EAU

PROJECT ID: 7995-02-74

WITH: N/A

COUNTY: EAU CLAIRE

MAY 2026

ORDER OF SHEETS

Section No.	1	Title
Section No.	2	Typical Sections and Details
Section No.	3	Estimate of Quantities
Section No.	3	Miscellaneous Quantities
Section No.	4	Right of Way Plat
Section No.	5	Plan and Profile
Section No.	6	Standard Detail Drawings
Section No.	7	Sign Plates
~~Section No.~~	~~8~~	~~Structure Plans~~
Section No.	9	Computer Earthwork Data
Section No.	9	Cross Sections

TOTAL SHEETS = 220

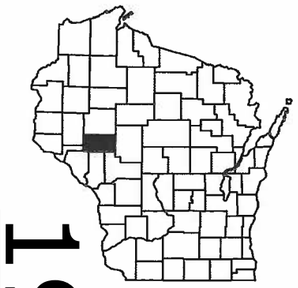

19

DESIGN DESIGNATION

A.A.D.T.	(2026)	=	600 vpd
A.A.D.T.	(2046)	=	650 vpd
D.H.V.		=	N/A
D.D.		=	50/50
T.		=	5.4%
DESIGN SPEED		=	40 MPH
ESALS		=	52,000

CONVENTIONAL SYMBOLS

PLAN

- CORPORATE LIMITS
- PROPERTY LINE
- LOT LINE
- LIMITED HIGHWAY EASEMENT
- EXISTING RIGHT OF WAY
- PROPOSED OR NEW R/W LINE
- SLOPE INTERCEPT
- REFERENCE LINE (300'EB')
- EXISTING CULVERT
- PROPOSED CULVERT (Box or Pipe)
- COMBUSTIBLE FLUIDS (CAUTION)
- MARSH AREA
- WOODED OR SHRUB AREA

PROFILE

- GRADE LINE
- ORIGINAL GROUND
- MARSH OR ROCK PROFILE (To be noted as such) (ROCK)
- SPECIAL DITCH (LABEL)
- GRADE ELEVATION (95.36)
- CULVERT (Profile View)

UTILITIES

- ELECTRIC (E)
- FIBER OPTIC (FO)
- GAS (G)
- SANITARY SEWER (SAN)
- STORM SEWER (SS)
- TELEPHONE (T)
- WATER (W)
- UTILITY PEDESTAL
- POWER POLE
- TELEPHONE POLE

STATE OF WISCONSIN
DEPARTMENT OF TRANSPORTATION

PLAN OF PROPOSED IMPROVEMENT

C EAU CLAIRE, COUNTY LINE RD

2800 W OF JEFFERS RD TO JEFFERS RD

LOC STR
EAU CLAIRE COUNTY

STATE PROJECT	FEDERAL PROJECT	
	PROJECT	CONTRACT
7995-02-74	WISC 2026318	1

STATE PROJECT NUMBER

7995-02-74

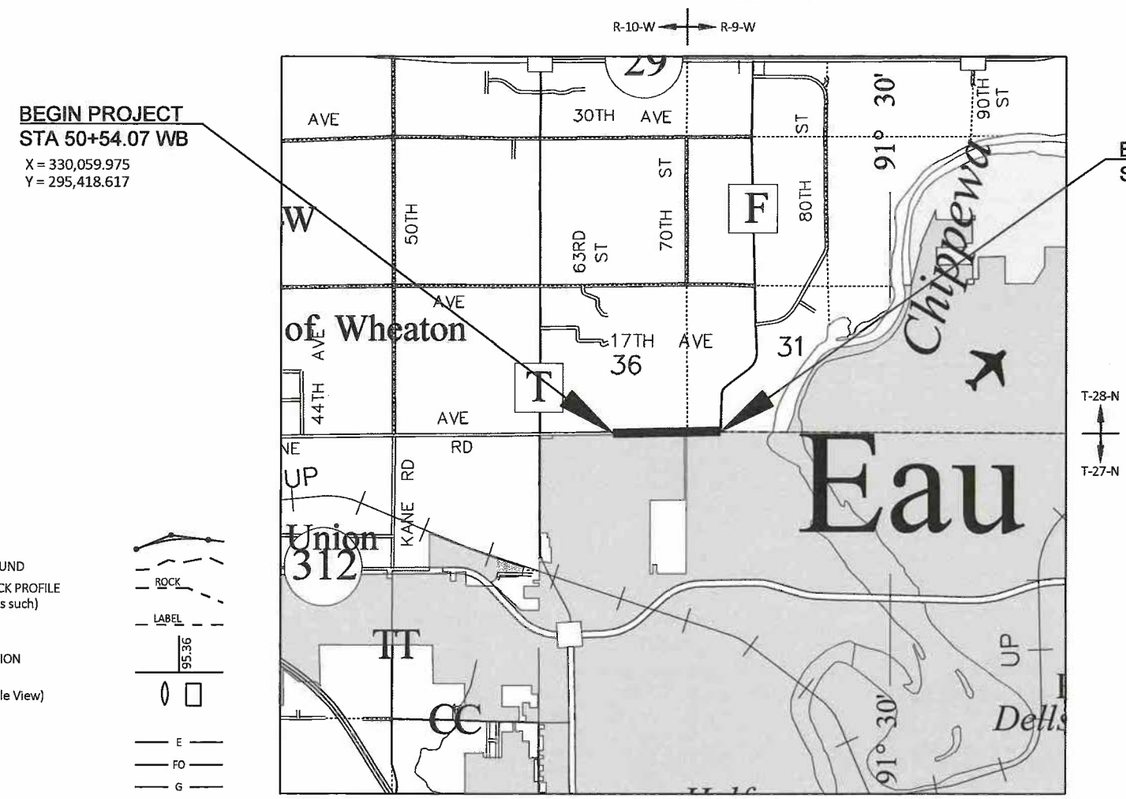

LAYOUT

SCALE 0 1 MI

TOTAL NET LENGTH OF CENTERLINE = 0.765

HORIZONTAL POSITIONS SHOWN ON THIS PLAN ARE WISCONSIN COORDINATE REFERENCE SYSTEM (WISCRS), EAU CLAIRE COUNTY, NAD83 (2011), IN U.S. SURVEY FEET. POSITIONS SHOWN ARE GRID COORDINATES, GRID BEARINGS, AND GRID DISTANCES. GRID DISTANCES ARE THE SAME AS GROUND DISTANCES.

ELEVATIONS ARE REFERENCED TO NAVD 88 (2012). GPS DERIVED ELEVATIONS ARE BASED ON GEOID 12A

ACCEPTED FOR

CITY OF EAU CLAIRE

Date 1/28/26 Earl Nerr
(Signature and Title of Official)

ORIGINAL PLANS PREPARED BY

AYRES

WISCONSIN JEFFREY A. ABRAMSON 32337 Eau Claire WI PROFESSIONAL ENGINEER

DATE: 1/28/2026
(Professional Engineer Signature)

STATE OF WISCONSIN
DEPARTMENT OF TRANSPORTATION

PREPARED BY

Surveyor	AYRES ASSOCIATES INC
Designer	AYRES ASSOCIATES INC
Project Manager	TOU YANG, PE
Regional Examiner	NW REGION
Regional Supervisor	TOU YANG, PE

APPROVED FOR THE DEPARTMENT

DATE: 2026.01.30 13:47:50-06'00'
(Signature)

E

FILE NAME : I:\41\410897_CITY OF EC_COUNTY LINE ROAD 79950273\C3D\SHEETS\010101-TI.DWG

PLOT DATE : 1/19/2026 11:17 AM

PLOT BY : RESHESKE, CARRIE

PLOT NAME :

GENERAL NOTES

THERE ARE UTILITY FACILITIES WITHIN THE PROJECT AREA THAT ARE NOT SHOWN ON THE PLANS. THE CONTRACTOR SHALL COORDINATE THEIR CONSTRUCTION ACTIVITIES WITH A CALL TO DIGGERS HOTLINE AND/OR A DIRECT CALL TO THE UTILITIES THAT HAVE FACILITIES IN THE AREA.

THE EXACT LOCATION AND WIDTH OF DRIVEWAY ENTRANCES WILL BE DETERMINED IN THE FIELD BY THE ENGINEER. ALL DRIVEWAYS ARE TO BE REPLACED IN KIND UNLESS OTHERWISE DIRECTED BY THE ENGINEER OR AS SHOWN ON THE PLANS.

CONTRACTOR WILL BE RESPONSIBLE FOR RESHAPING AND SEEDING ANY PREVIOUSLY GRASSED AREAS WHICH ARE DISTURBED BY OPERATIONS, OUTSIDE OF NORMAL CONSTRUCTION LIMITS.

NO TREES OR SHRUBS ARE TO BE REMOVED WITHOUT THE APPROVAL OF THE ENGINEER.

RIGHT OF WAY INFORMATION SHOWN ON THE PLANS IS APPROXIMATE.

CONTRACTOR SHALL MAINTAIN ACCESS TO ALL DRIVEWAYS AT ALL TIMES EXCEPT WHEN PAVING OPERATION REQUIRE THE DRIVEWAY TO BE CLOSED. ACCESS TO DRIVEWAYS SHALL BE RE-ESTABLISHED IMMEDIATELY AFTER OPERATIONS ARE COMPLETED. ACCESS SHALL BE PROVIDED DURING ALL NON-WORKING HOURS.

TRAFFIC CONTROL DEVICES SHALL BE ADJUSTED TO FIT FIELD CONDITIONS AS DIRECTED BY THE ENGINEER.

UTILITY CONTACTS

AT&T - COMMUNICATION
304 SOUTH DEWEY STREET
EAU CLAIRE, WI 54701
ATTN: RICK PADOLAK
OFFICE: 715-839-5565
MOBILE: 715-410-0656
rp4514@att.com

CITY OF EAU CLAIRE - SEWER
1000 FERRY STREET
EAU CLAIRE, WI 54703
ATTN: BEN SPANEL
715-839-6117
ben.spanel@eauclairewi.gov

CITY OF EAU CLAIRE - WATER
1000 FERRY STREET
EAU CLAIRE, WI 54703
ATTN: BEN SPANEL
715-839-6117
BEN.SPANEL@EAUCLAIREWI.GOV

SPECTRUM - COMMUNICATION
1201 MCCANN DRIVE
ALTOONA, WI 54720
ATTN: ROBERT STEPHENS
OFFICE: 715-214-1173
MOBILE: 715-579-5594
robert.stephans@charter.com

WEST WISCONSIN TELCOM - COMMUNICATION
912 CRESCENT STREET
PO BOX 247
MENOMONIE, WI 54751
ATTN: BRAD SCHMIDTKNECHT
OFFICE: 715-231-0504
MOBILE: 715-308-1914
brads@wwt.coop

XCEL ENERGY - ELECTRICITY
1414 WEST HAMILTON AVENUE
PO BOX 8
EAU CLAIRE, WI 54702
ATTN: DAVID MELSNESS
OFFICE: 715-737-6026
david. j.melsness@xcelenergy.com

XCEL ENERGY - GAS/PETROLEUM
1414 WEST HAMILTON AVENUE
PO BOX 8
EAU CLAIRE, WI 54702
ATTN: JIM FLANAGAN
OFFICE: 715-737-6028
MOBILE: 715-577-0418
james.a.flanagan@xcelenergy.com

* DENOTES NOT A DIGGERS HOTLINE MEMBER

DIGGERS HOTLINE
Dial 811 or (800)242-8511
www.DiggersHotline.com

DNR CONTACT

DNR WEST CENTRAL REGION HQ
1300 WEST CLAIREMONT AVENUE
EAU CLAIRE, WI 54701
ATTN: LEAH NICOL
715-934-9014
leah nicol@wisconsin.gov

DESIGN CONTACT

AYRES ASSOCIATES INC
3433 OAKWOOD HILLS PARKWAY
EAU CLAIRE, WI 54701
ATTN: JEFF ABRAMSON, PE
715-834-3161
abramsonj@ayresassociates.com

ORDER OF SECTION 2 DETAIL SHEETS

GENERAL NOTES
TYPICAL SECTIONS
CONSTRUCTION DETAILS
PLAN DETAILS
PAVING DETAILS
CURB RAMP DETAILS
EROSION CONTROL
STORM SEWER
UTILITY PLAN & PROFILE
SIGNING & PAVEMENT MARKING
LIGHTING PLAN
TRAFFIC CONTROL
DETOUR ROUTE
ALIGNMENT DIAGRAM

RUNOFF COEFFICIENT TABLE

	HYDROLOGIC SOIL GROUP											
	A			B			C			D		
	SLOPE RANGE (PERCENT)			SLOPE RANGE (PERCENT)			SLOPE RANGE (PERCENT)			SLOPE RANGE (PERCENT)		
LAND USE:	0-2	2-6	6 & OVER	0-2	2-6	6 & OVER	0-2	2-6	6 & OVER	0-2	2-6	6 & OVER
ROW CROPS:	.08 .22	.16 .30	.22 .38	.12 .26	.20 .34	.27 .44	.15 .30	.24 .37	.33 .50	.19 .34	.28 .41	.38 .56
MEDIAN STRIPTURF:	.19 .24	.20 .26	.24 .30	.19 .25	.22 .28	.26 .33	.20 .26	.23 .30	.30 .37	.20 .27	.25 .32	.30 .40
SIDE SLOPETURF:			.25 .32			.27 .34			.28 .36			.30 .38
PAVEMENT:												
ASPHALT:	.70 - .95											
CONCRETE:	.80 - .95											
BRICK:	.70 - .80											
DRIVES, WALKS:	.75 - .85											
ROOFS:	.75 - .95											
GRAVEL ROADS, SHOULDERS:	.40 - .60											

TOTAL PROJECT AREA = 8.977 ACRES
TOTAL AREA EXPECTED TO BE DISTURBED BY CONSTRUCTION ACTIVITIES = 7.368 ACRES

2

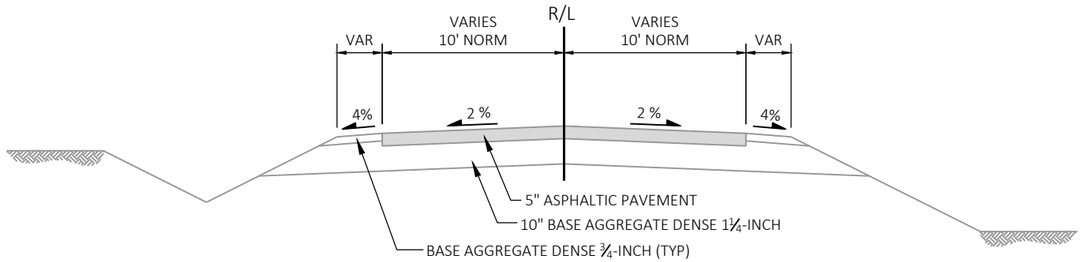

EXISTING TYPICAL SECTION
COUNTY LINE ROAD (WEST LEG)

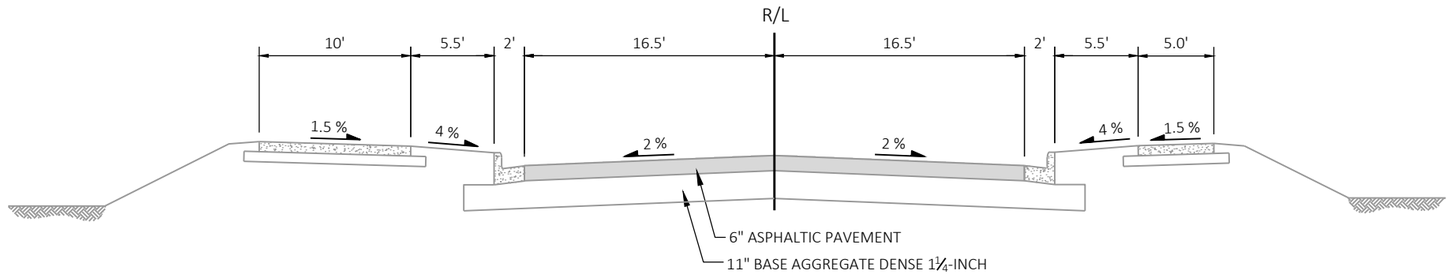

EXISTING TYPICAL SECTION
JEFFERS ROAD / CTH F (SOUTH LEG)

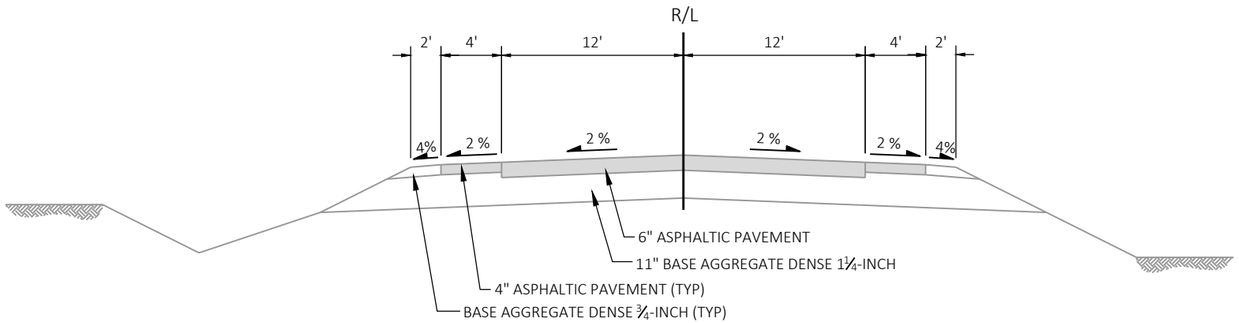

EXISTING TYPICAL SECTION
CTH F (NORTH LEG)

PROJECT NO: 7995-02-74	HWY: COUNTY LINE ROAD	COUNTY: EAU CLAIRE	TYPICAL SECTIONS	SHEET 3	E

FILE NAME : I:\41\410897_CITY OF EC_COUNTY LINE ROAD 79950273\C3D\SHEETS\020301-TS.DWG
LAYOUT NAME - 020301-ts
PLOT DATE : 3/19/2026 3:16 PM PLOT BY : RESHESKE, CARRIE PLOT NAME : PLOT SCALE : 1 IN:10 FT

2

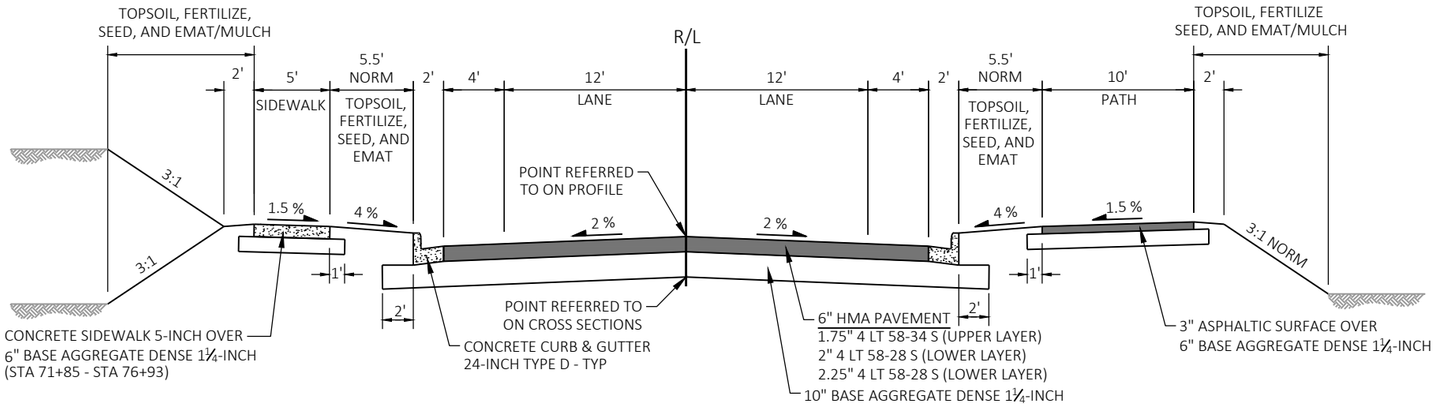

FINISHED TYPICAL SECTION

STA 50+54 - STA 76+93

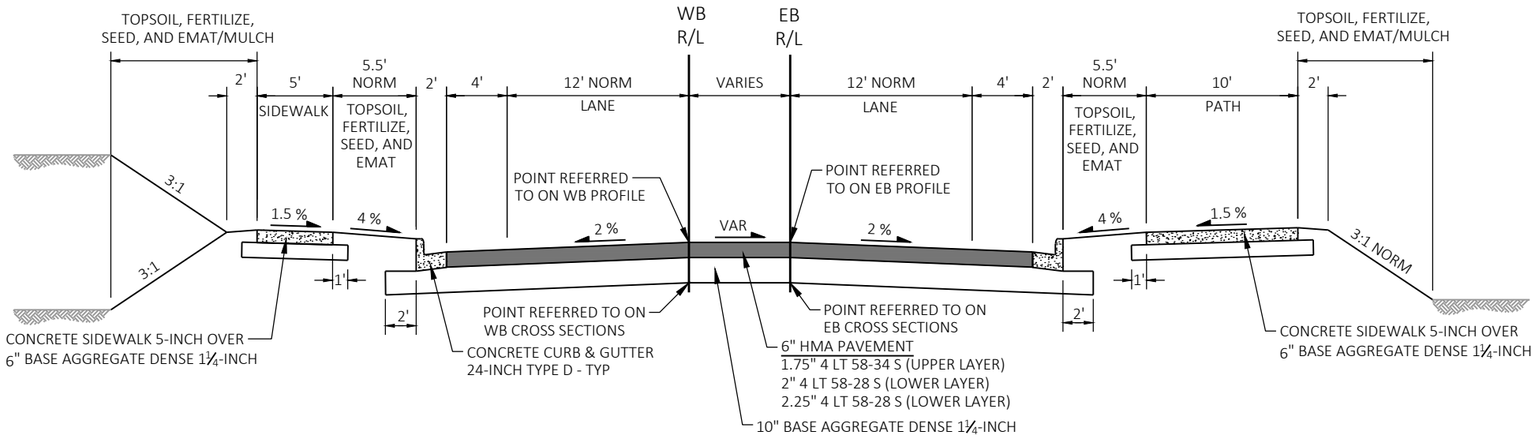

FINISHED TYPICAL SECTION

STA 76+93 EB - STA 79+48 EB

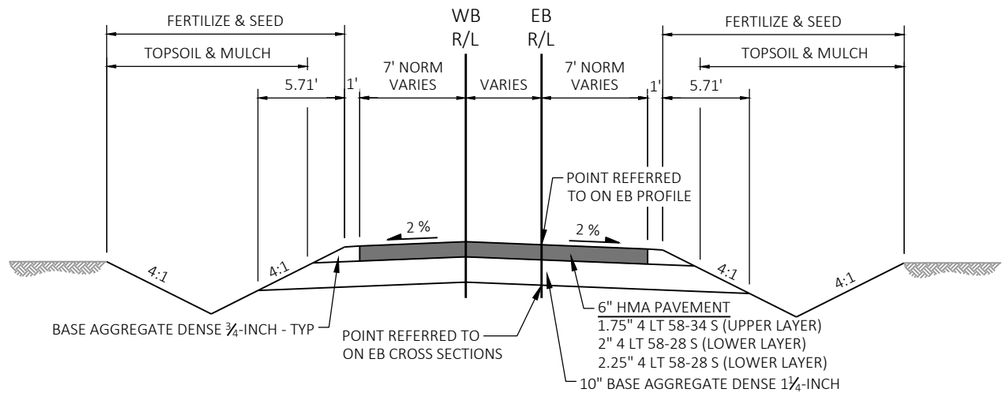

FINISHED TYPICAL SECTION

STA 90+31 EB - STA 92+00 EB

PROJECT NO: 7995-02-74	HWY: COUNTY LINE ROAD	COUNTY: EAU CLAIRE	TYPICAL SECTIONS	SHEET 4	E

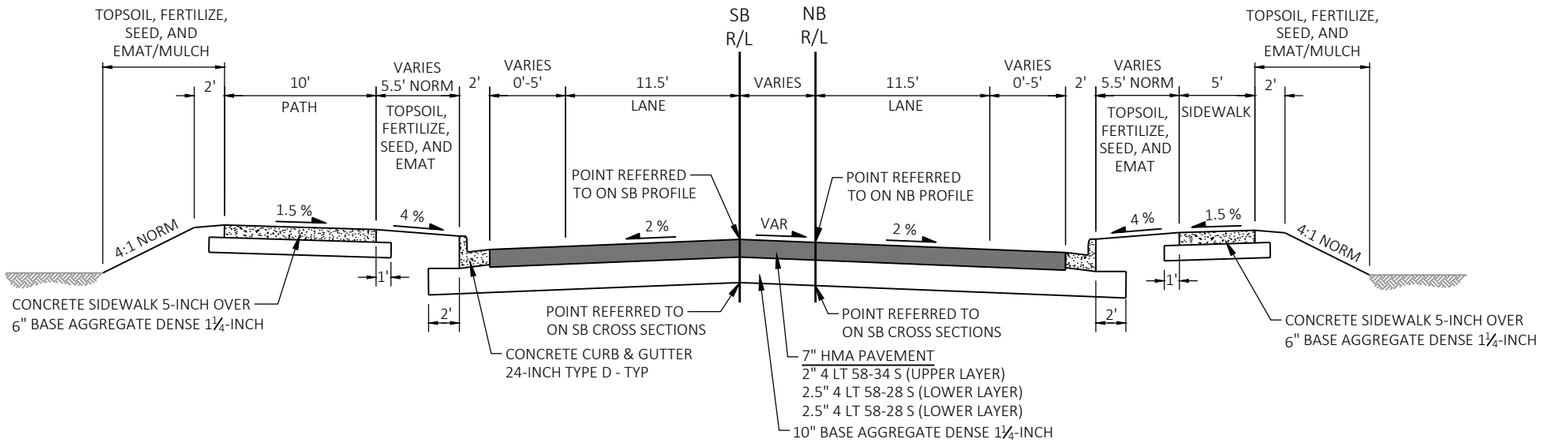

FINISHED TYPICAL SECTION

STA 100+00 NB - STA 101+42 NB
STA 110+72 NB - STA 111+29 NB

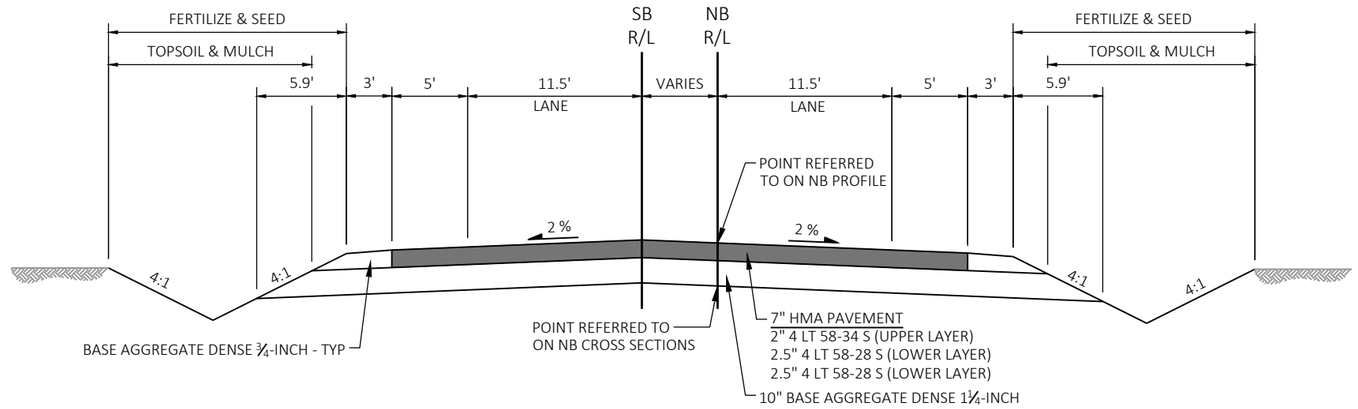

FINISHED TYPICAL SECTION

STA 111+29 NB - STA 112+31 NB

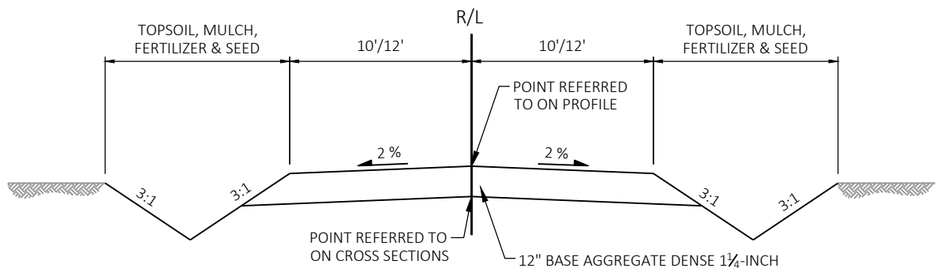

FINISHED TYPICAL SECTION

STA 10+34.00 X - STA 13+97.26 X
STA 12+30 - STA 14+44.62 (TEMPORARY PRIVATE DRIVEWAY)
STA 76+94 EB, RT (PRIVATE DRIVEWAY)

PROJECT NO: 7995-02-74	HWY: COUNTY LINE ROAD	COUNTY: EAU CLAIRE	TYPICAL SECTIONS	SHEET 5	E

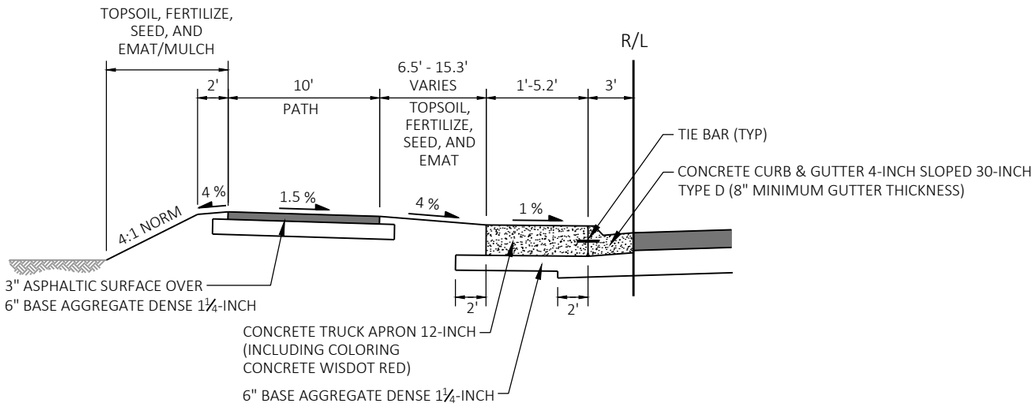

FINISHED TYPICAL SECTION

SOUTHBOUND TRUCK APRON

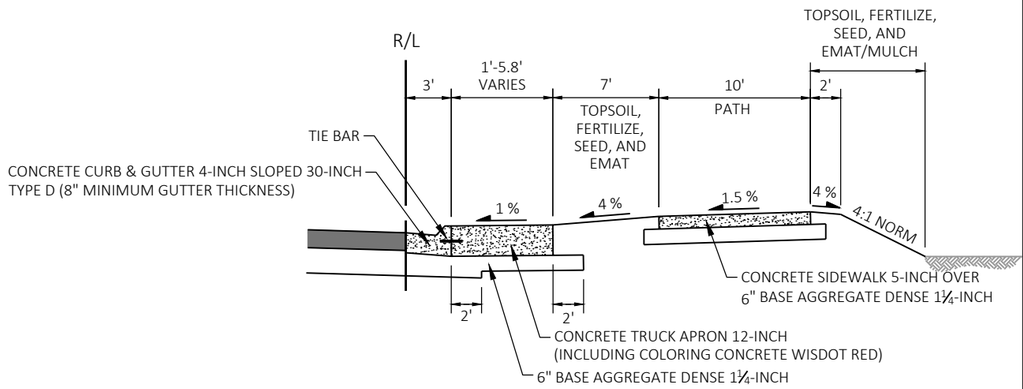

FINISHED TYPICAL SECTION

NORTHBOUND TRUCK APRON

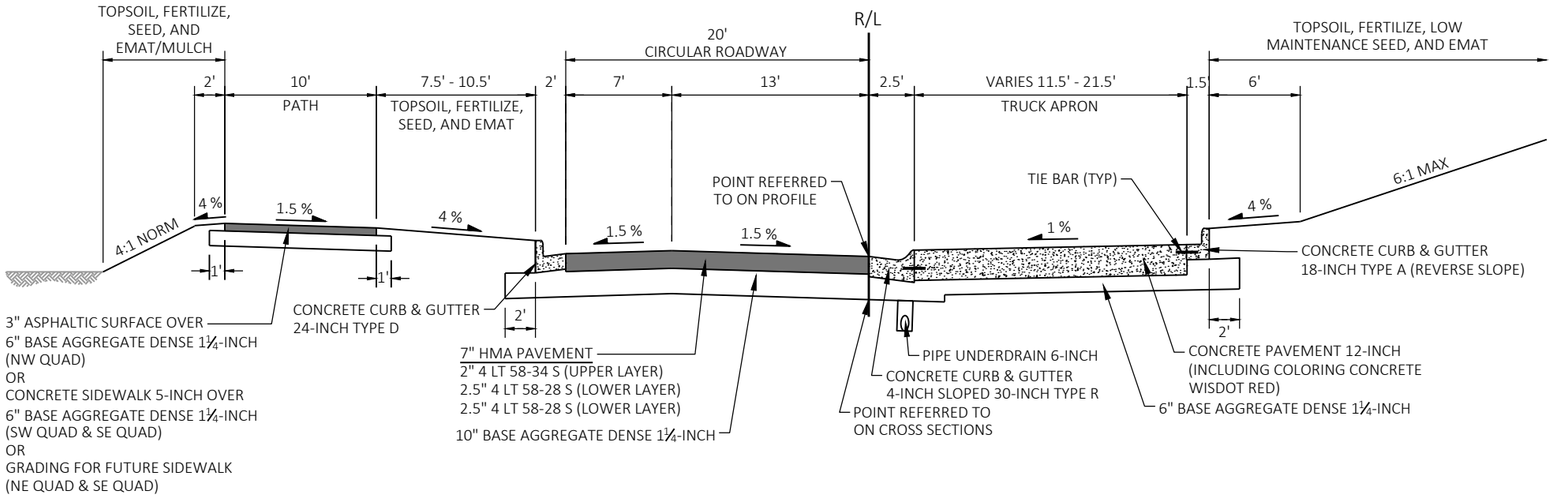

FINISHED TYPICAL HALF SECTION

ROUNDABOUT

PROJECT NO: 7995-02-74	HWY: COUNTY LINE ROAD	COUNTY: EAU CLAIRE	TYPICAL SECTIONS	SHEET 6	E

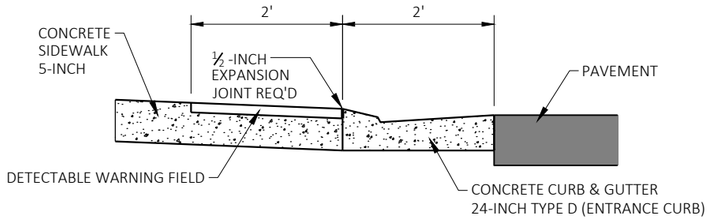

SECTION A-A

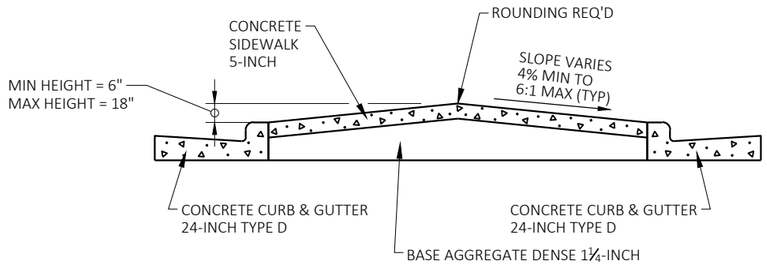

SECTION C-C

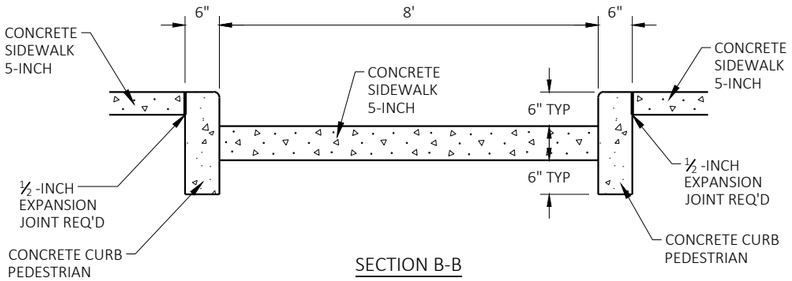

SECTION B-B

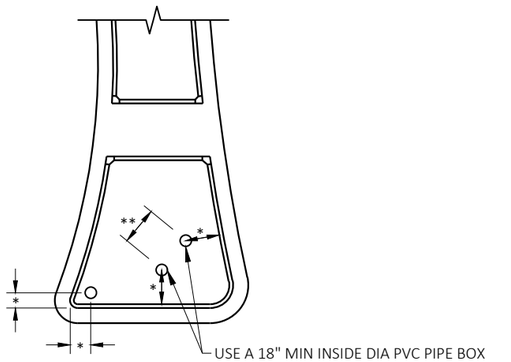

ISLAND SIGN LOCATION DETAIL (TYP)

* DISTANCE TO BE LAID OUT IN THE FIELD BASED ON SIGN SIZE. TWO FOOT MINIMUM CLEARANCE BETWEEN THE EDGE OF SIGN AND THE FACE OF CURB.

** SEE A4-4 SIGN PLATE FOR POST SPACING REQUIREMENTS.

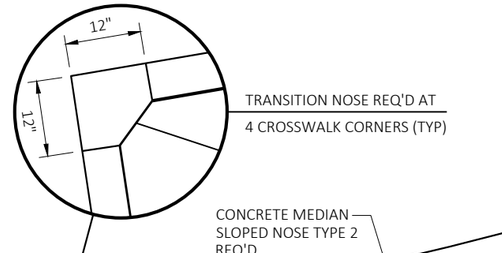

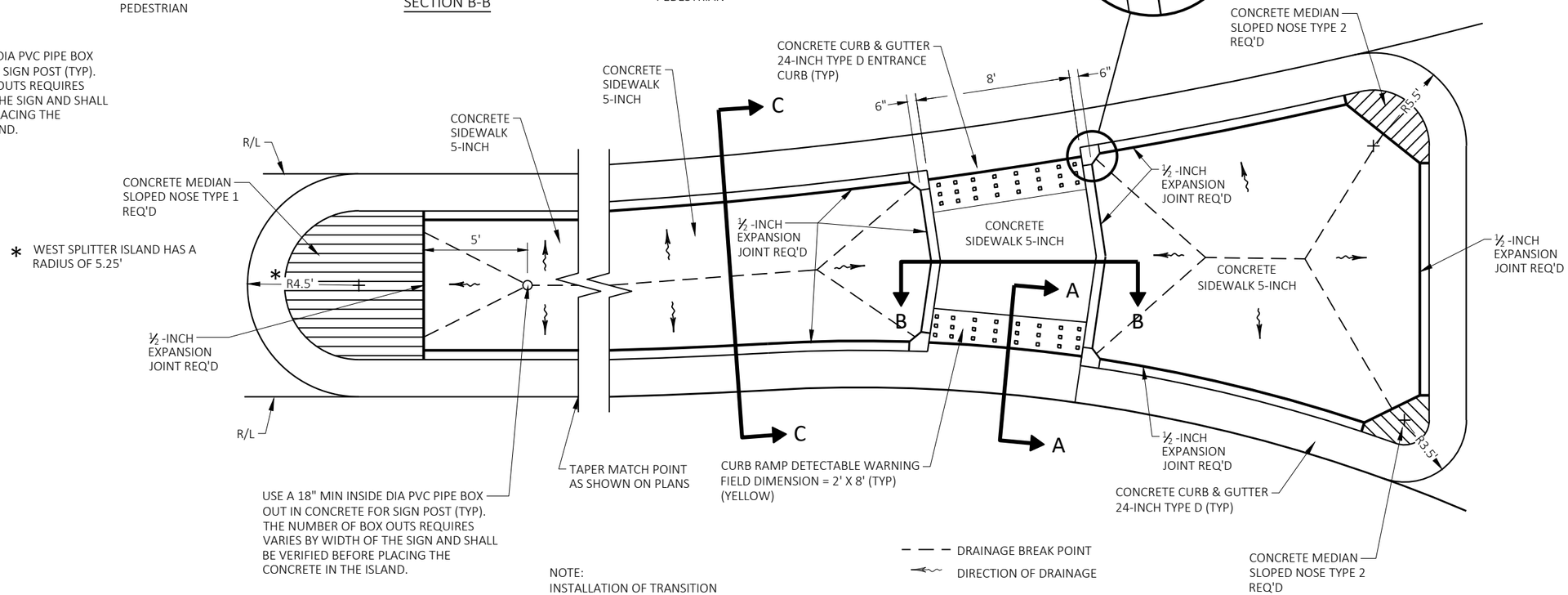

* WEST SPLITTER ISLAND HAS A RADIUS OF 5.25'

NOTE:
INSTALLATION OF TRANSITION NOSE IS INCIDENTAL TO OTHER PAY ITEMS. DO NOT MARK TRANSITION NOSE.

CONCRETE SPLITTER ISLAND DETAIL

NOT TO SCALE

2

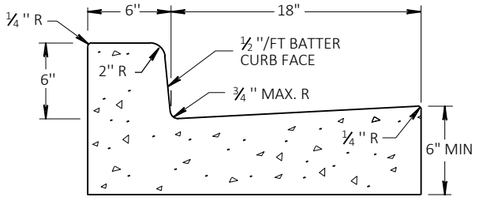

CONCRETE CURB & GUTTER
24-INCH TYPE D

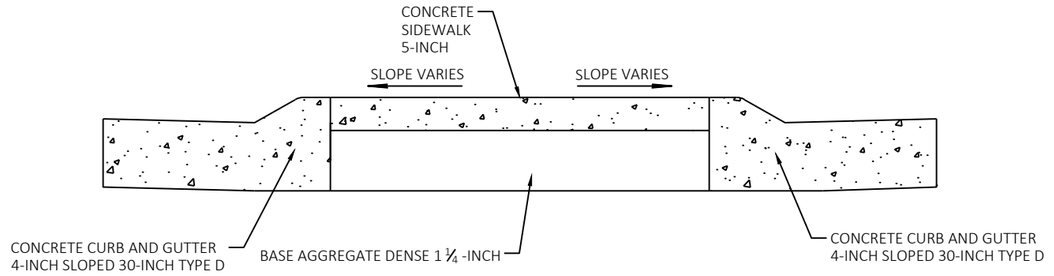

SECTION A-A

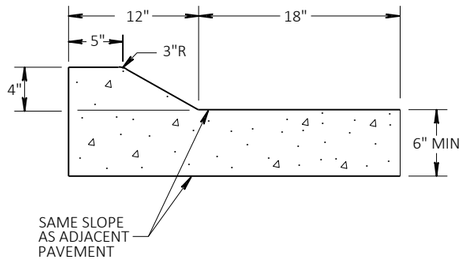

CONCRETE CURB & GUTTER 4-INCH
SLOPED 30-INCH TYPE D

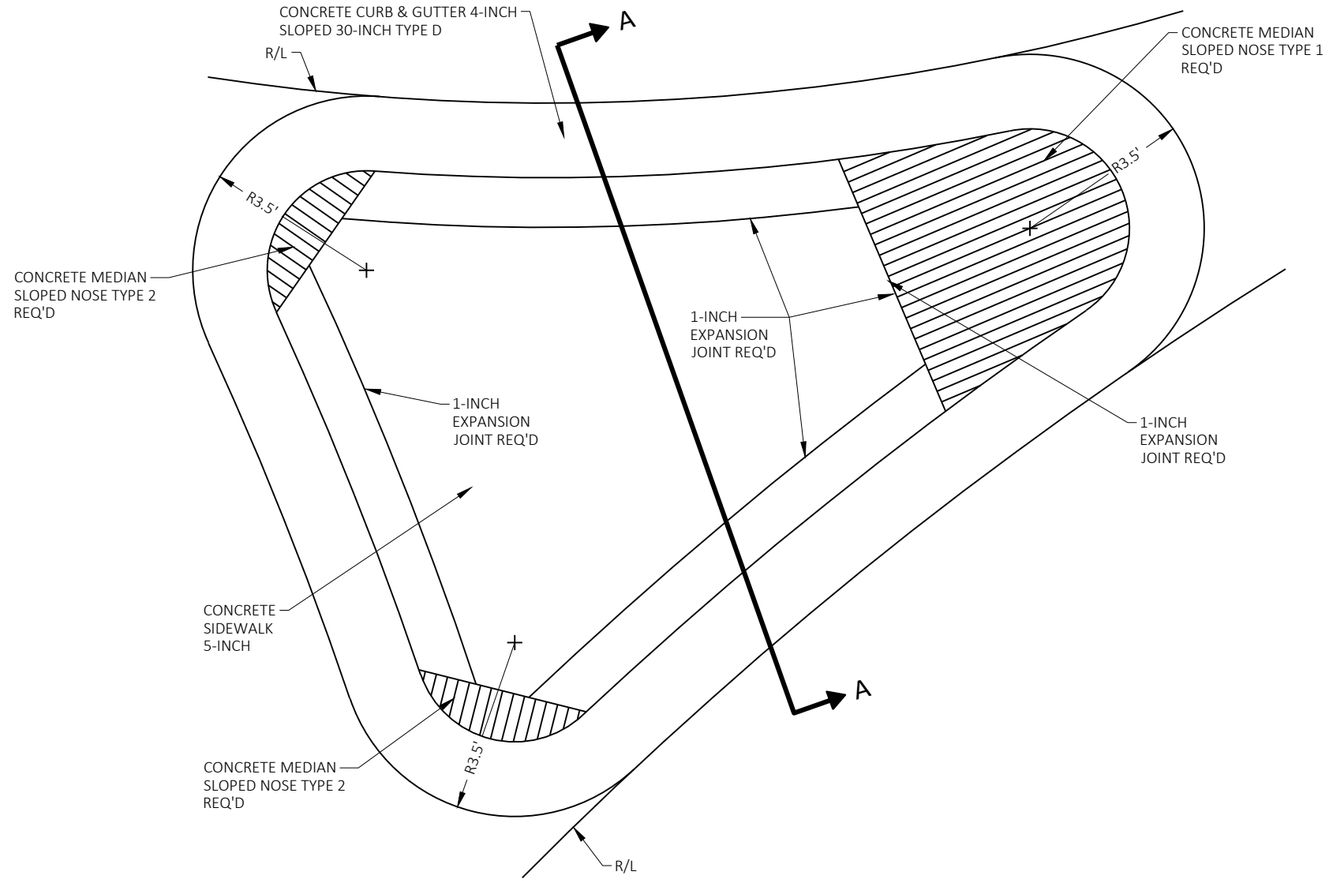

CONCRETE SPLITTER ISLAND DETAIL WITHOUT CROSSWALK

NOT TO SCALE

PAGE 1A				
POINT NO	STATION	OFFSET	NORTHING	EASTING
1	52+54.11	16.0' LT	295438.75	330259.61
2	52+54.03	16.0' RT	295406.76	330260.25

STA 51+41
CONSTRUCT PE (ASPHALT)
(12' WIDE)
SAWCUT REQ'D

STA 54+73
CONSTRUCT PE (ASPHALT)
(14' WIDE)
SAWCUT REQ'D

STA 51+41
-36' LT

EXISTING R/W

COUNTY LINE RD

EXISTING R/W

PROPOSED R/W

BEGIN PROJECT
STA 50+54.07 WB
MATCH EXISTING
SAWCUT REQ'D

LEGEND
- ASPHALTIC SURFACE
- ASPHALTIC SURFACE DRIVEWAYS (3")
- CONCRETE SIDEWALK 5-INCH
- CONCRETE DRIVEWAY 6-INCH
- CONCRETE TRUCK APRON 12-INCH

STA 59+63
CONSTRUCT PE (ASPHALT)
(12' WIDE)
SAWCUT REQ'D

EXISTING R/W

COUNTY LINE RD

EXISTING R/W

PROPOSED R/W

TLE

PROJECT NO: 7995-02-74	HWY: COUNTY LINE ROAD	COUNTY: EAU CLAIRE	PLAN DETAIL	SHEET 9	E

FILE NAME : I:\41\410897_CITY OF EC_COUNTY LINE ROAD 79950273\C3D\SHEETS\021101-ID.DWG
LAYOUT NAME - 021101-id
PLOT DATE : 1/19/2026 4:15 PM PLOT BY : RESHESKE, CARRIE PLOT NAME : PLOT SCALE : 1 IN:40 FT

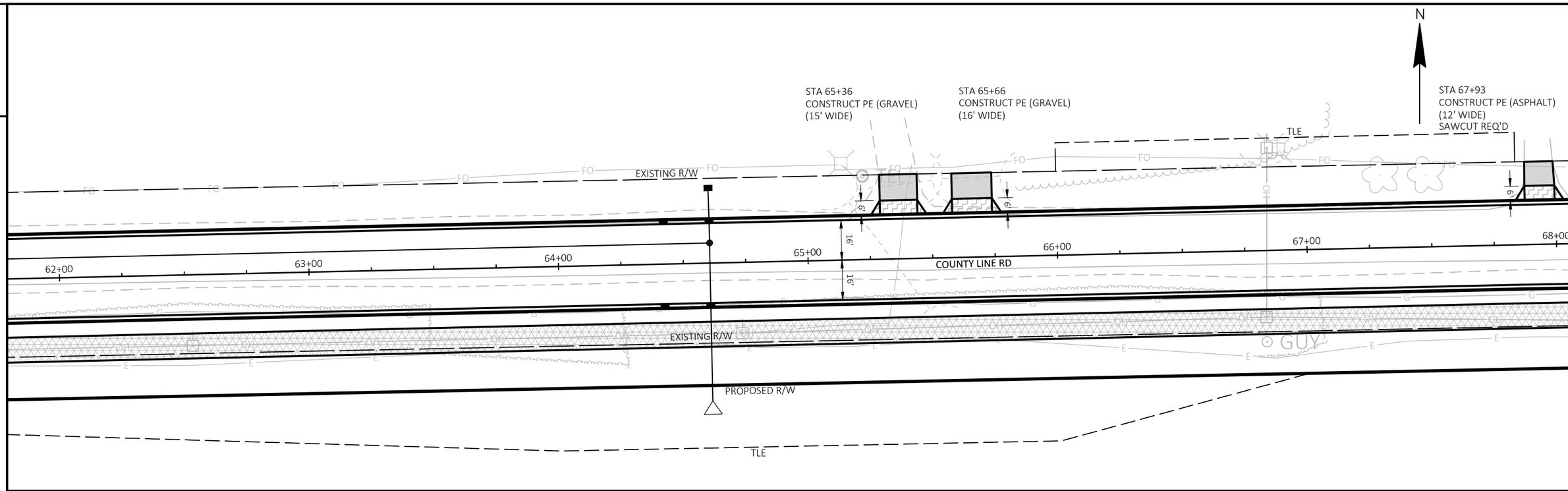

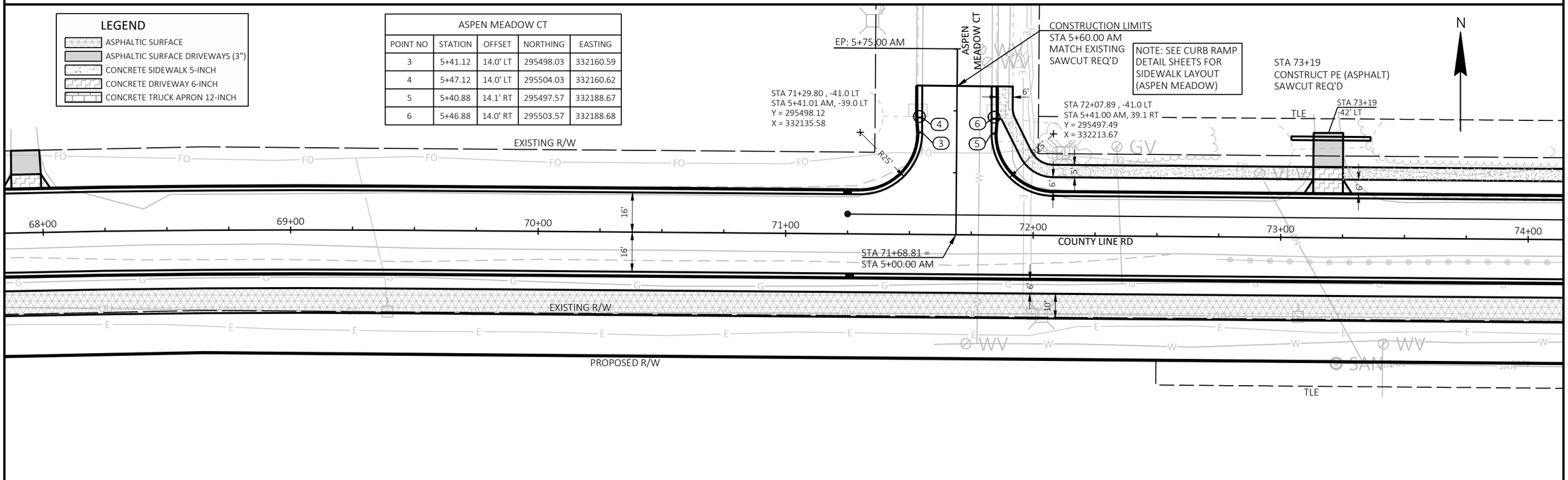

ASPEN MEADOW CT				
POINT NO	STATION	OFFSET	NORTHING	EASTING
3	5+41.12	14.0' LT	295498.03	332160.59
4	5+47.12	14.0' LT	295504.03	332160.62
5	5+40.88	14.1' RT	295497.57	332188.67
6	5+46.88	14.0' RT	295503.57	332188.68

PROJECT NO: 7995-02-74	HWY: COUNTY LINE ROAD	COUNTY: EAU CLAIRE	PLAN DETAIL	SHEET 10	E

LEGEND

- ASPHALTIC SURFACE
- ASPHALTIC SURFACE DRIVEWAYS (3")
- CONCRETE SIDEWALK 5-INCH
- CONCRETE DRIVEWAY 6-INCH
- CONCRETE TRUCK APRON 12-INCH

ASPEN RIDGE DR				
POINT NO	STATION	OFFSET	NORTHING	EASTING
7	10+40.96	12.9' LT	295493.66	332685.50
8	10+46.96	12.9' LT	295499.65	332685.55
9	10+41.04	12.9' RT	295493.53	332711.27
10	10+47.04	12.9' RT	295499.53	332711.32

PRIVATE DRIVEWAY				
POINT NO	STATION	OFFSET	NORTHING	EASTING
11	9+13.35	45.7' LT	295399.63	332649.67
12	9+47.53	0.0'	295400.14	332697.41
13	9+48.31	23.2' RT	295398.84	332720.62
14	9+18.16	21.0' RT	295360.59	332703.78
15	9+37.17	105.9' RT	295359.53	332796.84
16	9+44.01	103.7' RT	295379.38	332799.22

ASPEN RIDGE DR

CONSTRUCTION LIMITS
STA 10+60.00 AR
MATCH EXISTING
SAWCUT REQ'D

NOTE: SEE CURB RAMP DETAIL SHEETS FOR SIDEWALK LAYOUT (ASPEN RIDGE)

PROPOSED R/W

STA 76+54.74 , -41.0 LT
STA 10+40.99 AR, -37.9 LT
Y = 295493.89
X = 332660.50

STA 77+30.51 WB, -41.0 LT
STA 10+41.00 AR, 37.9 RT
Y = 295493.29
X = 332736.27

TLE

EXISTING R/W

COUNTY LINE RD

74+00 75+00 76+00 77+00 EB 10+00 AR

STA 76+92.64 WB =
STA 10+00.00 AR

78+00 WB 78+00 EB 79+00 WB 79+00 EB

277+00 SW 278+00 SW 279+00 SW

478+00 NW 479+00 NW 480+00 NW

NW1 NW2 NW3 NW4 NW5 NW6 NW7 NW16 NW18

W1 W2 W3

SW6 SW7 SW8 SW9 SW10

R25' R35' R10'

STA 76+54.64 , 41.0 RT
STA 9+59.00 AR, -38.0 LT
Y = 295411.90
X = 332659.75

STA 77+33.44 EB, 41.0 RT
STA 9+57.29 AR, 38.0 RT
Y = 295409.58
X = 332735.73

XCEL GAS DRIVEWAY

CONSTRUCTION LIMITS
STA 9+04.64 AR
MATCH EXISTING

N

2

PROJECT NO: 7995-02-74	HWY: COUNTY LINE ROAD	COUNTY: EAU CLAIRE	PLAN DETAIL	SHEET 11	E

FILE NAME : I:\41\410897_CITY OF EC_COUNTY LINE ROAD 79950273\C3D\SHEETS\021101-ID.DWG
LAYOUT NAME - 021103-id
PLOT DATE : 1/19/2026 4:15 PM
PLOT BY : RESHESKE, CARRIE
PLOT NAME :
PLOT SCALE : 1 IN:40 FT
WISDOT/CADDS SHEET 44

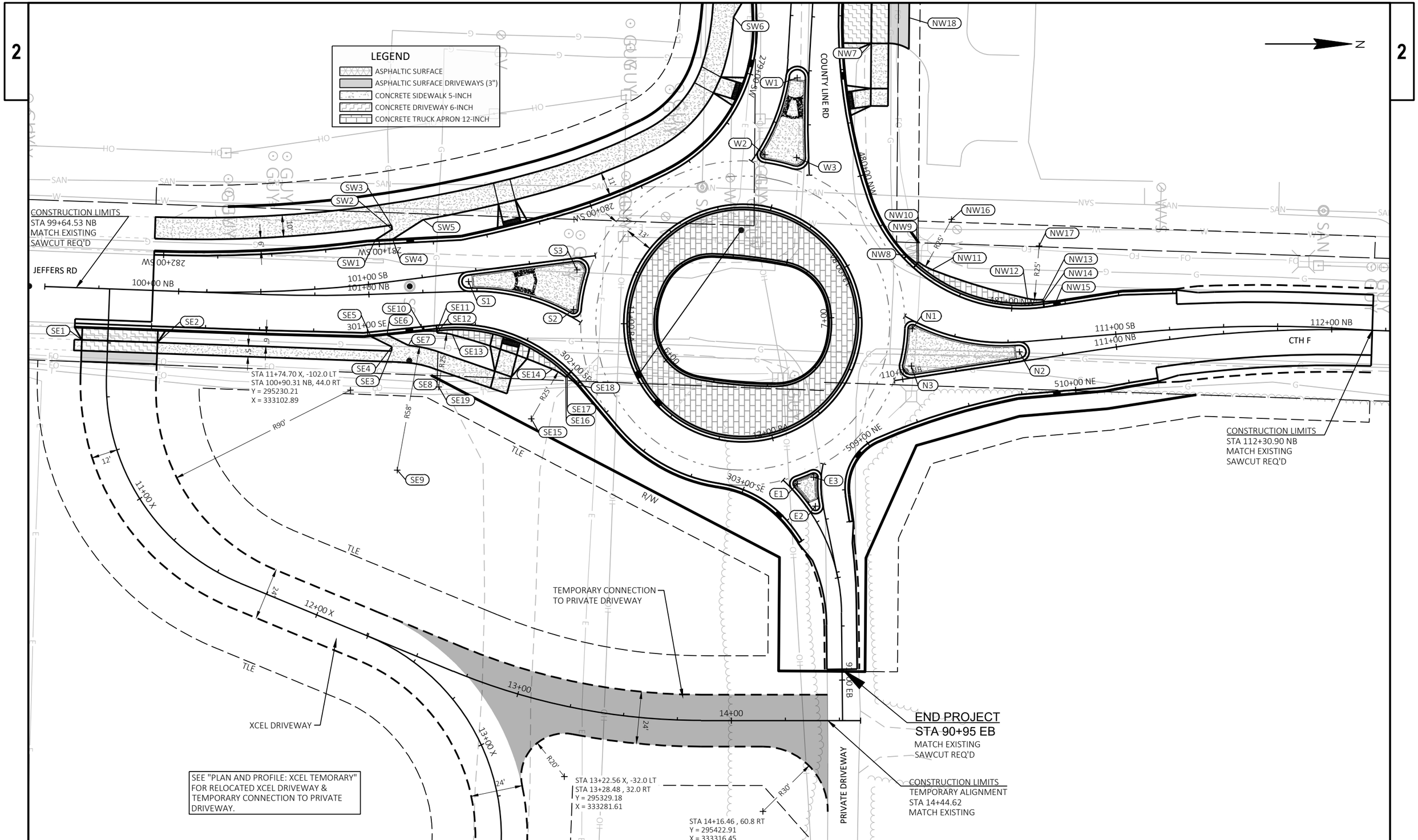

PROJECT NO: 7995-02-74	HWY: COUNTY LINE ROAD	COUNTY: EAU CLAIRE	PLAN DETAIL	SHEET 12	E

FILE NAME : I:\41\410897_CITY OF EC_COUNTY LINE ROAD 79950273\C3D\SHEETS\021101-ID.DWG
LAYOUT NAME - 021104-id
PLOT DATE : 1/19/2026 4:15 PM PLOT BY : RESHESKE, CARRIE PLOT NAME : PLOT SCALE : 1 IN:40 FT
WISDOT/CADDS SHEET 42

SIDEWALK NW QUAD				
POINT NO	STATION	OFFSET	NORTHING	EASTING
NW1	478+62.84	2.0' LT	295465.01	332868.46
NW2	478+70.36	2.0' LT	295463.64	332875.86
NW3	478+80.21	12.9' LT	295472.57	332887.54
NW4	478+79.86	14.9' LT	295474.57	332887.55
NW5	478+88.43	13.3' LT	295471.51	332895.70
NW6	479+12.87	14.8' LT	295471.32	332918.48
NW7	479+38.34	14.9' LT	295471.13	332942.48
NW8	480+43.70	2.0' LT	295487.72	333040.64
NW9	480+49.88	2.5' LT	295492.37	333044.44
NW10	480+49.88	3.5' LT	295493.04	333043.69
NW11	480+57.37	4.7' LT	295499.29	333047.22
NW12	481+07.51	4.7' LT	295543.47	333060.55
NW13	481+15.00	3.5' LT	295550.63	333061.06
NW14	481+15.00	2.5' LT	295550.77	333062.05
NW15	481+21.03	2.0' LT	295556.77	333061.62
NW16	480+47.09	28.4' LT	295508.33	333023.91
NW17	481+17.14	28.4' LT	295548.83	333036.13
NW18	79+22.77	44.9' LT	295488.72	332930.62

SIDEWALK SW QUAD				
POINT NO	STATION	OFFSET	NORTHING	EASTING
SW1	281+01.82	2.0' RT	295241.68	333033.48
SW2	280+93.77	6.6' RT	295249.49	333028.51
SW3	280+93.97	8.5' RT	295249.19	333026.56
SW4	280+93.70	2.0' RT	295249.79	333033.06
SW5	280+79.21	10.2' RT	295263.85	333024.12
SW6	278+72.93	10.6' RT	295407.51	332930.32
SW7	278+59.22	2.0' RT	295415.67	332916.33
SW8	278+51.70	2.0' RT	295415.42	332908.81
SW9	278+59.53	6.9' RT	295410.76	332916.80
SW10	278+59.29	8.9' RT	295408.77	332916.62

SIDEWALK SE QUAD				
POINT NO	STATION	OFFSET	NORTHING	EASTING
SE1	99+68.02	24.0' RT	295106.00	333079.60
SE2	300+03.02	7.5' RT	295140.98	333080.87
SE3	301+10.19	9.7' RT	295249.28	333084.81
SE4	301+10.46	7.7' RT	295249.35	333082.82
SE5	301+01.31	2.0' RT	295239.67	333078.01
SE6	301+08.83	2.0' RT	295247.16	333077.26
SE7	301+18.20	7.9' RT	295257.06	333082.18
SE8	301+31.49	12.1' RT	295270.71	333085.09
SE9	301+07.30	64.8' RT	295251.90	333139.87
SE10	301+25.97	2.0' RT	295264.20	333075.55
SE11	301+31.97	2.5' RT	295270.22	333075.45
SE12	301+31.97	3.5' RT	295270.32	333076.45
SE13	301+39.31	4.8' RT	295277.42	333077.25
SE14	301+92.78	4.8' RT	295323.74	333093.15
SE15	302+04.00	28.3' RT	295313.90	333116.13
SE16	302+00.18	3.5' RT	295329.82	333096.85
SE17	302+00.18	2.5' RT	295330.52	333096.15
SE18	302+06.35	2.0' RT	295334.94	333100.21
SE19	301+30.23	28.4' RT	295271.08	333101.43

SOUTH SAFETY ISLAND				
POINT NO	STATION	OFFSET	NORTHING	EASTING
S1	101+46.25	4.5' LT	295284.86	333052.69
S2	101+94.98	3.5' LT	295333.48	333065.56
S3	101+96.46	5.5' RT	295335.07	333047.29

WEST SAFETY ISLAND				
POINT NO	STATION	OFFSET	NORTHING	EASTING
W1	79+53.16	5.2' LT	295436.95	332958.44
W2	79+90.21	3.5' LT	295421.94	332994.02
W3	79+89.97	5.5' RT	295436.66	332995.32

EAST SAFETY ISLAND				
POINT NO	STATION	OFFSET	NORTHING	EASTING
E1	90+05.75	3.5' LT	295437.00	333146.18
E2	90+18.54	3.5' LT	295445.33	333156.54
E3	90+05.63	3.5' RT	295444.49	333143.19

NORTH SAFETY ISLAND				
POINT NO	STATION	OFFSET	NORTHING	EASTING
N1	110+05.79	3.5' RT	295490.18	333074.56
N2	110+55.29	4.5' LT	295539.72	333085.15
N3	110+04.89	5.5' LT	295489.73	333091.74

2

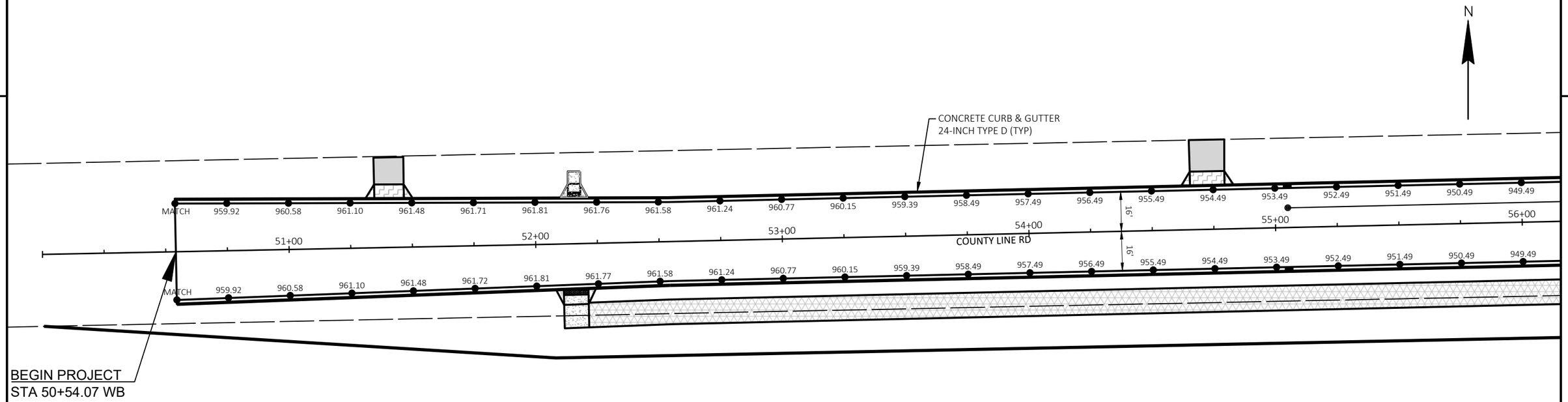

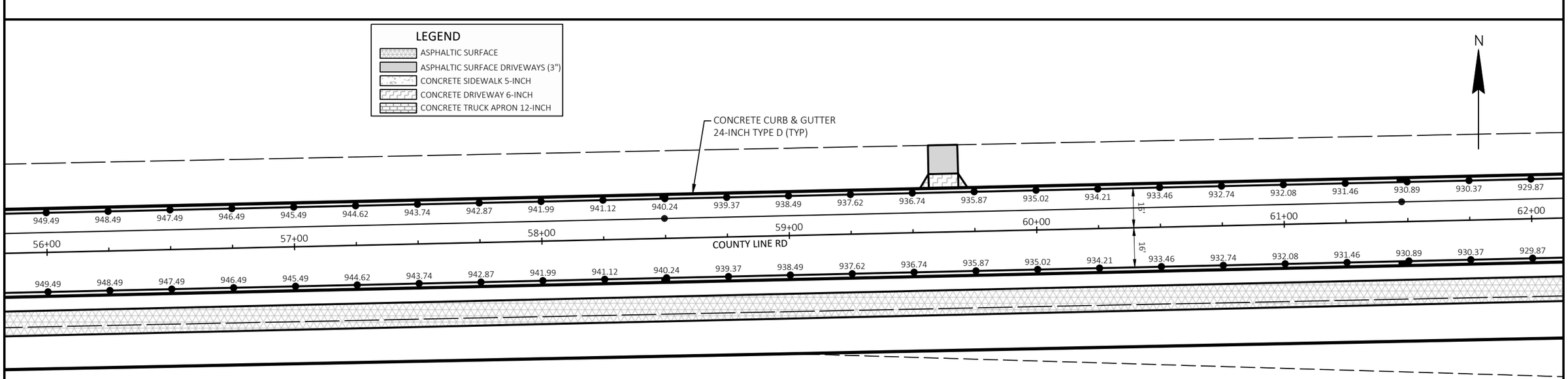

PROJECT NO: 7995-02-74	HWY: COUNTY LINE ROAD	COUNTY: EAU CLAIRE	PAVING DETAIL	SHEET 14	E

FILE NAME : I:\41\410897_CITY OF EC_COUNTY LINE ROAD 79950273\C3D\SHEETS\021201-PD.DWG
LAYOUT NAME - 021201-pd
PLOT DATE : 3/19/2026 3:16 PM
PLOT BY : RESHESKE, CARRIE
PLOT NAME :
PLOT SCALE : 1 IN:40 FT
WISDOT/CADDS SHEET 44

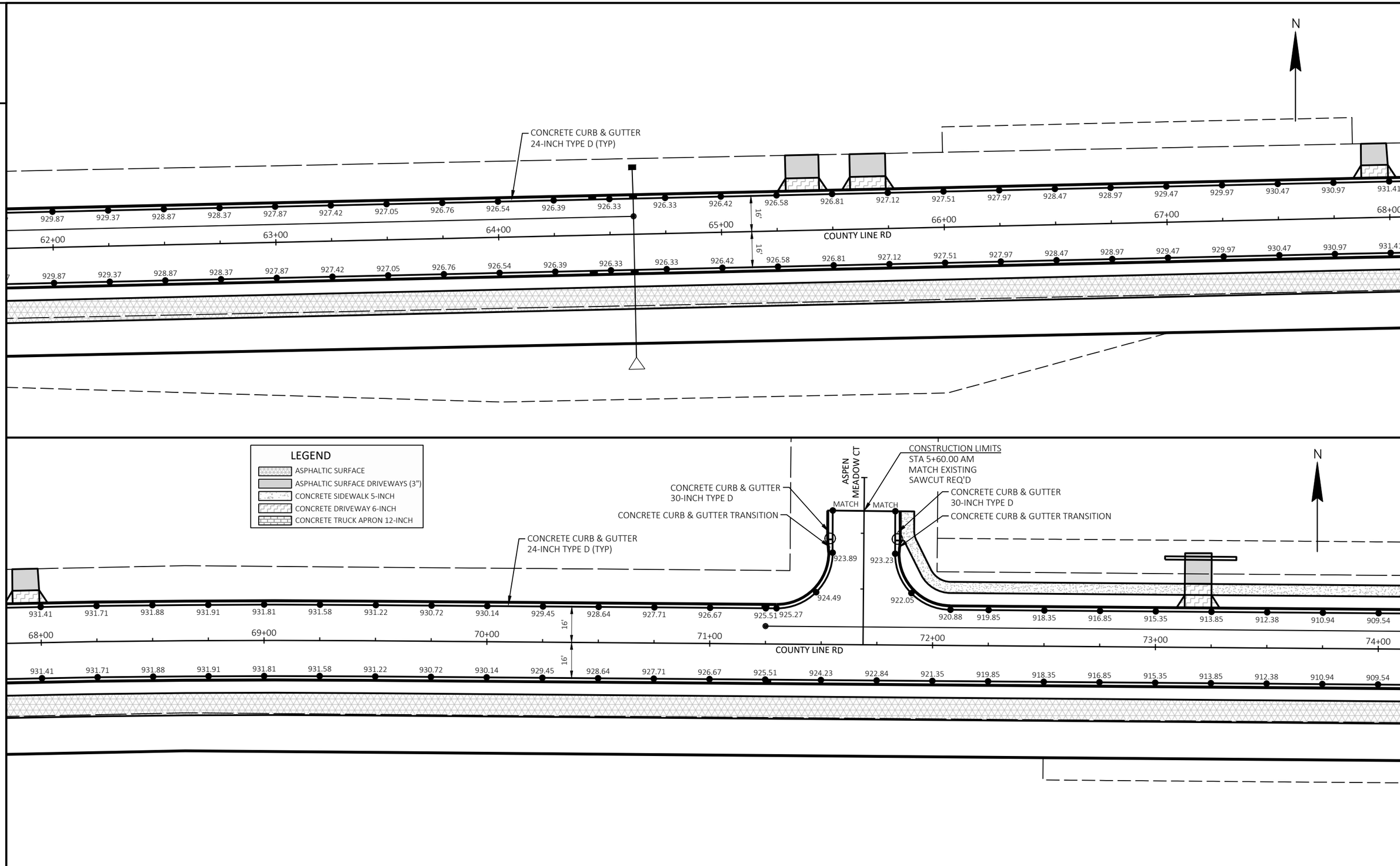

PROJECT NO: 7995-02-74	HWY: COUNTY LINE ROAD	COUNTY: EAU CLAIRE	PAVING DETAIL	SHEET 15	E

FILE NAME : I:\41\410897_CITY OF EC_COUNTY LINE ROAD 79950273\C3D\SHEETS\021201-PD.DWG
LAYOUT NAME - 021202-pd
PLOT DATE : 3/19/2026 3:16 PM PLOT BY : RESHESKE, CARRIE PLOT NAME : PLOT SCALE : 1 IN:40 FT
WISDOT/CADDS SHEET 44

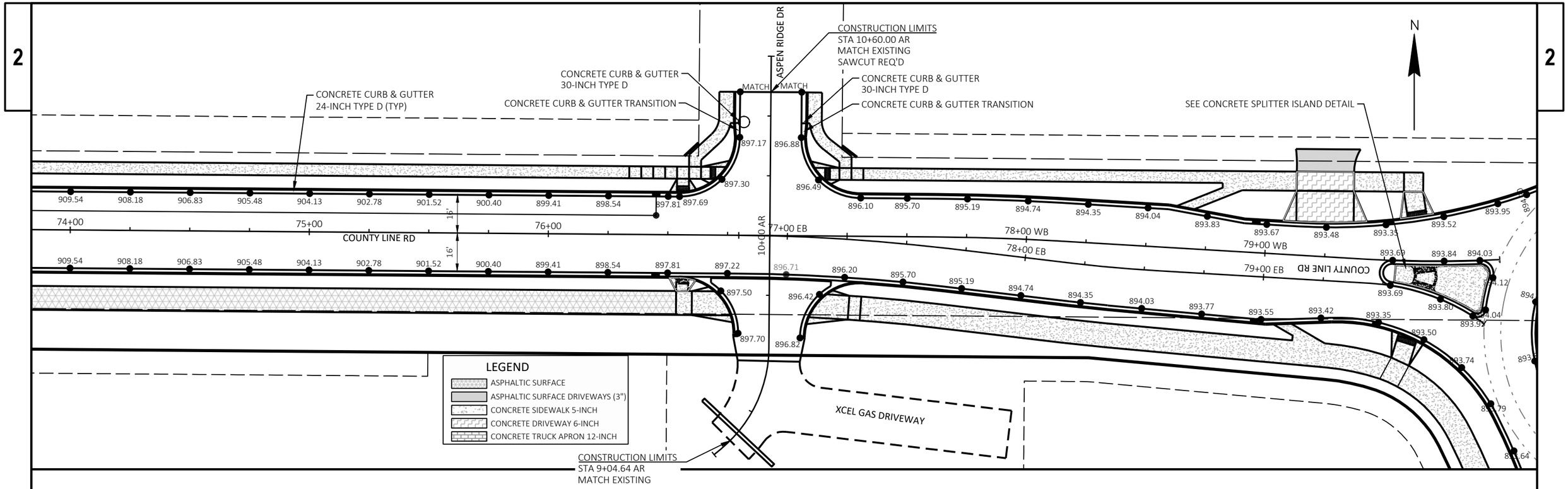

PROJECT NO: 7995-02-74	HWY: COUNTY LINE ROAD	COUNTY: EAU CLAIRE	PAVING DETAIL	SHEET 16	E

FILE NAME : I:\41\410897_CITY OF EC_COUNTY LINE ROAD 79950273\C3D\SHEETS\021201-PD.DWG
LAYOUT NAME - 021203-pd
PLOT DATE : 3/19/2026 3:16 PM PLOT BY : RESHESKE, CARRIE PLOT NAME : PLOT SCALE : 1 IN:40 FT

2

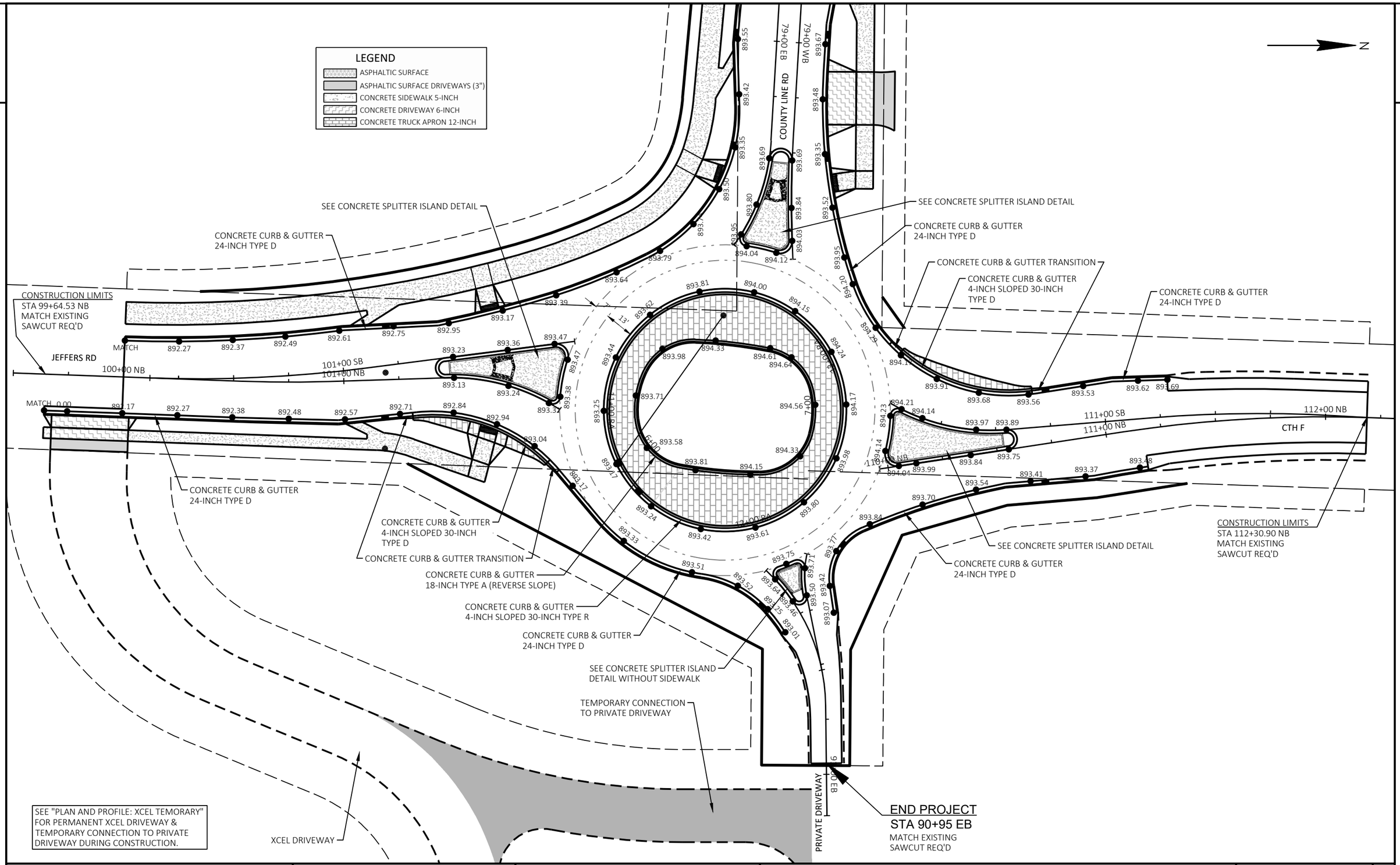

PROJECT NO: 7995-02-74	HWY: COUNTY LINE ROAD	COUNTY: EAU CLAIRE	PAVING DETAIL	SHEET 17	E

CURB RAMP 1					
POINT NUMBER	STATION	OFFSET	ELEVATION	NORTHING	EASTING
1-1	52+13.67	29.29' LT	962.18	295451.12	330218.88
1-2	52+13.58	24.29' LT	962.10	295446.12	330218.90
1-3	52+13.47	18.79' LT	961.72	295440.62	330218.92
1-4	52+18.47	18.69' LT	961.70	295440.64	330223.92
1-5	52+18.58	24.19' LT	962.09	295446.14	330223.90
1-6	52+18.67	29.19' LT	962.16	295451.14	330223.88

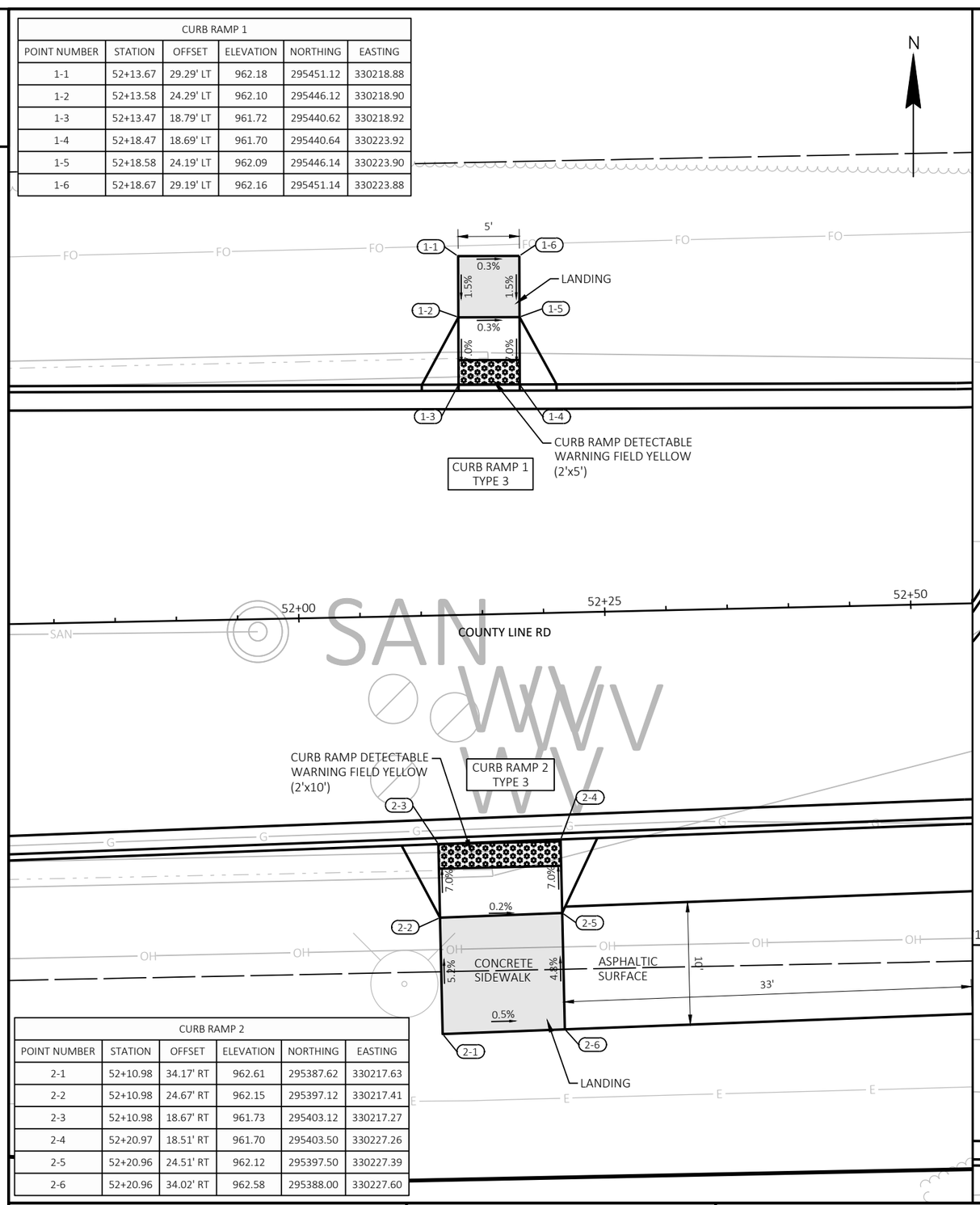

CURB RAMP 2					
POINT NUMBER	STATION	OFFSET	ELEVATION	NORTHING	EASTING
2-1	52+10.98	34.17' RT	962.61	295387.62	330217.63
2-2	52+10.98	24.67' RT	962.15	295397.12	330217.41
2-3	52+10.98	18.67' RT	961.73	295403.12	330217.27
2-4	52+20.97	18.51' RT	961.70	295403.50	330227.26
2-5	52+20.96	24.51' RT	962.12	295397.50	330227.39
2-6	52+20.96	34.02' RT	962.58	295388.00	330227.60

ASPEN MEADOW SIDEWALK				
POINT NUMBER	STATION	OFFSET	NORTHING	EASTING
1	5+51.46	22.49' RT	295508.08	332197.17
2	5+46.68	23.72' RT	295503.29	332198.36
3	5+33.70	30.30' RT	295490.26	332204.84
4	72+07.89	28.50' LT	295484.99	332213.57
5	5+46.89	17.95' RT	295503.55	332192.59
6	5+38.50	39.08' RT	295494.99	332213.65
7	5+51.48	32.49' RT	295508.02	332207.17

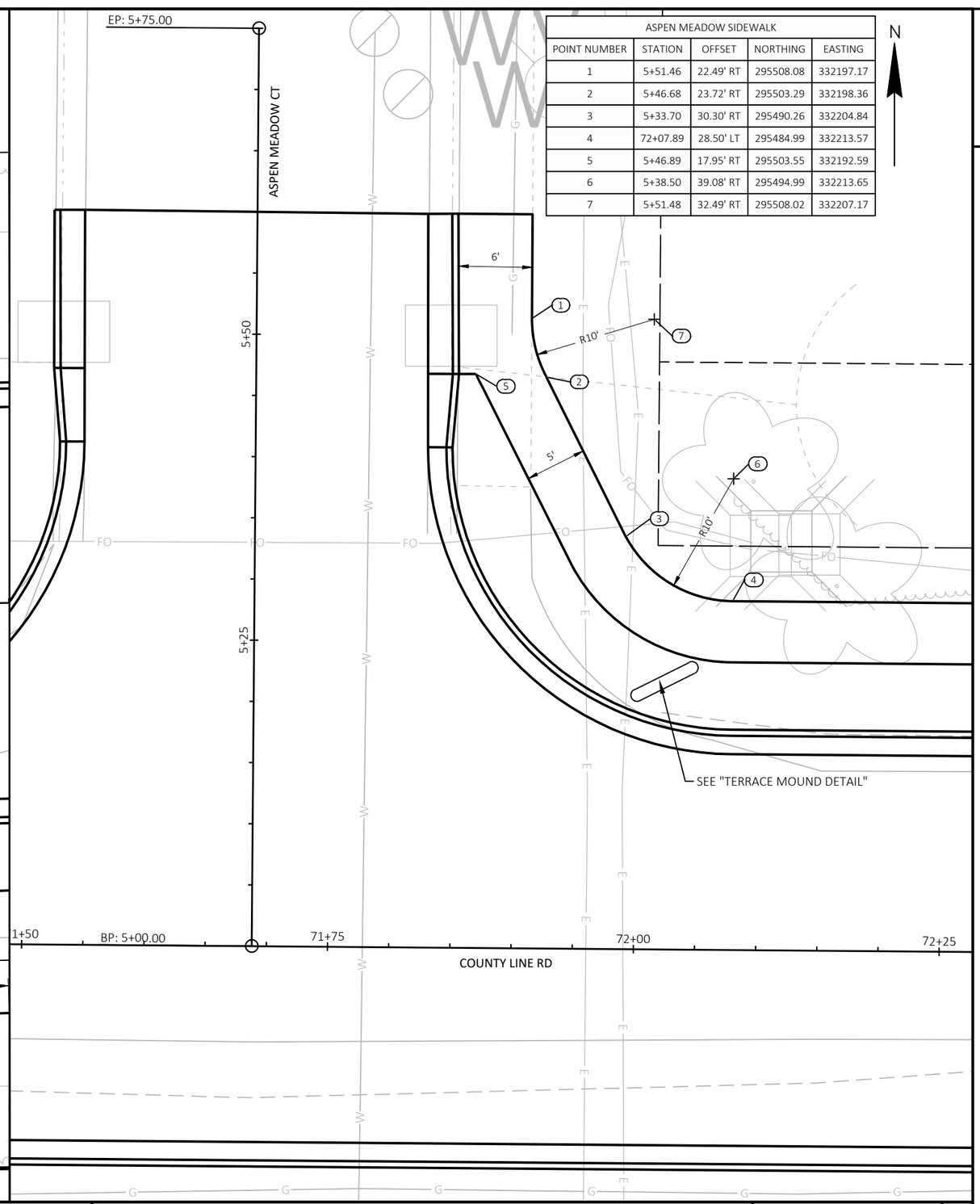

PROJECT NO: 7995-02-74	HWY: COUNTY LINE ROAD	COUNTY: EAU CLAIRE	CURB RAMP DETAILS	SHEET 18	E

FILE NAME : I:\41\410897_CITY OF EC_COUNTY LINE ROAD 79950273\C3D\SHEETS\021301-CR.DWG
LAYOUT NAME - 021301-cr
PLOT DATE : 1/29/2026 2:21 PM
PLOT BY : RESHESKE, CARRIE
PLOT NAME :
PLOT SCALE : 1 IN:10 FT
WISDOT/CADDS SHEET 44

CURB RAMP 3					
POINT NUMBER	STATION	OFFSET	ELEVATION	NORTHING	EASTING
3-1	76+69.66	23.50' LT	897.26	295476.28	332675.28
3-2	76+63.66	23.50' LT	897.75	295476.33	332669.28
3-3	76+58.66	23.50' LT	897.77	295476.37	332664.28
3-4	76+58.66	18.34' LT	897.52	295471.20	332664.24
3-5	76+53.66	18.00' LT	897.64	295470.91	332659.24
3-6	76+53.66	23.50' LT	897.84	295476.41	332659.28
3-7	76+48.66	23.50' LT	898.10	295476.45	332654.28
3-8	76+43.66	23.50' LT	898.36	295476.49	332649.28
3-8A	76+38.66	23.50' LT	898.52	295476.53	332644.28

CURB RAMP 3					
POINT NUMBER	STATION	OFFSET	ELEVATION	NORTHING	EASTING
3-8B	76+33.66	23.50' LT	898.72	295476.57	332639.28
3-8C	76+33.66	28.50' LT	898.89	295481.57	332639.32
3-8D	76+38.66	28.50' LT	898.66	295481.53	332644.32
3-9	76+43.66	28.50' LT	898.43	295481.49	332649.32
3-10	76+48.66	28.50' LT	898.10	295481.45	332654.32
3-11	76+53.66	28.50' LT	897.77	295481.41	332659.32
3-12	76+58.66	28.50' LT	897.69	295481.37	332664.32
3-13	76+63.66	28.50' LT	897.62	295481.33	332669.32
3-14	76+74.04	28.50' LT	897.13	295481.24	332679.70

CURB RAMP 3					
POINT NUMBER	STATION	OFFSET	ELEVATION	NORTHING	EASTING
3-14A	76+69.66	28.50' LT	897.20	295481.28	332675.32
3-15	10+31.34	28.98' LT	897.74	295484.16	332669.35
3-16	10+33.50	33.98' LT	897.81	295486.37	332664.36
3-17	10+38.59	21.27' LT	897.85	295491.35	332677.11
3-18	10+42.23	24.70' LT	897.94	295495.02	332673.72
3-19	10+46.96	16.77' LT	897.72	295499.68	332681.68
3-20	10+49.52	21.55' LT	897.82	295502.29	332676.92
3-21	10+49.52	31.55' LT	0.00	295502.36	332666.92

CURB RAMP 4					
POINT NUMBER	STATION	OFFSET	ELEVATION	NORTHING	EASTING
4-1	77+15.58	23.50' LT	896.37	295475.91	332721.21
4-2	77+21.58	23.50' LT	896.49	295475.86	332727.21
4-3	77+26.58	23.50' LT	896.56	295475.82	332732.21
4-4	77+31.58	23.50' LT	896.73	295475.78	332737.21
4-5	77+31.58	28.50' LT	896.80	295480.78	332737.25
4-6	77+26.58	28.50' LT	896.64	295480.82	332732.25
4-7	77+21.58	28.50' LT	896.56	295480.86	332727.25
4-8	77+11.20	28.50' LT	896.51	295480.94	332716.86
4-8A	77+15.58	28.50' LT	896.44	295480.91	332721.25
4-9	10+31.04	28.94' RT	896.62	295483.40	332727.27
4-10	10+33.50	33.94' RT	896.71	295485.82	332732.29
4-11	10+36.20	22.24' RT	896.91	295488.61	332720.61
4-12	10+40.16	25.29' RT	897.04	295492.55	332723.69
4-13	10+47.03	16.43' RT	897.58	295499.49	332714.89
4-14	10+48.09	21.40' RT	897.74	295500.51	332719.86
4-15	10+48.08	31.40' RT	0.00	295500.42	332729.86

CURB RAMP 5					
POINT NUMBER	STATION	OFFSET	ELEVATION	NORTHING	EASTING
5-1	76+53.66	33.50' RT	898.14	295419.41	332658.83
5-2	76+60.25	33.50' RT	898.04	295419.36	332665.42
5-3	76+76.38	33.50' RT	897.54	295419.23	332681.55
5-4	76+69.57	23.50' RT	897.41	295429.28	332674.81
5-5	76+60.25	23.50' RT	897.89	295429.35	332665.50
5-6	76+58.66	23.50' RT	897.87	295429.37	332663.91
5-7	76+58.66	18.35' RT	897.51	295434.51	332663.95
5-8	76+53.66	18.00' RT	897.64	295434.91	332658.95
5-9	76+53.66	23.50' RT	897.94	295429.41	332658.91

CURB RAMP 6					
POINT NUMBER	STATION	OFFSET	ELEVATION	NORTHING	EASTING
6-1	77+10.63	33.50' RT	896.56	295418.39	332714.49
6-2	77+27.60	33.50' RT	896.78	295417.46	332730.72
6-3	77+32.82	33.48' RT	896.85	295417.12	332735.71
6-4	77+32.75	23.50' RT	896.70	295427.08	332736.39
6-5	77+27.60	23.50' RT	896.63	295427.43	332731.40
6-6	77+17.88	23.50' RT	896.29	295428.02	332721.98

CURB RAMP 3 TYPE 4B1

CURB RAMP 3A TYPE 3

CURB RAMP 4 TYPE 4B1

CURB RAMP 5 TYPE 3

CURB RAMP DETECTABLE WARNING FIELD YELLOW (2'x5')

CURB RAMP DETECTABLE WARNING FIELD YELLOW (2'x5')

CURB RAMP DETECTABLE WARNING FIELD YELLOW (2'x5')

NO DETECTABLE WARNING FIELD REQ'D AT DRIVEWAY

LANDING

SEE "TERRACE MOUND DETAIL"

ASPHALTIC SURFACE

CONCRETE SIDEWALK

CONCRETE SIDEWALK

COUNTY LINE RD

ASPEN RIDGE DR

PRIVATE DRIVEWAY

76+25 76+50 76+75 10+00 10+25 9+75 77+00 EB 77+25 WB 77+25 EB 77+50 WB 77+50 EB

PROJECT NO: 7995-02-74 | HWY: COUNTY LINE ROAD | COUNTY: EAU CLAIRE | CURB RAMP DETAILS | SHEET 19 | E

CURB RAMP 8					
POINT NUMBER	STATION	OFFSET	ELEVATION	NORTHING	EASTING
8-1	79+68.11	12.12' LT	893.72	295439.84	332975.96
8-2	79+70.16	7.65' LT	893.77	295434.88	332976.68
8-3	79+70.39	2.00' LT	893.68	295429.47	332975.02
8-4	79+62.56	2.00' LT	893.64	295431.81	332967.37
8-5	79+62.72	5.86' LT	893.70	295435.51	332968.50
8-6	79+61.58	8.83' LT	893.67	295438.69	332968.04
8-7	79+61.15	9.99' LT	893.66	295439.93	332967.86

CURB RAMP 7					
POINT NUMBER	STATION	OFFSET	ELEVATION	NORTHING	EASTING
7-1	79+65.88	37.02' LT	894.26	295478.90	332971.51
7-2	79+65.92	29.02' LT	894.14	295470.90	332971.45
7-3	79+67.51	19.34' LT	893.36	295461.20	332972.86
7-4	79+59.31	18.05' LT	893.40	295460.05	332964.94
7-5	79+57.33	28.91' LT	894.25	295470.96	332963.36
7-6	79+57.14	36.91' LT	894.37	295478.96	332963.42

CURB RAMP 9					
POINT NUMBER	STATION	OFFSET	ELEVATION	NORTHING	EASTING
9-1	79+70.12	40.58' RT	894.39	295389.38	332960.67
9-2	79+72.55	30.69' RT	894.24	295398.17	332965.45
9-3	79+71.62	20.02' RT	893.39	295408.39	332968.57
9-4	79+61.39	19.09' RT	893.32	295411.62	332961.20
9-5	79+61.33	20.02' RT	893.39	295410.73	332960.92
9-6	79+60.51	29.59' RT	894.16	295401.56	332958.12
9-7	79+55.73	39.26' RT	894.31	295392.70	332953.27

CURB RAMP 11					
POINT NUMBER	STATION	OFFSET	ELEVATION	NORTHING	EASTING
11-1	101+72.20	14.17' LT	893.30	295314.30	333046.40
11-2	101+74.89	8.81' LT	893.23	295315.79	333052.38
11-3	101+75.16	1.98' LT	893.20	295314.12	333059.00
11-4	101+67.33	2.00' LT	893.12	295306.36	333057.03
11-5	101+67.52	6.81' LT	893.18	295307.54	333052.36
11-6	101+65.91	10.57' LT	893.23	295306.54	333048.34
11-7	101+65.57	11.42' LT	893.25	295306.32	333047.43

CURB RAMP 10					
POINT NUMBER	STATION	OFFSET	ELEVATION	NORTHING	EASTING
10-1	101+63.17	39.26' LT	894.09	295296.38	333007.11
10-2	101+64.26	29.31' LT	893.94	295298.72	333016.83
10-3	101+65.48	18.89' LT	893.45	295301.25	333027.02
10-4	101+73.42	19.81' LT	893.51	295309.01	333025.09
10-5	101+72.21	30.24' LT	894.01	295306.48	333014.90
10-6	101+70.98	40.17' LT	894.16	295304.01	333005.21

CURB RAMP 12					
POINT NUMBER	STATION	OFFSET	ELEVATION	NORTHING	EASTING
12-1	101+79.23	44.85' RT	893.82	295302.66	333104.51
12-2	101+78.02	36.85' RT	893.70	295304.62	333096.73
12-3	101+76.91	26.41' RT	893.11	295307.18	333086.57
12-4	101+76.44	20.77' RT	892.87	295308.56	333081.09
12-5	101+66.11	19.85' RT	892.83	295301.02	333078.25
12-6	101+66.04	20.77' RT	892.84	295300.80	333079.14
12-7	101+65.64	25.67' RT	893.02	295299.60	333083.90
12-8	101+64.55	36.18' RT	893.58	295297.03	333094.12
12-9	101+63.38	44.18' RT	893.70	295295.07	333101.90

CURB RAMP 7 TYPE 3

CURB RAMP 8 TYPE 5

CURB RAMP 9 TYPE 3

CURB RAMP 10 TYPE 3

CURB RAMP 11 TYPE 5

CURB RAMP 12 TYPE 3

CURB RAMP DETECTABLE WARNING FIELD YELLOW (2'x8')

LANDING

COUNTY LINE RD WB

COUNTY LINE RD EB

JEFFERS RD SB

79+75 WB

79+75 EB

79+50 WB

79+50 EB

101+75 SB

101+75 WB

101+50 SB

101+50 NB

N

2

2

N

SLOPE INTERCEPT

TYPE A ONLY

51+00 52+00 53+00 54+00 55+00 56+00

COUNTY LINE RD

SLOPE INTERCEPT

CLEARING (BY OTHERS)
& GRUBBING

LEGEND

- SURFACE WATER FLOW
- EROSION MAT URBAN CLASS I TYPE B
- RIPRAP (TYPE AS NOTED)
- SILT FENCE
- INLET PROTECTION TYPES A & C (UNLESS NOTED OTHERWISE)
- CULVERT PIPE CHECKS
- TEMPORARY DITCH CHECKS

N

SLOPE INTERCEPT

TYPE A ONLY

TYPE A ONLY

56+00 57+00 58+00 59+00 60+00 61+00 62+00

COUNTY LINE RD

SLOPE INTERCEPT

CLEARING (BY OTHERS)
& GRUBBING

PROJECT NO: 7995-02-74	HWY: COUNTY LINE ROAD	COUNTY: EAU CLAIRE	EROSION CONTROL	SHEET 21	E

FILE NAME : I:\41\410897_CITY OF EC_COUNTY LINE ROAD 79950273\C3D\SHEETS\022001-EC.DWG
LAYOUT NAME - 022001-ec

PLOT DATE : 1/21/2026 8:41 AM PLOT BY : RESHESKE, CARRIE PLOT NAME : PLOT SCALE : 1 IN:40 FT

WISDOT/CADDS SHEET 44

2

2

N

CLEARING (BY OTHERS)
& GRUBBING

TYPE A ONLY

SLOPE INTERCEPT

TYPE A ONLY

TYPES A&D

62+00 63+00 64+00 65+00 66+00 67+00 68+00

COUNTY LINE RD

TYPES A&D

SLOPE INTERCEPT

RIPRAP MEDIUM
(7'Wx14'L)

CLEARING (BY OTHERS)
& GRUBBING

LEGEND

- SURFACE WATER FLOW
- EROSION MAT URBAN CLASS I TYPE B
- RIPRAP (TYPE AS NOTED)
- SILT FENCE
- INLET PROTECTION TYPES A & C (UNLESS NOTED OTHERWISE)
- CULVERT PIPE CHECKS
- TEMPORARY DITCH CHECKS

ASPEN
MEADOW CT

N

TYPE C ONLY

SLOPE INTERCEPT

TYPE C ONLY

CLEARING (BY OTHERS)
& GRUBBING

TYPE A ONLY

68+00 69+00 70+00 71+00 72+00 73+00 74+00

COUNTY LINE RD

SLOPE INTERCEPT

PROJECT NO: 7995-02-74	HWY: COUNTY LINE ROAD	COUNTY: EAU CLAIRE	EROSION CONTROL	SHEET 22	E

FILE NAME : I:\41\410897_CITY OF EC_COUNTY LINE ROAD 79950273\C3D\SHEETS\022001-EC.DWG
LAYOUT NAME - 022002-ec

PLOT DATE : 1/21/2026 8:41 AM PLOT BY : RESHESKE, CARRIE PLOT NAME : PLOT SCALE : 1 IN:40 FT

WISDOT/CADDS SHEET 44

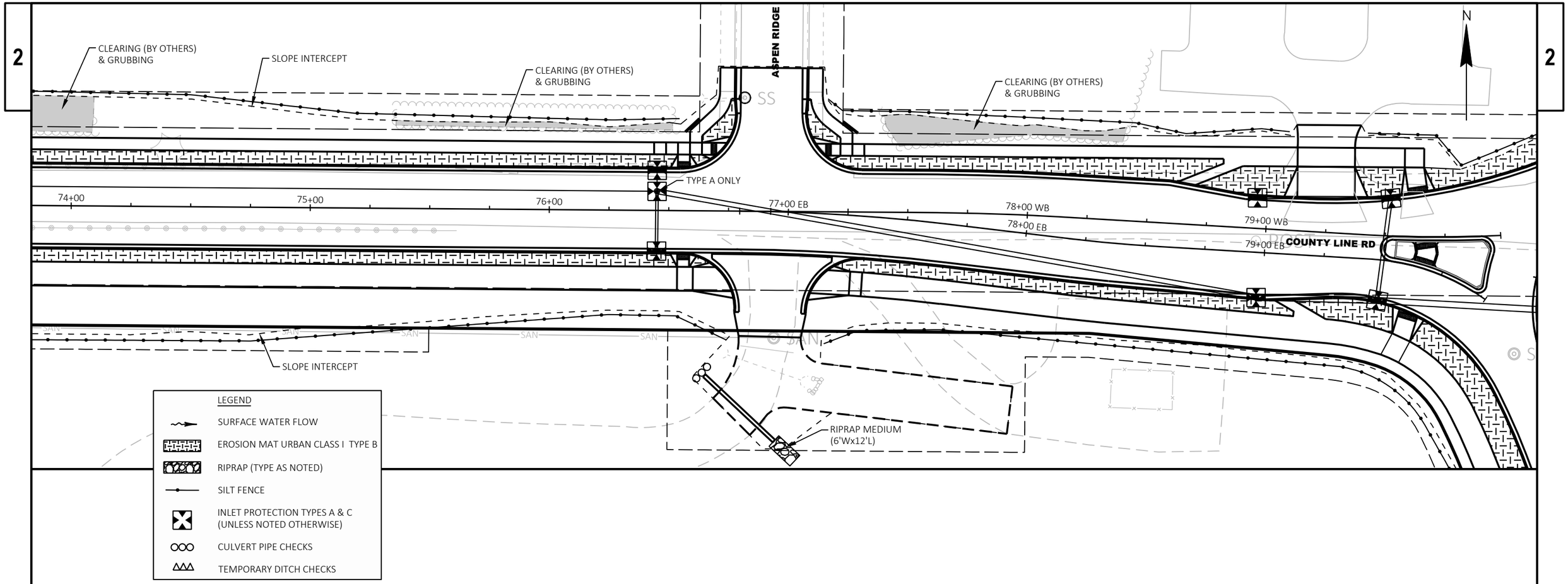

PROJECT NO: 7995-02-74	HWY: COUNTY LINE ROAD	COUNTY: EAU CLAIRE	EROSION CONTROL	SHEET 23	E

FILE NAME : I:\41\410897_CITY OF EC_COUNTY LINE ROAD 79950273\C3D\SHEETS\022001-EC.DWG
LAYOUT NAME - 022003-ec
PLOT DATE : 1/21/2026 8:41 AM
PLOT BY : RESHESKE, CARRIE
PLOT NAME :
PLOT SCALE : 1 IN:40 FT
WISDOT/CADDS SHEET 44

LEGEND

- SURFACE WATER FLOW
- EROSION MAT URBAN CLASS I TYPE B
- RIPRAP (TYPE AS NOTED)
- SILT FENCE
- INLET PROTECTION TYPES A & C (UNLESS NOTED OTHERWISE)
- CULVERT PIPE CHECKS
- TEMPORARY DITCH CHECKS

N

JEFFERS RD

100+00 NB

101+00 SB
101+00 NB

TYPES A&D

TYPE A ONLY

TYPES A&D

TYPES A&B

TYPES A&B

SLOPE INTERCEPT

SLOPE INTERCEPT

11+00 X

XCEL DRIVEWAY

12+00 X

13+00 X

COUNTY LINE RD

79+00 EB

79+00 WB

11+00 RA

12+00 RA

CLEARING (BY OTHERS) & GRUBBING

TEMPORARY PRIVATE DRIVEWAY

PRIVATE DRIVE

9+00 EB

SLOPE INTERCEPT

111+00 SB
111+00 NB

112+00 NB

CTH F

110+00 NB

CLEARING (BY OTHERS) & GRUBBING

2

PROJECT NO: 7995-02-74	HWY: COUNTY LINE ROAD	COUNTY: EAU CLAIRE	EROSION CONTROL	SHEET 24	E

FILE NAME : I:\41\410897_CITY OF EC_COUNTY LINE ROAD 79950273\C3D\SHEETS\022001-EC.DWG
LAYOUT NAME - 022004-ec
PLOT DATE : 1/21/2026 8:41 AM
PLOT BY : RESHESKE, CARRIE
PLOT NAME :
PLOT SCALE : 1 IN:40 FT
WISDOT/CADDS SHEET 42

STA 51+41
CONSTRUCT PE (ASPHALT)
SAWCUT REQ'D

SLOPE INTERCEPT

STA 55+05.09, 8.00' LT
MANHOLES 4-J
A6

A6.1
STA 55+05.10, 17.00' LT
INLETS 2x3-H

N

COUNTY LINE RD

51+00 52+00 53+00 54+00 55+00 56+00

CAUTION

STA 55+05.10, 17.00' RT
INLETS 2x3-H
A6.2

SLOPE INTERCEPT

970 965 960 955 950 945 940 935

EXISTING GROUND

FINISHED GRADE

A6

953.45

947.08

SSP CLASS III-A 24-INCH @ 3.66%

960 955 950 945

A6.1 A6 A6.2

953.25 953.45 953.25

FINISHED GRADE

EXISTING GROUND

948.17 948.08 948.08 948.33

SSP CLASS III-A 12-INCH @ 1.00%

SSP CLASS III-A 12-INCH @ 1.00%

PROJECT NO: 7995-02-74	HWY: COUNTY LINE ROAD	COUNTY: EAU CLAIRE	STORM SEWER	SHEET 25	E

FILE NAME : I:\41\410897_CITY OF EC_COUNTY LINE ROAD 79950273\C3D\SHEETS\022501-SS.DWG
LAYOUT NAME - 1 SS
PLOT DATE : 1/20/2026 1:39 PM
PLOT BY : AYRES
PLOT NAME :
PLOT SCALE : 1 IN:40 FT
WISDOT/CADDS SHEET 42

2

N

SLOPE INTERCEPT

STA 58+49.65, 8.00' LT
MANHOLES 4-J
A5

A5.1 STA 58+49.66, 17.00' LT
INLETS 2x3-H

STA 61+47.60, 8.00' LT
MANHOLES 4-J
A4

A4.1 STA 61+47.61, 17.00' LT
INLETS 2x3-H

24"
12"
12"
24"
12"
12"

56+00 57+00 58+00 59+00 60+00 61+00 62+00

COUNTY LINE RD

CAUTION

A5.2 STA 58+49.65, 17.00' RT
INLETS 2x3-H

A4.2 STA 61+47.60, 17.00' RT
INLETS 2x3-H

SLOPE INTERCEPT

955 950 945 940 935 930 925 920

SSP CLASS III-A 24-INCH @ 3.66%

A5
940.42
FINISHED GRADE
EXISTING GROUND
934.47
934.36

SSP CLASS III-A 24-INCH @ 3.21%

A5.1 A5 A5.2
940.22 940.42 940.22
935.55
935.71
SSP CLASS III-A 12-INCH @ 1.00%
935.46
935.46
SSP CLASS III-A 12-INCH @ 1.00%

A4.1 A4 A4.2
930.91 931.11 930.91
FINISHED GRADE
EXISTING GROUND
925.88
926.04
SSP CLASS III-A 12-INCH @ 1.00%
925.79
925.79
SSP CLASS III-A 12-INCH @ 1.00%

A4
931.11
924.79
924.69

PROJECT NO: 7995-02-74	HWY: COUNTY LINE ROAD	COUNTY: EAU CLAIRE	STORM SEWER	SHEET 26	E

FILE NAME : I:\41\410897_CITY OF EC_COUNTY LINE ROAD 79950273\C3D\SHEETS\022501-SS.DWG
LAYOUT NAME - 2 SS
PLOT DATE : 1/20/2026 1:39 PM
PLOT BY : AYRES
PLOT NAME :
PLOT SCALE : 1 IN:40 FT
WISDOT/CADDS SHEET 42

2

N

, 17.00' LT

SLOPE INTERCEPT

STA 64+60.56, 30.03' LT
INLETS MEDIAN 1G-MS
A3.3

STA 64+42.32, 17.00' LT
INLETS 2x3-H
A3.2

A3.1 STA 64+60.67, 17.00' LT
MANHOLES 5-H

A3 STA 64+60.67, 8.00' LT
MANHOLES 5-J

12"

24"

24"

COUNTY LINE RD

62+00 63+00 64+00 65+00 66+00 67+00 68+00

30"

12"

CAUTION

30"

, 17.00' RT

STA 64+42.33, 17.00' RT
INLETS 2x3-H
A2.1

A2 STA 64+60.68, 17.00' RT
MANHOLES 5-H

STA 64+60.61, 55.13' RT
APRON ENDWALLS FOR CPRC 30-INCH
A1

SLOPE INTERCEPT

940 935 930 925 920 915 910 905

A3

926.48

EXISTING GROUND

FINISHED GRADE

SSP CLASS III-A 24-INCH @ 1.64%

919.56

A3.2 A3.1

930 925 920 915

926.31 926.28

920.54

920.92

SSP CLASS III-A 12-INCH @ 2.06%

935 930 925 920 915

A3.3 A3.1 A3 A2 A2.1

926.28 926.48 926.28 926.31

925.51

SSP CLASS III-A
24-INCH @ 1.00%

919.69 919.56 919.46 918.87 919.37 921.22 918.62 921.40

SSP CLASS III-A 12-INCH @ 1.00%

SSP CLASS III-A 24-INCH @ 1.00%

SSP CLASS III-A 30-INCH @ 1.00%

PROJECT NO: 7995-02-74	HWY: COUNTY LINE ROAD	COUNTY: EAU CLAIRE	STORM SEWER	SHEET 27	E

FILE NAME : I:\41\410897_CITY OF EC_COUNTY LINE ROAD 79950273\C3D\SHEETS\022501-SS.DWG
LAYOUT NAME - 3 SS

PLOT DATE : 1/20/2026 1:40 PM PLOT BY : AYRES PLOT NAME : PLOT SCALE : 1 IN:40 FT

2

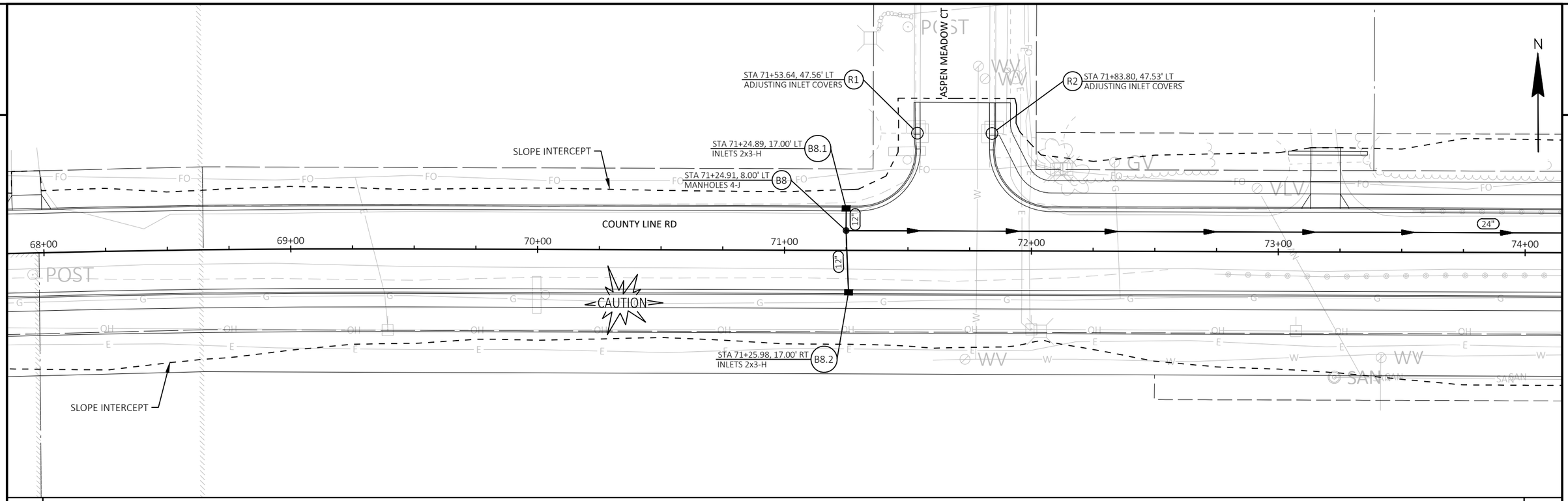

PROJECT NO: 7995-02-74	HWY: COUNTY LINE ROAD	COUNTY: EAU CLAIRE	STORM SEWER	SHEET 28 E

2

STA 76+81.40, 47.41' LT
ADJUSTING MANHOLE COVERS R3

ASPEN RIDGE DR

SLOPE INTERCEPT

STA 76+45.01, 17.00' LT
INLETS 2x3-H B7.1

STA 78+95.62, 12.98' LT
INLETS 2x3-H B5.2

STA 79+51.65, 15.95' LT
INLETS 2x3-H B5.1

N

74+00 75+00 76+00 77+00 WB 77+00 EB 78+00 WB 78+00 EB 79+00 WB 79+00 EB

COUNTY LINE RD

COUNTY LINE RD

STA 76+45.01, 8.00' LT
MANHOLES 5-J B7

CAUTION

12" 12" 24" 12" 30" 30"

STA 76+45, 17.00' RT
INLETS 2x3-H B7.2

SLOPE INTERCEPT

STA 78+97.17, 18.68' RT
INLETS 4-H B6

STA 79+48.91, 17.05' RT
MANHOLES 5-H B5

B7.1 B7 B7.2

EXISTING GROUND

897.92 898.12 897.92

FINISHED GRADE

892.58 892.65

SSP CLASS III-A
12-INCH @ 2.00%

892.40 892.40

SSP CLASS III-A
12-INCH @ 1.00%

915 910 905 900 895 890 885 880

EXISTING GROUND

FINISHED GRADE

SSP CLASS III-A 24-INCH @ 5.31%

B7 898.12

890.74 889.36

SSP CLASS III-A 24-INCH @ 0.49%

B6 B5

893.53 893.30

SSPRC CLASS IV
30-INCH @ 0.17%

888.11 887.61 887.52 887.52

PROJECT NO: 7995-02-74	HWY: COUNTY LINE ROAD	COUNTY: EAU CLAIRE	STORM SEWER	SHEET 29	E

FILE NAME : I:\41\410897_CITY OF EC_COUNTY LINE ROAD 79950273\C3D\SHEETS\022501-SS.DWG
LAYOUT NAME - 5 SS
PLOT DATE : 1/20/2026 1:40 PM PLOT BY : AYRES PLOT NAME : PLOT SCALE : 1 IN:40 FT
WISDOT/CADDS SHEET 42

2

2

N

STA 110+73.98, 16.58' LT
INLETS 2x3-H
B4.5

STA 110+69.55, 17.20' RT
INLETS 2x3-H
B4.4

STA 78+95.62, 12.98' LT
INLETS 2x3-H
B5.2

STA 79+51.65, 15.95' LT
INLETS 2x3-H
B5.1

STA 12+25.78, 26.19' RT
INLETS 4-H
B4.3

STA 10+14.28, 12.03' LT
MANHOLES 5-J
B4X

STA 90+11.21, 12.49' RT
INLETS 4-H
B4.2

STA 78+97.17, 18.68' RT
INLETS 4-H
B6

STA 79+48.91, 17.05' RT
MANHOLES 5-H
B5

STA 11+41.18, 1.30' LT
INLETS 4-T
B4.1

STA 11+24.91, 1.30' LT
MANHOLES 5-T
B4

STA 101+21.59, 17.80' LT
INLETS 2x3-H
B1.1

STA 101+17.71, 31.23' RT
MANHOLES 6-J
B3

STA 101+18.19, 17.17' RT
MANHOLES 5-H
B2

STA 101+18.99, 3.17' LT
MANHOLES 5-J
B1

CAUTION

CAUTION

CAUTION

PIPE UNDERDRAIN 6-INCH

TEMPORARY PRIVATE DRIVEWAY

XCEL DRIVEWAY

PRIVATE DRIVEWAY

COUNTY LINE RD

JEFFERS RD

78+00 WB

78+00 EB

79+00 WB

79+00 EB

90+00 WB

91+00 EB

11+00 BA

111+00 SB

111+00 NB

110+00 NB

113+00 BA

102+00 SB

102+00 NB

101+00 SB

101+00 NB

24"

30"

18"

12"

PROJECT NO: 7995-02-74	HWY: COUNTY LINE ROAD	COUNTY: EAU CLAIRE	STORM SEWER	SHEET 30	E

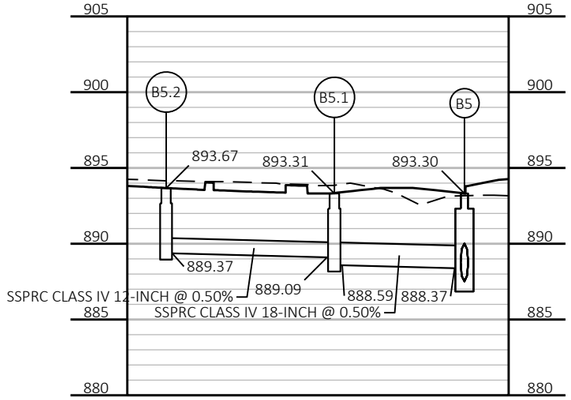

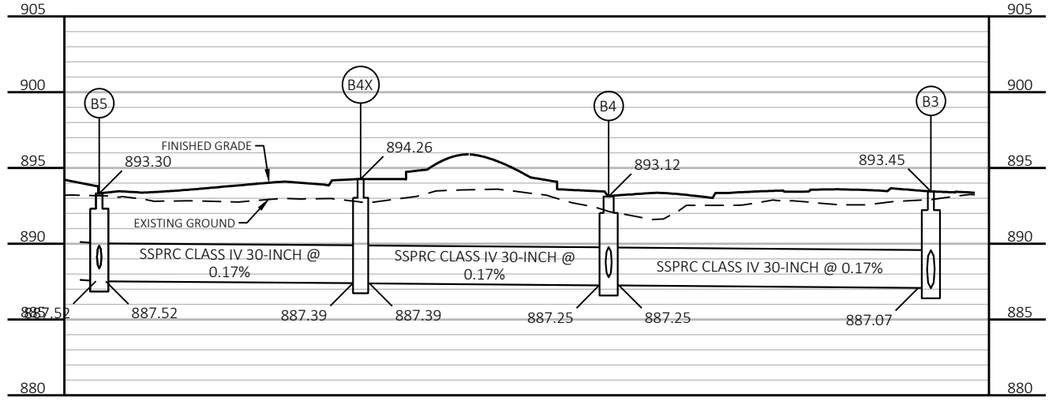

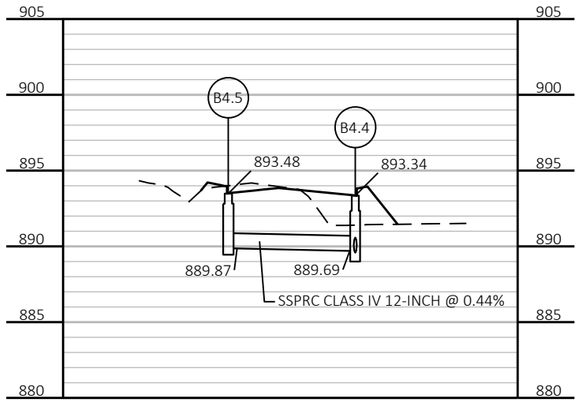

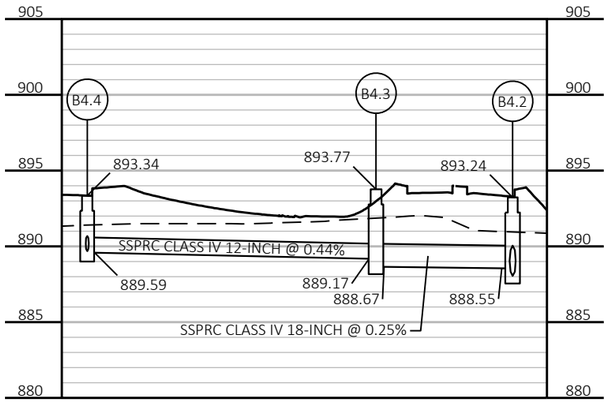

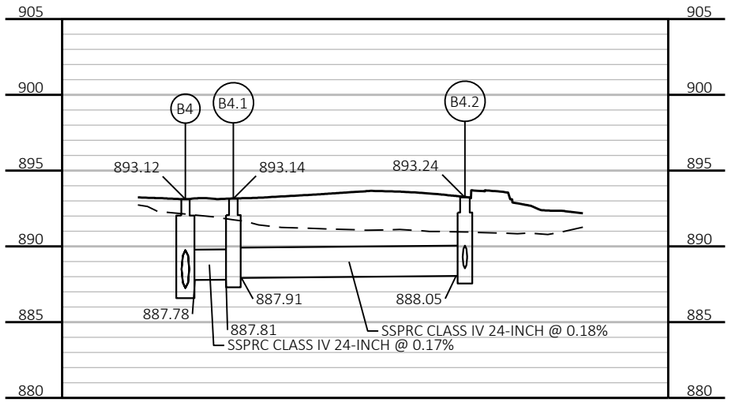

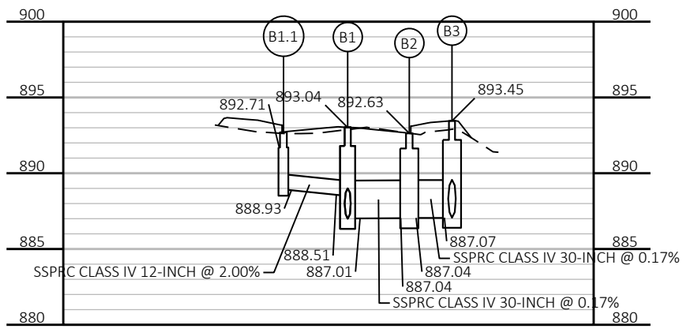

PROJECT NO: 7995-02-74	HWY: COUNTY LINE ROAD	COUNTY: EAU CLAIRE	STORM SEWER	SHEET 31	E

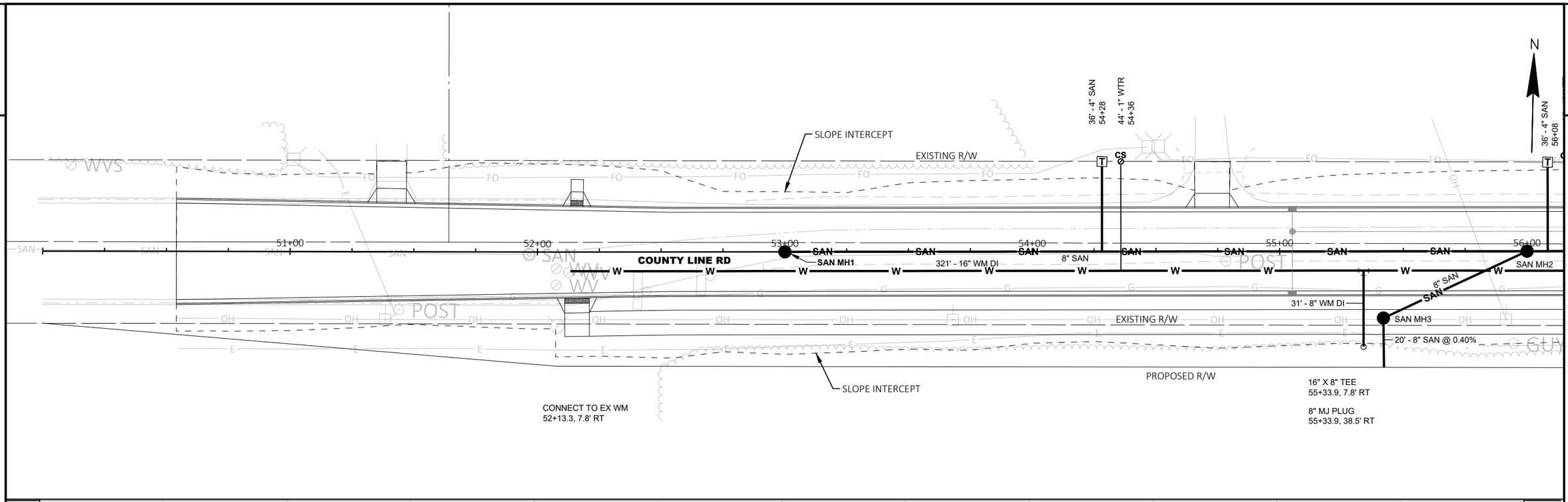

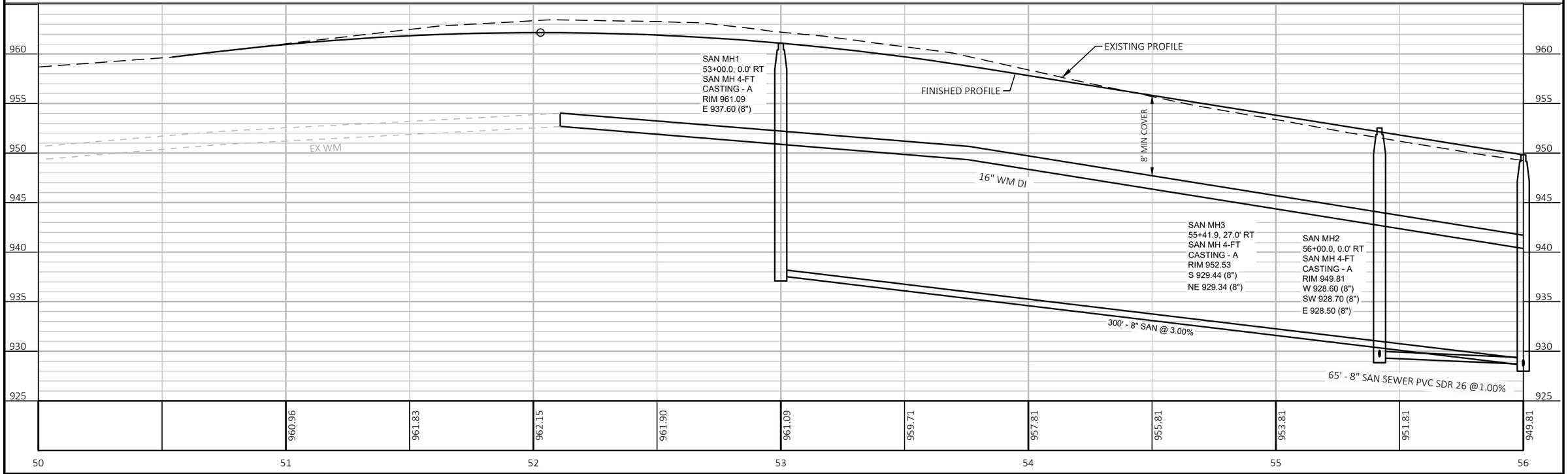

PROJECT NO: 7995-02-74	HWY: COUNTY LINE ROAD	COUNTY: EAU CLAIRE	UTILITY PLAN AND PROFILE: COUNTY LINE ROAD	SHEET 32	E

FILE NAME : I:\41\410897_CITY OF EC_COUNTY LINE ROAD 79950273\C3D\SHEETS\060101- UPP.DWG
LAYOUT NAME - 01 023001-up
PLOT DATE : 3/19/2026 1:45 PM
PLOT BY : AYRES
PLOT NAME :
PLOT SCALE : 1 IN:40 FT
WISDOT/CADDS SHEET 44

2

N

36' - 4" SAN
56+08
44' - 1" WTR
56+16

CP#6

35' - 4" SAN
57+88
43' - 1" WTR
57+96

SLOPE INTERCEPT

35' - 4" SAN
59+74
43' - 1" WTR
59+80

EXISTING R/W

35' - 4" SAN
61+52
43' - 1" WTR
61+60

56+00 57+00 58+00 59+00 60+00 61+00 62+00

SAN MH2

167' - 16" WM DI

8" SAN

COUNTY LINE RD

SAN MH4

500' - 16" WM DI

EXISTING R/W

PROPOSED R/W

HYDRANT
57+00.0, 21.5 RT
BREAKOFF 946.37

6" GV
57+00.0, 11.0' RT

16" X 6" TEE
57+00.0, 8.0' RT

14' - 6" WM DI

16" GV
57+08.0, 8.0' RT

TLE

SLOPE INTERCEPT

HYDRANT
62+00.0, 21.5 RT
BREAKOFF 931.74

6" GV
62+00.0, 10.7' RT

16" X 6" TEE
62+00.0, 8.0' RT

14' - 6" WM DI

16" GV
62+07.0, 8.0' RT

945 940 935 930 925 920 915 910

EXISTING PROFILE

FINISHED PROFILE

8' MIN COVER

16" WM DI

401' - 8" SAN PVC SDR 26 @1.97%

SAN MH4
60+00.0, 0.0' RT
SAN MH 4-FT
CASTING - A
RIM 935.34
W 920.60 (8")
E 920.50 (8")

400' - 8" SAN SEWER PVC SDR 35 @1.50%

949.81 947.81 945.81 944.06 942.31 940.56 938.81 937.06 935.34 933.78 932.40 931.21 930.19

56 57 58 59 60 61 62

PROJECT NO: 7995-02-74	HWY: COUNTY LINE ROAD	COUNTY: EAU CLAIRE	UTILITY PLAN AND PROFILE: COUNTY LINE ROAD	SHEET 33	E

FILE NAME : I:\41\410897_CITY OF EC_COUNTY LINE ROAD 79950273\C3D\SHEETS\060101- UPP.DWG
LAYOUT NAME - 02 023001-up

PLOT DATE : 3/19/2026 1:45 PM PLOT BY : AYRES PLOT NAME : PLOT SCALE : 1 IN:40 FT

WISDOT/CADDS SHEET 44

2

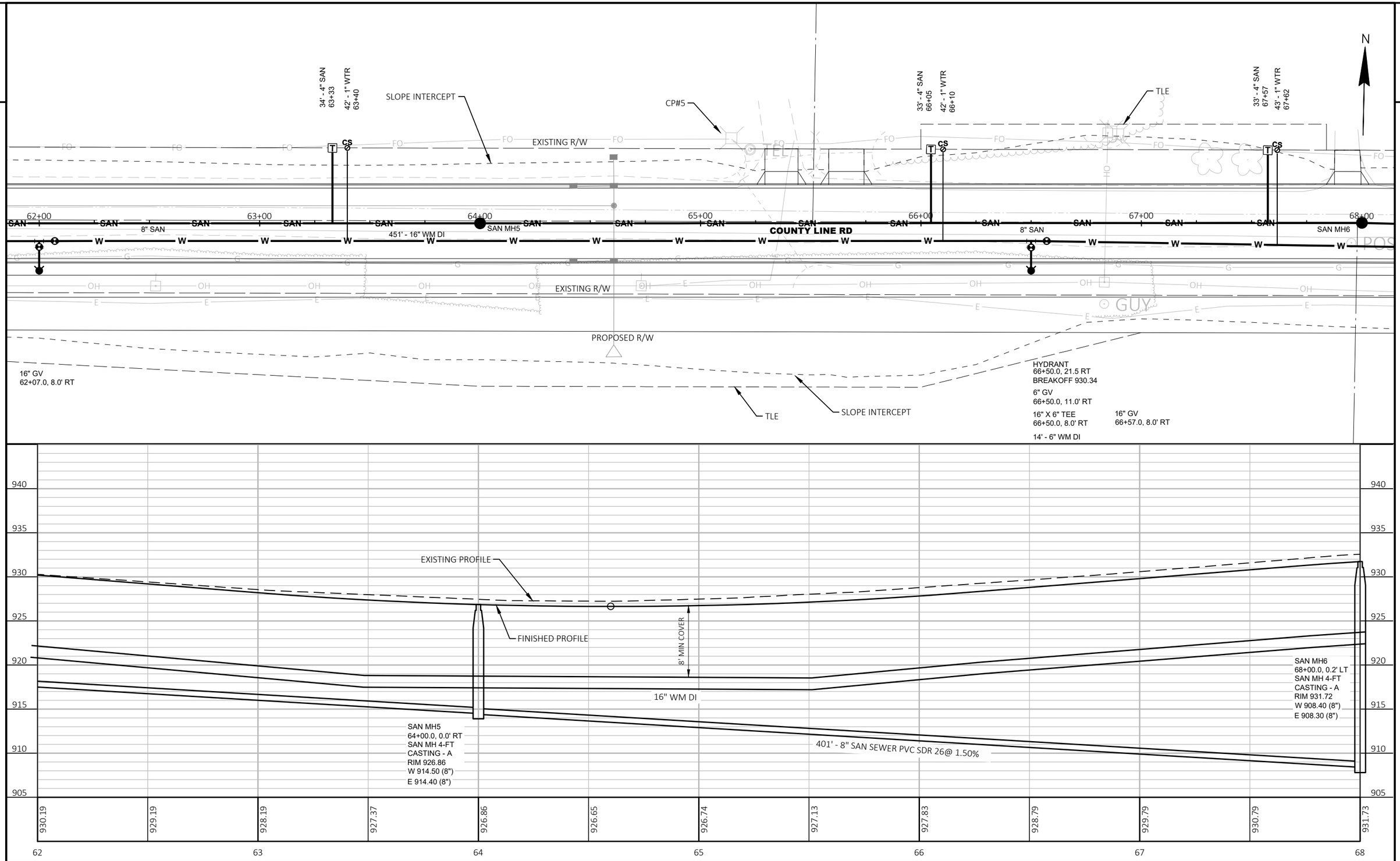

PROJECT NO: 7995-02-74	HWY: COUNTY LINE ROAD	COUNTY: EAU CLAIRE	UTILITY PLAN AND PROFILE: COUNTY LINE ROAD	SHEET 34	E

FILE NAME : I:\41\410897_CITY OF EC_COUNTY LINE ROAD 79950273\C3D\SHEETS\060101- UPP.DWG
LAYOUT NAME - 03 023001-up
PLOT DATE : 3/19/2026 1:45 PM
PLOT BY : AYRES
PLOT NAME :
PLOT SCALE : 1 IN:40 FT
WISDOT/CADDS SHEET 44

2

N

ASPEN MEADOW CT

BM#52

TLE

34' - 4" SAN
69+50

43' - 1" WTR
69+55

STA 71+68.81 =
STA 5+00.00 AM
Y = 295456.802
X = 332174.264

SLOPE INTERCEPT

EXISTING R/W

CS

68+00 69+00 70+00 71+00 72+00 73+00 74+00

N MH6

452' - 16" WM DI

8" SAN

COUNTY LINE RD

SAN MH7

EXISTING R/W

53' - 16" WM DI

8" SAN

SLOPE INTERCEPT

PROPOSED R/W

11' - 12" WM DI

9' - 12" WM DI

CP#4

HYDRANT
71+50.0, 36.4 RT
BREAKOFF 926.48

6" GV
71+50.0, 41.4' RT

12" X 6" TEE
71+50.0, 44.5' RT

9' - 6" WM DI

45° BEND
71+01.5, 8.0' RT

45° BEND
71+39.2, 44.7' RT

16" X 12" REDUCER
71+42.2, 44.6' RT

CONNECT TO EX WM
71+58.2, 44.4' RT
W -0.50 (12" WM DI)

TLE

CONNECT TO EX SAN SEWER
73+22.8, 50.8' RT
NW 896.60 (8" SAN)
E 896.40 (8" SAN HDPE)

930
925
920
915
910
905
900
895

SAN MH6
68+00.0, 0.2' LT
SAN MH 4-FT
CASTING - A
RIM 931.72
W 908.40 (8")
E 908.30 (8")

EXISTING PROFILE

8' MIN COVER

FINISHED PROFILE

16" WM DI

12" WM DI

410' - 8" SAN SEWER PVC SDR 26 @1.60%

SAN MH7
72+10.0, 0.0' RT
SAN MH 4-FT
CASTING - A
RIM 921.07
W 901.75 (8")
SE 901.65 (8")

EX 12" WM

124' - 8" SAN @ 4.08%

CONNECT TO EX SAN SEWER C EX 1
910.20
NW 896.60 (8" SAN)
E 896.40 (8" SAN HDPE)

931.73 932.20 932.13 931.54 930.46 928.96 926.99 924.55 921.67 918.67 915.67 912.70 909.86

68 69 70 71 72 73 74

PROJECT NO: 7995-02-74	HWY: COUNTY LINE ROAD	COUNTY: EAU CLAIRE	UTILITY PLAN AND PROFILE: COUNTY LINE ROAD	SHEET 35	E

FILE NAME : I:\41\410897_CITY OF EC_COUNTY LINE ROAD 79950273\C3D\SHEETS\060101- UPP.DWG
LAYOUT NAME - 04 023001-up

PLOT DATE : 3/19/2026 1:45 PM PLOT BY : AYRES PLOT NAME : PLOT SCALE : 1 IN:40 FT

WISDOT/CADDS SHEET 44

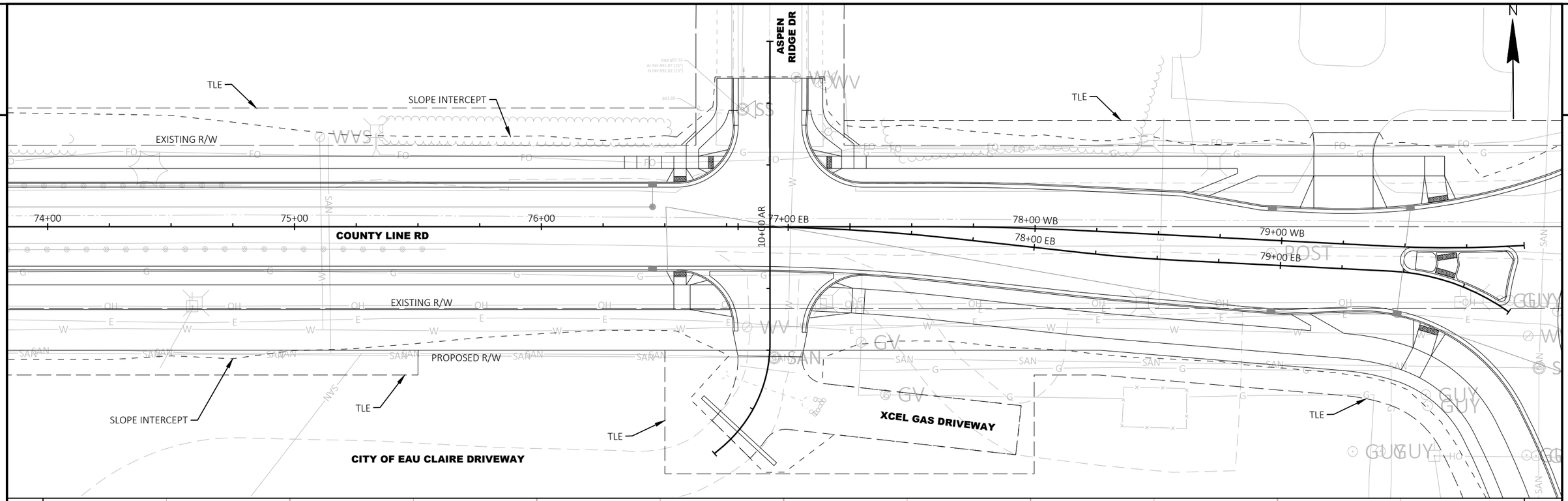

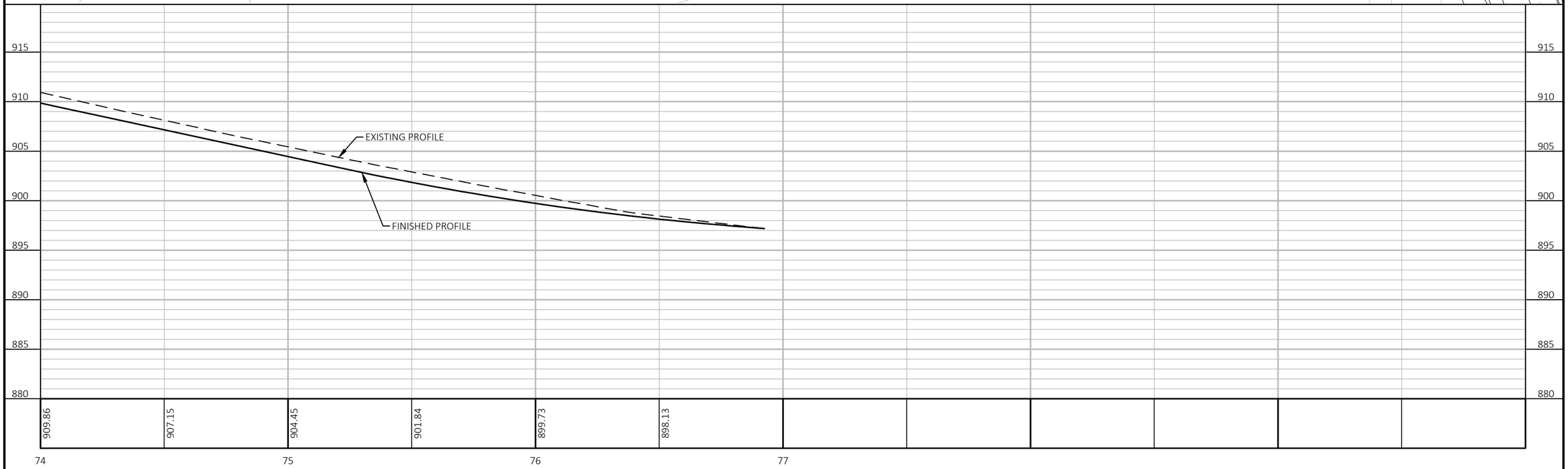

PROJECT NO: 7995-02-74	HWY: COUNTY LINE ROAD	COUNTY: EAU CLAIRE	UTILITY PLAN AND PROFILE: COUNTY LINE ROAD	SHEET 36	E

FILE NAME : I:\41\410897_CITY OF EC_COUNTY LINE ROAD 79950273\C3D\SHEETS\060101- UPP.DWG
LAYOUT NAME - 05 023001-up
PLOT DATE : 3/19/2026 1:45 PM
PLOT BY : AYRES
PLOT NAME :
PLOT SCALE : 1 IN:40 FT
WISDOT/CADDS SHEET 44

2

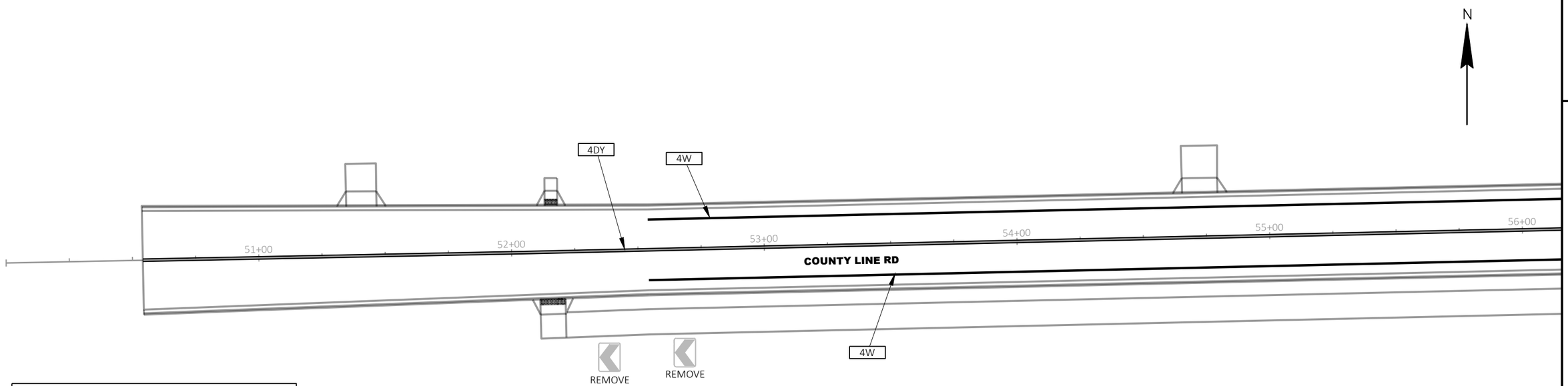

LEGEND

PROPOSED SIGN ON SINGLE/DOUBLE SUPPORT

LABEL	DESCRIPTION
CURB	MARKING CURB EPOXY, YELLOW
ISL	MARKING ISLAND NOSE EPOXY, YELLOW
4W	MARKING LINE EPOXY 4-INCH, WHITE
4-3-9	MARKING LINE EPOXY 4-INCH, WHITE, 3' DASH - 9' GAP
4Y	MARKING LINE EPOXY 4-INCH, YELLOW
4DY	MARKING LINE EPOXY 4-INCH, DOUBLE YELLOW
STOP	MARKING STOP LINE EPOXY 18-INCH WHITE
TLX	MARKING CROSSWALK EPOXY TRANSVERSE LINE 6-INCH, WHITE
8W	MARKING LINE EPOXY 8-INCH, WHITE
DIA-Y	MARKING DIAGONAL EPOXY 12-INCH, YELLOW, 25-FOOT SPACING
18-2-2	MARKING DOTTED EXTENSION EPOXY 18-INCH, WHITE, 2' DASH - 2' GAP

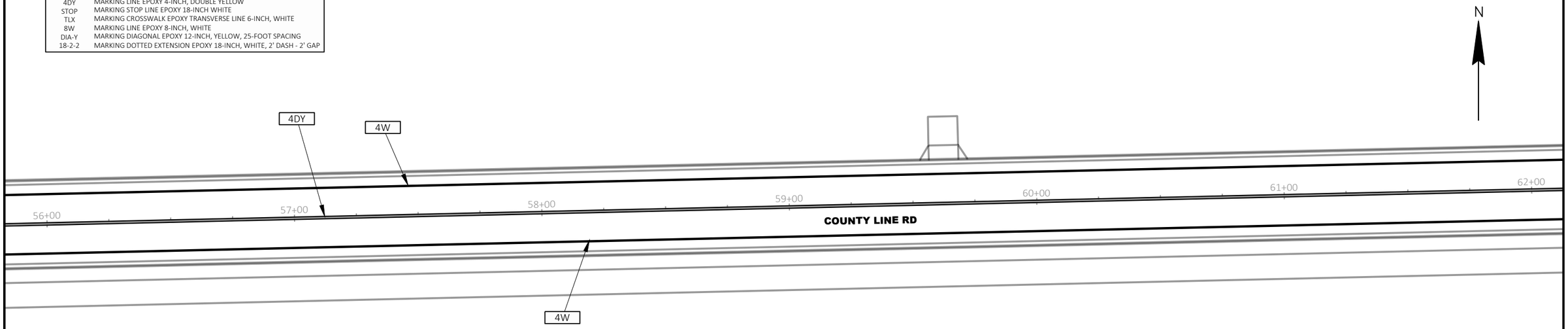

PROJECT NO: 7995-02-74	HWY: COUNTY LINE ROAD	COUNTY: EAU CLAIRE	SIGNING & PAVEMENT MARKING	SHEET 37	E

2

2

N

4DY

4W

62+00 63+00 64+00 65+00 66+00 67+00 68+00

COUNTY LINE RD

4W

LEGEND

PROPOSED SIGN ON SINGLE/DOUBLE SUPPORT

LABEL	DESCRIPTION
CURB	MARKING CURB EPOXY, YELLOW
ISL	MARKING ISLAND NOSE EPOXY, YELLOW
4W	MARKING LINE EPOXY 4-INCH, WHITE
4-3-9	MARKING LINE EPOXY 4-INCH, WHITE, 3' DASH - 9' GAP
4Y	MARKING LINE EPOXY 4-INCH, YELLOW
4DY	MARKING LINE EPOXY 4-INCH, DOUBLE YELLOW
STOP	MARKING STOP LINE EPOXY 18-INCH WHITE
TLX	MARKING CROSSWALK EPOXY TRANSVERSE LINE 6-INCH, WHITE
8W	MARKING LINE EPOXY 8-INCH, WHITE
DIA-Y	MARKING DIAGONAL EPOXY 12-INCH, YELLOW, 25-FOOT SPACING
18-2-2	MARKING DOTTED EXTENSION EPOXY 18-INCH, WHITE, 2' DASH - 2' GAP

ASPEN MEADOW CT

N

STOP

MOVING SAME LOCATION

R9-3A 24"X24"

USE CROSSWALK

R9-3BL 18"X12"

4DY

4W

4W

68+00 69+00 70+00 71+00 72+00 73+00 74+00

COUNTY LINE RD

4W

REMOVE

PROJECT NO: 7995-02-74	HWY: COUNTY LINE ROAD	COUNTY: EAU CLAIRE	SIGNING & PAVEMENT MARKING	SHEET 38	E

FILE NAME : I:\41\410897_CITY OF EC_COUNTY LINE ROAD 79950273\C3D\SHEETS\023201-PS.DWG
LAYOUT NAME - 023202-ps

PLOT DATE : 1/19/2026 4:36 PM PLOT BY : RESHESKE, CARRIE PLOT NAME : PLOT SCALE : 1 IN:40 FT

WISDOT/CADDS SHEET 44

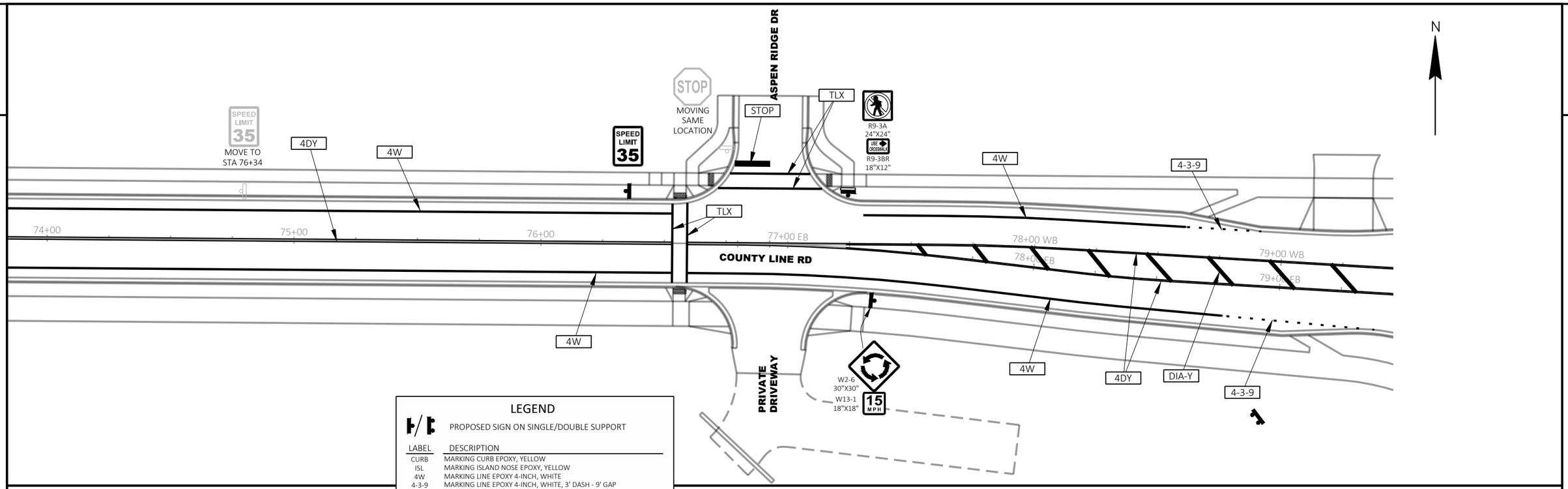

LEGEND

PROPOSED SIGN ON SINGLE/DOUBLE SUPPORT

LABEL	DESCRIPTION
CURB	MARKING CURB EPOXY, YELLOW
ISL	MARKING ISLAND NOSE EPOXY, YELLOW
4W	MARKING LINE EPOXY 4-INCH, WHITE
4-3-9	MARKING LINE EPOXY 4-INCH, WHITE, 3' DASH - 9' GAP
4Y	MARKING LINE EPOXY 4-INCH, YELLOW
4DY	MARKING LINE EPOXY 4-INCH, DOUBLE YELLOW
STOP	MARKING STOP LINE EPOXY 18-INCH WHITE
TLX	MARKING CROSSWALK EPOXY TRANSVERSE LINE 6-INCH, WHITE
8W	MARKING LINE EPOXY 8-INCH, WHITE
DIA-Y	MARKING DIAGONAL EPOXY 12-INCH, YELLOW, 25-FOOT SPACING
18-2-2	MARKING DOTTED EXTENSION EPOXY 18-INCH, WHITE, 2' DASH - 2' GAP

2

N

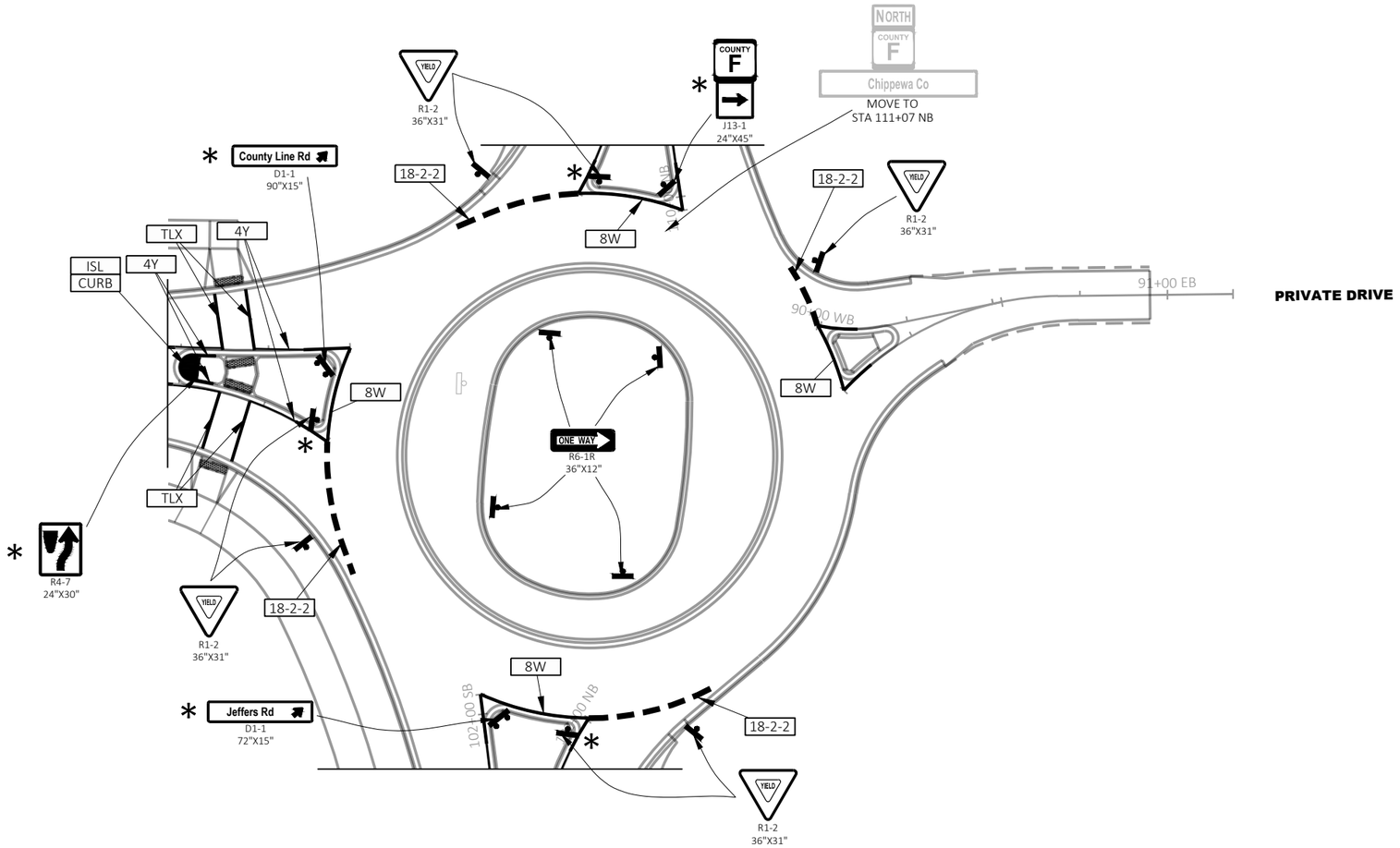

LEGEND

PROPOSED SIGN ON SINGLE/DOUBLE SUPPORT

LABEL	DESCRIPTION
CURB	MARKING CURB EPOXY, YELLOW
ISL	MARKING ISLAND NOSE EPOXY, YELLOW
4W	MARKING LINE EPOXY 4-INCH, WHITE
4-3-9	MARKING LINE EPOXY 4-INCH, WHITE, 3' DASH - 9' GAP
4Y	MARKING LINE EPOXY 4-INCH, YELLOW
4DY	MARKING LINE EPOXY 4-INCH, DOUBLE YELLOW
STOP	MARKING STOP LINE EPOXY 18-INCH WHITE
TLX	MARKING CROSSWALK EPOXY TRANSVERSE LINE 6-INCH, WHITE
8W	MARKING LINE EPOXY 8-INCH, WHITE
DIA-Y	MARKING DIAGONAL EPOXY 12-INCH, YELLOW, 25-FOOT SPACING
18-2-2	MARKING DOTTED EXTENSION EPOXY 18-INCH, WHITE, 2' DASH - 2' GAP

* USE BREAKOUT SIGNPOST COUPLER AND SLEAVE COMBINATION

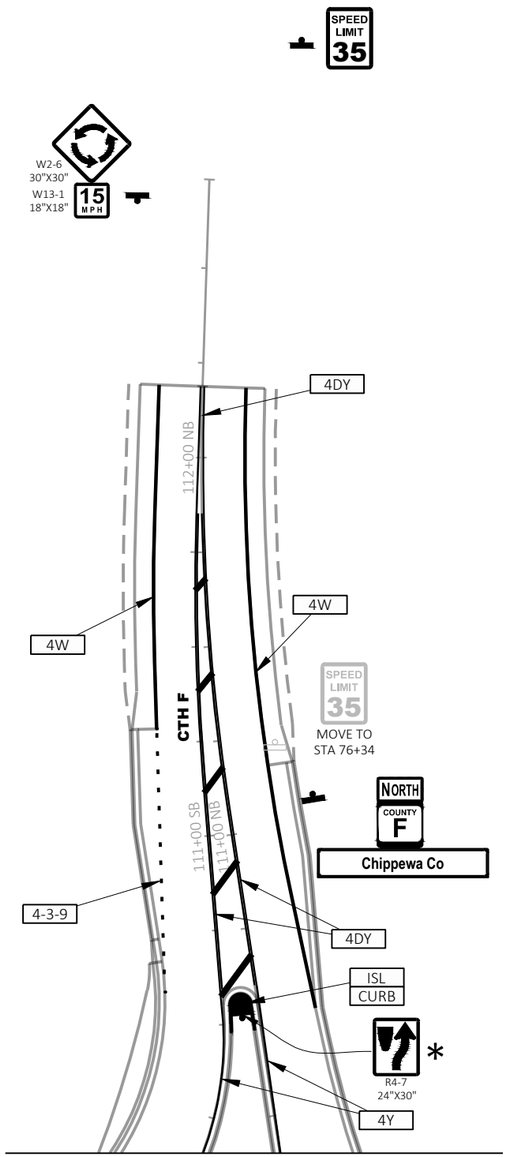

N

LEGEND

PROPOSED SIGN ON SINGLE/DOUBLE SUPPORT

LABEL	DESCRIPTION
CURB	MARKING CURB EPOXY, YELLOW
ISL	MARKING ISLAND NOSE EPOXY, YELLOW
4W	MARKING LINE EPOXY 4-INCH, WHITE
4-3-9	MARKING LINE EPOXY 4-INCH, WHITE, 3' DASH - 9' GAP
4Y	MARKING LINE EPOXY 4-INCH, YELLOW
4DY	MARKING LINE EPOXY 4-INCH, DOUBLE YELLOW
STOP	MARKING STOP LINE EPOXY 18-INCH WHITE
TLX	MARKING CROSSWALK EPOXY TRANSVERSE LINE 6-INCH, WHITE
8W	MARKING LINE EPOXY 8-INCH, WHITE
DIA-Y	MARKING DIAGONAL EPOXY 12-INCH, YELLOW, 25-FOOT SPACING
18-2-2	MARKING DOTTED EXTENSION EPOXY 18-INCH, WHITE, 2' DASH - 2' GAP

* USE BREAKOUT SIGNPOST COUPLER AND SLEAVE COMBINATION

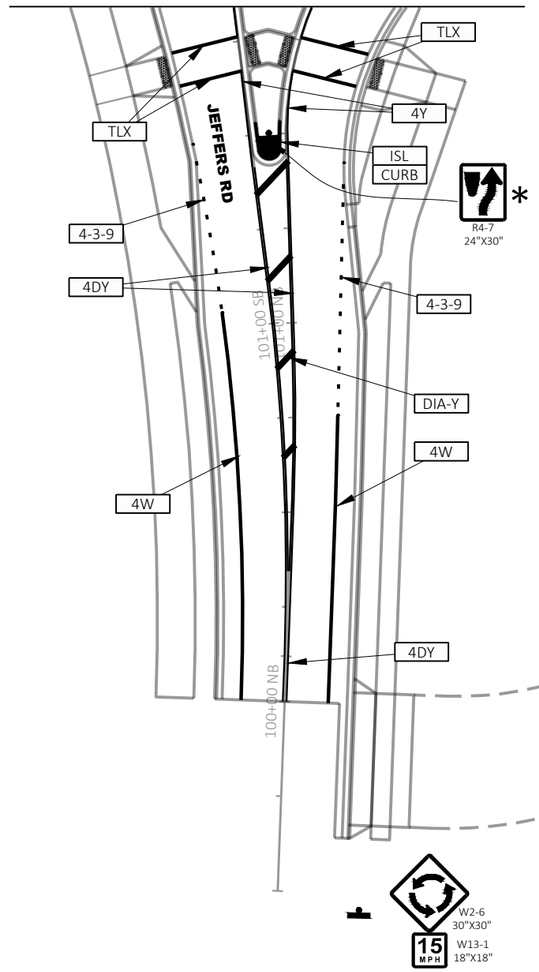

N

2

PROJECT NO: 7995-02-74	HWY: COUNTY LINE ROAD	COUNTY: EAU CLAIRE	SIGNING & PAVEMENT MARKING	SHEET 41	E

2

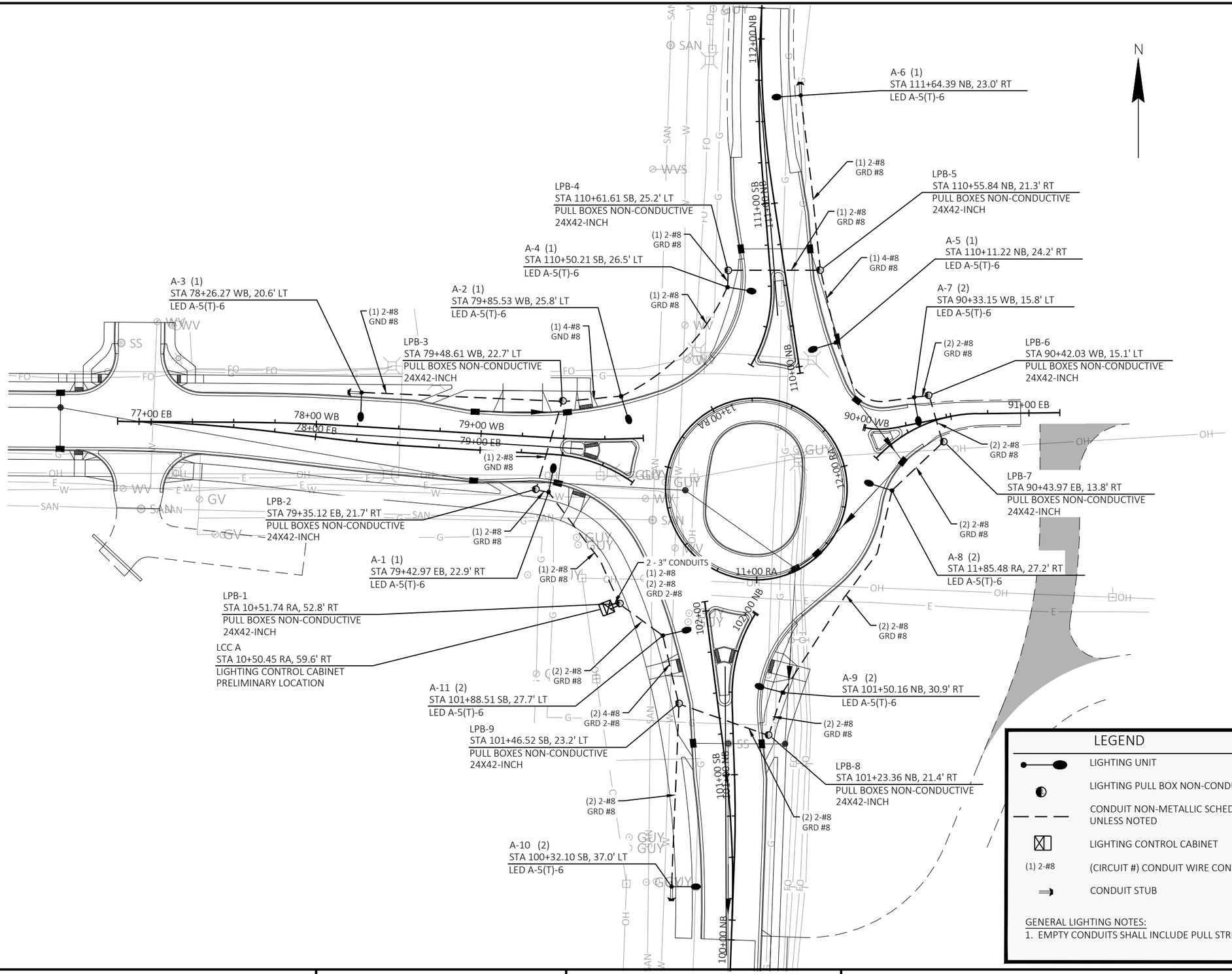

PROJECT NO: 7995-02-74	HWY: COUNTY LINE ROAD	COUNTY: EAU CLAIRE	LIGHTING PLAN	SHEET 42	E

FILE NAME : I:\41\410897_CITY OF EC_COUNTY LINE ROAD 79950273\C3D\SHEETS\023601-LP.DWG 1 023601-lp
PLOT DATE : 1/20/2026 9:03 AM
PLOT BY : AVRES
PLOT NAME :
PLOT SCALE : ##########
WISDOT/CADDS SHEET 42

2

99

99+55 NB

50' NORTH IS THE XCEL'S DRIVEWAY AND THE TEMPORARY ACCESS TO PRIVATE DRIVEWAY. ROAD IS CLOSED RIGHT AFTER THE XCEL DRIVEWAY.

BP: 99+50.00 NB

JEFFERS RD

N

2

SIDEWALK CLOSED
R9-9
24"X12"

TEMPORARY PEDESTRIAN SURFACE
TEMPORARY PEDESTRIAN BARRICADE
TEMPORARY CURB RAMP
TEMPORARY DETECTABLE WARNING FIELD

TEMPORARY PEDESTRIAN SURFACE
TEMPORARY PEDESTRIAN BARRICADE
TEMPORARY CURB RAMP
TEMPORARY DETECTABLE WARNING FIELD

SIDEWALK CLOSED
R9-9
24"X12"

TEMPORARY MARKING CROSSWALK
REMOVABLE TAPE 6-INCH

SEE SDD "TRAFFIC CONTROL, PEDESTRIAN ACCOMODATION" DETAIL L FOR ADDITIONAL INFORMATION.

DRUMS 50' TAPER @ 10' SPACING

100'

WO11-2
48"X48"
WO16-7L
24"X12"

WO11-2
48"X48"
AHEAD
WO16-9P
24"X12"

PROJECT NO: 7995-02-74	HWY: COUNTY LINE ROAD	COUNTY: EAU CLAIRE	TEMPORARY CURB RAMP	SHEET 43	E

FILE NAME : I:\41\410897_CITY OF EC_COUNTY LINE ROAD 79950273\C3D\SHEETS\026001-TC.DWG
LAYOUT NAME - 026001-tc

PLOT DATE : 3/19/2026 9:33 AM PLOT BY : RESHESKE, CARRIE PLOT NAME : PLOT SCALE : ##########

TRAFFIC CONTROL NOTES:

ALL SIGNS AND DEVICES SHALL BE IN CONFORMANCE WITH THE WISCONSIN MANUAL OF UNIFORM TRAFFIC CONTROL DEVICES (WMUTCD).

ANY SIGNS TEMPORARY OR EXISTING, WHICH CONFLICT WITH TRAFFIC CONTROL IN USE SHALL BE COVERED OR REMOVED AS NEEDED AND AS APPROVED BY THE ENGINEER. ALL SIGNS SHALL BE 48"X48" UNLESS NOTED BY THE ENGINEER.

SEE SDD "BARRICADES AND SIGNS FOR MAINLINE CLOSURES" AND "BARRICADES AND SIGNS FOR VARIOUS CLOSURES" FOR ADDITIONAL INFORMATION.

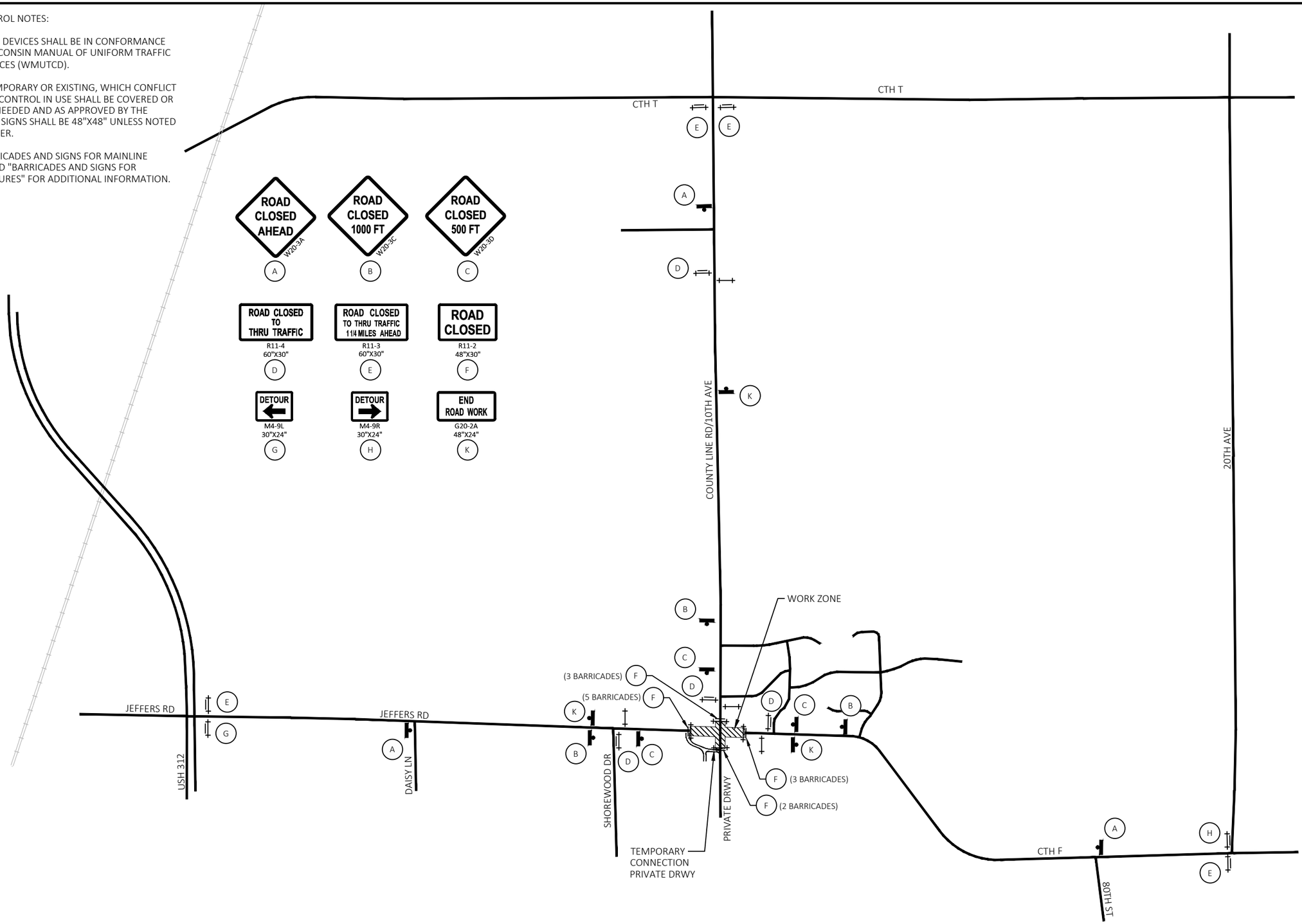

PROJECT NO: 7995-02-74	HWY: COUNTY LINE ROAD	COUNTY: EAU CLAIRE	TRAFFIC CONTROL - STAGE 1	SHEET 44	E

FILE NAME : I:\41\410897_CITY OF EC_COUNTY LINE ROAD 79950273\C3D\SHEETS\026001-S1.DWG
LAYOUT NAME - 026001-s1

PLOT DATE : 3/19/2026 9:49 AM PLOT BY : RESHESKE, CARRIE PLOT NAME : PLOT SCALE : 1 IN:1000 FT

2

TRAFFIC CONTROL NOTES:

ALL SIGNS AND DEVICES SHALL BE IN CONFORMANCE WITH THE WISCONSIN MANUAL OF UNIFORM TRAFFIC CONTROL DEVICES (WMUTCD).

ANY SIGNS TEMPORARY OR EXISTING, WHICH CONFLICT WITH TRAFFIC CONTROL IN USE SHALL BE COVERED OR REMOVED AS NEEDED AND AS APPROVED BY THE ENGINEER. ALL SIGNS SHALL BE 48"X48" UNLESS NOTED BY THE ENGINEER.

SEE SDD "BARRICADES AND SIGNS FOR MAINLINE CLOSURES" AND "BARRICADES AND SIGNS FOR VARIOUS CLOSURES" FOR ADDITIONAL INFORMATION.

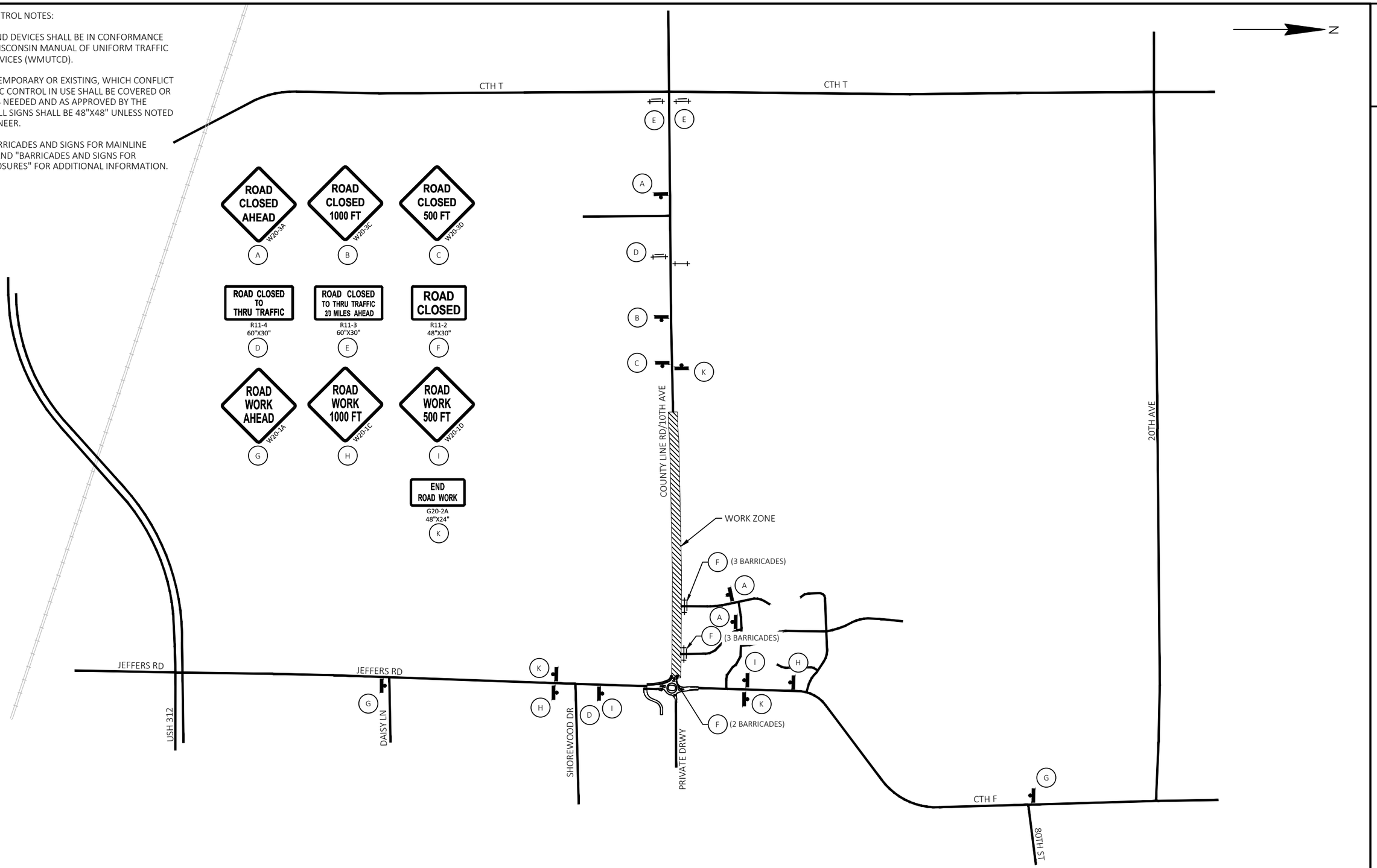

PROJECT NO: 7995-02-74	HWY: COUNTY LINE ROAD	COUNTY: EAU CLAIRE	TRAFFIC CONTROL - STAGE 2	SHEET 45	E

TRAFFIC CONTROL NOTES:

ALL SIGNS AND DEVICES SHALL BE IN CONFORMANCE WITH THE WISCONSIN MANUAL OF UNIFORM TRAFFIC CONTROL DEVICES (WMUTCD).

ANY SIGNS TEMPORARY OR EXISTING, WHICH CONFLICT WITH TRAFFIC CONTROL IN USE SHALL BE COVERED OR REMOVED AS NEEDED AND AS APPROVED BY THE ENGINEER. ALL SIGNS SHALL BE 48"X48" UNLESS NOTED BY THE ENGINEER.

"MO" SIGNS ARE THE SAME AS "M" SIGNS EXCEPT THE BACKGROUND SHALL BE ORANGE.

SEE SDD "BARRICADES AND SIGNS FOR MAINLINE CLOSURES", "BARRICADES AND SIGNS FOR VARIOUS CLOSURES", "DETOUR SIGNING FOR MAINLINE CLOSURES", AND "OFF RAMP LANE CLOSURE" FOR ADDITIONAL INFORMATION.

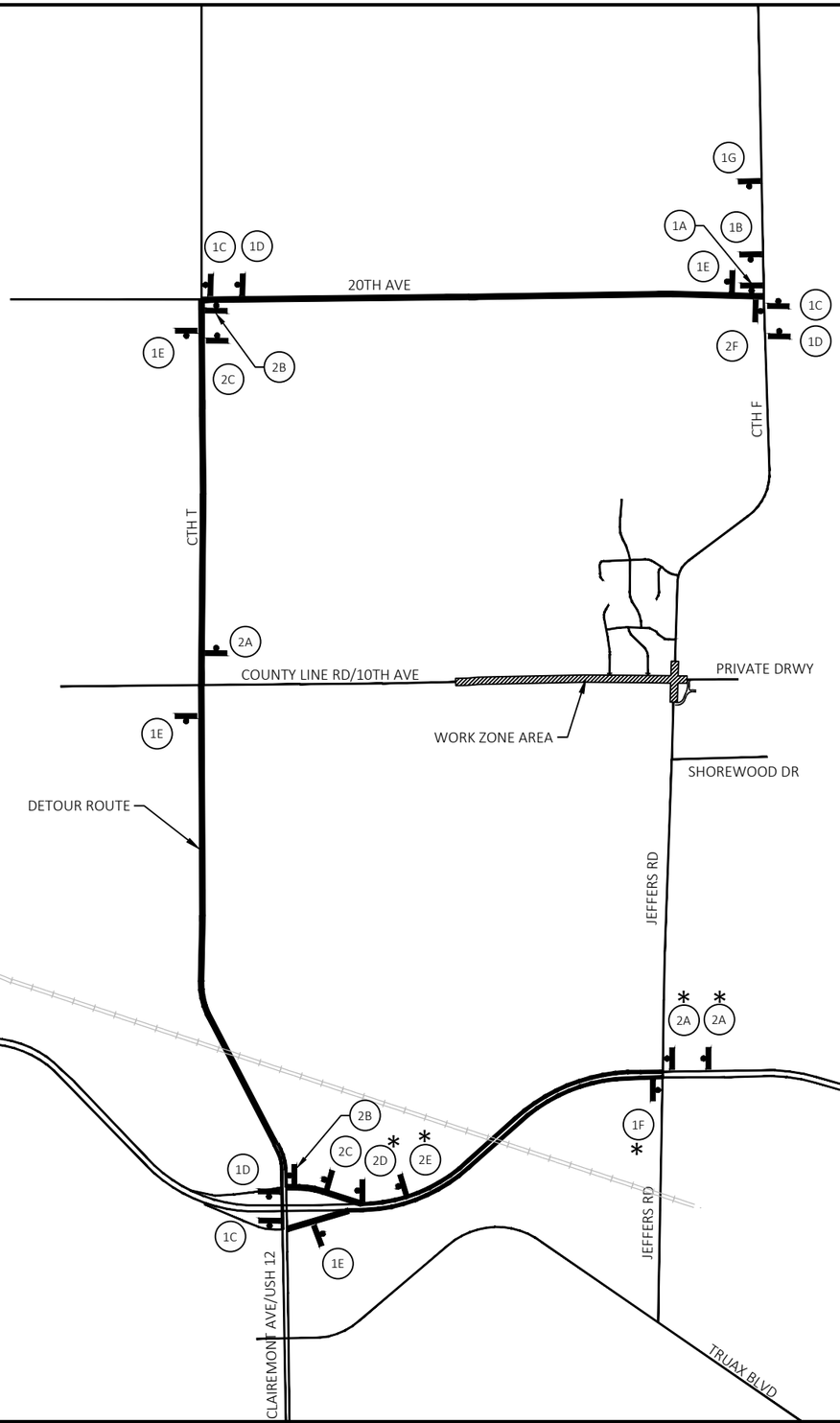

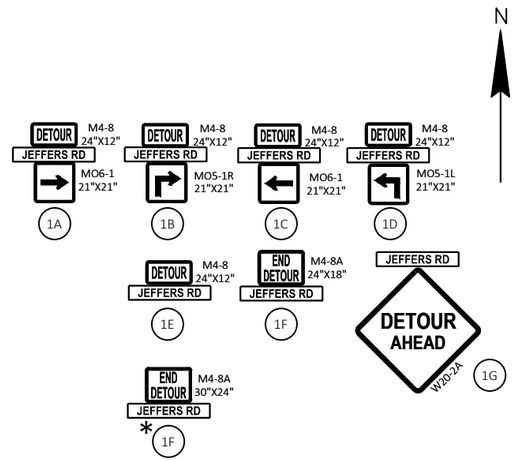

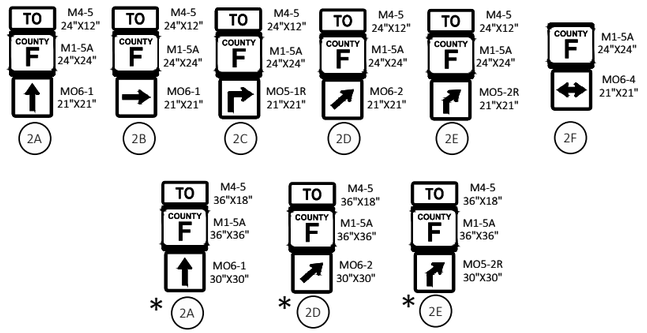

PROJECT NO: 7995-02-74	HWY: COUNTY LINE ROAD	COUNTY: EAU CLAIRE	DETOUR ROUTE	SHEET 46	E

2

N

PI STA = 77+87.68 WB
Y = 295451.830
X = 332793.112
DELTA = 2°54'42" RT
D = 5°43'46"
T = 25.41'
L = 50.82'
R = 1000.00'
PC STA = 77+62.27 WB
Y = 295452.035
X = 332767.699
PT STA = 78+13.08 WB
Y = 295450.336
X = 332818.482
DB = S89°32'23"E
DA = S86°37'41"E

PI STA = 79+70.60 WB
Y = 295441.071
X = 332975.732
DELTA = 6°21'34" LT
D = 11°27'33"
T = 27.78'
L = 55.50'
R = 500.00'
PC STA = 79+42.83 WB
Y = 295442.705
X = 332948.003
PT STA = 79+98.32 WB
Y = 295442.519
X = 333003.471
DB = S86°37'41"E
DA = N87°00'45"E

PI STA = 90+08.71 WB
Y = 295446.828
X = 333146.386
DELTA = 24°12'33" LT
D = 127°19'26"
T = 9.65'
L = 19.01'
R = 45.00'
PC STA = 89+99.06 WB
Y = 295448.945
X = 333136.970
PT STA = 90+18.07 WB
Y = 295448.758
X = 333155.842
DB = S77°19'33"E
DA = N78°27'55"E

ASPEN RIDGE DR

CTH F

COUNTY LINE RD

+00 WB

S89°32'23"E

77+00 WB

78+00 WB

78+00 EB

S83°15'08"E

S86°37'41"E

79+00 WB

79+00 EB

S86°37'41"E

90+00 WB

N78°27'55"E

91+00 EB

N89°20'13"E

PRIVATE DRIVE

BP: 76+79.67 EB

PC: 77+62.27 WB

PT: 77+67.46 EB

PT: 78+13.08 WB

PC: 78+20.39 EB

PT: 78+55.74 EB

PC: 79+42.83 WB

PC: 79+45.06 EB

EP: 79+96.00 EB

EP: 79+98.32 WB

BP: 89+99.06 WB

PT: 90+18.07 WB

EP: 90+52.57 WB
Y = 295455.656
X = 333189.642

BP: 90+00.00 EB

PT: 90+68.70 EB

EP: 91+18.74 EB
Y = 295457.946
X = 333255.696

PI STA = 77+23.61 EB
Y = 295452.345
X = 332729.042
DELTA = 6°17'15" RT
D = 7°09'43"
T = 43.94'
L = 87.79'
R = 800.00'
PC STA = 76+79.67 EB
Y = 295452.698
X = 332685.104
PT STA = 77+67.46 EB
Y = 295447.182
X = 332772.677
DB = S89°32'23"E
DA = S83°15'08"E

PI STA = 78+38.07 EB
Y = 295438.886
X = 332842.795
DELTA = 3°22'34" LT
D = 9°32'57"
T = 17.68'
L = 35.35'
R = 600.00'
PC STA = 78+20.39 EB
Y = 295440.964
X = 332825.235
PT STA = 78+55.74 EB
Y = 295437.846
X = 332860.446
DB = S83°15'08"E
DA = S86°37'41"E

PI STA = 79+71.23 EB
Y = 295431.053
X = 332975.737
DELTA = 32°25'54" RT
D = 63°39'43"
T = 26.17'
L = 50.94'
R = 90.00'
PC STA = 79+45.06 EB
Y = 295432.593
X = 332949.608
PT STA = 79+96.00 EB
Y = 295415.741
X = 332996.965
DB = S86°37'41"E
DA = S54°11'48"E

PI STA = 90+36.35 EB
Y = 295456.946
X = 333169.307
DELTA = 46°18'31" RT
D = 67°24'24"
T = 36.35'
L = 68.70'
R = 85.00'
PC STA = 90+00.00 EB
Y = 295430.373
X = 333144.502
PT STA = 90+68.70 EB
Y = 295457.367
X = 333205.655
DB = N43°01'42"E
DA = N89°20'13"E

JEFFERS RD

PROJECT NO: 7995-02-74	HWY: COUNTY LINE ROAD	COUNTY: EAU CLAIRE	ALIGNMENT DIAGRAM	SHEET 47	E

FILE NAME : I:\41\410897_CITY OF EC_COUNTY LINE ROAD 79950273\C3D\SHEETS\027201-AD.DWG
LAYOUT NAME - 027201-ad
PLOT DATE : 8/13/2025 4:21 PM
PLOT BY : RESHESKE, CARRIE
PLOT NAME :
PLOT SCALE : 1 IN:50 FT
WISDOT/CADDS SHEET 42

2

N

COUNTY LINE RD

JEFFERS RD

XCEL DRWY

CTH F

PRIVATE DRIVE

PI STA = 100+61.10 SB
Y = 295199.879
X = 333059.001
DELTA = 9°21'34" LT
D = 9°32'57"
T = 49.12'
L = 98.01'
R = 600.00'
PC STA = 100+11.98 SB
Y = 295150.796
X = 333057.214
PT STA = 101+09.99 SB
Y = 295248.600
X = 333052.781
DB = N02°05'05"E
DA = N07°16'29"W

PI STA = 110+28.33 SB
Y = 295511.116
X = 333082.962
DELTA = 34°56'37" LT
D = 63°39'43"
T = 28.33'
L = 54.89'
R = 90.00'
PC STA = 110+00.00 SB
Y = 295486.658
X = 333068.670
PT STA = 110+54.89 SB
Y = 295539.352
X = 333080.668
DB = N30°17'55"E
DA = N04°38'42"W

PI STA = 111+62.88 SB
Y = 295646.985
X = 333071.923
DELTA = 7°58'50" RT
D = 9°32'57"
T = 41.85'
L = 83.57'
R = 600.00'
PC STA = 111+21.02 SB
Y = 295605.268
X = 333075.312
PT STA = 112+04.60 SB
Y = 295688.769
X = 333074.358
DB = N04°38'42"W
DA = N03°20'08"E

BP: 99+50.00 NB
Y = 295088.860
X = 333054.960

BP: 100+11.98 SB

PC: 100+53.19 NB

PT: 100+93.67 NB

PT: 101+09.99 SB

PC: 101+46.25 NB

EP: 102+00.77 NB

EP: 102+05.68 SB
Y = 295343.520
X = 333040.664

100+00 NB

101+00 SB
101+00 NB

102+00 SB

102+00 NB

N2°05'05"E

N1°46'52"W

N7°16'29"W

BP: 110+00.00 SB

PT: 110+54.89 SB

PC: 111+21.02 SB

PT: 112+04.60 SB

EP: 112+18.79 SB
Y = 295702.940
X = 333075.184

110+00 NB

111+00 SB
111+00 NB

112+00 NB

N8°38'41"W

N3°20'08"E

N1°55'25"E

BP: 109+96.06 NB
Y = 295481.832
X = 333098.505

PC: 111+08.12 NB

PT: 112+18.79 NB

EP: 112+73.41 NB
Y = 295757.529
X = 333077.018

PI STA = 101+74.37 NB
Y = 295313.117
X = 333056.312
DELTA = 34°42'38" RT
D = 63°39'43"
T = 28.13'
L = 54.52'
R = 90.00'
PC STA = 101+46.25 NB
Y = 295285.004
X = 333057.186
PT STA = 102+00.77 NB
Y = 295336.726
X = 333071.602
DB = N01°46'52"W
DA = N32°55'46"E

PI STA = 111+63.61 NB
Y = 295647.478
X = 333073.321
DELTA = 10°34'06" RT
D = 9°32'57"
T = 55.49'
L = 110.67'
R = 600.00'
PC STA = 111+08.12 NB
Y = 295592.615
X = 333081.662
PT STA = 112+18.79 NB
Y = 295702.940
X = 333075.184
DB = N08°38'41"W
DA = N01°55'25"E

PI STA = 100+73.44 NB
Y = 295212.216
X = 333059.450
DELTA = 3°51'57" LT
D = 9°32'57"
T = 20.25'
L = 40.48'
R = 600.00'
PC STA = 100+53.19 NB
Y = 295191.980
X = 333058.713
PT STA = 100+93.67 NB
Y = 295232.456
X = 333058.820
DB = N02°05'05"E
DA = N01°46'52"W

PROJECT NO: 7995-02-74	HWY: COUNTY LINE ROAD	COUNTY: EAU CLAIRE	ALIGNMENT DIAGRAM	SHEET 48	E

FILE NAME : I:\41\410897_CITY OF EC_COUNTY LINE ROAD 79950273\C3D\SHEETS\027202-AD.DWG
LAYOUT NAME - 027202-ad
PLOT DATE : 1/19/2026 4:06 PM
PLOT BY : RESHESKE, CARRIE
PLOT NAME :
PLOT SCALE : 1 IN:50 FT
WISDOT/CADDS SHEET 42

2

N

PI STA = 477+88.22 NW
Y = 295467.827
X = 332793.648
DELTA = 2°54'42" RT
D = 5°38'22"
T = 25.82'
L = 51.63'
R = 1016.00'
PC STA = 477+62.40 NW
Y = 295468.034
X = 332767.828
PT STA = 478+14.03 NW
Y = 295466.308
X = 332819.423
DB = S89°32'23"E
DA = S86°37'41"E

PI STA = 479+63.29 NW
Y = 295453.551
X = 332967.942
DELTA = 22°22'42" LT
D = 22°55'06"
T = 49.45'
L = 97.64'
R = 250.00'
PC STA = 479+13.84 NW
Y = 295456.459
X = 332918.576
PT STA = 480+11.48 NW
Y = 295469.656
X = 333014.698
DB = S86°37'41"E
DA = N70°59'37"E

PI STA = 480+74.31 NW
Y = 295490.117
X = 333074.099
DELTA = 79°54'17" LT
D = 76°23'40"
T = 62.83'
L = 104.59'
R = 75.00'
PC STA = 480+11.48 NW
Y = 295469.656
X = 333014.698
PT STA = 481+16.08 NW
Y = 295552.184
X = 333064.368
DB = N70°59'37"E
DA = N08°54'40"W

EP: 481+76.72 NW
Y = 295612.384
X = 333058.067

PI: 481+51.72 NW
Y = 295587.396
X = 333058.847

PT: 481+16.08 NW

N11°47'10"W

N08°54'40"W

CTH F

EP: 510+38.32 NE

PC: 510+13.32 NE

510+00 NE

N4°51'45"W

Y = 295538.846
X = 333105.010
PI: 509+73.00 NE

PT: 509+64.95 NE

PI STA = 508+91.49 NE
Y = 295456.499
X = 333132.645
DELTA = 74°44'35" RT
D = 229°11'01"
T = 19.09'
L = 32.61'
R = 25.00'
PC STA = 508+72.39 NE
Y = 295459.252
X = 333151.540
PT STA = 509+05.00 NE
Y = 295474.003
X = 333125.016
DB = S81°42'28"W
DA = N23°32'57"W

PI STA = 509+35.08 NE
Y = 295501.569
X = 333113.002
DELTA = 11°26'53" RT
D = 19°05'55"
T = 30.07'
L = 59.94'
R = 300.00'
PC STA = 509+05.00 NE
Y = 295474.003
X = 333125.016
PT STA = 509+64.95 NE
Y = 295530.972
X = 333106.698
DB = N23°32'57"W
DA = N12°06'04"W

PI STA = 510+25.82 NE
Y = 295591.291
X = 333099.181
DELTA = 2°37'43" RT
D = 10°30'47"
T = 12.50'
L = 25.00'
R = 545.00'
PC STA = 510+13.32 NE
Y = 295579.022
X = 333101.592
PT STA = 510+38.32 NE
Y = 295603.657
X = 333097.336
DB = N11°06'56"W
DA = N08°29'14"W

BP: 477+30.64 NW
Y = 295468.289
X = 332736.071

PC: 477+62.40 NW

PT: 478+14.03 NW

PI: 478+59.65 NW
Y = 295463.625
X = 332864.969

Y = 295457.749
X = 332896.678
PI: 478+91.90 NW

PC: 479+13.84 NW

PCC: 480+11.48 NW

481+00 NW

PCC: 7+16.83 TA

PCC: 6+86.44 TA

478+00 NW

479+00 NW

480+00 NW

S89°32'23"E

S86°37'41"E

S79°30'11"E

S08°54'40"W

S81°42'28"W

509+00 NE

PC: 508+72.39 NE

BP: 508+60.11 NE
Y = 295461.024
X = 333163.696

COUNTY LINE RD

PRIVATE DRIVE

PCC: 509+05.00 NE

7+00 TA

BP: 5+00.00 TA

PCC: 6+54.02 TA

EP: 7+35.58 TA

PRC: 302+88.77 SE

303+00 SE

EP: 303+36.61 SE

PCC: 303+23.47 SE

PCC: 6+18.02 TA

6+00 TA

PI STA = 300+56.90 SE
Y = 295195.084
X = 333075.337
DELTA = 0°41'21" LT
D = 9°17'37"
T = 3.71'
L = 7.41'
R = 616.50'
PC STA = 300+53.19 SE
Y = 295191.380
X = 333075.202
PT STA = 300+60.60 SE
Y = 295198.791
X = 333075.427
DB = N02°05'05"E
DA = N01°23'44"E

PI STA = 301+73.35 SE
Y = 295311.150
X = 333068.832
DELTA = 55°38'36" RT
D = 76°23'40"
T = 39.58'
L = 72.84'
R = 75.00'
PC STA = 301+33.77 SE
Y = 295271.768
X = 333072.783
PT STA = 302+06.61 SE
Y = 295336.636
X = 333099.113
DB = N05°43'46"W
DA = N49°54'50"E

277+00 SW

S83°15'08"E

278+00 SW

S84°45'23"E

N88°07'07"E

279+00 SW

PCC: 5+34.16 TA

PCC: 279+61.53 SW

280+00 SW

PCC: 5+62.90 TA

PCC: 5+85.60 TA

N49°54'50"E

PC: 302+34.11 SE

PT: 302+06.61 SE

PC: 301+33.77 SE

PCC: 280+18.45 SW

PT: 280+61.88 SW

S2°55'26"E

281+00 SW

PC: 281+05.35 SW

N5°43'46"W

301+00 SE

PI: 300+98.13 SE
Y = 295236.304
X = 333076.341

N1°23'44"E

PT: 300+60.60 SE

PC: 300+53.19 SE

N2°05'05"E

282+00 SW

EP: 282+04.40 SW

Y = 295138.226
X = 333073.268
BP: 300+00.00 SE

JEFFERS RD

PI STA = 276+96.34 SW
Y = 295433.252
X = 332754.239
DELTA = 2°26'12" RT
D = 7°18'29"
T = 16.67'
L = 33.34'
R = 784.00'
PC STA = 276+79.67 SW
Y = 295434.506
X = 332737.611
PT STA = 277+13.01 SW
Y = 295431.293
X = 332770.797
DB = S85°41'20"E
DA = S83°15'08"E

BP: 276+79.67 SW

PT: 277+13.01 SW

PC: 277+65.94 SW

PT: 277+82.11 SW

PI: 278+48.51 SW
Y = 295417.317
X = 332905.562

PC: 278+76.09 SW

PI STA = 277+74.02 SW
Y = 295424.124
X = 332831.386
DELTA = 1°30'15" LT
D = 9°18'05"
T = 8.09'
L = 16.17'
R = 616.00'
PC STA = 277+65.94 SW
Y = 295425.074
X = 332823.355
PT STA = 277+82.11 SW
Y = 295423.385
X = 332839.439
DB = S83°15'08"E
DA = S84°45'23"E

PI STA = 279+24.12 SW
Y = 295419.799
X = 332981.127
DELTA = 65°16'00" RT
D = 76°23'40"
T = 48.03'
L = 85.43'
R = 75.00'
PC STA = 278+76.09 SW
Y = 295418.222
X = 332933.127
PT STA = 279+61.53 SW
Y = 295376.862
X = 333002.642
DB = N88°07'07"E
DA = S26°36'53"E

PI STA = 279+90.07 SW
Y = 295351.338
X = 333015.432
DELTA = 10°52'19" RT
D = 19°05'55"
T = 28.55'
L = 56.93'
R = 300.00'
PC STA = 279+61.53 SW
Y = 295376.862
X = 333002.642
PT STA = 280+18.45 SW
Y = 295323.860
X = 333023.177
DB = S26°36'53"E
DA = S15°44'33"E

PI STA = 280+40.18 SW
Y = 295302.951
X = 333029.071
DELTA = 4°08'50" RT
D = 9°32'58"
T = 21.72'
L = 43.43'
R = 599.99'
PC STA = 280+18.45 SW
Y = 295323.860
X = 333023.177
PT STA = 280+61.88 SW
Y = 295281.671
X = 333033.438
DB = S15°44'33"E
DA = S11°35'44"E

PI STA = 281+54.99 SW
Y = 295189.036
X = 333042.095
DELTA = 9°32'19" RT
D = 9°37'46"
T = 49.64'
L = 99.06'
R = 595.00'
PC STA = 281+05.35 SW
Y = 295238.259
X = 333035.655
PT STA = 282+04.40 SW
Y = 295139.427
X = 333040.289
DB = S07°27'14"E
DA = S03°05'05"W

PI STA = 5+17.11 TA
Y = 295415.367
X = 333040.430
DELTA = 9°06'14" LT
D = 26°39'14"
T = 17.11'
L = 34.16'
R = 214.96'
PC STA = 5+00.00 TA
Y = 295432.157
X = 333043.743
PT STA = 5+34.16 TA
Y = 295398.264
X = 333039.816
DB = S11°09'42"W
DA = S02°03'27"W

PI STA = 5+50.35 TA
Y = 295382.076
X = 333039.234
DELTA = 65°52'55" LT
D = 229°10'59"
T = 16.20'
L = 28.75'
R = 25.00'
PC STA = 5+34.16 TA
Y = 295398.264
X = 333039.816
PT STA = 5+62.90 TA
Y = 295374.930
X = 333053.771
DB = S02°03'27"W
DA = S63°49'27"E

PI STA = 5+74.55 TA
Y = 295369.793
X = 333064.224
DELTA = 31°42'56" LT
D = 139°44'45"
T = 11.65'
L = 22.70'
R = 41.00'
PC STA = 5+62.90 TA
Y = 295374.930
X = 333053.771
PT STA = 5+85.60 TA
Y = 295370.917
X = 333075.816
DB = S63°49'27"E
DA = N84°27'36"E

PI STA = 6+04.54 TA
Y = 295372.746
X = 333094.670
DELTA = 74°18'11" LT
D = 229°10'59"
T = 18.94'
L = 32.42'
R = 25.00'
PC STA = 5+85.60 TA
Y = 295370.917
X = 333075.816
PT STA = 6+18.02 TA
Y = 295391.391
X = 333098.010
DB = N84°27'36"E
DA = N10°09'25"E

PI STA = 6+36.07 TA
Y = 295409.159
X = 333101.194
DELTA = 10°18'51" LT
D = 28°38'52"
T = 18.05'
L = 36.00'
R = 200.00'
PC STA = 6+18.02 TA
Y = 295391.391
X = 333098.010
PT STA = 6+54.02 TA
Y = 295427.209
X = 333101.144
DB = N10°09'25"E
DA = N00°09'26"W

PI STA = 6+72.96 TA
Y = 295446.152
X = 333101.092
DELTA = 74°18'11" LT
D = 229°10'59"
T = 18.94'
L = 32.42'
R = 25.00'
PC STA = 6+54.02 TA
Y = 295427.209
X = 333101.144
PT STA = 6+86.44 TA
Y = 295451.227
X = 333082.842
DB = N00°09'26"W
DA = N74°27'37"W

PI STA = 302+62.72 SE
Y = 295372.767
X = 333142.041
DELTA = 41°45'32" LT
D = 76°23'40"
T = 28.61'
L = 54.66'
R = 75.00'
PC STA = 302+34.11 SE
Y = 295354.344
X = 333120.153
PT STA = 302+88.77 SE
Y = 295401.086
X = 333146.099
DB = N49°54'50"E
DA = N08°09'18"E

PI STA = 303+06.85 SE
Y = 295418.986
X = 333148.664
DELTA = 39°45'54" RT
D = 114°35'30"
T = 18.08'
L = 34.70'
R = 50.00'
PC STA = 302+88.77 SE
Y = 295401.086
X = 333146.099
PT STA = 303+23.47 SE
Y = 295431.104
X = 333162.085
DB = N08°09'18"E
DA = N47°55'12"E

PI STA = 303+30.06 SE
Y = 295435.520
X = 333166.975
DELTA = 10°02'27" RT
D = 76°23'40"
T = 6.59'
L = 13.14'
R = 75.00'
PC STA = 303+23.47 SE
Y = 295431.104
X = 333162.085
PT STA = 303+36.61 SE
Y = 295439.015
X = 333172.560
DB = N47°55'12"E
DA = N57°57'39"E

PI STA = 6+96.85 TA
Y = 295454.016
X = 333072.811
DELTA = 28°29'46" LT
D = 139°44'45"
T = 10.41'
L = 20.39'
R = 41.00'
PC STA = 6+86.44 TA
Y = 295451.227
X = 333082.842
PT STA = 7+06.83 TA
Y = 295451.682
X = 333062.665
DB = N74°27'37"W
DA = S77°02'36"W

PI STA = 7+23.03 TA
Y = 295448.050
X = 333046.879
DELTA = 65°52'55" LT
D = 229°10'59"
T = 16.20'
L = 28.75'
R = 25.00'
PC STA = 7+06.83 TA
Y = 295451.682
X = 333062.665
PT STA = 7+35.58 TA
Y = 295432.157
X = 333043.743
DB = S77°02'36"W
DA = S11°09'42"W

PROJECT NO: 7995-02-74	HWY: COUNTY LINE ROAD	COUNTY: EAU CLAIRE	ALIGNMENT DIAGRAM	SHEET 49	E

Estimate Of Quantities

7995-02-74

Line	Item	Item Description	Unit	Total	Qty
0002	201.0105	Clearing	STA	24.000	24.000
0004	201.0205	Grubbing	STA	24.000	24.000
0006	203.0100	Removing Small Pipe Culverts	EACH	6.000	6.000
0008	204.0100	Removing Concrete Pavement	SY	13.000	13.000
0010	204.0150	Removing Curb & Gutter	LF	654.000	654.000
0012	204.0155	Removing Concrete Sidewalk	SY	123.000	123.000
0014	204.0165	Removing Guardrail	LF	413.000	413.000
0016	205.0100	Excavation Common	CY	9,182.000	9,182.000
0018	208.0100	Borrow	CY	2,043.000	2,043.000
0020	213.0100	Finishing Roadway (project) 01. 7995-02-74	EACH	1.000	1.000
0022	305.0110	Base Aggregate Dense 3/4-Inch	TON	46.000	46.000
0024	305.0120	Base Aggregate Dense 1 1/4-Inch	TON	13,210.000	13,210.000
0026	310.0115	Base Aggregate Open-Graded	CY	12.000	12.000
0028	405.0100	Coloring Concrete WisDOT Red	CY	183.000	183.000
0030	415.2010	Concrete Truck Apron 12-Inch	SY	548.000	548.000
0032	455.0605	Tack Coat	GAL	1,421.000	1,421.000
0034	460.2000	Incentive Density HMA Pavement	DOL	3,160.000	3,160.000
0036	460.5224	HMA Pavement 4 LT 58-28 S	TON	3,503.000	3,503.000
0038	460.5244	HMA Pavement 4 LT 58-34 S	TON	1,434.000	1,434.000
0040	465.0105	Asphaltic Surface	TON	454.000	454.000
0042	465.0120	Asphaltic Surface Driveways and Field Entrances	TON	31.000	31.000
0044	520.1018	Apron Endwalls for Culvert Pipe 18-Inch	EACH	4.000	4.000
0046	520.3318	Culvert Pipe Class III-A 18-Inch	LF	72.000	72.000
0048	522.1030	Apron Endwalls for Culvert Pipe Reinforced Concrete 30-Inch	EACH	1.000	1.000
0050	601.0405	Concrete Curb & Gutter 18-Inch Type A	LF	230.000	230.000
0052	601.0411	Concrete Curb & Gutter 30-Inch Type D	LF	20.000	20.000
0054	601.0581	Concrete Curb & Gutter 4-Inch Sloped 30-Inch Type R	LF	336.000	336.000
0056	601.0600	Concrete Curb Pedestrian	LF	42.000	42.000
0058	602.0410	Concrete Sidewalk 5-Inch	SF	13,450.000	13,450.000
0060	602.0505	Curb Ramp Detectable Warning Field Yellow	SF	198.000	198.000
0062	602.0810	Concrete Driveway 6-Inch	SY	188.000	188.000
0064	606.0100	Riprap Light	CY	3.000	3.000
0066	606.0200	Riprap Medium	CY	5.000	5.000
0068	608.0412	Storm Sewer Pipe Reinforced Concrete Class IV 12-Inch	LF	219.000	219.000
0070	608.0418	Storm Sewer Pipe Reinforced Concrete Class IV 18-Inch	LF	85.000	85.000
0072	608.0424	Storm Sewer Pipe Reinforced Concrete Class IV 24-Inch	LF	92.000	92.000
0074	608.0430	Storm Sewer Pipe Reinforced Concrete Class IV 30-Inch	LF	346.000	346.000
0076	608.3012	Storm Sewer Pipe Class III-A 12-Inch	LF	206.000	206.000
0078	608.3024	Storm Sewer Pipe Class III-A 24-Inch	LF	1,753.000	1,753.000
0080	608.3030	Storm Sewer Pipe Class III-A 30-Inch	LF	63.000	63.000
0082	611.0530	Manhole Covers Type J	EACH	9.000	9.000
0084	611.0624	Inlet Covers Type H	EACH	24.000	24.000
0086	611.0642	Inlet Covers Type MS	EACH	1.000	1.000
0088	611.0652	Inlet Covers Type T	EACH	2.000	2.000
0090	611.2004	Manholes 4-FT Diameter	EACH	4.000	4.000
0092	611.2005	Manholes 5-FT Diameter	EACH	9.000	9.000
0094	611.2006	Manholes 6-FT Diameter	EACH	1.000	1.000
0096	611.3004	Inlets 4-FT Diameter	EACH	4.000	4.000
0098	611.3230	Inlets 2x3-FT	EACH	17.000	17.000

7995-02-74

Line	Item	Item Description	Unit	Total	Qty
0100	611.3901	Inlets Median 1 Grate	EACH	1.000	1.000
0102	611.8110	Adjusting Manhole Covers	EACH	1.000	1.000
0104	611.8115	Adjusting Inlet Covers	EACH	2.000	2.000
0106	612.0106	Pipe Underdrain 6-Inch	LF	336.000	336.000
0108	618.0100	Maintenance and Repair of Haul Roads (project) 01. 7995-02-74	EACH	1.000	1.000
0110	619.1000	Mobilization	EACH	1.000	1.000
0112	620.0300	Concrete Median Sloped Nose	SF	303.000	303.000
0114	624.0100	Water	MGAL	255.000	255.000
0116	625.0100	Topsoil	SY	13,955.000	13,955.000
0118	627.0200	Mulching	SY	8,725.000	8,725.000
0120	628.1504	Silt Fence	LF	4,808.000	4,808.000
0122	628.1520	Silt Fence Maintenance	LF	4,808.000	4,808.000
0124	628.1905	Mobilizations Erosion Control	EACH	3.000	3.000
0126	628.1910	Mobilizations Emergency Erosion Control	EACH	4.000	4.000
0128	628.2008	Erosion Mat Urban Class I Type B	SY	5,575.000	5,575.000
0130	628.7005	Inlet Protection Type A	EACH	44.000	44.000
0132	628.7010	Inlet Protection Type B	EACH	5.000	5.000
0134	628.7015	Inlet Protection Type C	EACH	30.000	30.000
0136	628.7020	Inlet Protection Type D	EACH	10.000	10.000
0138	628.7504	Temporary Ditch Checks	LF	135.000	135.000
0140	628.7555	Culvert Pipe Checks	EACH	14.000	14.000
0142	629.0210	Fertilizer Type B	CWT	9.000	9.000
0144	630.0120	Seeding Mixture No. 20	LB	398.000	398.000
0146	630.0140	Seeding Mixture No. 40	LB	205.000	205.000
0148	630.0170	Seeding Mixture No. 70	LB	2.000	2.000
0150	630.0200	Seeding Temporary	LB	127.000	127.000
0152	630.0400	Seeding Nurse Crop	LB	4.000	4.000
0154	630.0500	Seed Water	MGAL	312.000	312.000
0156	637.2210	Signs Type II Reflective H	SF	89.540	89.540
0158	637.2230	Signs Type II Reflective F	SF	25.500	25.500
0160	638.2102	Moving Signs Type II	EACH	5.000	5.000
0162	638.2602	Removing Signs Type II	EACH	4.000	4.000
0164	638.3000	Removing Small Sign Supports	EACH	9.000	9.000
0166	642.5001	Field Office Type B	EACH	1.000	1.000
0168	643.0300	Traffic Control Drums	DAY	4,120.000	4,120.000
0170	643.0420	Traffic Control Barricades Type III	DAY	3,425.000	3,425.000
0172	643.0705	Traffic Control Warning Lights Type A	DAY	5,170.000	5,170.000
0174	643.0900	Traffic Control Signs	DAY	15,410.000	15,410.000
0176	643.0920	Traffic Control Covering Signs Type II	EACH	5.000	5.000
0178	643.1050	Traffic Control Signs PCMS	DAY	21.000	21.000
0180	643.3350	Temporary Marking Crosswalk Removable Tape 6-Inch	LF	48.000	48.000
0182	643.5000	Traffic Control	EACH	1.000	1.000
0184	644.1440	Temporary Pedestrian Surface Matting	SF	60.000	60.000
0186	644.1601	Temporary Pedestrian Curb Ramp	DAY	300.000	300.000
0188	644.1605	Temporary Pedestrian Detectable Warning Field	SF	20.000	20.000
0190	644.1810	Temporary Pedestrian Barricade	LF	71.000	71.000
0192	645.0111	Geotextile Type DF Schedule A	SY	150.000	150.000
0194	645.0120	Geotextile Type HR	SY	19.000	19.000
0196	645.0130	Geotextile Type R	SY	12.000	12.000

Estimate Of Quantities

7995-02-74

Line	Item	Item Description	Unit	Total	Qty
0198	646.1020	Marking Line Epoxy 4-Inch	LF	11,984.000	11,984.000
0200	646.3020	Marking Line Epoxy 8-Inch	LF	207.000	207.000
0202	646.6120	Marking Stop Line Epoxy 18-Inch	LF	14.000	14.000
0204	646.6320	Marking Dotted Extension Epoxy 18-Inch	LF	65.000	65.000
0206	646.7120	Marking Diagonal Epoxy 12-Inch	LF	104.000	104.000
0208	646.7420	Marking Crosswalk Epoxy Transverse Line 6-Inch	LF	280.000	280.000
0210	646.8120	Marking Curb Epoxy	LF	30.000	30.000
0212	646.8220	Marking Island Nose Epoxy	EACH	3.000	3.000
0214	650.4000	Construction Staking Storm Sewer	EACH	37.000	37.000
0216	650.4500	Construction Staking Subgrade	LF	4,646.000	4,646.000
0218	650.5000	Construction Staking Base	LF	4,646.000	4,646.000
0220	650.5500	Construction Staking Curb Gutter and Curb & Gutter	LF	7,984.000	7,984.000
0222	650.8501	Construction Staking Electrical Installations (project) 01. 7995-02-74	EACH	1.000	1.000
0224	650.9000	Construction Staking Curb Ramps	EACH	12.000	12.000
0226	650.9500	Construction Staking Sidewalk (project) 01. 7995-02-74	EACH	1.000	1.000
0228	650.9911	Construction Staking Supplemental Control (project) 01. 7995-02-74	EACH	1.000	1.000
0230	650.9920	Construction Staking Slope Stakes	LF	4,646.000	4,646.000
0232	652.0225	Conduit Rigid Nonmetallic Schedule 40 2-Inch	LF	1,205.000	1,205.000
0234	652.0235	Conduit Rigid Nonmetallic Schedule 40 3-Inch	LF	14.000	14.000
0236	653.0164	Pull Boxes Non-Conductive 24x42-Inch	EACH	9.000	9.000
0238	654.0105	Concrete Bases Type 5	EACH	11.000	11.000
0240	654.0224	Concrete Control Cabinet Bases Type L24	EACH	1.000	1.000
0242	655.0610	Electrical Wire Lighting 12 AWG	LF	1,590.000	1,590.000
0244	655.0620	Electrical Wire Lighting 8 AWG	LF	4,678.000	4,678.000
0246	656.0201	Electrical Service Meter Breaker Pedestal (location) 01. STA 10+50 RA	EACH	1.000	1.000
0248	657.0255	Transformer Bases Breakaway 11 1/2-Inch Bolt Circle	EACH	11.000	11.000
0250	657.0322	Poles Type 5-Aluminum	EACH	11.000	11.000
0252	657.0610	Luminaire Arms Single Member 4 1/2-Inch Clamp 6-FT	EACH	11.000	11.000
0254	659.1115	Luminaires Utility LED A	EACH	11.000	11.000
0256	659.2124	Lighting Control Cabinets 120/240 24-Inch	EACH	1.000	1.000
0258	690.0150	Sawing Asphalt	LF	302.000	302.000
0260	690.0250	Sawing Concrete	LF	51.000	51.000
0262	715.0720	Incentive Compressive Strength Concrete Pavement	DOL	500.000	500.000
0264	740.0440	Incentive IRI Ride	DOL	2,200.000	2,200.000
0266	ASP.1T0A	On-the-Job Training Apprentice at $5.00/HR	HRS	600.000	600.000
0268	ASP.1T0G	On-the-Job Training Graduate at $5.00/HR	HRS	800.000	800.000
0270	SPV.0060	Special 10. Manhole Chimney Seal	EACH	7.000	7.000
0272	SPV.0060	Special 11. Manhole Casting Type A Lid	EACH	7.000	7.000
0274	SPV.0060	Special 12. Sanitary Sewer Service Wye, 8-Inch X 4-Inch	EACH	9.000	9.000
0276	SPV.0060	Special 13. Connect to Existing Sanitary	EACH	1.000	1.000
0278	SPV.0060	Special 14. Construction Staking Sanitary Structure	EACH	17.000	17.000
0280	SPV.0060	Special 15. Gate Valve & Box 6-Inch	EACH	4.000	4.000
0282	SPV.0060	Special 17. Gate Valve & Box Resilient Wedge 16-Inch	EACH	3.000	3.000
0284	SPV.0060	Special 18. Fire Hydrant	EACH	4.000	4.000
0286	SPV.0060	Special 19. Tap and Corporation Stop 1-Inch	EACH	9.000	9.000
0288	SPV.0060	Special 20. Curb Stop and Box 1-Inch	EACH	9.000	9.000
0290	SPV.0060	Special 21. Connect to Existing Water Main	EACH	2.000	2.000
0292	SPV.0060	Special 22. Construction Staking Water Main Structures	EACH	30.000	30.000
0294	SPV.0060	Special 23. Posts Steel U-Channel 12-FT	EACH	5.000	5.000

7995-02-74

Line	Item	Item Description	Unit	Total	Qty
0296	SPV.0060	Special 24. Posts Steel U-Channel 10-FT	EACH	22.000	22.000
0298	SPV.0060	Special 25. Posts Steel U-Channel 4-FT	EACH	18.000	18.000
0300	SPV.0060	Special 26. Install Break Out Signpost Coupler and Sleeve	EACH	11.000	11.000
0302	SPV.0060	Special 28. Posts Steel U-Channel 8-FT	EACH	2.000	2.000
0304	SPV.0085	Special 10. Water Main Fittings	LB	1,709.000	1,709.000
0306	SPV.0090	Special 01. Concrete Curb & Gutter 24-Inch Type D	LF	7,174.000	7,174.000
0308	SPV.0090	Special 02. Concrete Curb & Gutter 4-Inch Sloped 30-Inch Type D	LF	155.000	155.000
0310	SPV.0090	Special 10. 8-Inch Sanitary Sewer PVC SDR 26	LF	2,121.000	2,121.000
0312	SPV.0090	Special 11. 4-Inch Sanitary Service PVC	LF	311.000	311.000
0314	SPV.0090	Special 12. Construction Staking Sanitary Pipe	LF	2,121.000	2,121.000
0316	SPV.0090	Special 13. 8-Inch Water Main DI	LF	31.000	31.000
0318	SPV.0090	Special 14. 12-Inch Water Main DI	LF	20.000	20.000
0320	SPV.0090	Special 15. 16-Inch Water Main DI	LF	1,948.000	1,948.000
0322	SPV.0090	Special 16. 6-Inch Hydrant Lead	LF	51.000	51.000
0324	SPV.0090	Special 17. Water Service Copper Type K 1-Inch	LF	387.000	387.000
0326	SPV.0090	Special 18. Construction Staking Water Main Pipe	LF	1,999.000	1,999.000
0328	SPV.0200	Special 10. 4-Foot Manhole Masonry - Sanitary Sewer	VF	134.000	134.000

3

CLEARING & GRUBBING

STATION	TO	STATION	LOCATION	201.0105 CLEARING STA	201.0205 GRUBBING STA
52+00	-	54+00	COUNTY LINE RD	2	2
59+00	-	68+00	COUNTY LINE RD	9	9
72+00	-	79+00	COUNTY LINE RD	7	7
89+00	-	92+00	PRIVATE DRWY	3	3
109+00	-	112+00	CTH F	3	3
			TOTAL 0010	**24**	**24**

NOTE: CLEARING WILL BE DONE BY OTHERS (FOR INFORMATION ONLY).

REMOVING SMALL PIPE CULVERTS

STATION	LOCATION	203.0100 REMOVING SMALL PIPE CULVERTS EACH	SIZE/TYPE
65+34	COUNTY LINE RD	1	30'x12" CMCP
65+36	LT	1	54'x24" CMCP
65+66	LT	1	22'x18" CMCP
66+84	LT	1	56'x24" CMCP
73+19	LT	1	32'x18" CMCP
9+35 AR	RT	1	32'x18" RCCP
	TOTAL 0010	**6**	

REMOVING CONCRETE PAVEMENT, CURB & GUTTER, & SIDEWALK

STATION	TO	STATION	LOCATION	204.0100 REMOVING CONCRETE PAVEMENT SY	204.0150 REMOVING CURB & GUTTER LF	204.0155 REMOVING CONCRETE SIDEWALK SY
50+54	-	52+16	COUNTY LINE RD, LT/RT	--	324	--
		51+41	COUNTY LINE RD, LT	13	--	--
			ASPEN MEADOW CT	--	53	15
			ASPEN RIDGE DR	--	29	20
99+65 NB	-	101+07 NB	JEFFERS RD, LT/RT	--	248	88
			TOTAL 0010	**13**	**654**	**123**

DIVISION	FROM/TO STATION	205.0100 COMMON EXCAVATION (1) CUT (2)	205.0100 COMMON EXCAVATION (1) EBS EXCAVATION (3)	UNEXPANDED FILL	EXPANDED FILL (13) FACTOR 1.30	MASS ORDINATE +/- (14)	WASTE	208.0100 BORROW
DIVISION 1								
RAB-CIRCLE	10+00/13+25	234	0	524	681	-447	0	447
COUNTY LINE RD	50+54/76+92.6	7,025	0	6,631	8,620	-1,595	0	1,595
EB-EAST LEG	90+25/90+95	52	0	15	20	33	33	0
EB-WEST LEG	77+25/79+75	172	0	108	140	32	32	0
NB-NORTH LEG	110+25/112+25	260	0	96	125	135	135	0
NB-SOUTH LEG	100+00/101+75	273	0	10	13	260	260	0
SB-NORTH LEG	110+25/111+25	140	0	5	7	134	134	0
SB-SOUTH LEG	100+25/101+75	176	0	4	5	171	171	0
WB-EAST LEG	90+25/90+50	6	0	4	5	1	1	0
WB-WEST LEG	77+50/79+75	314	0	51	66	248	248	0
XCEL DRWY	10+29/13+97.26	377	0	60	78	299	299	0
XCEL TEMP	13+00/14+40	153	0	18	23	130	130	0
DIVISION 1 SUBTOTAL		9,182	0	7,526	9,784	-602	1,441	2,043
GRAND TOTAL		9,182	0	7,526	9,784	-602	1,441	2,043
TOTAL COMMON EXC		9,182						

NOTES:
(1) COMMON EXCAVATION IS THE SUM OF THE CUT AND EBS EXCAVATION COLUMNS. ITEM NUMBER 205.0100
(2) SALVAGED/UNSUABLE PAVEMENT MATERIAL IS INCLUDED IN CUT.
(3) EBS EXCAVATION TO BE BACKFILLED WITH SELECT BORROW MATERIAL. NOTE: THIS IS DESIGNERS CHOICE, CAN BE BACKFILLED WITH BORROW, OR CUT AS WELL.
(13) EXPANDED FILL FACTOR = 1.30 EXPANDED FILL = UNEXPANDED FILL * FILL FACTOR
(14) THE MASS ORDINATE + OR - QTY CALCULATED FOR THE DIVISION. PLUS QUANTITY INDICATES AN EXCESS OF MATERIAL WITHIN THE DIVISION MINUS INDICATES A SHORTAGE OF MATERIAL WITHIN THE DIVISION.
(15) FACTORS USED TO COMPUTE ANTICIPATED WASTE AND THE COMPUTED WASTE VOLUME IDENTIFIED ARE FOR GENERAL INFORMATION ONLY.

BASE AGGREGATE DENSE

STATION	TO	STATION	LOCATION	305.0110 BASE AGGREGATE DENSE 3/4-INCH TON	305.0120 BASE AGGREGATE DENSE 1 1/4-INCH TON
50+54	-	79+48 EB	COUNTY LINE RD	--	7,703
		51+41	DRWY, LT	--	11
52+23	-	76+74 EB	PATH, RT	--	1,100
		54+73	DRWY, LT	--	11
		59+63	DRWY, LT	--	10
		65+36	DRWY, LT	--	11
		65+66	DRWY, LT	--	11
		67+93	DRWY, LT	--	9
71+85	-	76+78	SIDEWALK, LT	--	155
		76+94 EB	PRIVATE DRIVE, RT	--	207
77+14 EB	-	100+00 NB	SIDEWALK, RT	--	247
77+08 WB	-	110+68 SB	SIDEWALK/PATH, LT	--	127
90+31 EB	-	90+95 EB	PRIVATE DRIVE	11	157
			ROUNDABOUT	--	1,064
100+00 NB	-	101+42 NB	JEFFERS RD	--	590
99+65 NB	-	101+77 NB	SIDEWALK, RT	--	87
10+34 X	-	13+97 X	XCEL DRWY	--	705
12+76	-	14+45	TEMP PRIVATE DRIVEWAY	--	345
110+72 NB	-	112+31 NB	CTH F	35	660
			TOTAL 0010	**46**	**13,210**

REMOVING GUARDRAIL

STATION	TO	STATION	LOCATION	204.0165 REMOVING GUARDRAIL LF
72+74	-	75+61	COUNTY LINE RD, RT	288
73+54	-	74+79	COUNTY LINE RD, LT	125
			TOTAL 0010	**413**

FINISHING ROADWAY

LOCATION	213.0100.01 FINISHING ROADWAY (PROJECT) (01. 7995-02-74) EACH
PROJECT LIMITS	1
TOTAL 0010	**1**

ALL ITEMS ON THIS SHEET ARE CATEGORY 0010 UNLESS OTHERWISE NOTED

3

CULVERT PIPE CLASS III-A 18-INCH & APRON ENDWALLS

STATION	LOCATION	520.1018 APRON ENDWALLS FOR CULVERT PIPE 18-INCH EACH	520.3318 CULVERT PIPE CLASS III-A 18-INCH LF	MINIMUM THICKNESS (INCHES) STEEL	ALUM
73+19	DRWY, LT	2	32	0.064	0.060
9+15 AR	PRIVATE DRWY	2	40	0.064	0.060
	TOTAL 0010	**4**	**72**		

HMA PAVEMENT & ASPHALTIC SURFACE

STATION	TO	STATION	LOCATION	455.0605 TACK COAT GAL	460.5224 HMA PAVEMENT 4 LT 58-28 S TON	460.5244 HMA PAVEMENT 4 LT 58-34 S TON	465.0105 ASPHALTIC SURFACE TON	465.0120 ASPHALTIC SURFACE DRIVEWAYS AND FIELD ENTRANCES TON
50+54	-	79+48 EB	COUNTY LINE RD	1,116	2,655	1,093	--	--
		51+41	DRWY, LT	--	--	--	--	4
52+23	-	76+54	PATH, RT	--	--	--	454	--
		54+73	DRWY, LT	--	--	--	--	4
		59+63	DRWY, LT	--	--	--	--	3
		65+36	DRWY, LT	--	--	--	--	3
		65+66	DRWY, LT	--	--	--	--	3
		67+93	DRWY, LT	--	--	--	--	2
		73+19	DRWY, LT	--	--	--	--	3
		79+24 WB	DRWY, LT	--	--	--	--	5
90+31 EB	-	90+95 EB	PRIVATE DRIVE	18	43	18	--	--
			ROUNDABOUT	124	348	140	--	--
100+00 NB	-	101+42 NB	JEFFERS RD	78	219	88	--	--
		99+86 NB	DRWY, RT	--	--	--	--	4
110+72 NB	-	112+31 NB	CTH F	85	238	95	--	--
			TOTAL 0010	**1,421**	**3,503**	**1,434**	**454**	**31**

CONCRETE CURB & GUTTER

STATION	TO	STATION	LOCATION	601.0405 CONCRETE CURB & GUTTER 18-INCH TYPE A LF	601.0411 CONCRETE CURB & GUTTER 30-INCH TYPE D LF	601.0581 CONCRETE CURB & GUTTER 4-INCH SLOPED 30-INCH TYPE R LF	601.0600 CONCRETE CURB PEDESTRIAN LF	650.5500 CONSTRUCTION STAKING CURB GUTTER AND CURB & GUTTER LF	SPV.0090.01 SPECIAL (01. CONCRETE CURB & GUTTER 24-INCH TYPE D LF	SPV.0090.02 SPECIAL (02. CONCRETE CURB & GUTTER 4-INCH SLOPED 30-INCH TYPE D) LF
50+54	-	71+55	COUNTY LINE, LT	--	7	--	--	2,139	2,132	--
50+54	-	76+80	COUNTY LINE, RT	--	--	--	--	2,625	2,625	--
71+83	-	76+80	COUNTY LINE, LT	--	10	--	--	569	559	--
		77+00	COUNTY LINE RD, RT/PRIVATE DRWY	--	--	--	--	77	77	--
77+05 WB	-	111+38 SB	COUNTY LINE, LT/CTH F, LT	--	3	--	--	427	424	--
77+07 EB	-	100+00 NB	COUNTY LINE, RT/JEFFERS, LT	--	--	--	--	575	575	--
			SAFETY ISLAND WEST	--	--	--	19	105	86	--
			ROUNDABOUT	230	--	336	--	566	--	--
			SAFETY ISLAND EAST	--	--	--	--	27	--	
99+65 NB	-	90+38 EB	JEFFERS RD/PRIVATE DRWY	--	--	--	--	292	292	--
			SAFETY ISLAND SOUTH	--	--	--	23	137	114	--
			TRUCK APRON SOUTH	--	--	--	--	79	--	79
			SAFETY ISLAND NORTH	--	--	--	--	114	114	--
			TRUCK APRON NORTH	--	--	--	--	76	--	76
90+41 WB	-	111+29 NB	PRIVATE DRWY/CTH F	--	--	--	--	176	176	--
			TOTAL 0010	**230**	**20**	**336**	**42**	**7,984**	**7,174**	**155**

CONCRETE TRUCK APRON

LOCATION	405.0100 COLORING CONCRETE WISDOT RED CY	415.2010 CONCRETE TRUCK APRON 12-INCH SY
ROUNDABOUT	165	494
TRUCK APRON SOUTH	10	29
TRUCK APRON NORTH	8	25
TOTAL 0010	**183**	**548**

ALL ITEMS ON THIS SHEET ARE CATEGORY 0010 UNLESS OTHERWISE NOTED

3

CONCRETE ITEMS

STATION	TO	STATION	LOCATION	602.0410 CONCRETE SIDEWALK 5-INCH SF	602.0505 CURB RAMP DETECTABLE WARNING FIELD YELLOW SF	602.0810 CONCRETE DRIVEWAY 6-INCH SY	650.9000 CONSTRUCTION STAKING CURB RAMPS EACH	650.9500.01 CONSTRUCTION STAKING SIDEWALK (PROJECT) (01. 7995-02-74) EACH
		51+41	DRWY, LT	--	--	10	--	--
		52+16	RT	200	20	--	1	--
		52+16	LT	69	10	--	1	--
		54+73	DRWY, LT	--	--	11	--	--
		59+63	DRWY, LT	--	--	10	--	--
		65+36	DRWY, LT	--	--	12	--	--
		65+66	DRWY, LT	--	--	12	--	--
		67+93	DRWY, LT	--	--	10	--	--
71+88	-	76+72	LT	2,706	20	--	2	--
		73+19	DRWY, LT	--	--	16	--	--
76+54	-	76+74	RT	275	10	--	1	--
77+13 WB	-	79+11 WB	LT	1,390	10	--	1	--
77+14 EB	-	100+00 NB	RT	5,573	32	--	2	--
		79+24 WB	DRWY, LT	--	--	64	--	--
		79+63 WB	LT	347	16	--	1	--
			SAFETY ISLAND WEST	452	32	--	1	--
99+65 NB	-	101+77 NB	RT	1,149	16	--	1	--
		99+86 NB	DRWY, RT	--	--	43	--	--
			SAFETY ISLAND SOUTH	618	32	--	1	--
			SAFETY ISLAND EAST	70	--	--	--	--
			SAFETY ISLAND NORTH	601	--	--	--	--
			PROJECT LIMITS	--	--	--	--	1
			TOTAL 0010	**13,450**	**198**	**188**	**12**	**1**

RIPRAP & GEOTEXTILE

STATION	LOCATION	606.0100 RIPRAP LIGHT CY	606.0200 RIPRAP MEDIUM CY	645.0120 GEOTEXTILE TYPE HR SY	645.0130 GEOTEXTILE TYPE R SY
64+61	RT	--	5	19	--
9+15 AR	RT	3	--	--	12
	TOTAL 0010	**3**	**5**	**19**	**12**

WATER

LOCATION	624.0100 WATER MGAL
DUST CONTROL	190
COMPACTION	65
TOTAL 0010	**255**

CONCRETE MEDIAN SLOPED NOSE

LOCATION	620.0300 CONCRETE MEDIAN SLOPED NOSE SF	TYPE
SAFETY ISLAND WEST	84	(1) TYPE 1, (2) TYPE 2
SAFETY ISLAND SOUTH	77	(1) TYPE 1, (2) TYPE 2
SAFETY ISLAND EAST	65	(1) TYPE 1, (2) TYPE 2
SAFETY ISLAND NORTH	77	(1) TYPE 1, (2) TYPE 2
TOTAL 0010	**303**	

EROSION CONTROL ITEMS

STATION	TO	STATION	LOCATION	628.1504 SILT FENCE LF	628.1520 SILT FENCE MAINTENANCE LF	628.2008 EROSION MAT URBAN CLASS I TYPE B SY	628.7504 TEMPORARY DITCH CHECKS LF	628.7555 CULVERT PIPE CHECKS EACH
50+54	-	76+67	RT	--	--	1,555	--	--
50+54	-	71+52	LT	--	--	895	--	--
53+50	-	58+75	LT	--	--	325	108	--
54+25	-	70+00	RT	1,580	1,580	--	--	--
		54+73	LT	--	--	--	--	1
		59+63	LT	--	--	--	--	3
65+80	-	67+85	LT	210	210	--	--	--
		71+40	LT	--	--	--	--	3
71+85	-	76+67	LT	--	--	300	--	--
72+25	-	76+75	RT	450	450	--	--	--
72+25	-	76+50	LT	410	410	--	--	--
		73+19	LT	--	--	--	--	2
		9+15 AR	LT	--	--	--	--	2
77+18 EB	-	80+05 EB	RT	290	290	--	--	--
77+16 WB	-	110+50 SB	LT	338	338	--	--	--
77+20 EB	-	100+00 NB	RT	--	--	395	--	--
77+18 WB	-	111+30 SB	LT	--	--	350	--	--
99+65 NB	-	90+39 EB	RT	--	--	195	--	--
90+50 WB	-	112+30 NB	RT	260	260	--	--	--
90+41 WB	-	111+29 NB	RT	--	--	80	--	--
100+00 NB	-	90+72 EB	RT	330	330	--	--	--
			ROUNDABOUT	--	--	430	--	--
			UNDISTRIBUTED	940	940	1,050	27	3
			TOTAL 0010	**4,808**	**4,808**	**5,575**	**135**	**14**

ALL ITEMS ON THIS SHEET
ARE CATEGORY 0010
UNLESS OTHERWISE NOTED

3

INLET PROTECTION

STRUCTURE #	STATION	LOCATION	628.7005 INLET PROTECTION TYPE A EACH	628.7010 INLET PROTECTION TYPE B EACH	628.7015 INLET PROTECTION TYPE C EACH	628.7020 INLET PROTECTION TYPE D EACH
A6.1	55+05	LT	1	--	1	--
A6	55+05	LT	1	--	--	--
A6.2	55+05	RT	1	--	1	--
A5.1	58+50	LT	1	--	1	--
A5	58+50	LT	1	--	--	--
A5.2	58+50	RT	1	--	1	--
A4.1	61+48	LT	1	--	1	--
A4	61+48	LT	1	--	--	--
A4.2	61+48	RT	1	--	1	--
A3.2	64+42	LT	1	--	--	1
A2.1	64+42	RT	1	--	--	1
A3.3	64+61	LT	1	--	--	--
A3.1	64+61	LT	1	--	--	1
A3	64+61	LT	1	--	--	--
A2	64+61	RT	1	--	--	1
B8.1	71+25	LT	1	--	1	--
B8	71+25	LT	1	--	--	--
B8.2	71+26	RT	1	--	1	--
EX	5+48 AM	RT	--	--	1	--
EX	5+48 AM	LT	--	--	1	--
B7.1	76+50	LT	1	--	1	--
B7	76+50	LT	1	--	--	--
B7.2	76+51	RT	1	--	1	--
B5.2	78+96 WB	LT	1	--	1	--
B6	78+97 EB	RT	1	--	1	--
B5.1	79+52 WB	LT	1	--	--	1
B5	79+49 EB	RT	1	--	--	1
B1.1	101+22 SB	LT	1	--	1	--
B1	101+19 NB	LT	1	--	--	--
B2	101+18 NB	RT	1	--	1	--
B3	101+18 NB	RT	1	1	--	--
B4	11+25 RA	LT	1	1	--	--
B4.1	11+41 RA	LT	1	1	--	--
B4.2	90+11 EB	RT	1	--	1	--
B4.3	12+23 RA	LT	1	--	1	--
B4.4	110+70 NB	RT	1	--	1	--
B4.5	110+74 SB	LT	1	--	1	--
	UNDISTRIBUTED		9	2	10	4
		TOTAL 0010	**44**	**5**	**30**	**10**

MOBILIZATIONS EROSION CONTROL

LOCATION	628.1905 MOBILIZATIONS EROSION CONTROL EACH	628.1910 MOBILIZATIONS EMERGENCY EROSION CONTROL EACH
PROJECT LIMITS	3	4
TOTAL 0010	**3**	**4**

RESTORATION ITEMS

STATION	TO	STATION	LOCATION	625.0100 TOPSOIL SY	627.0200 MULCHING SY	629.0210 FERTILIZER TYPE B CWT	630.0120 SEEDING MIXTURE NO. 20 LB	630.0140 SEEDING MIXTURE NO. 40 LB	630.0170 SEEDING MIXTURE NO. 70 LB	630.0200 SEEDING TEMPORARY LB	630.0400 SEEDING NURSE CROP LB	630.0500 SEED WATER MGAL
50+54	-	76+67	RT	5,150	3,590	3.2	164.6	67.1	--	49.4	--	116
50+54	-	71+52	LT	2,425	1,530	1.5	85.9	23.2	--	25.8	--	54
71+85	-	76+67	LT	870	575	0.5	16.7	22.4	--	5.0	--	19
77+20 EB	-	100+00 NB	RT	720	330	0.5	14.7	17.6	--	4.4	--	16
91+00 WB	-	112+28 SB	LT	640	305	0.4	--	28.6	--	--	--	14
99+65 NB	-	90+39 EB	RT	505	305	0.3	17.6	5.1	--	5.3	--	11
91+00 WB	-	112+31 NB	RT	425	345	0.3	19.0	--	--	5.7	--	9
			ROUNDABOUT	430	--	0.3	--	--	1.6	5.8	3.1	10
			UNDISTRIBUTED	2,790	1,745	2.0	79.5	41.0	0.4	25.6	0.9	63
			TOTAL 0010	**13,955**	**8,725**	**9**	**398**	**205**	**2**	**127**	**4**	**312**

ALL ITEMS ON THIS SHEET
ARE CATEGORY 0010
UNLESS OTHERWISE NOTED

SIGNS TYPE II

STATION	LOCATION	SIGN CODE	SIZE (LxW) INCHES	637.2210 SIGNS TYPE II REFLECTIVE H SF	637.2230 SIGNS TYPE II REFLECTIVE F SF	638.2102 MOVING SIGNS TYPE II EACH	638.2602 REMOVING SIGNS TYPE II EACH	638.3000 REMOVING SMALL SIGN SUPPORTS EACH	SPV.0060.23 SPECIAL (23. POSTS STEEL U-CHANNEL 12-FT) EACH	SPV.0060.24 SPECIAL (24. POSTS STEEL U-CHANNEL 10-FT) EACH	SPV.0060.25 SPECIAL (25. POSTS STEEL U-CHANNEL 4-FT) EACH	SPV.0060.26 SPECIAL (26. INSTALL BREAK OUT SIGNPOST COUPLER AND SLEEVE) EACH	SPV.0060.28 SPECIAL (28. POSTS STEEL U-CHANNEL 8-FT) EACH	MESSAGE
52+44	RT	--	--	--	--	--	1	1	--	--	--	--	--	ARROW
52+70	RT	--	--	--	--	--	1	1	--	--	--	--	--	ARROW
70+03	RT	--	--	--	--	--	1	1	--	--	--	--	--	STOP AHEAD
71+50	ASPEN MEADOW	--	--	--	--	1	--	1	--	1	1	--	--	STOP (71+50)
72+00	LT	R9-3A	24x24	4.00	--	--	--	--	--	--	1	--	1	
		R9-3BL	18x12	1.50	--	--	--	--	--	--	--	--	--	(SHARES POST)
76+34	LT	--	--	--	--	1	--	1	--	1	1	--	--	35 MPH (74+78)
76+75	ASPEN RIDGE	--	--	--	--	1	--	1	--	1	1	--	--	STOP (76+75)
77+25 WB	LT	R9-3A	24x24	4.00	--	--	--	--	--	--	1	--	1	
		R9-3BL	18x12	1.50	--	--	--	--	--	--	--	--	--	(SHARES POST)
77+37	RT	W2-6	30x30	--	6.25	--	--	--	1	--	1	--	--	
		W13-1	18x18	--	2.25	--	--	--	--	--	--	--	--	15 MPH (SHARES POST)
79+55 EB	SAFETY ISLAND	R4-7	24x30	5.00	--	--	--	--	--	1	--	1	--	
79+90 WB	SAFETY ISLAND	D1-1	90x15	9.38	--	--	--	--	--	2	--	2	--	COUNTY LINE RD, RT ARROW
79+90 EB	SAFETY ISLAND	R1-2	36x31	3.88	--	--	--	--	--	1	--	1	--	
--	COUNTY LINE, RT	R1-2	36x31	3.88	--	--	--	--	--	1	1	--	--	
--	COUNTY LINE, RT	--	--	--	--	--	1	1	--	--	--	--	--	STOP
--	ROUNDABOUT CENTER	R6-1R	36x12	3.00	--	--	--	--	--	1	1	--	--	
--	ROUNDABOUT CENTER	R6-1R	36x12	3.00	--	--	--	--	--	1	1	--	--	
--	ROUNDABOUT CENTER	R6-1R	36x12	3.00	--	--	--	--	--	1	1	--	--	
--	ROUNDABOUT CENTER	R6-1R	36x12	3.00	--	--	--	--	--	1	1	--	--	
--	PRIVATE DR, LT	R1-2	36x31	3.88	--	--	--	--	--	1	1	--	--	
99+45 NB	JEFFERS, RT	W2-6	30x30	--	6.25	--	--	--	1	--	1	--	--	
		W13-1	18x18	--	2.25	--	--	--	--	--	--	--	--	15 MPH (SHARES POST)
101+50 NB	SAFETY ISLAND	R4-7	24x30	5.00	--	--	--	--	--	1	--	1	--	
101+96 SB	SAFETY ISLAND	D1-1	72x15	7.50	--	--	--	--	--	2	--	2	--	JEFFERS RD, RT ARROW
101+95 NB	SAFETY ISLAND	R1-2	36x31	3.88	--	--	--	--	--	1	--	1	--	
--	JEFFERS, RT	R1-2	36x31	3.88	--	--	--	--	--	1	1	--	--	
111+07 NB	RT	--	--	--	--	1	--	1	1	--	1	--	--	NORTH, F; CHIPPEWA CO
--	CTH F, LT	R1-2	36x31	3.88	--	--	--	--	--	1	1	--	--	
110+05 SB	SAFETY ISLAND	R1-2	36x31	3.88	--	--	--	--	--	1	--	1	--	
110+04 NB	SAFETY ISLAND	J13-1	24x45	7.50	--	--	--	--	1	--	--	1	--	F, RT ARROW
110+53 NB	SAFETY ISLAND	R4-7	24x30	5.00	--	--	--	--	--	1	--	1	--	
112+68 NB	LT	W2-6	30x30	--	6.25	--	--	--	1	--	1	--	--	
		W13-1	18x18	--	2.25	--	--	--	--	--	--	--	--	15 MPH (SHARES POST)
113+10 NB	RT	--	--	--	--	1	--	1	--	1	1	--	--	35 MPH (111+22 NB)
		TOTAL 0010		89.54	25.50	5	4	9	5	22	18	11	2	

ALL ITEMS ON THIS SHEET
ARE CATEGORY 0010
UNLESS OTHERWISE NOTED

3

3

TRAFFIC CONTROL

STAGE	IN SERVICE DAYS	#	643.0300 TRAFFIC CONTROL DRUMS DAY	#	643.0420 TRAFFIC CONTROL BARRICADES TYPE III DAY	#	643.0705 TRAFFIC CONTROL WARNING LIGHTS TYPE A DAY	#	643.0900 TRAFFIC CONTROL SIGNS DAY	#	643.1050 TRAFFIC CONTROL SIGNS PCMS DAY
7 DAYS PRIOR TO WORK	7	--	--	--	--	--	--	--	--	3	21
STAGE 1	90	20	1,800	27	2,430	41	3,690	24	2,160	--	--
STAGE 2	60	20	1,200	12	720	18	1,080	20	1,200	--	--
DETOUR	150	--	--	--	--	--	--	65	9,750	--	--
TEMP CROSSWALK	150	5	750	--	--	--	--	6	900	--	--
UNDISTRIBUTED			370		275		400		1,400	--	--
TOTAL 0010			**4,120**		**3,425**		**5,170**		**15,410**		**21**

TEMPORARY PEDESTRIAN CURB RAMP

LOCATION	DAYS	643.3350 TEMPORARY MARKING CROSSWALK REMOVABLE TAPE 6-INCH LF	644.1440 TEMPORARY PEDESTRIAN SURFACE MATTING SF	644.1601 TEMPORARY PEDESTRIAN CURB RAMP DAY	644.1605 TEMPORARY PEDESTRIAN DETECTABLE WARNING FIELD SF	644.1810 TEMPORARY PEDESTRIAN BARRICADE LF
CROSSWALK ON JEFFERS 50' PRIOR TO PROPOSED XCEL DRIVEWAY	150	48	60	300	20	71
TOTAL 0010		**48**	**60**	**300**	**20**	**71**

TRAFFIC CONTROL COVERING SIGNS TYPE II

LOCATION	643.0920 TRAFFIC CONTROL COVERING SIGNS TYPE II EACH	SIGN TO COVER
INT OF JEFFERS / STH 312	1	RT ARROW
UNDISTRIBUTED	4	
TOTAL 0010	**5**	

ALL ITEMS ON THIS SHEET
ARE CATEGORY 0010
UNLESS OTHERWISE NOTED

3

PAVEMENT MARKING EPOXY

STATION	TO	STATION	LOCATION	COLOR/DESCRIPTION	646.1020 MARKING LINE EPOXY 4-INCH LF	646.3020 MARKING LINE EPOXY 8-INCH LF	646.6120 MARKING STOP LINE EPOXY 18-INCH LF	646.6320 MARKING DOTTED EXTENSION EPOXY 18-INCH LF	646.7120 MARKING DIAGONAL EPOXY 12-INCH LF
52+50	-	78+77 EB	RT	WHITE/EDGELINE	2,617	--	--	--	--
52+50	-	78+60 WB	LT	WHITE/EDGELINE	2,453	--	--	--	--
50+50	-	76+93	C/L	DBL YELLOW/CENTERLINE	5,264	--	--	--	--
			ASPEN RIDGE DR		--	--	14	--	--
76+92 EB	-	79+53 EB		YELLOW/EDGELINE	522	--	--	--	104
78+77 EB	-	79+39 EB	RT	WHITE/EDGELINE EXT	16	--	--	--	--
78+60 WB	-	78+91 WB	LT	WHITE/EDGELINE EXT	8	--	--	--	--
100+00 NB	-	100+76 NB	RT	WHITE/EDGELINE	76	--	--	--	--
100+00 NB	-	101+04 SB	LT	WHITE/EDGELINE	103	--	--	--	--
100+76 NB	-	101+42 NB	RT	WHITE/EDGELINE EXT	17	--	--	--	--
101+04 SB	-	101+50 SB	LT	WHITE/EDGELINE EXT	12	--	--	--	--
100+00 NB	-	100+12 NB	C/L	DBL YELLOW/CENTERLINE	24	--	--	--	--
100+12 NB	-	101+46 NB		YELLOW/EDGELINE	269	--	--	--	--
110+64 NB	-	112+31 NB	RT	WHITE/EDGELINE	166	--	--	--	--
111+29 SB	-	112+28 SB	LT	WHITE/EDGELINE	91	--	--	--	--
110+69 SB	-	111+29 SB	LT	WHITE/EDGELINE EXT	18	--	--	--	--
110+67 NB	-	112+31 NB		YELLOW/EDGELINE	328	--	--	--	--
			WEST LEG	CHANNELIZING/DOTTED EDGE EXT	--	52	--	20	--
			SOUTH LEG	CHANNELIZING/DOTTED EDGE EXT	--	57	--	18	--
			EAST LEG	CHANNELIZING/DOTTED EDGE EXT	--	43	--	9	--
			NORTH LEG	CHANNELIZING/DOTTED EDGE EXT	--	55	--	18	--
			TOTAL 0010		**11,984**	**207**	**14**	**65**	**104**

MARKING CROSSWALK EPOXY TRANSVERSE LINE 6-INCH

LOCATION	646.7420 MARKING CROSSWALK EPOXY TRANSVERSE LINE 6-INCH LF
ASPEN RIDGE DR & COUNTY LINE RD	139
JEFFERS RD (SOUTH CROSSWALKS)	71
COUNTY LINE RD (WEST CROSSWALKS)	70
TOTAL 0010	**280**

MARKING CURB & ISLAND NOSE EPOXY

LOCATION	646.8120 MARKING CURB EPOXY LF	646.8220 MARKING ISLAND NOSE EPOXY EACH
WEST SAFETY ISLAND	10	1
SOUTH SAFETY ISLAND	10	1
NORTH SAFETY ISLAND	10	1
TOTAL 0010	**30**	**3**

CONSTRUCTION STAKING

STATION	TO	STATION	LOCATION	650.4500 CONSTRUCTION STAKING SUBGRADE LF	650.5000 CONSTRUCTION STAKING BASE LF	650.9920 CONSTRUCTION STAKING SLOPE STAKES LF
50+54	-	80+05 EB	COUNTY LINE RD	2,951	2,951	2,951
76+93 WB	-	80+06 WB	COUNTY LINE RD	313	313	313
90+00 EB	-	91+00 EB	PRIVATE DRWY	100	100	100
90+00 WB	-	90+65 WB	PRIVATE DRWY	65	65	65
10+00 RA	-	13+46 RA	ROUNDABOUT	346	346	346
100+00 NB	-	102+10 NB	JEFFERS RD	210	210	210
100+12 SB	-	102+14 SB	JEFFERS RD	202	202	202
110+00 NB	-	112+31 NB	CTH F	231	231	231
110+00 SB	-	112+28 SB	CTH F	228	228	228
			TOTAL 0010	**4,646**	**4,646**	**4,646**

CONSTRUCTION STAKING SUPPLEMENTAL CONTROL

PROJECT	650.9911.01 CONSTRUCTION STAKING SUPPLEMENTAL CONTROL (PROJECT) (01. 7995-02-74) EACH
7995-02-74	1
TOTAL 0010	**1**

SAWING

STATION	LOCATION	690.0150 SAWING ASPHALT LF	690.0250 SAWING CONCRETE LF
50+54	COUNTY LINE RD	39	4
51+41	LT	13	--
54+72	LT	15	--
59+63	LT	13	--
67+93	LT	13	--
	ASPEN MEADOW CT	28	11
73+19	LT	12	--
	ASPEN RIDGE DR	26	17
79+24 WB	LT	27	--
92+00 EB	PRIVATE DRWY	15	--
100+00 NB	JEFFERS RD	69	19
112+31 NB	CTH F	32	--
	TOTAL 0010	**302**	**51**

ALL ITEMS ON THIS SHEET
ARE CATEGORY 0010
UNLESS OTHERWISE NOTED

CONSTRUCTION STAKING ELECTRICAL INSTALLATIONS

LOCATION	650.8501 EACH
PROJECT (7995-02-74)	1
TOTAL	1

CONDUIT RIGID NONMETALLIC SCHEDULE 40 AND ELECTRICAL WIRE LIGHTING

FROM	TO	652.0235 3-INCH LF	652.0225 2-INCH LF	655.0620 8 AWG LF
LCC A	LPB-1	14	-	132
LPB-1	A-1	-	79	285
A-1	LPB-2	-	8	69
LPB-2	LPB-3	-	57	216
LPB-3	A-2	-	35	255
A-2	A-4	-	95	333
A-4	LPB-4	-	11	78
LPB-4	LPB-5	-	56	213
LPB-5	A-5	-	45	305
A-5	A-7	-	68	-
A-7	LPB-6	-	10	75
LPB-6	LPB-7	-	30	135
LPB-7	A-8	-	43	177
A-8	A-9	-	140	468
A-9	LPB-8	-	27	126
LPB-8	LPB-9	-	58	219
LPB-9	A-11	-	42	290
A-11	LPB-1	-	32	141
LPB-3	A-3		122	414
LPB-5	A-6		106	366
LPB-9	A-10		111	381
CONDUIT STUBS		-	30	-
		14	1205	4678

PULL BOXES NON-CONDUCTIVE 24X42-INCH

DESCRIPTION	STATION, OFFSET	653.0164 EACH
LPB-1	10+51.74 RA, 52.8' RT	1
LPB-2	79+35.12 EB, 21.7' RT	1
LPB-3	79+48.61 WB, 22.7' LT	1
LPB-4	110+61.61 SB, 25.2' LT	1
LPB-5	110+55.84 NB, 21.3' R	1
LPB-6	90+42.03 WB, 15.1' LT	1
LPB-7	90+43.97 EB, 13.8' RT	1
LPB-8	101+23.36 NB, 21.4' R	1
LPB-9	101+46.52 SB, 23.2' LT	1
TOTAL		9

LIGHTING CONTROL CABINET AND BASES

DESCRIPTION	STATION, OFFSET	CONCRETE CONTROL CABINET BASES TYPE L24 654.0224 EACH	ELECTRICAL SERVICE METER BREAKER PEDESTAL (LCC A) 656.0201 EACH	LIGHTING CONTROL CABINETS 120/240 24-INCH 659.2124 EACH
LCC A	10+50.45 RA, 59.6' RT	1	1	1
TOTALS		1	1	1

ALL ITEMS ON THIS SHEET ARE CATEGORY 0010 UNLESS OTHERWISE NOTED

ALL ITEMS ARE CATEGORY 0010 UNLESS OTHERWISE STATED

3

CONCRETE BASES TYPE 5

DESCRIPTION	STATION, OFFSET	654.0105 EACH
A-1	79+42.97 EB, 22.9' RT	1
A-2	79+85.53 WB, 25.8' LT	1
A-3	78+26.27 WB, 20.6' LT	1
A-4	110+50.21 SB, 26.5' LT	1
A-5	110+11.22 NB, 24.2' RT	1
A-6	111+64.39 NB, 23.0' RT	1
A-7	90+33.15 WB, 15.8' LT	1
A-8	11+85.48 RA, 27.2' RT	1
A-9	101+50.16 NB, 30.9' RT	1
A-10	100+32.10 SB, 37.0' LT	1
A-11	101+88.51 SB, 27.7' LT	1
TOTAL		11

LIGHTING UNITS AND ELECTRICAL WIRE LIGHTING

DESCRIPTION	STATION, OFFSET	TRANSFORMER BASES BREAKAWAY 11 1/2-INCH BOLT CIRCLE 657.0255 EACH	POLES TYPE 5-ALUMINUM 657.0322 EACH	LUMINAIRE ARMS SINGLE MEMBER 4 1/2-INCH CLAMP 6-FT 657.0610 LF	LUMINAIRES UTILITY LED A 659.1115 EACH	ELECTRICAL WIRE LIGHTING 12 AWG 655.0610 LF
A-1	79+42.97 EB, 22.9' RT	1	1	1	1	159
A-2	79+85.53 WB, 25.8' LT	1	1	1	1	159
A-3	78+26.27 WB, 20.6' LT	1	1	1	1	159
A-4	110+50.21 SB, 26.5' LT	1	1	1	1	159
A-5	110+11.22 NB, 24.2' RT	1	1	1	1	159
A-6	111+64.39 NB, 23.0' RT	1	1	1	1	159
A-7	90+33.15 WB, 15.8' LT	1	1	1	1	159
A-8	11+85.48 RA, 27.2' RT	1	1	1	1	159
A-9	101+50.16 NB, 30.9' RT	1	1	1	1	159
A-10	100+32.10 SB, 37.0' LT	1	1	1	1	159
A-11	101+88.51 SB, 27.7' LT	1	1	1	1	159
TOTALS		11	11	11	11	1,590

3

ALL ITEMS ON THIS SHEET
ARE CATEGORY 0010
UNLESS OTHERWISE NOTED

ALL ITEMS ARE CATEGORY 0010 UNLESS OTHERWISE STATED

3

STORM SEWER PIPES

FROM	-	TO	LOCATION	608.0412 REINFORCED CONCRETE CLASS IV 12-INCH LF	608.0418 REINFORCED CONCRETE CLASS IV 18-INCH LF	608.0424 REINFORCED CONCRETE CLASS IV 24-INCH LF	608.0430 REINFORCED CONCRETE CLASS IV 30-INCH LF	608.3012 STORM SEWER PIPE CLASS III-A 12-INCH LF	608.3024 STORM SEWER PIPE CLASS III-A 24-INCH LF	608.3030 STORM SEWER PIPE CLASS III-A 30-INCH LF	JOINT TIES* EACH	INLET ELEVATION	DISCHARGE ELEVATION	SLOPE FT/FT
A2	-	A1	CO LINE							38	9	918.52	918.14	0.0100
A2.1	-	A2	CO LINE					18			9	921.40	921.22	0.0100
A3	-	A2	CO LINE							25		918.87	918.62	0.0100
A3.1	-	A3	CO LINE						9			919.46	919.37	0.0100
A3.2	-	A3.1	CO LINE					18				920.92	920.54	0.0206
A3.3	-	A3.1	CO LINE						13			919.69	919.56	0.0100
A4	-	A3	CO LINE						313			924.69	919.56	0.0164
A4.1	-	A4	CO LINE					9				925.88	925.79	0.0100
A4.2	-	A4	CO LINE					25				926.04	925.79	0.0100
A5	-	A4	CO LINE						298			934.36	924.79	0.0321
A5.1	-	A5	CO LINE					9				935.55	935.46	0.0100
A5.2	-	A5	CO LINE					25				935.71	935.46	0.0100
A6	-	A5	CO LINE						345			947.08	934.47	0.0366
A6.1	-	A6	CO LINE					9				948.17	948.08	0.0100
A6.2	-	A6	CO LINE					25				948.33	948.08	0.0100
B1	-	94	CO LINE									887.01	886.19	0.0047
B1.1	-	B1	CO LINE	21								888.93	888.51	0.0200
B2	-	B1	CO LINE				20					887.04	887.01	0.0017
B3	-	B2	CO LINE				16					887.08	887.04	0.0021
B4	-	B3	CO LINE				106					887.26	887.08	0.0017
B4.1	-	B4	CO LINE			16						887.81	887.78	0.0017
B4.2	-	B4.1	CO LINE			76						888.04	887.91	0.0017
B4.3	-	B4.2	CO LINE		42							888.65	888.54	0.0025
B4.4	-	B4.3	CO LINE	100								889.59	889.15	0.0044
B4.4	-	B4.5	CO LINE	42								889.87	889.69	0.0044
B5	-	B4	CO LINE				153					887.52	887.26	0.0017
B5.1	-	B5	CO LINE		43							888.59	888.37	0.0050
B5.2	-	B5.1	CO LINE	56								889.37	889.09	0.0050
B6	-	B5	CO LINE				51					887.61	887.52	0.0017
B7	-	B6	CO LINE						249			889.36	888.11	0.0050
B7.1	-	B7	CO LINE					9				892.58	892.40	0.0200
B7	-	B7.2	CO LINE					25				892.90	892.65	0.0100
B8	-	B7	CO LINE						526			918.33	890.74	0.0525
B8.1	-	B8	CO LINE					9				919.59	919.50	0.0100
B8.2	-	B8	CO LINE					25				919.75	919.50	0.0100
			TOTALS	219	85	92	346	206	1753	63	18			

*NON-BID ITEM: FOR INFORMATION ONLY

PIPE UNDERDRAIN 6-INCH

STATION	TO	STATION	LOCATION	310.0115 BASE AGGREGATE OPEN GRADED CY	612.0106 PIPE UNDERDRAIN 6-INCH LF	645.0111 GEOTEXTILE TYPE DF SCHEDULE A SY
10+00	-	13+45	ROUNDABOUT	12	336	150
			TOTAL 0010	12	336	150

ALL ITEMS ON THIS SHEET
ARE CATEGORY 0010
UNLESS OTHERWISE NOTED

STORM SEWER STRUCTURES

STRUCTURE	STATION	OFFSET*	LOCATION	522.1030 APRON ENDWALLS FOR CULVERT PIPE REINFORCED CONCRETE 30-INCH EACH	611.0530 MANHOLE COVERS TYPE J EACH	611.0624 INLET COVERS EACH	611.0642 INLET COVERS TYPE EACH	611.0652 INLET COVERS EACH	611.2004 MANHOLES 4-FT DIAMETER EACH	611.2005 MANHOLES 5-FT DIAMETER EACH	611.2006 MANHOLES 6-FT DIAMETER EACH	611.3004 INLETS 4-FT DIAMETER EACH	611.3230 INLETS 2X3-FT EACH	611.3901 INLETS MEDIAN I EACH	611.8110 ADJUSTING MANHOLE EACH	611.8115 ADJUSTING INLET COVERS EACH	650.4000 CONSTRUCTION STAKING STORM SEWER EACH	RIM** ELEVATION	INVERT*** ELEVATION	DEPTH**** FT
A1	64+60.61	55.13' RT	CO_LINE	1													1		918.14	
A2	64+60.68	17.00' RT	CO_LINE			1				1							1	926.28	918.52	7.05
A2.1	64+42.33	17.00' RT	CO_LINE			1							1				1	926.31	921.40	4.07
A3	64+60.67	8.00' LT	CO_LINE		1					1							1	926.48	918.87	6.66
A3.1	64+60.67	17.00' LT	CO_LINE			1				1							1	926.28	919.46	6.07
A3.2	64+42.32	17.00' LT	CO_LINE			1							1				1	926.31	920.92	4.55
A3.3	64+60.56	30.03' LT	CO_LINE				1							1			1	925.51	919.69	6.07
A4	61+47.60	8.00' LT	CO_LINE		1				1								1	931.11	924.69	5.43
A4.1	61+47.61	17.00' LT	CO_LINE			1							1				1	930.91	925.88	4.19
A4.2	61+47.60	17.00' RT	CO_LINE			1							1				1	930.91	926.04	4.03
A5	58+49.65	8.00' LT	CO_LINE		1				1								1	940.42	934.36	5.07
A5.1	58+49.66	17.00' LT	CO_LINE			1							1				1	940.22	935.55	3.83
A5.2	58+49.65	17.00' RT	CO_LINE			1							1				1	940.22	935.71	3.67
A6	55+05.09	8.00' LT	CO_LINE		1				1								1	953.45	947.08	5.38
A6.1	55+05.10	17.00' LT	CO_LINE			1							1				1	953.25	948.17	4.25
A6.2	55+05.10	17.00' RT	CO_LINE			1							1				1	953.25	948.33	4.09
B1	101+18.99	3.17' LT	NB_S_LEG		1					1							1	893.04	887.01	5.08
B1.1	101+21.59	17.80' LT	SB_S_LEG			1							1				1	892.71	888.93	2.94
B2	101+18.19	17.17' RT	NB_S_LEG			1				1							1	892.63	887.04	4.88
B3	101+17.71	31.23' RT	NB_S_LEG		1						1						1	893.45	887.07	5.43
B4	11+24.91	1.30' LT	CIRCLE					1		1							1	893.12	887.25	5.07
B4.1	11+41.18	1.30' LT	CIRCLE					1				1					1	893.14	887.81	4.50
B4.2	90+11.21	12.49' RT	EB_E_LEG			1						1					1	893.24	888.05	4.44
B4.3	12+25.78	26.19' RT	CIRCLE			1						1					1	893.77	888.67	4.32
B4.4	110+69.55	17.20' RT	NB_N_LEG			1							1				1	893.34	889.42	2.92
B4.5	110+73.98	16.58' LT	SB_N_LEG			1							1				1	893.48	889.87	2.77
B4X	10+14.28	12.03' LT	CIRCLE		1					1							1	894.26	887.39	5.93
B5	79+48.91	17.05' RT	EB_W_LEG			1				1							1	893.30	887.52	5.08
B5.1	79+51.65	15.95' LT	WB_W_LEG			1							1				1	893.31	888.59	3.94
B5.2	78+95.62	12.98' LT	WB_W_LEG			1							1				1	893.67	889.37	3.47
B6	78+97.17	18.68' RT	EB_W_LEG			1						1					1	893.53	887.61	5.22
B7	76+45.31	8.00' LT	CO_LINE		1					1							1	898.12	889.36	7.76
B7.1	76+45.31	17.00' LT	CO_LINE			1							1				1	897.92	892.58	4.51
B7.2	76+45.30	17.00' RT	CO_LINE			1							1				1	897.92	892.65	4.44
B8	71+74.91	8.00' LT	CO_LINE		1				1								1	925.68	918.33	6.35
B8.1	71+74.89	17.00' LT	CO_LINE			1							1				1	925.48	919.59	5.05
B8.2	71+75.98	17.00' RT	CO_LINE			1							1				1	925.47	919.75	4.84
R1	71+53.64	47.56' LT	CO_LINE													1		923.80	918.80	4.50
R2	71+83.80	47.53' LT	CO_LINE													1		923.54	918.54	4.50
R3	76+81.40	47.41' LT	CO_LINE												1			897.30	892.30	4.50
			TOTALS	1	9	24	1	2	4	9	1	4	17	1	1	2	37			

REMARKS:
*STATIONS AND OFFSETS ARE TO CENTER OF STRUCTURE
**RIM ELEV S AT THE INLET COVER FLOWLINE LOCATION
***FOR STRUCTURES WITH SUMPS, THE INVERT ELEVATION IS THE ELEVATION OF THE SUMP. FOR STRUCTURES WITHOUT SUMPS, THE INVERT ELEVATION IS THE ELEVATION OF THE LOWEST PIPE FLOW LINE
****DEPTH = RIM ELEV - TOP OF STRUCTURE BASE ELEV - COVER HEIGHT - 6-INCH ADJUSTMENT RING HEIGHT

ALL ITEMS ON THIS SHEET
ARE CATEGORY 0010
UNLESS OTHERWISE NOTED

3

SANITARY MANHOLES

DESCRIPTION	STATION	OFFSET	4-FOOT MANHOLE MASONRY - SANITARY SEWER SPV.0200.10 VF	MANHOLE CASTING TYPE A LID SPV.0060.11 EACH	MANHOLE CHIMNEY SEAL SPV.0060.10 EACH	CONSTRUCTION STAKING SANITARY STRUCTURE* SPV.0060.14 EACH
SAN MH 1	53+00	0'	22.9	1	1	1
SAN MH 2	56+00	0'	20.7	1	1	1
SAN MH 3	55+41	27' RT	22.6	1	1	1
SAN MH 4	60+00	0'	14.3	1	1	1
SAN MH 5	64+00	0'	11.9	1	1	1
SAN MH 6	68+00	0'	22.8	1	1	1
SAN MH 7	72+10	0'	18.8	1	1	1
TOTAL			134	7	7	7

*ADDITIONAL QUANTITIES SHOWN ELSEWHERE

SANITARY SERVICES

LOCATION	4-INCH SANITARY SERVICE PVC SPV.0090.11 LF	SANITARY SEWER SERVICE WYE, 8-INCH X 4-INCH SPV.0060.12 EACH	CONSTRUCTION STAKING SANITARY STRUCTURE* SPV.0060.14 EACH
54+28	36	1	1
56+08	36	1	1
57+88	35	1	1
59+74	35	1	1
61+52	35	1	1
63+33	34	1	1
66+05	33	1	1
67+57	33	1	1
69+50	34	1	1
TOTALS	311	9	9

*ADDITIONAL QUANTITIES SHOWN ELSEWHERE

GATE VALVE & BOX

LOCATION	OFFSET	6-INCH SPV.0060.15 EACH	CONSTRUCTION STAKING WATER MAIN STRUCTURES* SPV.0060.22 EACH
57+00	11.0 RT	1	1
62+00	10.7 RT	1	1
66+50	11.0 RT	1	1
71+50	41.4 RT	1	1
TOTAL		4	4

*ADDITIONAL QUANTITIES SHOWN ELSEWHERE

GATE VALVE & BOX RESILIENT WEDGE

STATION	OFFSET	16-INCH SPV.0060.17 EACH	CONSTRUCTION STAKING WATER MAIN STRUCTURES* SPV.0060.22 EACH
57+08.0	8.0 RT	1	1
62+07.0	8.0 RT	1	1
66+57.0	8.0 RT	1	1
TOTAL		3	3

*ADDITIONAL QUANTITIES SHOWN ELSEWHERE

SANITARY SEWER

LOCATION	STATION	8-INCH SANITARY SEWER PVC SDR 26 SPV.0090.10 LF	CONSTRUCTION STAKING SANITARY PIPE SPV.0090.12 LF
SAN MH 1- SAN MH 2	53+00 - 56+00	300	300
SAN MH 2- SAN MH 3	56+00 - 55+41	65	65
SAN MH 3	55+41	20	20
SAN MH 2- SAN MH 4	56+00 - 60+00	401	401
SAN MH 4- SAN MH 5	60+00 - 64+00	400	400
SAN MH 5- SAN MH 6	64+00 - 68+00	401	401
SAN MH 6- SAN MH 7	68+00 - 72+10	410	410
SAN MH 7- EX SAN MH 8	72+10 - 73+22	124	124
TOTAL		2121	2121

CONNECT TO EXISTING SANITARY

STATION	OFFSET	CONNECT TO EXISTING SANITARY SPV.0060.13 EACH	CONSTRUCTION STAKING SANITARY STRUCTURE* SPV.0060.14 EACH
73+22	50.8 RT	1	1
TOTAL		1	1

*ADDITIONAL QUANTITIES SHOWN ELSEWHERE

CONNECT TO EXISTING WATER MAIN

LOCATION	CONNECT TO EXISTING WATER MAIN SPV.0060.21 EACH	CONSTRUCTION STAKING WATER MAIN STRUCTURES* SPV.0060.22 EACH
52+13.3	1	1
71+58.2	1	1
TOTAL	2	2

*ADDITIONAL QUANTITIES SHOWN ELSEWHERE

ALL ITEMS ON THIS SHEET
ARE CATEGORY 0020
UNLESS OTHERWISE NOTED

3

WATER MAIN

LOCATION	OFFSET	8-INCH WATER MAIN DI SPV.0090.13 LF	CONSTRUCTION STAKING WATER MAIN PIPE* SPV.0090.18 LF
55+33.9	38.5 RT	31	31
TOTAL		31	31

*ADDITIONAL QUANTITIES SHOWN ELSEWHERE

WATER MAIN

LOCATION	OFFSET	12-INCH WATER MAIN DI SPV.0090.14 LF	CONSTRUCTION STAKING WATER MAIN PIPE* SPV.0090.18 LF
71+42.2	44.6 RT	11	11
71+50.1	41.4 RT	9	9
TOTAL		20	20

*ADDITIONAL QUANTITIES SHOWN ELSEWHERE

WATER MAIN

LOCATION	OFFSET	16-INCH WATER MAIN DI SPV.0090.15 LF	CONSTRUCTION STAKING WATER MAIN PIPE* SPV.0090.18 LF
52+13.3 - 55+33.9	8 RT	321	321
55+33.9 - 57+00	8 RT	167	167
57+00 - 62+00	8 RT	500	500
62+00 - 66+50	8 RT	451	451
66+50 - 71+02	8.5 RT	452	452
71+02 - 71+39.2	8.5-44.7 RT	53	53
71+39.2 - 71+42.2	44.6 RT	4	4
TOTAL		1948	1948

*ADDITIONAL QUANTITIES SHOWN ELSEWHERE

WATER MAIN FITTINGS

LOCATION	OFFSET	8-INCH PLUG	16X8-INCH TEE	16X12-INCH REDUCER	16-INCH 45° BEND	16-INCH 22.5° BEND	16X6-INCH TEE	12X6-INCH TEE	CONSTRUCTION STAKING WATER MAIN STRUCTURES* SPV.0060.22 EACH
		SPV.0085.10							
55+33.9	7.8 RT	-	1	-	-	-	-	-	1
55+33.9	38.5 RT	1	-	-	-	-	-	-	1
57+00	8 RT	-	-	-	-	-	1	-	1
62+00	8 RT	-	-	-	-	-	1	-	1
66+50	8 RT	-	-	-	-	-	1	-	1
71+01.5	8' RT	-	-	-	1	-	-	-	1
71+39.2	44.7' RT	-	-	-	-	-	-	-	0
71+42.2	44.6 RT	-	-	1	-	-	-	-	1
71+50	44.5' RT	-	-	-	-	-	-	1	1
SUBTOTAL EACH		1	1	1	1	0	3	1	
LB/EACH		50	248	125	202		323	115	
SUBTOTAL LB		50	248	125	202	0	969	115	
WATER MAIN FITTINGS DUCTILE IRON TOTAL								1709	
CONSTRUCTION STAKING WATER MAIN STRUCTURES SUBTOTAL									8

*ADDITIONAL QUANTITIES SHOWN ELSEWHERE

HYDRANT LEAD

LOCATION	OFFSET	6-INCH HYDRANT LEAD SPV.0090.16 LF
57+00	21.5 RT	14
62+00	21.5 RT	14
66+50	21.5 RT	14
71+50	36.4 RT	9
TOTAL		51

*ADDITIONAL QUANTITIES SHOWN ELSEWHERE

WATER SERVICES

LOCATION	TAP AND CORPORATION STOP 1-INCH SPV.0060.19 EACH	CURB STOP AND BOX 1-INCH SPV.0060.20 EACH	WATER SERVICE COPPER TYPE K 1-INCH SPV.0090.17 LF	CONSTRUCTION STAKING WATER MAIN STRUCTURES* SPV.0060.22 EACH
54+36	1	1	44	1
56+16	1	1	44	1
57+96	1	1	43	1
59+80	1	1	43	1
61+60	1	1	43	1
63+40	1	1	42	1
66+10	1	1	42	1
67+62	1	1	43	1
69+55	1	1	43	1
TOTALS	9	9	387	9

*ADDITIONAL QUANTITIES SHOWN ELSEWHERE

HYDRANTS

LOCATION	OFFSET	FIRE HYDRANT SPV.0060.18 EACH	CONSTRUCTION STAKING WATER MAIN STRUCTURES* SPV.0060.22 EACH
57+00	21.5 RT	1	1
62+00	21.5 RT	1	1
66+50	21.5 RT	1	1
71+50	36.4 RT	1	1
TOTAL		4	4

*ADDITIONAL QUANTITIES SHOWN ELSEWHERE

ALL ITEMS ON THIS SHEET
ARE CATEGORY 0020
UNLESS OTHERWISE NOTED

TRANSPORTATION PROJECT PLAT NO: 7995-02-73-4.01-AMENDMENT NO: 1

AMENDS PARCEL NO: 1 OF TRANSPORTATION PROJECT PLAT NO. 7995-02-73-4.02 RECORDED AS DOCUMENT NO: 1274465.

THAT PART OF LOT 1 OF CERTIFIED SURVEY MAP 3406, VOLUME 19, PAGE 124, DOCUMENT NUMBER 1165672 LOCATED IN THE FRACTIONAL NORTHEAST 1/4 OF THE NORTHEAST 1/4 AND THAT PART OF THE FRACTIONAL NORTHWEST 1/4 OF THE NORTHEAST 1/4 OF SECTION 1, TOWNSHIP 27 NORTH, RANGE 10 WEST, CITY OF EAU CLAIRE AND THAT PART OF OUTLOT 1 OF CERTIFIED SURVEY MAP 3406, VOLUME 19, PAGE 124, DOCUMENT NUMBER 1165672 LOCATED IN THE FRACTIONAL NORTHEAST 1/4 OF THE NORTHEAST 1/4 OF SECTION 1, TOWNSHIP 27 NORTH, RANGE 10 WEST, TOWN OF UNION, EAU CLAIRE COUNTY, WISCONSIN AND THAT PART OF THE SOUTHEAST 1/4 OF THE SOUTHEAST 1/4 OF SECTION 36, TOWNSHIP 28 NORTH, RANGE 10 WEST, TOWN OF WHEATON, CHIPPEWA COUNTY, WISCONSIN.

RELOCATION ORDER COUNTY LINE ROAD, C EAU CLAIRE, 2800 W OF JEFFERS ROAD TO JEFFERS ROAD, CHIPPEWA AND EAU CLAIRE COUNTIES

A PROPERLY ESTABLISH, LAY OUT, WIDEN, ENLARGE, EXTEND, CONSTRUCT, RECONSTRUCT, IMPROVE, OR MAINTAIN A PORTION OF THE HIGHWAY DESIGNATED ABOVE, THE CITY OF EAU CLAIRE DEEMS IT NECESSARY TO RELOCATE OR CHANGE SAID HIGHWAY AND ACQUIRE CERTAIN LANDS AND INTERESTS OR RIGHTS IN LANDS FOR THE ABOVE PROJECT.

TO EFFECT THIS CHANGE, PURSUANT TO AUTHORITY GRANTED UNDER SECTION 62.22, WISCONSIN STATUTES, THE CITY OF EAU CLAIRE HEREBY ORDERS THAT:

1. THAT PORTION OF SAID HIGHWAY AS SHOWN ON THIS PLAT IS LAID OUT AND ESTABLISHED TO THE LINES AND WIDTHS AS SO SHOWN FOR THE ABOVE PROJECT.
2. THE LANDS OR INTERESTS OR RIGHTS IN LANDS AS SHOWN ON THIS PLAT ARE REQUIRED BY THE CITY FOR THE ABOVE PROJECT AND SHALL BE ACQUIRED IN THE NAME OF THE CITY OF EAU CLAIRE, PURSUANT TO THE PROVISIONS OF SECTION 62.22, WISCONSIN STATUTES.

SCHEDULE OF LANDS AND INTERESTS REQUIRED

PARCEL NO.	OWNER(S)	INTEREST(S) REQUIRED	FEE R/W (ACRES)			TLE. AC.
			NEW	EXISTING	TOTAL	
1	CITY OF EAU CLAIRE	FEE	0.661	1.952	2.613	----
2	GATEWAY INDUSTRIAL PARK	FEE	0.026	0.050	0.076	----
3	KEVIN S. LINK AND JODI J. LINK	TLE	----	----	----	0.049
50	XCEL ENERGY - ELECTRIC	RELEASE OF RIGHTS				
52	WEST WI TELECOM	RELEASE OF RIGHTS				
53	AT&T	RELEASE OF RIGHTS				

OWNER'S NAMES ARE SHOWN FOR REFERENCE PURPOSES ONLY AND ARE SUBJECT TO CHANGE PRIOR TO THE TRANSFER OF LAND INTERESTS TO THE CITY.

ALL TLES ARE FOR GRADING PURPOSES UNLESS OTHERWISE NOTED.

1276995
TINA K POMMIER
EAU CLAIRE COUNTY WI
REGISTER OF DEEDS
RECORDED ON
03/05/2026 10:19 AM
REC FEE: 25.00
PAGES: 2
This document was electronically recorded and returned to submitter

RESERVED FOR REGISTER OF DEEDS
PROJECT NUMBER 7995-02-73
SHEET NUMBER 1 OF 2
AMENDMENT NO: 1

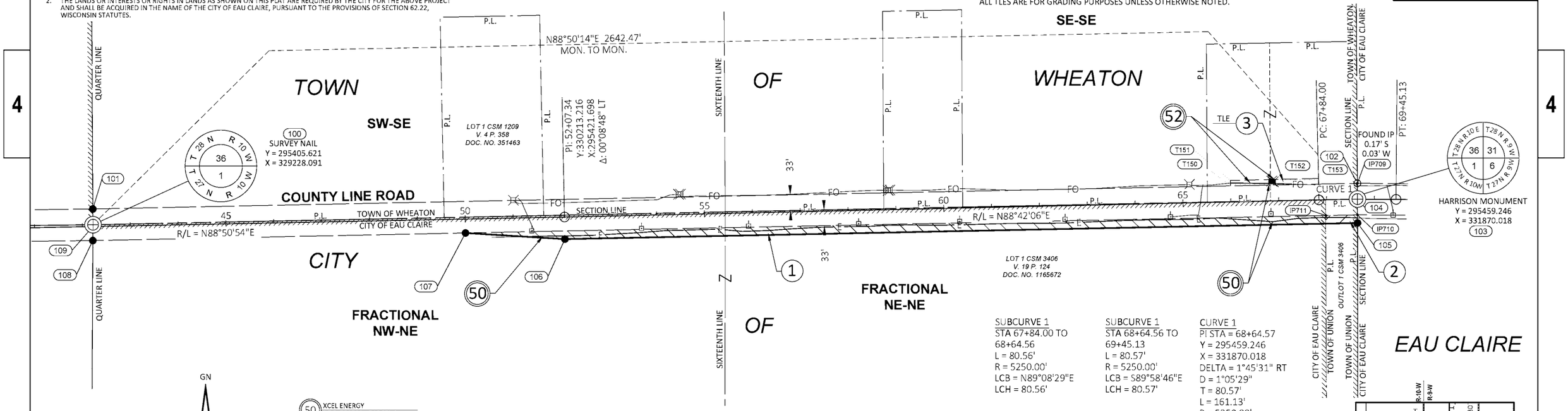

50 XCEL ENERGY
DOC. 781511 - PARCEL 1
DOC. 779541 - PARCEL 1

52 WEST WI TELECOM
NO EASEMENT OF RECORD - PARCEL 3

53 AT&T
DOC. 324890 - PARCEL 3

NOTES:

POSITIONS SHOWN ON THIS PLAT ARE WISCONSIN COORDINATE REFERENCE SYSTEM COORDINATES (WISCRS), EAU CLAIRE COUNTY, NAD83(2011), IN U.S. SURVEY FEET. VALUES ARE GRID COORDINATES, GRID BEARINGS, AND GRID DISTANCES. GRID DISTANCES MAY BE USED AS GROUND DISTANCES.

ALL NEW RIGHT-OF-WAY AND PERMANENT MONUMENTS WILL BE TYPE 2 (TYPICALLY ¾" X 24" IRON REBARS), UNLESS OTHERWISE NOTED, AND WILL BE PLACED PRIOR TO THE COMPLETION OF THE PROJECT.

EXISTING HIGHWAY RIGHT-OF-WAY SHOWN HEREIN IS BASED ON THE FOLLOWING POINTS OF REFERENCE: COUNTY LINE ROAD: CSM 3406 AND PRESUMED TO BE 66 FEET IN WIDTH CENTERED ON THE EXISTING SECTION LINE BETWEEN SECTIONS 1 AND 36 PER STATE STATUE 82.31(2).

FOR CURRENT ACCESS/DRIVEWAY INFORMATION, CONTACT THE PLANNING UNIT OF THE CITY OF EAU CLAIRE.

FOR ADDITIONAL INFORMATION REFER TO THE TITLE SHEET, RECORDED AS SHEET 2 OF 2.

R/W COURSE TABLE		
COURSE	BEARING	DISTANCE
100-101	N00°17'17"W	33.00'
101-102	N88°50'14"E	2642.43'
102-103	S00°21'36"E	33.00'
103-104	S00°05'48"E	0.62'
104-105	S00°05'48"E	49.38'
105-106	S88°50'13"W	1656.29'
106-107	N86°28'35"W	208.04'
107-108	S88°50'14"W	778.72'
108-109	N00°15'12"E	29.28'
109-100	N00°15'12"E	3.73'

R/W STATION & OFFSET TABLE		
POINT	STATION	OFFSET
100	42+22.09	3.73' LT
101	42+22.59	36.73' LT
102	68+64.60	33.62' LT
103	68+64.56	0.62' LT
104	68+64.56	0.00'
105	68+64.28	49.38' RT
106	52+07.34	46.08' RT
107	50+00.01	29.12' RT
108	42+21.28	29.27' RT
109	42+22.00	0.00'

SUBCURVE 1
STA 67+84.00 TO 68+64.56
L = 80.56'
R = 5250.00'
LCB = N89°08'29"E
LCH = 80.56'

SUBCURVE 1
STA 68+64.56 TO 69+45.13
L = 80.57'
R = 5250.00'
LCB = S89°58'46"E
LCH = 80.57'

CURVE 1
PI STA = 68+64.57
Y = 295459.246
X = 331870.018
DELTA = 1°45'31" RT
D = 1°05'29"
T = 80.57'
L = 161.13'
R = 5250.00'
PC STA = 67+84.00
PT STA = 69+45.13
DA = S89°32'23"E

TLE STATION & OFFSET TABLE		
POINT	STATION	OFFSET
T150	66+00.00	33.63' LT
T151	66+00.00	45.00' LT
T152	67+84.00	45.00' LT
T153	67+84.00	33.19' LT

FOUND MONUMENT TABLE			
POINT	Y	X	DESCRIPTION
709	295492.080	331869.782	1" OD IP
710	295426.193	331870.107	3/4" REBAR
711	295424.821	331804.023	3/4" REBAR

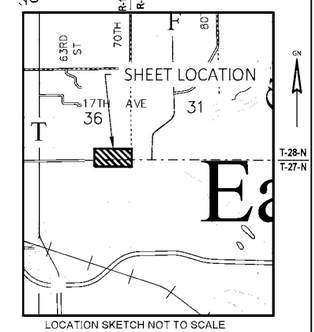

I, CHRISTOPHER R. BADTKE, PROFESSIONAL LAND SURVEYOR, HEREBY CERTIFY THAT IN FULL COMPLIANCE WITH THE PROVISIONS OF SECTION 84.095 OF THE WISCONSIN STATUTES AND UNDER THE DIRECTION OF THE CITY OF EAU CLAIRE, I HAVE SURVEYED AND MAPPED THIS TRANSPORTATION PROJECT PLAT AND SUCH PLAT CORRECTLY REPRESENTS ALL EXTERIOR BOUNDARIES OF THE SURVEYED LAND.

AYRES

WISCONSIN
CHRISTOPHER R BADTKE
S-3150
EAU CLAIRE, WI
LAND SURVEYOR

SIGNATURE: _____ DATE: 02/24/2026
PRINT NAME: CHRISTOPHER R. BADTKE
REGISTRATION NUMBER: S-3150
THIS PLAT AND RELOCATION ORDER ARE APPROVED FOR THE CITY OF EAU CLAIRE.
SIGNATURE: _____ DATE: 03/04/2026
PRINT NAME: LEAH NESS

FILE NAME : I:\41\410897_CITY OF EC_COUNTY LINE ROAD 79950273\C3D\RW\79950273_401_AMEND1.DWG
APPRAISAL PLAT DATE : 02/24/2026
PLOT DATE : 2/23/2026 8:15 PM
PLOT BY : BADTKE, CHRISTOPHER
PLOT NAME :
PLOT SCALE :

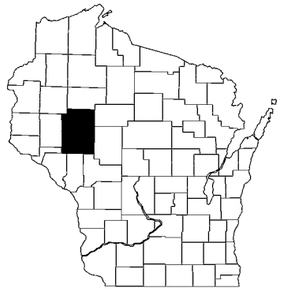

CITY OF EAU CLAIRE
TRANSPORTATION PROJECT PLAT TITLE SHEET
7995-02-73
C EAU CLAIRE, COUNTY LINE RD
2800 W OF JEFFERS ROAD TO JEFFERS ROAD
COUNTY LINE ROAD
CHIPPEWA AND EAU CLAIRE COUNTIES

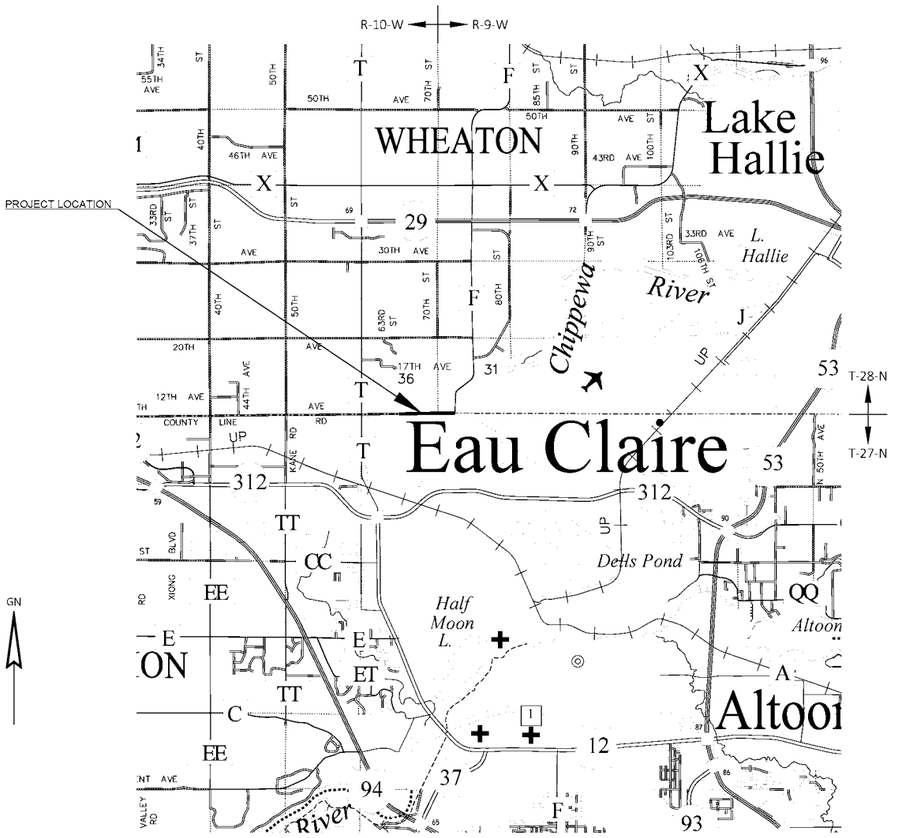

CONVENTIONAL SYMBOLS

SECTION LINE		SECTION CORNER SYMBOL	
QUARTER LINE		SECTION CORNER MONUMENT	
SIXTEENTH LINE		GEODETIC SURVEY MONUMENT	
NEW REFERENCE LINE		SIXTEENTH CORNER MONUMENT	
NEW R/W LINE		SIGN	SIGN
EXISTING R/W OR HE LINE		R/W MONUMENT (TO BE SET)	
PROPERTY LINE	P.L.	NON-MONUMENTED R/W POINT	
LOT, TIE & OTHER MINOR LINES		FOUND IRON PIN (1-INCH UNLESS NOTED)	IP
SLOPE INTERCEPT		OFF-PREMISE SIGN	SIGN
CORPORATE LIMITS			
UNDERGROUND FACILITY (COMMUNICATIONS, ELECTRIC, ETC)	W (TYPE)		
NEW R/W (FEE OR HE) (HATCHING VARIES BY OWNER)			
TEMPORARY LIMITED EASEMENT AREA			
EASEMENT AREA (PERMANENT LIMITED OR RESTRICTED DEVELOPMENT)			
TRANSMISSION STRUCTURES			
BUILDING	TO BE REMOVED		
BRIDGE	CULVERT		

	COMPENSABLE	NON-COMPENSABLE
ELECTRIC POLE		
TELEPHONE POLE		
PEDESTAL (LABEL TYPE) (TV, TEL, ELEC, ETC.)		

ACCESS RESTRICTED BY ACQUISITION	
NO ACCESS (BY STATUTORY AUTHORITY)	
ACCESS RESTRICTED (BY PREVIOUS PROJECT OR CONTROL)	
NO ACCESS (NEW HIGHWAY)	
PARCEL NUMBER	25
UTILITY NUMBER	40
PARALLEL OFFSETS	

CONVENTIONAL ABBREVIATIONS

ACCESS RIGHTS	AR	POINT OF COMPOUND CURVE	PCC
ACRES	AC	POINT OF INTERSECTION	PI
AHEAD	AH	PROPERTY LINE	PL
ALUMINUM	ALUM	RECORDED AS	(100')
AND OTHERS	ET AL	REEL / IMAGE	R/I
BACK	BK	REFERENCE LINE	R/L
BLOCK	BLK	REMAINING	REM
CENTERLINE	C/L	RESTRICTIVE DEVELOPMENT EASEMENT	RDE
CERTIFIED SURVEY MAP	CSM	RIGHT	RT
CONCRETE	CONC	RIGHT OF WAY	R/W
COUNTY	CO	SECTION	SEC
COUNTY TRUNK HIGHWAY	CTH	SEPTIC VENT	SEPV
DISTANCE	DIST	SQUARE FEET	SF
CORNER	COR	STATE TRUNK HIGHWAY	STH
DOCUMENT NUMBER	DOC	STATION	STA
EASEMENT	EASE	TELEPHONE PEDESTAL	TP
EXISTING	EX	TEMPORARY LIMITED EASEMENT	TLE
GAS VALVE	GV	TRANSPORTATION PROJECT PLAT	TPP
GRID NORTH	GN	UNITED STATES HIGHWAY	USH
HIGHWAY EASEMENT	HE	VOLUME	V
IDENTIFICATION	ID		
LAND CONTRACT	LC		
LEFT	LT		
MONUMENT	MON		
NATIONAL GEODETIC SURVEY	NGS		
NUMBER	NO		
OUTLOT	OL		
PAGE	P		
POINT OF TANGENCY	PT		
PERMANENT LIMITED EASEMENT	PLE		
POINT OF BEGINNING	POB		
POINT OF CURVATURE	PC		

CURVE DATA ABBREVIATIONS

LONG CHORD	LCH
LONG CHORD BEARING	LCB
RADIUS	R
DEGREE OF CURVE	D
CENTRAL ANGLE	Δ/DELTA
LENGTH OF CURVE	L
TANGENT	T
DIRECTION AHEAD	DA
DIRECTION BACK	DB

CONVENTIONAL UTILITY SYMBOLS

WATER	W
GAS	G
TELEPHONE	T
OVERHEAD TRANSMISSION LINES	OH
ELECTRIC	E
CABLE TELEVISION	TV
FIBER OPTIC	FO
SANITARY SEWER	SAN
STORM SEWER	SS
ELECTRIC TOWER	

LAYOUT
SCALE 0 1 MI.

THE NOTES,CONVENTIONAL SIGNS, AND ABBREVIATIONS ARE ASSOCIATED WITH EACH TRANSPORTATION PROJECT PLAT FOR PROJECT 7995-02-73

NOTES:

POSITIONS SHOWN ON THIS PLAT ARE WISCONSIN COORDINATE REFERENCE SYSTEM COORDINATES (WISCRS), EAU CLAIRE COUNTY, NAD83(2011), IN U.S. SURVEY FEET. VALUES ARE GRID COORDINATES, GRID BEARINGS, AND GRID DISTANCES. GRID DISTANCES MAY BE USED AS GROUND DISTANCES.

ALL NEW RIGHT-OF-WAY AND PERMANENT EASEMENT MONUMENTS WILL BE TYPE 2 (TYPICALLY ¾" X 24" IRON REBARS), UNLESS OTHERWISE NOTED, AND WILL BE PLACED PRIOR TO THE COMPLETION OF THE PROJECT.

ALL RIGHT-OF-WAY LINES DEPICTED IN THE NON-ACQUISITION AREAS ARE INTENDED TO RE-ESTABLISH EXISTING RIGHT-OF-WAY LINES AS DETERMINED FROM PREVIOUS PROJECTS, OTHER RECORDED DOCUMENTS, CENTERLINE OF EXISTING PAVEMENTS AND/OR EXISTING OCCUPATIONAL LINES.

RIGHT-OF-WAY BOUNDARIES ARE DEFINED WITH COURSES OF THE PERIMETER OF THE HIGHWAY LANDS REFERENCED TO THE U.S. PUBLIC LAND SURVEY SYSTEM OR OTHER "SURVEYS" OF PUBLIC RECORD.

DIMENSIONING FOR THE NEW RIGHT-OF-WAY IS MEASURED ALONG AND PERPENDICULAR TO THE NEW REFERENCE LINES.

A TEMPORARY LIMITED EASEMENT (TLE) IS A RIGHT FOR CONSTRUCTION PURPOSES, AS DEFINED HEREIN, INCLUDING THE RIGHT TO OPERATE NECESSARY EQUIPMENT THEREON, THE RIGHT OF INGRESS AND EGRESS, AS LONG AS REQUIRED FOR SUCH PUBLIC PURPOSE, INCLUDING THE RIGHT TO PRESERVE, PROTECT, REMOVE, OR PLANT THEREON ANY VEGETATION THAT THE HIGHWAY AUTHORITIES MAY DEEM DESIRABLE. ALL (TLEs) ON THIS PLAT EXPIRE AT THE COMPLETION OF THE CONSTRUCTION PROJECT FOR WHICH THIS INSTRUMENT IS GIVEN.

A PERMANENT LIMITED EASEMENT (PLE) IS A RIGHT FOR CONSTRUCTION AND MAINTENANCE PURPOSES, AS DEFINED HEREIN, INCLUDING THE RIGHT TO OPERATE NECESSARY EQUIPMENT THEREON AND THE RIGHT OF INGRESS AND EGRESS, AS LONG AS REQUIRED FOR SUCH PUBLIC PURPOSE, INCLUDING THE RIGHT TO PRESERVE, PROTECT, REMOVE, OR PLANT THEREON ANY VEGETATION THAT THE HIGHWAY AUTHORITIES MAY DEEM DESIRABLE, BUT WITHOUT PREJUDICE TO THE OWNER'S RIGHTS TO MAKE OR CONSTRUCT IMPROVEMENTS ON SAID LANDS OR TO FLATTEN THE SLOPES, PROVIDING SAID ACTIVITIES WILL NOT IMPAIR OR OTHERWISE ADVERSELY AFFECT THE HIGHWAY FACILITIES.

AN EASEMENT FOR HIGHWAY PURPOSES (HE), AS LONG AS SO USED, INCLUDING THE RIGHT TO PRESERVE, PROTECT, REMOVE, OR PLANT THEREON ANY VEGETATION THAT THE HIGHWAY AUTHORITIES MAY DEEM DESIRABLE.

PROPERTY LINES SHOWN ON THIS PLAT FOR PROPERTIES BEING IMPACTED ARE DRAWN FROM DATA DERIVED FROM FILED/RECORDED MAPS AND DOCUMENTS OF PUBLIC RECORD. THIS PLAT MAY NOT BE A TRUE REPRESENTATION OF EXISTING PROPERTY LINES, EXCLUDING RIGHT-OF-WAY, AND SHOULD NOT BE USED AS A SUBSTITUTE FOR AN ACCURATE FIELD SURVEY.

FOR THE CURRENT ACCESS/DRIVEWAY INFORMATION, CONTACT THE CITY OF EAU CLAIRE

PARCEL AND UTILITY IDENTIFICATION NUMBERS MAY NOT POINT TO ALL AREAS OF ACQUISITION, AS NOTED ON THE TPP DETAIL PAGES.

INFORMATION FOR THE BASIS OF EXISTING HIGHWAY RIGHT-OF-WAY POINTS OF REFERENCE AND ACCESS CONTROL ARE LISTED ON THE TPP DETAIL PAGES.

PROJECT NUMBER 7995-02-73-4.01
SHEET 2 OF 2
AMENDMENT NO: 1

FILE NAME : I:\41\410897_CITY OF EC_COUNTY LINE ROAD 79950273\C3D\RW\79950273_400.DWG PLOT DATE : 2/23/2026 7:46 PM PLOT BY : BADTKE, CHRISTOPHER PLOT NAME : _____

7995-02-73-4.01-AMENDMENT NO: 1

4

TRANSPORTATION PROJECT PLAT NO: 7995-02-73-4.02-AMENDMENT NO: 1

AMENDS PARCEL NO: 1 OF TRANSPORTATION PROJECT PLAT NO. 7995-02-73-4.02 RECORDED AS DOCUMENT NO: 1274520.

THAT PART OF LOT 1 OF CERTIFIED SURVEY MAP 2132 RECORDED IN VOLUME 11 ON PAGE 07 AS DOCUMENT NUMBER 894550 LOCATED IN THE FRACTIONAL NORTHWEST 1/4 OF THE NORTHWEST 1/4 AND A PART OF THE FRACTIONAL NORTHEAST 1/4 OF THE NORTHWEST 1/4 OF SECTION 6, TOWNSHIP 27 NORTH, RANGE 9 WEST, CITY OF EAU CLAIRE, EAU CLAIRE COUNTY, WISCONSIN AND THAT PART OF LOT 1 OF CERTIFIED SURVEY MAP 3762 RECORDED IN VOLUME 17 ON PAGE 111 AS DOCUMENT NUMBER 784651 AND THAT PART OF ASPEN MEADOWS CONDOMINIUM PLAT LOCATED IN THE SOUTHWEST 1/4 OF THE SOUTHWEST 1/4 OF SECTION 31, TOWNSHIP 28 NORTH, RANGE 9 WEST, CITY OF EAU CLAIRE, CHIPPEWA COUNTY, WISCONSIN AND A PART OF LOT 1 OF CERTIFIED SURVEY MAP 288 RECORDED IN VOLUME 1 ON PAGE 398 AS DOCUMENT NUMBER 397111 LOCATED IN THE SOUTHEAST 1/4 OF THE SOUTHWEST 1/4 OF SECTION 31, TOWNSHIP 28 NORTH, RANGE 9 WEST, TOWN OF WHEATON, CHIPPEWA COUNTY, WISCONSIN.

RELOCATION ORDER COUNTY LINE ROAD, C EAU CLAIRE, 2800 W OF JEFFERS ROAD TO JEFFERS ROAD, CHIPPEWA AND EAU CLAIRE COUNTIES

A PROPERLY ESTABLISH, LAY OUT, WIDEN, ENLARGE, EXTEND, CONSTRUCT, RECONSTRUCT, IMPROVE, OR MAINTAIN A PORTION OF THE HIGHWAY DESIGNATED ABOVE, THE CITY OF EAU CLAIRE DEEMS IT NECESSARY TO RELOCATE OR CHANGE SAID HIGHWAY AND ACQUIRE CERTAIN LANDS AND INTERESTS OR RIGHTS IN LANDS FOR THE ABOVE PROJECT.

TO EFFECT THIS CHANGE, PURSUANT TO AUTHORITY GRANTED UNDER SECTION 62.22, WISCONSIN STATUTES, THE CITY OF EAU CLAIRE HEREBY ORDERS THAT:

1. THAT PORTION OF SAID HIGHWAY AS SHOWN ON THIS PLAT IS LAID OUT AND ESTABLISHED TO THE LINES AND WIDTHS AS SO SHOWN FOR THE ABOVE PROJECT.
2. THE LANDS OR INTERESTS OR RIGHTS IN LANDS AS SHOWN ON THIS PLAT ARE REQUIRED BY THE CITY FOR THE ABOVE PROJECT AND SHALL BE ACQUIRED IN THE NAME OF THE CITY OF EAU CLAIRE, PURSUANT TO THE PROVISIONS OF SECTION 62.22, WISCONSIN STATUTES.

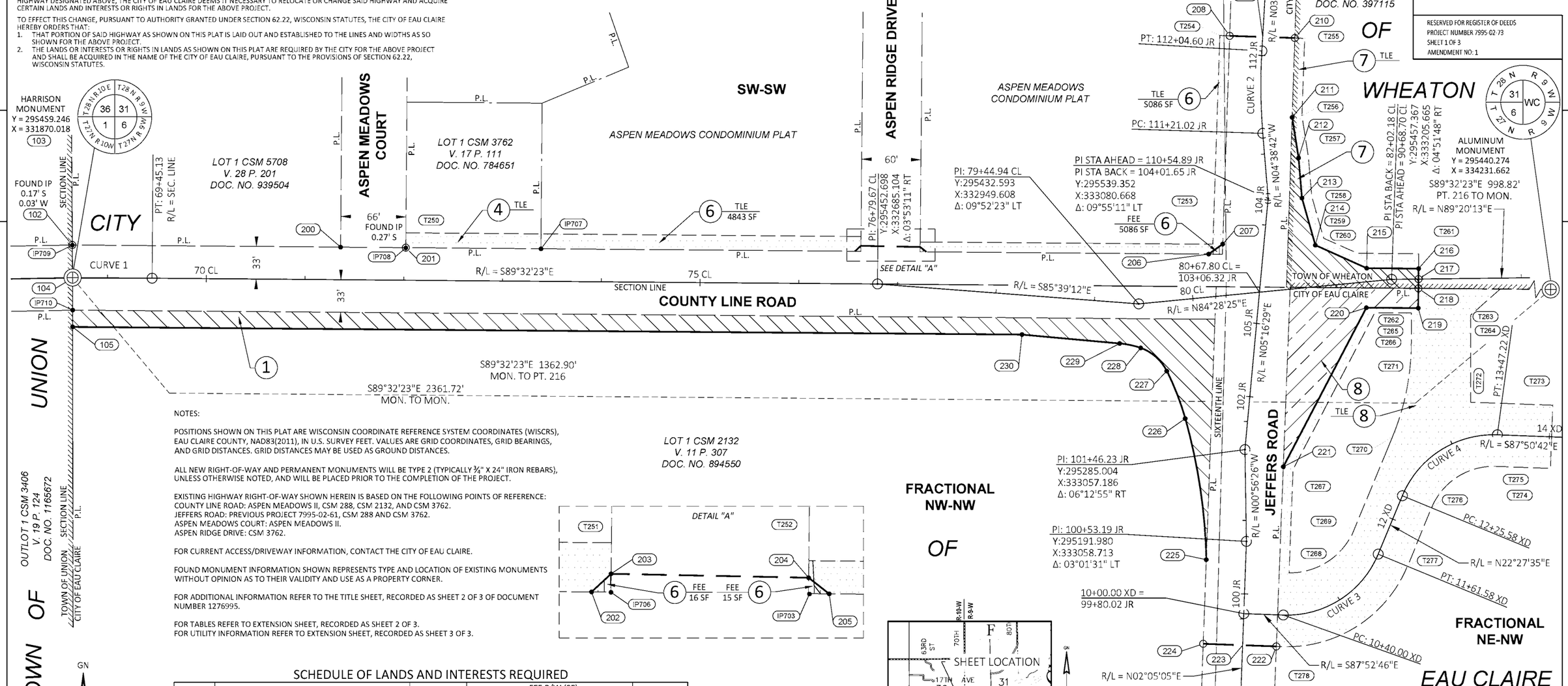

NOTES:

POSITIONS SHOWN ON THIS PLAT ARE WISCONSIN COORDINATE REFERENCE SYSTEM COORDINATES (WISCRS), EAU CLAIRE COUNTY, NAD83(2011), IN U.S. SURVEY FEET. VALUES ARE GRID COORDINATES, GRID BEARINGS, AND GRID DISTANCES. GRID DISTANCES MAY BE USED AS GROUND DISTANCES.

ALL NEW RIGHT-OF-WAY AND PERMANENT MONUMENTS WILL BE TYPE 2 (TYPICALLY ¾" X 24" IRON REBARS), UNLESS OTHERWISE NOTED, AND WILL BE PLACED PRIOR TO THE COMPLETION OF THE PROJECT.

EXISTING HIGHWAY RIGHT-OF-WAY SHOWN HEREIN IS BASED ON THE FOLLOWING POINTS OF REFERENCE:
COUNTY LINE ROAD: ASPEN MEADOWS II, CSM 288, CSM 2132, AND CSM 3762.
JEFFERS ROAD: PREVIOUS PROJECT 7995-02-61, CSM 288 AND CSM 3762.
ASPEN MEADOWS COURT: ASPEN MEADOWS II.
ASPEN RIDGE DRIVE: CSM 3762.

FOR CURRENT ACCESS/DRIVEWAY INFORMATION, CONTACT THE CITY OF EAU CLAIRE.

FOUND MONUMENT INFORMATION SHOWN REPRESENTS TYPE AND LOCATION OF EXISTING MONUMENTS WITHOUT OPINION AS TO THEIR VALIDITY AND USE AS A PROPERTY CORNER.

FOR ADDITIONAL INFORMATION REFER TO THE TITLE SHEET, RECORDED AS SHEET 2 OF 3 OF DOCUMENT NUMBER 1276995.

FOR TABLES REFER TO EXTENSION SHEET, RECORDED AS SHEET 2 OF 3.
FOR UTILITY INFORMATION REFER TO EXTENSION SHEET, RECORDED AS SHEET 3 OF 3.

SCHEDULE OF LANDS AND INTERESTS REQUIRED

PARCEL NO.	OWNER(S)	INTEREST(S) REQUIRED	FEE R/W (SF) NEW	FEE R/W (SF) EXISTING	FEE R/W (SF) TOTAL	TLE SF
1	CITY OF EAU CLAIRE	FEE	25,717	0	25,717	----
4	GREENPOINT PROPERTIES 1 LLC	TLE	----	----	----	205S
6	ASPEN MEADOWS CONDOMINIUMS	FEE & TLE	101	0	101	9929
7	MICHAEL A. LARSON AND REBEKAH L. LARSON	FEE & TLE	5446	0	5446	3406
8	NORTHERN STATES POWER COMPANY	FEE & TLE	8903	0	8903	36,060

OWNER'S NAMES ARE SHOWN FOR REFERENCE PURPOSES ONLY AND ARE SUBJECT TO CHANGE PRIOR TO THE TRANSFER OF LAND INTERESTS TO THE CITY.

ALL TLES ARE FOR GRADING PURPOSES UNLESS OTHERWISE NOTED.

I, CHRISTOPHER R. BADTKE, PROFESSIONAL LAND SURVEYOR, HEREBY CERTIFY THAT IN FULL COMPLIANCE WITH THE PROVISIONS OF SECTION 84.095 OF THE WISCONSIN STATUTES AND UNDER THE DIRECTION OF THE CITY OF EAU CLAIRE, I HAVE SURVEYED AND MAPPED THIS TRANSPORTATION PROJECT PLAT AND SUCH PLAT CORRECTLY REPRESENTS ALL EXTERIOR BOUNDARIES OF THE SURVEYED LAND.

SIGNATURE: _____ DATE: 02/24/2026
PRINT NAME: CHRISTOPHER R. BADTKE
REGISTRATION NUMBER: S-3150

THIS PLAT AND RELOCATION ORDER ARE APPROVED FOR THE CITY OF EAU CLAIRE.

SIGNATURE: _____ DATE: 03/04/2026
PRINT NAME: LEAH NESS

AYRES

WISCONSIN — CHRISTOPHER R. BADTKE S-3150 EAU CLAIRE, WI — LAND SURVEYOR

FILE NAME : I:\41\410897_CITY OF EC_COUNTY LINE ROAD 79950273\C3D\RW\79950273_402_AMEND1.DWG
APPRAISAL PLAT DATE : 02/24/2026
PLOT DATE : 2/24/2026 8:13 AM
PLOT BY : BADTKE, CHRISTOPHER
PLOT NAME :
PLOT SCALE :
7995-02-73 4.02-AMENDMENT NO: 1

TRANSPORTATION PROJECT PLAT NO: 7995-02-73-4.02 - AMENDMENT NO: 1 - EXTENSION SHEET

RELOCATION ORDER COUNTY LINE ROAD, C EAU CLAIRE, 2800 W OF JEFFERS ROAD TO JEFFERS ROAD, CHIPPEWA AND EAU CLAIRE COUNTIES

4

R/W COURSE TABLE					
COURSE	BEARING	DISTANCE	COURSE	BEARING	DISTANCE
103-102	N00°21'36"W	33.00'	216-217	S00°27'37"W	10.61'
102-200	S89°32'23"E	271.68'	217-218	S00°27'37"W	9.39'
200-201	S89°32'23"E	66.00'	218-219	S00°27'37"W	20.00'
201-202	S89°32'23"E	454.91'	219-220	N89°32'23"W	52.54'
202-203	N47°12'45"E	8.11'	220-221	S27°34'15"W	181.77'
203-204	S88°52'01"E	60.00'	221-222	S02°12'47"W	182.10'
204-205	S51°55'57"E	7.95'	222-223	N87°55'02"W	34.15'
205-206	S89°32'23"E	285.91'	223-224	N87°55'02"W	39.96'
206-207	N54°35'31"E	17.48'	224-225	N02°04'58"E	85.25'
207-208	N01°54'44"E	211.04'	225-226	SEE CURVE TABLE C1	
208-209	S88°05'16"E	33.44'	226-227	SEE CURVE TABLE C2	
209-210	S88°05'16"E	32.56'	227-228	SEE CURVE TABLE C3	
210-211	S01°54'44"W	80.38'	228-229	SEE CURVE TABLE C4	
211-212	S08°56'43"E	41.61'	229-230	N84°45'23"W	99.30'
212-213	S04°51'45"E	40.87'	230-105	N89°32'23"W	961.41'
213-214	S15°50'25"E	49.53'	105-104	N00°05'48"W	49.38'
214-215	S65°50'19"E	57.00'	104-103	N00°05'48"W	0.62'
215-216	S89°32'23"E	52.54'			

R/W STATION & OFFSET TABLE					
POINT	STATION	OFFSET	POINT	STATION	OFFSET
102	68+64.60 CL	33.62' LT	214	81+28.71 CL	41.95' LT
103	68+64.56 CL	0.62' LT	215	81+78.23 CL	13.72' LT
104	68+64.56 CL	0.00'	216	90+96.20 CL	10.61' LT
105	68+64.28 CL	49.38' RT	217	90+95.99 CL	0.00'
200	71+35.76 CL	33.00' LT	218	90+95.81 CL	9.38' RT
201	72+01.76 CL	33.00' LT	219	90+95.42 CL	29.38' RT
202	76+56.67 CL	33.00' LT	220	81+74.06 CL	26.06' RT
203	76+62.59 CL	38.56' LT	221	103+53.61 JR	38.57' RT
204	77+19.91 CL	40.67' LT	222	101+73.44 JR	34.15' RT
205	77+26.25 CL	36.26' LT	223	101+73.44 JR	0.00'
206	80+20.32 CL	43.35' LT	224	101+73.44 JR	39.96' LT
207	105+76.84 JR	41.51' LT	225	102+58.69 JR	39.97' LT
208	112+17.97 JR	33.43' LT	226	103+97.36 JR	63.11' LT
209	112+18.80 JR	0.00'	227	79+66.70 CL	70.47' RT
210	112+19.61 JR	32.55' RT	228	104+64.48 JR	114.57' LT
211	111+35.56 JR	30.78' RT	229	79+28.79 CL	41.49' RT
212	110+93.32 JR	34.07' RT	230	78+29.51 CL	39.94' RT
213	81+19.85 CL	90.68' LT			

TLE STATION & OFFSET TABLE					
POINT	STATION	OFFSET	POINT	STATION	OFFSET
T250	72+01.76 CL	48.00' LT	T265	90+88.35 CL	34.24' RT
T251	76+62.60 CL	48.00' LT	T266	81+82.16 CL	31.94' RT
T252	77+19.59 CL	45.81' LT	T267	103+50.81 JR	48.43' RT
T253	105+75.76 JR	51.46' LT	T268	102+48.45 JR	44.32' RT
T254	112+17.72 JR	43.39' LT	T269	11+74.70 XD	32.00' LT
T255	112+19.84 JR	42.54' RT	T270	12+62.84 XD	41.73' LT
T256	111+36.63 JR	40.73' RT	T271	13+02.58 XD	109.62' LT
T257	110+93.72 JR	44.06' RT	T272	13+26.09 XD	35.00' LT
T258	81+29.86 CL	91.52' LT	T273	14+02.26 XD	32.00' LT
T259	81+37.76 CL	48.10' LT	T274	14+02.26 XD	32.00' RT
T260	81+70.55 CL	29.61' LT	T275	13+47.22 XD	32.00' RT
T261	90+96.50 CL	25.61' LT	T276	12+25.58 XD	32.00' RT
T262	90+95.81 CL	9.38' RT	T277	11+61.58 XD	32.00' RT
T263	91+78.61 CL	11.01' RT	T278	101+73.44 JR	39.97' RT
T264	91+48.31 CL	37.22' RT			

R/W CURVE TABLE				
CURVE #	LENGTH	RADIUS	CHORD BEARING	CHORD LENGTH
C1	144.85'	572.50'	N08°29'39"W	144.47'
C2	51.71'	272.51'	N21°10'44"W	51.63'
C3	36.18'	47.44'	N48°26'22"W	35.31'
C4	21.78'	93.21'	N78°07'06"W	21.73'

CURVE 1
PI STA = 68+64.57 CL
Y = 295459.246
X = 331870.018
DELTA = 1°45'31" RT
D = 1°05'29"
T = 80.57'
L = 161.13'
R = 5250.00'
PC STA = 67+84.00 CL
PT STA = 69+45.13 CL
DB =S88°42'06"W

CURVE 2
PI STA = 111+62.88 JR
Y = 295646.985
X = 333071.923
DELTA = 7°58'50" RT
D = 9°32'57"
T = 41.85'
L = 83.57'
R = 600.00'
PC STA = 111+21.02 JR
PT STA = 112+04.60 JR

CURVE 3
PI STA = 11+09.58 XD
Y = 295114.816
X = 333165.557
DELTA = 69°39'39" LT
D = 57°17'45"
T = 69.58'
L = 121.58'
R = 100.00'
PC STA = 10+40.00 XD
PT STA = 11+61.58 XD

CURVE 4
PI STA = 12+95.20 XD
Y = 295302.605
X = 333243.187
DELTA = 69°41'43" RT
D = 57°17'45"
T = 69.63'
L = 121.64'
R = 100.00'
PC STA = 12+25.58 XD
PT STA = 13+47.22 XD

SUBCURVE 1
STA 67+84.00 CL
TO 68+64.56 CL
L = 80.56'
R = 5250.00'
LCB = N89°08'29"E
LCH = 80.56'

SUBCURVE 1
STA 68+64.56 CL
TO 69+45.13 CL
L = 80.57'
R = 5250.00'
LCB = S89°58'46"E
LCH = 80.57'

FOUND MONUMENT TABLE			
POINT	Y	X	DESCRIPTION
700	295776.910	333110.262	1.25" OD IP
701	295823.009	333045.757	1" OD IP
703	295485.244	332728.564	1" OD IP
706	295485.764	332668.288	1" OD IP
707	295488.322	332344.385	1" OD IP
708	295489.262	332207.475	1" OD IP
709	295492.080	331869.782	1" OD IP
710	295426.193	331870.107	3/4" REBAR

NOTES:

POSITIONS SHOWN ON THIS PLAT ARE WISCONSIN COORDINATE REFERENCE SYSTEM COORDINATES (WISCRS), EAU CLAIRE COUNTY, NAD83(2011), IN U.S. SURVEY FEET. VALUES ARE GRID COORDINATES, GRID BEARINGS, AND GRID DISTANCES. GRID DISTANCES MAY BE USED AS GROUND DISTANCES.

FOR ADDITIONAL INFORMATION REFER TO THE TITLE SHEET, RECORDED AS SHEET 2 OF 2 OF DOCUMENT NUMBER 1276995.

TPP NUMBER 7995-02-73-4.02
SHEET 2 OF 3
AMENDMENT NO: 1

FILE NAME : I:\41\410897_CITY OF EC_COUNTY LINE ROAD 79950273\C3D\RW\79950273_402_AMEND1.DWG
PLOT DATE : 2/24/2026 8:39 AM
PLOT BY : BADTKE, CHRISTOPHER
PLOT NAME :
PLOT SCALE :
7995-02-73-4.02-AMENDMENT NO: 1

TRANSPORTATION PROJECT PLAT NO: 7995-02-73-4.02-AMENDMENT NO: 1 - UTILITY SHEET

RELOCATION ORDER COUNTY LINE ROAD, C EAU CLAIRE, 2800 W OF JEFFERS ROAD TO JEFFERS ROAD, CHIPPEWA AND EAU CLAIRE COUNTIES

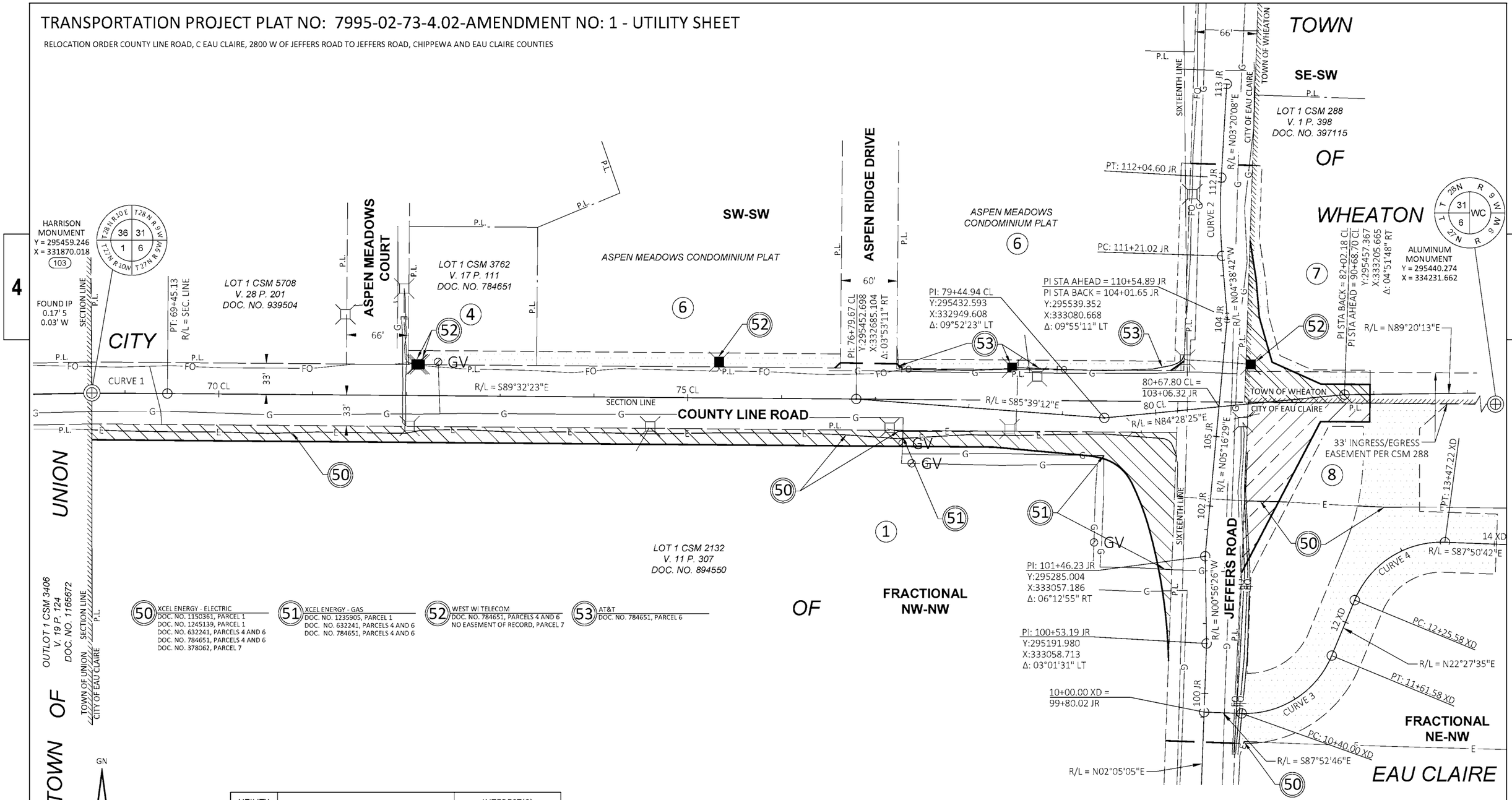

50	XCEL ENERGY - ELECTRIC DOC. NO. 1150361, PARCEL 1 DOC. NO. 1245139, PARCEL 1 DOC. NO. 632241, PARCELS 4 AND 6 DOC. NO. 784651, PARCELS 4 AND 6 DOC. NO. 378062, PARCEL 7	
51	XCEL ENERGY - GAS DOC. NO. 1235905, PARCEL 1 DOC. NO. 632241, PARCELS 4 AND 6 DOC. NO. 784651, PARCELS 4 AND 6	
52	WEST WI TELECOM DOC. NO. 784651, PARCELS 4 AND 6 NO EASEMENT OF RECORD, PARCEL 7	
53	AT&T DOC. NO. 784651, PARCEL 6	

GN

0 50 100

SCALE, FEET

UTILITY NUMBER	UTILITY OWNER	INTEREST(S) REQUIRED
50	XCEL ENERGY - ELECTRIC	RELEASE OF RIGHTS
51	XCEL ENERGY - GAS	RELEASE OF RIGHTS
52	WEST WI TELECOM	RELEASE OF RIGHTS
53	AT&T	RELEASE OF RIGHTS

NOTES:

POSITIONS SHOWN ON THIS PLAT ARE WISCONSIN COORDINATE REFERENCE SYSTEM COORDINATES (WISCRS), EAU CLAIRE COUNTY, NAD83(2011), IN U.S. SURVEY FEET. VALUES ARE GRID COORDINATES, GRID BEARINGS, AND GRID DISTANCES. GRID DISTANCES MAY BE USED AS GROUND DISTANCES.

FOR ADDITIONAL INFORMATION REFER TO THE TITLE SHEET, RECORDED AS SHEET 2 OF 2 OF DOCUMENT NUMBER 1276995.

TPP NUMBER 7995-02-73-4.02
SHEET 3 OF 3
AMENDMENT NO: 1

FILE NAME : I:\41\410897_CITY OF EC_COUNTY LINE ROAD 79950273\C3D\RW\79950273_402_AMEND1.DWG PLOT DATE : 2/24/2026 7:55 AM PLOT BY : BADTKE, CHRISTOPHER PLOT NAME : PLOT SCALE :

7995-02-73-4.02-AMENDMENT NO: 1

BENCH MARKS			
NO.	STATION	ELEV.	DESCRIPTION
50	52+08	965.10	30.4' RT, FH BURY BOLT
51	55+91	950.85	27' RT, 120D SPK IN PPOL

STA 51+41
CONSTRUCT PE (ASPHALT)
SAWCUT REQ'D

STA 54+73
EX CMCP 12"x24' TO REMAIN

N

BP: 50+00.00
Y = 295417.396
X = 330005.918

PI: 52+07.34
Y = 295421.698
X = 330213.216

SLOPE INTERCEPT

EXISTING R/W

51+00 52+00 53+00 54+00 55+00 56+00

N88°50'54"E

COUNTY LINE RD

N88°42'06"E

EXISTING R/W

CP#2

BM#50

BM#51

PROPOSED R/W

SLOPE INTERCEPT

5

BEGIN PROJECT
STA 50+54.07 WB
Y = 295418.617
X = 330059.975
MATCH EXISTING
SAWCUT REQ'D

CONTROL POINT #2
STA 51+92.55, 30.18' RT
¾" REBAR W\YELLOW CAP
Y = 295391.23
X = 330199.03

5

975 970 965 960 955 950 945 940

STA 50+54.07
EL 959.68

VPC STA 50+70.00
VPC EL 960.16

3.00%

VPI STA 52+25.00
VPI EL 964.81

EXISTING PROFILE

VPT STA 53+80.00
VPT EL 958.61

FINISHED PROFILE

HP STA 52+02.89
HP EL 962.15

-4.00%

VCL = 310.00

K = 44.30

50	51	52	53	54	55	56
958.68	959.60	961.03	960.96	962.47	961.83	963.35	962.15	963.27	961.90	962.20	961.09	960.72	959.71	958.39	957.81	955.70	955.81	953.38	953.81	951.20	951.81	949.25	949.81

PROJECT NO: 7995-02-74	HWY: COUNTY LINE ROAD	COUNTY: EAU CLAIRE	PLAN AND PROFILE: COUNTY LINE ROAD	SHEET 72	E

CONTROL POINT #6
STA 56+67.57, 38.75' LT
¾" REBAR W\YELLOW CAP
Y = 295470.86
X = 330672.45

CP#6

SLOPE INTERCEPT

STA 59+63
EX CMCP 24"x21' TO REMAIN

N

EXISTING R/W

56+00 57+00 58+00 59+00 60+00 61+00 62+00

COUNTY LINE RD

N88°42'06"E

POST

EXISTING R/W

PROPOSED R/W

SLOPE INTERCEPT

TLE

5

5

955 950 945 940 935 930 925 920

STA 57+00.00
EL 945.81

-4.00%

-3.50%

-2.00%

FINISHED PROFILE

EXISTIING PROFILE

VCL = 200.00
K = 133.33

VPC STA 59+75.00
VPC EL 936.19

VPI STA 60+75.00
VPI EL 932.69

VPT STA 61+75.00
VPT EL 930.69

949.25	947.53	945.81	944.00	942.11	940.27	938.64	936.95	935.31	933.75	932.35	931.29	930.28
949.81	947.81	945.81	944.06	942.31	940.56	938.81	937.06	935.34	933.78	932.40	931.21	930.19

56 57 58 59 60 61 62

PROJECT NO: 7995-02-74	HWY: COUNTY LINE ROAD	COUNTY: EAU CLAIRE	PLAN AND PROFILE: COUNTY LINE ROAD	SHEET 73	E

CONTROL POINT #5
STA 65+09.13, 41.08' LT
¾" REBAR W\YELLOW CAP
Y = 295492.26
X = 331513.74

STA 65+36
REMOVING SMALL PIPE CULVERTS
(EX CMCP 12"x30')

STA 65+66
REMOVING SMALL PIPE CULVERTS
(EX CMCP 18"x24')

N

SLOPE INTERCEPT

CP#5

TLE

EXISTING R/W

PC 67+84.00

62+00 63+00 64+00 65+00 66+00 67+00 68+00

N88°42'06"E

COUNTY LINE RD

EXISTING R/W

PROPOSED R/W

STA 65+34
REMOVING SMALL PIPE CULVERTS
(EX CMCP 24"x54')

STA 66+84
REMOVING SMALL PIPE CULVERTS
(EX CMCP 24"x56')

TLE

SLOPE INTERCEPT

5

5

945 940 935 930 925 920 915 910

VCL = 330.00
K = 82.48

LP STA 64+59.95
LP EL 926.64

VPC STA 67+75.00
VPC EL 931.29

2.00%

EXISTING PROFILE

2.00%

FINISHED PROFILE

VPC STA 62+95.00
VPC EL 928.29

VPI STA 64+60.00
VPI EL 924.99

VPT STA 66+25.00
VPT EL 928.29

VCL = 200.00
K = 47.05

930.28	929.42	928.55	927.98	927.45	927.24	927.48	928.04	928.78	929.65	930.58	931.59	932.56
930.19	929.19	928.19	927.37	926.86	926.65	926.74	927.13	927.83	928.79	929.79	930.79	931.73

62 63 64 65 66 67 68

PROJECT NO: 7995-02-74	HWY: COUNTY LINE ROAD	COUNTY: EAU CLAIRE	PLAN AND PROFILE: COUNTY LINE ROAD	SHEET 74	E

PI STA = 68+64.57
Y = 295459.246
X = 331870.018
DELTA = 1°45'31" RT
D = 1°05'29"
T = 80.57'
L = 161.13'
R = 5250.00'
PC STA = 67+84.00
Y = 295457.420
X = 331789.465
PT STA = 69+45.13
Y = 295458.599
X = 331950.589
DB = N88°42'06"E
DA = S89°32'23"E

BENCH MARKS			
NO.	STATION	ELEV.	DESCRIPTION
52	5+71	926.32	24.9' RT, HYD BURY BOLT

EP: 5+75.00 AM
Y = 295581.799
X = 332174.965

CONSTRUCTION LIMITS
STA 5+53.59 AM
MATCH EXISTING
SAWCUT REQ'D

BM#52

STA 73+19
REMOVING SMALL PIPE CULVERTS
(EX CMCP 18"x32')
1-32'x18" CP CL.III-A
2-APRON ENDWALLS

ASPEN MEADOW CT

N

TLE

PC: 67+84.00

PT: 69+45.13

SLOPE INTERCEPT

EXISTING R/W

N0°27'37"E

68+00 69+00 70+00 71+00 72+00 73+00 74+00

COUNTY LINE RD

S89°32'23"E

EXISTING R/W

SLOPE INTERCEPT

PROPOSED R/W

STA 71+68.81 =
STA 5+00.00 AM
Y = 295456.802
X = 332174.264

CP#4

CONTROL POINT #4
STA 71+65.70, 60.33' RT
¾" REBAR W\YELLOW CAP
Y = 295396.50
X = 332170.67

TLE

5

5

940 935 930 925 920 915 910 905

VPI STA 68+75.00
VPI EL 933.29

VPT STA 69+75.00
VPT EL 931.04

VPC STA 69+85.00
VPC EL 930.82

VPI STA 70+85.00
VPI EL 928.57

VPT STA 71+85.00
VPT EL 922.57

VPC STA 73+20.00
VPC EL 914.47

VPI STA 73+70.00
VPI EL 911.47

HP STA 68+69.15
HP EL 932.23

2.25%

EXISTING PROFILE

FINISHED PROFILE

6.00%

VCL = 200.00
K = 47.05

VCL = 200.00
K = 53.33

VCL = 100.00
K = 166.67

932.56	932.97	933.06	932.29	931.13	929.68	927.79	925.39	922.61	919.59	916.68	913.81	910.94
931.73	932.20	932.13	931.54	930.46	928.96	926.99	924.55	921.67	918.67	915.67	912.70	909.86

68 69 70 71 72 73 74

PROJECT NO: 7995-02-74	HWY: COUNTY LINE ROAD	COUNTY: EAU CLAIRE	PLAN AND PROFILE: COUNTY LINE ROAD	SHEET 75	E

FILE NAME : I:\41\410897_CITY OF EC_COUNTY LINE ROAD 79950273\C3D\SHEETS\050101- PP.DWG
LAYOUT NAME - PP 4

PLOT DATE : 8/25/2025 5:11 PM PLOT BY : RESHESKE, CARRIE PLOT NAME : PLOT SCALE : 1 IN:40 FT

WISDOT/CADDS SHEET 44

BENCH MARKS			
NO.	STATION	ELEV.	DESCRIPTION
53	10+59	899.64	22.5' RT, HYD BURY BOLT

CONSTRUCTION LIMITS
STA 10+50.00 AR
MATCH EXISTING
SAWCUT REQ'D

EP: 10+75.00 AR
Y = 295527.590
X = 332698.679

ASPEN RIDGE DR

BM#53

EP: 76+92.64
Y = 295452.592
X = 332698.076

TLE

SLOPE INTERCEPT

EXISTING R/W

74+00 | 75+00 | 76+00 | 77+00 EB | 78+00 WB | 78+00 EB | 79+00 WB | 79+00 EB

COUNTY LINE RD

S89°32'23"E

STA 76+92.64 WB =
STA 10+00.00 AR

10+00.00 AR

N0°27'37"E

EXISTING R/W

PT: 9+52.77 AR

PROPOSED R/W

SLOPE INTERCEPT

TLE

STA 9+15 AR
REMOVING SMALL PIPE CULVERT (STA 9+35 AR)
(EX RCCP 18"x32')
1-40'x18" CP CL.III-A
2-APRON ENDWALLS

CITY OF EAU CLAIRE DRIVEWAY

PC: 9+04.64 AR

TLE

XCEL GAS DRIVEWAY

PI STA = 9+30.37 AR
Y = 295379.637
X = 332697.490
DELTA = 50°08'16" LT
D = 104°10'27"
T = 25.73'
L = 48.13'
R = 55.00'
PC STA = 9+04.64 AR
Y = 295363.306
X = 332677.611
PT STA = 9+52.77 AR
Y = 295405.363
X = 332697.697

TLE

END CONSTRUCTION
STA 9+04.64 AR
MATCH EXISTING

5

5

VCL = 100.00
K = 166.67

VCL = 160.00
K = 47.34

-5.40%

-2.02%

EXISTING PROFILE

FINISHED PROFILE

VPT STA 74+20.00
VPT EL 908.77

VPC STA 75+20.00
VPC EL 903.37

VPI STA 76+00.00
VPI EL 899.05

VPT STA 76+80.00
VPT EL 897.43

STA 76+92.64
EL 897.18

915 | 910 | 905 | 900 | 895 | 890 | 885 | 880

910.94 | 909.86 | 908.12 | 907.15 | 905.43 | 904.45 | 902.90 | 901.84 | 900.54 | 899.73 | 898.45 | 898.13

74 | 75 | 76 | 77

PROJECT NO: 7995-02-74	HWY: COUNTY LINE ROAD	COUNTY: EAU CLAIRE	PLAN AND PROFILE: COUNTY LINE ROAD	SHEET 76	E

BENCH MARKS			
NO.	STATION	ELEV.	DESCRIPTION
54	12+96 RA	895.01	30.9' RT, HYD BURY BOLT

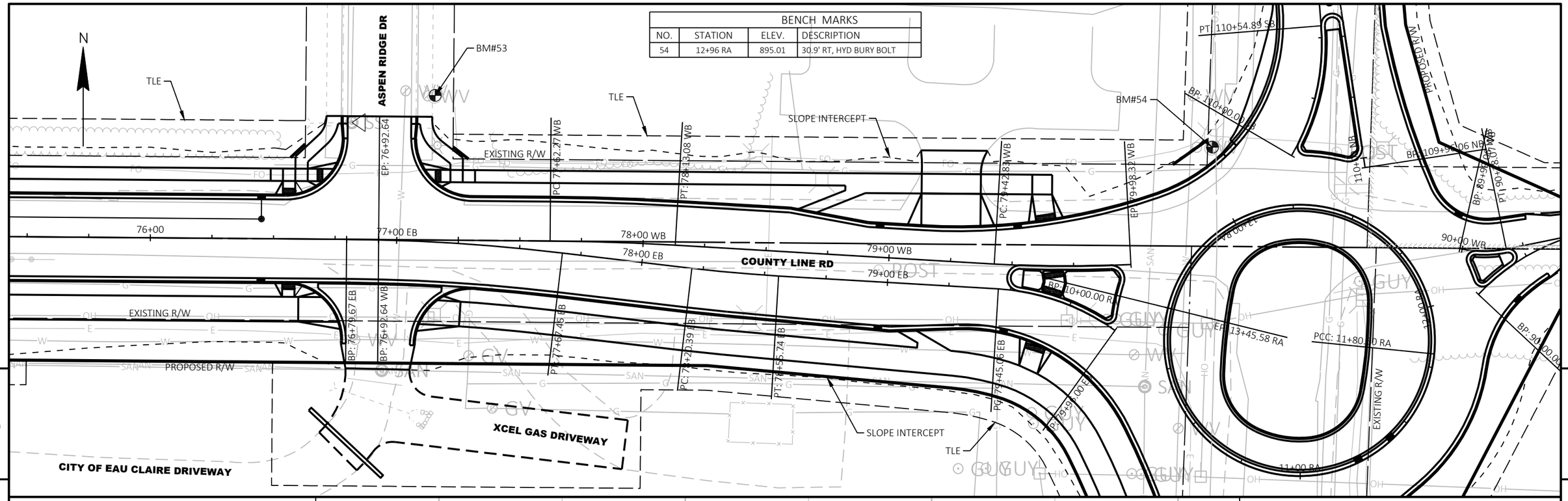

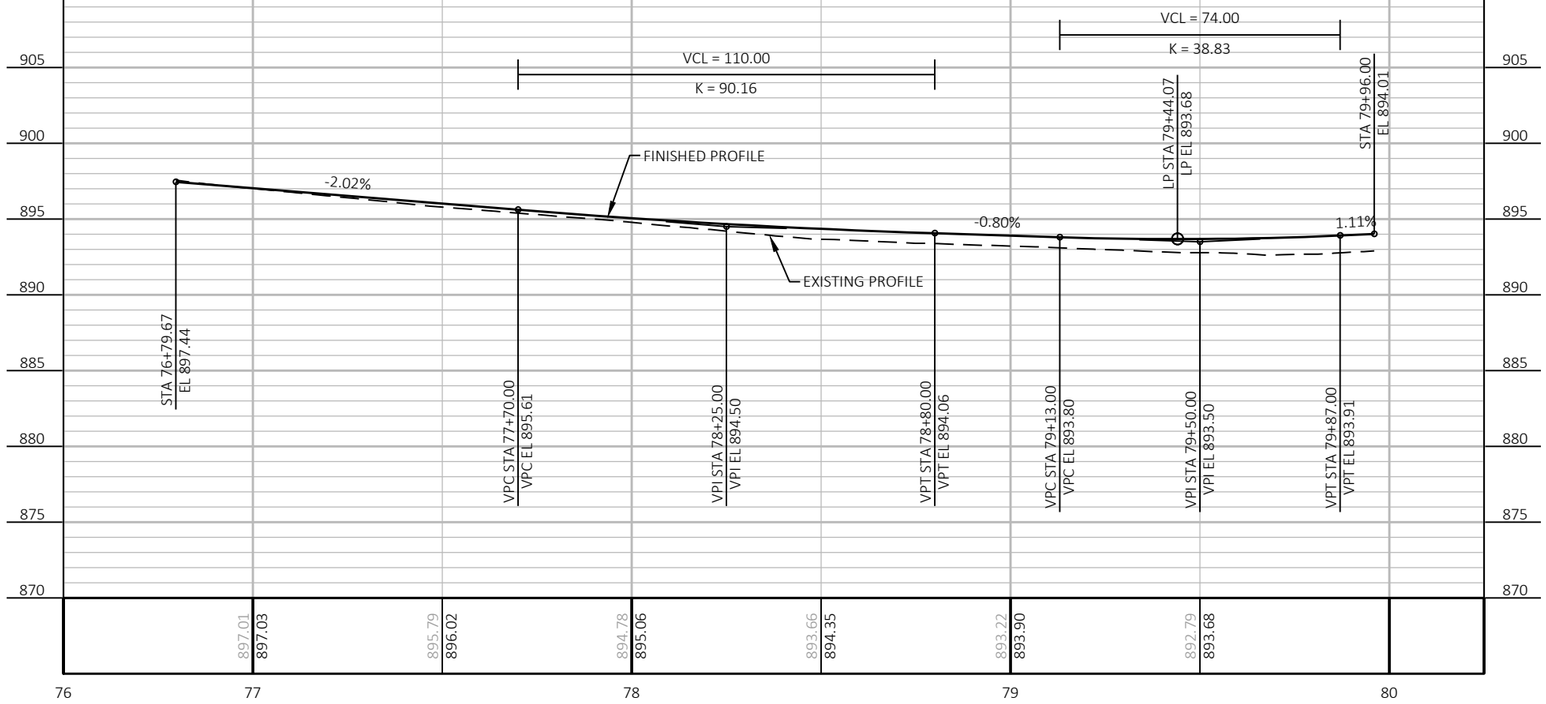

PROJECT NO: 7995-02-74	HWY: COUNTY LINE ROAD	COUNTY: EAU CLAIRE	PLAN AND PROFILE: EASTBOUND - WEST LEG	SHEET 77	E

FILE NAME : I:\41\410897_CITY OF EC_COUNTY LINE ROAD 79950273\C3D\SHEETS\050102- PP.DWG
LAYOUT NAME - PP EB-W
PLOT DATE : 10/20/2025 4:32 PM PLOT BY : HEDRINGTON, MARK PLOT NAME : PLOT SCALE : 1 IN:40 FT

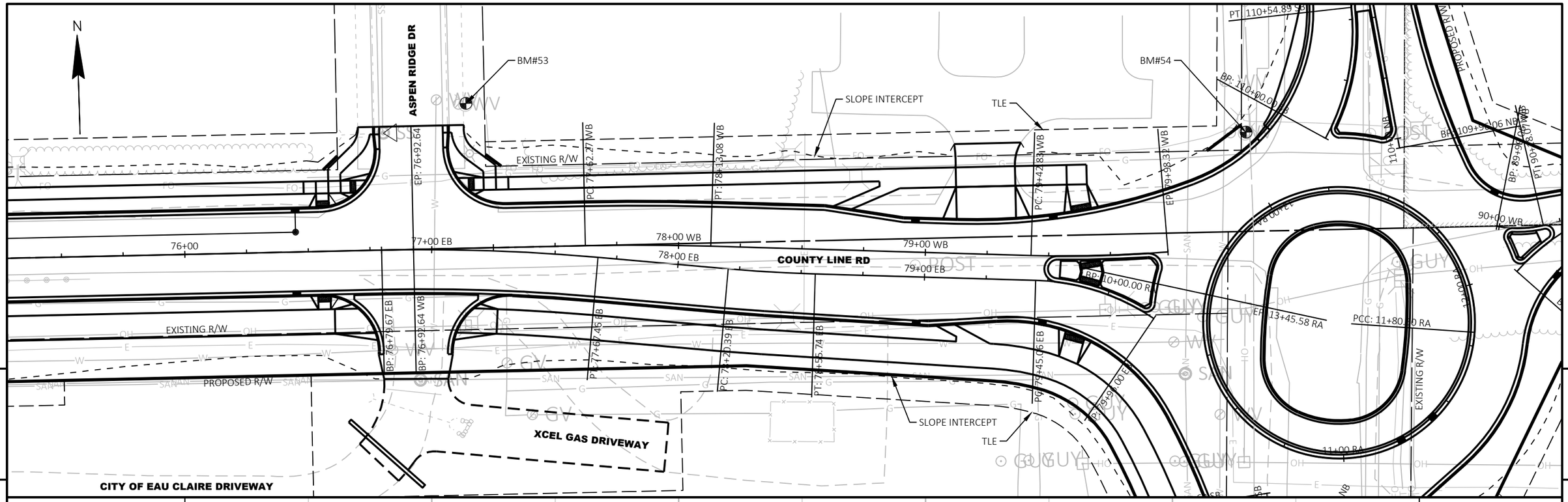

PROJECT NO: 7995-02-74	HWY: COUNTY LINE ROAD	COUNTY: EAU CLAIRE	PLAN AND PROFILE: WESTBOUND - WEST LEG	SHEET 78 E

FILE NAME : I:\41\410897_CITY OF EC_COUNTY LINE ROAD 79950273\C3D\SHEETS\050102- PP.DWG
LAYOUT NAME - PP WB-W

PLOT DATE : 10/20/2025 4:32 PM PLOT BY : HEDRINGTON, MARK PLOT NAME : PLOT SCALE : 1 IN:40 FT

WISDOT/CADDS SHEET 44

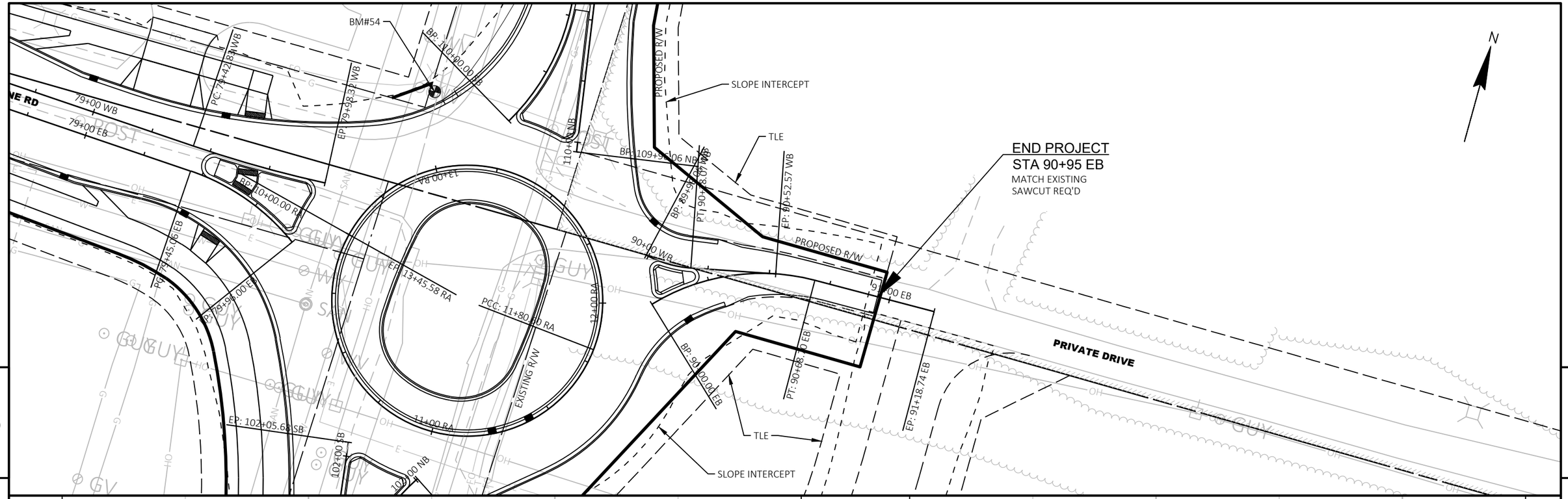

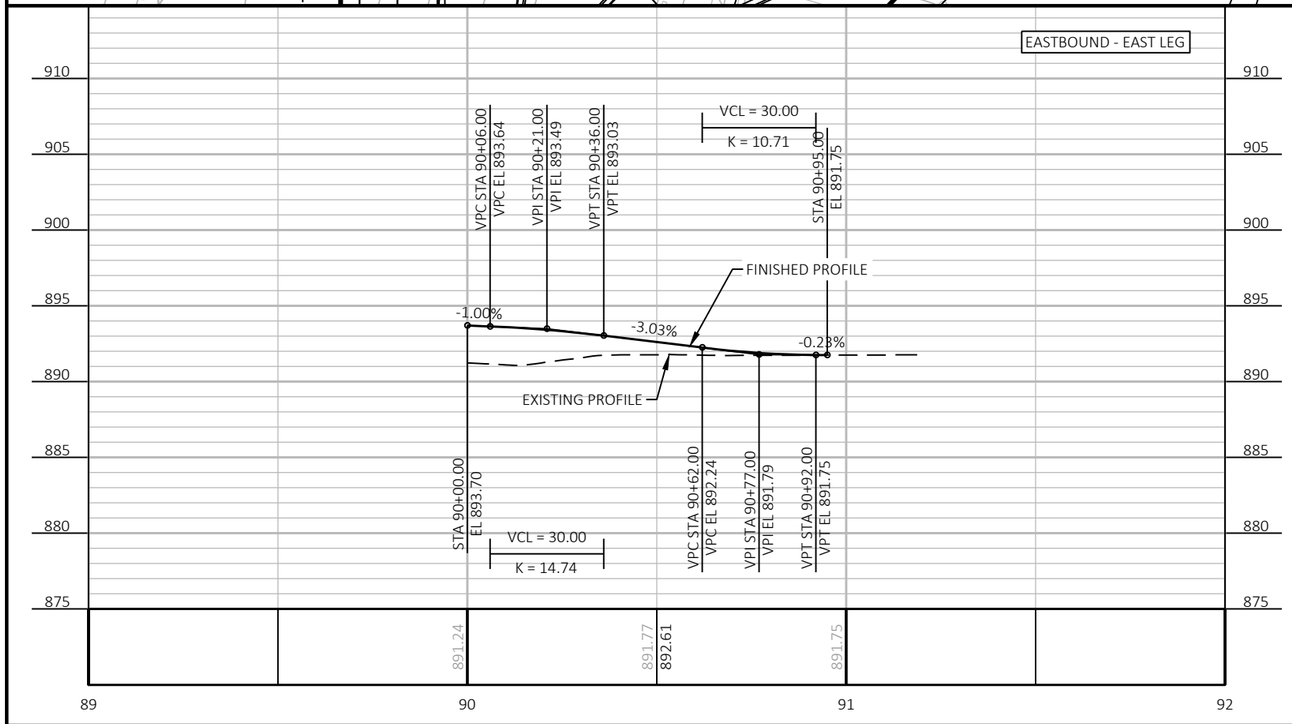

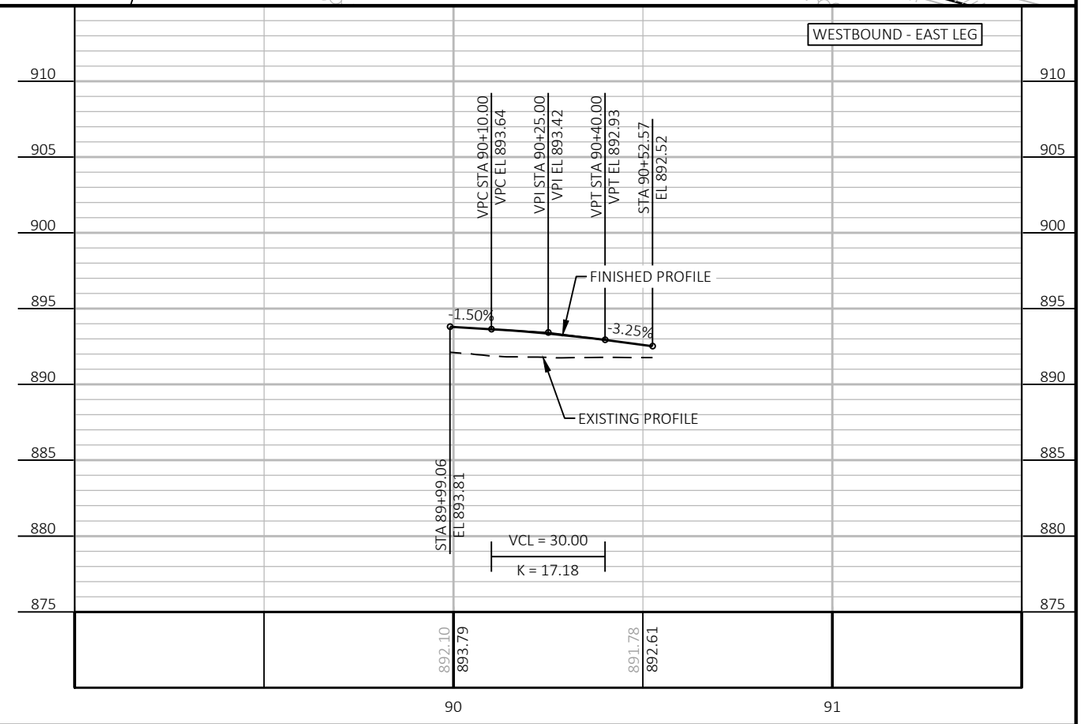

PROJECT NO: 7995-02-74	HWY: COUNTY LINE ROAD	COUNTY: EAU CLAIRE	PLAN AND PROFILE: EB & WB - EAST LEG	SHEET 79	E

FILE NAME : I:\41\410897_CITY OF EC_COUNTY LINE ROAD 79950273\C3D\SHEETS\050102- PP.DWG
LAYOUT NAME - PP EB-E
PLOT DATE : 8/25/2025 5:11 PM
PLOT BY : RESHESKE, CARRIE
PLOT NAME :
PLOT SCALE : 1 IN:40 FT

BENCH MARKS			
NO.	STATION	ELEV.	DESCRIPTION
55		895.40	120D NAIL IN EAST SIDE OF PPOL

CONTROL POINT #9
STA 101+66.44 SB, 58.95' LT
¾" REBAR W\YELLOW CAP
Y = 295297.13
X = 332987.16

CONTROL POINT #11
¾" REBAR W\YELLOW CAP
Y = 295025.20
X = 333031.40

CONSTRUCTION LIMITS
STA 99+64.53 NB
MATCH EXISTING
SAWCUT REQ'D

JEFFERS RD

CTH F

EXISTING R/W

PROPOSED R/W

SLOPE INTERCEPT

TLE

BM#55

BM#54

CP#9

CP#11

BP: 99+50.00 NB

PI: 100+11.98 SB

PC: 100+58.19 NB

PI: 100+93.67 NB

PC: 101+46.25 NB

PI: 101+69.19 SB

EP: 102+06.68 SB

EP: 102+40.27 SB

EP: 13+45.58 RA

PCC: 1+80.60 RA

BP: 10+00.00 EB

EP: 79+98.32 WB

BP: 10+00.80 SB

PI: 101+54.89 SB

PC: 111+21.02 SB

BP: 89+96.00 NB

PT: 90+38.07 WB

PC: 11+08.

100+00 NB

101+00 SB
101+00 NB

102+00 SB

102+00 NB

111+00 SB
111+00 NB

110+00 NB

12+00 BA

BM 00+06

99+00 EB

79+98.00 EB

SOUTHBOUND - SOUTH LEG

STA	EL
100+11.98	892.55
100+50.00	892.72
102+05.68	893.52

FINISHED PROFILE
EXISTING PROFILE
0.45%
0.51%

892.66 892.72 892.81 892.98 892.71 893.23 892.48 893.49

100 101 102

NORTHBOUND - SOUTH LEG

STA	EL
99+50.00	892.26
100+00.00	892.50
102+00.77	893.34

FINISHED PROFILE
EXISTING PROFILE
0.48%
0.42%

892.26 892.26 892.50 892.50 892.68 892.71 892.94 892.92 892.94 893.13 893.02 893.34

99 100 101 102

PROJECT NO: 7995-02-74	HWY: COUNTY LINE ROAD	COUNTY: EAU CLAIRE	PLAN AND PROFILE: NB & SB - SOUTH LEG	SHEET 80	E

FILE NAME : I:\41\410897_CITY OF EC_COUNTY LINE ROAD 79950273\C3D\SHEETS\050102- PP.DWG
LAYOUT NAME - PP NB-S
PLOT DATE : 1/20/2026 8:26 AM PLOT BY : RESHESKE, CARRIE PLOT NAME : PLOT SCALE : 1 IN:40 FT
WISDOT/CADDS SHEET 44

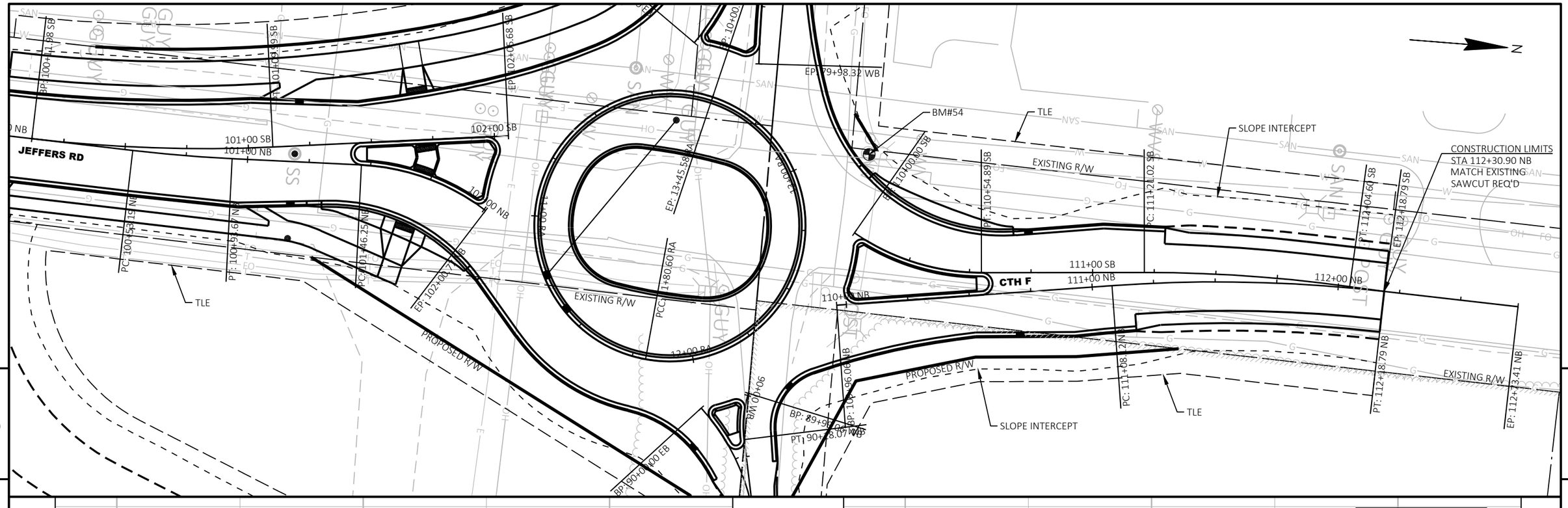

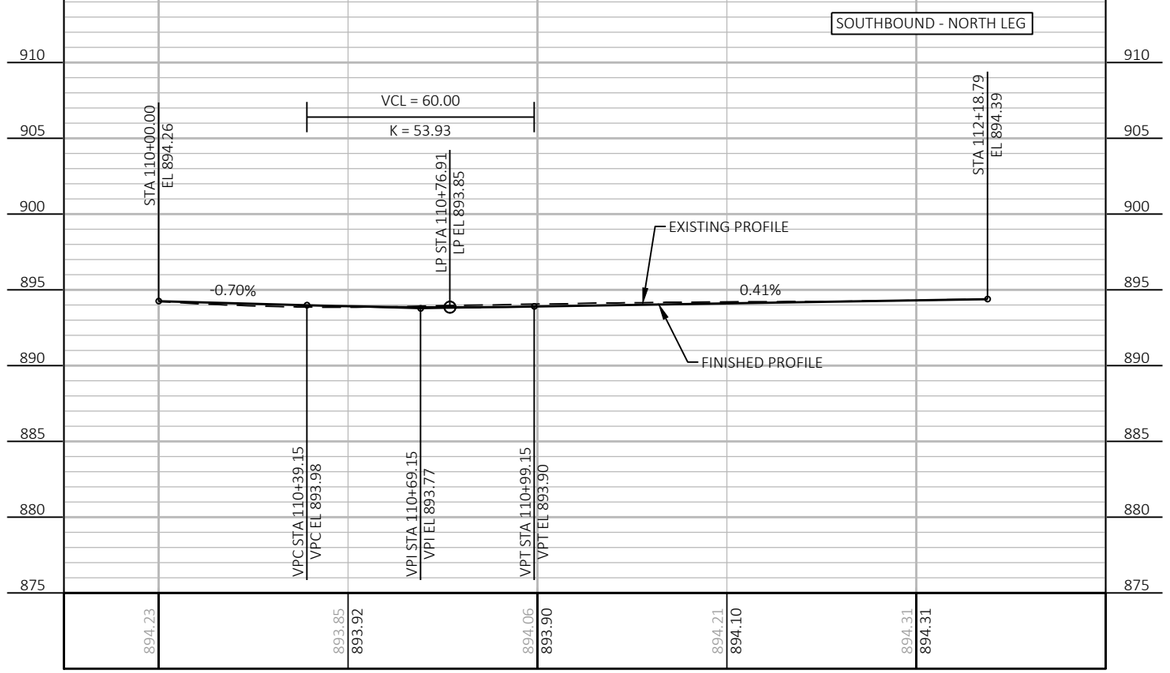

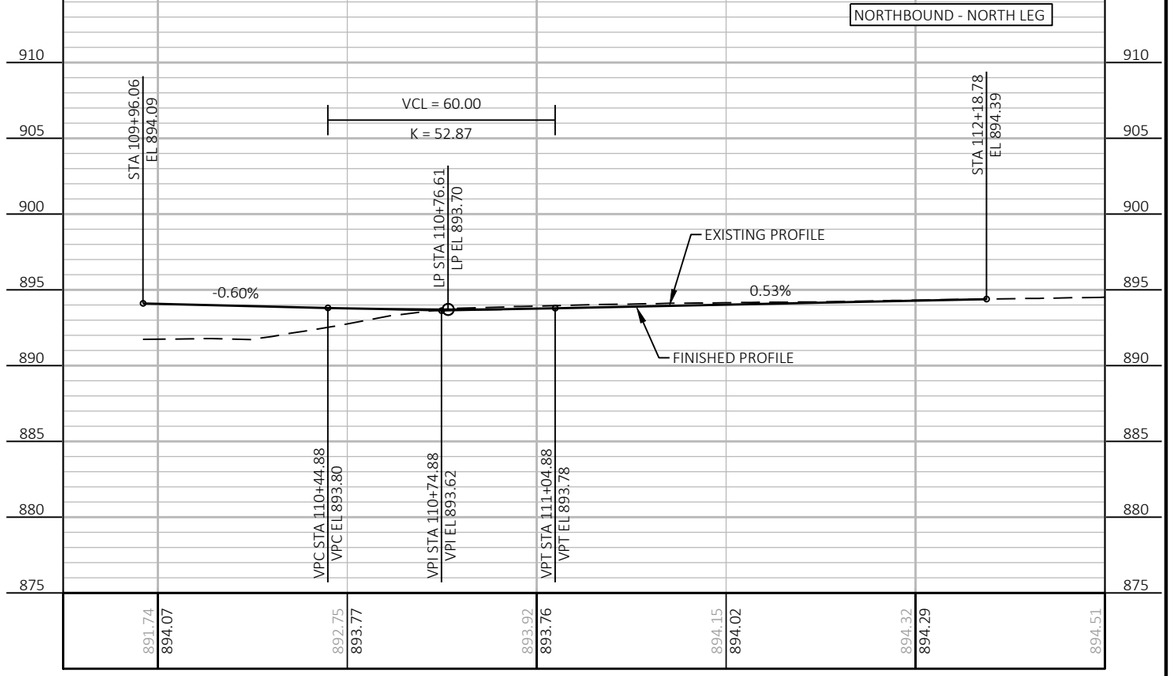

PROJECT NO: 7995-02-74	HWY: COUNTY LINE ROAD	COUNTY: EAU CLAIRE	PLAN AND PROFILE: NB & SB - NORTH LEG	SHEET 81 E

FILE NAME : I:\41\410897_CITY OF EC_COUNTY LINE ROAD 79950273\C3D\SHEETS\050102- PP.DWG
LAYOUT NAME - PP NB-N

PLOT DATE : 1/20/2026 8:26 AM PLOT BY : RESHESKE, CARRIE PLOT NAME : PLOT SCALE : 1 IN:40 FT

WISDOT/CADDS SHEET 44

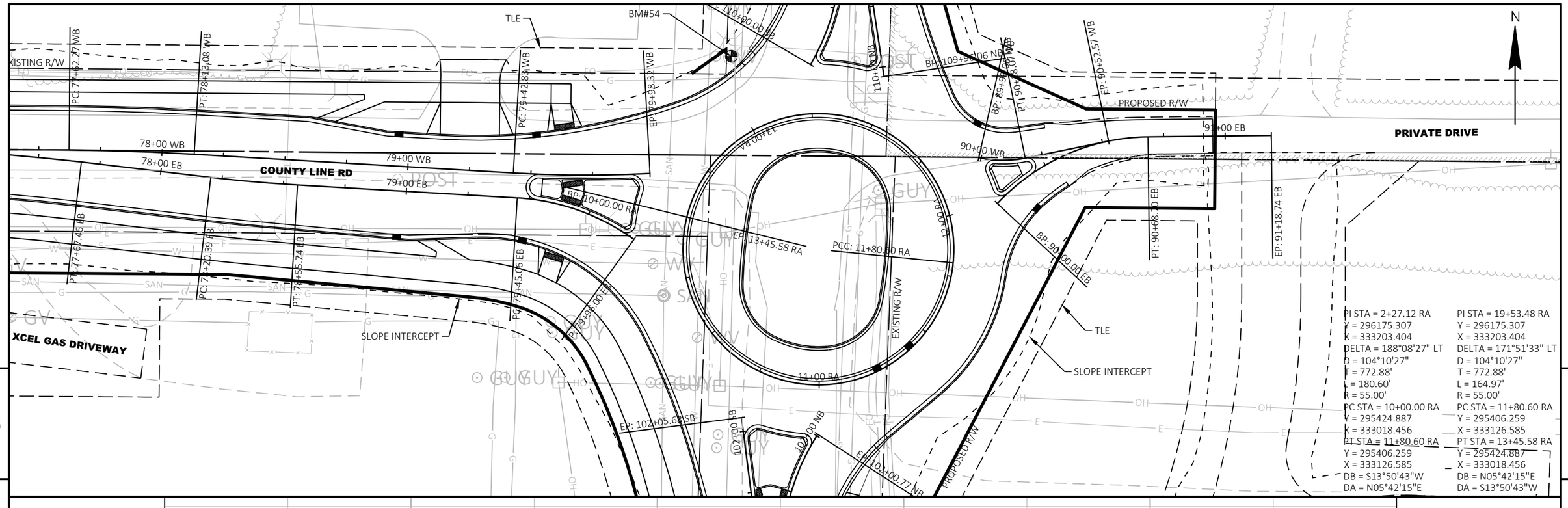

PROJECT NO: 7995-02-74	HWY: COUNTY LINE ROAD	COUNTY: EAU CLAIRE	PLAN AND PROFILE: RAB CIRCLE	SHEET 82 E

FILE NAME : I:\41\410897_CITY OF EC_COUNTY LINE ROAD 79950273\C3D\SHEETS\050102- PP.DWG
LAYOUT NAME - PP RAB

PLOT DATE : 8/25/2025 5:11 PM PLOT BY : RESHESKE, CARRIE PLOT NAME : PLOT SCALE : 1 IN:40 FT

WISDOT/CADDS SHEET 44

PI STA = 11+09.58 X
Y = 295114.816
X = 333165.557
DELTA = 69°39'39" LT
D = 57°17'45"
T = 69.58'
L = 121.58'
R = 100.00'
PC STA = 10+40.00 X
Y = 295117.391
X = 333096.025
PT STA = 11+61.58 X
Y = 295179.119
X = 333192.140
DB = S87°52'46"E
DA = N22°27'35"E

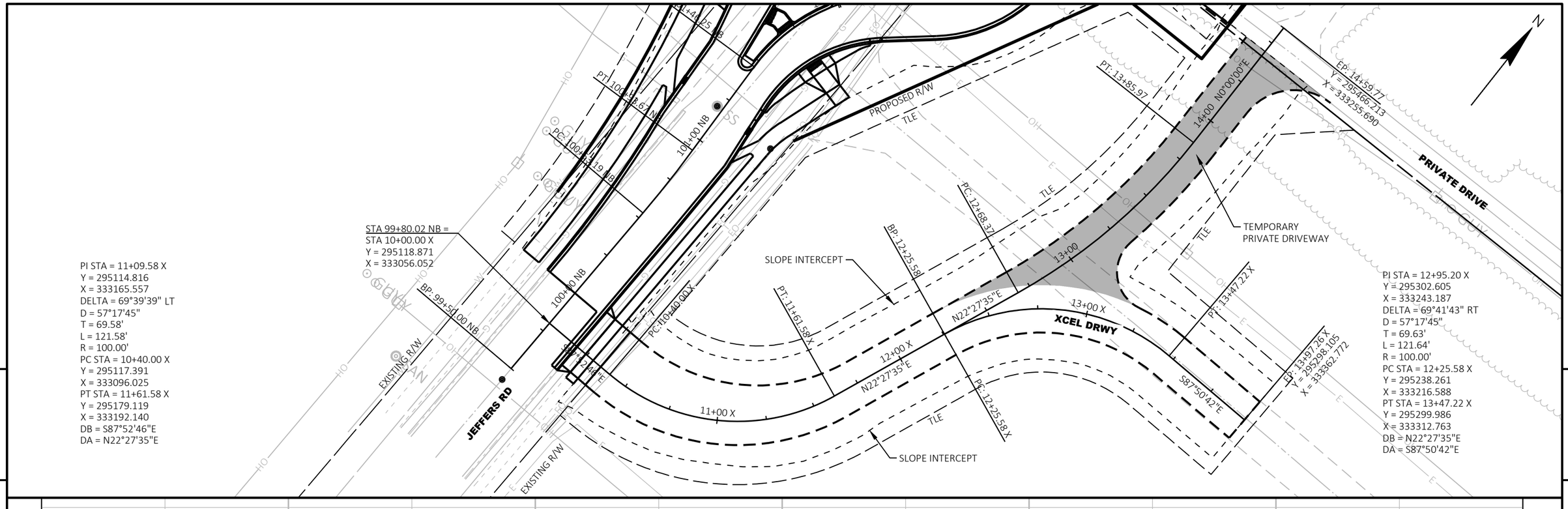

PI STA = 12+95.20 X
Y = 295302.605
X = 333243.187
DELTA = 69°41'43" RT
D = 57°17'45"
T = 69.63'
L = 121.64'
R = 100.00'
PC STA = 12+25.58 X
Y = 295238.261
X = 333216.588
PT STA = 13+47.22 X
Y = 295299.986
X = 333312.763
DB = N22°27'35"E
DA = S87°50'42"E

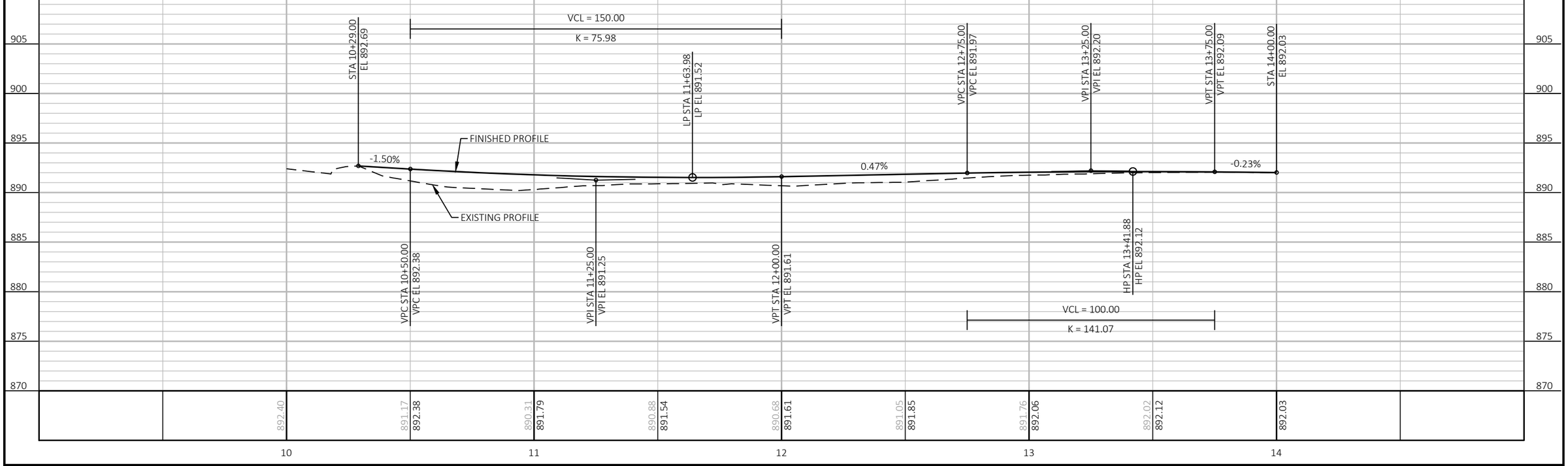

PROJECT NO: 7995-02-74	HWY: COUNTY LINE ROAD	COUNTY: EAU CLAIRE	PLAN AND PROFILE: XCEL DRWY	SHEET 83 E

FILE NAME : I:\41\410897_CITY OF EC_COUNTY LINE ROAD 79950273\C3D\SHEETS\050103- PP.DWG
LAYOUT NAME - XCEL DRWY
PLOT DATE : 1/20/2026 8:38 AM
PLOT BY : RESHESKE, CARRIE
PLOT NAME :
PLOT SCALE : 1 IN:40 FT

WISDOT/CADDS SHEET 44

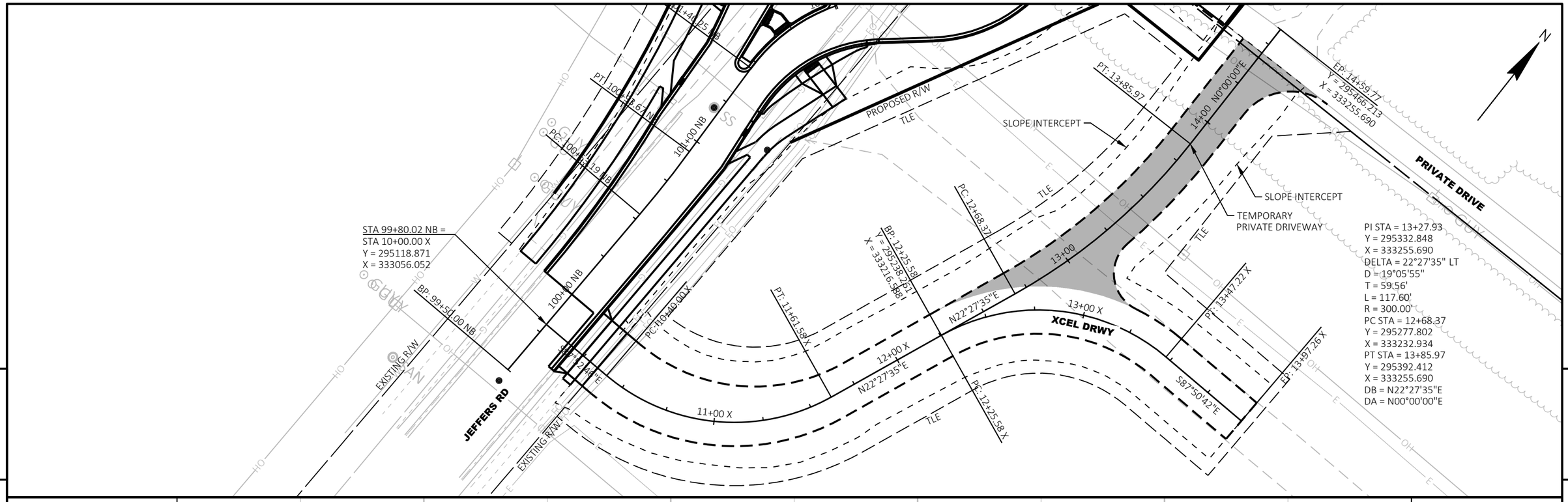

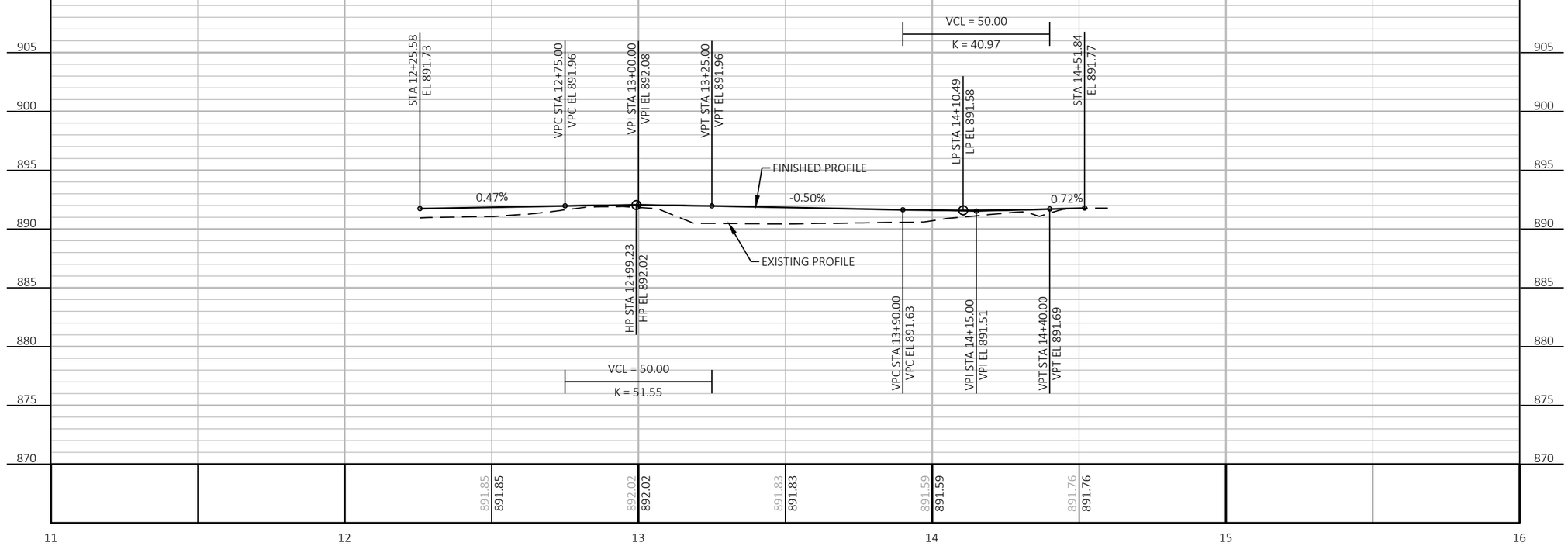

PROJECT NO: 7995-02-74	HWY: COUNTY LINE ROAD	COUNTY: EAU CLAIRE	PLAN AND PROFILE: TEMPORARY PRIVATE DRIVEWAY	SHEET 84 E

FILE NAME : I:\41\410897_CITY OF EC_COUNTY LINE ROAD 79950273\C3D\SHEETS\050103- PP.DWG
LAYOUT NAME - XCEL TEMP
PLOT DATE : 1/20/2026 8:50 AM
PLOT BY : RESHESKE, CARRIE
PLOT NAME :
PLOT SCALE : 1 IN:40 FT

Standard Detail Drawing List

08A05-22A	INLET COVERS TYPE A, H, A-S, H-S & Z
08A05-22B	INLET COVERS TYPE B, B-A, C, MS, MS-A, DW & WM
08A05-22C	INLET COVERS TYPE F, HM, HM-S, S, T, HM-GJ & HM-GJ-S
08A05-22E	INLET COVER TYPE BW, MANHOLE COVERS, TYPE K, J, J-S, L & M
08B09-04	MANHOLES 3-FT, 4-FT, 5-FT, 6-FT, 7-FT, 8-FT, 9-FT, 10-FT DIAMETER
08C06-03	INLETS 3-FT AND 4-FT DIAMETER
08C07-03	INLETS 2X2-FT, 2X2.5-FT, 2X3-FT, 2.5X3-FT & 2X3.5-FT
08C08-03	INLETS MEDIAN 1 AND 2 GRATE
08D01-24A	CONCRETE CURB & GUTTER
08D01-24B	CONCRETE CURB, TIES AND CURB AND GUTTER APPLICATIONS
08D05-22B	CURB RAMPS TYPES 2 AND 3
08D05-22D	CURB RAMPS TYPES 4B AND 4B1
08D05-22E	CURB RAMPS TYPES 5, 6, 7A, 7B & 8
08D05-22G	CURB RAMPS RECTANGULAR AND RADIAL DETECTABLE WARNING PLATES
08D15-05B	EDGEDRAIN AND BASE AGGREGATE OPEN GRADED
08E08-03	TYPICAL INSTALLATIONS OF EROSION BALES / TEMPORARY DITCH CHECKS
08E09-06	SILT FENCE
08E10-02	INLET PROTECTION TYPE A, B, C AND D
08E15-01	CULVERT PIPE CHECK
08F01-11	APRON ENDWALLS FOR CULVERT PIPE
08F04-08	JOINT TIES FOR CONCRETE PIPE AND CONCRETE COLLAR DETAIL
09A11-01	DRIVEWAY AND SIDEWALK RAMPS TYPE X AND Y
09A12-01	DRIVEWAY AND SIDEWALK RAMPS TYPE Z
09B02-10	CONDUIT
09B16-03	PULL BOX NON-CONDUCTIVE
09C02-09	CONCRETE BASES, TYPES 1, 2, 5, & 6
09C03-04	TRANSFORMER/PEDESTAL BASES
09D01-05	CABINET SERVICE INSTALLATION (METER BREAKER PEDESTAL)
09D04-03	LIGHTING CONTROL CABINET 120/240 VOLT
09E01-16D	POLE MOUNTINGS FOR LIGHTING UNITS, TYPE 5 (30 FEET)
09E01-16G	HARDWARE DETAILS FOR POLE MOUNTINGS
09E03-06	NON-FREEWAY LIGHTING UNIT POLE WIRING
11B02-02	CONCRETE MEDIAN NOSE
15C02-10A	BARRICADES AND SIGNS FOR MAINLINE CLOSURES
15C02-10B	BARRICADES AND SIGNS FOR VARIOUS CLOSURES
15C02-10C	DETOUR SIGNING FOR MAINLINE CLOSURES
15C02-10E	OFF RAMP LANE CLOSURE
15C05-05	TRAFFIC CONTROL, ADVANCE WARNING SIGNS 40 M.P.H. OR LESS TWO-WAY UNDIVIDED ROAD OPEN TO TRAFFIC
15C08-24A	PERMANENT LONGITUDINAL PAVEMENT MARKINGS
15C11-10B	CHANNELIZING DEVICES DRUMS, CONES, BARRICADES AND VERTICAL PANELS
15C18-09A	MEDIAN ISLAND PAVEMENT MARKINGS
15C18-09B	PAVEMENT MARKINGS, MEDIAN ISLAND NOSE
15C33-05	STOP LINE AND CROSSWALK PAVEMENT MARKING
15D30-12A	TRAFFIC CONTROL, PEDESTRIAN ACCOMMODATION
15D30-12B	TRAFFIC CONTROL, PEDESTRIAN ACCOMMODATION
15D30-12C	TRAFFIC CONTROL, PEDESTRIAN ACCOMMODATION
15D30-12L	TRAFFIC CONTROL, PEDESTRIAN ACCOMMODATION

6

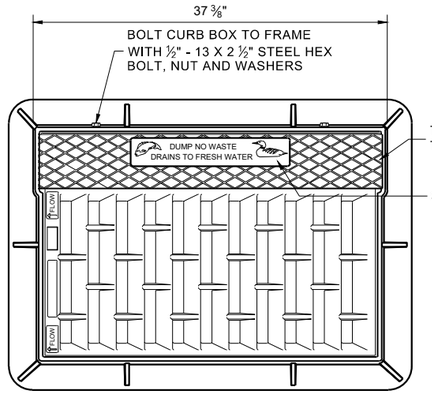

NOTE: EITHER CASTING IS ACCEPTABLE

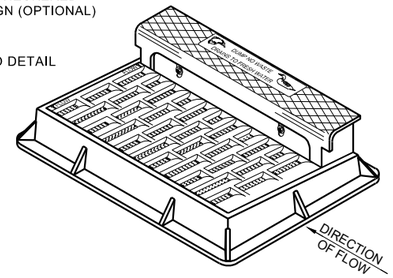

NOTE: CURB BOX HEIGHT ADJUSTABLE 6" - 9"

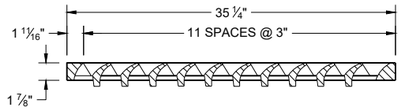

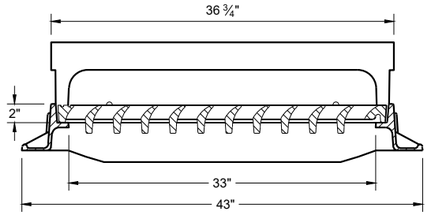

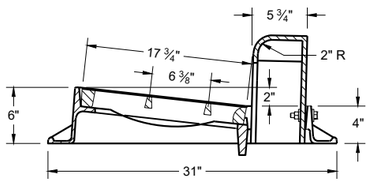

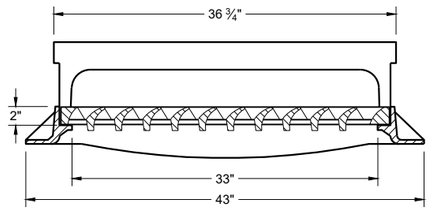

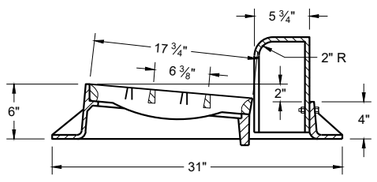

TYPE "H"

NOTE: EITHER CASTING IS ACCEPTABLE

1 1/8" DIAGONAL BARS WITH 1 5/8" OPENINGS

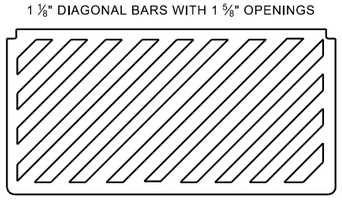

SPECIAL GRATE FOR TYPE "H" COVER

(MEASURES 35" X 17 3/4" X 2")

(NOTED AS TYPE H-S ON DRAINAGE TABLE)

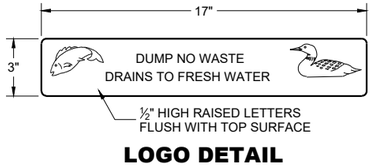

LOGO DETAIL

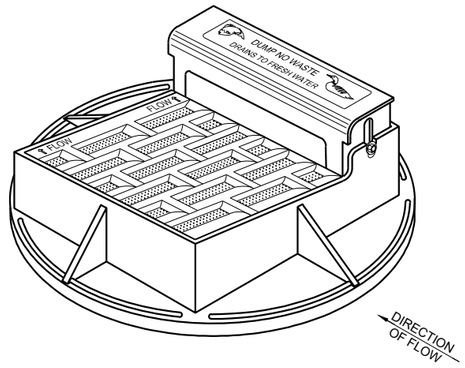

NOTE: CURB BOX HEIGHT ADJUSTABLE 6" - 9"

NOTE: EITHER CASTING IS ACCEPTABLE

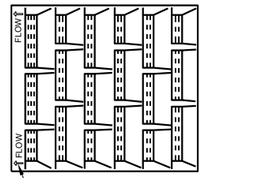

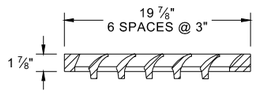

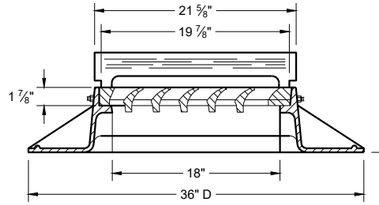

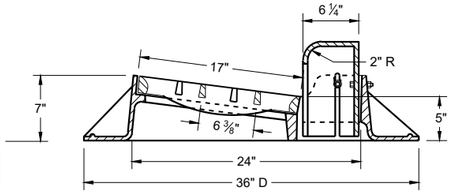

TYPE "A"

1" DIAGONAL BARS
WITH 1 1/2" OPENINGS

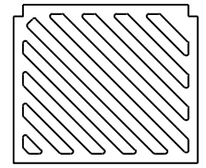

SPECIAL GRATE FOR TYPE "A" COVER

(MEASURES 19 3/4" X 17" X 1 7/8")

(NOTED AS TYPE A-S ON DRAINAGE TABLE)

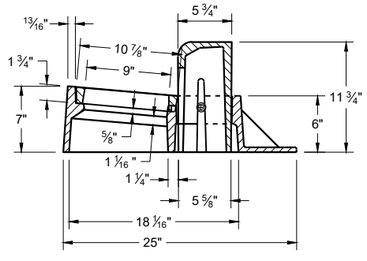

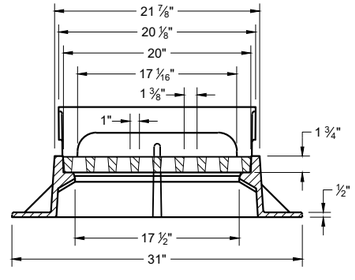

TYPE "Z"

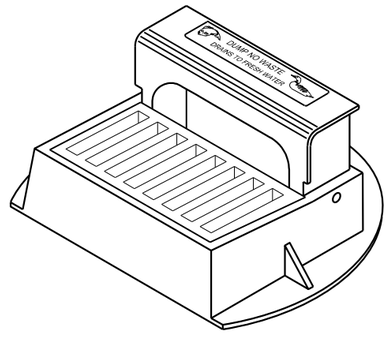

GENERAL NOTES

DETAILS OF CONSTRUCTION, MATERIALS AND WORKMANSHIP NOT SHOWN ON THIS DRAWING SHALL CONFORM TO THE PERTINENT REQUIREMENTS OF THE STANDARD SPECIFICATIONS AND THE APPLICABLE SPECIAL PROVISIONS.

DETAIL DRAWINGS FOR PROPOSED ALTERNATE DESIGNS FOR CATCH BASIN, MANHOLE AND INLET COVERS SHALL BE SUBMITTED TO THE ENGINEER FOR APPROVAL PROVIDING THAT SUCH ALTERNATE DESIGNS MAKE PROVISION FOR EQUIVALENT CAPACITY AND STRENGTH.

ROUND FRAMES AND COVERS SHALL HAVE CONTINUOUSLY MACHINED BEARING SURFACES TO PREVENT ROCKING AND RATTLING.

INLET COVERS
TYPES A, H, A-S, H-S AND Z

STATE OF WISCONSIN
DEPARTMENT OF TRANSPORTATION

APPROVED
February 2025 — DATE
/S/ Rodney Taylor — ROADWAY STANDARDS DEVELOPMENT UNIT SUPERVISOR
FHWA

6
SDD 08A05-22a

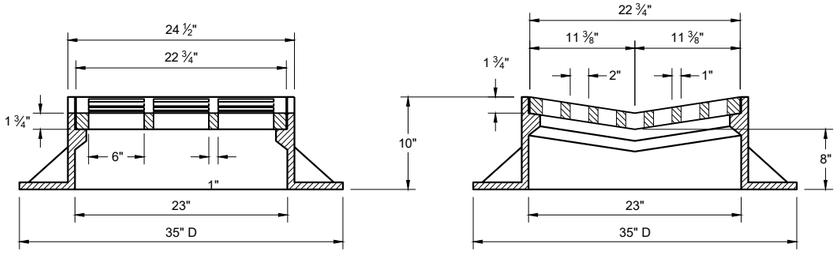

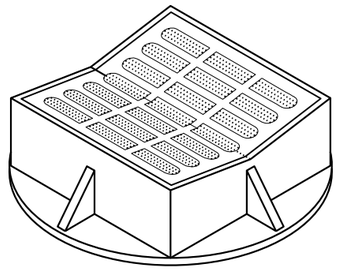

TYPE "B"

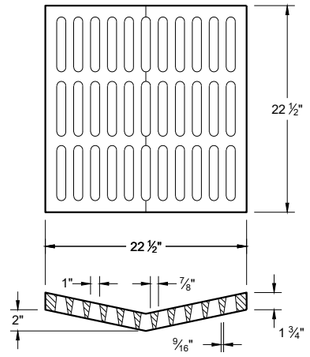

ALTERNATIVE GRATE FOR TYPE "B" COVER

USE WHERE PEDESTRIAN OF BICYCLE TRAFFIC IS POSSIBLE

NOTED AS TYPE B - A ON THE DRAINAGE TABLE

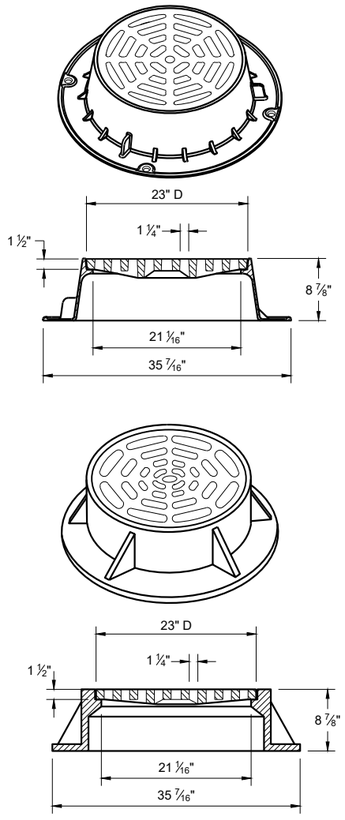

TYPE "C"

NOTE: EITHER CASTING IS ACCEPTABLE

GENERAL NOTES

DETAILS OF CONSTRUCTION, MATERIALS AND WORKMANSHIP NOT SHOWN ON THIS DRAWING SHALL CONFORM TO THE PERTINENT REQUIREMENTS OF THE STANDARD SPECIFICATIONS AND THE APPLICABLE SPECIAL PROVISIONS.

DETAIL DRAWINGS FOR PROPOSED ALTERNATE DESIGNS FOR CATCH BASIN, MANHOLE AND INLET COVERS SHALL BE SUBMITTED TO THE ENGINEER FOR APPROVAL PROVIDING THAT SUCH ALTERNATE DESIGNS MAKE PROVISION FOR EQUIVALENT CAPACITY AND STRENGTH.

ROUND FRAMES AND COVERS SHALL HAVE CONTINUOUSLY MACHINED BEARING SURFACES TO PREVENT ROCKING AND RATTLING.

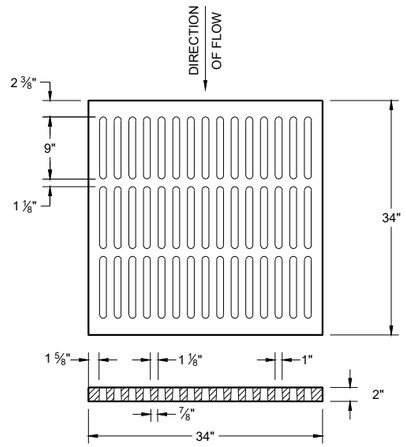

ALTERNATIVE TYPE "MS"

USE WHERE PEDESTRIAN OF BICYCLE TRAFFIC IS PERMITTED

NOTED AS TYPE MS-A ON THE DRAINAGE TABLE

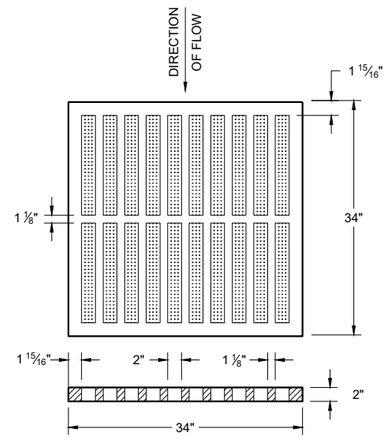

TYPE "MS"

USE ON FREEWAYS AND EXPRESSWAYS

NOTED AS TYPE MS ON THE DRAINAGE TABLE

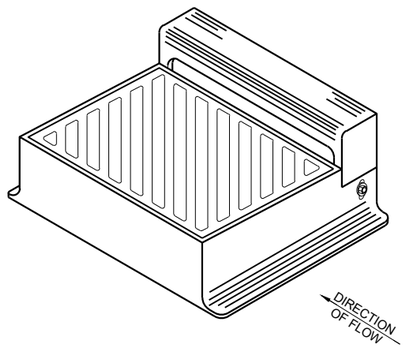

DIAGONAL SLOTS SHALL BE ORIENTEDTO THE DIRECTION OF FLOW AS ILLUSTRATED.
GRATES ARE MANUFACTURED TO BE REVERSIBLE.

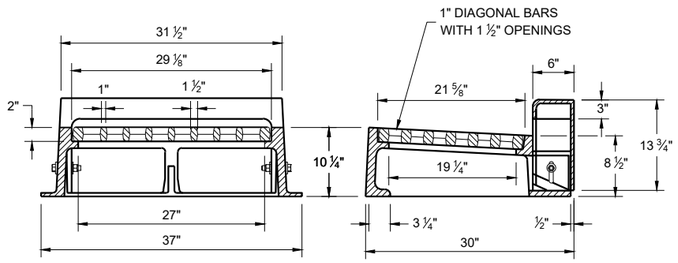

TYPE "WM"

NOTE: CURB BOX HEIGHT ADJUSTABLE 6" - 9"

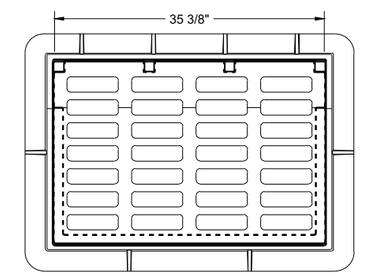

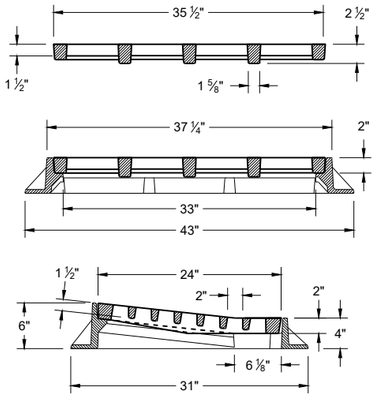

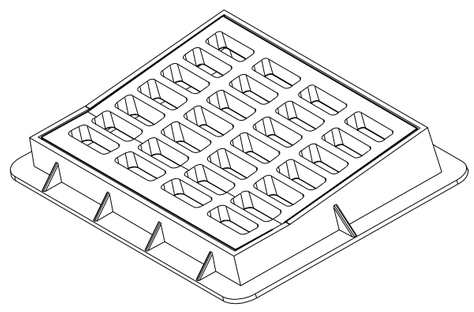

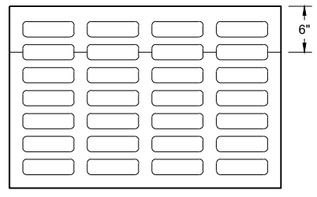

TYPE "DW"

NOTES: FOR USE IN A SUMP CONDITION. THIS OPTION IS ONLY TO BE USED IF NO OTHER INLETS ARE APPLICABLE.

INLET COVERS
TYPES B, B-A, C,
MS, MS-A ,DW AND WM

STATE OF WISCONSIN
DEPARTMENT OF TRANSPORTATION

APPROVED
February 2025 — DATE
/S/ Rodney Taylor — ROADWAY STANDARDS DEVELOPMENT UNIT SUPERVISOR

FHWA

6

SDD 08A05-22b

SDD 08A05-22b

GENERAL NOTES

DETAILS OF CONSTRUCTION, MATERIALS AND WORKMANSHIP NOT SHOWN ON THIS DRAWING SHALL CONFORM TO THE PERTINENT REQUIREMENTS OF THE STANDARD SPECIFICATIONS AND THE APPLICABLE SPECIAL PROVISIONS.

DETAIL DRAWINGS FOR PROPOSED ALTERNATE DESIGNS FOR INLET COVERS SHALL BE SUBMITTED TO THE ENGINEER FOR APPROVAL PROVIDING THAT SUCH ALTERNATE DESIGNS MAKE PROVISION FOR EQUIVALENT CAPACITY AND STRENGTH.

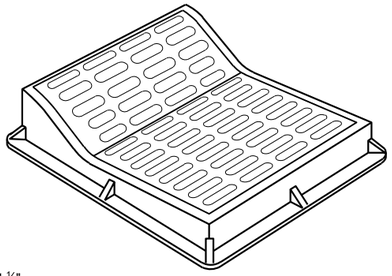

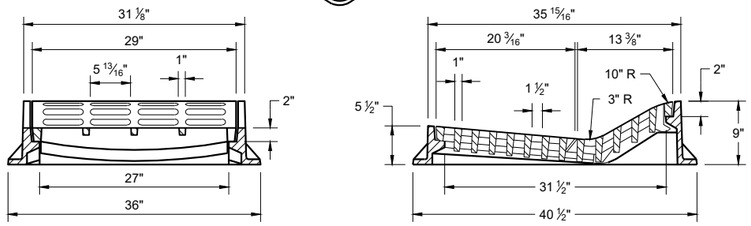

TYPE "F"

USE WITH TYPES "A" AND "D" CONCRETE CURB AND GUTTER, 36"

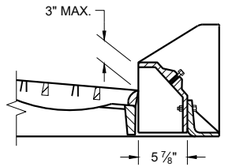

ALTERNATIVE CURB BOX FOR TYPE "HM" COVER

USE WITH TYPES "G" AND "J" CONCRETE CURB AND GUTTER, 30 INCH
NOTED AS TYP "HM-GJ" ON DRAINAGE TABLE

NOTE:
SPECIAL GRATE FOR THE TYPE "H" COVER MAY ALSO BE USED FOR THE TYPE "HM-GJ" COVER.

NOTED AS TYPE HM-GJ-S ON THE DRAINAGE TABLE.

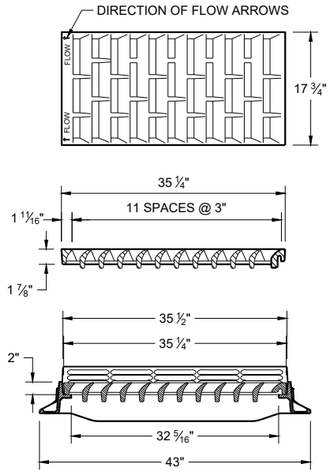

TYPE "HM"

USE WITH TYPES "A" AND "D" CONCRETE CURB AND GUTTER, 36"

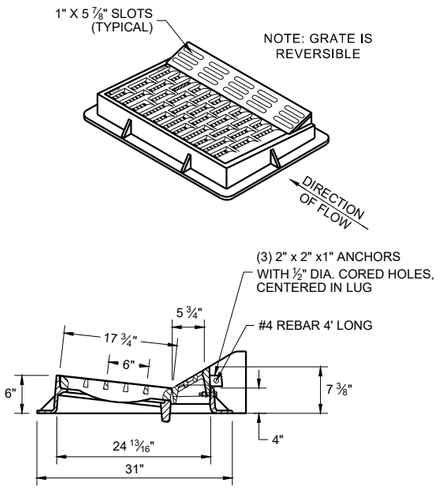

NOTE:
SPECIAL GRATE FOR THE TYPE "H" COVER MAY ALSO BE USED FOR THE TYPE "HM-GJ" COVER.

NOTED AS TYPE HM-GJ-S ON THE DRAINAGE TABLE.

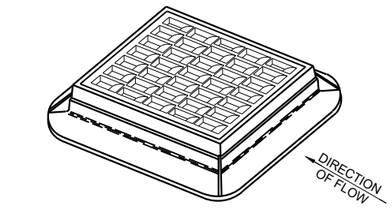

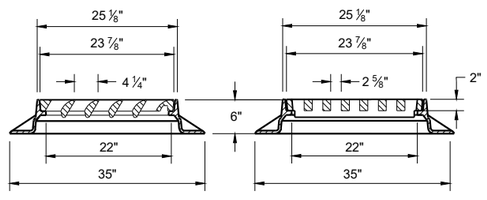

TYPE "S"

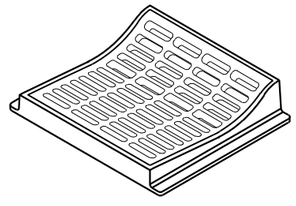

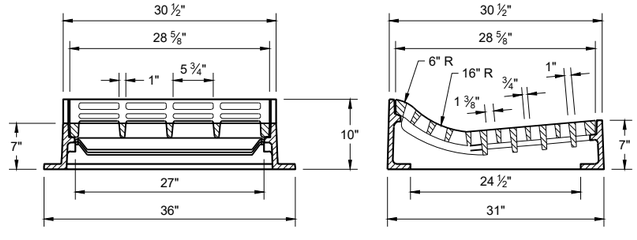

TYPE "T"

USE WITH TYPES "R" AND "T" CONCRETE CURB AND GUTTER, 36"

INLET COVERS
TYPES F, HM, HM-S, S, T, HM-GJ AND HM-GJ-S

STATE OF WISCONSIN
DEPARTMENT OF TRANSPORTATION

APPROVED
February 2025 — DATE
/S/ Rodney Taylor — ROADWAY STANDARDS DEVELOPMENT UNIT SUPERVISOR

FHWA

6
SDD 08A05-22c

GENERAL NOTES

DETAILS OF CONSTRUCTION, MATERIALS AND WORKMANSHIP NOT SHOWN ON THIS DRAWING SHALL CONFORM TO THE PERTINENT REQUIREMENTS OF THE STANDARD SPECIFICATIONS AND THE APPLICABLE SPECIAL PROVISIONS.

DETAIL DRAWINGS FOR PROPOSED ALTERNATE DESIGNS FOR MANHOLE COVERS SHALL BE SUBMITTED TO THE ENGINEER FOR APPROVAL PROVIDING THAT SUCH ALTERNATE DESIGNS MAKE PROVISION FOR EQUIVALENT CAPACITY AND STRENGTH.

ROUND FRAMES AND COVERS SHALL HAVE CONTINUOUSLY MACHINED BEARING SURFACES TO PREVENT ROCKING AND RATTLING.

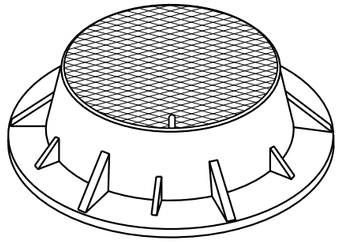

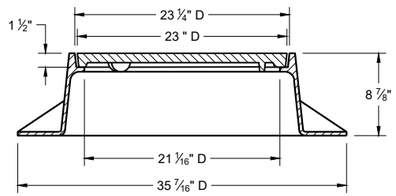

TYPE "J"

NOTE: EITHER CASTING IS ACCEPTABLE

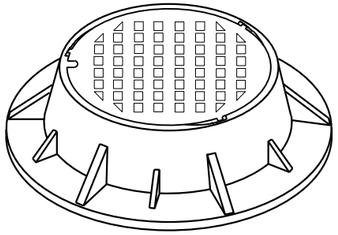

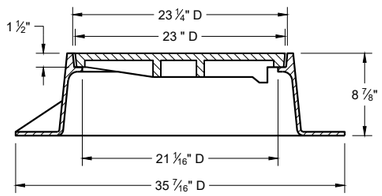

TYPE "J" SPECIAL

TYPE "B" NON-ROCKING SELF-SEAL LID
(NOTED AS TYPE J-S ON THE DRAINAGE TABLE)

NOTE: EITHER CASTING IS ACCEPTABLE

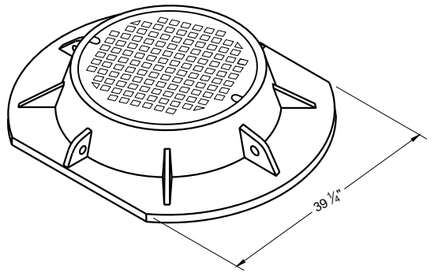

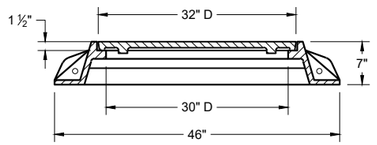

TYPE "K"

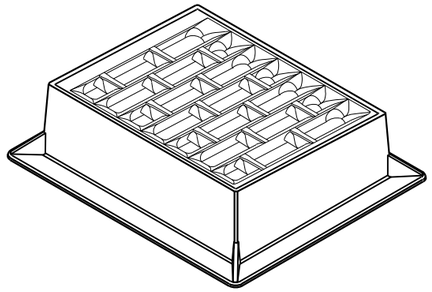

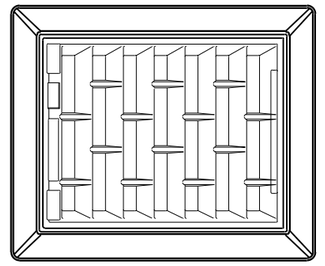

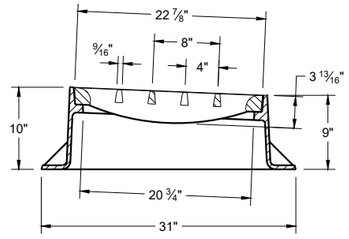

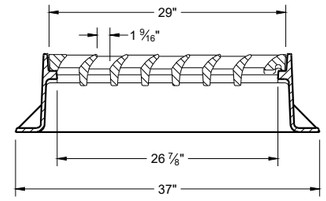

INLET COVER TYPE "BW"

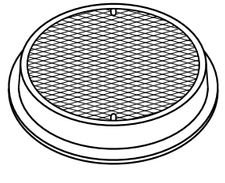

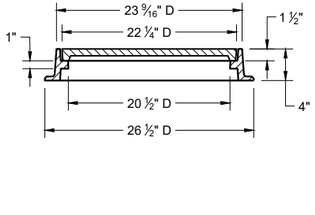

TYPE "L"

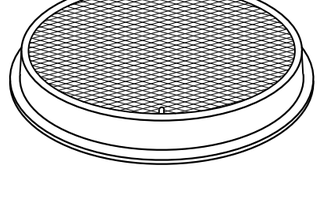

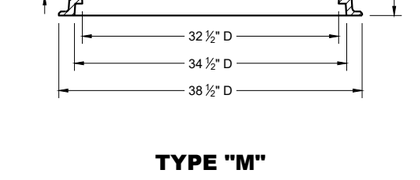

TYPE "M"

INLET COVERS TYPES BW
MANHOLE COVERS TYPES K, J, J-S, L, AND M

STATE OF WISCONSIN
DEPARTMENT OF TRANSPORTATION

APPROVED
February 2025 — DATE
/S/ Rodney Taylor — ROADWAY STANDARDS DEVELOPMENT UNIT SUPERVISOR

FHWA

6
SDD 08A05-22e

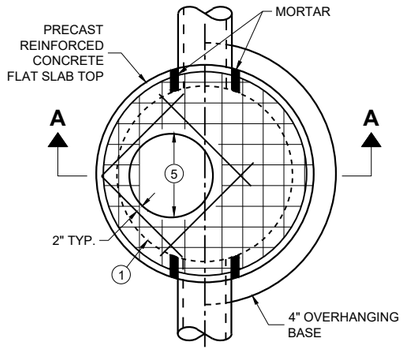

PLAN VIEW

CIRCULAR OPENING

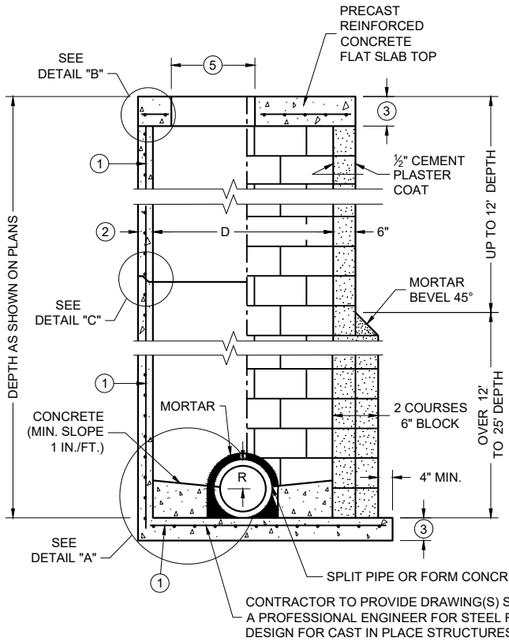

SECTION A - A

PRECAST REINFORCED CONCRETE WITH MONOLITHIC BASE

CONCRETE BLOCK WITH CAST IN PLACE OR PRECAST REINFORCED CONCRETE BASE (1)

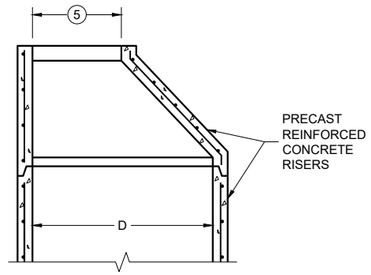

OPTIONAL PRECAST REINFORCED CONCRETE ECCENTRIC TOP

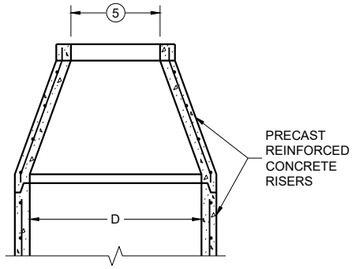

OPTIONAL PRECAST REINFORCED CONCRETE CONCENTRIC TOP

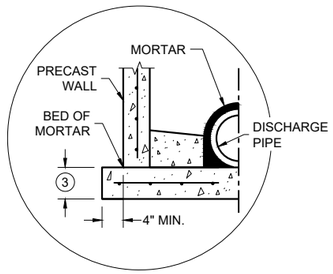

SEPARATE PRECAST REINFORCED CONCRETE BASE OPTION

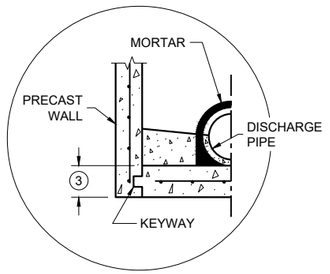

PRECAST REINFORCED CONCRETE WITH INTEGRAL BASE OPTION

DETAIL "A"

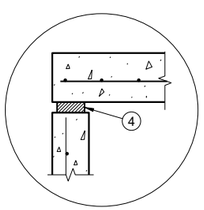

TOP WITH PLAIN END JOINT

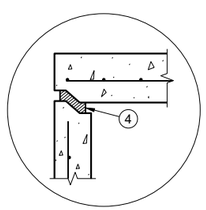

TOP WITH TONGUE AND GROOVE JOINT

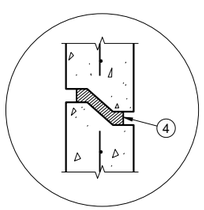

RISER WITH TONGUE AND GROOVE JOINT

DETAIL "B"

DETAIL "C"

MANHOLE COVER OPENING MATRIX

OPENING SIZE (FT.) (5) \ MANHOLE COVER TYPE	C	ALL J'S	K	L	M
2 DIA.	X	X		X	
3 DIA.			X		X

PIPE MATRIX

MANHOLE SIZE (DIA.)	MAXIMUM INSIDE PIPE DIAMETER FOR TWO PIPES		MINIMUM WALL THICKNESS (IN)	MINIMUM PRECAST FLAT SLAB TOP AND BASE THICKNESS
	180° SEPARATION (IN)	90° SEPARATION (IN)		
3-FT	15	12	4	6
4-FT	24	18	4	6
5-FT	36	24	5	8
6-FT	42	36	6	8
7-FT	48	36/42 *	7	8
8-FT	60	42	8	8
9-FT	66	54	9	10
10-FT	72	60	10	10

*A 36" PIPE AND A 42" PIPE CAN BE PLACED WITHIN 90 DEGREES. SEE MINIMUM HORIZONTAL PIPE SEPARATION DETAIL.

GENERAL NOTES

DETAILS OF CONSTRUCTION, MATERIALS AND WORKMANSHIP NOT SHOWN ON THIS DRAWING SHALL CONFORM TO THE PERTINENT REQUIREMENTS OF THE STANDARD SPECIFICATIONS AND THE APPLICABLE SPECIAL PROVISIONS.

UNLESS OTHERWISE AUTHORIZED IN WRITING BY THE ENGINEER, THE CONTRACTOR SHALL NOT ORDER AND DELIVER PRECAST MANHOLE UNITS REQUIRED FOR THE PROJECT UNTIL A LIST OF SIZES IS FURNISHED BY THE ENGINEER.

DETAILED DRAWINGS FOR PROPOSED ALTERNATE DESIGNS FOR UNDERGROUND DRAINAGE STRUCTURES SHALL BE SUBMITTED TO THE ENGINEER FOR APPROVAL PROVIDING THAT SUCH ALTERNATE DESIGNS MAKE PROVISION FOR EQUIVALENT CAPACITY AND STRENGTH.

ALL DRAINAGE STRUCTURES ARE DESIGNATED ON THE PLANS AS "MANHOLES 3X3-L", "CATCH BASINS 4-B", "INLETS 2X3-H", ETC. THE FIRST NUMBERS DESIGNATE THE SIZE OF THE STRUCTURE, AND THE FOLLOWING LETTER DESIGNATES THE TYPE OF COVER TO BE USED TO COMPRISE THE COMPLETE UNIT.

BASES SHALL BE PLACED ON A BED OF MATERIAL AT LEAST 6 INCHES IN DEPTH, WHICH MEETS THE REQUIREMENTS OF FOUNDATION BACKFILL. THIS BEDDING SHALL BE COMPACTED AND PROVIDE UNIFORM SUPPORT FOR THE ENTIRE AREA OF THE BASE.

PRECAST REINFORCED CONCRETE CONE TOPS (ECCENTRIC OR CONCENTRIC) OR PRECAST REINFORCED CONCRETE FLAT SLAB TOPS MAY BE USED ON CONCRETE BLOCK STRUCTURES.

ECCENTRIC CONE TOPS MAY BE USED ON ALL STRUCTURES. CONCENTRIC CONE TOPS SHALL BE USED ONLY ON STRUCTURES 5 FEET OR LESS IN DEPTH UNLESS OTHERWISE DIRECTED BY THE ENGINEER.

STEPS MEETING AASHTO M199 AND THE FOLLOWING REQUIREMENTS SHALL BE INSTALLED IN ALL STRUCTURES OVER 5 FEET IN DEPTH: 16 INCH C-C MAXIMUM SPACING; PROJECT A MINIMUM CLEAR DISTANCE OF 4 INCHES FROM THE WALL AT THE POINT OF EMBEDMENT; MINIMUM LENGTH OF 10 INCHES; MINIMUM WALL EMBEDMENT OF 3 INCHES. FERROUS METAL STEPS NOT PAINTED OR TREATED TO RESIST CORROSION SHALL HAVE A MINIMUM CROSS SECTIONAL IMENSION OF 1 INCH.

STEPS OF APPROVED POLYPROPYLENE PLASTIC COATED REINFORCEMENT BAR ARE ACCEPTABLE. REINFORCING BAR MUST BE A MINIMUM OF ½ INCH AND MEET THE REQUIREMENTS OF ASTM A615.

CERTIFICATION SHALL BE PROVIDED THAT INSTALLED STEPS WHEN TESTED IN ACCORDANCE WITH SECTION 10 OF AASHTO T280 CAN WITHSTAND A VERTICAL LOAD OF 800 LBS. AND A HORIZONTAL LOAD OF 400 LBS.

ALL BAR STEEL REINFORCEMENT SHALL BE EMBEDDED 2 INCHES CLEAR UNLESS OTHERWISE SHOWN OR NOTED.

ALL PRECAST MANHOLE UNITS SHALL CONFORM TO THE PERTINENT REQUIREMENTS OF AASHTO DESIGNATION M199.

PRECAST REINFORCED RISERS SHALL HAVE A TONGUE AND GROOVE JOINT WITH TONGUE UP OR DOWN.

CONCRETE BLOCK WILL NOT BE PERMITTED FOR STRUCTURES GREATER THAN 4 FEET IN DIAMETER.

4" OVERHANGING BASES ARE REQUIRED FOR ALL CONCRETE BLOCK INSTALLATIONS. 4" OVERHANG IS REQUIRED WHEN SEPARATE PRECAST BASE IS PROVIDED. OVERHANG IS NOT REQUIRED ON PRECAST STRUCTURES WITH AN INTEGRAL OR MONOLITHIC BASE.

FOR ADDITIONAL CONFIGURATIONS, MAINTAIN A MINIMUM OF 12 INCHES AS MEASURED FROM THE INSIDE OF THE STRUCTURE WALL BETWEEN THE OUTSIDE PIPE WALLS OF ADJACENT PIPES. SEE DETAIL "D".

(1) FOR PRECAST MANHOLES AND REINFORCED CONCRETE BASES PROVIDE REINFORCING STEEL IN ACCORDANCE TO AASHTO M199.

(2) SEE PIPE MATRIX TABLE FOR MINIMUM WALL THICKNESS FOR PRECAST MANHOLES

(3) SEE PIPE MATRIX TABLE FOR MINIMUM THICKNESS OF PRECAST FLAT SLAB TOPS AND BASES.

(4) JOINTS TO BE SEALED WITH A BUTYL RUBBER SEAL PER SEALANT MANUFACTURERS RECOMMENDATIONS CONFORMING TO ASTM C 990 OR RUBBER GASKETS CONFORMING TO ASTM C443.

(5) SEE MANHOLE COVER OPENING MATRIX.

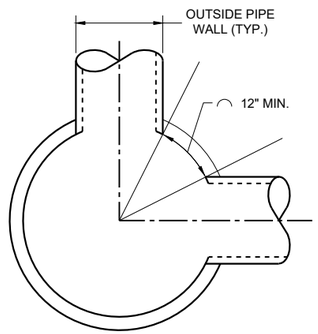

MINIMUM HORIZONTAL PIPE SEPARATION

DETAIL "D"

MANHOLES 3-FT, 4-FT, 5-FT, 6-FT, 7-FT, 8-FT, 9-FT AND 10-FT DIAMETER

MANHOLES, 3-FT, 4-FT 5-FT, 6-FT, 7-FT, 8-FT, 9-FT AND 10-FT DIAMETER

STATE OF WISCONSIN
DEPARTMENT OF TRANSPORTATION

APPROVED
December 2023 — DATE
/S/ Rodney Taylor — ROADWAY STANDARDS DEVELOPMENT UNIT SUPERVISOR

FHWA

SDD 08B09-04

6

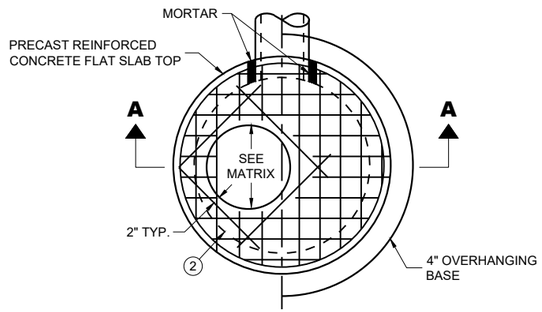

PLAN VIEW CIRCULAR OPENING

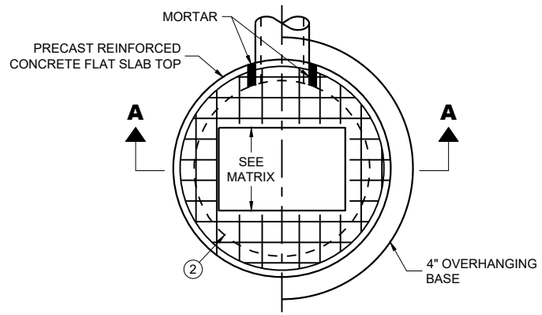

PLAN VIEW RECTANGULAR OPENING

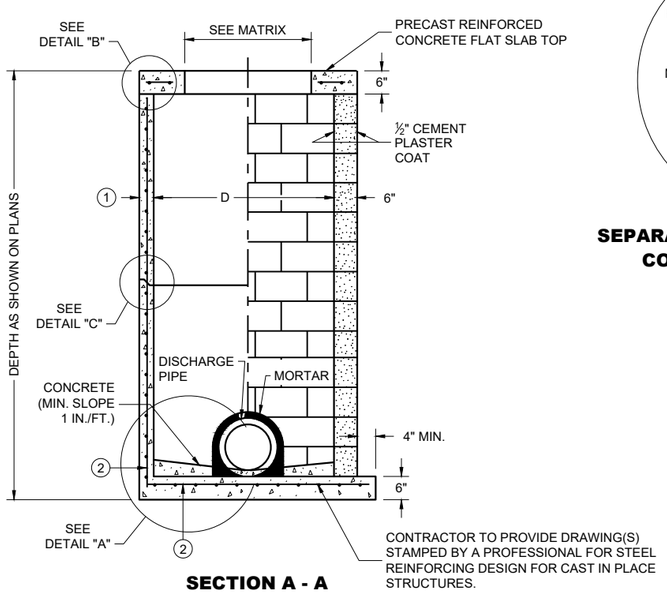

SECTION A - A

PRECAST REINFORCED CONCRETE WITH MONOLITHIC BASE

CONCRETE BLOCK WITH CAST IN PLACE OR PRECAST REINFORCED CONCRETE BASE (2)

CIRCULAR INLETS WITH FLAT TOP

CATCH BASIN COVER OPENING MATRIX

INLET SIZE	INLET COVER TYPE	ALL A'S	ALL B'S	BW	C	F	ALL H'S	S	T	V V-B	WM	Z
	OPENING SIZE (FT.)											
3-FT	2 DIA.				X							X
	2 X 2	X	X					X		X		
4-FT	2 DIA.				X							X
	2 X 2	X	X					X		X		
	2 X 2.5			X				X	X	X	X	
	2 X 3						X					
	2.5 X 3					X						

PIPE MATRIX

INLET SIZE	MAXIMUM INSIDE PIPE DIAMETER FOR TWO PIPES	
	180° SEPARATION (IN)	90° SEPARATION (IN)
3-FT	15	12
4-FT	24	18

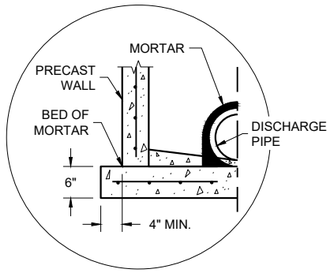

SEPARATE PRECAST REINFORCED CONCRETE BASE OPTION

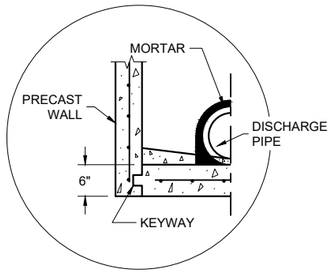

PRECAST REINFORCED CONCRETE WITH INTEGRAL BASE OPTION

DETAIL "A"

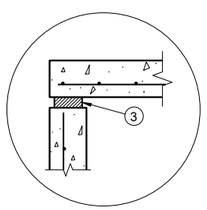

TOP WITH PLAIN END JOINT

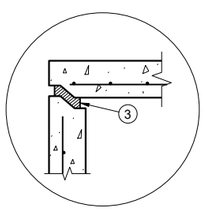

TOP WITH TONGUE AND GROOVE JOINT

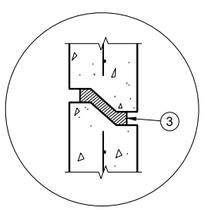

RISER WITH TONGUE AND GROOVE JOINT

DETAIL "B" **DETAIL "C"**

GENERAL NOTES

DETAILS OF CONSTRUCTION, MATERIALS AND WORKMANSHIP NOT SHOWN ON THIS DRAWING SHALL CONFORM TO THE PERTINENT REQUIREMENTS OF THE STANDARD SPECIFICATIONS AND THE APPLICABLE SPECIAL PROVISIONS.

UNLESS OTHERWISE AUTHORIZED IN WRITING BY THE ENGINEER, THE CONTRACTOR SHALL NOT ORDER AND DELIVER PRECAST INLET UNITS REQUIRED FOR THE PROJECT UNTIL A LIST OF SIZES IS FURNISHED BY THE ENGINEER.

DETAILED DRAWINGS FOR PROPOSED ALTERNATE DESIGNS FOR UNDERGROUND DRAINAGE STRUCTURES SHALL BE SUBMITTED TO THE ENGINEER FOR APPROVAL PROVIDING THAT SUCH ALTERNATE DESIGNS MAKE PROVISION FOR EQUIVALENT CAPACITY AND STRENGTH.

ALL DRAINAGE STRUCTURES ARE DESIGNATED ON THE PLANS AS "MANHOLES 3X3-L", "CATCH BASINS 4-B", "INLETS 2X3-H", ETC. THE FIRST NUMBERS DESIGNATE THE SIZE OF THE STRUCTURE, AND THE FOLLOWING LETTER DESIGNATES THE TYPE OF COVER TO BE USED TO COMPRISE THE COMPLETE UNIT.

BASES SHALL BE PLACED ON A BED OF MATERIAL AT LEAST 6 INCHES IN DEPTH, WHICH MEETS THE REQUIREMENTS OF FOUNDATION BACKFILL. THIS BEDDING SHALL BE COMPACTED AND PROVIDE UNIFORM SUPPORT FOR THE ENTIRE AREA OF THE BASE.

ALL BAR STEEL REINFORCEMENT SHALL BE EMBEDDED 2 INCHES CLEAR UNLESS OTHERWISE SHOWN OR NOTED.

ALL PRECAST INLET UNITS SHALL CONFORM TO THE PERTINENT REQUIREMENTS OF AASHTO DESIGNATION M199.

PRECAST REINFORCED RISERS SHALL HAVE A TONGUE AND GROOVE JOINT WITH TONGUE UP OR DOWN.

4" OVERHANGING BASES ARE REQUIRED FOR ALL CONCRETE BLOCK INSTALLATIONS. 4" OVERHANG IS REQUIRED WHEN SEPARATE PRECAST BASE IS PROVIDED. OVERHANG IS NOT REQUIRED ON PRECAST STRUCTURES WITH AN INTEGRAL OR MONOLITHIC BASE.

FOR ADDITIONAL CONFIGURATIONS, MAINTAIN A MINIMUM OF 12 INCHES AS MEASURED FROM THE INSIDE OF THE STRUCTURE WALL BETWEEN THE OUTSIDE PIPE WALLS OF ADJACENT PIPES. SEE DETAIL "D".

(1) MINIMUM WALL THICKNESS SHALL BE 4 INCHES FOR 3-FT DIAMETER AND 5 INCHES FOR 4-FT DIAMTER PRECAST INLETS.

(2) FOR PRECAST INLETS AND REINFORCED CONCRETE BASES PROVIDE REINFORCING STEEL IN ACCORDANCE TO AASHTO M199.

(3) JOINTS TO BE SEALED WITH A BUTYL RUBBER SEAL PER SEALANT MANUFACTURERS RECOMMENDATIONS CONFORMING TO ASTM C 990 OR RUBBER GASKETS CONFORMING TO ASTM C443.

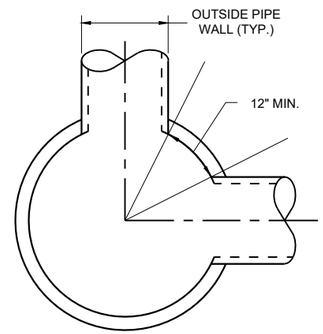

MINIMUM HORIZONTAL PIPE SEPARATION

DETAIL "D"

INLETS 3-FT AND 4-FT DIAMETER

STATE OF WISCONSIN
DEPARTMENT OF TRANSPORTATION

APPROVED
December 2023 — DATE
/S/ Rodney Taylor — ROADWAY STANDARDS DEVELOPMENT UNIT SUPERVISOR

FHWA

6
SDD 08C06-03

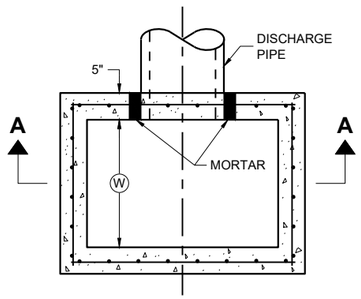

PLAN VIEW

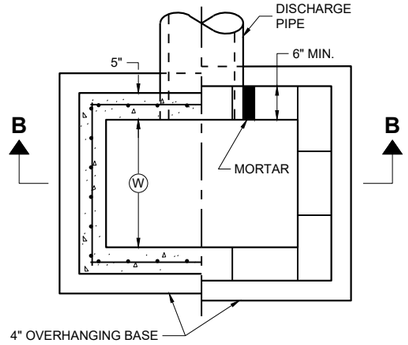

PLAN VIEW

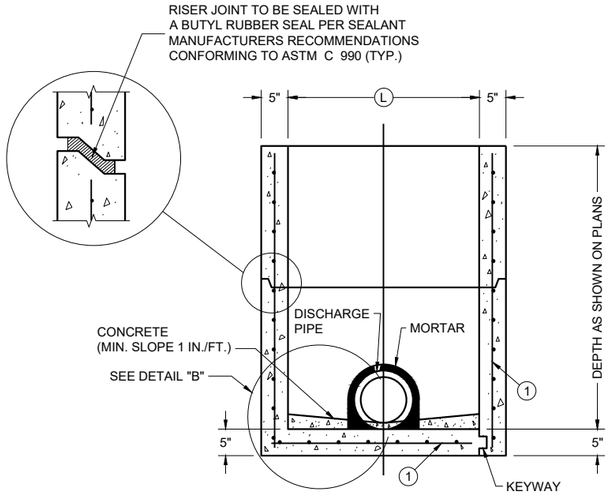

PRECAST REINFORCED CONCRETE WITH MONOLITHIC BASE

PRECAST REINFORCED CONCRETE WITH INTEGRAL BASE

SECTION A - A

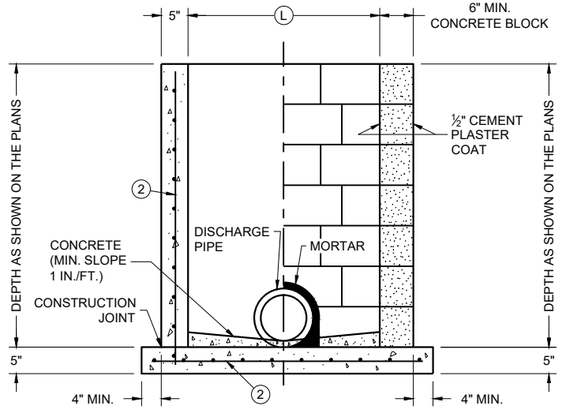

CAST IN PLACE REINFORCED CONCRETE

CONCRETE BLOCK WITH CAST IN PLACE OR PRECAST REINFORCED CONCRETE BASE (1)

SECTION B - B

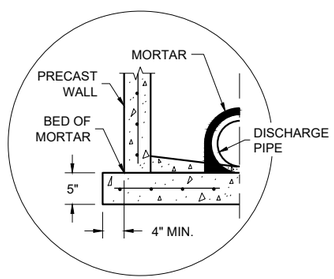

SEPARATE PRECAST REINFORCED CONCRETE BASE OPTION

DETAIL "B"

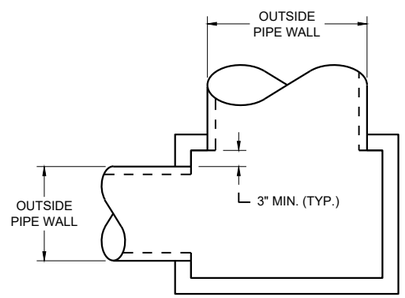

DETAIL "A"

GENERAL NOTES

DETAILS OF CONSTRUCTION, MATERIALS AND WORKMANSHIP N0T SHOWN ON THIS DRAWING SHALL CONFORM TO THE PERTINENT REQUIREMENTS OF THE STANDARD SPECIFICATIONS AND THE APPLICABLE SPECIAL PROVISIONS.

UNLESS OTHERWISE AUTHORIZED IN WRITING BY THE ENGINEER, THE CONTRACTOR SHALL NOT ORDER AND DELIVER PRECAST INLET UNITS REQUIRED FOR THE PROJECT UNTIL A LIST OF SIZES IS FURNISHED BY THE ENGINEER.

DETAILED DRAWINGS FOR PROPOSED ALTERNATE DESIGNS FOR UNDERGROUND DRAINAGE STRUCTURES SHALL BE SUBMITTED TO THE ENGINEER FOR APPROVAL PROVIDING THAT SUCH ALTERNATE DESIGNS MAKE PROVISION FOR EQUIVALENT CAPACITY AND STRENGTH.

ALL PRECAST INLET UNITS SHALL CONFORM TO THE PERTINENT REQUIREMENTS OF ASTM C 913.

ALL DRAINAGE STRUCTURES ARE DESIGNATED ON THE PLANS AS "MANHOLES 3X3-L", "CATCH BASINS 4-B", "INLETS 2X3-H", ETC. THE FIRST NUMBERS DESIGNATES THE SIZE OF THE STRUCTURE, AND THE FOLLOWING LETTER DESIGNATES THE TYPE OF COVER TO BE USED TO COMPRISE THE COMPLETE UNIT.

BASES SHALL BE PLACED ON A BED OF MATERIAL AT LEAST 6 INCHES IN DEPTH, WHICH MEETS THE REQUIREMENTS OF FOUNDATION BACKFILL. THIS BEDDING SHALL BE COMPACTED AND PROVIDE UNIFORM SUPPORT FOR THE ENTIRE AREA OF THE BASE.

ALL BAR STEEL REINFORCEMENT SHALL BE EMBEDDED 2 INCHES CLEAR UNLESS OTHERWISE SHOWN OR NOTED.

PRECAST REINFORCED RISERS SHALL HAVE A TONGUE AND GROOVE JOINT WITH TONGUE UP OR DOWN.

4" OVERHANGING BASES ARE REQUIRED FOR CAST-IN-PLACE REINFORCED CONCRETE AND CONCRETE BLOCK INSTALLATIONS. 4" OVERHANG IS REQUIRED WHEN SEPARATE PRECAST BASE IS PROVIDED. OVERHANG IS NOT REQUIRED ON PRECAST STRUCTURES WITH AN INTEGRAL OR MONOLITHIC BASE.

MAXIMUM INSIDE PIPE DIAMETER DETERMINED BY 3" CLEARANCE ON EACH SIDE OF THE OUTSIDE WALL OF THE PIPE. SEE DETAIL "A". ASSUMES PIPE ENTERS PERPENDICULAR TO THE STRUCTURE.

(1) FOR PRECAST INLETS AND REINFORCED CONCRETE BASES PROVIDE REINFORCING STEEL IN ACCORDANCE TO ASTM C 913
(2) CONTRACTOR TO PROVIDE DRAWING(S) STAMPED BY A PROFESSIONAL ENGINEER FOR STEEL REINFORCING DESIGN FOR CAST-IN-PLACE STRUCTURES.

CATCH BASIN COVER MATRIX

INLET SIZE	WIDTH (W) (FT.)	LENGTH (L) (FT.)	INLET COVER TYPE									
			ALL A'S	ALL B'S	BW	F	ALL H'S	S	T	V	WM	V V-B
2 X 2-FT	2	2	X	X				X				
2 X 2.5-FT	2	2.5			X			X	X	X	X	
2 X 3-FT	2	3					X					
2.5 X 3-FT	2.5	3				X						
2 X 3.5-FT	2	3.5										X

PIPE MATRIX

CATCH BASIN SIZE	MAXIMUM INSIDE PIPE DIAMETER FOR TWO PIPES	
	WIDTH (IN)	LENGTH (IN)
2 X 2-FT	12	12
2 X 2.5-FT	12	18
2 X 3-FT	12	24
2.5 X 3-FT	18	24
2 X 3.5-FT	12	30

INLETS 2 X 2-FT, 2 X 2.5-FT, 2 X 3-FT, 2.5 X 3-FT AND 2X3.5-FT

INLETS 2 X 2-FT, 2 X 2.5-FT, 2 X 3-FT, 2.5 X 3-FT AND 2 X 3.5-FT

STATE OF WISCONSIN
DEPARTMENT OF TRANSPORTATION

APPROVED
December 2023
DATE

/S/ Rodney Taylor
ROADWAY STANDARDS DEVELOPMENT UNIT SUPERVISOR

FHWA

6

SDD 08C07-03

6

SDD 08C07-03

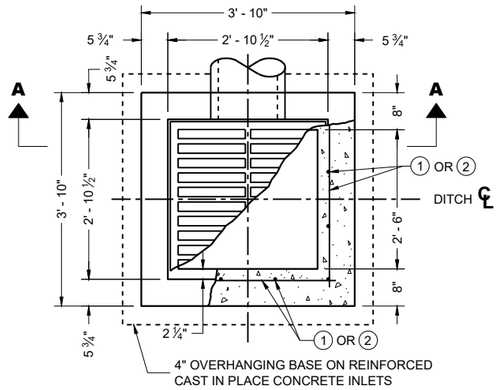

PLAN VIEW

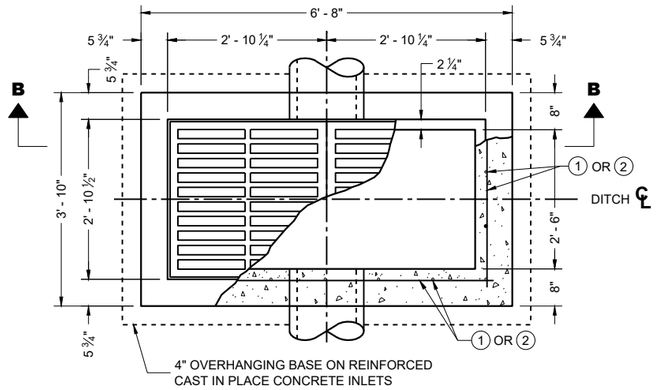

PLAN VIEW

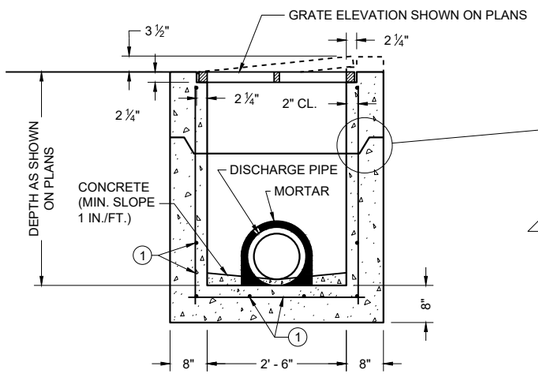

PRECAST REINFORCED CONCRETE SECTION A - A

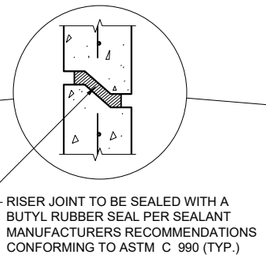

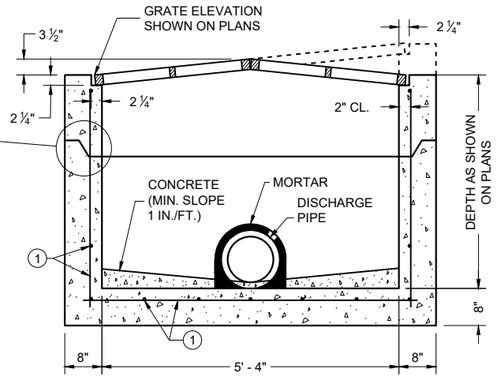

PRECAST REINFORCED CONCRETE SECTION B - B

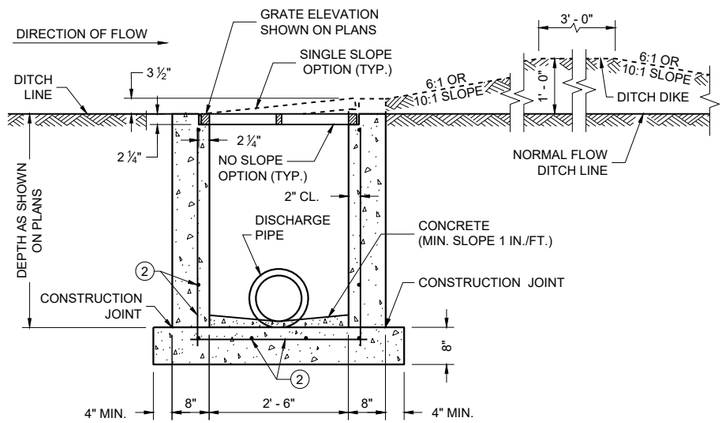

REINFORCED CAST IN PLACE CONCRETE SECTION A - A

INLETS MEDIAN 1 GRATE

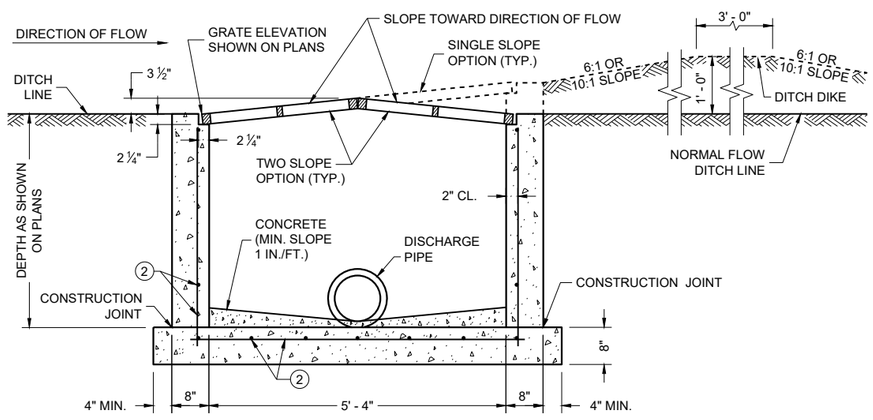

REINFORCED CAST IN PLACE CONCRETE SECTION B - B

INLETS MEDIAN 2 GRATE

GENERAL NOTES

DETAILS OF CONSTRUCTION, MATERIALS AND WORKMANSHIP N0T SHOWN ON THIS DRAWING SHALL CONFORM TO THE PERTINENT REQUIREMENTS OF THE STANDARD SPECIFICATIONS AND THE APPLICABLE SPECIAL PROVISIONS.

UNLESS OTHERWISE AUTHORIZED IN WRITING BY THE ENGINEER, THE CONTRACTOR SHALL NOT ORDER AND DELIVER PRECAST INLET UNITS REQUIRED FOR THE PROJECT UNTIL A LIST OF SIZES IS FURNISHED BY THE ENGINEER.

DETAILED DRAWINGS FOR PROPOSED ALTERNATE DESIGNS FOR INLETS WHICH MAY INCLUDE PRECAST REINFORCED CONCRETE INLETS, SHALL BE SUBMITTED TO THE ENGINEER FOR APPROVAL PROVIDING THAT SUCH ALTERNATE DESIGNS MAKE PROVISION FOR EQUIVALENT CAPACITY AND STRENGTH.

ALL MEDIAN INLETS ARE DESIGNATED ON THE PLANS AS "INLETS, 1G-MS", ETC. THE FIRST NUMBER AND LETTER DESIGNATE THE TYPE OF STRUCTURE, AND THE FOLLOWING LETTERS DESIGNATE THE TYPE OF COVER TO BE USED TO COMPRISE THE COMPLETE UNIT.

BASES SHALL BE PLACED ON A BED OF MATERIAL AT LEAST 6 INCHES IN DEPTH, WHICH MEETS THE REQUIREMENTS OF FOUNDATION BACKFILL. THIS BEDDING SHALL BE COMPACTED AND PROVIDE UNIFORM SUPPORT FOR THE ENTIRE AREA OF THE BASE.

ALL PRECAST INLET UNITS SHALL CONFORM TO THE PERTINENT REQUIREMENTS OF ASTM C 913.

ALL BAR STEEL REINFORCEMENT SHALL BE EMBEDDED 2 INCHES CLEAR UNLESS OTHERWISE SHOWN OR NOTED.

PRECAST REINFORCED RISERS SHALL HAVE A TONGUE AND GROOVE JOINT WITH TONGUE UP OR DOWN.

MAXIMUM INSIDE PIPE DIAMETER DETERMINED BY 3" CLEARANCE ON EACH SIDE OF THE OUTSIDE WALL OF THE PIPE. SEE DETAIL "A". ASSUMES PIPE ENTERS PERPENDICULAR TO THE STRUCTURE.

(1) FOR PRECAST INLETS AND REINFORCED CONCRETE BASES PROVIDE REINFORCING STEEL IN ACCORDANCE TO ASTM C 913.

(2) CONTRACTOR TO PROVIDE DRAWING(S) STAMPED BY A PROFESSIONAL ENGINEER FOR STEEL REINFORCING DESIGN FOR CAST-IN-PLACE STRUCTURES.

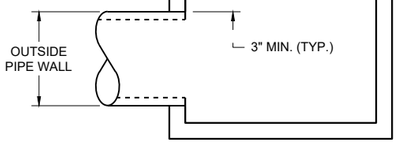

DETAIL "A"

PIPE MATRIX

INLET SIZE	MAXIMUM INSIDE PIPE DIAMETER	
	WIDTH (IN)	LENGTH (IN)
1 GRATE	18	18
2 GRATE	18	42

INLETS
MEDIAN 1 AND 2 GRATE

STATE OF WISCONSIN
DEPARTMENT OF TRANSPORTATION

APPROVED
December 2023 — DATE
/S/ Rodney Taylor — ROADWAY STANDARDS DEVELOPMENT UNIT SUPERVISOR

FHWA

6
SDD 08C08-03

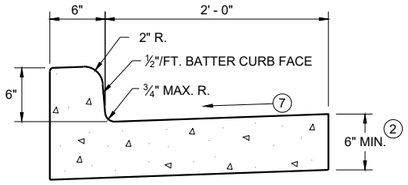

TYPES A (1) & D

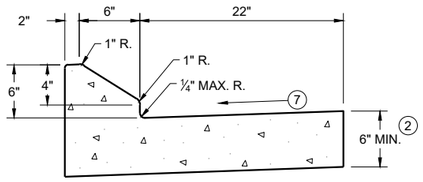

6" SLOPED CURB TYPES G (1) & J

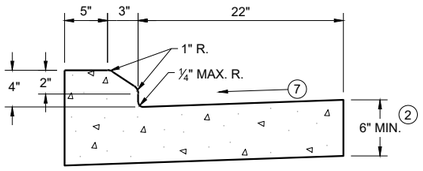

4" SLOPED CURB TYPES G (1) & J

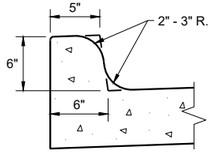

TYPES K (1) & L
(OPTIONAL CURB SHAPE)

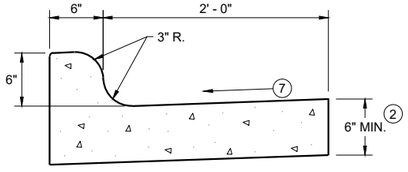

TYPES K (1) & L

CONCRETE CURB AND GUTTER 30"

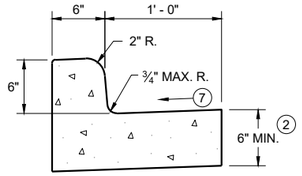

TYPES A (1) & D

CONCRETE CURB AND GUTTER 18"

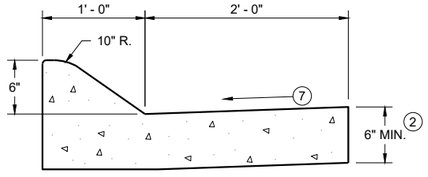

6" SLOPED CURB TYPES A (1) & D

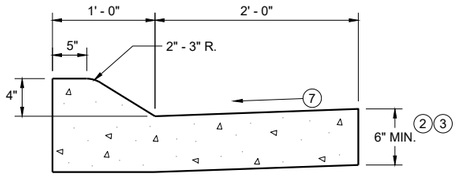

4" SLOPED CURB TYPES A (1) & D

CONCRETE CURB AND GUTTER 36"

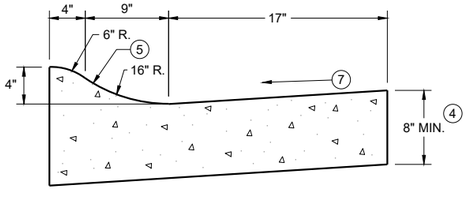

4" SLOPED CURB TYPES R (1) & T
CONCRETE CURB AND GUTTER 30"

TBT & TBTT	X
30"	22"
36"	28"

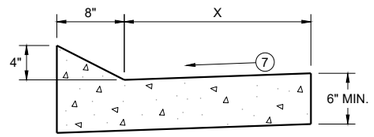

TYPES TBT & TBTT (1)

CONCRETE CURB AND GUTTER

PAVEMENT THICKNESS AND MAXIMUM CONCRETE PANEL WIDTH TABLE

PAVEMENT THICKNESS	MAXIMUM PANEL WIDTH
LESS THAN 10"	12'
10" & ABOVE	15'

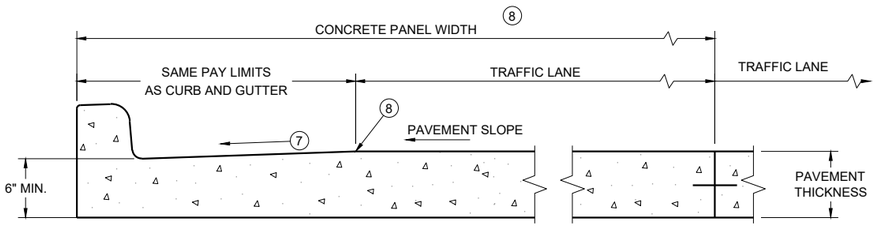

PARTIAL SECTION OF PAVEMENT * WITH INTEGRAL CURB AND GUTTER

* BIKE LANE IS NOT SHOWN

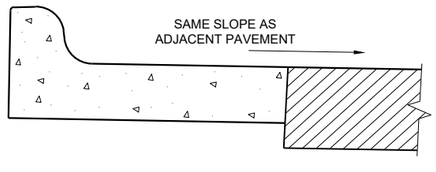

REVERSE SLOPE GUTTER (6)
(TYPICAL FOR ALL CURB & GUTTER TYPES)

GENERAL NOTES

DETAILS OF CONSTRUCTION AND WORKMANSHIP NOT SHOWN ON THIS DRAWING SHALL CONFORM TO THE PERTINENT REQUIREMENTS OF THE CONTRACT.

PAVEMENT TIES AND TIE BARS SHALL BE EPOXY COATED IN CONFORMANCE WITH SUBSECTION 505.2.6.2 OF THE STANDARD SPECIFICATIONS.

INTEGRAL CURB AND GUTTER SHALL CONFORM TO THE DETAILS SHOWN FOR CONCRETE CURB AND GUTTER INCLUDING THE TRANSVERSE GUTTER SLOPE.

UNLESS OTHERWISE SHOWN ON THE TYPICAL CROSS SECTIONS, THE BASE AGGREGATE AND COMMON EXCAVATION LIMITS ARE 2' - 0" BEHIND THE BACK OF CURBS.

(1) TIE BARS ARE REQUIRED FOR CURB AND GUTTERS TYPES A, G, K, R, AND TBTT.

(2) THE BOTTOM OF CURB AND GUTTER MAY BE CONSTRUCTED EITHER LEVEL OR PARALLEL TO THE SLOPE OF THE SUBGRADE OR BASE AGGREGATE PROVIDED A 6" MINIMUM GUTTER THICKNESS IS MAINTAINED.

(3) USE 8" MINIMUM GUTTER THICKNESS WHEN USED WITH AN ADJACENT CONCRETE TRUCK APRON PLACED BEHIND BACK OF CURB.

(4) THE BOTTOM OF CURB AND GUTTER MAY BE CONSTRUCTED EITHER LEVEL OR PARALLEL TO THE SLOPE OF THE SUBGRADE OR BASE AGGREGATE PROVIDED A 8" MINIMUM GUTTER THICKNESS IS MAINTAINED.

(5) UNLESS OTHERWISE NOTED, FOR STAKING PURPOSES THE FACE OF CURB IS 6" FROM THE BACK OF CURB.

(6) WHEN REVERSE SLOPE GUTTER IS REQUIRED, THE LOCATION(S) WILL BE SHOWN ELSEWHERE IN THE PLAN.

(7) USE 4% GUTTER CROSS SLOPE UNLESS OTHERWISE NOTED IN THE PLANS.

(8) INCLUDE LONGITUDINAL JOINT AND TIE BARS ALONG LANE EDGE WHEN CONCRETE PANEL WIDTH EXCEEDS THE MAXIMUM WIDTH PER TABLE BELOW. LONGITUDINAL JOINT(S) ARE NOT ALLOWED WITHIN TRAFFIC LANES AND BIKE LANES. LONGITUDINAL JOINT MAY BE SAWED.

(9) SLOPE TO BE REVERSE SLOPE MATCHING THE SLOPE OF THE PAVEMENT AND THE CIRCULATORY ROADWAY

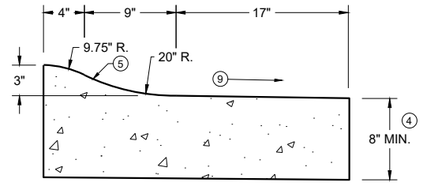

3" SLOPED CURB TYPES R (1) & T

CONCRETE CURB AND GUTTER

STATE OF WISCONSIN
DEPARTMENT OF TRANSPORTATION

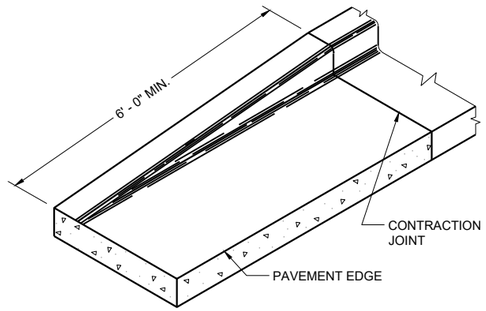

END SECTION CURB AND GUTTER

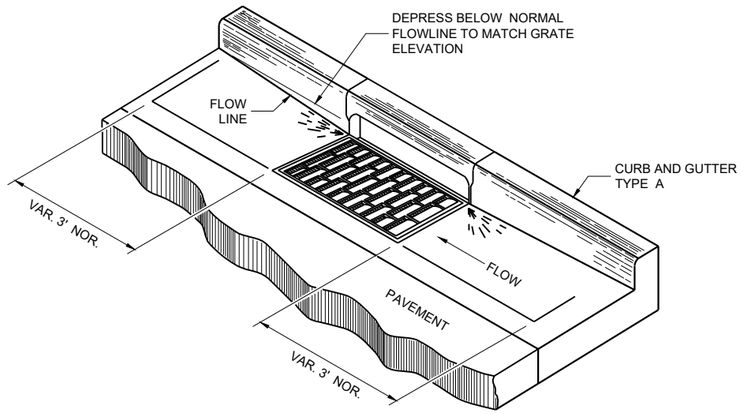

DETAIL OF CURB AND GUTTER AT INLETS

(TYPICAL H INLET COVER SHOWN)

GENERAL NOTES

DETAILS OF CONSTRUCTION AND WORKMANSHIP NOT SHOWN ON THIS DRAWING SHALL CONFORM TO THE PERTINENT REQUIREMENTS OF THE CONTRACT.

PAVEMENT TIES AND TIE BARS SHALL BE EPOXY COATED IN CONFORMANCE WITH SUBSECTION 505.2.6.2 OF THE STANDARD SPECIFICATIONS.

UNLESS OTHERWISE SHOWN ON THE TYPICAL CROSS SECTIONS, THE BASE AGGREGATE AND COMMON EXCAVATION LIMITS ARE 2' - 0" BEHIND THE BACK OF CURBS.

(1) TIE BARS ARE REQUIRED FOR CURB AND GUTTERS TYPES A, G, K, R, AND TBTT.

(2) THE BOTTOM OF CURB AND GUTTER MAY BE CONSTRUCTED EITHER LEVEL OR PARALLEL TO THE SLOPE OF THE SUBGRADE OR BASE AGGREGATE PROVIDED A 6" MINIMUM GUTTER THICKNESS IS MAINTAINED.

(10) REFER TO SDD 08D18 AND 08D19 FOR ADDITIONAL DRIVEWAY ENTRANCE CURB DETAILS.

(11) PLACE 1" THICK EXPANSION JOINT MATERIAL BETWEEN VERTICAL FACE CURB TYPES EXTENDING FROM THE TOP OF CURB TO 1 INCH BELOW THE ADJOINING CONCRETE SURFACE. RIGID CONCRETE STRUCTURES INCLUDE RAISED CONCRETE MEDIANS, CONCRETE SAFETY ISLANDS, SPLITTER ISLANDS, OR LOCATIONS IDENTIFIED ON THE PLANS.

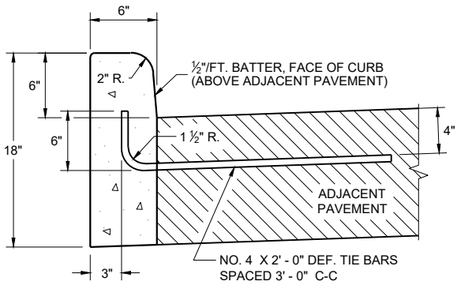

TYPES A (1) & D

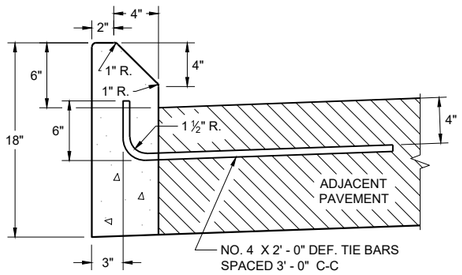

TYPES G (1) & J

CONCRETE CURB

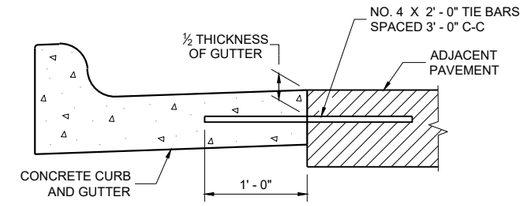

TYPICAL TIE BAR LOCATION (1)

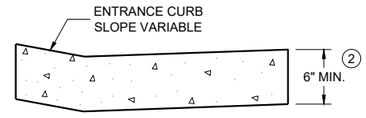

DRIVEWAY ENTRANCE CURB (10)

(WHEN DIRECTED BY THE ENGINEER)

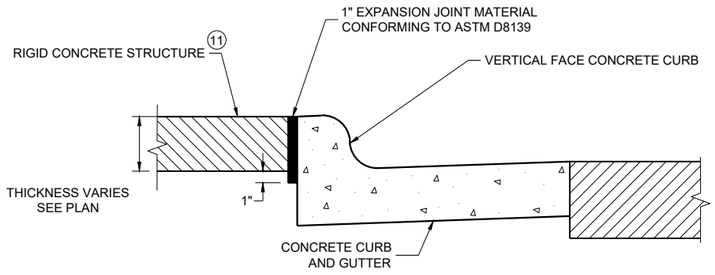

EXPANSION JOINT DETAIL FOR VERTICAL CURB ABUTTING A RIGID STRUCTURE (11)

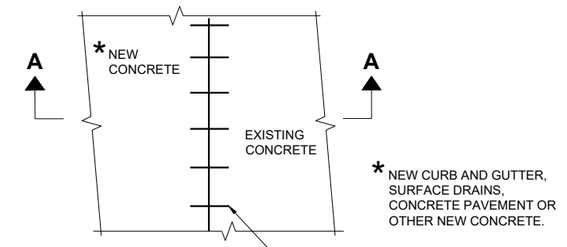

PLAN VIEW

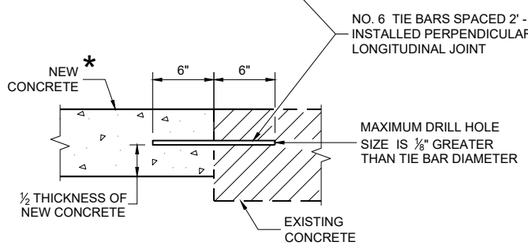

SECTION A - A

TIE BARS DRILLED INTO EXISTING PAVEMENT

CONCRETE CURB, TIES AND CURB AND GUTTER APPLICATIONS

STATE OF WISCONSIN
DEPARTMENT OF TRANSPORTATION

APPROVED
February 2025 — DATE
/S/ Rodnery Taylor — ROADWAY STANDARDS DEVELOPMENT UNIT SUPERVISOR

FHWA

6

SDD 08D01-24b

6

SDD 08D01-24b

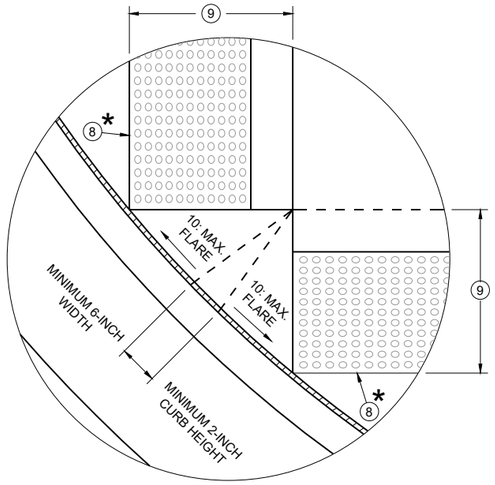

DETAIL A

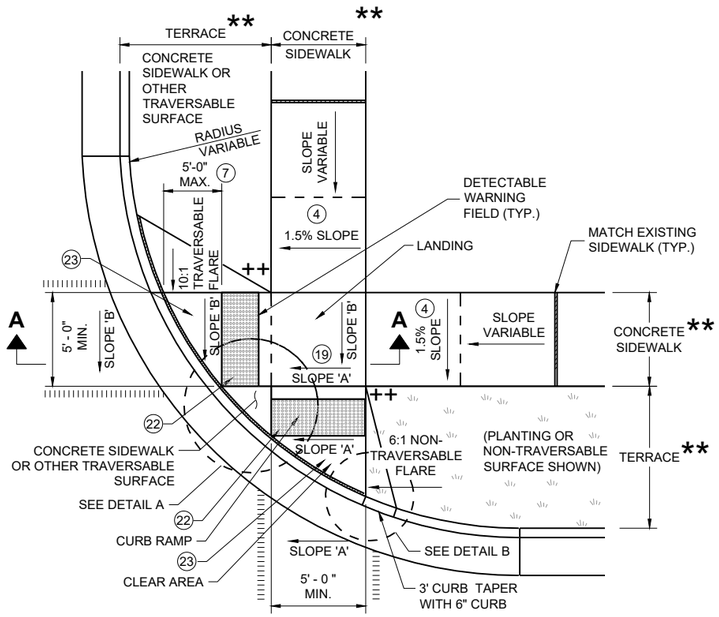

PLAN VIEW

CURB RAMP TYPE 2

(CENTER OF CORNER RADIUS)

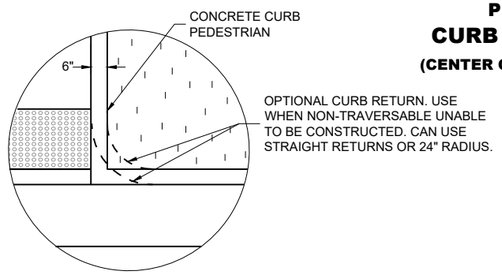

DETAIL B

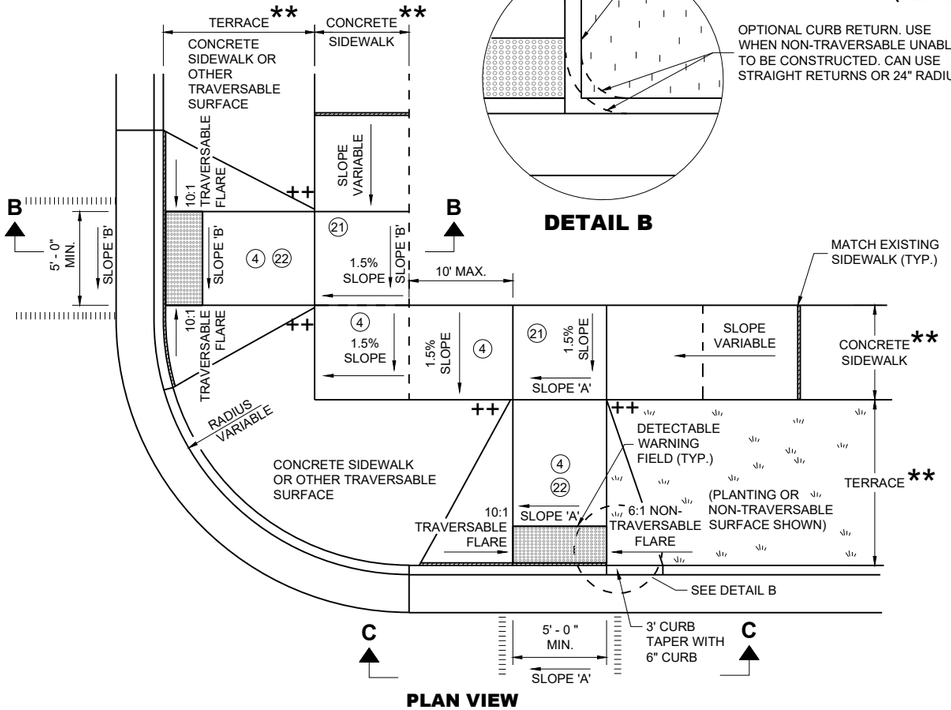

PLAN VIEW

CURB RAMP TYPE 3

(OUTSIDE OF CROSSWALK AREA)

GENERAL NOTES

AVOID PLACING DRAINAGE STRUCTURES, JUNCTION BOXES OR OTHER OBSTRUCTIONS IN FRONT OF CURB RAMP ACCESS AREAS.

DETAILS OF CONSTRUCTION, MATERIALS AND WORKMANSHIP NOT SHOWN ON THIS DRAWING SHALL CONFORM TO THE PERTINENT REQUIREMENTS OF THE STANDARD SPECIFICATIONS AND THE APPLICABLE SPECIAL PROVISIONS.

DETECTABLE WARNING FIELDS THAT ARE INSTALLED AS A GROUP OR SIDE BY SIDE SHALL BE FROM THE SAME MANUFACTURER.

(2) GRADE CHANGE BETWEEN GUTTER COUNTER SLOPE AND THE CURB RAMP SLOPE IS DESIRABLY 11% OR LESS AND SHALL NOT EXCEED 13.3%. TYPICAL GUTTER COUNTER SLOPE IS 4% BUT MAY BE MODIFIED TO FIT FIELD CONDITIONS. PROVIDE LONGITUDINAL DRAINAGE AROUND CURB AND AWAY FROM CURB RAMP. NO VERTICAL LIPS OR DISCONTINUITIES ARE ALLOWED. SLOPE OF CURB HEAD OPENING SHALL MATCH THE RAMP SLOPE, MINIMALLY 1.5%, DESIRABLY 7% OR LESS, AND SHALL NOT EXCEED A MAXIMUM OF 8.3%. WHEN ADJACENT TO 1.5% LANDING, CONSTRUCT CURB HEAD OPENING AT 1.5% IN THE DIRECTION OF PEDESTRIAN TRAVEL.

(3) MAXIMUM 8.3% CURB RAMP SLOPE IS ALLOWABLE WITH GUTTER COUNTER SLOPE OF 5% MAXIMUM AND A 13.3% MAXIMUM GRADE CHANGE.

(4) ±0.5% CONSTRUCTION TOLERANCE IN SIDEWALK CROSS SLOPE. THE SIDEWALK CROSS SLOPE SHALL NOT EXCEED 2.1% WITHOUT PRIOR APPROVAL FROM THE ENGINEER.

(7) WHEN GRADE BREAK DISTANCE EXCEEDS 5 FEET, USE RADIAL DETECTABLE WARNING FIELD PER SDD 8D5-f.

(8) PROVIDE GRADE BREAK PERPENDICULAR TO DIRECTION OF WHEELCHAIR TRAVEL.

(9) WHEN DISTANCE IS LESS THAN 6' - 0", IT MAY BE DIFFICULT TO ACHIEVE A 7% DESIGN MAXIMUM SLOPE OR FLATTER ALONG THE RAMP. REDUCE CURB HEIGHT IN TRIANGLE AREA TO ACHIEVE 7% DESIGN MAXIMUM SLOPE OR FLATTER ON RAMP. CONSTRUCT 2-INCH MINIMUM CURB HEIGHT BETWEEN 10:1 FLARES.

(17) A MAXIMUM 2-INCH CONCRETE BORDER IS PERMITTED ALONG ALL SIDES OF THE DETECTABLE WARNING FIELD SURFACE.

(19) WHERE A LANDING SERVES TWO CURB RAMPS, THE LANDING SLOPE SHALL NOT EXCEED THE CROSS SLOPE AT THE BOTTOM OF THE RAMP OR WITHIN THE CROSSWALK PARALLEL TO THE DIRECTION OF TRAVEL.

(21) PROVIDE A LANDING WITH A SLOPE PARALLEL TO ROADWAY THAT MATCHES SLOPE AT THE BOTTOM OF THE ADJACENT RAMP. SLOPE PERPENDICULAR TO ROADWAY SHALL BE 2.1% MAXIMUM. STANDARD LANDING SIZE IS 5 FEET BY 5 FEET.

(22) THE ENTIRE RAMP SHALL BE A PLANAR SURFACE. DO NOT WARP THE RUNNING SLOPE OR CROSS SLOPE OF THE RAMP. WARPING OF THE SIDEWALK CROSS SLOPE SHALL TAKE PLACE BETWEEN THE LANDING AND MATCH POINT.

(23) THE CLEAR AREA BETWEEN THE BOTTOM OF RAMP AND BACK OF CURB SHALL BE SLOPED SO THAT WATER DRAINS OUT OF ONE SIDE OR BOTH SIDES OF THE CURB OPENING.

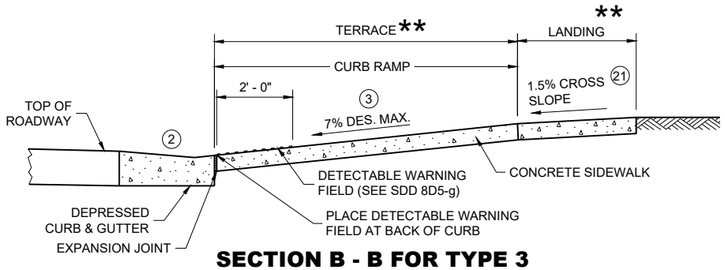

SECTION B - B FOR TYPE 3

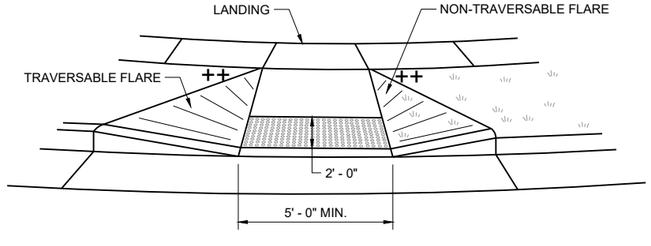

VIEW C - C FOR TYPE 3

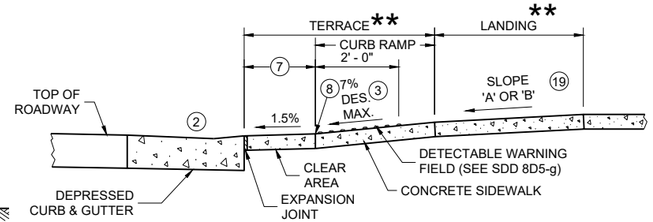

SECTION A - A FOR TYPE 2

LEGEND

▨	½" EXPANSION JOINT SIDEWALK
- - - -	CONTRACTION JOINT SIDEWALK
ıllıllıllıllıl	PAVEMENT MARKING CROSSWALK (WHITE)
*	MAXIMUM 2.1% SLOPE IN ALL DIRECTIONS IN FRONT OF GRADE BREAK
**	WIDTH SHOWN ELSEWHERE IN THE PLANS
++	CONSTRUCT 6" WEDGE TO AVOID CONCRETE BREAKAGE

CURB RAMPS TYPE 2 AND 3

STATE OF WISCONSIN
DEPARTMENT OF TRANSPORTATION

6
SDD 08D05-22b

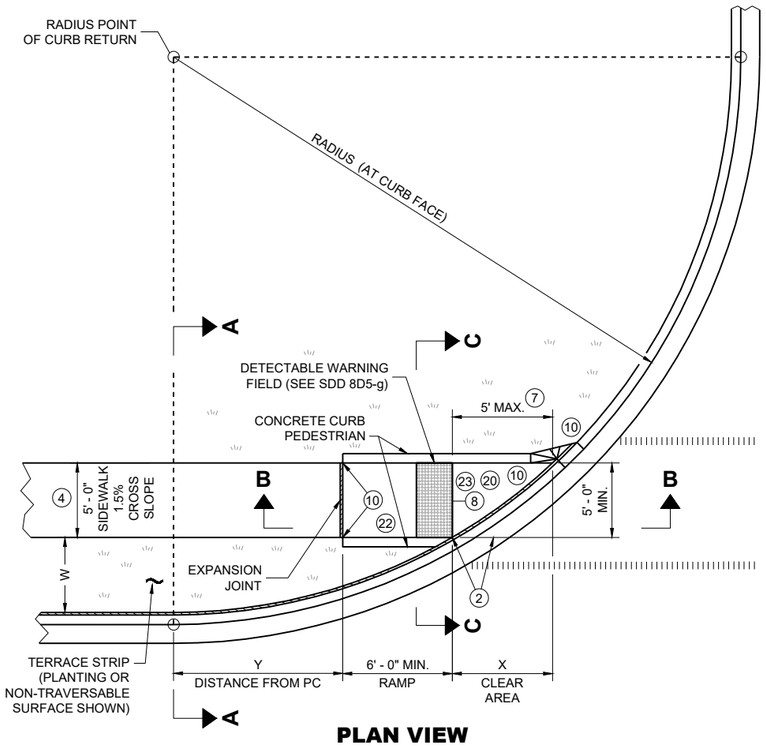

PLAN VIEW
CURB RAMP TYPE 4B

RADIUS (AT CURB FACE)	W = 3' - 0"		W = 4' - 0"		W = 5' - 0"		W = 6' - 0"		W = 7' - 0"		W = 8' - 0"		W = 9' - 0"		W = 10' - 0"	
	X	Y	X	Y	X	Y	X	Y	X	Y	X	Y	X	Y	X	Y
10 FEET	2' - 10 ¼"	0' - 5"	2' - 1"	1' - 4 ½"	1' - 5"	2' - 1"	0' - 10"	2' - 7 ½"	0' - 3 ¼"	3' - 0 ¼"						
15 FEET	4' - 6 ¾"	2' - 1 ¾"	3' - 9"	3' - 5 ¾"	3' - 1 ¼"	4' - 6"	2' - 6 ¾"	5' - 4 ½"	2' - 1"	6' - 1"	1' - 8"	6' - 8 ½"	1' - 3 ¼"	7' - 2 ½"	0' - 10 ¾"	7' - 7 ¼"
20 FEET			4' - 11 ½"	5' - 1 ¾"	4' - 3 ¼"	6' - 5 ½"	3' - 8 ¾"	7' - 7"	3' - 3"	8' - 6 ½"	2' - 10"	9' - 4 ½"	2' - 5 ½"	10' - 1 ¼"	2' - 1 ¼"	10' - 9"
30 FEET									4' - 10 ¾"	12' - 5 ¾"	4' - 5 ½"	13' - 7 ¾"	4' - 0 ¾"	14' - 8 ½"	3' - 8 ½"	15' - 8 ¼"
40 FEET															4' - 10 ¾"	19' - 8 ¼"

INTERMEDIATE RADII CAN BE INTERPOLATED
DIMENSION "Y" IS CALCULATED BASED ON 6'-0" RAMP LENGTH
DIMENSION "X" IS CALCULATED BASED ON 5'-0" SIDEWALK WIDTH

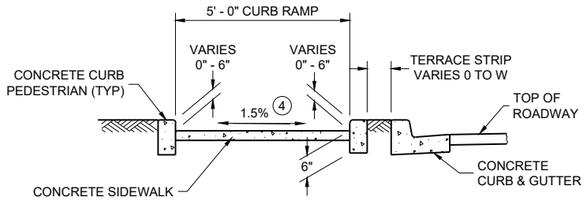

SECTION C - C FOR TYPE 4B

LEGEND

- ½" EXPANSION JOINT SIDEWALK
- CONTRACTION JOINT SIDEWALK
- PAVEMENT MARKING CROSSWALK (WHITE)
- * MAXIMUM 2.1% SLOPE IN ALL DIRECTIONS IF FRONT OF GRADE BREAK
- ++ CONSTRUCT 6" WEDGE TO AVOID CONCRETE BREAKAGE

GENERAL NOTES

AVOID PLACING DRAINAGE STRUCTURES, JUNCTION BOXES OR OTHER OBSTRUCTIONS IN FRONT OF CURB RAMP ACCESS AREAS.

DETAILS OF CONSTRUCTION, MATERIALS AND WORKMANSHIP NOT SHOWN ON THIS DRAWING SHALL CONFORM TO THE PERTINENT REQUIREMENTS OF THE STANDARD SPECIFICATIONS AND THE APPLICABLE SPECIAL PROVISIONS.

DETECTABLE WARNING FIELDS THAT ARE INSTALLED AS A GROUP OR SIDE BY SIDE, SHALL BE FROM THE SAME MANUFACTURER.

(2) GRADE CHANGE BETWEEN GUTTER COUNTER SLOPE AND THE CURB RAMP SLOPE IS DESIRABLY 11% OR LESS AND SHALL NOT EXCEED 13.3%. TYPICAL GUTTER COUNTER SLOPE IS 4% BUT MAY BE MODIFIED TO FIT FIELD CONDITIONS. PROVIDE LONGITUDINAL DRAINAGE AROUND CURB AND AWAY FROM CURB RAMP. NO VERTICAL LIPS OR DISCONTINUITIES ARE ALLOWED. SLOPE OF CURB HEAD OPENING SHALL MATCH THE RAMP SLOPE, MINIMALLY 1.5%, DESIRABLY 7% OR LESS, AND SHALL NOT EXCEED A MAXIMUM OF 8.3%. WHEN ADJACENT TO 1.5% LANDING, CONSTRUCT CURB HEAD OPENING AT 1.5% IN THE DIRECTION OF PEDESTRIAN TRAVEL.

(3) MAXIMUM 8.3% CURB RAMP SLOPE IS ALLOWABLE WITH GUTTER COUNTER SLOPE OF 5% MAXIMUM AND A 13.3% MAXIMUM GRADE CHANGE.

(4) ±0.5% CONSTRUCTION TOLERANCE IN SIDEWALK CROSS SLOPE. THE SIDEWALK CROSS SLOPE SHALL NOT EXCEED 2.1% WITHOUT PRIOR APPROVAL FROM THE ENGINEER.

(7) WHEN THIS GRADE BREAK DISTANCE EXCEEDS 5 FEET, USE RADIAL DETECTABLE WARNING FIELD PER SDD 8D5-f.

(8) PROVIDE GRADE BREAK PERPENDICULAR TO DIRECTION OF WHEELCHAIR TRAVEL.

(10) INSTALL TRANSITION NOSE (INCIDENTAL TO OTHER PAY ITEMS). DO NOT MARK TRANSITION NOSE.

(17) A MAXIMUM 2-INCH CONCRETE BORDER IS PERMITTED ALONG ALL SIDES OF THE DETECTABLE WARNING FIELD SURFACE.

(20) MAXIMUM 1.5% DESIGN MAXIMUM AND 2.1% PROWAG MAXIMUM RUNNING SLOPE ON CLEAR AREA. CROSS SLOPE OF CLEAR AREA SHALL MATCH THE CROSS SLOPE OF THE ADJACENT CROSSWALK.

(22) THE ENTIRE RAMP SHALL BE A PLANAR SURFACE. DO NOT WARP THE RUNNING SLOPE OR CROSS SLOPE OF THE RAMP. WARPING OF THE SIDEWALK CROSS SLOPE SHALL TAKE PLACE BETWEEN THE LANDING AND MATCH POINT.

(23) THE CLEAR AREA BETWEEN THE BOTTOM OF RAMP AND BACK OF CURB SHALL BE SLOPED SO THAT WATER DRAINS OUT OF ONE SIDE OR BOTH SIDES OF THE CURB OPENING.

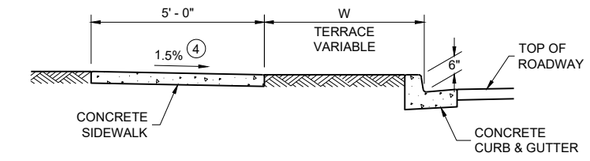

SECTION A - A FOR TYPE 4B

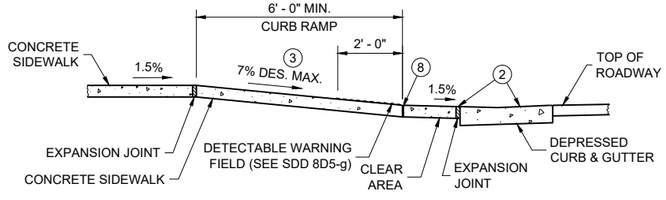

SECTION B - B FOR TYPE 4B AND TYPE 4B1

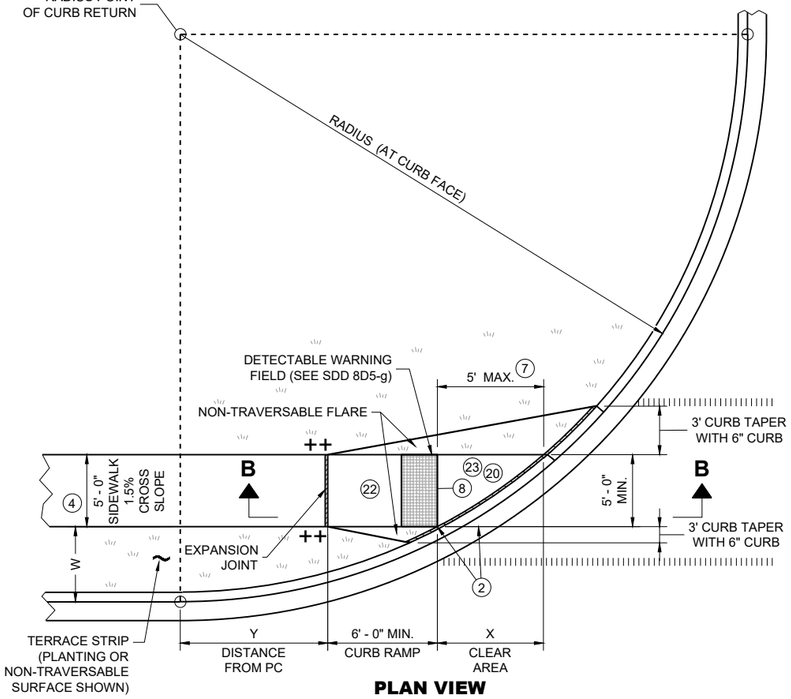

PLAN VIEW
CURB RAMP TYPE 4B1

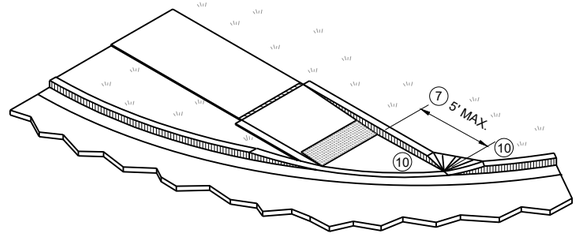

ISOMETRIC VIEW FOR TYPE 4B

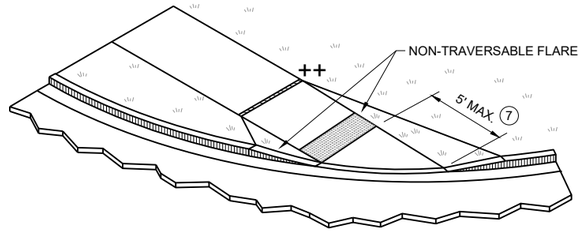

ISOMETRIC VIEW FOR TYPE 4B1

CURB RAMPS
TYPE 4B AND 4B1

STATE OF WISCONSIN
DEPARTMENT OF TRANSPORTATION

6

SDD 08D05-22d

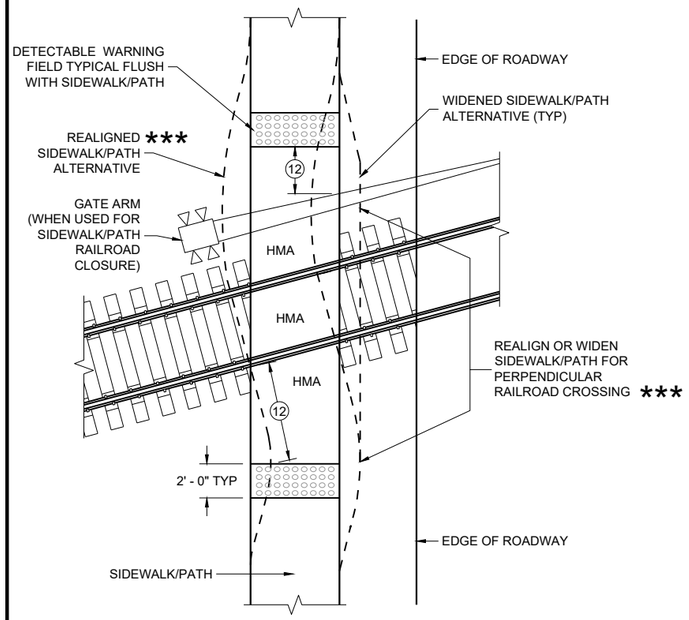

CURB RAMP TYPE 8

DETECTABLE WARNINGS FOR SIDEWALKS OR SHARED USE PATHS AT RAILROAD CROSSINGS

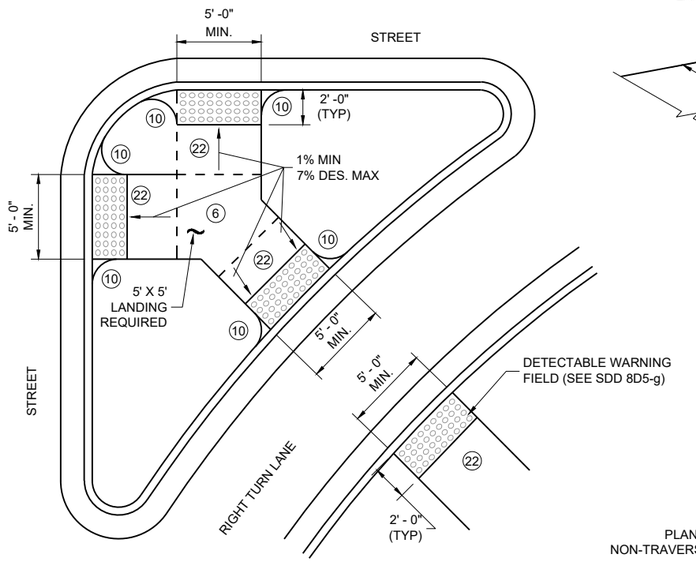

CURB RAMP TYPE 6

DETECTABLE WARNING AT ISLANDS

REFER TO GENERAL NOTES (2) AND (3) FOR ALL ISLAND CURB RAMPS

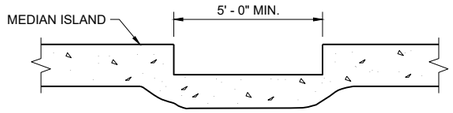

SECTION A - A FOR TYPE 5

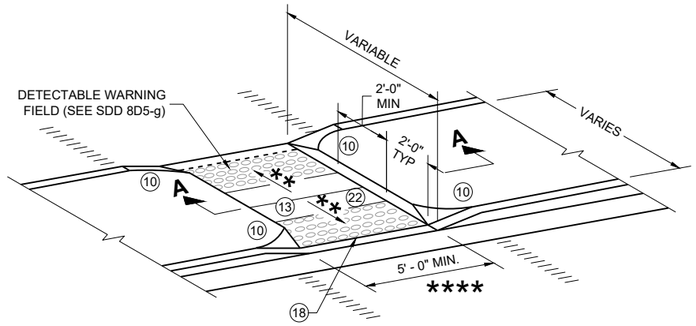

CURB RAMP TYPE 5

MEDIAN ISLAND NON-ELEVATED PEDESTRIAN CROSSING

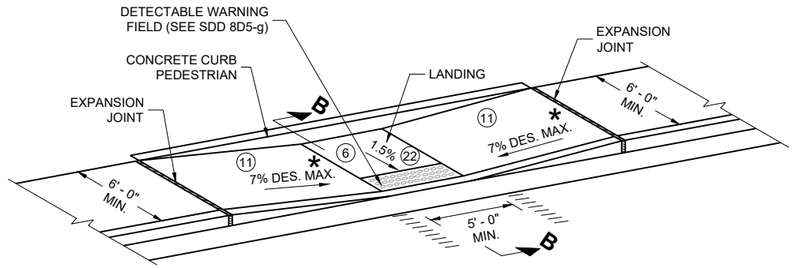

CURB RAMP TYPE 7A

FOR INTERSECTIONS AND MID BLOCK CROSSINGS

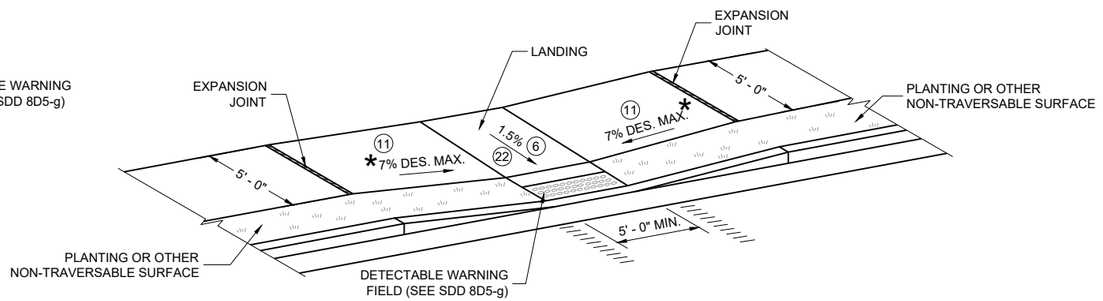

CURB RAMP TYPE 7B

FOR INTERSECTIONS AND MID BLOCK CROSSINGS

GENERAL NOTES

AVOID PLACING DRAINAGE STRUCTURES, JUNCTION BOXES OR OTHER OBSTRUCTIONS IN FRONT OF CURB RAMP ACCESS AREAS.

DETAILS OF CONSTRUCTION, MATERIALS AND WORKMANSHIP NOT SHOWN ON THIS DRAWING SHALL CONFORM TO THE PERTINENT REQUIREMENTS OF THE STANDARD SPECIFICATIONS AND THE APPLICABLE SPECIAL PROVISIONS.

SIDEWALK CROSS SLOPE SHALL NOT EXCEED 2.1%.

DETECTABLE WARNING FIELDS THAT ARE INSTALLED AS A GROUP OR SIDE BY SIDE, SHALL BE FROM THE SAME MANUFACTURER.

(2) GRADE CHANGE BETWEEN GUTTER COUNTER SLOPE AND THE CURB RAMP SLOPE IS DESIRABLY 11% OR LESS AND SHALL NOT EXCEED 13.3%. TYPICAL GUTTER COUNTER SLOPE IS 4% BUT MAY BE MODIFIED TO FIT FIELD CONDITIONS. PROVIDE LONGITUDINAL DRAINAGE AROUND CURB AND AWAY FROM CURB RAMP. NO VERTICAL LIPS OR DISCONTINUITIES ARE ALLOWED. SLOPE OF CURB HEAD OPENING SHALL MATCH THE RAMP SLOPE, MINIMALLY 1.5%, DESIRABLY 7% OR LESS, AND SHALL NOT EXCEED A MAXIMUM OF 8.3%. WHEN ADJACENT TO 1.5% LANDING, CONSTRUCT CURB HEAD OPENING AT 1.5% IN THE DIRECTION OF PEDESTRIAN TRAVEL.

(3) MAXIMUM 8.3% CURB RAMP SLOPE IS ALLOWABLE WITH GUTTER COUNTER SLOPE OF 5% MAXIMUM AND A 13.3% MAXIMUM GRADE CHANGE.

(4) ±0.5% CONSTRUCTION TOLERANCE IN SIDEWALK CROSS SLOPE. THE SIDEWALK CROSS SLOPE SHALL NOT EXCEED 2.1% WITHOUT PRIOR APPROVAL FROM THE ENGINEER.

(6) PROVIDE A 5 FOOT BY 5 FOOT LANDING. SLOPE PERPENDICULAR TO CURB SHALL BE 2.1% MAXIMUM. SLOPE PARALLEL TO CURB SHALL MATCH THE CURB AND GUTTER LONGITUDINAL SLOPE.

(10) INSTALL TRANSITION NOSE (INCIDENTAL TO OTHER PAY ITEMS). DO NOT MARK TRANSITION NOSE.

(11) SLOPE SIDEWALK TOWARD LANDING AS SHOWN WHERE THERE IS NO TERRACE OR WHERE THE TERRACE WIDTH IS LESS THAN 6 FEET WIDE.

(12) THE EDGE OF THE DETECTABLE WARNING FIELD NEAREST TO A RAILROAD CROSSING SHALL BE 1.5 FEET ±0.1' FROM THE FACE OF THE GATE ARM IF THE GATE ARM EXTENDS ACROSS THE SIDEWALK/PATH, WHERE THERE IS NO PEDESTRIAN GATE, THE EDGE OF THE DETECTABLE WARNING FIELD NEAREST TO THE RAILROAD TRACK IS 15 FEET MAXIMUM AND 12 FEET MINIMUM, 15 FEET TYPICAL FROM THE NEAREST RAIL.

(13) DO NOT INSTALL DETECTABLE WARNING FIELDS AT THE EDGES OF STEET-LEVEL PEDESTRIAN REFUGE ISLANDS IF A MINIMUM 2 FOOT CONCRETE SURFACE WITHOUT DETECTABLE WARNINGS (MEASURED IN THE DIRECTION OF PEDESTRIAN TRAVEL) CANNOT BE ACHIEVED.

(17) A MAXIMUM 2-INCH CONCRETE BORDER IS PERMITTED ALONG ALL SIDES OF THE DETECTABLE WARNING FIELD SURFACE.

(18) WHEN THE DISTANCE BETWEEN THE BACK OF CURBS IS LESS THAN 6 FEET BUT THE FACE OF CURB TO FACE OF CURB DISTANCE IS 6 FEET OR GREATER THEN THE DETECTABLE WARNING FIELDS MAY BE MOVED SO THAT THE EDGE OF THE WARNING FIELD IS PLACED AT THE GUTTER FLOWLINE. MAINTAIN A MINIMUM OF TWO FEET BETWEEN DETECTABLE WARNING FIELD PANELS.

(22) THE ENTIRE RAMP SHALL BE A PLANAR SURFACE. DO NOT WARP THE RUNNING SLOPE OR CROSS SLOPE OF THE RAMP. WARPING OF THE SIDEWALK CROSS SLOPE SHALL TAKE PLACE BETWEEN THE LANDING AND MATCH POINT.

LEGEND

═══	½" EXPANSION JOINT SIDEWALK
– – – –	CONTRACTION JOINT FIELD LOCATED
ıı ıı ıı ıı	PAVEMENT MARKING CROSSWALK (WHITE)
*	MAXIMUM 8.3%
**	1% MINIMUM (PROVIDE DRAINAGE)
***	DETAILS TO BE DETERMINED BY ENGINEER
****	FOR SHARED USE PATHS, WIDTH MUST BE AS WIDE AS THE CROSSWALK

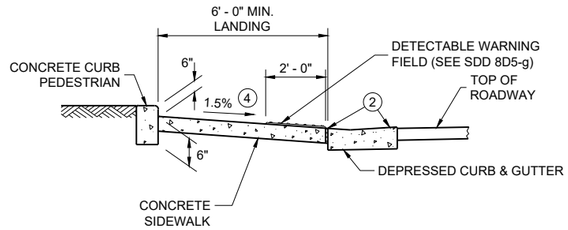

SECTION B - B FOR TYPE 7A

CURB RAMPS
TYPE 5, 6, 7A, 7B & 8

STATE OF WISCONSIN
DEPARTMENT OF TRANSPORTATION

	MIN.	MAX.
A	1.6"	2.4"
B	0.65"	1.5"
C	*	*
D	0.9"	1.4"

* THE C DIMENSION IS 50% TO 65% OF THE D DIMENSION.

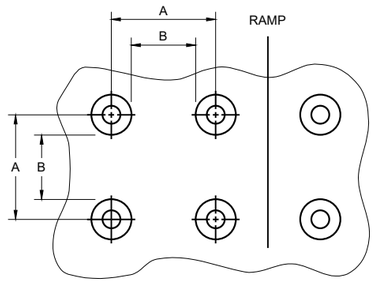

PLAN VIEW

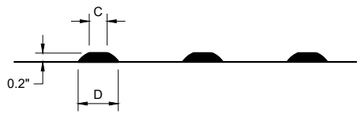

ELEVATION VIEW

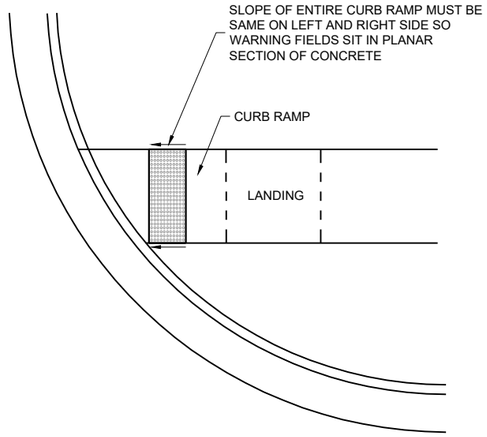

DETECTABLE WARNING FIELD
PLANAR INSTALLATION

GENERAL NOTES

DETECTABLE WARNING FIELDS THAT ARE INSTALLED AT A CURB RAMP SHALL BE FROM THE SAME MANUFACTURER.

PLACE ALL DETECTABLE WARNING FIELD SYSTEMS IN ACCORDANCE TO THE MANUFACTURER'S RECOMMENDATION.

FIELD CUTS AT INTERMEDIATE JOINTS WITHIN THE RADIAL DETECTABLE WARNING FILED ARE PROHIBITED.

DETERMINE FINAL RADIAL WARNING FIELD CONFIGURATION AND ITS INDIVIDUAL PLATE LOCATIONS. PERFORM PRE-LAYOUT PRIOR TO PLACEMENT IN PLASTIC CONCRETE. FOLLOW MANUFACTURER'S PRODUCT LIST AND INSTALLATION RECOMMENDATIONS.

FOR RADIAL DETECTABLE WARNING FIELD APPLICATIONS WHERE STANDARD RADIAL PLATES ARE NOT AVAILABLE AT AN INTERSECTION CURB RADIUS, A COMBINATION OF SQUARE OR RECTANGULAR PLATES AND RADIAL PLATES MAY BE USED TO FORM RADIAL CONFIGURATION. RADIAL WEDGE PLATES IN COMBINATION WITH SQUARE PLATES ARE ALSO ACCEPTABLE. FOLLOW MANUFACTURER'S RECOMMENDATIONS.

REFER TO CONTRACT AND STANDARD SPECIFICATIONS FOR FIELD CUTTING REQUIREMENTS.

DO NOT EMBED IN CONCRETE ANY FIELD-CUT PLATES WITH CUT EDGES SHORTER THAN 6 INCHES. CONSULT WITH MANUFACTURER FOR RE-DRILLING AND ANCHORING REQUIREMENTS OF FIELD-CUT PLATES.

(15) FIELD SAW CUTS ALONG RADIAL DETECTABLE WARNING PLATES WILL BE NECESSARY TO MATCH EACH CURB RAMP EDGE. AVOID CUTTING THROUGH DOMES WHENEVER POSSIBLE. MAKE FIELD CUTS TRUE TO LINE AND WITHIN ⅛" DEVIATION. SMOOTH EDGES OF FIELD CUT PLATES.

TRUNCATED DOMES
DETECTABLE WARNING PATTERN DETAIL

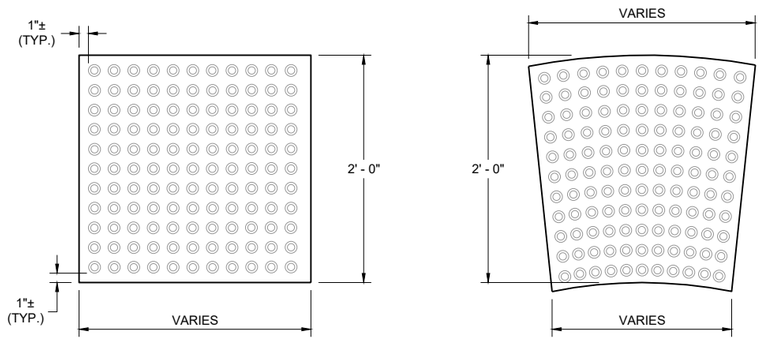

RECTANGULAR PLATES

RADIAL PLATES

PLAN VIEW
DETECTABLE WARNING FIELDS (TYPICAL)

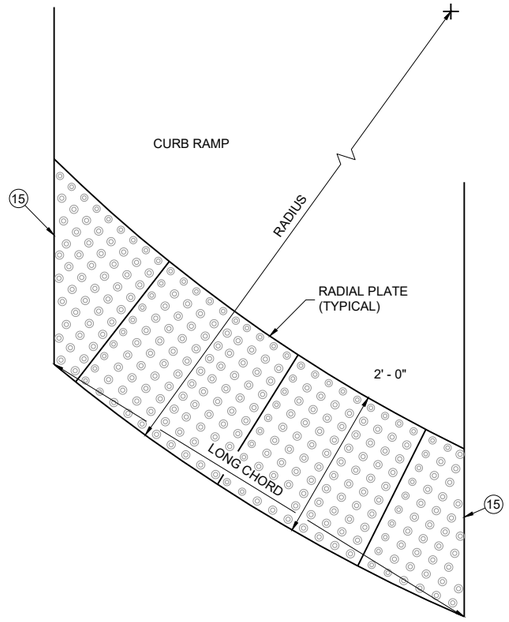

PLAN VIEW
RADIAL DETECTABLE WARNING FIELD ATTRIBUTES

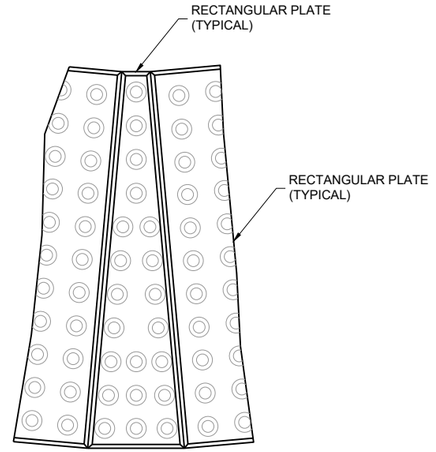

PLAN VIEW
RADIAL WEDGE PLATE CONNECTION DETAIL

CURB RAMPS
RECTANGULAR AND RADIAL
DETECTABLE WARNING PLATES

STATE OF WISCONSIN
DEPARTMENT OF TRANSPORTATION

APPROVED
February 2025 — DATE
/S/ Rodney Taylor — <position>

FHWA

6
SDD 08D05-22g

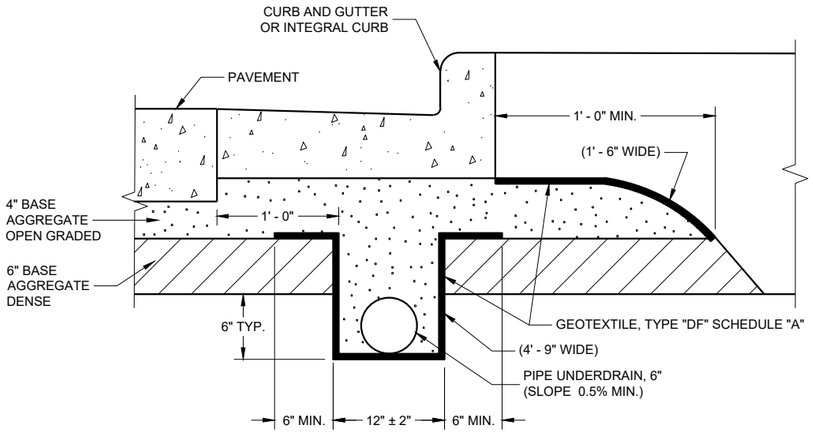

EDGEDRAIN IN URBAN ROADWAY

GENERAL NOTES

THE DIMENSIONS SHOWN ON THE TYPICAL CROSS SECTIONS WILL GOVERN IN THE EVENT THERE IS A CONFLICT WITH THE DETAILS SHOWN ON THIS DRAWING.

PIPE UNDERDRAIN SHALL BE LAID PARALLEL TO THE GRADE OF THE ROADWAY.

(1) FOLD OVER EXCESS GEOTEXTILE AT THIS LOCATION.

(2) TOTAL GEOTEXTILE WIDTH IS 6'-3" FOR PAYMENT.

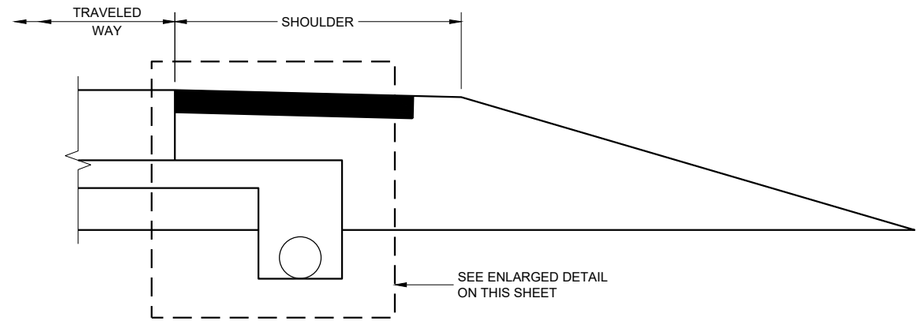

RURAL CROSS SECTION

6

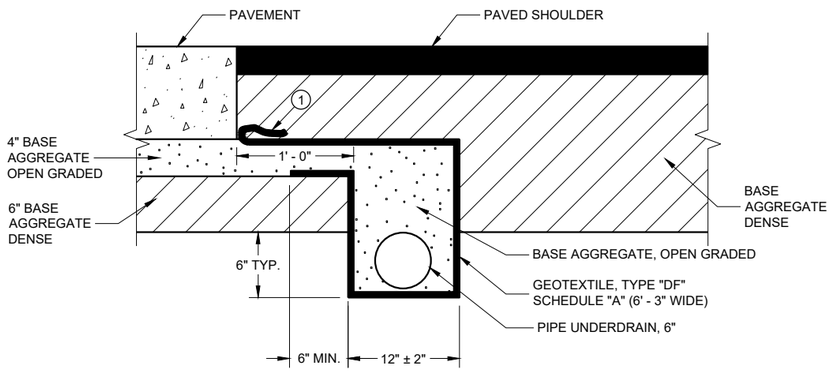

POST PAVING INSTALLATION

(QUANTITIES ARE BASED ON THIS DETAIL)

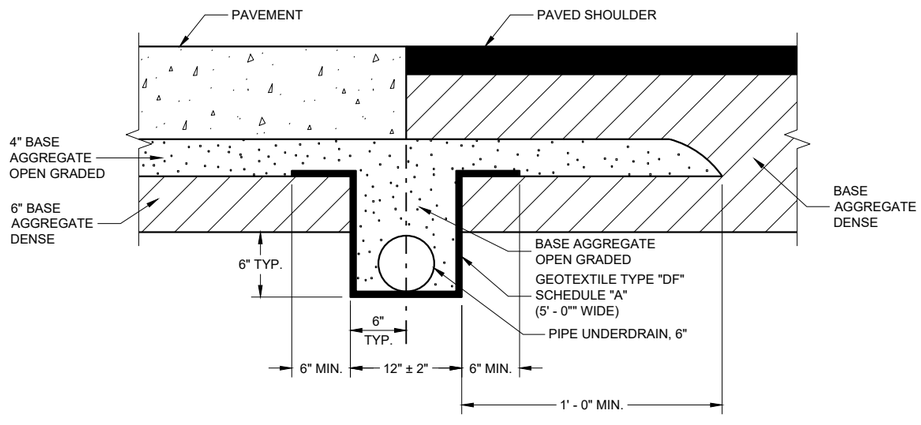

PRE-PAVING INSTALLATION ALTERNATIVE

EDGEDRAIN IN RURAL ROADWAY

6

SDD 08D15 - 05b

EGEDRAIN AND BASE AGGREGATE OPEN GRADED

SDD 08D15 - 05b

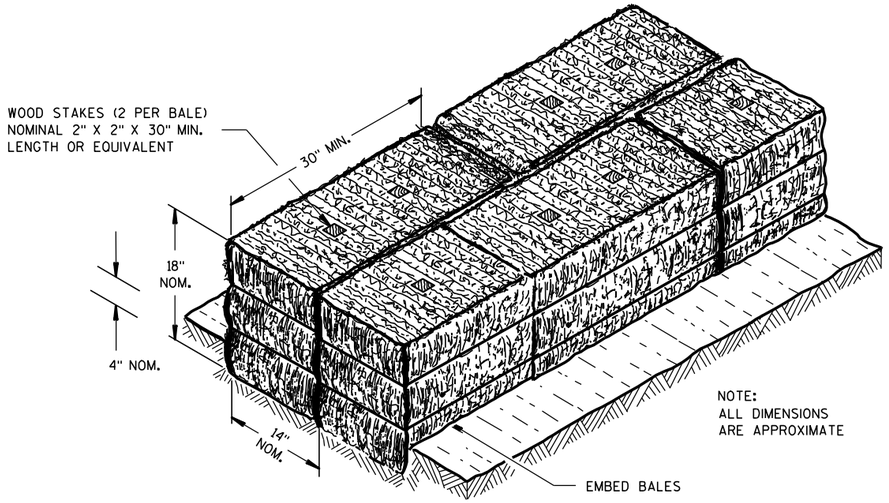

SECTION A-A

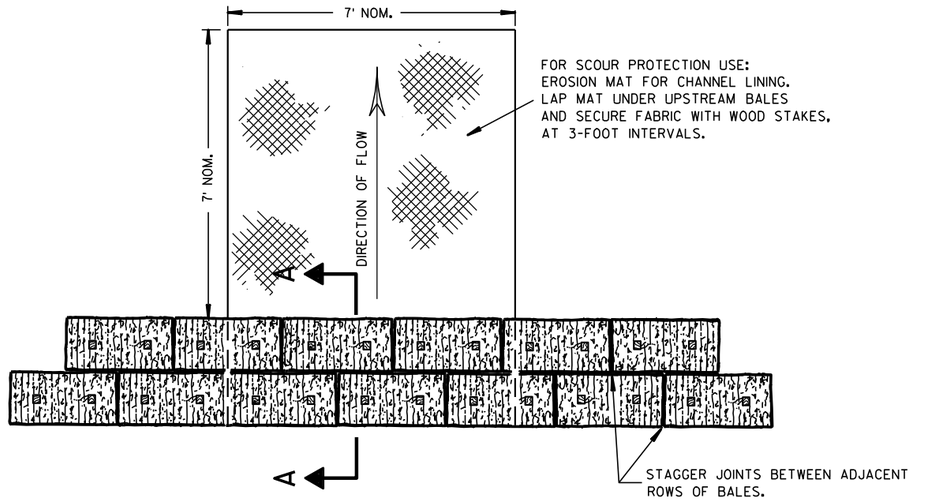

PLAN VIEW

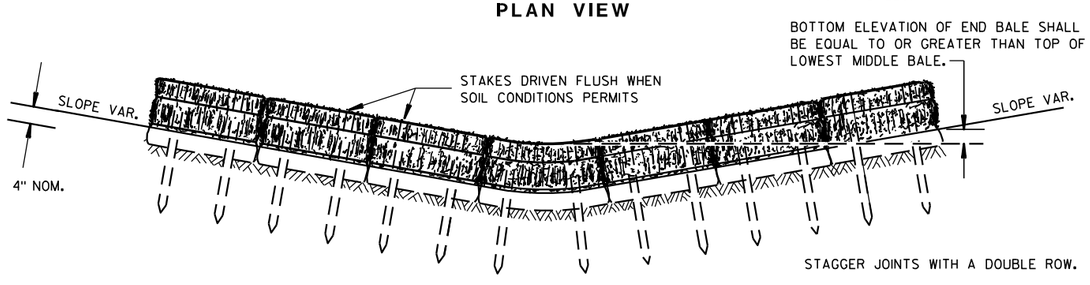

FRONT ELEVATION

TEMPORARY DITCH CHECK USING EROSION BALES (1)

GENERAL NOTES

DETAILS OF CONSTRUCTION, MATERIALS AND WORKMANSHIP NOT SHOWN ON THIS DRAWING SHALL CONFORM TO THE PERTINENT REQUIREMENTS OF THE STANDARD SPECIFICATIONS AND THE APPLICABLE SPECIAL PROVISIONS.

(1) TEMPORARY DITCH CHECKS EITHER EROSION BALES OR MANUFACTURED SHALL BE PAID FOR UNDER THE BID ITEM OF TEMPORARY DITCH CHECK. THE DEPARTMENT WILL NOT PAY FOR TEMPORARY DITCH CHECKS CONSTRUCTED OF A SINGLE ROW OF EROSION BALES.

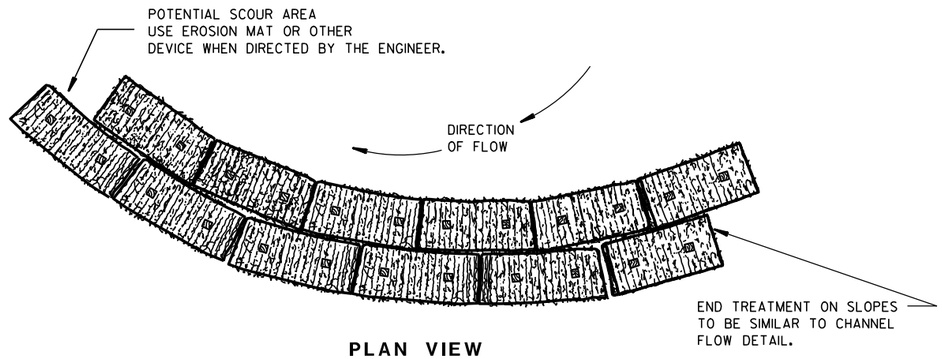

PLAN VIEW

WHEN ALTERING THE DIRECTION OF FLOW

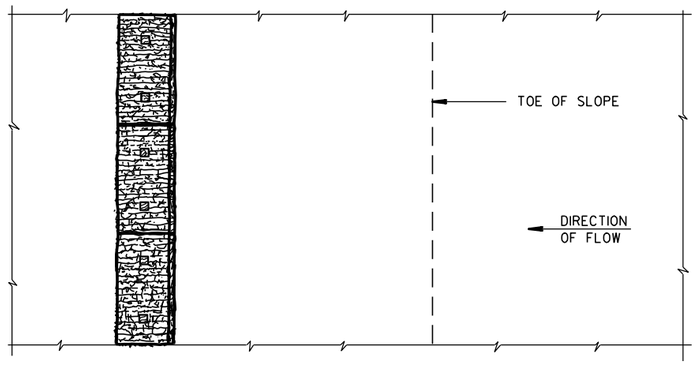

PLAN VIEW

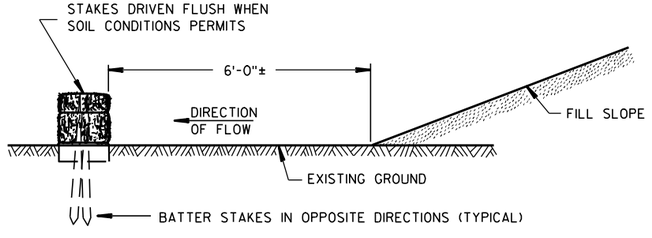

FRONT ELEVATION

WHEN EXISTING GROUND SLOPES AWAY FROM FILL SLOPE

EROSION BALES FOR SHEET FLOW

TYPICAL INSTALLATIONS OF EROSION BALES / TEMPORARY DITCH CHECKS

STATE OF WISCONSIN
DEPARTMENT OF TRANSPORTATION

APPROVED
6/04/02 DATE
/S/ Beth Cannestra
CHIEF ROADWAY DEVELOPMENT ENGINEER
FHWA

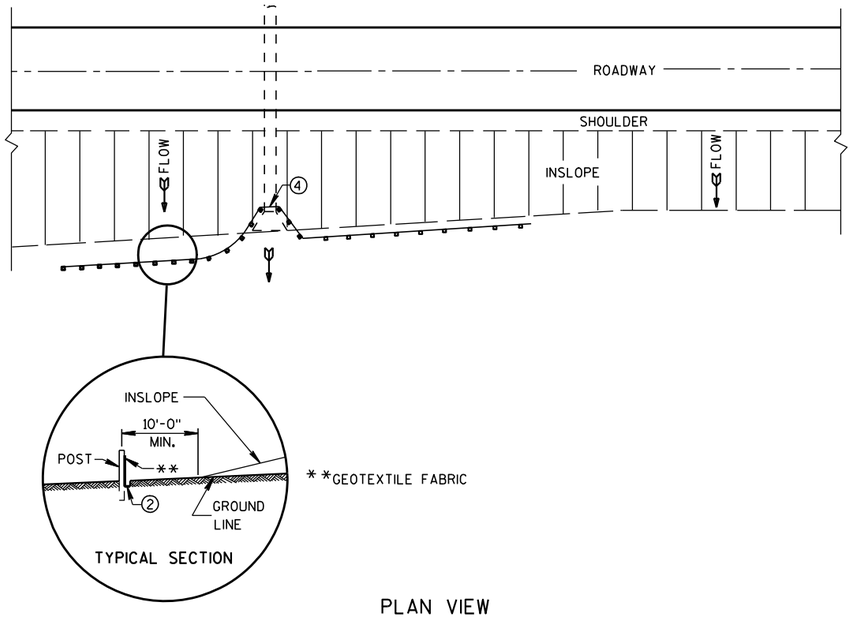

PLAN VIEW

TYPICAL APPLICATION OF SILT FENCE

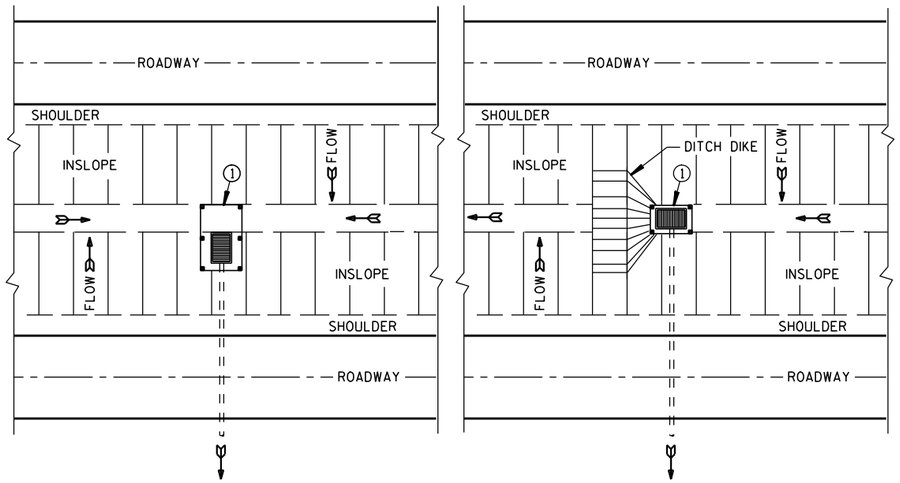

PLAN VIEW

SILT FENCE AT MEDIAN SURFACE DRAINS

GENERAL NOTES

DETAILS OF CONSTRUCTION NOT SHOWN ON THIS DRAWING SHALL CONFORM TO THE PERTINENT REQUIREMENTS OF THE STANDARD SPECIFICATIONS AND APPLICABLE SPECIAL PROVISIONS.

1. HORIZONTAL BRACE REQUIRED WITH 2" X 4" WOODEN FRAME OR EQUIVALENT AT TOP OF POSTS.
2. FOR MANUAL INSTALLATIONS THE TRENCH SHALL BE A MINIMUM OF 4" WIDE & 6" DEEP TO BURY AND ANCHOR THE GEOTEXTILE FABRIC. FOLD MATERIAL TO FIT TRENCH AND BACKFILL & COMPACT TRENCH WITH EXCAVATED SOIL.
3. WOOD POSTS SHALL BE A MINIMUM SIZE OF 1⅛" X 1⅛" OF OAK OR HICKORY.
4. SILT FENCE TO EXTEND ACROSS THE TOP OF THE PIPE.
5. CONSTRUCT SILT FENCE FROM A CONTINUOUS ROLL IF POSSIBLE BY CUTTING LENGTHS TO AVOID JOINTS. IF A JOINT IS NECESSARY USE ONE OF THE FOLLOWING TWO METHODS; A) OVERLAP THE END POSTS AND TWIST, OR ROTATE, AT LEAST 180 DEGREES, B) HOOK THE END OF EACH SILT FENCE LENGTH.

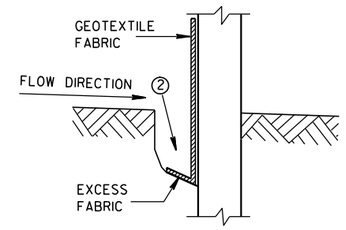

TRENCH DETAIL

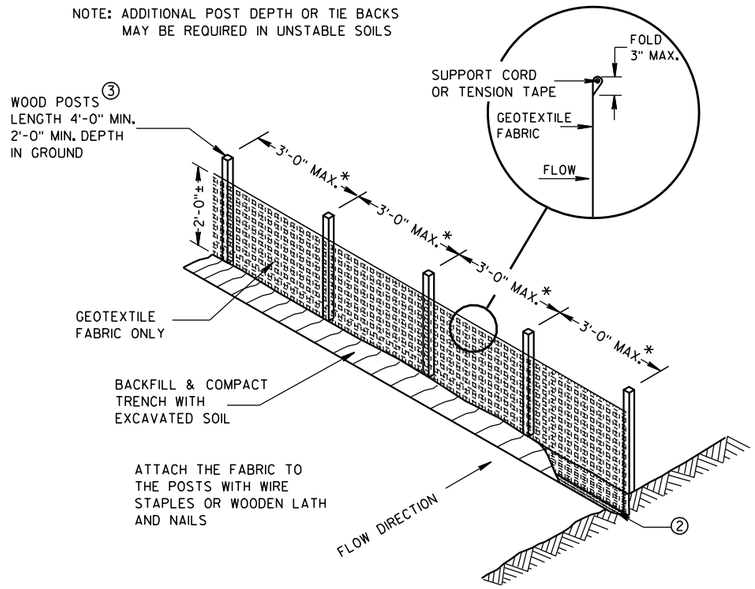

*NOTE: 8'-0" POST SPACING ALLOWED IF A WOVEN GEOTEXTILE FABRIC IS USED.

SILT FENCE

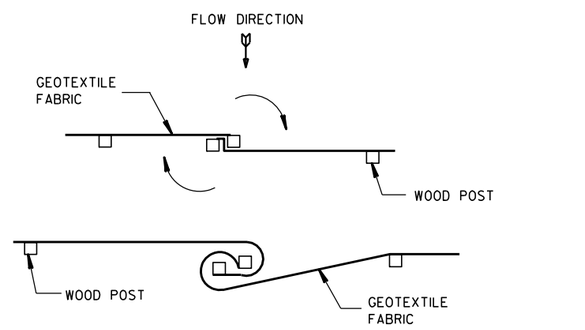

TWIST METHOD

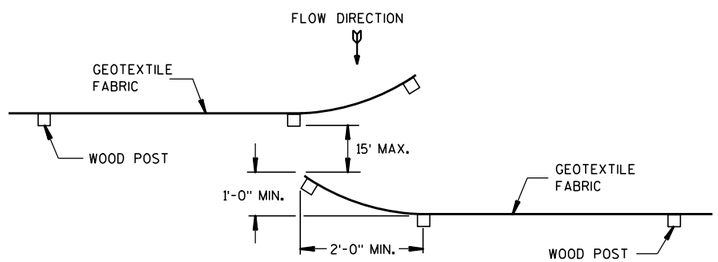

HOOK METHOD

JOINING TWO LENGTHS OF SILT FENCE 5

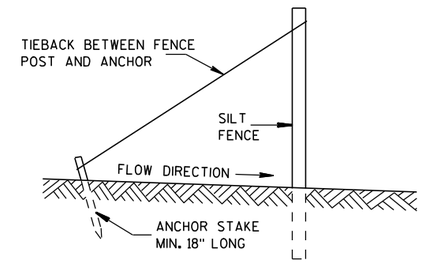

SILT FENCE TIE BACK

(WHEN REQUIRED BY THE ENGINEER)

SILT FENCE

STATE OF WISCONSIN
DEPARTMENT OF TRANSPORTATION

APPROVED
4-29-05 DATE
/S/ Beth Cannestra
CHIEF ROADWAY DEVELOPMENT ENGINEER
FHWA

6

S.D.D. 8 E 9-6

6

S.D.D. 8 E 9-6

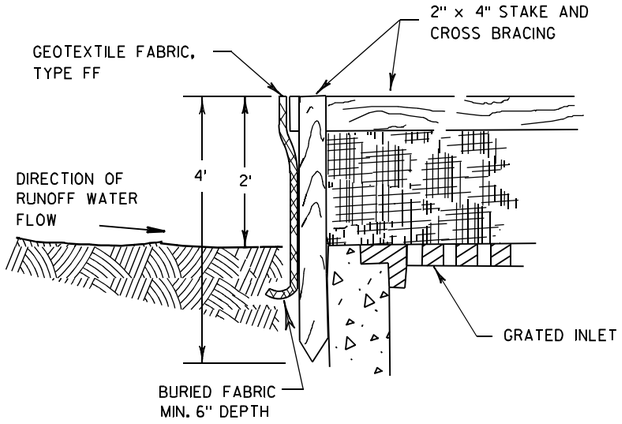

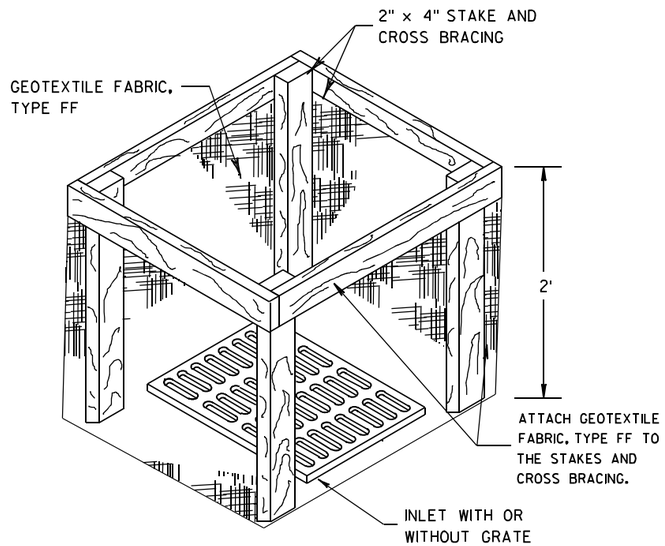

INLET PROTECTION, TYPE A

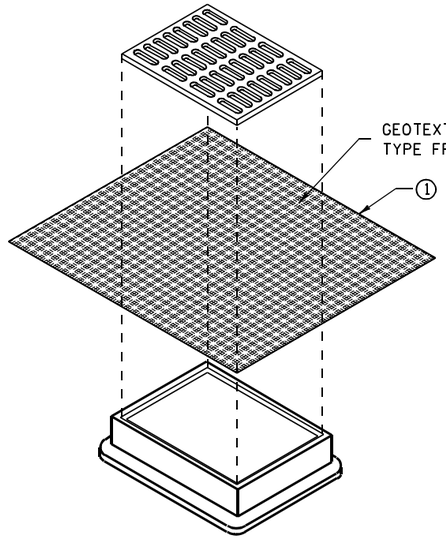

INLET PROTECTION, TYPE B
(WITHOUT CURB BOX)

(CAN BE INSTALLED IN ANY INLET WITHOUT A CURB BOX)

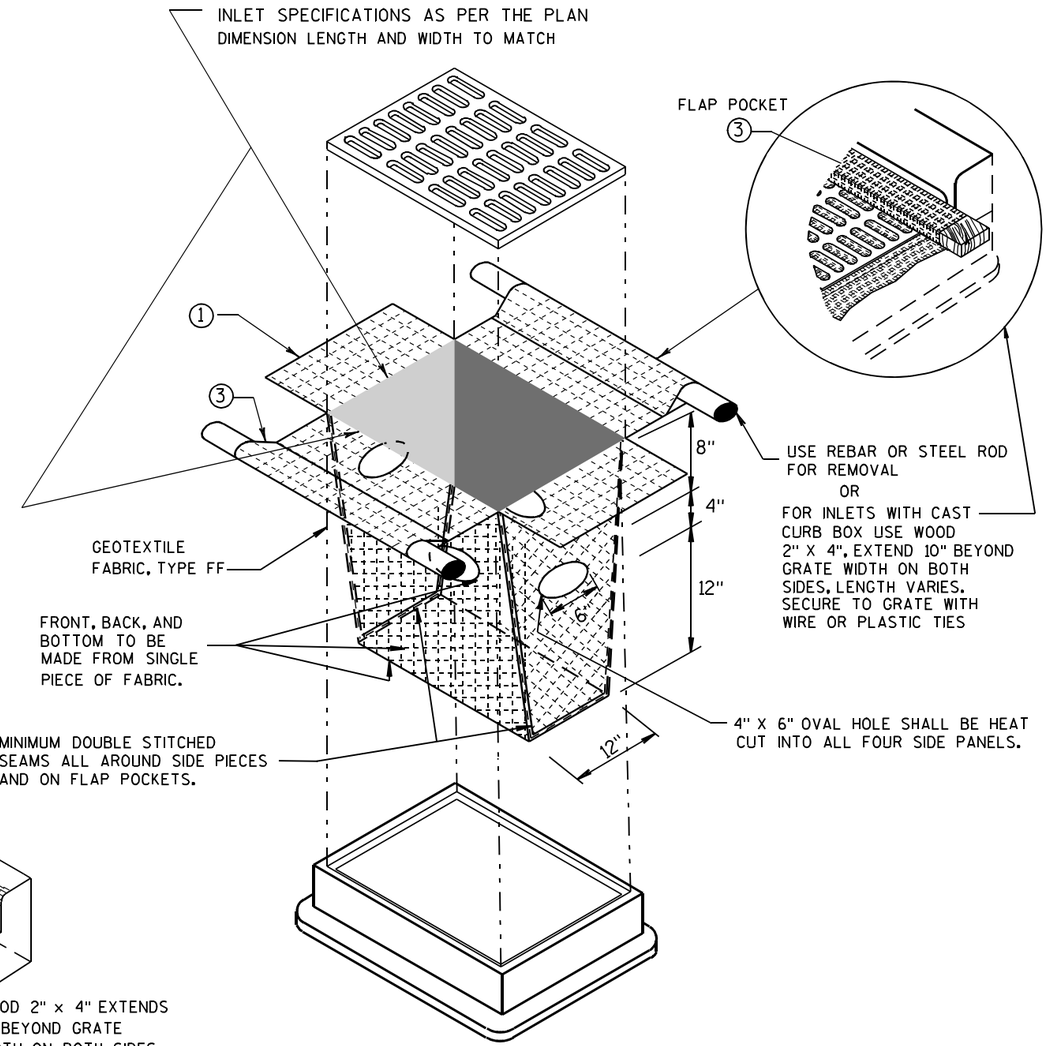

INLET PROTECTION, TYPE D

(CAN BE INSTALLED IN ANY INLET TYPE WITH
OR WITHOUT A CURB BOX AS PER NOTE ②)

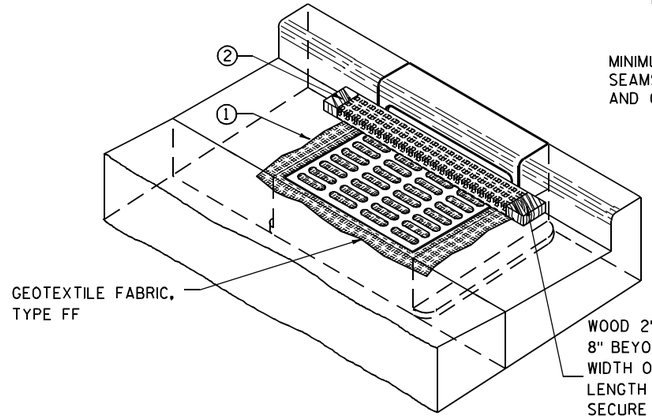

INLET PROTECTION, TYPE C (WITH CURB BOX)

GENERAL NOTES

INLET PROTECTION DEVICES SHALL BE MAINTAINED OR REPLACED AT THE DIRECTION OF THE ENGINEER.

MANUFACTURED ALTERNATIVES APPROVED AND LISTED ON THE DEPARTMENT'S EROSION CONTROL PRODUCT ACCEPTABILITY LIST MAY BE SUBSTITUTED.

WHEN REMOVING OR MAINTAINING INLET PROTECTION, CARE SHALL BE TAKEN SO THAT THE SEDIMENT TRAPPED ON THE GEOTEXTILE FABRIC DOES NOT FALL INTO THE INLET. ANY MATERIAL FALLING INTO THE INLET SHALL BE REMOVED IMMEDIATELY.

① FINISHED SIZE, INCLUDING FLAP POCKETS WHERE REQUIRED, SHALL EXTEND A MINIMUM OF 10" AROUND THE PERIMETER TO FACILITATE MAINTENANCE OR REMOVAL.

② FOR INLET PROTECTION, TYPE C (WITH CURB BOX), AN ADDITIONAL 18" OF FABRIC IS WRAPPED AROUND THE WOOD AND SECURED WITH STAPLES. THE WOOD SHALL NOT BLOCK THE ENTIRE HEIGHT OF THE CURB BOX OPENING.

③ FLAP POCKETS SHALL BE LARGE ENOUGH TO ACCEPT WOOD 2X4.

INSTALLATION NOTES

TYPE B & C

TRIM EXCESS FABRIC IN THE FLOW LINE TO WITHIN 3" OF THE GRATE.

THE CONTRACTOR SHALL DEMONSTRATE A METHOD OF MAINTENANCE, USING A SEWN FLAP, HAND HOLDS OR OTHER METHOD TO PREVENT ACCUMULATED SEDIMENT FROM ENTERING THE INLET.

TYPE D

DO NOT INSTALL INLET PROTECTION TYPE D IN INLETS SHALLOWER THAN 30", MEASURED FROM THE BOTTOM OF THE INLET TO THE TOP OF THE GRATE.

TRIM EXCESS FABRIC IN THE FLOW LINE TO WITHIN 3" OF THE GRATE.

THE INSTALLED BAG SHALL HAVE A MINIMUM SIDE CLEARANCE, BETWEEN THE INLET WALLS AND THE BAG, MEASURED AT THE BOTTOM OF THE OVERFLOW HOLES, OF 3". WHERE NECESSARY THE CONTRACTOR SHALL CINCH THE BAG, USING PLASTIC ZIP TIES, TO ACHIEVE THE 3" CLEARANCE. THE TIES SHALL BE PLACED AT A MAXIMUM OF 4" FROM THE BOTTOM OF THE BAG.

INLET PROTECTION
TYPE A, B, C, AND D

STATE OF WISCONSIN
DEPARTMENT OF TRANSPORTATION

APPROVED
10/16/02
DATE
/S/ Beth Cannestra
CHIEF ROADWAY DEVELOPMENT ENGINEER
FHWA

6
S.D.D. 8 E 10-2

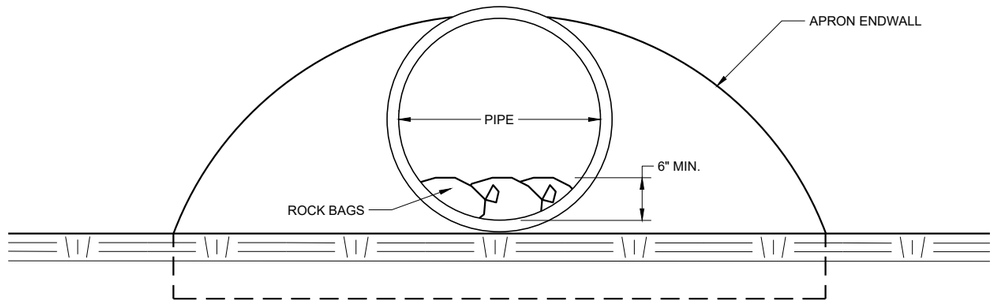

END VIEW

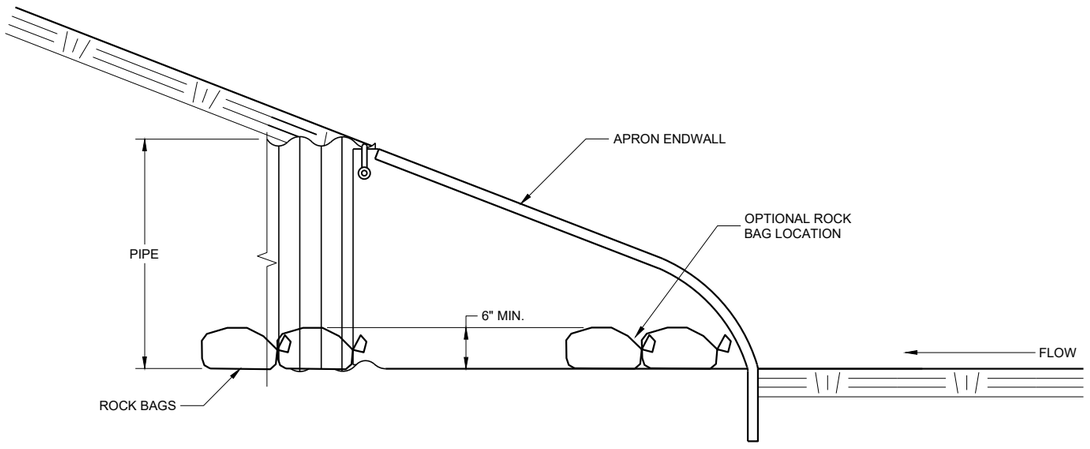

SIDE VIEW

CULVERT PIPE CHECK

(INSTALL ON INLET END ONLY)

CULVERT PIPE CHECK

STATE OF WISCONSIN
DEPARTMENT OF TRANSPORTATION

APPROVED
May 2019
DATE

/S/ Daniel Schave
EROSION CONTROL ENGI

FHWA

6

SDD 08E15 - 01

6

SDD 08E15 - 01

METAL APRON ENDWALLS

PIPE DIA. (IN.)	MIN. THICK. (Inches) STEEL	MIN. THICK. (Inches) ALUM.	DIMENSIONS (Inches) A (±1")	B (MAX.)	H (±1")	L (±1 1/2")	L1 ①	L2 ①	W (±2")	APPROX. SLOPE	BODY
12	.064	.060	6	6	6	21	12	17 1/2	24	2 1/2 to 1	1 Pc.
15	.064	.060	7	8	6	26	14	21 3/4	30	2 1/2 to 1	1 Pc.
18	.064	.060	8	10	6	31	15	28 1/4	36	2 1/2 to 1	1 Pc.
21	.064	.060	9	12	6	36	18	29 5/8	42	2 1/2 to 1	1 Pc.
24	.064	.075	10	13	6	41	18	37 1/4	48	2 1/2 to 1	1 Pc.
30	.079	.075	12	16	8	51	18	52 1/4	60	2 1/2 to 1	1 Pc.
36	.079	.105	14	19	9	60	24	59 3/4	72	2 1/2 to 1	2 Pc.
42	.109	.105	16	22	11	69	24	75 5/8	84	2 1/2 to 1	2 Pc.
48	.109	.105	18	27	12	78	24	81	90	2 1/4 to 1	3 Pc.
54	.109	.105	18	30	12	84	30	85 1/2	102	2 1/4 to 1	3 Pc.
60	.109×	.105×	18	33	12	87	—	—	114	2 to 1	3 Pc.
66	.109×	.105×	18	36	12	87	—	—	120	2 to 1	3 Pc.
72	.109×	.105×	18	39	12	87	—	—	126	2 to 1	3 Pc.
78	.109×	.105×	18	42	12	87	—	—	132	1 1/2 to 1	3 Pc.
84	.109×	.105×	18	45	12	87	—	—	138	1 1/2 to 1	3 Pc.
90	.109×	.105×	18	37	12	87	—	—	144	1 1/2 to 1	3 Pc.
96	.109×	.105×	18	35	12	87	—	—	150	1 1/2 to 1	3 Pc.

× EXCEPT CENTER PANEL SEE GENERAL NOTES

REINFORCED CONCRETE APRON ENDWALLS

PIPE DIA. (IN.)	DIMENSIONS (Inches) T	A	B	C	D	E	G	APPROX. SLOPE
12	2	4	24	48 7/8	72 1/8	24	2	3 to 1
15	2 1/4	6	27	46	73	30	2 1/4	3 to 1
18	2 1/2	9	27	46	73	36	2 1/2	3 to 1
21	2 3/4	9	36	37 1/2	73 1/2	42	2 3/4	3 to 1
24	3	9 1/2	43 1/2	30	73 1/2	48	3	3 to 1
27	3 1/4	10 1/2	49 1/2	24	73 1/2	54	3 1/4	3 to 1
30	3 1/2	12	54	19 3/4	73 1/2	60	3 1/2	3 to 1
36	4	15	63	34 3/4	97 3/4	72	4	3 to 1
42	4 1/2	21	63	35	98	78	4 1/2	3 to 1
48	5	24	72	26	98	84	5	3 to 1
54	5 1/2	27	65	* 33 1/4 - ** 35	* 98 1/4 - ** 100	90	5 1/2	2 2/5 to 1
60	6	* 30 - ** 35	60	39	99	96	5	2 to 1
66	6 1/2	* 24 - ** 30	* 72 - ** 78	* 21 - ** 27	99	102	5 1/2	2 to 1
72	7	* 24 - ** 36	78	21	99	108	6	2 to 1
78	7 1/2	* 24 - ** 36	78	21	99	114	6 1/2	2 to 1
84	8	36	90 1/2	21	111 1/2	120	6 1/2	1 1/2 to 1
90	8 1/2	41	87 1/2	24	111 1/2	132	6 1/2	1 1/2 to 1

*MINIMUM
**MAXIMUM

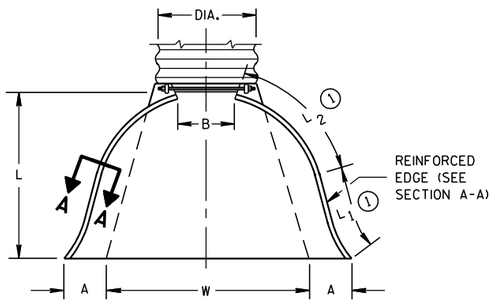

PLAN VIEW

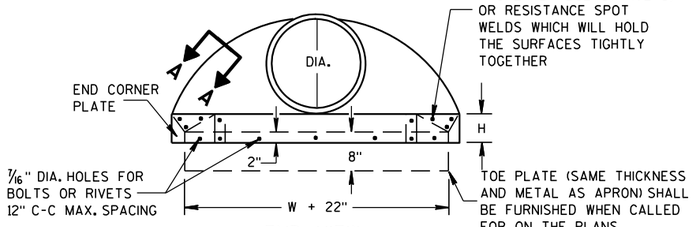

END VIEW

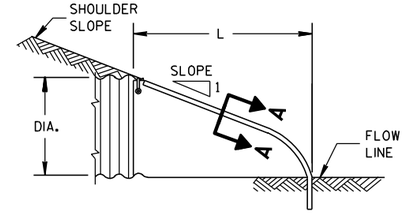

SIDE ELEVATION

METAL ENDWALLS

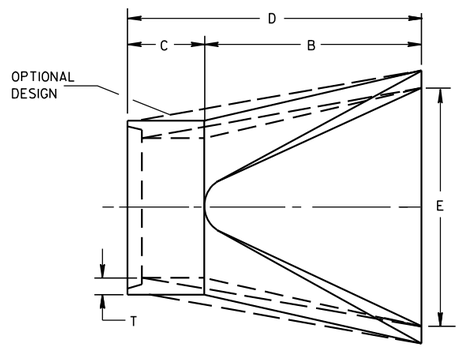

PLAN

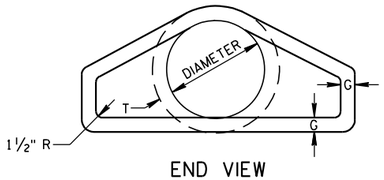

END VIEW

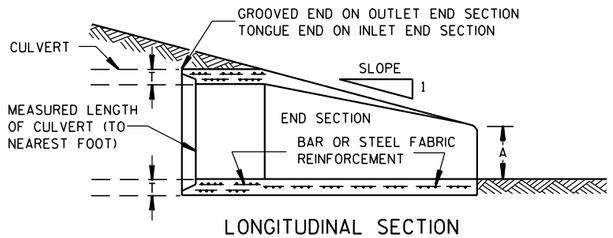

LONGITUDINAL SECTION

CONCRETE ENDWALLS

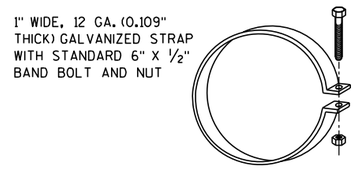

ALTERNATE FOR TYPE 1 CONNECTION

END SECTION CONNECTOR STRAP

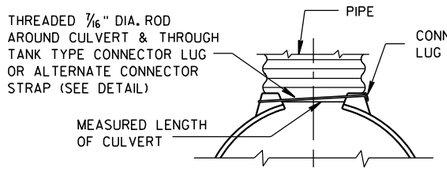

TYPE 1
FOR 12" THRU 24" CORR. PIPE

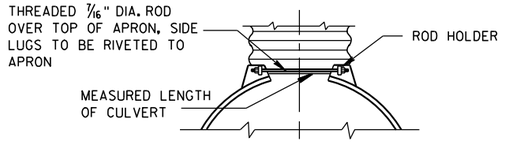

TYPE 2
FOR 30" THRU 96" CORR. PIPE

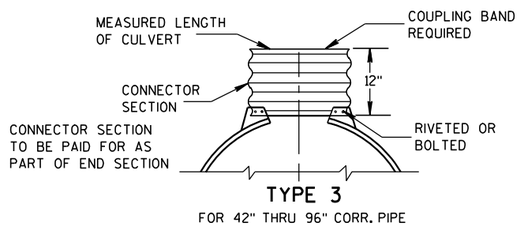

TYPE 3
FOR 42" THRU 96" CORR. PIPE

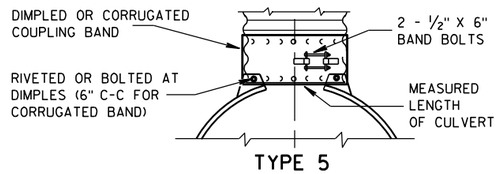

TYPE 5
ALTERNATE FOR:
ALL SIZES CORRUGATED CIRCULAR PIPE

NOTE: DIMPLED BAND FITS OVER OUTSIDE OF ENDWALL. AND CORRUGATED BAND FITS INSIDE ENDWALL. DIMPLED BAND MAY BE USED WITH HELICALLY CORRUGATED PIPE.

FOR CIRCUMFERENTIALLY CORRUGATED PIPE USE ENDWALL CONNECTION DETAILS 1, 2, 3 OR 5 AS APPLICABLE.

FOR HELICALLY CORRUGATED PIPE USE ENDWALL CONNECTION DETAILS 1, 2 OR 5.

FOR HELICALLY CORRUGATED PIPES WITH TWO CIRCUMFERENTIAL CORRUGATIONS AT EACH END USE ENDWALL CONNECTION DETAILS 1, 2 OR 3.

CONNECTION DETAILS

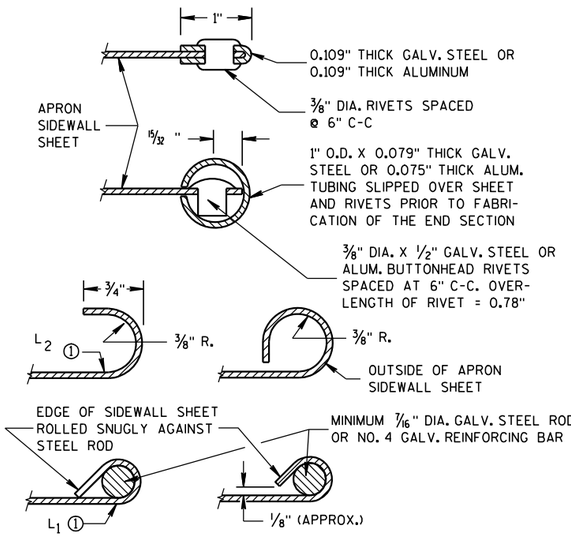

SECTION A-A

GENERAL NOTES

DETAILS OF CONSTRUCTION, MATERIALS AND WORKMANSHIP NOT SHOWN ON THIS DRAWING SHALL CONFORM TO THE PERTINENT REQUIREMENTS OF THE STANDARD SPECIFICATIONS AND THE APPLICABLE SPECIAL PROVISIONS.

CONCRETE CULVERT ENDWALLS MAY NOT BE USED WITH GALVANIZED STEEL OR ALUMINUM CULVERT PIPE OR VISE VERSA. GALVANIZED STEEL OR ALUMINUM ENDWALLS SHALL NORMALLY BE INSTALLED ON CULVERT PIPE OF THE SAME METAL.

ALL THREE PIECE STEEL APRON ENDWALLS FOR 60" DIAMETER PIPE AND LARGER SHALL HAVE 0.109" SIDES AND 0.138" CENTER PANELS. ALL THREE PIECE ALUMINUM APRON ENDWALLS FOR 60" DIAMETER PIPE AND LARGER SHALL HAVE 0.105" SIDES AND 0.134" CENTER PANELS. THE WIDTH OF CENTER PANELS SHALL BE GREATER THAN 20 PERCENT OF THE PIPE PERIMETER.

LAP SEAMS SHALL BE TIGHTLY JOINED BY GALVANIZED RIVETS OR BOLTS FOR STEEL UNITS AND ALUMINUM RIVETS AND BOLTS FOR ALUMINUM UNITS. FOR THE 60" THROUGH 96" DIAMETER APRON ENDWALL SIZES, THE REINFORCED EDGES AND CENTER PANEL SEAMS SHALL BE FURTHER REINFORCED WITH GALVANIZED STEEL OR ALUMINUM STIFFENER ANGLES. THE ANGLES SHALL BE ATTACHED BY GALVANIZED NUTS AND BOLTS FOR STEEL UNITS AND ALUMINUM NUTS AND BOLTS FOR ALUMINUM UNITS.

WHERE TWO OR MORE PIPES WITH APRON ENDWALLS ARE LAID ADJACENT TO EACH OTHER, THEY SHALL BE SEPARATED BY A DISTANCE SUFFICIENT TO PROVIDE A MINIMUM CLEARANCE OF 6 INCHES BETWEEN APRON ENDWALLS.

① FOR PIPE SIZES UP TO 60" DIAMETER, A 180° ROLLED EDGE MAY BE USED INSTEAD OF STEEL ROD REINFORCEMENT. SEE SECTION A-A.

APRON ENDWALLS FOR CULVERT PIPE

STATE OF WISCONSIN
DEPARTMENT OF TRANSPORTATION

APPROVED
11/30/94 DATE
/S/ Rory L. Rhinesmith
CHIEF ROADWAY DEVELOPMENT ENGINEER
FHWA

6

S.D.D. 8 F 1-11

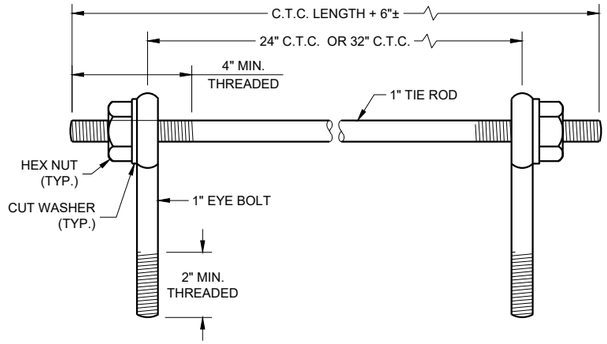

EYE BOLTS AND TIE ROD

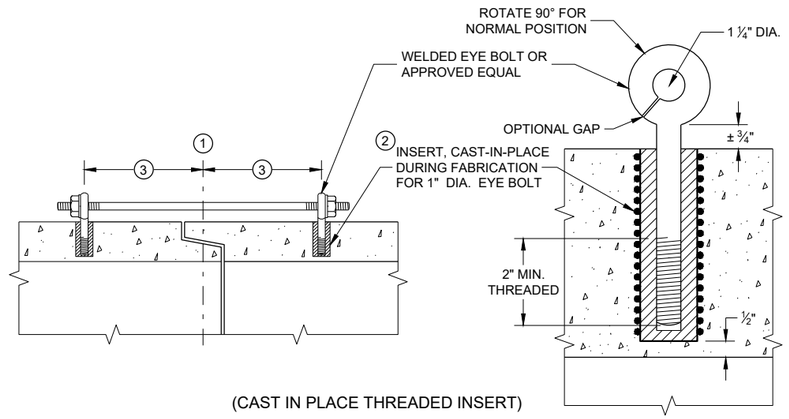

(CAST IN PLACE THREADED INSERT)

LONGITUDINAL SECTIONS

EYE BOLT AND TIE ROD ASSEMBLY (ALTERNATE NO. 1)

GENERAL NOTES

DETAILS OF CONSTRUCTION, MATERIALS, AND WORKMANSHIP NOT SHOWN ON THIS DRAWING SHALL CONFORM TO THE PERTINENT REQUIREMENTS OF THE STANDARD SPECIFICATIONS AND APPLICABLE SPECIAL PROVISIONS.

CONCRETE CULVERT AND STORM SEWER PIPE SHALL BE TIED TOGETHER IN THE MANNER ILLUSTRATED BY THIS DETAIL AT LOCATIONS DESIGNATED IN THE STANDARD SPECIFICATIONS AND THE PLAN. THE CONTRACTOR MAY USE EITHER ALTERNATE 1, 2 OR 3 FOR DRAINAGE STRUCTURES. ONLY ALTERNATE 1 AND 3 MAY BE USED FOR CATTLE PASSES, UNLESS OTHERWISE STATED IN THE CONTRACT. THE MATERIALS, FABRICATION AND WORK NECESSARY TO TIE THE PIPE BY THIS DETAIL WILL BE CONSIDERED INCIDENTAL TO THE PIPE AND APRON ENDWALLS IF REQUIRED.

DETAILED DRAWINGS FOR PROPOSED ALTERNATE DESIGNS FOR JOINT TIES SHALL BE SUBMITTED TO THE ENGINEER FOR APPROVAL.

JOINT TIES TO BE HOT-DIP GALVANIZED PER ASTM A 153.

(1) CENTER LINE OF TONGUE AND GROOVE OR BELL AND SPIGOT JOINTS.

(2) THE INSIDE OF THE THREADED INSERTS SHALL BE CLEAN TO ALLOW THE INSERTION OF THREADED EYE BOLTS.

(3) HOLES SHALL BE CAST-IN-PLACE OR DRILLED PER THE APPLICABLE DETAIL, AND EQUAL DISTANCE FROM THE CENTERLINE OF THE JOINT.

(4) BOLT PROJECTION INSIDE OF PIPE SHALL NOT EXCEED 2 INCHES.

(5) OPENING TO BE ROD DIAMETER PLUS 1 INCH.

(6) LENGTH ADEQUATE TO EXTEND TO WITHIN ½ INCH OF THE INNER SURFACE OF THE PIPE.

(7) EYE BOLT LENGTH DETERMINED BY WALL THICKNESS, BELL THICKNESS AND BOLT PROJECTION INSIDE PIPE.

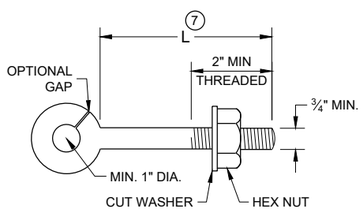

EYE BOLT (7)

NOTE: TWO EYE BOLTS MAY BE USED WITH A 30" OR 38" LONG THREADED ROD IN LIEU OF THE 90° BENT TIE ROD.

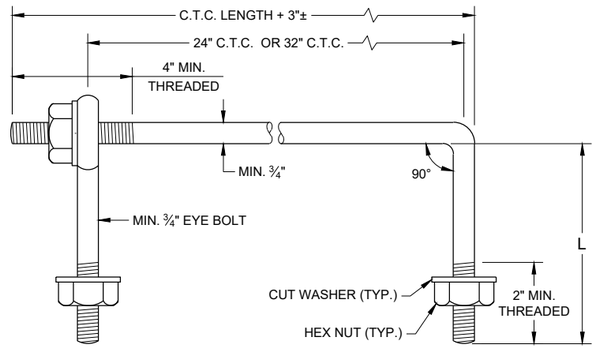

EYE BOLT AND TIE ROD

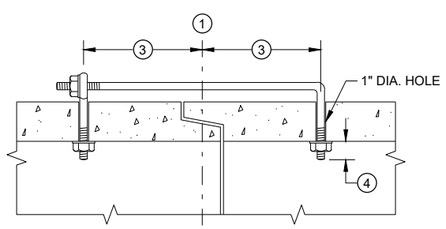

(TONGUE AND GROOVE PIPE)

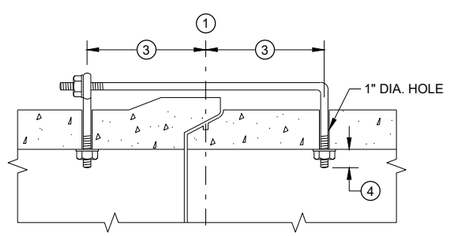

(MODIFIED BELL PIPE)

LONGITUDINAL SECTION

(JOINT TIES FOR 18" TO 66" DIA. CONCRETE PIPE)

EYE BOLT AND TIE ROD ASSEMBLY (ALTERNATE NO. 2)

ADJUSTABLE TIE ROD TABLE

PIPE DIAMETER	TIE ROD DIAMETER	D	L_1	N
12 - 60	⅝	⅝	5	½
66 - 84	¾	¾	5	½
90 - 144	1	1	7	1 7/16

DIMENSIONS SHOWN ARE IN INCHES

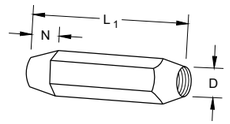

TAPERED

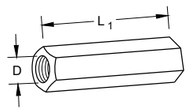

PLAIN

RIGHT AND LEFT THREADS

SLEEVE NUTS

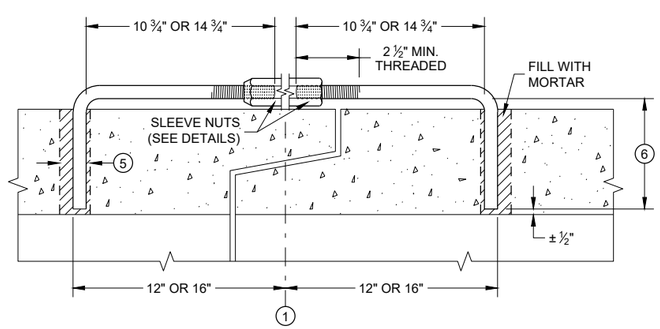

LONGITUDINAL SECTION

ADJUSTABLE TIE ROD (ALTERNATE NO. 3)

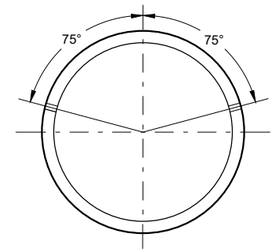

PLACEMENT OF (2) CAST-IN-PLACE INSERTS OR HOLES DURING FABRICATION FOR PIPE SECTIONS REQUIRING TIE RODS

TRANSVERSE SECTION

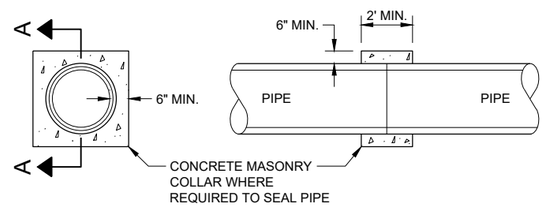

SECTION A - A

CONCRETE COLLAR DETAIL

JOINT TIES FOR CONCRETE PIPE AND CONCRETE COLLAR DETAIL

STATE OF WISCONSIN
DEPARTMENT OF TRANSPORTATION

APPROVED
November 2021 — DATE
/S/ Rodney Taylor — ROADWAY STANDARDS DEVE ENGINEER

FHWA

SDD 08F04 - 08

SDD 08F04 - 08

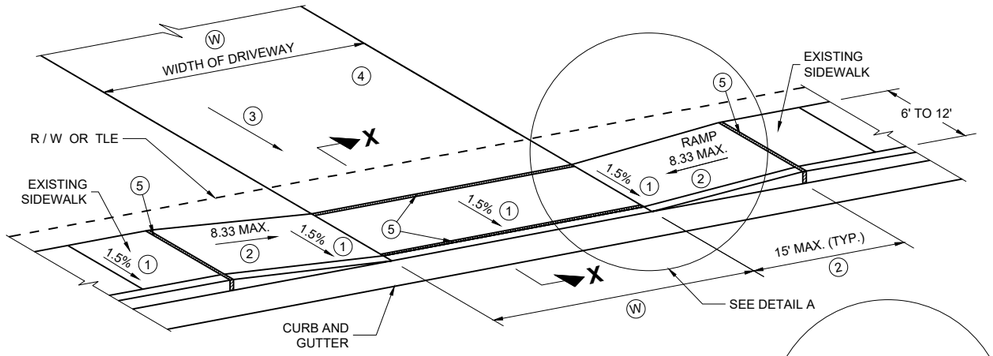

TYPE X
SIDEWALK ABUTS CURB AND GUTTER
TERRACE VARIES 0 TO 3 FEET

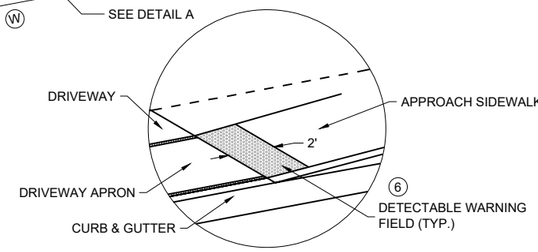

DETAIL A

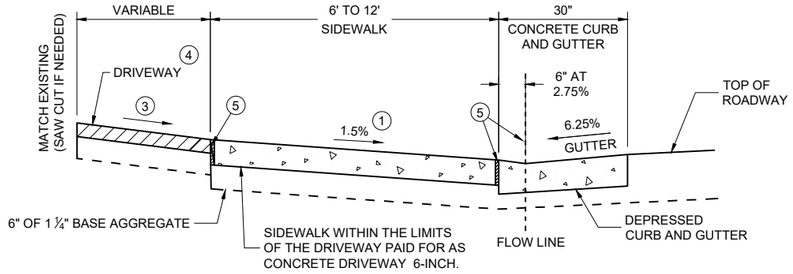

SECTION X - X

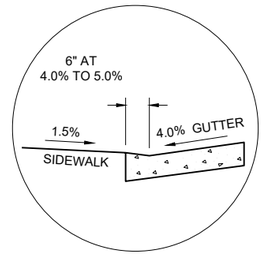

SECTION X - X
4% GUTTER SLOPE

Ⓦ : DRIVEWAY WIDTHS (MEASURED AT ROW LINE)
~ COMMERCIAL & INDUSTRIAL 16' MIN. - 35' MAX.
~ RESIDENTIAL & AGRICULTURAL (NONCOMMERCIAL) 16' MIN. - 24' MAX.

TABLE Y

Ⓐ FEET	Ⓒ FEET
3.5'	2.0'
4.5'	3.0'
5.5'	3.5'

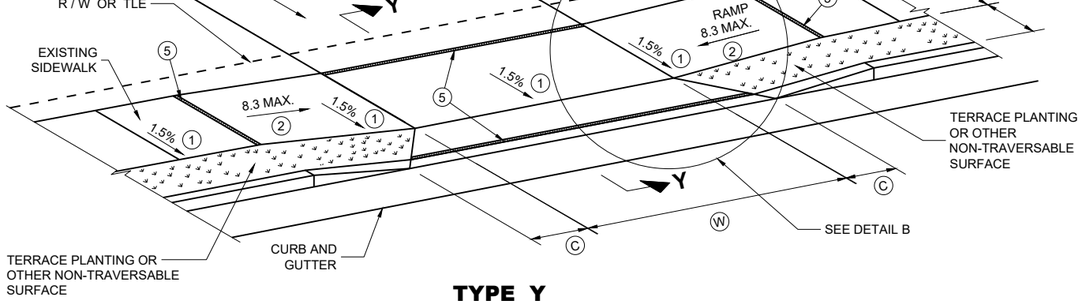

TYPE Y
SIDEWALK WITH NARROWER TERRACE
TERRACE VARIES 4 TO 6 FEET

Ⓐ:MEASURE FROM BACK OF CURB

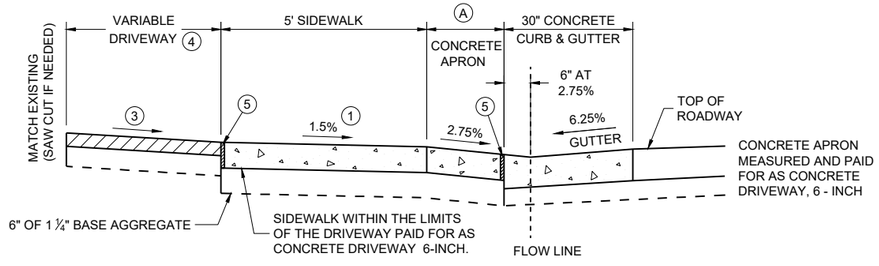

NOTE: SIDEWALK MY BE DEPRESSED IN DRIVEWAY AREAS

SECTION Y - Y

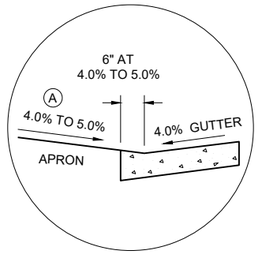

SECTION Y - Y
4% GUTTER SLOPE

DRIVEWAY DETAIL WITH CONCRETE CURB AND GUTTER
(URBAN AND SUBURBAN)

GENERAL NOTES

PROVIDE CONSTRUCTION JOINTS ALONG THE CENTER OF THE CONCRETE FOR DRIVEWAYS UNDER 20 FEET IN WIDTH AND AT THE THIRD POINTS OVER 20 FEET IN WIDTH.

Ⓦ IS SHOWN ON PLAN AND PROFILE SHEETS.

OFFSETS, ELEVATIONS, AND PERCENT GRADE ARE SHOWN ON THE CROSS SECTIONS.

① CONSTRUCTION TOLERANCE OF 0.5%± FOR SIDEWALK CROSS SLOPE. THE SIDEWALK CROSS SLOPE SHALL NOT EXCEED 2.1%.

② THE SIDEWALK RAMP MAXIMUM RUNNING SLOPE SHALL NOT REQUIRE THE RAMP LENGTH TO EXCEED 15 FEET TO AVOID CHASING THE SLOPE INDEFINITELY WHEN CONNECTING TO STEEP GRADES. WHEN APPLYING THE 15 FOOT MAXIMUM LENGTH, THE RUNNING SLOPE OF THE SIDEWALK SHALL BE AS FLAT AS FEASIBLE AND NOT EXCEED THE LONGITUDINAL GRADE OF THE ROADWAY. SLOPE SIDEWALK RAMP TOWARD APRON AS SHOWN WHERE THERE IS NO TERRACE OR WHERE THE TERRACE WIDTH IS LESS THAN 6 FEET WIDE.

③ DRIVEWAY SLOPES: DESIRABLE MAXIMUM
10.5% UP AWAY FROM SIDEWALK (SAG)
8.5% DOWN AWAY FROM SIDEWALK (CREST)
ABSOLUTE MAXIMUM 15% FOR BOTH CREST AND SAG

④ DRIVEWAY TYPES
* 6-INCH CONCRETE DRIVEWAY PAVEMENT OVER 6-INCH BASE AGGREGATE
* 2-INCH TO 3-INCH ASPHALTIC SURFACE OVER 6-INCH BASE AGGREGATE
* 6-INCH BASE AGGREGATE (MAY BE INCREASED FOR CLAY SUBGRADES.)

⑤ 1/2" EXPANSION JOINT FILLER

⑥ DETECABLE WARNING FIELDS ARE REQUIRED WHEN A PEDESTRIAN CIRCULATION ROUTE CROSSES A DRIVEWAY THAT IS TRAFFIC SIGNAL, STOP, OR YIELD SIGN CONTROLLED. DETECTABLE WARNING FIELDS TO BE 2 FT DEEP AND EXTEND THE WIDTH OF THE PEDESTRIAN CIRCULATION ROUTE.

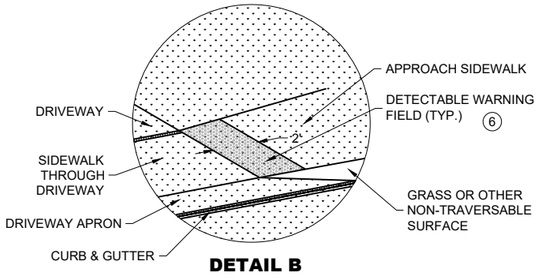

DETAIL B

DRIVEWAY AND SIDEWALK RAMPS TYPES X AND Y

STATE OF WISCONSIN
DEPARTMENT OF TRANSPORTATION

APPROVED
November 2025 — DATE
/S/ Rodney Taylor — ROADWAY STANDARDS DEVELOPMENT UNIT SUPERVISOR

FHWA

6
SDD 09A11-01

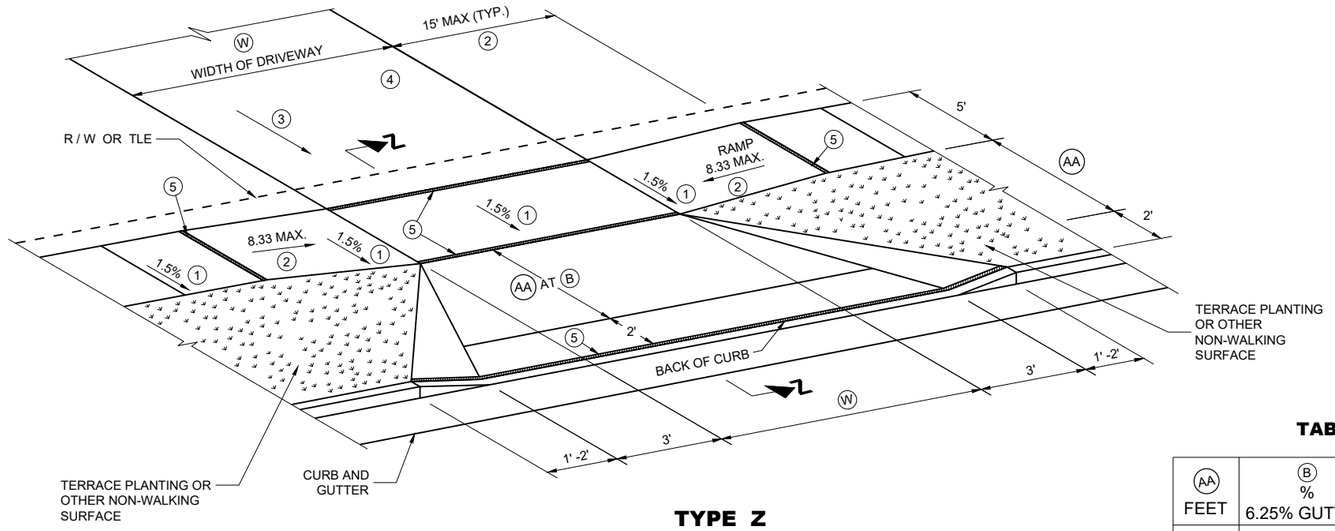

TYPE Z

SIDEWALK WITH WIDER TERRACE
TERRACE VARIES 7 TO 12 FEET

GENERAL NOTES

PROVIDE CONSTRUCTION JOINTS ALONG THE CENTER OF THE CONCRETE FOR DRIVEWAYS UNDER 20 FEET IN WIDTH AND AT THE THIRD POINTS OVER 20 FEET IN WIDTH.

(W) IS SHOWN ON PLAN AND PROFILE SHEETS.

OFFSETS, ELEVATIONS, AND PERCENT GRADE ARE SHOWN ON THE CROSS SECTIONS.

(1) CONSTRUCTION TOLERANCE OF 0.5%± FOR SIDEWALK CROSS SLOPE. THE SIDEWALK CROSS SLOPE SHALL NOT EXCEED 2.1%.

(2) THE SIDEWALK RAMP MAXIMUM RUNNING SLOPE SHALL NOT REQUIRE THE RAMP LENGTH TO EXCEED 15 FEET TO AVOID CHASING THE SLOPE INDEFINITELY WHEN CONNECTING TO STEEP GRADES. WHEN APPLYING THE 15 FOOT MAXIMUM LENGTH, THE RUNNING SLOPE OF THE SIDEWALK SHALL BE AS FLAT AS FEASIBLE AND NOT EXCEED THE LONGITUDINAL GRADE OF THE ROADWAY.

(3) DRIVEWAY SLOPES: DESIRABLE MAXIMUM
10.5% UP AWAY FROM SIDEWALK (SAG)
8.5% DOWN AWAY FROM SIDEWALK (CREST)
ABSOLUTE MAXIMUM 15% FOR BOTH CREST AND SAG

(4) DRIVEWAY TYPES
* 6-INCH CONCRETE DRIVEWAY PAVEMENT OVER 6-INCH BASE AGGREGATE 2-INCH
* TO 3-INCH ASPHALTIC SURFACE OVER 6-INCH BASE AGGREGATE 6-INCH BASE
* AGGREGATE (MAY BE INCREASED FOR CLAY SUBGRADES.)

(5) 1/2" EXPANSION JOINT FILLER.

TABLE Z

(AA) FEET	(B) % 6.25% GUTTER	(B) % 4% GUTTER
4.5'	11.5%	9% TO 11.5%
5.5'	9% TO 11.5%	8% TO 11.5%
6.5'	8% TO 11.5%	6% TO 11.5%
7.5'	7% TO 11.5%	6% TO 11.5%
8.5'	6% TO 11.5%	5% TO 11.5%
9.5'	5% TO 11.5%	4% TO 11.5%

(W) : DRIVEWAY WIDTHS (MEASURED AT ROW LINE)
~ COMMERCIAL & INDUSTRIAL 16' MIN. - 35' MAX.
~ RESIDENTIAL & AGRICULTURAL (NONCOMMERCIAL) 16' MIN. - 24' MAX.

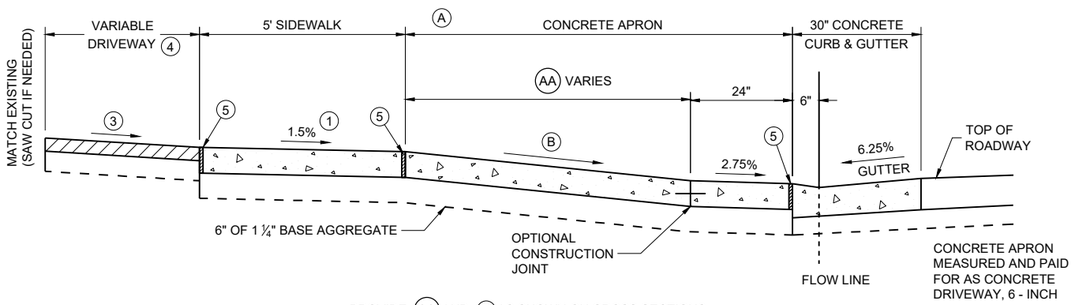

PROVIDE (AA) AND (B) AS SHOWN ON CROSS SECTIONS.

6.25% GUTTER SLOPE

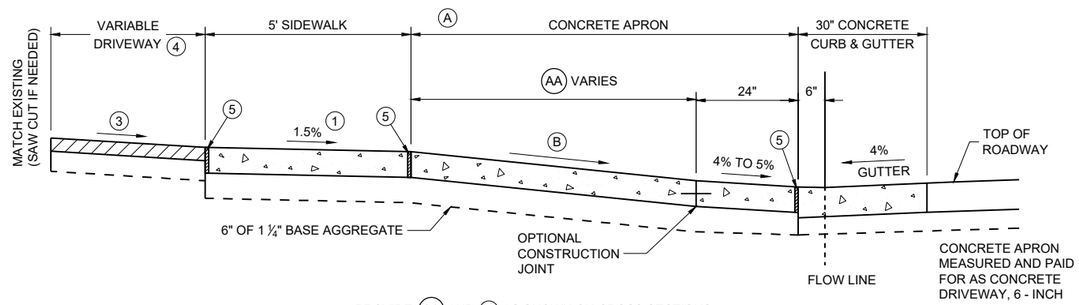

PROVIDE (AA) AND (B) AS SHOWN ON CROSS SECTIONS.

4% GUTTER SLOPE

NOTE: SIDEWALK MAY BE DEPRESSED IN DRIVEWAY AREAS FOR (B) VALUES NOT SHOWN IN TABLE Z.

SIDEWALK WITHIN THE LIMITS OF THE DRIVEWAY PAID FOR AS CONCRETE DRIVEWAY 6-INCH.

SECTION Z - Z

DRIVEWAY DETAIL WITH CONCRETE CURB AND GUTTER

(URBAN AND SUBURBAN)

DRIVEWAY AND SIDEWALK RAMPS TYPE Z

STATE OF WISCONSIN
DEPARTMENT OF TRANSPORTATION

APPROVED
November 2025 — DATE
/S/ Rodney Taylor — ROADWAY STANDARDS DEVELOPMENT UNIT SUPERVISOR

FHWA

6
SDD 09A12-01

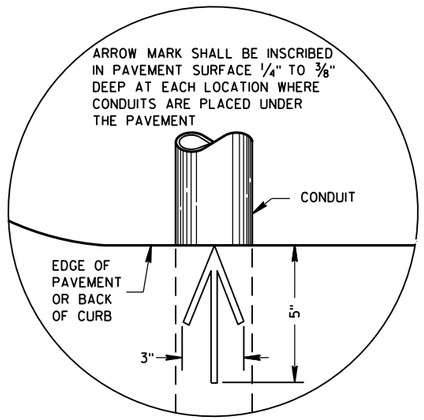

PLAN VIEW

ARROW MARK

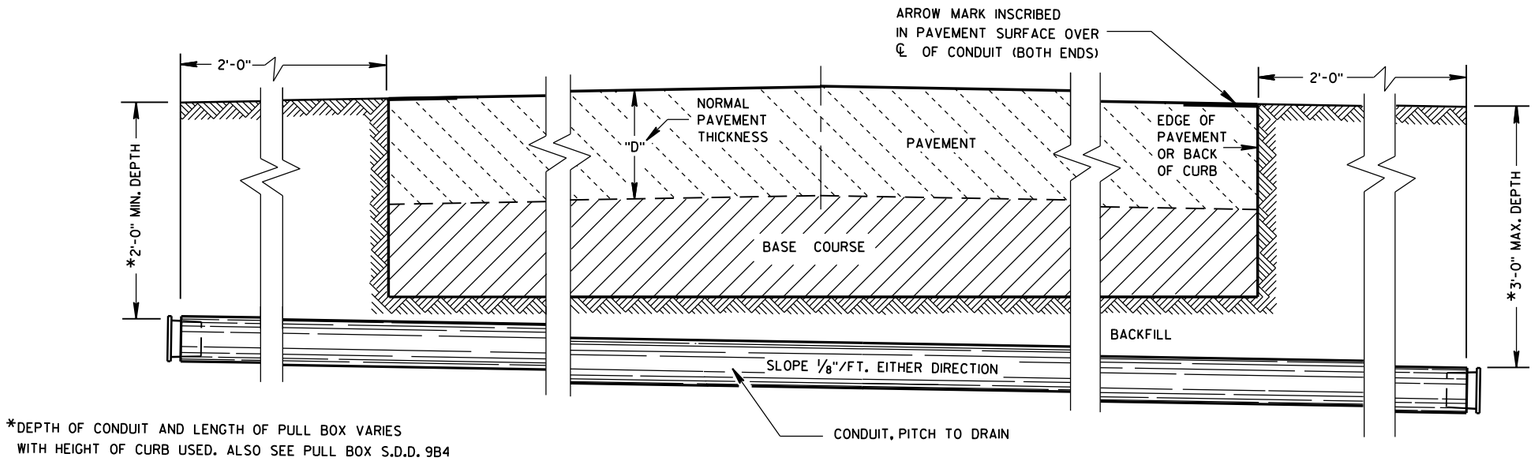

*DEPTH OF CONDUIT AND LENGTH OF PULL BOX VARIES WITH HEIGHT OF CURB USED. ALSO SEE PULL BOX S.D.D. 9B4

SIDE ELEVATION

DETAIL FOR CONDUIT UNDER PAVED HIGHWAYS

GENERAL NOTES

DETAILS OF CONSTRUCTION, MATERIALS AND WORKMANSHIP NOT SHOWN ON THIS DRAWING SHALL CONFORM TO THE PERTINENT REQUIREMENTS OF THE CONTRACT.

METALLIC (STANDARD SPECIFICATION 652.2.2) OR NONMETALLIC (STANDARD SPECIFICATION 652.2.3) CONDUIT SHALL BE FURNISHED AND PLACED AS SHOWN.

DEPTH OF CONDUIT INSTALLED BELOW THE TRAVELED WAY SHALL BE 24 INCHES MINIMUM AND 36 INCHES MAXIMUM.

DEPTH OF CONDUIT INSTALLED THAT IS NOT BELOW THE TRAVELED WAY SHALL BE 18 INCHES MINIMUM AND 36 INCHES MAXIMUM.

ANY EXCEPTION TO THE MAXIMUM DEPTH SHALL BE ONLY WITH THE WRITTEN APPROVAL OF THE ENGINEER.

THE TRENCH SHALL NOT BE BACKFILLED PRIOR TO INSPECTION OF THE CONDUIT.

ALL METALLIC CONDUIT RACEWAY ENDS SHALL BE REAMED AND THREADED.

ALL METALLIC CONDUIT IN WHICH WIRE OR CABLE IS TO BE INSTALLED SHALL BE BUSHED WITH APPROVED THREADED BUSHINGS BEFORE INSTALLATION OF THE WIRE OR CABLE.

ALL METALLIC CONDUITS IN WHICH WIRE OR CABLE IS NOT TO BE INSTALLED SHALL BE CAPPED WITH THREADED PROTECTIVE CAPS, AS APPROVED BY THE ENGINEER.

ALL NONMETALLIC CONDUIT SHALL BE CAPPED OR PLUGGED IMMEDIATELY AFTER INSTALLATION AND SHALL REMAIN CAPPED OR PLUGGED UNTIL WIRE/CABLES ARE INSTALLED.

NONMETALLIC CONDUITS IN WHICH WIRE OR CABLE IS NOT BEING INSTALLED SHALL REMAIN CAPPED OR PLUGGED.

BENDING OF PVC ELECTRICAL CONDUIT SHALL BE ACCOMPLISHED BY USING A BLANKET OR EMERSION TYPE TANK DESIGNED FOR THE PURPOSE OF BENDING PVC ELECTRICAL CONDUIT.

ALL CUT ENDS SHALL BE TRIMMED INSIDE AND OUTSIDE TO REMOVE ALL ROUGH EDGES ON NONMETALLIC CONDUIT. (SEE NEC 347.5)

WHEN REQUIRED TO CONNECT NONMETALLIC CONDUIT TO METALLIC CONDUIT, ONLY U.L. LISTED ADAPTER FITTINGS SHALL BE USED.

PRIOR TO CONDUIT ACCEPTANCE, CONDUIT CAPS OR PLUGS SHALL BE REMOVED, AND THE CAPS, PLUGS AND CONDUIT ENDS SHALL BE THOROUGHLY CLEANED AND THEN THE CAPS OR PLUGS REINSTALLED TO ENSURE THAT THE CAPS OR PLUGS CAN BE EASILY REMOVED IN THE FUTURE.

ALL CONDUIT BEING FURNISHED AND INSTALLED SHALL HAVE THE U.L. LABEL FIRMLY ATTACHED.

CONDUIT RUNS SHALL BE THE SAME SIZE OF CONDUIT FROM ONE END TO THE OTHER (FROM PULL BOX TO PULL BOX-OR-JUNCTION BOX TO JUNCTION BOX-OR-BASE TO BASE, ETC.).

TRACER WIRE SHALL BE INSTALLED AS STATED IN THE STANDARD SPECIFICATION, ITEM 652.3.1.1.

ALL CONDUIT RUNS SHALL BE STRAIGHT (WITHOUT BENDS) FROM PULL BOX TO PULL BOX, PULL BOX TO BASE AND BASE TO BASE AS SHOWN ON THE PLANS.

CONDUIT

STATE OF WISCONSIN
DEPARTMENT OF TRANSPORTATION

APPROVED
March, 2017 — DATE
/S/ Ahmet Demirbilek — STATE ELECTRICAL
FHWA

6

S.D.D. 9 B 2-10

TABLE OF NOMINAL DIMENSIONS
AND WEIGHTS

DIMENSION IN INCHES		NON- CONDUCTIVE PULL BOX	
BOX DIAMETER ** (INSIDE)	A	24	24
BOX OVERALL OUTSIDE DIAMETER	B	27	27
BOX LENGTH	C	36	42
FRAME OPENING	D	22 ½	22 ½
WEIGHT IN POUNDS *			
COVER		50	50
BOX ONLY		75	85

*THE ACTUAL WEIGHT OF THE COVER OR BOX ONLY MAY VARY NOT TO EXCEED 100 LBS INDIVIDUALLY.

** DIAMETER VARIES FROM TOP TO BOTTOM WITH THE DIAMETER LARGER AT THE BOTTOM TO PREVENT FROST HEAVE.

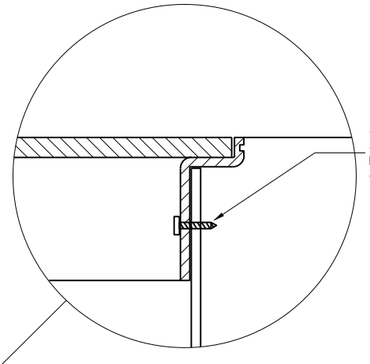

INSTALLED IN SOD OR CRUSHED AGGREGATE

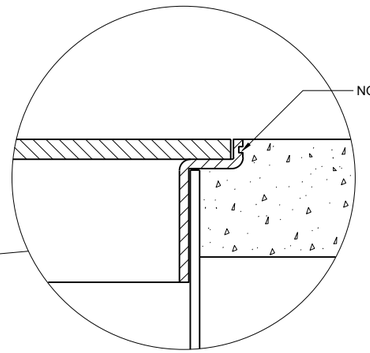

INSTALLED IN SIDEWALK

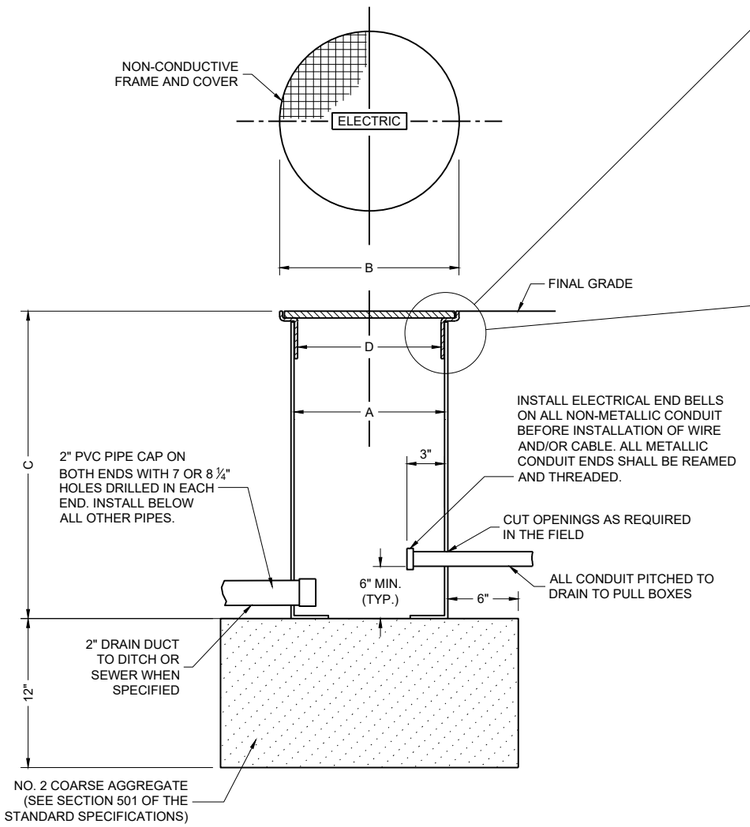

NON-CONDUCTIVE PULL BOX

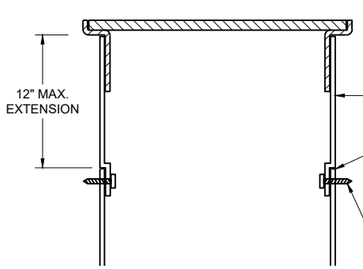

BOX EXTENSION

GENERAL NOTES

DETAILS OF CONSTRUCTION, MATERIALS AND WORKMANSHIP NOT SHOWN ON THIS DRAWING SHALL CONFORM TO THE PERTINENT REQUIREMENTS OF THE CONTRACT.

ALL BOXES, FRAMES AND COVERS SHALL BE SUITABLE FOR TIER 15 LOADING AS SPECIFIED IN ANSI/SCTE 77.

PROVIDE AN OPENING FOR TOOL ASSISTED COVER REMOVAL NOT LARGE ENOUGH TO PERMIT PASSAGE OF A SPHERE MORE THAN ½" DIAMETER

ENSURE COVER SURFACE IS SKID RESISTANT WITH A COEFFICIENT OF FRICTION OF AT LEAST 0.5 AND VERTICAL SURFACE DICONTINUITIES LESS THAN ¼".

COVER SHALL BE MAGNETICALLY LOCATABLE.

BOXES AND EXTENSIONS ARE TRIMMABLE FOR CUSTOM LENGTHS. TRIMMED PIECES SHALL MAINTAIN A UNIFORM LENGTH.

ENTRANCE HOLES INTO PULL BOXES SHALL BE CUT WITH A CIRCULAR HOLE SAW OR HYDRAULIC CONDUIT PUNCH. HOLE SIZE SHALL BE THE OUTSIDE DIAMETER OF THE CONDUIT THAT IS TO FIT IN THE OPENING PLUS NO MORE THAN ¼".

THE CONTRACTOR SHALL NOT INSTALL WIRE IN ANY PULL BOX UNTIL ITS INSTALLATION HAS BEEN INSPECTED AND ACCEPTED BY THE ENGINEER.

ALL METALLIC CONDUIT IN WHICH WIRE AND/OR CABLE IS TO BE INSTALLED, SHALL BE BUSHED BEFORE INSTALLATION OF THE WIRE AND/OR CABLE.

ENTIRE BOX MUST BE CONSTRUCTED OF NON-CONDUCTIVE MATERIALS WITH THE EXCEPTION OF STAINLESS STEEL FASTENERS AND MAGNETIC LOCATABLE DEVICE.

WHEN A PULL BOX IS INSTALLED IN CRUSHED AGGREGATE SHOULDERS, PLACE IT 2-3 INCHES BELOW GRADE AND COVER IT WITH 2-3 INCHES OF CRUSHED AGGREGATE.

LABEL ON COVER SHALL READ "ELECTRIC" FOR SIGNAL AND LIGHTING SYSTEMS, "WISDOT ITS" FOR COMMUNICATIONS AND ITS EQUIPMENT SYSTEMS.

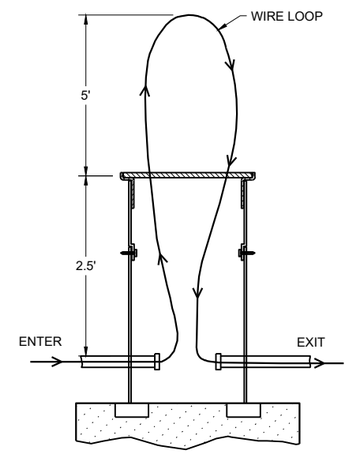

MEASUREMENT DETAIL FOR WIRE/CABLE IN THE PULL BOX

PULL BOXES NON-CONDUCTIVE

STATE OF WISCONSIN
DEPARTMENT OF TRANSPORTATION

APPROVED
November 2024 — DATE
/S/ Ahmet Demirbilek — STATE ELECTRICAL ENGINEER

FHWA

6
SDD 09B16-03

FORM DEPTH SHALL BE NO MORE THAN 6" BELOW GRADE ON THE LOWER SIDE OF BASE

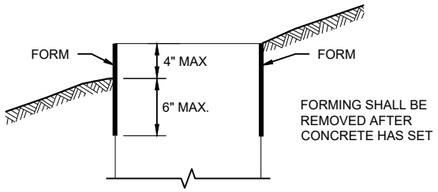

FORMING DETAIL

QUANTITY REQUIREMENTS	CONCRETE BASE TYPE		
	1	2	5 & 6
APPROX. CUBIC YARDS OF CONCRETE	0.40	0.57	0.40
LBS. OF HOOP BAR STEEL	NONE	23	16
LBS. OF VERTICAL BAR STEEL	NONE	60	18

GENERAL NOTES

DETAILS OF CONSTRUCTION, MATERIALS AND WORKMANSHIP NOT SHOWN ON THIS DRAWINGSHALL CONFORM TO THE PERTINENT REQUIREMENTS OF THE CONTRACT.

BASES SHALL BE EXCAVATED BY USE OF A CIRCULAR AUGER.

TOP SURFACES OF CONCRETE BASES SHALL BE TROWEL FINISHED SMOOTH AND LEVEL.

CONDUIT SIZES AND LOCATIONS SHALL BE SHOWN ON THE PLANS

THE FINAL OR TERMINATING CONCRETE BASE IN A CONDUIT RUN SHALL HAVE A 6" EXIT STUB INSTALLED FOR FUTURE CABLING USE. THE EXIT STUB SHALL BE SIZED AS USED THROUGHOUT THE CONDUIT RUN AS SHOWN A THE ENTRANCE OF THE BASE.

ENDS OF CONDUIT INSTALLED BELOW GRADE FRO FUTURE USE SHALL BE CAPPED IF METALLIC OR PLUGGED IF NON-METALLIC.

MINIMUM BENDING RADIUS OF CONDUIT IS EQUAL TO 6X THE DIAMETER.

CONDUIT HEIGHT ABOVE CONCRETE BASES SHALL BE 1 INCH. ALL METALLIC CONDUIT ENDS SHALL BE REAMED AND THREADED.

ALL CONDUIT ENDS AT THE TOP OF CONCRETE BASES SHALL BE CAPPED IF METALLIC OR PLUGGED IF NON-METALLIC IMMEDIATELY AFTER PLACEMENT AND BEFORE CONCRETE IS POURED. CONDUITS IN WHICH WIRE OR CABLE IS NOT INSTALLED SHALL REMAIN CAPPED OR PLUGGED.

BELL ENDS SHALL BE INSTALLED ON ALL PVC CONDUIT EXPOSED AT THE TOP OF CONCRETE BASES BEFORE INSTALLATION.

WHEN REQUIRED TO CONNECT NON-METALLIC CONDUIT TO METALLIC CONDUIT, ONLY ADAPTER FITTINGS, U.L. LISTED FOR ELECTRICAL USE, SHALL BE USED.

IF A BASE REQUIRES A DEEP FORM BECAUSE OF LOOSE DIRT OR FILL, THE FORM SHALL BE REMOVED BEFORE BACKFILLING AROUND THE BASE. BACKFILL SHALL BE TAMPED TIGHT AGAINST THE BARE CONCRETE BASE IN LAYERS OF 1 FOOT OR LESS.

A NO. 4 AWG STRANDED COPPER EQUIPMENT GROUNDING CONDUCTOR SHALL BE EXOTHERMICALLY WELDED TO THE EQUIPMENT GROUNDING ELECTRODE (GROUND ROD) FOR TYPE 2, TYPE 5 AND TYPE 6 BASES.

THE EQUIPMENT GROUNDING CONDUCTOR SHALL BE FURNISHED AND INSTALLED TO ENTER ALL BASE TYPES THROUGH A 1 INCH CONDUIT INSTALLED FOR GROUNDING PURPOSES, LEAVING A 4 FOOT COIL OF WIRE ABOVE THE CONCRETE BASE. THE EQUIPMENT GROUNDING CONDUCTOR SHALL BE NEATLY COILED AND THE COILS TIED TOGETHER.

ANCHOR RODS SHALL BE THREADED 12" IN LENGTH ON EACH END OF THE ROD. ANCHOR RODS SHALL BE MANUFACTURED IN ACCORDANCE WITH SECTION 654.2.1 OF THE STANDARD SPECIFICATIONS.

WASHERS AND LOCK WASHERS ARE REQUIRED ON ALL ANCHOR RODS.

WHEN ANCHOR RODS USING THE ALTERNATE "L" BEND ARE FURNISHED, THE 4 INCH"L" BEND SHALL BE IN ADDITION TO THE SPECIFIED ANCHOR ROD BAR LENGTH. THE "L" BEND SHALL NOT BE THREADED.

ANCHOR RODS SHALL BE INSTALLED WITH MISALIGNMENTS OF LESS THAN 1:40 FROM VERTICAL.

WELDING OF THE ANCHOR RODS TO THE CAGE IS UNACCEPTABLE. TIE WIRES SHALL BE USED.

BAR STEEL REINFORCEMENT SHALL BE COATED WITH POWDERED EPOXY RESIN IN ACCORDANCE WITH SECTION 505 OF THE STANDARD SPECIFICATIONS (LATEST EDITION).

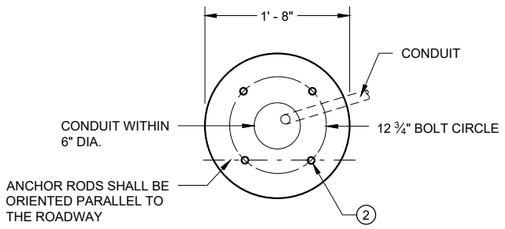

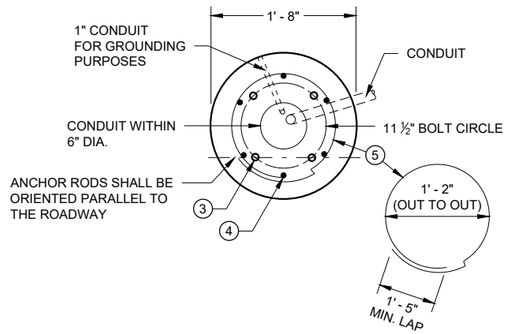

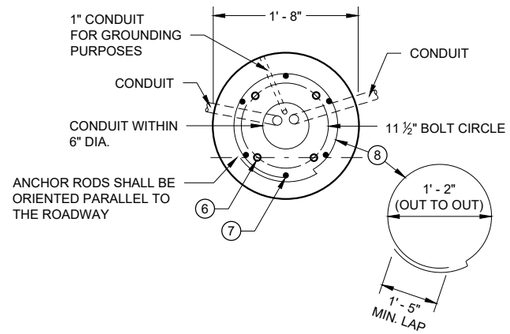

(1) THE MINIMUM DEPTH OF CONDUIT EXITING THE CONCRETE BASE AND INSTALLED BELOW THE TRAVELED WAY SHALL BE 24 INCHES. THE MINIMUM DEPTH OF CONDUIT EXITING THE CONCRETE BASE THAT IS NOT INSTALLED BELOW THE TRAVELED WAY SHALL BE 18 INCHES. THE MAXIMUM DEPTH OF ALL CONDUIT SHALL BE 36 INCHES EXCEPT WITH WRITTEN APPROVAL OF THE ENGINEER.

(2) (4) 1" DIA. X 3' - 6" ANCHOR RODS.

(3) (4) 1" DIA. X 5' - 0" ANCHOR RODS.

(4) (6) NO. 6 X 6' - 8" BAR STEEL REINFORCEMENT.

(5) (7) NO. 4 X 5' - 1" BAR STEEL REINFORCEMENT @ 1' - 0" C - C.

(6) (4) 1" DIA. X 3' - 6" ANCHOR RODS.

(7) (6) NO. 4 X 4' - 8" BAR STEEL REINFORCEMENT.

(8) (5) NO. 4 X 5' - 1" BAR STELL REINFORCEMENT @ 1' - 0" C -C.

(9) EXOTHERMIC CONNECTION TO EUIPMENT GROUNDING CONDUCTOR

(10) ⅝" DIA. X 8' -0" COPPERCLAD EQUIPMENT GROUNDING ELECTRODE REQUIRED

(11) ANY ANCHOR ROD PROJECTION SHORTER THAN 2 ¾" OR LONGER THAN 3 ¼" SHALL REQUIRE THE BASE TO BE REMOVED AND REPLACED AT THE CONTRACTORS EXPENSE.

(12) FOR NON - BREAKAWAY INSTALLATIONS, 4 ½" ± ANCHOR ROD PROJECTION WITH THE USE OF LEVELING NUTS. RODENT SCREEN REQUIRED.

HALF SECTION IN UNPAVED AREA
(TYPICAL FOR TYPES 1, 2, 5 & 6)

HALF SECTION IN PAVEMENT
(TYPICAL FOR TYPES 1, 2, 5 & 6)

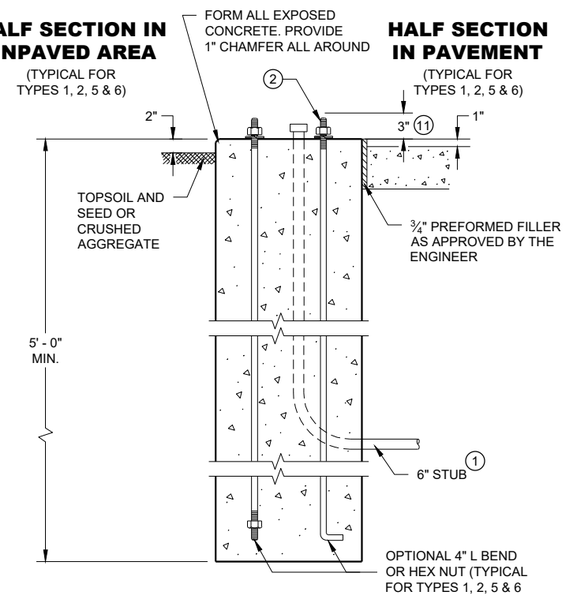

TYPE 1

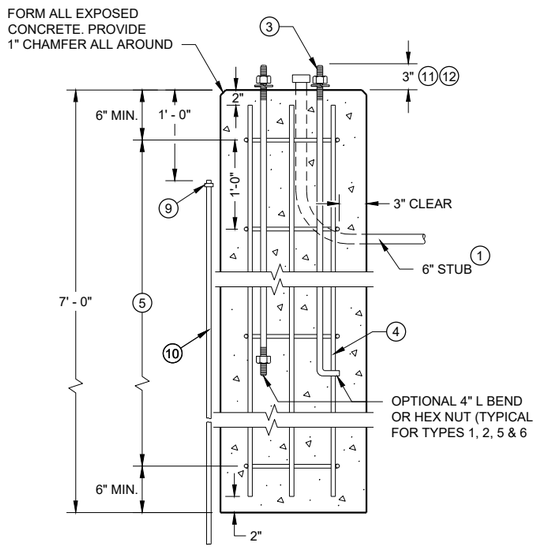

TYPE 2

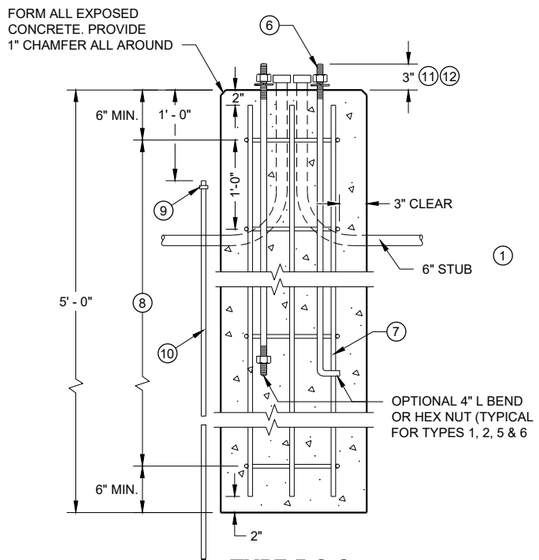

TYPE 5 & 6

CONCRETE BASES

CONCRETE BASES TYPES 1, 2, 5, & 6

STATE OF WISCONSIN
DEPARTMENT OF TRANSPORTATION

APPROVED
May 2019
DATE

/S/ Ahmet Demirbilek
STATE ELECTRICAL ENGI 111

FHWA

GENERAL NOTES

DETAILS OF CONSTRUCTION, MATERIALS AND WORKMANSHIP NOT SHOWN ON THIS DRAWING SHALL CONFORM TO THE PERTINENT REQUIREMENTS OF THE CONTRACT.

FOUR (4) BOLTS SHALL BE FURNISHED WITH EACH TRANSFORMER BASE. BOLTS SHALL BE 1" DIAMETER, 4" IN LENGTH, WITH WASHERS, LOCK WASHERS AND NUTS. BOLTS, NUTS AND WASHERS SHALL BE MANUFACTURED IN ACCORDANCE WITH SECTION 531.2.2 OF THE STANDARD SPECIFICATIONS.

LEVELING SHIMS, IF NEEDED, SHALL BE DESIGNED FOR THE PURPOSE AND USED UNDER CAST BASES WHEN PLUMBING POLES OR STANDARDS DURING INSTALLATION. THE USE OF WASHERS IN LIEU OF PROPER LEVELING SHIMS IS NOT ACCEPTABLE.

SHIM LENGTH SHALL BE LONG ENOUGH TO COMPLETELY COVER THE AREA UNDER THE LENGTH AND WIDTH OF THE BASE MOUNTING FLANGE.

DOUBLE NUTTING IS NOT ACCEPTABLE FOR LEVELING OR MOUNTING PURPOSES.

A NEMA APPROVED, U.L. LISTED, COPPER WITH BRASS OR STAINLESS STEEL SET SCREW, DIRECT BURY RATED, MECHANICAL CONNECTOR (LUG), SIZED TO ACCEPT AWG. #10 TO #4 COPPER STRANDED WIRE SHALL BE FURNISHED AND INSTALLED IN THE PEDESTAL AND TRANSFORMER BASES.

THE MECHANICAL CONNECTOR SHALL BE INSTALLED USING A 1/4" - 20 (TPI) STAINLESS STEEL HEX HEAD BOLT OF SUFFICIENT LENGTH TO FIRMLY ATTACH THE LUG TO THE BASE.

SHOULD THE MANNER OF ATTACHMENT OF THE LUG REQUIRE WASHERS, HEX NUTS, LOCK WASHER - THEY SHALL BE STAINLESS STEEL AS IS THE BOLT. THE MANNER OF ATTACHMENT SHALL NOT BLOCK ACCESSIBILITY TO WIRE PLACEMENT IN THE CONNECTOR.

PEDESTAL BASE COLLAR THREADING SHALL BE TAPERED AND IN ACCORDANCE WITH NATIONAL PIPE THREADING DIMENSIONS.

BASE COLLAR THREADING SHALL EXTEND INTO THE BASE COLLAR WITH SUFFICIENT DEPTH TO ACCEPT THE INSTALLATION OF TRAFFIC SIGNAL STANDARDS TO A DEPTH OF 1 1/2", THEN TIGHTENING TO A POINT OF BEING IMMOVABLE.

THE ACCESS DOOR SHALL BE OF THE SAME MATERIAL AS THE BASE.

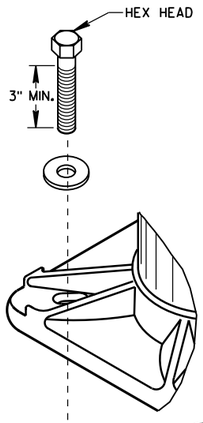

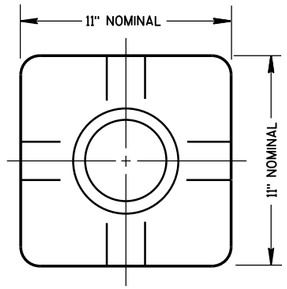

TOP VIEW
(PEDESTAL BASE)

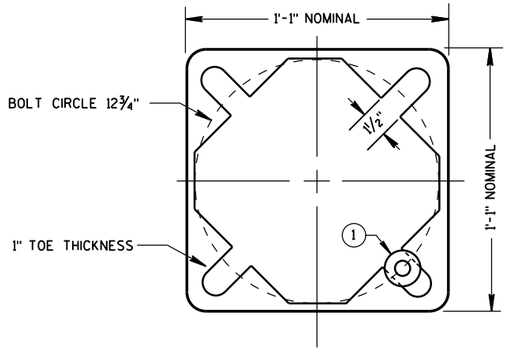

BOTTOM VIEW
(PEDESTAL BASE)

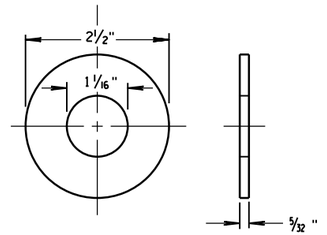

ZINC COATED STEEL WASHER
TO BE PROVIDED BY THE CONTRACTOR

PEDESTAL BASE WASHER (1)

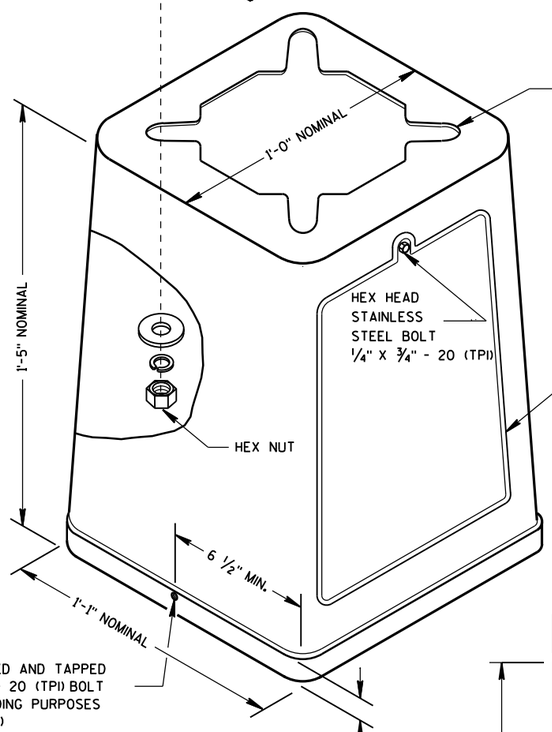

ISOMETRIC VIEW

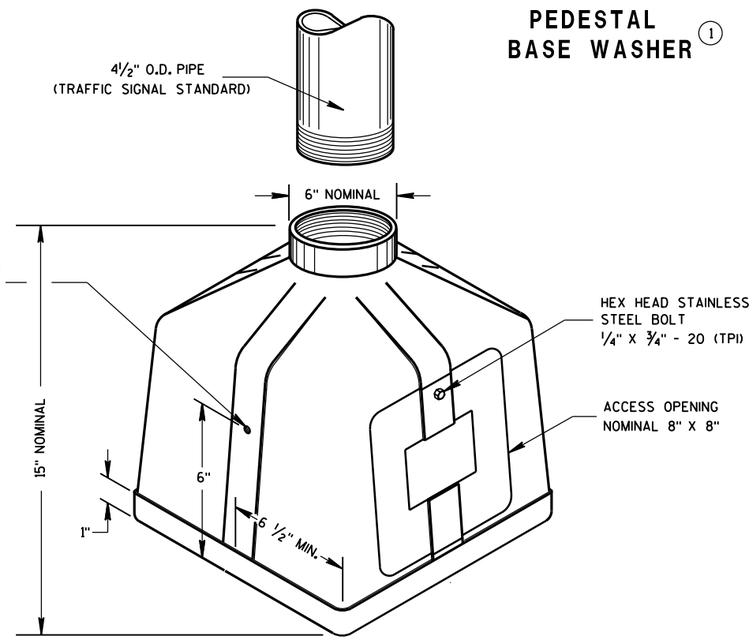

ISOMETRIC VIEW

PEDESTAL BASE

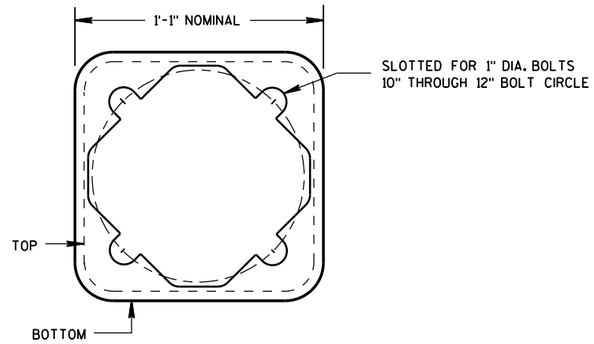

BOTTOM VIEW
(TRANSFORMER BASE)

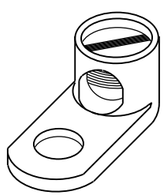

TYPICAL MECHANICAL CONNECTOR LUG

TO BE FURNISHED WITH EACH BASE

TRANSFORMER BASE

INTENDED FOR USE WITH TYPE 2, 3, 4, 5 & 6 POLES

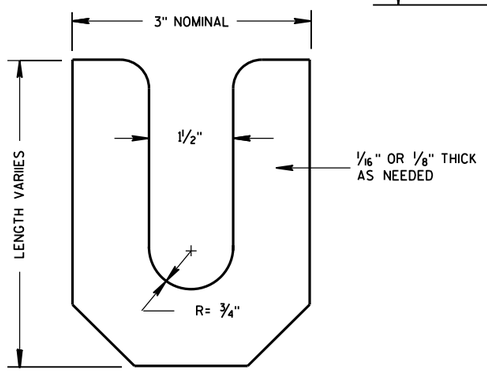

LEVELING SHIM

TRANSFORMER/PEDESTAL BASES

STATE OF WISCONSIN
DEPARTMENT OF TRANSPORTATION

APPROVED
Sept. 2014 — DATE
/S/ Ahmet Demirbilek — STATE ELECTRICAL
FHWA

6

S.D.D. 9 C 3-4

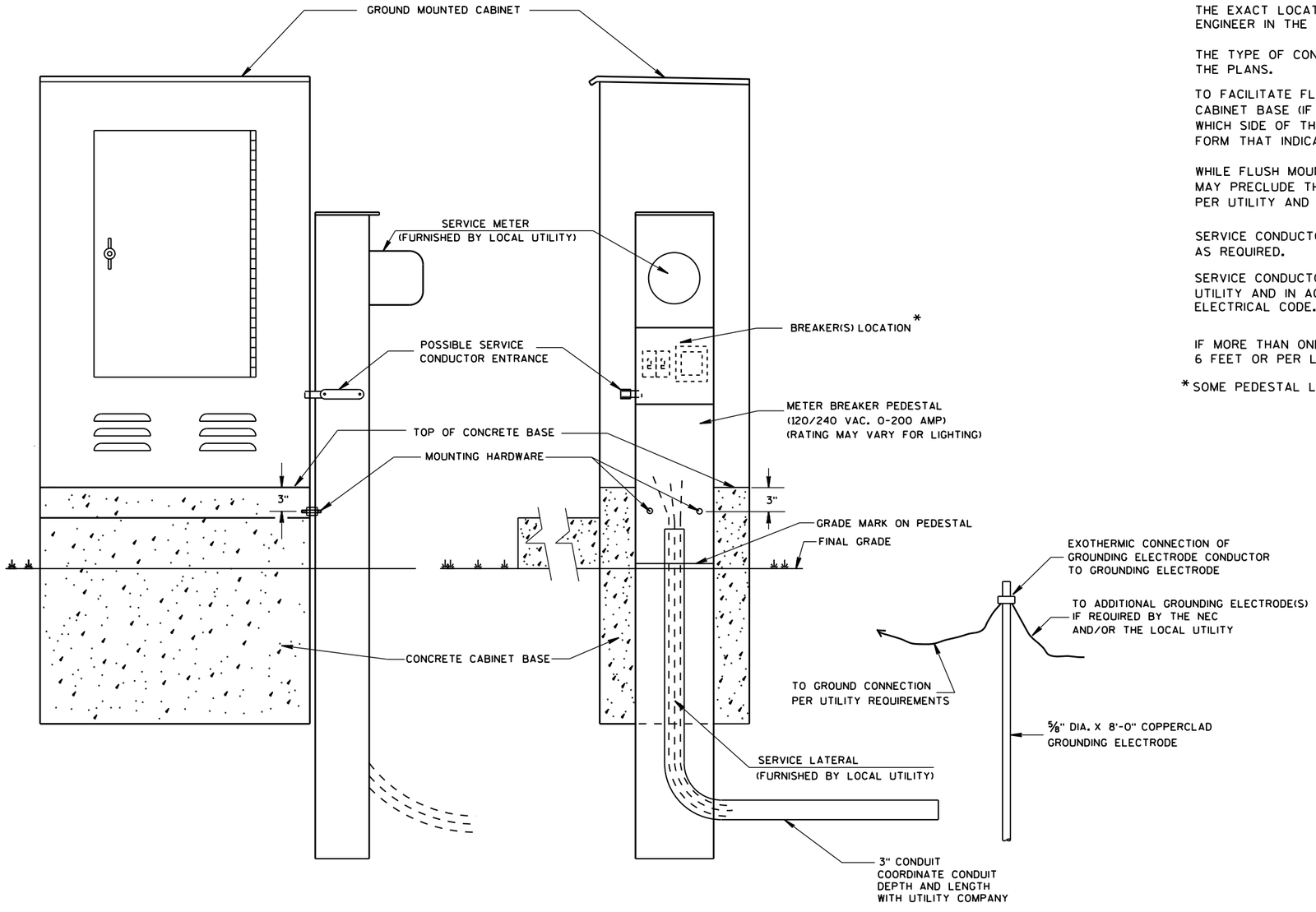

TYPICAL CABINET SERVICE INSTALLATION

GENERAL NOTES

DETAILS OF CONSTRUCTION, MATERIALS AND WORKMANSHIP NOT SHOWN ON THIS DRAWING SHALL CONFORM TO THE PERTINENT REQUIREMENTS OF THE CONTRACT.

THE EXACT LOCATION OF THE METER BREAKER PEDESTAL SHALL BE DETERMINED BY THE ENGINEER IN THE FIELD.

THE TYPE OF CONCRETE CABINET BASE TO BE INSTALLED SHALL BE AS CALLED FOR IN THE PLANS.

TO FACILITATE FLUSH MOUNTING OF THE METER BREAKER PEDESTAL AGAINST THE SIDE OF THE CABINET BASE (IF FLUSH MOUNTING POSSIBLE. CONFER WITH THE LOCAL UTILITY TO DETERMINE WHICH SIDE OF THE CONCRETE BASE THE ELECTRICAL SERVICE LATERAL WILL APPROACH. THEN FORM THAT INDICATED SIDE FOR FULL SIDE DEPTH.

WHILE FLUSH MOUNTING IS THE MOST DESIRABLE MOUNTING CONFIGURATION UTILITY REQUIREMENTS MAY PRECLUDE THIS OPTION. CONTRACTOR MUST PROVIDE UTILITY APPROVED PEDESTAL AND INSTALL PER UTILITY AND MANUFACTURERS REQUIREMENTS.

SERVICE CONDUCTOR ENTRANCES SHALL BE RIGID METALLIC CONDUIT, NIPPLES AND/OR CONDULETS AS REQUIRED.

SERVICE CONDUCTOR ENTRANCES SHALL BE SIZED AND LOCATED AS REQUIRED BY THE LOCAL UTILITY AND IN ACCORDANCE WITH APPROPRIATE ARTICLES OF THE LATEST ACCEPTED NATIONAL ELECTRICAL CODE.

IF MORE THAN ONE GROUNDING ELECTRODE IS REQUIRED, THE DISTANCE APART SHALL BE 6 FEET OR PER LOCAL UTILITY REGULATIONS.

* SOME PEDESTAL LIGHTING PLANS SHOW MAIN LUGS ONLY.

6

S.D.D. 9 D 1-5

6

S.D.D. 9 D 1-5

CABINET SERVICE INSTALLATION (METER BREAKER PEDESTAL)

STATE OF WISCONSIN
DEPARTMENT OF TRANSPORTATION

APPROVED
Sept. 2014
DATE

/S/ Ahmet Demirbilek
STATE ELECTRICAL

FHWA

FRONT INTERIOR ELEVATION

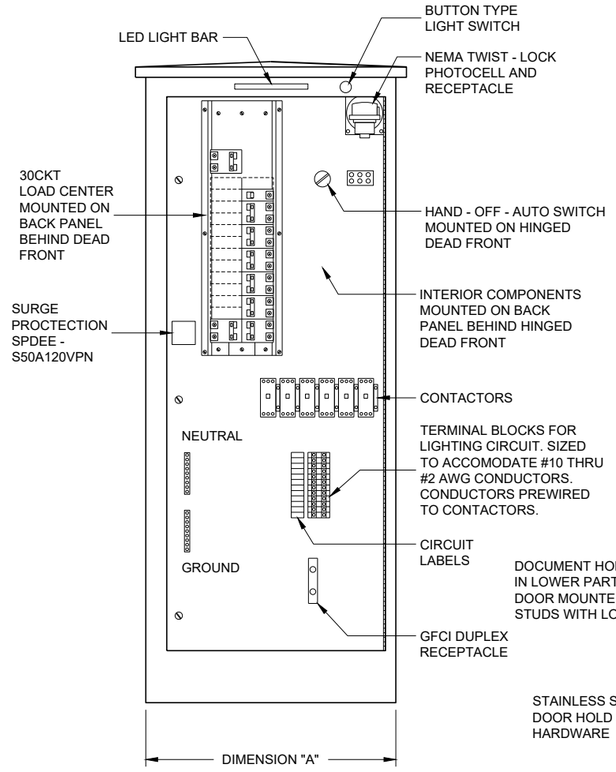

SIDE VIEW

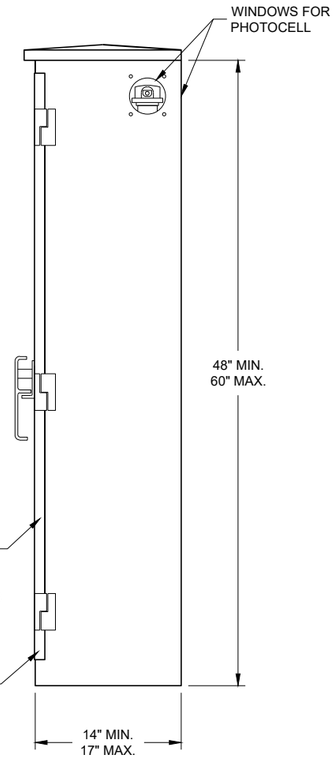

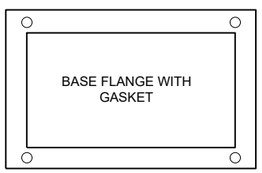

TABLE OF DIMENSIONS (INCHES)		
CONCRETE BASE TYPE	CABINET WIDTH	DIMENSION "A"
L24	24"	24"
L30	30"	30"

LIGHTING CONTROL CABINET

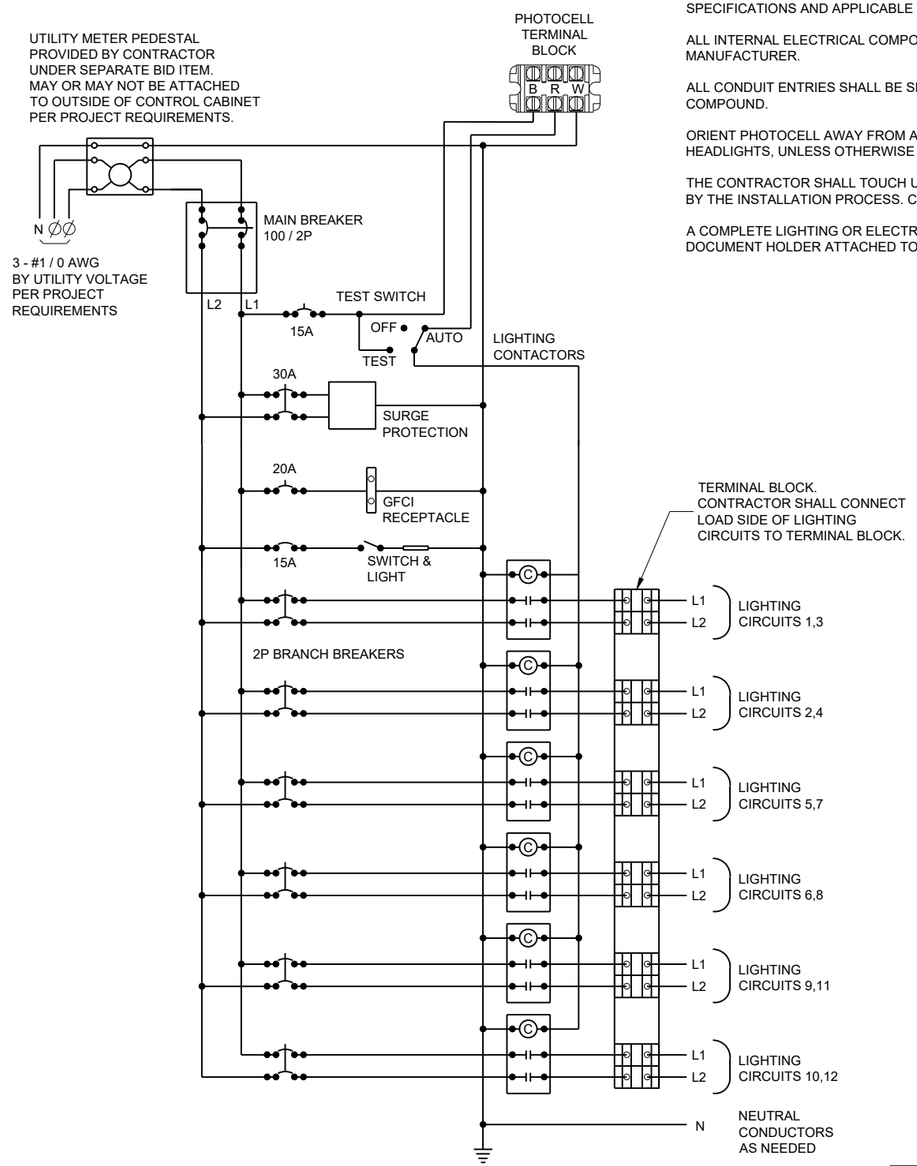

CONTROL CABINET SCHEMATIC

GENERAL NOTES

DETAILS OF CONSTRUCTION, MATERIALS AND WORKMANSHIP NOT SHOWN ON THIS DRAWING SHALL CONFORM TO THE PERTINENT REQUIREMENTS OF THE STANDARD SPECIFICATIONS AND APPLICABLE SPECIAL PROVISIONS.

ALL INTERNAL ELECTRICAL COMPONENTS WILL BE PRE - WIRED BY THE CABINENT MANUFACTURER.

ALL CONDUIT ENTRIES SHALL BE SEALED WITH AN APPROPRIATE DUCT SEALING COMPOUND.

ORIENT PHOTOCELL AWAY FROM AMBIENT LIGHT SOURCES AND ONCOMING TRAFFIC HEADLIGHTS, UNLESS OTHERWISE CALLED FOR IN THE SPECIAL PROVISION.

THE CONTRACTOR SHALL TOUCH UP ANY DAMAGE TO THE ANODIZED FINISH CAUSED BY THE INSTALLATION PROCESS. COLOR MATCH PAINT SHALL BE USED.

A COMPLETE LIGHTING OR ELECTRICAL PLAN SHALL BE SECURELY PLACED IN THE DOCUMENT HOLDER ATTACHED TO THE DOOR.

LIGHTING CONTROL CABINET
120 / 240 VOLT

STATE OF WISCONSIN
DEPARTMENT OF TRANSPORTATION

APPROVED
November 2018
DATE

/S/ Ahmet Demirbilek
STATE ELECTRICAL ENGI

FHWA

6
SDD 09D04 - 03

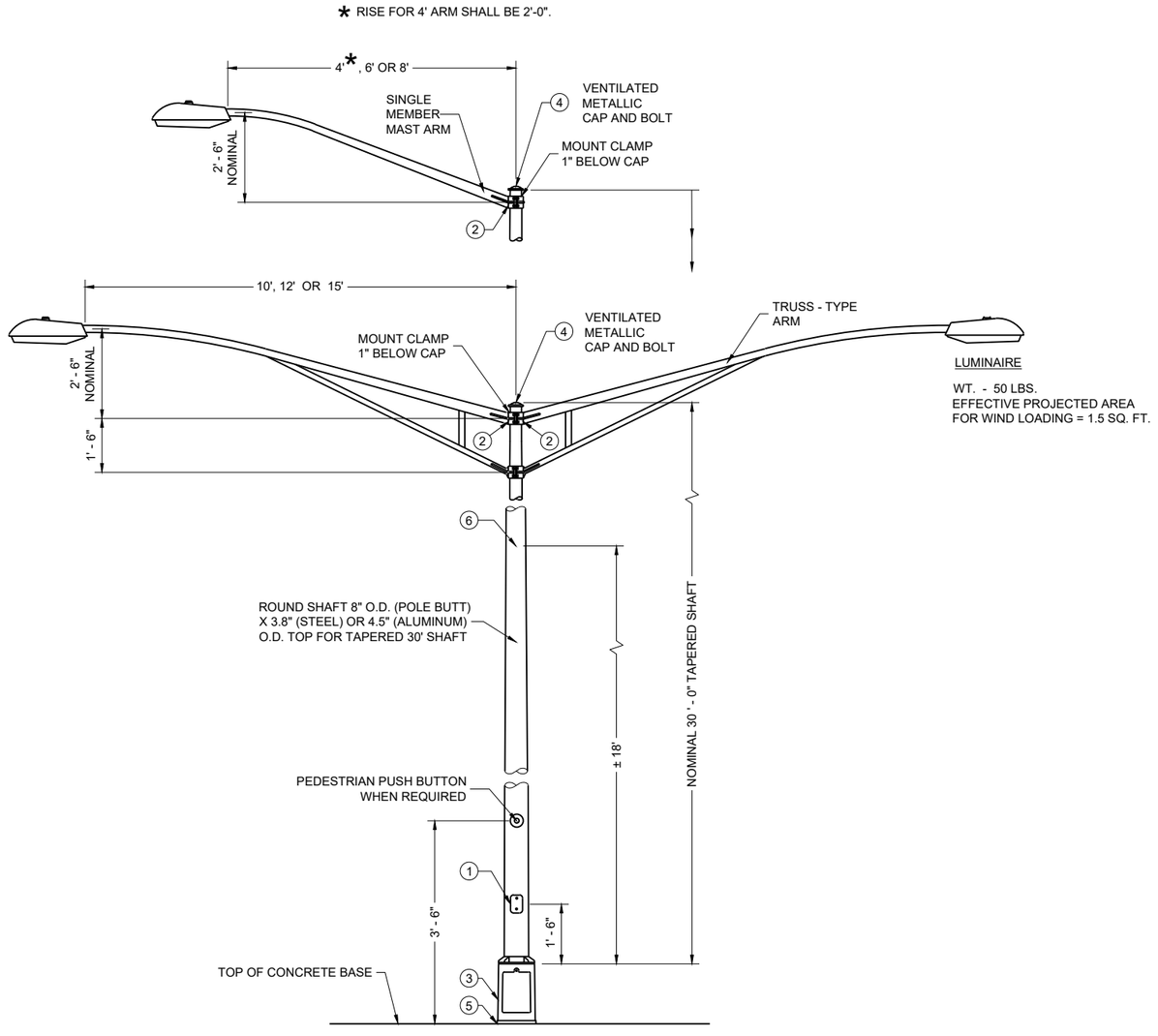

TYPE 5 POLE MOUNTING CONFIGURATION

(MAXIMUM LOAD)

LIGHTING ONLY

LUMINAIRE

WT. - 50 LBS.
EFFECTIVE PROJECTED AREA
FOR WIND LOADING = 1.5 SQ. FT.

GENERAL NOTES

DETAILS OF CONSTRUCTION, MATERIALS AND WORKMANSHIP NOT SHOWN ON THIS DRAWING SHALL CONFORM TO THE PERTINENT REQUIREMENTS OF THE CONTRACT.

SECTION 657, POLES, OF THE STANDARD SPECIFICATIONS SHALL APPLY TO THIS DRAWING.

ALL TYPE 5 POLE MOUNTINGS SHALL BE DESIGNED TO INCLUDE TWIN 15' ARMS WITH LUMINAIRES.

POLES SHALL BE GALVANIZED STEEL OR ALUMINUM, AS CALLED FOR IN THE CONTRACT.

TYPE 5 ALUMINUM POLES SHALL BE CONSTRUCTED OF 6063 - T6 ALUMINUM ALLOY. SLEEVING INSIDE THE POLE IS NOT ACCEPTABLE.

TYPE 5 ALUMINUM POLES SHALL HAVE A MINIMUM WALL THICKNESS OF 0.1888".

TYPE 5 STEEL POLES SHALL HAVE A MINIMUM WALL THICKNESS OF U.S. STANDARD 11 GAGE (0.1196").

THE SLIPFITTER END OF THE LUMINAIRE MAST ARM SHALL BE A NOMINAL 2 ⅜" INCHES IN OUTSIDE DIAMETER. THE STRAIGHT PORTION OF THE SLIPFITTER END OF THE LUMINAIRE MAST ARM SHALL BE A NOMINAL 12 INCHES IN LENGTH.

WHEN TRANSFORMER BASES ARE USED, WIRE CONNECTIONS SHALL BE MADE IN THE TRANSFORMER BASE.

(1) 4" X 6" REINFORCED HANDHOLE AND COVER ASSEMBLY WITH TWO (2) ¼"X¾" - 20 TPI , STAINLESS STEEL, HEX HEAD BOLTS.

(2) GROMMETS. 1" CHASE NIPPLES OR 1" CLOSE CONDUIT NIPPLES WITH BUSHINGS SHALL BE PROVIDED FOR 1 ⅜" HOLE IN POLE SHAFT FOR WIRING.

(3) CAST ALUMINUM TRANSFORMER BASE.

(4) FURNISH AND INSTALL VENTILATED, CAST METALLIC (ALUMINUM ALLOY) CAPS. FASTEN CAPS WITH ¼"X¾" - 20 TPI STAINLESS STEEL, HEX HEAD BOLT. ONE (1)

(5) SHIMMING, IF NEEDED, SHALL BE LOCATED BETWEEN THE CONCRETE FOUNDATION AND POLE.

(6) INTERNAL DUMBBELL - TYPE VIBRATION DAMPER.

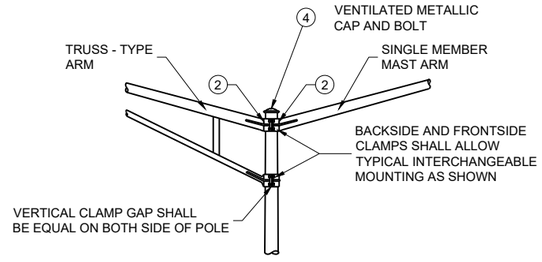

INTERCHANGEABLE MOUNTING DETAIL

POLE MOUNTINGS FOR LIGHTING UNITS, TYPE 5 (30 FEET)

STATE OF WISCONSIN
DEPARTMENT OF TRANSPORTATION

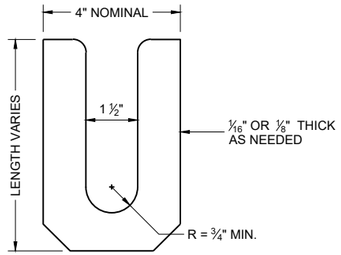

①

LEVELING SHIM
SHALL BE ALUMINUM

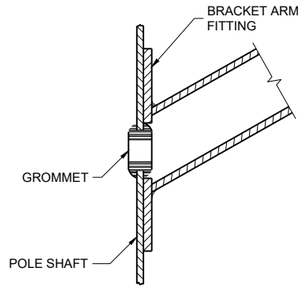

TYPICAL APPLICATION OF GROMMET IN POLE SHAFT

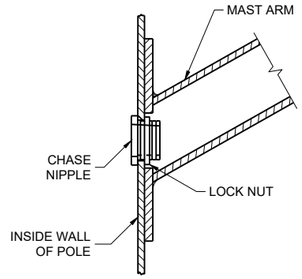

TYPICAL APPLICATION OF CHASE NIPPLE IN POLE SHAFT

GENERAL NOTES

CLAMP BOLT-NUT TIGHTENING TORQUE SHALL BE INDICATED BY INDENT STAMPING (1/2 INCH NUMERALS AND LETTERS) OR WEATHERPROOF PRINTING ON THE INSIDE OF THE CLAMP THAT IS WELDED TO THE ARM MEMBER.

① 4.5" I.D. FOR LUMINAIRE MAST ARM CLAMP. 6.625" I.D. FOR TROMBONE MAST ARM CLAMP.

② INDIVIDUAL BASE PLATE ANCHOR ROD COVERS. (4 REQUIRED)

③ BASE PLATE SLOTTED TO ACCEPT 11" THROUGH 12" BOLT CIRCLE USING 1" DIAMETER ANCHOR RODS.

④ LEVELING SHIMS, DESIGNED FOR THE PURPOSE, SHALL BE USED WHEN PLUMBING POLES. THE USE OF WASHERS IN LIEU OF PROPER LEVELING SHIMS IS NOT ACCEPTABLE. LEVELING SHIMS SHALL BE USED ONLY BETWEEN THE TOP OF THE CONCRETE BASE AND A METALLIC BASE PLATE.

SHIMS SHALL BE LONG ENOUGH AND WIDE ENOUGH TO COMPLETELY COVER THE AREA UNDER THE LENGTH AND WIDTH OF THE BASE MOUNTING FLANGE.

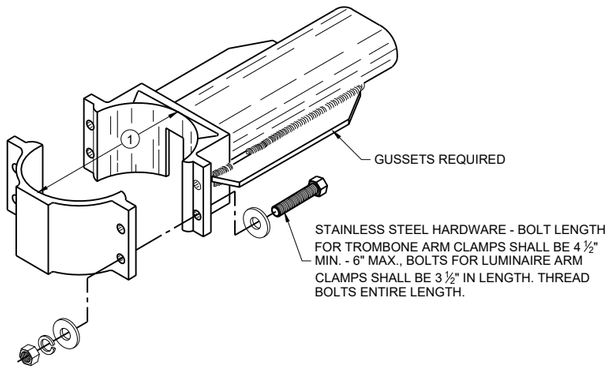

TYPICAL TROMBONE MAST ARM AND SINGLE LUMINAIRE MAST ARM MOUNTING CLAMP

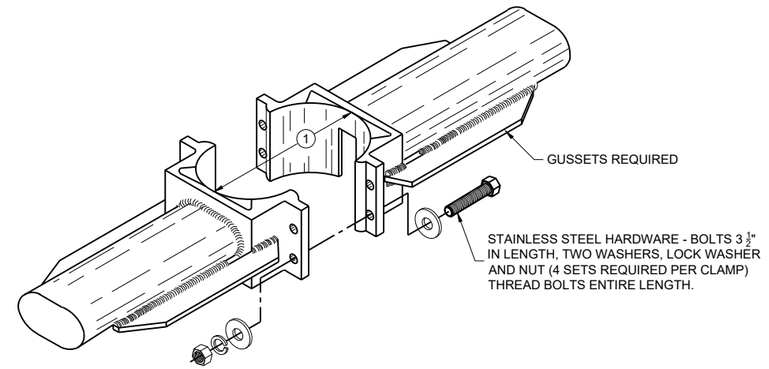

TYPICAL LUMINAIRE MAST ARM (DOUBLE) MOUNTING BRACKETS

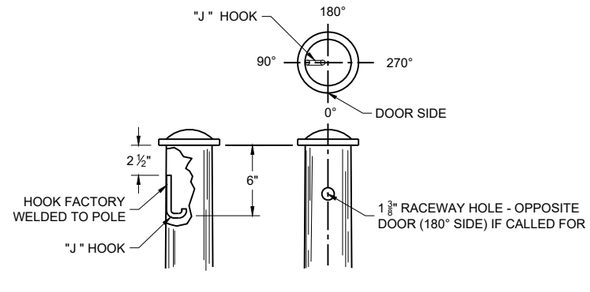

TYPICAL "J" HOOK LOCATION

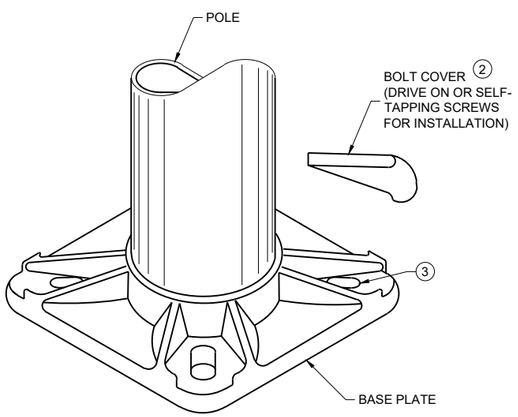

BASE PLATE

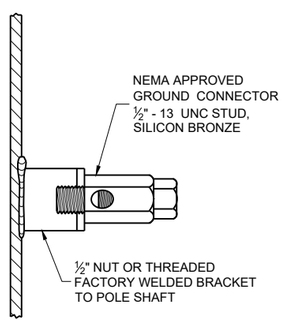

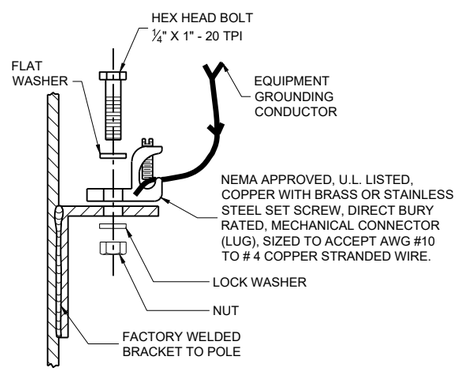

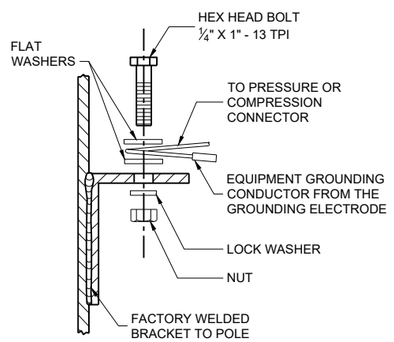

TYPICAL GROUNDING CONNECTIONS
NUT, BOLT AND WASHERS SHALL BE STAINLESS STEEL

HARDWARE DETAILS FOR POLE MOUNTING

STATE OF WISCONSIN
DEPARTMENT OF TRANSPORTATION

APPROVED
November 2025 — DATE
/S/ Ahmet Demirbilek — STATE ELECTRICAL ENGINEER

FHWA

6
SDD 09E01-16g

GENERAL NOTES

DETAILS OF CONSTRUCTION, MATERIALS AND WORKMANSHIP NOT SHOWN ON THIS DRAWING SHALL CONFORM TO THE PERTINENT REQUIREMENTS OF THE CONTRACT.

THE EQUIPMENT GROUND CONNECTOR SHALL BE TAPED WITH 3 WRAPS (MINIMUM) OF APPROVED RUBBER TAPE AND 3 WRAPS (MINIMUM) OF APPROVED VINYL TAPE TO COVER SHARP WIRE ENDS AFTER THE CONNECTION IS COMPLETED.

WHEN TRANSFORMER BASES ARE USED, ALL WIRING CONNECTIONS SHALL OCCUR WITHIN THE TRANSFORMER BASES.

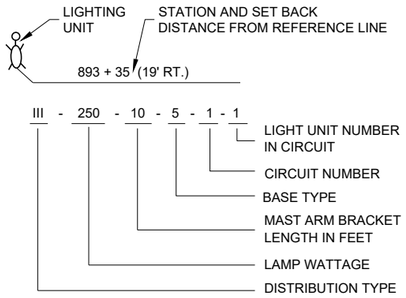

LIGHTING UNIT CODE
(TYPICAL)

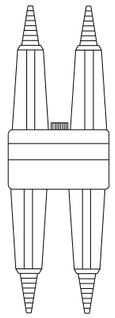

DETAIL "A"
BREAKAWAY DOUBLE POLE WITH WATERPROOF INSULATING BOOT

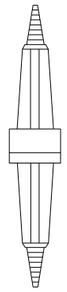

DETAIL "B"
BREAKAWAY SINGLE POLE WITH WATERPROOF INSULATING BOOT

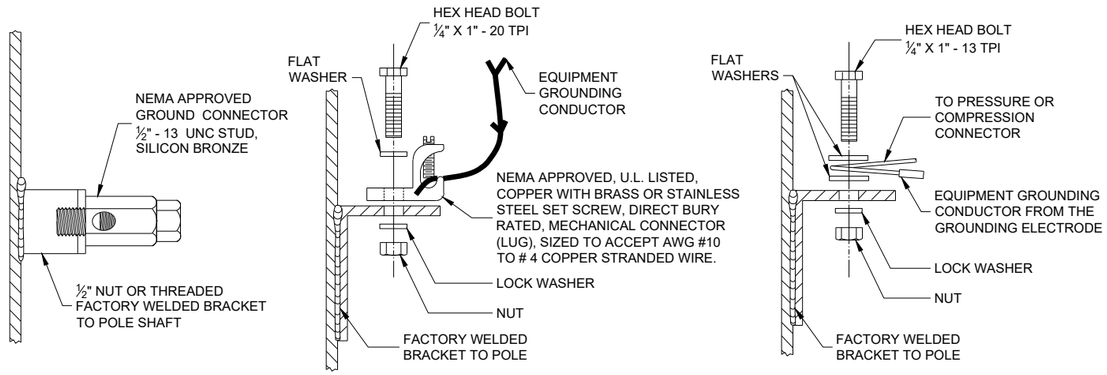

TYPICAL GROUNDING CONNECTIONS
NUT, BOLT AND WASHERS SHALL BE STAINLESS STEEL

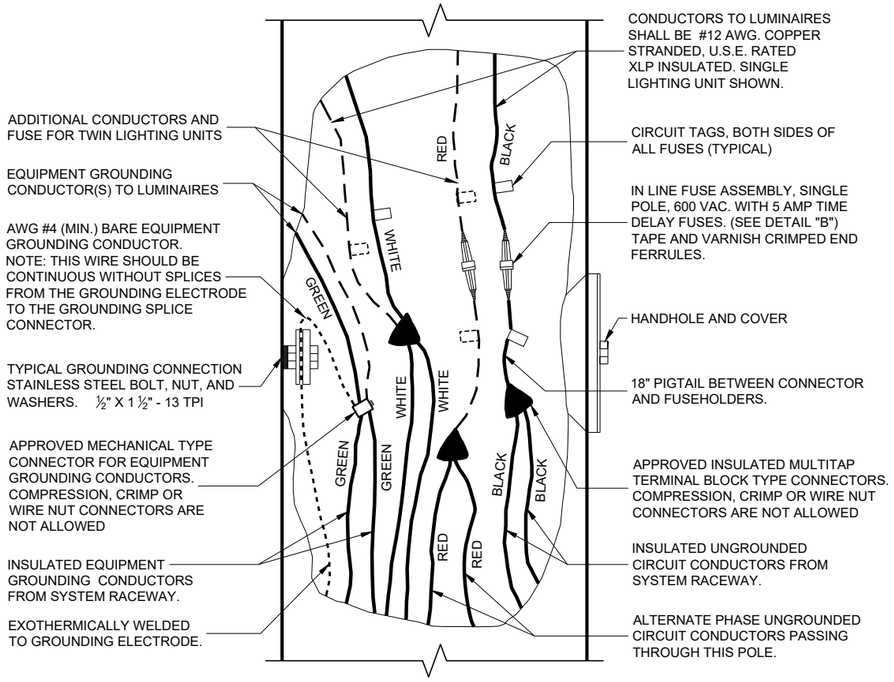

3 WIRE - 120, 240 OR 480 VAC (UNGROUNDED CONDUCTORS) WITH GROUNDING CONDUCTOR AND EQUIPMENT GROUNDING CONDUCTOR

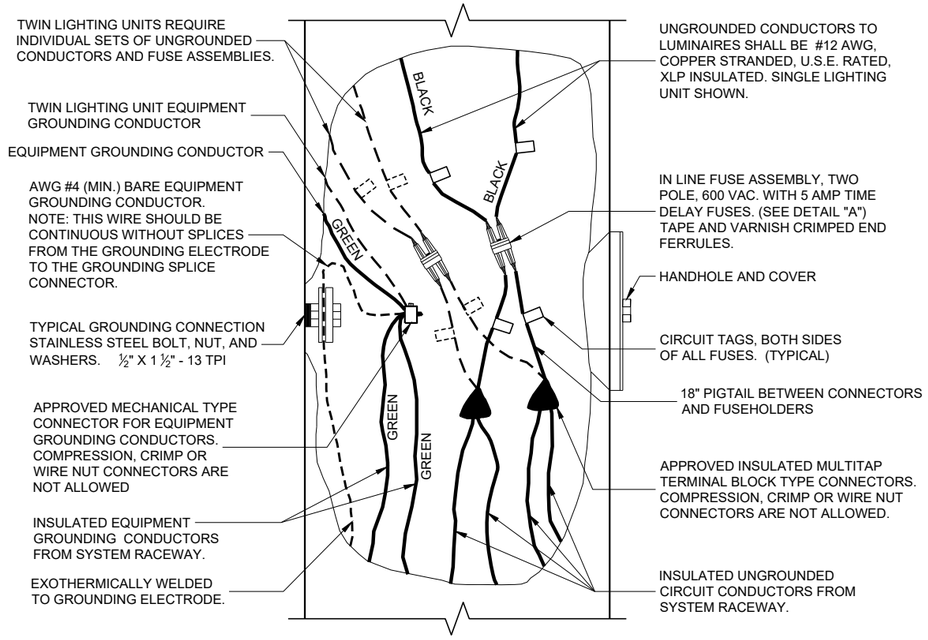

2 WIRE - 240 OR 480 VAC (UNGROUNDED CONDUCTORS) WITH EQUIPMENT GROUNDING CONDUCTOR

NON - FREEWAY LIGHTING UNIT POLE WIRING

STATE OF WISCONSIN
DEPARTMENT OF TRANSPORTATION

APPROVED
November 2018
DATE
/S/ Ahmet Demirbilek
STATE ELECTRICAL ENGI

FHWA

6

SDD 09E03 - 06

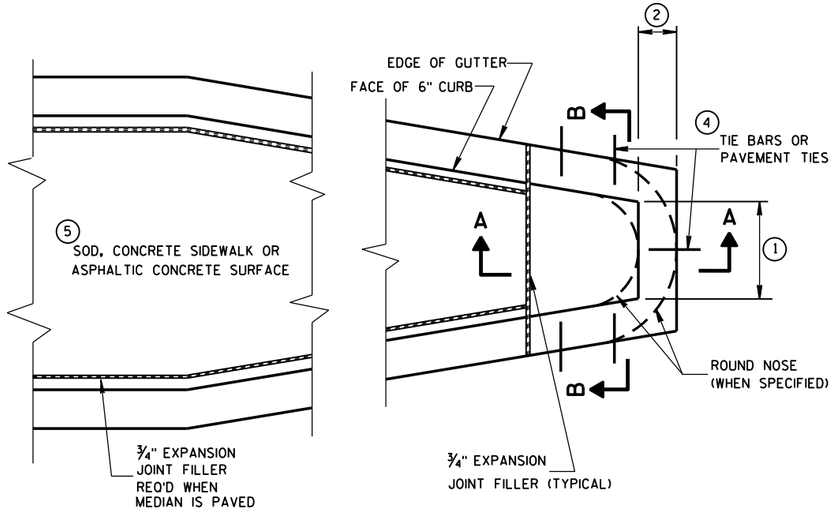

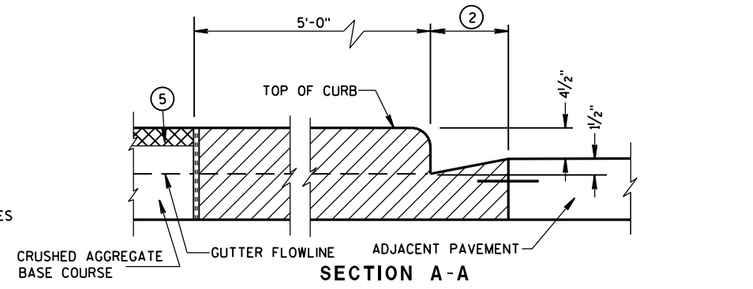

CONCRETE MEDIAN BLUNT NOSE DETAIL

GENERAL NOTES

DETAILS OF CONSTRUCTION, MATERIALS AND WORKMANSHIP NOT SHOWN ON THIS DRAWING SHALL CONFORM TO THE PERTINENT REQUIREMENTS OF THE STANDARD SPECIFICATIONS AND THE APPLICABLE SPECIAL PROVISIONS.

(1) SEE PLAN FOR MEDIAN NOSE WIDTH AND RADIUS (FOR ROUND NOSE ALTERNATE).

(2) WIDTH OF GUTTER TO MATCH EXISTING ADJACENT GUTTER OR AS SPECIFIED ELSEWHERE IN THE PLAN.

(3) DEPTH EQUAL TO ADJACENT PAVEMENT. ADJACENT PAVEMENT STRUCTURE DETAILS ARE SHOWN ON THE PLAN. TYPICAL OPTIONS ARE:

(1) NEW OR EXISTING CONCRETE PAVEMENT.

(2) ASPHALTIC CONCRETE PAVEMENT OVER NEW OR EXISTING CONCRETE BASE COURSE.

(3) ASPHALTIC CONCRETE PAVEMENT OVER CRUSHED AGGREGATE BASE COURSE.

(4) TIE BARS OR PAVEMENT TIES REQUIRED IN NEW CONCRETE PAVEMENT OR CONCRETE BASE COURSE. TIE BARS SHALL BE NO. 4 X 2'-0" SPACED AT 2'-0" C-C.

PAVEMENT TIES REQUIRED IN EXISTING CONCRETE BASE COURSE. PAVEMENT TIES SHALL BE NO. 6 X 1'-0" SPACED AT 3'-0" C-C INSTALLED ON A HORIZONTAL SKEW OF 6:1. THE DIRECTION OF SKEW SHALL ALTERNATE AFTER EVERY ONE OR TWO BARS.

(5) SURFACE TYPE AND DETAILS ARE SHOWN ELSEWHERE IN THE PLAN.

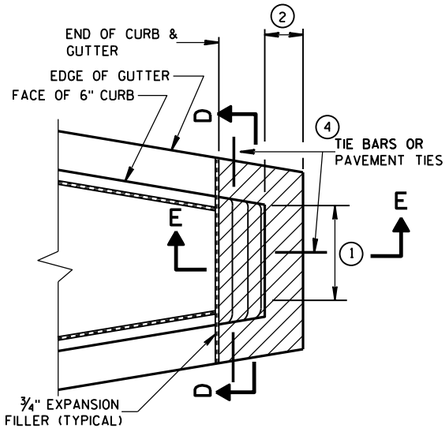

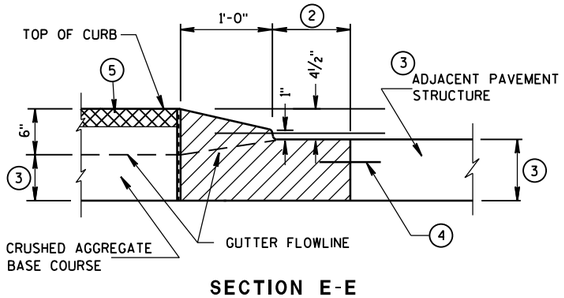

CONCRETE MEDIAN SLOPED NOSE TYPE 2

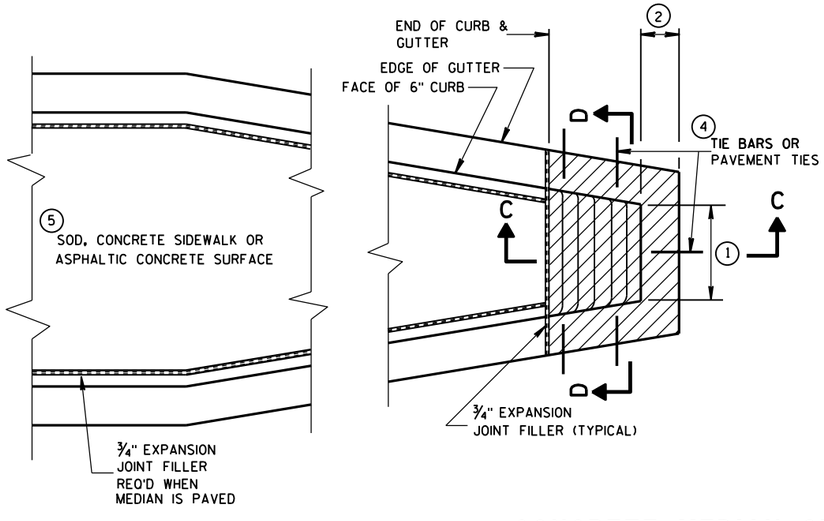

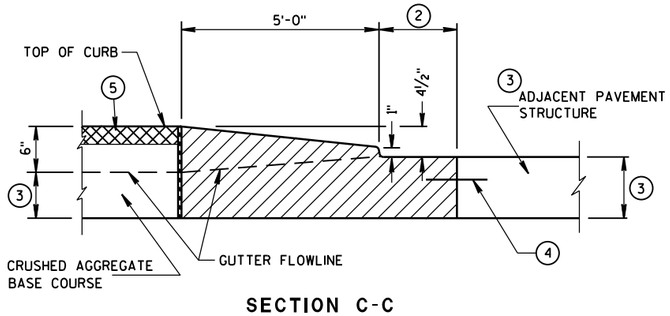

CONCRETE MEDIAN SLOPED NOSE TYPE 1

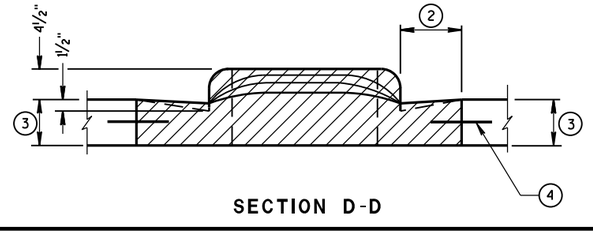

CONCRETE MEDIAN NOSE	
STATE OF WISCONSIN DEPARTMENT OF TRANSPORTATION	
APPROVED 6/8/2006 DATE FHWA	/S/ Jerry H. Zogg ROADWAY STANDARDS D ENGINEER

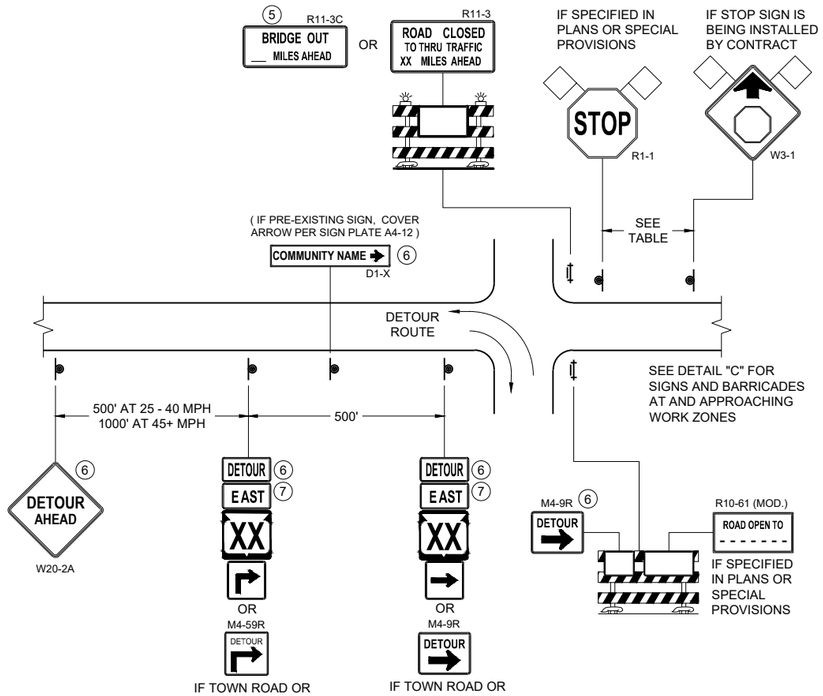

DETAIL A

MAINLINE CLOSURE WITH POSTED DETOUR

WORK ZONE GREATER THAN OR EQUAL TO ½ MILE FROM DETOUR ROUTE (1000 FEET IF URBAN)

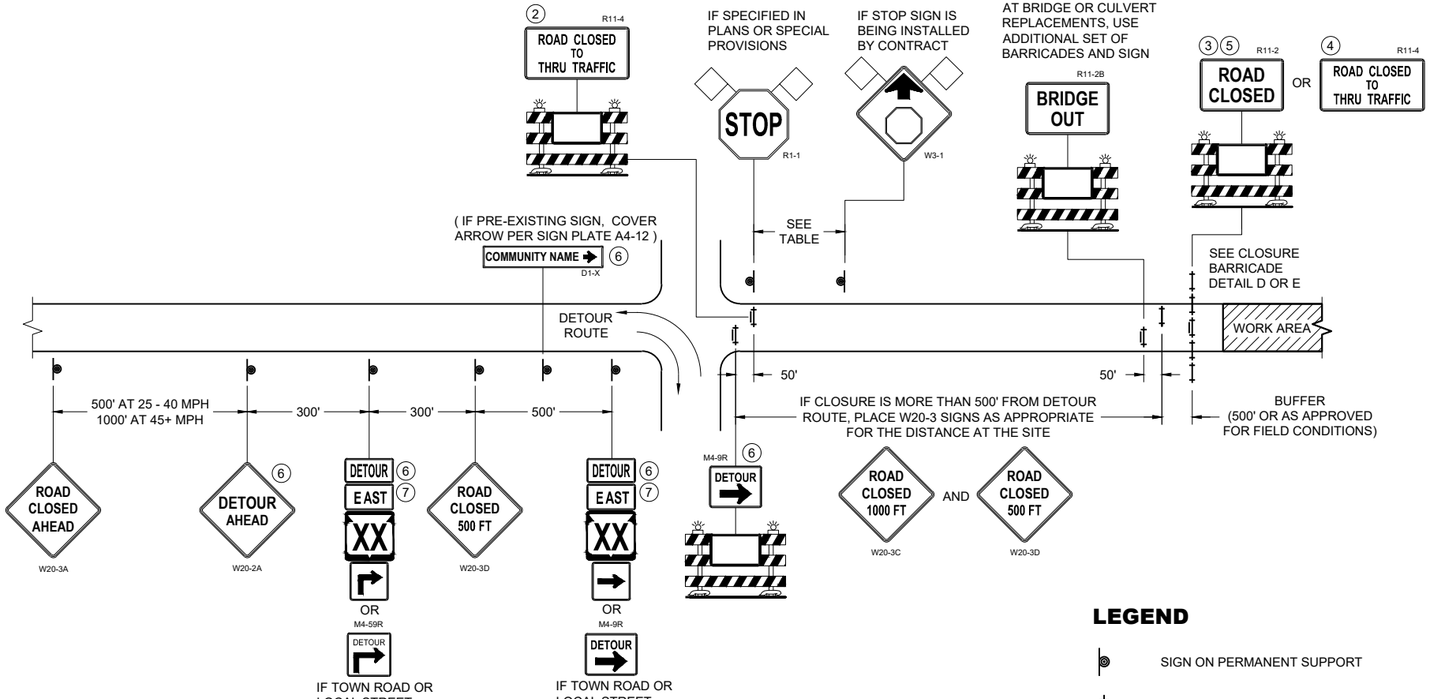

DETAIL B

MAINLINE CLOSURE WITH POSTED DETOUR

WORK ZONE LESS THAN ½ MILE FROM DETOUR ROUTE (1000 FEET IF URBAN)

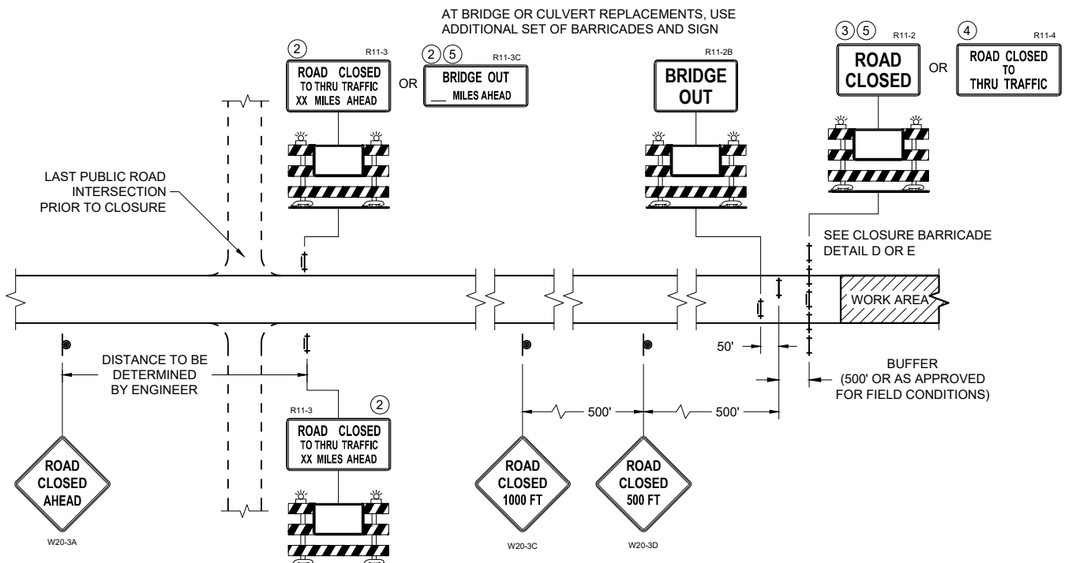

DETAIL C

MAINLINE CLOSURE, NO POSTED DETOUR

SPEED LIMIT (MPH)	"STOP AHEAD" ADVANCE WARNING DISTANCE (FT)
25	200
30	200
35	350
40	350
45	500
50	550
55	750

SEE SDD 15C2-SHEET "b" FOR GENERAL NOTES AND FOOTNOTES (1) THROUGH (7)

LEGEND

- SIGN ON PERMANENT SUPPORT
- TYPE III BARRICADE
- TYPE III BARRICADE WITH ATTACHED SIGN
- TYPE "A" WARNING LIGHT (FLASHING)
- WORK AREA
- FLAGS, 16" X 16" MIN. (ORANGE)
- DETOUR — M4 - 8
- EAST — M3 - X
- XX — M1 - 4 OR XX — M1 - 6 OR COUNTY X — M1 - 5A
- M05 - 1 OR M06 - 1

BARRICADES AND SIGNS FOR MAINLINE CLOSURES

STATE OF WISCONSIN
DEPARTMENT OF TRANSPORTATION

APPROVED
November 2025 — DATE
/S/ Andrew Heidtke — WORK ZONE ENGINEER
FHWA

6
SDD 15C02-10a

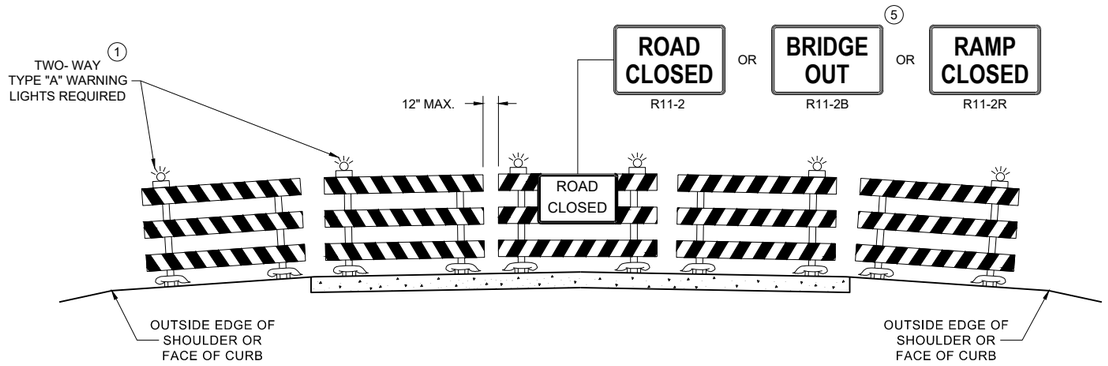

DETAIL D

ROAD CLOSURE BARRICADE DETAIL

APPROACH VIEW

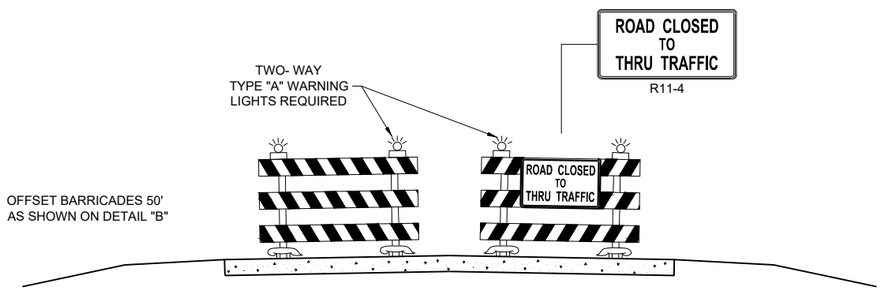

DETAIL E

LANE CLOSURE BARRICADE DETAIL

APPROACH VIEW

SEE SDD 15C2 - SHEET "a" FOR LEGEND

GENERAL NOTES

THE EXACT NUMBER, LOCATION, AND SPACING OF ALL SIGNS AND BARRICADES SHALL BE ADJUSTED TO FIT FIELD CONDITIONS AS APPROVED BY THE ENGINEER.

ANY SIGNS TEMPORARY OR EXISTING, WHICH CONFLICT WITH TRAFFIC CONTROL "IN USE", SHALL BE REMOVED OR COVERED AS NEEDED AND AS APPROVED BY THE ENGINEER.

THE SPACING BETWEEN TRAFFIC CONTROL SIGNS SHOULD BE ADJUSTED TO NOT CONFLICT WITH AND SHOULD PROVIDE A DESIRABLE MINIMUM OF 200 FEET CLEARANCE TO EXISTING SIGNS THAT WILL REMAIN IN PLACE.

BARRICADES THAT MUST BE MOVED FOR A WORK OPERATION SHALL BE IMMEDIATELY RE-ESTABLISHED UPON COMPLETION OF THE OPERATION, OR FOR CONTINUING OPERATIONS, AT THE END OF EACH WORKING DAY.

SIGNS THAT WILL BE IN PLACE LESS THAN 7 CONTINUOUS DAYS AND NIGHTS MAY BE MOUNTED ON PORTABLE SUPPORTS.

ALL TYPE III BARRICADES SHALL HAVE RAILS REFLECTORIZED ON BOTH FACES. STRIPES SHALL BE PROPERLY SLOPED DOWN TOWARD THE TRAFFIC SIDE OR AS SHOWN IN THE ROAD CLOSURE BARRICADE DETAIL "D" FOR FULL ROAD CLOSURES.

TYPE "A" LOW - INTENSITY FLASHING WARNING LIGHTS SHALL BE VISIBLE ON BOTH SIDES OF THE BARRICADE.

PARTIAL NUMBERS ON SIGNS SHALL BE DISPLAYED AS A WHOLE NUMBER(AS NEEDED) FOLLOWED BY A FRACTION. SIGNS SHALL NOT DISPLAY NUMBERS IN DECIMAL FORM.

"WO" AND "MO" SIGNS ARE THE SAME AS "W" AND "M" SIGNS EXCEPT THE BACKGROUND IS ORANGE.

ALL SIGNS SHALL BE 48" X 48" UNLESS OTHERWISE NOTED BELOW:

- R11 - 2 SHALL BE 48" X 30"
- R11 - 3 SHALL, R11 - 4 AND R10 - 61 SHALL BE 60 " X 30"
- M4 - 9 SHALL BE 30" X 24"
- M3 - X SHALL BE 24" X 12" (36" X 18" IF NEEDED TO MATCH EXISTING SIGNS)
- M4 - 8 SHALL BE 24" X 12" (36" X 18" IF NEEDED TO MATCH EXISTING SIGNS)
- M1 - 4, M1 - 5A AND M1 - 6 SHALL BE 24" X 24" (36" X 36" IF NEEDED TO MATCH EXISTING SIGNS)
- MO5 - 1 AND MO6 - 1 SHALL BE 21" X 21" (30" X 30" IF NEEDED TO MATCH EXISTING SIGNS)
- D1 - X SHALL BE AS SHOWN ON SPECIFIC PROJECT SIGNING DETAIL SHEETS.
- R1 - 1 SHALL BE 36" X 36"

SIGNS PLACED ON TYPE III BARRICADES THAT ARE SIZES OTHER THAN 48"X30" SHALL HAVE A CORRUGATED POLYPROPYLENE OR POLYETHYLENE PLASTIC SIGN BASE.

(1) TWO WARNING LIGHTS SHALL BE PROVIDED ON THE CENTER BARRICADE AND A MINIMUM OF ONE WARNING LIGHT SHALL BE PROVIDED ON EACH OF THE OTHER BARRICADES WITHIN THE ROADWAY LIMITS. SPACING OF THE WARNING LIGHTS SHALL BE UNIFORM TO THE EDGE OF ROADWAY AS SHOWN (APPROX. 8 FOOT LIGHT SPACING.

(2) THESE SIGNS AND BARRICADES ARE NOT REQUIRED IF ROAD CLOSURE BEGINS AT AN INTERSECTION.

(3) FOR ROAD CLOSURE WITHOUT LOCAL ACCESS TO PROJECT, SEE ROAD CLOSURE BARRICADE DETAIL "D".

(4) FOR ROAD CLOSURE WITH LOCAL ACCESS TO PROJECT, SEE ROAD CLOSURE BARRICADE DETAIL "E".

(5) FOR BRIDGE OR CULVERT REPLACEMENTS, SUBSTITUTE "BRIDGE OUT" INSTEAD OF "ROAD CLOSED" ON R11 - 2 AND R11 - 3 SIGNS.

(6) INSTALL DETOUR AND COMMUNITY GUIDE SIGNS AND ARROWS ONLY IF SPECIFIED IN THE CONTRACT. IF THERE ARE EXISTING ROUTE MARKER ASSEMBLIES THAT WILL REMAIN IN PLACE, ADJUST THE LOCATION OF THE DETOUR ROUTE SIGNS TO CORRESPOND WITH THE EXISTING ASSEMBLIES. MODIFY EXISTING SIGNS WHERE POSSIBLE. SEE SPECIFIC PROJECT DETOUR SIGNING DETAIL SHEETS. IF DETOUR SIGNS ARE BEING INSTALLED BY OTHERS, PLACE THE CONTRACTED TRAFFIC CONTROL SIGNS TO ALLOW FOR PLACEMENT OF ALL WARNING, DETOUR AND GUIDE SIGNS AS SHOWN.

(7) "EAST" CARDINAL DIRECTION MARKERS AND RIGHT TURN ARROWS ARE SHOWN. USE OTHER CARDINAL DIRECTIONS AND ARROWS AS APPROPRIATE.

BARRICADES AND SIGNS FOR VARIOUS CLOSURES

STATE OF WISCONSIN
DEPARTMENT OF TRANSPORTATION

APPROVED
November 2025 — DATE
/S/ Andrew Heidtke — WORK ZONE ENGINEER
FHWA

6
SDD 15C02-10b

THIS DRAWING PROVIDES GENERAL GUIDANCE ON TYPICAL DETOUR SIGN LAYOUT AND SPACING. SEE PROJECT DETOUR SIGNING SHEETS FOR SPECIFIC DETAILS FOR EACH PROJECT.

LEGEND

- SIGN ON PERMANENT SUPPORT
- WORK AREA
- DETOUR — M4 - 8
- EAST — M3 - X
- XX — M1 - 4 OR XX — M1 - 6 OR COUNTY X — M1 - 5A
- M05 - 1 OR M06 - 1 OR M06 - 1

GENERAL NOTES

THE EXACT NUMBER, LOCATION AND SPACING OF ALL SIGNS SHALL BE ADJUSTED TO FIT FIELD CONDITIONS AS APPROVED BY THE ENGINEER.

IF THERE ARE EXISTING ROUTE MARKER ASSEMBLIES THAT WILL REMAIN IN PLACE, ADJUST THE LOCATION OF THE DETOUR ROUTE SIGNS TO CORRESPOND WITH THE EXISTING ASSEMBLIES. SEE SPECIFIC PROJECT DETOUR SIGNING DETAIL SHEETS. MODIFY EXISTING SIGNS WHERE POSSIBLE.

THE SPACING BETWEEN TRAFFIC CONTROL AND DETOUR SIGNS SHOULD BE ADJUSTED TO NOT CONFLICT WITH AND TO PROVIDE A DESIRABLE MINIMUM OF 200 FEET CLEARANCE TO EXISTING SIGNS THAT WILL REMAIN IN PLACE.

ANY SIGNS TEMPORARY OR EXISTING, WHICH CONFLICT WITH TRAFFIC CONTROL "IN USE" SHALL BE REMOVED OR COVERED AS NEEDED AND AS APPROVED BY THE ENGINEER.

SIGNS THAT WILL BE IN PLACE LESS THAN 7 CONTINUOUS DAYS AND NIGHTS MAY BE MOUNTED ON PORTABLE SUPPORTS.

"MO" SIGNS ARE THE SAME AS "M" SIGNS EXCEPT THE BACKGROUND IS ORANGE.

SIGN SIZES SHALL BE AS FOLLOWS:

- M3-X SHALL BE 24" X 12" (36" X 18" IF NEEDED TO MATCH EXISTING SIGNS)
- M4-8 SHALL BE 24" X 12" (36" X 18" IF NEEDED TO MATCH EXISTING SIGNS)
- M1-4, M1-5A AND M1-6 SHALL BE 24" X 24" (36" X 36" IF NEEDED TO MATCH EXISTING SIGNS)
- M05-1 AND M06-1 SHALL BE 21" X 21" (30" X 30" IF NEEDED TO MATCH EXISTING SIGNS)
- M4-9 AND M4-59 SHALL BE 30" X 24"
- M4-8a SHALL BE 24" X 18"
- G20-51 SHALL BE 60" X 24"
- W20-2A SHALL BE 48" X 48"
- D1-X SHALL BE AS SHOWN ON SPECIFIC PROJECT SIGNING DETAIL SHEETS.

* OPTIONAL SIGNS. SEE SPECIFIC PROJECT DETOUR SIGNING DETAIL SHEETS.

** FOR A TOWN ROAD OR LOCAL STREET DETOURED ONTO A STATE TRUNK HIGHWAY, PLACE A ROAD NAME PLAQUE ABOVE THE M4-9 SIGN AS SPECIFIED IN THE CONTRACT.

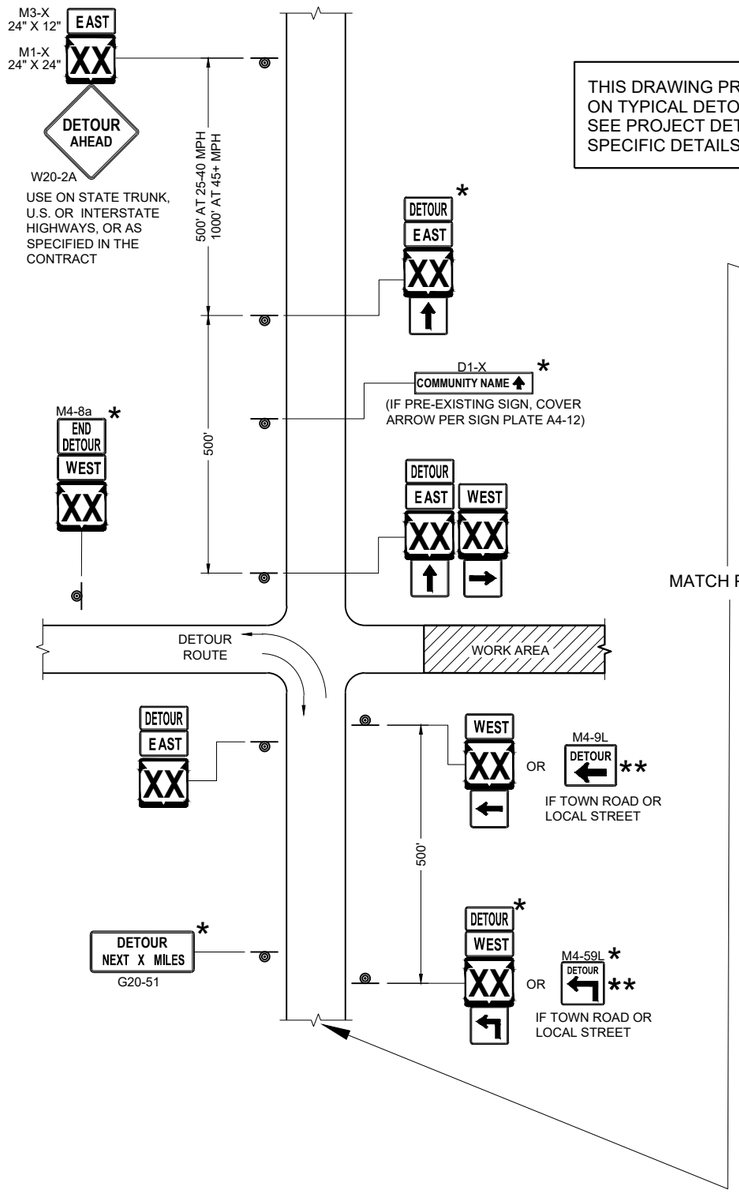

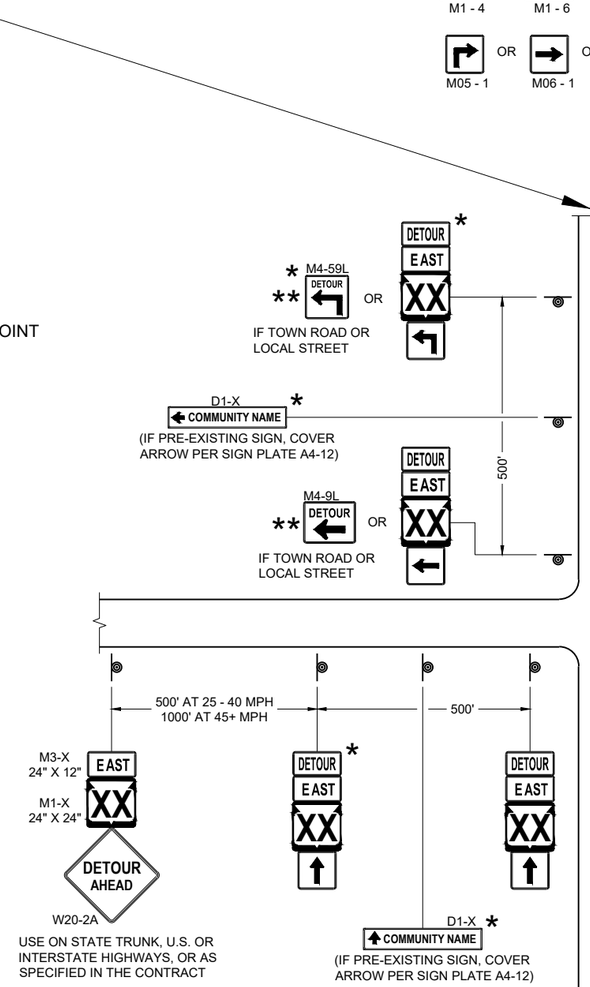

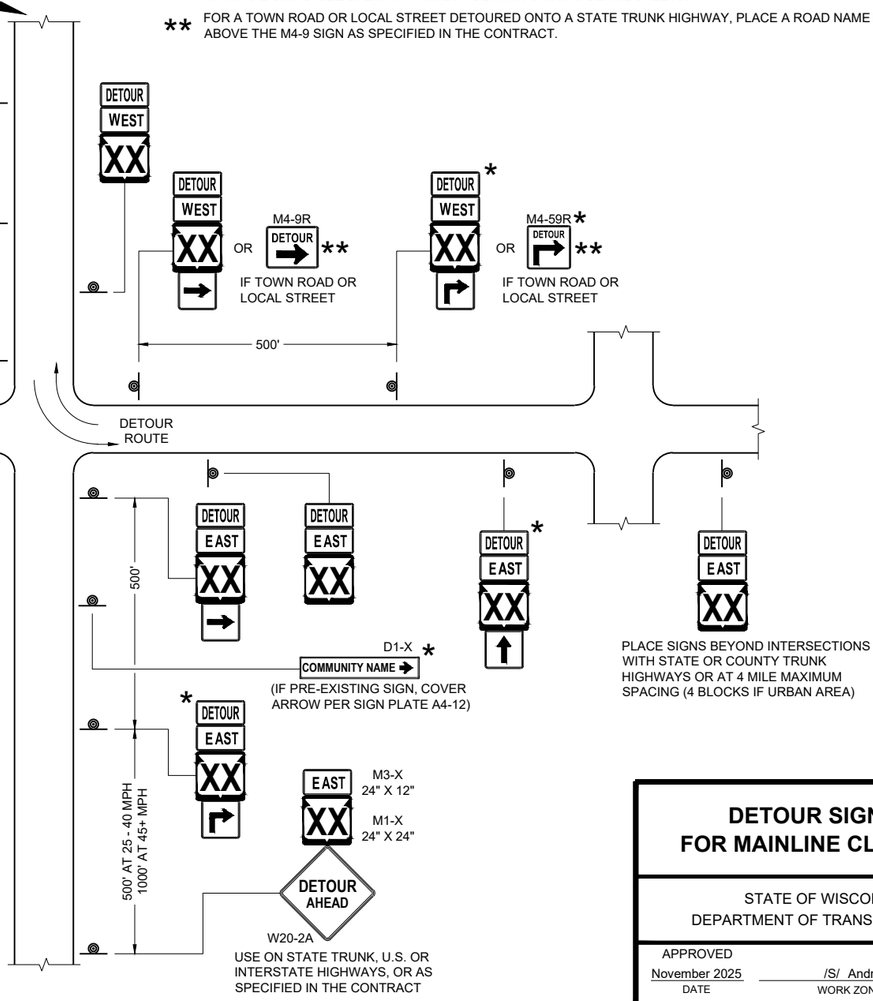

SEE SPECIFIC PROJECT DETOUR SIGNING DETAIL SHEETS AND DETAIL A OR B ON SDD SHEET 15C02 - SHEET "a"

DETAIL F
DETOUR SIGNING

DETOUR SIGNING FOR MAINLINE CLOSURES

STATE OF WISCONSIN
DEPARTMENT OF TRANSPORTATION

APPROVED
November 2025 — DATE
/S/ Andrew Heidtke — WORK ZONE ENGINEER

FHWA

6
SDD 15C02-10c

THIS DRAWING PROVIDES GENERAL GUIDANCE ON TYPICAL "TO" MO-4 SIGN LAYOUT AND SPACING. SEE PROJECT TO SIGNING SHEETS FOR SPECIFIC DETAILS FOR EACH PROJECT.

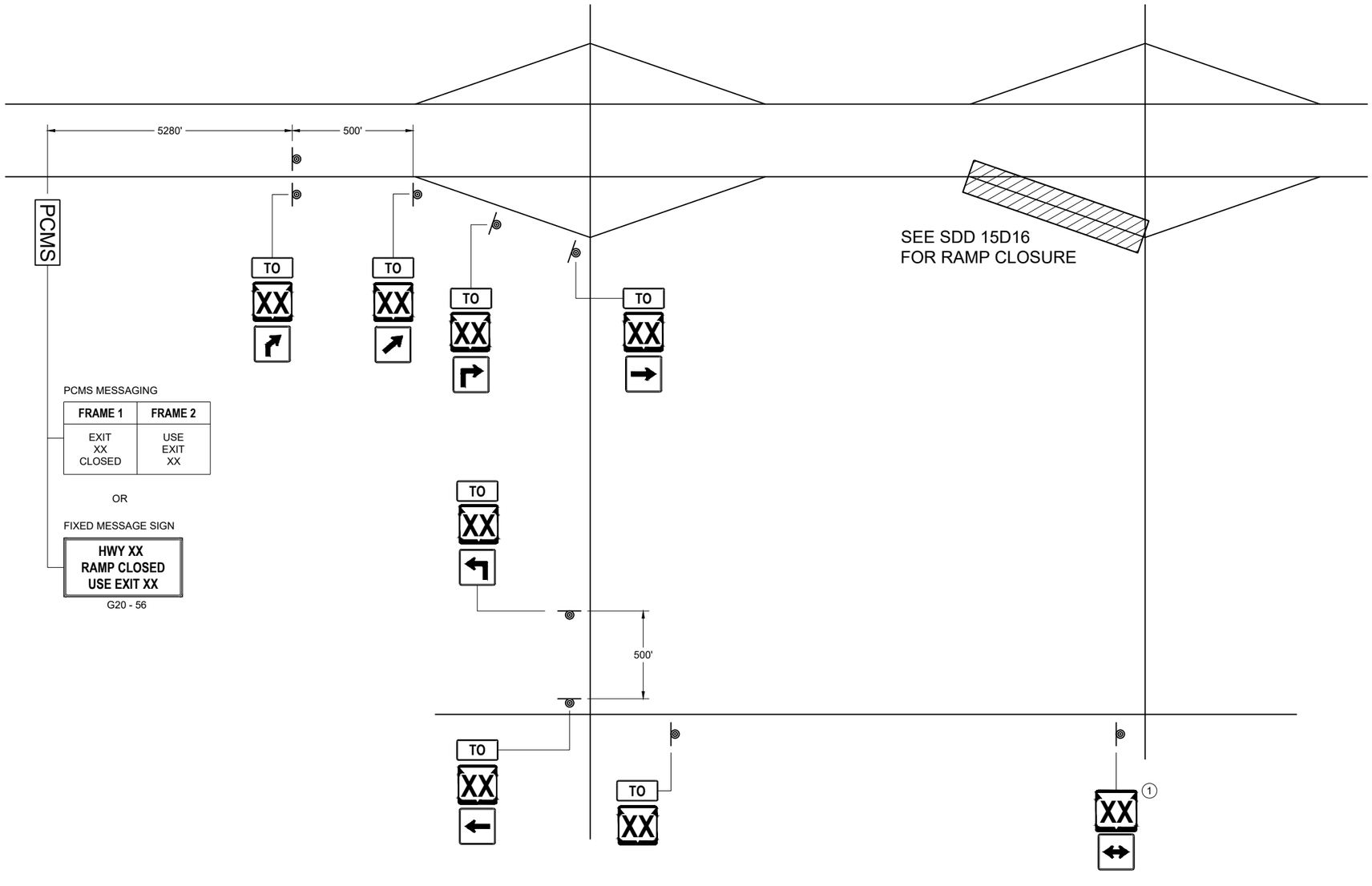

PCMS MESSAGING

FRAME 1	FRAME 2
EXIT XX CLOSED	USE EXIT XX

OR

FIXED MESSAGE SIGN

HWY XX
RAMP CLOSED
USE EXIT XX

G20 - 56

LEGEND

- SIGN ON PERMANENT SUPPORT
- PCMS — PORTABLE CHANGEABLE MESSAGE SIGN
- TO — MO4 - 5
- XX — M1 - 4 OR XX — M1 - 6 OR COUNTY X — M1 - 5A
- M05 - 1 OR M05 - 2 OR M06 - 1 OR M06 - 2 OR M06 - 4

GENERAL NOTES

SEE SDD 15D16 "TRAFFIC CONTROL, EXIT RAMP CLOSURE" DETAIL FOR TRAFFIC CONTROL AT EXIT RAMP CLOSURE.

THE EXACT NUMBER, LOCATION AND SPACING OF ALL SIGNS SHALL BE ADJUSTED TO FIT FIELD CONDITIONS AS APPROVED BY THE ENGINEER.

IF THERE ARE ANY ROUTE MARKER ASSEMBLIES THAT WILL REMAIN IN PLACE, ADJUST THE LOCATION OF THE "TO" MO-4 ROUTE SIGNS TO CORRESPOND WITH THE EXISTING ASSEMBLIES. SEE SPECIFIC PROJECT TO SIGNING DETAIL SHEETS. MODIFY EXISTING SIGNS WHERE POSSIBLE.

THE SPACING BETWEEN TRAFFIC CONTROL AND "TO" MO-4 SIGNS SHOULD BE ADJUSTED TO NOT CONFLICT WITH AND TO PROVIDE A DESIRABLE MINIMUM OF 200 FEET CLEARANCE TO EXISTING SIGNS THAT WILL REMAIN IN PLACE.

ANY SIGNS TEMPORARY OR EXISTING, WHICH CONFLICT WITH TRAFFIC CONTROL " IN USE" SHALL BE REMOVED OR COVERED AS NEEDED AND AS APPROVED BY THE ENGINEER.

SIGNS THAT SHALL BE IN PLACE LESS THAN 7 CONTINUOUS DAYS AND NIGHTS MAY BE MOUNTED ON PORTABLE SUPPORTS.

"MO" SIGNS ARE THE SAME AS "M" SIGNS EXCEPT THE BACKGROUND IS ORANGE.

SIGN SIZES SHALL BE AS FOLLOW:

MO4 - 5 SHALL BE 24" X 12". (36" X 18" IF NEEDED TO MATCH EXISTING SIGNS).
M1 - 4, M1 - 5A, AND M1 - 6 SHALL BE 24" X 24" (36" X 36" IF NEEDED TO MATCH EXISTING SIGNS).
MO5 - 1, MO5 - 2, AND MO6 - 1, SHALL BE 21" X 21". (30" X 30" IF NEEDED TO MATCH EXISTING SIGNS).

(1) ONLY ADD IF THERE ARE NO EXISTING ROUTE MARKERS FOR THE INTERSECTING ROADWAY.

OFF RAMP LANE CLOSURE

STATE OF WISCONSIN
DEPARTMENT OF TRANSPORTATION

APPROVED
November 2025 — DATE
/S/ Andrew Heidtke — WORK ZONE ENGINEER

FHWA

6 SDD 15C02-10e

GENERAL NOTES

THE EXACT NUMBER, LOCATION, AND SPACING OF ALL SIGNS AND DEVICES SHALL BE ADJUSTED TO FIT FIELD CONDITIONS.

THE SPACING BETWEEN TRAFFIC CONTROL SIGNS SHOULD BE ADJUSTED TO NOT CONFLICT WITH AND SHOULD PROVIDE A MINIMUM OF 200 FEET (500 FEET DESIRABLE) CLEARANCE TO EXISTING SIGNS THAT WILL REMAIN IN PLACE.

ALL SIGNS ARE 48" X 48" UNLESS OTHERWISE NOTED. IF NECESSARY DUE TO SPACE CONSTRAINTS, 36"X36" SIGNS MAY BE USED INSTEAD OF 48" X 48" SIGNS.

SIGNS THAT WILL BE IN PLACE LESS THAN SEVEN CONTINUOUS DAYS AND NIGHTS MAY BE MOUNTED ON PORTABLE SUPPORTS.

IF A "STOP" SIGN MUST BE REMOVED FOR A WORK OPERATION, A TEMPORARY "STOP" SIGN SHALL BE PLACED PRIOR TO THE SIGN REMOVAL, OR A FLAGGER SHALL BE PROVIDED UNTIL THE SIGN IS REESTABLISHED.

* THE THIRD W20-1 SIGN IS REQUIRED ONLY IF THERE IS AN INTERSECTION BETWEEN THE "ROAD WORK 500 FEET" SIGN AND THE WORK ZONE. ADJUST THE PLACEMENT OF THIS SIGN BASED ON INTERSECTION LOCATION AND OTHER FIELD CONDITIONS.

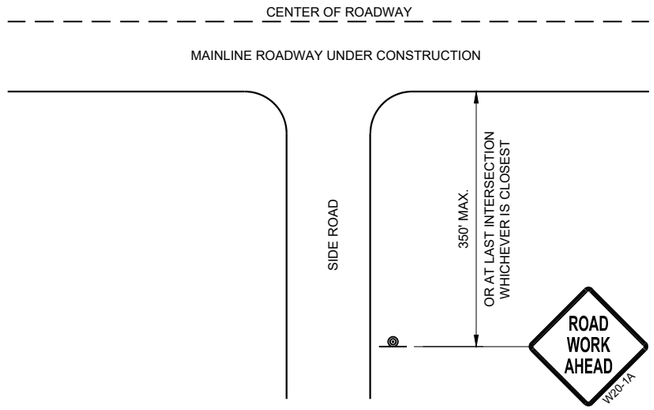

TYPICAL SIDE ROAD APPROACH WARNING SIGN DETAIL

LEGEND

SIGN ON PERMANENT SUPPORT

DIRECTION OF TRAFFIC

WORK AREA

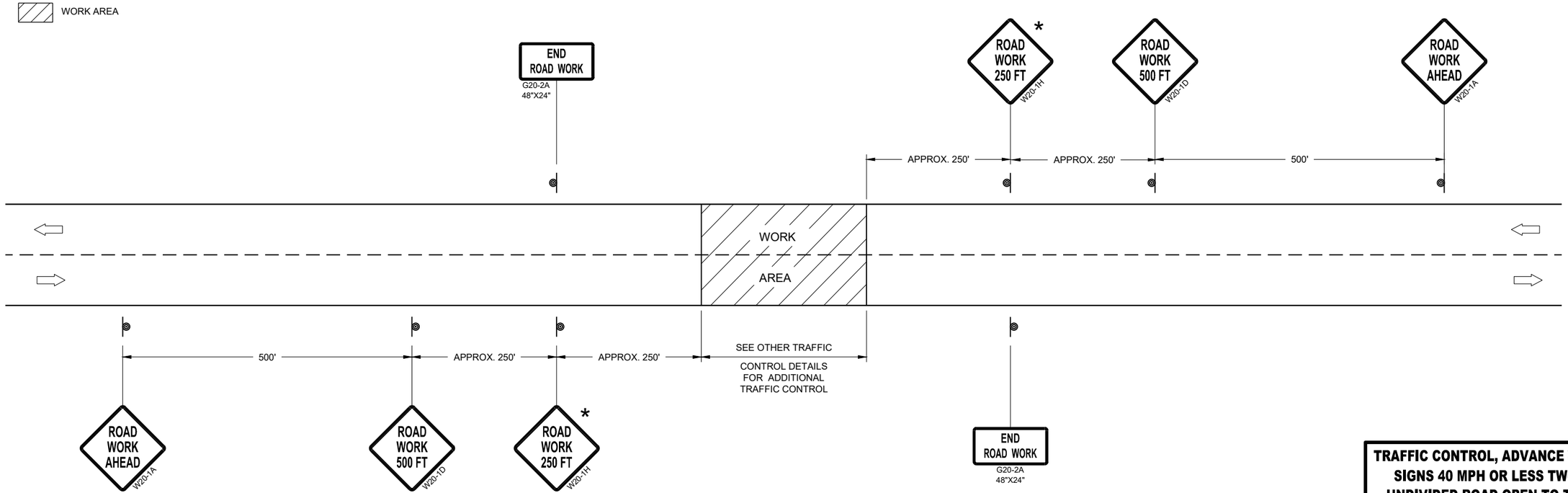

TRAFFIC CONTROL, ADVANCE WARNING SIGNS 40MPH OR LESS

TRAFFIC CONTROL, ADVANCE WARNING SIGNS 40 MPH OR LESS TWO-WAY UNDIVIDED ROAD OPEN TO TRAFFIC

STATE OF WISCONSIN
DEPARTMENT OF TRANSPORTATION

APPROVED
July 2018
DATE

/S/ Andrew Heidtke
WORK ZONE ENGINEE

FHWA

6

SDD 15C05 - 05

GENERAL NOTES

DETAILS OF CONSTRUCTION NOT SHOWN ON THIS DRAWING SHALL CONFORM TO STANDARD SPECIFICATIONS AND SPECIAL PROVISIONS.

(1) LOCATE THE NO PASSING ZONE W14-3 SIGN WITHIN 50 FEET OF THE "T" MARKING

(2) MEASURE FROM EDGE OF MARKING TO JOINT LINE. THIS DOES NOT INCLUDE SPACE NEEDED FOR GROOVING OPERATIONS.

*CONFIRM MARKING LINE WIDTH WITH THE MISCELLANEOUS QUANTITIES

LEGEND

"T" MARKING

SIGN ON PERMANENT SUPPORT

DIRECTION OF TRAFFIC

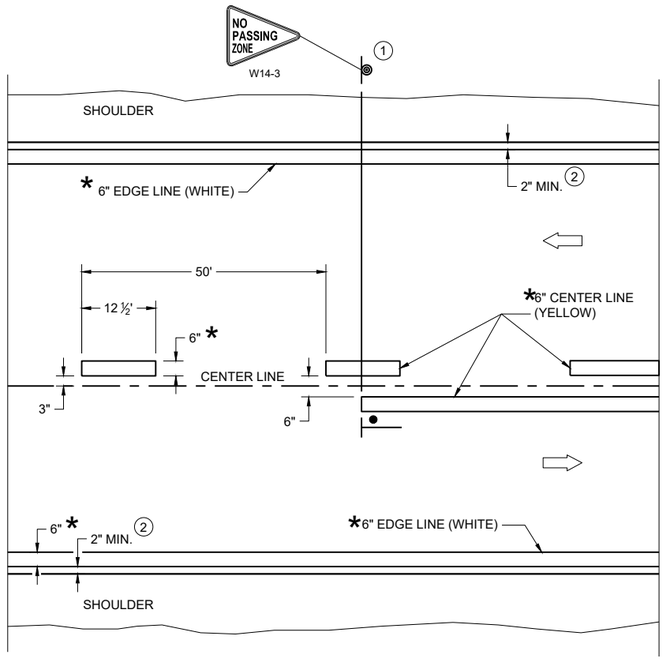

TWO WAY TRAFFIC

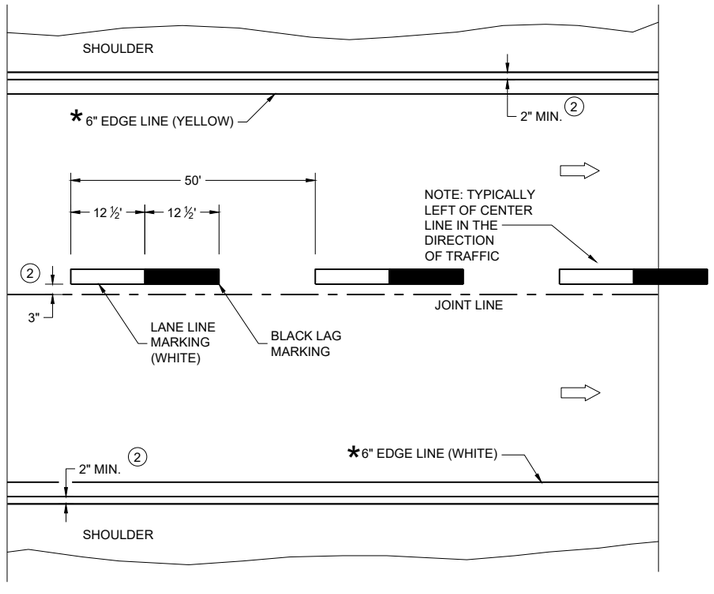

ONE WAY TRAFFIC

PERMANENT PAVEMENT MARKING

PERMANENT LONGITUDINAL PAVEMENT MARKINGS

STATE OF WISCONSIN
DEPARTMENT OF TRANSPORTATION

APPROVED
December 2024
DATE

/S/ Jeannie Silver
Statewide Pavement Marking Engineer

FHWA

6

SDD 15C08-24a

SDD 15C08-24a

GENERAL NOTES

1. REFLECTIVE SHEETING SHALL FOLLOW THE REQUIREMENTS IN THE APPROVED PRODUCTS LISTING FOR SIGN SHEETING.
2. LOCATION OF WARNING LIGHTS WHEN SHOWN ON THE PLAN.

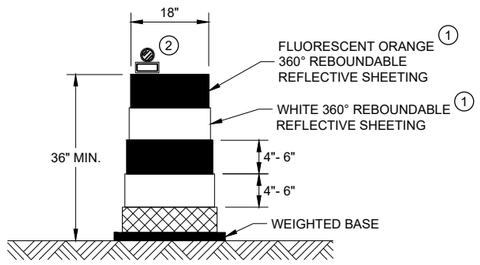

DRUM

BALLAST WIDTHS
RANGE FROM 24"-36"

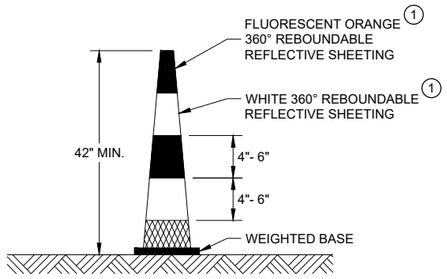

42" CONE

DO NOT USE IN TAPERS
½ SPACING OF DRUMS

BALLAST WIDTHS
RANGE FROM 14"-20"

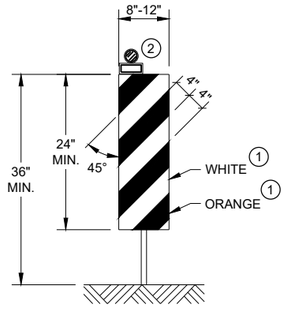

VERTICAL PANEL

THE STRIPES SHALL SLOPE DOWNWARD TO
THE TRAFFIC SIDE FOR CHANNELIZATION.

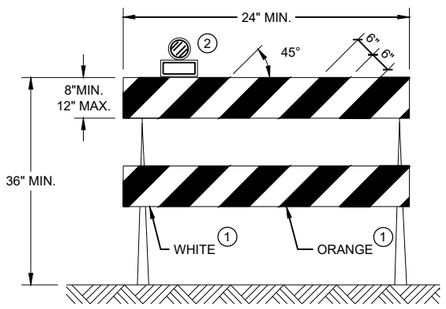

TYPE II BARRICADE

FOR RAILS LESS THAN 36" LONG, 4" WIDE STRIPES
MAY BE USED. ALL STRIPES SHALL SLOPE DOWNWARD
TO THE TRAFFIC SIDE FOR CHANNELIZATION.

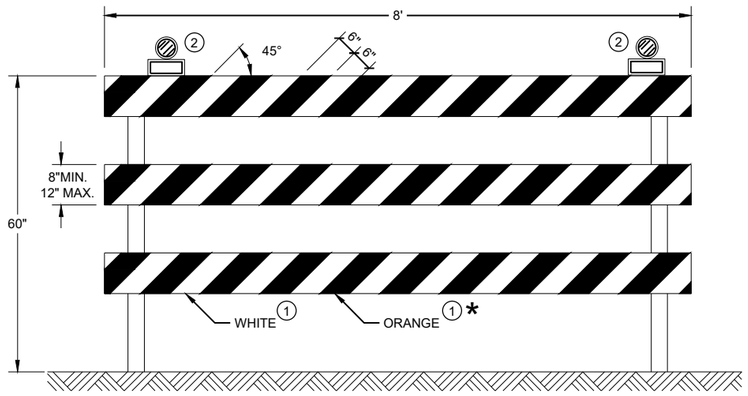

TYPE III BARRICADE

IF SIGN MOUNTED, DO NOT COVER MORE THAN 50% OF THE TOP
TWO RAILS OR 33% OF THE TOTAL AREA OF THE THREE RAILS.

* IF USED FOR A PERMANENT APPLICATION USE RED SHEETING.

CHANNELIZING DEVICES
DRUMS, CONES, BARRICADES
AND VERTICAL PANELS

STATE OF WISCONSIN
DEPARTMENT OF TRANSPORTATION

APPROVED
November 2022
DATE

/S/ Andrew Heidtke
WORK ZONE ENGINEE

FHWA

6

SDD15C11 - 10b

6

SDD15C11 - 10b

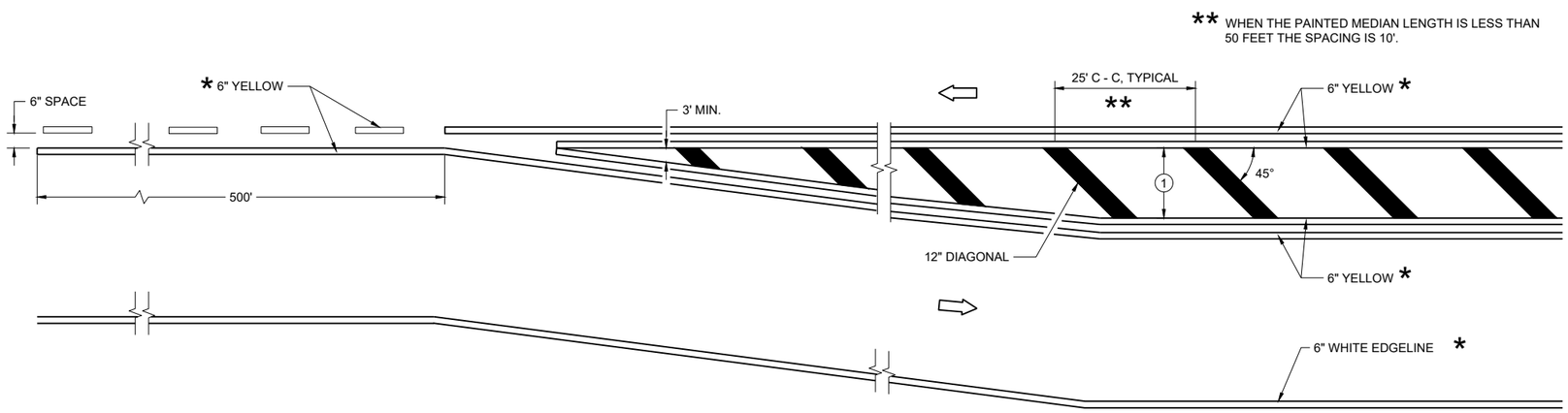

MEDIAN ISLAND DETAIL

GENERAL NOTES

(1) DIAGONALS ARE OPTIONAL WHEN PAINTED ISLAND IS LESS THAN 6 FEET AT THE WIDEST POINT. OMIT DIAGONALS IF WIDTH IS LESS THAN 4 FEET.

DIRECTION OF TRAVEL

*CONFIRM MARKING LINE WIDTH WITH THE MISCELLANEOUS QUANTITIES

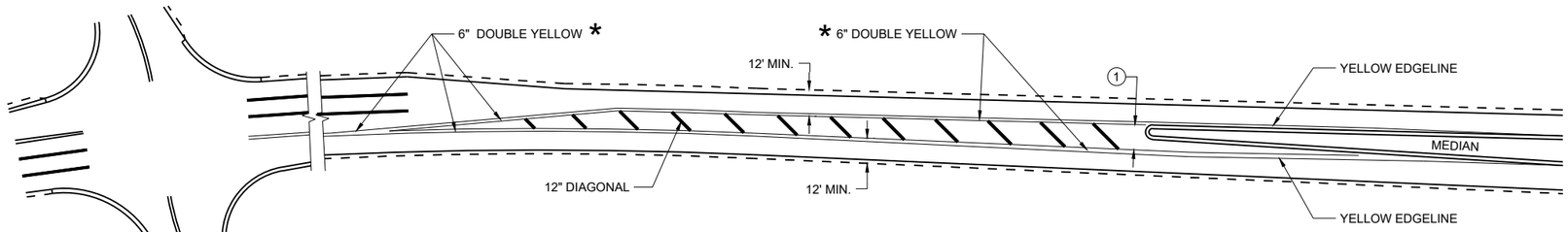

APPROACH MARKINGS FOR OTHER MEDIAN TYPES

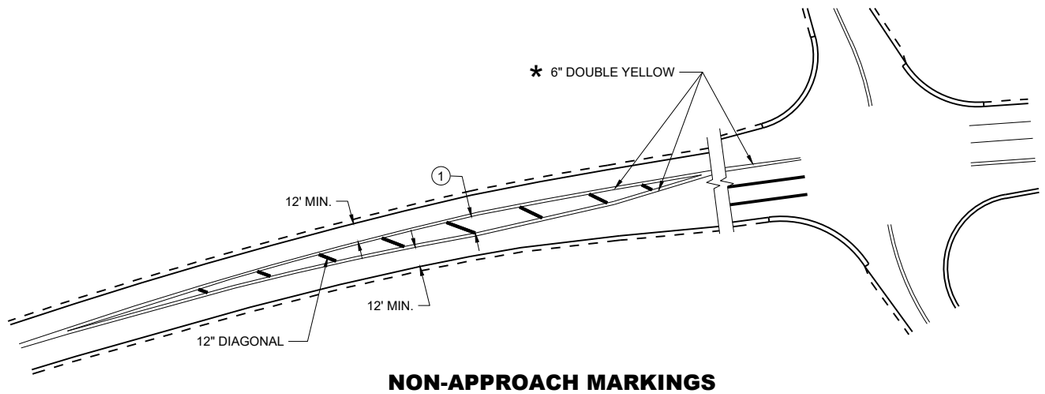

NON-APPROACH MARKINGS

MEDIAN ISLAND PAVEMENT MARKINGS

STATE OF WISCONSIN
DEPARTMENT OF TRANSPORTATION

APPROVED
August 2024
DATE
/S/ Jeannie Silver
Statewide Pavement Marking Engineer
FHWA

6

SDD 15C18-09a

SDD 15C18-09a

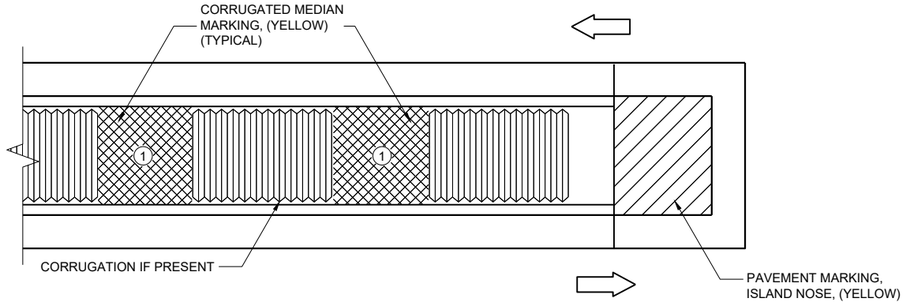

MEDIAN ISLAND WITH SQUARE BLUNT NOSE

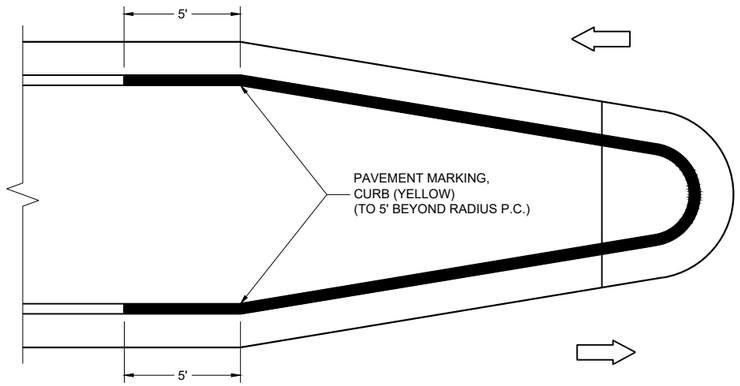

MEDIAN ISLAND WITH ROUND BLUNT NOSE

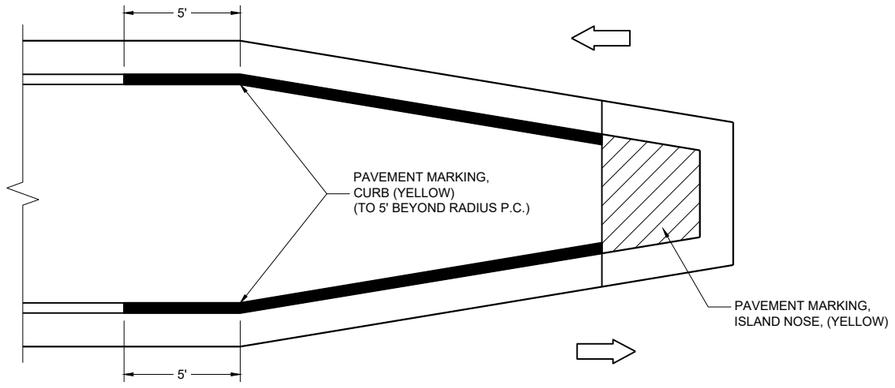

MEDIAN ISLAND WITH SLOPED NOSE

**TYPICAL PLACEMENT OF
PAVEMENT MARKING ON MEDIAN ISLANDS**

GENERAL NOTES

WHEN CONCRETE CORRUGATED MEDIAN IS CONSTRUCTED TO SEPARATE TRAFFIC OPERATING IN THE OPPOSING DIRECTION, YELLOW PAVEMENT MARKING SHALL BE APPLIED TO THE FLAT PORTION OF THE CONCRETE CORRUGATED MEDIAN. THE ITEM OF PAVEMENT MARKING, CONCRETE CORRUGATED MEDIAN, WILL BE MEASURED IN PLACE AND ACCEPTED IN ACCORDANCE WITH THE CONTRACT AND PAID FOR AT THE CONTRACT UNIT PRICE PER SQUARE FOOT.

(1) APPLY PAVEMENT MARKING TO THE FLAT PORTION OF CORRUGATED MEDIAN.

ISLAND NOSE MARKING

CURB MARKING

CORRUGATED MEDIAN MARKING

DIRECTION OF TRAVEL

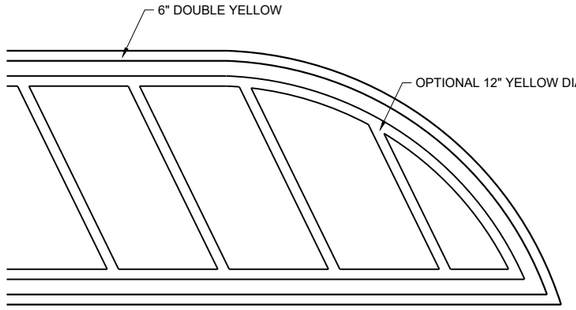

FLUSH MEDIAN ISLAND NOSE

**PAVEMENT MARKINGS,
MEDIAN ISLAND NOSE**

STATE OF WISCONSIN
DEPARTMENT OF TRANSPORTATION

APPROVED
August 2024
DATE

/S/ Jeannie Silver
Statewide Pavement Marking Engineer

FHWA

GENERAL NOTES

STOP SIGN SHALL BE PLACED A MINIMUM OF 6 FEET TO A MAXIMUM OF 50 FEET FROM THE EDGELINE LOCATION.

1. 18-INCH STOP LINES MAY BE DELETED OR ADDED BY THE REGION MARKING ENGINEER BASED ON VISIBILITY AND SIGHT LINES.
2. NO STOP LINE IS REQUIRED IF STOP SIGN IS LESS THAN OR EQUAL TO 40 FEET FROM THE EDGELINE.
3. NO STOP LINE IS REQUIRED IF STOP SIGN IS LESS THAN OR EQUAL TO 30 FEET FROM THE FLANGE LINE EXTENSION.
4. MOVE CLOSER TO THE EDGE OF TRAVEL LINE AS NEEDED FOR VISIBILITY AND SIGHT LINES (NO CLOSER THAN 4 FEET).
5. LADDER BAR CROSSWALKS SHOULD ONLY BE USED FOR MID BLOCK CROSSINGS. USE 2 - 6" TRANSVERSE LINES.
6. POSTED SPEED LIMITS OF 40 MPH OR GREATER USE A MINIMUM WIDTH OF 8' FOR MIDBLOCK CROSSWALKS

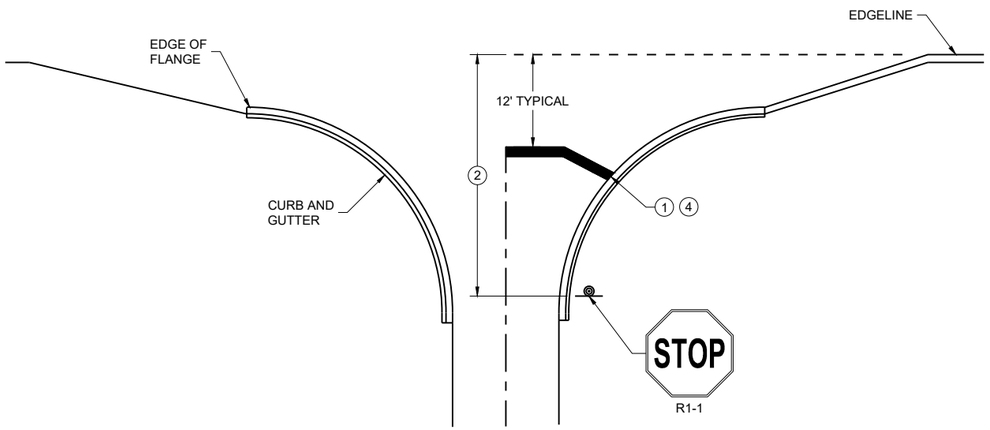

TYPICAL STOP LINE PAVEMENT MARKING WITH CURB AND GUTTER

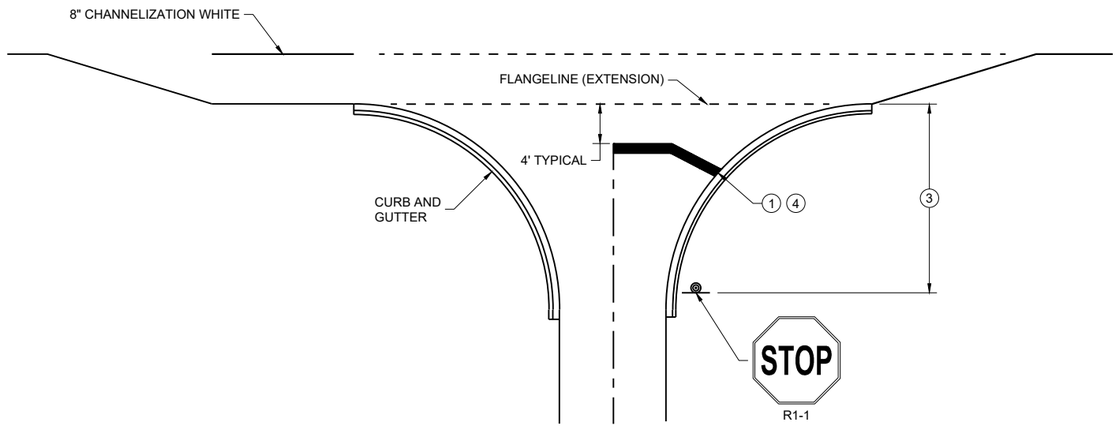

TYPICAL STOP LINE PAVEMENT MARKING FOR SIDE ROADS WITH RIGHT TURN LANE

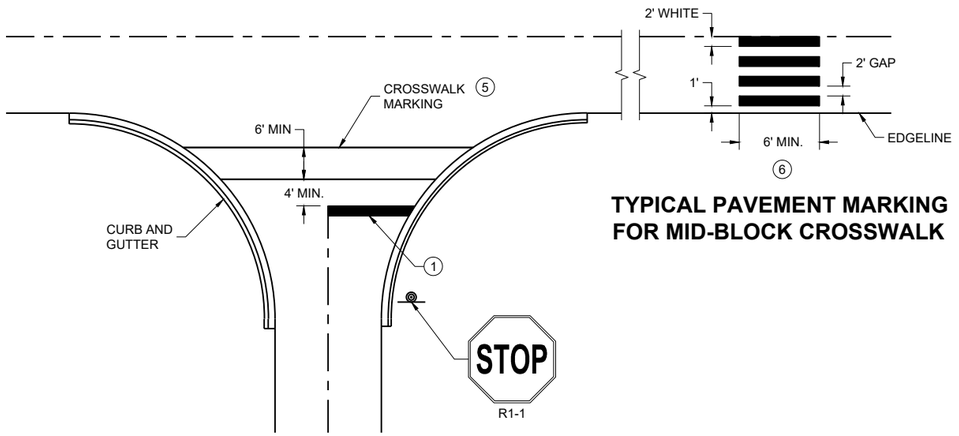

TYPICAL PAVEMENT MARKING FOR MID-BLOCK CROSSWALK 5

TYPICAL STOP LINE PAVEMENT MARKING FOR SIDE ROADS WITH CROSSWALK MARKING

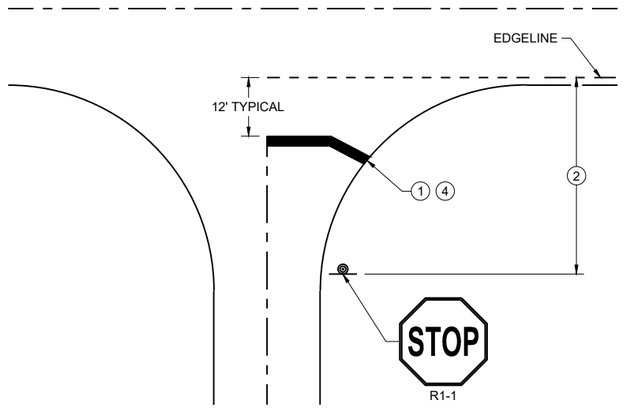

TYPICAL STOP LINE PAVEMENT MARKING WITHOUT CURB AND GUTTER

STOP LINE AND CROSSWALK PAVEMENT MARKING

STATE OF WISCONSIN
DEPARTMENT OF TRANSPORTATION

APPROVED

March 2024 — DATE

/S/ Matthew Rauch — STATE SIGNING AND MARKING ENGINEER

FHWA

6

SDD 15C33-05

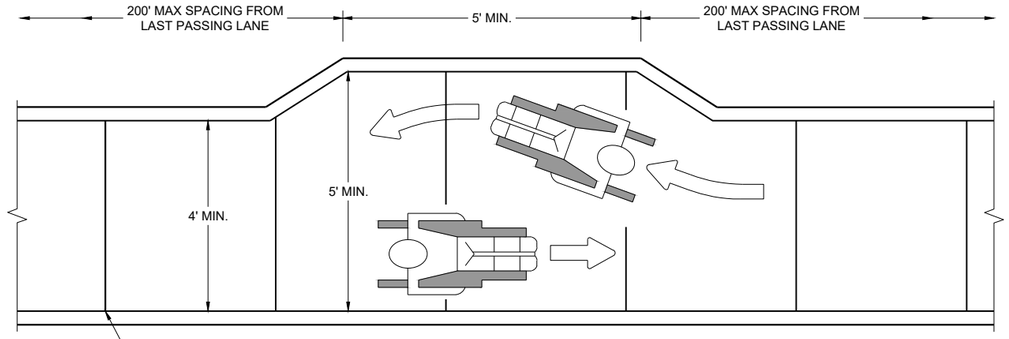

NARROW SIDEWALK PASSING DETAIL

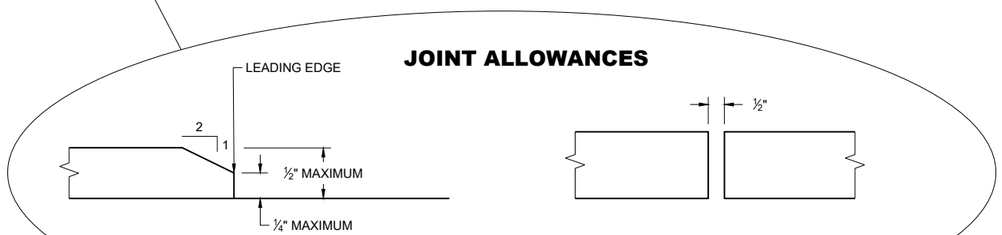

MAXIMUM VERTICAL GAP

MAXIMUM HORIZONTAL GAP

GENERAL NOTES

BARRICADE DEVICE SELECTED FROM APPROVED PRODUCT LIST

1. REFLECTIVE SHEETING SHALL FOLLOW THE REQUIREMENTS IN THE APPROVED PRODUCTS LISTING FOR SIGN SHEETING.
2. SHEETING REQUIRED ON MORE THAN 50% OF BARRICADE WIDTH.
3. PLACE SHEETING ON BOTH SIDES OF THE BARRICADE.
* USE THIS DETAIL FOR SHEETING PLACEMENT REFERENCE.
4. WHEN THE TEMPORARY PEDESTRIAN ACCESS ROUTE RUNS PARALLEL ON THE ROADWAY SURFACE, THE MAXIMUM CROSS SLOPE WILL MATCH THE EXISTING ROADWAY CROSS SLOPE.
5. WHERE SIGNS FOR TEMPORARY PEDESTRIAN ACCOMMODATIONS ARE SHOWN BEING PLACED BEHIND TEMPORARY PEDESTRIAN BARRICADE, THE SIGNS MAY BE MOUNTED ON THE TEMPORARY PEDESTRIAN BARRICADE INSTEAD. A CORRUGATED POLYPROPYLENE OR POLYETHYLENE PLASTIC SIGN BASE SHALL BE USED IF MOUNTED ON THE BARRICADE. THE TOP OF THE SIGN SHALL BE MOUNTED BELOW THE TOP OF THE BARRICADE TO ALLOW A CONTINUOUS HAND-TRAILING EDGE.

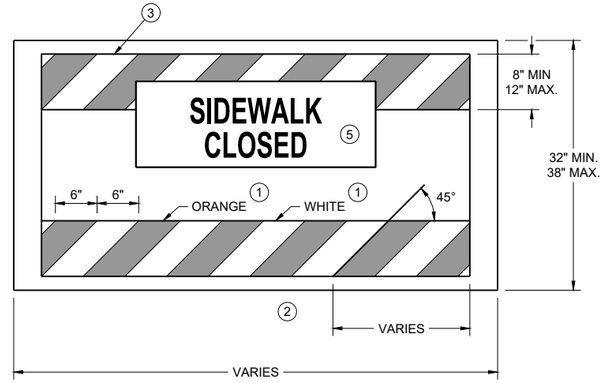

TEMPORARY PEDESTRIAN BARRICADE *

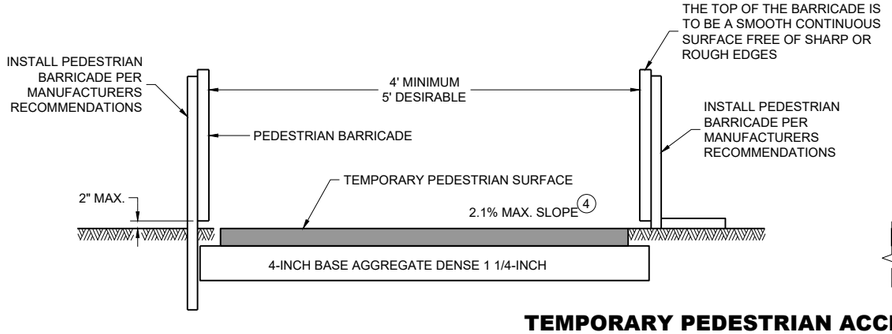

TEMPORARY PEDESTRIAN ACCESS

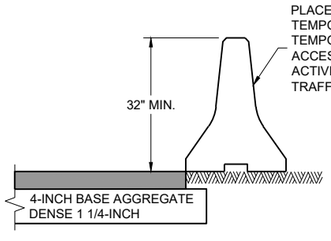

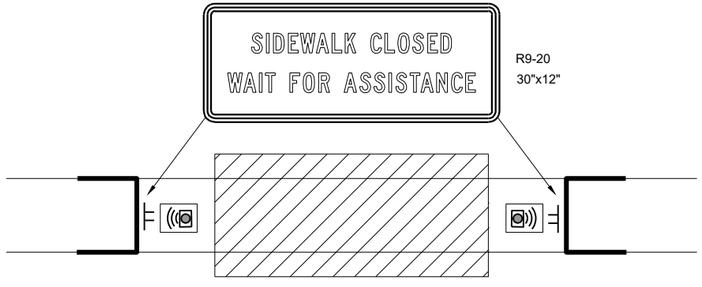

TEMPORARY PEDESTRIAN FLAGGING

LEGEND

- TEMPORARY PEDESTRIAN BARRICADE
- AUDIBLE MESSAGE DEVICE
- TEMPORARY SIGN SUPPORT
- WORK AREA

TRAFFIC CONTROL, PEDESTRIAN ACCOMMODATION

STATE OF WISCONSIN
DEPARTMENT OF TRANSPORTATION

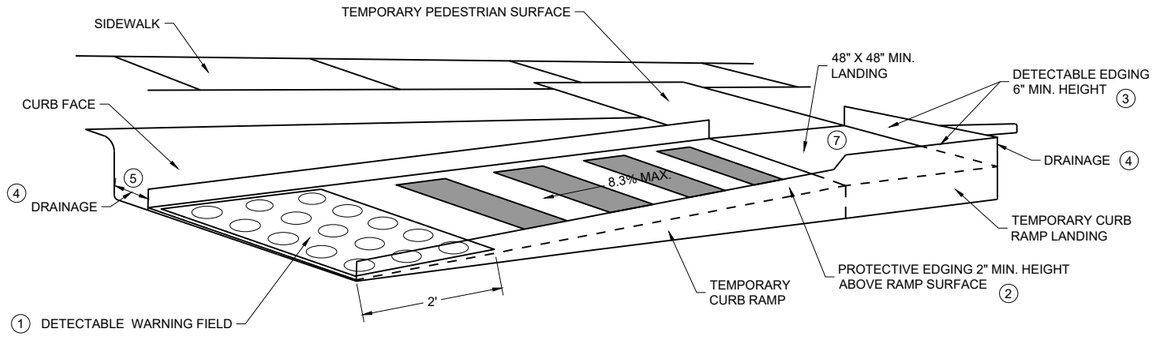

PERSPECTIVE VIEW

GENERAL NOTES

CURB RAMPS SHALL BE 48" MIN. WIDTH WITH A FIRM, STABLE AND SLIP RESISTANT SURFACE.

CURB RAMPS AND LANDINGS SHALL HAVE A 1:48 (2.1%) MAX. CROSS-SLOPE.

CLEAR SPACE OF 48" X 48" SHALL BE PROVIDED ABOVE AND BELOW THE CURB RAMP.
LATERAL JOINTS OR GAPS BETWEEN SURFACES SHALL BE LESS THAN ½" WIDTH.

CHANGES BETWEEN SURFACE HEIGHTS SHALL NOT EXCEED ½". LATERAL EDGES MAY BE VERTICAL UP TO ¼" HIGH AND SHALL BE BEVELED AT 1:2 BETWEEN ¼" AND ½".

1. INSTALL CONTRASTING TEMPORARY DETECTABLE WARNING FIELD AT PEDESTRIAN STREET CROSSINGS, AS SHOWN IN THE PLANS.
2. PROTECTIVE EDGING WITH A 2" MIN. HEIGHT SHALL BE INSTALLED WHEN A CURB RAMP OR LANDING PLATFORM HAS A VERTICAL DROP OF 6" OR GREATER OR HAS A SIDE APRON SLOPE STEEPER THAN 1:3 (33%). PROTECTIVE EDGING SHOULD BE CONSIDERED WHEN CURB RAMPS OR LANDING PLATFORMS HAVE A VERTICAL DROP OF 3" OR MORE.
3. DETECTABLE EDGING WITH 6" MIN. HEIGHT AND CONTRASTING COLOR SHALL BE INSTALLED ON ALL CURB RAMP LANDINGS WHERE THE WALKWAY CHANGES DIRECTION (TURNS).
4. DO NOT RESTRICT WATER FLOW IN THE GUTTER SYSTEM.
5. ENSURE CURB RAMP IS OUT OF THE GUTTER PAN.
6. IF ONLY PART OF THE END PANEL OF TEMPORARY PEDESTRIAN BARRICADE PANEL IS NEEDED, EXTEND EXCESS PORTION OF TEMPORARY PEDESTRIAN BARRICADE PANEL HERE.
7. LANDING TO BE SLOPED A MAXIMUM OF 2.1% IN ALL DIRECTIONS OF PEDESTRIAN TRAVEL.

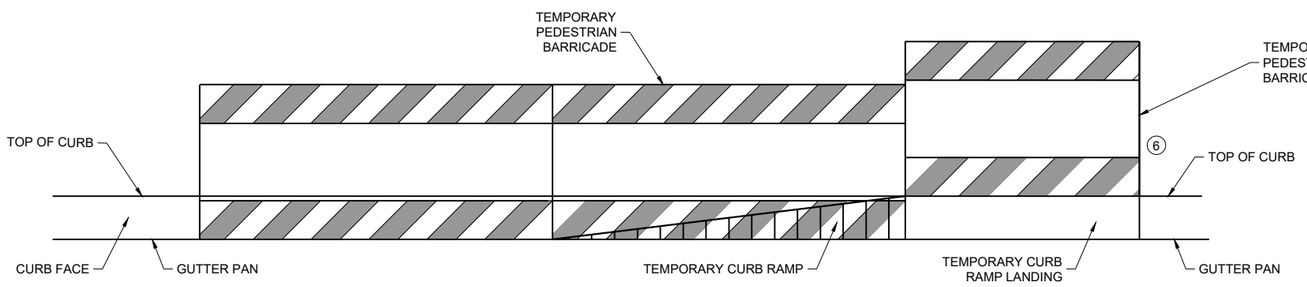

FRONT VIEW

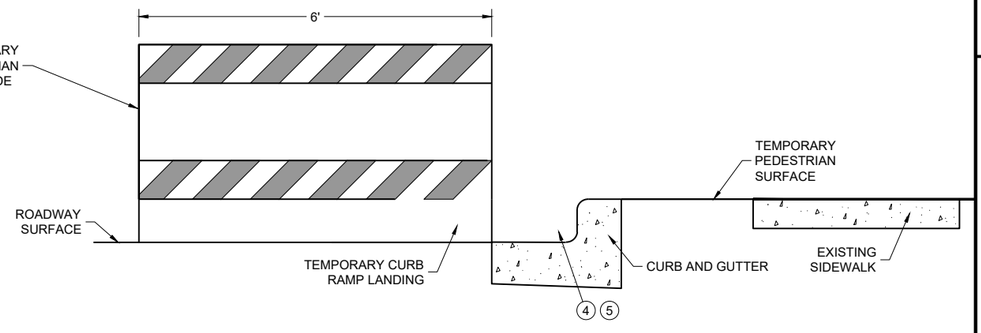

SIDE VIEW

TEMPORARY CURB RAMP PARALLEL TO CURB

TRAFFIC CONTROL, PEDESTRIAN ACCOMMODATION

STATE OF WISCONSIN
DEPARTMENT OF TRANSPORTATION

6

SDD 15D30-12b

6

SDD 15D30-12b

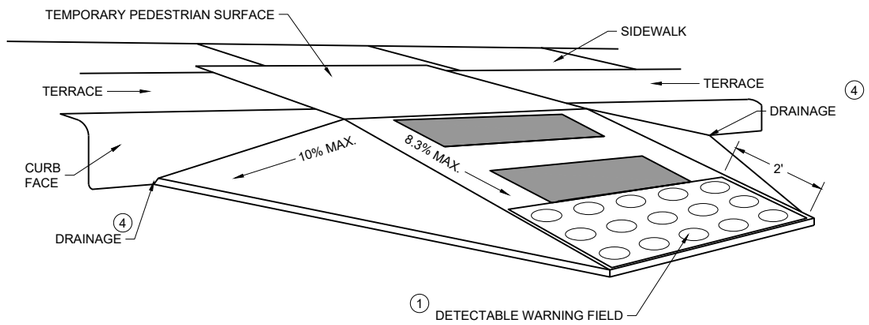

WITH SIDE APRON (5)

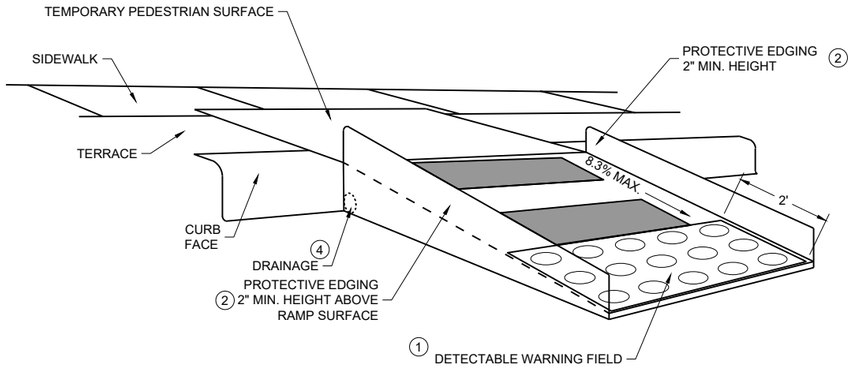

WITH PROTECTIVE EDGE

TEMPORARY CURB RAMP PERPENDICULAR TO CURB

GENERAL NOTES

CURB RAMPS SHALL BE 48" MINIMUM WIDTH WITH A FIRM, STABLE AND SLIP RESISTANT SURFACE.

ALTERNATE SIDEWALK WORK BETWEEN LEFT AND RIGHT SIDE OF ROADWAY TO MAINTAIN PEDESTRIAN ACCESS.

CURB RAMPS AND LANDINGS SHALL HAVE A 1:48 (2.1%) MAX. CROSS-SLOPE.

CLEAR SPACE OF 48" X 48" SHALL BE PROVIDED ABOVE AND BELOW THE CURB RAMP.

LATERAL JOINTS OR GAPS BETWEEN SURFACES SHALL BE LESS THAN ½" WIDTH.

CHANGES BETWEEN SURFACE HEIGHTS SHALL NOT EXCEED ½". LATERAL EDGES MAY BE VERTICAL UP TO ¼" HIGH AND SHALL BE BEVELED AT 1:2 BETWEEN ¼" AND ½".

(1) INSTALL CONTRASTING TEMPORARY DETECTABLE WARNING FIELD AT PEDESTRIAN STREET CROSSINGS, AS SHOWN IN THE PLANS

(2) PROTECTIVE EDGING WITH A 2" MIN. HEIGHT SHALL BE INSTALLED WHEN A CURB RAMP OR LANDING PLATFORM HAS A VERTICAL DROP OF 6" OR GREATER OR HAS A SIDE APRON SLOPE STEEPER THAN 1:3 (33%). PROTECTIVE EDGING SHOULD BE CONSIDERED WHEN CURB RAMPS OR LANDING PLATFORMS HAVE A VERTICAL DROP OF 3" OR MORE.

(3) DETECTABLE EDGING WITH 6" MIN. HEIGHT AND CONTRASTING COLOR SHALL BE INSTALLED ON ALL CURB RAMP LANDINGS WHERE THE WALKWAY CHANGES DIRECTION (TURNS).

(4) DO NOT RESTRICT WATER FLOW IN THE GUTTER SYSTEM.

(5) CAN ONLY BE USED FOR RAMPS WITH 6" OR LESS OF VERTICAL CHANGE.

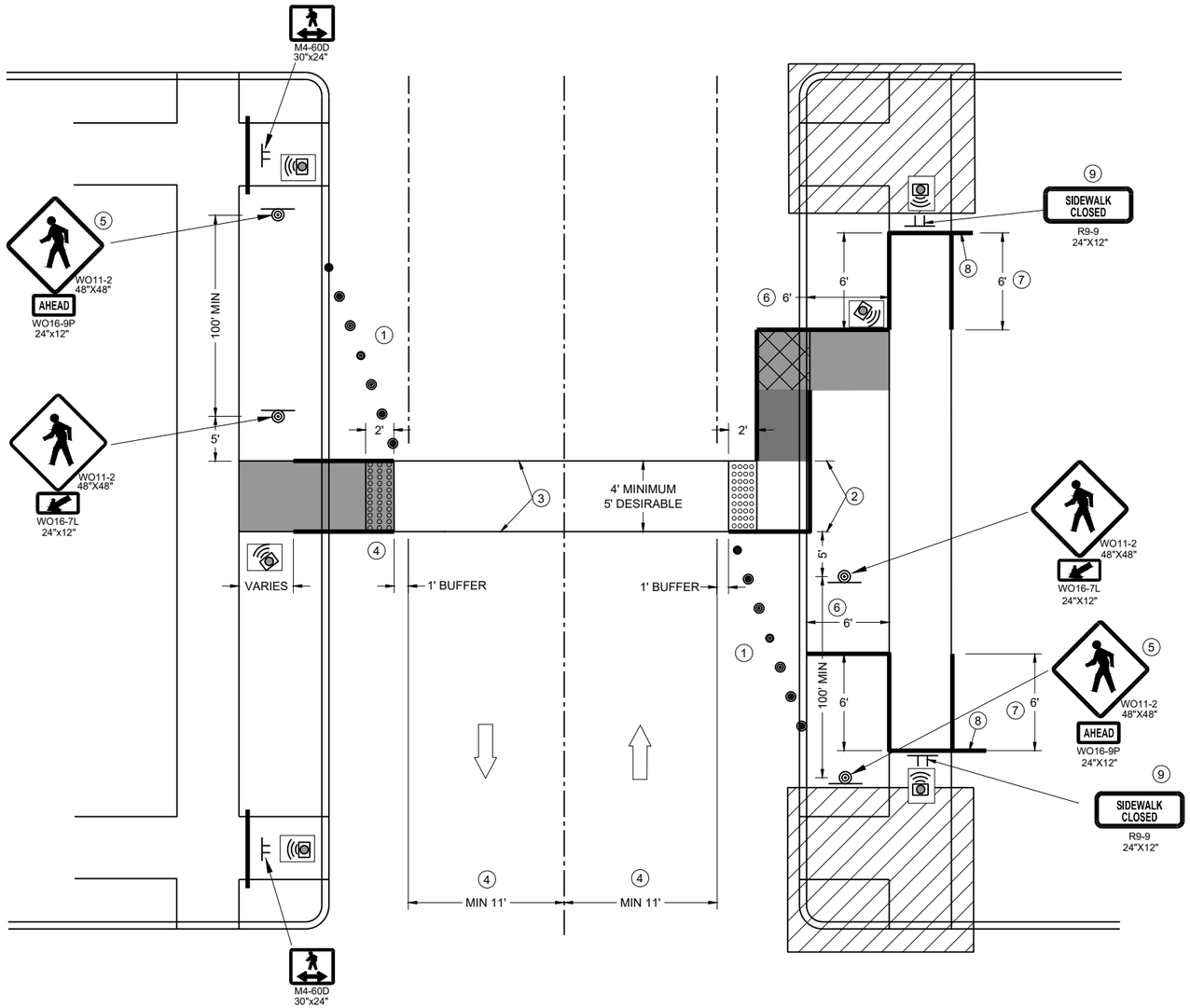

TEMPORARY PEDESTRIAN CROSSING

GENERAL NOTES

TYPICAL TEMPORARY PEDESTRIAN BARRICADE PANEL IS 6 FEET LONG.

SEE OTHER PEDESTRIAN ACCOMMODATION DETAILS FOR SIGNING AND DEVICES FOR DIFFERENT PEDESTRIAN FACILITIES CLOSURES.

WHEN THE TEMPORARY PEDESTRIAN ACCESS ROUTE RUNS PARALLEL ON THE ROADWAY SURFACE, THE MAXIMUM CROSS SLOPE WILL MATCH THE EXISTING ROADWAY CROSS SLOPE.

1. SHOULDER OR LANE CLOSURE ADVANCED WARNING AND PROPER BUFFER SPACE REQUIRED.
2. 4 FEET MINIMUM, 5 FEET DESIRABLE.
3. WHITE 6" TEMPORARY PAVEMENT MARKING.
4. IF MINIMUM LANE WIDTHS CAN'T BE ATTAINED, PERPENDICULAR CURB RAMPS MAY NEED TO BE UTILIZED.
5. IF MINIMUM 100' SPACING FROM THE MID-BLOCK CROSSING CANNOT BE ATTAINED BEFORE THE INTERSECTION, REMOVE THIS SIGN ASSEMBLY.
6. IF TERRACE IS LESS THAN 6 FEET WIDE, OMIT TEMPORARY PEDESTRIAN BARRICADE FROM THE SIDEWALK TO THE CURB.
7. PLACE BARRICADE CLOSURE SO THAT THE TEMPORARY PEDESTRIAN BARRICADE END IS AT THE LAST OPEN SIDEWALK ACCESS TO RESIDENCES OR BUSINESSES BEFORE THE SIDEWALK CLOSURE.
8. IF TEMPORARY PEDESTRIAN BARRICADE PANEL IS WIDER THAN THE SIDEWALK WIDTH, THE PORTION OF THE EXCESS PANEL SHOULD EXTEND INTO THE TERRACE.
9. MOUNTING HEIGHT OF 5 FEET FROM THE SURFACE TO THE BOTTOM OF THE SIGN.

LEGEND

- TRAFFIC CONTROL DRUM
- SIGN ON TEMPORARY SUPPORT
- TEMPORARY CURB RAMP
- TEMPORARY DETECTABLE WARNING FIELD
- TEMPORARY PEDESTRIAN SURFACE "A"
- TEMPORARY PEDESTRIAN SURFACE "B"
- WORK AREA
- TEMPORARY PEDESTRIAN BARRICADE
- DIRECTION OF TRAFFIC
- TEMPORARY AUDIBLE MESSAGE DEVICE (EXACT PLACEMENT BASED UPON FIELD CONDITIONS)

TRAFFIC CONTROL, PEDESTRIAN ACCOMMODATION

STATE OF WISCONSIN
DEPARTMENT OF TRANSPORTATION

APPROVED
November 2025 — DATE
/S/ Andrew Heidtke — WORK ZONE ENGINEER

FHWA

NOTES

1. Signs are Type II - Type H Reflective
2. Color:
   Background - Green
   Message - White
3. Message Series - E or as noted

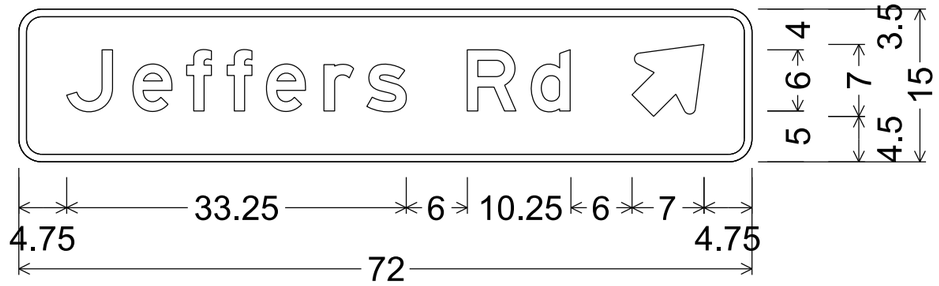

D1-1; 2.250" Radius, 0.750" Border

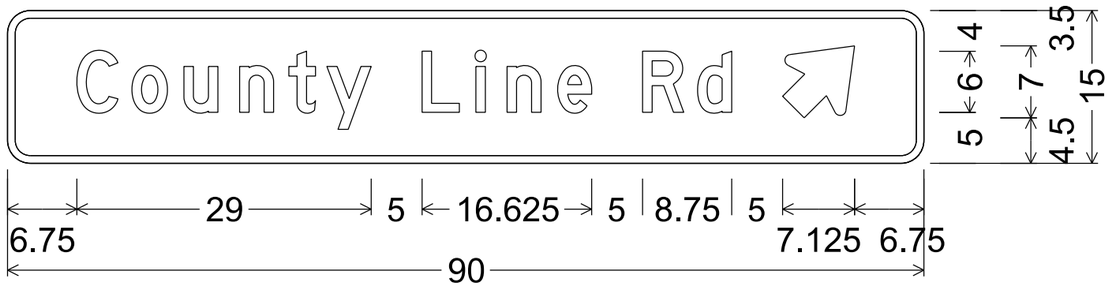

D1-1; 2.250" Radius, 0.750" Border
"County", D; "Line", D; "Rd", D

7

7

PROJECT NO: 7995-02-73	HWY: COUNTY LINE RD	COUNTY: EAU CLAIRE	PERMANENT SIGNING	SHEET NO: 133	E

TYPICAL ASSEMBLIES

J1-1

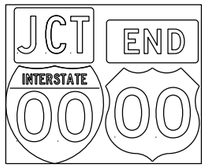

J1-2

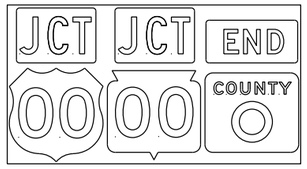

J1-3

JR1-1

J2-1

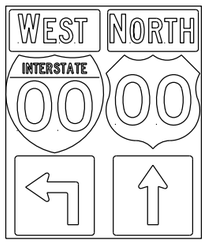

J2-2

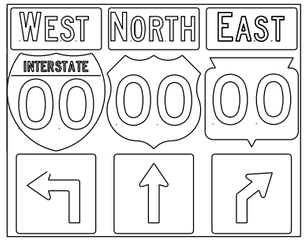

J2-3

JV
(Typical Vertical J-Assembly
See Note 10 and 11)

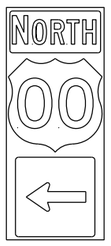

J3-1

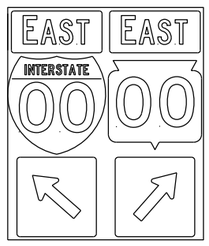

J3-2

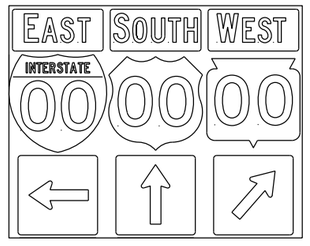

J3-3

J4-1

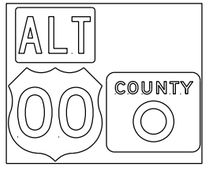

J4-2

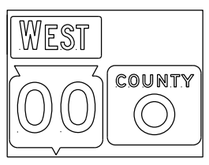

J4-2

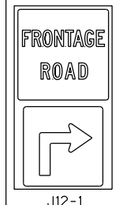

J12-1

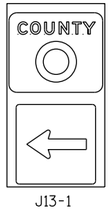

J13-1

J32-1

J33-1

J22-1

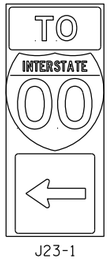

J23-1

JR13-1

JR23-1

JR99-1

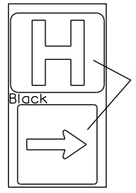

JH-1

NOTES

1. Signs are Type II - Type H Reflective
2. Color:
   Background - Black Non-reflective
   Message - see Note 4
3. Message Series - See Note 4
4. The colors and message spacing on each marker shall be according to the applicable route marker panel specifications.
5. Certain marker heads require the component pieces to be the same color. As an example, all the components used with an M1-1 Interstate marker shall be blue.
6. Single panel j-assemblies shall only be used with route marker shields that are same size. If the route marker shields are different size use multiple piece component.
7. Route assemblies that have 24 inch route shields and have dimensions greater than 48 inches (both vertical and horizontal) shall have one horizontal splice between the arrows and route shields. Vertical splices shall not be used on route assemblies with a horizontal dimension of 144 inches or less. The contractor shall not use more than one vertical joint per sign and the joint shall be between route shields.
8. Route assemblies that have 36 inch shields and have dimensions greater than 48 inchs (both vertical and horizontal) shall have two horizontal splices. One horizontal splice shall be between the cardinal direction and route shields and the other horizontal splice shall be between the arrows and route shields. Vertical splices shall not be used on route assemblies with a horizontal dimension of 144 or less. The contractor shall not use more than one vertical joint per sign and the joint shall be between route shields.
9. All Vertical J Assemblies are given a Sign Code of JV
10. For JV Assemblies that have a mixture of Interstate and Non-Interstate shields, arrows and cardinals shall be white on blue.
11. For JV Assemblies that have a mixture of Non-Interstate and Auto-Tour shields, arrows and cardinals shall be black on white.

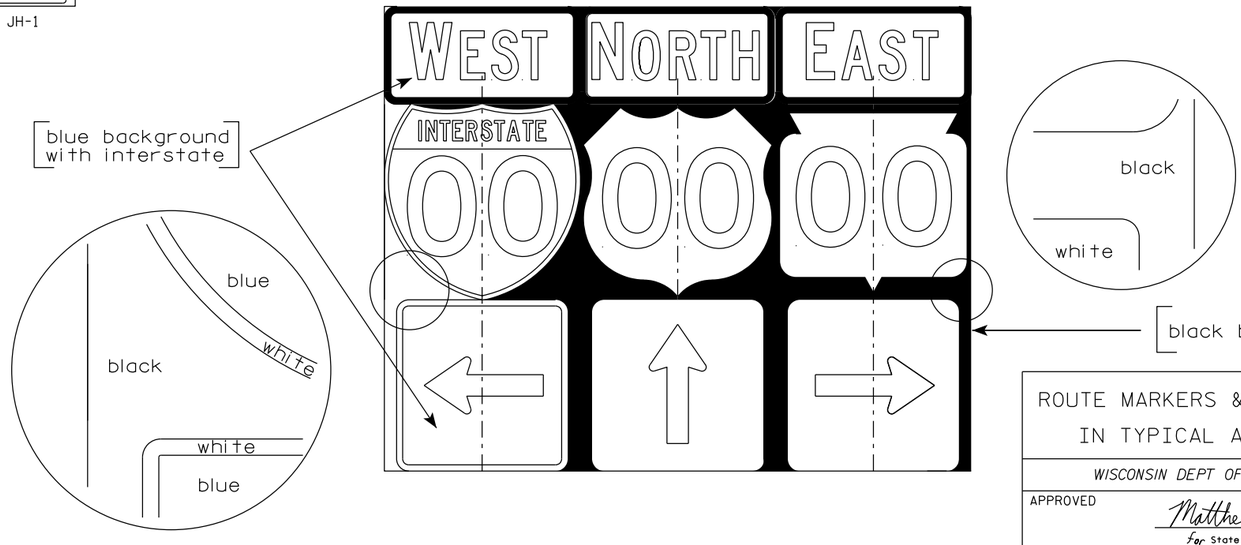

ROUTE MARKERS & COMPONENTS IN TYPICAL ASSEMBLIES

WISCONSIN DEPT OF TRANSPORTATION

APPROVED Matthew R Rauch
for State Traffic Engineer

DATE 6/7/23 PLATE NO. A2-1S.10

PROJECT NO:

SHEET NO: 134 E

URBAN AREA

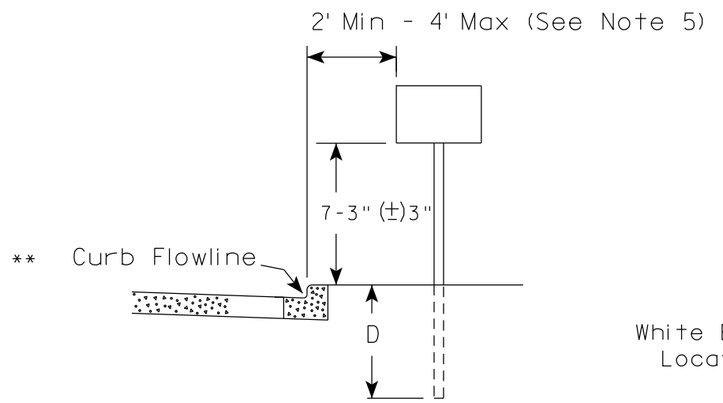

RURAL AREA (See Note 2)

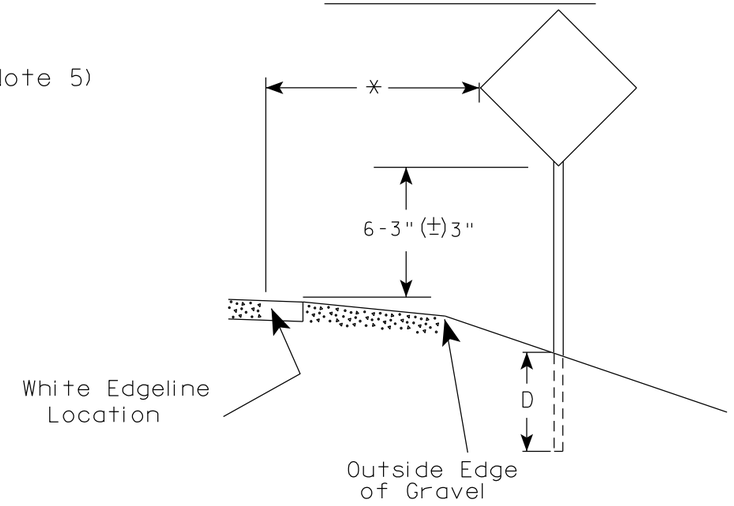

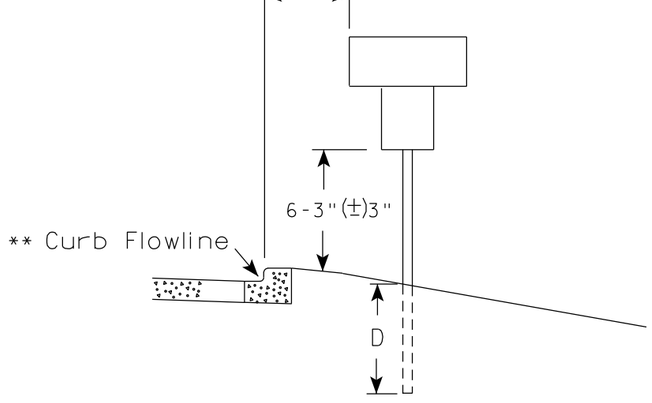

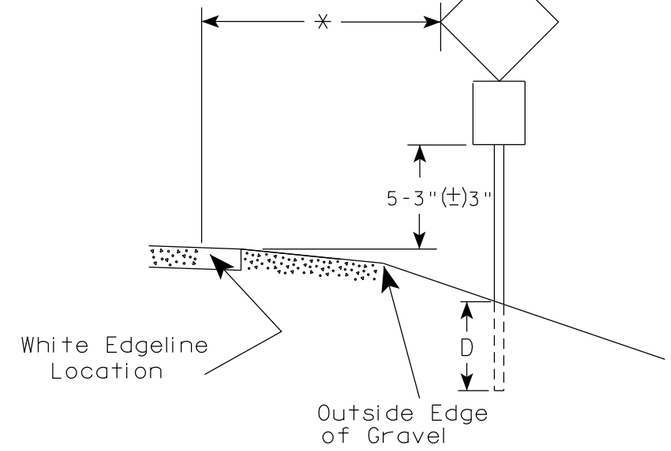

** The existence of curb and gutter does not in itself mandate the vertical clearance illustrated. That height is typically measured where there is sidewalk adjacent to the roadway or parking is permitted. In the absence of sidewalk vertical clearance is measured from the top of the curb. Offset of signs is measured from the flow line.

* 6 feet from edge of a paved shoulder or 12 feet from the edge of pavement (edge line location) or 2 feet from outside edge of gravel, whichever is greater unless directed by project engineer.

GENERAL NOTES

1. Signs wider than 4 feet or 20 sq.ft or larger, shall be mounted on multiple posts. Refer to plate A4-4.
2. If signs are mounted on or behind barrier wall, see A4-10 sign plate.
   The Double Arrow sign (W12-1D) shall be mounted at a height of 2'-3" (±) 3". The Chevron sign (W1-8), Roundabout Chevron panel (R6-4B), Enhanced Reference Markers, Clearance Markers (W5-52), Mile Markers (D10 series), In Road Object Markers (W5-54) & End of Road Markers (W5-56) shall be mounted at a height of 4'-3" (±) 3".
3. For expressways and freeways, mounting height is 7'- 3" (±) 3" or 6'-3" (±) 3" depending upon existence of a sub-sign.
4. Minimum mounting height for signs mounted on traffic signal poles is 5'- 3" (±) 3".
5. Offset distance shall be consistent with existing signs or consistent throughout length of project.
6. Folding signs shall be mounted at a height of 5'-3" (±) 3" or as directd by the Engineer.

POST EMBEDMENT DEPTH

Area of Sign Installation (Sq. Ft.)	D (Min)
20 or Less	4'
Greater than 20	5'

TYPICAL INSTALLATION OF PERMANENT TYPE II SIGNS ON SINGLE POSTS

WISCONSIN DEPT OF TRANSPORTATION

APPROVED Matthew R Rauch
for State Traffic Engineer

DATE 12/6/23 PLATE NO. A4-3.23

PROJECT NO:	HWY:	COUNTY:		SHEET NO: 135	E

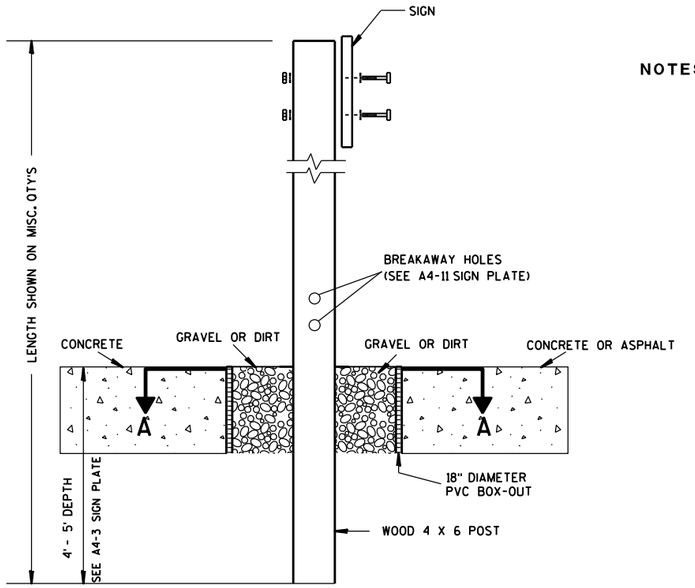

ELEVATION VIEW

DETAIL OF WOOD 4 X 6 SIGN POST IN BOX-OUT

NOTES:
1. ALL MATERIAL TO BE APPROVED BY ENGINEER PRIOR TO INSTALLATION
2. SEE SIGN PLATE A4-8 FOR SIGN HARDWARE REQUIREMENTS
3. 18 INCH X 18 INCH SQUARE BOX-OUTS MAY BE USED FOR INSTALLATIONS IN EXISTING CONCRETE OR ASPHALT LOCATIONS.

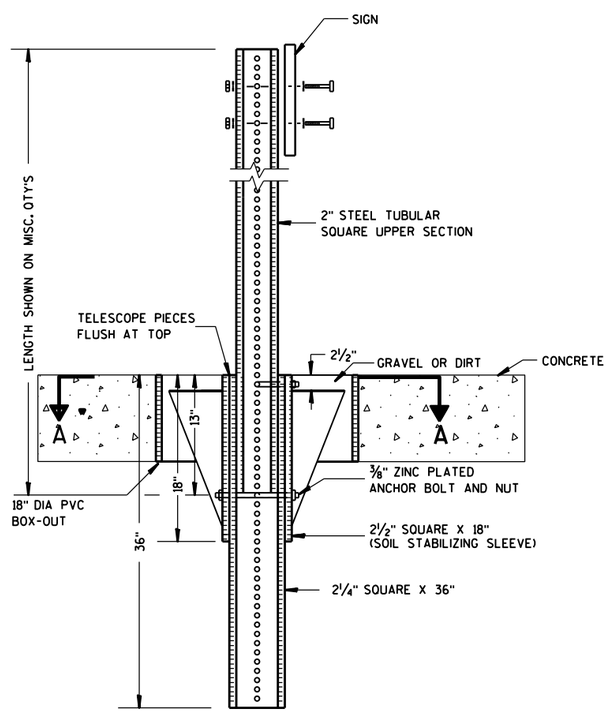

ELEVATION VIEW

DETAIL OF STEEL 2 X 2 SIGN POST IN BOX-OUT

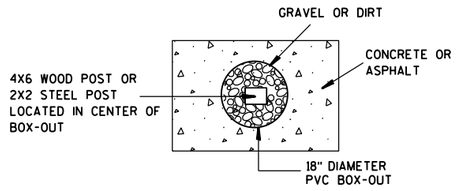

PLAN VIEW

FOR NEW CONCRETE/ASPHALT INSTALLATIONS

SIGN POST BOX-OUTS A4-3B

WISCONSIN DEPT OF TRANSPORTATION

APPROVED Matthew R Rauch
for State Traffic Engineer

DATE 1/27/14 PLATE NO. A4-3B.1

PROJECT NO:	HWY:	COUNTY:		SHEET NO:	E

FILE NAME : C:\CAEFiles\Projects\tr_stdplate\A43B.DGN PLOT DATE : 27-JAN-2014 09:48 PLOT BY : mscsja PLOT NAME : PLOT SCALE : 13.659812:1.000000 WISDOT/CADDS SHEET 42

URBAN AREA

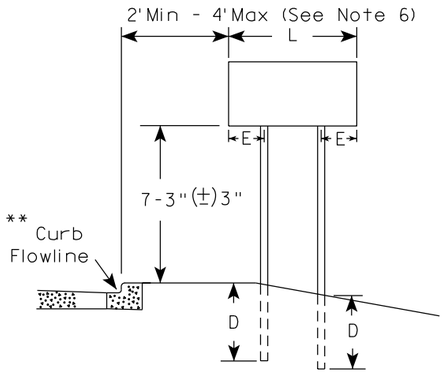

RURAL AREA (See Note 3)

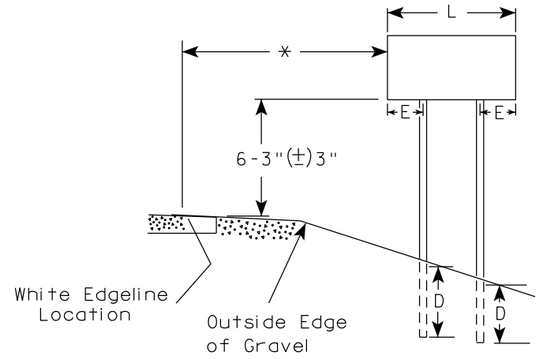

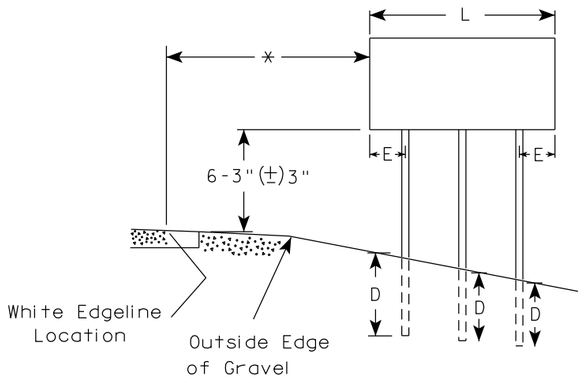

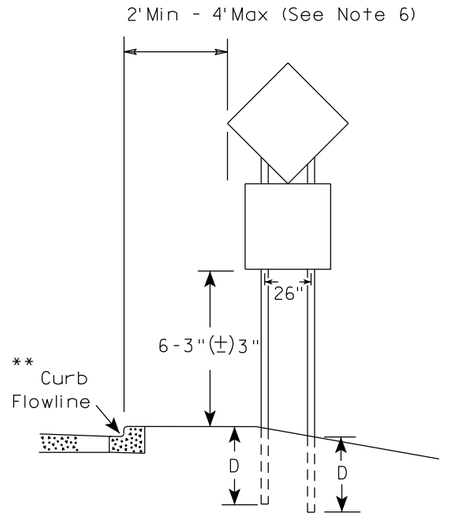

48" DIAMOND WARNING SIGN

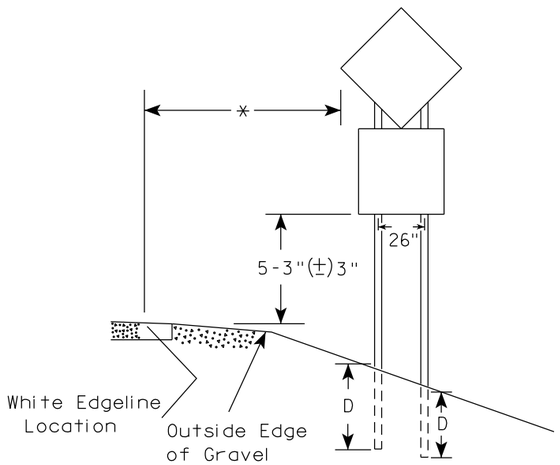

48" DIAMOND WARNING SIGN

SIGN SHAPE OTHER THAN DIAMOND (TWO POSTS REQUIRED)		
	L	E
***	Greater than 48" Less than 60"	12"
	60" to 108"	L/5

SIGN SHAPE OTHER THAN DIAMOND (THREE POSTS REQUIRED)	
L	E
Greater than 108" to 144"	12"

GENERAL NOTES

1. For 3 or 4 post installations, individual post spacing shall be greater than 3'-6".
2. See tables below for required number of posts.
3. For expressways and freeways, mounting height is 7'-3" (±) 3" or 6'-3" (±) 3" depending upon existence of sub-sign.
4. The (±) tolerance for mounting height is 3 inches.
5. J-Assemblies are considered to be one sign for mounting height.
6. Offset distance shall be consistent with existing signs or consistent throughout length of project.
7. Folding signs shall be mounted at a height of 5'-3" (±) 3" or as directed by the engineer.
8. The Double Arrow sign (W12-1) shall be mounted at a height of 2'-3" (±) 3". The Chevron sign (W1-8), Roundabout Chevron panel (R6-4B), Clearance Markers (W5-52), Mile Markers (D10 series), In Road Object Markers (W5-54) & End of Road Markers (W5-56) shall be mounted at a height of 4"-3" (±) 3".

* 6 feet from edge of a paved shoulder or 12 feet from the edge of pavement (edge line location) or 2 feet from outside edge of gravel, whichever is greater unless directed by project engineer.

** The existence of curb and gutter does not in itself mandate the vertical clearance illustrated. That height is typically measured where there is sidewalk adjacent to the roadway or parking is permitted. In the absence of sidewalk vertical clearance is measured from the top of the curb. Offset of signs is measured from the flow line.

*** See A4-3 sign plate for signs 4' or less in width and less than 20 S.F. in area.

POST EMBEDMENT DEPTH

Area of Sign Installation (Sq. Ft.)	D (Min)
20 or Less	4'
Greater than 20	5'

TYPICAL INSTALLATION OF TYPE II SIGNS ON MULTIPLE POSTS

WISCONSIN DEPT OF TRANSPORTATION

APPROVED Matthew R Rauch
for State Traffic Engineer

DATE 12/6/23 PLATE NO. A4-4.16

PROJECT NO:	HWY:	COUNTY:		SHEET NO: 137	E

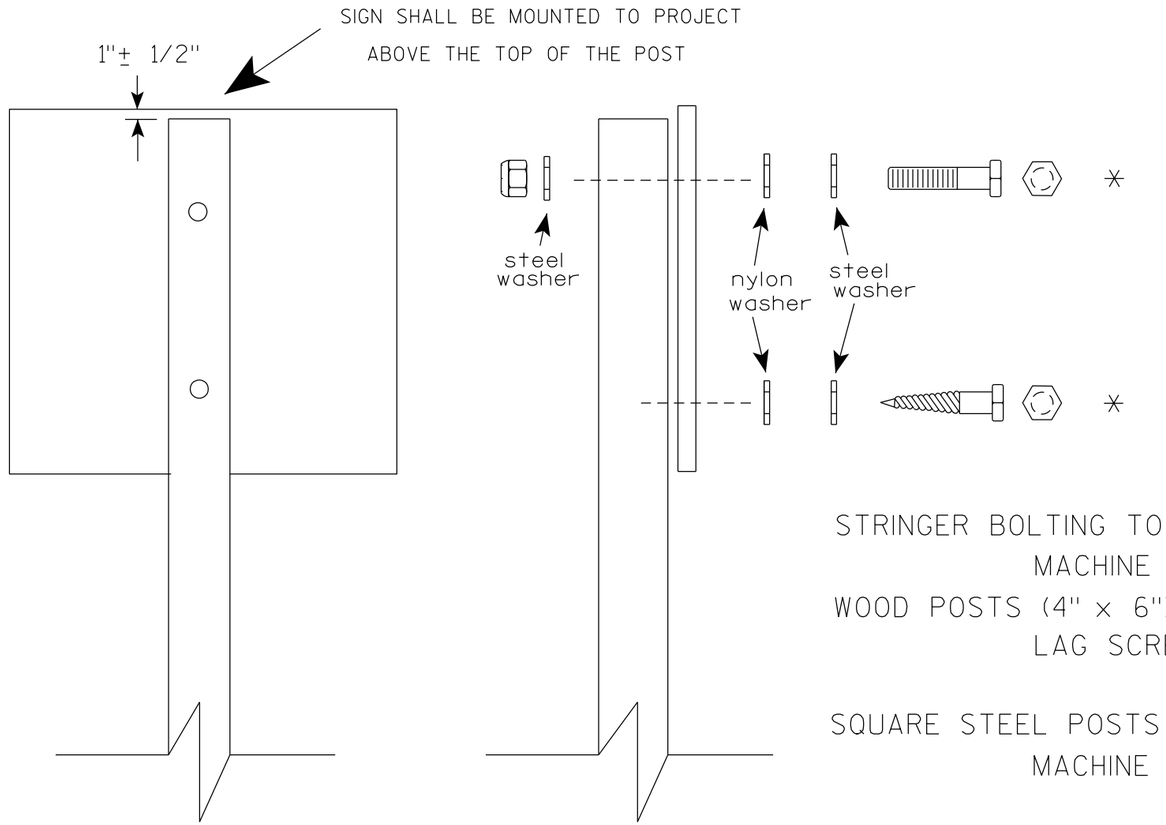

Nuts, bolts and lags used for mounting signs shall have hexagonal heads and shall be either :

a. Hot dip galvanized in accordance with ASTM Designation: A 153, Class D, or SC 3

b. Electro-galvanized in accordance with ASTM Designation : B 633, TYPE III, SC 3.

Threads on bolts and nuts shall be manufactured with sufficient allowance for the cadmium plate or galvanized coating to permit the nuts to run freely on the bolts.

STRINGER BOLTING TO ALUMINUM SIGNS (SEE SIGN PLATE A4-18)

MACHINE BOLTS - 5/16" X 1-3/4" Length w/ lock nuts

WOOD POSTS (4" x 6")

LAG SCREWS - 3/8" X 3" (NO STRINGERS ON BACK OF SIGN)
3/8" X 4" (STRINGERS ON BACK OF SIGN)

SQUARE STEEL POSTS (2" x 2")

MACHINE BOLTS - 3/8" X 3-1/4" Length w/ nuts (NO STRINGER ON BACK OF SIGN)
3/8" X 5" Length w/ nuts (STRINGERS ON BACK OF SIGN)

RIVETS - 9/32" (6605-9-6) BULB-TITE, TRI-FOLD, ALUMINUM BODY/MANDREL
O.D. FLANGE .720-.765 INCH, GRIP RANGE .042-.375 INCH

WASHERS (ALL POSTS) -

1-1/4" O.D. X 3/8" I.D. X 1/16" STEEL
1-1/4" O.D. X 3/8" I.D. X .080 NYLON

* Two different fastening systems are shown for illustration purposes. On any individual sign, either one or the other system shall be used. Actual number of fasteners per sign varies with the sign area, but normally there are two. For a single post installation, all signs greater than 9 sq. ft. require the use of 3 fasteners.

ATTACHMENT OF SIGNS TO POSTS

WISCONSIN DEPT OF TRANSPORTATION

APPROVED Matthew R Rauch
for State Traffic Engineer

DATE 4/1/2020 PLATE NO. A4-8.9

TELESCOPIC TUBING ANCHORS
TWO PIECE SYSTEM

2 1/4 " SQUARE
12 GAUGE
PERFORATED
GALVANIZED FINISH

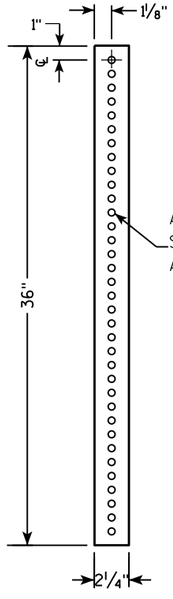

2 1/2 " SQUARE
12 GAUGE
OMNI-DIRECTIONAL
PERFORATED
SOIL STABILIZING SLEEVE
GALVANIZED FINISH

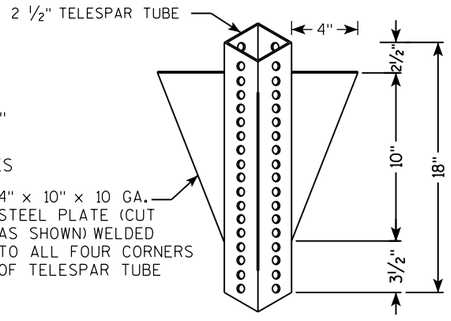

DETAIL OF TUBULAR STEEL SIGN POST
(IN POURED CONCRETE OR ASPHALT)

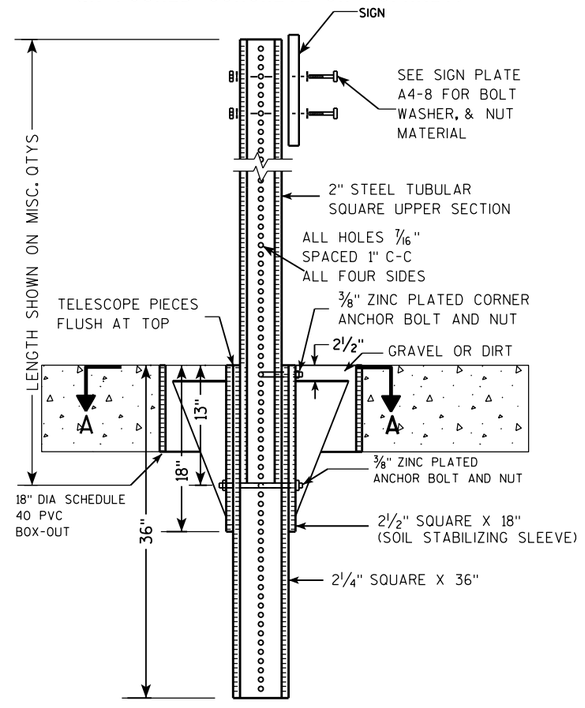

DETAIL OF TUBULAR STEEL SIGN POST
(IN LOCATIONS OTHER THAN POURED CONCRETE OR ASPHALT)

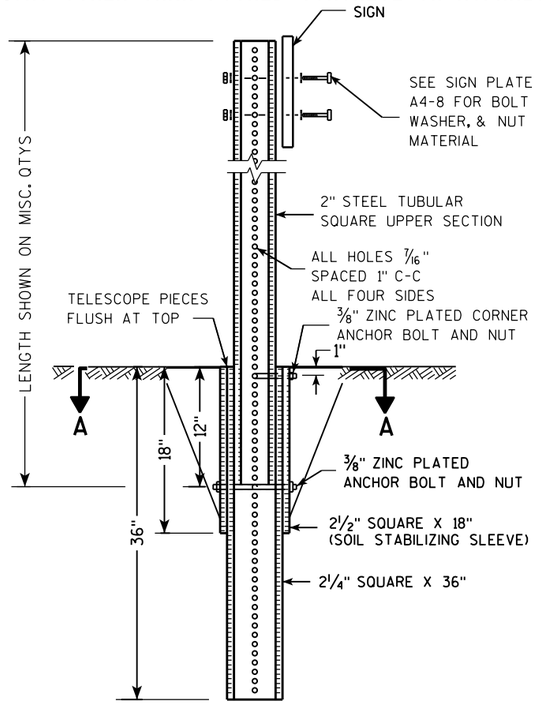

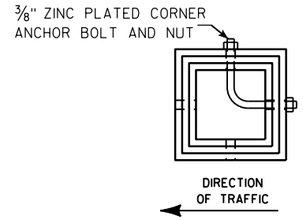

SECTION A-A

Area of Sign Installation (Sq. Ft.)	Number of Required Posts
9 or less	1
Greater than 9 less than or equal to 18	2
Greater than 18 less than or equal to 27	3

Signs wider than 3 feet or larger than 9 sq. ft shall be mounted on multiple posts (see above table).

TUBULAR STEEL
SIGN POST
A4-9

WISCONSIN DEPT OF TRANSPORTATION

APPROVED Matthew R Rauch
for State Traffic Engineer

DATE 2/05/15 PLATE A4-9.9

PROJECT NO:	HWY:	COUNTY:		SHEET NO:	E

FILE NAME : C:\CAEFiles\Projects\tr_stdplate\A49.DGN PLOT DATE : 05-FEB-2015 17:09 PLOT BY : mscsja PLOT NAME : PLOT SCALE : 13.659812:1.000000 WISDOT/CADDS SHEET 42

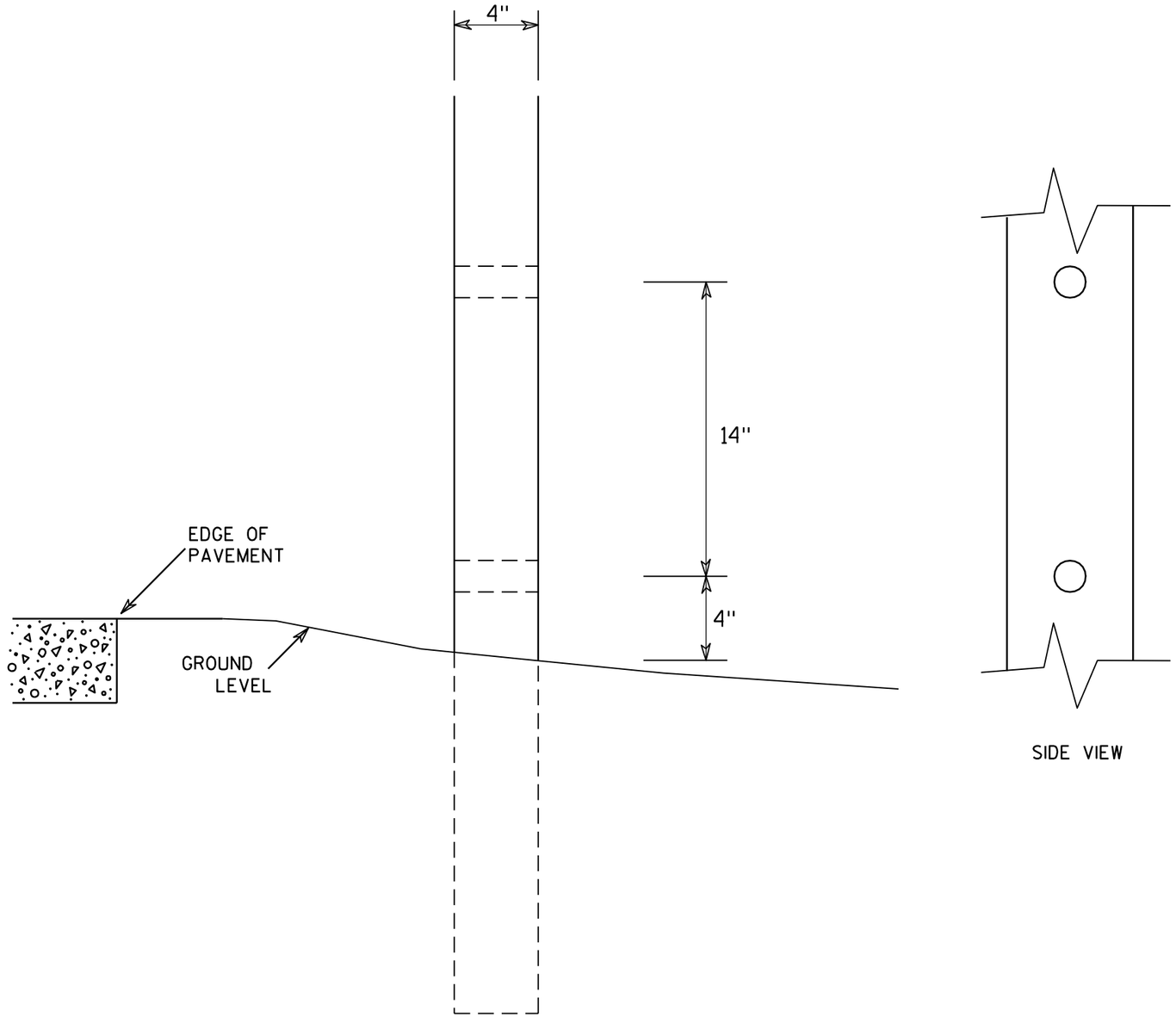

SIDE VIEW

GENERAL NOTES

1. All 4 x 6 Wood Posts shall be modified by having two 1½" diameter holes drilled perpendicular to the roadway centerline.

4 X 6 WOOD POST MODIFICATIONS

WISCONSIN DEPT OF TRANSPORTATION

APPROVED Chester J Spang for State Traffic Engineer

DATE 3/27/97 PLATE NO. A4-11.2

PROJECT NO:	HWY:	COUNTY:		SHEET NO: 140	E

BANDING

SINGLE SIGN

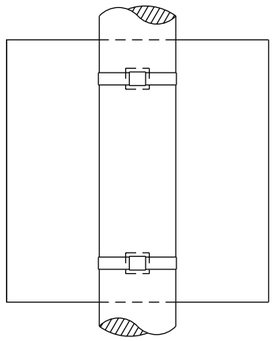

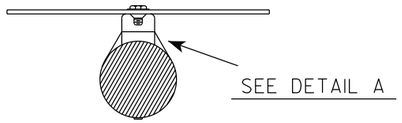

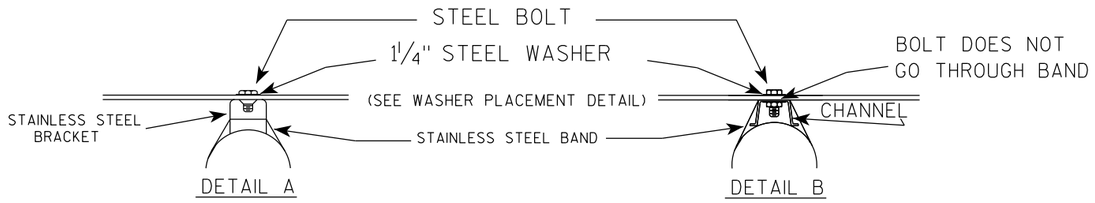

GENERAL NOTES

1. Any sign over 3 feet in width shall use the V-Block banding method. See A5-10 standard plate.
2. Signs 3 feet or greater in height shall have three bracket bands installed. Signs less than 3 feet in height shall have two bracket bands installed.
3. Banding and assembly bracket shall be stainless steel. All bands shall be ¾" in width and 0.025" thickness.
4. ALL SIGN MOUNTING BOLTS AND WASHERS SHALL BE EITHER:
   a. Hot dip or mechanically galvanized in accordance with ASTM Designation: A 153, Class D
   b. Electro-galvanized in accordance with ASTM designation: B 633, Type III, SC 3

"J" ASSEMBLY

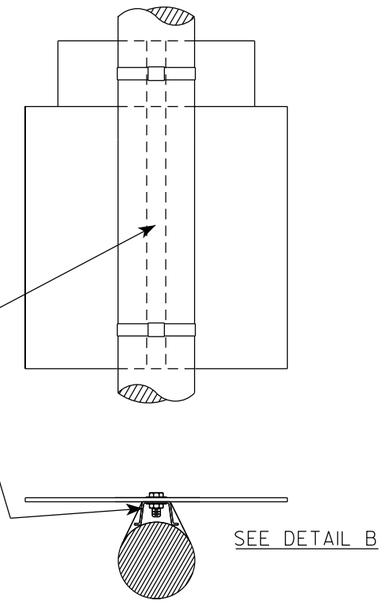

WASHER PLACEMENT

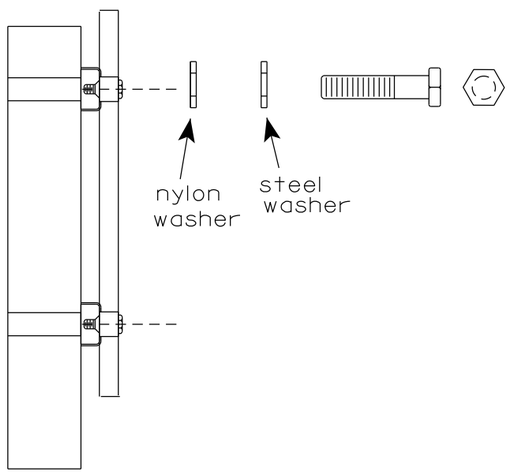

WASHERS (ALL POSTS) -
1-1/4" O.D. X ⅜" I.D. X 1/16" STEEL
1-1/4" O.D. X ⅜" I.D. X .080 NYLON
FOR ALL TYPE H SIGNS

STANDARD SIGN
SIGN BANDING DETAILS

WISCONSIN DEPT OF TRANSPORTATION

APPROVED Matthew R Rauch
for State Traffic Engineer

DATE 6/10/19 PLATE NO. A5-9.4

PROJECT NO:	HWY:	COUNTY:		SHEET NO: 141	E

FILE NAME : C:\CAEfiles\Projects\tr_stdplate\A59.dgn PLOT DATE : 10-JUN 2019 4:10 PLOT BY : mscj9h PLOT NAME : PLOT SCALE : $$.....plotscale.....$$ WISDOT/CADDS SHEET 42

7

7

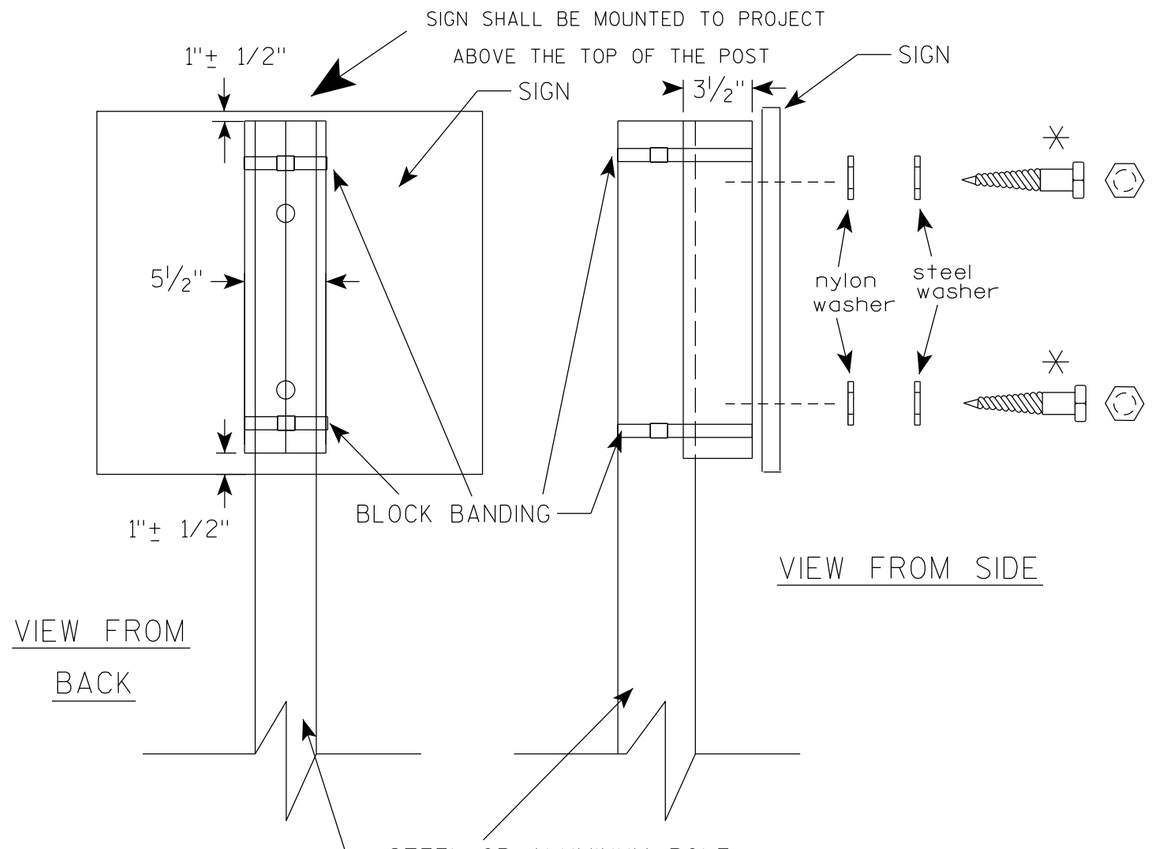

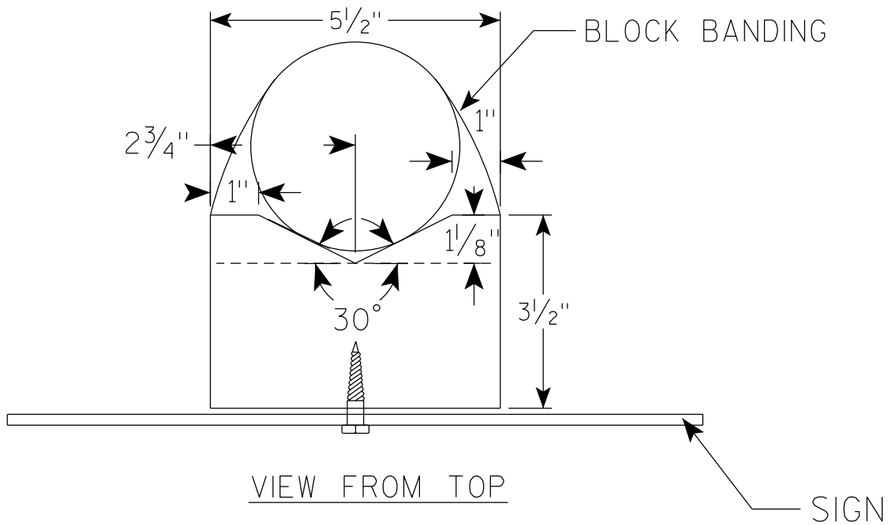

GENERAL NOTES

1. WOOD 4"X6" POST MATERIAL SHALL CONFORM TO 507.2.2 OF THE WisDOT STANDARD SPECIFICATIONS
2. BLOCK BANDING AND CLIPS SHALL BE STAINLESS STEEL, ¾" WIDTH AND 0.025" THICKNESS
3. SIGNS 3' OR GREATER IN HEIGHT SHALL UTILIZE 3 BLOCK BANDS. SIGNS UNDER 3' IN HEIGHT SHALL UTILIZE 2 BLOCK BANDS
4. ACTUAL NUMBER OF FASTENERS PER SIGN VARIES WITH THE SIGN AREA, BUT NORNALLY THERE ARE TWO. FOR SIGNS GREATER THAN 9 S.F. 3 FASTENERS SHALL BE USED.
5. ALL SIGN MOUNTING BOLTS AND WASHERS SHALL BE EITHER:
   a. Hot dip or mechanically galvanized in accordance with ASTM Designation: A 153, Class D
   b. Electro-galvanized in accordance with ASTM Designation : B 633, TYPE III, SC 3
6. ALL BOLTS SHALL HAVE HEXAGONAL HEADS.
7. STEEL WASHERS SHALL BE 1¼" O.D. X ⅜" I.D. X 1/16"
8. NYLON WASHERS SHALL BE 1¼" O.D. X ⅜" I.D. X .080 FOR TYPE H OR TYPE F FACE SIGN

✳ LAG BOLTS SHALL BE ⅜" X 2½"

BLOCK BANDING DETAIL (V-BLOCK OPTION)

WISCONSIN DEPT OF TRANSPORTATION

APPROVED Matthew R Rauch
for State Traffic Engineer

DATE 4/19/2022 PLATE NO. A5-10.3

PROJECT NO:

SHEET NO: 142 E

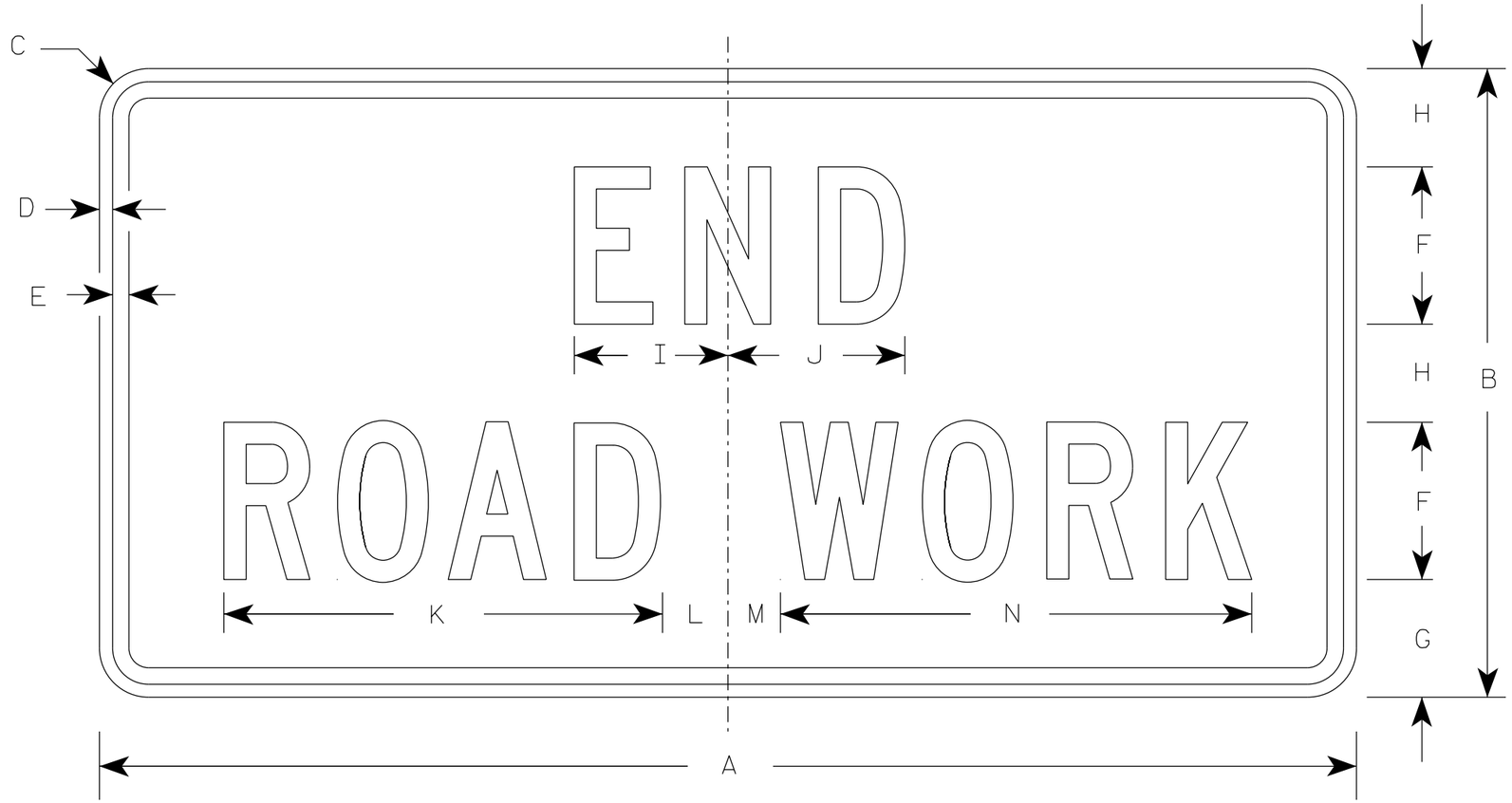

G20-2A

NOTES

1. Sign is Type II - Type F Reflective
2. Color:
   Background - Orange
   Message - Black
3. Message Series - C
4. Corners may be square or rounded when base material is plywood but borders shall be rounded as shown. When base material is metal, the corners and borders shall be rounded.

SIZE	A	B	C	D	E	F	G	H	I	J	K	L	M	N	O	P	Q	R	S	T	U	V	W	X	Y	Z	Area sq. ft.
1	36	18	1 1/2	3/8	1/2	4	3 3/4	2 1/2	4 1/8	4 1/8	11 1/8	2	1	12 1/8													4.5
2	48	24	1 7/8	1/2	5/8	6	4 1/2	3 3/4	5 7/8	6 3/4	16 3/4	2 1/2	1 3/4	18 1/2													8.0
2M	48	24	1 7/8	1/2	5/8	6	4 1/2	3 3/4	5 7/8	6 3/4	16 3/4	2 1/2	1 3/4	18 1/2													8.0
3	48	24	1 7/8	1/2	5/8	6	4 1/2	3 3/4	5 7/8	6 3/4	16 3/4	2 1/2	1 3/4	18 1/2													8.0
4	48	24	1 7/8	1/2	5/8	6	4 1/2	3 3/4	5 7/8	6 3/4	16 3/4	2 1/2	1 3/4	18 1/2													8.0
5	48	24	1 7/8	1/2	5/8	6	4 1/2	3 3/4	5 7/8	6 3/4	16 3/4	2 1/2	1 3/4	18 1/2													8.0

STANDARD SIGN

G20-2A

WISCONSIN DEPT OF TRANSPORTATION

APPROVED Matthew R Rauch
for State Traffic Engineer

DATE 1/26/2023 PLATE NO. G20-2A.10

PROJECT NO: | HWY: | COUNTY: | SHEET NO: 143 E

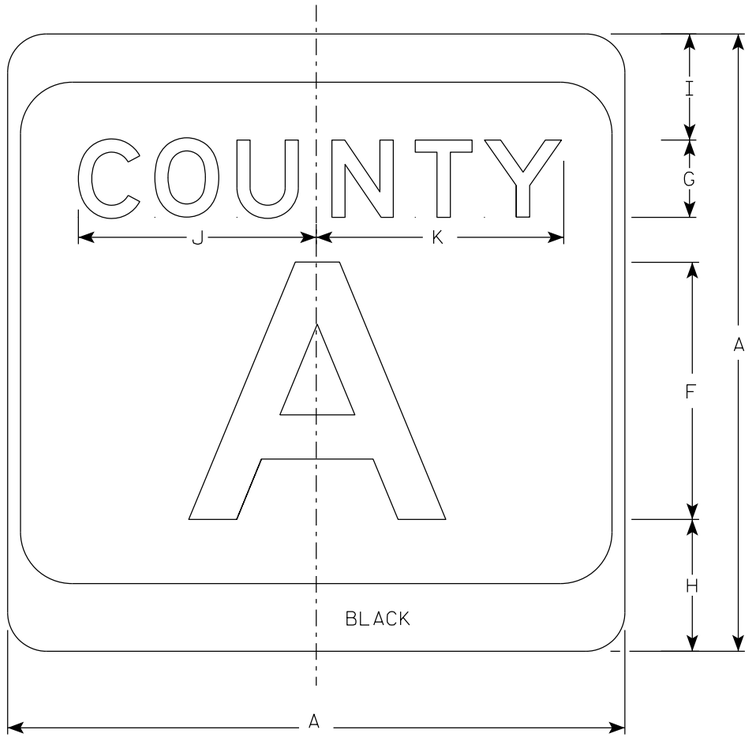

M1-5A

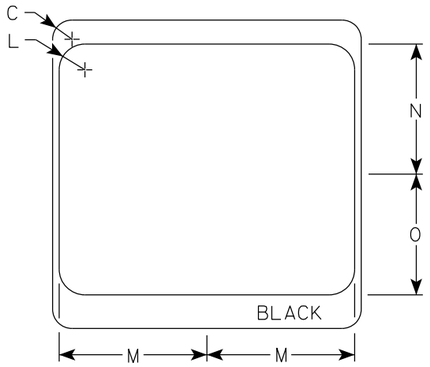

NOTES

1. Sign is Type II - Type H Reflective
2. Color:
   Background - White & Black
   Message - Black
3. Message Series - see Note 4
4. Message Series E for 1 letter.
   Message Series D for 2 letters unless message is too big then Series C.
   Message Series C for 3 letters unless message is too big then Series B.
5. Substitute appropriate letters & optically center to achieve proper balance.

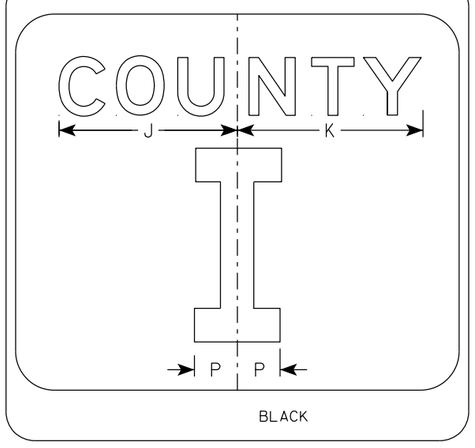

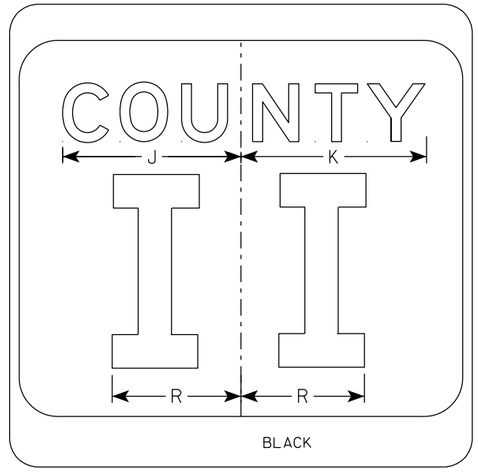

SIZE	A	B	C	D	E	F	G	H	I	J	K	L	M	N	O	P	Q	R	S	T	U	V	W	X	Y	Z	Area sq. ft.
1																											
2	24		1 1/2			10	3	5 1/8	4 1/8	9 1/4	9 5/8	2	11 1/2	10 1/8	9 3/8	2 1/4		6 5/8									4.0
2M	24		1 1/2			10	3	5 1/8	4 1/8	9 1/4	9 5/8	2	11 1/2	10 1/8	9 3/8	2 1/4		6 5/8									4.0
3	36		2 1/4			16	4	7 5/8	5 5/8	12 1/4	12 7/8	3	17 1/8	15 1/4	14	3 3/8		10									9.0
4	36		2 1/4			16	4	7 5/8	5 5/8	12 1/4	12 7/8	3	17 1/8	15 1/4	14	3 3/8		10									9.0
5	36		2 1/4			16	4	7 5/8	5 5/8	12 1/4	12 7/8	3	17 1/8	15 1/4	14	3 3/8		10									9.0

CTH MARKER
M1-5A FOR ASSEMBLIES

WISCONSIN DEPT OF TRANSPORTATION

APPROVED Matthew R Rauch
for State Traffic Engineer

DATE 11/8/2022 PLATE NO. M1-5A.9

PROJECT NO:	HWY:	COUNTY:		SHEET NO:	E

FILE NAME : C:\CAEfiles\Projects\tr_stdplate\M15A.dgn PLOT DATE : 8-NOV 2022 8:26 PLOT BY : dotc4c PLOT NAME : PLOT SCALE : $$.....plotscale.....$$ WISDOT/CADDS SHEET 42

7

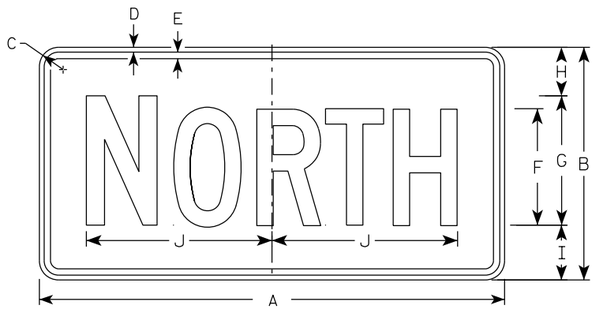

M3-1
MM3-1
MP3-1

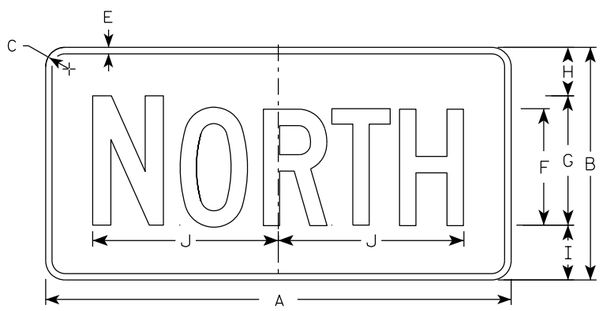

MB3-1
MK3-1
MN3-1

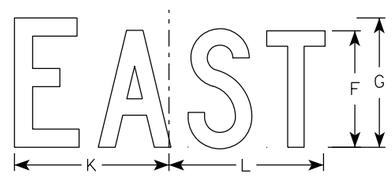

M3-2
MM3-2
MP3-2

MB3-2
MK3-2
MN3-2

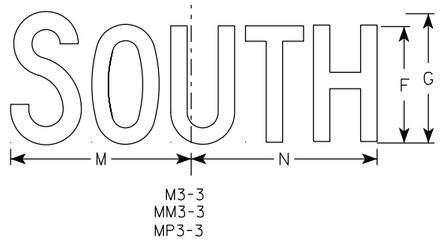

M3-3
MM3-3
MP3-3

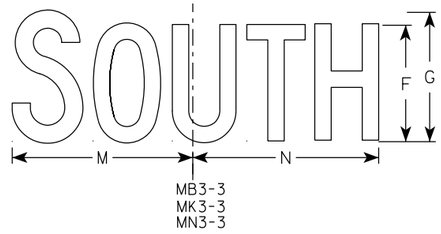

MB3-3
MK3-3
MN3-3

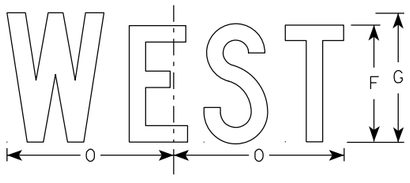

M3-4
MM3-4
MP3-4

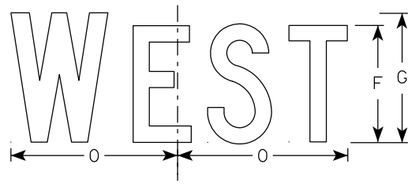

MB3-4
MK3-4
MN3-4

NOTES

1. All Signs Type II - Type H Reflective
2. Color:
   Background - See note 5
   Message - See note 5
3. Message Series - C
4. Corners may be square or rounded when base material is plywood but borders shall be rounded as shown. When base material is metal, the corners and borders shall be rounded.
5. M3-1 thru M3-4 Background - White
   Message - Black
   MB3-1 thru MB3-4 Background - Blue
   Message - White
   MK3-1 thru MK3-4 Background - Green
   Message - White
   MM3-1 thru MM3-4 Background - White
   Message - Green
   MN3-1 thru MN3-4 Background - Brown
   Message - White
   MP3-1 thru MP3-4 Background - White
   Message - Blue
6. Note the first letter of each direction is larger than the remainder of the message.

SIZE	A	B	C	D	E	F	G	H	I	J	K	L	M	N	O	P	Q	R	S	T	U	V	W	X	Y	Z	Area sq. ft.
1																											
2S	24	12	1 1/2	3/8	3/8	6	7	2 1/4	2 3/4	10 1/4	7 7/8	8 3/8	10 1/4	9 3/4	8 3/4												2.00
2M	24	12	1 1/2	3/8	3/8	6	7	2 1/4	2 3/4	10 1/4	7 7/8	8 3/8	10 1/4	9 3/4	8 3/4												2.00
3	36	18	1 1/2	3/8	1/2	9	10	3 3/4	4 1/4	14 3/8	12	12 1/8	14	14 1/8	13												4.5
4	36	18	1 1/2	3/8	1/2	9	10	3 3/4	4 1/4	14 3/8	12	12 1/8	14	14 1/8	13												4.5
5	36	18	1 1/2	3/8	1/2	9	10	3 3/4	4 1/4	14 3/8	12	12 1/8	14	14 1/8	13												4.5

STANDARD SIGNS
M3-1 THRU M3-4
SERIES

WISCONSIN DEPT OF TRANSPORTATION

APPROVED Matthew R Rauch
For State Traffic Engineer

DATE 2/8/2023 PLATE NO. M3-1.15

PROJECT NO: | HWY: | COUNTY: | SHEET NO: 145 | E

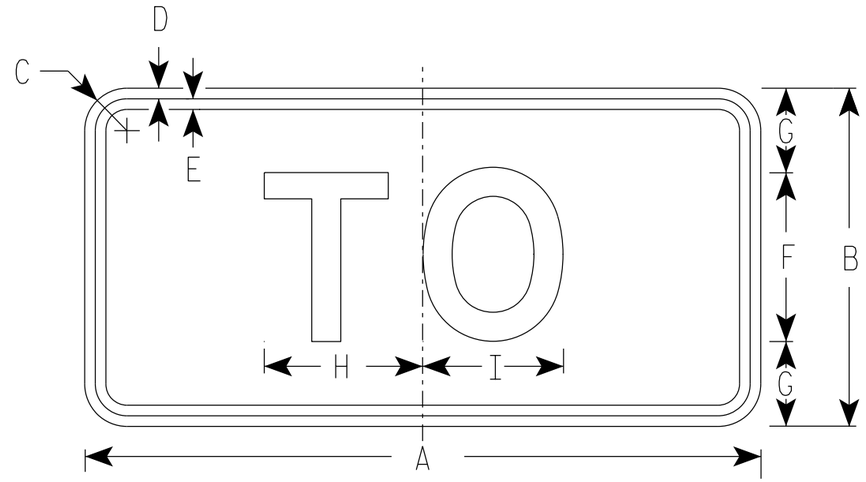

M4-5
MM4-5
MP4-5
M04-5

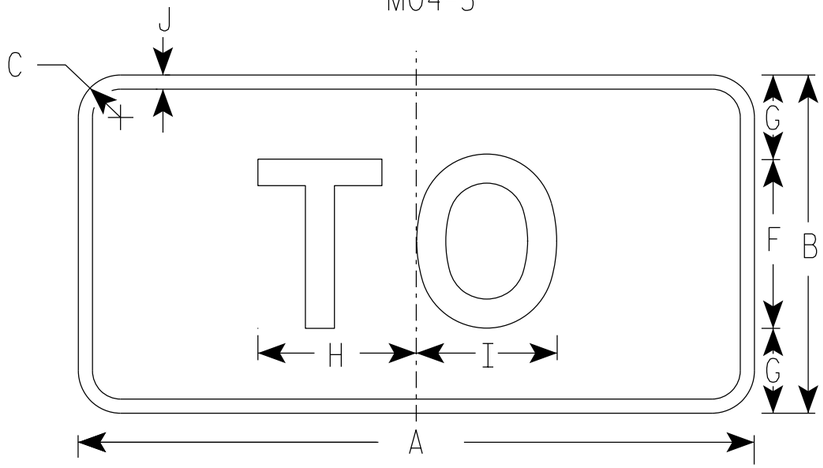

MB4-5
MK4-5
MN4-5

NOTES

1. Sign is Type II - Type H Reflective
2. Color:
   Background - See note 5
   Message - See note 5
3. Message Series - E
4. Corners may be square or rounded when base material is plywood but borders shall be rounded as shown. When base material is metal, the corners and borders shall be rounded.
5. M4-5 Background - White
   Message - Black

   MB4-5 Background - Blue
   Message - White

   MK4-5 Background - Green
   Message - White

   MM4-5 Background - White
   Message - Green

   MN4-5 Background - Brown
   Message - White

   MP4-5 Background - White
   Message - Blue

   M04-5 Background - Orange Type F Reflective
   Message - Black

SIZE	A	B	C	D	E	F	G	H	I	J	K	L	M	N	O	P	Q	R	S	T	U	V	W	X	Y	Z	Area sq. ft.
1																											
2S	24	12	1 1/2	3/8	3/8	6	3	5 3/8	5 1/4	1/2																	2.00
2M	24	12	1 1/2	3/8	3/8	6	3	5 3/8	5 1/4	1/2																	2.00
3	36	18	1 1/2	3/8	1/2	9	4 1/2	8 1/4	8 3/8	1/2																	4.5
4	36	18	1 1/2	3/8	1/2	9	4 1/2	8 1/4	8 3/8	1/2																	4.5
5	36	18	1 1/2	3/8	1/2	9	4 1/2	8 1/4	8 3/8	1/2																	4.5

STANDARD SIGN
M4-5

WISCONSIN DEPT OF TRANSPORTATION

APPROVED Matthew R Rauch
for State Traffic Engineer

DATE 2/8/2023 PLATE NO. M4-5.11

PROJECT NO: | HWY: | COUNTY: | SHEET NO: 146 E

7

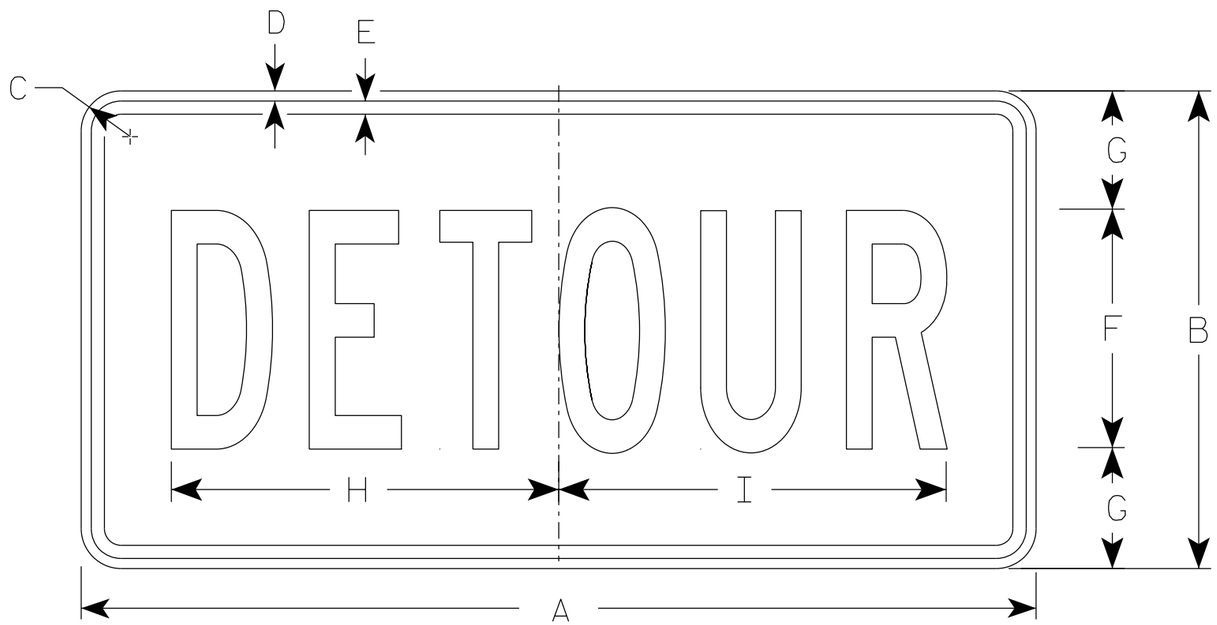

M4-8

NOTES

1. Sign is Type II - Type F Reflective
2. Color:
   Background - Orange
   Message - Black
3. Message Series - B
4. Corners may be square or rounded when base material is plywood but borders shall be rounded as shown. When base material is metal, the corners and borders shall be rounded.

SIZE	A	B	C	D	E	F	G	H	I	J	K	L	M	N	O	P	Q	R	S	T	U	V	W	X	Y	Z	Area sq. ft.
1																											
2	24	12	1 1/2	3/8	3/8	6	3	10	10 1/4																		2.0
2M	24	12	1 1/2	3/8	3/8	6	3	10	10 1/4																		2.0
3	36	18	1 1/2	3/8	1/2	9	4 1/2	14 5/8	14 1/2																		4.5
4	36	18	1 1/2	3/8	1/2	9	4 1/2	14 5/8	14 1/2																		4.5
5	36	18	1 1/2	3/8	1/2	9	4 1/2	14 5/8	14 1/2																		4.5

STANDARD SIGN
M4-8

WISCONSIN DEPT OF TRANSPORTATION

APPROVED Matthew R Rauch
for State Traffic Engineer

DATE 2/9/2023 PLATE NO. M4-8.4

PROJECT NO:	HWY:	COUNTY:		SHEET NO: 147	E

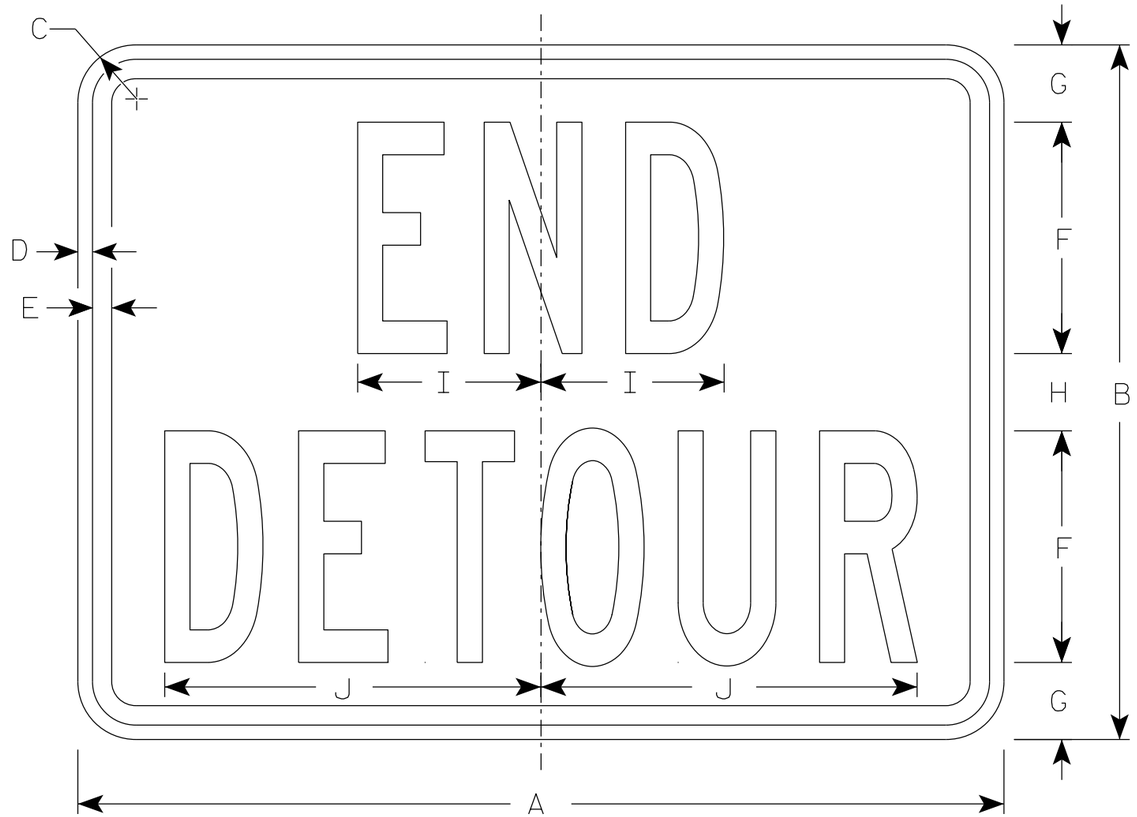

M4-8A

NOTES

1. Sign is Type II - Type F Reflective
2. Color:
   Background - Orange
   Message - Black
3. Message Series - B
4. Corners may be square or rounded when base material is plywood but borders shall be rounded as shown. When base material is metal, the corners and borders shall be rounded.

SIZE	A	B	C	D	E	F	G	H	I	J	K	L	M	N	O	P	Q	R	S	T	U	V	W	X	Y	Z	Area sq. ft.
1																											
2	24	18	1 ½	⅜	½	6	2	2	4 ¾	9 ¾																	3.0
2M	24	18	1 ½	⅜	½	6	2	2	4 ¾	9 ¾																	3.0
3	30	24	1 ½	⅜	½	8	2 ½	3	6 ¾	13																	5.0
4	30	24	1 ½	⅜	½	8	2 ½	3	6 ¾	13																	5.0
5	30	24	1 ½	⅜	½	8	2 ½	3	6 ¾	13																	5.0

STANDARD SIGN
M4-8A

WISCONSIN DEPT OF TRANSPORTATION

APPROVED Matthew R Rauch
for State Traffic Engineer

DATE 2/9/2023 PLATE NO. M4-8A.4

PROJECT NO: | HWY: | COUNTY: | SHEET NO: 148 | E

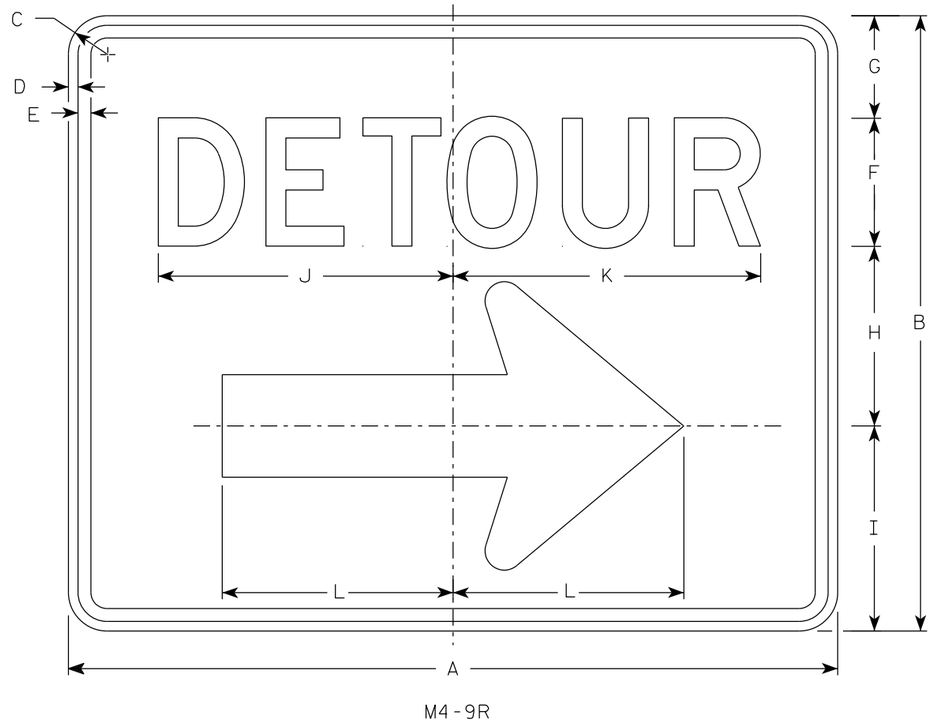

M4-9R

NOTES

1. Sign is Type II - Type F Reflective
2. Color:
   Background - Orange
   Message - Black
3. Message Series - D
4. Corners may be square or rounded when base material is plywood but borders shall be rounded as shown. When base material is metal, the corners and borders shall be rounded.
4. M4-9L is the same as M4-9R except the arrow is reversed.

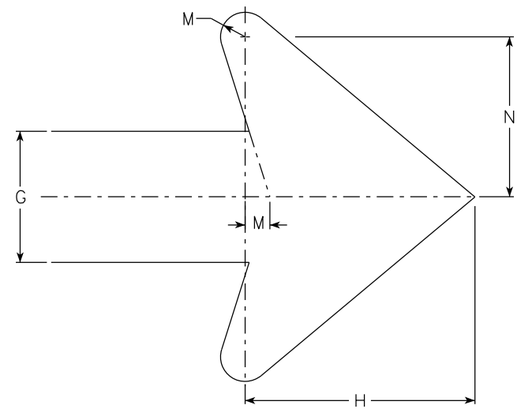

Arrow Detail

SIZE	A	B	C	D	E	F	G	H	I	J	K	L	M	N	O	P	Q	R	S	T	U	V	W	X	Y	Z	Area sq. ft.
1																											
2	30	24	1 1/2	3/8	1/2	5	4	7	8	11 1/2	12	9	3/4	4 7/8													5.00
2M	30	24	1 1/2	3/8	1/2	5	4	7	8	11 1/2	12	9	3/4	4 7/8													5.00
3	30	24	1 1/2	3/8	1/2	5	4	7	8	11 1/2	12	9	3/4	4 7/8													5.00
4	48	36	1 7/8	1/2	5/8	8	6	10 1/2	11 5/8	20 5/8	20 1/2	13 1/4	1 1/8	6 7/8													12.0
5	48	36	1 7/8	1/2	5/8	8	6	10 1/2	11 5/8	20 5/8	20 1/2	13 1/4	1 1/8	6 7/8													12.0

STANDARD SIGN
M4-9 R & L

WISCONSIN DEPT OF TRANSPORTATION

APPROVED Matthew R Rauch
For State Traffic Engineer

DATE 2/9/2023 PLATE NO. M4-9R.6

PROJECT NO:	HWY:	COUNTY:		SHEET NO:	E

FILE NAME : C:\CAEfiles\Projects\tr_stdplate\M49R.dgn PLOT DATE : 21-MARCH 2023 1:40 PLOT BY : dotc4c PLOT NAME : PLOT SCALE : $$.....plotscale.....$$ WISDOT/CADDS SHEET 42

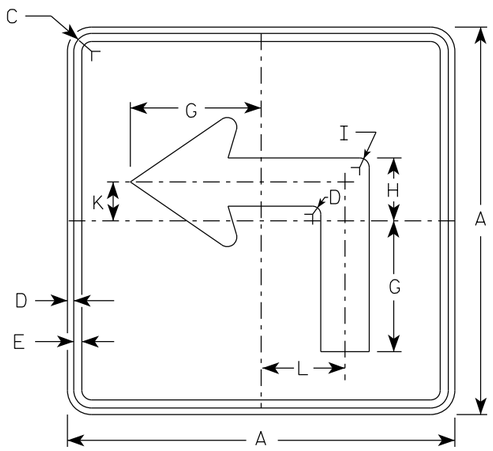

M5-1L
MM5-1L
MO5-1L
MP5-1L

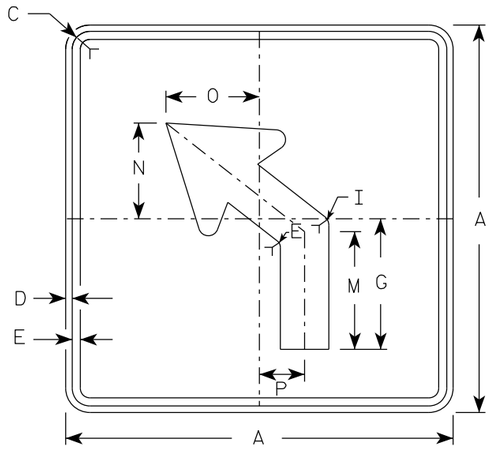

M5-2L
MM5-2L
MO5-2L
MP5-2L

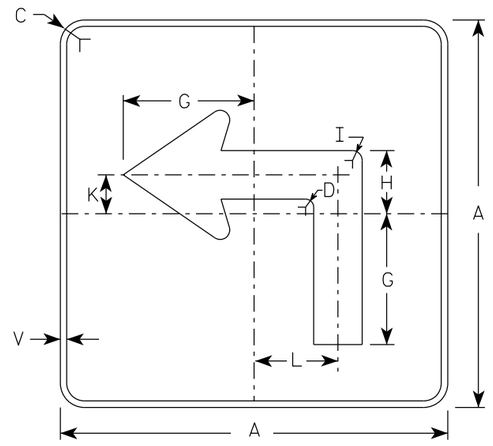

MB5-1L
MK5-1L
MN5-1L
MR5-1L

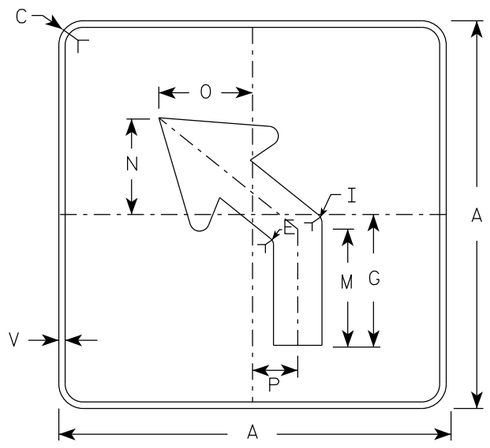

MB5-2L
MK5-2L
MN5-2L
MR5-2L

NOTES

1. Signs are Type II - Type H reflective except as shown
2. Color:
   Background - See note 4
   Message - See note 4
3. Corners may be square or rounded when base material is plywood but borders shall be rounded as shown. When base material is metal, the corners and borders shall be rounded.
4. M5-1 and M5-2 Background - White
   Message - Black
   MB5-1 and MB5-2 Background - Blue
   Message - White
   MK5-1 and MK5-2 Background - Green
   Message - White
   MM5-1 and MM5-2 Background - White
   Message - Green
   MN5-1 and MN5-2 Background - Brown
   Message - White
   MO5-1 and MO5-2 Background - Orange - Type F Reflective
   Message - Black
   MP5-1 and MP5-2 Background - White
   Message - Blue
   MR5-1 and MR5-2 Background - Brown
   Message - Yellow
5. M5-1R same as M5-1L except arrow points right.
6. M5-2R same as M5-2L except arrow tilts right.

ARROW DETAIL

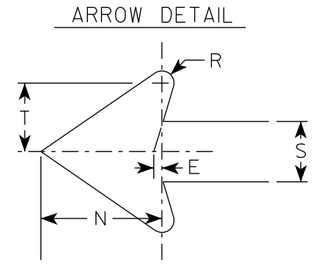

SIZE	A	B	C	D	E	F	G	H	I	J	K	L	M	N	O	P	Q	R	S	T	U	V	W	X	Y	Z	Area sq. ft.
1																											
2S	21		1 1/2	3/8	3/8		7	3 3/8	5/8		2 1/8	4 1/2	6 3/8	5 1/4	5	2 1/2		1/2	2 5/8	3		1/2					3.06
2M	21		1 1/2	3/8	3/8		7	3 3/8	5/8		2 1/8	4 1/2	6 3/8	5 1/4	5	2 1/2		1/2	2 5/8	3		1/2					3.06
3	30		1 7/8	1/2	5/8		10 1/8	4 7/8	7/8		3	6 1/2	9 1/8	7 1/2	7 1/4	3 1/2		3/4	3 3/4	4 1/4		1/2					6.25
4	30		1 7/8	1/2	5/8		10 1/8	4 7/8	7/8		3	6 1/2	9 1/8	7 1/2	7 1/4	3 1/2		3/4	3 3/4	4 1/4		1/2					6.25
5	30		1 7/8	1/2	5/8		10 1/8	4 7/8	7/8		3	6 1/2	9 1/8	7 1/2	7 1/4	3 1/2		3/4	3 3/4	4 1/4		1/2					6.25

STANDARD SIGN
M5-1 & M5-2

WISCONSIN DEPT OF TRANSPORTATION

APPROVED Matthew R Rauch
for State Traffic Engineer

DATE 2/13/2023 PLATE NO. M5-1.15

PROJECT NO: | HWY: | COUNTY: | SHEET NO: 150 | E

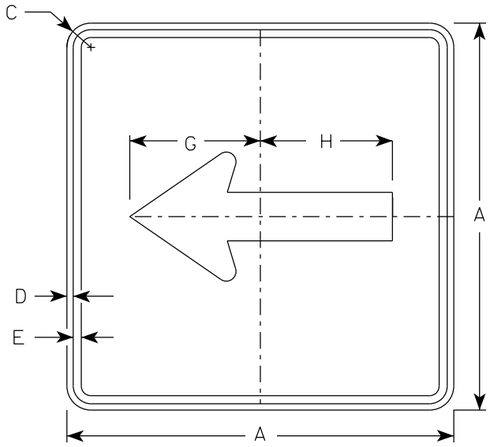

M6-1
MM6-1
MO6-1
MP6-1

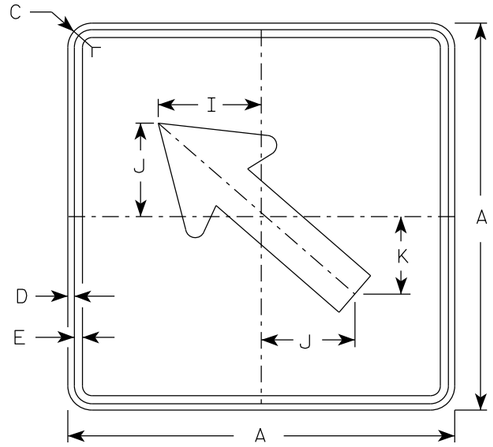

M6-2
MM6-2
MO6-2
MP6-2

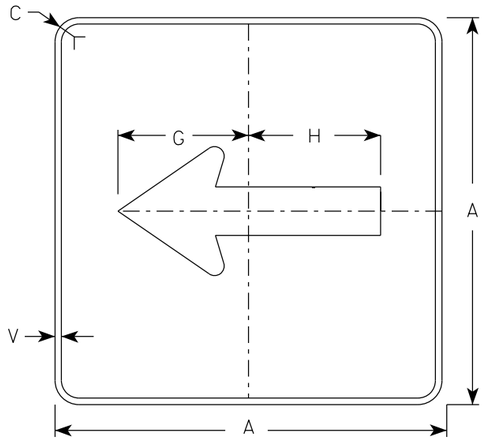

MB6-1
MK6-1
MN6-1
MR6-1

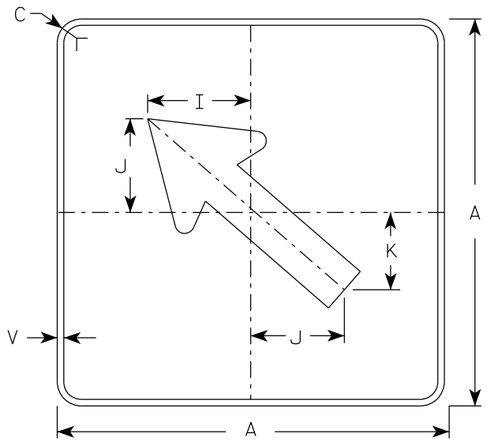

MB6-2
MK6-2
MN6-2
MR6-2

NOTES

1. Signs are Type II - Type H Reflective except as Shown
2. Color:
   Background - See note 4
   Message - See note 4
3. Corners may be square or rounded when base material is plywood but borders shall be rounded as shown. When base material is metal, the corners and borders shall be rounded.
4. M6-1 and M6-2 Background - White
   Message - Black
   MB6-1 and MB6-2 Background - Blue
   Message - White
   MK6-1 and MK6-2 Background - Green
   Message - White
   MM6-1 and MM6-2 Background - White
   Message - Green
   MN6-1 and MN6-2 Background - Brown
   Message - White
   MO6-1 and MO6-2 Background - Orange - Type F Reflective
   Message - Black
   MP6-1 and MP6-2 Background - White
   Message - Blue
   MR6-1 and MR6-2 Background - Brown
   Message - Yellow

ARROW DETAIL

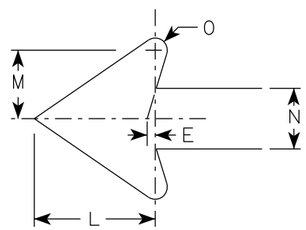

SIZE	A	B	C	D	E	F	G	H	I	J	K	L	M	N	O	P	Q	R	S	T	U	V	W	X	Y	Z	Area sq. ft.
1																											
2S	21		1 1/2	3/8	3/8		7 1/2	7 1/8	5 5/8	5	4 1/4	5 1/4	3	2 5/8	1/2							1/2					3.06
2M	21		1 1/2	3/8	3/8		7 1/2	7 1/8	5 5/8	5	4 1/4	5 1/4	3	2 5/8	1/2							1/2					3.06
3	30		1 7/8	1/2	5/8		10 3/4	10 1/4	8	7 1/4	6	7 1/2	4 1/4	3 3/4	3/4							1/2					6.25
4	30		1 7/8	1/2	5/8		10 3/4	10 1/4	8	7 1/4	6	7 1/2	4 1/4	3 3/4	3/4							1/2					6.25
5	30		1 7/8	1/2	5/8		10 3/4	10 1/4	8	7 1/4	6	7 1/2	4 1/4	3 3/4	3/4							1/2					6.25

STANDARD SIGN
M6-1 & M6-2
SERIES

WISCONSIN DEPT OF TRANSPORTATION

APPROVED Matthew R Rauch
For State Traffic Engineer

DATE 2/13/2023 PLATE NO. M6-1.16

PROJECT NO: | HWY: | COUNTY: | SHEET NO: 151 | E

7

7

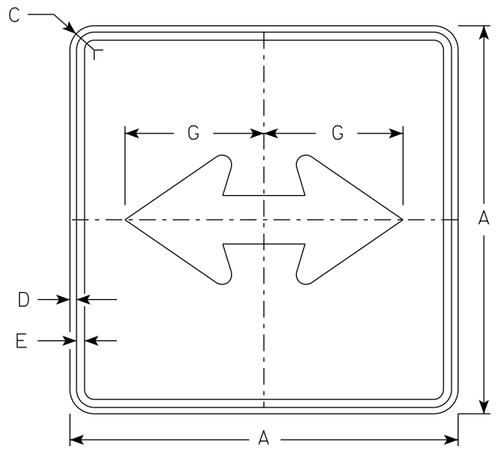

M6-4
MM6-4
MO6-4
MP6-4

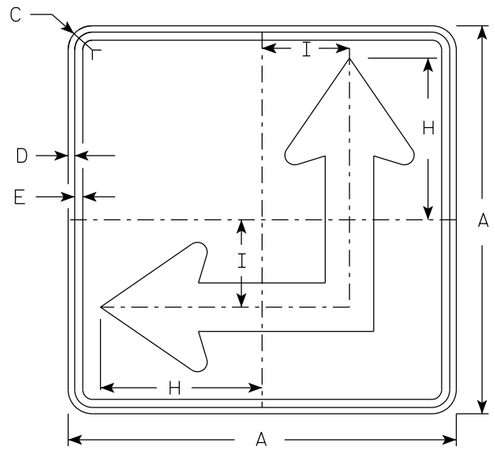

M6-6
MM6-6
MO6-6
MP6-6

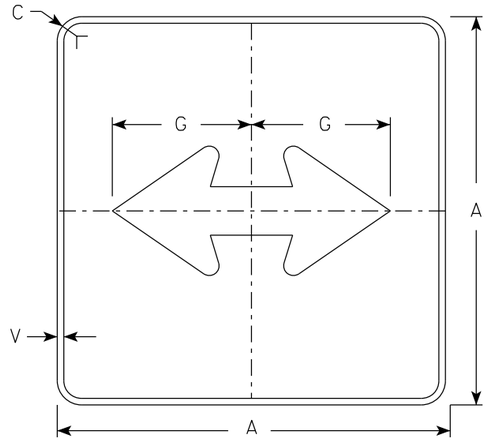

MB6-4
MK6-4
MN6-4
MR6-4

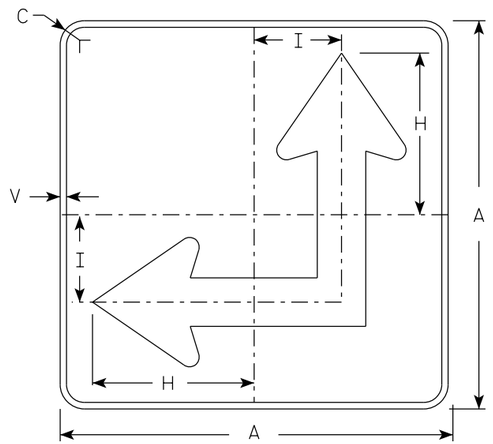

MB6-6
MK6-6
MN6-6
MR6-6

NOTES

1. Signs are Type II - Type H Reflective except as Shown
2. Color:
   Background - See Note 4
   Message - See Note 4
3. Corners may be square or rounded when base material is plywood but borders shall be rounded as shown. When base material is metal, the corners and borders shall be rounded.
4. M6-4 and M6-6 Background - White
   Message - Black
   MB6-4 and MB6-6 Background - Blue
   Message - White
   MK6-4 and MK6-6 Background - Green
   Message - White
   MM6-4 and MM6-6 Background - White
   Message - Green
   MN6-4 and MN6-6 Background - Brown
   Message - White
   MO6-4 and MO6-6 Background - Orange - Type F Reflective
   Message - Black
   MP6-4 and MP6-6 Background - White
   Message - Blue
   MR6-4 and MR6-6 Background - Brown
   Message - Yellow
5. M6-6R same as M6-6L except arrow points ahead and right.

ARROW DETAIL

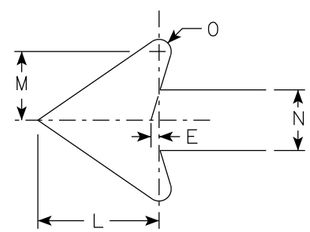

SIZE	A	B	C	D	E	F	G	H	I	J	K	L	M	N	O	P	Q	R	S	T	U	V	W	X	Y	Z	Area sq. ft.
1																											
2S	21		1 1/2	3/8	3/8		7 1/2	8 3/4	4 1/4			5 1/4	3	2 5/8	1/2							1/2					3.06
2M	21		1 1/2	3/8	3/8		7 1/2	8 3/4	4 1/4			5 1/4	3	2 5/8	1/2							1/2					3.06
3	30		1 7/8	1/2	5/8		10 3/4	12 1/2	6 3/4			7 1/2	4 1/4	3 3/4	3/4							1/2					6.25
4	30		1 7/8	1/2	5/8		10 3/4	12 1/2	6 3/4			7 1/2	4 1/4	3 3/4	3/4							1/2					6.25
5	30		1 7/8	1/2	5/8		10 3/4	12 1/2	6 3/4			7 1/2	4 1/4	3 3/4	3/4							1/2					6.25

STANDARD SIGN
M6-4 & M6-6
SERIES

WISCONSIN DEPT OF TRANSPORTATION

APPROVED Matthew R Rauch
for State Traffic Engineer

DATE 2/13/2023 PLATE NO. M6-4.11

PROJECT NO: | HWY: | COUNTY: | SHEET NO: 152 | E

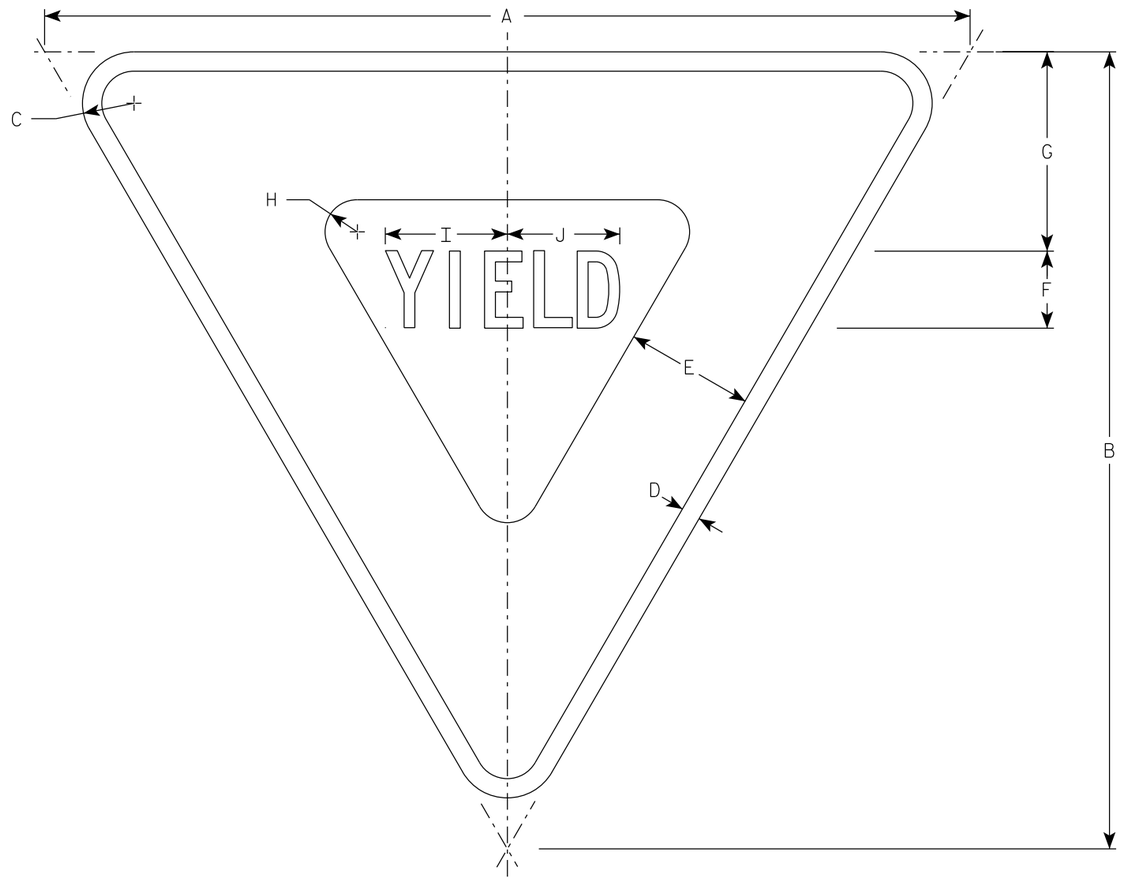

R1-2

NOTES

1. Sign is Type II - Type H Reflective
2. Color:
   Background - White
   Message - See note 4
3. Message Series - C
4. The border strip and word message are reflectorized red.

SIZE	A	B	C	D	E	F	G	H	I	J	K	L	M	N	O	P	Q	R	S	T	U	V	W	X	Y	Z	Area sq. ft.
1	30	26	2	5/8	4	2 1/2	6 3/8	7/8	4	3 5/8																	2.71
2S	36	31	2	3/4	5	3	7 3/4	1 1/4	4 3/4	4 3/8																	3.88
2M	48	42	3	1	6	4	9 3/4	2	6 1/4	5 7/8																	7.00
3	48	42	3	1	6	4	9 3/4	2	6 1/4	5 7/8																	7.00
4	48	42	3	1	6	4	9 3/4	2	6 1/4	5 7/8																	7.00
5	60	52	3	1 1/2	8	5	13	2 1/2	7 7/8	7 1/4																	10.83
6																											
7	18	15 1/2	1	3/8	2 1/2	1 1/2	3 7/8	5/8	2 3/8	2 1/4																	0.97

STANDARD SIGN
R1-2

WISCONSIN DEPT OF TRANSPORTATION

APPROVED Matthew R Rauch
for State Traffic Engineer

DATE 9/10/2024 PLATE NO. R1-2.13

PROJECT NO:	HWY:	COUNTY:		SHEET NO: 153	E

NOTES

1. Sign is Type II - Type H Reflective
2. Color:
   Background - White
   Message - Black
3. R4-8 is the same as R4-7 except Legend is reversed.

DIVIDER DETAIL

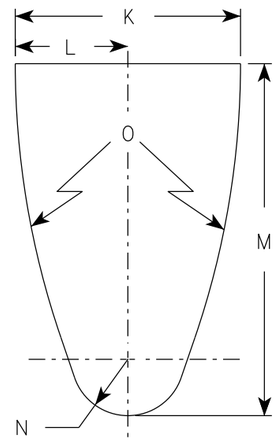

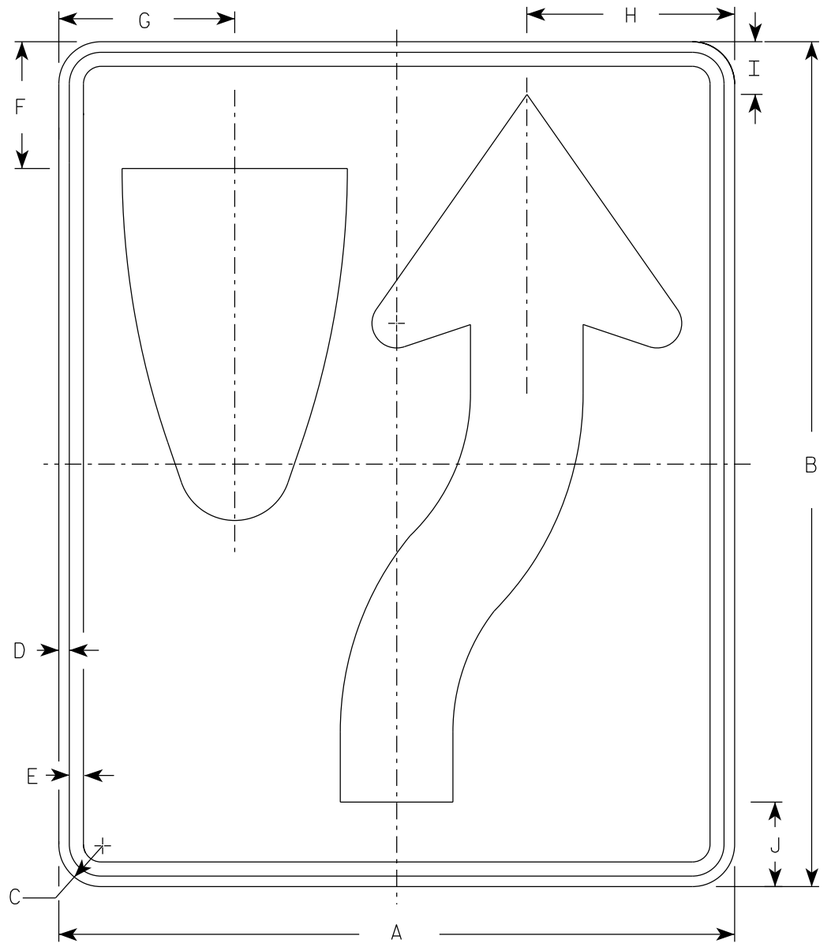

R4-7

ARROW DETAIL

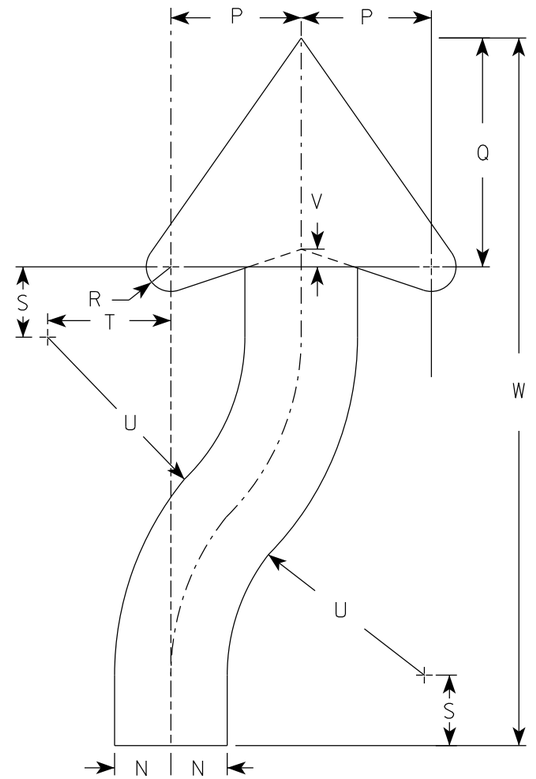

SIZE	A	B	C	D	E	F	G	H	I	J	K	L	M	N	O	P	Q	R	S	T	U	V	W	X	Y	Z	Area sq. ft.
1	18	24	1 1/2	3/8	1/2	3 3/8	4 3/4	5 1/2	1 3/8	2 1/4	6	3	9 3/8	1 1/2	22 1/2	3 1/2	6 1/8	5/8	1 7/8	3 1/4	6 3/4	1/2	20 3/8				3.0
2S	24	30	1 1/2	3/8	1/2	4 1/2	6 1/4	7 3/8	1 7/8	3	8	4	12 1/2	2	30	4 5/8	8 1/8	7/8	2 1/2	4 3/8	9	5/8	25 1/8				5.0
2M	24	30	1 1/2	3/8	1/2	4 1/2	6 1/4	7 3/8	1 7/8	3	8	4	12 1/2	2	30	4 5/8	8 1/8	7/8	2 1/2	4 3/8	9	5/8	25 1/8				5.0
3	36	48	1 7/8	1/2	5/8	6 3/4	9 3/8	11 1/8	2 7/8	4 1/2	12	6	18 3/4	3	45	6 7/8	12 1/4	1 1/4	3 3/4	6 5/8	13 1/2	1	40 3/4				12.0
4	36	48	1 7/8	1/2	5/8	6 3/4	9 3/8	11 1/8	2 7/8	4 1/2	12	6	18 3/4	3	45	6 7/8	12 1/4	1 1/4	3 3/4	6 5/8	13 1/2	1	40 3/4				12.0
5	48	60	3	3/4	1	9	12 1/2	14 3/4	3 3/4	6	16	8	25	4	60	9 1/4	16 1/4	1 5/8	5	8 3/4	18	1 1/4	50 1/4				20.0

STANDARD SIGN
R4-7 & R4-8

WISCONSIN DEPT OF TRANSPORTATION

APPROVED Matthew R Rauch for State Traffic Engineer

DATE 8/17/23 PLATE NO. R4-7.9

PROJECT NO:	HWY:	COUNTY:		SHEET NO: 154	E

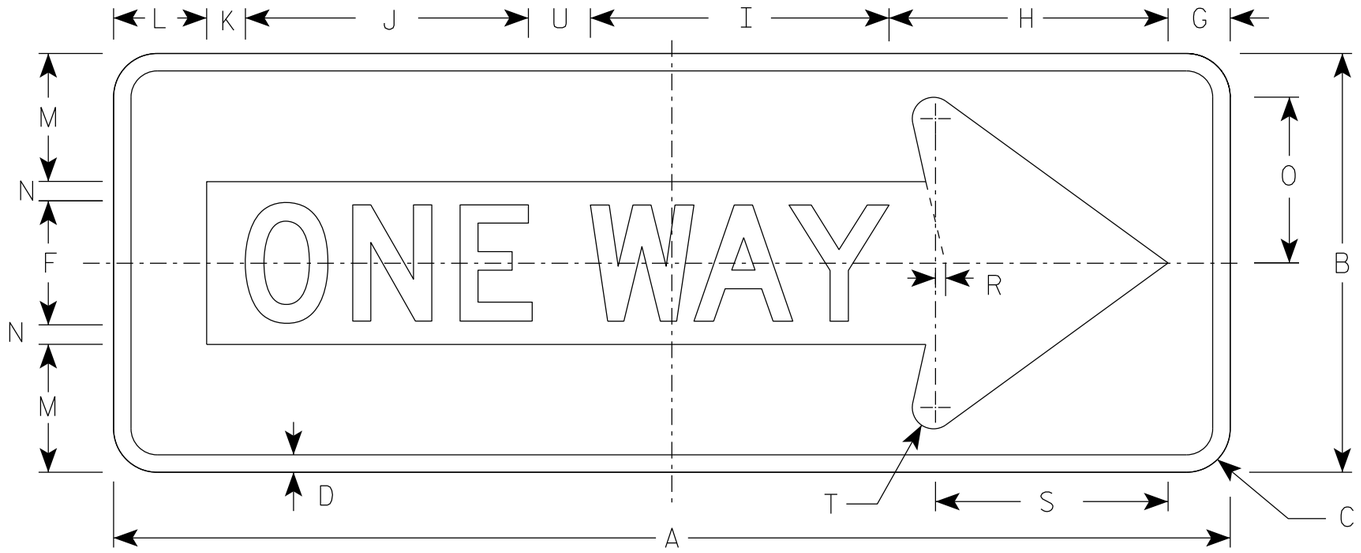

R6-1R

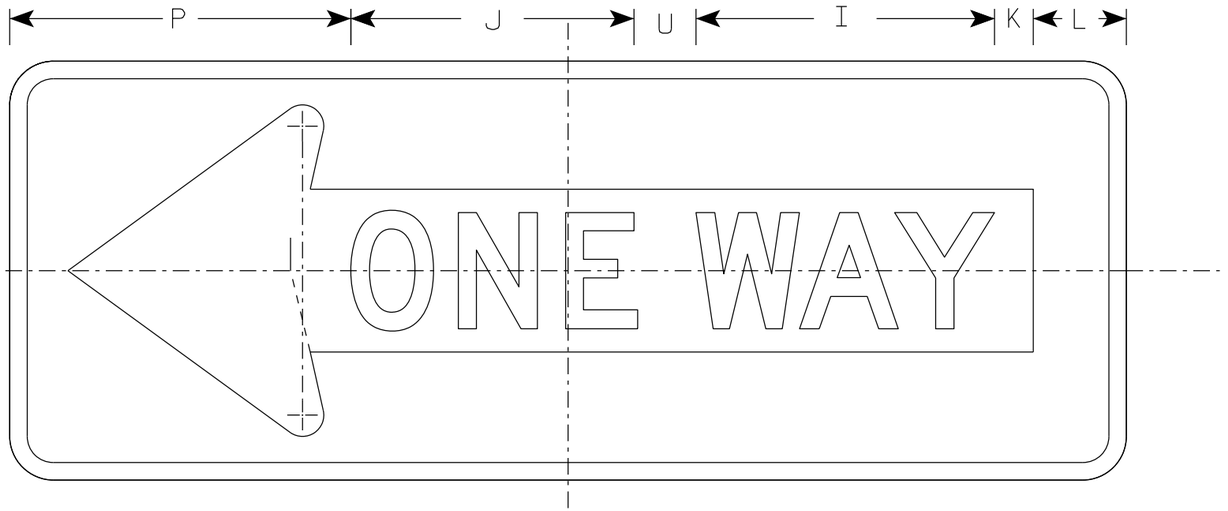

R6-1L

NOTES

1. Sign is Type II - Type H Reflective
2. Color:
   Background - Black
   Message - Black Legend & White Arrow & Border
3. Message Series - D

SIZE	A	B	C	D	E	F	G	H	I	J	K	L	M	N	O	P	Q	R	S	T	U	V	W	X	Y	Z	Area sq. ft.
1																											
2S	36	12	1 ½	½		4	2	7 ½	9 ⅝	9 ⅛	1 ¼	3	3 ⅜	⅝	4 ⅜	11		⅜	7 ½	¾	2						3.0
2M	48	18	1 ⅞	¾		5	2 ½	11	13	12 ¼	2 ¾	3 ½	5 ½	1	7 ⅛	13 ½		½	10 ⅛	⅞	3						6.0
3	48	18	1 ⅞	¾		5	2 ½	11	13	12 ¼	2 ¾	3 ½	5 ½	1	7 ⅛	13 ½		½	10 ⅛	⅞	3						6.0
4	48	18	1 ⅞	¾		5	2 ½	11	13	12 ¼	2 ¾	3 ½	5 ½	1	7 ⅛	13 ½		½	10 ⅛	⅞	3						6.0
5																											

STANDARD SIGN
R6-1 L&R

WISCONSIN DEPT OF TRANSPORTATION

APPROVED Matthew R Rauch
for State Traffic Engineer

DATE 4/7/2025 PLATE NO. R6-1.5

PROJECT NO:

SHEET NO: 155 E

FILE NAME : C:\CAEfiles\Projects\tr_stdplate\R61.dgn PLOT DATE : 7-APR 2025 1:18 PLOT BY : dotc4c

WISDOT/CADDS SHEET 42

7

7

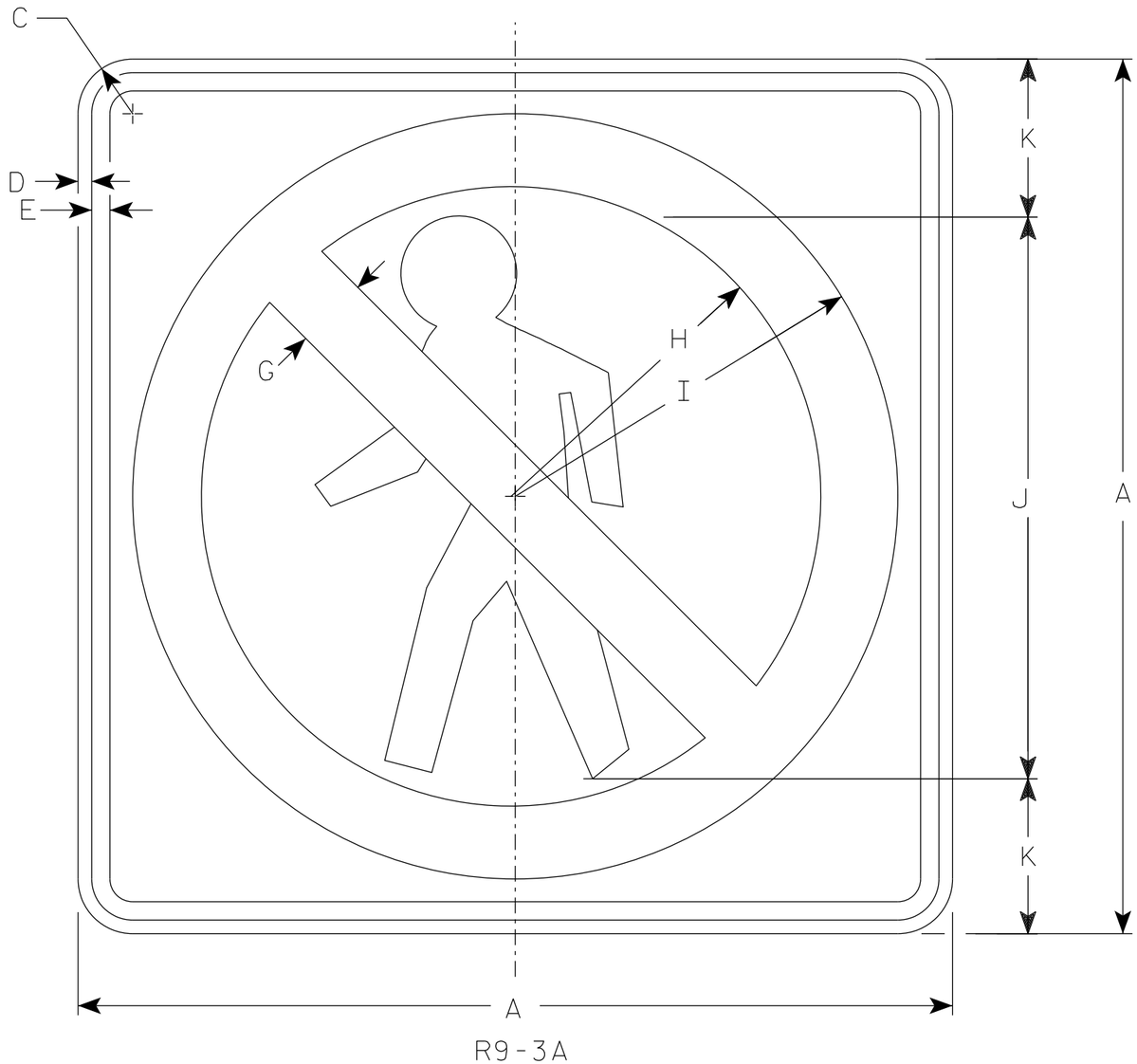

R9-3A

NOTES

1. Sign is Type II - Type H Reflective
2. Color:
   Background - White
   Message - See note 3
3. Border & Pedestrian are non-reflective black. Circle with diagonal bar is reflective red.

SIZE	A	B	C	D	E	F	G	H	I	J	K	L	M	N	O	P	Q	R	S	T	U	V	W	X	Y	Z	Area sq. ft.
1	18		1 1/2	3/8	3/8		1 1/2	6 1/4	7 7/8	12	3																2.25
2S	24		1 1/2	3/8	1/2		2	8 1/2	10 1/2	15	4																4.00
2M	24		1 1/2	3/8	1/2		2	8 1/2	10 1/2	15	4																4.00
3																											
4																											
5																											

STANDARD SIGN
R9-3A

WISCONSIN DEPT OF TRANSPORTATION

APPROVED Matthew R Rauch
for State Traffic Engineer

DATE 1/23/24 PLATE NO. R9-3A.4

PROJECT NO: | HWY: | COUNTY: | SHEET NO: 156 | E

FILE NAME : C:\CAEfiles\Projects\tr_stdplate\R93A.dgn PLOT DATE : 23-JAN 2024 1:15 PLOT BY : mscj9h PLOT NAME : PLOT SCALE : $$.....plotscale.....$$ WISDOT/CADDS SHEET 42

NOTES

1. Sign is Type II - Type H Reflective
2. Color:
   Background - White
   Message - Black
3. Message Series - C Line 1, Series B Line 2

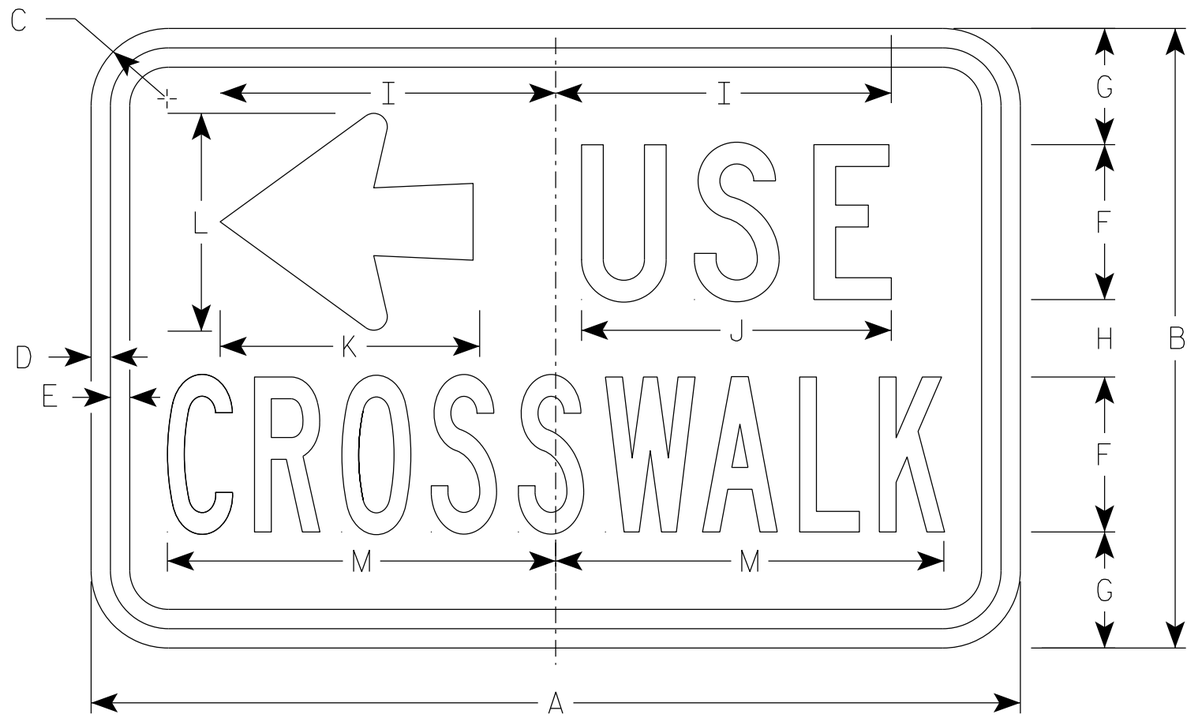

R9-3BL

SIZE	A	B	C	D	E	F	G	H	I	J	K	L	M	N	O	P	Q	R	S	T	U	V	W	X	Y	Z	Area sq. ft.
1																											
2S	18	12	1 ½	⅜	⅜	3	2 ¼	1 ½	6 ½	6	5	4 ¼	7 ½														1.5
2M	18	12	1 ½	⅜	⅜	3	2 ¼	1 ½	6 ½	6	5	4 ¼	7 ½														1.5
3																											
4																											
5																											

STANDARD SIGN
R9-3BL

WISCONSIN DEPT OF TRANSPORTATION

APPROVED Matthew R Rauch
for State Traffic Engineer

DATE 1/23/24 PLATE NO. R9-3BL.2

PROJECT NO:	HWY:	COUNTY:		SHEET NO: 157	E

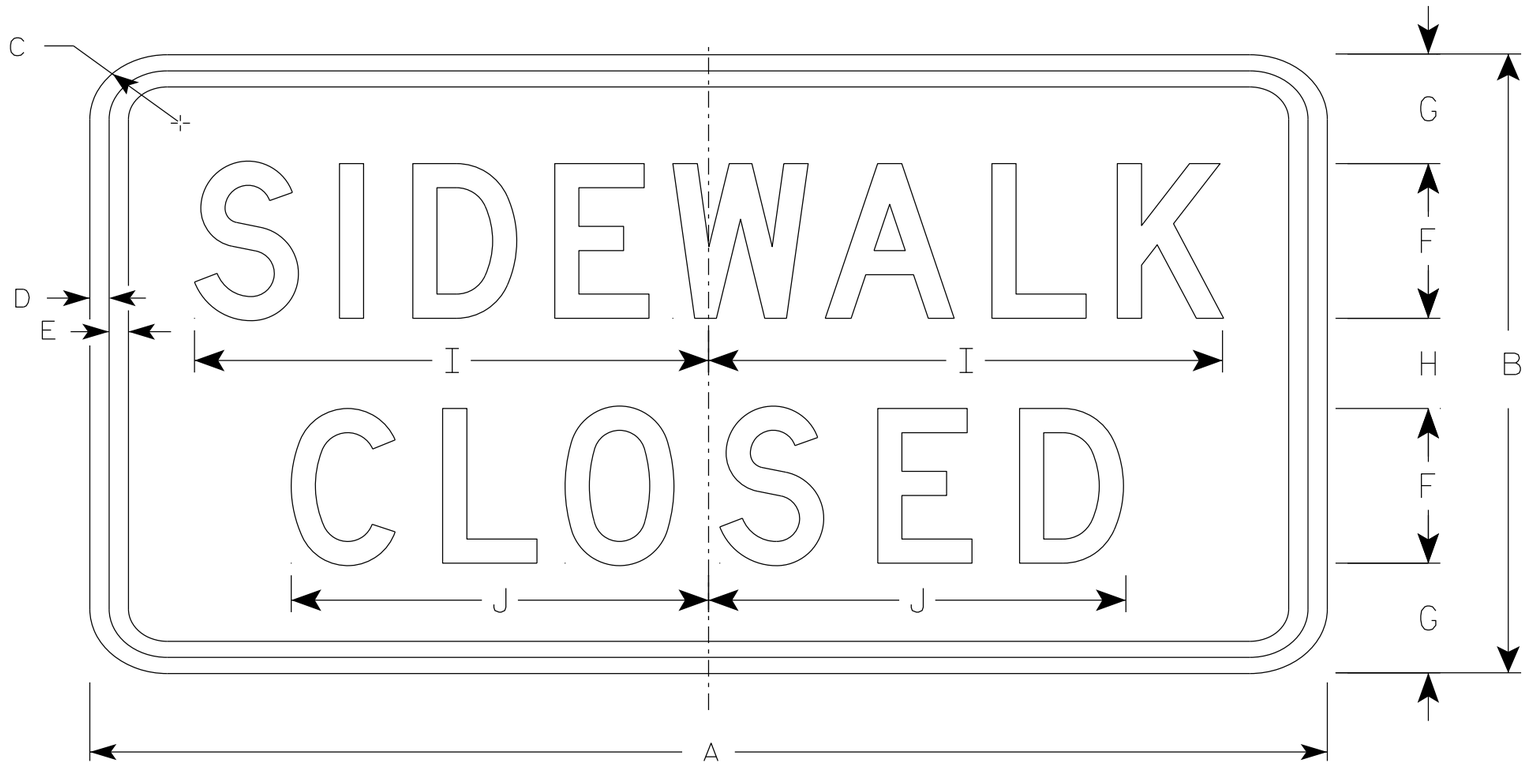

R9-9

NOTES

1. Sign is Type II - Type H Reflective
2. Color:
   Background - White
   Message - Black
3. Message Series - C
4. Use Size 2 for Sidewalks. Use Size 3 for Paths and Trails.

SIZE	A	B	C	D	E	F	G	H	I	J	K	L	M	N	O	P	Q	R	S	T	U	V	W	X	Y	Z	Area sq. ft.
1																											
2S	24	12	1 ½	½	½	3	2 ⅛	1 ¾	10	8 ⅛																	2.0
2M	24	12	1 ½	½	½	3	2 ⅛	1 ¾	10	8 ⅛																	2.0
3	30	18	1 ½	½	½	4	3 ½	3	12 ½	10 ¼																	3.75
4																											
5																											

STANDARD SIGN
R9-9

WISCONSIN DEPT OF TRANSPORTATION

APPROVED Matthew R Rauch
for State Traffic Engineer

DATE 1/24/24 PLATE NO. R9-9.7

PROJECT NO: | HWY: | COUNTY: | SHEET NO: 158 | E

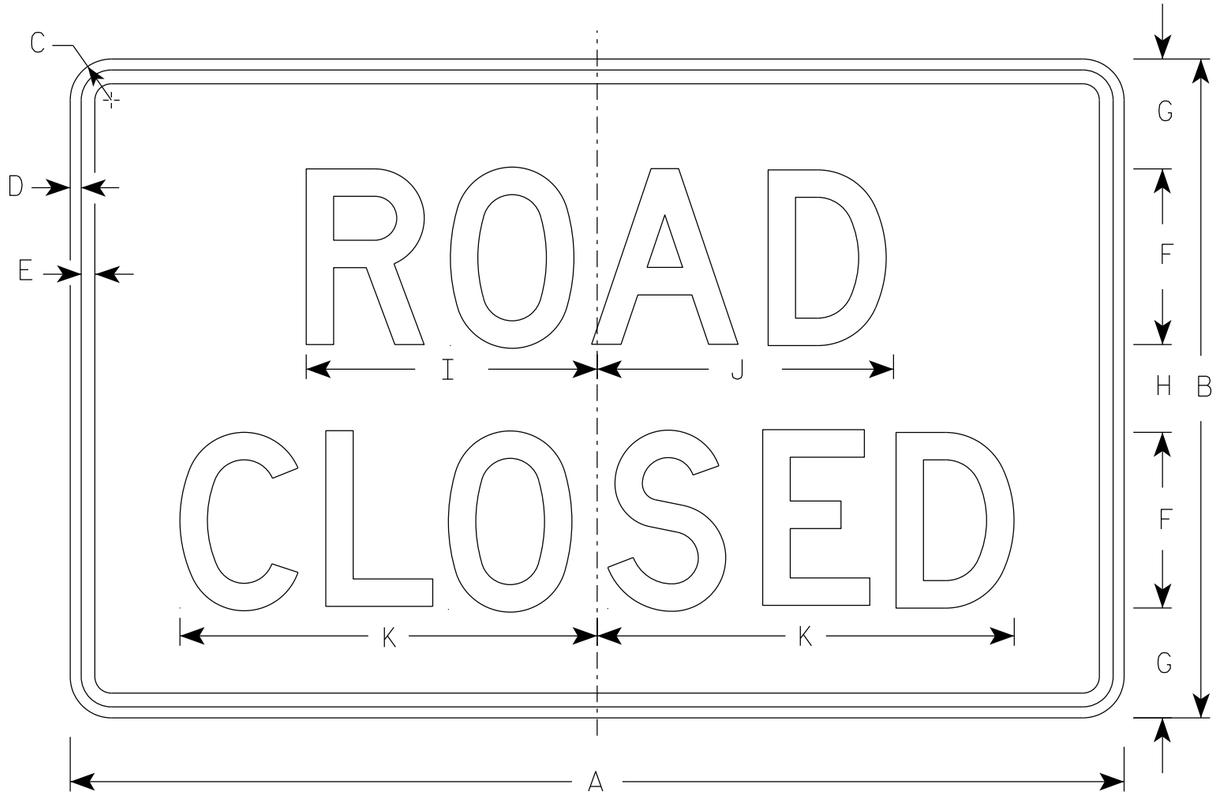

R11-2

NOTES

1. Sign is Type II - Type H Reflective
2. Color:
   Background - White
   Message - Black
3. Message Series - D
4. Corners may be square or rounded when base material is plywood but borders shall be rounded as shown. When base material is metal, the corners and borders shall be rounded.
5. Modify the message as required.

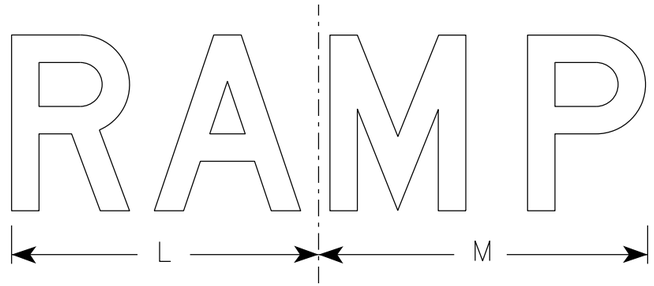

R11-2R

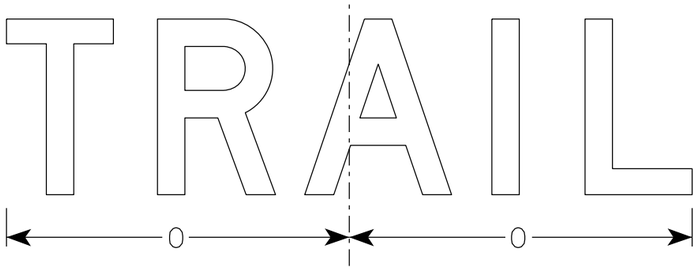

R11-2T

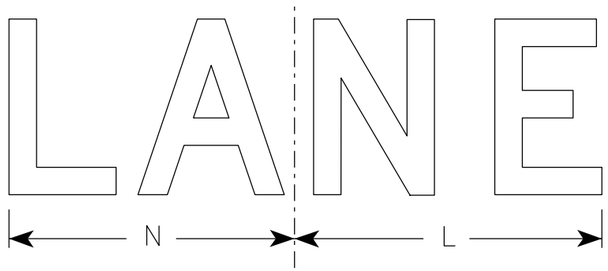

R11-2L

SIZE	A	B	C	D	E	F	G	H	I	J	K	L	M	N	O	P	Q	R	S	T	U	V	W	X	Y	Z	Area sq. ft.
1																											
2S	48	30	1 7/8	1/2	5/8	8	5	4	13 1/4	13 1/2	19	14	15	13	15 5/8												10.0
2M	48	30	1 7/8	1/2	5/8	8	5	4	13 1/4	13 1/2	19	14	15	13	15 5/8												10.0
3	48	30	1 7/8	1/2	5/8	8	5	4	13 1/4	13 1/2	19	14	15	13	15 5/8												10.0
4	48	30	1 7/8	1/2	5/8	8	5	4	13 1/4	13 1/2	19	14	15	13	15 5/8												10.0
5	48	30	1 7/8	1/2	5/8	8	5	4	13 1/4	13 1/2	19	14	15	13	15 5/8												10.0

STANDARD SIGN
R11-2

WISCONSIN DEPT OF TRANSPORTATION

APPROVED Matthew R Rauch
for State Traffic Engineer

DATE 2/5/24 PLATE NO. R11-2.12

PROJECT NO:	HWY:	COUNTY:		SHEET NO:	E

FILE NAME : C:\Users\PROJECTS\tr_stdplate\R112.dgn PLOT DATE : 5-FEB 2024 2:10 PLOT BY : mscj9h PLOT NAME : PLOT SCALE : $$.....plotscale.....$$ WISDOT/CADDS SHEET 42

NOTES

1. Sign is Type II - Type H Reflective
2. Color:
   Background - White
   Message - Black
3. Message Series - C
4. Corners may be square or rounded when base material is plywood but borders shall be rounded as shown. When base material is metal, the corners and borders shall be rounded.
5. Substitute appropriate numerals to nearest quarter mile and optically adjust spacing to achieve proper balance.

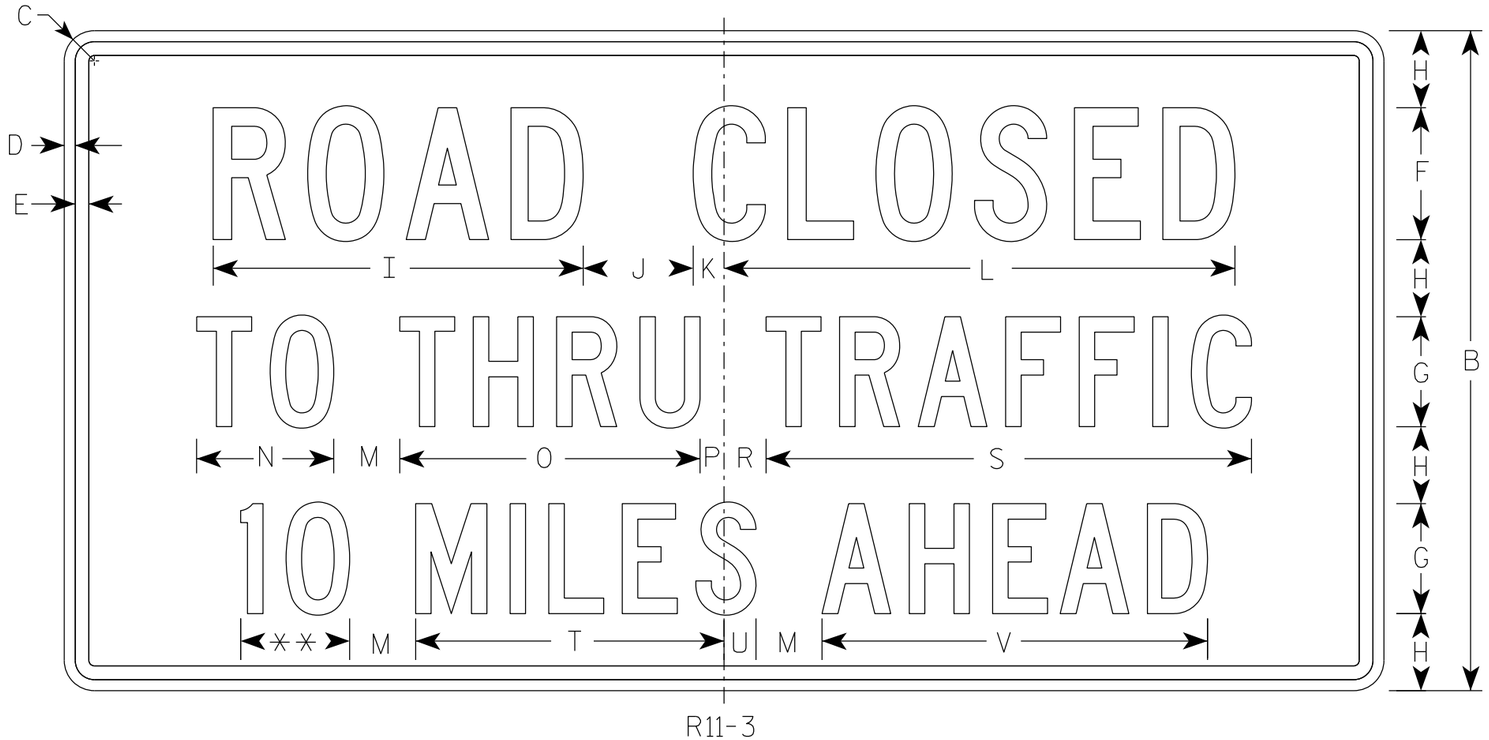

R11-3

** See Note 5

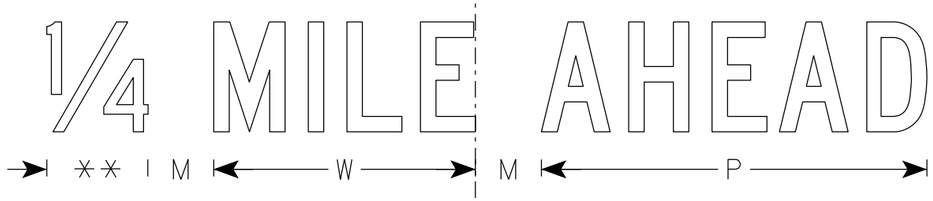

SIZE	A	B	C	D	E	F	G	H	I	J	K	L	M	N	O	P	Q	R	S	T	U	V	W	X	Y	Z	Area sq. ft.
1	36	18	1 1/2	3/8	3/8	4	3	2	11 1/4	3	1 1/8	15 3/8	2	3 3/4	8 1/4	5/8		1 3/8	13 1/4	8 3/8	7/8	10 1/2	7 1/8				4.5
2S	60	30	1 7/8	1/2	5/8	6	5	3 1/2	16 7/8	5	1 3/8	23 1/4	3	6 1/4	13 5/8	1 1/8		1 7/8	22 1/8	14	1 1/2	17 1/2	11 7/8				12.5
2M	60	30	1 7/8	1/2	5/8	6	5	3 1/2	16 7/8	5	1 3/8	23 1/4	3	6 1/4	13 5/8	1 1/8		1 7/8	22 1/8	14	1 1/2	17 1/2	11 7/8				12.5
3																											
4																											
5																											

STANDARD SIGN
R11-3

WISCONSIN DEPT OF TRANSPORTATION

APPROVED Matthew R Rauch
for State Traffic Engineer

DATE 2/5/24 PLATE NO. R11-3.10

PROJECT NO:	HWY:	COUNTY:		SHEET NO: 160	E

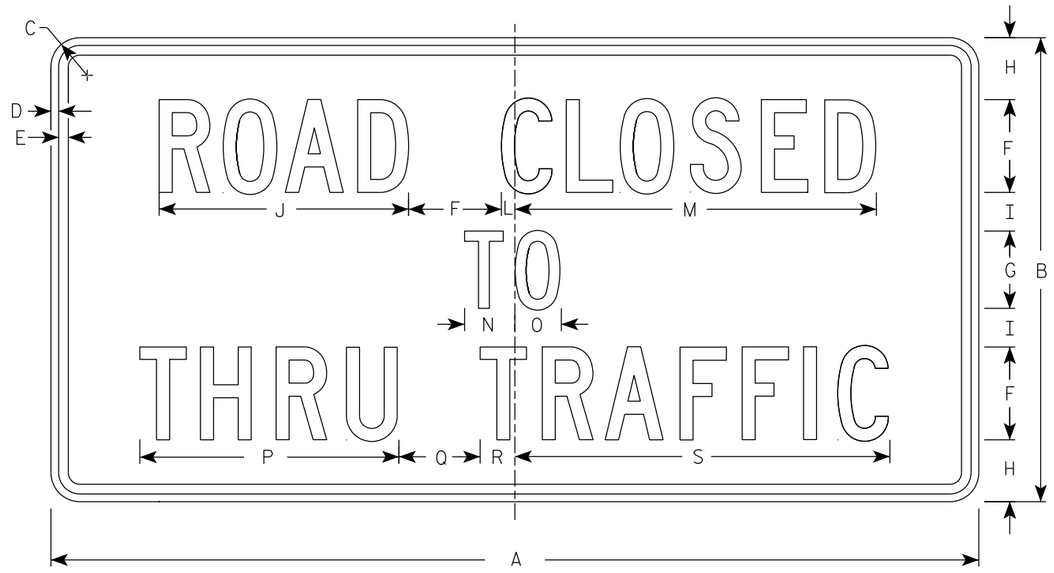

R11-4

NOTES

1. Sign is Type II - Type H Reflective
2. Color:
   Background - White
   Message - Black
3. Message Series - C
4. Corners may be square or rounded when base material is plywood but borders shall be rounded as shown. When base material is metal, the corners and borders shall be rounded.

SIZE	A	B	C	D	E	F	G	H	I	J	K	L	M	N	O	P	Q	R	S	T	U	V	W	X	Y	Z	Area sq. ft.
1																											
2S	60	30	1 7/8	1/2	5/8	6	5	4	2 1/2	16 1/8		7/8	23 3/8	3 1/4	3	16 3/4	5 1/4	2 1/4	24 1/4								12.5
2M	60	30	1 7/8	1/2	5/8	6	5	4	2 1/2	16 1/8		7/8	23 3/8	3 1/4	3	16 3/4	5 1/4	2 1/4	24 1/4								12.5
3																											
4																											
5																											

STANDARD SIGN
R11 - 4

WISCONSIN DEPT OF TRANSPORTATION

APPROVED Matthew R Rauch
for State Traffic Engineer

DATE 2/5/24 PLATE NO. R11-4.4

PROJECT NO: | HWY: | COUNTY: | SHEET NO: 161 | E

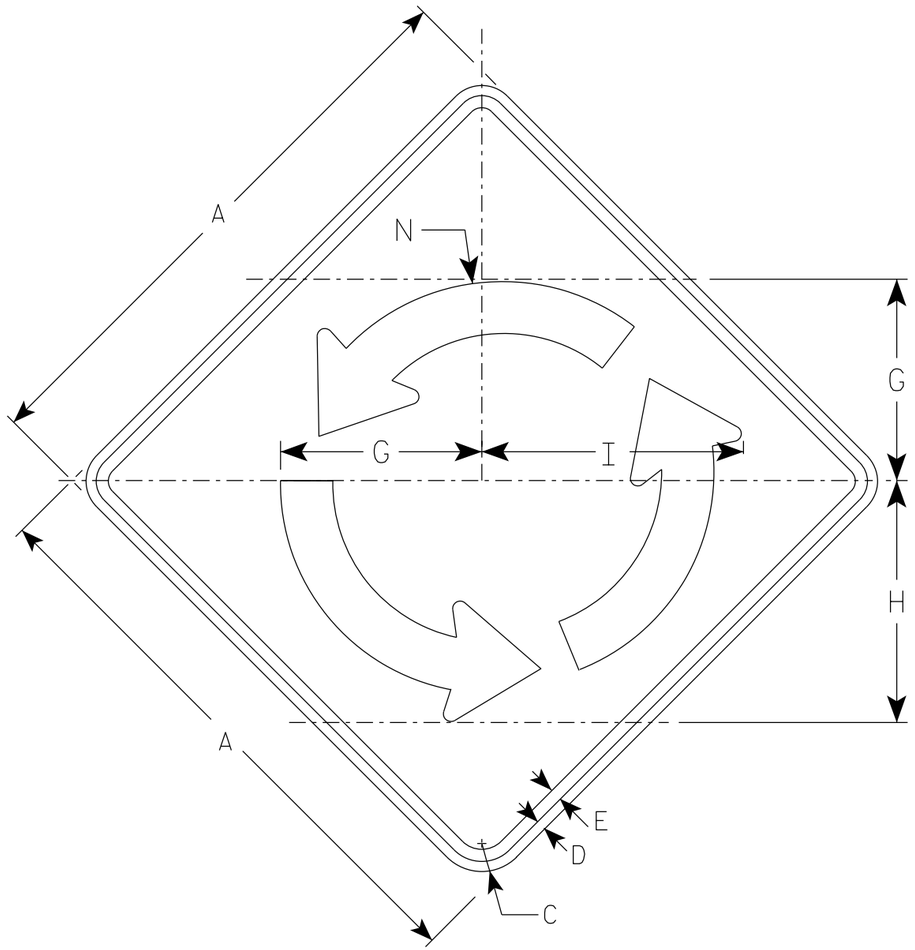

W2-6

NOTES

1. Sign is Type II - Type F Reflective
2. Color:
   Background - Yellow
   Message - Black

Arrow Detail

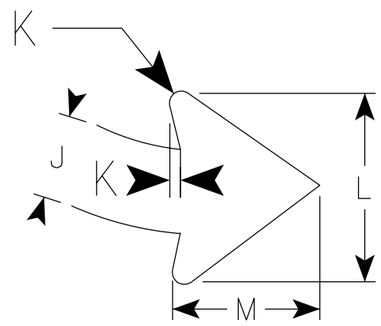

SIZE	A	B	C	D	E	F	G	H	I	J	K	L	M	N	O	P	Q	R	S	T	U	V	W	X	Area sq. ft.
1																									
2S	30		1 7/8	1/2	5/8		10 3/8	12 1/2	13 1/2	2 3/4	3/8	6	4 3/4	11 1/8											6.25
2M	30		1 7/8	1/2	5/8		10 3/8	12 1/2	13 1/2	2 3/4	3/8	6	4 3/4	11 1/8											6.25
3	36		2 1/4	5/8	3/4		12 1/2	15	16 1/4	3 1/4	1/2	7 3/8	5 3/4	13 3/8											9.00
4	48		3	3/4	1		16 5/8	20	16 1/4	4 3/8	5/8	9 3/4	7 5/8	17 7/8											16.0
5																									

STANDARD SIGN
W2-6

WISCONSIN DEPT OF TRANSPORTATION

APPROVED Matthew R Rauch
for State Traffic Engineer

DATE 8/17/2023 PLATE NO. W2-6.8

PROJECT NO:

SHEET NO: 162 E

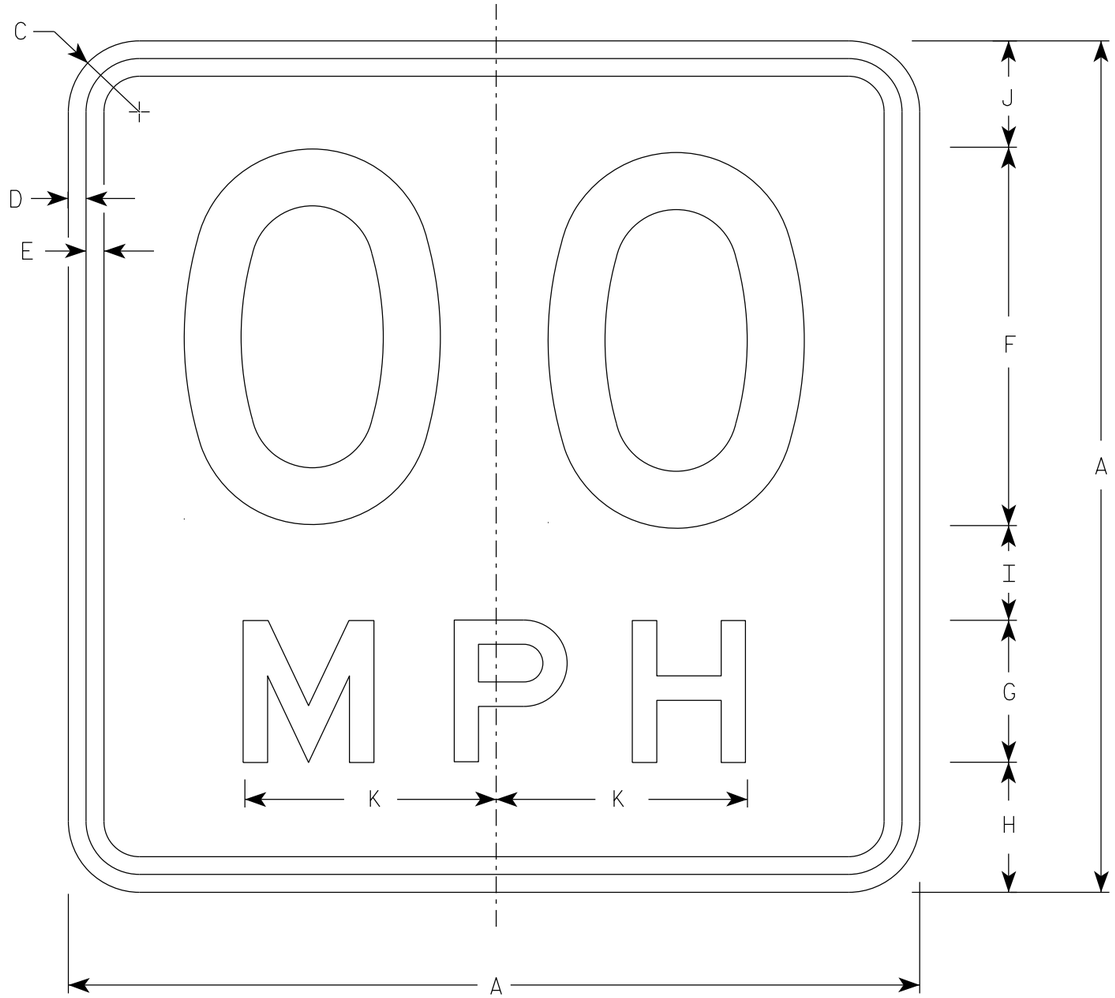

W13-1

* For 30" x 30" Warning Signs, use 18" x 18" W13-1 signs.
For 36" x 36" Warning Signs, use 24" x 24" W13-1 signs.

NOTES

1. Sign is Type II - Type F Reflective
2. Color:
   Background - Yellow
   Message - Black
3. Message Series - See Note 5
4. Substitute appropriate numerals and optically space about centerline to achieve proper balance.
5. Line 1 is Series D
   Line 2 is Series E

SIZE	A	B	C	D	E	F	G	H	I	J	K	L	M	N	O	P	Q	R	S	T	U	V	W	X	Y	Z	Area sq. ft.
1	18		1 1/2	3/8	3/8	8	3	2 3/4	2	2 1/4	5 3/8																2.25
* 2S	18		1 1/2	3/8	3/8	8	3	2 3/4	2	2 1/4	5 3/8																2.25
* 2M	18		1 1/2	3/8	3/8	8	3	2 3/4	2	2 1/4	5 3/8																2.25
3	24		1 1/2	3/8	1/2	10	4	4	2 3/4	3 1/4	6 5/8																4.00
4	36		2 1/4	5/8	3/4	16	6	5 1/2	4	4 1/2	10 5/8																9.00
5	36		2 1/4	5/8	3/4	16	6	5 1/2	4	4 1/2	10 5/8																9.00

STANDARD SIGN
W13-1

WISCONSIN DEPT OF TRANSPORTATION

APPROVED Matthew R Rauch
for State Traffic Engineer

DATE 1/8/2024 PLATE NO. W13-1.17

PROJECT NO: | HWY: | COUNTY: | SHEET NO: | E

FILE NAME : C:\CAEfiles\Projects\tr_stdplate\W131.dgn PLOT DATE : 8-Jan 2024 11:07 PLOT BY : dotc4c PLOT NAME : PLOT SCALE : $$.....plotscale.....$$ WISDOT/CADDS SHEET 42

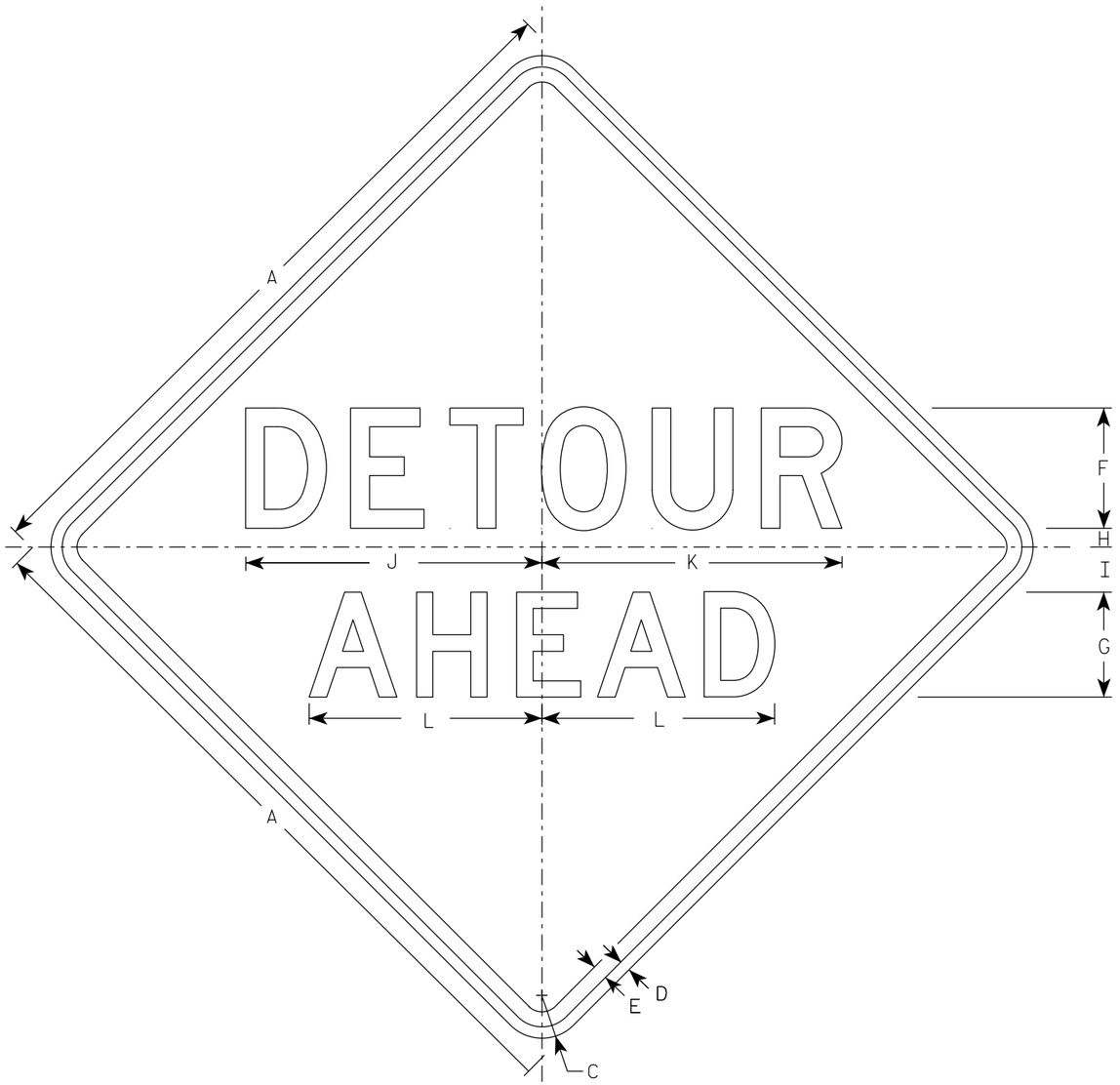

W20-2A

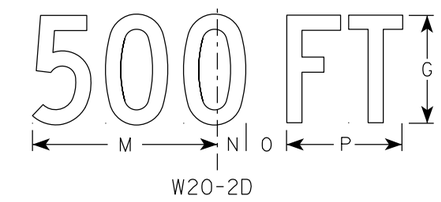

W20-2D

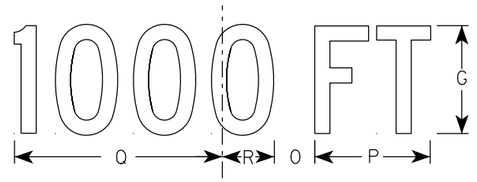

W20-2C

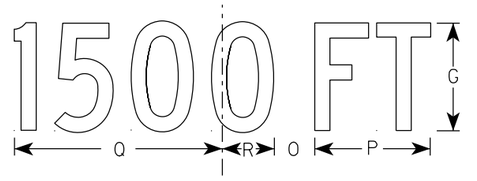

W20-2B

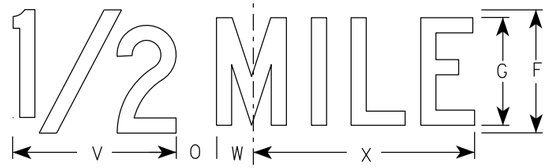

W20-2G

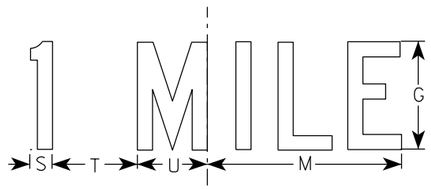

W20-2F

NOTES

1. Sign is Type II - Type F Reflective
2. Color:
   Background - Orange
   Message - Black
3. Message Series - See note 5
4. Corners may be square or rounded when base material is plywood but borders shall be rounded as shown. When base material is metal, the corners and borders shall be rounded.
5. Line 1 is Series D.
   Line 2 is Series D for AHEAD and Series C for all other distances.

SIZE	A	B	C	D	E	F	G	H	I	J	K	L	M	N	O	P	Q	R	S	T	U	V	W	X	Y	Z	Area sq. ft.
1	36		2 1/4	5/8	3/4	6	5	1	2 1/4	14 3/4	15	11 5/8	9	1 3/8	1 7/8	5 5/8	10 1/8	2 1/2	1 1/8	4 1/2	3 1/2	8	1 3/4	10 3/4			9.0
2S	48		3	3/4	1	8	7	1 1/4	3	19 3/4	20	15 1/2	12	1 7/8	2 5/8	7 1/2	13 1/2	3 3/8	1 1/2	6	4 5/8	10 5/8	2 3/8	14 3/8			16.0
2M	48		3	3/4	1	8	7	1 1/4	3	19 3/4	20	15 1/2	12	1 7/8	2 5/8	7 1/2	13 1/2	3 3/8	1 1/2	6	4 5/8	10 5/8	2 3/8	14 3/8			16.0
3	48		3	3/4	1	8	7	1 1/4	3	19 3/4	20	15 1/2	12	1 7/8	2 5/8	7 1/2	13 1/2	3 3/8	1 1/2	6	4 5/8	10 5/8	2 3/8	14 3/8			16.0
4	48		3	3/4	1	8	7	1 1/4	3	19 3/4	20	15 1/2	12	1 7/8	2 5/8	7 1/2	13 1/2	3 3/8	1 1/2	6	4 5/8	10 5/8	2 3/8	14 3/8			16.0
5	48		3	3/4	1	8	7	1 1/4	3	19 3/4	20	15 1/2	12	1 7/8	2 5/8	7 1/2	13 1/2	3 3/8	1 1/2	6	4 5/8	10 5/8	2 3/8	14 3/8			16.0

STANDARD SIGN
W20-2A,B,C,D,F & G

WISCONSIN DEPT OF TRANSPORTATION

APPROVED Matthew R Rauch
For State Traffic Engineer

DATE 1/10/2024 PLATE NO. W20-2.7

PROJECT NO:	HWY:	COUNTY:		SHEET NO: E

FILE NAME : C:\CAEfiles\Projects\tr_stdplate\W202.DGN PLOT DATE : 10-JAN 2024 11:36 PLOT BY : dotc4c PLOT NAME : PLOT SCALE : $$.....plotscale.....$$ WISDOT/CADDS SHEET 42

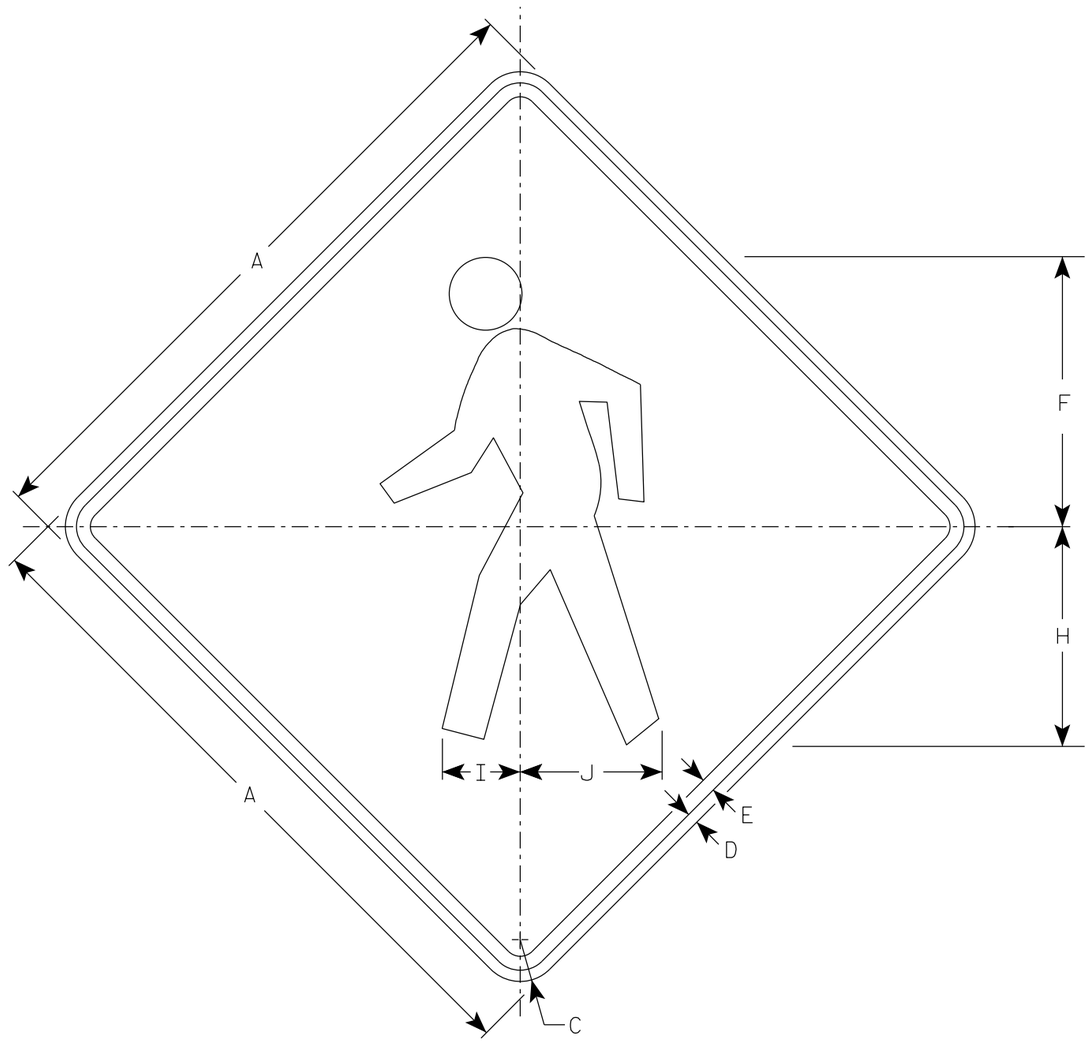

WO11-2

NOTES

1. Sign is Type II - Type F Reflective
2. Color:
   Background - Orange
   Message - Black
3. Corners may be square or rounded when base material is plywood but borders shall be rounded as shown. When base material is metal, the corners and borders shall be rounded.

SIZE	A	B	C	D	E	F	G	H	I	J	K	L	M	N	O	P	Q	R	S	T	U	V	W	X	Y	Z	Area sq. ft.
1	36		2 1/4	5/8	3/4	14 1/2		11 7/8	4 1/4	7 5/8																	9.0
2S	48		3	3/4	1	19 3/8		15 3/4	5 5/8	10 1/4																	16.0
2M	48		3	3/4	1	19 3/8		15 3/4	5 5/8	10 1/4																	16.0
3	48		3	3/4	1	19 3/8		15 3/4	5 5/8	10 1/4																	16.0
4	48		3	3/4	1	19 3/8		15 3/4	5 5/8	10 1/4																	16.0
5																											

STANDARD SIGN

WO11-2

WISCONSIN DEPT OF TRANSPORTATION

APPROVED Matthew R Rauch

For State Traffic Engineer

DATE 2/1/2024 PLATE NO. WO11-2.2

PROJECT NO: | HWY: | COUNTY: | SHEET NO: 165 E

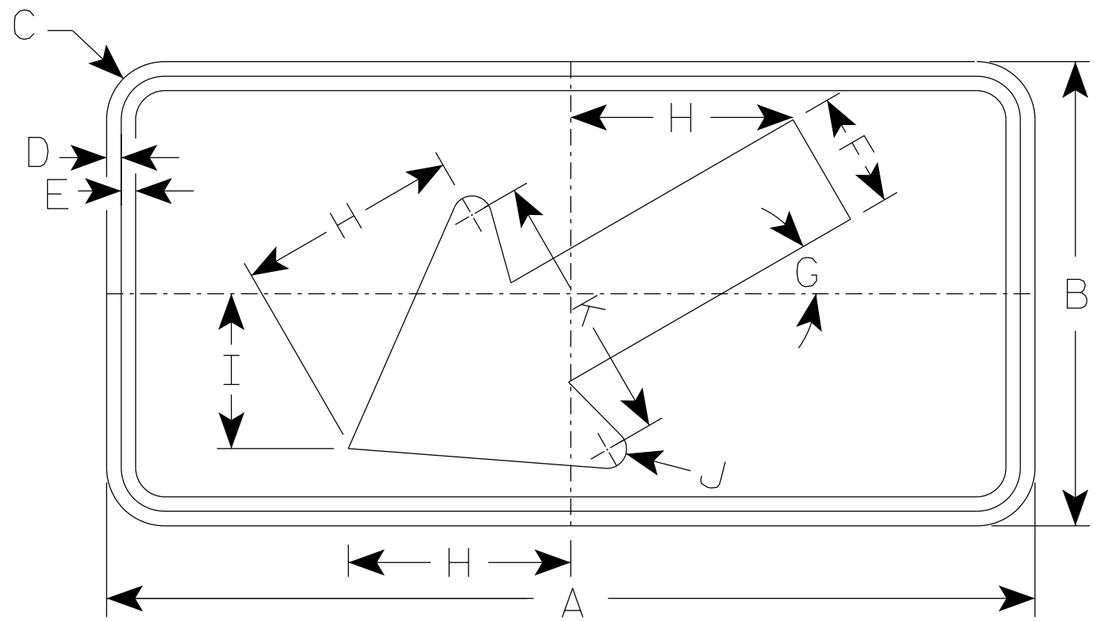

W016-7L

NOTES

1. Sign is Type II - Type F Reflective
2. Color:
   Background - Orange
   Message - Black
3. Corners may be square or rounded but corners shall be rounded when base material is metal.
4. W016-7R is the same as W016-L except the arrow is reversed along the vertical centerline.

SIZE	A	B	C	D	E	F	G	H	I	J	K	L	M	N	O	P	Q	R	S	T	U	V	W	X	Y	Z	Area sq. ft.
1	30	18	1 ½	⅜	½	4 ½	30°	8 ½	6	⅝	10 ¼																3.75
2S	48	24	1 ⅞	½	⅝	6	30°	11 ½	8	1	14																8.0
2M	48	24	1 ⅞	½	⅝	6	30°	11 ½	8	1	14																8.0
3	48	24	1 ⅞	½	⅝	6	30°	11 ½	8	1	14																8.0
4	48	24	1 ⅞	½	⅝	6	30°	11 ½	8	1	14																8.0
5	48	24	1 ⅞	½	⅝	6	30°	11 ½	8	1	14																8.0

STANDARD SIGN
W016-7

WISCONSIN DEPT OF TRANSPORTATION

APPROVED Matthew R Rauch
for State Traffic Engineer

DATE 2/1/2024 PLATE NO. W016-7.3

PROJECT NO:	HWY:	COUNTY:		SHEET NO: 166	E

7

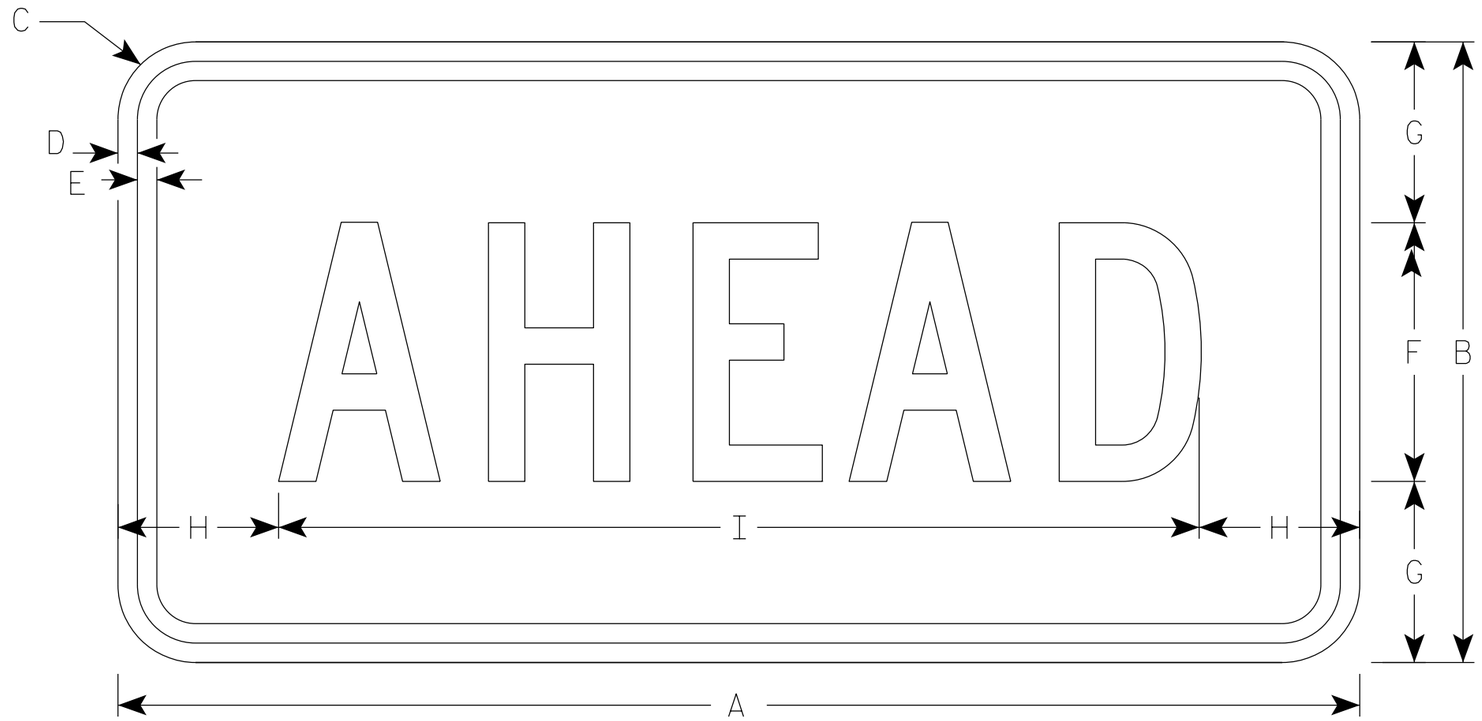

W016-9P

NOTES

1. Sign is Type II - Type F Reflective
2. Color:
   Background - Orange
   Message - Black
3. Message Series - C
4. Corners may be square or rounded when base material is plywood but borders shall be rounded as shown. When base material is metal, the corners and borders shall be rounded.

SIZE	A	B	C	D	E	F	G	H	I	J	K	L	M	N	O	P	Q	R	S	T	U	V	W	X	Y	Z	Area sq. ft.
1	30	18	1 1/2	3/8	1/2	7	5 1/2	2 3/4	24 1/2																		3.75
2S	48	24	1 7/8	1/2	5/8	10	7	6 1/8	35 3/4																		8.0
2M	48	24	1 7/8	1/2	5/8	10	7	6 1/8	35 3/4																		8.0
3	48	24	1 7/8	1/2	5/8	10	7	6 1/8	35 3/4																		8.0
4	48	24	1 7/8	1/2	5/8	10	7	6 1/8	35 3/4																		8.0
5	48	24	1 7/8	1/2	5/8	10	7	6 1/8	35 3/4																		8.0

STANDARD SIGN
W016-9P

WISCONSIN DEPT OF TRANSPORTATION

APPROVED Matthew R Rauch
for State Traffic Engineer

DATE 2/1/2024 PLATE NO. W016-9P.8

PROJECT NO: | HWY: | COUNTY: | SHEET NO: 167 | E

DIVISION 1 - RAB CIRCLE

STATION	AREA (SF)		INCREMENTAL VOL (CY) (UNADJUSTED)		CUMULATIVE VOL (CY)		
	CUT	FILL	CUT	FILL	CUT 1.00	EXPANDED FILL 1.30	MASS ORDINATE
10+00	14.93	29.73	0.00	0.00	0.00	0.00	0.00
10+25	13.03	29.81	13.00	28.00	13.00	36.40	-23.40
10+40	17.96	57.59	9.00	24.00	22.00	67.60	-45.60
10+75	28.88	22.97	30.00	52.00	52.00	135.20	-83.20
10+88.95	49.84	20.86	20.00	11.00	72.00	149.50	-77.50
11+00	42.94	21.67	19.00	9.00	91.00	161.20	-70.20
11+25	9.03	32.35	24.00	25.00	115.00	193.70	-78.70
11+40	0.54	44.54	3.00	21.00	118.00	221.00	-103.00
11+75	0.00	80.90	0.00	81.00	118.00	326.30	-208.30
12+00	0.00	87.51	0.00	78.00	118.00	427.70	-309.70
12+06.93	0.00	95.16	0.00	23.00	118.00	457.60	-339.60
12+25	1.33	47.43	0.00	48.00	118.00	520.00	-402.00
12+50	12.68	38.81	6.00	40.00	124.00	572.00	-448.00
12+64.66	39.86	29.35	14.00	19.00	138.00	596.70	-458.70
12+75	45.34	27.87	16.00	11.00	154.00	611.00	-457.00
13+04	43.17	29.68	48.00	31.00	202.00	651.30	-449.30
13+25	38.16	29.51	32.00	23.00	234.00	681.20	-447.20

DIVISION 1 - COUNTY LINE ROAD

STATION	AREA (SF)		INCREMENTAL VOL (CY) (UNADJUSTED)		CUMULATIVE VOL (CY)		
	CUT	FILL	CUT	FILL	CUT 1.00	EXPANDED FILL 1.30	MASS ORDINATE
50+54.08	59.49	4.96	0.00	0.00	0.00	0.00	0.00
51+00	60.20	2.43	102.00	6.00	102.00	7.80	94.20
51+41	97.10	0.02	119.00	2.00	221.00	10.40	210.60
51+50	82.65	0.03	30.00	0.00	251.00	10.40	240.60
52+00	112.18	0.00	180.00	0.00	431.00	10.40	420.60
52+50	136.21	0.00	230.00	0.00	661.00	10.40	650.60
53+00	154.06	0.00	269.00	0.00	930.00	10.40	919.60
53+50	127.93	1.75	261.00	2.00	1,191.00	13.00	1,178.00
54+00	84.67	5.39	197.00	7.00	1,388.00	22.10	1,365.90
54+50	44.03	9.62	119.00	14.00	1,507.00	40.30	1,466.70
54+72.5	56.24	11.33	42.00	9.00	1,549.00	52.00	1,497.00
55+00	34.15	13.94	46.00	13.00	1,595.00	68.90	1,526.10
55+50	31.65	19.86	61.00	31.00	1,656.00	109.20	1,546.80
56+00	36.39	19.92	63.00	37.00	1,719.00	157.30	1,561.70
56+50	50.45	14.45	80.00	32.00	1,799.00	198.90	1,600.10
57+00	62.04	10.37	104.00	23.00	1,903.00	228.80	1,674.20
57+50	54.41	14.62	108.00	23.00	2,011.00	258.70	1,752.30
58+00	48.86	14.17	96.00	27.00	2,107.00	293.80	1,813.20
58+50	48.85	9.31	90.00	22.00	2,197.00	322.40	1,874.60
59+00	44.28	11.93	86.00	20.00	2,283.00	348.40	1,934.60
59+50	42.01	31.61	80.00	40.00	2,363.00	400.40	1,962.60
59+62.75	58.56	32.13	24.00	15.00	2,387.00	419.90	1,967.10
60+00	42.53	46.42	70.00	54.00	2,457.00	490.10	1,966.90
60+50	41.99	76.26	78.00	114.00	2,535.00	638.30	1,896.70

DIVISION 1 - COUNTY LINE ROAD

STATION	AREA (SF)		INCREMENTAL VOL (CY) (UNADJUSTED)		CUMULATIVE VOL (CY)		
	CUT	FILL	CUT	FILL	CUT 1.00	EXPANDED FILL 1.30	MASS ORDINATE
61+00	41.14	73.68	77.00	139.00	2,612.00	819.00	1,793.00
61+50	45.04	120.89	80.00	180.00	2,692.00	1,053.00	1,639.00
62+00	44.93	137.26	83.00	239.00	2,775.00	1,363.70	1,411.30
62+50	50.69	181.36	89.00	295.00	2,864.00	1,747.20	1,116.80
63+00	56.33	210.54	99.00	363.00	2,963.00	2,219.10	743.90
63+50	64.12	163.85	112.00	347.00	3,075.00	2,670.20	404.80
64+00	62.21	186.14	117.00	324.00	3,192.00	3,091.40	100.60
64+50	61.43	211.37	114.00	368.00	3,306.00	3,569.80	-263.80
65+00	63.35	244.05	116.00	422.00	3,422.00	4,118.40	-696.40
65+36	88.48	249.46	101.00	329.00	3,523.00	4,546.10	-1,023.10
65+66	89.14	276.46	99.00	292.00	3,622.00	4,925.70	-1,303.70
66+00	72.38	260.24	102.00	338.00	3,724.00	5,365.10	-1,641.10
66+50	70.46	133.92	132.00	365.00	3,856.00	5,839.60	-1,983.60
67+00	71.60	63.73	132.00	183.00	3,988.00	6,077.50	-2,089.50
67+50	70.84	69.71	132.00	124.00	4,120.00	6,238.70	-2,118.70
67+93	88.38	66.97	127.00	109.00	4,247.00	6,380.40	-2,133.40
68+00	71.94	70.56	21.00	18.00	4,268.00	6,403.80	-2,135.80
68+50	82.13	40.48	143.00	103.00	4,411.00	6,537.70	-2,126.70
69+00	85.71	8.40	155.00	45.00	4,566.00	6,596.20	-2,030.20
69+50	82.85	4.89	156.00	12.00	4,722.00	6,611.80	-1,889.80
70+00	81.15	3.13	152.00	7.00	4,874.00	6,620.90	-1,746.90
70+50	84.14	0.92	153.00	4.00	5,027.00	6,626.10	-1,599.10
71+00	101.74	0.00	172.00	1.00	5,199.00	6,627.40	-1,428.40
71+50	98.55	0.00	185.00	0.00	5,384.00	6,627.40	-1,243.40
71+68.81	101.59	0.86	70.00	0.00	5,454.00	6,627.40	-1,173.40
72+00	83.63	3.16	107.00	2.00	5,561.00	6,630.00	-1,069.00
72+50	76.54	60.51	148.00	59.00	5,709.00	6,706.70	-997.70
73+00	86.41	83.99	151.00	134.00	5,860.00	6,880.90	-1,020.90
73+19	125.27	70.92	74.00	55.00	5,934.00	6,952.40	-1,018.40
73+50	86.48	128.97	122.00	115.00	6,056.00	7,101.90	-1,045.90
74+00	79.52	162.46	154.00	270.00	6,210.00	7,452.90	-1,242.90
74+50	77.22	148.04	145.00	287.00	6,355.00	7,826.00	-1,471.00
75+00	82.35	102.91	148.00	232.00	6,503.00	8,127.60	-1,624.60
75+50	85.34	76.44	155.00	166.00	6,658.00	8,343.40	-1,685.40
76+00	78.82	48.95	152.00	116.00	6,810.00	8,494.20	-1,684.20
76+50	62.21	30.09	131.00	73.00	6,941.00	8,589.10	-1,648.10
76+92.63	43.99	0.00	84.00	24.00	7,025.00	8,620.30	-1,595.30

DIVISION 1 - EB_EAST_LEG

STATION	AREA (SF)		INCREMENTAL VOL (CY) (UNADJUSTED)		CUMULATIVE VOL (CY)		
	CUT	FILL	CUT	FILL	CUT 1.00	EXPANDED FILL 1.30	MASS ORDINATE
90+25	0.00	29.98	0.00	0.00	0.00	0.00	0.00
90+50	3.92	1.08	2.00	14.00	2.00	18.20	-16.20
90+75	36.76	0.00	19.00	1.00	21.00	19.50	1.50
90+95	46.70	0.00	31.00	0.00	52.00	19.50	32.50

DIVISION 1 - WB_EAST_LEG

STATION	AREA (SF)		INCREMENTAL VOL (CY) (UNADJUSTED)		CUMULATIVE VOL (CY)		
	CUT	FILL	CUT	FILL	CUT 1.00	EXPANDED FILL 1.30	MASS ORDINATE
90+25	0.80	9.31	0.00	0.00	0.00	0.00	0.00
90+50	11.30	0.00	6.00	4.00	6.00	5.20	0.80

DIVISION 1 - EB_WEST_LEG

STATION	AREA (SF)		INCREMENTAL VOL (CY) (UNADJUSTED)		CUMULATIVE VOL (CY)		
	CUT	FILL	CUT	FILL	CUT 1.00	EXPANDED FILL 1.30	MASS ORDINATE
77+25	0.00	0.00	0.00	0.00	0.00	0.00	0.00
77+50	15.87	25.51	7.00	12.00	7.00	15.60	-8.60
77+62	16.36	21.54	7.00	10.00	14.00	28.60	-14.60
77+75	16.39	20.40	8.00	10.00	22.00	41.60	-19.60
78+00	16.06	16.98	15.00	17.00	37.00	63.70	-26.70
78+25	17.83	9.21	16.00	12.00	53.00	79.30	-26.30
78+50	18.66	6.99	17.00	8.00	70.00	89.70	-19.70
78+75	21.73	5.12	19.00	6.00	89.00	97.50	-8.50
79+00	21.82	7.86	20.00	6.00	109.00	105.30	3.70
79+25	21.90	9.10	20.00	8.00	129.00	115.70	13.30
79+50	28.55	7.78	23.00	8.00	152.00	126.10	25.90
79+75	14.73	15.00	20.00	11.00	172.00	140.40	31.60

DIVISION 1 - WB_WEST_LEG

STATION	AREA (SF)		INCREMENTAL VOL (CY) (UNADJUSTED)		CUMULATIVE VOL (CY)		
	CUT	FILL	CUT	FILL	CUT 1.00	EXPANDED FILL 1.30	MASS ORDINATE
77+50	27.22	15.93	0.00	0.00	0.00	0.00	0.00
77+75	29.78	11.20	26.00	13.00	26.00	16.90	9.10
78+00	31.65	10.06	28.00	10.00	54.00	29.90	24.10
78+25	35.61	4.08	31.00	7.00	85.00	39.00	46.00
78+50	36.42	8.08	33.00	6.00	118.00	46.80	71.20
78+75	38.31	2.27	35.00	5.00	153.00	53.30	99.70
79+00	34.98	6.11	34.00	4.00	187.00	58.50	128.50
79+25	57.25	0.00	43.00	3.00	230.00	62.40	167.60
79+50	40.51	2.99	45.00	1.00	275.00	63.70	211.30
79+75	42.91	1.20	39.00	2.00	314.00	66.30	247.70

DIVISION 1 - NB_NORTH_LEG

STATION	AREA (SF)		INCREMENTAL VOL (CY) (UNADJUSTED)		CUMULATIVE VOL (CY)		
	CUT	FILL	CUT	FILL	CUT 1.00	EXPANDED FILL 1.30	MASS ORDINATE
110+25	4.80	32.28	0.00	0.00	0.00	0.00	0.00
110+50	6.94	23.48	5.00	26.00	5.00	33.80	-28.80
110+75	16.74	22.40	11.00	21.00	16.00	61.10	-45.10
111+00	22.27	22.71	18.00	21.00	34.00	88.40	-54.40
111+25	26.56	7.54	23.00	14.00	57.00	106.60	-49.60
111+50	73.16	4.83	46.00	6.00	103.00	114.40	-11.40
111+75	67.98	3.13	65.00	4.00	168.00	119.60	48.40
112+00	65.33	2.85	62.00	3.00	230.00	123.50	106.50
112+25	0.00	0.00	30.00	1.00	260.00	124.80	135.20

DIVISION 1 - SB_NORTH_LEG

STATION	AREA (SF)		INCREMENTAL VOL (CY) (UNADJUSTED)		CUMULATIVE VOL (CY)		
	CUT	FILL	CUT	FILL	CUT 1.00	EXPANDED FILL 1.30	MASS ORDINATE
110+25	42.19	0.58	0.00	0.00	0.00	0.00	0.00
110+50	41.78	0.31	39.00	0.00	39.00	0.00	39.00
110+75	35.13	0.43	36.00	0.00	75.00	0.00	75.00
111+00	36.72	2.84	33.00	2.00	108.00	2.60	105.40
111+25	32.12	3.59	32.00	3.00	140.00	6.50	133.50

DIVISION 1 - NB_SOUTH_LEG

STATION	AREA (SF)		INCREMENTAL VOL (CY) (UNADJUSTED)		CUMULATIVE VOL (CY)		
	CUT	FILL	CUT	FILL	CUT 1.00	EXPANDED FILL 1.30	MASS ORDINATE
100+00	71.84	0.41	0.00	0.00	0.00	0.00	0.00
100+25	36.47	0.37	50.00	0.00	50.00	0.00	50.00
100+50	38.34	0.34	35.00	0.00	85.00	0.00	85.00
100+75	42.09	0.35	37.00	0.00	122.00	0.00	122.00
101+00	47.57	0.49	42.00	0.00	164.00	0.00	164.00
101+25	41.04	4.02	41.00	2.00	205.00	2.60	202.40
101+50	35.01	4.88	35.00	4.00	240.00	7.80	232.20
101+75	36.94	4.03	33.00	4.00	273.00	13.00	260.00

9

9

PROJECT NO: 7995-02-74 | HWY: COUNTY LINE ROAD | COUNTY: EAU CLAIRE | EARTHWORK DATA | SHEET 169 | E

DIVISION 1 - SB_SOUTH_LEG

STATION	AREA (SF)		INCREMENTAL VOL (CY) (UNADJUSTED)		CUMULATIVE VOL (CY)		
	CUT	FILL	CUT	FILL	CUT 1.00	EXPANDED FILL 1.30	MASS ORDINATE
100+25	35.05	0.28	0.00	0.00	0.00	0.00	0.00
100+50	34.67	0.05	32.00	0.00	32.00	0.00	32.00
100+75	34.12	0.08	32.00	0.00	64.00	0.00	64.00
101+00	33.14	0.22	31.00	0.00	95.00	0.00	95.00
101+25	29.90	1.26	29.00	1.00	124.00	1.30	122.70
101+50	28.86	1.21	27.00	1.00	151.00	2.60	148.40
101+75	25.05	2.33	25.00	2.00	176.00	5.20	170.80

DIVISION 1 - XCEL DRWY

STATION	AREA (SF)		INCREMENTAL VOL (CY) (UNADJUSTED)		CUMULATIVE VOL (CY)		
	CUT	FILL	CUT	FILL	CUT 1.00	EXPANDED FILL 1.30	MASS ORDINATE
10+29.00	64.87	0.00	0.00	0.00	0.00	0.00	0.00
10+50	14.28	4.24	31.00	2.00	31.00	2.60	28.40
11+00	5.39	14.46	18.00	17.00	49.00	24.70	24.30
11+50	26.01	0.00	29.00	13.00	78.00	41.60	36.40
11+62.5	29.71	0.00	13.00	0.00	91.00	41.60	49.40
12+00	18.55	0.33	34.00	0.00	125.00	41.60	83.40
12+50	25.00	0.01	40.00	0.00	165.00	41.60	123.40
13+00	43.70	15.46	64.00	14.00	229.00	59.80	169.20
13+50	37.97	0.00	76.00	14.00	305.00	78.00	227.00
13+97.26	43.74	0.00	72.00	0.00	377.00	78.00	299.00

DIVISION 1 - XCEL TEMP

STATION	AREA (SF)		INCREMENTAL VOL (CY) (UNADJUSTED)		CUMULATIVE VOL (CY)		
	CUT	FILL	CUT	FILL	CUT 1.00	EXPANDED FILL 1.30	MASS ORDINATE
13+00	86.21	0.00	0.00	0.00	0.00	0.00	0.00
13+50	5.31	10.02	85.00	9.00	85.00	11.70	73.30
14+00	17.49	0.00	21.00	9.00	106.00	23.40	82.60
14+40	45.87	0.00	47.00	0.00	153.00	23.40	129.60

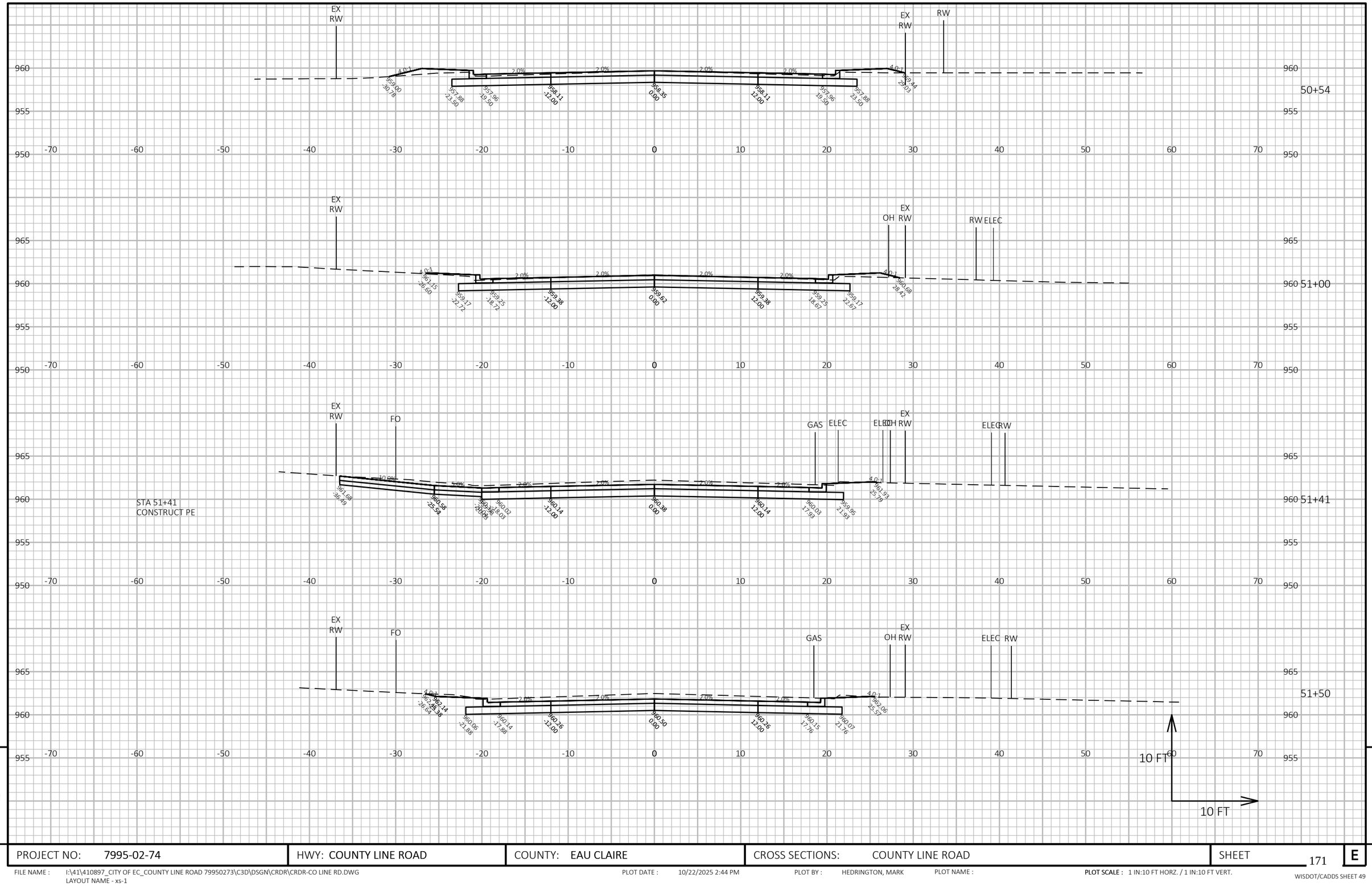

9

9

PROJECT NO: 7995-02-74	HWY: COUNTY LINE ROAD	COUNTY: EAU CLAIRE	CROSS SECTIONS: COUNTY LINE ROAD	SHEET 171	E

FILE NAME : I:\41\410897_CITY OF EC_COUNTY LINE ROAD 79950273\C3D\DSGN\CRDR\CRDR-CO LINE RD.DWG
LAYOUT NAME - xs-1

PLOT DATE : 10/22/2025 2:44 PM PLOT BY : HEDRINGTON, MARK PLOT NAME : PLOT SCALE : 1 IN:10 FT HORZ. / 1 IN:10 FT VERT.

WISDOT/CADDS SHEET 49

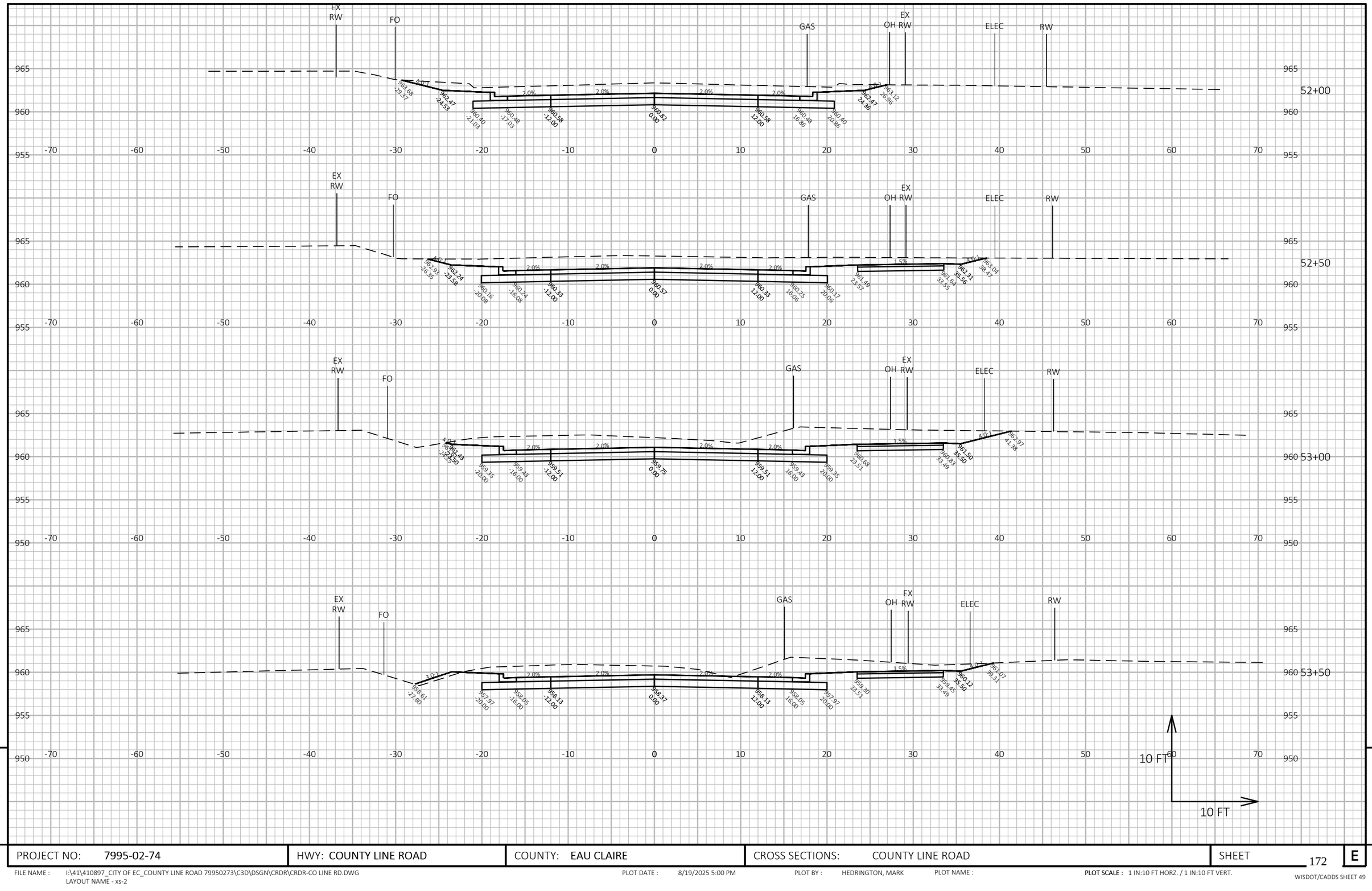

PROJECT NO: 7995-02-74	HWY: COUNTY LINE ROAD	COUNTY: EAU CLAIRE	CROSS SECTIONS: COUNTY LINE ROAD	SHEET 172	E

FILE NAME : I:\41\410897_CITY OF EC_COUNTY LINE ROAD 79950273\C3D\DSGN\CRDR\CRDR-CO LINE RD.DWG
LAYOUT NAME - xs-2

PLOT DATE : 8/19/2025 5:00 PM PLOT BY : HEDRINGTON, MARK PLOT NAME : PLOT SCALE : 1 IN:10 FT HORZ. / 1 IN:10 FT VERT.

WISDOT/CADDS SHEET 49

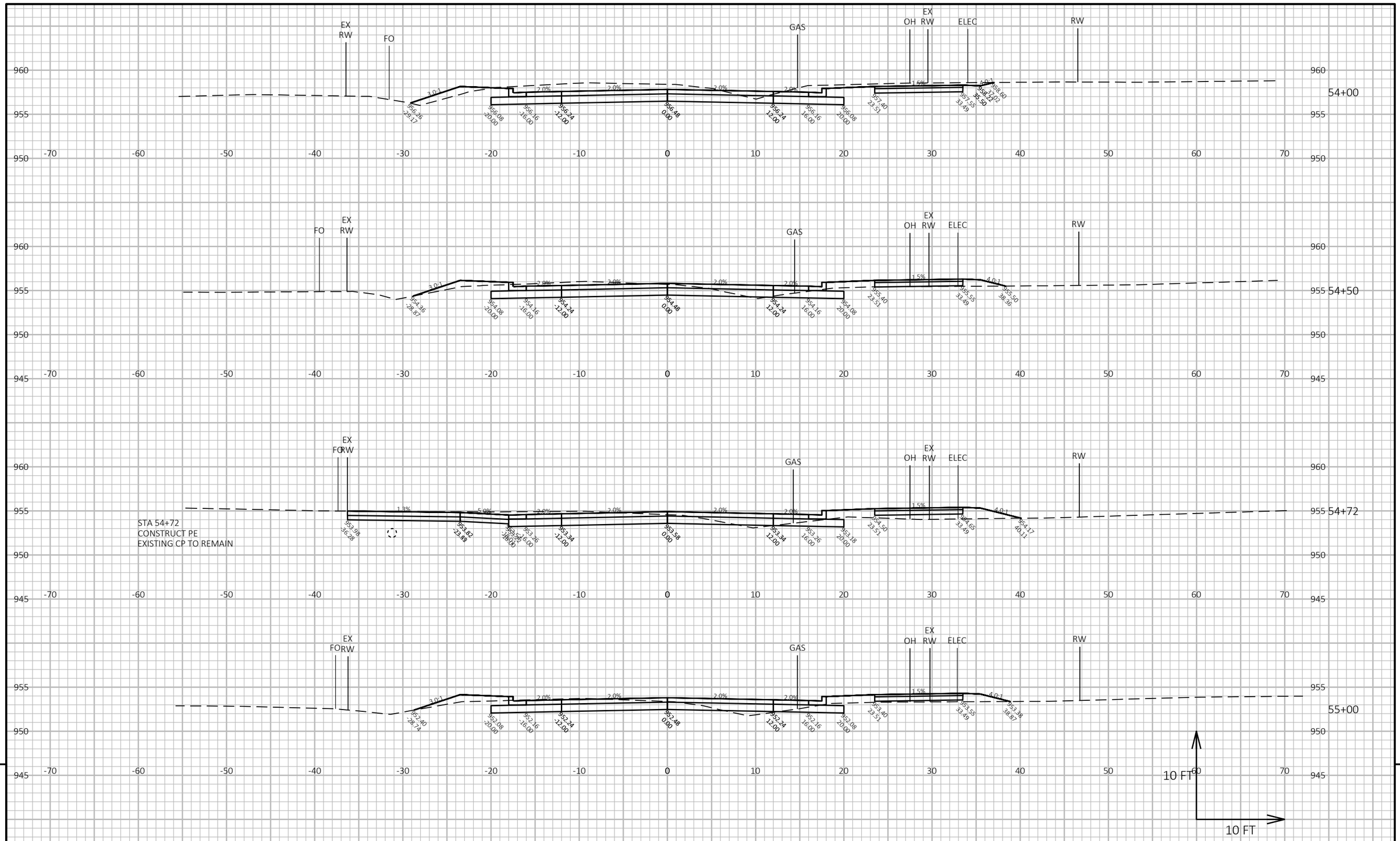

9

9

PROJECT NO: 7995-02-74	HWY: COUNTY LINE ROAD	COUNTY: EAU CLAIRE	CROSS SECTIONS: COUNTY LINE ROAD	SHEET 173	E

FILE NAME : I:\41\410897_CITY OF EC_COUNTY LINE ROAD 79950273\C3D\DSGN\CRDR\CRDR-CO LINE RD.DWG
LAYOUT NAME - xs-3

PLOT DATE : 8/27/2025 8:54 AM PLOT BY : HEDRINGTON, MARK PLOT NAME :

PLOT SCALE : 1 IN:10 FT HORZ. / 1 IN:10 FT VERT.

WISDOT/CADDS SHEET 49

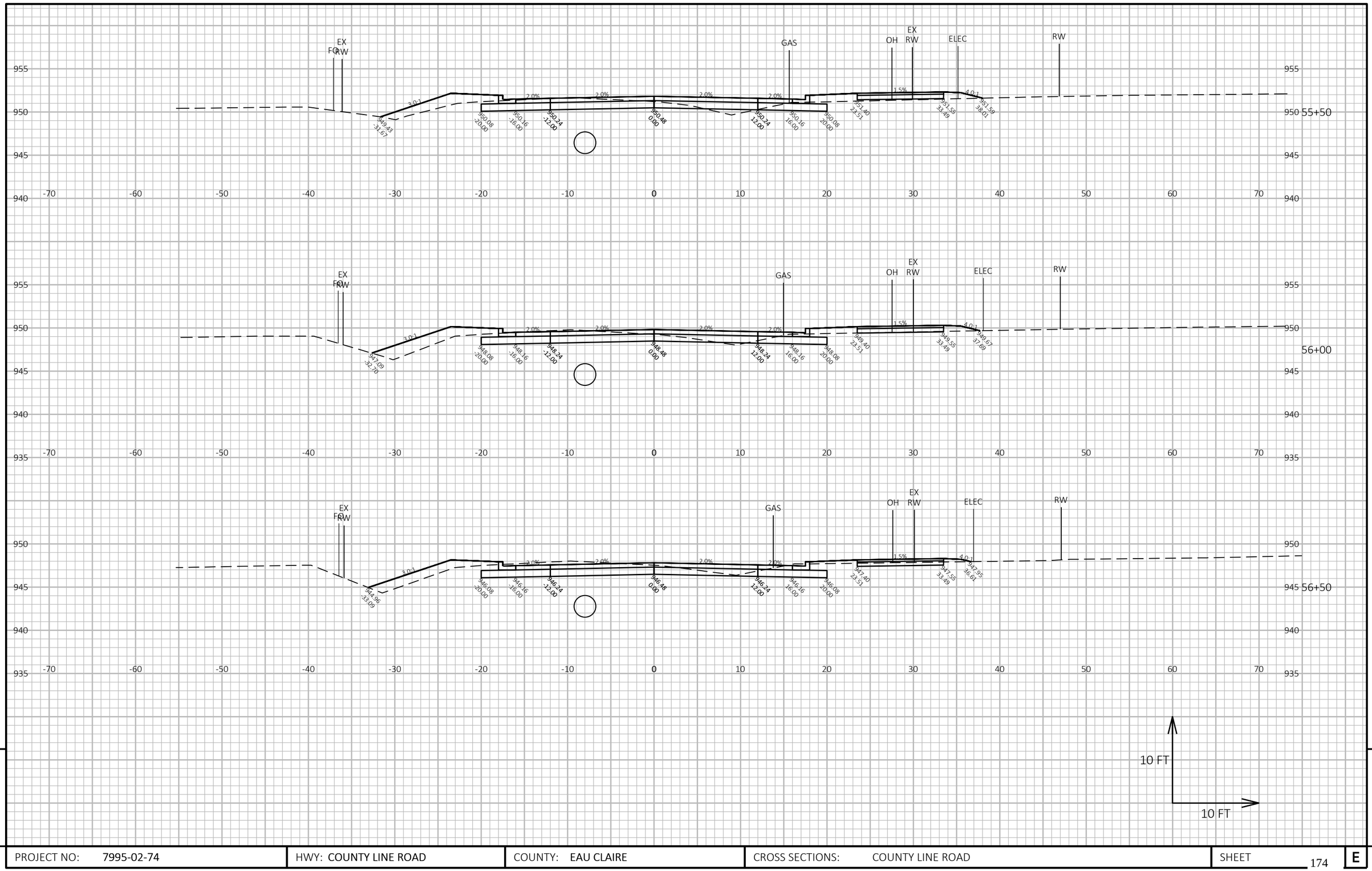

9

9

PROJECT NO: 7995-02-74	HWY: COUNTY LINE ROAD	COUNTY: EAU CLAIRE	CROSS SECTIONS: COUNTY LINE ROAD	SHEET 174	E

FILE NAME : I:\41\410897_CITY OF EC_COUNTY LINE ROAD 79950273\C3D\DSGN\CRDR\CRDR-CO LINE RD.DWG
LAYOUT NAME - xs-4

PLOT DATE : 8/19/2025 5:00 PM PLOT BY : HEDRINGTON, MARK PLOT NAME : **PLOT SCALE :** 1 IN:10 FT HORZ. / 1 IN:10 FT VERT.

WISDOT/CADDS SHEET 49

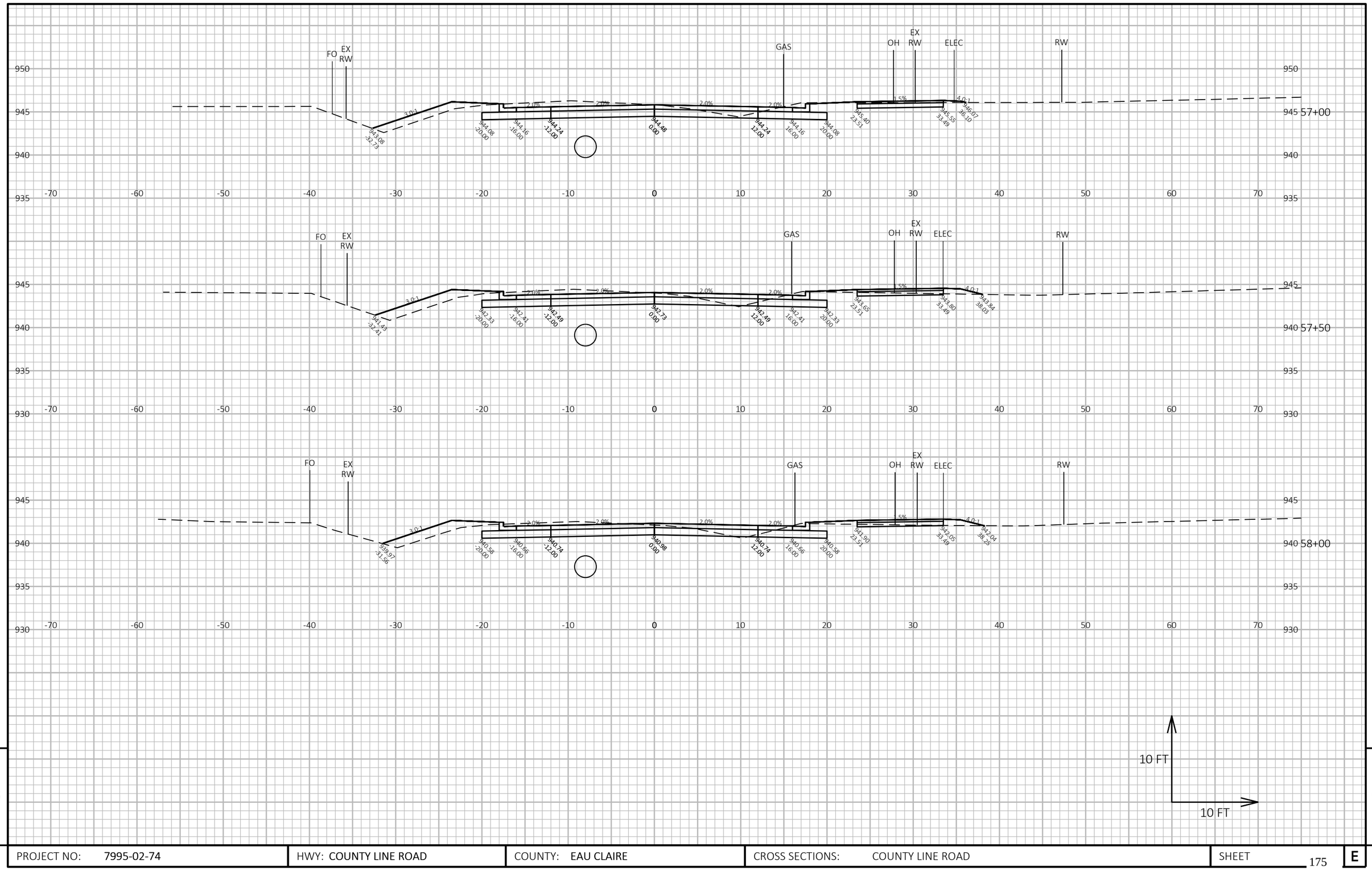

9

9

PROJECT NO: 7995-02-74	HWY: COUNTY LINE ROAD	COUNTY: EAU CLAIRE	CROSS SECTIONS: COUNTY LINE ROAD	SHEET 175	E

FILE NAME : I:\41\410897_CITY OF EC_COUNTY LINE ROAD 79950273\C3D\DSGN\CRDR\CRDR-CO LINE RD.DWG
LAYOUT NAME - xs-5

PLOT DATE : 8/19/2025 5:00 PM PLOT BY : HEDRINGTON, MARK PLOT NAME : **PLOT SCALE :** 1 IN:10 FT HORZ. / 1 IN:10 FT VERT.

WISDOT/CADDS SHEET 49

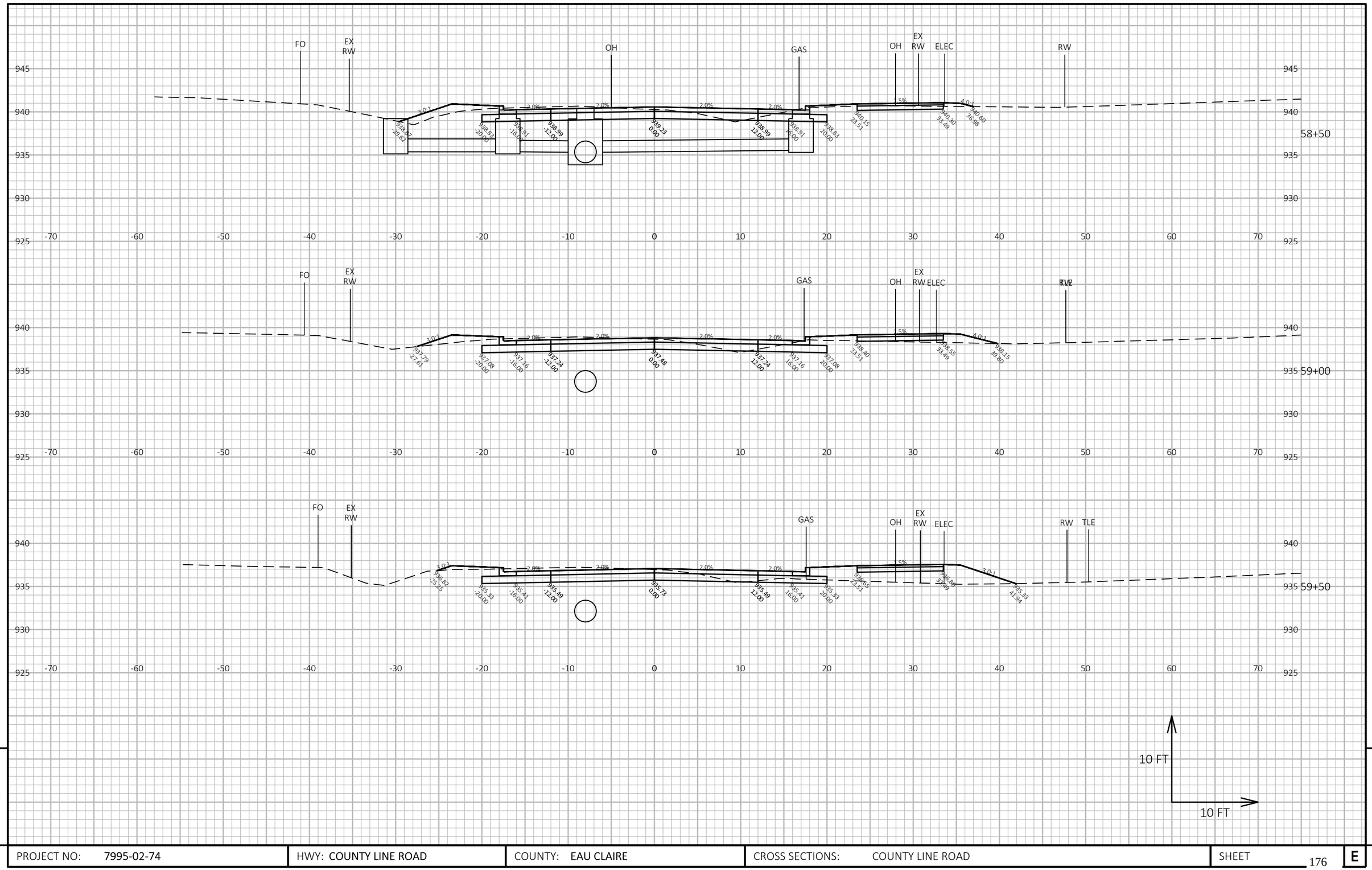

9

9

PROJECT NO: 7995-02-74	HWY: COUNTY LINE ROAD	COUNTY: EAU CLAIRE	CROSS SECTIONS: COUNTY LINE ROAD	SHEET 176	E

FILE NAME : I:\41\410897_CITY OF EC_COUNTY LINE ROAD 79950273\C3D\DSGN\CRDR\CRDR-CO LINE RD.DWG
LAYOUT NAME - xs-6

PLOT DATE : 8/27/2025 8:54 AM PLOT BY : HEDRINGTON, MARK PLOT NAME : **PLOT SCALE :** 1 IN:10 FT HORZ. / 1 IN:10 FT VERT.

WISDOT/CADDS SHEET 49

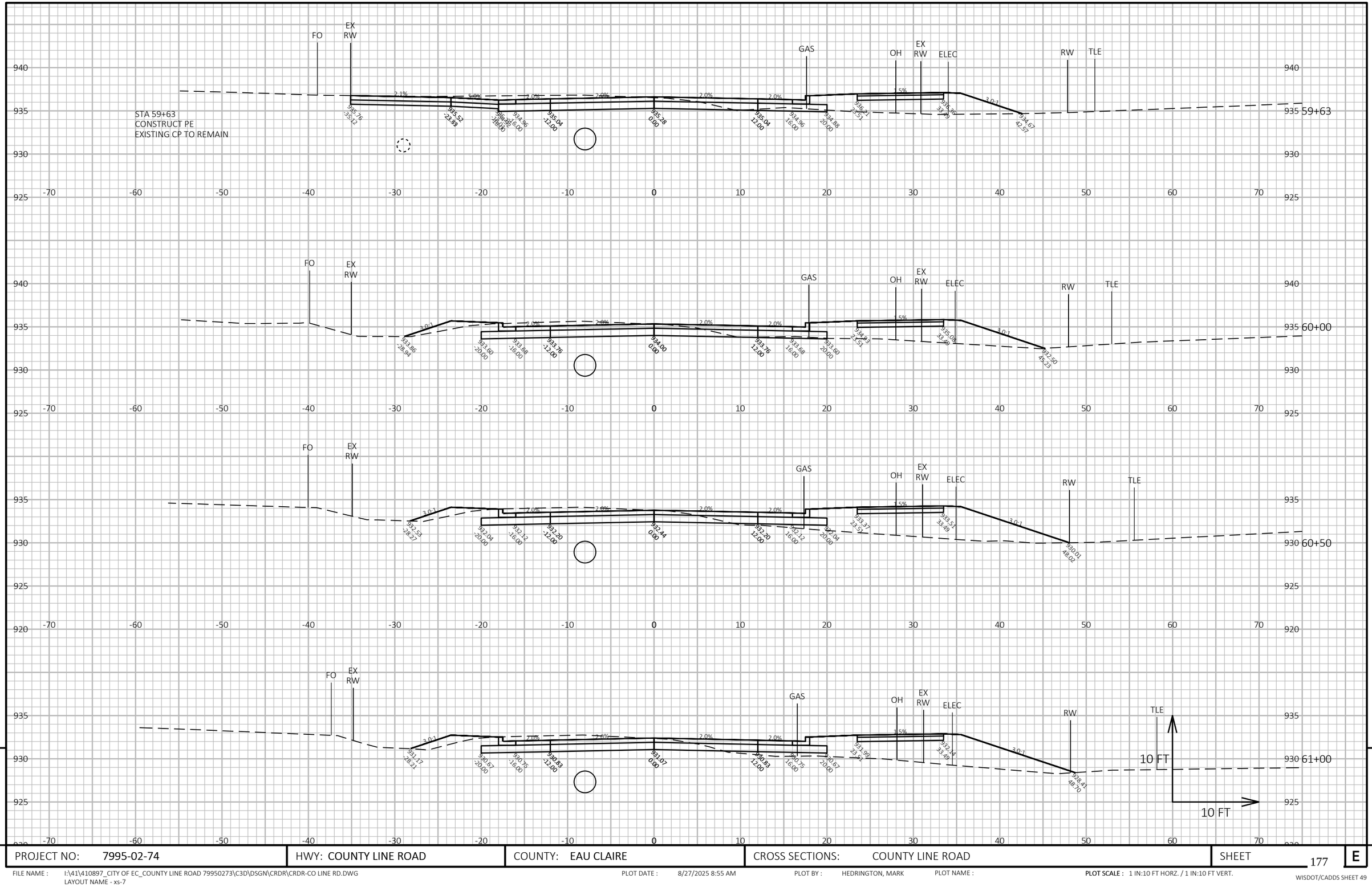

9

9

PROJECT NO: 7995-02-74	HWY: COUNTY LINE ROAD	COUNTY: EAU CLAIRE	CROSS SECTIONS: COUNTY LINE ROAD	SHEET 177	E

FILE NAME : I:\41\410897_CITY OF EC_COUNTY LINE ROAD 79950273\C3D\DSGN\CRDR\CRDR-CO LINE RD.DWG
LAYOUT NAME - xs-7

PLOT DATE : 8/27/2025 8:55 AM PLOT BY : HEDRINGTON, MARK PLOT NAME : **PLOT SCALE :** 1 IN:10 FT HORZ. / 1 IN:10 FT VERT.

WISDOT/CADDS SHEET 49

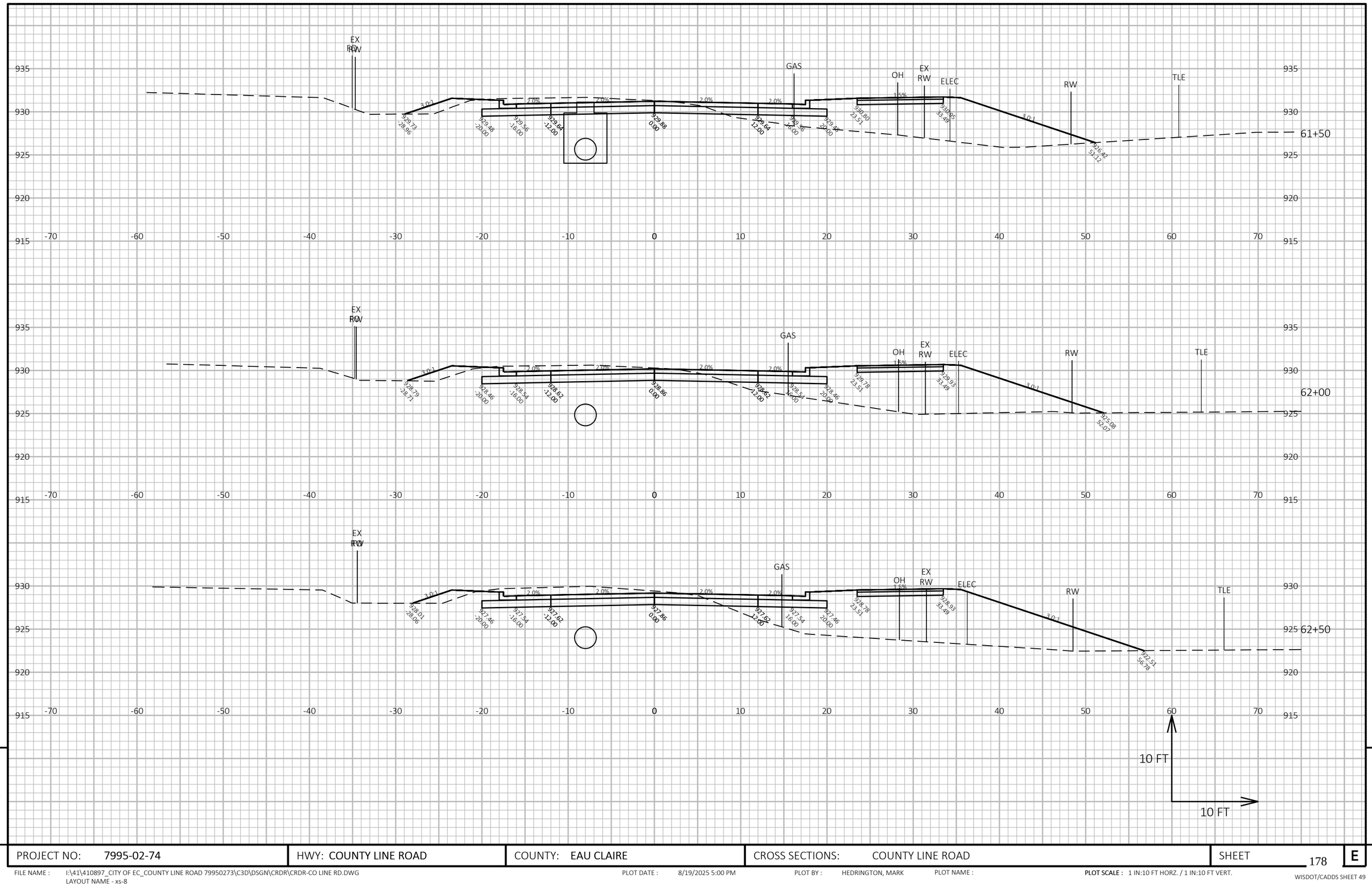

9

9

PROJECT NO: 7995-02-74	HWY: COUNTY LINE ROAD	COUNTY: EAU CLAIRE	CROSS SECTIONS: COUNTY LINE ROAD	SHEET 178	E

FILE NAME : I:\41\410897_CITY OF EC_COUNTY LINE ROAD 79950273\C3D\DSGN\CRDR\CRDR-CO LINE RD.DWG
LAYOUT NAME - xs-8

PLOT DATE : 8/19/2025 5:00 PM PLOT BY : HEDRINGTON, MARK PLOT NAME : **PLOT SCALE :** 1 IN:10 FT HORZ. / 1 IN:10 FT VERT.

WISDOT/CADDS SHEET 49

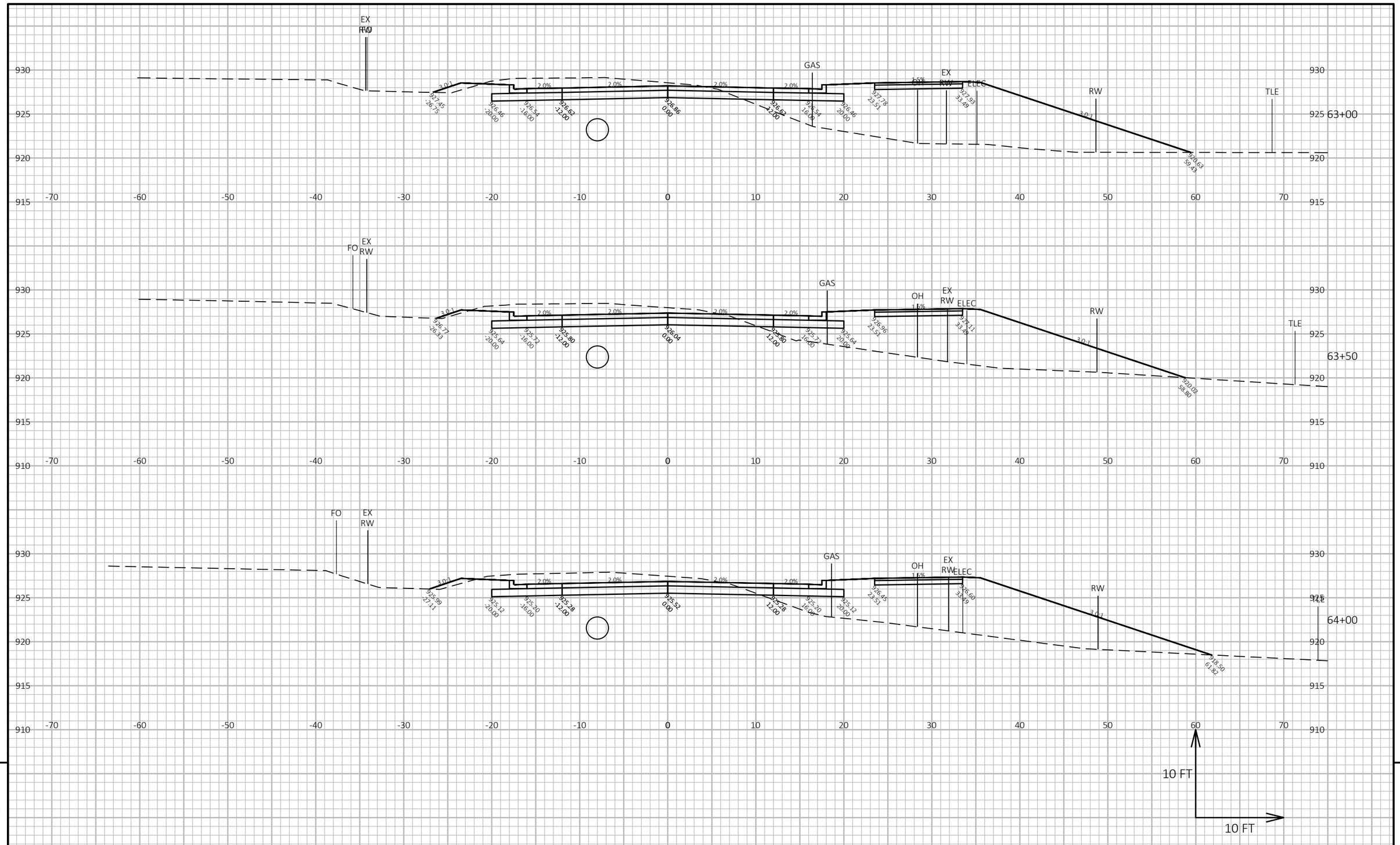

9

9

PROJECT NO: 7995-02-74	HWY: COUNTY LINE ROAD	COUNTY: EAU CLAIRE	CROSS SECTIONS: COUNTY LINE ROAD	SHEET 179	E

FILE NAME : I:\41\410897_CITY OF EC_COUNTY LINE ROAD 79950273\C3D\DSGN\CRDR\CRDR-CO LINE RD.DWG
LAYOUT NAME - xs-9

PLOT DATE : 8/19/2025 5:00 PM PLOT BY : HEDRINGTON, MARK PLOT NAME : **PLOT SCALE :** 1 IN:10 FT HORZ. / 1 IN:10 FT VERT.

WISDOT/CADDS SHEET 49

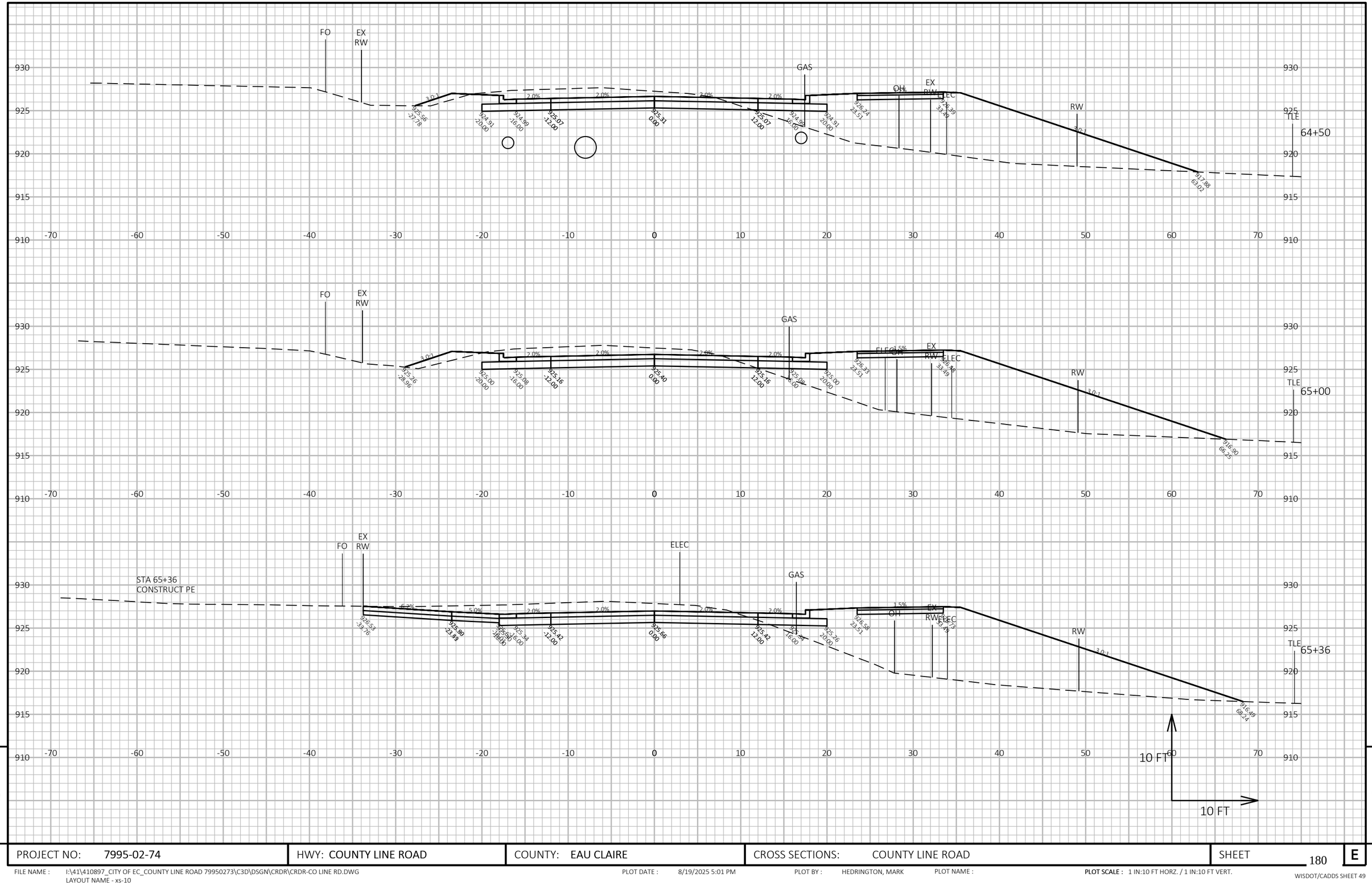

PROJECT NO: 7995-02-74	HWY: COUNTY LINE ROAD	COUNTY: EAU CLAIRE	CROSS SECTIONS: COUNTY LINE ROAD	SHEET 180	E

FILE NAME : I:\41\410897_CITY OF EC_COUNTY LINE ROAD 79950273\C3D\DSGN\CRDR\CRDR-CO LINE RD.DWG
LAYOUT NAME - xs-10

PLOT DATE : 8/19/2025 5:01 PM PLOT BY : HEDRINGTON, MARK PLOT NAME : **PLOT SCALE :** 1 IN:10 FT HORZ. / 1 IN:10 FT VERT.

WISDOT/CADDS SHEET 49

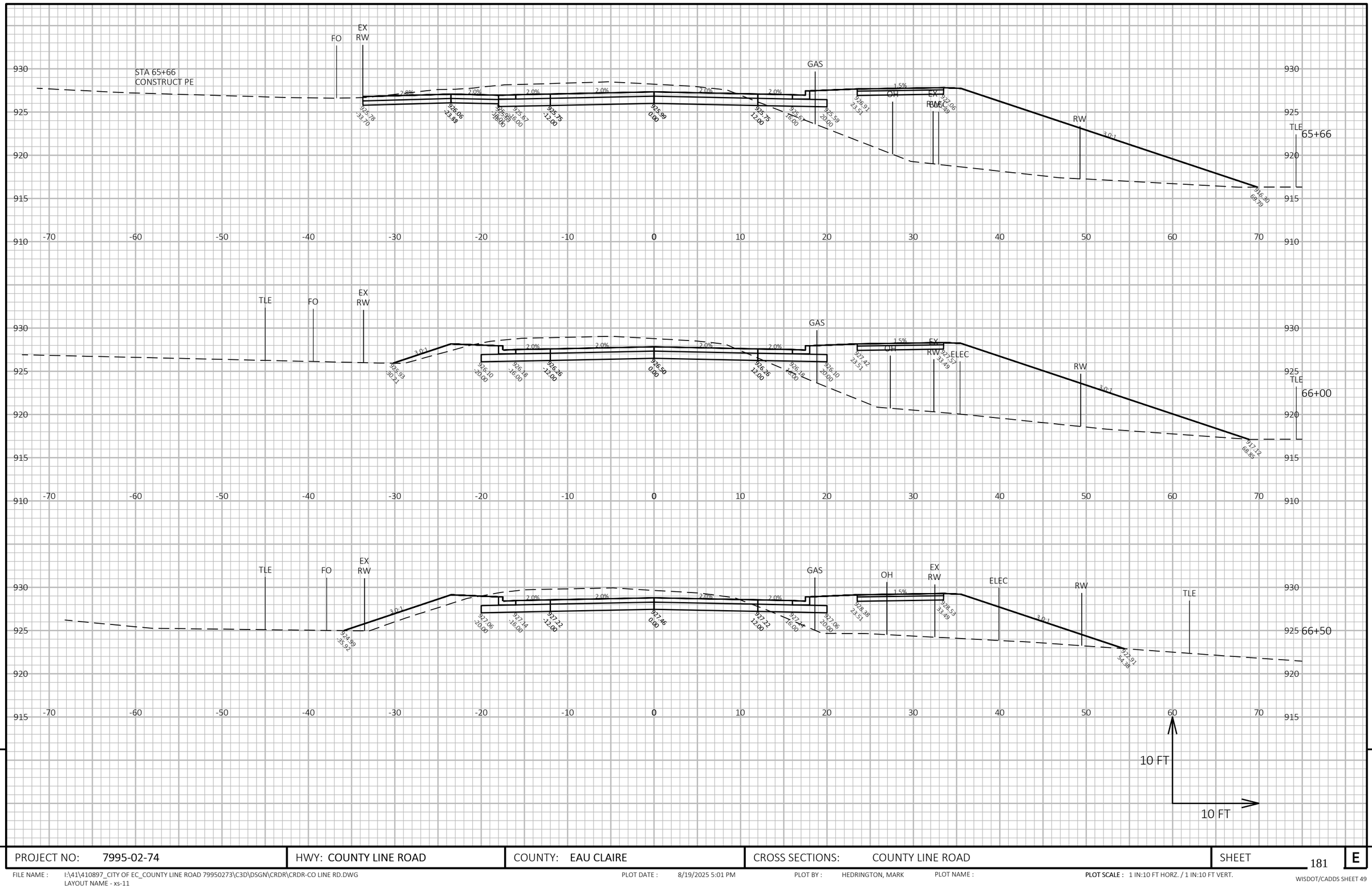

PROJECT NO: 7995-02-74	HWY: COUNTY LINE ROAD	COUNTY: EAU CLAIRE	CROSS SECTIONS: COUNTY LINE ROAD	SHEET 181	E

FILE NAME : I:\41\410897_CITY OF EC_COUNTY LINE ROAD 79950273\C3D\DSGN\CRDR\CRDR-CO LINE RD.DWG
LAYOUT NAME - xs-11

PLOT DATE : 8/19/2025 5:01 PM PLOT BY : HEDRINGTON, MARK PLOT NAME : **PLOT SCALE :** 1 IN:10 FT HORZ. / 1 IN:10 FT VERT.

WISDOT/CADDS SHEET 49

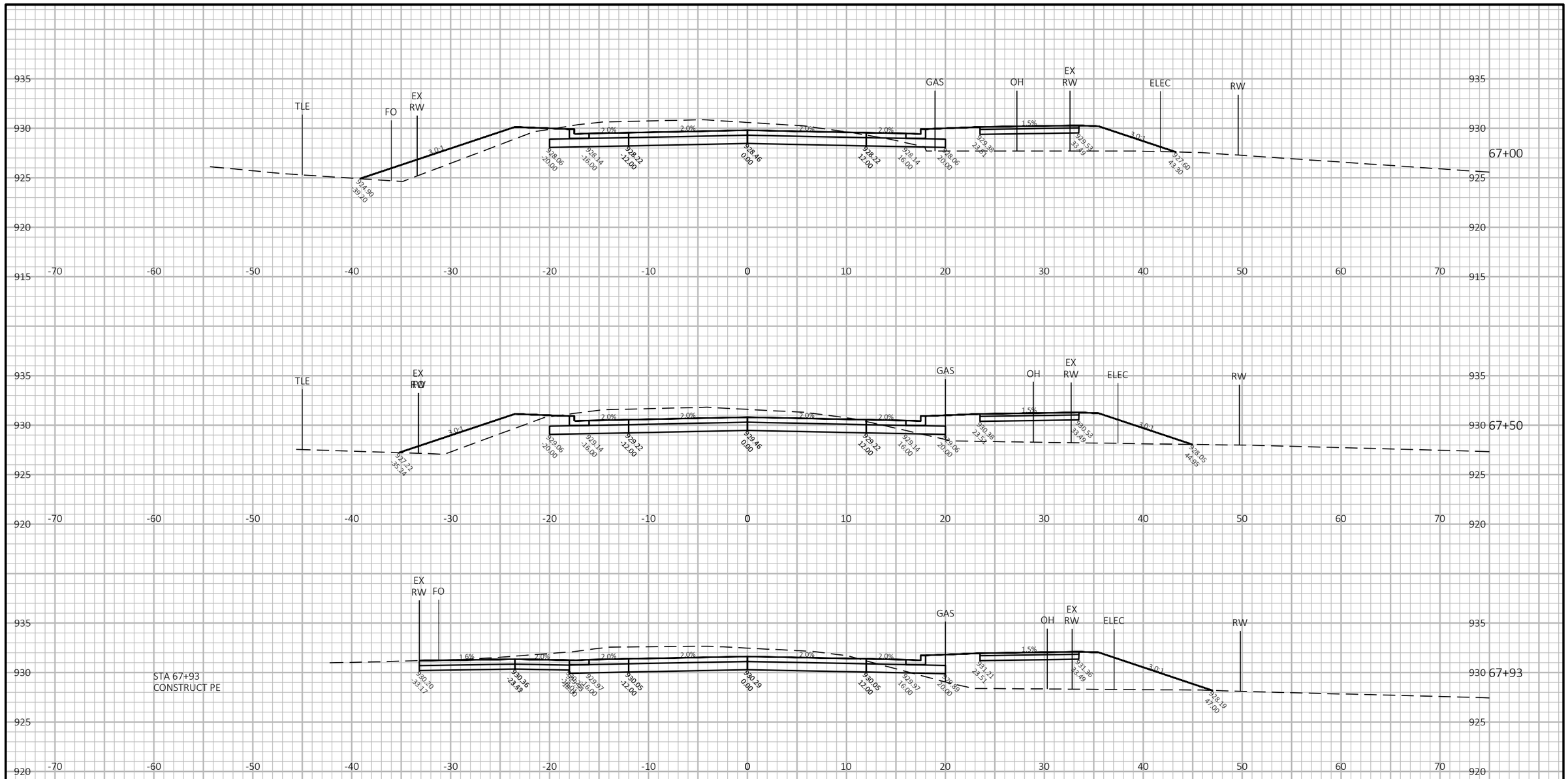

PROJECT NO: 7995-02-74	HWY: COUNTY LINE ROAD	COUNTY: EAU CLAIRE	CROSS SECTIONS: COUNTY LINE ROAD	SHEET 182 E

FILE NAME : I:\41\410897_CITY OF EC_COUNTY LINE ROAD 79950273\C3D\DSGN\CRDR\CRDR-CO LINE RD.DWG
LAYOUT NAME - xs-12

PLOT DATE : 8/19/2025 5:01 PM PLOT BY : HEDRINGTON, MARK PLOT NAME : **PLOT SCALE :** 1 IN:10 FT HORZ. / 1 IN:10 FT VERT.

WISDOT/CADDS SHEET 49

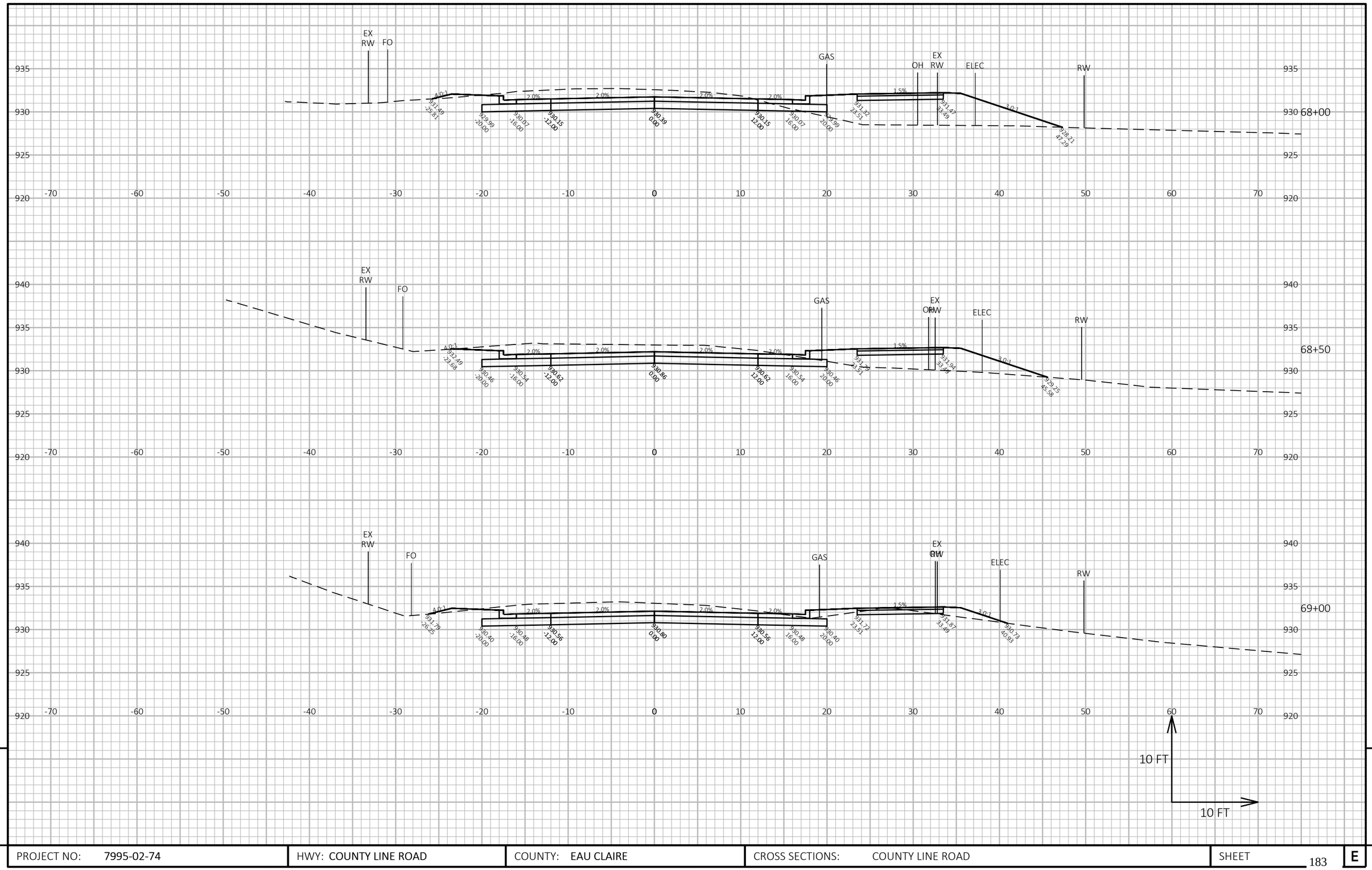

9

9

PROJECT NO: 7995-02-74	HWY: COUNTY LINE ROAD	COUNTY: EAU CLAIRE	CROSS SECTIONS: COUNTY LINE ROAD	SHEET 183	E

FILE NAME : I:\41\410897_CITY OF EC_COUNTY LINE ROAD 79950273\C3D\DSGN\CRDR\CRDR-CO LINE RD.DWG
LAYOUT NAME - xs-13

PLOT DATE : 8/19/2025 5:01 PM PLOT BY : HEDRINGTON, MARK PLOT NAME : **PLOT SCALE :** 1 IN:10 FT HORZ. / 1 IN:10 FT VERT.

WISDOT/CADDS SHEET 49

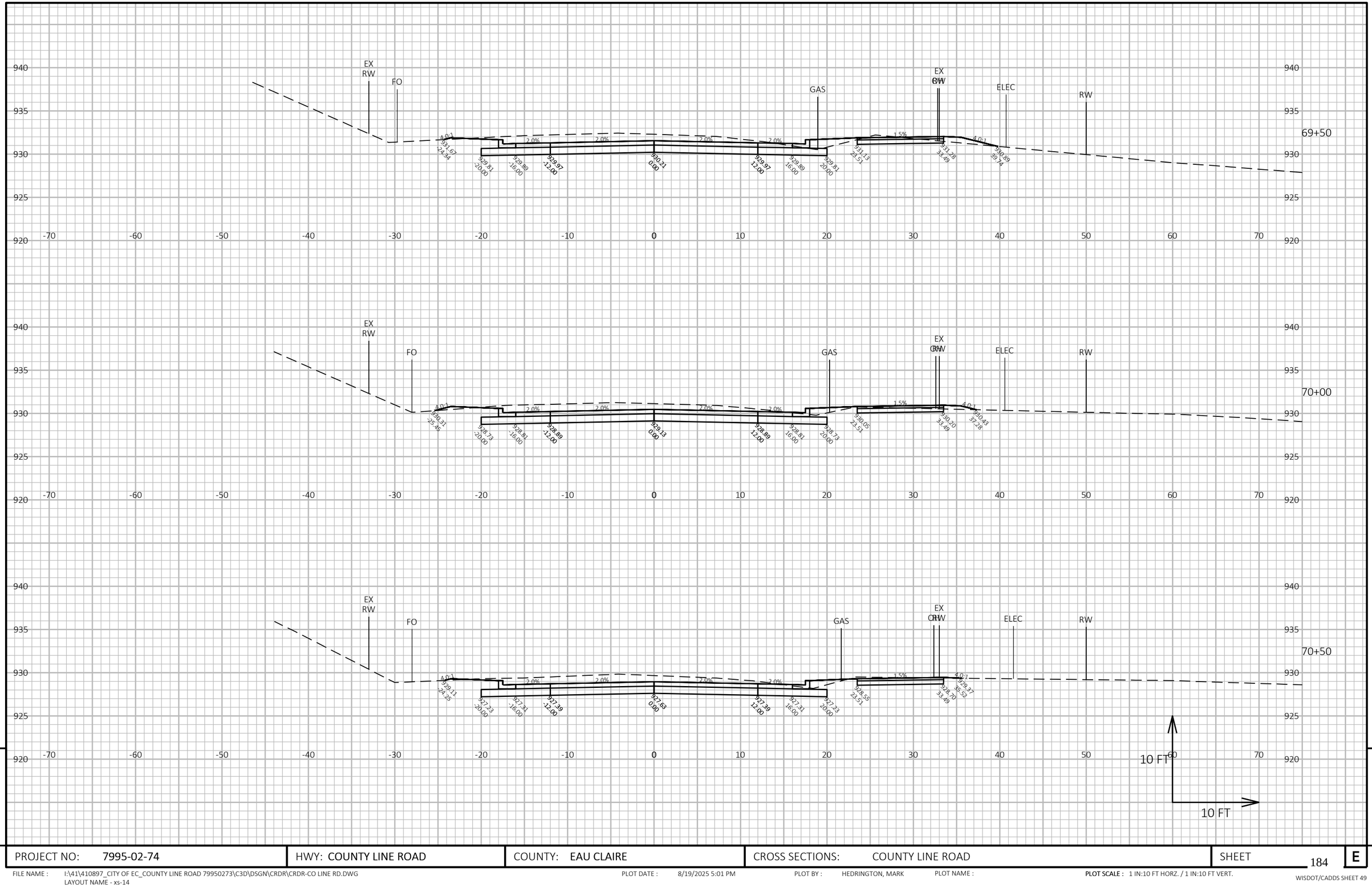

PROJECT NO: 7995-02-74	HWY: COUNTY LINE ROAD	COUNTY: EAU CLAIRE	CROSS SECTIONS: COUNTY LINE ROAD	SHEET 184	E

FILE NAME : I:\41\410897_CITY OF EC_COUNTY LINE ROAD 79950273\C3D\DSGN\CRDR\CRDR-CO LINE RD.DWG
LAYOUT NAME - xs-14

PLOT DATE : 8/19/2025 5:01 PM PLOT BY : HEDRINGTON, MARK PLOT NAME : PLOT SCALE : 1 IN:10 FT HORZ. / 1 IN:10 FT VERT.

WISDOT/CADDS SHEET 49

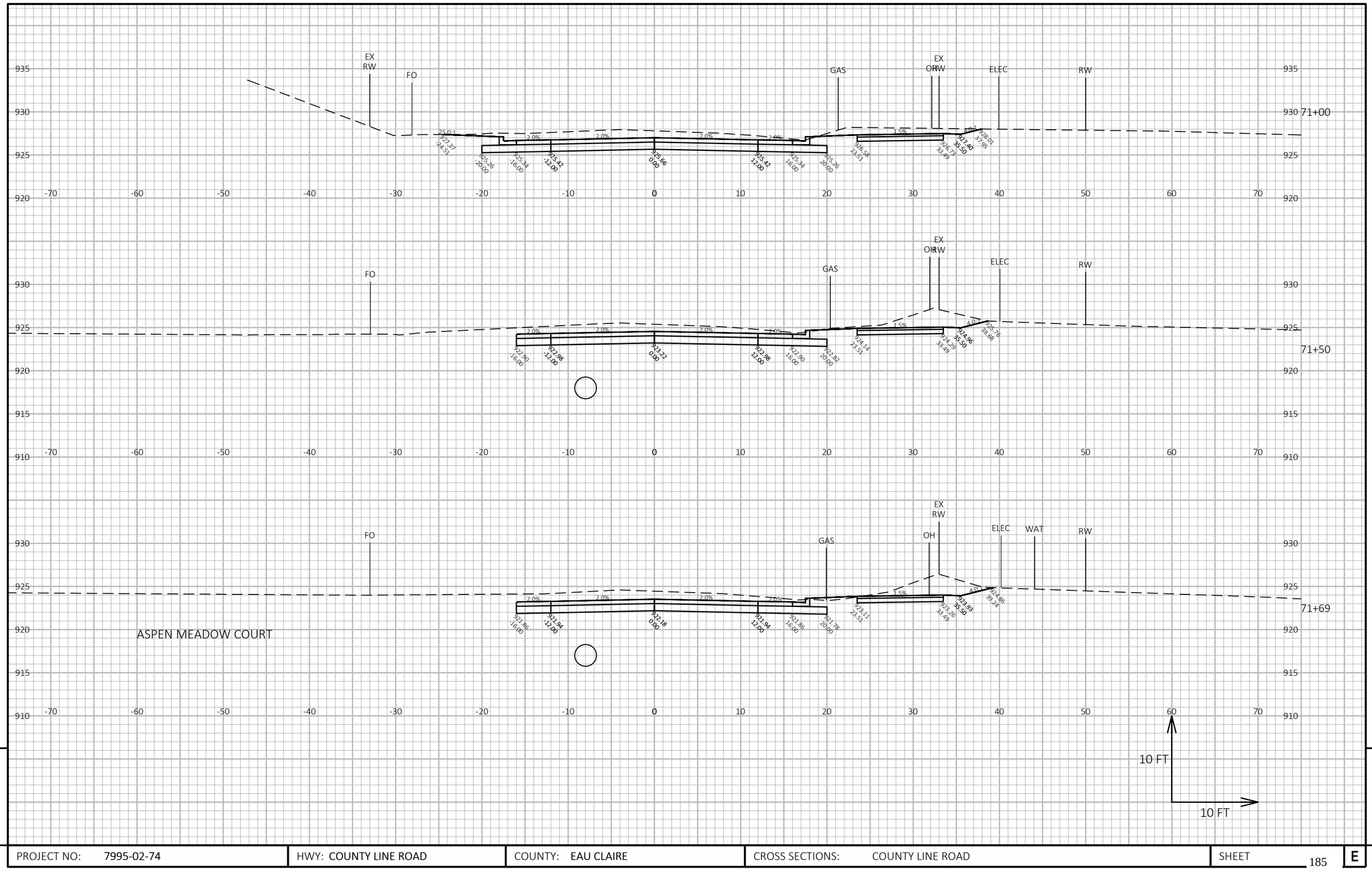

PROJECT NO: 7995-02-74	HWY: COUNTY LINE ROAD	COUNTY: EAU CLAIRE	CROSS SECTIONS: COUNTY LINE ROAD	SHEET 185 E

FILE NAME : I:\41\410897_CITY OF EC_COUNTY LINE ROAD 79950273\C3D\DSGN\CRDR\CRDR-CO LINE RD.DWG
LAYOUT NAME - xs-15

PLOT DATE : 1/21/2026 4:10 PM PLOT BY : HEDRINGTON, MARK PLOT NAME : PLOT SCALE : 1 IN:10 FT HORZ. / 1 IN:10 FT VERT.

WISDOT/CADDS SHEET 49

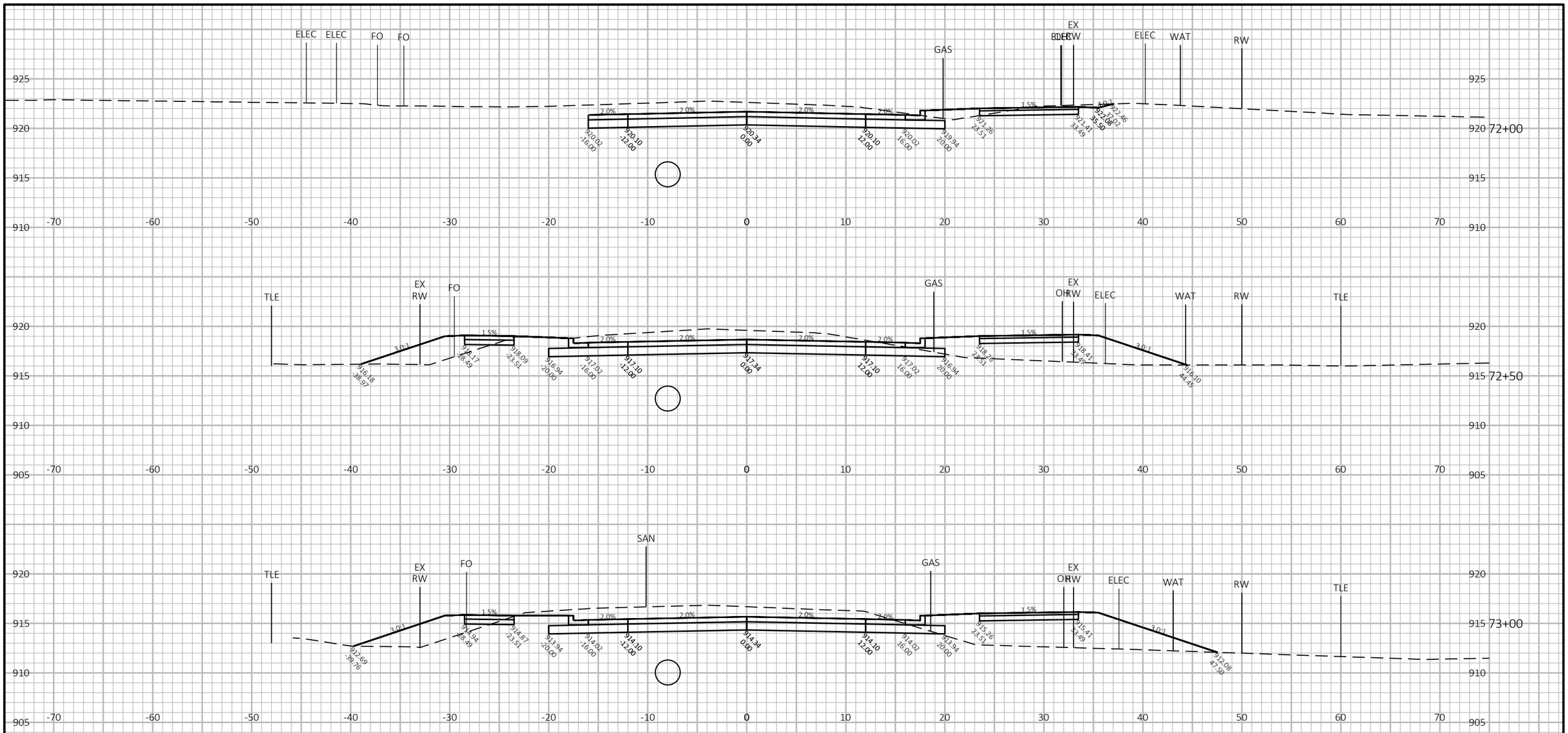

PROJECT NO: 7995-02-74	HWY: COUNTY LINE ROAD	COUNTY: EAU CLAIRE	CROSS SECTIONS: COUNTY LINE ROAD	SHEET 186	E

FILE NAME : I:\41\410897_CITY OF EC_COUNTY LINE ROAD 79950273\C3D\DSGN\CRDR\CRDR-CO LINE RD.DWG
LAYOUT NAME - xs-16

PLOT DATE : 1/21/2026 4:14 PM PLOT BY : HEDRINGTON, MARK PLOT NAME : **PLOT SCALE :** 1 IN:10 FT HORZ. / 1 IN:10 FT VERT.

WISDOT/CADDS SHEET 49

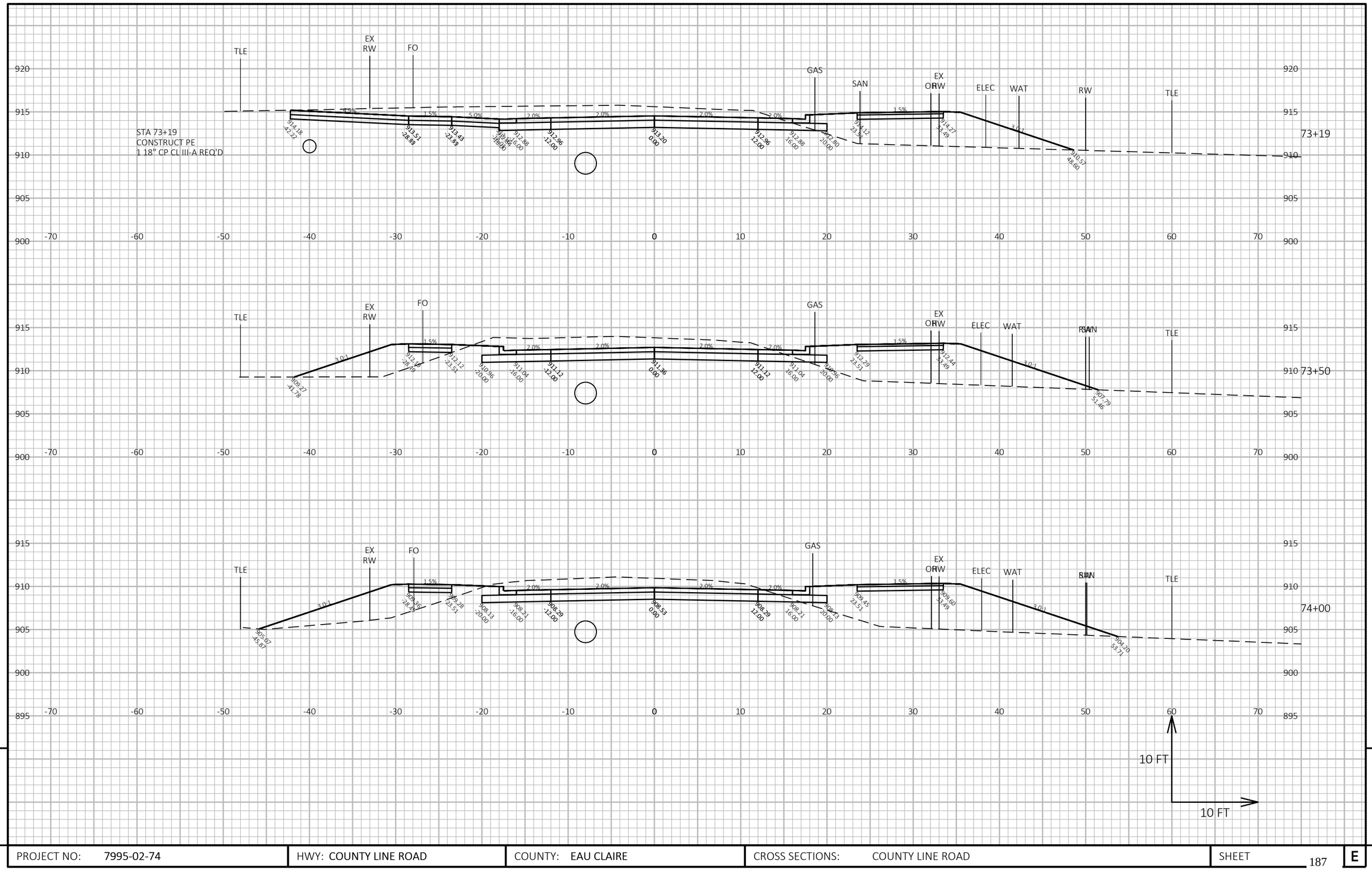

PROJECT NO: 7995-02-74	HWY: COUNTY LINE ROAD	COUNTY: EAU CLAIRE	CROSS SECTIONS: COUNTY LINE ROAD	SHEET 187	E

FILE NAME : I:\41\410897_CITY OF EC_COUNTY LINE ROAD 79950273\C3D\DSGN\CRDR\CRDR-CO LINE RD.DWG
LAYOUT NAME - xs-17

PLOT DATE : 1/21/2026 3:51 PM PLOT BY : HEDRINGTON, MARK PLOT NAME : PLOT SCALE : 1 IN:10 FT HORZ. / 1 IN:10 FT VERT.

WISDOT/CADDS SHEET 49

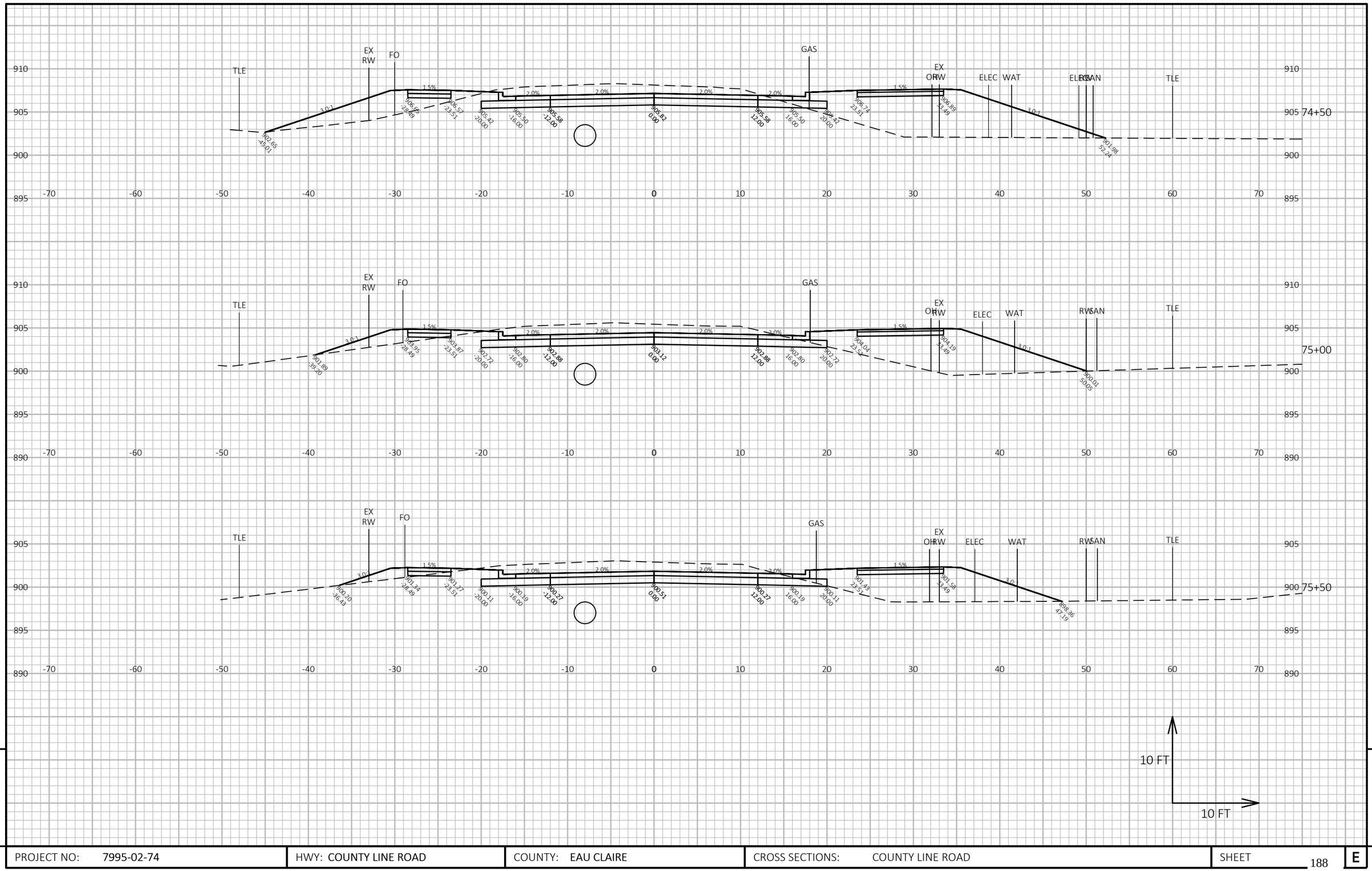

9

9

PROJECT NO: 7995-02-74	HWY: COUNTY LINE ROAD	COUNTY: EAU CLAIRE	CROSS SECTIONS: COUNTY LINE ROAD	SHEET 188	E

FILE NAME : I:\41\410897_CITY OF EC_COUNTY LINE ROAD 79950273\C3D\DSGN\CRDR\CRDR-CO LINE RD.DWG
LAYOUT NAME - xs-18

PLOT DATE : 8/19/2025 5:01 PM PLOT BY : HEDRINGTON, MARK PLOT NAME : PLOT SCALE : 1 IN:10 FT HORZ. / 1 IN:10 FT VERT.

WISDOT/CADDS SHEET 49

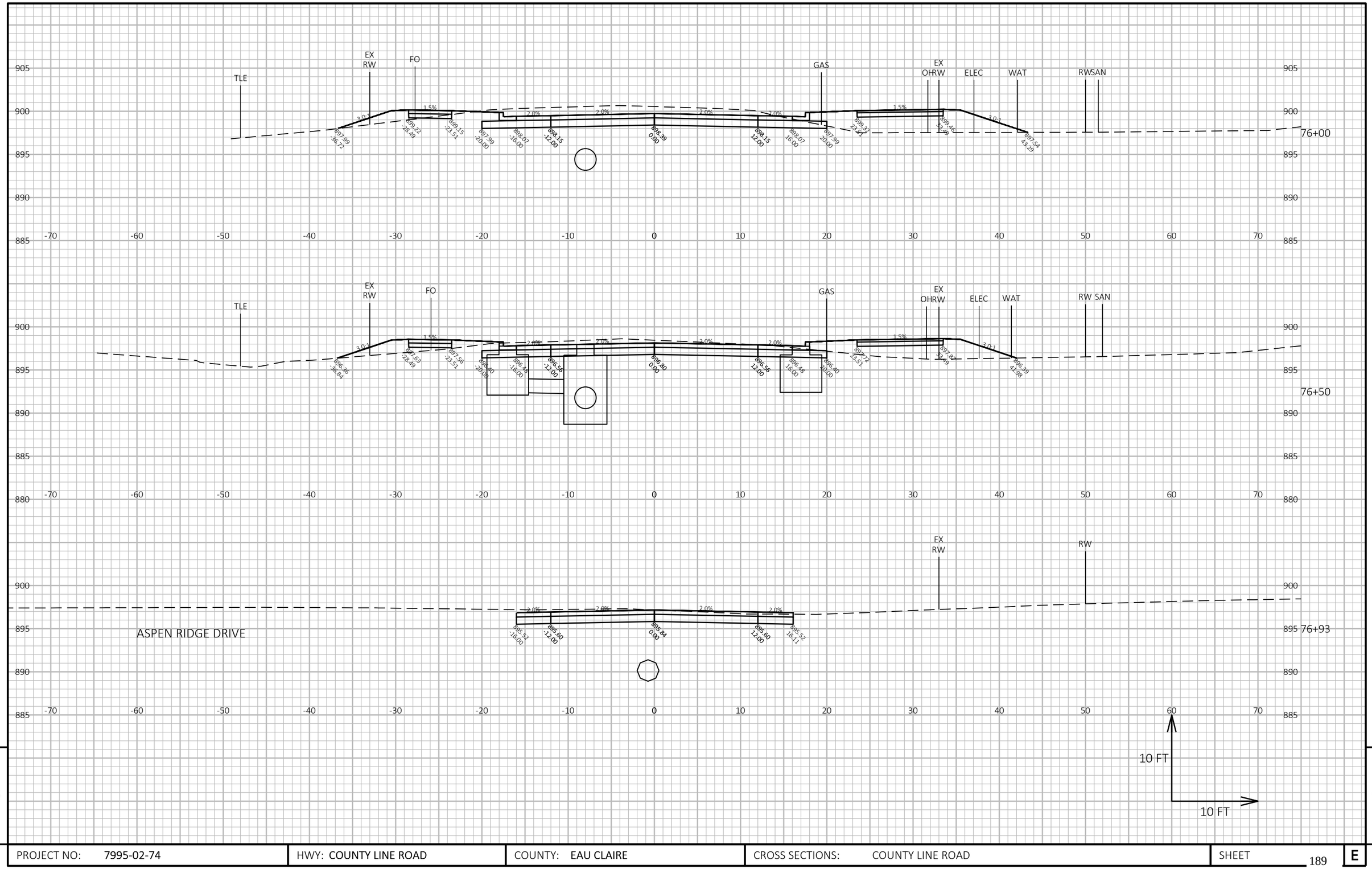

PROJECT NO: 7995-02-74	HWY: COUNTY LINE ROAD	COUNTY: EAU CLAIRE	CROSS SECTIONS: COUNTY LINE ROAD	SHEET 189	E

FILE NAME : I:\41\410897_CITY OF EC_COUNTY LINE ROAD 79950273\C3D\DSGN\CRDR\CRDR-CO LINE RD.DWG
LAYOUT NAME - xs-19

PLOT DATE : 8/19/2025 5:01 PM PLOT BY : HEDRINGTON, MARK PLOT NAME :

PLOT SCALE : 1 IN:10 FT HORZ. / 1 IN:10 FT VERT.

WISDOT/CADDS SHEET 49

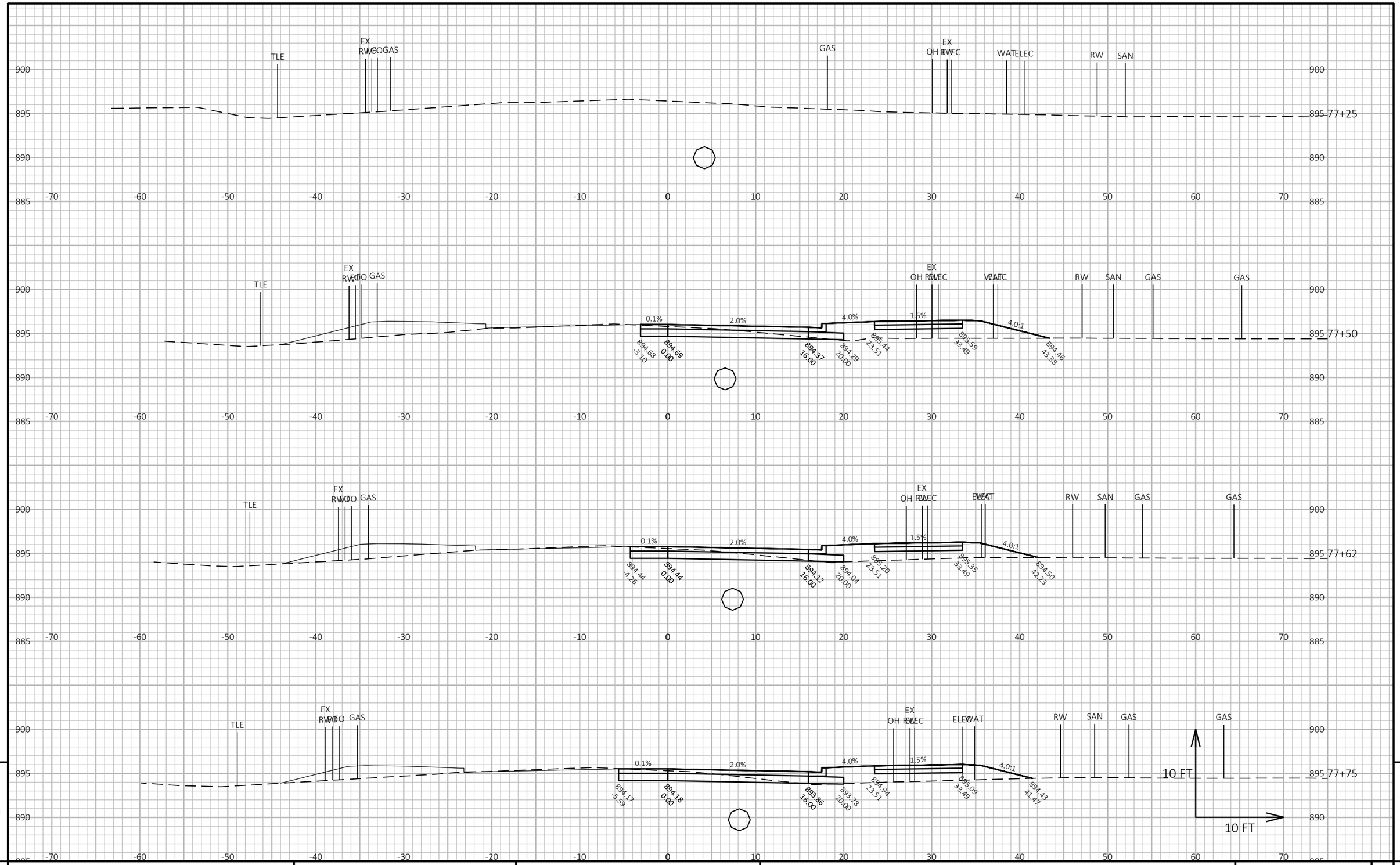

9

9

PROJECT NO: 7995-02-74	HWY: COUNTY LINE ROAD	COUNTY: EAU CLAIRE	CROSS SECTIONS: RAB WEST LEG	SHEET 190	E

FILE NAME : I:\41\410897_CITY OF EC_COUNTY LINE ROAD 79950273\C3D\DSGN\CRDR\CRDR-CO RAB W LEG.DWG
LAYOUT NAME - EB-WEST1

PLOT DATE : 1/21/2026 2:53 PM PLOT BY : HEDRINGTON, MARK PLOT NAME :

PLOT SCALE : 1 IN:10 FT HORZ. / 1 IN:10 FT VERT.

WISDOT/CADDS SHEET 49

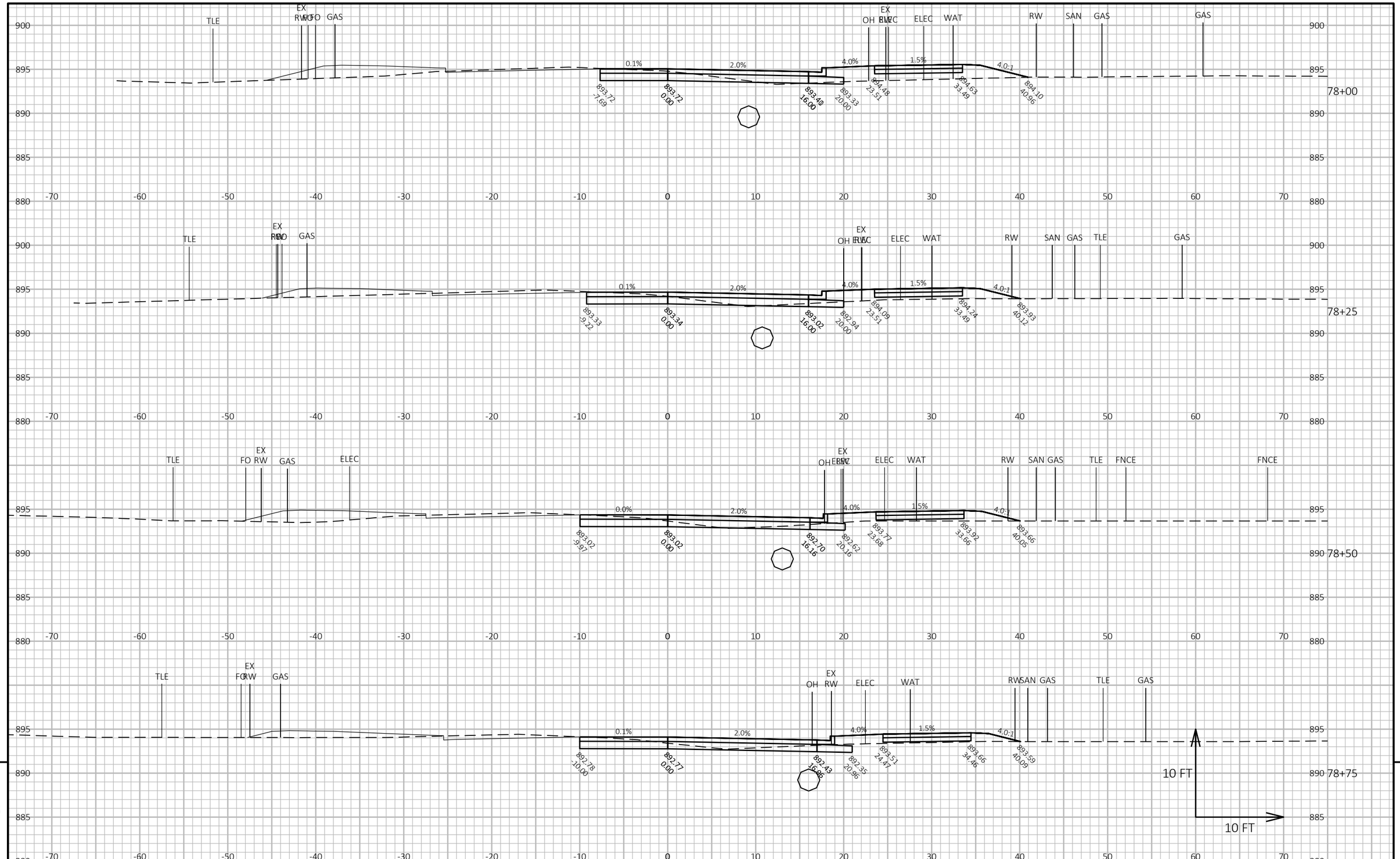

9

9

PROJECT NO: 7995-02-74	HWY: COUNTY LINE ROAD	COUNTY: EAU CLAIRE	CROSS SECTIONS: RAB WEST LEG	SHEET 191	E

FILE NAME : I:\41\410897_CITY OF EC_COUNTY LINE ROAD 79950273\C3D\DSGN\CRDR\CRDR-CO RAB W LEG.DWG
LAYOUT NAME - EB-WEST2

PLOT DATE : 8/19/2025 4:37 PM PLOT BY : HEDRINGTON, MARK PLOT NAME : **PLOT SCALE :** 1 IN:10 FT HORZ. / 1 IN:10 FT VERT.

WISDOT/CADDS SHEET 49

9

9

PROJECT NO: 7995-02-74	HWY: COUNTY LINE ROAD	COUNTY: EAU CLAIRE	CROSS SECTIONS: RAB WEST LEG	SHEET 192	E

FILE NAME : I:\41\410897_CITY OF EC_COUNTY LINE ROAD 79950273\C3D\DSGN\CRDR\CRDR-CO RAB W LEG.DWG
LAYOUT NAME - EB-WEST3

PLOT DATE : 8/19/2025 4:37 PM PLOT BY : HEDRINGTON, MARK PLOT NAME :

PLOT SCALE : 1 IN:10 FT HORZ. / 1 IN:10 FT VERT.

WISDOT/CADDS SHEET 49

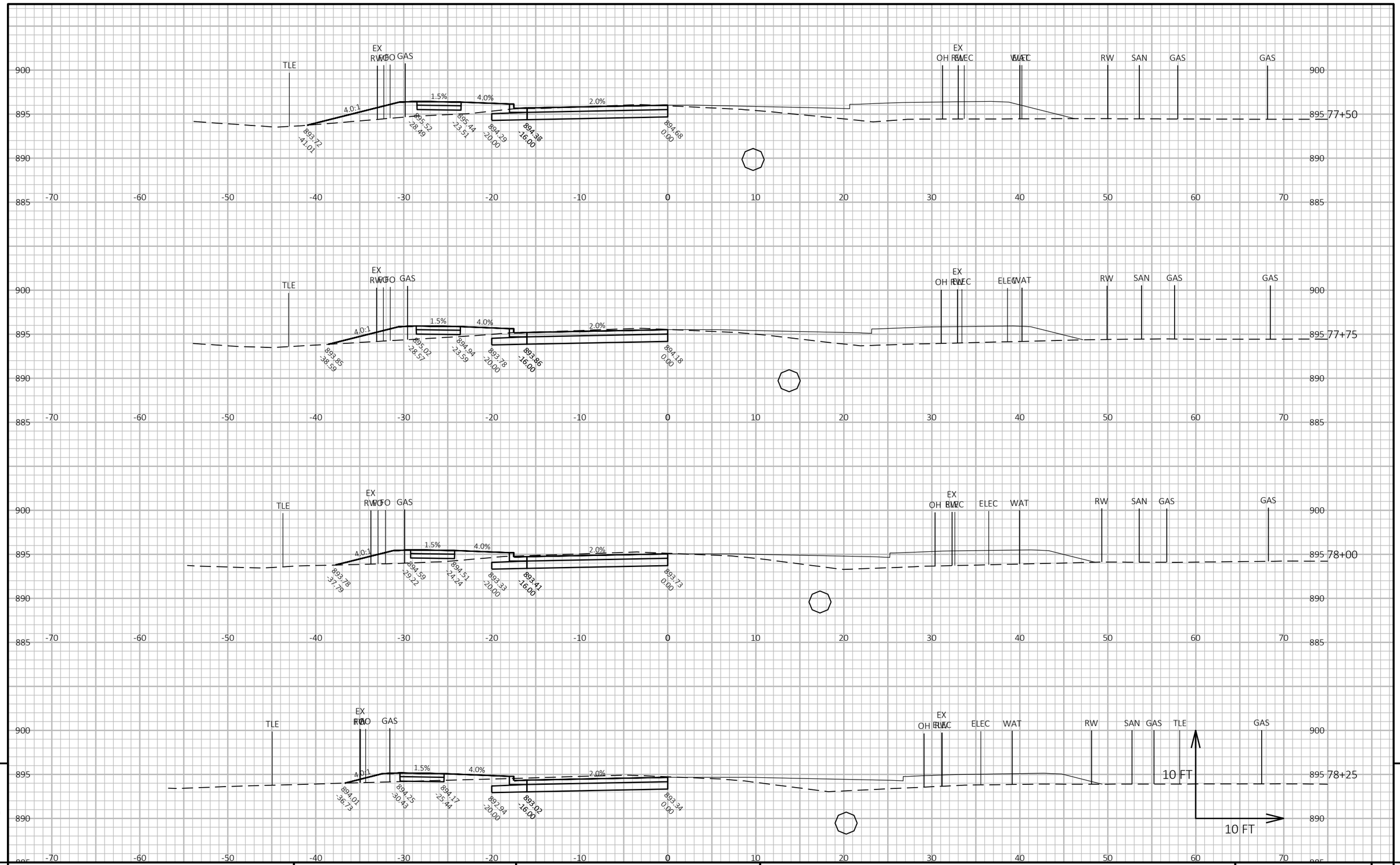

9

9

PROJECT NO: 7995-02-74	HWY: COUNTY LINE ROAD	COUNTY: EAU CLAIRE	CROSS SECTIONS: RAB WEST LEG	SHEET 193	E

FILE NAME : I:\41\410897_CITY OF EC_COUNTY LINE ROAD 79950273\C3D\DSGN\CRDR\CRDR-CO RAB W LEG.DWG
LAYOUT NAME - WB-WEST1

PLOT DATE : 1/21/2026 2:54 PM

PLOT BY : HEDRINGTON, MARK

PLOT NAME :

PLOT SCALE : 1 IN:10 FT HORZ. / 1 IN:10 FT VERT.

WISDOT/CADDS SHEET 49

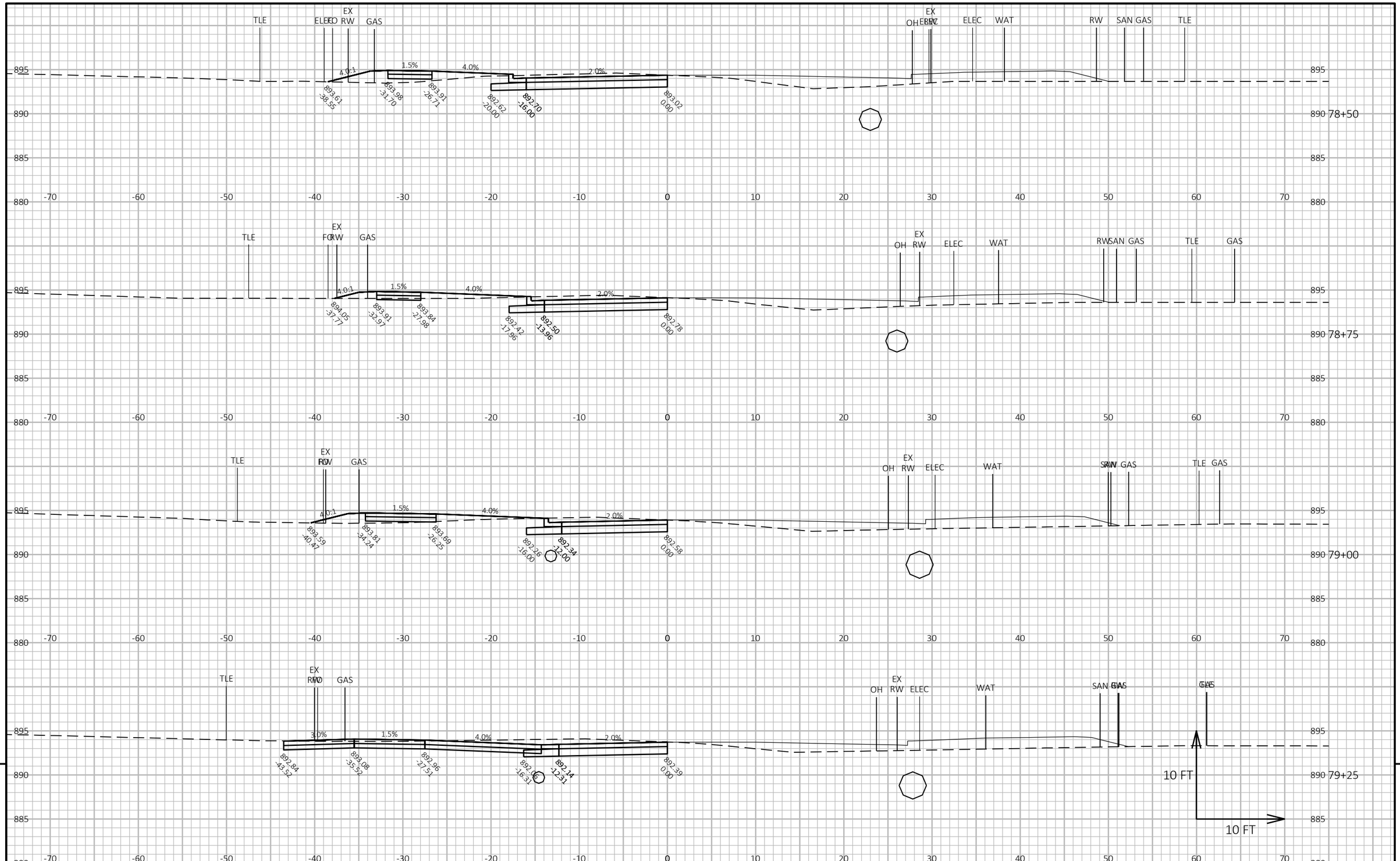

PROJECT NO: 7995-02-74	HWY: COUNTY LINE ROAD	COUNTY: EAU CLAIRE	CROSS SECTIONS: RAB WEST LEG	SHEET 194 E

FILE NAME : I:\41\410897_CITY OF EC_COUNTY LINE ROAD 79950273\C3D\DSGN\CRDR\CRDR-CO RAB W LEG.DWG
LAYOUT NAME - WB-WEST2

PLOT DATE : 8/19/2025 4:37 PM PLOT BY : HEDRINGTON, MARK PLOT NAME : PLOT SCALE : 1 IN:10 FT HORZ. / 1 IN:10 FT VERT.

WISDOT/CADDS SHEET 49

9 9

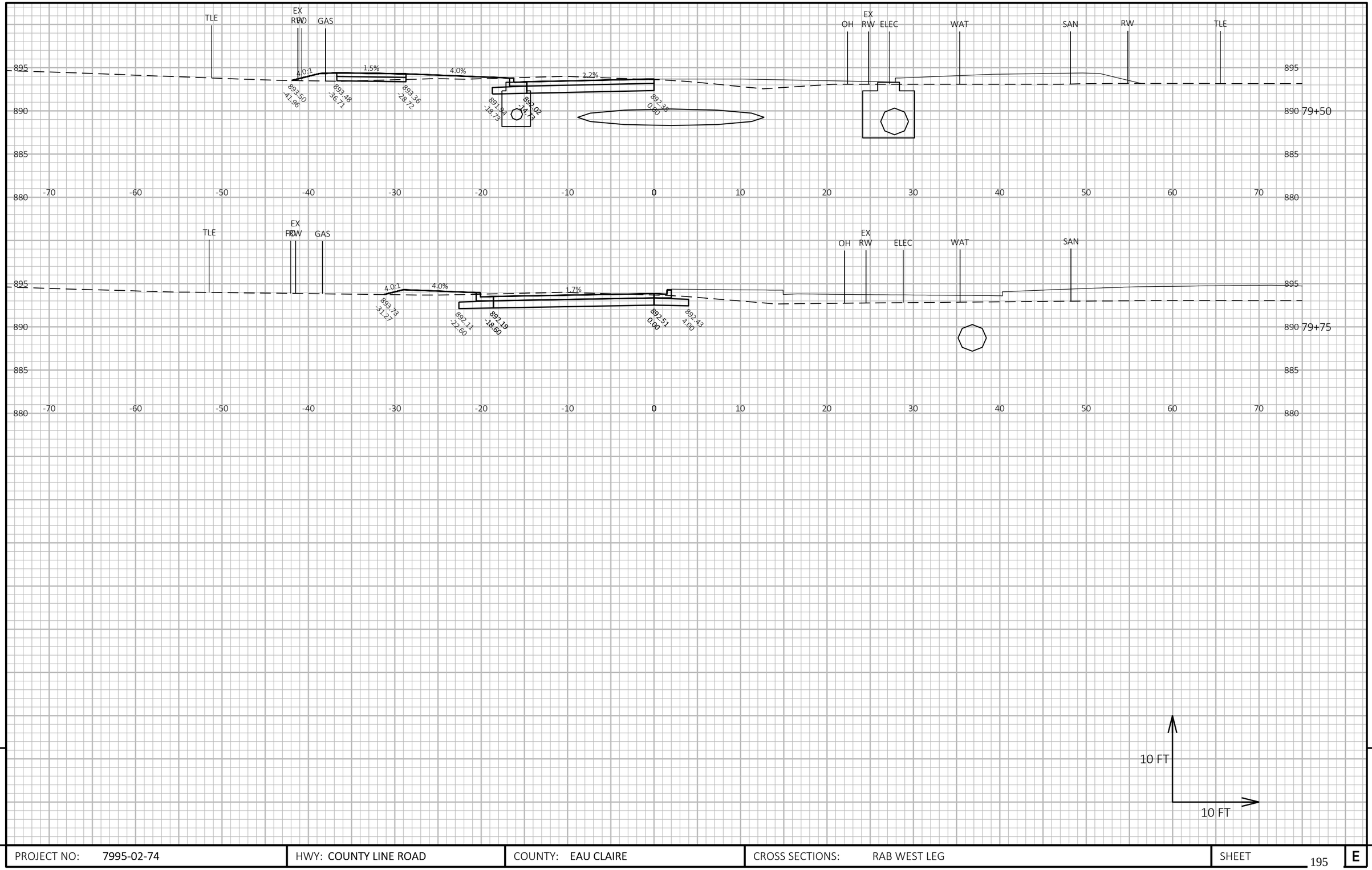

9

9

PROJECT NO: 7995-02-74	HWY: COUNTY LINE ROAD	COUNTY: EAU CLAIRE	CROSS SECTIONS: RAB WEST LEG	SHEET 195	E

FILE NAME : I:\41\410897_CITY OF EC_COUNTY LINE ROAD 79950273\C3D\DSGN\CRDR\CRDR-CO RAB W LEG.DWG
LAYOUT NAME - WB-WEST3

PLOT DATE : 8/19/2025 4:37 PM PLOT BY : HEDRINGTON, MARK PLOT NAME : **PLOT SCALE :** 1 IN:10 FT HORZ. / 1 IN:10 FT VERT.

WISDOT/CADDS SHEET 49

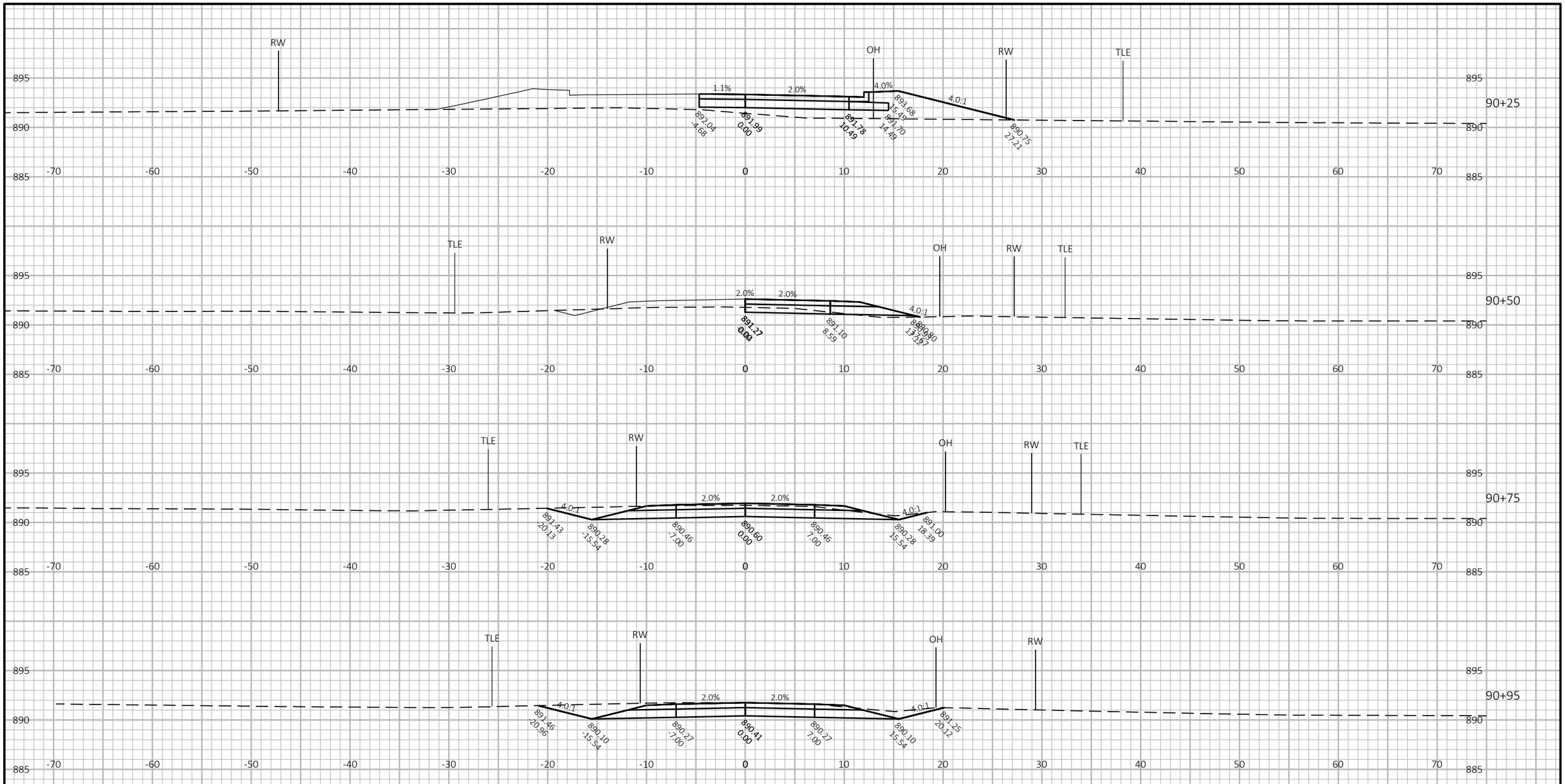

9

9

PROJECT NO: 7995-02-74	HWY: COUNTY LINE ROAD	COUNTY: EAU CLAIRE	CROSS SECTIONS: RAB EAST LEG	SHEET 196	E

FILE NAME : I:\41\410897_CITY OF EC_COUNTY LINE ROAD 79950273\C3D\DSGN\CRDR\CRDR-CO RAB E LEG.DWG
LAYOUT NAME - EB-EAST1

PLOT DATE : 8/19/2025 4:43 PM PLOT BY : HEDRINGTON, MARK PLOT NAME : **PLOT SCALE :** 1 IN:10 FT HORZ. / 1 IN:10 FT VERT.

WISDOT/CADDS SHEET 49

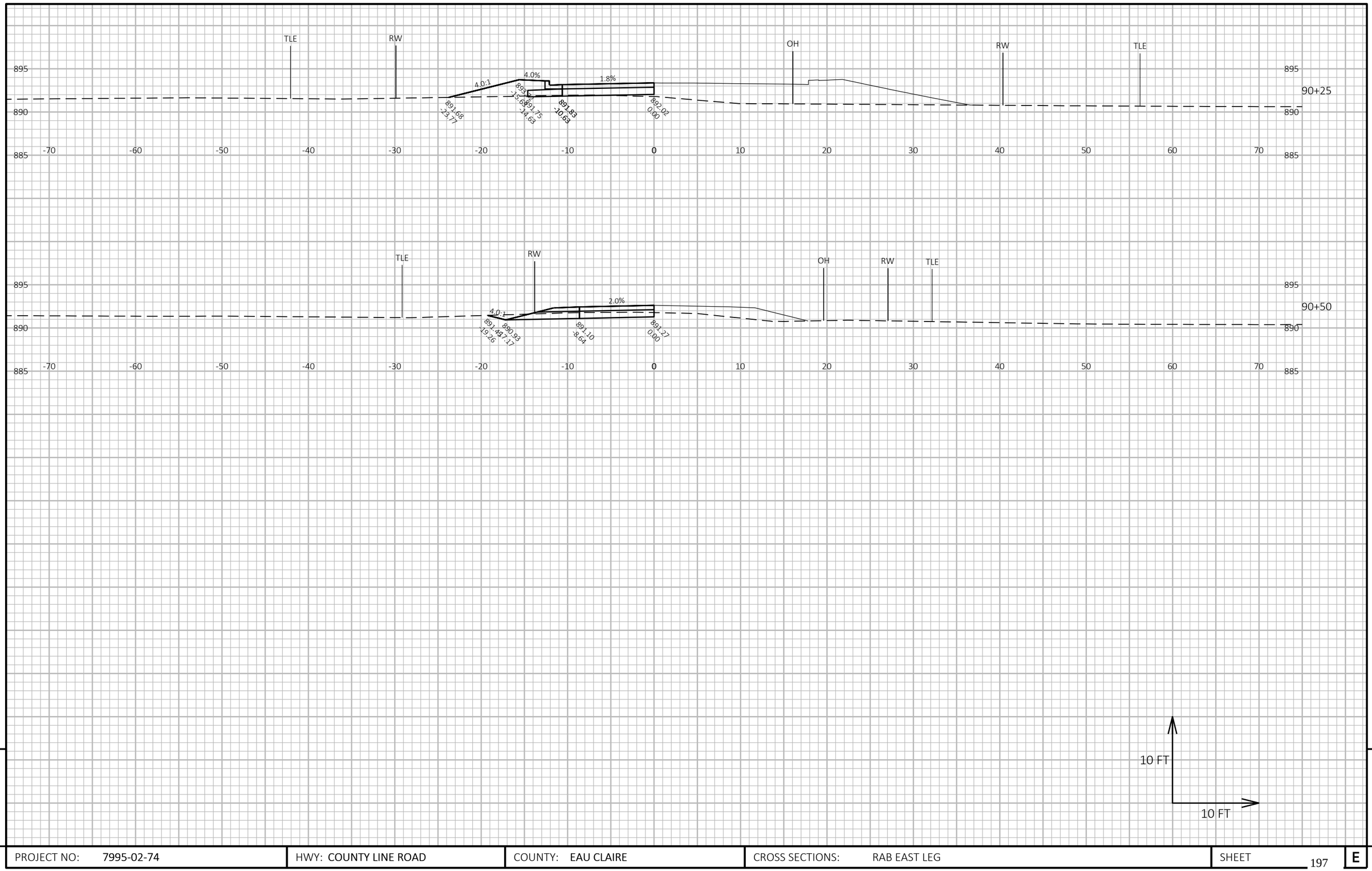

9

9

PROJECT NO: 7995-02-74	HWY: COUNTY LINE ROAD	COUNTY: EAU CLAIRE	CROSS SECTIONS: RAB EAST LEG	SHEET 197	E

FILE NAME : I:\41\410897_CITY OF EC_COUNTY LINE ROAD 79950273\C3D\DSGN\CRDR\CRDR-CO RAB E LEG.DWG
LAYOUT NAME - WB-EAST1

PLOT DATE : 8/19/2025 4:43 PM

PLOT BY : HEDRINGTON, MARK

PLOT NAME :

PLOT SCALE : 1 IN:10 FT HORZ. / 1 IN:10 FT VERT.

WISDOT/CADDS SHEET 49

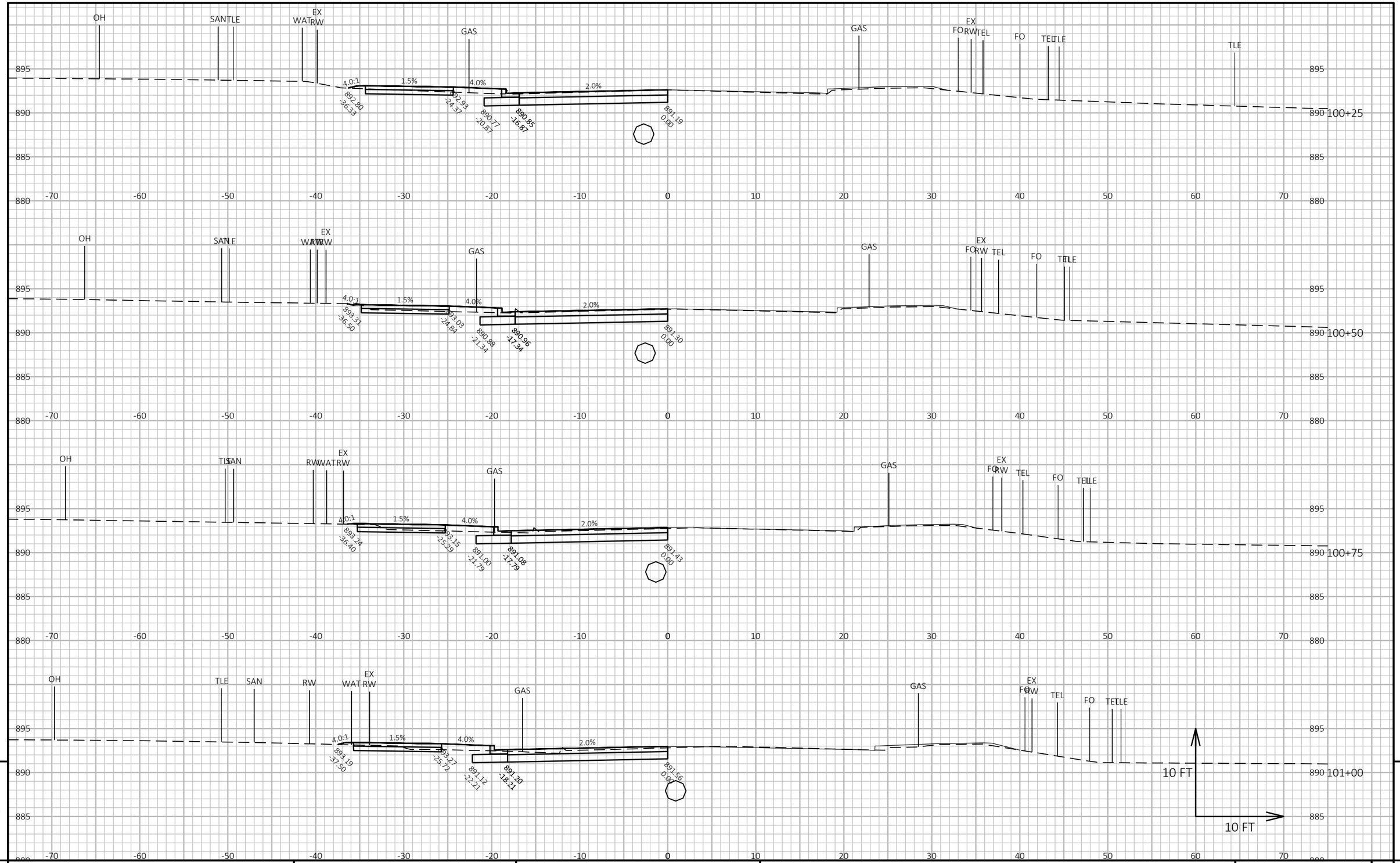

PROJECT NO: 7995-02-74	HWY: COUNTY LINE ROAD	COUNTY: EAU CLAIRE	CROSS SECTIONS: RAB SOUTH LEG	SHEET 198	E

FILE NAME : I:\41\410897_CITY OF EC_COUNTY LINE ROAD 79950273\C3D\DSGN\CRDR\CRDR-CO RAB S LEG.DWG
LAYOUT NAME - SB-SOUTH1

PLOT DATE : 8/19/2025 4:39 PM PLOT BY : HEDRINGTON, MARK PLOT NAME : **PLOT SCALE :** 1 IN:10 FT HORZ. / 1 IN:10 FT VERT.

WISDOT/CADDS SHEET 49

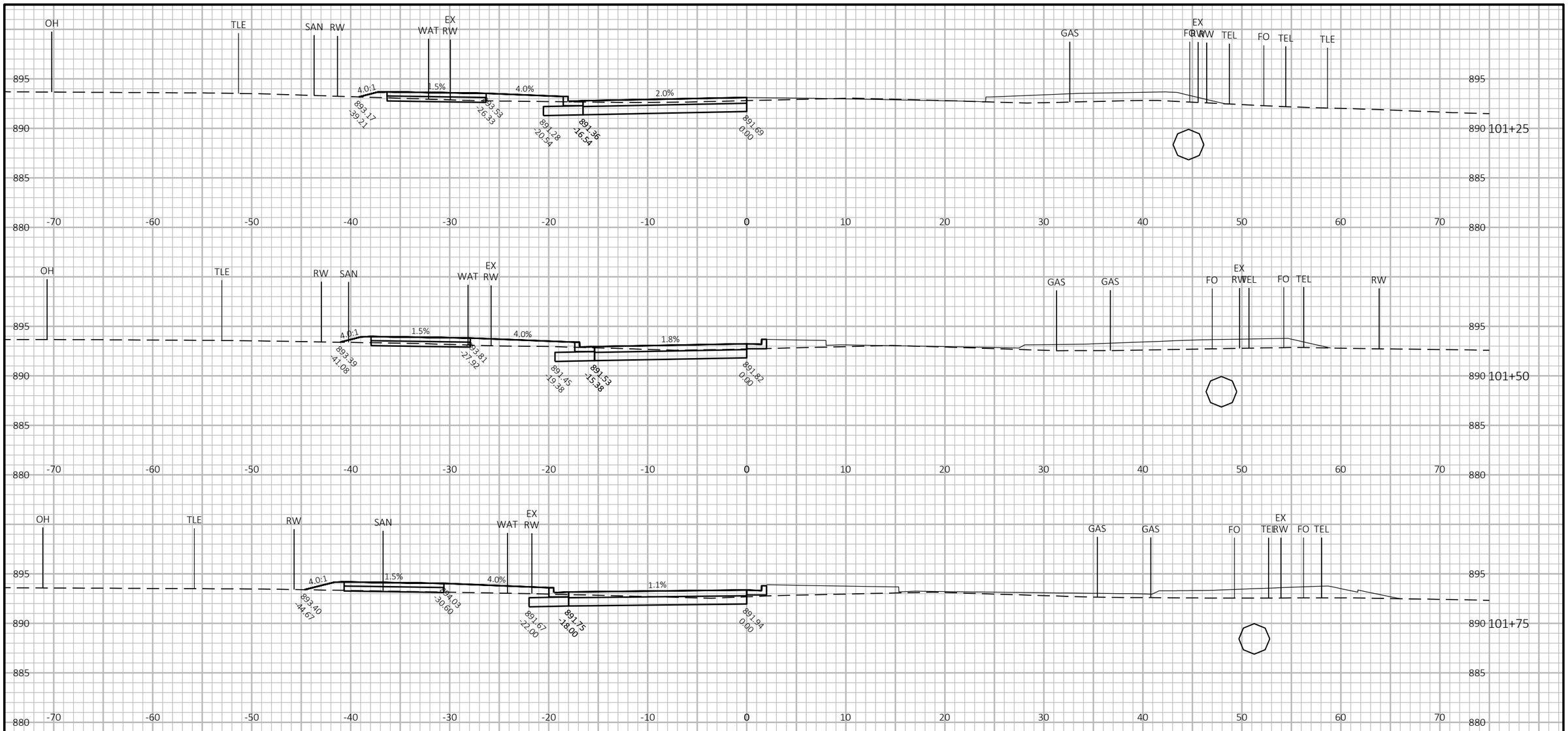

9

9

PROJECT NO: 7995-02-74	HWY: COUNTY LINE ROAD	COUNTY: EAU CLAIRE	CROSS SECTIONS: RAB SOUTH LEG	SHEET 199	E

FILE NAME : I:\41\410897_CITY OF EC_COUNTY LINE ROAD 79950273\C3D\DSGN\CRDR\CRDR-CO RAB S LEG.DWG
LAYOUT NAME - SB-SOUTH2

PLOT DATE : 8/19/2025 4:39 PM PLOT BY : HEDRINGTON, MARK PLOT NAME : **PLOT SCALE :** 1 IN:10 FT HORZ. / 1 IN:10 FT VERT.

WISDOT/CADDS SHEET 49

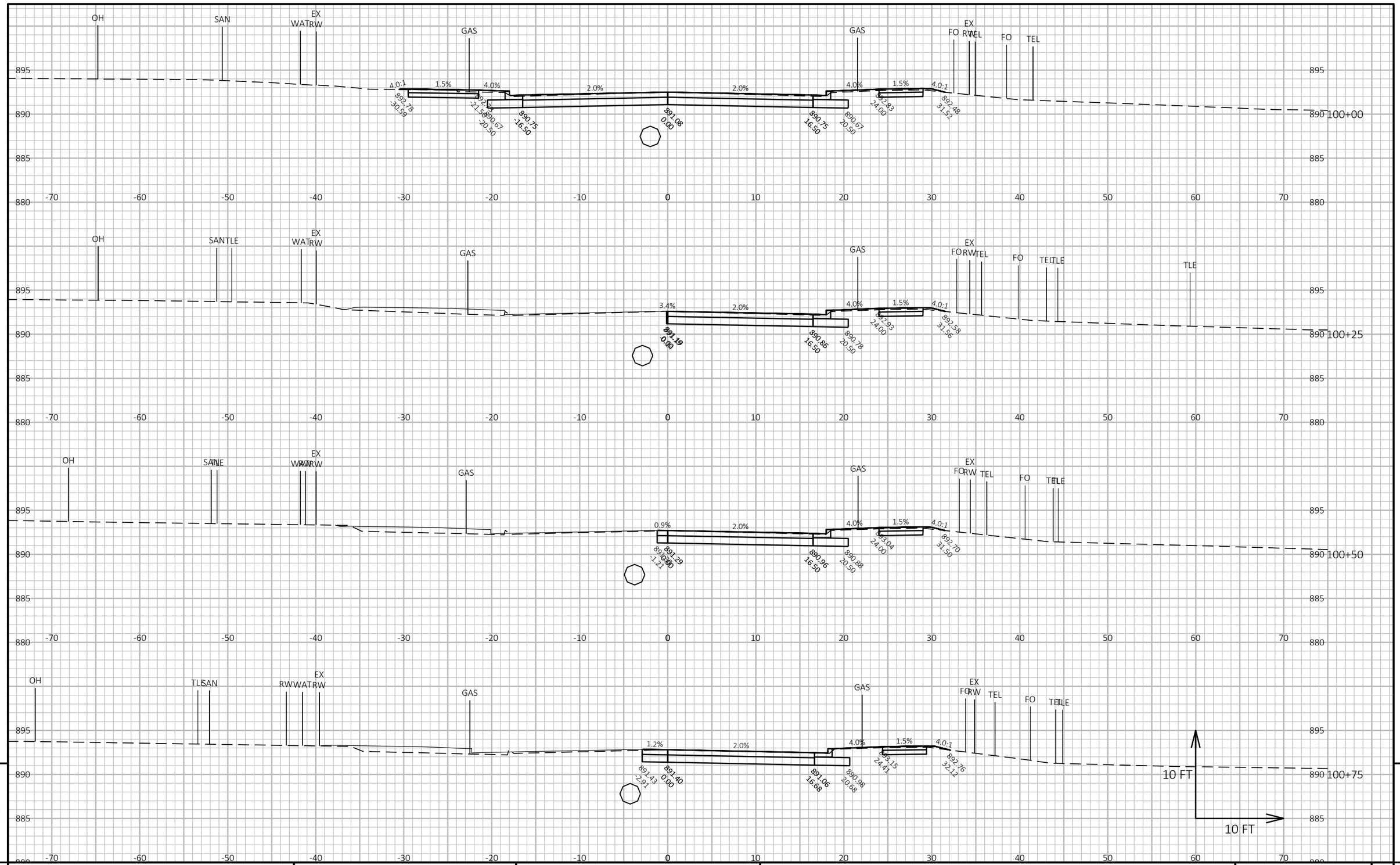

9

9

PROJECT NO: 7995-02-74	HWY: COUNTY LINE ROAD	COUNTY: EAU CLAIRE	CROSS SECTIONS: RAB SOUTH LEG	SHEET 200	E

FILE NAME : I:\41\410897_CITY OF EC_COUNTY LINE ROAD 79950273\C3D\DSGN\CRDR\CRDR-CO RAB S LEG.DWG
LAYOUT NAME - NB-SOUTH1

PLOT DATE : 8/19/2025 4:39 PM

PLOT BY : HEDRINGTON, MARK

PLOT NAME :

PLOT SCALE : 1 IN:10 FT HORZ. / 1 IN:10 FT VERT.

WISDOT/CADDS SHEET 49

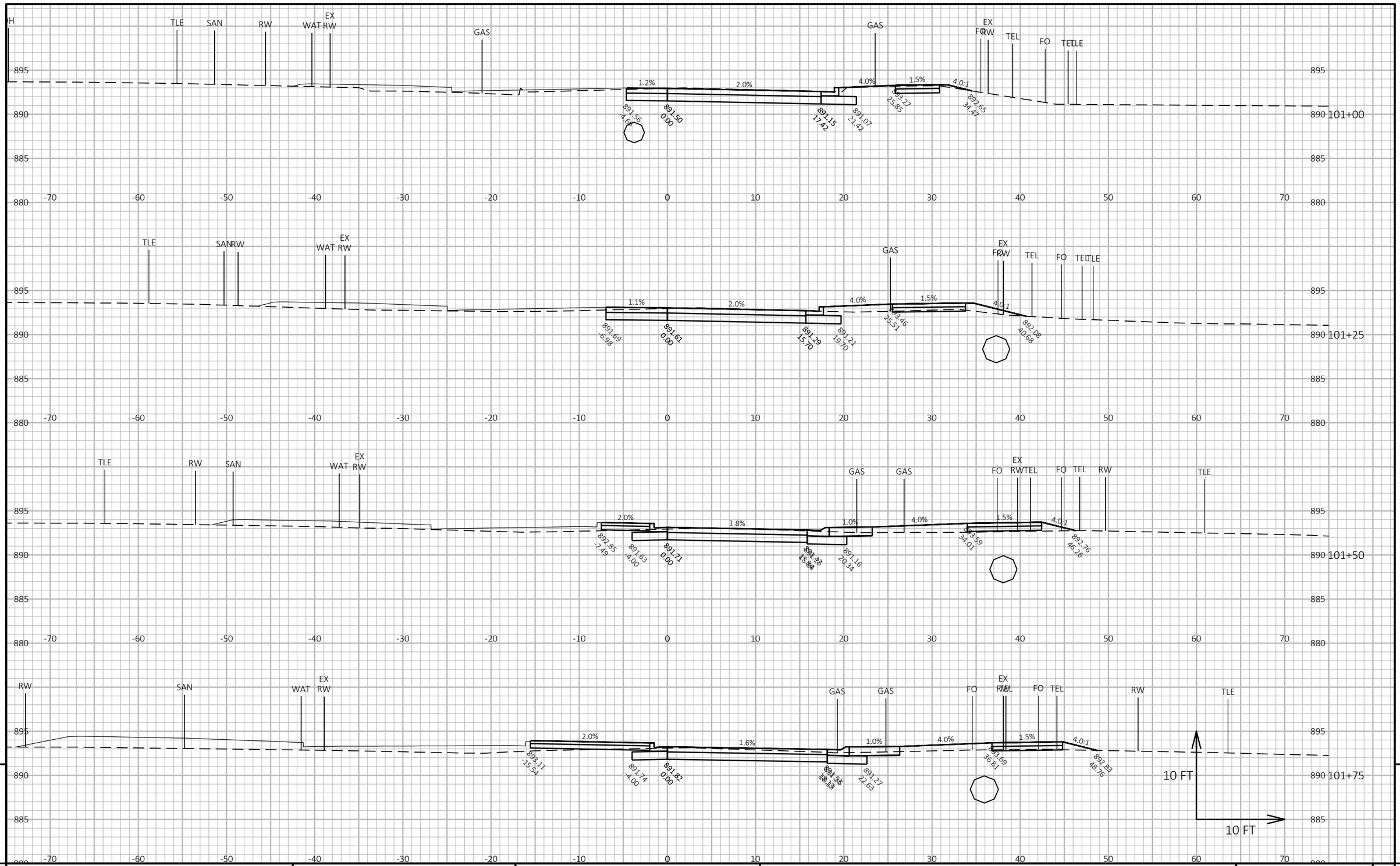

9

9

PROJECT NO: 7995-02-74	HWY: COUNTY LINE ROAD	COUNTY: EAU CLAIRE	CROSS SECTIONS: RAB SOUTH LEG	SHEET 201	E

FILE NAME : I:\41\410897_CITY OF EC_COUNTY LINE ROAD 79950273\C3D\DSGN\CRDR\CRDR-CO RAB S LEG.DWG
LAYOUT NAME - NB-SOUTH2

PLOT DATE : 8/19/2025 4:39 PM PLOT BY : HEDRINGTON, MARK PLOT NAME : PLOT SCALE : 1 IN:10 FT HORZ. / 1 IN:10 FT VERT.

WISDOT/CADDS SHEET 49

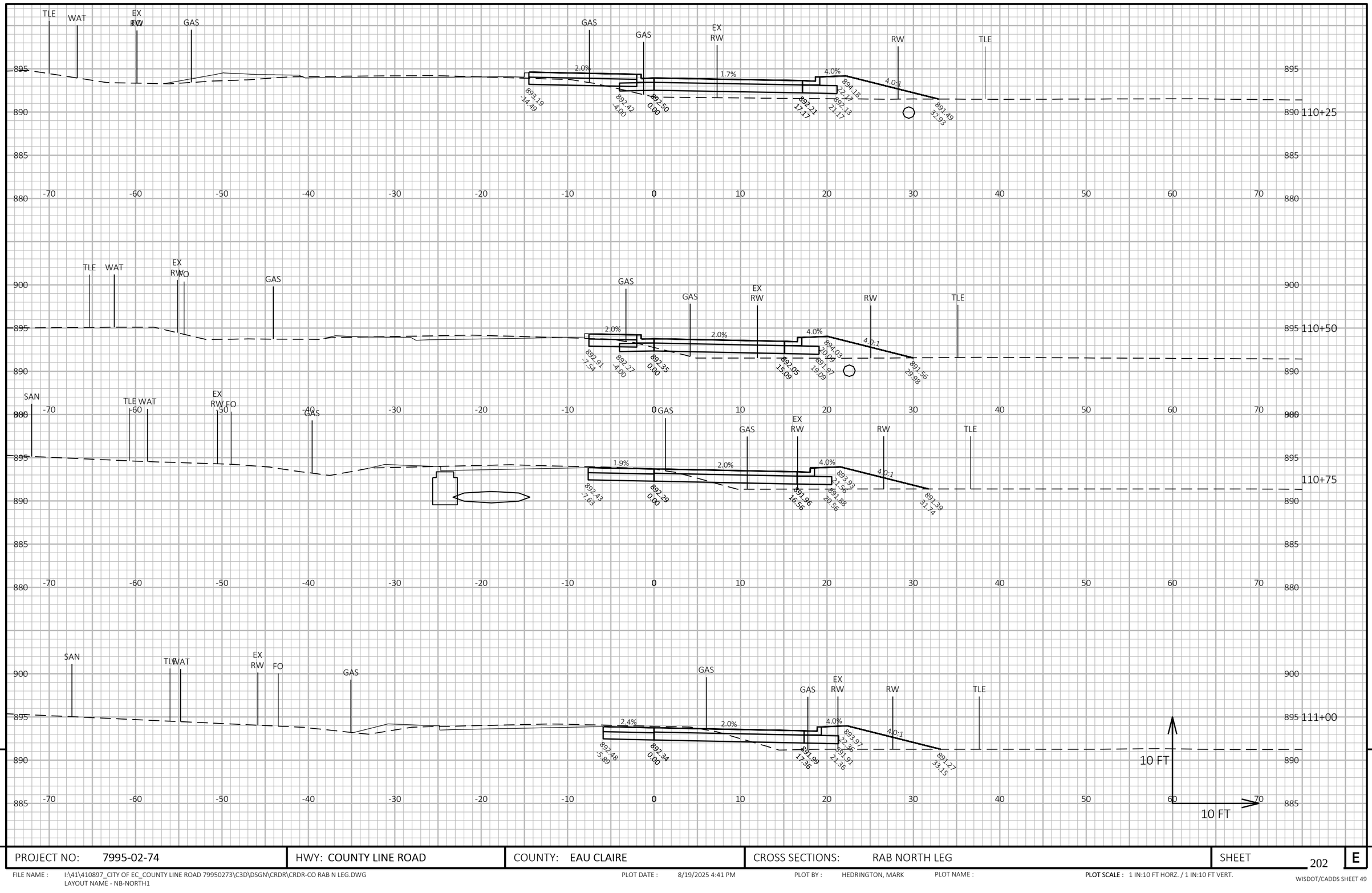

9

9

PROJECT NO: 7995-02-74	HWY: COUNTY LINE ROAD	COUNTY: EAU CLAIRE	CROSS SECTIONS: RAB NORTH LEG	SHEET 202	E

FILE NAME : I:\41\410897_CITY OF EC_COUNTY LINE ROAD 79950273\C3D\DSGN\CRDR\CRDR-CO RAB N LEG.DWG
LAYOUT NAME - NB-NORTH1

PLOT DATE : 8/19/2025 4:41 PM

PLOT BY : HEDRINGTON, MARK

PLOT NAME :

PLOT SCALE : 1 IN:10 FT HORZ. / 1 IN:10 FT VERT.

WISDOT/CADDS SHEET 49

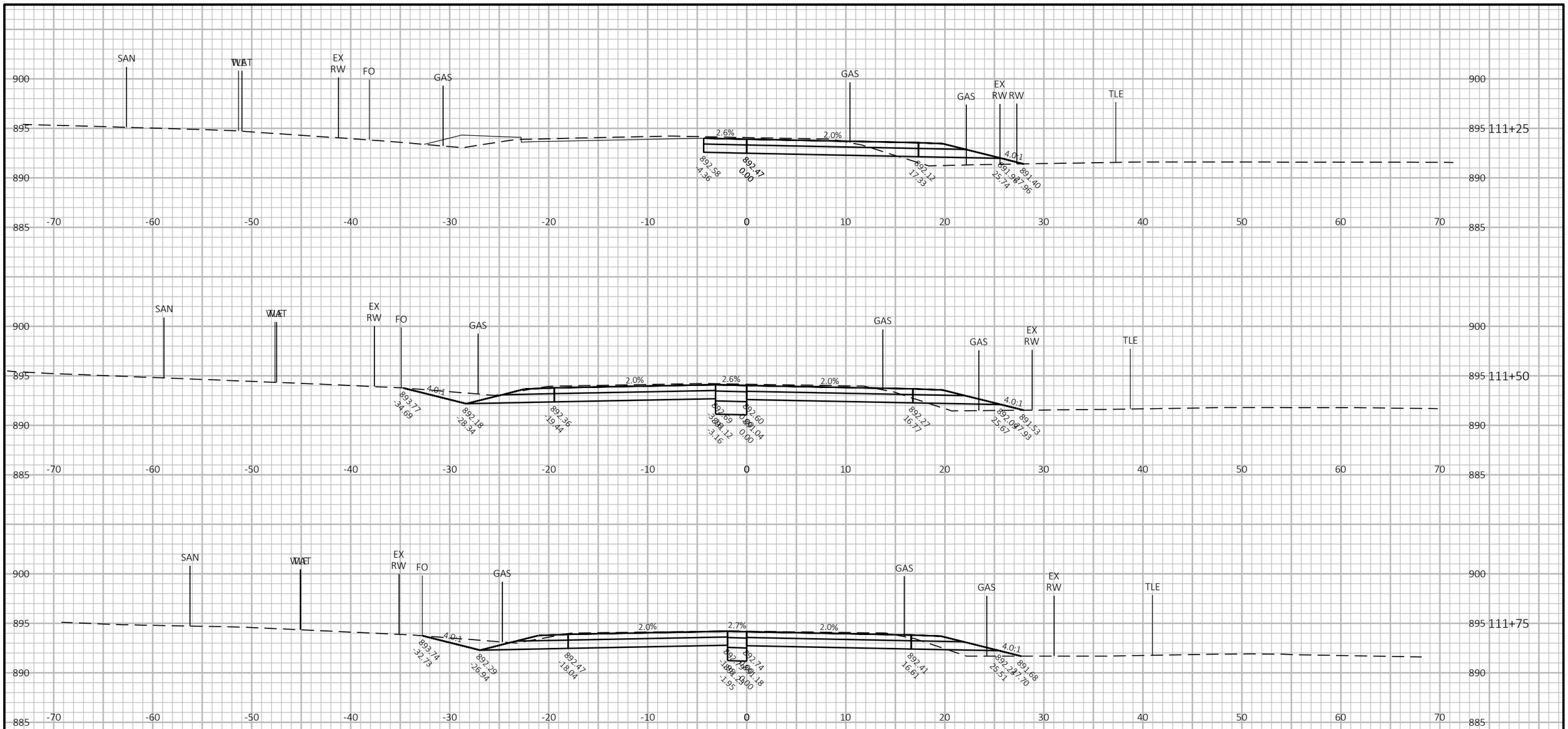

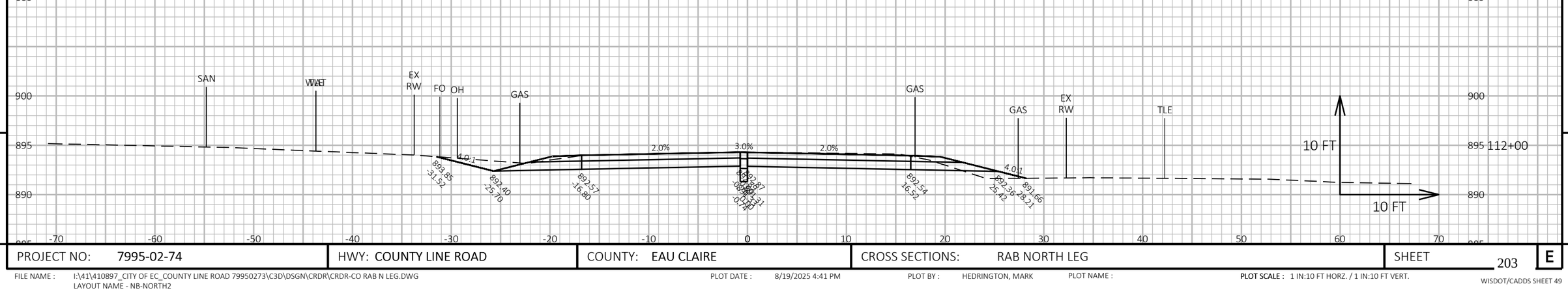

9

9

PROJECT NO: 7995-02-74	HWY: COUNTY LINE ROAD	COUNTY: EAU CLAIRE	CROSS SECTIONS: RAB NORTH LEG	SHEET 203	E

FILE NAME : I:\41\410897_CITY OF EC_COUNTY LINE ROAD 79950273\C3D\DSGN\CRDR\CRDR-CO RAB N LEG.DWG
LAYOUT NAME - NB-NORTH2

PLOT DATE : 8/19/2025 4:41 PM

PLOT BY : HEDRINGTON, MARK

PLOT NAME :

PLOT SCALE : 1 IN:10 FT HORZ. / 1 IN:10 FT VERT.

WISDOT/CADDS SHEET 49

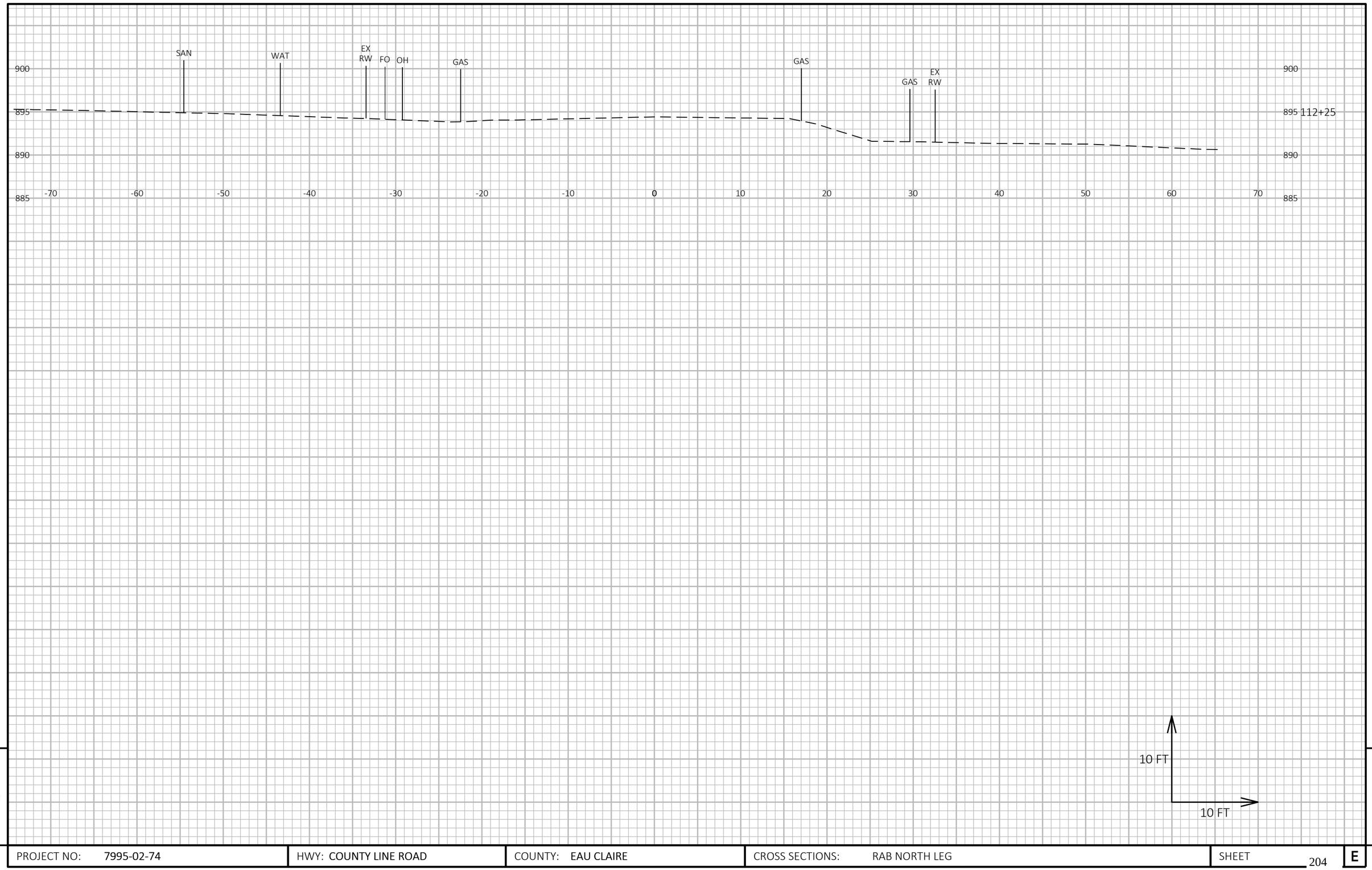

9

9

PROJECT NO: 7995-02-74	HWY: COUNTY LINE ROAD	COUNTY: EAU CLAIRE	CROSS SECTIONS: RAB NORTH LEG	SHEET 204	E

FILE NAME : I:\41\410897_CITY OF EC_COUNTY LINE ROAD 79950273\C3D\DSGN\CRDR\CRDR-CO RAB N LEG.DWG
LAYOUT NAME - NB-NORTH3

PLOT DATE : 8/19/2025 4:41 PM PLOT BY : HEDRINGTON, MARK PLOT NAME :

PLOT SCALE : 1 IN:10 FT HORZ. / 1 IN:10 FT VERT.

WISDOT/CADDS SHEET 49

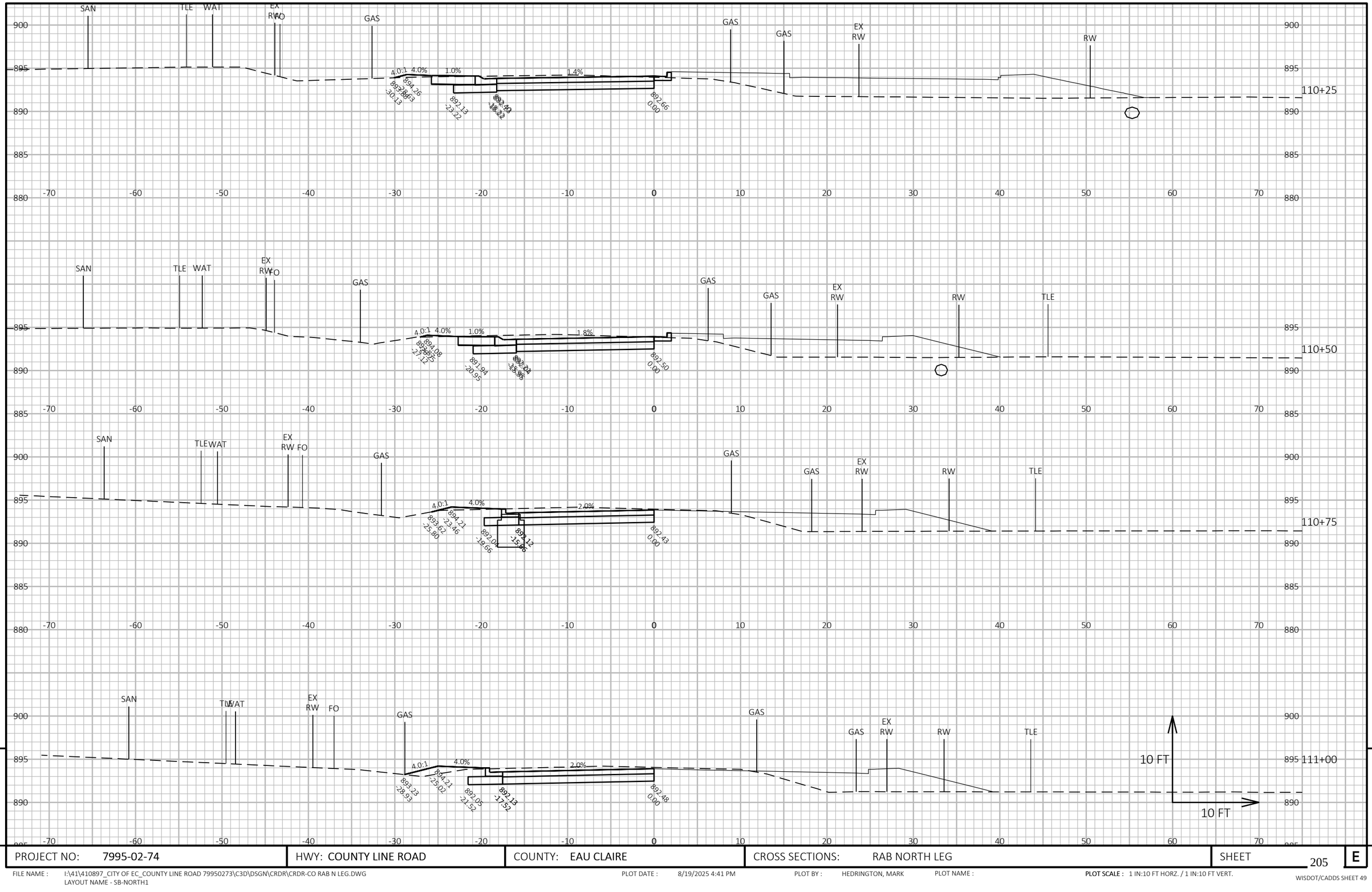

PROJECT NO: 7995-02-74	HWY: COUNTY LINE ROAD	COUNTY: EAU CLAIRE	CROSS SECTIONS: RAB NORTH LEG	SHEET 205 E

FILE NAME : I:\41\410897_CITY OF EC_COUNTY LINE ROAD 79950273\C3D\DSGN\CRDR\CRDR-CO RAB N LEG.DWG
LAYOUT NAME - SB-NORTH1

PLOT DATE : 8/19/2025 4:41 PM PLOT BY : HEDRINGTON, MARK PLOT NAME : PLOT SCALE : 1 IN:10 FT HORZ. / 1 IN:10 FT VERT.

WISDOT/CADDS SHEET 49

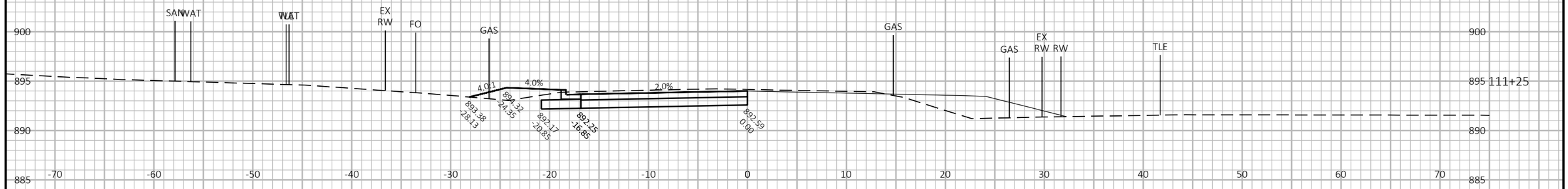

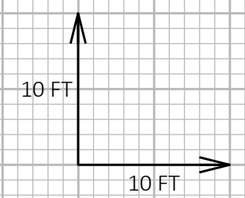

9

9

PROJECT NO: 7995-02-74	HWY: COUNTY LINE ROAD	COUNTY: EAU CLAIRE	CROSS SECTIONS: RAB NORTH LEG	SHEET 206	E

FILE NAME : I:\41\410897_CITY OF EC_COUNTY LINE ROAD 79950273\C3D\DSGN\CRDR\CRDR-CO RAB N LEG.DWG
LAYOUT NAME - SB-NORTH2

PLOT DATE : 8/19/2025 4:41 PM PLOT BY : HEDRINGTON, MARK PLOT NAME : **PLOT SCALE :** 1 IN:10 FT HORZ. / 1 IN:10 FT VERT.

WISDOT/CADDS SHEET 49

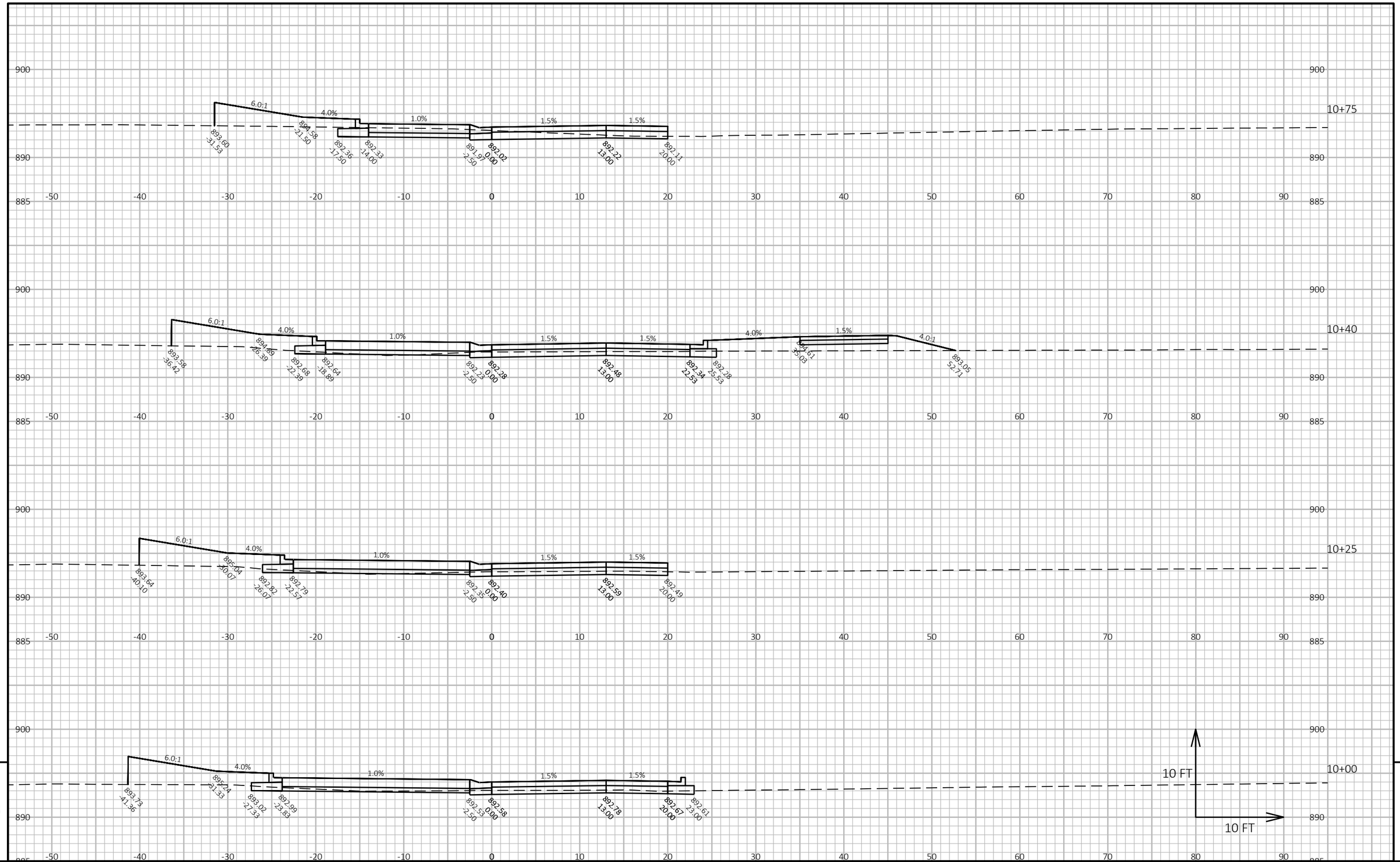

9

9

PROJECT NO: 7995-02-74	HWY: COUNTY LINE ROAD	COUNTY: EAU CLAIRE	CROSS SECTIONS: RAB CIRCLE	SHEET 207	E

FILE NAME : I:\41\410897_CITY OF EC_COUNTY LINE ROAD 79950273\C3D\DSGN\CRDR\CRDR-CO RAB CIRCLE.DWG
LAYOUT NAME - RAB-1

PLOT DATE : 1/21/2026 11:21 AM PLOT BY : HEDRINGTON, MARK PLOT NAME : **PLOT SCALE :** 1 IN:10 FT HORZ. / 1 IN:10 FT VERT.

WISDOT/CADDS SHEET 49

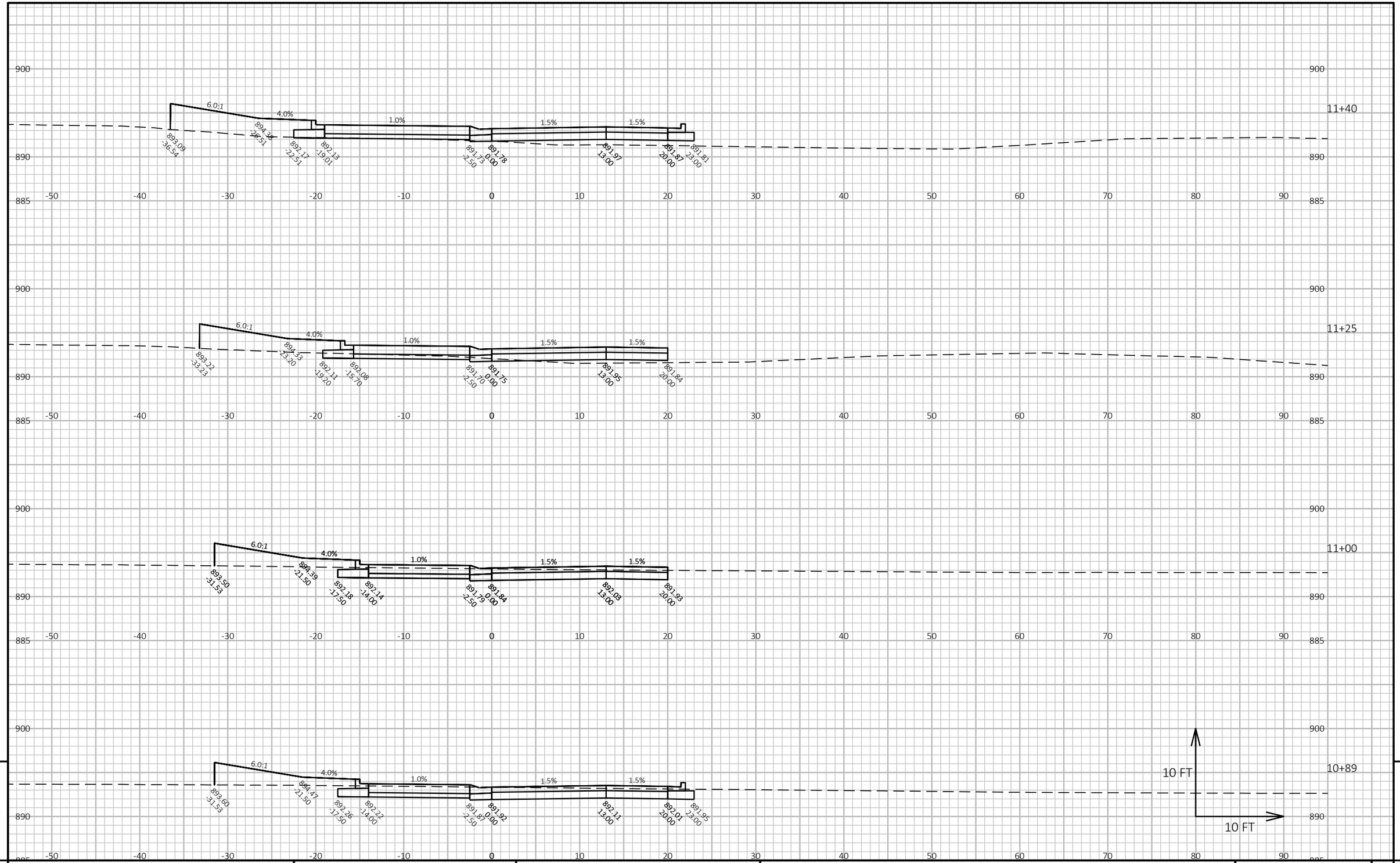

9

9

PROJECT NO: 7995-02-74	HWY: COUNTY LINE ROAD	COUNTY: EAU CLAIRE	CROSS SECTIONS: RAB CIRCLE	SHEET 208	E

FILE NAME : I:\41\410897_CITY OF EC_COUNTY LINE ROAD 79950273\C3D\DSGN\CRDR\CRDR-CO RAB CIRCLE.DWG
LAYOUT NAME - RAB-2

PLOT DATE : 1/21/2026 11:21 AM PLOT BY : HEDRINGTON, MARK PLOT NAME : **PLOT SCALE :** 1 IN:10 FT HORZ. / 1 IN:10 FT VERT.

WISDOT/CADDS SHEET 49

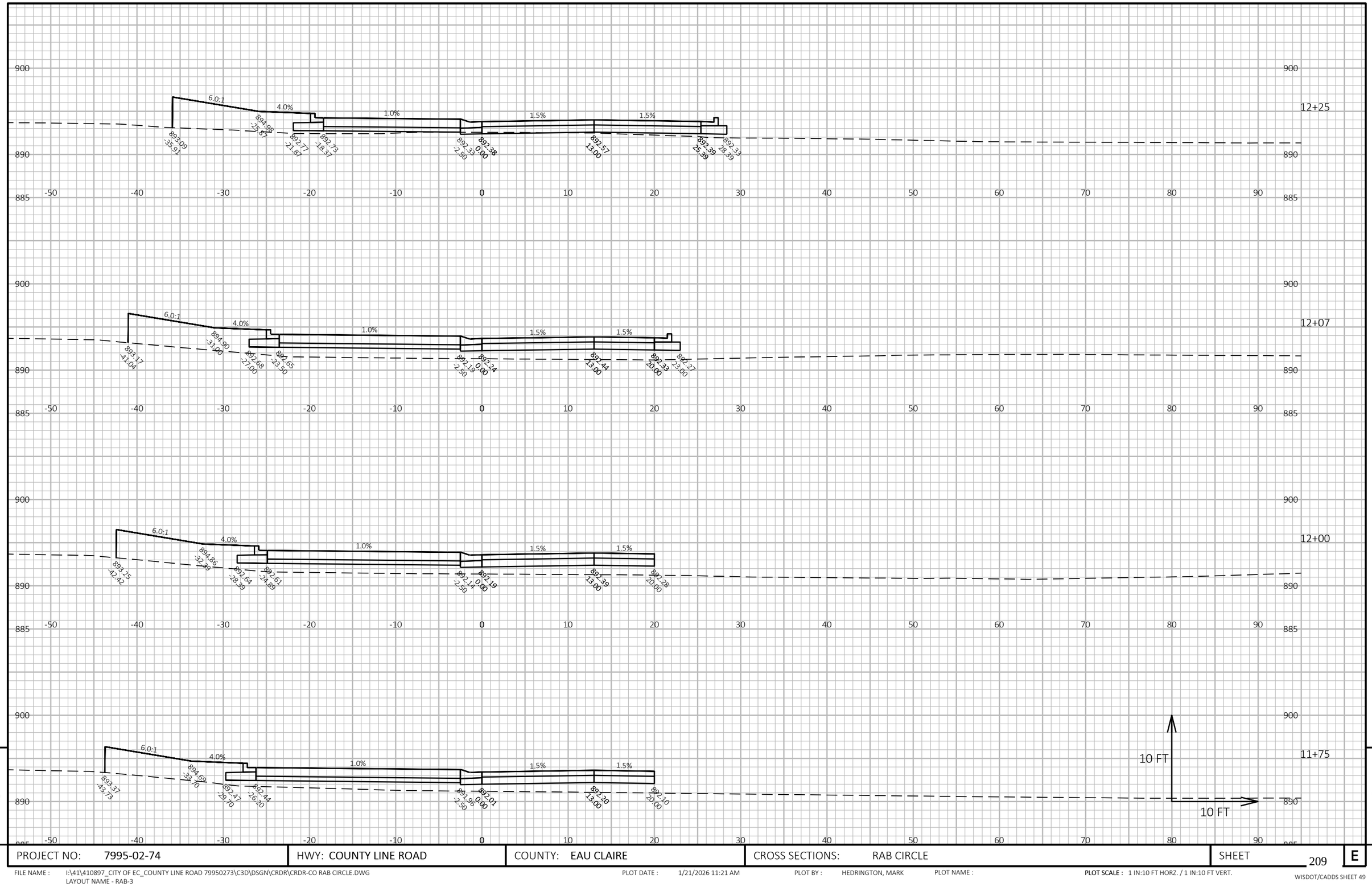

9

9

PROJECT NO: 7995-02-74	HWY: COUNTY LINE ROAD	COUNTY: EAU CLAIRE	CROSS SECTIONS: RAB CIRCLE	SHEET 209	E

FILE NAME : I:\41\410897_CITY OF EC_COUNTY LINE ROAD 79950273\C3D\DSGN\CRDR\CRDR-CO RAB CIRCLE.DWG
LAYOUT NAME - RAB-3

PLOT DATE : 1/21/2026 11:21 AM PLOT BY : HEDRINGTON, MARK PLOT NAME : **PLOT SCALE :** 1 IN:10 FT HORZ. / 1 IN:10 FT VERT.

WISDOT/CADDS SHEET 49

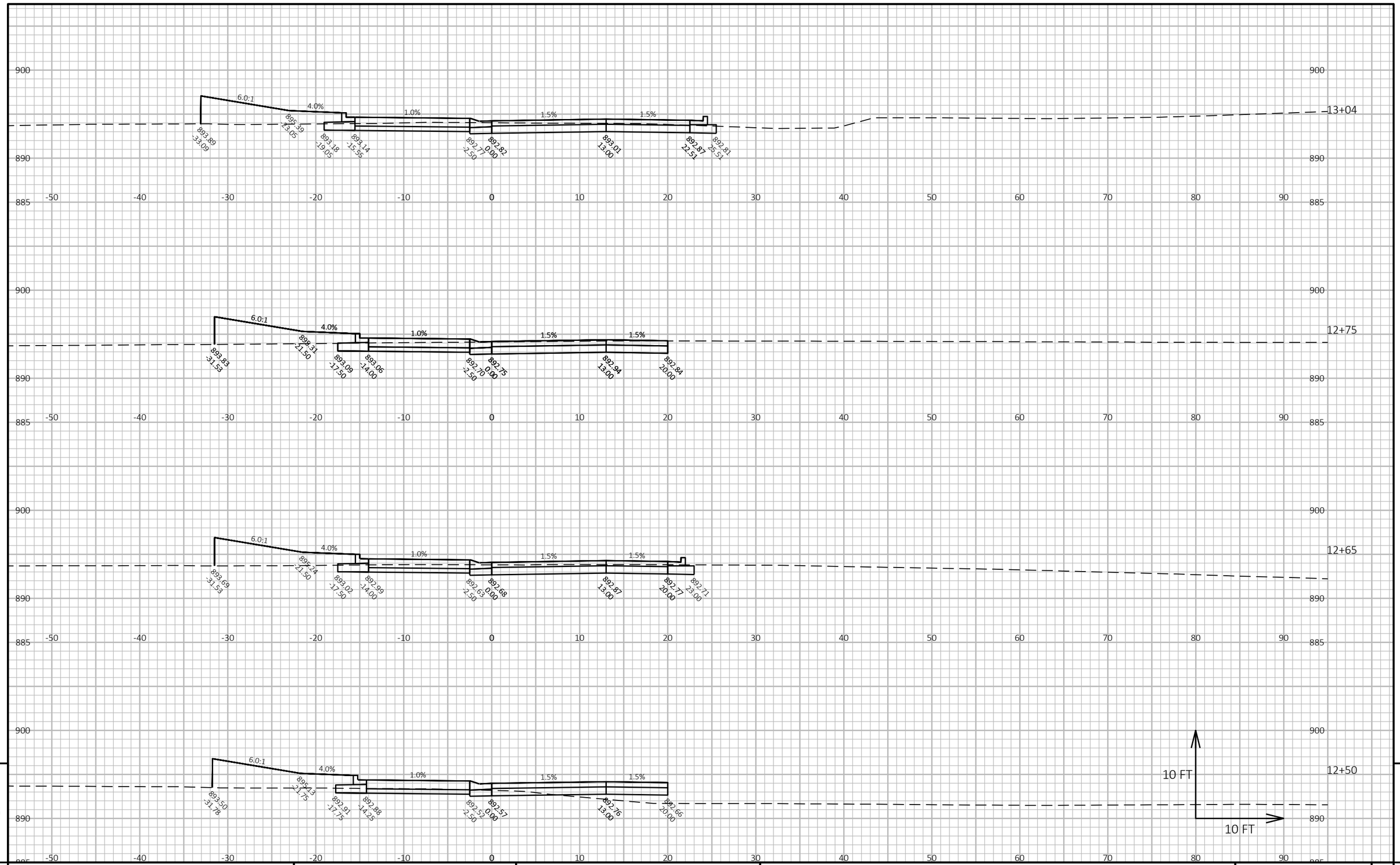

9

9

PROJECT NO: 7995-02-74	HWY: COUNTY LINE ROAD	COUNTY: EAU CLAIRE	CROSS SECTIONS: RAB CIRCLE	SHEET 210	E

FILE NAME : I:\41\410897_CITY OF EC_COUNTY LINE ROAD 79950273\C3D\DSGN\CRDR\CRDR-CO RAB CIRCLE.DWG
LAYOUT NAME - RAB-4

PLOT DATE : 1/21/2026 11:21 AM PLOT BY : HEDRINGTON, MARK PLOT NAME : **PLOT SCALE :** 1 IN:10 FT HORZ. / 1 IN:10 FT VERT.

WISDOT/CADDS SHEET 49

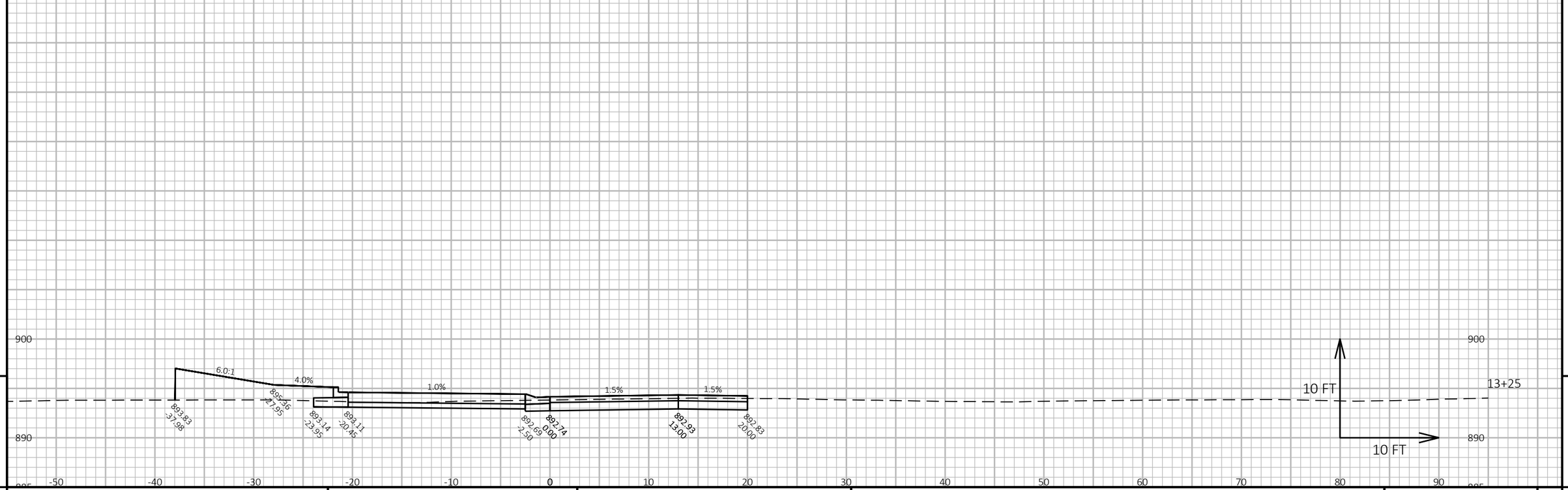

9

9

PROJECT NO: 7995-02-74	HWY: COUNTY LINE ROAD	COUNTY: EAU CLAIRE	CROSS SECTIONS: RAB CIRCLE	SHEET 211	E

FILE NAME : I:\41\410897_CITY OF EC_COUNTY LINE ROAD 79950273\C3D\DSGN\CRDR\CRDR-CO RAB CIRCLE.DWG
LAYOUT NAME - RAB-5

PLOT DATE : 1/21/2026 11:21 AM PLOT BY : HEDRINGTON, MARK PLOT NAME : **PLOT SCALE :** 1 IN:10 FT HORZ. / 1 IN:10 FT VERT.

WISDOT/CADDS SHEET 49

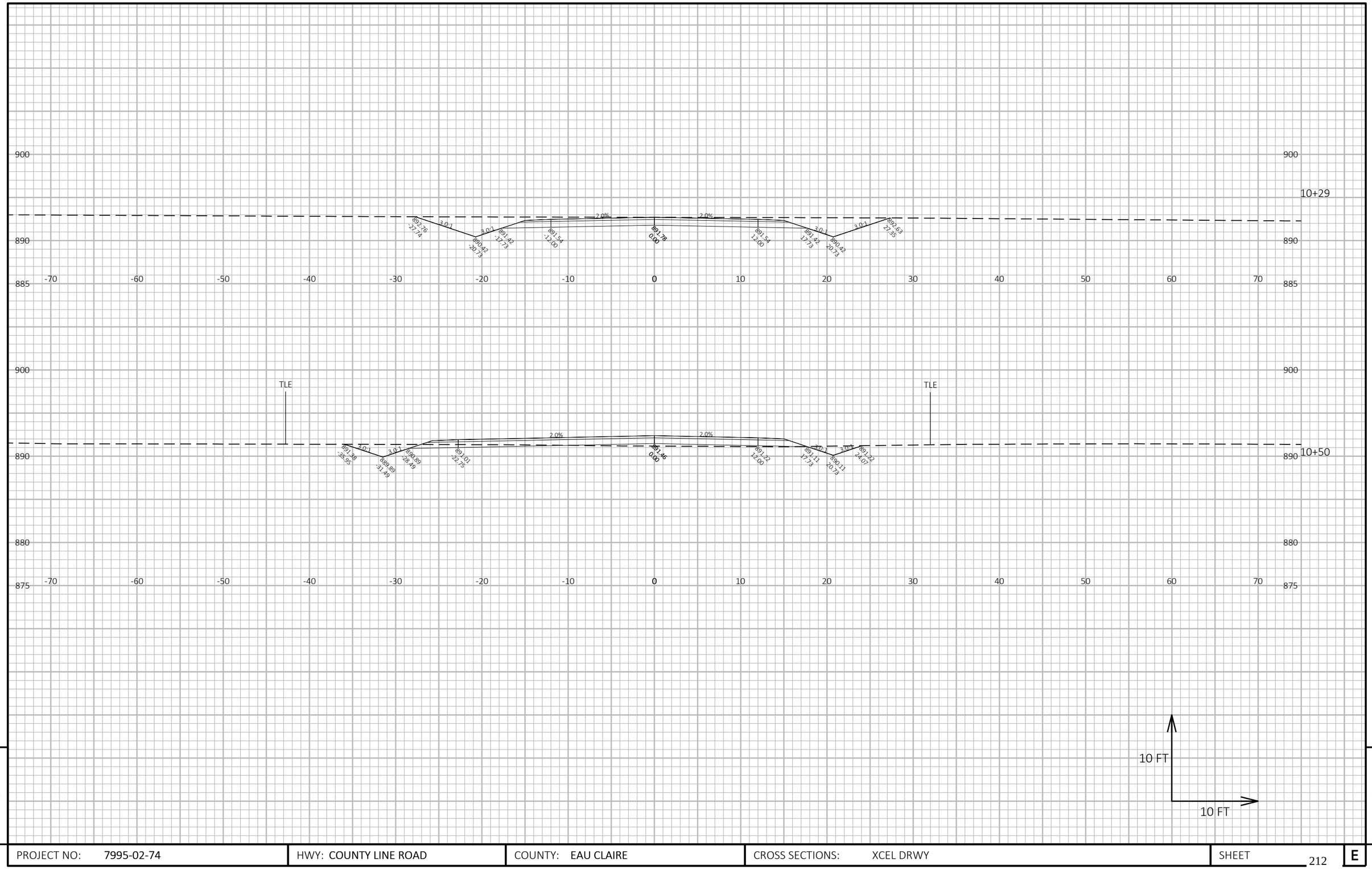

9

9

PROJECT NO: 7995-02-74	HWY: COUNTY LINE ROAD	COUNTY: EAU CLAIRE	CROSS SECTIONS: XCEL DRWY	SHEET 212	E

FILE NAME : I:\41\410897_CITY OF EC_COUNTY LINE ROAD 79950273\C3D\DSGN\CRDR\CRDR-CO LINE XCEL.DWG
LAYOUT NAME - XD-1

PLOT DATE : 8/19/2025 4:53 PM

PLOT BY : HEDRINGTON, MARK

PLOT NAME :

PLOT SCALE : 1 IN:10 FT HORZ. / 1 IN:10 FT VERT.

WISDOT/CADDS SHEET 49

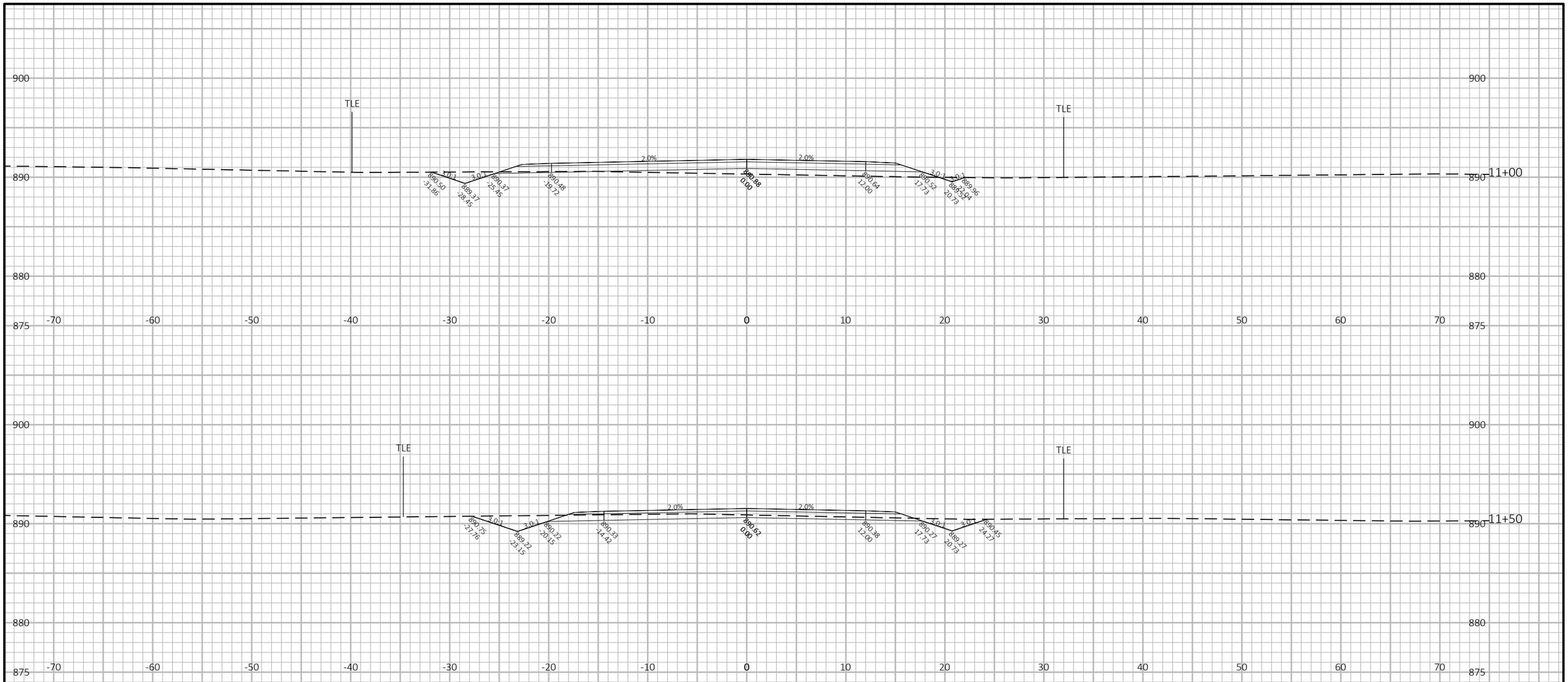

9

9

PROJECT NO: 7995-02-74	HWY: COUNTY LINE ROAD	COUNTY: EAU CLAIRE	CROSS SECTIONS: XCEL DRWY	SHEET 213	E

FILE NAME : I:\41\410897_CITY OF EC_COUNTY LINE ROAD 79950273\C3D\DSGN\CRDR\CRDR-CO LINE XCEL.DWG
LAYOUT NAME - XD-2

PLOT DATE : 8/19/2025 4:53 PM

PLOT BY : HEDRINGTON, MARK

PLOT NAME :

PLOT SCALE : 1 IN:10 FT HORZ. / 1 IN:10 FT VERT.

WISDOT/CADDS SHEET 49

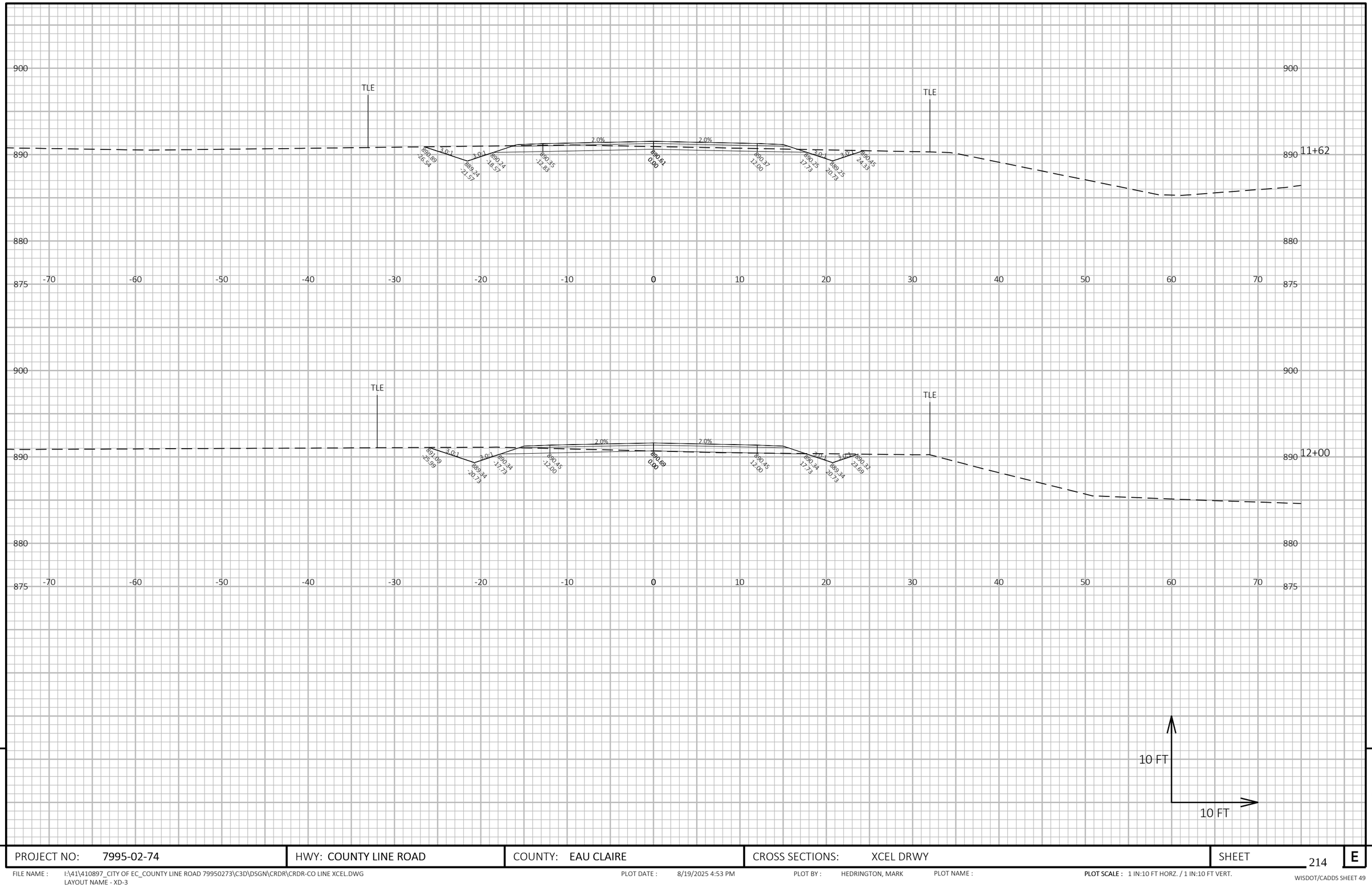

9

9

PROJECT NO: 7995-02-74	HWY: COUNTY LINE ROAD	COUNTY: EAU CLAIRE	CROSS SECTIONS: XCEL DRWY	SHEET 214	E

FILE NAME : I:\41\410897_CITY OF EC_COUNTY LINE ROAD 79950273\C3D\DSGN\CRDR\CRDR-CO LINE XCEL.DWG
LAYOUT NAME - XD-3

PLOT DATE : 8/19/2025 4:53 PM PLOT BY : HEDRINGTON, MARK PLOT NAME : **PLOT SCALE :** 1 IN:10 FT HORZ. / 1 IN:10 FT VERT.

WISDOT/CADDS SHEET 49

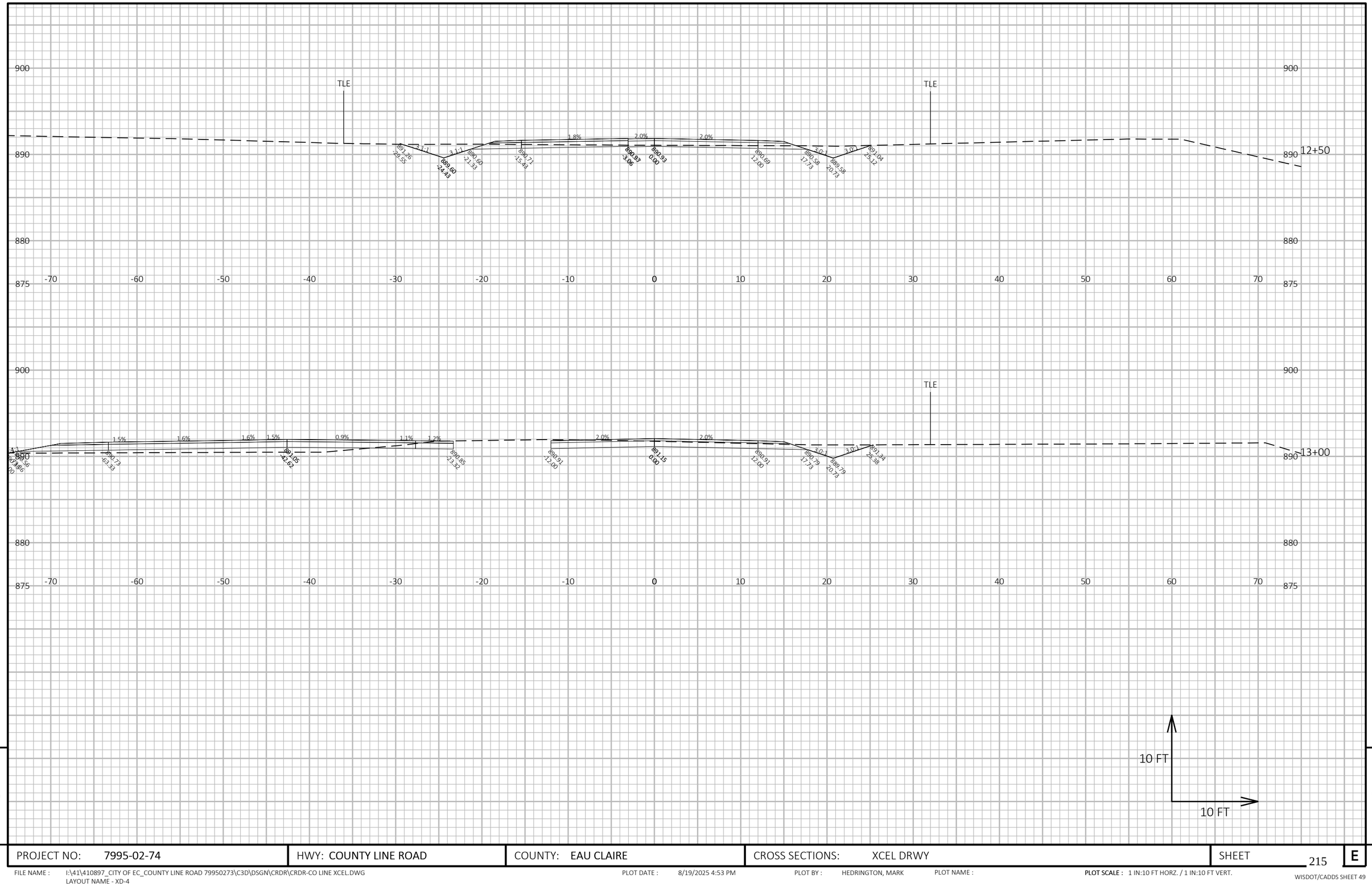

9

9

PROJECT NO: 7995-02-74	HWY: COUNTY LINE ROAD	COUNTY: EAU CLAIRE	CROSS SECTIONS: XCEL DRWY	SHEET 215	E

FILE NAME : I:\41\410897_CITY OF EC_COUNTY LINE ROAD 79950273\C3D\DSGN\CRDR\CRDR-CO LINE XCEL.DWG
LAYOUT NAME - XD-4

PLOT DATE : 8/19/2025 4:53 PM

PLOT BY : HEDRINGTON, MARK

PLOT NAME :

PLOT SCALE : 1 IN:10 FT HORZ. / 1 IN:10 FT VERT.

WISDOT/CADDS SHEET 49

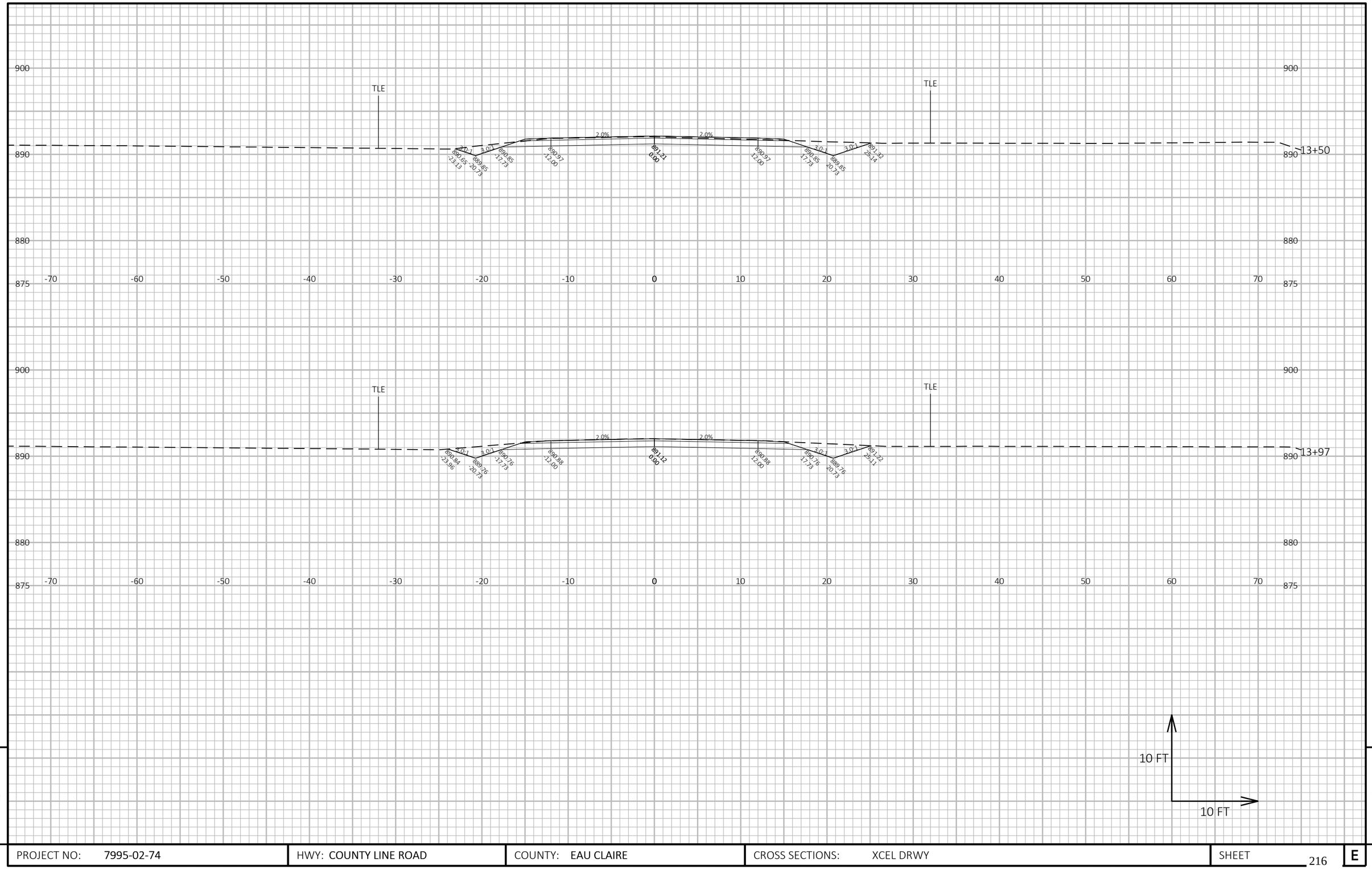

9

9

PROJECT NO: 7995-02-74	HWY: COUNTY LINE ROAD	COUNTY: EAU CLAIRE	CROSS SECTIONS: XCEL DRWY	SHEET 216	E

FILE NAME : I:\41\410897_CITY OF EC_COUNTY LINE ROAD 79950273\C3D\DSGN\CRDR\CRDR-CO LINE XCEL.DWG
LAYOUT NAME - XD-5

PLOT DATE : 8/19/2025 4:53 PM PLOT BY : HEDRINGTON, MARK PLOT NAME : **PLOT SCALE :** 1 IN:10 FT HORZ. / 1 IN:10 FT VERT.

WISDOT/CADDS SHEET 49

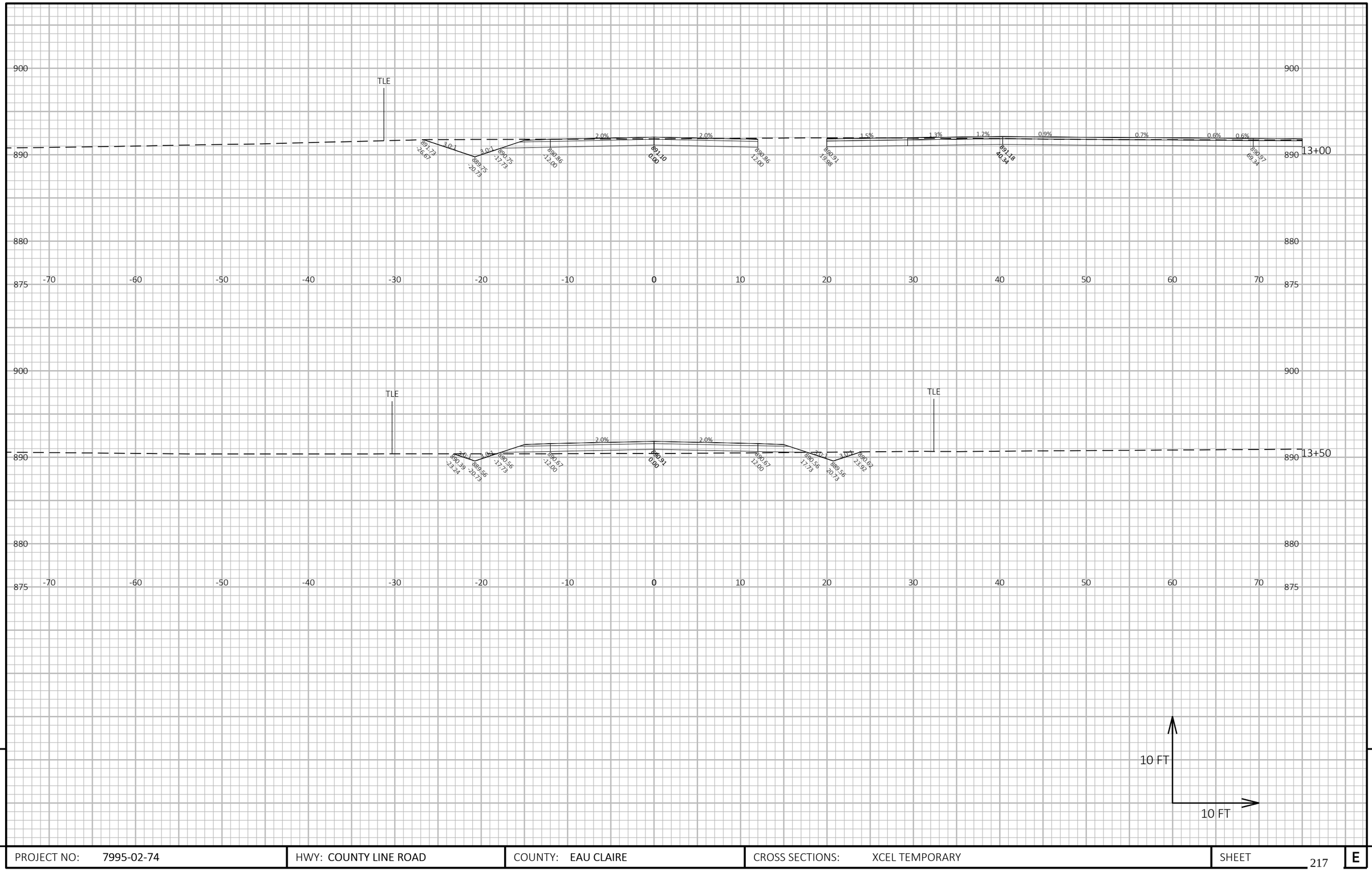

PROJECT NO: 7995-02-74	HWY: COUNTY LINE ROAD	COUNTY: EAU CLAIRE	CROSS SECTIONS: XCEL TEMPORARY	SHEET 217	E

FILE NAME : I:\41\410897_CITY OF EC_COUNTY LINE ROAD 79950273\C3D\DSGN\CRDR\CRDR-CO LINE XCEL.DWG
LAYOUT NAME - XT-1

PLOT DATE : 8/19/2025 4:53 PM PLOT BY : HEDRINGTON, MARK PLOT NAME : **PLOT SCALE :** 1 IN:10 FT HORZ. / 1 IN:10 FT VERT.

WISDOT/CADDS SHEET 49

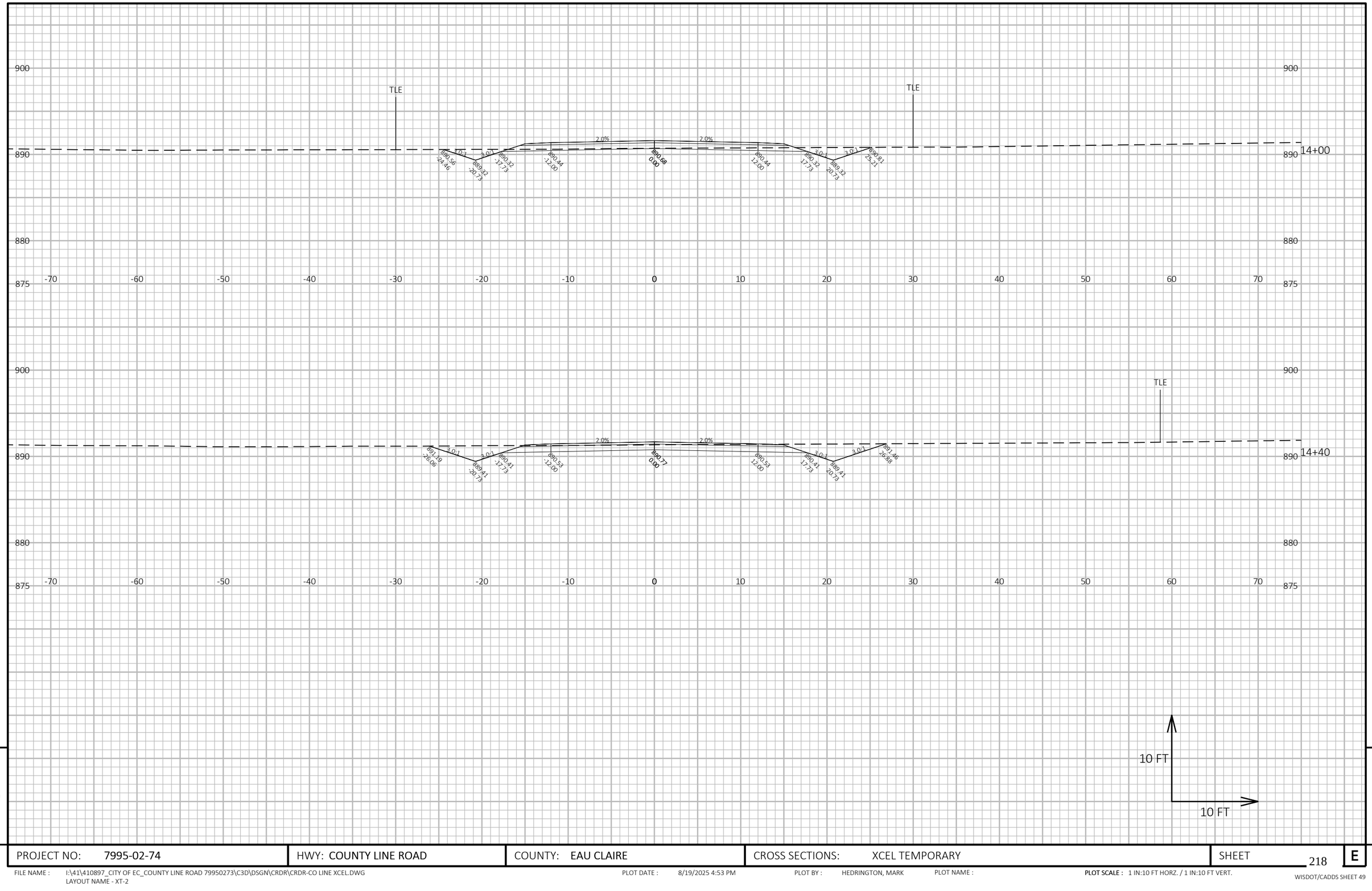

9

9

PROJECT NO: 7995-02-74	HWY: COUNTY LINE ROAD	COUNTY: EAU CLAIRE	CROSS SECTIONS: XCEL TEMPORARY	SHEET 218	E

FILE NAME : I:\41\410897_CITY OF EC_COUNTY LINE ROAD 79950273\C3D\DSGN\CRDR\CRDR-CO LINE XCEL.DWG
LAYOUT NAME - XT-2

PLOT DATE : 8/19/2025 4:53 PM PLOT BY : HEDRINGTON, MARK PLOT NAME : **PLOT SCALE :** 1 IN:10 FT HORZ. / 1 IN:10 FT VERT.

WISDOT/CADDS SHEET 49

Notes

Wisconsin Department of Transportation

Dedicated people creating transportation solutions
through innovation and exceptional service.

http://www.dot.wisconsin.gov