SUP MAY 2026

PROJECT ID: 1550-04-78

WITH: N/A

COUNTY: BARRON

ORDER OF SHEETS

Section No.	1	Title
Section No.	2	Typical Sections and Details
Section No.	3	Estimate of Quantities
Section No.	3	Miscellaneous Quantities
Section No.	4	Right of Way Plat
Section No.	5	Plan and Profile
Section No.	6	Standard Detail Drawings
Section No.	7	Sign Plates
~~Section No.~~	~~8~~	~~Structure Plans~~
Section No.	9	Computer Earthwork Data
Section No.	9	Cross Sections

TOTAL SHEETS = 248

N

15

DESIGN DESIGNATION 1550-04-08

STA 391+04 - 409+82

A.A.D.T.	2027	=	4380
A.A.D.T.	2047	=	5510
D.H.V.		=	749 (2047)
D.D.		=	61/39
T.		=	17.9%
DESIGN SPEED		=	55 MPH 40 MPH
ESALS		=	1,270,000

CONVENTIONAL SYMBOLS

PLAN

- CORPORATE LIMITS
- PROPERTY LINE
- LOT LINE
- LIMITED HIGHWAY EASEMENT
- EXISTING RIGHT OF WAY
- PROPOSED OR NEW R/W LINE
- SLOPE INTERCEPT
- REFERENCE LINE (300'EB')
- EXISTING CULVERT
- PROPOSED CULVERT (Box or Pipe)
- COMBUSTIBLE FLUIDS (CAUTION)
- MARSH AREA
- WOODED OR SHRUB AREA

PROFILE

- GRADE LINE
- ORIGINAL GROUND
- MARSH OR ROCK PROFILE (To be noted as such) (ROCK)
- SPECIAL DITCH (LABEL)
- GRADE ELEVATION (95.36)
- CULVERT (Profile View)

UTILITIES

- ELECTRIC (E)
- FIBER OPTIC (FO)
- GAS (G)
- SANITARY SEWER (SAN)
- STORM SEWER (SS)
- TELEPHONE (T)
- WATER (W)
- UTILITY PEDESTAL
- POWER POLE
- TELEPHONE POLE

STATE OF WISCONSIN
DEPARTMENT OF TRANSPORTATION

PLAN OF PROPOSED IMPROVEMENT

CLEAR LAKE - CUMBERLAND

USH 8 E TO STH 48 W

USH 63

BARRON COUNTY

STATE PROJECT NUMBER
1550-04-78

STATE PROJECT	FEDERAL PROJECT	
	PROJECT	CONTRACT
1550-04-78	WISC 2026334	1

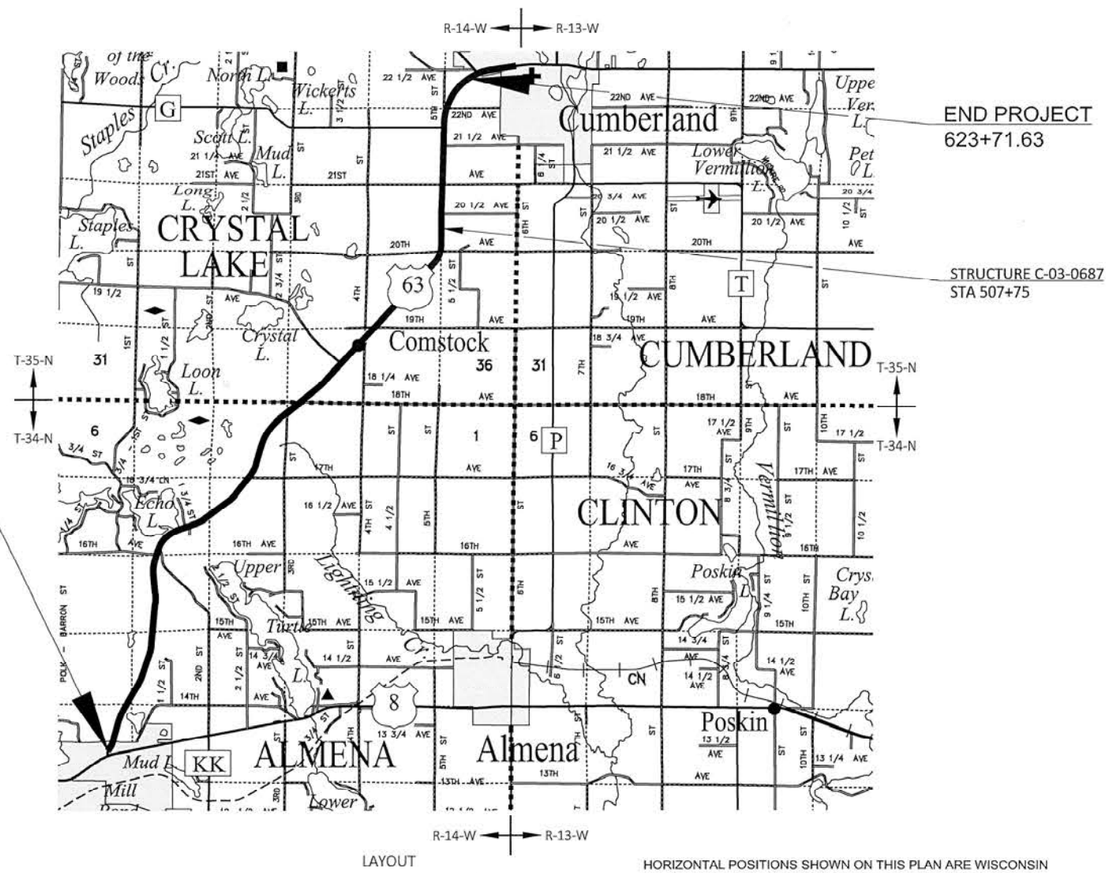

END PROJECT
623+71.63

STRUCTURE C-03-0687
STA 507+75

BEGIN PROJECT
STA 56+90.90
Y = 97,710.12
X = 230,624.30

LAYOUT

SCALE 0 2 MI

TOTAL NET LENGTH OF CENTERLINE = 10.735 MI

HORIZONTAL POSITIONS SHOWN ON THIS PLAN ARE WISCONSIN COORDINATE REFERENCE SYSTEM (WISCRS), BARRON COUNTY, NAD83 (2011), IN U.S. SURVEY FEET. POSITIONS SHOWN ARE GRID COORDINATES, GRID BEARINGS, AND GRID DISTANCES. GRID DISTANCES ARE THE SAME AS GROUND DISTANCES.

ELEVATIONS ARE REFERENCED TO NAVD 88 (2012). GPS DERIVED ELEVATIONS ARE BASED ON GEOID 12A.

ORIGINAL PLANS PREPARED BY

N.W.B.E.
NORTHERN WISCONSIN-BASED ENGINEERS, INC.

WISCONSIN
GARY T. COLBERT
E-31562
SPOONER, WIS.
PROFESSIONAL ENGINEER

January 20, 2026

DATE:

STATE OF WISCONSIN
DEPARTMENT OF TRANSPORTATION

PREPARED BY

Surveyor	WISDOT / COLEMAN ENGINEERING / NWBE INC
Designer	NWBE, INC.
Project Manager	TOU YANG, PE
Regional Examiner	NW REGION
Regional Supervisor	TOU YANG, PE

APPROVED FOR THE DEPARTMENT

2026.01.29 13:56:07-06'00'

DATE: (Signature)

E

FILE NAME : W:\NWBE_PROJECTS\DESIGN\2324_US63-US8TOSTH48\C3D-22\SHEETS\D10101_TI.DWG

PLOT DATE : 1/20/2026 10:38 AM

PLOT BY : G. COLBERT

PLOT NAME :

UTILITIES CONTACTS

BARRON ELECTRIC COOPERATIVE
ELECTRICITY
TYLER NANSTAD
1434 N. STH 25
BARRON, WI, 54812
PHONE: (715) 537-3171
EMAIL: TNANSTAD@BARRONELECTRIC.COM

WE ENERGIES
GAS/PETROLEUM
STEVEN CHAVERS
104 W. SOUTH STREET
RICE LAKE, WI 54868
PHONE: (715) 234-9605
PHONE: (800) 261-5325 - GAS DISPATCH
EMAIL: STEVEN.CHAVERS@WE-ENERGIES.COM

VILLAGE OF TURTLE LAKE
WATER
CORY DAVIS - DPW
PO BOX 11
TURTLE LAKE, WI 54889
PHONE: (715) 986-2820
EMAIL: VTLPW@TURTLELAKEWI.COM

CRYSTAL LAKE SANITARY DISTRICT
SEWER
DILLON SNOWBANK
2808 COUNTY ROAD E
CUMBERLAND, WI 54829
PHONE: (715) 419-2253
EMAIL: DILLON.SNOWBANK@CRYSTALLAKEWI.NET

DAIRYLAND POWER COOPERATIVE
ELECTRICITY
MICHAEL LYDON
3200 EAST AVENUE SOUTH
LA CROSSE, WI 54602
PHONE: (608) 787-1381
EMAIL: MICHAEL.LYDON@DAIRYLANDPOWER.COM

NORTHWEST COMMUNICATIONS
COMMUNICATION LINE
GREG CARDINAL
116 HARRIMAN AVE N
AMERY, WI 54001
PHONE: (715) 268-3379
EMAIL: GREGCARDINAL@AMERYTEL.NET

BRIGHTSPEED OF WESTERN WI
COMMUNICATION LINE
BRIAN HUHN
425 ELLINGTON AVENUE
HAWKINS, WI 54530
PHONE: (980) 376-1559
EMAIL: BRIAN.HUHN@BRIGHTSPEED.COM

XCEL ENERGY
ELECTRICITY
JOHN KELSER
1400 WESTERN AVENUE
EAU CLAIRE, WI 54703
PHONE: (715) 737-6020
EMAIL: JOHN.KELSER@XCELENERGY.COM

MOSAIC TELECOM
COMMUNICATIONS LINE
JACE SINCLAIR
401 S. 1ST STREET
CAMERON, WI 54822
PHONE: (715) 458-5352
EMAIL: JSINCLAIR@EXPERIENCEMOSAIC.COM

SPECTRUM
COMMUNICATIONS LINE
MICKEY BENIK
2016 180 3/4 STREET
RICE LAKE, WI 54868
PHONE: (715) 210-3868
EMAIL: MICKEY.BENIK@CHARTER.COM

DESIGN CONTACT

NORTHERN WISCONSIN-BASED ENGINEERS, INC.
GARY COLBERT, PE
P.O. BOX 328
HAYWARD, WI 54843
PHONE: (715) 634-4334
EMAIL: GCOLBERT@NWBEINC.COM

WISDOT CONTACT

WISCONSIN DEPARTMENT OF TRANSPORTATION - NORTHWEST REGION
TOU YANG, PE - PROJECT MANAGER
718 W CLAIREMONT AVENUE
EAU CLAIRE, WI 54701
PHONE: (715) 833-5570
EMAIL: TOU.YANG@DOT.WI.GOV

WISCONSIN DNR LIAISON

AMY CRONK
DNR NORTHERN REGION HEADQUARTERS
810 W. MAPLE STREET
SPOONER, WI 54801
PHONE: 715-520-3976
EMAIL: AMY.CRONK@WISCONSIN.GOV

ORDER OF SECTION 2 DETAIL SHEETS

GENERAL NOTES
TYPICAL SECTIONS
CONSTRUCTION DETAILS
INTERSECTION DETAILS
EROSION CONTROL DETAILS
PAVEMENT MARKING DETAILS
TRAFFFIC CONTROL DETAILS

GENERAL NOTES

THE LOCATIONS OF EXISTING AND PROPOSED UTILITY INSTALLATIONS AS SHOWN ON THE PLANS ARE APPROXIMATE. THERE MAY BE OTHER UTILITY INSTALLATIONS WITHIN THE PROJECT AREA THAT ARE NOT SHOWN.

NO TREES OR SHRUBS ARE TO BE REMOVED WITHOUT THE APPROVAL OF THE ENGINEER.

DISTURBED AREAS WITHIN THE RIGHT-OF-WAY, EXCEPT THE AREAS WITHIN THE FINISHED SHOULDER POINTS, SHALL BE SEEDED, FERTILIZED, AND COVERED WITH MULCH OR EMAT.

EROSION CONTROL FEATURES AS SHOWN IN THE PLANS ARE AT APPROXIMATE LOCATIONS. EXACT LOCATIONS WILL BE DETERMINED BY THE CONTRACTOR'S EROSION CONTROL IMPLEMENTATION PLAN (ECIP) AND APPROVED BY THE ENGINEER. MAINTAIN EROSION CONTROL MEASURES UNTIL SUCH A TIME AS THE ENGINEER DETERMINES THE MEASURE IS NO LONGER NECESSARY.

HMA PAVEMENT WEIGHT CALCULATIONS ARE BASED ON 112 LBS/SY/IN.

THE CONTRACTOR'S PAVING OPERATION SHALL BE CONSISTENT WITH THE TYPICAL SECTIONS AND CONSTRUCTED TO PREVENT LONGITUDINAL JOINTS FROM BEING LOCATED WITHIN A DRIVING, TURNING, PASSING, OR PARKING LANE.

PRIOR TO PLACEMENT OF BEAM GUARD THE SHOULDERS SHALL BE IN PLACE, SHAPED AND COMPACTED.

RESTORE SIDE ROAD INTERSECTIONS AND PRIVATE ENTRANCES TO EXISTING CONDITIONS UNLESS OTHERWISE SHOWN.

CONTRACTOR SHALL MAINTAIN ACCESS TO ALL DRIVEWAYS AT ALL TIMES.

DO NOT DRIVE OR STORE EQUIPMENT, OR STORE CONSTRUCTION MATERIALS IN ENVIRONMENTALLY SENSITIVE AREAS, WETLANDS OR WATERWAYS.

RIGHT OF WAY INFORMATION SHOWN ON THE PLANS IS APPROXIMATE. RIGHT-OF-WAY LOCATIONS SHOWN ON THE PLAN AND CROSS-SECTION SHEETS WERE DERIVED FROM BARRON COUNTY PARCEL GIS DATA, AND WISCONSIN DEPARTMENT OF TRANSPORTATION PROJECT PLAT 1000-58-20 AND PROJECT PLAT 1550-04-21.

RUNOFF COEFFICIENT TABLE

	HYDROLOGIC SOIL GROUP											
	A			B			C			D		
	SLOPE RANGE (PERCENT)			SLOPE RANGE (PERCENT)			SLOPE RANGE (PERCENT)			SLOPE RANGE (PERCENT)		
LAND USE:	0-2	2-6	6 & OVER	0-2	2-6	6 & OVER	0-2	2-6	6 & OVER	0-2	2-6	6 & OVER
ROW CROPS:	.08 .22	.16 .30	.22 .38	.12 .26	.20 .34	.27 .44	.15 .30	.24 .37	.33 .50	.19 .34	.28 .41	.38 .56
MEDIAN STRIPTURF:	.19 .24	.20 .26	.24 .30	.19 .25	.22 .28	.26 .33	.20 .26	.23 .30	.30 .37	.20 .27	.25 .32	.30 .40
SIDE SLOPETURF:			.25 .32			.27 .34			.28 .36			.30 .38
PAVEMENT:												
ASPHALT:	.70 - .95											
CONCRETE:	.80 - .95											
BRICK:	.70 - .80											
DRIVES, WALKS:	.75 - .85											
ROOFS:	.75 - .95											
GRAVEL ROADS, SHOULDERS:	.40 - .60											

TOTAL PROJECT AREA = 200 ACRES
TOTAL AREA EXPECTED TO BE DISTURBED BY CONSTRUCTION ACTIVITIES = 3.1 ACRES

DIGGERS HOTLINE
Dial 811 or (800)242-8511
www.DiggersHotline.com

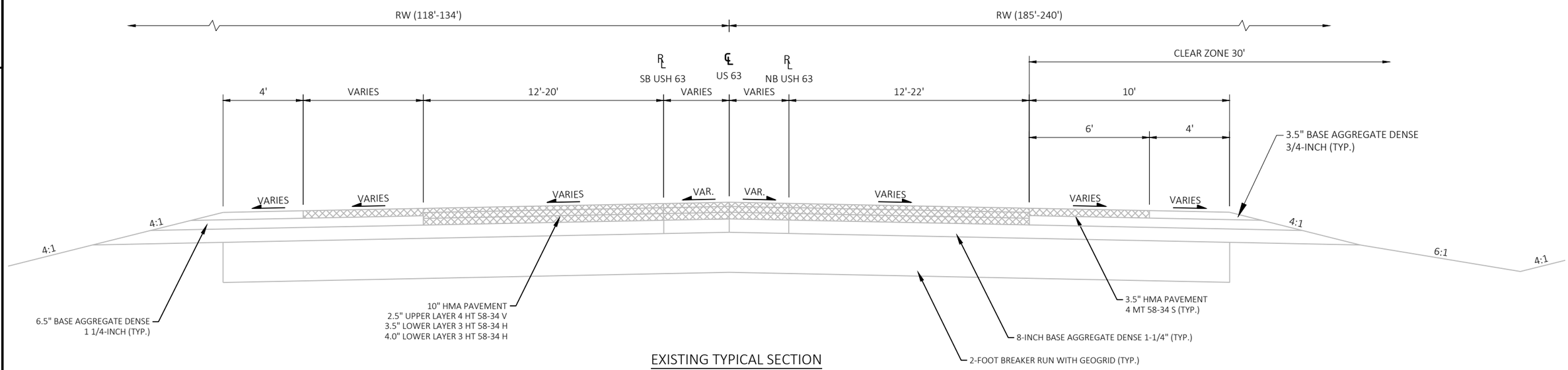

EXISTING TYPICAL SECTION

STA 56+90.90 - 60+18

NOTE

CROSS SLOPE VARIES DUE TO SUPERELEVATION. SEE SECTION 5 PLANS FOR SUPERELEVATION INFORMATION.

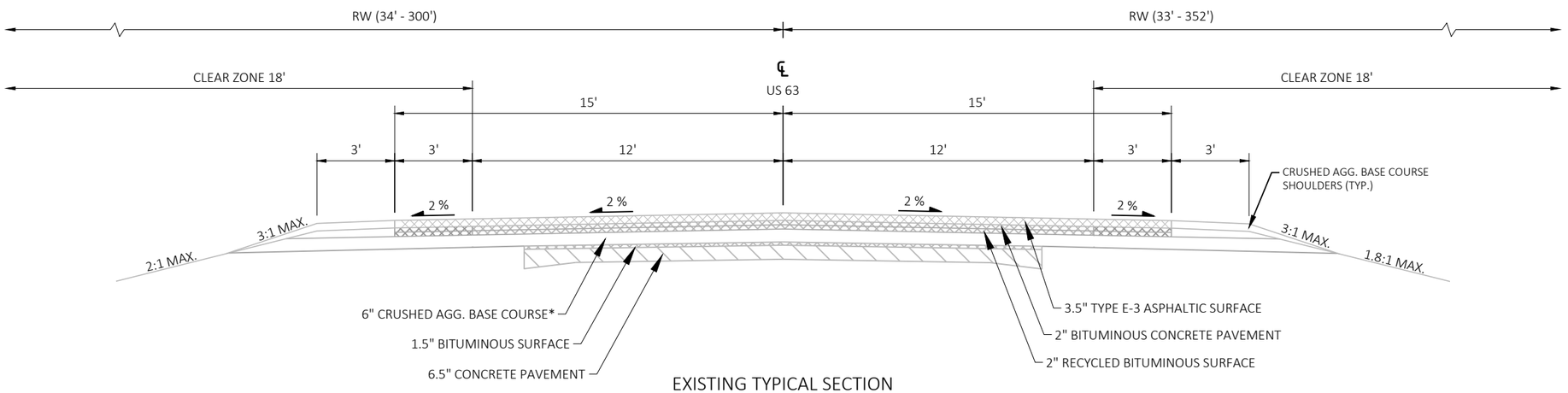

EXISTING TYPICAL SECTION

STA 60+27 -150+00
STA 150+00 -229+60 LT
STA 229+60 -253+40
STA 253+40 -341+00 RT
STA 341+00 - 395+20
STA 410+00 - 445+00
STA 445+00 - 519+36 LT
STA 519+36 - 551+40
STA 551+40 - 623+72 RT

* VARIABLE DEPTH CRUSHED AGG. BASE COURSE
STA 71+00 - 78+00
STA 102+00 - 117+00
STA 286+33 - 293+96 RT
STA 353+00 - 359+00
STA 586+00 - 592+00 RT

PROJECT NO: 1550-04-78	HWY: USH 63	COUNTY: BARRON	TYPICAL SECTIONS	SHEET 3	E

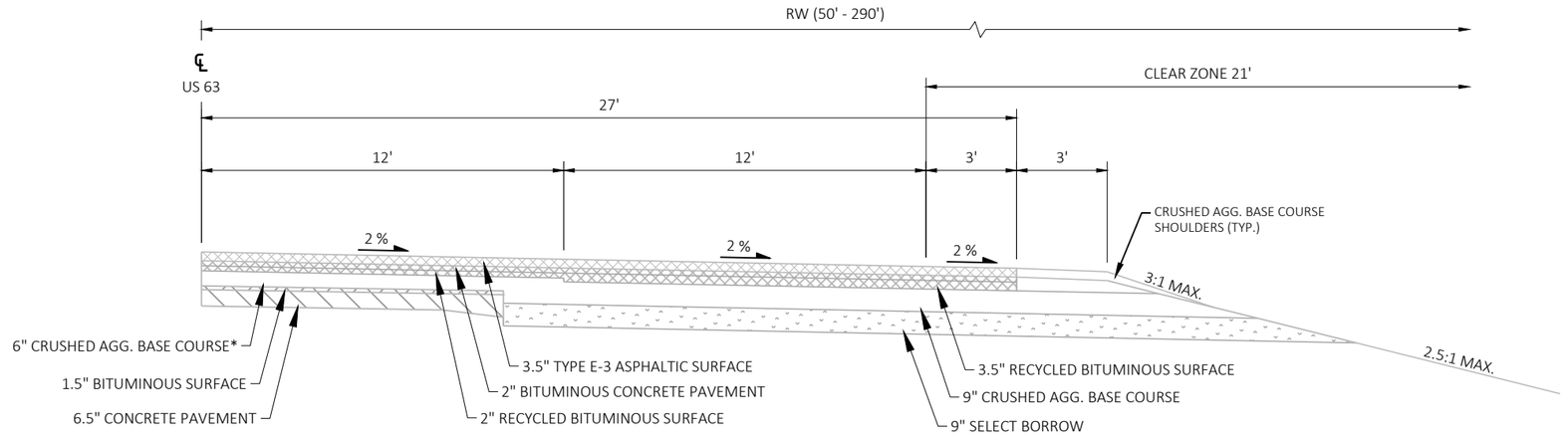

EXISTING TYPICAL HALF SECTION (PASSING LANE)

STA 150+00 -229+60 RT
STA 198+18 - 205+70 LT (TURNING LANE)
STA 253+40 -341+00 LT
STA 445+00 - 519+36 RT
STA 551+40 - 623+72 LT
STA 581+50 - 587+75 RT (PASSING LANE)
STA 582+94 - 594+00 LT (TURNING LN.)

NOTE

CROSS SLOPE VARIES DUE TO SUPERELEVATION. SEE SECTION 5 PLANS FOR SUPERELEVATION INFORMATION.

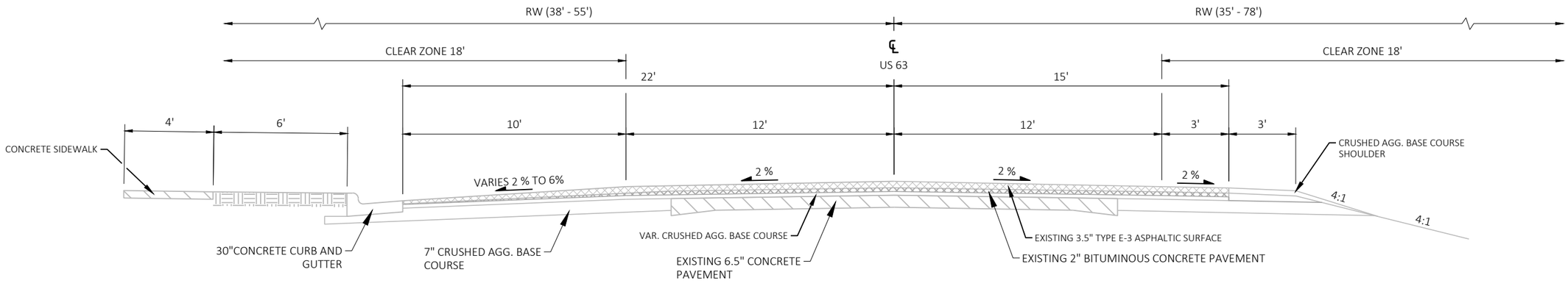

EXISTING TYPICAL SECTION

STA 395+20 - 410+00 (VILLAGE OF COMSTOCK)

PROJECT NO: 1550-04-78	HWY: USH 63	COUNTY: BARRON	TYPICAL SECTIONS	SHEET 4	E

2

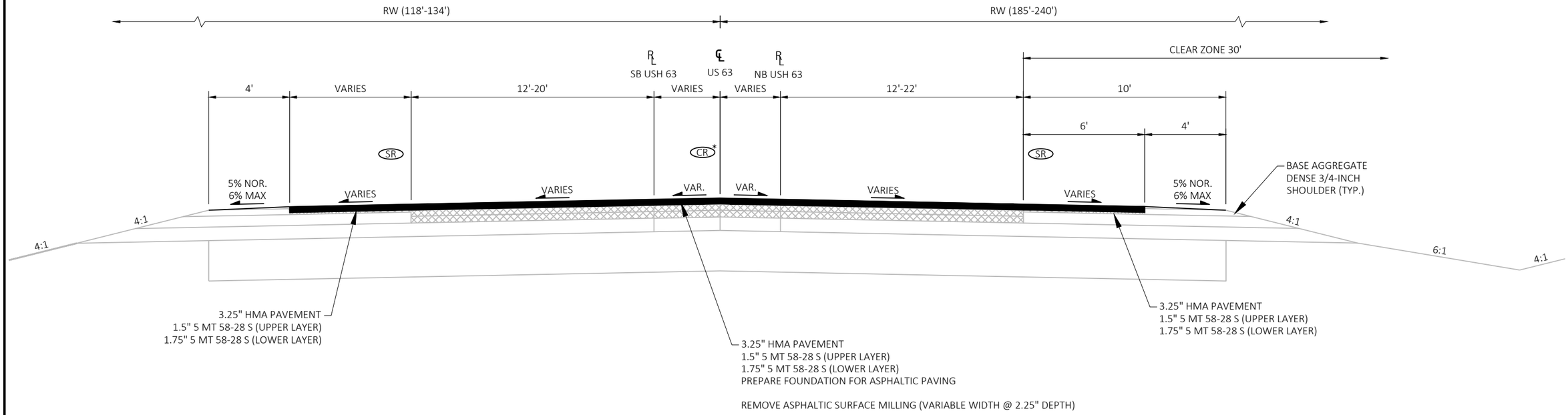

FINISHED TYPICAL SECTION

STA 56+90.90 - 60+18

NOTES

CROSS SLOPE VARIES DUE TO SUPERELEVATION. MATCH EXISTING SUPERELEVATION AND TRANSITIONS OR AS NOTED IN SECTION 5 PLAN SHEETS.

MILLING DEPTH REFERENCED AT ROADWAY CENTERLINE.

(CR) ASPHALTIC RUMBLE STRIPS, CENTERLINE - SEE SDD "2-LANE RURAL CENTERLINE RUMBLE STRIPS" FOR ADDITIONAL INFORMATION.

(SR) ASPHALTIC RUMBLE STRIPS, SHOULDER - SEE SDD "2-LANE RURAL SHOULDER RUMBLE STRIPS" FOR ADDITIONAL INFORMATION.

* BEGIN ASPHALTIC RUMBLE STRIP, CENTERLINE, STA. 60+00.

PROJECT NO: 1550-04-78	HWY: USH 63	COUNTY: BARRON	TYPICAL SECTIONS	SHEET 5	E

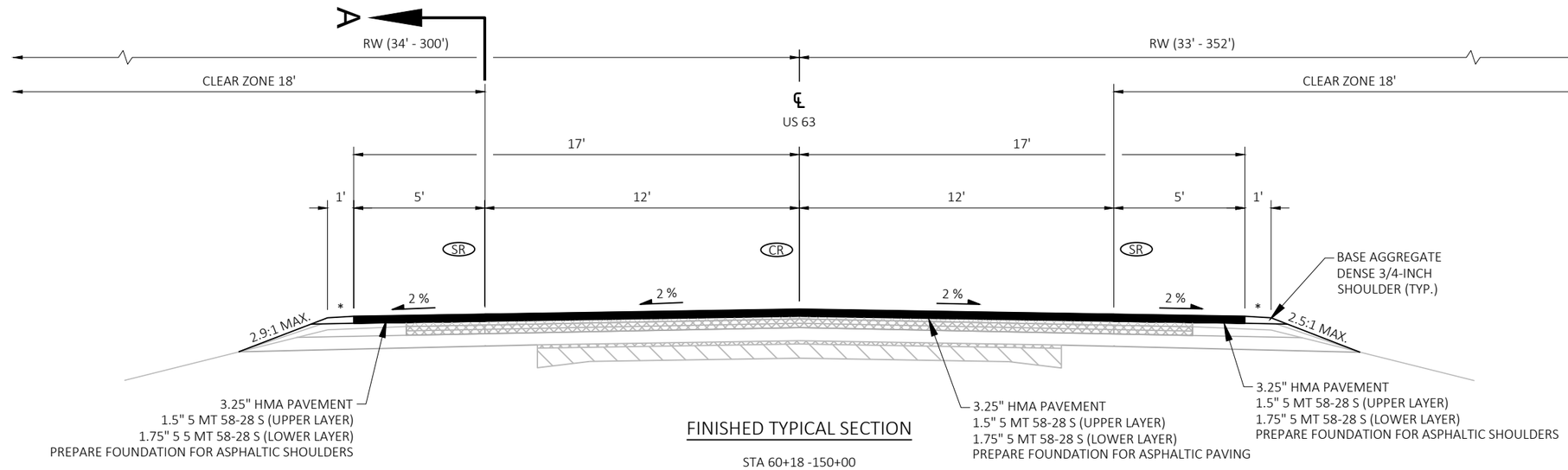

FINISHED TYPICAL SECTION

STA 60+18 -150+00
STA 150+00 -229+60 LT
STA 229+60 -253+40
STA 253+40 -341+00 RT
STA 341+00 - 395+20
STA 410+00 - 445+00
STA 445+00 - 519+36 LT
STA 519+36 - 551+40
STA 551+40 - 623+72 RT

REMOVE ASPHALTIC SURFACE MILLING (30' @ 2.25" DEPTH)

* 2' MGS GUARDRAIL 3
0' MGS GUARDRAIL 3 K

** STA 131+09 - 137+00 LT
GUARDRAIL MOW STRIP
EMULSIFIED ASPHALT

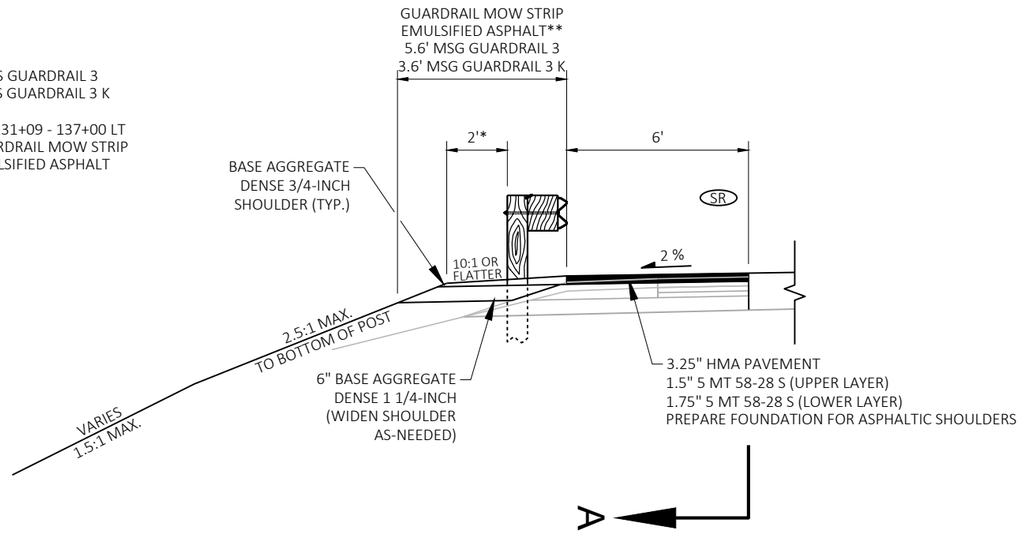

FINISHED MGS GUARDRAIL SECTION A-A

SEE SECTION 5 PLANS AND SECTION 9 CROSS-SECTIONS FOR MGS GUARDRAIL 3 AND MGS GUARDRAIL 3 K LOCATIONS.

NOTES

CROSS SLOPE VARIES DUE TO SUPERELEVATION. MATCH EXISTING SUPERELEVATION AND TRANSITIONS OR AS NOTED IN SECTION 5 PLAN SHEETS.

MILLING DEPTH REFERENCED AT ROADWAY CENTERLINE.

(CR) ASPHALTIC RUMBLE STRIPS, CENTERLINE - SEE SDD "2-LANE RURAL CENTERLINE RUMBLE STRIPS" FOR ADDITIONAL INFORMATION.

(SR) ASPHALTIC RUMBLE STRIPS, SHOULDER - SEE SDD "2-LANE RURAL SHOULDER RUMBLE STRIPS" FOR ADDITIONAL INFORMATION.

* 4% SLOPE NORMAL, 6% SLOPE MAX.

PROJECT NO: 1550-04-78	HWY: USH 63	COUNTY: BARRON	TYPICAL SECTIONS	SHEET 6	E

NOTES

CROSS SLOPE VARIES DUE TO SUPERELEVATION. MATCH EXISTING SUPERELEVATION AND TRANSITIONS OR AS NOTED IN SECTION 5 PLAN SHEETS.

MILLING DEPTH REFERENCED AT ROADWAY CENTERLINE.

(CR) ASPHALTIC RUMBLE STRIPS, CENTERLINE - SEE SDD "2-LANE RURAL CENTERLINE RUMBLE STRIPS" FOR ADDITIONAL INFORMATION.

(SR) ASPHALTIC RUMBLE STRIPS, SHOULDER - SEE SDD "2-LANE RURAL SHOULDER RUMBLE STRIPS" FOR ADDITIONAL INFORMATION.

* 4% SLOPE NORMAL, 6% SLOPE MAX.

** STA 582+94 - 594+00 LT - 12' WIDTH PASSING, 5'-12' TURNING LANE.

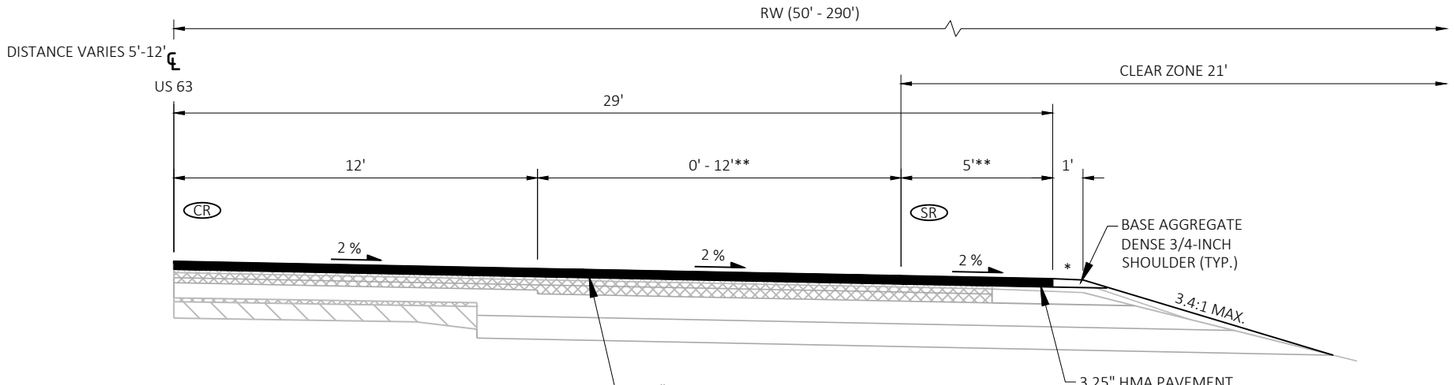

FINISHED TYPICAL HALF SECTION

STA 150+00 - 229+60 RT (PASSING LANE)
STA 198+18 - 205+70 LT (TURNING LANE)
STA 253+40 - 341+00 LT (PASSING LANE)
STA 445+00 - 519+36 RT (PASSING LANE
STA 551+40 - 623+72 LT (PASSING LANE)**
STA 581+50 - 587+75 RT (BY-PASSING LANE)

3.25" HMA PAVEMENT
1.5" 5 MT 58-28 S (UPPER LAYER)
1.75" 5 MT 58-28 S (LOWER LAYER)
PREPARE FOUNDATION FOR ASPHALTIC PAVING

REMOVE ASPHALTIC SURFACE MILLING (WIDTH VARIES @ 2.25" DEPTH)

3.25" HMA PAVEMENT
1.5" 5 MT 58-28 S (UPPER LAYER)
1.75" 5 MT 58-28 S (LOWER LAYER)
PREPARE FOUNDATION FOR ASPHALTIC SHOULDERS

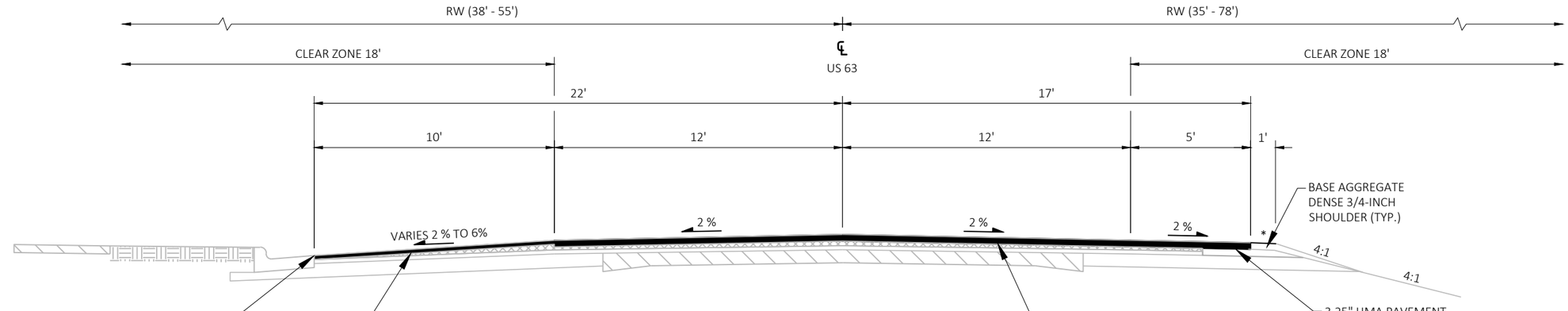

1.5" HMA PAVEMENT
1.5" 5 MT 58-28 S (UPPER LAYER)
PREPARE FOUNDATION FOR ASPHALTIC PAVING

REMOVE ASPHALTIC SURFACE MILLING (10' WIDTH @ 1.5" DEPTH)

FINISHED TYPICAL SECTION

STA 395+20 - 410+00 (VILLAGE OF COMSTOCK)

3.25" HMA PAVEMENT
1.5" 5 MT 58-28 S (UPPER LAYER)
1.75" 5 MT 58-28 S (LOWER LAYER)
PREPARE FOUNDATION FOR ASPHALTIC PAVING

REMOVE ASPHALTIC SURFACE MILLING (27' @ 2.25" DEPTH)

3.25" HMA PAVEMENT
1.5" 5 MT 58-28 S (UPPER LAYER)
1.75" 5 MT 58-28 S (LOWER LAYER)
PREPARE FOUNDATION FOR ASPHALTIC SHOULDERS

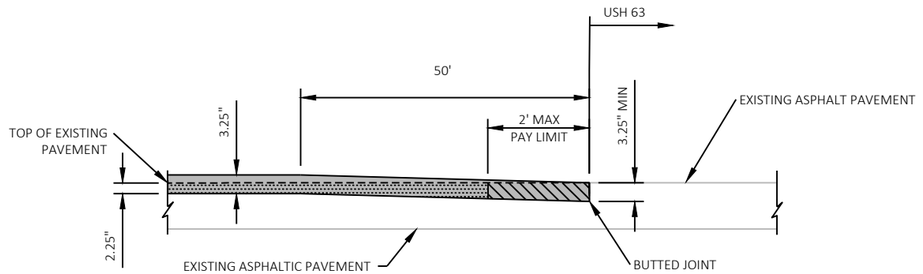

REMOVING ASPHALTIC SURFACE BUTT JOINTS
DO NOT REMOVE MATERIAL UNDER THIS ITEM UNTIL 24 HOURS BEFORE PAVING

REMOVING ASPHALTIC SURFACE MILLING

PROPOSED HMA PAVEMENT OVERLAY

USH 63 BUTTED JOINT AND PROFILE MATCH DETAIL

STA 56+90.90
STA 623+71.63

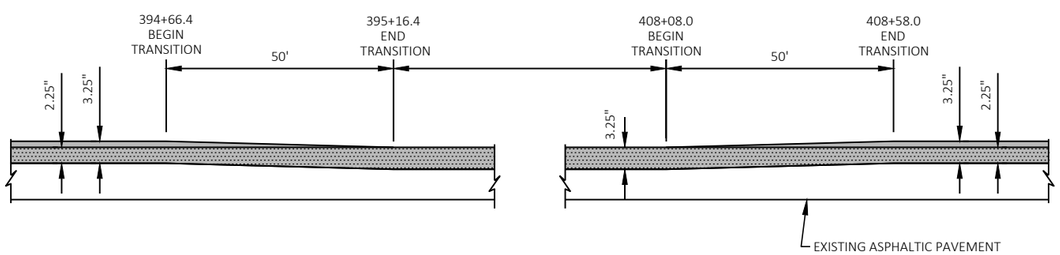

REMOVING ASPHALTIC SURFACE MILLING

PROPOSED HMA PAVEMENT OVERLAY

USH 63 MILL DEPTH TRANSITION DETAIL

STA. 394+66.4 - 408+58.0

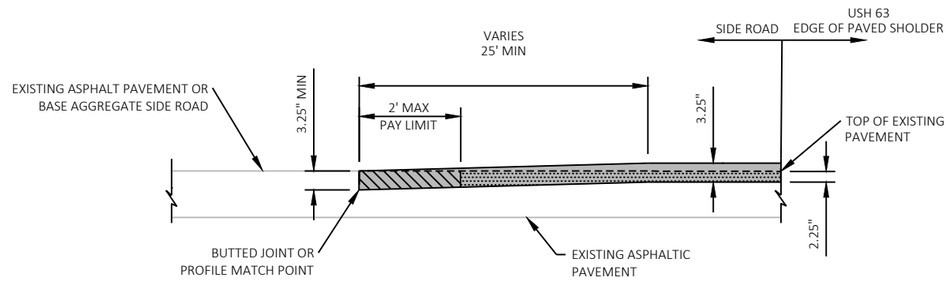

REMOVING ASPHALTIC SURFACE BUTT JOINTS (EXISTING ASPHALTIC SURFACE SIDE ROADS ONLY)
DO NOT REMOVE MATERIAL UNDER THIS ITEM UNTIL 24 HOURS BEFORE PAVING

REMOVING ASPHALTIC SURFACE MILLING

PROPOSED HMA PAVEMENT OVERLAY

SIDE ROAD BUTTED JOINT AND PROFILE MATCH DETAIL

STA 63+79 RT - 13 1/2 AVE
STA 152+87 LT - DUMP ROAD
STA 199+24 LT - 16TH AVE
STA 203+83 RT - 15TH AVE
** STA 228+81 LT - 1 3/4 ST
STA 231+11 RT - 1 3/4 ST
** STA 285+64 RT - 17TH AVE
STA 349+03 LT - 18TH AVE
STA 350+97 RT - 18TH AVE
** STA 388+61 RT - 18 1/2 19 1/2 AVE
STA 388+78 LT - 18 1/2 19 1/2 AVE
* STA 405+73 RT - 18 3/4 AVE
STA 421+94 LT - 19TH AVE
STA 423+43 RT - 19TH AVE
STA 492+58 LT - 20TH AVE
** STA 493+06 RT - 20TH AVE
STA 519+11 RT - 20 1/2 AVE
** STA 545+12 RT - 21ST AVE
STA 545+15 LT - 21ST AVE
STA 571+28 RT - 21 1/2 AVE
+ STA 584+40 LT - CTH G
STA 597+43 LT - 5TH ST
STA 597+92 RT - 22ND AVE

NOTES

* MILL ASPHALTIC SURFACE TO CONCRETE GUTTER FLANGE LINE ONLY.

** MILL ASPHALTIC SURFACE AND CONCRETE GUTTER TO GUTTER FLOWLINE.

+ REPLACE CONCRETE CURB AND GUTTER - SEE SECTION 2 CONSTRUCTION AND INTERSECTION DETAILS.

TRANSITION PROFILE TO MATCH EXISTING BASE AGGREGATE SIDE ROADS WITH VARIABLE DEPTH MILLING AS SHOWN. PAYMENT FOR BUTT JOINTS WILL NOT BE PAID AT BASE AGGREGATE SURFACE SIDE ROADS.

PREPARATION INCLUDED IN PREPARE FOUNDATION FOR ASPHALTIC PAVING ITEM.

SEE SECTION 5 PLAN SHEETS FOR SIDE ROAD LOCATIONS.

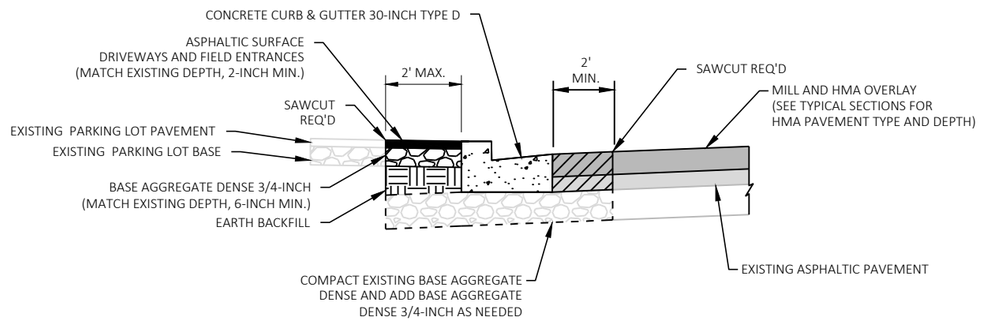

3 1/2" (MIN) ASPHALTIC SURFACE PATCHING (MATCH EXISTING PAVEMENT DEPTH)

DETAIL OF CURB & GUTTER REPLACEMENT

STA 396+35 - 396+50 LT
STA 396+72 - 396+87 LT

NOTES

COMPLETE CURB & GUTTER REPLACEMENTS AND ASPHALTIC SURFACE PATCHING TO MATCH THE EXISTING SURFACE PRIOR TO THE MILL AND OVERLAY OF USH 63.

REMOVING ASPHALTIC SURFACE AND REMOVING CURB & GUTTER WILL BE PAID SEPARATELY UNDER THEIR RESPECTIVE BID ITEMS.

EXCAVATION AND EARTH BACKFILL INCIDENTAL TO CURB AND GUTTER ITEM.

FOR DETAILS NOT SHOWN, SEE SDD "CONCRETE CURB, CONCRETE CURB & GUTTER AND TIES".

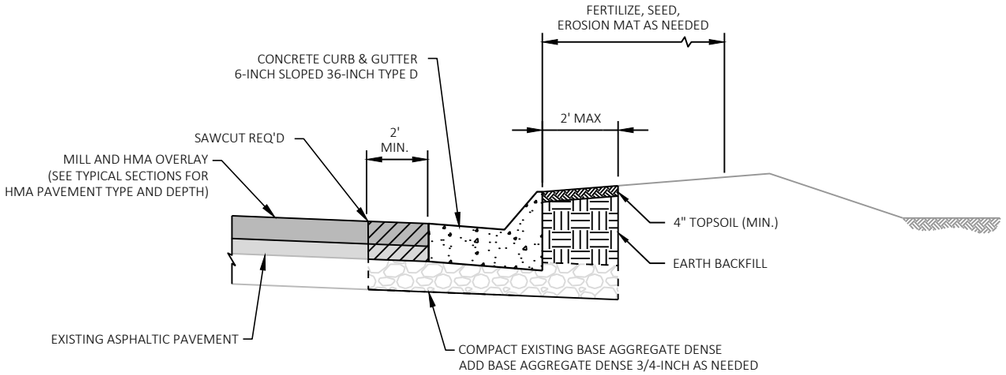

DETAIL OF CURB & GUTTER REPLACEMENT

STA 584+41 LT (USH 63 & 21 3/4 AVENUE/CTH G INTERSECTION)
STA 545+51 RT (USH 63 & 21ST AVE, STAGE 2 TEMPORARY WIDENING)

3 1/2" (MIN) ASPHALTIC SURFACE PATCHING
(MATCH EXISTING PAVEMENT DEPTH, 5-INCH MIN.)

NOTES

COMPLETE CURB & GUTTER REPLACEMENTS AND ASPHALTIC SURFACE PATCHING TO MATCH THE EXISTING SURFACE PRIOR TO THE MILL AND OVERLAY OF USH 63.

REMOVING ASPHALTIC SURFACE AND REMOVING CURB & GUTTER WILL BE PAID SEPARATELY UNDER THEIR RESPECTIVE BID ITEMS.

FOR DETAILS NOT SHOWN, SEE SDD "CONCRETE CURB, CONCRETE CURB & GUTTER AND TIES".

SEE INTERSECTION DETAILS FOR CURB & GUTTER LOCATIONS FOR ADDITIONAL INFORMATION.

EXCAVATION AND EARTH BACKFILL INCIDENTAL TO CURB AND GUTTER ITEM.

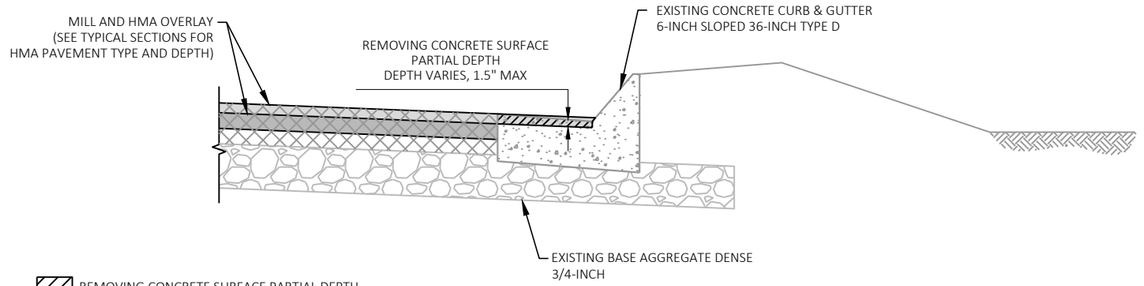

DETAIL OF CONCRETE GUTTER PARTIAL DEPTH REMOVAL

STA 228+81 LT - 1 3/4 ST
STA 285+64 RT - 17TH AVE
STA 388+61 LT - 18 1/2 19 1/2 AVE
STA 493+06 RT - 20TH AVE
STA 545+12 RT - 21ST AVE

NOTES

REMOVING ASPHALTIC SURFACE MILLING WILL BE PAID SEPARATELY UNDER RESPECTIVE BID ITEM.

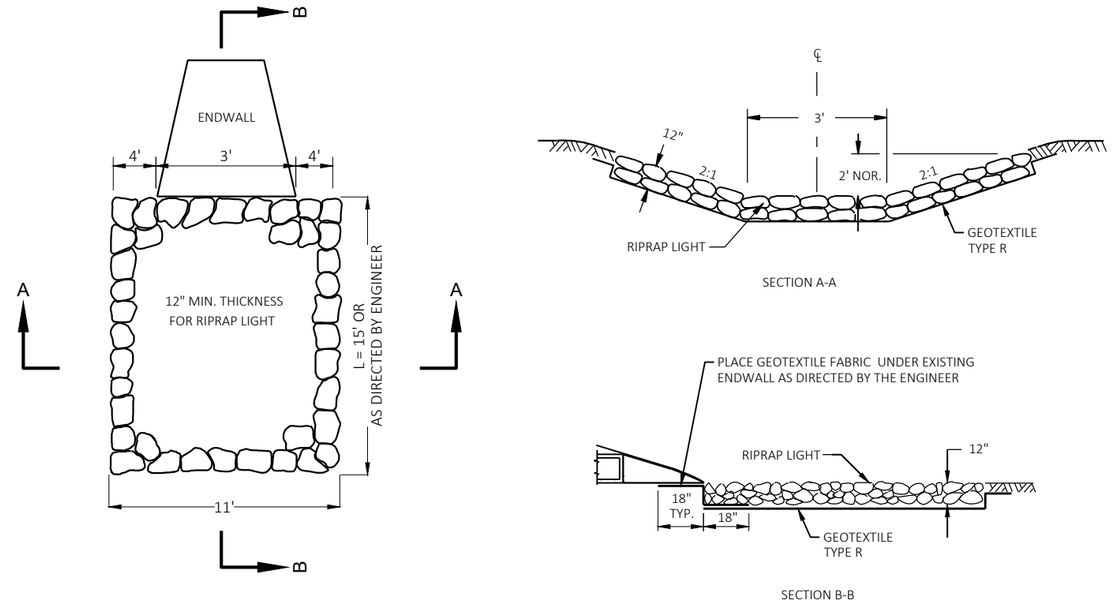

RIPRAP LIGHT AND GEOTEXTILE FABRIC DETAIL AT APRON ENDWALLS

STA 365+77, 47' RT

NOTE:

GEOTEXTILE FABRIC MAY BE INSTALLED AS TWO SEPARATE PIECES, OVERLAPPING AS SHOWN OR AS APPROVED BY THE ENGINEER IN THE FIELD. EXTRA QUANTITY FOR OVERLAP IS INCIDENTAL TO THE CONTRACT.

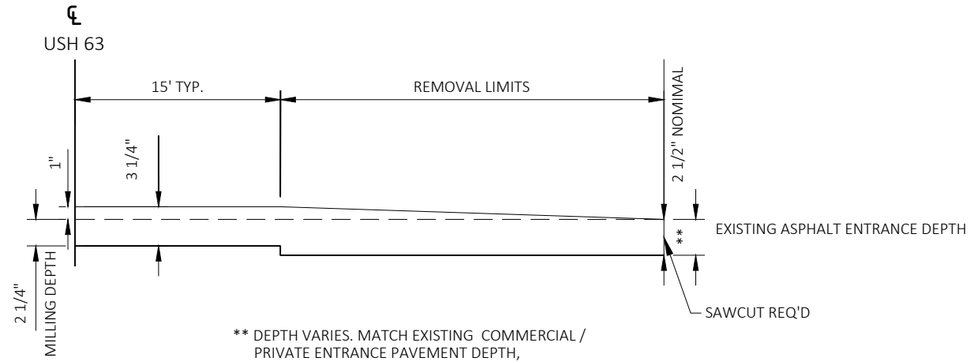

** DEPTH VARIES. MATCH EXISTING COMMERCIAL / PRIVATE ENTRANCE PAVEMENT DEPTH, MINIMUM 2 INCHES.

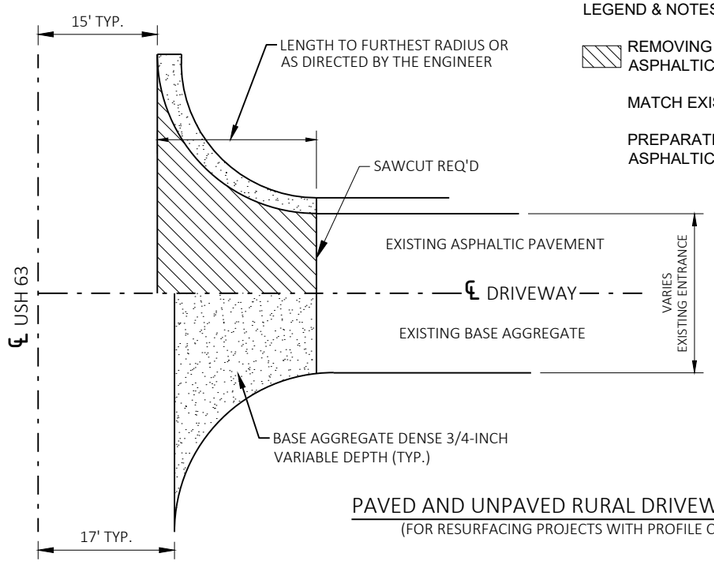

LEGEND & NOTES:

REMOVING ASPHALTIC SURFACE (ENTRANCES)
ASPHALTIC SURFACE DRIVEWAY AND FIELD ENTRANCES

MATCH EXISTING PAVED SURFACE RADII AND TAPERS

PREPARATION INCLUDED IN PREPARE FOUNDATION FOR ASPHALTIC PAVING ITEM

PAVED AND UNPAVED RURAL DRIVEWAY DETAIL

(FOR RESURFACING PROJECTS WITH PROFILE CHANGE)

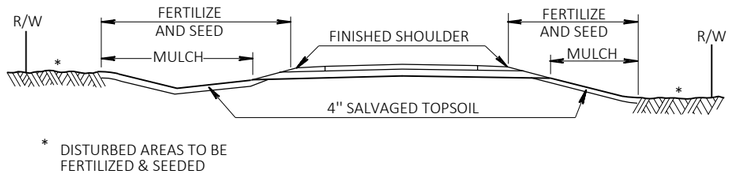

* DISTURBED AREAS TO BE FERTILIZED & SEEDED

DETAIL FOR FINISHING ITEMS

(OR AS NOTED ON SECTION 2 EROSION CONTROL PLANS)

2

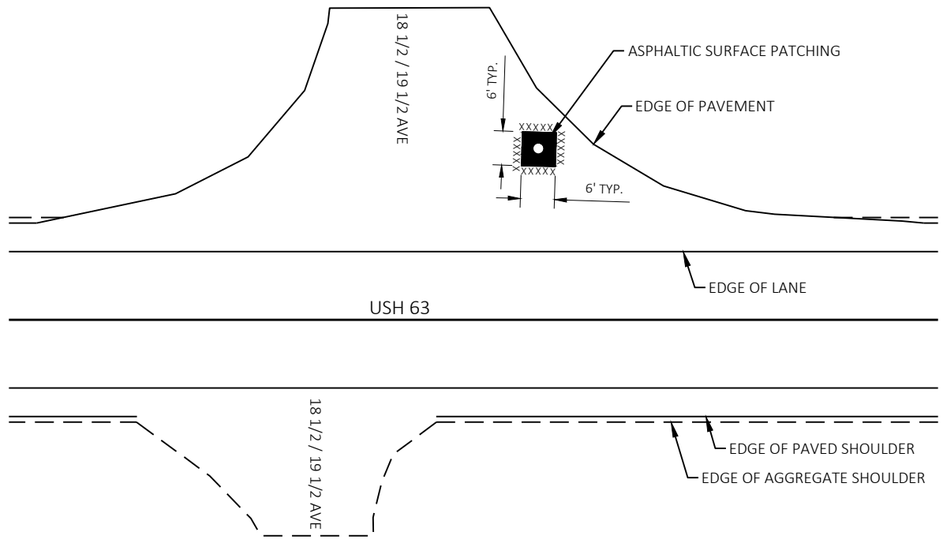

PLAN VIEW

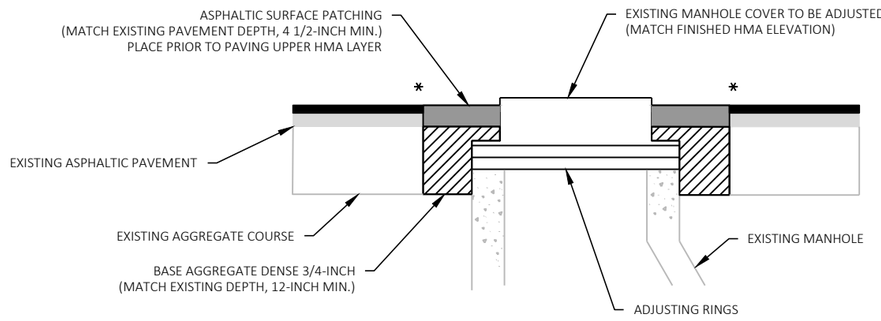

SECTION VIEW

LEGEND

* SAWCUT REQ'D

FOR MANHOLES IN THE DRIVING LANE OR THE MIDDLE OF INTERSECTIONS:

- SAW AROUND MANHOLE, REMOVE EXISTING PAVEMENT, STOCKPILE MANHOLE COVER AND PLACE TEMPORARY COVER PLATE
- MILL EXISTING ASPHALT AND PAVE LOWER HMA LAYER
- SAW AND REMOVE HMA, REINSTALL MANHOLE COVER WITH ADJUSTING RINGS TO FINISHED HMA ELEVATION, PLACE AGGREGATE AND ASPHALTIC SURFACE PATCHING TO TOP OF LOWER HMA LAYER
- PAVE UPPER HMA LAYER
- ENTIRE PROCESS OF REMOVAL, SALVAGE, STORAGE, AND RE-INSTALLATION PAID AS ONE ADJUSTING MANHOLE COVERS.

ADJUSTING SANITARY MANHOLE COVERS DETAIL

STA. 389+00, 30' LT

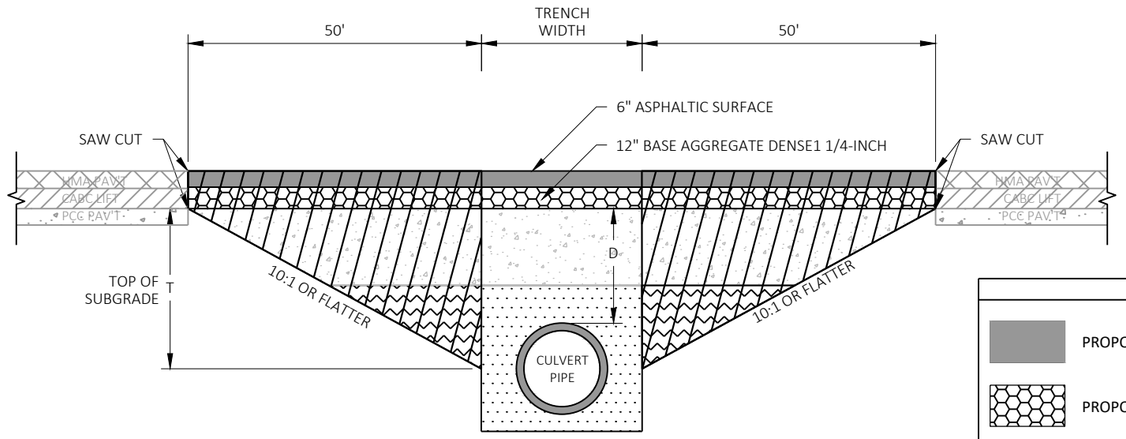

DEPTH D < 6 FT

TRANSITION CUT DEPTH (T) = THE LESSER OF DEPTH TO CENTER OF PIPE OR 5 FT.
DO NOT EXTEND TRANSITION CUT BELOW HORIZONTAL CENTER OF PIPE.

KEY

- PROPOSED SURFACE
- PROPOSED BASE
- TRENCH BACKFILL
- TRENCH OR FOUNDATION BACKFILL
- FOUNDATION BACKFILL
- TRANSITION CUT

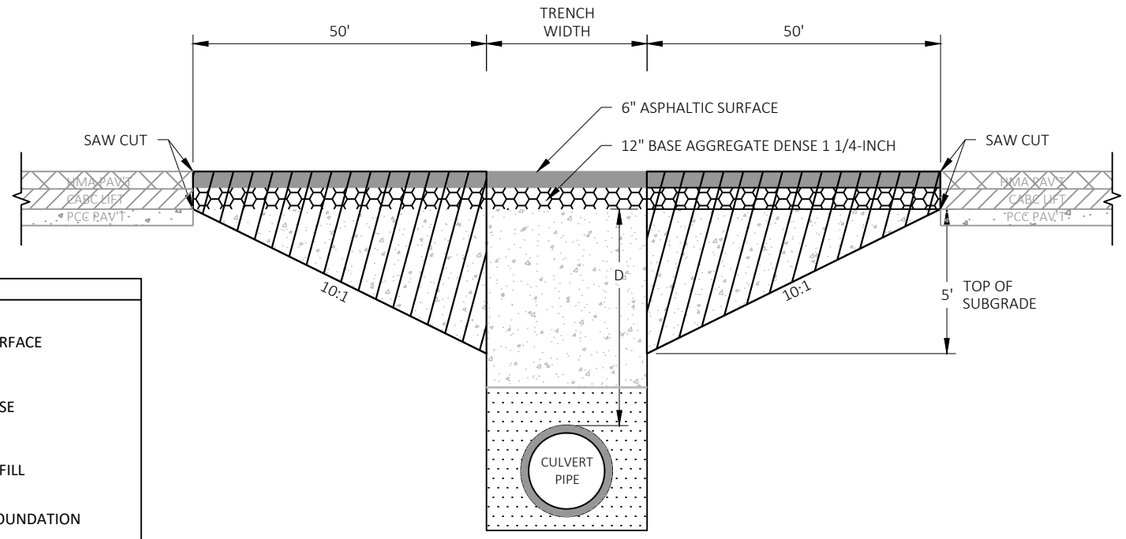

DEPTH D ≥ 6 FT

NOTES

TRANSITION CUT IS PAID AS EXCAVATION COMMON.
TRANSITION CUT WIDTH IS FROM SUBGRADE SHOULDER POINT TO SUBGRADE SHOULDER POINT.
BACKFILL THE TRANSITION CUT AREAS WITH FOUNDATION AND TRENCH BACKFILL AS SPECIFIED IN STANDARD SPEC 520.
PERFORM CULVERT PIPE INSTALLATION BEFORE REMOVING ASPHALTIC SURFACE MILLING.

DEPTH D (FT) - MINIMUM PIPE COVER TO SUBGRADE BETWEEN FINISHED SHOULDER POINTS

CULVERT PIPE TRANSITION

ROUTE	STA (CL)	DEPTH D (FT)	PIPE DIA (IN)	REMARKS
USH 63	64+20.0	5.4	24	C 03063074398 (NEW INSTALLATION UP STA)
USH 63	385+35.0	1.5	30	C 03063027179
USH 63	420+07.0	1.1	42	C 03063027182
USH 63	441+86.0	1.7	24	C 03063027184
USH 63	507+71.0	3.4	48	C-03-0687 (NEW INSTALLATION UP STA)
USH 63	507+78.0	3.4	48	C-03-0687 (NEW INSTALLATION DOWN STA)
USH 63	547+00.0	2.9	60	C 03063027191
USH 63	547+10.0	3.2	60	C 03063074557
USH 63	618+51.0	2.8	30	C 03063027197

2

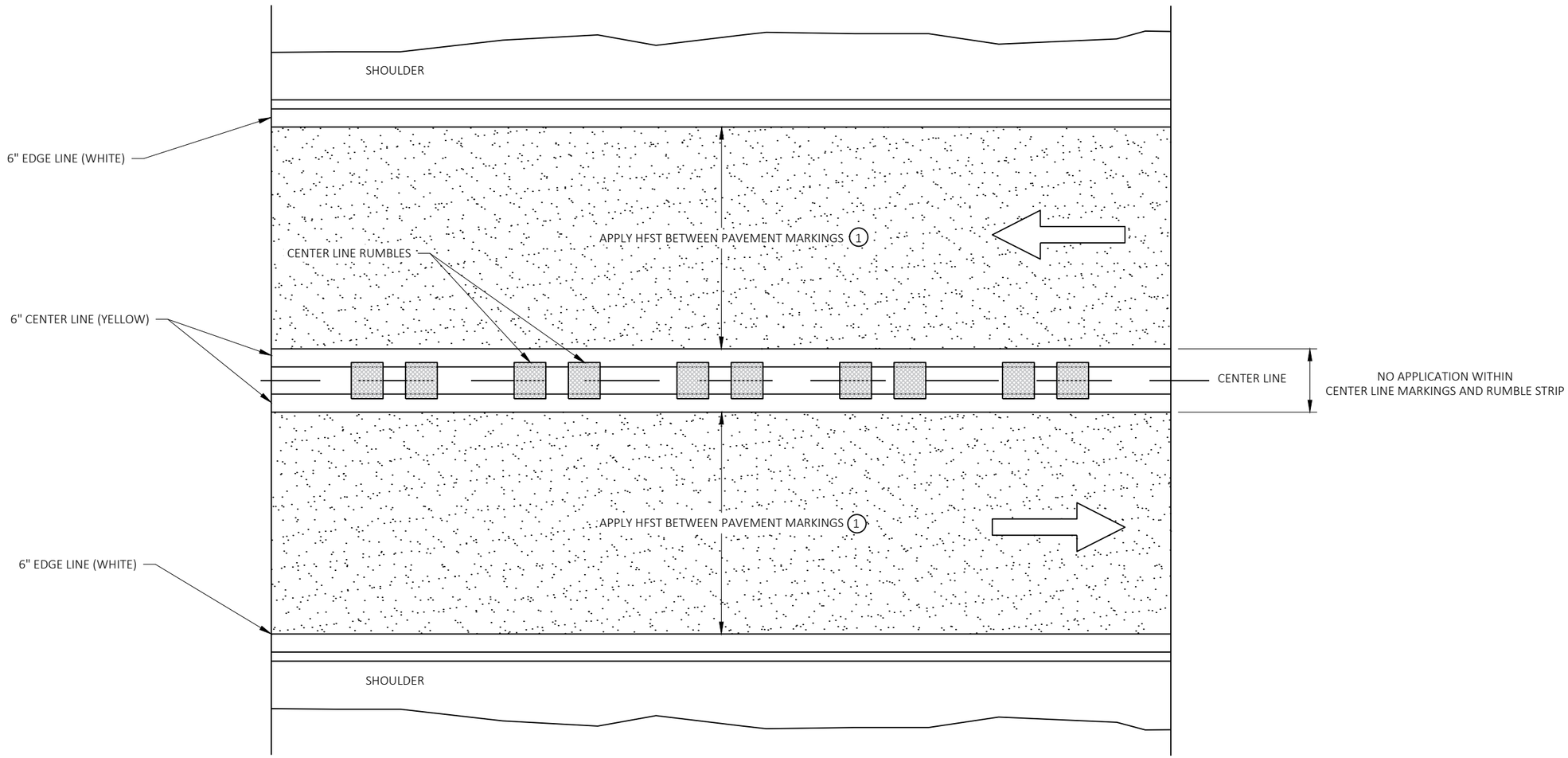

RESIN BINDER HIGH FRICTION SURFACE TREATMENT (HFST)

STA 228+50 - 244+80
STA 264+25 - 270+25

PROJECT NO: 1550-04-78	HWY: USH 63	COUNTY: BARRON	CONSTRUCTION DETAILS	SHEET 12	E

FILE NAME : W:\NWBE_PROJECTS\DESIGN\2324_US63-US8TOSTH48\C3D-22\SHEETS\021001_CD-2324.DWG
LAYOUT NAME - 63_cd-05
PLOT DATE : 3/23/2026 10:12 AM PLOT BY : G. COLBERT PLOT NAME : PLOT SCALE : 1:10
WISDOT/CADDS SHEET 42

2

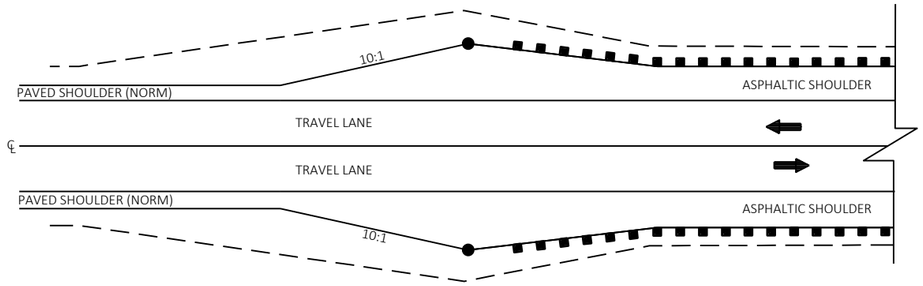

PAVED SHOULDER AT GUARDRAIL DETAIL

STA 83+86.7 - 91+45.0 LT
STA 130+79.1 - 140+61.2 LT

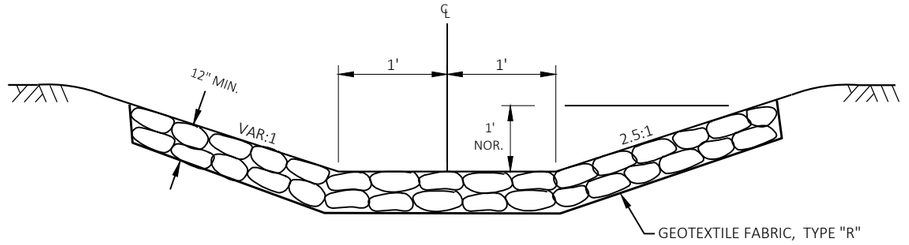

DETAIL FOR SPECIAL DITCH WITH RIPRAP EXTRA LIGHT AND GEOTEXTILE FABRIC

STA 131+00 - 131+50 LT

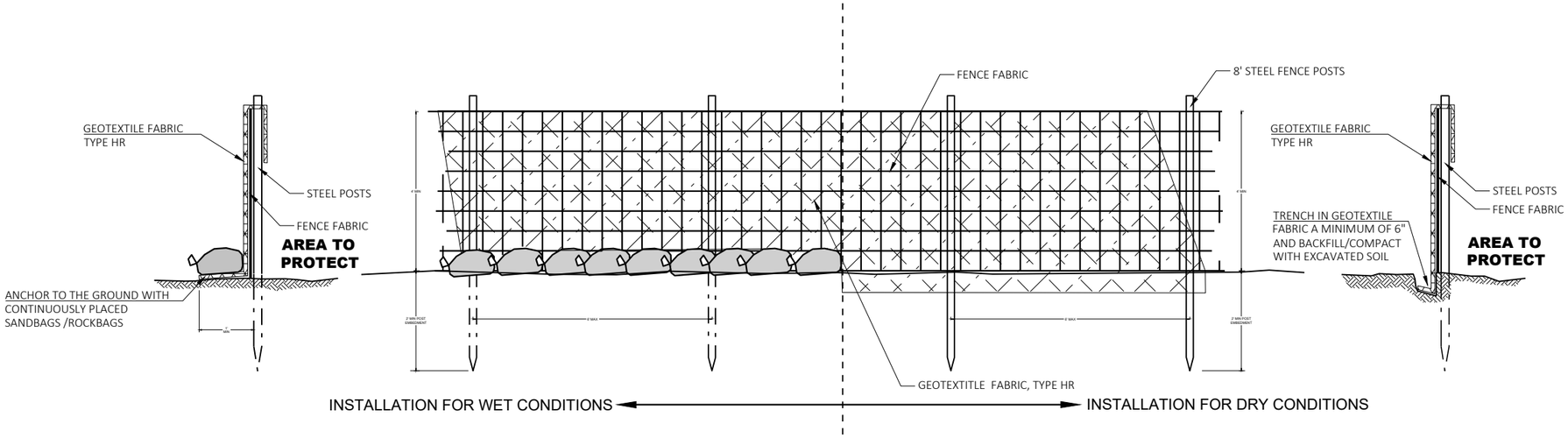

SILT FENCE HEAVY DUTY

STA 85+36 - 86+88 LT
STA 88+25 - 90+75 LT
STA 132+36 - 137+98 LT

GENERAL NOTES:

1. ATTACH FENCE FABRIC TO POSTS A MINIMUM OF 3 TIES PER POST (TOP, MIDDLE, BOTTOM)
2. ATTACH GEOTEXTILE FABRIC TO FENCE FABRIC AND/OR POSTS AT A MAXIMUM SPACING OF EVERY 2 FEET ALONG THE TOP AND ADDITIONALLY AS NECESSARY TO PREVENT DISPLACEMENT BY WIND AND WAVE ACTIONS.

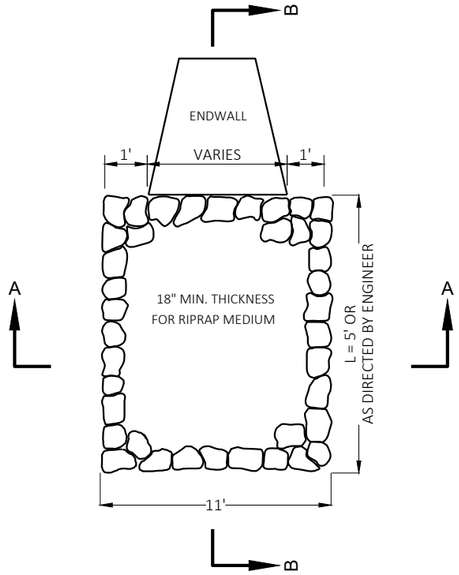

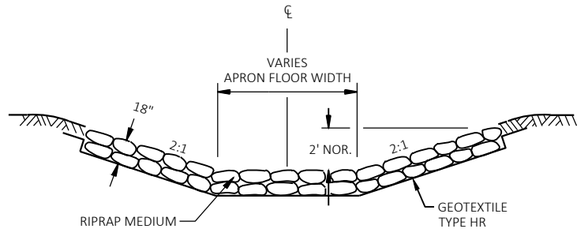

SECTION A-A

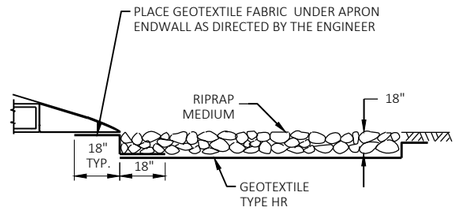

SECTION B-B

RIPRAP MEDIUM AND GEOTEXTILE FABRIC DETAIL AT APRON ENDWALLS

STA 507+66 - 507+78 RT
STA 546+81 - 546+94 RT

NOTE:

GEOTEXTILE FABRIC MAY BE INSTALLED AS TWO SEPARATE PIECES, OVERLAPPING AS SHOWN OR AS APPROVED BY THE ENGINEER IN THE FIELD. EXTRA QUANTITY FOR OVERLAP IS INCIDENTAL TO THE CONTRACT.

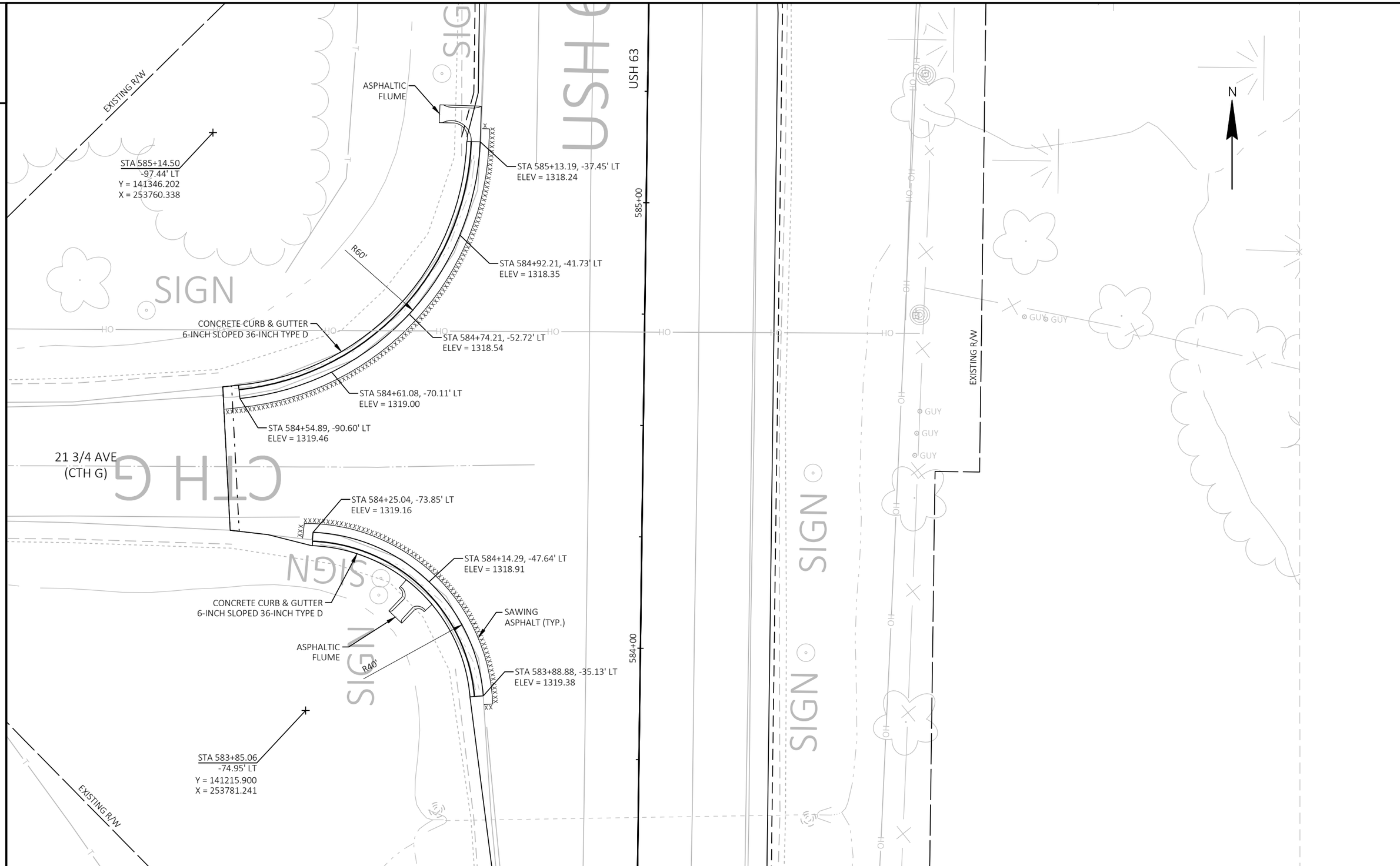

PROJECT NO: 1550-04-78	HWY: USH 63	COUNTY: BARRON	INTERSECTION DETAILS	SHEET 15	E

FILE NAME : W:\NWBE_PROJECTS\DESIGN\2324_US63-US8TOSTH48\C3D-22\SHEETS\021101_ID-2324.DWG
LAYOUT NAME - 63_id-1
PLOT DATE : 1/20/2026 11:14 AM PLOT BY : G. COLBERT PLOT NAME : PLOT SCALE : 1 IN:20 FT
WISDOT/CADDS SHEET 42

2

EROSION CONTROL LEGEND

- EROSION MAT URBAN CLASS I, TYPE B
- EROSION MAT CLASS III, TYPE C
- SILT FENCE
- HEAVY DUTY SILT FENCE
- CULVERT PIPE CHECK
- TEMPORARY DITCH CHECK
- SURFACE WATER FLOW
- SLOPE INTERCEPT

PROJECT NO: 1550-04-78	HWY: USH 63	COUNTY: BARRON	EROSION CONTROL DETAILS - USH 63	SHEET 16 E

FILE NAME : W:\NWBE_PROJECTS\DESIGN\2324_US63-US8TOSTH48\C3D-22\SHEETS\022001-EC-2324.DWG
LAYOUT NAME - 63_ec-01
PLOT DATE : 1/20/2026 1:57 PM PLOT BY : G. COLBERT PLOT NAME : PLOT SCALE : 1 IN:40 FT
WISDOT/CADDS SHEET 42

2

PATRICIA MILLER
DOC.# 862021

APPROX. R/W

BARRON ELEC.

HEATHER LAKE

DELINEATED WETLAND

BRIGHTSPEED

EDGE OF WATER

N

EROSION CONTROL LEGEND

- EROSION MAT URBAN CLASS I, TYPE B
- EROSION MAT CLASS III, TYPE C
- SILT FENCE
- HEAVY DUTY SILT FENCE
- CULVERT PIPE CHECK
- TEMPORARY DITCH CHECK
- SURFACE WATER FLOW
- SLOPE INTERCEPT

90+00 USH 63 91+00 92+00 USH 63 93+00 94+00 95+00

BRIGHTSPEED

DELINEATED WETLAND

TLE

R/W

DELINEATED WETLAND

EXISITNG R/W

POST

APPROX. R/W

N

PC: 129+86.04

STA 131+00 - 13+50 LT
6' X 50' RIPRAP EXTRA LIGHT W/
GEOTEXTILE TYPE R

DELINEATED WETLAND

SIGN

BRIGHTSPEED

POST

KOURTNEY LAKE

EDGE OF WATER

BRIGHTSPEED

130+00 131+00 132+00 USH 63 133+00 USH 63 134+00 135+00

APPROX. R/W

ATV/SNOWMOBILE ROUTE

DELINEATED WETLAND

PROJECT NO: 1550-04-78	HWY: USH 63	COUNTY: BARRON	EROSION CONTROL DETAILS - USH 63	SHEET 17	E

FILE NAME : W:\NWBE_PROJECTS\DESIGN\2324_US63-US8TOSTH48\C3D-22\SHEETS\022001-EC-2324.DWG
LAYOUT NAME - 63_ec-02

PLOT DATE : 1/20/2026 1:58 PM PLOT BY : G. COLBERT PLOT NAME : PLOT SCALE : 1 IN:40 FT

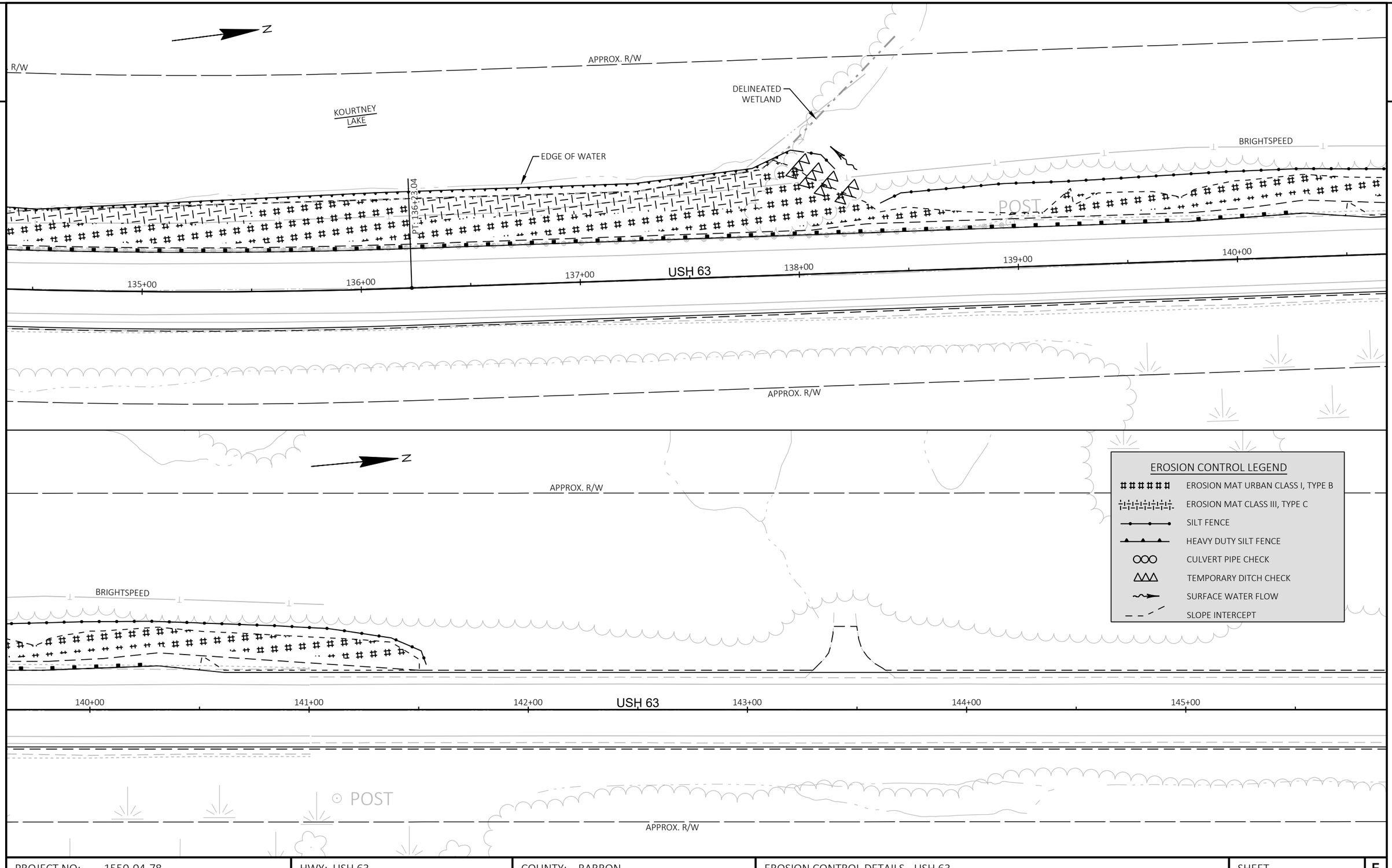

PROJECT NO: 1550-04-78	HWY: USH 63	COUNTY: BARRON	EROSION CONTROL DETAILS - USH 63	SHEET 18	E

FILE NAME : W:\NWBE_PROJECTS\DESIGN\2324_US63-US8TOSTH48\C3D-22\SHEETS\022001-EC-2324.DWG
LAYOUT NAME - 63_ec-03
PLOT DATE : 1/20/2026 1:58 PM
PLOT BY : G. COLBERT
PLOT NAME :
PLOT SCALE : 1 IN:40 FT
WISDOT/CADDS SHEET 42

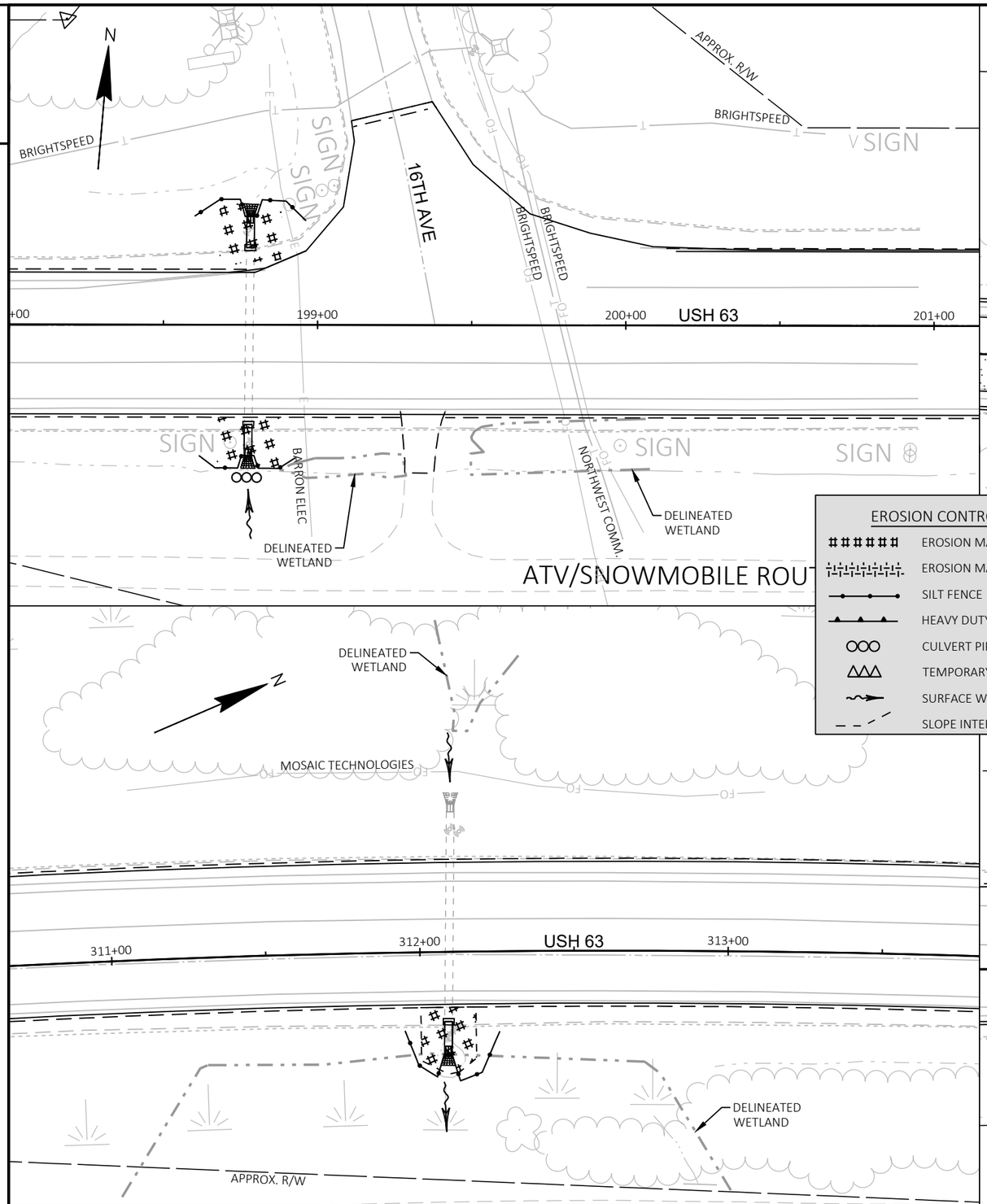

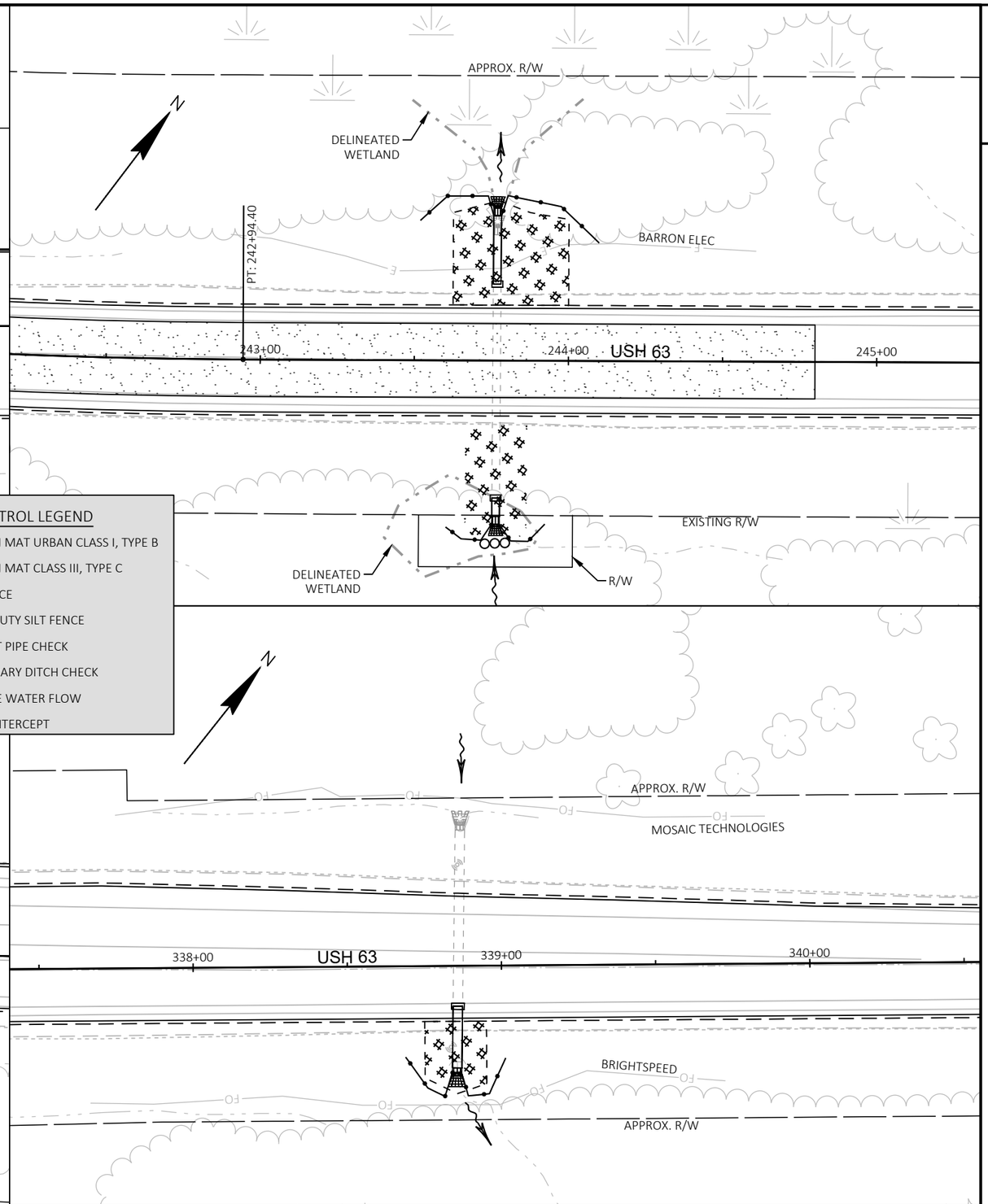

EROSION CONTROL LEGEND

- EROSION MAT URBAN CLASS I, TYPE B
- EROSION MAT CLASS III, TYPE C
- SILT FENCE
- HEAVY DUTY SILT FENCE
- CULVERT PIPE CHECK
- TEMPORARY DITCH CHECK
- SURFACE WATER FLOW
- SLOPE INTERCEPT

PROJECT NO: 1550-04-78	HWY: USH 63	COUNTY: BARRON	EROSION CONTROL DETAILS - USH 63	SHEET 19	E

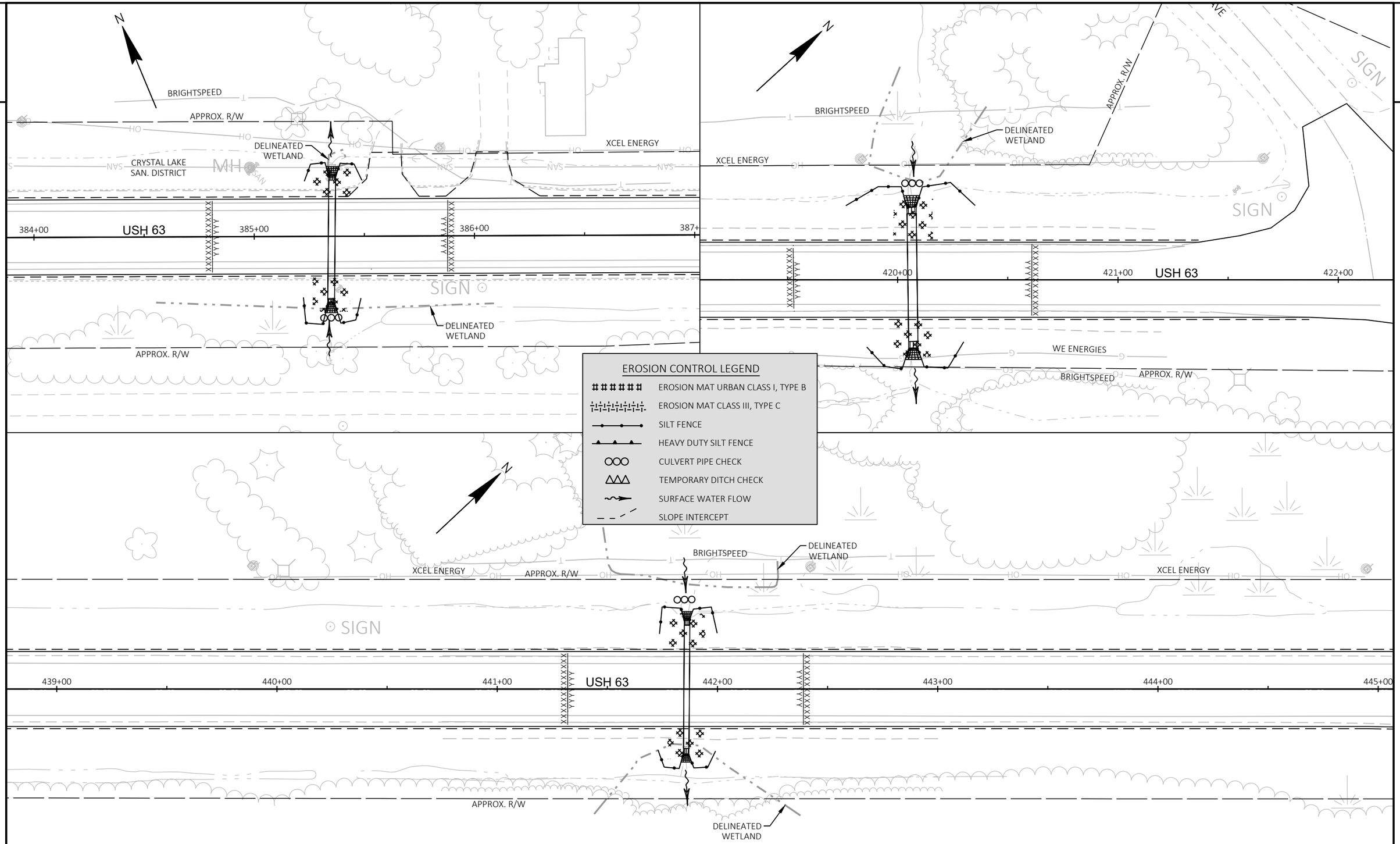

2

PROJECT NO: 1550-04-78	HWY: USH 63	COUNTY: BARRON	EROSION CONTROL DETAILS - USH 63	SHEET 20	E

FILE NAME : W:\NWBE_PROJECTS\DESIGN\2324_US63-US8TOSTH48\C3D-22\SHEETS\022001-EC-2324.DWG
LAYOUT NAME - 63_ec-05
PLOT DATE : 1/20/2026 1:59 PM
PLOT BY : G. COLBERT
PLOT NAME :
PLOT SCALE : 1 IN:40 FT
WISDOT/CADDS SHEET 42

NOTE:
STABILIZE TEMPORARY WIDENING SLOPES
WITH TEMPORARY SEED AND MULCH.

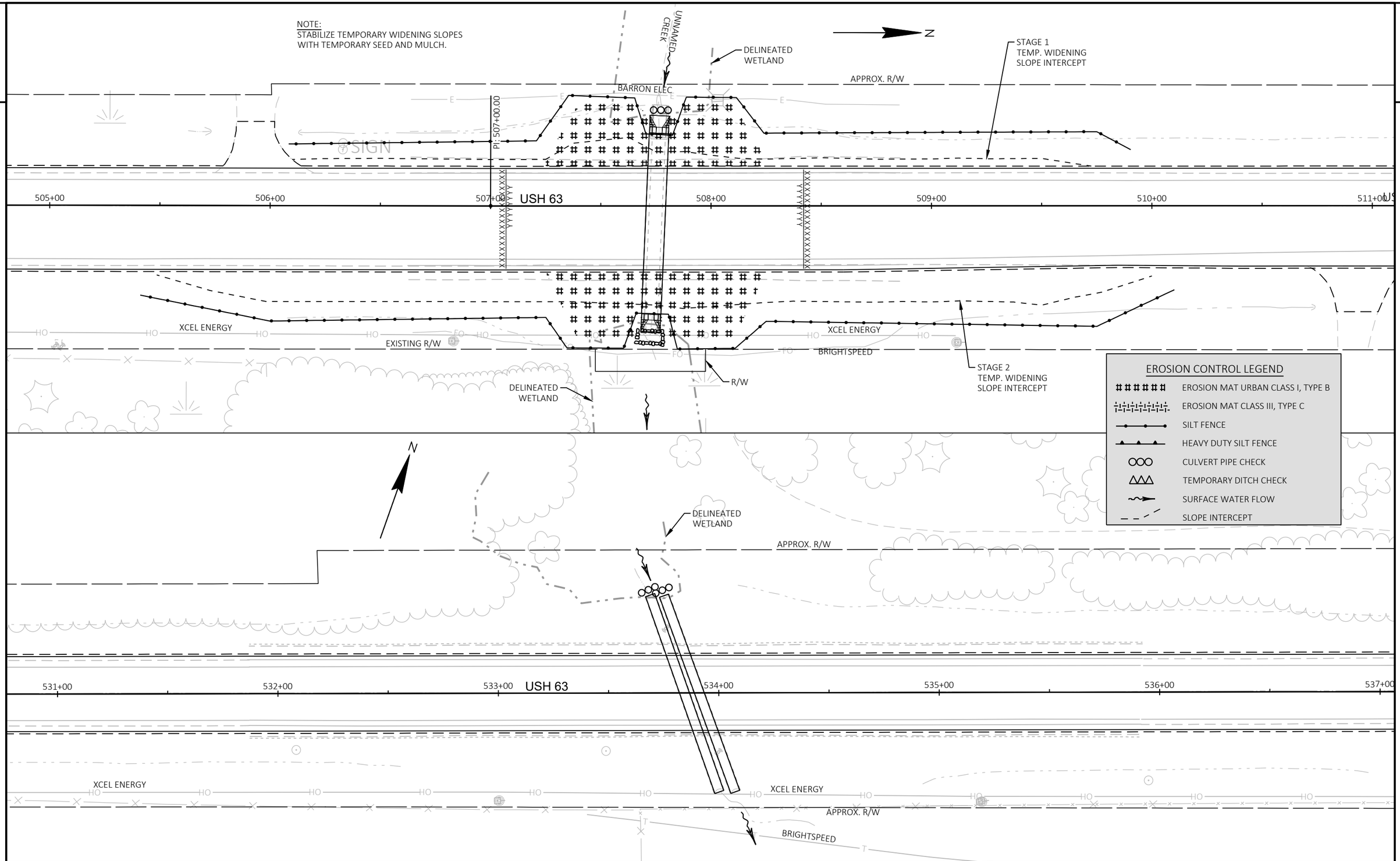

PROJECT NO: 1550-04-78	HWY: USH 63	COUNTY: BARRON	EROSION CONTROL DETAILS - USH 63	SHEET 21	E

FILE NAME : W:\NWBE_PROJECTS\DESIGN\2324_US63-US8TOSTH48\C3D-22\SHEETS\022001-EC-2324.DWG
LAYOUT NAME - 63_ec-06

PLOT DATE : 1/26/2026 3:18 PM PLOT BY : G. COLBERT PLOT NAME : PLOT SCALE : 1 IN:40 FT

WISDOT/CADDS SHEET 42

2

NOTE:
STABILIZE TEMPORARY WIDENING SLOPES WITH TEMPORARY SEED AND MULCH.

21ST AVE

N

SIGN

DELINEATED WETLAND

UNNAMED CREEK

TLE

STAGE 1 TEMP. WIDENING SLOPE INTERCEPT

EXISTING R/W

544+00 545+00 546+00 547+00 USH 63 548+00 549+00

DELINEATED WETLAND

STAGE 2 TEMP. WIDENING SLOPE INTERCEPT

XCEL ENERGY

BRIGHTSPEED

TLE

STAGE 2 TEMP. WIDENING SLOPE INTERCEPT

EXISTING R/W

XCEL ENERGY

NOTE:
STABILIZE TEMPORARY WIDENING SLOPES WITH TEMPORARY SEED AND MULCH.

STAGE 1 TEMP. WI SLOPE INT

2

EROSION CONTROL LEGEND

- EROSION MAT URBAN CLASS I, TYPE B
- EROSION MAT CLASS III, TYPE C
- SILT FENCE
- HEAVY DUTY SILT FENCE
- CULVERT PIPE CHECK
- TEMPORARY DITCH CHECK
- SURFACE WATER FLOW
- SLOPE INTERCEPT

DELINEATED WETLAND

UNNAMED CREEK

TLE

NOTE:
STABILIZE TEMPORARY WIDENING SLOPES WITH TEMPORARY SEED AND MULCH.

STAGE 1 TEMP. WIDENING SLOPE INTERCEPT

EXISTING R/W

SIGN

SIGN

547+00 USH 63 548+00 549+00 550+00 551+00 552+00

DELINEATED WETLAND

XCEL ENERGY

BRIGHTSPEED

TLE

EXISTING R/W

XCEL ENERGY

STAGE 2 TEMP. WIDENING SLOPE INTERCEPT

POST

SIGN

PROJECT NO: 1550-04-78	HWY: USH 63	COUNTY: BARRON	EROSION CONTROL DETAILS - USH 63	SHEET 22	E

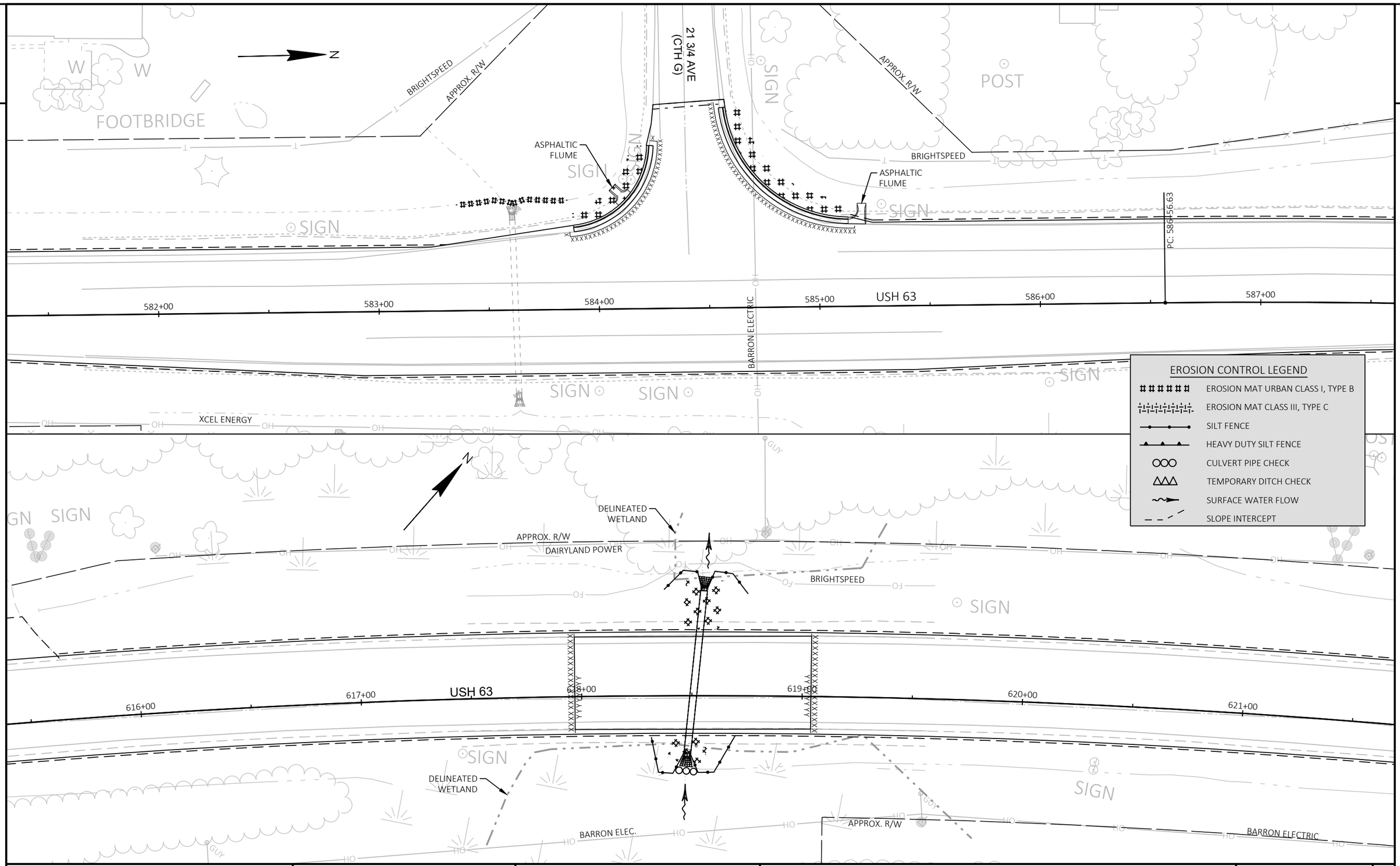

PROJECT NO: 1550-04-78	HWY: USH 63	COUNTY: BARRON	EROSION CONTROL DETAILS - USH 63	SHEET 23	E

FILE NAME : W:\NWBE_PROJECTS\DESIGN\2324_US63-US8TOSTH48\C3D-22\SHEETS\022001-EC-2324.DWG
LAYOUT NAME - 63_ec-08
PLOT DATE : 1/30/2026 11:26 AM
PLOT BY : G. COLBERT
PLOT NAME :
PLOT SCALE : 1 IN:40 FT
WISDOT/CADDS SHEET 42

2

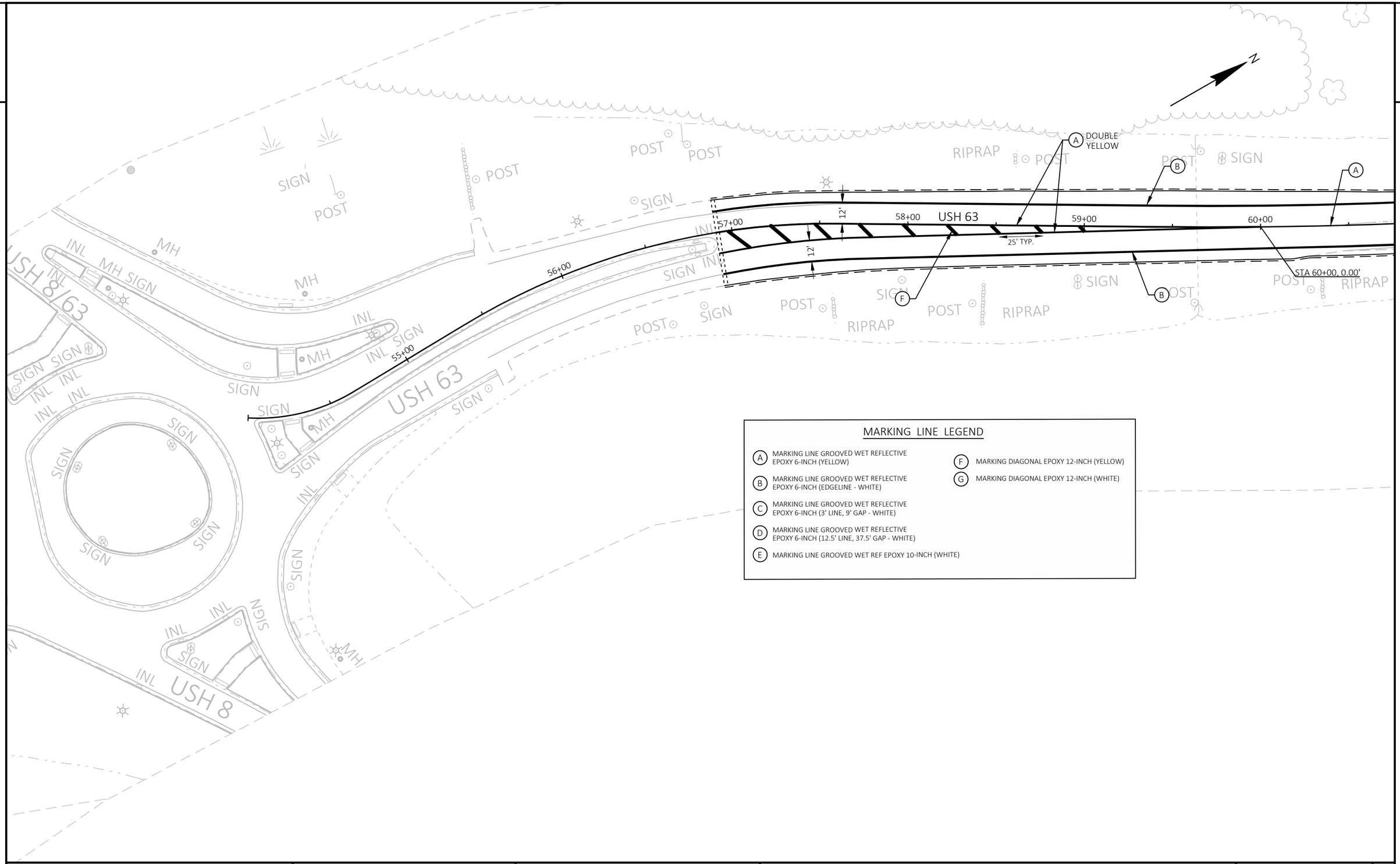

MARKING LINE LEGEND

- (A) MARKING LINE GROOVED WET REFLECTIVE EPOXY 6-INCH (YELLOW)
- (B) MARKING LINE GROOVED WET REFLECTIVE EPOXY 6-INCH (EDGELINE - WHITE)
- (C) MARKING LINE GROOVED WET REFLECTIVE EPOXY 6-INCH (3' LINE, 9' GAP - WHITE)
- (D) MARKING LINE GROOVED WET REFLECTIVE EPOXY 6-INCH (12.5' LINE, 37.5' GAP - WHITE)
- (E) MARKING LINE GROOVED WET REF EPOXY 10-INCH (WHITE)
- (F) MARKING DIAGONAL EPOXY 12-INCH (YELLOW)
- (G) MARKING DIAGONAL EPOXY 12-INCH (WHITE)

PROJECT NO: 1550-04-78	HWY: USH 63	COUNTY: BARRON	PAVEMENT MARKING	SHEET 24	E

FILE NAME : W:\NWBE_PROJECTS\DESIGN\2324_US63-US8TOSTH48\C3D-22\SHEETS\024501_PM-2324.DWG
LAYOUT NAME - pm-1

PLOT DATE : 1/20/2026 2:15 PM PLOT BY : G. COLBERT PLOT NAME : PLOT SCALE : 1 IN:50 FT

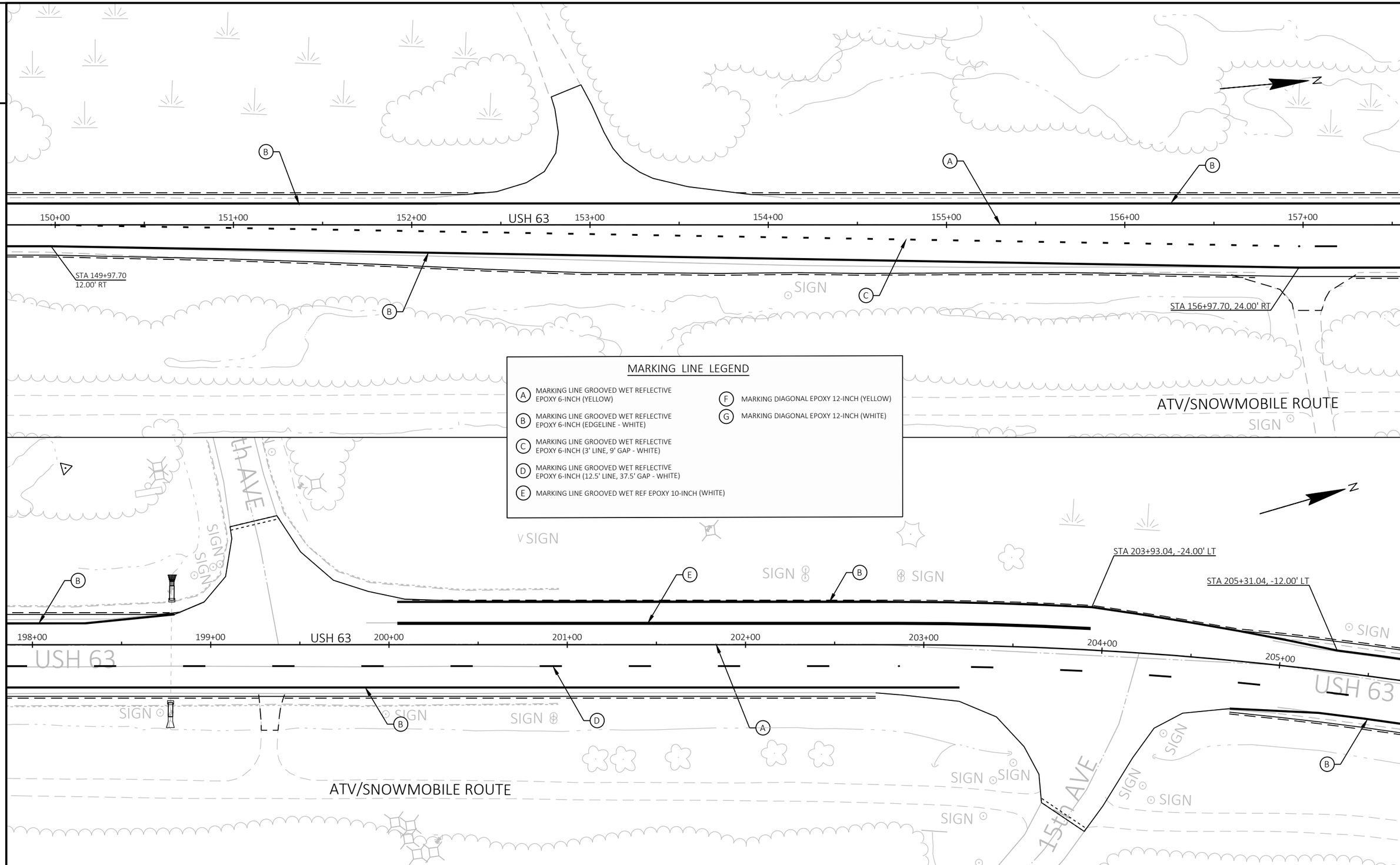

PROJECT NO: 1550-04-78	HWY: USH 63	COUNTY: BARRON	PAVEMENT MARKING	SHEET 25	E

FILE NAME : W:\NWBE_PROJECTS\DESIGN\2324_US63-US8TOSTH48\C3D-22\SHEETS\024501_PM-2324.DWG
LAYOUT NAME - pm-2
PLOT DATE : 1/20/2026 2:15 PM
PLOT BY : G. COLBERT
PLOT NAME :
PLOT SCALE : 1 IN:50 FT
WISDOT/CADDS SHEET 42

2

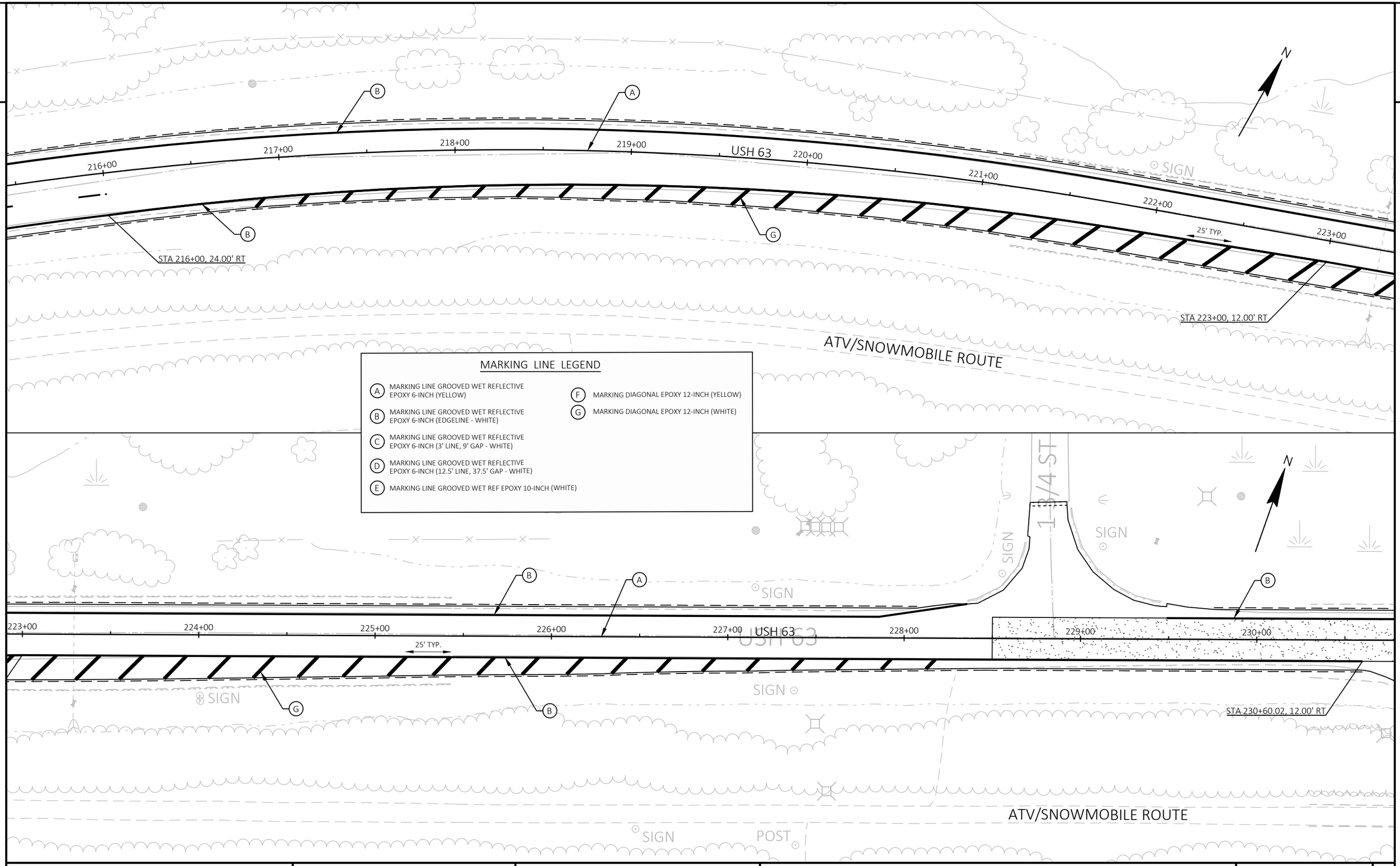

PROJECT NO: 1550-04-78	HWY: USH 63	COUNTY: BARRON	PAVEMENT MARKING	SHEET 26	E

2

STA 253+50, -12.00' LT

STA 260+50, -24.00' LT

RIPRAP

RIPRAP

USH 63

254+00 255+00 256+00 257+00 258+00 259+00 260+00 261+00

SIGN

SIGN

MARKING LINE LEGEND

- (A) MARKING LINE GROOVED WET REFLECTIVE EPOXY 6-INCH (YELLOW)
- (B) MARKING LINE GROOVED WET REFLECTIVE EPOXY 6-INCH (EDGELINE - WHITE)
- (C) MARKING LINE GROOVED WET REFLECTIVE EPOXY 6-INCH (3' LINE, 9' GAP - WHITE)
- (D) MARKING LINE GROOVED WET REFLECTIVE EPOXY 6-INCH (12.5' LINE, 37.5' GAP - WHITE)
- (E) MARKING LINE GROOVED WET REF EPOXY 10-INCH (WHITE)
- (F) MARKING DIAGONAL EPOXY 12-INCH (YELLOW)
- (G) MARKING DIAGONAL EPOXY 12-INCH (WHITE)

STA 333+90, -24.00' LT

STA 340+90, -12.00' LT

SIGN

USH 63

334+00 335+00 336+00 337+00 338+00 339+00 340+00 341+00

PROJECT NO: 1550-04-78	HWY: USH 63	COUNTY: BARRON	PAVEMENT MARKING	SHEET 27	E

FILE NAME : W:\NWBE_PROJECTS\DESIGN\2324_US63-US8TOSTH48\C3D-22\SHEETS\024501_PM-2324.DWG
LAYOUT NAME - pm-4

PLOT DATE : 1/20/2026 2:16 PM PLOT BY : G. COLBERT PLOT NAME : PLOT SCALE : 1 IN:50 FT

2

2

445+00 446+00 447+00 USH 63 448+00 449+00 450+00 451+00 452+00

STA 445+00, 12.00' RT

STA 452+00, 24.00' RT

SIGN

ATV/SNOWMOBILE ROUTE SIGN

MARKING LINE LEGEND

- (A) MARKING LINE GROOVED WET REFLECTIVE EPOXY 6-INCH (YELLOW)
- (B) MARKING LINE GROOVED WET REFLECTIVE EPOXY 6-INCH (EDGELINE - WHITE)
- (C) MARKING LINE GROOVED WET REFLECTIVE EPOXY 6-INCH (3' LINE, 9' GAP - WHITE)
- (D) MARKING LINE GROOVED WET REFLECTIVE EPOXY 6-INCH (12.5' LINE, 37.5' GAP - WHITE)
- (E) MARKING LINE GROOVED WET REF EPOXY 10-INCH (WHITE)
- (F) MARKING DIAGONAL EPOXY 12-INCH (YELLOW)
- (G) MARKING DIAGONAL EPOXY 12-INCH (WHITE)

SIGN

507+00 508+00 509+00 510+00 511+00 512+00 USH 63 513+00 514+00

25' TYP.

STA 506+60, 24.00' RT

STA 513+60, 12.00' RT

PROJECT NO: 1550-04-78	HWY: USH 63	COUNTY: BARRON	PAVEMENT MARKING	SHEET 28	E

FILE NAME : W:\NWBE_PROJECTS\DESIGN\2324_US63-US8TOSTH48\C3D-22\SHEETS\024501_PM-2324.DWG
LAYOUT NAME - pm-5

PLOT DATE : 1/26/2026 3:15 PM PLOT BY : G. COLBERT PLOT NAME : PLOT SCALE : 1 IN:50 FT

2

N

515+00 516+00 517+00 518+00 519+00 520+00 USH 63 521+00 522+00

25' TYP.

STA 515+10, 12.00' RT

STA 516+60, 24.00' RT

STA 518+60, 24.00' RT

SIGN SIGN POST SIGN

MARKING LINE LEGEND

- (A) MARKING LINE GROOVED WET REFLECTIVE EPOXY 6-INCH (YELLOW)
- (B) MARKING LINE GROOVED WET REFLECTIVE EPOXY 6-INCH (EDGELINE - WHITE)
- (C) MARKING LINE GROOVED WET REFLECTIVE EPOXY 6-INCH (3' LINE, 9' GAP - WHITE)
- (D) MARKING LINE GROOVED WET REFLECTIVE EPOXY 6-INCH (12.5' LINE, 37.5' GAP - WHITE)
- (E) MARKING LINE GROOVED WET REF EPOXY 10-INCH (WHITE)
- (F) MARKING DIAGONAL EPOXY 12-INCH (YELLOW)
- (G) MARKING DIAGONAL EPOXY 12-INCH (WHITE)

N

STA 551+22.21, -12.00' LT

STA 558+22.21, -24.00' LT

SIGN SIGN POST

552+00 553+00 554+00 555+00 USH 63 556+00 557+00 558+00

USH 63

SIGN POST SIGN SIGN POST SEPV

PROJECT NO: 1550-04-78	HWY: USH 63	COUNTY: BARRON	PAVEMENT MARKING	SHEET 29	E

FILE NAME : W:\NWBE_PROJECTS\DESIGN\2324_US63-US8TOSTH48\C3D-22\SHEETS\024501_PM-2324.DWG
LAYOUT NAME - pm-6

PLOT DATE : 1/20/2026 2:16 PM PLOT BY : G. COLBERT PLOT NAME : PLOT SCALE : 1 IN:50 FT

2

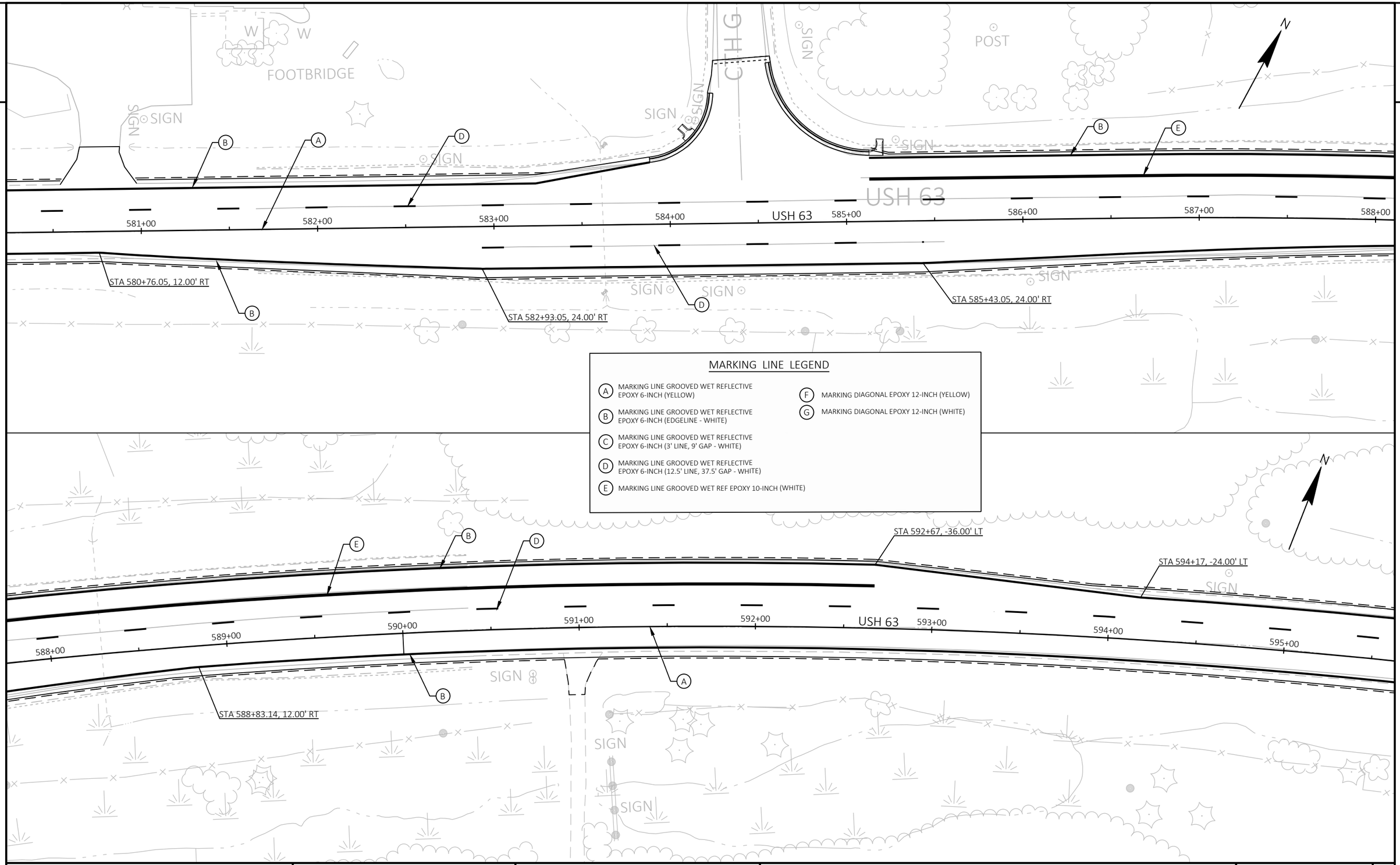

PROJECT NO: 1550-04-78	HWY: USH 63	COUNTY: BARRON	PAVEMENT MARKING	SHEET 30	E

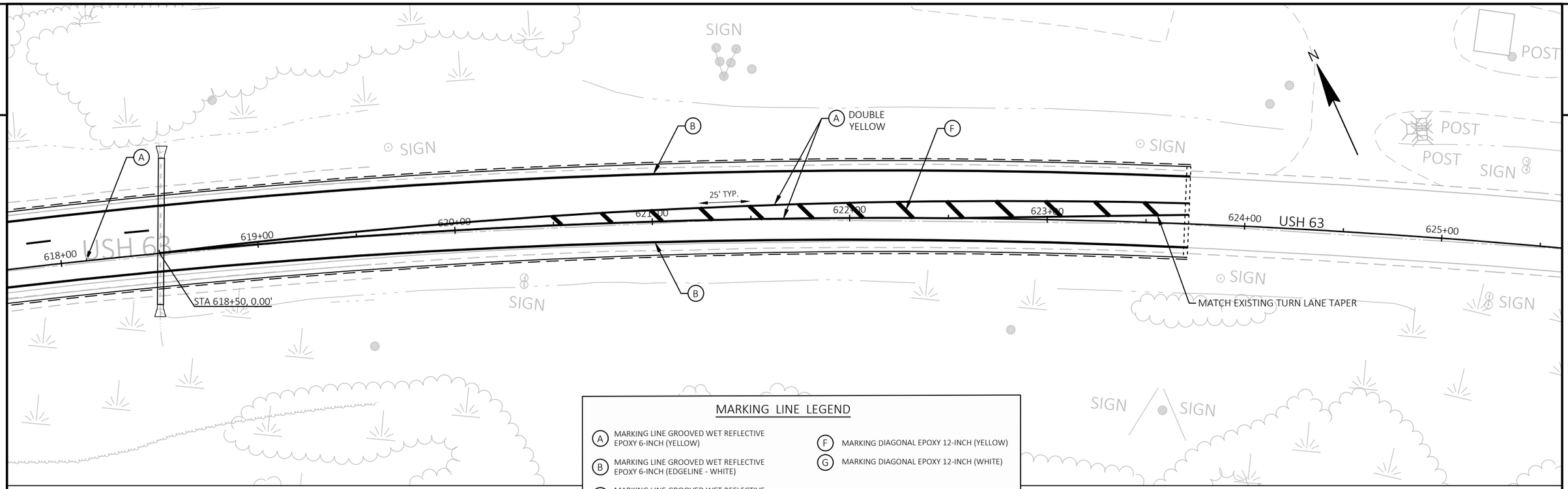

MARKING LINE LEGEND

- (A) MARKING LINE GROOVED WET REFLECTIVE EPOXY 6-INCH (YELLOW)
- (B) MARKING LINE GROOVED WET REFLECTIVE EPOXY 6-INCH (EDGELINE - WHITE)
- (C) MARKING LINE GROOVED WET REFLECTIVE EPOXY 6-INCH (3' LINE, 9' GAP - WHITE)
- (D) MARKING LINE GROOVED WET REFLECTIVE EPOXY 6-INCH (12.5' LINE, 37.5' GAP - WHITE)
- (E) MARKING LINE GROOVED WET REF EPOXY 10-INCH (WHITE)
- (F) MARKING DIAGONAL EPOXY 12-INCH (YELLOW)
- (G) MARKING DIAGONAL EPOXY 12-INCH (WHITE)

2

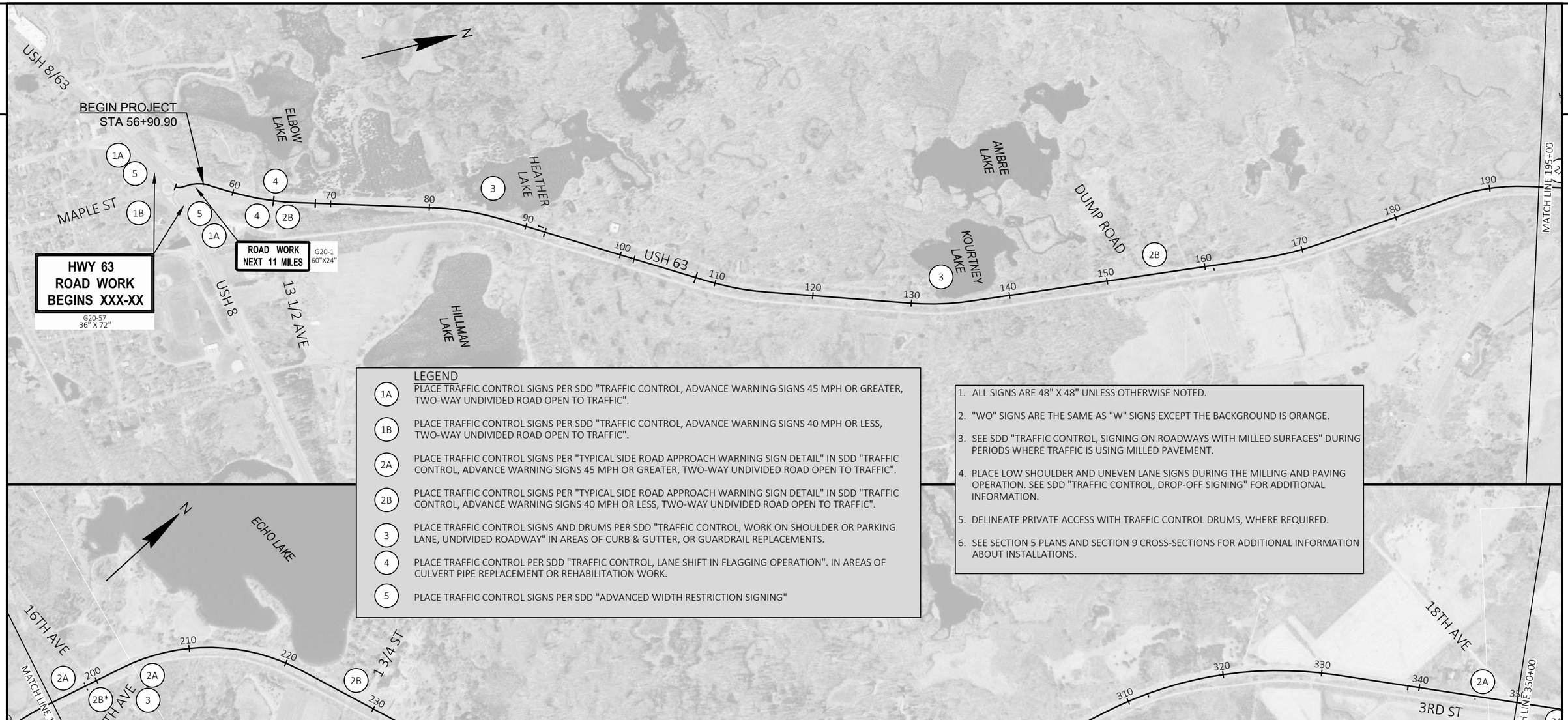

LEGEND

1A PLACE TRAFFIC CONTROL SIGNS PER SDD "TRAFFIC CONTROL, ADVANCE WARNING SIGNS 45 MPH OR GREATER, TWO-WAY UNDIVIDED ROAD OPEN TO TRAFFIC".

1B PLACE TRAFFIC CONTROL SIGNS PER SDD "TRAFFIC CONTROL, ADVANCE WARNING SIGNS 40 MPH OR LESS, TWO-WAY UNDIVIDED ROAD OPEN TO TRAFFIC".

2A PLACE TRAFFIC CONTROL SIGNS PER "TYPICAL SIDE ROAD APPROACH WARNING SIGN DETAIL" IN SDD "TRAFFIC CONTROL, ADVANCE WARNING SIGNS 45 MPH OR GREATER, TWO-WAY UNDIVIDED ROAD OPEN TO TRAFFIC".

2B PLACE TRAFFIC CONTROL SIGNS PER "TYPICAL SIDE ROAD APPROACH WARNING SIGN DETAIL" IN SDD "TRAFFIC CONTROL, ADVANCE WARNING SIGNS 40 MPH OR LESS, TWO-WAY UNDIVIDED ROAD OPEN TO TRAFFIC".

3 PLACE TRAFFIC CONTROL SIGNS AND DRUMS PER SDD "TRAFFIC CONTROL, WORK ON SHOULDER OR PARKING LANE, UNDIVIDED ROADWAY" IN AREAS OF CURB & GUTTER, OR GUARDRAIL REPLACEMENTS.

4 PLACE TRAFFIC CONTROL PER SDD "TRAFFIC CONTROL, LANE SHIFT IN FLAGGING OPERATION". IN AREAS OF CULVERT PIPE REPLACEMENT OR REHABILITATION WORK.

5 PLACE TRAFFIC CONTROL SIGNS PER SDD "ADVANCED WIDTH RESTRICTION SIGNING"

1. ALL SIGNS ARE 48" X 48" UNLESS OTHERWISE NOTED.
2. "WO" SIGNS ARE THE SAME AS "W" SIGNS EXCEPT THE BACKGROUND IS ORANGE.
3. SEE SDD "TRAFFIC CONTROL, SIGNING ON ROADWAYS WITH MILLED SURFACES" DURING PERIODS WHERE TRAFFIC IS USING MILLED PAVEMENT.
4. PLACE LOW SHOULDER AND UNEVEN LANE SIGNS DURING THE MILLING AND PAVING OPERATION. SEE SDD "TRAFFIC CONTROL, DROP-OFF SIGNING" FOR ADDITIONAL INFORMATION.
5. DELINEATE PRIVATE ACCESS WITH TRAFFIC CONTROL DRUMS, WHERE REQUIRED.
6. SEE SECTION 5 PLANS AND SECTION 9 CROSS-SECTIONS FOR ADDITIONAL INFORMATION ABOUT INSTALLATIONS.

PROJECT NO: 1550-04-78	HWY: USH 63	COUNTY: BARRON	TRAFFIC CONTROL - PROJECT OVERVIEW	SHEET 32	E

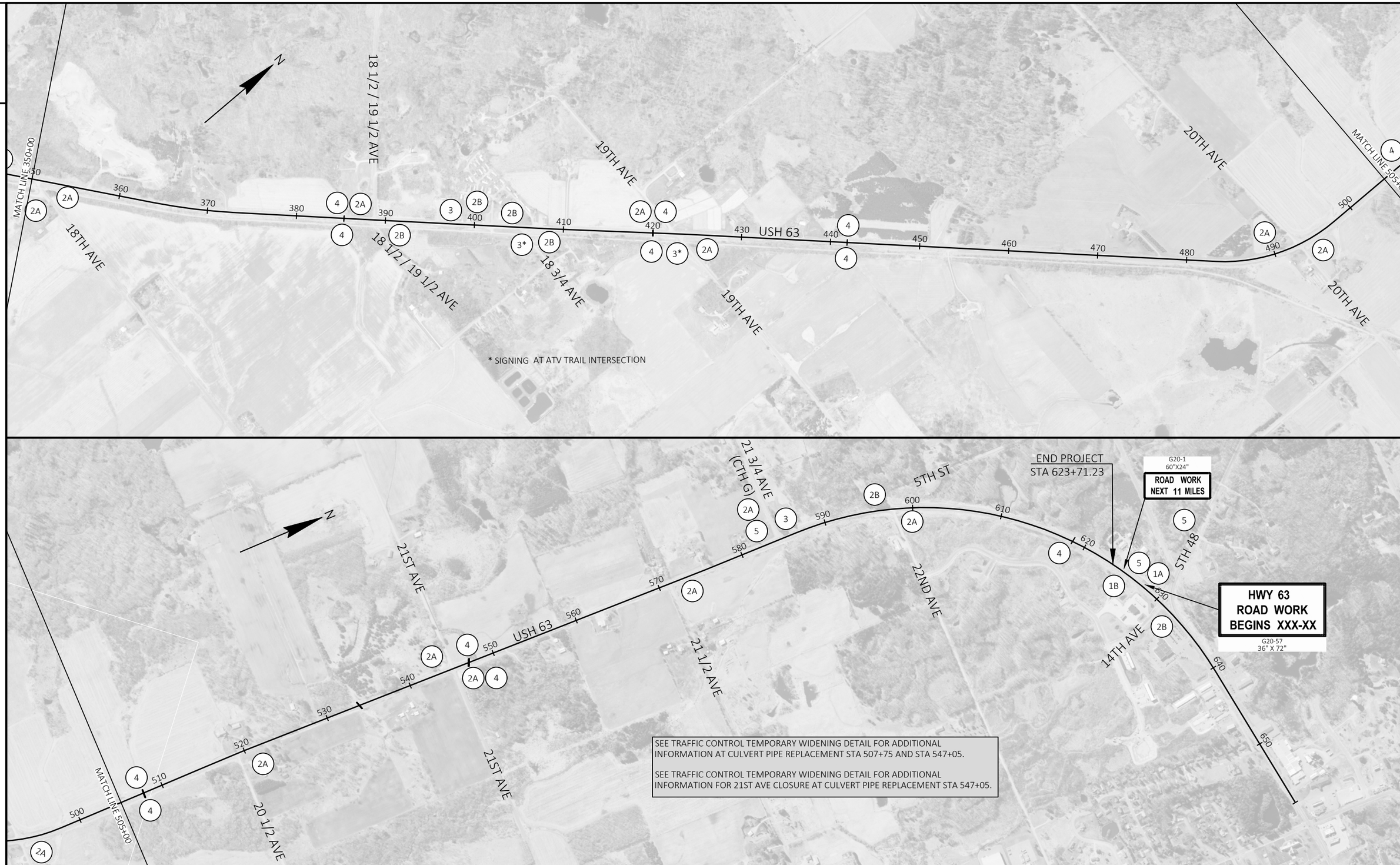

PROJECT NO: 1550-04-78	HWY: USH 63	COUNTY: BARRON	TRAFFIC CONTROL - PROJECT OVERVIEW	SHEET 33	E

FILE NAME : W:\NWBE_PROJECTS\DESIGN\2324_US63-US8TOSTH48\C3D-22\SHEETS\025000_TC-OVERVIEW.DWG
LAYOUT NAME - 63_tc-02-Overview
PLOT DATE : 1/29/2026 2:56 PM PLOT BY : G. COLBERT PLOT NAME : PLOT SCALE : 1 IN:1000 FT
WISDOT/CADDS SHEET 44

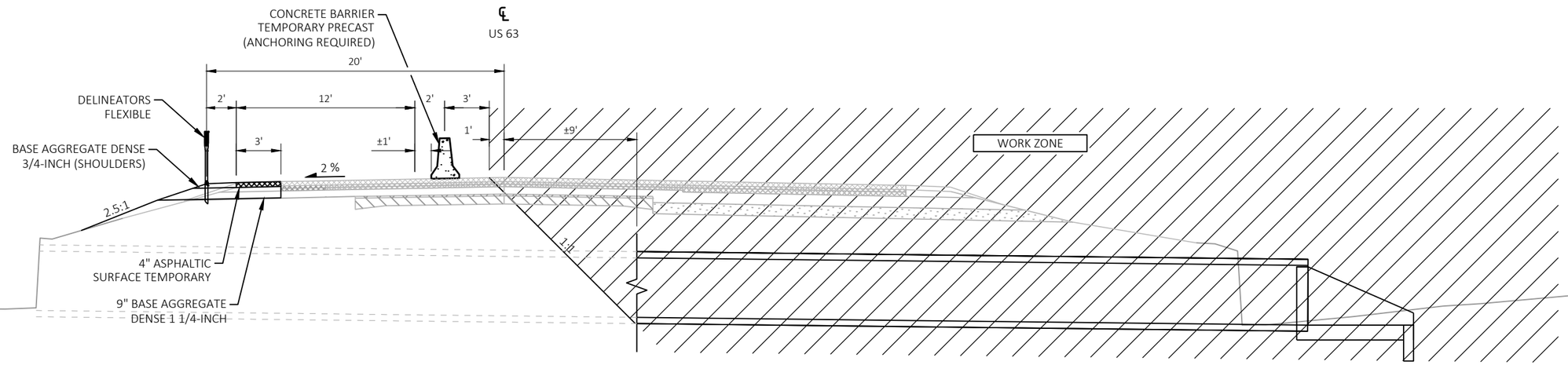

FINISHED TRAFFIC CONTROL TYPICAL SECTION

STAGE 1 - 58" x 91" CPRC HORIZONTAL ELLIPTICAL INSTALLATION
STA 507+75

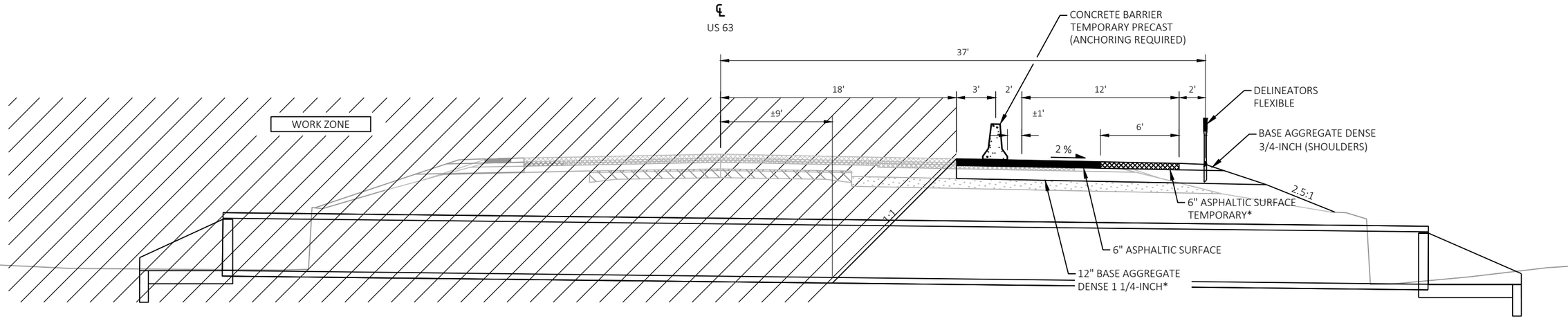

* STA 505+30 - 507+07
* STA 508+42 - 510+24
4" ASPHALTIC SURFACE TEMPORARY
9" BASE AGGREGATE DENSE 1 1/4-INCH

FINISHED TRAFFIC CONTROL TYPICAL SECTION

STAGE 2 - 58" x 91" CPRC HORIZONTAL ELLIPTICAL INSTALLATION
STA 507+75

PROJECT NO: 1550-04-78	HWY: USH 63	COUNTY: BARRON	TRAFFIC CONTROL - TEMPORARY WIDENING TYPICAL SECTIONS	SHEET 34	E

FILE NAME : W:\NWBE_PROJECTS\DESIGN\2324_US63-US8TOSTH48\C3D-22\SHEETS\025002_TC-TYPXSEC.DWG
LAYOUT NAME - 63_tc-01-TypXS
PLOT DATE : 1/23/2026 2:22 PM PLOT BY : G. COLBERT PLOT NAME : PLOT SCALE : 1 IN:8 FT
WISDOT/CADDS SHEET 42

NOTE:

SECTION SHOWN PERPENDICULAR TO ROADWAY.

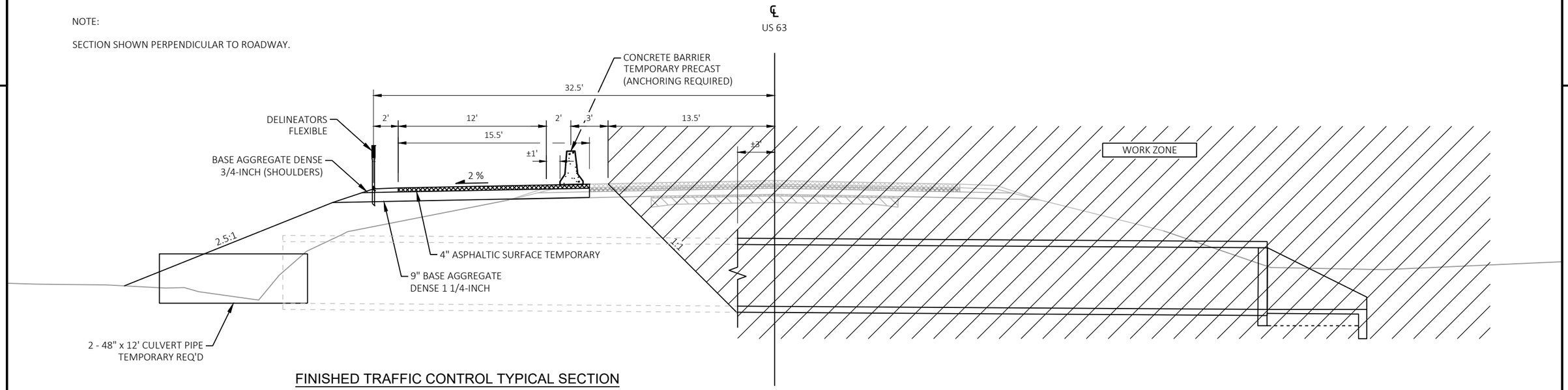

FINISHED TRAFFIC CONTROL TYPICAL SECTION

STAGE 1 - 68" x 106" CPRC HORIZONTAL ELLIPTICAL INSTALLATION
STA 547+07

NOTE:

SECTION SHOWN PERPENDICULAR TO ROADWAY.

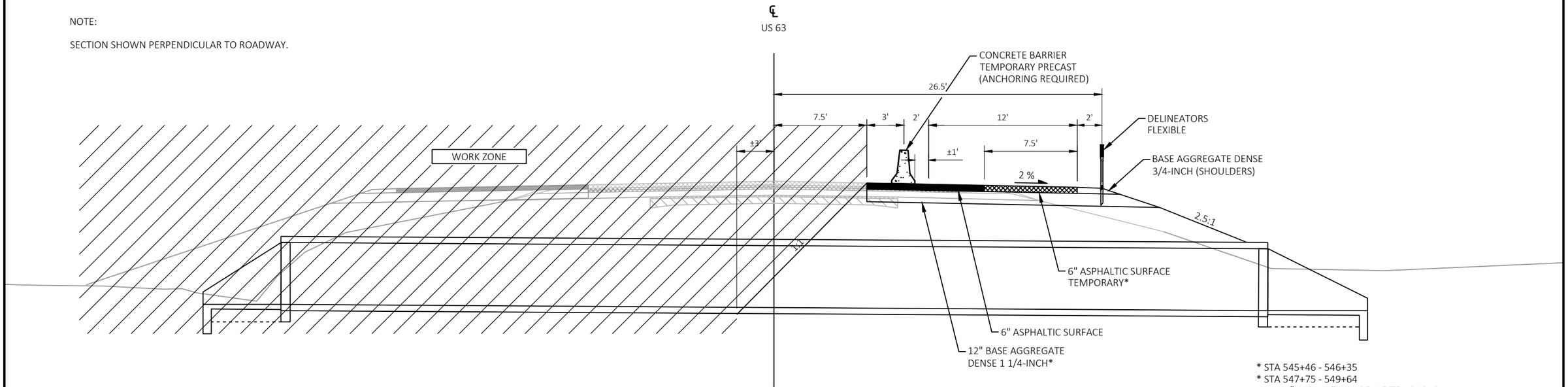

* STA 545+46 - 546+35
* STA 547+75 - 549+64
4" ASPHALTIC SURFACE TEMPORARY
9" BASE AGGREGATE DENSE 1 1/4-INCH

FINISHED TRAFFIC CONTROL TYPICAL SECTION

STAGE 2 - 68" x 106" CPRC HORIZONTAL ELLIPTICAL INSTALLATION
STA 547+07

PROJECT NO: 1550-04-78	HWY: USH 63	COUNTY: BARRON	TRAFFIC CONTROL - TEMPORARY WIDENING TYPICAL SECTIONS	SHEET 35	E

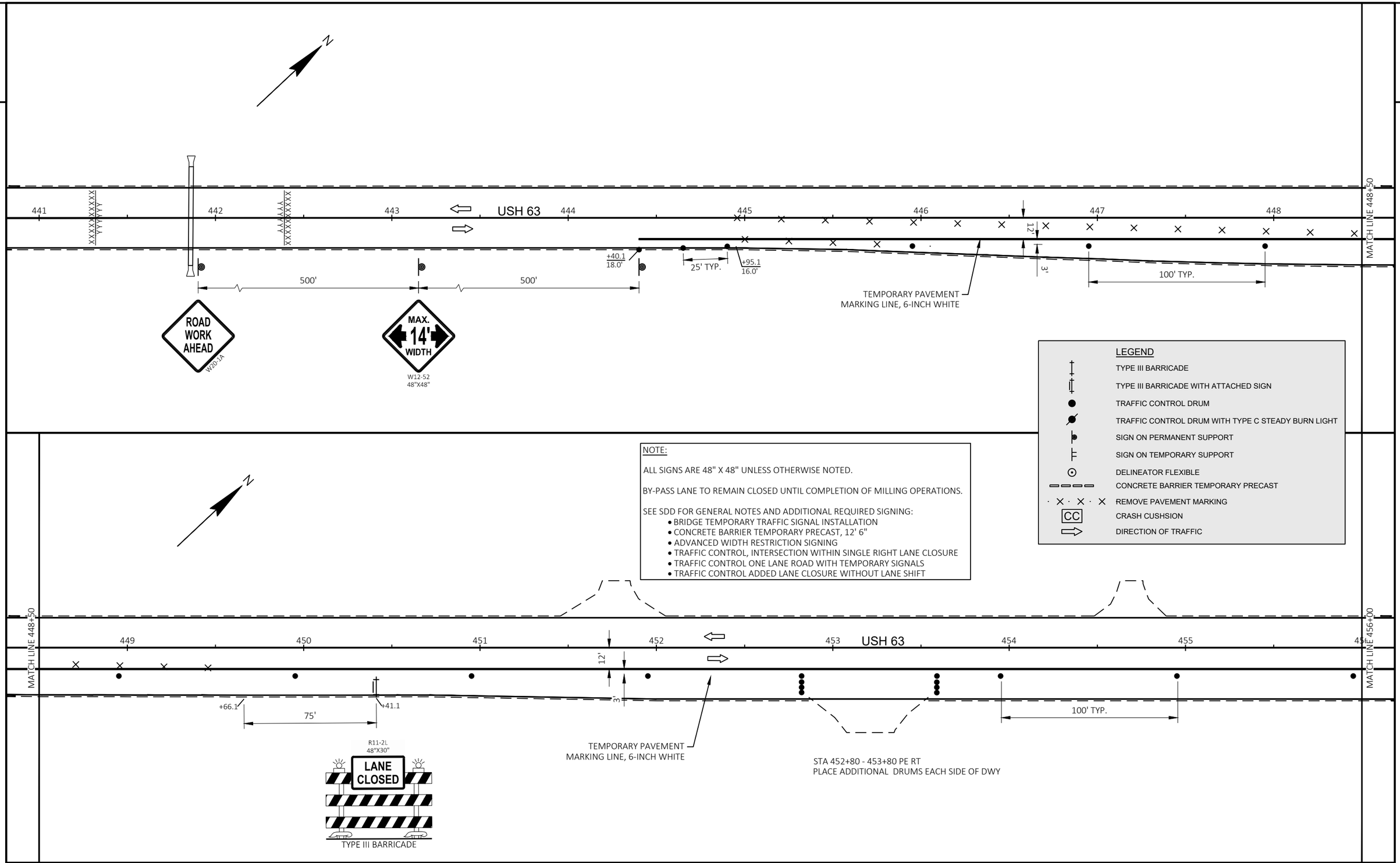

PROJECT NO: 1550-04-78	HWY: USH 63	COUNTY: BARRON	TRAFFIC CONTROL PLAN - TEMPORARY WIDENING STA 507+75 - STAGE 1	SHEET 36	E

FILE NAME : W:\NWBE_PROJECTS\DESIGN\2324_US63-US8TOSTH48\C3D-22\SHEETS\025003_TC-STAGING-50775.DWG
LAYOUT NAME - 63_tc-01-507+75-Stg1

PLOT DATE : 3/23/2026 3:22 PM PLOT BY : G. COLBERT PLOT NAME : PLOT SCALE : 1 IN:50 FT

2

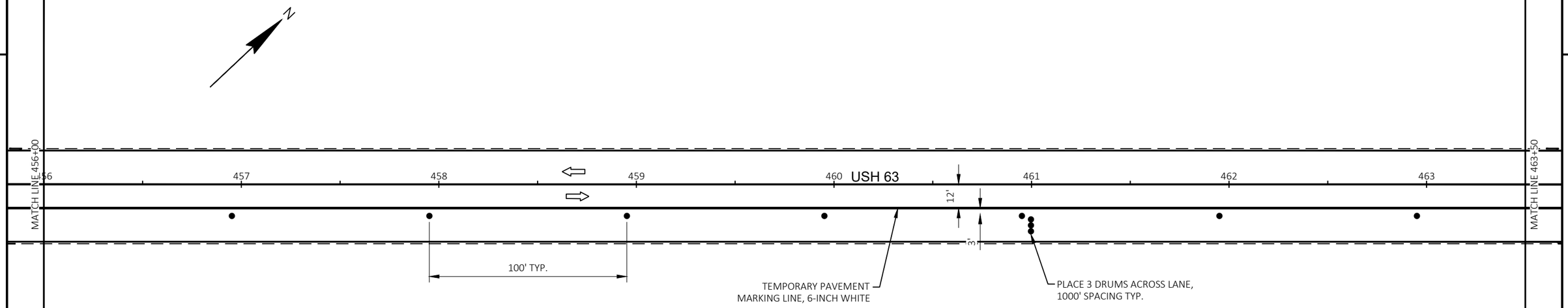

LEGEND

- TYPE III BARRICADE
- TYPE III BARRICADE WITH ATTACHED SIGN
- TRAFFIC CONTROL DRUM
- TRAFFIC CONTROL DRUM WITH TYPE C STEADY BURN LIGHT
- SIGN ON PERMANENT SUPPORT
- SIGN ON TEMPORARY SUPPORT
- DELINEATOR FLEXIBLE
- CONCRETE BARRIER TEMPORARY PRECAST
- REMOVE PAVEMENT MARKING
- CC CRASH CUSHSION
- DIRECTION OF TRAFFIC

NOTE:

ALL SIGNS ARE 48" X 48" UNLESS OTHERWISE NOTED.

BY-PASS LANE TO REMAIN CLOSED UNTIL COMPLETION OF MILLING OPERATIONS.

SEE SDD FOR GENERAL NOTES AND ADDITIONAL REQUIRED SIGNING:

- BRIDGE TEMPORARY TRAFFIC SIGNAL INSTALLATION
- CONCRETE BARRIER TEMPORARY PRECAST, 12' 6"
- ADVANCED WIDTH RESTRICTION SIGNING
- TRAFFIC CONTROL, INTERSECTION WITHIN SINGLE RIGHT LANE CLOSURE
- TRAFFIC CONTROL ONE LANE ROAD WITH TEMPORARY SIGNALS
- TRAFFIC CONTROL ADDED LANE CLOSURE WITHOUT LANE SHIFT

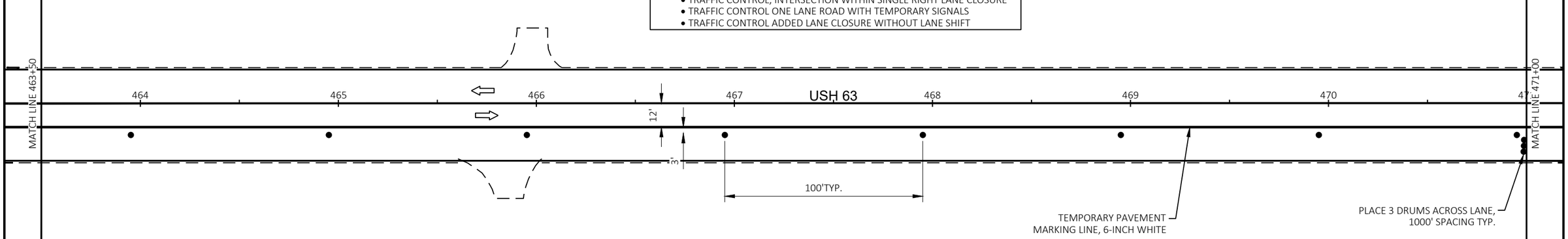

PROJECT NO: 1550-04-78	HWY: USH 63	COUNTY: BARRON	TRAFFIC CONTROL PLAN - TEMPORARY WIDENING STA 507+75 - STAGE 1	SHEET 37	E

FILE NAME : W:\NWBE_PROJECTS\DESIGN\2324_US63-US8TOSTH48\C3D-22\SHEETS\025003_TC-STAGING-50775.DWG
LAYOUT NAME - 63_tc-02-507+75-Stg1
PLOT DATE : 3/23/2026 3:22 PM
PLOT BY : G. COLBERT
PLOT NAME :
PLOT SCALE : 1 IN:50 FT
WISDOT/CADDS SHEET 44

2

2

MATCH LINE 471+00

471 472 473 474 475 476 477 478

USH 63

12'

3'

TEMPORARY PAVEMENT MARKING LINE, 6-INCH WHITE

100' TYP.

MATCH LINE 478+50

LEGEND

- TYPE III BARRICADE
- TYPE III BARRICADE WITH ATTACHED SIGN
- TRAFFIC CONTROL DRUM
- TRAFFIC CONTROL DRUM WITH TYPE C STEADY BURN LIGHT
- SIGN ON PERMANENT SUPPORT
- SIGN ON TEMPORARY SUPPORT
- DELINEATOR FLEXIBLE
- CONCRETE BARRIER TEMPORARY PRECAST
- REMOVE PAVEMENT MARKING
- CRASH CUSHSION
- DIRECTION OF TRAFFIC

NOTE:

ALL SIGNS ARE 48" X 48" UNLESS OTHERWISE NOTED.

BY-PASS LANE TO REMAIN CLOSED UNTIL COMPLETION OF MILLING OPERATIONS.

SEE SDD FOR GENERAL NOTES AND ADDITIONAL REQUIRED SIGNING:

- BRIDGE TEMPORARY TRAFFIC SIGNAL INSTALLATION
- CONCRETE BARRIER TEMPORARY PRECAST, 12' 6"
- ADVANCED WIDTH RESTRICTION SIGNING
- TRAFFIC CONTROL, INTERSECTION WITHIN SINGLE RIGHT LANE CLOSURE
- TRAFFIC CONTROL ONE LANE ROAD WITH TEMPORARY SIGNALS
- TRAFFIC CONTROL ADDED LANE CLOSURE WITHOUT LANE SHIFT

PC: 483+25.19

MATCH LINE 478+50

479 480 481 482 USH 63 483 484 485 486

MATCH LINE 486+00

12'

3'

PLACE 3 DRUMS ACROSS LANE, 1000' SPACING TYP.

TEMPORARY PAVEMENT MARKING LINE, 6-INCH WHITE

100' TYP.

PROJECT NO: 1550-04-78	HWY: USH 63	COUNTY: BARRON	TRAFFIC CONTROL PLAN - TEMPORARY WIDENING STA 507+75 - STAGE 1	SHEET 38	E

FILE NAME : W:\NWBE_PROJECTS\DESIGN\2324_US63-US8TOSTH48\C3D-22\SHEETS\025003_TC-STAGING-50775.DWG
LAYOUT NAME - 63_tc-03-507+75-Stg1

PLOT DATE : 3/23/2026 3:22 PM PLOT BY : G. COLBERT PLOT NAME : PLOT SCALE : 1 IN:50 FT

WISDOT/CADDS SHEET 44

NOTE:

ALL SIGNS ARE 48" X 48" UNLESS OTHERWISE NOTED.

BY-PASS LANE TO REMAIN CLOSED UNTIL COMPLETION OF MILLING OPERATIONS.

SEE SDD FOR GENERAL NOTES AND ADDITIONAL REQUIRED SIGNING:
- BRIDGE TEMPORARY TRAFFIC SIGNAL INSTALLATION
- CONCRETE BARRIER TEMPORARY PRECAST, 12' 6"
- ADVANCED WIDTH RESTRICTION SIGNING
- TRAFFIC CONTROL, INTERSECTION WITHIN SINGLE RIGHT LANE CLOSURE
- TRAFFIC CONTROL ONE LANE ROAD WITH TEMPORARY SIGNALS
- TRAFFIC CONTROL ADDED LANE CLOSURE WITHOUT LANE SHIFT

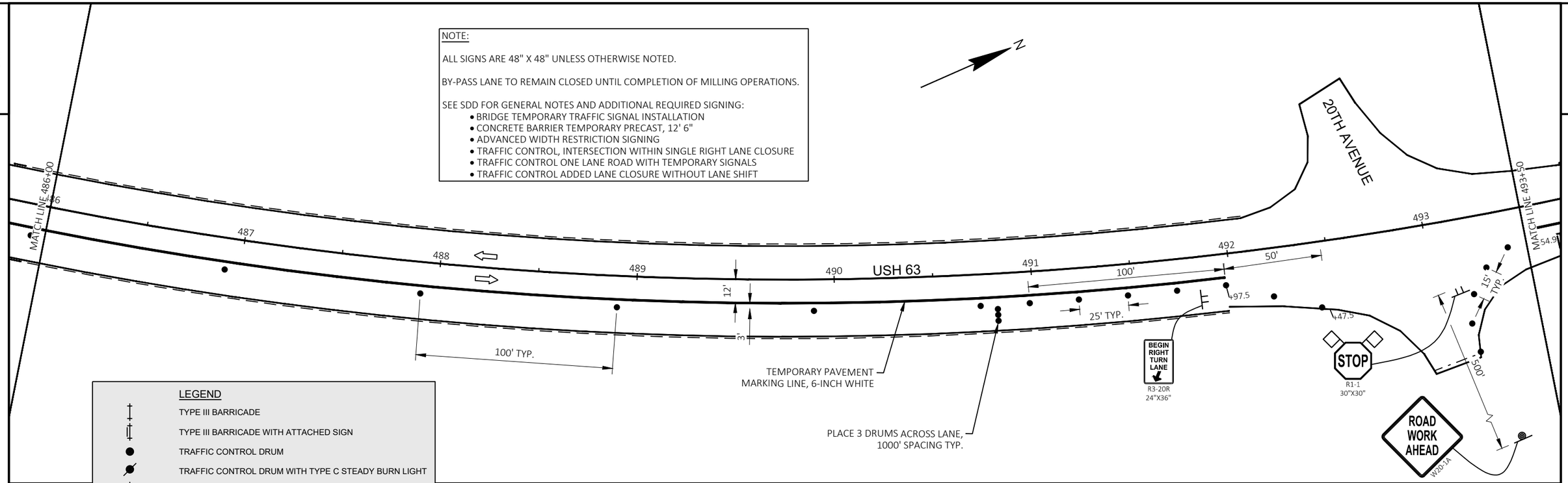

LEGEND

- TYPE III BARRICADE
- TYPE III BARRICADE WITH ATTACHED SIGN
- TRAFFIC CONTROL DRUM
- TRAFFIC CONTROL DRUM WITH TYPE C STEADY BURN LIGHT
- SIGN ON PERMANENT SUPPORT
- SIGN ON TEMPORARY SUPPORT
- DELINEATOR FLEXIBLE
- CONCRETE BARRIER TEMPORARY PRECAST
- REMOVE PAVEMENT MARKING
- CC CRASH CUSHSION
- DIRECTION OF TRAFFIC

PROJECT NO: 1550-04-78	HWY: USH 63	COUNTY: BARRON	TRAFFIC CONTROL PLAN - TEMPORARY WIDENING STA 507+75 - STAGE 1	SHEET 39	E

FILE NAME : W:\NWBE_PROJECTS\DESIGN\2324_US63-US8TOSTH48\C3D-22\SHEETS\025003_TC-STAGING-50775.DWG
LAYOUT NAME - 63_tc-04-507+75-Stg1

PLOT DATE : 3/23/2026 3:22 PM PLOT BY : G. COLBERT PLOT NAME : PLOT SCALE : 1 IN:50 FT

WISDOT/CADDS SHEET 44

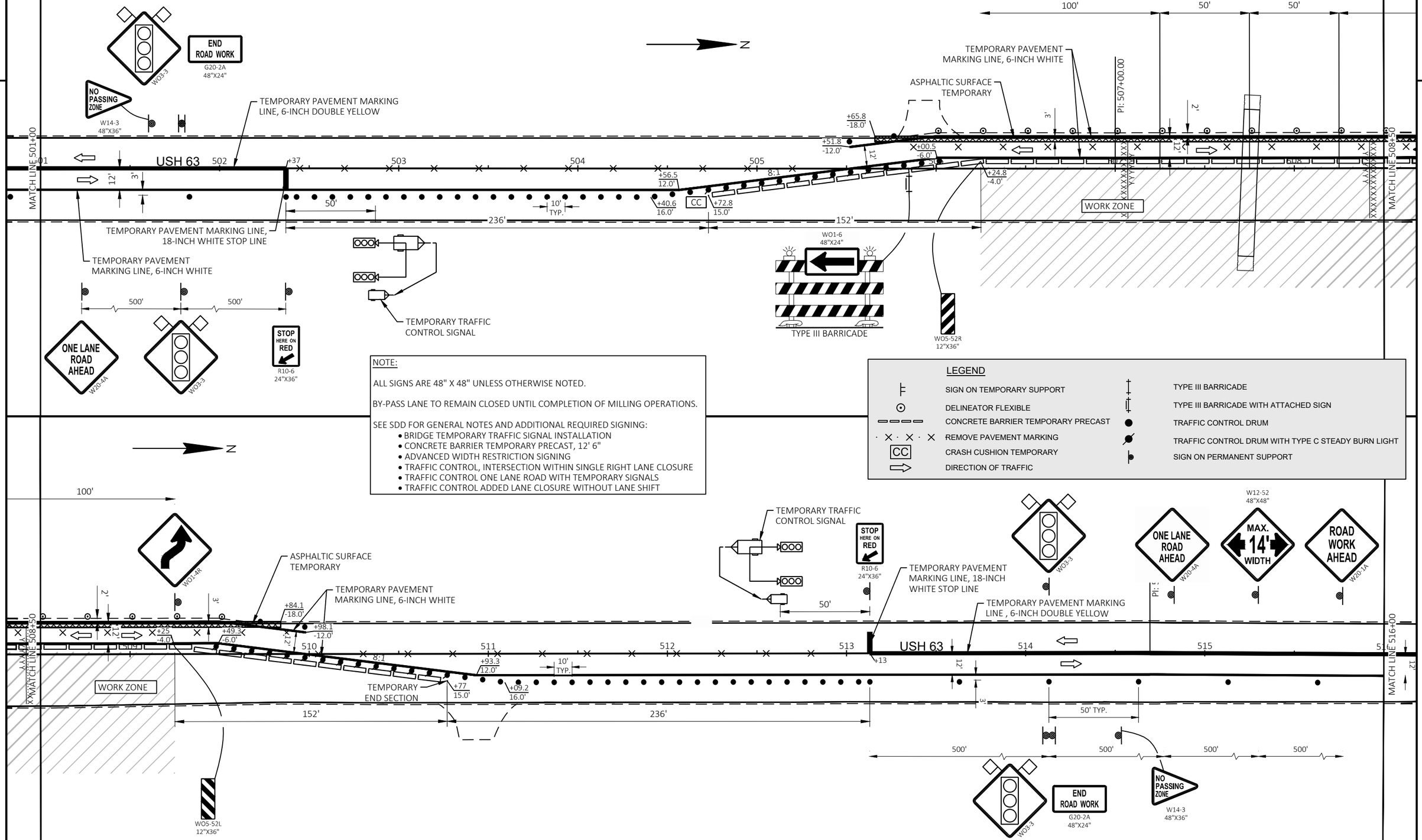

NOTE:

ALL SIGNS ARE 48" X 48" UNLESS OTHERWISE NOTED.

BY-PASS LANE TO REMAIN CLOSED UNTIL COMPLETION OF MILLING OPERATIONS.

SEE SDD FOR GENERAL NOTES AND ADDITIONAL REQUIRED SIGNING:

- BRIDGE TEMPORARY TRAFFIC SIGNAL INSTALLATION
- CONCRETE BARRIER TEMPORARY PRECAST, 12' 6"
- ADVANCED WIDTH RESTRICTION SIGNING
- TRAFFIC CONTROL, INTERSECTION WITHIN SINGLE RIGHT LANE CLOSURE
- TRAFFIC CONTROL ONE LANE ROAD WITH TEMPORARY SIGNALS
- TRAFFIC CONTROL ADDED LANE CLOSURE WITHOUT LANE SHIFT

LEGEND

SIGN ON TEMPORARY SUPPORT	TYPE III BARRICADE
DELINEATOR FLEXIBLE	TYPE III BARRICADE WITH ATTACHED SIGN
CONCRETE BARRIER TEMPORARY PRECAST	TRAFFIC CONTROL DRUM
REMOVE PAVEMENT MARKING	TRAFFIC CONTROL DRUM WITH TYPE C STEADY BURN LIGHT
CRASH CUSHION TEMPORARY	SIGN ON PERMANENT SUPPORT
DIRECTION OF TRAFFIC	

PROJECT NO: 1550-04-78	HWY: USH 63	COUNTY: BARRON	TRAFFIC CONTROL PLAN - TEMPORARY WIDENING STA 507+75 - STAGE 1	SHEET 40	E

2

2

N

NOTE:

STA 441+90 - 502+37 STAGE 1 TRAFFIC CONTROL TO REMAIN IN-PLACE DURING STAGE 2 CONSTRUCTION

20TH AVENUE

MATCH LINE 486+00

MATCH LINE 493+50

486 487 488 489 490 491 492 493

USH 63

BEGIN RIGHT TURN LANE
R3-20R
24"X36"

STOP
R1-1
30"X30"

ROAD WORK AHEAD
W20-1A

LEGEND

- TYPE III BARRICADE
- TYPE III BARRICADE WITH ATTACHED SIGN
- TRAFFIC CONTROL DRUM
- TRAFFIC CONTROL DRUM WITH TYPE C STEADY BURN LIGHT
- SIGN ON PERMANENT SUPPORT
- SIGN ON TEMPORARY SUPPORT
- DELINEATOR FLEXIBLE
- CONCRETE BARRIER TEMPORARY PRECAST
- REMOVE PAVEMENT MARKING
- CRASH CUSHSION (CC)
- DIRECTION OF TRAFFIC

N

END ROAD WORK
G20-2A
48"X24"

W03-3

NO PASSING ZONE
W14-3
48"X36"

500'

PT: 497+64.63

MATCH LINE 493+50

MATCH LINE 501+00

494 495 496 497 498 499 500

USH 63

STAGE 1 TRAFFIC CONTROL TO REMAIN IN-PLACE DURING STAGE 2 CONSTRUCTION

W03-3

R11-2L
48"X30"

LANE CLOSED

TYPE III BARRICADE

NOTE:

ALL SIGNS ARE 48" X 48" UNLESS OTHERWISE NOTED.

SEE SDD FOR GENERAL NOTES AND ADDITIONAL REQUIRED SIGNING:

- BRIDGE TEMPORARY TRAFFIC SIGNAL INSTALLATION
- CONCRETE BARRIER TEMPORARY PRECAST, 12' 6"
- ADVANCED WIDTH RESTRICTION SIGNING
- TRAFFIC CONTROL, INTERSECTION WITHIN SINGLE RIGHT LANE CLOSURE
- TRAFFIC CONTROL ONE LANE ROAD WITH TEMPORARY SIGNALS
- TRAFFIC CONTROL ADDED LANE CLOSURE WITHOUT LANE SHIFT

PROJECT NO: 1550-04-78	HWY: USH 63	COUNTY: BARRON	TRAFFIC CONTROL PLAN - TEMPORARY WIDENING STA 507+75 - STAGE 2	SHEET 41	E

FILE NAME : W:\NWBE_PROJECTS\DESIGN\2324_US63-US8TOSTH48\C3D-22\SHEETS\025003_TC-STAGING-50775.DWG
LAYOUT NAME - 63_tc-06-507+75-Stg2

PLOT DATE : 3/23/2026 3:22 PM PLOT BY : G. COLBERT PLOT NAME : PLOT SCALE : 1 IN:50 FT

WISDOT/CADDS SHEET 44

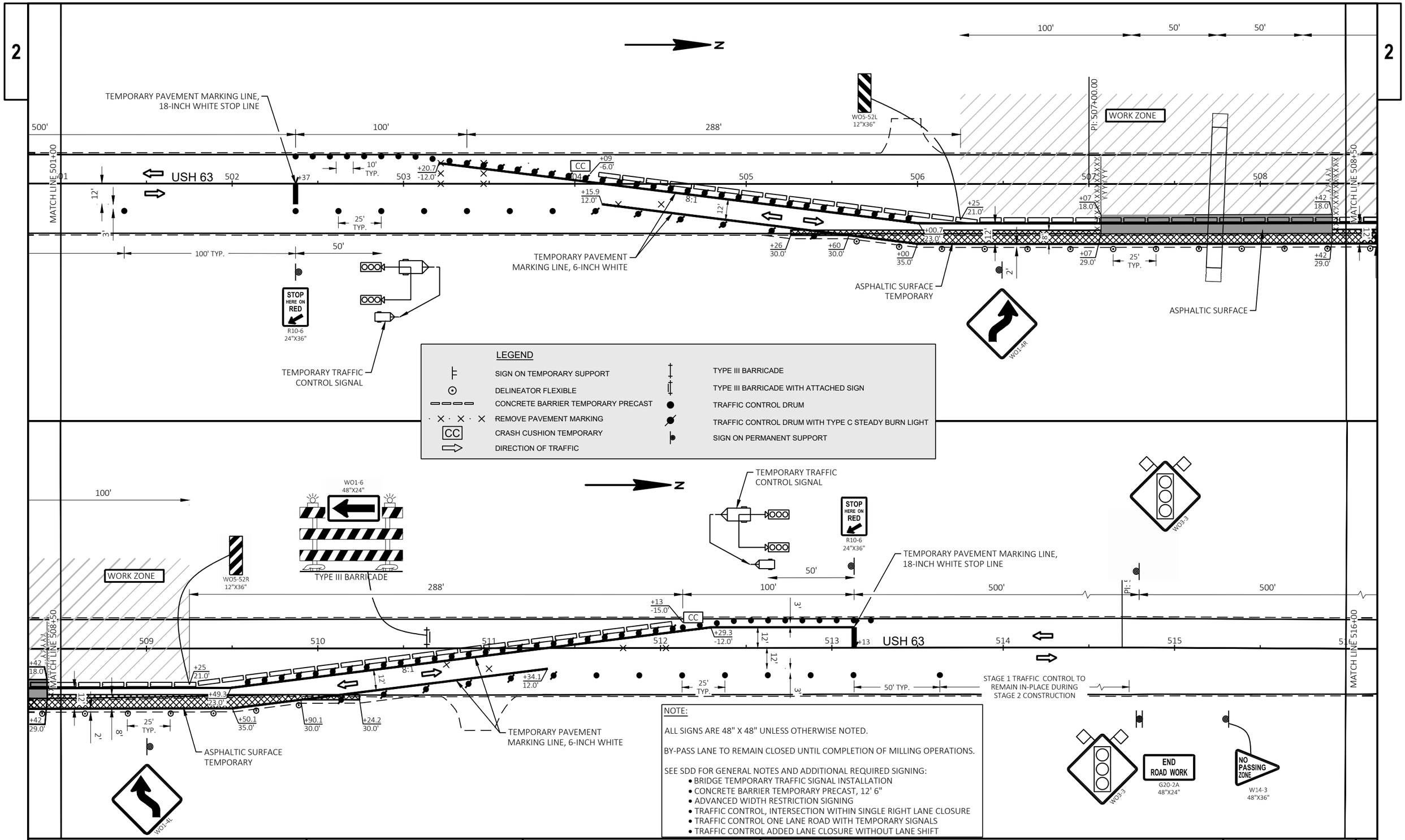

NOTE:

ALL SIGNS ARE 48" X 48" UNLESS OTHERWISE NOTED.

BY-PASS LANE TO REMAIN CLOSED UNTIL COMPLETION OF MILLING OPERATIONS.

SEE SDD FOR GENERAL NOTES AND ADDITIONAL REQUIRED SIGNING:

- BRIDGE TEMPORARY TRAFFIC SIGNAL INSTALLATION
- CONCRETE BARRIER TEMPORARY PRECAST, 12' 6"
- ADVANCED WIDTH RESTRICTION SIGNING
- TRAFFIC CONTROL, INTERSECTION WITHIN SINGLE RIGHT LANE CLOSURE
- TRAFFIC CONTROL ONE LANE ROAD WITH TEMPORARY SIGNALS
- TRAFFIC CONTROL ADDED LANE CLOSURE WITHOUT LANE SHIFT

PROJECT NO: 1550-04-78	HWY: USH 63	COUNTY: BARRON	TRAFFIC CONTROL PLAN - TEMPORARY WIDENING STA 507+75 - STAGE 2	SHEET 42	E

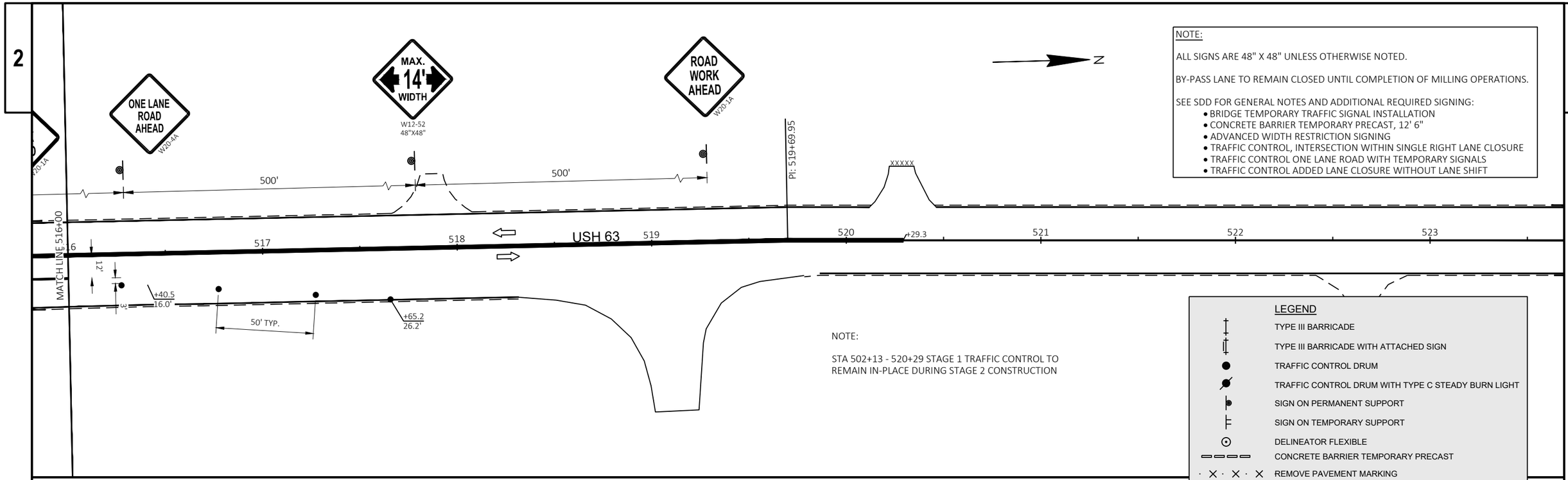

SIGNAL SEQUENCE (MON., TUES, WED., THURS., SAT.)

Interval	NB/EB	SB/WB	Seconds
1	G	R	22.5
2	Y	R	5.5
3	R	R	0.0
4	R	R	0
5	R	R	0
6	R	R	23.5
7	R	G	22.5
8	R	Y	5.5
9	R	R	23.5
Cycle length =	103.0		

DESIGN TRAFFIC VOLUME

ADT (MON., TUES, WED., THURS., SAT.) =	6012
% ADT IN PEAK HOUR =	10
DIRECTIONAL SPLIT N/E =	0.5
DIRECTIONAL SPLIT S/W =	0.5
PHF =	0.9
LENGTH OF WORK ZONE (FT) =	300
TOTAL STOP LINE - STOP LINE LENGTH =	1076

SIGNAL SEQUENCE (FRIDAY)

Interval	NB/EB	SB/WB	Seconds
1	G	R	43.2
2	Y	R	5.5
3	R	R	0.0
4	R	R	0
5	R	R	0
6	R	R	23.5
7	R	G	28.8
8	R	Y	5.5
9	R	R	23.5
Cycle length =	130.0		

DESIGN TRAFFIC VOLUME

ADT (FRIDAY) =	8600
% ADT IN PEAK HOUR =	10
DIRECTIONAL SPLIT N/E =	0.6
DIRECTIONAL SPLIT S/W =	0.4
PHF =	0.9
LENGTH OF WORK ZONE (FT) =	300
TOTAL STOP LINE - STOP LINE LENGTH =	1076

SIGNAL SEQUENCE (SUNDAY)

Interval	NB/EB	SB/WB	Seconds
1	G	R	24.6
2	Y	R	5.5
3	R	R	0.0
4	R	R	0
5	R	R	0
6	R	R	23.5
7	R	G	57.4
8	R	Y	5.5
9	R	R	23.5
Cycle length =	140.0		

DESIGN TRAFFIC VOLUME

ADT (SUNDAY) =	8600
% ADT IN PEAK HOUR =	10
DIRECTIONAL SPLIT N/E =	0.3
DIRECTIONAL SPLIT S/W =	0.7
PHF =	0.9
LENGTH OF WORK ZONE (FT) =	300
TOTAL STOP LINE - STOP LINE LENGTH =	1076

NOTES:

TIME CAN BE ADDED AS NEEDED TO PHASES. FOUR (4) SECONDS FOR YELLOW PHASE TIMES.

THE CONTRACTOR SHALL REVIEW SIGNALS AFTER PROGRAMMING TO ASSURE THERE ARE NO CONFLICTING MOVEMENTS.

IF CONFLICTING MOVEMENTS EXIST OR IF MORE ALL-RED TIME IS NEEDED, THE CONTRACTOR SHALL MAKE THE NECESSARY CHANGES.

IF THERE ARE QUESTIONS REGARDING THE TIMINGS, PLEASE CONTACT THE TRAFFIC ENGINEER 715-833-9816.

PROJECT NO: 1550-04-78	HWY: USH 63	COUNTY: BARRON	TRAFFIC CONTROL PLAN - TEMPORARY WIDENING STA 507+75 - STAGE 2	SHEET 43	E

2

N

ROAD CLOSED AHEAD
W20-3A

INTERSECTION 21ST AVE AND 4TH ST

ROAD CLOSED 500 FT
W20-3D

500'

R11-2
48" X 30"
ROAD CLOSED
TYPE III BARRICADE

W01-4L

100'

50'

NO PASSING ZONE
W14-3
48"X36"

W03-3

END ROAD WORK
G20-2A
48"X24"

TEMPORARY PAVEMENT MARKING LINE, 6-INCH WHITE

ASPHALTIC SURFACE TEMPORARY

700 LF TEMPORARY PAVEMENT MARKING LINE, 6-INCH DOUBLE YELLOW

TEMPORARY PAVEMENT MARKING LINE, 18-INCH WHITE STOP

21ST AVE

25' TYP.

2'

+95.9
-18.0'

3'

+29.9
-18.0'

+29.9
-30.5'

+30.7
-18.5'

+55
-16.5'

CC

540 541 USH 63 542 543 544 545 546

+03

12'

8:1

USH 63

3'

10' TYP.

+03
15.0'

MATCH LINE 546+75

XXXXX

XXXX

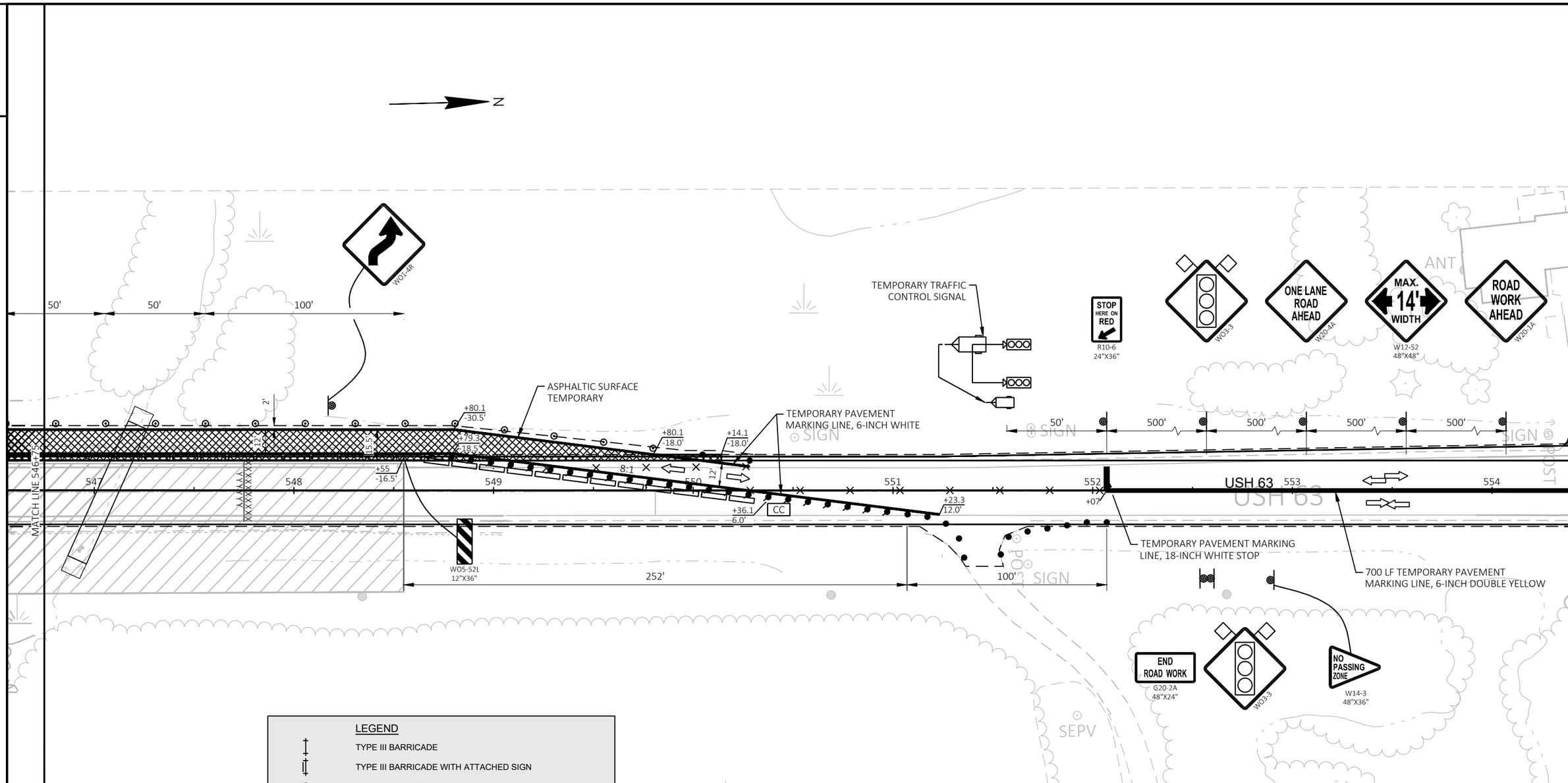

LEGEND

- TYPE III BARRICADE
- TYPE III BARRICADE WITH ATTACHED SIGN
- TRAFFIC CONTROL DRUM
- TRAFFIC CONTROL DRUM WITH TYPE C STEADY BURN LIGHT
- SIGN ON PERMANENT SUPPORT
- SIGN ON TEMPORARY SUPPORT
- DELINEATOR FLEXIBLE
- CONCRETE BARRIER TEMPORARY PRECAST
- REMOVE PAVEMENT MARKING
- CC CRASH CUSHSION
- DIRECTION OF TRAFFIC

NOTE:

ALL SIGNS ARE 48" X 48" UNLESS OTHERWISE NOTED.

SEE SDD FOR GENERAL NOTES AND ADDITIONAL REQUIRED SIGNING.

- BRIDGE TEMPORARY TRAFFIC SIGNAL INSTALLATION
- CONCRETE BARRIER TEMPORARY PRECAST, 12' 6"
- ADVANCED WIDTH RESTRICTION SIGNING
- BARRICADES AND SIGNS FOR SIDEROAD CLOSURES
- TRAFFIC CONTROL ONE LANE ROAD WITH TEMPORARY SIGNALS

PROJECT NO: 1550-04-78	HWY: USH 63	COUNTY: BARRON	TRAFFIC CONTROL PLAN - TEMPORARY WIDENING STA 547+05 - STAGE 1	SHEET 45	E

2

2

LEGEND

- TYPE III BARRICADE
- TYPE III BARRICADE WITH ATTACHED SIGN
- TRAFFIC CONTROL DRUM
- TRAFFIC CONTROL DRUM WITH TYPE C STEady BURN LIGHT
- SIGN ON PERMANENT SUPPORT
- SIGN ON TEMPORARY SUPPORT
- DELINEATOR FLEXIBLE
- CONCRETE BARRIER TEMPORARY PRECAST
- REMOVE PAVEMENT MARKING
- CC CRASH CUSHSION
- DIRECTION OF TRAFFIC

N

ROAD CLOSED AHEAD W20-3A

INTERSECTION 21ST AVE AND 4TH ST

ROAD CLOSED 500 FT W20-3D

500'

21st AVE

R11-2 48" X 30" ROAD CLOSED

TYPE III BARRICADE

SIGN

100' 50'

NO PASSING ZONE W14-3 48"X36"

W03-3

END ROAD WORK G20-2A 48"X24"

3' 10' TYP.

12'

540 541 USH 63 542 543 545 546

+03 +34.7 -12.0' +23 -6.0' CC +17.9 10.5' +30.7 12.5' +29.9 24.5' +46.3 24.5' +55 10.5' +35 7.5'

WO5-52L 12"X36"

XXXX XXXX XXXX

MATCH LINE 546+75

TEMPORARY PAVEMENT MARKING LINE, 18-INCH WHITE STOP

148' 204'

TEMPORARY PAVEMENT MARKING LINE, 6-INCH WHITE

25' TYP. 2'

ASPHALTIC SURFACE TEMPORARY

ASPHALTIC SURFACE

SIGN FLAG

500' 500' 500' 500' 50'

ROAD WORK AHEAD W20-1A

MAX. 14' WIDTH W12-52 48"X48"

ONE LANE ROAD AHEAD W20-4A

W03-3

STOP HERE ON RED R10-6 24"X36"

TEMPORARY TRAFFIC CONTROL SIGNAL

R11-2 48" X 30" ROAD CLOSED

TYPE III BARRICADE

WO1-4R

ROAD CLOSED 500 FT W20-3D

INTERSECTION 21ST AVE AND 6TH ST

ROAD CLOSED AHEAD W20-3A

NOTE:

ALL SIGNS ARE 48" X 48" UNLESS OTHERWISE NOTED.

SEE SDD FOR GENERAL NOTES AND ADDITIONAL REQUIRED SIGNING.

- BRIDGE TEMPORARY TRAFFIC SIGNAL INSTALLATION
- CONCRETE BARRIER TEMPORARY PRECAST, 12' 6"
- ADVANCED WIDTH RESTRICTION SIGNING
- BARRICADES AND SIGNS FOR SIDEROAD CLOSURES
- TRAFFIC CONTROL ONE LANE ROAD WITH TEMPORARY SIGNALS

PROJECT NO: 1550-04-78	HWY: USH 63	COUNTY: BARRON	TRAFFIC CONTROL PLAN - TEMPORARY WIDENING STA 547+05 - STAGE 2	SHEET 46	E

2

N

50' 50' 100'

WO5-52R
12"X36"

WO1-6
48"X24"

TYPE III BARRICADE

TEMPORARY TRAFFIC
CONTROL SIGNAL

STOP
HERE ON
RED
R10-6
24"X36"

WO3-3

ONE LANE
ROAD
AHEAD
W20-4A

MAX.
14'
WIDTH
W12-52
48"X48"

ROAD
WORK
AHEAD
W20-1A

TEMPORARY PAVEMENT MARKING
LINE, 18-INCH WHITE STOP

50' 500' 500' 500' 500'

MATCH LINE 546+75

547 548 549 551 552 553 554

USH 63

+75
7.5'

+55
10.5'

+79.3
12.5'

+80.3
24.5'

+32.1
18.0'

+64
18.0'

+92.1
10.5'

+59
-15.0'

+75.3
-12.0'

CC

10'
TYP.

8:1

12'

3'

2'

+07

ASPHALTIC SURFACE
TEMPORARY

ASPHALTIC SURFACE

WO1-4L

204'

100'

TEMPORARY PAVEMENT
MARKING LINE, 6-INCH WHITE

SIGN

SEPV

END
ROAD WORK
G20-2A
48"X24"

WO3-3

NO
PASSING
ZONE
W14-3
48"X36"

LEGEND

- TYPE III BARRICADE
- TYPE III BARRICADE WITH ATTACHED SIGN
- TRAFFIC CONTROL DRUM
- TRAFFIC CONTROL DRUM WITH TYPE C STEADY BURN LIGHT
- SIGN ON PERMANENT SUPPORT
- SIGN ON TEMPORARY SUPPORT
- DELINEATOR FLEXIBLE
- CONCRETE BARRIER TEMPORARY PRECAST
- REMOVE PAVEMENT MARKING
- CRASH CUSHSION (CC)
- DIRECTION OF TRAFFIC

NOTE:

ALL SIGNS ARE 48" X 48" UNLESS OTHERWISE NOTED.

SEE SDD FOR GENERAL NOTES AND ADDITIONAL REQUIRED SIGNING.

- BRIDGE TEMPORARY TRAFFIC SIGNAL INSTALLATION
- CONCRETE BARRIER TEMPORARY PRECAST, 12' 6"
- ADVANCED WIDTH RESTRICTION SIGNING
- BARRICADES AND SIGNS FOR SIDEROAD CLOSURES
- TRAFFIC CONTROL ONE LANE ROAD WITH TEMPORARY SIGNALS

PROJECT NO: 1550-04-78	HWY: USH 63	COUNTY: BARRON	TRAFFIC CONTROL PLAN - TEMPORARY WIDENING STA 547+05 - STAGE 2	SHEET 47	E

FILE NAME : W:\NWBE_PROJECTS\DESIGN\2324_US63-US8TOSTH48\C3D-22\SHEETS\025004_TC-STAGING-54705.DWG
LAYOUT NAME - 54705_tc-04-Stg2

PLOT DATE : 3/23/2026 11:24 AM PLOT BY : G. COLBERT PLOT NAME : PLOT SCALE : 1 IN:50 FT

WISDOT/CADDS SHEET 44

2

SIGNAL SEQUENCE (MON., TUES, WED., THURS., SAT.)

Interval	NB/EB	SB/WB	Seconds
1	G	R	22
2	Y	R	5.5
3	R	R	0.0
4	R	R	0
5	R	R	0
6	R	R	22.2
7	R	G	22
8	R	Y	5.5
9	R	R	22.2
Cycle length =	99.4		

DESIGN TRAFFIC VOLUME

ADT (MON., TUES, WED., THURS., SAT.) =	6012
% ADT IN PEAK HOUR =	10
DIRECTIONAL SPLIT N/E =	0.5
DIRECTIONAL SPLIT S/W =	0.5
PHF =	0.9
LENGTH OF WORK ZONE (FT) =	300
TOTAL STOP LINE - STOP LINE LENGTH =	1004

SIGNAL SEQUENCE (FRIDAY)

Interval	NB/EB	SB/WB	Seconds
1	G	R	42
2	Y	R	5.5
3	R	R	0.0
4	R	R	0
5	R	R	0
6	R	R	22.2
7	R	G	28
8	R	Y	5.5
9	R	R	22.2
Cycle length =	125.4		

DESIGN TRAFFIC VOLUME

ADT (FRIDAY) =	8600
% ADT IN PEAK HOUR =	10
DIRECTIONAL SPLIT N/E =	0.6
DIRECTIONAL SPLIT S/W =	0.4
PHF =	0.9
LENGTH OF WORK ZONE (FT) =	300
TOTAL STOP LINE - STOP LINE LENGTH =	1004

SIGNAL SEQUENCE (SUNDAY)

Interval	NB/EB	SB/WB	Seconds
1	G	R	24
2	Y	R	5.5
3	R	R	0.0
4	R	R	0
5	R	R	0
6	R	R	22.2
7	R	G	56
8	R	Y	5.5
9	R	R	22.2
Cycle length =	135.4		

DESIGN TRAFFIC VOLUME

ADT (SUNDAY) =	8600
% ADT IN PEAK HOUR =	10
DIRECTIONAL SPLIT N/E =	0.3
DIRECTIONAL SPLIT S/W =	0.7
PHF =	0.9
LENGTH OF WORK ZONE (FT) =	300
TOTAL STOP LINE - STOP LINE LENGTH =	1004

NOTES:

TIME CAN BE ADDED AS NEEDED TO PHASES. FOUR (4) SECONDS FOR YELLOW PHASE TIMES.

THE CONTRACTOR SHALL REVIEW SIGNALS AFTER PROGRAMMING TO ASSURE THERE ARE NO CONFLICTING MOVEMENTS.

IF CONFLICTING MOVEMENTS EXIST OR IF MORE ALL-RED TIME IS NEEDED, THE CONTRACTOR SHALL MAKE THE NECESSARY CHANGES.

IF THERE ARE QUESTIONS REGARDING THE TIMINGS, PLEASE CONTACT THE TRAFFIC ENGINEER AARON CHRIST 715-833-9816

Estimate Of Quantities

1550-04-78

Line	Item	Item Description	Unit	Total	Qty
0002	201.0105	Clearing	STA	1.000	1.000
0004	201.0205	Grubbing	STA	1.000	1.000
0006	203.0100	Removing Small Pipe Culverts	EACH	15.000	15.000
0008	203.0220	Removing Structure (structure) 01. C-03-67	EACH	1.000	1.000
0010	203.0220	Removing Structure (structure) 02. Sta. 547+00, 60-Inch CPRC	EACH	1.000	1.000
0012	203.0220	Removing Structure (structure) 03. Sta. 547+10, 60-Inch CPRC	EACH	1.000	1.000
0014	204.0100	Removing Concrete Pavement	SY	1,886.000	1,886.000
0016	204.0109.S	Removing Concrete Surface Partial Depth	SF	1,286.000	1,286.000
0018	204.0110	Removing Asphaltic Surface	SY	740.000	740.000
0020	204.0115	Removing Asphaltic Surface Butt Joints	SY	96.000	96.000
0022	204.0120	Removing Asphaltic Surface Milling	SY	240,984.000	240,984.000
0024	204.0150	Removing Curb & Gutter	LF	185.000	185.000
0026	204.0165	Removing Guardrail	LF	1,408.000	1,408.000
0028	205.0100	Excavation Common	CY	6,169.000	6,169.000
0030	208.0100	Borrow	CY	551.000	551.000
0032	208.1500.S	Temporary Lane Shift During Culvert Work	EACH	7.000	7.000
0034	209.2500	Backfill Granular Grade 2	TON	4,416.000	4,416.000
0036	211.0101	Prepare Foundation for Asphaltic Paving (project) 01. 1550-04-78	EACH	1.000	1.000
0038	211.0400	Prepare Foundation for Asphaltic Shoulders	STA	1,059.000	1,059.000
0040	213.0100	Finishing Roadway (project) 01. 1550-04-78	EACH	1.000	1.000
0042	305.0110	Base Aggregate Dense 3/4-Inch	TON	2,897.000	2,897.000
0044	305.0120	Base Aggregate Dense 1 1/4-Inch	TON	4,333.000	4,333.000
0046	455.0605	Tack Coat	GAL	30,339.000	30,339.000
0048	460.0105.S	HMA Percent Within Limits (PWL) Test Strip Volumetrics	EACH	1.000	1.000
0050	460.0110.S	HMA Percent Within Limits (PWL) Test Strip Density	EACH	2.000	2.000
0052	460.2005	Incentive Density PWL HMA Pavement	DOL	34,400.000	34,400.000
0054	460.2007	Incentive Density HMA Pavement Longitudinal Joints	DOL	34,820.000	34,820.000
0056	460.2010	Incentive Air Voids HMA Pavement	DOL	47,930.000	47,930.000
0058	460.6225	HMA Pavement 5 MT 58-28 S	TON	47,857.000	47,857.000
0060	460.9000.S	Material Transfer Vehicle	EACH	1.000	1.000
0062	465.0105	Asphaltic Surface	TON	1,639.000	1,639.000
0064	465.0110	Asphaltic Surface Patching	TON	215.000	215.000
0066	465.0120	Asphaltic Surface Driveways and Field Entrances	TON	108.000	108.000
0068	465.0125	Asphaltic Surface Temporary	TON	425.000	425.000
0070	465.0315	Asphaltic Flumes	SY	11.000	11.000
0072	465.0520	Asphaltic Rumble Strips, Shoulder	LF	99,870.000	99,870.000
0074	465.0560	Asphaltic Rumble Strips, Centerline	LF	47,674.000	47,674.000
0076	490.0100.S	Resin Binder High Friction Surface Treatment	SY	6,224.000	6,224.000
0078	520.1018	Apron Endwalls for Culvert Pipe 18-Inch	EACH	2.000	2.000
0080	520.2048	Culvert Pipe Temporary 48-Inch	LF	24.000	24.000
0082	520.3418	Culvert Pipe Class III-A Non-metal 18-Inch	LF	52.000	52.000
0084	520.8000	Concrete Collars for Pipe	EACH	10.000	10.000
0086	520.8700	Cleaning Culvert Pipes	EACH	8.000	8.000
0088	520.9700.S	Culvert Pipe Liners (size) 01. 24-Inch	LF	154.000	154.000
0090	520.9700.S	Culvert Pipe Liners (size) 02. 36-Inch	LF	110.000	110.000
0092	520.9700.S	Culvert Pipe Liners (size) 03. 48-Inch	LF	188.000	188.000
0094	520.9750.S	Cleaning Culvert Pipes for Liner Verification	EACH	5.000	5.000
0096	522.0124	Culvert Pipe Reinforced Concrete Class III 24-Inch	LF	138.000	138.000
0098	522.0130	Culvert Pipe Reinforced Concrete Class III 30-Inch	LF	56.000	56.000

1550-04-78

Line	Item	Item Description	Unit	Total	Qty
0100	522.0136	Culvert Pipe Reinforced Concrete Class III 36-Inch	LF	14.000	14.000
0102	522.0424	Culvert Pipe Reinforced Concrete Class IV 24-Inch	LF	56.000	56.000
0104	522.0430	Culvert Pipe Reinforced Concrete Class IV 30-Inch	LF	128.000	128.000
0106	522.0442	Culvert Pipe Reinforced Concrete Class IV 42-Inch	LF	58.000	58.000
0108	522.1024	Apron Endwalls for Culvert Pipe Reinforced Concrete 24-Inch	EACH	10.000	10.000
0110	522.1030	Apron Endwalls for Culvert Pipe Reinforced Concrete 30-Inch	EACH	7.000	7.000
0112	522.1036	Apron Endwalls for Culvert Pipe Reinforced Concrete 36-Inch	EACH	1.000	1.000
0114	522.1042	Apron Endwalls for Culvert Pipe Reinforced Concrete 42-Inch	EACH	2.000	2.000
0116	522.2358	Culvert Pipe Reinforced Concrete Horizontal Elliptical Class HE-III 58x91-Inch	LF	82.000	82.000
0118	522.2368	Culvert Pipe Reinforced Concrete Horizontal Elliptical Class HE-III 68x106-Inch	LF	74.000	74.000
0120	522.2658	Apron Endwalls for Culvert Pipe Reinforced Concrete Horizontal Elliptical 58x91-Inch	EACH	2.000	2.000
0122	522.2668	Apron Endwalls for Culvert Pipe Reinforced Concrete Horizontal Elliptical 68x106-Inch	EACH	2.000	2.000
0124	601.0411	Concrete Curb & Gutter 30-Inch Type D	LF	30.000	30.000
0126	601.0557	Concrete Curb & Gutter 6-Inch Sloped 36-Inch Type D	LF	155.000	155.000
0128	603.8000	Concrete Barrier Temporary Precast Delivered	LF	1,550.000	1,550.000
0130	603.8125	Concrete Barrier Temporary Precast Installed	LF	2,800.000	2,800.000
0132	603.8500	Anchoring Concrete Barrier Temporary Precast	LF	1,400.000	1,400.000
0134	606.0050	Riprap Extra-Light	CY	11.000	11.000
0136	606.0100	Riprap Light	CY	6.000	6.000
0138	606.0200	Riprap Medium	CY	9.000	9.000
0140	611.8110	Adjusting Manhole Covers	EACH	1.000	1.000
0142	611.8120.S	Cover Plates Temporary	EACH	1.000	1.000
0144	614.0010	Barrier System Grading Shaping Finishing	EACH	2.000	2.000
0146	614.0397	Guardrail Mow Strip Emulsified Asphalt	SY	270.000	270.000
0148	614.0905	Crash Cushions Temporary	EACH	7.000	7.000
0150	614.2300	MGS Guardrail 3	LF	375.000	375.000
0152	614.2330	MGS Guardrail 3 K	LF	1,050.000	1,050.000
0154	614.2610	MGS Guardrail Terminal EAT	EACH	4.000	4.000
0156	618.0100	Maintenance and Repair of Haul Roads (project) 01. 1550-04-78	EACH	1.000	1.000
0158	619.1000	Mobilization	EACH	1.000	1.000
0160	624.0100	Water	MGAL	64.000	64.000
0162	625.0100	Topsoil	SY	9,119.000	9,119.000
0164	627.0200	Mulching	SY	5,442.000	5,442.000
0166	628.1504	Silt Fence	LF	3,811.000	3,811.000
0168	628.1520	Silt Fence Maintenance	LF	3,811.000	3,811.000
0170	628.1530.S	Silt Fence Heavy Duty	LF	964.000	964.000
0172	628.1535.S	Silt Fence Heavy Duty Maintenance	LF	964.000	964.000
0174	628.1905	Mobilizations Erosion Control	EACH	10.000	10.000
0176	628.1910	Mobilizations Emergency Erosion Control	EACH	5.000	5.000
0178	628.2008	Erosion Mat Urban Class I Type B	SY	4,928.000	4,928.000
0180	628.2037	Erosion Mat Class III Type C	SY	460.000	460.000
0182	628.7504	Temporary Ditch Checks	LF	100.000	100.000
0184	628.7555	Culvert Pipe Checks	EACH	106.000	106.000
0186	629.0210	Fertilizer Type B	CWT	4.000	4.000
0188	630.0120	Seeding Mixture No. 20	LB	394.000	394.000
0190	630.0200	Seeding Temporary	LB	190.000	190.000
0192	630.0500	Seed Water	MGAL	245.000	245.000
0194	633.0200	Delineators Flexible	EACH	72.000	72.000
0196	633.5200	Markers Culvert End	EACH	72.000	72.000

Estimate Of Quantities

1550-04-78

Line	Item	Item Description	Unit	Total	Qty
0198	638.2102	Moving Signs Type II	EACH	2.000	2.000
0200	642.5001	Field Office Type B	EACH	1.000	1.000
0202	643.0300	Traffic Control Drums	DAY	5,504.000	5,504.000
0204	643.0420	Traffic Control Barricades Type III	DAY	304.000	304.000
0206	643.0705	Traffic Control Warning Lights Type A	DAY	342.000	342.000
0208	643.0715	Traffic Control Warning Lights Type C	DAY	1,881.000	1,881.000
0210	643.0900	Traffic Control Signs	DAY	9,005.000	9,005.000
0212	643.1000	Traffic Control Signs Fixed Message	SF	54.000	54.000
0214	643.3165	Temporary Marking Line Paint 6-Inch	LF	221,925.000	221,925.000
0216	643.3170	Temporary Marking Line Epoxy 6-Inch	LF	100,401.000	100,401.000
0218	643.3805	Temporary Marking Stop Line Paint 18-Inch	LF	48.000	48.000
0220	643.5000	Traffic Control	EACH	1.000	1.000
0222	645.0120	Geotextile Type HR	SY	28.000	28.000
0224	645.0130	Geotextile Type R	SY	69.000	69.000
0226	646.2040	Marking Line Grooved Wet Ref Epoxy 6-Inch	LF	211,842.000	211,842.000
0228	646.4040	Marking Line Grooved Wet Ref Epoxy 10-Inch	LF	1,335.000	1,335.000
0230	646.7120	Marking Diagonal Epoxy 12-Inch	LF	1,450.000	1,450.000
0232	646.9002	Marking Removal Line 6-Inch	LF	4,108.000	4,108.000
0234	648.0100	Locating No-Passing Zones	MI	10.700	10.700
0236	650.4500	Construction Staking Subgrade	LF	2,719.000	2,719.000
0238	650.5000	Construction Staking Base	LF	2,719.000	2,719.000
0240	650.6000	Construction Staking Pipe Culverts	EACH	14.000	14.000
0242	650.8000	Construction Staking Resurfacing Reference	LF	56,681.000	56,681.000
0244	650.9911	Construction Staking Supplemental Control (project) 01. 1550-04-78	EACH	1.000	1.000
0246	650.9920	Construction Staking Slope Stakes	LF	1,955.000	1,955.000
0248	661.0101	Temporary Traffic Signals for Bridges (structure) 01. Sta. 507+75 Culvert C-03-687	EACH	1.000	1.000
0250	661.0101	Temporary Traffic Signals for Bridges (structure) 02. Sta. 547+07 Culvert Replacement	EACH	1.000	1.000
0252	690.0150	Sawing Asphalt	LF	1,241.000	1,241.000
0254	690.0250	Sawing Concrete	LF	303.000	303.000
0256	740.0440	Incentive IRI Ride	DOL	42,940.000	42,940.000
0258	999.2005.S	Maintaining Bird Deterrent System (station) 01. Sta. 507+75 Culvert C-03-687	EACH	1.000	1.000
0260	ASP.1T0A	On-the-Job Training Apprentice at $5.00/HR	HRS	2,500.000	2,500.000
0262	ASP.1T0G	On-the-Job Training Graduate at $5.00/HR	HRS	2,000.000	2,000.000
0264	SPV.0090	Special 01. Ditch Cleaning	LF	50.000	50.000

CLEARING & GRUBBING

STATION		STATION	LOCATION		201.0105 CLEARING STA	201.0205 GRUBBING STA	COMMENTS
91+00	-	92+00	USH 63	LT	1	1	CLEAR AND GRUB FOR DWY CULVERT PIPE INSTALLATION ONLY
			PROJECT TOTALS		1	1	

REMOVING SMALL PIPE CULVERTS

STATION	LOCATION		203.0100 REMOVING SMALL PIPE CULVERTS EACH	COMMENTS
64+00	USH 63		1	24" x 96' CPRC
91+44	USH 63	LT	1	18" X 32' CPCS - DRIVEWAY
92+02	USH 63	LT	1	30" X 18' CPRC
92+02	USH 63	RT	1	30" X 20' CPRC
160+88	USH 63	RT	1	36" X 20' CPRC
198+78	USH 63	LT	1	24" X 14' CPRC
198+78	USH 63	RT	1	24" X 14' CPRC
243+77	USH 63	LT	1	24" X 22' CPRC
243+77	USH 63	RT	1	24" X 10' CPRC
312+09	USH 63	RT	1	24" X 6' CPRC
338+86	USH 63	RT	1	30" X 18' CPRC
385+35	USH 63		1	30" X 62' CPRC
420+07	USH 63		1	42" X 68' CPRC
441+86	USH 63		1	24" X 59' CPRC
618+52	USH 63		1	30" X 75' CPRC
	PROJECT TOTAL		15	

REMOVING STRUCTURE

STATION	LOCATION	203.0220 REMOVING STRUCTURE (STRUCTURE) 01. C-03-0687 EACH	203.0220 REMOVING STRUCTURE (STRUCTURE) 02. STA. 547+00, 60-INCH CPRC EACH	203.0220 REMOVING STRUCTURE (STRUCTURE) 03. STA. 547+10, 60-INCH CPRC EACH
507+75	USH 63	1	-	-
547+00	USH 63	-	1	-
547+10	USH 63	-	-	1
	PROJECT TOTALS	1	1	1

REMOVING CONCRETE PAVEMENT

STATION	-	STATION	LOCATION	204.0100 REMOVING CONCRETE PAVEMENT SY	COMMENTS
63+40	-	64+84	USH 63	320	CULVERT REPLACEMENT
384+81	-	385+88	USH 63	238	CULVERT REPLACEMENT
419+53	-	420+61	USH 63	240	CULVERT REPLACEMENT
441+32	-	442+39	USH 63	238	CULVERT REPLACEMENT
507+07	-	508+42	USH 63	300	CULVERT REPLACEMENT
546+35	-	547+75	USH 63	312	CULVERT REPLACEMENT
617+97	-	619+04	USH 63	238	CULVERT REPLACEMENT
			PROJECT TOTAL	1886	

ALL ITEMS ARE CATEGORY 0010 UNLESS OTHERWISE NOTED.

REMOVING ASPHALTIC SURFACE

STATION	-	STATION	LOCATION		204.0110 REMOVING ASPHALTIC SURFACE SY	COMMENTS
91+16	-	91+69	USH 63	LT	98	DRIVEWAY
96+43	-	96+94	USH 63	LT	71	DRIVEWAY
103+16	-	103+53	USH 63	LT	47	DRIVEWAY
127+22	-	127+59	USH 63	LT	47	DRIVEWAY
235+98	-	236+29	USH 63	LT	42	DRIVEWAY
258+89	-	259+44	USH 63	LT	68	DRIVEWAY
266+96	-	267+41	USH 63	LT	51	DRIVEWAY
343+13	-	343+36	USH 63	LT	28	DRIVEWAY
371+85	-	372+27	USH 63	LT	44	DRIVEWAY
396+35	-	396+50	USH 63	LT	4	CURB REPLACEMENT
396+72	-	396+87	USH 63	LT	3	CURB REPLACEMENT
520+12	-	520+46	USH 63	LT	49	DRIVEWAY
539+26	-	539+67	USH 63	RT	56	DRIVEWAY
554+36	-	554+59	USH 63	LT	30	DRIVEWAY
580+54	-	580+98	USH 63	LT	71	DRIVEWAY
583+89	-	584+25	USH 63	LT	12	CURB REPLACEMENT
584+55	-	585+13	USH 63	LT	19	CURB REPLACEMENT
			PROJECT TOTAL		740	

REMOVING CONCRETE SURFACE

STATION	-	STATION	LOCATION			204.0109.S REMOVING CONCRETE SURFACE PARTIAL DEPTH SF	COMMENTS
228+35	-	229+45	USH 63	LT	(1 3/4 ST)	266	CURB PAN MILLING
284+79	-	285+99	USH 63	RT	(17TH AVE)	243	CURB PAN MILLING
388+31	-	389+42	USH 63	LT	(18 1/2 / 19 1/2 AVE)	252	CURB PAN MILLING
492+47	-	493+47	USH 63	RT	(20TH AVE)	253	CURB PAN MILLING
544+45	-	545+60	USH 63	RT	(21ST AVE)	272	CURB PAN MILLING
					PROJECT TOTAL	1286	

MILLING ITEMS

CATEGORY	STATION	-	STATION		LOCATION	204.0115 REMOVING ASPHALTIC SURFACE BUTT JOINTS SY	204.0120 REMOVING ASPHALTIC SURFACE MILLING SY
0010	56+91	-	623+72		USH 63	20	232,492
	62+85	-	64+25	RT	13 1/2 AVE	4	372
	152+30	-	153+91	LT	DUMP ROAD	-	312
	198+80	-	200+16	LT	16TH AVE	6	291
	202+73	-	204+74	RT	15TH AVE	6	503
	228+07	-	229+76	LT	1 3/4 ST	5	314
	230+60	-	231+52	RT	1 3/4 ST	4	156
	284+57	-	286+21	RT	17TH AVE	5	373
	348+62	-	350+31	LT	18TH AVE	-	501
	350+02	-	351+44	RT	18TH AVE	5	348
	388+12	-	389+68	LT	18 1/2 / 19 1/2 AVE	6	275
	404+54	-	406+46	RT	18 3/4 AVE	7	460
	421+37	-	423+09	LT	19TH AVE	-	427
	421+87	-	423+94	RT	19TH AVE	5	495
	491+98	-	493+73	RT	20TH AVE	-	295
	492+09	-	493+74	LT	20TH AVE	5	372
	518+30	-	519+78	RT	20 1/2 AVE	-	320
	544+23	-	545+78	RT	21ST AVE	6	305
	544+61	-	545+89	LT	21ST AVE	-	286
	570+48	-	571+88	RT	21 1/2 AVE	5	281
	583+67	-	585+05	LT	CTH G	7	319
	596+85	-	598+44	LT	5TH ST	-	346
	597+18	-	598+32	RT	22ND AVE	-	314
CATEGORY 0010 TOTALS						96	240,157

	STATION	-	STATION		LOCATION		
0040	394+43	-	409+58	LT	PARKING LANE	-	827
CATEGORY 0040 TOTALS						-	827
					PROJECT TOTALS	96	240,984

REMOVING CURB & GUTTER

STATION		STATION	LOCATION	204.0150 REMOVING CURB & GUTTER LF	COMMENTS
396+35	-	396+50	LT	15	PARKING LANE
396+72	-	396+87	LT	15	PARKING LANE
583+89	-	584+25	LT	55	21 3/4 AVE (CTH G) - SW QUADRANT
584+55	-	585+13	LT	83	21 3/4 AVE (CTH G) - NW QUADRANT
545+43	-	545+59	RT	17	21ST AVE (STAGE 2 TEMP. WIDENING)
			PROJECT TOTAL	185	

REMOVING GUARDRAIL

STATION	-	STATION	LOCATION		204.0165 REMOVING GUARDRAIL LF
84+14	-	91+15	UHS 63	LT	701
131+92	-	138+99	USH 63	LT	707
			PROJECT TOTAL		1408

TEMPORARY LANE SHIFT

STATION	LOCATION	208.1500.S TEMPORARY LANE SHIFT DURING CULVERT WORK EACH
64+20	USH 63	2
385+35	USH 63	2
420+07	USH 63	2
618+52	USH 63	1
	PROJECT TOTAL	7

ASPHALTIC SHOULDERS

CAT. 0020	STATION		STATION	LOCATION		211.0400 PREPARE FOUNDATION FOR ASPHALTIC SHOULDERS STA
	60+18		219+00	USH 63	RT	159
	61+02	-	82+84	USH 63	LT	22
	91+35		130+00	USH 63	LT	39
	141+50		199+00	USH 63	LT	58
	204+75		394+43	USH 63	LT	190
	219+00		446+00	USH 63	RT	227
	409+57	-	583+24	USH 63	LT	174
	451+00		510+00	USH 63	RT	59
	520+00	-	623+72	USH 63	RT	104
	596+71	-	623+71	USH 63	LT	27
CATERGORY 0020 TOTAL						1059
				PROJECT TOTAL		1059

ALL ITEMS ARE CATEGORY 0010 UNLESS OTHERWISE NOTED.

3

3

EARTHWORK

DIVISION	FROM/TO STATION	LOCATION	205.0100 EXCAVATION COMMON (1) CUT (2)	SALVAGED/UNUSABLE PAVEMENT MATERIAL (4)	AVAILABLE MATERIAL (5)	UNEXPANDED FILL	EXPANDED FILL (13) FACTOR 1.25	MASS ORDINATE +/- (14)	WASTE	208.0100 BORROW	COMMENT
DIVISION 01											
91+02-92+88 SLOPE REPAIR	91+01.72/92+87.50		2	0	2	181	226	-224			
DIVISION 01 SUBTOTAL			2	0	2	181	226	-224	0	224	
DIVISION 02											
243+62-244+00 SLOPE REPAIR	243+62.50/244+00.00		0	0	0	27	34	-34			
DIVISION 02 SUBTOTAL			0	0	0	27	34	-34	0	34	
DIVISION 03											
312+00-312+18 SLOPE REPAIR	312+00.00/312+18.00		0	0	0	10	13	-13			
DIVISION 03 SUBTOTAL			0	0	0	10	13	-13	0	13	
DIVISION 04											
338+75-338+95 SLOPE REPAIR	338+75.00/338+95.00		0	0	0	9	11	-11			
DIVISION 04 SUBTOTAL			0	0	0	9	11	-11	0	11	
DIVISION 05											
507+75 STAGE 1	505+65.80/509+84.10		104	0	104	0	0	104			
DIVISION 05 SUBTOTAL			104	0	104	0	0	104	104	0	
DIVISION 06											
507+75 STAGE 2	505+26.00/510+24.20		211	51	160	28	35	125			
DIVISION 06 SUBTOTAL			211	51	160	28	35	125	125	0	
DIVISION 07											
547+05 STAGE 1	543+95.90/550+14.10		187	0	187	328	410	-223			
DIVISION 07 SUBTOTAL			187	0	187	328	410	-223	0	223	
DIVISION 08											
54705 STAGE 2	545+43.50/549+64.00		170	41	129	140	175	-46			
DIVISION 08 SUBTOTAL			170	41	129	140	175	-46	0	46	
DIVISION 09											
507+75 STAGE 1 REMOVAL	505+65.80/509+84.10		11	0	11	0	0	11			
DIVISION 09 SUBTOTAL			11	0	11	0	0	11	11	0	
DIVISION 10											
507+75 STAGE 2 REMOVAL	505+26.00/510+24.20		121	0	121	0	0	121			
DIVISION 10 SUBTOTAL			121	0	121	0	0	121	121	0	
DIVISION 11											
547+05 STAGE 1 REMOVAL	544+75.00/550+14.10		511	0	511	0	0	511			
DIVISION 11 SUBTOTAL			511	0	511	0	0	511	511	0	
DIVISION 12											
547+05 STAGE 2 REMOVAL	545+43.50/549+64.00		252	0	252	0	0	252			
DIVISION 12 SUBTOTAL			252	0	252	0	0	252	252	0	
DIVISION 13											
64+20 CULVERT TRANSITION CUT	63+40/64+84		738	178	560	0	0	738			
DIVISION 13 SUBTOTAL			738	178	560	0	0	738	738	0	

ALL ITEMS ARE CATEGORY 0010 UNLESS OTHERWISE NOTED.

3

3

EARTHWORK - CONT'D

DIVISION	FROM/TO STATION	LOCATION	205.0100 EXCAVATION COMMON (1) CUT (2)	SALVAGED/UNUSABLE PAVEMENT MATERIAL (4)	AVAILABLE MATERIAL (5)	UNEXPANDED FILL	EXPANDED FILL (13) FACTOR 1.25	MASS ORDINATE +/- (14)	WASTE	208.0100 BORROW	COMMENT
DIVISION 14											
385+35 CULVERT TRANSITION CUT	384+81/385+88		480	178	302	0	0	480			
DIVISION 14 SUBTOTAL			480	178	302	0	0	480	480	0	
DIVISION 15											
420+07 CULVERT TRANSITION CUT	419+53/420+61		598	178	420	0	0	598			
DIVISION 15 SUBTOTAL			598	178	420	0	0	598	598	0	
DIVISION 16											
441+86 CULVERT TRANSITION CUT	441+32/442+39		499	178	321	0	0	499			
DIVISION 16 SUBTOTAL			499	178	321	0	0	499	499	0	
DIVISION 17											
507+75 CULVERT TRANSITION CUT	507+07/508+42		820	207	613	0	0	820			
DIVISION 17 SUBTOTAL			820	207	613	0	0	820	820	0	
DIVISION 18											
547+07 CULVERT TRANSITION CUT	546+35/547+75		736	178	558	0	0	736			
DIVISION 18 SUBTOTAL			736	178	558	0	0	736	736	0	
DIVISION 19											
618+51 CULVERT TRANSITION CUT	617+97/619+04		729	178	551	0	0	729			
DIVISION 19 SUBTOTAL			729	178	551	0	0	729	729	0	
GRAND TOTAL			6,169	1,367	4,802	723	904	5,173	5,724	551	

NOTES:
(1) COMMON EXCAVATION IS THE SUM OF THE CUT AND EBS EXCAVATION COLUMNS. ITEM NUMBER 205.0100
(2) SALVAGED/UNSUABLE PAVEMENT MATERIAL IS INCLUDED IN CUT.
(4) SALVAGED/UNUSABLE PAVEMENT MATERIAL
(5) AVAILABLE MATERIAL = CUT - SALVAGED/UNUSUABLE PAVEMENT MATERIAL
(13) EXPANDED FILL FACTOR = 1.25
(14) THE MASS ORDINATE + OR - QTY CALCULATED FOR THE DIVISION. PLUS QUANTITY INDICATES AN EXCESS OF MATERIAL WITHIN THE DIVISION. MINUS INDICATES A SHORTAGE OF MATERIAL WITHIN THE DIVISION.
(15) FACTORS USED TO COMPUTE ANTICIPATED WASTE AND THE COMPUTED WASTE VOLUME IDENTIFIED ARE FOR GENERAL INFORMATION ONLY.

BACKFILL GRANULAR

STATION	-	STATION	LOCATION	209.2500 BACKFILL GRANULAR GRADE 2 TON	COMMENTS
63+68	-	64+72	USH 63	755	CULVERT REPLACEMENT TRNSITION CUT AND TRENCH
384+82	-	385+88	USH 63	350	CULVERT REPLACEMENT TRNSITION CUT AND TRENCH
419+53	-	420+61	USH 63	444	CULVERT REPLACEMENT TRNSITION CUT AND TRENCH
441+34	-	442+38	USH 63	362	CULVERT REPLACEMENT TRNSITION CUT AND TRENCH
507+18	-	508+32	USH 63	1006	CULVERT REPLACEMENT TRNSITION CUT AND TRENCH
546+45	-	547+66	USH 63	902	CULVERT REPLACEMENT TRNSITION CUT AND TRENCH
617+98	-	619+04	USH 63	597	CULVERT REPLACEMENT TRNSITION CUT AND TRENCH
			PROJECT TOTAL	4416	

ALL ITEMS ARE CATEGORY 0010 UNLESS OTHERWISE NOTED.

BASE AGGREGATE DENSE 3/4-INCH

STATION	-	STATION		LOCATION	305.0110 BASE AGGREGATE DENSE 3/4-INCH TON	COMMENTS
56+91	-	394+43	USH 63	LT	653	SHOULDERS
409+57	-	623+71	USH 63	LT	415	SHOULDERS
56+91	-	623+71	USH 63	RT	1096	SHOULDERS
152+78	-	152+95	USH 63	DUMP ROAD	2	BLEND FROM NEW HMA 10'
348+93	-	349+13	USH 63	18TH AVE (WEST)	2	BLEND FROM NEW HMA 10'
421+84	-	422+04	USH 63	19TH AVE (WEST)	2	BLEND FROM NEW HMA 10'
492+47	-	492+70	USH 63	20TH AVE (WEST)	2	BLEND FROM NEW HMA 10'
519+00	-	519+23	USH 63	20 1/2 AVE	2	BLEND FROM NEW HMA 10'
545+04	-	545+26	USH 63	21ST AVE (WEST)	2	BLEND FROM NEW HMA 10'
597+34	-	597+53	USH 63	5TH ST	2	BLEND FROM NEW HMA 10'
597+81	-	598+02	USH 63	22ND AVE	2	BLEND FROM NEW HMA 10'
63+68	-	64+72	USH 63		34	CULVERT REPLACEMENT
384+82	-	385+88	USH 63		34	CULVERT REPLACEMENT
389+00			USH 63	30' LT	3	ADJUSTING MANHOLE COVER
419+53	-	420+61	USH 63		35	CULVERT REPLACEMENT
441+34	-	442+38	USH 63		34	CULVERT REPLACEMENT
507+18	-	508+32	USH 63		37	CULVERT REPLACEMENT
545+43	-	545+59	USH 63	RT	3	21ST AVE (STAGE 2 TEMP. WIDENING)
546+45	-	547+66	USH 63		39	CULVERT REPLACEMENT
617+98	-	619+04	USH 63		34	CULVERT REPLACEMENT
505+66	-	509+84	USH 63	LT	26	STAGE 1 TEMPORAY WIDENING
505+26	-	510+24	USH 63	RT	36	STAGE 2 TEMPORAY WIDENING
543+96	-	550+14	USH 63	LT	37	STAGE 1 TEMPORAY WIDENING
545+43	-	549+64	USH 63	RT	32	STAGE 2 TEMPORAY WIDENING
MISC. ENTRANCES			USH 63	C.E./P.E./F.E.	305	61 ENTRANCES @ 5 TON EACH
MISC. REPAIRS			USH 63		28	C&G REPLACEMENT
				PROJECT TOTAL	2897	

BASE AGGREGATE DENSE 1 1/4-INCH

STATION	-	STATION	LOCATION	305.0120 BASE AGGREGATE DENSE 1 1/4-INCH TON	COMMENTS
63+68	-	64+72	USH 63	384	CULVERT REPLACEMENT
384+82	-	385+88	USH 63	357	CULVERT REPLACEMENT
419+53	-	420+61	USH 63	392	CULVERT REPLACEMENT
441+34	-	442+38	USH 63	371	CULVERT REPLACEMENT
507+18	-	508+32	USH 63	515	CULVERT REPLACEMENT
546+45	-	547+66	USH 63	441	CULVERT REPLACEMENT
617+98	-	619+04	USH 63	462	CULVERT REPLACEMENT
505+66	-	509+84	USH 63 LT	153	STAGE 1 TEMPORAY WIDENING
505+26	-	510+24	USH 63 RT	417	STAGE 2 TEMPORAY WIDENING
543+96	-	550+14	USH 63 LT	455	STAGE 1 TEMPORAY WIDENING
545+43	-	549+64	USH 63 RT	386	STAGE 2 TEMPORAY WIDENING
			PROJECT TOTALS	4,333	

ALL ITEMS ARE CATEGORY 0010 UNLESS OTHERWISE NOTED.

PWL ITEMS

STATION	-	STATION	LOCATION		460.0105.S HMA PERCENT WITHIN LIMITS (PWL) TEST STRIP VOLUMETRICS EACH	460.0100.S HMA PERCENT WITHIN LIMITS (PWL) TEST STRIP DENSITY EACH
PROJECT LIMITS			USH 63	LT	1	2
			PROJECT TOTALS		1	2

HMA PAVEMENT ITEMS

CATEGORY	STATION	-	STATION		LOCATION	455.0605 TACK COAT GAL	460.6225 HMA PAVEMENT 5 MT 58-28 S TON
0010	56+91	-	623+72		USH 63	27,758	42,099
	62+85	-	64+25	RT	13 1/2 AVE	41	62
	152+30	-	153+91	LT	DUMP ROAD	33	50
	198+80	-	200+16	LT	16TH AVE	38	58
	202+73	-	204+74	RT	15TH AVE	55	84
	228+07	-	229+76	LT	1 3/4 ST	35	53
	230+60	-	231+52	RT	1 3/4 ST	16	24
	284+57	-	286+21	RT	17TH AVE	40	61
	348+62	-	350+31	LT	18TH AVE	54	82
	350+02	-	351+44	RT	18TH AVE	38	58
	388+12	-	389+68	LT	18 1/2 / 19 1/2 AVE	29	45
	404+54	-	406+46	RT	18 3/4 AVE	50	77
	421+37	-	423+09	LT	19TH AVE	47	72
	421+87	-	423+94	RT	19TH AVE	54	82
	492+09	-	493+74	LT	20TH AVE	40	61
	492+16	-	493+62	RT	20TH AVE	32	49
	518+42	-	519+78	RT	20 1/2 AVE	36	54
	544+23	-	545+78	RT	21ST AVE	35	53
	544+61	-	545+89	LT	21ST AVE	31	46
	570+48	-	571+88	RT	21 1/2 AVE	30	46
	583+67	-	585+05	LT	CTH G	37	56
	596+95	-	598+35	LT	5TH ST	39	58
	597+18	-	598+32	RT	22ND AVE	30	46
	PROJECT LIMITS				CULVERT REPLACEMENTS	492	-
CATEGORY 0010 TOTALS						29,090	43,376
	STATION	-	STATION		LOCATION		
0020	60+27	-	150+20	RT	USH 63 SHOULDER WIDENING	100	364
	159+98	-	216+00	RT	USH 63 SHOULDER WIDENING	62	227
	228+47	-	449+00	RT	USH 63 SHOULDER WIDENING	245	892
	452+00	-	509+91	RT	USH 63 SHOULDER WIDENING	64	306
	517+27	-	623+72	RT	USH 63 SHOULDER WIDENING	118	431
	61+02	-	83+69	LT	USH 63 SHOULDER WIDENING	25	92
	91+45	-	130+79	LT	USH 63 SHOULDER WIDENING	44	159
	140+61	-	335+07	LT	USH 63 SHOULDER WIDENING	216	786
	338+24	-	623+72	LT	USH 63 SHOULDER WIDENING	317	1,155
CATEGORY 0020 TOTALS						1,191	4,412
	STATION	-	STATION		LOCATION		
0040	394+43	-	409+57	LT	PARKING LANE	58	69
CATEGORY 0040 TOTALS						58	69
					PROJECT TOTALS	30,339	47,857

HMA ACCEPTANCE TABLE

LOCATION	STATION	MIXTURE USE	UNDERLYING SURFACE	BID ITEM	TONS	THICKNESS	QUALITY MANAGEMENT PROGRAM TO USE	
							MIXTURE ACCEPTANCE	DENSITY ACCEPTANCE
12 FOOT DRIVING LANE	56+90.90 TO 623+71.63	UPPER LAYER	5 MT 58-28 S	5 MT 58-28 S	12,696	1 1/2"	PWL INCENTIVE AIR VOIDS HMA PAVEMENT 460.2010	INCENTIVE DENSITY PWL HMA PAVEMENT 460.2005
12 FOOT DRIVING LANE	56+90.90 TO 623+71.63	LOWER LAYER	MILLED EXISTING HMA SURFACE	5 MT 58-28 S	14,813	1 3/4"	PWL INCENTIVE AIR VOIDS HMA PAVEMENT 460.2010	INCENTIVE DENSITY PWL HMA PAVEMENT 460.2005
12 FOOT PASSING LANES	VARIOUS	UPPER LAYER	5 MT 58-28 S	5 MT 58-28 S	3,179	1 1/2"	PWL INCENTIVE AIR VOIDS HMA PAVEMENT 460.2010	INCENTIVE DENSITY PWL HMA PAVEMENT 460.2005
12 FOOT PASSING LANES	VARIOUS	LOWER LAYER	MILLED EXISTING HMA SURFACE	5 MT 58-28 S	3,709	1 3/4"	PWL INCENTIVE AIR VOIDS HMA PAVEMENT 460.2010	INCENTIVE DENSITY PWL HMA PAVEMENT 460.2005
SHOULDERS, SIDEROADS, BEAMGUARD WIDENINGS, BYPASS LANES, TURN LANES	56+90.90 TO 623+71.63	UPPER LAYER	5 MT 58-28 S	5 MT 58-28 S	6,242	1 1/2"	PWL INCENTIVE AIR VOIDS HMA PAVEMENT 460.2010	ACCEPTANCE TESTING BY THE DEPARTMENT; NOT ELIGIBLE FOR INCENTIVE
SHOULDERS, SIDEROADS, BEAMGUARD WIDENINGS, BYPASS LANES, TURN LANES	56+90.90 TO 623+71.63	LOWER LAYER	MILLED EXISTING HMA SURFACE	5 MT 58-28 S	7,282	1 3/4"	PWL INCENTIVE AIR VOIDS HMA PAVEMENT 460.2010	ACCEPTANCE TESTING BY THE DEPARTMENT; NOT ELIGIBLE FOR INCENTIVE
CURB & GUTTER REPLACEMENTS	VARIOUS	PATCHING AFTER REPLACEMENTS	BASE AGGREGATE	ASPHALTIC SURFACE PATCHING	10	4.5"	SS 465	ACCEPTANCE BY ORDINARY COMPACTION
CULVERT PIPE PATCHES	VARIOUS	PATCHING AFTER INSTALLATION	BASE AGGREGATE	ASPHALTIC SURFACE	1139	6"	SS 465	ACCEPTANCE BY ORDINARY COMPACTION
VARIOUS	VARIOUS	PATCHING AFTER MILLING	MILLED EXISTING HMA SURFACE	ASPHALTIC SURFACE PATCHING	200	VARIES	SS 465	ACCEPTANCE BY ORDINARY COMPACTION

ASPHALTIC SURFACE

STATION	-	STATION	LOCATION	465.0105 ASPHALTIC SURFACE TON	465.0125 ASPHALTIC SURFACE TEMPORARY TON	COMMENTS
63+40	-	64+84	USH 63	241	-	CULVERT REPLACEMENT
384+81	-	385+88	USH 63	120	-	CULVERT REPLACEMENT
419+53	-	420+61	USH 63	121	-	CULVERT REPLACEMENT
441+32	-	442+39	USH 63	120	-	CULVERT REPLACEMENT
507+07	-	508+42	USH 63	212	152	CULVERT REPLACEMENT / TEMP. WIDENING
546+35	-	547+75	USH 63	157	273	CULVERT REPLACEMENT / TEMP. WIDENING
617+97	-	619+04	USH 63	168	-	CULVERT REPLACEMENT
UNDISTRIBUTED			USH 63	500	-	MISCELLANEOUS REPAIRS
		PROJECT TOTALS		1639	425	

ASPHALTIC SURFACE PATCHING

STATION	-	STATION	LOCATION		465.0110 ASPHALTIC SURFACE PATCHING TON	COMMENTS
583+89	-	585+13	USH 63	LT	9	C&G REPLACEMENT (21 3/4 AVE / CTH G)
396+35	-	396+87	USH 63	LT	3	C&G REPLACEMENT (COMSTOCK)
389+00			USH 63	30' LT	2	ADJUSTING MANHOLE COVER
545+43	-	545+59	USH 63	RT	1	21ST AVE (STAGE 2 TEMP. WIDENING)
UNDISTRIBUTED			USH 63		200	MISC. MILLED SURFACE REPAIR
			PROJECT TOTAL		215	

ASPHALTIC FLUMES

STATION	LOCATION		465.0315 ASPHALTIC FLUMES CY	COMMENTS
584+13	USH 63	LT	5	21 3/4 AVE (CTH G) SW QUADRANT
585+13	USH 63	LT	6	21 3/4 AVE (CTH G) NW QUADRANT
	PROJECT TOTAL		11	

HIGH FRICTION SURFACE TREATMENT

CATEGORY	STATION	TO	STATION	LOCATION	490.0100.S RESIN BINDER HIGH FRICTION SURFACE TREATMENT SY
0030	228+50	-	244+80	USH 63	3835
	264+25	-	270+75	USH 63	2389
CATEGORY 0030 TOTAL					6224
			PROJECT TOTAL		6224

ALL ITEMS ARE CATEGORY 0010 UNLESS OTHERWISE NOTED.

ASPHALTIC SURFACE DRIVEWAYS AND FIELD ENTRANCES

STATION	-	STATION	LOCATION		465.0120 ASPHALTIC SURFACE DRIVEWAYS AND FIELD ENTRANCES TON	COMMENTS
91+16	-	91+69	USH 63	LT	17	DRIVEWAY
96+43	-	96+94	USH 63	LT	10	DRIVEWAY
103+16	-	103+53	USH 63	LT	7	DRIVEWAY
127+22	-	127+59	USH 63	LT	7	DRIVEWAY
235+98	-	236+29	USH 63	LT	6	DRIVEWAY
258+89	-	259+44	USH 63	LT	10	DRIVEWAY
266+96	-	267+41	USH 63	LT	8	DRIVEWAY
343+13	-	343+36	USH 63	LT	4	DRIVEWAY
371+85	-	372+27	USH 63	LT	7	DRIVEWAY
520+12	-	520+46	USH 63	LT	7	DRIVEWAY
539+26	-	539+67	USH 63	RT	8	DRIVEWAY
554+36	-	554+59	USH 63	LT	5	DRIVEWAY
580+54	-	580+98	USH 63	LT	10	DRIVEWAY
396+35	-	396+50	USH 63	LT	1	DRIVEWAY REPLACEMENT BEHIND C&G
396+72	-	396+87	USH 63	LT	1	DRIVEWAY REPLACEMENT BEHIND C&G
			PROJECT TOTAL		108	

CULVERT PIPE SUMMARY - DRIVEWAYS

STATION	LOCATION	520.1018 APRON ENDWALLS FOR CULVERT PIPE 18-INCH EACH	520.3418 CULVERT PIPE CLASS III-A NON-METAL 18-INCH LF	INLET** ELEVATION	OUTLET** ELEVATION
91+45 LT	USH 63	2	52	1246.30	1245.30
PROJECT TOTALS		2	52		

**PIPE INVERT AT END OF PIPE FOR INFORMATION ONLY. FIELD VERIFY.

ASPHALTIC RUMBLE STRIPS, CENTERLINE

STATION	-	STATION	LOCATION	465.0560 ASPHALTIC RUMBLE STRIPS, CENTERLINE LF
60+00	-	61+42	USH 63	142
65+38	-	151+17	USH 63	8579
155+17	-	197+40	USH 63	4223
206+25	-	226+80	USH 63	2055
232+10	-	283+45	USH 63	5135
287+45	-	347+30	USH 63	5985
352+80	-	355+40	USH 63	260
357+40		386+55	USH 63	2915
411+00	-	420+15	USH 63	915
424+95	-	490+76	USH 63	6581
494+88		517+10	USH 63	2222
521+10		543+10	USH 63	2200
547+10		569+25	USH 63	2215
573+25		582+40	USH 63	915
586+40		595+50	USH 63	910
599+50		623+72	USH 63	2422
		PROJECT TOTAL		47674

CULVERT PIPE SUMMARY - LINERS

STATION	LOCATION	520.9700.S CULVERT PIPE LINERS (SIZE) 01. 24-INCH LF	520.9700.S CULVERT PIPE LINERS (SIZE) 02. 36-INCH LF	520.9700.S CULVERT PIPE LINERS (SIZE) 03. 48-INCH LF	520.9750.S CLEANING CULVERT PIPES FOR LINER VERIFICATION EACH	COMMENTS
68+45	USH 63	82	-	-	1	SLOPE 2.00%
101+45	USH 63	72	-	-	1	SLOPE 2.82%
107+96	USH 63	-	110	-	1	SLOPE 0.25%
533+84	USH 63	-	-	94	1	SLOPE 0.26%
533+91	USH 63	-	-	94	1	SLOPE 0.52%
PROJECT TOTALS		154	110	188	5	

ASPHALTIC RUMBLE STRIPS, SHOULDER

CATEGORY	STATION	-	STATION	LOCATION	465.0520 ASPHALTIC RUMBLE STRIPS, SHOULDER LF
0020	56+91	-	391+00	USH 63 LT	29909
	410+75	-	623+71	USH 63 LT	18156
	56+91	-	391+00	USH 63 RT	31604
	409+75	-	623+71	USH 63 RT	20201
CATEGORY 0020 TOTAL					99870
				PROJECT TOTAL	99870

CLEANING CULVERT PIPES

STATION	LOCATION	520.8700 CLEANING CULVERT PIPES EACH
160+88	USH 63	1
198+78	USH 63	1
211+82	USH 63	1
268+74	USH 63	1
391+39	USH 63	1
565+31	USH 63	1
583+62	USH 63	1
588+29	USH 63	1
	PROJECT TOTAL	8

ALL ITEMS ARE CATEGORY 0010 UNLESS OTHERWISE NOTED.

CULVERT PIPE SUMMARY - MAINLINE

STATION	LOCATION	520.8000 CONCRETE COLLARS FOR PIPE EACH	522.0124 CULVERT PIPE REINFORCED CONCRETE CLASS III 24-INCH LF	522.0130 CULVERT PIPE REINFORCED CONCRETE CLASS III 30-INCH LF	522.0136 CULVERT PIPE REINFORCED CONCRETE CLASS III 36-INCH LF	522.0424 CULVERT PIPE REINFORCED CONCRETE CLASS IV 24-INCH LF	522.0430 CULVERT PIPE REINFORCED CONCRETE CLASS IV 30-INCH LF	522.0442 CULVERT PIPE REINFORCED CONCRETE CLASS IV 42-INCH LF	522.1024 APRON ENDWALLS FOR CULVERT PIPE REINFORCED CONCRETE 24-INCH EACH	522.1030 APRON ENDWALLS FOR CULVERT PIPE REINFORCED CONCRETE 30-INCH EACH	522.1036 APRON ENDWALLS FOR CULVERT PIPE REINFORCED CONCRETE 36-INCH EACH	522.1042 APRON ENDWALLS FOR CULVERT PIPE REINFORCED CONCRETE 42-INCH EACH	522.2358 CULVERT PIPE REINFORCED CONCRETE HORIZONTAL ELLIPTICAL CLASS HE-III 58X91-INCH	522.2368 CULVERT PIPE REINFORCED CONCRETE HORIZONTAL ELLIPTICAL CLASS HE-III 68X106-INCH	522.2658 APRON ENDWALLS FOR CULVERT PIPE REINFORCED CONCRETE HORIZONTAL ELLIPTICAL 58X91-INCH	522.2668 APRON ENDWALLS FOR CULVERT PIPE REINFORCED CONCRETE HORIZONTAL ELLIPTICAL 68X106-INCH	JOINT TIES* EACH	INLET** ELEV.	OUTLET** ELEV.
64+20	USH 63		86						2									24	1252.10	1249.75
92+01	USH 63 LT	1		12						1								4	1241.80	1241.50
92+02	USH 63 RT	1		24						1								6	1240.20	1239.57
160+88	USH 63 RT	1			14						1							4	1235.43	1235.19
198+77	USH 63 RT	1	8						1									2	1244.52	1244.38
198+78	USH 63 LT	1	8						1									2	1243.35	1243.20
243+77	USH 63 RT	1	6						1									2	1246.12	1245.97
243+77	USH 63 LT	1	22						1									6	1244.43	1244.07
312+09	USH 63 RT	1	8						1									2	1285.88	1285.72
338+86	USH 63 RT	1		20						1								6	1275.28	1274.93
345+76	USH 63 RT	1							1									2		
385+35	USH 63						54			2								16	1268.28	1267.39
420+07	USH 63							58				2						18	1262.45	1262.33
441+86	USH 63					56			2									16	1273.83	1273.65
507+75	USH 63												82		2			24	1260.47	1259.43
547+07	USH 63													74		2		20	1270.69	1280.21
618+52	USH 63						74			2								20	1309.45	1308.54
PROJECT TOTALS		10	138	56	14	56	128	58	10	7	1	2	82	74	2	2		174		

*NON-BID ITEM: FOR INFORMATION ONLY.
**PIPE INVERT AT END OF PIPE FOR INFORMATION ONLY. FIELD VERIFY.

CULVERT PIPE SUMMARY - TEMPORARY

STATION		LOCATION		520.2048 CULVERT PIPE TEMPORARY 48-INCH LF
547+00	USH 63	LT		12
547+09	USH 63	LT		12
PROJECT TOTAL				24

CONCRETE CURB & GUTTER

STATION		STATION	LOCATION		601.0411 CONCRETE CURB & GUTTER 30-INCH TYPE D LF	601.0557 CONCRETE CURB & GUTTER 6-INCH SLOPED 36-INCH TYPE D LF	COMMENTS
396+35	-	396+50	USH 63	LT	15	-	PARKING LANE
396+72	-	396+87	USH 63	LT	15	-	PARKING LANE
583+89	-	584+25	USH 63	LT	-	55	21 3/4 AVE (CTH G) SW QUADRANT
584+55	-	585+13	USH 63	LT	-	83	21 3/4 AVE (CTH G) NW QUADRANT
545+43	-	545+59	USH 63	RT	-	17	21ST AVE (STAGE 2 TEMP. WIDENING)
			PROJECT TOTALS		30	155	

TEMPORARY CONCRETE BARRIER

STATION		STATION	LOCATION	603.8000 CONCRETE BARRIER TEMPORARY PRECAST DELIVERED LF	603.8125 CONCRETE BARRIER TEMPORARY PRECAST INSTALLED LF	603.8500 ANCHORING CONCRETE BARRIER TEMPORARY PRECAST LF	614.0905 CRASH CUSHIONS TEMPORARY EACH	BACK WIDTH FT	OBJECT MARKING PATTERN	CRASH TEST LEVEL	TRAFFIC DIRECTION	TRAFFIC LOCATION	CRASH CUSHION SHIELDS	COMMENTS
504+73	-	510+77	USH 63	612	612	350	1	2	OM-3R (W5-58R)	TL-3	UNIDIRECTIONAL	LT	TEMP. CONC. BARRIER BLUNT END	STAGE 1 TEMP. WIDENING - CULV. REPLACEMENT
504+09	-	512+13	USH 63	200	812	350	2	2	OM-3L, OM-3R (W5-58L, W5-58L)	TL-3	UNIDIRECTIONAL	LT &RT	TEMP. CONC. BARRIER BLUNT END	STAGE 2 TEMP. WIDENING - CULV. REPLACEMENT
543+03	-	550+36	USH 63	738	738	350	2	2	OM-3L, OM-3R (W5-58L, W5-58L)	TL-3	UNIDIRECTIONAL	LT &RT	TEMP. CONC. BARRIER BLUNT END	STAGE 1 TEMP. WIDENING - CULV. REPLACEMENT
544+23	-	550+59	USH 63	-	638	350	2	2	OM-3L, OM-3R (W5-58L, W5-58L)	TL-3	UNIDIRECTIONAL	LT &RT	TEMP. CONC. BARRIER BLUNT END	STAGE 2 TEMP. WIDENING - CULV. REPLACEMENT
			PROJECT TOTALS	1550	2800	1400	7							

ALL ITEMS ARE CATEGORY 0010 UNLESS OTHERWISE NOTED.

3

RIPRAP ITEMS

STATION	-	STATION	LOCATION		606.0050 RIPRAP EXTRA LIGHT CY	606.0100 RIPRAP LIGHT CY	606.0200 RIPRAP MEDIUM CY	645.0120 GEOTEXTILE TYPE HR SY	645.0130 GEOTEXTILE TYPE R SY	COMMENTS
131+00	-	131+50	USH 63	LT	11	-	-	-	46	50' X 7' LINED DITCH
365+73	-	365+80	USH 63	RT	-	6	-	-	23	11' x 15' AT CULVERT DISCHARGE
507+66	-	507+78	USH 63	RT	-	-	4	13	-	11' X 5' AT CULVERT DISCHARGE
546+81	-	546+94	USH 63	RT	-	-	5	15	-	12.3' X 5' AT CULVERT DISCHARGE
			PROJECT TOTALS		11	6	9	28	69	

EROSION MAT CLASS III TYPE C

STATION	-	STATION		LOCATION	628.2037 EROSION MAT CLASS III TYPE C SY
132+64	-	135+50	LT	63	222
136+25	-	137+84	LT	63	195
UNDISTRIBUTED					43
				TOTAL	460

ADJUST MANHOLE COVERS

CATEGORY	STATION	LOCATION		611.8110 ADJUSTING MANHOLE COVERS EACH	611.8120.S COVER PLATES TEMPORARY EACH	COMMENTS
0040	389+00	USH 63	30' LT	1	1	SANITARY MANHOLE COVER
CATEGORY 0040 TOTALS				1	1	
		PROJECT TOTALS		1	1	

GUARDRAIL MOW STRIP

STATION	-	STATION	LOCATION		WIDTH LF	614.0397 GUARDRAIL MOW STRIP EMULSIFIED ASPHALT LF
131+09	-	132+51	USH 63	LT	5.6	90
132+51	-	137+00	USH 63	LT	3.6	180
		PROJECT TOTAL				270

GUARDRAIL ITEMS

STATION	-	STATION	LOCATION		614.2300 MGS GUARDRAIL 3 LF	614.2330 MGS GUARDRAIL 3K LF	614.2610 MGS GUARDRAIL TERMINAL EAT EACH
83+98.5	-	84+51.3	USH 63	LT	-	-	1
84+51.3	-	85+38.3	USH 63	LT	87.5	-	-
85+38.3	-	90+11.9	USH 63	LT	-	475.0	-
90+11.9	-	90+61.9	USH 63	LT	50.0	-	-
90+61.9	-	91+15.0	USH 63	LT	-	-	1
131+09.3	-	131+62.7	USH 63	LT	-	-	1
131+62.7	-	132+50.8	USH 63	LT	87.5	-	-
132+50.8	-	138+28.1	USH 63	LT	-	575.0	-
138+28.1	-	139+78.1	USH 63	LT	150.0	-	-
139+78.1	-	140+31.2	USH 63	LT	-	-	1
			PROJECT TOTALS		375	1,050	4

WATER

LOCATION	624.0100 WATER MGAL
PROJECT LIMITS	64
PROJECT TOTAL	64

BARRIER SYSTEM GRADING SHAPING FINISHING

STATION	TO	STATION	LOCATION		614.0010 BARRIER SYSTEM GRADING SHAPING FINISHING EACH	** EXCAVATION COMMON CY	** FILL CY	** BORROW
83+98	-	91+15	USH 63	LT	1	8	131	123
131+09	-	140+31	USH 63	LT	1	0	378	378
			PROJECT TOTALS		2	8	509	501

** ITEMS AND QUANTITIES LISTED FOR BID INFORMATION ONLY. ITEMS INCIDENTAL TO BARRIER SYSTEM GRADING SHAPING FINISHING. FILL IS EXPANDED BY A FACTOR OF 1.25

TEMPORARY DITCH CHECKS

STATION	LOCATION		628.7504 TEMPORARY DITCH CHECKS LF
84+20	USH 63	LT	10
84+95	USH 63	LT	10
91+90	USH 63	LT	10
131+95	USH 63	LT	10
132+00	USH 63	LT	10
132+25	USH 63	LT	10
138+00	USH 63	LT	10
138+08	USH 63	LT	10
138+17	USH 63	LT	10
138+25	USH 63	LT	10
PROJECT TOTAL			100

ALL ITEMS ARE CATEGORY 0010 UNLESS OTHERWISE NOTED.

3

MOBILIZATION EROSION CONTROL

STATION	-	STATION	LOCATION	628.1905 MOBILIZATION EROSION CONTROL EACH	629.1910 MOBILIZATION EMERGENCY EROSION CONTROL EACH
PROJECT LIMITS			USH 63	10	5
			PROJECT TOTALS	10	5

CULVERT PIPE CHECKS

STATION	LOCATION		628.7555 CULVERT PIPE CHECKS EACH
64+20	USH 63	RT	3
91+17	USH 63	RT	2
92+02	USH 63	LT	5
160+88	USH 63	RT	7
198+78	USH 63	RT	3
243+77	USH 63	RT	3
385+35	USH 63	LT	5
420+07	USH 63	LT	8
441+86	USH 63	RT	3
507+75	USH 63	LT	20
533+84	USH 63	LT	8
533+91	USH 63	LT	8
547+07	USH 63	LT	26
618+51	USH 63	RT	5
PROJECT TOTAL			106

LANDSCAPING ITEMS

STATION	-	STATION		LOCATION	625.0100 TOPSOIL SY	627.0200 MULCHING SY	628.2008 EROSION MAT URBAN CLASS I TYPE B SY	629.0210 FERTILIZER TYPE B CWT	630.0120 SEEDING MIXTURE #20 LB	630.0200 SEEDING TEMPORARY LB	630.0500 SEED WATER MGAL	COMMENTS
505+98	-	509+00	LT	USH 63	72	240	-	0.2	-	7	6	CULVERT REPLACEMENT - STAGE 1 TEMPORARY WIDENING
505+49	-	510+01	RT	USH 63	301	552	-	0.4	-	15	13	CULVERT REPLACEMENT - STAGE 2 TEMPORARY WIDENING
545+50	-	550+01	LT	USH 63	500	751	-	0.5	-	21	17	CULVERT REPLACEMENT - STAGE 1 TEMPORARY WIDENING
545+50	-	549+51	RT	USH 63	467	689	-	0.5	-	19	16	CULVERT REPLACEMENT - STAGE 2 TEMPORARY WIDENING
63+96	-	64+28	LT	USH 63	80	-	80	-	4	2	2	
63+96	-	64+28	RT	USH 63	79	-	79	-	4	2	2	
82+80	-	91+28	LT	USH 63	790	-	790	-	36	11	16	
91+02	-	92+88	RT	USH 63	527	-	527	-	24	8	12	SLOPE GRADING
91+58	-	91+79	LT	USH 63	38	-	38	-	2	1	1	
131+00	-	141+50	LT	USH 63	1,923	-	1,506	-	87	26	34	
160+78	-	160+98	RT	USH 63	46	-	46	-	3	1	2	
168+68	-	198+88	LT	USH 63	41	-	41	-	2	1	1	
168+68	-	198+88	RT	USH 63	35	-	35	-	2	1	1	
243+62	-	244+00	LT	USH 63	124	-	124	-	6	2	3	SLOPE GRADING
312+00	-	312+18	RT	USH 63	36	-	36	-	2	1	1	SLOPE GRADING
338+75	-	338+95	RT	USH 63	44	-	44	-	2	1	1	SLOPE GRADING
385+26	-	385+43	RT	USH 63	29	-	29	-	2	1	1	
385+27	-	385+44	LT	USH 63	25	-	25	-	2	1	1	
419+98	-	420+16	LT	USH 63	35	-	35	-	2	1	1	
419+98	-	420+16	RT	USH 63	33	-	33	-	2	1	1	
441+77	-	441+94	RT	USH 63	26	-	26	-	2	1	1	
441+78	-	441+95	LT	USH 63	29	-	29	-	2	1	1	
505+49	-	507+31	RT	USH 63	221	322	-	0.3	15	3	8	TEMPORARY WIDENING REMOVAL RESTORATION
507+25	-	508+25	LT	USH 63	253	-	253	-	12	4	6	
507+25	-	508+25	RT	USH 63	280	-	280	-	13	4	7	
508+18	-	510+00	RT	USH 63	244	346	-	0.3	16	4	8	TEMPORARY WIDENING REMOVAL RESTORATION
545+59	-	547+01	LT	USH 63	392	471	-	0.3	22	6	11	TEMPORARY WIDENING REMOVAL RESTORATION
545+63	-	546+75	RT	USH 63	247	310	-	0.2	14	4	7	TEMPORARY WIDENING REMOVAL RESTORATION
546+66	-	547+17	RT	USH 63	102	-	102	-	5	2	3	
546+92	-	547+41	LT	USH 63	95	-	95	-	5	2	3	
547+05	-	549+80	RT	USH 63	409	562	-	0.4	26	6	13	TEMPORARY WIDENING REMOVAL RESTORATION
547+32	-	550+30	LT	USH 63	540	706	-	-	32	8	16	TEMPORARY WIDENING REMOVAL RESTORATION
583+35	-	583+85	LT	USH 63	56	-	56	0.1	3	1	2	DITCH CLEANING
583+88	-	584+22	LT	USH 63	42	-	42	-	2	1	1	
584+58	-	585+13	LT	USH 63	68	-	68	-	4	1	2	
618+39	-	618+57	RT	USH 63	21	-	21	-	1	1	1	
618+45				USH 63	41	-	41	-	2	1	1	
UNDISTRIBUTED					829	495	448	0.3	36	17	22	
				PROJECT TOTALS	9,119	5,442	4,928	4.0	394	190	245	

ALL ITEMS ARE CATEGORY 0010 UNLESS OTHERWISE NOTED.

SILT FENCE ITEMS

STATION	-	STATION		LOCATION	628.1504 SILT FENCE LF	628.1520 SILT FENCE MAINTENANCE LF	628.1530.S SILT FENCE HEAVY DUTY LF	628.1535.S SILT FENCE HEAVY DUTY MAINTENANCE LF	COMMENTS
63+83	-	64+34	LT	USH 63	77	77	-	-	CULVERT WORK
64+03	-	64+41	RT	USH 63	57	57	-	-	CULVERT WORK
84+27	-	85+36	LT	USH 63	111	111	-	-	GUARDRAIL WORK
85+36		86+88	LT	USH 63	-	-	153	153	GUARDRAIL WORK
86+88	-	88+25	LT	USH 63	138	138	-	-	GUARDRAIL WORK
88+25		90+75	LT	USH 63	-	-	252	252	GUARDRAIL WORK
90+72	-	90+91	LT	USH 63	29	29	-	-	GUARDRAIL WORK
90+94	-	92+96	RT	USH 63	218	218	-	-	CULVERT WORK
132+01	-	132+36	LT	USH 63	38	38	-	-	GUARDRAIL WORK
132+36		137+98	LT	USH 63	-	-	559	559	GUARDRAIL WORK
137+98	-	138+18	LT	USH 63	23	23	-	-	GUARDRAIL WORK
138+38	-	141+53	LT	USH 63	323	323	-	-	GUARDRAIL WORK
160+69	-	161+08	RT	USH 63	63	63	-	-	CULVERT WORK
198+60	-	198+96	LT	USH 63	49	49	-	-	CULVERT WORK
198+62	-	198+93	RT	USH 63	40	40	-	-	CULVERT WORK
243+52	-	244+10	LT	USH 63	76	76	-	-	CULVERT WORK
243+60	-	243+93	RT	USH 63	42	42	-	-	CULVERT WORK
311+95	-	312+26	RT	USH 63	61	61	-	-	CULVERT WORK
338+69	-	339+01	RT	USH 63	57	57	-	-	CULVERT WORK
385+22	-	385+48	RT	USH 63	60	60	-	-	CULVERT WORK
385+23	-	385+49	LT	USH 63	46	46	-	-	CULVERT WORK
419+76	-	420+35	LT	USH 63	79	79	-	-	CULVERT WORK
419+86	-	420+30	RT	USH 63	67	67	-	-	CULVERT WORK
441+73	-	441+99	RT	USH 63	46	46	-	-	CULVERT WORK
441+74	-	442+00	LT	USH 63	55	55	-	-	CULVERT WORK
505+41	-	510+10	RT	USH 63	505	505	-	-	CULVERT WORK
506+08	-	509+90	LT	USH 63	419	419	-	-	CULVERT WORK
545+48	-	550+35	LT	USH 63	524	524	-	-	CULVERT WORK
545+50	-	549+93	RT	USH 63	479	479	-	-	CULVERT WORK
618+31	-	618+70	RT	USH 63	72	72	-	-	CULVERT WORK
618+38	-	618+75	LT	USH 63	57	57	-	-	CULVERT WORK
				PROJECT TOTALS	3811	3811	964	964	

MARKERS CULVERT END

STATION	LOCATION		633.5200 MARKERS CULVERT END EACH
64+20	USH 63	LT & RT	2
68+45	USH 63	LT & RT	2
92+02	USH 63	LT & RT	2
101+45	USH 63	LT & RT	2
107+96	USH 63	LT & RT	2
123+87	USH 63	LT & RT	2
133+36	USH 63	LT & RT	2
160+88	USH 63	LT & RT	2
173+52	USH 63	LT & RT	2
198+78	USH 63	LT & RT	2
211+82	USH 63	LT & RT	2
223+29	USH 63	LT & RT	2
231+38	USH 63	LT & RT	2
243+77	USH 63	LT & RT	2
268+74	USH 63	LT & RT	2
293+24	USH 63	LT & RT	2
312+09	USH 63	LT & RT	2
320+99	USH 63	LT & RT	2
330+82	USH 63	LT & RT	2
338+86	USH 63	LT & RT	2
345+76	USH 63	LT & RT	2
365+77	USH 63	LT & RT	2
385+35	USH 63	LT & RT	2
391+39	USH 63	LT & RT	2
420+07	USH 63	LT & RT	2
441+86	USH 63	LT & RT	2
487+35	USH 63	LT & RT	2
497+62	USH 63	LT & RT	2
507+72	USH 63	RT	1
507+78	USH 63	LT	1
533+65	USH 63	LT	1
534+10	USH 63	RT	1
546+80	USH 63	RT	1
547+30	USH 63	LT	1
565+31	USH 63	LT & RT	2
583+62	USH 63	LT & RT	2
588+29	USH 63	LT & RT	2
611+39	USH 63	LT & RT	2
618+51	USH 63	LT & RT	2
PROJECT TOTAL			72

ALL ITEMS ARE CATEGORY 0010 UNLESS OTHERWISE NOTED.

DELINEATORS FLEXIBLE

STATION		STATION	LOCATION		633.0200 DELINEATORS FLEXIBLE EACH	COMMENTS
506+00	-	509+49	USH 63	LT	15	CULVERT REPLACEMENT - STAGE 1
505+60	-	509+60	USH 63	RT	18	CULVERT REPLACEMENT - STAGE 2
544+30	-	549+80	USH 63	LT	23	CULVERT REPLACEMENT - STAGE 1
545+46	-	549+32	USH 63	RT	16	CULVERT REPLACEMENT - STAGE 2
			PROJECT TOTAL		72	

MOVING SIGNS

STATION	LOCATION		638.2102 MOVING SIGNS TYPE II EACH	COMMENTS
64+20	USH 63	46' RT	1	STOP SIGN
68+45	USH 63	38' RT	1	RIGHT LANE ENDS
PROJECT TOTAL			2	

TRAFFIC CONTROL ITEMS

LOCATION	DAYS	DRUMS (COUNT)	643.0300 TRAFFIC CONTROL DRUMS DAY	BARRICADES (COUNT)	643.0420 TRAFFIC CONTROL BARRICADES TYPE III DAY	LIGHTS (COUNT)	643.0705 TRAFFIC CONTROL WARNING LIGHTS TYPE A DAY	LIGHTS (COUNT)	643.0715 CONTROL WARNING LIGHTS TYPE C DAY	SIGNS (COUNT)	643.0900 TRAFFIC CONTROL SIGNS DAY	643.1000 TRAFFIC CONTROL SIGNS FIXED MESSAGE SF	643.5000 TRAFFIC CONTROL EACH	COMMENTS
PROJECT LIMITS	-	-	-	-	-	-	-	-	-	-	-	54	1	ADVANCE NOTICE OF CONSTRUCTION
PROJECT LIMITS	130	-	-	-	-	-	-	-	-	24	3,120	-	-	MAINLINE ADVANCE WARNING
PROJECT LIMITS	130	-	-	-	-	-	-	-	-	27	3,510	-	-	SIDEROAD ADVANCE WARNING
PROJECT LIMITS	38	-	-	-	-	-	-	-	-	28	1,064	-	-	ADVANCE WIDTH RESTRICTION
83+98 - 91+15 LT	5	18	90	-	-	-	-	-	-	-	-	-	-	MGS GUARDRAIL CONSTRUCTION
131+09 - 140+31 LT	5	18	90	-	-	-	-	-	-	-	-	-	-	MGS GUARDRAIL CONSTRUCTION
444+95 - 504+00 RT	19	88	1,672	2	38	4	76	-	-	5	95	-	-	NB PASSING LANE CLOSURE
507+75	19	68	1,292	2	38	4	76	42	798	24	456	-	-	STAGED CULVERT CONSTRUCTION
547+00	19	70	1,330	2	38	4	76	57	1,083	24	456	-	-	STAGED CULVERT CONSTRUCTION
545+12	19	-	-	10	190	6	114	-	-	6	114	-	-	21ST AVE CLOSURE
199+38 RT	10	-	-	-	-	-	-	-	-	1	10	-	-	ATV TRAIL
204+00 RT	10	13	130	-	-	-	-	-	-	6	60	-	-	ATV TRAIL
405+73 RT	10	13	130	-	-	-	-	-	-	6	60	-	-	ATV TRAIL
423+43 RT	10	13	130	-	-	-	-	-	-	6	60	-	-	ATV TRAIL
583+00 - 585+20 LT	14	10	140	-	-	-	-	-	-	-	-	-	-	21 3/4 AVE (CTH G) C&G CONSTRUCTION
PROJECT LIMITS	-		500	-	-	-	-	-	-	-	-	-	-	UNDISTRIBUTED
PROJECT TOTALS			5,504		304		342		1,881		9,005	54	1	

ALL ITEMS ARE CATEGORY 0010 UNLESS OTHERWISE NOTED.

TEMPORARY PAVEMENT MARKING

STATION		STATION	LOCATION	643.3165 TEMPORARY MARKING LINE PAINT 6-INCH LF	643.3805 TEMPORARY MARKING STOP LINE PAINT 18-INCH LF	646.9002 MARKING LINE REMOVAL 6-INCH LF	COMMENTS
56+91	-	60+00	USH 63 MEDIAN LT	1236	---	---	DOUBLE YELLOW
56+91	-	60+00	USH 63 MEDIAN RT	1236	---	---	DOUBLE YELLOW
60+00	-	112+30	USH 63 CL	20920	---	---	DOUBLE YELLOW
112+30	-	123+84	USH 63 CL	2884	---	---	PASSING ONE DIRECTION YELLOW
123+84	-	124+24	USH 63 CL	160	---	---	DOUBLE YELLOW
124+24	-	132+86	USH 63 CL	2600	---	---	PASSING ONE DIRECTION YELLOW
132+86	-	227+43	USH 63 CL	37828	---	---	DOUBLE YELLOW
224+43	-	239+79	USH 63 CL	3472	---	---	PASSING ONE DIRECTION YELLOW
239+79	-	329+37	USH 63 CL	35832	---	---	DOUBLE YELLOW
329+37	-	346+75	USH 63 CL	4352	---	---	PASSING ONE DIRECTION YELLOW
346+75	-	357+45	USH 63 CL	2416	---	---	PASSING ONE DIRECTION YELLOW
357+45	-	365+53	USH 63 CL	3232	---	---	DOUBLE YELLOW
365+53	-	377+05	USH 63 CL	2880	---	---	PASSING ONE DIRECTION YELLOW
377+05	-	394+36	USH 63 CL	876	---	---	PASSING BOTH DIRECTIONS YELLOW
394+36	-	400+00	USH 63 CL	2054	---	---	PASSING ONE DIRECTION YELLOW
400+00	-	401+20	USH 63 CL	50	---	---	PASSING BOTH DIRECTIONS YELLOW
401+20	-	406+70	USH 63 CL	1376	---	---	PASSING ONE DIRECTION YELLOW
406+70	-	440+18	USH 63 CL	1676	---	---	PASSING BOTH DIRECTIONS YELLOW
440+18	-	458+89	USH 63 CL	4392	---	---	PASSING ONE DIRECTION YELLOW
458+89	-	521+45	USH 63 CL	25024	---	---	DOUBLE YELLOW
521+45	-	532+20	USH 63 CL	2700	---	---	PASSING ONE DIRECTION YELLOW
532+20	-	551+20	USH 63 CL	950	---	---	PASSING BOTH DIRECTIONS YELLOW
551+20	-	564+00	USH 63 CL	3210	---	---	PASSING ONE DIRECTION YELLOW
564+00	-	618+50	USH 63 CL	21800	---	---	DOUBLE YELLOW
618+50	-	623+72	USH 63 PAINTED MEDIAN LT	2088	---	---	DOUBLE YELLOW
618+50	-	623+72	USH 63 PAINTED MEDIAN RT	2088	---	---	DOUBLE YELLOW
149+98	-	156+89	USH 63 RT, PASSING LANE	348	---	---	3' LINE 9' GAP WHITE
156+98	-	216+00	USH 63 RT, PASSING LANE	2950	---	---	12.5' LINE 37.5 GAP WHITE
260+50	-	333+90	USH 63 LT, PASSING LANE	3676	---	---	12.5' LINE 37.5 GAP WHITE
333+90	-	340+90	USH 63 LT, PASSING LANE	348	---	---	3' LINE 9' GAP WHITE
445+00	-	452+00	USH 63 RT, PASSING LANE	348	---	---	3' LINE 9' GAP WHITE
452+00	-	506+60	USH 63 RT, PASSING LANE	2750	---	---	12.5' LINE 37.5 GAP WHITE
558+22	-	619+04	USH 63 LT, PASSING LANE	3050	---	---	12.5' LINE 37.5 GAP WHITE
582+93	-	585+43	USH 63 BYPASS LANE	100	---	---	12.5' LINE 37.5 GAP WHITE
444+40	-	503+73	USH 63 LT & RT	10389	24	1528	CULVERT REPLACEMENT - STAGE 1
503+21	-	513+13	USH 63 LT & RT	1174	---	481	CULVERT REPLACEMENT - STAGE 2
503+73	-	511+77	USH 63 LT & RT	3220	---	640	POST CULVERT REPLACEMENT
543+82	-	551+23	USH 63 LT & RT	1488	24	625	CULVERT REPLACEMENT - STAGE 1
543+35	-	550+75	USH 63 LT & RT	1120	---	366	CULVERT REPLACEMENT - STAGE 2
542+51	-	552+07	USH 63 LT & RT	3632	---	468	POST CULVERT REPLACEMENT
			PROJECT TOTALS	221925	48	4108	

ALL ITEMS ARE CATEGORY 0010 UNLESS OTHERWISE NOTED.

MARKING LINE ITEMS

CAT 0010				646.2040 MARKING LINE GROOVED WET REFLECTIVE EPOXY 6-INCH	643.3170 TEMPORARY MARKING LINE EPOXY 6-INCH	
STATION	-	STATION	LOCATION	LF	LF	COMMENT
56+91	-	60+00	USH 63 MEDIAN LT	618	618	DOUBLE YELLOW
56+91	-	60+00	USH 63 MEDIAN RT	618	618	DOUBLE YELLOW
60+00	-	112+30	USH 63 CL	10460	10460	DOUBLE YELLOW
112+30	-	123+84	USH 63 CL	1442	1442	PASSING ONE DIRECTION YELLOW
123+84	-	124+24	USH 63 CL	80	80	DOUBLE YELLOW
124+24	-	132+86	USH 63 CL	1300	1300	PASSING ONE DIRECTION YELLOW
132+86	-	227+43	USH 63 CL	18914	18914	DOUBLE YELLOW
224+43	-	239+79	USH 63 CL	1736	1736	PASSING ONE DIRECTION YELLOW
239+79	-	329+37	USH 63 CL	17916	17916	DOUBLE YELLOW
329+37	-	346+75	USH 63 CL	2176	2176	PASSING ONE DIRECTION YELLOW
346+75	-	357+45	USH 63 CL	1208	1208	PASSING ONE DIRECTION YELLOW
357+45	-	365+53	USH 63 CL	1616	1616	DOUBLE YELLOW
365+53	-	377+05	USH 63 CL	1440	1440	PASSING ONE DIRECTION YELLOW
377+05	-	394+36	USH 63 CL	438	438	PASSING BOTH DIRECTIONS YELLOW
394+36	-	400+00	USH 63 CL	1027	1027	PASSING ONE DIRECTION YELLOW
400+00	-	401+20	USH 63 CL	25	25	PASSING BOTH DIRECTIONS YELLOW
401+20	-	406+70	USH 63 CL	688	688	PASSING ONE DIRECTION YELLOW
406+70	-	440+18	USH 63 CL	838	838	PASSING BOTH DIRECTIONS YELLOW
440+18	-	458+89	USH 63 CL	2196	2196	PASSING ONE DIRECTION YELLOW
458+89	-	521+45	USH 63 CL	12512	12512	DOUBLE YELLOW
521+45	-	532+20	USH 63 CL	1350	1350	PASSING ONE DIRECTION YELLOW
532+20	-	551+20	USH 63 CL	475	475	PASSING BOTH DIRECTIONS YELLOW
551+20	-	564+00	USH 63 CL	1605	1605	PASSING ONE DIRECTION YELLOW
564+00	-	618+50	USH 63 CL	10900	10900	DOUBLE YELLOW
618+50	-	623+72	USH 63 PAINTED MEDIAN LT	1044	1044	DOUBLE YELLOW
618+50	-	623+72	USH 63 PAINTED MEDIAN RT	1044	1044	DOUBLE YELLOW
149+98	-	156+89	USH 63 RT, PASSING LANE	174	174	3' LINE 9' GAP WHITE
156+98	-	216+00	USH 63 RT, PASSING LANE	1475	1475	12.5' LINE 37.5 GAP WHITE
260+50	-	333+90	USH 63 LT, PASSING LANE	1838	1838	12.5' LINE 37.5 GAP WHITE
333+90	-	340+90	USH 63 LT, PASSING LANE	174	174	3' LINE 9' GAP WHITE
445+00	-	452+00	USH 63 RT, PASSING LANE	174	174	3' LINE 9' GAP WHITE
452+00	-	506+60	USH 63 RT, PASSING LANE	1375	1375	12.5' LINE 37.5 GAP WHITE
558+22	-	619+04	USH 63 LT, PASSING LANE	1525	1525	12.5' LINE 37.5 GAP WHITE
582+93	-	585+43	USH 63 BYPASS LANE	50	---	12.5' LINE 37.5 GAP WHITE
56+91	-	623+72	USH 63 LT	55650	---	EDGELINE WHITE
56+91	-	623+72	USH 63 RT	55741	---	EDGELINE WHITE
			PROJECT TOTALS	211,842	100,401	

NOTES: TEMPORARY MARKING LINE EPOXY ITEM IS FOR FINAL SURFACE APPLICATION PRIOR TO RUMBLE STRIPS.

PAVEMENT MARKING

					646.4040 MARKING LINE GROOVED WET REFLECTIVE EPOXY 10-INCH	646.7120 MARKING DIAGONAL EPOXY 12-INCH
STATION		STATION	LOCATION		LF	LF
56+98	-	59+00	USH 63	MEDIAN	-	88
200+16	-	203+93	USH 63	LT	377	-
217+33	-	230+38	USH 63	RT	-	633
506+60	-	516+60	USH 63	RT	-	601
516+60	-	518+60	USH 63	RT	200	-
585+13	-	592+67	USH 63	LT	758	-
620+49	-	623+56	USH 63	MEDIAN	-	128
				PROJECT TOTALS	1335	1450

ALL ITEMS ARE CATEGORY 0010 UNLESS OTHERWISE NOTED.

CONSTRUCTION STAKING

STATION	-	STATION	LOCATION	650.4500 CONSTRUCTION STAKING SUBGRADE LF	650.5000 CONSTRUCTION STAKING BASE LF	650.9920 CONSTRUCTION STAKING SLOPE STAKES	COMMENTS
63+68	-	64+72	USH 63	105	105	-	CULVERT REPLACEMENT
384+82	-	385+88	USH 63	106	106	-	CULVERT REPLACEMENT
419+53	-	420+61	USH 63	108	108	-	CULVERT REPLACEMENT
441+34	-	442+38	USH 63	105	105	-	CULVERT REPLACEMENT
507+18	-	508+32	USH 63	115	115	-	CULVERT REPLACEMENT
546+45	-	547+66	USH 63	121	121	-	CULVERT REPLACEMENT
617+98	-	619+04	USH 63	106	106	-	CULVERT REPLACEMENT
505+66	-	509+84	USH 63 LT	418	418	418	STAGE 1 TEMPORAY WIDENING
505+26	-	510+24	USH 63 RT	498	498	498	STAGE 2 TEMPORAY WIDENING
543+96	-	550+14	USH 63 LT	618	618	618	STAGE 1 TEMPORAY WIDENING
545+43	-	549+64	USH 63 RT	421	421	421	STAGE 2 TEMPORAY WIDENING
			PROJECT TOTALS	2,719	2,719	1,955	

LOCATING NO-PASSING ZONES

STATION	TO	STATION	LOCATION	648.0100 LOCATING NO-PASING ZONES MI
56+91	-	623+72	USH 63	10.7
		PROJECT TOTAL		10.7

CONSTRUCTION STAKING RESURFACING REFERENCE AND CONTROL

STATION	TO	STATION	LOCATION	650.8000 CONSTRUCTION STAKING RESURFACING REFERENCE LF	650.9911 CONSTRUCTION STAKING SUPPLEMENTAL CONTROL EACH
56+91	-	623+72	USH 63	56681	1
		PROJECT TOTAL		56681	1

CONSTRUCTION STAKING PIPE CULVERTS

STATION	LOCATION		650.6000 CONSTRUCTION STAKING PIPE CULVERTS EACH
64+05	USH 63	LT & RT	1
92+02	USH 63	LT & RT	1
160+88	USH 63	RT	1
198+78	USH 63	LT & RT	1
243+77	USH 63	LT & RT	1
312+09	USH 63	RT	1
338+86	USH 63	RT	1
345+76	USH 63	RT	1
385+35	USH 63	LT & RT	1
420+07	USH 63	LT & RT	1
441+86	USH 63	LT & RT	1
507+75	USH 63	LT & RT	1
547+07	USH 63	LT & RT	1
618+51	USH 63	LT & RT	1
		PROJECT TOTAL	14

ALL ITEMS ARE CATEGORY 0010 UNLESS OTHERWISE NOTED.

TEMPORARY TRAFFIC SIGNALS

STATION	LOCATION	661.0101 TEMPORARY TRAFFIC SIGNALS FOR BRIDGES (STRUCTURE) 01. STA. 507+75 CULVERT C-03-687 EACH	661.0101 TEMPORARY TRAFFIC SIGNALS FOR BRIDGES (STRUCTURE) 02. STA. 547+07 CULVERT REPLACEMENT EACH
507+75	USH 63	1	-
547+07	USH 63	-	1
	PROJECT TOTALS	1	1

BIRD DETERRENT SYSTEM

STATION	LOCATION	999.2005.S MAINTAINING BIRD DETERRENT SYSTEM (STATION) 01. STA. 507+75 CULVERT C-03-687 EACH
507+75	USH 63	1
	PROJECT TOTAL	1

SAWING ASPHALT AND CONCRETE

STATION		STATION	LOCATION		690.0150 SAWING ASPHALT LF	690.0250 SAWING CONCRETE LF	COMMENTS
63+40			USH 63		52	20	NEW CULVERT
64+84			USH 63		30	20	NEW CULVERT
91+43			USH 63	LT	19	-	P.E.
96+70			USH 63	LT	18	-	P.E.
103+35			USH 63	LT	12	-	P.E.
127+42			USH 63	LT	12	-	P.E.
236+15			USH 63	LT	12	-	P.E.
259+20			USH 63	LT	16	-	P.E.
267+16			USH 63	LT	12	-	P.E.
343+23			USH 63	LT	10	-	P.E.
384+81			USH 63		30	20	CULVERT REPLACEMENT
385+88			USH 63		30	20	CULVERT REPLACEMENT
389+00			USH 63	30' LT	36	-	ADJUSTING MANHOLE COVER
396+35	-	396+50	USH 63		19	5	CURB REPLACEMENT ROADWAY CUT
396+35	-	396+50	USH 63		19	5	CURB REPLACEMENT PARKING LOT CUT
396+72	-	396+87	USH 63		19	5	CURB REPLACEMENT ROADWAY CUT
396+72	-	396+87	USH 63		19	5	CURB REPLACEMENT PARKING LOT CUT
419+53			USH 63		30	20	CULVERT REPLACEMENT
420+61			USH 63		30	20	CULVERT REPLACEMENT
441+32			USH 63		30	20	CULVERT REPLACEMENT
442+39			USH 63		30	20	CULVERT REPLACEMENT
507+07			USH 63		42	20	BOX CULVERT
507+07	-	508+42	USH63	RT	135	-	TEMPORARY HMA WIDENING REMOVAL
508+42			USH 63		42	20	BOX CULVERT
520+28			USH 63	LT	13	-	P.E.
539+45			USH 63	RT	21	-	P.E.
545+44	-	545+59	USH 63	RT	17	3	21ST AVE (STAGE 2 TEMP. WIDENING)
546+35			USH 63		30	20	TWIN 60
546+35	-	547+75	USH 63	RT	140	-	TEMPORARY HMA WIDENING REMOVAL
547+75			USH 63		30	20	TWIN 60
554+45			USH 63	LT	11	-	P.E.
580+77			USH 63	LT	23	-	P.E.
583+89	-	584+25			70	-	CURB REPLACEMENT, CTH G
584+55	-	585+13			98	-	CURB REPLACEMENT, CTH G
617+97			USH 63		42	20	CULVERT REPLACEMENT
619+04			USH 63		42	20	CULVERT REPLACEMENT
			PROJECT TOTALS		1,241	303	

DITCH CLEANING

STATION	TO	STATION	LOCATION		SPV.0090.01 DITCH CLEANING LF
583+37	-	583+87	USH 63	LT	50
			PROJECT TOTAL		50

ALL ITEMS ARE CATEGORY 0010 UNLESS OTHERWISE NOTED.

TRANSPORTATION PROJECT PLAT NO: 1550-04-28 - 4.01
AMENDMENT NO. 1

REMOVES UTILITY NUMBERS 200 & 201 AND ADDS UTILITY NUMBER 211 ON TRANSPORTATION PROJECT PLAT NO: 1550-04-28 - 4.01 RECORDED AS DOCUMENT 909237

THAT PART OF THE SE 1/4 - SE 1/4 OF SECTION 19 AND THE NE 1/4 - NE 1/4 OF SECTION 30, ALL IN T 34 N, R 14 W, TOWN OF ALMENA, BARRON COUNTY, WISCONSIN.

RELOCATION ORDER USH 63 CLEAR LAKE - CUMBERLAND USH 8 E TO STH 48 W BARRON COUNTY

TO PROPERLY ESTABLISH, LAY OUT, WIDEN, ENLARGE, EXTEND, CONSTRUCT, RECONSTRUCT, IMPROVE, OR MAINTAIN A PORTION OF THE HIGHWAY DESIGNATED ABOVE, THE STATE OF WISCONSIN DEPARTMENT OF TRANSPORTATION DEEMS IT NECESSARY TO RELOCATE OR CHANGE SAID HIGHWAY AND ACQUIRE CERTAIN LANDS AND INTERESTS OR RIGHTS IN LANDS FOR THE ABOVE PROJECT.

TO EFFECT THIS CHANGE, PURSUANT TO AUTHORITY GRANTED UNDER SECTION 84.02 (3), 84.09, AND 84.30, WISCONSIN STATUTES, THE DEPARTMENT OF TRANSPORTATION HEREBY ORDERS THAT:
1. THAT PORTION OF SAID HIGHWAY AS SHOWN ON THIS PLAT IS LAID OUT AND ESTABLISHED TO THE LINES AND WIDTHS AS SO SHOWN FOR THE ABOVE PROJECT.
2. THE LANDS OR INTERESTS OR RIGHTS IN LANDS AS SHOWN ON THIS PLAT ARE REQUIRED BY THE DEPARTMENT FOR THE ABOVE PROJECT AND SHALL BE ACQUIRED IN THE NAME OF THE STATE OF WISCONSIN, PURSUANT TO THE PROVISIONS OF SECTION 84.09 (1) OR (2), WISCONSIN STATUTES.

UTILITY EASEMENT TABLE			
UTILITY NUMBER	RELATED DOCS	UTILITY OWNER	PARCEL AFFECTED
211	VOL. 607, P 535	TURTLE LAKE TELEPHONE CO. DBA/BRIGHTSPEED	1
211	DOC. NO. 760795	CENTURYTEL OF THE MIDWEST WISCONSIN LLC DBA/BRIGHTSPEED	

UTILITY INTERESTS REQUIRED		
UTILITY NUMBER	UTILITY OWNER	INTERESTS REQUIRED
211	BRIGHTSPEED	RELEASE OF RIGHTS

SCHEDULE OF LANDS & INTERESTS REQUIRED						
PARCEL		INTEREST(S)	FEE R/W SF REQUIRED			TLE
NUMBE	OWNER(S)	REQUIRED	NEW	EXISTING	TOTAL	SF
1	BARRON COUNTY	FEE/TLE	568	0	568	675
OWNERS NAMES ARE SHOWN FOR REFERENCE PURPOSES ONLY, AND ARE SUBJECT TO CHANGE PRIOR TO THE TRANSFER OF LAND INTERESTS TO THE DEPARTMENT. ALL AREAS ARE SHOWN IN SQUARE FEET (SQ FT).						

Document Number: 916462
MARGO KATTERHAGEN
Barron County, Wisconsin
Register of Deeds
Recorded On:
12/08/2025 12:24:00 PM
Number of Pages: 1

This document has been electronically recorded and
Protect your investment.
www.propertyfraudalert.com

RESERVED FOR REGISTER OF DEEDS
PROJECT NUMBER 1550-04-28 4.01
SHEET 1 OF 1
AMENDMENT NO. 1

4

NOTES:

POSITIONS SHOWN ON THIS PLAT ARE WISCONSIN COORDINATE REFERENCE SYSTEM COORDINATES (WISCRS), BARRON COUNTY, NAD83(2011), IN U.S. SURVEY FEET. VALUES ARE GRID COORDINATES, GRID BEARINGS, AND GRID DISTANCES. GRID DISTANCES MAY BE USED AS GROUND DISTANCES.

ALL NEW RIGHT-OF-WAY AND PERMANENT EASEMENT MONUMENTS WILL BE TYPE 2 (TYPICALLY ¾" X 24" IRON REBARS), UNLESS OTHERWISE NOTED, AND WILL BE PLACED PRIOR TO THE COMPLETION OF THE PROJECT.

ALL RIGHT-OF-WAY LINES DEPICTED IN THE NON-ACQUISITION AREAS ARE INTENDED TO RE-ESTABLISH EXISTING RIGHT-OF-WAY LINES AS DETERMINED FROM PREVIOUS PROJECTS, OTHER RECORDED DOCUMENTS, CENTERLINE OF EXISTING PAVEMENTS AND/OR EXISTING OCCUPATIONAL LINES.

RIGHT-OF-WAY BOUNDARIES ARE DEFINED WITH COURSES OF THE PERIMETER OF THE HIGHWAY LANDS REFERENCED TO THE U.S. PUBLIC LAND SURVEY SYSTEM OR OTHER "SURVEYS" OF PUBLIC RECORD.

DIMENSIONING FOR THE NEW RIGHT-OF-WAY IS MEASURED ALONG AND PERPENDICULAR TO THE NEW REFERENCE LINES.

A TEMPORARY LIMITED EASEMENT (TLE) IS A RIGHT FOR CONSTRUCTION PURPOSES, AS DEFINED HEREIN, INCLUDING THE RIGHT TO OPERATE NECESSARY EQUIPMENT THEREON, THE RIGHT OF INGRESS AND EGRESS, AS LONG AS REQUIRED FOR SUCH PUBLIC PURPOSE, INCLUDING THE RIGHT TO PRESERVE, PROTECT, REMOVE, OR PLANT THEREON ANY VEGETATION THAT THE HIGHWAY AUTHORITIES MAY DEEM DESIRABLE. ALL (TLES) ARE FOR SLOPE GRADING PURPOSES UNLESS OTHERWISE NOTED. ALL (TLES) ON THIS PLAT EXPIRE AT THE COMPLETION OF THE CONSTRUCTION PROJECT FOR WHICH THIS INSTRUMENT IS GIVEN.

PROPERTY LINES SHOWN ON THIS PLAT FOR PROPERTIES BEING IMPACTED ARE DRAWN FROM DATA DERIVED FROM FILED/RECORDED MAPS AND DOCUMENTS OF PUBLIC RECORD. THIS PLAT MAY NOT BE A TRUE REPRESENTATION OF EXISTING PROPERTY LINES, EXCLUDING RIGHT-OF-WAY, AND SHOULD NOT BE USED AS A SUBSTITUTE FOR AN ACCURATE FIELD SURVEY.

FOR THE CURRENT ACCESS/DRIVEWAY INFORMATION, CONTACT THE PLANNING UNIT OF THE WISCONSIN DEPARTMENT OF TRANSPORTATION OFFICE IN SUPERIOR.

PARCEL AND UTILITY IDENTIFICATION NUMBERS MAY NOT POINT TO ALL AREAS OF ACQUISITION, AS NOTED ON THE TPP PAGES.

EXISTING HIGHWAY RIGHT OF WAY FOR USH 63 ESTABLISHED FROM PREVIOUS PROJECTS DJ8548A, 1550-04-21, AND MOS 8787.

EXISTING ACCESS CONTROL FOR USH 63 ESTABLISHED FROM PREVIOUS PROJECT 1550-10-29.

COURSE TABLE		
COURSE	BEARING	DISTANCE
1475-PRW60	S89° 03' 49"W	465.57'
PRW60-PRW27	S30° 24' 42"W	24.45'
PRW27-PRW28	N59° 35' 18"W	11.35'
PRW28-65	S30° 24' 42"W	86.82'
65-81	N59° 35' 18"W	50.00'
81-95	N59° 35' 18"W	100.00'
95-57	N59° 35' 18"W	21.31'
57-58	N89° 03' 49"E	13.24'
58-63	N30° 24' 42"E	359.25'
63-82	S59° 35' 18"E	110.00'
82-64	S59° 35' 18"E	50.00'
64-PRW29	S30° 24' 42"W	229.32'
PRW29-PRW26	S59° 35' 18"E	11.35'
PRW26-PRW60	S30° 24' 42"W	25.55'
PRW60-61	S89° 03' 49"W	71.84'
61-58	S89° 03' 49"W	128.80'
57-1474	S89° 03' 49"W	1935.20'

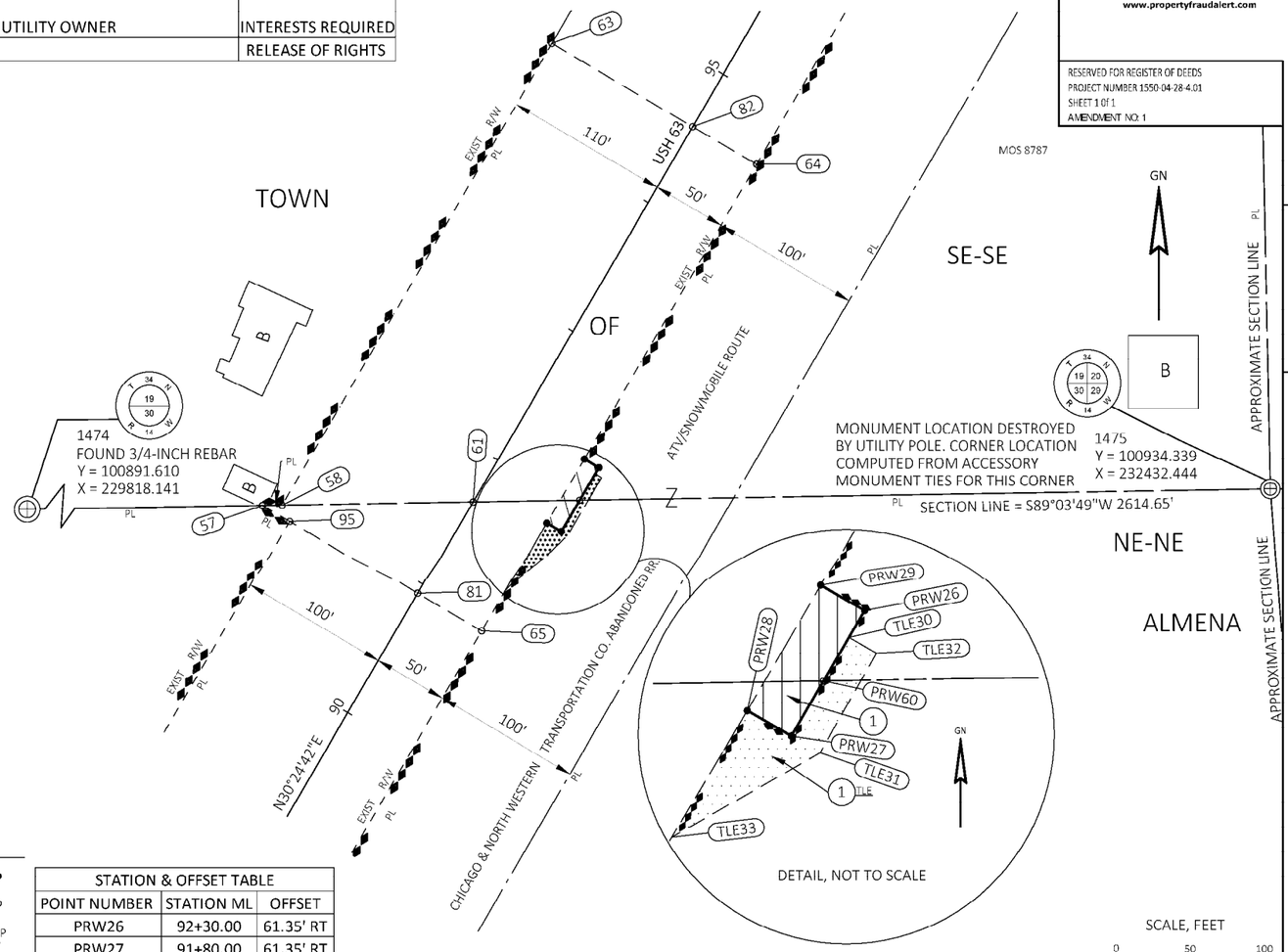

SCALE, FEET
0 50 100

CONVENTIONAL UTILITY SYMBOLS

WATER	W
GAS	G
TELEPHONE	T
OVERHEAD TRANSMISSION LINES	OH
ELECTRIC	E
CABLE TELEVISION	TV
FIBER OPTIC	FO
SANITARY SEWER	SAN
STORM SEWER	SS

CONVENTIONAL ABBREVIATIONS

ACCESS RIGHTS	AR	POINT OF COMPOUND CURVE	PCC
ACRES	AC	POINT OF INTERSECTION	PI
AHEAD	AH	PROPERTY LINE	PL
ALUMINUM	ALUM	RECORDED AS	(100')
AND OTHERS	ET AL	REEL / IMAGE	R/I
BACK	BK	REFERENCE LINE	R/L
BLOCK	BLK	REMAINING	REM
CENTERLINE	C/L	RESTRICTIVE DEVELOPMENT EASEMENT	RDE
CERTIFIED SURVEY MAP	CSM	RIGHT	RT
CONCRETE	CONC	RIGHT OF WAY	R/W
COUNTY	CO	SECTION	SEC
COUNTY TRUNK HIGHWAY	CTH	SEPTIC VENT	SEPV
DISTANCE	DIST	SQUARE FEET	SF
CORNER	COR	STATE TRUNK HIGHWAY	STH
DOCUMENT NUMBER	DOC	STATION	STA
EASEMENT	EASE	TELEPHONE PEDESTAL	TP
EXISTING	EX	TEMPORARY LIMITED EASEMENT	TLE
GAS VALVE	GV	TRANSPORTATION PROJECT PLAT	TPP
GRID NORTH	GN	UNITED STATES HIGHWAY	USH
HIGHWAY EASEMENT	HE	VOLUME	V
IDENTIFICATION	ID		
LAND CONTRACT	LC		
LEFT	LT		
MONUMENT	MON		
NATIONAL GEODETIC SURVEY	NGS		
NUMBER	NO		
OUTLOT	OL		
PAGE	P		
POINT OF TANGENCY	PT		
PERMANENT LIMITED EASEMENT	PLE		
POINT OF BEGINNING	POB		
POINT OF CURVATURE	PC		

CURVE DATA ABBREVIATIONS

LONG CHORD	LCH
LONG CHORD BEARING	LCB
RADIUS	R
DEGREE OF CURVE	D
CENTRAL ANGLE	Δ /DELTA
LENGTH OF CURVE	L
TANGENT	T
DIRECTION AHEAD	DA
DIRECTION BACK	DB

CONVENTIONAL SYMBOLS

SECTION LINE
QUARTER LINE
SIXTEENTH LINE
NEW REFERENCE LINE
NEW R/W LINE
EXISTING R/W OR HE LINE
PROPERTY LINE
LOT, TIE & OTHER MINOR LINES
SLOPE INTERCEPT
CORPORATE LIMITS
UNDERGROUND FACILITY (COMMUNICATIONS, ELECTRIC, ETC)
NEW R/W (FEE OR HE) (HATCHING VARIES BY OWNER)
TEMPORARY LIMITED EASEMENT AREA
EASEMENT AREA (PERMANENT LIMITED OR RESTRICTED DEVELOPMENT)
TRANSMISSION STRUCTURES
BUILDING
TO BE REMOVED
BRIDGE
CULVERT

SECTION CORNER SYMBOL
SECTION CORNER MONUMENT
R/W MONUMENT (TO BE SET)
NON-MONUMENTED R/W POINT
FOUND IRON PIN (1-INCH UNLESS NOTED) IP
GEODETIC SURVEY MONUMENT
SIXTEENTH CORNER MONUMENT
SIGN
OFF-PREMISE SIGN

	COMPENSABLE	NON-COMPENSABLE
ELECTRIC POLE	■	○
TELEPHONE POLE	■	○
PEDESTAL (LABEL TYPE) (TV, TEL, ELEC, ETC.)	✕	⌀

ACCESS RESTRICTED BY ACQUISITION
NO ACCESS (BY STATUTORY AUTHORITY)
ACCESS RESTRICTED (BY PREVIOUS PROJECT OR CONTROL)
NO ACCESS (NFW HIGHWAY)
PARCEL NUMBER 25
UTILITY NUMBER 40
PARALLEL OFFSETS

STATION & OFFSET TABLE		
POINT NUMBER	STATION ML	OFFSET
PRW26	92+30.00	61.35' RT
PRW27	91+80.00	61.35' RT
PRW28	91+80.00	50.00' RT
PRW29	92+30.00	50.00' RT
57	90+93.18	121.31' LT
58	91+00.07	110.00' LT
61	91+67.08	0.00'
PRW60	92+04.45	61.35' RT
63	94+59.32	110.00' LT
64	94+59.32	50.00' RT
65	90+93.18	50.00' RT
81	90+93.18	0.00'
82	94+59.32	110.00' LT
95	90+93.18	100.00' LT
TLE30	92+25.00	61.35' RT
TLE31	91+80.00	66.35' RT
TLE32	92+25.00	66.35' RT
TLE33	91+24.92	50.00' RT

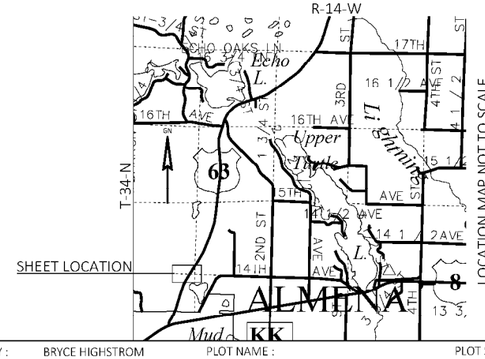

LOCATION MAP NOT TO SCALE

N.W.B.E.
NORTHERN WISCONSIN-BASED ENGINEERS, INC.

I, DOUGLAS R. CRANE PROFESSIONAL LAND SURVEYOR, HEREBY CERTIFY THAT IN FULL COMPLIANCE WITH THE PROVISIONS OF SECTION 84.095 OF THE WISCONSIN STATUTES AND UNDER THE DIRECTION OF DEPARTMENT OF TRANSPORTATION I HAVE SURVEYED AND MAPPED THIS TRANSPORTATION PROJECT PLAT AND SUCH PLAT CORRECTLY REPRESENTS ALL EXTERIOR BOUNDARIES OF THE SURVEYED LAND.

WISCONSIN DOUGLAS R. CRANE S-1511 SIREN WISC. LAND SURVEYOR

SIGNATURE: _____ DATE: 12/04/25
PRINT NAME: DOUGLAS R. CRANE
REGISTRATION NUMBER: S-1511

THIS PLAT AND RELOCATION ORDER ARE APPROVED FOR THE DEPARTMENT OF TRANSPORTATION NORTHWEST REGION

SIGNATURE: _____ DATE: 12/08/25
PRINT NAME: AARON GUSTAFSON

FILE NAME : C:\USERS\BHIGH\ONEDRIVE\DOCUMENTS\2024\USH63\2324_USH63\1550-04-28_TKNG-PRW.DWG
APPRAISAL PLAT DATE : 02/06/25
PLOT DATE : 11/5/2025 2:36 PM PLOT BY : BRYCE HIGHSTROM PLOT NAME : PLOT SCALE :

1550-04-28-4.01A1

TRANSPORTATION PROJECT PLAT NO: 1550-04-28 - 4.02
AMENDMENT NO. 1

REMOVES UTILITY NUMBERS 200 & 201 AND ADDS UTILITY NUMBER 211 ON TRANSPORTATION PROJECT PLAT NO: 1550-04-28 - 4.02 RECORDED AS DOCUMENT 910294

THAT PART OF THE NE 1/4 - SE 1/4 OF SECTION 8 IN T 34 N, R 14 W,
TOWN OF ALMENA, BARRON COUNTY, WISCONSIN.

RELOCATION ORDER USH 63 CLEAR LAKE - CUMBERLAND USH 8 E TO STH 48 W BARRON COUNTY

TO PROPERLY ESTABLISH, LAY OUT, WIDEN, ENLARGE, EXTEND, CONSTRUCT, RECONSTRUCT, IMPROVE, OR MAINTAIN A PORTION OF THE HIGHWAY DESIGNATED ABOVE, THE STATE OF WISCONSIN DEPARTMENT OF TRANSPORTATION DEEMS IT NECESSARY TO RELOCATE OR CHANGE SAID HIGHWAY AND ACQUIRE CERTAIN LANDS AND INTERESTS OR RIGHTS IN LANDS FOR THE ABOVE PROJECT.

TO EFFECT THIS CHANGE, PURSUANT TO AUTHORITY GRANTED UNDER SECTION 84.02 (3), 84.09, AND 84.30, WISCONSIN STATUTES, THE DEPARTMENT OF TRANSPORTATION HEREBY ORDERS THAT:
1. THAT PORTION OF SAID HIGHWAY AS SHOWN ON THIS PLAT IS LAID OUT AND ESTABLISHED TO THE LINES AND WIDTHS AS SO SHOWN FOR THE ABOVE PROJECT.
2. THE LANDS OR INTERESTS OR RIGHTS IN LANDS AS SHOWN ON THIS PLAT ARE REQUIRED BY THE DEPARTMENT FOR THE ABOVE PROJECT AND SHALL BE ACQUIRED IN THE NAME OF THE STATE OF WISCONSIN, PURSUANT TO THE PROVISIONS OF SECTION 84.09 (1) OR (2), WISCONSIN STATUTES.

NOTES:

POSITIONS SHOWN ON THIS PLAT ARE WISCONSIN COORDINATE REFERENCE SYSTEM COORDINATES (WISCRS), BARRON COUNTY, NAD83(2011), IN U.S. SURVEY FEET. VALUES ARE GRID COORDINATES, GRID BEARINGS, AND GRID DISTANCES. GRID DISTANCES MAY BE USED AS GROUND DISTANCES.

ALL NEW RIGHT-OF-WAY AND PERMANENT EASEMENT MONUMENTS WILL BE TYPE 2 (TYPICALLY ¾" X 24" IRON REBARS), UNLESS OTHERWISE NOTED, AND WILL BE PLACED PRIOR TO THE COMPLETION OF THE PROJECT.

ALL RIGHT-OF-WAY LINES DEPICTED IN THE NON-ACQUISITION AREAS ARE INTENDED TO RE-ESTABLISH EXISTING RIGHT-OF-WAY LINES AS DETERMINED FROM PREVIOUS PROJECTS, OTHER RECORDED DOCUMENTS, CENTERLINE OF EXISTING PAVEMENTS AND/OR EXISTING OCCUPATIONAL LINES.

RIGHT-OF-WAY BOUNDARIES ARE DEFINED WITH COURSES OF THE PERIMETER OF THE HIGHWAY LANDS REFERENCED TO THE U.S. PUBLIC LAND SURVEY SYSTEM OR OTHER "SURVEYS" OF PUBLIC RECORD.

DIMENSIONING FOR THE NEW RIGHT-OF-WAY IS MEASURED ALONG AND PERPENDICULAR TO THE NEW REFERENCE LINES.

A TEMPORARY LIMITED EASEMENT (TLE) IS A RIGHT FOR CONSTRUCTION PURPOSES, AS DEFINED HEREIN, INCLUDING THE RIGHT TO OPERATE NECESSARY EQUIPMENT THEREON, THE RIGHT OF INGRESS AND EGRESS, AS LONG AS REQUIRED FOR SUCH PUBLIC PURPOSE, INCLUDING THE RIGHT TO PRESERVE, PROTECT, REMOVE, OR PLANT THEREON ANY VEGETATION THAT THE HIGHWAY AUTHORITIES MAY DEEM DESIRABLE. ALL (TLES) ARE FOR SLOPE GRADING PURPOSES UNLESS OTHERWISE NOTED. ALL (TLES) ON THIS PLAT EXPIRE AT THE COMPLETION OF THE CONSTRUCTION PROJECT FOR WHICH THIS INSTRUMENT IS GIVEN.

PROPERTY LINES SHOWN ON THIS PLAT FOR PROPERTIES BEING IMPACTED ARE DRAWN FROM DATA DERIVED FROM FILED/RECORDED MAPS AND DOCUMENTS OF PUBLIC RECORD. THIS PLAT MAY NOT BE A TRUE REPRESENTATION OF EXISTING PROPERTY LINES, EXCLUDING RIGHT-OF-WAY, AND SHOULD NOT BE USED AS A SUBSTITUTE FOR AN ACCURATE FIELD SURVEY.

FOR THE CURRENT ACCESS/DRIVEWAY INFORMATION, CONTACT THE PLANNING UNIT OF THE WISCONSIN DEPARTMENT OF TRANSPORTATION OFFICE IN SUPERIOR.

PARCEL AND UTILITY IDENTIFICATION NUMBERS MAY NOT POINT TO ALL AREAS OF ACQUISITION, AS NOTED ON THE TPP PAGES.

EXISTING HIGHWAY RIGHT OF WAY FOR USH 63 ESTABLISHED FROM PREVIOUS PROJECTS DJ8548 AND 1550-04-21.

EXISTING ACCESS CONTROL FOR USH 63 ESTABLISHED FROM PREVIOUS PROJECT 1550-10-29.

AN EASEMENT FOR HIGHWAY PURPOSES (HE), AS LONG AS SO USED, INCLUDING THE RIGHT TO PRESERVE, PROTECT, REMOVE OR PLANT THEREON ANY VEGETATION THAT THE HIGHWAY AUTHORITIES MAY DEEM DESIRABLE.

CONVENTIONAL ABBREVIATIONS

ACCESS RIGHTS	AR	POINT OF COMPOUND CURVE	PCC
ACRES	AC	POINT OF INTERSECTION	PI
AHEAD	AH	PROPERTY LINE	PL
ALUMINUM	ALUM	RECORDED AS	(100')
AND OTHERS	ET AL	RECEL / IMAGE	R/I
BACK	BK	REFERENCE LINE	R/L
BLOCK	BLK	REMAINING	REM
CENTERLINE	C/L	RESTRICTIVE DEVELOPMENT EASEMENT	RDE
CERTIFIED SURVEY MAP	CSM	RIGHT	RT
CONCRETE	CONC	RIGHT OF WAY	R/W
COUNTY	CO	SECTION	SEC
COUNTY TRUNK HIGHWAY	CTH	SEPTIC VENT	SEPV
DISTANCE	DIST	SQUARE FEET	SF
CORNER	COR	STATE TRUNK HIGHWAY	STH
DOCUMENT NUMBER	DOC	STATION	STA
EASEMENT	EASE	TELEPHONE PEDESTAL	TP
EXISTING	EX	TEMPORARY LIMITED EASEMENT	TLE
GAS VALVE	GV	TRANSPORTATION PROJECT PLAT	TPP
GRID NORTH	GN	UNITED STATES HIGHWAY	USH
HIGHWAY EASEMENT	HE	VOLUME	V
IDENTIFICATION	ID		
LAND CONTRACT	LC		
LEFT	LT		
MONUMENT	MON		
NATIONAL GEODETIC SURVEY	NGS		
NUMBER	NO		
OUTLOT	OL		
PAGE	P		
POINT OF TANGENCY	PT		
PERMANENT LIMITED EASEMENT	PLE		
POINT OF BEGINNING	POB		
POINT OF CURVATURE	PC		

CURVE DATA ABBREVIATIONS

LONG CHORD	LCH
LONG CHORD BEARING	LCB
RADIUS	R
DEGREE OF CURVE	D
CENTRAL ANGLE	Δ/DELTA
LENGTH OF CURVE	L
TANGENT	T
DIRECTION AHEAD	DA
DIRECTION BACK	DB

CONVENTIONAL SYMBOLS

SECTION LINE
QUARTER LINE
SIXTEENTH LINE
NEW REFERENCE LINE
NEW R/W LINE
EXISTING R/W OR HE LINE
PROPERTY LINE
LOT, TIE & OTHER MINOR LINES
SLOPE INTERCEPT
CORPORATE LIMITS
UNDERGROUND FACILITY (COMMUNICATIONS, ELECTRIC, ETC)
NEW R/W (FEE OR HE) (HATCHING VARIES BY OWNER)
TEMPORARY LIMITED EASEMENT AREA
EASEMENT AREA (PERMANENT LIMITED OR RESTRICTED DEVELOPMENT)
TRANSMISSION STRUCTURES
BUILDING — TO BE REMOVED
BRIDGE — CULVERT

SECTION CORNER SYMBOL
SECTION CORNER MONUMENT
GEODETIC SURVEY MONUMENT
SIXTEENTH CORNER MONUMENT
SIGN
OFF-PREMISE SIGN
R/W MONUMENT (TO BE SET)
NON-MONUMENTED R/W POINT
FOUND IRON PIN (1-INCH UNLESS NOTED)

	COMPENSABLE	NON-COMPENSABLE
ELECTRIC POLE	■	□
TELEPHONE POLE	●	⌀
PEDESTAL (LABEL TYPE) (TV, TEL, ELEC, ETC.)	▼	▽

ACCESS RESTRICTED BY ACQUISITION
NO ACCESS (BY STATUTORY AUTHORITY)
ACCESS RESTRICTED (BY PREVIOUS PROJECT OR CONTROL)
NO ACCESS (NEW HIGHWAY)
PARCEL NUMBER (25) UTILITY NUMBER (40)
PARALLEL OFFSETS

CONVENTIONAL UTILITY SYMBOLS

WATER	W
GAS	G
TELEPHONE	T
OVERHEAD TRANSMISSION LINES	OH
ELECTRIC	E
CABLE TELEVISION	TV
FIBER OPTIC	FO
SANITARY SEWER	SAN
STORM SEWER	SS

SCHEDULE OF LANDS & INTERESTS REQUIRED						
PARCEL NUMBER	OWNER(S)	INTEREST(S) REQUIRED	FEE R/W SF REQUIRED NEW	EXISTING	TOTAL	HIGHWAY EASEMENT SF
2	BARRON COUNTY	HE	0	0	0	850
OWNERS NAMES ARE SHOWN FOR REFERENCE PURPOSES ONLY, AND ARE SUBJECT TO CHANGE PRIOR TO THE TRANSFER OF LAND INTERESTS TO THE DEPARTMENT. ALL AREAS ARE SHOWN IN SQUARE FEET (SQ.FT).						

UTILITY INTERESTS REQUIRED		
UTILITY NUMBER	UTILITY OWNER	INTERESTS REQUIRED
211	BRIGHTSPEED	RELEASE OF RIGHTS

UTILITY EASEMENT TABLE			
UTILITY NUMBER	RELATED DOCS	UTILITY OWNER	PARCEL AFFECTED
211	VOL. 607, P 535	TURTLE LAKE TELEPHONE CO. DBA/BRIGHTSPEED	2
211	VOL. 715, P 801	TURTLE LAKE TELEPHONE CO. DBA/BRIGHTSPEED	
211	DOC. NO. 760795	CENTURYTEL OF THE MIDWEST WISCONSIN LLC DBA/BRIGHTSPEED	

COURSE TABLE		
COURSE	BEARING	DISTANCE
1260-71	S00° 32' 23"E	15.59'
71-84	S53° 05' 09"W	204.98'
84-68	S36° 54' 51"E	50.00'
68-PRW1	S53° 05' 09"W	66.15'
PRW1-PRW2	S36° 54' 51"E	17.00'
PRW2-PRW3	S53° 05' 09"W	50.00'
PRW3-PRW4	N36° 54' 51"W	17.00'
PRW4-69	S53° 05' 09"W	32.56'
69-83	N36° 54' 51"W	50.00'
83-70	N36° 54' 51"W	100.00'
70-67	N53° 05' 09"E	148.71'
67-84	S36° 54' 51"E	100.00'

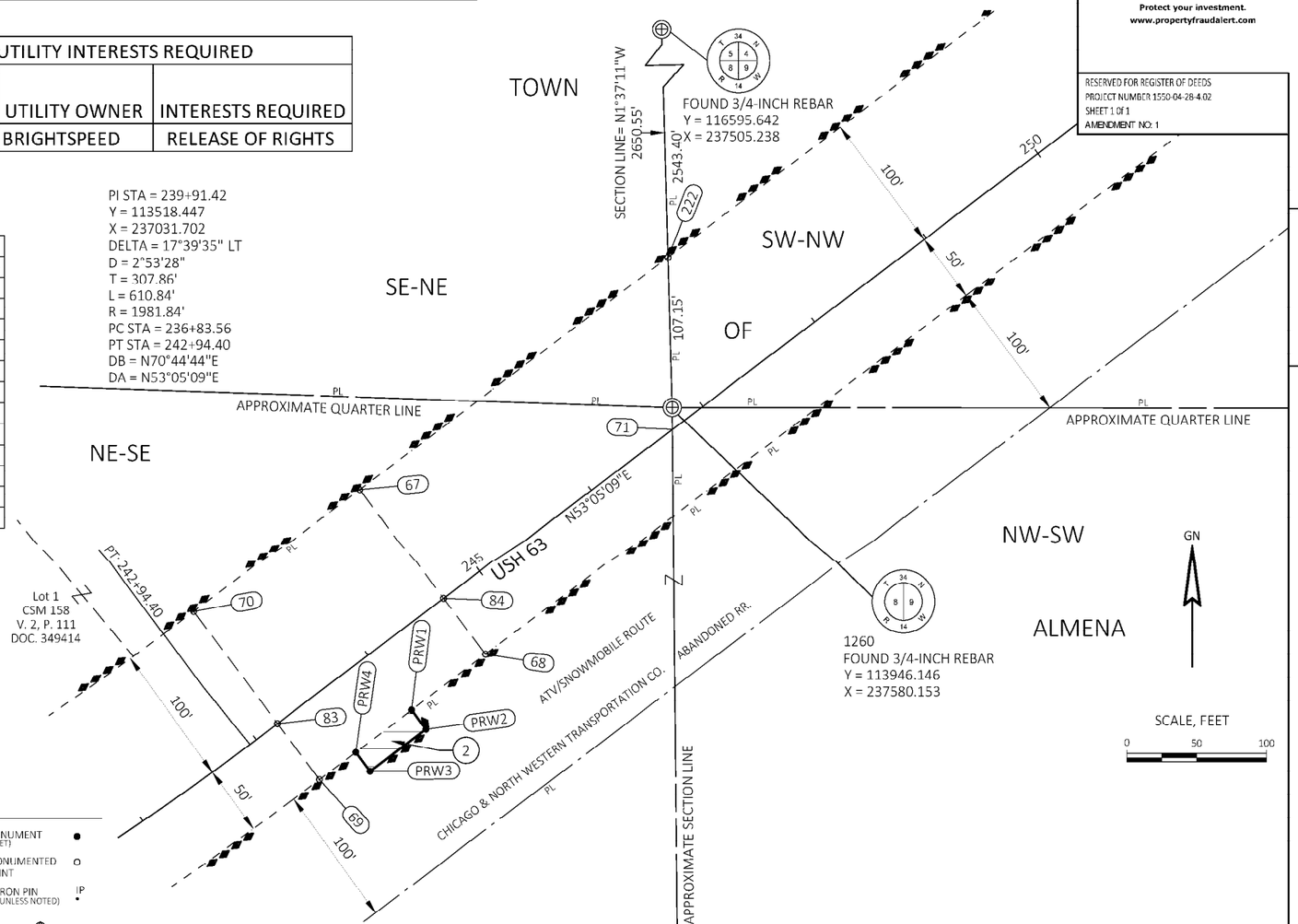

STATION & OFFSET TABLE		
POINT NUMBER	STATION ML	OFFSET
PRW1	244+01.56	50.00' RT
PRW2	244+01.56	67.00' RT
PRW3	243+51.56	67.00' RT
PRW4	243+51.56	50.00' RT
67	244+67.71	100.00' LT
68	244+67.71	50.00' RT
69	243+19.00	50.00' RT
70	243+19.00	100.00' LT
71	246+72.68	0.00'
83	243+19.00	0.00'
84	244+67.71	0.00'
222	247+43.85	100.00' LT
1260	246+81.93	12.55' LT

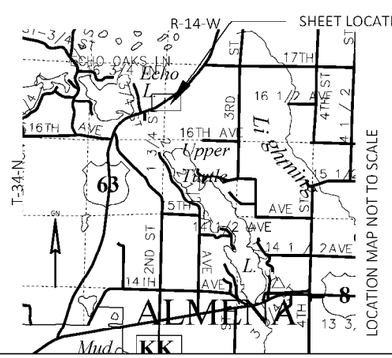

N.W.B.E.
NORTHERN WISCONSINBASED ENGINEERS, INC.

I, DOUGLAS R. CRANE PROFESSIONAL LAND SURVEYOR, HEREBY CERTIFY THAT IN FULL COMPLIANCE WITH THE PROVISIONS OF SECTION 84.095 OF THE WISCONSIN STATUTES AND UNDER THE DIRECTION OF THE DEPARTMENT OF TRANSPORTATION I HAVE SURVEYED AND MAPPED THIS TRANSPORTATION PROJECT PLAT AND SUCH PLAT CORRECTLY REPRESENTS ALL EXTERIOR BOUNDARIES OF THE SURVEYED LAND.

WISCONSIN DOUGLAS R. CRANE S-1511 SIREN W.S.C. LAND SURVEYOR

SIGNATURE: _____ DATE: 12/04/25
PRINT NAME: DOUGLAS R. CRANE
REGISTRATION NUMBER: S-1511

THIS PLAT AND RELOCATION ORDER ARE APPROVED FOR THE DEPARTMENT OF TRANSPORTATION NORTHWEST REGION

SIGNATURE: Aaron Gustafson DATE: 12/08/25
PRINT NAME: AARON GUSTAFSON

Document Number: 916463
MARGO KATTERHAGEN
Barron County, Wisconsin
Register of Deeds
Recorded On:
12/08/2025 01:05:09 PM
Number of Pages: 1

This document has been electronically recorded and
Protect your investment.
www.propertyfraudalert.com

RESERVED FOR REGISTER OF DEEDS
PROJECT NUMBER 1550-04-28 4.02
SHEET 1 OF 1
AMENDMENT NO: 1

4

4

TRANSPORTATION PROJECT PLAT NO: 1550-04-28 - 4.03
AMENDMENT NO. 1

REMOVES UTILITY NUMBERS 200, 201, & 203 AND ADDS UTILITY NUMBER 211 ON TRANSPORTATION PROJECT PLAT NO: 1550-04-28 - 4.03 RECORDED AS DOCUMENT 910442.

THAT PART OF THE SE 1/4 - SW 1/4 OF SECTION 34 IN T 35 N, R 14 W,
TOWN OF CRYSTAL LAKE, BARRON COUNTY, WISCONSIN.

RELOCATION ORDER USH 63 CLEAR LAKE - CUMBERLAND USH 8 E TO STH 48 W BARRON COUNTY

TO PROPERLY ESTABLISH, LAY OUT, WIDEN, ENLARGE, EXTEND, CONSTRUCT, RECONSTRUCT, IMPROVE, OR MAINTAIN A PORTION OF THE HIGHWAY DESIGNATED ABOVE, THE STATE OF WISCONSIN DEPARTMENT OF TRANSPORTATION DEEMS IT NECESSARY TO RELOCATE OR CHANGE SAID HIGHWAY AND ACQUIRE CERTAIN LANDS AND INTERESTS OR RIGHTS IN LANDS FOR THE ABOVE PROJECT.

TO EFFECT THIS CHANGE, PURSUANT TO AUTHORITY GRANTED UNDER SECTION 84.02 (3), 84.09, AND 84.30, WISCONSIN STATUTES, THE DEPARTMENT OF TRANSPORTATION HEREBY ORDERS THAT:
1. THAT PORTION OF SAID HIGHWAY AS SHOWN ON THIS PLAT IS LAID OUT AND ESTABLISHED TO THE LINES AND WIDTHS AS SO SHOWN FOR THE ABOVE PROJECT.
2. THE LANDS OR INTERESTS OR RIGHTS IN LANDS AS SHOWN ON THIS PLAT ARE REQUIRED BY THE DEPARTMENT FOR THE ABOVE PROJECT AND SHALL BE ACQUIRED IN THE NAME OF THE STATE OF WISCONSIN, PURSUANT TO THE PROVISIONS OF SECTION 84.09 (1) OR (2), WISCONSIN STATUTES.

NOTES:

POSITIONS SHOWN ON THIS PLAT ARE WISCONSIN COORDINATE REFERENCE SYSTEM COORDINATES (WISCRS), BARRON COUNTY, NAD83(2011), IN U.S. SURVEY FEET. VALUES ARE GRID COORDINATES, GRID BEARINGS, AND GRID DISTANCES. GRID DISTANCES MAY BE USED AS GROUND DISTANCES.

ALL NEW RIGHT-OF-WAY AND PERMANENT EASEMENT MONUMENTS WILL BE TYPE 2 (TYPICALLY ¾" X 24" IRON REBARS), UNLESS OTHERWISE NOTED, AND WILL BE PLACED PRIOR TO THE COMPLETION OF THE PROJECT.

ALL RIGHT-OF-WAY LINES DEPICTED IN THE NON-ACQUISITION AREAS ARE INTENDED TO RE-ESTABLISH EXISTING RIGHT-OF-WAY LINES AS DETERMINED FROM PREVIOUS PROJECTS, OTHER RECORDED DOCUMENTS, CENTERLINE OF EXISTING PAVEMENTS AND/OR EXISTING OCCUPATIONAL LINES.

RIGHT-OF-WAY BOUNDARIES ARE DEFINED WITH COURSES OF THE PERIMETER OF THE HIGHWAY LANDS REFERENCED TO THE U.S. PUBLIC LAND SURVEY SYSTEM OR OTHER "SURVEYS" OF PUBLIC RECORD.

DIMENSIONING FOR THE NEW RIGHT-OF-WAY IS MEASURED ALONG AND PERPENDICULAR TO THE NEW REFERENCE LINES.

A TEMPORARY LIMITED EASEMENT (TLE) IS A RIGHT FOR CONSTRUCTION PURPOSES, AS DEFINED HEREIN, INCLUDING THE RIGHT TO OPERATE NECESSARY EQUIPMENT THEREON, THE RIGHT OF INGRESS AND EGRESS, AS LONG AS REQUIRED FOR SUCH PUBLIC PURPOSE, INCLUDING THE RIGHT TO PRESERVE, PROTECT, REMOVE, OR PLANT THEREON ANY VEGETATION THAT THE HIGHWAY AUTHORITIES MAY DEEM DESIRABLE. ALL (TLES) ARE FOR SLOPE GRADING PURPOSES UNLESS OTHERWISE NOTED. ALL (TLES) ON THIS PLAT EXPIRE AT THE COMPLETION OF THE CONSTRUCTION PROJECT FOR WHICH THIS INSTRUMENT IS GIVEN.

PROPERTY LINES SHOWN ON THIS PLAT FOR PROPERTIES BEING IMPACTED ARE DRAWN FROM DATA DERIVED FROM FILED/RECORDED MAPS AND DOCUMENTS OF PUBLIC RECORD. THIS PLAT MAY NOT BE A TRUE REPRESENTATION OF EXISTING PROPERTY LINES, EXCLUDING RIGHT-OF-WAY, AND SHOULD NOT BE USED AS A SUBSTITUTE FOR AN ACCURATE FIELD SURVEY.

FOR THE CURRENT ACCESS/DRIVEWAY INFORMATION, CONTACT THE PLANNING UNIT OF THE WISCONSIN DEPARTMENT OF TRANSPORTATION OFFICE IN SUPERIOR.

PARCEL AND UTILITY IDENTIFICATION NUMBERS MAY NOT POINT TO ALL AREAS OF ACQUISITION, AS NOTED ON THE TPP PAGES.

EXISTING HIGHWAY RIGHT OF WAY FOR USH 63 ESTABLISHED FROM PREVIOUS PROJECTS DJ8548 AND 1550-04-21.

EXISTING ACCESS CONTROL FOR USH 63 ESTABLISHED FROM PREVIOUS PROJECT 1550-10-29.

SCHEDULE OF LANDS & INTERESTS REQUIRED					
PARCEL NUMBER	OWNER(S)	INTEREST(S) REQUIRED	FEE R/W SF REQUIRED NEW	EXISTING	TOTAL
3	BARRON COUNTY	FEE	498	0	498
OWNERS NAMES ARE SHOWN FOR REFERENCE PURPOSES ONLY, AND ARE SUBJECT TO CHANGE PRIOR TO THE TRANSFER OF LAND INTERESTS TO THE DEPARTMENT. ALL AREAS ARE SHOWN IN SQUARE FEET (SQ FT).					

COURSE TABLE		
COURSE	BEARING	DISTANCE
1112-79	N16° 13' 27"W	1161.68'
79-PRW12	SEE CURVE TABLE	
PRW12-PRW11	S40° 08' 12"E	10.00'
PRW11-PRW10	S49° 40' 40"W	50.00'
PRW10-PRW13	N39° 38' 29"W	10.00'
PRW13-78	SEE CURVE TABLE	
78-85	N38° 42' 19"W	50.00'
85-77	N38° 42' 19"W	40.00'
77-80	SEE CURVE TABLE	
80-86	S41° 57' 49"E	40.00'
86-79	S41° 57' 49"E	50.00'

R/W CURVE TABLE				
COURSE	ARC LENGTH	RADIUS	CHORD BEARING	CHORD LENGTH
79-PRW12	162.21'	6536.24'	S48°44'51"W	162.21'
PRW13-78	159.58'	6536.24'	S50° 35' 43"W	159.58'
77-80	366.59'	6446.24'	N49° 39' 56"E	366.54'

UTILITY EASEMENT TABLE			
UTILITY NUMBER	RELATED DOCS	UTILITY OWNER	PARCEL AFFECTED
211	VOL. T, P 191	WISCONSIN TELEPHONE COMPANY DBA/BRIGHTSPEED	3
211	VOL. 607, P 535	TURTLE LAKE TELEPHONE CO. DBA/BRIGHTSPEED	
211	DOC. NO. 760795	CENTURYTEL OF THE MIDWEST WISCONSIN LLC DBA/BRIGHTSPEED	

UTILITY INTERESTS REQUIRED		
UTILITY NUMBER	OWNER	INTERESTS REQUIRED
211	BRIGHTSPEED	RELEASE OF RIGHTS

STATION & OFFSET TABLE		
POINT NUMBER	STATION ML	OFFSET
PRW10	365+51.64	60.00' RT
PRW11	366+01.18	60.00' RT
PRW12	366+01.25	50.00' RT
PRW13	365+51.72	50.00' RT
77	363+93.36	40.00' LT
78	363+93.36	50.00' RT
79	367+62.22	50.00' RT
80	367+62.22	40.00' LT
85	363+93.36	0.00'
86	367+62.22	0.00'

CONVENTIONAL ABBREVIATIONS

ACCESS RIGHTS	AR	PAGE
ACRES	AC	POINT OF TANGENCY
AHEAD	AH	PERMANENT LIMITED EASEMENT
ALUMINUM	ALUM	POINT OF BEGINNING
AND OTHERS	ET AL	POINT OF CURVATURE
BACK	BK	POINT OF COMPOUND CURVE
BLOCK	BLK	POINT OF INTERSECTION
CENTERLINE	C/L	PROPERTY LINE
CERTIFIED SURVEY MAP	CSM	RECORDED AS
CONCRETE	CONC	REEL / IMAGE
COUNTY	CO	REFERENCE LINE
COUNTY TRUNK HIGHWAY	CTH	REMAINING
DISTANCE	DIST	RESTRICTIVE DEVELOPMENT EASEMENT
CORNER	COR	RIGHT
DOCUMENT NUMBER	DOC	RIGHT OF WAY
EASEMENT	EASE	SECTION
EXISTING	EX	SEPTIC VENT
GAS VALVE	GV	SQUARE FEET
GRID NORTH	GN	STATE TRUNK HIGHWAY
HIGHWAY EASEMENT	HE	STATION
IDENTIFICATION	ID	TELEPHONE PEDESTAL
LAND CONTRACT	LC	TEMPORARY LIMITED EASEMENT
LEFT	LT	TRANSPORTATION PROJECT PLAT
MONUMENT	MON	UNITED STATES HIGHWAY
NATIONAL GEODETIC SURVEY	NGS	VOLUME
NUMBER	NO	
OUTLOT	OL	

CONVENTIONAL SYMBOLS

SECTION LINE
P QUARTER LINE
PT SIXTEENTH LINE
PLE NEW REFERENCE LINE
POB NEW R/W LINE
PC EXISTING R/W OR HE LINE
PCC PROPERTY LINE
PI
PL LOT, TIE & OTHER MINOR LINES
(100')
R/I SLOPE INTERCEPT
R/L CORPORATE LIMITS
REM
RDE UNDERGROUND FACILITY (COMMUNICATIONS, ELECTRIC, ETC)
RT NEW R/W (FEE OR HE) (HATCHING VARIES BY OWNER)
R/W
SEC TEMPORARY LIMITED EASEMENT AREA
SEPV
SF EASEMENT AREA (PERMANENT LIMITED OR RESTRICTED DEVELOPMENT)
STH
STA
TP TRANSMISSION STRUCTURES
TLE
BUILDING TO BE REMOVED
TPP
USH BRIDGE CULVERT
V

SECTION CORNER SYMBOL
SECTION CORNER MONUMENT
GEODETIC SURVEY MONUMENT
SIXTEENTH CORNER MONUMENT
SIGN
R/W MONUMENT (TO BE SET)
NON-MONUMENTED R/W POINT
FOUND IRON PIN (1-INCH UNLESS NOTED)
OFF-PREMISE SIGN

	COMPENSABLE	NON-COMPENSABLE
ELECTRIC POLE		
TELEPHONE POLE		
PEDESTAL (LABEL TYPE) (TV, TEL, ELEC, ETC.)		

ACCESS RESTRICTED BY ACQUISITION
NO ACCESS (BY STATUTORY AUTHORITY)
ACCESS RESTRICTED (BY PREVIOUS PROJECT OR CONTROL)
NO ACCESS (NEW HIGHWAY)
PARCEL NUMBER 25 UTILITY NUMBER 40
PARALLEL OFFSETS

CURVE DATA ABBREVIATIONS

LONG CHORD	LCH
LONG CHORD BEARING	LCB
RADIUS	R
DEGREE OF CURVE	D
CENTRAL ANGLE	Δ /DELTA
LENGTH OF CURVE	L
TANGENT	T
DIRECTION AHEAD	DA
DIRECTION BACK	DB

CONVENTIONAL UTILITY SYMBOLS

WATER	W
GAS	G
TELEPHONE	T
OVERHEAD TRANSMISSION LINES	OH
ELECTRIC	E
CABLE TELEVISION	TV
FIBER OPTIC	FO
SANITARY SEWER	SAN
STORM SEWER	SS

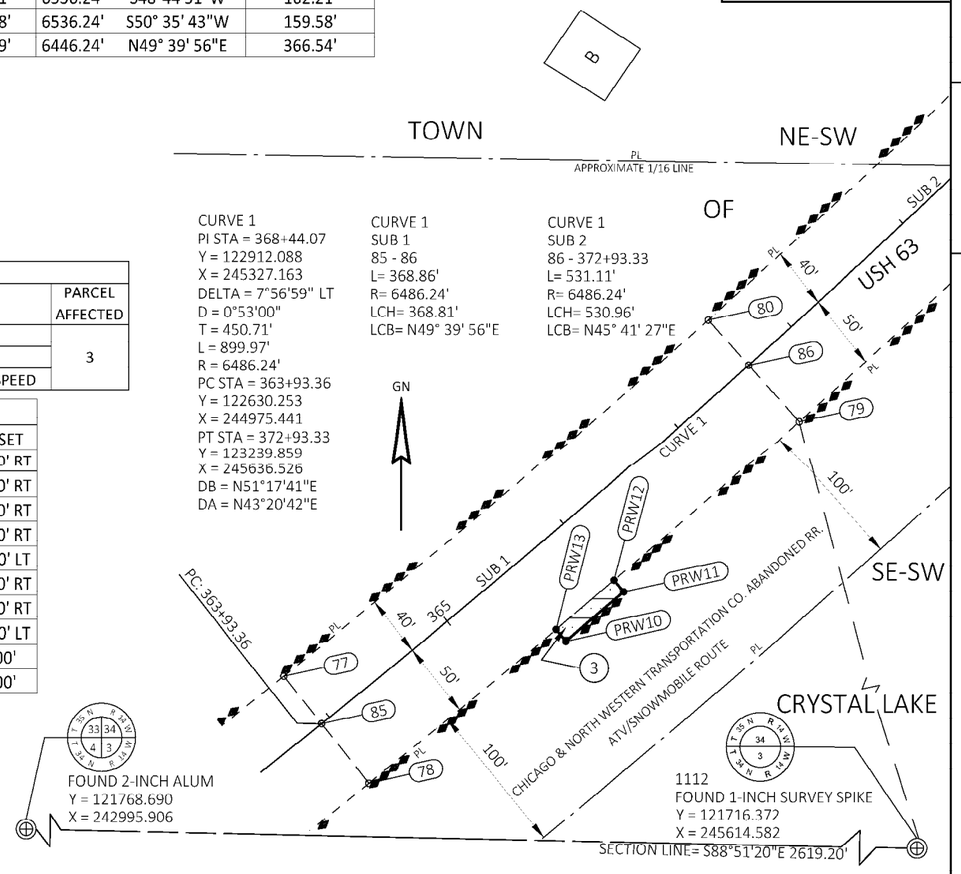

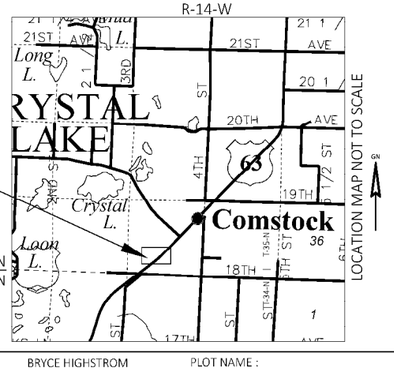

SCALE, FEET
0 50 100

N.W.B.E.
NORTHERN WISCONSIN-BASED ENGINEERS, INC.

I, DOUGLAS R. CRANE PROFESSIONAL LAND SURVEYOR, HEREBY CERTIFY THAT IN FULL COMPLIANCE WITH THE PROVISIONS OF SECTION 84.095 OF THE WISCONSIN STATUTES AND UNDER THE DIRECTION OF THE DEPARTMENT OF TRANSPORTATION I HAVE SURVEYED AND MAPPED THIS TRANSPORTATION PROJECT PLAT AND SUCH PLAT CORRECTLY REPRESENTS ALL EXTERIOR BOUNDARIES OF THE SURVEYED LAND.

WISCONSIN DOUGLAS R. CRANE S-1511 SIREN WSC. LAND SURVEYOR

SIGNATURE: _____ DATE: 12/04/25
PRINT NAME: DOUGLAS R. CRANE
REGISTRATION NUMBER: S-1511

THIS PLAT AND RELOCATION ORDER ARE APPROVED FOR THE DEPARTMENT OF TRANSPORTATION NORTHWEST REGION

SIGNATURE: _____ DATE: 12/08/25
PRINT NAME: AARON GUSTAFSON

Document Number: 916464
MARGO KATTERHAGEN
Barron County, Wisconsin
Register of Deeds
Recorded On:
12/08/2025 01:12:42 PM
Number of Pages: 1

This document has been electronically recorded and
Protect your investment.
www.propertyfraudalert.com

RESERVED FOR REGISTER OF DEEDS
PROJECT NUMBER 1550-04-28-4.03
SHEET 1 OF 1
AMENDMENT NO: 1

FILE NAME : C:\USERS\BHIGH\ONEDRIVE\DOCUMENTS\2024\USH63\2324_USH63\1550-04-28_TKNG-PRW.DWG
APPRAISAL PLAT DATE : 02/27/25
PLOT DATE : 11/6/2025 3:43 PM PLOT BY : BRYCE HIGHSTROM PLOT NAME : PLOT SCALE :

TRANSPORTATION PROJECT PLAT NO: 1550-04-28 - 4.04

THAT PART OF THE NW 1/4 - SW 1/4 OF SECTION 24, IN T 35 N, R 14 W,
TOWN OF CRYSTAL LAKE, BARRON COUNTY, WISCONSIN.

RELOCATION ORDER USH 63 CLEAR LAKE - CUMBERLAND USH 8 E TO STH 48 W BARRON COUNTY

TO PROPERLY ESTABLISH, LAY OUT, WIDEN, ENLARGE, EXTEND, CONSTRUCT, RECONSTRUCT, IMPROVE, OR MAINTAIN A PORTION OF THE HIGHWAY DESIGNATED ABOVE, THE STATE OF WISCONSIN DEPARTMENT OF TRANSPORTATION DEEMS IT NECESSARY TO RELOCATE OR CHANGE SAID HIGHWAY AND ACQUIRE CERTAIN LANDS AND INTERESTS OR RIGHTS IN LANDS FOR THE ABOVE PROJECT.

TO EFFECT THIS CHANGE, PURSUANT TO AUTHORITY GRANTED UNDER SECTION 84.02 (3), 84.09, AND 84.30, WISCONSIN STATUTES, THE DEPARTMENT OF TRANSPORTATION HEREBY ORDERS THAT:
1. THAT PORTION OF SAID HIGHWAY AS SHOWN ON THIS PLAT IS LAID OUT AND ESTABLISHED TO THE LINES AND WIDTHS AS SO SHOWN FOR THE ABOVE PROJECT.
2. THE LANDS OR INTERESTS OR RIGHTS IN LANDS AS SHOWN ON THIS PLAT ARE REQUIRED BY THE DEPARTMENT FOR THE ABOVE PROJECT AND SHALL BE ACQUIRED IN THE NAME OF THE STATE OF WISCONSIN, PURSUANT TO THE PROVISIONS OF SECTION 84.09 (1) OR (2), WISCONSIN STATUTES.

NOTES:

POSITIONS SHOWN ON THIS PLAT ARE WISCONSIN COORDINATE REFERENCE SYSTEM COORDINATES (WISCRS), BARRON COUNTY, NAD83(2011), IN U.S. SURVEY FEET. VALUES ARE GRID COORDINATES, GRID BEARINGS, AND GRID DISTANCES. GRID DISTANCES MAY BE USED AS GROUND DISTANCES.

ALL NEW RIGHT-OF-WAY AND PERMANENT EASEMENT MONUMENTS WILL BE TYPE 2 (TYPICALLY ¾" X 24" IRON REBARS), UNLESS OTHERWISE NOTED, AND WILL BE PLACED PRIOR TO THE COMPLETION OF THE PROJECT.

ALL RIGHT-OF-WAY LINES DEPICTED IN THE NON-ACQUISITION AREAS ARE INTENDED TO RE-ESTABLISH EXISTING RIGHT-OF-WAY LINES AS DETERMINED FROM PREVIOUS PROJECTS, OTHER RECORDED DOCUMENTS, CENTERLINE OF EXISTING PAVEMENTS AND/OR EXISTING OCCUPATIONAL LINES.

RIGHT-OF-WAY BOUNDARIES ARE DEFINED WITH COURSES OF THE PERIMETER OF THE HIGHWAY LANDS REFERENCED TO THE U.S. PUBLIC LAND SURVEY SYSTEM OR OTHER "SURVEYS" OF PUBLIC RECORD.

DIMENSIONING FOR THE NEW RIGHT-OF-WAY IS MEASURED ALONG AND PERPENDICULAR TO THE NEW REFERENCE LINES.

A TEMPORARY LIMITED EASEMENT (TLE) IS A RIGHT FOR CONSTRUCTION PURPOSES, AS DEFINED HEREIN, INCLUDING THE RIGHT TO OPERATE NECESSARY EQUIPMENT THEREON, THE RIGHT OF INGRESS AND EGRESS, AS LONG AS REQUIRED FOR SUCH PUBLIC PURPOSE, INCLUDING THE RIGHT TO PRESERVE, PROTECT, REMOVE, OR PLANT THEREON ANY VEGETATION THAT THE HIGHWAY AUTHORITIES MAY DEEM DESIRABLE. ALL (TLES) ARE FOR SLOPE GRADING PURPOSES UNLESS OTHERWISE NOTED. ALL (TLES) ON THIS PLAT EXPIRE AT THE COMPLETION OF THE CONSTRUCTION PROJECT FOR WHICH THIS INSTRUMENT IS GIVEN.

PROPERTY LINES SHOWN ON THIS PLAT FOR PROPERTIES BEING IMPACTED ARE DRAWN FROM DATA DERIVED FROM FILED/RECORDED MAPS AND DOCUMENTS OF PUBLIC RECORD. THIS PLAT MAY NOT BE A TRUE REPRESENTATION OF EXISTING PROPERTY LINES, EXCLUDING RIGHT-OF-WAY, AND SHOULD NOT BE USED AS A SUBSTITUTE FOR AN ACCURATE FIELD SURVEY.

FOR THE CURRENT ACCESS/DRIVEWAY INFORMATION, CONTACT THE PLANNING UNIT OF THE WISCONSIN DEPARTMENT OF TRANSPORTATION OFFICE IN SUPERIOR.

PARCEL AND UTILITY IDENTIFICATION NUMBERS MAY NOT POINT TO ALL AREAS OF ACQUISITION, AS NOTED ON THE TPP PAGES.

EXISTING HIGHWAY RIGHT OF WAY FOR USH 63 ESTABLISHED FROM PREVIOUS PROJECTS DJ8548 AND 1550-04-21.

EXISTING ACCESS CONTROL FOR USH 63 ESTABLISHED FROM PREVIOUS PROJECT 1550-10-29.

CONVENTIONAL ABBREVIATIONS

ACCESS RIGHTS	AR	POINT OF COMPOUND CURVE	PCC
ACRES	AC	POINT OF INTERSECTION	PI
AHEAD	AH	PROPERTY LINE	PL
ALUMINUM	ALUM	RECORDED AS	(100')
AND OTHERS	ET AL	REEL / IMAGE	R/I
BACK	BK	REFERENCE LINE	R/L
BLOCK	BLK	REMAINING	REM
CENTERLINE	C/L	RESTRICTIVE DEVELOPMENT EASEMENT	RDE
CERTIFIED SURVEY MAP	CSM	RIGHT	RT
CONCRETE	CONC	RIGHT OF WAY	R/W
COUNTY	CO	SECTION	SEC
COUNTY TRUNK HIGHWAY	CTH	SEPTIC VENT	SEPV
DISTANCE	DIST	SQUARE FEET	SF
CORNER	COR	STATE TRUNK HIGHWAY	STH
DOCUMENT NUMBER	DOC	STATION	STA
EASEMENT	EASE	TELEPHONE PEDESTAL	TP
EXISTING	EX	TEMPORARY LIMITED EASEMENT	TLE
GAS VALVE	GV	TRANSPORTATION PROJECT PLAT	TPP
GRID NORTH	GN	UNITED STATES HIGHWAY	USH
HIGHWAY EASEMENT	HE	VOLUME	V
IDENTIFICATION	ID		
LAND CONTRACT	LC		
LEFT	LT		
MONUMENT	MON		
NATIONAL GEODETIC SURVEY	NGS		
NUMBER	NO		
OUTLOT	OL		
PAGE	P		
POINT OF TANGENCY	PT		
PERMANENT LIMITED EASEMENT	PLE		
POINT OF BEGINNING	POB		
POINT OF CURVATURE	PC		

CURVE DATA ABBREVIATIONS

LONG CHORD	LCH
LONG CHORD BEARING	LCB
RADIUS	R
DEGREE OF CURVE	D
CENTRAL ANGLE	Δ/DELTA
LENGTH OF CURVE	L
TANGENT	T
DIRECTION AHEAD	DA
DIRECTION BACK	DB

CONVENTIONAL SYMBOLS

SECTION LINE
QUARTER LINE
SIXTEENTH LINE
NEW REFERENCE LINE
NEW R/W LINE
EXISTING R/W OR HE LINE
PROPERTY LINE
LOT, TIE & OTHER MINOR LINES
SLOPE INTERCEPT
CORPORATE LIMITS
UNDERGROUND FACILITY (COMMUNICATIONS, ELECTRIC, ETC)
NEW R/W (FEE OR HE) (HATCHING VARIES BY OWNER)
TEMPORARY LIMITED EASEMENT AREA
EASEMENT AREA (PERMANENT LIMITED OR RESTRICTED DEVELOPMENT)
TRANSMISSION STRUCTURES
BUILDING — TO BE REMOVED
BRIDGE — CULVERT

SECTION CORNER SYMBOL
SECTION CORNER MONUMENT
R/W MONUMENT (TO BE SET)
NON-MONUMENTED R/W POINT
FOUND IRON PIN (1-INCH UNLESS NOTED)
GEODETIC SURVEY MONUMENT
SIXTEENTH CORNER MONUMENT
SIGN
OFF-PREMISE SIGN

	COMPENSABLE	NON-COMPENSABLE
ELECTRIC POLE	■	□
TELEPHONE POLE	●	⌀
PEDESTAL (LABEL TYPE) (TV, TEL, ELEC, ETC.)	●	⌀

ACCESS RESTRICTED BY ACQUISITION
NO ACCESS (BY STATUTORY AUTHORITY)
ACCESS RESTRICTED (BY PREVIOUS PROJECT OR CONTROL)
NO ACCESS (NEW HIGHWAY)
PARCEL NUMBER (25) UTILITY NUMBER (40)
PARALLEL OFFSETS

CONVENTIONAL UTILITY SYMBOLS

WATER — W
GAS — G
TELEPHONE — T
OVERHEAD TRANSMISSION LINES — OH
ELECTRIC — E
CABLE TELEVISION — TV
FIBER OPTIC — FO
SANITARY SEWER — SAN
STORM SEWER — SS

SCHEDULE OF LANDS & INTERESTS REQUIRED

PARCEL NUMBER	OWNER(S)	INTEREST(S) REQUIRED	FEE R/W SF REQUIRED NEW	EXISTING	TOTAL
4	GARY J. BAZEWICZ AND SUZANNE G. BAZEWICZ	FEE	500	0	500

OWNERS NAMES ARE SHOWN FOR REFERENCE PURPOSES ONLY, AND ARE SUBJECT TO CHANGE PRIOR TO THE TRANSFER OF LAND INTERESTS TO THE DEPARTMENT. ALL AREAS ARE SHOWN IN SQUARE FEET (SQ FT).

COURSE TABLE

COURSE	BEARING	DISTANCE
895-154	S00° 10' 30"E	1065.91'
154-90	N89° 55' 40"E	6.37'
90-73	N89° 55' 40"E	65.00'
73-PRW14	S00° 04' 20"E	55.93'
PRW14-PRW15	N89° 55' 40"E	10.00'
PRW15-PRW16	S00° 04' 20"E	50.00'
PRW16-PRW17	S89° 55' 40"W	10.00'
PRW17-74	S00° 04' 20"E	37.50'
74-91	S89° 55' 40"W	65.00'
91-155	S89° 55' 40"W	6.11'
155-75	S89° 55' 40"W	48.89'
75-76	N00° 04' 20"W	143.43'
76-154	N89° 55' 40"E	48.63'
154-155	S00° 10' 30"E	143.43'
155-931	S00° 10' 30"E	1425.46'

UTILITY EASEMENT TABLE

UTILITY NUMBER	RELATED DOCS	UTILITY OWNER	PARCEL AFFECTED
205	VOL. 1MISC., P 466	BARRON COUNTY ELECTRIC COOPERATIVE	4
206	VOL. 5MISC., 578	DAIRYLAND POWER COOPERATIVE	
207	NO RECORD OF EASEMENT	CENTURYLINK	

UTILITY INTERESTS REQUIRED

UTILITY NUMBER	OWNER	INTERESTS REQUIRED
205	BARRON COUNTY ELECTRIC COOPERATIVE	RELEASE OF RIGHTS
206	DAIRYLAND POWER COOPERATIVE	RELEASE OF RIGHTS
207	CENTURYLINK	RELEASE OF RIGHTS

STATION & OFFSET TABLE

POINT NUMBER	STATION ML	OFFSET
PRW14	507+97.50	65.00' RT
PRW15	507+97.50	75.00' RT
PRW16	507+47.50	75.00' RT
PRW17	507+47.50	65.00' RT
73	508+53.43	65.00' RT
74	507+10.00	65.00' RT
75	507+10.00	55.00'LT
76	508+53.43	55.00' LT
90	508+53.43	0.00'
91	507+10.00	0.00'
154	508+53.43	6.37' LT
155	507+10.00	6.11' LT
895	519+19.27	11.15' LT
931	492+94.08	58.61' RT

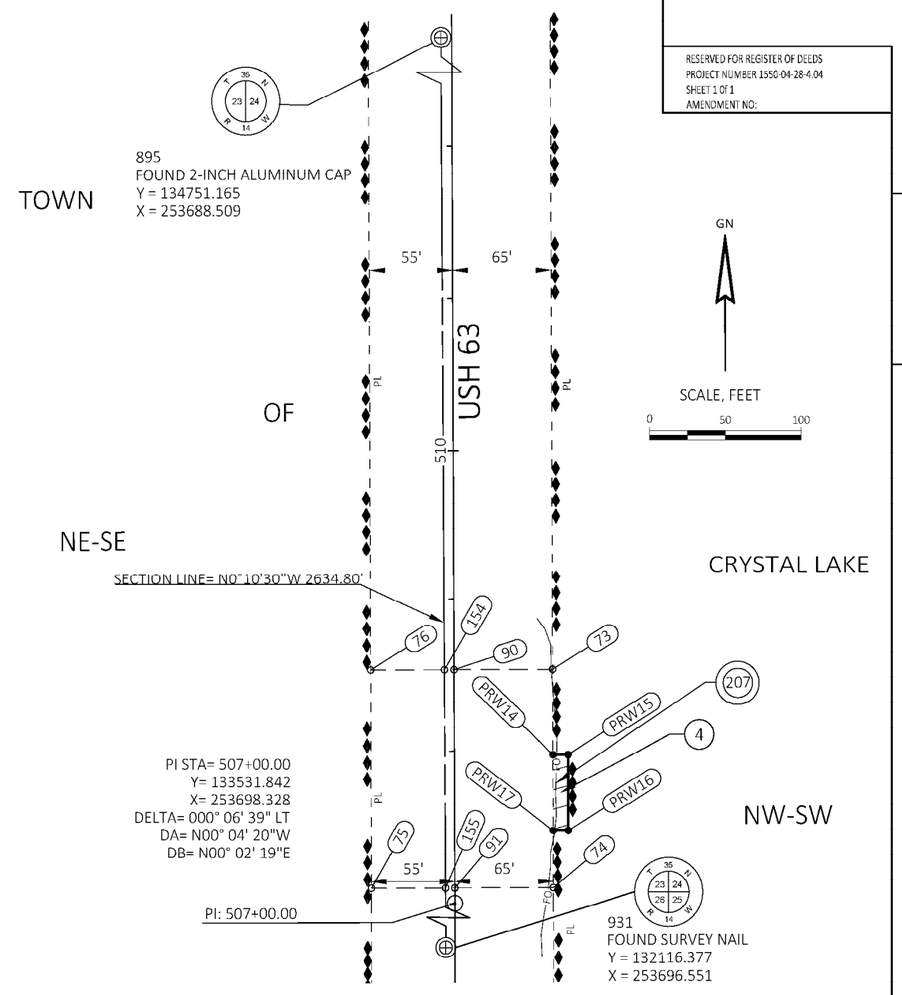

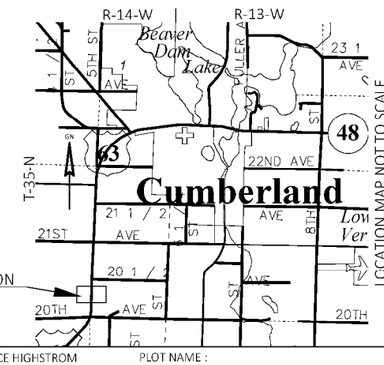

SHEET LOCATION

Document Number: 910395
MARGO KATTERHAGEN
Barron County, Wisconsin
Register of Deeds
Recorded On:
04/11/2025 08:34:34 AM
Number of Pages: 1

This document has been electronically recorded and Protect your investment. www.propertyfraudalert.com

RESERVED FOR REGISTER OF DEEDS
PROJECT NUMBER 1550-04-28-4.04
SHEET 1 OF 1
AMENDMENT NO:

4

4

N.W.B.E.
NORTHERN WISCONSIN-BASED ENGINEERS, INC.

I, DOUGLAS R. CRANE PROFESSIONAL LAND SURVEYOR, HEREBY CERTIFY THAT IN FULL COMPLIANCE WITH THE PROVISIONS OF SECTION 84.095 OF THE WISCONSIN STATUTES AND UNDER THE DIRECTION OF THE DEPARTMENT OF TRANSPORTATION I HAVE SURVEYED AND MAPPED THIS TRANSPORTATION PROJECT PLAT AND SUCH PLAT CORRECTLY REPRESENTS ALL EXTERIOR BOUNDARIES OF THE SURVEYED LAND.

WISCONSIN — DOUGLAS R. CRANE S-1511 SIREN WSC. — LAND SURVEYOR

SIGNATURE: _____ DATE: 02/27/25
PRINT NAME: DOUGLAS R. CRANE
REGISTRATION NUMBER: S-1511

THIS PLAT AND RELOCATION ORDER ARE APPROVED FOR THE DEPARTMENT OF TRANSPORTATION NORTHWEST REGION

SIGNATURE: _____ DATE: 04/10/25
PRINT NAME: AARON GUSTAFSON

FILE NAME : C:\USERS\BHIGH\ONEDRIVE\DOCUMENTS\2024\USH63\2324_USH63\1550-04-28_TKNG-PRW.DWG
APPRAISAL PLAT DATE : 02/27/25
PLOT DATE : 4/10/2025 10:25 AM PLOT BY : BRYCE HIGHSTROM PLOT NAME : PLOT SCALE :

1550-04-28-4.04

TRANSPORTATION PROJECT PLAT NO: 1550-04-28 - 4.05
AMENDMENT NO. 1

REMOVES UTILITY NUMBER 209 AND ADDS UTILITY NUMBER 211 ON TRANSPORTATION PROJECT PLAT NO: 1550-01-28 - 4.05 RECORDED AS DOCUMENT 911476.

THAT PART OF THE SW 1/4 - SW 1/4 OF SECTION 13, AND THAT PART OF THE SE 1/4 OF THE SE 1/4 OF SECTION 14, ALL IN T 35 N, R 14 W, TOWN OF CRYSTAL LAKE , BARRON COUNTY, WISCONSIN.

RELOCATION ORDER USH 63 CLEAR LAKE - CUMBERLAND USH 8 E TO STH 48 W BARRON COUNTY

TO PROPERLY ESTABLISH, LAY OUT, WIDEN, ENLARGE, EXTEND, CONSTRUCT, RECONSTRUCT, IMPROVE, OR MAINTAIN A PORTION OF THE HIGHWAY DESIGNATED ABOVE, THE STATE OF WISCONSIN DEPARTMENT OF TRANSPORTATION DEEMS IT NECESSARY TO RELOCATE OR CHANGE SAID HIGHWAY AND ACQUIRE CERTAIN LANDS AND INTERESTS OR RIGHTS IN LANDS FOR THE ABOVE PROJECT.

TO EFFECT THIS CHANGE, PURSUANT TO AUTHORITY GRANTED UNDER SECTION 84.02 (3), 84.09, AND 84.30, WISCONSIN STATUTES, THE DEPARTMENT OF TRANSPORTATION HEREBY ORDERS THAT:
1. THAT PORTION OF SAID HIGHWAY AS SHOWN ON THIS PLAT IS LAID OUT AND ESTABLISHED TO THE LINES AND WIDTHS AS SO SHOWN FOR THE ABOVE PROJECT.
2. THE LANDS OR INTERESTS OR RIGHTS IN LANDS AS SHOWN ON THIS PLAT ARE REQUIRED BY THE DEPARTMENT FOR THE ABOVE PROJECT AND SHALL BE ACQUIRED IN THE NAME OF THE STATE OF WISCONSIN, PURSUANT TO THE PROVISIONS OF SECTION 84.09 (1) OR (2), WISCONSIN STATUTES.

NOTES:

POSITIONS SHOWN ON THIS PLAT ARE WISCONSIN COORDINATE REFERENCE SYSTEM COORDINATES (WISCRS), BARRON COUNTY, NAD83(2011), IN U.S. SURVEY FEET. VALUES ARE GRID COORDINATES, GRID BEARINGS, AND GRID DISTANCES. GRID DISTANCES MAY BE USED AS GROUND DISTANCES.

ALL NEW RIGHT-OF-WAY AND PERMANENT EASEMENT MONUMENTS WILL BE TYPE 2 (TYPICALLY ¾" X 24" IRON REBARS), UNLESS OTHERWISE NOTED, AND WILL BE PLACED PRIOR TO THE COMPLETION OF THE PROJECT.

ALL RIGHT-OF-WAY LINES DEPICTED IN THE NON-ACQUISITION AREAS ARE INTENDED TO RE-ESTABLISH EXISTING RIGHT-OF-WAY LINES AS DETERMINED FROM PREVIOUS PROJECTS, OTHER RECORDED DOCUMENTS, CENTERLINE OF EXISTING PAVEMENTS AND/OR EXISTING OCCUPATIONAL LINES.

RIGHT-OF-WAY BOUNDARIES ARE DEFINED WITH COURSES OF THE PERIMETER OF THE HIGHWAY LANDS REFERENCED TO THE U.S. PUBLIC LAND SURVEY SYSTEM OR OTHER "SURVEYS" OF PUBLIC RECORD.

DIMENSIONING FOR THE NEW RIGHT-OF-WAY IS MEASURED ALONG AND PERPENDICULAR TO THE NEW REFERENCE LINES.

A TEMPORARY LIMITED EASEMENT (TLE) IS A RIGHT FOR CONSTRUCTION PURPOSES, AS DEFINED HEREIN, INCLUDING THE RIGHT TO OPERATE NECESSARY EQUIPMENT THEREON, THE RIGHT OF INGRESS AND EGRESS, AS LONG AS REQUIRED FOR SUCH PUBLIC PURPOSE, INCLUDING THE RIGHT TO PRESERVE, PROTECT, REMOVE, OR PLANT THEREON ANY VEGETATION THAT THE HIGHWAY AUTHORITIES MAY DEEM DESIRABLE. ALL (TLES) ARE FOR SLOPE GRADING PURPOSES UNLESS OTHERWISE NOTED. ALL (TLES) ON THIS PLAT EXPIRE AT THE COMPLETION OF THE CONSTRUCTION PROJECT FOR WHICH THIS INSTRUMENT IS GIVEN.

PROPERTY LINES SHOWN ON THIS PLAT FOR PROPERTIES BEING IMPACTED ARE DRAWN FROM DATA DERIVED FROM FILED/RECORDED MAPS AND DOCUMENTS OF PUBLIC RECORD. THIS PLAT MAY NOT BE A TRUE REPRESENTATION OF EXISTING PROPERTY LINES, EXCLUDING RIGHT-OF-WAY, AND SHOULD NOT BE USED AS A SUBSTITUTE FOR AN ACCURATE FIELD SURVEY.

FOR THE CURRENT ACCESS/DRIVEWAY INFORMATION, CONTACT THE PLANNING UNIT OF THE WISCONSIN DEPARTMENT OF TRANSPORTATION OFFICE IN SUPERIOR.

PARCEL AND UTILITY IDENTIFICATION NUMBERS MAY NOT POINT TO ALL AREAS OF ACQUISITION, AS NOTED ON THE TPP PAGES.

EXISTING HIGHWAY RIGHT OF WAY FOR USH 63 ESTABLISHED FROM PREVIOUS PROJECT DJ8548, AND VOL 587, PG 646 DOC 501082, VOL 594, PG 546, DOC 504606, VOL 587, PG 648, DOC 501084 AND VOL 587, PG 361, DOC 500897.

EXISTING RIGHT OF WAY FOR 21ST AVE ESTABLISHED FROM WISCONSIN STATE STATUTE 82.31 AS 66 FEET AND CENTERED ON THE ROADWAY AS TRAVELED.

EXISTING ACCESS CONTROL FOR USH 63 ESTABLISHED FROM PREVIOUS PROJECT 1550-10-29.

FOUND MONUMENT INFORMATION SHOWN REPRESENTS TYPE AND LOCATION OF EXISTING MONUMENTS WITHOUT OPINION AS TO THEIR VALIDITY AND USE AS A PROPERTY CORNER.

CONVENTIONAL ABBREVIATIONS

ACCESS RIGHTS	AR	POINT OF TANGENCY	PT
ACRES	AC	PERMANENT LIMITED EASEMENT	PLE
AHEAD	AH	POINT OF BEGINNING	POB
ALUMINUM	ALUM		
AND OTHERS	ET AL		
BACK	BK	POINT OF CURVATURE	PC
BLOCK	BLK	POINT OF COMPOUND CURVE	PCC
CENTERLINE	C/L	POINT OF INTERSECTION	PI
CERTIFIED SURVEY MAP	CSM	PROPERTY LINE	PL
CONCRETE	CONC	RECORDED AS	(100')
COUNTY	CO	REEL / IMAGE	R/I
COUNTY TRUNK HIGHWAY	CTH	REFERENCE LINE	R/L
DISTANCE	DIST	REMAINING	REM
CORNER	COR	RESTRICTIVE DEVELOPMENT EASEMENT	RDE
DOCUMENT NUMBER	DOC	RIGHT	RT
EASEMENT	EASE	RIGHT OF WAY	R/W
EXISTING	EX	SECTION	SEC
GAS VALVE	GV	SEPTIC VENT	SEPV
GRID NORTH	GN	SQUARE FEET	SF
HIGHWAY EASEMENT	HE	STATE TRUNK HIGHWAY	STH
IDENTIFICATION	ID	STATION	STA
LAND CONTRACT	LC	TELEPHONE PEDESTAL	TP
LEFT	LT	TEMPORARY LIMITED EASEMENT	TLE
MONUMENT	MON		
NATIONAL GEODETIC SURVEY	NGS	TRANSPORTATION PROJECT PLAT	TPP
NUMBER	NO	UNITED STATES HIGHWAY	USH
OUTLOT	OL	VOLUME	V
PAGE	P		

CONVENTIONAL SYMBOLS

SECTION LINE
QUARTER LINE
SIXTEENTH LINE
NEW REFERENCE LINE
NEW R/W LINE
EXISTING R/W OR HE LINE
PROPERTY LINE
LOT, TIE & OTHER MINOR LINES
SLOPE INTERCEPT
CORPORATE LIMITS
UNDERGROUND FACILITY (COMMUNICATIONS, ELECTRIC, ETC)
NEW R/W (FEE OR HE) (HATCHING VARIES BY OWNER)
TEMPORARY LIMITED EASEMENT AREA
EASEMENT AREA (PERMANENT LIMITED OR RESTRICTED DEVELOPMENT)
TRANSMISSION STRUCTURES
BUILDING TO BE REMOVED
BRIDGE CULVERT

SECTION CORNER SYMBOL
SECTION CORNER MONUMENT
GEODETIC SURVEY MONUMENT
SIXTEENTH CORNER MONUMENT
SIGN
R/W MONUMENT (TO BE SET)
NON-MONUMENTED R/W POINT
FOUND IRON PIN (1-INCH UNLESS NOTED) IP
OFF-PREMISE SIGN

	COMPENSABLE	NON-COMPENSABLE
ELECTRIC POLE	■	□
TELEPHONE POLE	●	○
PEDESTAL (LABEL TYPE) (TV, TEL, ELEC, ETC.)	✖	⌀

ACCESS RESTRICTED BY ACQUISITION
NO ACCESS (BY STATUTORY AUTHORITY)
ACCESS RESTRICTED (BY PREVIOUS PROJECT OR CONTROL)
NO ACCESS (NEW HIGHWAY)
PARCEL NUMBER 25 UTILITY NUMBER 40
PARALLEL OFFSETS

CONVENTIONAL UTILITY SYMBOLS

WATER	W
GAS	G
TELEPHONE	T
OVERHEAD TRANSMISSION LINES	OH
ELECTRIC	E
CABLE TELEVISION	TV
FIBER OPTIC	FO
SANITARY SEWER	SAN
STORM SEWER	SS

STATION & OFFSET TABLE

POINT NUMBER	STATION ML	OFFSET
TLE19	546+55.30	60.00' RT
TLE20	547+10.00	60.00'RT
TLE21	547+10.00	55.00' RT
TLE22	546+97.00	50.00' LT
TLE23	547+47.00	50.00' LT
TLE24	547+47.00	60.00' LT
TLE25	546+97.00	60.00' LT
43	548+40.00	50.00' LT
44	548+40.00	55.00' RT
46	548+40.00	7.40' LT
47	548+40.00	00.00'
49	545+49.92	168.79' RT
50	545+15.18	166.42' LT
51	545+25.34	167.96' RT
52	543+65.47	00.00'
53	543+64.79	9.89' LT
66	546+60.14	55.00' RT
72	544+83.80	166.55' RT
87	545+44.60	163.83' LT
88	544+78.37	169.67' LT
89	543+62.07	50.00' LT
92	543+69.20	55.00' RT
94	546+62.70	50.00' LT
839	545+20.12	9.88' LT

UTILITY EASEMENT TABLE

UTILITY NUMBER	RELATED DOCS	UTILITY OWNER	PARCEL AFFECTED
205	VOL. 1MISC., P 478, DOC. NO. 248353	BARRON COUNTY ELECTRIC COOPERATIVE	5
206	VOL. 5, P 575, DOC. NO. 325920	DAIRYLAND POWER COPORATIVE	
208	VOL. 64, P 478 DOC. NO. 164259	APPLE RIVER MILLING COMPANY	
211	VOL. 393, P 154, DOC. NO. 391185	CUMBERLAND TELEPHONE COMPANY DBA/BRIGHTSPEED	

UTILITY INTERESTS REQUIRED

UTILITY NUMBER	OWNER	INTERESTS REQUIRED
205	BARRON COUNTY ELECTRIC COOPERATIVE	NO INTERESTS REQUIRED
206	DAIRYLAND POWER COPORATIVE	NO INTERESTS REQUIRED
208	APPLE RIVER MILLING COMPANY	NO INTERESTS REQUIRED
211	BRIGHTSPEED	NO INTERESTS REQUIRED

COURSE TABLE

START POINT	BEARING	DISTANCE
839-50	S89° 41' 02"W	156.62'
50-87	N06° 31' 46"E	29.53'
87-94	N45° 26' 12"E	164.03'
94-43	N01° 29' 31"E	177.29'
43-46	S88° 30' 46"E	42.60'
46-47	S88° 30' 46"E	7.40'
47-44	S88° 30' 46"E	55.00'
44-66	S01° 29' 31"W	179.86'
66-49	S44° 25' 06"E	158.42'
49-51	S03° 25' 39"W	24.59'
51-72	S03° 25' 39"W	41.56'
72-92	S45° 43' 11"W	159.93'
92-52	S87° 36' 21"W	55.13'
52-53	S87° 36' 21"W	9.92'
53-89	S87° 36' 21"W	40.20'
89-88	N44° 19' 37"W	166.87'
88-50	N06° 31' 46"E	36.96'
839-46	N01° 56' 11"E	319.88'
46-803	N01° 56' 11"E	2288.59'
839-53	S01° 29' 48"W	155.33'
53-895	S01° 29' 48"W	2445.74'

CURVE DATA ABBREVIATIONS

LONG CHORD	LCH
LONG CHORD BEARING	LCB
RADIUS	R
DEGREE OF CURVE	D
CENTRAL ANGLE	Δ /DELTA
LENGTH OF CURVE	L
TANGENT	T
DIRECTION AHEAD	DA
DIRECTION BACK	DB

EXISTING MONUMENTS

POINT NUMBER	Y	X	DESCRIPION
IP9015	137310.800	253598.499	3/4" IRON BAR
IP9016	137376.559	253599.829	3/4" IRON BAR
IP9017	137313.177	253934.665	3/4" IRON BAR
IP9018	137194.284	253712.339	3/4" IRON BAR
IP9600	137198.985	253817.568	3/4" IRON BAR
IP9601	137488.848	253825.715	3/4" IRON BAR

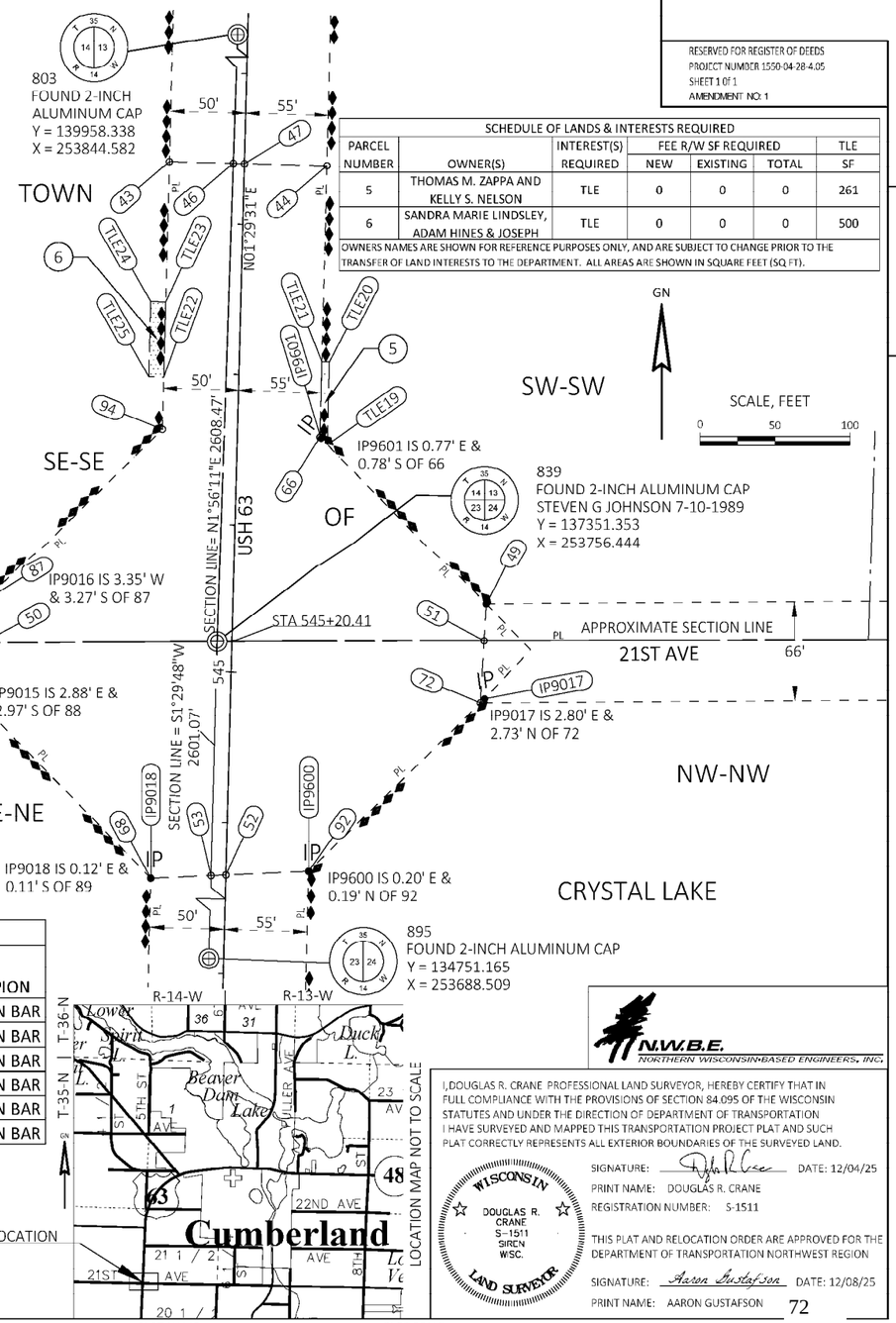

SCHEDULE OF LANDS & INTERESTS REQUIRED

PARCEL NUMBER	OWNER(S)	INTEREST(S) REQUIRED	FEE R/W SF REQUIRED NEW	FEE R/W SF REQUIRED EXISTING	FEE R/W SF REQUIRED TOTAL	TLE SF
5	THOMAS M. ZAPPA AND KELLY S. NELSON	TLE	0	0	0	261
6	SANDRA MARIE LINDSLEY, ADAM HINES & JOSEPH	TLE	0	0	0	500

OWNERS NAMES ARE SHOWN FOR REFERENCE PURPOSES ONLY, AND ARE SUBJECT TO CHANGE PRIOR TO THE TRANSFER OF LAND INTERESTS TO THE DEPARTMENT. ALL AREAS ARE SHOWN IN SQUARE FEET (SQ FT).

Document Number: 916465
MARGO KATTERHAGEN
Barron County, Wisconsin
Register of Deeds
Recorded On:
12/08/2025 01:20:12 PM
Number of Pages: 1

This document has been electronically recorded and Protect your investment. www.propertyfraudalert.com

RESERVED FOR REGISTER OF DEEDS
PROJECT NUMBER 1550-04-28-4.05
SHEET 1 OF 1
AMENDMENT NO: 1

N.W.B.E.
NORTHERN WISCONSIN-BASED ENGINEERS, INC.

I, DOUGLAS R. CRANE PROFESSIONAL LAND SURVEYOR, HEREBY CERTIFY THAT IN FULL COMPLIANCE WITH THE PROVISIONS OF SECTION 84.095 OF THE WISCONSIN STATUTES AND UNDER THE DIRECTION OF DEPARTMENT OF TRANSPORTATION I HAVE SURVEYED AND MAPPED THIS TRANSPORTATION PROJECT PLAT AND SUCH PLAT CORRECTLY REPRESENTS ALL EXTERIOR BOUNDARIES OF THE SURVEYED LAND.

WISCONSIN DOUGLAS R. CRANE S-1511 SIREN W.S.C. LAND SURVEYOR

SIGNATURE: _____ DATE: 12/04/25
PRINT NAME: DOUGLAS R. CRANE
REGISTRATION NUMBER: S-1511

THIS PLAT AND RELOCATION ORDER ARE APPROVED FOR THE DEPARTMENT OF TRANSPORTATION NORTHWEST REGION

SIGNATURE: Aaron Gustafson DATE: 12/08/25
PRINT NAME: AARON GUSTAFSON

FILE NAME : C:\USERS\BHIGH\ONEDRIVE\DOCUMENTS\2024\USH63\2324_USH63\1550-04-28_TKNG-PRW.DWG
APPRAISAL PLAT DATE : 04/01/25
PLOT DATE : 11/5/2025 4:07 PM PLOT BY : BRYCE HIGHSTROM PLOT NAME : PLOT SCALE :

1550-04-28-4.05A1

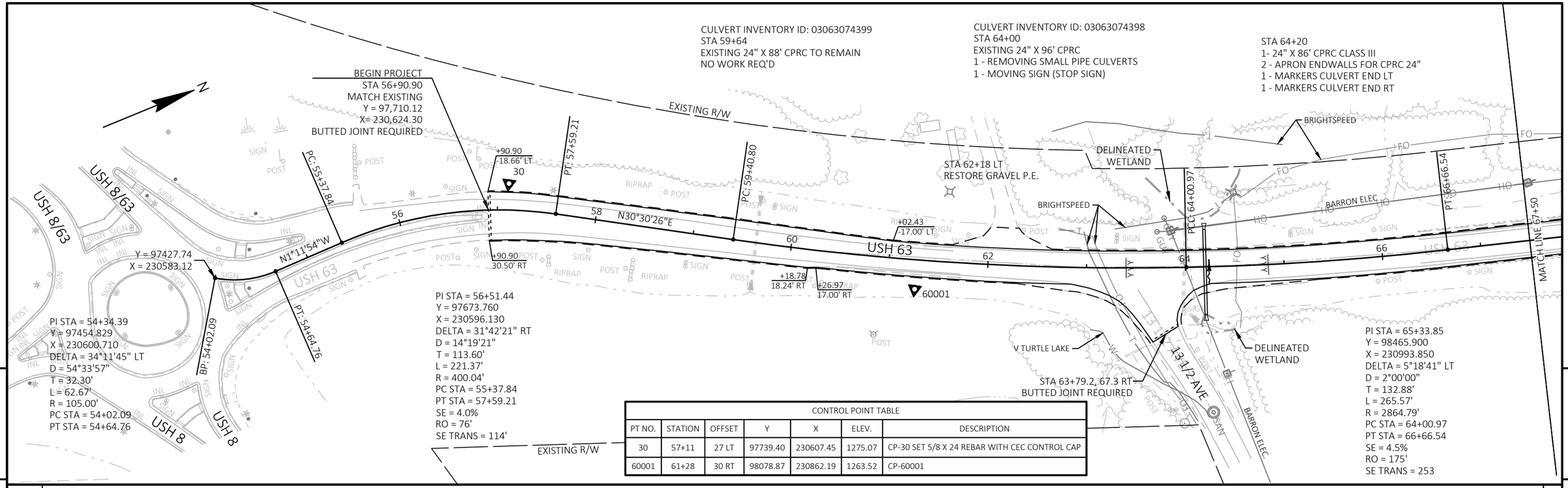

CONTROL POINT TABLE						
PT NO.	STATION	OFFSET	Y	X	ELEV.	DESCRIPTION
30	57+11	27 LT	97739.40	230607.45	1275.07	CP-30 SET 5/8 X 24 REBAR WITH CEC CONTROL CAP
60001	61+28	30 RT	98078.87	230862.19	1263.52	CP-60001

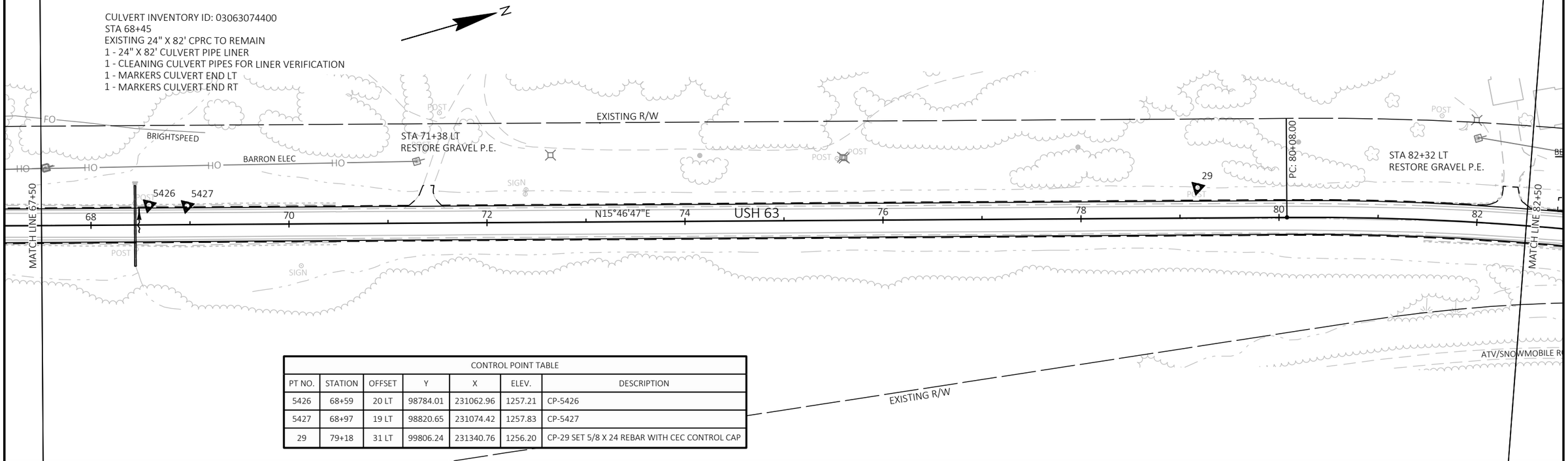

CONTROL POINT TABLE						
PT NO.	STATION	OFFSET	Y	X	ELEV.	DESCRIPTION
5426	68+59	20 LT	98784.01	231062.96	1257.21	CP-5426
5427	68+97	19 LT	98820.65	231074.42	1257.83	CP-5427
29	79+18	31 LT	99806.24	231340.76	1256.20	CP-29 SET 5/8 X 24 REBAR WITH CEC CONTROL CAP

PROJECT NO: 1550-04-78	HWY: USH 63	COUNTY: BARRON	PLAN - USH 63	SHEET 73	E

FILE NAME : W:\NWBE_PROJECTS\DESIGN\2324_US63-US8TOSTH48\C3D-22\SHEETS\050201_PN-63-8TO3RD.DWG
LAYOUT NAME - 63_pn-01
PLOT DATE : 1/23/2026 3:56 PM PLOT BY : G. COLBERT PLOT NAME : PLOT SCALE : 1 IN:100 FT
WISDOT/CADDS SHEET 44

STA 84+13.8 - 91+15.0 LT
REMOVING GUARDRAIL

STA 83+98.5 - 84+51.3 LT, MGS GUARDRAIL TERMINAL EAT
STA 84+51.3 - 85+38.3 LT, MGS GUARDRAIL
STA 85+38.3 - 90+11.9 LT, MGS GUARDRAIL 3 K
STA 90+11.9 - 90+61.9 LT, MGS GUARDRAIL
STA 90+61.9 - 91+15.0 LT, MGS GUARDRAIL TERMINAL EAT

STA 91+44 P.E. LT
1 - REMOVING SMALL PIPE CULVERTS
1 - 18" X 52' CP CLASS III-A
2 - APRON ENDWALLS

CULVERT INVENTORY ID: 03063074407
STA 92+02
EXISTING 30" X 82' CPRC TO REMAIN

STA 92+02 LT
1 - REMOVING SMALL PIPE CULVERTS
(SEE SECTION 9 - CROSS SECTIONS)
1 - 30" X 12' CPRC CLASS III
1 - APRON ENDWALLS FOR CPRC 30"
1 - CONCRETE COLLAR
1 - MARKERS CULVERT END

STA 91+45 LT
RESTORE ASPHALT P.E.

HEATHER LAKE

BEGIN TAPER +68.72
-17.00' LT

POST 1 +98.54
-20.00' LT

END TAPER +51.28
-18.00' LT

DELINEATED
WETLAND

BARRON ELEC

BRIGHTSPEED

PT: 87+59.29

SLOPE INTERCEPT
BARRIER SYSTEM GRADING
SHAPING FINISHING

POST 1 +14.99
-20.00' LT

BEGIN TAPER +61.90
-18.00' LT

END TAPER +44.99
-17.00' LT

EXISTING R/W

STA 96+67 LT
RESTORE ASPHALT P.E.

MATCH LINE 82+50

MATCH LINE 97+50

USH 63

N30°24'42"E

BRIGHTSPEED

PI STA = 83+85.70
Y = 100248.148
X = 231497.493
DELTA = 14°37'55" RT
D = 1°56'51"
T = 377.70'
L = 751.29'
R = 2941.86'
PC STA = 80+08.00
PT STA = 87+59.29
SE = 4.5%
RO = 175'
SE TRANS = 253'

DELINEATED
WETLAND

SLOPE INTERCEPT
SLOPE GRADING

TLE

R/W

DELINEATED
WETLAND

EXISTING R/W

STA 94+17 RT
GRAVEL P.E.

ATV/SNOWMOBILE ROUTE

CONTROL POINT TABLE						
PT NO.	STATION	OFFSET	Y	X	ELEV.	DESCRIPTION
5284	91+18	93 LT	100929.99	231789.79	1252.32	CP-5284
5283	91+73	101 LT	100981.51	231810.75	1253.30	CP-5283

OWNER
BARRON COUNTY

STA 91+02 - 92+88 RT
SLOPE GRADING
SEE SECTION 9 - CROSS SECTIONS

STA 92+02 RT
1 - REMOVING SMALL PIPE CULVERTS
(SEE SECTION 9 - CROSS SECTIONS)
1 - 30" X 24' CPRC CLASS III
1 - APRON ENDWALLS FOR CPRC 30"
1 - CONCRETE COLLAR
1 - MARKERS CULVERT END

CULVERT INVENTORY ID: 03063074401
STA 101+45
EXISTING 24" X 72' CPRC TO REMAIN
1 - 24" X 72' CULVERT PIPE LINER
1 - CLEANING CULVERT PIPE FOR LINER VERIFICATION
1 - MARKERS CULVERT END LT
1 - MARKERS CULVERT END RT

CULVERT INVENTORY ID: 03063074408
STA 107+96
EXISTING 36" X 110' CPRC TO REMAIN
1 - 36" X 110' CULVERT PIPE LINER
1 - CLEANING CULVERT PIPES FOR LINER VERIFICATION
1 - MARKERS CULVERT END LT
1 - MARKERS CULVERT END RT

PI STA = 112+29.36
Y = 102704.089
X = 232939.063
DELTA = 12°21'27" LT
D = 2°00'00"
T = 310.14'
L = 617.87'
R = 2864.79'
PC STA = 109+19.22
PT STA = 115+37.09
SE = 4.5%
RO = 175'
SE TRANS = 253'

4927

4926

BARRON ELEC

STA 103+34 LT
RESTORE ASPHALT P.E.

EXISTING R/W

BRIGHTSPEED

PC: 109+19.22

STA 106+26 LT
RESTORE GRAVEL P.E.

28

MATCH LINE 97+50

MATCH LINE 112+50

USH 63

N30°24'42"E

DELINEATED
WETLAND

EXISTING R/W

ATV/SNOWMOBILE ROUTE

ATV/SNOWMOBILE ROUTE

CONTROL POINT TABLE						
PT NO.	STATION	OFFSET	Y	X	ELEV.	DESCRIPTION
4926	103+04	137 LT	101975.87	232352.19	1264.85	CP-4926
4927	103+53	163 LT	102031.05	232354.72	1265.98	CP-4927
28	112+18	50 LT	102722.45	232873.62	1264.36	CP-28 SET 5/8 X 24

PROJECT NO: 1550-04-78	HWY: USH 63	COUNTY: BARRON	PLAN - USH 63	SHEET 74	E

FILE NAME : W:\NWBE_PROJECTS\DESIGN\2324_US63-US8TOSTH48\C3D-22\SHEETS\050201_PN-63-8TO3RD.DWG
LAYOUT NAME - 63_pn-02

PLOT DATE : 1/23/2026 3:56 PM PLOT BY : G. COLBERT PLOT NAME : PLOT SCALE : 1 IN:100 FT

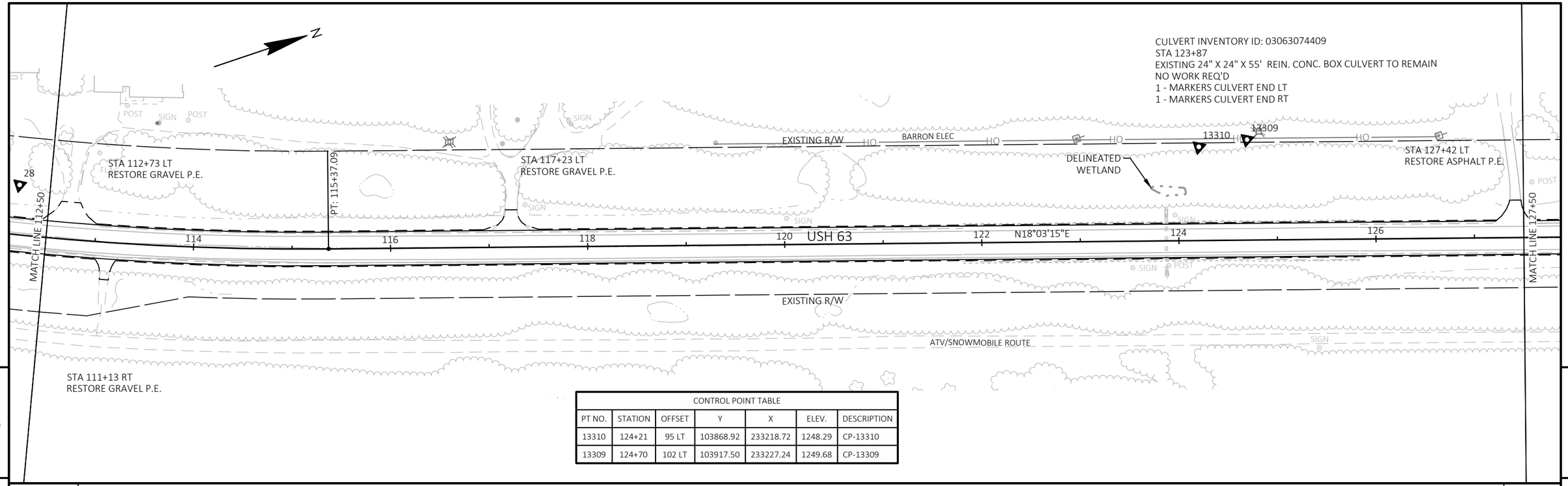

CONTROL POINT TABLE						
PT NO.	STATION	OFFSET	Y	X	ELEV.	DESCRIPTION
13310	124+21	95 LT	103868.92	233218.72	1248.29	CP-13310
13309	124+70	102 LT	103917.50	233227.24	1249.68	CP-13309

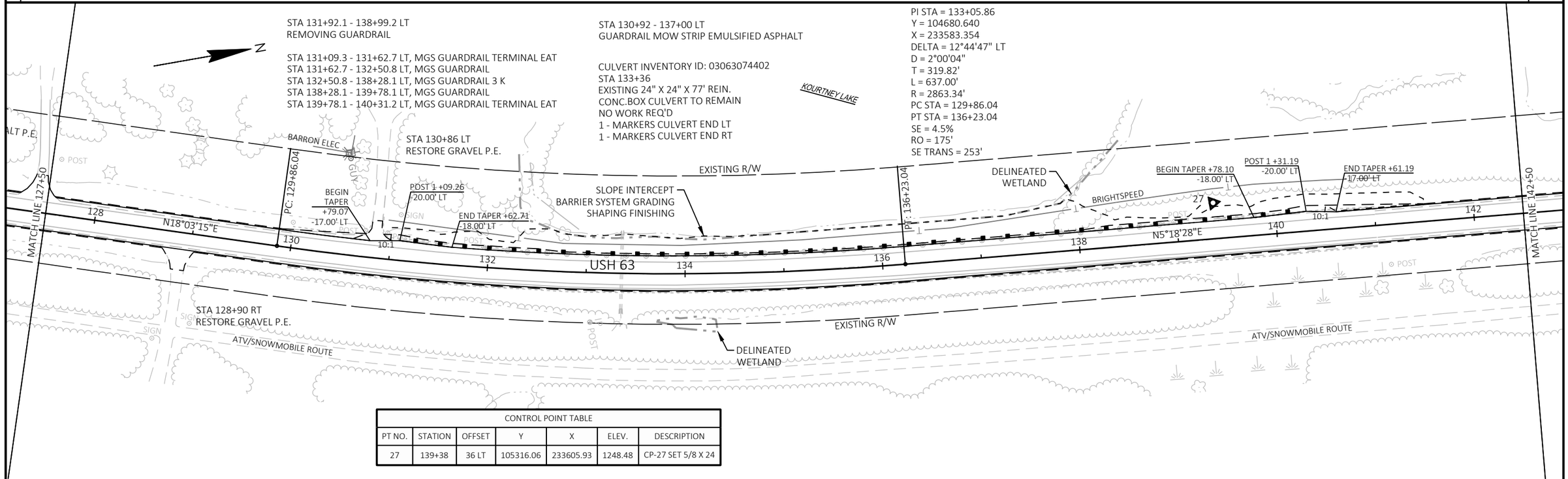

CONTROL POINT TABLE						
PT NO.	STATION	OFFSET	Y	X	ELEV.	DESCRIPTION
27	139+38	36 LT	105316.06	233605.93	1248.48	CP-27 SET 5/8 X 24

PROJECT NO: 1550-04-78	HWY: USH 63	COUNTY: BARRON	PLAN - USH 63	SHEET 75	E

FILE NAME : W:\NWBE_PROJECTS\DESIGN\2324_US63-US8TOSTH48\C3D-22\SHEETS\050201_PN-63-8TO3RD.DWG
LAYOUT NAME - 63_pn-03
PLOT DATE : 1/23/2026 3:56 PM PLOT BY : G. COLBERT PLOT NAME : PLOT SCALE : 1 IN:100 FT

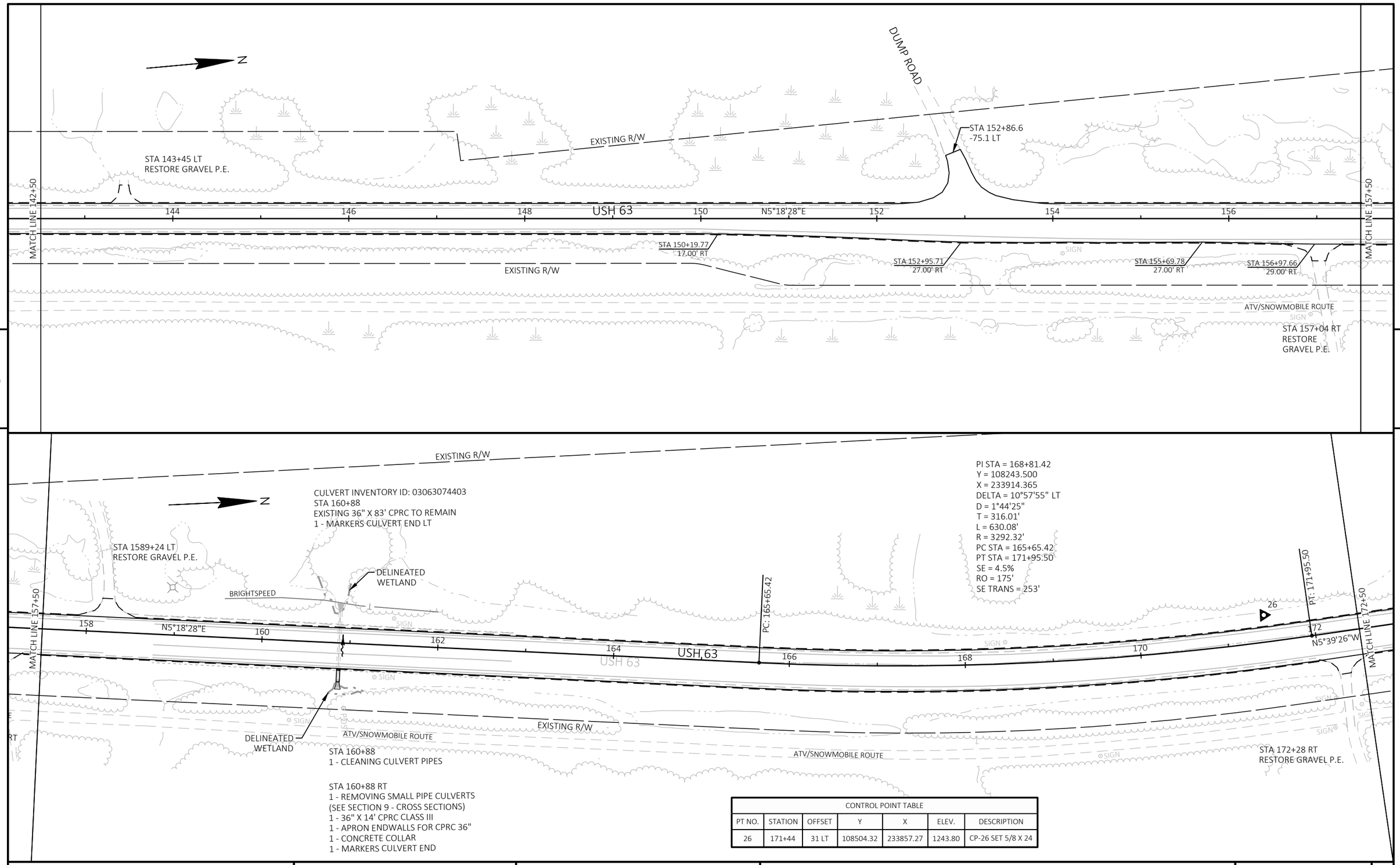

CONTROL POINT TABLE						
PT NO.	STATION	OFFSET	Y	X	ELEV.	DESCRIPTION
26	171+44	31 LT	108504.32	233857.27	1243.80	CP-26 SET 5/8 X 24

PROJECT NO: 1550-04-78	HWY: USH 63	COUNTY: BARRON	PLAN - USH 63	SHEET 76	E

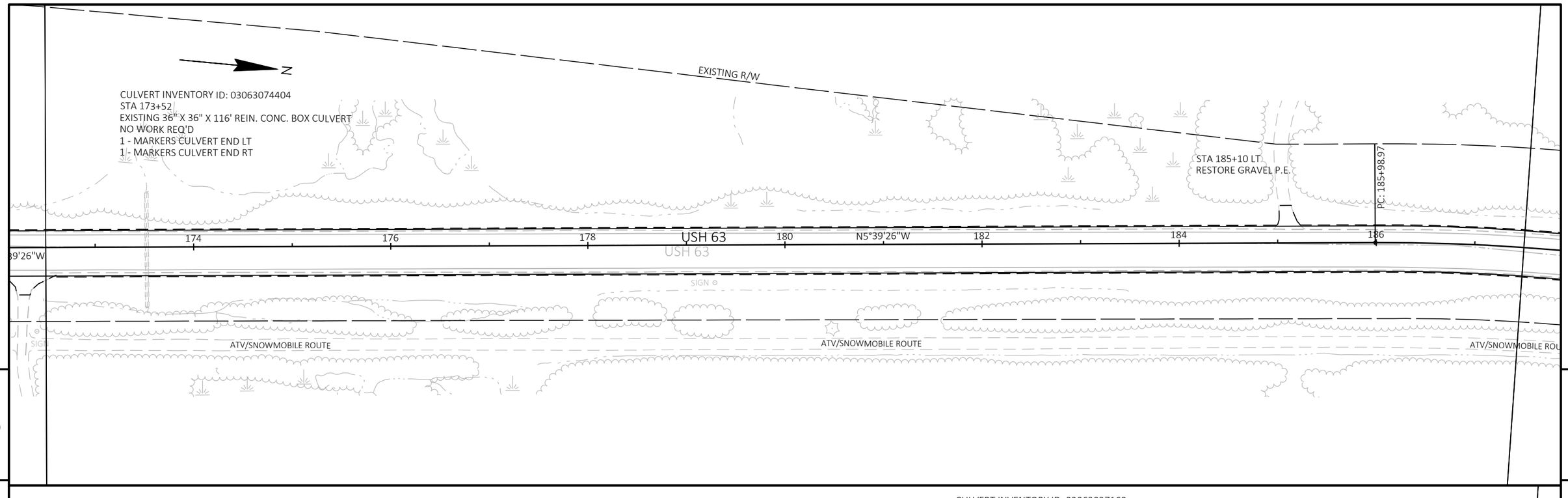

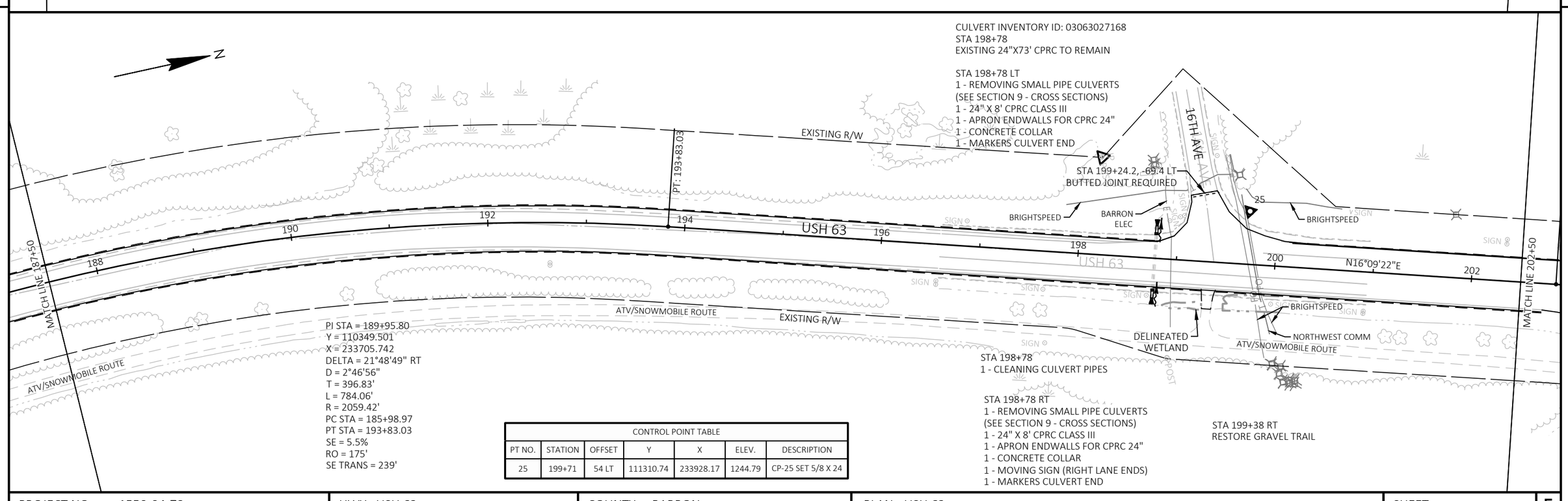

CONTROL POINT TABLE						
PT NO.	STATION	OFFSET	Y	X	ELEV.	DESCRIPTION
25	199+71	54 LT	111310.74	233928.17	1244.79	CP-25 SET 5/8 X 24

PROJECT NO: 1550-04-78	HWY: USH 63	COUNTY: BARRON	PLAN - USH 63	SHEET 77	E

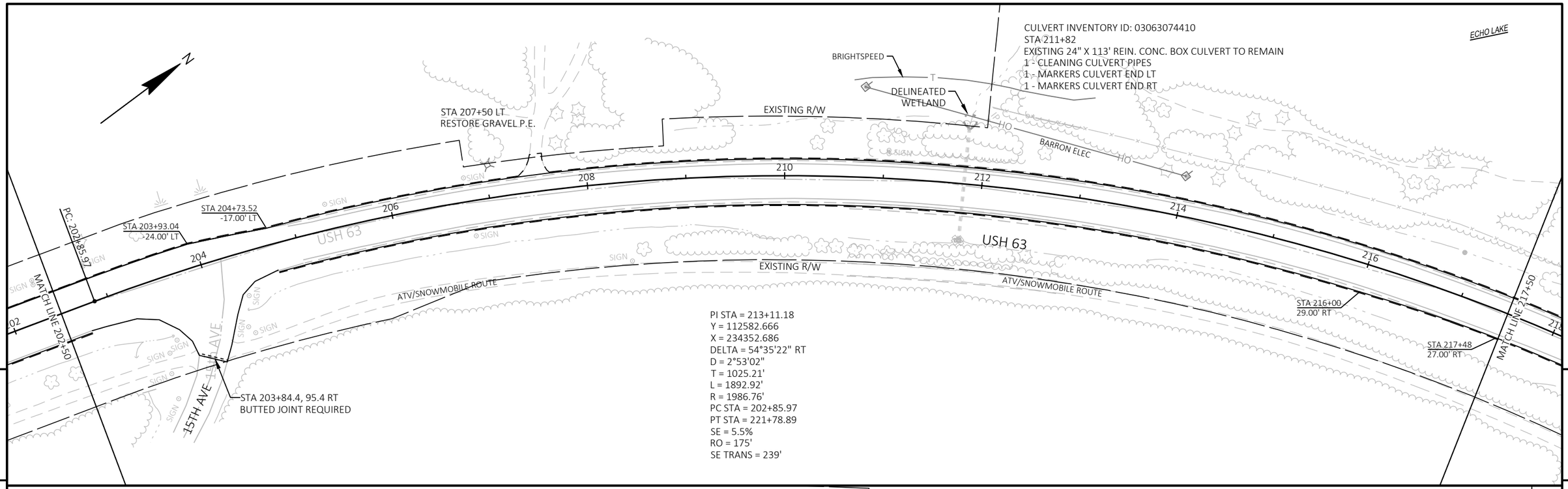

CONTROL POINT TABLE						
PT NO.	STATION	OFFSET	Y	X	ELEV.	DESCRIPTION
12758	223+89	59 LT	113045.77	235499.34	1216.32	CP-12958
12960	224+50	79 LT	113084.93	235550.09	1218.60	CP-12960
60568	224+98	30 LT	113054.08	235611.49	1226.17	CP-60568
24	227+55	32 LT	113140.59	235854.12	1229.29	CP-24 SET 5/8 X 24
60966	231+14	19 LT	113247.26	236196.58	1232.06	CP-60966
60967	232+06	22 RT	113238.86	236297.89	1232.75	CP-60967

PROJECT NO: 1550-04-78	HWY: USH 63	COUNTY: BARRON	PLAN - USH 63	SHEET 78	E

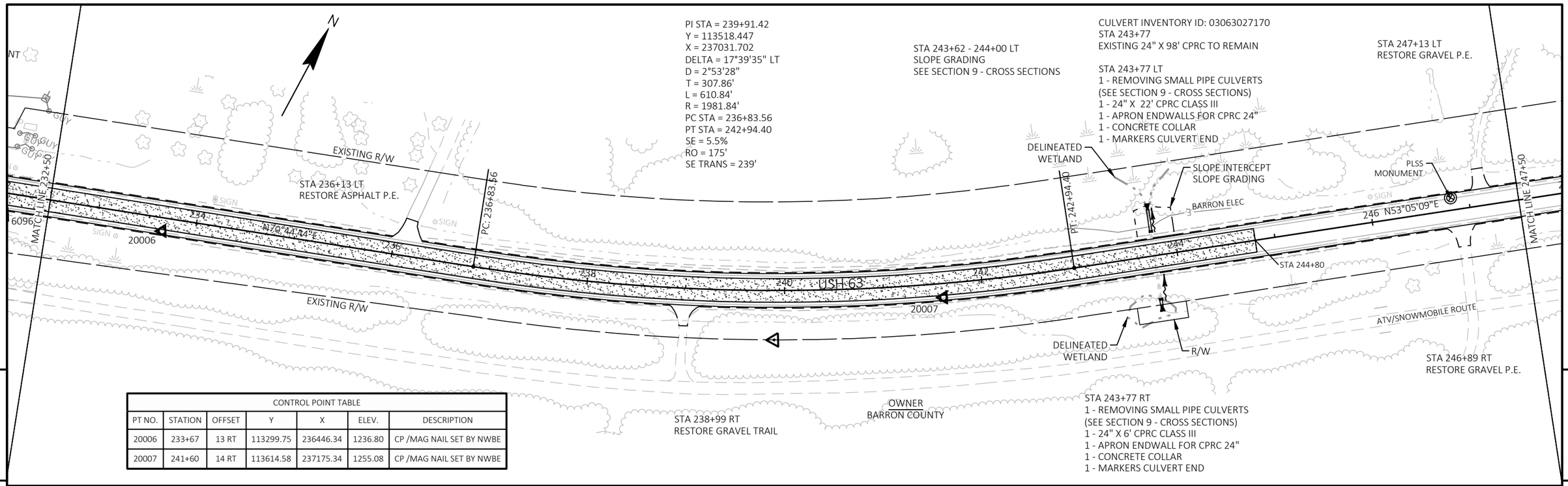

CONTROL POINT TABLE						
PT NO.	STATION	OFFSET	Y	X	ELEV.	DESCRIPTION
20006	233+67	13 RT	113299.75	236446.34	1236.80	CP /MAG NAIL SET BY NWBE
20007	241+60	14 RT	113614.58	237175.34	1255.08	CP /MAG NAIL SET BY NWBE

CONTROL POINT TABLE						
PT NO.	STATION	OFFSET	Y	X	ELEV.	DESCRIPTION
23	257+30	37 LT	114595.03	238403.15	1283.10	CP-23 SET 5/8 X 24

PROJECT NO: 1550-04-78	HWY: USH 63	COUNTY: BARRON	PLAN - USH 63	SHEET 79	E

FILE NAME : W:\NWBE_PROJECTS\DESIGN\2324_US63-US8TOSTH48\C3D-22\SHEETS\050201_PN-63-8TO3RD.DWG
LAYOUT NAME - 63_pn-07
PLOT DATE : 1/23/2026 3:57 PM PLOT BY : G. COLBERT PLOT NAME : PLOT SCALE : 1 IN:100 FT

WISDOT/CADDS SHEET 44

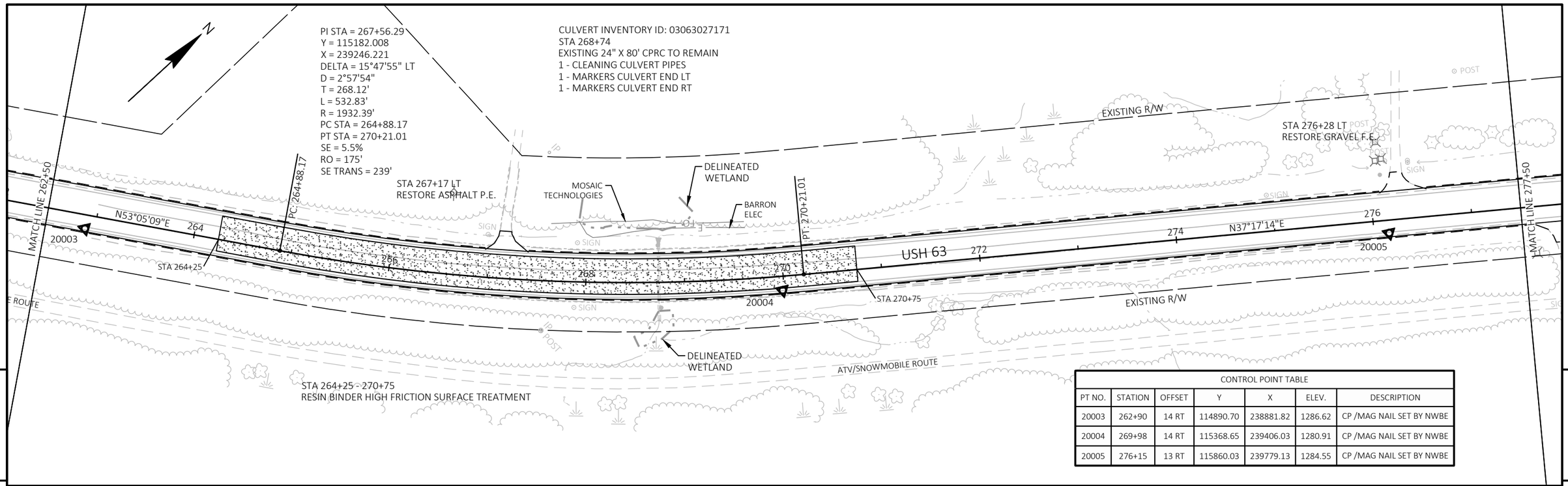

CONTROL POINT TABLE						
PT NO.	STATION	OFFSET	Y	X	ELEV.	DESCRIPTION
20003	262+90	14 RT	114890.70	238881.82	1286.62	CP /MAG NAIL SET BY NWBE
20004	269+98	14 RT	115368.65	239406.03	1280.91	CP /MAG NAIL SET BY NWBE
20005	276+15	13 RT	115860.03	239779.13	1284.55	CP /MAG NAIL SET BY NWBE

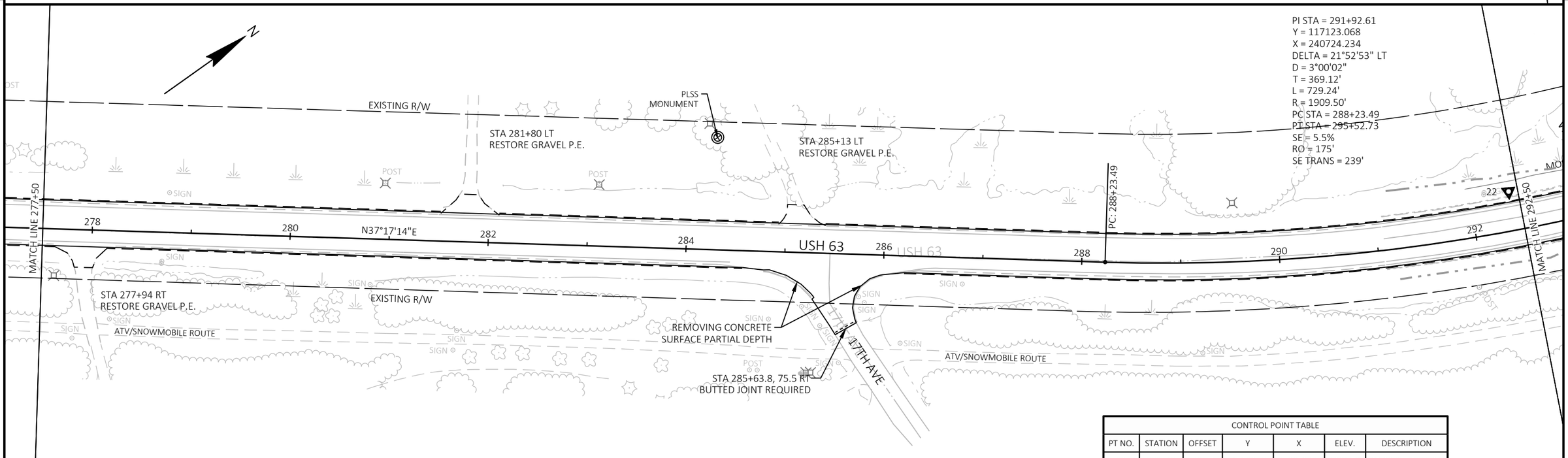

CONTROL POINT TABLE						
PT NO.	STATION	OFFSET	Y	X	ELEV.	DESCRIPTION
22	292+40	40 LT	117202.64	240679.06	1281.73	CP-22 SET 5/8 X 24

PROJECT NO: 1550-04-78	HWY: USH 63	COUNTY: BARRON	PLAN - USH 63	SHEET 80	E

FILE NAME : W:\NWBE_PROJECTS\DESIGN\2324_US63-US8TOSTH48\C3D-22\SHEETS\050201_PN-63-8TO3RD.DWG
LAYOUT NAME - 63_pn-08
PLOT DATE : 1/23/2026 3:58 PM PLOT BY : G. COLBERT PLOT NAME : PLOT SCALE : 1 IN:100 FT
WISDOT/CADDS SHEET 44

CULVERT INVENTORY ID: 03063027173
STA 293+24
EXISTING 24" X 77' CPRC
NO WORK REQ'D
1 - MARKERS CULVERT END LT
1 - MARKERS CULVERT END RT

N

EXISTING R/W

MOSIAC TECHNOLOGIES

DELINEATED WETLAND

FO

22

MATCH LINE 292+50

PT: 295+52.73

STA 301+75 LT
RESTORE GRAVEL P.E.

PC: 307+28.31

294 296 298 N15°24'21"E 300 USH 63 302 304 306

EXISTING R/W

DELINEATED WETLAND

ATV/SNOWMOBILE ROUTE

ATV/SNOWMOBILE ROUTE

5

5

CULVERT INVENTORY ID: 03063027174
STA 312+09
EXISTING 24" X 77' CPRC TO REMAIN
1 - MARKERS CULVERT END LT

CULVERT INVENTORY ID: 03063074411
STA 320+99
EXISTING 36" X 36" X 163' REIN. CONC. BOX CULVERT
NO WORK REQ'D
1 - MARKERS CULVERT END LT
1 - MARKERS CULVERT END RT

N

EXISTING R/W

DELINEATED WETLAND

MOSIAC TECHNOLOGIES

FO

MOSIAC TECHNOLOGIES

322+13 LT
RESTORE GRAVEL P.E.

21

PC: 307+28.31

MATCH LINE 307+50

308 310 312 314 USH 63 316 318 320 322

MATCH LINE 322+50

DELINEATED WETLAND

ATV/SNOWMOBILE ROUTE

SLOPE INTERCEPT
SLOPE GRADING

EXISTING R/W

ATV/SNOWMOBILE ROUTE

STA 312+00 - 312+18 RT
SLOPE GRADING
SEE SECTION 9 - CROSS SECTIONS

312+09 RT
1 - REMOVING SMALL PIPE CULVERTS
(SEE SECTION 9 - CROSSECTIONS)
1 -24" X 8' CPRC CLASS III
1 - APRON ENDWALLS FOR CPRC 24"
1 - CONCRETE COLLAR
1 - MARKERS CULVERT END

PI STA = 319+80.07
Y = 119819.043
X = 241467.127
DELTA = 35°53'20" RT
D = 1°28'56"
T = 1251.77'
L = 2421.14'
R = 3865.28'
PC STA = 307+28.31
PT STA = 331+49.44
SE = 3.7%
RO = 175'
SE TRANS = 270'

CONTROL POINT TABLE

PT NO.	STATION	OFFSET	Y	X	ELEV.	DESCRIPTION
21	321+56	41 LT	119912.71	241723.06	1284.01	CP-21 SET 5/8 X 24

PROJECT NO: 1550-04-78	HWY: USH 63	COUNTY: BARRON	PLAN - USH 63	SHEET 81	E

FILE NAME : W:\NWBE_PROJECTS\DESIGN\2324_US63-US8TOSTH48\C3D-22\SHEETS\050201_PN-63-8TO3RD.DWG
LAYOUT NAME - 63_pn-09

PLOT DATE : 1/23/2026 3:58 PM PLOT BY : G. COLBERT PLOT NAME : PLOT SCALE : 1 IN:100 FT

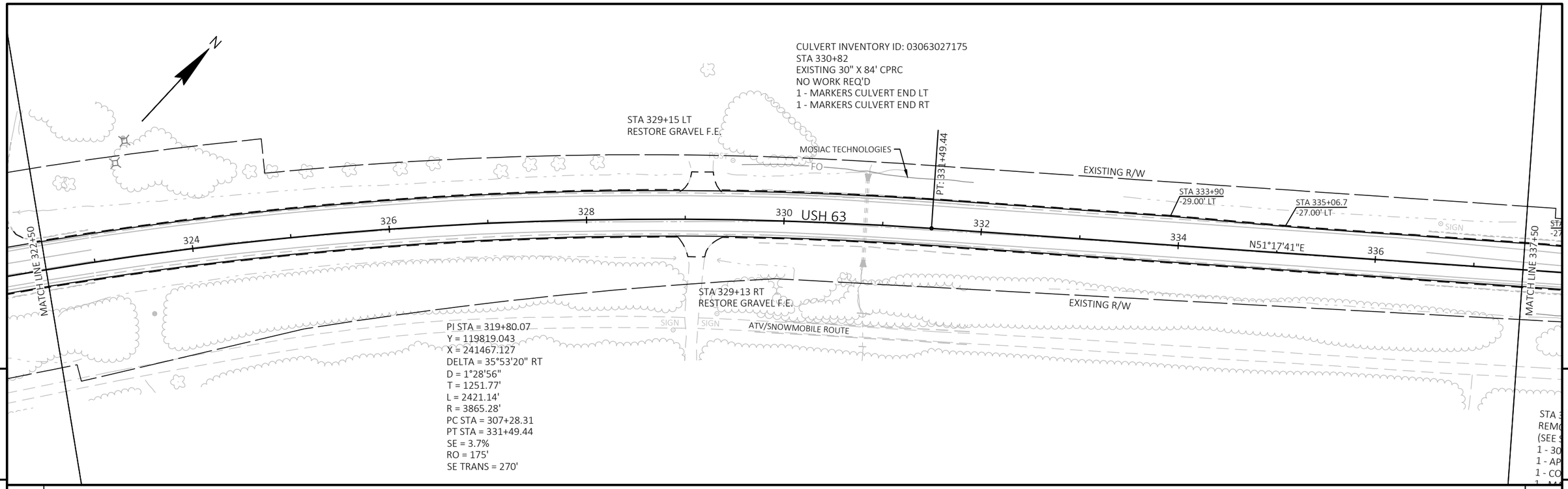

CONTROL POINT TABLE						
PT NO.	STATION	OFFSET	Y	X	ELEV.	DESCRIPTION
20	348+71	37 LT	121706.80	243764.14	1280.50	CP-20 SET 5/8 X 24

PROJECT NO: 1550-04-78	HWY: USH 63	COUNTY: BARRON	PLAN - USH 63	SHEET 82	E

CULVERT INVENTORY ID: 03063074556
STA 365+77
EXISTING 24" X 24" X 63' REIN. CONC. BOX CULVERT TO REMAIN
NO WORK REQ'D
1 - CULVERT MARKER LT
1 - CULVERT MARKER RT

STA 356+50 LT
RESTORE GRAVEL C.E.

MATCH LINE 352+50

EXISTING R/W

354 356 N51°17'41"E 358 USH 63 360 362 364 366

PC: 363+93.36

XCEL ENERGY

BRIGHTSPEED

QUARRY

12453 12454

50'

EXISTING R/W

ATV/SNOWMOBILE ROUTE

STA 365+71 - 365+82 RT
11' X 15' RIPRAP LIGHT W/
GEOTEXTILE TYPE R TO R/W

R/W

MATCH LINE 367+50

CONTROL POINT TABLE						
PT NO.	STATION	OFFSET	Y	X	ELEV.	DESCRIPTION
12453	366+07	17 RT	122753.34	245151.17	1304.94	CP-12453
12454	366+60	18 RT	122788.04	245191.85	1304.08	CP-12454

REMAIN

PI STA = 368+44.07
Y = 122912.088
X = 245327.163
DELTA = 7°56'59" LT
D = 0°53'00"
T = 450.71'
L = 899.97'
R = 6486.24'
PC STA = 363+93.36
PT STA = 372+93.33
SE = 2.7%
RO = 175'
SE TRANS = 305'

STA 372+08 LT
RESTORE ASPHALT
P.E. (APRON ONLY)

PT: 372+93.33

MATCH LINE 367+50

EXISTING R/W

368 370 372 374 USH 63 376 378 380 382

N43°20'42"E

19

CRYSTAL LAKE SANITARY DISTRICT

MATCH LINE 382+50

STA 372+20 RT
RESTORE GRAVEL TRAIL

ATV/SNOWMOBILE ROUTE

EXISTING R/W

ATV/SNOWMOBILE ROUTE

CONTROL POINT TABLE						
PT NO.	STATION	OFFSET	Y	X	ELEV.	DESCRIPTION
19	376+09	33 LT	123491.84	245828.96	1277.62	CP-19 SET 5/8 X 24

PROJECT NO: 1550-04-78	HWY: USH 63	COUNTY: BARRON	PLAN - USH 63	SHEET 83	E

FILE NAME : W:\NWBE_PROJECTS\DESIGN\2324_US63-US8TOSTH48\C3D-22\SHEETS\050202_PN-63-3RDTO48.DWG
LAYOUT NAME - 63_pn-11
PLOT DATE : 1/23/2026 4:02 PM PLOT BY : G. COLBERT PLOT NAME : PLOT SCALE : 1 IN:100 FT

CULVERT INVENTORY ID: 03063027179
STA 385+35
EXISTING 30" X 62' CPRC
1 - REMOVING SMALL PIPE CULVERTS
1 - 30" X 54' CPRC CLASS IV
2 - APRON ENDWALLS FOR CPRC 30"
1 - MARKERS CULVERT END LT
1 - MARKERS CULVERT END RT

CULVERT INVENTORY ID: 03063027181
STA 391+39
EXISTING 30" X 61' CPRC TO REMAIN
1 - CLEANING CULVERT PIPES
1 - MARKERS CULVERT END LT
1 - MARKERS CULVERT END RT

STA 396+35 - 396+50 LT
REMOVING CURB & GUTTER
CONCRETE CURB & GUTTER 30-INCH TYPE D REQ'D
(SEE DETAIL)

STA 396+72 - 396+87 LT
REMOVING CURB & GUTTER
CONCRETE CURB & GUTTER 30-INCH TYPE D REQ'D
(SEE DETAIL)

STA 385+60 LT
RESTORE GRAVEL F.E.

STA 386+08 LT
RESTORE GRAVEL P.E.

STA 388+75.1, -54.9 LT
BUTTED JOINT REQUIRED

STA 389+00
-30.0 LT
ADJUST SAN. MH

CLEANING CULVERT
PIPE MINIMAL TO RW

STA 394+43.25
-17.00' LT

STA 395+16.13
-22.40' LT

EXISTING CONCRETE CURB
AND GUTTER TO REMAIN

BRIGHTSPEED
XCEL ENERGY
CRYSTAL LAKE SANITARY DISTRICT
EXISTING R/W
12372
12373
REMOVING CONCRETE
SURFACE PARTIAL DEPTH
18 1/2 / 19 1/2 AVE
N43°20'42"E
N43°09'59"E
USH 63
MATCH LINE 382+50
MATCH LINE 397+50
EXISTING R/W
PI: 388+07.08
STA 388+61.32
38.0 RT
18 1/2 / 19 1/2 AVE
WE ENERGIES
ATV/SNOWMOBILE ROUTE
ROUTE

CONTROL POINT TABLE						
PT NO.	STATION	OFFSET	Y	X	ELEV.	DESCRIPTION
12372	385+89	18 LT	124194.95	246512.91	1273.26	CP-12372
12373	386+47	18 LT	124236.14	246552.52	1273.20	CP-12373

MILL DEPTH TRANSITION
STA 394+66.4 - 2.25" MILL DEPTH
STA 395+16.4 - 3.25" MILL DEPTH

EXISTING CONCRETE CURB
AND GUTTER TO REMAIN
1007
853
18
EXISTING R/W
N43°09'59"E
USH 63
N42°34'39"E
MATCH LINE 397+50
MATCH LINE 412+50
PI: 408+82.25
STA 409+02.21
-21.37' LT
STA 409+57.49
-17.00' LT
STA 410+34 LT
RESTORE GRAVEL P.E.
EXISTING R/W
STA 401+95 RT
RESTORE GRAVEL P.E.
ATV/SNOWMOBILE ROUTE
STA 405+73.3, 75.6 RT
BUTTED JOINT REQUIRED
18 3/4 AVE
WISCONSIN DEPARTMENT OF TRANSPORTATION
ACQUIRED UNDER PROJECT 1000-58-20

CONTROL POINT TABLE						
PT NO.	STATION	OFFSET	Y	X	ELEV.	DESCRIPTION
1007	398+51	31 LT	125123.48	247366.76	1283.10	CP-1007
853	402+41	22 LT	125401.60	247640.82	1281.74	CP-853
18	405+04	31 LT	125599.64	247814.43	1280.64	CP-18 SET 5/8 X 24

MILL DEPTH TRANSITION
STA 408+08.0 - 3.25" MILL DEPTH
STA 408+58.0 - 2.25" MILL DEPTH

PROJECT NO: 1550-04-78	HWY: USH 63	COUNTY: BARRON	PLAN - USH 63	SHEET 84	E

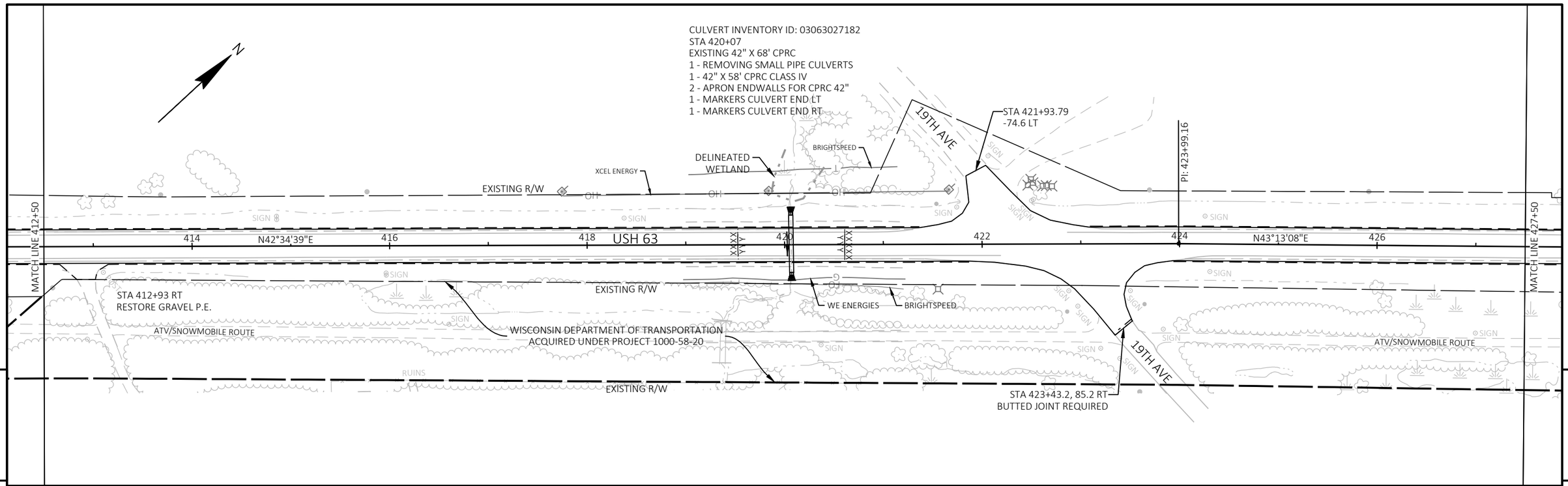

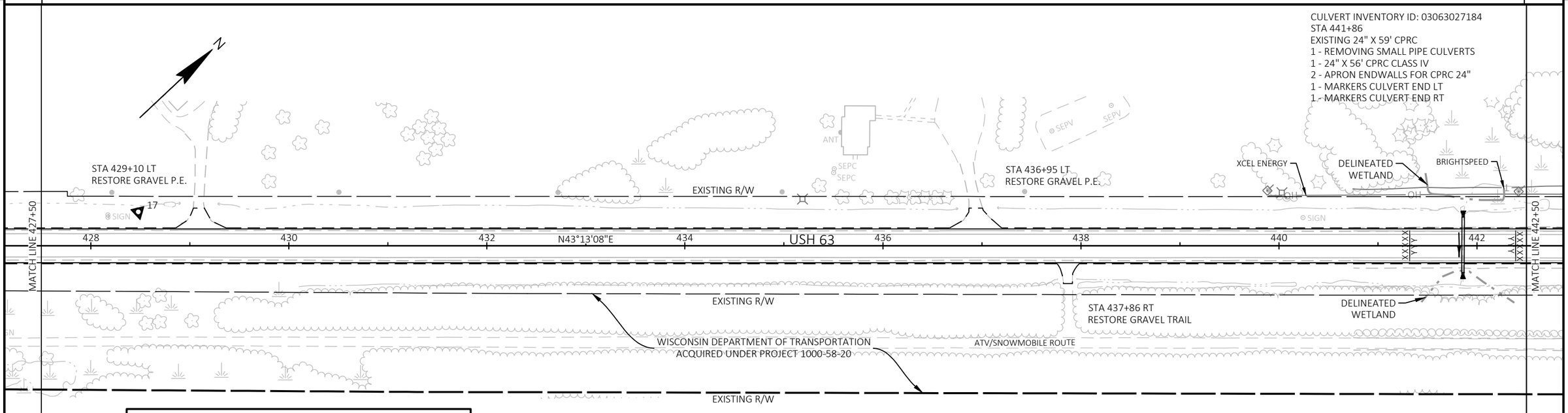

CONTROL POINT TABLE						
PT NO.	STATION	OFFSET	Y	X	ELEV.	DESCRIPTION
17	428+48	34 LT	127321.68	249403.82	1269.91	CP-17 SET 5/8 X 24

PROJECT NO: 1550-04-78	HWY: USH 63	COUNTY: BARRON	PLAN - USH 63	SHEET 85	E

FILE NAME : W:\NWBE_PROJECTS\DESIGN\2324_US63-US8TOSTH48\C3D-22\SHEETS\050202_PN-63-3RDTO48.DWG
LAYOUT NAME - 63_pn-13

PLOT DATE : 1/23/2026 4:02 PM PLOT BY : G. COLBERT PLOT NAME : PLOT SCALE : 1 IN:100 FT

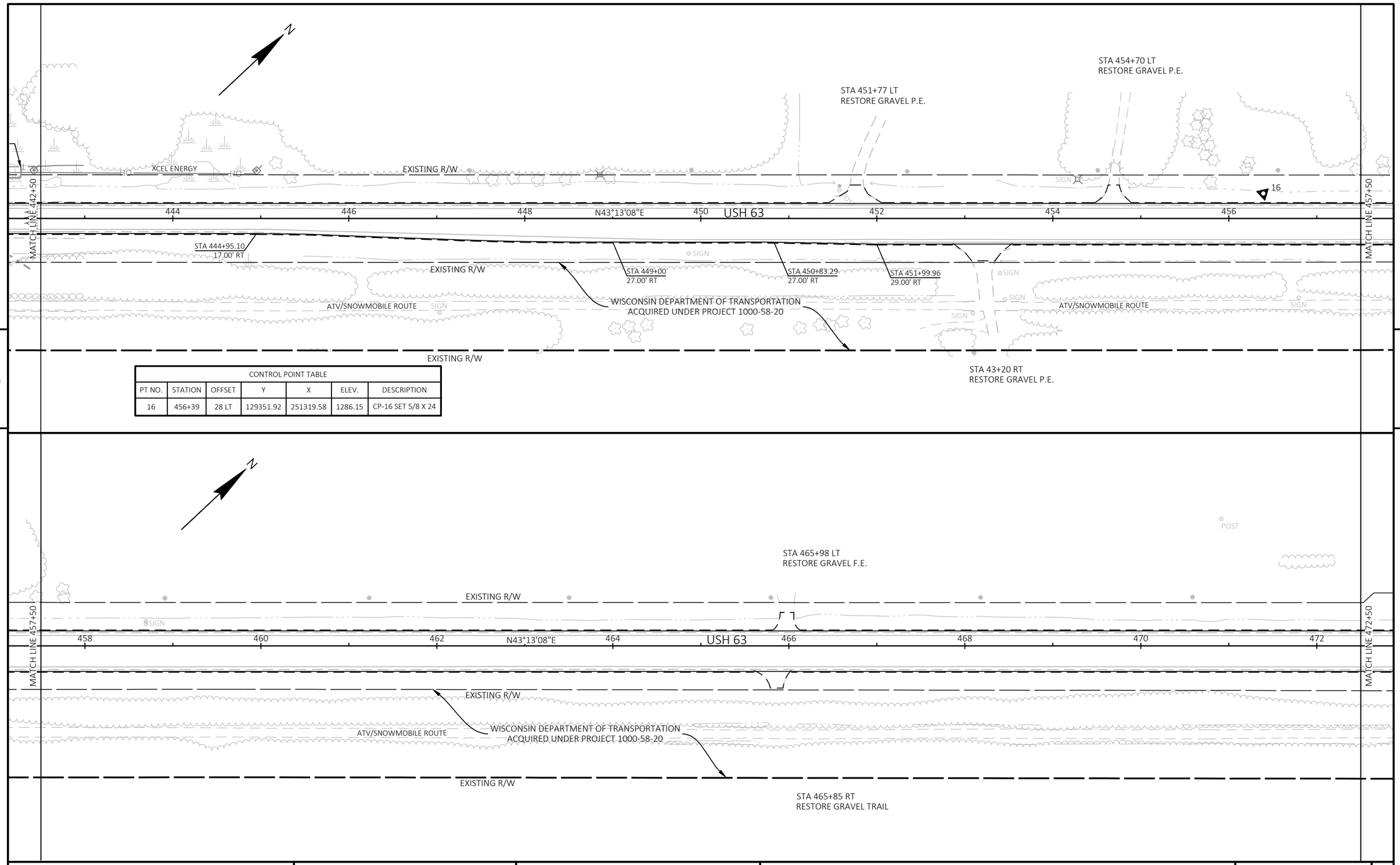

CONTROL POINT TABLE						
PT NO.	STATION	OFFSET	Y	X	ELEV.	DESCRIPTION
16	456+39	28 LT	129351.92	251319.58	1286.15	CP-16 SET 5/8 X 24

PROJECT NO: 1550-04-78	HWY: USH 63	COUNTY: BARRON	PLAN - USH 63	SHEET 86	E

FILE NAME : W:\NWBE_PROJECTS\DESIGN\2324_US63-US8TOSTH48\C3D-22\SHEETS\050202_PN-63-3RDTO48.DWG
LAYOUT NAME - 63_pn-14

PLOT DATE : 1/23/2026 4:03 PM PLOT BY : G. COLBERT PLOT NAME : PLOT SCALE : 1 IN:100 FT

STA 476+90 LT
RESTORE GRAVEL P.E.

CULVERT INVENTORY ID: 03063027185
STA 487+35
EXISTING 24" X 90' CPRC
NO WORK REQ'D
1 - MARKERS CULVERT END LT
1 - MARKERS CULVERT END RT

MATCH LINE 472+50

474 476 478 480 482 484 486

N43°13'08"E

USH 63

PC: 483+25.19

15

MATCH LINE 487+50

EXISTING R/W

SIGN

WISCONSIN DEPARTMENT OF TRANSPORTATION
ACQUIRED UNDER PROJECT 1000-58-20

EXISTING R/W

ATV/SNOWMOBILE ROUTE

STA 476+97 RT
RESTORE GRAVEL F.E.

5

5

PI STA = 490+81.03
Y = 131840.634
X = 253697.191
DELTA = 43°10'49" LT
D = 2°59'59"
T = 755.84'
L = 1439.44'
R = 1909.98'
PC STA = 483+25.19
PT STA = 497+64.63
SE = 5.5%
RO = 175'
SE TRANS = 239'

CULVERT INVENTORY ID: 03063027187
STA 497+62
EXISTING 30" X 95' CPRC
NO WORK REQ'D
1 - MARKERS CULVERT END LT
1 - MARKERS CULVERT END RT

STA 469+88 LT
RESTORE GRAVEL F.E.

20TH AVE

15

MATCH LINE 487+50

488 490 492 494 496 498 500 502

STA 492+58.30
-75.3 LT

EXISTING R/W

PT: 497+64.63

USH 63

MATCH LINE 502+50

SIGN

POST

REMOVING CONCRETE
SURFACE PARTIAL DEPTH

STA 493+06.4, 73.4 RT
BUTTED JOINT REQUIRED

20TH AVE

EXISTING R/W

CONTROL POINT TABLE						
PT NO.	STATION	OFFSET	Y	X	ELEV.	DESCRIPTION
15	487+68	44 LT	131666.82	253405.09	1261.99	CP-15 SET 5/8 X 24

PROJECT NO: 1550-04-78	HWY: USH 63	COUNTY: BARRON	PLAN - USH 63	SHEET 87	E

FILE NAME : W:\NWBE_PROJECTS\DESIGN\2324_US63-US8TOSTH48\C3D-22\SHEETS\050202_PN-63-3RDTO48.DWG
LAYOUT NAME - 63_pn-15

PLOT DATE : 1/23/2026 4:03 PM PLOT BY : G. COLBERT PLOT NAME : PLOT SCALE : 1 IN:100 FT

CULVERT INVENTORY ID: C-3-0687
STA 507+75
EXISTING 42" X 72" X 82' REIN. CONC. BOX CULVERT, C-03-0687
1 - REMOVING STRUCTURE C-03-0687
1 - 58" X 91" X 82' CPRC HOR. ELLIPTICAL CLASS HE-III, SKEW 2° LHF
2 - APRON ENDWALLS FOR CPRC HOR. ELLIPTICAL 58" X 91"
1 - MARKERS CULVERT END LT
1 - MARKERS CULVERT END RT

N

STA 504+95 LT
RESTORE GRAVEL F.E.

BARRON ELEC

PI: 507+00.00

DELINEATED WETLAND

SLOPE INTERCEPT
TEMP. WIDENING AND RESTORATION

EXISTING R/W

PI: 514+69.42

61525

14

MATCH LINE 502+50

504 506 508 510 USH 63 512 514 516 N0°17'38"E

MATCH LINE 517+50

XCEL ENERGY

BRIGHTSPEED

R/W

STA 508+42
29.00' RT

STA 509+91.40
27.00' RT

STA 517+26.62
27.00' RT

SLOPE INTERCEPT
TEMP. WIDENING AND RESTORATION

EXISTING R/W

DELINEATED WETLAND

STA 507+66.5 - 507+77.5 RT
11' X 5' RIPRAP MEDIUM
W/ GEOTEXTILE TYPE HR

STA 510+94 RT
RESTORE GRAVEL F.E.

CONTROL POINT TABLE						
PT NO.	STATION	OFFSET	Y	X	ELEV.	DESCRIPTION
61525	511+31	34 LT	133963.02	253663.90	1269.75	CP-61525
14	516+46	31 LT	134477.60	253667.35	1287.90	CP-14 SET 5/8 X 24

5

5

N

STA 517+88 LT
RESTORE GRAVEL P.E.

STA 520+29 LT
RESTORE ASPHALT P.E.

STA 527+44 LT
RESTORE GRAVEL P.E.

PI: 519+69.95

EXISTING R/W

PLSS MONUMENT

MATCH LINE 517+50

518 N0°17'38"E 520 522 524 USH 63 526 528 N1°29'31"E 530 532

MATCH LINE 532+50

STA 518+54.1
29.00' RT

STA 517+59.8
29.00' RT

STA 519+11.31
86.5 RT

20 1/2 AVE

STA 519+86.52
17.00' RT

XCEL ENERGY

EXISTING R/W

522+65 RT
RESTORE GRAVEL P.E.

PROJECT NO: 1550-04-78	HWY: USH 63	COUNTY: BARRON	PLAN - USH 63	SHEET 88	E

CULVERT INVENTORY ID: 03063027188
STA 533+84
EXISTING 48" X 94' CPRC
1 - 48" X 94' CULVERT PIPE LINER
1 - CLEANING CULVERT PIPES FOR LINER VERIFICATION
2 - MARKERS CULVERT END (1-LT, 1-RT)

CULVERT INVENTORY ID: 03063027189
STA 533+91
EXISTING 48" X 94' CPRC
1 - 48" X 94' CULVERT PIPE LINER
1 - CLEANING CULVERT PIPES FOR LINER VERIFICATION
2 - MARKERS CULVERT END (1-LT, 1-RT)

STA 539+15 LT
RESTORE GRAVEL P.E.

CULVERT INVENTORY ID: 03063027191
STA 547+00
EXISTING 60" X 86' CPRC
1 - REMOVING STRUCTURE

STA 547+07
1 - 68" X 106" X 74' CPRC HOR. ELLIPTICAL CLASS HE-III, SKEW 24° LHF
2 - APRON ENDWALLS FOR CPRC HOR. ELLIPTICAL 68" X 106"
1 - MARKERS CULVERT END LT
1 - MARKERS CULVERT END RT

CULVERT INVENTORY ID: 03063074557
STA 547+10
EXISTING 60" X 86' CPRC
1 - REMOVING STRUCTURE

OWNERS
SANDRA MARIE LINDSLEY,
ADAM HINES & JOSEPH VENNIE

DELINEATED WETLAND

EXISTING. R/W

STA 545+14.66
-64.5 LT

21ST AVE

MATCH LINE 532+50

12298 12299

534 536 538 USH 63 540 N1°29'31"E 542 544 546

PLSS MONUMENT

MATCH LINE 547+50

XCEL ENERGY

BRIGHTSPEED

EXISTING. R/W

REMOVING CONCRETE SURFACE PARTIAL DEPTH

STA 545+12.1, 63.5 RT
BUTTED JOINT REQUIRED

STA 539+45 RT
RESTORE ASPHALT P.E.

STA 546+81 - 546+94 RT
12.3' X 5' RIPRAP MEDIUM
W/ GEOTEXTILE TYPE HR

DELINEATED WETLAND

TLE

OWNERS
THOMAS M. ZAPPA
AND KELLY S. NELSON

1 SLOPE INTERCEPT
TEMP. WIDENING AND RESTORATION

CONTROL POINT TABLE						
PT NO.	STATION	OFFSET	Y	X	ELEV.	DESCRIPTION
12298	534+39	19 LT	136271.02	253719.63	1285.22	CP-12298
12299	534+99	19 LT	136331.15	253720.85	1284.96	CP-12299
13	544+68	30 LT	137299.66	253734.91	1280.72	CP-13 SET 5/8 X 24

STA 554+47 LT
RESTORE ASPHALT P.E.

STA 557+92 LT
RESTORE GRAVEL F.E.

EXISTING. R/W

STA 551+22.21
-17.00' LT

STA 557+16.64
-29.00' LT

MATCH LINE 547+50

12223 12224

548 550 552 554 USH 63 556 N1°29'31"E 558 560 562

MATCH LINE 562+50

XCEL ENERGY

BRIGHTSPEED

EXISTING. R/W

SLOPE INTERCEPT
TEMP. WIDENING AND RESTORATION

SLOPE INTERCEPT
TEMP. WIDENING AND RESTORATION

STA 551+43 RT
RESTORE GRAVEL P.E.

STA 556+62 RT
RESTORE GRAVEL P.E.

CONTROL POINT TABLE						
PT NO.	STATION	OFFSET	Y	X	ELEV.	DESCRIPTION
12223	547+71	17 LT	137602.49	253755.38	1280.90	CP-12223
12224	548+30	18 LT	137661.16	253756.37	1280.80	CP-12224

PROJECT NO: 1550-04-78	HWY: USH 63	COUNTY: BARRON	PLAN - USH 63	SHEET 89	E

CULVERT INVENTORY ID: 03063027192
STA 565+31
EXISTING 24" X 70' CPRC TO REMAIN
1 - CLEANING CULVERT PIPES
1 - MARKERS CULVERT END LT
1 - MARKERS CULVERT END RT

STA 569+95 LT
RESTORE GRAVEL P.E.

STA 575+43 LT
RESTORE GRAVEL P.E.

EXISTING. R/W

PI: 575+60.22

MATCH LINE 562+50

564 566 568 N1°29'31"E 570 USH 63 572 574 576 N0°44'38"E

PLSS MONUMENT

MATCH LINE 577+50

XCEL ENERGY

EXISTING. R/W

STA 562+65 RT
RESTORE GRAVEL P.E.

STA 571+27.6, 65.7 RT
BUTTED JOINT REQUIRED

21 1/2 AVE

CONTROL POINT TABLE						
PT NO.	STATION	OFFSET	Y	X	ELEV.	DESCRIPTION
12	571+38	38 LT	139968.87	253796.16	1314.75	CP-12 SET 5/8 X 24

CULVERT INVENTORY ID: 03063027193
STA 583+62
EXISTING 24" X 83' CPRC TO REMAIN
1 - CLEANING CULVERT PIPES
1 - MARKERS CULVERT END LT
1 - MARKERS CULVERT END RT

STA 583+37 - 583+87
50 LF DITCH CLEANING LT

STA 580+77 LT
RESTORE ASPHALT P.E.

21 3/4 AVE (CTH G)

STA 584+40.2, -93.3 LT
BUTTED JOINT REQUIRED

CONCRETE CURB & GUTTER
6-INCH SLOPED 36-INCH TYPE D
(SEE DETAIL)

CULVERT INVENTORY ID: 03063027195
STA 588+29
EXISTING 30" X 94' CPRC TO REMAIN
1 - CLEANING CULVERT PIPES
1 - MARKERS CULVERT END LT
1 - MARKERS CULVERT END RT

PI: 586+56.63

BRIGHTSPEED

EXISTING. R/W

ASPHALTIC FLUME

STA 583+23.96
-29.00' LT

STA 585+13.20
-38.00' LT

MATCH LINE 577+50

578 580 N0°44'38"E 582 584 USH 63 586 588 590 592

MATCH LINE 592+50

3241 3240

BARRON ELEC

STA 580+75.91
17.00' RT

STA 582+92.91
29.00' RT

XCEL ENERGY

STA 585+42.91
29.00' RT

XCEL ENERGY

STA 588+67.91
17.00' RT

EXISTING. R/W

STA 591+00 RT
RESTORE GRASS/GRAVEL F.E.

CONTROL POINT TABLE						
PT NO.	STATION	OFFSET	Y	X	ELEV.	DESCRIPTION
3241	582+27	22 RT	141056.91	253876.47	1321.13	CP-3241
3240	583+64	26 RT	141193.10	253881.80	1319.46	CP-3240

PROJECT NO: 1550-04-78	HWY: USH 63	COUNTY: BARRON	PLAN - USH 63	SHEET 90	E

FILE NAME : W:\NWBE_PROJECTS\DESIGN\2324_US63-US8TOSTH48\C3D-22\SHEETS\050202_PN-63-3RDTO48.DWG
LAYOUT NAME - 63_pn-18

PLOT DATE : 1/30/2026 11:20 AM PLOT BY : G. COLBERT PLOT NAME : PLOT SCALE : 1 IN:100 FT

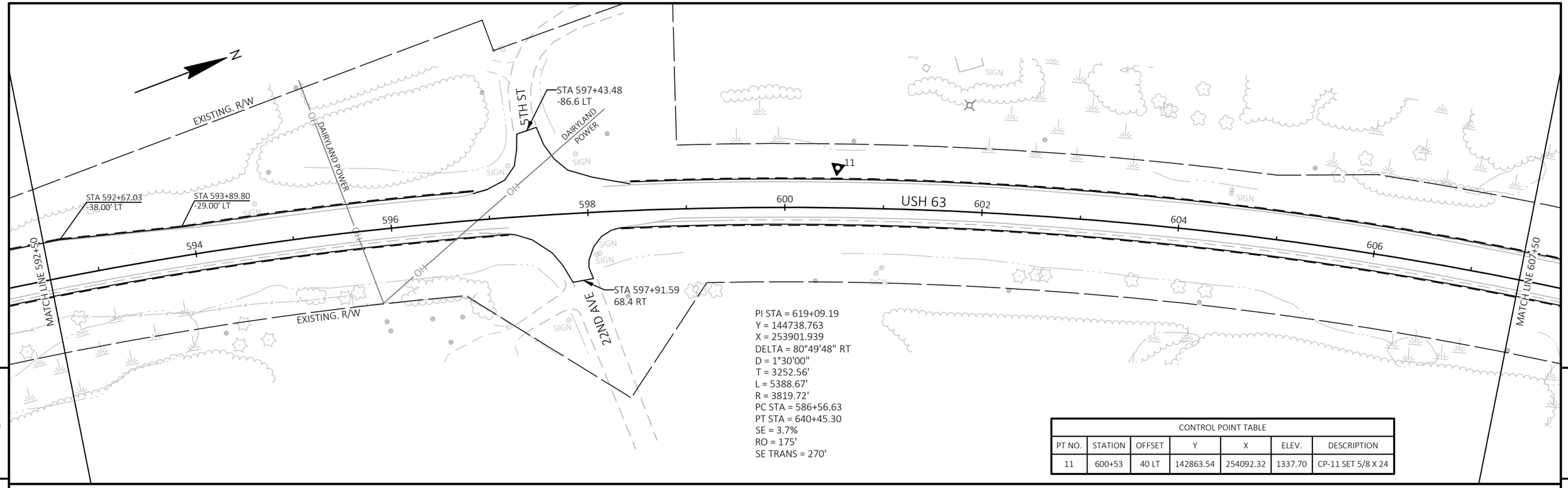

CONTROL POINT TABLE						
PT NO.	STATION	OFFSET	Y	X	ELEV.	DESCRIPTION
11	600+53	40 LT	142863.54	254092.32	1337.70	CP-11 SET 5/8 X 24

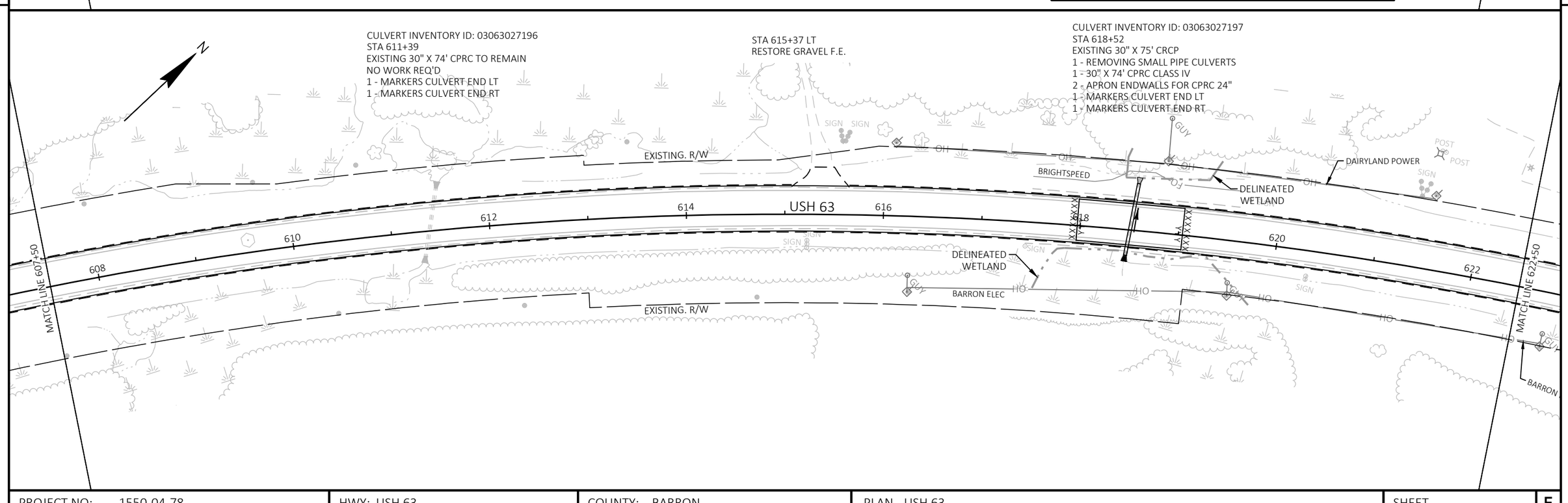

PROJECT NO: 1550-04-78	HWY: USH 63	COUNTY: BARRON	PLAN - USH 63	SHEET 91	E

FILE NAME : W:\NWBE_PROJECTS\DESIGN\2324_US63-US8TOSTH48\C3D-22\SHEETS\050202_PN-63-3RDTO48.DWG
LAYOUT NAME - 63_pn-19
PLOT DATE : 1/26/2026 3:14 PM
PLOT BY : G. COLBERT
PLOT NAME :
PLOT SCALE : 1 IN:100 FT

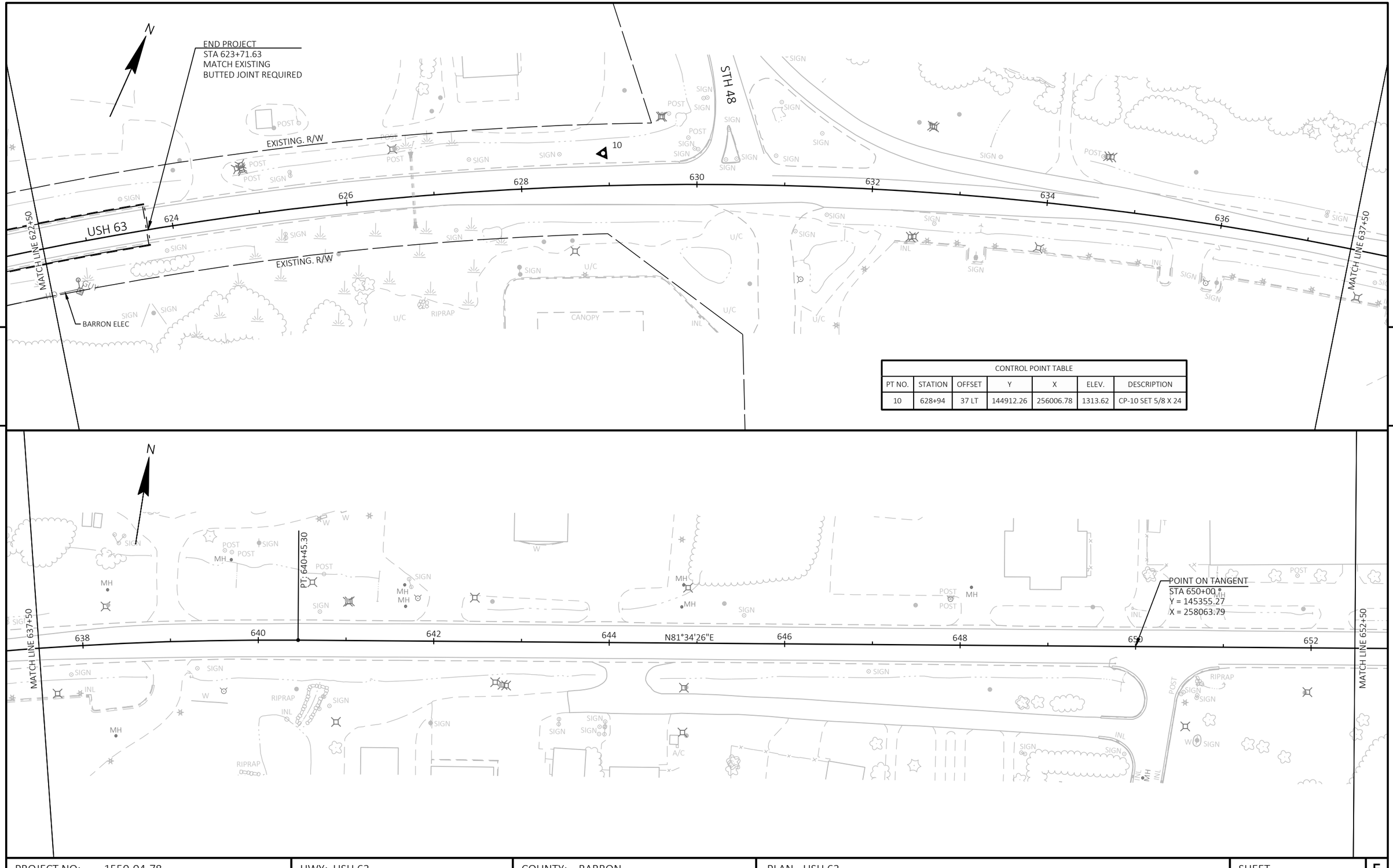

CONTROL POINT TABLE						
PT NO.	STATION	OFFSET	Y	X	ELEV.	DESCRIPTION
10	628+94	37 LT	144912.26	256006.78	1313.62	CP-10 SET 5/8 X 24

PROJECT NO: 1550-04-78	HWY: USH 63	COUNTY: BARRON	PLAN - USH 63	SHEET 92	E

FILE NAME : W:\NWBE_PROJECTS\DESIGN\2324_US63-US8TOSTH48\C3D-22\SHEETS\050202_PN-63-3RDTO48.DWG
LAYOUT NAME - 63_pn-20

PLOT DATE : 1/23/2026 4:04 PM PLOT BY : G. COLBERT PLOT NAME : PLOT SCALE : 1 IN:100 FT

Standard Detail Drawing List

08D01-24A	CONCRETE CURB & GUTTER
08D01-24B	CONCRETE CURB, TIES AND CURB AND GUTTER APPLICATIONS
08E08-03	TYPICAL INSTALLATIONS OF EROSION BALES / TEMPORARY DITCH CHECKS
08E09-06	SILT FENCE
08E15-01	CULVERT PIPE CHECK
08F01-11	APRON ENDWALLS FOR CULVERT PIPE
08F02-01	APRON ENDWALLS FOR PIPE ARCH AND ELLIPTICAL PIPE
08F04-08	JOINT TIES FOR CONCRETE PIPE AND CONCRETE COLLAR DETAIL
09A15-01	DRIVEWAYS WITHOUT CURB AND GUTTER RESURFACING PROJECTS RURAL
09G02-05A	BRIDGE TEMPORARY TRAFFIC SIGNAL INSTALLATION
09G02-05B	BRIDGE TEMPORARY TRAFFIC SIGNAL INSTALLATION
09G02-05C	BRIDGE TEMPORARY TRAFFIC SIGNAL INSTALLATION
13A10-03A	SHOULDER RUMBLE STRIPS - ASPHALT
13A10-03G	SHOULDER AND EDGE LINE RUMBLE STRIPS - CROSSINGS, INTERSECTIONS, BRIDGES, DRIVEWAYS
13A10-03H	SHOULDER AND EDGE LINE RUMBLE STRIPS - RAILROAD, PASSING, CLIMBING AND BYPASS LANES
13A11-04A	CENTERLINE RUMBLE STRIPS - ASPHALT
13A11-04D	CENTERLINE RUMBLE STRIPS - INTERSECTIONS, DRIVEWAYS, BRIDGES, RAILROADS
13C19-03	HMA LONGITUDINAL JOINTS
14B07-16A	CONCRETE BARRIER TEMPORARY PRECAST, 12'-6"
14B07-16B	CONCRETE BARRIER TEMPORARY PRECAST, 12'-6"
14B07-16C	CONCRETE BARRIER TEMPORARY PRECAST, 12'-6"
14B07-16D	CONCRETE BARRIER TEMPORARY PRECAST, 12'-6"
14B07-16E	CONCRETE BARRIER TEMPORARY PRECAST, 12'-6"
14B07-16F	CONCRETE BARRIER TEMPORARY PRECAST, 12'-6"
14B07-16G	CONCRETE BARRIER TEMPORARY PRECAST, 12'-6"
14B07-16H	CONCRETE BARRIER TEMPORARY PRECAST, 12'-6"
14B07-16I	CONCRETE BARRIER TEMPORARY PRECAST, 12'-6"
14B07-16J	CONCRETE BARRIER TEMPORARY PRECAST, 12'-6"
14B07-16K	CONCRETE BARRIER TEMPORARY PRECAST, 12'-6"
14B07-16L	CONCRETE BARRIER TEMPORARY PRECAST, 12'-6"
14B07-16M	CONCRETE BARRIER TEMPORARY PRECAST, 12'-6"
14B07-16N	CONCRETE BARRIER TEMPORARY PRECAST, 12'-6"
14B08-02A	CRASH CUSHION/SAND BARREL ARRAY AND OTHER TEMPORARY BARRIER LAYOUT DETAILS
14B08-02B	CRASH CUSHION/SAND BARREL ARRAY AND OTHER TEMPORARY BARRIER LAYOUT DETAILS
14B08-02C	CRASH CUSHION/SAND BARREL ARRAY AND OTHER TEMPORARY BARRIER LAYOUT DETAILS
14B08-02D	CRASH CUSHION/SAND BARREL ARRAY AND OTHER TEMPORARY BARRIER LAYOUT DETAILS
14B08-02E	CRASH CUSHION/SAND BARREL ARRAY AND OTHER TEMPORARY BARRIER LAYOUT DETAILS
14B28-04A	GUARDRAIL MOW STRIP
14B28-04B	GUARDRAIL MOW STRIP
14B29-01	SAFETY EDGE
14B42-07A	MIDWEST GUARDRAIL SYSTEM (MGS) GUARDRAIL
14B42-07B	MIDWEST GUARDRAIL SYSTEM (MGS) GUARDRAIL
14B42-07C	MIDWEST GUARDRAIL SYSTEM (MGS) GUARDRAIL
14B42-07D	MIDWEST GUARDRAIL SYSTEM (MGS) GUARDRAIL
14B44-04A	MIDWEST GUARDRAIL SYSTEM ENERGY ABSORBING TERMINAL (MGS)
14B44-04B	MIDWEST GUARDRAIL SYSTEM ENERGY ABSORBING TERMINAL (MGS)
14B44-04C	MIDWEST GUARDRAIL SYSTEM ENERGY ABSORBING TERMINAL (MGS)
15A03-02A	FLEXIBLE MARKER POST FOR CULVERT END
15A03-02B	FLEXIBLE MARKER POST FOR CULVERT END
15A04-08A	FLEXIBLE DELINEATOR POST
15A04-08C	DELINEATOR POST WITH REFLECTIVE SHEETING
15C02-10F	ADVANCED WIDTH RESTRICTION SIGNING
15C03-05	BARRICADES AND SIGNS FOR SIDEROAD CLOSURES
15C04-05	TRAFFIC CONTROL, ADVANCE WARNING SIGNS 45 M.P.H. OR GREATER TWO-WAY UNDIVIDED ROAD OPEN TO TRAFFIC
15C05-05	TRAFFIC CONTROL, ADVANCE WARNING SIGNS 40 M.P.H. OR LESS TWO-WAY UNDIVIDED ROAD OPEN TO TRAFFIC
15C08-24A	PERMANENT LONGITUDINAL PAVEMENT MARKINGS
15C08-24B	TEMPORARY LONGITUDINAL PAVEMENT MARKING
15C08-24C	PAVEMENT MARKING (TURN LANES)
15C08-24D	PAVEMENT MARKING (TURN LANES)
15C11-10B	CHANNELIZING DEVICES DRUMS, CONES, BARRICADES AND VERTICAL PANELS
15C12-09A	TRAFFIC CONTROL FOR LANE CLOSURE WITH FLAGGING OPERATION
15C19-11A	MOVING PAVEMENT MARKING OPERATION TWO-LANE TWO-WAY ROADWAY
15C19-11B	MOVING PAVEMENT MARKING OPERATION MULTI-LANE UNDIVIDED ROADWAY
15C35-06A	PAVEMENT MARKING (INTERSECTIONS)
15C35-06B	PAVEMENT MARKING AND SIGNING (CLIMBING LANE & PASSING LANE)
15C35-06C	PAVEMENT MARKING AND SIGNING (CLIMBING LANE & PASSING LANE)

6

Standard Detail Drawing List

15D21-07A	TRAFFIC CONTROL, INTERSECTION WITHIN SINGLE LANE CLOSURE
15D21-07B	TRAFFIC CONTROL, INTERSECTION WITHIN SINGLE LANE CLOSURE
15D28-05	TRAFFIC CONTROL, WORK ON SHOULDER OR PARKING LANE, UNDIVIDED ROADWAY
15D33-10A	TRAFFIC CONTROL, ONE LANE ROAD WITH TEMPORARY SIGNALS
15D39-03	TRAFFIC CONTROL, DROP-OFF SIGNING
15D44-02	TRAFFIC CONTROL, SIGNING ON ROADWAYS WITH MILLED SURFACES
15D48-01	TRAFFIC CONTROL, LANE SHIFT IN FLAGGING OPERATION
15D50-04A	TRAFFIC CONTROL, ADDED LANE CLOSURE WITHOUT LANE SHIFT

6

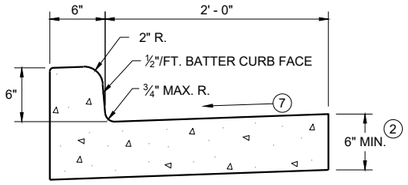

TYPES A (1) & D

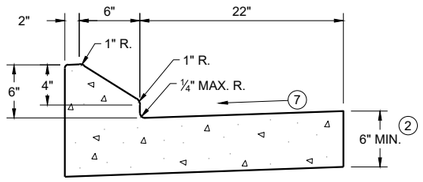

6" SLOPED CURB TYPES G (1) & J

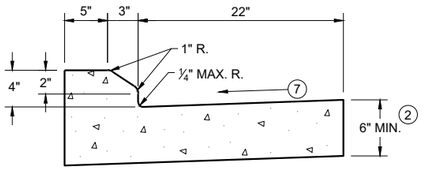

4" SLOPED CURB TYPES G (1) & J

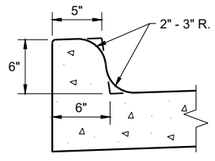

TYPES K (1) & L
(OPTIONAL CURB SHAPE)

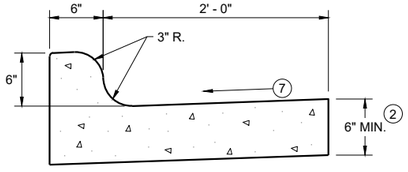

TYPES K (1) & L

CONCRETE CURB AND GUTTER 30"

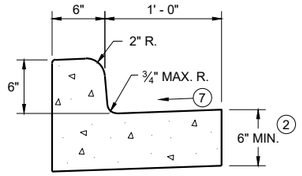

TYPES A (1) & D

CONCRETE CURB AND GUTTER 18"

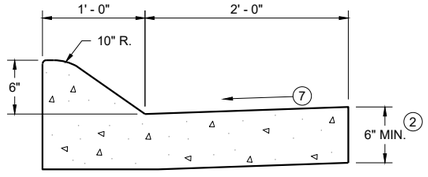

6" SLOPED CURB TYPES A (1) & D

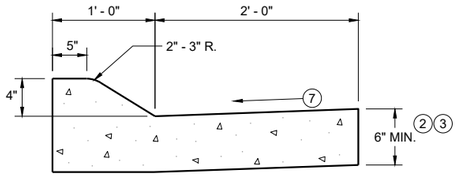

4" SLOPED CURB TYPES A (1) & D

CONCRETE CURB AND GUTTER 36"

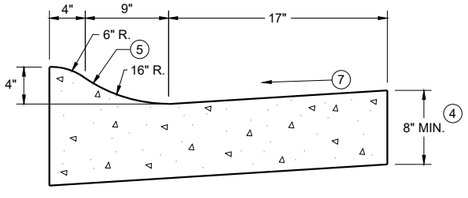

4" SLOPED CURB TYPES R (1) & T
CONCRETE CURB AND GUTTER 30"

TBT & TBTT	X
30"	22"
36"	28"

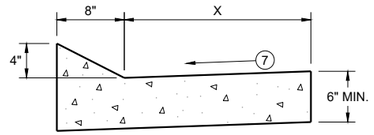

TYPES TBT & TBTT (1)

CONCRETE CURB AND GUTTER

PAVEMENT THICKNESS AND MAXIMUM CONCRETE PANEL WIDTH TABLE

PAVEMENT THICKNESS	MAXIMUM PANEL WIDTH
LESS THAN 10"	12'
10" & ABOVE	15'

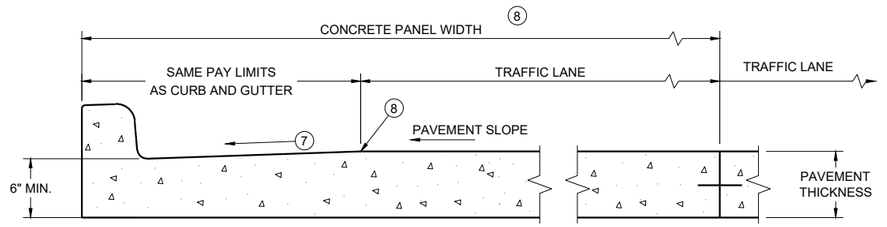

PARTIAL SECTION OF PAVEMENT * WITH INTEGRAL CURB AND GUTTER

* BIKE LANE IS NOT SHOWN

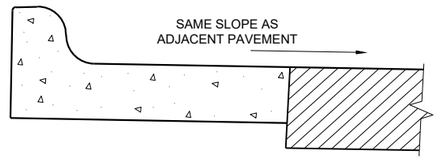

REVERSE SLOPE GUTTER (6)
(TYPICAL FOR ALL CURB & GUTTER TYPES)

GENERAL NOTES

DETAILS OF CONSTRUCTION AND WORKMANSHIP NOT SHOWN ON THIS DRAWING SHALL CONFORM TO THE PERTINENT REQUIREMENTS OF THE CONTRACT.

PAVEMENT TIES AND TIE BARS SHALL BE EPOXY COATED IN CONFORMANCE WITH SUBSECTION 505.2.6.2 OF THE STANDARD SPECIFICATIONS.

INTEGRAL CURB AND GUTTER SHALL CONFORM TO THE DETAILS SHOWN FOR CONCRETE CURB AND GUTTER INCLUDING THE TRANSVERSE GUTTER SLOPE.

UNLESS OTHERWISE SHOWN ON THE TYPICAL CROSS SECTIONS, THE BASE AGGREGATE AND COMMON EXCAVATION LIMITS ARE 2' - 0" BEHIND THE BACK OF CURBS.

(1) TIE BARS ARE REQUIRED FOR CURB AND GUTTERS TYPES A, G, K, R, AND TBTT.

(2) THE BOTTOM OF CURB AND GUTTER MAY BE CONSTRUCTED EITHER LEVEL OR PARALLEL TO THE SLOPE OF THE SUBGRADE OR BASE AGGREGATE PROVIDED A 6" MINIMUM GUTTER THICKNESS IS MAINTAINED.

(3) USE 8" MINIMUM GUTTER THICKNESS WHEN USED WITH AN ADJACENT CONCRETE TRUCK APRON PLACED BEHIND BACK OF CURB.

(4) THE BOTTOM OF CURB AND GUTTER MAY BE CONSTRUCTED EITHER LEVEL OR PARALLEL TO THE SLOPE OF THE SUBGRADE OR BASE AGGREGATE PROVIDED A 8" MINIMUM GUTTER THICKNESS IS MAINTAINED.

(5) UNLESS OTHERWISE NOTED, FOR STAKING PURPOSES THE FACE OF CURB IS 6" FROM THE BACK OF CURB.

(6) WHEN REVERSE SLOPE GUTTER IS REQUIRED, THE LOCATION(S) WILL BE SHOWN ELSEWHERE IN THE PLAN.

(7) USE 4% GUTTER CROSS SLOPE UNLESS OTHERWISE NOTED IN THE PLANS.

(8) INCLUDE LONGITUDINAL JOINT AND TIE BARS ALONG LANE EDGE WHEN CONCRETE PANEL WIDTH EXCEEDS THE MAXIMUM WIDTH PER TABLE BELOW. LONGITUDINAL JOINT(S) ARE NOT ALLOWED WITHIN TRAFFIC LANES AND BIKE LANES. LONGITUDINAL JOINT MAY BE SAWED.

(9) SLOPE TO BE REVERSE SLOPE MATCHING THE SLOPE OF THE PAVEMENT AND THE CIRCULATORY ROADWAY

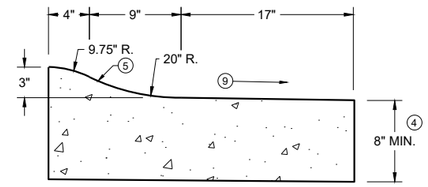

3" SLOPED CURB TYPES R (1) & T

CONCRETE CURB AND GUTTER

STATE OF WISCONSIN
DEPARTMENT OF TRANSPORTATION

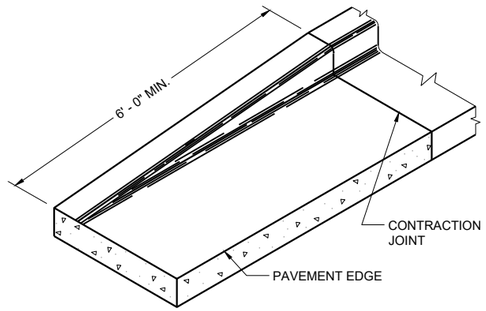

END SECTION CURB AND GUTTER

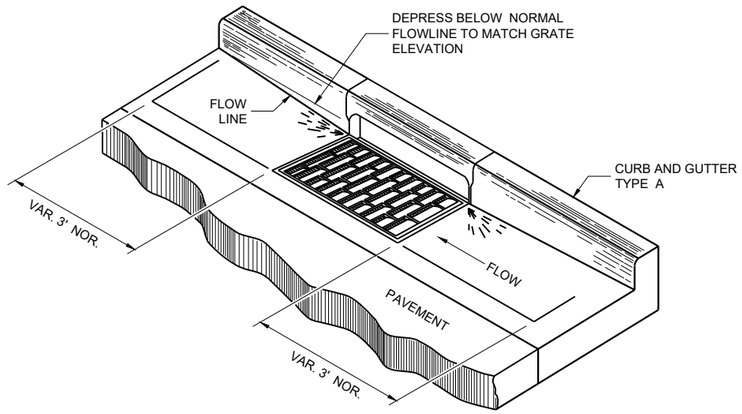

DETAIL OF CURB AND GUTTER AT INLETS

(TYPICAL H INLET COVER SHOWN)

GENERAL NOTES

DETAILS OF CONSTRUCTION AND WORKMANSHIP NOT SHOWN ON THIS DRAWING SHALL CONFORM TO THE PERTINENT REQUIREMENTS OF THE CONTRACT.

PAVEMENT TIES AND TIE BARS SHALL BE EPOXY COATED IN CONFORMANCE WITH SUBSECTION 505.2.6.2 OF THE STANDARD SPECIFICATIONS.

UNLESS OTHERWISE SHOWN ON THE TYPICAL CROSS SECTIONS, THE BASE AGGREGATE AND COMMON EXCAVATION LIMITS ARE 2' - 0" BEHIND THE BACK OF CURBS.

(1) TIE BARS ARE REQUIRED FOR CURB AND GUTTERS TYPES A, G, K, R, AND TBTT.

(2) THE BOTTOM OF CURB AND GUTTER MAY BE CONSTRUCTED EITHER LEVEL OR PARALLEL TO THE SLOPE OF THE SUBGRADE OR BASE AGGREGATE PROVIDED A 6" MINIMUM GUTTER THICKNESS IS MAINTAINED.

(10) REFER TO SDD 08D18 AND 08D19 FOR ADDITIONAL DRIVEWAY ENTRANCE CURB DETAILS.

(11) PLACE 1" THICK EXPANSION JOINT MATERIAL BETWEEN VERTICAL FACE CURB TYPES EXTENDING FROM THE TOP OF CURB TO 1 INCH BELOW THE ADJOINING CONCRETE SURFACE. RIGID CONCRETE STRUCTURES INCLUDE RAISED CONCRETE MEDIANS, CONCRETE SAFETY ISLANDS, SPLITTER ISLANDS, OR LOCATIONS IDENTIFIED ON THE PLANS.

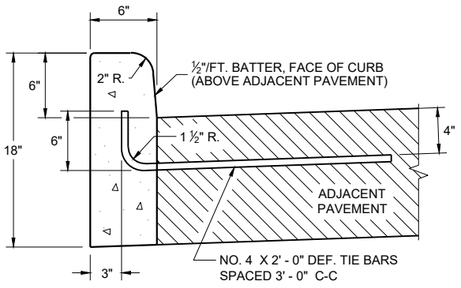

TYPES A (1) & D

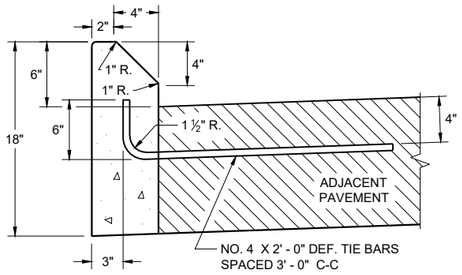

TYPES G (1) & J

CONCRETE CURB

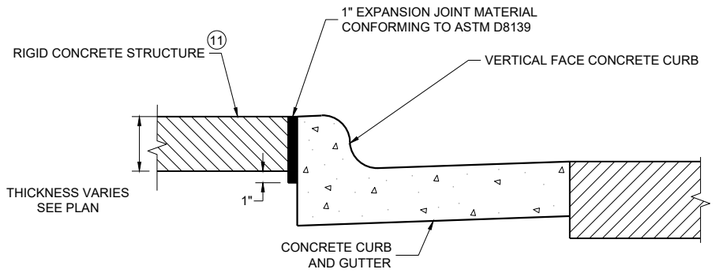

EXPANSION JOINT DETAIL FOR VERTICAL CURB ABUTTING A RIGID STRUCTURE (11)

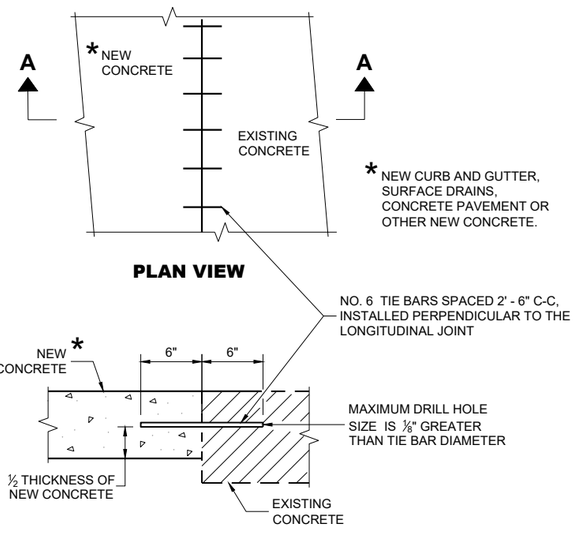

PLAN VIEW

SECTION A - A

TIE BARS DRILLED INTO EXISTING PAVEMENT

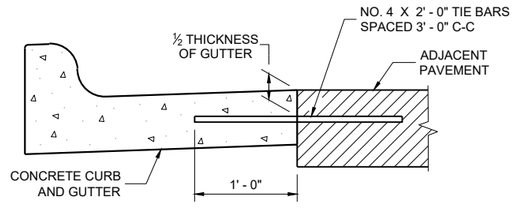

TYPICAL TIE BAR LOCATION (1)

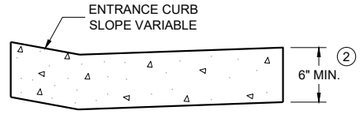

DRIVEWAY ENTRANCE CURB (10)

(WHEN DIRECTED BY THE ENGINEER)

CONCRETE CURB, TIES AND CURB AND GUTTER APPLICATIONS

STATE OF WISCONSIN
DEPARTMENT OF TRANSPORTATION

APPROVED
February 2025 — DATE
/S/ Rodnery Taylor — ROADWAY STANDARDS DEVELOPMENT UNIT SUPERVISOR

FHWA

6

SDD 08D01-24b

6

SDD 08D01-24b

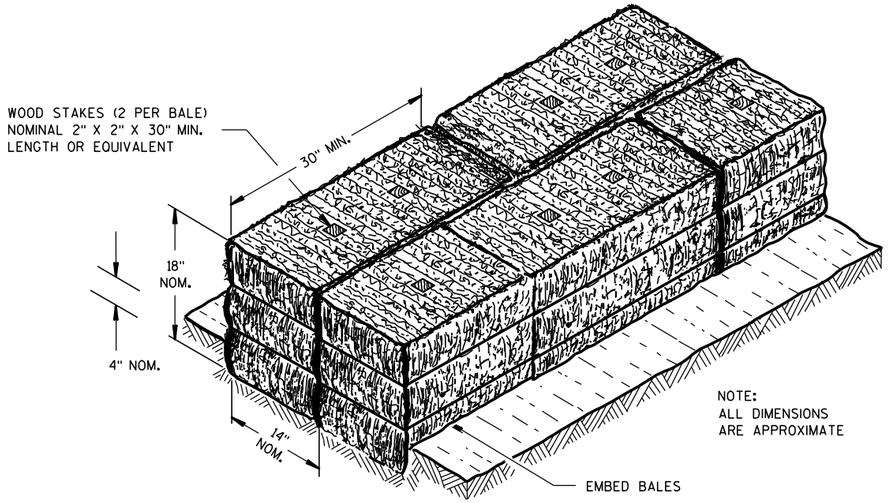

SECTION A-A

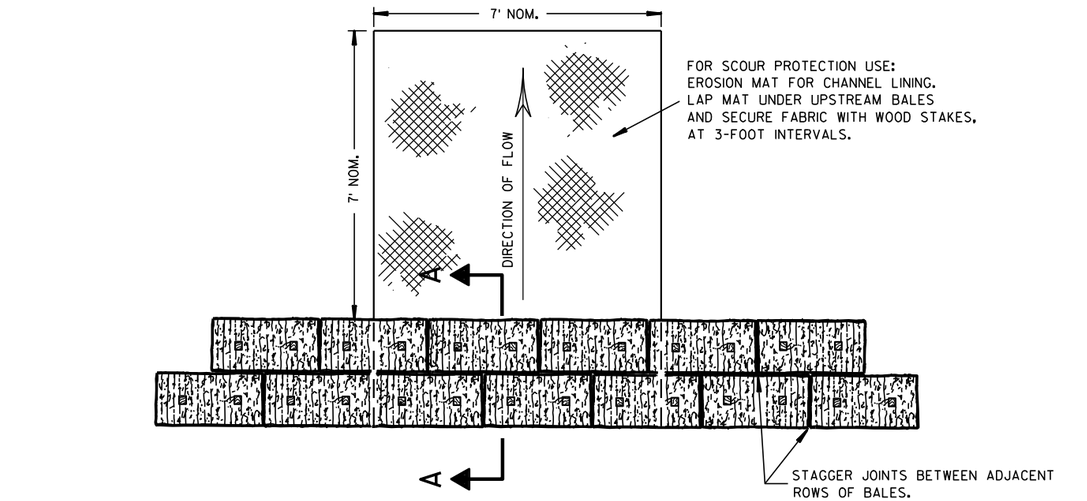

PLAN VIEW

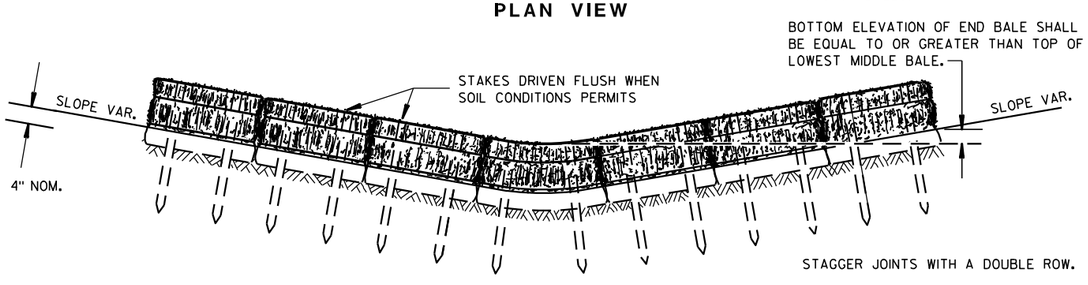

FRONT ELEVATION

TEMPORARY DITCH CHECK USING EROSION BALES ①

GENERAL NOTES

DETAILS OF CONSTRUCTION, MATERIALS AND WORKMANSHIP NOT SHOWN ON THIS DRAWING SHALL CONFORM TO THE PERTINENT REQUIREMENTS OF THE STANDARD SPECIFICATIONS AND THE APPLICABLE SPECIAL PROVISIONS.

① TEMPORARY DITCH CHECKS EITHER EROSION BALES OR MANUFACTURED SHALL BE PAID FOR UNDER THE BID ITEM OF TEMPORARY DITCH CHECK. THE DEPARTMENT WILL NOT PAY FOR TEMPORARY DITCH CHECKS CONSTRUCTED OF A SINGLE ROW OF EROSION BALES.

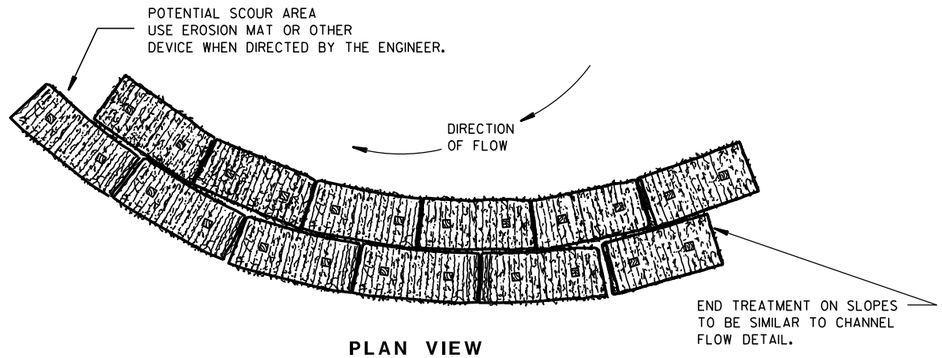

PLAN VIEW

WHEN ALTERING THE DIRECTION OF FLOW

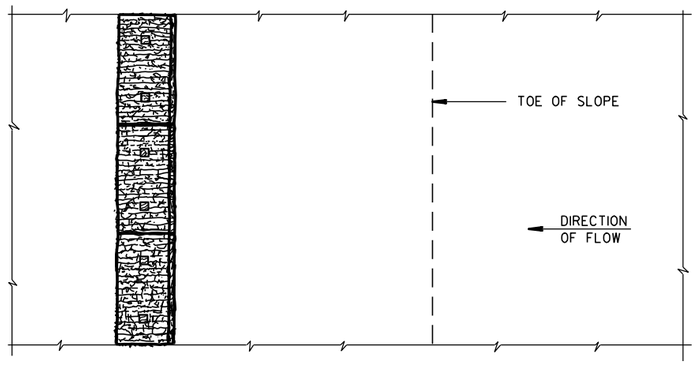

PLAN VIEW

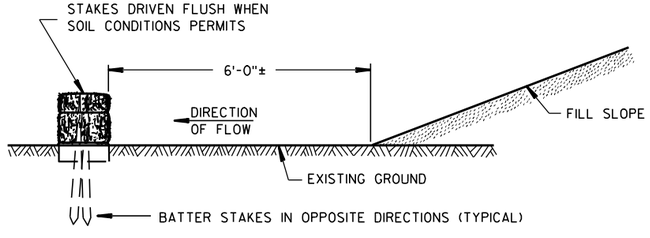

FRONT ELEVATION

WHEN EXISTING GROUND SLOPES AWAY FROM FILL SLOPE

EROSION BALES FOR SHEET FLOW

TYPICAL INSTALLATIONS OF EROSION BALES / TEMPORARY DITCH CHECKS

STATE OF WISCONSIN
DEPARTMENT OF TRANSPORTATION

APPROVED
6/04/02 DATE
/S/ Beth Cannestra
CHIEF ROADWAY DEVELOPMENT ENGINEER
FHWA

6

S.D.D. 8 E 8-3

6

S.D.D. 8 E 8-3

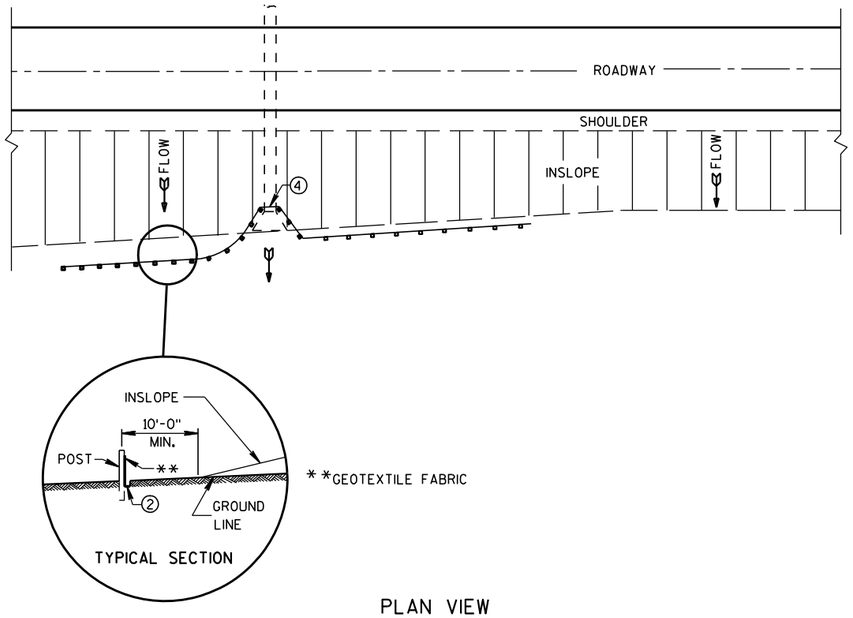

PLAN VIEW

TYPICAL APPLICATION OF SILT FENCE

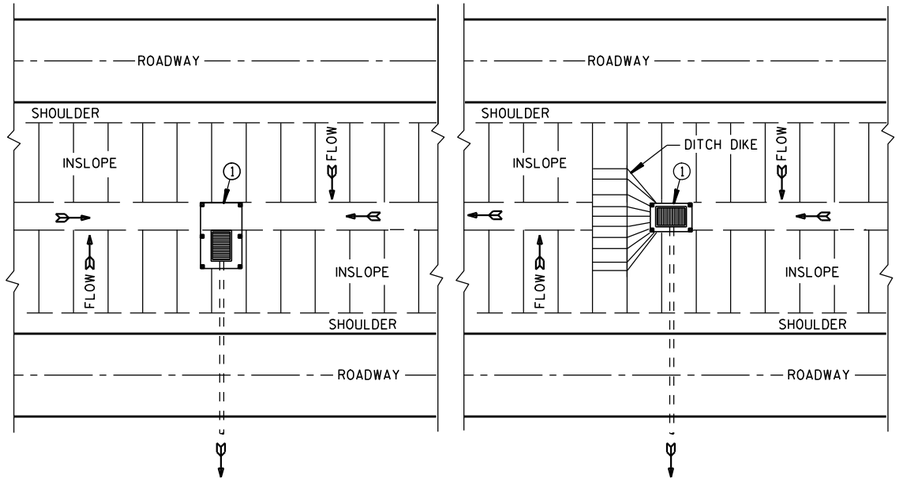

PLAN VIEW

SILT FENCE AT MEDIAN SURFACE DRAINS

GENERAL NOTES

DETAILS OF CONSTRUCTION NOT SHOWN ON THIS DRAWING SHALL CONFORM TO THE PERTINENT REQUIREMENTS OF THE STANDARD SPECIFICATIONS AND APPLICABLE SPECIAL PROVISIONS.

1. HORIZONTAL BRACE REQUIRED WITH 2" X 4" WOODEN FRAME OR EQUIVALENT AT TOP OF POSTS.
2. FOR MANUAL INSTALLATIONS THE TRENCH SHALL BE A MINIMUM OF 4" WIDE & 6" DEEP TO BURY AND ANCHOR THE GEOTEXTILE FABRIC. FOLD MATERIAL TO FIT TRENCH AND BACKFILL & COMPACT TRENCH WITH EXCAVATED SOIL.
3. WOOD POSTS SHALL BE A MINIMUM SIZE OF 1⅛" X 1⅛" OF OAK OR HICKORY.
4. SILT FENCE TO EXTEND ACROSS THE TOP OF THE PIPE.
5. CONSTRUCT SILT FENCE FROM A CONTINUOUS ROLL IF POSSIBLE BY CUTTING LENGTHS TO AVOID JOINTS. IF A JOINT IS NECESSARY USE ONE OF THE FOLLOWING TWO METHODS; A) OVERLAP THE END POSTS AND TWIST, OR ROTATE, AT LEAST 180 DEGREES, B) HOOK THE END OF EACH SILT FENCE LENGTH.

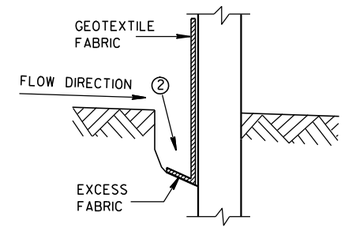

TRENCH DETAIL

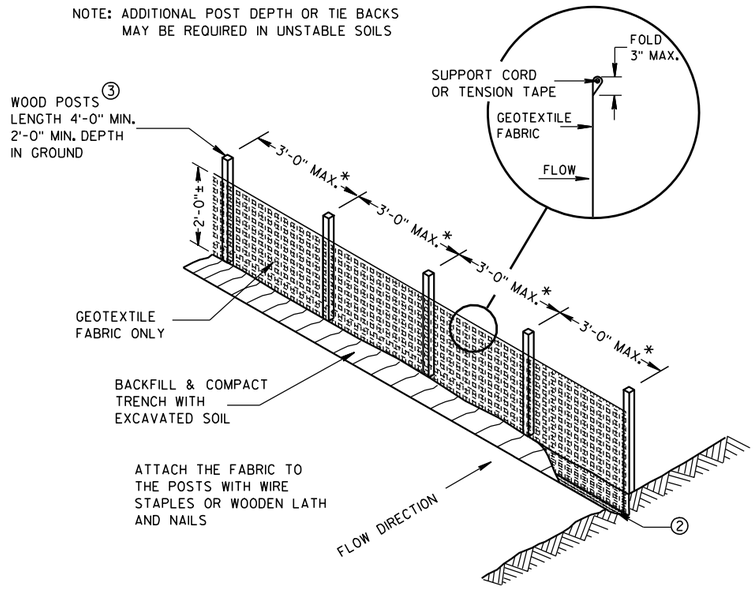

SILT FENCE

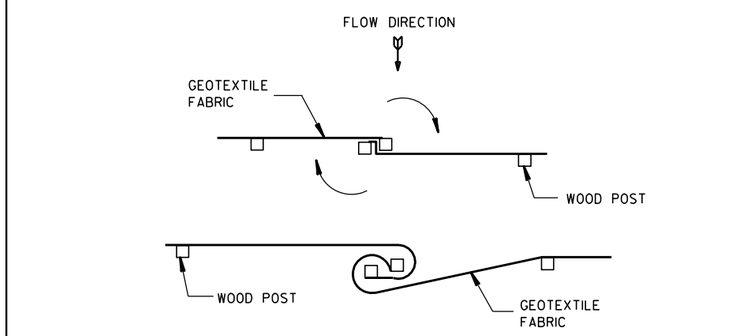

TWIST METHOD

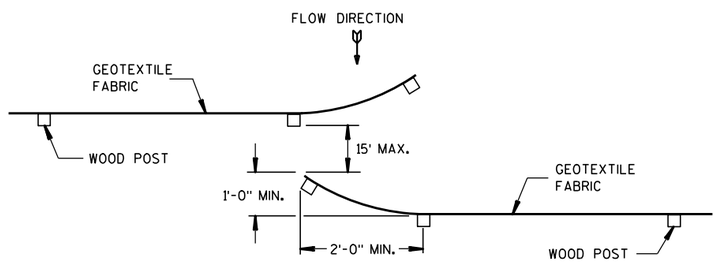

HOOK METHOD

JOINING TWO LENGTHS OF SILT FENCE 5

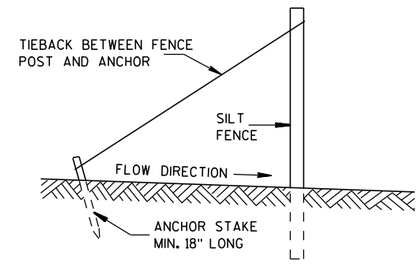

SILT FENCE TIE BACK

(WHEN REQUIRED BY THE ENGINEER)

SILT FENCE

STATE OF WISCONSIN
DEPARTMENT OF TRANSPORTATION

APPROVED
4-29-05 DATE
/S/ Beth Cannestra
CHIEF ROADWAY DEVELOPMENT ENGINEER
FHWA

6

S.D.D. 8 E 9-6

6

S.D.D. 8 E 9-6

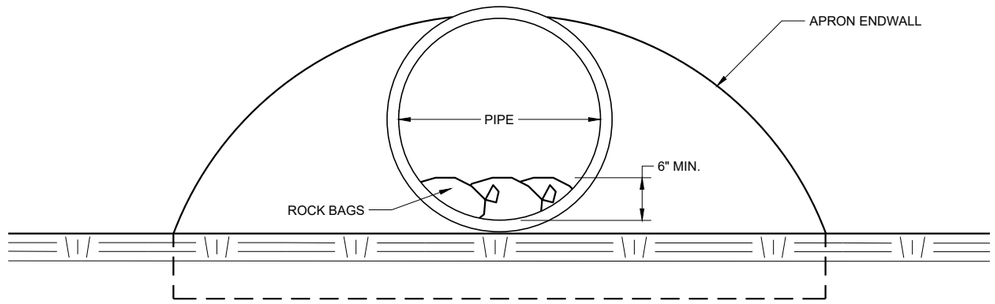

END VIEW

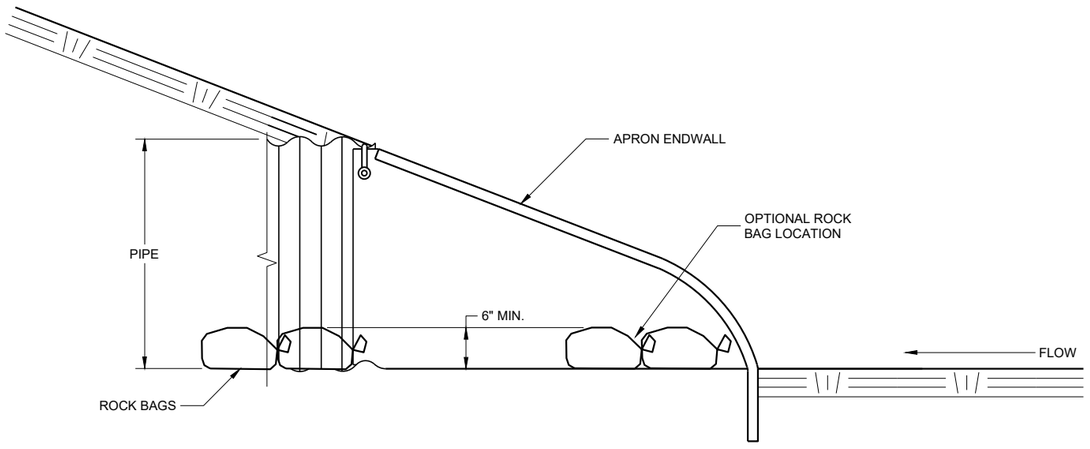

SIDE VIEW

CULVERT PIPE CHECK

(INSTALL ON INLET END ONLY)

CULVERT PIPE CHECK

STATE OF WISCONSIN
DEPARTMENT OF TRANSPORTATION

APPROVED
May 2019
DATE

/S/ Daniel Schave
EROSION CONTROL ENGI

FHWA

6

SDD 08E15 - 01

6

SDD 08E15 - 01

METAL APRON ENDWALLS

PIPE DIA. (IN.)	MIN. THICK. (Inches) STEEL	MIN. THICK. (Inches) ALUM.	DIMENSIONS (Inches) A (±1")	B (MAX.)	H (±1")	L (±1 1/2")	L1 ①	L2 ①	W (±2")	APPROX. SLOPE	BODY
12	.064	.060	6	6	6	21	12	17 1/2	24	2 1/2 to 1	1 Pc.
15	.064	.060	7	8	6	26	14	21 3/4	30	2 1/2 to 1	1 Pc.
18	.064	.060	8	10	6	31	15	28 1/4	36	2 1/2 to 1	1 Pc.
21	.064	.060	9	12	6	36	18	29 5/8	42	2 1/2 to 1	1 Pc.
24	.064	.075	10	13	6	41	18	37 1/4	48	2 1/2 to 1	1 Pc.
30	.079	.075	12	16	8	51	18	52 1/4	60	2 1/2 to 1	1 Pc.
36	.079	.105	14	19	9	60	24	59 3/4	72	2 1/2 to 1	2 Pc.
42	.109	.105	16	22	11	69	24	75 5/8	84	2 1/2 to 1	2 Pc.
48	.109	.105	18	27	12	78	24	81	90	2 1/4 to 1	3 Pc.
54	.109	.105	18	30	12	84	30	85 1/2	102	2 1/4 to 1	3 Pc.
60	.109×	.105×	18	33	12	87	—	—	114	2 to 1	3 Pc.
66	.109×	.105×	18	36	12	87	—	—	120	2 to 1	3 Pc.
72	.109×	.105×	18	39	12	87	—	—	126	2 to 1	3 Pc.
78	.109×	.105×	18	42	12	87	—	—	132	1 1/2 to 1	3 Pc.
84	.109×	.105×	18	45	12	87	—	—	138	1 1/2 to 1	3 Pc.
90	.109×	.105×	18	37	12	87	—	—	144	1 1/2 to 1	3 Pc.
96	.109×	.105×	18	35	12	87	—	—	150	1 1/2 to 1	3 Pc.

× EXCEPT CENTER PANEL SEE GENERAL NOTES

REINFORCED CONCRETE APRON ENDWALLS

PIPE DIA. (IN.)	DIMENSIONS (Inches) T	A	B	C	D	E	G	APPROX. SLOPE
12	2	4	24	48 7/8	72 1/8	24	2	3 to 1
15	2 1/4	6	27	46	73	30	2 1/4	3 to 1
18	2 1/2	9	27	46	73	36	2 1/2	3 to 1
21	2 3/4	9	36	37 1/2	73 1/2	42	2 3/4	3 to 1
24	3	9 1/2	43 1/2	30	73 1/2	48	3	3 to 1
27	3 1/4	10 1/2	49 1/2	24	73 1/2	54	3 1/4	3 to 1
30	3 1/2	12	54	19 3/4	73 1/2	60	3 1/2	3 to 1
36	4	15	63	34 3/4	97 3/4	72	4	3 to 1
42	4 1/2	21	63	35	98	78	4 1/2	3 to 1
48	5	24	72	26	98	84	5	3 to 1
54	5 1/2	27	65	* 33 1/4 - ** 35	* 98 1/4 - ** 100	90	5 1/2	2 2/5 to 1
60	6	* 30 - ** 35	60	39	99	96	5	2 to 1
66	6 1/2	* 24 - ** 30	* 72 - ** 78	* 21 - ** 27	99	102	5 1/2	2 to 1
72	7	* 24 - ** 36	78	21	99	108	6	2 to 1
78	7 1/2	* 24 - ** 36	78	21	99	114	6 1/2	2 to 1
84	8	36	90 1/2	21	111 1/2	120	6 1/2	1 1/2 to 1
90	8 1/2	41	87 1/2	24	111 1/2	132	6 1/2	1 1/2 to 1

*MINIMUM
**MAXIMUM

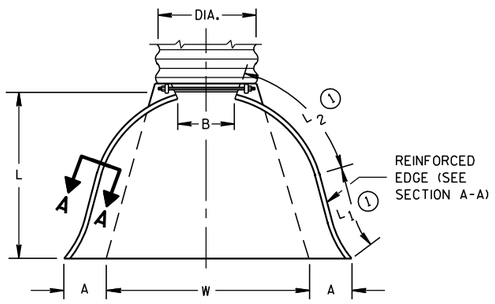

PLAN VIEW

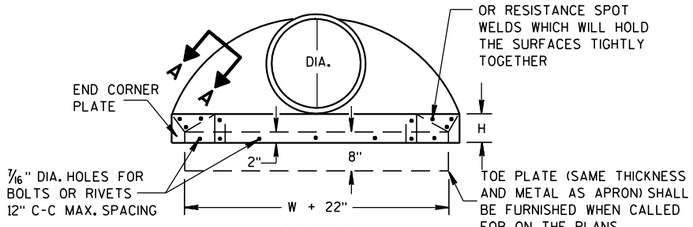

END VIEW

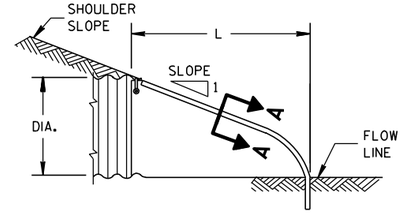

SIDE ELEVATION

METAL ENDWALLS

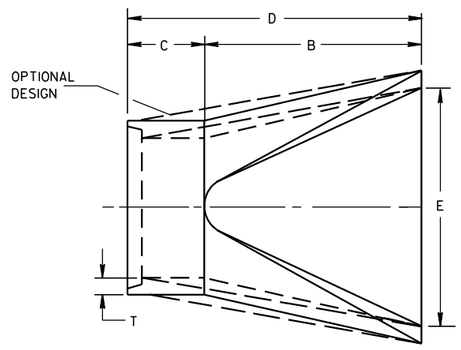

PLAN

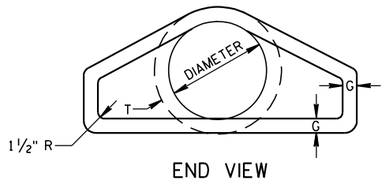

END VIEW

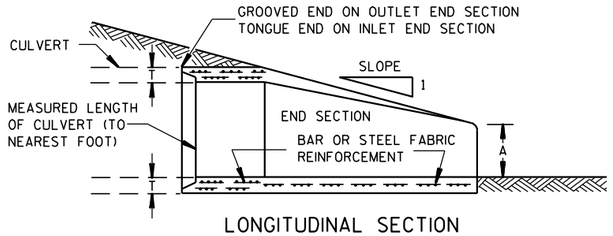

LONGITUDINAL SECTION

CONCRETE ENDWALLS

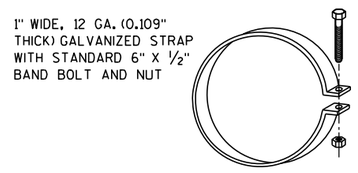

ALTERNATE FOR TYPE 1 CONNECTION

END SECTION CONNECTOR STRAP

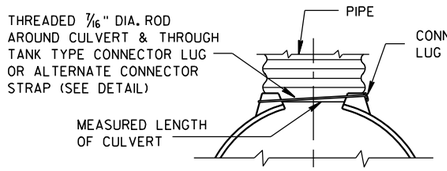

TYPE 1
FOR 12" THRU 24" CORR. PIPE

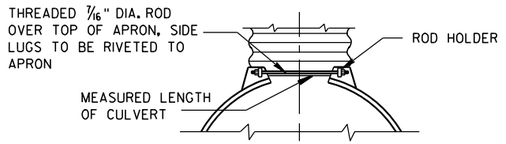

TYPE 2
FOR 30" THRU 96" CORR. PIPE

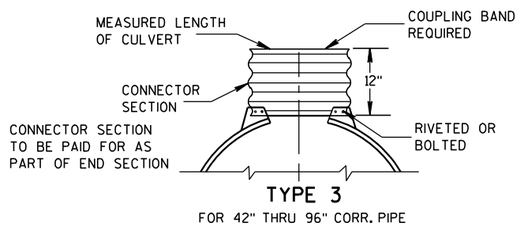

TYPE 3
FOR 42" THRU 96" CORR. PIPE

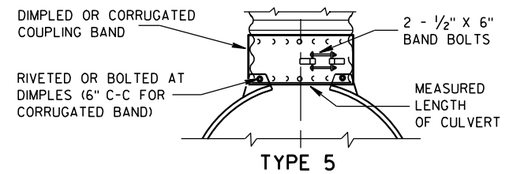

TYPE 5
ALTERNATE FOR:
ALL SIZES CORRUGATED CIRCULAR PIPE

NOTE: DIMPLED BAND FITS OVER OUTSIDE OF ENDWALL. AND CORRUGATED BAND FITS INSIDE ENDWALL. DIMPLED BAND MAY BE USED WITH HELICALLY CORRUGATED PIPE.

FOR CIRCUMFERENTIALLY CORRUGATED PIPE USE ENDWALL CONNECTION DETAILS 1, 2, 3 OR 5 AS APPLICABLE.

FOR HELICALLY CORRUGATED PIPE USE ENDWALL CONNECTION DETAILS 1, 2 OR 5.

FOR HELICALLY CORRUGATED PIPES WITH TWO CIRCUMFERENTIAL CORRUGATIONS AT EACH END USE ENDWALL CONNECTION DETAILS 1, 2 OR 3.

CONNECTION DETAILS

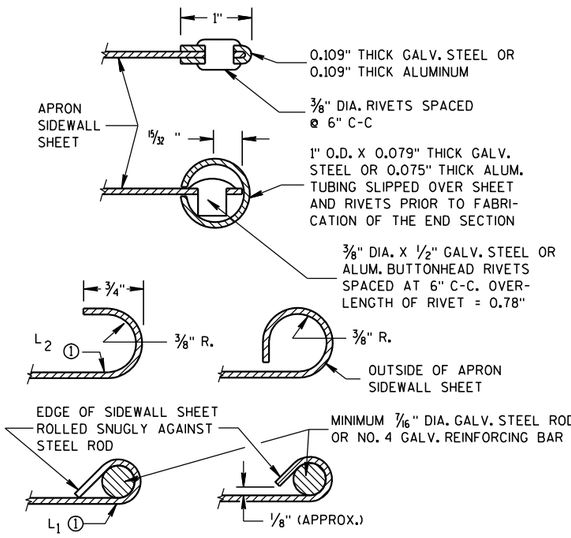

SECTION A-A

GENERAL NOTES

DETAILS OF CONSTRUCTION, MATERIALS AND WORKMANSHIP NOT SHOWN ON THIS DRAWING SHALL CONFORM TO THE PERTINENT REQUIREMENTS OF THE STANDARD SPECIFICATIONS AND THE APPLICABLE SPECIAL PROVISIONS.

CONCRETE CULVERT ENDWALLS MAY NOT BE USED WITH GALVANIZED STEEL OR ALUMINUM CULVERT PIPE OR VISE VERSA. GALVANIZED STEEL OR ALUMINUM ENDWALLS SHALL NORMALLY BE INSTALLED ON CULVERT PIPE OF THE SAME METAL.

ALL THREE PIECE STEEL APRON ENDWALLS FOR 60" DIAMETER PIPE AND LARGER SHALL HAVE 0.109" SIDES AND 0.138" CENTER PANELS. ALL THREE PIECE ALUMINUM APRON ENDWALLS FOR 60" DIAMETER PIPE AND LARGER SHALL HAVE 0.105" SIDES AND 0.134" CENTER PANELS. THE WIDTH OF CENTER PANELS SHALL BE GREATER THAN 20 PERCENT OF THE PIPE PERIMETER.

LAP SEAMS SHALL BE TIGHTLY JOINED BY GALVANIZED RIVETS OR BOLTS FOR STEEL UNITS AND ALUMINUM RIVETS AND BOLTS FOR ALUMINUM UNITS. FOR THE 60" THROUGH 96" DIAMETER APRON ENDWALL SIZES, THE REINFORCED EDGES AND CENTER PANEL SEAMS SHALL BE FURTHER REINFORCED WITH GALVANIZED STEEL OR ALUMINUM STIFFENER ANGLES. THE ANGLES SHALL BE ATTACHED BY GALVANIZED NUTS AND BOLTS FOR STEEL UNITS AND ALUMINUM NUTS AND BOLTS FOR ALUMINUM UNITS.

WHERE TWO OR MORE PIPES WITH APRON ENDWALLS ARE LAID ADJACENT TO EACH OTHER, THEY SHALL BE SEPARATED BY A DISTANCE SUFFICIENT TO PROVIDE A MINIMUM CLEARANCE OF 6 INCHES BETWEEN APRON ENDWALLS.

① FOR PIPE SIZES UP TO 60" DIAMETER, A 180° ROLLED EDGE MAY BE USED INSTEAD OF STEEL ROD REINFORCEMENT. SEE SECTION A-A.

APRON ENDWALLS FOR CULVERT PIPE

STATE OF WISCONSIN
DEPARTMENT OF TRANSPORTATION

APPROVED
11/30/94 DATE
/S/ Rory L. Rhinesmith
CHIEF ROADWAY DEVELOPMENT ENGINEER
FHWA

6
S.D.D. 8 F 1-11

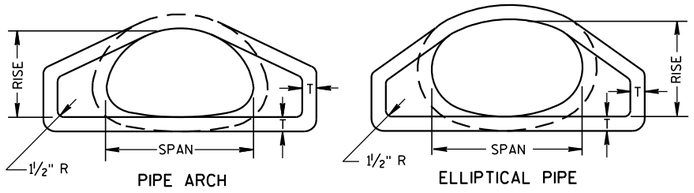

END VIEW

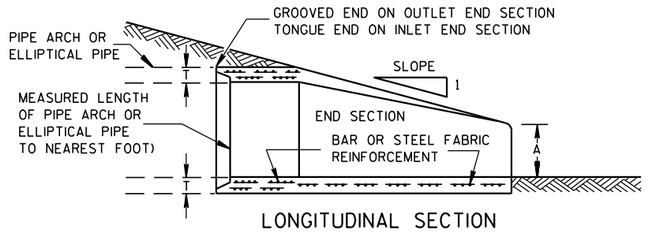

LONGITUDINAL SECTION

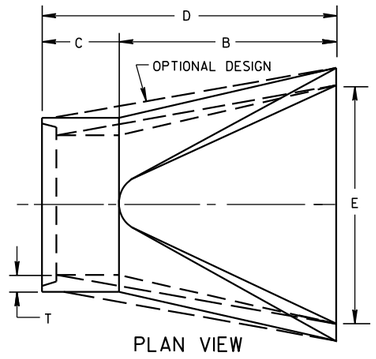

PLAN VIEW

CONCRETE ENDWALLS

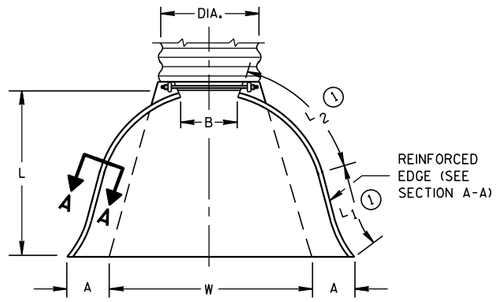

REINFORCED EDGE (SEE SECTION A-A)

PLAN VIEW

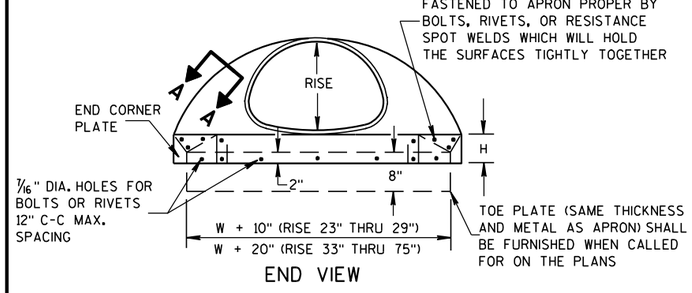

END CORNER PLATES MAY BE FASTENED TO APRON PROPER BY BOLTS, RIVETS, OR RESISTANCE SPOT WELDS WHICH WILL HOLD THE SURFACES TIGHTLY TOGETHER

TOE PLATE (SAME THICKNESS AND METAL AS APRON) SHALL BE FURNISHED WHEN CALLED FOR ON THE PLANS

END VIEW

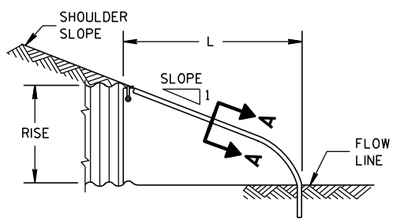

SIDE ELEVATION

METAL ENDWALLS

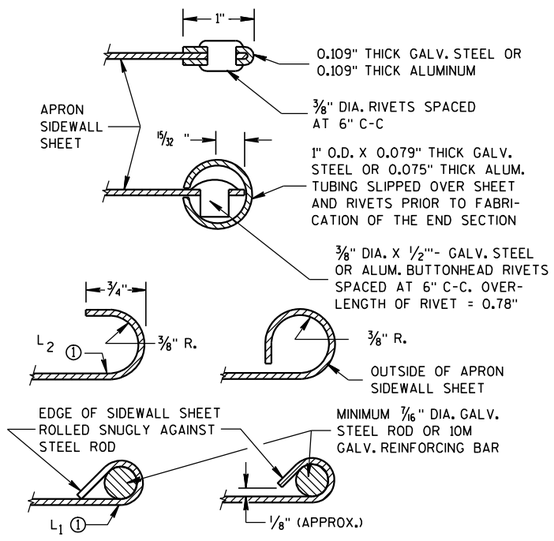

SECTION A-A

2- 2/3" X 1/2" CORRUGATIONS

EQUIV. DIA. (Inches)	(Inches) SPAN	(Inches) RISE	MIN. THICK. (Inches) STEEL	MIN. THICK. (Inches) ALUM.	DIMENSIONS (Inches) A (±1")	B (MAX.)	H (±1")	L (±1 1/2")	L1 ①	L2 ①	W (±2")	APPROX. SLOPE	BODY
15	17	13	.064	.060	7	9	6	19	14	16	30	2½ to 1	1 Pc.
18	21	15	.064	.060	7	10	6	23	14	19⅜	36	2½ to 1	1 Pc.
21	24	18	.064	.060	8	12	6	28	18	21¾	42	2½ to 1	1 Pc.
24	28	20	.064	.060	9	14	6	32	18	27½	48	2½ to 1	1 Pc.
30	35	24	.079	.075	10	16	6	39	18	37⅝	60	2½ to 1	1 Pc.
36	42	29	.079	.075	12	18	8	46	24	45⅜	75	2½ to 1	1 Pc.
42	49	33	.109	.105	13	21	9	53	24	54¾	85	2½ to 1	2 Pc.
48	57	38	.109	.105	18	26	12	63	24	68	90	2½ to 1	3 Pc.
54	64	43	.109	.105	18	30	12	70	24	72¾	102	2¼ to 1	3 Pc.
60	71	47	.109*	.105*	18	33	12	77	30	82¼	114	2¼ to 1	3 Pc.
66	77	52	.109*	.105*	18	36	12	77	—	—	126	2 to 1	3 Pc.
72	83	57	.109*	.105*	18	39	12	77	—	—	138	2 to 1	3 Pc.

3" X 1" CORRUGATIONS

EQUIV. DIA. (Inches)	(Inches) SPAN	(Inches) RISE	MIN. THICK. (Inches) STEEL	MIN. THICK. (Inches) ALUM.	DIMENSIONS (Inches) A (±1")	B (MAX.)	H (±1")	L (±1 1/2")	L1 ①	L2 ①	W (±2")	APPROX. SLOPE	BODY
48	53	41	.109	.105	18	26	12	63	24	72¾	90	2½ to 1	2 Pc.
54	60	46	.109	.105	18	30	12	70	30	82¼	102	2 to 1	2 Pc.
60	66	51	.109*	.105*	18	33	12	77	—	—	114	1½ to 1	3 Pc.
66	73	55	.109*	.105*	18	36	12	77	—	—	126	1½ to 1	3 Pc.
72	81	59	.109*	.105*	18	39	12	77	—	—	138	2 to 1	3 Pc.
78	87	63	.109*	.105*	22	38	12	77	—	—	148	1½ to 1	3 Pc.
84	95	67	.109*	.105*	22	34	12	77	—	—	162	1½ to 1	3 Pc.
90	103	71	.109*	.105*	22	38	12	77	—	—	174	1½ to 1	3 Pc.
96	112	75	.109*	.105*	24	40	12	77	—	—	174	1½ to 1	3 Pc.

NOTE: ALL SPLICES TO BE LAP RIVETED OR BOLTED.

* EXCEPT CENTER PANEL SEE GENERAL NOTES

REINFORCED CONCRETE PIPE ARCH

EQUIV. DIA. (Inches)	DIMENSIONS (Inches) ** SPAN	** RISE	T	A	B	C	D	E	APPROX. SLOPE
24	29	18	3	8½	39	33	72	48	3 to 1
30	36	22	3½	9½	50	46	96	60	3 to 1
36	44	27	4	11⅛	60	36	96	72	3 to 1
42	51	31	4½	15 13/16	60	36	96	78	3 to 1
48	58	36	5	21	60	36	96	84	3 to 1
54	65	40	5½	25½	60	36	96	90	3 to 1
60	73	45	6	31	60	36	96	96	3 to 1
72	88	54	7	31	60	39	99	120	2 to 1
84	102	62	8	28½	83	19	102	144	2 to 1

REINFORCED CONCRETE ELLIPTICAL PIPE

EQUIV. DIA. (Inches)	DIMENSIONS (Inches) ** SPAN	** RISE	T	A	B	C	D	E	APPROX. SLOPE
24	30	19	3¼	8½	39	33	72	48	3 to 1
30	38	24	3¾	9½	54	18	72	60	3 to 1
36	45	29	4½	11⅛	60	24	84	72	2½ to 1
42	53	34	5	15¾	60	36	96	78	2½ to 1
48	60	38	5½	21	60	36	96	84	2½ to 1
54	68	43	6	25½	60	36	96	90	2½ to 1
60	76	48	6½	30	60	36	96	96	2½ to 1

**NOMINAL SIZE

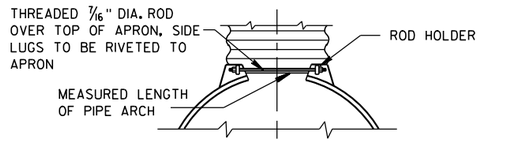

TYPE 2

FOR 17" X 13" THRU 112" X 75" PIPE ARCH

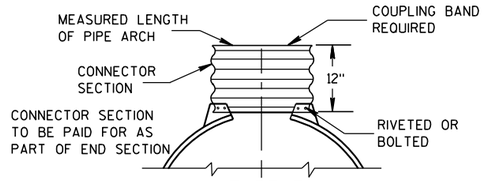

TYPE 3

FOR 64" X 43" THRU 112" X 75" PIPE ARCH

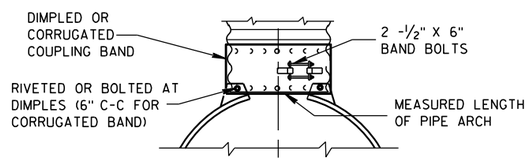

TYPE 5

ALTERNATE FOR:

ALL SIZES CORRUGATED PIPE ARCHES

NOTE: DIMPLED BAND FITS OVER OUTSIDE OF ENDWALL, AND CORRUGATED BAND FITS INSIDE ENDWALL.

CONNECTION DETAILS

GENERAL NOTES

DETAILS OF CONSTRUCTION, MATERIALS AND WORKMANSHIP NOT SHOWN ON THIS DRAWING SHALL CONFORM TO THE PERTINENT REQUIREMENTS OF THE STANDARD SPECIFICATIONS AND THE APPLICABLE SPECIAL PROVISIONS.

CONCRETE APRON ENDWALLS MAY NOT BE USED WITH GALVANIZED STEEL OR ALUMINUM CULVERT PIPE OR VISE VERSA. GALVANIZED STEEL OR ALUMINUM APRON ENDWALLS SHALL NORMALLY BE INSTALLED ON CULVERT PIPE OF THE SAME METAL.

ALL THREE PIECE STEEL APRON ENDWALLS FOR 66" X 51" PIPE ARCH AND LARGER SHALL HAVE 0.109" SIDES AND 0.138" CENTER PANELS. ALL THREE PIECE ALUMINUM APRON ENDWALLS FOR 66" X 51" PIPE ARCH AND LARGER SHALL HAVE 0.105" SIDES AND 0.134" CENTER PANELS. THE WIDTH OF CENTER PANELS SHALL BE GREATER THAN 20 PERCENT OF THE PIPE ARCH PERIMETER.

LAP SEAMS SHALL BE TIGHTLY JOINED BY GALVANIZED RIVETS OR BOLTS FOR STEEL UNITS AND ALUMINUM RIVETS AND BOLTS FOR ALUMINUM UNITS. FOR THE 77" X 52" THROUGH 112" X 75" APRON ENDWALL SIZES, THE REINFORCED EDGES AND CENTER PANEL SEAMS SHALL BE FURTHER REINFORCED WITH GALVANIZED STEEL OR ALUMINUM STIFFENER ANGLES. THE ANGLES SHALL BE ATTACHED BY GALVANIZED NUTS AND BOLTS FOR STEEL UNITS AND ALUMINUM NUTS AND BOLTS FOR ALUMINUM UNITS.

WHERE TWO OR MORE PIPES WITH APRON ENDWALLS ARE LAID ADJACENT TO EACH OTHER, THEY SHALL BE SEPARATED BY A DISTANCE SUFFICIENT TO PROVIDE A MINIMUM CLEARANCE OF 6 INCHES BETWEEN APRON ENDWALLS.

① FOR PIPE ARCH SIZES UP TO 73" X 55" A 180° ROLLED EDGE MAY BE USED INSTEAD OF STEEL ROD REINFORCEMENT. SEE SECTION A-A.

APRON ENDWALLS FOR PIPE ARCH AND ELLIPTICAL PIPE

STATE OF WISCONSIN
DEPARTMENT OF TRANSPORTATION

APPROVED

11/30/94 — DATE

/S/ Rory L. Rhinesmith — CHIEF ROADWAY DEVELOPMENT ENGINEER

FHWA

6

S.D.D. 8 F 2-1

6

S.D.D. 8 F 2-1

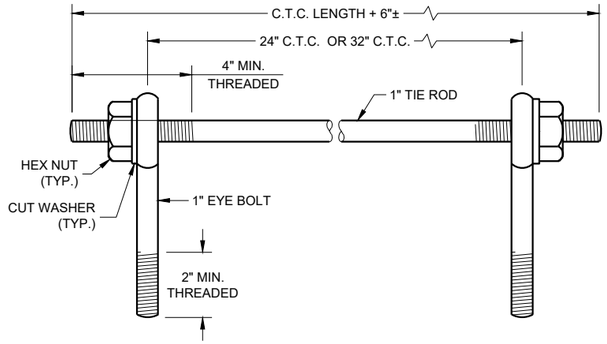

EYE BOLTS AND TIE ROD

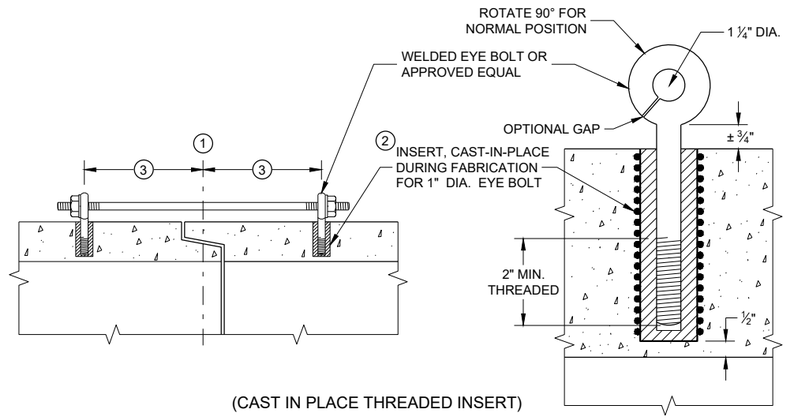

(CAST IN PLACE THREADED INSERT)

LONGITUDINAL SECTIONS

EYE BOLT AND TIE ROD ASSEMBLY (ALTERNATE NO. 1)

GENERAL NOTES

DETAILS OF CONSTRUCTION, MATERIALS, AND WORKMANSHIP NOT SHOWN ON THIS DRAWING SHALL CONFORM TO THE PERTINENT REQUIREMENTS OF THE STANDARD SPECIFICATIONS AND APPLICABLE SPECIAL PROVISIONS.

CONCRETE CULVERT AND STORM SEWER PIPE SHALL BE TIED TOGETHER IN THE MANNER ILLUSTRATED BY THIS DETAIL AT LOCATIONS DESIGNATED IN THE STANDARD SPECIFICATIONS AND THE PLAN. THE CONTRACTOR MAY USE EITHER ALTERNATE 1, 2 OR 3 FOR DRAINAGE STRUCTURES. ONLY ALTERNATE 1 AND 3 MAY BE USED FOR CATTLE PASSES, UNLESS OTHERWISE STATED IN THE CONTRACT. THE MATERIALS, FABRICATION AND WORK NECESSARY TO TIE THE PIPE BY THIS DETAIL WILL BE CONSIDERED INCIDENTAL TO THE PIPE AND APRON ENDWALLS IF REQUIRED.

DETAILED DRAWINGS FOR PROPOSED ALTERNATE DESIGNS FOR JOINT TIES SHALL BE SUBMITTED TO THE ENGINEER FOR APPROVAL.

JOINT TIES TO BE HOT-DIP GALVANIZED PER ASTM A 153.

(1) CENTER LINE OF TONGUE AND GROOVE OR BELL AND SPIGOT JOINTS.

(2) THE INSIDE OF THE THREADED INSERTS SHALL BE CLEAN TO ALLOW THE INSERTION OF THREADED EYE BOLTS.

(3) HOLES SHALL BE CAST-IN-PLACE OR DRILLED PER THE APPLICABLE DETAIL, AND EQUAL DISTANCE FROM THE CENTERLINE OF THE JOINT.

(4) BOLT PROJECTION INSIDE OF PIPE SHALL NOT EXCEED 2 INCHES.

(5) OPENING TO BE ROD DIAMETER PLUS 1 INCH.

(6) LENGTH ADEQUATE TO EXTEND TO WITHIN ½ INCH OF THE INNER SURFACE OF THE PIPE.

(7) EYE BOLT LENGTH DETERMINED BY WALL THICKNESS, BELL THICKNESS AND BOLT PROJECTION INSIDE PIPE.

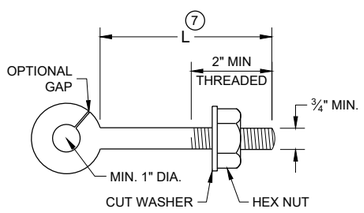

EYE BOLT (7)

NOTE: TWO EYE BOLTS MAY BE USED WITH A 30" OR 38" LONG THREADED ROD IN LIEU OF THE 90° BENT TIE ROD.

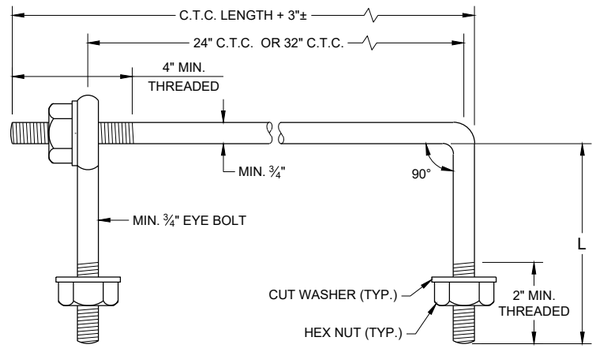

EYE BOLT AND TIE ROD

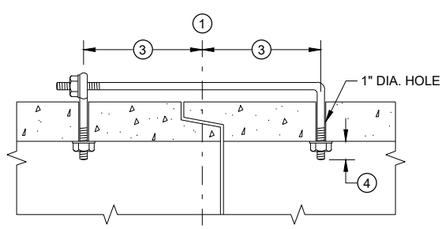

(TONGUE AND GROOVE PIPE)

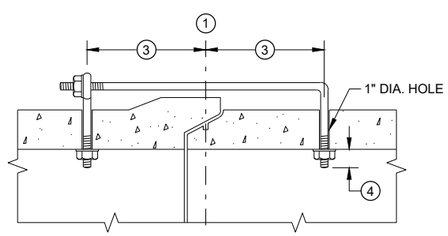

(MODIFIED BELL PIPE)

LONGITUDINAL SECTION

(JOINT TIES FOR 18" TO 66" DIA. CONCRETE PIPE)

EYE BOLT AND TIE ROD ASSEMBLY (ALTERNATE NO. 2)

ADJUSTABLE TIE ROD TABLE

PIPE DIAMETER	TIE ROD DIAMETER	D	L_1	N
12 - 60	⅝	⅝	5	½
66 - 84	¾	¾	5	½
90 - 144	1	1	7	1 7/16

DIMENSIONS SHOWN ARE IN INCHES

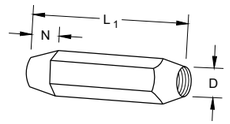

TAPERED

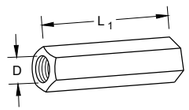

PLAIN

RIGHT AND LEFT THREADS

SLEEVE NUTS

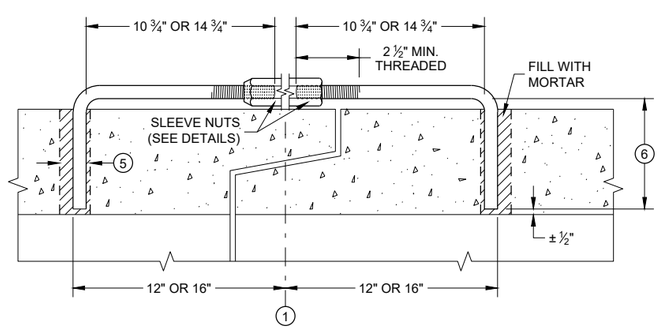

LONGITUDINAL SECTION

ADJUSTABLE TIE ROD (ALTERNATE NO. 3)

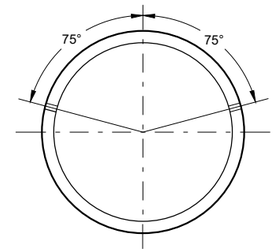

PLACEMENT OF (2) CAST-IN-PLACE INSERTS OR HOLES DURING FABRICATION FOR PIPE SECTIONS REQUIRING TIE RODS

TRANSVERSE SECTION

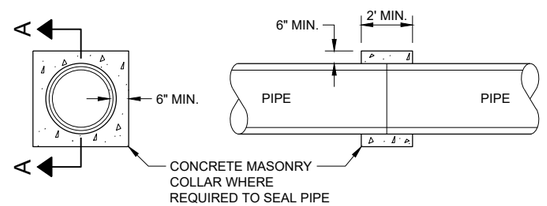

SECTION A - A

CONCRETE COLLAR DETAIL

JOINT TIES FOR CONCRETE PIPE AND CONCRETE COLLAR DETAIL

STATE OF WISCONSIN
DEPARTMENT OF TRANSPORTATION

APPROVED
November 2021 — DATE
/S/ Rodney Taylor — ROADWAY STANDARDS DEVE ENGINEER

FHWA

SDD 08F04 - 08

SDD 08F04 - 08

GENERAL NOTES

(1) DESIGN WILL DETERMINE FINAL DRIVEWAY ASPHALTIC THICKNESS BASED ON TYPE OF USAGE AND LOADINGS.

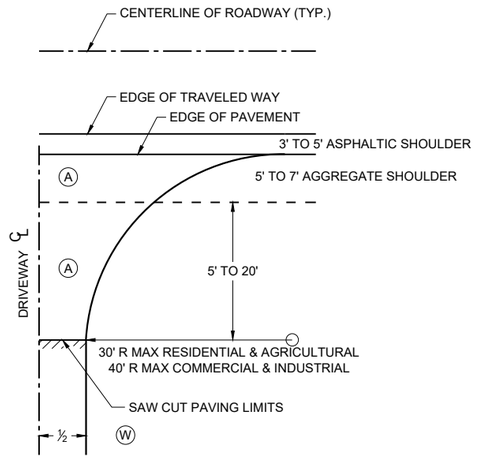

PLAN VIEW

HALF SECTION

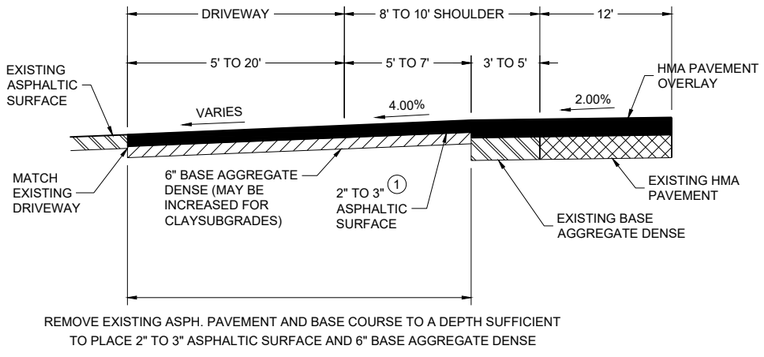

PROFILE VIEW

RURAL ENTRANCE WITH ASPHALTIC SURFACE RESURFACING PROJECTS

(A) : PAID FOR AS ASPHALTIC SURFACE DRIVEWAYS AND FIELD ENTRANCES. (TON)

(B) : PAID FOR AS BASE AGGREGATE DENSE 1 1/4" (TON)

(W) : DRIVEWAY WIDTHS (MEASURED AT ROW LINE)
- ~ COMMERCIAL & INDUSTRIAL 16' MIN. - 35' MAX.
- ~ RESIDENTIAL & AGRICULTURAL (NONCOMMERCIAL) 16' MIN. - 24' MAX.

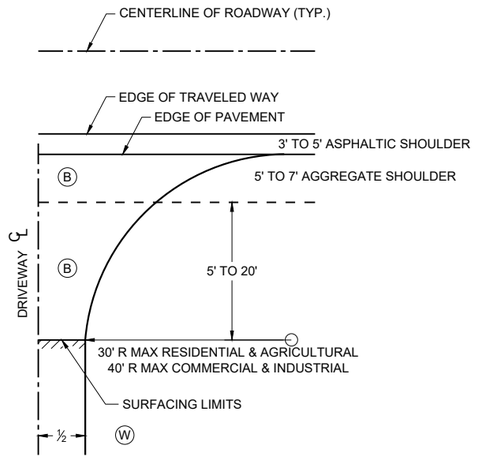

PLAN VIEW

HALF SECTION

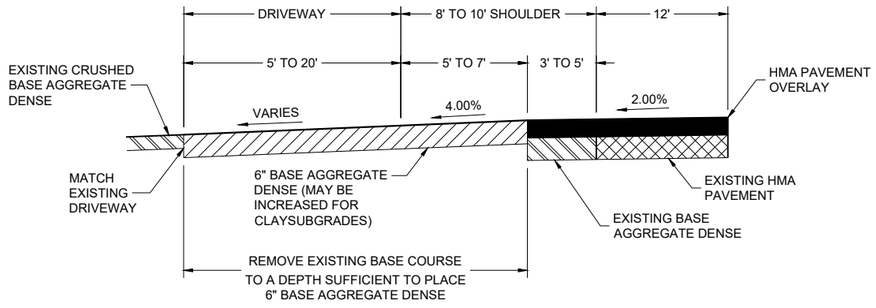

PROFILE VIEW

RURAL ENTRANCE WITH AGGREGATE SURFACE 6" BASE AGGREGATE DENSE RESURFACING PROJECTS

DRIVEWAYS WITHOUT CURB AND GUTTER RESURFACING PROJECTS RURAL

STATE OF WISCONSIN
DEPARTMENT OF TRANSPORTATION

APPROVED
November 2025 (DATE)
/S/ Rodney Taylor
ROADWAY STANDARDS DEVELOPMENT UNIT SUPERVISOR

FHWA

6
SDD 09A15-01

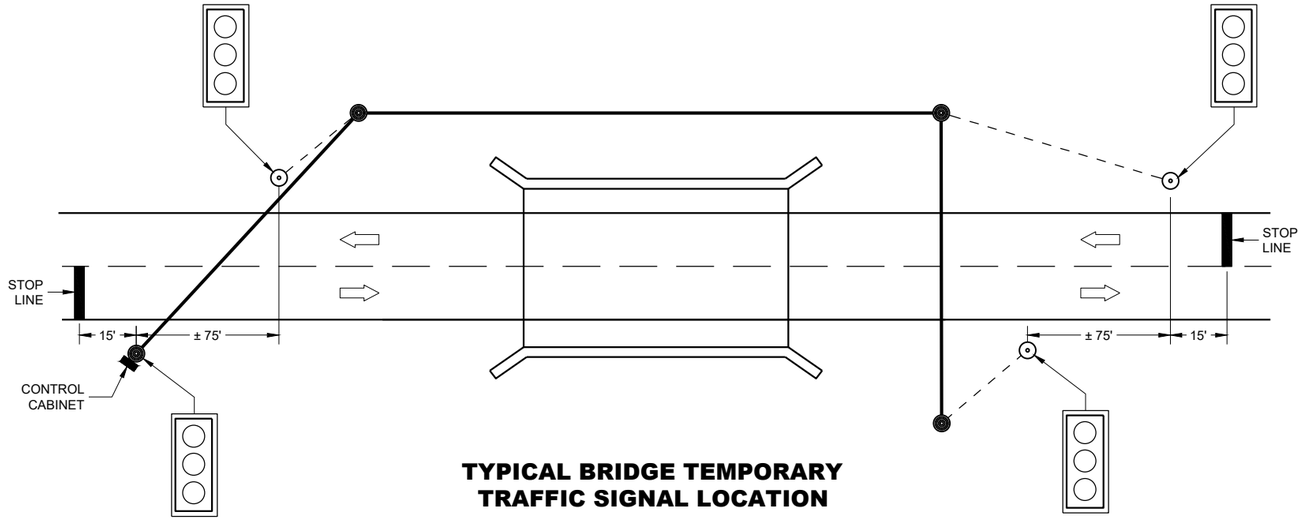

TYPICAL BRIDGE TEMPORARY TRAFFIC SIGNAL LOCATION

LEGEND

- WOOD POLE (NON-BREAKAWAY)
- WOOD POST (BREADAWAY)
- SIGNAL CABLE
- SIGNAL CABLE W/MESSENGER
- DIRECTION OF TRAFFIC
- LED TRAFFIC SIGNAL WITH BACKPLATE (3-12")

GENERAL NOTES

DETAILS OF CONSTRUCTION, MATERIALS AND WORKMANSHIP NOT SHOWN ON THIS DRAWING SHALL CONFORM TO THE PERTINENT REQUIREMENTS OF THE CONTRACT.

POLE MOUNTED TRAFFIC SIGNAL CONTROL CABINET MAY BE MOUNTED ON THE SERVICE POLE IF THE ELECTRICAL UTILITY ALLOWS THE INSTALLATION.

WHEN UTILITY POLES ARE USED TO SPAN THE TEMPORARY OVERHEAD CABLE, WRITTEN PERMISSION MUST BE OBTAINED FROM THE OWNER OF THE POLES AND GIVEN TO THE PROJECT MANAGER. ALL PERTINENT UTILITY AND CODE CLEARANCES SHALL BE MAINTAINED.

WOOD POLES (NON-BREAKAWAY) SHALL BE NO CLOSER TO EDGE OF PAVEMENT THAN OFFSET DISTANCE CHART ALLOWS OR 4 FEET BEHIND PROTECTIVE BARRIER (BEAM GUARD, ETC.).

WOOD POSTS (BREAKAWAY) SHALL BE NO CLOSER THAN 2 FEET OUTSIDE OF SHOULDER.

VERTICAL CLEARANCE ETC. PER NEC.

TRAFFIC SIGNAL FACES SHALL BE TYPICALLY PLACED 12 FEET FROM EDGE OF PAVEMENT.

EACH TRAFFIC SIGNAL SHALL HAVE A BACKPLATE.

SIGNING, PAVEMENT MARKING AND LANE CONTROL REQUIREMENTS SHALL CONFORM TO STANDARD DETAIL DRAWING 15D33.

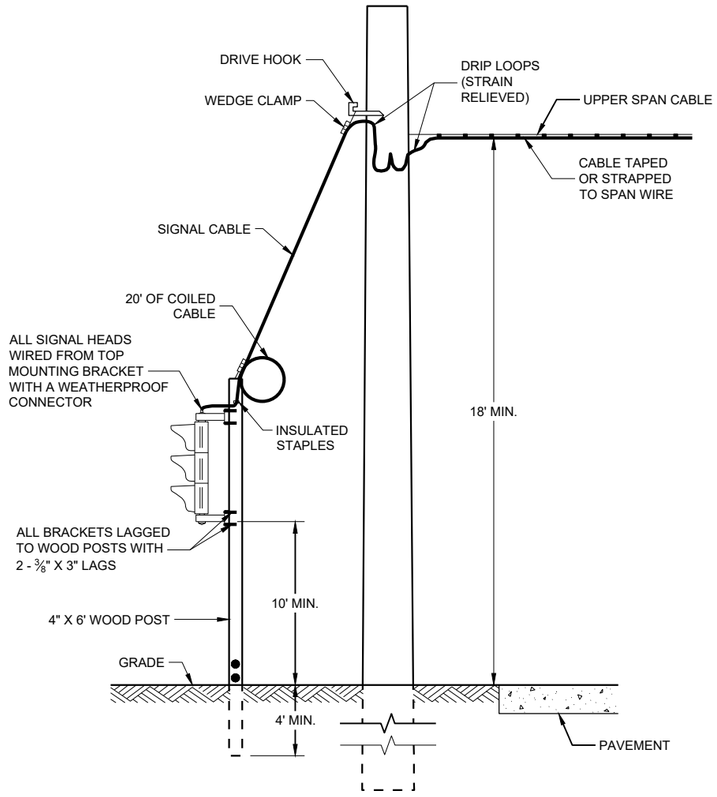

TYPICAL DROP TO TRAFFIC SIGNAL FACE

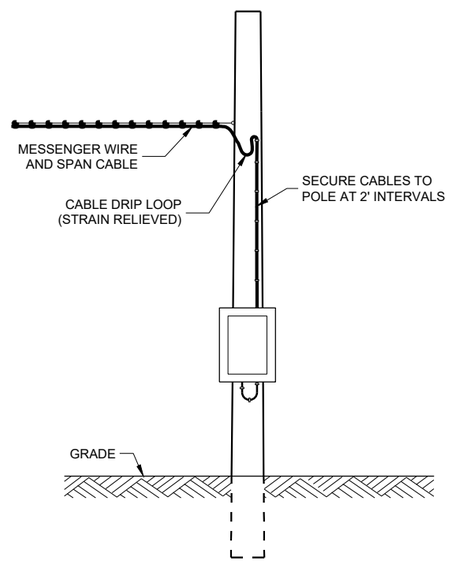

POLE MOUNT CABINET INSTALLATION

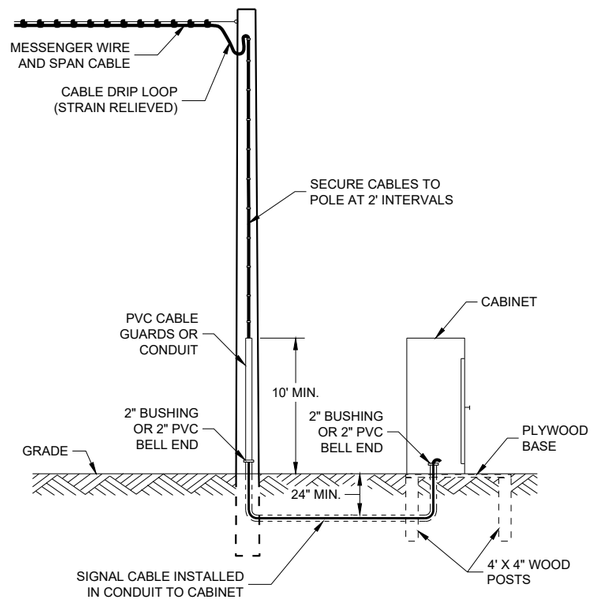

GROUND MOUNT CABINET INSTALLATION

MINIMUM POLE LENGTHS	CLASS	POLE BURIAL DEPTHS
25'	V	5'
30'	V	6'
35'	IV	7'
40'	IV	8'
45'	IV	9'

OFFSET DISTANCES FOR TEMPORARY NON-BREAKAWAY POLES	
SPEED LIMIT	OFFSET DISTANCE*
GREATER THAN 45 MPH	18 FT
45 MPH OR LESS	12 FT
45 MPH OR LESS W/CURBS	2 FT

* NOTE: OFFSET MEASURED FROM OUTER EDGE OF OUTSIDE THRU LANE.

BRIDGE TEMPORARY TRAFFIC SIGNAL INSTALLATION

STATE OF WISCONSIN
DEPARTMENT OF TRANSPORTATION

APPROVED
March 2018 — DATE
/S/ Ahmet Demirbilek — ROADWAY STANDARDS DEVE ENGINEER

FHWA

6

SDD09G02 - 05a

6

SDD09G02 - 05a

GENERAL NOTES

USE ¾" DRILL IN WOOD POLE TO PROVIDE FOR ⅝" BOLTS.

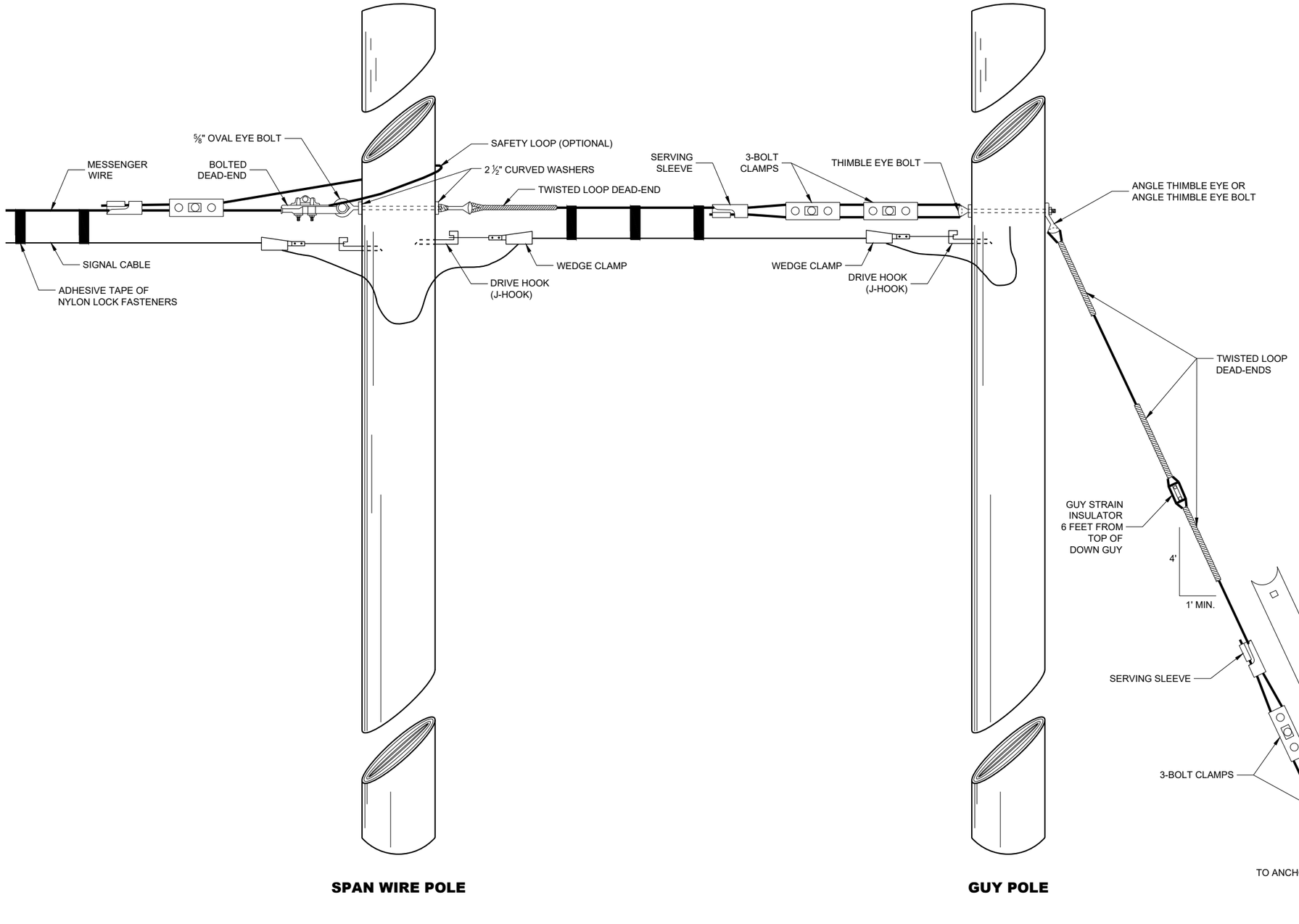

SPAN WIRE POLE

GUY POLE

TYPICAL DEAD-ENDINGS OR GUYING

BRIDGE TEMPORARY TRAFFIC SIGNAL INSTALLATION

STATE OF WISCONSIN
DEPARTMENT OF TRANSPORTATION

APPROVED
June 2015 — DATE
/S/ Ahmet Demerbilek — ROADWAY STANDARDS DEVE ENGINEER

FHWA

6

SDD09G02 - 05b

6

SDD09G02 - 05b

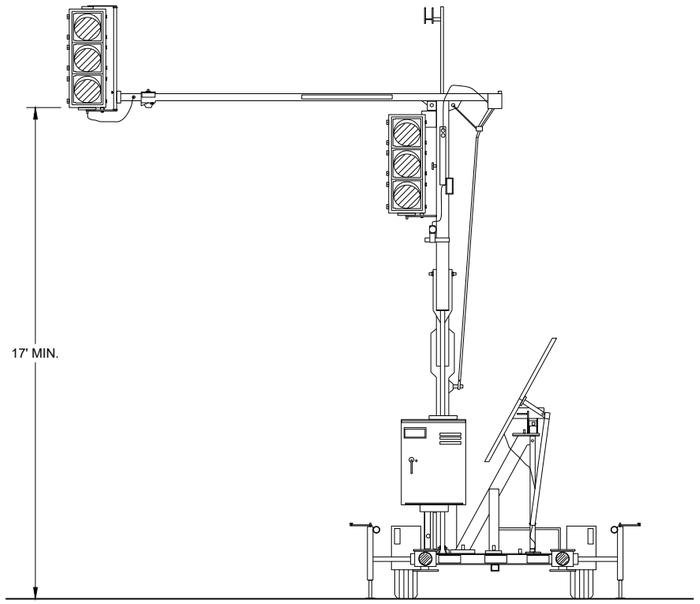

TRAILER MOUNTED TRAFFIC SIGNAL

GENERAL NOTES

DETAIL OF CONSTRUCTION, MATERIALS AND WORKMANSHIP NOT SHOWN ON THIS DRAWING SHALL CONFORM TO THE PERTINENT REQUIREMENTS OF THE CONTRACT.

SIGNING, PAVEMENT MARKING AND LANE CONTROL REQUIREMENTS SHALL CONFORM TO STANDARD DETAIL DRAWING 15D33.

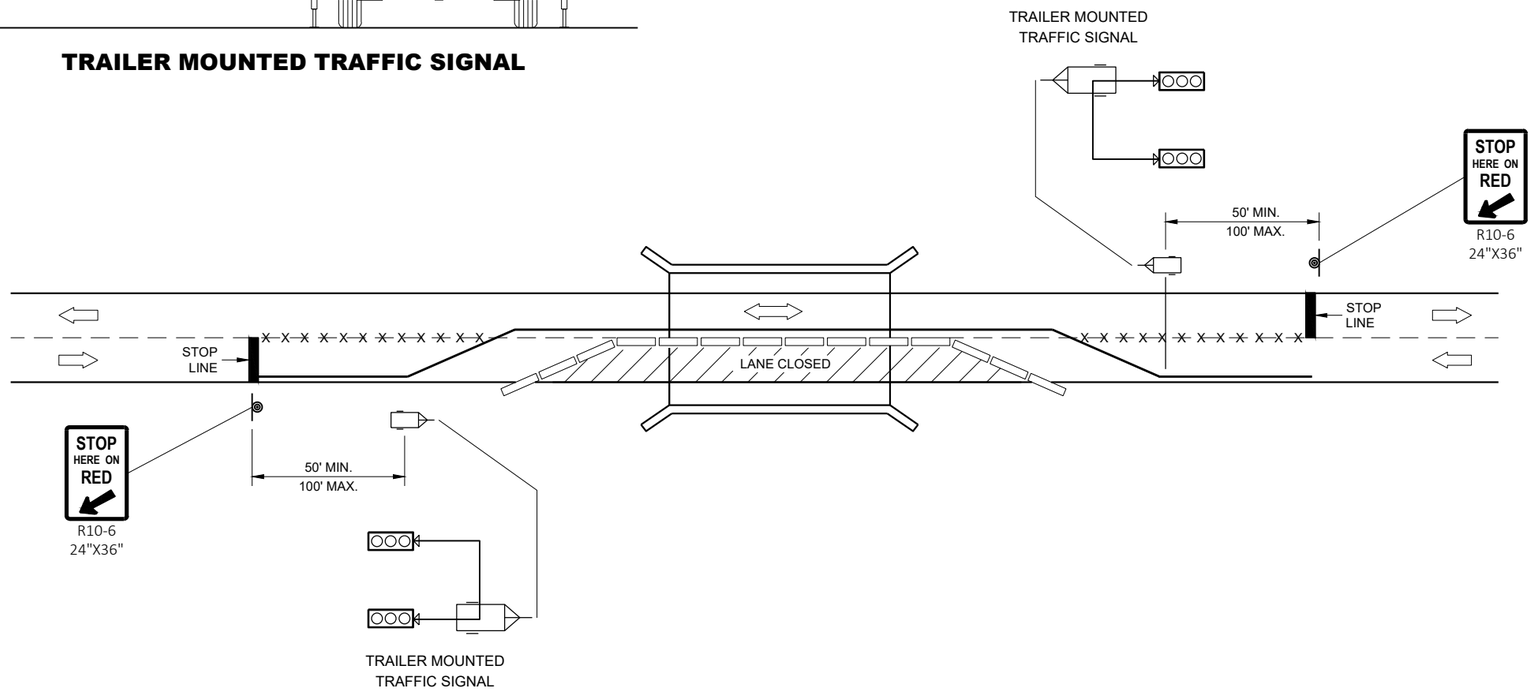

TYPICAL TRAILER MOUNTED TRAFFIC SIGNAL LOCATION

LEGEND

- POST MOUNTED SIGN
- TEMPORARY PRECAST CONCRETE BARRIER
- TRAILER MOUNTED TRAFFIC SIGNAL
- REMOVE PAVEMENT MARKINGS
- DIRECTION OF TRAFFIC

BRIDGE TEMPORARY TRAFFIC SIGNAL INSTALLATION

STATE OF WISCONSIN
DEPARTMENT OF TRANSPORTATION

APPROVED

June 2015
DATE

/S/ Ahmet Demerbilek
ROADWAY STANDARDS DEVE ENGINEER

FHWA

6

SDD09G02 - 05c

6

SDD09G02 - 05c

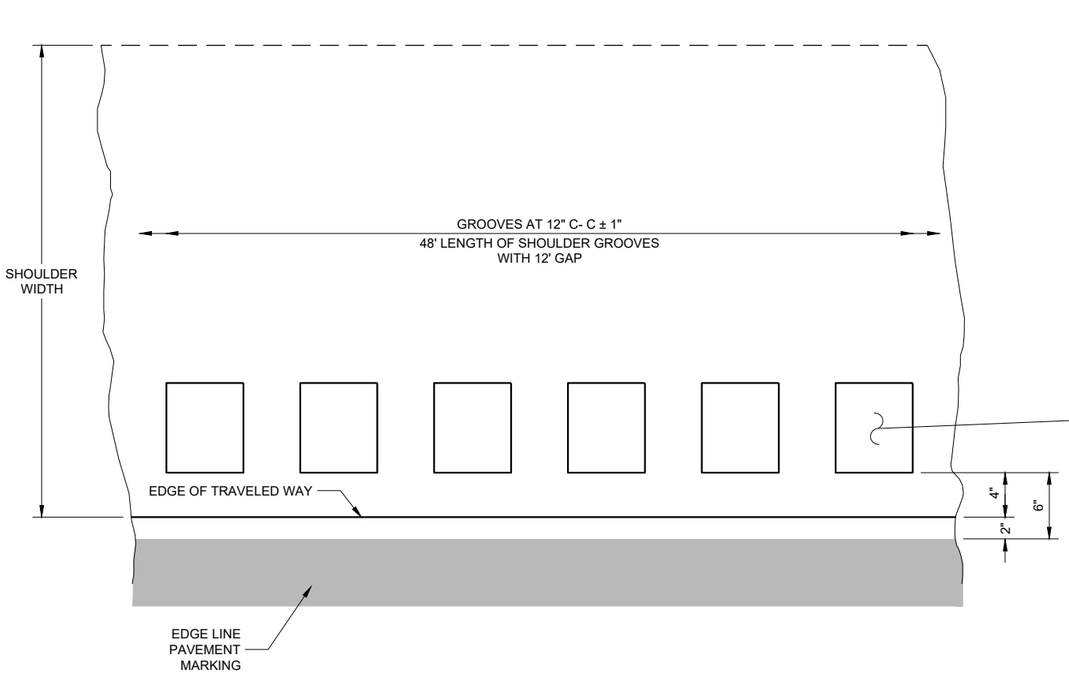

PLAN DETAIL VIEW
SHOULDER WITH GROOVES

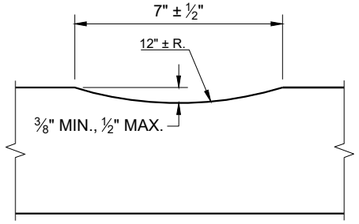

SECTION A - A

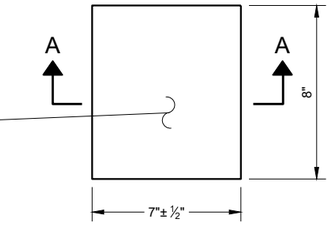

PLAN VIEW
(SINGLE GROOVE)

GENERAL NOTES

DO NOT MILL SHOULDER GROOVES THROUGH INTERSECTIONS, MARKED CROSSWALKS, NON-MOTORIZED PATH CROSSINGS, ETC. REFER TO SDD 13A10 SHEETS "g" AND "h".

SHOULDER GROOVES MAY BE OMITTED IN AREAS WITH HIGH CONCENTRATIONS OF DRIVEWAYS WHEN DIRECTED BY THE ENGINEER.

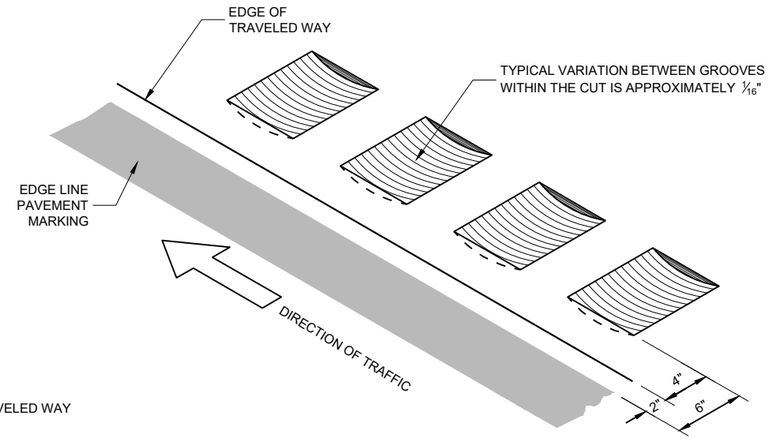

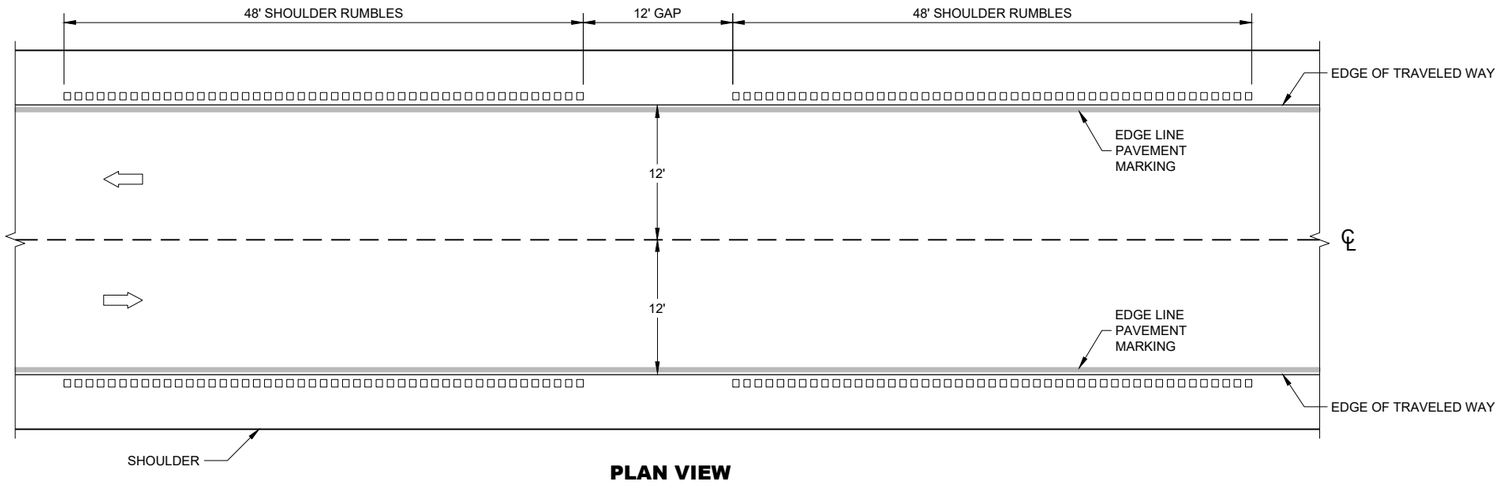

PLAN VIEW

SHOULDER RUMBLE STRIPS - ASPHALT

6

SDD 13A10 - 03a

SHOULDER RUMBLE STRIPS ASPHALT

STATE OF WISCONSIN
DEPARTMENT OF TRANSPORTA

6

SDD 13A10 - 03a

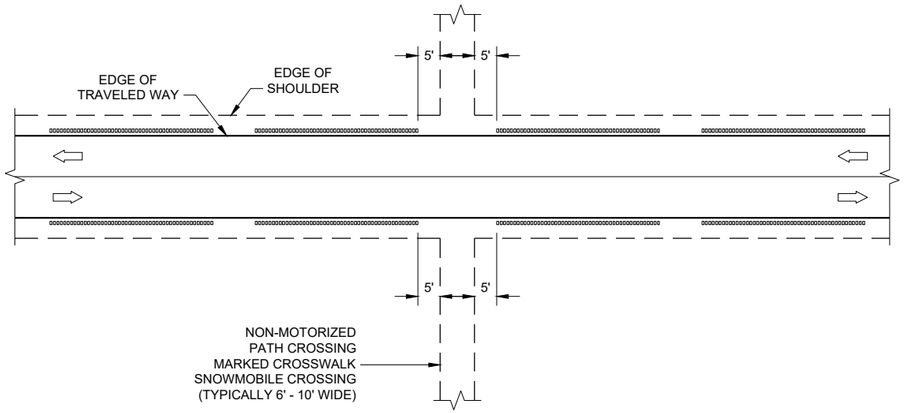

GROOVES AT MISCELLANEOUS CROSSINGS

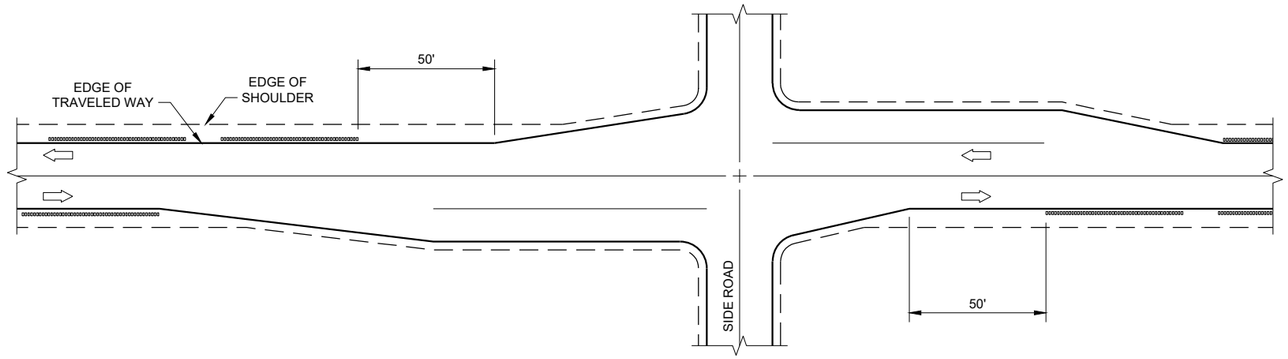

GROOVES AT RIGHT TURN LANE

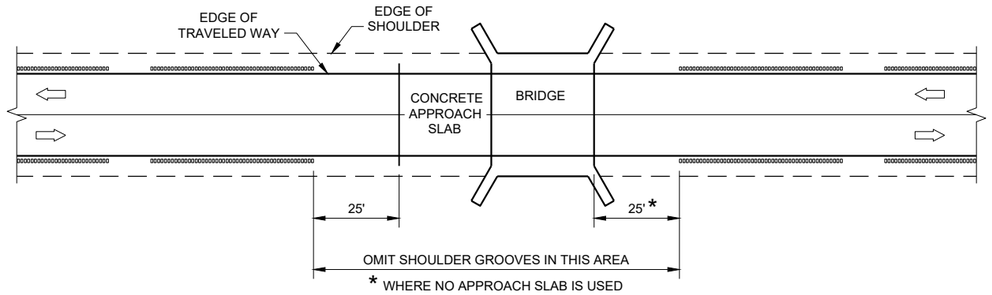

GROOVES AT BRIDGES

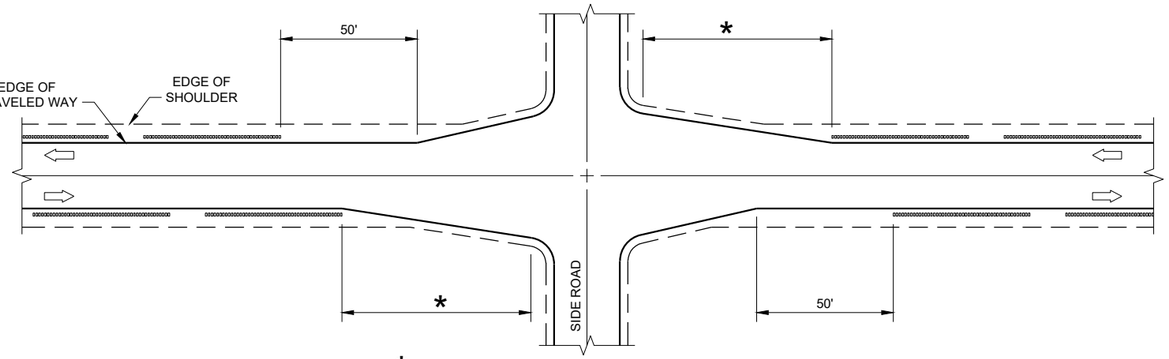

GROOVES AT INTERSECTIONS WITH APPROACH TAPER

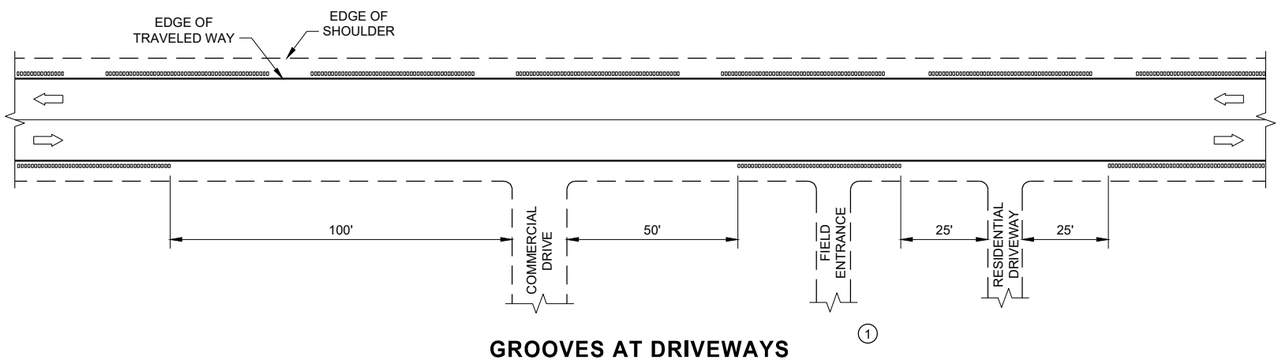

GROOVES AT DRIVEWAYS ①

GENERAL NOTES

① SHOULDER GROOVES MAY BE OMITTED IN AREAS WITH HIGH CONCENTRATIONS OF DRIVEWAYS. WHEN DIRECTED BY THE ENGINEER.

SHOULDER AND EDGE LINE RUMBLE STRIPS CROSSINGS, INTERSECTIONS, BRIDGES, DRIVEWAYS

STATE OF WISCONSIN
DEPARTMENT OF TRANSPORTA

6

SDD 13A10 - 03g

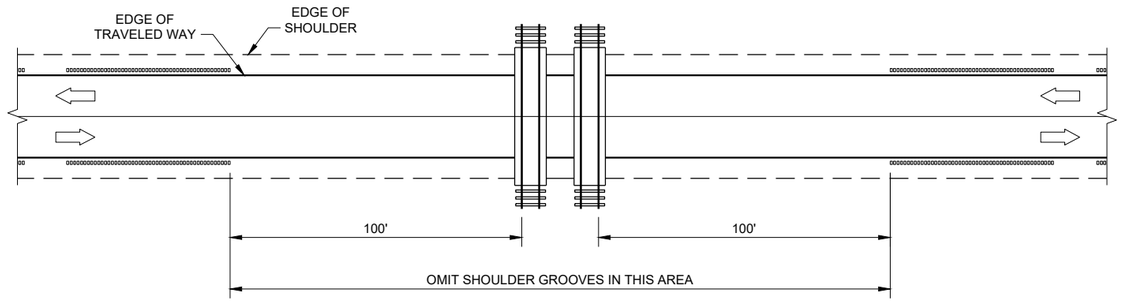

GROOVES AT RAILROADS

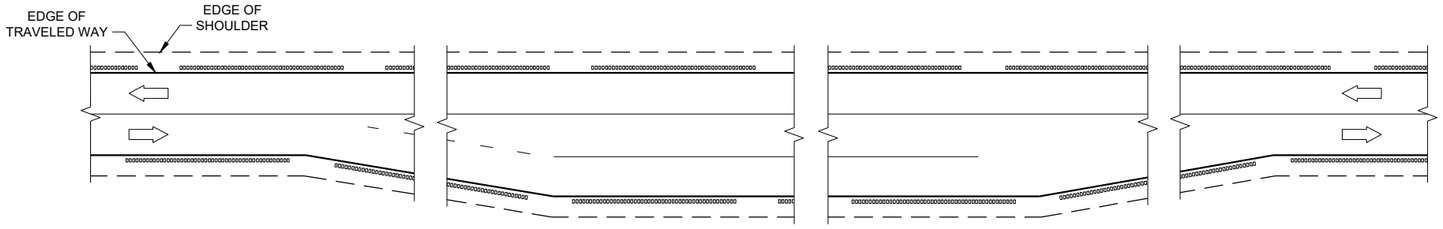

GROOVES AT PASSING AND CLIMBING LANES

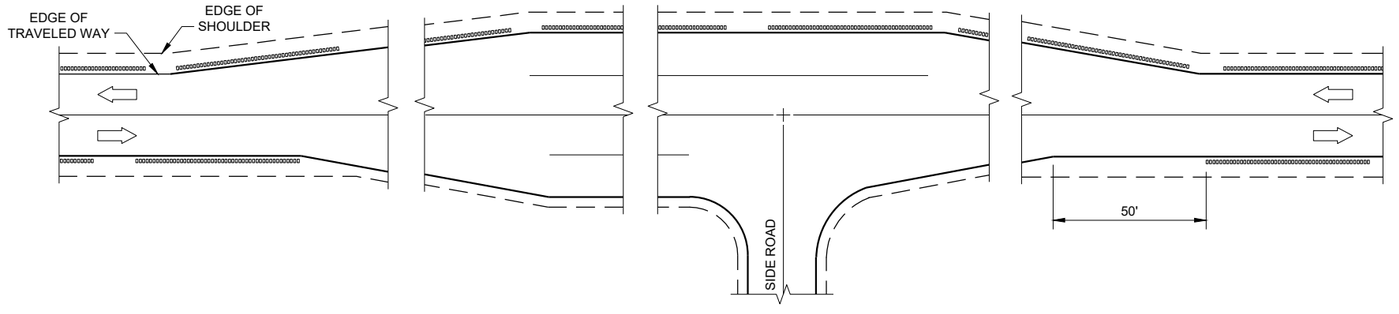

GROOVES AT BYPASS LANES

6

SDD 13A10 - 03h

SHOULDER AND EDGE LINE RUMBLE STRIPS - RAILROAD, PASSING, CLIMBING AND BYPASS LANES

STATE OF WISCONSIN
DEPARTMENT OF TRANSPORTATION

APPROVED

May 2023
DATE

/S/ John Jenkins
ROADWAY STANDARDS DEVE ENGINEER

FHWA

6

SDD 13A10 - 03h

GENERAL NOTES

DO NOT MILL SHOULDER GROOVES THROUGH INTERSECTIONS, MARKED CROSSWALKS, NON-MOTORIZED PATH CROSSINGS, ETC. REFER TO SDD 13A11 SHEETS "d" AND "e".

CENTERLINE GROOVES MAY BE OMITTED IN AREAS WITH HIGH CONCENTRATIONS OF DRIVEWAYS WHEN DIRECTED BY THE ENGINEER.

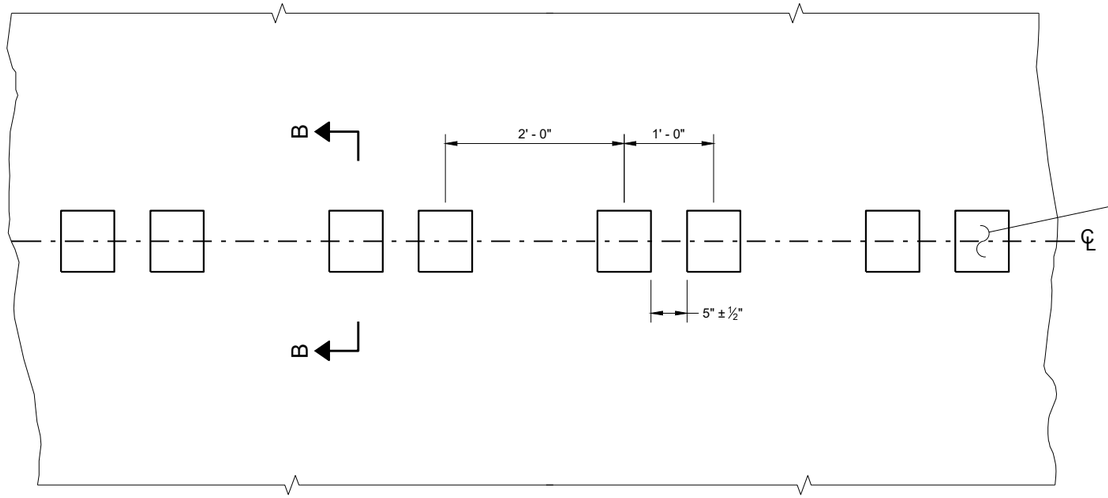

PLAN DETAIL VIEW

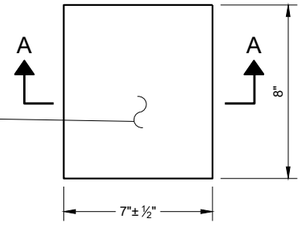

PLAN VIEW (SINGLE GROOVE)

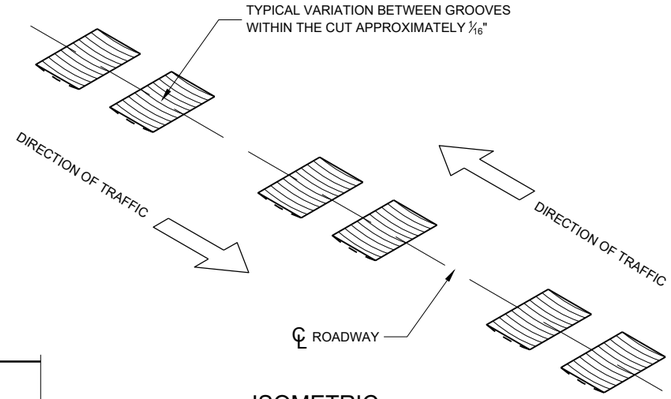

ISOMETRIC

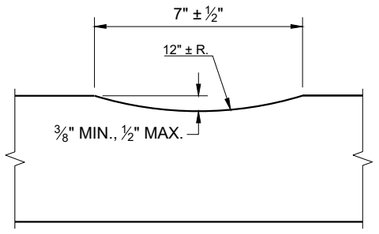

SECTION A - A

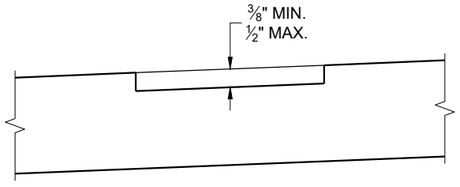

SECTION B - B
SUPERELEVATED ROADWAY

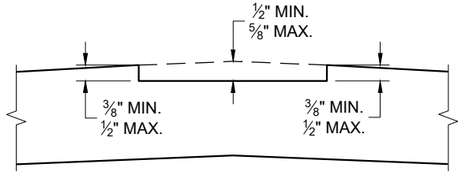

SECTION B - B
CROWNED ROADWAY

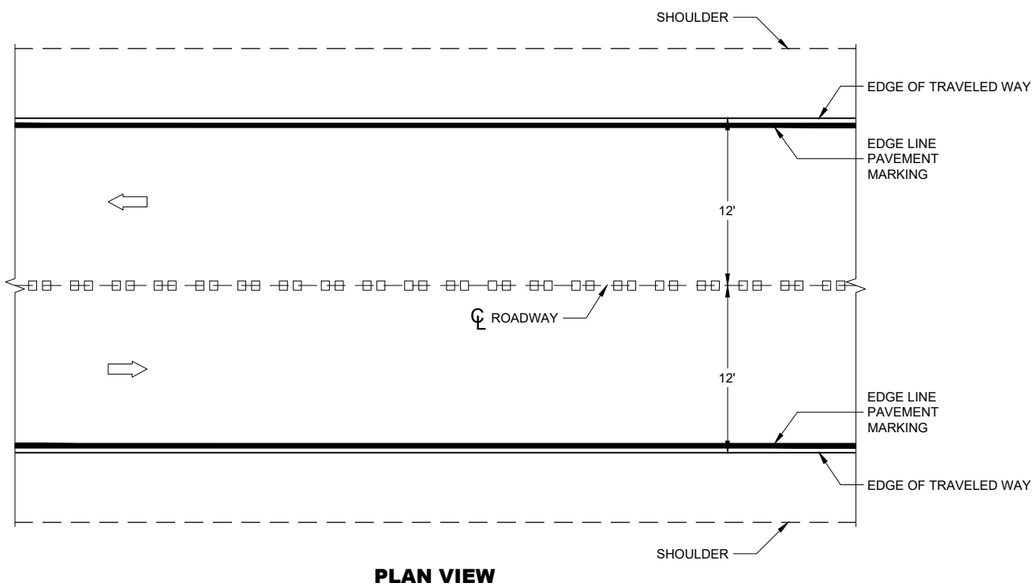

PLAN VIEW

CENTERLINE RUMBLE STRIPS - ASPHALT

CENTERLINE RUMBLE STRIPS - ASPHALT

STATE OF WISCONSIN
DEPARTMENT OF TRANSPORTATION

6

SDD 13A11 - 04a

6

SDD 13A11 - 04a

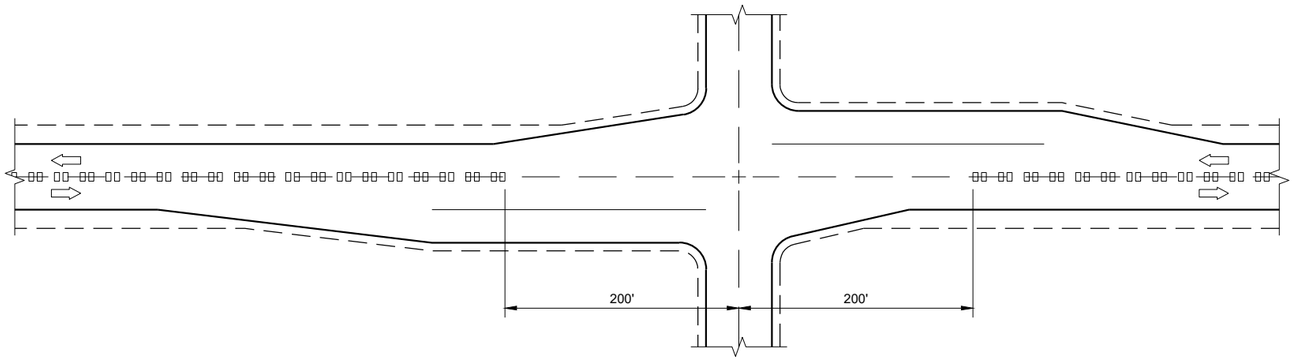

CENTERLINE GROOVES AT INTERSECTIONS

GENERAL NOTES

1. CENTERLINE GROOVES MAY BE OMITTED IN AREAS WITH HIGH CONCENTRATIONS OF DRIVEWAYS WHEN DIRECTED BY THE ENGINEER.

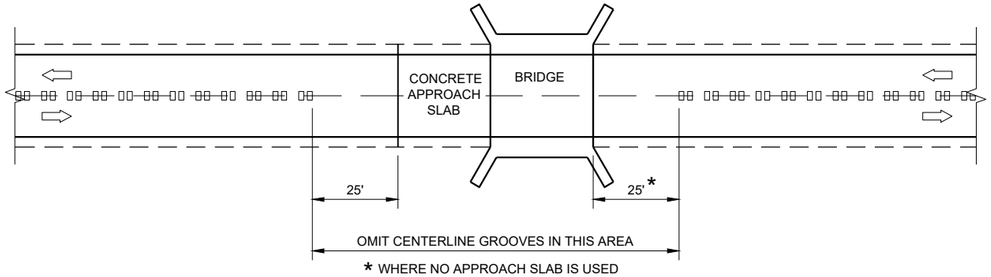

* WHERE NO APPROACH SLAB IS USED

CENTERLINE GROOVES AT BRIDGES

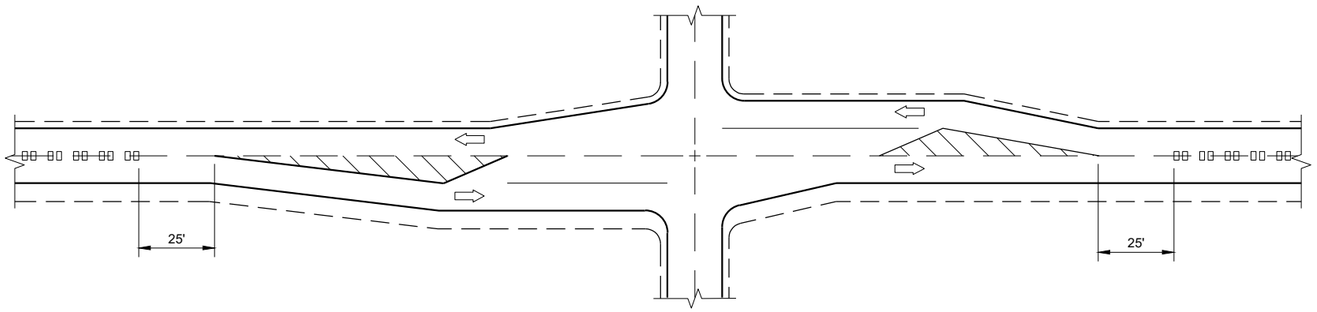

CENTERLINE GROOVES AT INTERSECTIONS (WITH LEFT TURN LANES)

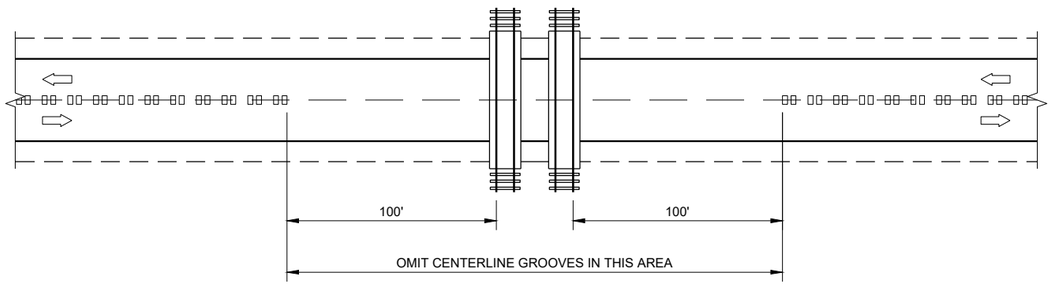

CENTERLINE GROOVES AT RAILROADS

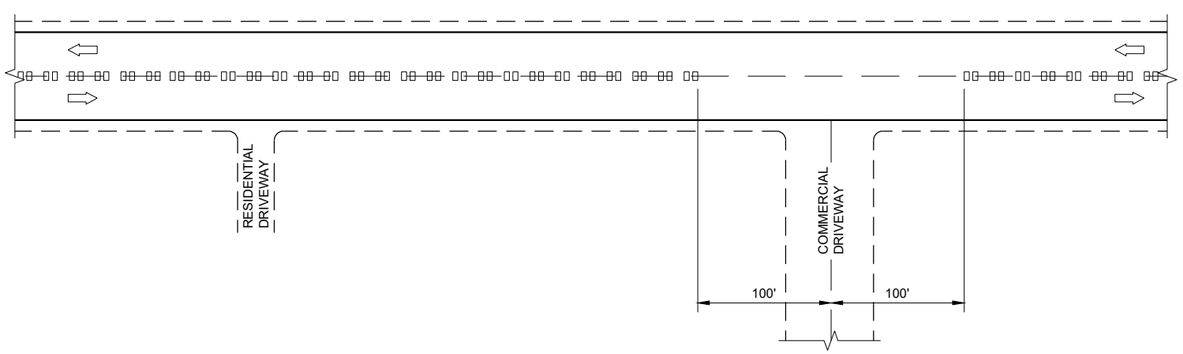

CENTERLINE GROOVES AT DRIVEWAYS (1)

CENTER LINE RUMBLE STRIPS - INTERSECTIONS, DRIVEWAYS, BRIDGES, RAIL ROADS

STATE OF WISCONSIN
DEPARTMENT OF TRANSPORTATION

APPROVED

May 2023
DATE

/S/ John Jenkins
ROADWAY STANDARDS DEVE ENGINEER

FHWA

6

SDD 13A11 - 04d

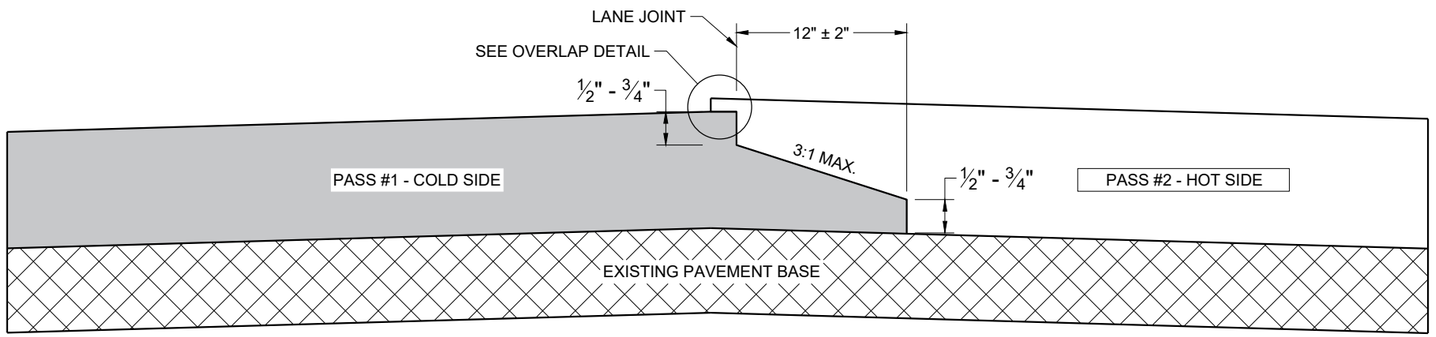

TYPICAL PAVEMENT CROSS SECTION
NOTCHED WEDGE JOINT

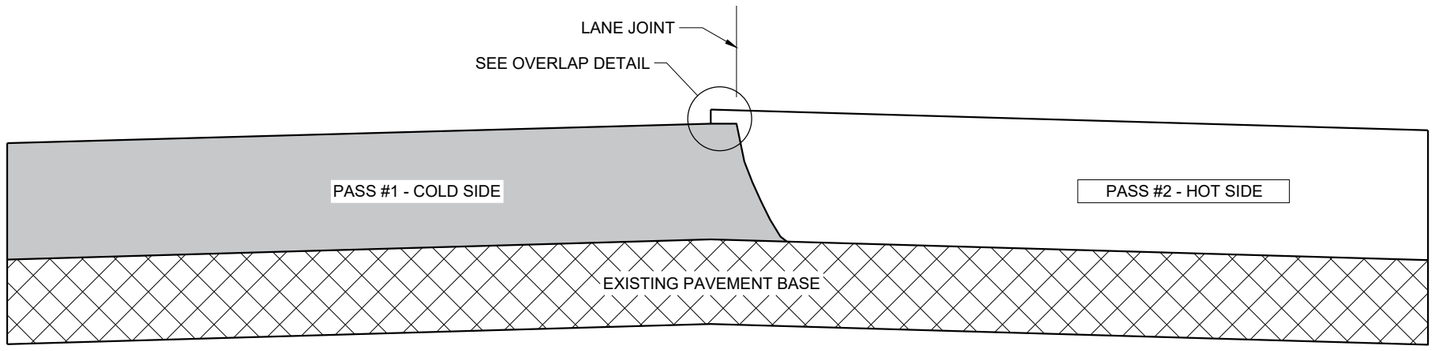

TYPICAL PAVEMENT CROSS SECTION
VERTICAL JOINT

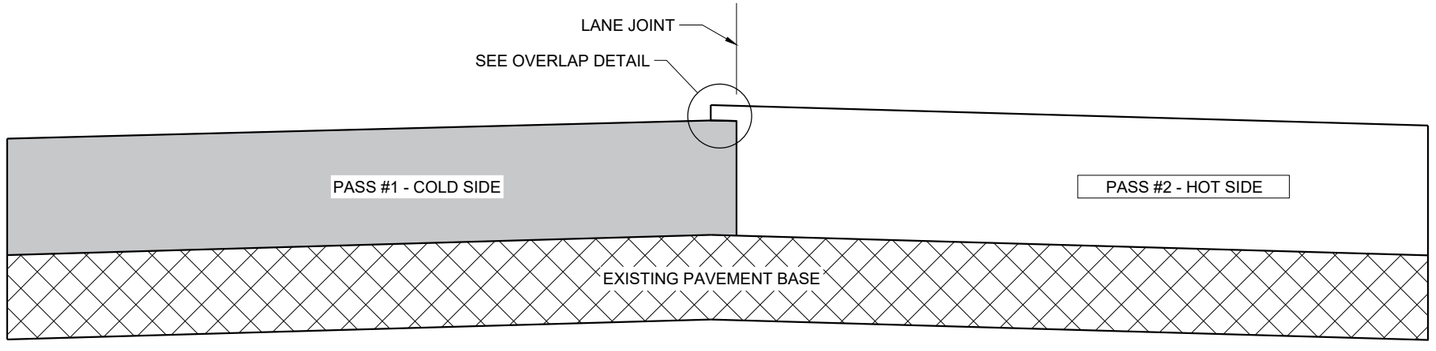

TYPICAL PAVEMENT CROSS SECTION
VERTICAL JOINT (MILLED)

GENERAL NOTES

IN ADDITION TO THE DETAILS PROVIDED IN THIS DRAWING, CONFORM TO STANDARD SPECIFICATION 450.3.2.8 FOR WHEN A NOTCHED WEDGE JOINT IS REQUIRED AND FOR GENERAL JOINT CONSTRUCTION REQUIREMENTS.

FOR ALL LONGITUDINAL JOINTS, ENSURE THE PAVER SCREED OVERLAPS THE PREVIOUSLY PLACED PAVEMENT BY 1" ± 0.5" AND THE HOT SIDE OF THE JOINT REMAINS HIGHER THAN THE COLD SIDE BY APPROXIMATELY 0.1" AFTER FINAL COMPACTION. (IT WILL BE FLUSH WHEN PAVING IN ECHELON.)

ONLY REMOVE THE LONGITUDINAL NOTCHED WEDGE JOINT FOR SMA PAVEMENT OR AS DIRECTED BY THE ENGINEER TO ADDRESS SPECIFIC LENGTHS OF JOINT DAMAGED BY TRAFFIC.

WHEN MILLING BACK OR REMOVING ANY LONGITUDINAL JOINT, LIMIT THE MATERIAL REMOVED TO 2" FROM THE TOP NOTCH OR FROM THE VERTICAL JOINT EDGE ON THE COLD SIDE OF THE JOINT.

USE LONGITUDINAL MILLED JOINT AS PLANS SHOW OR THE AS THE ENGINEER DIRECTS.

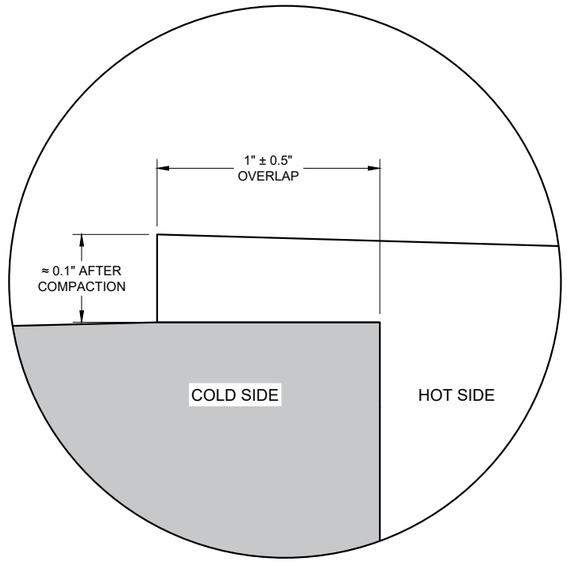

OVERLAP DETAIL (TYPICAL)

6

6

SDD 13C19 - 03

SDD 13C19 - 03

HMA LONGITUDINAL JOINTS

STATE OF WISCONSIN
DEPARTMENT OF TRANSPORTATION

APPROVED
November 2020
DATE

/S/ Steven Hefel
HMA PAVEMENT ENGIN

FHWA

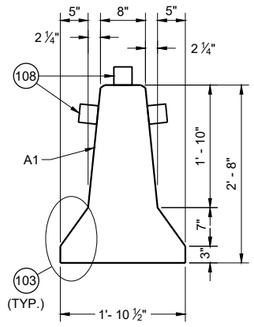

CROSS SECTION

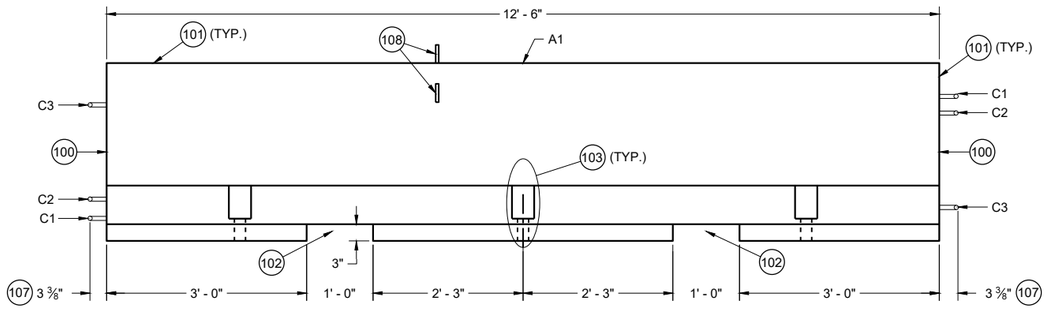

PROFILE VIEW

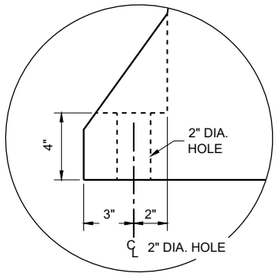

ANCHOR BLOCK DETAIL

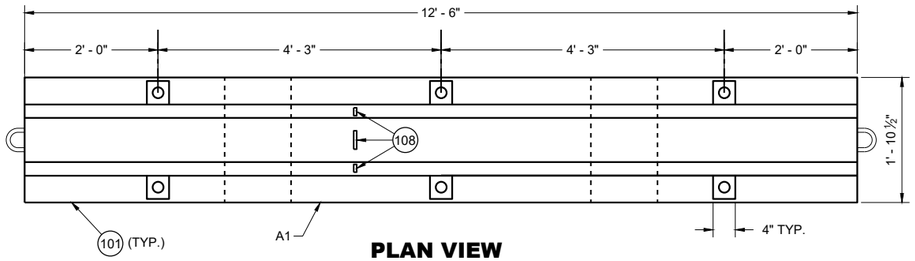

PLAN VIEW

TEMPORARY BARRIER

GENERAL NOTES

PLACE BARRIER ON PAVED SURFACE. BEFORE PLACEMENT OF TEMPORARY BARRIER, REMOVE ALL LOOSE MATERIAL FROM PAVED SURFACE.

LOOP BARS C1, C2 AND C3 ARE NOT FOR PLACEMENT OR MOVEMENT OF BARRIER.

100 PERMANENTLY FORM INTO ONE END OF BARRIER THE FOLLOWING INFORMATION:
- A. TYPE OF BARRIER: WI-CBTP
- B. MANUFACTURER
- C. DATE OF MANUFACTURE (MONTH AND YEAR)

101 1" OPTIONAL CHAMFER

102 SEE LIFTING SLOT DETAIL

103 SEE ANCHOR BLOCK DETAIL

104 1 ¾" MIN. CLEAR COVER

105 2" MIN. CLEAR COVER

106 1" MIN. CLEAR COVER

107 ± ⅛" MEASURED FROM FACE OF CONCRETE BARRIER TO OUTSIDE OF LOOP BAR (TYP.)

108 USE DELINEATORS CONFORMING TO SECTION 633 OF THE STANDARD SPECIFICATIONS. CONTRACTOR MY USE ALTERNATE SHAPES AND HOUSING. INSTALL DELINEATORS ACCORDING TO MANUFACTURERS INSTRUCTION. INSTALL YELLOW REFLECTORS WHEN BARRIER IS LOCATED LEFT OF TRAFFIC AND WHITE WHEN BARRIER IS LOCATED RIGHT OF TRAFFIC. SPACE DELINEATORS A MAXIMUM OF 25 FEET APART, PROVIDE TOP MOUNTED DELINEATORS IN ADDITION TO SIDE MOUNTED DELINEATORS ON BARRIER INSTALLATIONS LOCATED ON A CURVED ALIGNMENT LONGER THAT 200 FEET AND ON BARRIERS USED TO SEPARATE OPPOSING TRAFFIC.

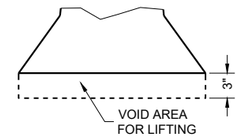

LIFTING SLOT DETAIL (TYP.)

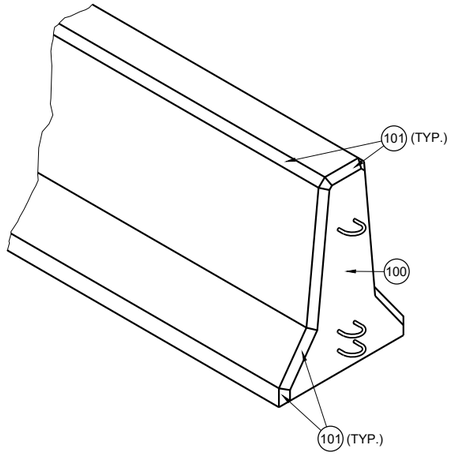

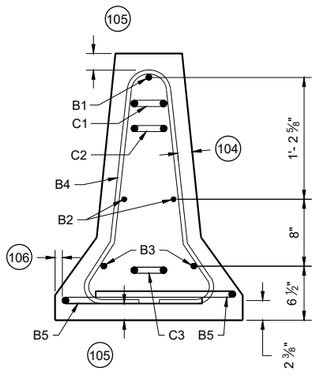

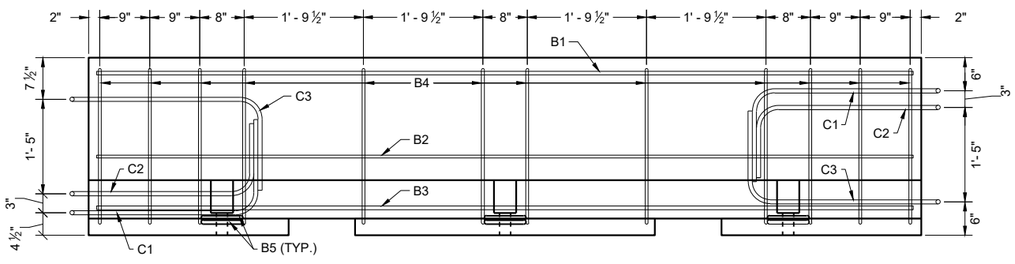

PROFILE VIEW

TEMPORARY BARRIER REINFORCEMENT

CONCRETE BARRIER TEMPORARY PRECAST, 12' - 6"

STATE OF WISCONSIN
DEPARTMENT OF TRANSPORTATION

6

SDD 14B07-16a

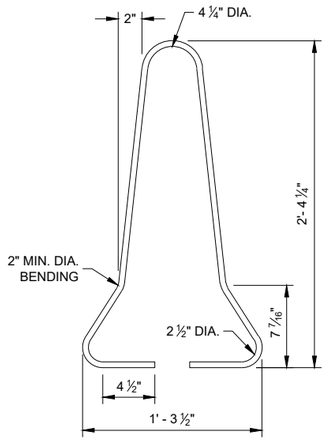

B4 BAR DETAIL

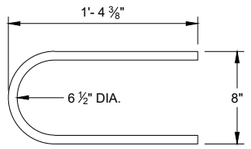

B5 BAR DETAIL

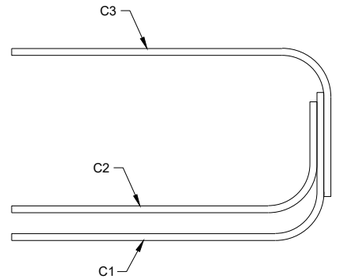

PROFILE VIEW

LOOP BAR ASSEMBLY

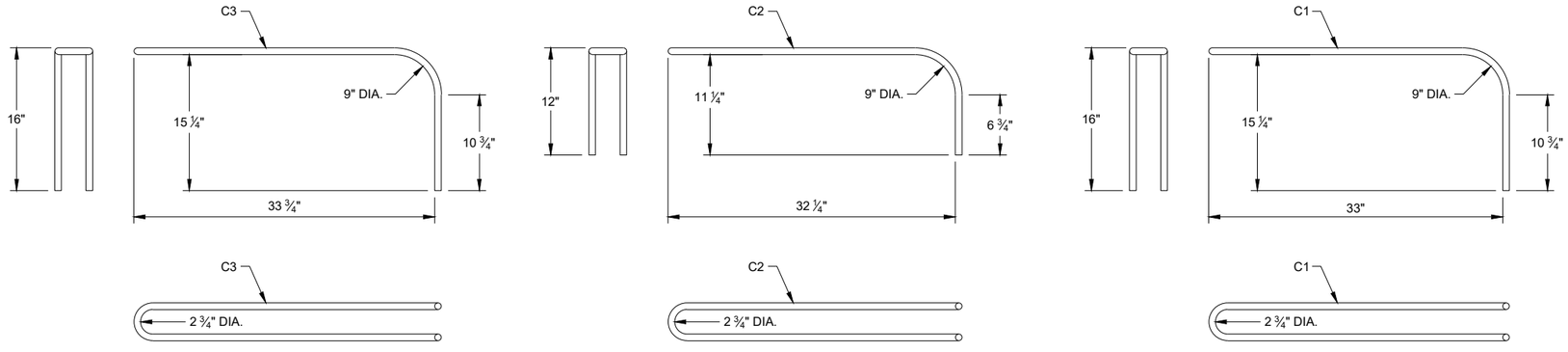

C BAR DETAILS

CONCRETE BARRIER TEMPORARY PRECAST, 12' - 6"

STATE OF WISCONSIN
DEPARTMENT OF TRANSPORTA

6

SDD 14B07-16b

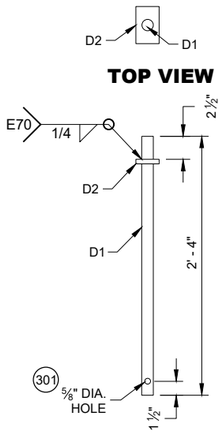

TOP VIEW

PROFILE VIEW

CONNECTOR PIN ASSEMBLY

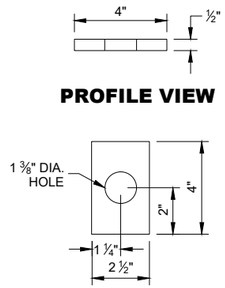

PROFILE VIEW

TOP VIEW D2

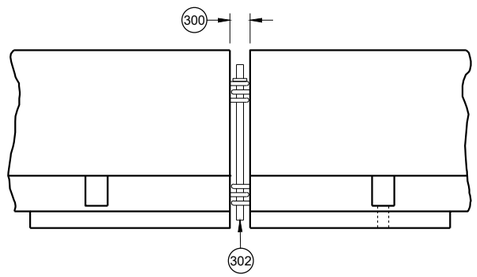

CONNECTING TEMPORARY BARRIER SECTIONS

GENERAL NOTES

300 SET WITH 3 ⅝" WOOD BLOCK.

301 HOLE IS OPTIONAL.

302 CONNECTOR PIN ASSEMBLY.

303 CONCRETE PAVEMENT, APPROACH SLAB, OR DECK.

304 CONCRETE DECK.

305 DO NOT USE ON CONCRETE BRIDGE DECK WITH ASPHALT OVERLAY OR CONCRETE PAVEMENT WITH ASPHALT OVERLAY.

306 MINIMUM OF 2" OF ASPHALT.

307 ASPHALT ANCHOR PIN ASSEMBLY

308 IF DRILLING A PILOT HOLE, THE MAX, DIA. OF THE HOLE IS 3/4"

309 WHEN THERE IS ASPHALT OVERLAYING CONCRETE PAVEMENT, A 1 5/8" DIA. PILOT HOLE CAN BE DRILLED INTO THE OVERLAY AND CONCRETE. IF NEEDED DRILL A 3/4" PILOT HOLE IN BASE COURSE.

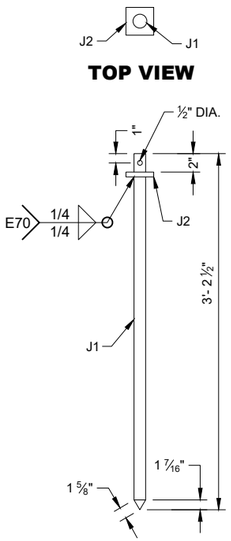

TOP VIEW

PROFILE VIEW

ASPHALT ANCHOR PIN ASSEMBLY

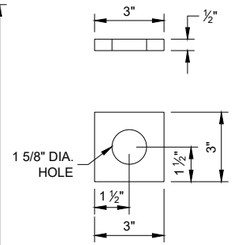

TOP VIEW J2

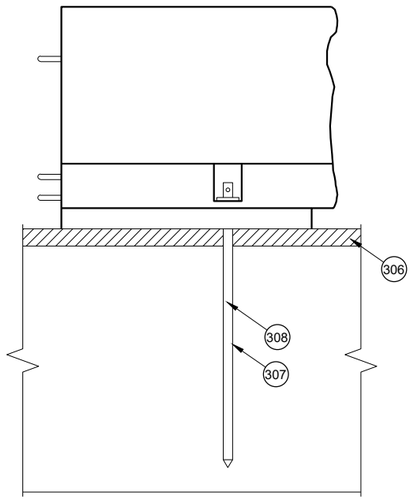

SIDE VIEW

ASPHALT ANCHOR INSTALLATION THROUGH ASPHALT PAVEMENT

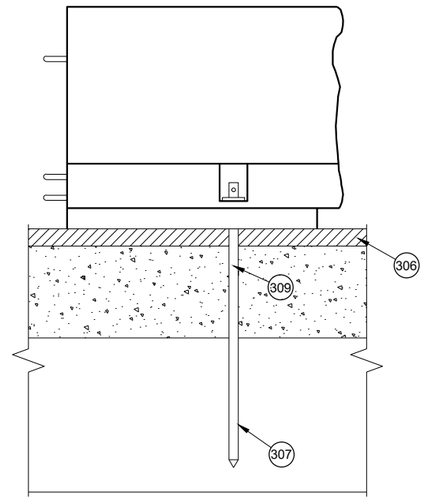

SIDE VIEW

ASPHALT ANCHOR INSTALLATION THROUGH ASPHALT OVERLAY ON TOP OF CONCRETE PAVEMENT

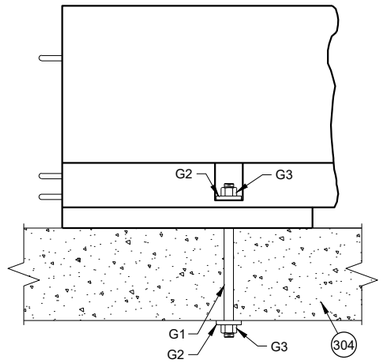

SIDE VIEW

THROUGH BOLT ANCHOR INSTALLATION (305)

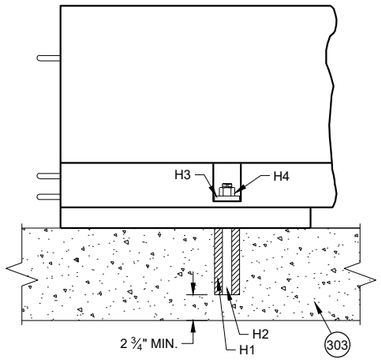

SIDE VIEW

ADHESIVE ANCHOR INSTALLATION (305)

CONCRETE BARRIER TEMPORARY PRECAST, 12' - 6"

6

SDD 14B07-16c

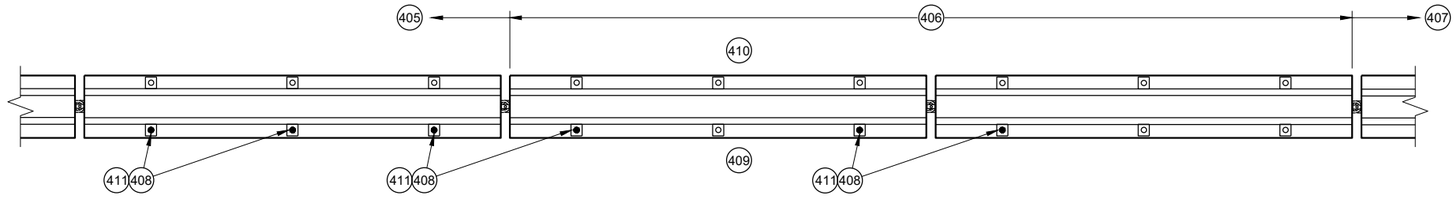

PLAN VIEW

TRANSITION FROM FREE STANDING TO ANCHORED BARRIER

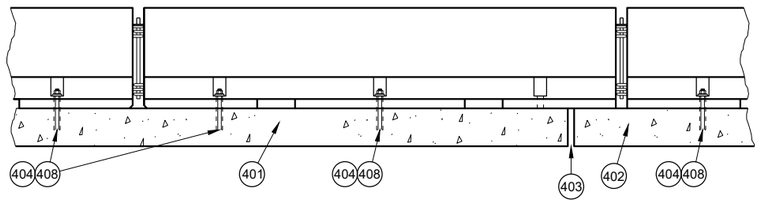

PROFILE VIEW

ANCHORED BARRIER NEAR EXPANSION JOINT (400)

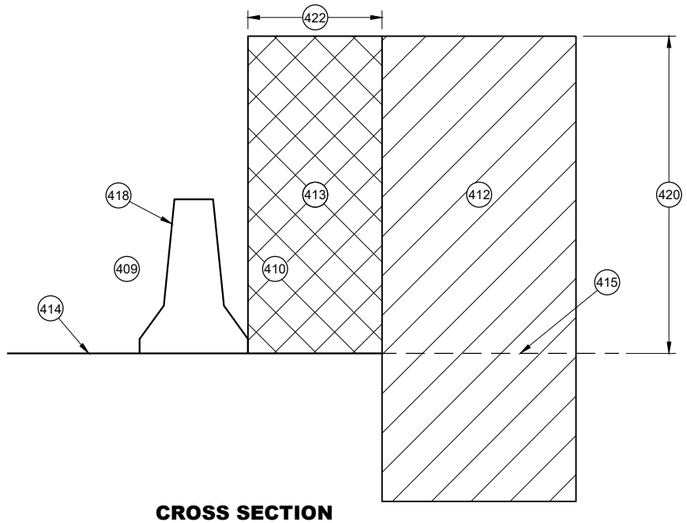

CROSS SECTION

FREE STANDING BARRIER

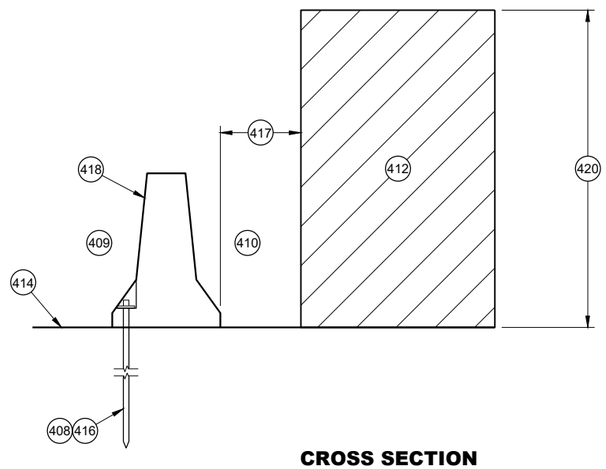

CROSS SECTION

ANCHORED BARRIER FOR OBJECTS ABOVE THE GRADE LINE AND NEAR THE BARRIER

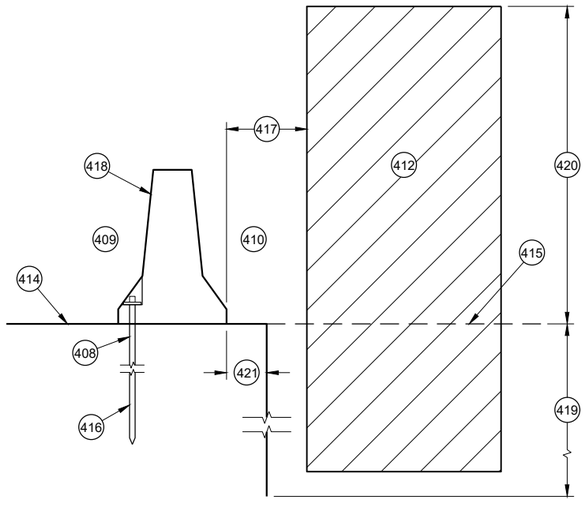

CROSS SECTION

ANCHORED BARRIER NEAR VERTICAL DROP OFF

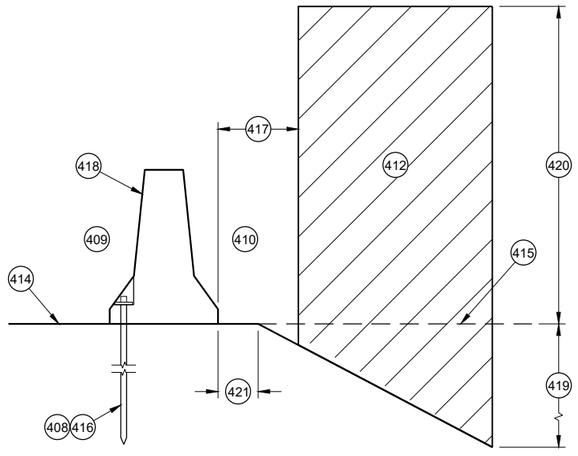

CROSS SECTION

ANCHORED BARRIER NEAR A SLOPE

GENERAL NOTES

(400) NO SINGLE CONCRETE BARRIER SECTION SHALL BE ANCHORED TO BOTH THE BRIDGE DECK AND THE APPROACH SLAB. ALL ANCHOR BOLT LOCATIONS SHALL BE ANCHORED TO THE DECK IN ACCORDANCE WITH THE DETAIL. NO MORE THAN ONE ANCHOR BOLT SHALL BE ELIMINATED FROM A BARRIER SECTION WHEN SPANNING AN EXPANSION JOINT.

(401) CONCRETE DECK

(402) CONCRETE DECK OR APPROACH SLAB.

(403) EXPANSION JOINT

(404) ADHESIVE ANCHOR SHOWN. SEE ANCHOR DETAILS.

(405) ANCHORED TEMPORARY BARRIER

(406) TRANSITION FROM ANCHORED TEMPORARY BARRIER TO FREE STANDING

(407) FREE STANDING BARRIER

(408) REMOVE ALL ANCHORS WHEN NO LONGER NEEDED. FILL CONCRETE PAVEMENTS, DECKS AND APPROACH SLABS WITH NON-SHRINK COMMERCIAL GROUT FROM THE APPROVED PRODUCT LIST. FILL ASPHALT PAVEMENTS WITH ASTM D6690 TYPE II RUBBERIZED CRACK FILLER.

(409) TRAFFIC SIDE

(410) NON-TRAFFIC SIDE

(411) ANCHOR LOCATION. SEE ANCHORING DETAILS.

(412) WORK AREA

(413) AREA FREE OF OBJECTS AND WORKERS

(414) GRADE LINE

(415) EXTENDED GRADE LINE

(416) ANCHORED TEMPORARY BARRIER. SEE BOLT THROUGH DECK, REMOVABLE ADHESIVE ANCHOR, OR AN ASPHALT ANCHOR ROD DETAILS FOR MORE INFORMATION. ASPHALT ANCHOR ROD SHOWN.

(417) WHEN OBJECTS EXTEND ABOVE THE GRADE. A MINIMUM OF 1 FOOT IS REQUIRED FROM BACK OF BARRIER TO OBJECT.

(418) OBJECTS ARE NOT TO BE PLACED ON, MOUNTED TO, OR ALLOWED TO LEAN AGAINST THE BARRIER WITHOUT WRITTEN PERMISSION OF THE PROJECT ENGINEER.

(419) DEPTHS OF 3 FEET OR MORE.

(420) Y = 6.5'

(421) OFFSET FROM BACK OF BARRIER EDGE:

CONCRETE PAVEMENT	0.5'
ASPHALT	0.5'

(422) POSTED SPEED (MPH):

45 OR GREATER	4.0'
40 OR LOWER	2.0'

CONCRETE BARRIER TEMPORARY PRECAST, 12' - 6"

STATE OF WISCONSIN
DEPARTMENT OF TRANSPORTATION

6
SDD 14B07-16d

GENERAL NOTES

500 EXISTING RIGID BARRIERS (VARIES)

501 TEMPORARY BARRIER

502 SEE OTHER DETAIL ON HOW TO ANCHOR TEMPORARY BARRIER (BARRIER ASPHALT ANCHOR SHOWN).

503 ANCHORS ARE REQUIRED ON BOTH SIDE OF THE TEMPORARY BARRIER.

504 NESTED RAILS ARE REQUIRED ON BOTH SIDES OF THE TEMPORARY BARRIER FOR ALL INSTALLATIONS.

505 TRAFFIC TRAVELS FROM PERMANENT BARRIER TO TEMPORARY BARRIER.

506 TRAFFIC TRAVELS FROM TEMPORARY BARRIER TO PERMANENT BARRIER.

507 VERTICAL BARRIER

508 SAFETY SHAPE BARRIER

509 SINGLE SLOPE BARRIER

510 CAP END PLATE PLACED FLUSH WITH UPSTREAM END OF RIGID BARRIER.

511 BENT THRIE BEAM TO FIT.

512 THRIE BEAM PIECES ARE OFFSET 15 ¼" TO PREVENT INTERFERENCE FROM THE ANCHORS ON OPPOSING SIDES.

513 TWO (2) P1, P2 AND P3 ARE REQUIRED

514 FIVE (5) N1, N2 AND N3 ARE REQUIRED

515 TWO (2) R1, R2 AND R3 ARE REQUIRED

516 CUT WOOD BLOCK TO FIT.

517 SEE THRIE BEAM RAIL TERMINAL CONNECTOR DETAIL ASSEMBLY.

518 CAP ASSEMBLY

519 4" MAX. GAP BETWEEN TEMPORARY BARRIER AND RIGID BARRIER.

520 ALL TWELVE SPLICE HOLES REQUIRE M1 AND M2

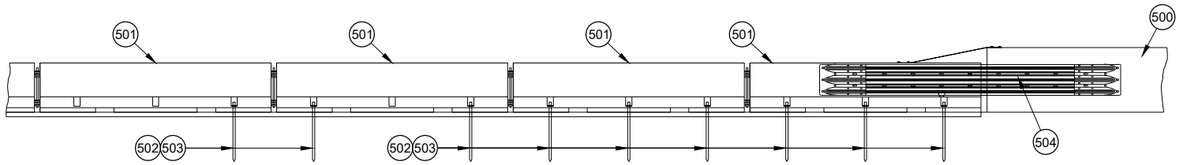

PROFILE VIEW

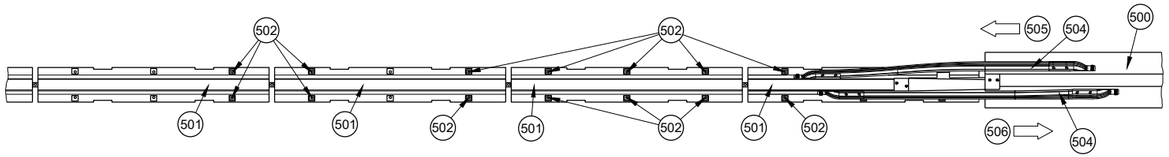

PLAN VIEW

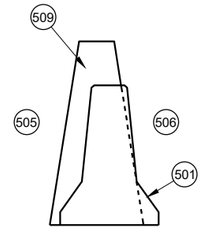

CROSS SECTION TEMPORARY BARRIER PLACEMENT SINGLE SLOPE

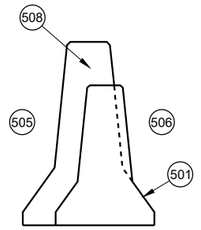

CROSS SECTION TEMPORARY BARRIER PLACEMENT SAFETY SHAPE

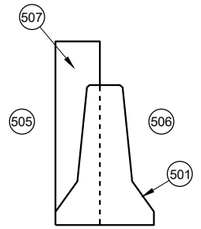

CROSS SECTION TEMPORARY BARRIER PLACEMENT VERTICAL

PLAN VIEW
TRANSITION TO RIGID BARRIER

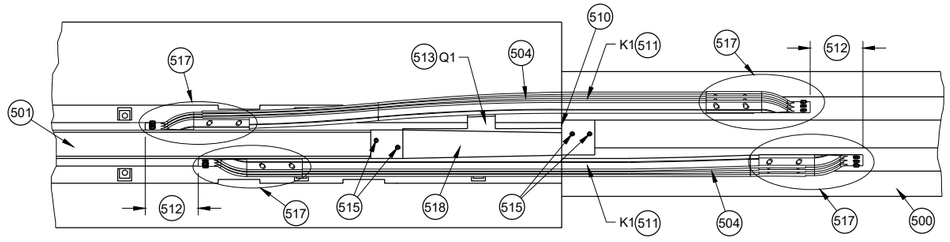

PLAN DETAIL VIEW
TRANSITION TO RIGID BARRIER

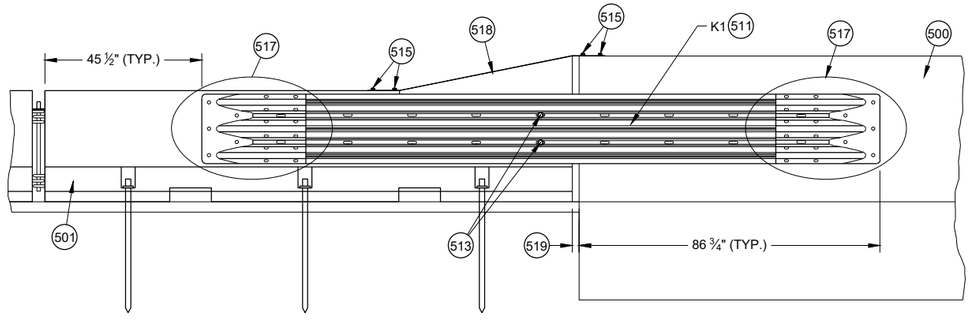

FRONT DETAIL VIEW
TRANSITION TO RIGID BARRIER

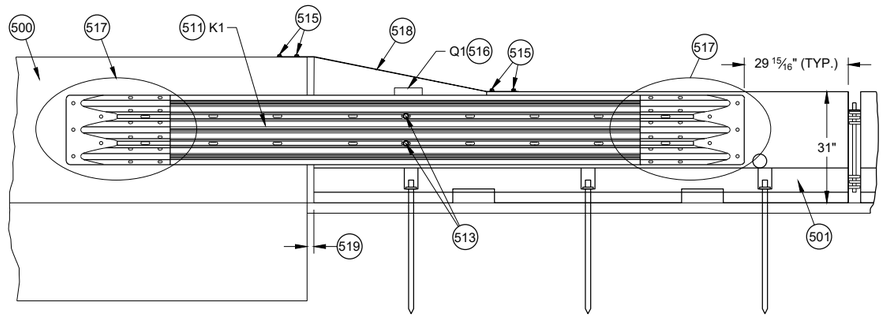

BACK DETAIL VIEW
TRANSITION TO RIGID BARRIER

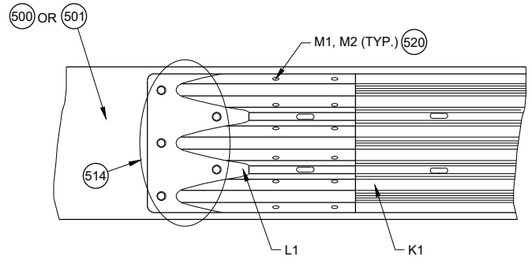

517 DETAIL PLAN VIEW
THRIE BEAM RAIL TERMINAL CONNECTOR ASSEMBLY

CONCRETE BARRIER TEMPORARY PRECAST, 12' - 6"

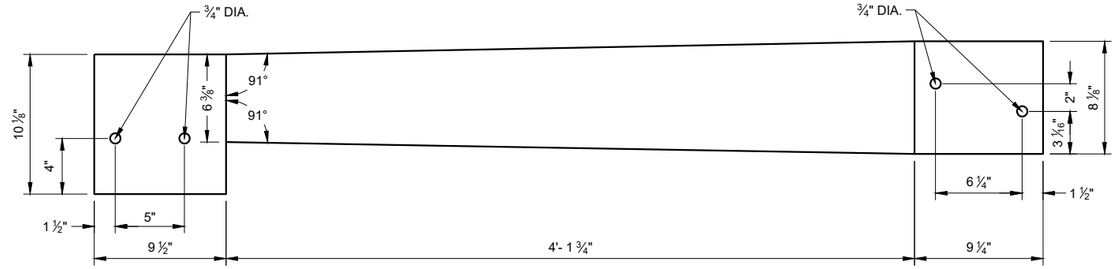

TOP VIEW

S1

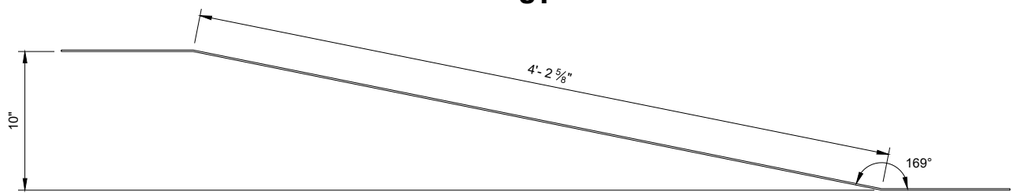

ELEVATION VIEW

S1

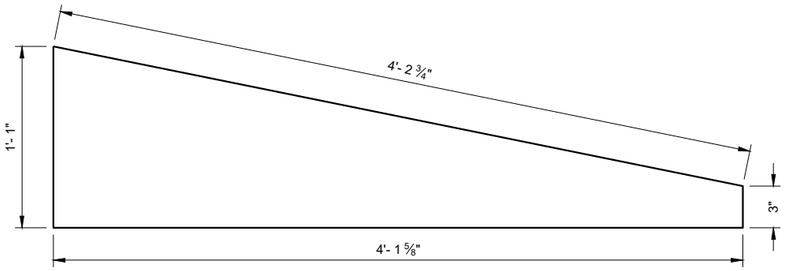

SIDE VIEW

S3

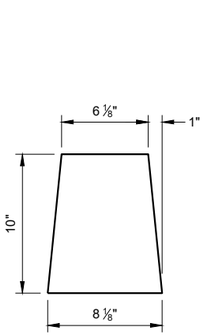

S2

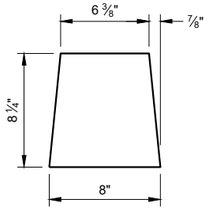

S4

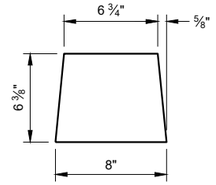

S5

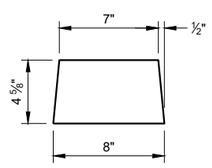

S6

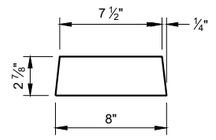

S7

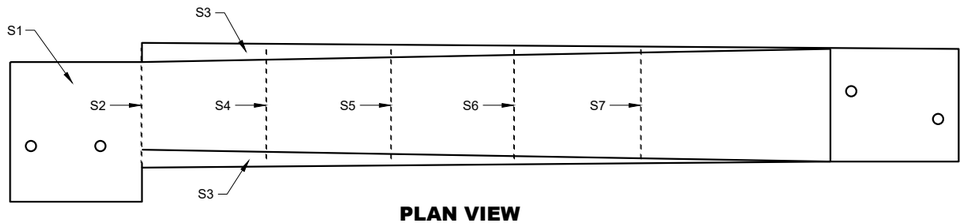

PLAN VIEW

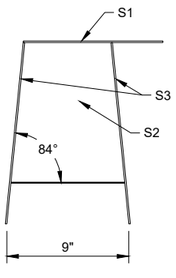

BACK VIEW

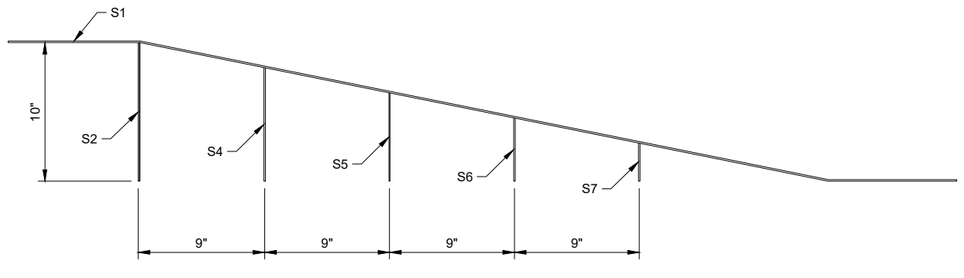

SIDE VIEW (600)

42" TOP CAP ASSEMBLY

GENERAL NOTES

STITCH WELD GUSSET PLATES AND END PLATES ON THREE SIDES

STITCH WELD TWO SIDE PLATES TO TOP PLATE, END PLATE AND GUSSETS.

(600) SIDE PLATES (S3) NOT SHOWN FOR CLARITY.

CONCRETE BARRIER TEMPORARY PRECAST, 12' - 6"

STATE OF WISCONSIN
DEPARTMENT OF TRANSPORTA

6

SDD 14B07-16f

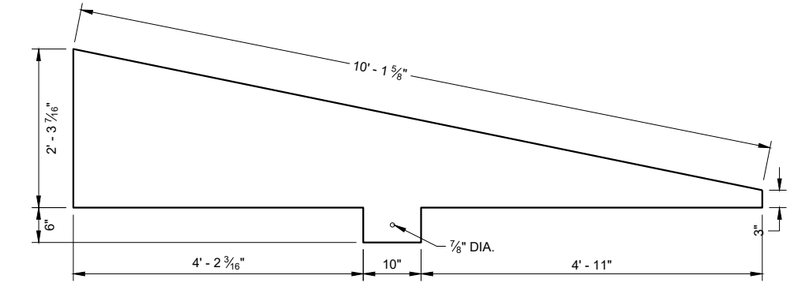

SIDE VIEW
T4

END VIEW

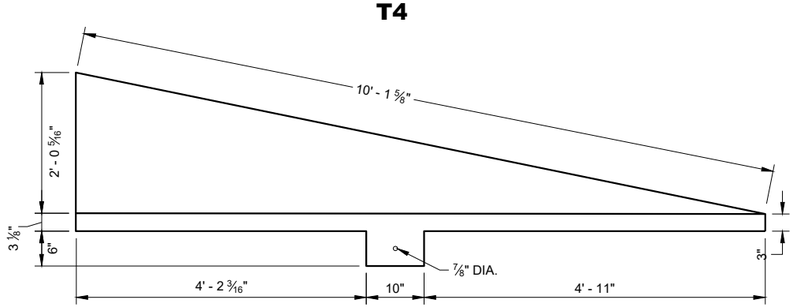

SIDE VIEW
T3

END VIEW

GENERAL NOTES

STITCH WELD GUSSET PLATES AND END PLATES ON THRIE SIDES

STITCH WELD TWO SIDE PLATES TO TOP PLATE, END PLATE AND GUSSETS.

SIDE PLATES, TOP PLATE, END PLATE AND GUSSETS ARE 12 GAUGE ASTM A36 GALVANIZED STEEL.

(700) SIDE PLATES (T3 AND T4) NOT SHOWN FOR CLARITY.

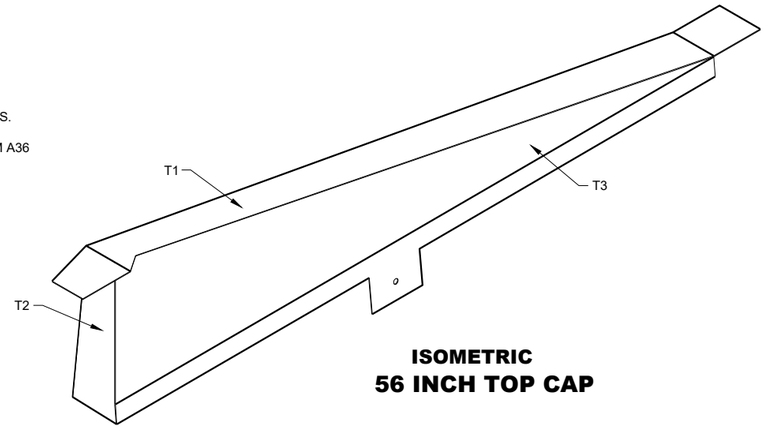

ISOMETRIC
56 INCH TOP CAP

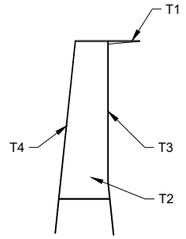

END VIEW
56 INCH TOP CAP

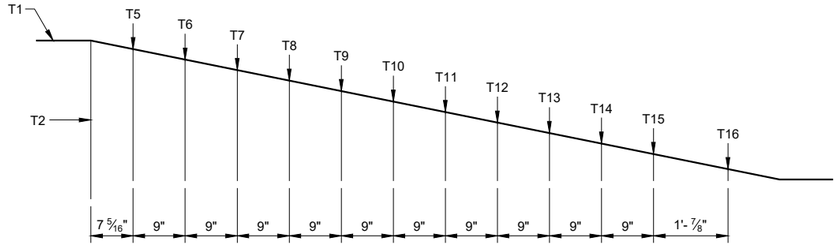

SIDE VIEW (700)
56 INCH TOP CAP

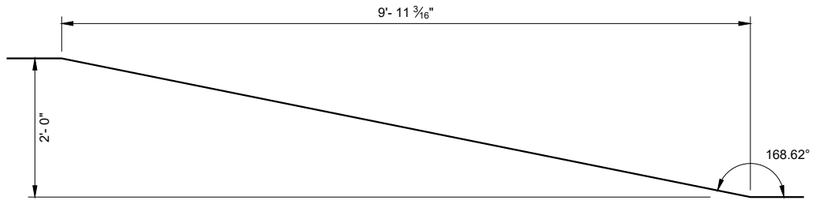

SIDE VIEW
TOP PLATE T1

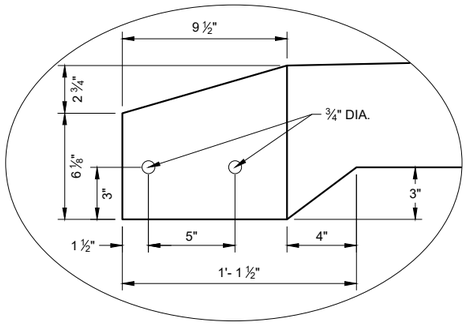

DETAIL "A"

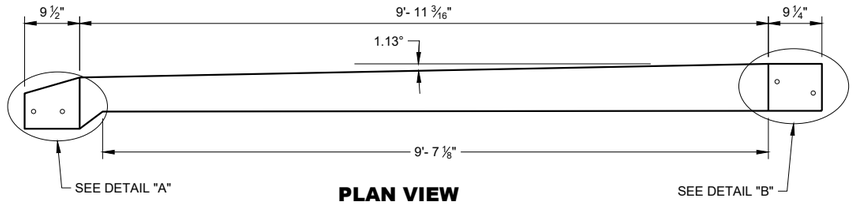

PLAN VIEW
TOP PLATE T1

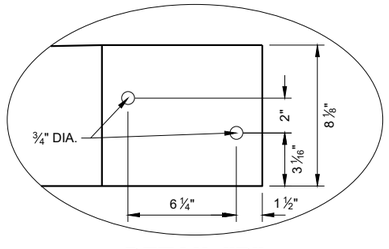

DETAIL "B"

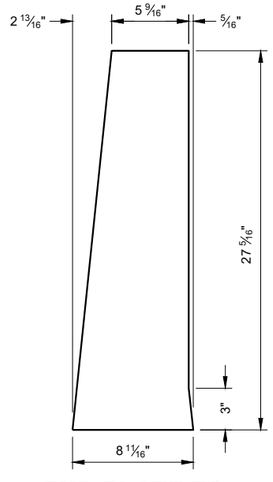

END PLATE T2

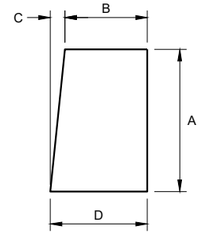

GUSSET PLATES
T5 - T16

GUSSET DIMENSIONS				
GUSSET NO.	A	B	C	D
T5	22 13/16"	5 1/16"	2 5/16"	8 1/16"
T6	21"	5 7/8"	2 3/16"	8 1/16"
T7	19 3/16"	6 1/16"	1 15/16"	8 1/16"
T8	17 3/8"	6 1/4"	1 13/16"	8 1/16"
T9	15 5/16"	6 7/16"	1 9/16"	8 1/16"
T10	13 3/4"	6 5/8"	1 7/16"	8 1/16"
T11	11 15/16"	6 13/16"	1 1/4"	8 1/16"
T12	10 1/8"	7"	1 1/16"	8 1/16"
T13	8 5/16"	7 3/16"	7/8"	8 1/16"
T14	6 1/2"	7 3/8"	1 1/16"	8 1/16"
T15	4 11/16"	7 9/16"	1/2"	8"
T16	2 7/8"	7 3/4"	1/4"	8"

CONCRETE BARRIER TEMPORARY PRECAST, 12' - 6"

STATE OF WISCONSIN
DEPARTMENT OF TRANSPORTATION

6

SDD 14B07-16g

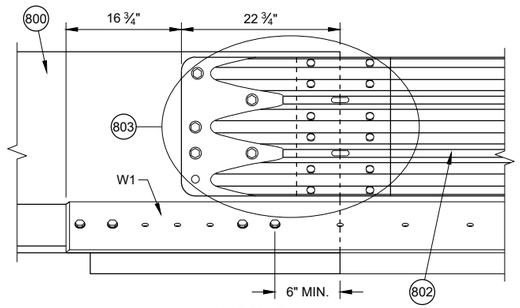

DETAIL D

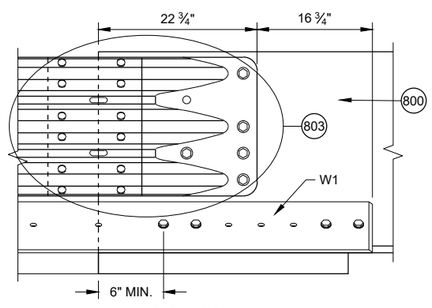

DETAIL E

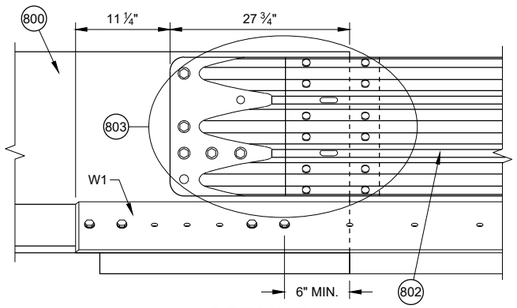

DETAIL F

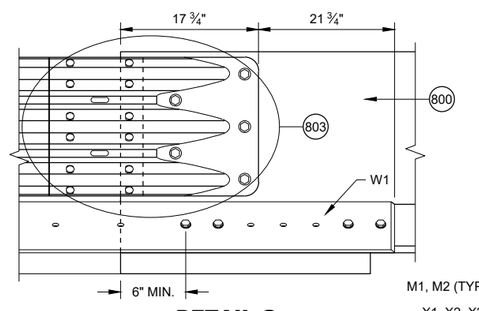

DETAIL G

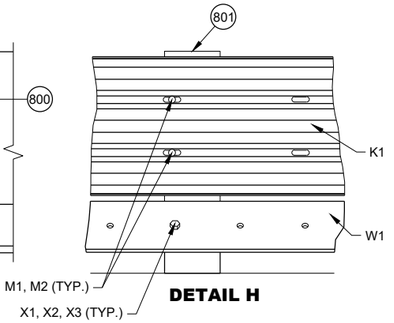

DETAIL H

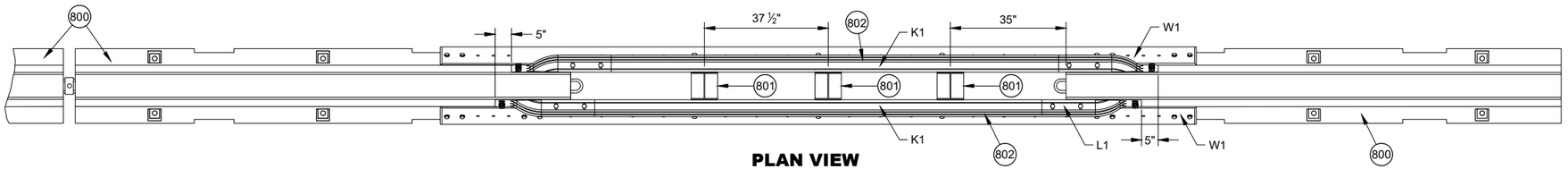

PLAN VIEW

GENERAL NOTES

(800) FREE STANDING TEMPORARY BARRIER

(801) GAP STIFFENER ASSEMBLY

(802) THRIE BEAMS ARE NESTED ON BOTH SIDES OF THE TEMPORARY BARRIER.

(803) SEE THRIE BEAM RAIL TERMINAL CONNECTOR DETAIL

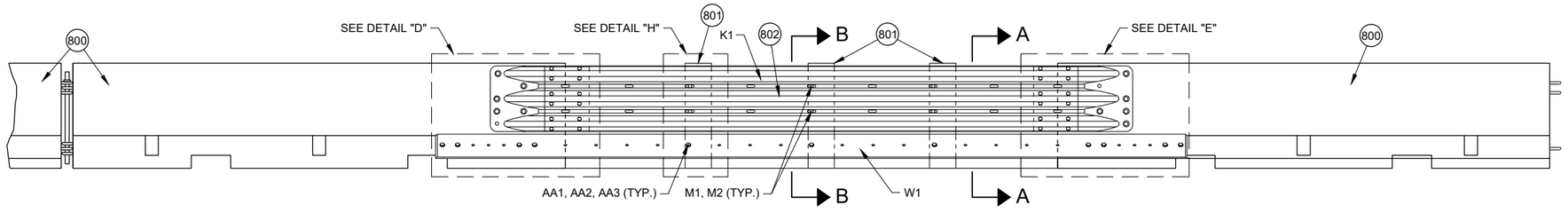

FRONT ELEVATION VIEW

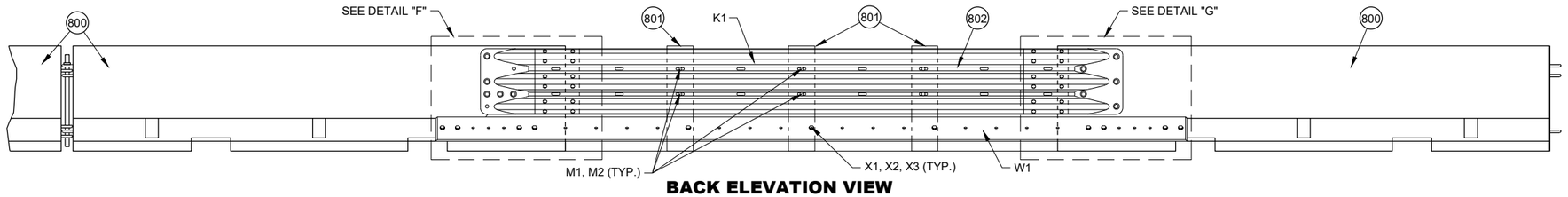

BACK ELEVATION VIEW

PORTABLE CONCRETE BARRIER GAP THRIE BEAM COVER

CONCRETE BARRIER TEMPORARY PRECAST, 12' - 6"

STATE OF WISCONSIN
DEPARTMENT OF TRANSPORTATION

6
SDD 14B07-16h

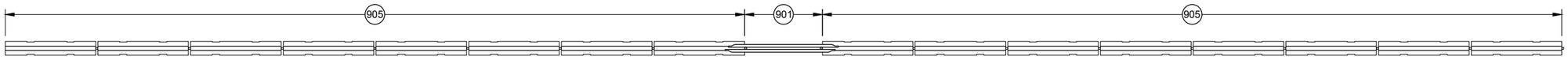

PLAN VIEW
GAP WITHIN SPACING

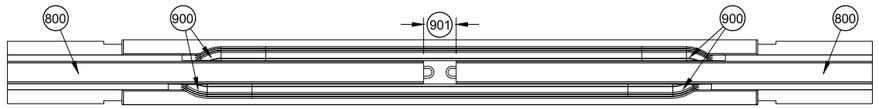

PLAN VIEW
TEMPORARY BARRIER GAP OVER 4" TO 1' MAX. (904)

GENERAL NOTES

(900) SEE OTHER DETAILS FOR TEMPORARY GAP HARDWARE (TYP.)
(901) TEMPORARY BARRIER GAP
(902) GAP STIFFENER ASSEMBLY CENTERED IN THE GAP.
(903) GAP STIFFENER ASSEMBLY IS OFFSET 18 ¾" FROM CENTER
(904) MINIMUM NUMBER OF GAP STIFFENERS SHOWN FOR THE GAP RANGE SHOWN.
(905) MINIMUM OF 8 CONTINUOUS FREE STANDING TEMPORARY BARRIERS

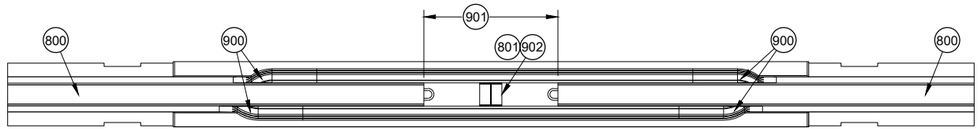

PLAN VIEW
TEMPORARY BARRIER GAP OVER 1' TO 4' MAX. (904)

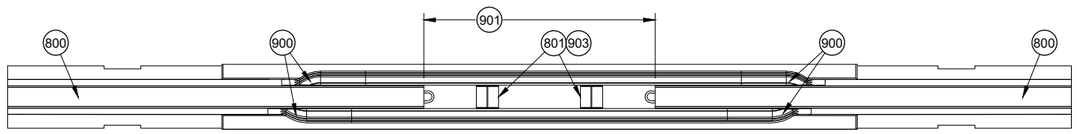

PLAN VIEW
TEMPORARY BARRIER GAP OVER 4' TO 7' MAX. (904)

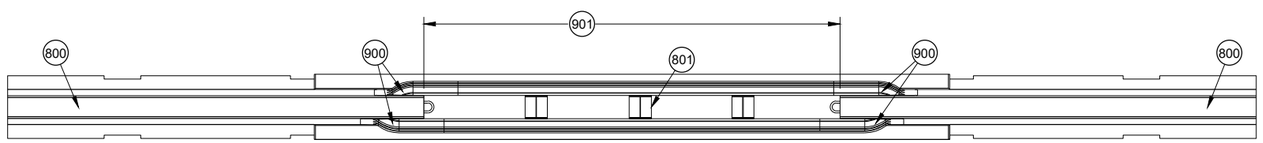

PLAN VIEW
TEMPORARY BARRIER GAP OVER 7' TO 12.5' MAX. (904)

CONCRETE BARRIER TEMPORARY PRECAST, 12' - 6"

STATE OF WISCONSIN
DEPARTMENT OF TRANSPORTATION

6
SDD 14B07-16i

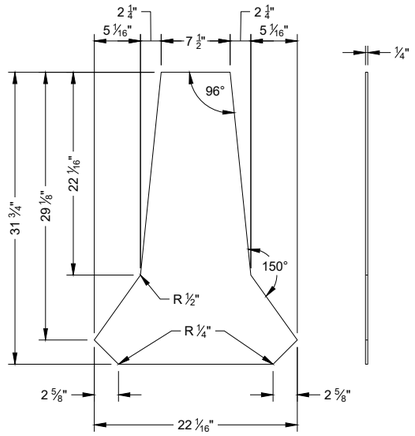

PROFILE VIEW SIDE VIEW

STIFFENER ASSEMBLY CENTER PANEL U1

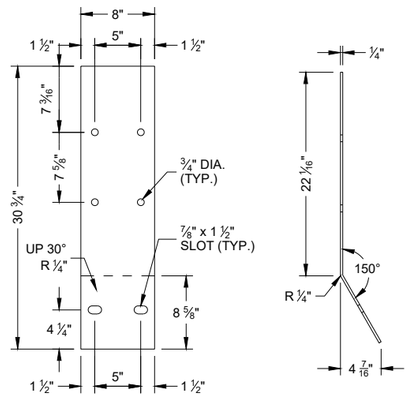

FLAT PATTERN SIDE VIEW

STIFFENER ASSEMBLY SIDE PANEL U2

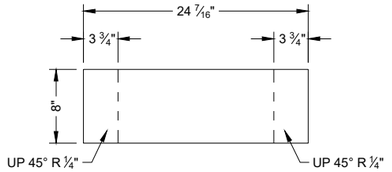

FLAT PATTERN

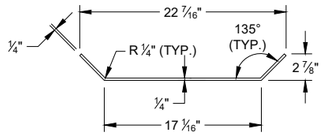

PROFILE VIEW

STIFFENER ASSEMBLY BOTTOM PANEL U3

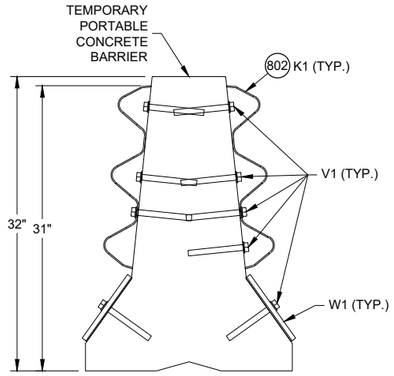

SECTION A - A

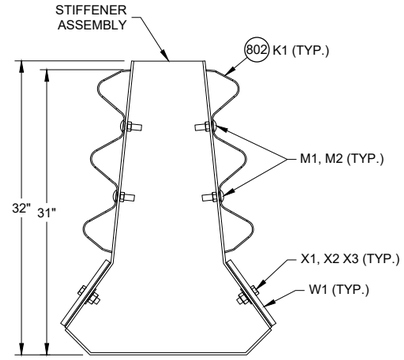

SECTION B - B

PLAN VIEW

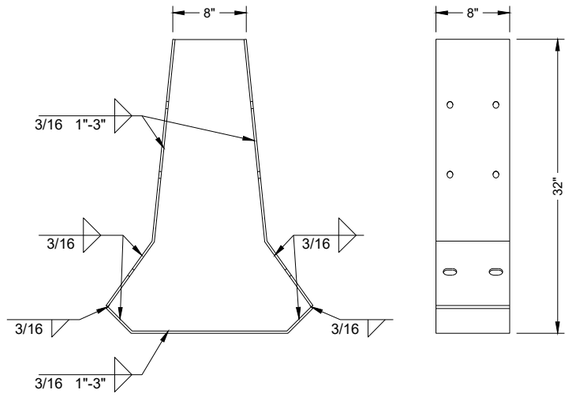

PROFILE VIEW

SIDE VIEW

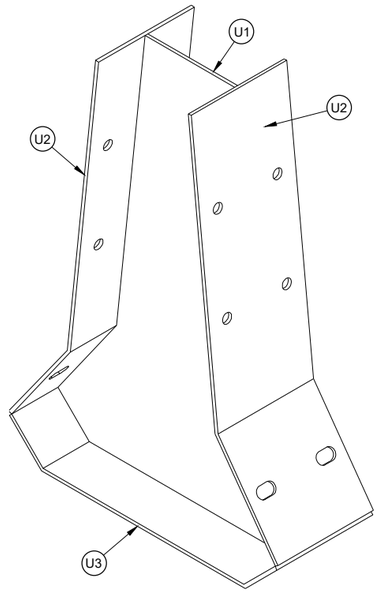

ISOMETRIC

GAP STIFFENER ASSEMBLY

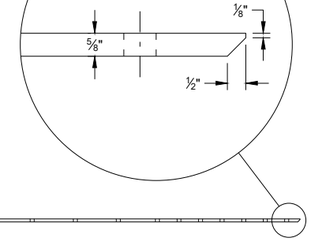

PLAN VIEW

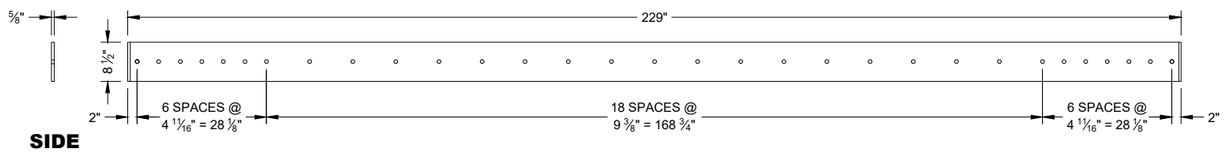

SIDE VIEW

ELEVATION VIEW

W1 TOE PLATE

CONCRETE BARRIER TEMPORARY PRECAST, 12' - 6"

STATE OF WISCONSIN
DEPARTMENT OF TRANSPORTATION

6
SDD 14B07-16j

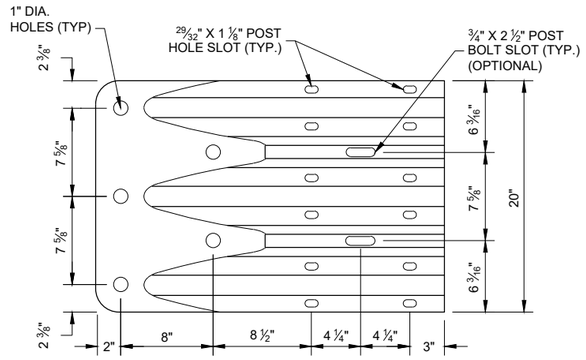

ELEVATION VIEW

THRIE BEAM TERMINAL CONNECTOR

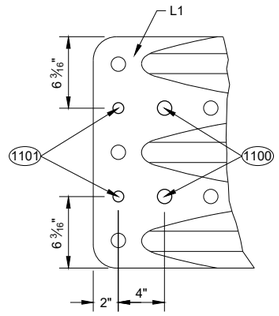

ELEVATION VIEW

ADDITIONAL THRIE BEAM (1102) TERMINAL CONNECTOR HOLE DETAIL

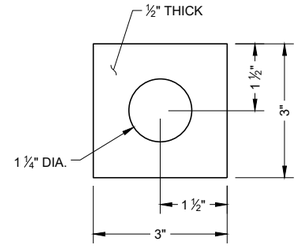

PLATE WASHER DETAIL G2, H3

GENERAL NOTES

(1100) 1" DIA. HOLE

(1101) 3/4" DIA. HOLE

(1102) PROVIDE HOLES IN THRIE BEAM TERMINAL CONNECTOR TO LIMIT STEEL REINFORCEMENT OR LOOP BAR CONFLICT. CONTRACTOR MAY FIELD DRILL ADDITIONAL HOLE OR PROVIDE THRIE BEAM TERMINAL CONNECTOR WITH ADDITIONAL HOLES FROM SUPPLIER.

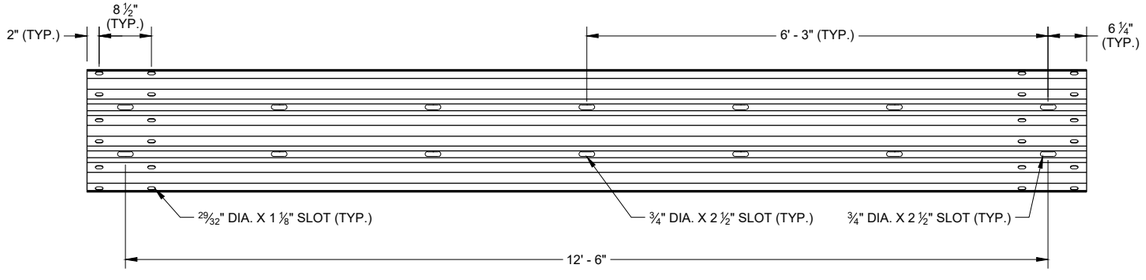

SLOTTED THRIE BEAM RAIL K1

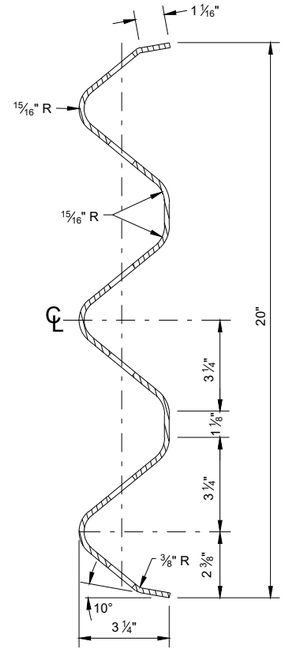

SECTION THROUGH BEAM K1

CONCRETE BARRIER TEMPORARY PRECAST, 12' - 6"

STATE OF WISCONSIN
DEPARTMENT OF TRANSPORTATION

6
SDD 14B07-16k

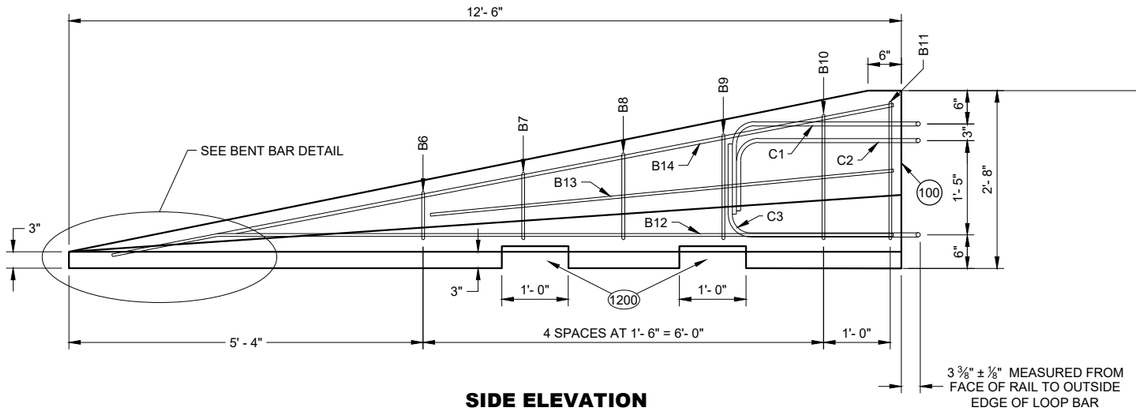

SIDE ELEVATION
(FOR CONNECTION TO LEFT END OF BARRIER)

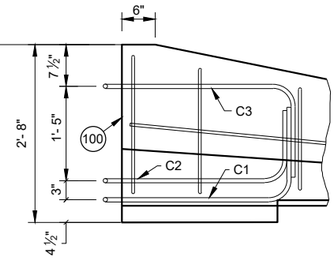

SIDE ELEVATION
LOOP BAR ASSEMBLY INVERTED FOR OPPOSITE END
(FOR CONNECTION TO RIGHT END OF BARRIER)

GENERAL NOTES

(1200) SEE LIFTING SLOT DETAIL. LOCATION OF LIFTING SLOTS DETERMINED BY CONTRACTOR.

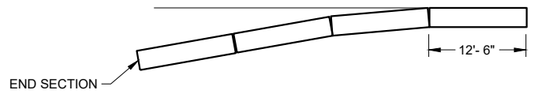

FLARE AT BARRIER END

POSTED SPEED, (MPH)	FLARE RATE
40 OR LESS	6:1
45 OR GREATER	8:1

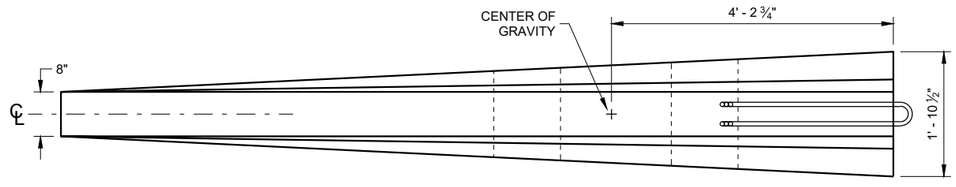

PLAN VIEW

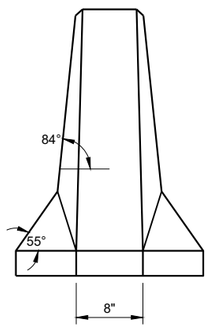

FRONT ELEVATION

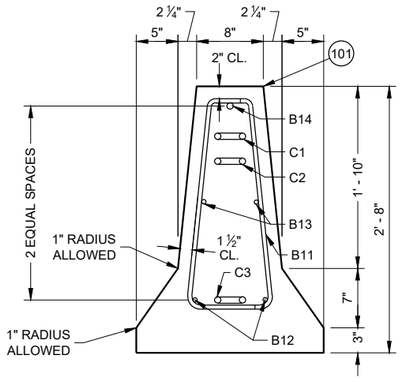

END SECTION

DETAILS OF BARRIER TAPER SECTION

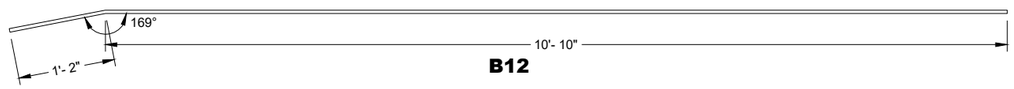

B12

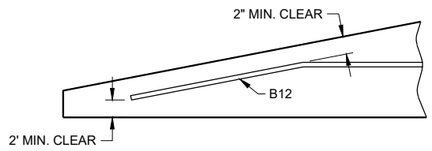

BENT BAR DETAIL

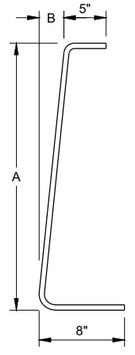

BAR	A	B
B6	10"	1"
B7	1'- 1"	1 ¼"
B8	1'- 5"	1 ⅝"
B9	1'- 8"	1 ⅞"
B10	2'- 0 ½"	2 ⅜"
B11	2'- 3"	2 ¾"

B BARS
2 OF EACH SIZE REQUIRED FOR STIRRUP ASSEMBLY

CONCRETE BARRIER TEMPORARY PRECAST, 12' - 6"

BILL OF MATERIALS - CONCRETE BARRIER PRECAST

PART	DESCRIPTION	MATERIALS SPECIFICATIONS	NOTES
A1	PRECAST TEMPORARY BARRIER - CONCRETE	MIN. = f'c 5000 PSI	
B1	REBAR	STANDARD SPEC. 505.2 GRADE 60 UNCOATED REBAR	#5 REBAR, LENGTH 12'-2"
B2	REBAR	STANDARD SPEC. 505.2 GRADE 60 UNCOATED REBAR	#4 REBAR, LENGTH 12'-2"
B3	REBAR	STANDARD SPEC. 505.2 GRADE 60 UNCOATED REBAR	#5 REBAR, LENGTH 12'-2"
B4	REBAR	STANDARD SPEC. 505.2 GRADE 60 UNCOATED REBAR	#4 REBAR, LENGTH 6'-0"
B5	REBAR	STANDARD SPEC. 505.2 GRADE 60 UNCOATED REBAR	#6 REBAR, LENGTH 2'-11"
B6	REBAR	STANDARD SPEC. 505.2 GRADE 60 UNCOATED REBAR	#4 REBAR, LENGTH 1'-11"
B7	REBAR	STANDARD SPEC. 505.2 GRADE 60 UNCOATED REBAR	#4 REBAR, LENGTH 2'-2"
B8	REBAR	STANDARD SPEC. 505.2 GRADE 60 UNCOATED REBAR	#4 REBAR, LENGTH 2'-6"
B9	REBAR	STANDARD SPEC. 505.2 GRADE 60 UNCOATED REBAR	#4 REBAR, LENGTH 2'-9"
B10	REBAR	STANDARD SPEC. 505.2 GRADE 60 UNCOATED REBAR	#4 REBAR, LENGTH 3'-2"
B11	REBAR	STANDARD SPEC. 505.2 GRADE 60 UNCOATED REBAR	#4 REBAR, LENGTH 3'-4"
B12	REBAR	STANDARD SPEC. 505.2 GRADE 60 UNCOATED REBAR	#4 REBAR, LENGTH 12'-0"
B13	REBAR	STANDARD SPEC. 505.2 GRADE 60 UNCOATED REBAR	#4 REBAR, LENGTH 7'-9"
B14	REBAR	STANDARD SPEC. 505.2 GRADE 60 UNCOATED REBAR	#5 REBAR, LENGTH 11'-9"
C1	LOOP BAR	ASTM A709 GRADE 70 SMOOTH BAR OR ASTM A706 GRADE 60 REBAR UNCOATED	¾" DIA.
C2	LOOP BAR	ASTM A709 GRADE 70 SMOOTH BAR OR ASTM A706 GRADE 60 REBAR UNCOATED	¾" DIA.
C3	LOOP BAR	ASTM A709 GRADE 70 SMOOTH BAR OR ASTM A706 GRADE 60 REBAR UNCOATED	¾" DIA.
D1	CONNECTION PIN - ROD	ASTM A36 MIN. STRENGTH 36 KSI / ASTM A529 MAX. STRENGTH 50 KSI / ASTM A572 MAX STRENGTH 50 KSI / ASTM A709 MAX STRENGTH 50 KSI / ASTM A992 MAX STRENGTH 50 KSI	1 ¼" DIA.
D2	CONNECTION PIN - TOP PLATE	ASTM A36 MIN. STRENGTH 36 KSI / ASTM A529 MAX. STRENGTH 50 KSI / ASTM A572 MAX STRENGTH 50 KSI / ASTM A709 MAX STRENGTH 50 KSI / ASTM A992 MAX STRENGTH 50 KSI	
G1	BOLT THROUGH ANCHOR - THREADED ROD	HOT DIP AASHTO M232 CLASS / ASTM A153 CLASS C / ASTM F2329 C OR MECHANICAL GALVANIZE TO AASHTO M298 CLASS 55 TYPE 2 / ASTM B695 CLASS 55 TYPE 2 A307 GRADE A OR SAE J429 GRADE 2 UNC	1 ⅛" DIA.
G2	BOLT THROUGH ANCHOR - WASHER, SQUARE	ASTM A36 MIN. STRENGTH 36 KSI / ASTM A529 MAX. STRENGTH 50 KSI / ASTM A572 MAX STRENGTH 50 KSI / ASTM A709 MAX STRENGTH 50 KSI / ASTM A992 MAX STRENGTH 50 KSI	
G3	BOLT THROUGH ANCHOR - NUT	HOT DIP AASHTO M232 CLASS / ASTM A153 CLASS C / ASTM F2329 C OR MECHANICAL GALVANIZE TO AASHTO M298 CLASS 55 TYPE 2 / ASTM B695 CLASS 55 UNC OVER TAP NUTS AS SPECIFIED IN AASHTO 291 / ASTM A 563 HEAVY HEX HEAD ASTM A563DH OR SAE J995 GRADE 5	
H1	ADHESIVE ANCHOR - ADHESIVE	ICC-ES-AC308 5 ¼" EMBEDMENT WITH A MIN. BOND STRENGTH OF 1,650 PSI. SEE 603.2 AND 603.3.1.2 OF THE WISCONSIN STANDARD SPECIFICATIONS FOR MORE INFORMATION ON ADHESIVE ANCHORS.	
H2	ADHESIVE ANCHOR - THREADED ROD	HOT DIP AASHTO M232 CLASS / ASTM A153 CLASS C / ASTM F2329 C OR MECHANICAL GALVANIZE TO AASHTO M298 CLASS 55 TYPE 2 / ASTM B695 CLASS 55 TYPE 2 A307 GRADE A / SAE J429 GRADE 2 UNC	1 ⅛" DIA.
H3	ADHESIVE ANCHOR - WASHER, SQUARE	ASTM A36 MIN. STRENGTH 36 KSI / ASTM A529 MAX. STRENGTH 50 KSI / ASTM A572 MAX STRENGTH 50 KSI / ASTM A709 MAX STRENGTH 50 KSI / ASTM A992 MAX STRENGTH 50 KSI	
H4	ADHESIVE ANCHOR - NUT	HOT DIP AASHTO M232 CLASS / ASTM A153 CLASS C / ASTM F2329 C OR MECHANICAL GALVANIZE TO AASHTO M298 CLASS 55 TYPE 2 / ASTM B695 CLASS 55 UNC OVER TAP NUTS AS SPECIFIED IN AASHTO 291 / ASTM A 563 HEAVY HEX HEAD ASTM A563DH OR SAE J995 GRADE 5	
J1	ASPHALT ANCHOR PIN - ROD	ASTM A36 MIN. STRENGTH 36 KSI / ASTM A529 MAX. STRENGTH 50 KSI / ASTM A572 MAX STRENGTH 50 KSI / ASTM A709 MAX STRENGTH 50 KSI / ASTM A992 MAX STRENGTH 50 KSI	1 ½" DIA.
J2	ASPHALT ANCHOR PIN - STOP PLATE	ASTM A36 MIN. STRENGTH 36 KSI / ASTM A529 MAX. STRENGTH 50 KSI / ASTM A572 MAX STRENGTH 50 KSI / ASTM A709 MAX STRENGTH 50 KSI / ASTM A992 MAX STRENGTH 50 KSI	
K1	THRIE BEAM RAIL	AASHTO M180 CLASS A TYPE 2 APPROVED PRODUCER	12 GAUGE
L1	THRIE BEAM RAIL - TERMINAL	AASHTO M180 CLASS A TYPE 2 APPROVED PRODUCER	12 GAUGE

PART	DESCRIPTION	MATERIALS SPECIFICATIONS	NOTES
M1	SPLICE BOLT	HOT DIP AASHTO M232 CLASS / ASTM A153 CLASS C / ASTM F2329 C OR MECHANICAL GAL. TO AASHTO M298 CLASS 55 TYPE 2 / ASTM B695 CLASS 55 TYPE 2 UNC AASHTO M180 HEAD ASTM A307 GRADE B OR SAE J429 GRADE 2 OR ASTM F1554 GRADE 36	⅝" DIA.
M2	SPLICE BOLT - NUT	HOT DIP AASHTO M232 CLASS / ASTM A153 CLASS C / ASTM F2329 C OR MECHANICAL GALVANIZE TO AASHTO M298 CLASS 55 TYPE 2 / ASTM B695 CLASS 55 UNC OVER TAP NUTS AS SPECIFIED IN AASHTO 291 / ASTM A 563 AASHTO M180 RECESSED HEAVY HEX HEAD ASTM A563DH OR SAE J995 GRADE 5	
N1	THRIE BEAM RAIL TERMINAL - MECHANICAL ANCHOR	HOT DIP AASHTO M232 CLASS / ASTM A153 CLASS C / ASTM F2329 C OR MECHANICAL GALVANIZE TO AASHTO M298 CLASS 55 TYPE 2 / ASTM B695 CLASS 55 UNC OVER TAP NUTS AS SPECIFIED IN AASHTO 291 / ASTM A 563 AASHTO M180 RECESSED HEAVY HEX HEAD ASTM A563DH OR SAE J995 GRADE 5	¾" DIA. LENGTH 6"
N2	THRIE BEAM RAIL TERMINAL - WASHER	HOT DIP AASHTO M232 CLASS / ASTM A153 CLASS C / ASTM F2329 C OR MECHANICAL GALVANIZE TO AASHTO M298 CLASS 55 TYPE 2 / ASTM B695 CLASS 55 TYPE 2 F436 TYPE 1	
N3	THRIE BEAM RAIL TERMINAL MECHANICAL OR ADHESIVE ANCHOR	MINIMUM MECHANICAL OR ADHESIVE ANCHOR STRENGTH REQUIREMENTS: ULTIMATE TENSILE LOAD 17.9 KIPS AND ULTIMATE SHEAR LOAD 21.96 KIPS. SEE 603.2 AND 603.3.1.2 OF THE WISCONSIN STANDARD SPECIFICATIONS FOR MORE INFORMATION ON ADHESIVE ANCHORS.	
P1	THRIE BEAM RAIL CONNECTION 1-BOLT	HOT DIP AASHTO M232 CLASS / ASTM A153 CLASS C / ASTM F2329 C OR MECHANICAL GALVANIZE TO AASHTO M298 CLASS 55 TYPE 2 / ASTM B695 CLASS 55 UNC OVER TAP NUTS AS SPECIFIED IN AASHTO 291 / ASTM A 563 AASHTO M180 RECESSED HEAVY HEX HEAD ASTM A563DH OR SAE J995 GRADE 5	¾" DIA.
P2	THRIE BEAM RAIL CONNECTION 1-WASHER	HOT DIP AASHTO M232 CLASS / ASTM A153 CLASS C / ASTM F2329 C OR MECHANICAL GAL. TO AASHTO M298 CLASS 55 TYPE 2 / ASTM B695 CLASS 55 TYPE 2 F436 TYPE 1	
P3	THRIE BEAM RAIL CONNETION 1- MECHANICAL OR ADHESIVE ANCHOR	MINIMUM MECHANICAL OR ADHESIVE ANCHOR STRENGTH REQUIREMENTS: ULTIMATE TENSILE LOAD 9.48 KIPS AND ULTIMATE SHEAR LOAD 10.48 KIPS. SEE 603.2 AND 603.3.1.2 OF THE WISCONSIN STANDARD SPECIFICATIONS FOR MORE INFORMATION ON ADHESIVE ANCHORS.	
Q1	BLOCK WOOD	SEE STANDARD SPEC. 614	
R1	CAP - BOLT	HOT DIP AASHTO M232 CLASS / ASTM A153 CLASS C / ASTM F2329 C OR MECHANICAL GALVANIZE TO AASHTO M298 CLASS 55 TYPE 2 / ASTM B695 CLASS 55 UNC OVER TAP NUTS AS SPECIFIED IN AASHTO 291 / ASTM A 563 AASHTO M180 RECESSED HEAVY HEX HEAD ASTM A563DH OR SAE J995 GRADE 5	⅝" DIA.
R2	CAP- BOLT - WASHER	HOT DIP AASHTO M232 CLASS / ASTM A153 CLASS C / ASTM F2329 C OR MECHANICAL GAL. TO AASHTO M298 CLASS 55 TYPE 2 / ASTM B695 CLASS 55 TYPE 2 F436 TYPE 1	
R3	CAP - BOLT - MECHANICAL ANCHOR	MINIMUM MECHANICAL OR ADHESIVE ANCHOR STRENGTH REQUIREMENTS ULTIMATE TENSILE LOAD 12.14 KIPS AND ULTIMATE SHEAR LOAD 17.5 KIPS.SEE 603.2 AND 603.3.1.2 OF THE WISCONSIN STANDARD SPECIFICATIONS FOR MORE INFORMATION ON ADHESIVE ANCHORS.	12 GAUGE
S1	CAP 42-INCH TOP PLATE	AASHTO M111 / ASTM A123 ASTM A36 MIN. STRENGTH 36 KSI, OR ASTM A529 MAX. STRENGTH 50 KSI, OR ASTM A572 MAX. STRENGTH 50 KSI, OR ASTM A709 MAX. STRENGTH 50 KSI, OR ASTM A992 MAX. STRENGTH 50 KSI	12 GAUGE
S2	CAP 42-INCH END PLATE	AASHTO M111 / ASTM A123 ASTM A36 MIN. STRENGTH 36 KSI, OR ASTM A529 MAX. STRENGTH 50 KSI, OR ASTM A572 MAX. STRENGTH 50 KSI, OR ASTM A709 MAX. STRENGTH 50 KSI, OR ASTM A992 MAX. STRENGTH 50 KSI	12 GAUGE
S3	CAP 42-INCH SIDE PLATE	AASHTO M111 / ASTM A123 ASTM A36 MIN. STRENGTH 36 KSI, OR ASTM A529 MAX. STRENGTH 50 KSI, OR ASTM A572 MAX. STRENGTH 50 KSI, OR ASTM A709 MAX. STRENGTH 50 KSI, OR ASTM A992 MAX. STRENGTH 50 KSI	12 GAUGE
S4	CAP 42-INCH GUSSET 1	AASHTO M111 / ASTM A123 ASTM A36 MIN. STRENGTH 36 KSI, OR ASTM A529 MAX. STRENGTH 50 KSI, OR ASTM A572 MAX. STRENGTH 50 KSI, OR ASTM A709 MAX. STRENGTH 50 KSI, OR ASTM A992 MAX. STRENGTH 50 KSI	12 GAUGE
S5	CAP 42-INCH GUSSET 2	AASHTO M111 / ASTM A123 ASTM A36 MIN. STRENGTH 36 KSI, OR ASTM A529 MAX. STRENGTH 50 KSI, OR ASTM A572 MAX. STRENGTH 50 KSI, OR ASTM A709 MAX. STRENGTH 50 KSI, OR ASTM A992 MAX. STRENGTH 50 KSI	12 GAUGE
S6	CAP 42-INCH GUSSET 3	AASHTO M111 / ASTM A123 ASTM A36 MIN. STRENGTH 36 KSI, OR ASTM A529 MAX. STRENGTH 50 KSI, OR ASTM A572 MAX. STRENGTH 50 KSI, OR ASTM A709 MAX. STRENGTH 50 KSI, OR ASTM A992 MAX. STRENGTH 50 KSI	12 GAUGE
S7	CAP 42-INCH GUSSET 4	AASHTO M111 / ASTM A123 ASTM A36 MIN. STRENGTH 36 KSI, OR ASTM A529 MAX. STRENGTH 50 KSI, OR ASTM A572 MAX. STRENGTH 50 KSI, OR ASTM A709 MAX. STRENGTH 50 KSI, OR ASTM A992 MAX. STRENGTH 50 KSI	12 GAUGE

6

SDD 14B07-16m

CONCRETE BARRIER TEMPORARY PRECAST, 12' - 6"

STATE OF WISCONSIN
DEPARTMENT OF TRANSPORTATION

6

SDD 14B07-16m

BILL OF MATERIALS - CONCRETE BARRIER PRECAST

PART	DESCRIPTION	MATERIALS SPECIFICATIONS	NOTES
T1	CAP 56-INCH TOP PLATE	AASHTO M111 / ASTM A123 ASTM A36 MIN. STRENGTH 36 KSI, OR ASTM A529 MAX. STRENGTH 50 KSI, OR ASTM A572 MAX. STRENGTH 50 KSI, OR ASTM A709 MAX. STRENGTH 50 KSI, OR ASTM A992 MAX. STRENGTH 50 KSI	12 GAUGE
T2	CAP 56-INCH END PLATE	AASHTO M111 / ASTM A123 ASTM A36 MIN. STRENGTH 36 KSI, OR ASTM A529 MAX. STRENGTH 50 KSI, OR ASTM A572 MAX. STRENGTH 50 KSI, OR ASTM A709 MAX. STRENGTH 50 KSI, OR ASTM A992 MAX. STRENGTH 50 KSI	12 GAUGE
T3	CAP 56-INCH SIDE PLATE 1	AASHTO M111 / ASTM A123 ASTM A36 MIN. STRENGTH 36 KSI, OR ASTM A529 MAX. STRENGTH 50 KSI, OR ASTM A572 MAX. STRENGTH 50 KSI, OR ASTM A709 MAX. STRENGTH 50 KSI, OR ASTM A992 MAX. STRENGTH 50 KSI	12 GAUGE
T4	CAP 56-INCH SIDE PLATE 2	AASHTO M111 / ASTM A123 ASTM A36 MIN. STRENGTH 36 KSI, OR ASTM A529 MAX. STRENGTH 50 KSI, OR ASTM A572 MAX. STRENGTH 50 KSI, OR ASTM A709 MAX. STRENGTH 50 KSI, OR ASTM A992 MAX. STRENGTH 50 KSI	12 GAUGE
T5	CAP 56-INCH GUSSET 1	AASHTO M111 / ASTM A123 ASTM A36 MIN. STRENGTH 36 KSI, OR ASTM A529 MAX. STRENGTH 50 KSI, OR ASTM A572 MAX. STRENGTH 50 KSI, OR ASTM A709 MAX. STRENGTH 50 KSI, OR ASTM A992 MAX. STRENGTH 50 KSI	12 GAUGE
T6	CAP 56-INCH GUSSET 2	AASHTO M111 / ASTM A123 ASTM A36 MIN. STRENGTH 36 KSI, OR ASTM A529 MAX. STRENGTH 50 KSI, OR ASTM A572 MAX. STRENGTH 50 KSI, OR ASTM A709 MAX. STRENGTH 50 KSI, OR ASTM A992 MAX. STRENGTH 50 KSI	12 GAUGE
T7	CAP 56-INCH GUSSET 3	AASHTO M111 / ASTM A123 ASTM A36 MIN. STRENGTH 36 KSI, OR ASTM A529 MAX. STRENGTH 50 KSI, OR ASTM A572 MAX. STRENGTH 50 KSI, OR ASTM A709 MAX. STRENGTH 50 KSI, OR ASTM A992 MAX. STRENGTH 50 KSI	12 GAUGE
T8	CAP 42-INCH GUSSET 4	AASHTO M111 / ASTM A123 ASTM A36 MIN. STRENGTH 36 KSI, OR ASTM A529 MAX. STRENGTH 50 KSI, OR ASTM A572 MAX. STRENGTH 50 KSI, OR ASTM A709 MAX. STRENGTH 50 KSI, OR ASTM A992 MAX. STRENGTH 50 KSI	12 GAUGE
T9	CAP 42-INCH GUSSET 5	AASHTO M111 / ASTM A123 ASTM A36 MIN. STRENGTH 36 KSI, OR ASTM A529 MAX. STRENGTH 50 KSI, OR ASTM A572 MAX. STRENGTH 50 KSI, OR ASTM A709 MAX. STRENGTH 50 KSI, OR ASTM A992 MAX. STRENGTH 50 KSI	12 GAUGE
T10	CAP 42-INCH GUSSET 6	AASHTO M111 / ASTM A123 ASTM A36 MIN. STRENGTH 36 KSI, OR ASTM A529 MAX. STRENGTH 50 KSI, OR ASTM A572 MAX. STRENGTH 50 KSI, OR ASTM A709 MAX. STRENGTH 50 KSI, OR ASTM A992 MAX. STRENGTH 50 KSI	12 GAUGE
T11	CAP 42-INCH GUSSET 7	AASHTO M111 / ASTM A123 ASTM A36 MIN. STRENGTH 36 KSI, OR ASTM A529 MAX. STRENGTH 50 KSI, OR ASTM A572 MAX. STRENGTH 50 KSI, OR ASTM A709 MAX. STRENGTH 50 KSI, OR ASTM A992 MAX. STRENGTH 50 KSI	12 GAUGE
T12	CAP 42-INCH GUSSET 8	AASHTO M111 / ASTM A123 ASTM A36 MIN. STRENGTH 36 KSI, OR ASTM A529 MAX. STRENGTH 50 KSI, OR ASTM A572 MAX. STRENGTH 50 KSI, OR ASTM A709 MAX. STRENGTH 50 KSI, OR ASTM A992 MAX. STRENGTH 50 KSI	12 GAUGE
T13	CAP 42-INCH GUSSET 9	AASHTO M111 / ASTM A123 ASTM A36 MIN. STRENGTH 36 KSI, OR ASTM A529 MAX. STRENGTH 50 KSI, OR ASTM A572 MAX. STRENGTH 50 KSI, OR ASTM A709 MAX. STRENGTH 50 KSI, OR ASTM A992 MAX. STRENGTH 50 KSI	12 GAUGE
T14	CAP 42-INCH GUSSET 10	AASHTO M111 / ASTM A123 ASTM A36 MIN. STRENGTH 36 KSI, OR ASTM A529 MAX. STRENGTH 50 KSI, OR ASTM A572 MAX. STRENGTH 50 KSI, OR ASTM A709 MAX. STRENGTH 50 KSI, OR ASTM A992 MAX. STRENGTH 50 KSI	12 GAUGE
T15	CAP 42-INCH GUSSET 11	AASHTO M111 / ASTM A123 ASTM A36 MIN. STRENGTH 36 KSI, OR ASTM A529 MAX. STRENGTH 50 KSI, OR ASTM A572 MAX. STRENGTH 50 KSI, OR ASTM A709 MAX. STRENGTH 50 KSI, OR ASTM A992 MAX. STRENGTH 50 KSI	12 GAUGE
T16	CAP 42-INCH GUSSET 12	AASHTO M111 / ASTM A123 ASTM A36 MIN. STRENGTH 36 KSI, OR ASTM A529 MAX. STRENGTH 50 KSI, OR ASTM A572 MAX. STRENGTH 50 KSI, OR ASTM A709 MAX. STRENGTH 50 KSI, OR ASTM A992 MAX. STRENGTH 50 KSI	12 GAUGE
U1	GAP STIFFENER	AASHTO M111 / ASTM A123 ASTM A36 MIN. STRENGTH 36 KSI, OR ASTM A529 MAX. STRENGTH 50 KSI, OR ASTM A572 MAX. STRENGTH 50 KSI, OR ASTM A709 MAX. STRENGTH 50 KSI, OR ASTM A992 MAX. STRENGTH 50 KSI	
U2	GAP STIFFENER - CONNECTOR PLATE 1	AASHTO M111 / ASTM A123 ASTM A36 MIN. STRENGTH 36 KSI, OR ASTM A529 MAX. STRENGTH 50 KSI, OR ASTM A572 MAX. STRENGTH 50 KSI, OR ASTM A709 MAX. STRENGTH 50 KSI, OR ASTM A992 MAX. STRENGTH 50 KSI	
U3	GAP STIFFENER - CONNECTOR PLATE 2	AASHTO M111 / ASTM A123 ASTM A36 MIN. STRENGTH 36 KSI, OR ASTM A529 MAX. STRENGTH 50 KSI, OR ASTM A572 MAX. STRENGTH 50 KSI, OR ASTM A709 MAX. STRENGTH 50 KSI, OR ASTM A992 MAX. STRENGTH 50 KSI	

PART	DESCRIPTION	MATERIALS SPECIFICATIONS	NOTES
V1	THRIE BEAM RAIL TERMINAL MECHANICAL OR ADHESIVE ANCHOR	MINIMUM MECHANICAL OR ADHESIVE ANCHOR STRENGTH REQUIREMENTS ULTIMATE TENSILE LOAD 24.0 KIPS AND ULTIMATE SHEAR LOAD 21.5 KIPS. SEE 603.2 AND 603.3.1.2 OF THE WISCONSIN STANDARD SPECIFICATIONS FOR MORE INFORMATION ON ADHESIVE ANCHORS.	¾" DIA.
V2	GAP STIFFENER - BOLT - NUT	HOT DIP AASHTO M232 CLASS / ASTM A153 CLASS C / ASTM F2329 C O R MECHANICAL GALVANIZE TO AASHTO M298 CLASS 50 TYPE 1 / ASTM B695 CLASS 50 TYPE 1 UNC OVER TAP NUTS AS SPECIFIED IN AASHTO 291/ASTM A 563 HEAVY HEX HEAD ASTM A563DH OR SAE J995 GRADE 5	
W1	TOE PLATE	AASHTO M111/ASTM A123 ASTM A36 MIN STRENGTH 36 KSI, OR ASTM A529 MAX. STRENGTH 50 KSI, OR ASTM A572 MAX. STRENGTH 50 KSI, OR ASTM A709 MAX. STRENGTH 50 KSI, OR ASTM A992 MAX. STRENGTH 50 KSI	
X1	TOE PLATE - CONNECTION BOLT	HOT DIP AASHTO M232 CLASS / ASTM A153 CLASS C / ASTM F2329 C OR MECHANICAL GALVANIZE TO AASHTO M298 CLASS 55 TYPE 2 / ASTM B695 CLASS 55 TYPE 2 UNC HEAVY HEX HEAD OR AASTHO M180 HEAD, ASTM F3125 GRADE A325 TYPE 1 HEAVY HEX HEAD OR SAE J429 GRADE 5 HEAVY HEX HEAD / ASTM A449 TYPE 1 HEAVY HEX HEAD. BOLTS MAY BE FULLY THREADED. PROVIDE ENOUGH THREADING FOR PROPER TIGHTENING OF BOLT.	¾" DIA.
X2	TOE PLATE - CONNECTION BOLT - WASHER	HOT DIP AASHTO M232 CLASS / ASTM A153 CLASS C / ASTM F2329 C OR MECHANICAL GALVANIZE TO AASHTO M298 CLASS 55 TYPE 2 / ASTM B695 CLASS 55 TYPE 2 F436 TYPE 1 (HARDEN WASHER ONLY)	
X3	TOE PLATE - CONNECTION BOLT - NUT	HOT DIP AASHTO M232 CLASS / ASTM A153 CLASS C / ASTM F2329 C OR MECHANICAL GALVANIZE TO AASHTO M298 CLASS 55 TYPE 2 / ASTM B695 CLASS 55 UNC OVER TAP NUTS AS SPECIFIED IN AASHTO 291 / ASTM A 563 HEAVY HEX HEAD ASTM A563DH OR SAE J995 GRADE 5	

6

SDD 14B07-16n

CONCRETE BARRIER TEMPORARY PRECAST, 12' - 6"

STATE OF WISCONSIN
DEPARTMENT OF TRANSPORTATION

APPROVED
February 2023
DATE
/S/ Rodney Taylor
ROADWAY STANDARDS DEVE ENGINEER

FHWA

6

SDD 14B07-16n

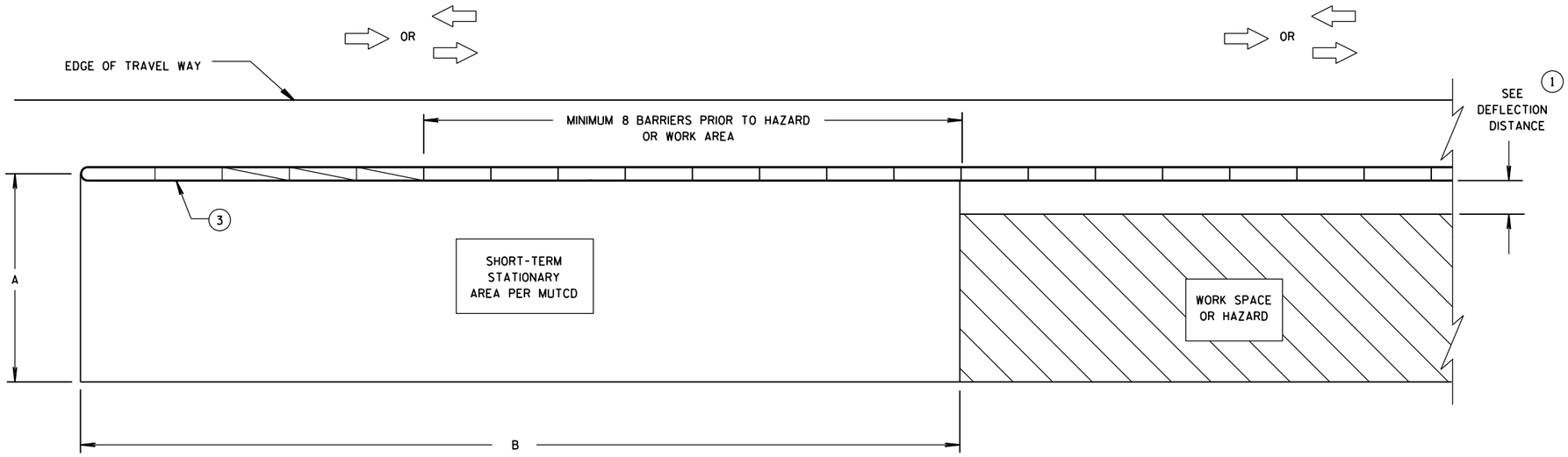

CRASH CUSHION/SAND BARREL ARRAY AND TEMPORARY BARRIER INSTALLATION FOR TRAFFIC ON ONE SIDE OF BARRIER

DIMENSION A TABLE (2)

FACILITY	POSTED SPEED MPH	DIMENSION A	
		MIN. FT	MAX. FT
FREEWAY/EXPRESSWAY	ALL	15	20
NON-FREEWAY/EXPRESSWAY	GREATER THAN OR EQUAL TO 45	10	15
NON-FREEWAY/EXPRESSWAY	LESS THAN 45	8	10
AADT LESS THAN 1,500	ALL	8	10

DIMENSION B TABLE (2)

POSTED SPEEDS MPH	DIMENSION B FT
20	115
25	155
30	200
35	250
40	305
45	360
50	425
55	495
60	570
65	645

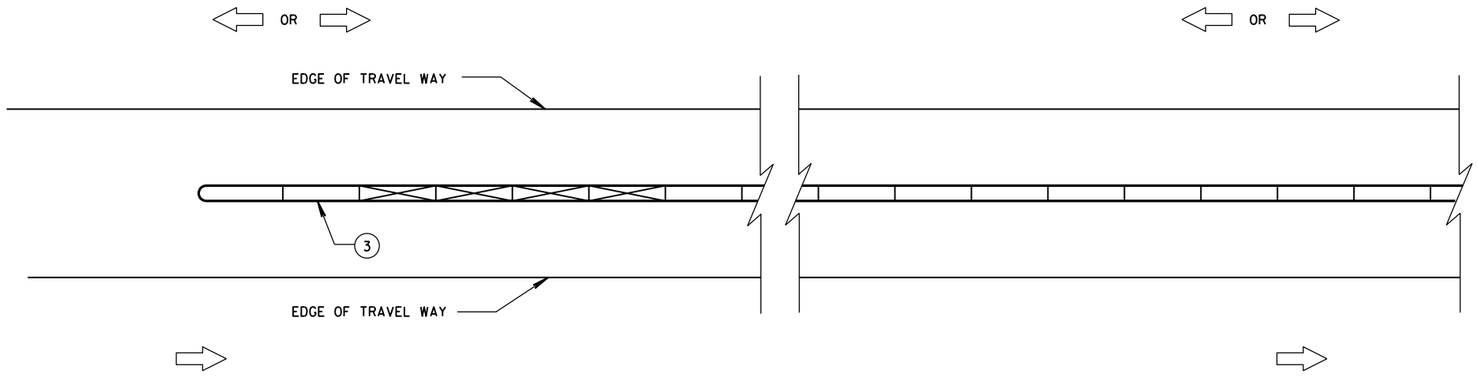

CRASH CUSHION/SAND BARREL ARRAY AND TEMPORARY BARRIER INSTALLATION FOR TRAFFIC ON BOTH SIDES OF BARRIER

LEGEND

- DIRECTION OF TRAVEL
- CRASH CUSHION OR SAND BARREL ARRAY
- SEE FREE STANDING TRANSITION TO TIED-DOWN SYSTEM DETAILS
- SEE BI-DIRECTIONAL TRANSITION TO TIED-DOWN SYSTEM DETAILS
- 3 PINS PLACED ON TRAFFIC SIDE OF BARRIER
- PERMANENT CONCRETE BARRIER OR CONCRETE PARAPET
- FREE STANDING TEMPORARY BARRIER

GENERAL NOTES

SEE STANDARD DETAIL DRAWING 14B7 FOR MORE INFORMATION.

DETAILS PROVIDE A GENERAL LAYOUT OF TEMPORARY CONCRETE BARRIER, CRASH CUSHIONS, SAND BARREL ARRAYS AND TIE DOWN TRANSITIONS. DETAILS PROVIDED MAY NOT FIT ALL POSSIBLE SITUATIONS OR SITE CONDITIONS. SEE OTHER SECTIONS OF THE CONTRACT OR PROJECT ENGINEER FOR MORE DETAILS.

ADDITIONAL TEMPORARY BARRIER MAY BE REQUIRED TO PROTECT TRAVELING PUBLIC FROM HAZARDS, CONTRACTOR'S OPERATIONS OR TO CONTROL TRAFFIC.

TEMPORARY BARRIER MAY BE REQUIRED TO BE ANCHORED TO PAVEMENT OR BRIDGE DECK.

FOR DETAILS ON CRASH CUSHION OR SAND BARREL ARRAYS SEE OTHER SECTIONS OF THE PLAN AND MANUFACTURE'S DETAILS.

SLOPES LEADING TO TEMPORARY BARRIER, CRASH CUSHION OR SAND BARREL ARRAY ARE 10:1 OR LESS.

(1) FOR DEFLECTION INFORMATION SEE STANDARD DETAIL DRAWING 14B7.

(2) VALUES PROVIDED MAY NOT FIT ALL POSSIBLE SITUATIONS OR SITE CONDITIONS. SEE OTHER SECTIONS OF THE CONTRACT OR PROJECT ENGINEER FOR MORE DETAILS.

(3) ANCHOR TEMPORARY BARRIER ACCORDING TO CRASH CUSHION OR SAND BARREL MANUFACTURER'S RECOMMENDATIONS. IF MANUFACTURER'S RECOMMENDATIONS ARE NOT PROVIDED, ANCHOR 3 PINS ON TRAFFIC SIDE.

CRASH CUSHION/SAND BARREL ARRAY AND OTHER TEMPORARY BARRIER LAYOUT DETAILS

STATE OF WISCONSIN
DEPARTMENT OF TRANSPOI

6

S.D.D. 14 B 8-2a
S.D.D. 14 B 8-2a

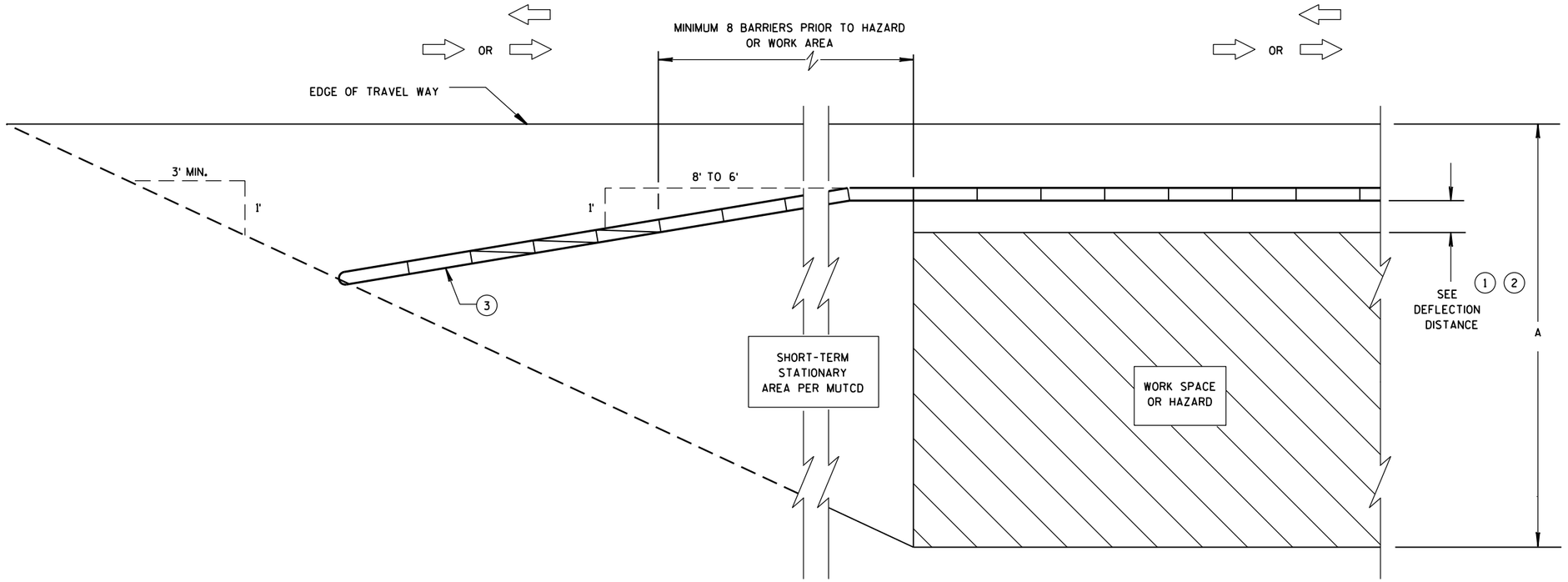

CRASH CUSHION/SAND BARREL ARRAY AND TEMPORARY BARRIER INSTALLATION FOR TRAFFIC ON ONE SIDE - FLARED INSTALLATION

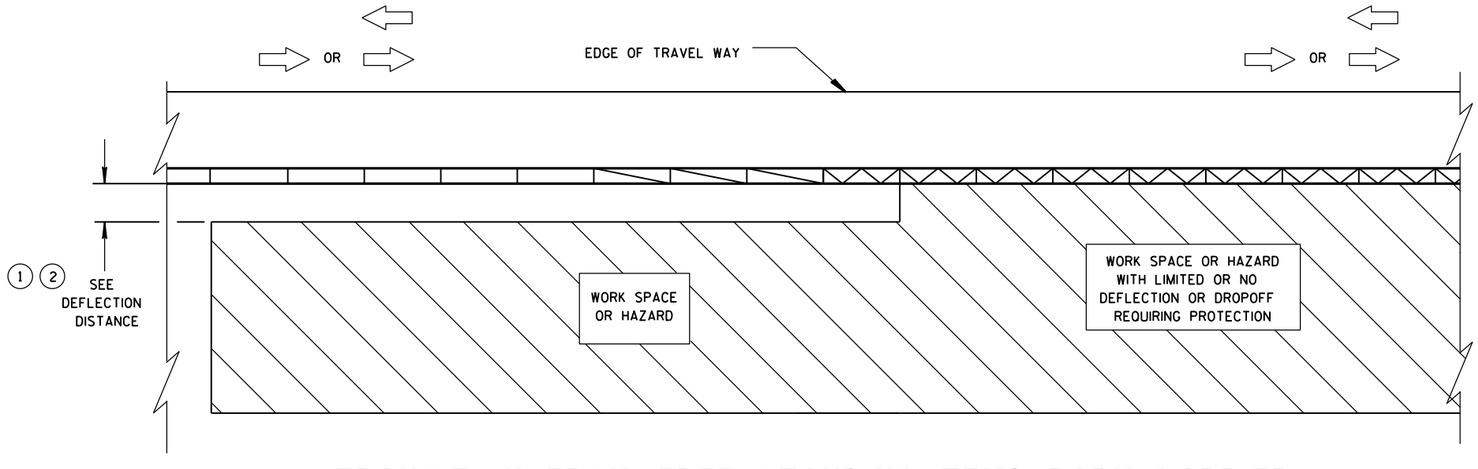

TRANSITION FROM FREE STANDING TEMPORARY BARRIER TO ANCHORED BARRIER

LEGEND

- DIRECTION OF TRAVEL
- CRASH CUSHION OR SAND BARREL ARRAY
- SEE FREE STANDING TRANSITION TO TIED-DOWN SYSTEM DETAILS
- SEE BI-DIRECTIONAL TRANSITION TO TIED-DOWN SYSTEM DETAILS
- 3 PINS PLACED ON TRAFFIC SIDE OF BARRIER
- PERMANENT CONCRETE BARRIER OR CONCRETE PARAPET
- FREE STANDING TEMPORARY BARRIER

CRASH CUSHION/SAND BARREL ARRAY AND OTHER TEMPORARY BARRIER LAYOUT DETAILS

STATE OF WISCONSIN
DEPARTMENT OF TRANSPOI

6

S.D.D. 14 B 8-2b

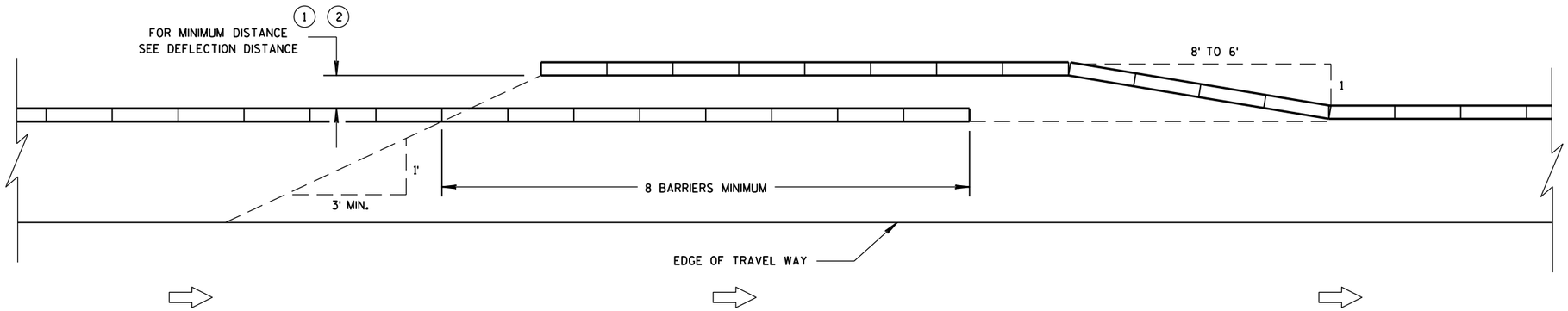

TEMPORARY BARRIER OVERLAP - ONE-WAY TRAFFIC

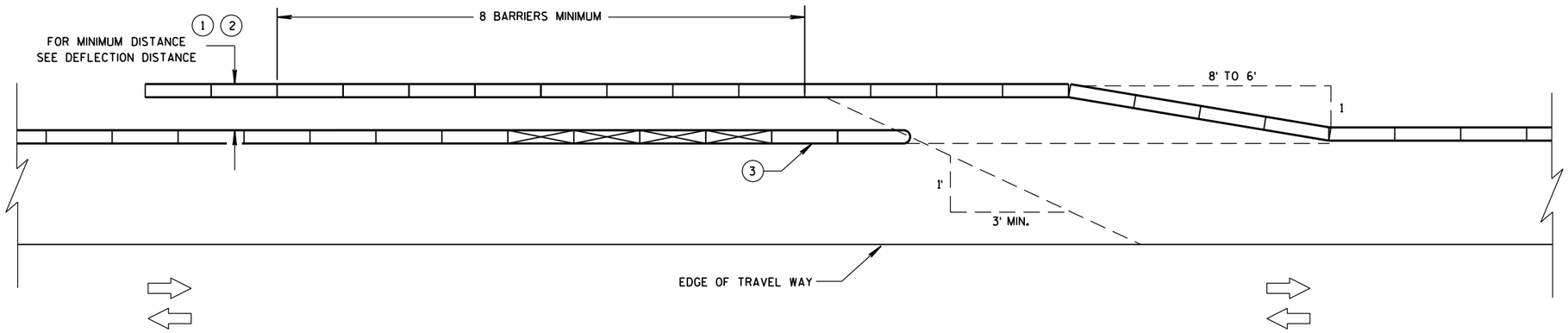

TEMPORARY BARRIER OVERLAP - TWO-WAY TRAFFIC

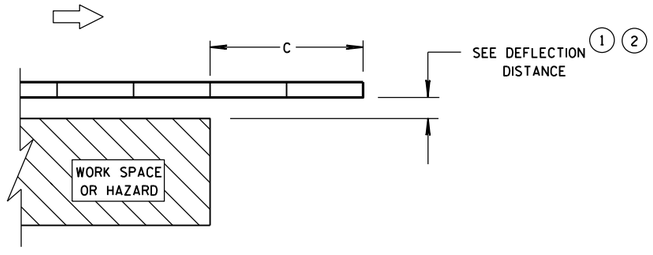

ENDING TEMPORARY BARRIER DOWNSTREAM - UNANCHORED

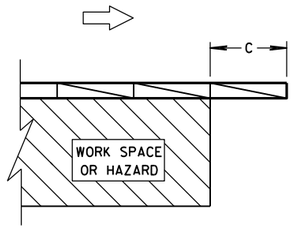

ENDING TEMPORARY BARRIER DOWNSTREAM - ANCHORED

LEGEND

- DIRECTION OF TRAVEL
- CRASH CUSHION OR SAND BARREL ARRAY
- SEE FREE STANDING TRANSITION TO TIED-DOWN SYSTEM DETAILS
- SEE BI-DIRECTIONAL TRANSITION TO TIED-DOWN SYSTEM DETAILS
- 3 PINS PLACED ON TRAFFIC SIDE OF BARRIER
- PERMANENT CONCRETE BARRIER OR CONCRETE PARAPET
- FREE STANDING TEMPORARY BARRIER

CRASH CUSHION/SAND BARREL ARRAY AND OTHER TEMPORARY BARRIER LAYOUT DETAILS

STATE OF WISCONSIN
DEPARTMENT OF TRANSPOR

6

S.D.D. 14 B 8-2c

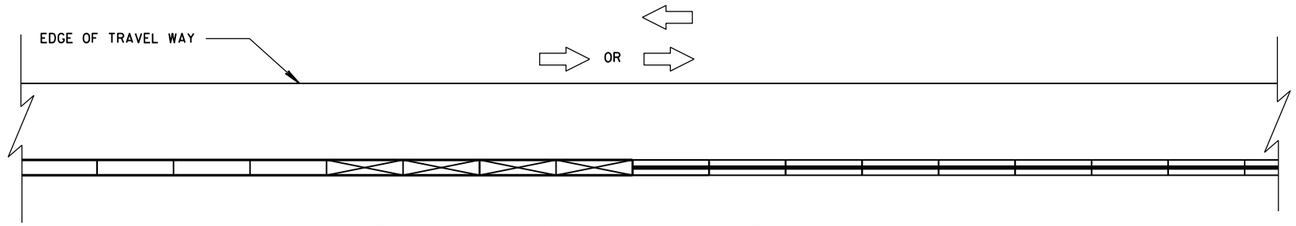

CONNECTING TEMPORARY BARRIER TO PERMANENT
CONCRETE BARRIER-TRAFFIC ON ONE SIDE

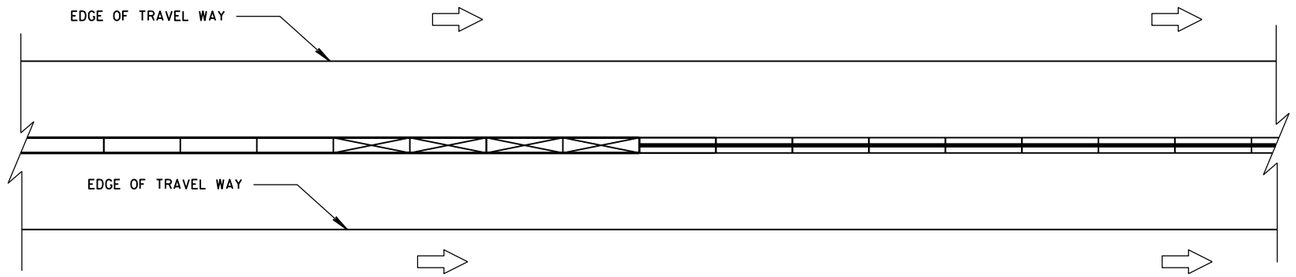

CONNECTING TEMPORARY BARRIER TO PERMANENT
CONCRETE BARRIER-TRAFFIC ON BOTH SIDES

LEGEND

DIRECTION OF TRAVEL

CRASH CUSHION OR
SAND BARREL ARRAY

SEE FREE STANDING TRANSITION
TO TIED-DOWN SYSTEM DETAILS

SEE BI-DIRECTIONAL TRANSITION
TO TIED-DOWN SYSTEM DETAILS

3 PINS PLACED ON
TRAFFIC SIDE OF BARRIER

PERMANENT CONCRETE BARRIER
OR CONCRETE PARAPET

FREE STANDING TEMPORARY
BARRIER

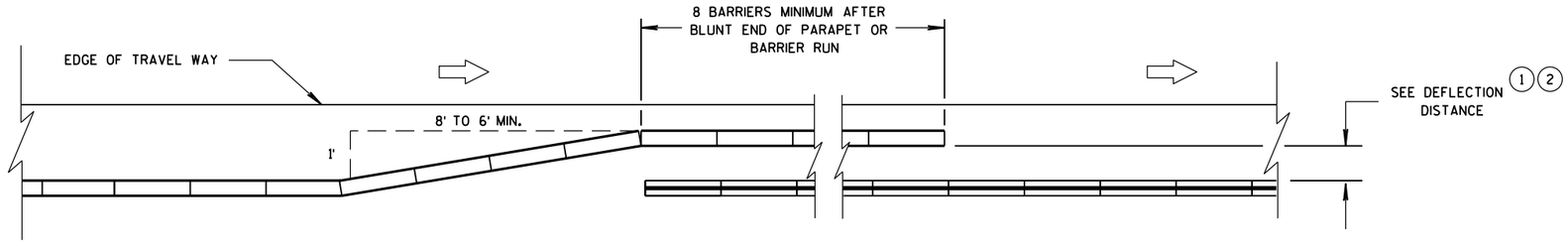

OVERLAPPING TEMPORARY BARRIER AND PERMANENT BARRIER -
ONE WAY TRAFFIC

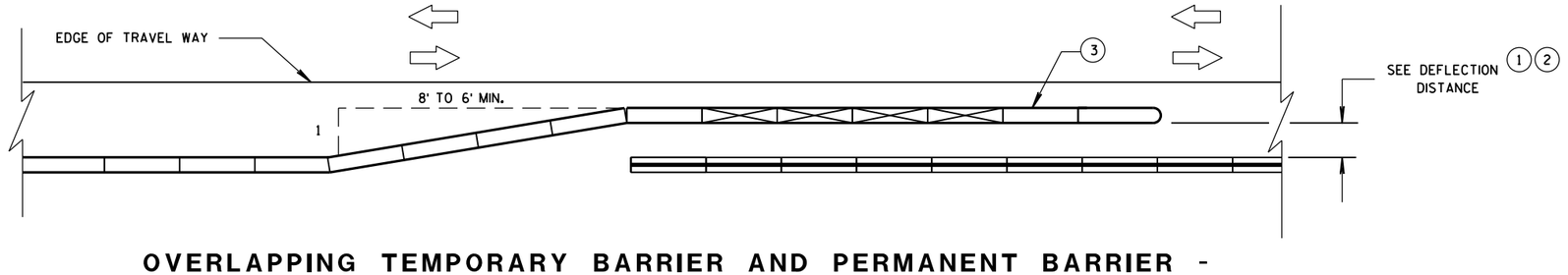

OVERLAPPING TEMPORARY BARRIER AND PERMANENT BARRIER -
TWO WAY TRAFFIC

CRASH CUSHION/SAND BARREL
ARRAY AND OTHER TEMPORARY
BARRIER LAYOUT DETAILS

STATE OF WISCONSIN
DEPARTMENT OF TRANSPOI

6

S.D.D. 14 B 8-2d

LEGEND

DIRECTION OF TRAVEL

CRASH CUSHION OR SAND BARREL ARRAY

SEE FREE STANDING TRANSITION TO TIED-DOWN SYSTEM DETAILS

SEE BI-DIRECTIONAL TRANSITION TO TIED-DOWN SYSTEM DETAILS

3 PINS PLACED ON TRAFFIC SIDE OF BARRIER

PERMANENT CONCRETE BARRIER OR CONCRETE PARAPET

FREE STANDING TEMPORARY BARRIER

DIMENSION C TABLE (2)

AVAILABLE DEFLECTION DISTANCE	MINIMUM LENGTH OF BARRIER BEYOND HAZARD FT
GREATER THAN 8'	12.5
LESS THAN OR EQUAL TO 8' BUT GREATER THAN 4'	50
LESS THAN OR EQUAL TO 4'	100

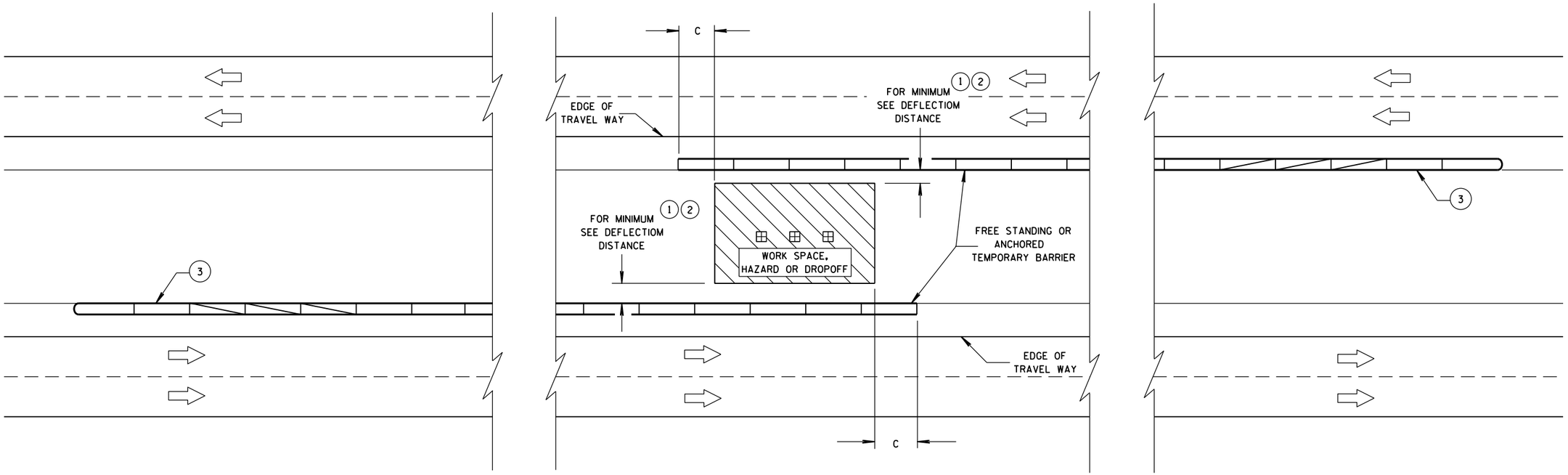

CRASH CUSHION/SAND BARREL ARRAY AND OTHER TEMPORARY BARRIER LAYOUT DETAILS

STATE OF WISCONSIN
DEPARTMENT OF TRANSPORTATION

APPROVED
June, 2015 — DATE
/S/ Jerry H. Zogg — ROADWAY STANDARDS ENGINNER
FHWA

6

S.D.D. 14 B 8-2e

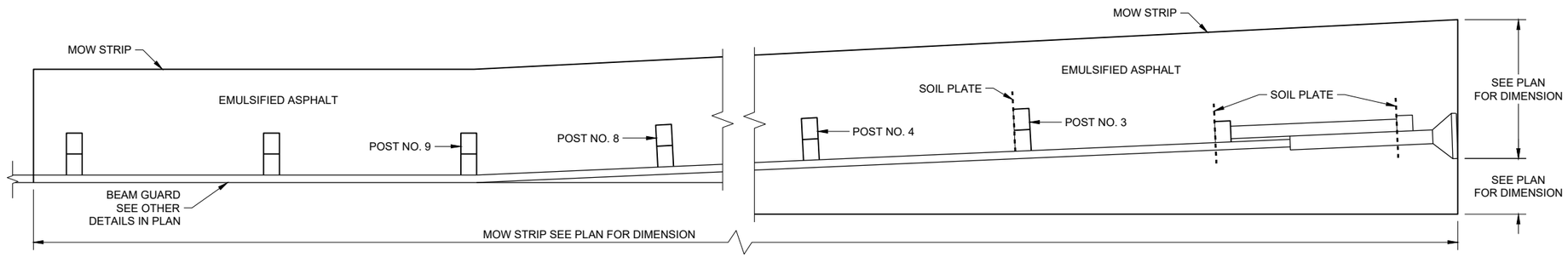

PLAN VIEW

MOW STRIP LAYOUT FOR ENERGY ABSORBING TERMINAL

GENERAL NOTES

ONLY USE STEEL POSTS IN CONCRETE AND ASPHALT MOW STRIPS.

1. CONTROLLED LOW-STRENGTH BACKFILL OR EMULSIFIED ASPHALT.
2. DEPTH OF MOW STRIP:
   ASPHALT - 4"
   CONCRETE - 4"
   EMULSIFIED ASPHALT - 1" OR LESS
3. FOR EMULSIFIED ASPHALT, MOW STRIP STRIP LEAVE OUTS NOT REQUIRED. (TYPICAL FOR ALL POSTS)

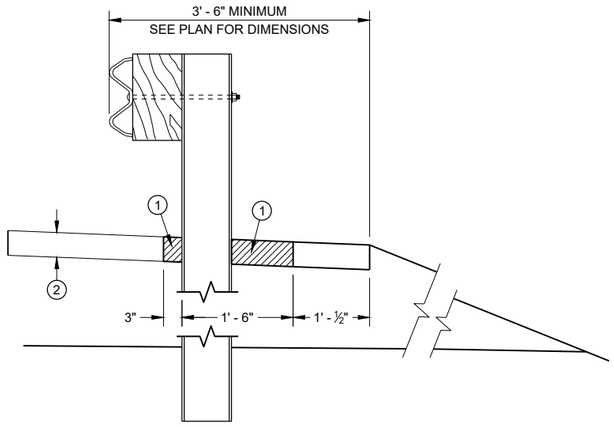

SECTION A - A

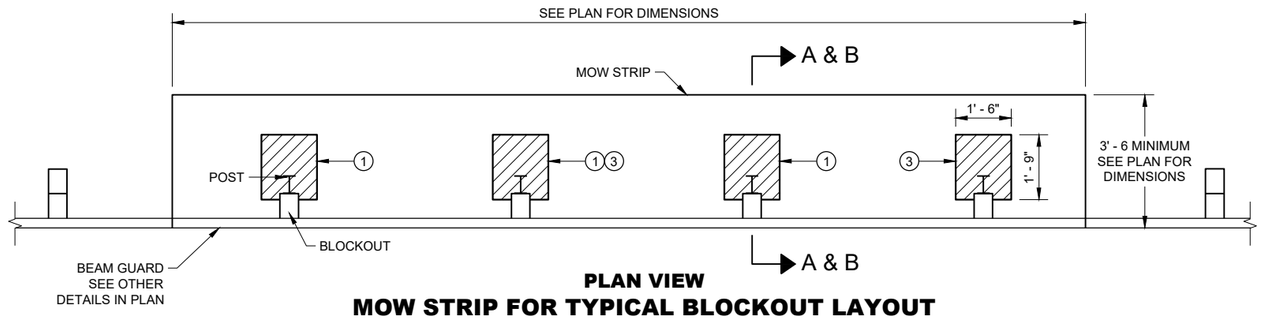

PLAN VIEW

MOW STRIP FOR TYPICAL BLOCKOUT LAYOUT

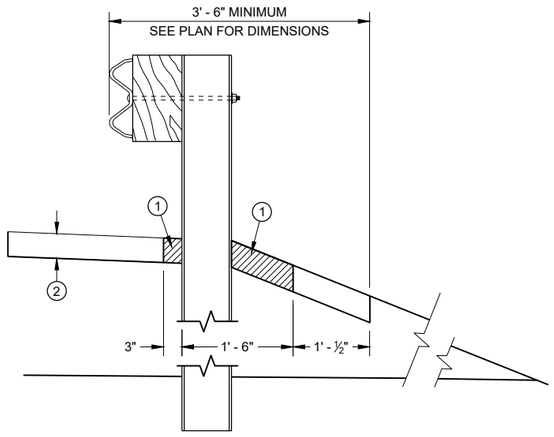

SECTION B - B

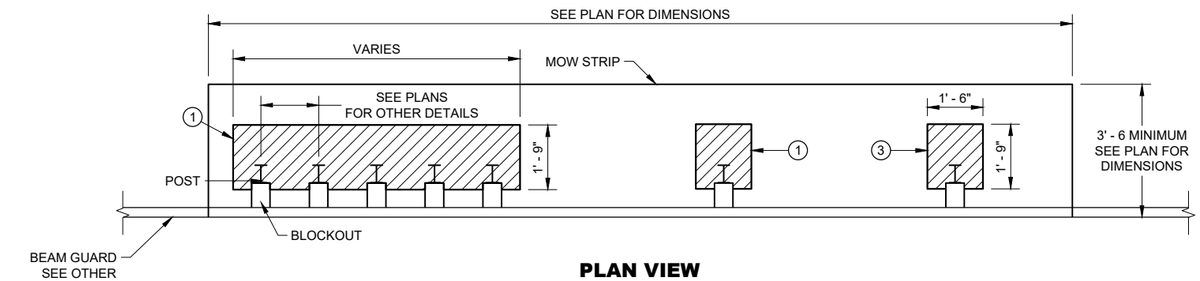

PLAN VIEW

MOW STRIP FOR TIGHT SPACING LAYOUT

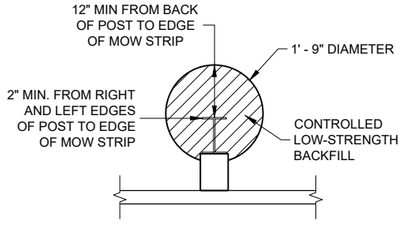

ALTERNATIVE HMA MOW STRIP DESIGN

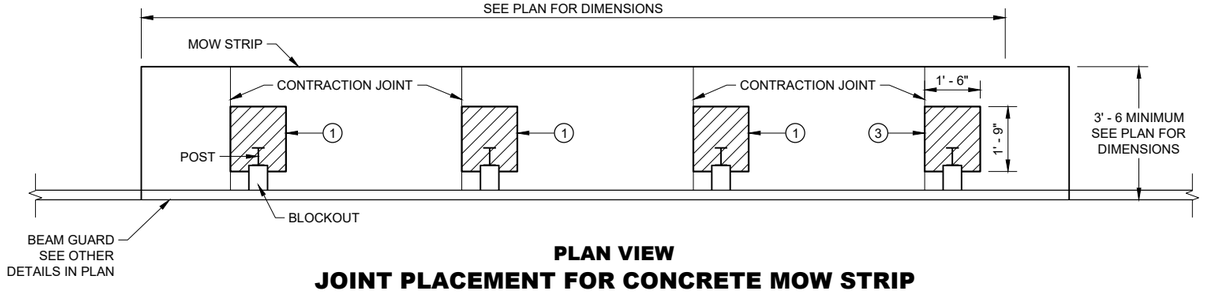

PLAN VIEW

JOINT PLACEMENT FOR CONCRETE MOW STRIP

GUARDRAIL MOW STRIP

STATE OF WISCONSIN
DEPARTMENT OF TRANSPORTATION

6

SDD 14B28 - 04a

LEGEND

CONCRETE, ASPHALT, OR EMULSIFIED ASPHALT MOW STRIP (SEE OTHER DETAILS)

EMULSIFIED ASPHALT MOW STRIP (SEE OTHER DETAILS)

GENERAL NOTES

EXISTING THRIE BEAM BULLNOSES MAY HAVE WOOD POSTS. NEW THRIE BEAM BULLNOSE WILL HAVE STEEL POSTS.

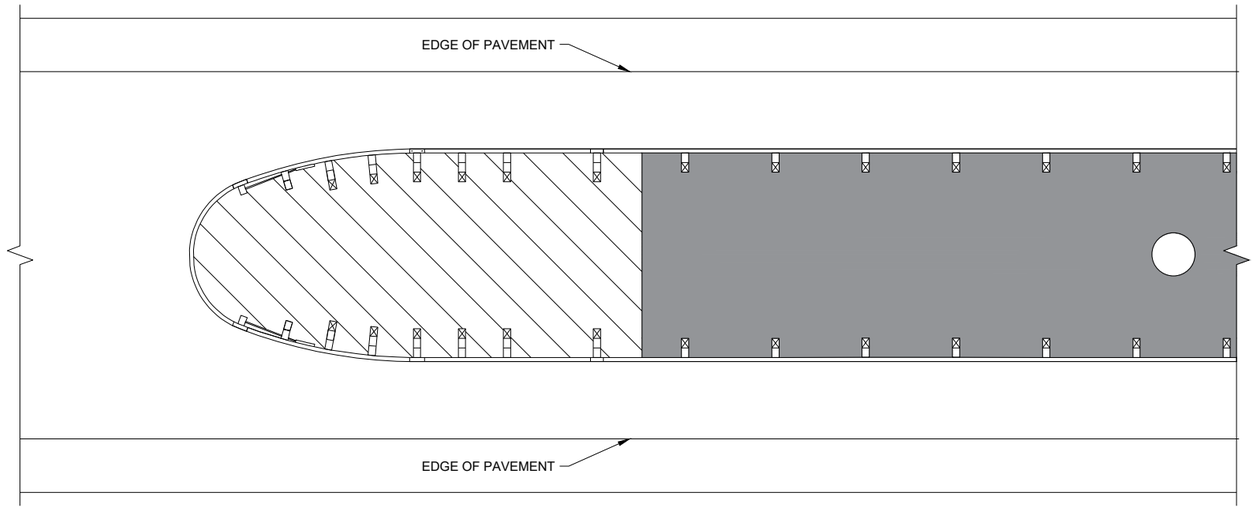

THRIE BEAM BULLNOSE

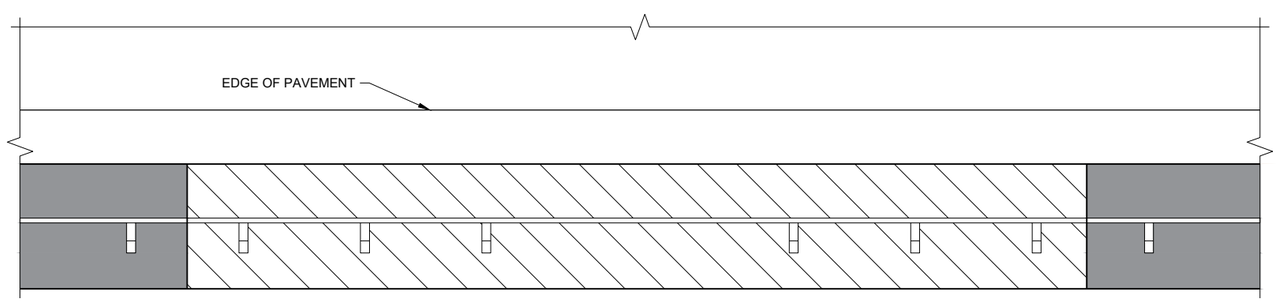

LONG - SPAN

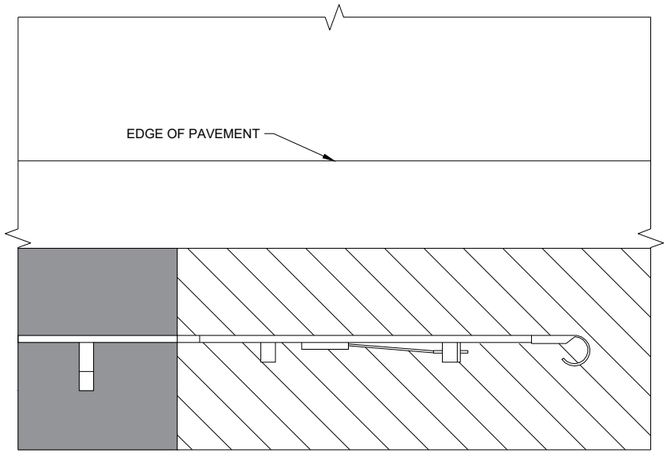

TYPE 2 TERMINAL

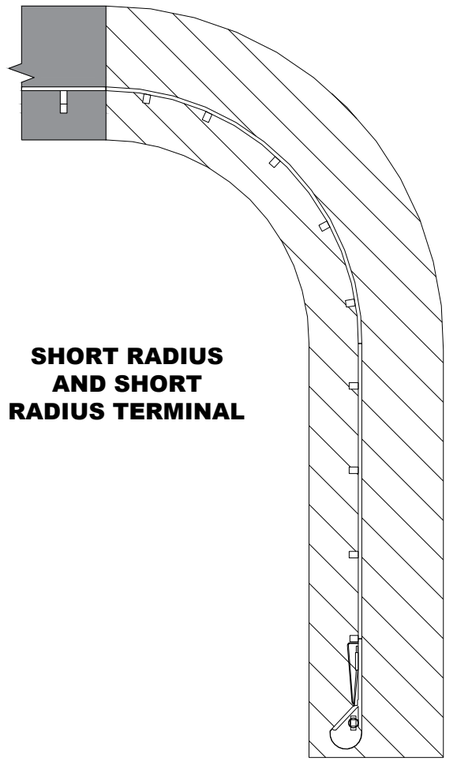

SHORT RADIUS AND SHORT RADIUS TERMINAL

GUARDRAIL MOW STRIP

STATE OF WISCONSIN
DEPARTMENT OF TRANSPORTATION

APPROVED
August 2020
DATE

/S/ Rodney Taylor
ROADWAY STANDARDS DEVE
ENGINEER

FHWA

6

SDD 14B28 - 04b

6

SDD 14B28 - 04b

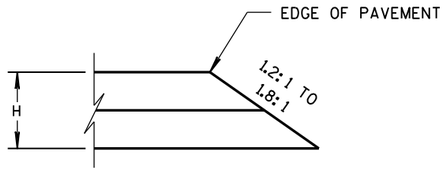

CONSTRUCTED WITH FINAL TWO LAYERS

FOR H 5" OR LESS

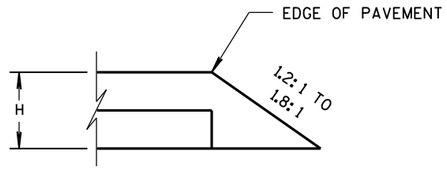

CONSTRUCTED WITH FINAL LAYER

FOR H 5" OR LESS

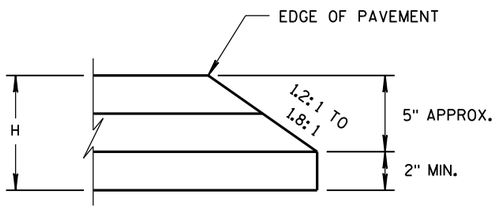

CONSTRUCTED WITH FINAL TWO LAYERS

FOR H GREATER THAN 5"

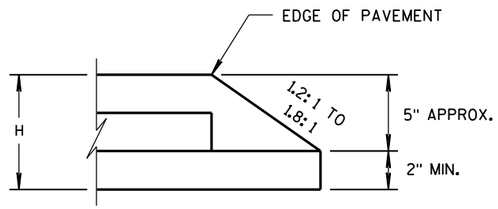

CONSTRUCTED WITH FINAL LAYER

FOR H GREATER THAN 5"

HMA PAVEMENT AND HMA OVERLAYS

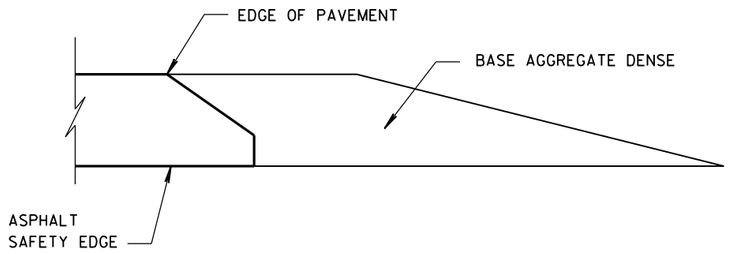

FINISHED SHOULDER AGGREGATE PLACEMENT

6

6

S.D.D. 14 B 29-1

S.D.D. 14 B 29-1

SAFETY EDGE SM

STATE OF WISCONSIN
DEPARTMENT OF TRANSPORTATION

APPROVED

11/30/2012
DATE

/S/ Jerry H. Zoda
ROADWAY STANDARDS DEVELOPMENT ENGINEER

FHWA

(1) WOOD OR STEEL POSTS (w6X9 OR w6X8.5) MAY BE USED. DO NOT INTERMIX WOOD AND STEEL POSTS. INSTALL STEEL POSTS WITH HOLES ON APPROACHING TRAFFIC SIDE.

(2) USE WOOD OR APPROVED PLASTIC BLOCKOUTS. WOOD BLOCKOUTS MAY BE CONSTRUCTED OUT OF TWO OR MORE WOOD BLOCKOUTS. SEE ALTERNATE WOOD BLOCKOUT DETAIL. DIMENSIONS OF APPROVED PLASTIC BLOCKOUTS MAY VARY.

(3) IF ROCK IS ENCOUNTERED DURING EXCAVATION, PROVIDE A HOLE 12 INCHES IN DIAMETER EXTENDING 20 INCHES DEEP INTO THE ROCK. PLACE APPROXIMATELY 2 1/2" INCHES OF GRANULAR MATERIAL IN THE BOTTOM OF THE HOLE. CUT THE POSTS THE TO LENGTH AMD INSTALL. BACKFILL WITH EXCAVATED MATERIAL AND COMPACT. BACKFILL IS TO BE FREE OF LARGE ROCKS.

(4) WHEN THE DISTANCE FROM BACK OF POST TO SHOULDER HINGE POINT IS LESS THAN 2 FEET INSTALL LONGER POST AT HALF POST SPACING (K).

(5) FOR NEW MGS INSTALLATION TOP OF W-BEAM RAIL TOLERANCE IS ±1". FOR EXISTING MGS INSTALLATION TOP OF W-BEAM IS BETWEEN 27 ¾" TO 32".

(6) WHEN USING STEEL POST AND WOOD BLOCKOUTS INSTALL FOUR 16D GALVANIZED NAILS. INSTALL NAILS AT THE BACK CORNERS OF THE BLOCK AND BEND THE NAILS OVER THE FLANGE OF THE STEEL POST.

(7) TOTAL POST LENGTH FOR TYPE K IS 7' - 0".
TOTAL POST LENGTH FOR OTHER MGS TYPES IS 6' - 0".

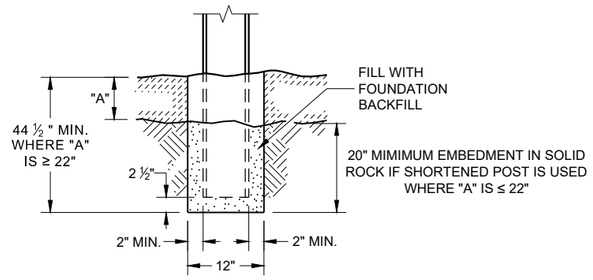

END VIEW
SETTING STEEL OR WOOD POST IN ROCK (3)

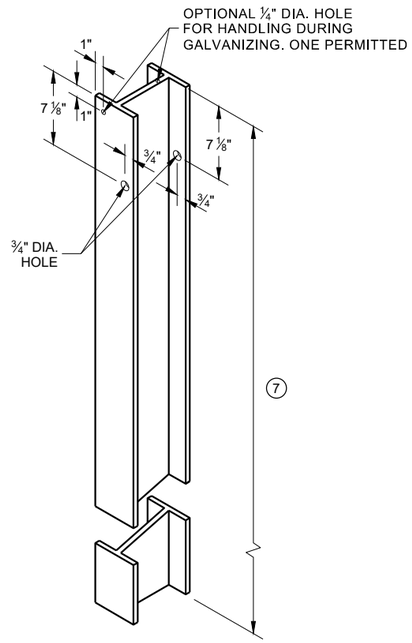

STEEL POST & HOLE PUNCHING DETAIL (W 6 X 9) (1)

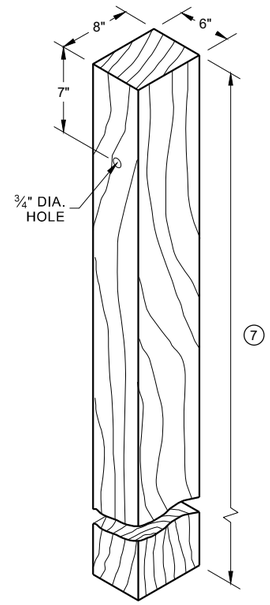

WOOD POST (6" X 8") NOMINAL (1)

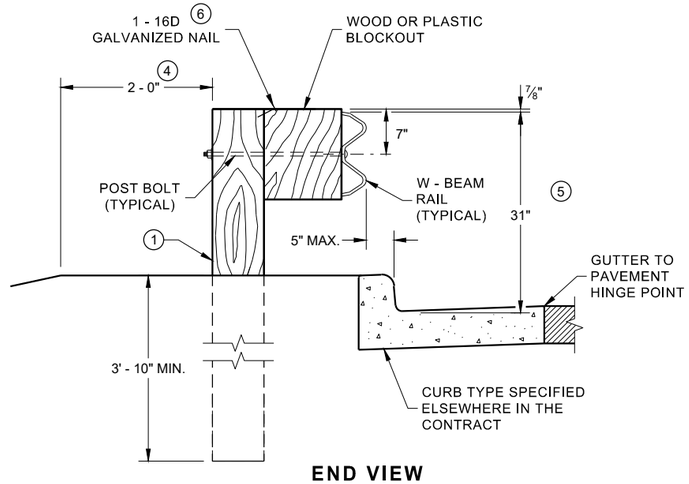

END VIEW
LOCATED ALONG A CURBED ROADWAY

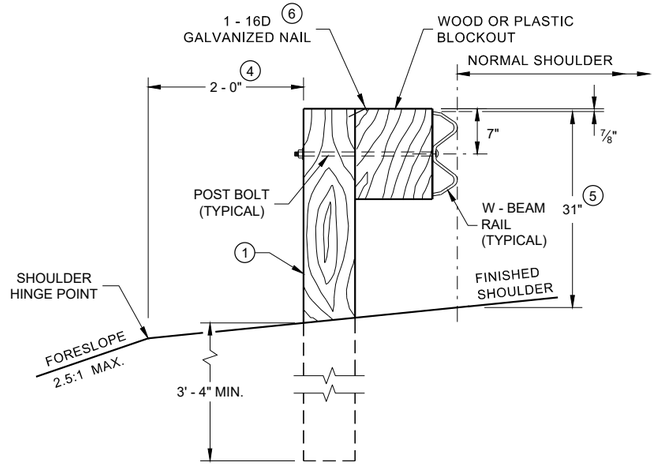

END VIEW
LOCATED ALONG A ROADWAY SHOULDER STANDARD INSTALLATION

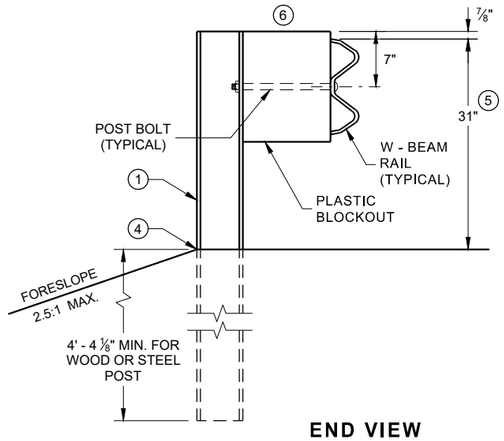

END VIEW
MGS LONGER POST AT HALFPOST SPACING W BEAM (K)

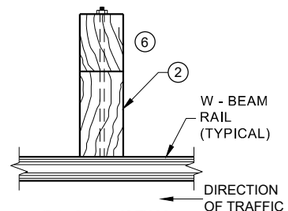

PLAN VIEW
WOOD POST, BLOCKOUT & BEAM

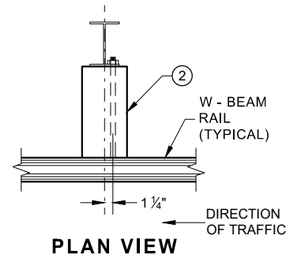

PLAN VIEW
STEEL POST, PLASTIC BLOCKOUT & BEAM

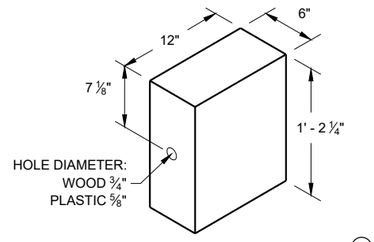

WOOD OR PLASTIC BLOCKOUT (2)

MIDWEST GUARDRAIL SYSTEM (MGS) GUARDRAIL

STATE OF WISCONSIN
DEPARTMENT OF TRANSPORTATION

6

SDD 14B42 - 07a

6

SDD 14B42 - 07a

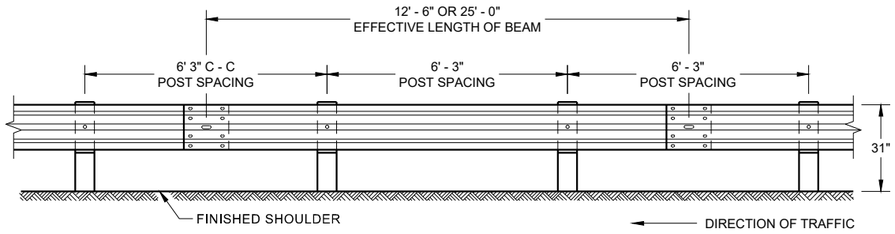

FRONT VIEW
POST SPACING STANDARD INSTALLATION

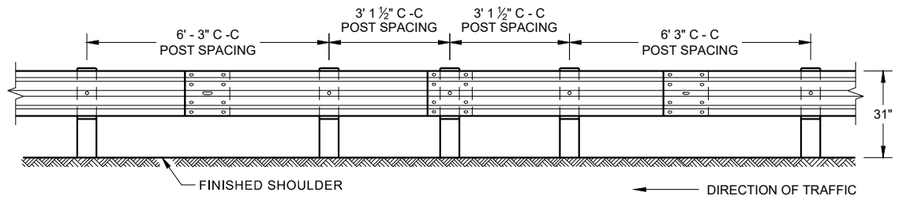

FRONT VIEW
HALF POST SPACING (HS) AND
HALF POST SPACING WITH LONGER POSTS (K)

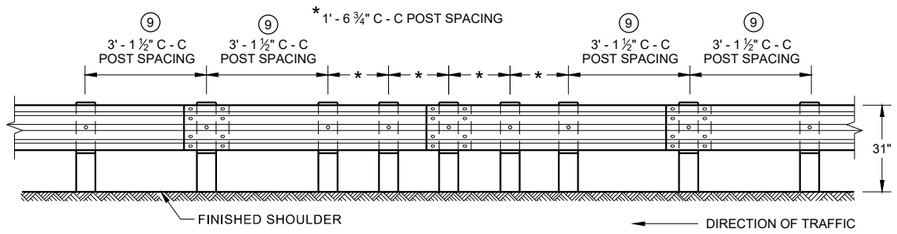

FRONT VIEW
QUARTER POST SPACING (QS)

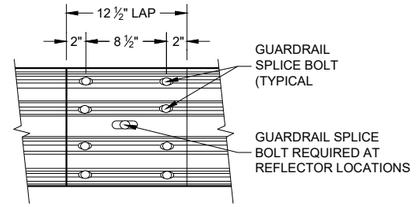

FRONT VIEW
MID-SPAN BEAM SPLICE

GENERAL NOTES

⑧ DO NOT INSTALL REFLECTORS ON THE FIRST 50 FEET OF THE APPROACH END OF THE ENERGY ABSORBING TERMINAL.

⑨ 25 FEET OF HALF POST SPACING IS REQUIRED ON APPROACH AND DEPARTURE ENDS OF QUARTER POST SPACING.

POST BOLTS ARE A ⅝" DIAMETER ASTM A307 GUARDRAIL BOLT. A POST BOLT REQUIRES ⅝" DIAMETER A563A DOUBLE RECESSED (DR) HEAVY HEX NUT AND ⅝" DIAMETER F844 FLAT WASHER. POST BOLTS MAY BE LONGER IF MULTIPLE BLOCKOUTS ARE BEING USED.

GUARD RAIL SPLICE BOLTS ARE A ⅝" DIAMETER ASTM A307 GUARDRAIL HEAD BOLT. A GUARDRAIL SPLICE BOLT REQUIRES ⅝" DIAMETER A563A DOUBLE RECESSED (DR) HEAVY HEX NUT.

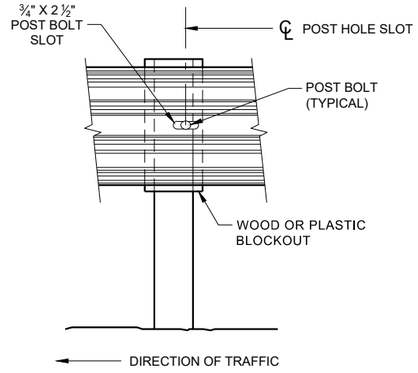

FRONT VIEW AT STEEL POST

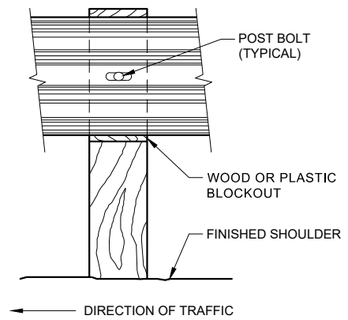

FRONT VIEW AT WOOD POST

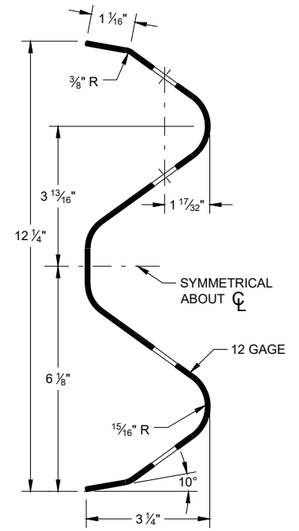

SECTION THRU W-BEAM RAIL

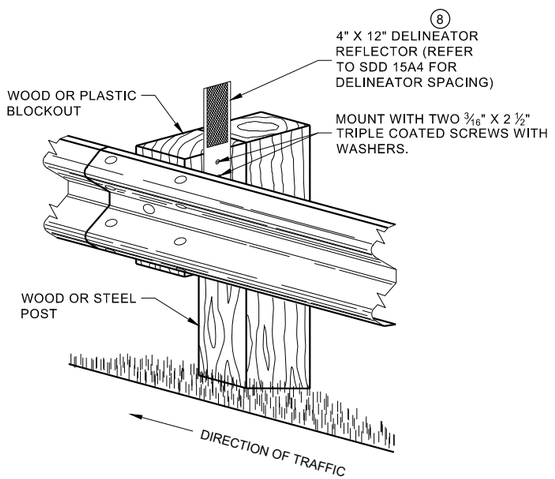

ONE SIDED REFLECTOR DETAIL
AND TYPICAL INSTALLATION

MIDWEST GUARDRAIL SYSTEM
(MGS) GUARDRAIL

STATE OF WISCONSIN
DEPARTMENT OF TRANSPORTATION

6

SDD 14B42 - 07b

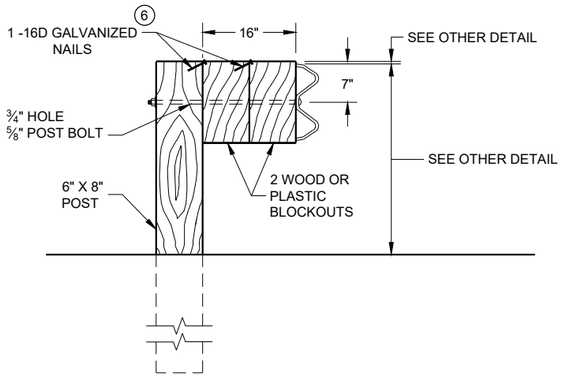

DETAIL FOR 16" BLOCKOUT DEPTH

IT IS ACCEPTABLE TO USE BLOCKOUTS UP TO 16" DEEP TO INCREASE THE POST OFFSET TO AVOID UNDERGROUND OBSTACLES. THERE IS NO LIMIT TO THE NUMBER OF POSTS THAT CAN HAVE ADDITIONAL BLOCKOUTS UP TO 16" DEEP.

NOTE:

1. ALL FILLETS SHALL HAVE A MINIMUM RADIUS OF 3⁄16".
2. IF THE BOLT EXTENDS MORE THAN ¼" FROM THE NUT THE BOLT SHOULD BE TRIMMED BACK.

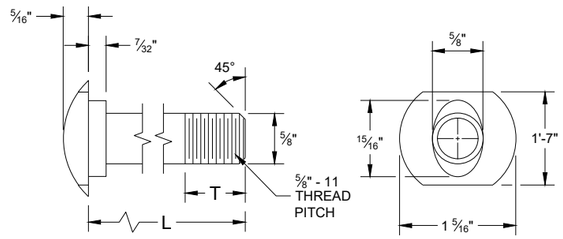

POST BOLT TABLE

L	T (MIN.)
1 ¼"	1 ⅛"
2"	1 ¾"
10"	4"
14"	4 1⁄16"
18"	4"
21"	4 1⁄16"
25"	4"

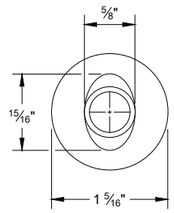

ALTERNATE BOLT HEAD

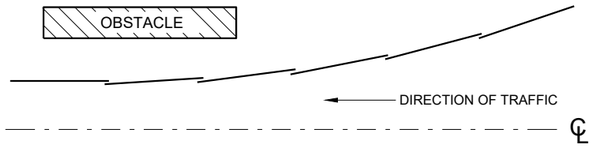

PLAN VIEW
BEAM LAPPING DETAIL

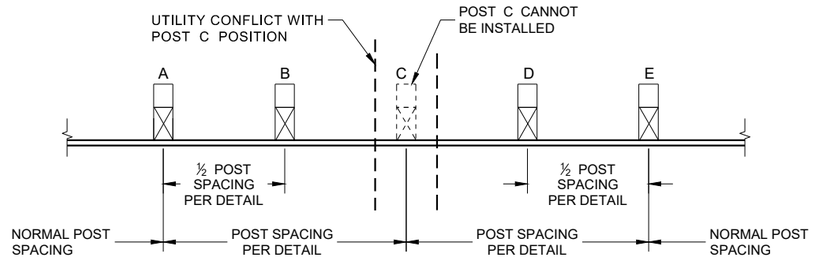

POST DRIVING FOR CONTINUOUS UNDERGROUND OBSTRUCTION

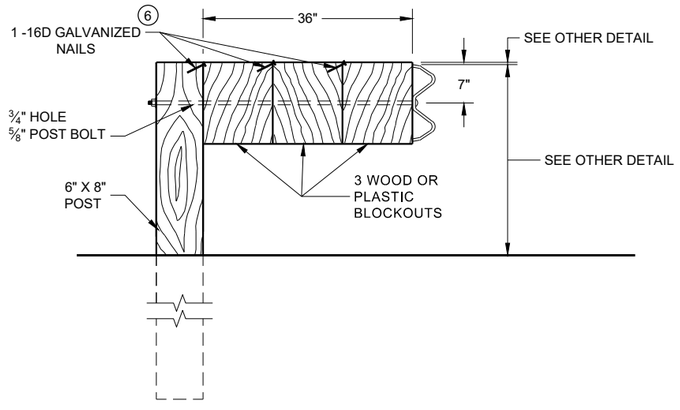

DETAIL FOR 36" BLOCKOUT DEPTH

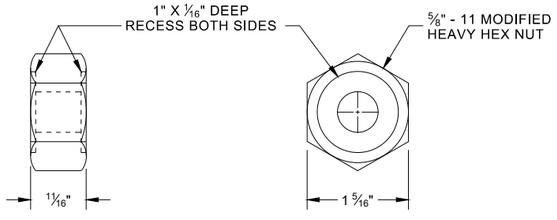

POST BOLT, SPLICE BOLT AND RECESS NUT

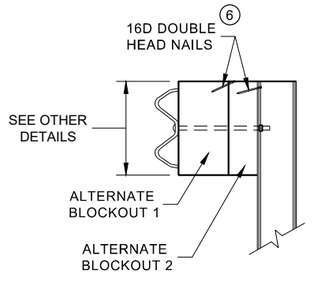

SIDE VIEW

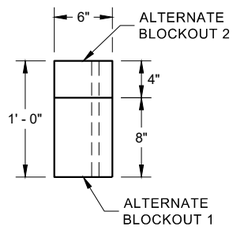

PLAN VIEW

ALTERNATE WOOD BLOCKOUT DETAIL

NOTES: UNDER SPECIAL CIRCUMSTANCES, SUCH AS AVOIDING OBSTACLES THAT ARE NOT RELOCATED, IT IS ACCEPTABLE TO INSTALL ADDITIONAL BLOCKOUTS TO OBTAIN UP TO 36" DEPTH FOR ONE OR TWO POSTS IN A SECTION OF GUARDRAIL.

DO NOT USE 16" OR 36" BLOCKOUTS IF IT CAUSES THE POST TO BE DRIVEN BEYOND SHOULDER HINGE POINT OR CAUSES A FIXED OBJECT TO BE WITHIN THE DEFLECTION DISTANCE OF THE BARRIER.

(6) WHEN USING STEEL POST AD WOOD BLOCKOUTS, INSTALL FOUR 16D GALVANIZED NAILS. INSTALL NAILS AT THE BACK CORNERS OF THE BLOCK AND BEND THE NAILS OVER THE FLANGE OF THE STEEL POST.

MIDWEST GUARDRAIL SYSTEM (MGS) GUARDRAIL

6

SDD 14B42 - 07c

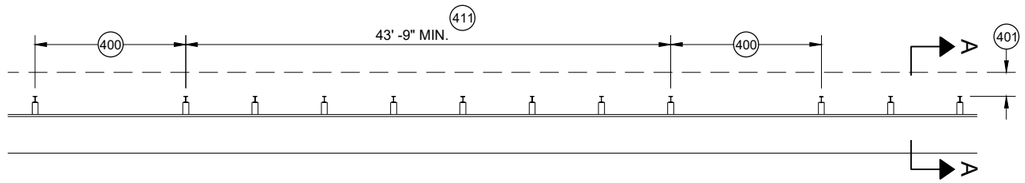

MISSING POST IN MGS GUARDRAIL

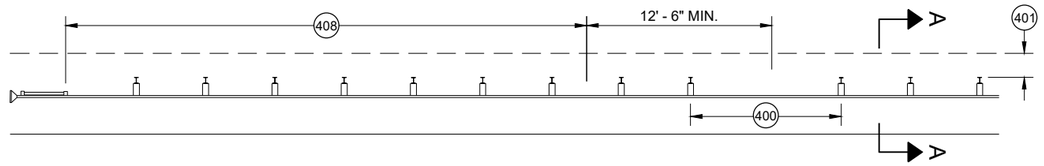

MISSING POST IN MGS GUARDRAIL NEAR EAT

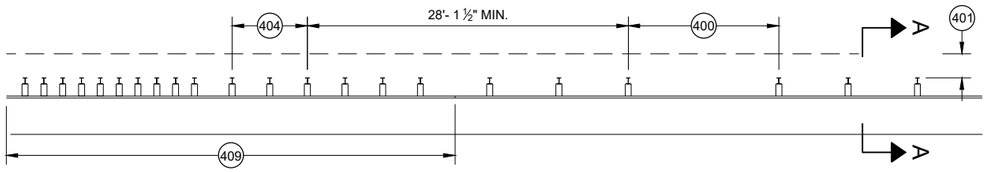

MISSING POST IN MGS GUARDRAIL NEAR AN APPROACH TRANSITION

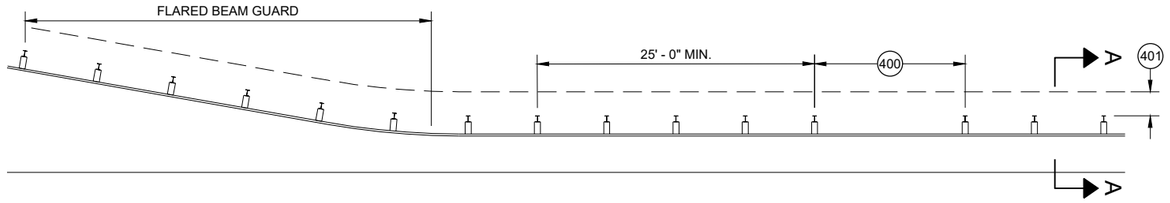

MISSING POST IN MGS GUARDRAIL NEAR FLARED BEAM GUARD

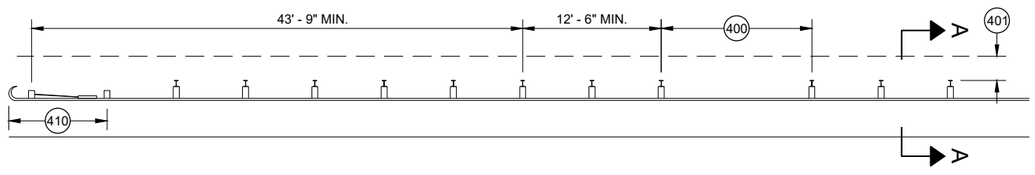

MISSING POST IN MGS GUARDRAIL NEAR A TYPE 2 END TERMINAL

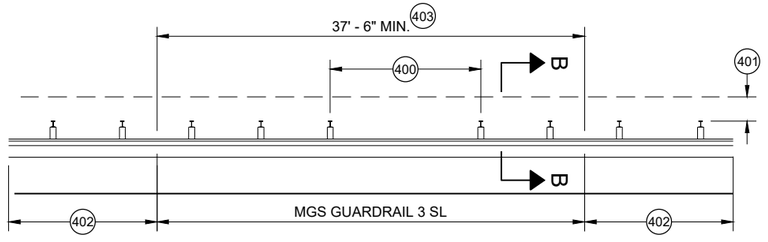

MISSING POST IN SHORT SPAN MGS GUARDRAIL NEAR CURB (SL) 407

(400) MAX SPAN 12' - 6"
(401) 2' MIN.
(402) MGS GUARDRAIL 3
(403) NESTING BEAM GUARD
(404) ASYMMETRIC TRANSITION
(405) SOIL WELL DRAINED AND COMPACTED
(406) SEE OTHER DRAWINGS IN THIS SDD
(407) SEE OTHER DRAWINGS FOR MIN. SPACING BETWEEN SPANS
(408) SEE SDD 14B44
(409) SEE SDD 14B45
(410) SEE SDD 14B47
(411) MINIMUM DISTANCE BETWEEN MISSING POST SPANS.

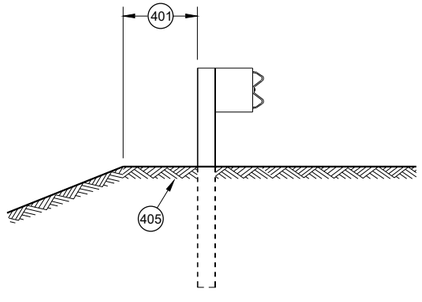

SECTION A - A 406

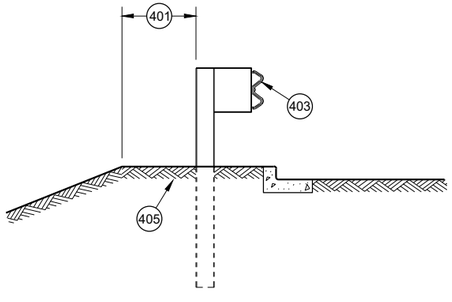

SECTION B - B 406

MIDWEST GUARDRAIL SYSTEM (MGS) GUARDRAIL

STATE OF WISCONSIN
DEPARTMENT OF TRANSPORTATION

APPROVED
May 2021
DATE
/S/ Rodney Taylor
ROADWAY STANDARDS DEVE
UNIT SUPERVISOR

FHWA

6

SDD 14B42 - 07d

GENERAL NOTES

(A) THE SLOPE IN THE AREA BOUNDED BY THE GRADELINE, THE HINGE POINT LINE (HPL) AND THE CLEAR ZONE LIMITS (CZL) SHALL BE 4:1 OR FLATTER.

(B) AFTER FINAL ASSEMBLY, RECHECK CABLE TO BE SURE IT IS TAUT AND HAS NOT RELAXED

(C) DIFFERENT MANUFACTURERS REQUIRE DIFFERENT PERFORATED W - BEAM RAIL END PANELS. SEE MANUFACTURER'S INFORMATION.

(D) ATTACH ALUMINUM SHEET TO E.A.T. HEAD USING 4 STAINLESS STEEL SELF - TAPPING SCREWS. ONE SCREW PER CORNER.

(E) HARDWARE MAY VARY BETWEEN MANUFACTURER. SEE MANUFACTURER'S DRAWING FOR INFORMATION.

DIMENSIONS MAY VARY, MANUFACTURER'S INFORMATION.

SEE SDD 14B42 FOR MORE INFORMATION.

* DO NOT ATTACH BLOCKOUTS TO POST 1 AND 2.

DO NOT INSTALL REFLECTORS ON THE FIRST 50 FEET OF THE APPROACH END OF THE ENERGY ABSORBING TERMINAL.

SEE MANUFACTURER'S DRAWING FOR SPLICE LOCATION, HARDWARE DIMENSIONS AND INSTALLATION INSTRUCTIONS.

THE CENTER OF THE UPPER 3 ½" DIAMETER HOLE ON POST NUMBER 3 THROUGH POST 9 IS TO BE FLUSH WITH THE GROUND LINE UP TO A MAXIMUM OF 2" ABOVE GROUND LINE. WOOD BLOCKS ON POSTS NUMBERED 3 THROUGH 9 MAY BE ADJUSTED UP TO 3" ABOVE THE TOP OF POST.

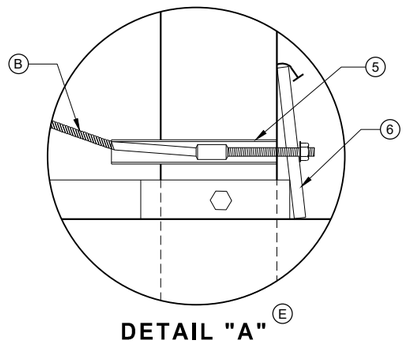

DETAIL "A" (E)

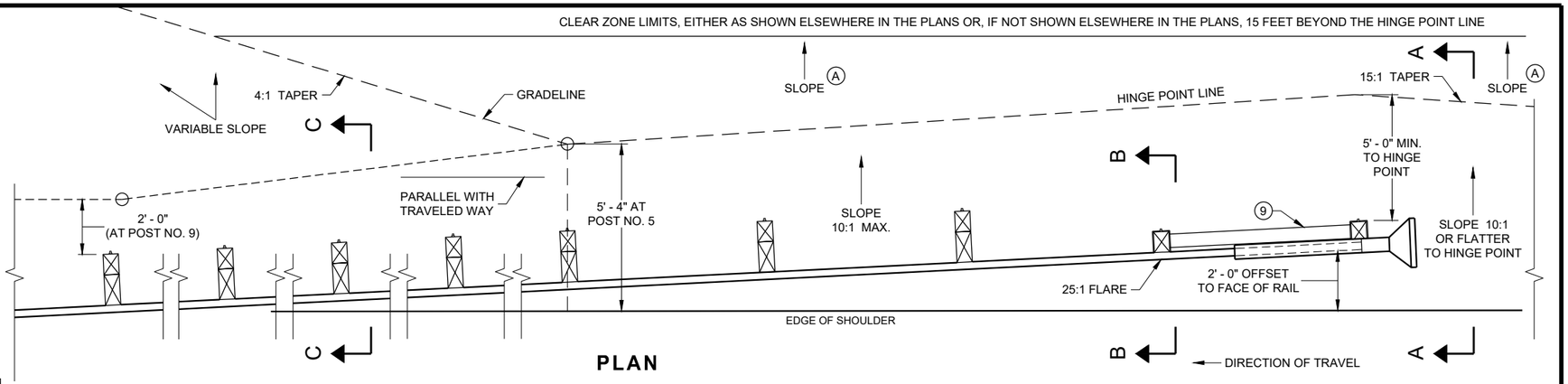

PLAN

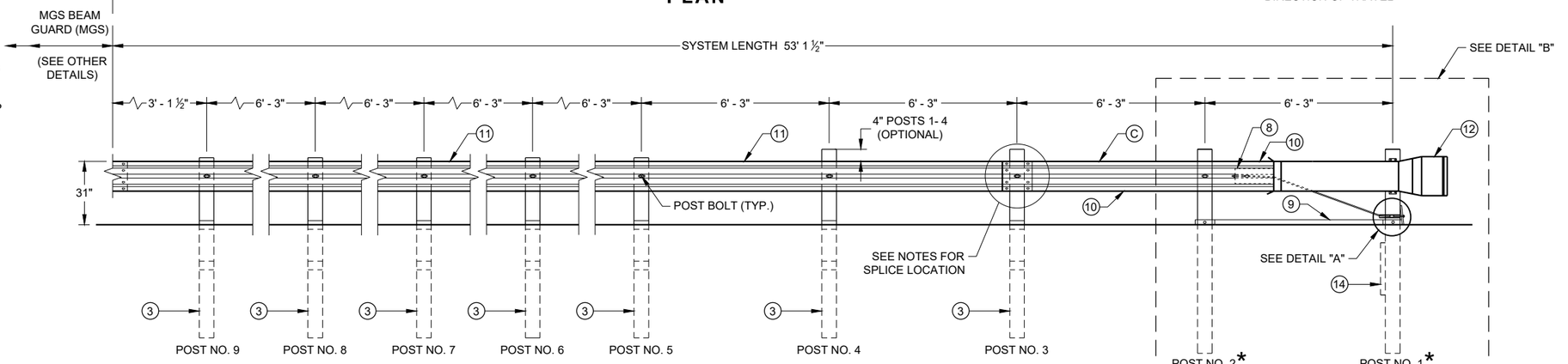

ELEVATION

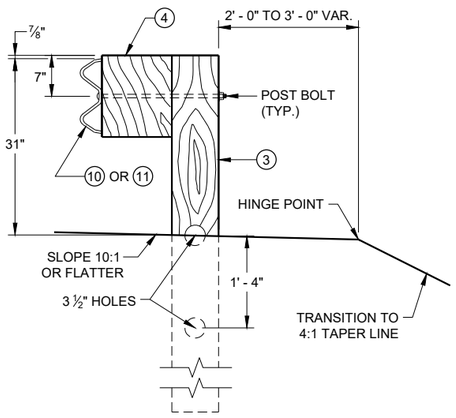

SECTION C - C
TYPICAL AT POST NOS. 3 - 9

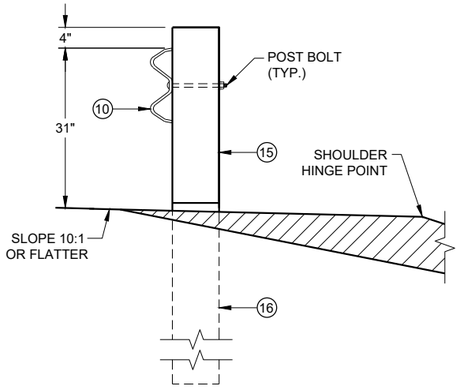

SECTION B - B
TYPICAL AT POST NO. 2*

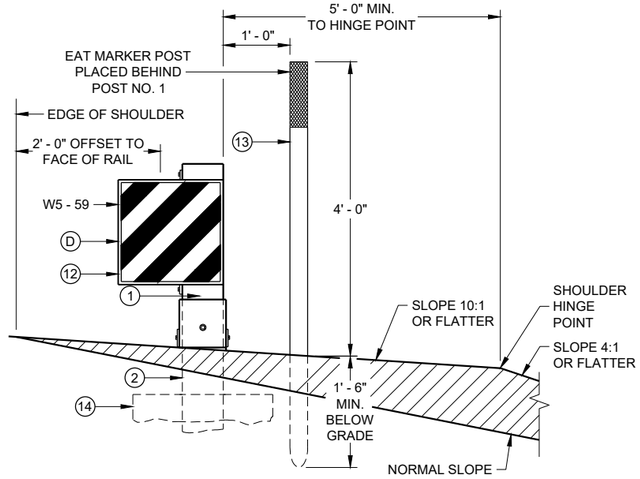

SECTION A - A
TYPICAL AT POST NO. 1*

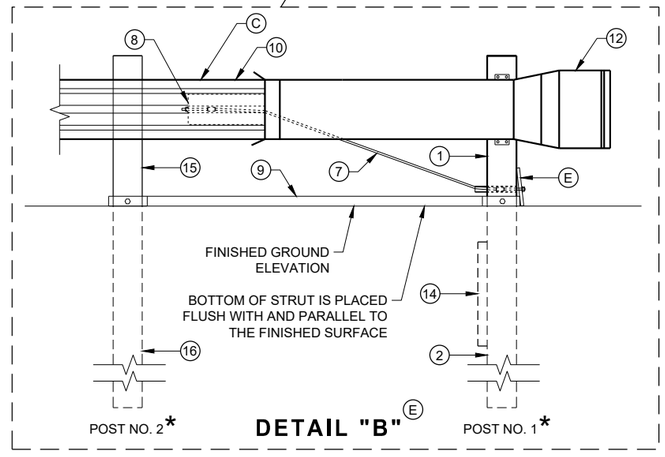

DETAIL "B" (E)

MIDWEST GUARDRAIL SYSTEM
ENERGY ABSORBING TERMINAL (MGS)

STATE OF WISCONSIN
DEPARTMENT OF TRANSPORTATION

SDD 14B44 - 04a

SDD 14B44 - 04a

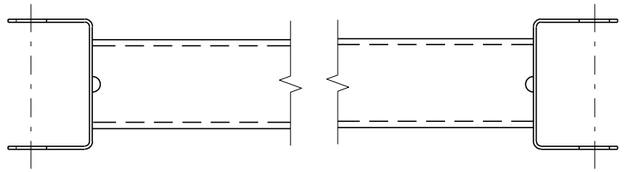

GENERIC GROUND STRUT ⑨ Ⓔ

BILL OF MATERIALS

PART NO.	DESCRIPTION MATERIALS PROVIDED BY MGS EAT MANUFACTURER. SEE MANUGACTURER'S DETAILS FOR MORE INFORMATION.
①	UPPER POST NO. 1 6" X 6" TUBE
②	LOWER POST NO. 1
③	WOOD CRT
④	WOOD BLOCKOUT
⑤	PIPE SLEEVE
⑥	BEARING PLATE
⑦	BCT CABLE ASSEMBLY
⑧	ANCHOR CABLE BOX
⑨	GROUND STRUT
⑩	PERFORATED W-BEAM RAIL END PANEL, 12'-6" LONG.
⑪	STANDARD W-BEAM RAIL. MULTIPLE SECTIONS REQUIRED. SECTIONS VARY IN LENGTH.
⑫	IMPACT HEAD
⑬	EAT MARKER POST - YELLOW (SEE APPROVED PRODUCTS LIST)
⑭	SOIL PLATE
⑮	UPPER POST NO. 2
⑯	LOWER POST NO. 2

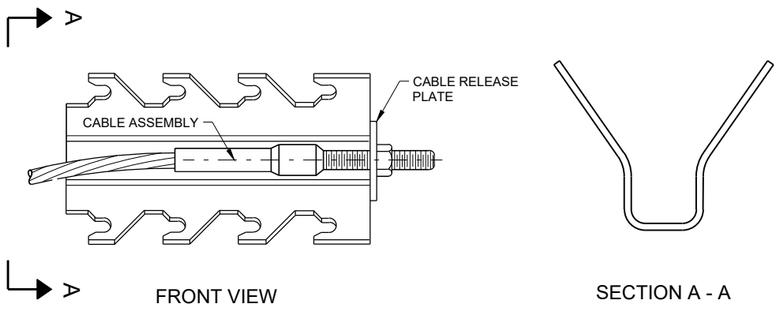

GENERIC ANCHOR CABLE BOX ⑧ Ⓔ

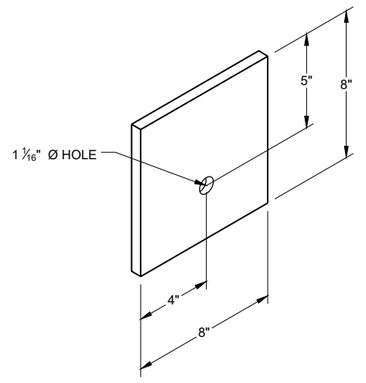

BEARING PLATE ⑥ Ⓔ

6

6

SDD 14B44 - 04b

SDD 14B44 - 04b

MIDWEST GUARDRAIL SYSTEM
ENERGY ABSORBING TERMINAL
(MGS)

STATE OF WISCONSIN
DEPARTMENT OF TRANSPORTATION

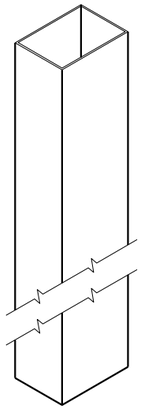

UPPER POST NO. 1 (1) (E)

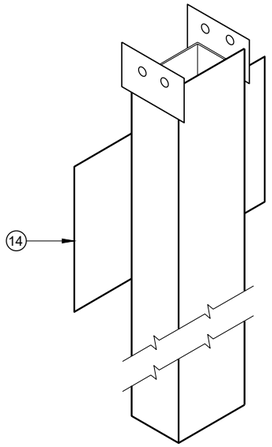

LOWER POST NO. 1 (2) (E)

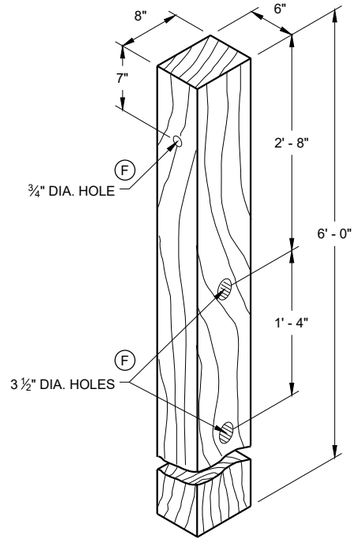

WOOD CRT POST (3) (E)
POSTS NUMBER 3-9

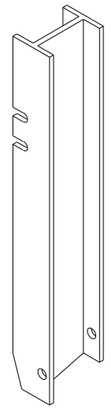

UPPER POST NO. 2 (15) (E)

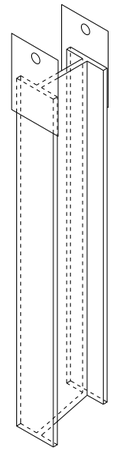

LOWER POST NO. 2 (16) (E)

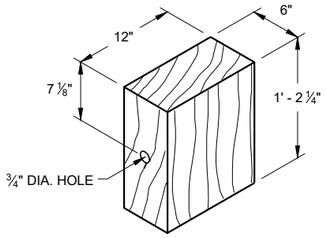

WOOD BLOCKOUT (4)
REQ'D. AT ALL POSTS EXCEPT POST NO'S 1 & 2

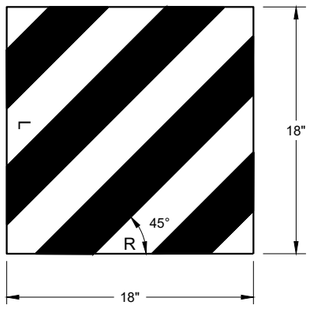

W5 - 59

REFLECTIVE SHEETING DETAIL (E)

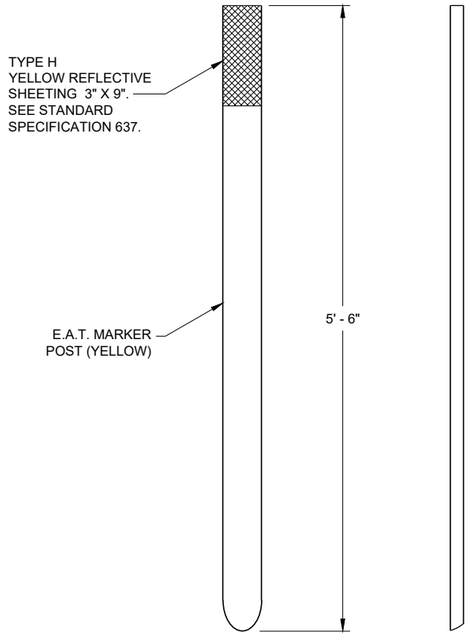

FRONT VIEW SIDE VIEW

E.A.T. MARKER POST (13)

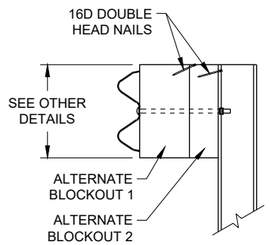

SIDE VIEW

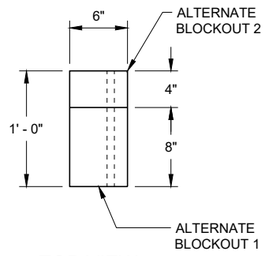

TOP VIEW

ALTERNATE WOOD BLOCKOUT DETAIL

MIDWEST GUARDRAIL SYSTEM ENERGY ABSORBING TERMINAL (MGS)

STATE OF WISCONSIN
DEPARTMENT OF TRANSPORTATION

APPROVED
7/2018
DATE
/S/ Rodney Taylor
ROADWAY STANDARDS DEVE
UNIT SUPERVISOR

FHWA

6

SDD 14B44 - 04c

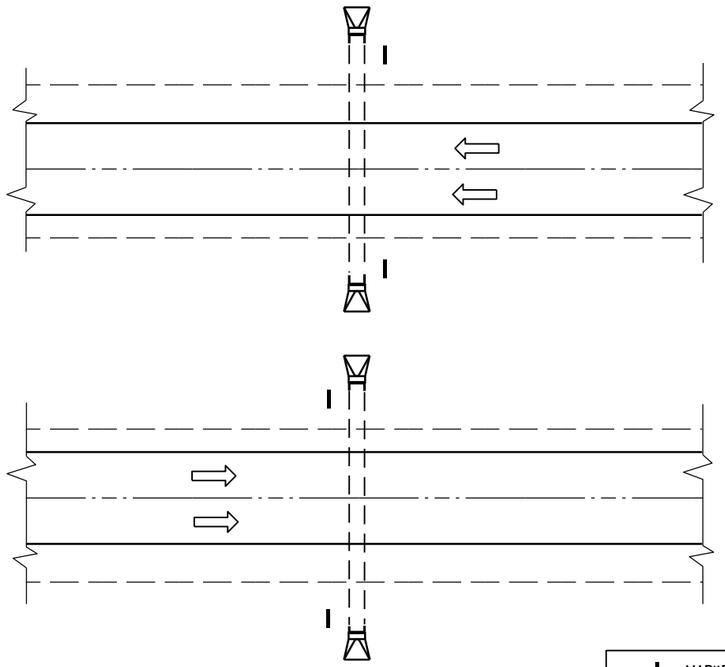

PLAN VIEW

DIVIDED HIGHWAY

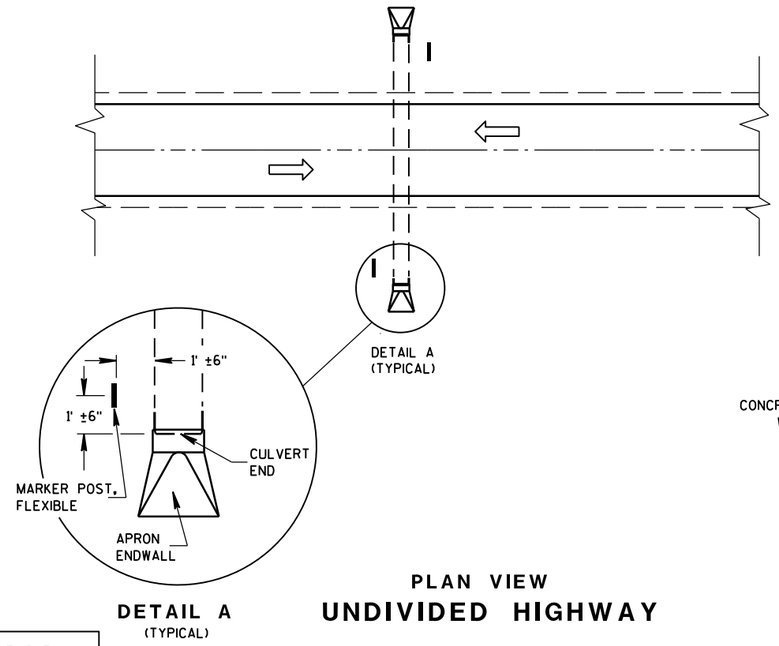

DETAIL A
(TYPICAL)

PLAN VIEW

UNDIVIDED HIGHWAY

MARKER POST, FLEXIBLE

DIRECTION OF TRAFFIC FLOW

GENERAL NOTES

DETAILS OF CONSTRUCTION, MATERIALS AND WORKMANSHIP NOT SHOWN ON THIS DRAWING SHALL CONFORM TO THE PERTINENT REQUIREMENTS OF THE STANDARD SPECIFICATIONS AND THE APPLICABLE SPECIAL PROVISIONS.

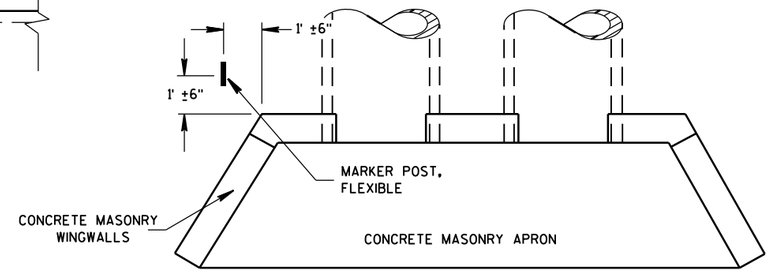

PLAN VIEW

CONCRETE MASONRY ENDWALLS FOR CULVERT PIPE AND PIPE ARCH

FLEXIBLE MARKER POST LOCATION

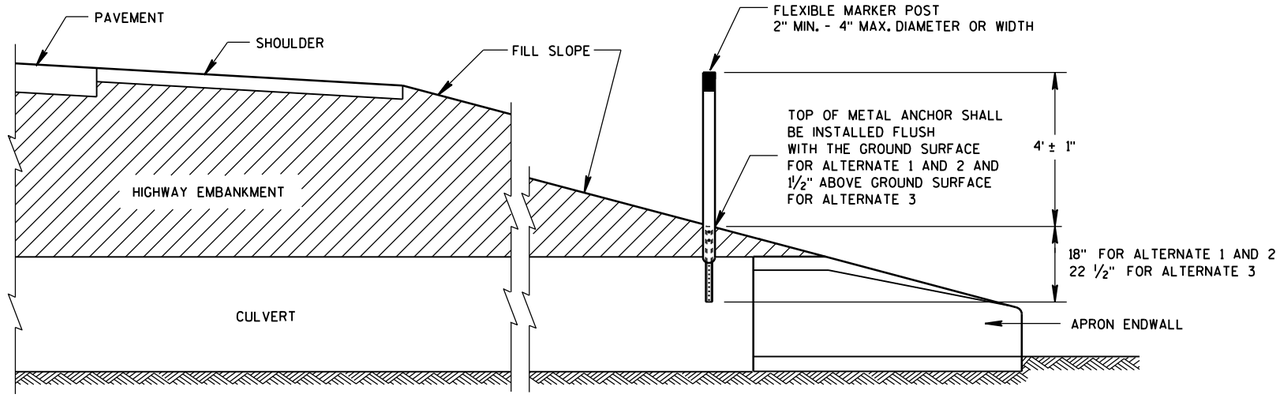

CROSS SECTION

FLEXIBLE MARKER POST

FLEXIBLE MARKER POST
FOR CULVERT END

STATE OF WISCONSIN
DEPARTMENT OF TRANSPOI

6

S.D.D. 15 A 3-2a

6

S.D.D. 15 A 3-2a

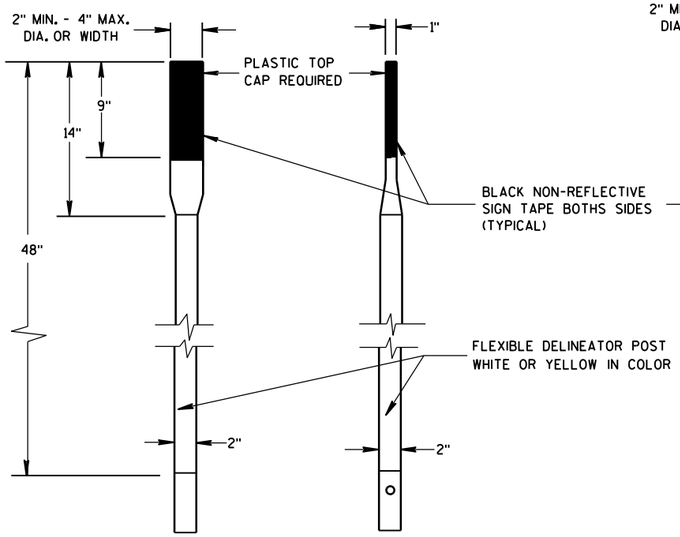

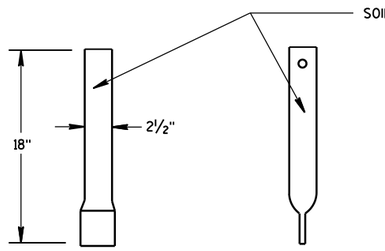

FRONT VIEW SIDE VIEW

ALTERNATE 1

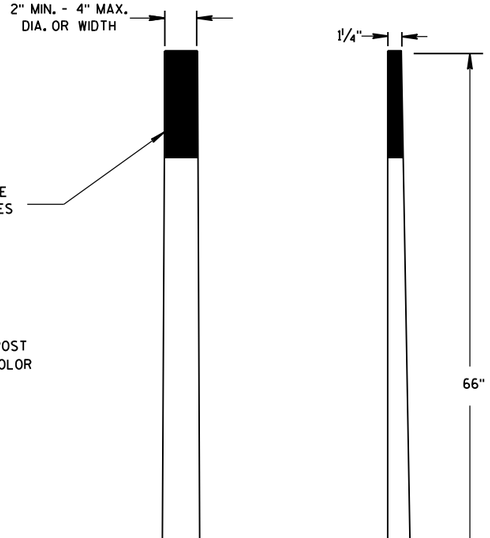

FRONT VIEW SIDE VIEW

ALTERNATE 2

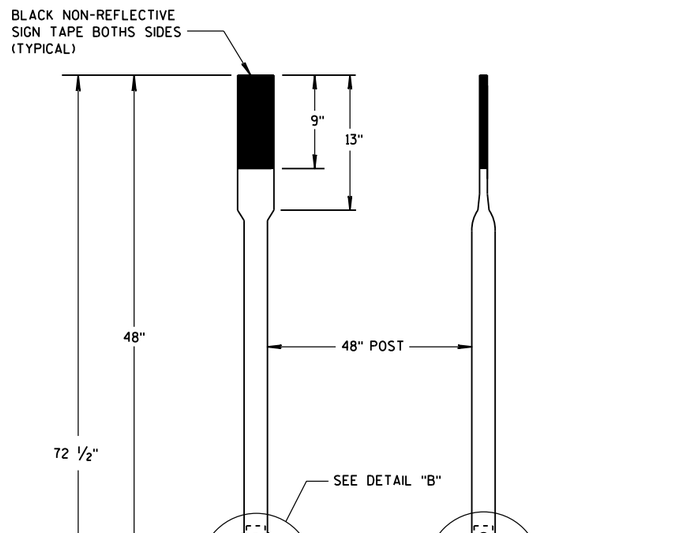

FRONT VIEW SIDE VIEW

ALTERNATE 3

FLEXIBLE MARKER POSTS

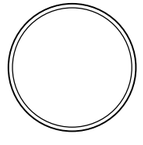

SECTION A-A

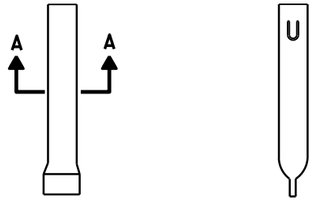

FRONT VIEW SIDE VIEW

ALTERNATE 1

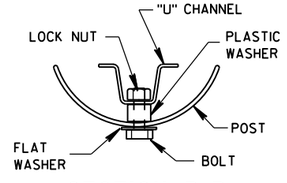

SECTION B-B

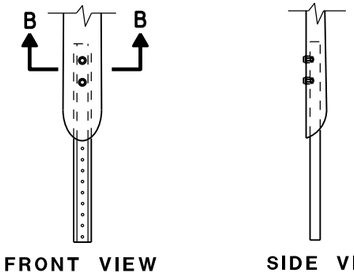

FRONT VIEW SIDE VIEW

ALTERNATE 2

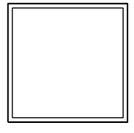

SECTION C-C

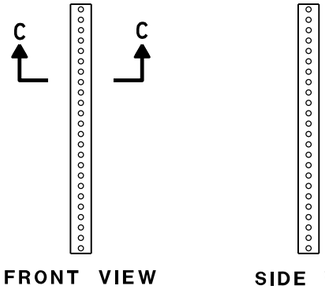

FRONT VIEW SIDE VIEW

ALTERNATE 3

FLEXIBLE MARKER POST ANCHORS

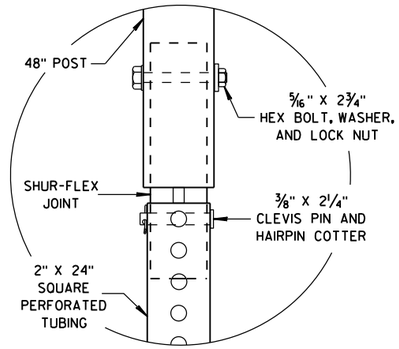

DETAIL B

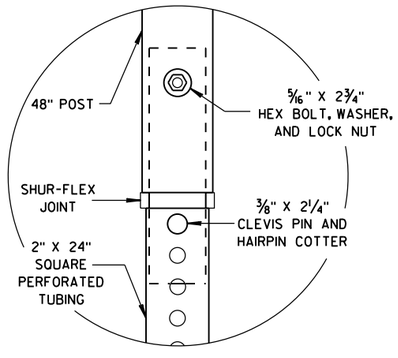

DETAIL C

FLEXIBLE MARKER POST
FOR CULVERT END

STATE OF WISCONSIN
DEPARTMENT OF TRANSPORTATION

APPROVED
10/1/2012 — DATE
/S/ Travis Feltes — STATE TRAFFIC ENGINEER
FHWA

6

S.D.D. 15 A 3-2b

6

S.D.D. 15 A 3-2b

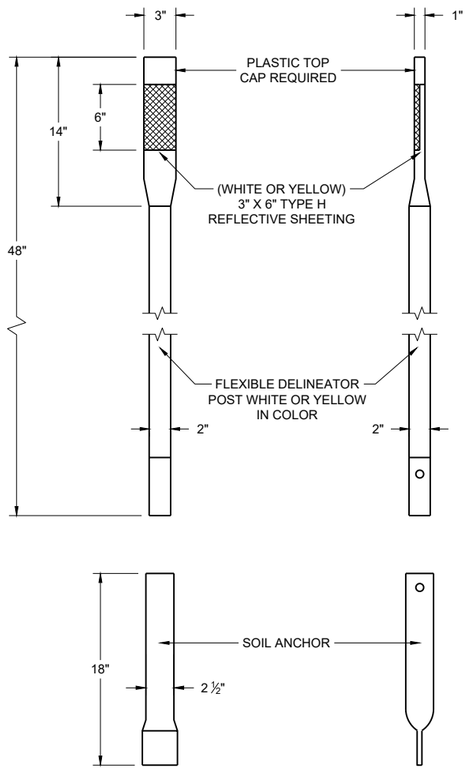

FRONT VIEW **SIDE VIEW**

ALTERNATE 1

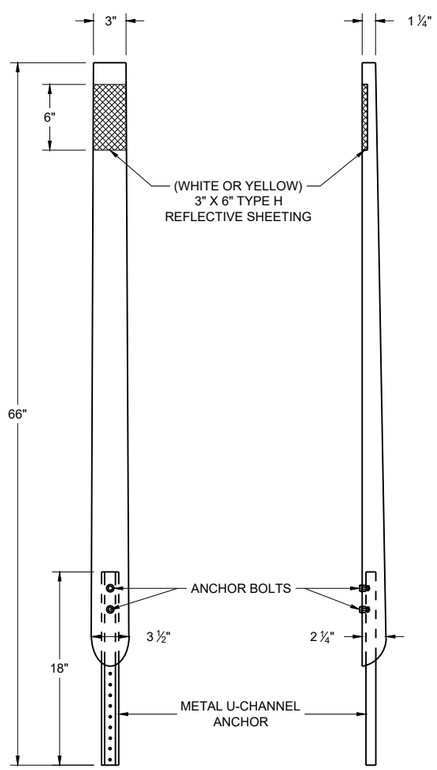

FRONT VIEW **SIDE VIEW**

ALTERNATE 2

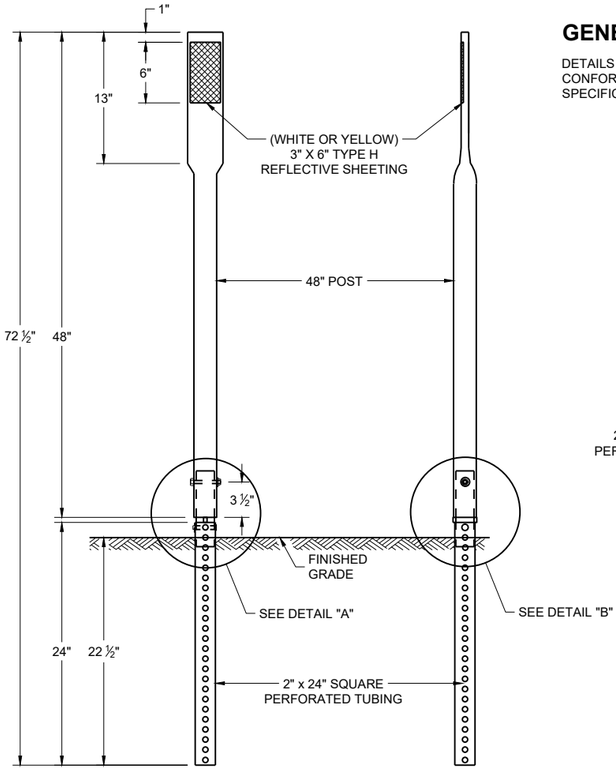

FRONT VIEW **SIDE VIEW**

ALTERNATE 3

FLEXIBLE DELINEATOR POSTS

GENERAL NOTES

DETAILS OF CONSTRUCTION NOT SHOWN ON THIS DRAWING SHALL CONFORM TO THE PERTINENT REQUIREMENTS OF THE STANDARD SPECIFICATIONS AND THE APPLICABLE SPECIAL PROVISIONS.

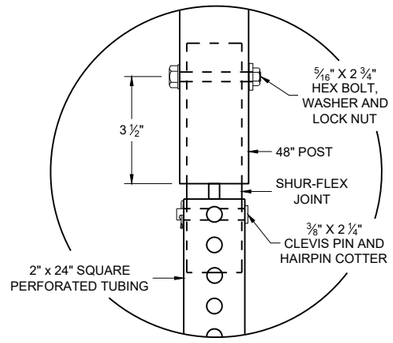

DETAIL A

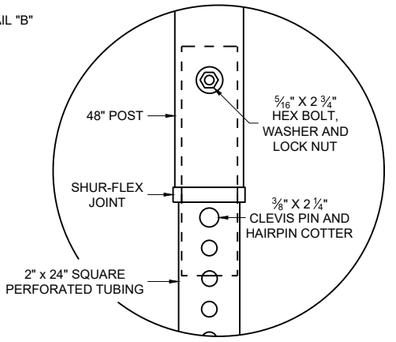

DETAIL B

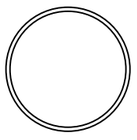

SECTION A - A

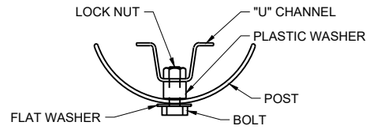

SECTION B - B

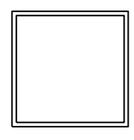

SECTION C - C

REFLECTOR SPACING TABLE

REFLECTOR SPACING	LOCATION
* 100' C-C	RAMPS
400' C-C	MAINLINE

* START AT BEGINNING OF RAMP TAPER AND END AT END OF RAMP TAPER

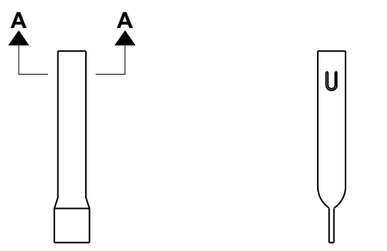

FRONT VIEW **SIDE VIEW**

ALTERNATE 1

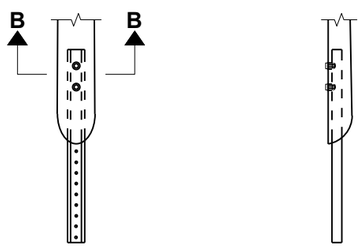

FRONT VIEW **SIDE VIEW**

ALTERNATE 2

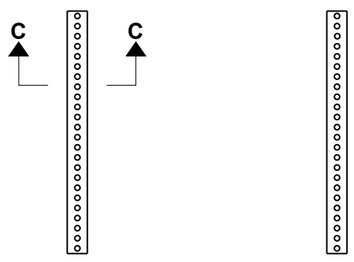

FRONT VIEW **SIDE VIEW**

ALTERNATE 3

FLEXIBLE MARKER POST ANCHORS

FLEXIBLE DELINEATOR POST

STATE OF WISCONSIN
DEPARTMENT OF TRANSPORTATION

APPROVED
March 2024
DATE

/S/ Jeannie Silver
Statewide Pavement Marking Engineer

FHWA

6

SDD 15A04-08a

SDD 15A04-08a

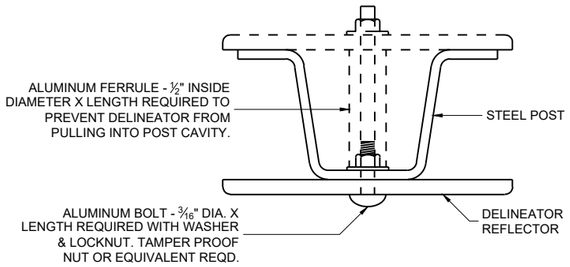

MOUNTING DETAIL FOR DELINEATOR REFLECTOR

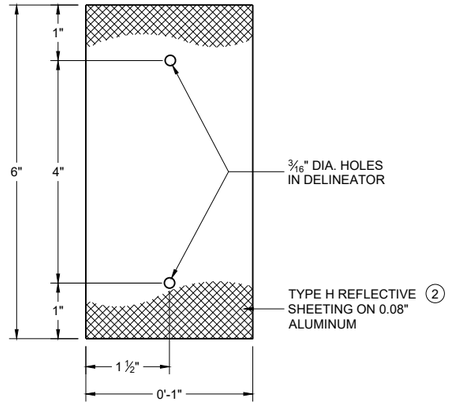

DETAIL "A" 3" X 6" DELINEATOR REFLECTOR

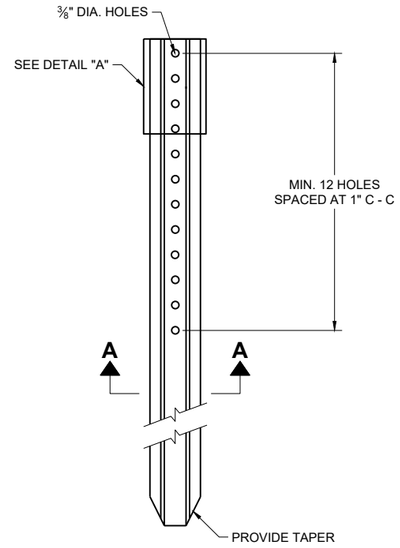

DELINEATOR POST

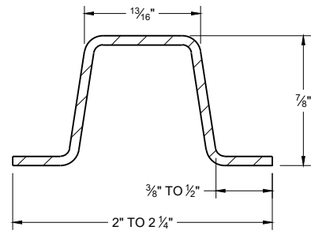

SECTION A - A

WEIGHT 1.12 LBS PER FT. \ 0.1 LB.

REFLECTOR SPACING TABLE

REFLECTOR SPACING	LOCATION
* 100' C-C	RAMPS
400' C-C	MAINLINE

* START AT BEGINNING OF RAMP TAPER AND END AT END OF RAMP TAPER

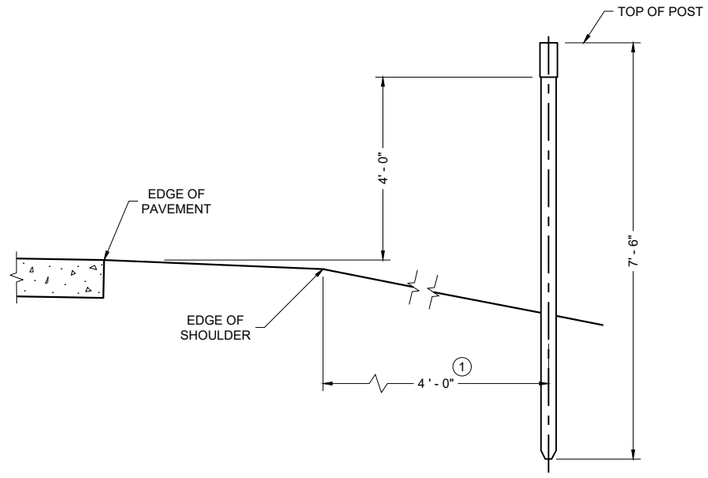

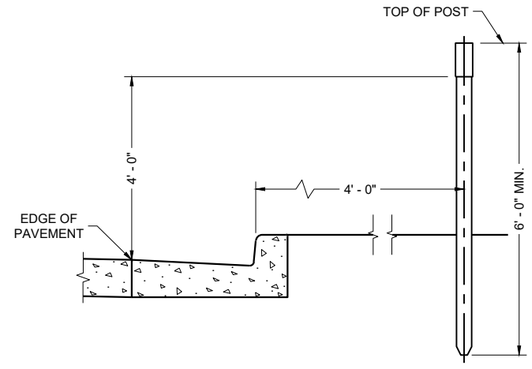

TYPICAL INSTALLATIONS OF DELINEATOR POSTS

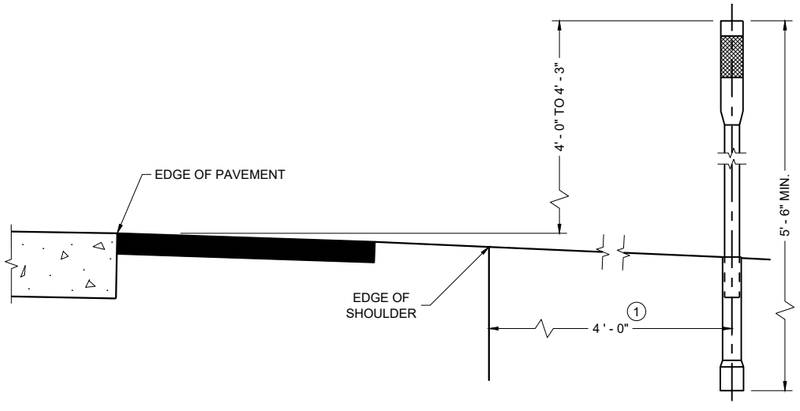

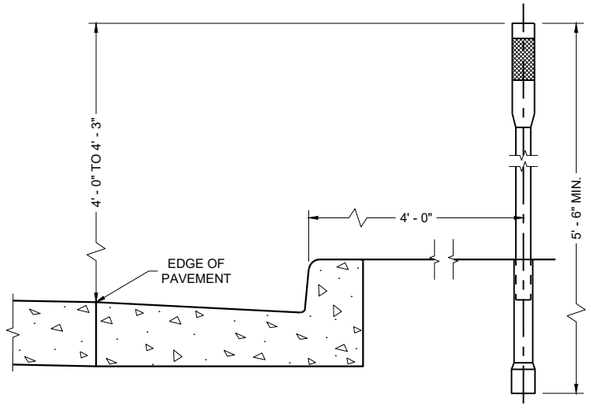

TYPICAL INSTALLATIONS OF FLEXIBLE DELINEATOR POSTS

GENERAL NOTES

DETAILS OF CONSTRUCTION NOT SHOWN ON THIS DRAWING SHALL CONFORM TO THE PERTINENT REQUIREMENTS OF TEH STANDARD SPECIFICATIONS AND THE APPLICABLE SPECIAL PROVISIONS.

(1) DELINEATORS SHALL BE PLACED AT A CONSTANT DISTANCE FROM THE EDGE OF THE SHOULDER FOR THE LENGTH OF THE INSTALLATION.

(2) FURNISH TYPE H SHEETING FROM THE APPROVED PRODUCTS LIST.

DELINEATOR POST WITH REFLECTIVE SHEETING

STATE OF WISCONSIN
DEPARTMENT OF TRANSPORTATION

APPROVED
March 2024
DATE
/S/ Jeannie Silver
Statewide Pavement Marking Engineer

FHWA

6
SDD 15A04-08c

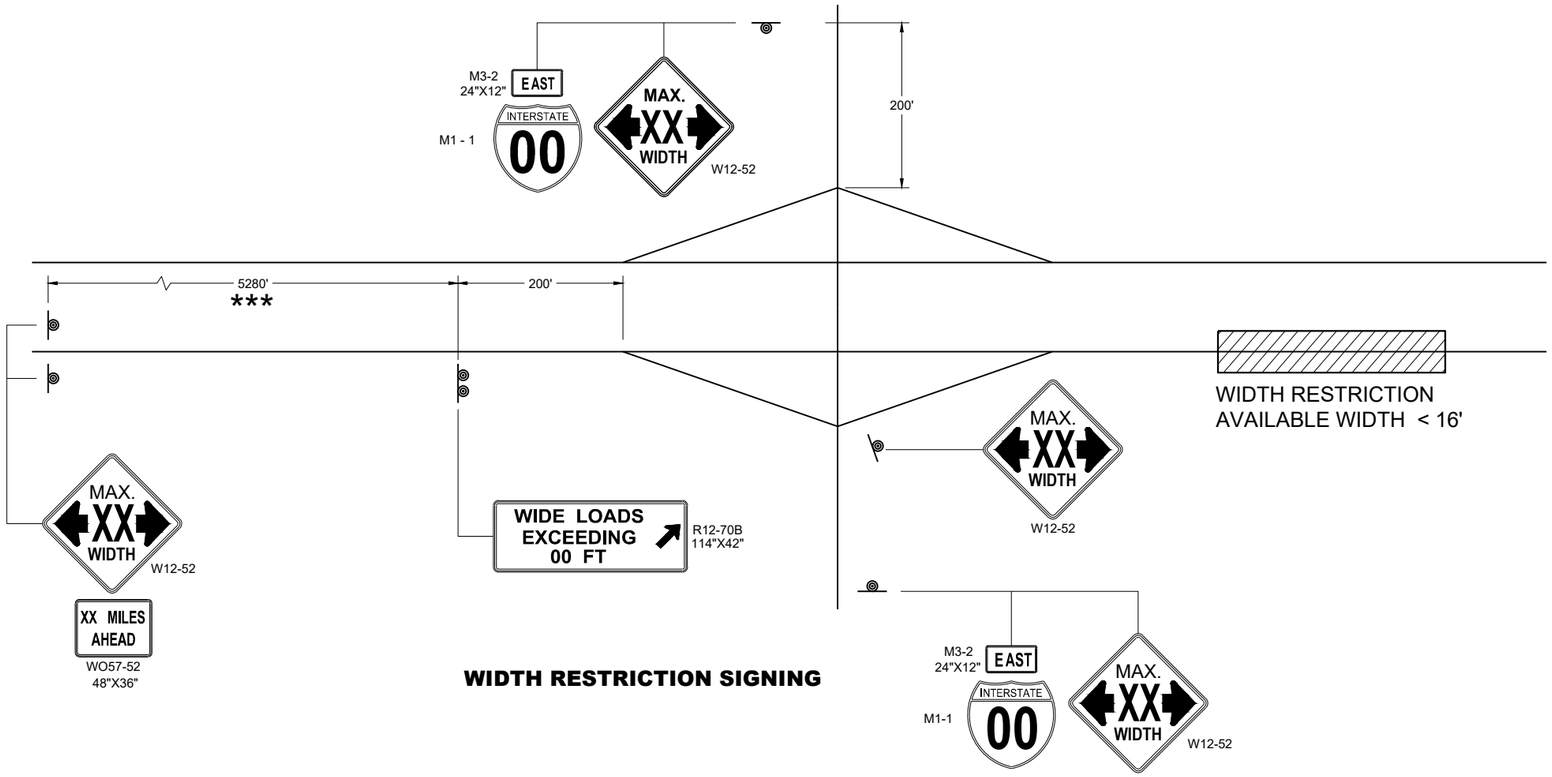

WIDTH RESTRICTION SIGNING

LEGEND

SIGN ON PERMANENT SUPPORT

GENERAL NOTES

THE EXACT NUMBER, LOCATION AND SPACING OF ALL SIGNS SHALL BE ADJUSTED TO FIT FIELD CONDITIONS AS APPROVED BY THE ENGINEER.

THE SPACING BETWEEN SIGNS SHOULD BE ADJUSTED TO NOT CONFLICT WITH AND TO PROVIDE A DESIRABLE MINIMUM OF 200 FEET CLEARANCE TO EXISTING SIGNS THAT WILL REMAIN IN PLACE.

ANY SIGNS TEMPORARY OR EXISTING, WHICH CONFLICT WITH TRAFFIC CONTROL " IN USE" SHALL BE REMOVED OR COVERED AS NEEDED AND AS APPROVED BY THE ENGINEER.

ALL SIGNS ARE 48" X 48" UNLESS OTHERWISE NOTED.

"WO" SIGNS ARE THE SAME AS "W" SIGNS EXCEPT THE BACKGROUND IS ORANGE.

WIDTH ON SIGN TO BE APPROXIMATELY ONE FOOT LESS THAN AVAILABLE WIDTH.

* PLACE 500 FEET AFTER THE W20 - 1A AND 500 FEET BEFORE ADDITIONAL SIGNS FOR ROADWAYS WITH A PRE - CONSTRUCTION SPEED LIMIT OF 45 MPH OR MORE. FOR 35-40 MPH, USE 350 FOOT TYPICAL SPACING. FOR 25-30 MPH, USE 200 FOOT TYPICAL SPACING.

** SIGN SHALL BE VISIBLE FROM ROADWAY.

*** ADDITIONAL SIGNS NEEDED IF THERE IS AN ON RAMP BETWEEN SIGNS.

WIDTH ON SIGN TO BE APPROX. 1 - FOOT LESS THAN AVAILABLE WIDTH

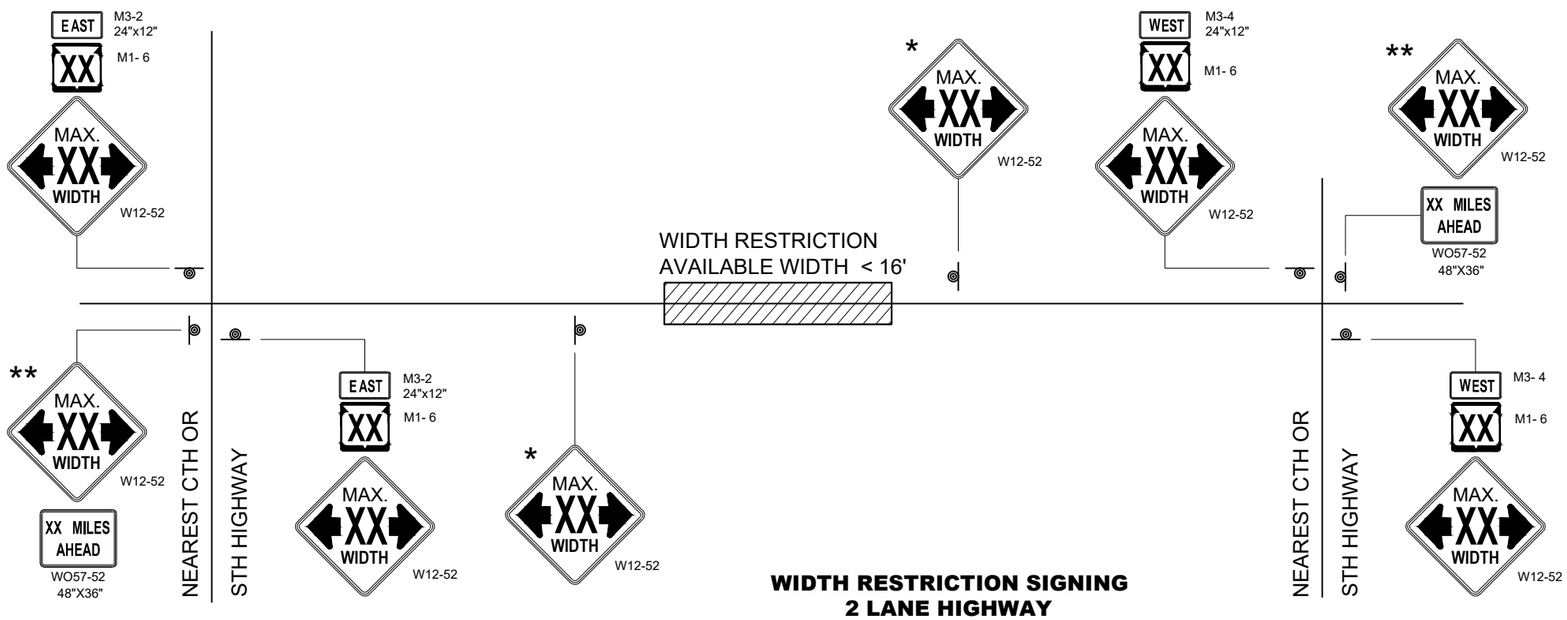

WIDTH RESTRICTION SIGNING
2 LANE HIGHWAY

ADVANCED WIDTH RESTRICTION SIGNING

STATE OF WISCONSIN
DEPARTMENT OF TRANSPORTATION

APPROVED
November 2025 — DATE
/S/ Andrew Heidtke — WORK ZONE ENGINEER

FHWA

6

SDD 15C02-10f

SDD 15C02-10f

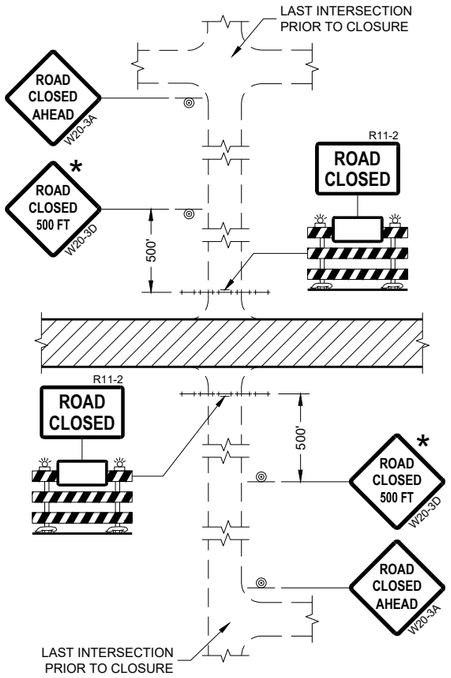

DETAIL 1
(NO ACCESS TO PROJECT)

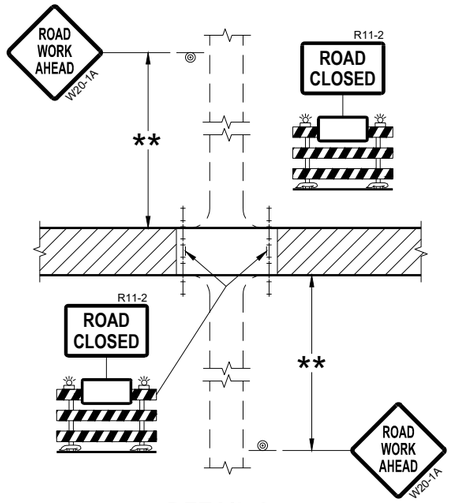

DETAIL 2
(PUBLIC CROSS-TRAFFIC MAINTAINED.
NO ACCESS TO PROJECT)

GENERAL NOTES

THE EXACT NUMBER, LOCATION, AND SPACING OF ALL SIGNS AND BARRICADES SHALL BE ADJUSTED TO FIT FIELD CONDITIONS AS APPROVED BY THE ENGINEER.

ANY SIGNS TEMPORARY OR EXISTING, WHICH CONFLICT WITH TRAFFIC CONTROL "IN USE" SHALL BE REMOVED OR COVERED AS NEEDED AND AS APPROVED BY THE ENGINEER.

THE SPACING BETWEEN TRAFFIC CONTROL SIGNS SHOULD BE ADJUSTED TO NOT CONFLICT WITH AND SHOULD PROVIDE A DESIRABLE MINIMUM OF 200 FEET CLEARANCE (500 FEET DESIRABLE) TO EXISTING SIGNS THAT WILL REMAIN IN PLACE.

IF A "STOP" SIGN MUST BE REMOVED FOR A WORK OPERATION, A TEMPORARY "STOP" SIGN SHALL BE PLACED PRIOR TO THE SIGN REMOVAL, OR A FLAGGER SHALL BE PROVIDED UNTIL THE SIGN IS REESTABLISHED.

BARRICADES THAT MUST BE MOVED FOR A WORK OPERATION SHALL BE IMMEDIATELY REESTABLISHED UPON COMPLETION OF THE OPERATION OR FOR CONTINUING OPERATIONS, AT THE END OF EACH WORKING DAY.

SIGNS THAT WILL BE IN PLACE LESS THAN SEVEN CONTINUOUS DAYS AND NIGHTS MAY BE MOUNTED ON PORTABLE SUPPORTS.

ALL TYPE III BARRICADES SHALL HAVE RAILS REFLECTORIZED ON BOTH FACES. STRIPES SHALL BE PROPERLY SLOPED DOWN TOWARD THE TRAFFIC SIDE OR AS SHOWN IN THE ROAD CLOSURE BARRICADE DETAIL "D" FOR FULL ROAD CLOSURES.

TYPE "A" LOW-INTENSITY FLASHING WARNING LIGHTS SHALL BE VISIBLE ON BOTH SIDES OF THE BARRICADE.

THE R11-2, R11-3, AND R11-4 SIGNS PLACED ON BARRICADES SHALL COVER NO MORE THAN THE TOP RAIL. THE SIGNS SHALL NOT COVER ANY PORTION OF THE MIDDLE OR BOTTOM RAILS.

ALL SIGNS SHALL BE 48" X 48" UNLESS OTHERWISE NOTED BELOW:
R11-2 SHALL BE 48" X 30".
R11-4 AND R11-3 SHALL BE 60" X 30".

* OMIT THE "ROAD CLOSED 500 FT." SIGN IF THE LAST INTERSECTION IS 500 FEET OR LESS FROM THE WORK ZONE.

** 500' MAX. OR AT LAST INTERSECTION, WHICHEVER IS CLOSEST.

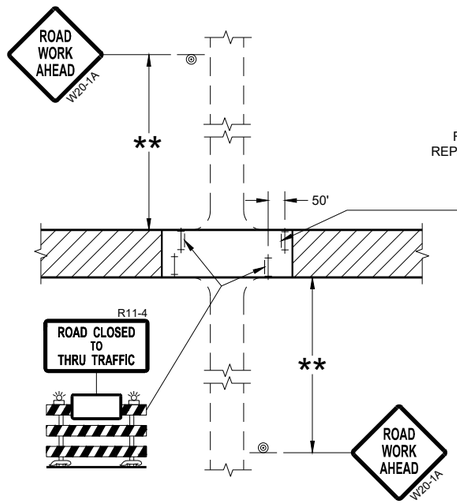

DETAIL 3
(PUBLIC CROSS-TRAFFIC MAINTAINED.
CONTRACTOR, LOCAL BUSINESS AND
RESIDENT ACCESS TO PROJECT)

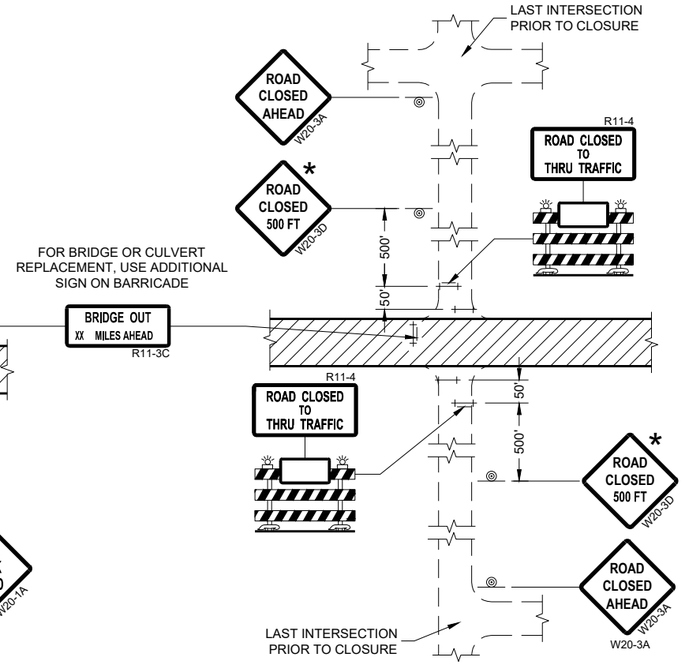

DETAIL 4
(CONTRACTOR, LOCAL BUSINESS AND
RESIDENT ACCESS TO PROJECT)

LEGEND

- SIGN ON PERMANENT SUPPORT
- TYPE III BARRICADE
- TYPE III BARRICADE WITH ATTACHED SIGN
- TYPE "A" WARNING LIGHT (FLASHING)
- WORK AREA

BARRICADES AND SIGNS FOR SIDEROAD CLOSURES

STATE OF WISCONSIN
DEPARTMENT OF TRANSPORTATION

APPROVED
July 2018
DATE

/S/ Andrew Heidtke
WORK ZONE ENGINEER

FHWA

6

SDD 15C03 - 05

GENERAL NOTES

THE EXACT NUMBER, LOCATION, AND SPACING OF ALL SIGNS AND DEVICES SHALL BE ADJUSTED TO FIT FIELD CONDITIONS.

THE SPACING BETWEEN TRAFFIC CONTROL SIGNS SHOULD BE ADJUSTED TO NOT CONFLICT WITH AND SHOULD PROVIDE A MINIMUM OF 200 FEET (500 FEET DESIRABLE) CLEARANCE TO EXISTING SIGNS THAT WILL REMAIN IN PLACE.

ALL SIGNS ARE 48" X 48" UNLESS OTHERWISE NOTED.

SIGNS THAT WILL BE IN PLACE LESS THAN SEVEN CONTINUOUS DAYS AND NIGHTS MAY BE MOUNTED ON PORTABLE SUPPORTS.

IF A "STOP" SIGN MUST BE REMOVED FOR A WORK OPERATION, A TEMPORARY "STOP" SIGN SHALL BE PLACED PRIOR TO THE SIGN REMOVAL, OR A FLAGGER SHALL BE PROVIDED UNTIL THE SIGN IS REESTABLISHED.

* OMIT G20-1 SIGNS IF LENGTH OF WORK AREA IS 2 MILES OR LESS

** PLACE AN ADDITIONAL W20-1A "ROAD WORK AHEAD" SIGN IF WORK AREA WITHIN THE PROJECT IS SEPARATED BY MORE THAN 2 MILES FROM PREVIOUS WORK AREA.

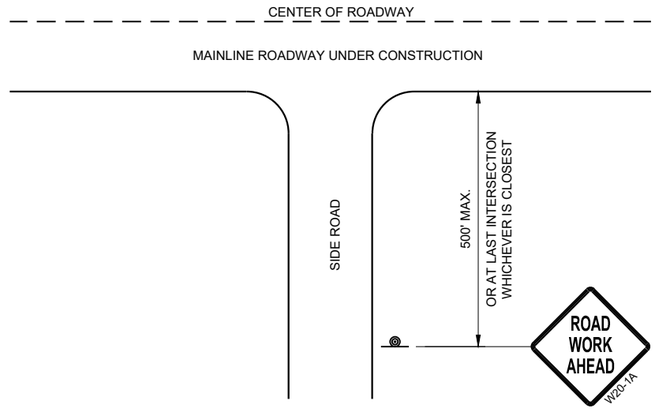

TYPICAL SIDE ROAD APPROACH WARNING SIGN DETAIL

LEGEND

- SIGN ON PERMANENT SUPPORT
- DIRECTION OF TRAFFIC
- WORK AREA

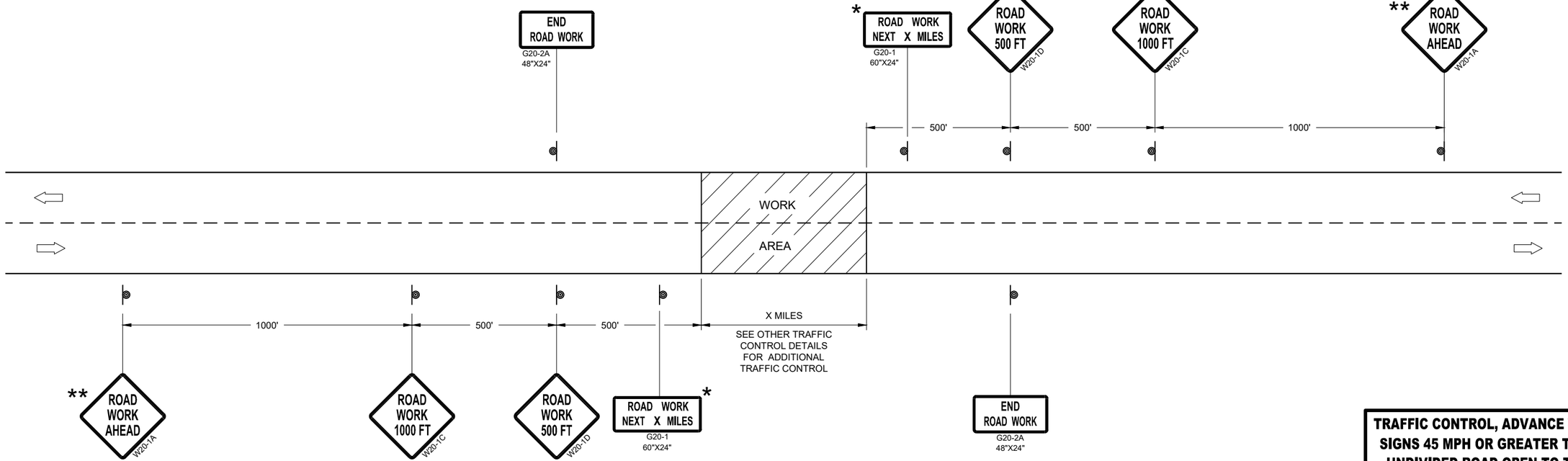

TRAFFIC CONTROL, ADVANCE WARNING SIGNS 45MPH OR GREATER

TRAFFIC CONTROL, ADVANCE WARNING SIGNS 45 MPH OR GREATER TWO-WAY UNDIVIDED ROAD OPEN TO TRAFFIC

STATE OF WISCONSIN
DEPARTMENT OF TRANSPORTATION

APPROVED
July 2018
DATE

/S/ Andrew Heidtke
WORK ZONE ENGINEE

FHWA

6

SDD 15C04 - 05

GENERAL NOTES

THE EXACT NUMBER, LOCATION, AND SPACING OF ALL SIGNS AND DEVICES SHALL BE ADJUSTED TO FIT FIELD CONDITIONS.

THE SPACING BETWEEN TRAFFIC CONTROL SIGNS SHOULD BE ADJUSTED TO NOT CONFLICT WITH AND SHOULD PROVIDE A MINIMUM OF 200 FEET (500 FEET DESIRABLE) CLEARANCE TO EXISTING SIGNS THAT WILL REMAIN IN PLACE.

ALL SIGNS ARE 48" X 48" UNLESS OTHERWISE NOTED. IF NECESSARY DUE TO SPACE CONSTRAINTS, 36"X36" SIGNS MAY BE USED INSTEAD OF 48" X 48" SIGNS.

SIGNS THAT WILL BE IN PLACE LESS THAN SEVEN CONTINUOUS DAYS AND NIGHTS MAY BE MOUNTED ON PORTABLE SUPPORTS.

IF A "STOP" SIGN MUST BE REMOVED FOR A WORK OPERATION, A TEMPORARY "STOP" SIGN SHALL BE PLACED PRIOR TO THE SIGN REMOVAL, OR A FLAGGER SHALL BE PROVIDED UNTIL THE SIGN IS REESTABLISHED.

* THE THIRD W20-1 SIGN IS REQUIRED ONLY IF THERE IS AN INTERSECTION BETWEEN THE "ROAD WORK 500 FEET" SIGN AND THE WORK ZONE. ADJUST THE PLACEMENT OF THIS SIGN BASED ON INTERSECTION LOCATION AND OTHER FIELD CONDITIONS.

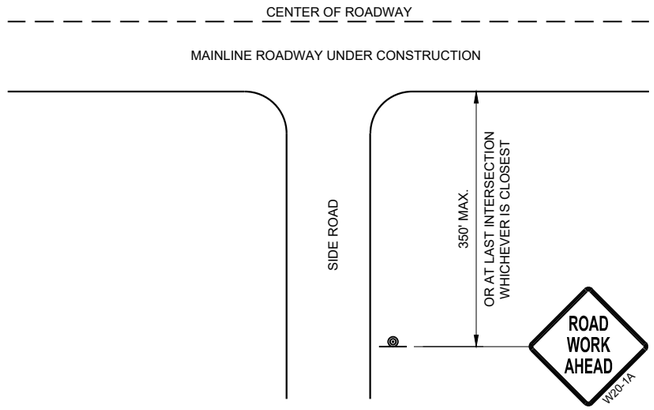

TYPICAL SIDE ROAD APPROACH WARNING SIGN DETAIL

LEGEND

SIGN ON PERMANENT SUPPORT

DIRECTION OF TRAFFIC

WORK AREA

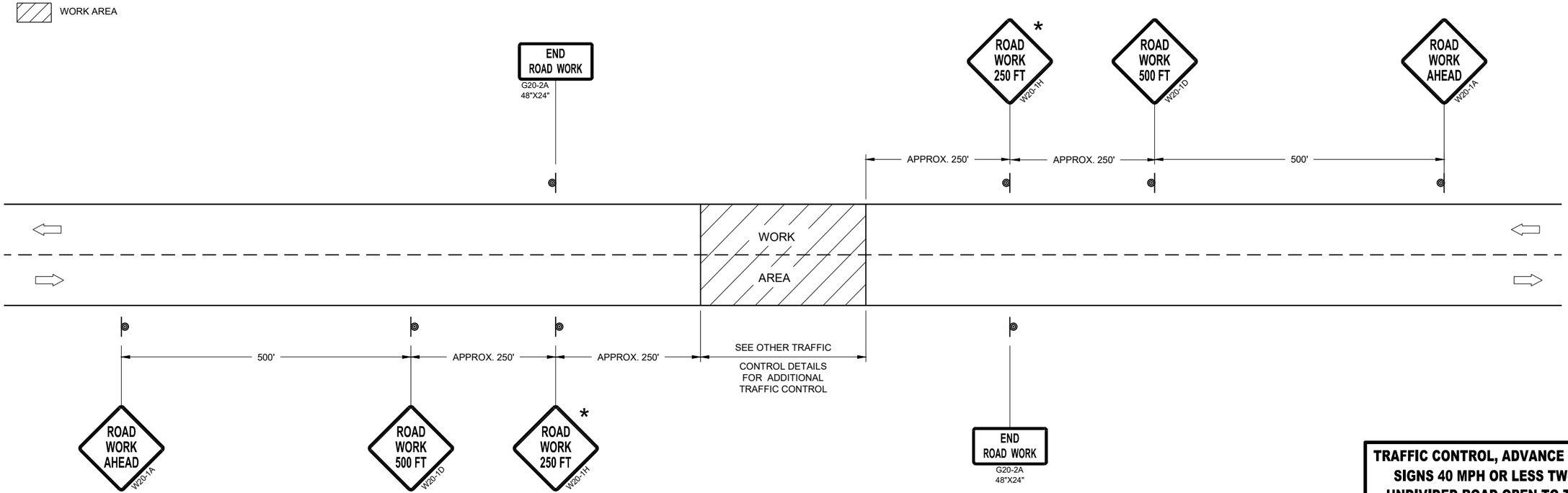

TRAFFIC CONTROL, ADVANCE WARNING SIGNS 40MPH OR LESS

TRAFFIC CONTROL, ADVANCE WARNING SIGNS 40 MPH OR LESS TWO-WAY UNDIVIDED ROAD OPEN TO TRAFFIC

STATE OF WISCONSIN
DEPARTMENT OF TRANSPORTATION

APPROVED
July 2018
DATE

/S/ Andrew Heidtke
WORK ZONE ENGINEE

FHWA

6

SDD 15C05 - 05

GENERAL NOTES

DETAILS OF CONSTRUCTION NOT SHOWN ON THIS DRAWING SHALL CONFORM TO STANDARD SPECIFICATIONS AND SPECIAL PROVISIONS.

(1) LOCATE THE NO PASSING ZONE W14-3 SIGN WITHIN 50 FEET OF THE "T" MARKING

(2) MEASURE FROM EDGE OF MARKING TO JOINT LINE. THIS DOES NOT INCLUDE SPACE NEEDED FOR GROOVING OPERATIONS.

LEGEND

"T" MARKING

SIGN ON PERMANENT SUPPORT

DIRECTION OF TRAFFIC

*CONFIRM MARKING LINE WIDTH WITH THE MISCELLANEOUS QUANTITIES

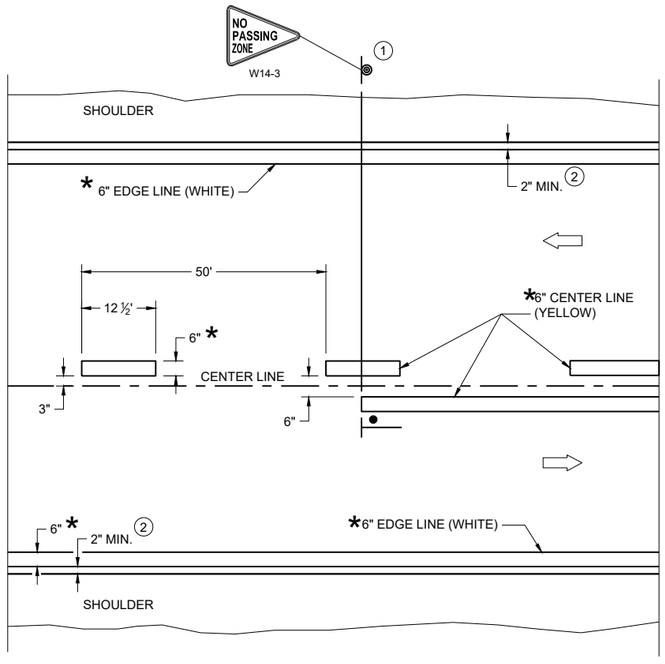

TWO WAY TRAFFIC

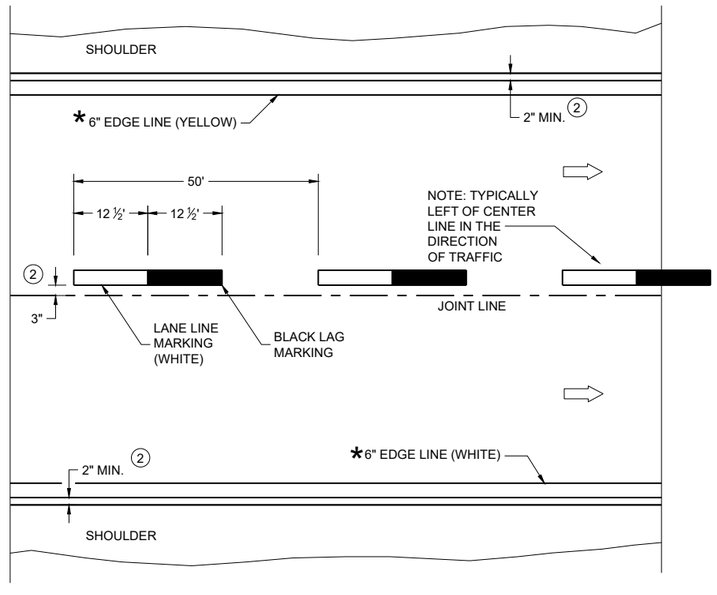

ONE WAY TRAFFIC

PERMANENT PAVEMENT MARKING

6

SDD 15C08-24a

PERMANENT LONGITUDINAL PAVEMENT MARKINGS

STATE OF WISCONSIN
DEPARTMENT OF TRANSPORTATION

APPROVED
December 2024
DATE

/S/ Jeannie Silver
Statewide Pavement Marking Engineer

FHWA

6

SDD 15C08-24a

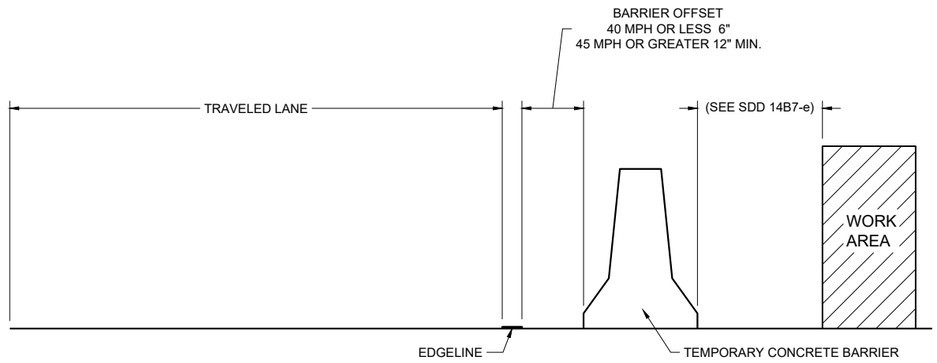

TEMPORARY BARRIER OFFSET FROM EDGELINE

GENERAL NOTES

DETAILS OF CONSTRUCTION NOT SHOWN ON THIS DRAWING SHALL CONFORM TO STANDARD SPECIFICATIONS AND SPECIAL PROVISIONS.

LEGEND

DIRECTION OF TRAFFIC

*CONFIRM MARKING LINE WIDTH WITH THE MISCELLANEOUS QUANTITIES

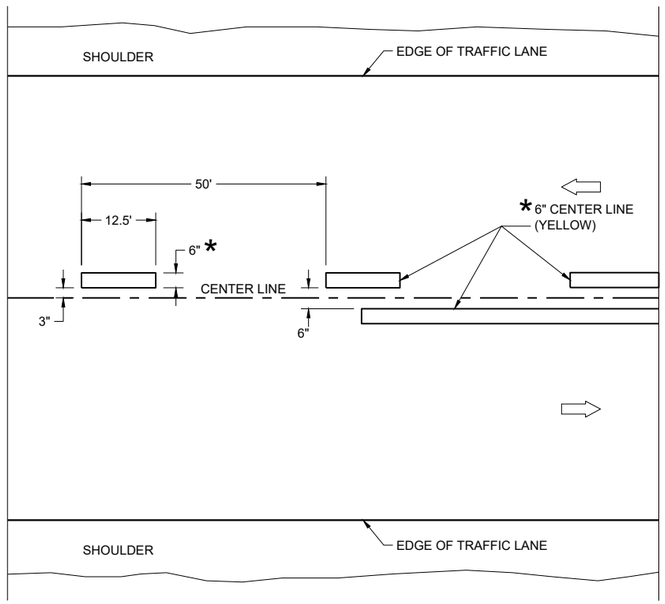

TWO WAY TRAFFIC

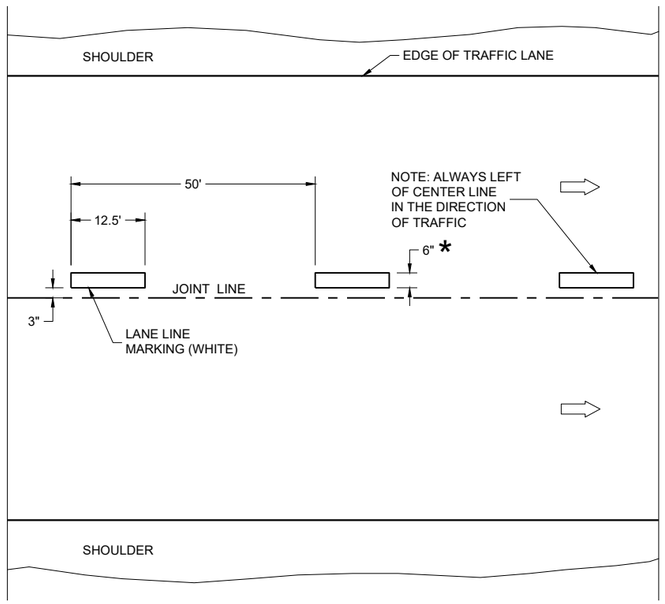

ONE WAY TRAFFIC

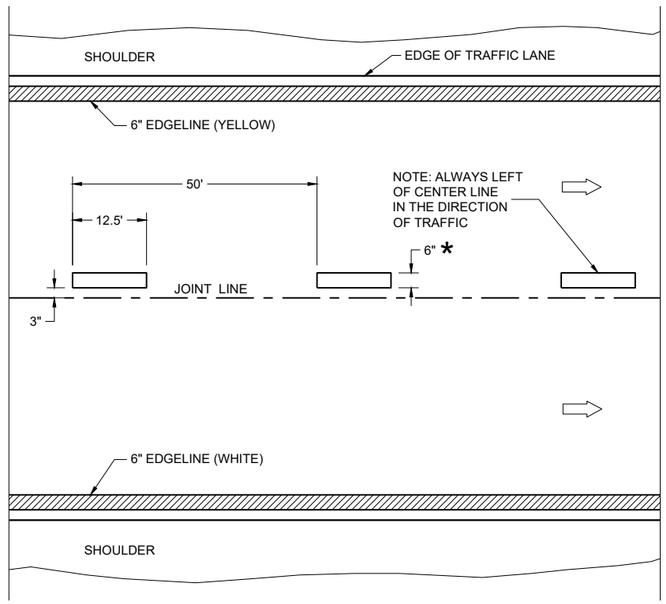

FREEWAYS AND EXPRESSWAYS

TEMPORARY PAVEMENT MARKING

TEMPORARY LONGITUDINAL PAVEMENT MARKING

STATE OF WISCONSIN
DEPARTMENT OF TRANSPORTATION

APPROVED
December 2024
DATE
/S/ Jeannie Silver
Statewide Pavement Marking Engineer

FHWA

6

SDD 15C08-24b

6

SDD 15C08-24b

GENERAL NOTES

1. A SET OF ARROWS IS REQUIRED EVERY 400 FEET OR NEAR INTERSECTIONS OR DRIVEWAYS WITH TURNING TRAFFIC.
2. 10" WHITE
3. TURN BAY LENGTH OF LESS THAN 48' DOES NOT REQUIRE PAVEMENT ARROWS OR TEXT.

DIRECTION OF TRAFFIC

*CONFIRM MARKING LINE WIDTH WITH THE MISCELLANEOUS QUANTITIES

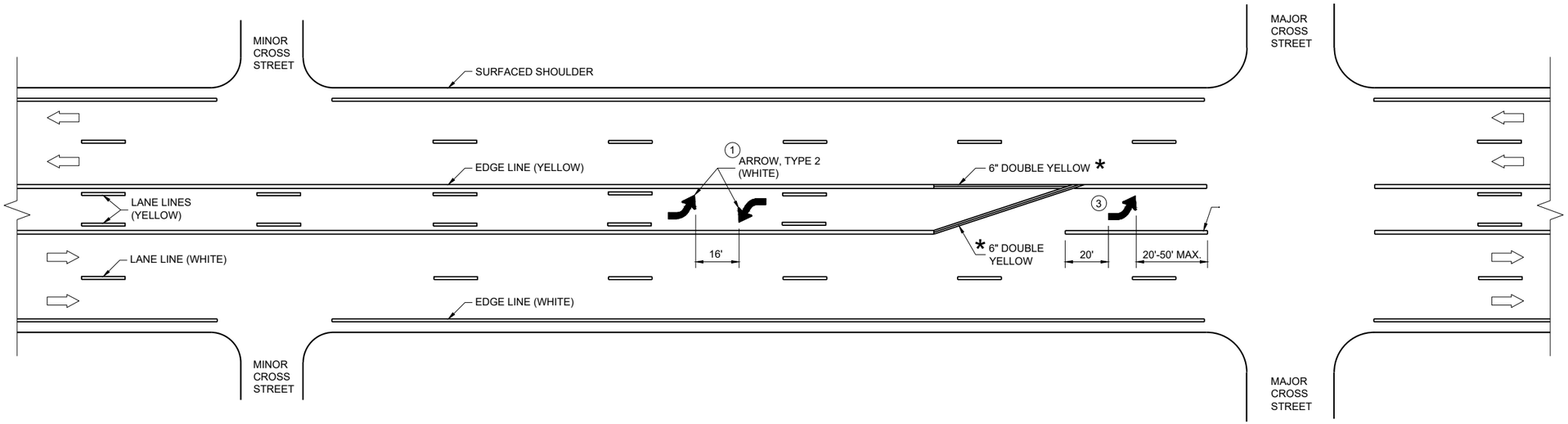

TWO WAY LEFT TURN LANE

PAVEMENT MARKING (TURN LANES)

STATE OF WISCONSIN
DEPARTMENT OF TRANSPORTATION

6

SDD 15C08-24c

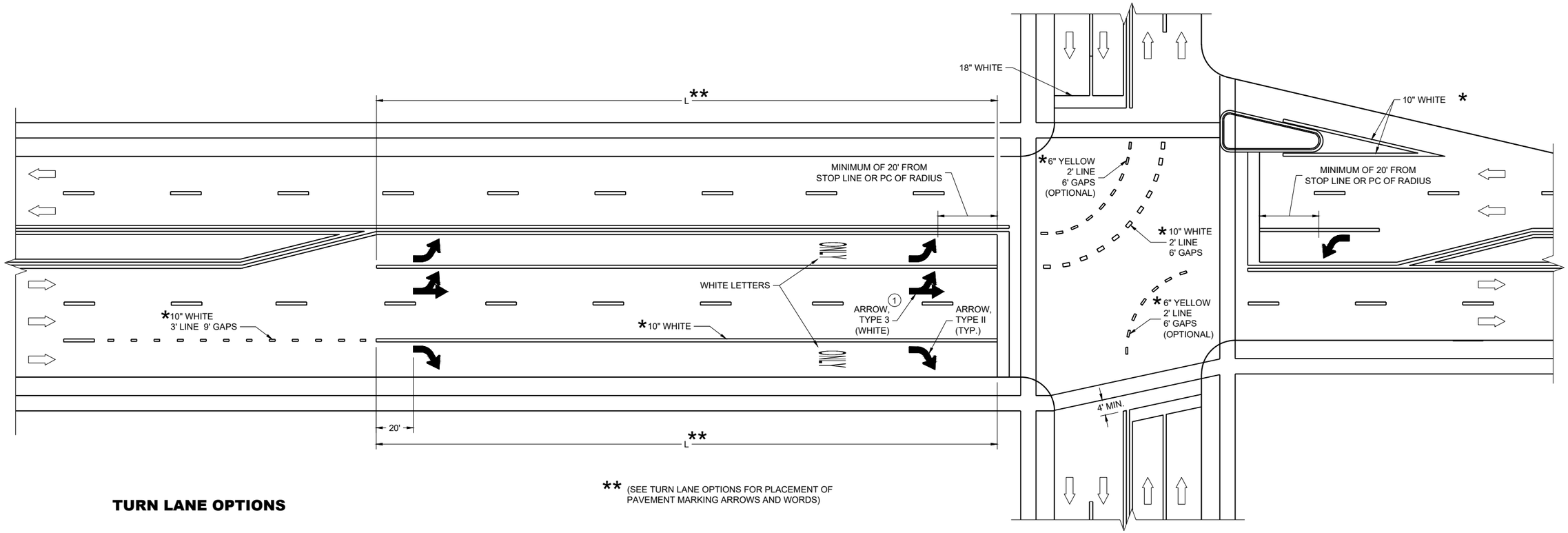

** (SEE TURN LANE OPTIONS FOR PLACEMENT OF PAVEMENT MARKING ARROWS AND WORDS)

TURN LANE OPTIONS

LENGTH OF TURN BAY (**L**) OF 0 - 47' DOES NOT
REQUIRE PAVEMENT MARKING ARROWS OR WORDS

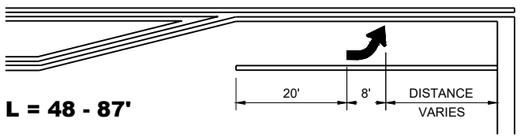

L = 48 - 87'

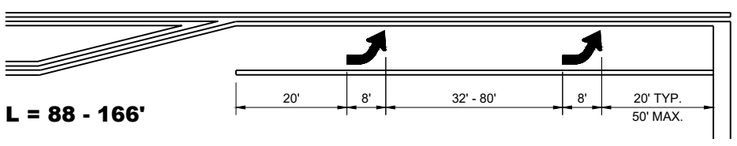

L = 88 - 166'

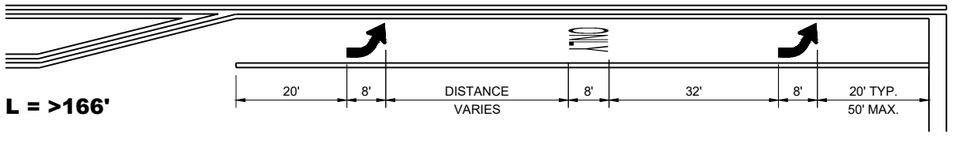

L = >166'

GENERAL NOTES

1. QUANTITY AND LOCATION OF TYPE 3 ARROWS ARE THE SAME AS THE TYPE II ARROWS IN THE ADJACENT TURN LANE. FOR TURN LANES WITH A PHYSICAL SEPARATION IN THE SAME DIRECTION OF TRAVEL, THE ARROWS AND "ONLY" MARKING MAY BE ELIMINATED.

DIRECTION OF TRAFFIC

L = LENGTH OF TURN BAY

*CONFIRM MARKING LINE WIDTH WITH THE MISCELLANEOUS QUANTITIES

PAVEMENT MARKING (TURN LANES)

STATE OF WISCONSIN
DEPARTMENT OF TRANSPORTATION

GENERAL NOTES

1. REFLECTIVE SHEETING SHALL FOLLOW THE REQUIREMENTS IN THE APPROVED PRODUCTS LISTING FOR SIGN SHEETING.
2. LOCATION OF WARNING LIGHTS WHEN SHOWN ON THE PLAN.

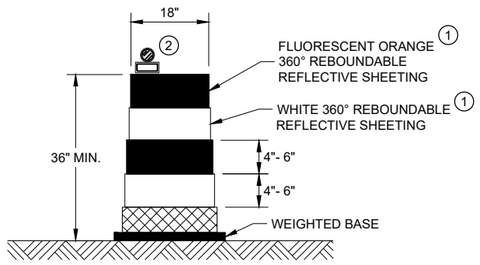

DRUM

BALLAST WIDTHS
RANGE FROM 24"-36"

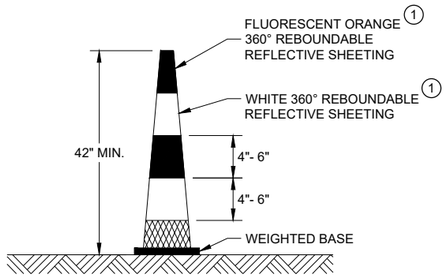

42" CONE

DO NOT USE IN TAPERS
½ SPACING OF DRUMS

BALLAST WIDTHS
RANGE FROM 14"-20"

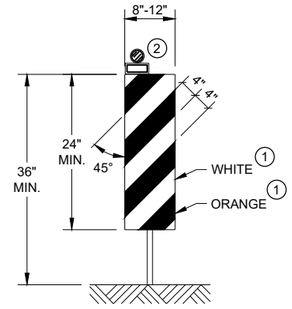

VERTICAL PANEL

THE STRIPES SHALL SLOPE DOWNWARD TO
THE TRAFFIC SIDE FOR CHANNELIZATION.

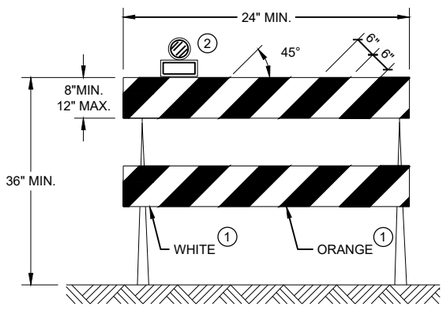

TYPE II BARRICADE

FOR RAILS LESS THAN 36" LONG, 4" WIDE STRIPES
MAY BE USED. ALL STRIPES SHALL SLOPE DOWNWARD
TO THE TRAFFIC SIDE FOR CHANNELIZATION.

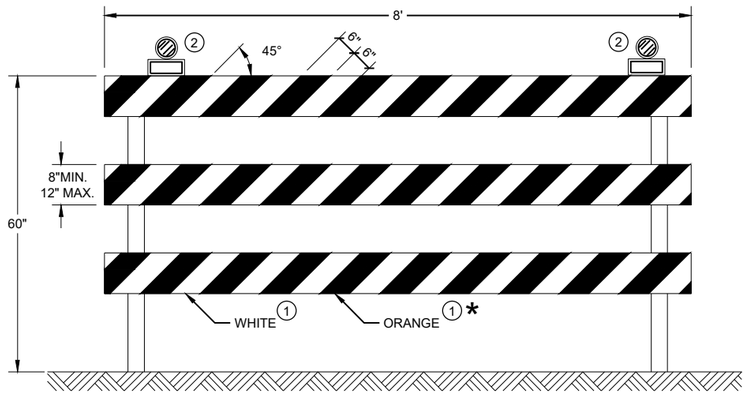

TYPE III BARRICADE

IF SIGN MOUNTED, DO NOT COVER MORE THAN 50% OF THE TOP
TWO RAILS OR 33% OF THE TOTAL AREA OF THE THREE RAILS.

* IF USED FOR A PERMANENT APPLICATION USE RED SHEETING.

CHANNELIZING DEVICES DRUMS, CONES, BARRICADES AND VERTICAL PANELS

STATE OF WISCONSIN
DEPARTMENT OF TRANSPORTATION

APPROVED
November 2022
DATE

/S/ Andrew Heidtke
WORK ZONE ENGINEE

FHWA

6

SDD 15C11 - 10b

6

SDD 15C11 - 10b

LEGEND

SIGN ON PORTABLE OR PERMANENT SUPPORT

TEMPORARY PORTABLE RUMBLE STRIP ARRAY

DIRECTION OF TRAFFIC

WORK AREA

FLAGGER, EQUIPPED WITH STOP/SLOW PADDLE FASTENED ON SUPPORT STAFF

GENERAL NOTES

DETAILS OF TRAFFIC CONTROL DEVICES AND INSTALLATION NOT SHOWN ON THIS DRAWING SHALL CONFORM TO THE PERTINENT REQUIREMENTS OF THE STANDARD SPECIFICATIONS, THE SPECIAL PROVISIONS, AND THE MANUAL ON UNIFORM TRAFFIC CONTROL DEVICES.

ALL SIGNS ARE 48" X 48" UNLESS OTHERWISE NOTED.

"WO" SIGNS ARE THE SAME AS "W" SIGNS EXCEPT THE BACKGROUND IS ORANGE.

THE EXACT NUMBER, LOCATION AND SPACING OF ALL SIGNS, DEVICES, AND LOCATION OF ALL FLAGGERS SHALL BE ADJUSTED TO FIT FIELD CONDITIONS AS APPROVED BY THE ENGINEER.

THE FIRST ADVANCE WARNING SIGN SHOULD TYPICALLY BE LOCATED IN ADVANCE OF THE ANTICIPATED TRAFFIC BACKUP OR QUEUE.

WHEN A SIDE ROAD OR RAMP INTERSECTS THE FACILITY ON WHICH THE WORK IS BEING PERFORMED, ADDITIONAL TRAFFIC CONTROLS SHALL BE PROVIDED AS SPECIFIED IN THE PLANS AND/OR THE SPECIAL PROVISIONS OR AS APPROVED BY THE ENGINEER.

FLAGGING

FLAGGERS SHALL BE IN SIGHT OF EACH OTHER OR IN DIRECT COMMUNICATION AT ALL TIMES. THEY SHALL BE EQUIPPED WITH STOP/SLOW PADDLES FASTENED ON SUPPORT STAFFS. WHEN THE FLAGGING OPERATION IS NOT IN EFFECT REMOVE TEMPORARY PORTABLE RUMBLE STRIPS PRIOR TO COVERING OR REMOVING ALL ADVANCE SIGNING.

(1) FOR MOVING WORK OPERATIONS, POST ADDITIONAL W20-7A FLAGGER SIGNS AT APPROXIMATELY 3,500' INTERVALS IN THE MOVING WORK OPERATION OR AS APPROVED BY THE ENGINEER.

(2) SIGN NOT REQUIRED IF FLAGGING OPERATION OCCURS WITHIN A SIGNED ROAD WORK ZONE AREA.

WHEN THE DISTANCE BETWEEN FLAGGERS EXCEEDS 2 MILES, A PILOT CAR IS REQUIRED. WHEN CURVES REDUCE SIGHT DISTANCE BELOW 400', A PILOT CAR IS REQUIRED.

TEMPORARY PORTABLE RUMBLE STRIPS

UTILIZE TEMPORARY PORTABLE RUMBLE STRIPS ON ALL FLAGGING OPERATIONS.

(3) EACH TEMPORARY PORTABLE RUMBLE STRIP ARRAY CONSISTS OF THREE RUMBLE STRIPS PLACED TRANSVERSE ACROSS THE LANE AT THE LOCATIONS SHOWN. WITHIN EACH ARRAY, SPACING BETWEEN RUMBLE STRIPS SHALL BE 15 FEET ON CENTER

ONLY USE TEMPORARY PORTABLE RUMBLE STRIPS FROM THE APPROVED PRODUCTS LIST.

INSTALL TEMPORARY RUMBLE STRIPS PER MANUFACTURER'S RECOMMENDATIONS.

PLACE ADVANCE SIGNING PRIOR TO INSTALLING TEMPORARY RUMBLE STRIPS.

DO NOT INSTALL TEMPORARY PORTABLE RUMBLE STRIPS ON GRAVEL, MILLED SURFACES, OR ASPHALT THAT HAS BEEN PAVED LESS THAN 12 HOURS.

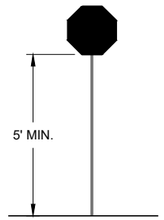

STOP/SLOW PADDLE ON SUPPORT STAFF

SIGN AND TEMPORARY RUMBLE STRIP ARRAY SPACING TABLE

SPEED LIMIT	SPACING "A"
25-30 MPH	200'
35-40 MPH	350'
45-55 MPH	500'

WO3-4

USE OF WO3-4 SIGN IS OPTIONAL. WHEN USED, THIS SIGN SHALL BE LOCATED BETWEEN THE W20-7A AND W20-4A SIGNS, USING SPACING "A".

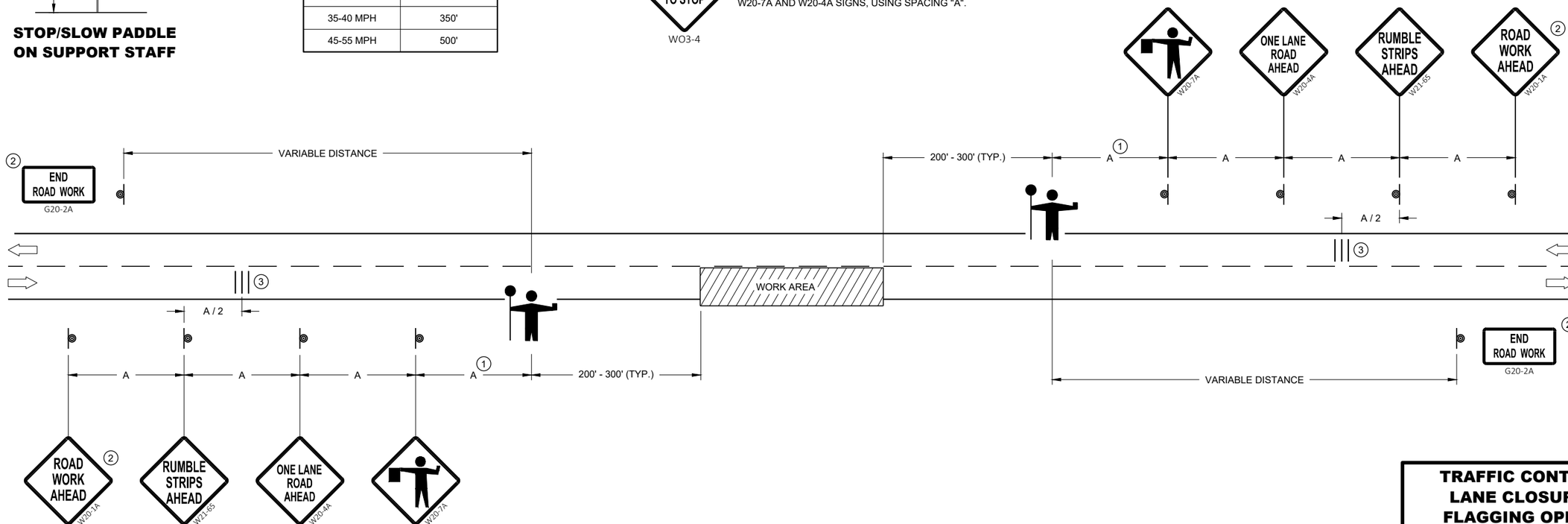

TRAFFIC CONTROL FOR LANE CLOSURE WITH FLAGGING OPERATION

STATE OF WISCONSIN
DEPARTMENT OF TRANSPORTATION

APPROVED
May 2022
DATE

/S/ Andrew Heidtke
WORK ZONE ENGINEE

FHWA

6

SDD 15C12 - 09a

6

SDD 15C12 - 09a

LEGEND

V1 LEAD VEHICLE

V2 MARKING VEHICLE

V3 SHADOW VEHICLE

TRUCK MOUNTED ATTENUATOR (TMA)

SIGN ON TEMPORARY SUPPORT

DIRECTION OF TRAFFIC

GENERAL NOTES

ALL VEHICLES SHALL BE EQUIPPED WITH TWO 360 DEGREE HIGH INTENSITY YELLOW FLASHING LIGHTS OR STROBE LIGHTS AND OPERATED WITH HEADLIGHTS TURNED ON.

ALL VEHICLES SHALL BE EQUIPPED WITH REAR FACING TYPE B OR C FLASHING ARROW PANEL OPERATING IN CAUTION MODE. SIGNS PLACED ON VEHICLES MUST NOT OBSCURE THE ARROW PANEL.

ALL SIGNS ARE 48" X 48" UNLESS OTHERWISE SPECIFIED.

DISTANCE BETWEEN VEHICLES MAY VARY ACCORDING TO TERRAIN, SIGHT DISTANCE, PAINT DRYING TIME, AND OTHER FACTORS. WHENEVER ADEQUATE STOPPING SIGHT DISTANCE EXISTS TO THE REAR, SHADOW VEHICLES SHOULD MAINTAIN THE MINIMUM DISTANCE FROM THE WORK VEHICLE AND PROCEED AT THE SAME SPEED AS THE WORK VEHICLE. SHADOW VEHICLES SHOULD SLOW DOWN IN ADVANCE OF VERTICAL AND HORIZONTAL CURVES THAT RESTRICT SIGHT DISTANCE.

THE WORK AND SHADOW VEHICLES SHOULD PULL OVER PERIODICALLY TO ALLOW TRAFFIC TO PASS.

WHEN NO WORK ACTIVITY IS TAKING PLACE, REMOVE OR LAY STATIONARY SIGNS AND SUPPORTS FLAT ON THE GRADE WITH

WORKERS SHALL NOT PERFORM WORK FROM ANY SHADOW OR PROTECTION VEHICLES.

UPRIGHTS ORIENTED PARALLEL TO AND DOWNSTREAM FROM TRAFFIC.

CONES SHOULD BE USED BETWEEN THE MARKING AND SHADOW VEHICLE AT 100 FOOT SPACING. CONES MAY BE OMITTED ON PAINTED LINE IF APPROVED BY THE ENGINEER. CONSIDER PAVEMENT MARKING DRY OR CURE TIMES AND TRAFFIC VOLUME.

CONES SHALL BE A MINIMUM OF 28" FOR WET PAVEMENT MARKING .

(1) SIGNS SHALL BE REPEATED APPROXIMATELY EVERY THREE MILES AND AFTER EVERY MAJOR INTERSECTION.

(2) IF CONSTRUCTION WORK ZONE SIGNS ARE IN PLACE, W20-1A OR W21-63 ARE NOT REQUIRED.

(3) V1 AND V2 CAN BE SWITCHED SO THAT THE MARKER IS THE LEAD VEHICLE.

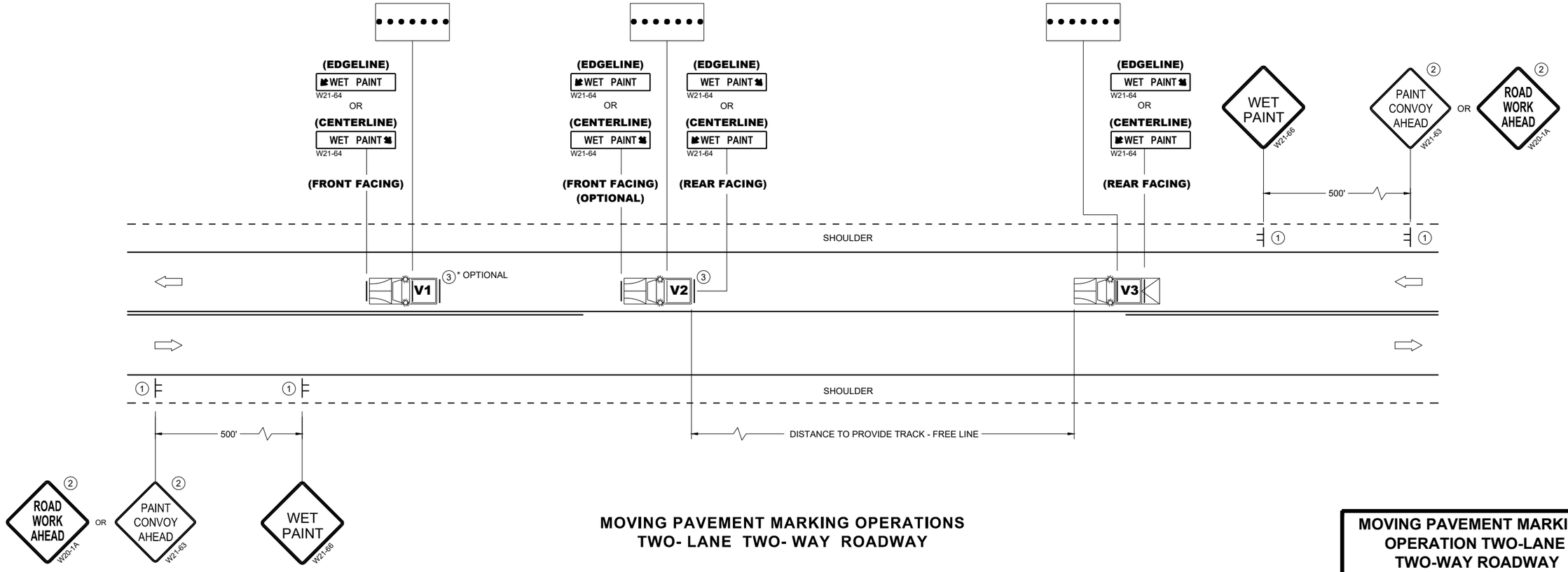

MOVING PAVEMENT MARKING OPERATIONS
TWO- LANE TWO- WAY ROADWAY

MOVING PAVEMENT MARKING OPERATION TWO-LANE TWO-WAY ROADWAY

STATE OF WISCONSIN
DEPARTMENT OF TRANSPORTATION

APPROVED
November 2025 — DATE
/S/ Andrew Heidtke — STATE ELECTRICAL ENGINEER

FHWA

6

SDD 15C19-11a

SDD 15C19-11a

LEGEND

V1 LEAD VEHICLE

V2 MARKING VEHICLE

V3 SHADOW VEHICLE

TRUCK MOUNTED ATTENUATOR (TMA)

SIGN ON TEMPORARY SUPPORT

DIRECTION OF TRAFFIC

ARROW PANEL (CAUTION)

GENERAL NOTES

ALL VEHICLES SHALL BE EQUIPPED WITH TWO 360 DEGREE HIGH INTENSITY YELLOW FLASHING LIGHTS OR STROBE LIGHTS AND OPERATED WITH HEADLIGHTS TURNED ON.

ALL VEHICLES SHALL BE EQUIPPED WITH REAR FACING TYPE B OR C FLASHING ARROW PANEL. SIGNS PLACED ON VEHICLES MUST NOT OBSCURE THE ARROW PANEL.

ALL SIGNS ARE 48" X 48" UNLESS OTHERWISE SPECIFIED.

DISTANCE BETWEEN VEHICLES MAY VARY ACCORDING TO TERRAIN, SIGHT DISTANCE, PAINT DRYING TIME, AND OTHER FACTORS. WHENEVER ADEQUATE STOPPING SIGHT DISTANCE EXISTS TO THE REAR, SHADOW VEHICLES SHOULD MAINTAIN THE MINIMUM DISTANCE FROM THE WORK VEHICLE AND PROCEED AT THE SAME SPEED AS THE WORK VEHICLE. SHADOW VEHICLES SHOULD SLOW DOWN IN ADVANCE OF VERTICAL AND HORIZONTAL CURVES THAT RESTRICT SIGHT DISTANCE.

WHEN WORK ACTIVITY BLOCKS THE LEFT LANE, REVERSE TRAFFIC CONTROL.

WHEN A RAMP INTERSECTS THE FACILITY ON WHICH THE WORK IS BEING PERFORMED, PROVIDE ADDITIONAL TRAFFIC CONTROLS AS SPECIFIED IN THE CONTRACT OR AS APPROVED BY THE ENGINEER.

WORKERS SHALL NOT PERFORM WORK FROM ANY SHADOW OR PROTECTION VEHICLES.

WHEN NO WORK ACTIVITY IS TAKING PLACE, REMOVE OR LAY STATIONARY SIGNS AND SUPPORTS FLAT ON THE GRADE WITH UPRIGHTS ORIENTED PARALLEL TO AND DOWNSTREAM FROM TRAFFIC.

CONES SHOULD BE USED BETWEEN THE MARKING AND SHADOW VEHICLES AT 100 FOOT SPACING. CONES MAY BE OMITTED ON PAINTED LINE IF APPROVED BY THE ENGINEER. CONSIDER PAVEMENT MARKING DRY OR CURE TIMES AND TRAFFIC VOLUME.

CONES SHALL HAVE A MINIMUM HEIGHT OF 28" FOR WET PAVEMENT MARKINGS.

(1) SIGNS SHALL BE REPEATED APPROXIMATELY EVERY THREE MILES AND AFTER EVERY MAJOR INTERSECTION.

(2) IF CONSTRUCTION WORK ZONE SIGNS ARE IN PLACE, W20-1A OR W21-63 ARE NOT REQUIRED.

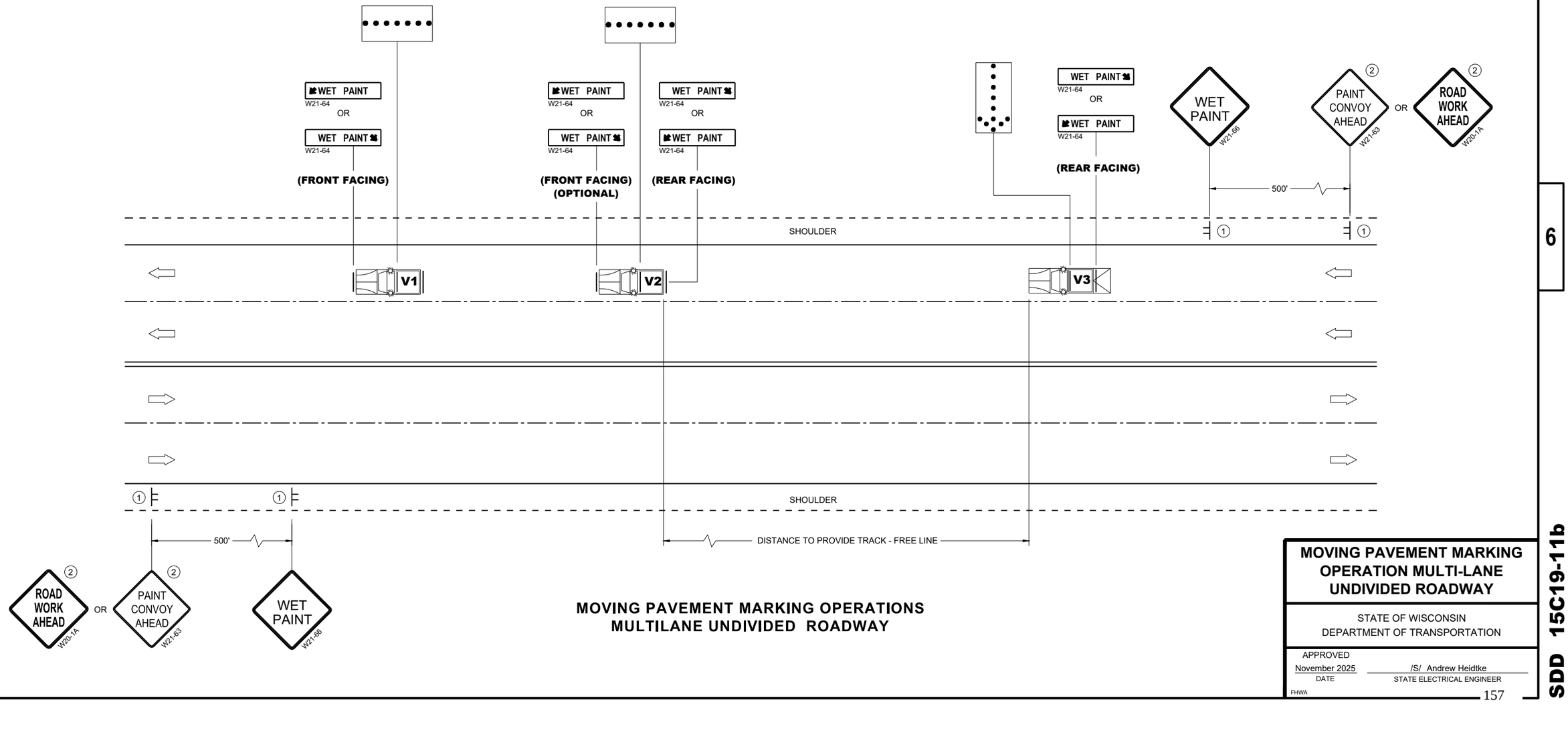

MOVING PAVEMENT MARKING OPERATIONS MULTILANE UNDIVIDED ROADWAY

MOVING PAVEMENT MARKING OPERATION MULTI-LANE UNDIVIDED ROADWAY

STATE OF WISCONSIN
DEPARTMENT OF TRANSPORTATION

APPROVED
November 2025 — DATE
/S/ Andrew Heidtke — STATE ELECTRICAL ENGINEER

FHWA

6

SDD 15C19-11b

6

SDD 15C19-11b

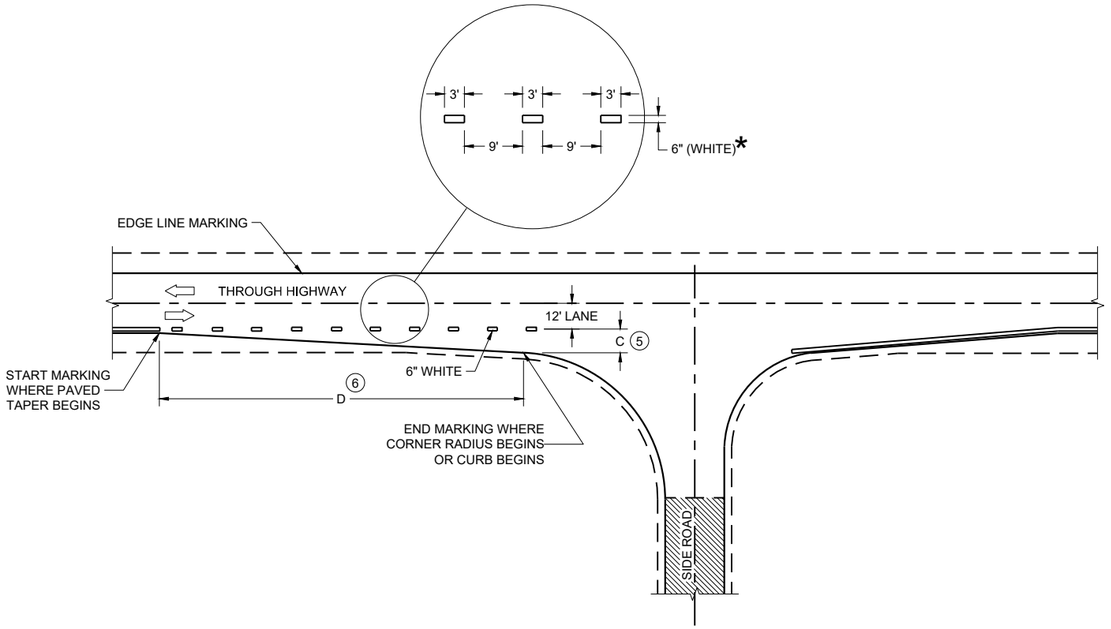

MINOR INTERSECTION

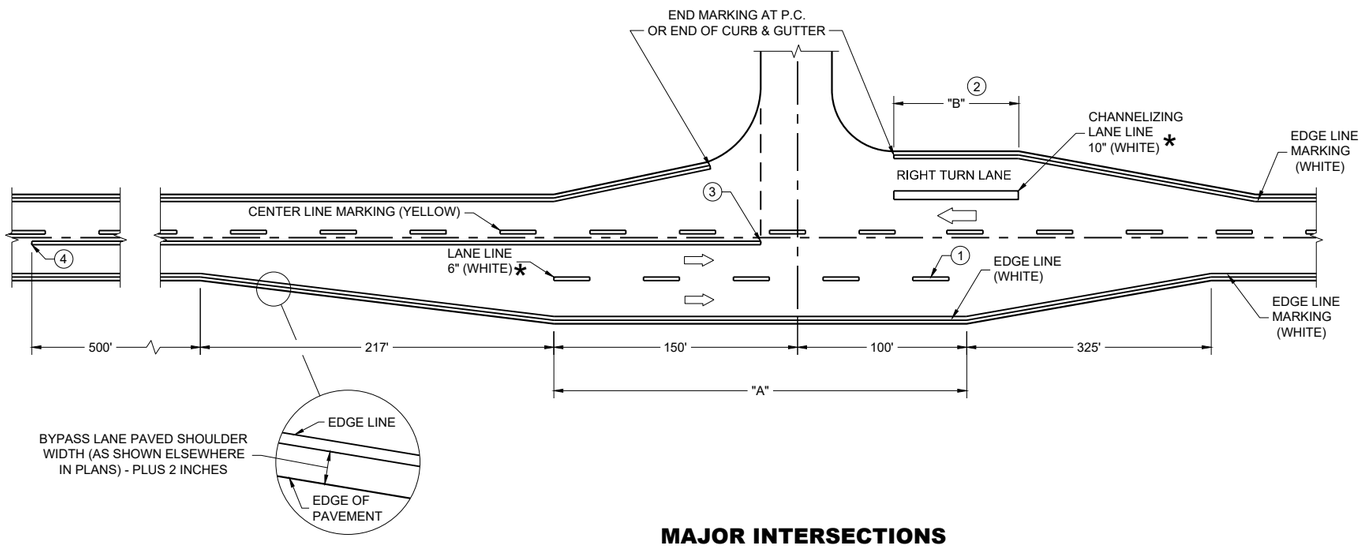

MAJOR INTERSECTIONS

(INTERSECTION WITH FULL RIGHT TURN LANE OR BYPASS LANE)

*CONFIRM MARKING LINE WIDTH WITH THE MISCELLANEOUS QUANTITIES

GENERAL NOTES

OMIT EDGE LINES THROUGH INTERSECTIONS. CONTINUE EDGE LINES THROUGH DRIVEWAYS.

1. WHEN DISTANCE "A" IS LESS THAN 250 FEET, OMIT LANE LINE.
2. WHEN DISTANCE "B" IS LESS THAN 100 FEET, OMIT CHANNELIZING LANE LINE.
3. BARRIER LINE ENDS AT SIDE ROAD PAVEMENT / SURFACE EDGE EXTENSION.
4. BARRIER LINE STARTS 500 FEET PRIOR TO THE BYPASS TAPER.
5. WHEN DISTANCE "C" IS LESS THAN 4 FEET, OMIT DOTTED EXTENSION.
6. WHEN DISTANCE "D" IS LESS THAN 50 FEET, OMIT DOTTED EXTENSION.

LEGEND

DIRECTION OF TRAVEL

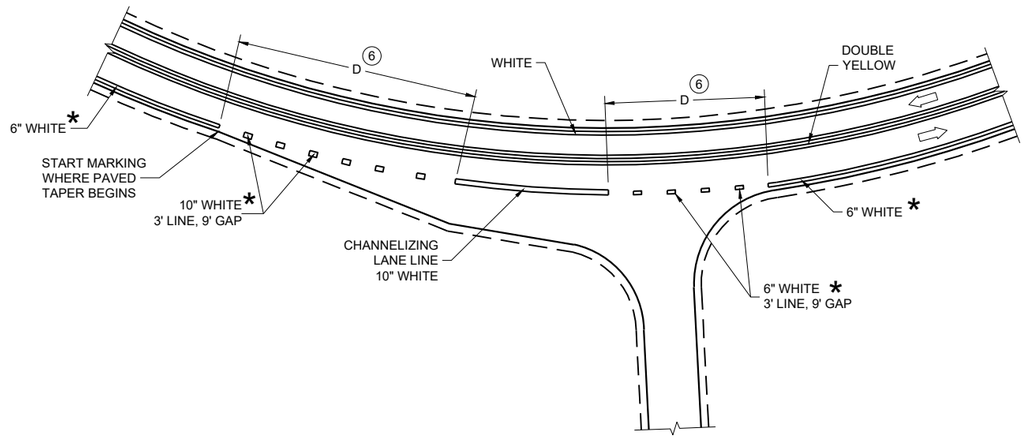

INTERSECTION ON OUTSIDE OF CURVE

PAVEMENT MARKING (INTERSECTIONS)

STATE OF WISCONSIN
DEPARTMENT OF TRANSPORTATION

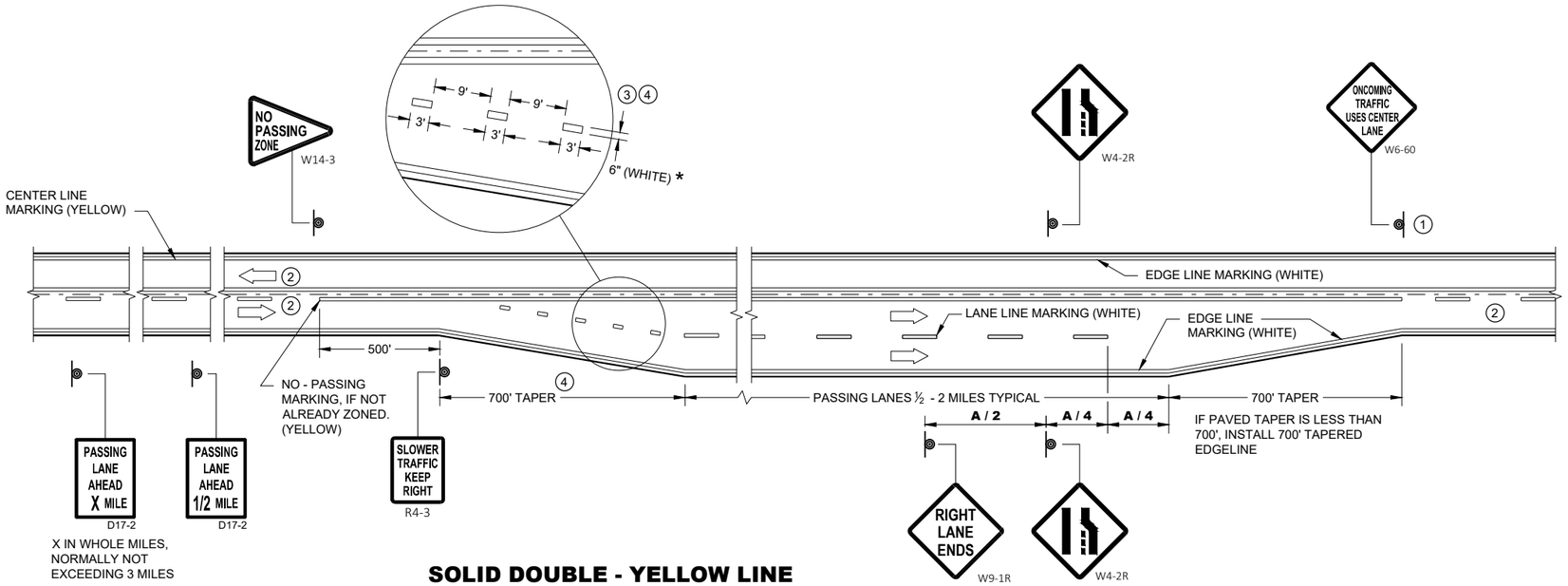

SOLID DOUBLE - YELLOW LINE
(THROUGHOUT ENTIRE PASSING / CLIMBING LANE)

GENERAL NOTES

1. SIGN SHALL BE REPEATED AT 1 MILE INCREMENTS OR AT THE DISCRETION OF THE REGIONAL TRAFFIC ENGINEER.
2. THERE MAY BE SOLID YELLOW ON THE CENTERLINE DUE TO SIGHT CONDITIONS.
3. THE TAPER LENGTH OF THE DOTTED LINE PAVEMENT MARKING SHALL BE 700 FEET, 3' LINE, 9' GAP, EXCEPT RETRACE THE EXISTING LINE - GAP PATTERN WHERE EXISTING MARKINGS ARE IN PLACE.
4. WHEN THE ENTRANCE TAPER IS LESS THAN 700 FEET OR THE SHOULDER WIDTH IN THE PASSING / CLIMBING LANE IS LESS THAN THE ADJACENT HIGHWAY, DO NOT INSTALL DOTTED LINE PAVEMENT MARKING.
5. REPEAT EVERY 1 MILE UP UNTIL R4-53.

ARROW SYMBOL (⇨) SHOWS DIRECTION OF TRAVEL

DISTANCE TABLE

POSTED OR 85th PERCENTILE SPEED	DISTANCE "A"
45	775
50	885
55	990

* CONFIRM MARKING LINE WIDTH WITH THE MISCELLANEOUS QUANTITIES

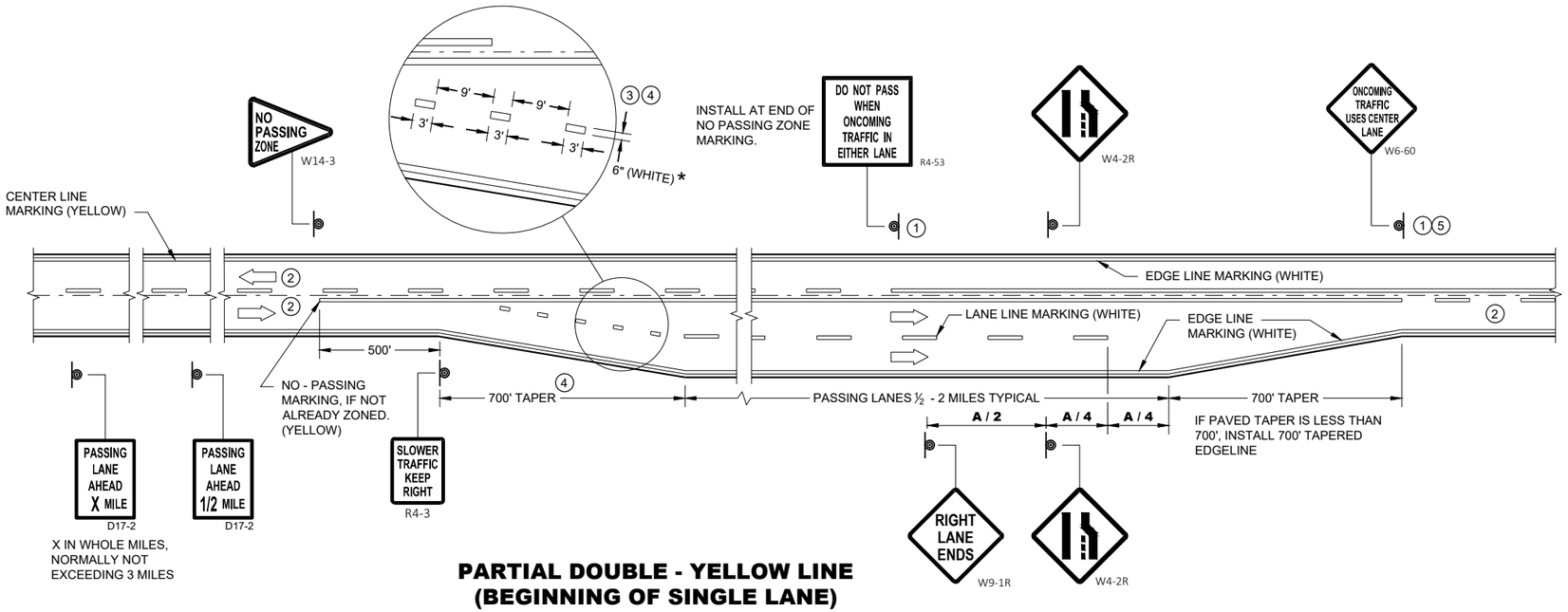

PARTIAL DOUBLE - YELLOW LINE
(BEGINNING OF SINGLE LANE)

PAVEMENT MARKING & SIGNING (CLIMBING LANE & PASSING LANE)

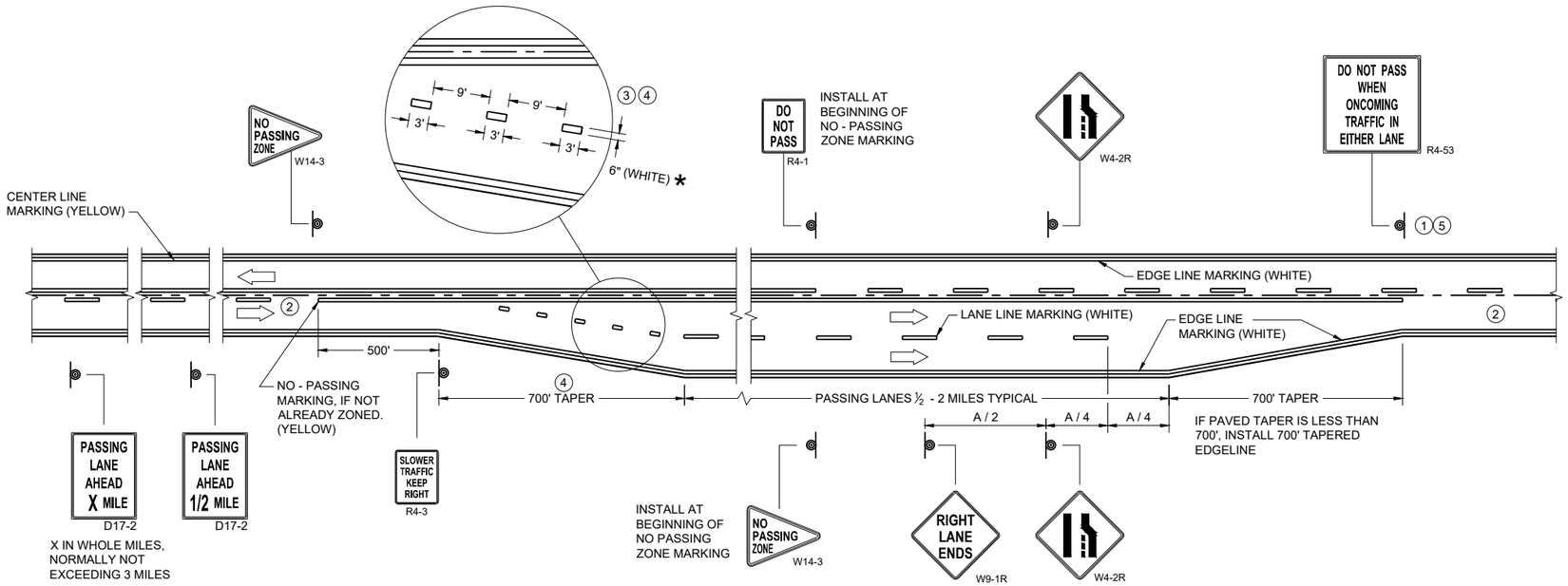

SOLID DOUBLE - YELLOW LINE
(END OF SINGLE LANE)

GENERAL NOTES

1. SIGN SHALL BE REPEATED AT 1 MILE INCREMENTS OR AT THE DISCRETION OF THE REGIONAL TRAFFIC ENGINEER.
2. THERE MAY BE SOLID YELLOW ON THE CENTERLINE DUE TO SIGHT CONDITIONS.
3. THE TAPER LENGTH OF THE DOTTED LINE PAVEMENT MARKING SHALL BE 700 FEET, 3' LINE, 9' GAP, EXCEPT RETRACE THE EXISTING LINE - GAP PATTERN WHERE EXISTING MARKINGS ARE IN PLACE.
4. WHEN THE ENTRANCE TAPER IS LESS THAN 700 FEET OR THE SHOULDER WIDTH IN THE PASSING / CLIMBING LANE IS LESS THAN THE ADJACENT HIGHWAY, DO NOT INSTALL DOTTED LINE PAVEMENT MARKING.
5. REPEAT EVERY ONE MILE UP UNTIL NO PASSING ZONE.

ARROW SYMBOL (⇨) SHOWS DIRECTION OF TRAVEL

DISTANCE TABLE

POSTED OR 85th PERCENTILE SPEED	DISTANCE "A"
45	775
50	885
55	990

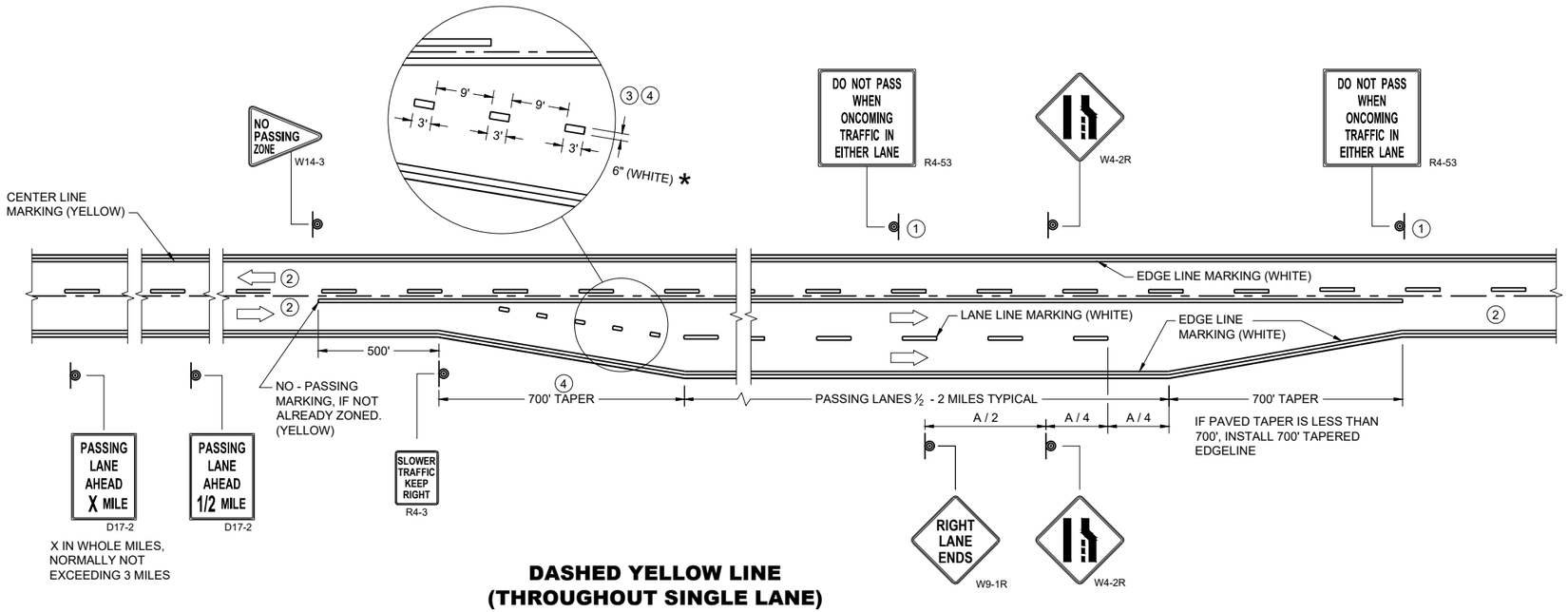

DASHED YELLOW LINE
(THROUGHOUT SINGLE LANE)

*CONFIRM MARKING LINE WIDTH WITH THE MISCELLANEOUS QUANTITIES

PAVEMENT MARKING & SIGNING (CLIMBING LANE & PASSING LANE)

STATE OF WISCONSIN
DEPARTMENT OF TRANSPORTATION

APPROVED
May 2023 — DATE
/S/ Jeannie Silver — Statewide Pavement Marking Engineer
FHWA

6

SDD 15C35-06c

SDD 15C35-06c

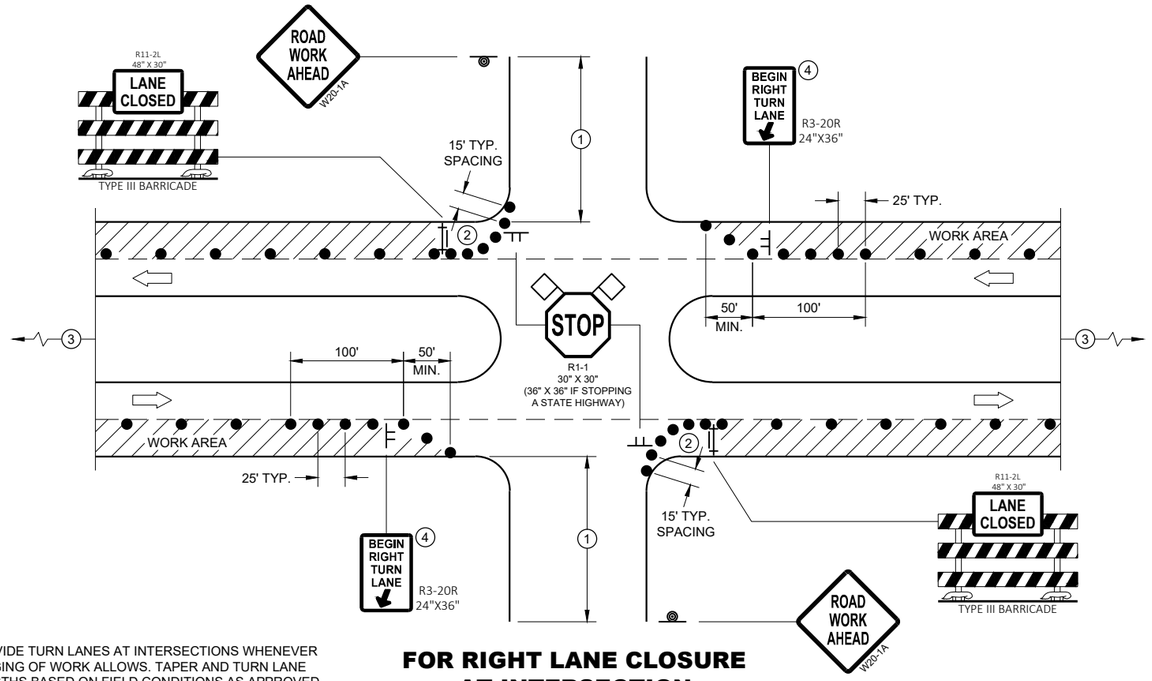

PROVIDE TURN LANES AT INTERSECTIONS WHENEVER STAGING OF WORK ALLOWS. TAPER AND TURN LANE LENGTHS BASED ON FIELD CONDITIONS AS APPROVED BY THE ENGINEER.

FOR RIGHT LANE CLOSURE AT INTERSECTION

GENERAL NOTES

ALL SIGNS ARE 48"X48" UNLESS OTHERWISE NOTED. IF NECESSARY DUE TO SPACE CONSTRAINTS IN URBAN AREAS, 36" X 36" MAY BE USED IF APPROVED BY THE DISTRICT TRAFFIC UNIT.

"WO" SIGN IS THE SAME AS "W" SIGN EXCEPT THE BACKGROUND IS ORANGE.

ANY SIGNS TEMPORARY OR EXISTING, WHICH CONFLICT WITH THE TRAFFIC CONTROL "IN USE" SHALL BE REMOVED OR COVERED AS NEEDED AND AS APPROVED BY THE ENGINEER. NO WARNING LIGHTS SHALL BE WORKING ON COVERED OR "DOWNED" SIGNS.

THE EXACT NUMBER, LOCATION, AND SPACING OF ALL SIGNS AND DEVICES SHALL BE ADJUSTED TO FIT FIELD CONDITIONS AS APPROVED BY THE ENGINEER.

THE SPACING BETWEEN TRAFFIC CONTROL SIGNS SHOULD BE ADJUSTED TO NOT CONFLICT WITH AND TO PROVIDE A MINIMUM OF 200 FEET (500' DESIRABLE) DISTANCE TO EXISTING SIGNS THAT WILL REMAIN IN PLACE

SIGN LAYOUTS SHALL BE IN ACCORDANCE WITH THE FHWA'S MANUAL OF STANDARD HIGHWAY SIGNS OR THE WISCONSIN STANDARD SIGN PLATES.

SIGNS THAT WILL REMAIN IN PLACE LESS THAN 7 CONTINUOUS DAYS AND NIGHTS OR THAT WILL BE PLACED IN A CLOSED LANE MAY BE MOUNTED ON PORTABLE SUPPORTS.

BARRICADES IN A CLOSED LANE THAT MUST BE MOVED FOR A WORK OPERATION SHALL BE IMMEDIATELY REESTABLISHED UPON COMPLETION OF THE OPERATION, OR FOR CONTINUING OPERATIONS, AT THE END OF EACH WORKING DAY.

CHANNELIZING DEVICES PLACED ADJACENT TO WORK AREA SHALL BE PULLED BACK FROM THE TRAVEL LANE WHEN WORK IS NOT IN PROGRESS.

(1) 500' TYPICAL OR AT LAST INTERSECTION, WHICHEVER IS CLOSER.
350' IF 35 - 40 MPH.
200' IF 25 - 30 MPH.

(2) ALSO USE BARRICADE AND 15 FOOT TYPICAL DRUM SPACING AT COMMERCIAL DRIVEWAYS

(3) SEE SEPARATE LANE CLOSURE DETAIL FOR ADDITIONAL TRAFFIC CONTROL.

(4) MINIMUM MOUNTING HEIGHT OF 5 FEET FROM EDGE OF PAVEMENT (AT EDGE LINE LOCATION) TO BOTTOM OF SIGN.

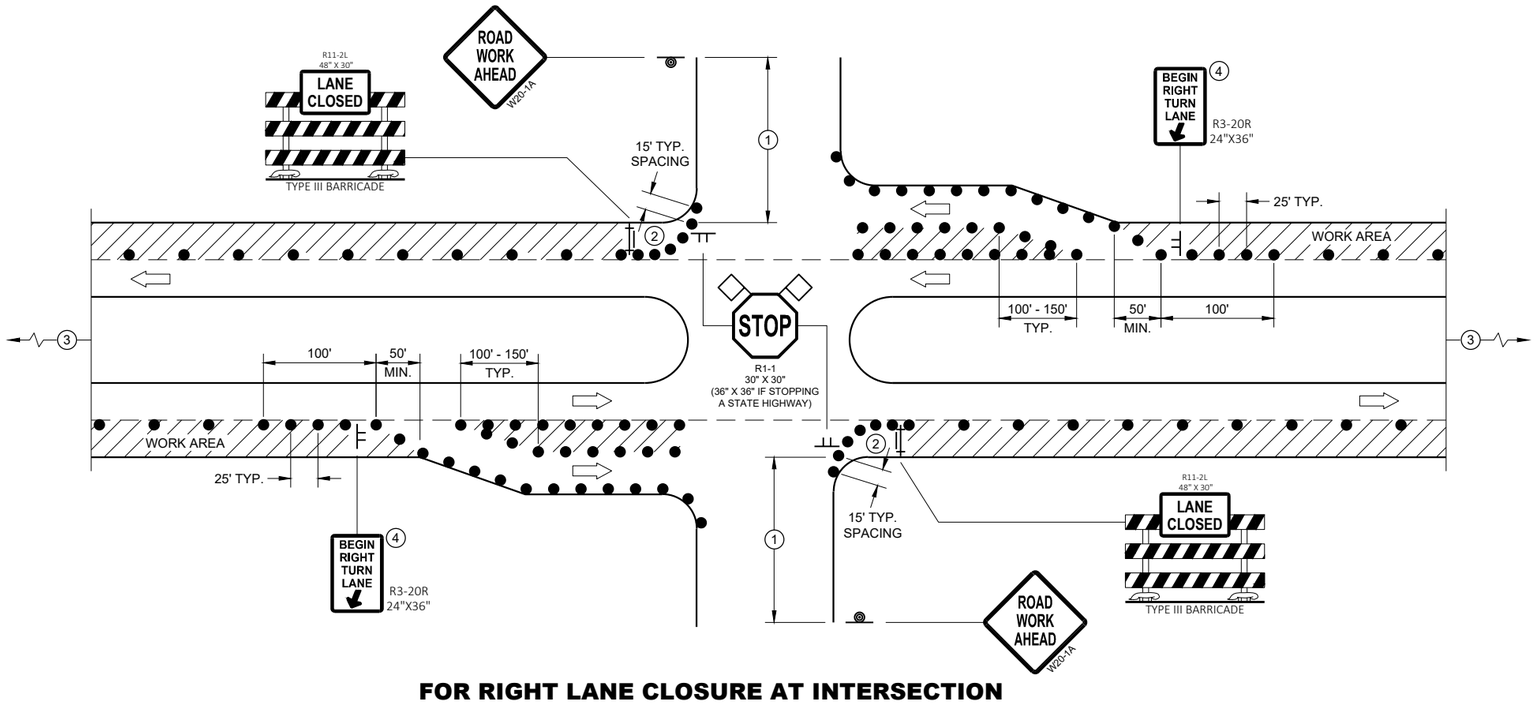

FOR RIGHT LANE CLOSURE AT INTERSECTION (WITH RIGHT TURN BAY OPEN)

LEGEND

- SIGN ON TEMPORARY SUPPORT
- SIGN ON PERMANENT SUPPORT
- TRAFFIC CONTROL DRUM
- TYPE III BARRICADE WITH ATTACHED SIGN
- DIRECTION OF TRAFFIC
- FLAGS, 16" X 16" MIN., ORANGE
- WORK AREA

TRAFFIC CONTROL, INTERSECTION WITHIN SINGLE RIGHT LANE CLOSURE

STATE OF WISCONSIN
DEPARTMENT OF TRANSPORTAT 161

SDD 15D21 - 07a

6

SDD 15D21 - 07a

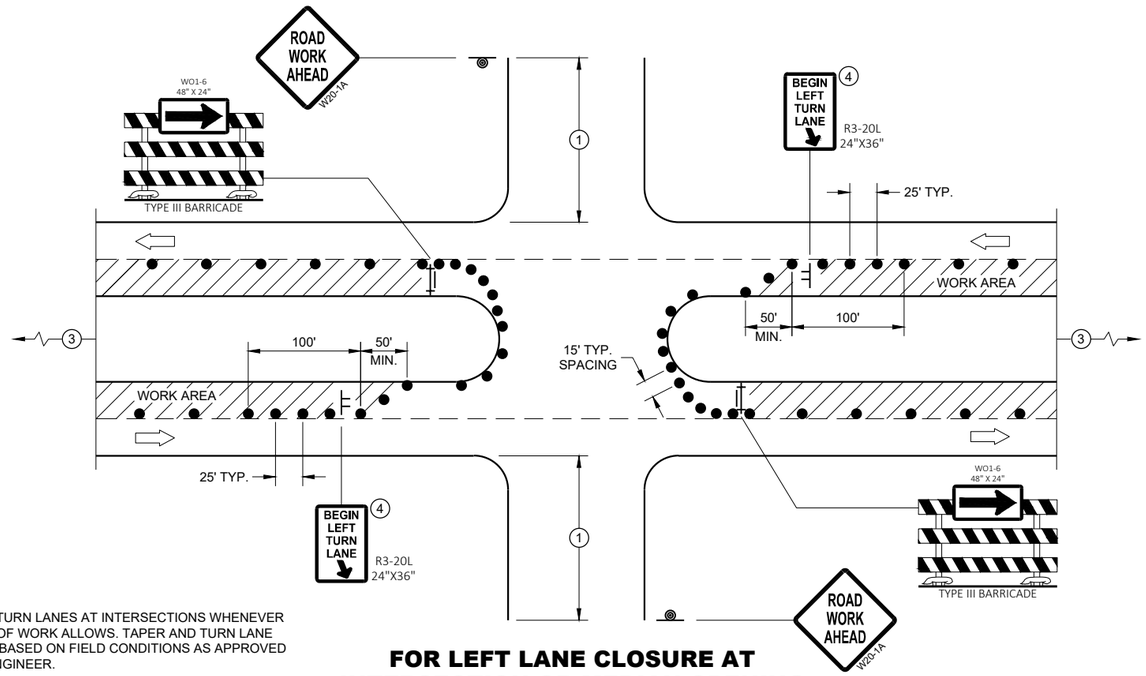

PROVIDE TURN LANES AT INTERSECTIONS WHENEVER STAGING OF WORK ALLOWS. TAPER AND TURN LANE LENGTHS BASED ON FIELD CONDITIONS AS APPROVED BY THE ENGINEER.

FOR LEFT LANE CLOSURE AT INTERSECTION OR MEDIAN OPENING

GENERAL NOTES

ALL SIGNS ARE 48"X48" UNLESS OTHERWISE NOTED. IF NECESSARY DUE TO SPACE CONSTRAINTS IN URBAN AREAS, 36" X 36" MAY BE USED IF APPROVED BY THE DISTRICT TRAFFIC UNIT.

"WO" SIGN IS THE SAME AS "W" SIGN EXCEPT THE BACKGROUND IS ORANGE.

ANY SIGNS TEMPORARY OR EXISTING, WHICH CONFLICT WITH THE TRAFFIC CONTROL "IN USE" SHALL BE REMOVED OR COVERED AS NEEDED AND AS APPROVED BY THE ENGINEER. NO WARNING LIGHTS SHALL BE WORKING ON COVERED OR "DOWNED" SIGNS.

THE EXACT NUMBER, LOCATION, AND SPACING OF ALL SIGNS AND DEVICES SHALL BE ADJUSTED TO FIT FIELD CONDITIONS AS APPROVED BY THE ENGINEER.

THE SPACING BETWEEN TRAFFIC CONTROL SIGNS SHOULD BE ADJUSTED TO NOT CONFLICT WITH AND TO PROVIDE A MINIMUM OF 200 FEET (500' DESIRABLE) DISTANCE TO EXISTING SIGNS THAT WILL REMAIN IN PLACE

SIGN LAYOUTS SHALL BE IN ACCORDANCE WITH THE FHWA'S MANUAL OF STANDARD HIGHWAY SIGNS OR THE WISCONSIN STANDARD SIGN PLATES.

SIGNS THAT WILL REMAIN IN PLACE LESS THAN 7 CONTINUOUS DAYS AND NIGHTS OR THAT WILL BE PLACED IN A CLOSED LANE MAY BE MOUNTED ON PORTABLE SUPPORTS.

BARRICADES IN A CLOSED LANE THAT MUST BE MOVED FOR A WORK OPERATION SHALL BE IMMEDIATELY REESTABLISHED UPON COMPLETION OF THE OPERATION, OR FOR CONTINUING OPERATIONS, AT THE END OF EACH WORKING DAY.

CHANNELIZING DEVICES PLACED ADJACENT TO WORK AREA SHALL BE PULLED BACK FROM THE TRAVEL LANE WHEN WORK IS NOT IN PROGRESS.

(1) 500' TYPICAL OR AT LAST INTERSECTION, WHICHEVER IS CLOSER.
350' IF 35 - 40 MPH.
200' IF 25 - 30 MPH.

(2) ALSO USE BARRICADE AND 15 FOOT TYPICAL DRUM SPACING AT COMMERCIAL DRIVEWAYS

(3) SEE SEPARATE LANE CLOSURE DETAIL FOR ADDITIONAL TRAFFIC CONTROL.

(4) MINIMUM MOUNTING HEIGHT OF 5 FEET FROM EDGE OF PAVEMENT (AT EDGE LINE LOCATION) TO BOTTOM OF SIGN.

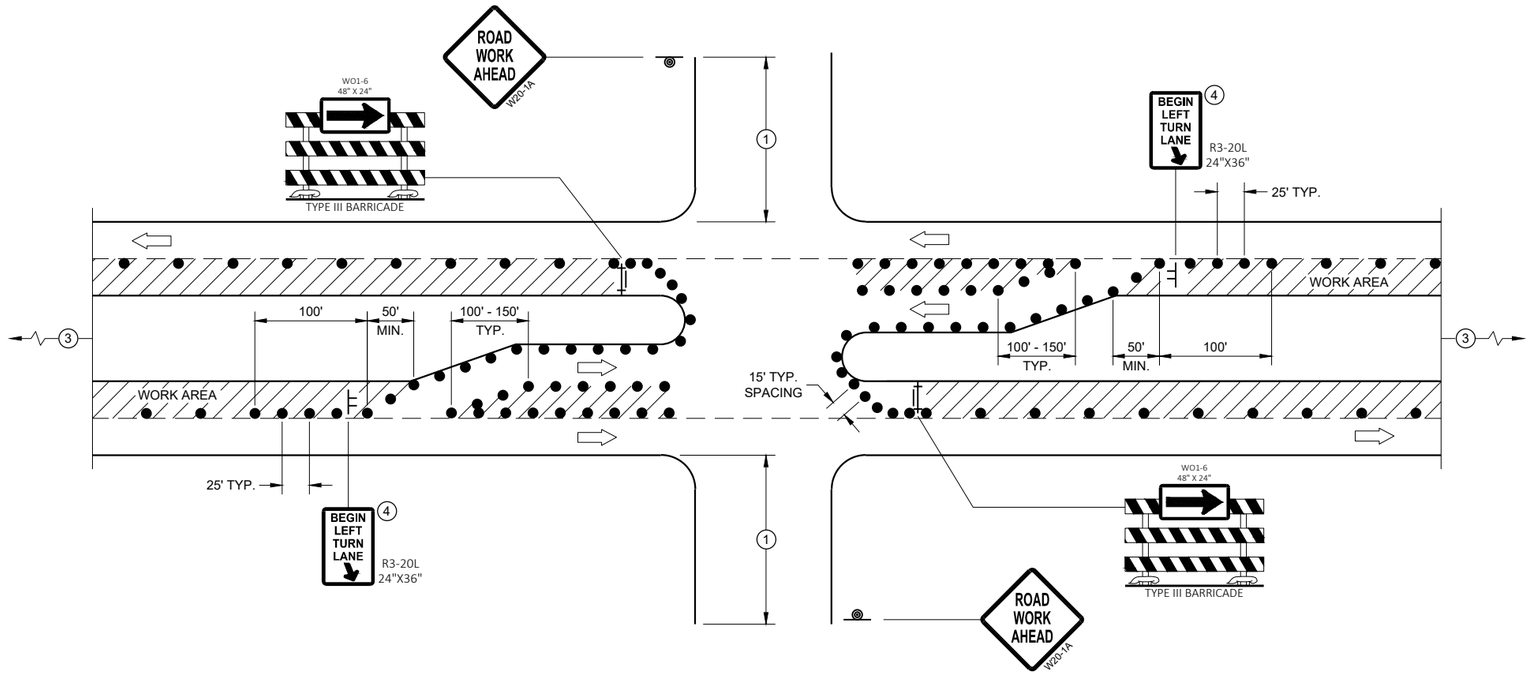

FOR LEFT LANE CLOSURE AT INTERSECTION OR MEDIAN OPENING (WITH LEFT TURN BAY OPEN)

LEGEND

- SIGN ON TEMPORARY SUPPORT
- SIGN ON PERMANENT SUPPORT
- TRAFFIC CONTROL DRUM
- TYPE III BARRICADE WITH ATTACHED SIGN
- DIRECTION OF TRAFFIC
- FLAGS, 16" X 16" MIN., ORANGE
- WORK AREA

TRAFFIC CONTROL, INTERSECTION WITHIN SINGLE LEFT LANE CLOSURE

STATE OF WISCONSIN
DEPARTMENT OF TRANSPORTATION

APPROVED
August 2020
DATE

/S/ Andrew Heidtke
WORK ZONE ENGINEER

FHWA

6

SDD 15D21 - 07b

6

SDD 15D21 - 07b

LEGEND

- SIGN ON PERMANENT SUPPORT
- TRAFFIC CONTROL DRUM
- DIRECTION OF TRAFFIC
- WORK ZONE

GENERAL NOTES

ALL SIGNS ARE 48"X48" UNLESS OTHERWISE NOTED. IF NECESSARY DUE TO SPACE CONSTRAINTS IN URBAN AREAS, 36" X 36" SIGNS MAY BE USED IF APPROVED BY THE REGIONAL TRAFFIC UNIT.

"WO" SIGN IS THE SAME AS "W" SIGN EXCEPT THE BACKGROUND IS ORANGE.

ANY SIGNS TEMPORARY OR EXISTING, WHICH CONFLICT WITH THE TRAFFIC CONTROL "IN USE" SHALL BE REMOVED OR COVERED AS NEEDED AND AS APPROVED BY THE ENGINEER.

THE EXACT NUMBER, LOCATION, AND SPACING OF ALL SIGNS AND DEVICES SHALL BE ADJUSTED TO FIT FIELD CONDITIONS AS APPROVED BY THE ENGINEER.

CHANNELIZING DEVICES PLACED ADJACENT TO WORK AREA SHALL BE PULLED BACK FROM THE TRAVEL LANE WHEN WORK IS NOT IN PROGRESS.

SIGNS THAT WILL BE IN PLACE LESS THAN 7 CONTINUOUS DAYS AND NIGHTS MAY BE MOUNTED ON PORTABLE SUPPORTS.

W20-1A AND G20-2A SIGNS ARE NOT REQUIRED IF THE WORK AREA IS WITHIN A LARGER WORK ZONE WHERE THESE SIGNS ARE ALREADY PRESENT. G20-2A SIGNS MAY ALSO BE OMITTED IF DURATION OF WORK IS LESS THAN 7 CONTINUOUS DAYS AND NIGHTS.

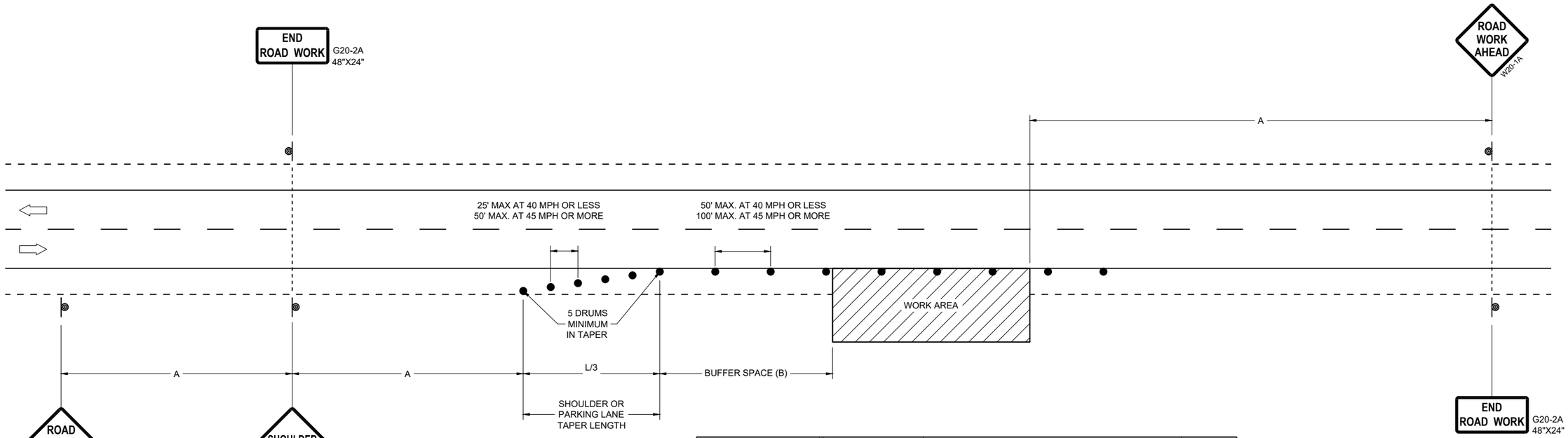

POSTED SPEED LIMIT PRIOR TO WORK STARTING (MPH)	ADVANCE WARNING SIGN SPACING (A) FEET	SHOULDER TAPER L / 3 W, LATERAL OFFSET (FT)						BUFFER SPACE (B) FEET
		3	4	5	6	7	8	
25	200'	10	14	17	21	24	28	155
30	200'	15	20	25	30	35	40	200
35	350'	20	27	34	40	47	54	250
40	350'	26	35	44	53	62	70	305
45	500'	45	59	74	89	104	119	360
50	500'	50	66	83	99	116	132	425
55	500'	54	73	91	109	127	145	495

TRAFFIC CONTROL, WORK ON SHOULDER OR PARKING LANE, UNDIVIDED ROADWAY

STATE OF WISCONSIN
DEPARTMENT OF TRANSPORTATION

APPROVED
November 2025
DATE

/S/ ANDREW HEIDTKE
STATEWIDE WORK ZONE TRAFFIC SAFETY ENGINEER

FHWA

6
SDD 15D28-05

LEGEND

TYPE III BARRICADE WITH ATTACHED SIGN

SIGN ON PERMANENT SUPPORT

TRAFFIC CONTROL DRUM WITH TYPE "C" STEADY BURN LIGHT

TRAFFIC CONTROL DRUM

FLAGS, 16" X 16" MIN. (ORANGE)

REMOVING PAVEMENT MARKING

DIRECTION OF TRAFFIC

ASPHALTIC PAVEMENT WIDENING

CONCRETE BARRIER TEMPORARY PRECAST

TEMPORARY SIGNAL. SEE SDD 09G02 FOR EXACT PLACEMENT

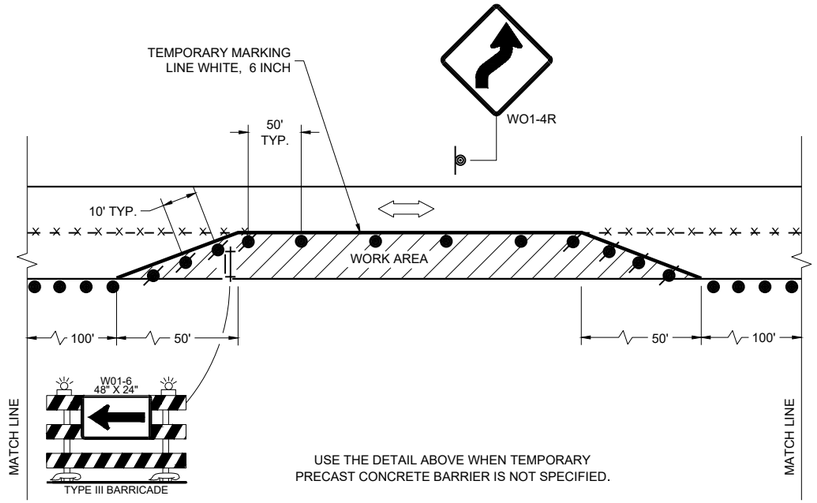

USE THE DETAIL ABOVE WHEN TEMPORARY PRECAST CONCRETE BARRIER IS NOT SPECIFIED.

GENERAL NOTES

THE EXACT NUMBER, LOCATION, AND SPACING OF ALL SIGNS AND DEVICES SHALL BE ADJUSTED TO FIT FIELD CONDITIONS AS APPROVED BY THE ENGINEER.

THE SPACING BETWEEN TRAFFIC CONTROL SIGNS SHOULD BE ADJUSTED TO NOT CONFLICT WITH AND TO PROVIDE A MINIMUM OF 200 FEET (500 FEET DESIRABLE) CLEARANCE TO EXISTING SIGNS THAT WILL REMAIN IN PLACE..

THIS LANE CLOSURE IS TYPICAL FOR CLOSING RIGHT LANE - REVERSE FOR CLOSING LEFT LANE.

ALL SIGNS ARE 48" x 48" UNLESS OTHERWISE NOTED.

"WO" IS THE SAME AS "W" EXCEPT THE BACKGROUND IS ORANGE.

ANY SIGNS TEMPORARY OR EXISTING, WHICH CONFLICT WITH TRAFFIC CONTROL "IN USE" SHALL BE REMOVED OR COVERED AS NEEDED OR AS APPROVED BY THE ENGINEER.

REMOVE PAVEMENT MARKING AND PLACE TEMPORARY PAVEMENT MARKING LINES IF THE CLOSURE IS TO BE IN PLACE FOR 4 OR MORE CONTINUOUS DAYS AND NIGHTS.

INSTALL OVERHEAD TEMPORARY SIGNAL HEADS ABOVE THE MIDDLE OF THE TRAVEL LANE THEY ARE CONTROLLING.

(1) 500 FOOT SPACING SHOWN IS FOR ROADWAYS WITH A PRE-CONSTRUCTION REGULATORY SPEED LIMIT OF 45 MPH OR MORE. FOR 35 - 40 MPH, USE 350 FOOT TYPICAL SPACING. FOR 25 - 30 MPH, USE 200 FOOT TYPICAL SPACING.

(2) USE 300 FOOT SPACING IF THE PRE - CONSTRUCTION REGULATORY SPEED IS 35 MPH OR LESS.

(3) DIMENSION DETERMINED BY CBTP TAPER FROM EDGE LINE TO TANGENT SECTION OF THE ROAD.

(4) TEMPORARY PAVEMENT MARKING LINE, 18 INCH WHITE STOP LINE.

(5) 700 FOOT TEMPORARY PAVEMENT MARKING LINE, 6 INCH DOUBLE YELLOW . WHEN THE DISTANCE FOR THE PRECEDING NO - PASSING ZONE IS LESS THAN THE MINIMUM DISTANCE BETWEEN ZONES AS INDICATED IN THE SPECIFICATIONS, THE TWO ZONES SHALL BE CONNECTED.

(6) SEE SDD 15C02 - SHEET "F" FOR ADVANCED WIDTH RESTRICTION SIGNING.

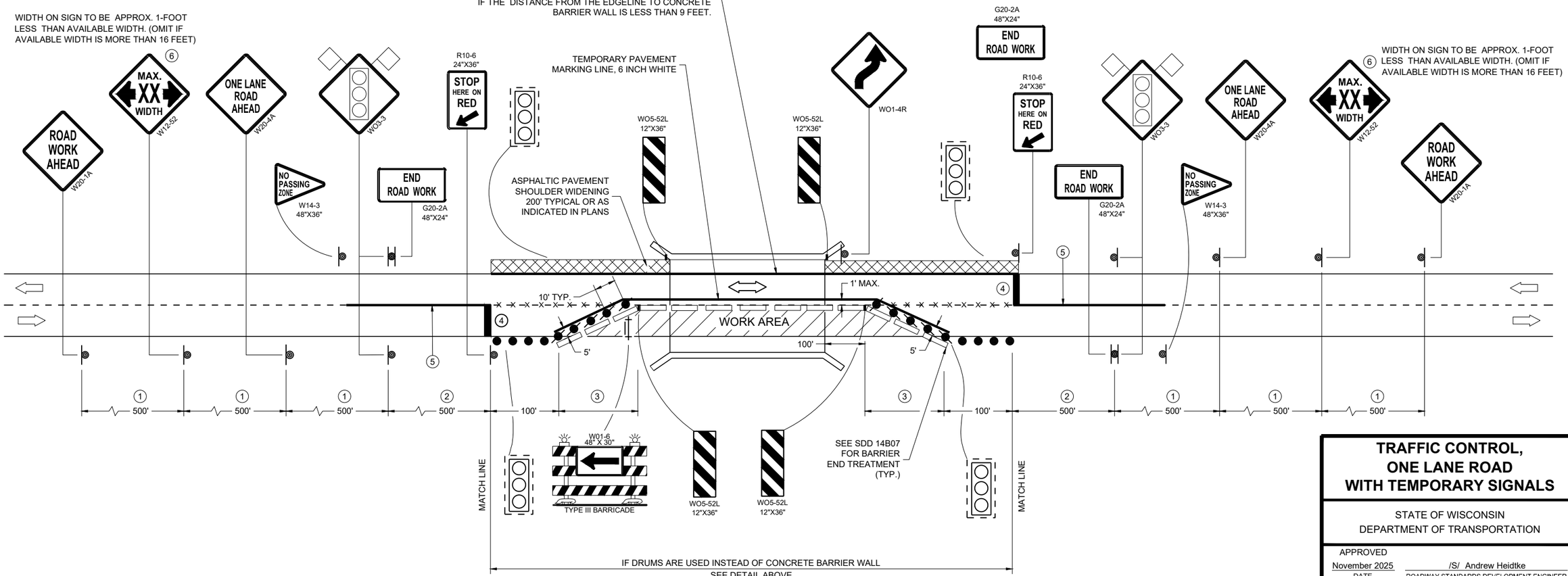

TRAFFIC CONTROL, ONE LANE ROAD WITH TEMPORARY SIGNALS

STATE OF WISCONSIN
DEPARTMENT OF TRANSPORTATION

APPROVED
November 2025 — DATE
/S/ Andrew Heidtke — ROADWAY STANDARDS DEVELOPMENT ENGINEER

FHWA

6
SDD 15D33-10a

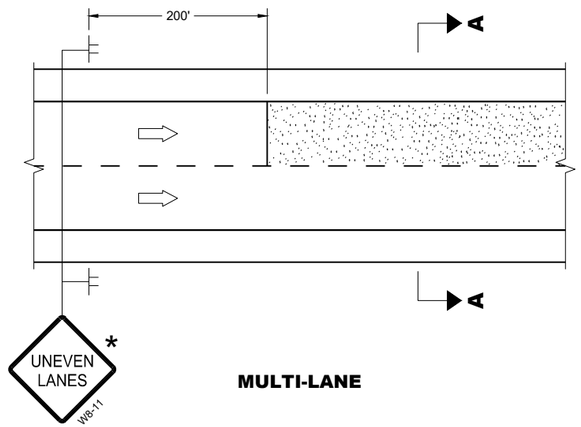

MULTI-LANE

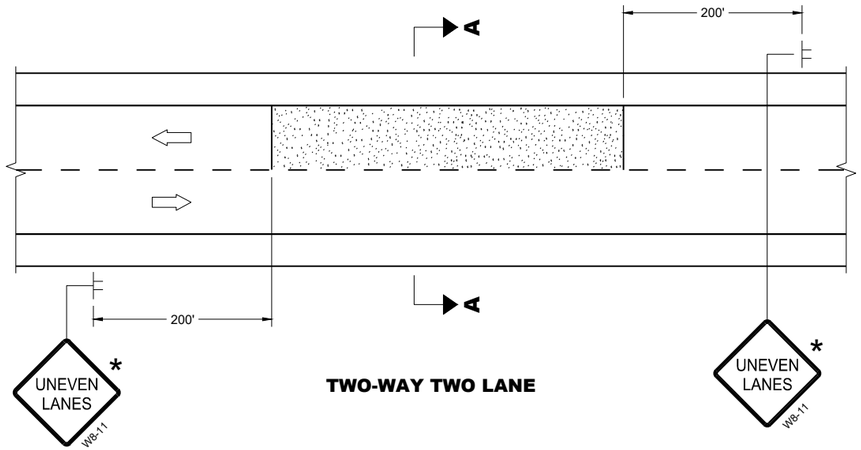

TWO-WAY TWO LANE

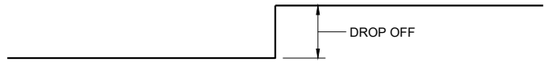

SECTION A - A

OR

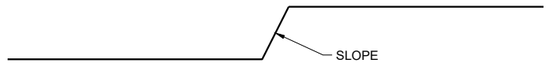

SECTION A - A

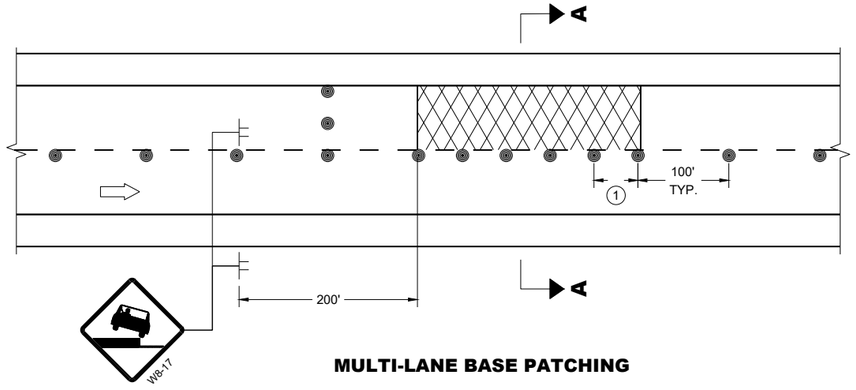

MULTI-LANE BASE PATCHING

ADJACENT LANE DROP-OFFS

GENERAL NOTES

FOR SPOT LOCATIONS USE ENGINEERING JUDGEMENT WHEN PLACING ADDITIONAL SIGNS.

ALL SIGNS ARE 48" X 48" UNLESS OTHERWISE NOTED.

"WO" SIGNS ARE THE SAME AS "W" SIGNS EXCEPT THE BACKGROUND IS ORANGE.

WARNING LIGHTS ARE NOT REQUIRED IF THE LANE CLOSURE IS A DAYTIME ONLY OPERATION.

* IF THE DROP-OFF IS CONTINUOUS ALONG THE PROJECT, PLACE ADDITIONAL SIGNS EVERY 1 MILE AND AFTER EVERY ENTRANCE RAMP.

(1) USE CLOSER SPACING WHEN DELINEATING DROP-OFF.

LEGEND

- SIGN ON TEMPORARY SUPPORT
- TRAFFIC CONTROL DRUM
- TYPE III BARRICADE WITH ATTACHED SIGN
- TYPE "A" WARNING LIGHT (FLASHING)
- DIRECTION OF TRAFFIC
- WORK AREA WITH DROP-OFF
- MILLED SURFACE

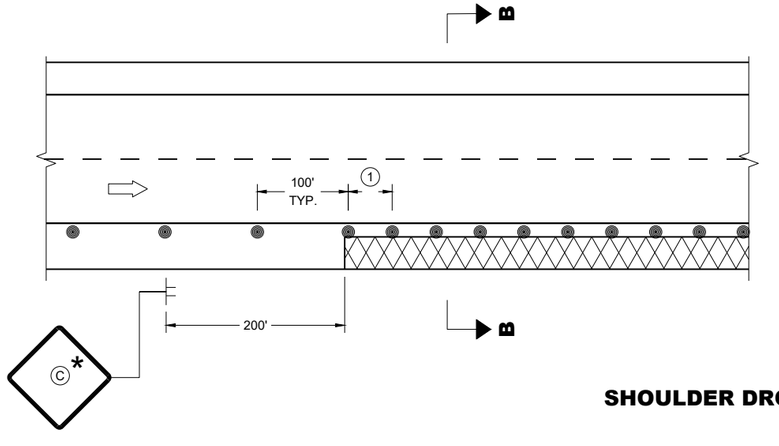

SHOULDER DROP-OFFS

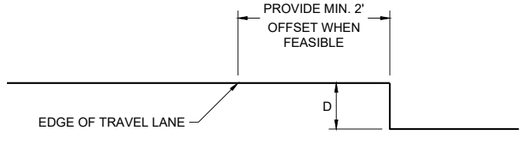

SECTION B - B

D	SIGN (C)
< 2" WITH A SLOPE STEEPER THAN 3:1	LOW SHOULDER WO8-9
2" < 6" WITH A SLOPE STEEPER THAN 3:1	SHOULDER DROP - OFF W8-9A
	PROVIDE A 3:1 OR FLATTER SLOPE OF MATERIAL ADJACENT TO THE PAVEMENT

TRAFFIC CONTROL, DROP-OFF SIGNING

STATE OF WISCONSIN
DEPARTMENT OF TRANSPORTATION

APPROVED
February 2025 — DATE
/S/ Andrew Heidtke — WORK ZONE ENGINEER

FHWA

6
SDD 15D39-03

GENERAL NOTES

DRAWING NOT TO SCALE. ALL SIGNS AND POSTS ON THIS SHEET SHALL BE PAID FOR WITH 'TRAFFIC CONTROL SIGNS' BID ITEM. ALL SIDE ROADS WHICH ARE UNDER CONSTRUCTION OF CURB AND GUTTER AND/OR GRADING SHALL BE ADEQUATELY SIGNED.

ALL SIGNS AND DEVICES SHALL BE IN CONFORMANCE WITH THE WISCONSIN MANUAL OF UNIFORM TRAFFIC CONTROL DEVICES (WMUTCD). SIGN LAYOUTS SHALL BE IN ACCORDANCE WITH THE WISDOT STANDARD SIGN PLATES.

"WO" SIGNS ARE THE SAME AS "W" SIGNS EXCEPT THAT THE BACKGROUND IS ORANGE.

ALL SIGNS ARE 48" X 48" UNLESS OTHERWISE NOTED.

THE EXACT NUMBER, LOCATION AND SPACING OF ALL SIGNS AND DEVICES SHALL BE ADJUSTED TO FIT FIELD CONDITIONS AS DIRECTED BY THE ENGINEER.

ALL SIGNS INAPPROPRIATE TO THE STATUS OF THE CONTROL ZONE, INCLUDING PRE-EXISTING SIGNS IN THE VICINITY, SHALL BE COVERED OR REMOVED AS DIRECTED BY THE ENGINEER.

SEE 15C34 FOR ADDITIONAL TRAFFIC CONTROL SIGNING WHEN CENTERLINE PAVEMENT MAKINGS ARE MISSING. 'DO NOT PASS' SIGNS MUST BE INSTALLED ON THE SAME DAY AS MILLING OPERATIONS.

(1) PLACE SIGNS 350' IN ADVANCE OF MILLED SURFACES AND AT 1 MILE INTERVALS, OR AS DIRECTED BY THE ENGINEER.

(2) PLACE SIGN 200' MIN. FROM INTERSECTION AND 200' MIN. AFTER ADVANCE WARNING SIGN SHOWN IN SDD 15C04.

LEGEND

SIGN ON TEMPORARY SUPPORT

DIRECTION OF TRAFFIC

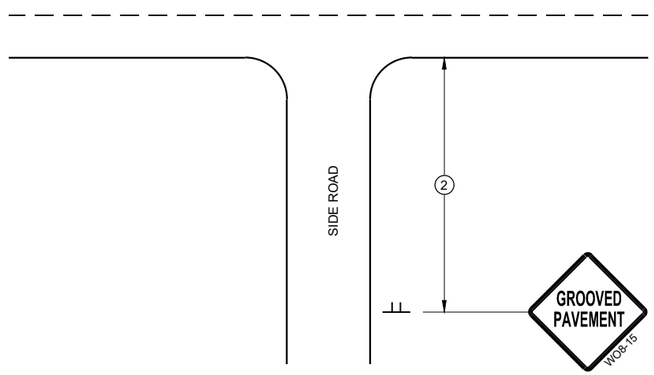

TYPICAL SIDE ROAD APPROACH SIGN DETAIL

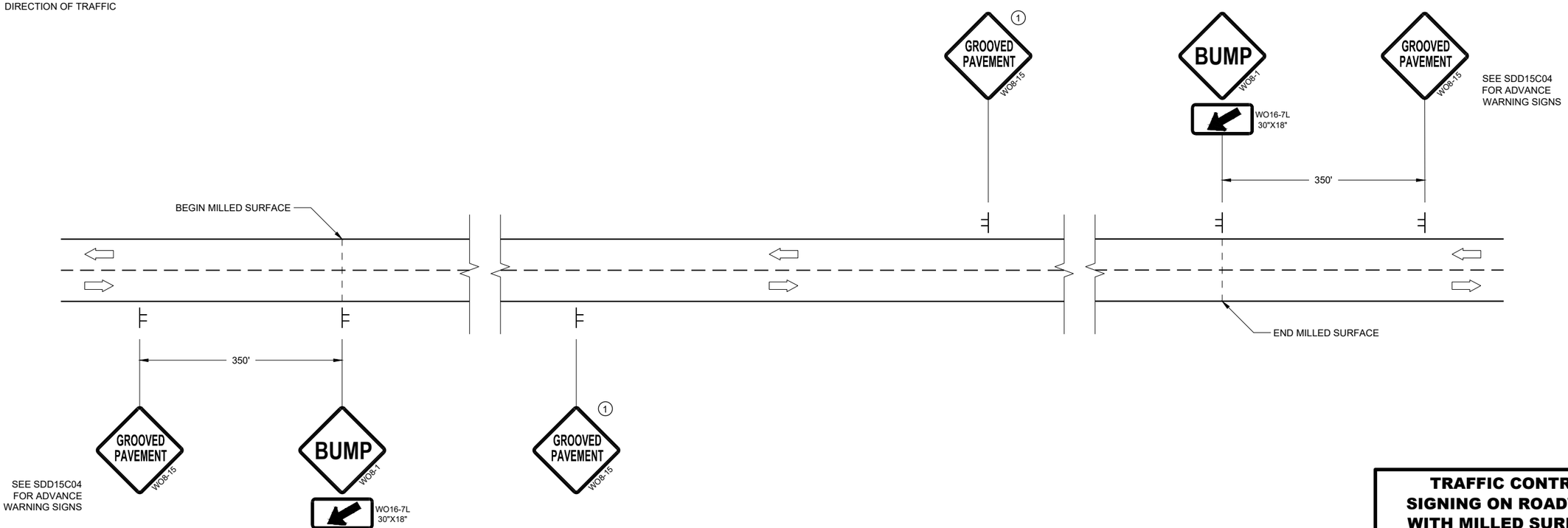

DETAIL FOR SIGNING ON MILLED SURFACES

TRAFFIC CONTROL, SIGNING ON ROADWAYS WITH MILLED SURFACES

STATE OF WISCONSIN
DEPARTMENT OF TRANSPORTATION

APPROVED
February 2020
DATE

/S/ Andrew Heidtke
WORK ZONE ENGINEE

FHWA

SDD 15D44 - 02

SDD 15D44 - 02

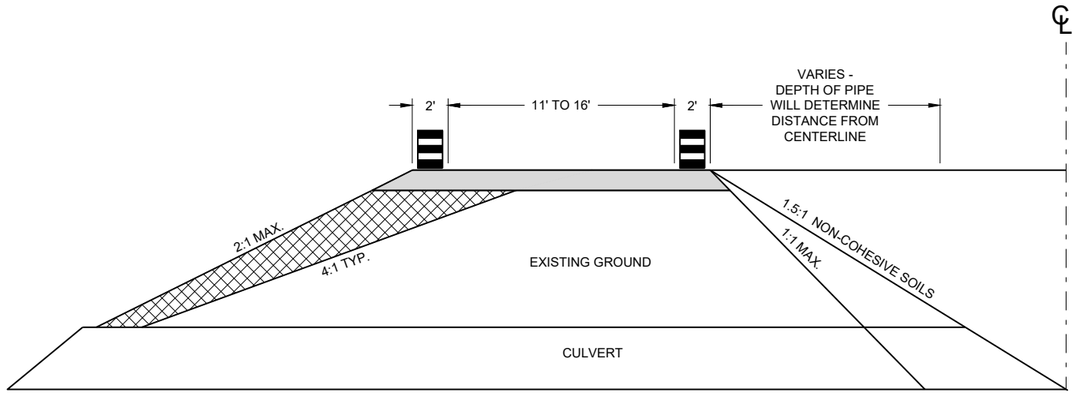

CROSS SECTION

GENERAL NOTES

USE 1:1 FOR COHESIVE CLAYS AND SILTS, LOAMS, SANDY CLAYS AND ANGULAR GRAVEL SOILS.
USE 1.5:1 FOR NON-COHESIVE SOILS.

THE TAPER SHOULD EXTEND ACROSS THE SHOULDER UNLESS DOING SO WOULD GREATLY CONFLICT WITH THE WORK OPERATION.

ALL LANE CLOSURE SIGNS SHALL BE REMOVED OR COVERED AND ALL DEVICES REMOVED BEYOND THE SHOULDER WHEN WORK IS NOT IN PROGRESS AND THE LANE IS RESTORED TO A SAFE OPERATING CONDITION.

CHANNELIZING DEVICES PLACED ADJACENT TO WORK AREA SHALL BE PULLED BACK FROM TRAVEL LANE WHEN WORK IS NOT IN PROGRESS.

USE WITH SDD 15C12 "TRAFFIC CONTROL FOR LANE CLOSURE WITH FLAGGING OPERATIONS"

USE WITH SDD 15D45 "SIGNING ON ROADWAYS WITH LOOSE GRAVEL"

LEGEND

- DRUM WITHOUT WARNING LIGHT
- 6" BASE AGGREGATE DENSE 1 ¼" -INCIDENTAL TO LANE SHIFT ITEM
- FILL - INCIDENTAL TO LANE SHIFT ITEM
- WORK AREA
- FLAGGER, EQUIPPED WITH STOP/SLOW PADDLE FASTENED ON SUPPORT STAFF

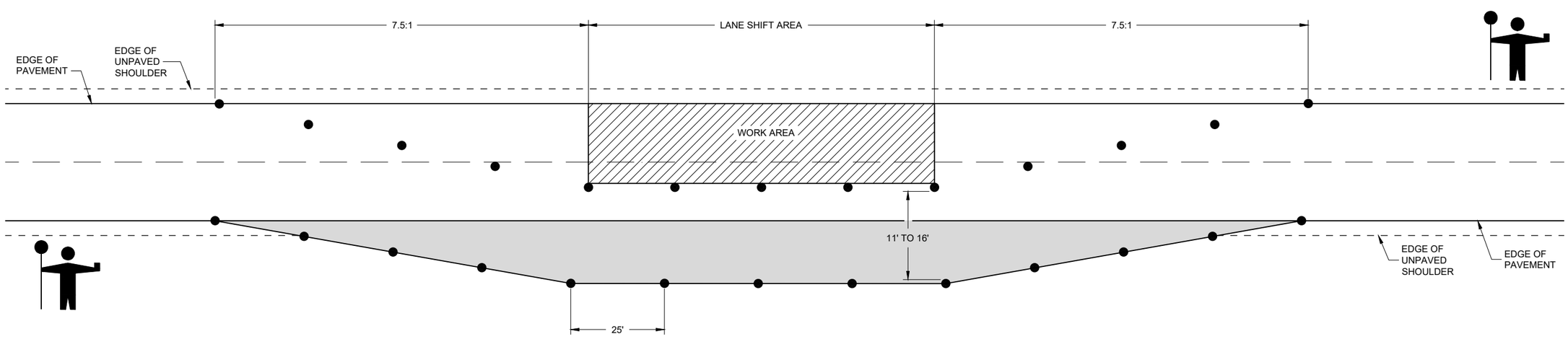

LANE SHIFT IN FLAGGING OPERATION

TRAFFIC CONTROL, TEMPORARY LANE SHIFT DURING CULVERT WORK

STATE OF WISCONSIN
DEPARTMENT OF TRANSPORTATION

APPROVED
February 2021
DATE

/S/ Andrew Heidtke
WORK ZONE ENGINEE

FHWA

6

SDD 15D48 - 01

6

SDD 15D48 - 01

LEGEND

- TYPE III BARRICADE WITH ATTACHED SIGN
- SIGN ON PERMANENT SUPPORT
- TRAFFIC CONTROL DRUM
- TRAFFIC CONTROL DRUM WITH TYPE "C" STEADY BURN LIGHT
- TYPE "A" WARNING LIGHT (FLASHING)
- DIRECTION OF TRAFFIC
- WORK AREA

POSTED SPEED LIMIT PRIOR TO WORK STARTING (MPH)	ADVANCE WARNING SIGN SPACING (A) FEET	SHIFTING TAPER L/2 W, LATERAL OFFSET (FT)					
		3	4	5	6	7	8
25	200	10	14	17	21	24	28
30	200	15	20	25	30	35	40
35	350	20	27	34	40	47	54
40	350	26	35	44	53	62	70
45	500	45	59	74	89	104	119
50	500	50	66	83	99	116	132
55	500	54	73	91	109	127	145

GENERAL NOTES

THE EXACT NUMBER, LOCATION, AND SPACING OF ALL SIGNS AND DEVICES SHALL BE ADJUSTED TO FIT FIELD CONDITIONS AS APPROVED BY THE ENGINEER.

ALL SIGNS ARE 48"x48" UNLESS OTHERWISE NOTED. IF NECESSARY DUE TO SPACE CONSTRAINTS IN URBAN AREAS, 36"x36" SIGNS MAY BE USED IF APPROVED BY THE REGIONAL TRAFFIC UNIT.

"WO" IS THE SAME AS "W" EXCEPT THE BACKGROUND IS ORANGE.

ANY SIGNS TEMPORARY OR EXISTING, WHICH CONFLICT WITH TRAFFIC CONTROL "IN USE" SHALL BE REMOVED OR COVERED AS NEEDED AND AS APPROVED BY THE ENGINEER.

CHANNELIZING DEVICES PLACED ADJACENT TO WORK AREA SHALL BE PULLED BACK FROM THE TRAVEL LANE WHEN WORK IS NOT IN PROGRESS.

SIGNS THAT WILL BE IN PLACE LESS THAN 7 CONTINUOUS DAYS AND NIGHTS MAY BE MOUNTED ON PORTABLE SUPPORTS.

W20-1 AND G20-2A SIGNS ARE NOT REQUIRED IF THE WORK AREA IS WITHIN A LARGER WORK ZONE WHERE THESE SIGNS ARE ALREADY PRESENT. G20-2A SIGNS MAY ALSO BE OMITTED IF DURATION WORK IS LESS THAN SEVEN CONTINUOUS DAYS AND NIGHTS.

(1) DRUMS IN A CLOSED LANE THAT MUST BE MOVED FOR A WORK OPERATION SHALL BE IMMEDIATELY REESTABLISHED UPON COMPLETION OF THE OPERATION, OR FOR CONTINUING OPERATIONS, AT THE END OF EACH WORKING DAY.

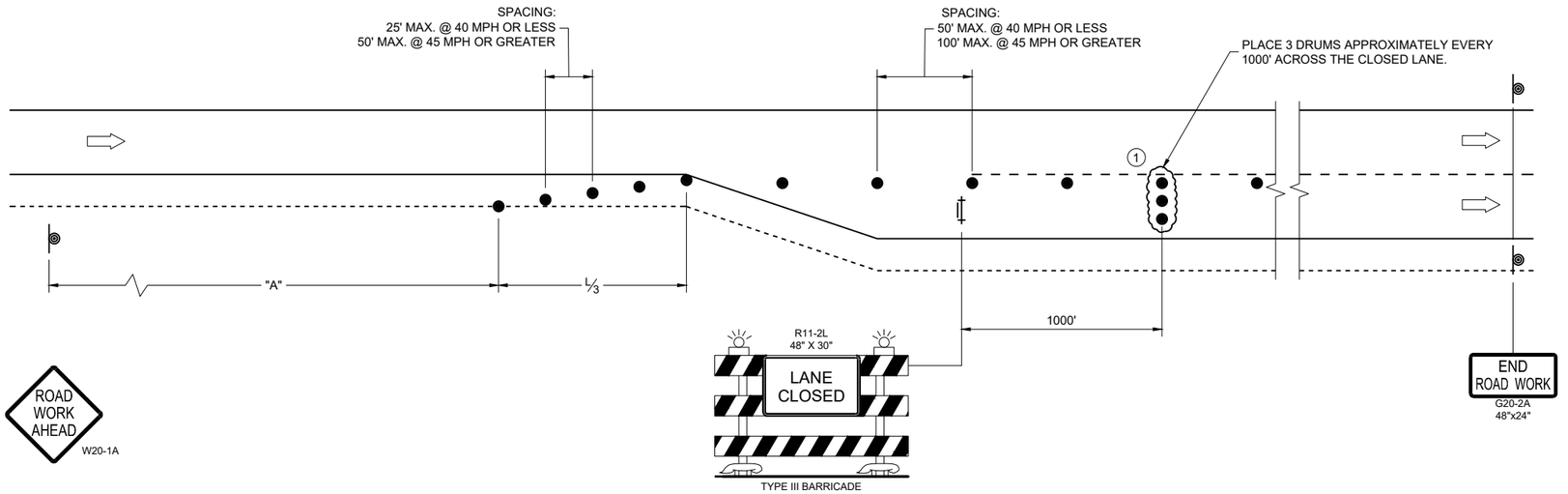

TRAFFIC CONTROL
ADDED LANE CLOSURE
WITHOUT LANE SHIFT

STATE OF WISCONSIN
DEPARTMENT OF TRANSPORTATION

APPROVED
February 2025 — DATE
/S/ Andrew Heidtke — WORK ZONE ENGINEER

FHWA

6
SDD 15D50-04a

URBAN AREA

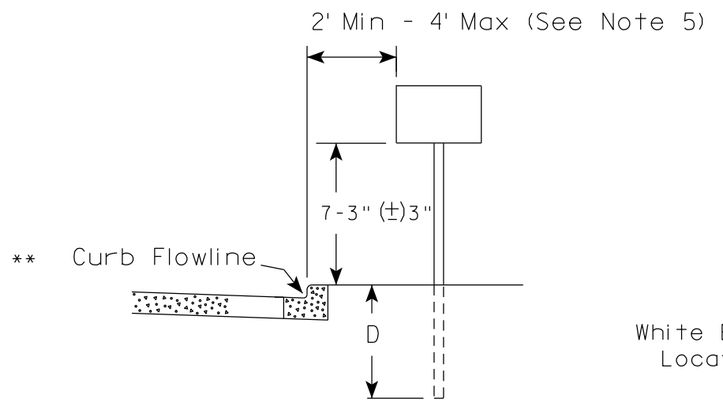

RURAL AREA (See Note 2)

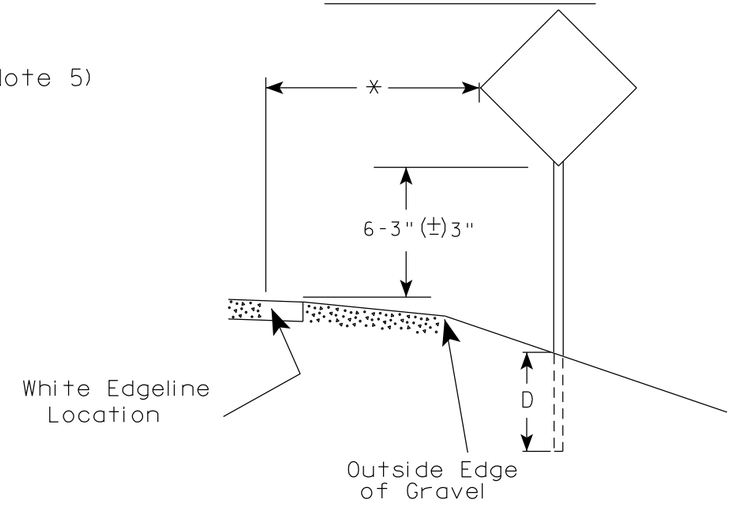

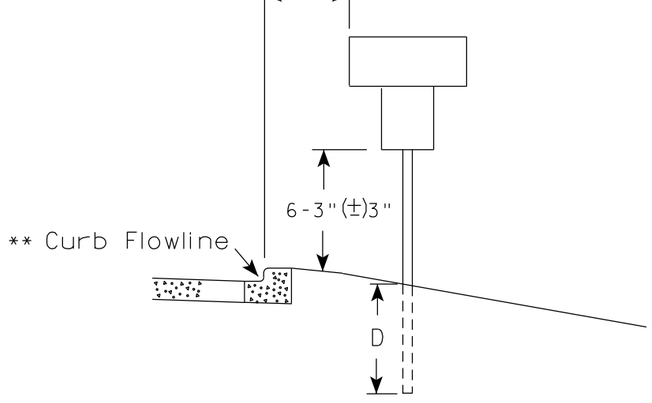

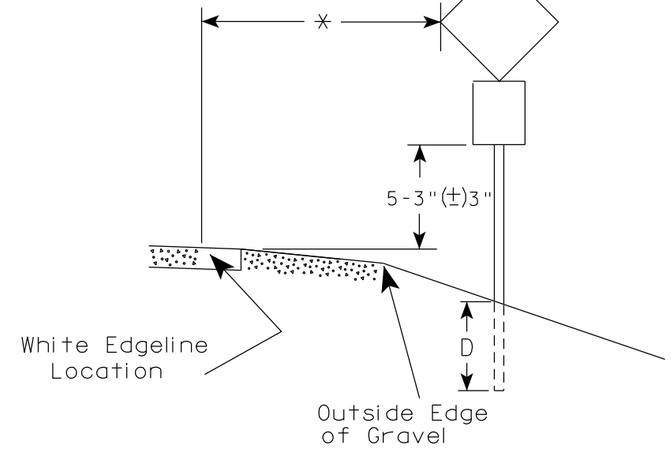

** The existence of curb and gutter does not in itself mandate the vertical clearance illustrated. That height is typically measured where there is sidewalk adjacent to the roadway or parking is permitted. In the absence of sidewalk vertical clearance is measured from the top of the curb. Offset of signs is measured from the flow line.

* 6 feet from edge of a paved shoulder or 12 feet from the edge of pavement (edge line location) or 2 feet from outside edge of gravel, whichever is greater unless directed by project engineer.

POST EMBEDMENT DEPTH

Area of Sign Installation (Sq. Ft.)	D (Min)
20 or Less	4'
Greater than 20	5'

GENERAL NOTES

1. Signs wider than 4 feet or 20 sq.ft or larger, shall be mounted on multiple posts. Refer to plate A4-4.
2. If signs are mounted on or behind barrier wall, see A4-10 sign plate.
   The Double Arrow sign (W12-1D) shall be mounted at a height of 2'-3" (±) 3". The Chevron sign (W1-8), Roundabout Chevron panel (R6-4B), Enhanced Reference Markers, Clearance Markers (W5-52), Mile Markers (D10 series), In Road Object Markers (W5-54) & End of Road Markers (W5-56) shall be mounted at a height of 4'-3" (±) 3".
3. For expressways and freeways, mounting height is 7'- 3" (±) 3" or 6'-3" (±) 3" depending upon existence of a sub-sign.
4. Minimum mounting height for signs mounted on traffic signal poles is 5'- 3" (±) 3".
5. Offset distance shall be consistent with existing signs or consistent throughout length of project.
6. Folding signs shall be mounted at a height of 5'-3" (±) 3" or as directd by the Engineer.

TYPICAL INSTALLATION OF PERMANENT TYPE II SIGNS ON SINGLE POSTS

WISCONSIN DEPT OF TRANSPORTATION

APPROVED Matthew R Rauch
for State Traffic Engineer

DATE 12/6/23 PLATE NO. A4-3.23

PROJECT NO:	HWY:	COUNTY:		SHEET NO: 169	E

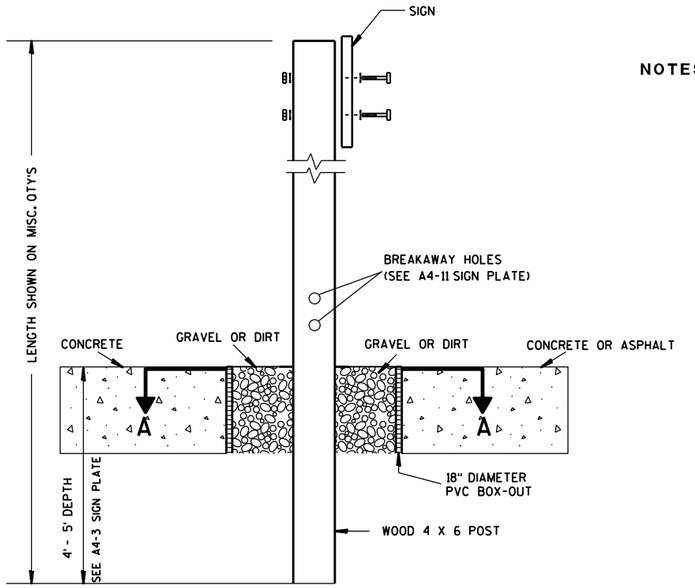

ELEVATION VIEW

DETAIL OF WOOD 4 X 6 SIGN POST IN BOX-OUT

NOTES:
1. ALL MATERIAL TO BE APPROVED BY ENGINEER PRIOR TO INSTALLATION
2. SEE SIGN PLATE A4-8 FOR SIGN HARDWARE REQUIREMENTS
3. 18 INCH X 18 INCH SQUARE BOX-OUTS MAY BE USED FOR INSTALLATIONS IN EXISTING CONCRETE OR ASPHALT LOCATIONS.

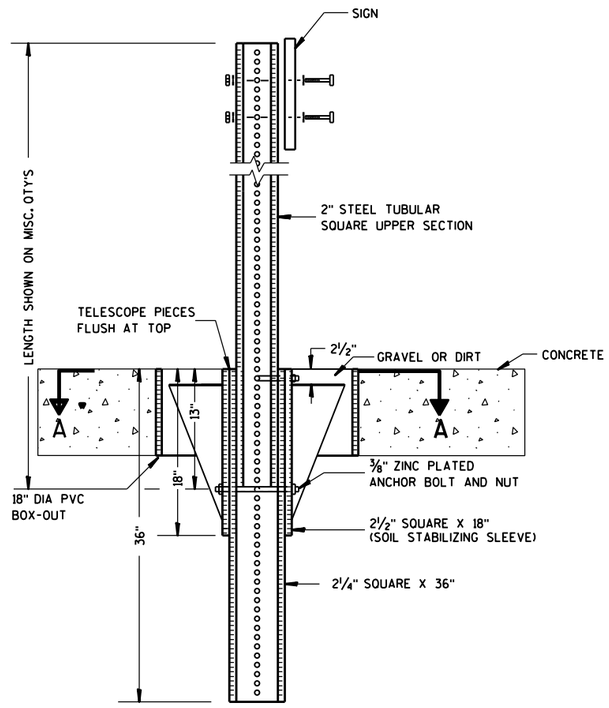

ELEVATION VIEW

DETAIL OF STEEL 2 X 2 SIGN POST IN BOX-OUT

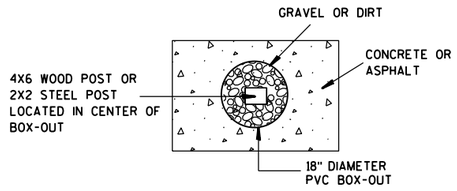

PLAN VIEW

FOR NEW CONCRETE/ASPHALT INSTALLATIONS

SIGN POST BOX-OUTS A4-3B

WISCONSIN DEPT OF TRANSPORTATION

APPROVED Matthew R Rauch
for State Traffic Engineer

DATE 1/27/14 PLATE NO. A4-3B.1

PROJECT NO:	HWY:	COUNTY:		SHEET NO:	E

FILE NAME : C:\CAEFiles\Projects\tr_stdplate\A43B.DGN PLOT DATE : 27-JAN-2014 09:48 PLOT BY : mscsja PLOT NAME : PLOT SCALE : 13.659812:1.000000 WISDOT/CADDS SHEET 42

URBAN AREA

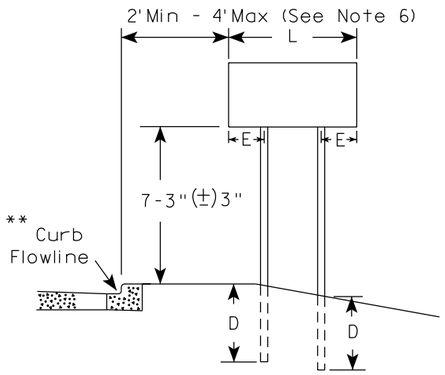

RURAL AREA (See Note 3)

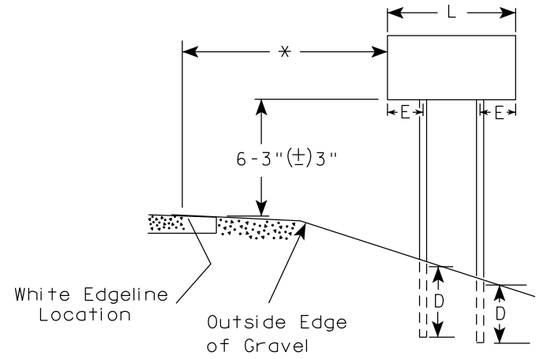

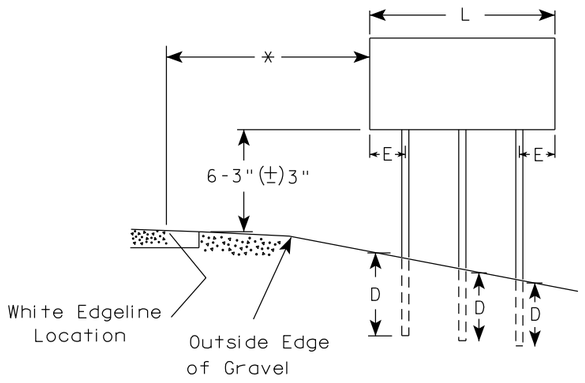

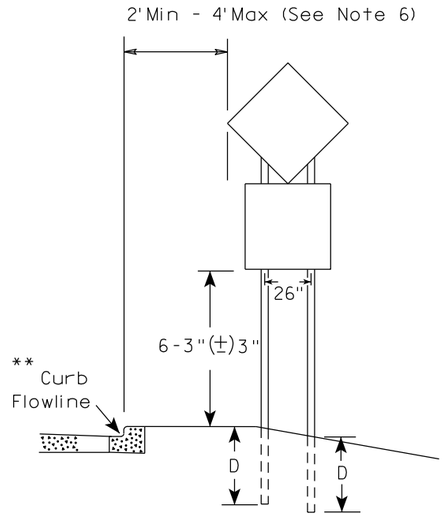

48" DIAMOND WARNING SIGN

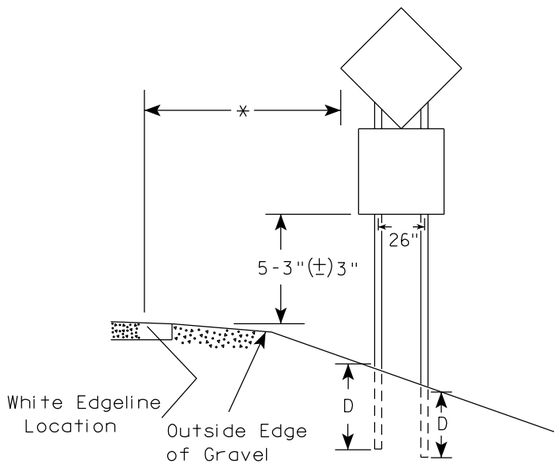

48" DIAMOND WARNING SIGN

SIGN SHAPE OTHER THAN DIAMOND (TWO POSTS REQUIRED)		
	L	E
***	Greater than 48" Less than 60"	12"
	60" to 108"	L/5

SIGN SHAPE OTHER THAN DIAMOND (THREE POSTS REQUIRED)	
L	E
Greater than 108" to 144"	12"

GENERAL NOTES

1. For 3 or 4 post installations, individual post spacing shall be greater than 3'-6".
2. See tables below for required number of posts.
3. For expressways and freeways, mounting height is 7'-3" (±) 3" or 6'-3" (±) 3" depending upon existence of sub-sign.
4. The (±) tolerance for mounting height is 3 inches.
5. J-Assemblies are considered to be one sign for mounting height.
6. Offset distance shall be consistent with existing signs or consistent throughout length of project.
7. Folding signs shall be mounted at a height of 5'-3" (±) 3" or as directed by the engineer.
8. The Double Arrow sign (W12-1) shall be mounted at a height of 2'-3" (±) 3". The Chevron sign (W1-8), Roundabout Chevron panel (R6-4B), Clearance Markers (W5-52), Mile Markers (D10 series), In Road Object Markers (W5-54) & End of Road Markers (W5-56) shall be mounted at a height of 4"-3" (±) 3".

* 6 feet from edge of a paved shoulder or 12 feet from the edge of pavement (edge line location) or 2 feet from outside edge of gravel, whichever is greater unless directed by project engineer.

** The existence of curb and gutter does not in itself mandate the vertical clearance illustrated. That height is typically measured where there is sidewalk adjacent to the roadway or parking is permitted. In the absence of sidewalk vertical clearance is measured from the top of the curb. Offset of signs is measured from the flow line.

*** See A4-3 sign plate for signs 4' or less in width and less than 20 S.F. in area.

POST EMBEDMENT DEPTH

Area of Sign Installation (Sq. Ft.)	D (Min)
20 or Less	4'
Greater than 20	5'

TYPICAL INSTALLATION OF TYPE II SIGNS ON MULTIPLE POSTS

WISCONSIN DEPT OF TRANSPORTATION

APPROVED Matthew R Rauch
for State Traffic Engineer

DATE 12/6/23 PLATE NO. A4-4.16

PROJECT NO:	HWY:	COUNTY:		SHEET NO: 171	E

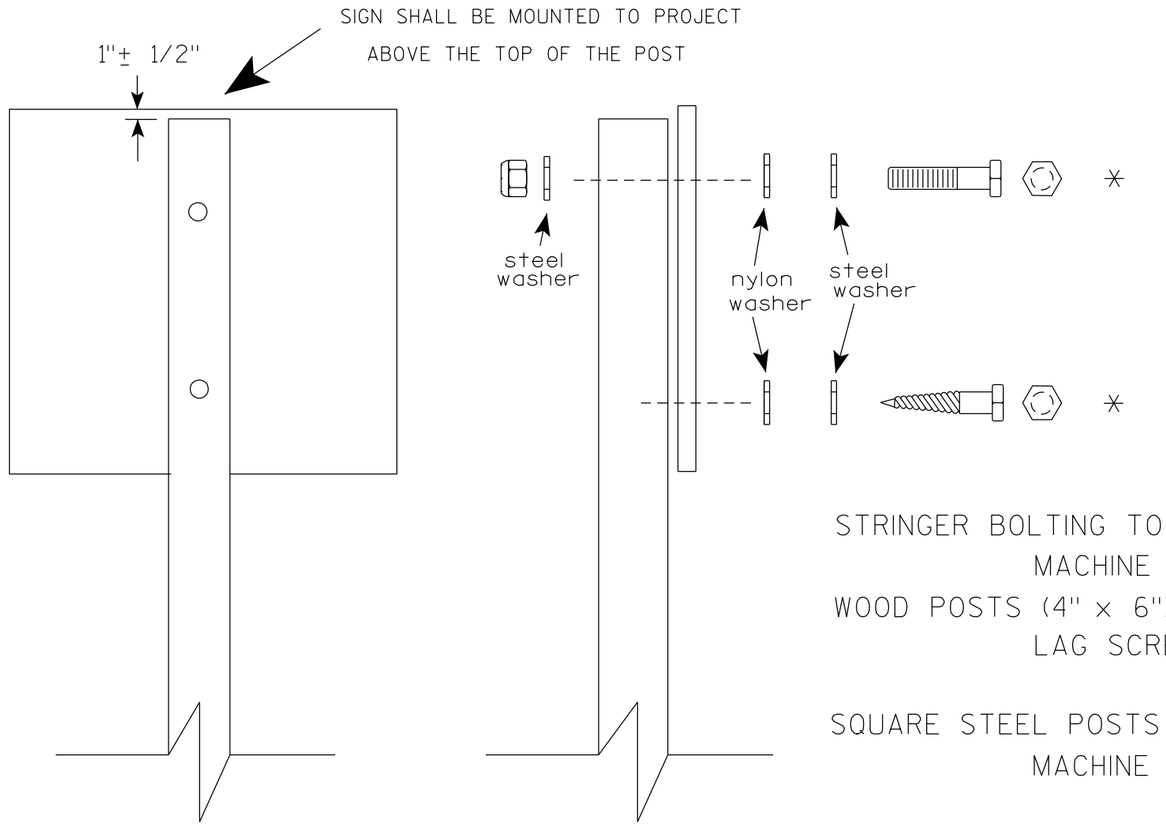

Nuts, bolts and lags used for mounting signs shall have hexagonal heads and shall be either :

a. Hot dip galvanized in accordance with ASTM Designation: A 153, Class D, or SC 3

b. Electro-galvanized in accordance with ASTM Designation : B 633, TYPE III, SC 3.

Threads on bolts and nuts shall be manufactured with sufficient allowance for the cadmium plate or galvanized coating to permit the nuts to run freely on the bolts.

STRINGER BOLTING TO ALUMINUM SIGNS (SEE SIGN PLATE A4-18)

MACHINE BOLTS - 5/16" X 1-3/4" Length w/ lock nuts

WOOD POSTS (4" x 6")

LAG SCREWS - 3/8" X 3" (NO STRINGERS ON BACK OF SIGN)
3/8" X 4" (STRINGERS ON BACK OF SIGN)

SQUARE STEEL POSTS (2" x 2")

MACHINE BOLTS - 3/8" X 3-1/4" Length w/ nuts (NO STRINGER ON BACK OF SIGN)
3/8" X 5" Length w/ nuts (STRINGERS ON BACK OF SIGN)

RIVETS - 9/32" (6605-9-6) BULB-TITE, TRI-FOLD, ALUMINUM BODY/MANDREL
O.D. FLANGE .720-.765 INCH, GRIP RANGE .042-.375 INCH

WASHERS (ALL POSTS) -

1-1/4" O.D. X 3/8" I.D. X 1/16" STEEL
1-1/4" O.D. X 3/8" I.D. X .080 NYLON

* Two different fastening systems are shown for illustration purposes. On any individual sign, either one or the other system shall be used. Actual number of fasteners per sign varies with the sign area, but normally there are two. For a single post installation, all signs greater than 9 sq. ft. require the use of 3 fasteners.

ATTACHMENT OF SIGNS TO POSTS

WISCONSIN DEPT OF TRANSPORTATION

APPROVED Matthew R Rauch
for State Traffic Engineer

DATE 4/1/2020 PLATE NO. A4-8.9

TELESCOPIC TUBING ANCHORS
TWO PIECE SYSTEM

2 1/4 " SQUARE
12 GAUGE
PERFORATED
GALVANIZED FINISH

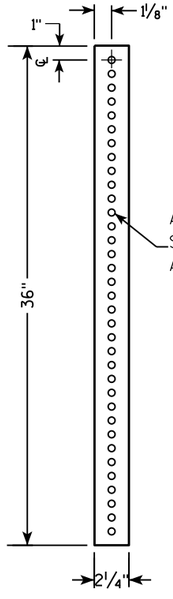

2 1/2 " SQUARE
12 GAUGE
OMNI-DIRECTIONAL
PERFORATED
SOIL STABILIZING SLEEVE
GALVANIZED FINISH

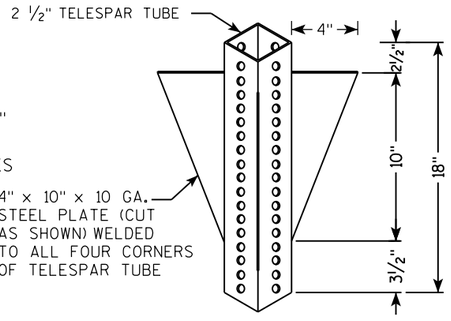

DETAIL OF TUBULAR STEEL SIGN POST
(IN POURED CONCRETE OR ASPHALT)

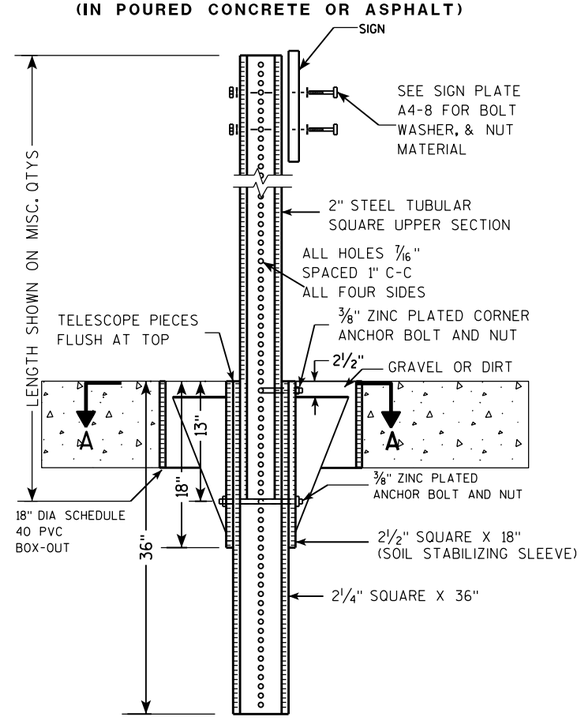

DETAIL OF TUBULAR STEEL SIGN POST
(IN LOCATIONS OTHER THAN POURED CONCRETE OR ASPHALT)

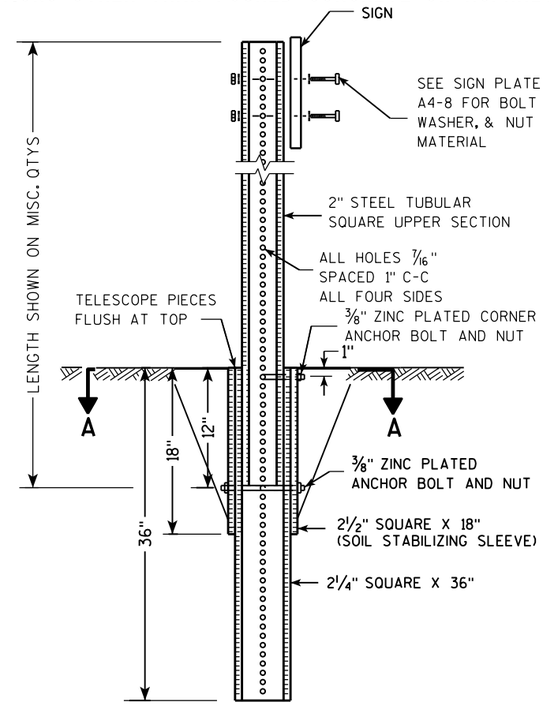

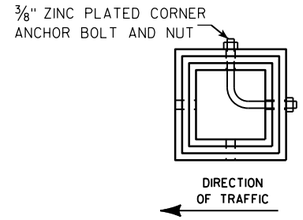

SECTION A-A

Area of Sign Installation (Sq. Ft.)	Number of Required Posts
9 or less	1
Greater than 9 less than or equal to 18	2
Greater than 18 less than or equal to 27	3

Signs wider than 3 feet or larger than 9 sq. ft shall be mounted on multiple posts (see above table).

TUBULAR STEEL
SIGN POST
A4-9

WISCONSIN DEPT OF TRANSPORTATION

APPROVED Matthew R Rauch
for State Traffic Engineer

DATE 2/05/15 PLATE A4-9.9

PROJECT NO:	HWY:	COUNTY:		SHEET NO:	E

FILE NAME : C:\CAEFiles\Projects\tr_stdplate\A49.DGN PLOT DATE : 05-FEB-2015 17:09 PLOT BY : mscsja PLOT NAME : PLOT SCALE : 13.659812:1.000000
WISDOT/CADDS SHEET 42

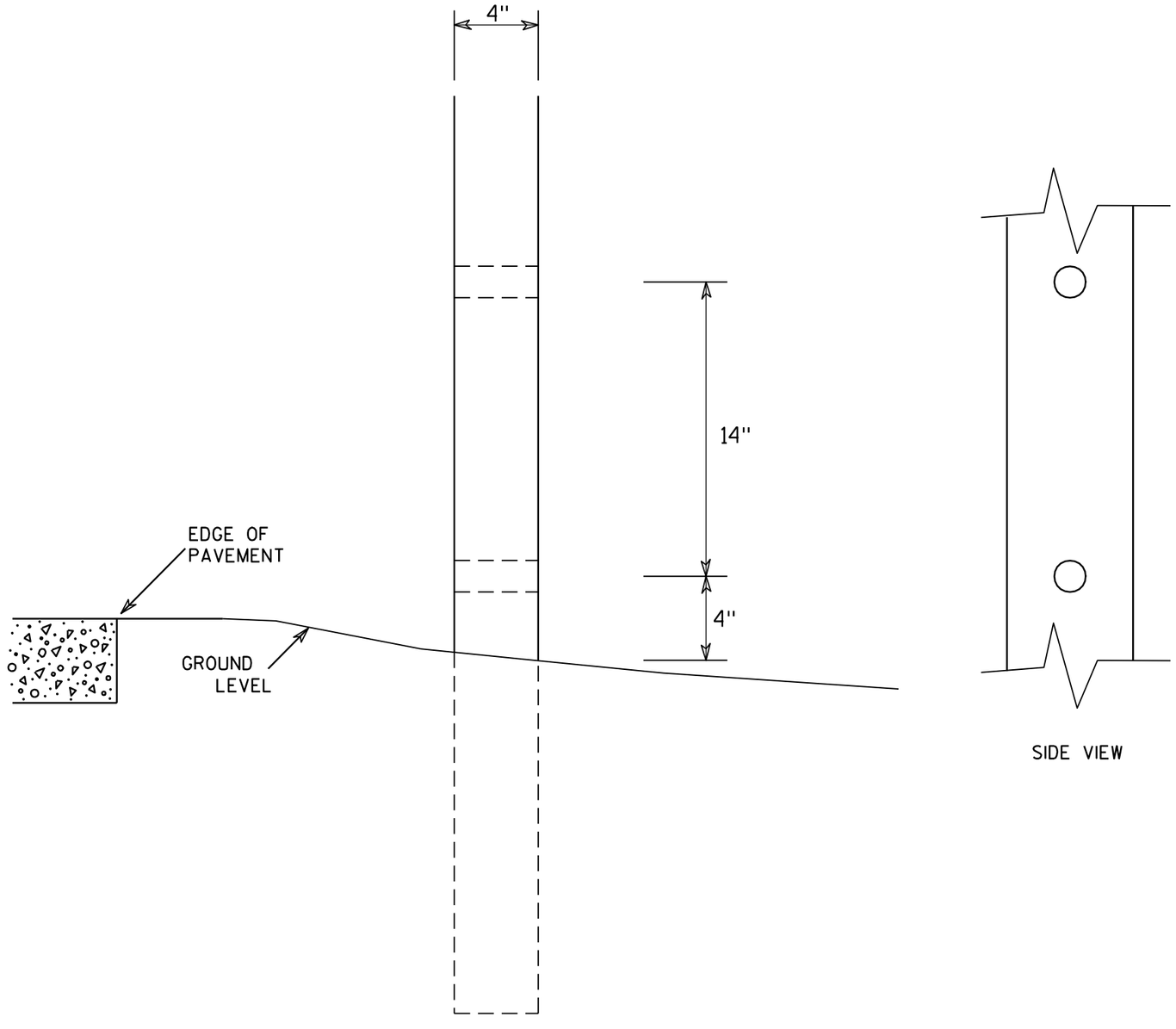

SIDE VIEW

GENERAL NOTES

1. All 4 x 6 Wood Posts shall be modified by having two 1½" diameter holes drilled perpendicular to the roadway centerline.

7

7

4 X 6 WOOD POST MODIFICATIONS

WISCONSIN DEPT OF TRANSPORTATION

APPROVED Chester J Spang
for State Traffic Engineer

DATE 3/27/97 PLATE NO. A4-11.2

PROJECT NO:	HWY:	COUNTY:		SHEET NO: 174	E

BANDING

SINGLE SIGN

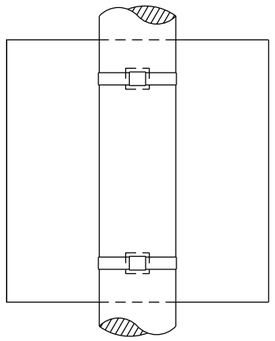

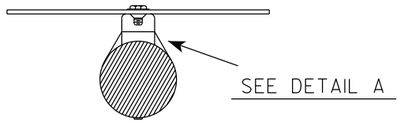

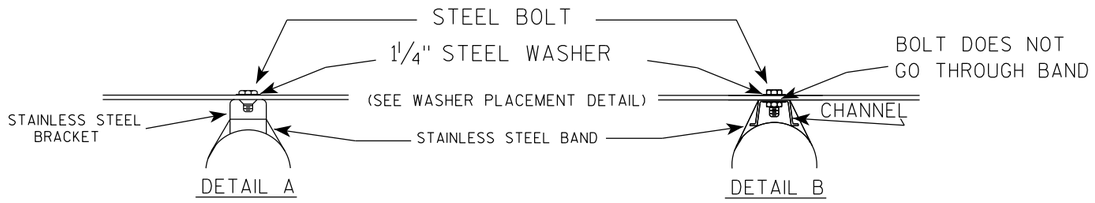

GENERAL NOTES

1. Any sign over 3 feet in width shall use the V-Block banding method. See A5-10 standard plate.
2. Signs 3 feet or greater in height shall have three bracket bands installed. Signs less than 3 feet in height shall have two bracket bands installed.
3. Banding and assembly bracket shall be stainless steel. All bands shall be ¾" in width and 0.025" thickness.
4. ALL SIGN MOUNTING BOLTS AND WASHERS SHALL BE EITHER:
   a. Hot dip or mechanically galvanized in accordance with ASTM Designation: A 153, Class D
   b. Electro-galvanized in accordance with ASTM designation: B 633, Type III, SC 3

"J" ASSEMBLY

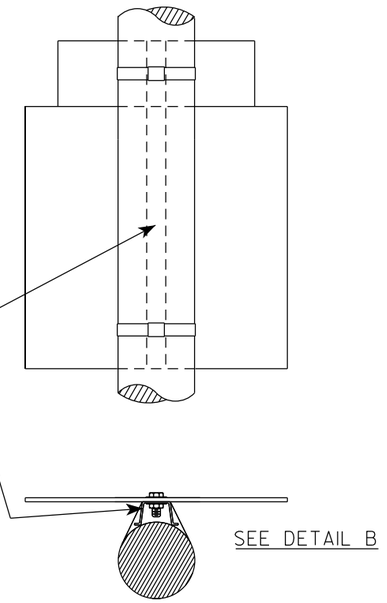

WASHER PLACEMENT

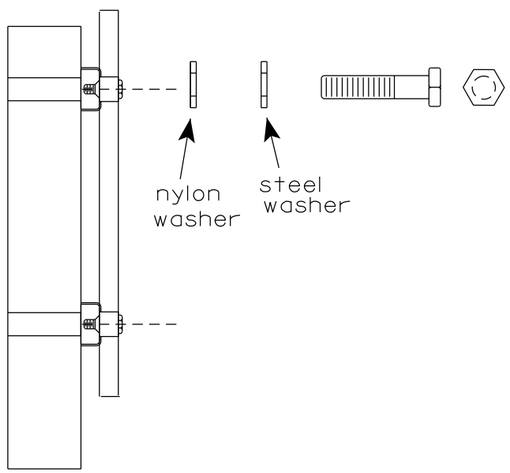

WASHERS (ALL POSTS) -
1-1/4" O.D. X ⅜" I.D. X 1/16" STEEL
1-1/4" O.D. X ⅜" I.D. X .080 NYLON
FOR ALL TYPE H SIGNS

STANDARD SIGN
SIGN BANDING DETAILS

WISCONSIN DEPT OF TRANSPORTATION

APPROVED Matthew R Rauch
for State Traffic Engineer

DATE 6/10/19 PLATE NO. A5-9.4

PROJECT NO:	HWY:	COUNTY:		SHEET NO: 175	E

FILE NAME : C:\CAEfiles\Projects\tr_stdplate\A59.dgn PLOT DATE : 10-JUN 2019 4:10 PLOT BY : mscj9h PLOT NAME : PLOT SCALE : $$.....plotscale.....$$ WISDOT/CADDS SHEET 42

7

7

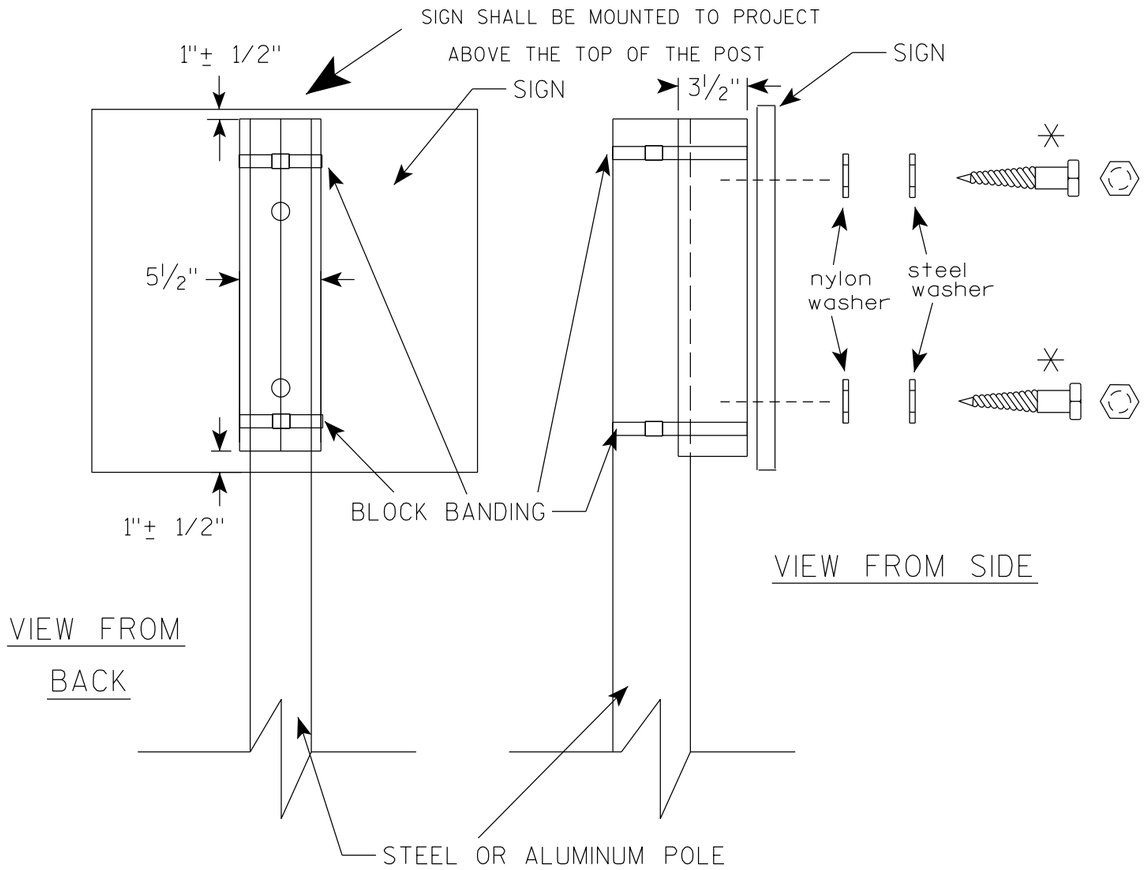

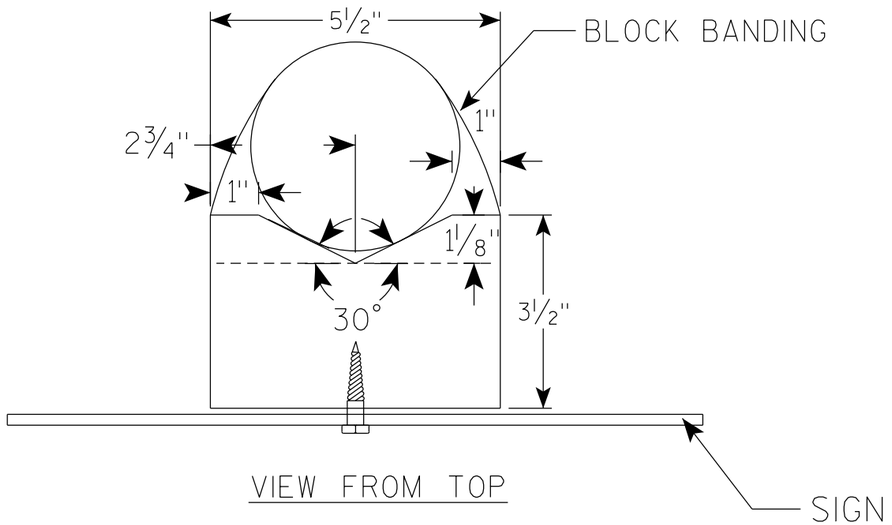

GENERAL NOTES

1. WOOD 4"X6" POST MATERIAL SHALL CONFORM TO 507.2.2 OF THE WisDOT STANDARD SPECIFICATIONS
2. BLOCK BANDING AND CLIPS SHALL BE STAINLESS STEEL, ¾" WIDTH AND 0.025" THICKNESS
3. SIGNS 3' OR GREATER IN HEIGHT SHALL UTILIZE 3 BLOCK BANDS. SIGNS UNDER 3' IN HEIGHT SHALL UTILIZE 2 BLOCK BANDS
4. ACTUAL NUMBER OF FASTENERS PER SIGN VARIES WITH THE SIGN AREA, BUT NORNALLY THERE ARE TWO. FOR SIGNS GREATER THAN 9 S.F. 3 FASTENERS SHALL BE USED.
5. ALL SIGN MOUNTING BOLTS AND WASHERS SHALL BE EITHER:
   a. Hot dip or mechanically galvanized in accordance with ASTM Designation: A 153, Class D
   b. Electro-galvanized in accordance with ASTM Designation : B 633, TYPE III, SC 3
6. ALL BOLTS SHALL HAVE HEXAGONAL HEADS.
7. STEEL WASHERS SHALL BE 1¼" O.D. X ⅜" I.D. X 1/16"
8. NYLON WASHERS SHALL BE 1¼" O.D. X ⅜" I.D. X .080 FOR TYPE H OR TYPE F FACE SIGN

✳ LAG BOLTS SHALL BE ⅜" X 2½"

BLOCK BANDING DETAIL (V-BLOCK OPTION)

WISCONSIN DEPT OF TRANSPORTATION

APPROVED Matthew R Rauch
for State Traffic Engineer

DATE 4/19/2022 PLATE NO. A5-10.3

PROJECT NO:

SHEET NO: 176 E

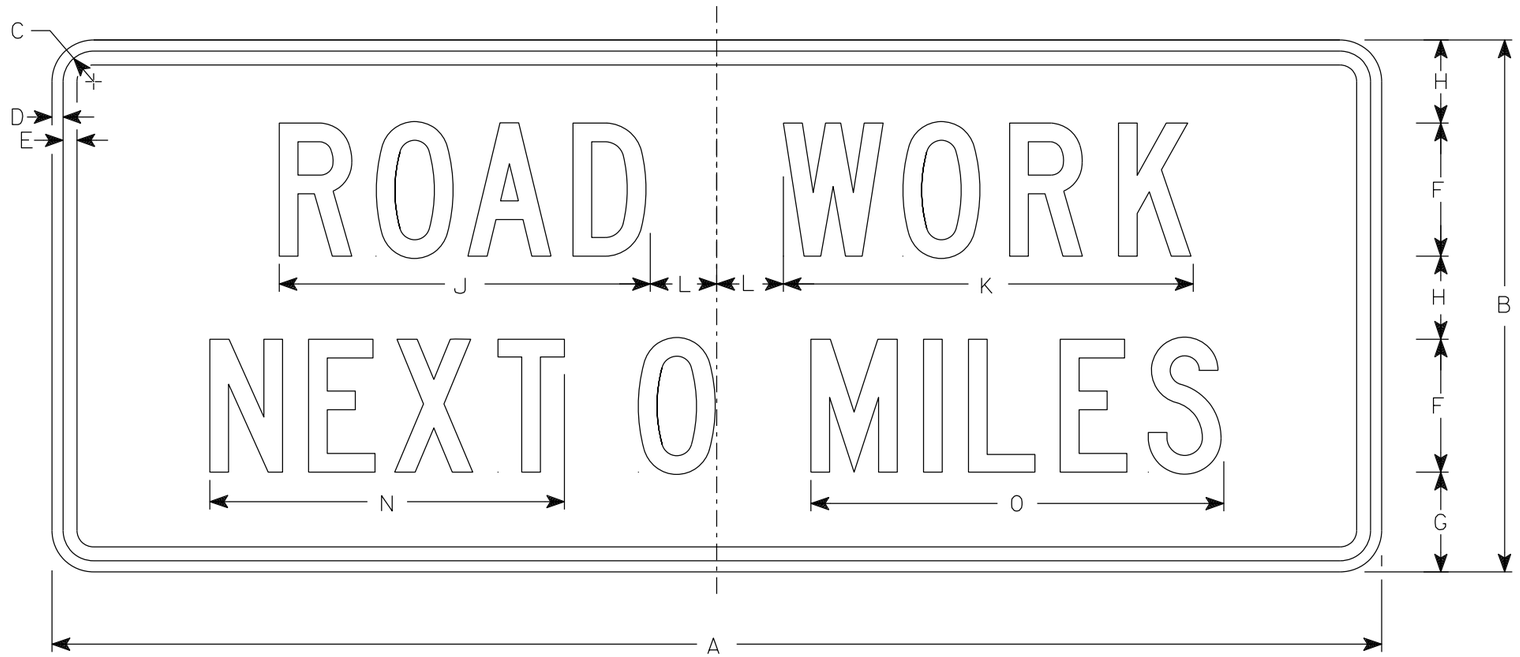

G20-1

NOTES

1. Sign is Type II - Type F Reflective
2. Color:
   Background - Orange
   Message - Black
3. Message Series - C
4. Corners may be square or rounded when base material is plywood but borders shall be rounded as shown. When base material is metal, the corners and borders shall be rounded.
5. Round distance to nearest whole Mile and substitute appropriate numerals and optically adjust spacing to achieve proper balance

SIZE	A	B	C	D	E	F	G	H	I	J	K	L	M	N	O	P	Q	R	S	T	U	V	W	X	Y	Z	Area sq. ft.
1																											
2S	60	24	1 7/8	1/2	5/8	6	4 1/2	3 3/4		16 3/4	18 1/2	3		16	18 5/8												10.0
2M	60	24	1 7/8	1/2	5/8	6	4 1/2	3 3/4		16 3/4	18 1/2	3		16	18 5/8												10.0
3	60	24	1 7/8	1/2	5/8	6	4 1/2	3 3/4		16 3/4	18 1/2	3		16	18 5/8												10.0
4	60	24	1 7/8	1/2	5/8	6	4 1/2	3 3/4		16 3/4	18 1/2	3		16	18 5/8												10.0
5	60	24	1 7/8	1/2	5/8	6	4 1/2	3 3/4		16 3/4	18 1/2	3		16	18 5/8												10.0

STANDARD SIGN
G20-1

WISCONSIN DEPT OF TRANSPORTATION

APPROVED Matthew R Rauch
for State Traffic Engineer

DATE 1/26/2023 PLATE NO. G20-1.9

PROJECT NO:	HWY:	COUNTY:		SHEET NO: 177	E

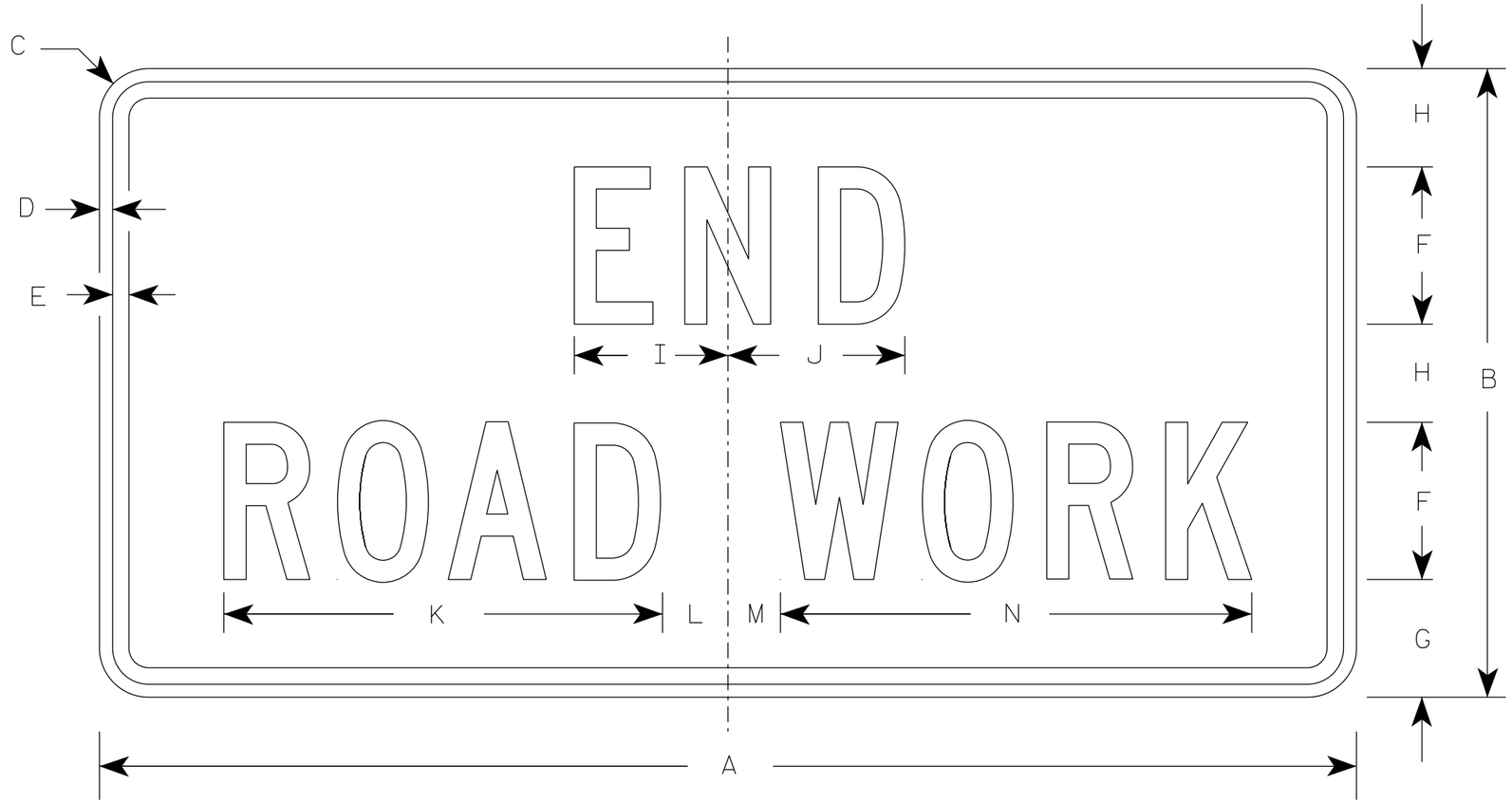

G20-2A

NOTES

1. Sign is Type II - Type F Reflective
2. Color:
   Background - Orange
   Message - Black
3. Message Series - C
4. Corners may be square or rounded when base material is plywood but borders shall be rounded as shown. When base material is metal, the corners and borders shall be rounded.

SIZE	A	B	C	D	E	F	G	H	I	J	K	L	M	N	O	P	Q	R	S	T	U	V	W	X	Y	Z	Area sq. ft.
1	36	18	1 1/2	3/8	1/2	4	3 3/4	2 1/2	4 1/8	4 1/8	11 1/8	2	1	12 1/8													4.5
2	48	24	1 7/8	1/2	5/8	6	4 1/2	3 3/4	5 7/8	6 3/4	16 3/4	2 1/2	1 3/4	18 1/2													8.0
2M	48	24	1 7/8	1/2	5/8	6	4 1/2	3 3/4	5 7/8	6 3/4	16 3/4	2 1/2	1 3/4	18 1/2													8.0
3	48	24	1 7/8	1/2	5/8	6	4 1/2	3 3/4	5 7/8	6 3/4	16 3/4	2 1/2	1 3/4	18 1/2													8.0
4	48	24	1 7/8	1/2	5/8	6	4 1/2	3 3/4	5 7/8	6 3/4	16 3/4	2 1/2	1 3/4	18 1/2													8.0
5	48	24	1 7/8	1/2	5/8	6	4 1/2	3 3/4	5 7/8	6 3/4	16 3/4	2 1/2	1 3/4	18 1/2													8.0

STANDARD SIGN

G20-2A

WISCONSIN DEPT OF TRANSPORTATION

APPROVED Matthew R Rauch
for State Traffic Engineer

DATE 1/26/2023 PLATE NO. G20-2A.10

PROJECT NO: | HWY: | COUNTY: | SHEET NO: E

FILE NAME : C:\CAEfiles\Projects\tr_stdplate\G202A.dgn PLOT DATE : 26-JAN 2023 8:27 PLOT BY : dotc4c PLOT NAME : PLOT SCALE : $$.....plotscale.....$$ WISDOT/CADDS SHEET 42

NOTES

1. Sign is Type II - Type F Reflective
2. Color:
   Background - Orange
   Message - Black
3. Message Series - D
4. Substitute appropriate numeral and adjust spacing to achieve proper balance.

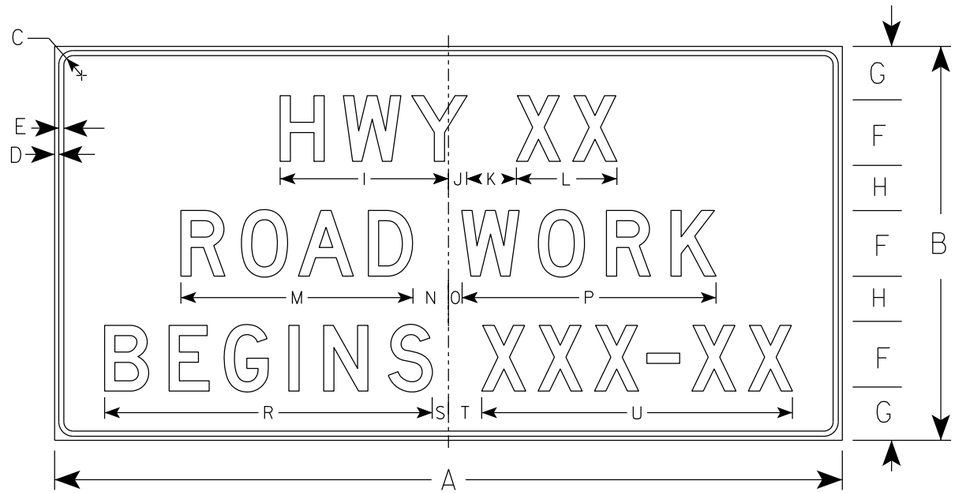

G20-57

SIZE	A	B	C	D	E	F	G	H	I	J	K	L	M	N	O	P	Q	R	S	T	U	V	W	X	Y	Z	Area sq. ft.
1																											
2																											
3	72	36	1 1/8	1/2	5/8	6	5	4	15 5/8	1 5/8	5	9 1/4	21 1/4	3 1/2	1 1/2	23 1/4		29 7/8	1 3/4	3 1/4	28 1/2						18.0
4	96	48	2 1/4	3/4	1	8	6 1/2	5 1/2	20 5/8	2 1/4	6	12 1/4	28 1/4	4 3/8	1 5/8	31		39 1/4	2	4	37 7/8						32.0
5																											

STANDARD SIGN
G20-57

WISCONSIN DEPT OF TRANSPORTATION

APPROVED Matthew R Rauch
For State Traffic Engineer

DATE 1/22/19 PLATE NO. G20-57.3

PROJECT NO: | HWY: | COUNTY: | SHEET NO: 179 | E

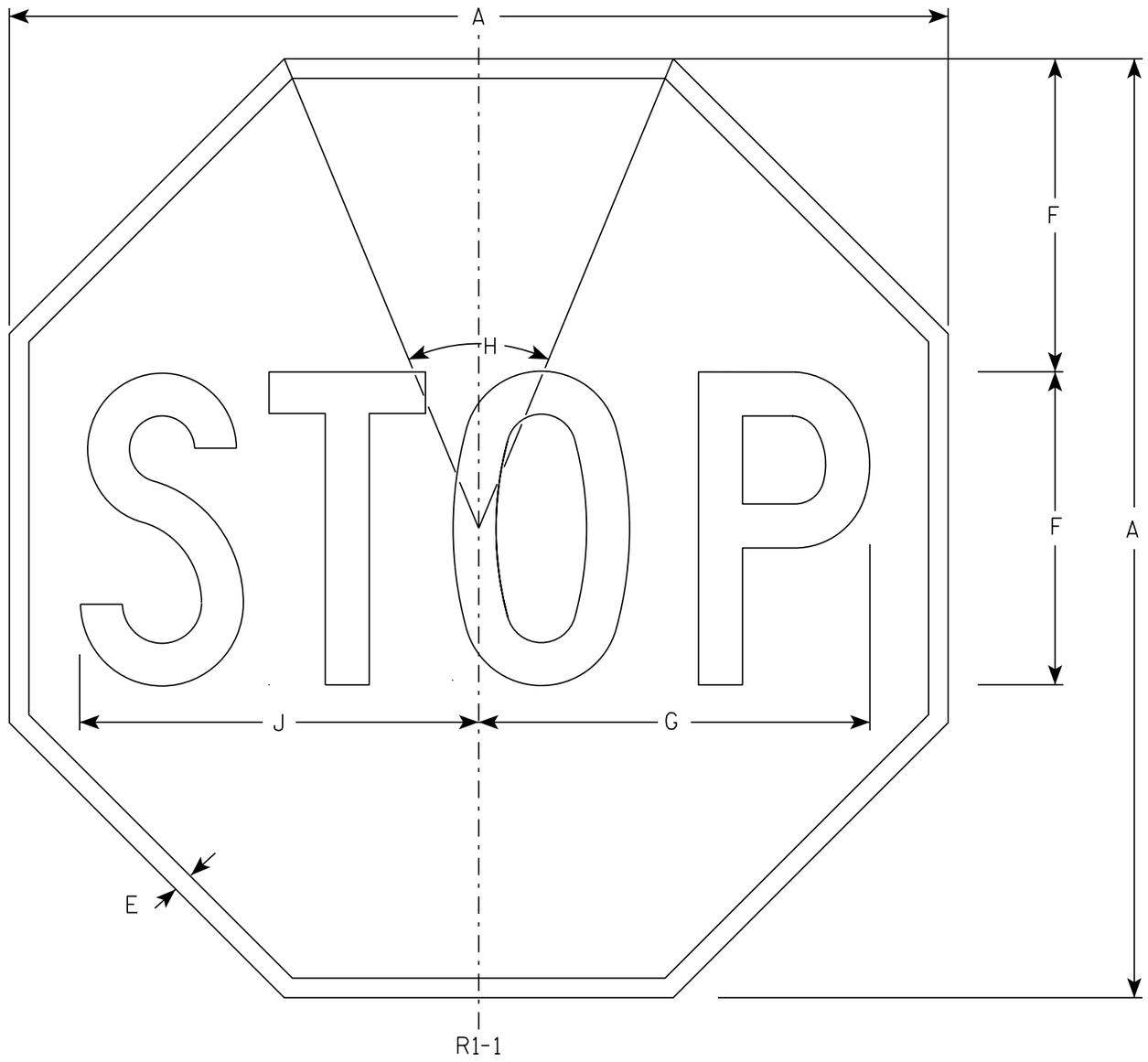

NOTES

1. Sign is Type II - Type H Reflective - reference WIS DOT Standard Specification for HIGHWAY and STRUCTURE CONSTRUCTION latest edition.
2. Color:
   Background - Red
   Message - White
3. Message Series - C

SIZE	A	B	C	D	E	F	G	H	I	J	K	L	M	N	O	P	Q	R	S	T	U	V	W	X	Y	Z	Area sq. ft.
1	30				5/8	10	12 1/2	45°		12 3/4																	5.18
2S	30				5/8	10	12 1/2	45°		12 3/4																	5.18
2M	36				3/4	12	15	45°		15 3/8																	7.46
3	36				3/4	12	15	45°		15 3/8																	7.46
4	48				1	16	20	45°		20 1/2																	13.25
5	48				1	16	20	45°		20 1/2																	13.25
6	18				3/8	6	7 3/4	45°		7 3/4																	1.86
7	12				1/4	4	5	45°		5 1/8																	0.78

STANDARD SIGN

R1-1

WISCONSIN DEPT OF TRANSPORTATION

APPROVED Matthew R Rauch

for State Traffic Engineer

DATE 11/12/15 PLATE NO. R1-1.13

PROJECT NO:	HWY:	COUNTY:		SHEET NO: 180	E

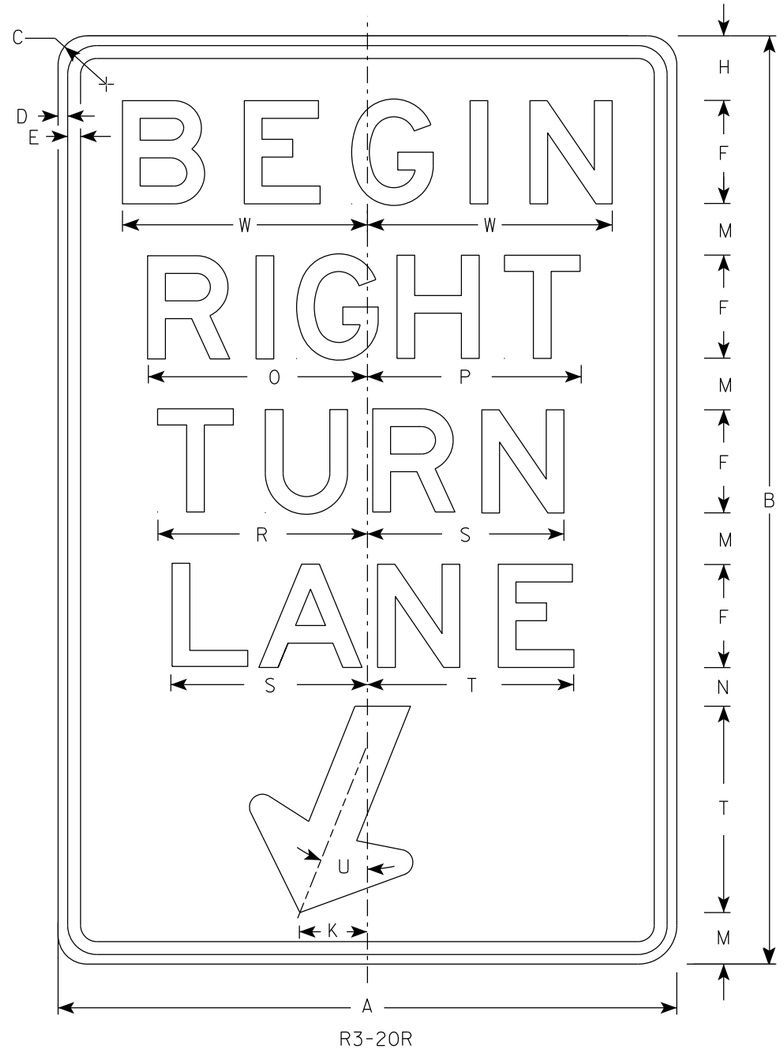

R3-20R

NOTES

1. Sign is Type II - Type H Reflective
2. Color:
   Background - White
   Message - Black
3. Message Series - E

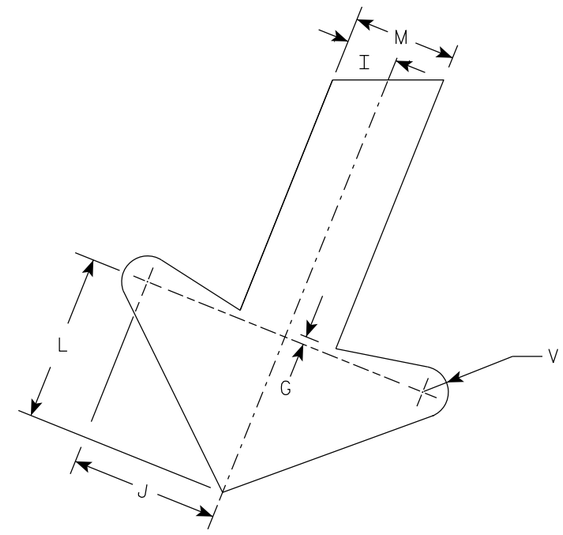

ARROW DETAIL

SIZE	A	B	C	D	E	F	G	H	I	J	K	L	M	N	O	P	Q	R	S	T	U	V	W	X	Y	Z	Area sq. ft.
1																											
2S	24	36	1 1/2	3/8	1/2	4	1/4	2 1/2	1	2 7/8	2 5/8	3 1/4	2	1 1/2	8 1/2	8 1/4		8 1/8	7 5/8	8	22°	1/2	9 1/2				6.0
2M	24	36	1 1/2	3/8	1/2	4	1/4	2 1/2	1	2 7/8	2 5/8	3 1/4	2	1 1/2	8 1/2	8 1/4		8 1/8	7 5/8	8	22°	1/2	9 1/2				6.0
3	36	54	1 7/8	1/2	5/8	6	3/8	3 3/4	1 1/2	4 1/4	4	4 7/8	3	2 1/4	12 3/4	12 1/2		12 1/4	11 1/2	12	22°	3/4	13 1/4				13.5
4																											
5																											

STANDARD SIGN
R3-20R

WISCONSIN DEPT OF TRANSPORTATION

APPROVED Matthew R Rauch
For State Traffic Engineer

DATE 2/23/23 PLATE NO. R3-20R.7

PROJECT NO: | HWY: | COUNTY: | SHEET NO: 181 | E

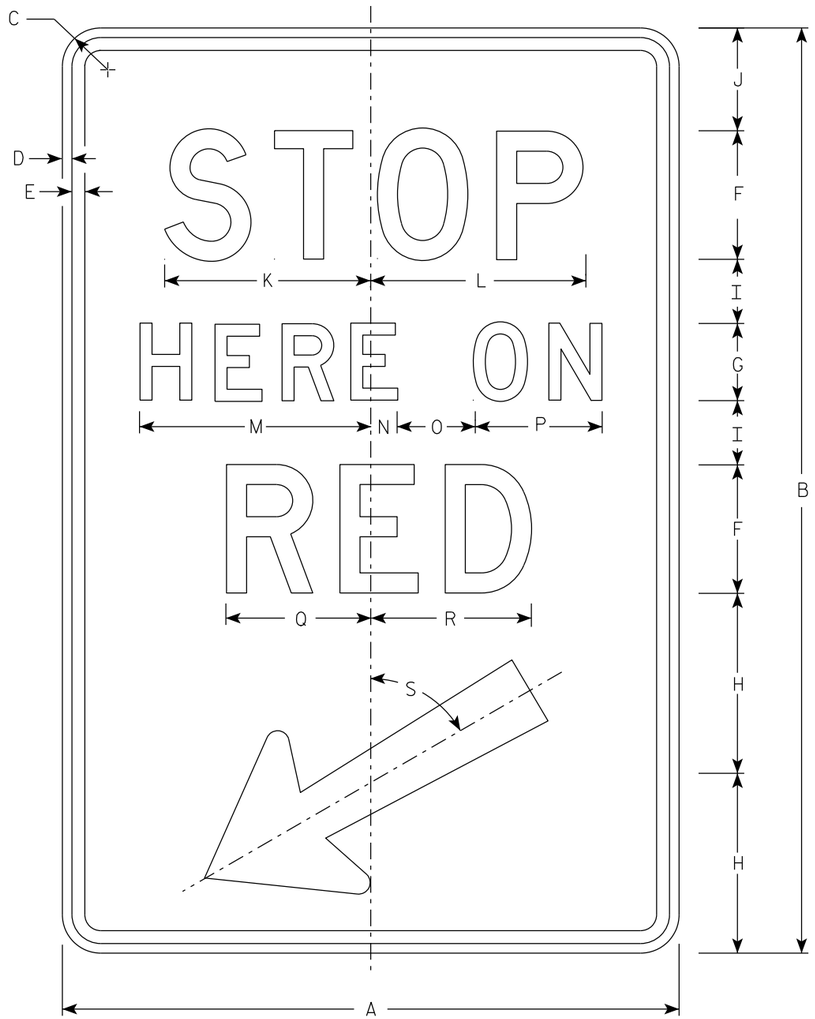

R10-6

NOTES

1. Sign is Type II - Type H Reflective
2. Color:
   Background - White
   Message - Black
3. Message Series - D

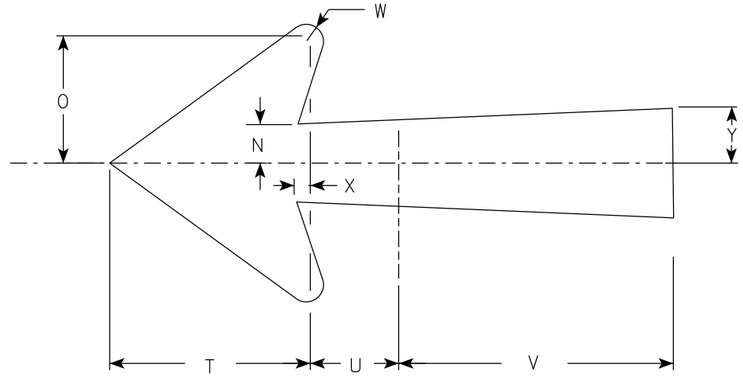

Arrow Detail

SIZE	A	B	C	D	E	F	G	H	I	J	K	L	M	N	O	P	Q	R	S	T	U	V	W	X	Y	Z	Areq sq. ft.
1																											
2S	24	36	1 1/2	3/8	1/2	5	3	7	2 1/2	4	8	8 3/8	9	1	3	5	5 5/8	6 1/4	60°	5 1/4	2 1/4	7 1/8	1/2	3/8	1 3/8		6.0
2M	24	36	1 1/2	3/8	1/2	5	3	7	2 1/2	4	8	8 3/8	9	1	3	5	5 5/8	6 1/4	60°	5 1/4	2 1/4	7 1/8	1/2	3/8	1 3/8		6.0
3																											
4																											
5																											

STANDARD SIGN
R10-6

WISCONSIN DEPT OF TRANSPORTATION

APPROVED Matthew R Rauch
for State Traffic Engineer

DATE 1/25/24 PLATE NO. R10-6.7

PROJECT NO:	HWY:	COUNTY:		SHEET NO: 182	E

FILE NAME : C:\CAEfiles\Projects\tr_stdplate\R106.dgn PLOT DATE : 25-JAN 2024 11:01 PLOT BY : mscj9h PLOT NAME : PLOT SCALE : $$.....plotscale.....$$ WISDOT/CADDS SHEET 42

7

7

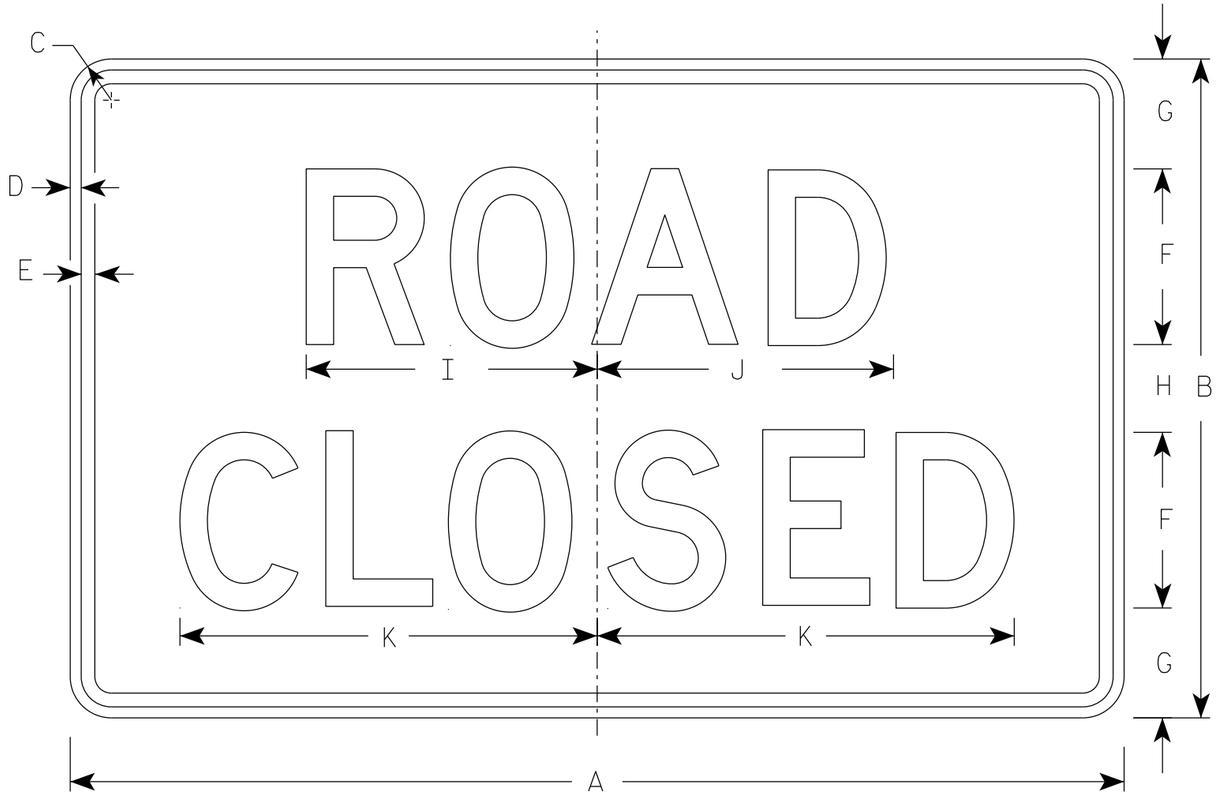

R11-2

NOTES

1. Sign is Type II - Type H Reflective
2. Color:
   Background - White
   Message - Black
3. Message Series - D
4. Corners may be square or rounded when base material is plywood but borders shall be rounded as shown. When base material is metal, the corners and borders shall be rounded.
5. Modify the message as required.

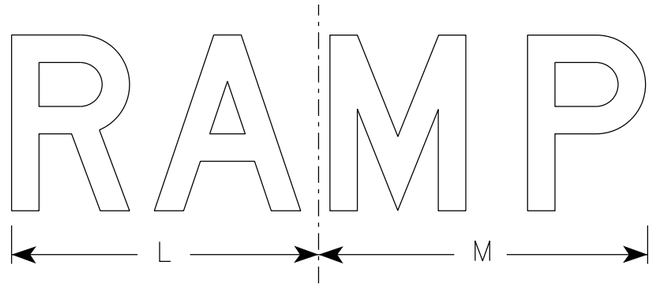

R11-2R

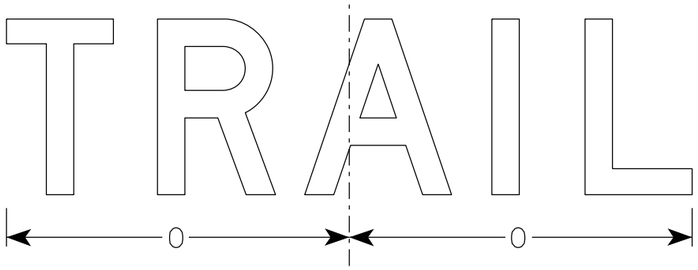

R11-2T

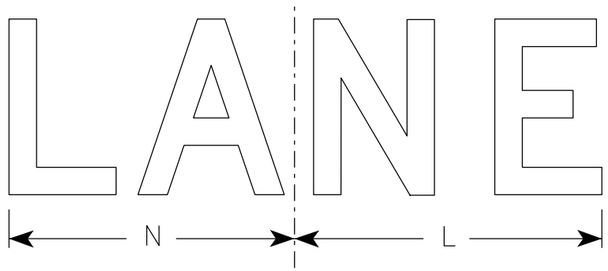

R11-2L

SIZE	A	B	C	D	E	F	G	H	I	J	K	L	M	N	O	P	Q	R	S	T	U	V	W	X	Y	Z	Area sq. ft.
1																											
2S	48	30	1 7/8	1/2	5/8	8	5	4	13 1/4	13 1/2	19	14	15	13	15 5/8												10.0
2M	48	30	1 7/8	1/2	5/8	8	5	4	13 1/4	13 1/2	19	14	15	13	15 5/8												10.0
3	48	30	1 7/8	1/2	5/8	8	5	4	13 1/4	13 1/2	19	14	15	13	15 5/8												10.0
4	48	30	1 7/8	1/2	5/8	8	5	4	13 1/4	13 1/2	19	14	15	13	15 5/8												10.0
5	48	30	1 7/8	1/2	5/8	8	5	4	13 1/4	13 1/2	19	14	15	13	15 5/8												10.0

STANDARD SIGN
R11-2

WISCONSIN DEPT OF TRANSPORTATION

APPROVED Matthew R Rauch
for State Traffic Engineer

DATE 2/5/24 PLATE NO. R11-2.12

PROJECT NO: | HWY: | COUNTY: | SHEET NO: E

7

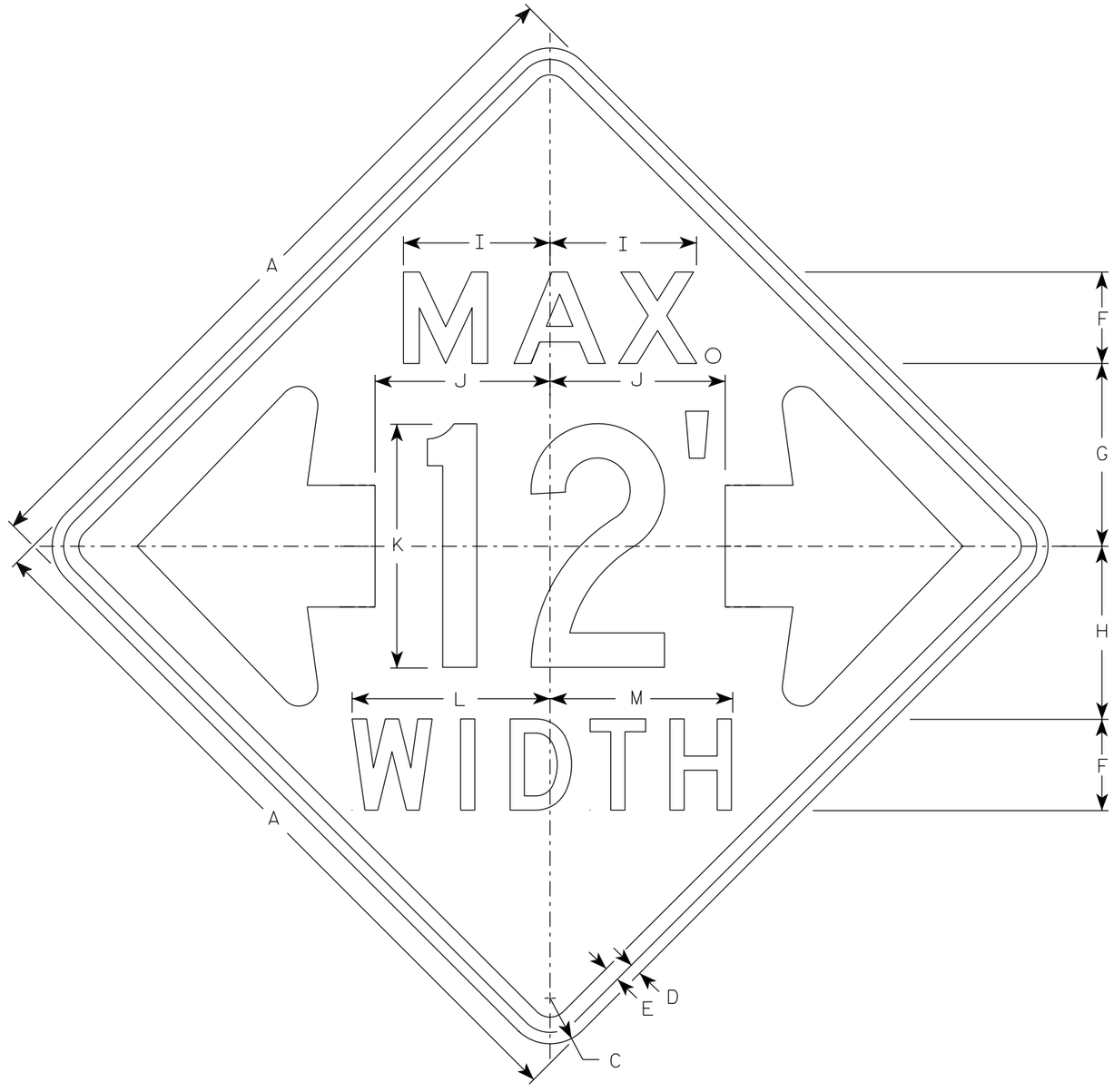

W12-52

NOTES

1. Sign is Type II - Type F Reflective
2. Color:
   Background - Orange
   Message - Black
3. Message Series - See note 5
4. The top line is series E, the numerals are series C, and the bottom line is series D.
5. Substitute appropriate numerals and adjust spacing as required.

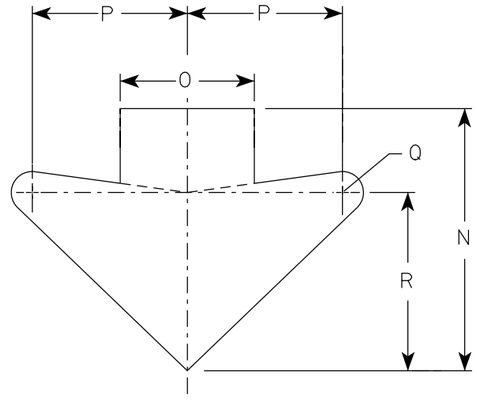

ARROW DETAIL

SIZE	A	B	C	D	E	F	G	H	I	J	K	L	M	N	O	P	Q	R	S	T	U	V	W	X	Y	Z	Area sq. ft.
1																											
2S	48		3	¾	1	6	12	11 ⅜	9 ⅝	11 ½	16	13	12	15 ⅝	8	9 ¼	1 ¼	10 ⅝									16.0
2M	48		3	¾	1	6	12	11 ⅜	9 ⅝	11 ½	16	13	12	15 ⅝	8	9 ¼	1 ¼	10 ⅝									16.0
3																											
4																											
5																											

STANDARD SIGN
W12-52

WISCONSIN DEPT OF TRANSPORTATION

APPROVED Matthew R Rauch
for State Traffic Engineer

DATE 3/10/2024 PLATE NO. W12-52.8

PROJECT NO: | HWY: | COUNTY: | SHEET NO: 184 E

NOTES

1. Sign is Type II- Type F Reflective
2. Color:
   Background - Yellow
   Message - Black
3. Message Series - Lines 1 and 2 are Series D.
   Line 3 is series C.
4. Corners and borders shall be rounded on all base materials for this sign.

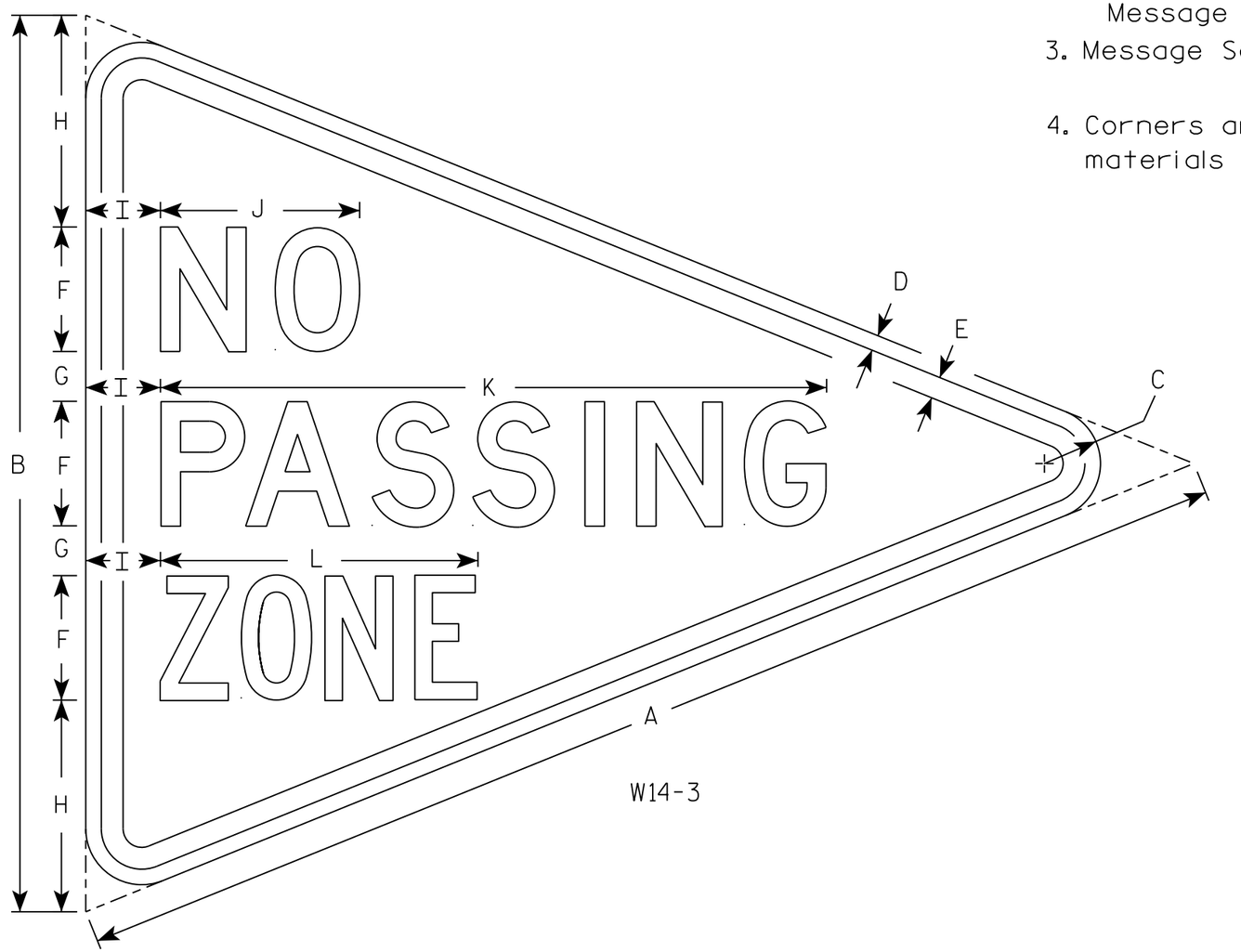

W14-3

SIZE	A	B	C	D	E	F	G	H	I	J	K	L	M	N	O	P	Q	R	S	T	U	V	W	X	Y	Z	Area sq. ft.
1																											
2S	48	36	2 1/4	5/8	7/8	5	2	8 1/2	3	8	26 3/4	12 3/4															5.56
2M																											
3																											
4																											
5																											

STANDARD SIGN
W14-3

WISCONSIN DEPT OF TRANSPORTATION

APPROVED Matthew R Rauch
for State Traffic Engineer

DATE 3/21/17 PLATE NO. W14-3.10

PROJECT NO: | HWY: | COUNTY: | SHEET NO: 185 | E

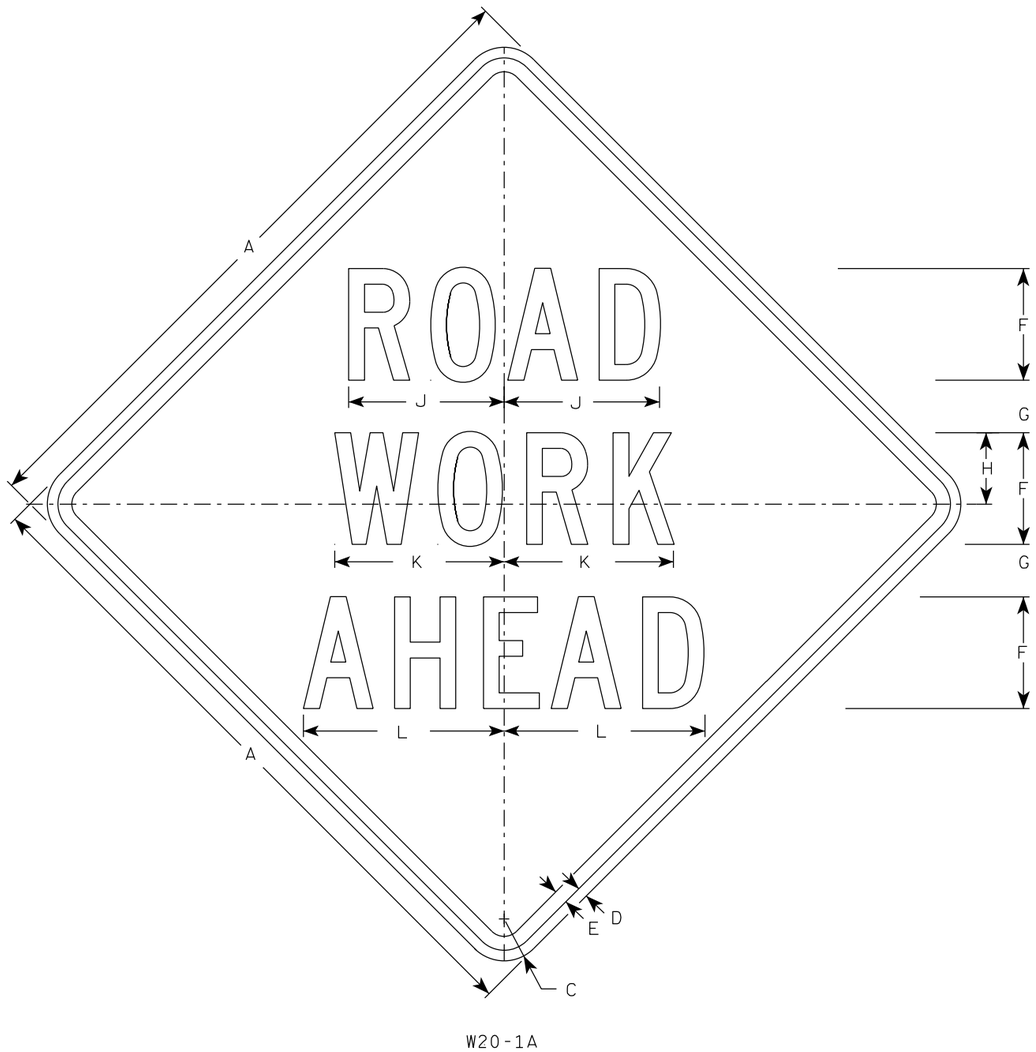

W20-1A

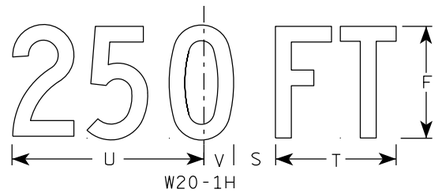

W20-1H

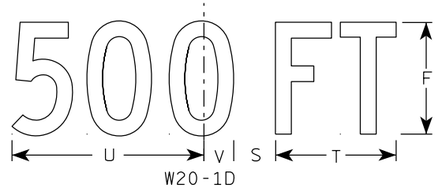

W20-1D

W20-1C

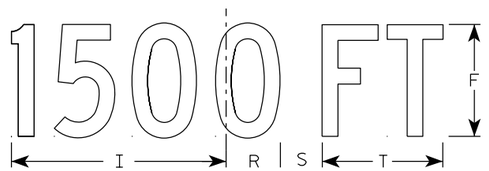

W20-1B

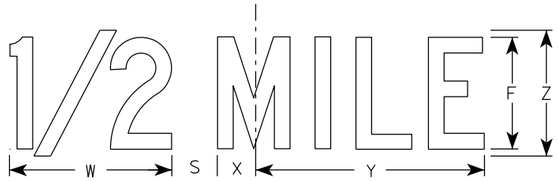

W20-1G

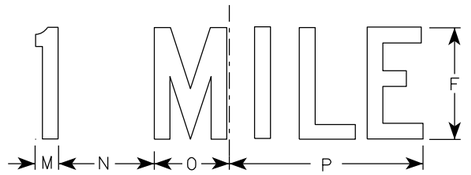

W20-1F

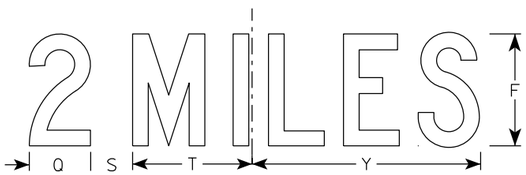

W20-1E

NOTES

1. Sign is Type II - Type F Reflective
2. Color:
   Background - Orange
   Message - Black
3. Message Series - C
4. Corners may be square or rounded when base material is plywood but borders shall be rounded as shown. When base material is metal, the corners and borders shall be rounded.

SIZE	A	B	C	D	E	F	G	H	I	J	K	L	M	N	O	P	Q	R	S	T	U	V	W	X	Y	Z	Area sq. ft.
1	36		2 1/4	5/8	3/4	5	2 5/8	3 1/4	10 1/8	7	7 5/8	8 7/8	1 1/8	4 1/2	3 1/2	9	3 1/4	2 1/2	2 1/4	5 5/8	9	1 3/8	8	1 3/4	10 3/4	6	9.0
2S	48		3	3/4	1	8	3 3/4	5 1/8	15 3/8	11 1/8	12 1/8	14 3/8	1 5/8	6 7/8	5 3/8	13 7/8	4 3/8	3 7/8	3	8 5/8	13 3/4	2 1/8	11 7/8	2 3/4	16 3/8	9	16.0
2M	48		3	3/4	1	8	3 3/4	5 1/8	15 3/8	11 1/8	12 1/8	14 3/8	1 5/8	6 7/8	5 3/8	13 7/8	4 3/8	3 7/8	3	8 5/8	13 3/4	2 1/8	11 7/8	2 3/4	16 3/8	9	16.0
3	48		3	3/4	1	8	3 3/4	5 1/8	15 3/8	11 1/8	12 1/8	14 3/8	1 5/8	6 7/8	5 3/8	13 7/8	4 3/8	3 7/8	3	8 5/8	13 3/4	2 1/8	11 7/8	2 3/4	16 3/8	9	16.0
4	48		3	3/4	1	8	3 3/4	5 1/8	15 3/8	11 1/8	12 1/8	14 3/8	1 5/8	6 7/8	5 3/8	13 7/8	4 3/8	3 7/8	3	8 5/8	13 3/4	2 1/8	11 7/8	2 3/4	16 3/8	9	16.0
5	48		3	3/4	1	8	3 3/4	5 1/8	15 3/8	11 1/8	12 1/8	14 3/8	1 5/8	6 7/8	5 3/8	13 7/8	4 3/8	3 7/8	3	8 5/8	13 3/4	2 1/8	11 7/8	2 3/4	16 3/8	9	16.0

STANDARD SIGN
W20-1A, B, C, D, E, F, G & H

WISCONSIN DEPT OF TRANSPORTATION

APPROVED Matthew R Rauch
For State Traffic Engineer

DATE 1/10/2024 PLATE NO. W20-1.12

PROJECT NO:

SHEET NO: E

FILE NAME : C:\CAEfiles\Projects\tr_stdplate\W201.DGN PLOT DATE : 10-JAN 2024 11:16 PLOT BY : dotc4c

WISDOT/CADDS SHEET 42

7

7

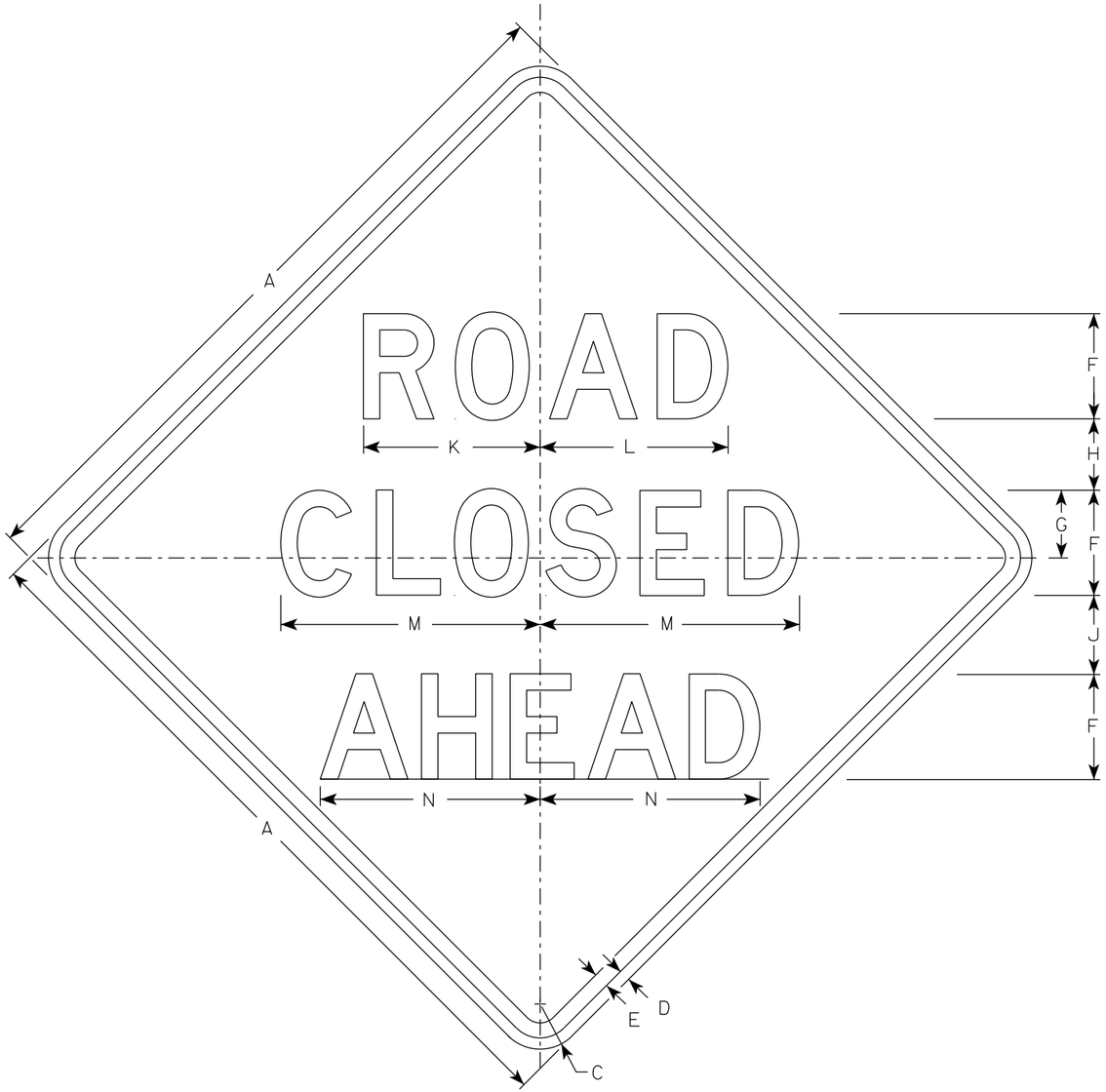

W20-3A

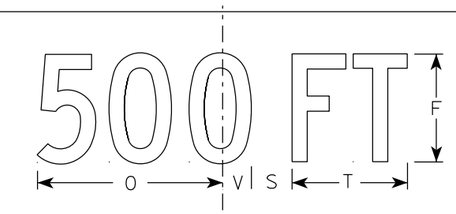

W20-3D

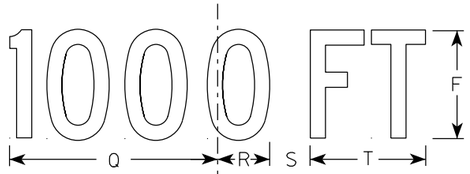

W20-3C

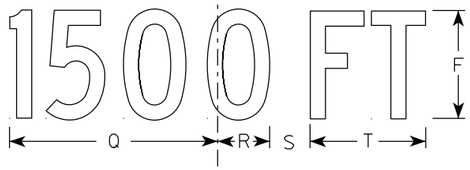

W20-3B

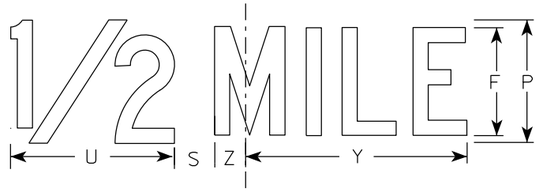

W20-3G

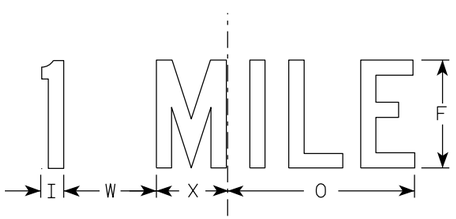

W20-3F

NOTES

1. Sign is Type II - Type F Reflective
2. Color:
   Background - Orange
   Message - Black
3. Message Series - see note 5
4. Corners may be square or rounded when base material is plywood but borders shall be rounded as shown. When base material is metal, the corners and borders shall be rounded.
5. Lines 1 and 2 are Series D.
   Line 3 is Series D for AHEAD and Series C for all other distances.

SIZE	A	B	C	D	E	F	G	H	I	J	K	L	M	N	O	P	Q	R	S	T	U	V	W	X	Y	Z	Area sq. ft.
1	36		2 1/4	5/8	3/4	5	3 3/8	3 1/2	1 1/8	4	8 3/8	8 7/8	12 1/2	11	9	6	10 1/8	2 1/2	1 7/8	5 5/8	8	1 3/8	4 1/2	3 1/2	10 3/4	1 3/4	9.0
2S	48		3	3/4	1	7	4 1/2	4 3/4	1 1/2	5 1/4	11 3/4	12 1/2	17 1/4	14 5/8	12	8	13 1/2	3 3/8	2 5/8	7 1/2	10 5/8	1 7/8	6	4 5/8	14 3/8	2 3/8	16.0
2M	48		3	3/4	1	7	4 1/2	4 3/4	1 1/2	5 1/4	11 3/4	12 1/2	17 1/4	14 5/8	12	8	13 1/2	3 3/8	2 5/8	7 1/2	10 5/8	1 7/8	6	4 5/8	14 3/8	2 3/8	16.0
3	48		3	3/4	1	7	4 1/2	4 3/4	1 1/2	5 1/4	11 3/4	12 1/2	17 1/4	14 5/8	12	8	13 1/2	3 3/8	2 5/8	7 1/2	10 5/8	1 7/8	6	4 5/8	14 3/8	2 3/8	16.0
4	48		3	3/4	1	7	4 1/2	4 3/4	1 1/2	5 1/4	11 3/4	12 1/2	17 1/4	14 5/8	12	8	13 1/2	3 3/8	2 5/8	7 1/2	10 5/8	1 7/8	6	4 5/8	14 3/8	2 3/8	16.0
5	48		3	3/4	1	7	4 1/2	4 3/4	1 1/2	5 1/4	11 3/4	12 1/2	17 1/4	14 5/8	12	8	13 1/2	3 3/8	2 5/8	7 1/2	10 5/8	1 7/8	6	4 5/8	14 3/8	2 3/8	16.0

STANDARD SIGN
W20-3A, B, C, D, F & G

WISCONSIN DEPT OF TRANSPORTATION

APPROVED Matthew R Rauch
for State Traffic Engineer

DATE 1/10/2024 PLATE NO. W20-3.8

PROJECT NO: | HWY: | COUNTY: | SHEET NO: E

FILE NAME : C:\CAEfiles\Projects\tr_stdplate\W203.DGN PLOT DATE : 10-JAN 2024 12:02 PLOT BY : dotc4c PLOT NAME : PLOT SCALE : $$.....plotscale.....$$

7

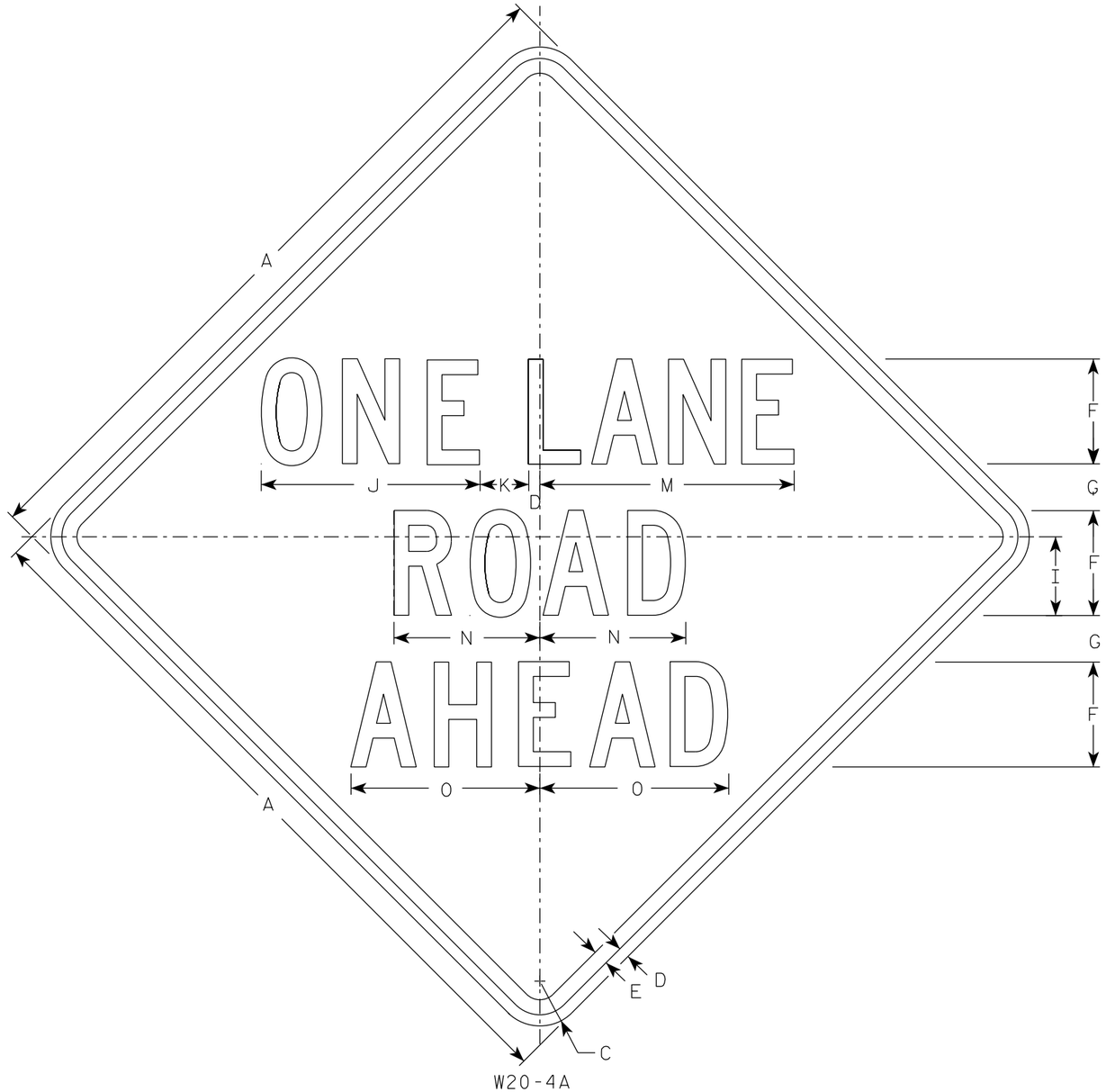

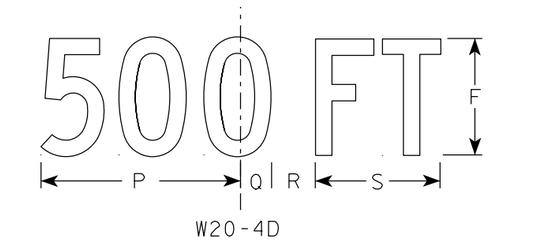

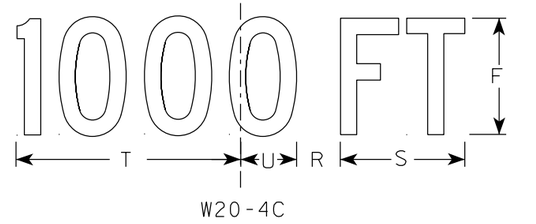

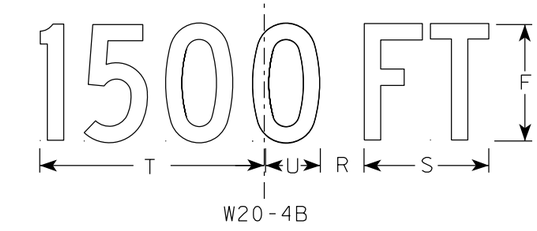

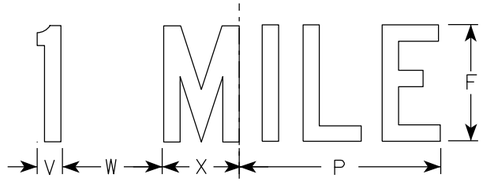

NOTES

1. Sign is Type II - Type F Reflective
2. Color:
   Background - Orange
   Message - Black
3. Message Series - C
4. Corners may be square or rounded when base material is plywood but borders shall be rounded as shown. When base material is metal, the corners and borders shall be rounded.

SIZE	A	B	C	D	E	F	G	H	I	J	K	L	M	N	O	P	Q	R	S	T	U	V	W	X	Y	Z	Area sq. ft.
1	36		2 1/4	5/8	3/4	5	2 3/8	6	3 3/4	10 3/8	2 3/8	8	13 1/2	7	8 7/8	9	1 3/8	1 7/8	5 5/8	10 1/8	2 1/2	1 1/8	4 1/2	3 1/2	10 3/4	1 3/4	9.0
2S	48		3	3/4	1	7	3 1/8	8	5 1/4	14 5/8	3 1/4	10 5/8	17 3/4	9 3/4	12 5/8	12	1 7/8	2 5/8	7 1/2	13 1/2	3 3/8	1 1/2	6	4 5/8	14 3/8	2 3/8	16.0
2M	48		3	3/4	1	7	3 1/8	8	5 1/4	14 5/8	3 1/4	10 5/8	17 3/4	9 3/4	12 5/8	12	1 7/8	2 5/8	7 1/2	13 1/2	3 3/8	1 1/2	6	4 5/8	14 3/8	2 3/8	16.0
3	48		3	3/4	1	7	3 1/8	8	5 1/4	14 5/8	3 1/4	10 5/8	17 3/4	9 3/4	12 5/8	12	1 7/8	2 5/8	7 1/2	13 1/2	3 3/8	1 1/2	6	4 5/8	14 3/8	2 3/8	16.0
4	48		3	3/4	1	7	3 1/8	8	5 1/4	14 5/8	3 1/4	10 5/8	17 3/4	9 3/4	12 5/8	12	1 7/8	2 5/8	7 1/2	13 1/2	3 3/8	1 1/2	6	4 5/8	14 3/8	2 3/8	16.0
5	48		3	3/4	1	7	3 1/8	8	5 1/4	14 5/8	3 1/4	10 5/8	17 3/4	9 3/4	12 5/8	12	1 7/8	2 5/8	7 1/2	13 1/2	3 3/8	1 1/2	6	4 5/8	14 3/8	2 3/8	16.0

STANDARD SIGN
W20-4A, B, C, D, F & G

WISCONSIN DEPT OF TRANSPORTATION

APPROVED Matthew R Rauch
for State Traffic Engineer

DATE 1/10/2024 PLATE NO. W20-4.10

PROJECT NO:

SHEET NO: 188 E

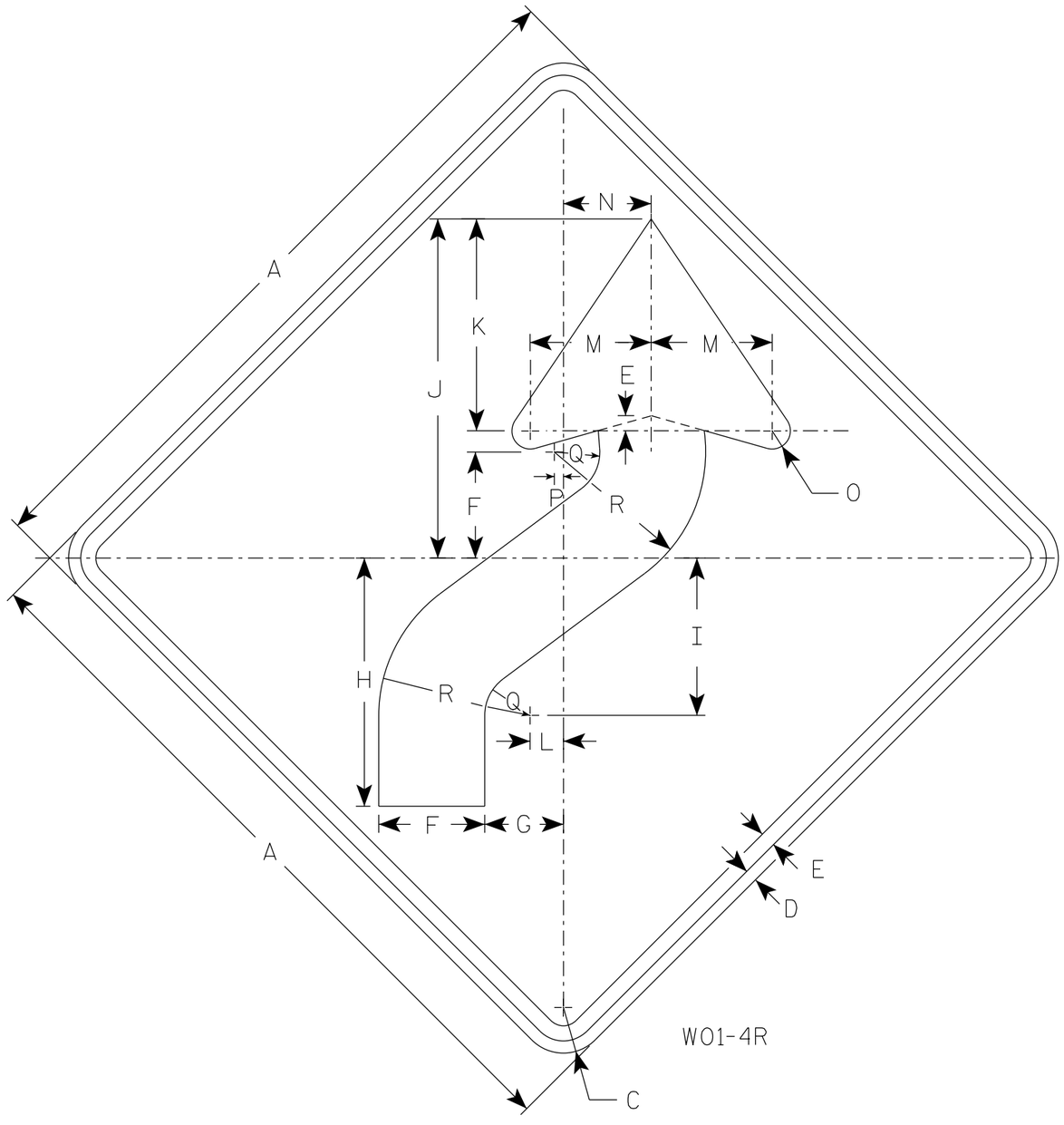

WO1-4R

NOTES

1. Sign is Type II - Type F Reflective
2. Color:
   Background - Orange
   Message - Black
3. Corners may be square or rounded when base material is plywood but borders shall be rounded as shown. When base material is metal, the corners and borders shall be rounded.
4. WO1-4L is the same as WO1-4R except the arrow is reversed along the vertical centerline.

SIZE	A	B	C	D	E	F	G	H	I	J	K	L	M	N	O	P	Q	R	S	T	U	V	W	X	Y	Z	Area sq. ft.
1	36		2 1/4	5/8	3/4	5 1/4	4	12 3/8	7 7/8	16 7/8	10 1/2	1 5/8	6	4 1/2	1	1/2	2 1/4	7 1/2									9.0
2S	48		3	3/4	1	7	5 1/4	16 1/2	10 1/2	22 1/2	14	2 1/4	8	6	1 1/4	5/8	3	10									16.0
2M	48		3	3/4	1	7	5 1/4	16 1/2	10 1/2	22 1/2	14	2 1/4	8	6	1 1/4	5/8	3	10									16.0
3	48		3	3/4	1	7	5 1/4	16 1/2	10 1/2	22 1/2	14	2 1/4	8	6	1 1/4	5/8	3	10									16.0
4	48		3	3/4	1	7	5 1/4	16 1/2	10 1/2	22 1/2	14	2 1/4	8	6	1 1/4	5/8	3	10									16.0
5	48		3	3/4	1	7	5 1/4	16 1/2	10 1/2	22 1/2	14	2 1/4	8	6	1 1/4	5/8	3	10									16.0

STANDARD SIGN
WO1-4

WISCONSIN DEPT OF TRANSPORTATION

APPROVED Matthew R Rauch
For State Traffic Engineer

DATE 1/24/2024 PLATE NO. WO1-4.2

PROJECT NO: | HWY: | COUNTY: | SHEET NO: 189 | E

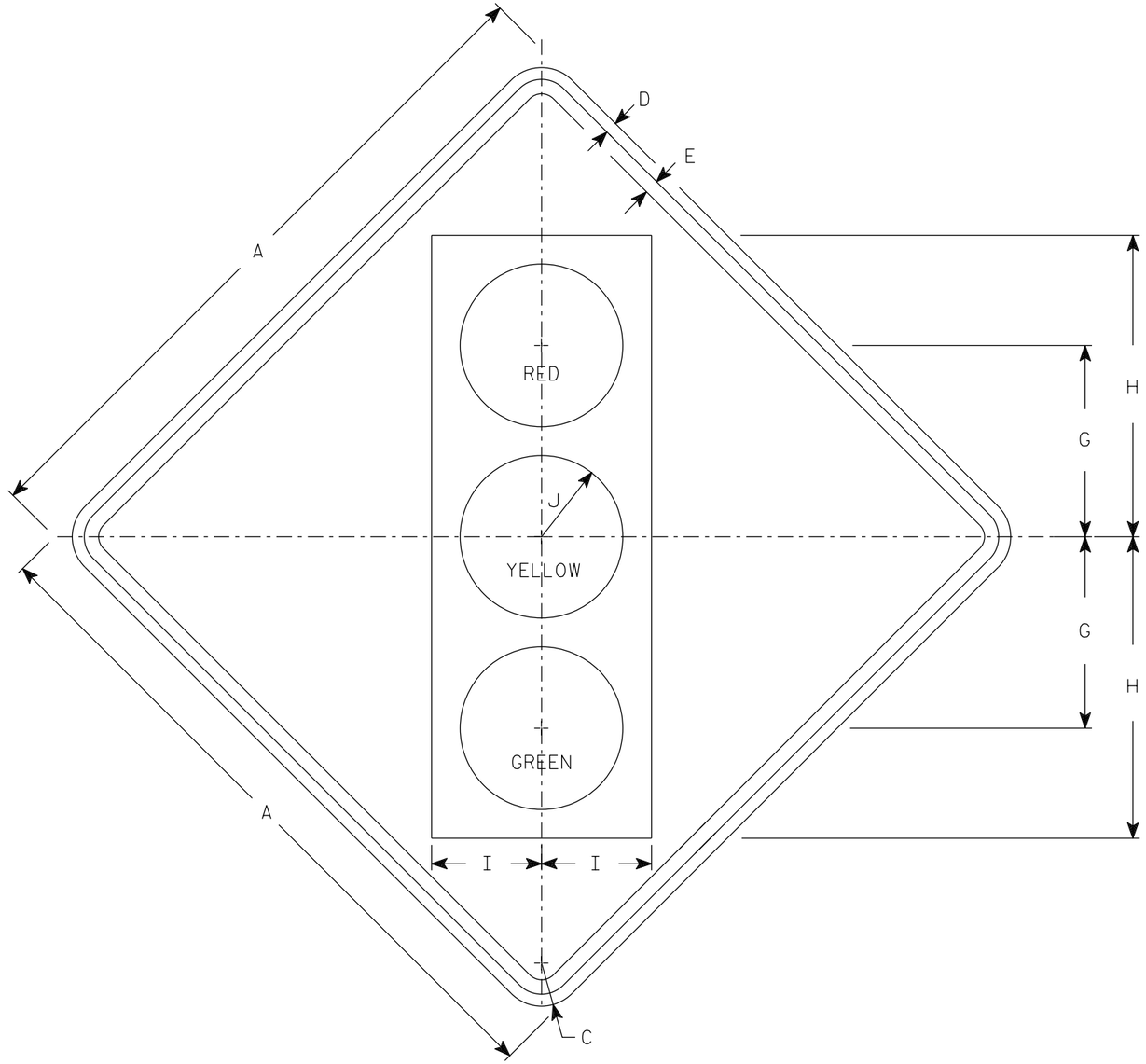

W03-3

NOTES

1. Sign is Type II - Type F Reflective
2. Color:
   Background - Orange
   Message - See Note 4
3. Corners may be square or rounded when base material is plywood but borders shall be rounded as shown. When base material is metal, the corners and borders shall be rounded.
4. Symbol and border are non-reflective black.
   Top circle - Type H Reflectorized Red
   Center circle - Same as background
   Bottom circle - Type H Reflectorized Green

SIZE	A	B	C	D	E	F	G	H	I	J	K	L	M	N	O	P	Q	R	S	T	U	V	W	X	Y	Z	Area sq. ft.
1	36		2 1/4	5/8	3/4		10	15 3/4	5 3/4	4 1/4																	9.0
2S	48		3	3/4	1		12 1/2	20	7 1/2	5																	16.0
2M	48		3	3/4	1		12 1/2	20	7 1/2	5																	16.0
3	48		3	3/4	1		12 1/2	20	7 1/2	5																	16.0
4	48		3	3/4	1		12 1/2	20	7 1/2	5																	16.0
5	48		3	3/4	1		12 1/2	20	7 1/2	5																	16.0

STANDARD SIGN
W03-3

WISCONSIN DEPT OF TRANSPORTATION

APPROVED Matthew R Rauch
for State Traffic Engineer

DATE 1/24/2024 PLATE NO. W03-3.2

PROJECT NO:	HWY:	COUNTY:		SHEET NO:	E

FILE NAME : C:\CAEFiles\Projects\tr_stdplate\W033.DGN PLOT DATE : 24-JAN 2024 2:07 PLOT BY : dotc4c PLOT NAME : PLOT SCALE : $$.....plotscale.....$$ WISDOT/CADDS SHEET 42

7

7

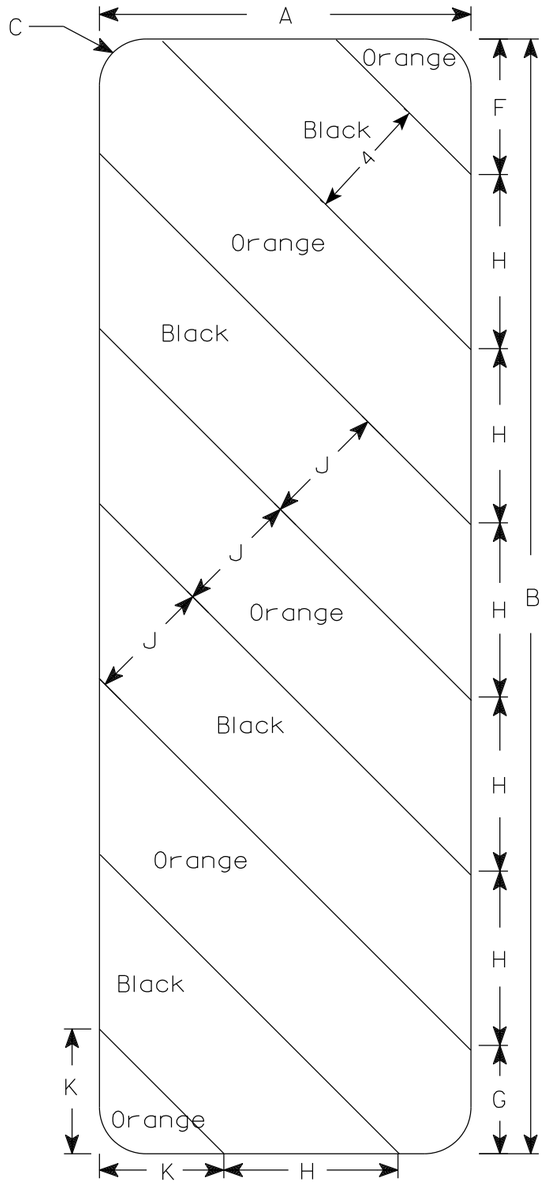

W05-52L

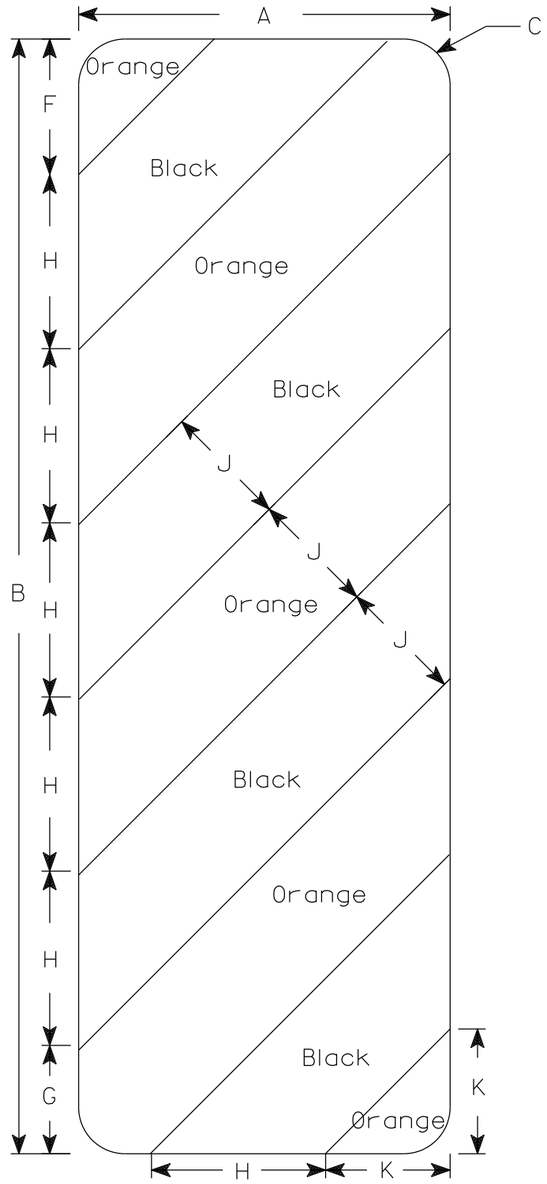

W05-52R

NOTES

1. Sign is Type II - Type F Reflective
2. Color:
   Background - Orange
   Message - Black
4. Alternate colors of stripes as shown.

SIZE	A	B	C	D	E	F	G	H	I	J	K	L	M	N	O	P	Q	R	S	T	U	V	W	X	Y	Z	Area sq. ft.
1																											
2S	12	36	1 ½			4 ⅜	3 ½	5 ⅝	45°	4	4																3.0
2M	12	36	1 ½			4 ⅜	3 ½	5 ⅝	45°	4	4																3.0
3	18	54	1 ½			6	5 ½	8 ½	45°	6	6 9/16																6.75
4																											
5																											

STANDARD SIGN
W05-52L & W05-52R

WISCONSIN DEPT OF TRANSPORTATION

APPROVED Matthew R Rauch
for State Traffic Engineer

DATE 3/13/2024 PLATE NO. W05-52.2

PROJECT NO: | HWY: | COUNTY: | SHEET NO: 191 | E

DIVISION 01 - SLOPE REPAIR

STATION	REAL STATION	DISTANCE	AREA (SF)			INCREMENTAL VOL (CY) (UNADJUSTED)			CUMULATIVE VOL (CY)		
			CUT	SALVAGED/UNUSABLE PAVEMENT MATERIAL	FILL	CUT	SALVAGED/UNUSABLE PAVEMENT MATERIAL	FILL	CUT 1.00	EXPANDED FILL 1.25	MASS ORDINATE
						NOTE 1	NOTE 2	NOTE 3	NOTE 1		NOTE 8
91+01.72	9101.72	0.00	1.92	0.00	2.07	0	0	0	0	0	0
91+50.00	9150.00	48.28	0.04	0.00	34.96	2	0	33	2	41	-39
92+02.00	9202.00	52.00	0.01	0.00	49.74	0	0	82	2	144	-142
92+50.00	9250.00	48.00	0.06	0.00	12.89	0	0	56	2	214	-212
92+87.50	9287.50	37.50	0.48	0.00	1.27	0	0	10	2	226	-224

DIVISION 02 - SLOPE REPAIR

STATION	REAL STATION	DISTANCE	AREA (SF)			INCREMENTAL VOL (CY) (UNADJUSTED)			CUMULATIVE VOL (CY)		
			CUT	SALVAGED/UNUSABLE PAVEMENT MATERIAL	FILL	CUT	SALVAGED/UNUSABLE PAVEMENT MATERIAL	FILL	CUT 1.00	EXPANDED FILL 1.25	MASS ORDINATE
						NOTE 1	NOTE 2	NOTE 3	NOTE 1		NOTE 8
243+62.50	24362.50	0.00	0.26	0.00	9.22	0	0	0	0	0	0
243+77.00	24377.00	14.50	0.21	0.00	33.99	0	0	12	0	15	-15
243+88.00	24388.00	11.00	0.24	0.00	12.71	0	0	10	0	28	-28
244+00.00	24400.00	12.00	0.29	0.00	11.47	0	0	5	0	34	-34

DIVISION 03 - SLOPE REPAIR

STATION	REAL STATION	DISTANCE	AREA (SF)			INCREMENTAL VOL (CY) (UNADJUSTED)			CUMULATIVE VOL (CY)		
			CUT	SALVAGED/UNUSABLE PAVEMENT MATERIAL	FILL	CUT	SALVAGED/UNUSABLE PAVEMENT MATERIAL	FILL	CUT 1.00	EXPANDED FILL 1.25	MASS ORDINATE
						NOTE 1	NOTE 2	NOTE 3	NOTE 1		NOTE 8
312+00.00	31200.00	0.00	0.00	0.00	7.61	0	0	0	0	0	0
312+09.50	31209.50	9.50	0.00	0.00	24.35	0	0	6	0	8	-8
312+12.50	31212.50	3.00	0.00	0.00	17.97	0	0	2	0	10	-10
312+18.00	31218.00	5.50	0.05	0.00	5.04	0	0	2	0	13	-13

DIVISION 04 - SLOPE REPAIR

STATION	REAL STATION	DISTANCE	AREA (SF)			INCREMENTAL VOL (CY) (UNADJUSTED)			CUMULATIVE VOL (CY)		
			CUT	SALVAGED/UNUSABLE PAVEMENT MATERIAL	FILL	CUT	SALVAGED/UNUSABLE PAVEMENT MATERIAL	FILL	CUT 1.00	EXPANDED FILL 1.25	MASS ORDINATE
						NOTE 1	NOTE 2	NOTE 3	NOTE 1		NOTE 8
338+75.00	33875.00	0.00	1.13	0.00	1.31	0	0	0	0	0	0
338+86.00	33886.00	11.00	0.87	0.00	20.98	0	0	5	0	6	-6
338+95.00	33895.00	9.00	0.91	0.00	3.77	0	0	4	0	11	-11

NOTES:	
1 - CUT	CUT INCLUDES SALVAGED/UNUSABLE PAVEMENT MATERIAL
2 - SALVAGED/UNUSABLE PAVEMENT MATERIAL	THIS DOES NOT SHOW UP IN CROSS SECTIONS
3 - FILL	DOES NOT INCLUDE UNUSABLE PAVEMENT EXC VOLUME
8 - MASS ORDINATE	CUT - EXPANDED FILL

DIVISION 05 - 507+75 STAGE 1 TEMPORARY WIDENING

STATION	REAL STATION	DISTANCE	AREA (SF)			INCREMENTAL VOL (CY) (UNADJUSTED)			CUMULATIVE VOL (CY)		
			CUT	SALVAGED/UNUSABLE PAVEMENT MATERIAL	FILL	CUT	SALVAGED/UNUSABLE PAVEMENT MATERIAL	FILL	CUT 1.00	EXPANDED FILL 1.25	MASS ORDINATE
						NOTE 1	NOTE 2	NOTE 3	NOTE 1		NOTE 8
505+65.80	50565.80	0.00	5.48	0.00	0.03	0	0	0	0	0	0
506+00.00	50600.00	34.2	9.27	0.00	0.00	9	0	0	9	0	9
506+50.00	50650.00	50	6.70	0.00	0.00	15	0	0	24	0	24
507+00.00	50700.00	50	6.58	0.00	0.00	12	0	0	36	0	36
507+50.00	50750.00	50	6.30	0.00	0.39	12	0	0	48	0	48
508+00.00	50800.00	50	6.52	0.00	0.00	12	0	0	60	0	60
508+50.00	50850.00	50	6.21	0.00	0.00	12	0	0	72	0	72
509+00.00	50900.00	50	6.74	0.00	0.00	12	0	0	84	0	84
509+50.00	50950.00	50	6.73	0.00	0.00	12	0	0	96	0	96
509+84.10	50984.10	34.1	6.00	0.00	0.00	8	0	0	104	0	104

DIVISION 06 - 507+75 STAGE 2 TEMPORARY WIDENING

STATION	REAL STATION	DISTANCE	AREA (SF)			INCREMENTAL VOL (CY) (UNADJUSTED)			CUMULATIVE VOL (CY)		
			CUT	SALVAGED/UNUSABLE PAVEMENT MATERIAL	FILL	CUT	SALVAGED/UNUSABLE PAVEMENT MATERIAL	FILL	CUT 1.00	EXPANDED FILL 1.25	MASS ORDINATE
						NOTE 1	NOTE 2	NOTE 3	NOTE 1		NOTE 8
505+26.00	50526.00	0.00	6.53	0.00	0.00	0	0	0	0	0	0
505+50.00	50550.00	24	6.74	0.00	0.00	6	0	0	6	0	6
506+00.00	50600.00	50	6.00	0.00	2.54	12	0	2	18	3	16
506+50.00	50650.00	50	6.53	0.00	1.80	12	0	4	30	8	23
507+05.00	50705.00	55	6.44	0.00	2.17	13	0	4	43	13	31
507+07.00	50707.00	2	24.30	10.00	1.07	1	0	0	44	13	32
507+50.00	50750.00	43	24.60	10.00	1.23	39	16	2	83	15	52
508+00.00	50800.00	50	23.70	10.00	2.30	45	19	3	128	19	74
508+42.00	50842.00	42	24.54	10.00	0.74	38	16	2	166	21	94
508+44.00	50844.00	2	6.68	0.00	1.62	1	0	0	167	21	95
509+00.00	50900.00	56	6.91	0.00	1.89	14	0	4	181	26	104
509+50.00	50950.00	50	6.65	0.00	2.91	13	0	4	194	31	112
510+00.00	51000.00	50	5.98	0.00	0.00	12	0	3	206	35	120
510+24.20	51024.20	24.2	5.86	0.00	0.00	5	0	0	211	35	125

DIVISION 07 - 547+05 STAGE 1 TEMPORARY WIDENING

U	REAL STATION	DISTANCE	AREA (SF)			INCREMENTAL VOL (CY) (UNADJUSTED)			CUMULATIVE VOL (CY)		
			CUT	SALVAGED/UNUSABLE PAVEMENT MATERIAL	FILL	CUT	SALVAGED/UNUSABLE PAVEMENT MATERIAL	FILL	CUT 1.00	EXPANDED FILL 1.25	MASS ORDINATE
						NOTE 1	NOTE 2	NOTE 3	NOTE 1		NOTE 8
543+95.90	54395.90	0.00	8.18	0.00	0.00	0	0	0	0	0	0
544+75.00	54475.00	79.1	9.18	0.00	0.00	25	0	0	25	0	25
544+87.50	54487.50	12.5	15.74	0.00	0.00	6	0	0	31	0	31
544+87.51	54487.51	0.01	0.00	0.00	0.00	0	0	0	0	0	31
545+43.50	54543.50	55.99	0.00	0.00	0.00	0	0	0	0	0	31
545+43.53	54543.53	56.03	13.06	0.00	0.00	30	0	0	61	0	61
546+00.00	54600.00	56.47	9.36	0.00	14.05	23	0	15	84	19	65
546+50.00	54650.00	50	7.15	0.00	25.91	15	0	37	99	65	34
547+00.00	54700.00	50	6.52	0.00	34.38	13	0	56	112	135	-23
547+50.00	54750.00	50	6.41	0.00	43.14	12	0	72	124	225	-101
548+00.00	54800.00	50	5.54	0.00	28.81	11	0	67	135	309	-174
548+50.00	54850.00	50	5.98	0.00	19.37	11	0	45	146	365	-219
549+00.00	54900.00	50	6.74	0.00	8.69	12	0	26	158	398	-240
549+50.00	54950.00	50	7.50	0.00	1.28	13	0	9	171	409	-238
550+00.00	55000.00	50	6.55	0.00	0.00	13	0	1	184	410	-226
550+14.10	55014.10	14.1	6.23	0.00	0.00	3	0	0	187	410	-223

DIVISION 08 - 547+05 STAGE 2 TEMPORARY WIDENING

STATION	REAL STATION	DISTANCE	AREA (SF)			INCREMENTAL VOL (CY) (UNADJUSTED)			CUMULATIVE VOL (CY)		
			CUT	SALVAGED/UNUSABLE PAVEMENT MATERIAL	FILL	CUT	SALVAGED/UNUSABLE PAVEMENT MATERIAL	FILL	CUT 1.00	EXPANDED FILL 1.25	MASS ORDINATE
						NOTE 1	NOTE 2	NOTE 3	NOTE 1		NOTE 8
545+43.50	54543.50	0.00	6.69	0.00	0.00	0	0	0	0	0	0
546+00.00	54600.00	56.5	8.27	0.00	1.05	16	0	1	16	1	15
546+33.00	54633.00	33	6.58	0.00	17.33	9	0	11	25	15	10
546+35.00	54635.00	2	20.26	8.00	17.27	1	0	1	26	16	10
547+00.00	54700.00	65	19.44	8.00	18.80	48	19	43	74	70	-15
547+50.00	54750.00	50	18.70	8.00	15.80	35	15	32	109	110	-35
547+75.25	54775.25	25.25	18.41	8.00	12.53	17	7	13	126	126	-41
547+78.00	54778.00	2.75	4.69	0.00	14.00	1	0	1	127	128	-42
548+00.00	54800.00	22	4.73	0.00	11.49	4	0	10	131	140	-50
548+50.00	54850.00	50	5.92	0.00	8.18	10	0	18	141	163	-63
549+00.00	54900.00	50	6.89	0.00	1.21	12	0	9	153	174	-62
549+50.00	54950.00	50	7.13	0.00	0.00	13	0	1	166	175	-50
549+64.00	54964.00	14	7.15	0.00	0.00	4	0	0	170	175	-46

DIVISION 09 - 50775 STAGE 1 TEMPORARY WIDENING REMOVAL

STATION	REAL STATION	DISTANCE	AREA (SF)			INCREMENTAL VOL (CY) (UNADJUSTED)			CUMULATIVE VOL (CY)		
			CUT	SALVAGED/UNUSABLE PAVEMENT MATERIAL	FILL	CUT	SALVAGED/UNUSABLE PAVEMENT MATERIAL	FILL	CUT 1.00	EXPANDED FILL 1.25	MASS ORDINATE
						NOTE 1	NOTE 2	NOTE 3	NOTE 1		NOTE 8
505+65.80	50565.80	0.00	0.34	0.00	0.00	0	0	0	0	0	0
506+00.00	50600.00	34.2	0.69	0.00	0.00	1	0	0	1	0	1
506+50.00	50650.00	50	0.85	0.00	0.00	1	0	0	2	0	2
507+00.00	50700.00	50	0.75	0.00	0.00	1	0	0	3	0	3
507+50.00	50750.00	50	1.10	0.00	0.00	2	0	0	5	0	5
508+00.00	50800.00	50	0.77	0.00	0.00	2	0	0	7	0	7
508+50.00	50850.00	50	0.00	0.00	0.00	1	0	0	8	0	8
509+00.00	50900.00	50	0.80	0.00	0.00	1	0	0	9	0	9
509+50.00	50950.00	50	0.72	0.00	0.00	1	0	0	10	0	10
509+84.10	50984.10	34.1	0.12	0.00	0.00	1	0	0	11	0	11

DIVISION 10 - 507+75 STAGE 2 TEMPORARY WIDENING REMOVAL

STATION	REAL STATION	DISTANCE	AREA (SF)			INCREMENTAL VOL (CY) (UNADJUSTED)			CUMULATIVE VOL (CY)		
			CUT	SALVAGED/UNUSABLE PAVEMENT MATERIAL	FILL	CUT	SALVAGED/UNUSABLE PAVEMENT MATERIAL	FILL	CUT 1.00	EXPANDED FILL 1.25	MASS ORDINATE
						NOTE 1	NOTE 2	NOTE 3	NOTE 1		NOTE 8
505+26.00	50526.00	0.00	0.05	0.00	0.00	0	0	0	0	0	0
505+50.00	50550.00	24	0.32	0.00	0.00	0	0	0	0	0	0
506+00.00	50600.00	50	8.64	0.00	0.00	8	0	0	8	0	8
506+50.00	50650.00	50	7.49	0.00	0.00	15	0	0	23	0	23
507+05.00	50705.00	55	7.96	0.00	0.00	16	0	0	39	0	39
507+07.00	50707.00	2	8.02	0.00	0.00	1	0	0	40	0	40
507+50.00	50750.00	43	7.98	0.00	0.00	13	0	0	53	0	53
508+00.00	50800.00	50	9.93	0.00	0.00	17	0	0	70	0	70
508+42.00	50842.00	42	7.41	0.00	0.00	13	0	0	83	0	83
508+44.00	50844.00	2	7.17	0.00	0.00	1	0	0	84	0	84
509+00.00	50900.00	56	7.20	0.00	0.00	15	0	0	99	0	99
509+50.00	50950.00	50	8.42	0.00	0.00	14	0	0	113	0	113
510+00.00	51000.00	50	0.48	0.00	0.00	8	0	0	121	0	121
510+24.20	51024.20	24.2	0.06	0.00	0.00	0	0	0	121	0	121

DIVISION 11 - 547+05 STAGE 1 TEMPORARY WIDENING REMOVAL

STATION	REAL STATION	DISTANCE	AREA (SF)			INCREMENTAL VOL (CY) (UNADJUSTED)			CUMULATIVE VOL (CY)		
			CUT	SALVAGED/UNUSABLE PAVEMENT MATERIAL	FILL	CUT	SALVAGED/UNUSABLE PAVEMENT MATERIAL	FILL	CUT 1.00	EXPANDED FILL 1.25	MASS ORDINATE
						NOTE 1	NOTE 2	NOTE 3	NOTE 1		NOTE 8
544+75.00	54475.00	0.00	1.27	0.00	0.00	0	0	0	0	0	0
544+87.50	54487.50	12.5	0.00	0.00	0.00	0	0	0	0	0	0
544+87.51	54487.51	0.01	0.00	0.00	0.00	0	0	0	0	0	0
545+43.50	54543.50	55.99	0.00	0.00	0.00	0	0	0	0	0	0
545+43.53	54543.53	0.03	0.03	0.00	0.00	0	0	0	0	0	0
546+00.00	54600.00	56.47	25.43	0.00	0.00	27	0	0	27	0	27
546+50.00	54650.00	50	39.52	0.00	0.00	60	0	0	87	0	87
547+00.00	54700.00	50	48.61	0.00	0.00	82	0	0	169	0	169
547+50.00	54750.00	50	57.49	0.00	0.00	98	0	0	267	0	267
548+00.00	54800.00	50	44.04	0.00	0.00	94	0	0	361	0	361
548+50.00	54850.00	50	34.17	0.00	0.00	72	0	0	433	0	433
549+00.00	54900.00	50	20.04	0.00	0.00	50	0	0	483	0	483
549+50.00	54950.00	50	4.96	0.00	0.00	23	0	0	506	0	506
550+00.00	55000.00	50	0.19	0.00	0.00	5	0	0	511	0	511
550+14.10	55014.10	14.1	0.11	0.00	0.00	0	0	0	511	0	511

DIVISION 12 - 547+05 STAGE 2 TEMPORARY WIDENING REMOVAL

STATION	REAL STATION	DISTANCE	AREA (SF)			INCREMENTAL VOL (CY) (UNADJUSTED)			CUMULATIVE VOL (CY)		
			CUT	SALVAGED/UNUSABLE PAVEMENT MATERIAL	FILL	CUT	SALVAGED/UNUSABLE PAVEMENT MATERIAL	FILL	CUT 1.00	EXPANDED FILL 1.25	MASS ORDINATE
						NOTE 1	NOTE 2	NOTE 3	NOTE 1		NOTE 8
545+43.50	54543.50	0.00	0.01	0.00	0.00	0	0	0	0	0	0
546+00.00	54600.00	56.5	6.02	0.00	0.00	6	0	0	6	0	6
546+33.00	54633.00	33	23.98	0.00	0.00	18	0	0	24	0	24
546+35.00	54635.00	2	26.35	0.00	0.00	2	0	0	26	0	26
547+00.00	54700.00	65	30.63	0.00	0.00	69	0	0	95	0	95
547+50.00	54750.00	50	28.45	0.00	0.00	55	0	0	150	0	150
547+75.25	54775.25	25.25	24.88	0.00	0.00	25	0	0	175	0	175
547+78.00	54778.00	2.75	22.80	0.00	0.00	2	0	0	177	0	177
548+00.00	54800.00	22	20.22	0.00	0.00	18	0	0	195	0	195
548+50.00	54850.00	50	15.67	0.00	0.00	33	0	0	228	0	228
549+00.00	54900.00	50	5.25	0.00	0.00	19	0	0	247	0	247
549+50.00	54950.00	50	0.18	0.00	0.00	5	0	0	252	0	252
549+64.00	54964.00	14	0.05	0.00	0.00	0	0	0	252	0	252

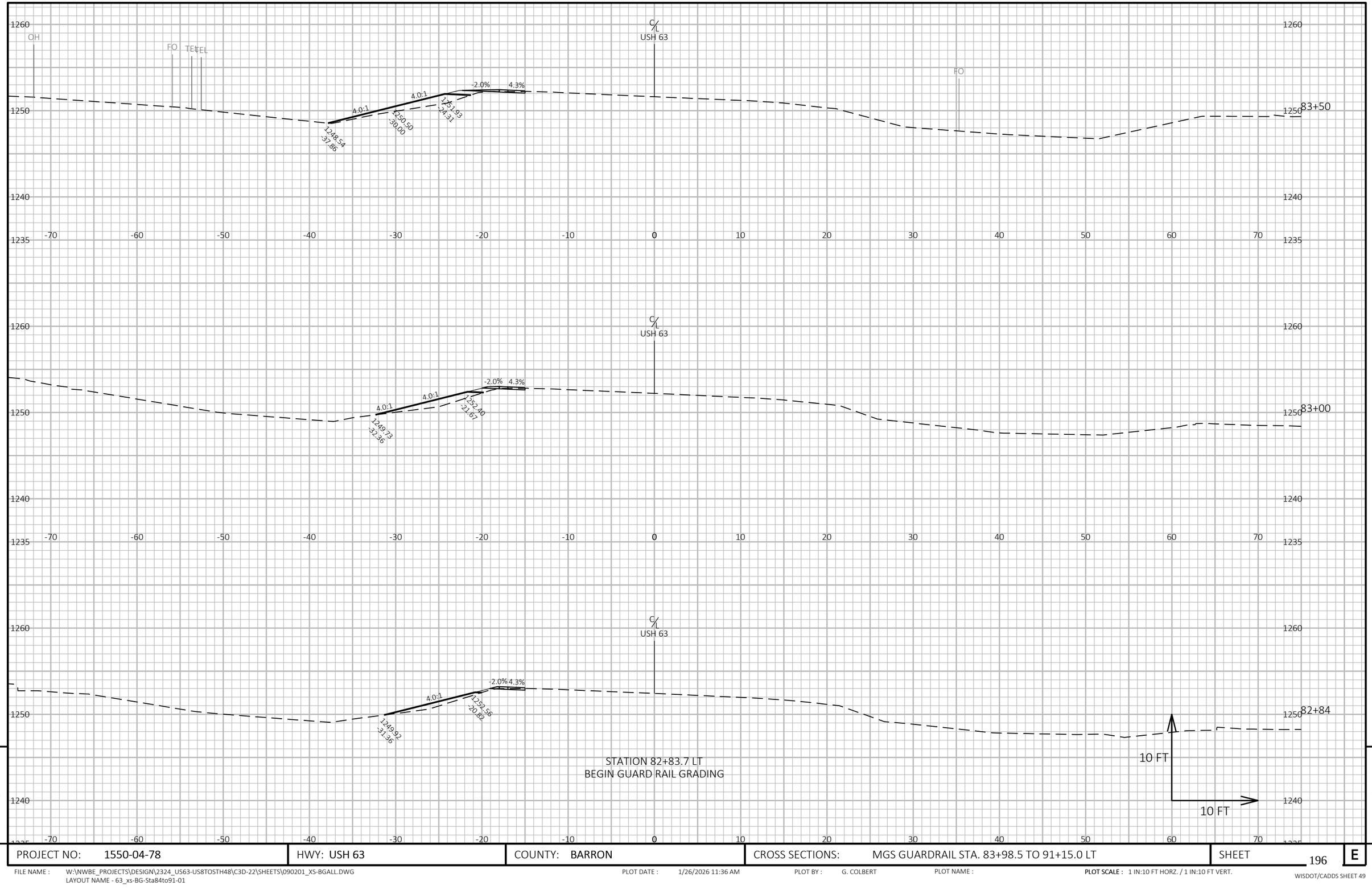

9

9

PROJECT NO: 1550-04-78	HWY: USH 63	COUNTY: BARRON	CROSS SECTIONS: MGS GUARDRAIL STA. 83+98.5 TO 91+15.0 LT	SHEET 196	E

FILE NAME : W:\NWBE_PROJECTS\DESIGN\2324_US63-US8TOSTH48\C3D-22\SHEETS\090201_XS-BGALL.DWG
LAYOUT NAME - 63_xs-BG-Sta84to91-01

PLOT DATE : 1/26/2026 11:36 AM PLOT BY : G. COLBERT PLOT NAME : PLOT SCALE : 1 IN:10 FT HORZ. / 1 IN:10 FT VERT.

WISDOT/CADDS SHEET 49

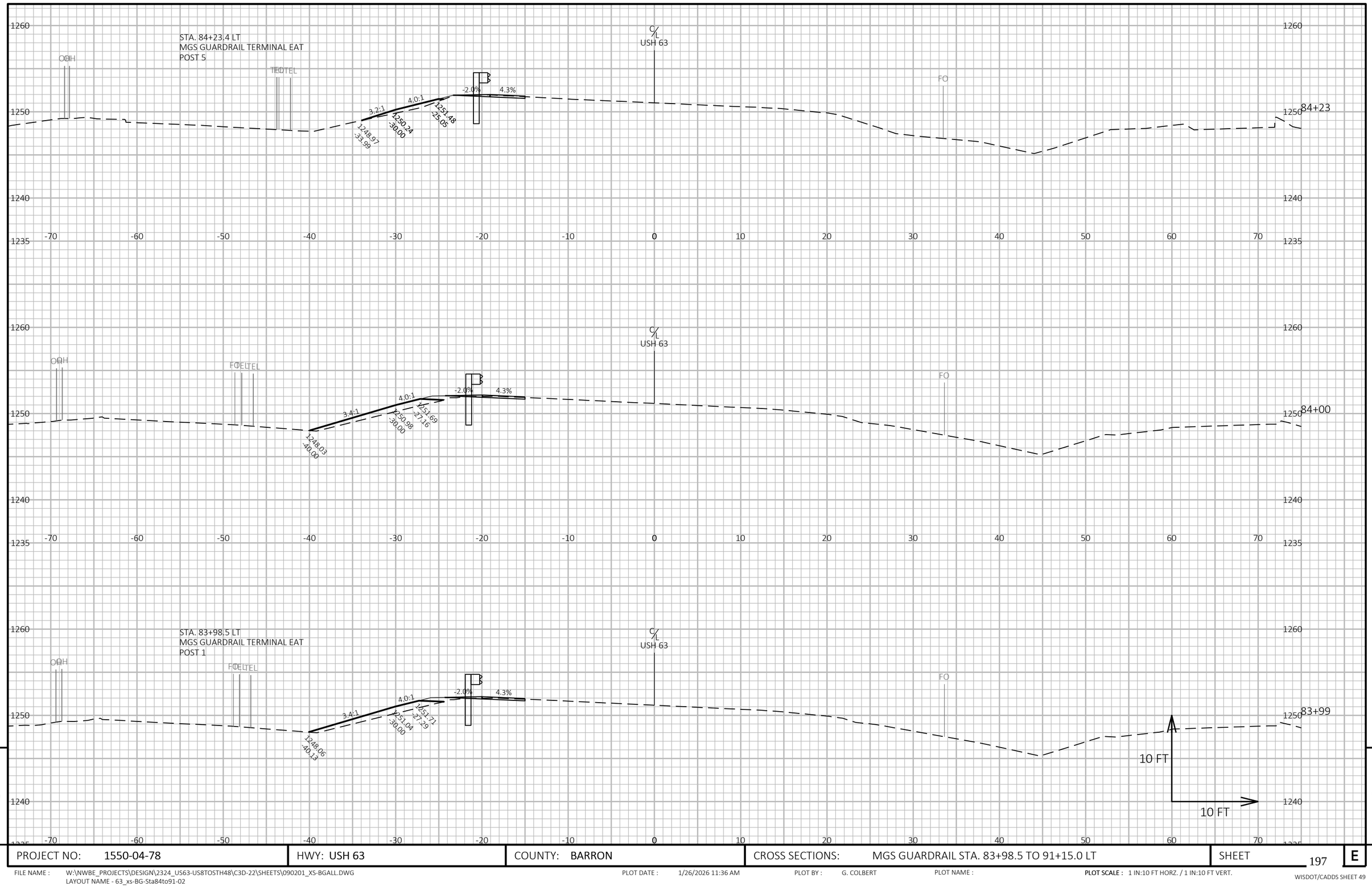

9

9

PROJECT NO: 1550-04-78	HWY: USH 63	COUNTY: BARRON	CROSS SECTIONS: MGS GUARDRAIL STA. 83+98.5 TO 91+15.0 LT	SHEET 197	E

FILE NAME : W:\NWBE_PROJECTS\DESIGN\2324_US63-US8TOSTH48\C3D-22\SHEETS\090201_XS-BGALL.DWG
LAYOUT NAME - 63_xs-BG-Sta84to91-02

PLOT DATE : 1/26/2026 11:36 AM PLOT BY : G. COLBERT PLOT NAME : **PLOT SCALE :** 1 IN:10 FT HORZ. / 1 IN:10 FT VERT.

WISDOT/CADDS SHEET 49

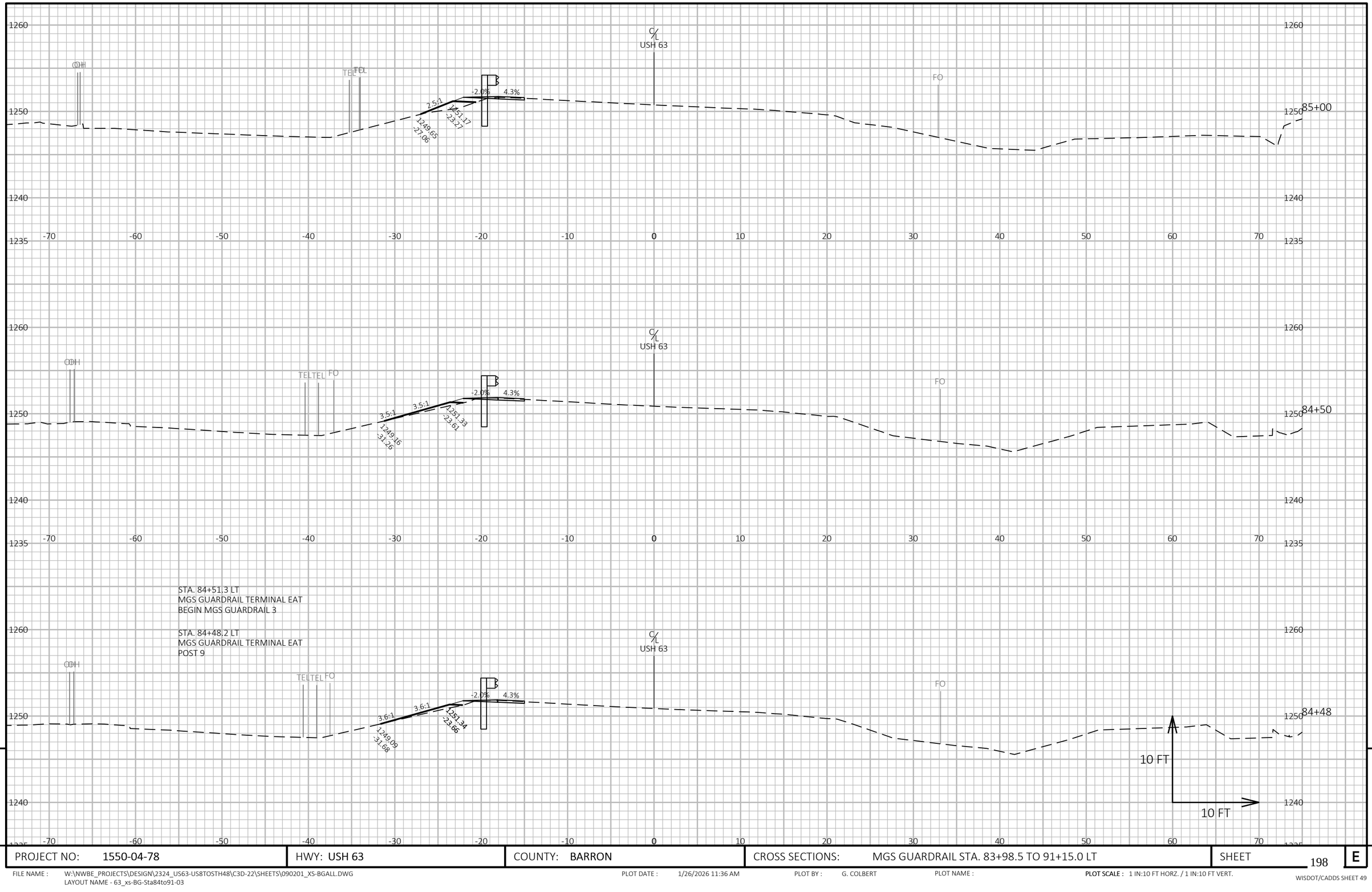

9

9

PROJECT NO: 1550-04-78	HWY: USH 63	COUNTY: BARRON	CROSS SECTIONS: MGS GUARDRAIL STA. 83+98.5 TO 91+15.0 LT	SHEET 198	E

FILE NAME : W:\NWBE_PROJECTS\DESIGN\2324_US63-US8TOSTH48\C3D-22\SHEETS\090201_XS-BGALL.DWG
LAYOUT NAME - 63_xs-BG-Sta84to91-03

PLOT DATE : 1/26/2026 11:36 AM PLOT BY : G. COLBERT PLOT NAME : PLOT SCALE : 1 IN:10 FT HORZ. / 1 IN:10 FT VERT.

WISDOT/CADDS SHEET 49

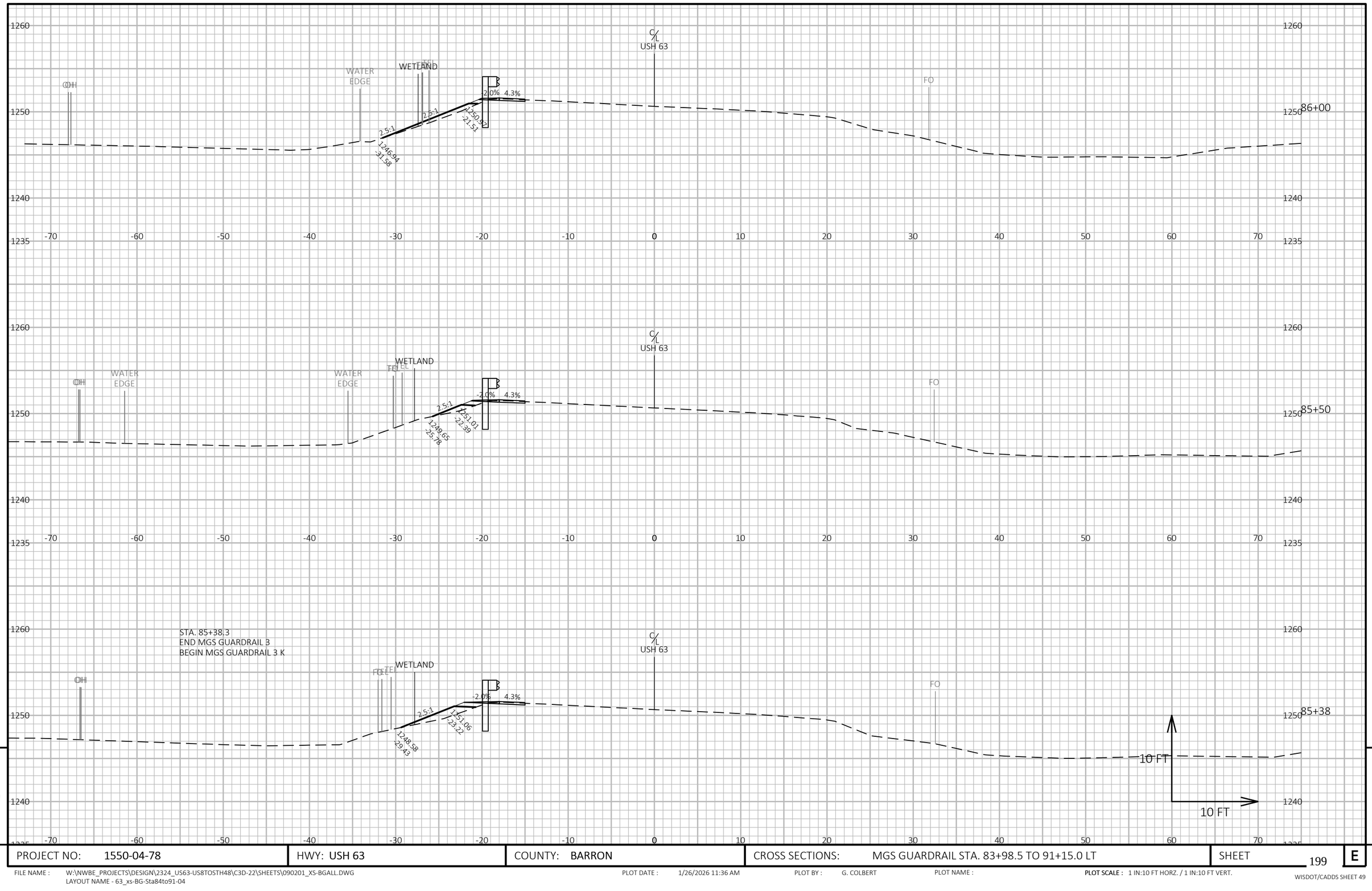

9

9

PROJECT NO: 1550-04-78	HWY: USH 63	COUNTY: BARRON	CROSS SECTIONS: MGS GUARDRAIL STA. 83+98.5 TO 91+15.0 LT	SHEET 199	E

FILE NAME : W:\NWBE_PROJECTS\DESIGN\2324_US63-US8TOSTH48\C3D-22\SHEETS\090201_XS-BGALL.DWG
LAYOUT NAME - 63_xs-BG-Sta84to91-04

PLOT DATE : 1/26/2026 11:36 AM PLOT BY : G. COLBERT PLOT NAME : **PLOT SCALE :** 1 IN:10 FT HORZ. / 1 IN:10 FT VERT.

WISDOT/CADDS SHEET 49

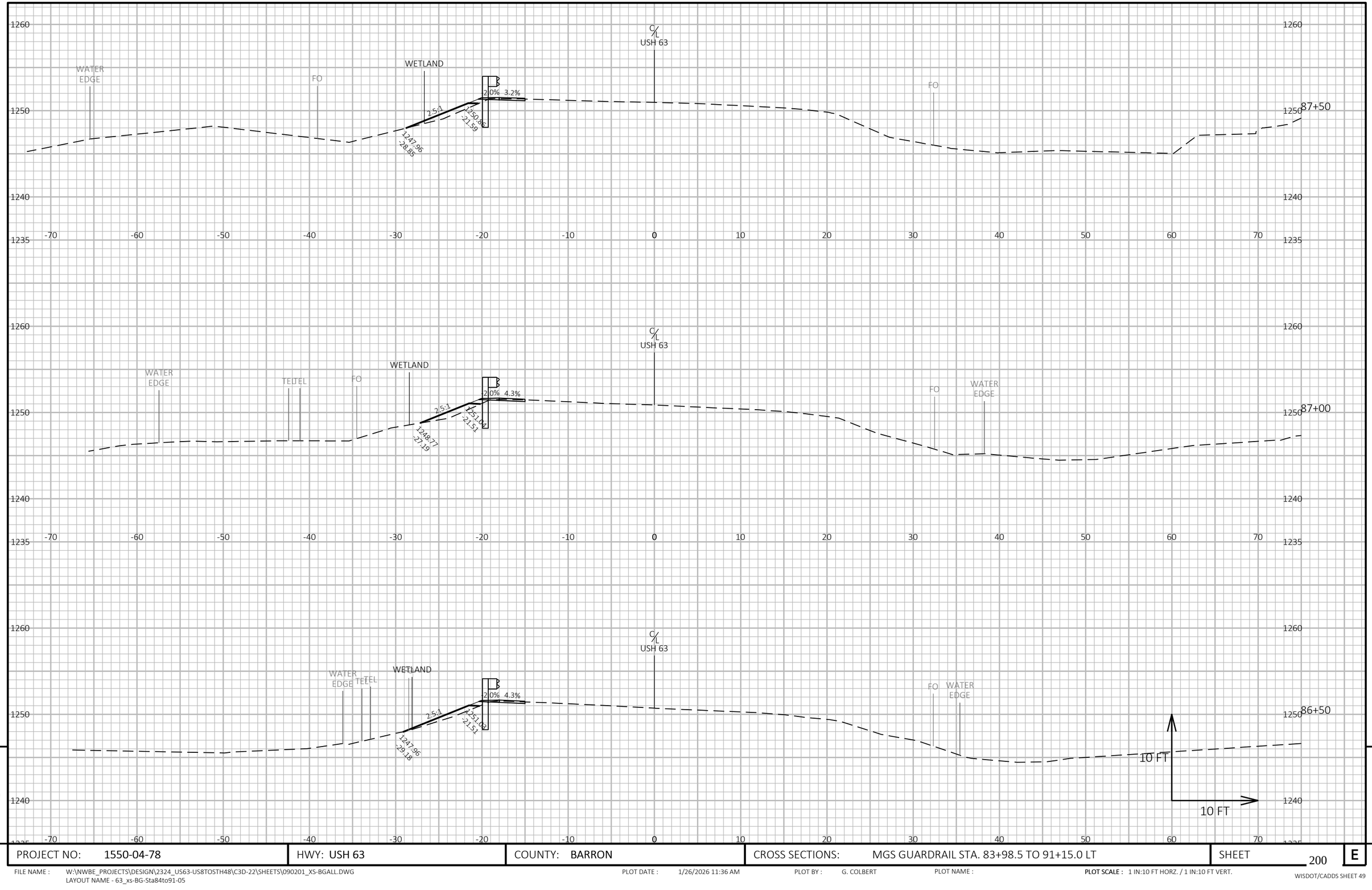

9

9

PROJECT NO: 1550-04-78	HWY: USH 63	COUNTY: BARRON	CROSS SECTIONS: MGS GUARDRAIL STA. 83+98.5 TO 91+15.0 LT	SHEET 200	E

FILE NAME : W:\NWBE_PROJECTS\DESIGN\2324_US63-US8TOSTH48\C3D-22\SHEETS\090201_XS-BGALL.DWG
LAYOUT NAME - 63_xs-BG-Sta84to91-05

PLOT DATE : 1/26/2026 11:36 AM PLOT BY : G. COLBERT PLOT NAME : **PLOT SCALE :** 1 IN:10 FT HORZ. / 1 IN:10 FT VERT.

WISDOT/CADDS SHEET 49

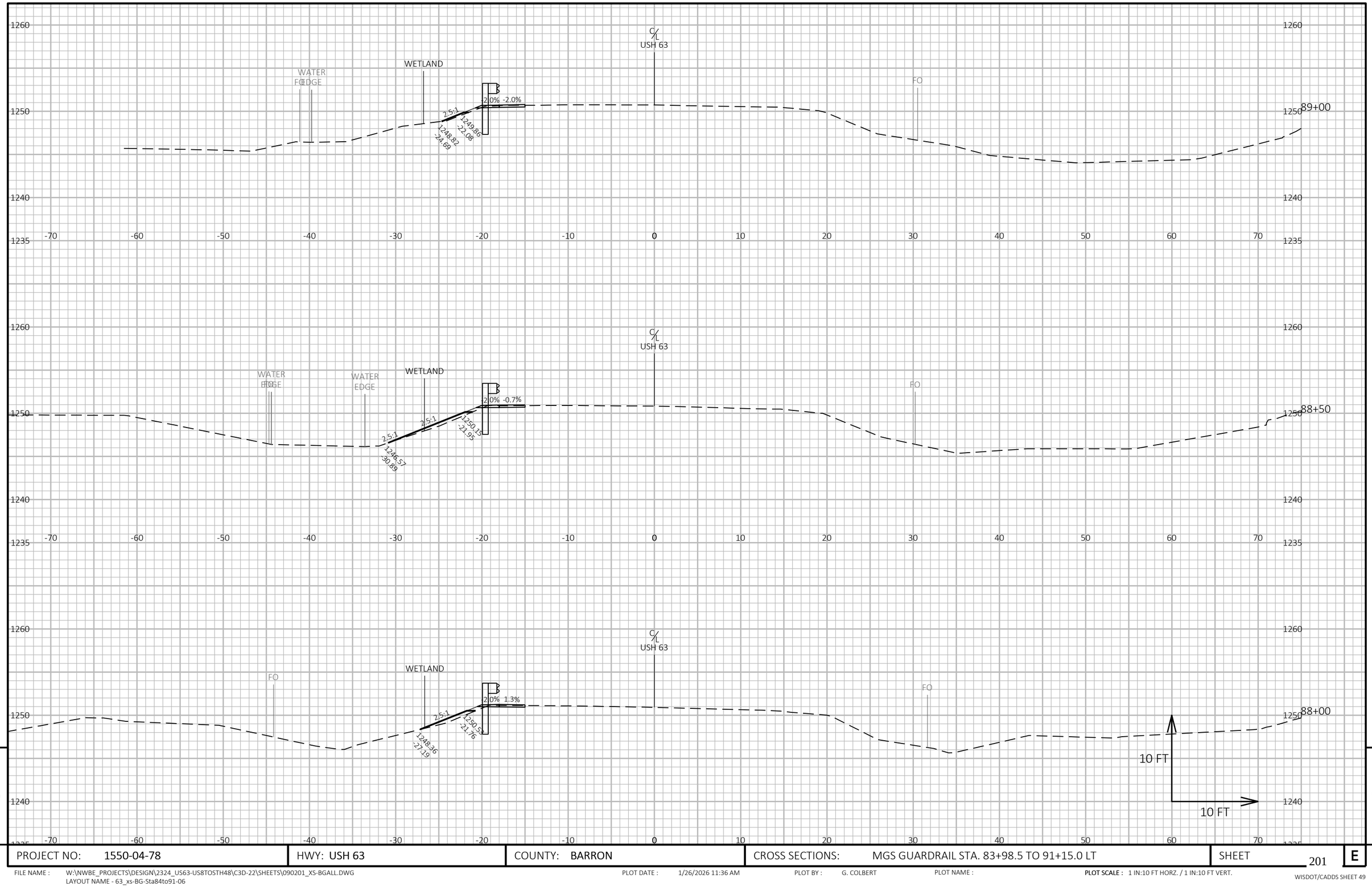

9

9

PROJECT NO: 1550-04-78	HWY: USH 63	COUNTY: BARRON	CROSS SECTIONS: MGS GUARDRAIL STA. 83+98.5 TO 91+15.0 LT	SHEET 201	E

FILE NAME : W:\NWBE_PROJECTS\DESIGN\2324_US63-US8TOSTH48\C3D-22\SHEETS\090201_XS-BGALL.DWG
LAYOUT NAME - 63_xs-BG-Sta84to91-06

PLOT DATE : 1/26/2026 11:36 AM PLOT BY : G. COLBERT PLOT NAME : **PLOT SCALE :** 1 IN:10 FT HORZ. / 1 IN:10 FT VERT.

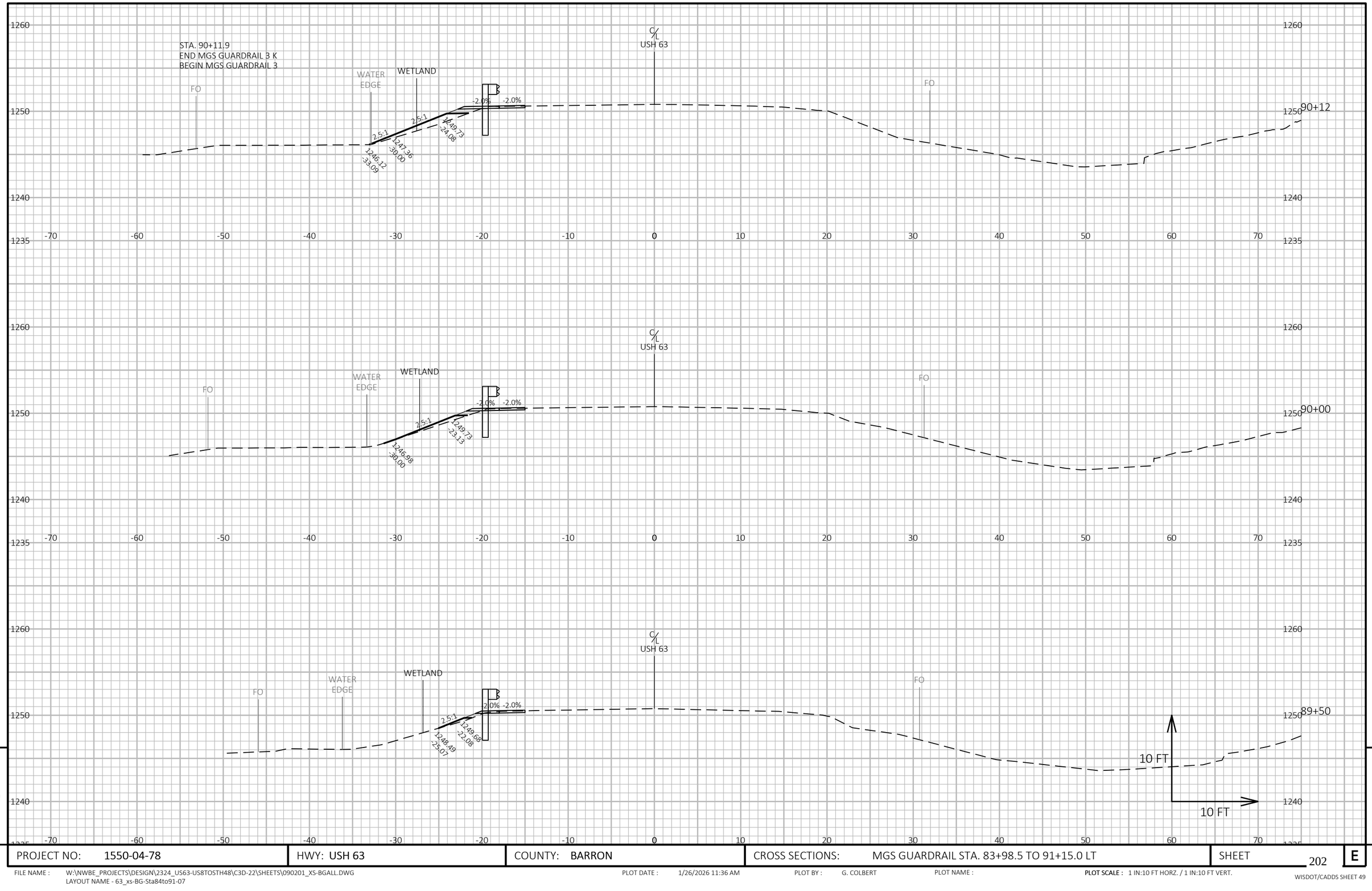

9 9

PROJECT NO: 1550-04-78	HWY: USH 63	COUNTY: BARRON	CROSS SECTIONS: MGS GUARDRAIL STA. 83+98.5 TO 91+15.0 LT	SHEET 202	E

FILE NAME : W:\NWBE_PROJECTS\DESIGN\2324_US63-US8TOSTH48\C3D-22\SHEETS\090201_XS-BGALL.DWG
LAYOUT NAME - 63_xs-BG-Sta84to91-07

PLOT DATE : 1/26/2026 11:36 AM PLOT BY : G. COLBERT PLOT NAME : **PLOT SCALE :** 1 IN:10 FT HORZ. / 1 IN:10 FT VERT.

WISDOT/CADDS SHEET 49

STA. 90+90.0
MGS GUARDRAIL TERMINAL EAT
POST 5

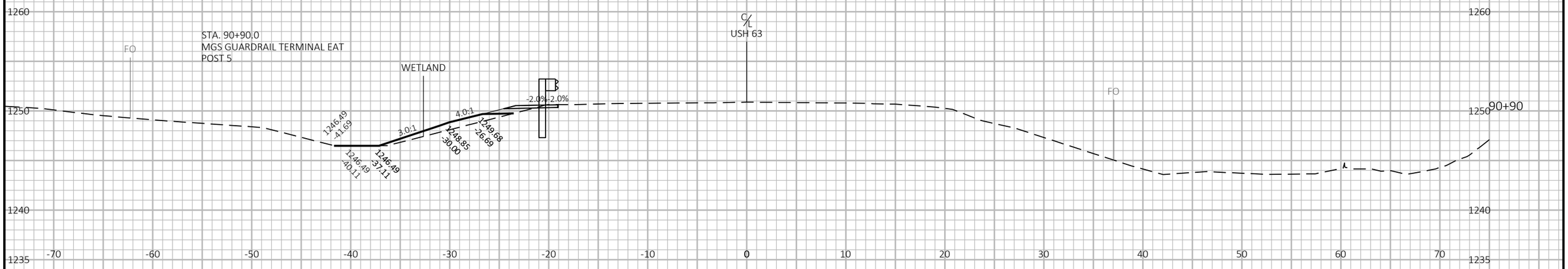

STA. 90+65.0
MGS GUARDRAIL TERMINAL EAT
POST 9

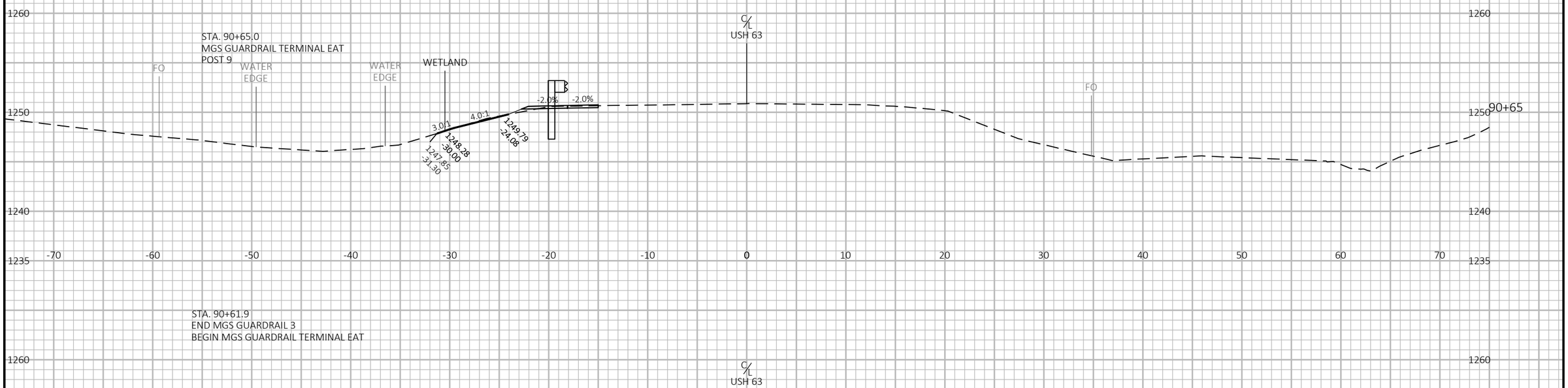

STA. 90+61.9
END MGS GUARDRAIL 3
BEGIN MGS GUARDRAIL TERMINAL EAT

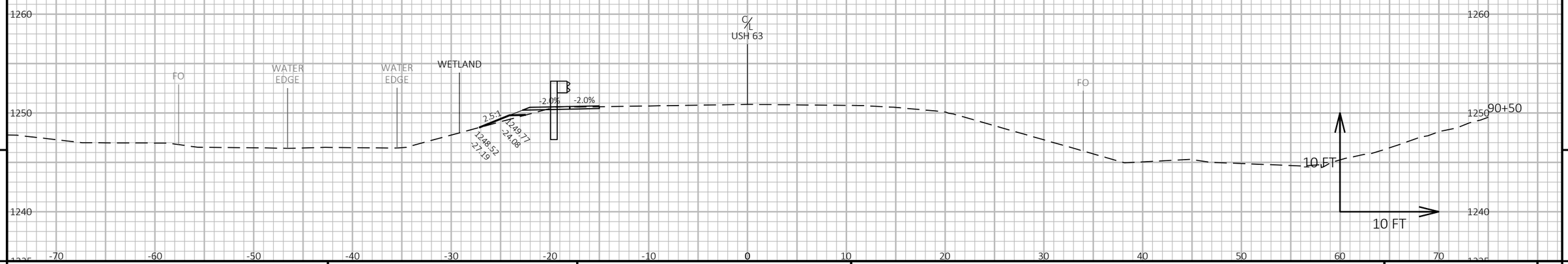

9

9

PROJECT NO: 1550-04-78	HWY: USH 63	COUNTY: BARRON	CROSS SECTIONS: MGS GUARDRAIL STA. 83+98.5 TO 91+15.0 LT	SHEET 203	E

FILE NAME : W:\NWBE_PROJECTS\DESIGN\2324_US63-US8TOSTH48\C3D-22\SHEETS\090201_XS-BGALL.DWG
LAYOUT NAME - 63_xs-BG-Sta84to91-08

PLOT DATE : 1/26/2026 11:36 AM PLOT BY : G. COLBERT PLOT NAME : **PLOT SCALE :** 1 IN:10 FT HORZ. / 1 IN:10 FT VERT.

WISDOT/CADDS SHEET 49

9

9

PROJECT NO: 1550-04-78	HWY: USH 63	COUNTY: BARRON	CROSS SECTIONS: MGS GUARDRAIL STA. 83+98.5 TO 91+15.0 LT	SHEET 204	E

FILE NAME : W:\NWBE_PROJECTS\DESIGN\2324_US63-US8TOSTH48\C3D-22\SHEETS\090201_XS-BGALL.DWG
LAYOUT NAME - 63_xs-BG-Sta84to91-09

PLOT DATE : 1/26/2026 11:37 AM PLOT BY : G. COLBERT PLOT NAME : **PLOT SCALE :** 1 IN:10 FT HORZ. / 1 IN:10 FT VERT.

STATION 91+35.0 LT
END GUARD RAIL GRADING

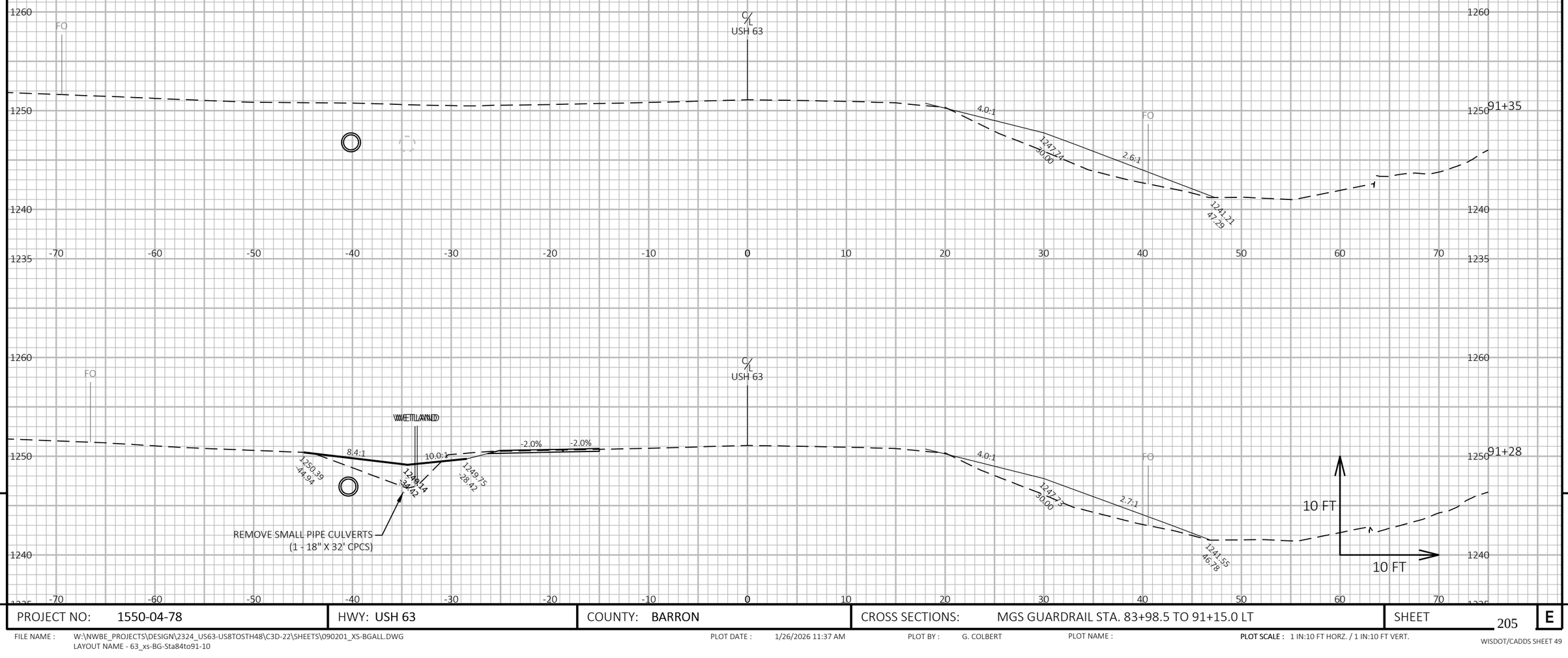

9

9

PROJECT NO: 1550-04-78	HWY: USH 63	COUNTY: BARRON	CROSS SECTIONS: MGS GUARDRAIL STA. 83+98.5 TO 91+15.0 LT	SHEET 205	E

FILE NAME : W:\NWBE_PROJECTS\DESIGN\2324_US63-US8TOSTH48\C3D-22\SHEETS\090201_XS-BGALL.DWG
LAYOUT NAME - 63_xs-BG-Sta84to91-10

PLOT DATE : 1/26/2026 11:37 AM PLOT BY : G. COLBERT PLOT NAME : **PLOT SCALE :** 1 IN:10 FT HORZ. / 1 IN:10 FT VERT.

WISDOT/CADDS SHEET 49

STA. 131+34.4 LT
MGS GUARDRAIL TERMINAL EAT
POST 5

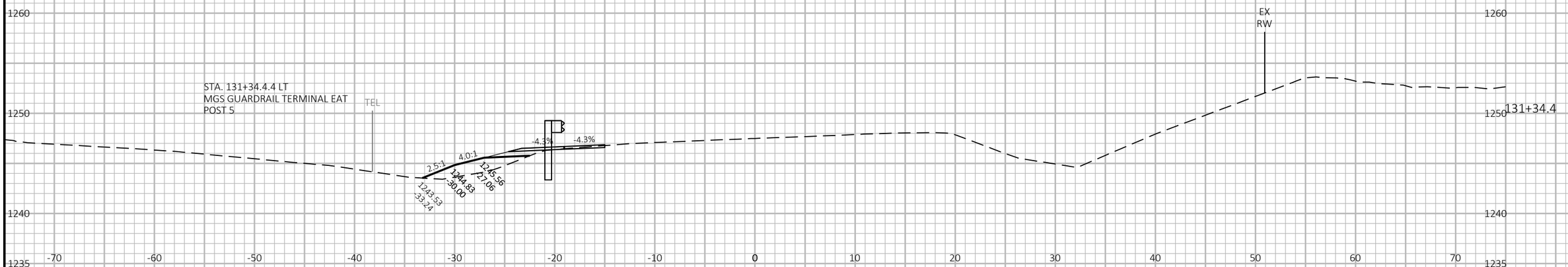

STA. 131+09.3 LT
MGS GUARDRAIL TERMINAL EAT
POST 1

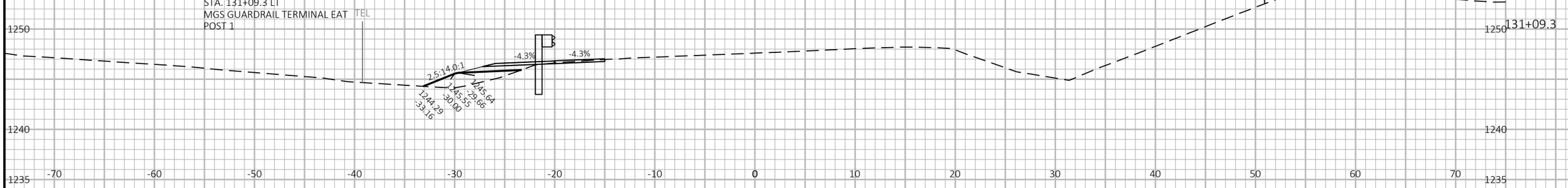

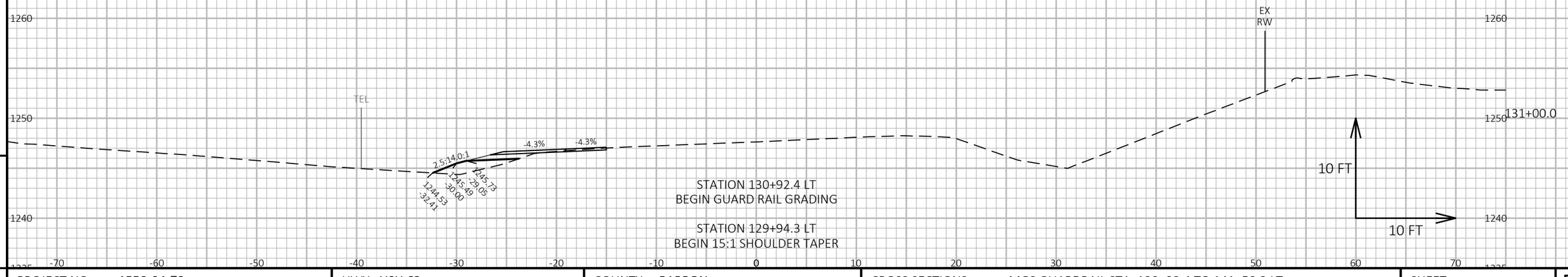

STATION 130+92.4 LT
BEGIN GUARD RAIL GRADING

STATION 129+94.3 LT
BEGIN 15:1 SHOULDER TAPER

9

9

PROJECT NO: 1550-04-78	HWY: USH 63	COUNTY: BARRON	CROSS SECTIONS: MGS GUARDRAIL STA. 130+92.4 TO 141+50.3 LT	SHEET 206	E

FILE NAME : W:\NWBE_PROJECTS\DESIGN\2324_US63-US8TOSTH48\C3D-22\SHEETS\090201_XS-BGALL.DWG
LAYOUT NAME - 63_xs-BG-Sta131to141-01

PLOT DATE : 1/26/2026 11:37 AM PLOT BY : G. COLBERT PLOT NAME : PLOT SCALE : 1 IN:10 FT HORZ. / 1 IN:10 FT VERT.

WISDOT/CADDS SHEET 49

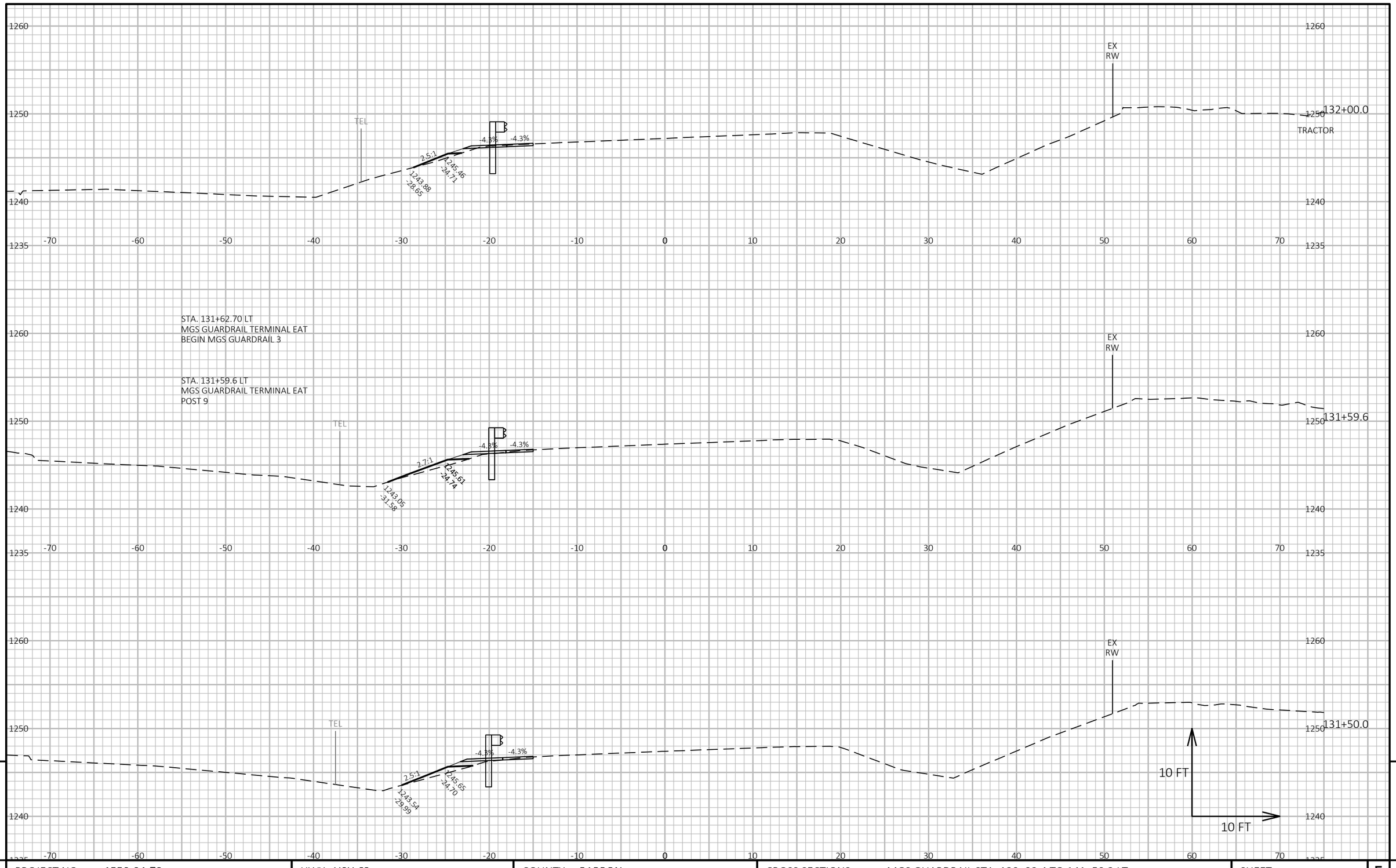

9

9

PROJECT NO: 1550-04-78	HWY: USH 63	COUNTY: BARRON	CROSS SECTIONS: MGS GUARDRAIL STA. 130+92.4 TO 141+50.3 LT	SHEET 207	E

FILE NAME : W:\NWBE_PROJECTS\DESIGN\2324_US63-US8TOSTH48\C3D-22\SHEETS\090201_XS-BGALL.DWG
LAYOUT NAME - 63_xs-BG-Sta131to141-02

PLOT DATE : 1/26/2026 11:37 AM PLOT BY : G. COLBERT PLOT NAME : PLOT SCALE : 1 IN:10 FT HORZ. / 1 IN:10 FT VERT.

WISDOT/CADDS SHEET 49

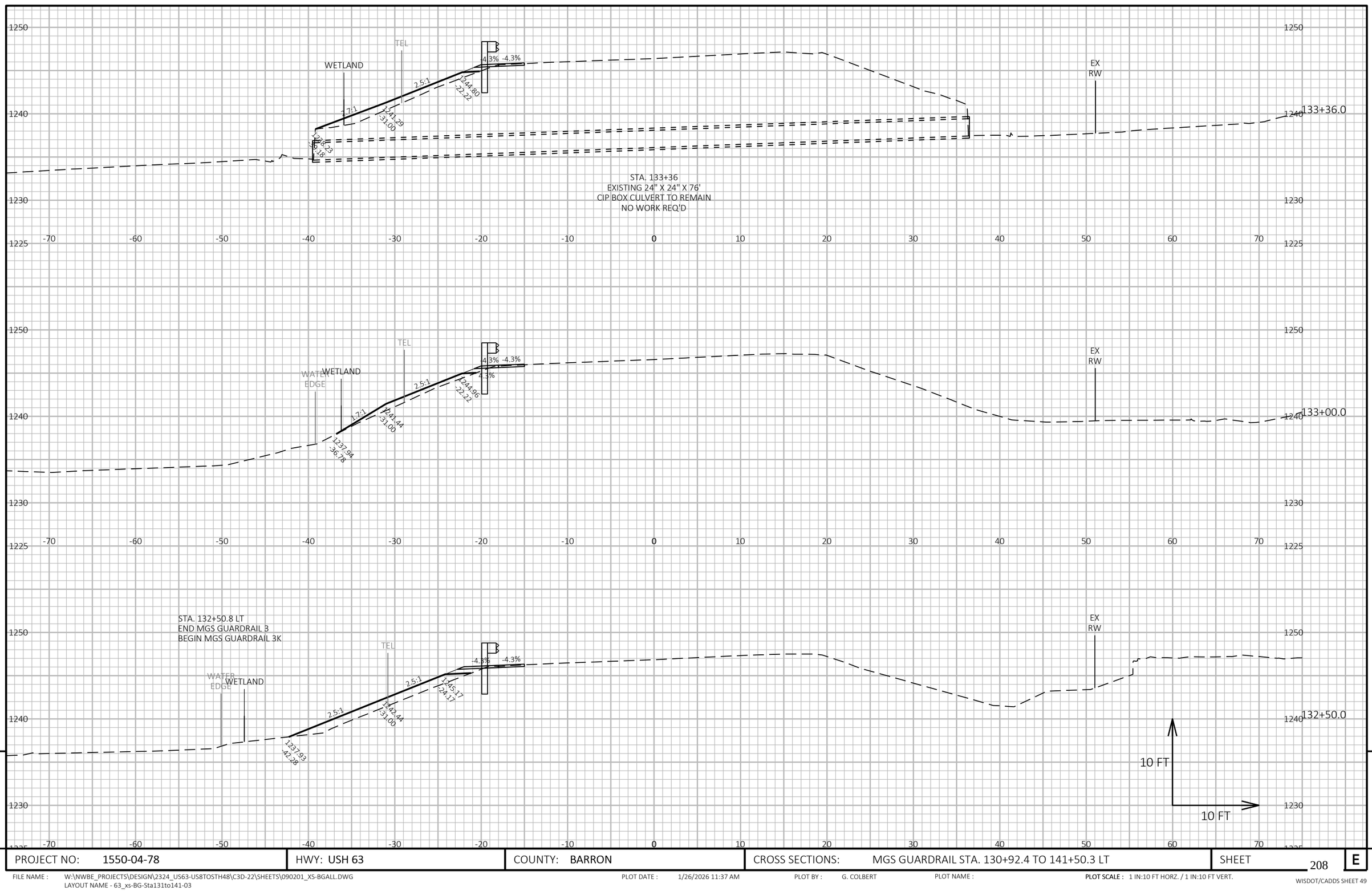

9 9

PROJECT NO: 1550-04-78	HWY: USH 63	COUNTY: BARRON	CROSS SECTIONS: MGS GUARDRAIL STA. 130+92.4 TO 141+50.3 LT	SHEET 208	E

FILE NAME : W:\NWBE_PROJECTS\DESIGN\2324_US63-US8TOSTH48\C3D-22\SHEETS\090201_XS-BGALL.DWG
LAYOUT NAME - 63_xs-BG-Sta131to141-03

PLOT DATE : 1/26/2026 11:37 AM PLOT BY : G. COLBERT PLOT NAME : **PLOT SCALE :** 1 IN:10 FT HORZ. / 1 IN:10 FT VERT.

WISDOT/CADDS SHEET 49

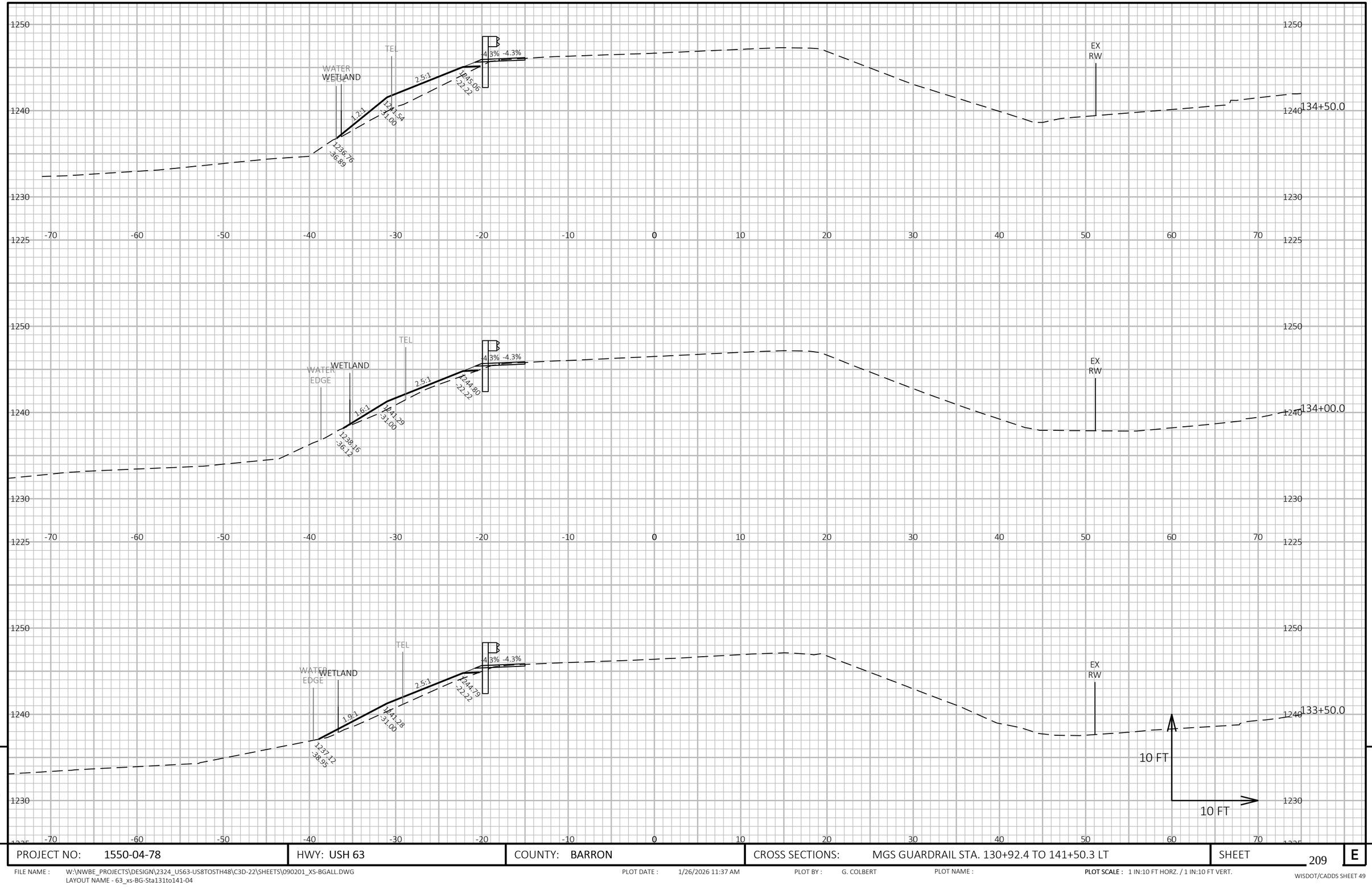

9

9

PROJECT NO: 1550-04-78	HWY: USH 63	COUNTY: BARRON	CROSS SECTIONS: MGS GUARDRAIL STA. 130+92.4 TO 141+50.3 LT	SHEET 209	E

FILE NAME : W:\NWBE_PROJECTS\DESIGN\2324_US63-US8TOSTH48\C3D-22\SHEETS\090201_XS-BGALL.DWG
LAYOUT NAME - 63_xs-BG-Sta131to141-04

PLOT DATE : 1/26/2026 11:37 AM PLOT BY : G. COLBERT PLOT NAME : PLOT SCALE : 1 IN:10 FT HORZ. / 1 IN:10 FT VERT.

WISDOT/CADDS SHEET 49

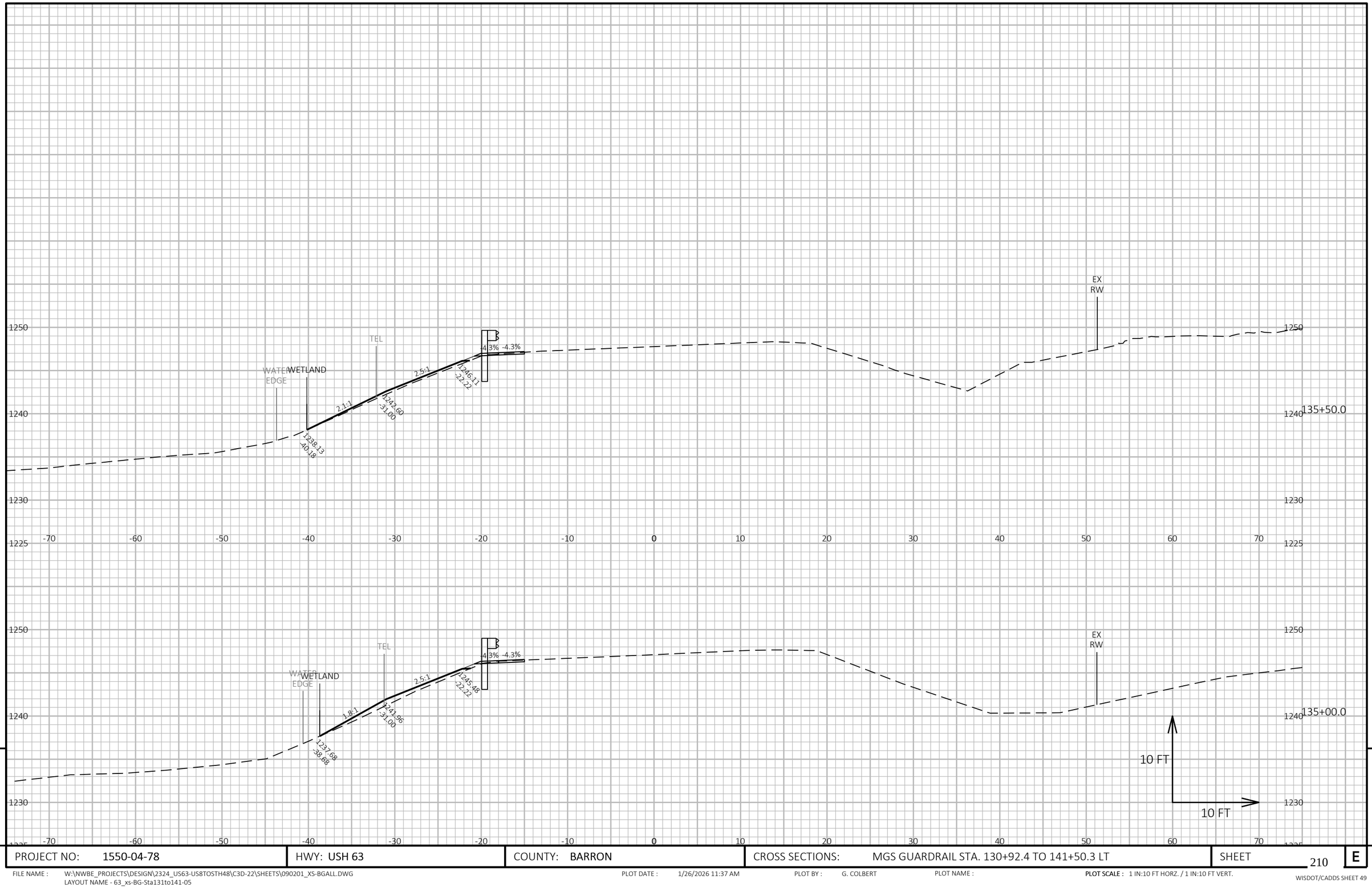

9

9

PROJECT NO: 1550-04-78	HWY: USH 63	COUNTY: BARRON	CROSS SECTIONS: MGS GUARDRAIL STA. 130+92.4 TO 141+50.3 LT	SHEET 210	E

FILE NAME : W:\NWBE_PROJECTS\DESIGN\2324_US63-US8TOSTH48\C3D-22\SHEETS\090201_XS-BGALL.DWG
LAYOUT NAME - 63_xs-BG-Sta131to141-05

PLOT DATE : 1/26/2026 11:37 AM PLOT BY : G. COLBERT PLOT NAME : **PLOT SCALE :** 1 IN:10 FT HORZ. / 1 IN:10 FT VERT.

WISDOT/CADDS SHEET 49

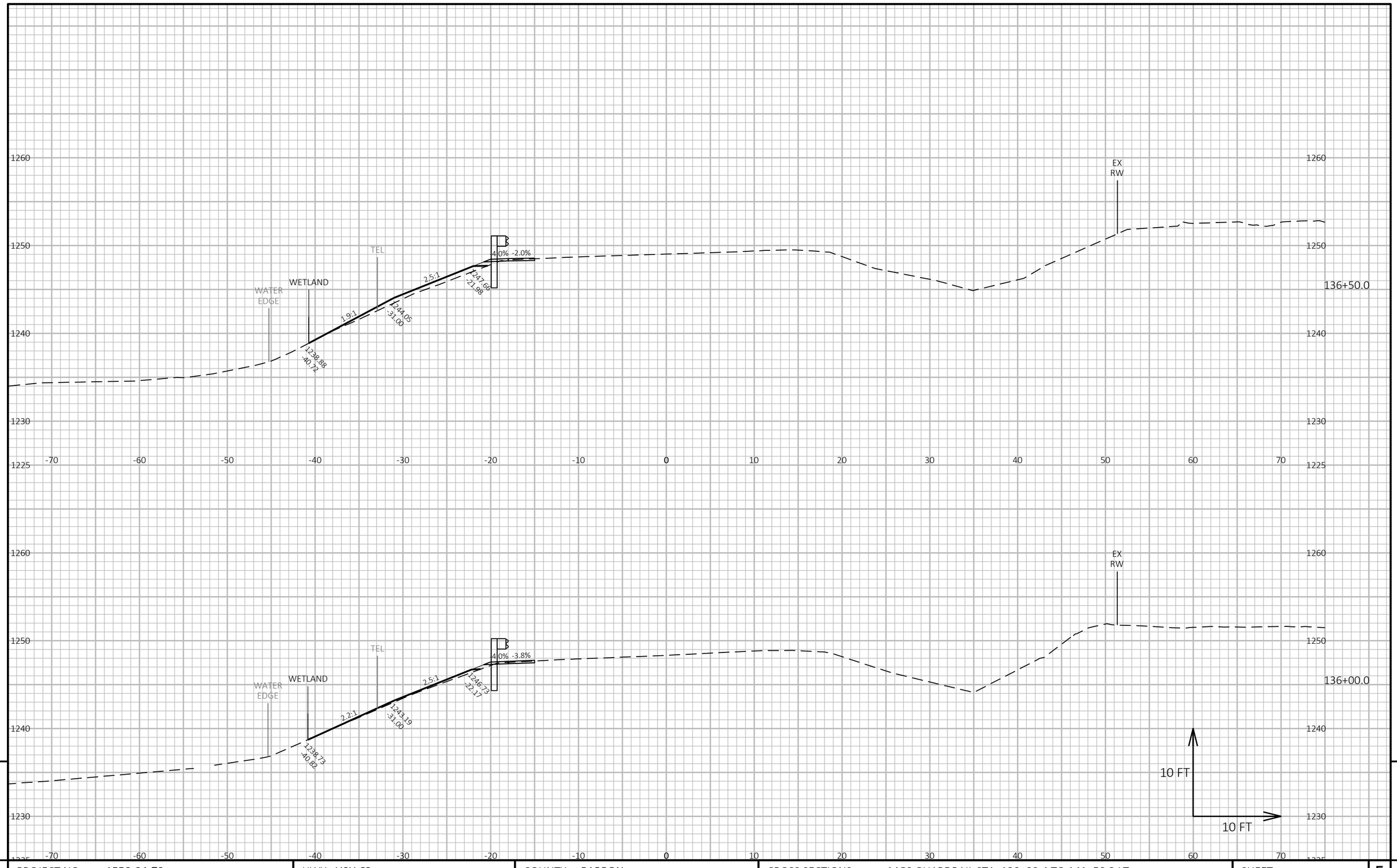

9

9

PROJECT NO: 1550-04-78	HWY: USH 63	COUNTY: BARRON	CROSS SECTIONS: MGS GUARDRAIL STA. 130+92.4 TO 141+50.3 LT	SHEET 211	E

FILE NAME : W:\NWBE_PROJECTS\DESIGN\2324_US63-US8TOSTH48\C3D-22\SHEETS\090201_XS-BGALL.DWG
LAYOUT NAME - 63_xs-BG-Sta131to141-06

PLOT DATE : 1/26/2026 11:37 AM PLOT BY : G. COLBERT PLOT NAME : **PLOT SCALE :** 1 IN:10 FT HORZ. / 1 IN:10 FT VERT.

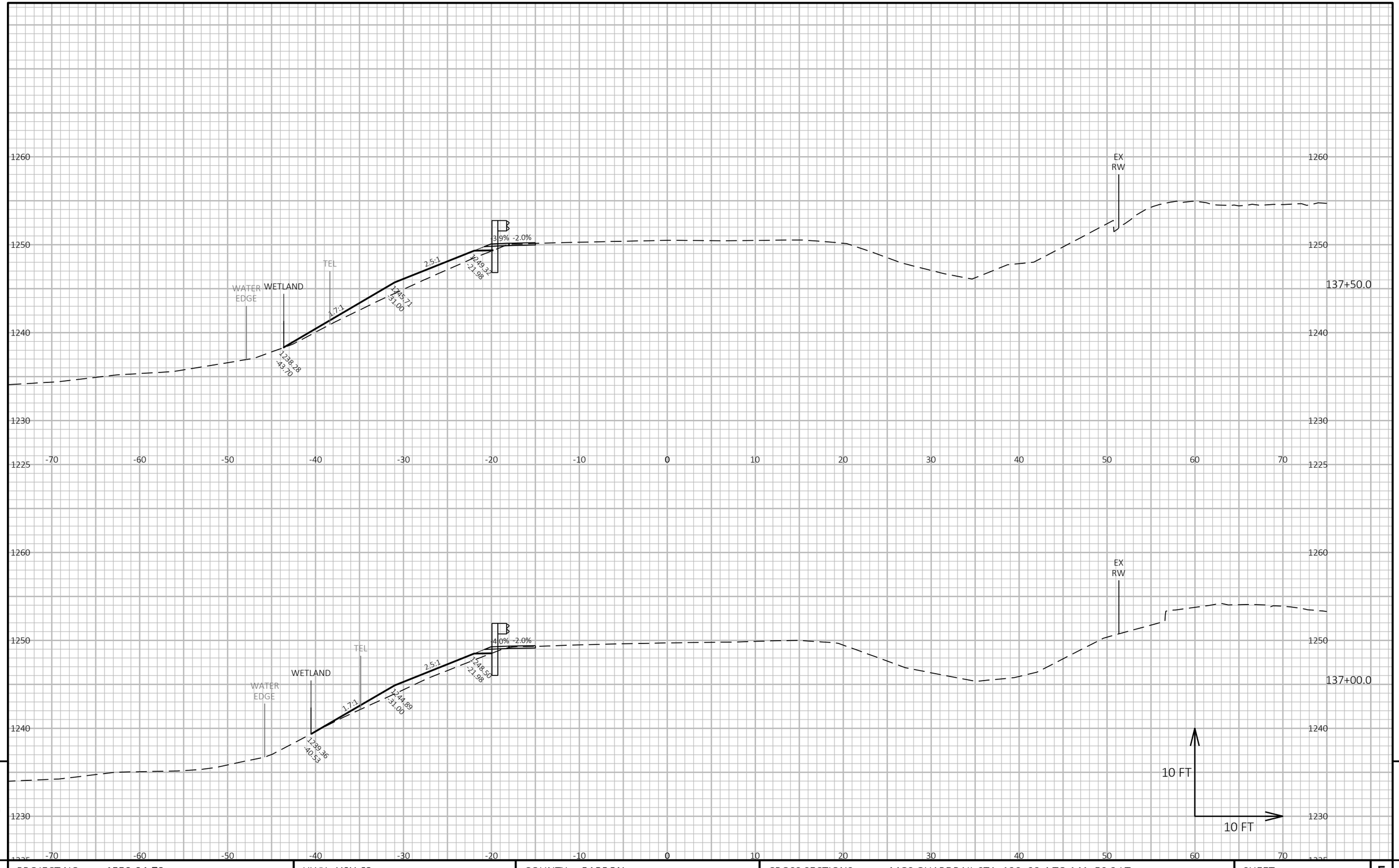

PROJECT NO: 1550-04-78	HWY: USH 63	COUNTY: BARRON	CROSS SECTIONS: MGS GUARDRAIL STA. 130+92.4 TO 141+50.3 LT	SHEET 212	E

FILE NAME : W:\NWBE_PROJECTS\DESIGN\2324_US63-US8TOSTH48\C3D-22\SHEETS\090201_XS-BGALL.DWG
LAYOUT NAME - 63_xs-BG-Sta131to141-07

PLOT DATE : 1/26/2026 11:38 AM PLOT BY : G. COLBERT PLOT NAME : **PLOT SCALE :** 1 IN:10 FT HORZ. / 1 IN:10 FT VERT.

WISDOT/CADDS SHEET 49

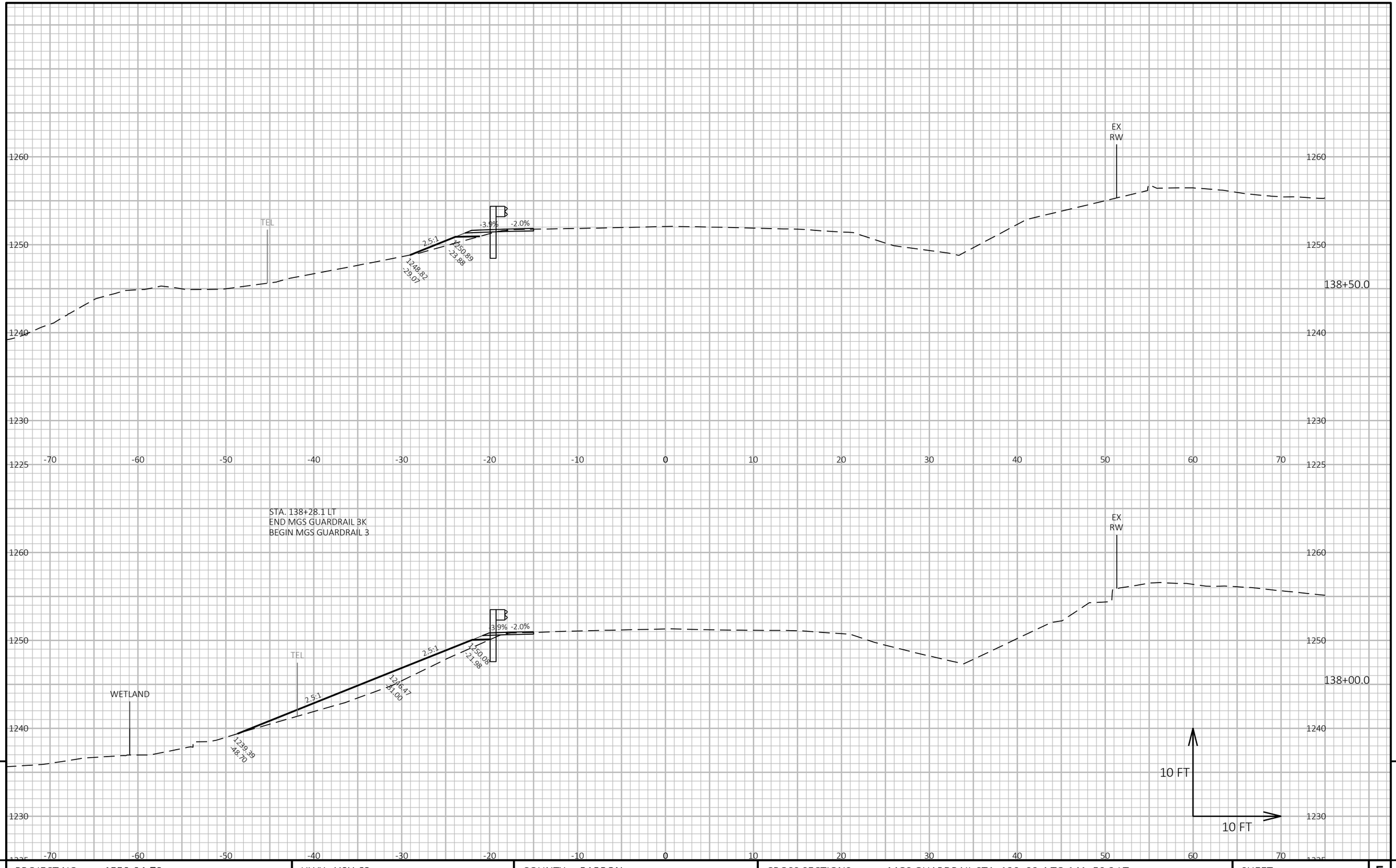

PROJECT NO: 1550-04-78	HWY: USH 63	COUNTY: BARRON	CROSS SECTIONS: MGS GUARDRAIL STA. 130+92.4 TO 141+50.3 LT	SHEET 213 E

FILE NAME : W:\NWBE_PROJECTS\DESIGN\2324_US63-US8TOSTH48\C3D-22\SHEETS\090201_XS-BGALL.DWG
LAYOUT NAME - 63_xs-BG-Sta131to141-08

PLOT DATE : 1/26/2026 11:38 AM PLOT BY : G. COLBERT PLOT NAME : PLOT SCALE : 1 IN:10 FT HORZ. / 1 IN:10 FT VERT.

WISDOT/CADDS SHEET 49

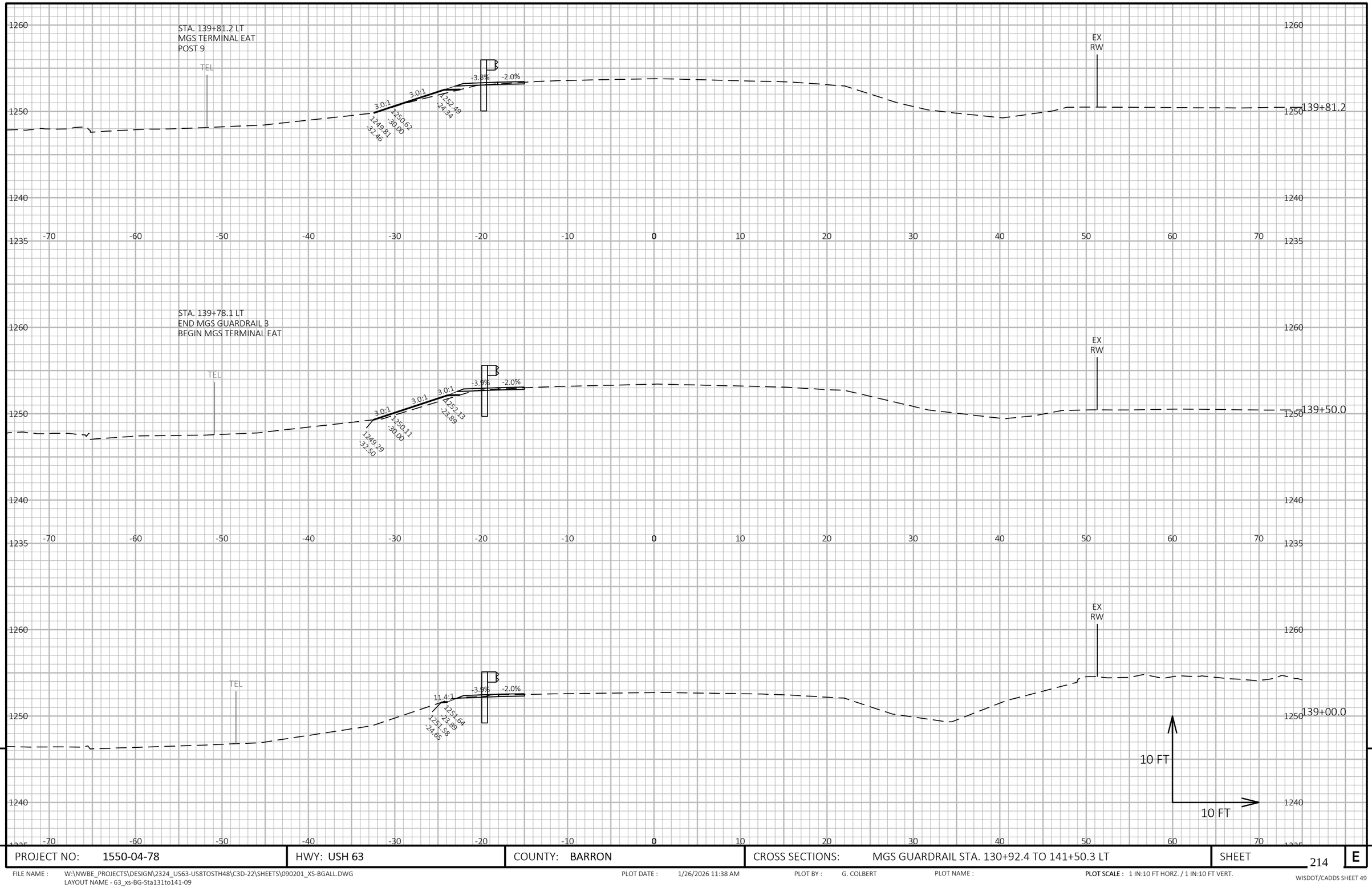

9

9

PROJECT NO: 1550-04-78	HWY: USH 63	COUNTY: BARRON	CROSS SECTIONS: MGS GUARDRAIL STA. 130+92.4 TO 141+50.3 LT	SHEET 214	E

FILE NAME : W:\NWBE_PROJECTS\DESIGN\2324_US63-US8TOSTH48\C3D-22\SHEETS\090201_XS-BGALL.DWG
LAYOUT NAME - 63_xs-BG-Sta131to141-09

PLOT DATE : 1/26/2026 11:38 AM PLOT BY : G. COLBERT PLOT NAME : PLOT SCALE : 1 IN:10 FT HORZ. / 1 IN:10 FT VERT.

WISDOT/CADDS SHEET 49

STA. 140+31.2 LT
MGS TERMINAL EAT
POST 1

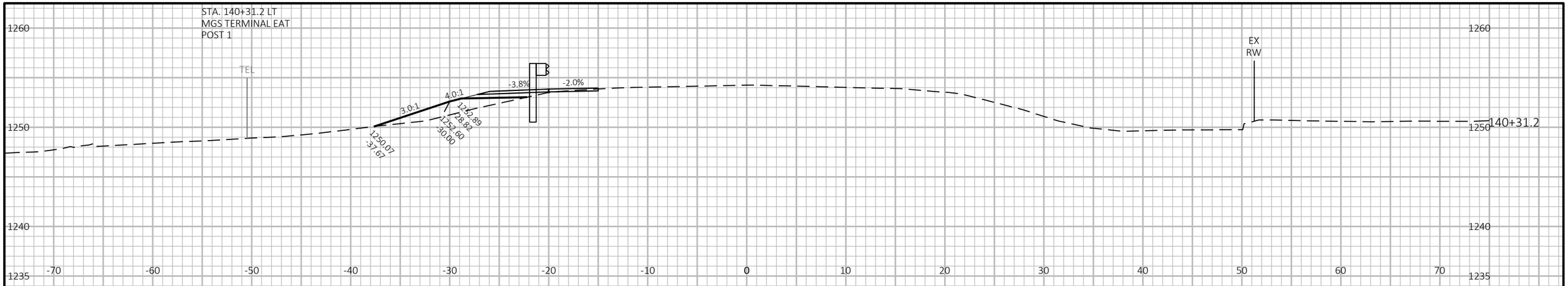

STA. 140+06.2 LT
MGS TERMINAL EAT
POST 5

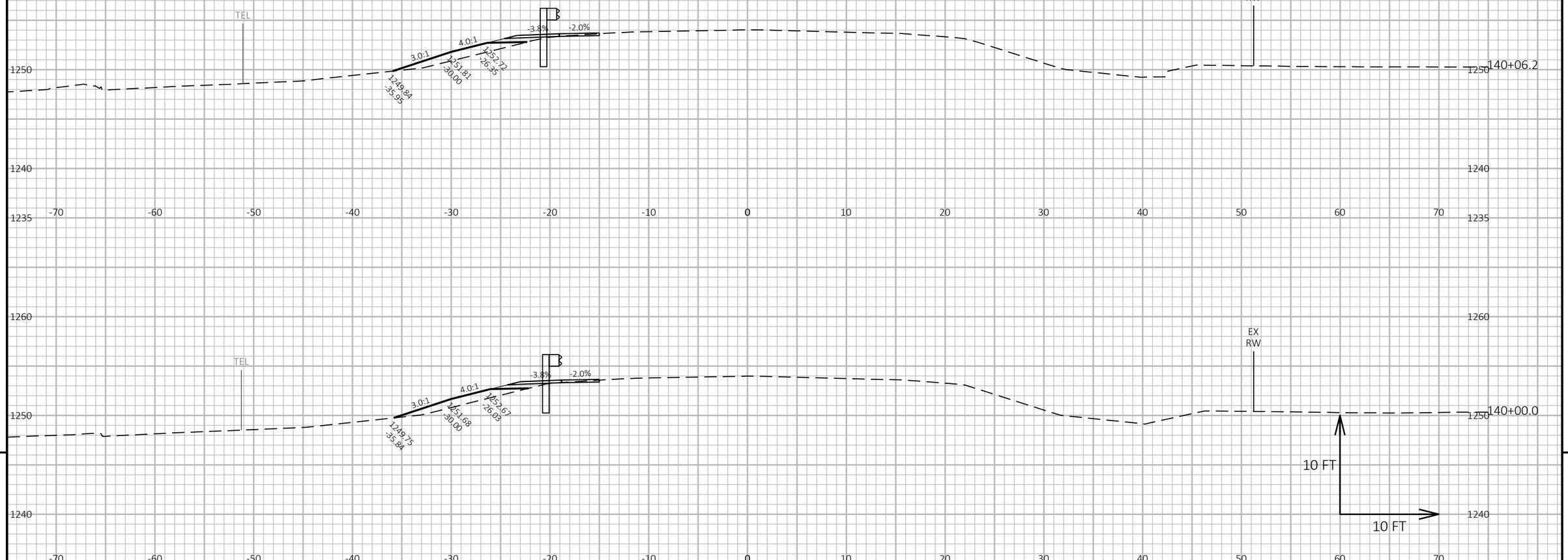

9

9

PROJECT NO: 1550-04-78	HWY: USH 63	COUNTY: BARRON	CROSS SECTIONS: MGS GUARDRAIL STA. 130+92.4 TO 141+50.3 LT	SHEET 215	E

FILE NAME : W:\NWBE_PROJECTS\DESIGN\2324_US63-US8TOSTH48\C3D-22\SHEETS\090201_XS-BGALL.DWG
LAYOUT NAME - 63_xs-BG-Sta131to141-10

PLOT DATE : 1/26/2026 11:38 AM PLOT BY : G. COLBERT PLOT NAME : PLOT SCALE : 1 IN:10 FT HORZ. / 1 IN:10 FT VERT.

STATION 141+50.3 LT
END GUARD RAIL GRADING

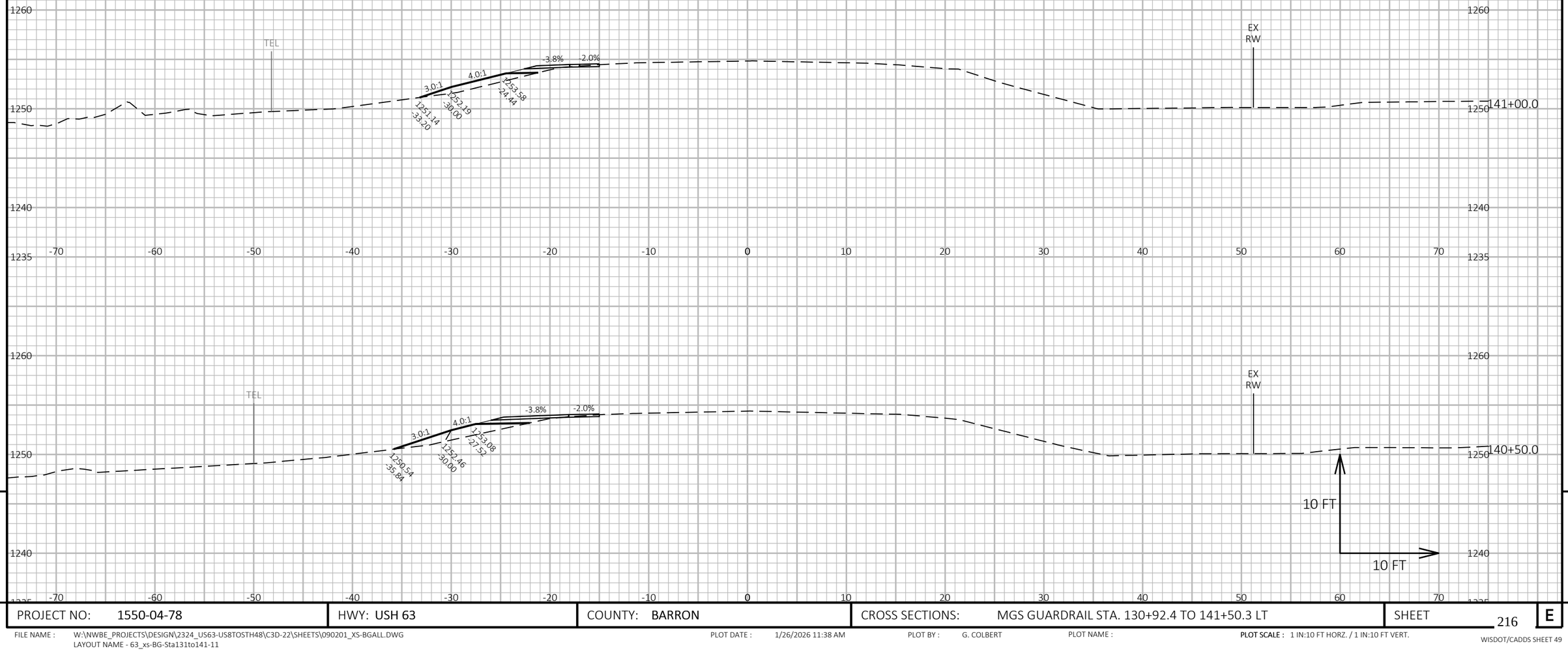

PROJECT NO: 1550-04-78	HWY: USH 63	COUNTY: BARRON	CROSS SECTIONS: MGS GUARDRAIL STA. 130+92.4 TO 141+50.3 LT	SHEET 216	E

FILE NAME : W:\NWBE_PROJECTS\DESIGN\2324_US63-US8TOSTH48\C3D-22\SHEETS\090201_XS-BGALL.DWG
LAYOUT NAME - 63_xs-BG-Sta131to141-11

PLOT DATE : 1/26/2026 11:38 AM PLOT BY : G. COLBERT PLOT NAME : PLOT SCALE : 1 IN:10 FT HORZ. / 1 IN:10 FT VERT.

WISDOT/CADDS SHEET 49

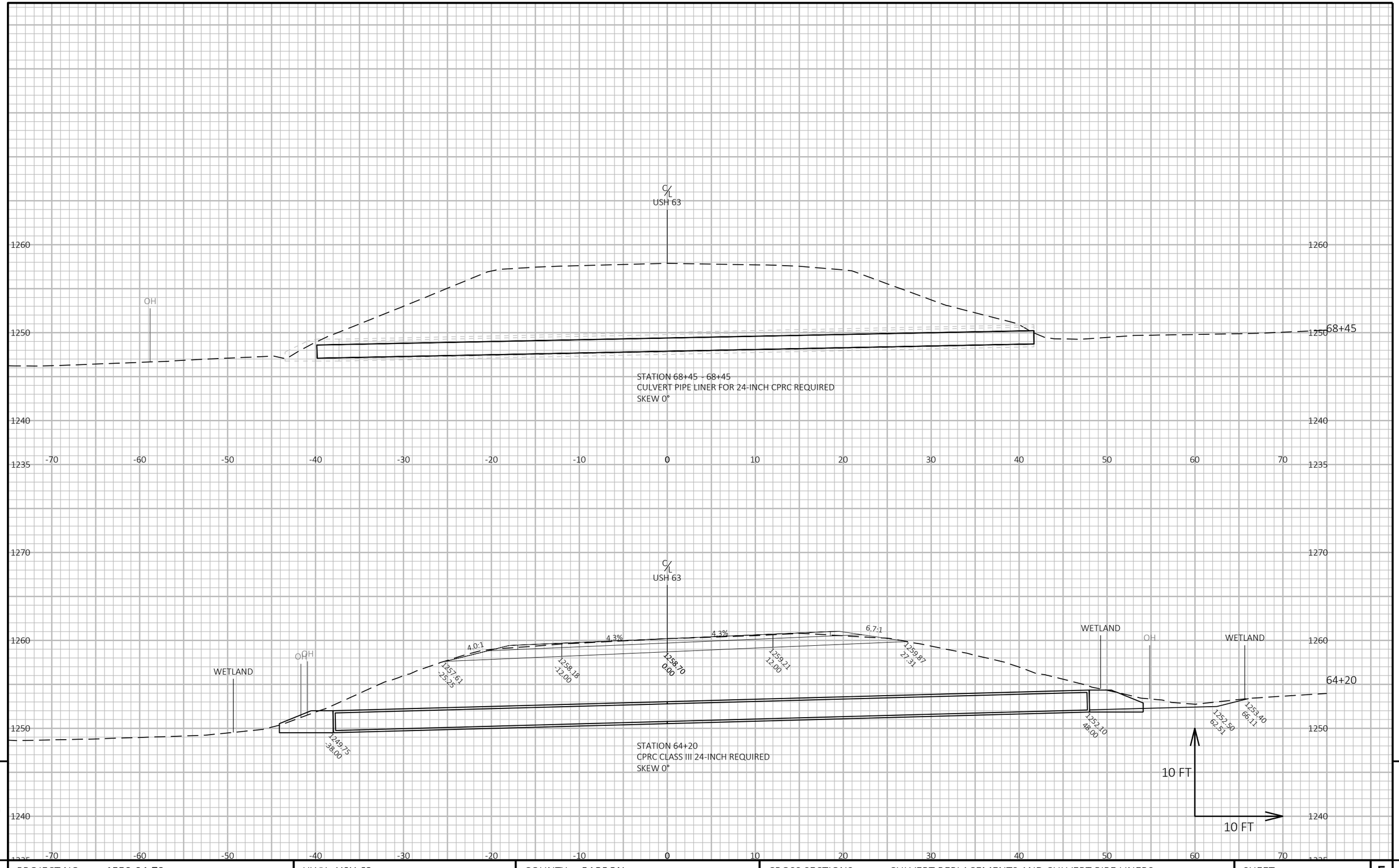

9

9

PROJECT NO: 1550-04-78	HWY: USH 63	COUNTY: BARRON	CROSS SECTIONS: CULVERT REPLACEMENTS AND CULVERT PIPE LINERS	SHEET 217	E

FILE NAME : W:\NWBE_PROJECTS\DESIGN\2324_US63-US8TOSTH48\C3D-22\SHEETS\090202_XS-CULVERTSALL.DWG
LAYOUT NAME - 63_xs-01-Culverts

PLOT DATE : 1/26/2026 12:42 PM PLOT BY : G. COLBERT PLOT NAME : **PLOT SCALE :** 1 IN:10 FT HORZ. / 1 IN:10 FT VERT.

WISDOT/CADDS SHEET 49

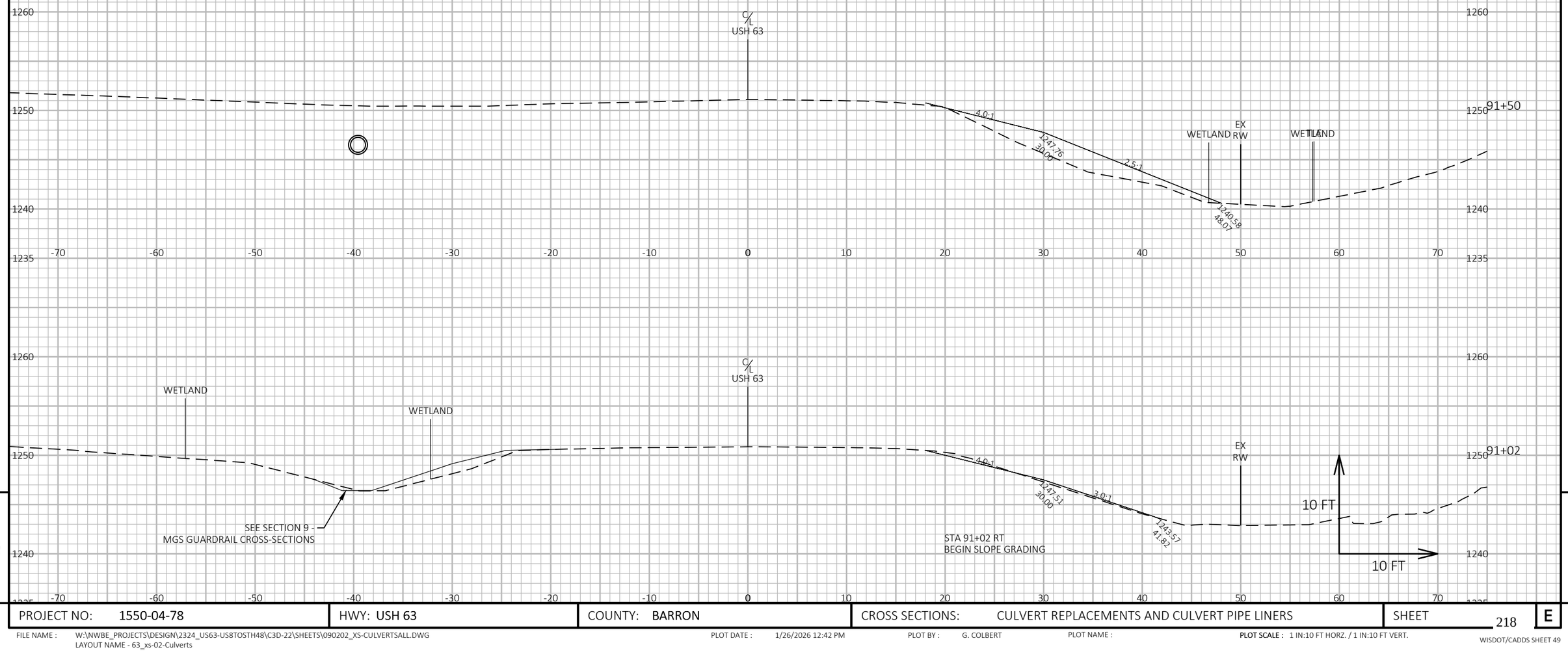

9

9

PROJECT NO: 1550-04-78	HWY: USH 63	COUNTY: BARRON	CROSS SECTIONS: CULVERT REPLACEMENTS AND CULVERT PIPE LINERS	SHEET 218	E

FILE NAME : W:\NWBE_PROJECTS\DESIGN\2324_US63-US8TOSTH48\C3D-22\SHEETS\090202_XS-CULVERTSALL.DWG
LAYOUT NAME - 63_xs-02-Culverts

PLOT DATE : 1/26/2026 12:42 PM PLOT BY : G. COLBERT PLOT NAME : PLOT SCALE : 1 IN:10 FT HORZ. / 1 IN:10 FT VERT.

WISDOT/CADDS SHEET 49

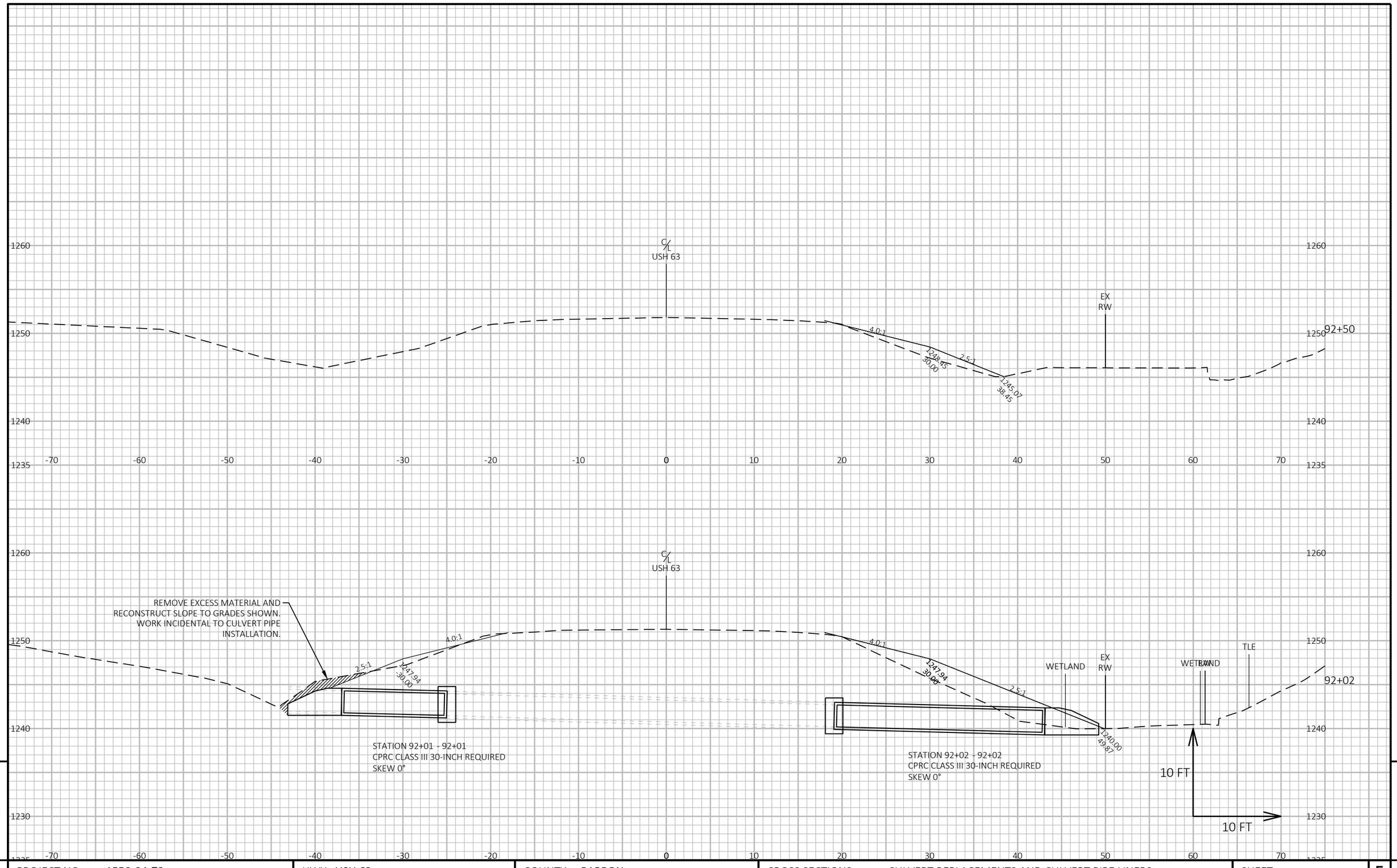

PROJECT NO: 1550-04-78	HWY: USH 63	COUNTY: BARRON	CROSS SECTIONS: CULVERT REPLACEMENTS AND CULVERT PIPE LINERS	SHEET 219	E

FILE NAME : W:\NWBE_PROJECTS\DESIGN\2324_US63-US8TOSTH48\C3D-22\SHEETS\090202_XS-CULVERTSALL.DWG
LAYOUT NAME - 63_xs-03-Culverts

PLOT DATE : 1/26/2026 12:43 PM PLOT BY : G. COLBERT PLOT NAME : PLOT SCALE : 1 IN:10 FT HORZ. / 1 IN:10 FT VERT.

WISDOT/CADDS SHEET 49

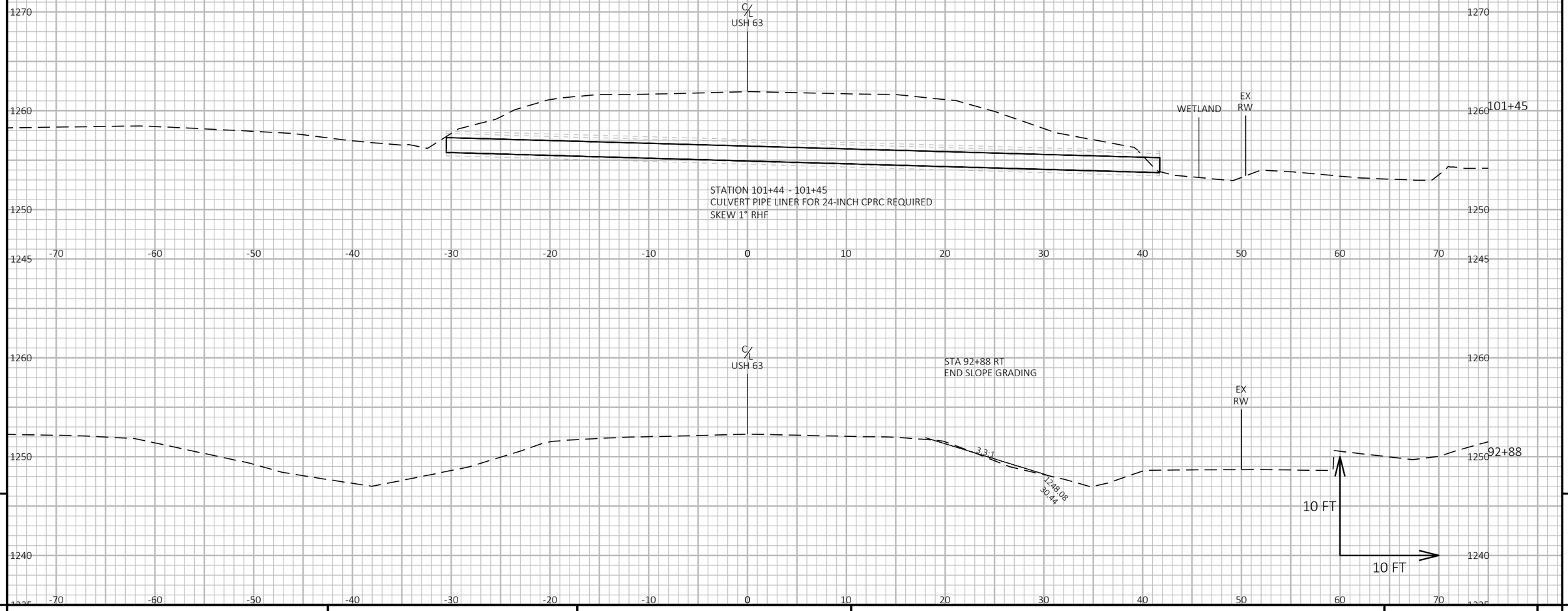

9

9

PROJECT NO: 1550-04-78	HWY: USH 63	COUNTY: BARRON	CROSS SECTIONS: CULVERT REPLACEMENTS AND CULVERT PIPE LINERS	SHEET 220	E

FILE NAME : W:\NWBE_PROJECTS\DESIGN\2324_US63-US8TOSTH48\C3D-22\SHEETS\090202_XS-CULVERTSALL.DWG
LAYOUT NAME - 63_xs-04-Culverts

PLOT DATE : 1/26/2026 12:43 PM PLOT BY : G. COLBERT PLOT NAME : PLOT SCALE : 1 IN:10 FT HORZ. / 1 IN:10 FT VERT.

WISDOT/CADDS SHEET 49

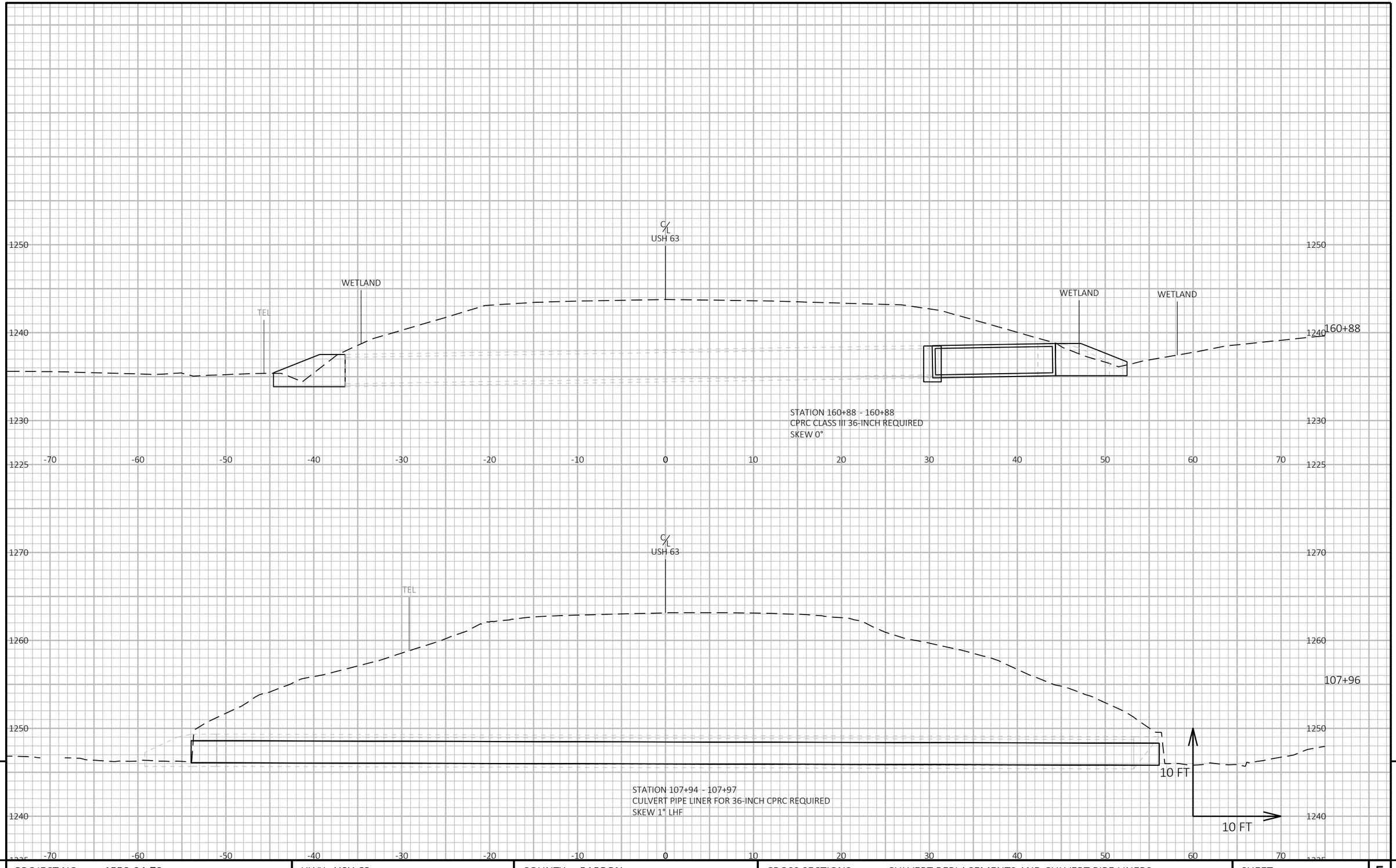

9

9

PROJECT NO: 1550-04-78	HWY: USH 63	COUNTY: BARRON	CROSS SECTIONS: CULVERT REPLACEMENTS AND CULVERT PIPE LINERS	SHEET 221	E

FILE NAME : W:\NWBE_PROJECTS\DESIGN\2324_US63-US8TOSTH48\C3D-22\SHEETS\090202_XS-CULVERTSALL.DWG
LAYOUT NAME - 63_xs-05-Culverts

PLOT DATE : 1/26/2026 12:43 PM PLOT BY : G. COLBERT PLOT NAME : PLOT SCALE : 1 IN:10 FT HORZ. / 1 IN:10 FT VERT.

WISDOT/CADDS SHEET 49

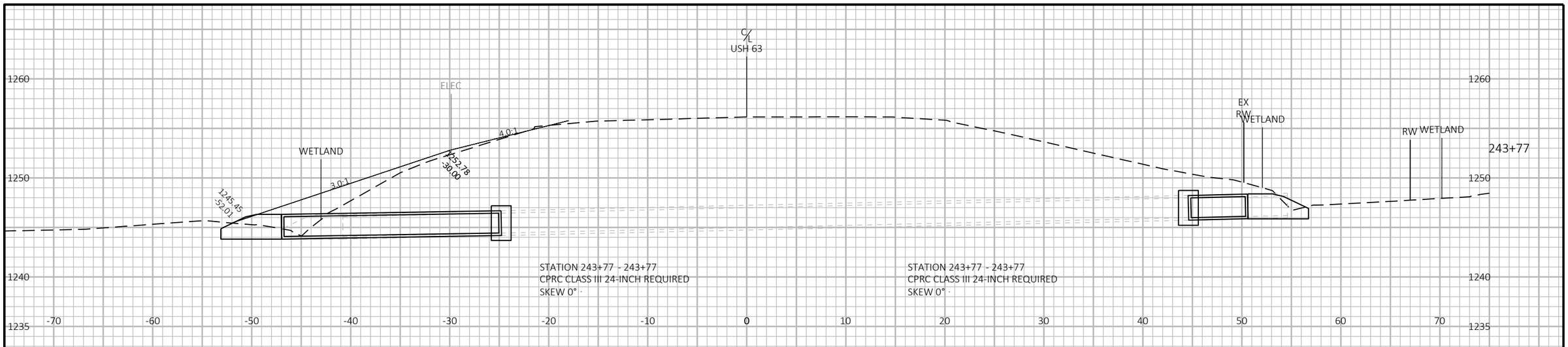

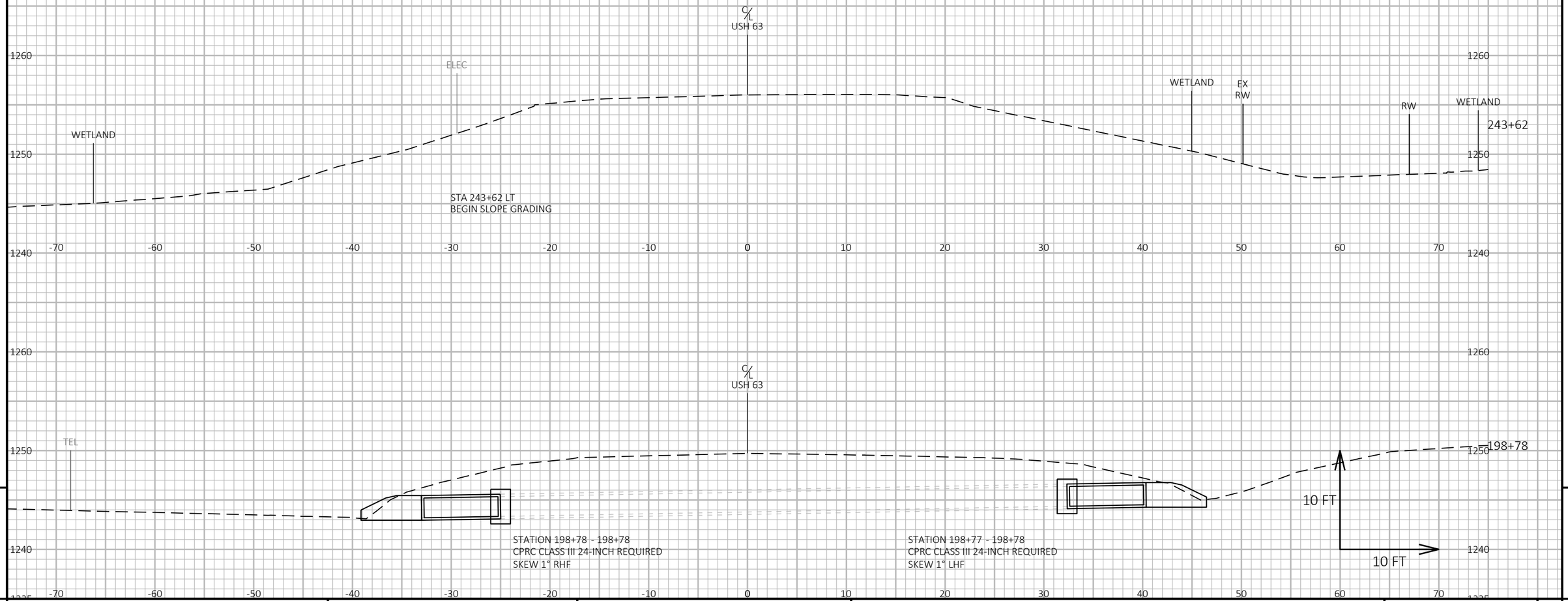

9

9

PROJECT NO: 1550-04-78	HWY: USH 63	COUNTY: BARRON	CROSS SECTIONS: CULVERT REPLACEMENTS AND CULVERT PIPE LINERS	SHEET 222	E

FILE NAME : W:\NWBE_PROJECTS\DESIGN\2324_US63-US8TOSTH48\C3D-22\SHEETS\090202_XS-CULVERTSALL.DWG
LAYOUT NAME - 63_xs-06-Culverts

PLOT DATE : 1/26/2026 12:43 PM PLOT BY : G. COLBERT PLOT NAME : PLOT SCALE : 1 IN:10 FT HORZ. / 1 IN:10 FT VERT.

WISDOT/CADDS SHEET 49

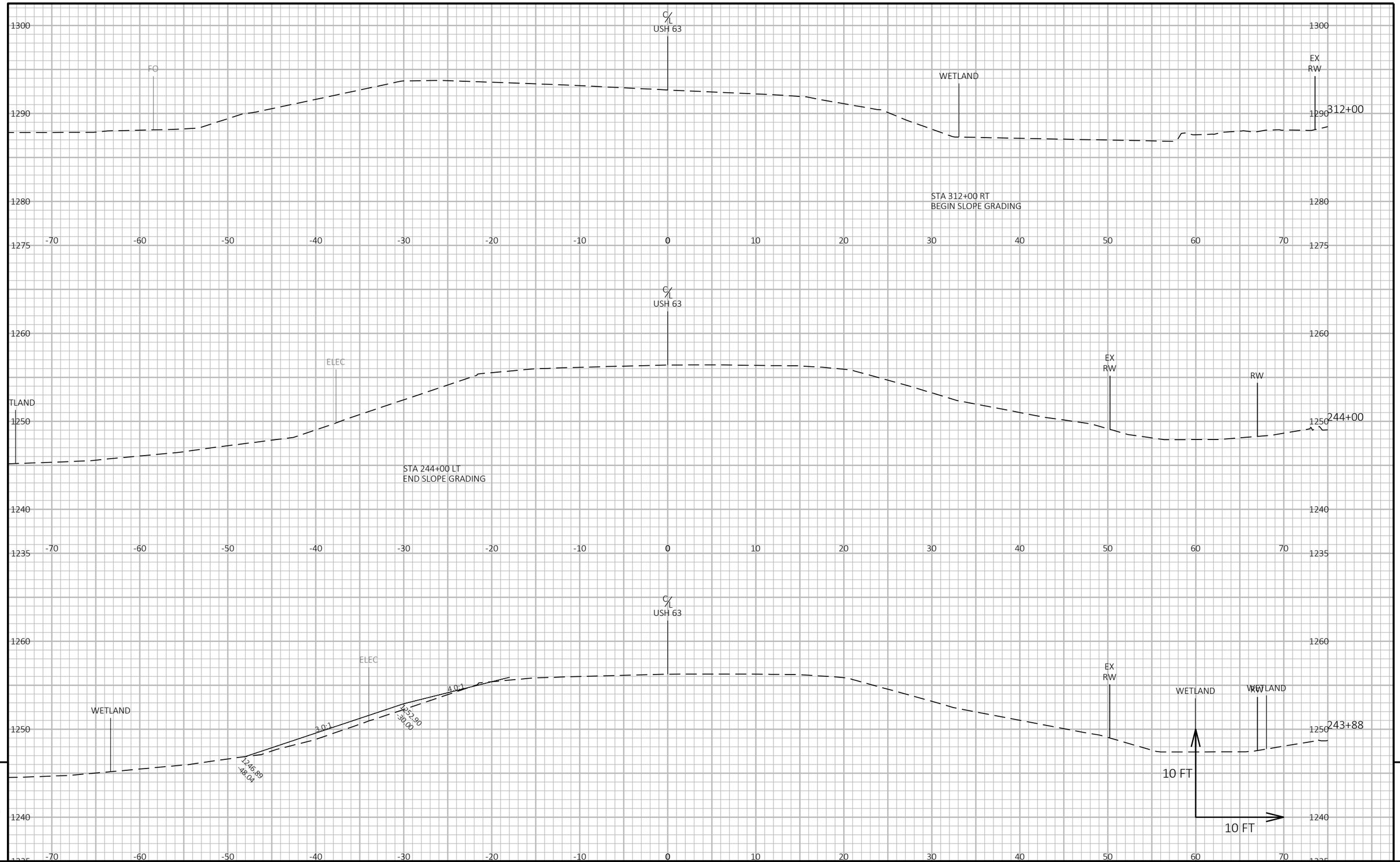

PROJECT NO: 1550-04-78	HWY: USH 63	COUNTY: BARRON	CROSS SECTIONS: CULVERT REPLACEMENTS AND CULVERT PIPE LINERS	SHEET 223 E

FILE NAME : W:\NWBE_PROJECTS\DESIGN\2324_US63-US8TOSTH48\C3D-22\SHEETS\090202_XS-CULVERTSALL.DWG
LAYOUT NAME - 63_xs-07-Culverts

PLOT DATE : 1/26/2026 12:43 PM PLOT BY : G. COLBERT PLOT NAME : PLOT SCALE : 1 IN:10 FT HORZ. / 1 IN:10 FT VERT.

WISDOT/CADDS SHEET 49

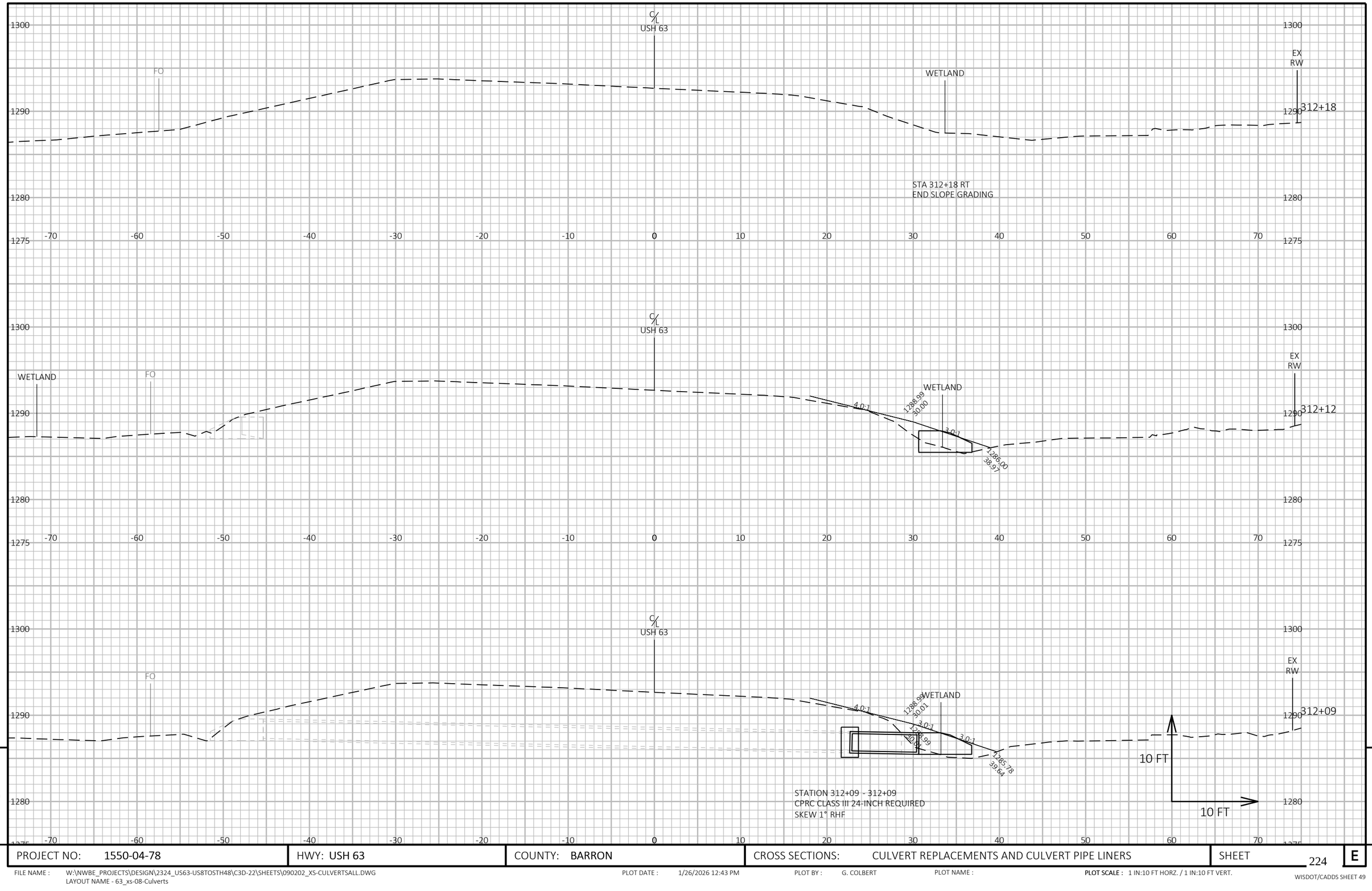

9

9

PROJECT NO: 1550-04-78	HWY: USH 63	COUNTY: BARRON	CROSS SECTIONS: CULVERT REPLACEMENTS AND CULVERT PIPE LINERS	SHEET 224	E

FILE NAME : W:\NWBE_PROJECTS\DESIGN\2324_US63-US8TOSTH48\C3D-22\SHEETS\090202_XS-CULVERTSALL.DWG
LAYOUT NAME - 63_xs-08-Culverts

PLOT DATE : 1/26/2026 12:43 PM PLOT BY : G. COLBERT PLOT NAME : **PLOT SCALE :** 1 IN:10 FT HORZ. / 1 IN:10 FT VERT.

WISDOT/CADDS SHEET 49

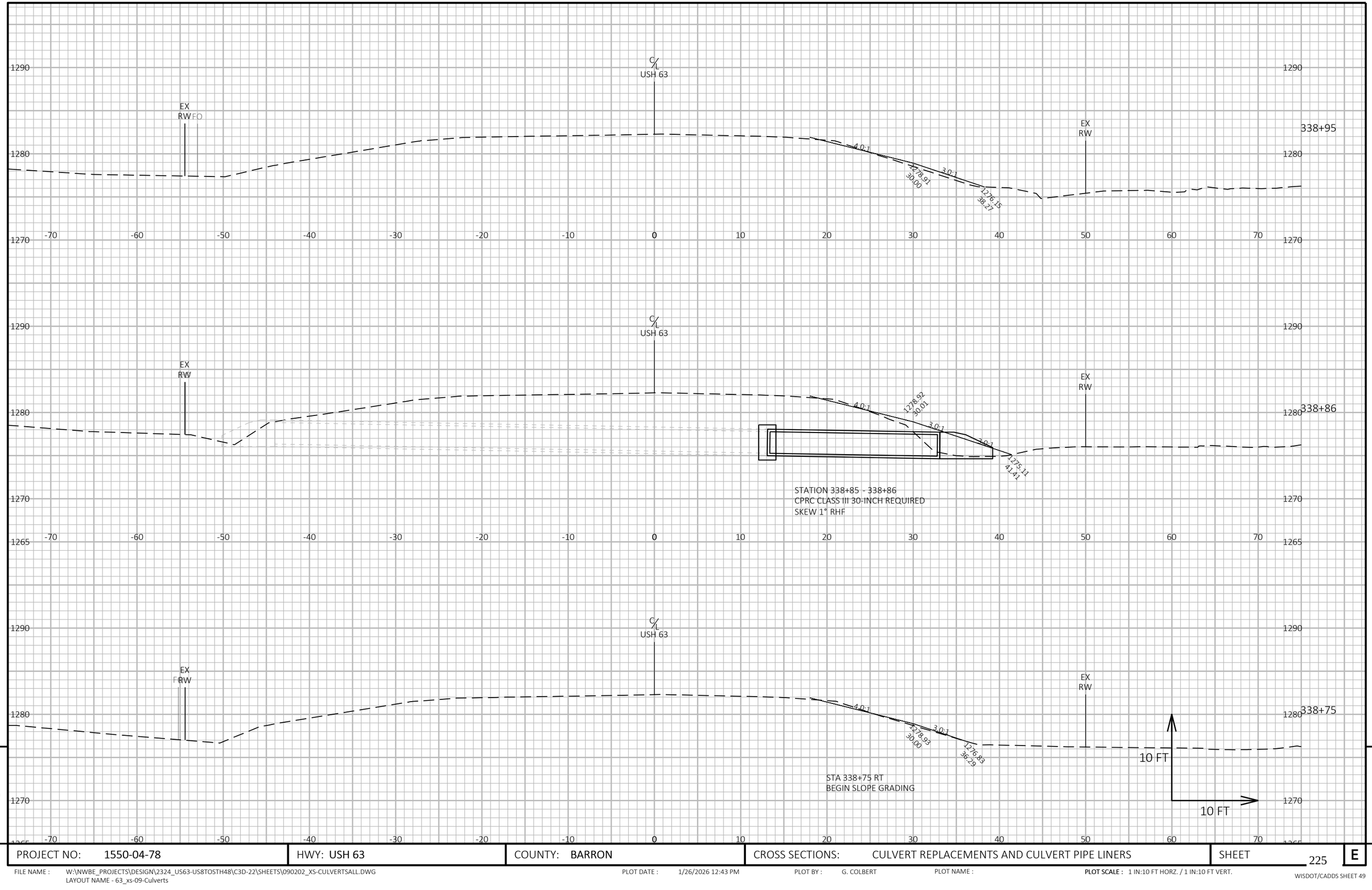

9

9

PROJECT NO: 1550-04-78	HWY: USH 63	COUNTY: BARRON	CROSS SECTIONS: CULVERT REPLACEMENTS AND CULVERT PIPE LINERS	SHEET 225	E

FILE NAME : W:\NWBE_PROJECTS\DESIGN\2324_US63-US8TOSTH48\C3D-22\SHEETS\090202_XS-CULVERTSALL.DWG
LAYOUT NAME - 63_xs-09-Culverts

PLOT DATE : 1/26/2026 12:43 PM PLOT BY : G. COLBERT PLOT NAME : PLOT SCALE : 1 IN:10 FT HORZ. / 1 IN:10 FT VERT.

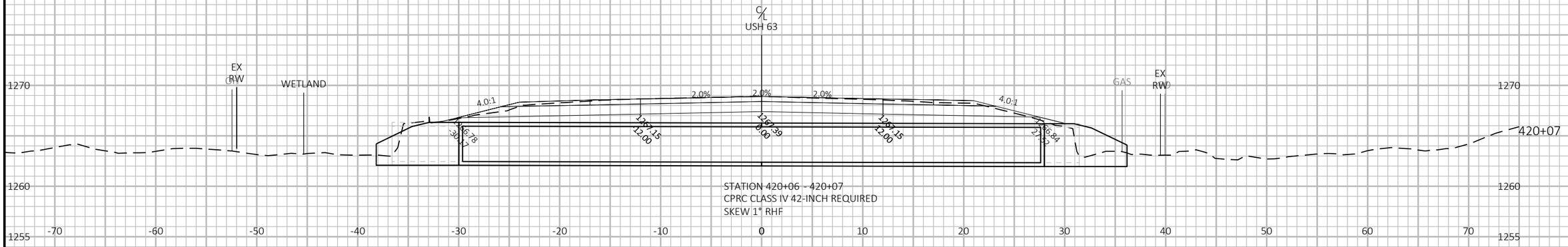

STATION 420+06 - 420+07
CPRC CLASS IV 42-INCH REQUIRED
SKEW 1° RHF

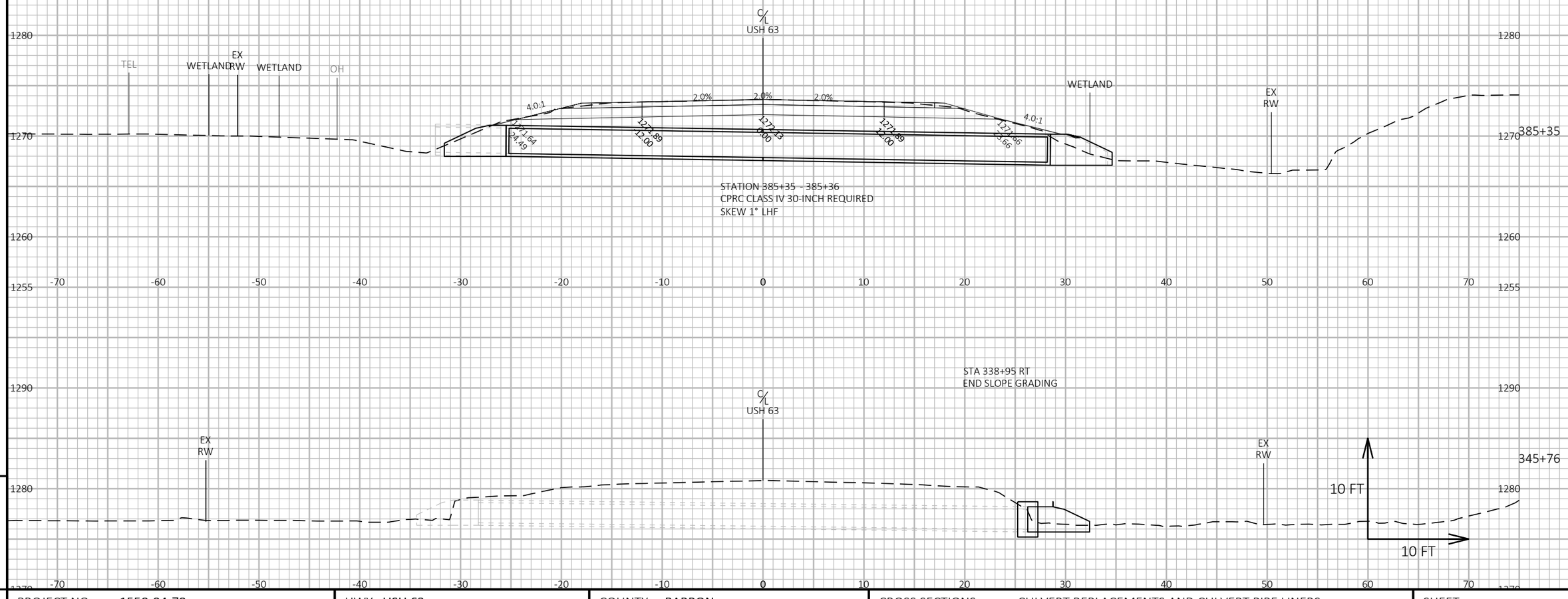

STATION 385+35 - 385+36
CPRC CLASS IV 30-INCH REQUIRED
SKEW 1° LHF

STA 338+95 RT
END SLOPE GRADING

9

9

PROJECT NO: 1550-04-78	HWY: USH 63	COUNTY: BARRON	CROSS SECTIONS: CULVERT REPLACEMENTS AND CULVERT PIPE LINERS	SHEET 226	E

FILE NAME : W:\NWBE_PROJECTS\DESIGN\2324_US63-US8TOSTH48\C3D-22\SHEETS\090202_XS-CULVERTSALL.DWG
LAYOUT NAME - 63_xs-10-Culverts

PLOT DATE : 1/26/2026 12:43 PM PLOT BY : G. COLBERT PLOT NAME : PLOT SCALE : 1 IN:10 FT HORZ. / 1 IN:10 FT VERT.

WISDOT/CADDS SHEET 49

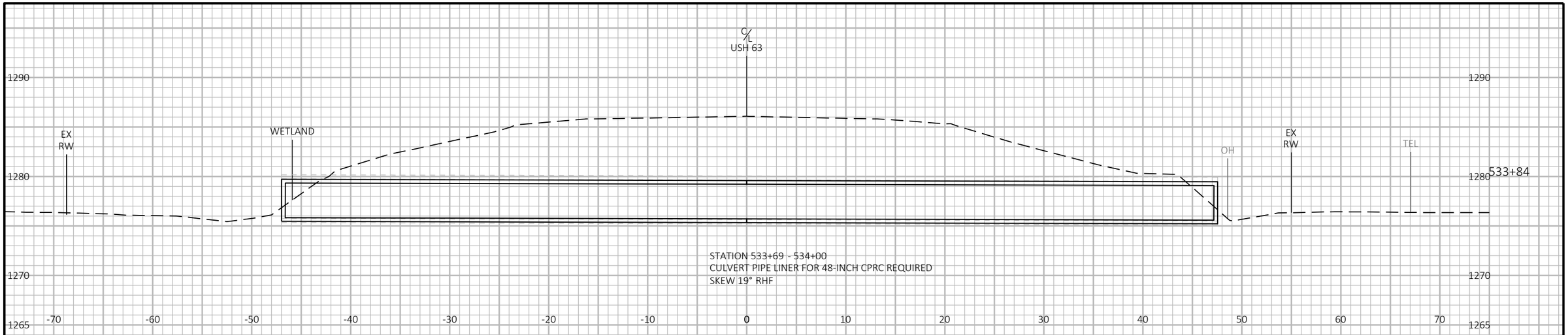

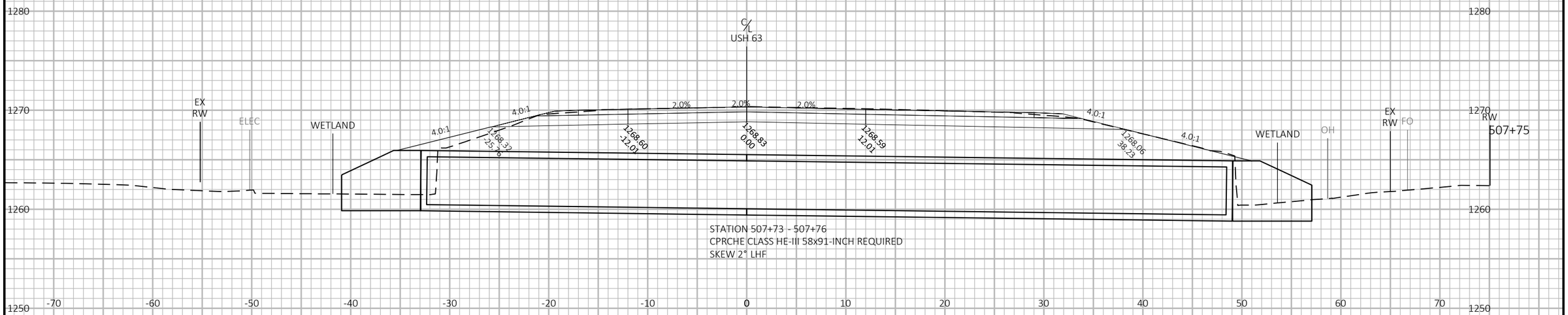

9

9

PROJECT NO: 1550-04-78	HWY: USH 63	COUNTY: BARRON	CROSS SECTIONS: CULVERT REPLACEMENTS AND CULVERT PIPE LINERS	SHEET 227	E

FILE NAME : W:\NWBE_PROJECTS\DESIGN\2324_US63-US8TOSTH48\C3D-22\SHEETS\090202_XS-CULVERTSALL.DWG
LAYOUT NAME - 63_xs-11-Culverts

PLOT DATE : 1/26/2026 12:44 PM PLOT BY : G. COLBERT PLOT NAME : **PLOT SCALE :** 1 IN:10 FT HORZ. / 1 IN:10 FT VERT.

WISDOT/CADDS SHEET 49

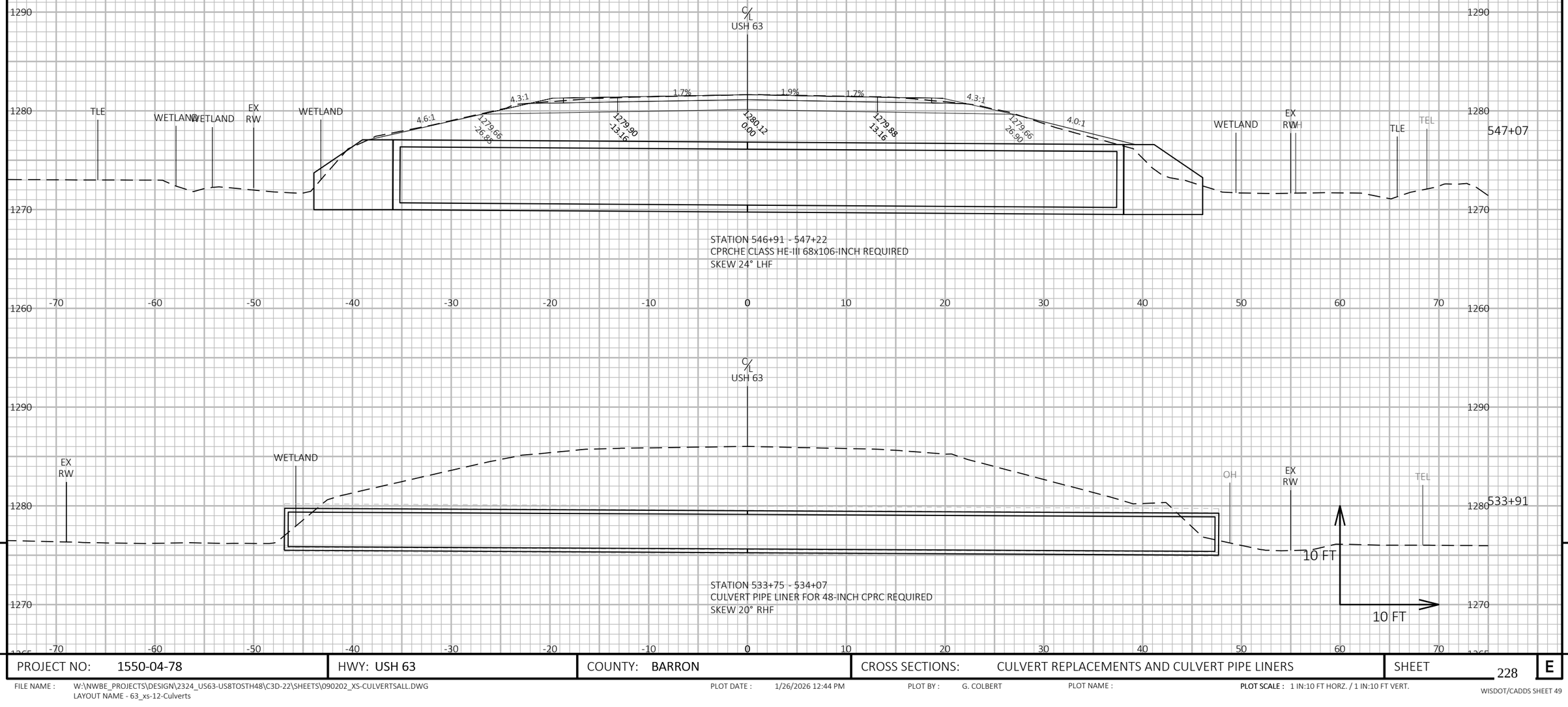

PROJECT NO: 1550-04-78	HWY: USH 63	COUNTY: BARRON	CROSS SECTIONS: CULVERT REPLACEMENTS AND CULVERT PIPE LINERS	SHEET 228	E

FILE NAME : W:\NWBE_PROJECTS\DESIGN\2324_US63-US8TOSTH48\C3D-22\SHEETS\090202_XS-CULVERTSALL.DWG
LAYOUT NAME - 63_xs-12-Culverts

PLOT DATE : 1/26/2026 12:44 PM PLOT BY : G. COLBERT PLOT NAME : PLOT SCALE : 1 IN:10 FT HORZ. / 1 IN:10 FT VERT.

WISDOT/CADDS SHEET 49

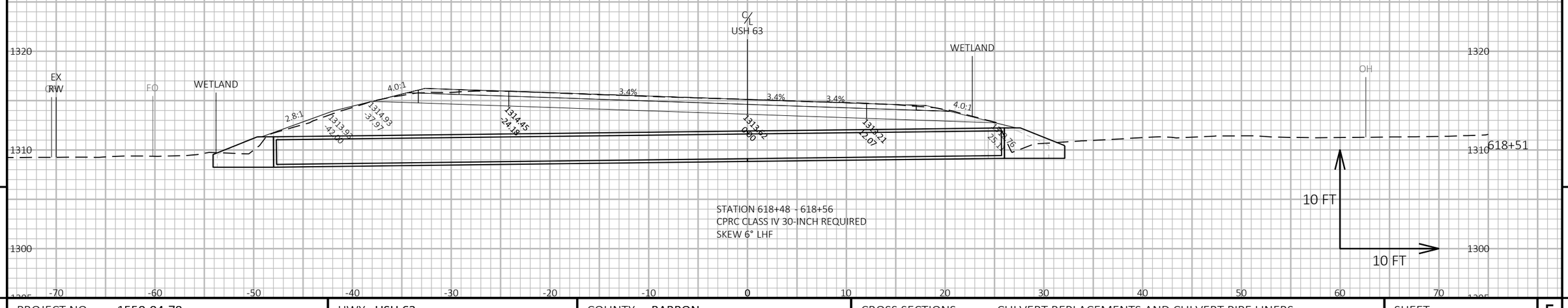

STATION 618+48 - 618+56
CPRC CLASS IV 30-INCH REQUIRED
SKEW 6° LHF

9 9

PROJECT NO: 1550-04-78	HWY: USH 63	COUNTY: BARRON	CROSS SECTIONS: CULVERT REPLACEMENTS AND CULVERT PIPE LINERS	SHEET 229	E

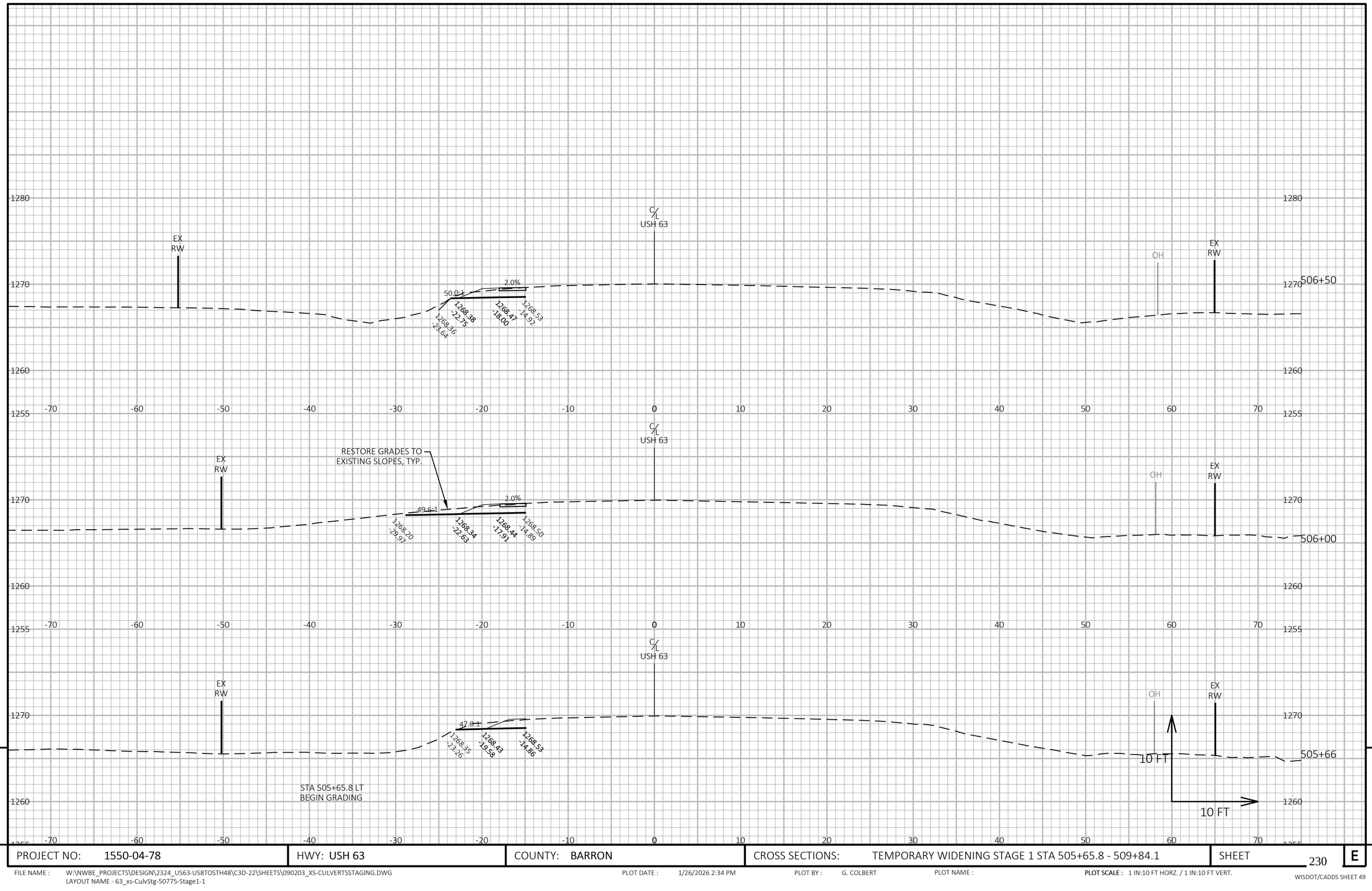

PROJECT NO: 1550-04-78	HWY: USH 63	COUNTY: BARRON	CROSS SECTIONS: TEMPORARY WIDENING STAGE 1 STA 505+65.8 - 509+84.1	SHEET 230	E

FILE NAME : W:\NWBE_PROJECTS\DESIGN\2324_US63-US8TOSTH48\C3D-22\SHEETS\090203_XS-CULVERTSSTAGING.DWG
LAYOUT NAME - 63_xs-CulvStg-50775-Stage1-1

PLOT DATE : 1/26/2026 2:34 PM PLOT BY : G. COLBERT PLOT NAME : PLOT SCALE : 1 IN:10 FT HORZ. / 1 IN:10 FT VERT.

WISDOT/CADDS SHEET 49

PROJECT NO: 1550-04-78	HWY: USH 63	COUNTY: BARRON	CROSS SECTIONS: TEMPORARY WIDENING STAGE 1 STA 505+65.8 - 509+84.1	SHEET 231	E

FILE NAME : W:\NWBE_PROJECTS\DESIGN\2324_US63-US8TOSTH48\C3D-22\SHEETS\090203_XS-CULVERTSSTAGING.DWG
LAYOUT NAME - 63_xs-CulvStg-50775-Stage1-2

PLOT DATE : 1/26/2026 2:34 PM PLOT BY : G. COLBERT PLOT NAME : PLOT SCALE : 1 IN:10 FT HORZ. / 1 IN:10 FT VERT.

WISDOT/CADDS SHEET 49

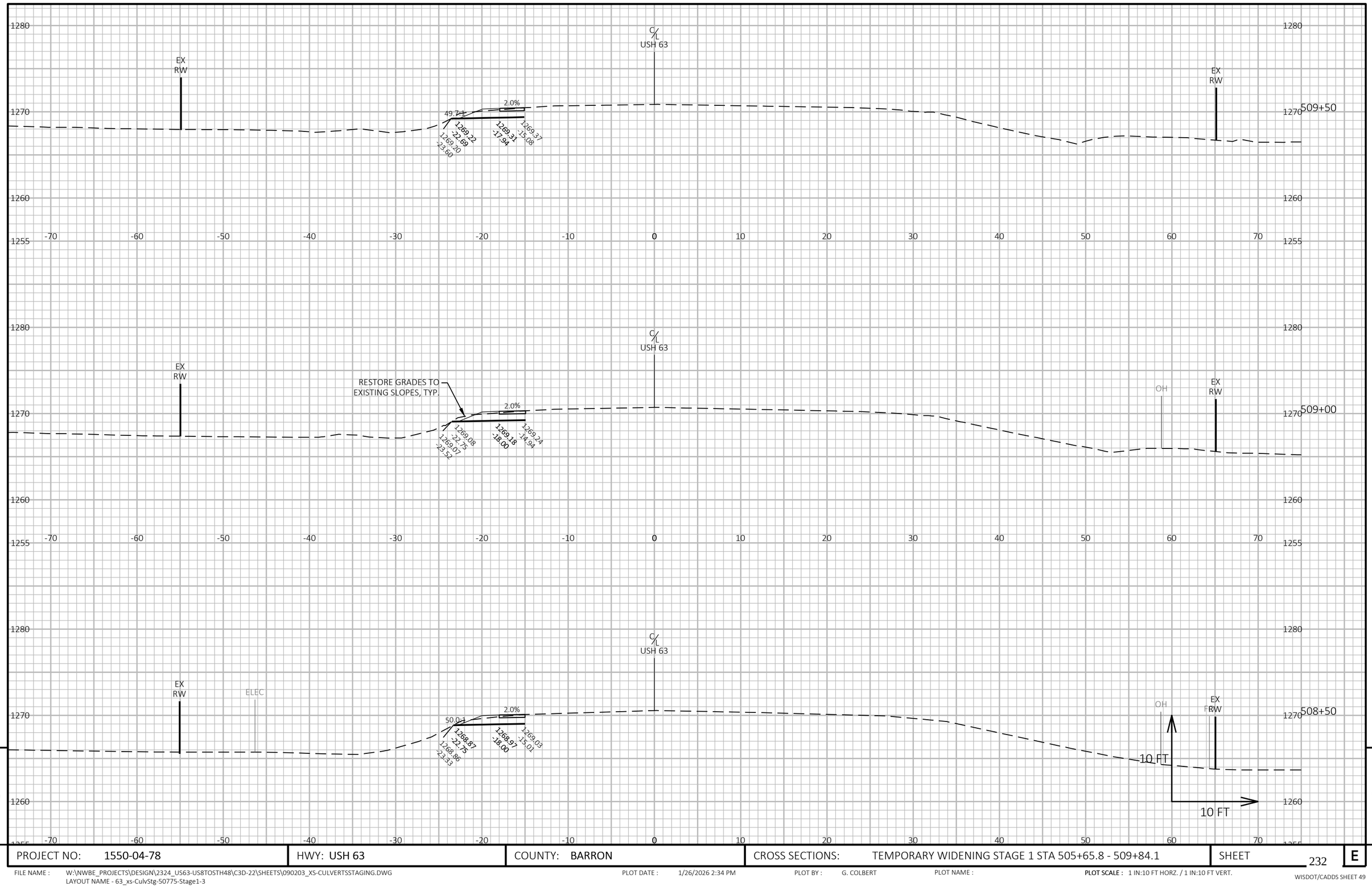

9

9

PROJECT NO: 1550-04-78	HWY: USH 63	COUNTY: BARRON	CROSS SECTIONS: TEMPORARY WIDENING STAGE 1 STA 505+65.8 - 509+84.1	SHEET 232	E

FILE NAME : W:\NWBE_PROJECTS\DESIGN\2324_US63-US8TOSTH48\C3D-22\SHEETS\090203_XS-CULVERTSSTAGING.DWG
LAYOUT NAME - 63_xs-CulvStg-50775-Stage1-3

PLOT DATE : 1/26/2026 2:34 PM PLOT BY : G. COLBERT PLOT NAME : PLOT SCALE : 1 IN:10 FT HORZ. / 1 IN:10 FT VERT.

WISDOT/CADDS SHEET 49

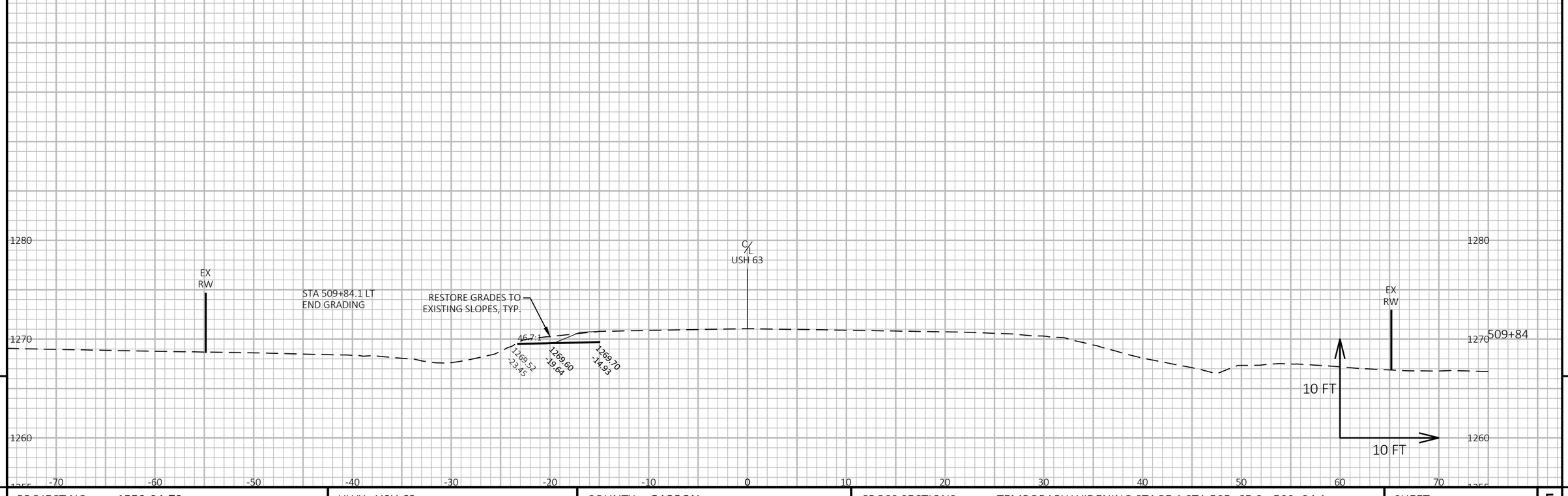

9

9

PROJECT NO: 1550-04-78	HWY: USH 63	COUNTY: BARRON	CROSS SECTIONS: TEMPORARY WIDENING STAGE 1 STA 505+65.8 - 509+84.1	SHEET 233	E

FILE NAME : W:\NWBE_PROJECTS\DESIGN\2324_US63-US8TOSTH48\C3D-22\SHEETS\090203_XS-CULVERTSSTAGING.DWG
LAYOUT NAME - 63_xs-CulvStg-50775-Stage1-4

PLOT DATE : 1/26/2026 2:35 PM PLOT BY : G. COLBERT PLOT NAME : **PLOT SCALE :** 1 IN:10 FT HORZ. / 1 IN:10 FT VERT.

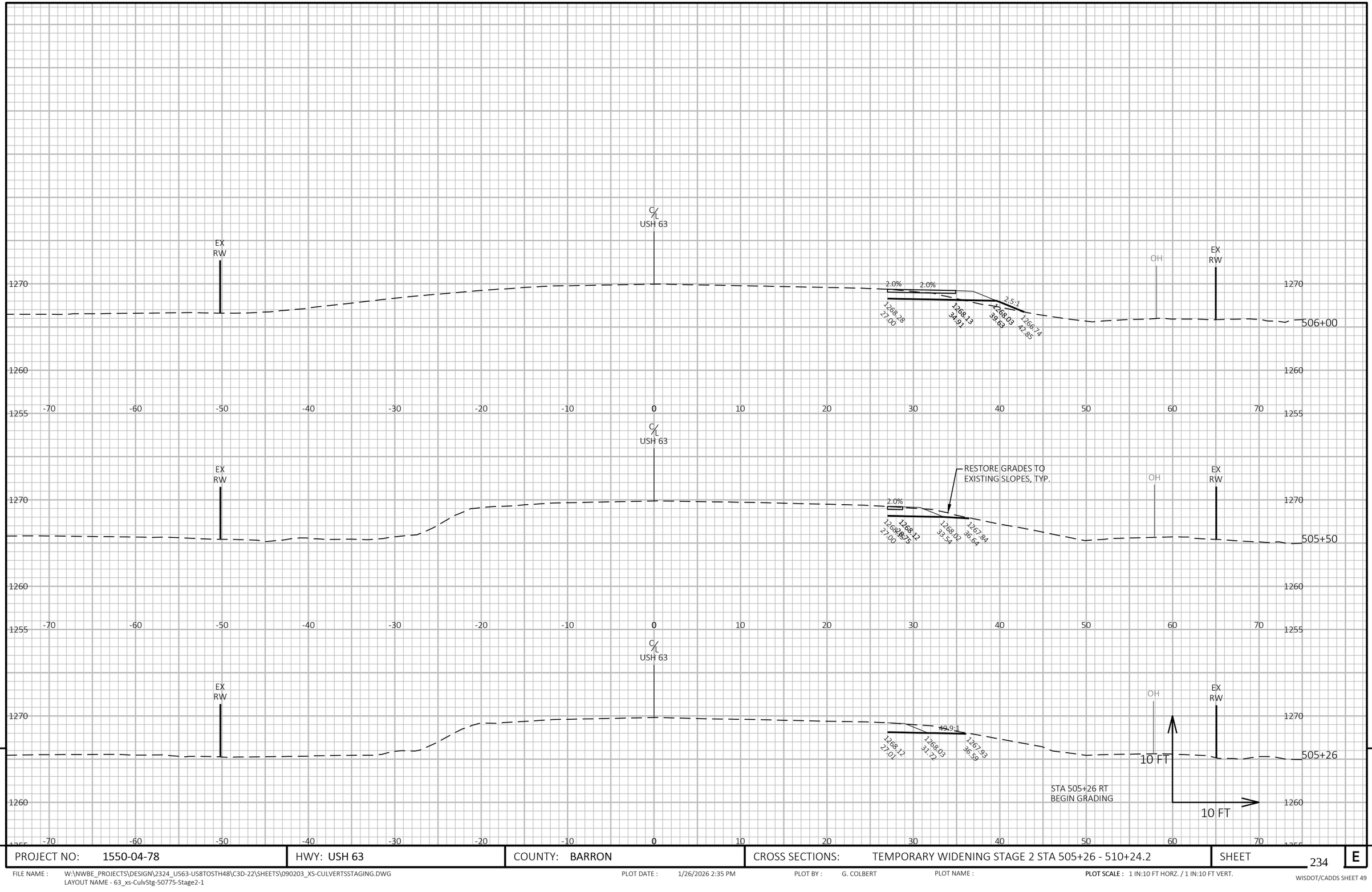

PROJECT NO: 1550-04-78	HWY: USH 63	COUNTY: BARRON	CROSS SECTIONS: TEMPORARY WIDENING STAGE 2 STA 505+26 - 510+24.2	SHEET 234	E

FILE NAME : W:\NWBE_PROJECTS\DESIGN\2324_US63-US8TOSTH48\C3D-22\SHEETS\090203_XS-CULVERTSSTAGING.DWG
LAYOUT NAME - 63_xs-CulvStg-50775-Stage2-1

PLOT DATE : 1/26/2026 2:35 PM PLOT BY : G. COLBERT PLOT NAME : PLOT SCALE : 1 IN:10 FT HORZ. / 1 IN:10 FT VERT.

WISDOT/CADDS SHEET 49

9

PROJECT NO: 1550-04-78	HWY: USH 63	COUNTY: BARRON	CROSS SECTIONS: TEMPORARY WIDENING STAGE 2 STA 505+26 - 510+24.2	SHEET 235	E

FILE NAME : W:\NWBE_PROJECTS\DESIGN\2324_US63-US8TOSTH48\C3D-22\SHEETS\090203_XS-CULVERTSSTAGING.DWG
LAYOUT NAME - 63_xs-CulvStg-50775-Stage2-2

PLOT DATE : 1/26/2026 2:35 PM PLOT BY : G. COLBERT PLOT NAME : **PLOT SCALE :** 1 IN:10 FT HORZ. / 1 IN:10 FT VERT.

WISDOT/CADDS SHEET 49

1280
1270
1260
1255
-70
-60
-50
-40
-30
-20
-10
0
10
20
30
40
50
60
70
℄
USH 63
EX
RW
ELEC
2.0%
2.0%
2.5:1
12:1
12:1
12

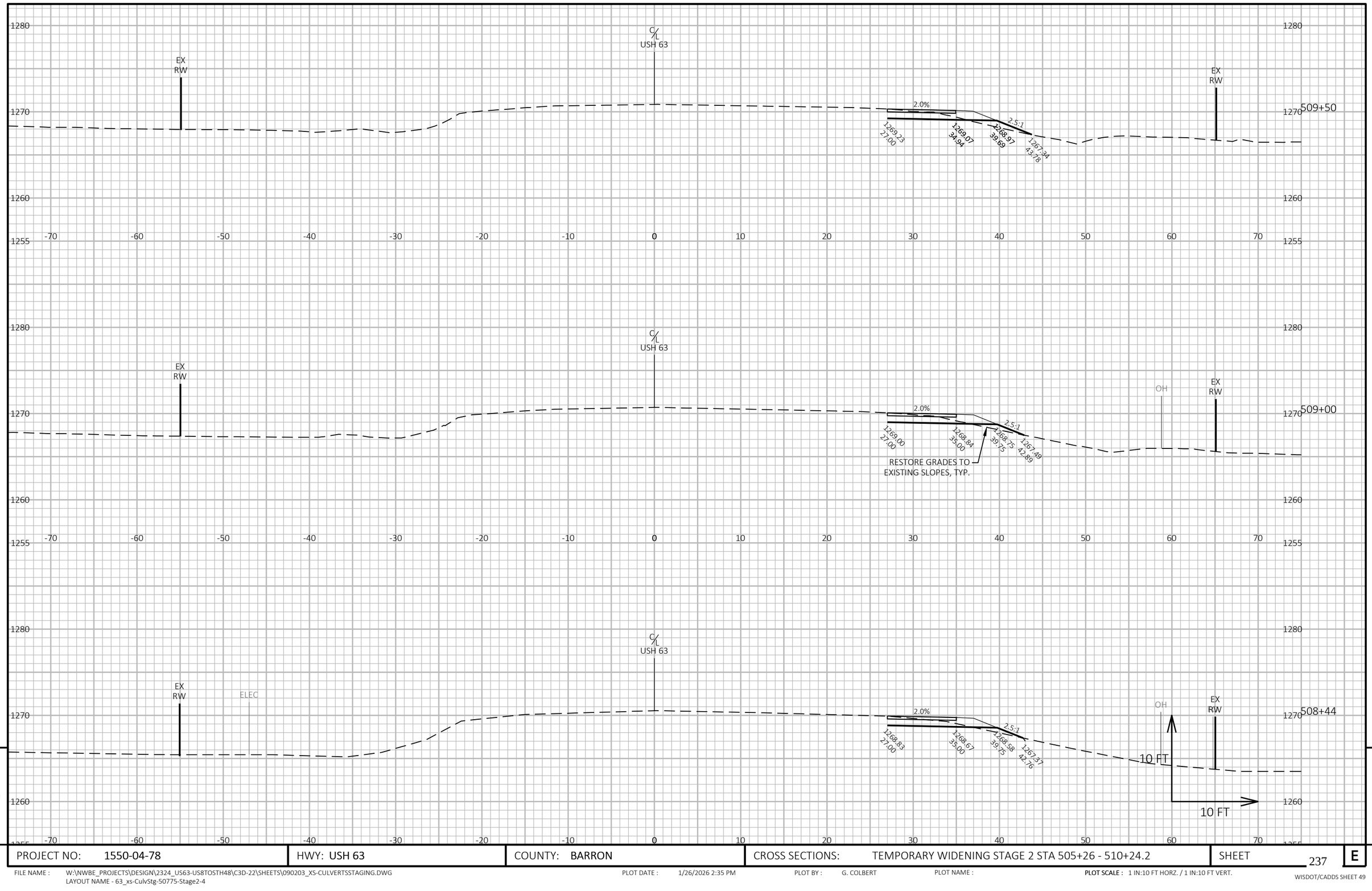

9

9

PROJECT NO: 1550-04-78	HWY: USH 63	COUNTY: BARRON	CROSS SECTIONS: TEMPORARY WIDENING STAGE 2 STA 505+26 - 510+24.2	SHEET 237	E

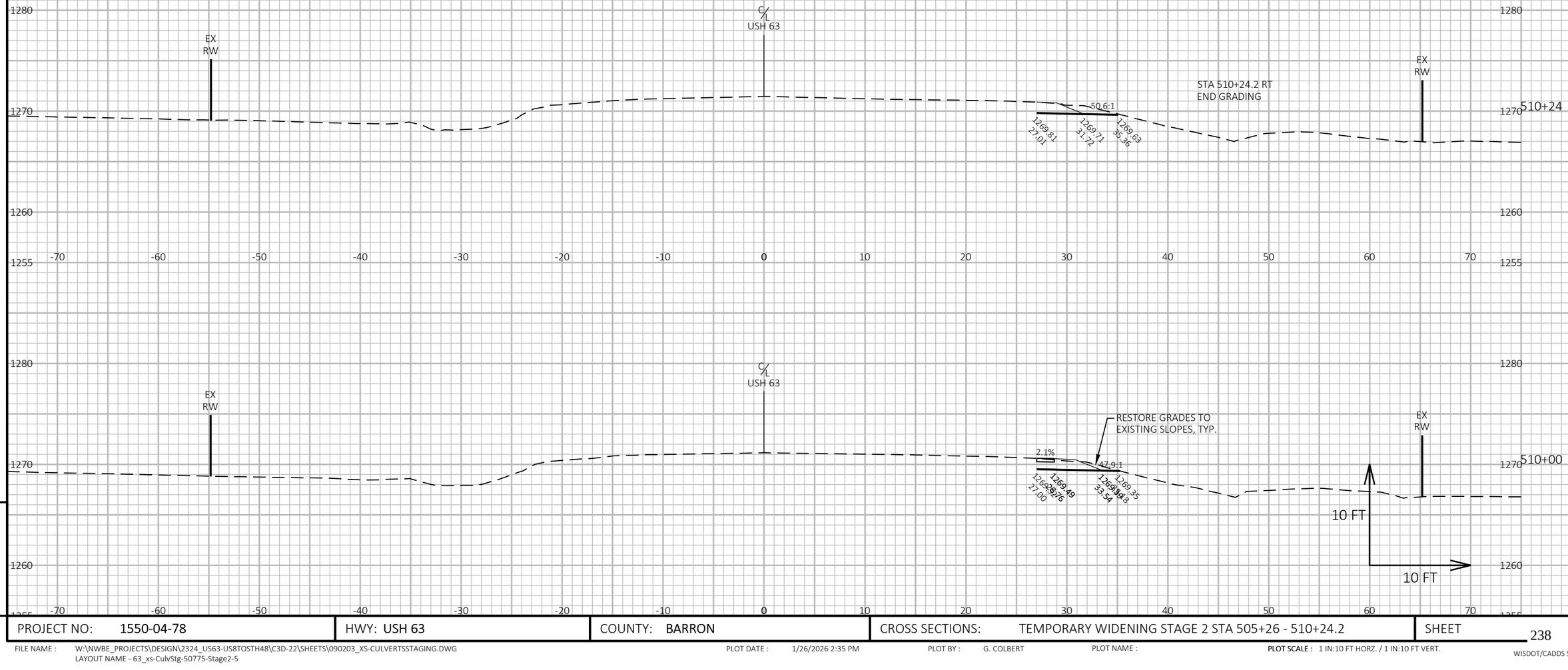

9

9

PROJECT NO: 1550-04-78	HWY: USH 63	COUNTY: BARRON	CROSS SECTIONS: TEMPORARY WIDENING STAGE 2 STA 505+26 - 510+24.2	SHEET 238	E

FILE NAME : W:\NWBE_PROJECTS\DESIGN\2324_US63-US8TOSTH48\C3D-22\SHEETS\090203_XS-CULVERTSSTAGING.DWG
LAYOUT NAME - 63_xs-CulvStg-50775-Stage2-5

PLOT DATE : 1/26/2026 2:35 PM PLOT BY : G. COLBERT PLOT NAME : PLOT SCALE : 1 IN:10 FT HORZ. / 1 IN:10 FT VERT.

WISDOT/CADDS SHEET 49

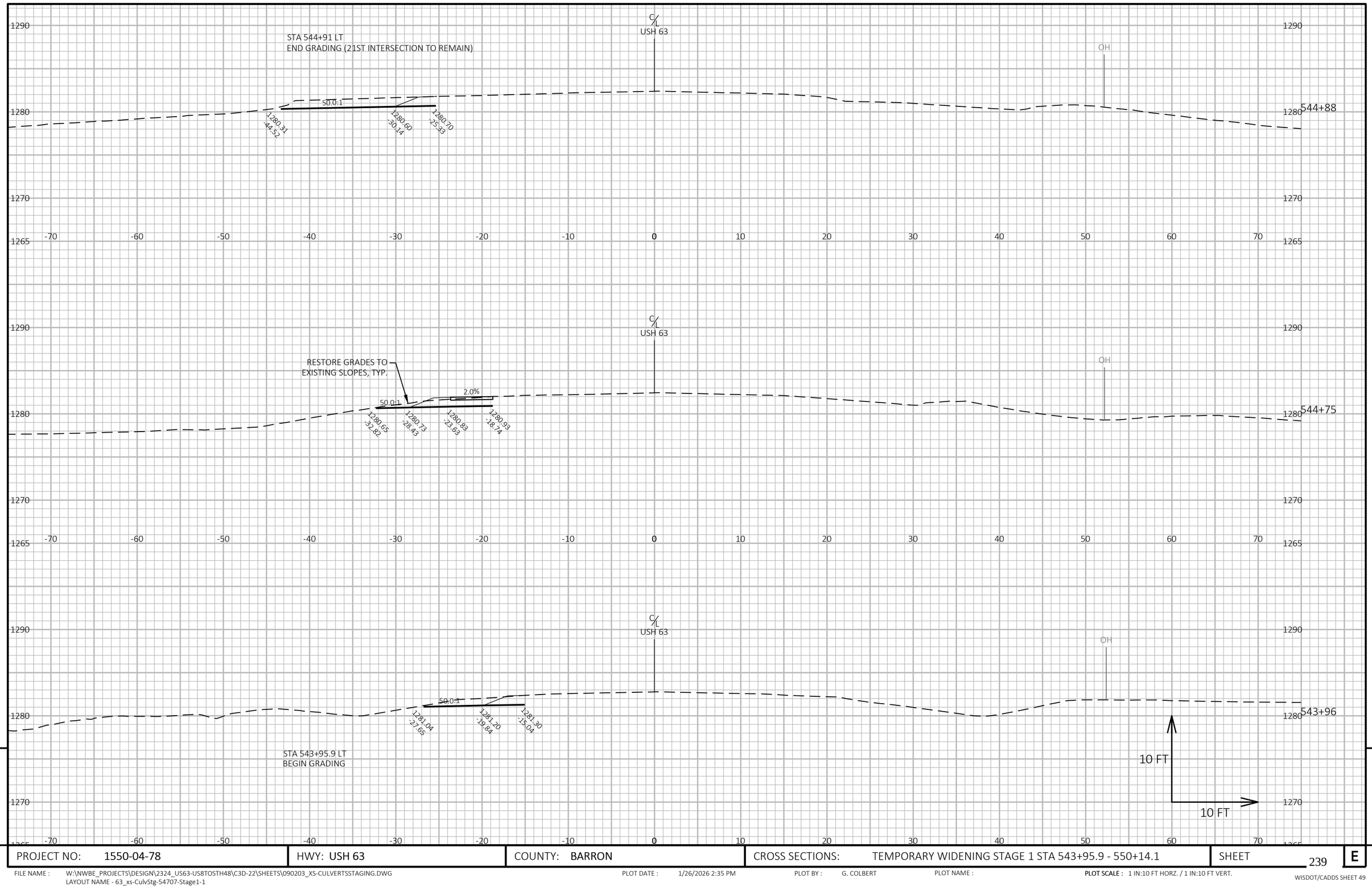

PROJECT NO: 1550-04-78	HWY: USH 63	COUNTY: BARRON	CROSS SECTIONS: TEMPORARY WIDENING STAGE 1 STA 543+95.9 - 550+14.1	SHEET 239	E

FILE NAME : W:\NWBE_PROJECTS\DESIGN\2324_US63-US8TOSTH48\C3D-22\SHEETS\090203_XS-CULVERTSSTAGING.DWG
LAYOUT NAME - 63_xs-CulvStg-54707-Stage1-1

PLOT DATE : 1/26/2026 2:35 PM PLOT BY : G. COLBERT PLOT NAME : PLOT SCALE : 1 IN:10 FT HORZ. / 1 IN:10 FT VERT.

WISDOT/CADDS SHEET 49

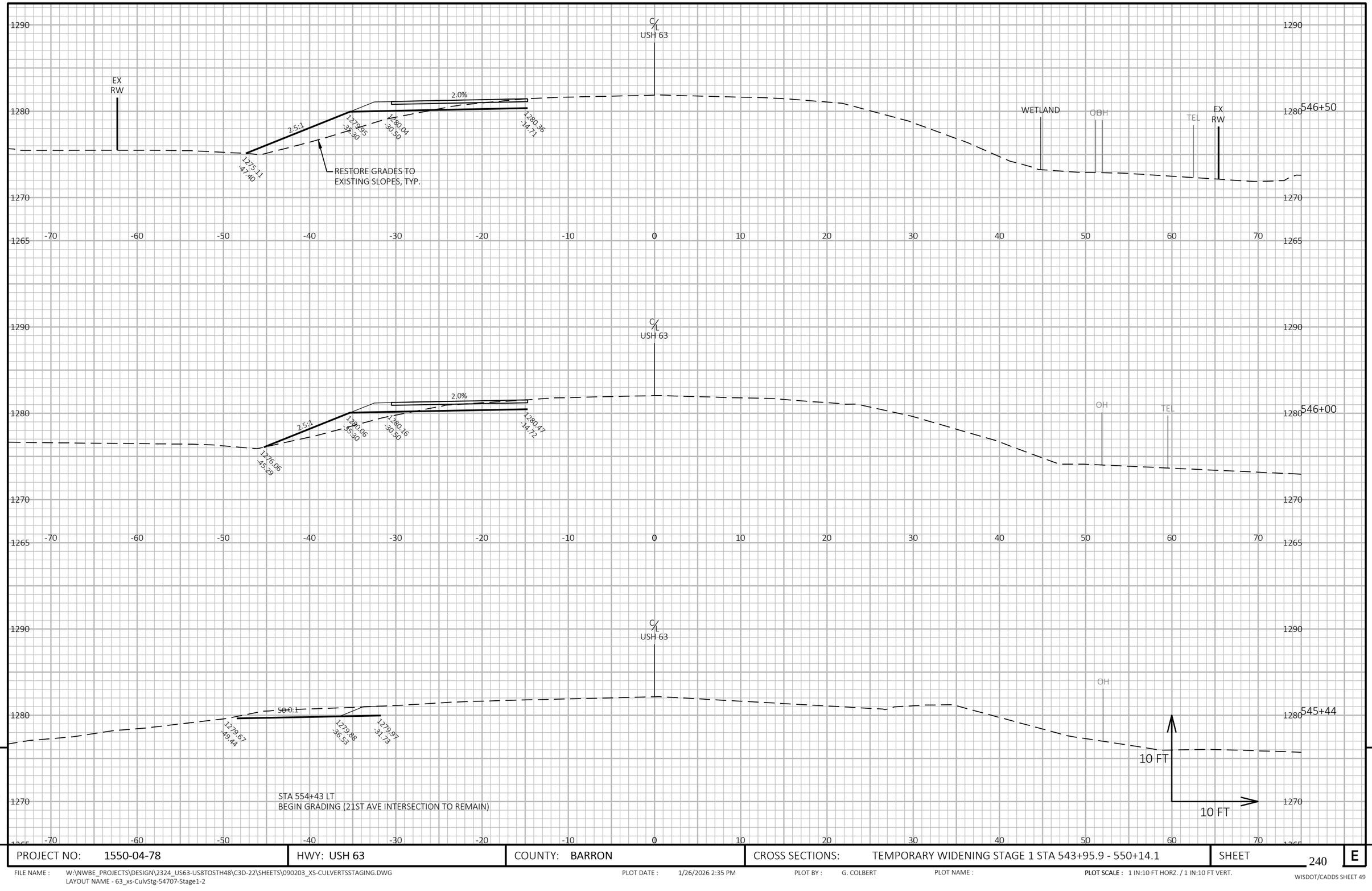

9

9

PROJECT NO: 1550-04-78	HWY: USH 63	COUNTY: BARRON	CROSS SECTIONS: TEMPORARY WIDENING STAGE 1 STA 543+95.9 - 550+14.1	SHEET 240	E

FILE NAME : W:\NWBE_PROJECTS\DESIGN\2324_US63-US8TOSTH48\C3D-22\SHEETS\090203_XS-CULVERTSSTAGING.DWG
LAYOUT NAME - 63_xs-CulvStg-54707-Stage1-2

PLOT DATE : 1/26/2026 2:35 PM PLOT BY : G. COLBERT PLOT NAME : PLOT SCALE : 1 IN:10 FT HORZ. / 1 IN:10 FT VERT.

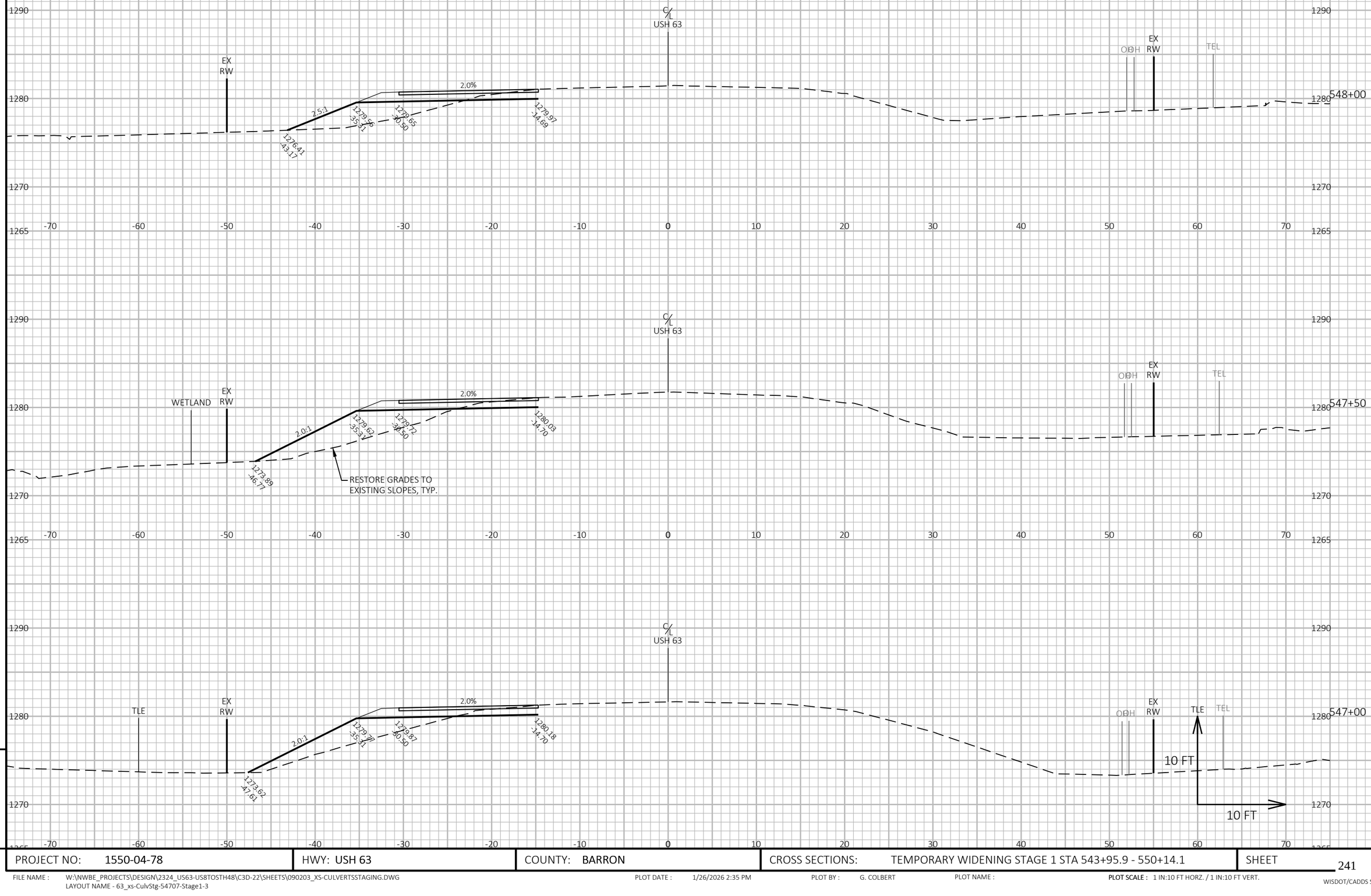

PROJECT NO: 1550-04-78	HWY: USH 63	COUNTY: BARRON	CROSS SECTIONS: TEMPORARY WIDENING STAGE 1 STA 543+95.9 - 550+14.1	SHEET 241	E

FILE NAME : W:\NWBE_PROJECTS\DESIGN\2324_US63-US8TOSTH48\C3D-22\SHEETS\090203_XS-CULVERTSSTAGING.DWG
LAYOUT NAME - 63_xs-CulvStg-54707-Stage1-3

PLOT DATE : 1/26/2026 2:35 PM PLOT BY : G. COLBERT PLOT NAME : **PLOT SCALE :** 1 IN:10 FT HORZ. / 1 IN:10 FT VERT.

WISDOT/CADDS SHEET 49

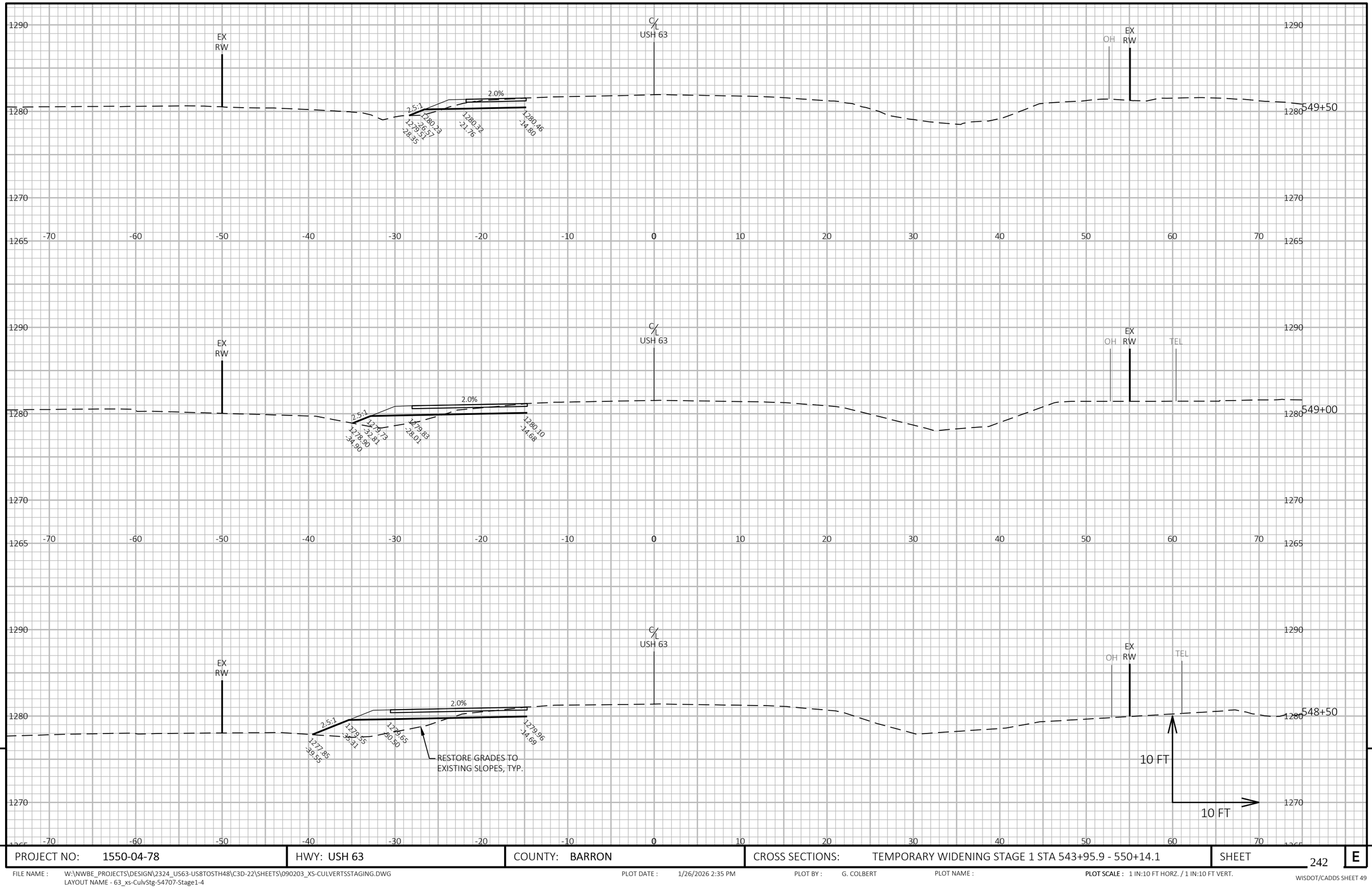

9

9

PROJECT NO: 1550-04-78	HWY: USH 63	COUNTY: BARRON	CROSS SECTIONS: TEMPORARY WIDENING STAGE 1 STA 543+95.9 - 550+14.1	SHEET 242	E

FILE NAME : W:\NWBE_PROJECTS\DESIGN\2324_US63-US8TOSTH48\C3D-22\SHEETS\090203_XS-CULVERTSSTAGING.DWG
LAYOUT NAME - 63_xs-CulvStg-54707-Stage1-4

PLOT DATE : 1/26/2026 2:35 PM PLOT BY : G. COLBERT PLOT NAME : **PLOT SCALE :** 1 IN:10 FT HORZ. / 1 IN:10 FT VERT.

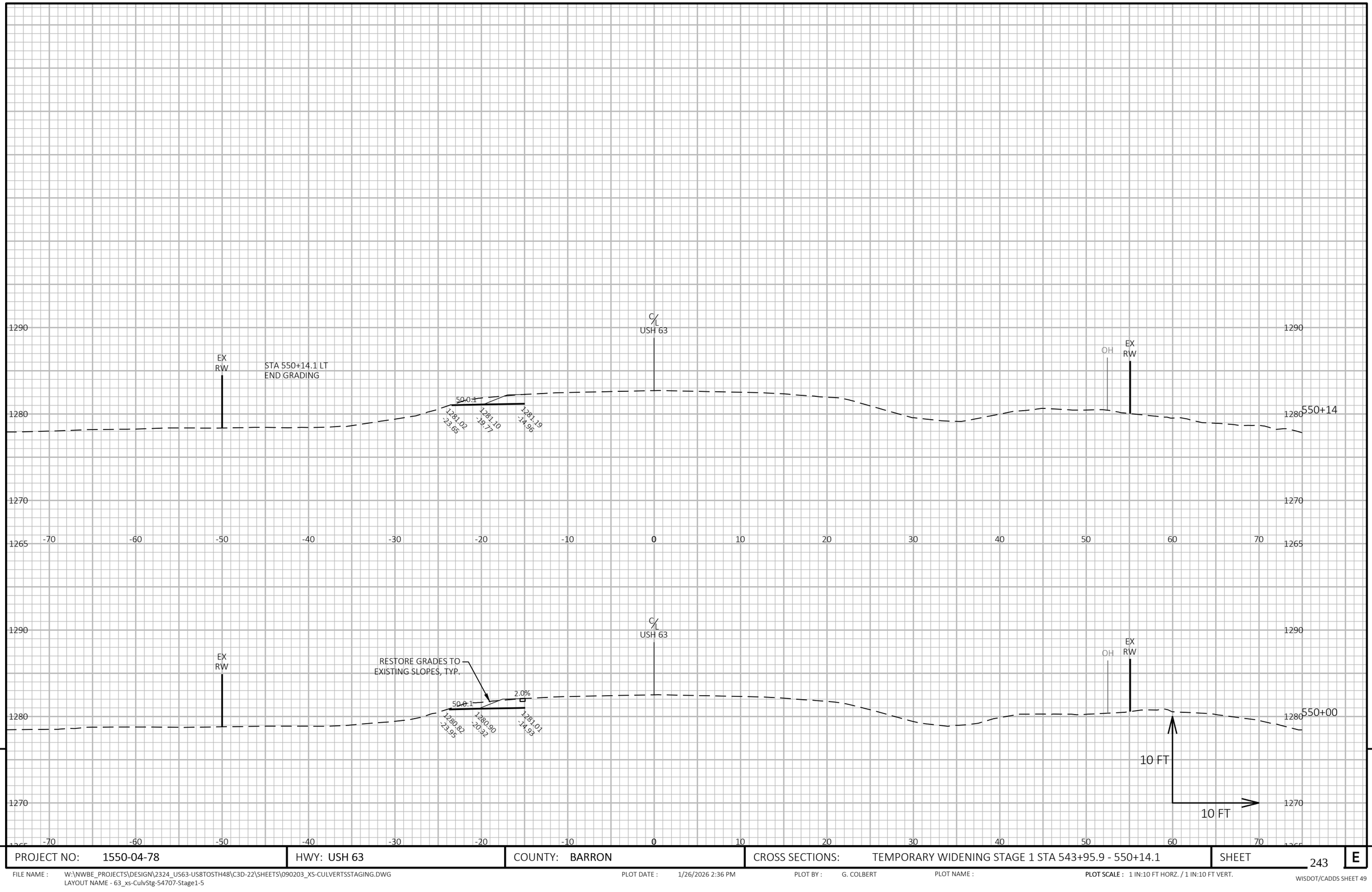

PROJECT NO: 1550-04-78	HWY: USH 63	COUNTY: BARRON	CROSS SECTIONS: TEMPORARY WIDENING STAGE 1 STA 543+95.9 - 550+14.1	SHEET 243	E

FILE NAME : W:\NWBE_PROJECTS\DESIGN\2324_US63-US8TOSTH48\C3D-22\SHEETS\090203_XS-CULVERTSSTAGING.DWG
LAYOUT NAME - 63_xs-CulvStg-54707-Stage1-5

PLOT DATE : 1/26/2026 2:36 PM PLOT BY : G. COLBERT PLOT NAME : **PLOT SCALE :** 1 IN:10 FT HORZ. / 1 IN:10 FT VERT.

WISDOT/CADDS SHEET 49

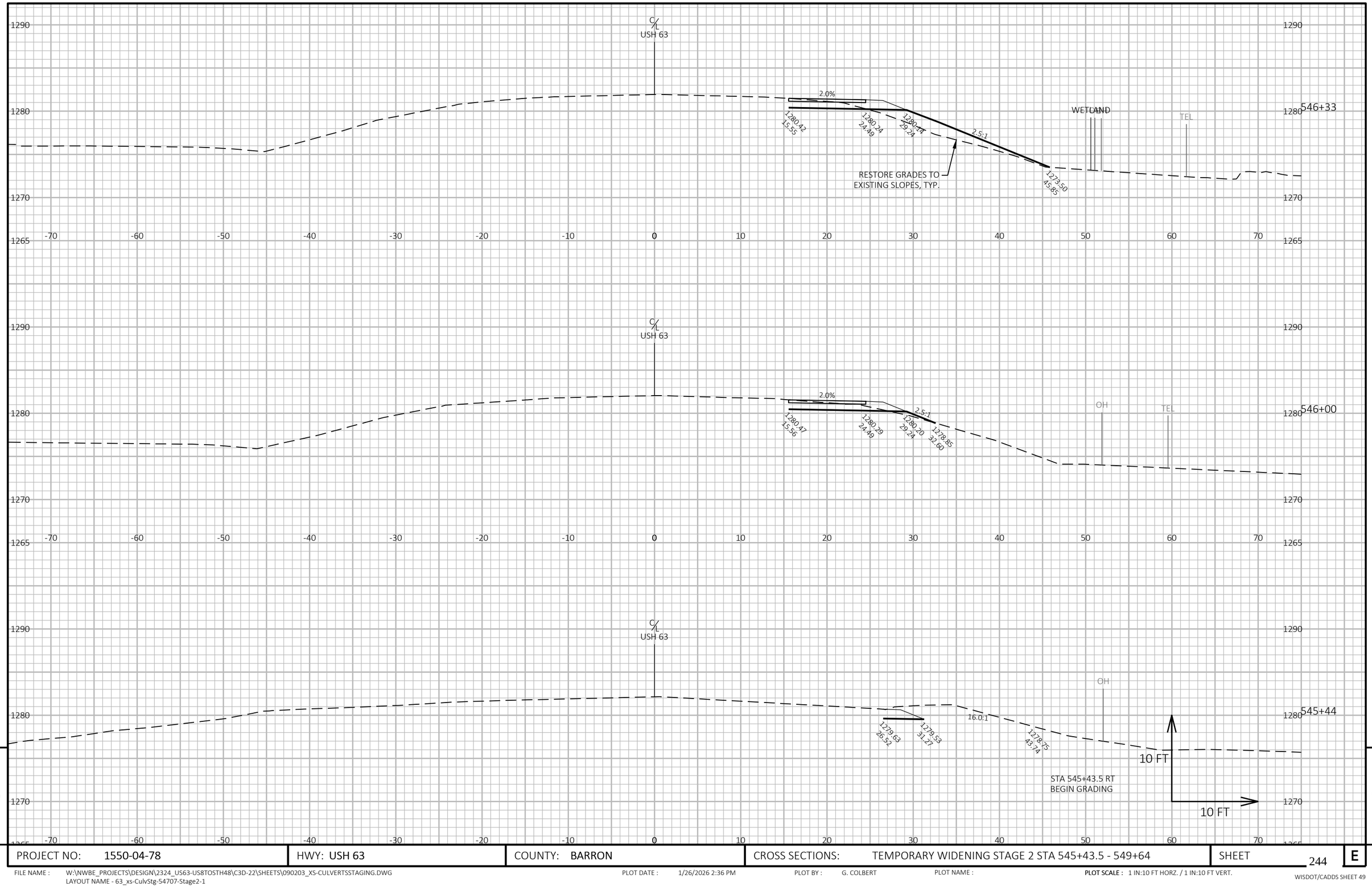

9

9

PROJECT NO: 1550-04-78	HWY: USH 63	COUNTY: BARRON	CROSS SECTIONS: TEMPORARY WIDENING STAGE 2 STA 545+43.5 - 549+64	SHEET 244	E

FILE NAME : W:\NWBE_PROJECTS\DESIGN\2324_US63-US8TOSTH48\C3D-22\SHEETS\090203_XS-CULVERTSSTAGING.DWG
LAYOUT NAME - 63_xs-CulvStg-54707-Stage2-1

PLOT DATE : 1/26/2026 2:36 PM PLOT BY : G. COLBERT PLOT NAME : **PLOT SCALE :** 1 IN:10 FT HORZ. / 1 IN:10 FT VERT.

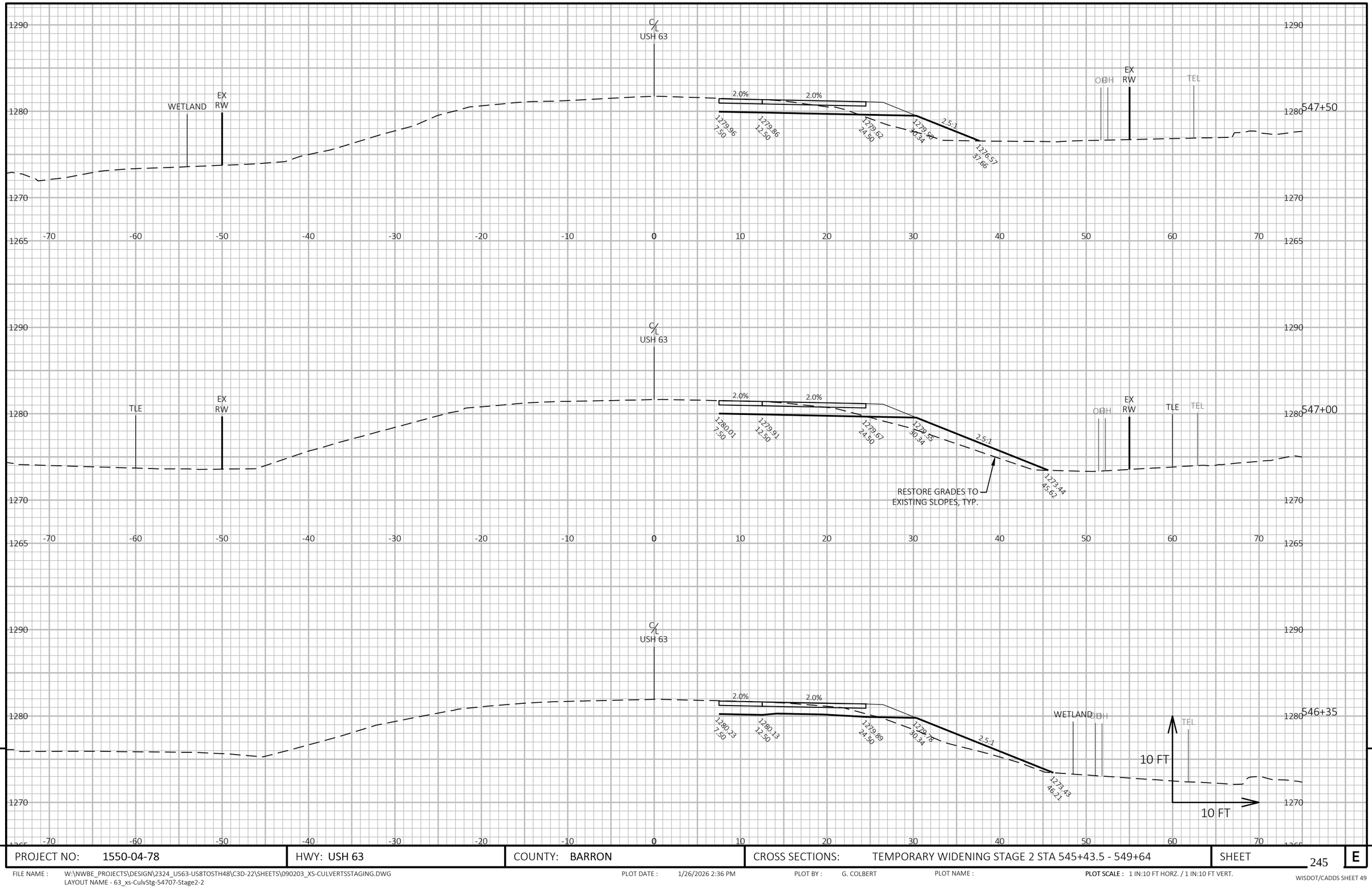

PROJECT NO: 1550-04-78	HWY: USH 63	COUNTY: BARRON	CROSS SECTIONS: TEMPORARY WIDENING STAGE 2 STA 545+43.5 - 549+64	SHEET 245	E

FILE NAME : W:\NWBE_PROJECTS\DESIGN\2324_US63-US8TOSTH48\C3D-22\SHEETS\090203_XS-CULVERTSSTAGING.DWG
LAYOUT NAME - 63_xs-CulvStg-54707-Stage2-2

PLOT DATE : 1/26/2026 2:36 PM PLOT BY : G. COLBERT PLOT NAME : **PLOT SCALE :** 1 IN:10 FT HORZ. / 1 IN:10 FT VERT.

WISDOT/CADDS SHEET 49

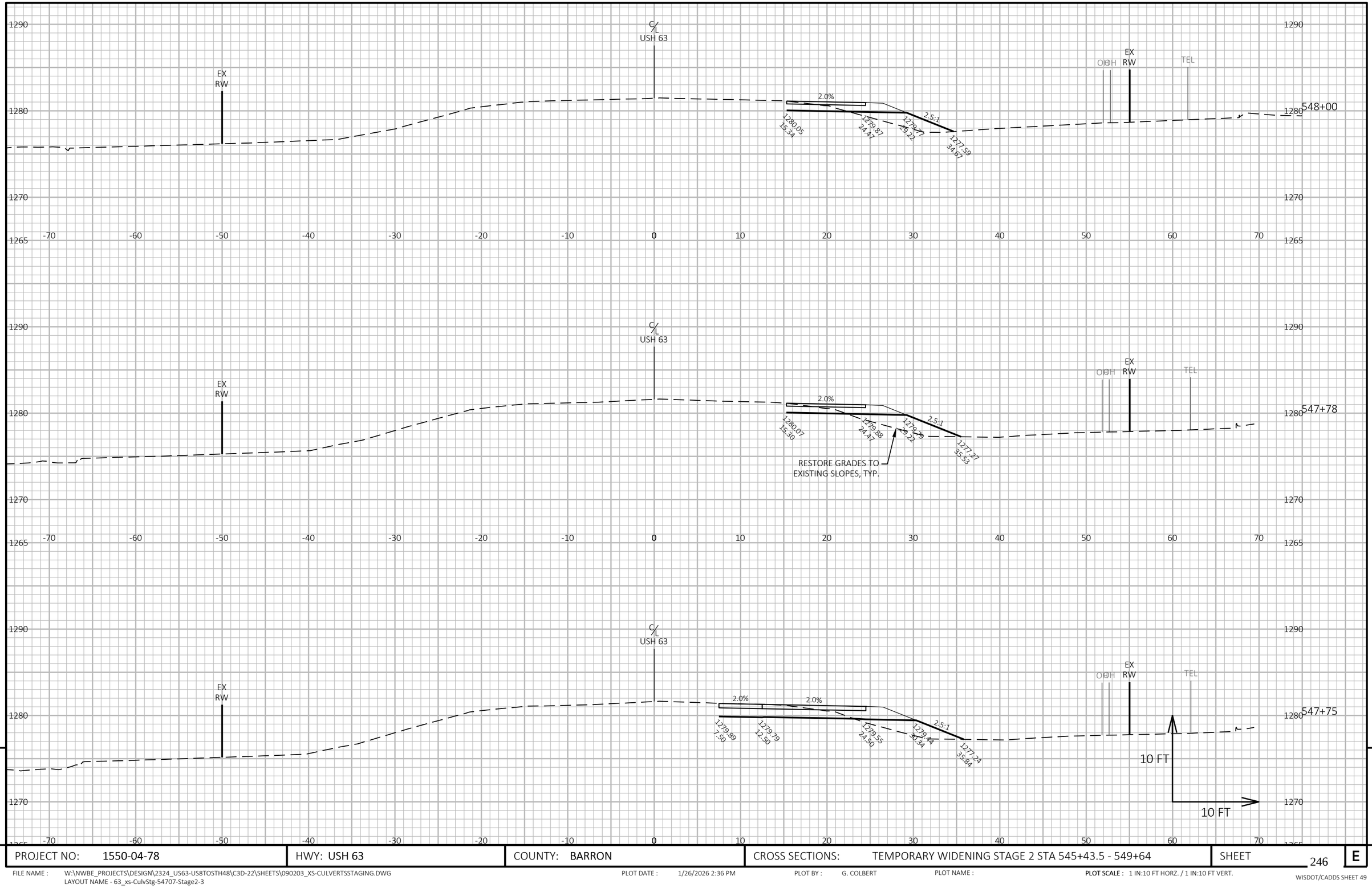

9

9

PROJECT NO: 1550-04-78	HWY: USH 63	COUNTY: BARRON	CROSS SECTIONS: TEMPORARY WIDENING STAGE 2 STA 545+43.5 - 549+64	SHEET 246	E

FILE NAME : W:\NWBE_PROJECTS\DESIGN\2324_US63-US8TOSTH48\C3D-22\SHEETS\090203_XS-CULVERTSSTAGING.DWG
LAYOUT NAME - 63_xs-CulvStg-54707-Stage2-3

PLOT DATE : 1/26/2026 2:36 PM PLOT BY : G. COLBERT PLOT NAME : PLOT SCALE : 1 IN:10 FT HORZ. / 1 IN:10 FT VERT.

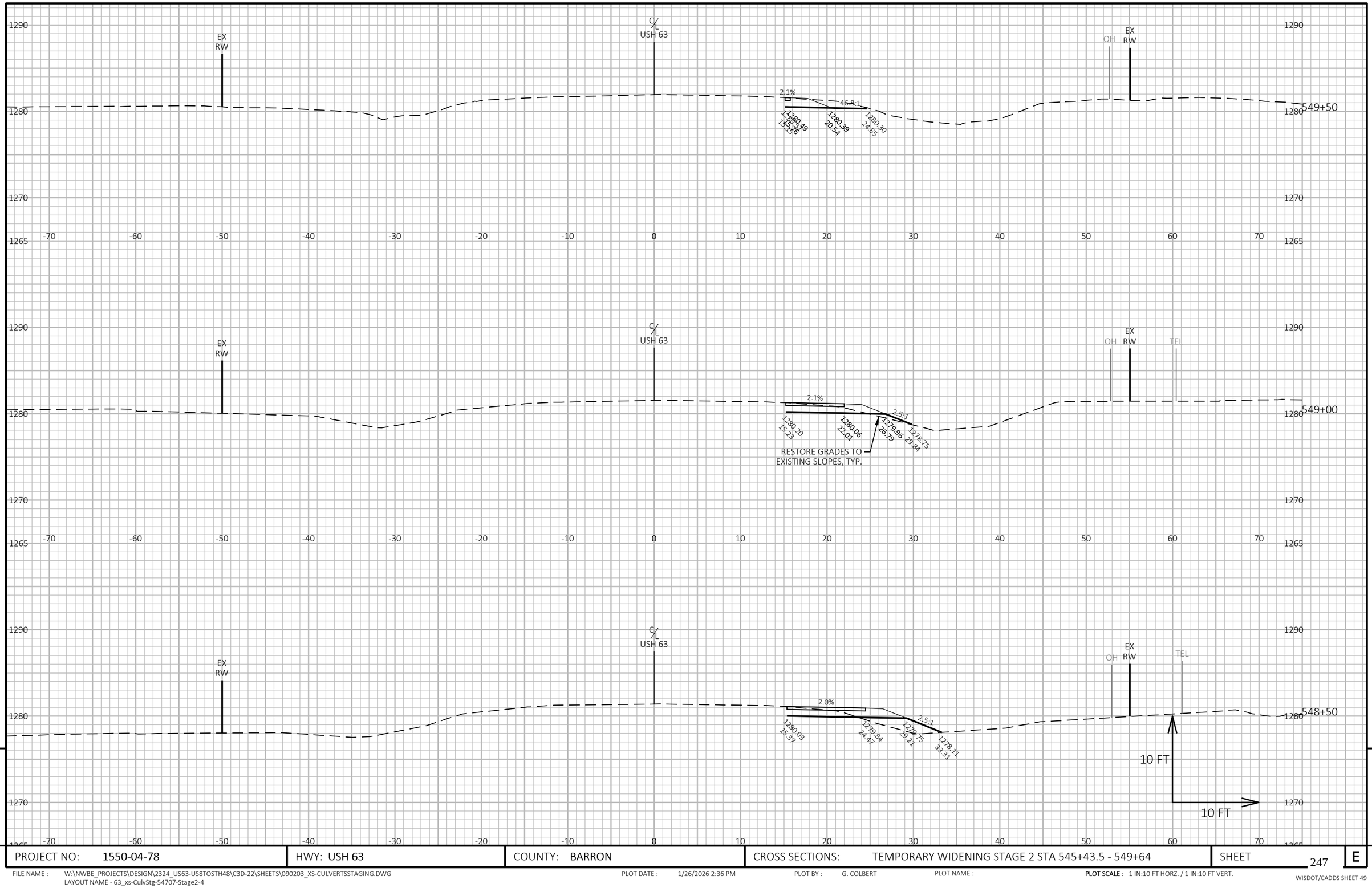

9

9

PROJECT NO: 1550-04-78	HWY: USH 63	COUNTY: BARRON	CROSS SECTIONS: TEMPORARY WIDENING STAGE 2 STA 545+43.5 - 549+64	SHEET 247	E

FILE NAME : W:\NWBE_PROJECTS\DESIGN\2324_US63-US8TOSTH48\C3D-22\SHEETS\090203_XS-CULVERTSSTAGING.DWG
LAYOUT NAME - 63_xs-CulvStg-54707-Stage2-4

PLOT DATE : 1/26/2026 2:36 PM PLOT BY : G. COLBERT PLOT NAME : **PLOT SCALE :** 1 IN:10 FT HORZ. / 1 IN:10 FT VERT.

Wisconsin Department of Transportation

Dedicated people creating transportation solutions
through innovation and exceptional service.

http://www.dot.wisconsin.gov