RHI

MARCH 2026

ORDER OF SHEETS

Section No.	1	Title
Section No.	2	Typical Sections and Details
Section No.	3	Estimate of Quantities
Section No.	3	Miscellaneous Quantities
Section No.	4	Right of Way Plat
Section No.	5	Plan and Profile
Section No.	6	Standard Detail Drawings
Section No.	7	Sign Plates
~~Section No.~~	~~8~~	~~Structure Plans~~
Section No.	9	Computer Earthwork Data
Section No.	9	Cross Sections

TOTAL SHEETS = 242

PROJECT ID: 9260-00-71 / 81

WITH: N/A

COUNTY: FOREST

STATE OF WISCONSIN
DEPARTMENT OF TRANSPORTATION

PLAN OF PROPOSED IMPROVEMENT

STATE PROJECT	FEDERAL PROJECT	
	PROJECT	CONTRACT
9260-00-71	———	———
9260-00-81	———	———

C CRANDON, LAKE AVENUE

USH 8 TO CRANDON RR OVERHEAD

STH 32

FOREST COUNTY

STATE PROJECT NUMBER

9260-00-71

C CRANDON, LAKE AVENUE

USH 8 TO CRANDON RR OVERHEAD

STH 32

FOREST COUNTY

STATE PROJECT NUMBER

9260-00-81

(SANITARY SEWER & WATERMAIN)

31

DESIGN DESIGNATION 9260-00-01

A.A.D.T.	(2021)	=	2,700
A.A.D.T.	(2045)	=	2,700
D.H.V.	(2045)	=	648
D.D.		=	51/49
T.		=	18.2%
DESIGN SPEED		=	30 - 40 MPH
ESALS		=	760,000

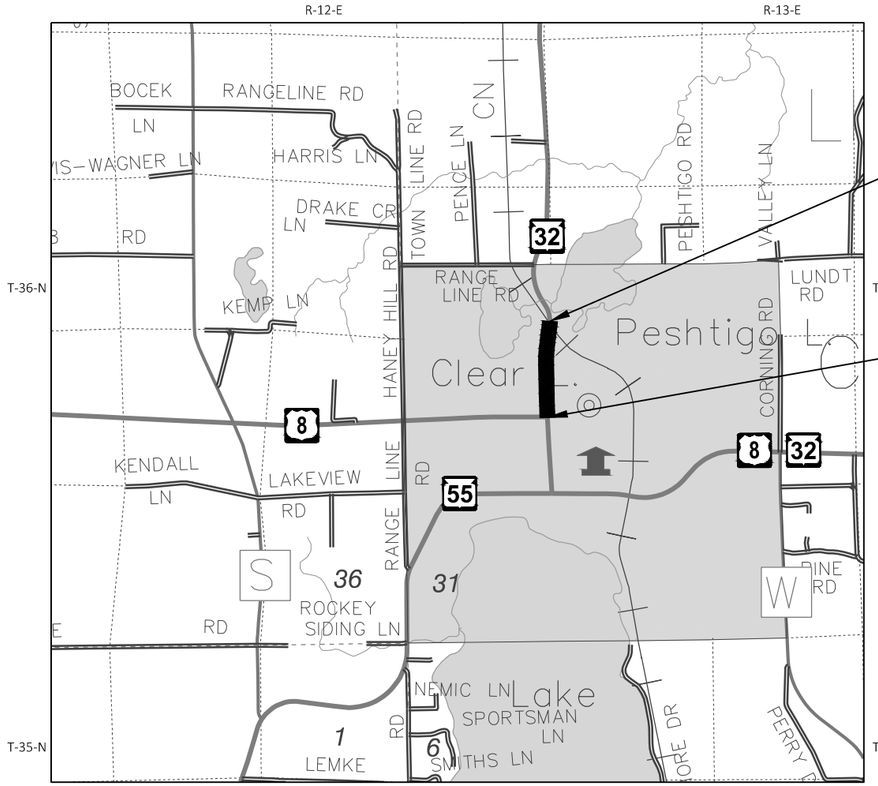

END PROJECT ID 9260-00-71/81
STA 75+65.63

BEGIN PROJECT ID 9260-00-71/81
STA 46+75.09
Y = 571278.570
X = 835833.676

LAYOUT

SCALE 0 1 MI

TOTAL NET LENGTH OF CENTERLINE PROJECT 9260-00-71 = 0.547 MI
TOTAL NET LENGTH OF CENTERLINE PROJECT 9260-00-81 = 0.547 MI

HORIZONTAL POSITIONS SHOWN ON THIS PLAN ARE WISCONSIN COORDINATE REFERENCE SYSTEM (WISCRS), FOREST COUNTY, NAD83 (1991), IN U.S. SURVEY FEET. POSITIONS SHOWN ARE GRID COORDINATES, GRID BEARINGS, AND GRID DISTANCES. GRID DISTANCES ARE THE SAME AS GROUND DISTANCES. ELEVATIONS ARE REFERENCED TO NAVD 88 (2012). GPS DERIVED ELEVATIONS ARE BASED ON GEOID 12A.

CONVENTIONAL SYMBOLS

PLAN		PROFILE	
CORPORATE LIMITS		GRADE LINE	
PROPERTY LINE		ORIGINAL GROUND	
LOT LINE		MARSH OR ROCK PROFILE (To be noted as such)	ROCK
LIMITED HIGHWAY EASEMENT		SPECIAL DITCH	LABEL
EXISTING RIGHT OF WAY		GRADE ELEVATION	95.36
PROPOSED OR NEW R/W LINE		CULVERT (Profile View)	
SLOPE INTERCEPT		**UTILITIES**	
REFERENCE LINE	300'EB'	ELECTRIC	E
EXISTING CULVERT		FIBER OPTIC	FO
PROPOSED CULVERT (Box or Pipe)		GAS	G
COMBUSTIBLE FLUIDS	CAUTION	SANITARY SEWER	SAN
MARSH AREA		STORM SEWER	SS
WOODED OR SHRUB AREA		TELEPHONE	T
		WATER	W
		UTILITY PEDESTAL	
		POWER POLE	
		TELEPHONE POLE	

ORIGINAL PLANS PREPARED BY

cbs²

WISCONSIN
BRADLEY L BECKER
E-46067
EAU CLAIRE
WI
PROFESSIONAL ENGINEER

DATE: 10/24/2025 Bradley L. Becker
(Professional Engineer Signature)

STATE OF WISCONSIN
DEPARTMENT OF TRANSPORTATION

PREPARED BY

Surveyor	CBS SQUARED, INC.
Designer	CBS SQUARED, INC.
Project Manager	ANDREW CASPER
Regional Examiner	FRED SCHUNKE
Regional Supervisor	KAI KILEN

APPROVED FOR THE DEPARTMENT

DATE: 10/27/2025 Andrew Casper
(Signature)

E

FILE NAME : N:\PDS\C3D\92600001\SHEETSPLAN\010101-TI.DWG PLOT DATE : 10/24/2025 2:03 PM PLOT BY : BRAD BECKER PLOT NAME :

PLANS FOR THE CITY OF CRANDON PREPARED BY

cbs2

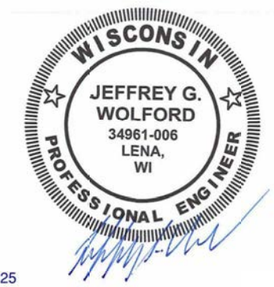

DATE: 10/24/2025 (Professional Engineer Signature)

THE ABOVE NAMED PROFESSIONAL ENGINEER SHALL BE RESPONSIBLE FOR THE DESIGN ELEMENTS LISTED IN ACCORDANCE WITH WISCONSIN ADMIN CODE CHAPTER A-E2.02 (5)

ROADWAY PLANS

USH 8 TO CRANDON RR OVERHEAD

-SANITARY SEWER AND WATER PLANS AND DETAILS
-REMOVAL PLAN ASSOCIATED WITH WATER AND SANITARY
-MISCELLANEOUS QUANTITIES ASSOCIATED WITH WATER AND SANITARY
-SPECIAL PROVISIONS ASSOCIATED WITH WATER AND SANITARY

2

GENERAL NOTES

THE LOCATIONS OF EXISTING AND PROPOSED UTILITY INSTALLATIONS AS SHOWN ON THE PLANS ARE APPROXIMATE. THERE MAY BE OTHER UTILITY FACILITIES WITHIN THE PROJECT AREA THAT ARE NOT SHOWN ON THE PLANS.

ALL CURB AND GUTTER RADII, PAVEMENT DIMENSIONS AND STATIONS ARE SHOWN TO THE EDGE OF THE PAVEMENT UNLESS NOTED OTHERWISE.

HMA PAVEMENT WEIGHT CALCULATIONS ARE BASED ON 112 LB/SY/IN

ORDER OF SECTION 2 DETAIL SHEETS

PLAN PROFESSIONAL ENGINEER STAMPS
GENERAL NOTES
PROJECT OVERVIEW
TYPICAL SECTIONS
CONSTRUCTION DETAILS
BEAMGUARD DETAILS
INTERSECTION DETAILS
PAVING DETAILS
CURB RAMP DETAILS
EROSION CONTROL
STORM SEWER
STORMWATER POND & OUTFALL PIPE
UTILITY PLAN
PERMANENT SIGNING
PAVEMENT MARKING
TRAFFIC CONTROL
DETOUR PLAN
FENCING PLAN
ALIGNMENT DIAGRAM

UTILITIES CONTACTS

CRANDON WATER & SEWER UTILITY DEPARTMENT
SANITARY SEWER
ROSS CRUM
PO BOX 176 801 N RAILROAD AVE
CRANDON, WI 54520
PHONE: (715) 478-2836
EMAIL: CRANDONW@FRONTIERNET.NET

CRANDON WATER & SEWER UTILITY DEPARTMENT
WATER
ROSS CRUM
PO BOX 176 801 N RAILROAD AVE
CRANDON, WI 54520
PHONE: (715) 478-2836
EMAIL: CRANDONW@FRONTIERNET.NET

BUG TUSSEL
COMMUNICATION LINE
ERIN WICHMANN
417 PINE ST
GREEN BAY, WI 54301
PHONE: (920) 940-0112
EMAIL: ERIN.WICHMANN@BTUSSEL.COM

FRONTIER COMMUNICATIONS OF WI, LLC
COMMUNICATION LINE
CHRISTOPHER POLLACK
521 N 4TH ST
WAUSAU, WI 54403
PHONE: (715) 847-1240
EMAIL: CHRISTOPHER.POLLACK@FTR.COM

SPECTRUM
COMMUNICATION LINE
JASON GOERTZ
853 MCINTOSH ST
WAUSAU, WI 54403
PHONE: (715) 527-0183
EMAIL: JASON.GOERTZ@CHARTER.COM

WISCONSIN PUBLIC SERVICE CORPORATION
ELECTRICITY
DON LUTZOW
PO BOX 1166
WAUSAU, WI 54402
PHONE: OFFICE (715) 848-7487; MOBILE (507) 848-4211
EMAIL: DONALD.LUTZOW@WISCONSINPUBLICSERVICE.COM

DIGGERS HOTLINE
Dial 811 or (800)242-8511
www.DiggersHotline.com

WISCONSIN PUBLIC SERVICE CORPORATION
GAS/PETROLEUM
MATT ELLMAN
2027 NAVAJO ST
RHINELANDER, WI 54501
PHONE: OFFICE (715) 369-7113; MOBILE (715) 525-9691
EMAIL: MATHEW.ELLMAN@WISCONSINPUBLICSERVICE.COM

WISCONSIN DNR LIAISON

JON SIMONSEN
ENVIRONMENTAL ANALYSIS AND REVIEW SPECIALIST
BUREAU OF ENVIRONMENTAL ANALYSIS AND SUSTAINABILITY (BEAS)
107 SUTLIFF AVENUE
RHINELANDER, WI 54501-3349
PHONE: (715) 367-1936
EMAIL: JONATHAN.SIMONSEN@WISCONSIN.GOV

RUNOFF COEFFICIENT TABLE

	HYDROLOGIC SOIL GROUP											
	A			B			C			D		
	SLOPE RANGE (PERCENT)			SLOPE RANGE (PERCENT)			SLOPE RANGE (PERCENT)			SLOPE RANGE (PERCENT)		
LAND USE:	0-2	2-6	6 & OVER	0-2	2-6	6 & OVER	0-2	2-6	6 & OVER	0-2	2-6	6 & OVER
ROW CROPS:	.08 .22	.16 .30	.22 .38	.12 .26	.20 .34	.27 .44	.15 .30	.24 .37	.33 .50	.19 .34	.28 .41	.38 .56
MEDIAN STRIPTURF:	.19 .24	.20 .26	.24 .30	.19 .25	.22 .28	.26 .33	.20 .26	.23 .30	.30 .37	.20 .27	.25 .32	.30 .40
SIDE SLOPETURF:			.25 .32			.27 .34			.28 .36			.30 .38
PAVEMENT:												
ASPHALT:	.70 - .95											
CONCRETE:	.80 - .95											
BRICK:	.70 - .80											
DRIVES, WALKS:	.75 - .85											
ROOFS:	.75 - .95											
GRAVEL ROADS, SHOULDERS:	.40 - .60											

TOTAL PROJECT AREA = 12.02 ACRES
TOTAL AREA EXPECTED TO BE DISTURBED BY CONSTRUCTION ACTIVITIES = 3.66 ACRES

2

2

BEGIN PROJECT
9260-00-71 / 81
STA 46+75.09
Y=571278.570
X=835833.676

CITY OF CRANDON

USH 8 / W GLEN ST

E GLEN ST

RAILWAY LN

1ST ST

2ND ST

W 4TH ST

W 6TH ST

W 7TH ST

E 6TH ST

E ELM ST

STH 32 / STH 55 / LAKE AVE

60

66

15

MATCHLINE STA 70+00

N

MATCHLINE STA 70+00

CITY OF CRANDON

LAKE AVE

EXISTING BRIDGE
B-21-15 (NO PROPOSED WORK)

STH 32 / STH 55

END PROJECT
9260-00-71 / 81
STA 75+65.63

PESHTIGO
LAKE

N

PROJECT NO: 9260-00-71 / 81	HWY: STH 32	COUNTY: FOREST	PROJECT OVERVIEW	SHEET 4	E

FILE NAME : N:\PDS\C3D\92600001\SHEETSPLAN\020201-PO.DWG
LAYOUT NAME - 01

PLOT DATE : 10/21/2025 12:40 PM PLOT BY : MATT PAYNE PLOT NAME : PLOT SCALE : 1 IN:200 FT

WISDOT/CADDS SHEET 42

BORING LOCATIONS			
NO.	STATION	OFFSET	DEPTHS/GEOLOGY DESCRIPTION
B-1	49+50	11.3' LT	7" BITUMINOUS PAVEMENT OVER 9" FILL
B-2	54+67	8.1' RT	9" BITUMINOUS PAVEMENT OVER 9" FILL
B-3	59+45	6.9' LT	9" BITUMINOUS PAVEMENT OVER 12" FILL
B-4	63+80	6.5' RT	12" BITUMINOUS PAVEMENT OVER 7.5" FILL
B-5	68+71	6.4' LT	16" BITUMINOUS PAVEMENT OVER 14" FILL
B-6	72+69	6.5' RT	9" BITUMINOUS PAVEMENT OVER 5" FILL

FILL = SILTY SAND, FINE GRAINED, GRAVEL

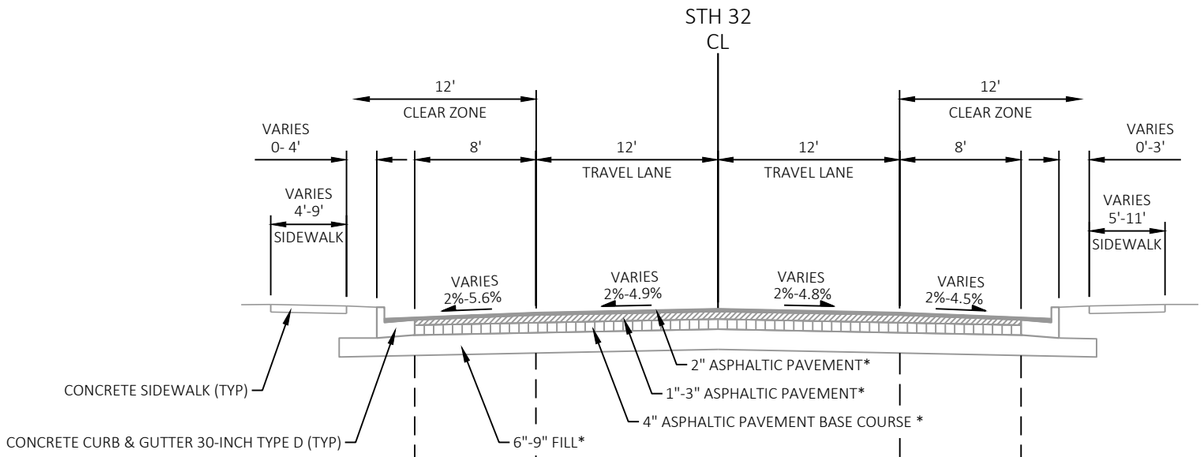

EXISTING TYPICAL SECTION
STH 32
STA 46+75.09 TO STA 59+00**

NOTES:

* DEPTH ESTIMATED BASED ON COMBINATION OF AS-BUILTS AND BORING RESULTS

**APPROXIMATE LIMIT OF CHANGE IN PAVEMENT DEPTHS BASED ON AS-BUILTS

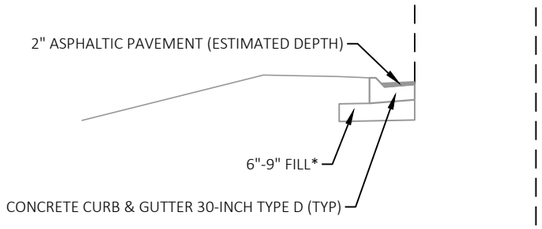

PARTIAL EXISTING TYPICAL SECTION
STH 32
STA 49+79 LT TO STA 57+96 LT

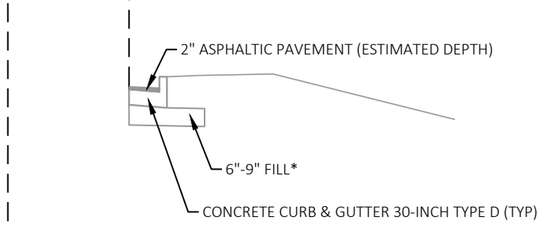

PARTIAL EXISTING TYPICAL SECTION
STH 32
STA 50+00 RT TO STA 53+92 RT

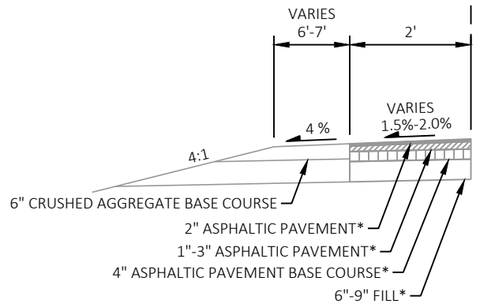

PARTIAL EXISTING TYPICAL SECTION
STH 32
STA 57+96 LT TO STA 59+00 LT

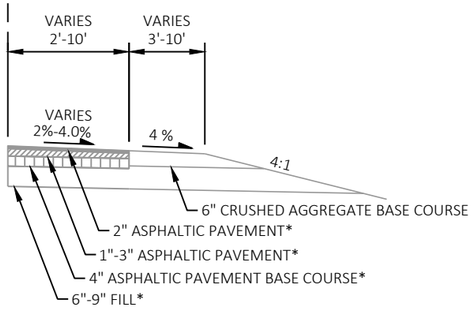

PARTIAL EXISTING TYPICAL SECTION
STH 32
STA 53+92 RT TO STA 59+00 RT

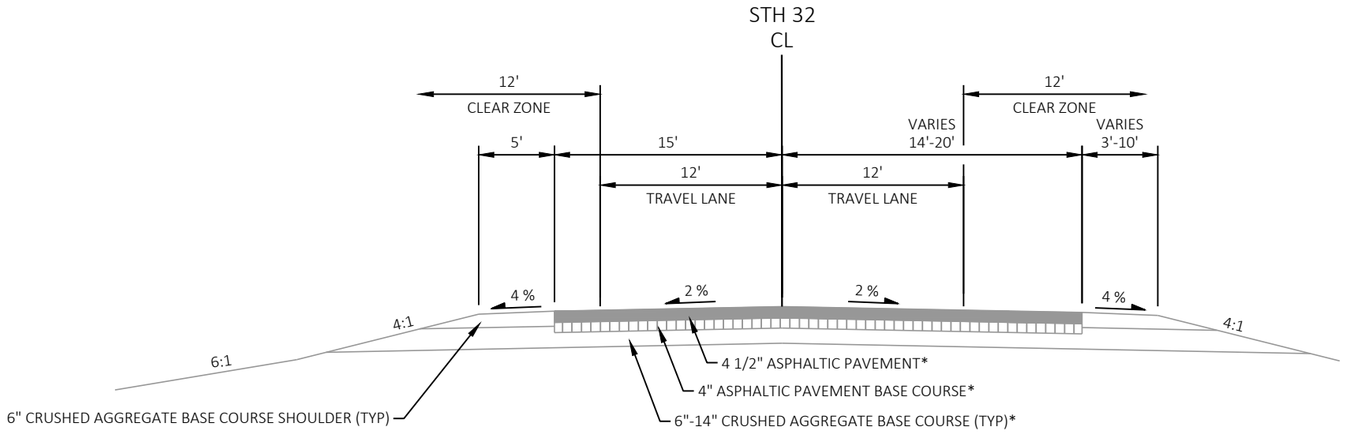

EXISTING TYPICAL SECTION
STH 32
STA 59+00** TO STA 65+50

BORING LOCATIONS			
NO.	STATION	OFFSET	DEPTHS/GEOLOGY DESCRIPTION
B-1	49+50	11.3' LT	7" BITUMINOUS PAVEMENT OVER 9" FILL
B-2	54+67	8.1' RT	9" BITUMINOUS PAVEMENT OVER 9" FILL
B-3	59+45	6.9' LT	9" BITUMINOUS PAVEMENT OVER 12" FILL
B-4	63+80	6.5' RT	12" BITUMINOUS PAVEMENT OVER 7.5" FILL
B-5	68+71	6.4' LT	16" BITUMINOUS PAVEMENT OVER 14" FILL
B-6	72+69	6.5' RT	9" BITUMINOUS PAVEMENT OVER 5" FILL

FILL = SILTY SAND, FINE GRAINED, GRAVEL

NOTES:

* DEPTH ESTIMATED BASED ON COMBINATION OF AS-BUILTS AND BORING RESULTS

**APPROXIMATE LIMIT OF CHANGE IN PAVEMENT DEPTHS BASED ON AS-BUILTS

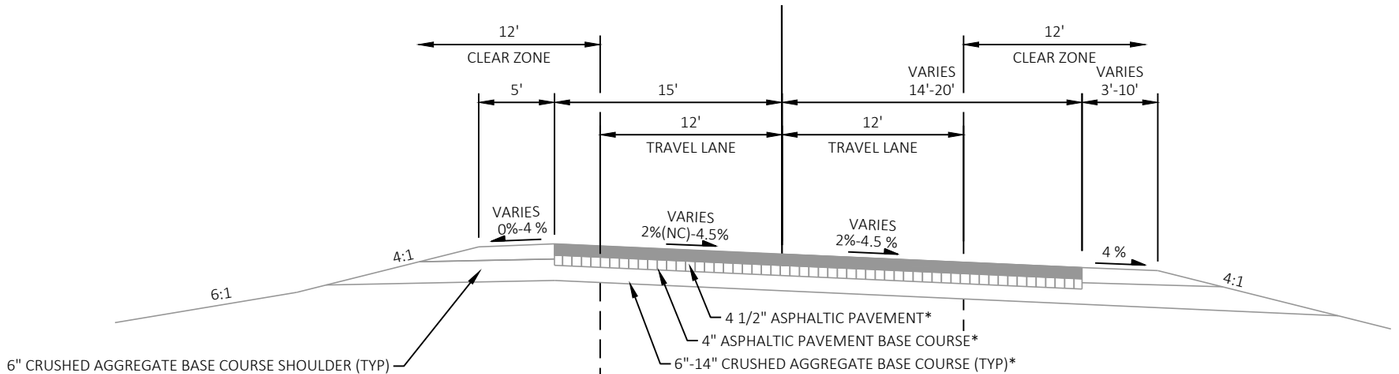

EXISTING TYPICAL SECTION
STH 32
SUPERELEVATED
STA 65+50 TO STA 71+00

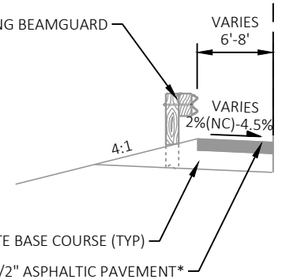

PARTIAL EXISTING TYPICAL SECTION - BEAMGUARD LT
STH 32
STA 70+32 TO STA 71+00

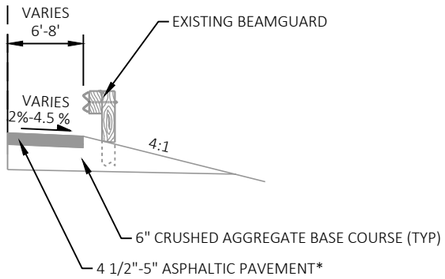

PARTIAL EXISTING TYPICAL SECTION - BEAMGUARD RT
STH 32
STA 70+32 TO STA 71+00

PROJECT NO: 9260-00-71	HWY: STH 32	COUNTY: FOREST	TYPICAL SECTIONS	SHEET 6	E

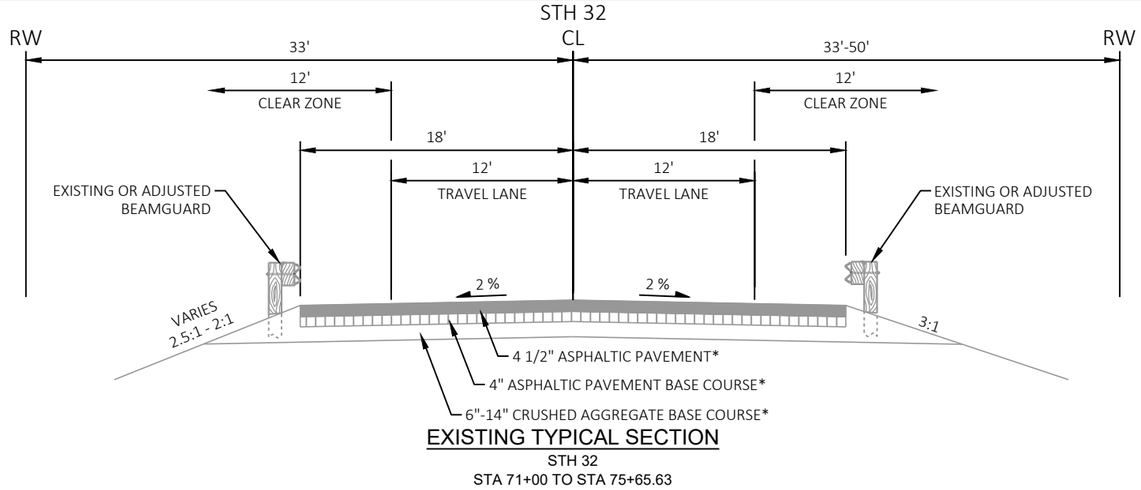

EXISTING TYPICAL SECTION
STH 32
STA 71+00 TO STA 75+65.63

BORING LOCATIONS			
NO.	STATION	OFFSET	DEPTHS/GEOLOGY DESCRIPTION
B-1	49+50	11.3' LT	7" BITUMINOUS PAVEMENT OVER 9" FILL
B-2	54+67	8.1' RT	9" BITUMINOUS PAVEMENT OVER 9" FILL
B-3	59+45	6.9' LT	9" BITUMINOUS PAVEMENT OVER 12" FILL
B-4	63+80	6.5' RT	12" BITUMINOUS PAVEMENT OVER 7.5" FILL
B-5	68+71	6.4' LT	16" BITUMINOUS PAVEMENT OVER 14" FILL
B-6	72+69	6.5' RT	9" BITUMINOUS PAVEMENT OVER 5" FILL

FILL = SILTY SAND, FINE GRAINED, GRAVEL

NOTES:

* DEPTH ESTIMATED BASED ON COMBINATION OF AS-BUILTS AND BORING RESULTS

**APPROXIMATE LIMIT OF CHANGE IN PAVEMENT DEPTHS BASED ON AS-BUILTS

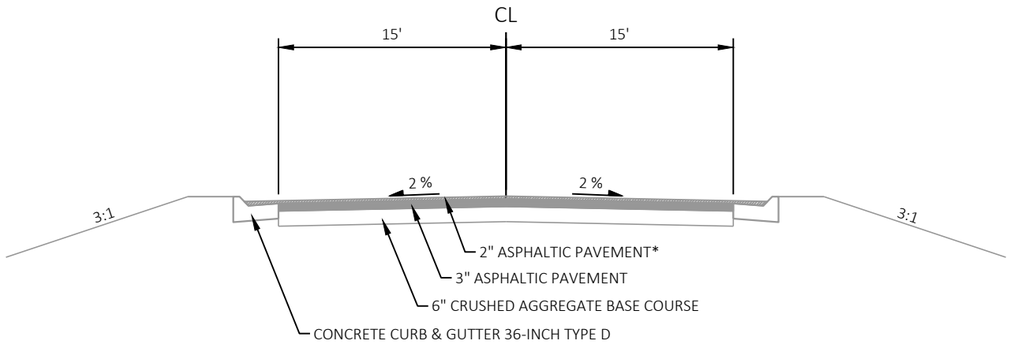

EXISTING TYPICAL SECTION
SIDEROADS WITH CURB AND GUTTER

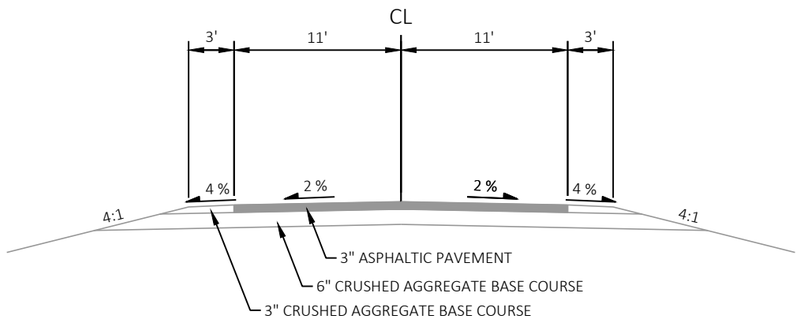

EXISTING TYPICAL SECTION
SIDEROADS WITH RURAL SHOULDERS

PROJECT NO: 9260-00-71	HWY: STH 32	COUNTY: FOREST	TYPICAL SECTIONS	SHEET 7	E

FILE NAME : N:\PDS\C3D\92600001\SHEETSPLAN\020301-TS.DWG
LAYOUT NAME - 03
PLOT DATE : 10/21/2025 12:43 PM
PLOT BY : MATT PAYNE
PLOT NAME :
PLOT SCALE : 1 IN:10 FT

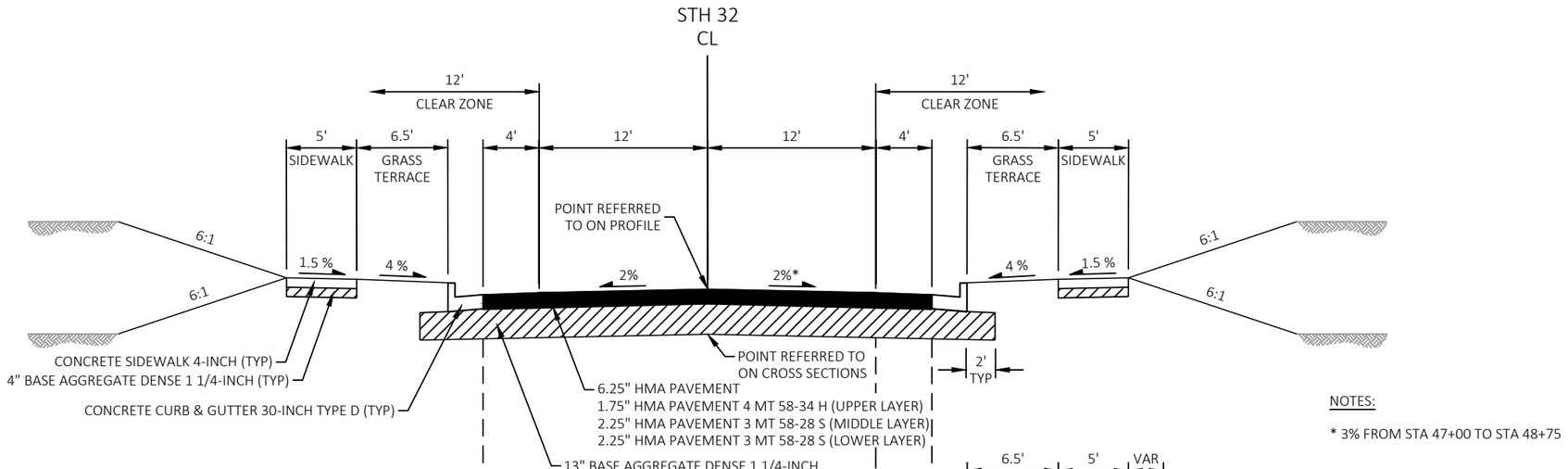

FINISHED TYPICAL SECTION
STH 32
STA 46+75.09 TO STA 58+19

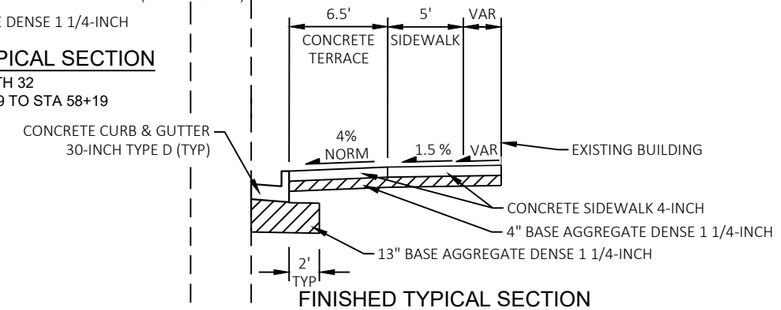

FINISHED TYPICAL SECTION
STH 32
STA 46+75 TO STA 47+92

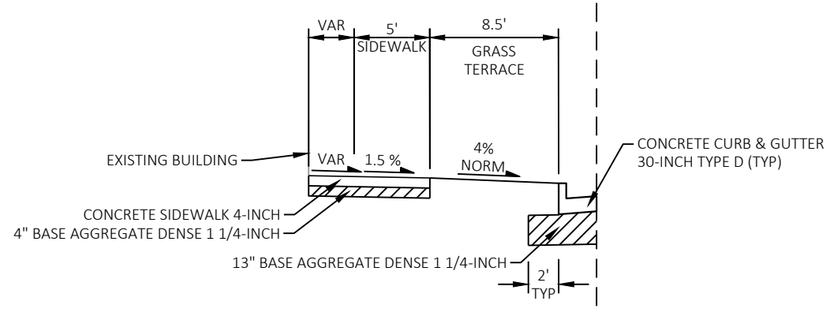

PARTIAL FINISHED SECTION
STH 32
STA 46+75 TO STA 48+20

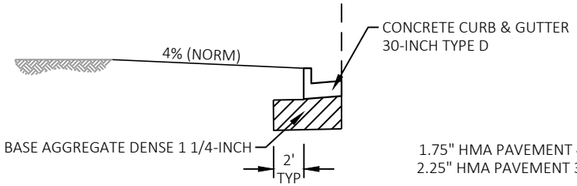

PARTIAL FINISHED SECTION
STH 32
STA 52+00 TO STA 58+19

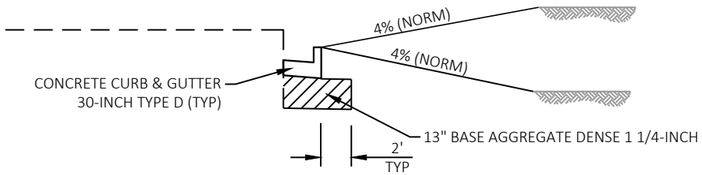

PARTIAL FINISHED SECTION
STH 32
STA 53+35 TO STA 55+83

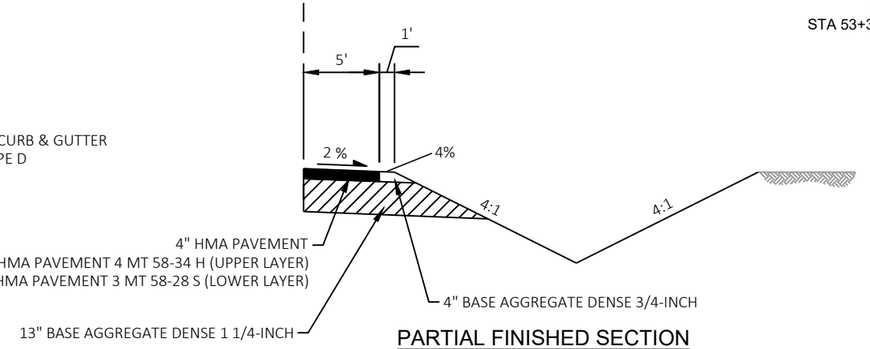

PARTIAL FINISHED SECTION
STH 32
STA 55+83 TO STA 58+19

PROJECT NO: 9260-00-71	HWY: STH 32	COUNTY: FOREST	TYPICAL SECTIONS	SHEET 8	E

2

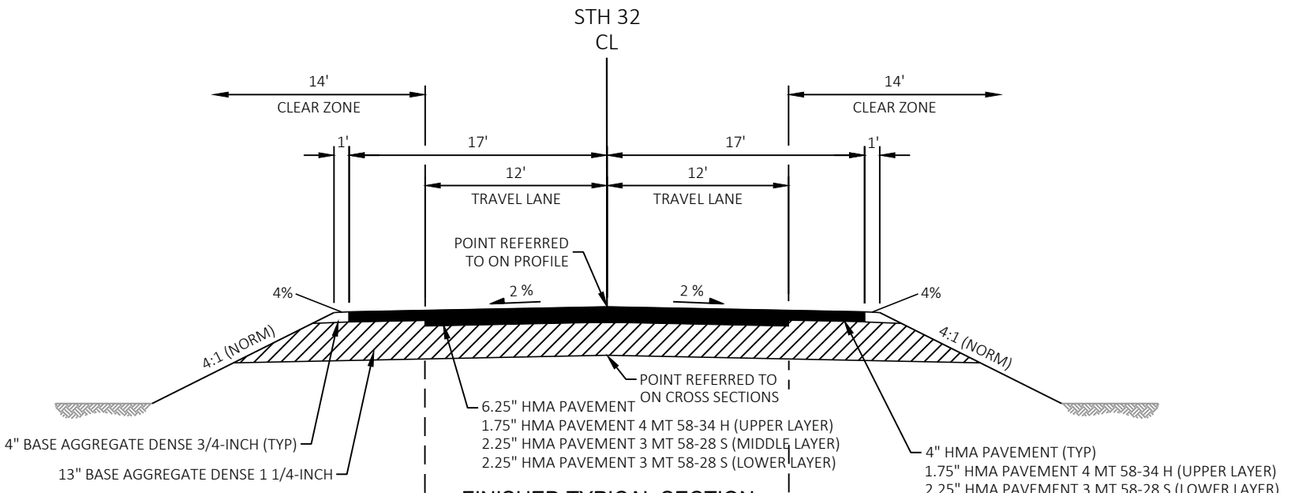

FINISHED TYPICAL SECTION
STH 32
STA 58+00 TO STA 65+75

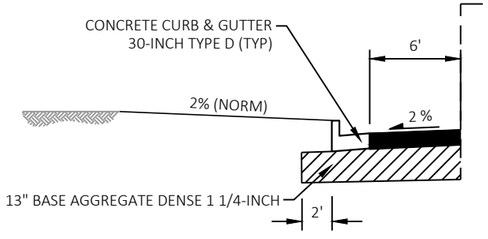

PARTIAL FINISHED SECTION
STH 32
STA 61+50 TO STA 65+75

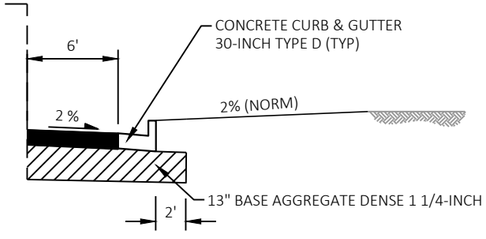

PARTIAL FINISHED SECTION
STH 32
STA 63+00 TO STA 65+75

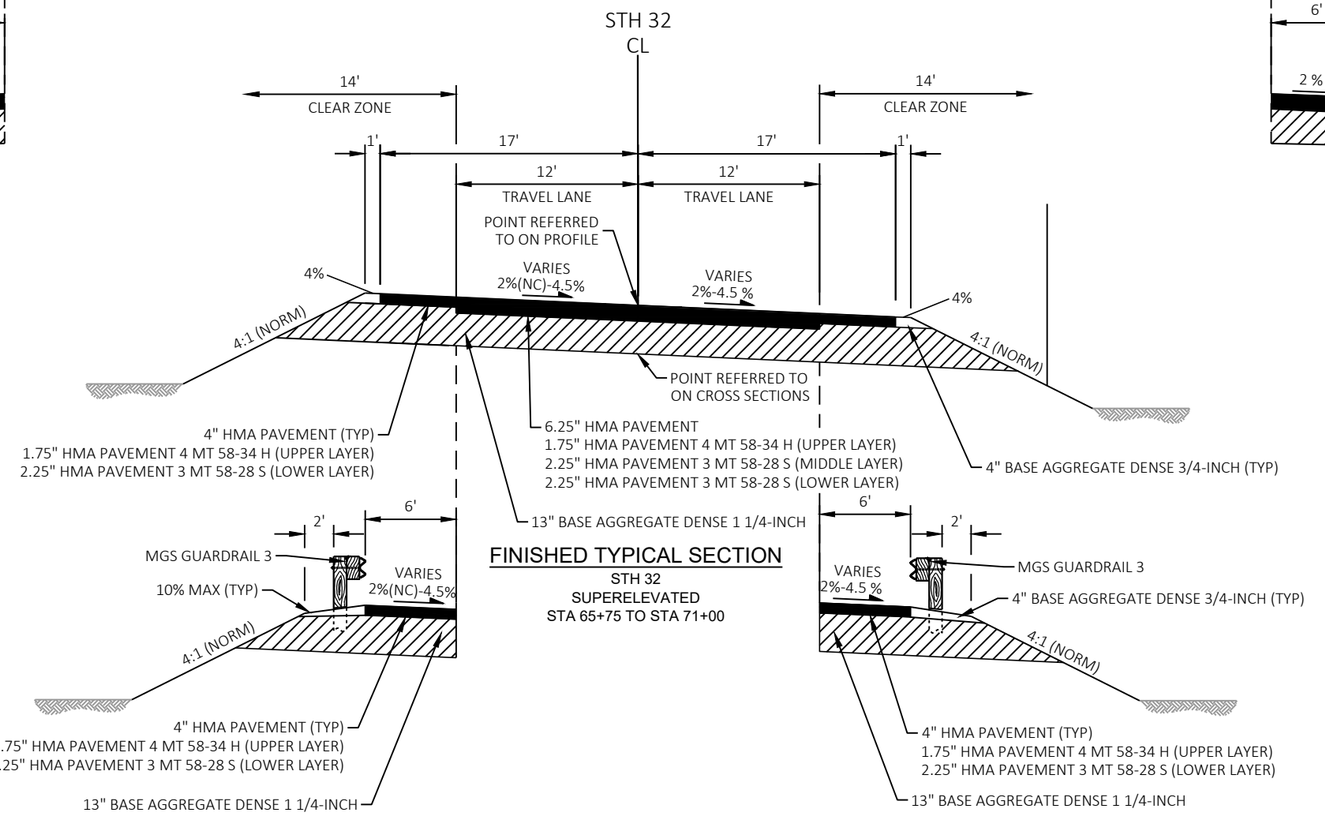

FINISHED TYPICAL SECTION
STH 32
SUPERELEVATED
STA 65+75 TO STA 71+00

PARTIAL FINISHED SECTION - BEAMGUARD LT
STH 32
STA 70+24 TO STA 71+00

PARTIAL FINISHED SECTION - BEAMGUARD RT
STH 32
STA 70+25 TO STA 71+00

PROJECT NO: 9260-00-71	HWY: STH 32	COUNTY: FOREST	TYPICAL SECTIONS	SHEET 9	E

2

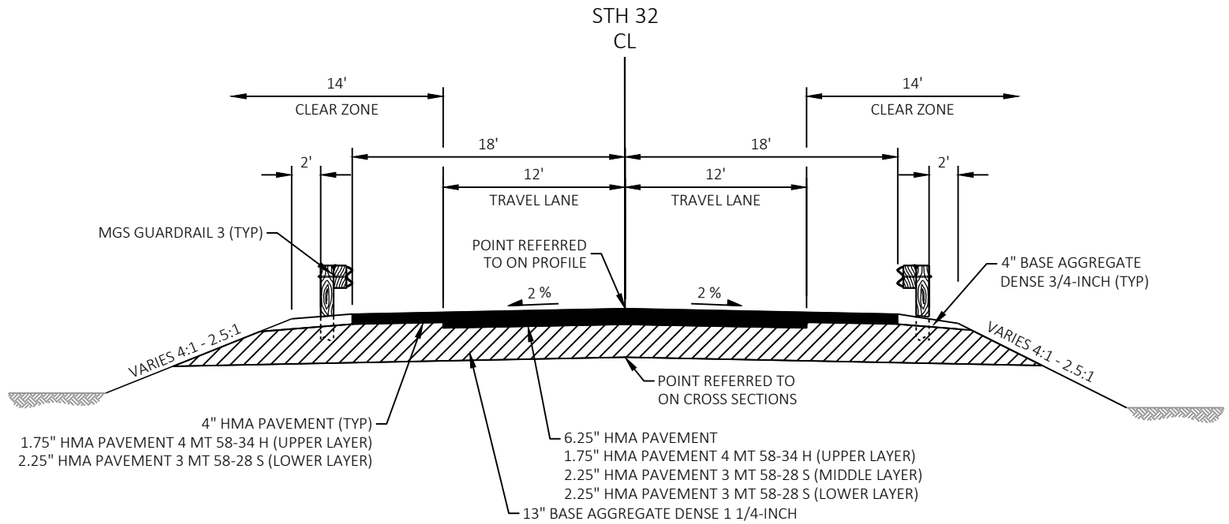

FINISHED TYPICAL SECTION

STH 32
STA 71+00 TO STA 75+65.63

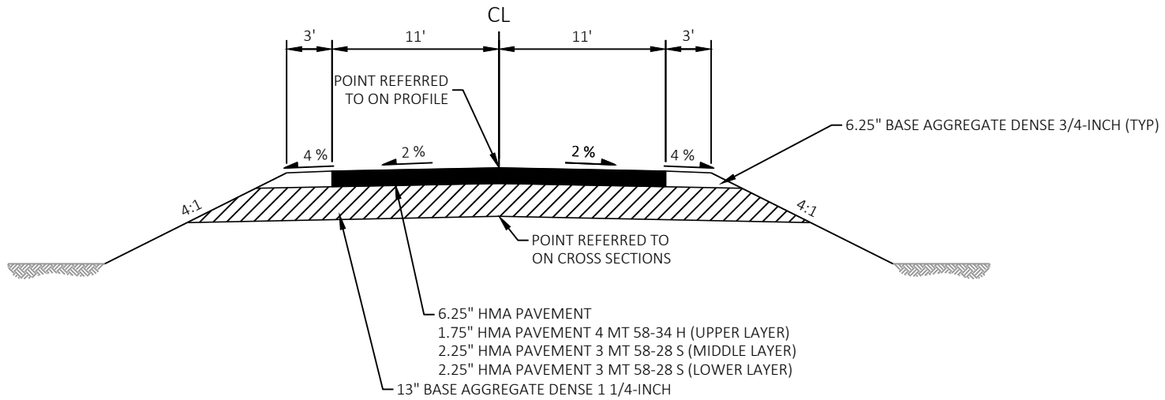

FINISHED TYPICAL SECTION

W 2ND ST
W 4TH ST
W 6TH ST
E 6TH ST
RAILWAY LN
ELM ST
W 1ST ST

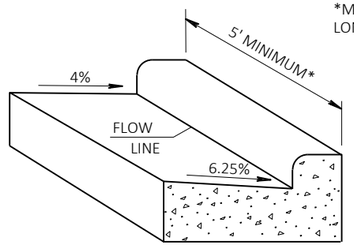

*MAINTAIN 0.3% MINIMUM
LONGITUDINAL SLOPE

DETAIL OF GUTTER SLOPE TRANSITION

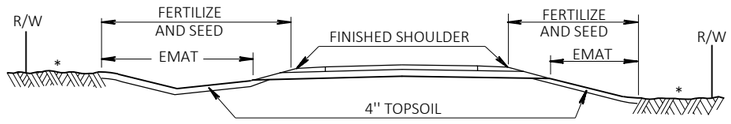

* DISTURBED AREAS TO BE
FERTILIZED & SEEDED

DETAIL FOR FINISHING ITEMS

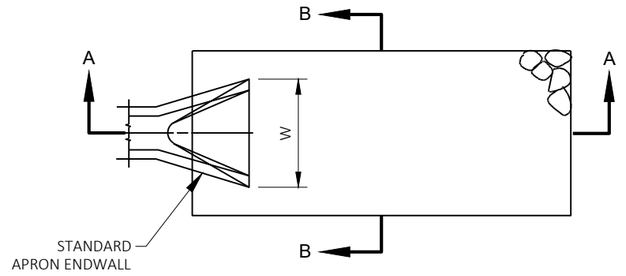

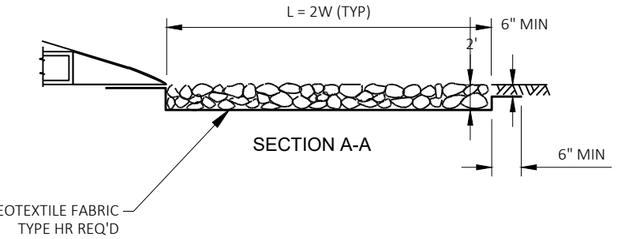

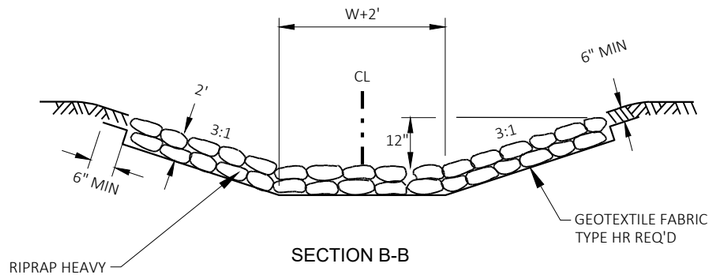

RIP RAP AND GEOTEXTILE

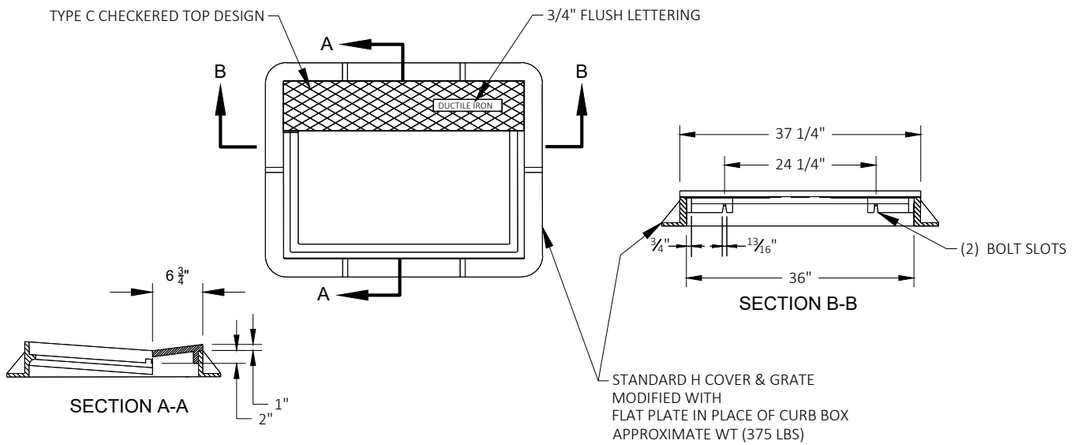

INLET COVER TYPE H-D
(WITH MOUNTABLE CURB PLATE)

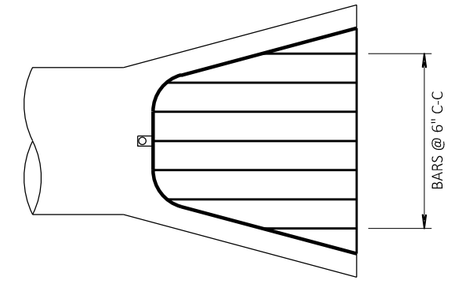

TOP VIEW

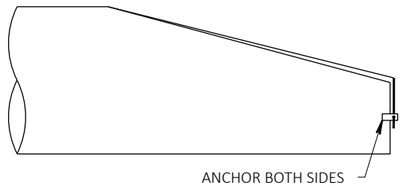

SIDE VIEW

STANDARD DETAILS
FLARED END SECTION
AND TRASH GUARD

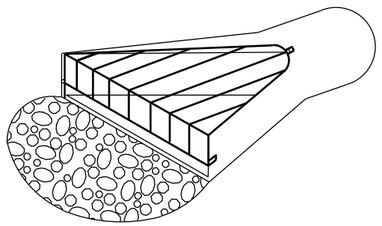

¾ " DIA. STEEL REBAR
PAINTED WITH 2 COATS
OF GALVINIZED PAINT

PIPE GRATE DETAIL

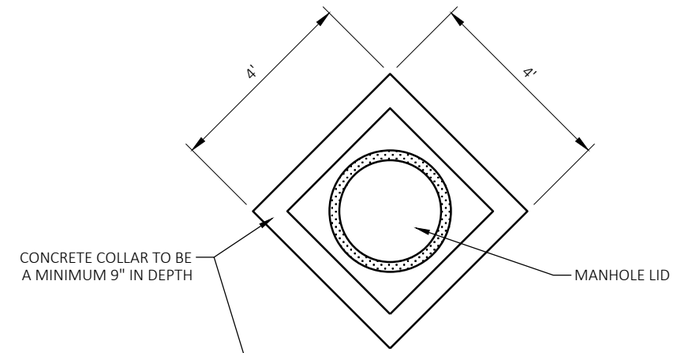

PLAN

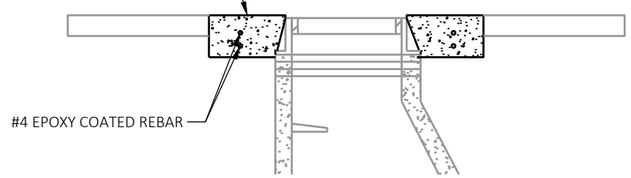

PROFILE

CONCRETE COLLARS FOR MANHOLES

2

2

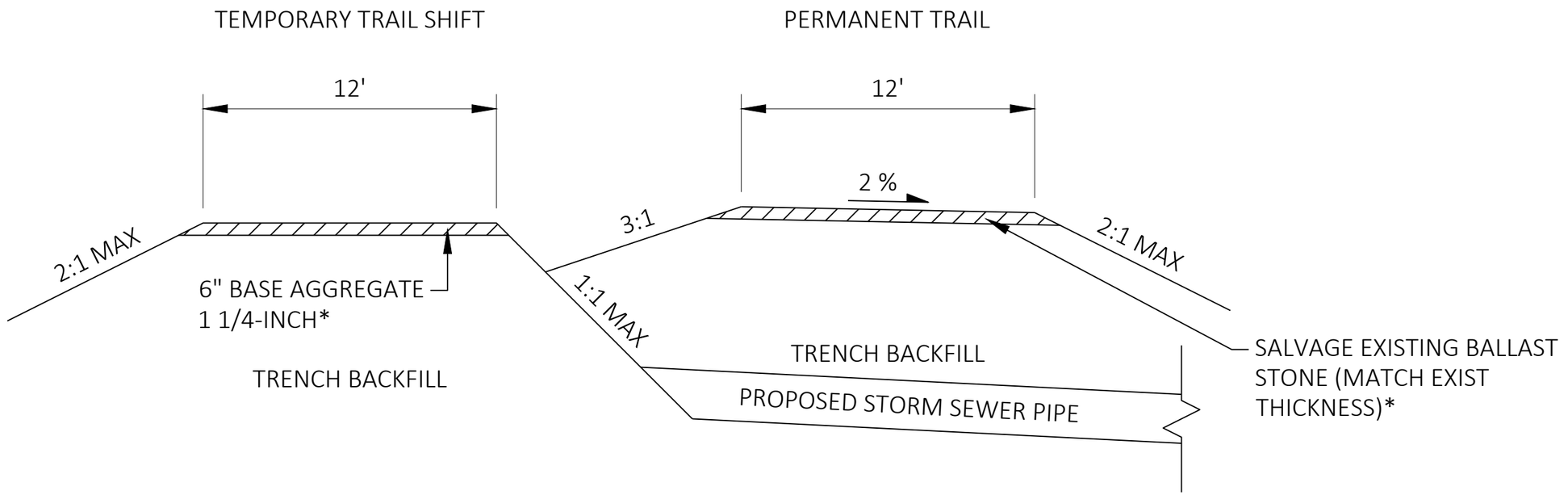

WOLF RIVER STATE TRAIL TEMPORARY TRAIL SHIFT DURING STORM SEWER INSTALLATION

LOOKING NORTHWEST

*INCIDENTAL TO TEMPORARY TRAIL SHIFT FOR STORM SEWER WORK BID ITEM

NOTE:
1. UTILIZE INSULATION DETAIL WHERE THERE IS LESS THAN OR EQUAL TO 48" OF VERTICAL SEPARATION BETWEEN STORM SEWER AND SANITARY SEWER/ WATER MAIN.

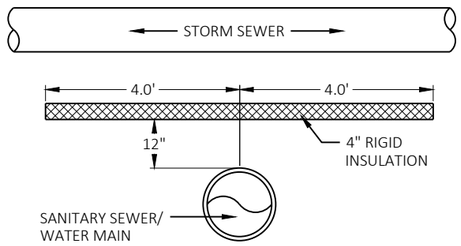

SANITARY SEWER AND WATER MAIN INSULATION UNDER STORM SEWER

NOTE:
1. UTILIZE INSULATION DETAIL WHEREVER STORM PIPE IS UNDER SANITARY SEWER OR WATER MAIN.

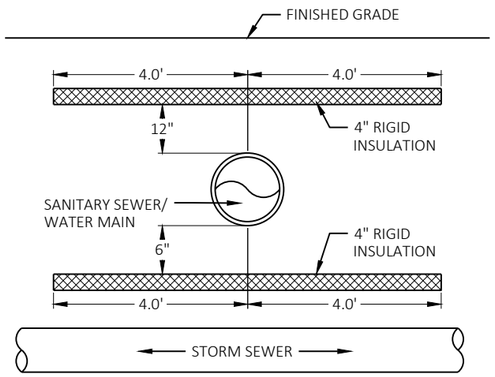

SANITARY SEWER AND WATER MAIN INSULATION OVER STORM SEWER

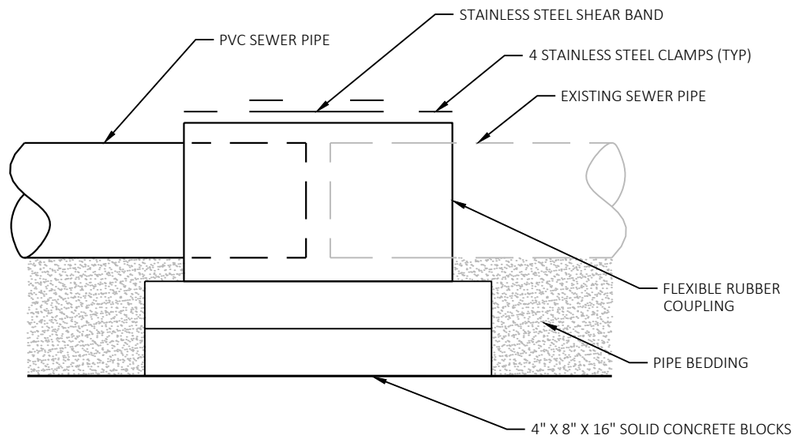

TRANSITION COUPLING

NOTE:
1. THE CONTRACTOR SHALL PROVIDE A REPLACEMENT 7" HIGH MANHOLE CASTING FOR MH116 AND MH118; AND A 4" HIGH MANHOLE CASTING FOR MH117.

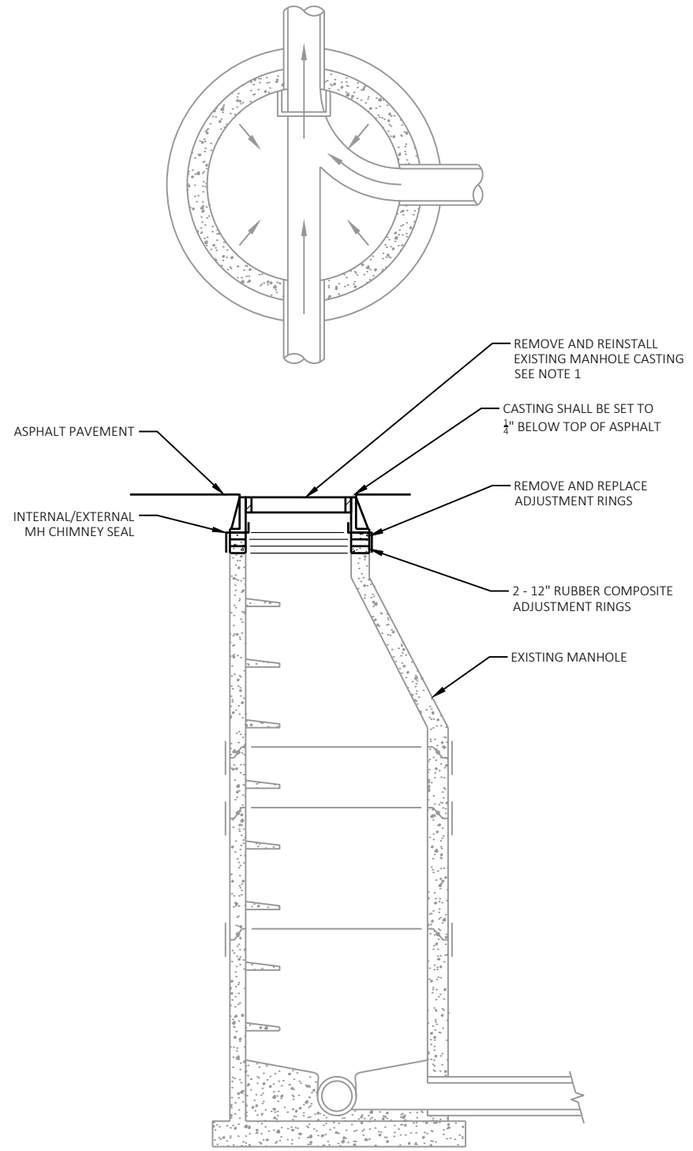

SANITARY MANHOLE CASTING ELEVATION ADJUSTMENT

WATER SERVICE NOTE:
3/4" CORPORATION STOPS SHALL BE TAPPED USING A SADDLE.
EXISTING CORPORATION STOPS SHALL BE REMOVED AND
REPLACED WITH A NEW CORPORATION STOP AND SADDLE.

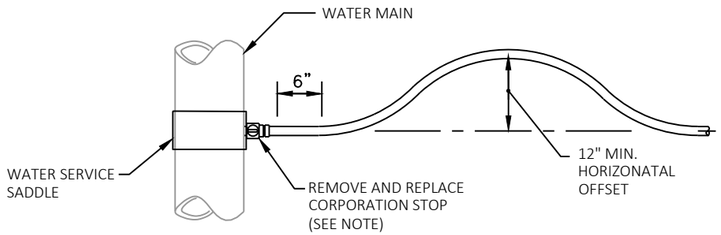

PLAN

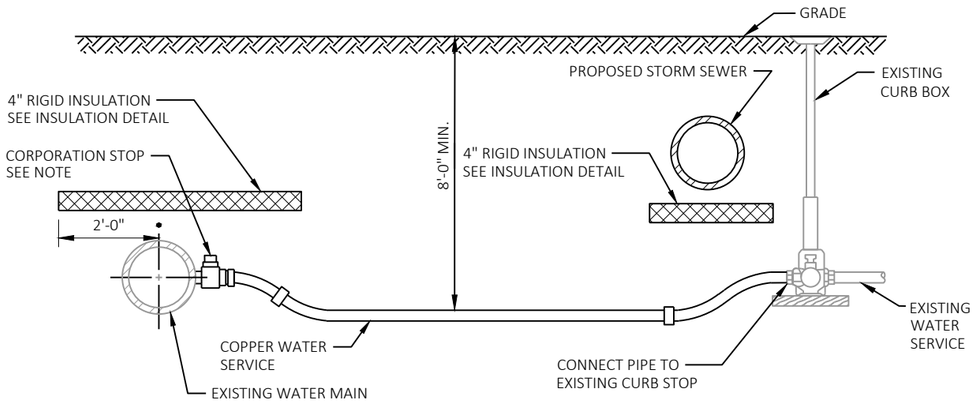

REPLACE WATER SERVICE DETAIL
NOT TO SCALE

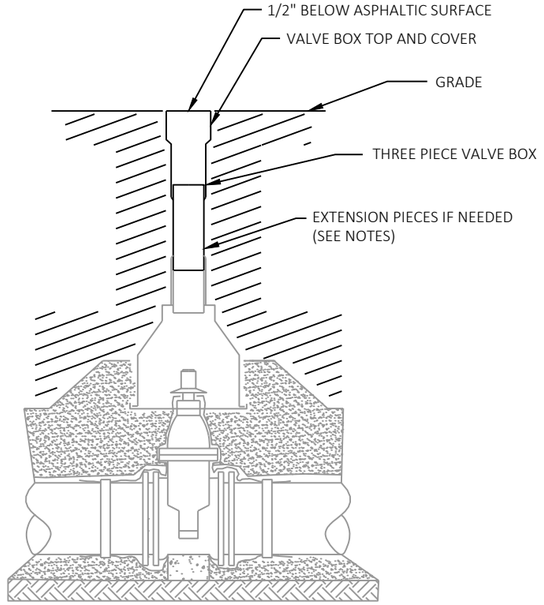

SIDE VIEW

NOTES:
1. CONTRACTOR MAY USE PAVING RINGS FOR ADJUSTMENTS UP TO 3". FOR ADJUSTMENTS GREATER THAN 3", THE VALVE BOX SHALL BE RAISED AND AN EXTENSION ADDED IF NEEDED.
2. CONTRACTOR MAY NEED TO REPLACE THE VALVE BOX WITH A SHORTER VALVE BOX IF NEEDED TO MEET FINAL GRADE.

VALVE BOX ADJUSTMENT DETAIL
NOT TO SCALE

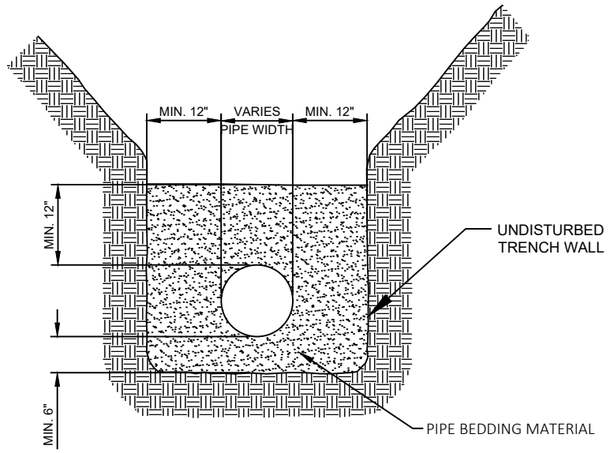

NOTE: PIPE BEDDING MATERIAL SHALL BE INCIDENTAL TO ALL PIPE INSTALLATION AND MEET SAME REQUIREMENTS AS STORM SEWER PIPE BEDDING MATERIAL

WATER AND SANITARY SEWER PIPE BEDDING

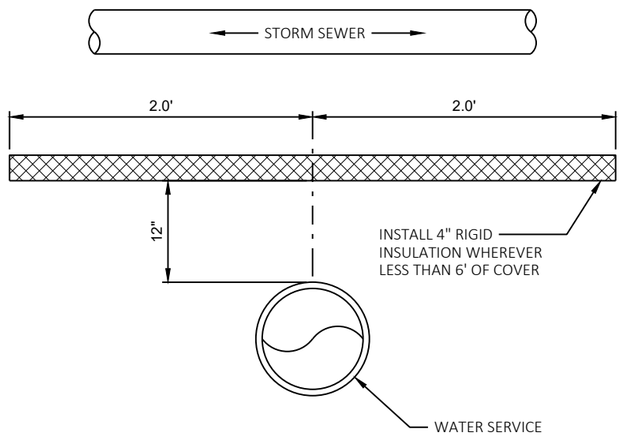

WATER SERVICE INSULATION UNDER STORM SEWER

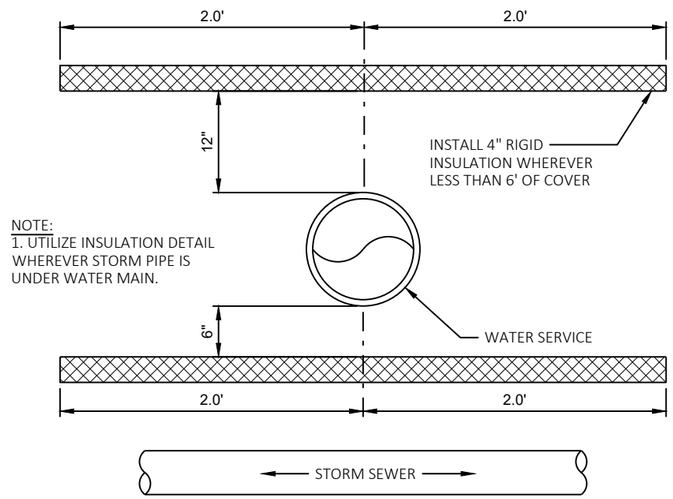

WATER SERVICE INSULATION UNDER STORM SEWER

THRUST BLOCKING NOTES:

1. CONCRETE SHALL HAVE A MIN. COMPRESSIVE STRENGTH OF 2000 PSI & SHALL BE CAST AGAINST UNDISTURBED EARTH.
2. FITTINGS SHALL BE WRAPPED IN POLYETHYLENE WRAP TO PREVENT CONCRETE FROM BONDING TO FITTINGS.
3. FORM CONCRETE AS REQUIRED TO PREVENT CONTACT OR INTERFERENCE WITH PIPE JOINTS.
4. THE LENGTH OF THE THRUST BLOCK SHALL BE APPROXIMATELY TWICE THE HEIGHT. BEARING AREA = LENGTH X HEIGHT

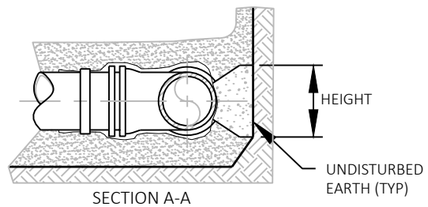

SECTION A-A

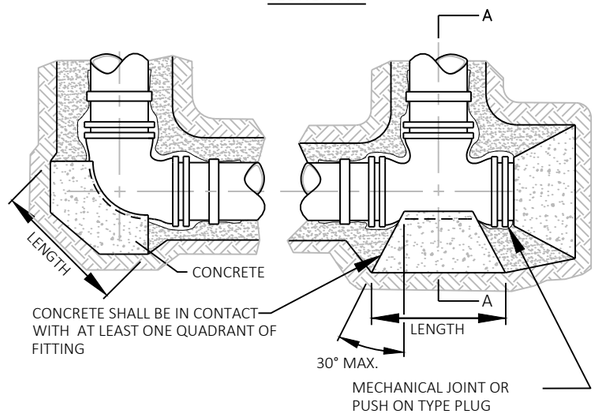

BEND PLAN TEE PLAN

THRUST BLOCKING
NOT TO SCALE

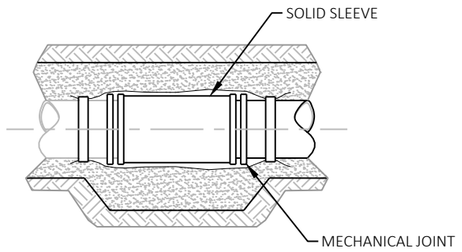

WATER MAIN CONNECTION

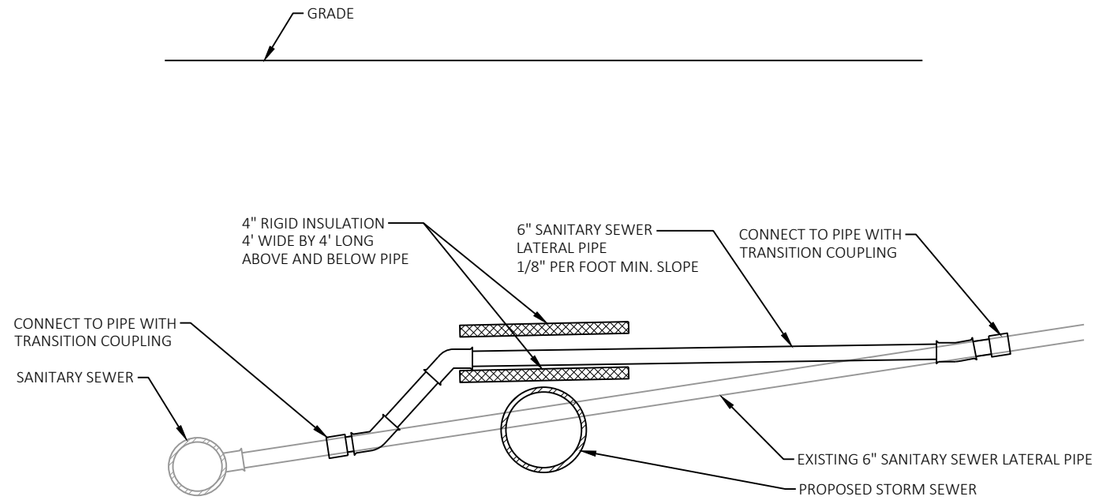

SANITARY SERVICE LATERAL REPLACEMENT DETAIL

OPTION 1

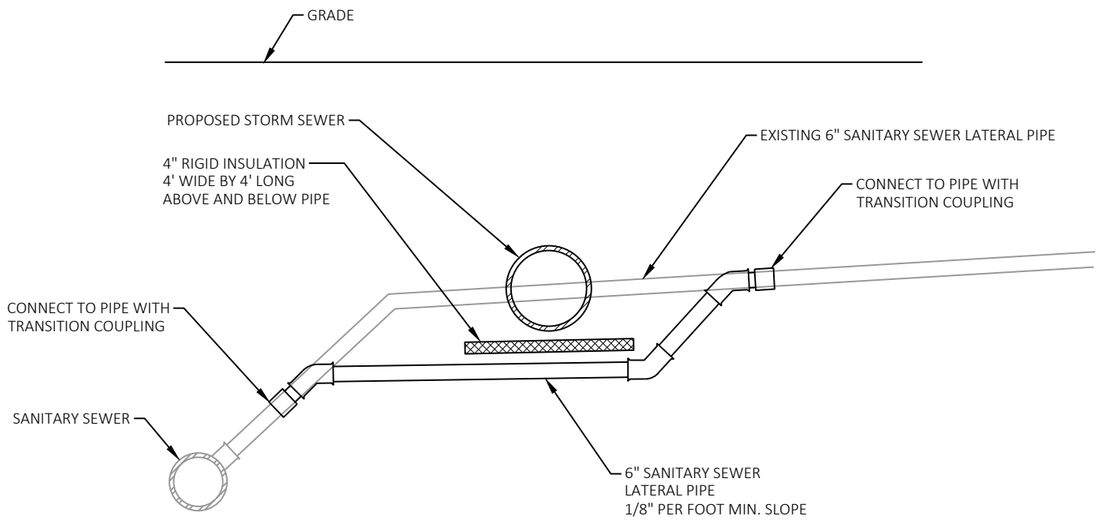

SANITARY SERVICE LATERAL REPLACEMENT DETAIL

OPTION 2

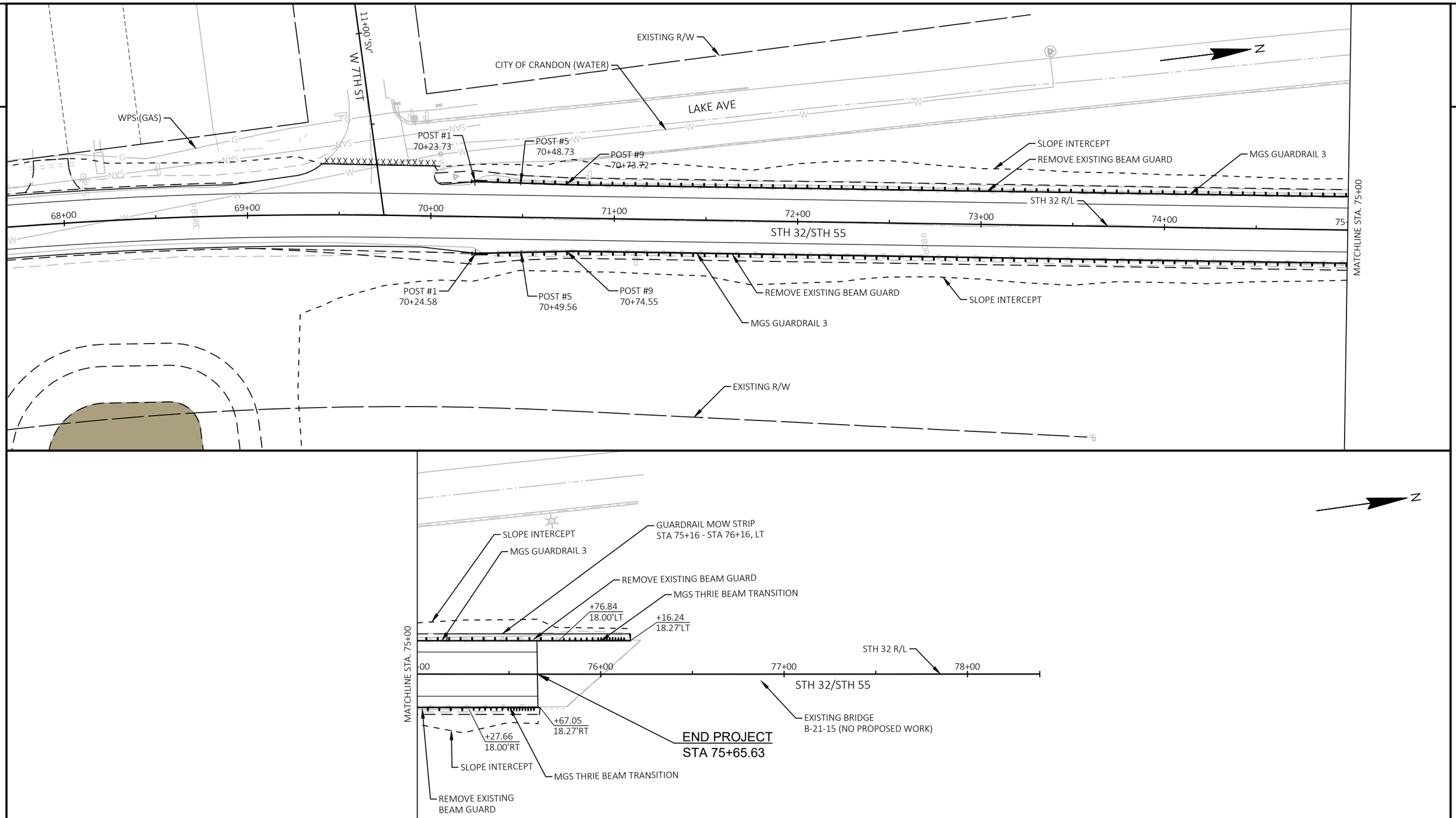

PROJECT NO: 9260-00-71	HWY: STH 32	COUNTY: FOREST	BEAMGUARD DETAILS	SHEET 17	E

FILE NAME : N:\PDS\C3D\926000001\SHEETSPLAN\021001-CD-BEAMGUARD.DWG
LAYOUT NAME - 01

PLOT DATE : 10/28/2025 8:33 AM PLOT BY : MATT PAYNE PLOT NAME : PLOT SCALE : 1 IN:50 FT

2

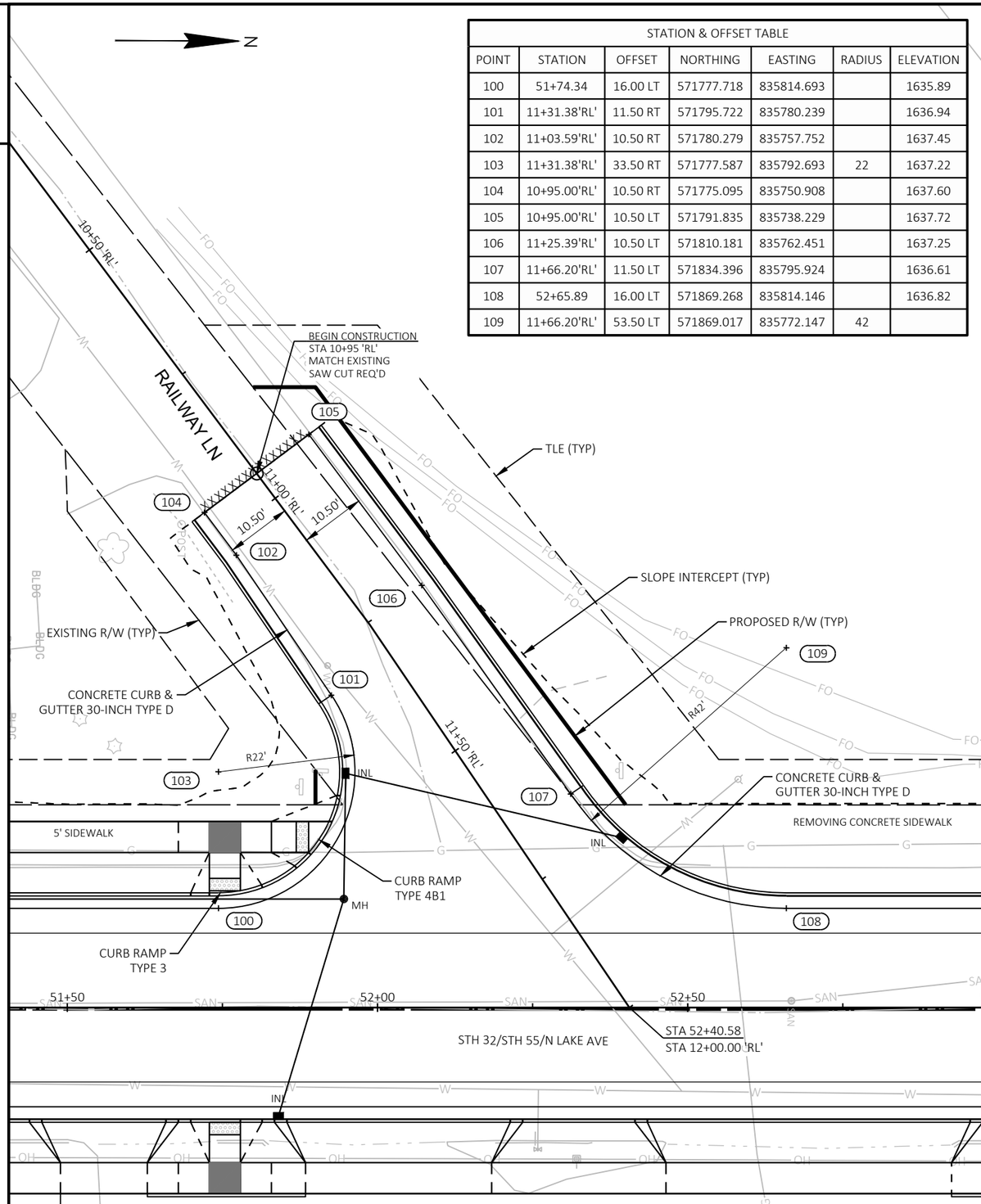

STATION & OFFSET TABLE						
POINT	STATION	OFFSET	NORTHING	EASTING	RADIUS	ELEVATION
100	51+74.34	16.00 LT	571777.718	835814.693		1635.89
101	11+31.38'RL'	11.50 RT	571795.722	835780.239		1636.94
102	11+03.59'RL'	10.50 RT	571780.279	835757.752		1637.45
103	11+31.38'RL'	33.50 RT	571777.587	835792.693	22	1637.22
104	10+95.00'RL'	10.50 RT	571775.095	835750.908		1637.60
105	10+95.00'RL'	10.50 LT	571791.835	835738.229		1637.72
106	11+25.39'RL'	10.50 LT	571810.181	835762.451		1637.25
107	11+66.20'RL'	11.50 LT	571834.396	835795.924		1636.61
108	52+65.89	16.00 LT	571869.268	835814.146		1636.82
109	11+66.20'RL'	53.50 LT	571869.017	835772.147	42	

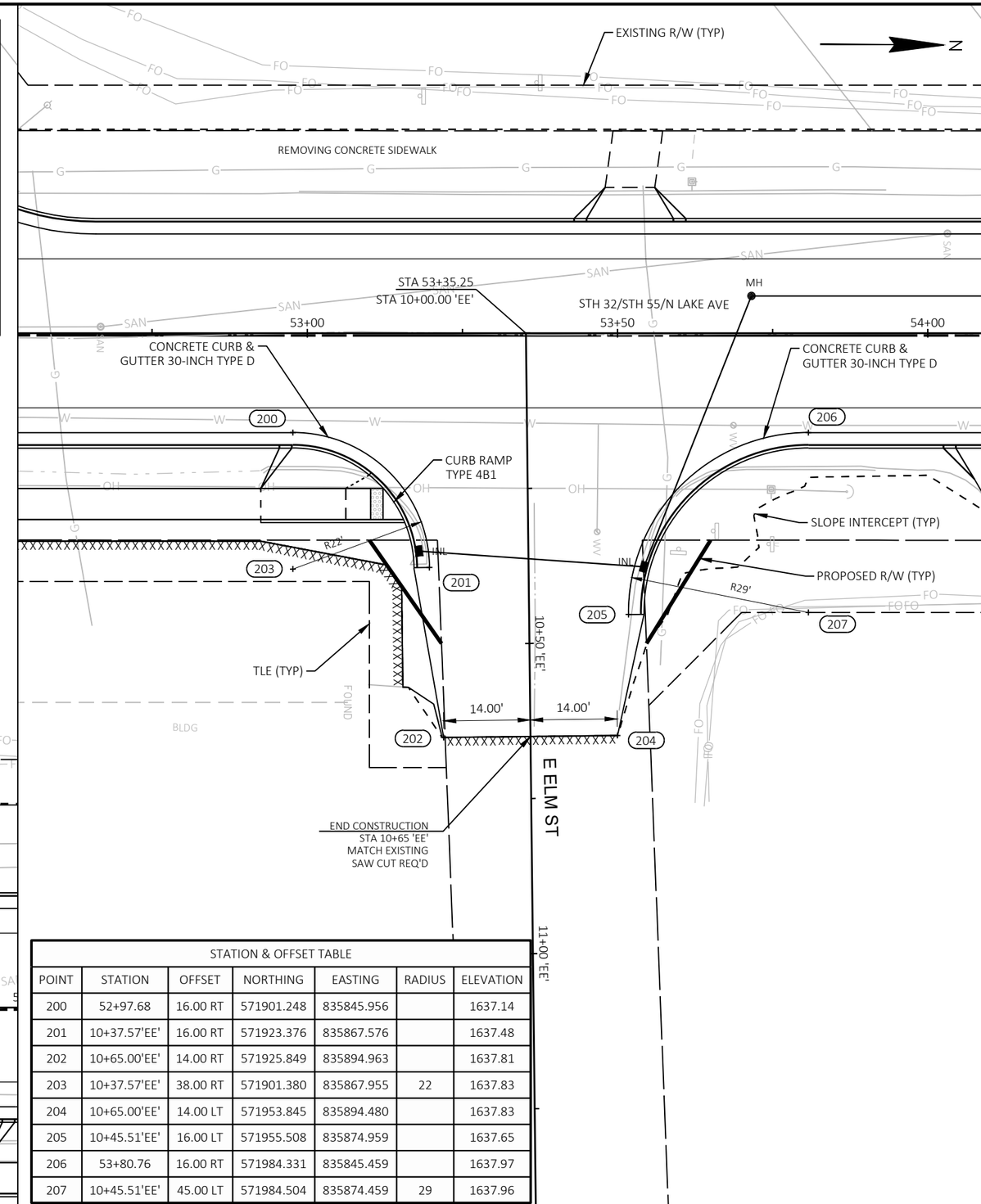

STATION & OFFSET TABLE						
POINT	STATION	OFFSET	NORTHING	EASTING	RADIUS	ELEVATION
200	52+97.68	16.00 RT	571901.248	835845.956		1637.14
201	10+37.57'EE'	16.00 RT	571923.376	835867.576		1637.48
202	10+65.00'EE'	14.00 RT	571925.849	835894.963		1637.81
203	10+37.57'EE'	38.00 RT	571901.380	835867.955	22	1637.83
204	10+65.00'EE'	14.00 LT	571953.845	835894.480		1637.83
205	10+45.51'EE'	16.00 LT	571955.508	835874.959		1637.65
206	53+80.76	16.00 RT	571984.331	835845.459		1637.97
207	10+45.51'EE'	45.00 LT	571984.504	835874.459	29	1637.96

2

PROJECT NO: 9260-00-71	HWY: STH 32	COUNTY: FOREST	INTERSECTION DETAILS	SHEET 18	E

2

STATION & OFFSET TABLE						
POINT	STATION	OFFSET	NORTHING	EASTING	RADIUS	ELEVATION
300	54+26.12	16.00 LT	572029.498	835813.189		1638.24
301	11+60.85'FI'	11.00 RT	572067.353	835788.852		1638.07
302	11+50.85'FI'	11.00 RT	572071.558	835779.779		1638.15
303	11+25.00'FI'	11.00 RT	572082.427	835756.330		1638.34
304	11+60.85'FI'	53.00 RT	572029.247	835771.190	42	
305	11+25.00'FI'	11.00 LT	572102.387	835765.581		1638.67
306	11+34.58'FI'	11.00 LT	572098.357	835774.276		1638.58
307	55+19.64	16.00 LT	572123.015	835812.630		1638.15
308	11+34.58'FI'	38.00 LT	572122.854	835785.631	27	

STATION & OFFSET TABLE						
POINT	STATION	OFFSET	NORTHING	EASTING	RADIUS	ELEVATION
400	57+69.75	16.00 LT	572373.122	835811.136		1638.81
401	11+64.76'SE'	19.04 RT	572404.524	835791.160		1638.66
402	11+55.63'SE'	14.96 RT	572408.816	835782.128		1638.87
403	11+40.00'SE'	9.69 RT	572414.450	835766.628		1639.17
404	11+50.48'SE'	50.99 RT	572372.912	835776.137	35	0.00
405	11+40.00'SE'	10.18 LT	572434.318	835767.096		1639.26
406	11+46.64'SE'	10.18 LT	572434.161	835773.737		1639.22
407	58+66.00	17.00 LT	572469.361	835809.561		1639.62
408	11+46.64'SE'	45.18 LT	572469.152	835774.562	35	

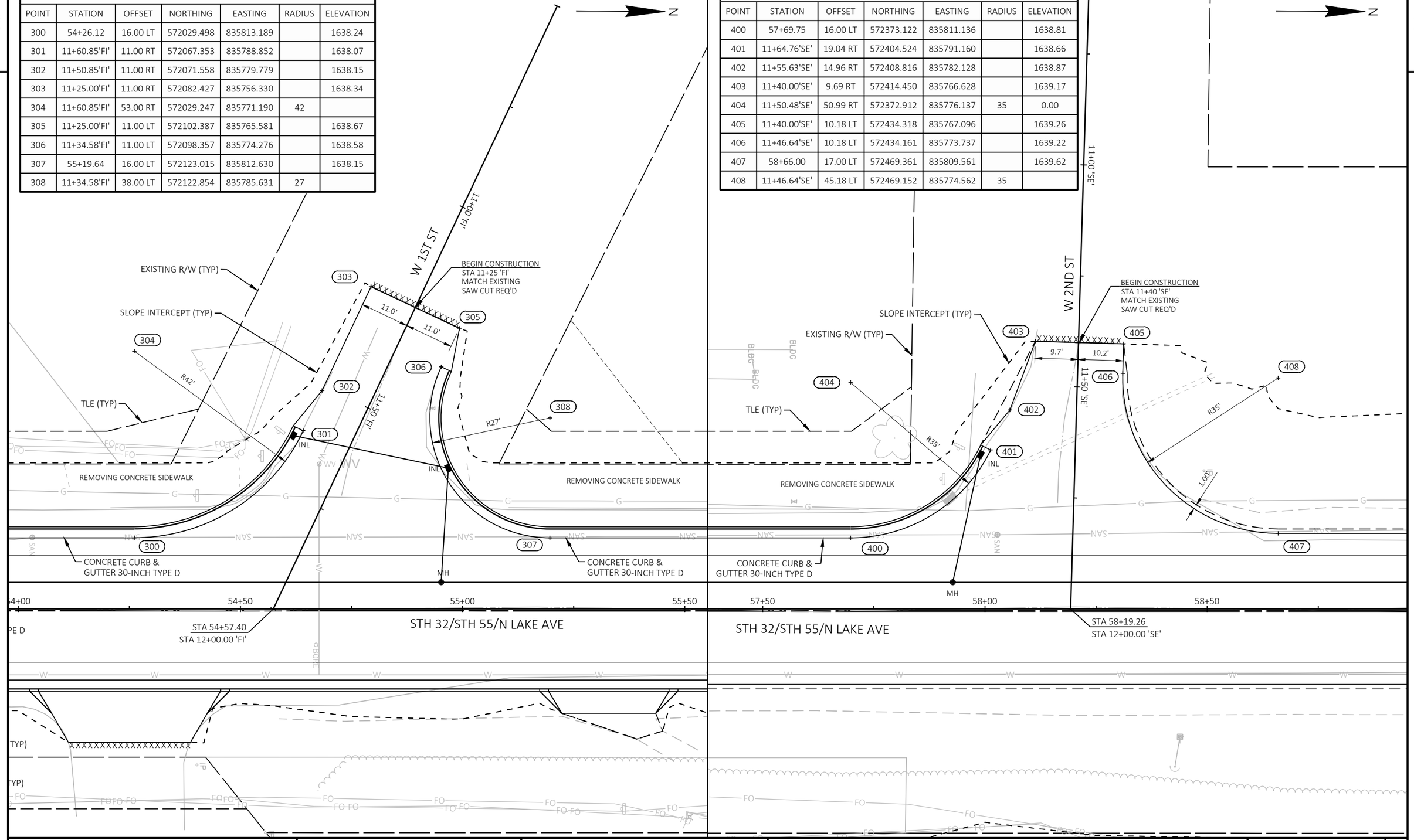

PROJECT NO: 9260-00-71	HWY: STH 32	COUNTY: FOREST	INTERSECTION DETAILS	SHEET 19	E

FILE NAME : N:\PDS\C3D\92600001\SHEETSPLAN\021101-ID.DWG
LAYOUT NAME - 02

PLOT DATE : 1/21/2026 9:00 PM PLOT BY : MATT PAYNE PLOT NAME : PLOT SCALE : 1 IN:20 FT

WISDOT/CADDS SHEET 44

STATION & OFFSET TABLE						
POINT	STATION	OFFSET	NORTHING	EASTING	RADIUS	ELEVATION
500	60+96.13	17.00 LT	572699.486	835808.185		1640.64
501	11+45.87'FO'	10.00 RT	572734.511	835771.362		1640.97
502	11+25.00'FO'	10.00 RT	572733.424	835750.523		1641.26
503	11+45.87'FO'	45.00 RT	572699.558	835773.185	35	1637.57
504	11+25.00'FO'	9.94 LT	572753.336	835749.485		1641.50
505	11+34.70'FO'	10.00 LT	572753.902	835759.166		
506	62+00.78	18.00 LT	572804.133	835806.561		1640.99
507	11+34.70'FO'	60.00 LT	572803.834	835756.562	50	

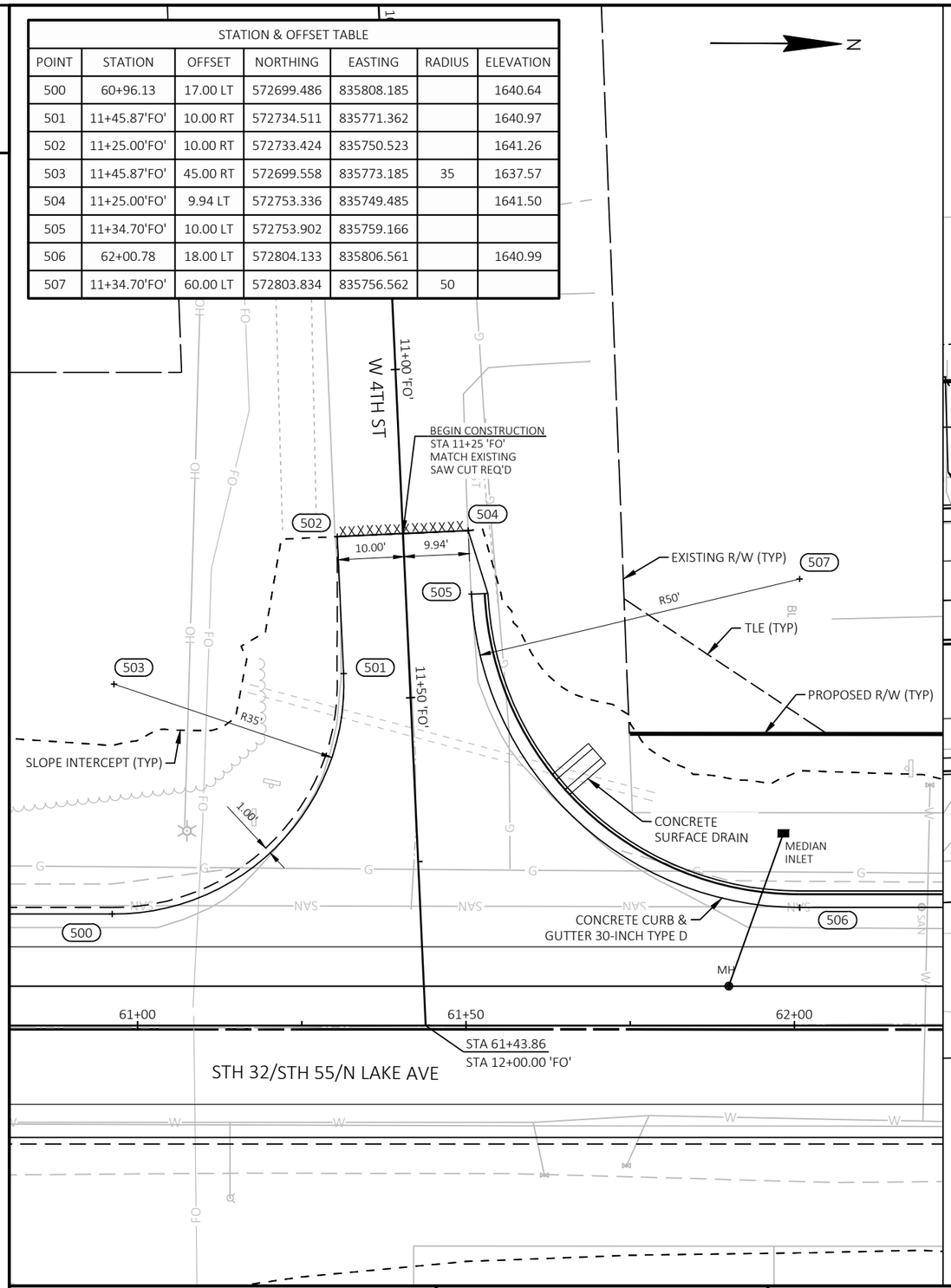

STATION & OFFSET TABLE						
POINT	STATION	OFFSET	NORTHING	EASTING	RADIUS	ELEVATION
700	66+05.16	18.00 LT	573208.502	835804.145		1640.68
701	11+52.33'WS'	9.65 RT	573238.323	835774.167		1640.92
702	11+42.00'WS'	9.70 RT	573238.353	835763.840		1640.90
703	11+52.53'WS'	39.65 RT	573208.323	835774.146	30	

STATION & OFFSET TABLE						
POINT	STATION	OFFSET	NORTHING	EASTING	RADIUS	ELEVATION
704	11+42.00'WS'	10.26 LT	573258.315	835763.991		1641.11
705	11+55.02'WS'	10.41 LT	573258.366	835777.010		1641.03
706	66+82.56	17.00 LT	573286.142	835804.901		1641.61
707	11+54.70'WS'	38.41 LT	573286.366	835776.902	28	1641.52

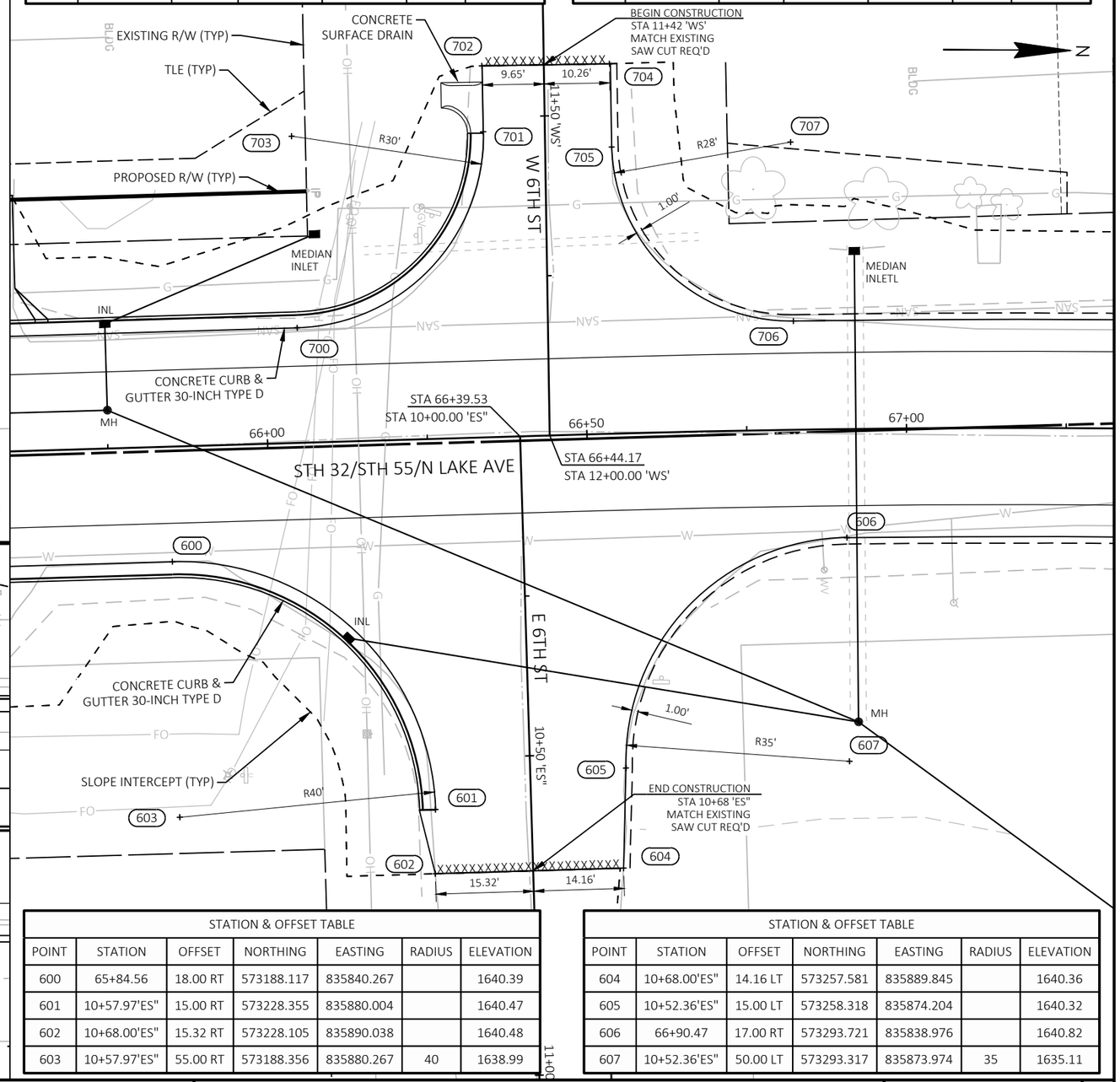

STATION & OFFSET TABLE						
POINT	STATION	OFFSET	NORTHING	EASTING	RADIUS	ELEVATION
600	65+84.56	18.00 RT	573188.117	835840.267		1640.39
601	10+57.97'ES"	15.00 RT	573228.355	835880.004		1640.47
602	10+68.00'ES"	15.32 RT	573228.105	835890.038		1640.48
603	10+57.97'ES"	55.00 RT	573188.356	835880.267	40	1638.99

STATION & OFFSET TABLE						
POINT	STATION	OFFSET	NORTHING	EASTING	RADIUS	ELEVATION
604	10+68.00'ES"	14.16 LT	573257.581	835889.845		1640.36
605	10+52.36'ES"	15.00 LT	573258.318	835874.204		1640.32
606	66+90.47	17.00 RT	573293.721	835838.976		1640.82
607	10+52.36'ES"	50.00 LT	573293.317	835873.974	35	1635.11

PROJECT NO: 9260-00-71	HWY: STH 32	COUNTY: FOREST	INTERSECTION DETAILS	SHEET 20	E

FILE NAME : N:\PDS\C3D\92600001\SHEETSPLAN\021101-ID.DWG
LAYOUT NAME - 03
PLOT DATE : 1/21/2026 9:00 PM
PLOT BY : MATT PAYNE
PLOT NAME :
PLOT SCALE : 1 IN:20 FT
WISDOT/CADDS SHEET 44

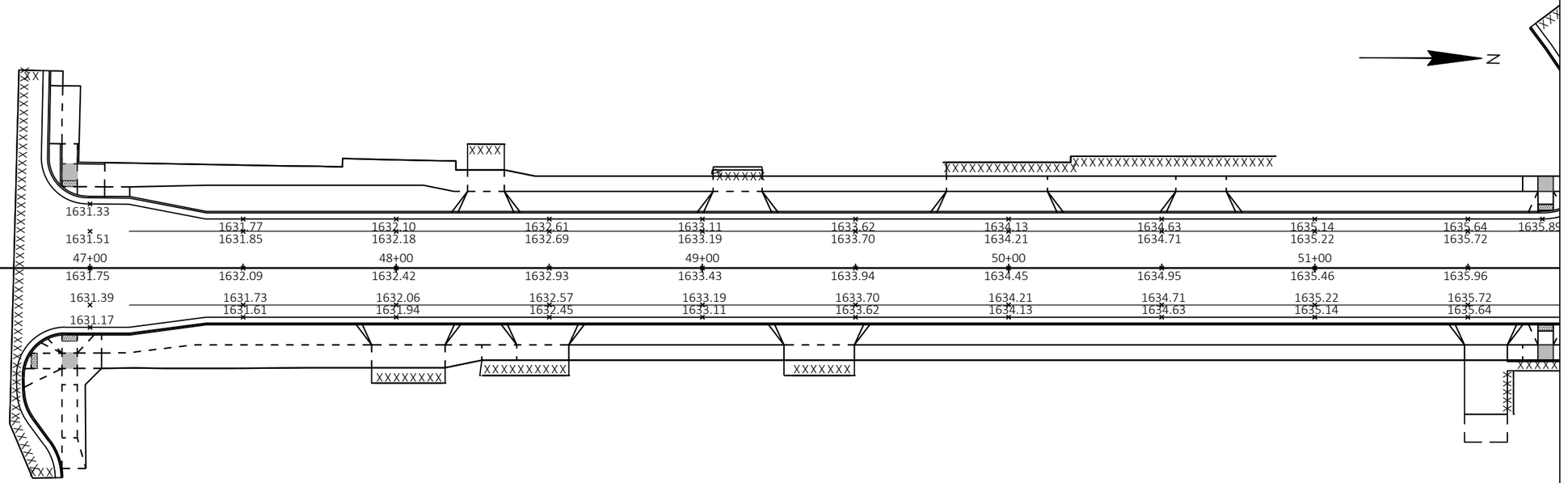

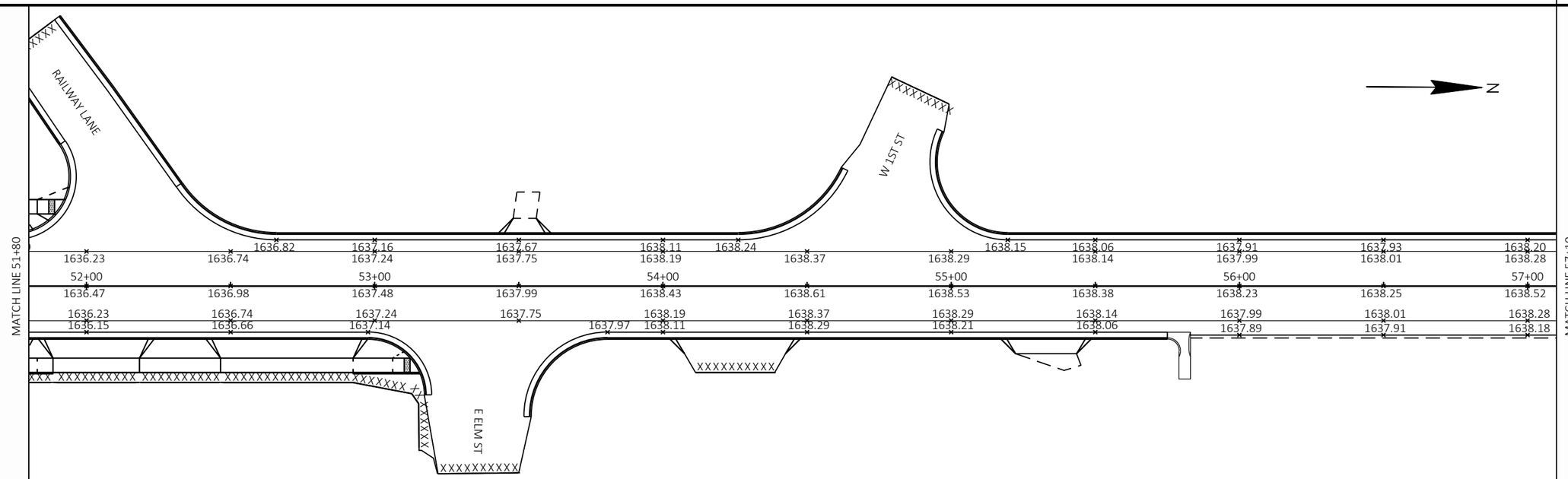

PROJECT NO: 9260-00-71	HWY: STH 32	COUNTY: FOREST	PAVING DETAILS	SHEET 21	E

FILE NAME : N:\PDS\C3D\92600001\SHEETSPLAN\021201-PD.DWG
LAYOUT NAME - 01

PLOT DATE : 10/27/2025 4:22 PM PLOT BY : MATT PAYNE PLOT NAME : PLOT SCALE : 1 IN:40 FT

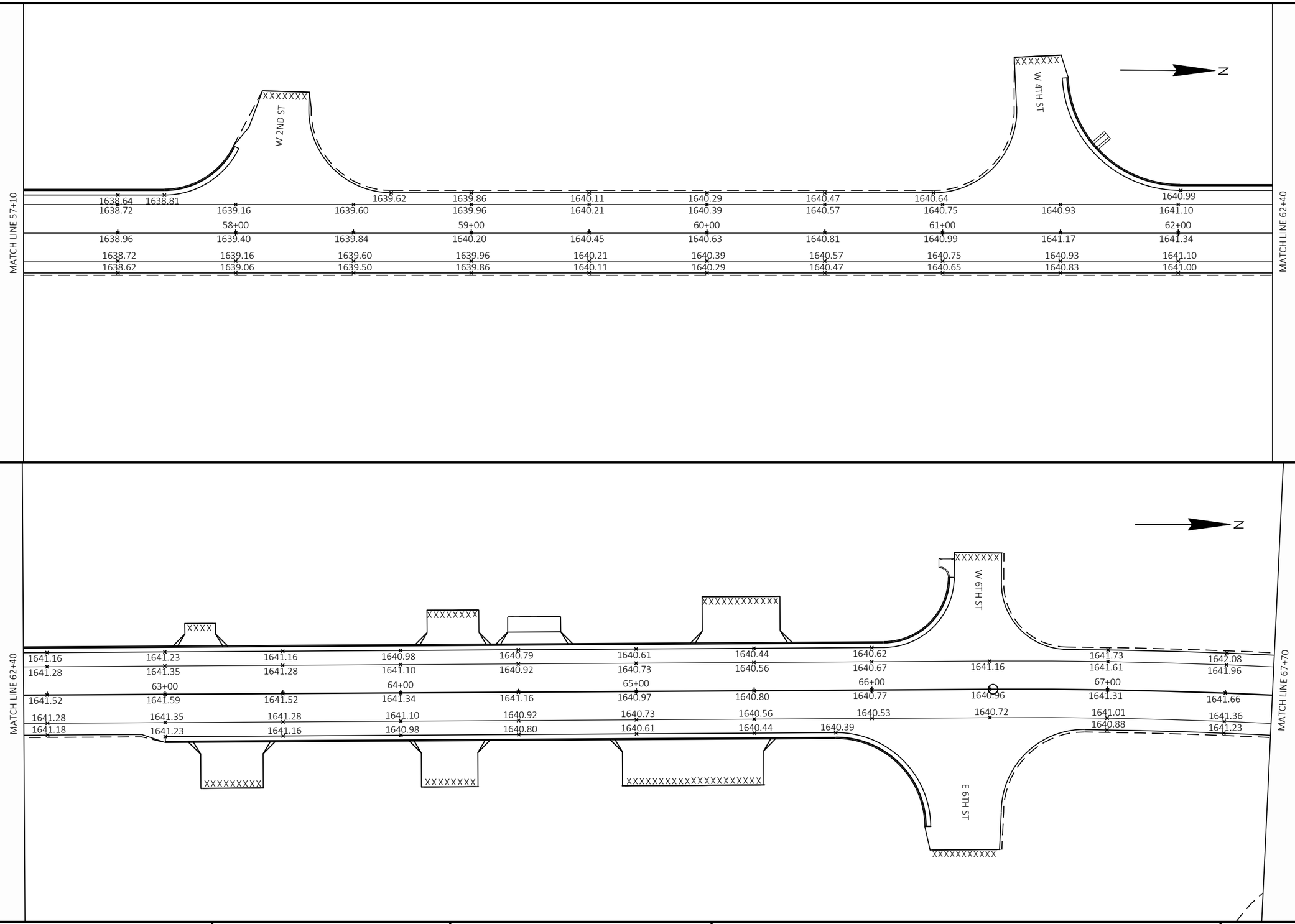

PROJECT NO: 9260-00-71	HWY: STH 32	COUNTY: FOREST	PAVING DETAILS	SHEET 22	E

FILE NAME : N:\PDS\C3D\92600001\SHEETSPLAN\021201-PD.DWG
LAYOUT NAME - 02

PLOT DATE : 10/27/2025 4:22 PM PLOT BY : MATT PAYNE PLOT NAME : PLOT SCALE : 1 IN:40 FT

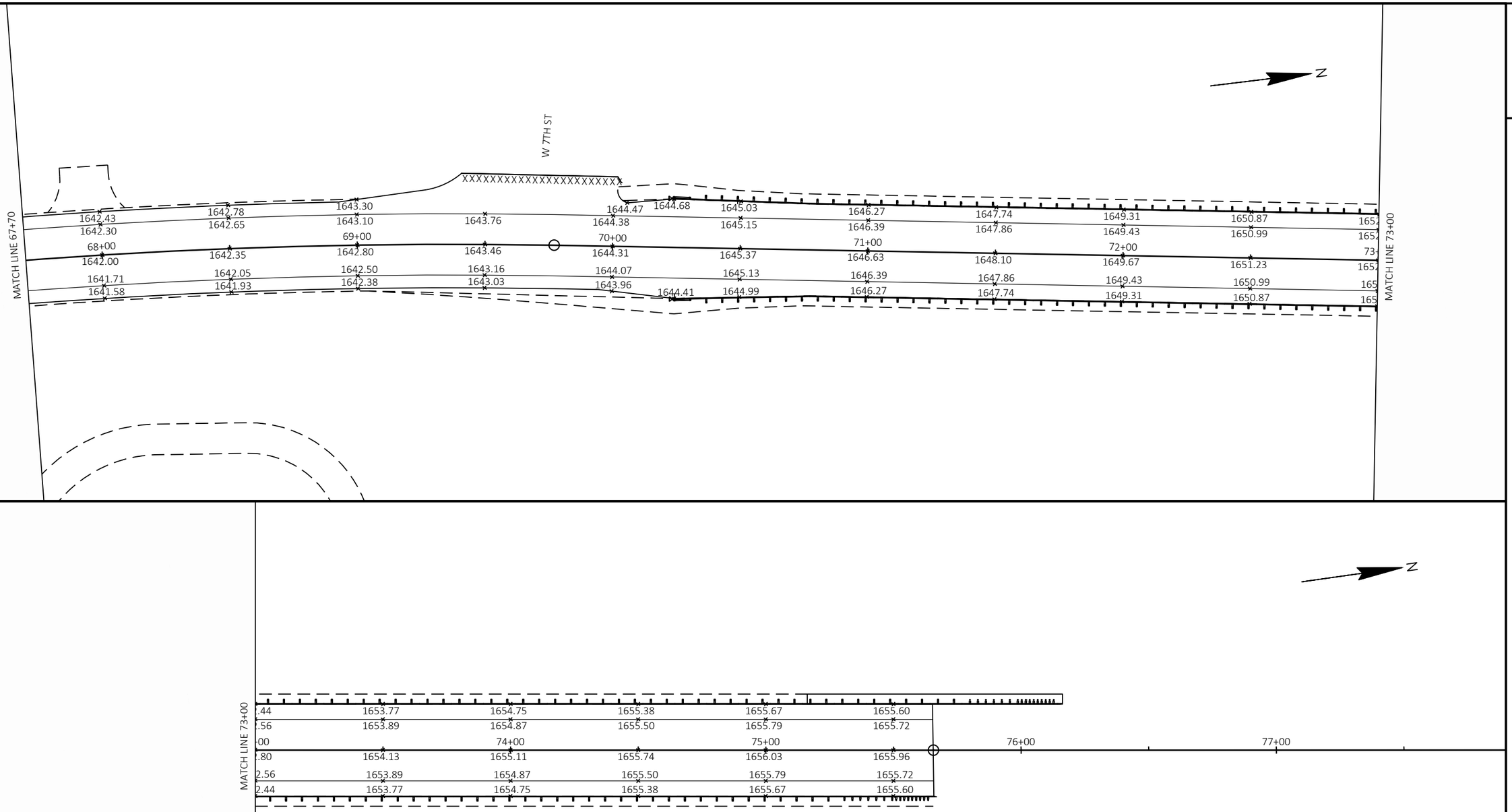

PROJECT NO: 9260-00-71	HWY: STH 32	COUNTY: FOREST	PAVING DETAILS	SHEET 23 E

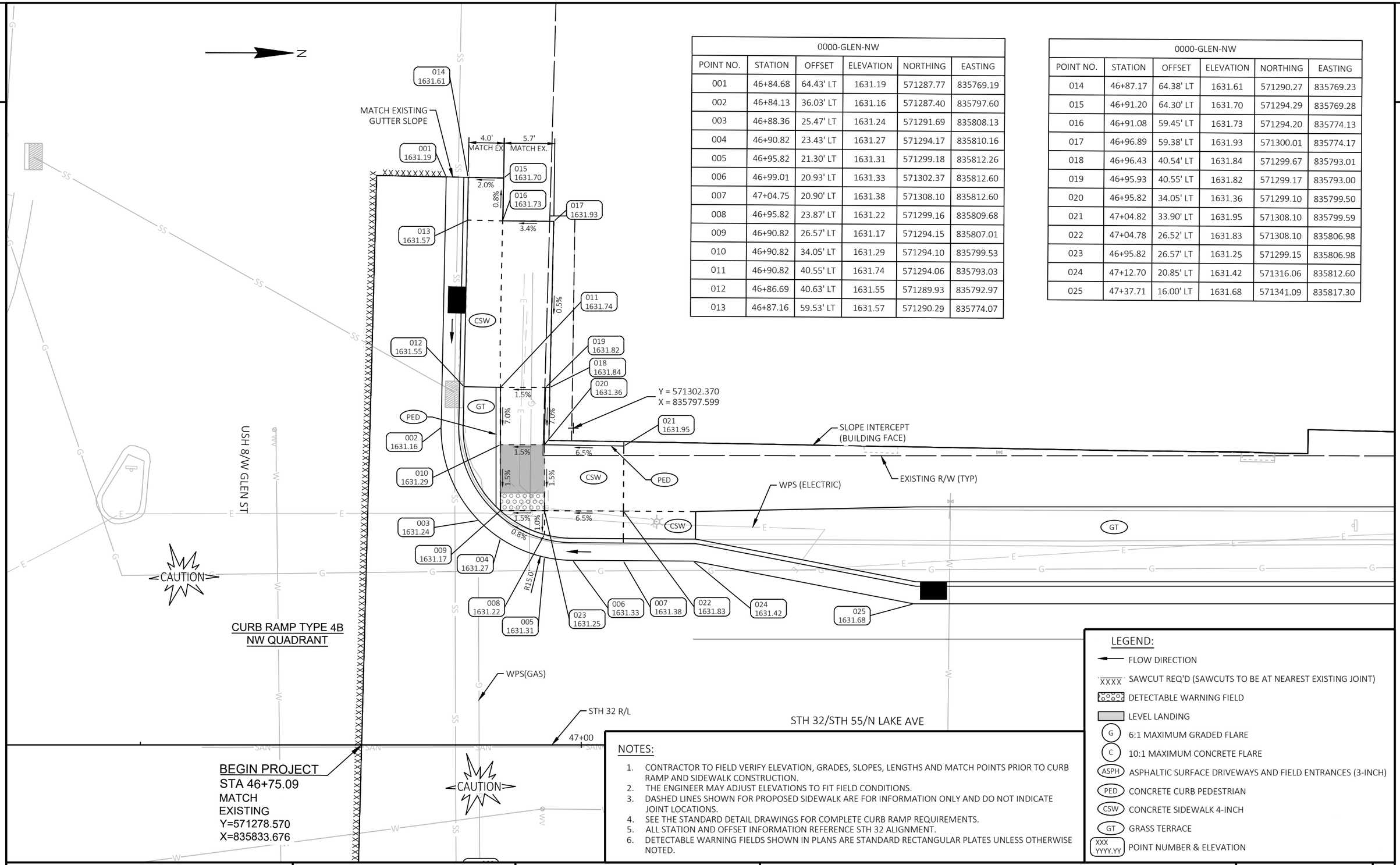

0000-GLEN-NW					
POINT NO.	STATION	OFFSET	ELEVATION	NORTHING	EASTING
001	46+84.68	64.43' LT	1631.19	571287.77	835769.19
002	46+84.13	36.03' LT	1631.16	571287.40	835797.60
003	46+88.36	25.47' LT	1631.24	571291.69	835808.13
004	46+90.82	23.43' LT	1631.27	571294.17	835810.16
005	46+95.82	21.30' LT	1631.31	571299.18	835812.26
006	46+99.01	20.93' LT	1631.33	571302.37	835812.60
007	47+04.75	20.90' LT	1631.38	571308.10	835812.60
008	46+95.82	23.87' LT	1631.22	571299.16	835809.68
009	46+90.82	26.57' LT	1631.17	571294.15	835807.01
010	46+90.82	34.05' LT	1631.29	571294.10	835799.53
011	46+90.82	40.55' LT	1631.74	571294.06	835793.03
012	46+86.69	40.63' LT	1631.55	571289.93	835792.97
013	46+87.16	59.53' LT	1631.57	571290.29	835774.07

0000-GLEN-NW					
POINT NO.	STATION	OFFSET	ELEVATION	NORTHING	EASTING
014	46+87.17	64.38' LT	1631.61	571290.27	835769.23
015	46+91.20	64.30' LT	1631.70	571294.29	835769.28
016	46+91.08	59.45' LT	1631.73	571294.20	835774.13
017	46+96.89	59.38' LT	1631.93	571300.01	835774.17
018	46+96.43	40.54' LT	1631.84	571299.67	835793.01
019	46+95.93	40.55' LT	1631.82	571299.17	835793.00
020	46+95.82	34.05' LT	1631.36	571299.10	835799.50
021	47+04.82	33.90' LT	1631.95	571308.10	835799.59
022	47+04.78	26.52' LT	1631.83	571308.10	835806.98
023	46+95.82	26.57' LT	1631.25	571299.15	835806.98
024	47+12.70	20.85' LT	1631.42	571316.06	835812.60
025	47+37.71	16.00' LT	1631.68	571341.09	835817.30

NOTES:

1. CONTRACTOR TO FIELD VERIFY ELEVATION, GRADES, SLOPES, LENGTHS AND MATCH POINTS PRIOR TO CURB RAMP AND SIDEWALK CONSTRUCTION.
2. THE ENGINEER MAY ADJUST ELEVATIONS TO FIT FIELD CONDITIONS.
3. DASHED LINES SHOWN FOR PROPOSED SIDEWALK ARE FOR INFORMATION ONLY AND DO NOT INDICATE JOINT LOCATIONS.
4. SEE THE STANDARD DETAIL DRAWINGS FOR COMPLETE CURB RAMP REQUIREMENTS.
5. ALL STATION AND OFFSET INFORMATION REFERENCE STH 32 ALIGNMENT.
6. DETECTABLE WARNING FIELDS SHOWN IN PLANS ARE STANDARD RECTANGULAR PLATES UNLESS OTHERWISE NOTED.

LEGEND:

- FLOW DIRECTION
- XXXX SAWCUT REQ'D (SAWCUTS TO BE AT NEAREST EXISTING JOINT)
- DETECTABLE WARNING FIELD
- LEVEL LANDING
- (G) 6:1 MAXIMUM GRADED FLARE
- (C) 10:1 MAXIMUM CONCRETE FLARE
- (ASPH) ASPHALTIC SURFACE DRIVEWAYS AND FIELD ENTRANCES (3-INCH)
- (PED) CONCRETE CURB PEDESTRIAN
- (CSW) CONCRETE SIDEWALK 4-INCH
- (GT) GRASS TERRACE
- (XXX / YYYY.YY) POINT NUMBER & ELEVATION

PROJECT NO: 9260-00-71	HWY: STH 32	COUNTY: FOREST	CURB RAMP DETAILS	SHEET 24	E

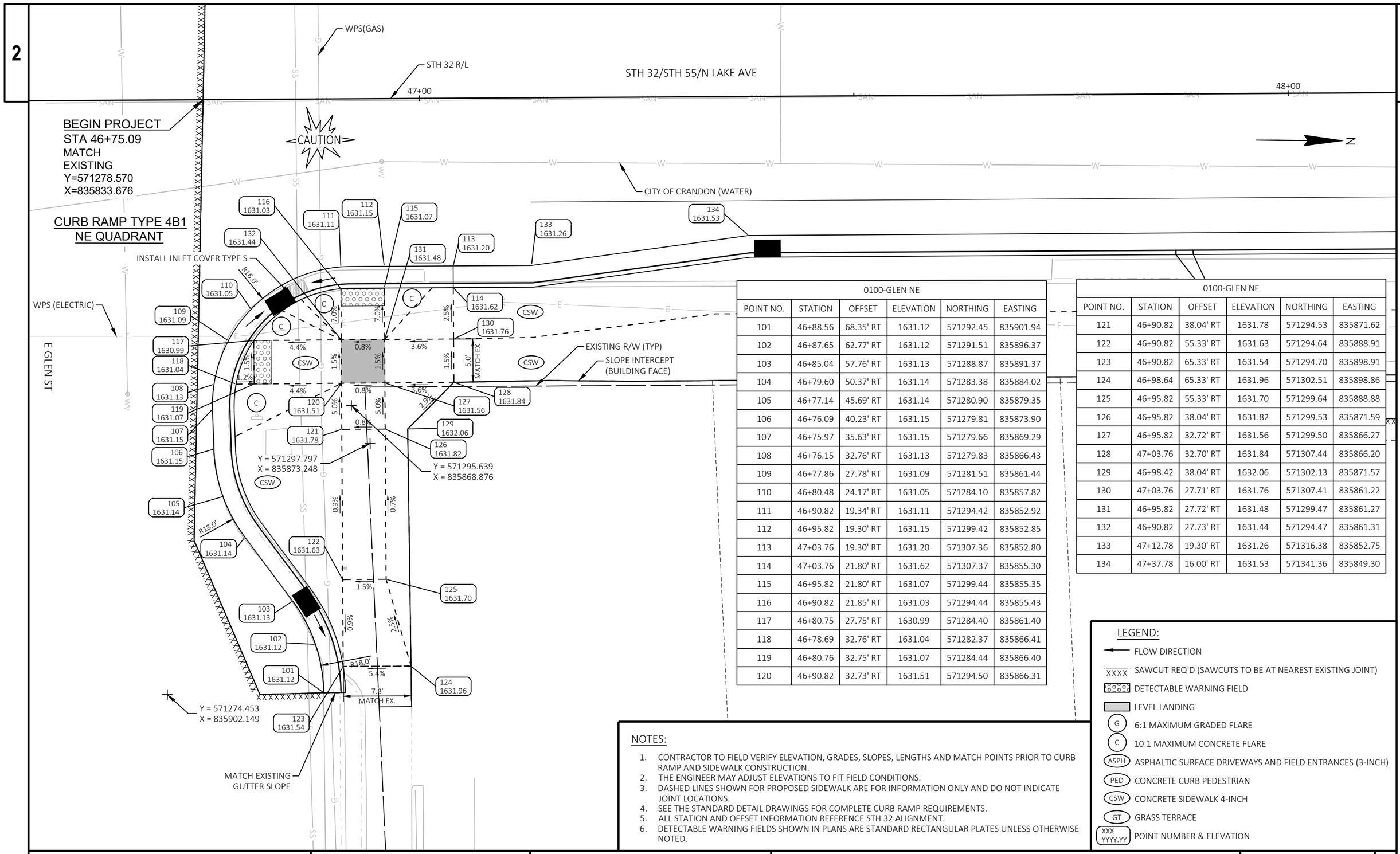

0100-GLEN NE					
POINT NO.	STATION	OFFSET	ELEVATION	NORTHING	EASTING
101	46+88.56	68.35' RT	1631.12	571292.45	835901.94
102	46+87.65	62.77' RT	1631.12	571291.51	835896.37
103	46+85.04	57.76' RT	1631.13	571288.87	835891.37
104	46+79.60	50.37' RT	1631.14	571283.38	835884.02
105	46+77.14	45.69' RT	1631.14	571280.90	835879.35
106	46+76.09	40.23' RT	1631.15	571279.81	835873.90
107	46+75.97	35.63' RT	1631.15	571279.66	835869.29
108	46+76.15	32.76' RT	1631.13	571279.83	835866.43
109	46+77.86	27.78' RT	1631.09	571281.51	835861.44
110	46+80.48	24.17' RT	1631.05	571284.10	835857.82
111	46+90.82	19.34' RT	1631.11	571294.42	835852.92
112	46+95.82	19.30' RT	1631.15	571299.42	835852.85
113	47+03.76	19.30' RT	1631.20	571307.36	835852.80
114	47+03.76	21.80' RT	1631.62	571307.37	835855.30
115	46+95.82	21.80' RT	1631.07	571299.44	835855.35
116	46+90.82	21.85' RT	1631.03	571294.44	835855.43
117	46+80.75	27.75' RT	1630.99	571284.40	835861.40
118	46+78.69	32.76' RT	1631.04	571282.37	835866.41
119	46+80.76	32.75' RT	1631.07	571284.44	835866.40
120	46+90.82	32.73' RT	1631.51	571294.50	835866.31

0100-GLEN NE					
POINT NO.	STATION	OFFSET	ELEVATION	NORTHING	EASTING
121	46+90.82	38.04' RT	1631.78	571294.53	835871.62
122	46+90.82	55.33' RT	1631.63	571294.64	835888.91
123	46+90.82	65.33' RT	1631.54	571294.70	835898.91
124	46+98.64	65.33' RT	1631.96	571302.51	835898.86
125	46+95.82	55.33' RT	1631.70	571299.64	835888.88
126	46+95.82	38.04' RT	1631.82	571299.53	835871.59
127	46+95.82	32.72' RT	1631.56	571299.50	835866.27
128	47+03.76	32.70' RT	1631.84	571307.44	835866.20
129	46+98.42	38.04' RT	1632.06	571302.13	835871.57
130	47+03.76	27.71' RT	1631.76	571307.41	835861.22
131	46+95.82	27.72' RT	1631.48	571299.47	835861.27
132	46+90.82	27.73' RT	1631.44	571294.47	835861.31
133	47+12.78	19.30' RT	1631.26	571316.38	835852.75
134	47+37.78	16.00' RT	1631.53	571341.36	835849.30

NOTES:

1. CONTRACTOR TO FIELD VERIFY ELEVATION, GRADES, SLOPES, LENGTHS AND MATCH POINTS PRIOR TO CURB RAMP AND SIDEWALK CONSTRUCTION.
2. THE ENGINEER MAY ADJUST ELEVATIONS TO FIT FIELD CONDITIONS.
3. DASHED LINES SHOWN FOR PROPOSED SIDEWALK ARE FOR INFORMATION ONLY AND DO NOT INDICATE JOINT LOCATIONS.
4. SEE THE STANDARD DETAIL DRAWINGS FOR COMPLETE CURB RAMP REQUIREMENTS.
5. ALL STATION AND OFFSET INFORMATION REFERENCE STH 32 ALIGNMENT.
6. DETECTABLE WARNING FIELDS SHOWN IN PLANS ARE STANDARD RECTANGULAR PLATES UNLESS OTHERWISE NOTED.

LEGEND:

- FLOW DIRECTION
- XXXX SAWCUT REQ'D (SAWCUTS TO BE AT NEAREST EXISTING JOINT)
- DETECTABLE WARNING FIELD
- LEVEL LANDING
- G 6:1 MAXIMUM GRADED FLARE
- C 10:1 MAXIMUM CONCRETE FLARE
- ASPH ASPHALTIC SURFACE DRIVEWAYS AND FIELD ENTRANCES (3-INCH)
- PED CONCRETE CURB PEDESTRIAN
- CSW CONCRETE SIDEWALK 4-INCH
- GT GRASS TERRACE
- XXX YYYY.YY POINT NUMBER & ELEVATION

PROJECT NO: 9260-00-71	HWY: STH 32	COUNTY: FOREST	CURB RAMP DETAILS	SHEET 25	E

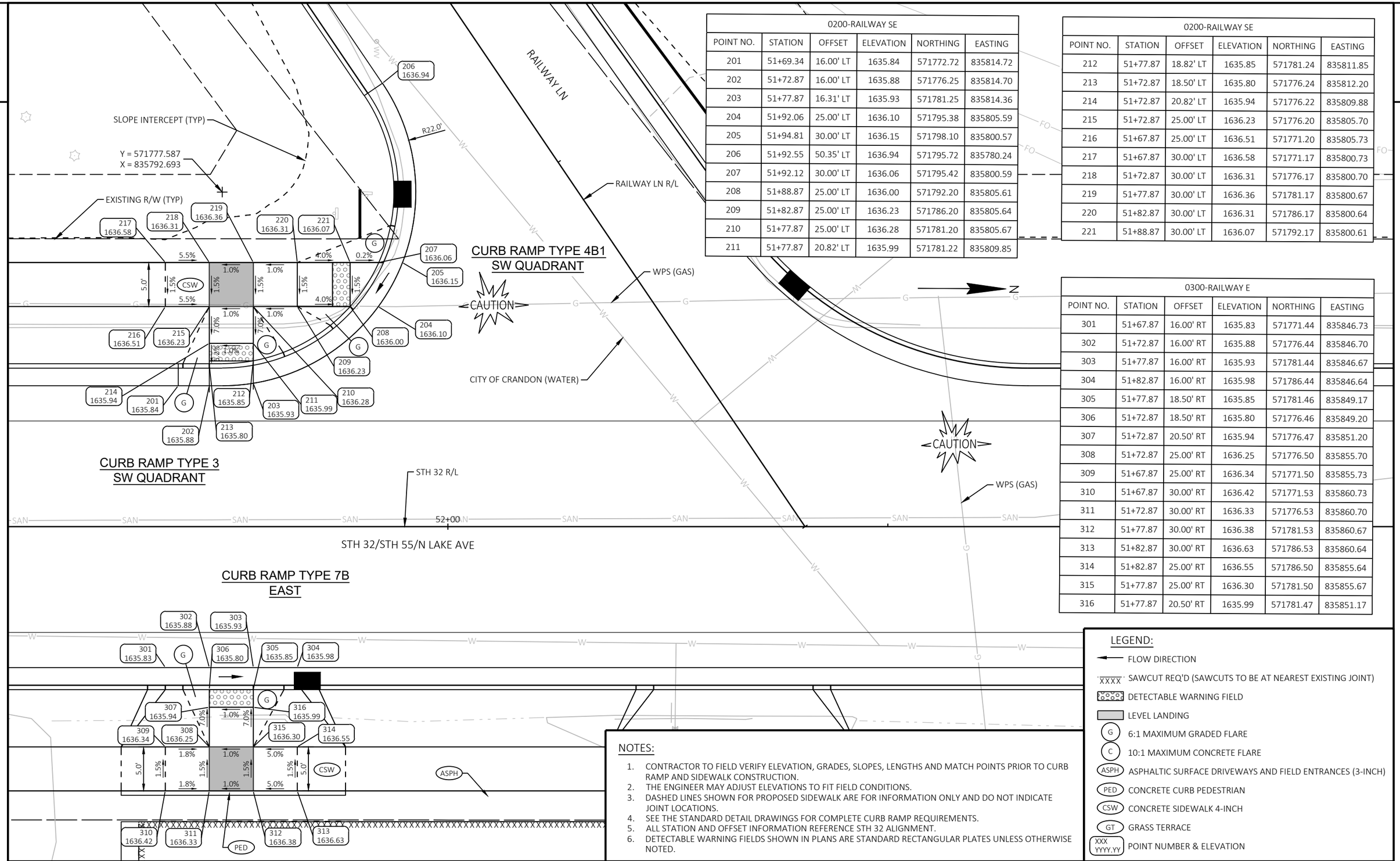

0200-RAILWAY SE					
POINT NO.	STATION	OFFSET	ELEVATION	NORTHING	EASTING
201	51+69.34	16.00' LT	1635.84	571772.72	835814.72
202	51+72.87	16.00' LT	1635.88	571776.25	835814.70
203	51+77.87	16.31' LT	1635.93	571781.25	835814.36
204	51+92.06	25.00' LT	1636.10	571795.38	835805.59
205	51+94.81	30.00' LT	1636.15	571798.10	835800.57
206	51+92.55	50.35' LT	1636.94	571795.72	835780.24
207	51+92.12	30.00' LT	1636.06	571795.42	835800.59
208	51+88.87	25.00' LT	1636.00	571792.20	835805.61
209	51+82.87	25.00' LT	1636.23	571786.20	835805.64
210	51+77.87	25.00' LT	1636.28	571781.20	835805.67
211	51+77.87	20.82' LT	1635.99	571781.22	835809.85

0200-RAILWAY SE					
POINT NO.	STATION	OFFSET	ELEVATION	NORTHING	EASTING
212	51+77.87	18.82' LT	1635.85	571781.24	835811.85
213	51+72.87	18.50' LT	1635.80	571776.24	835812.20
214	51+72.87	20.82' LT	1635.94	571776.22	835809.88
215	51+72.87	25.00' LT	1636.23	571776.20	835805.70
216	51+67.87	25.00' LT	1636.51	571771.20	835805.73
217	51+67.87	30.00' LT	1636.58	571771.17	835800.73
218	51+72.87	30.00' LT	1636.31	571776.17	835800.70
219	51+77.87	30.00' LT	1636.36	571781.17	835800.67
220	51+82.87	30.00' LT	1636.31	571786.17	835800.64
221	51+88.87	30.00' LT	1636.07	571792.17	835800.61

0300-RAILWAY E					
POINT NO.	STATION	OFFSET	ELEVATION	NORTHING	EASTING
301	51+67.87	16.00' RT	1635.83	571771.44	835846.73
302	51+72.87	16.00' RT	1635.88	571776.44	835846.70
303	51+77.87	16.00' RT	1635.93	571781.44	835846.67
304	51+82.87	16.00' RT	1635.98	571786.44	835846.64
305	51+77.87	18.50' RT	1635.85	571781.46	835849.17
306	51+72.87	18.50' RT	1635.80	571776.46	835849.20
307	51+72.87	20.50' RT	1635.94	571776.47	835851.20
308	51+72.87	25.00' RT	1636.25	571776.50	835855.70
309	51+67.87	25.00' RT	1636.34	571771.50	835855.73
310	51+67.87	30.00' RT	1636.42	571771.53	835860.73
311	51+72.87	30.00' RT	1636.33	571776.53	835860.70
312	51+77.87	30.00' RT	1636.38	571781.53	835860.67
313	51+82.87	30.00' RT	1636.63	571786.53	835860.64
314	51+82.87	25.00' RT	1636.55	571786.50	835855.64
315	51+77.87	25.00' RT	1636.30	571781.50	835855.67
316	51+77.87	20.50' RT	1635.99	571781.47	835851.17

NOTES:

1. CONTRACTOR TO FIELD VERIFY ELEVATION, GRADES, SLOPES, LENGTHS AND MATCH POINTS PRIOR TO CURB RAMP AND SIDEWALK CONSTRUCTION.
2. THE ENGINEER MAY ADJUST ELEVATIONS TO FIT FIELD CONDITIONS.
3. DASHED LINES SHOWN FOR PROPOSED SIDEWALK ARE FOR INFORMATION ONLY AND DO NOT INDICATE JOINT LOCATIONS.
4. SEE THE STANDARD DETAIL DRAWINGS FOR COMPLETE CURB RAMP REQUIREMENTS.
5. ALL STATION AND OFFSET INFORMATION REFERENCE STH 32 ALIGNMENT.
6. DETECTABLE WARNING FIELDS SHOWN IN PLANS ARE STANDARD RECTANGULAR PLATES UNLESS OTHERWISE NOTED.

LEGEND:

- FLOW DIRECTION
- XXXX SAWCUT REQ'D (SAWCUTS TO BE AT NEAREST EXISTING JOINT)
- DETECTABLE WARNING FIELD
- LEVEL LANDING
- (G) 6:1 MAXIMUM GRADED FLARE
- (C) 10:1 MAXIMUM CONCRETE FLARE
- (ASPH) ASPHALTIC SURFACE DRIVEWAYS AND FIELD ENTRANCES (3-INCH)
- (PED) CONCRETE CURB PEDESTRIAN
- (CSW) CONCRETE SIDEWALK 4-INCH
- (GT) GRASS TERRACE
- (XXX YYYY.YY) POINT NUMBER & ELEVATION

PROJECT NO: 9260-00-71	HWY: STH 32	COUNTY: FOREST	CURB RAMP DETAILS	SHEET 26	E

2

2

0400-ELM-SE					
POINT NO.	STATION	OFFSET	ELEVATION	NORTHING	EASTING
401	52+97.68	16.00' RT	1637.16	571901.25	835845.96
402	53+13.15	22.36' RT	1637.31	571916.75	835852.22
403	53+15.42	25.00' RT	1637.34	571919.04	835854.85
404	53+18.16	30.01' RT	1637.40	571921.81	835859.84
405	53+19.68	37.75' RT	1637.48	571923.38	835867.58
406	53+15.46	30.00' RT	1637.31	571919.11	835859.85
407	53+12.22	25.00' RT	1637.24	571915.84	835854.87
408	53+06.22	25.00' RT	1637.34	571909.84	835854.90
409	53+01.22	25.00' RT	1637.40	571904.84	835854.93
410	52+97.53	25.00' RT	1637.45	571901.15	835854.96
411	52+97.53	30.00' RT	1637.53	571901.18	835859.96
412	53+01.22	30.00' RT	1637.48	571904.87	835859.93
413	53+06.22	30.00' RT	1637.41	571909.87	835859.90
414	53+10.22	30.00' RT	1637.35	571913.87	835859.88

STH 32 R/L

53+00

54+00

STH 32/STH 55/N LAKE AVE

CITY OF CRANDON (WATER)

ELM ST

CURB RAMP TYPE 4B1
SE QUADRANT

401 1637.16
402 1637.31
403 1637.34
404 1637.40
405 1637.48
406 1637.31
407 1637.24
408 1637.34
409 1637.40
410 1637.45
411 1637.53
412 1637.48
413 1637.41
414 1637.35

R22.0'

5.0' MATCH EX.

1.4% 1.3% 1.5% 1.5% 1.5% 1.5% 1.5% 1.4% 1.4% 1.5% 0.3%

CSW

PED

ASPH

Y = 571901.380
X = 835867.955

TLE (TYP)

SLOPE INTERCEPT (TYP)

EXISTING R/W (TYP)

PROPOSED R/W (TYP)

FOUND

BLDG

NOTES:

1. CONTRACTOR TO FIELD VERIFY ELEVATION, GRADES, SLOPES, LENGTHS AND MATCH POINTS PRIOR TO CURB RAMP AND SIDEWALK CONSTRUCTION.
2. THE ENGINEER MAY ADJUST ELEVATIONS TO FIT FIELD CONDITIONS.
3. DASHED LINES SHOWN FOR PROPOSED SIDEWALK ARE FOR INFORMATION ONLY AND DO NOT INDICATE JOINT LOCATIONS.
4. SEE THE STANDARD DETAIL DRAWINGS FOR COMPLETE CURB RAMP REQUIREMENTS.
5. ALL STATION AND OFFSET INFORMATION REFERENCE STH 32 ALIGNMENT.
6. DETECTABLE WARNING FIELDS SHOWN IN PLANS ARE STANDARD RECTANGULAR PLATES UNLESS OTHERWISE NOTED.

LEGEND:

- FLOW DIRECTION
- XXXX SAWCUT REQ'D (SAWCUTS TO BE AT NEAREST EXISTING JOINT)
- DETECTABLE WARNING FIELD
- LEVEL LANDING
- G 6:1 MAXIMUM GRADED FLARE
- C 10:1 MAXIMUM CONCRETE FLARE
- ASPH ASPHALTIC SURFACE DRIVEWAYS AND FIELD ENTRANCES (3-INCH)
- PED CONCRETE CURB PEDESTRIAN
- CSW CONCRETE SIDEWALK 4-INCH
- GT GRASS TERRACE
- XXX YYYY.YY POINT NUMBER & ELEVATION

PROJECT NO: 9260-00-71	HWY: STH 32	COUNTY: FOREST	CURB RAMP DETAILS	SHEET 27	E

2

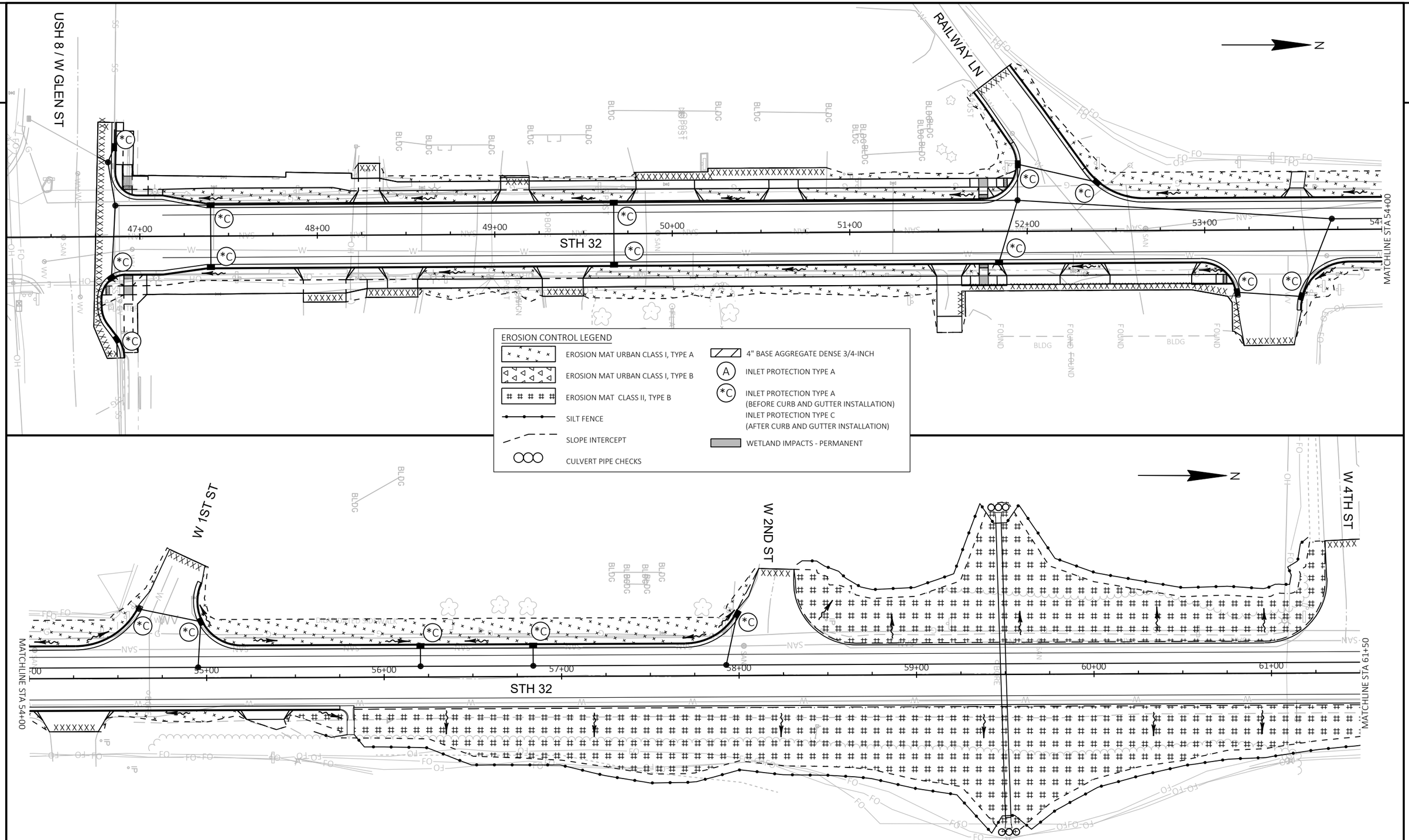

PROJECT NO: 9260-00-71	HWY: STH 32	COUNTY: FOREST	EROSION CONTROL	SHEET 28	E

FILE NAME : N:\PDS\C3D\92600001\SHEETSPLAN\022000-EC.DWG
LAYOUT NAME - 01

PLOT DATE : 10/27/2025 4:42 PM PLOT BY : MATT PAYNE PLOT NAME : PLOT SCALE : 1 IN:50 FT

2

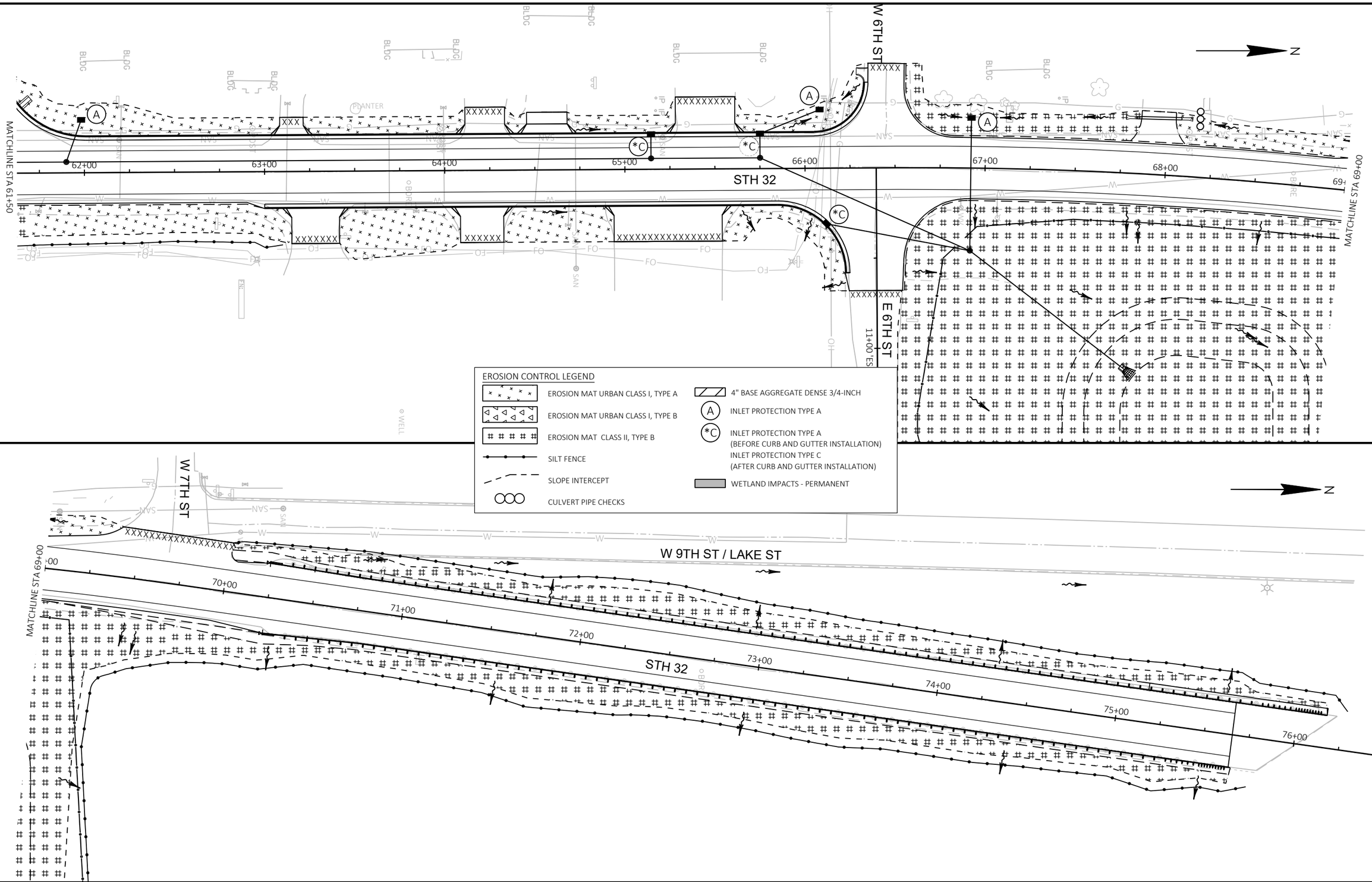

PROJECT NO: 9260-00-71	HWY: STH 32	COUNTY: FOREST	EROSION CONTROL	SHEET 29	E

FILE NAME : N:\PDS\C3D\92600001\SHEETSPLAN\022000-EC.DWG
LAYOUT NAME - 02

PLOT DATE : 10/27/2025 4:42 PM PLOT BY : MATT PAYNE PLOT NAME : PLOT SCALE : 1 IN:50 FT

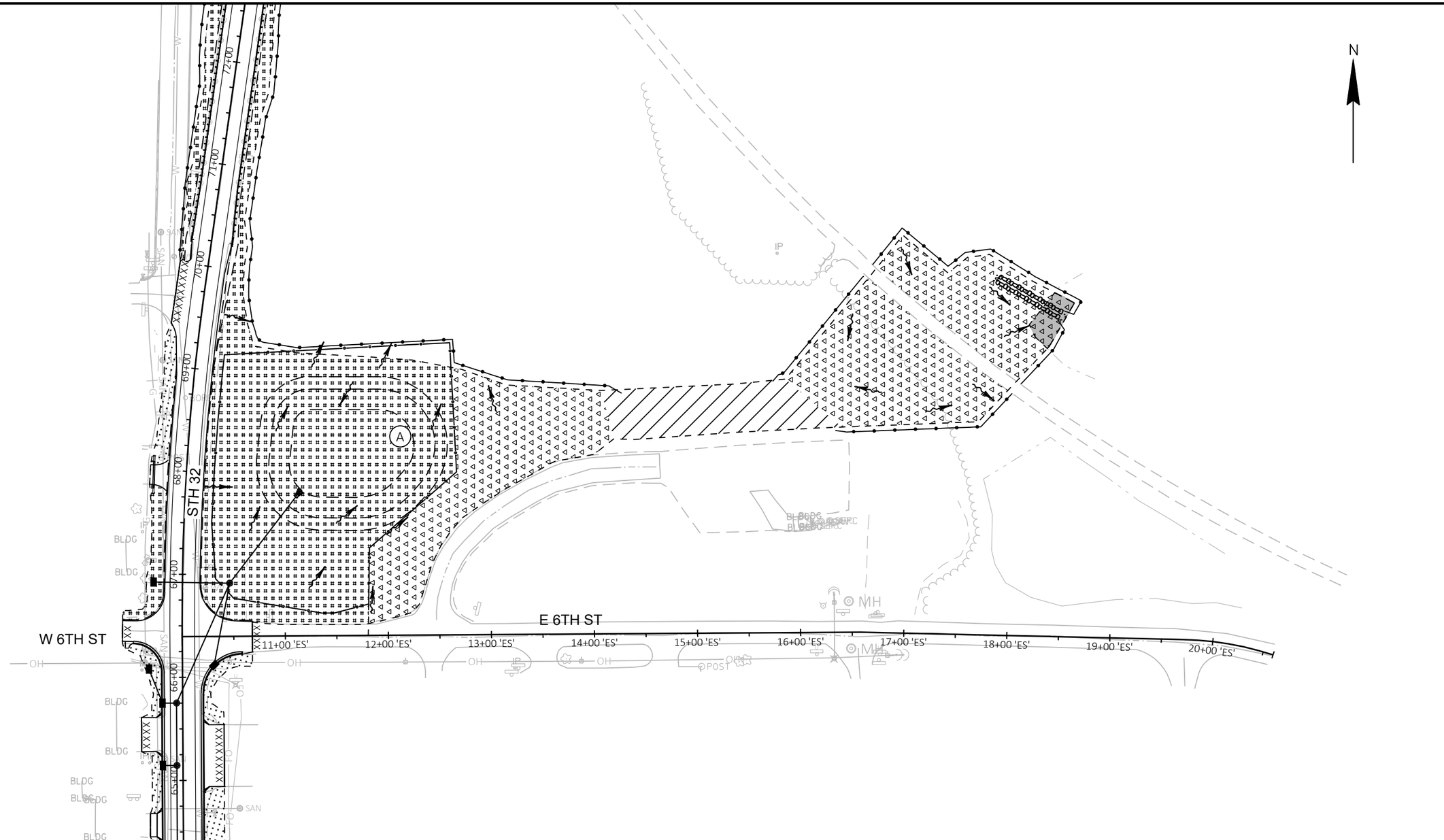

EROSION CONTROL LEGEND

- EROSION MAT URBAN CLASS I, TYPE A
- EROSION MAT URBAN CLASS I, TYPE B
- EROSION MAT CLASS II, TYPE B
- SILT FENCE
- SLOPE INTERCEPT
- CULVERT PIPE CHECKS
- 4" BASE AGGREGATE DENSE 3/4-INCH
- (A) INLET PROTECTION TYPE A
- (*C) INLET PROTECTION TYPE A (BEFORE CURB AND GUTTER INSTALLATION) INLET PROTECTION TYPE C (AFTER CURB AND GUTTER INSTALLATION)
- WETLAND IMPACTS - PERMANENT

PROJECT NO: 9260-00-71	HWY: STH 32	COUNTY: FOREST	EROSION CONTROL	SHEET 30	E

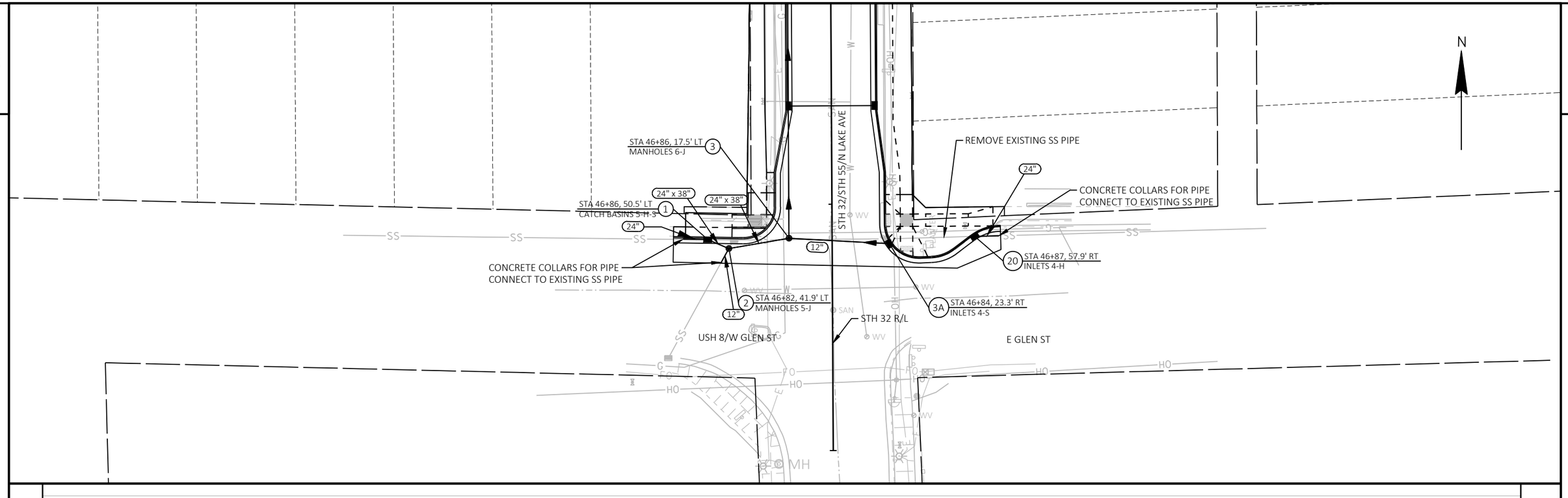

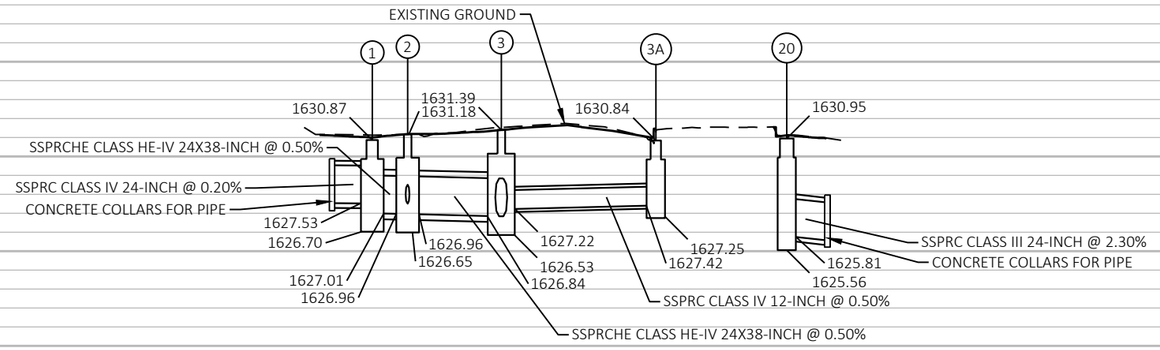

PROJECT NO: 9260-00-71	HWY: STH 32	COUNTY: FOREST	STORM SEWER	SHEET 31 E

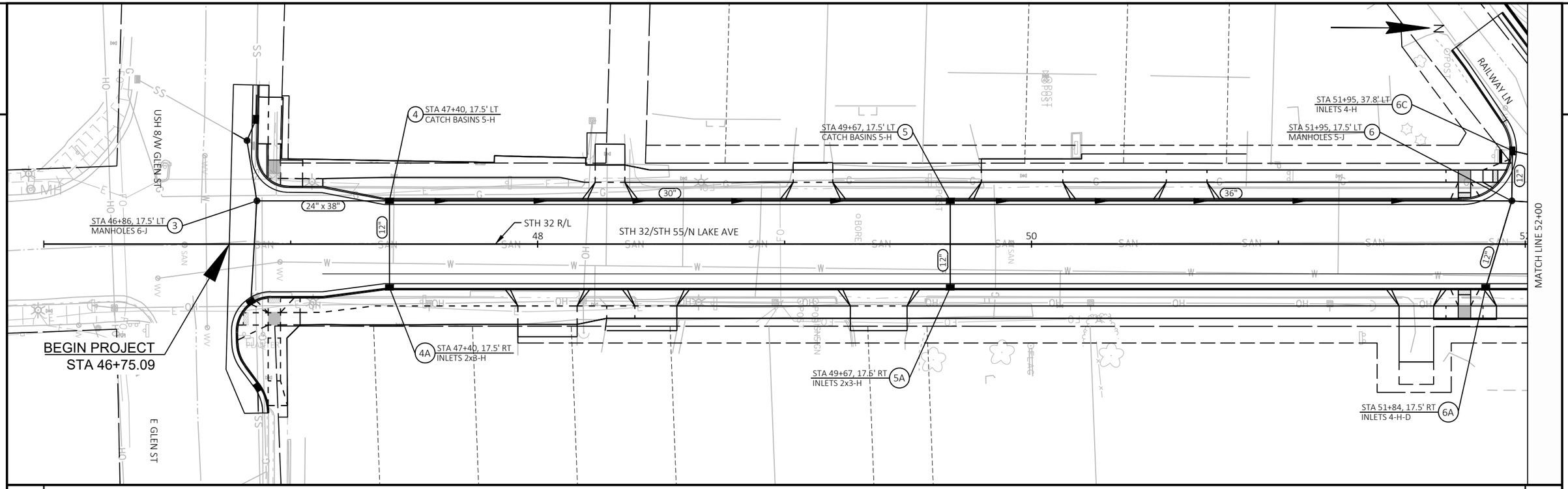

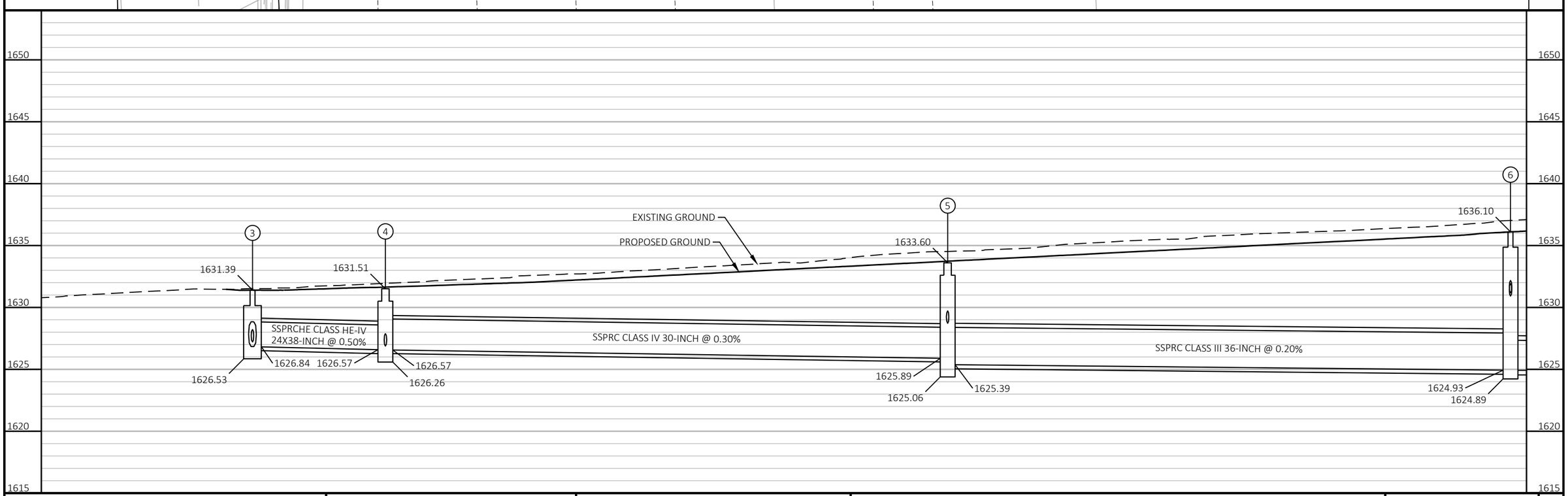

PROJECT NO: 9260-00-71	HWY: STH 32	COUNTY: FOREST	STORM SEWER	SHEET 32	E

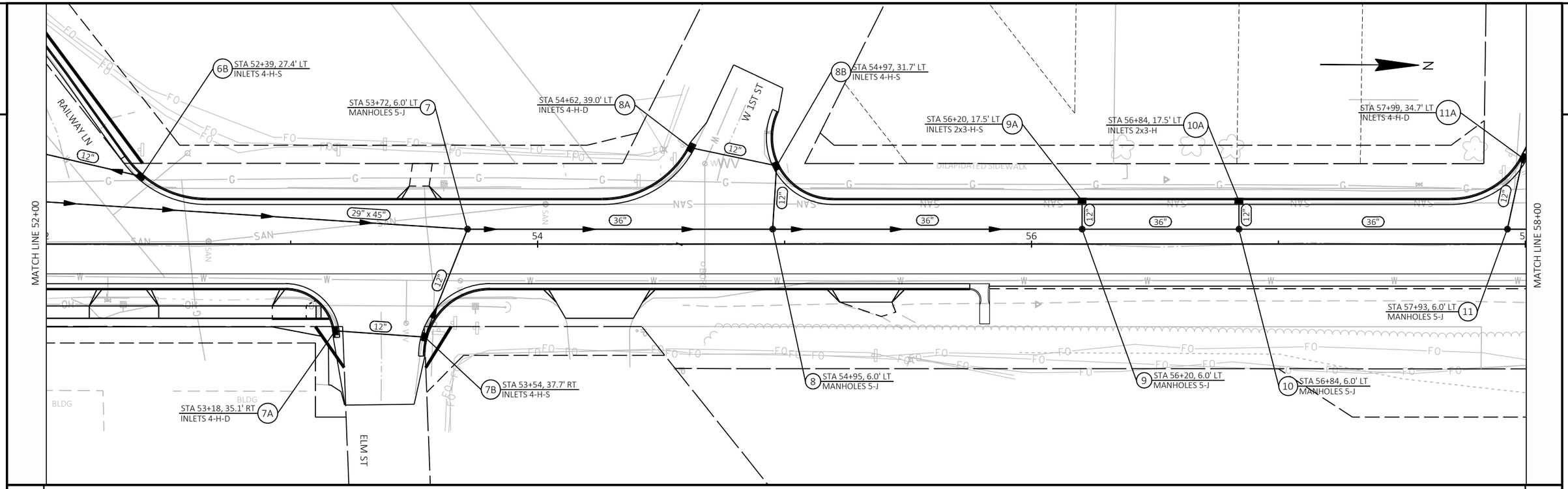

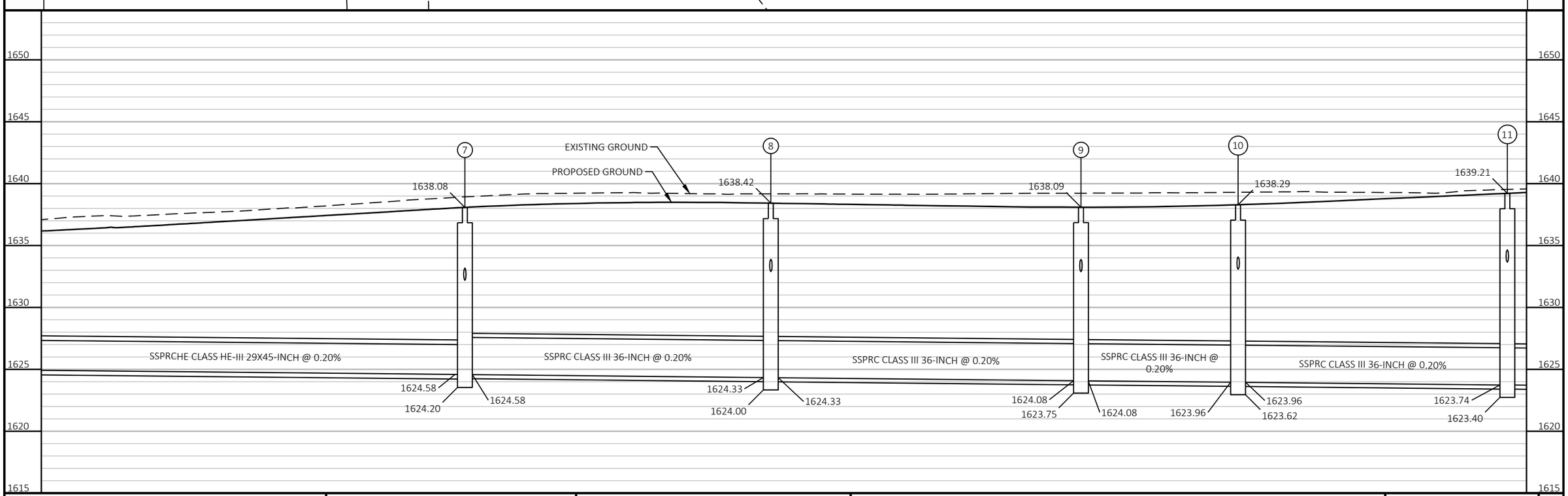

PROJECT NO: 9260-00-71	HWY: STH 32	COUNTY: FOREST	STORM SEWER	SHEET 33 E

2

MATCH LINE 58+00

MATCH LINE 64+00

W 2ND ST

W 4TH ST

STH 32 R/L

STH 32/STH 55/N LAKE AVE

58

60

62

64

12A STA 61+98, 29.3' LT
INLETS 3-C

12 STA 61+90, 6.0' LT
MANHOLES 5-J

12"

36"

PLANTER

1650
1645
1640
1635
1630
1625
1620
1615

EXISTING GROUND

PROPOSED GROUND

1641.19

SSPRC CLASS IV 36-INCH @ 0.20%

SSPRC CLASS IV 36-INCH @ 0.20%

1623.74

1622.94

1622.61

1622.94

PROJECT NO: 9260-00-71	HWY: STH 32	COUNTY: FOREST	STORM SEWER	SHEET 34 E

2

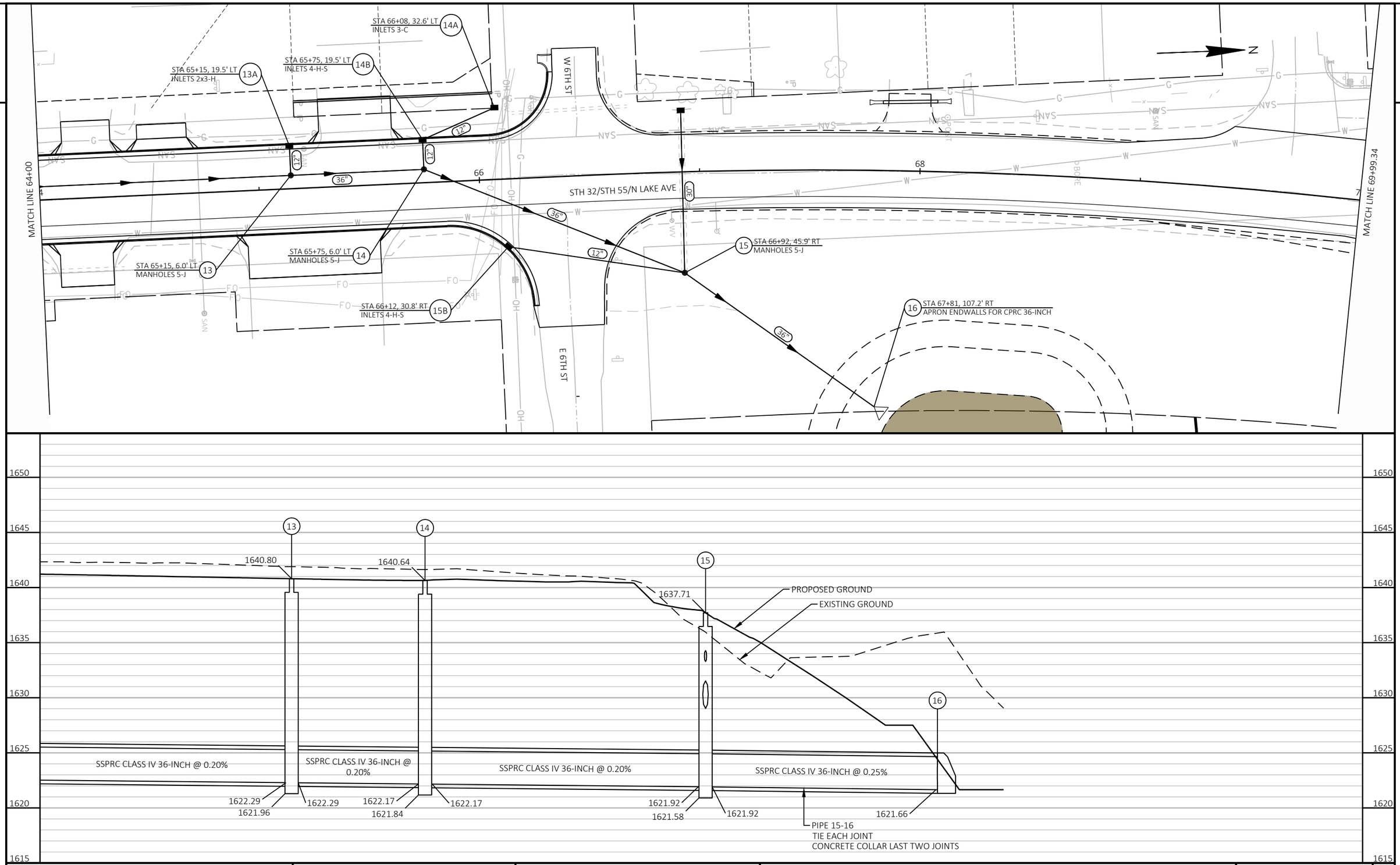

PROJECT NO: 9260-00-71	HWY: STH 32	COUNTY: FOREST	STORM SEWER	SHEET 35 E

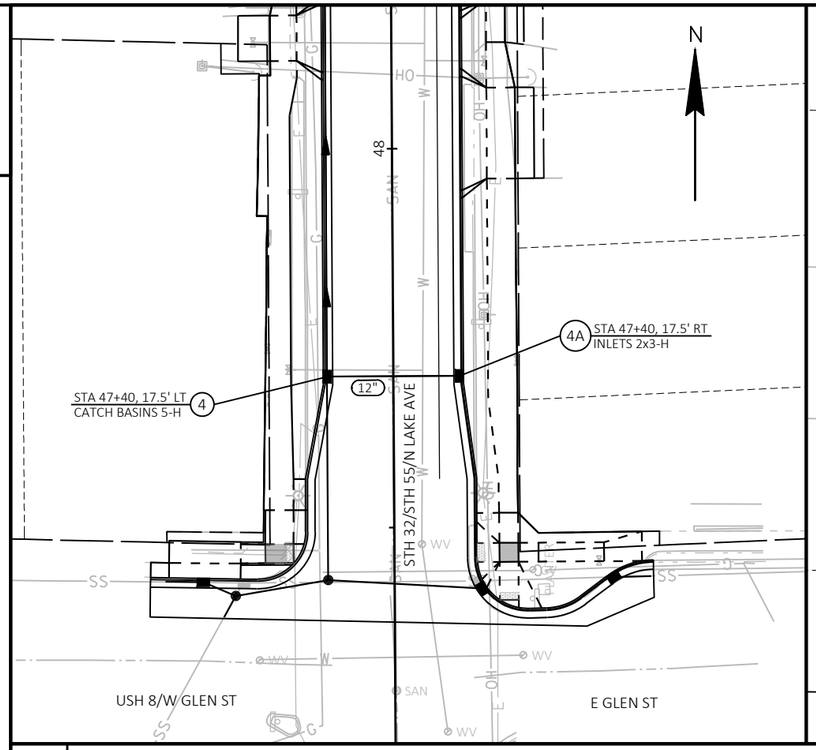

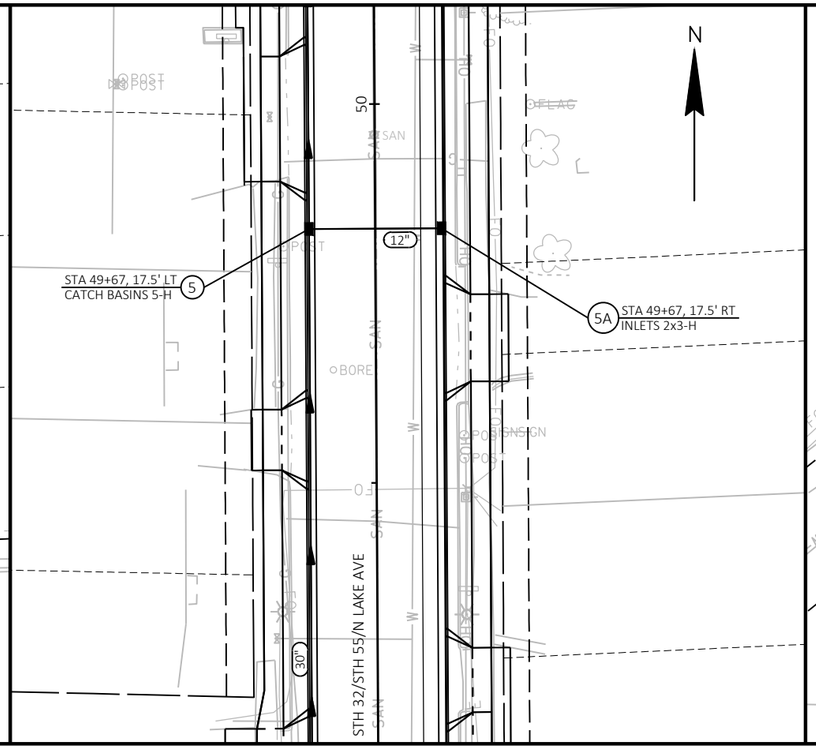

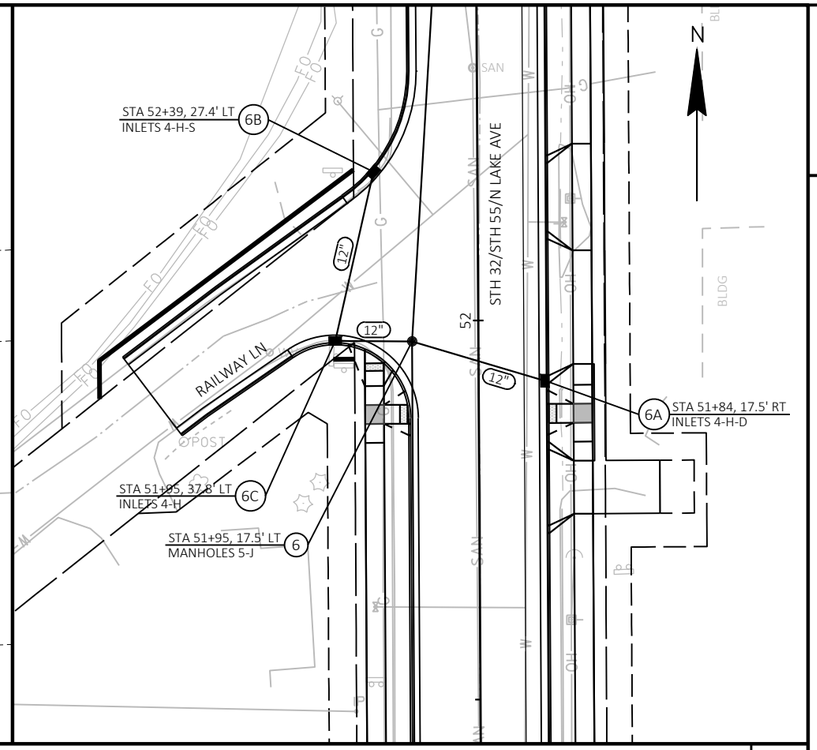

2

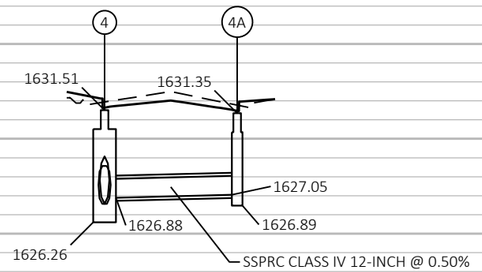

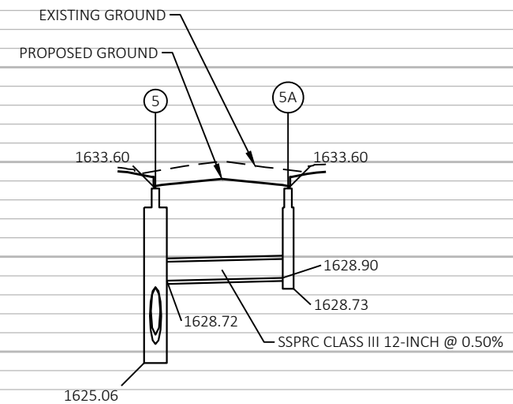

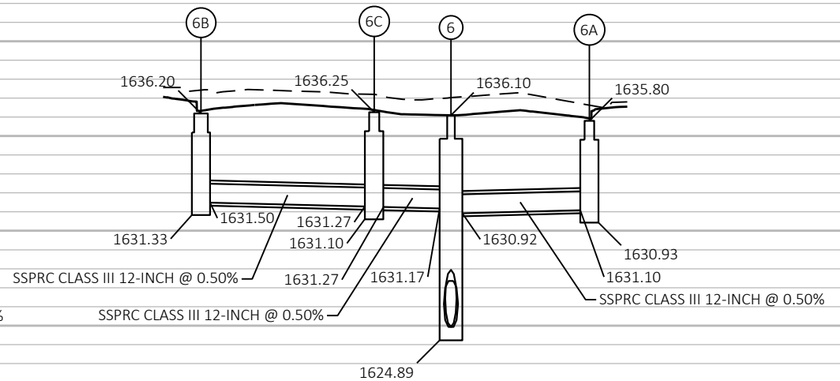

1650 1645 1640 1635 1630 1625 1620 1615

PROJECT NO: 9260-00-71	HWY: STH 32	COUNTY: FOREST	STORM SEWER	SHEET 36 E

FILE NAME : N:\PDS\C3D\92600001\SHEETSPLAN\022501-SS.DWG
LAYOUT NAME - 06
PLOT DATE : 10/27/2025 4:56 PM
PLOT BY : MATT PAYNE
PLOT NAME :
PLOT SCALE : 1 IN:40 FT
WISDOT/CADDS SHEET 41

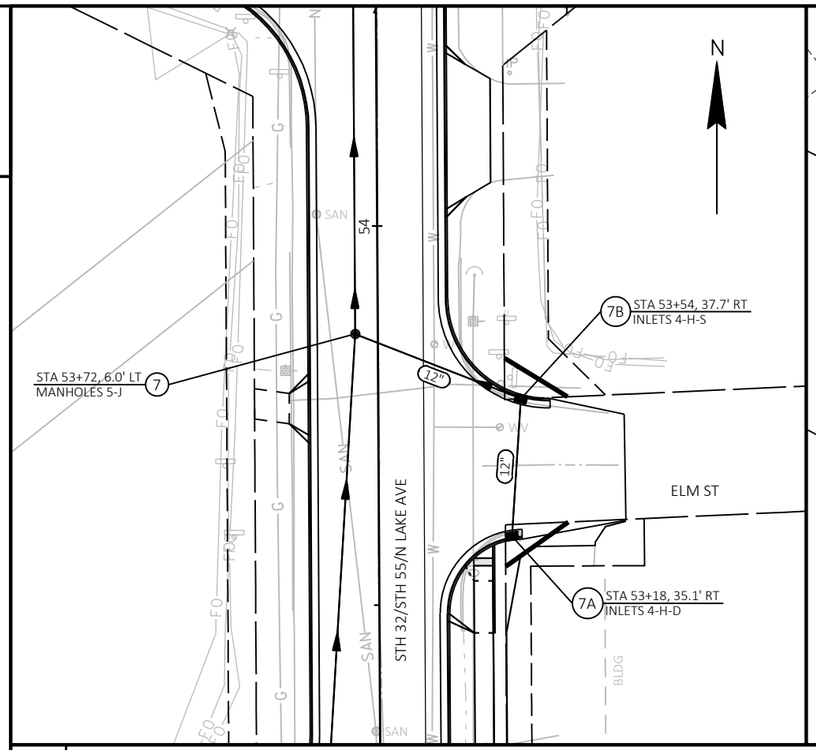

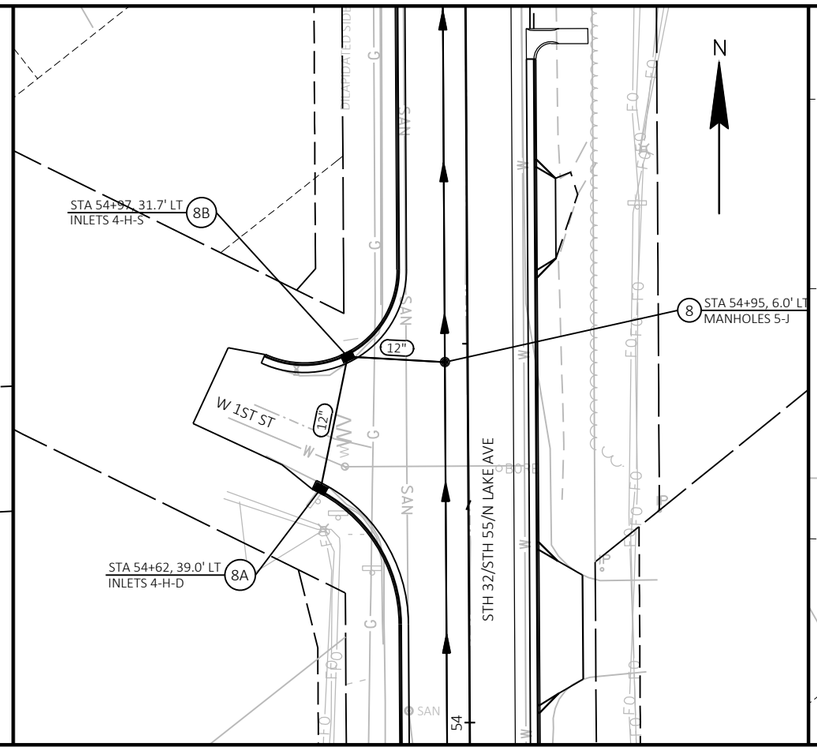

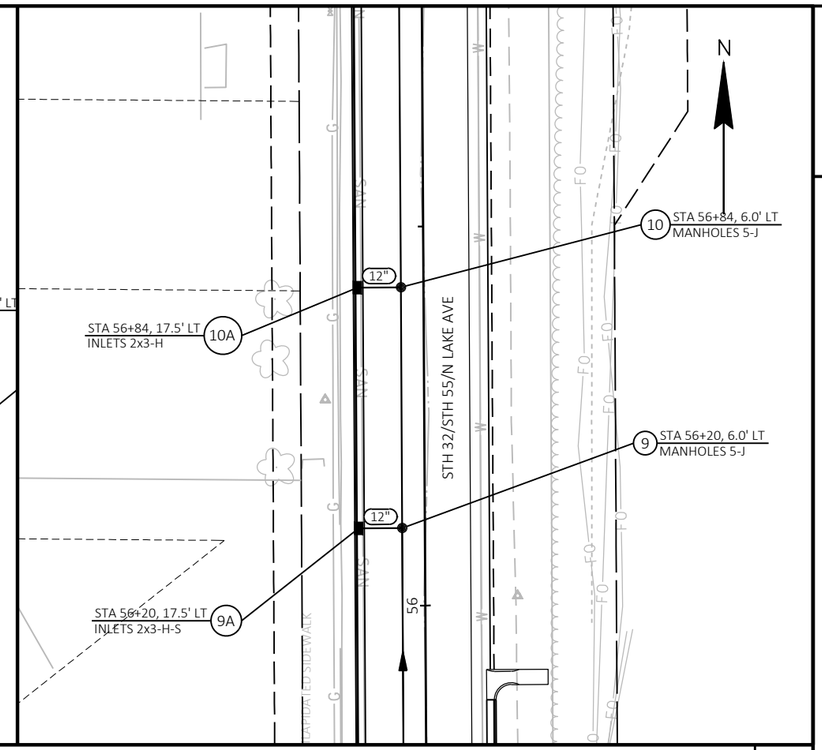

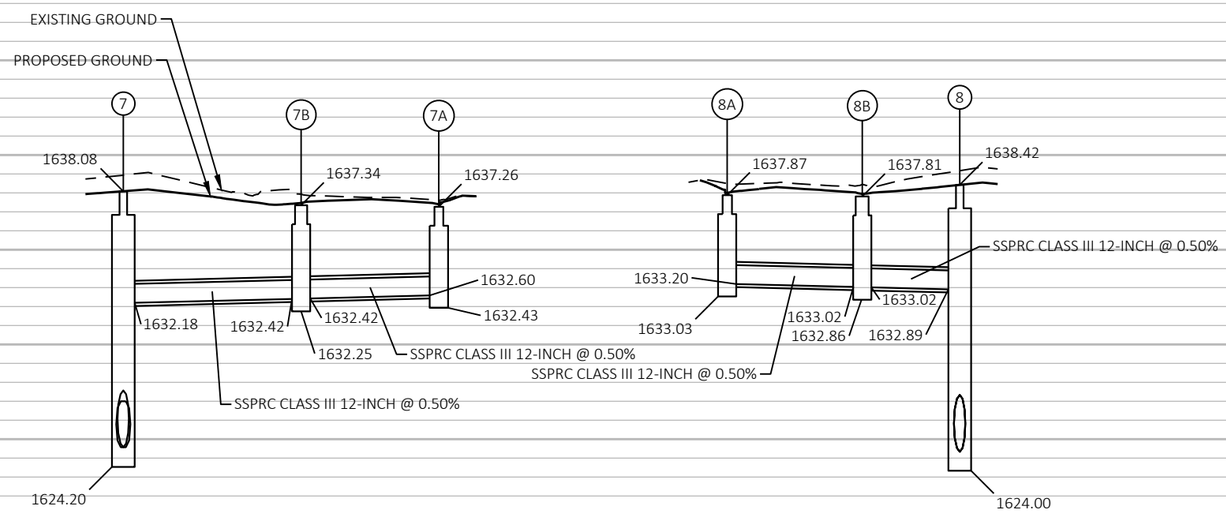

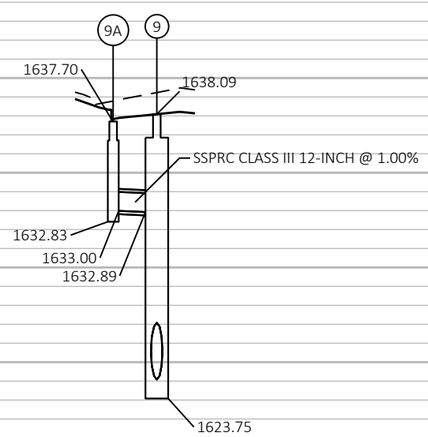

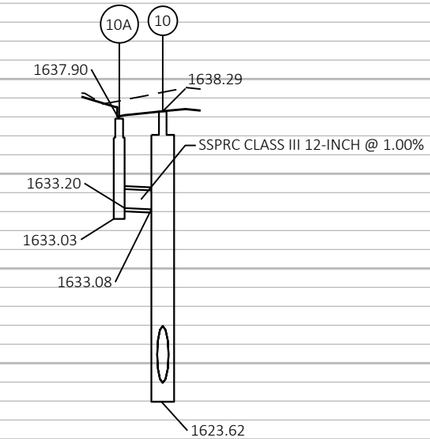

PROJECT NO: 9260-00-71	HWY: STH 32	COUNTY: FOREST	STORM SEWER	SHEET 37 E

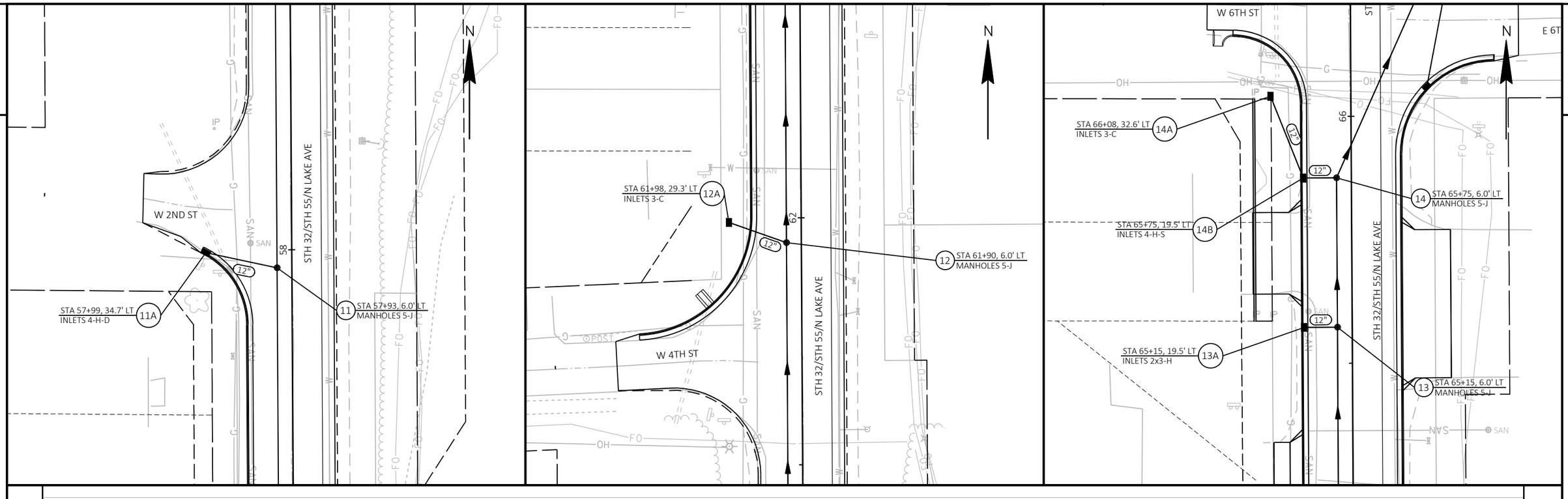

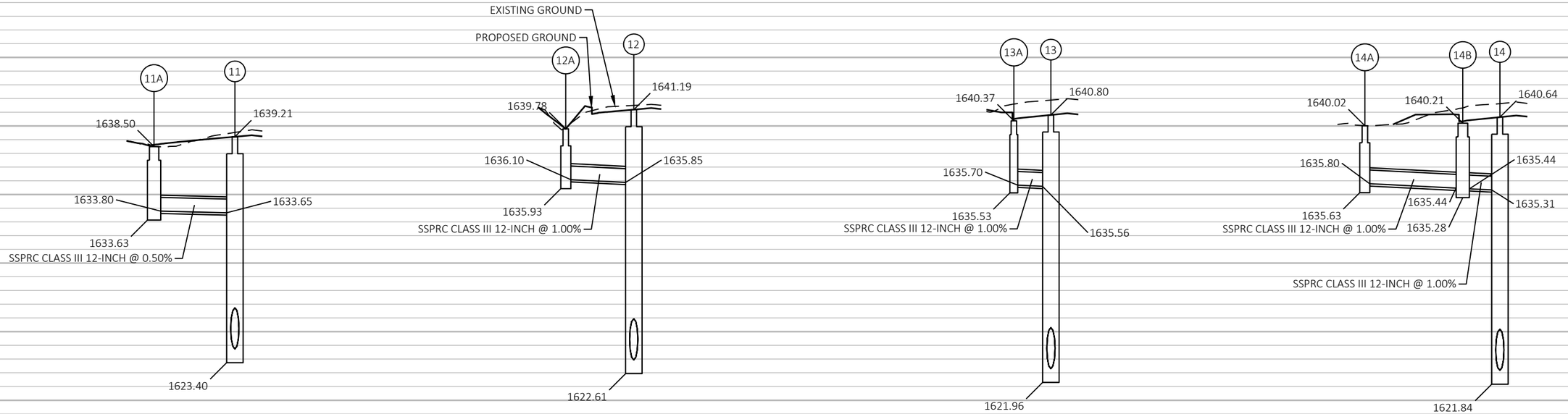

PROJECT NO: 9260-00-71	HWY: STH 32	COUNTY: FOREST	STORM SEWER	SHEET 38 E

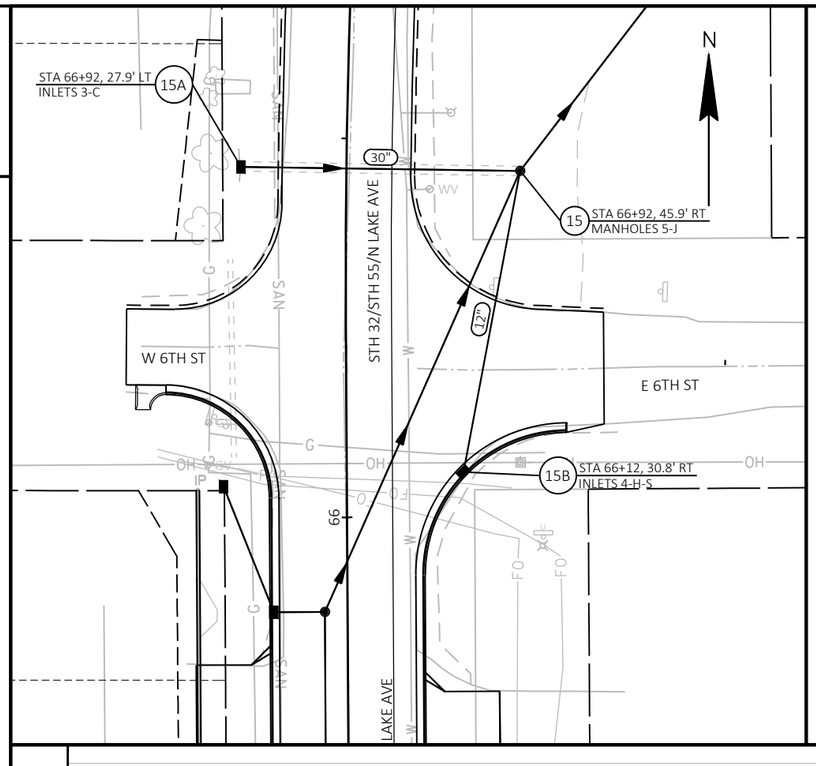

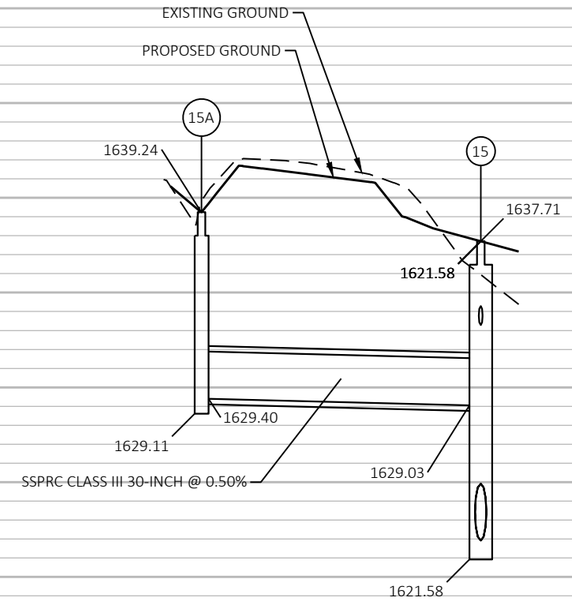

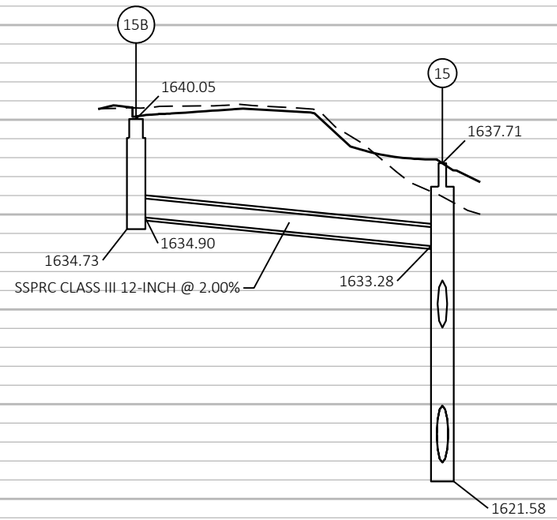

PROJECT NO: 9260-00-71	HWY: STH 32	COUNTY: FOREST	STORM SEWER	SHEET 39 E

NOTES

UTILIZE SEEDING MIXTURE NO. 20 FOR ENTIRE POND AREA.

POND TO BE A MINIMUM OF 400' FROM ANY COMMUNITY WELLS. CLOSEST COMMUNITY WELL IS WELL NO. 3 TO THE SOUTH.

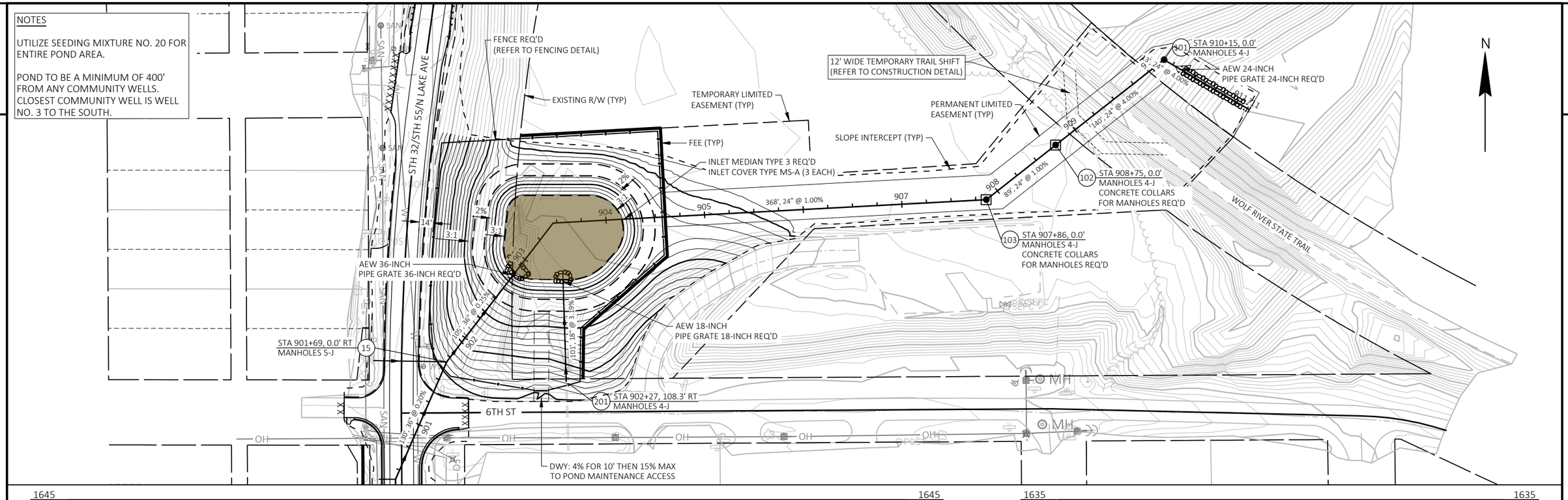

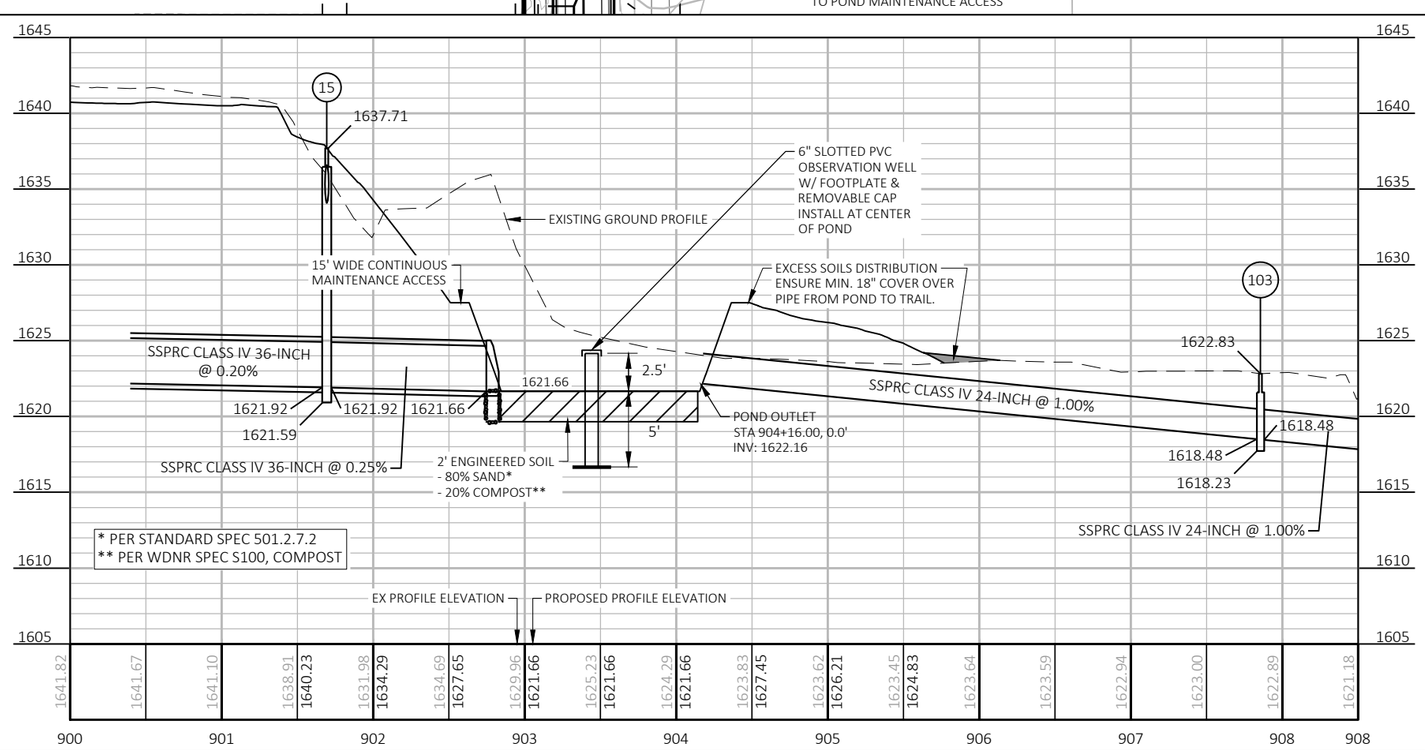

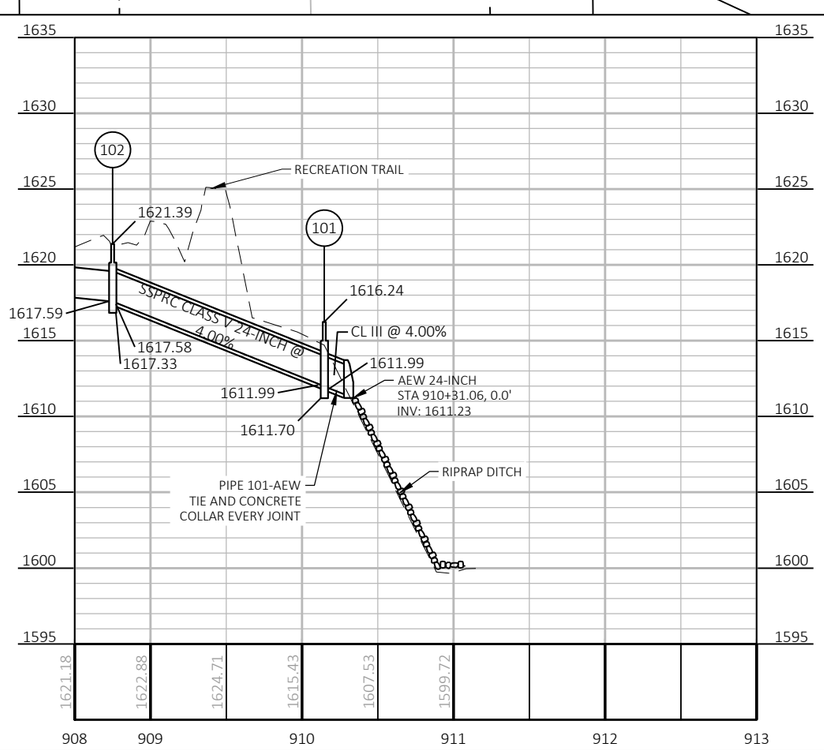

PROJECT NO: 9260-00-71	HWY: STH 32	COUNTY: FOREST	STORMWATER POND & OUTFALL PIPE	SHEET 40	E

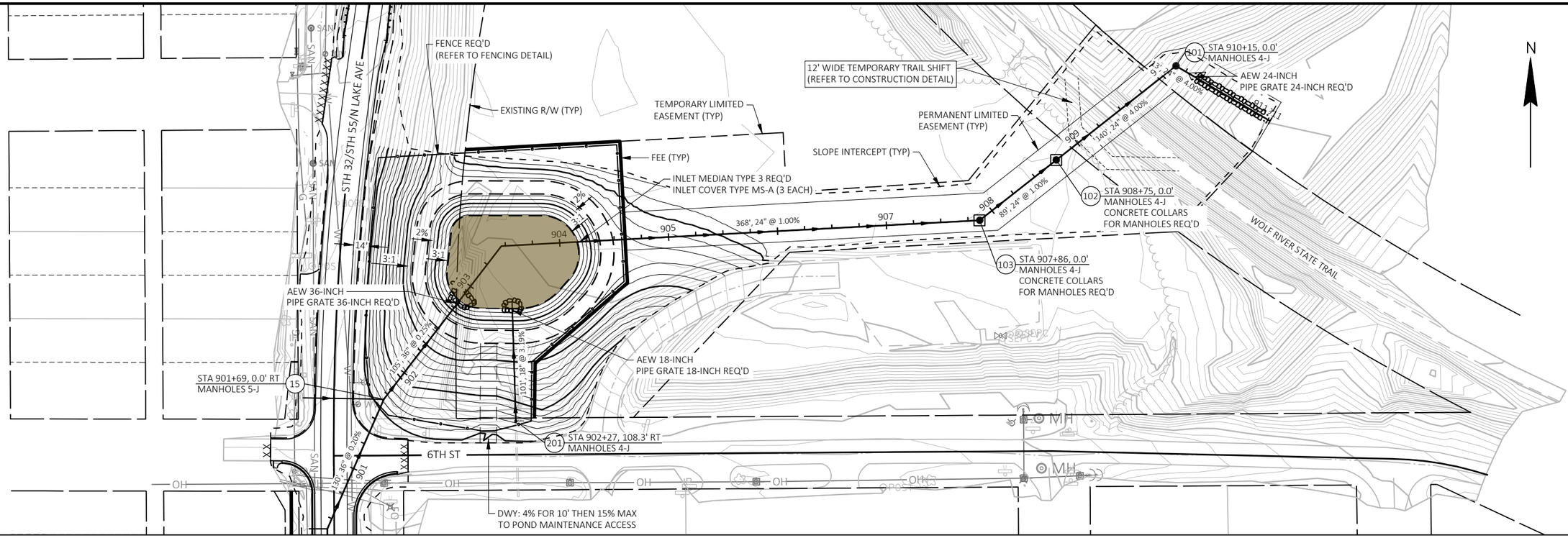

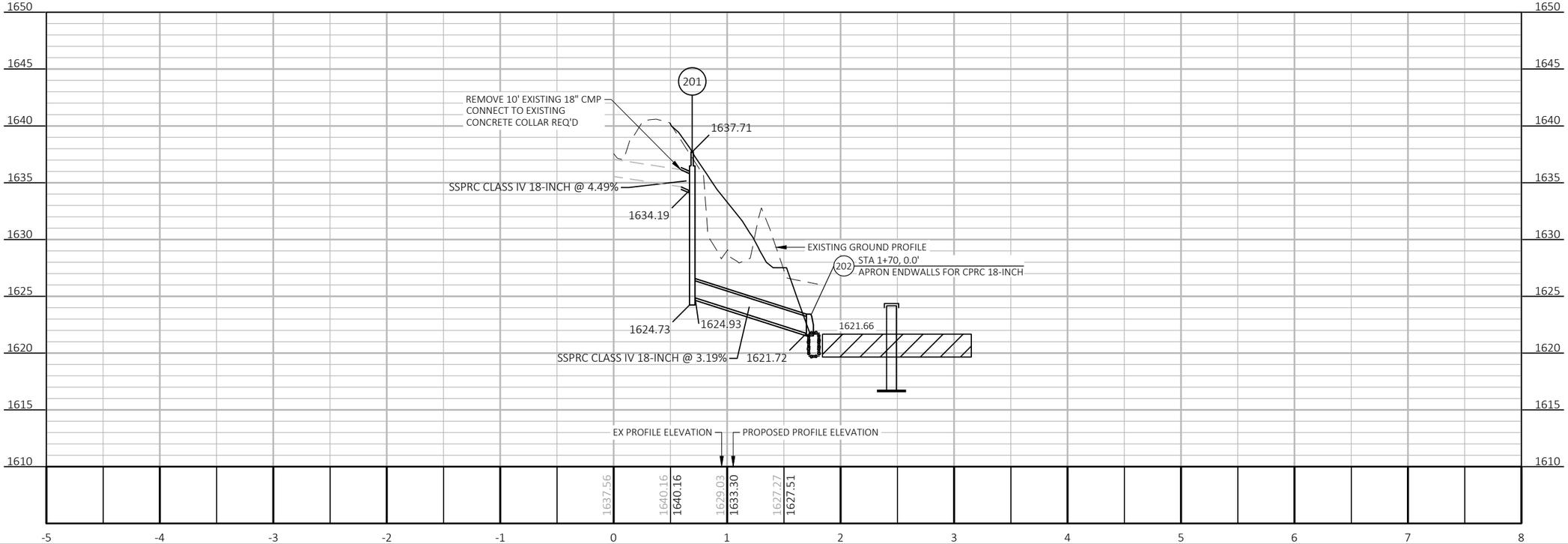

PROJECT NO: 9260-00-71	HWY: STH 32	COUNTY: FOREST	STORMWATER POND & OUTFALL PIPE	SHEET 41	E

2

2

GLEN STREET

MH 111 STA 49+91.82, O/S 0.22
EXISTING RIM EL: 1635.27
PROPOSED RIM EL: 1634.36
8" N. INV 1625.72
8" E. INV 1625.77
8" S. INV 1625.67

FIELD VERIFY HYDRANT LEAD LOCATION AND PROVIDE 4" THICK INSULATION, 8' WIDE. SEE INSULATION DETAIL

RAILWAY LANE

SUPPORT 8" CIPP (FIBERGLASS) SANITARY SEWER DURING STORM SEWER INSTALLATION AND PROVIDE 4" THICK INSULATION, 8' WIDE ABOVE AND BELOW THE SANITARY SEWER PIPE. SEE INSULATION DETAIL

HWY 32 / 55

47+00 48+00 49+00 50+00 51+00 52+00 53+00

HWY 32 / 55

MATCHLINE 53+50

REMOVE EXISTING CORPORATION STOP AND PROVIDE REPAIR CLAMP OVER HOLE

MH 112 STA 52+66.67, O/S 1.06
EXISTING RIM EL: 1638.02
PROPOSED RIM EL: 1637.13
8" N. INV 1627.92
8" S. INV 1627.87

ELM STREET

NOTE:
1. CENTER 8' WIDE INSULATION OVER SANITARY SEWER AND WATER MAIN.
2. CENTER 4' WIDE INSULATION OVER WATER SERVICES.

LEGEND:

- 4-INCH POLYSTYRENE INSULATION BOARD
- (SMA) SANITARY MANHOLE CASTING ELEVATION ADJUSTMENT
- (VBA) VALVE BOX ELEVATION ADJUSTMENT
- [W] REPLACE EXISTING WATER SERVICE
- [S] REPLACE SANITARY SEWER LATERAL

1ST STREET

MH 113 STA 54+03.15, O/S 16.08
EXISTING RIM EL: 1639.02
PROPOSED RIM EL: 1638.13
8" N. INV 1628.77
8" S. INV 1628.72

PROVIDE 12' x 8' x 4" INSULATION OVER SANITARY SEWER AND UNDER CATCH BASIN

2ND STREET

MH 1 STA 58+02.78, O/S 16.69
EXISTING RIM EL: 1639.06
PROPOSED RIM EL: 1639.09
8" N. INV 1630.56
8" W. INV 1630.76
8" S. INV 1630.56

REPLACE 38' OF 8" SANITARY SEWER

CONNECT TO EXISTING SANITARY SEWER WITH TRANSITION COUPLING

32' x 8' x 4" THICK INSULATION. PROVIDE INSULATION ABOVE AND BELOW THE SANITARY SEWER.

CONNECT TO EXISTING SANITARY SEWER WITH TRANSITION COUPLING

MH 116 STA 59+69.24, O/S 18.56
EXISTING RIM EL: 1639.50
PROPOSED RIM EL: 1640.00
8" N. INV 1631.20
8" S. INV 1631.20

54+00 55+00 56+00 57+00 58+00 59+00 60+00 61+

HWY 32 / 55

HWY 32 / 55

MATCHLINE 53+50

MATCHLINE 61+00

CONNECT TO EXISTING WATER MAIN WITH SOLID SLEEVE

32' x 8' x 4" THICK INSULATION. PROVIDE INSULATION ABOVE AND BELOW THE WATER MAIN.

CONNECT TO EXISTING WATER MAIN WITH SOLID SLEEVE

REPLACE 40' OF 8" WATER MAIN

PROJECT NO: 9260-00-81	HWY: STH 32	COUNTY: FOREST	SANITARY SEWER AND WATER MAIN	SHEET 42	E

FILE NAME : Q:\CRANU\24001 - STH 32 UTILITY IMPROVEMENTS\CAD\C3D\SHEETSPLAN\023001-UP.DWG
LAYOUT NAME - PRE 42

PLOT DATE : 10/17/2025 8:33 AM PLOT BY : CHRIS BURNS PLOT NAME : PLOT SCALE : 1 IN:50 FT

WISDOT/CADDS SHEET 44

2

2

MH 118 STA 62+19.36, O/S 18.04
EXISTING RIM EL: 1641.06
PROPOSED RIM EL: 1641.05
8" N. INV 1632.17
8" S. INV 1632.17

MH 117 STA 65+21.09, O/S 17.75
EXISTING RIM EL: 1641.59
PROPOSED RIM EL: 1640.54
8" N. INV 1633.34
8" S. INV 1633.34

INSULATE SANITARY SEWER
8' WIDE X 4" THICK. SEE DETAIL
STA 65+00 TO STA 67+50

4TH STREET

6TH STREET

MATCHLINE 61+00

MATCHLINE 68+50

HWY 32 / 55

62+00 63+00 64+00 65+00 66+00 67+00 68+00

STA 61+14.08
EXISTING GRADE: 1640.30
PROPOSED GRADE: 1638.77

MH 117 STA 64+73, O/S 54
EXISTING RIM EL: 1642.20
8" E. INV 1637.00
8" W. INV 1637.00

CONNECT TO EXISTING WATER MAIN WITH SOLID SLEEVE

CONNECT TO EXISTING WATER MAIN WITH SOLID SLEEVE

REPLACE 40' OF 8" WATER MAIN

32' x 8' x 4" THICK INSULATION. PROVIDE INSULATION ABOVE AND BELOW THE WATER MAIN.

LEGEND:

- 4-INCH POLYSTYRENE INSULATION BOARD
- (SMA) SANITARY MANHOLE CASTING ELEVATION ADJUSTMENT
- (VBA) VALVE BOX ELEVATION ADJUSTMENT
- [W] REPLACE EXISTING WATER SERVICE
- [S] REPLACE SANITARY SEWER LATERAL

MH 103
STA 70+26.26, O/S 50.02
EXISTING RIM EL: 1643.34
8" N. INV 1634.74

MH 109
STA 73+15.46, O/S 88.64
EXISTING RIM EL: 1636.83

7TH STREET

LAKE AVENUE

MATCHLINE 68+50

HWY 32 / 55

69+00 70+00 71+00 72+00 73+00 74+00 75+00 76+00

MH 119
STA 69+04.82, O/S 32.13
EXISTING RIM EL: 1643.31
8" S. INV 1635.11

PROJECT NO: 9260-00-81	HWY: STH 32	COUNTY: FOREST	SANITARY SEWER AND WATER MAIN	SHEET 43	E

FILE NAME : Q:\CRANU\24001 - STH 32 UTILITY IMPROVEMENTS\CAD\C3D\SHEETSPLAN\023001-UP.DWG
LAYOUT NAME - PRE 43

PLOT DATE : 10/17/2025 8:33 AM PLOT BY : CHRIS BURNS PLOT NAME : PLOT SCALE : 1 IN:50 FT

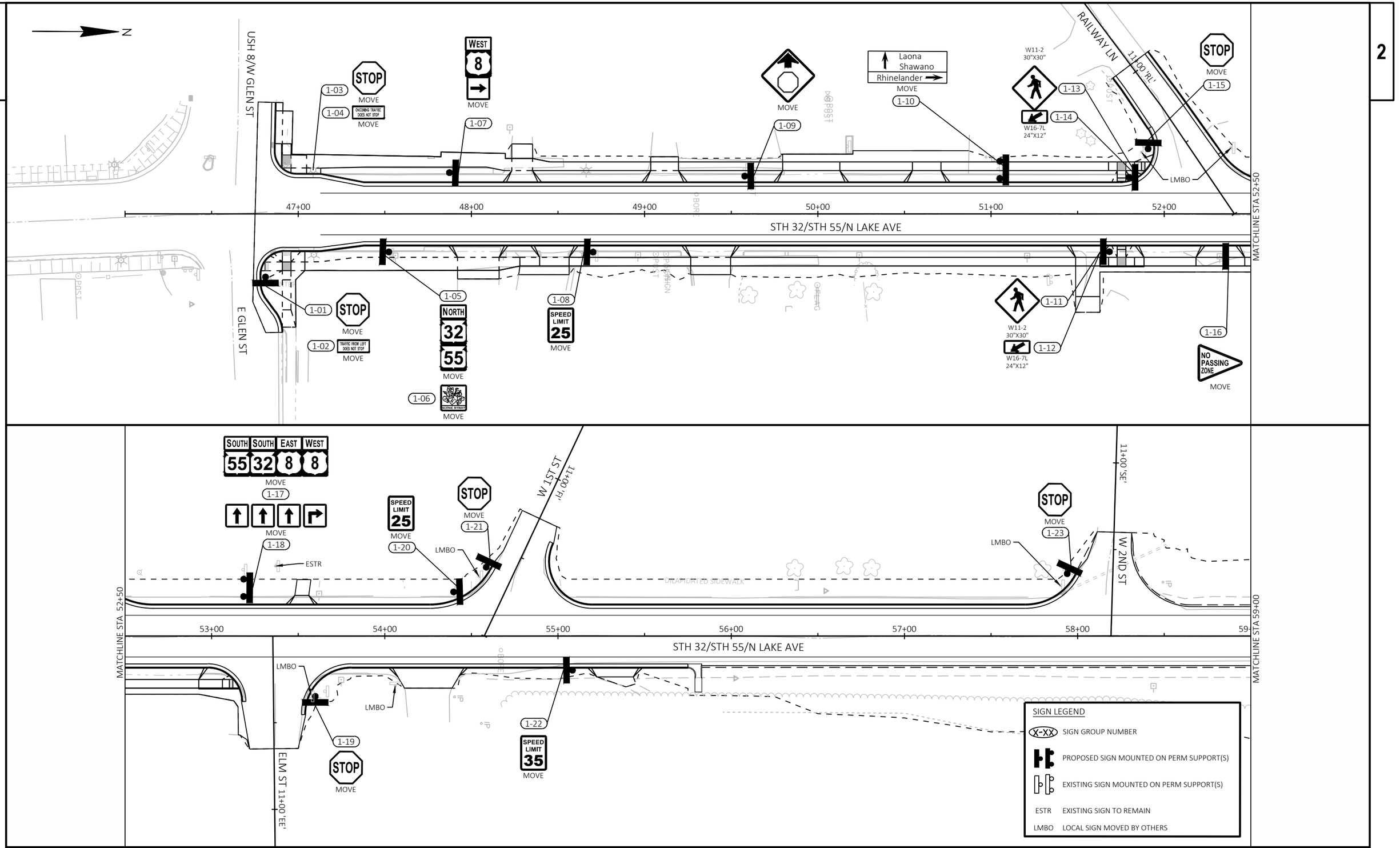

PROJECT NO: 9260-00-71	HWY: STH 32	COUNTY: FOREST	PERMANENT SIGNING	SHEET 44	E

FILE NAME : N:\PDS\C3D\92600001\SHEETSPLAN\023201-PS.DWG
LAYOUT NAME - 01
PLOT DATE : 10/27/2025 5:11 PM
PLOT BY : MATT PAYNE
PLOT NAME :
PLOT SCALE : 1 IN:50 FT
WISDOT/CADDS SHEET 44

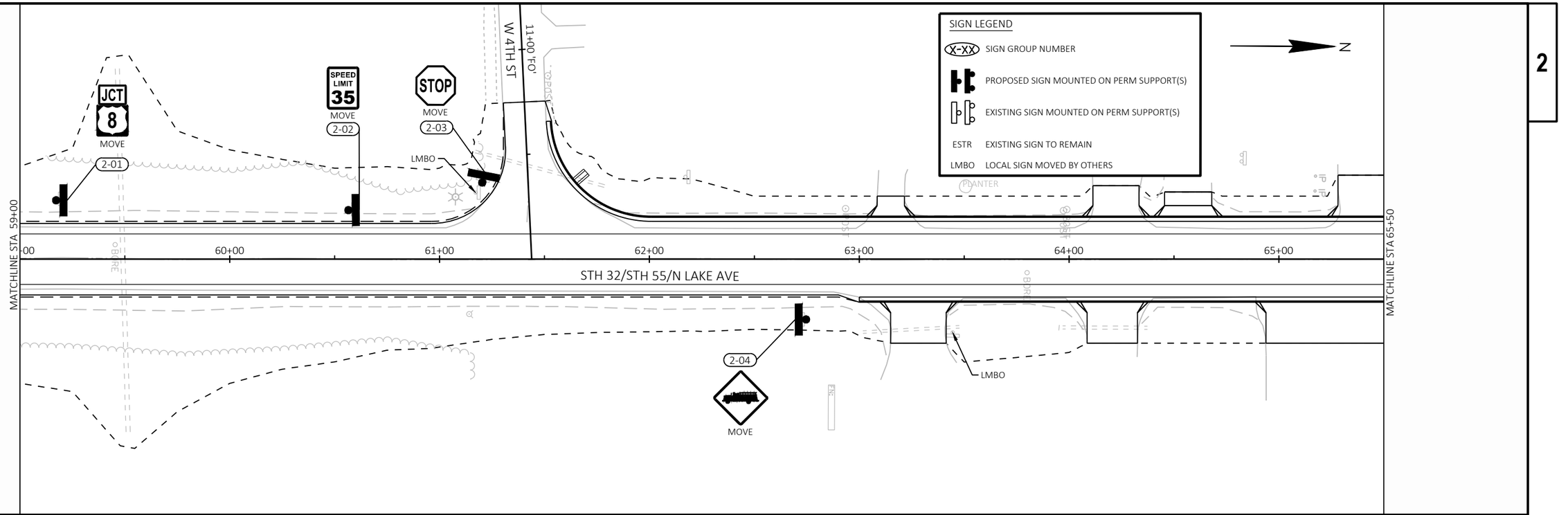

PROJECT NO: 9260-00-71	HWY: STH 32	COUNTY: FOREST	PERMANENT SIGNING	SHEET 45	E

FILE NAME : N:\PDS\C3D\92600001\SHEETSPLAN\023201-PS.DWG
LAYOUT NAME - 02
PLOT DATE : 10/27/2025 5:11 PM
PLOT BY : MATT PAYNE
PLOT NAME :
PLOT SCALE : 1 IN:50 FT

2

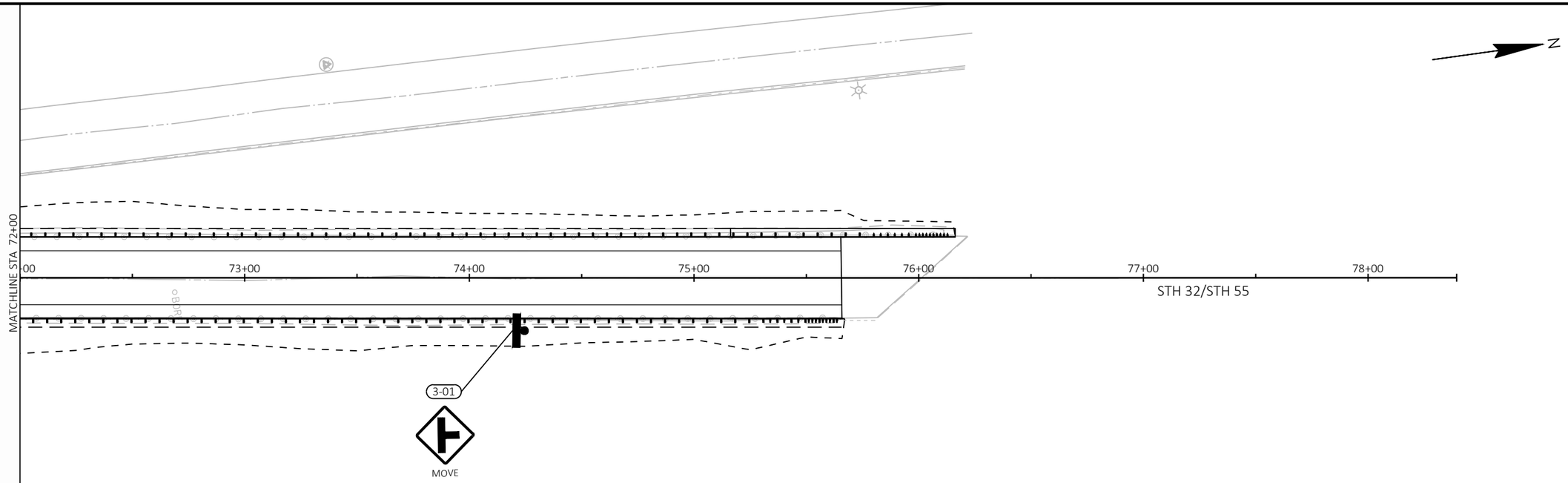

SIGN LEGEND

X-XX	SIGN GROUP NUMBER
	PROPOSED SIGN MOUNTED ON PERM SUPPORT(S)
	EXISTING SIGN MOUNTED ON PERM SUPPORT(S)
ESTR	EXISTING SIGN TO REMAIN
LMBO	LOCAL SIGN MOVED BY OTHERS

PROJECT NO: 9260-00-71	HWY: STH 32	COUNTY: FOREST	PERMANENT SIGNING	SHEET 46	E

FILE NAME : N:\PDS\C3D\92600001\SHEETSPLAN\023201-PS.DWG
LAYOUT NAME - 03
PLOT DATE : 10/27/2025 5:11 PM
PLOT BY : MATT PAYNE
PLOT NAME :
PLOT SCALE : 1 IN:50 FT
WISDOT/CADDS SHEET 44

2

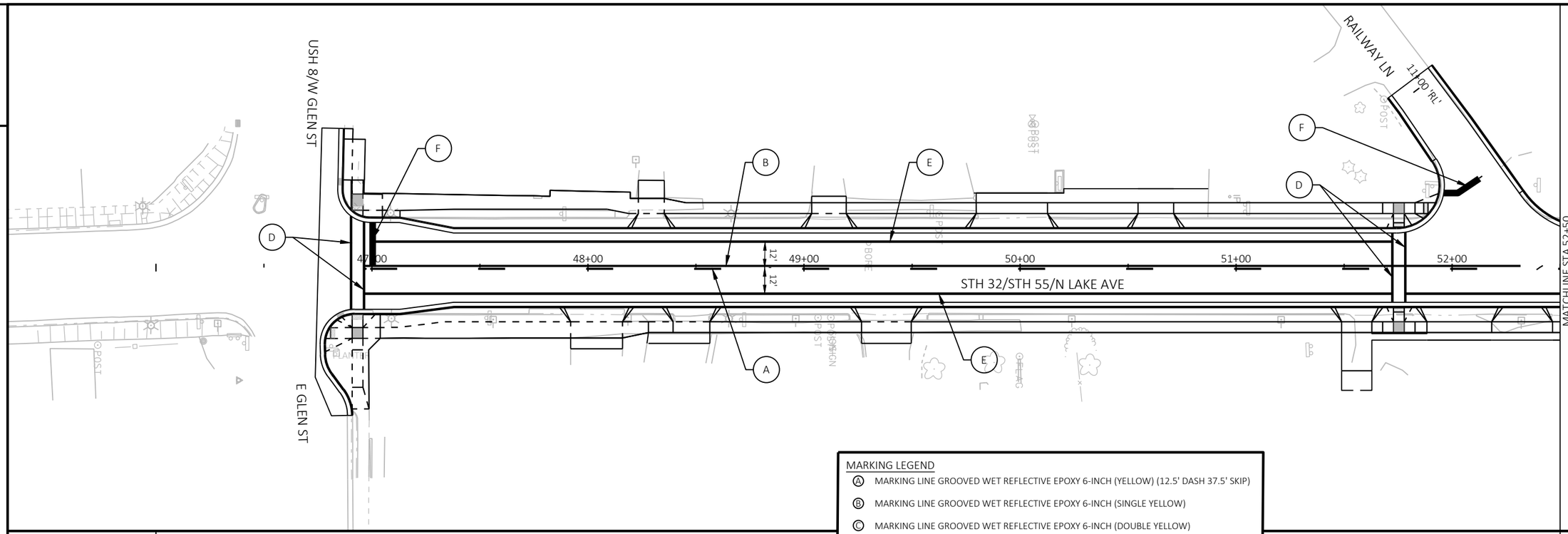

MARKING LEGEND

- (A) MARKING LINE GROOVED WET REFLECTIVE EPOXY 6-INCH (YELLOW) (12.5' DASH 37.5' SKIP)
- (B) MARKING LINE GROOVED WET REFLECTIVE EPOXY 6-INCH (SINGLE YELLOW)
- (C) MARKING LINE GROOVED WET REFLECTIVE EPOXY 6-INCH (DOUBLE YELLOW)
- (D) MARKING CROSSWALK EPOXY TRANSVERSE LINE 6-INCH
- (E) MARKING LINE GROOVED WET REFLECTIVE EPOXY 6-INCH (SINGLE WHITE)
- (F) MARKING STOP LINE EPOXY 18-INCH

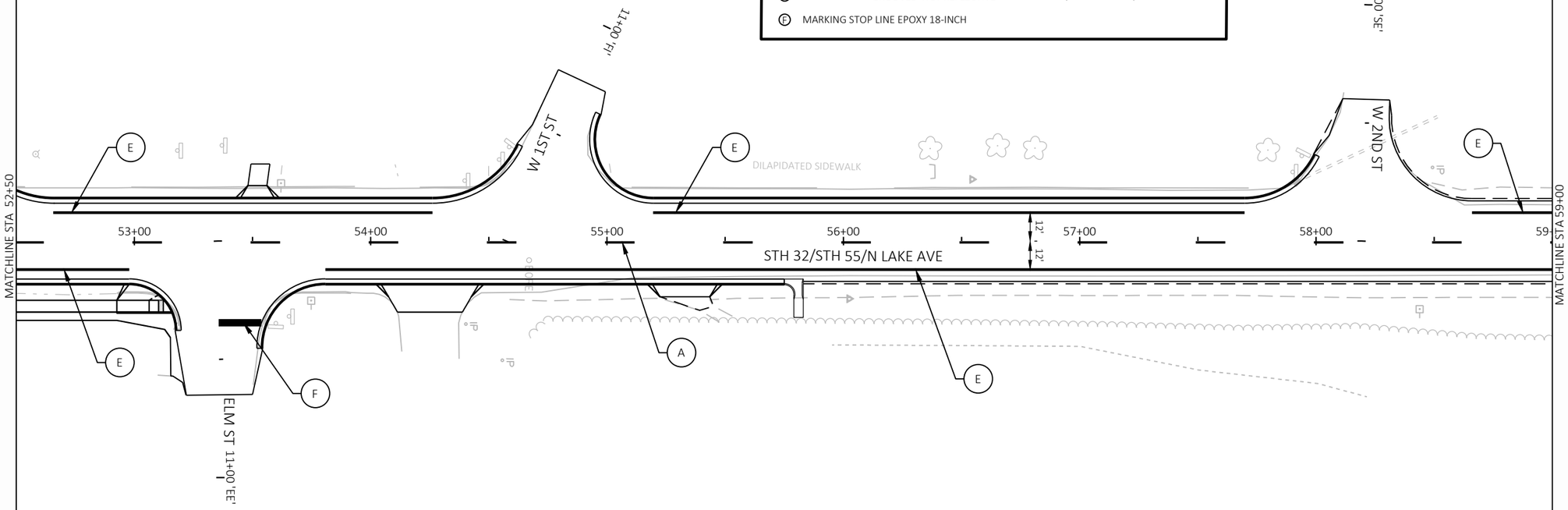

PROJECT NO: 9260-00-71	HWY: STH 32	COUNTY: FOREST	PAVEMENT MARKING	SHEET 47 E

FILE NAME : N:\PDS\C3D\92600001\SHEETSPLAN\024501-PM.DWG
LAYOUT NAME - 01

PLOT DATE : 10/27/2025 5:25 PM PLOT BY : MATT PAYNE PLOT NAME : PLOT SCALE : 1 IN:50 FT

2

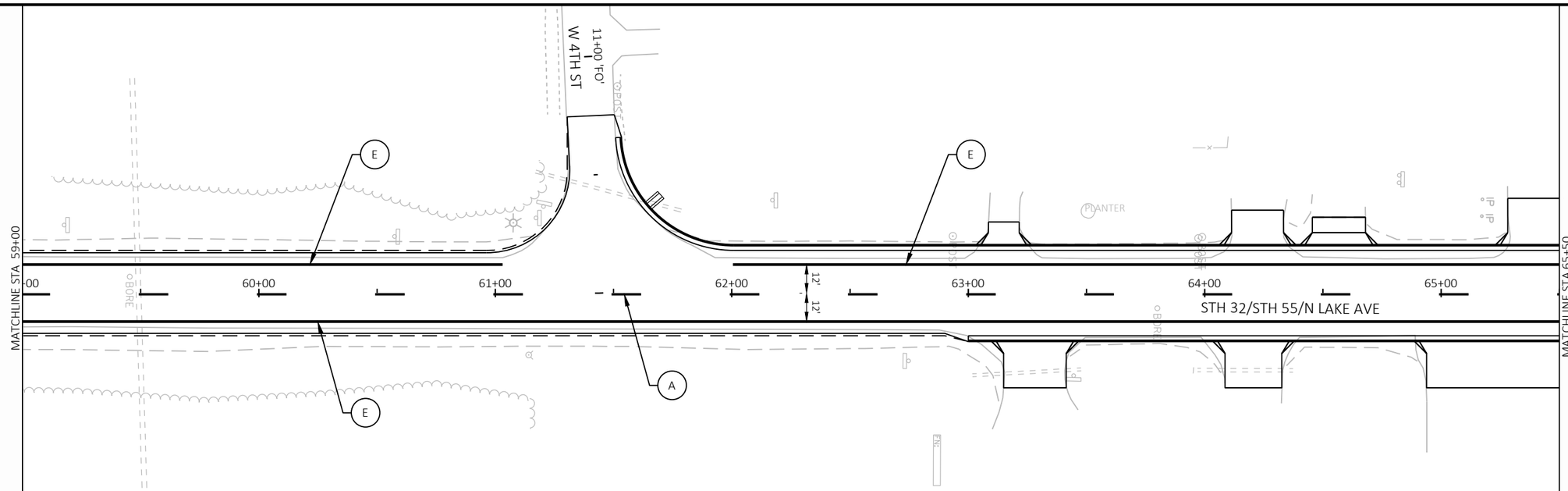

MARKING LEGEND

- Ⓐ MARKING LINE GROOVED WET REFLECTIVE EPOXY 6-INCH (YELLOW) (12.5' DASH 37.5' SKIP)
- Ⓑ MARKING LINE GROOVED WET REFLECTIVE EPOXY 6-INCH (SINGLE YELLOW)
- Ⓒ MARKING LINE GROOVED WET REFLECTIVE EPOXY 6-INCH (DOUBLE YELLOW)
- Ⓓ MARKING CROSSWALK EPOXY TRANSVERSE LINE 6-INCH
- Ⓔ MARKING LINE GROOVED WET REFLECTIVE EPOXY 6-INCH (SINGLE WHITE)
- Ⓕ MARKING STOP LINE EPOXY 18-INCH

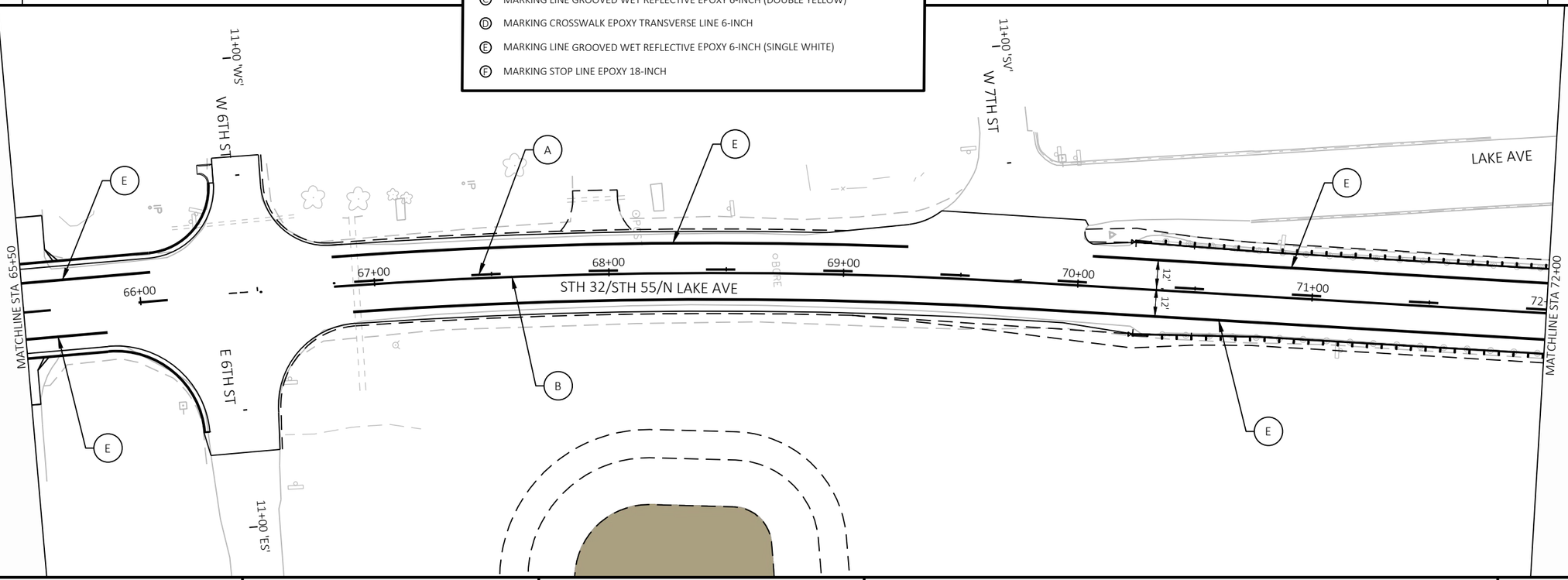

PROJECT NO: 9260-00-71	HWY: STH 32	COUNTY: FOREST	PAVEMENT MARKING	SHEET 48	E

2

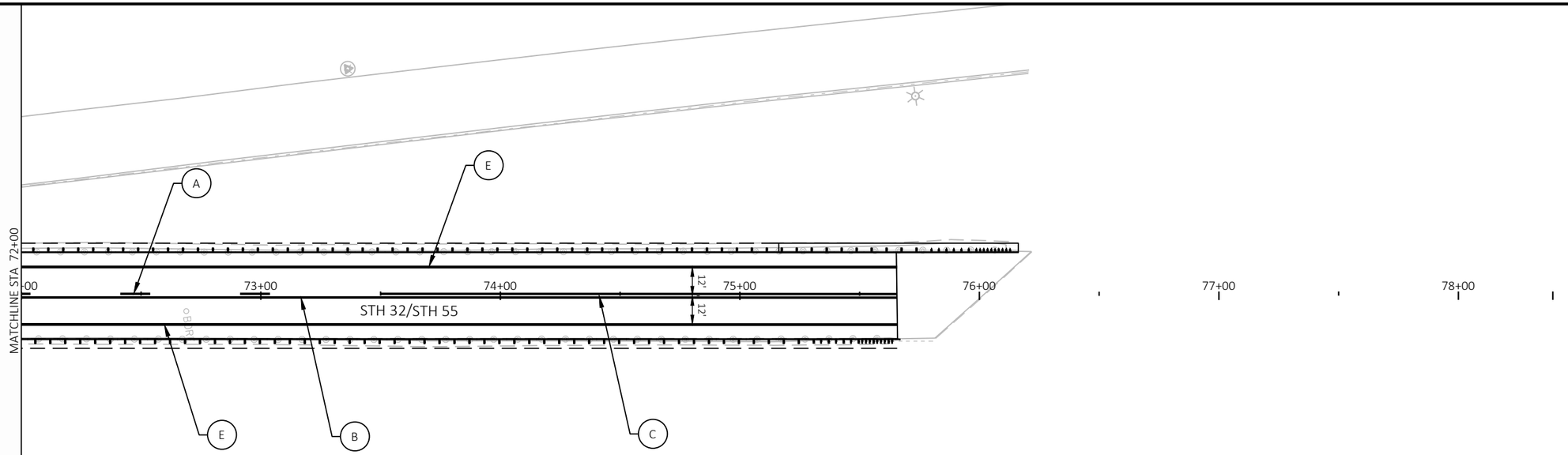

MARKING LEGEND

- Ⓐ MARKING LINE GROOVED WET REFLECTIVE EPOXY 6-INCH (YELLOW) (12.5' DASH 37.5' SKIP)
- Ⓑ MARKING LINE GROOVED WET REFLECTIVE EPOXY 6-INCH (SINGLE YELLOW)
- Ⓒ MARKING LINE GROOVED WET REFLECTIVE EPOXY 6-INCH (DOUBLE YELLOW)
- Ⓓ MARKING CROSSWALK EPOXY TRANSVERSE LINE 6-INCH
- Ⓔ MARKING LINE GROOVED WET REFLECTIVE EPOXY 6-INCH (SINGLE WHITE)
- Ⓕ MARKING STOP LINE EPOXY 18-INCH

PROJECT NO: 9260-00-71	HWY: STH 32	COUNTY: FOREST	PAVEMENT MARKING	SHEET 49	E

2

NOTES:

(A) SEE SDD "BARRICADES AND SIGNS FOR MAINLINE CLOSURES" DETAILS A & E.

(B) SEE SDD "BARRICADES AND SIGNS FOR MAINLINE CLOSURES" DETAILS B & E.

(C) SEE SDD "BARRICADES AND SIGNS FOR SIDEROAD CLOSURES" DETAIL 4.

LEGEND:

SIGN ON PERMANENT SUPPORT

N

BEGIN PROJECT
STA 46+75.09
Y=571278.570
X=835833.676

N HAZELDELL AVE

END ROAD WORK
G20-2A
48"X24"

USH 8 / STH 32 / STH 55 / LAKE AVE

USH 8 / W GLEN ST

W BROAD ST

RAILWAY LN

1ST ST

2ND ST

W 4TH ST

W 6TH ST

W 7TH ST

LAKE AVE

STH 32 / STH 55 / LAKE AVE

E 6TH ST

50 55 60 65 70 75

END PROJECT
STA 75+65.63

STH 32 / STH 55

END ROAD WORK
G20-2A
48"X24"

PLACE FIXED MESSAGE SIGNS 7 DAYS PRIOR TO BEGINNING DETOUR. ADD "FOLLOW DETOUR" PLAQUE ONCE ROAD IS CLOSED.

WIS 32/55
ROAD CLOSED
BEGINS XXX-XX
G20-57C
72"X36"

FOLLOW DETOUR
G20-57C
66"X10"

N PARK AVE

E GLEN ST

E ELM ST

W 4TH ST

CITY OF CRANDON

WIS 32/55
ROAD CLOSED
BEGINS XXX-XX
G20-57C
72"X36"

FOLLOW DETOUR
G20-57C
66"X10"

PLACE FIXED MESSAGE SIGNS 7 DAYS PRIOR TO BEGINNING DETOUR. ADD "FOLLOW DETOUR" PLAQUE ONCE ROAD IS CLOSED.

PROJECT NO: 9260-00-71	HWY: STH 32	COUNTY: FOREST	TRAFFIC CONTROL OVERVIEW	SHEET 50	E

FILE NAME : N:\PDS\C3D\92600001\SHEETSPLAN\025100-TC-TC OVERVIEW.DWG
LAYOUT NAME - 01
PLOT DATE : 10/21/2025 2:39 PM
PLOT BY : MATT PAYNE
PLOT NAME :
PLOT SCALE : 1 IN:400 FT
WISDOT/CADDS SHEET 42

2

STAGE 1B

SIDEWALK CLOSED AHEAD R9-9A 30"X18"
DETOUR M4-9BR 30"X24"
DETOUR M4-9BL 30"X24"
DETOUR M4-9BR 30"X24"
DETOUR M4-9BL 30"X24"

USH 8/W GLEN ST

HAZELDELL AVE

STAGE 1A: CLOSE STH 32 TO THRU TRAFFIC, PROVIDE LOCAL ACCESS. COMPLETE REMOVALS AND STORM SEWER FROM APPROXIMATELY STA 47+13 TO NORTH. LEAVE EXISTING SIDEWALK IN-PLACE. PEDESTRIANS TO UTILIZE EXISTING CROSSWALK NEAR STA 46+90.

STAGE 1B: INSTALL STAGE 1B TEMPORARY PEDESTRIAN ACCOMMODATIONS FOR SIDEWALK CLOSURE ALONG WEST SIDE OF STH 32. COMPLETE REMOVALS AND STORM SEWER ALONG WEST SIDE OF STH 32. CONSTRUCT SIDEWALK AND CURB RAMPS ALONG WEST SIDE OF STH 32.

SIDEWALK CLOSED R9-9 24"X12"
SIDEWALK CLOSED R9-9 24"X12"
47+00
15' TYP
15' TYP
SIDEWALK CLOSED AHEAD R9-9A 30"X18"
DETOUR M4-9BL 30"X24"
10' TYP
ROAD CLOSED TO THRU TRAFFIC R11-4 60"X30"
E GLEN ST
USH 8/STH 32/STH 55/N LAKE AVE
EXISTING R/W (TYP)
DETOUR M4-9BR 30"X24"
DETOUR M4-9BL 30"X24"
DETOUR M4-9BL 30"X24"
DETOUR M4-9BR 30"X24"
N

STAGE 2

SIDEWALK CLOSED AHEAD R9-9A 30"X18"
DETOUR M4-9BR 30"X24"
DETOUR M4-9BL 30"X24"

STAGE 2: INSTALL STAGE 2 TEMPORARY PEDESTRIAN ACCOMMODATIONS FOR SIDEWALK CLOSURE ALONG EAST SIDE OF STH 32.

USH 8/W GLEN ST

HAZELDELL AVE

DETOUR M4-9BR 30"X24"
DETOUR M4-9BL 30"X24"
DETOUR M4-9BR 30"X24"
DETOUR M4-9BL 30"X24"
SIDEWALK CLOSED R9-9 24"X12"
SIDEWALK CLOSED R9-9 24"X12"
47+00
15' TYP
15' TYP
SIDEWALK CLOSED R9-9 24"X12"
SIDEWALK CLOSED AHEAD R9-9A 30"X18"
DETOUR M4-9BL 30"X24"
10' TYP
TEMPORARY PEDESTRIAN CURB RAMP REQ'D REFER TO SDD TRAFFIC CONTROL, PEDESTRIAN ACCOMMODATION
E GLEN ST
ROAD CLOSED TO THRU TRAFFIC R11-4 60"X30"
PM6
DETOUR M4-9BL 30"X24"
DETOUR M4-9BR 30"X24"
DETOUR M4-9BR 30"X24"
TEMPORARY PEDESTRIAN SURFACE, REFER TO SDD TRAFFIC CONTROL, PEDESTRIAN ACCOMMODATION
EXISTING R/W (TYP)
USH 8/STH 32/STH 55/N LAKE AVE
DETOUR M4-9BR 30"X24"
DETOUR M4-9BL 30"X24"
DETOUR M4-9BL 30"X24"
DETOUR M4-9BR 30"X24"
N

NOTES:

SEE S.D.D. "TRAFFIC CONTROL, PEDESTRIAN ACCOMMODATION" FOR ADDITIONAL DETAILS AND DIMENSIONS.

SEE S.D.D. "TRAFFIC CONTROL, PEDESTRIAN ACCOMMODATION," DETAIL SIDEWALK DETOUR, SIDEWALK ON BOTH SIDES FOR SIGN LOCATION AND ADDITIONAL SIGNS REQ'D.

LEGEND

- TYPE III BARRICADE / WITH ATTACHED SIGN
- TRAFFIC CONTROL DRUM
- TRAFFIC CONTROL DRUM WITH TYPE C STEADY BURN LIGHT
- SIGN ON PERMANENT SUPPORT
- SIGN ON TEMPORARY SUPPORT
- PEDESTRIAN BARRICADE
- WORK AREA
- DIRECTION OF TRAFFIC
- TEMPORARY DETECTABLE WARNING FIELD
- TEMPORARY PEDESTRIAN SURFACE MATTING
- TEMPORARY PEDESTRIAN CURB RAMP
- PM6 MARKING LINE REMOVABLE TAPE 6-INCH
- TEMPORARY AUDIBLE MESSAGE DEVICES

PROJECT NO: 9260-00-71	HWY: STH 32	COUNTY: FOREST	TRAFFIC CONTROL - TEMPORARY PEDESTRIAN ACCOMMODATIONS	SHEET 51	E

2

STAGE 1B

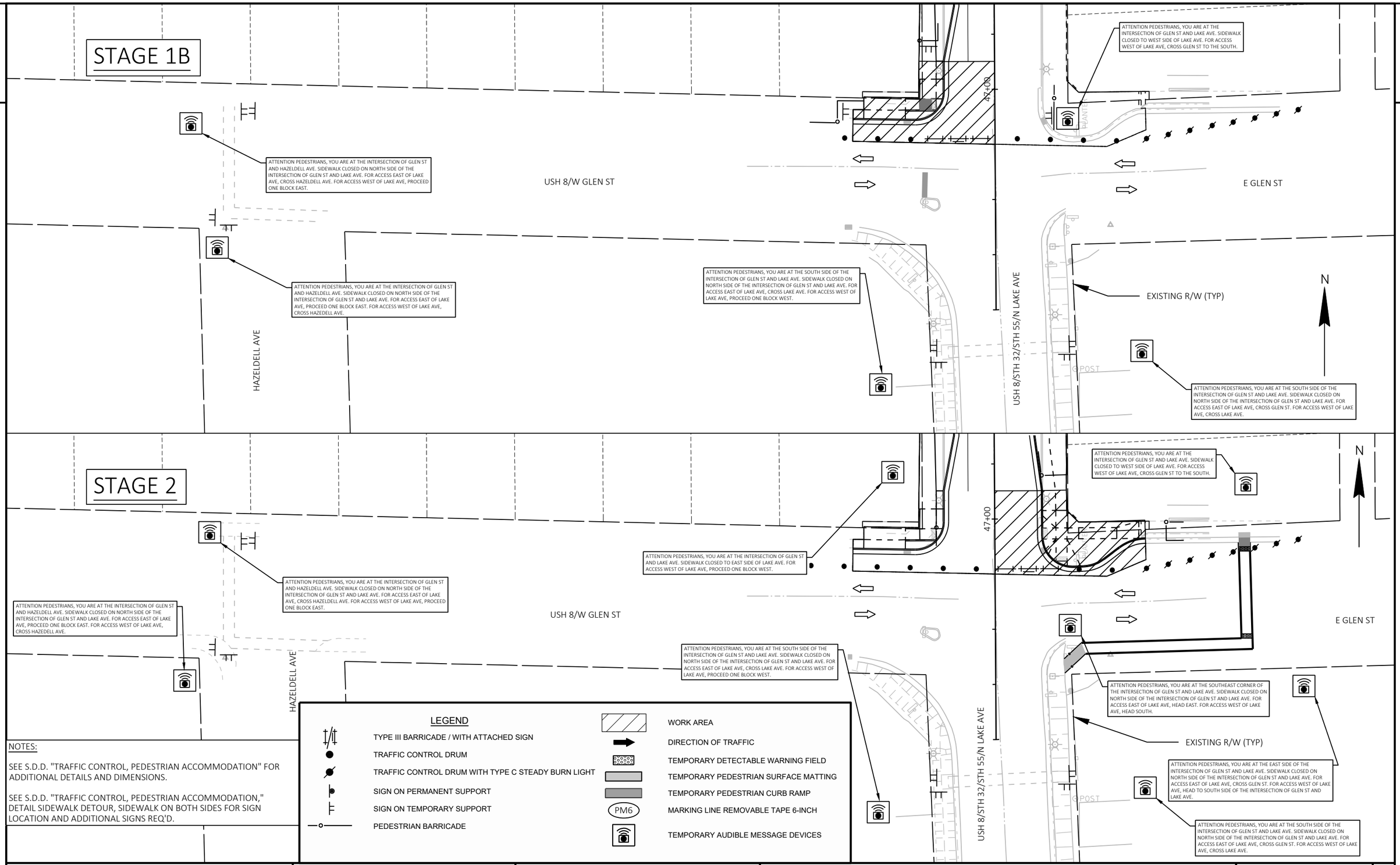

STAGE 2

NOTES:

SEE S.D.D. "TRAFFIC CONTROL, PEDESTRIAN ACCOMMODATION" FOR ADDITIONAL DETAILS AND DIMENSIONS.

SEE S.D.D. "TRAFFIC CONTROL, PEDESTRIAN ACCOMMODATION," DETAIL SIDEWALK DETOUR, SIDEWALK ON BOTH SIDES FOR SIGN LOCATION AND ADDITIONAL SIGNS REQ'D.

LEGEND

- TYPE III BARRICADE / WITH ATTACHED SIGN
- TRAFFIC CONTROL DRUM
- TRAFFIC CONTROL DRUM WITH TYPE C STEADY BURN LIGHT
- SIGN ON PERMANENT SUPPORT
- SIGN ON TEMPORARY SUPPORT
- PEDESTRIAN BARRICADE
- WORK AREA
- DIRECTION OF TRAFFIC
- TEMPORARY DETECTABLE WARNING FIELD
- TEMPORARY PEDESTRIAN SURFACE MATTING
- TEMPORARY PEDESTRIAN CURB RAMP
- PM6 — MARKING LINE REMOVABLE TAPE 6-INCH
- TEMPORARY AUDIBLE MESSAGE DEVICES

PROJECT NO: 9260-00-71	HWY: STH 32	COUNTY: FOREST	TRAFFIC CONTROL - TEMPORARY AUDIBLE DEVICE RECORDED MESSAGES	SHEET 52	E

2

2

N

ROAD WORK AHEAD
W20-1A
200' IN ADVANCE OF TRAIL SHIFT

W24-1R
100' IN ADVANCE OF TRAIL SHIFT

EXISTING R/W (TYP)

WO1-6
48"X24"

MAINTAIN ACCESS FROM TRAIL TO PARKING AREA AND RESTROOM FACILITIES

12' WIDE TEMPORARY TRAIL SHIFT (REFER TO CONSTRUCTION DETAIL)

PERMANENT LIMITED EASEMENT (TYP)

TEMPORARY LIMITED EASEMENT (TYP)

10' TYP

WO1-6
48"X24"

W24-1L
100' IN ADVANCE OF TRAIL SHIFT

ROAD WORK AHEAD
W20-1A
200' IN ADVANCE OF TRAIL SHIFT

SLOPE INTERCEPT (TYP)

WOLF RIVER STATE TRAIL

6TH ST

SEPC

SEPC

LEGEND

TYPE III BARRICADE WITH ATTACHED SIGN AND TYPE A FLASHING WARNING LIGHTS.

SIGN ON PERMANENT SUPPORT

TRAFFIC CONTROL DRUM WITH TYPE C STEADY BURN LIGHT
PLACE DRUMS ON THE PIPE EXCAVATION SIDE OF THE TRAIL SHIFT.

PROJECT NO: 9260-00-71	HWY: STH 32	COUNTY: FOREST	TRAFFIC CONTROL - TEMPORARY TRAIL SHIFT	SHEET 53	E

FILE NAME : N:\PDS\C3D\92600001\SHEETSPLAN\025102-TC.DWG
LAYOUT NAME - Trail Shift

PLOT DATE : 10/10/2025 1:51 PM PLOT BY : ED OCHS PLOT NAME : PLOT SCALE : 1 IN:50 FT

WISDOT/CADDS SHEET 41

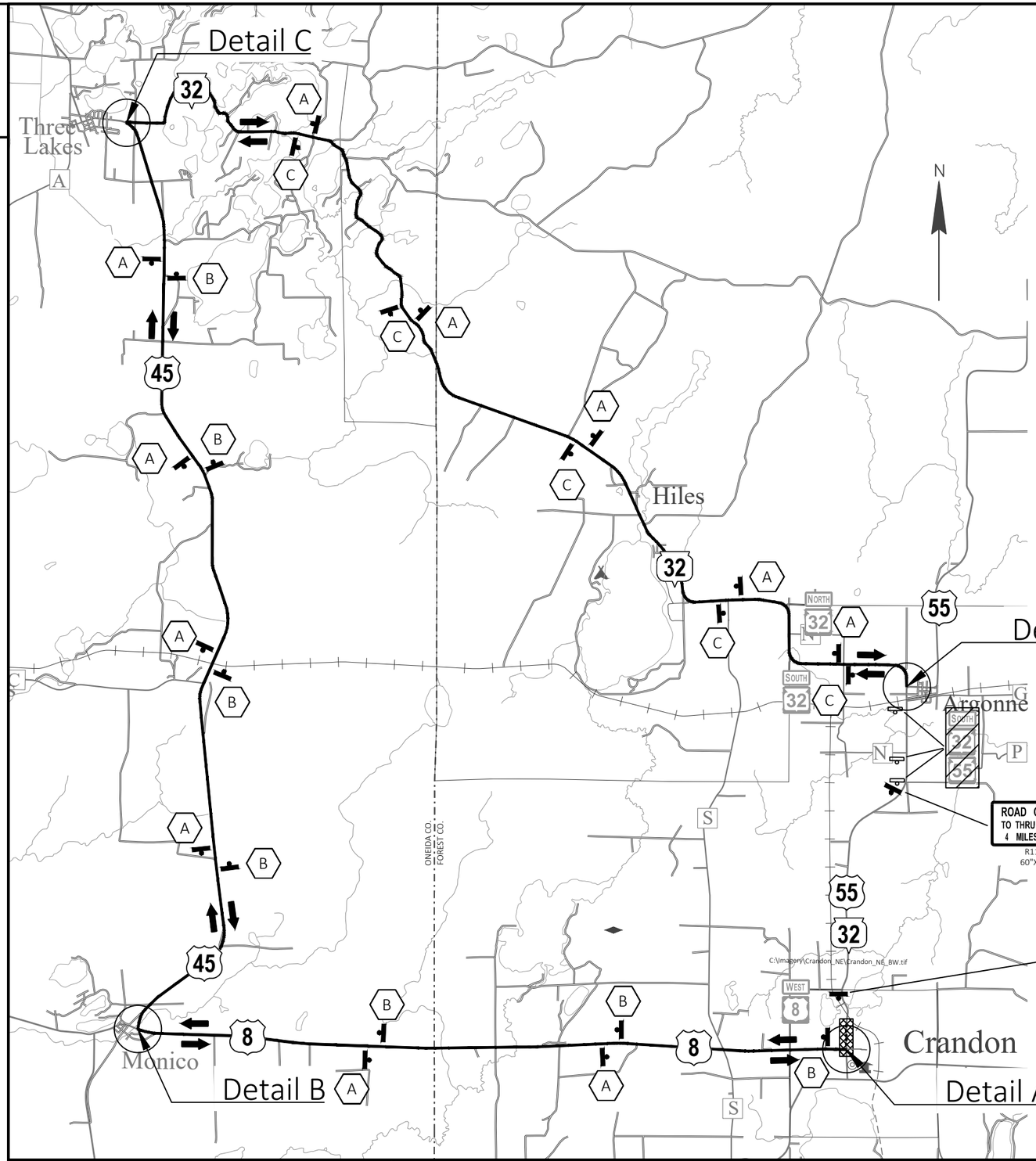

LEGEND:

- TRAFFIC FLOW ARROW
- PROPOSED SIGN ON POST
- EXISTING SIGN ON POST
- TYPE III BARRICADE
- TYPE III BARRICADE WITH SIGN
- WORK ZONE
- COVER SIGNS
- STH 32 DETOUR ROUTE

DETOUR SIGNS:

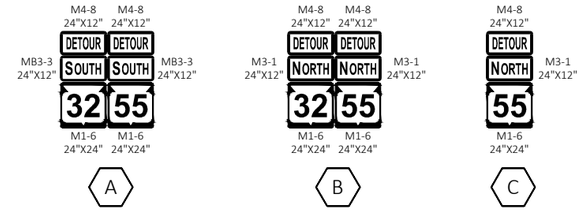

DETOUR PLAN:

OVERVIEW
DETAIL A
DETAIL B
DETAIL C
DETAIL D

NOTES:

1. UTILIZE DETAIL B & E OF SDD "BARRICADES AND SIGNS FOR MAINLINE CLOSURES" FOR SIGNING ON USH 8/STH 32/55 APPROACHING THE WORK ZONE AREA ON THE SOUTH END OF THE PROJECT.
2. UTILIZE DETAIL A & E OF SDD "BARRICADES AND SIGNS FOR MAINLINE CLOSURES" FOR SIGNING ON STH 32/55 APPROACHING THE WORK ZONE AREA ON THE NORTH END OF THE PROJECT.
3. UTILIZE DETAIL 4 OF SDD "BARRICADE AND SIGNS FOR SIDEROAD CLOSURES" ALONG STH 32/55 WITHIN THE WORKZONE AREA.
4. ALL SIGNS SHALL BE PLACED IN ACCORDANCE WITH THE MANUAL ON UNIFORM TRAFFIC CONTROL.
5. THE EXACT NUMBER, LOCATION AND SPACING OF ALL SIGNS SHALL BE ADJUSTED TO FIT FIELD CONDITIONS AS APPROVED BY THE ENGINEER
6. IF THERE ARE EXISTING ROUTE MARKER ASSEMBLIES THAT WILL REMAIN IN PLACE, ADJUST THE LOCATION OF THE DETOUR ROUTE SIGNS TO CORRESPOND WITH THE EXISTING ASSEMBLIES.
7. THE SPACING BETWEEN TRAFFIC CONTROL AND DETOUR SIGNS SHOULD BE ADJUSTED TO NOT CONFLICT WITH AND TO PROVIDE A DESIRABLE MINIMUM OF 200 FEET CLEARANCE TO EXISTING SIGNS THAT WILL REMAIN IN PLACE.
8. "WO" SIGNS ARE THE SAME AS "W" AND "MO" SIGNS ARE THE SAME AS "M" SIGNS EXCEPT THE BACKGROUND IS ORANGE.
9. ALL EXISTING SIGNS THAT NEED TO BE COVERED SHALL BE COVERED WITH A BLANK BLACK PANEL UNLESS OTHERWISE NOTED. EXISTING SIGNS BEING COVERED WITH NEW SIGN TO BE PAID FOR UNDER TRAFFIC CONTROL SIGNS BID ITEM.
10. ALL SIGNS ARE 48"X48" UNLESS OTHERWISE NOTED.

PROJECT NO: 9260-00-71	HWY: STH 32	COUNTY: FOREST	DETOUR PLAN	SHEET 54	E

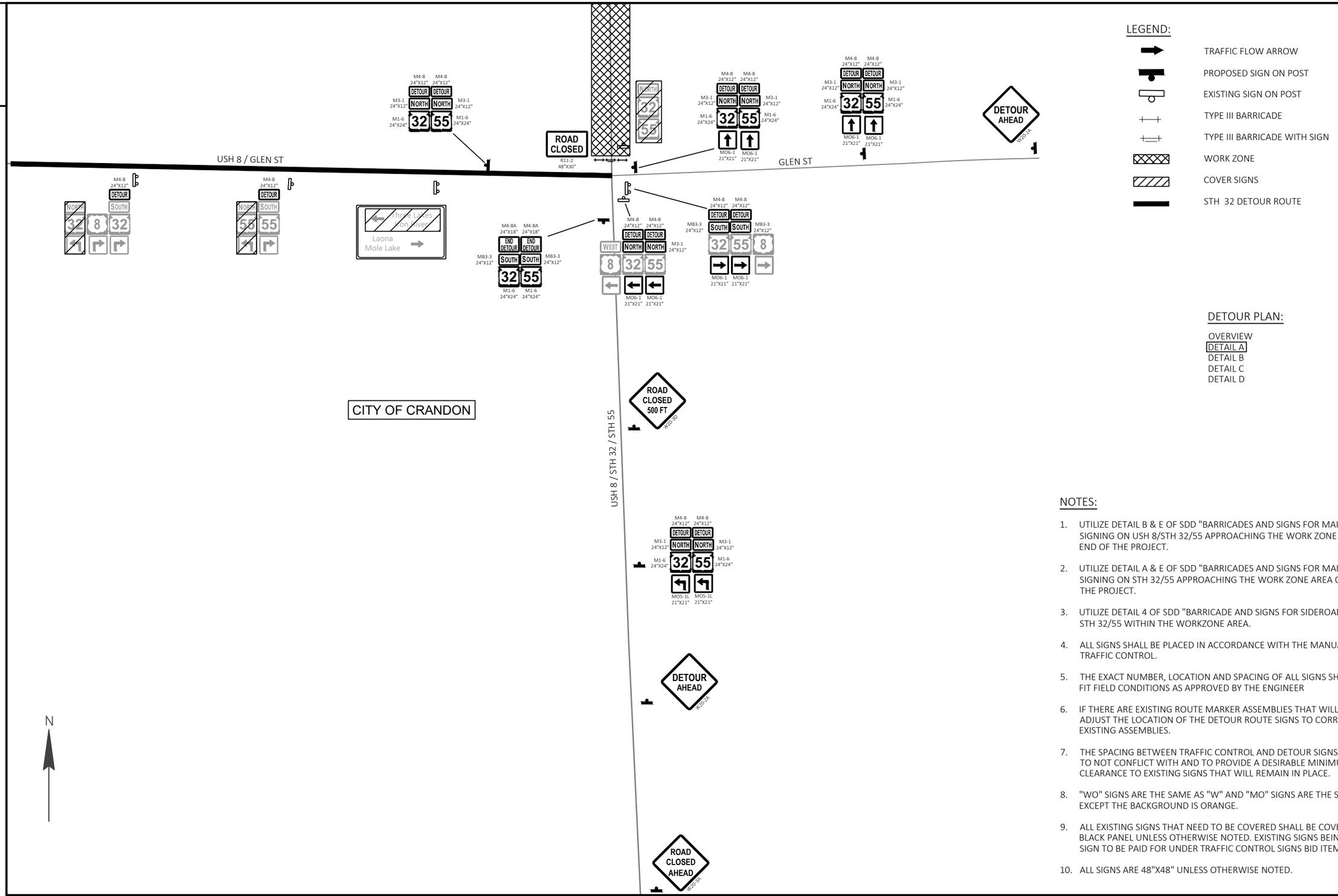

PROJECT NO: 9260-00-71	HWY: STH 32	COUNTY: FOREST	DETOUR PLAN	SHEET 55	E

FILE NAME : N:\PDS\C3D\92600001\SHEETSPLAN\027001-DT.DWG
LAYOUT NAME - Detail A

PLOT DATE : 10/21/2025 3:07 PM PLOT BY : MATT PAYNE PLOT NAME : PLOT SCALE : 1 IN:200 FT

WISDOT/CADDS SHEET 42

2

LEGEND:

- TRAFFIC FLOW ARROW
- PROPOSED SIGN ON POST
- EXISTING SIGN ON POST
- TYPE III BARRICADE
- TYPE III BARRICADE WITH SIGN
- WORK ZONE
- COVER SIGNS
- STH 32 DETOUR ROUTE

DETOUR PLAN:

OVERVIEW
DETAIL A
DETAIL B
DETAIL C
DETAIL D

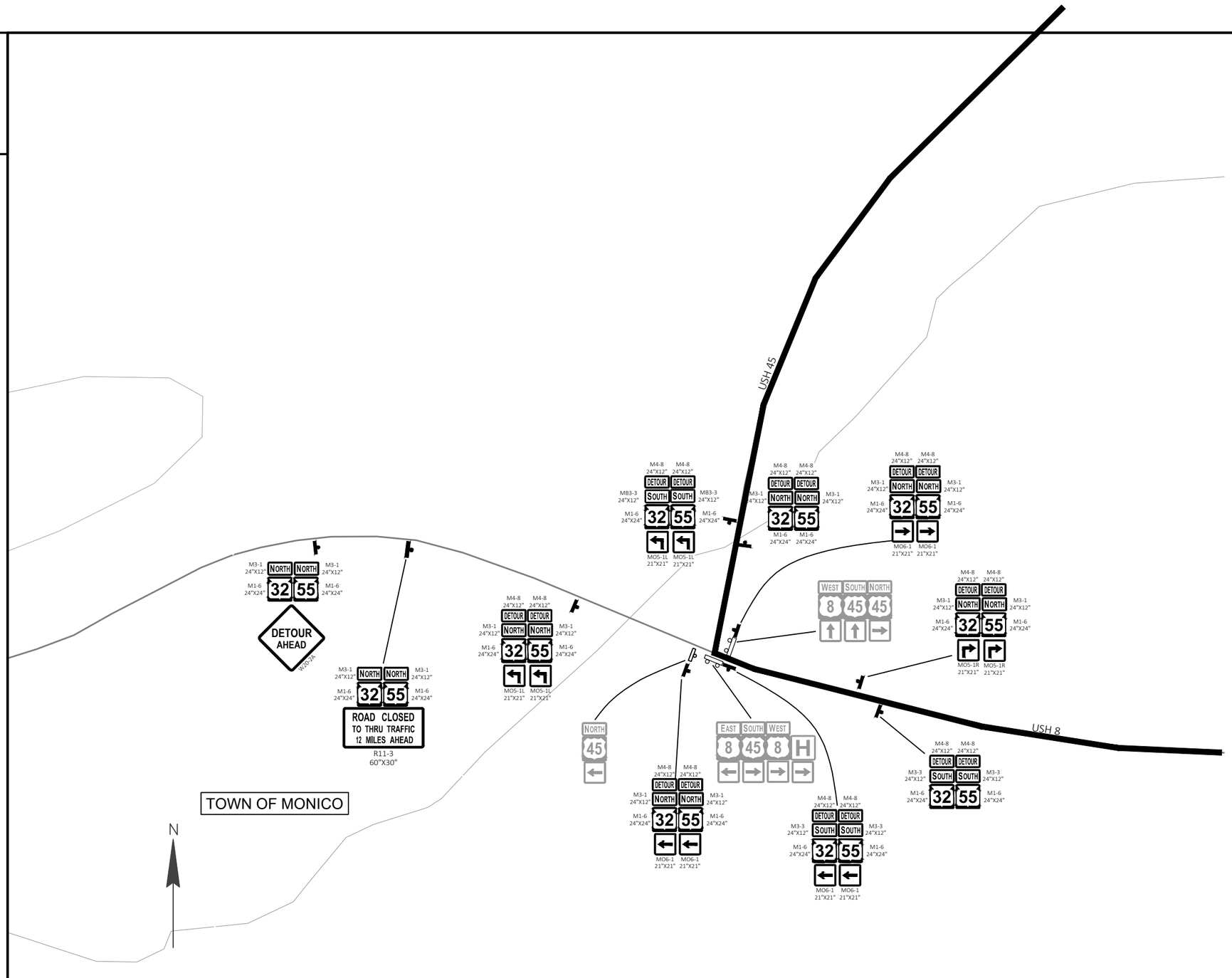

NOTES:

1. UTILIZE DETAIL B & E OF SDD "BARRICADES AND SIGNS FOR MAINLINE CLOSURES" FOR SIGNING ON USH 8/STH 32/55 APPROACHING THE WORK ZONE AREA ON THE SOUTH END OF THE PROJECT.
2. UTILIZE DETAIL A & E OF SDD "BARRICADES AND SIGNS FOR MAINLINE CLOSURES" FOR SIGNING ON STH 32/55 APPROACHING THE WORK ZONE AREA ON THE NORTH END OF THE PROJECT.
3. UTILIZE DETAIL 4 OF SDD "BARRICADE AND SIGNS FOR SIDEROAD CLOSURES" ALONG STH 32/55 WITHIN THE WORKZONE AREA.
4. ALL SIGNS SHALL BE PLACED IN ACCORDANCE WITH THE MANUAL ON UNIFORM TRAFFIC CONTROL.
5. THE EXACT NUMBER, LOCATION AND SPACING OF ALL SIGNS SHALL BE ADJUSTED TO FIT FIELD CONDITIONS AS APPROVED BY THE ENGINEER
6. IF THERE ARE EXISTING ROUTE MARKER ASSEMBLIES THAT WILL REMAIN IN PLACE, ADJUST THE LOCATION OF THE DETOUR ROUTE SIGNS TO CORRESPOND WITH THE EXISTING ASSEMBLIES.
7. THE SPACING BETWEEN TRAFFIC CONTROL AND DETOUR SIGNS SHOULD BE ADJUSTED TO NOT CONFLICT WITH AND TO PROVIDE A DESIRABLE MINIMUM OF 200 FEET CLEARANCE TO EXISTING SIGNS THAT WILL REMAIN IN PLACE.
8. "WO" SIGNS ARE THE SAME AS "W" AND "MO" SIGNS ARE THE SAME AS "M" SIGNS EXCEPT THE BACKGROUND IS ORANGE.
9. ALL EXISTING SIGNS THAT NEED TO BE COVERED SHALL BE COVERED WITH A BLANK BLACK PANEL UNLESS OTHERWISE NOTED. EXISTING SIGNS BEING COVERED WITH NEW SIGN TO BE PAID FOR UNDER TRAFFIC CONTROL SIGNS BID ITEM.
10. ALL SIGNS ARE 48"X48" UNLESS OTHERWISE NOTED.

PROJECT NO: 9260-00-71	HWY: STH 32	COUNTY: FOREST	DETOUR PLAN	SHEET 56	E

2

THREE LAKES

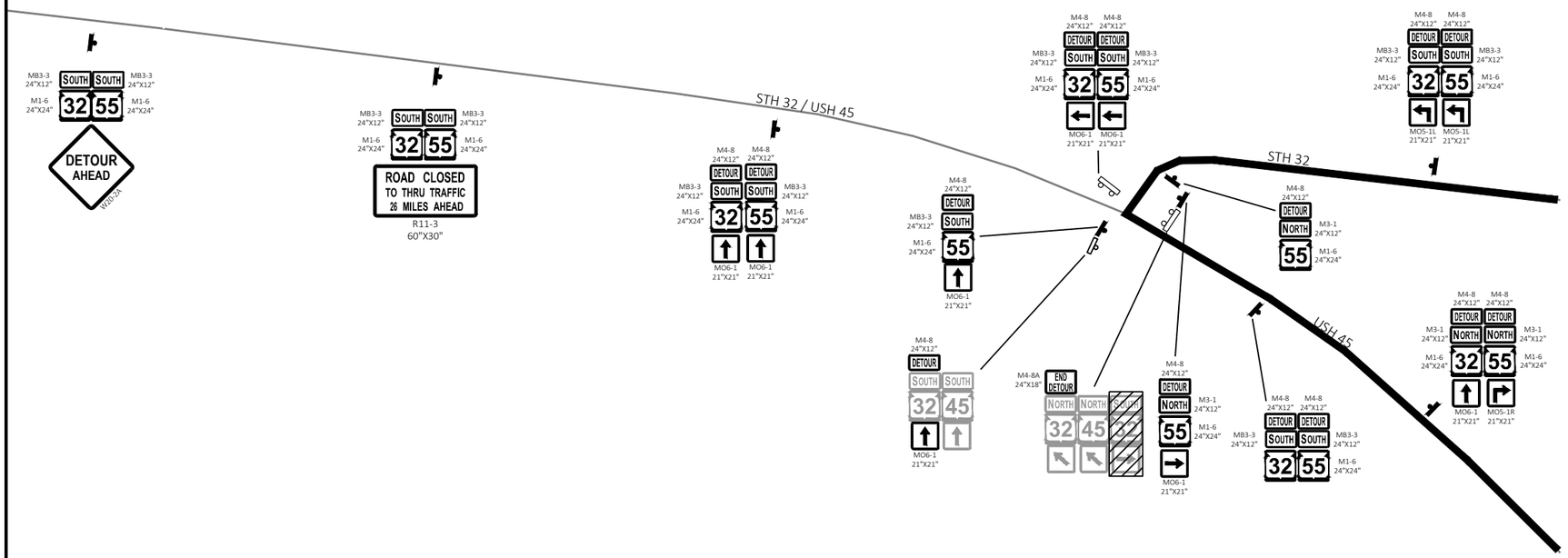

N

LEGEND:

- TRAFFIC FLOW ARROW
- PROPOSED SIGN ON POST
- EXISTING SIGN ON POST
- TYPE III BARRICADE
- TYPE III BARRICADE WITH SIGN
- WORK ZONE
- COVER SIGNS
- STH 32 DETOUR ROUTE

DETOUR PLAN:

OVERVIEW
DETAIL A
DETAIL B
DETAIL C
DETAIL D

NOTES:

1. UTILIZE DETAIL B & E OF SDD "BARRICADES AND SIGNS FOR MAINLINE CLOSURES" FOR SIGNING ON USH 8/STH 32/55 APPROACHING THE WORK ZONE AREA ON THE SOUTH END OF THE PROJECT.
2. UTILIZE DETAIL A & E OF SDD "BARRICADES AND SIGNS FOR MAINLINE CLOSURES" FOR SIGNING ON STH 32/55 APPROACHING THE WORK ZONE AREA ON THE NORTH END OF THE PROJECT.
3. UTILIZE DETAIL 4 OF SDD "BARRICADE AND SIGNS FOR SIDEROAD CLOSURES" ALONG STH 32/55 WITHIN THE WORKZONE AREA.
4. ALL SIGNS SHALL BE PLACED IN ACCORDANCE WITH THE MANUAL ON UNIFORM TRAFFIC CONTROL.
5. THE EXACT NUMBER, LOCATION AND SPACING OF ALL SIGNS SHALL BE ADJUSTED TO FIT FIELD CONDITIONS AS APPROVED BY THE ENGINEER
6. IF THERE ARE EXISTING ROUTE MARKER ASSEMBLIES THAT WILL REMAIN IN PLACE, ADJUST THE LOCATION OF THE DETOUR ROUTE SIGNS TO CORRESPOND WITH THE EXISTING ASSEMBLIES.
7. THE SPACING BETWEEN TRAFFIC CONTROL AND DETOUR SIGNS SHOULD BE ADJUSTED TO NOT CONFLICT WITH AND TO PROVIDE A DESIRABLE MINIMUM OF 200 FEET CLEARANCE TO EXISTING SIGNS THAT WILL REMAIN IN PLACE.
8. "WO" SIGNS ARE THE SAME AS "W" AND "MO" SIGNS ARE THE SAME AS "M" SIGNS EXCEPT THE BACKGROUND IS ORANGE.
9. ALL EXISTING SIGNS THAT NEED TO BE COVERED SHALL BE COVERED WITH A BLANK BLACK PANEL UNLESS OTHERWISE NOTED. EXISTING SIGNS BEING COVERED WITH NEW SIGN TO BE PAID FOR UNDER TRAFFIC CONTROL SIGNS BID ITEM.
10. ALL SIGNS ARE 48"X48" UNLESS OTHERWISE NOTED.

PROJECT NO: 9260-00-71	HWY: STH 32	COUNTY: FOREST	DETOUR PLAN	SHEET 57	E

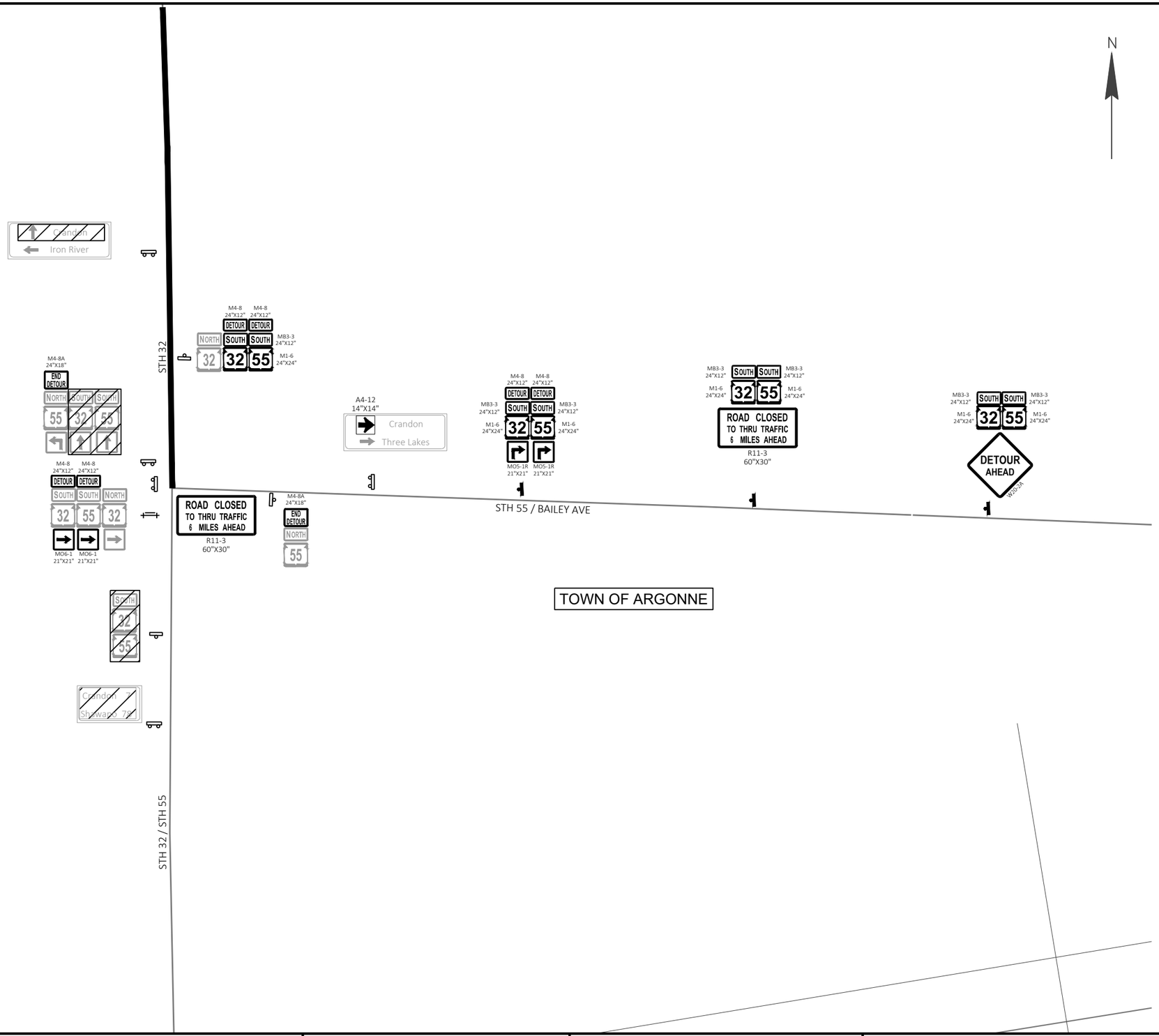

LEGEND:

- TRAFFIC FLOW ARROW
- PROPOSED SIGN ON POST
- EXISTING SIGN ON POST
- TYPE III BARRICADE
- TYPE III BARRICADE WITH SIGN
- WORK ZONE
- COVER SIGNS
- STH 32 DETOUR ROUTE

DETOUR PLAN:

OVERVIEW
DETAIL A
DETAIL B
DETAIL C
DETAIL D

NOTES:

1. UTILIZE DETAIL B & E OF SDD "BARRICADES AND SIGNS FOR MAINLINE CLOSURES" FOR SIGNING ON USH 8/STH 32/55 APPROACHING THE WORK ZONE AREA ON THE SOUTH END OF THE PROJECT.
2. UTILIZE DETAIL A & E OF SDD "BARRICADES AND SIGNS FOR MAINLINE CLOSURES" FOR SIGNING ON STH 32/55 APPROACHING THE WORK ZONE AREA ON THE NORTH END OF THE PROJECT.
3. UTILIZE DETAIL 4 OF SDD "BARRICADE AND SIGNS FOR SIDEROAD CLOSURES" ALONG STH 32/55 WITHIN THE WORKZONE AREA.
4. ALL SIGNS SHALL BE PLACED IN ACCORDANCE WITH THE MANUAL ON UNIFORM TRAFFIC CONTROL.
5. THE EXACT NUMBER, LOCATION AND SPACING OF ALL SIGNS SHALL BE ADJUSTED TO FIT FIELD CONDITIONS AS APPROVED BY THE ENGINEER
6. IF THERE ARE EXISTING ROUTE MARKER ASSEMBLIES THAT WILL REMAIN IN PLACE, ADJUST THE LOCATION OF THE DETOUR ROUTE SIGNS TO CORRESPOND WITH THE EXISTING ASSEMBLIES.
7. THE SPACING BETWEEN TRAFFIC CONTROL AND DETOUR SIGNS SHOULD BE ADJUSTED TO NOT CONFLICT WITH AND TO PROVIDE A DESIRABLE MINIMUM OF 200 FEET CLEARANCE TO EXISTING SIGNS THAT WILL REMAIN IN PLACE.
8. "WO" SIGNS ARE THE SAME AS "W" AND "MO" SIGNS ARE THE SAME AS "M" SIGNS EXCEPT THE BACKGROUND IS ORANGE.
9. ALL EXISTING SIGNS THAT NEED TO BE COVERED SHALL BE COVERED WITH A BLANK BLACK PANEL UNLESS OTHERWISE NOTED. EXISTING SIGNS BEING COVERED WITH NEW SIGN TO BE PAID FOR UNDER TRAFFIC CONTROL SIGNS BID ITEM.
10. ALL SIGNS ARE 48"X48" UNLESS OTHERWISE NOTED.

PROJECT NO: 9260-00-71	HWY: STH 32	COUNTY: FOREST	DETOUR PLAN	SHEET 58	E

FILE NAME : N:\PDS\C3D\92600001\SHEETSPLAN\027001-DT.DWG
LAYOUT NAME - Detail D
PLOT DATE : 10/21/2025 3:07 PM PLOT BY : MATT PAYNE PLOT NAME : PLOT SCALE : 1 IN:200 FT
WISDOT/CADDS SHEET 42

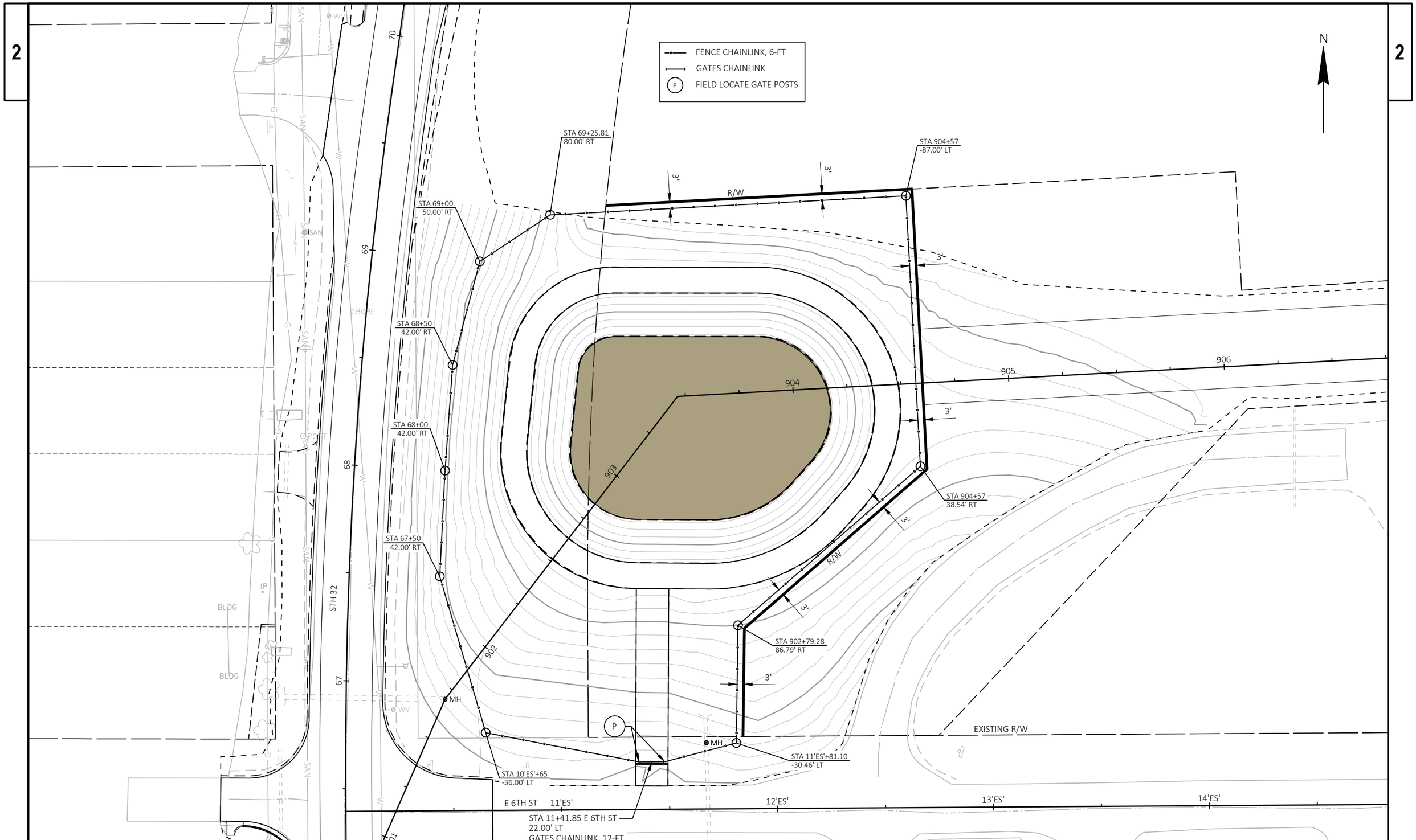

PROJECT NO: 9260-00-71	HWY: STH 32	COUNTY: FOREST	FENCING PLAN	SHEET 59	E

FILE NAME : N:\PDS\C3D\92600001\SHEETSPLAN\027101-FN.DWG
LAYOUT NAME - Pond
PLOT DATE : 10/27/2025 3:55 PM
PLOT BY : MATT PAYNE
PLOT NAME :
PLOT SCALE : 1 IN:40 FT
WISDOT/CADDS SHEET 42

2

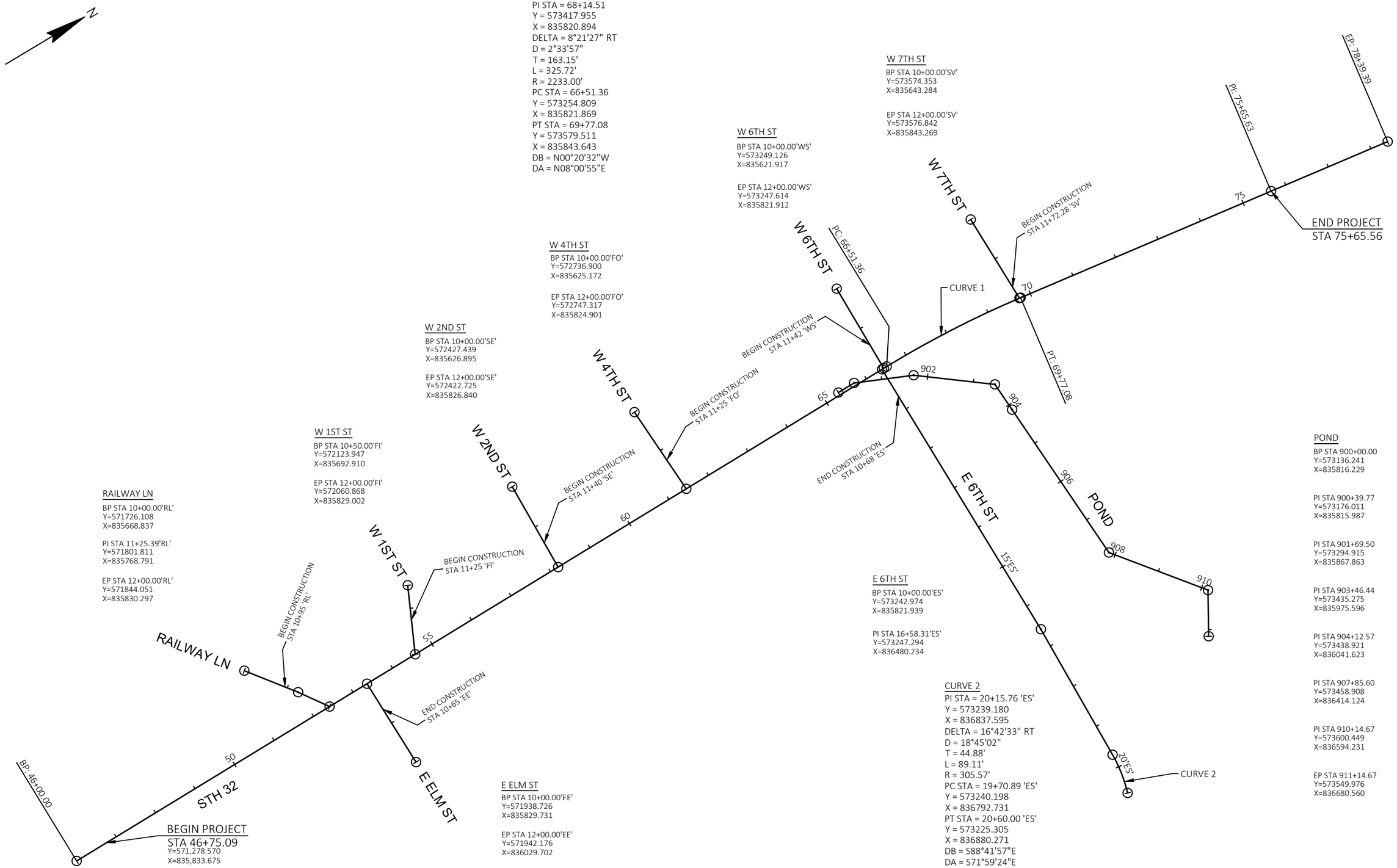

PROJECT NO: 9260-00-71	HWY: STH 32	COUNTY: FOREST	ALIGNMENT DIAGRAM	SHEET 60	E

Estimate Of Quantities

Line	Item	Item Description	Unit	Total	9260-00-71 Qty	9260-00-81 Qty
0002	201.0205	Grubbing	STA	15.000	15.000	
0004	203.0100	Removing Small Pipe Culverts	EACH	7.000	7.000	
0006	204.0150	Removing Curb & Gutter	LF	1,829.000	1,829.000	
0008	204.0155	Removing Concrete Sidewalk	SY	782.000	782.000	
0010	204.0165	Removing Guardrail	LF	1,120.000	1,120.000	
0012	204.0215	Removing Catch Basins	EACH	1.000	1.000	
0014	204.0220	Removing Inlets	EACH	2.000	2.000	
0016	204.0245	Removing Storm Sewer (size) 01. 12-Inch	LF	76.000	76.000	
0018	204.0245	Removing Storm Sewer (size) 02. 24-Inch	LF	128.000	128.000	
0020	205.0100	Excavation Common	CY	14,227.000	14,227.000	
0022	213.0100	Finishing Roadway (project) 01. 9260-00-71	EACH	1.000	1.000	
0024	305.0110	Base Aggregate Dense 3/4-Inch	TON	543.000	543.000	
0026	305.0120	Base Aggregate Dense 1 1/4-Inch	TON	12,836.000	12,836.000	
0028	450.4000	HMA Cold Weather Paving	TON	500.000	500.000	
0030	455.0605	Tack Coat	GAL	1,475.000	1,475.000	
0032	460.2000	Incentive Density HMA Pavement	DOL	2,650.000	2,650.000	
0034	460.6223	HMA Pavement 3 MT 58-28 S	TON	2,999.000	2,999.000	
0036	460.6444	HMA Pavement 4 MT 58-34 H	TON	1,243.000	1,243.000	
0038	465.0120	Asphaltic Surface Driveways and Field Entrances	TON	75.000	75.000	
0040	520.1012	Apron Endwalls for Culvert Pipe 12-Inch	EACH	2.000	2.000	
0042	520.3412	Culvert Pipe Class III-A Non-metal 12-Inch	LF	26.000	26.000	
0044	520.8000	Concrete Collars for Pipe	EACH	4.000	4.000	
0046	522.1018	Apron Endwalls for Culvert Pipe Reinforced Concrete 18-Inch	EACH	1.000	1.000	
0048	522.1024	Apron Endwalls for Culvert Pipe Reinforced Concrete 24-Inch	EACH	1.000	1.000	
0050	522.1036	Apron Endwalls for Culvert Pipe Reinforced Concrete 36-Inch	EACH	1.000	1.000	
0052	522.2419	Culvert Pipe Reinforced Concrete Horizontal Elliptical Class HE-IV 19x30-Inch	LF	166.000	166.000	
0054	522.2619	Apron Endwalls for Culvert Pipe Reinforced Concrete Horizontal Elliptical 19x30-Inch	EACH	2.000	2.000	
0056	601.0411	Concrete Curb & Gutter 30-Inch Type D	LF	3,058.000	3,058.000	
0058	601.0600	Concrete Curb Pedestrian	LF	79.000	79.000	
0060	602.0405	Concrete Sidewalk 4-Inch	SF	6,688.000	6,688.000	
0062	602.0505	Curb Ramp Detectable Warning Field Yellow	SF	70.000	70.000	
0064	602.0810	Concrete Driveway 6-Inch	SY	341.000	341.000	
0066	602.3010	Concrete Surface Drains	CY	1.800	1.800	
0068	606.0300	Riprap Heavy	CY	67.000	67.000	
0070	608.0312	Storm Sewer Pipe Reinforced Concrete Class III 12-Inch	LF	505.000	505.000	
0072	608.0324	Storm Sewer Pipe Reinforced Concrete Class III 24-Inch	LF	10.000	10.000	
0074	608.0330	Storm Sewer Pipe Reinforced Concrete Class III 30-Inch	LF	74.000	74.000	
0076	608.0336	Storm Sewer Pipe Reinforced Concrete Class III 36-Inch	LF	649.000	649.000	
0078	608.0412	Storm Sewer Pipe Reinforced Concrete Class IV 12-Inch	LF	82.000	82.000	
0080	608.0418	Storm Sewer Pipe Reinforced Concrete Class IV 18-Inch	LF	111.000	111.000	
0082	608.0424	Storm Sewer Pipe Reinforced Concrete Class IV 24-Inch	LF	467.000	467.000	
0084	608.0430	Storm Sewer Pipe Reinforced Concrete Class IV 30-Inch	LF	227.000	227.000	
0086	608.0436	Storm Sewer Pipe Reinforced Concrete Class IV 36-Inch	LF	1,014.000	1,014.000	
0088	608.0524	Storm Sewer Pipe Reinforced Concrete Class V 24-Inch	LF	140.000	140.000	
0090	608.2329	Storm Sewer Pipe Reinforced Concrete Horizontal Elliptical Class HE-III 29x45-Inch	LF	177.000	177.000	
0092	608.2424	Storm Sewer Pipe Reinforced Concrete Horizontal Elliptical Class HE-IV 24x38-Inch	LF	88.000	88.000	
0094	608.3012	Storm Sewer Pipe Class III-A 12-Inch	LF	13.000	13.000	
0096	611.0530	Manhole Covers Type J	EACH	16.000	16.000	
0098	611.0612	Inlet Covers Type C	EACH	3.000	3.000	

					9260-00-71	9260-00-81
Line	**Item**	**Item Description**	**Unit**	**Total**	**Qty**	**Qty**
0100	611.0624	Inlet Covers Type H	EACH	8.000	8.000	
0102	611.0639	Inlet Covers Type H-S	EACH	7.000	7.000	
0104	611.0645	Inlet Covers Type MS-A	EACH	3.000	3.000	
0106	611.1005	Catch Basins 5-FT Diameter	EACH	3.000	3.000	
0108	611.2004	Manholes 4-FT Diameter	EACH	4.000	4.000	
0110	611.2005	Manholes 5-FT Diameter	EACH	11.000	11.000	
0112	611.2006	Manholes 6-FT Diameter	EACH	1.000	1.000	
0114	611.3003	Inlets 3-FT Diameter	EACH	3.000	3.000	
0116	611.3004	Inlets 4-FT Diameter	EACH	12.000	12.000	
0118	611.3230	Inlets 2x3-FT	EACH	5.000	5.000	
0120	611.3903	Inlets Median 3 Grate	EACH	1.000	1.000	
0122	611.9850.S	Pipe Grates (size) 01. 18-Inch	EACH	1.000	1.000	
0124	611.9850.S	Pipe Grates (size) 02. 24-Inch	EACH	1.000	1.000	
0126	611.9850.S	Pipe Grates (size) 03. 36-Inch	EACH	1.000	1.000	
0128	614.0396	Guardrail Mow Strip Asphalt	SY	45.000	45.000	
0130	614.2300	MGS Guardrail 3	LF	950.000	950.000	
0132	614.2500	MGS Thrie Beam Transition	LF	78.800	78.800	
0134	614.2610	MGS Guardrail Terminal EAT	EACH	2.000	2.000	
0136	616.0206	Fence Chain Link 6-FT	LF	826.000	826.000	
0138	616.0329	Gates Chain Link (width) 01. 12-Ft	EACH	1.000	1.000	
0140	618.0100	Maintenance and Repair of Haul Roads (project) 01. 9260-00-71	EACH	1.000	1.000	
0142	619.1000	Mobilization	EACH	1.000	0.930	0.070
0144	624.0100	Water	MGAL	227.000	227.000	
0146	625.0100	Topsoil	SY	24,132.000	24,132.000	
0148	628.1504	Silt Fence	LF	4,739.000	4,739.000	
0150	628.1520	Silt Fence Maintenance	LF	4,739.000	4,739.000	
0152	628.1905	Mobilizations Erosion Control	EACH	5.000	5.000	
0154	628.1910	Mobilizations Emergency Erosion Control	EACH	5.000	5.000	
0156	628.2006	Erosion Mat Urban Class I Type A	SY	3,879.000	3,879.000	
0158	628.2008	Erosion Mat Urban Class I Type B	SY	6,893.000	6,893.000	
0160	628.2023	Erosion Mat Class II Type B	SY	13,360.000	13,360.000	
0162	628.7005	Inlet Protection Type A	EACH	29.000	29.000	
0164	628.7015	Inlet Protection Type C	EACH	24.000	24.000	
0166	628.7555	Culvert Pipe Checks	EACH	12.000	12.000	
0168	629.0210	Fertilizer Type B	CWT	16.300	16.300	
0170	630.0120	Seeding Mixture No. 20	LB	905.000	905.000	
0172	630.0140	Seeding Mixture No. 40	LB	189.000	189.000	
0174	630.0200	Seeding Temporary	LB	38.000	38.000	
0176	630.0500	Seed Water	MGAL	415.000	415.000	
0178	633.5200	Markers Culvert End	EACH	2.000	2.000	
0180	634.0616	Posts Wood 4x6-Inch X 16-FT	EACH	25.000	25.000	
0182	634.0618	Posts Wood 4x6-Inch X 18-FT	EACH	3.000	3.000	
0184	637.2230	Signs Type II Reflective F	SF	16.500	16.500	
0186	638.2102	Moving Signs Type II	EACH	30.000	30.000	
0188	638.3000	Removing Small Sign Supports	EACH	26.000	26.000	
0190	642.5201	Field Office Type C	EACH	1.000	1.000	
0192	643.0300	Traffic Control Drums	DAY	8,025.000	8,025.000	
0194	643.0420	Traffic Control Barricades Type III	DAY	4,694.000	4,694.000	
0196	643.0705	Traffic Control Warning Lights Type A	DAY	5,908.000	5,908.000	

					9260-00-71	9260-00-81
Line	**Item**	**Item Description**	**Unit**	**Total**	**Qty**	**Qty**
0198	643.0715	Traffic Control Warning Lights Type C	DAY	1,065.000	1,065.000	
0200	643.0900	Traffic Control Signs	DAY	44,032.000	44,032.000	
0202	643.0920	Traffic Control Covering Signs Type II	EACH	8.000	8.000	
0204	643.1000	Traffic Control Signs Fixed Message	SF	36.000	36.000	
0206	643.3180	Temporary Marking Line Removable Tape 6-Inch	LF	241.000	241.000	
0208	643.5000	Traffic Control	EACH	1.000	0.930	0.070
0210	644.1440	Temporary Pedestrian Surface Matting	SF	59.000	59.000	
0212	644.1601	Temporary Pedestrian Curb Ramp	DAY	20.000	20.000	
0214	644.1605	Temporary Pedestrian Detectable Warning Field	SF	20.000	20.000	
0216	644.1810	Temporary Pedestrian Barricade	LF	184.000	184.000	
0218	644.1900.S	Temporary Audible Message Devices	DAY	130.000	130.000	
0220	645.0120	Geotextile Type HR	SY	166.000	166.000	
0222	646.2040	Marking Line Grooved Wet Ref Epoxy 6-Inch	LF	7,302.000	7,302.000	
0224	646.6120	Marking Stop Line Epoxy 18-Inch	LF	57.000	57.000	
0226	646.6466	Cold Weather Marking Epoxy 6-Inch	LF	7,302.000	7,302.000	
0228	646.7420	Marking Crosswalk Epoxy Transverse Line 6-Inch	LF	148.000	148.000	
0230	650.4000	Construction Staking Storm Sewer	EACH	43.000	43.000	
0232	650.4500	Construction Staking Subgrade	LF	2,891.000	2,891.000	
0234	650.5000	Construction Staking Base	LF	2,891.000	2,891.000	
0236	650.5500	Construction Staking Curb Gutter and Curb & Gutter	LF	3,058.000	3,058.000	
0238	650.6000	Construction Staking Pipe Culverts	EACH	1.000	1.000	
0240	650.9000	Construction Staking Curb Ramps	EACH	6.000	6.000	
0242	650.9500	Construction Staking Sidewalk (project) 01. 9260-00-71	EACH	1.000	1.000	
0244	650.9911	Construction Staking Supplemental Control (project) 01. 9260-00-71	EACH	1.000	1.000	
0246	650.9920	Construction Staking Slope Stakes	LF	3,331.000	3,331.000	
0248	690.0150	Sawing Asphalt	LF	1,039.000	1,039.000	
0250	740.0440	Incentive IRI Ride	DOL	2,190.000	2,190.000	
0252	SPV.0035	Special 01. Engineered Soil	CY	662.000	662.000	
0254	SPV.0060	Special 01. Sanitary Sewer Connection to Existing Sanitary Sewer Pipe	EACH	3.000		3.000
0256	SPV.0060	Special 02. Sanitary Sewer Connection to Existing Sanitary Sewer Manhole	EACH	1.000		1.000
0258	SPV.0060	Special 03. Utility Line Opening (ULO)	EACH	1.000	1.000	
0260	SPV.0060	Special 04. Sanitary Sewer Manhole Casting Elevation Adjustment	EACH	7.000		7.000
0262	SPV.0060	Special 05. Water Main Connection to Existing Water Main 8-Inch	EACH	4.000		4.000
0264	SPV.0060	Special 06. Water Service Connection to Existing Water Main 1-Inch	EACH	6.000		6.000
0266	SPV.0060	Special 07. Water Valve Box Adjustment	EACH	12.000		12.000
0268	SPV.0060	Special 08. Temporary Water Service	EACH	10.000		10.000
0270	SPV.0060	Special 09. Inlet Covers Type H-D	EACH	5.000	5.000	
0272	SPV.0060	Special 10. Concrete Collars for Manholes	EACH	2.000	2.000	
0274	SPV.0060	Special 11. Observation Well	EACH	1.000	1.000	
0276	SPV.0060	Special 12. Temporary Trail Shift for Storm Sewer Work	EACH	1.000	1.000	
0278	SPV.0090	Special 01. Sanitary Sewer 8-Inch PVC	LF	80.000		80.000
0280	SPV.0090	Special 02. Water Main 8-Inch Ductile Iron	LF	80.000		80.000
0282	SPV.0090	Special 03. Water Service 1-Inch Copper	LF	228.000		228.000
0284	SPV.0090	Special 04. Sanitary Sewer Lateral 6-Inch PVC	LF	168.000		168.000
0286	SPV.0165	Special 01. Rigid Insulation Board 4-Inch Thick	SF	7,315.000		7,315.000

9260-00-71 9260-00-81

DIVISION	FROM/TO STATION	LOCATION	205.0100 EXCAVATION COMMON (1) CUT (2)	205.0100 EXCAVATION COMMON (1) EBS EXCAVATION (3)	SALVAGED/UNUSABLE PAVEMENT MATERIAL (4)	AVAILABLE MATERIAL (5)	UNEXPANDED FILL	EXPANDED FILL (6) FACTOR 1.25	MASS ORDINATE +/- (7)	WASTE	BORROW	COMMENT
DIVISION 1												
32	46+99.01/75+65.63		9,107	0	3,084	6,023	135	169	5,854	5,854	0	
UNDISTRIBUTED			0	456								
DIVISION 1 SUBTOTAL			9,107	456	3,084	6,023	135	169	5,854	5,854	0	
DIVISION 2												
RAILWAY LN	10+95.00 'RL'/11+80.00 'RL'		153	0	48	105	0	0	105	105	0	
ELM ST	10+20.00 'EE'/10+65.00 'EE'		66	0	37	29	0	0	29	29	0	
1ST ST	11+25.00 'FI'/11+80.00 'FI'		66	0	31	35	0	0	35	35	0	
2ND ST	11+40.00 'SE'/11+80.00 'SE'		61	0	25	36	0	0	36	36	0	
4TH ST	11+25.00 'FO'/11+80.00 'FO'		65	0	31	34	0	0	34	34	0	
W 6TH ST	11+42.00 'WS'/11+80.00 'WS'		48	0	20	28	2	3	26	26	0	
E 6TH ST	10+20.00 'ES'/10+68.00 'ES'		84	0	36	48	3	4	44	44	0	
DIVISION 2 SUBTOTAL			543	0	228	315	5	7	309	309	0	
DIVISION 3												
POND			4,121	0	0	4,121	135	169	5,854	5,854	0	
DIVISION 3 SUBTOTAL			4,121	0	0	4,121	135	169	5,854	5,854	0	
GRAND TOTAL			13,771	456	3,312	10,459	275	345	12,017	12,017	0	
	TOTAL COMMON EXC		14,227									

NOTES:
(1) COMMON EXCAVATION IS THE SUM OF THE CUT AND EBS EXCAVATION COLUMNS. ITEM NUMBER 205.0100
(2) SALVAGED/UNSUABLE PAVEMENT MATERIAL IS INCLUDED IN CUT
(3) EBS EXCAVATION TO BE BACKFILLED WITH 1 1/4-INCH BASE AGGREGATE DENSE
(4) SALVAGED/UNUSABLE PAVEMENT MATERIAL
(5) AVAILABLE MATERIAL = CUT - SALVAGED/UNUSUABLE PAVEMENT MATERIAL
(6) EXPANDED FILL FACTOR = 1.25

EXPANDED FILL = UNEXPANDED FILL * FILL FACTOR

(7) THE MASS ORDINATE + OR - QTY CALCULATED FOR THE DIVISION. PLUS QUANTITY INDICATES AN EXCESS OF MATERIAL WITHIN THE DIVISION. MINUS INDICATES A SHORTAGE OF MATERIAL WITHIN THE DIVISION.
(8) FACTORS USED TO COMPUTE ANTICIPATED WASTE AND THE COMPUTED WASTE VOLUME IDENTIFIED ARE FOR GENERAL INFORMATION ONLY.

3

CATEGORY	STATION	TO	STATION	LOCATION	201.0205 GRUBBING STA
0010	50+00	-	51+00	RT	1
0010	55+00	-	62+00	LT & RT	7
0010	67+00	-	70+00	RT	3
0010	15+00"ES"	-	19+00"ES"	E 6TH ST, LT	4
				TOTAL 0010	15

REMOVALS

CATEGORY	STATION	TO	STATION	LOCATION	204.0150 REMOVING CURB & GUTTER LF	204.0155 REMOVING CONCRETE SIDEWALK SY	204.0165 REMOVING GUARDRAIL LF
0010	46+76	-	53+20	RT	695	328	-
0010	46+84	-	51+95	LT	550	242	-
0010	52+34	-	54+58	LT	232	118	-
0010	53+54	-	53+92	RT	45	-	-
0010	54+96		57+97	LT	307	94	-
0010	70+31	-	76+16	LT	-	-	585
0010	70+32	-	75+67	RT	-	-	535
				TOTAL 0010	1,829	782	1,120

CATEGORY	STATION	LOCATION	DESCRIPTION	203.0100 REMOVING SMALL PIPE CULVERTS EACH
0010	59+49	LT & RT	174 FT 24-IN	1
0010	11+55"FO"	W 4TH ST	64 FT 15-IN	1
0010	63+25	RT	46 FT 15-IN	1
0010	64+17	RT	40 FT 18-IN	1
0010	11+70"WS"	W 6TH ST	52 FT 15-IN	1
0010	66+91	LT & RT	75 FT 30-IN	1
0010	67+95	LT	25 FT 18-IN	1
			TOTAL 0010	7

STORM SEWER REMOVALS

CATEGORY	STATION	TO	STATION	LOCATION	204.0215 REMOVING CATCH BASINS EACH	204.0220 REMOVING INLETS EACH	204.0245.01 REMOVING STORM SEWER (SIZE) (01. 12-INCH) LF	204.0245.02 REMOVING STORM SEWER (SIZE) (02. 24-INCH) LF
0010		46+86		LT & RT	-	2	10	128
0010	57+92	-	58+51	LT	1	-	66	-
				TOTAL 0010	1	2	76	128

FENCE

CATEGORY	LOCATION	616.0206 FENCE CHAIN LINK 6-FT LF	616.0329.01 GATES CHAIN LINK (WIDTH) (01. 12-FT) EACH
0010	POND	826	1
	TOTAL 0010	826	1

BASE AGGREGATE

CATEGORY	STATION	TO	STATION	LOCATION	305.0110 BASE AGGREGATE DENSE 3/4-INCH TON	305.0120 BASE AGGREGATE DENSE 1 1/4-INCH TON	624.0100 WATER MGAL	REMARKS
0010	46+75	-	75+66	LT & RT	-	9078	137	PAVEMENT AREA
0010	55+75	-	75+66	RT	137	763	14	UNPAVED SHOULDERS
0010	58+59 LT	-	75+66 LT	LT	106	472	.	UNPAVED SOULDERS
0010	46+76	-	53+20	RT	-	251	4	CG
0010	46+4	-	51+4	LT	-	205	4	CG
0010	10+5RL	-	11+66RL	RAILWA LN	-	3	1	CG
0010	52+31	-	54+64	LT	-	89	2	CG
0010	53+52	-	55+75	RT	-	6	2	CG
0010	54+2	-	5+01	LT	-	122	2	CG
0010	61+51	-	66+35	LT	-	1	3	CG
0010	63+00	-	66+25	RT	-	125	2	CG
0010	46+7	-	53+15	RT	-	4	2	SIDEWAL
0010	46+7	-	53+15	RT	-	76	2	DRIVEWA APRONS
0010	46+7	-	51+2	LT	-	70	2	SIDEWAL
0010	46+7	-	51+2	LT	-	3	1	DRIVEWA APRONS
0010				DRIVEWAS	-	27	1	
0010				TRAIL EAD CROSSING	250	-	4	
0010				PROECT	-	12	14	EBS BACFILL
0010				UNDISTRIBUTED	50	200	21	
				TOTAL 0010	543	1236	227	

3

3

CULVERTS

CATEGOR	STATION	LOCATION	520.1012 APRON ENDWALLS FOR CULVERT PIPE 12-INC EAC	520.3412 CULVERT PIPE CLASS III-A NON-METAL 12-INC LF	522.241 CULVERT PIPE REINFORCED CONCRETE ORIONTAL ELLIPTICAL CLASS E-IV 1X30-INC LF	522.261 APRON ENDWALLS FOR CULVERT PIPE REINFORCED CONCRETE ORIONTAL ELLIPTICAL 1X30-INC EAC	633.5200 MARERS CULVERT END EAC
0010	5+4	LT RT	-	-	166	2	2
0010	6+00	LT	2	26	-	-	-
		TOTAL 0010	2	26	166	2	2

EROSION CONTROL

CATEGOR	STATION	TO	STATION	LOCATION	62.1504 SILT FENCE LF	62.1520 SILT FENCE MAINTENANCE LF	62.105 MOBILIATIONS EROSION CONTROL EAC	62.110 MOBILIATIONS EMERGENC EROSION CONTROL EAC	62.2006 EROSION MAT URBAN CLASS I TPE A S	62.200 EROSION MAT URBAN CLASS I TPE B S	62.2023 EROSION MAT CLASS II TPE B S	62.7005 INLET PROTECTION TPE A EAC	62.7015 INLET PROTECTION TPE C EAC	62.7555 CULVERT PIPE CECS EAC
0010				PROECT	-	-	5	5	-	-	-	-	-	-
0010	46+7	-	53+22	RT	-	-	-	-	35	-	-	6	6	-
0010	47+11	-	51+4	LT	-	-	-	-	3	-	-	4	4	-
0010	51+1	-	54+7	LT	-	-	-	-	371	-	-	2	2	-
0010	53+50	-	55+75	RT	-	-	-	-	2	-	-	1	1	
0010	55+75	-	63+00	RT	75	75	-	-	234	-	217	-	-	3
0010	54+5	-	5+11	LT	-	-	-	-	43	-	-	4	4	-
0010	5+31	-	61+30	LT	34	34	-	-	-	-	1162	-	-	3
0010	63+00	-	66+24	RT	-	-	-	-	464	-	-	1	1	-
0010	61+50	-	66+35	LT	-	-	-	-	4	-	-	3	1	-
0010	66+55		70+02	LT	2	2	-	-	177	-	222	1	-	-
0010	66+50	-	6+76	POND	10	10	-	-	-	5514	607	1	-	-
0010	6+76	-	75+76	RT	605	605	-	-	-	-	55	-	-	-
0010	70+02	-	76+27	LT	630	630	-	-	-	-	4	-	-	-
0010			UNDISTRIBUTED		4	4	-	-	776	137	2672	6	5	6
				TOTAL 0010	473	473	5	5	37	63	13360	2	24	12

CURB AND GUTTER

CATEGOR	STATION	TO	STATION	LOCATION	601.0411 CONCRETE CURB GUTTER 30-INC TPE D LF	601.0600 CONCRETE CURB PEDESTRIAN LF
0010	46+7	-	53+20	RT	66	-
0010	46+0	-	47+05	GLENN ST/ST 32 NW	-	30
0010	46+4	-	51+6	LT	604	-
0010	51+63	-	51+	RT	-	26
0010	51+	-	54+64	LT	316	-
0010	52+3	-	53+16	ELM ST/ST 32 SE	-	23
0010	53+52	-	55+75	RT	237	-
0010	54+3	-	5+01	LT	33	-
0010	61+51	-	66+33	LT	522	-
0010	63+00	-	66+25	RT	345	-
				TOTAL 0010	305	7

MA

CATEGOR	STATION	TO	STATION	LOCATION	450.4000 MA COLD WEATER PAVING TON	455.0605 TAC COAT GAL	460.6223 MA PAVEMENT 3 MT 5-2 S TON	460.6444 MA PAVEMENT 4 MT 5-34 TON	465.0120 ASPALTIC SURFACE DRIVEWAS AND FIELD ENTRANCES TON
0010	46+75	-	55+75	ST 32	-	465	37	326	-
0010	55+75	-	63+00	ST 32	-	330	57	22	-
0010	63+00	-	6+5	ST 32	-	350	630	245	-
0010	6+5	-	75+66	ST 32	-	220	3	151	-
0011	55+75		75+66	RURAL SOULDERS	-	110	15	152	-
0010				SIDE ROADS	-	-	362	141	-
0010				DRIVEWAS	-	-	-	-	75
0010				UNDISTRIBUTED	500				
				TOTAL 0010	500	1475	2	1243	75

PROECT NO 260-00-71	W ST 32	COUNT FOREST	MISCELLANEOUS UANTITIES	SEET 67 E

3

3

CATEGOR	STATION	LOCATION	602.3010 CONCRETE SURFACE DRAINS C
0010	55+7	ST 32 RT	1.00
0010	11+64FO	W 4T ST LT	0.30
0010	11+47WS	W 6T ST RT	0.50
		TOTAL 0010	1.

SIDEWAL

CATEGOR	STATION	TO	STATION	LOCATION	602.0405 CONCRETE SIDEWAL 4-INC SF	602.0505 CURB RAMP DETECTABLE WARNING FIELD ELLOW SF	602.010 CONCRETE DRIVEWA 6-INC S
0010	46+76	-	53+1	RT	316	40	225
0010	46+5	-	51+5	LT	2772	30	116
				TOTAL 0010	66	70	341

PERMANENT SIGNING

CATEGOR	SIGN	SIGN CODE	SIGN SIE (IN) W X	LOCATION	DESCRIPTION	634.0616 POSTS WOOD 4X6-INC X 16-FT EAC	634.061 POSTS WOOD 4X6-INC X 1-FT EAC	637.2230 SIGNS TPE II REFLECTIVE F SF	63.2102 MOVING SIGNS TPE II EAC	63.3000 REMOVING SMALL SIGN SUPPORTS EAC	MOUNTED ON SAME SUPPORT AS	REMARS
0010	1-01	-	-	E GLEN ST	STOP	1	-	-	1	1	1-02	
0010	1-02	-	-	E GLEN ST	TRAFFIC FROM LEFT DOES NOT STOP	-	-	-	1	-	1-01	
0010	1-03	-	-	LT	STOP	-	-	-	1	-	1-04	MOUNTED ON STREET LIGTING
0010	1-04	-	-	LT	ONCOMING TRAFFIC DOES NOT STOP	-	-	-	1	-	1-03	MOUNTED ON STREET LIGTING
0010	1-05	-	-	RT	REASSURNACE ASSEMBL	-	1	-	1	1	1-06	
0010	1-06	-	-	RT	SCENIC BWA	-	-	-	1	-	1-05	
0010	1-07	-	-	LT	ROUTE TURN ASSEMBL	1	-	-	1	1	-	
0010	1-0	-	-	RT	SPEED LIMIT 25	1	-	-	1	1	-	
0010	1-0	-	-	LT	STOP AEAD	1	-	-	1	1	-	
0010	1-10	-	-	LT	DESTINATION/ARROWS	2	-	-	1	2	-	
0010	1-11	W11-2	30X30	RT	PEDESTRIAN CROSSING	1	-	6.25	-	-	1-12	
0010	1-12	W16-7L	24X12	RT	LEFT DIAGONAL DOWNWARD ARROW	-	-	2.00	-	-	1-11	
0010	1-13	W11-2	30X30	LT	PEDESTRIAN CROSSING	1	-	6.25	-	-	1-14	
0010	1-14	W16-7L	24X12	LT	LEFT DIAGONAL DOWNWARD ARROW	-	-	2.00	-	-	1-13	
0010	1-15	-	-	LT	STOP	1	-	-	1	1	-	
0010	1-16	-	-	RT	NO PASSING ONE	-	-	-	1	-	-	MOUNTED ON POWER POLE
0010	1-17	-	-	LT	ROUTE ASSEMBL	-	2	-	1	2	1-1	
0010	1-1	-	-	LT	ROUTE ARROW ASSEMBL	-	-	-	1	-	1-17	
0010	1-1	-	-	RT	STOP	1	-	-	1	1	-	
0010	1-20	-	-	LT	SPEED LIMIT 25	1	-	-	1	1	-	
0010	1-21	-	-	LT	STOP	1	-	-	1	1	-	
0010	1-22	-	-	RT	SPEED LIMIT 35	1	-	-	1	1	-	
0010	1-23	-	-	LT	STOP	1	-	-	1	1	-	
0010	2-01	-	-	LT	REASSURNACE ASSEMBL	1	-	-	1	1	-	
0010	2-02	-	-	LT	SPEED LIMIT 35	1	-	-	1	1	-	
0010	2-03	-	-	LT	STOP	1	-	-	1	1	-	
0010	2-04	-	-	RT	FIRE STATION TRUC CROSSING	1	-	-	1	1	-	
0010	2-05	-	-	LT	STOP	1	-	-	1	1	-	
0010	2-06	-	-	RT	STOP	1	-	-	1	1	-	
0010	2-07	-	-	LT	NO PASSING ONE	1	-	-	1	1	-	
0010	2-0	-	-	LT	FIRE STATION TRUC CROSSING	1	-	-	1	1	-	
0010	2-0	-	-	LT	SPEED LIMIT 35	1	-	-	1	1	-	
0010	2-10	-	-	RT	SPEED LIMIT 35	1	-	-	1	1	-	
0010	3-01	-	-	RT	SIDE ROAD (0 DEGREES)	1	-	-	1	1	-	
				TOTAL 0010		25	3	16.50	30	26		

3

GUARDRAIL

CATEGOR	STATION	TO	STATION	LOCATION	614.036 GUARDRAIL MOW STRIP ASPALT S	614.2300 MGS GUARDRAIL 3 LF	614.2500 MGS TRIE BEAM TRANSITION LF	614.2610 MGS GUARDRAIL TERMINAL EAT EAC
0010	70+24	-	75+67	RT	-	450	3.4	1
0010	70+24	-	76+16	LT	45	500	3.4	1
				TOTAL 0010	45	50	7.	2

RESTORATION

CATEGOR	STATION	TO	STATION	LOCATION	625.0100 TOPSOIL S	62.0210 FERTILIER TPE B CWT	630.0120 SEEDING MIXTURE NO. 20 LB	630.0140 SEEDING MIXTURE NO. 40 LB	630.0200 SEEDING TEMPORAR LB	630.0500 SEED WATER MGAL
0010				PROECT	-	-	-	-	-	-
0010	46+7	-	53+22	RT	35	0.3	-	1	-	7
0010	47+11	-	51+4	LT	3	0.3	-	1	-	7
0010	51+1	-	54+7	LT	371	0.3	17	-	-	7
0010	53+50	-	55+75	RT	2	0.1	-	5	-	2
0010	55+75	-	63+00	RT	2412	1.6	10	-	-	41
0010	54+5	-	5+11	LT	43	0.4	-	22	-	9
0010	5+31	-	61+30	LT	1162	0.	53	-	-	20
0010	63+00	-	66+24	RT	464	0.3	-	21	-	8
0010	61+50	-	66+35	LT	4	0.4	-	23	-	9
0010	66+55		70+02	LT	3	0.3	-	1	-	7
0010	66+50	-	6+76	POND	1152	7.4	522	-	-	16
0010	6+76	-	75+76	RT	55	0.4	-	26	-	10
0010	70+02	-	76+27	LT	4	0.4	23	-	-	9
0010		UNDISTRIBUTED			427	3.3	11	3	3	3
				TOTAL 0010	24132	16.3	05	1	3	415

SAWING ASPALT

CATEGOR	STATION	LOCATION	60.0150 SAWING ASPALT LF	REMARS
0010	46+75	LT RT	150	BEGIN PROECT
0010	4+04	RT	24	DRIVEWA
0010	4+2	LT	12	DRIVEWA
0010	4+42	RT	2	DRIVEWA
0010	4+11	LT	22	DRIVEWA
0010	4+3	RT	22	DRIVEWA
0010	50+00	LT	111	DRIVEWA
0010	51+56	RT	200	DRIVEWA
0010	51+0	LT	21	RAILWA LN
0010	53+36	RT	2	E ELM ST
0010	54+25	RT	2	DRIVEWA
0010	54+	LT	22	W 1ST ST
0010	5+21	LT	20	W 2ND ST
0010	61+3	LT	20	W 4T ST
0010	63+15	LT	13	DRIVEWA
0010	63+2	RT	27	DRIVEWA
0010	64+21	RT	24	DRIVEWA
0010	64+22	LT	22	DRIVEWA
0010	65+24	RT	61	DRIVEWA
0010	65+45	LT	33	DRIVEWA
0010	66+3	RT	30	E 6T ST
0010	66+45	LT	20	W 6T ST
0010	6+71	LT	64	W 7T ST
0010	75+66	LT RT	36	END PROECT
		TOTAL 0010	103	

RIPRAP

CATEGOR	STATION	LOCATION	606.0300 RIPRAP EAV C	645.0120 GEOTEXTILE TPE R S
0010	02+7	POND	21	47
0010	03+10	POND	12	30
0010	10+33	POND	34	89
		TOTAL 0010	67	166

PAVEMENT MARINGS

CATEGOR	STATION	TO	STATION	LOCATION	646.2040 MARING LINE GROOVED WET REF EPOX 6-INC ELLOW LF	646.2040 MARING LINE GROOVED WET REF EPOX 6-INC WITE LF	646.6120 MARING STOP LINE EPOX 1-INC LF	646.6466 COLD WEATER MARING EPOX 6-INC LF	646.7420 MARING CROSSWAL EPOX TRANSVERSE LINE 6-INC LF
0010	46+0	-	52+32	LT RT	66	1002	20	1671	14
0010				RAILWA LN	-	-	1	-	-
0010	52+32	-	66+2	LT RT	363	2323	-	266	-
0010				E ELM ST	-	-	1	-	-
0010	66+2	-	73+50	LT RT	34	124	-	203	-
0010	73+50	-	75+66	LT RT	431	431	-	62	-
				SUBTOTAL 0010	227	5005			
				TOTAL 0010	7302		57	7302	14

STORM SEWER PIPES

CATEGOR	STRUCTURE	TO	STRUCTURE	LOCATION	520.000 CONCRETE COLLARS FOR PIPE EAC	60.0312 STORM SEWER PIPE REINFORCED CONCRETE CLASS III 12-INC LF	60.0324 STORM SEWER PIPE REINFORCED CONCRETE CLASS III 24-INC LF	60.0330 STORM SEWER PIPE REINFORCED CONCRETE CLASS III 30-INC LF	60.0336 STORM SEWER PIPE REINFORCED CONCRETE CLASS III 36-INC LF	60.0412 STORM SEWER PIPE REINFORCED CONCRETE CLASS IV 12-INC LF	60.041 STORM SEWER PIPE REINFORCED CONCRETE CLASS IV 1-INC LF	60.0424 STORM SEWER PIPE REINFORCED CONCRETE CLASS IV 24-INC LF	INLET ELEVATION	DISCARGE ELEVATION	SLOPE FT/FT
0010	EXIST	-	1	US	1	-	-	-	-	-	-	10	1627.53	1627.51	0.0020
0010	1	-	2	US	-	-	-	-	-	-	-	-	-	-	-
0010	EXIST	-	2	US	1	-	-	-	-	6	-	-	1627.55	1627.51	0.0065
0010	2	-	3	ST 32	-	-	-	-	-	-	-	-	-	-	-
0010	3	-	4	ST 32	-	-	-	-	-	-	-	-	-	-	-
0010	3A	-	3	ST 32	-	-	-	-	-	41	-	-	1627.42	1627.22	0.0050
0010	20	-	EXIST	E GLEN ST	1	-	10	-	-	-	-	-	1625.1	1625.5	0.0230
0010	4	-	5	ST 32	-	-	-	-	-	-	-	-	-	-	-
0010	4A	-	4	ST 32	-	-	-	-	-	35	-	-	1627.05	1626.	0.0050
0010	5	-	6	ST 32	-	-	-	-	227	-	-	-	1625.3	1624.3	0.0020
0010	5A	-	5	ST 32	-	35	-	-	-	-	-	-	162.0	162.72	0.0050
0010	6	-	7	ST 32	-	-	-	-	-	-	-	-	-	-	-
0010	6A	-	6	ST 32	-	37	-	-	-	-	-	-	1631.10	1630.2	0.0050
0010	6B	-	6C	ST 32	-	46	-	-	-	-	-	-	1631.50	1631.27	0.0050
0010	6C	-	6	ST 32	-	20	-	-	-	-	-	-	1631.27	1631.17	0.0050
0010	7	-	8	ST 32	-	-	-	-	124	-	-	-	1624.5	1624.33	0.0020
0010	7A	-	7B	ST 32	-	36	-	-	-	-	-	-	1632.60	1632.42	0.0050
0010	7B	-	7	ST 32	-	47	-	-	-	-	-	-	1632.42	1632.1	0.0050
0010	8	-	9	ST 32	-	-	-	-	125	-	-	-	1624.33	1624.0	0.0020
0010	A	-	B	ST 32	-	36	-	-	-	-	-	-	1633.20	1633.02	0.0050
0010	B	-	8	ST 32	-	26	-	-	-	-	-	-	1633.02	1632.	0.0050
0010	9	-	10	ST 32	-	-	-	-	64	-	-	-	1624.0	1623.6	0.0020
0010	A	-	9	ST 32	-	11	-	-	-	-	-	-	1633.00	1632.	0.0100
0010	10	-	11	ST 32	-	-	-	-	10	-	-	-	1623.6	1623.74	0.0020
0010	10A	-	10	ST 32	-	12	-	-	-	-	-	-	1633.20	1633.0	0.0100
0010	11	-	12	ST 32	-	-	-	-	-	-	-	-	-	-	-
0010	11A	-	11	ST 32	-	2	-	-	-	-	-	-	1633.0	1633.65	0.0050
0010	12	-	13	ST 32	-	-	-	-	-	-	-	-	-	-	-
0010	12A	-	12	ST 32	-	25	-	-	-	-	-	-	1636.10	1635.5	0.0100
0010	13	-	14	ST 32	-	-	-	-	-	-	-	-	-	-	-
0010	13A	-	13	ST 32	-	14	-	-	-	-	-	-	1635.70	1635.56	0.0100
0010	14	-	15	ST 32	-	-	-	-	-	-	-	-	-	-	-
0010	14A	-	14B	ST 32	-	36	-	-	-	-	-	-	1635.0	1635.44	0.0100
0010	14B	-	14	ST 32	-	14	-	-	-	-	-	-	1635.44	1635.31	0.0100
0010	15	-	16	POND	-	-	-	-	-	-	-	-	-	-	-
0010	15A	-	15	ST 32	-	-	-	74	-	-	-	-	162.40	162.03	0.0050
0010	15B	-	15	ST 32	-	1	-	-	-	-	-	-	1634.0	1633.2	0.0200
0010	100	-	101	POND	-	-	-	-	-	-	-	-	-	-	-
0010	101	-	102	POND	-	-	-	-	-	-	-	-	-	-	-
0010	102	-	103	POND	-	-	-	-	-	-	-	89	161.4	1617.5	0.0100
0010	103	-	104	POND	-	-	-	-	-	-	-	36	1622.16	161.4	0.0100
0010	EXIST	-	201	POND	1	-	-	-	-	-	10	-	1634.64	1634.1	0.044
0010	201	-	202	POND	-	-	-	-	-	-	101	-	1624.3	1621.72	0.031
				TOTAL 0010	4	505	10	74	64	2	111	467			

STORM SEWER PIPES CONTINUED

CATEGOR	STRUCTURE	TO	STRUCTURE	LOCATION	60.0430 STORM SEWER PIPE REINFORCED CONCRETE CLASS IV 30-INC LF	60.0436 STORM SEWER PIPE REINFORCED CONCRETE CLASS IV 36-INC LF	60.0524 STORM SEWER PIPE REINFORCED CONCRETE CLASS V 24-INC LF	60.232 STORM SEWER PIPE REINFORCED CONCRETE ORIONTAL ELLIPTICAL CLASS E-III 2X45-INC LF	60.2424 STORM SEWER PIPE REINFORCED CONCRETE ORIONTAL ELLIPTICAL CLASS E-IV 24X3-INC LF	60.3012 STORM SEWER PIPE CLASS III-A 12-INC LF	INLET ELEVATION	DISCARGE ELEVATION	SLOPE FT/FT
0010	EXIST	-	1	US	-	-	-	-	-	-	-	-	-
0010	1	-	2	US	-	-	-	-	9	-	1627.01	1626.6	0.0050
0010	EXIST	-	2	US	-	-	-	-	-	-	-	-	-
0010	2	-	3	ST 32	-	-	-	-	25	-	1626.6	1626.4	0.0050
0010	3	-	4	ST 32	-	-	-	-	54	-	1626.4	1626.57	0.0050
0010	3A	-	3	ST 32	-	-	-	-	-	-	-	-	-
0010	20	-	EXIST	E GLEN ST	-	-	-	-	-	-	-	-	-
0010	4	-	5	ST 32	227	-	-	-	-	-	1626.57	1625.	0.0030
0010	4A	-	4	ST 32	-	-	-	-	-	-	-	-	-
0010	5	-	6	ST 32	-	-	-	-	-	-	-	-	-
0010	5A	-	5	ST 32	-	-	-	-	-	-	-	-	-
0010	6	-	7	ST 32	-	-	-	177	-	-	1624.3	1624.5	0.0020
0010	6A	-	6	ST 32	-	-	-	-	-	-	-	-	-
0010	6B	-	6C	ST 32	-	-	-	-	-	-	-	-	-
0010	6C	-	6	ST 32	-	-	-	-	-	-	-	-	-
0010	7	-	8	ST 32	-	-	-	-	-	-	-	-	-
0010	7A	-	7B	ST 32	-	-	-	-	-	-	-	-	-
0010	7B	-	7	ST 32	-	-	-	-	-	-	-	-	-
0010	8	-	9	ST 32	-	-	-	-	-	-	-	-	-
0010	A	-	B	ST 32	-	-	-	-	-	-	-	-	-
0010	B	-	8	ST 32	-	-	-	-	-	-	-	-	-
0010	9	-	10	ST 32	-	-	-	-	-	-	-	-	-
0010	A	-	9	ST 32	-	-	-	-	-	-	-	-	-
0010	10	-	11	ST 32	-	-	-	-	-	-	-	-	-
0010	10A	-	10	ST 32	-	-	-	-	-	-	-	-	-
0010	11	-	12	ST 32	-	37	-	-	-	-	1623.74	1622.4	0.0020
0010	11A	-	11	ST 32	-	-	-	-	-	-	-	-	-
0010	12	-	13	ST 32	-	325	-	-	-	-	1622.4	1622.2	0.0020
0010	12A	-	12	ST 32	-	-	-	-	-	-	-	-	-
0010	13	-	14	ST 32	-	60	-	-	-	-	1622.2	1622.17	0.0020
0010	13A	-	13	ST 32	-	-	-	-	-	-	-	-	-
0010	14	-	15	ST 32	-	127	-	-	-	-	1622.17	1621.2	0.0020
0010	14A	-	14B	ST 32	-	-	-	-	-	-	-	-	-
0010	14B	-	14	ST 32	-	-	-	-	-	-	-	-	-
0010	15	-	16	POND	-	105	-	-	-	-	1621.2	1621.66	0.0025
0010	15A	-	15	ST 32	-	-	-	-	-	-	-	-	-
0010	15B	-	15	ST 32	-	-	-	-	-	-	-	-	-
0010	100	-	101	POND	-	-	-	-	-	13	1611.	1611.47	0.0400
0010	101	-	102	POND	-	-	140	-	-	-	1617.5	1611.	0.0400
0010	102	-	103	POND	-	-	-	-	-	-	-	-	-
0010	103	-	104	POND	-	-	-	-	-	-	-	-	-
0010	EXIST	-	201	POND	-	-	-	-	-	-	-	-	-
0010	201	-	202	POND	-	-	-	-	-	-	-	-	-
				TOTAL 0010	227	1014	140	177	88	13			

STORM SEWER STRUCTURES

CATEGOR	STRUCTURE	STATION	OFFSET	LOCATION	522.101 APRON ENDWALLS FOR CULVERT PIPE REINFORCED CONCRETE 1-INC EAC	522.1024 APRON ENDWALLS FOR CULVERT PIPE REINFORCED CONCRETE 24-INC EAC	522.1036 APRON ENDWALLS FOR CULVERT PIPE REINFORCED CONCRETE 36-INC EAC	611.0530 MANOLE COVERS TPE EAC	611.0612 INLET COVERS TPE C EAC	611.0624 INLET COVERS TPE EAC	611.063 INLET COVERS TPE -S EAC	611.0645 INLET COVERS TPE MS-A EAC	611.50.S.01 PIPE GRATES (SIE) (01. 1-INC) EAC	611.50.S.02 PIPE GRATES (SIE) (02. 24-INC) EAC	611.50.S.03 PIPE GRATES (SIE) (03. 36-INC) EAC	SPV.0060.0 SPECIAL (0. INLET COVERS TPE -D) EAC
0010	20	46+3.5	23.3 RT	GLENN ST	-	-	-	-	-	1	-	-	-	-	-	-
0010	1	46+5.	50.47 LT	US	-	-	-	-	-	-	1	-	-	-	-	-
0010	2	46+2.22	41.2 LT	US	-	-	-	1	-	-	-	-	-	-	-	-
0010	3	46+6.24	17.50 LT	ST 32	-	-	-	1	-	-	-	-	-	-	-	-
0010	3A	46+3.5	23.2 RT	ST 32	-	-	-	-	-	-	-	-	-	-	-	1
0010	4	47+3.5	17.50 LT	ST 32	-	-	-	-	-	1	-	-	-	-	-	-
0010	4A	47+3.5	17.50 RT	ST 32	-	-	-	-	-	1	-	-	-	-	-	-
0010	5	4+67.13	17.50 LT	ST 32	-	-	-	-	-	1	-	-	-	-	-	-
0010	5A	4+67.12	17.50 RT	ST 32	-	-	-	-	-	1	-	-	-	-	-	-
0010	6	51+4.56	17.50 LT	ST 32	-	-	-	1	-	-	-	-	-	-	-	-
0010	6A	51+4.01	17.50 RT	ST 32	-	-	-	-	-	-	-	-	-	-	-	1
0010	6B	52+3.36	27.40 LT	ST 32	-	-	-	-	-	-	1	-	-	-	-	-
0010	6C	51+4.4	37.76 LT	ST 32	-	-	-	-	-	1	-	-	-	-	-	-
0010	7	53+71.57	6.00 LT	ST 32	-	-	-	1	-	-	-	-	-	-	-	-
0010	7A	53+17.7	35.10 RT	ST 32	-	-	-	-	-	-	-	-	-	-	-	1
0010	7B	53+54.26	37.65 RT	ST 32	-	-	-	-	-	-	1	-	-	-	-	-
0010	8	54+5.1	6.00 LT	ST 32	-	-	-	1	-	-	-	-	-	-	-	-
0010	A	54+61.0	3.02 LT	ST 32	-	-	-	-	-	-	-	-	-	-	-	1
0010	B	54+6.7	31.6 LT	ST 32	-	-	-	-	-	-	1	-	-	-	-	-
0010	9	56+20.4	6.00 LT	ST 32	-	-	-	1	-	-	-	-	-	-	-	-
0010	A	56+20.4	17.50 LT	ST 32	-	-	-	-	-	-	1	-	-	-	-	-
0010	10	56+4.00	6.00 LT	ST 32	-	-	-	1	-	-	-	-	-	-	-	-
0010	10A	56+4.00	17.50 LT	ST 32	-	-	-	-	-	1	-	-	-	-	-	-
0010	11	57+2.74	6.00 LT	ST 32	-	-	-	1	-	-	-	-	-	-	-	-
0010	11A	57+.04	34.74 LT	ST 32	-	-	-	-	-	-	-	-	-	-	-	1
0010	12	61+0.00	6.00 LT	ST 32	-	-	-	1	-	-	-	-	-	-	-	-
0010	12A	61+.33	2.30 LT	ST 32	-	-	-	-	1	-	-	-	-	-	-	-
0010	13	65+14.60	6.00 LT	ST 32	-	-	-	1	-	-	-	-	-	-	-	-
0010	13A	65+14.5	1.50 LT	ST 32	-	-	-	-	-	1	-	-	-	-	-	-
0010	14	65+75.0	6.00 LT	ST 32	-	-	-	1	-	-	-	-	-	-	-	-
0010	14A	66+0.2	32.57 LT	ST 32	-	-	-	-	1	-	-	-	-	-	-	-
0010	14B	65+75.0	1.50 LT	ST 32	-	-	-	-	-	-	1	-	-	-	-	-
0010	15	66+1.	45.6 RT	ST 32	-	-	-	1	-	-	-	-	-	-	-	-
0010	15A	66+2.15	27.5 LT	ST 32	-	-	-	-	1	-	-	-	-	-	-	-
0010	15B	66+11.7	30.77 RT	ST 32	-	-	-	-	-	-	1	-	-	-	-	-
0010	16	67+0.53	107.20 RT	ST 32	-	-	1	-	-	-	-	-	-	-	1	-
0010	100	10+27.67	0.00	POND	-	1	-	-	-	-	-	-	-	1	-	-
0010	101	10+14.67	0.00	POND	-	-	-	1	-	-	-	-	-	-	-	-
0010	102	0+75.00	0.00	POND	-	-	-	1	-	-	-	-	-	-	-	-
0010	103	07+5.60	0.00	POND	-	-	-	1	-	-	-	-	-	-	-	-
0010	104	04+16.00	0.01	POND	-	-	-	-	-	-	-	3	-	-	-	-
0010	201	02+27.15	10.2 RT	POND	-	-	-	1	-	-	-	-	-	-	-	-
0010	202	03+05.0	44.50 RT	POND	1	-	-	-	-	-	-	-	1	-	-	-
				TOTAL 0010	1	1	1	16	3	8	7	3	1	1	1	5

STORM SEWER STRUCTURES CONTINUED

CATEGOR	STRUCTURE	* STATION	* OFFSET	LOCATION	611.1005 CATC BASINS 5-FT DIAMETER EAC	611.2004 MANOLES 4-FT DIAMETER EAC	611.2005 MANOLES 5-FT DIAMETER EAC	611.2006 MANOLES 6-FT DIAMETER EAC	611.3003 INLETS 3-FT DIAMETER EAC	611.3004 INLETS 4-FT DIAMETER EAC	611.3230 INLETS 2X3-FT EAC	611.303 INLETS MEDIAN 3 GRATE EAC	SPV.0060.10 SPECIAL (10. CONCRETE COLLARS FOR MANOLES) EAC	RIM** ELEVATION	INVERT*** ELEVATION	DEPT**** FT
0010	20	46+3.5	23.3 RT	32	-	-	-	-	-	1	-	-	-	1631.23	1625.1	4.67
0010	1	46+5.	50.47 LT	32	1	-	-	-	-	-	-	-	-	1631.00	1627.01	3.30
0010	2	46+2.22	41.2 LT	32	-	-	1	-	-	-	-	-	-	1631.1	1626.6	3.30
0010	3	46+6.24	17.50 LT	32	-	-	-	1	-	-	-	-	-	1631.53	1626.4	3.76
0010	3A	46+3.5	23.2 RT	32	-	-	-	-	-	1	-	-	-	1630.6	1627.42	2.43
0010	4	47+3.5	17.50 LT	32	1	-	-	-	-	-	-	-	-	1631.51	1626.57	4.25
0010	4A	47+3.5	17.50 RT	32	-	-	-	-	-	-	1	-	-	1631.35	1627.05	3.46
0010	5	4+67.13	17.50 LT	32	1	-	-	-	-	-	-	-	-	1633.60	1625.3	7.55
0010	5A	4+67.12	17.50 RT	32	-	-	-	-	-	-	1	-	-	1633.60	162.0	3.7
0010	6	51+4.56	17.50 LT	32	-	-	1	-	-	-	-	-	-	1636.10	1624.3	10.30
0010	6A	51+4.01	17.50 RT	32	-	-	-	-	-	1	-	-	-	1635.0	1631.10	3.7
0010	6B	52+3.36	27.40 LT	32	-	-	-	-	-	1	-	-	-	1636.20	1631.50	3.6
0010	6C	51+4.4	37.76 LT	32	-	-	-	-	-	1	-	-	-	1636.25	1631.27	4.15
0010	7	53+71.57	6.00 LT	32	-	-	1	-	-	-	-	-	-	163.0	1624.5	12.64
0010	7A	53+17.7	35.10 RT	32	-	-	-	-	-	1	-	-	-	1637.26	1632.60	3.3
0010	7B	53+54.26	37.65 RT	32	-	-	-	-	-	1	-	-	-	1637.34	1632.42	4.0
0010	8	54+5.1	6.00 LT	32	-	-	1	-	-	-	-	-	-	163.42	1624.33	13.1
0010	A	54+61.0	3.02 LT	32	-	-	-	-	-	1	-	-	-	1637.7	1633.20	3.4
0010	B	54+6.7	31.6 LT	32	-	-	-	-	-	1	-	-	-	1637.1	1633.02	3.5
0010	9	56+20.4	6.00 LT	32	-	-	1	-	-	-	-	-	-	163.0	1624.0	13.11
0010	A	56+20.4	17.50 LT	32	-	-	-	-	-	-	1	-	-	1637.70	1633.00	3.7
0010	10	56+4.00	6.00 LT	32	-	-	1	-	-	-	-	-	-	163.2	1623.6	13.43
0010	10A	56+4.00	17.50 LT	32	-	-	-	-	-	-	1	-	-	1637.0	1633.20	3.7
0010	11	57+2.74	6.00 LT	32	-	-	1	-	-	-	-	-	-	163.21	1623.74	14.57
0010	11A	57+.04	34.74 LT	32	-	-	-	-	-	1	-	-	-	163.50	1633.0	3.6
0010	12	61+0.00	6.00 LT	32	-	-	1	-	-	-	-	-	-	1641.1	1622.4	17.34
0010	12A	61+.33	2.30 LT	32	-	-	-	-	1	-	-	-	-	163.7	1636.10	2.61
0010	13	65+14.60	6.00 LT	32	-	-	1	-	-	-	-	-	-	1640.0	1622.2	17.60
0010	13A	65+14.5	1.50 LT	32	-	-	-	-	-	-	1	-	-	1640.37	1635.70	3.4
0010	14	65+75.0	6.00 LT	32	-	-	1	-	-	-	-	-	-	1640.64	1622.17	17.56
0010	14A	66+0.2	32.57 LT	32	-	-	-	-	1	-	-	-	-	1640.02	1635.0	3.14
0010	14B	65+75.0	1.50 LT	32	-	-	-	-	-	1	-	-	-	1640.21	1635.44	3.3
0010	15	66+1.	45.6 RT	32	-	-	1	-	-	-	-	-	-	1637.1	1621.2	15.0
0010	15A	66+2.15	27.5 LT	32	-	-	-	-	1	-	-	-	-	163.24	162.11	.
0010	15B	66+11.7	30.77 RT	32	-	-	-	-	-	1	-	-	-	1640.05	1634.0	4.32
0010	16	67+0.53	107.20 RT	32	-	-	-	-	-	-	-	-	-	-	1621.66	-
0010	100	10+27.67	0.00	POND	-	-	-	-	-	-	-	-	-	-	1611.47	-
0010	101	10+14.67	0.00	POND	-	1	-	-	-	-	-	-	-	1616.24	1611.70	3.30
0010	102	0+75.00	0.00	POND	-	1	-	-	-	-	-	-	1	1621.3	1617.5	2.2
0010	103	07+5.60	0.00	POND	-	1	-	-	-	-	-	-	1	1622.3	161.4	3.36
0010	104	04+16.00	0.01	POND	-	1	-	-	-	-	-	1	-	-	1622.16	-
0010	201	02+27.15	10.2 RT	POND	-	-	-	-	-	-	-	-	-	1637.71	1624.3	11.74
0010	202	03+05.0	44.50 RT	POND	-	-	-	-	-	-	-	-	-	-	1621.72	-
				TOTAL 0010	3	4	11	1	3	12	5	1	2			

REMARS
*STATIONS AND OFFSETS ARE TO CENTER OF STRUCTURE
**RIM ELEV IS AT TE INLET COVER FLANGE LOCATION
***FOR STRUCTURES WIT SUMPS TE INVERT ELEVATION IS TE ELEVATION OF TE SUMP. FOR STRUCTURES WITOUT SUMPS TE INVERT ELEVATION IS TE ELEVATION OF TE LOWEST PIPE FLOW LINE
****DEPT = RIM ELEV - TOP OF STRUCTURE BASE ELEV - COVER EIGT - 6-INC ADUSTMENT RING EIGT

*ADDITIONAL UANTITIES LISTED ELSEWERE
** FOR INFORMATION ONL

3

TEMP PED ACCOMODATIONS

CATEGOR	LOCAITON	STAGE	DURATION DAS	* 643.000 TRAFFIC CONTROL SIGNS EAC**	DA	643.310 TEMPORAR MARING LINE REMOVABLE TAPE 6-INC LF	644.1440 TEMPORAR PEDESTRIAN SURFACE MATTING SF	644.1601 TEMPORAR PEDESTRIAN CURB RAMP EAC**	DA	644.1605 TEMPORAR PEDESTRIAN DETECTABLE WARNING FIELD SF	644.110 TEMPORAR PEDESTRIAN BARRICADE LF	644.100.S TEMPORAR AUDIBLE MESSAGE DEVICES EAC**	DA
0010	US / ST 32 INTERSECTION	STAGE 1B	10	13	130	-	-	-	-	-	0	5	50
0010	US / ST 32 INTERSECTION	STAGE 2	10	1	10	241	5	2	20	20	104	8	0
			TOTAL 0010		310	241	5		20	20	14		130

TRAFFIC CONTROL

CATEGOR	LOCATION	DURATION DAS	643.0300 TRAFFIC CONTROL DRUMS EAC**	DA	643.0420 TRAFFIC CONTROL BARRICADES TPE III EAC**	DA	643.0705 TRAFFIC CONTROL WARNING LIGTS TPE A EAC**	DA	643.0715 TRAFFIC CONTROL WARNING LIGTS TPE C EAC**	DA	* 643.000 TRAFFIC CONTROL SIGNS EAC**	DA	643.020 TRAFFIC CONTROL COVERING SIGNS TPE II EAC	643.1000 TRAFFIC CONTROL SIGNS FIXED MESSAGE SF
0010	PROECT BEGIN	120	16	120	6	720	7	40	8	60	2	240	8	1
0010	PROECT END	120	-	-	4	40	5	600	-	-	2	240	-	1
0010	SIDEROADS	120	-	-	2	340	37	4440	-	-	17	2040	-	-
0010	MAINLINE	120	50	6000	-	-	-	-	-	-	-	-	-	-
0010	DETOUR	120	-	-	-	-	-	-	-	-	343	41160	-	-
0010	WOLF RIVER STATE TRAIL	7	15	105	2	14	4	2	15	105	6	42	-	-
		TOTAL 0010		025		464		50		1065		43722	8	36

650 CONSTRUCTION STAING

CATEGOR	STATION	TO	STATION	LOCATION	650.4000 CONSTRUCTION STAING STORM SEWER EAC	650.4500 CONSTRUCTION STAING SUBGRADE LF	650.5000 CONSTRUCTION STAING BASE LF	650.5500 CONSTRUCTION STAING CURB GUTTER AND CURB GUTTER LF	650.6000 CONSTRUCTION STAING PIPE CULVERTS EAC	650.000 CONSTRUCTION STAING CURB RAMPS EAC	650.20 CONSTRUCTION STAING SLOPE STAES LF
0010				ST 32 (PROECT)	43	-	-	-	1	-	-
0010	46+75		53+20	RT	-	-	-	66	-	3	-
0010	46+4	-	51+6	LT	-	-	-	604	-	3	-
0010	51+	-	54+64	LT	-	-	-	316	-	-	-
0010	53+52	-	55+75	RT	-	-	-	237	-	-	-
0010	54+3	-	5+01	LT	-	-	-	33	-	-	-
0010	61+51	-	66+33	LT	-	-	-	522	-	-	-
0010	63+00	-	66+25	RT	-	-	-	345	-	-	-
0010	46+75	-	75+66	LT RT	-	21	21	-	-	-	21
0010	01+60	-	06+00	POND	-	-	-	-	-	-	440
				TOTAL 0010	43	21	21	305	1	6	3331

3

PROECT NO 260-00-71	W ST 32	COUNT FOREST	MISCELLANEOUS UANTITIES	SEET 74	E

FILE NAME NPDSC3D2600001SEETSPLAN030201-M.DWG
LAOUT NAME - 10
PLOT DATE 1/21/2026 1 PM PLOT B MATT PANE PLOT NAME PLOT SCALE 1 = 1
WISDOT/CADDS SEET 42

SPV.0035.01
SPECIAL (01. ENGINEERED SOIL)

CATEGOR	LOCATION	C
0010	POND	662

SPV.0060.11
SPECIAL (11. OBSERVATION WELL)

CATEGOR	LOCATION	EAC
0010	POND	1

SPV.0060.03
SPECIAL (03. UTILIT LINE OPENING (ULO))

CATEGOR	LOCATION	EAC
0010	PROECT	1

SPV.0060.12
SPECIAL (12. TEMPORAR TRAIL SIFT FOR STORM SEWER WOR)

CATEGOR	LOCATION	EAC
0010	PROECT	1

CATEGOR	LOCATION	SPV.0165.01 SPECIAL (01. RIGID INSULATION BOARD 4-INC TIC) SF
0010	PROECT	6650
	UNDISTRIBUTED	665
	TOTAL 0010	7315

SANITAR SEWER

CATEGOR	STATION	TO	STATION	LOCATION	SPV.0060.01 SPECIAL (01. SANITAR SEWER CONNECTION TO EXISTING SANITAR SEWER PIPE) EAC	SPV.0060.02 SPECIAL (02. SANITAR SEWER CONNECTION TO EXISTING SANITAR SEWER MANOLE) EAC	SPV.0060.04 SPECIAL (04. SANITAR SEWER MANOLE CASTING ELEVATION ADUSTMENT) EAC	SPV.000.01 SPECIAL (01. SANITAR SEWER -INC PVC) LF	SPV.000.04 SPECIAL (04. SANITAR SEWER LATERAL 6-INC PVC) LF
0010		4+2		0.22 LT	-	-	1	-	-
0010		52+67		1.06 LT	-	-	1	-	-
0010		54+03		16.0 LT	-	-	1	-	-
0010		5+03		16.6 LT	-	-	1	-	-
0010		5+6		1.56 LT	-	1	1	-	-
0010		62+1		1.04 LT	-	-	1	-	-
0010		65+21		17.75 LT	-	-	1	-	-
0010	5+2	-	5+6	1.11 LT	1	-	-	40	-
0010	53+16	-	53+55	.20 LT	2	-	-	40	-
0010			ST 32		-	-	-	-	-
0010		4+27			-	-	-	-	2
0010		4+53			-	-	-	-	2
0010		4+0			-	-	-	-	2
0010		4+2			-	-	-	-	2
0010		50+35			-	-	-	-	2
0010		51+25			-	-	-	-	2
				TOTAL 0010	3	1	7	0	16

WATER

CATEGOR	STATION	TO	STATION	LOCATION	SPV.0060.05 SPECIAL (05. WATER MAIN CONNECTION TO EXISTING WATER MAIN -INC) EAC	SPV.0060.06 SPECIAL (06. WATER SERVICE CONNECTION TO EXISTING WATER MAIN 1-INC) EAC	SPV.0060.07 SPECIAL (07. WATER VALVE BOX ADUSTMENT) EAC	SPV.0060.0 SPECIAL (0. TEMPORAR WATER SERVICE) EAC	SPV.000.02 SPECIAL (02. WATER MAIN -INC DUCTILE IRON) LF	SPV.000.03 SPECIAL (03. WATER SERVICE 1-INC COPPER) LF
0010		47+42		LT	-	1	-	1	-	40
0010		4+2		LT	-	1	-	1	-	3
0010		4+5		LT	-	1	-	1	-	36
0010		4+		LT	-	1	-	1	-	36
0010		4+6		LT	-	1	-	1	-	3
0010		51+24		LT	-	1	-	1	-	40
0010	5+2	-	66+5	LT RT	-	-	-	4	-	-
0010		46+6		7.25 RT	-	-	1	-	-	-
0010		51+2		55.10 LT	-	-	1	-	-	-
0010		52+26		22.7 RT	-	-	1	-	-	-
0010		53+47		32.02 RT	-	-	1	-	-	-
0010		53+6		14.6 RT	-	-	1	-	-	-
0010		54+6		32.5 LT	-	-	1	-	-	-
0010		61+62		22.75 RT	-	-	1	-	-	-
0010		61+74		21.31 RT	-	-	1	-	-	-
0010		63+56		22.60 RT	-	-	1	-	-	-
0010		63+4		22.55 RT	-	-	1	-	-	-
0010		64+6		30.64 RT	-	-	1	-	-	-
0010		65+66		26.50 RT	-	-	1	-	-	-
0010	5+2	-	5+6	1.51 RT	2	-	-	-	40	-
0010	66+1	-	66+5	22.33 RT	2	-	-	-	40	-
				TOTAL 0010	4	6	12	10	0	22

PROECT NO 260-00-1	W ST 32	COUNT FOREST	MISCELLANEOUS UANTITIES	SEET 76 E

FILE NAME NPDSC3D2600001SEETSPLAN030201-M.DWG
LAOUT NAME - 12
PLOT DATE 1/21/2026 1 PM PLOT B MATT PANE PLOT NAME PLOT SCALE 1 = 1
WISDOT/CADDS SEET 42

STATE OF WISCONSIN
DEPARTMENT OF TRANSPORTATION
TRANSPORTATION PROJECT PLAT TITLE SHEET
9260-00-21
C CRANDON, LAKE AVENUE
USH 8 TO CRANDON RR OVERHEAD
STH 32
FOREST COUNTY

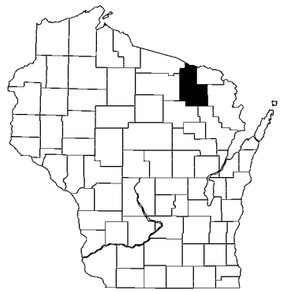

CONVENTIONAL SYMBOLS

SECTION LINE
QUARTER LINE
SIXTEENTH LINE
NEW REFERENCE LINE
NEW R/W LINE
EXISTING R/W OR HE LINE
PROPERTY LINE
LOT, TIE & OTHER MINOR LINES
SLOPE INTERCEPT
CORPORATE LIMITS
UNDERGROUND FACILITY (COMMUNICATIONS, ELECTRIC, ETC)
NEW R/W (FEE OR HE) (HATCHING VARIES BY OWNER)
TEMPORARY LIMITED EASEMENT AREA
EASEMENT AREA (PERMANENT LIMITED OR RESTRICTED DEVELOPMENT)
TRANSMISSION STRUCTURES
BUILDING
TO BE REMOVED
BRIDGE
CULVERT

SECTION CORNER SYMBOL
SECTION CORNER MONUMENT
GEODETIC SURVEY MONUMENT
SIXTEENTH CORNER MONUMENT
SIGN
OFF-PREMISE SIGN
R/W MONUMENT (TO BE SET)
NON-MONUMENTED R/W POINT
FOUND IRON PIN (1-INCH UNLESS NOTED)

	COMPENSABLE	NON-COMPENSABLE
ELECTRIC POLE		
TELEPHONE POLE		
PEDESTAL (LABEL TYPE) (TV, TEL, ELEC, ETC.)		

ACCESS RESTRICTED BY ACQUISITION
NO ACCESS (BY STATUTORY AUTHORITY)
ACCESS RESTRICTED (BY PREVIOUS PROJECT OR CONTROL)
NO ACCESS (NEW HIGHWAY)
PARCEL NUMBER 25
UTILITY NUMBER 40
PARALLEL OFFSETS

CONVENTIONAL ABBREVIATIONS

ACCESS RIGHTS	AR	POINT OF BEGINNING	POB
ACRES	AC	POINT OF CURVATURE	PC
AHEAD	AH	POINT OF COMPOUND CURVE	PCC
ALUMINUM	ALUM	POINT OF INTERSECTION	PI
AND OTHERS	ET AL	PROPERTY LINE	PL
BACK	BK	RECORDED AS	(100')
BLOCK	BLK	REEL / IMAGE	R/I
CENTERLINE	C/L	REFERENCE LINE	R/L
CERTIFIED SURVEY MAP	CSM	REMAINING	REM
CONCRETE	CONC	RESTRICTIVE DEVELOPMENT EASEMENT	RDE
COUNTY	CO	RIGHT	RT
COUNTY TRUNK HIGHWAY	CTH	RIGHT OF WAY	R/W
DISTANCE	DIST	SECTION	SEC
CORNER	COR	SEPTIC VENT	SEPV
DOCUMENT NUMBER	DOC	SQUARE FEET	SF
EASEMENT	EASE	STATE TRUNK HIGHWAY	STH
EXISTING	EX	STATION	STA
GAS VALVE	GV	TELEPHONE PEDESTAL	TP
GOVERNMENT	GOV	TEMPORARY LIMITED EASEMENT	TLE
GRID NORTH	GN	TRANSPORTATION PROJECT PLAT	TPP
HIGHWAY EASEMENT	HE	UNITED STATES HIGHWAY	USH
IDENTIFICATION	ID	VOLUME	V
LAND CONTRACT	LC		
LEFT	LT		
MEANDER CORNER	MC		
MONUMENT	MON		
NATIONAL GEODETIC SURVEY	NGS		
NUMBER	NO		
OUTLOT	OL		
PAGE	P		
POINT OF TANGENCY	PT		
PERMANENT LIMITED EASEMENT	PLE		

CURVE DATA ABBREVIATIONS

LONG CHORD	LCH
LONG CHORD BEARING	LCB
RADIUS	R
DEGREE OF CURVE	D
CENTRAL ANGLE	Δ /DELTA
LENGTH OF CURVE	L
TANGENT	T
DIRECTION AHEAD	DA
DIRECTION BACK	DB

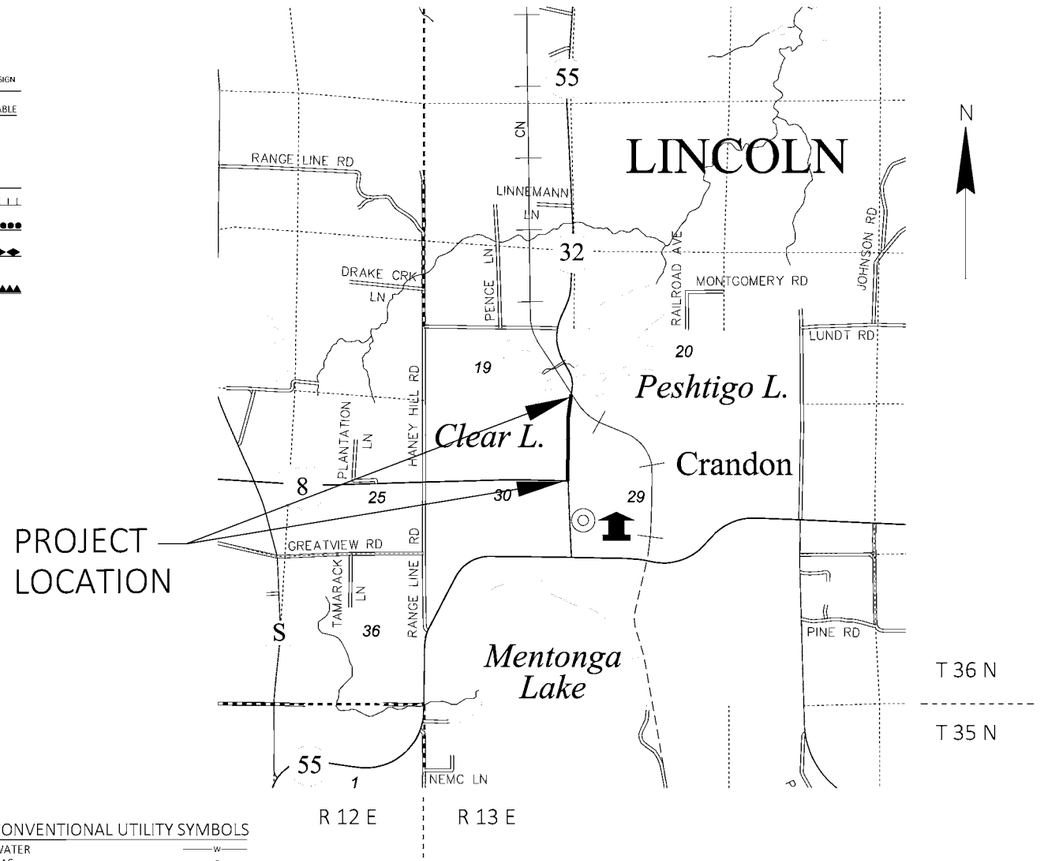

CONVENTIONAL UTILITY SYMBOLS

WATER	W
GAS	G
TELEPHONE	T
OVERHEAD TRANSMISSION LINES	OH
ELECTRIC	E
CABLE TELEVISION	TV
FIBER OPTIC	FO
SANITARY SEWER	SAN
STORM SEWER	SS
ELECTRIC TOWER	

THE NOTES,CONVENTIONAL SIGNS, AND ABBREVIATIONS ARE ASSOCIATED WITH EACH TRANSPORTATION PROJECT PLAT FOR PROJECT 9260-00-21.

NOTES:

POSITIONS SHOWN ON THIS PLAT ARE WISCONSIN COORDINATE REFERENCE SYSTEM COORDINATES (WISCRS), FOREST COUNTY, NAD83(2011), IN U.S. SURVEY FEET. VALUES ARE GRID COORDINATES, GRID BEARINGS, AND GRID DISTANCES. GRID DISTANCES MAY BE USED AS GROUND DISTANCES. NGS POINT UTILIZED WAS DP8724.

ALL NEW RIGHT-OF-WAY AND PERMANENT EASEMENT MONUMENTS WILL BE TYPE 2 (TYPICALLY ¾" X 24" IRON REBARS), UNLESS OTHERWISE NOTED, AND WILL BE PLACED PRIOR TO THE COMPLETION OF THE PROJECT.

ALL RIGHT-OF-WAY LINES DEPICTED IN THE NON-ACQUISITION AREAS ARE INTENDED TO RE-ESTABLISH EXISTING RIGHT-OF-WAY LINES AS DETERMINED FROM PREVIOUS PROJECTS, OTHER RECORDED DOCUMENTS, CENTERLINE OF EXISTING PAVEMENTS AND/OR EXISTING OCCUPATIONAL LINES.

RIGHT-OF-WAY BOUNDARIES ARE DEFINED WITH COURSES OF THE PERIMETER OF THE HIGHWAY LANDS REFERENCED TO THE U.S. PUBLIC LAND SURVEY SYSTEM OR OTHER "SURVEYS" OF PUBLIC RECORD.

DIMENSIONING FOR THE NEW RIGHT-OF-WAY IS MEASURED ALONG AND PERPENDICULAR TO THE NEW REFERENCE LINES.

A TEMPORARY LIMITED EASEMENT (TLE) IS A RIGHT FOR CONSTRUCTION PURPOSES, AS DEFINED HEREIN, INCLUDING THE RIGHT TO OPERATE NECESSARY EQUIPMENT THEREON, THE RIGHT OF INGRESS AND EGRESS, AS LONG AS REQUIRED FOR SUCH PUBLIC PURPOSE, INCLUDING THE RIGHT TO PRESERVE, PROTECT, REMOVE, OR PLANT THEREON ANY VEGETATION THAT THE HIGHWAY AUTHORITIES MAY DEEM DESIRABLE. ALL (TLEs) ON THIS PLAT EXPIRE AT THE COMPLETION OF THE CONSTRUCTION PROJECT FOR WHICH THIS INSTRUMENT IS GIVEN.

A PERMANENT LIMITED EASEMENT (PLE) IS A RIGHT FOR CONSTRUCTION AND MAINTENANCE PURPOSES, AS DEFINED HEREIN, INCLUDING THE RIGHT TO OPERATE NECESSARY EQUIPMENT THEREON AND THE RIGHT OF INGRESS AND EGRESS, AS LONG AS REQUIRED FOR SUCH PUBLIC PURPOSE, INCLUDING THE RIGHT TO PRESERVE, PROTECT, REMOVE, OR PLANT THEREON ANY VEGETATION THAT THE HIGHWAY AUTHORITIES MAY DEEM DESIRABLE, BUT WITHOUT PREJUDICE TO THE OWNER'S RIGHTS TO MAKE OR CONSTRUCT IMPROVEMENTS ON SAID LANDS OR TO FLATTEN THE SLOPES, PROVIDING SAID ACTIVITIES WILL NOT IMPAIR OR OTHERWISE ADVERSELY AFFECT THE HIGHWAY FACILITIES.

PROPERTY LINES SHOWN ON THIS PLAT FOR PROPERTIES BEING IMPACTED ARE DRAWN FROM DATA DERIVED FROM FILED/RECORDED MAPS AND DOCUMENTS OF PUBLIC RECORD. THIS PLAT MAY NOT BE A TRUE REPRESENTATION OF EXISTING PROPERTY LINES, EXCLUDING RIGHT-OF-WAY, AND SHOULD NOT BE USED AS A SUBSTITUTE FOR AN ACCURATE FIELD SURVEY.

FOR THE CURRENT ACCESS/DRIVEWAY INFORMATION, CONTACT THE PLANNING UNIT OF THE WISCONSIN DEPARTMENT OF TRANSPORTATION OFFICE IN THE NC REGION-RHINELANDER.

PARCEL AND UTILITY IDENTIFICATION NUMBERS MAY NOT POINT TO ALL AREAS OF ACQUISITION, AS NOTED ON THE TPP DETAIL PAGES.

INFORMATION FOR THE BASIS OF EXISTING HIGHWAY RIGHT-OF-WAY POINTS OF REFERENCE AND ACCESS CONTROL ARE LISTED ON THE TPP DETAIL PAGES.

PROJECT NUMBER 9260-00-21 - 4.01
SHEET 2 OF 2
AMENDMENT NO:

FILE NAME : N:\PDS\C3D\92600001\RW\DWG\040101-RP.DWG
LAYOUT NAME: RT_01
PLOT DATE : 11/30/2023 9:40 AM

TRANSPORTATION PROJECT PLAT NO: 9260-00-21-4.01 AMENDMENT NO: 1 REMOVES UTILITY NUMBER 82 AND AMENDS UTILITY NUMBER 81 OF TRANSPORTATION PROJECT PLAT 9260-00-21-4.01 RECORDED AS DOCUMENT NO: 242451

PART OF LOT 1, LOTS 23 THRU 29 , BLOCK 1, ALL IN SHAW'S PARK ADDITION TO CRANDON, PART OF LOT 1, CSM, V 7, P 17, DOC185102, LOCATED IN AND INCLUDING PART OF THE SE 1/4 OF THE NE 1/4, SECTION 30, PART OF LOTS 1 THRU 3, PART OF VACATED ALLEY AND BROAD STREET, DOC 130764, BLOCK 2, ALL IN SHAW'S PARK ADDITION TO CRANDON, SECTION 30. PART OF LOTS 8, 10 THRU 14, PART OF VACATED EAST MAPLE STREET, DOC51499, PART OF OUTLOT A, BLOCK 1, ALL IN MILLS'S ADDITION TO CRANDON, PART OF LOT 1, CSM, V 8, P 131, DOC204151, AND PART OF THE SW 1/4 OF THE NW 1/4, SECTION 29. ALL LOCATED IN TOWNSHIP 36 NORTH, RANGE 13 EAST, CITY OF CRANDON, FOREST COUNTY, WISCONSIN.

RELOCATION ORDER STH 32 CITY OF CRANDON, LAKE AVENUE USH 8 TO CRANDON RR OVERHEAD, FOREST COUNTY

TO PROPERLY ESTABLISH, LAY OUT, WIDEN, ENLARGE, EXTEND, CONSTRUCT, RECONSTRUCT, IMPROVE, OR MAINTAIN A PORTION OF THE HIGHWAY DESIGNATED ABOVE, THE STATE OF WISCONSIN DEPARTMENT OF TRANSPORTATION DEEMS IT NECESSARY TO RELOCATE OR CHANGE SAID HIGHWAY AND ACQUIRE CERTAIN LANDS AND INTERESTS OR RIGHTS IN LANDS FOR THE ABOVE NAMED PROJECT.

TO EFFECT THIS CHANGE, PURSUANT TO AUTHORITY GRANTED UNDER SECTION 84.02 (3), 84.09 AND 84.30, WISCONSIN STATUTES, THE DEPARTMENT OF TRANSPORTATION HEREBY ORDERS THAT:

1. THAT PORTION OF SAID HIGHWAY AS SHOWN ON THIS PLAT IS LAID OUT AND ESTABLISHED TO THE LINES AND WIDTHS AS SO SHOWN FOR THE ABOVE PROJECT.
2. THE LANDS OR INTERESTS OR RIGHTS IN LANDS AS SHOWN ON THIS PLAT ARE REQUIRED BY THE DEPARTMENT FOR THE ABOVE PROJECT AND SHALL BE ACQUIRED IN THE NAME OF THE STATE OF WISCONSIN, PURSUANT TO THE PROVISIONS OF SECTION 84.09 (1) OR (2), WISCONSIN STATUTES.

ROAD NAME	BASIS OF EXISTING R/W	YEAR
USH 8/GLEN ST STH 32/N. LAKE AVE. W 2ND ST W 1ST ST/W BROAD ST	SHAW'S PARK ADDITION TO CRANDON VOL. 14, PG 637 DOC7491	1901
USH 8/GLEN ST STH 32/N. LAKE AVE.	MILLS'S ADDITION TO CRANDON VOL. 17, PG 429 DOC9154	1903
USH 8/GLEN ST STH 32/N. LAKE AVE.	RIGHT-OF-WAY PLAT PROJECT T0231(6)	1956
STH 32/RAILWAY LN STH 32/E ELM ST	LOT 1, CSM, V 7, P 17, DOC 185102 LOT 1, CSM, V 8, P 131, DOC 204151	2004 2010

LOCATION SKETCH
NOT TO SCALE

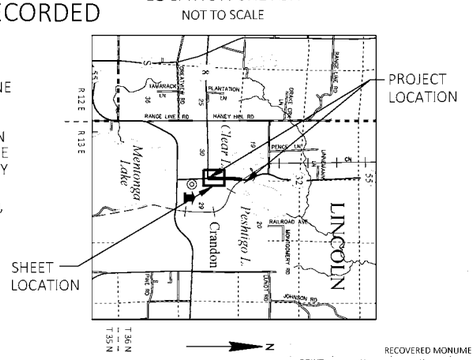

FOR ADDITIONAL INFORMATION REFER TO THE TITLE SHEET, RECORDED AS SHEET 2 OF 2, DOCUMENT NO: 242451.

POSITIONS SHOWN ON THIS PLAT ARE WISCONSIN COORDINATE REFERENCE SYSTEM COORDINATES (WISCRS), FOREST COUNTY, NAD83 (2011), IN U.S. SURVEY FEET. VALUES SHOWN ARE GRID COORDINATES, GRID BEARINGS, AND GRID DISTANCES. GRID DISTANCES MAY BE USED AS GROUND DISTANCES. NGS POINT UTILIZED WAS DP8724.

ALL NEW RIGHT-OF-WAY AND PERMANENT EASEMENT MONUMENTS WILL BE TYPE 2 (TYPICALLY ¾" X 24" IRON REBARS), UNLESS OTHERWISE NOTED, AND WILL BE PLACED PRIOR TO THE COMPLETION OF THE PROJECT.

FOR THE CURRENT ACCESS/DRIVEWAY INFORMATION, CONTACT THE PLANNING UNIT OF THE WISCONSIN DEPARTMENT OF TRANSPORTATION OFFICE IN THE NC REGION-RHINELANDER.

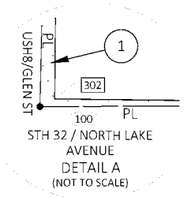

STH 32 / NORTH LAKE AVENUE
DETAIL A
(NOT TO SCALE)

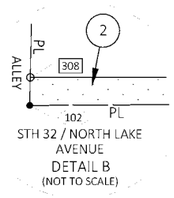

STH 32 / NORTH LAKE AVENUE
DETAIL B
(NOT TO SCALE)

RECOVERED MONUMENTS

POINT	Y	X	DESCRIPTION
1000	571421.266	835863.877	3/4" IRON PIPE
1003	572054.476	835856.119	1" IRON BAR
1011	572236.480	835795.198	1" IRON PIPE
1013	571994.945	835796.547	1" IRON PIPE
1019	571700.325	835798.443	3/4" IRON REBAR W/ CAP
31225	571559.209	835798.914	2" IRON PIPE
1015	571643.082	835374.799	3/4" IRON REBAR
1016	571700.082	835674.420	3/4" IRON REBAR W/ CAP
1017	571702.838	835677.885	3/4" IRON REBAR W/ CAP

FOUND MONUMENT INFORMATION SHOWN REPRESENTS TYPE AND LOCATION OF EXISTING MONUMENTS WITHOUT OPINION AS TO THEIR VALIDITY AND USE AS A PROPERTY CORNER.

OWNER'S NAMES ARE SHOWN FOR REFERENCE PURPOSES ONLY AND ARE SUBJECT TO CHANGE PRIOR TO TRANSFER OF LAND INTERESTS TO THE DEPARTMENT.

SCHEDULE OF LANDS & INTERESTS REQUIRED

PARCEL NUMBER	OWNER(S)	INTERESTS REQUIRED	R/W SQUARE FEET REQUIRED NEW	R/W SQUARE FEET REQUIRED EXISTING	R/W SQUARE FEET REQUIRED TOTAL	TLE SQUARE FEET
1	GLEN CORNER APARTMENTS LLC	TLE	-	-	-	355
2	MARY T. PAUL	TLE	-	-	-	522
3	MICHAEL R BOCEK JR. & KENDRA M BOCEK	TLE	-	-	-	290
4	ROBERT SMITH & SON LLC	TLE	-	-	-	1,026
5	-	-	-	-	-	-
6	EDWARD & ROSEMARIE ROGERS	FEE/TLE	12	-	12	1060
7	THEODORE DAVID & MARISSA MARIE GLINSKI	FEE/TLE	593	-	593	2536
8	JUSTIN EDWARD HARVEY & KIMBERLY A SHAWANO	TLE	-	-	-	234
9	CRANDON TELEPHONE COMPANY	TLE	-	-	-	166
10	-	-	-	-	-	-
11	ORVILLE A. DEWITT	TLE	-	-	-	933
12	MICHAEL O & JENNA R PARADIES	TLE	-	-	-	1183
13	KRUEGER'S NORTHERN LAKE PROPERTIES, INC.	TLE	-	-	-	860
14	STATE OF WISCONSIN	TLE	-	-	-	878
15	-	-	-	-	-	-
16	ALLEN C. & KIM L. KEEPERS, TRUSTEES OF THE AKK INCOME TRUST DATED DECEMBER 18, 2014	FEE/TLE	91	-	91	2853
17	CRANDON AREA RESCUE SQUAD, INC	FEE/TLE	91	-	91	1102
18	PAUL NEWTON, CRAIG NEWTON & DELBERT VANSTONE	FEE/TLE	2475	5665	8140	4703

246840
RECORDED ON:
10/02/2025 11:22 AM
CORTNEY BRITTEN CLEEREMAN
REGISTER OF DEEDS
FOREST COUNTY WI
RECORDING FEE: 25.00
PAGES: 1

ELECTRONICALLY RECORDED AND RETURNED TO SUBMITTER

RESERVED FOR REGISTER OF DEEDS
PROJECT NUMBER 9260-00-21-4.01
AMENDMENT NO: 1

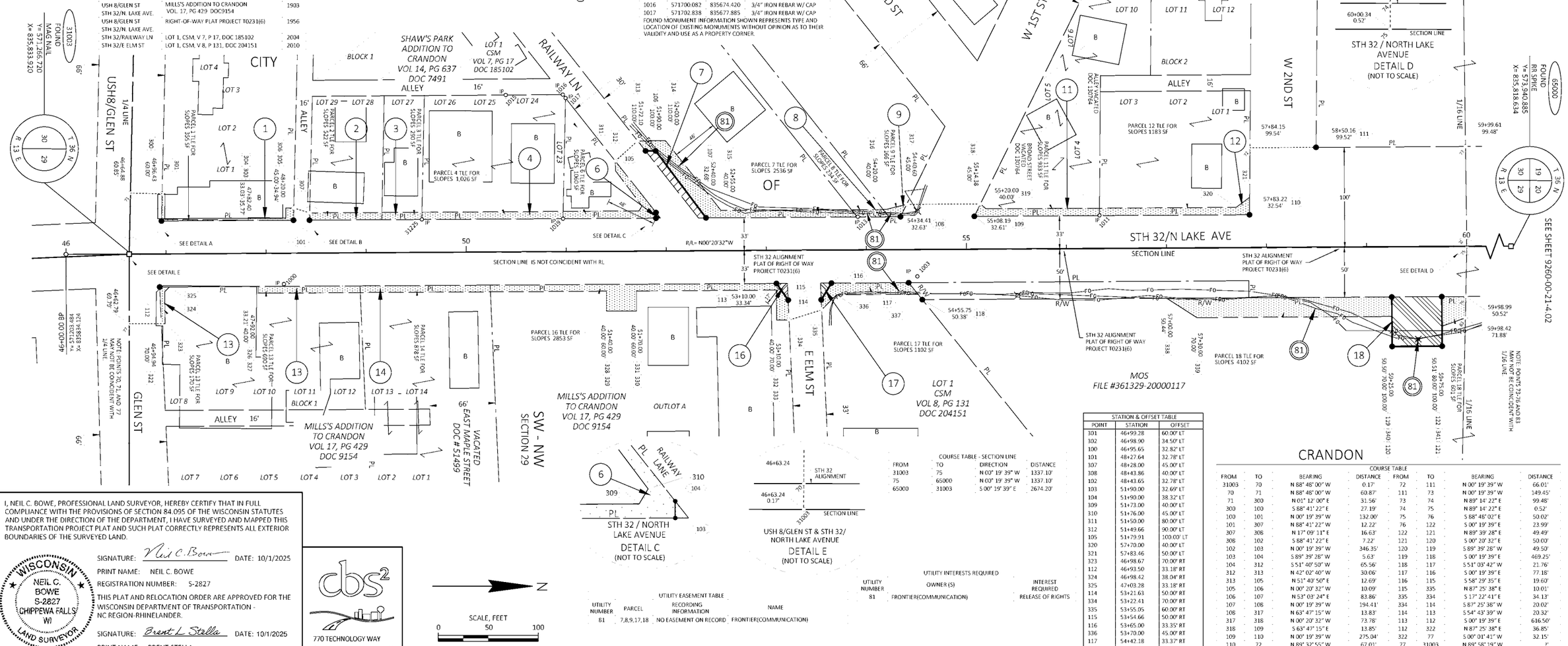

STATION & OFFSET TABLE		
POINT	STATION	OFFSET
301	46+99.28	60.00' LT
302	46+98.90	34.50' LT
100	46+95.65	32.82' LT
101	48+27.64	32.78' LT
307	48+28.00	45.00' LT
308	48+43.86	40.00' LT
102	48+43.65	32.78' LT
103	51+90.00	32.69' LT
104	51+90.00	38.32' LT
309	51+73.00	40.00' LT
310	51+76.00	45.00' LT
311	51+50.00	80.00' LT
312	51+49.66	90.00' LT
105	51+79.91	100.00' LT
320	57+70.00	40.00' LT
321	57+83.46	50.00' LT
323	46+98.67	70.00' RT
112	46+93.50	33.18' RT
324	46+98.42	38.04' RT
325	47+03.28	33.18' RT
114	53+21.63	50.00' RT
334	53+22.41	70.00' RT
335	53+55.05	60.00' RT
115	53+54.66	50.00' RT
116	53+65.00	33.35' RT
336	53+70.00	45.00' RT
117	54+42.18	33.37' RT
337	54+51.46	45.00' RT

COURSE TABLE - SECTION LINE

FROM	TO	DIRECTION	DISTANCE
31003	75	N 00° 19' 39" W	1337.10'
75	65000	N 00° 19' 39" W	1337.10'
65000	31003	S 00° 19' 39" E	2674.20'

UTILITY EASEMENT TABLE

UTILITY NUMBER	PARCEL	RECORDING INFORMATION	NAME
81	7,8,9,17,18	NO EASEMENT ON RECORD	FRONTIER(COMMUNICATION)

UTILITY INTERESTS REQUIRED

UTILITY NUMBER	OWNER(S)	INTEREST REQUIRED
81	FRONTIER(COMMUNICATION)	RELEASE OF RIGHTS

CRANDON

COURSE TABLE

FROM	TO	BEARING	DISTANCE	FROM	TO	BEARING	DISTANCE
31003	70	N 88° 48' 00" W	66.01'	72	111	N 00° 19' 39" W	66.01'
70	71	N 88° 48' 00" W	60.87'	111	73	N 00° 19' 39" W	149.45'
71	300	N 01° 12' 00" E	31.56'	73	74	N 89° 14' 22" E	99.48'
300	100	S 88° 41' 22" E	27.19'	74	75	N 89° 14' 22" E	0.52'
100	101	N 00° 19' 39" W	132.00'	75	76	S 88° 48' 02" E	50.02'
101	307	N 88° 41' 22" W	12.22'	76	122	S 00° 19' 39" E	23.99'
307	308	N 17° 09' 11" E	16.63'	122	121	N 89° 39' 28" E	49.49'
308	102	S 88° 41' 22" E	7.22'	121	120	S 00° 20' 32" E	50.00'
102	103	N 00° 19' 39" W	346.35'	120	119	S 89° 39' 28" W	49.50'
103	104	S 89° 39' 28" W	5.63'	119	118	S 00° 19' 39" E	469.25'
104	312	S 51° 40' 50" W	65.56'	118	117	S 51° 03' 42" W	21.76'
312	313	N 42° 02' 40" W	30.06'	117	116	S 00° 19' 39" E	77.18'
313	105	N 51° 40' 50" E	12.69'	116	115	S 58° 29' 35" E	19.60'
105	106	N 00° 20' 32" W	10.09'	115	335	N 87° 25' 38" E	10.01'
106	107	N 53° 03' 24" E	83.86'	335	334	S 17° 22' 41" E	34.13'
107	108	N 00° 19' 39" W	194.41'	334	114	S 87° 25' 38" W	20.02'
108	317	N 63° 47' 15" W	13.83'	114	113	S 54° 43' 39" W	20.32'
317	318	N 00° 20' 32" W	73.78'	113	112	S 00° 19' 39" E	616.50'
318	109	S 63° 47' 15" E	13.85'	112	322	N 87° 25' 38" E	36.85'
109	110	N 00° 19' 39" W	275.04'	322	77	S 00° 01' 41" W	32.15'
110	72	N 89° 32' 55" W	67.01'	77	31003	N 89° 58' 19" W	

I, NEIL C. BOWE, PROFESSIONAL LAND SURVEYOR, HEREBY CERTIFY THAT IN FULL COMPLIANCE WITH THE PROVISIONS OF SECTION 84.095 OF THE WISCONSIN STATUTES AND UNDER THE DIRECTION OF THE DEPARTMENT, I HAVE SURVEYED AND MAPPED THIS TRANSPORTATION PROJECT PLAT AND SUCH PLAT CORRECTLY REPRESENTS ALL EXTERIOR BOUNDARIES OF THE SURVEYED LAND.

SIGNATURE: Neil C. Bowe DATE: 10/1/2025
PRINT NAME: NEIL C. BOWE
REGISTRATION NUMBER: S-2827
THIS PLAT AND RELOCATION ORDER ARE APPROVED FOR THE WISCONSIN DEPARTMENT OF TRANSPORTATION - NC REGION-RHINELANDER.
SIGNATURE: Brent L. Stella DATE: 10/1/2025
PRINT NAME: BRENT STELLA

WISCONSIN NEIL C. BOWE S-2827 CHIPPEWA FALLS, WI LAND SURVEYOR

cbs2
770 TECHNOLOGY WAY
CHIPPEWA FALLS, WI 54729

FILE NAME : \\192.168.44.5\NDRIVE\PDS\C3D\92600001\RW\DWG\040101-RPA1.DWG
APPRAISAL PLAT DATE : 2/14/2024
PLOT DATE : 10/1/2025 12:59 PM
WISDOT 9260-00-21-4.01A1

TRANSPORTATION PROJECT PLAT NO: 9260-00-21-4.01

PART OF LOT 1, LOTS 23 THRU 29 , BLOCK 1, ALL IN SHAW'S PARK ADDITION TO CRANDON, PART OF LOT 1, CSM, V 7, P 17, DOC185102, LOCATED IN AND INCLUDING PART OF THE SE 1/4 OF THE NE 1/4, SECTION 30, PART OF LOTS 1 THRU 3, PART OF VACATED ALLEY AND BROAD STREET, DOC 130764, BLOCK 2, ALL IN SHAW'S PARK ADDITION TO CRANDON, SECTION 30. PART OF LOTS 8, 10 THRU 14, PART OF VACATED EAST MAPLE STREET, DOC51499, PART OF OUTLOT A, BLOCK 1, ALL IN MILLS'S ADDITION TO CRANDON, PART OF LOT 1, CSM, V 8, P 131, DOC204151, AND PART OF THE SW 1/4 OF THE NW 1/4, SECTION 29. ALL LOCATED IN TOWNSHIP 36 NORTH, RANGE 13 EAST, CITY OF CRANDON, FOREST COUNTY, WISCONSIN.

RELOCATION ORDER STH 32 CITY OF CRANDON, LAKE AVENUE USH 8 TO CRANDON RR OVERHEAD, FOREST COUNTY

TO PROPERLY ESTABLISH, LAY OUT, WIDEN, ENLARGE, EXTEND, CONSTRUCT, RECONSTRUCT, IMPROVE, OR MAINTAIN A PORTION OF THE HIGHWAY DESIGNATED ABOVE, THE STATE OF WISCONSIN DEPARTMENT OF TRANSPORTATION DEEMS IT NECESSARY TO RELOCATE OR CHANGE SAID HIGHWAY AND ACQUIRE CERTAIN LANDS AND INTERESTS OR RIGHTS IN LANDS FOR THE ABOVE NAMED PROJECT.

TO EFFECT THIS CHANGE, PURSUANT TO AUTHORITY GRANTED UNDER SECTION 84.02 (3), 84.09 AND 84.30, WISCONSIN STATUTES, THE DEPARTMENT OF TRANSPORTATION HEREBY ORDERS THAT:

1. THAT PORTION OF SAID HIGHWAY AS SHOWN ON THIS PLAT IS LAID OUT AND ESTABLISHED TO THE LINES AND WIDTHS AS SO SHOWN FOR THE ABOVE PROJECT.
2. THE LANDS OR INTERESTS OR RIGHTS IN LANDS AS SHOWN ON THIS PLAT ARE REQUIRED BY THE DEPARTMENT FOR THE ABOVE PROJECT AND SHALL BE ACQUIRED IN THE NAME OF THE STATE OF WISCONSIN, PURSUANT TO THE PROVISIONS OF SECTION 84.09 (1) OR (2), WISCONSIN STATUTES.

LOCATION SKETCH
NOT TO SCALE

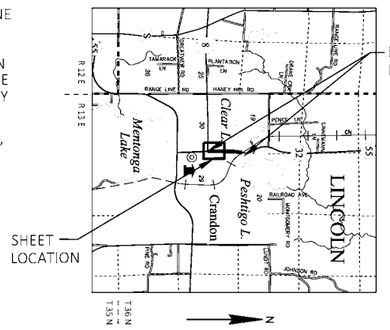

FOR ADDITIONAL INFORMATION REFER TO THE TITLE SHEET, RECORDED AS SHEET 2 OF 2.

POSITIONS SHOWN ON THIS PLAT ARE WISCONSIN COORDINATE REFERENCE SYSTEM COORDINATES (WISCRS), FOREST COUNTY, NAD83 (2011), IN U.S. SURVEY FEET. VALUES SHOWN ARE GRID COORDINATES, GRID BEARINGS, AND GRID DISTANCES. GRID DISTANCES MAY BE USED AS GROUND DISTANCES. NGS POINT UTILIZED WAS DP8724.

ALL NEW RIGHT-OF-WAY AND PERMANENT EASEMENT MONUMENTS WILL BE TYPE 2 (TYPICALLY ¾" X 24" IRON REBARS), UNLESS OTHERWISE NOTED, AND WILL BE PLACED PRIOR TO THE COMPLETION OF THE PROJECT.

FOR THE CURRENT ACCESS/DRIVEWAY INFORMATION, CONTACT THE PLANNING UNIT OF THE WISCONSIN DEPARTMENT OF TRANSPORTATION OFFICE IN THE NC REGION-RHINELANDER.

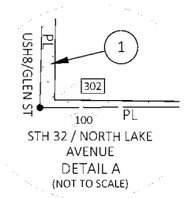

STH 32 / NORTH LAKE AVENUE
DETAIL A
(NOT TO SCALE)

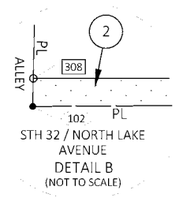

STH 32 / NORTH LAKE AVENUE
DETAIL B
(NOT TO SCALE)

OWNER'S NAMES ARE SHOWN FOR REFERENCE PURPOSES ONLY AND ARE SUBJECT TO CHANGE PRIOR TO TRANSFER OF LAND INTERESTS TO THE DEPARTMENT.

SCHEDULE OF LANDS & INTERESTS REQUIRED

PARCEL NUMBER	OWNER(S)	INTERESTS REQUIRED	R/W SQUARE FEET REQUIRED			TLE SQUARE FEET
			NEW	EXISTING	TOTAL	
1	GLEN CORNER APARTMENTS LLC	TLE	-	-	-	355
2	MARY T. PAUL	TLE	-	-	-	522
3	MICHAEL R BOCEK JR. & KENDRA M BOCEK	TLE	-	-	-	290
4	ROBERT SMITH & SON LLC	TLE	-	-	-	1,026
5	-	-	-	-	-	-
6	EDWARD & ROSEMARIE ROGERS	FEE/TLE	12	-	12	1060
7	THEODORE DAVID & MARISSA MARIE GLINSKI	FEE/TLE	593	-	593	2536
8	JUSTIN EDWARD HARVEY & KIMBERLY A SHAWANO	TLE	-	-	-	234
9	CRANDON TELEPHONE COMPANY	TLE	-	-	-	166
10	-	-	-	-	-	-
11	ORVILLE A. DEWITT	TLE	-	-	-	933
12	MICHAEL O & JENNA R PARADIES	TLE	-	-	-	1183
13	KRUEGER'S NORTHERN LAKE PROPERTIES, INC.	TLE	-	-	-	860
14	STATE OF WISCONSIN	TLE	-	-	-	878
15	-	-	-	-	-	-
16	ALLEN C. & KIM L. KEEPERS, TRUSTEES OF THE AKK INCOME TRUST DATED DECEMBER 18, 2014	FEE/TLE	91	-	91	2853
17	CRANDON AREA RESCUE SQUAD, INC	FEE/TLE	91	-	91	1102
18	PAUL NEWTON, CRAIG NEWTON & DELBERT VANSTONE	FEE/TLE	2475	5665	8140	4703

242451
RECORDED ON:
03/21/2024 02:01 PM
CORTNEY BRITTEN CLEEREMAN
REGISTER OF DEEDS
FOREST COUNTY WI
RECORDING FEE: 25.00
PAGES: 2
ELECTRONICALLY RECORDED AND RETURNED TO SUBMITTER

RESERVED FOR REGISTER OF DEEDS
PROJECT NUMBER 9260-00-21-4.01
SHEET 1 OF 2

RECOVERED MONUMENTS

POINT	Y	X	DESCRIPTION
1000	571421.266	835863.877	3/4" IRON PIPE
1003	572054.476	835856.119	1" IRON BAR
1011	572236.480	835795.198	1" IRON PIPE
1013	571994.945	835796.547	1" IRON PIPE
1019	571700.325	835798.443	3/4" IRON REBAR W/ CAP
31225	571559.209	835798.914	2" IRON PIPE
1015	571643.082	835374.799	3/4" IRON REBAR
1016	571700.082	835674.420	3/4" IRON REBAR W/ CAP
1017	571702.838	835677.885	3/4" IRON REBAR W/ CAP

FOUND MONUMENT INFORMATION SHOWN REPRESENTS TYPE AND LOCATION OF EXISTING MONUMENTS WITHOUT OPINION AS TO THEIR VALIDITY AND USE AS A PROPERTY CORNER.

ROAD NAME	BASIS OF EXISTING R/W	YEAR
USH 8/GLEN ST STH 32/N. LAKE AVE. W 2ND ST W 1ST ST/W BROAD ST	SHAW'S PARK ADDITION TO CRANDON VOL. 14, PG 637 DOC7491	1901
USH 8/GLEN ST STH 32/N. LAKE AVE.	MILLS'S ADDITION TO CRANDON VOL. 17, PG 429 DOC9154	1903
USH 8/GLEN ST STH 32/N. LAKE AVE.	RIGHT-OF-WAY PLAT PROJECT T0231(6)	1956
STH 32/RAILWAY LN	LOT 1, CSM, V 7, P 17, DOC 185102	2004
STH 32/E ELM ST	LOT 1, CSM, V 8, P 131, DOC 204151	2010

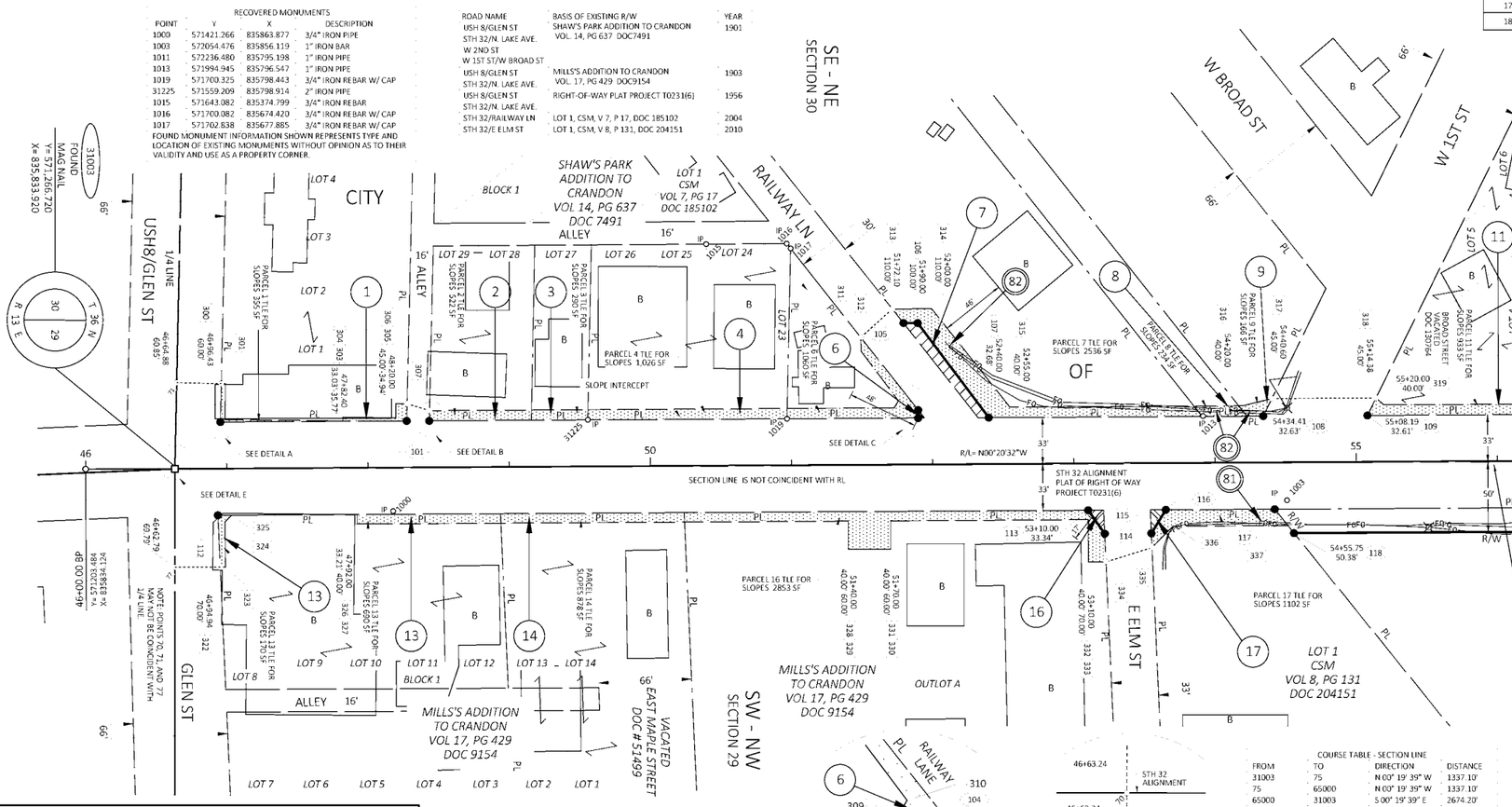

STATION & OFFSET TABLE		
POINT	STATION	OFFSET
301	46+99.28	60.00' LT
302	46+98.90	34.50' LT
100	46+95.65	32.82' LT
101	48+27.64	32.78' LT
307	48+28.00	45.00' LT
308	48+43.86	40.00' LT
102	48+43.65	32.78' LT
103	51+90.00	32.69' LT
104	51+90.00	38.32' LT
309	51+73.00	40.00' LT
310	51+76.00	45.00' LT
311	51+50.00	80.00' LT
312	51+49.66	90.00' LT
105	51+79.91	100.00' LT
320	57+70.00	40.00' LT
321	57+83.46	50.00' LT
323	46+98.67	70.00' RT
112	46+93.50	33.18' RT
324	46+98.42	38.04' RT
325	47+03.28	33.18' RT
114	53+21.63	50.00' RT
334	53+22.41	70.00' RT
335	53+55.05	60.00' RT
115	53+54.66	50.00' RT
116	53+65.00	33.35' RT
336	53+70.00	45.00' RT
117	54+42.18	33.37' RT
337	54+51.46	45.00' RT

COURSE TABLE - SECTION LINE			
FROM	TO	DIRECTION	DISTANCE
31003	75	N 00° 19' 39" W	1337.10'
75	65000	N 00° 19' 39" W	1337.10'
65000	31003	S 00° 19' 39" E	2674.20'

UTILITY EASEMENT TABLE			
UTILITY NUMBER	PARCEL	RECORDING INFORMATION	NAME
81	17,18	NO EASEMENT ON RECORD	FRONTIER(COMMUNICATION)
82	7,8,9	NO EASEMENT ON RECORD	CHARTER(COMMUNICATION)

UTILITY INTERESTS REQUIRED		
UTILITY NUMBER	OWNER (S)	INTEREST REQUIRED
81	FRONTIER(COMMUNICATION)	RELEASE OF RIGHTS
82	CHARTER(COMMUNICATION)	RELEASE OF RIGHTS

CRANDON

COURSE TABLE							
FROM	TO	BEARING	DISTANCE	FROM	TO	BEARING	DISTANCE
31003	70	N 88° 48' 00" W	0.17'	72	111	N 00° 19' 39" W	66.01'
70	71	N 88° 48' 00" W	60.87'	111	73	N 00° 19' 39" W	149.45'
71	300	N 01° 12' 00" E	31.56'	73	74	N 89° 14' 22" E	99.48'
300	100	S 88° 41' 22" E	27.19'	74	75	N 89° 14' 22" E	0.52'
100	101	N 00° 19' 39" W	132.00'	75	76	S 88° 48' 02" E	50.02'
101	307	N 88° 41' 22" W	12.22'	76	122	S 00° 19' 39" E	23.99'
307	308	N 17° 09' 11" E	16.63'	122	121	N 89° 39' 28" E	49.49'
308	102	S 88° 41' 22" E	7.22'	121	120	S 00° 20' 32" E	50.00'
102	103	N 00° 19' 39" W	346.35'	120	119	S 89° 39' 28" W	49.50'
103	104	S 89° 39' 28" W	5.63'	119	118	S 00° 19' 39" E	469.25'
104	312	S 51° 40' 50" W	65.56'	118	117	S 51° 03' 42" W	21.76'
312	313	N 42° 02' 40" W	30.06'	117	116	S 00° 19' 39" E	77.18'
313	105	N 51° 40' 50" E	12.69'	116	115	S 58° 39' 35" E	19.60'
105	106	N 00° 20' 32" W	10.09'	115	335	N 87° 25' 38" E	10.01'
106	107	N 53° 03' 24" E	83.86'	335	334	S 17° 22' 41" E	34.13'
107	108	N 00° 19' 39" W	194.41'	334	114	S 87° 25' 38" W	20.02'
108	317	N 63° 47' 15" W	13.83'	114	113	S 54° 43' 39" W	20.32'
317	318	N 00° 20' 32" W	73.78'	113	112	S 00° 19' 39" E	616.50'
318	109	S 63° 47' 15" E	13.85'	112	322	N 87° 25' 38" E	36.85'
109	110	N 00° 19' 39" W	275.04'	322	77	S 00° 01' 41" W	32.15'
110	72	N 89° 32' 55" W	67.01'	77	31003	N 89° 58' 19" W	

I, NEIL C. BOWE, PROFESSIONAL LAND SURVEYOR, HEREBY CERTIFY THAT IN FULL COMPLIANCE WITH THE PROVISIONS OF SECTION 84.095 OF THE WISCONSIN STATUTES AND UNDER THE DIRECTION OF THE DEPARTMENT, I HAVE SURVEYED AND MAPPED THIS TRANSPORTATION PROJECT PLAT AND SUCH PLAT CORRECTLY REPRESENTS ALL EXTERIOR BOUNDARIES OF THE SURVEYED LAND.

SIGNATURE: Neil C. Bowe DATE: 2/14/2024
PRINT NAME: NEIL C. BOWE
REGISTRATION NUMBER: S-2827

THIS PLAT AND RELOCATION ORDER ARE APPROVED FOR THE WISCONSIN DEPARTMENT OF TRANSPORTATION - NC REGION-RHINELANDER.

SIGNATURE: Brent L Stella DATE: 3/20/24
PRINT NAME: BRENT STELLA

WISCONSIN NEIL C. BOWE S-2827 CHIPPEWA FALLS WI LAND SURVEYOR

cbs2
770 TECHNOLOGY WAY
CHIPPEWA FALLS, WI 54729

SCALE, FEET
0 50 100

FILE NAME : N:\PDS\C3D\92600001\RW\DWG\040101-RP.DWG
APPRAISAL PLAT DATE : 2/14/2024
PLOT DATE : 2/14/2024 6:23 AM
WISDOT 9260-00-21-4.01

242502
RECORDED ON:
03/28/2024 03:33 PM
CORTNEY BRITTEN CLEEREMAN
REGISTER OF DEEDS
FOREST COUNTY WI
RECORDING FEE: 25.00
PAGES: 1
ELECTRONICALLY RECORDED
AND RETURNED TO SUBMITTER

TRANSPORTATION PROJECT PLAT NO: 9260-00-21-4.02

PART OF LOTS 1 THRU 6, LOT 9, BLOCK 3, PART OF LOTS 5 AND 6, BLOCK 4, ALL IN SHAW'S PARK ADDITION TO CRANDON, LOCATED IN THE NE 1/4 OF THE NE 1/4, SECTION 30.
ALSO THAT PART OF THE NW 1/4 OF THE NW 1/4, SECTION 29, ALL LOCATED IN TOWNSHIP 36 NORTH, RANGE 13 EAST, CITY OF CRANDON, FOREST COUNTY, WISCONSIN

RELOCATION ORDER STH 32 CITY OF CRANDON, LAKE AVENUE USH 8 TO CRANDON RR OVERHEAD, FOREST COUNTY

TO PROPERLY ESTABLISH, LAY OUT, WIDEN, ENLARGE, EXTEND, CONSTRUCT, RECONSTRUCT, IMPROVE, OR MAINTAIN A PORTION OF THE HIGHWAY DESIGNATED ABOVE, THE STATE OF WISCONSIN DEPARTMENT OF TRANSPORTATION DEEMS IT NECESSARY TO RELOCATE OR CHANGE SAID HIGHWAY AND ACQUIRE CERTAIN LANDS AND INTERESTS OR RIGHTS IN LANDS FOR THE ABOVE NAMED PROJECT.

TO EFFECT THIS CHANGE, PURSUANT TO AUTHORITY GRANTED UNDER SECTION 84.02 (3), 84.09 AND 84.30, WISCONSIN STATUTES, THE DEPARTMENT OF TRANSPORTATION HEREBY ORDERS THAT:

1. THAT PORTION OF SAID HIGHWAY AS SHOWN ON THIS PLAT IS LAID OUT AND ESTABLISHED TO THE LINES AND WIDTHS AS SO SHOWN FOR THE ABOVE PROJECT.
2. THE LANDS OR INTERESTS OR RIGHTS IN LANDS AS SHOWN ON THIS PLAT ARE REQUIRED BY THE DEPARTMENT FOR THE ABOVE PROJECT AND SHALL BE ACQUIRED IN THE NAME OF THE STATE OF WISCONSIN, PURSUANT TO THE PROVISIONS OF SECTION 84.09 (1) OR (2), WISCONSIN STATUTES.

LOCATION SKETCH
NOT TO SCALE

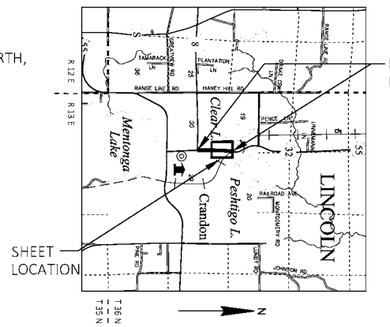

FOR ADDITIONAL INFORMATION REFER TO THE TITLE SHEET, RECORDED IN THE OFFICE OF THE REGISTER OF DEEDS IN FOREST COUNTY AS SHEET 2 OF 2 DOCUMENT NUMBER 242451.

POSITIONS SHOWN ON THIS PLAT ARE WISCONSIN COORDINATE REFERENCE SYSTEM COORDINATES (WISCRS), FOREST COUNTY, NAD83 (2011), IN U.S. SURVEY FEET. VALUES SHOWN ARE GRID COORDINATES. GRID BEARINGS, AND GRID DISTANCES. GRID DISTANCES MAY BE USED AS GROUND DISTANCES. NGS POINT UTILIZED WAS DP8724.

ALL NEW RIGHT-OF-WAY AND PERMANENT EASEMENT MONUMENTS WILL BE TYPE 2 (TYPICALLY ⅝" X 24" IRON REBARS), UNLESS OTHERWISE NOTED, AND WILL BE PLACED PRIOR TO THE COMPLETION OF THE PROJECT.

FOR THE CURRENT ACCESS/DRIVEWAY INFORMATION, CONTACT THE PLANNING UNIT OF THE WISCONSIN DEPARTMENT OF TRANSPORTATION OFFICE IN THE NC REGION-RHINELANDER.

UTILITY EASEMENT TABLE

UTILITY NUMBER	PARCEL	RECORDING INFORMATION	NAME
80	26	NO EASEMENT ON RECORD	WISCONSIN PUBLIC SERVICE CORP(GAS)
81	27	NO EASEMENT ON RECORD	FRONTIER(COMMUNICATION)

UTILITY INTERESTS REQUIRED

UTILITY NUMBER	OWNER (S)	INTEREST REQUIRED
80	WISCONSIN PUBLIC SERVICE CORP(GAS)	RELEASE OF RIGHTS
81	FRONTIER(COMMUNICATION)	RELEASE OF RIGHTS

OWNER'S NAMES ARE SHOWN FOR REFERENCE PURPOSES ONLY AND ARE SUBJECT TO CHANGE PRIOR TO TRANSFER OF LAND INTERESTS TO THE DEPARTMENT.

SCHEDULE OF LANDS & INTERESTS REQUIRED

PARCEL NUMBER	OWNER(S)	INTERESTS REQUIRED	R/W SQUARE FEET REQUIRED			TLE SQUARE FEET
			NEW	EXISTING	TOTAL	
18	PAUL NEWTON, CRAIG NEWTON & DELBERT VANSTONE	FEE/TLE	-	658	658	652
20	-	-	-	-	-	-
21	RALPH MARVIN SR	FEE/TLE	-	926	926	310
22	CHARLOTTE BOCEK TRUST	FEE/TLE	-	1060	1060	202
23	EVELYN M. GLINSKI	FEE/TLE	-	1120	1120	1438
24	CITY OF CRANDON	FEE	630	-	630	-
25	-	-	-	-	-	-
26	COLIN P. KINCAID	TLE	-	-	-	505
27	CITY OF CRANDON	FEE/TLE	-	7083	7083	610

RESERVED FOR REGISTER OF DEEDS
PROJECT NUMBER 9260-00-21-4.02

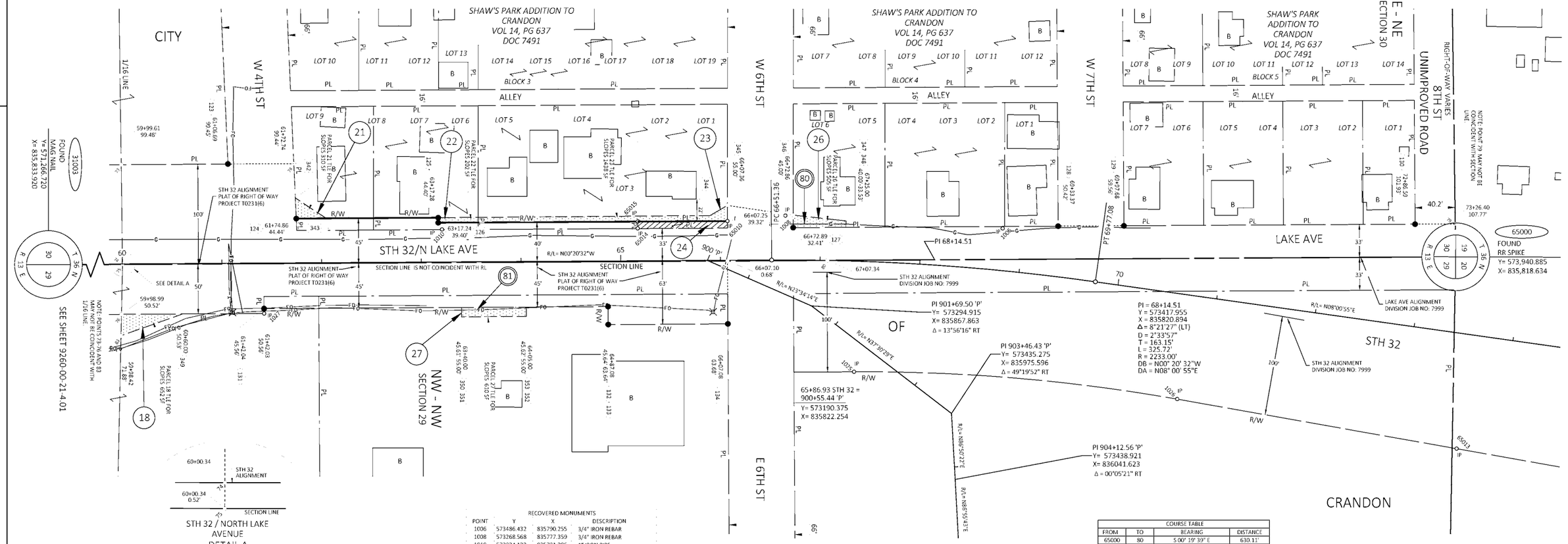

RECOVERED MONUMENTS

POINT	Y	X	DESCRIPTION
1006	573486.432	835790.255	3/4" IRON REBAR
1008	573268.568	835777.359	3/4" IRON REBAR
1010	572924.122	835791.296	1" IRON PIPE
1025	573337.334	835933.861	1" IRON PIPE
1026	573661.545	835961.180	1" IRON PIPE
1027	572745.793	835875.466	3/4" IRON REBAR
65010	573210.464	835782.809	3/4" IRON REBAR
65013	573941.821	836010.834	1 1/4" IRON PIPE
65014	573120.491	835790.183	3/4" IRON REBAR
65015	573120.631	835783.148	3/4" IRON REBAR

FOUND MONUMENT INFORMATION SHOWN REPRESENTS TYPE AND LOCATION OF EXISTING MONUMENTS WITHOUT OPINION AS TO THEIR VALIDITY AND USE AS A PROPERTY CORNER.

COURSE TABLE - SECTION LINE

FROM	TO	DIRECTION	DISTANCE
31003	75	N 00° 19' 39" W	1337.19'
75	81	N 00° 19' 39" W	606.76'
81	80	N 00° 19' 39" W	100.23'
80	65000	N 00° 19' 39" W	630.11'
65000	31003	S 00° 19' 39" E	2674.20'

COURSE TABLE

FROM	TO	BEARING	DISTANCE
65000	80	S 00° 19' 39" E	630.11'
80	81	S 00° 19' 39" E	100.23'
81	134	N 89° 40' 26" E	63.00'
134	133	S 00° 19' 39" E	120.00'
133	132	S 89° 39' 15" W	18.00'
132	131	S 00° 19' 39" E	345.05'
131	1027	N 89° 40' 21" E	5.00'
1027	76	S 00° 19' 39" E	143.04'
76	75	N 88° 48' 02" W	50.02'
75	74	S 89° 14' 22" W	0.52'
74	73	S 89° 14' 22" W	99.48'
73	123	N 00° 19' 39" W	107.08'
123	78	N 00° 19' 39" W	66.05'
78	124	N 87° 27' 15" E	55.04'
124	125	N 00° 19' 39" W	142.42'
125	126	S 89° 55' 31" E	5.00'
126	65010	N 00° 19' 39" W	290.01'
65010	345	N 89° 55' 31" W	15.68'
345	346	N 08° 22' 20" E	66.70'
346	127	S 89° 55' 31" E	12.59'
127	128	N 00° 19' 39" W	265.77'
128	129	N 00° 19' 39" W	66.00'
129	130	N 00° 19' 39" W	292.00'
130	79	N 00° 19' 39" W	40.24'
79	65000	N 89° 14' 22" E	33.00'

STATION & OFFSET TABLE

POINT	STATION	OFFSET
342	61+74.07	65.00' LT
343	62+05.00	44.43' LT
344	65+90.00	45.00' LT

ROAD NAME	BASIS OF EXISTING R/W	YEAR
STH 32/N. LAKE AVE. W 4TH ST, W 6TH ST E 6TH ST, W 7TH ST, 8TH ST, LAKE AVE	SHAW'S PARK ADDITION TO CRANDON VOL. 14, PG 637 DOC 7491	1901
STH 32/N. LAKE AVE.	RIGHT-OF-WAY PLAT PROJECT T0231(6)	1956
STH 32/ LAKE AVE.	DIVISION JOB NO. 7999	1935

I, NEIL C. BOWE, PROFESSIONAL LAND SURVEYOR, HEREBY CERTIFY THAT IN FULL COMPLIANCE WITH THE PROVISIONS OF SECTION 84.095 OF THE WISCONSIN STATUTES AND UNDER THE DIRECTION OF THE DEPARTMENT, I HAVE SURVEYED AND MAPPED THIS TRANSPORTATION PROJECT PLAT AND SUCH PLAT CORRECTLY REPRESENTS ALL EXTERIOR BOUNDARIES OF THE SURVEYED LAND.

SIGNATURE: Neil C. Bowe DATE: 3/27/2024
PRINT NAME: NEIL C. BOWE
REGISTRATION NUMBER: S-2827
THIS PLAT AND RELOCATION ORDER ARE APPROVED FOR THE WISCONSIN DEPARTMENT OF TRANSPORTATION - NC REGION-RHINELANDER.
SIGNATURE: Brent L Stella DATE: 3/28/24
PRINT NAME: BRENT STELLA

WISCONSIN NEIL C. BOWE S-2827 CHIPPEWA FALLS WI LAND SURVEYOR

cbs2
770 TECHNOLOGY WAY
CHIPPEWA FALLS, WI 54729

SCALE, FEET
0 50 100

242503
RECORDED ON:
03/28/2024 03:34 PM
CORTNEY BRITTEN CLEEREMAN
REGISTER OF DEEDS
FOREST COUNTY WI
RECORDING FEE: 25.00
PAGES: 1
ELECTRONICALLY RECORDED
AND RETURNED TO SUBMITTER

RESERVED FOR REGISTER OF DEEDS
PROJECT NUMBER 9260-00-21-4.03

4

CRANDON

4

65000
FOUND
RR SPIKE
Y= 573,940.885
X= 835,818.634

T 36 N
19 20
30 29
R 13 E

NOTE: POINTS 84 & 86 MAY NOT BE COINCIDENT WITH SECTION LINE.

IP 65013

73+40.61

73+54.63
114.88'

PL

LAKE AVE ALIGNMENT
DIVISION JOB NO: 7999

STH 32 ALIGNMENT
DIVISION JOB NO: 7999

R/L= N08°00'55"E

100'

LAKE AVE

33'

RECOVERED MONUMENTS

POINT	Y	X	DESCRIPTION
1005	573213.763	836325.797	2" IRON PIPE
1006	573486.432	835790.255	3/4" IRON REBAR
1008	573268.568	835777.359	3/4" IRON REBAR
1023	573614.641	836398.935	1" IRON PIPE
1025	573337.334	835933.861	1" IRON PIPE
1026	573661.545	835961.180	1" IRON PIPE
65010	573210.464	835782.809	3/4" IRON REBAR
65013	573941.821	836010.834	1 1/4" IRON PIPE

FOUND MONUMENT INFORMATION SHOWN REPRESENTS TYPE AND LOCATION OF EXISTING MONUMENTS WITHOUT OPINION AS TO THEIR VALIDITY AND USE AS A PROPERTY CORNER.

66'

PT 69+77.08

NE-NE
SECTION 30

W 7TH ST

LOT 1 B

LOT 2 B

LOT 3 B

LOT 4 BLOCK 4

LOT 5

LOT 6

SECTION LINE

SHAW'S PARK ADDITION TO CRANDON VOL 14, PG 637 DOC 7491

SECTION LINE IS NOT COINCIDENT WITH R/L

PC 66+51.36

W 6TH ST

66+07.10
0.68'

66+07.08
63.68'

134

63'

CITY

SEE SHEET 9260-00-21-4.02

31003
FOUND
MAG NAIL
Y= 571,266.720
X= 835,833.920

T 36 N
30 29
R 13 E

LOCATION SKETCH
NOT TO SCALE

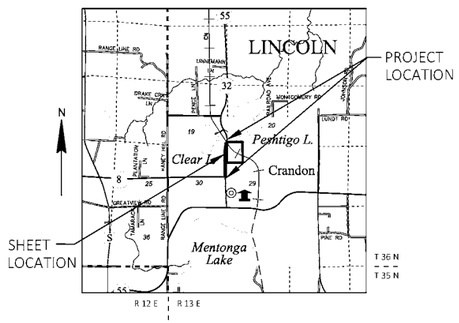

FOR ADDITIONAL INFORMATION REFER TO THE TITLE SHEET, RECORDED IN THE OFFICE OF THE REGISTER OF DEEDS IN FOREST COUNTY AS SHEET 2 OF 2 DOCUMENT NUMBER 242451.

POSITIONS SHOWN ON THIS PLAT ARE WISCONSIN COORDINATE REFERENCE SYSTEM COORDINATES (WSCRS), FOREST COUNTY, NAD83 (2011), IN U.S. SURVEY FEET. VALUES SHOWN ARE GRID COORDINATES, GRID BEARINGS, AND GRID DISTANCES. GRID DISTANCES MAY BE USED AS GROUND DISTANCES. NGS POINT UTILIZED WAS DP8724.

ALL NEW RIGHT-OF-WAY AND PERMANENT EASEMENT MONUMENTS WILL BE TYPE 2 (TYPICALLY ¾" X 24" IRON REBARS), UNLESS OTHERWISE NOTED, AND WILL BE PLACED PRIOR TO THE COMPLETION OF THE PROJECT.

FOR THE CURRENT ACCESS/DRIVEWAY INFORMATION, CONTACT THE PLANNING UNIT OF THE WISCONSIN DEPARTMENT OF TRANSPORTATION OFFICE IN THE NC REGION-RHINELANDER.

OWNER'S NAMES ARE SHOWN FOR REFERENCE PURPOSES ONLY AND ARE SUBJECT TO CHANGE PRIOR TO TRANSFER OF LAND INTERESTS TO THE DEPARTMENT.

SCHEDULE OF LANDS & INTERESTS REQUIRED

PARCEL NUMBER	OWNER(S)	INTERESTS REQUIRED	R/W SQUARE FEET REQUIRED			PLE SQUARE FEET	TLE SQUARE FEET
			NEW	EXISTING	TOTAL		
28	CITY OF CRANDON	FEE/PLE/TLE	30983	70384	101367	15058	41857
29	STATE OF WISCONSIN - DNR	PLE/TLE	-	-	-	3579	14543
30							
31	PAUL MURRAY	PLE	-	-	-	5248	-

ROAD NAME	BASIS OF EXISTING R/W	YEAR
STH 32/N. LAKE AVE, E 6TH ST, LAKE AVE	CSM VOL 6, PG. 62-62A DOC 174560	2002
STH 32/N. LAKE AVE,	RIGHT-OF-WAY PLAT PROJECT T0231(6)	1956
STH 32/N. LAKE AVE, LAKE AVE	DIVISION JOB NO. 7999	1935
STH 32/N. LAKE AVE, W 6TH ST, E 6TH ST, W 7TH ST, LAKE AVE	SHAW'S PARK ADDITION TO CRANDON VOL. 14, PG 637 DOC7491	1901

CURVE 1026-135
L=139.14'
LCH=139.10'
LCB=S 07°47'27" W
R=1797.85'

PI = 68+14.51
Y = 573417.955
X = 835820.894
Δ = 8°21'27" (LT)
D = 2°33'57"
T = 163.15'
L = 325.72'
R = 2233.00'
DB = N00° 20' 32"W
DA = N08° 00' 55"E

PI 904+12.56 'P'
Y= 573438.921
X= 836041.623
Δ = 00°05'21" RT

PI 903+46.43 'P'
Y= 573435.275
X= 835975.596
Δ = 49°19'52" RT

PI 901+69.50 'P'
Y= 573294.915
X= 835867.863
Δ = 13°56'16" RT

PI 68+14.51

R/L= N27°30'29"E

R/L= N13°34'14"E

STH 32 ALIGNMENT
DIVISION JOB NO: 7999

STH 32 ALIGNMENT
PLAT OF RIGHT OF WAY
PROJECT T0231(6)

65+86.93 STH 32 = 900+55.44 'P'
Y= 573190.375
X= 835842.254

900 'P'

SEE SHEET 9260-00-21-4.02

70+74.70
104.95'

69+33.55
105.09'

135

IP 1026

IP 1025

IP 1008

IP 65010

IP 1005

IP 1006

IP 65013

LOT B

PARCEL 28 TLE FOR SLOPES 13,937 SF

PARCEL 28 PLE FOR DRAINAGE 15,058 SF

PARCEL 28 TLE FOR SLOPES 27,920 SF

LOT 1
CSM
VOL. 6, PG. 62-62A
DOC 174560

35'

R/L= N86°50'22"E

R/L= N86°55'43"E

902+80.00'P'
90.00'
138

902+39.82 'P'
120.00'
137

904+58.88 'P'
163.45'
359

904+55.74 'P'
229.38'

904+60.00 'P'
100.00' 40.00'
405 / 139

906+10.00 'P'
20.00'
360

PI 907+85.60 'P'
Y= 573458.908
X= 836414.124
Δ = 35°05'29" LT

907+93.11 'P'
17.50'
406

909+21.65 'P'
120.03'
361

OF B

NW - NW
SECTION 29

WISCONSIN DNR TRAIL

MARSH

910+13.00 'P'
17.50'
402

910+15.00 'P'
20.00'
403

PI 910+14.67 'P'
Y= 573600.449
X= 836594.231
Δ = 68°28'34" RT

911+14.67 'P'
20.00'
404

911+14.67 "P"
Y=573549.976
X=836680.560

909+98.79 'P'
17.50'
407

911+14.67 'P'
32.35'
408

PARCEL 31 PLE FOR DRAINAGE 5,248 SF

PARCEL 29 TLE FOR SLOPES 3,784 SF

PARCEL 29 PLE FOR DRAINAGE 3,579 SF

CURVE 408-407
L=90.25'
LCH=90.24'
LCB=N 52°34'55" W
R=1813.81'

29

100'

PL

R/W

COURSE TABLE - SECTION LINE			
FROM	TO	DIRECTION	DISTANCE
31003	81	N 00° 19' 39" W	1943.86'
81	80	N 00° 19' 39" W	100.23'
80	65000	N 00° 19' 39" W	630.11'
65000	31003	S 00° 19' 39" E	2674.20'

COURSE TABLE - FEE			
FROM	TO	BEARING	DISTANCE
65000	84	S 88° 56' 33" E	75.71'
84	86	S 88° 56' 33" E	115.73'
86	1026	S 10° 02' 47" W	280.10'
135	136	N 86° 55' 43" E	142.05'
136	400	S 03° 04' 17" E	65.00'
400	405	S 03° 04' 17" E	35.00'
405	139	S 03° 04' 17" E	30.00'
139	138	S 48° 55' 10" W	112.23'
138	137	S 00° 45' 32" W	50.14'
137	359	N 89° 39' 15" E	90.76'
359	85	S 00° 20' 45" E	66.00'
85	134	S 89° 39' 15" W	211.23'
134	81	S 89° 49' 26" W	63.00'

COURSE TABLE - PLE			
FROM	TO	BEARING	DISTANCE
400	401	N 86° 55' 43" E	330.74'
401	402	N 51° 50' 14" E	208.82'
402	403	N 79° 00' 48" E	22.93'
403	404	S 59° 41' 12" E	99.67'
404	87	S 30° 18' 48" W	20.00'
87	408	S 30° 18' 48" W	32.35'
407	406	S 51° 50' 14" W	205.68'
406	405	S 86° 55' 43" W	341.81'
405	400	N 03° 04' 17" W	35.00'

N

SCALE, FEET
0 50 100

TRANSPORTATION PROJECT PLAT NO: 9260-00-21-4.03

THAT PART OF LOT 1, CSM VOL. 6, PAGE 62-62A, DOC 174560, LOCATED IN AND INCLUDING PART OF THE NW 1/4 OF THE NW 1/4 , ALL IN SECTION 29, TOWNSHIP 36 NORTH, RANGE 13 EAST, CITY OF CRANDON, FOREST COUNTY, WISCONSIN.

RELOCATION ORDER STH 32 CITY OF CRANDON, LAKE AVENUE USH 8 TO CRANDON RR OVERHEAD, FOREST COUNTY

TO PROPERLY ESTABLISH, LAY OUT, WIDEN, ENLARGE, EXTEND, CONSTRUCT, RECONSTRUCT, IMPROVE, OR MAINTAIN A PORTION OF THE HIGHWAY DESIGNATED ABOVE, THE STATE OF WISCONSIN DEPARTMENT OF TRANSPORTATION DEEMS IT NECESSARY TO RELOCATE OR CHANGE SAID HIGHWAY AND ACQUIRE CERTAIN LANDS AND INTERESTS OR RIGHTS IN LANDS FOR THE ABOVE NAMED PROJECT.

TO EFFECT THIS CHANGE, PURSUANT TO AUTHORITY GRANTED UNDER SECTION 84.02 (3), 84.09 AND 84.30, WISCONSIN STATUTES, THE DEPARTMENT OF TRANSPORTATION HEREBY ORDERS THAT:

1. THAT PORTION OF SAID HIGHWAY AS SHOWN ON THIS PLAT IS LAID OUT AND ESTABLISHED TO THE LINES AND WIDTHS AS SO SHOWN FOR THE ABOVE PROJECT.
2. THE LANDS OR INTERESTS OR RIGHTS IN LANDS AS SHOWN ON THIS PLAT ARE REQUIRED BY THE DEPARTMENT FOR THE ABOVE PROJECT AND SHALL BE ACQUIRED IN THE NAME OF THE STATE OF WISCONSIN, PURSUANT TO THE PROVISIONS OF SECTION 84.09 (1) OR (2), WISCONSIN STATUTES.

I, NEIL C. BOWE, PROFESSIONAL LAND SURVEYOR, HEREBY CERTIFY THAT IN FULL COMPLIANCE WITH THE PROVISIONS OF SECTION 84.095 OF THE WISCONSIN STATUTES AND UNDER THE DIRECTION OF THE DEPARTMENT, I HAVE SURVEYED AND MAPPED THIS TRANSPORTATION PROJECT PLAT AND SUCH PLAT CORRECTLY REPRESENTS ALL EXTERIOR BOUNDARIES OF THE SURVEYED LAND.

SIGNATURE: Neil C. Bowe DATE: 3/27/2024
PRINT NAME: NEIL C. BOWE
REGISTRATION NUMBER: S-2827

THIS PLAT AND RELOCATION ORDER ARE APPROVED FOR THE WISCONSIN DEPARTMENT OF TRANSPORTATION - NC REGION-RHINELANDER.

SIGNATURE: Brent L Stella DATE: 3/28/24
PRINT NAME: BRENT STELLA

WISCONSIN NEIL C. BOWE S-2827 CHIPPEWA FALLS WI LAND SURVEYOR

cbs2
770 TECHNOLOGY WAY
CHIPPEWA FALLS, WI 54729

FILE NAME : N:\PDS\C3D\92600001\RW\DWG\040101-RP.DWG
APPRAISAL PLAT DATE : 3/27/2024
PLOT DATE : 3/27/2024 6:04 AM
WISDOT 9260-00-21-4.03

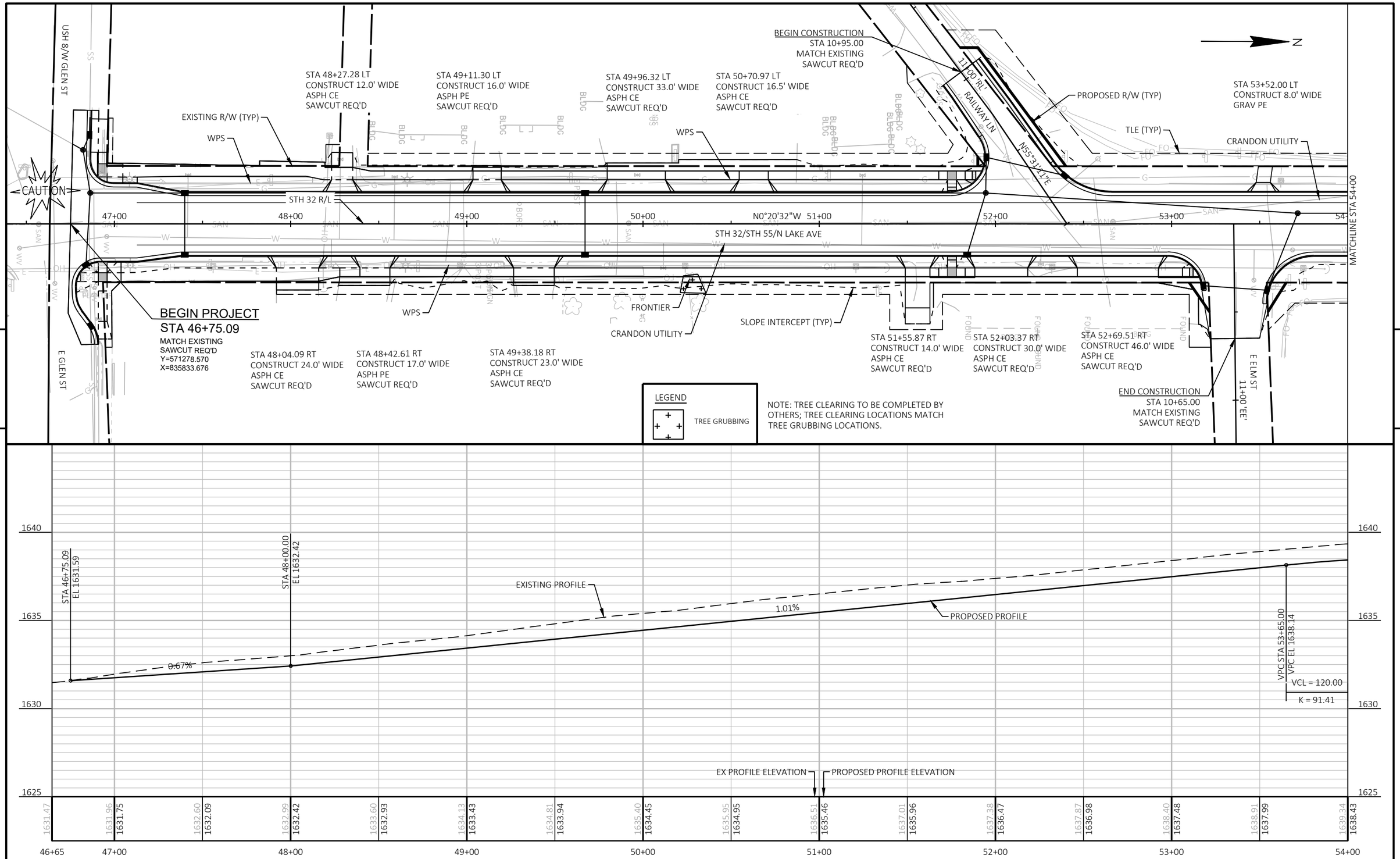

PROJECT NO: 9260-00-71	HWY: STH 32	COUNTY: FOREST	PLAN AND PROFILE: STH 32	SHEET 82	E

FILE NAME : N:\PDS\C3D\92600001\SHEETSPLAN\050201-PP.DWG
LAYOUT NAME - 01

PLOT DATE : 10/27/2025 5:44 PM PLOT BY : MATT PAYNE PLOT NAME : PLOT SCALE : 1 IN:50 FT

WISDOT/CADDS SHEET 44

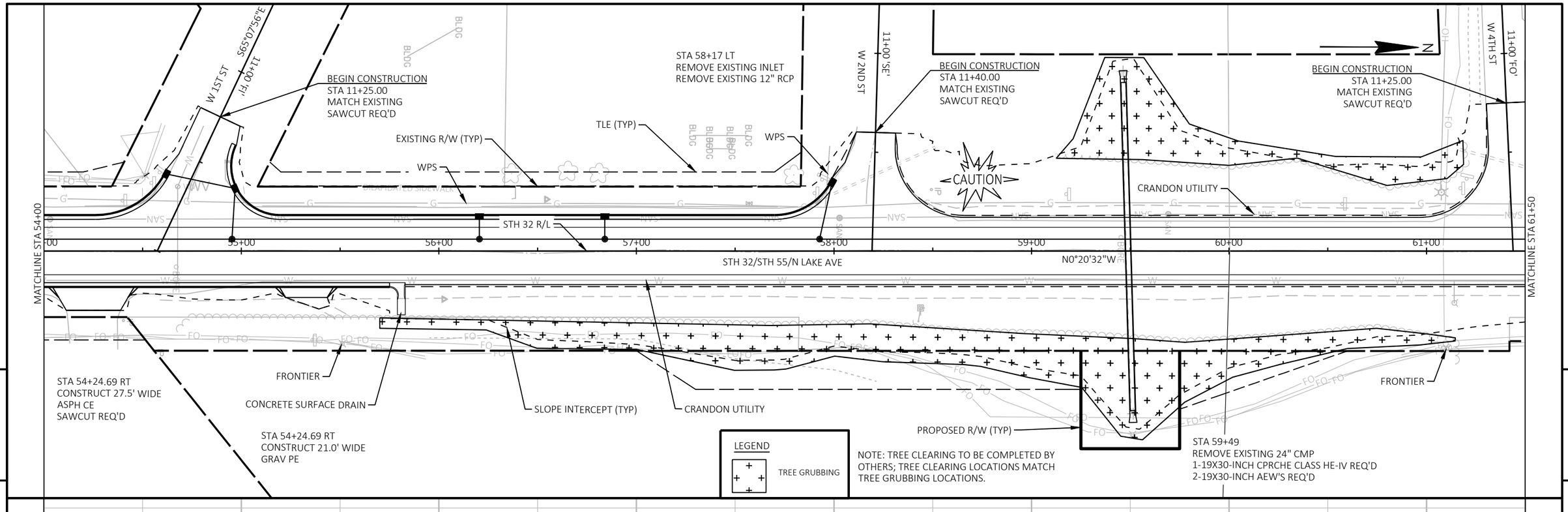

5

5

PROJECT NO: 9260-00-71	HWY: STH 32	COUNTY: FOREST	PLAN AND PROFILE: STH 32	SHEET 83	E

FILE NAME : N:\PDS\C3D\92600001\SHEETSPLAN\050201-PP.DWG
LAYOUT NAME - 02

PLOT DATE : 1/21/2026 9:25 PM PLOT BY : MATT PAYNE PLOT NAME : PLOT SCALE : 1 IN:50 FT

WISDOT/CADDS SHEET 44

LEGEND

TREE GRUBBING

NOTE: TREE CLEARING TO BE COMPLETED BY OTHERS; TREE CLEARING LOCATIONS MATCH TREE GRUBBING LOCATIONS.

STA 61+95 LT
REMOVE EXISTING 15" CMP

TLE (TYP)

CONCRETE SURFACE DRAIN

CRANDON UTILITY

CAUTION

STA 63+15.15 LT
CONSTRUCT 13.0' WIDE
ASPH PE
SAWCUT REQ'D

STA 64+22.44 LT
CONSTRUCT 22.0' WIDE
ASPH PE
SAWCUT REQ'D

STA 64+56.90 LT
CONSTRUCT 22.5' WIDE
GRAV PE

STA 65+44.96 LT
CONSTRUCT 33.0' WIDE
ASPH CE
SAWCUT REQ'D

BEGIN CONSTRUCTION
STA 11+42.00
MATCH EXISTING
SAWCUT REQ'D

CONCRETE SURFACE DRAIN

PROPOSED R/W (TYP)

W 6TH ST

11+00 'WS'

STA 66+44 LT
REMOVE EXISTING 15" CMP

STA 66+92 LT
REMOVE EXISTING 30" CMP

PI STA = 68+14.51
Y = 573417.955
X = 835820.894
DELTA = 8°21'27" RT
D = 2°33'57"
T = 163.15'
L = 325.72'
R = 2233.00'
PC STA = 66+51.36
PT STA = 69+77.08
DB = N00°20'32"W
DA = N08°00'55"E

REMOVE EXISTING 18" CMP
1-12" CP CLASS III-A NON-METAL REQ'D
2-12" AEW'S REQ'D

STA 67+94.84 LT
CONSTRUCT 19.0' WIDE
GRAV PE

WPS

N

MATCHLINE STA 61+50

62+00 63+00 64+00 65+00 66+00 67+00 68+00 69+00

N00°20'32"W

STH 32/STH 55/N LAKE AVE

STH 32 R/L

MATCHLINE STA 69+00

CRANDON UTILITY

SLOPE INTERCEPT (TYP)

EXISTING R/W (TYP)

FRONTIER

STA 63+26.51 RT
CONSTRUCT 26.5' WIDE
ASPH CE
SAWCUT REQ'D

REMOVE EXISTING 15" RCP

STA 64+19.88 RT
CONSTRUCT 24.0' WIDE
ASPH CE
SAWCUT REQ'D

REMOVE EXISTING 18" CMP

STA 65+25.11 RT
CONSTRUCT 60.0' WIDE
ASPH CE
SAWCUT REQ'D

END CONSTRUCTION
STA 10+68.00
MATCH EXISTING
SAWCUT REQ'D

E 6TH ST

11+00 'ES'

WPS

5

5

VPI STA 63+00.00
VPI EL 1641.70

VPC STA 62+40.00
VPC EL 1641.49

HP STA 62+99.35
HP EL 1641.59

VPT STA 63+60.00
VPT EL 1641.48

VCL = 120.00
K = 113.12

VPC STA 65+40.00
VPC EL 1640.83

LP STA 65+81.10
LP EL 1640.75

VPI STA 66+00.00
VPI EL 1640.61

VPT STA 66+60.00
VPT EL 1641.03

VCL = 300.00
K = 123.16

EXISTING PROFILE

PROPOSED PROFILE

-0.36%

0.70%

VCL = 120.00
K = 166.92

VPC STA 68+50.00
VPC EL 1642.35

EX PROFILE ELEVATION

PROPOSED PROFILE ELEVATION

1650 1645 1640 1635

1641.44 1641.17 1641.61 1641.34 1641.90 1641.52 1642.15 1641.59 1642.43 1641.52 1642.41 1641.34 1642.30 1641.16 1642.08 1640.97 1641.84 1640.80 1641.68 1640.77 1641.69 1640.96 1641.86 1641.31 1642.12 1641.66 1642.53 1642.00 1643.07 1642.35 1643.65 1642.80

61+50 62+00 63+00 64+00 65+00 66+00 67+00 68+00 69+00

PROJECT NO: 9260-00-71	HWY: STH 32	COUNTY: FOREST	PLAN AND PROFILE: STH 32	SHEET 84	E

FILE NAME : N:\PDS\C3D\92600001\SHEETSPLAN\050201-PP.DWG
LAYOUT NAME - 03

PLOT DATE : 1/21/2026 9:25 PM PLOT BY : MATT PAYNE PLOT NAME : PLOT SCALE : 1 IN:50 FT

WISDOT/CADDS SHEET 44

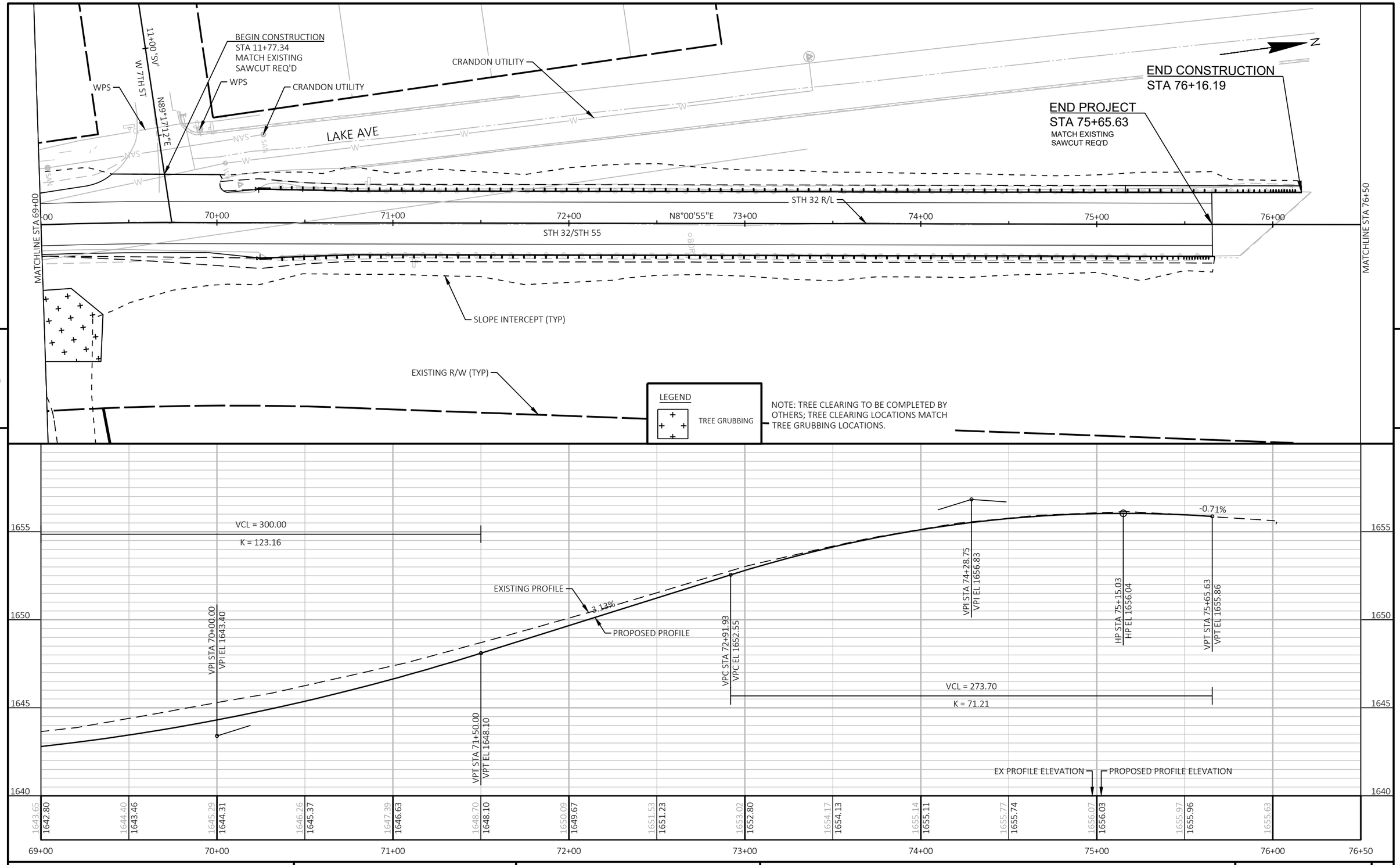

PROJECT NO: 9260-00-71	HWY: STH 32	COUNTY: FOREST	PLAN AND PROFILE: STH 32	SHEET 85	E

FILE NAME : N:\PDS\C3D\92600001\SHEETSPLAN\050201-PP.DWG
LAYOUT NAME - 04

PLOT DATE : 10/27/2025 5:44 PM PLOT BY : MATT PAYNE PLOT NAME : PLOT SCALE : 1 IN:50 FT

WISDOT/CADDS SHEET 44

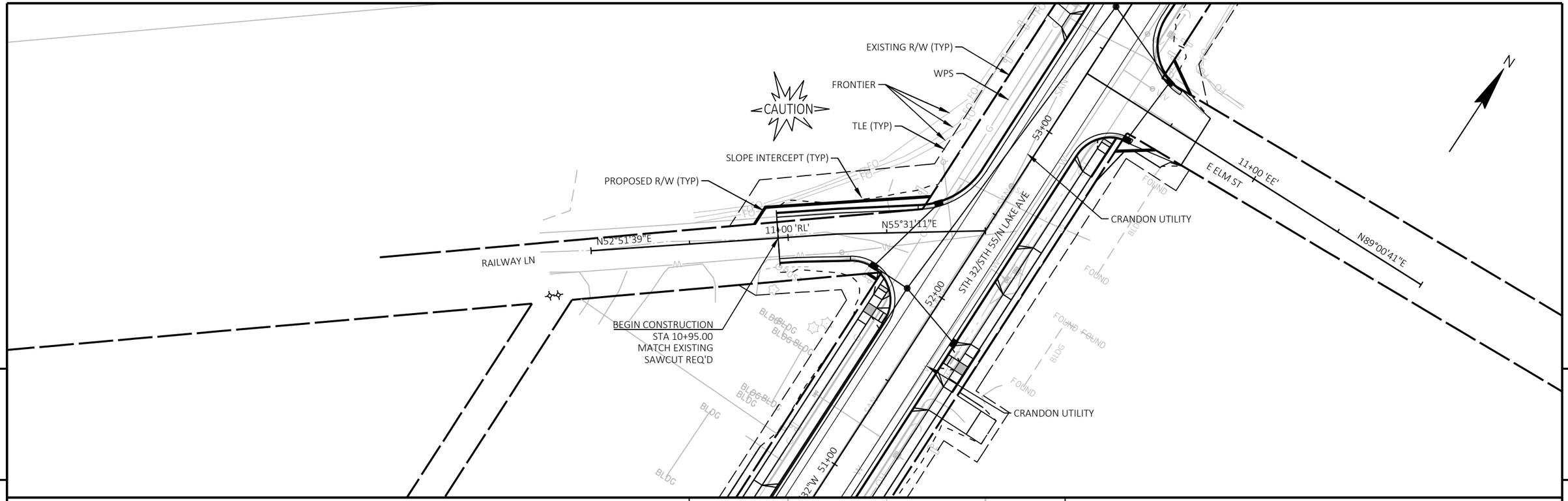

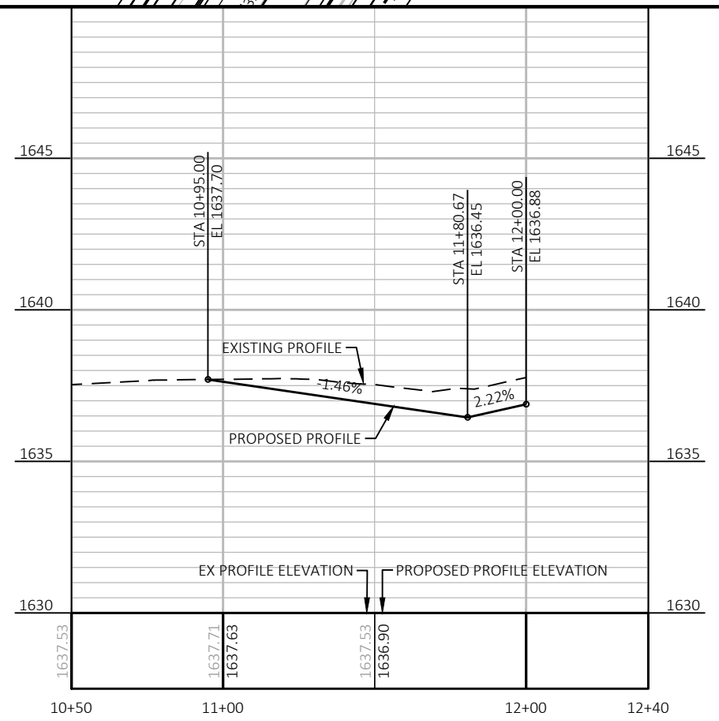

PROJECT NO: 9260-00-71	HWY: STH 32	COUNTY: FOREST	PLAN AND PROFILE: W RAILWAY LANE	SHEET 86	E

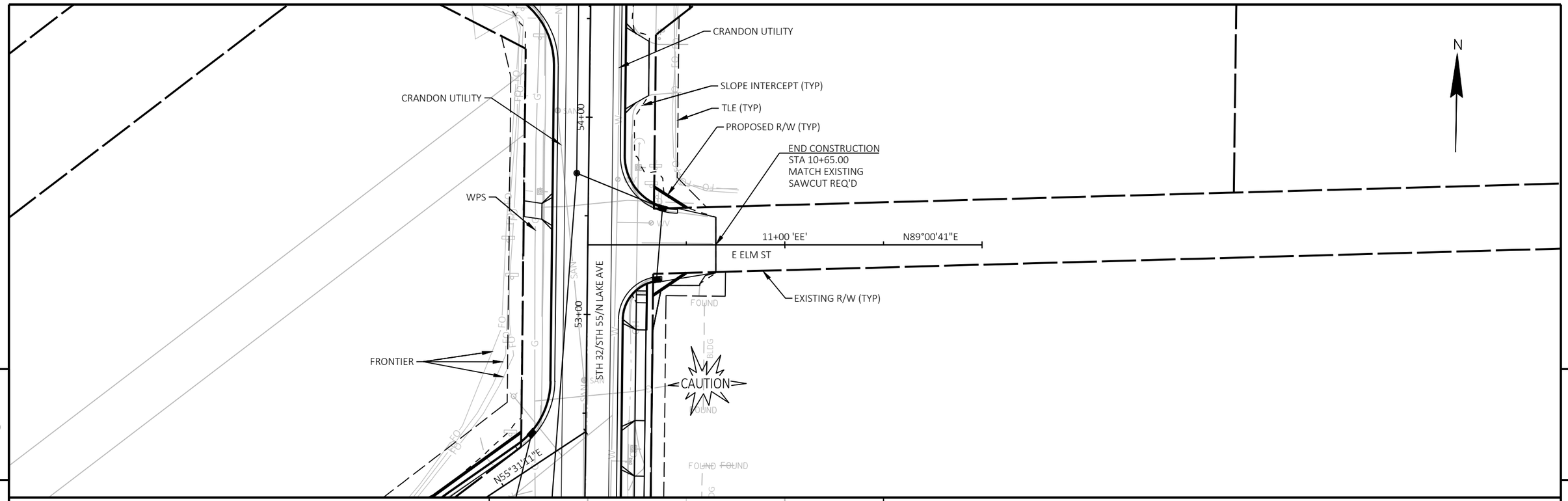

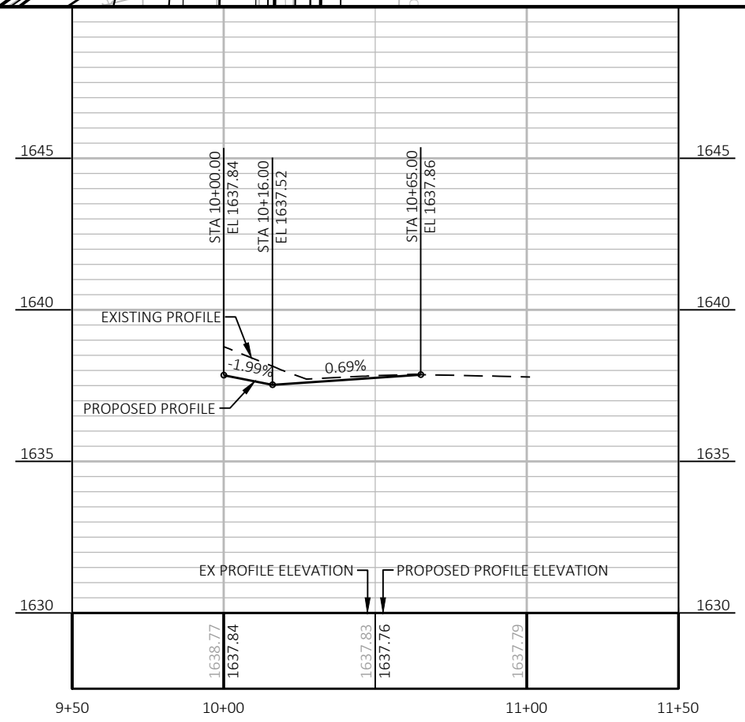

PROJECT NO: 9260-00-71	HWY: STH 32	COUNTY: FOREST	PLAN AND PROFILE: ELM ST	SHEET 87	E

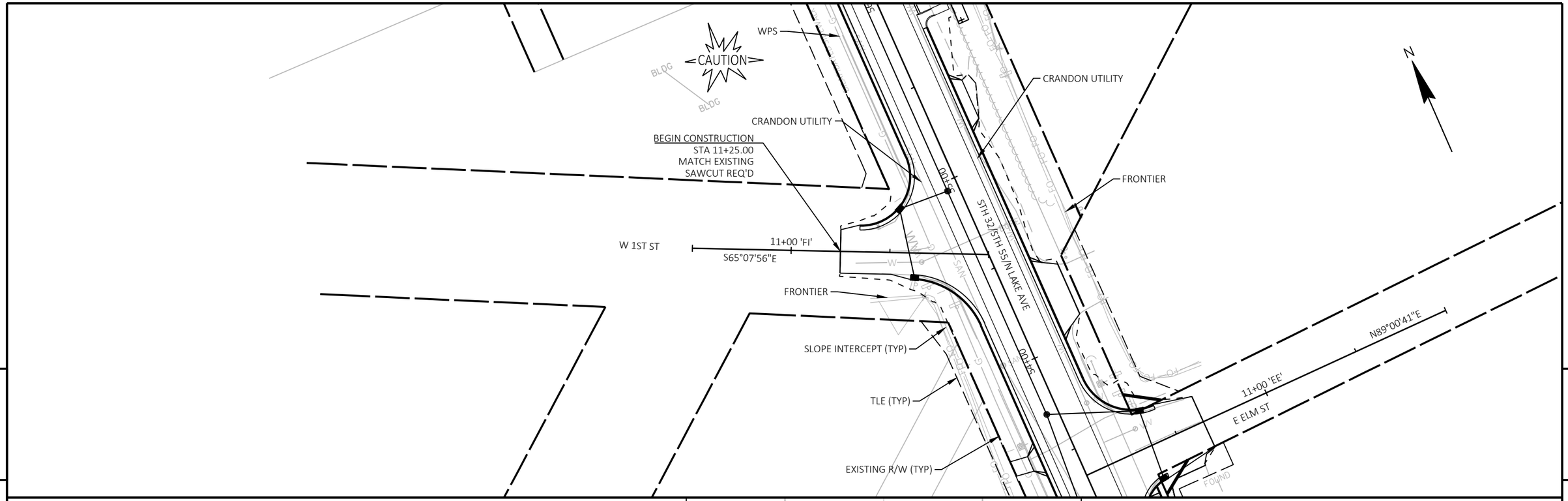

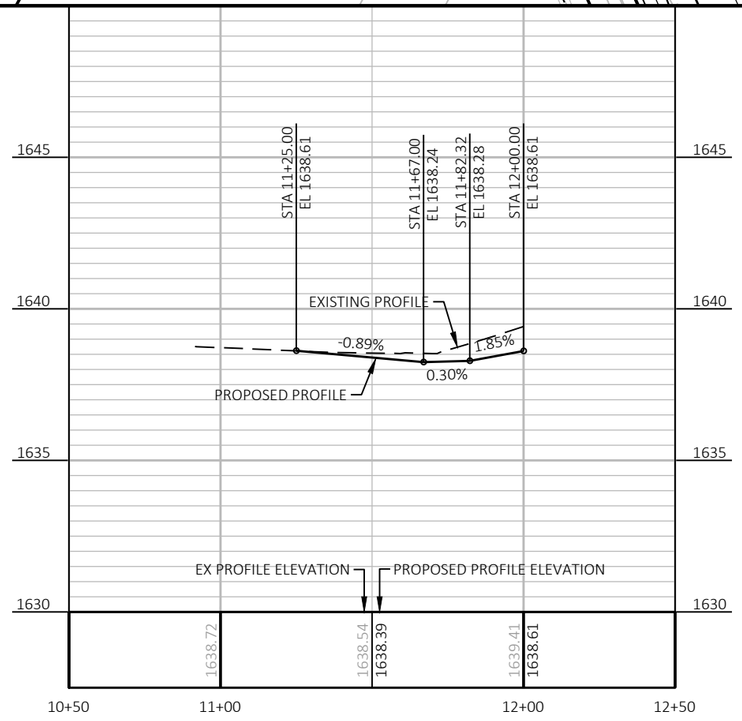

PROJECT NO: 9260-00-71	HWY: STH 32	COUNTY: FOREST	PLAN AND PROFILE: W 1ST ST	SHEET 88	E

LEGEND

TREE GRUBBING

NOTE: TREE CLEARING TO BE COMPLETED BY OTHERS; TREE CLEARING LOCATIONS MATCH TREE GRUBBING LOCATIONS.

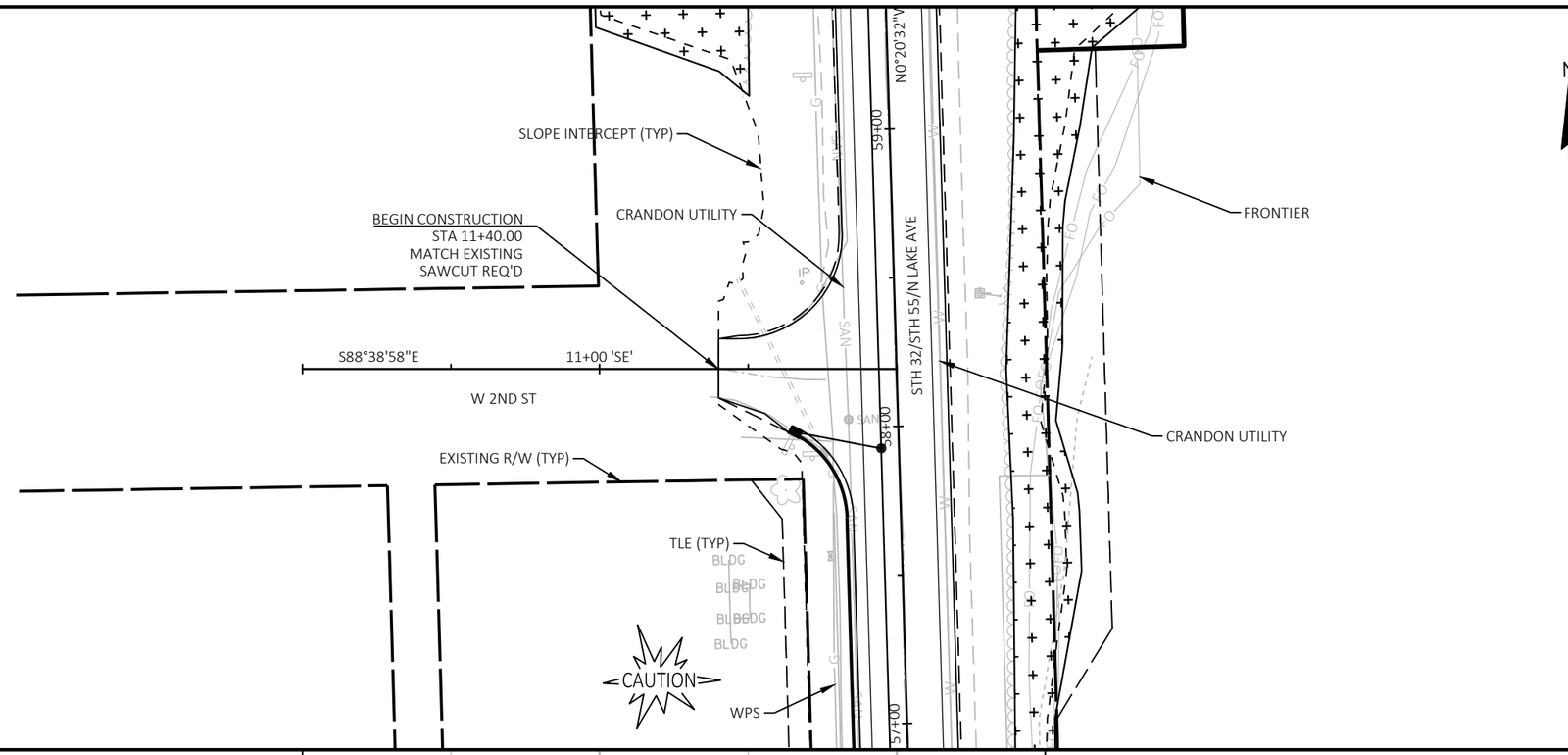

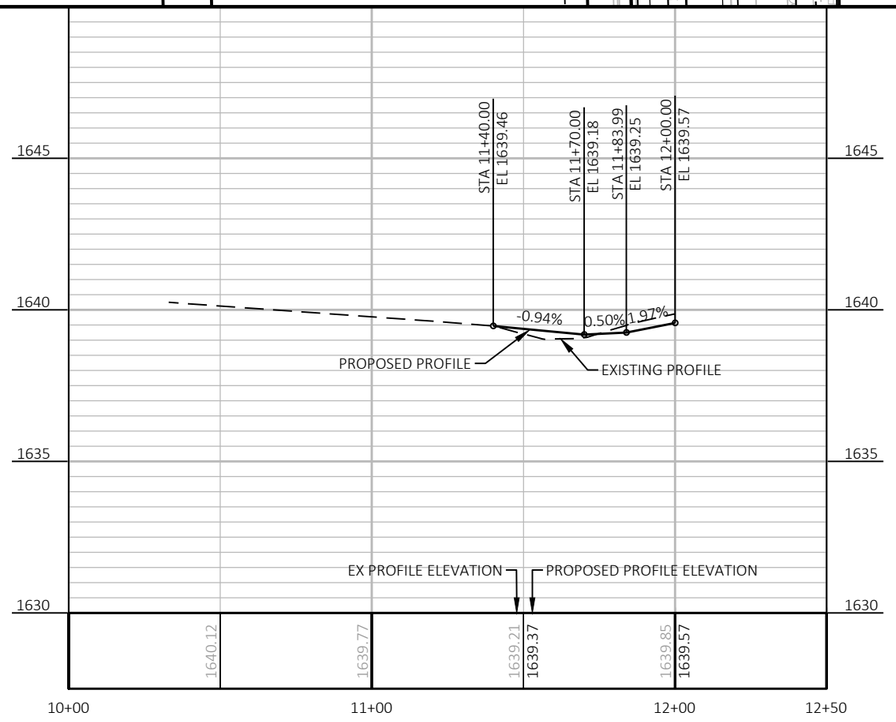

PROJECT NO: 9260-00-71	HWY: STH 32	COUNTY: FOREST	PLAN AND PROFILE: 2ND ST	SHEET 89	E

FILE NAME : N:\PDS\C3D\92600001\SHEETSPLAN\050201-PP.DWG
LAYOUT NAME - 2nd St

PLOT DATE : 10/27/2025 5:45 PM PLOT BY : MATT PAYNE PLOT NAME : PLOT SCALE : 1 IN:50 FT

WISDOT/CADDS SHEET 41

LEGEND

TREE GRUBBING

NOTE: TREE CLEARING TO BE COMPLETED BY OTHERS; TREE CLEARING LOCATIONS MATCH TREE GRUBBING LOCATIONS.

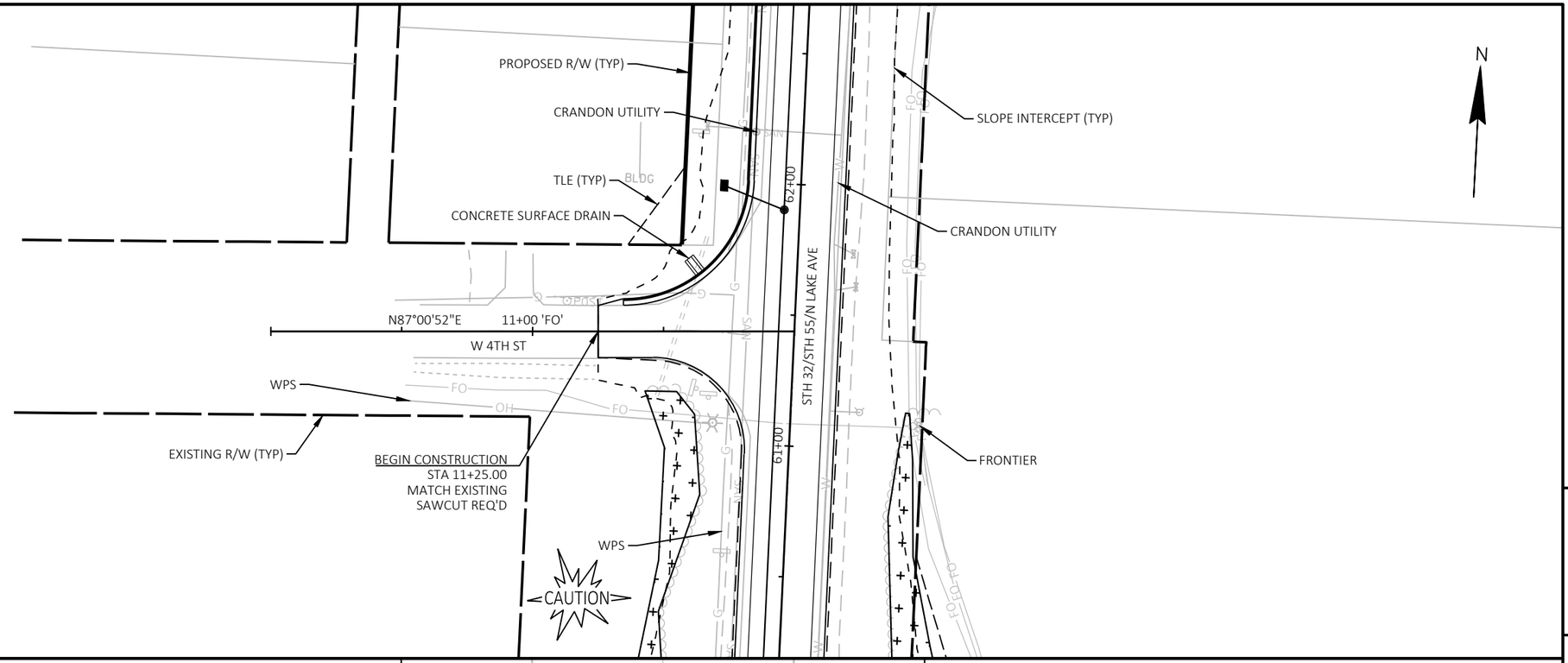

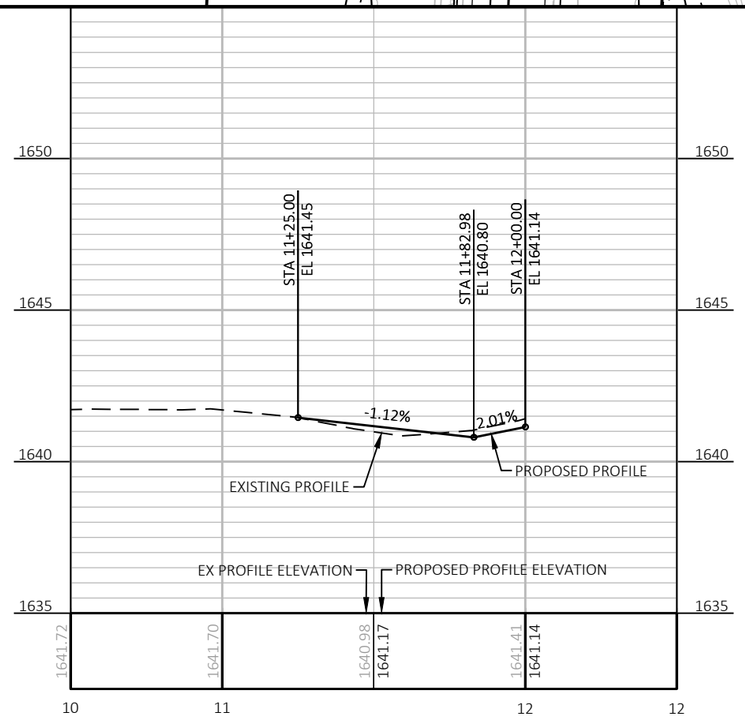

5

5

PROJECT NO: 9260-00-71	HWY: STH 32	COUNTY: FOREST	PLAN AND PROFILE: 4TH ST	SHEET 90	E

FILE NAME : N:\PDS\C3D\92600001\SHEETSPLAN\050201-PP.DWG
LAYOUT NAME - 4th St

PLOT DATE : 1/21/2026 9:25 PM PLOT BY : MATT PAYNE PLOT NAME : PLOT SCALE : 1 IN:50 FT

WISDOT/CADDS SHEET 44

LEGEND

TREE GRUBBING

NOTE: TREE CLEARING TO BE COMPLETED BY OTHERS; TREE CLEARING LOCATIONS MATCH TREE GRUBBING LOCATIONS.

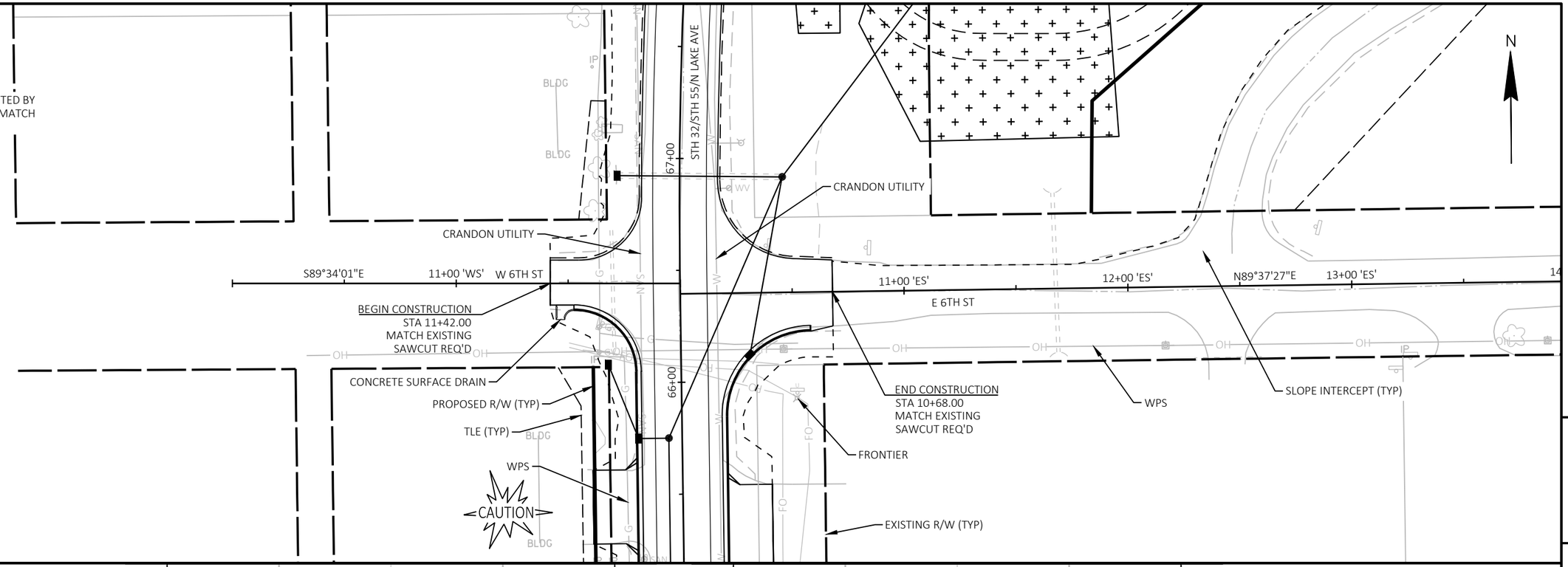

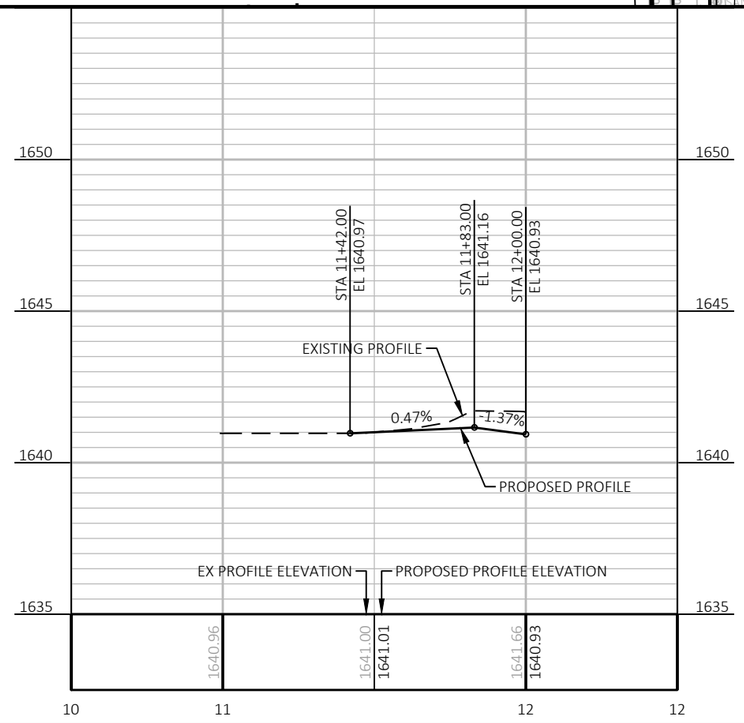

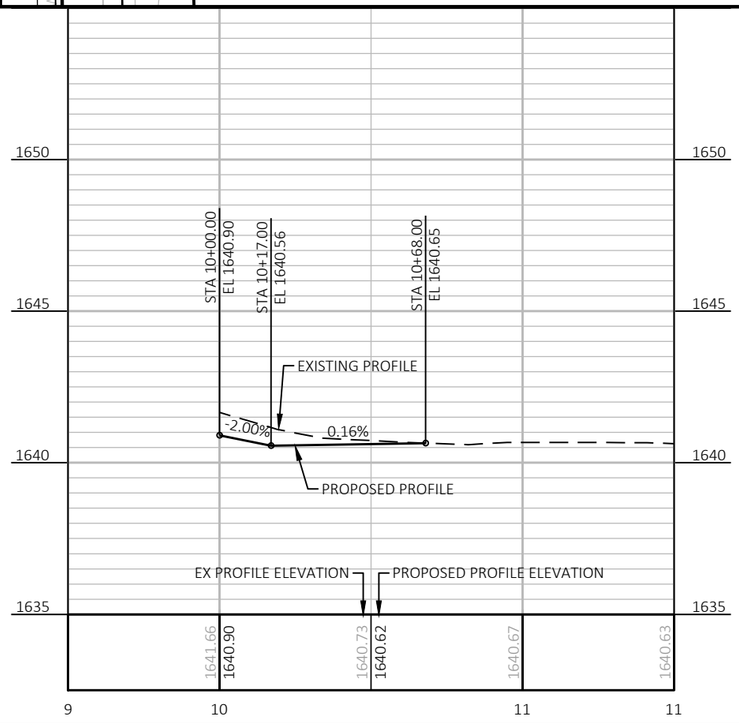

PROJECT NO: 9260-00-71	HWY: STH 32	COUNTY: FOREST	PLAN AND PROFILE: 6TH ST	SHEET 91	E

FILE NAME : N:\PDS\C3D\92600001\SHEETSPLAN\050201-PP.DWG
LAYOUT NAME - 6th St

PLOT DATE : 1/21/2026 9:25 PM PLOT BY : MATT PAYNE PLOT NAME : PLOT SCALE : 1 IN:50 FT

WISDOT/CADDS SHEET 44

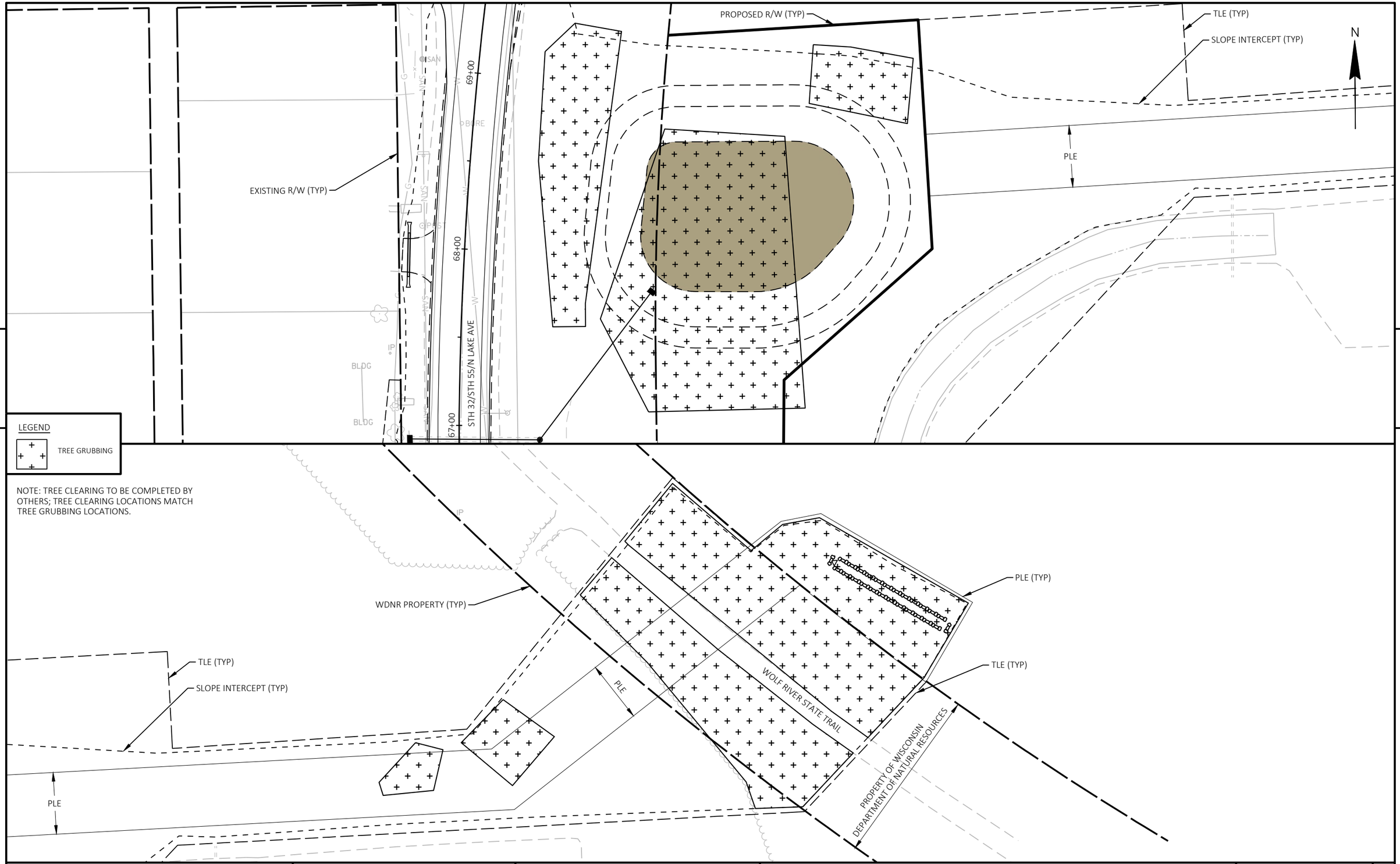

PROJECT NO: 9260-00-71	HWY: STH 32	COUNTY: FOREST	PLAN AND PROFILE: POND	SHEET 92	E

FILE NAME : N:\PDS\C3D\92600001\SHEETSPLAN\050201-PP.DWG
LAYOUT NAME - Pond

PLOT DATE : 10/27/2025 5:45 PM PLOT BY : MATT PAYNE PLOT NAME : PLOT SCALE : 1 IN:50 FT

Standard Detail Drawing List

08A05-22A	INLET COVERS TYPE A, H, A-S, H-S & Z
08A05-22B	INLET COVERS TYPE B, B-A, C, MS, MS-A, DW & WM
08A05-22E	INLET COVER TYPE BW, MANHOLE COVERS, TYPE K, J, J-S, L & M
08A08-03	CATCH BASINS 3-FT, 4-FT, 5-FT AND 6-FT DIAMETER
08B09-04	MANHOLES 3-FT, 4-FT, 5-FT, 6-FT, 7-FT, 8-FT, 9-FT, 10-FT DIAMETER
08C06-03	INLETS 3-FT AND 4-FT DIAMETER
08C07-03	INLETS 2X2-FT, 2X2.5-FT, 2X3-FT, 2.5X3-FT & 2X3.5-FT
08C09-02	INLETS MEDIAN 3 AND 4 GRATE
08D01-24A	CONCRETE CURB & GUTTER
08D01-24B	CONCRETE CURB, TIES AND CURB AND GUTTER APPLICATIONS
08D04-07	CONCRETE SURFACE DRAINS & ASPHALTIC FLUMES
08D05-22A	CURB RAMPS TYPES 1 AND 1-A
08D05-22B	CURB RAMPS TYPES 2 AND 3
08D05-22C	CURB RAMPS TYPES 4A AND 4A1
08D05-22D	CURB RAMPS TYPES 4B AND 4B1
08D05-22E	CURB RAMPS TYPES 5, 6, 7A, 7B & 8
08D05-22F	CURB RAMPS RADIAL DETECTABLE WARNING FIELD APPLICATIONS
08D05-22G	CURB RAMPS RECTANGULAR AND RADIAL DETECTABLE WARNING PLATES
08D19-05	DRIVEWAY AND SIDEWALK RAMPS TYPE Z
08E09-06	SILT FENCE
08E10-02	INLET PROTECTION TYPE A, B, C AND D
08E15-01	CULVERT PIPE CHECK
08F01-11	APRON ENDWALLS FOR CULVERT PIPE
08F02-01	APRON ENDWALLS FOR PIPE ARCH AND ELLIPTICAL PIPE
08F04-08	JOINT TIES FOR CONCRETE PIPE AND CONCRETE COLLAR DETAIL
13C19-03	HMA LONGITUDINAL JOINTS
14B42-07A	MIDWEST GUARDRAIL SYSTEM (MGS) GUARDRAIL
14B42-07B	MIDWEST GUARDRAIL SYSTEM (MGS) GUARDRAIL
14B42-07C	MIDWEST GUARDRAIL SYSTEM (MGS) GUARDRAIL
14B42-07D	MIDWEST GUARDRAIL SYSTEM (MGS) GUARDRAIL
14B43-04A	MIDWEST GUARDRAIL SYSTEM LONG SPAN MGS (L)
14B43-04B	MIDWEST GUARDRAIL SYSTEM LONG SPAN MGS (L)
14B43-04C	MIDWEST GUARDRAIL SYSTEM LONG SPAN MGS (L)
14B44-04A	MIDWEST GUARDRAIL SYSTEM ENERGY ABSORBING TERMINAL (MGS)
14B44-04B	MIDWEST GUARDRAIL SYSTEM ENERGY ABSORBING TERMINAL (MGS)
14B44-04C	MIDWEST GUARDRAIL SYSTEM ENERGY ABSORBING TERMINAL (MGS)
14B45-05A	MIDWEST GUARDRAIL SYSTEM THRIE BEAM TRANSITION (MGS)
14B45-05B	MIDWEST GUARDRAIL SYSTEM THRIE BEAM TRANSITION (MGS)
14B45-05C	MIDWEST GUARDRAIL SYSTEM THRIE BEAM TRANSITION (MGS)
14B45-05D	MIDWEST GUARDRAIL SYSTEM THRIE BEAM TRANSITION (MGS)
14B45-05E	MIDWEST GUARDRAIL SYSTEM THRIE BEAM TRANSITION (MGS)
14B45-05F	MIDWEST GUARDRAIL SYSTEM THRIE BEAM TRANSITION (MGS)
14B45-05G	MIDWEST GUARDRAIL SYSTEM THRIE BEAM TRANSITION (MGS)
14B45-05H	MIDWEST GUARDRAIL SYSTEM THRIE BEAM TRANSITION (MGS)
14B45-05I	MIDWEST GUARDRAIL SYSTEM THRIE BEAM TRANSITION (MGS)
14B45-05J	MIDWEST GUARDRAIL SYSTEM THRIE BEAM TRANSITION (MGS)
14B45-05K	MIDWEST GUARDRAIL SYSTEM THRIE BEAM TRANSITION (MGS)
14B45-05L	MIDWEST GUARDRAIL SYSTEM THRIE BEAM TRANSITION (MGS)
15A03-02A	FLEXIBLE MARKER POST FOR CULVERT END
15A03-02B	FLEXIBLE MARKER POST FOR CULVERT END
15B03-15A	FENCE CHAIN LINK
15B03-15B	FENCE CHAIN LINK
15C02-09A	BARRICADES AND SIGNS FOR MAINLINE CLOSURES
15C02-09B	BARRICADES AND SIGNS FOR VARIOUS CLOSURES
15C02-09C	DETOUR SIGNING FOR MAINLINE CLOSURES
15C03-05	BARRICADES AND SIGNS FOR SIDEROAD CLOSURES
15C08-24A	PERMANENT LONGITUDINAL PAVEMENT MARKINGS
15C11-10B	CHANNELIZING DEVICES DRUMS, CONES, BARRICADES AND VERTICAL PANELS
15C19-10A	MOVING PAVEMENT MARKING OPERATION TWO-LANE TWO-WAY ROADWAY
15C33-05	STOP LINE AND CROSSWALK PAVEMENT MARKING
15C35-06A	PAVEMENT MARKING (INTERSECTIONS)
15D30-11A	TRAFFIC CONTROL, PEDESTRIAN ACCOMMODATION
15D30-11B	TRAFFIC CONTROL, PEDESTRIAN ACCOMMODATION
15D30-11C	TRAFFIC CONTROL, PEDESTRIAN ACCOMMODATION
15D30-11D	TRAFFIC CONTROL, PEDESTRIAN ACCOMMODATION
15D30-11E	TRAFFIC CONTROL, PEDESTRIAN ACCOMMODATION

6

Standard Detail Drawing List

15D30-11F	TRAFFIC CONTROL, PEDESTRIAN ACCOMMODATION
15D30-11G	TRAFFIC CONTROL, PEDESTRIAN ACCOMMODATION
15D30-11H	TRAFFIC CONTROL, PEDESTRIAN ACCOMMODATION
15D30-11I	TRAFFIC CONTROL, PEDESTRIAN ACCOMMODATION
15D30-11J	TRAFFIC CONTROL, PEDESTRIAN ACCOMMODATION
15D30-11K	TRAFFIC CONTROL, PEDESTRIAN ACCOMMODATION
15D30-11L	TRAFFIC CONTROL, PEDESTRIAN ACCOMMODATION
15D51-01	TRAFFIC CONTROL, MOBILE OPERATIONS ON AN UNDIVIDED ROADWAY

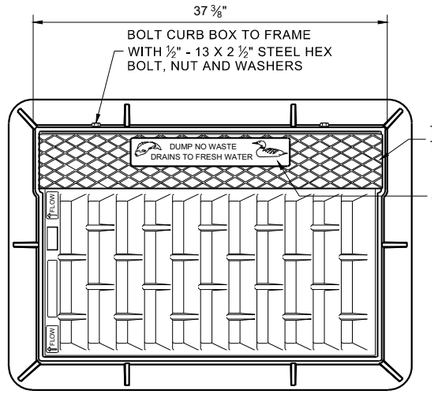

NOTE: EITHER CASTING IS ACCEPTABLE

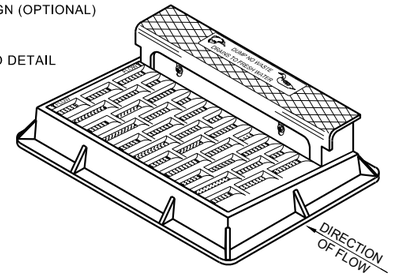

NOTE: CURB BOX HEIGHT ADJUSTABLE 6" - 9"

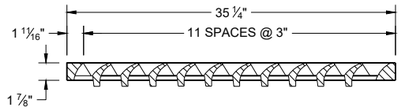

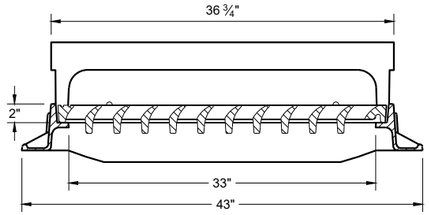

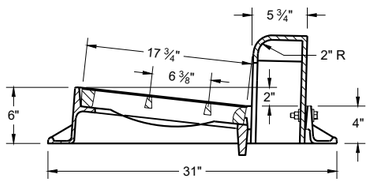

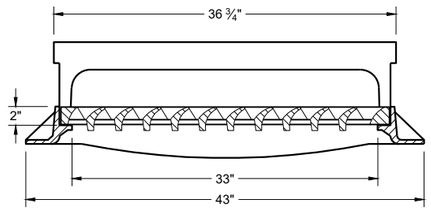

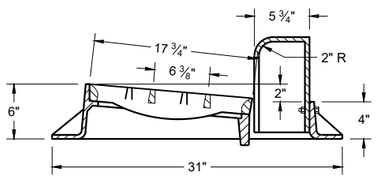

TYPE "H"

NOTE: EITHER CASTING IS ACCEPTABLE

1 1/8" DIAGONAL BARS WITH 1 5/8" OPENINGS

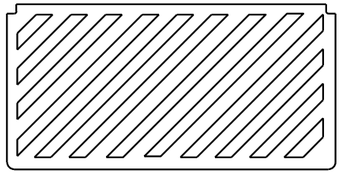

SPECIAL GRATE FOR TYPE "H" COVER

(MEASURES 35" X 17 3/4" X 2")

(NOTED AS TYPE H-S ON DRAINAGE TABLE)

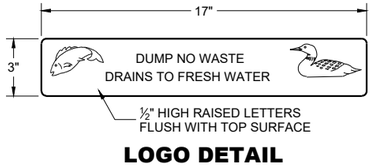

LOGO DETAIL

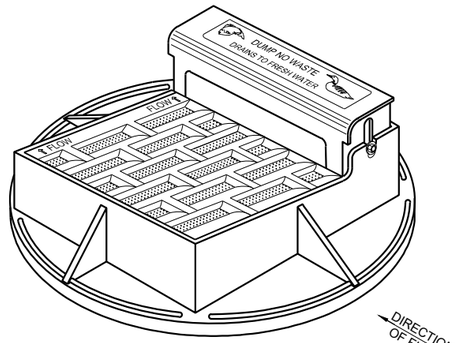

NOTE: CURB BOX HEIGHT ADJUSTABLE 6" - 9"

NOTE: EITHER CASTING IS ACCEPTABLE

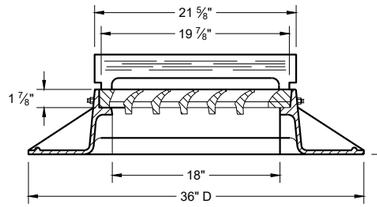

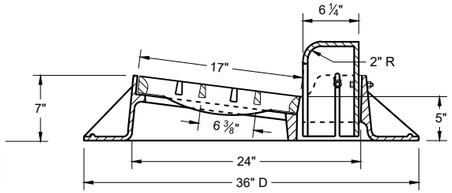

TYPE "A"

GENERAL NOTES

DETAILS OF CONSTRUCTION, MATERIALS AND WORKMANSHIP NOT SHOWN ON THIS DRAWING SHALL CONFORM TO THE PERTINENT REQUIREMENTS OF THE STANDARD SPECIFICATIONS AND THE APPLICABLE SPECIAL PROVISIONS.

DETAIL DRAWINGS FOR PROPOSED ALTERNATE DESIGNS FOR CATCH BASIN, MANHOLE AND INLET COVERS SHALL BE SUBMITTED TO THE ENGINEER FOR APPROVAL PROVIDING THAT SUCH ALTERNATE DESIGNS MAKE PROVISION FOR EQUIVALENT CAPACITY AND STRENGTH.

ROUND FRAMES AND COVERS SHALL HAVE CONTINUOUSLY MACHINED BEARING SURFACES TO PREVENT ROCKING AND RATTLING.

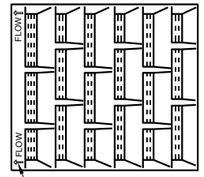

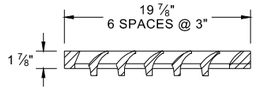

1" DIAGONAL BARS WITH 1 1/2" OPENINGS

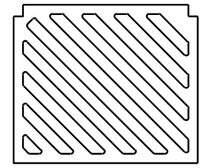

SPECIAL GRATE FOR TYPE "A" COVER

(MEASURES 19 3/4" X 17" X 1 7/8")

(NOTED AS TYPE A-S ON DRAINAGE TABLE)

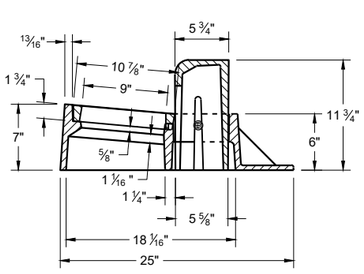

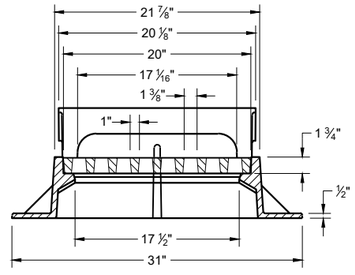

TYPE "Z"

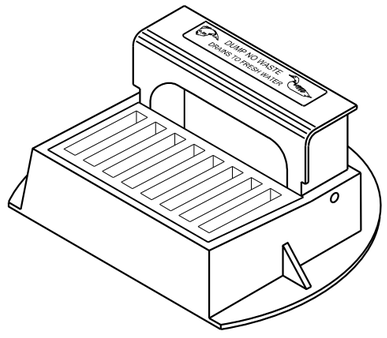

INLET COVERS
TYPES A, H, A-S, H-S AND Z

STATE OF WISCONSIN
DEPARTMENT OF TRANSPORTATION

APPROVED
February 2025
DATE

/S/ Rodney Taylor
ROADWAY STANDARDS DEVELOPMENT
UNIT SUPERVISOR

FHWA

6
SDD 08A05-22a

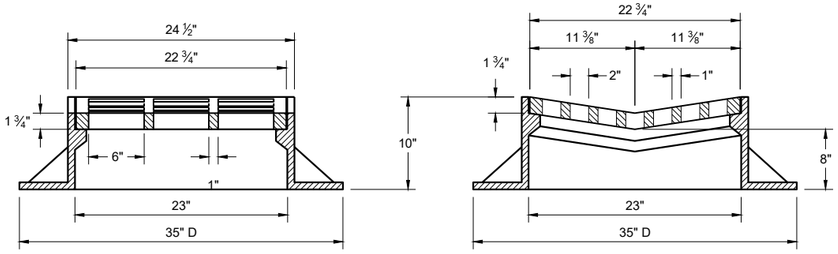

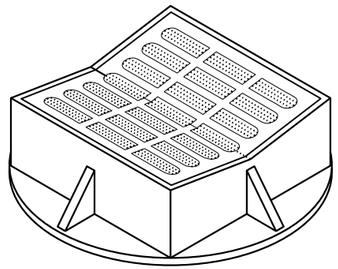

TYPE "B"

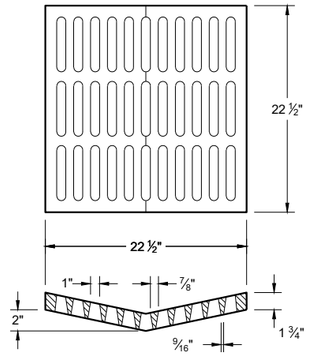

ALTERNATIVE GRATE FOR TYPE "B" COVER

USE WHERE PEDESTRIAN OF BICYCLE TRAFFIC IS POSSIBLE

NOTED AS TYPE B - A ON THE DRAINAGE TABLE

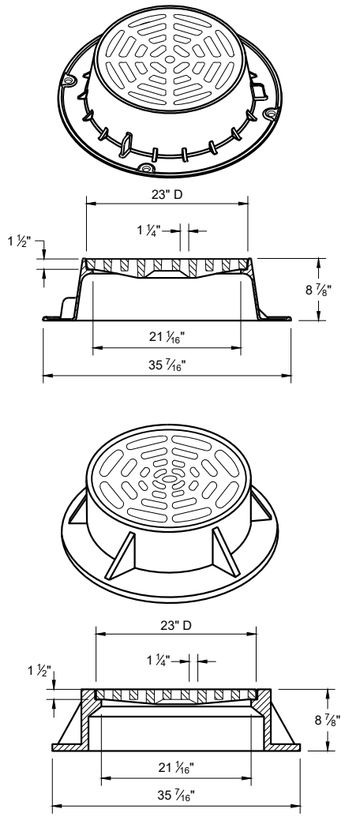

TYPE "C"

NOTE: EITHER CASTING IS ACCEPTABLE

GENERAL NOTES

DETAILS OF CONSTRUCTION, MATERIALS AND WORKMANSHIP NOT SHOWN ON THIS DRAWING SHALL CONFORM TO THE PERTINENT REQUIREMENTS OF THE STANDARD SPECIFICATIONS AND THE APPLICABLE SPECIAL PROVISIONS.

DETAIL DRAWINGS FOR PROPOSED ALTERNATE DESIGNS FOR CATCH BASIN, MANHOLE AND INLET COVERS SHALL BE SUBMITTED TO THE ENGINEER FOR APPROVAL PROVIDING THAT SUCH ALTERNATE DESIGNS MAKE PROVISION FOR EQUIVALENT CAPACITY AND STRENGTH.

ROUND FRAMES AND COVERS SHALL HAVE CONTINUOUSLY MACHINED BEARING SURFACES TO PREVENT ROCKING AND RATTLING.

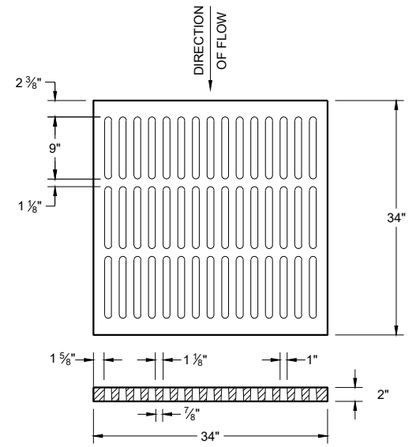

ALTERNATIVE TYPE "MS"

USE WHERE PEDESTRIAN OF BICYCLE TRAFFIC IS PERMITTED

NOTED AS TYPE MS-A ON THE DRAINAGE TABLE

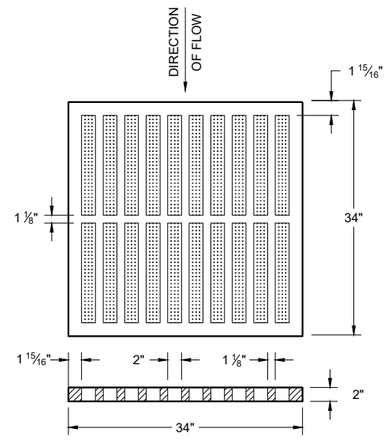

TYPE "MS"

USE ON FREEWAYS AND EXPRESSWAYS

NOTED AS TYPE MS ON THE DRAINAGE TABLE

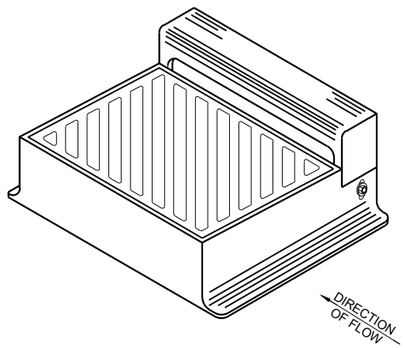

DIAGONAL SLOTS SHALL BE ORIENTEDTO THE DIRECTION OF FLOW AS ILLUSTRATED.
GRATES ARE MANUFACTURED TO BE REVERSIBLE.

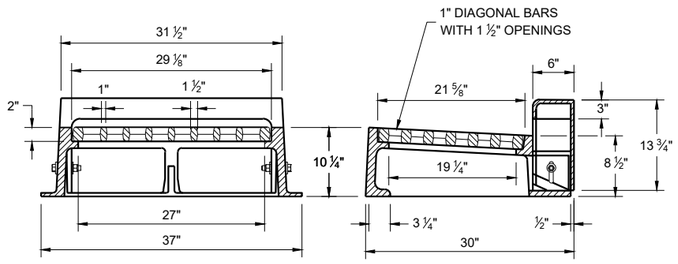

TYPE "WM"

NOTE: CURB BOX HEIGHT ADJUSTABLE 6" - 9"

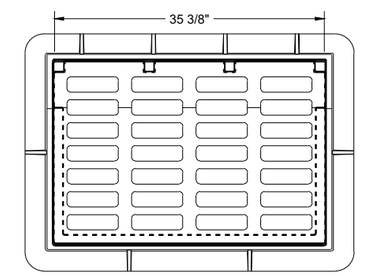

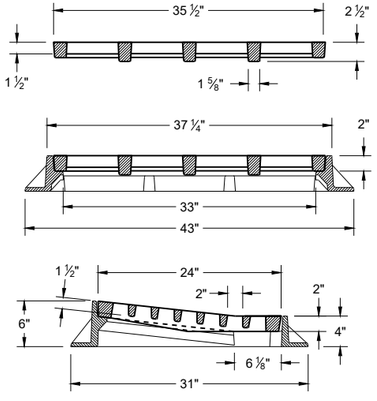

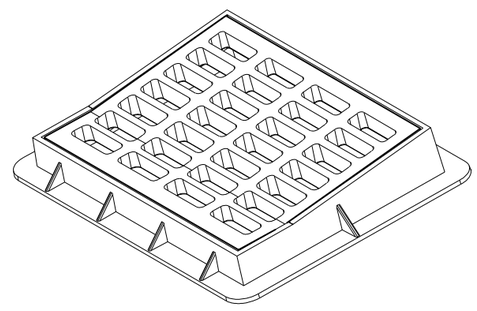

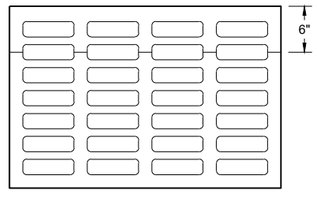

TYPE "DW"

NOTES: FOR USE IN A SUMP CONDITION. THIS OPTION IS ONLY TO BE USED IF NO OTHER INLETS ARE APPLICABLE.

INLET COVERS
TYPES B, B-A, C,
MS, MS-A ,DW AND WM

STATE OF WISCONSIN
DEPARTMENT OF TRANSPORTATION

APPROVED
February 2025 — DATE
/S/ Rodney Taylor — ROADWAY STANDARDS DEVELOPMENT UNIT SUPERVISOR

FHWA

6

SDD 08A05-22b

SDD 08A05-22b

GENERAL NOTES

DETAILS OF CONSTRUCTION, MATERIALS AND WORKMANSHIP NOT SHOWN ON THIS DRAWING SHALL CONFORM TO THE PERTINENT REQUIREMENTS OF THE STANDARD SPECIFICATIONS AND THE APPLICABLE SPECIAL PROVISIONS.

DETAIL DRAWINGS FOR PROPOSED ALTERNATE DESIGNS FOR MANHOLE COVERS SHALL BE SUBMITTED TO THE ENGINEER FOR APPROVAL PROVIDING THAT SUCH ALTERNATE DESIGNS MAKE PROVISION FOR EQUIVALENT CAPACITY AND STRENGTH.

ROUND FRAMES AND COVERS SHALL HAVE CONTINUOUSLY MACHINED BEARING SURFACES TO PREVENT ROCKING AND RATTLING.

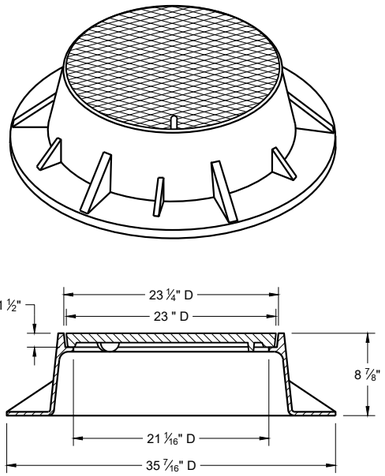

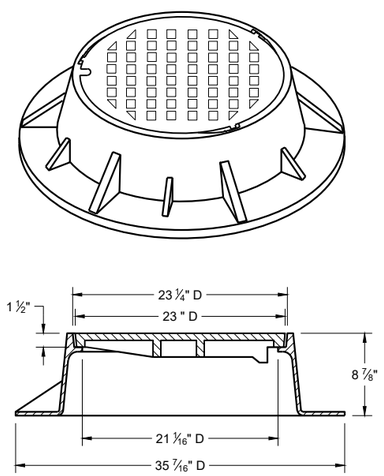

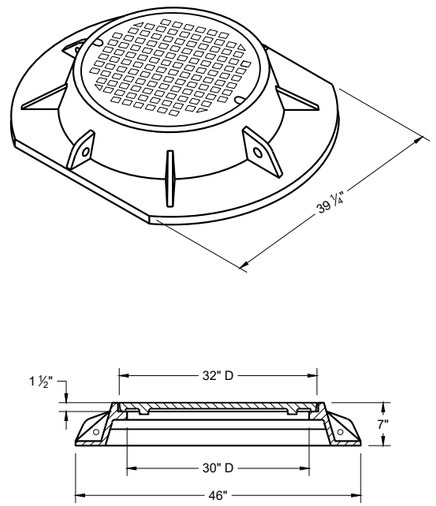

TYPE "K"

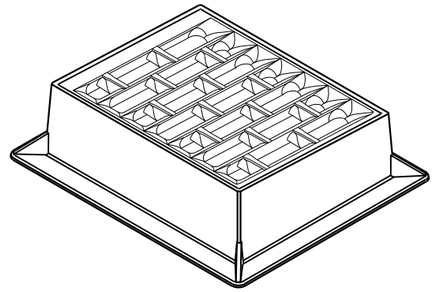

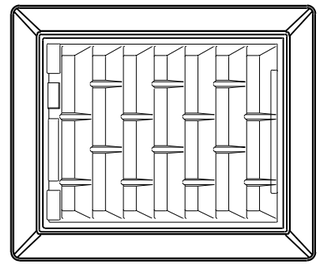

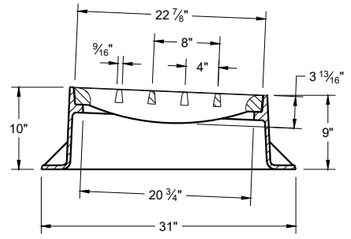

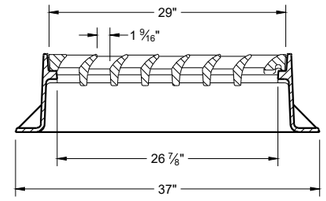

INLET COVER TYPE "BW"

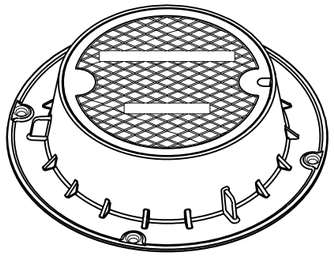

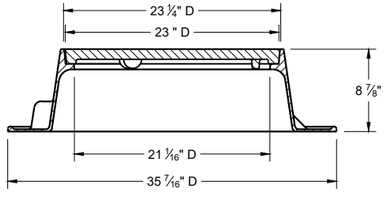

TYPE "J"

NOTE: EITHER CASTING IS ACCEPTABLE

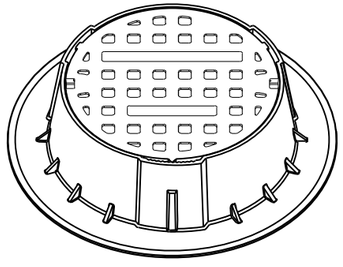

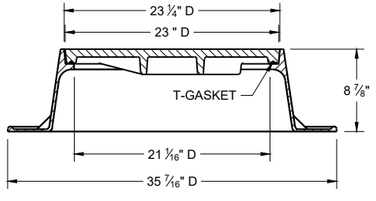

TYPE "J" SPECIAL

TYPE "B" NON-ROCKING SELF-SEAL LID
(NOTED AS TYPE J-S ON THE DRAINAGE TABLE)

NOTE: EITHER CASTING IS ACCEPTABLE

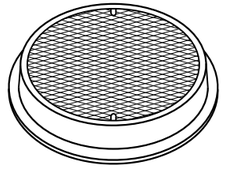

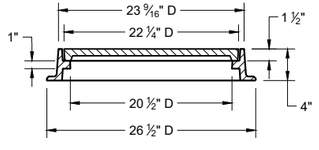

TYPE "L"

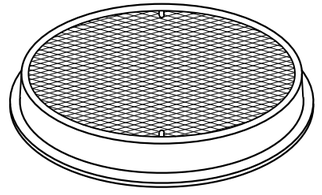

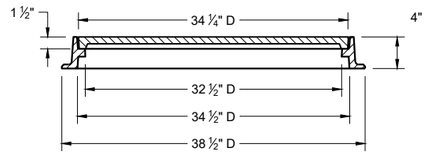

TYPE "M"

INLET COVERS TYPES BW
MANHOLE COVERS TYPES K, J, J-S, L, AND M

STATE OF WISCONSIN
DEPARTMENT OF TRANSPORTATION

APPROVED
February 2025 — DATE
/S/ Rodney Taylor — ROADWAY STANDARDS DEVELOPMENT UNIT SUPERVISOR

FHWA

6

SDD 08A05-22e

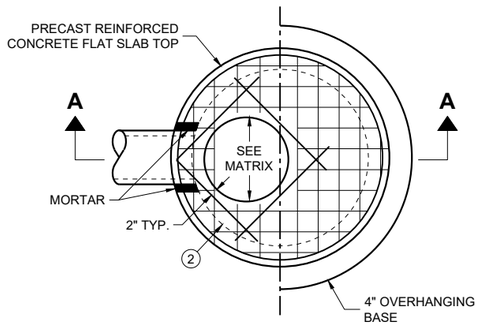

PLAN VIEW CIRCULAR OPENING

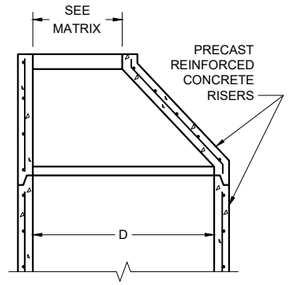

OPTIONAL PRECAST REINFORCED CONCRETE ECCENTRIC TOP

COVER MATRIX

CATCH BASIN SIZE	INLET COVER TYPE	ALL A'S	ALL B'S	BW	C	F	ALL H'S	S	T	V V-B	VV-B	WM	Z
	OPENING SIZE (FT.)												
3-FT	2 X 2	X	X					X		X			
	2 DIA.				X								X
4-FT TO 6-FT	2 X 2	X	X					X		X			
	2 X 2.5			X				X	X	X		X	
	2 DIA.				X								X
	2 X 3						X						
	2.5 X 3					X							
	2 X 3.5*										X*		

* REQUIRES 5-FT DIAMETER OR LARGER STRUCTURE

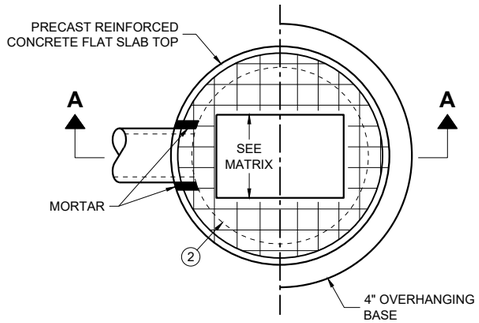

PLAN VIEW RECTANGULAR OPENING

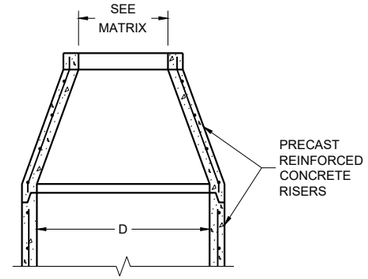

OPTIONAL PRECAST REINFORCED CONCRETE CONCENTRIC TOP

PIPE MATRIX

CATCH BASIN SIZE	MAXIMUM INSIDE PIPE DIAMETER FOR TWO PIPES	
	180° SEPARATION (IN)	90° SEPARATION (IN)
3-FT	15	12
4-FT	24	18
5-FT	36	24
6-FT	42	30

CATCH BASINS
3-FT, 4-FT, 5-FT AND 6-FT DIAMETER

GENERAL NOTES

DETAILS OF CONSTRUCTION, MATERIALS AND WORKMANSHIP NOT SHOWN ON THIS DRAWING SHALL CONFORM TO THE PERTINENT REQUIREMENTS OF THE STANDARD SPECIFICATIONS AND THE APPLICABLE SPECIAL PROVISIONS.

UNLESS OTHERWISE AUTHORIZED IN WRITING BY THE ENGINEER, THE CONTRACTOR SHALL NOT ORDER AND DELIVER PRECAST CATCH BASIN UNITS REQUIRED FOR THE PROJECT UNTIL A LIST OF SIZES IS FURNISHED BY THE ENGINEER.

DETAILED DRAWINGS FOR PROPOSED ALTERNATE DESIGNS FOR UNDERGROUND DRAINAGE STRUCTURES SHALL BE SUBMITTED TO THE ENGINEER FOR APPROVAL PROVIDING THAT SUCH ALTERNATE DESIGNS MAKE PROVISION FOR EQUIVALENT CAPACITY AND STRENGTH.

ALL DRAINAGE STRUCTURES ARE DESIGNATED ON THE PLANS AS "MANHOLES 3X3-L", "CATCH BASINS 4-B", "INLETS 2X3-H", ETC. THE FIRST NUMBERS DESIGNATE THE SIZE OF THE STRUCTURE, AND THE FOLLOWING LETTER DESIGNATES THE TYPE OF COVER TO BE USED TO COMPRISE THE COMPLETE UNIT.

BASES SHALL BE PLACED ON A BED OF MATERIAL AT LEAST 6 INCHES IN DEPTH, WHICH MEETS THE REQUIREMENTS OF FOUNDATION BACKFILL. THIS BEDDING SHALL BE COMPACTED AND PROVIDE UNIFORM SUPPORT FOR THE ENTIRE AREA OF THE BASE.

PRECAST REINFORCED CONCRETE CONE TOPS (ECCENTRIC OR CONCENTRIC) OR PRECAST REINFORCED CONCRETE FLAT SLAB TOPS MAY BE USED ON CONCRETE BLOCK STRUCTURES.

ECCENTRIC CONE TOPS MAY BE USED ON ALL STRUCTURES. CONCENTRIC CONE TOPS SHALL BE USE ONLY ON STRUCTURES 5 FEET OR LESS IN DEPTH UNLESS OTHERWISE DIRECTED BY THE ENGINEER.

STEPS MEETING AASHTO M199 AND THE FOLLOWING REQUIREMENTS SHALL BE INSTALLED IN ALL STRUCTURES OVER 5 FEET IN DEPTH: 16 INCH C-C MAXIMUM SPACING; PROJECT A MINIMUM CLEAR DISTANCE OF 4 INCHES FROM THE WALL AT THE POINT OF EMBEDMENT; MINIMUM LENGTH OF 10 INCHES; MINIMUM WALL EMBEDMENT OF 3 INCHES. FERROUS METAL STEPS NOT PAINTED OR TREATED TO RESIST CORROSION SHALL HAVE A MINIMUM CROSS SECTIONAL DIMENSION OF 1 INCH.

STEPS OF APPROVED POLYPROPYLENE PLASTIC COATED REINFORCEMENT BAR ARE ACCEPTABLE. REINFORCING BAR MUST BE A MINIMUM OF ½ INCH AND MEET THE REQUIREMENTS OF ASTM A615.

CERTIFICATION SHALL BE PROVIDED THAT INSTALLED STEPS WHEN TESTED IN ACCORDANCE WITH SECTION 10 OF AASHTO T280 CAN WITHSTAND A VERTICAL LOAD OF 800 LBS. AND A HORIZONTAL LOAD OF 400 LBS.

ALL BAR STEEL REINFORCEMENT SHALL BE EMBEDDED 2 INCHES CLEAR UNLESS OTHERWISE SHOWN OR NOTED.

ALL PRECAST INLET UNITS SHALL CONFORM TO THE PERTINENT REQUIREMENTS OF AASHTO DESIGNATION M199.

PRECAST REINFORCED RISERS SHALL HAVE A TONGUE AND GROOVE JOINT WITH TONGUE UP OR DOWN.

CONCRETE BLOCK WILL NOT BE PERMITTED FOR STRUCTURES GREATER THAN 4 FEET IN DIAMETER.

4" OVERHANGING BASES ARE REQUIRED FOR ALL CONCRETE BLOCK INSTALLATIONS. 4" OVERHANG IS REQUIRED WHEN SEPARATE PRECAST BASE IS PROVIDED. OVERHANG IS NOT REQUIRED ON PRECAST STRUCTURES WITH AN INTEGRAL OR MONOLITHIC BASE.

FOR ADDITIONAL CONFIGURATIONS, MAINTAIN A MINIMUM OF 12 INCHES AS MEASURED FROM THE INSIDE OF THE STRUCTURE WALL BETWEEN THE OUTSIDE PIPE WALLS OF ADJACENT PIPES. SEE DETAIL "D".

(1) MINIMUM WALL THICKNESS SHALL BE 4 INCHES FOR 3-FT, 5 INCHES FOR 4-FT, 6 INCHES FOR 5-FT AND 7 INCHES FOR 6-FT DIAMETER PRECAST CATCH BASINS.

(2) FOR PRECAST CATCH BASINS AND REINFORCED CONCRETE BASES PROVIDE REINFORCING STEEL IN ACCORDANCE TO AASHTO M199.

(3) PRECAST FLAT SLAB TOPS AND BASES WITH A DIAMETER OF 48" AND LESS SHALL HAVE A MINIMUM THICKNESS OF 6". PRECAST FLAT SLAB TOPS AND BASES WITH A DIAMETER LARGER THAN 48" SHALL HAVE A MINIMUM THICKNESS OF 8".

(4) 1" CONCRETE KEY POURED AFTER INSTALLATION. 2' SUMP MEASURED FROM TOP OF KEY.

(5) JOINTS TO BE SEALED WITH A BUTYL RUBBER SEAL PER SEALANT MANUFACTURERS RECOMMENDATIONS CONFORMING TO ASTM C 990 OR RUBBER GASKETS CONFROMING TO ASTM C443.

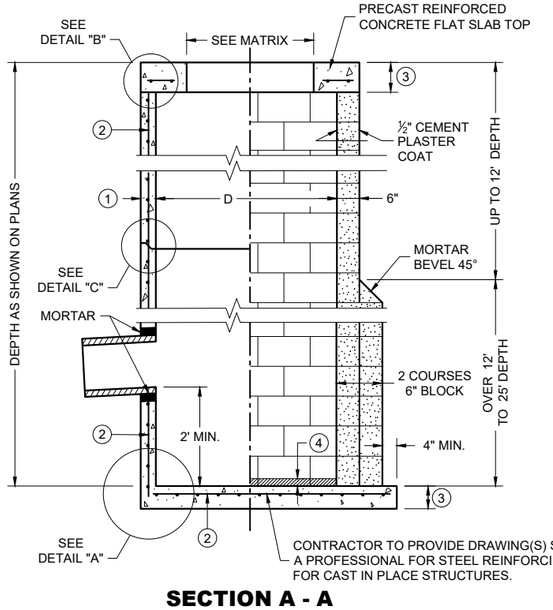

SECTION A - A

PRECAST REINFORCED CONCRETE WITH MONOLITHIC BASE

CONCRETE BLOCK WITH CAST IN PLACE OR PRECAST REINFORCED CONCRETE BASE (2)

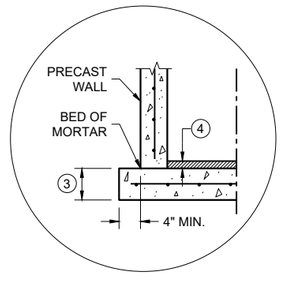

SEPARATE PRECAST REINFORCED CONCRETE BASE OPTION

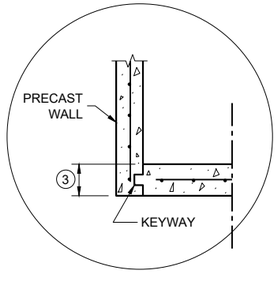

PRECAST REINFORCED CONCRETE WITH INTEGRAL BASE OPTION

DETAIL "A"

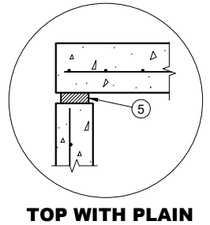

TOP WITH PLAIN END JOINT

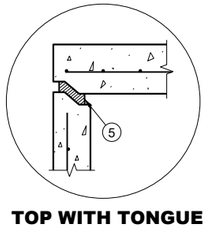

TOP WITH TONGUE AND GROOVE JOINT

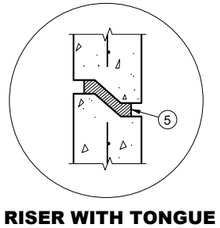

RISER WITH TONGUE AND GROOVE JOINT

DETAIL "B" **DETAIL "C"**

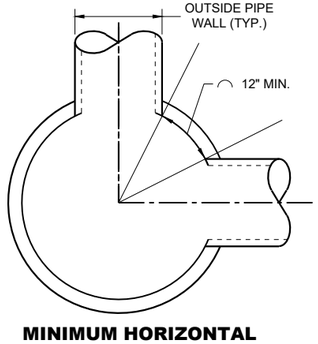

MINIMUM HORIZONTAL PIPE SEPARATION

DETAIL "D"

CATCH BASINS, 3-FT. 4-FT., 5 FT., AND 6-FT. DIAMETER

STATE OF WISCONSIN
DEPARTMENT OF TRANSPORTATION

APPROVED
December 2023 — DATE
/S/ Rodney Taylor — ROADWAY STANDARDS DEVELOPMENT UNIT SUPERVISOR

FHWA

SDD 08A08-03

SDD 08A08-03

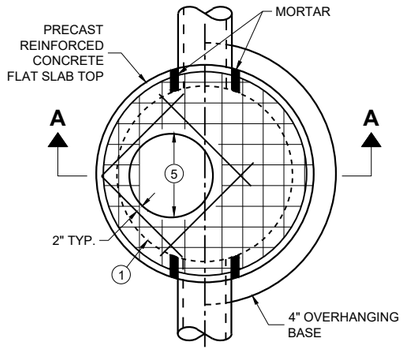

PLAN VIEW

CIRCULAR OPENING

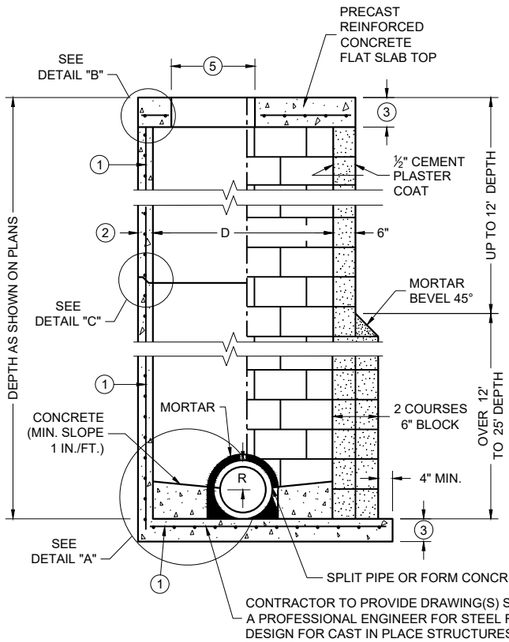

SECTION A - A

PRECAST REINFORCED CONCRETE WITH MONOLITHIC BASE

CONCRETE BLOCK WITH CAST IN PLACE OR PRECAST REINFORCED CONCRETE BASE (1)

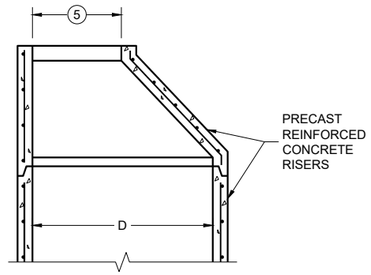

OPTIONAL PRECAST REINFORCED CONCRETE ECCENTRIC TOP

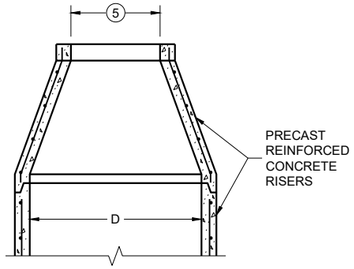

OPTIONAL PRECAST REINFORCED CONCRETE CONCENTRIC TOP

MANHOLE COVER OPENING MATRIX

OPENING SIZE (FT.) (5) \ MANHOLE COVER TYPE	C	ALL J'S	K	L	M
2 DIA.	X	X		X	
3 DIA.			X		X

PIPE MATRIX

MANHOLE SIZE (DIA.)	MAXIMUM INSIDE PIPE DIAMETER FOR TWO PIPES		MINIMUM WALL THICKNESS (IN)	MINIMUM PRECAST FLAT SLAB TOP AND BASE THICKNESS
	180° SEPARATION (IN)	90° SEPARATION (IN)		
3-FT	15	12	4	6
4-FT	24	18	4	6
5-FT	36	24	5	8
6-FT	42	36	6	8
7-FT	48	36/42 *	7	8
8-FT	60	42	8	8
9-FT	66	54	9	10
10-FT	72	60	10	10

*A 36" PIPE AND A 42" PIPE CAN BE PLACED WITHIN 90 DEGREES. SEE MINIMUM HORIZONTAL PIPE SEPARATION DETAIL.

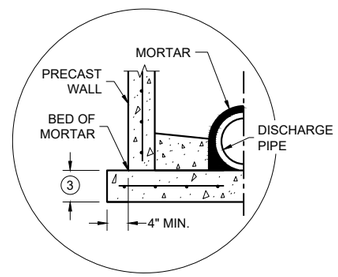

SEPARATE PRECAST REINFORCED CONCRETE BASE OPTION

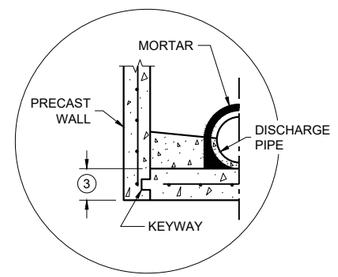

PRECAST REINFORCED CONCRETE WITH INTEGRAL BASE OPTION

DETAIL "A"

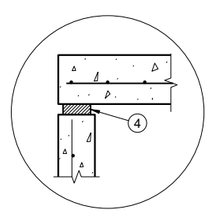

TOP WITH PLAIN END JOINT

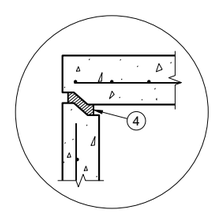

TOP WITH TONGUE AND GROOVE JOINT

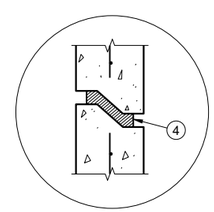

RISER WITH TONGUE AND GROOVE JOINT

DETAIL "B"

DETAIL "C"

GENERAL NOTES

DETAILS OF CONSTRUCTION, MATERIALS AND WORKMANSHIP NOT SHOWN ON THIS DRAWING SHALL CONFORM TO THE PERTINENT REQUIREMENTS OF THE STANDARD SPECIFICATIONS AND THE APPLICABLE SPECIAL PROVISIONS.

UNLESS OTHERWISE AUTHORIZED IN WRITING BY THE ENGINEER, THE CONTRACTOR SHALL NOT ORDER AND DELIVER PRECAST MANHOLE UNITS REQUIRED FOR THE PROJECT UNTIL A LIST OF SIZES IS FURNISHED BY THE ENGINEER.

DETAILED DRAWINGS FOR PROPOSED ALTERNATE DESIGNS FOR UNDERGROUND DRAINAGE STRUCTURES SHALL BE SUBMITTED TO THE ENGINEER FOR APPROVAL PROVIDING THAT SUCH ALTERNATE DESIGNS MAKE PROVISION FOR EQUIVALENT CAPACITY AND STRENGTH.

ALL DRAINAGE STRUCTURES ARE DESIGNATED ON THE PLANS AS "MANHOLES 3X3-L", "CATCH BASINS 4-B", "INLETS 2X3-H", ETC. THE FIRST NUMBERS DESIGNATE THE SIZE OF THE STRUCTURE, AND THE FOLLOWING LETTER DESIGNATES THE TYPE OF COVER TO BE USED TO COMPRISE THE COMPLETE UNIT.

BASES SHALL BE PLACED ON A BED OF MATERIAL AT LEAST 6 INCHES IN DEPTH, WHICH MEETS THE REQUIREMENTS OF FOUNDATION BACKFILL. THIS BEDDING SHALL BE COMPACTED AND PROVIDE UNIFORM SUPPORT FOR THE ENTIRE AREA OF THE BASE.

PRECAST REINFORCED CONCRETE CONE TOPS (ECCENTRIC OR CONCENTRIC) OR PRECAST REINFORCED CONCRETE FLAT SLAB TOPS MAY BE USED ON CONCRETE BLOCK STRUCTURES.

ECCENTRIC CONE TOPS MAY BE USED ON ALL STRUCTURES. CONCENTRIC CONE TOPS SHALL BE USED ONLY ON STRUCTURES 5 FEET OR LESS IN DEPTH UNLESS OTHERWISE DIRECTED BY THE ENGINEER.

STEPS MEETING AASHTO M199 AND THE FOLLOWING REQUIREMENTS SHALL BE INSTALLED IN ALL STRUCTURES OVER 5 FEET IN DEPTH: 16 INCH C-C MAXIMUM SPACING; PROJECT A MINIMUM CLEAR DISTANCE OF 4 INCHES FROM THE WALL AT THE POINT OF EMBEDMENT; MINIMUM LENGTH OF 10 INCHES; MINIMUM WALL EMBEDMENT OF 3 INCHES. FERROUS METAL STEPS NOT PAINTED OR TREATED TO RESIST CORROSION SHALL HAVE A MINIMUM CROSS SECTIONAL IMENSION OF 1 INCH.

STEPS OF APPROVED POLYPROPYLENE PLASTIC COATED REINFORCEMENT BAR ARE ACCEPTABLE. REINFORCING BAR MUST BE A MINIMUM OF ½ INCH AND MEET THE REQUIREMENTS OF ASTM A615.

CERTIFICATION SHALL BE PROVIDED THAT INSTALLED STEPS WHEN TESTED IN ACCORDANCE WITH SECTION 10 OF AASHTO T280 CAN WITHSTAND A VERTICAL LOAD OF 800 LBS. AND A HORIZONTAL LOAD OF 400 LBS.

ALL BAR STEEL REINFORCEMENT SHALL BE EMBEDDED 2 INCHES CLEAR UNLESS OTHERWISE SHOWN OR NOTED.

ALL PRECAST MANHOLE UNITS SHALL CONFORM TO THE PERTINENT REQUIREMENTS OF AASHTO DESIGNATION M199.

PRECAST REINFORCED RISERS SHALL HAVE A TONGUE AND GROOVE JOINT WITH TONGUE UP OR DOWN.

CONCRETE BLOCK WILL NOT BE PERMITTED FOR STRUCTURES GREATER THAN 4 FEET IN DIAMETER.

4" OVERHANGING BASES ARE REQUIRED FOR ALL CONCRETE BLOCK INSTALLATIONS. 4" OVERHANG IS REQUIRED WHEN SEPARATE PRECAST BASE IS PROVIDED. OVERHANG IS NOT REQUIRED ON PRECAST STRUCTURES WITH AN INTEGRAL OR MONOLITHIC BASE.

FOR ADDITIONAL CONFIGURATIONS, MAINTAIN A MINIMUM OF 12 INCHES AS MEASURED FROM THE INSIDE OF THE STRUCTURE WALL BETWEEN THE OUTSIDE PIPE WALLS OF ADJACENT PIPES. SEE DETAIL "D".

(1) FOR PRECAST MANHOLES AND REINFORCED CONCRETE BASES PROVIDE REINFORCING STEEL IN ACCORDANCE TO AASHTO M199.

(2) SEE PIPE MATRIX TABLE FOR MINIMUM WALL THICKNESS FOR PRECAST MANHOLES

(3) SEE PIPE MATRIX TABLE FOR MINIMUM THICKNESS OF PRECAST FLAT SLAB TOPS AND BASES.

(4) JOINTS TO BE SEALED WITH A BUTYL RUBBER SEAL PER SEALANT MANUFACTURERS RECOMMENDATIONS CONFORMING TO ASTM C 990 OR RUBBER GASKETS CONFORMING TO ASTM C443.

(5) SEE MANHOLE COVER OPENING MATRIX.

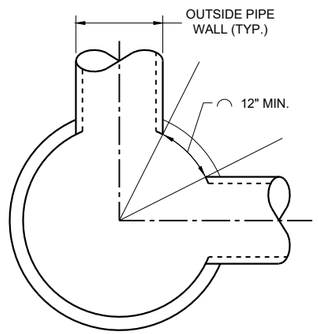

MINIMUM HORIZONTAL PIPE SEPARATION

DETAIL "D"

MANHOLES 3-FT, 4-FT, 5-FT, 6-FT, 7-FT, 8-FT, 9-FT AND 10-FT DIAMETER

MANHOLES, 3-FT, 4-FT 5-FT, 6-FT, 7-FT, 8-FT, 9-FT AND 10-FT DIAMETER

STATE OF WISCONSIN
DEPARTMENT OF TRANSPORTATION

APPROVED
December 2023 — DATE
/S/ Rodney Taylor — ROADWAY STANDARDS DEVELOPMENT UNIT SUPERVISOR

FHWA

6

SDD 08B09-04

6

SDD 08B09-04

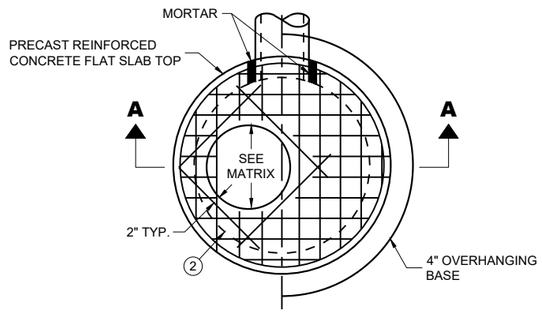

PLAN VIEW CIRCULAR OPENING

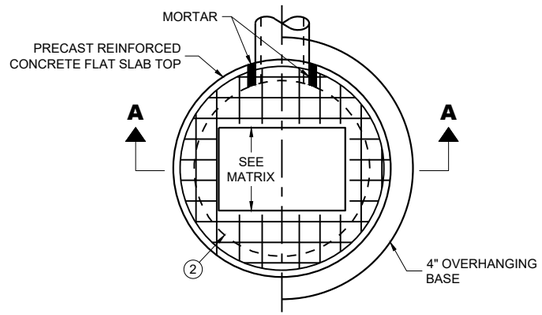

PLAN VIEW RECTANGULAR OPENING

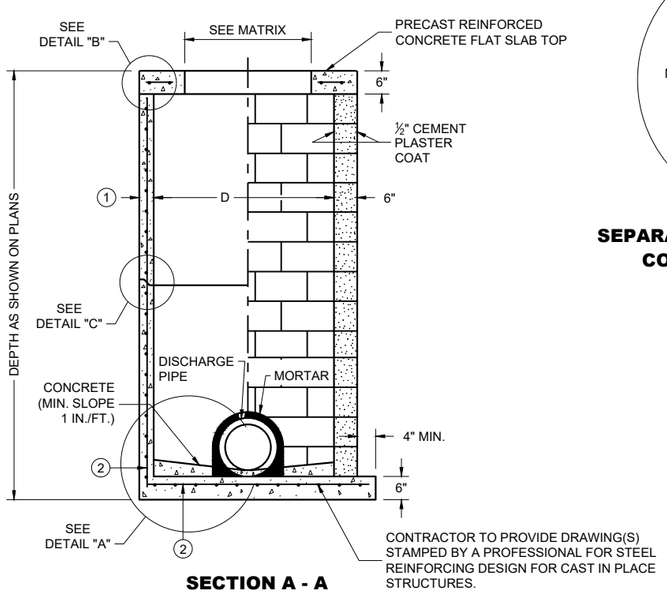

SECTION A - A

PRECAST REINFORCED CONCRETE WITH MONOLITHIC BASE

CONCRETE BLOCK WITH CAST IN PLACE OR PRECAST REINFORCED CONCRETE BASE (2)

CIRCULAR INLETS WITH FLAT TOP

CATCH BASIN COVER OPENING MATRIX

INLET SIZE	INLET COVER TYPE	ALL A'S	ALL B'S	BW	C	F	ALL H'S	S	T	V V-B	WM	Z
	OPENING SIZE (FT.)											
3-FT	2 DIA.				X							X
	2 X 2	X	X					X		X		
4-FT	2 DIA.				X							X
	2 X 2	X	X					X		X		
	2 X 2.5			X				X	X	X	X	
	2 X 3						X					
	2.5 X 3					X						

PIPE MATRIX

INLET SIZE	MAXIMUM INSIDE PIPE DIAMETER FOR TWO PIPES	
	180° SEPARATION (IN)	90° SEPARATION (IN)
3-FT	15	12
4-FT	24	18

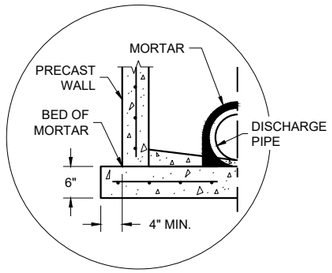

SEPARATE PRECAST REINFORCED CONCRETE BASE OPTION

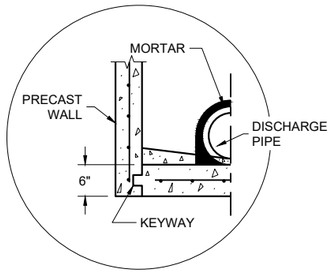

PRECAST REINFORCED CONCRETE WITH INTEGRAL BASE OPTION

DETAIL "A"

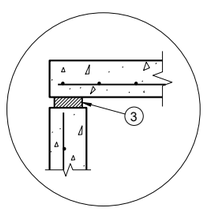

TOP WITH PLAIN END JOINT

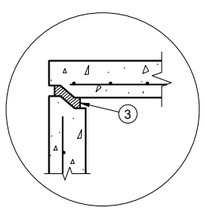

TOP WITH TONGUE AND GROOVE JOINT

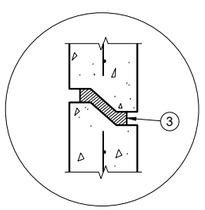

RISER WITH TONGUE AND GROOVE JOINT

DETAIL "B" **DETAIL "C"**

GENERAL NOTES

DETAILS OF CONSTRUCTION, MATERIALS AND WORKMANSHIP NOT SHOWN ON THIS DRAWING SHALL CONFORM TO THE PERTINENT REQUIREMENTS OF THE STANDARD SPECIFICATIONS AND THE APPLICABLE SPECIAL PROVISIONS.

UNLESS OTHERWISE AUTHORIZED IN WRITING BY THE ENGINEER, THE CONTRACTOR SHALL NOT ORDER AND DELIVER PRECAST INLET UNITS REQUIRED FOR THE PROJECT UNTIL A LIST OF SIZES IS FURNISHED BY THE ENGINEER.

DETAILED DRAWINGS FOR PROPOSED ALTERNATE DESIGNS FOR UNDERGROUND DRAINAGE STRUCTURES SHALL BE SUBMITTED TO THE ENGINEER FOR APPROVAL PROVIDING THAT SUCH ALTERNATE DESIGNS MAKE PROVISION FOR EQUIVALENT CAPACITY AND STRENGTH.

ALL DRAINAGE STRUCTURES ARE DESIGNATED ON THE PLANS AS "MANHOLES 3X3-L", "CATCH BASINS 4-B", "INLETS 2X3-H", ETC. THE FIRST NUMBERS DESIGNATE THE SIZE OF THE STRUCTURE, AND THE FOLLOWING LETTER DESIGNATES THE TYPE OF COVER TO BE USED TO COMPRISE THE COMPLETE UNIT.

BASES SHALL BE PLACED ON A BED OF MATERIAL AT LEAST 6 INCHES IN DEPTH, WHICH MEETS THE REQUIREMENTS OF FOUNDATION BACKFILL. THIS BEDDING SHALL BE COMPACTED AND PROVIDE UNIFORM SUPPORT FOR THE ENTIRE AREA OF THE BASE.

ALL BAR STEEL REINFORCEMENT SHALL BE EMBEDDED 2 INCHES CLEAR UNLESS OTHERWISE SHOWN OR NOTED.

ALL PRECAST INLET UNITS SHALL CONFORM TO THE PERTINENT REQUIREMENTS OF AASHTO DESIGNATION M199.

PRECAST REINFORCED RISERS SHALL HAVE A TONGUE AND GROOVE JOINT WITH TONGUE UP OR DOWN.

4" OVERHANGING BASES ARE REQUIRED FOR ALL CONCRETE BLOCK INSTALLATIONS. 4" OVERHANG IS REQUIRED WHEN SEPARATE PRECAST BASE IS PROVIDED. OVERHANG IS NOT REQUIRED ON PRECAST STRUCTURES WITH AN INTEGRAL OR MONOLITHIC BASE.

FOR ADDITIONAL CONFIGURATIONS, MAINTAIN A MINIMUM OF 12 INCHES AS MEASURED FROM THE INSIDE OF THE STRUCTURE WALL BETWEEN THE OUTSIDE PIPE WALLS OF ADJACENT PIPES. SEE DETAIL "D".

(1) MINIMUM WALL THICKNESS SHALL BE 4 INCHES FOR 3-FT DIAMETER AND 5 INCHES FOR 4-FT DIAMTER PRECAST INLETS.

(2) FOR PRECAST INLETS AND REINFORCED CONCRETE BASES PROVIDE REINFORCING STEEL IN ACCORDANCE TO AASHTO M199.

(3) JOINTS TO BE SEALED WITH A BUTYL RUBBER SEAL PER SEALANT MANUFACTURERS RECOMMENDATIONS CONFORMING TO ASTM C 990 OR RUBBER GASKETS CONFORMING TO ASTM C443.

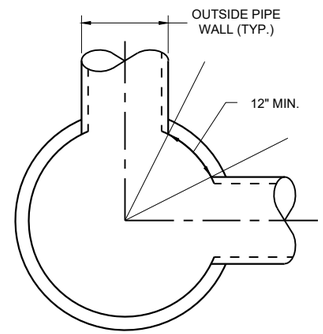

MINIMUM HORIZONTAL PIPE SEPARATION

DETAIL "D"

INLETS 3-FT AND 4-FT DIAMETER

STATE OF WISCONSIN
DEPARTMENT OF TRANSPORTATION

APPROVED
December 2023 — DATE
/S/ Rodney Taylor — ROADWAY STANDARDS DEVELOPMENT UNIT SUPERVISOR

FHWA

6
SDD 08C06-03

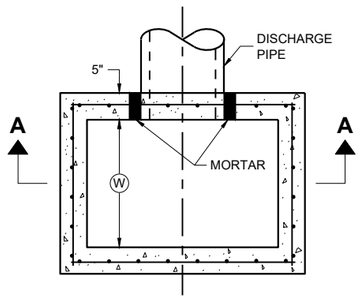

PLAN VIEW

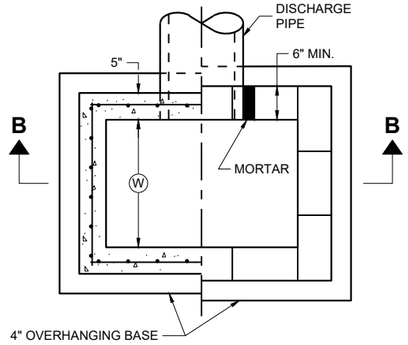

PLAN VIEW

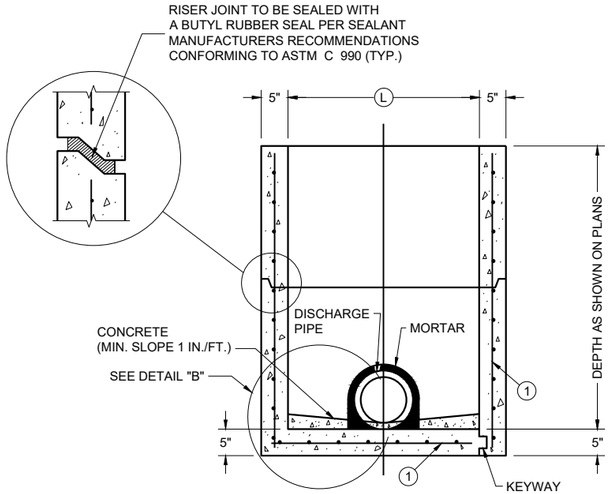

PRECAST REINFORCED CONCRETE WITH MONOLITHIC BASE

PRECAST REINFORCED CONCRETE WITH INTEGRAL BASE

SECTION A - A

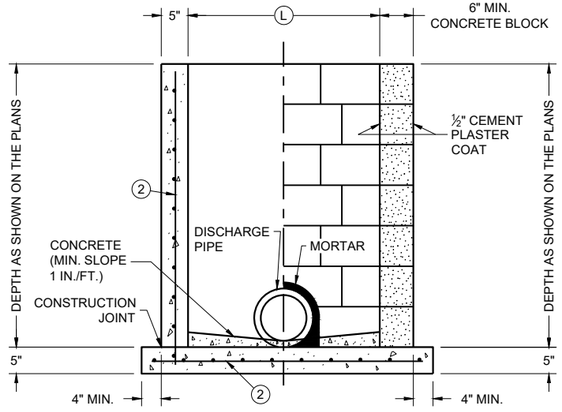

CAST IN PLACE REINFORCED CONCRETE

CONCRETE BLOCK WITH CAST IN PLACE OR PRECAST REINFORCED CONCRETE BASE (1)

SECTION B - B

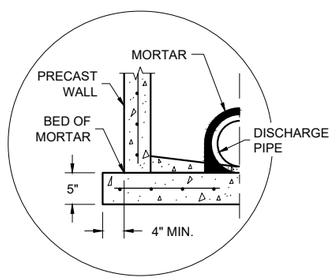

SEPARATE PRECAST REINFORCED CONCRETE BASE OPTION

DETAIL "B"

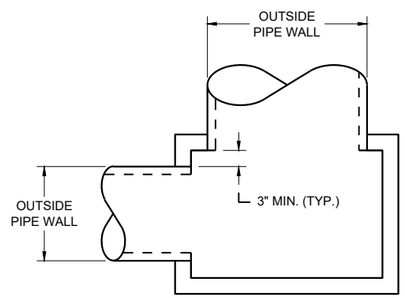

DETAIL "A"

GENERAL NOTES

DETAILS OF CONSTRUCTION, MATERIALS AND WORKMANSHIP N0T SHOWN ON THIS DRAWING SHALL CONFORM TO THE PERTINENT REQUIREMENTS OF THE STANDARD SPECIFICATIONS AND THE APPLICABLE SPECIAL PROVISIONS.

UNLESS OTHERWISE AUTHORIZED IN WRITING BY THE ENGINEER, THE CONTRACTOR SHALL NOT ORDER AND DELIVER PRECAST INLET UNITS REQUIRED FOR THE PROJECT UNTIL A LIST OF SIZES IS FURNISHED BY THE ENGINEER.

DETAILED DRAWINGS FOR PROPOSED ALTERNATE DESIGNS FOR UNDERGROUND DRAINAGE STRUCTURES SHALL BE SUBMITTED TO THE ENGINEER FOR APPROVAL PROVIDING THAT SUCH ALTERNATE DESIGNS MAKE PROVISION FOR EQUIVALENT CAPACITY AND STRENGTH.

ALL PRECAST INLET UNITS SHALL CONFORM TO THE PERTINENT REQUIREMENTS OF ASTM C 913.

ALL DRAINAGE STRUCTURES ARE DESIGNATED ON THE PLANS AS "MANHOLES 3X3-L", "CATCH BASINS 4-B", "INLETS 2X3-H", ETC. THE FIRST NUMBERS DESIGNATES THE SIZE OF THE STRUCTURE, AND THE FOLLOWING LETTER DESIGNATES THE TYPE OF COVER TO BE USED TO COMPRISE THE COMPLETE UNIT.

BASES SHALL BE PLACED ON A BED OF MATERIAL AT LEAST 6 INCHES IN DEPTH, WHICH MEETS THE REQUIREMENTS OF FOUNDATION BACKFILL. THIS BEDDING SHALL BE COMPACTED AND PROVIDE UNIFORM SUPPORT FOR THE ENTIRE AREA OF THE BASE.

ALL BAR STEEL REINFORCEMENT SHALL BE EMBEDDED 2 INCHES CLEAR UNLESS OTHERWISE SHOWN OR NOTED.

PRECAST REINFORCED RISERS SHALL HAVE A TONGUE AND GROOVE JOINT WITH TONGUE UP OR DOWN.

4" OVERHANGING BASES ARE REQUIRED FOR CAST-IN-PLACE REINFORCED CONCRETE AND CONCRETE BLOCK INSTALLATIONS. 4" OVERHANG IS REQUIRED WHEN SEPARATE PRECAST BASE IS PROVIDED. OVERHANG IS NOT REQUIRED ON PRECAST STRUCTURES WITH AN INTEGRAL OR MONOLITHIC BASE.

MAXIMUM INSIDE PIPE DIAMETER DETERMINED BY 3" CLEARANCE ON EACH SIDE OF THE OUTSIDE WALL OF THE PIPE. SEE DETAIL "A". ASSUMES PIPE ENTERS PERPENDICULAR TO THE STRUCTURE.

(1) FOR PRECAST INLETS AND REINFORCED CONCRETE BASES PROVIDE REINFORCING STEEL IN ACCORDANCE TO ASTM C 913
(2) CONTRACTOR TO PROVIDE DRAWING(S) STAMPED BY A PROFESSIONAL ENGINEER FOR STEEL REINFORCING DESIGN FOR CAST-IN-PLACE STRUCTURES.

CATCH BASIN COVER MATRIX

INLET SIZE	WIDTH (W) (FT.)	LENGTH (L) (FT.)	INLET COVER TYPE									
			ALL A'S	ALL B'S	BW	F	ALL H'S	S	T	V	WM	V V-B
2 X 2-FT	2	2	X	X				X				
2 X 2.5-FT	2	2.5			X			X	X	X	X	
2 X 3-FT	2	3					X					
2.5 X 3-FT	2.5	3				X						
2 X 3.5-FT	2	3.5										X

PIPE MATRIX

CATCH BASIN SIZE	MAXIMUM INSIDE PIPE DIAMETER FOR TWO PIPES	
	WIDTH (IN)	LENGTH (IN)
2 X 2-FT	12	12
2 X 2.5-FT	12	18
2 X 3-FT	12	24
2.5 X 3-FT	18	24
2 X 3.5-FT	12	30

INLETS 2 X 2-FT, 2 X 2.5-FT, 2 X 3-FT, 2.5 X 3-FT AND 2X3.5-FT

INLETS 2 X 2-FT, 2 X 2.5-FT, 2 X 3-FT, 2.5 X 3-FT AND 2 X 3.5-FT

STATE OF WISCONSIN
DEPARTMENT OF TRANSPORTATION

APPROVED
December 2023
DATE

/S/ Rodney Taylor
ROADWAY STANDARDS DEVELOPMENT UNIT SUPERVISOR

FHWA

6
SDD 08C07-03

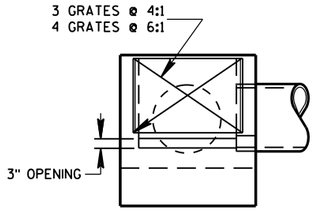

SECTION B-B

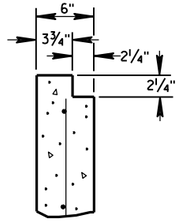

SECTION C-C

GENERAL NOTES

DETAILS OF CONSTRUCTION, MATERIALS AND WORKMANSHIP NOT SHOWN ON THIS DRAWING SHALL CONFORM TO THE PERTINENT REQUIREMENTS OF THE STANDARD SPECIFICATIONS AND THE APPLICABLE SPECIAL PROVISIONS.

UNLESS OTHERWISE AUTHORIZED IN WRITING BY THE ENGINEER, THE CONTRACTOR SHALL NOT ORDER AND DELIVER PRECAST INLET UNITS REQUIRED FOR THE PROJECT UNTIL A LIST OF SIZES IS FURNISHED BY THE ENGINEER.

DETAILED DRAWINGS FOR PROPOSED ALTERNATE DESIGNS FOR INLETS WHICH MAY INCLUDE PRECAST REINFORCED CONCRETE INLETS, SHALL BE SUBMITTED TO THE ENGINEER FOR APPROVAL PROVIDING THAT SUCH ALTERNATE DESIGNS MAKE PROVISION FOR EQUIVALENT CAPACITY AND STRENGTH.

ALL MEDIAN INLETS ARE DESIGNATED ON THE PLANS AS "INLETS, 3G-MS", ETC. THE FIRST NUMBER AND LETTER DESIGNATE THE TYPE OF STRUCTURE, AND THE FOLLOWING LETTERS DESIGNATE THE TYPE OF COVER TO BE USED TO COMPRISE THE COMPLETE UNIT.

ALL BAR STEEL REINFORCEMENT SHALL BE EMBEDDED 2 INCHES CLEAR UNLESS OTHERWISE SHOWN OR NOTED.

ALL PRECAST INLET UNITS SHALL CONFORM TO THE PERTINENT REQUIREMENTS OF ASTM C 913.

BASES SHALL BE PLACED ON A BED OF MATERIAL AT LEAST 6 INCHES IN DEPTH, WHICH MEETS THE REQUIREMENTS OF FOUNDATION BACKFILL. THIS BEDDING SHALL BE COMPACTED AND PROVIDE UNIFORM SUPPORT FOR THE ENTIRE AREA OF THE BASE.

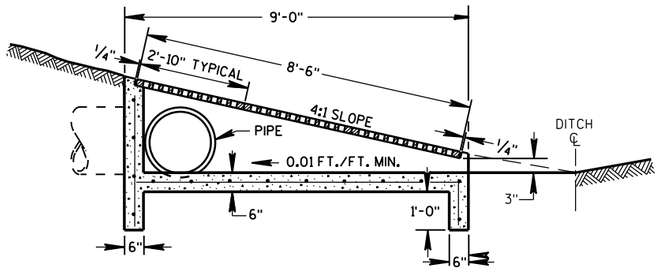

SECTION A-A

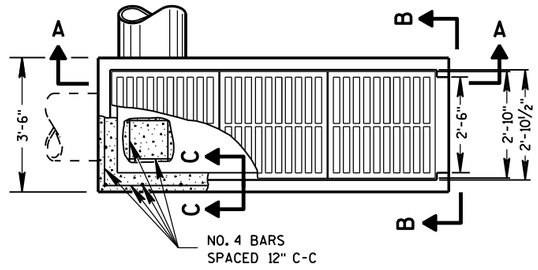

PLAN VIEW

INLETS MEDIAN 3 GRATE

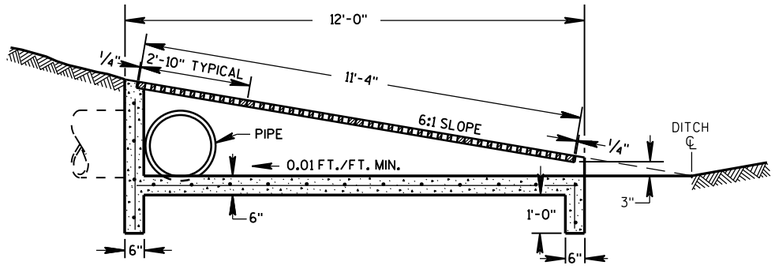

SECTION D-D

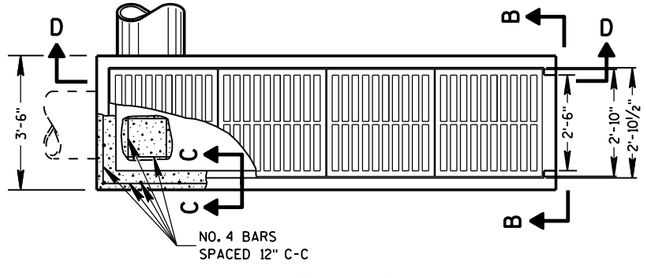

PLAN VIEW

INLETS MEDIAN 4 GRATE

INLETS MEDIAN 3 AND 4 GRATE

STATE OF WISCONSIN
DEPARTMENT OF TRANSPORTATION

APPROVED

Sept., 2016
DATE

/S/ Rodney Taylor
ROADWAY STANDARDS UNIT SUPERVISOR

FHWA

6

S.D.D. 8 C 9-2

6

S.D.D. 8 C 9-2

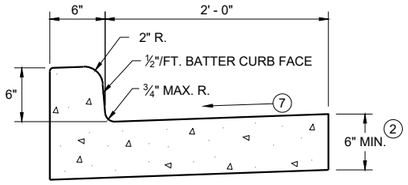

TYPES A (1) & D

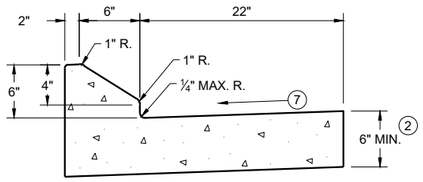

6" SLOPED CURB TYPES G (1) & J

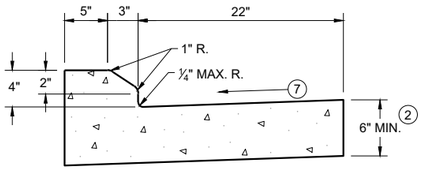

4" SLOPED CURB TYPES G (1) & J

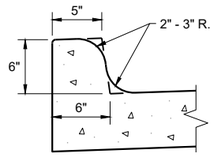

TYPES K (1) & L
(OPTIONAL CURB SHAPE)

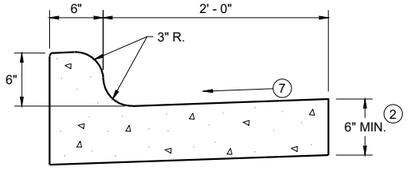

TYPES K (1) & L

CONCRETE CURB AND GUTTER 30"

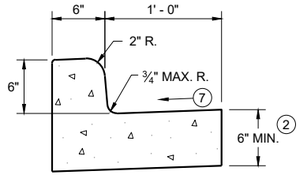

TYPES A (1) & D

CONCRETE CURB AND GUTTER 18"

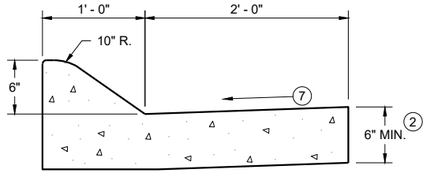

6" SLOPED CURB TYPES A (1) & D

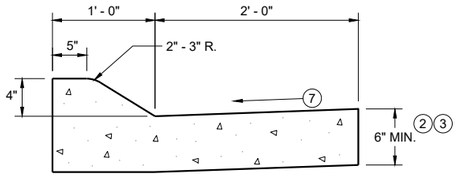

4" SLOPED CURB TYPES A (1) & D

CONCRETE CURB AND GUTTER 36"

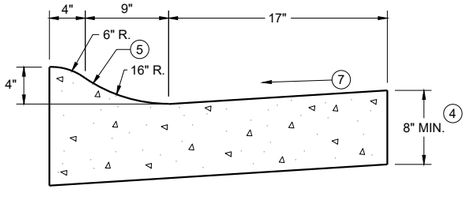

4" SLOPED CURB TYPES R (1) & T
CONCRETE CURB AND GUTTER 30"

TBT & TBTT	X
30"	22"
36"	28"

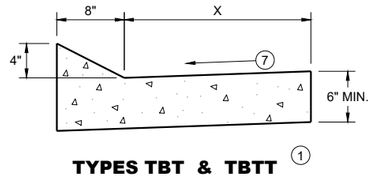

TYPES TBT & TBTT (1)

CONCRETE CURB AND GUTTER

PAVEMENT THICKNESS AND MAXIMUM CONCRETE PANEL WIDTH TABLE

PAVEMENT THICKNESS	MAXIMUM PANEL WIDTH
LESS THAN 10"	12'
10" & ABOVE	15'

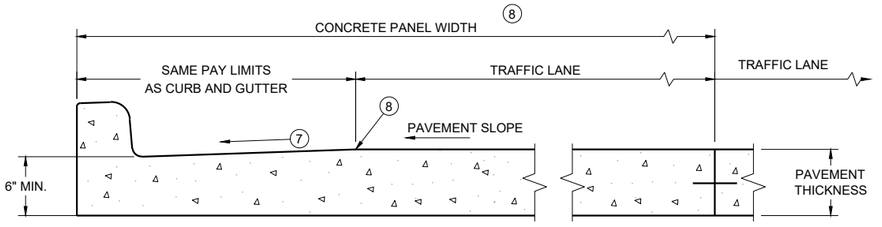

PARTIAL SECTION OF PAVEMENT WITH INTEGRAL CURB AND GUTTER *

* BIKE LANE IS NOT SHOWN

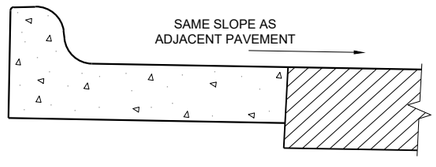

REVERSE SLOPE GUTTER (6)
(TYPICAL FOR ALL CURB & GUTTER TYPES)

GENERAL NOTES

DETAILS OF CONSTRUCTION AND WORKMANSHIP NOT SHOWN ON THIS DRAWING SHALL CONFORM TO THE PERTINENT REQUIREMENTS OF THE CONTRACT.

PAVEMENT TIES AND TIE BARS SHALL BE EPOXY COATED IN CONFORMANCE WITH SUBSECTION 505.2.6.2 OF THE STANDARD SPECIFICATIONS.

INTEGRAL CURB AND GUTTER SHALL CONFORM TO THE DETAILS SHOWN FOR CONCRETE CURB AND GUTTER INCLUDING THE TRANSVERSE GUTTER SLOPE.

UNLESS OTHERWISE SHOWN ON THE TYPICAL CROSS SECTIONS, THE BASE AGGREGATE AND COMMON EXCAVATION LIMITS ARE 2' - 0" BEHIND THE BACK OF CURBS.

(1) TIE BARS ARE REQUIRED FOR CURB AND GUTTERS TYPES A, G, K, R, AND TBTT.

(2) THE BOTTOM OF CURB AND GUTTER MAY BE CONSTRUCTED EITHER LEVEL OR PARALLEL TO THE SLOPE OF THE SUBGRADE OR BASE AGGREGATE PROVIDED A 6" MINIMUM GUTTER THICKNESS IS MAINTAINED.

(3) USE 8" MINIMUM GUTTER THICKNESS WHEN USED WITH AN ADJACENT CONCRETE TRUCK APRON PLACED BEHIND BACK OF CURB.

(4) THE BOTTOM OF CURB AND GUTTER MAY BE CONSTRUCTED EITHER LEVEL OR PARALLEL TO THE SLOPE OF THE SUBGRADE OR BASE AGGREGATE PROVIDED A 8" MINIMUM GUTTER THICKNESS IS MAINTAINED.

(5) UNLESS OTHERWISE NOTED, FOR STAKING PURPOSES THE FACE OF CURB IS 6" FROM THE BACK OF CURB.

(6) WHEN REVERSE SLOPE GUTTER IS REQUIRED, THE LOCATION(S) WILL BE SHOWN ELSEWHERE IN THE PLAN.

(7) USE 4% GUTTER CROSS SLOPE UNLESS OTHERWISE NOTED IN THE PLANS.

(8) INCLUDE LONGITUDINAL JOINT AND TIE BARS ALONG LANE EDGE WHEN CONCRETE PANEL WIDTH EXCEEDS THE MAXIMUM WIDTH PER TABLE BELOW. LONGITUDINAL JOINT(S) ARE NOT ALLOWED WITHIN TRAFFIC LANES AND BIKE LANES. LONGITUDINAL JOINT MAY BE SAWED.

(9) SLOPE TO BE REVERSE SLOPE MATCHING THE SLOPE OF THE PAVEMENT AND THE CIRCULATORY ROADWAY

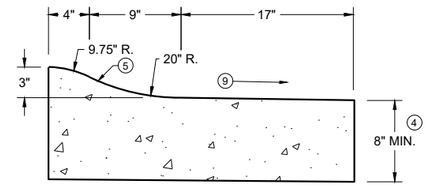

3" SLOPED CURB TYPES R (1) & T

CONCRETE CURB AND GUTTER

STATE OF WISCONSIN
DEPARTMENT OF TRANSPORTATION

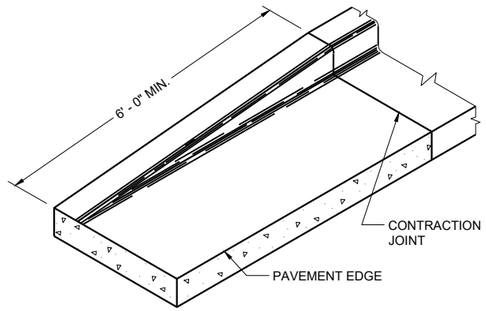

END SECTION CURB AND GUTTER

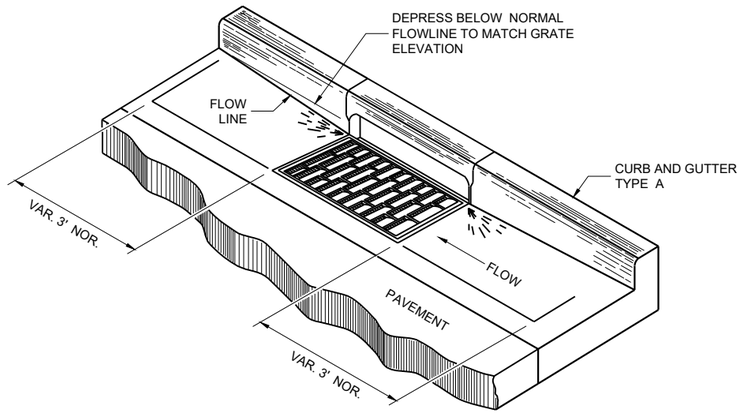

DETAIL OF CURB AND GUTTER AT INLETS

(TYPICAL H INLET COVER SHOWN)

GENERAL NOTES

DETAILS OF CONSTRUCTION AND WORKMANSHIP NOT SHOWN ON THIS DRAWING SHALL CONFORM TO THE PERTINENT REQUIREMENTS OF THE CONTRACT.

PAVEMENT TIES AND TIE BARS SHALL BE EPOXY COATED IN CONFORMANCE WITH SUBSECTION 505.2.6.2 OF THE STANDARD SPECIFICATIONS.

UNLESS OTHERWISE SHOWN ON THE TYPICAL CROSS SECTIONS, THE BASE AGGREGATE AND COMMON EXCAVATION LIMITS ARE 2' - 0" BEHIND THE BACK OF CURBS.

(1) TIE BARS ARE REQUIRED FOR CURB AND GUTTERS TYPES A, G, K, R, AND TBTT.

(2) THE BOTTOM OF CURB AND GUTTER MAY BE CONSTRUCTED EITHER LEVEL OR PARALLEL TO THE SLOPE OF THE SUBGRADE OR BASE AGGREGATE PROVIDED A 6" MINIMUM GUTTER THICKNESS IS MAINTAINED.

(10) REFER TO SDD 08D18 AND 08D19 FOR ADDITIONAL DRIVEWAY ENTRANCE CURB DETAILS.

(11) PLACE 1" THICK EXPANSION JOINT MATERIAL BETWEEN VERTICAL FACE CURB TYPES EXTENDING FROM THE TOP OF CURB TO 1 INCH BELOW THE ADJOINING CONCRETE SURFACE. RIGID CONCRETE STRUCTURES INCLUDE RAISED CONCRETE MEDIANS, CONCRETE SAFETY ISLANDS, SPLITTER ISLANDS, OR LOCATIONS IDENTIFIED ON THE PLANS.

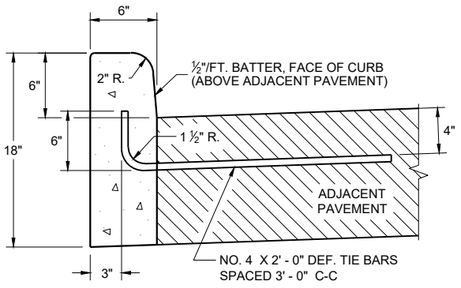

TYPES A (1) & D

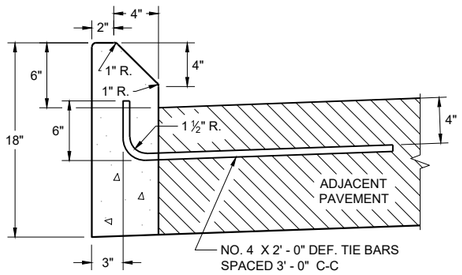

TYPES G (1) & J

CONCRETE CURB

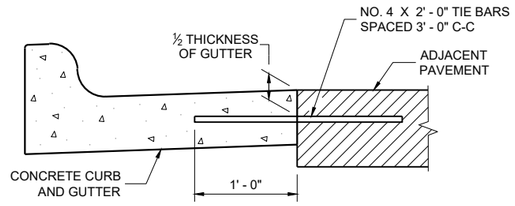

TYPICAL TIE BAR LOCATION (1)

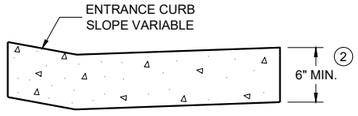

DRIVEWAY ENTRANCE CURB (10)

(WHEN DIRECTED BY THE ENGINEER)

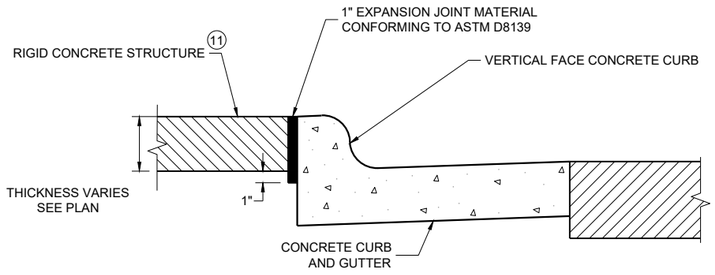

EXPANSION JOINT DETAIL FOR VERTICAL CURB ABUTTING A RIGID STRUCTURE (11)

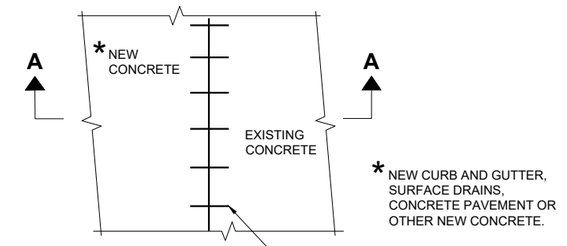

PLAN VIEW

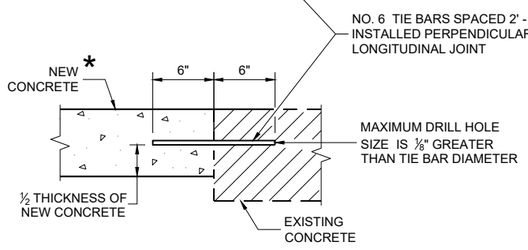

SECTION A - A

TIE BARS DRILLED INTO EXISTING PAVEMENT

CONCRETE CURB, TIES AND CURB AND GUTTER APPLICATIONS

STATE OF WISCONSIN
DEPARTMENT OF TRANSPORTATION

APPROVED
February 2025 — DATE
/S/ Rodnery Taylor — ROADWAY STANDARDS DEVELOPMENT UNIT SUPERVISOR

FHWA

6
SDD 08D01-24b

NOTE: TAPER CURB ENDS TO GUTTER IN 1' - 0"

ASPHALTIC FLUME

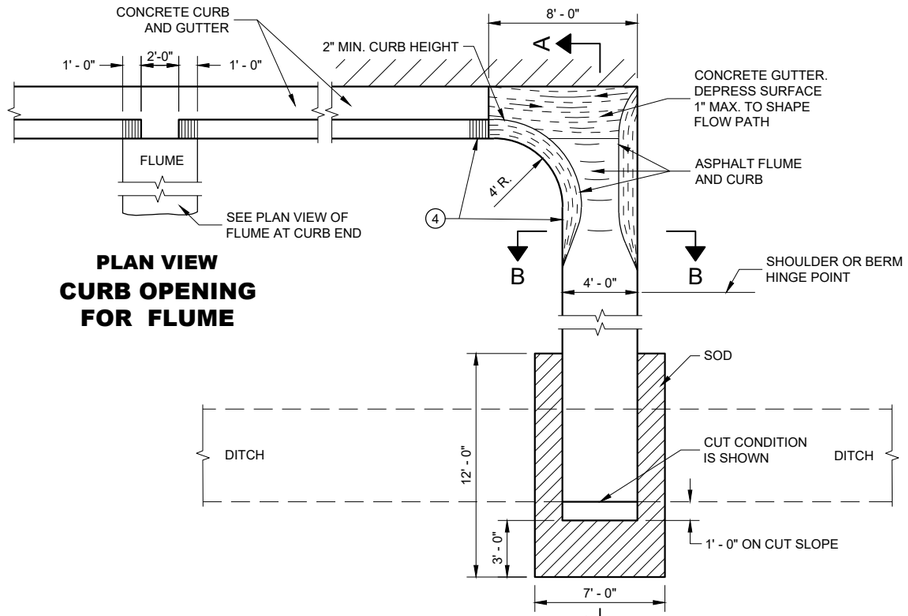

PLAN VIEW
CURB OPENING FOR FLUME

PLAN VIEW
FLUME AT CURB END

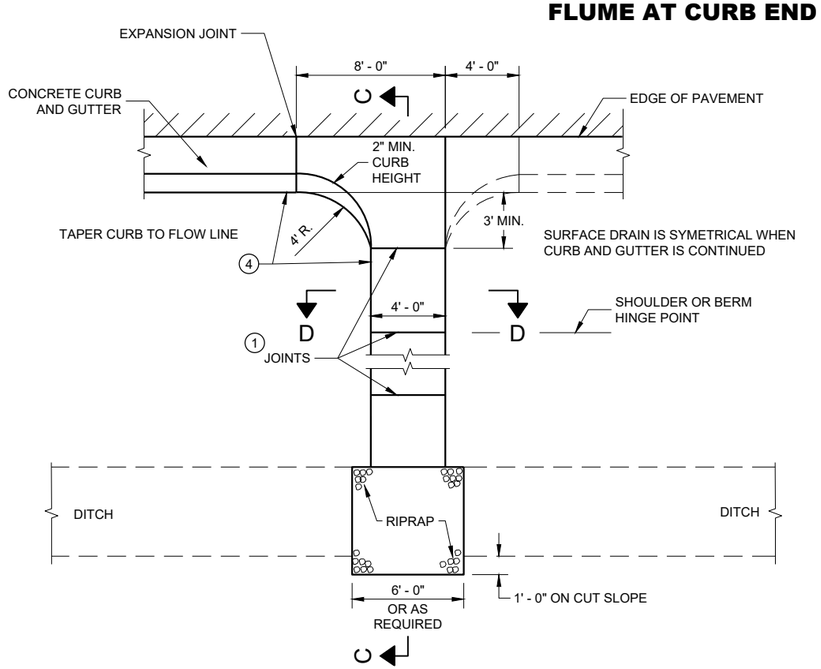

PLAN VIEW
CONCRETE SURFACE DRAIN

GENERAL NOTES

DETAILS OF CONSTRUCTION, MATERIALS AND WORKMANSHIP NOT SHOWN ON THIS DRAWING SHALL CONFORM TO PERTINENT REQUIREMENTS OF THE STANDARD SPECIFICATIONS AND APPLICABLE SPECIAL PROVISIONS.

4" X 4" - W3.0 X W3.0 CONCRETE REINFORCEMENT SHALL BE IN ACCORDANCE WITH AASHTO SPECIFICATION M55.

1. JOINTS SHALL BE ⅛" TO ¼" WIDE BY 1½" DEEP AND SPACED AT UNIFORM INTERVALS OF APPROXIMATELY 4 FEET.
2. GEOTEXTILE TYPE "R" SHALL UNDERLAY THE FULL LENGTH AND WIDTH OF THE CONCRETE SURFACE DRAIN AND RIPRAP.
3. CONCRETE SURFACE DRAIN WITHOUT CURB AND GUTTER MAY BE USED ON BACKSLOPES WHEN SPECIFIED.
4. ANGLE OF FLUME IN RELATION TO BACK OF CURB TO BE CONSTRUCTED PER THE PLAN DETAILS OR AS DIRECTED BY THE ENGINEER. ANGLE OF FLUME MAY BE OTHER THAN 90 DEGREES AS SHOWN.

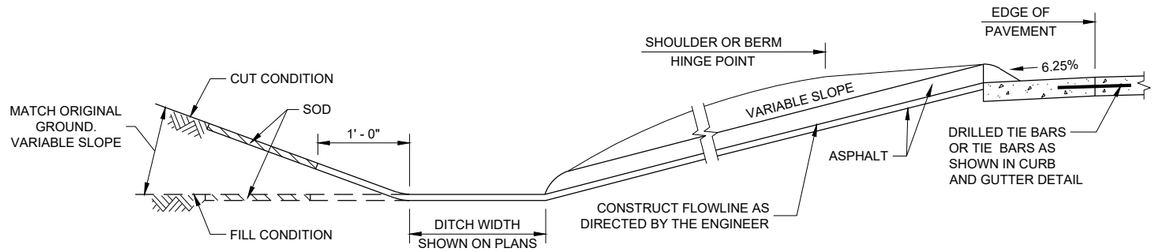

SECTION A - A

SECTION B - B

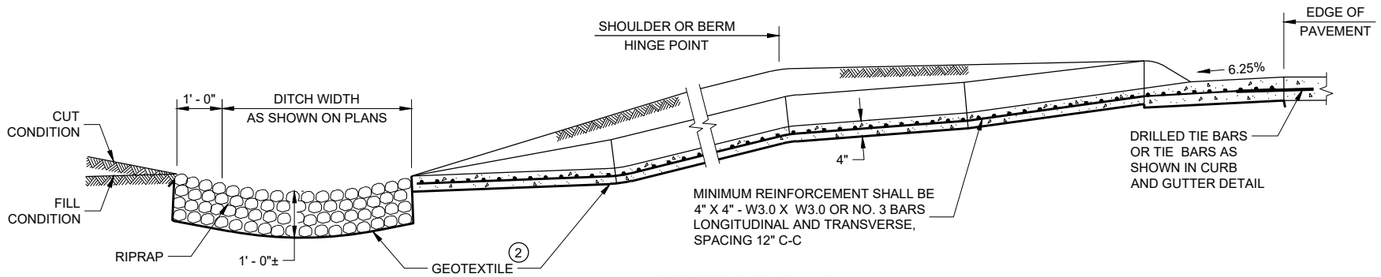

SECTION C - C

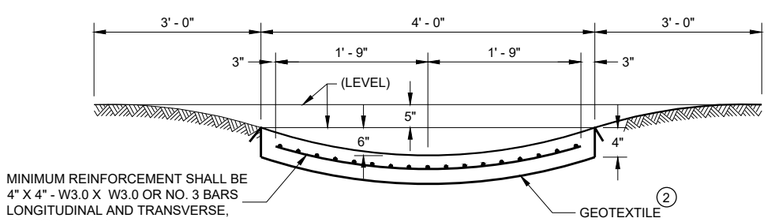

SECTION D - D

CONCRETE SURFACE DRAINS AND ASPHALTIC FLUMES

STATE OF WISCONSIN
DEPARTMENT OF TRANSPORTATION

APPROVED
May 2023
DATE

/S/ Rodney Taylor
ROADWAY STANDARDS DEVE ENGINEER

FHWA

6

SDD 08D04 - 07

6

SDD 08D04 - 07

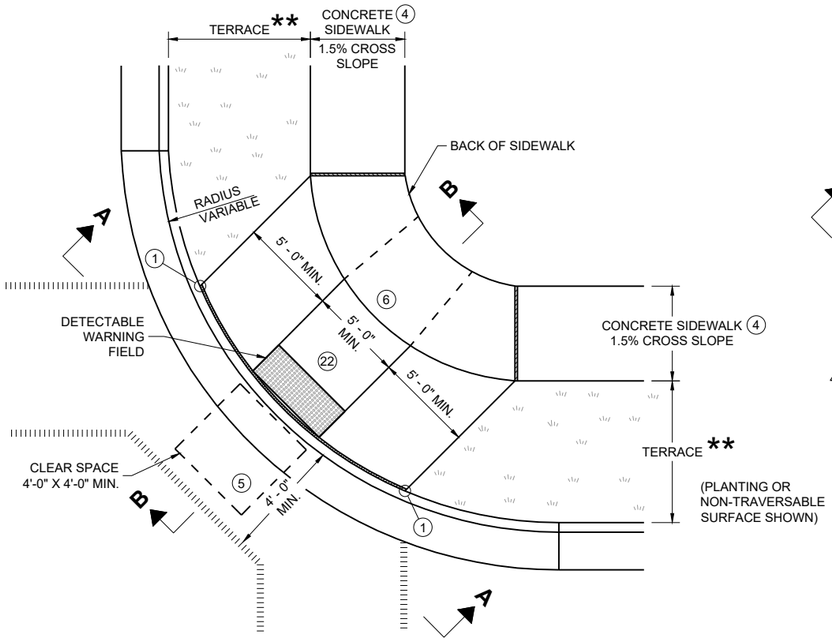

PLAN VIEW

CURB RAMP TYPE 1

(CENTER OF CORNER RADIUS)

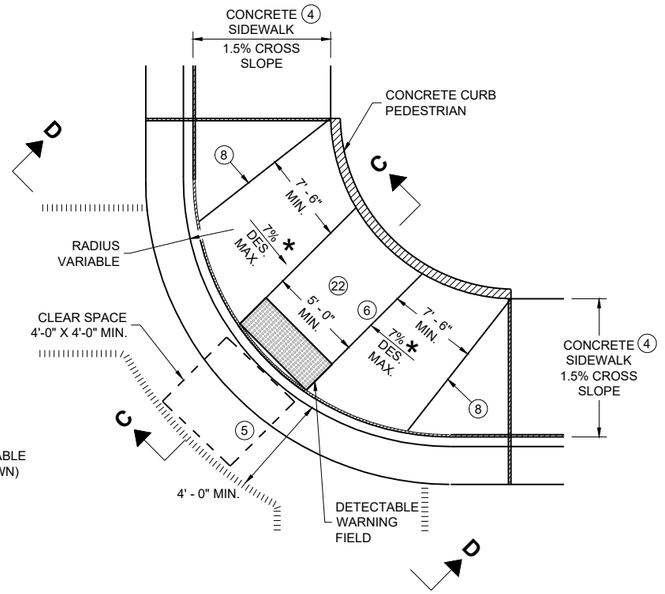

PLAN VIEW

CURB RAMP TYPE 1 - A

(NO TERRACE)

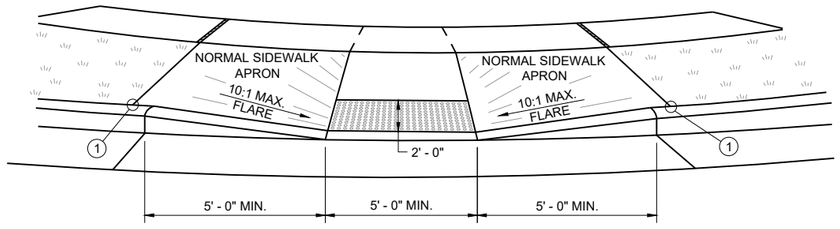

VIEW A - A FOR TYPE 1

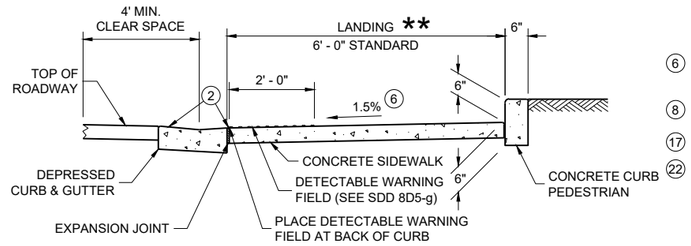

SECTION C - C FOR TYPE 1 - A

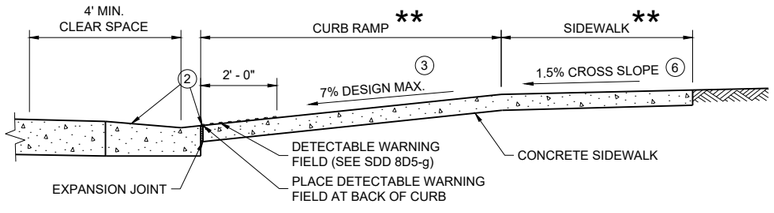

SECTION B - B FOR TYPE 1

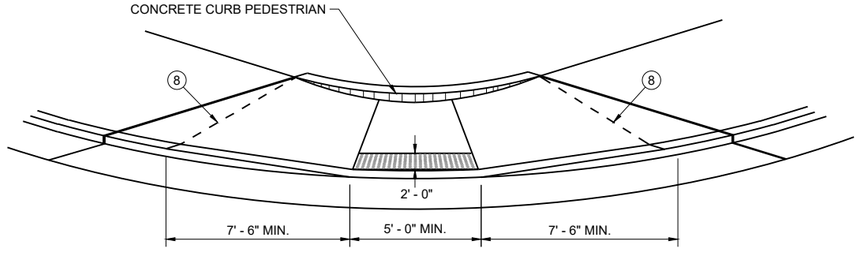

VIEW D - D FOR TYPE 1 - A

GENERAL NOTES

AVOID PLACING DRAINAGE STRUCTURES, JUNCTION BOXES OR OTHER OBSTRUCTIONS IN FRONT OF CURB RAMP ACCESS AREAS.

DETAILS OF CONSTRUCTION, MATERIALS AND WORKMANSHIP NOT SHOWN ON THIS DRAWING SHALL CONFORM TO THE PERTINENT REQUIREMENTS OF THE STANDARD SPECIFICATIONS AND THE APPLICABLE SPECIAL PROVISIONS.

WHEN NECESSARY, THE SIDEWALK ELEVATION MAY BE LOWERED TO MEET THE HIGH POINT ON THE CURB RAMP.

TYPE 1 CURB RAMPS SHALL HAVE A NORMAL SIDEWALK APRON AND CURB ON BOTH SIDES OF CURB RAMP.

DETECTABLE WARNING FILED SHALL BE MEASURED AND PAID BY THE SQUARE FOOT AS "CURB RAMP DETECTABLE WARNING FIELD". THE CONCRETE PEDESTRIAN CURB, IF NEEDED, SHALL BE MEASURED AND PAID BY THE LINEAR FOOT AS "CONCRETE CURB PEDESTRIAN". CONCRETE SIDEWALK IN THE CURB RAMP AREA SHALL BE MEASURED AND PAID BY THE SQUARE FOOT AS CONCRETE SIDEWALK, INCLUDING THE AREA UNDER THE DETECTABLE WARNING FIELD.

SELECT CURB RAMP DETECTABLE WARNING FIELD MATERIALS AND DEVICES FROM THE DEPARTMENT'S APPROVED MATERIALS LIST. THE COLOR OF THE DETECTABLE WARNING FIELD IS SPECIFIED ELSEWHERE AND IS INCIDENTAL TO THE BID ITEM OF "CURB RAMP DETECTABLE WARNING FIELD"

DETECTABLE WARNING FIELDS THAT ARE INSTALLED AS A GROUP OR SIDE BY SIDE, SHALL BE FROM THE SAME MANUFACTURER.

SURFACE TEXTURE OF THE RAMP SHALL BE OBTAINED BY COARSE BROOMING TRANSVERSE TO THE SLOPE OF THE CURB RAMP.

(1) THIS POINT IS AN EXTENSION OF OUTSIDE EDGE OF APPROACHING SIDEWALK WHERE IT MEETS THE BACK OF CONCRETE CURB. POINT LOCATION MAY BE ADJUSTED TO ALIGN WITH BEGINNING OF FULL-HEIGHT CURB IF THIS DISTANCE IS SHORT.

(2) GRADE CHANGE BETWEEN GUTTER COUNTER SLOPE AND THE CURB RAMP SLOPE IS DESIRABLY 11% OR LESS AND SHALL NOT EXCEED 13.3%. TYPICAL GUTTER COUNTER SLOPE IS 4% BUT MAY BE MODIFIED TO FIT FIELD CONDITIONS. PROVIDE LONGITUDINAL DRAINAGE AROUND CURB AND AWAY FROM CURB RAMP. NO VERTICAL LIPS OR DISCONTINUITIES ARE ALLOWED. SLOPE OF CURB HEAD OPENING SHALL MATCH THE RAMP SLOPE, MINIMALLY 1.5%, DESIRABLY 7% OR LESS, AND SHALL NOT EXCEED A MAXIMUM OF 8.3%. WHEN ADJACENT TO 1.5% LANDING, CONSTRUCT CURB HEAD OPENING AT 1.5% IN THE DIRECTION OF PEDESTRIAN TRAVEL.

(3) MAXIMUM 8.3% CURB RAMP SLOPE IS ALLOWABLE WITH GUTTER COUNTER SLOPE OF 5% MAXIMUM AND A 13.3% MAXIMUM GRADE CHANGE.

(4) ±0.5% CONSTRUCTION TOLERANCE IN SIDEWALK CROSS SLOPE. THE SIDEWALK CROSS SLOPE SHALL NOT EXCEED 2.1% WITHOUT PRIOR APPROVAL FROM THE ENGINEER.

(5) PROVIDE A CLEAR SPACE IN THE STREET AND GUTTER AREA. WHEN THE GUTTER CROSS SLOPE EXCEEDS 2.1%, CONSTRUCT THE CLEAR SPACE IN THE STREET AREA AND THE 4 FOOT WIDTH IS MEASURED FROM THE FLANGE LINE. FOR RECONSTRUCTION AND MODERNIZATION PROJECTS THE CLEAR SPACE SLOPE PARALLEL TO THE CURBLINE SHOULD BE 2.1% MAX FOR CROSSINGS THAT ARE STOP AND YIELD CONTROLLED, AND 5% MAX FOR THOSE THAT ARE SIGNAL CONTROLLED. FOR PERPETUATION AND REHABILITATION PROJECTS THE SLOPE OF THE CLEAR SPACE PARALLEL TO THE CURBLINE WILL MATCH THE ROADWAY LONGITUDINAL SLOPE. THE SLOPE OF THE CLEAR SPACE PERPENDICULAR TO THE CURBLINE WILL MATCH THE ROADWAY CROSS SLOPE BUT SHOULD NOT EXCEED 5% UNLESS THE ROADWAY IS SUPERELEVATED (WHEN SUPERELEVATED THE ROADWAY CROSS SLOPE SHOULD MATCH THE SUPERELEVATION).

(6) PROVIDE A 5 FOOT BY 5 FOOT LANDING. SLOPE PERPENDICULAR TO CURB SHALL BE 2.1% MAXIMUM. SLOPE PARALLEL TO CURB SHALL MATCH THE CURB AND GUTTER LONGITUDINAL SLOPE.

(8) PROVIDE GRADE BREAK PERPENDICULAR TO DIRECTION OF WHEELCHAIR TRAVEL.

(17) A MAXIMUM 2-INCH CONCRETE BORDER IS PERMITTED ALONG ALL SIDES OF THE DETECTABLE WARNING FIELD SURFACE.

(22) THE ENTIRE RAMP SHALL BE A PLANAR SURFACE. DO NOT WARP THE RUNNING SLOPE OR CROSS SLOPE OF THE RAMP. WARPING OF THE SIDEWALK CROSS SLOPE SHALL TAKE PLACE BETWEEN THE LANDING AND MATCH POINT.

LEGEND

- ½" EXPANSION JOINT SIDEWALK
- CONTRACTION JOINT FIELD LOCATED
- PAVEMENT MARKING CROSSWALK (WHITE)
- * MAXIMUM 8.3%
- ** WIDTH SHOWN ELSEWHERE IN THE PLANS

CURB RAMPS TYPE 1 AND 1-A

STATE OF WISCONSIN
DEPARTMENT OF TRANSPORTATION

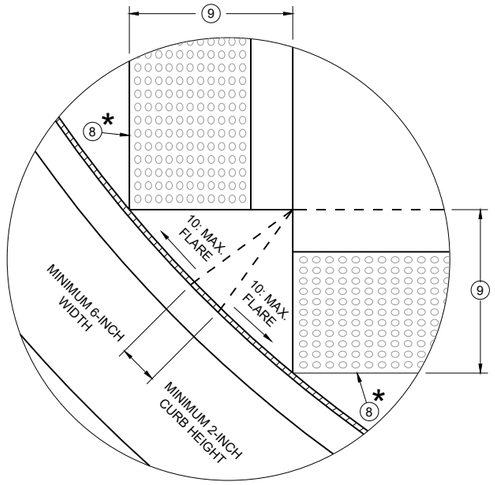

DETAIL A

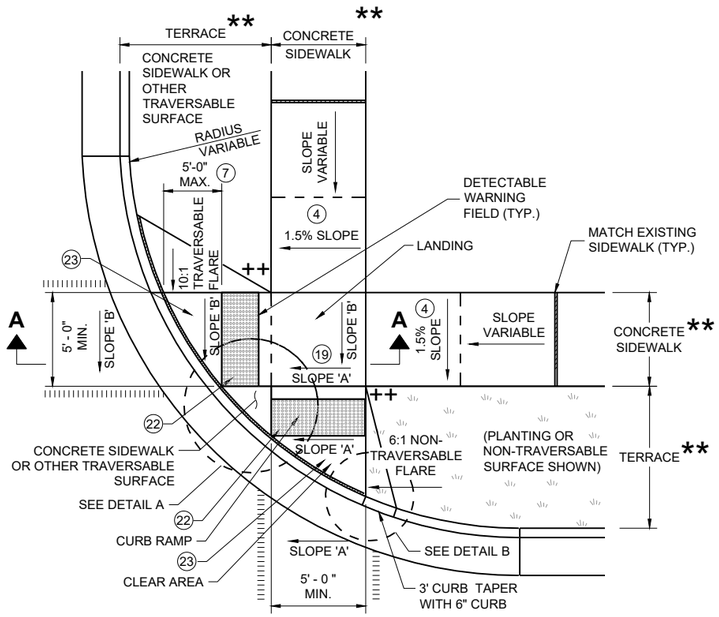

PLAN VIEW

CURB RAMP TYPE 2

(CENTER OF CORNER RADIUS)

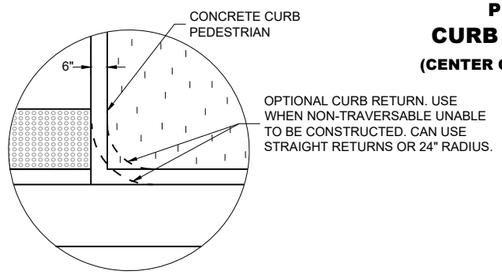

DETAIL B

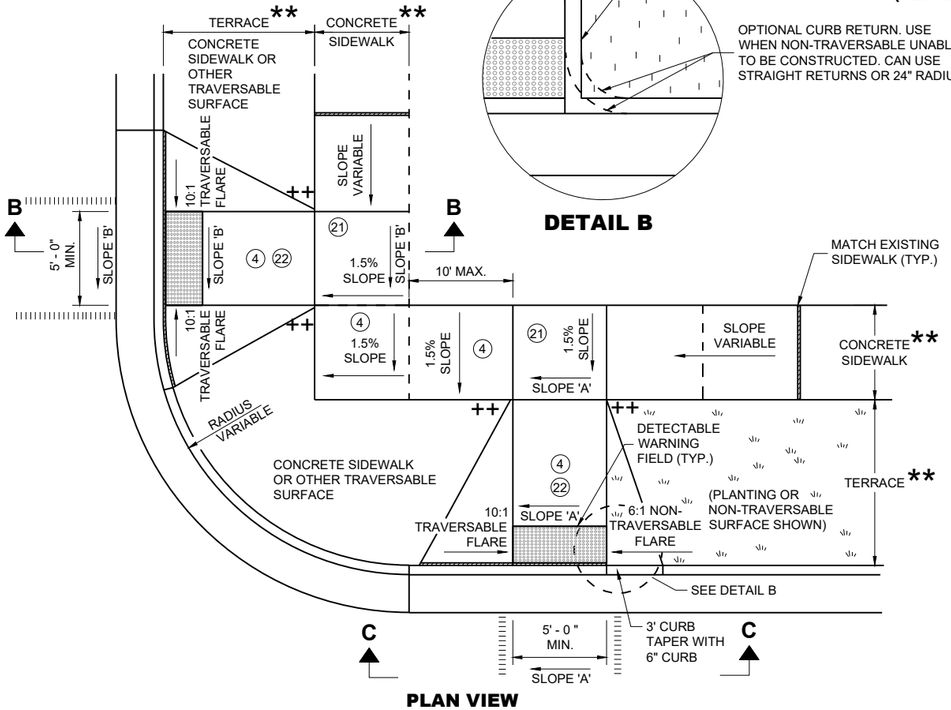

PLAN VIEW

CURB RAMP TYPE 3

(OUTSIDE OF CROSSWALK AREA)

GENERAL NOTES

AVOID PLACING DRAINAGE STRUCTURES, JUNCTION BOXES OR OTHER OBSTRUCTIONS IN FRONT OF CURB RAMP ACCESS AREAS.

DETAILS OF CONSTRUCTION, MATERIALS AND WORKMANSHIP NOT SHOWN ON THIS DRAWING SHALL CONFORM TO THE PERTINENT REQUIREMENTS OF THE STANDARD SPECIFICATIONS AND THE APPLICABLE SPECIAL PROVISIONS.

DETECTABLE WARNING FIELDS THAT ARE INSTALLED AS A GROUP OR SIDE BY SIDE SHALL BE FROM THE SAME MANUFACTURER.

(2) GRADE CHANGE BETWEEN GUTTER COUNTER SLOPE AND THE CURB RAMP SLOPE IS DESIRABLY 11% OR LESS AND SHALL NOT EXCEED 13.3%. TYPICAL GUTTER COUNTER SLOPE IS 4% BUT MAY BE MODIFIED TO FIT FIELD CONDITIONS. PROVIDE LONGITUDINAL DRAINAGE AROUND CURB AND AWAY FROM CURB RAMP. NO VERTICAL LIPS OR DISCONTINUITIES ARE ALLOWED. SLOPE OF CURB HEAD OPENING SHALL MATCH THE RAMP SLOPE, MINIMALLY 1.5%, DESIRABLY 7% OR LESS, AND SHALL NOT EXCEED A MAXIMUM OF 8.3%. WHEN ADJACENT TO 1.5% LANDING, CONSTRUCT CURB HEAD OPENING AT 1.5% IN THE DIRECTION OF PEDESTRIAN TRAVEL.

(3) MAXIMUM 8.3% CURB RAMP SLOPE IS ALLOWABLE WITH GUTTER COUNTER SLOPE OF 5% MAXIMUM AND A 13.3% MAXIMUM GRADE CHANGE.

(4) ±0.5% CONSTRUCTION TOLERANCE IN SIDEWALK CROSS SLOPE. THE SIDEWALK CROSS SLOPE SHALL NOT EXCEED 2.1% WITHOUT PRIOR APPROVAL FROM THE ENGINEER.

(7) WHEN GRADE BREAK DISTANCE EXCEEDS 5 FEET, USE RADIAL DETECTABLE WARNING FIELD PER SDD 8D5-f.

(8) PROVIDE GRADE BREAK PERPENDICULAR TO DIRECTION OF WHEELCHAIR TRAVEL.

(9) WHEN DISTANCE IS LESS THAN 6' - 0", IT MAY BE DIFFICULT TO ACHIEVE A 7% DESIGN MAXIMUM SLOPE OR FLATTER ALONG THE RAMP. REDUCE CURB HEIGHT IN TRIANGLE AREA TO ACHIEVE 7% DESIGN MAXIMUM SLOPE OR FLATTER ON RAMP. CONSTRUCT 2-INCH MINIMUM CURB HEIGHT BETWEEN 10:1 FLARES.

(17) A MAXIMUM 2-INCH CONCRETE BORDER IS PERMITTED ALONG ALL SIDES OF THE DETECTABLE WARNING FIELD SURFACE.

(19) WHERE A LANDING SERVES TWO CURB RAMPS, THE LANDING SLOPE SHALL NOT EXCEED THE CROSS SLOPE AT THE BOTTOM OF THE RAMP OR WITHIN THE CROSSWALK PARALLEL TO THE DIRECTION OF TRAVEL.

(21) PROVIDE A LANDING WITH A SLOPE PARALLEL TO ROADWAY THAT MATCHES SLOPE AT THE BOTTOM OF THE ADJACENT RAMP. SLOPE PERPENDICULAR TO ROADWAY SHALL BE 2.1% MAXIMUM. STANDARD LANDING SIZE IS 5 FEET BY 5 FEET.

(22) THE ENTIRE RAMP SHALL BE A PLANAR SURFACE. DO NOT WARP THE RUNNING SLOPE OR CROSS SLOPE OF THE RAMP. WARPING OF THE SIDEWALK CROSS SLOPE SHALL TAKE PLACE BETWEEN THE LANDING AND MATCH POINT.

(23) THE CLEAR AREA BETWEEN THE BOTTOM OF RAMP AND BACK OF CURB SHALL BE SLOPED SO THAT WATER DRAINS OUT OF ONE SIDE OR BOTH SIDES OF THE CURB OPENING.

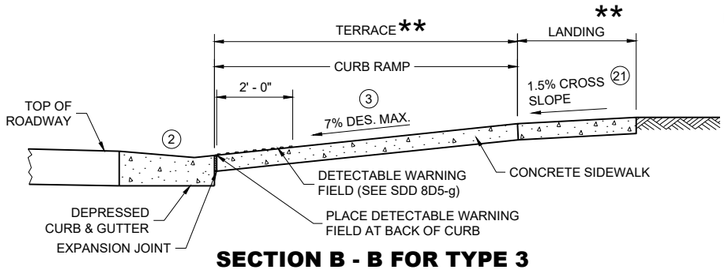

SECTION B - B FOR TYPE 3

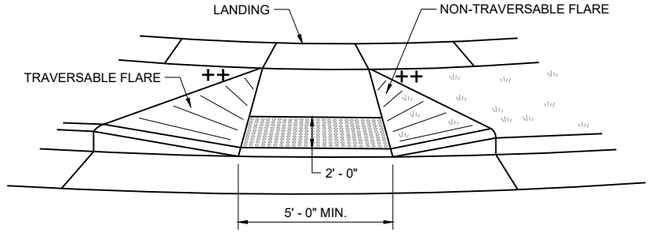

VIEW C - C FOR TYPE 3

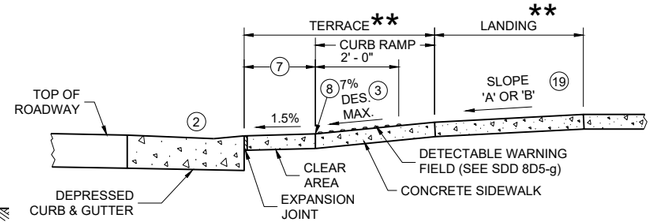

SECTION A - A FOR TYPE 2

LEGEND

▨	½" EXPANSION JOINT SIDEWALK
– – – –	CONTRACTION JOINT SIDEWALK
ıllıllıllıllıl	PAVEMENT MARKING CROSSWALK (WHITE)
*	MAXIMUM 2.1% SLOPE IN ALL DIRECTIONS IN FRONT OF GRADE BREAK
**	WIDTH SHOWN ELSEWHERE IN THE PLANS
++	CONSTRUCT 6" WEDGE TO AVOID CONCRETE BREAKAGE

CURB RAMPS TYPE 2 AND 3

STATE OF WISCONSIN
DEPARTMENT OF TRANSPORTATION

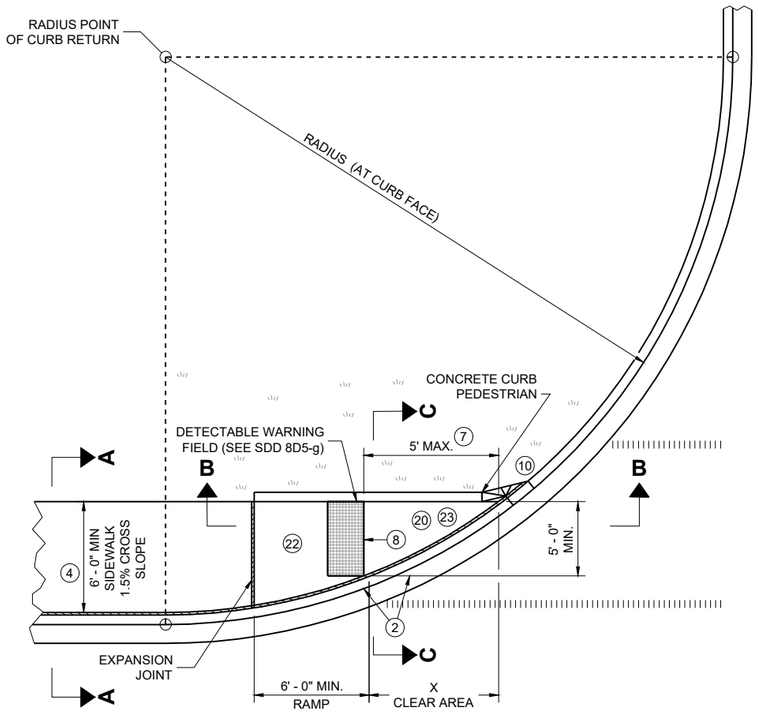

PLAN VIEW

CURB RAMP TYPE 4A

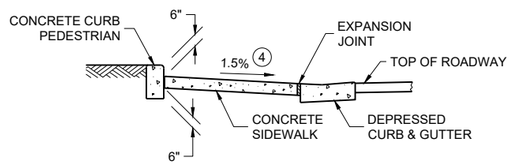

SECTION C - C FOR TYPE 4A

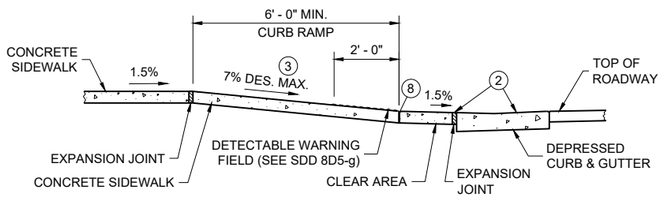

SECTION B - B FOR TYPE 4A AND TYPE 4A1

LEGEND

- ½" EXPANSION JOINT SIDEWALK
- CONTRACTION JOINT SIDEWALK
- PAVEMENT MARKING CROSSWALK (WHITE)
- ++ CONSTRUCT 6" WEDGE TO AVOID CONCRETE BREAKAGE

RADIUS (AT CURB FACE)	X
10 FEET	4' - 7"

INTERMEDIATE RADII CAN BE INTERPOLATED

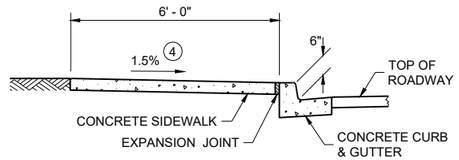

SECTION A - A FOR TYPE 4A

GENERAL NOTES

AVOID PLACING DRAINAGE STRUCTURES, JUNCTION BOXES OR OTHER OBSTRUCTIONS IN FRONT OF CURB RAMP ACCESS AREAS.

DETAILS OF CONSTRUCTION, MATERIALS AND WORKMANSHIP NOT SHOWN ON THIS DRAWING SHALL CONFORM TO THE PERTINENT REQUIREMENTS OF THE STANDARD SPECIFICATIONS AND THE APPLICABLE SPECIAL PROVISIONS.

DETECTABLE WARNING FIELDS THAT ARE INSTALLED AS A GROUP OR SIDE BY SIDE, SHALL BE FROM THE SAME MANUFACTURER.

(2) GRADE CHANGE BETWEEN GUTTER COUNTER SLOPE AND THE CURB RAMP SLOPE IS DESIRABLY 11% OR LESS AND SHALL NOT EXCEED 13.3%. TYPICAL GUTTER COUNTER SLOPE IS 4% BUT MAY BE MODIFIED TO FIT FIELD CONDITIONS. PROVIDE LONGITUDINAL DRAINAGE AROUND CURB AND AWAY FROM CURB RAMP. NO VERTICAL LIPS OR DISCONTINUITIES ARE ALLOWED. SLOPE OF CURB HEAD OPENING SHALL MATCH THE RAMP SLOPE, MINIMALLY 1.5%, DESIRABLY 7% OR LESS, AND SHALL NOT EXCEED A MAXIMUM OF 8.3%. WHEN ADJACENT TO 1.5% LANDING, CONSTRUCT CURB HEAD OPENING AT 1.5% IN THE DIRECTION OF PEDESTRIAN TRAVEL.

(3) MAXIMUM 8.3% CURB RAMP SLOPE IS ALLOWABLE WITH GUTTER COUNTER SLOPE OF 5% MAXIMUM AND A 13.3% MAXIMUM GRADE CHANGE.

(4) ±0.5% CONSTRUCTION TOLERANCE IN SIDEWALK CROSS SLOPE. THE SIDEWALK CROSS SLOPE SHALL NOT EXCEED 2.1% WITHOUT PRIOR APPROVAL FROM THE ENGINEER.

(7) WHEN THIS GRADE BREAK DISTANCE EXCEEDS 5 FEET, USE RADIAL DETECTABLE WARNING FIELD PER SDD 8D5-f.

(8) PROVIDE GRADE BREAK PERPENDICULAR TO DIRECTION OF WHEELCHAIR TRAVEL.

(10) INSTALL TRANSITION NOSE (INCIDENTAL TO OTHER PAY ITEMS). DO NOT MARK TRANSITION NOSE.

(17) A MAXIMUM 2-INCH CONCRETE BORDER IS PERMITTED ALONG ALL SIDES OF THE DETECTABLE WARNING FIELD SURFACE.

(20) MAXIMUM 1.5% DESIGN MAXIMUM AND 2.1% PROWAG MAXIMUM RUNNING SLOPE ON CLEAR AREA. CROSS SLOPE OF CLEAR AREA SHALL MATCH THE CROSS SLOPE OF THE ADJACENT CROSSWALK.

(22) THE ENTIRE RAMP SHALL BE A PLANAR SURFACE. DO NOT WARP THE RUNNING SLOPE OR CROSS SLOPE OF THE RAMP. WARPING OF THE SIDEWALK CROSS SLOPE SHALL TAKE PLACE BETWEEN THE LANDING AND MATCH POINT.

(23) THE CLEAR AREA BETWEEN THE BOTTOM OF RAMP AND BACK OF CURB SHALL BE SLOPED SO THAT WATER DRAINS OUT OF ONE SIDE OR BOTH SIDES OF THE CURB OPENING.

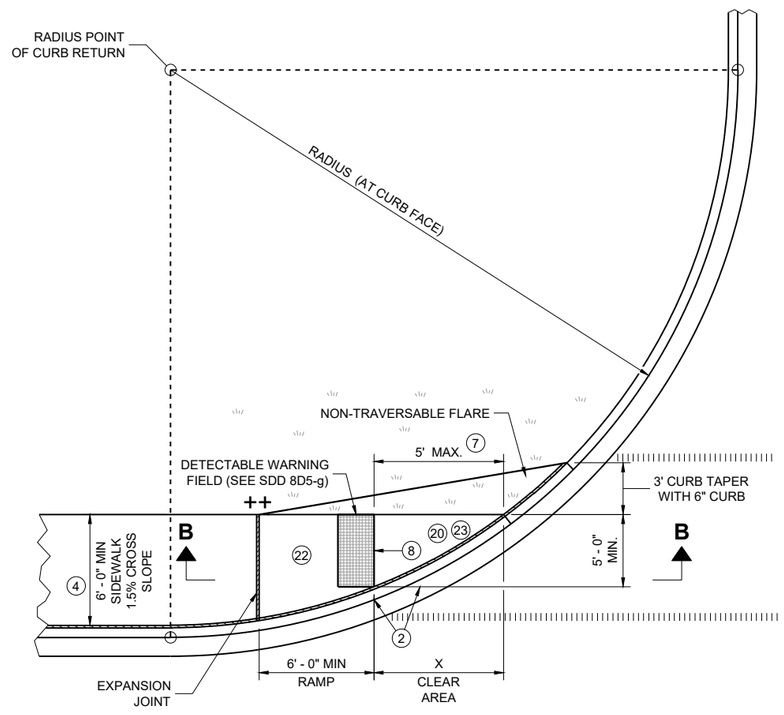

PLAN VIEW

CURB RAMP TYPE 4A1

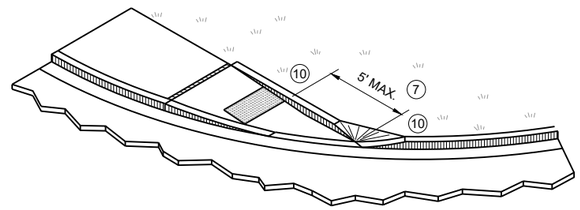

ISOMETRIC VIEW FOR TYPE 4A

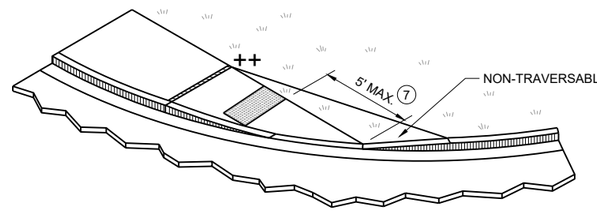

ISOMETRIC VIEW FOR TYPE 4A1

CURB RAMPS
TYPE 4A AND 4A1

STATE OF WISCONSIN
DEPARTMENT OF TRANSPORTATION

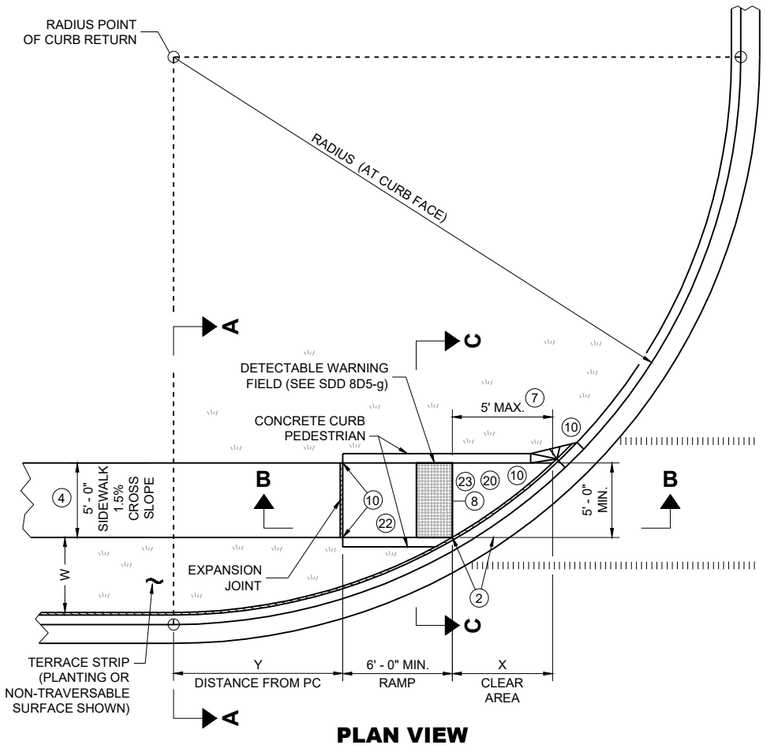

PLAN VIEW
CURB RAMP TYPE 4B

RADIUS (AT CURB FACE)	W = 3' - 0"		W = 4' - 0"		W = 5' - 0"		W = 6' - 0"		W = 7' - 0"		W = 8' - 0"		W = 9' - 0"		W = 10' - 0"	
	X	Y	X	Y	X	Y	X	Y	X	Y	X	Y	X	Y	X	Y
10 FEET	2' - 10 ¼"	0' - 5"	2' - 1"	1' - 4 ½"	1' - 5"	2' - 1"	0' - 10"	2' - 7 ½"	0' - 3 ¼"	3' - 0 ¼"						
15 FEET	4' - 6 ¾"	2' - 1 ¾"	3' - 9"	3' - 5 ¾"	3' - 1 ¼"	4' - 6"	2' - 6 ¾"	5' - 4 ½"	2' - 1"	6' - 1"	1' - 8"	6' - 8 ½"	1' - 3 ¼"	7' - 2 ½"	0' - 10 ¾"	7' - 7 ¼"
20 FEET			4' - 11 ½"	5' - 1 ¾"	4' - 3 ¼"	6' - 5 ½"	3' - 8 ¾"	7' - 7"	3' - 3"	8' - 6 ½"	2' - 10"	9' - 4 ½"	2' - 5 ½"	10' - 1 ¼"	2' - 1 ¼"	10' - 9"
30 FEET									4' - 10 ¾"	12' - 5 ¾"	4' - 5 ½"	13' - 7 ¾"	4' - 0 ¾"	14' - 8 ½"	3' - 8 ½"	15' - 8 ¼"
40 FEET															4' - 10 ¾"	19' - 8 ¼"

INTERMEDIATE RADII CAN BE INTERPOLATED
DIMENSION "Y" IS CALCULATED BASED ON 6'-0" RAMP LENGTH
DIMENSION "X" IS CALCULATED BASED ON 5'-0" SIDEWALK WIDTH

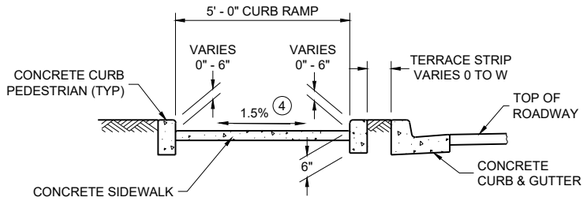

SECTION C - C FOR TYPE 4B

LEGEND

- ½" EXPANSION JOINT SIDEWALK
- CONTRACTION JOINT SIDEWALK
- PAVEMENT MARKING CROSSWALK (WHITE)
- * MAXIMUM 2.1% SLOPE IN ALL DIRECTIONS IF FRONT OF GRADE BREAK
- ++ CONSTRUCT 6" WEDGE TO AVOID CONCRETE BREAKAGE

GENERAL NOTES

AVOID PLACING DRAINAGE STRUCTURES, JUNCTION BOXES OR OTHER OBSTRUCTIONS IN FRONT OF CURB RAMP ACCESS AREAS.

DETAILS OF CONSTRUCTION, MATERIALS AND WORKMANSHIP NOT SHOWN ON THIS DRAWING SHALL CONFORM TO THE PERTINENT REQUIREMENTS OF THE STANDARD SPECIFICATIONS AND THE APPLICABLE SPECIAL PROVISIONS.

DETECTABLE WARNING FIELDS THAT ARE INSTALLED AS A GROUP OR SIDE BY SIDE, SHALL BE FROM THE SAME MANUFACTURER.

(2) GRADE CHANGE BETWEEN GUTTER COUNTER SLOPE AND THE CURB RAMP SLOPE IS DESIRABLY 11% OR LESS AND SHALL NOT EXCEED 13.3%. TYPICAL GUTTER COUNTER SLOPE IS 4% BUT MAY BE MODIFIED TO FIT FIELD CONDITIONS. PROVIDE LONGITUDINAL DRAINAGE AROUND CURB AND AWAY FROM CURB RAMP. NO VERTICAL LIPS OR DISCONTINUITIES ARE ALLOWED. SLOPE OF CURB HEAD OPENING SHALL MATCH THE RAMP SLOPE, MINIMALLY 1.5%, DESIRABLY 7% OR LESS, AND SHALL NOT EXCEED A MAXIMUM OF 8.3%. WHEN ADJACENT TO 1.5% LANDING, CONSTRUCT CURB HEAD OPENING AT 1.5% IN THE DIRECTION OF PEDESTRIAN TRAVEL.

(3) MAXIMUM 8.3% CURB RAMP SLOPE IS ALLOWABLE WITH GUTTER COUNTER SLOPE OF 5% MAXIMUM AND A 13.3% MAXIMUM GRADE CHANGE.

(4) ±0.5% CONSTRUCTION TOLERANCE IN SIDEWALK CROSS SLOPE. THE SIDEWALK CROSS SLOPE SHALL NOT EXCEED 2.1% WITHOUT PRIOR APPROVAL FROM THE ENGINEER.

(7) WHEN THIS GRADE BREAK DISTANCE EXCEEDS 5 FEET, USE RADIAL DETECTABLE WARNING FIELD PER SDD 8D5-f.

(8) PROVIDE GRADE BREAK PERPENDICULAR TO DIRECTION OF WHEELCHAIR TRAVEL.

(10) INSTALL TRANSITION NOSE (INCIDENTAL TO OTHER PAY ITEMS). DO NOT MARK TRANSITION NOSE.

(17) A MAXIMUM 2-INCH CONCRETE BORDER IS PERMITTED ALONG ALL SIDES OF THE DETECTABLE WARNING FIELD SURFACE.

(20) MAXIMUM 1.5% DESIGN MAXIMUM AND 2.1% PROWAG MAXIMUM RUNNING SLOPE ON CLEAR AREA. CROSS SLOPE OF CLEAR AREA SHALL MATCH THE CROSS SLOPE OF THE ADJACENT CROSSWALK.

(22) THE ENTIRE RAMP SHALL BE A PLANAR SURFACE. DO NOT WARP THE RUNNING SLOPE OR CROSS SLOPE OF THE RAMP. WARPING OF THE SIDEWALK CROSS SLOPE SHALL TAKE PLACE BETWEEN THE LANDING AND MATCH POINT.

(23) THE CLEAR AREA BETWEEN THE BOTTOM OF RAMP AND BACK OF CURB SHALL BE SLOPED SO THAT WATER DRAINS OUT OF ONE SIDE OR BOTH SIDES OF THE CURB OPENING.

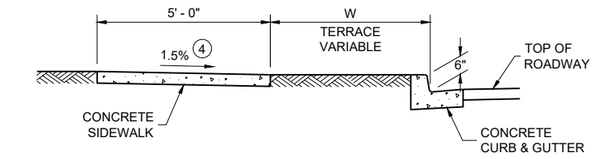

SECTION A - A FOR TYPE 4B

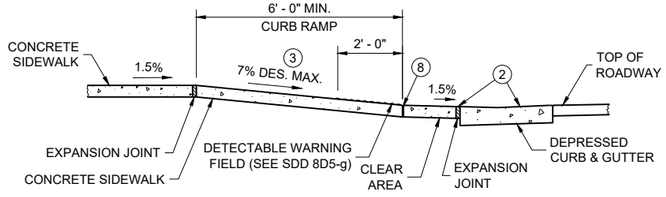

SECTION B - B FOR TYPE 4B AND TYPE 4B1

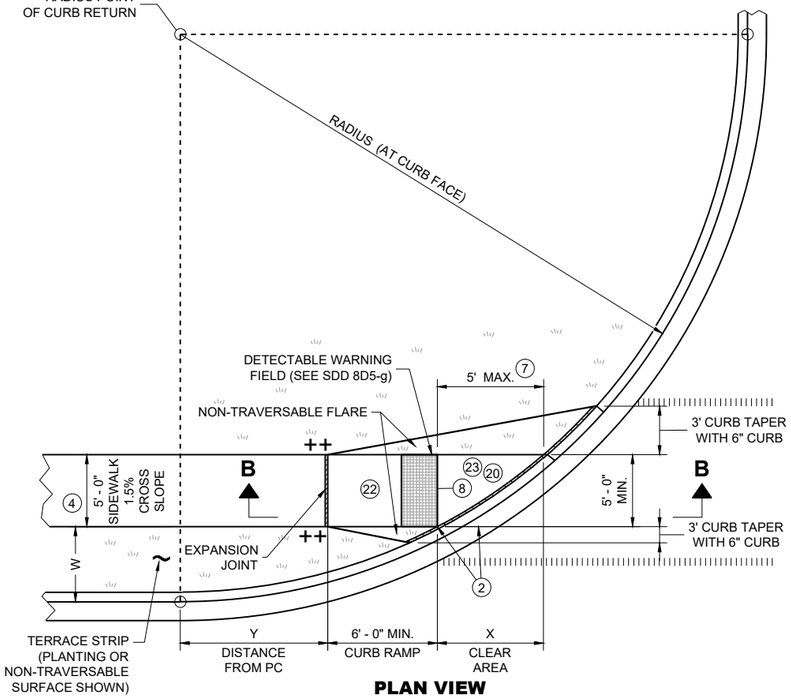

PLAN VIEW
CURB RAMP TYPE 4B1

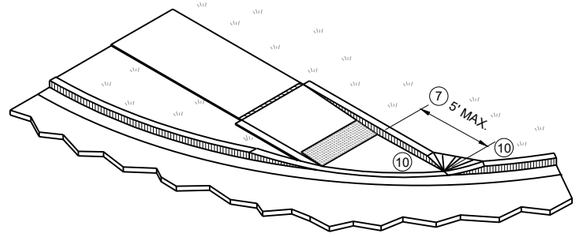

ISOMETRIC VIEW FOR TYPE 4B

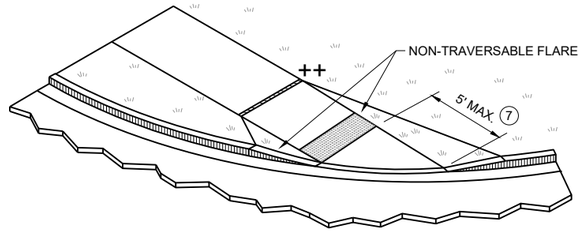

ISOMETRIC VIEW FOR TYPE 4B1

CURB RAMPS
TYPE 4B AND 4B1

STATE OF WISCONSIN
DEPARTMENT OF TRANSPORTATION

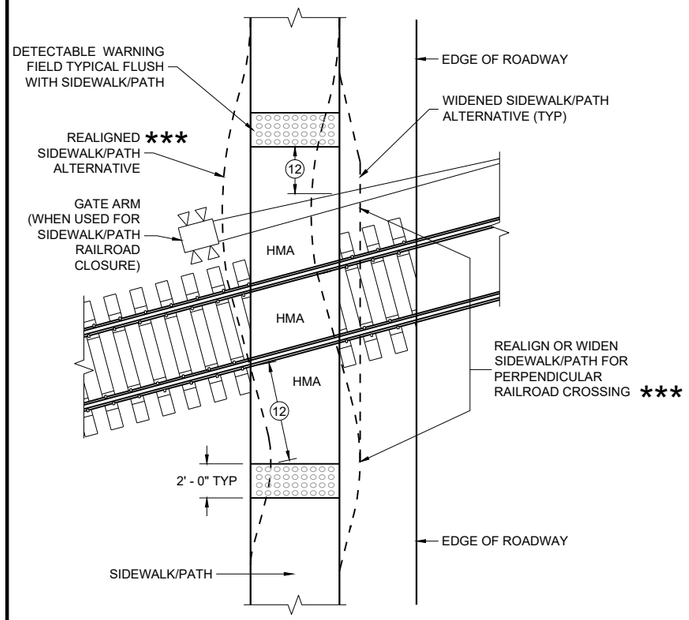

CURB RAMP TYPE 8

DETECTABLE WARNINGS FOR SIDEWALKS OR SHARED USE PATHS AT RAILROAD CROSSINGS

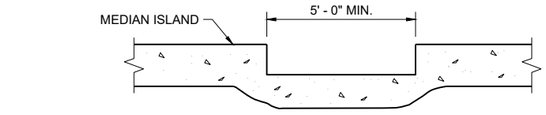

SECTION A - A FOR TYPE 5

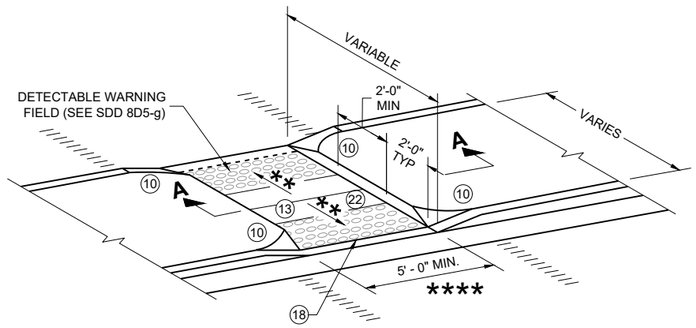

CURB RAMP TYPE 5

MEDIAN ISLAND NON-ELEVATED PEDESTRIAN CROSSING

GENERAL NOTES

AVOID PLACING DRAINAGE STRUCTURES, JUNCTION BOXES OR OTHER OBSTRUCTIONS IN FRONT OF CURB RAMP ACCESS AREAS.

DETAILS OF CONSTRUCTION, MATERIALS AND WORKMANSHIP NOT SHOWN ON THIS DRAWING SHALL CONFORM TO THE PERTINENT REQUIREMENTS OF THE STANDARD SPECIFICATIONS AND THE APPLICABLE SPECIAL PROVISIONS.

SIDEWALK CROSS SLOPE SHALL NOT EXCEED 2.1%.

DETECTABLE WARNING FIELDS THAT ARE INSTALLED AS A GROUP OR SIDE BY SIDE, SHALL BE FROM THE SAME MANUFACTURER.

(2) GRADE CHANGE BETWEEN GUTTER COUNTER SLOPE AND THE CURB RAMP SLOPE IS DESIRABLY 11% OR LESS AND SHALL NOT EXCEED 13.3%. TYPICAL GUTTER COUNTER SLOPE IS 4% BUT MAY BE MODIFIED TO FIT FIELD CONDITIONS. PROVIDE LONGITUDINAL DRAINAGE AROUND CURB AND AWAY FROM CURB RAMP. NO VERTICAL LIPS OR DISCONTINUITIES ARE ALLOWED. SLOPE OF CURB HEAD OPENING SHALL MATCH THE RAMP SLOPE, MINIMALLY 1.5%, DESIRABLY 7% OR LESS, AND SHALL NOT EXCEED A MAXIMUM OF 8.3%. WHEN ADJACENT TO 1.5% LANDING, CONSTRUCT CURB HEAD OPENING AT 1.5% IN THE DIRECTION OF PEDESTRIAN TRAVEL.

(3) MAXIMUM 8.3% CURB RAMP SLOPE IS ALLOWABLE WITH GUTTER COUNTER SLOPE OF 5% MAXIMUM AND A 13.3% MAXIMUM GRADE CHANGE.

(4) ±0.5% CONSTRUCTION TOLERANCE IN SIDEWALK CROSS SLOPE. THE SIDEWALK CROSS SLOPE SHALL NOT EXCEED 2.1% WITHOUT PRIOR APPROVAL FROM THE ENGINEER.

(6) PROVIDE A 5 FOOT BY 5 FOOT LANDING. SLOPE PERPENDICULAR TO CURB SHALL BE 2.1% MAXIMUM. SLOPE PARALLEL TO CURB SHALL MATCH THE CURB AND GUTTER LONGITUDINAL SLOPE.

(10) INSTALL TRANSITION NOSE (INCIDENTAL TO OTHER PAY ITEMS). DO NOT MARK TRANSITION NOSE.

(11) SLOPE SIDEWALK TOWARD LANDING AS SHOWN WHERE THERE IS NO TERRACE OR WHERE THE TERRACE WIDTH IS LESS THAN 6 FEET WIDE.

(12) THE EDGE OF THE DETECTABLE WARNING FIELD NEAREST TO A RAILROAD CROSSING SHALL BE 1.5 FEET ±0.1' FROM THE FACE OF THE GATE ARM IF THE GATE ARM EXTENDS ACROSS THE SIDEWALK/PATH, WHERE THERE IS NO PEDESTRIAN GATE, THE EDGE OF THE DETECTABLE WARNING FIELD NEAREST TO THE RAILROAD TRACK IS 15 FEET MAXIMUM AND 12 FEET MINIMUM, 15 FEET TYPICAL FROM THE NEAREST RAIL.

(13) DO NOT INSTALL DETECTABLE WARNING FIELDS AT THE EDGES OF STEET-LEVEL PEDESTRIAN REFUGE ISLANDS IF A MINIMUM 2 FOOT CONCRETE SURFACE WITHOUT DETECTABLE WARNINGS (MEASURED IN THE DIRECTION OF PEDESTRIAN TRAVEL) CANNOT BE ACHIEVED.

(17) A MAXIMUM 2-INCH CONCRETE BORDER IS PERMITTED ALONG ALL SIDES OF THE DETECTABLE WARNING FIELD SURFACE.

(18) WHEN THE DISTANCE BETWEEN THE BACK OF CURBS IS LESS THAN 6 FEET BUT THE FACE OF CURB TO FACE OF CURB DISTANCE IS 6 FEET OR GREATER THEN THE DETECTABLE WARNING FIELDS MAY BE MOVED SO THAT THE EDGE OF THE WARNING FIELD IS PLACED AT THE GUTTER FLOWLINE. MAINTAIN A MINIMUM OF TWO FEET BETWEEN DETECTABLE WARNING FIELD PANELS.

(22) THE ENTIRE RAMP SHALL BE A PLANAR SURFACE. DO NOT WARP THE RUNNING SLOPE OR CROSS SLOPE OF THE RAMP. WARPING OF THE SIDEWALK CROSS SLOPE SHALL TAKE PLACE BETWEEN THE LANDING AND MATCH POINT.

CURB RAMP TYPE 7A

FOR INTERSECTIONS AND MID BLOCK CROSSINGS

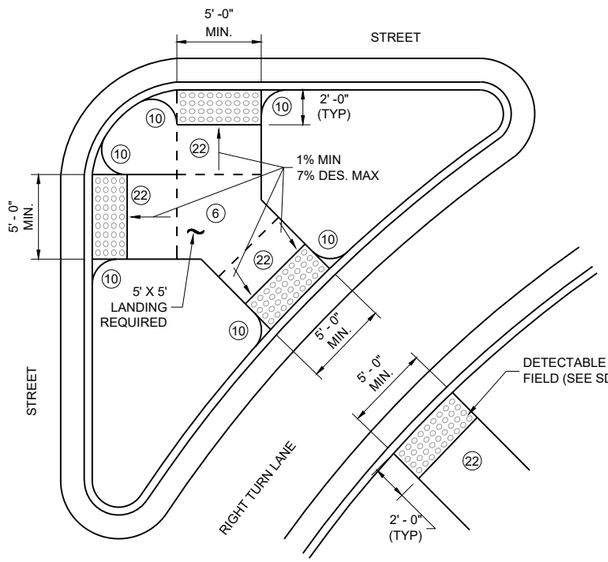

CURB RAMP TYPE 6

DETECTABLE WARNING AT ISLANDS

REFER TO GENERAL NOTES (2) AND (3) FOR ALL ISLAND CURB RAMPS

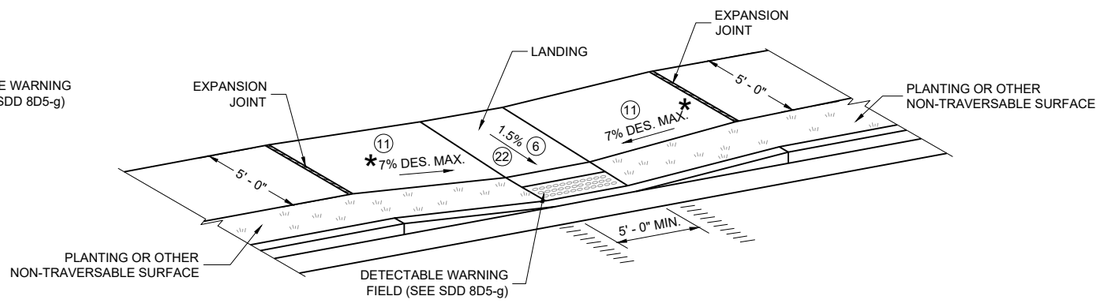

CURB RAMP TYPE 7B

FOR INTERSECTIONS AND MID BLOCK CROSSINGS

LEGEND

═══	½" EXPANSION JOINT SIDEWALK
– – – –	CONTRACTION JOINT FIELD LOCATED
ıı ıı ıı ıı	PAVEMENT MARKING CROSSWALK (WHITE)
*	MAXIMUM 8.3%
**	1% MINIMUM (PROVIDE DRAINAGE)
***	DETAILS TO BE DETERMINED BY ENGINEER
****	FOR SHARED USE PATHS, WIDTH MUST BE AS WIDE AS THE CROSSWALK

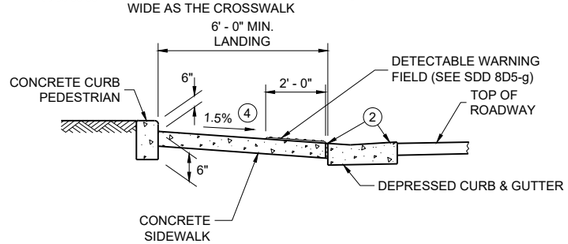

SECTION B - B FOR TYPE 7A

CURB RAMPS
TYPE 5, 6, 7A, 7B & 8

STATE OF WISCONSIN
DEPARTMENT OF TRANSPORTATION

RADIAL DETECTABLE WARNING FIELD PLACEMENT WHEN 5 FOOT GRADE BREAK DISTANCE PER SDD 8D5-c IS EXCEEDED

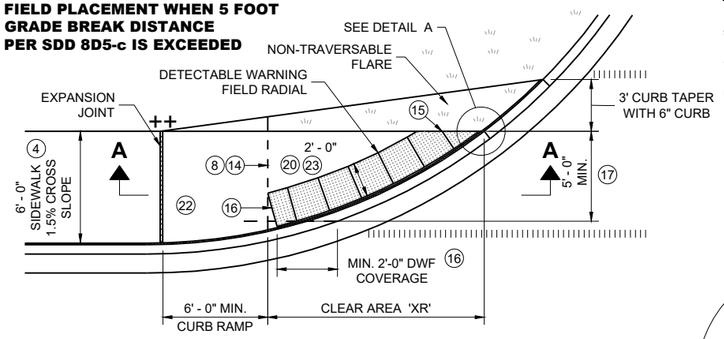

PLAN VIEW

CURB RAMP TYPE 4A1
(GRADE BREAK DISTANCE GREATER THAN 5 FEET)

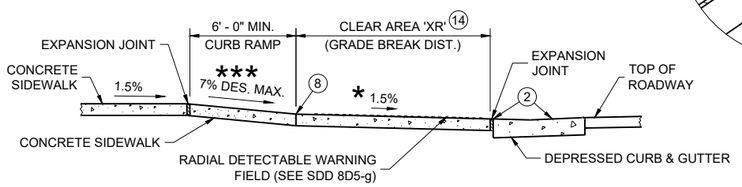

SECTION A - A FOR TYPE 4A1

LEGEND

═══	½" EXPANSION JOINT SIDEWALK
– – – –	CONTRACTION JOINT SIDEWALK
ıı ıı ıı ıı	PAVEMENT MARKING CROSSWALK (WHITE)
**	WIDTH SHOWN ELSEWHERE IN THE PLANS
***	MAXIMUM 8.3%
++	CONSTRUCT 6" WEDGE TO AVOID CONCRETE BREAKAGE

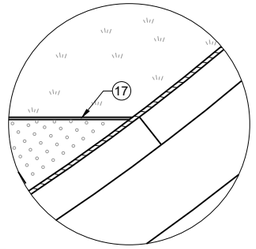

DETAIL A

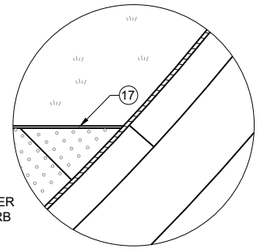

DETAIL B

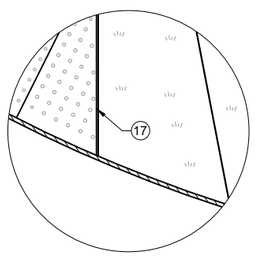

DETAIL C

GENERAL NOTES

AVOID PLACING DRAINAGE STRUCTURES, JUNCTION BOXES OR OTHER OBSTRUCTIONS IN FRONT OF CURB RAMP ACCESS AREAS.

DETAILS OF CONSTRUCTION, MATERIALS AND WORKMANSHIP NOT SHOWN ON THIS DRAWING SHALL CONFORM TO THE PERTINENT REQUIREMENTS OF THE STANDARD SPECIFICATIONS AND THE APPLICABLE SPECIAL PROVISIONS.

DETECTABLE WARNING FIELDS THAT ARE INSTALLED AS A GROUP OR SIDE BY SIDE, SHALL BE FROM THE SAME MANUFACTURER.

APPLY RADIAL DETECTABLE WARNING PLACEMENT SIMILARLY FOR TYPE 4A AND 4A1 CURB RAMPS AND SIMILARLY FOR TYPE 4B AND 4B1 CURB RAMPS. TYPE 4A AND 4B CURB RAMPS ARE NOT SHOWN.

REFER TO SDD 8D5-g FOR ADDITIONAL RADIAL PLATE REQUIREMENTS.

FIELD CUTS AT INTERMEDIATE JOINTS WITHIN THE RADIAL DETECTABLE WARNING FILED ARE PROHIBITED.

DETERMINE FINAL RADIAL WARNING FIELD CONFIGURATION AD ITS INDIVIDUAL PLATE LOCATIONS. PERFORM PRE-LAYOUT PRIOR TO PLACEMENT IN PLASTIC CONCRETE. FOLLOW MANUFACTURER'S PRODUCT LIST AND INSTALLATION RECOMMENDATIONS.

(2) GRADE CHANGE BETWEEN GUTTER COUNTER SLOPE AND THE CURB RAMP SLOPE IS DESIRABLY 11% OR LESS AND SHALL NOT EXCEED 13.3%. TYPICAL GUTTER COUNTER SLOPE IS 4% BUT MAY BE MODIFIED TO FIT FIELD CONDITIONS. PROVIDE LONGITUDINAL DRAINAGE AROUND CURB AND AWAY FROM CURB RAMP. NO VERTICAL LIPS OR DISCONTINUITIES ARE ALLOWED. SLOPE OF CURB HEAD OPENING SHALL MATCH THE RAMP SLOPE, MINIMALLY 1.5%, DESIRABLY 7% OR LESS, AND SHALL NOT EXCEED A MAXIMUM OF 8.3%. WHEN ADJACENT TO 1.5% LANDING, CONSTRUCT CURB HEAD OPENING AT 1.5% IN THE DIRECTION OF PEDESTRIAN TRAVEL.

(3) MAXIMUM 8.3% CURB RAMP SLOPE IS ALLOWABLE WITH GUTTER COUNTER SLOPE OF 5% MAXIMUM AND A 13.3% MAXIMUM GRADE CHANGE.

(4) ±0.5% CONSTRUCTION TOLERANCE IN SIDEWALK CROSS SLOPE. THE SIDEWALK CROSS SLOPE SHALL NOT EXCEED 2.1% WITHOUT PRIOR APPROVAL FROM THE ENGINEER.

(6) PROVIDE A 5 FOOT BY 5 FOOT LANDING. SLOPE PERPENDICULAR TO CURB SHALL BE 2.1% MAXIMUM. SLOPE PARALLEL TO CURB SHALL MATCH THE CURB AND GUTTER LONGITUDINAL SLOPE.

(8) PROVIDE GRADE BREAK PERPENDICULAR TO DIRECTION OF WHEELCHAIR TRAVEL.

(14) CONSULT ENGINEER IF GRADE BREAK LOCATION (END OF LANDING DIMENSION "XR") REQUIRES FIELD ADJUSTMENT WHEN ESTABLISHING FINAL RADIAL DETECTABLE WARNING FIELD LOCATION.

(15) FIELD SAW CUTS ALONG RADIAL DETECTABLE WARNING PLATES WILL BE NECESSARY TO MATCH EACH CURB RAMP EDGE. AVOID CUTTING THROUGH DOMES WHENEVER POSSIBLE. MAKE FIELD CUTS TRUE TO LINE AND WITHIN ⅛" DEVIATION. SMOOTH EDGES OF FIELD CUT PLATES.

(16) USE 1' X 2" RECTANGULAR END PLATE AT END OF TYPE 4A1 RAMP AND PROVIDE MINIMUM 2' - 0" DETECTABLE WARNING FIELD COVERAGE (IN DIRECTION OF PEDESTRIAN TRAVEL) ALONG THE ENTIRE CURB RAMP WIDTH.

(17) A MAXIMUM 2-INCH CONCRETE BORDER IS PERMITTED ALONG ALL SIDES OF THE DETECTABLE WARNING FIELD SURFACE.

(19) WHERE A LANDING SERVES TWO CURB RAMPS, THE LANDING SLOPE SHALL NOT EXCEED THE CROSS SLOPE AT THE BOTTOM OF THE RAMP OR WITHIN THE CROSSWALK PARALLEL TO THE DIRECTION OF TRAVEL.

(20) MAXIMUM 1.5% DESIGN MAXIMUM AND 2.1% PROWAG MAXIMUM RUNNING SLOPE ON CLEAR AREA. CROSS SLOPE OF CLEAR AREA SHALL MATCH THE CROSS SLOPE OF THE ADJACENT CROSSWALK.

(22) THE ENTIRE RAMP SHALL BE A PLANAR SURFACE. DO NOT WARP THE RUNNING SLOPE OR CROSS SLOPE OF THE RAMP. WARPING OF THE SIDEWALK CROSS SLOPE SHALL TAKE PLACE BETWEEN THE LANDING AND MATCH POINT.

(23) THE CLEAR AREA BETWEEN THE BOTTOM OF RAMP AND BACK OF CURB SHALL BE SLOPED SO THAT WATER DRAINS OUT OF ONE SIDE OR BOTH SIDES OF THE CURB OPENING.

RADIAL DETECTABLE WARNING FIELD PLACEMENT WHEN 5 FOOT GRADE BREAK DISTANCE PER SDD 8D5-d IS EXCEEDED

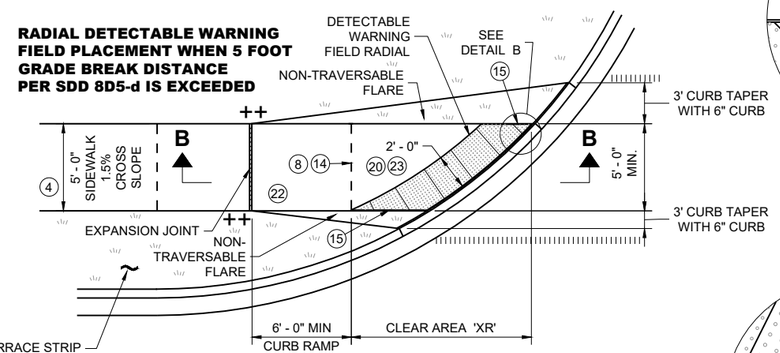

PLAN VIEW

CURB RAMP TYPE 4B1
(GRADE BREAK DISTANCE GREATER THAN 5 FEET)

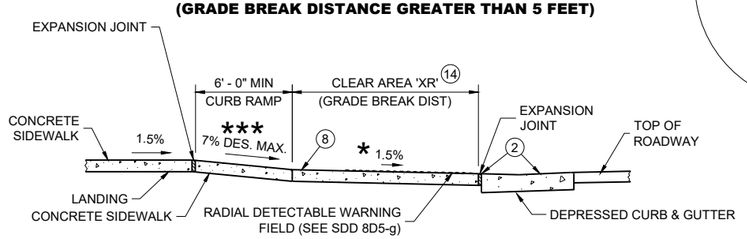

SECTION B - B FOR TYPE 4B1

RADIAL DETECTABLE WARNING FIELD PLACEMENT WHEN 5 FOOT GRADE BREAK DISTANCE PER SDD 8D5-b IS EXCEEDED

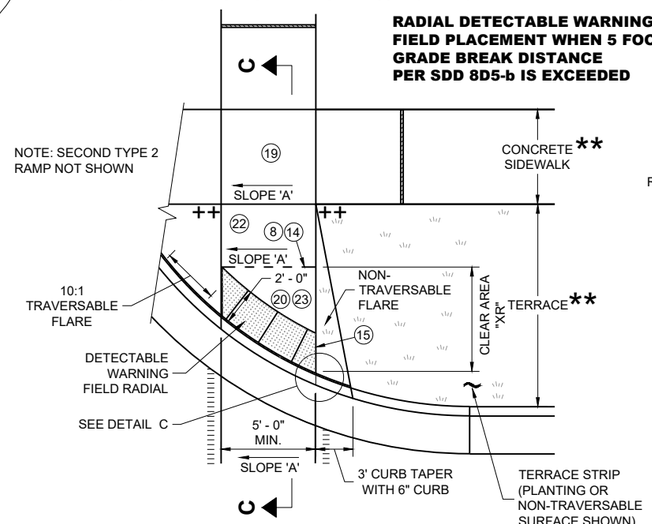

PLAN VIEW

CURB RAMP TYPE 2
(GRADE BREAK DISTANCE GREATER THAN 5 FEET)
(ON LINE WITH SIDEWALK)

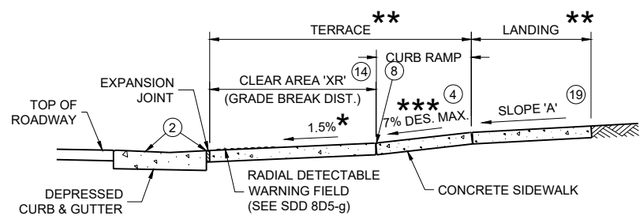

SECTION C - C FOR TYPE 2

CURB RAMPS
RADIAL DETECTABLE WARNING

STATE OF WISCONSIN
DEPARTMENT OF TRANSPORTATION

	MIN.	MAX.
A	1.6"	2.4"
B	0.65"	1.5"
C	*	*
D	0.9"	1.4"

* THE C DIMENSION IS 50% TO 65% OF THE D DIMENSION.

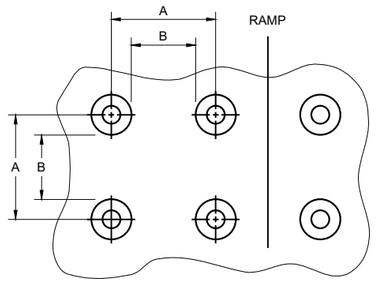

PLAN VIEW

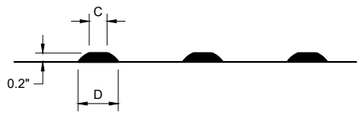

ELEVATION VIEW

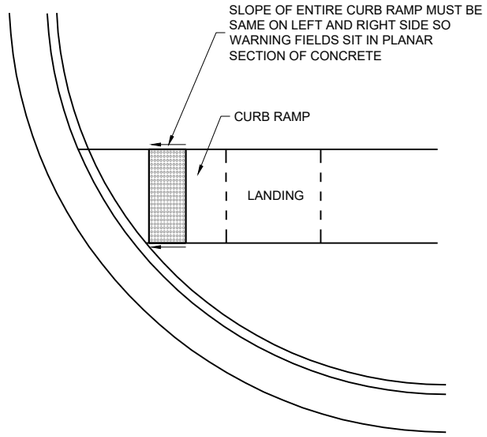

DETECTABLE WARNING FIELD
PLANAR INSTALLATION

GENERAL NOTES

DETECTABLE WARNING FIELDS THAT ARE INSTALLED AT A CURB RAMP SHALL BE FROM THE SAME MANUFACTURER.

PLACE ALL DETECTABLE WARNING FIELD SYSTEMS IN ACCORDANCE TO THE MANUFACTURER'S RECOMMENDATION.

FIELD CUTS AT INTERMEDIATE JOINTS WITHIN THE RADIAL DETECTABLE WARNING FILED ARE PROHIBITED.

DETERMINE FINAL RADIAL WARNING FIELD CONFIGURATION AND ITS INDIVIDUAL PLATE LOCATIONS. PERFORM PRE-LAYOUT PRIOR TO PLACEMENT IN PLASTIC CONCRETE. FOLLOW MANUFACTURER'S PRODUCT LIST AND INSTALLATION RECOMMENDATIONS.

FOR RADIAL DETECTABLE WARNING FIELD APPLICATIONS WHERE STANDARD RADIAL PLATES ARE NOT AVAILABLE AT AN INTERSECTION CURB RADIUS, A COMBINATION OF SQUARE OR RECTANGULAR PLATES AND RADIAL PLATES MAY BE USED TO FORM RADIAL CONFIGURATION. RADIAL WEDGE PLATES IN COMBINATION WITH SQUARE PLATES ARE ALSO ACCEPTABLE. FOLLOW MANUFACTURER'S RECOMMENDATIONS.

REFER TO CONTRACT AND STANDARD SPECIFICATIONS FOR FIELD CUTTING REQUIREMENTS.

DO NOT EMBED IN CONCRETE ANY FIELD-CUT PLATES WITH CUT EDGES SHORTER THAN 6 INCHES. CONSULT WITH MANUFACTURER FOR RE-DRILLING AND ANCHORING REQUIREMENTS OF FIELD-CUT PLATES.

(15) FIELD SAW CUTS ALONG RADIAL DETECTABLE WARNING PLATES WILL BE NECESSARY TO MATCH EACH CURB RAMP EDGE. AVOID CUTTING THROUGH DOMES WHENEVER POSSIBLE. MAKE FIELD CUTS TRUE TO LINE AND WITHIN ⅛" DEVIATION. SMOOTH EDGES OF FIELD CUT PLATES.

TRUNCATED DOMES
DETECTABLE WARNING PATTERN DETAIL

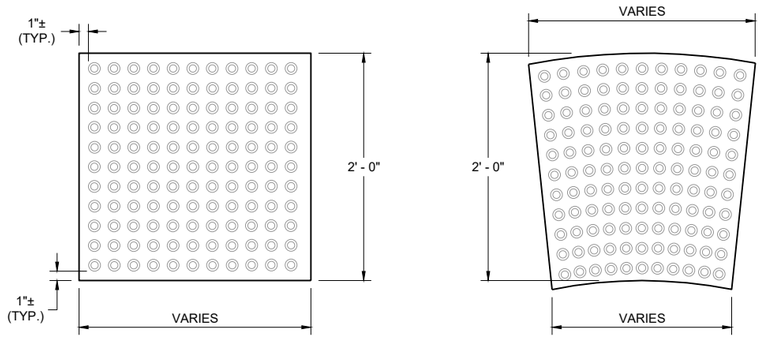

RECTANGULAR PLATES

RADIAL PLATES

PLAN VIEW
DETECTABLE WARNING FIELDS (TYPICAL)

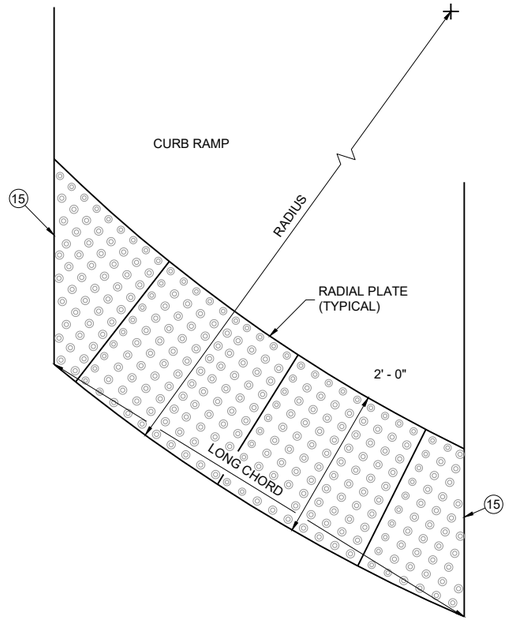

PLAN VIEW
RADIAL DETECTABLE WARNING FIELD ATTRIBUTES

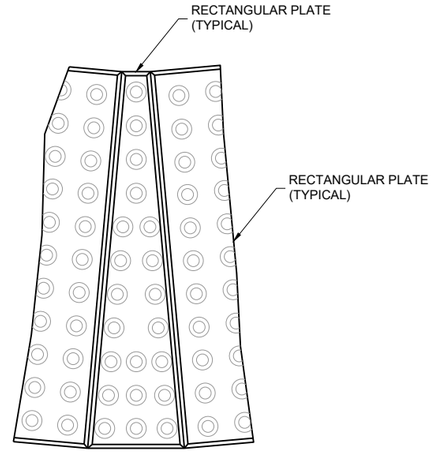

PLAN VIEW
RADIAL WEDGE PLATE CONNECTION DETAIL

CURB RAMPS
RECTANGULAR AND RADIAL
DETECTABLE WARNING PLATES

STATE OF WISCONSIN
DEPARTMENT OF TRANSPORTATION

APPROVED
February 2025 — DATE
/S/ Rodney Taylor — <position>

FHWA

6
SDD 08D05-22g

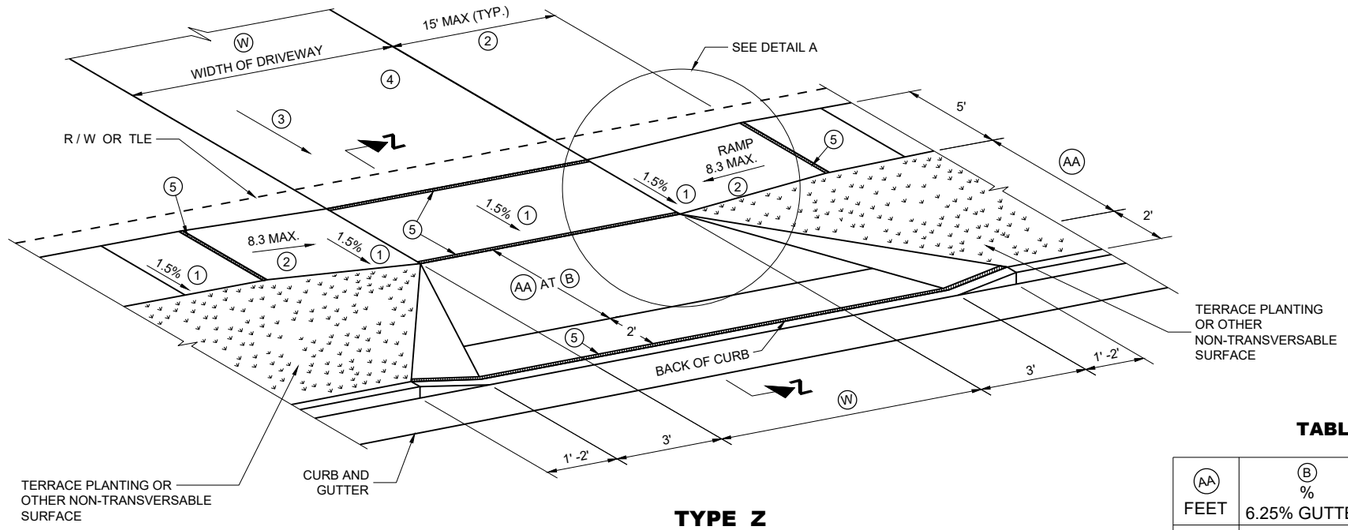

TYPE Z

SIDEWALK WITH WIDER TERRACE
TERRACE VARIES 7 TO 12 FEET

GENERAL NOTES

PROVIDE CONSTRUCTION JOINTS ALONG THE CENTER OF THE CONCRETE FOR DRIVEWAYS UNDER 20 FEET IN WIDTH AND AT THE THIRD POINTS OVER 20 FEET IN WIDTH.

(W) IS SHOWN ON PLAN AND PROFILE SHEETS.

OFFSETS, ELEVATIONS, AND PERCENT GRADE ARE SHOWN ON THE CROSS SECTIONS.

(1) CONSTRUCTION TOLERANCE OF 0.5%± FOR SIDEWALK CROSS SLOPE. THE SIDEWALK CROSS SLOPE SHALL NOT EXCEED 2.1%.

(2) THE SIDEWALK RAMP MAXIMUM RUNNING SLOPE SHALL NOT REQUIRE THE RAMP LENGTH TO EXCEED 15 FEET TO AVOID CHASING THE SLOPE INDEFINITELY WHEN CONNECTING TO STEEP GRADES. WHEN APPLYING THE 15 FOOT MAXIMUM LENGTH, THE RUNNING SLOPE OF THE SIDEWALK SHALL BE AS FLAT AS FEASIBLE AND NOT EXCEED THE LONGITUDINAL GRADE OF THE ROADWAY.

(3) DRIVEWAY SLOPES: DESIRABLE MAXIMUM
10.5% UP AWAY FROM SIDEWALK (SAG)
8.5% DOWN AWAY FROM SIDEWALK (CREST)
ABSOLUTE MAXIMUM 15% FOR BOTH CREST AND SAG

(4) DRIVEWAY TYPES
* 6-INCH CONCRETE DRIVEWAY PAVEMENT OVER 6-INCH BASE AGGREGATE 2-INCH
* TO 3-INCH ASPHALTIC SURFACE OVER 6-INCH BASE AGGREGATE 6-INCH BASE
* AGGREGATE (MAY BE INCREASED FOR CLAY SUBGRADES.)

(5) 1/2" EXPANSION JOINT FILLER.

(6) DETECABLE WARNING FIELDS ARE REQUIRED WHEN A PEDESTRIAN CIRCULATION ROUTE CROSSES A DRIVEWAY THAT IS TRAFFIC SIGNAL, STOP, OR YIELD CONTROLLED. DETECTABLE WARNING FIELDS TO BE 2 FT DEEP AND EXTEND THE WIDTH OF THE PEDESTRIAN CIRCULATION ROUTE.

(W): 12' MIN. - 24' MAX. RESIDENTIAL AND NON-COMMERCIAL (PE & FE)

16' MIN. - 35' MAX. COMMERCIAL (CE)

TABLE Z

(AA) FEET	(B) % 6.25% GUTTER	(B) % 4% GUTTER
4.5'	11.5%	9% TO 11.5%
5.5'	9% TO 11.5%	8% TO 11.5%
6.5'	8% TO 11.5%	6% TO 11.5%
7.5'	7% TO 11.5%	6% TO 11.5%
8.5'	6% TO 11.5%	5% TO 11.5%
9.5'	5% TO 11.5%	4% TO 11.5%

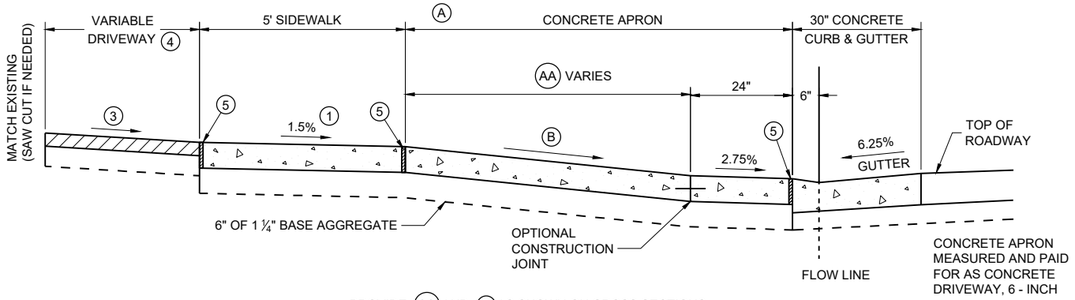

PROVIDE (AA) AND (B) AS SHOWN ON CROSS SECTIONS.

6.25% GUTTER SLOPE

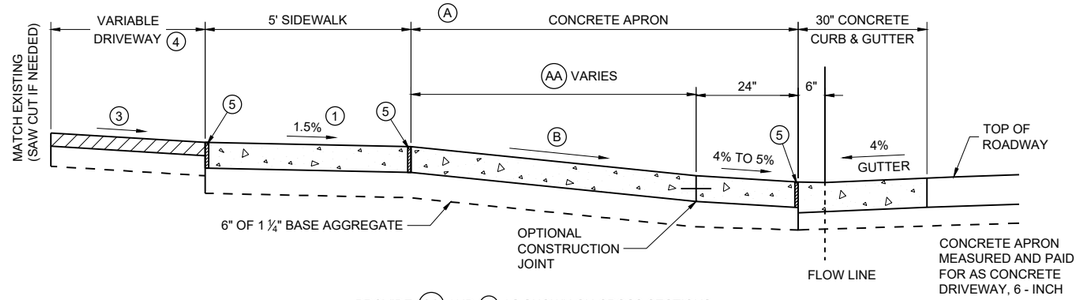

PROVIDE (AA) AND (B) AS SHOWN ON CROSS SECTIONS.

4% GUTTER SLOPE

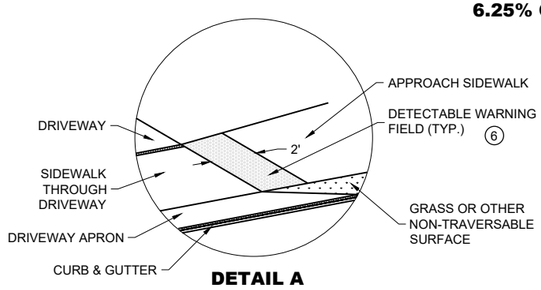

DETAIL A

NOTE: SIDEWALK MAY BE DEPRESSED IN DRIVEWAY AREAS FOR (B) VALUES NOT SHOWN IN TABLE Z.

SIDEWALK WITHIN THE LIMITS OF THE DRIVEWAY PAID FOR AS CONCRETE DRIVEWAY 6-INCH.

SECTION Z - Z
DRIVEWAY DETAIL WITH CONCRETE CURB AND GUTTER
(URBAN AND SUBURBAN)

DRIVEWAY AND SIDEWALK RAMPS TYPE Z

STATE OF WISCONSIN
DEPARTMENT OF TRANSPORTATION

APPROVED
July 2023 — DATE
/S/ Rodney Taylor — ROADWAY STANDARDS DEVELOPMENT UNIT SUPERVISOR

FHWA

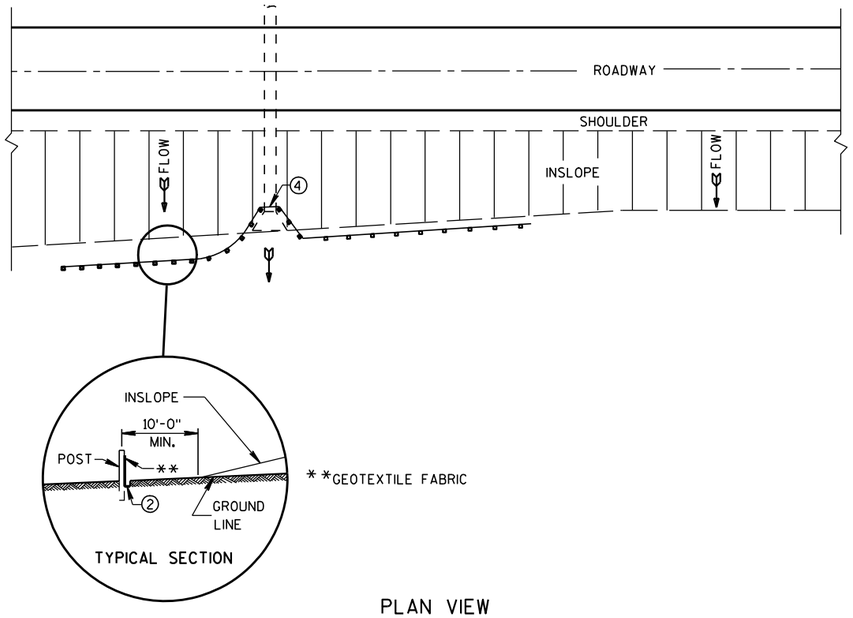

PLAN VIEW

TYPICAL APPLICATION OF SILT FENCE

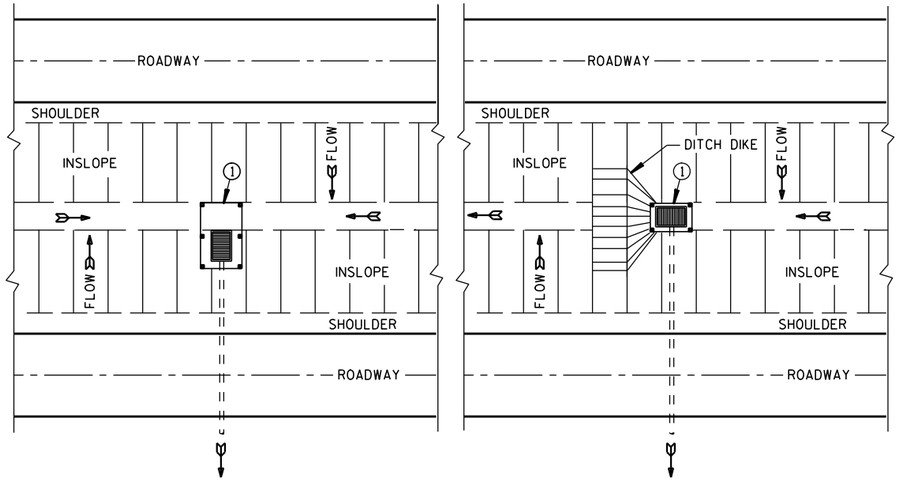

PLAN VIEW

SILT FENCE AT MEDIAN SURFACE DRAINS

GENERAL NOTES

DETAILS OF CONSTRUCTION NOT SHOWN ON THIS DRAWING SHALL CONFORM TO THE PERTINENT REQUIREMENTS OF THE STANDARD SPECIFICATIONS AND APPLICABLE SPECIAL PROVISIONS.

1. HORIZONTAL BRACE REQUIRED WITH 2" X 4" WOODEN FRAME OR EQUIVALENT AT TOP OF POSTS.
2. FOR MANUAL INSTALLATIONS THE TRENCH SHALL BE A MINIMUM OF 4" WIDE & 6" DEEP TO BURY AND ANCHOR THE GEOTEXTILE FABRIC. FOLD MATERIAL TO FIT TRENCH AND BACKFILL & COMPACT TRENCH WITH EXCAVATED SOIL.
3. WOOD POSTS SHALL BE A MINIMUM SIZE OF 1⅛" X 1⅛" OF OAK OR HICKORY.
4. SILT FENCE TO EXTEND ACROSS THE TOP OF THE PIPE.
5. CONSTRUCT SILT FENCE FROM A CONTINUOUS ROLL IF POSSIBLE BY CUTTING LENGTHS TO AVOID JOINTS. IF A JOINT IS NECESSARY USE ONE OF THE FOLLOWING TWO METHODS; A) OVERLAP THE END POSTS AND TWIST, OR ROTATE, AT LEAST 180 DEGREES, B) HOOK THE END OF EACH SILT FENCE LENGTH.

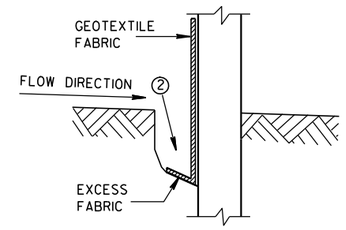

TRENCH DETAIL

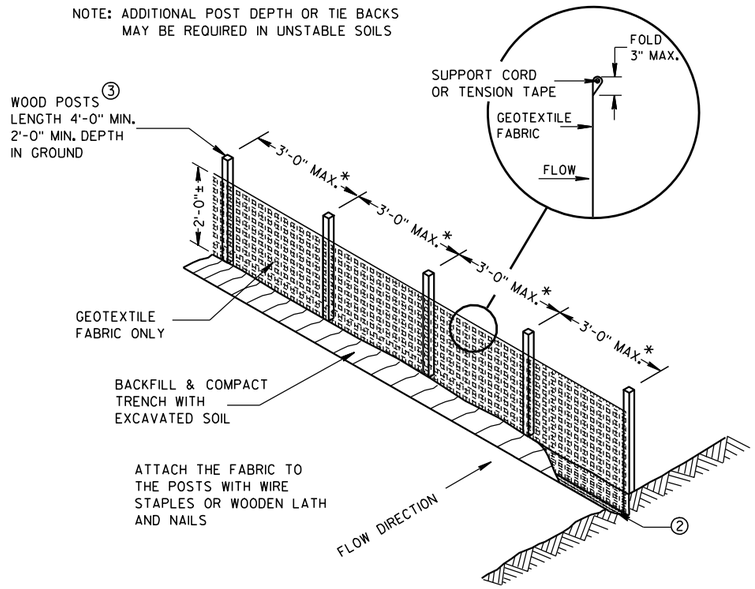

*NOTE: 8'-0" POST SPACING ALLOWED IF A WOVEN GEOTEXTILE FABRIC IS USED.

SILT FENCE

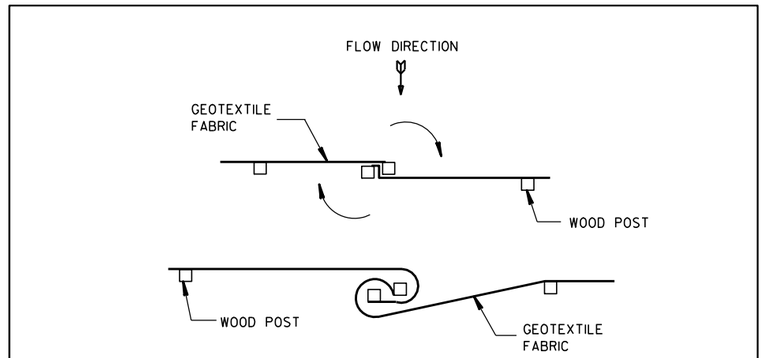

JOINING TWO LENGTHS OF SILT FENCE 5

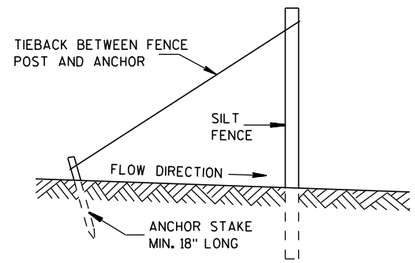

SILT FENCE TIE BACK

(WHEN REQUIRED BY THE ENGINEER)

SILT FENCE

STATE OF WISCONSIN
DEPARTMENT OF TRANSPORTATION

APPROVED
4-29-05 DATE
/S/ Beth Cannestra
CHIEF ROADWAY DEVELOPMENT ENGINEER
FHWA

6

S.D.D. 8 E 9-6

6

S.D.D. 8 E 9-6

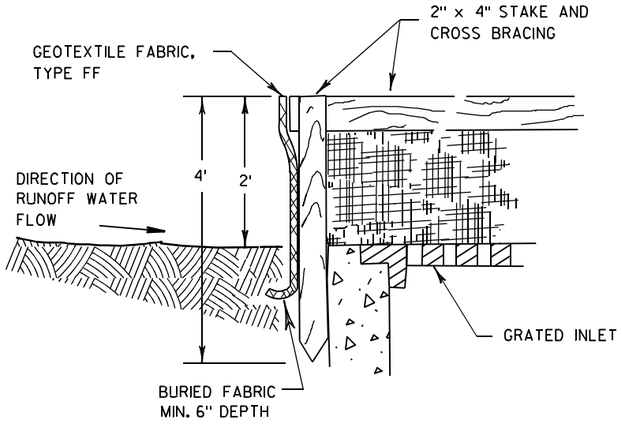

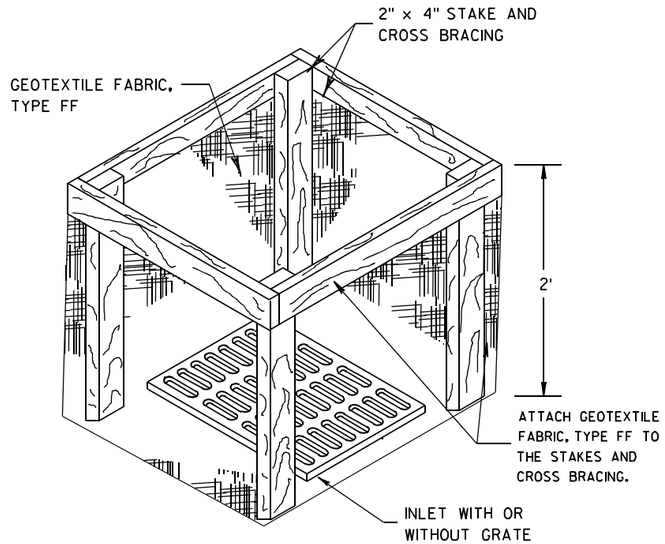

INLET PROTECTION, TYPE A

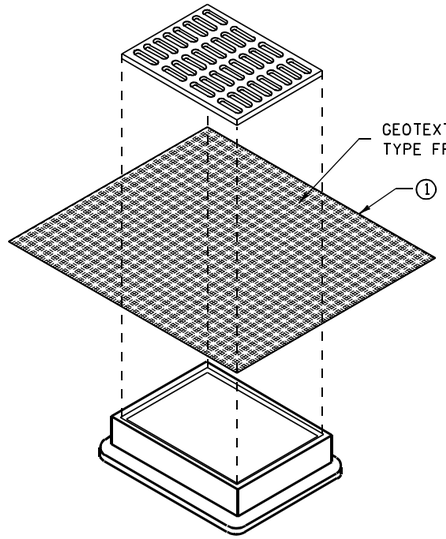

INLET PROTECTION, TYPE B
(WITHOUT CURB BOX)

(CAN BE INSTALLED IN ANY INLET WITHOUT A CURB BOX)

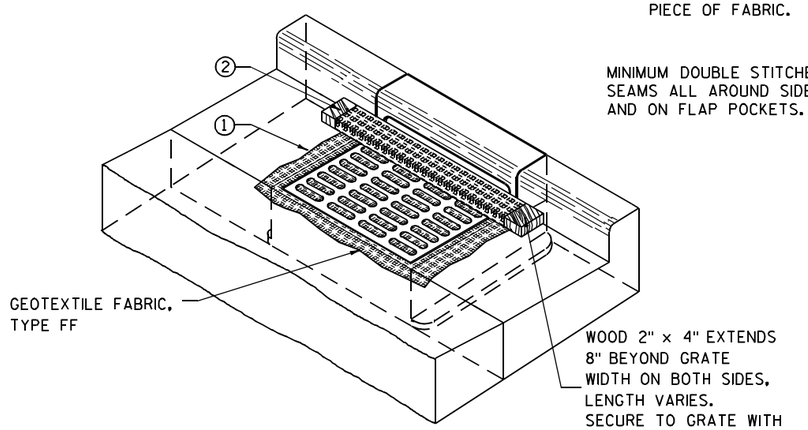

INLET PROTECTION, TYPE C (WITH CURB BOX)

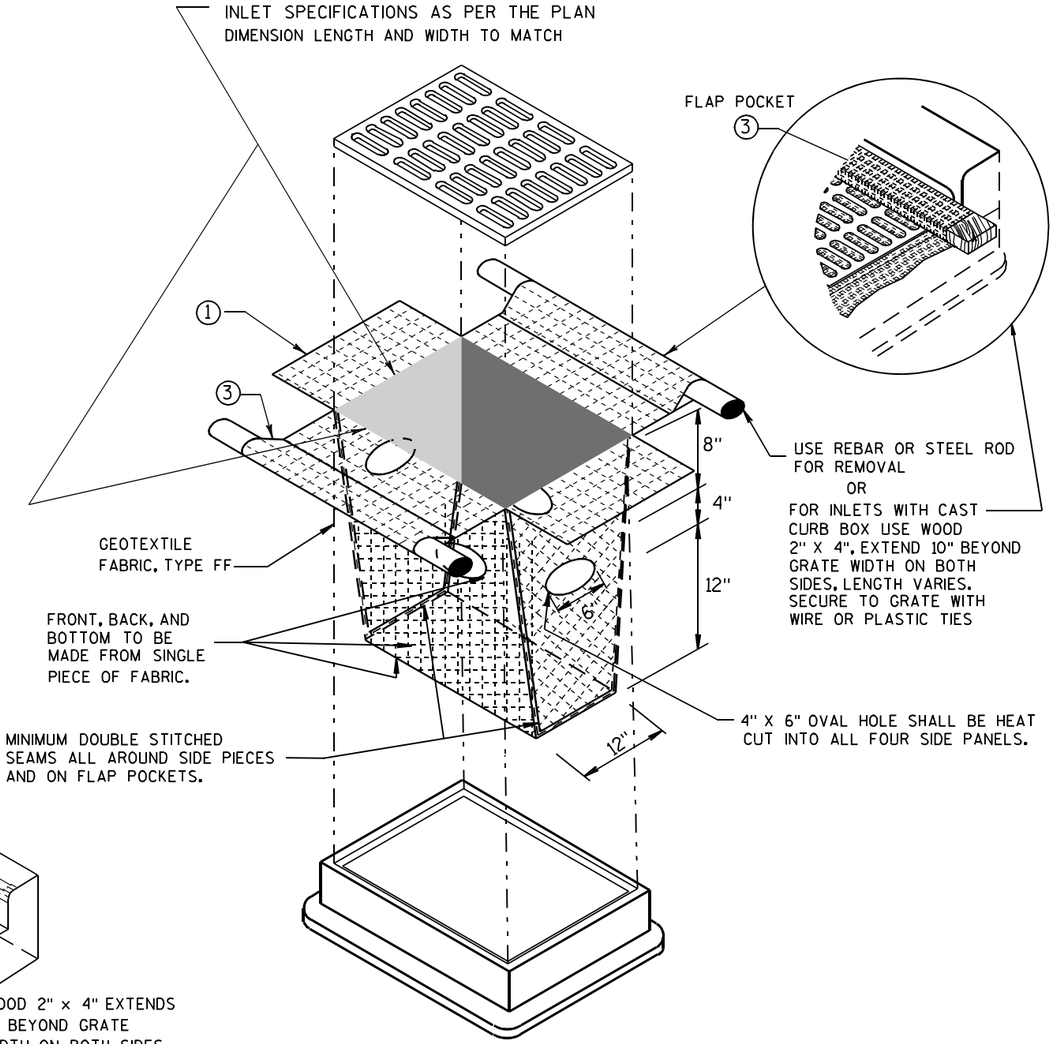

INLET PROTECTION, TYPE D

(CAN BE INSTALLED IN ANY INLET TYPE WITH
OR WITHOUT A CURB BOX AS PER NOTE ②)

GENERAL NOTES

INLET PROTECTION DEVICES SHALL BE MAINTAINED OR REPLACED AT THE DIRECTION OF THE ENGINEER.

MANUFACTURED ALTERNATIVES APPROVED AND LISTED ON THE DEPARTMENT'S EROSION CONTROL PRODUCT ACCEPTABILITY LIST MAY BE SUBSTITUTED.

WHEN REMOVING OR MAINTAINING INLET PROTECTION, CARE SHALL BE TAKEN SO THAT THE SEDIMENT TRAPPED ON THE GEOTEXTILE FABRIC DOES NOT FALL INTO THE INLET. ANY MATERIAL FALLING INTO THE INLET SHALL BE REMOVED IMMEDIATELY.

① FINISHED SIZE, INCLUDING FLAP POCKETS WHERE REQUIRED, SHALL EXTEND A MINIMUM OF 10" AROUND THE PERIMETER TO FACILITATE MAINTENANCE OR REMOVAL.

② FOR INLET PROTECTION, TYPE C (WITH CURB BOX), AN ADDITIONAL 18" OF FABRIC IS WRAPPED AROUND THE WOOD AND SECURED WITH STAPLES. THE WOOD SHALL NOT BLOCK THE ENTIRE HEIGHT OF THE CURB BOX OPENING.

③ FLAP POCKETS SHALL BE LARGE ENOUGH TO ACCEPT WOOD 2X4.

INSTALLATION NOTES

TYPE B & C

TRIM EXCESS FABRIC IN THE FLOW LINE TO WITHIN 3" OF THE GRATE.

THE CONTRACTOR SHALL DEMONSTRATE A METHOD OF MAINTENANCE, USING A SEWN FLAP, HAND HOLDS OR OTHER METHOD TO PREVENT ACCUMULATED SEDIMENT FROM ENTERING THE INLET.

TYPE D

DO NOT INSTALL INLET PROTECTION TYPE D IN INLETS SHALLOWER THAN 30", MEASURED FROM THE BOTTOM OF THE INLET TO THE TOP OF THE GRATE.

TRIM EXCESS FABRIC IN THE FLOW LINE TO WITHIN 3" OF THE GRATE.

THE INSTALLED BAG SHALL HAVE A MINIMUM SIDE CLEARANCE, BETWEEN THE INLET WALLS AND THE BAG, MEASURED AT THE BOTTOM OF THE OVERFLOW HOLES, OF 3". WHERE NECESSARY THE CONTRACTOR SHALL CINCH THE BAG, USING PLASTIC ZIP TIES, TO ACHIEVE THE 3" CLEARANCE. THE TIES SHALL BE PLACED AT A MAXIMUM OF 4" FROM THE BOTTOM OF THE BAG.

INLET PROTECTION
TYPE A, B, C, AND D

STATE OF WISCONSIN
DEPARTMENT OF TRANSPORTATION

APPROVED
10/16/02
DATE
/S/ Beth Cannestra
CHIEF ROADWAY DEVELOPMENT ENGINEER
FHWA

6
S.D.D. 8 E 10-2

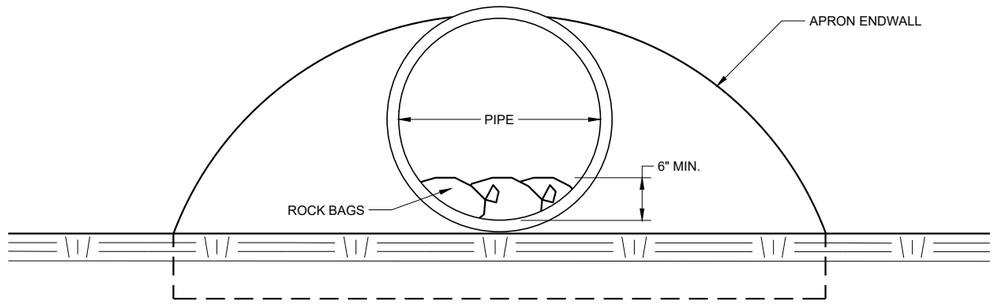

END VIEW

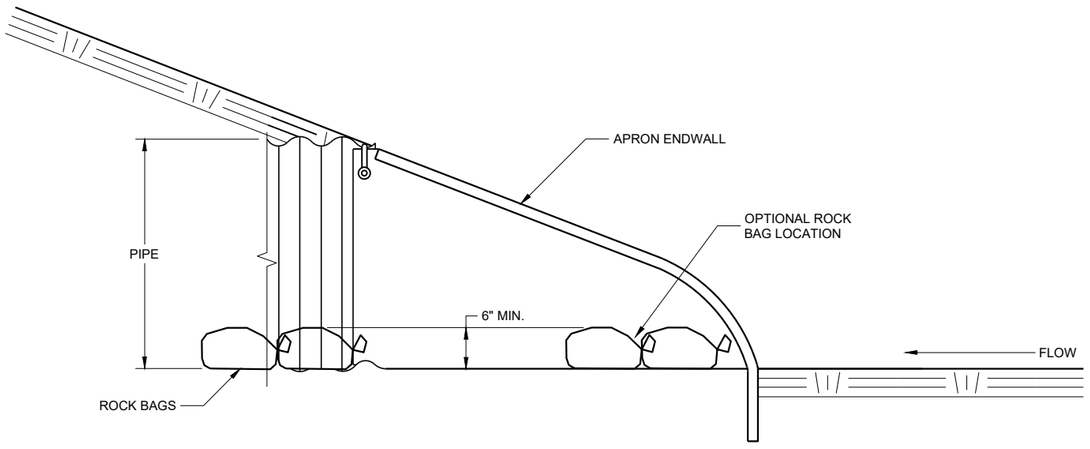

SIDE VIEW

CULVERT PIPE CHECK

(INSTALL ON INLET END ONLY)

CULVERT PIPE CHECK

STATE OF WISCONSIN
DEPARTMENT OF TRANSPORTATION

APPROVED
May 2019
DATE

/S/ Daniel Schave
EROSION CONTROL ENGI

FHWA

6

SDD 08E15 - 01

6

SDD 08E15 - 01

METAL APRON ENDWALLS

PIPE DIA. (IN.)	MIN. THICK. (Inches) STEEL	MIN. THICK. (Inches) ALUM.	DIMENSIONS (Inches) A (±1")	B (MAX.)	H (±1")	L (±1 1/2")	L1 ①	L2 ①	W (±2")	APPROX. SLOPE	BODY
12	.064	.060	6	6	6	21	12	17 1/2	24	2 1/2 to 1	1 Pc.
15	.064	.060	7	8	6	26	14	21 3/4	30	2 1/2 to 1	1 Pc.
18	.064	.060	8	10	6	31	15	28 1/4	36	2 1/2 to 1	1 Pc.
21	.064	.060	9	12	6	36	18	29 5/8	42	2 1/2 to 1	1 Pc.
24	.064	.075	10	13	6	41	18	37 1/4	48	2 1/2 to 1	1 Pc.
30	.079	.075	12	16	8	51	18	52 1/4	60	2 1/2 to 1	1 Pc.
36	.079	.105	14	19	9	60	24	59 3/4	72	2 1/2 to 1	2 Pc.
42	.109	.105	16	22	11	69	24	75 5/8	84	2 1/2 to 1	2 Pc.
48	.109	.105	18	27	12	78	24	81	90	2 1/4 to 1	3 Pc.
54	.109	.105	18	30	12	84	30	85 1/2	102	2 1/4 to 1	3 Pc.
60	.109×	.105×	18	33	12	87	—	—	114	2 to 1	3 Pc.
66	.109×	.105×	18	36	12	87	—	—	120	2 to 1	3 Pc.
72	.109×	.105×	18	39	12	87	—	—	126	2 to 1	3 Pc.
78	.109×	.105×	18	42	12	87	—	—	132	1 1/2 to 1	3 Pc.
84	.109×	.105×	18	45	12	87	—	—	138	1 1/2 to 1	3 Pc.
90	.109×	.105×	18	37	12	87	—	—	144	1 1/2 to 1	3 Pc.
96	.109×	.105×	18	35	12	87	—	—	150	1 1/2 to 1	3 Pc.

× EXCEPT CENTER PANEL SEE GENERAL NOTES

REINFORCED CONCRETE APRON ENDWALLS

PIPE DIA. (IN.)	DIMENSIONS (Inches) T	A	B	C	D	E	G	APPROX. SLOPE
12	2	4	24	48 7/8	72 1/8	24	2	3 to 1
15	2 1/4	6	27	46	73	30	2 1/4	3 to 1
18	2 1/2	9	27	46	73	36	2 1/2	3 to 1
21	2 3/4	9	36	37 1/2	73 1/2	42	2 3/4	3 to 1
24	3	9 1/2	43 1/2	30	73 1/2	48	3	3 to 1
27	3 1/4	10 1/2	49 1/2	24	73 1/2	54	3 1/4	3 to 1
30	3 1/2	12	54	19 3/4	73 1/2	60	3 1/2	3 to 1
36	4	15	63	34 3/4	97 3/4	72	4	3 to 1
42	4 1/2	21	63	35	98	78	4 1/2	3 to 1
48	5	24	72	26	98	84	5	3 to 1
54	5 1/2	27	65	* 33 1/4 - ** 35	* 98 1/4 - ** 100	90	5 1/2	2 2/5 to 1
60	6	* 30 - ** 35	60	39	99	96	5	2 to 1
66	6 1/2	* 24 - ** 30	* 72 - ** 78	* 21 - ** 27	99	102	5 1/2	2 to 1
72	7	* 24 - ** 36	78	21	99	108	6	2 to 1
78	7 1/2	* 24 - ** 36	78	21	99	114	6 1/2	2 to 1
84	8	36	90 1/2	21	111 1/2	120	6 1/2	1 1/2 to 1
90	8 1/2	41	87 1/2	24	111 1/2	132	6 1/2	1 1/2 to 1

*MINIMUM
**MAXIMUM

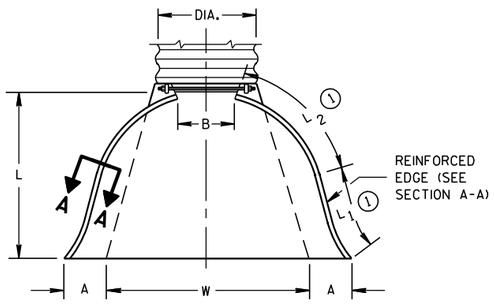

PLAN VIEW

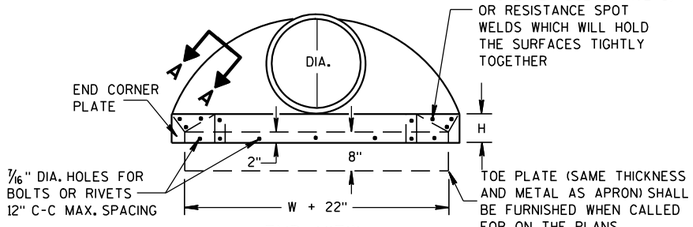

END VIEW

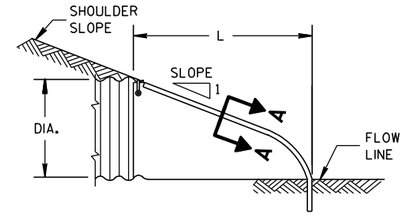

SIDE ELEVATION

METAL ENDWALLS

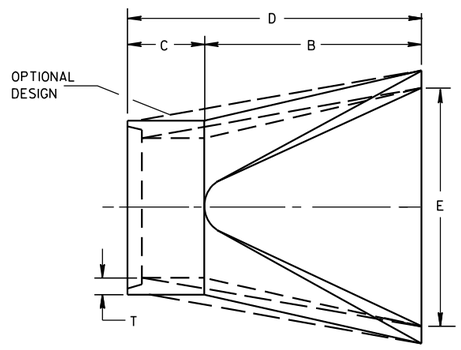

PLAN

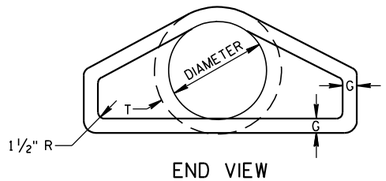

END VIEW

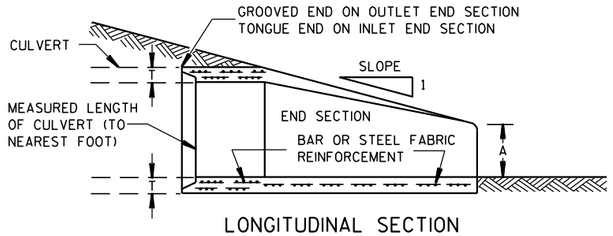

LONGITUDINAL SECTION

CONCRETE ENDWALLS

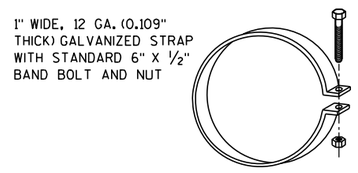

ALTERNATE FOR TYPE 1 CONNECTION

END SECTION CONNECTOR STRAP

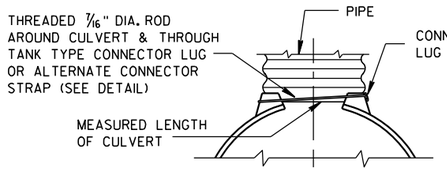

TYPE 1
FOR 12" THRU 24" CORR. PIPE

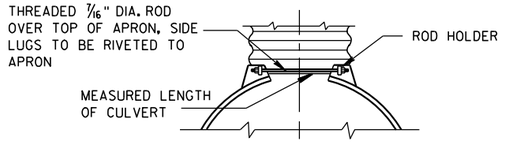

TYPE 2
FOR 30" THRU 96" CORR. PIPE

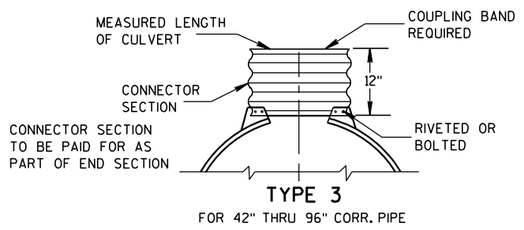

TYPE 3
FOR 42" THRU 96" CORR. PIPE

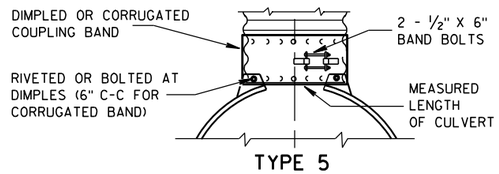

TYPE 5
ALTERNATE FOR:
ALL SIZES CORRUGATED CIRCULAR PIPE

NOTE: DIMPLED BAND FITS OVER OUTSIDE OF ENDWALL. AND CORRUGATED BAND FITS INSIDE ENDWALL. DIMPLED BAND MAY BE USED WITH HELICALLY CORRUGATED PIPE.

FOR CIRCUMFERENTIALLY CORRUGATED PIPE USE ENDWALL CONNECTION DETAILS 1, 2, 3 OR 5 AS APPLICABLE.

FOR HELICALLY CORRUGATED PIPE USE ENDWALL CONNECTION DETAILS 1, 2 OR 5.

FOR HELICALLY CORRUGATED PIPES WITH TWO CIRCUMFERENTIAL CORRUGATIONS AT EACH END USE ENDWALL CONNECTION DETAILS 1, 2 OR 3.

CONNECTION DETAILS

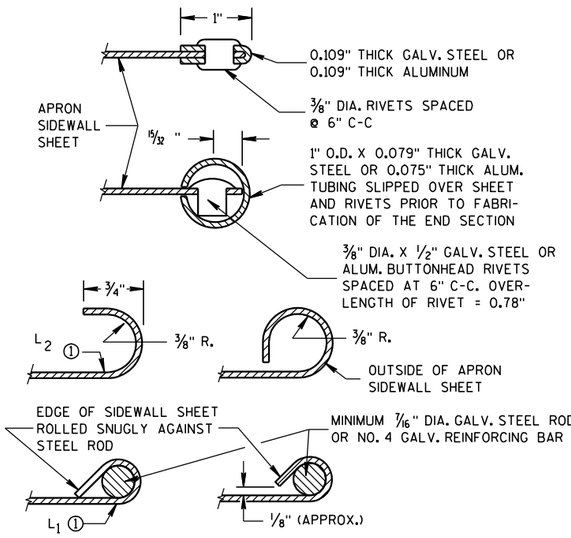

SECTION A-A

GENERAL NOTES

DETAILS OF CONSTRUCTION, MATERIALS AND WORKMANSHIP NOT SHOWN ON THIS DRAWING SHALL CONFORM TO THE PERTINENT REQUIREMENTS OF THE STANDARD SPECIFICATIONS AND THE APPLICABLE SPECIAL PROVISIONS.

CONCRETE CULVERT ENDWALLS MAY NOT BE USED WITH GALVANIZED STEEL OR ALUMINUM CULVERT PIPE OR VISE VERSA. GALVANIZED STEEL OR ALUMINUM ENDWALLS SHALL NORMALLY BE INSTALLED ON CULVERT PIPE OF THE SAME METAL.

ALL THREE PIECE STEEL APRON ENDWALLS FOR 60" DIAMETER PIPE AND LARGER SHALL HAVE 0.109" SIDES AND 0.138" CENTER PANELS. ALL THREE PIECE ALUMINUM APRON ENDWALLS FOR 60" DIAMETER PIPE AND LARGER SHALL HAVE 0.105" SIDES AND 0.134" CENTER PANELS. THE WIDTH OF CENTER PANELS SHALL BE GREATER THAN 20 PERCENT OF THE PIPE PERIMETER.

LAP SEAMS SHALL BE TIGHTLY JOINED BY GALVANIZED RIVETS OR BOLTS FOR STEEL UNITS AND ALUMINUM RIVETS AND BOLTS FOR ALUMINUM UNITS. FOR THE 60" THROUGH 96" DIAMETER APRON ENDWALL SIZES, THE REINFORCED EDGES AND CENTER PANEL SEAMS SHALL BE FURTHER REINFORCED WITH GALVANIZED STEEL OR ALUMINUM STIFFENER ANGLES. THE ANGLES SHALL BE ATTACHED BY GALVANIZED NUTS AND BOLTS FOR STEEL UNITS AND ALUMINUM NUTS AND BOLTS FOR ALUMINUM UNITS.

WHERE TWO OR MORE PIPES WITH APRON ENDWALLS ARE LAID ADJACENT TO EACH OTHER, THEY SHALL BE SEPARATED BY A DISTANCE SUFFICIENT TO PROVIDE A MINIMUM CLEARANCE OF 6 INCHES BETWEEN APRON ENDWALLS.

① FOR PIPE SIZES UP TO 60" DIAMETER, A 180° ROLLED EDGE MAY BE USED INSTEAD OF STEEL ROD REINFORCEMENT. SEE SECTION A-A.

APRON ENDWALLS FOR CULVERT PIPE

STATE OF WISCONSIN
DEPARTMENT OF TRANSPORTATION

APPROVED
11/30/94 DATE
/S/ Rory L. Rhinesmith
CHIEF ROADWAY DEVELOPMENT ENGINEER
FHWA

6
S.D.D. 8 F 1-11

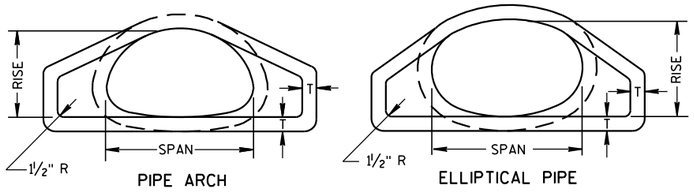

END VIEW

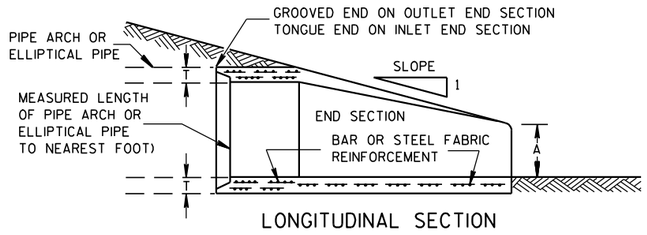

LONGITUDINAL SECTION

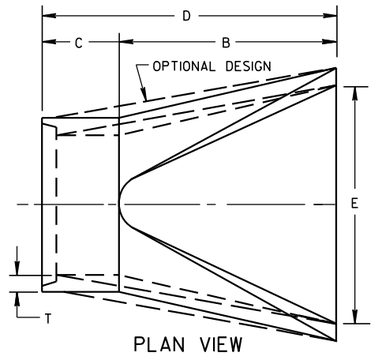

PLAN VIEW

CONCRETE ENDWALLS

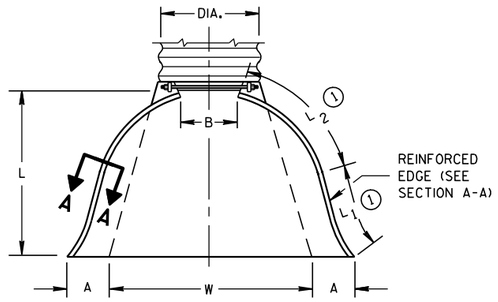

PLAN VIEW

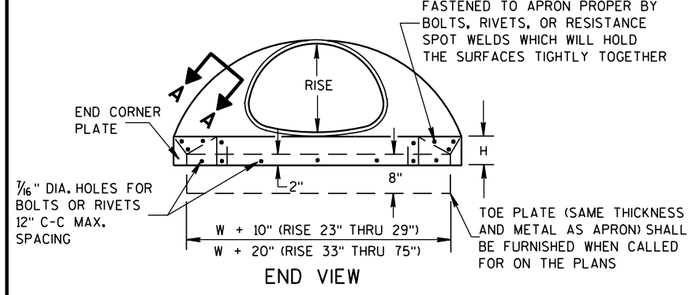

END CORNER PLATES MAY BE FASTENED TO APRON PROPER BY BOLTS, RIVETS, OR RESISTANCE SPOT WELDS WHICH WILL HOLD THE SURFACES TIGHTLY TOGETHER

END VIEW

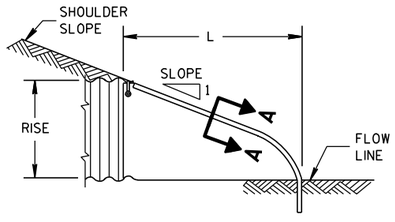

SIDE ELEVATION

METAL ENDWALLS

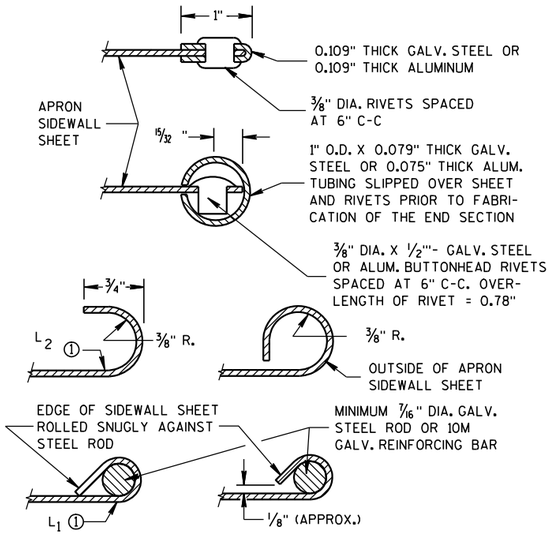

SECTION A-A

2- ⅔" X ½" CORRUGATIONS

EQUIV. DIA. (Inches)	(Inches) SPAN	(Inches) RISE	MIN. THICK. (Inches) STEEL	MIN. THICK. (Inches) ALUM.	DIMENSIONS (Inches) A (±1")	B (MAX.)	H (±1")	L (±1½")	L1 ①	L2 ①	W (±2")	APPROX. SLOPE	BODY
15	17	13	.064	.060	7	9	6	19	14	16	30	2½ to 1	1 Pc.
18	21	15	.064	.060	7	10	6	23	14	19⅜	36	2½ to 1	1 Pc.
21	24	18	.064	.060	8	12	6	28	18	21¾	42	2½ to 1	1 Pc.
24	28	20	.064	.060	9	14	6	32	18	27½	48	2½ to 1	1 Pc.
30	35	24	.079	.075	10	16	6	39	18	37⅝	60	2½ to 1	1 Pc.
36	42	29	.079	.075	12	18	8	46	24	45⅜	75	2½ to 1	1 Pc.
42	49	33	.109	.105	13	21	9	53	24	54¾	85	2½ to 1	2 Pc.
48	57	38	.109	.105	18	26	12	63	24	68	90	2½ to 1	3 Pc.
54	64	43	.109	.105	18	30	12	70	24	72¾	102	2¼ to 1	3 Pc.
60	71	47	.109*	.105*	18	33	12	77	30	82¼	114	2¼ to 1	3 Pc.
66	77	52	.109*	.105*	18	36	12	77	—	—	126	2 to 1	3 Pc.
72	83	57	.109*	.105*	18	39	12	77	—	—	138	2 to 1	3 Pc.

3" X 1" CORRUGATIONS

EQUIV. DIA. (Inches)	(Inches) SPAN	(Inches) RISE	MIN. THICK. (Inches) STEEL	MIN. THICK. (Inches) ALUM.	DIMENSIONS (Inches) A (±1")	B (MAX.)	H (±1")	L (±1½")	L1 ①	L2 ①	W (±2")	APPROX. SLOPE	BODY
48	53	41	.109	.105	18	26	12	63	24	72¾	90	2½ to 1	2 Pc.
54	60	46	.109	.105	18	30	12	70	30	82¼	102	2 to 1	2 Pc.
60	66	51	.109*	.105*	18	33	12	77	—	—	114	1½ to 1	3 Pc.
66	73	55	.109*	.105*	18	36	12	77	—	—	126	1½ to 1	3 Pc.
72	81	59	.109*	.105*	18	39	12	77	—	—	138	2 to 1	3 Pc.
78	87	63	.109*	.105*	22	38	12	77	—	—	148	1½ to 1	3 Pc.
84	95	67	.109*	.105*	22	34	12	77	—	—	162	1½ to 1	3 Pc.
90	103	71	.109*	.105*	22	38	12	77	—	—	174	1½ to 1	3 Pc.
96	112	75	.109*	.105*	24	40	12	77	—	—	174	1½ to 1	3 Pc.

NOTE: ALL SPLICES TO BE LAP RIVETED OR BOLTED.

* EXCEPT CENTER PANEL SEE GENERAL NOTES

REINFORCED CONCRETE PIPE ARCH

EQUIV. DIA. (Inches)	DIMENSIONS (Inches) ** SPAN	** RISE	T	A	B	C	D	E	APPROX. SLOPE
24	29	18	3	8½	39	33	72	48	3 to 1
30	36	22	3½	9½	50	46	96	60	3 to 1
36	44	27	4	11⅛	60	36	96	72	3 to 1
42	51	31	4½	15 13/16	60	36	96	78	3 to 1
48	58	36	5	21	60	36	96	84	3 to 1
54	65	40	5½	25½	60	36	96	90	3 to 1
60	73	45	6	31	60	36	96	96	3 to 1
72	88	54	7	31	60	39	99	120	2 to 1
84	102	62	8	28½	83	19	102	144	2 to 1

REINFORCED CONCRETE ELLIPTICAL PIPE

EQUIV. DIA. (Inches)	DIMENSIONS (Inches) ** SPAN	** RISE	T	A	B	C	D	E	APPROX. SLOPE
24	30	19	3¼	8½	39	33	72	48	3 to 1
30	38	24	3¾	9½	54	18	72	60	3 to 1
36	45	29	4½	11⅛	60	24	84	72	2½ to 1
42	53	34	5	15¾	60	36	96	78	2½ to 1
48	60	38	5½	21	60	36	96	84	2½ to 1
54	68	43	6	25½	60	36	96	90	2½ to 1
60	76	48	6½	30	60	36	96	96	2½ to 1

**NOMINAL SIZE

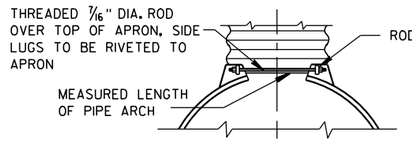

TYPE 2

FOR 17" X 13" THRU 112" X 75" PIPE ARCH

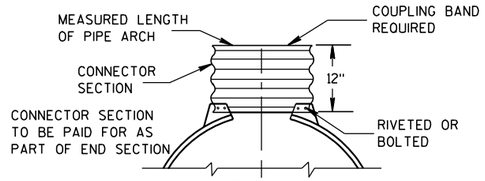

TYPE 3

FOR 64" X 43" THRU 112" X 75" PIPE ARCH

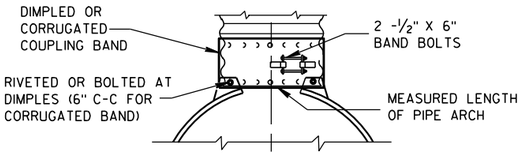

TYPE 5

ALTERNATE FOR:

ALL SIZES CORRUGATED PIPE ARCHES

NOTE: DIMPLED BAND FITS OVER OUTSIDE OF ENDWALL, AND CORRUGATED BAND FITS INSIDE ENDWALL.

CONNECTION DETAILS

GENERAL NOTES

DETAILS OF CONSTRUCTION, MATERIALS AND WORKMANSHIP NOT SHOWN ON THIS DRAWING SHALL CONFORM TO THE PERTINENT REQUIREMENTS OF THE STANDARD SPECIFICATIONS AND THE APPLICABLE SPECIAL PROVISIONS.

CONCRETE APRON ENDWALLS MAY NOT BE USED WITH GALVANIZED STEEL OR ALUMINUM CULVERT PIPE OR VISE VERSA. GALVANIZED STEEL OR ALUMINUM APRON ENDWALLS SHALL NORMALLY BE INSTALLED ON CULVERT PIPE OF THE SAME METAL.

ALL THREE PIECE STEEL APRON ENDWALLS FOR 66" X 51" PIPE ARCH AND LARGER SHALL HAVE 0.109" SIDES AND 0.138" CENTER PANELS. ALL THREE PIECE ALUMINUM APRON ENDWALLS FOR 66" X 51" PIPE ARCH AND LARGER SHALL HAVE 0.105" SIDES AND 0.134" CENTER PANELS. THE WIDTH OF CENTER PANELS SHALL BE GREATER THAN 20 PERCENT OF THE PIPE ARCH PERIMETER.

LAP SEAMS SHALL BE TIGHTLY JOINED BY GALVANIZED RIVETS OR BOLTS FOR STEEL UNITS AND ALUMINUM RIVETS AND BOLTS FOR ALUMINUM UNITS. FOR THE 77" X 52" THROUGH 112" X 75" APRON ENDWALL SIZES, THE REINFORCED EDGES AND CENTER PANEL SEAMS SHALL BE FURTHER REINFORCED WITH GALVANIZED STEEL OR ALUMINUM STIFFENER ANGLES. THE ANGLES SHALL BE ATTACHED BY GALVANIZED NUTS AND BOLTS FOR STEEL UNITS AND ALUMINUM NUTS AND BOLTS FOR ALUMINUM UNITS.

WHERE TWO OR MORE PIPES WITH APRON ENDWALLS ARE LAID ADJACENT TO EACH OTHER, THEY SHALL BE SEPARATED BY A DISTANCE SUFFICIENT TO PROVIDE A MINIMUM CLEARANCE OF 6 INCHES BETWEEN APRON ENDWALLS.

① FOR PIPE ARCH SIZES UP TO 73" X 55" A 180° ROLLED EDGE MAY BE USED INSTEAD OF STEEL ROD REINFORCEMENT. SEE SECTION A-A.

APRON ENDWALLS FOR PIPE ARCH AND ELLIPTICAL PIPE

STATE OF WISCONSIN
DEPARTMENT OF TRANSPORTATION

APPROVED

11/30/94 — DATE

/S/ Rory L. Rhinesmith — CHIEF ROADWAY DEVELOPMENT ENGINEER

FHWA

6

S.D.D. 8 F 2-1

6

S.D.D. 8 F 2-1

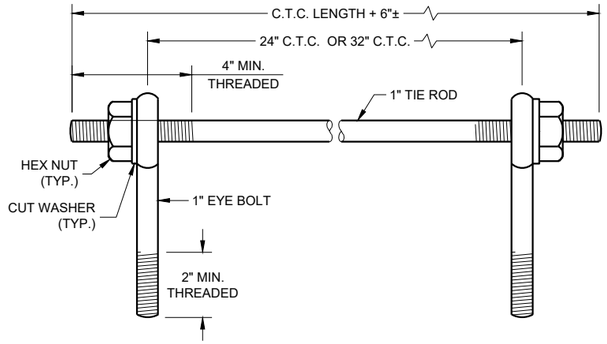

EYE BOLTS AND TIE ROD

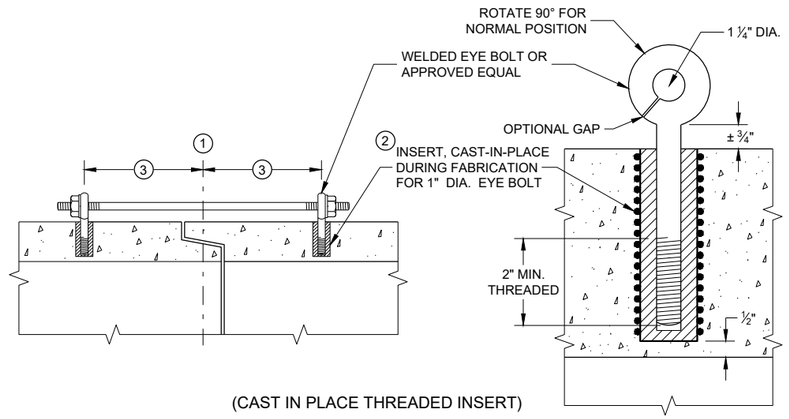

(CAST IN PLACE THREADED INSERT)

LONGITUDINAL SECTIONS

EYE BOLT AND TIE ROD ASSEMBLY (ALTERNATE NO. 1)

GENERAL NOTES

DETAILS OF CONSTRUCTION, MATERIALS, AND WORKMANSHIP NOT SHOWN ON THIS DRAWING SHALL CONFORM TO THE PERTINENT REQUIREMENTS OF THE STANDARD SPECIFICATIONS AND APPLICABLE SPECIAL PROVISIONS.

CONCRETE CULVERT AND STORM SEWER PIPE SHALL BE TIED TOGETHER IN THE MANNER ILLUSTRATED BY THIS DETAIL AT LOCATIONS DESIGNATED IN THE STANDARD SPECIFICATIONS AND THE PLAN. THE CONTRACTOR MAY USE EITHER ALTERNATE 1, 2 OR 3 FOR DRAINAGE STRUCTURES. ONLY ALTERNATE 1 AND 3 MAY BE USED FOR CATTLE PASSES, UNLESS OTHERWISE STATED IN THE CONTRACT. THE MATERIALS, FABRICATION AND WORK NECESSARY TO TIE THE PIPE BY THIS DETAIL WILL BE CONSIDERED INCIDENTAL TO THE PIPE AND APRON ENDWALLS IF REQUIRED.

DETAILED DRAWINGS FOR PROPOSED ALTERNATE DESIGNS FOR JOINT TIES SHALL BE SUBMITTED TO THE ENGINEER FOR APPROVAL.

JOINT TIES TO BE HOT-DIP GALVANIZED PER ASTM A 153.

(1) CENTER LINE OF TONGUE AND GROOVE OR BELL AND SPIGOT JOINTS.

(2) THE INSIDE OF THE THREADED INSERTS SHALL BE CLEAN TO ALLOW THE INSERTION OF THREADED EYE BOLTS.

(3) HOLES SHALL BE CAST-IN-PLACE OR DRILLED PER THE APPLICABLE DETAIL, AND EQUAL DISTANCE FROM THE CENTERLINE OF THE JOINT.

(4) BOLT PROJECTION INSIDE OF PIPE SHALL NOT EXCEED 2 INCHES.

(5) OPENING TO BE ROD DIAMETER PLUS 1 INCH.

(6) LENGTH ADEQUATE TO EXTEND TO WITHIN ½ INCH OF THE INNER SURFACE OF THE PIPE.

(7) EYE BOLT LENGTH DETERMINED BY WALL THICKNESS, BELL THICKNESS AND BOLT PROJECTION INSIDE PIPE.

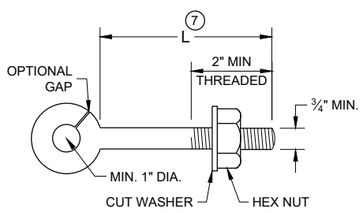

EYE BOLT (7)

NOTE: TWO EYE BOLTS MAY BE USED WITH A 30" OR 38" LONG THREADED ROD IN LIEU OF THE 90° BENT TIE ROD.

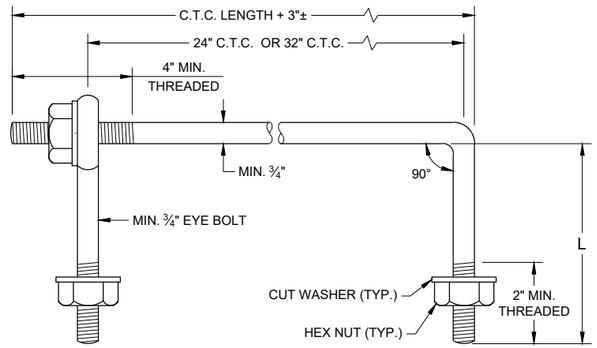

EYE BOLT AND TIE ROD

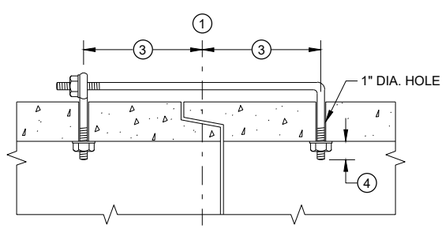

(TONGUE AND GROOVE PIPE)

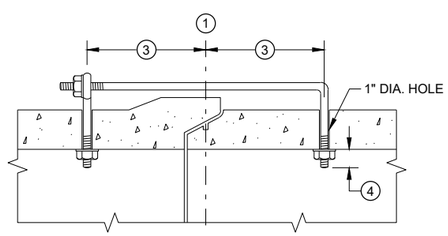

(MODIFIED BELL PIPE)

LONGITUDINAL SECTION

(JOINT TIES FOR 18" TO 66" DIA. CONCRETE PIPE)

EYE BOLT AND TIE ROD ASSEMBLY (ALTERNATE NO. 2)

ADJUSTABLE TIE ROD TABLE

PIPE DIAMETER	TIE ROD DIAMETER	D	L_1	N
12 - 60	⅝	⅝	5	½
66 - 84	¾	¾	5	½
90 - 144	1	1	7	1 7/16

DIMENSIONS SHOWN ARE IN INCHES

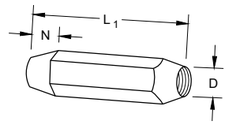

TAPERED

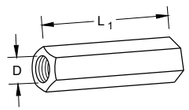

PLAIN

RIGHT AND LEFT THREADS

SLEEVE NUTS

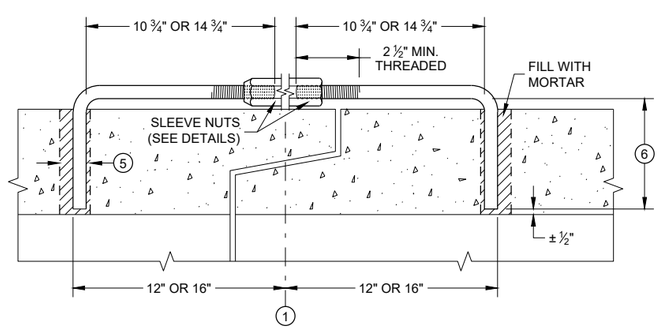

LONGITUDINAL SECTION

ADJUSTABLE TIE ROD (ALTERNATE NO. 3)

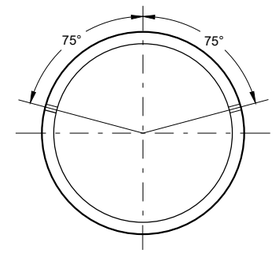

PLACEMENT OF (2) CAST-IN-PLACE INSERTS OR HOLES DURING FABRICATION FOR PIPE SECTIONS REQUIRING TIE RODS

TRANSVERSE SECTION

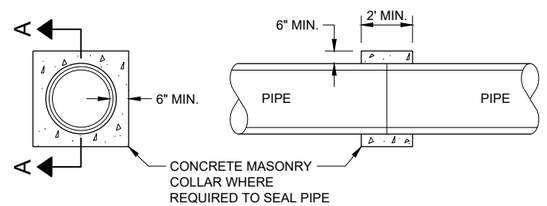

SECTION A - A

CONCRETE COLLAR DETAIL

JOINT TIES FOR CONCRETE PIPE AND CONCRETE COLLAR DETAIL

STATE OF WISCONSIN
DEPARTMENT OF TRANSPORTATION

APPROVED
November 2021 — DATE
/S/ Rodney Taylor — ROADWAY STANDARDS DEVE ENGINEER
FHWA

SDD 08F04 - 08

SDD 08F04 - 08

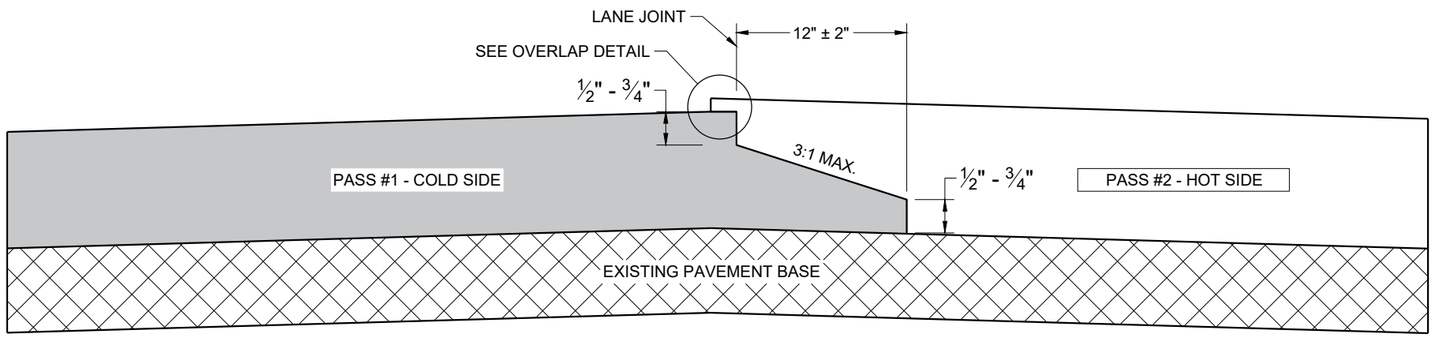

TYPICAL PAVEMENT CROSS SECTION
NOTCHED WEDGE JOINT

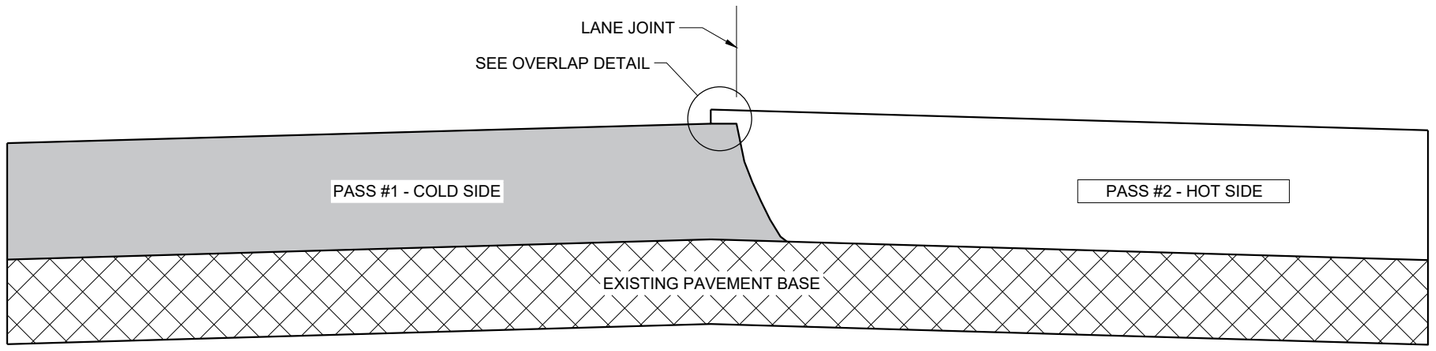

TYPICAL PAVEMENT CROSS SECTION
VERTICAL JOINT

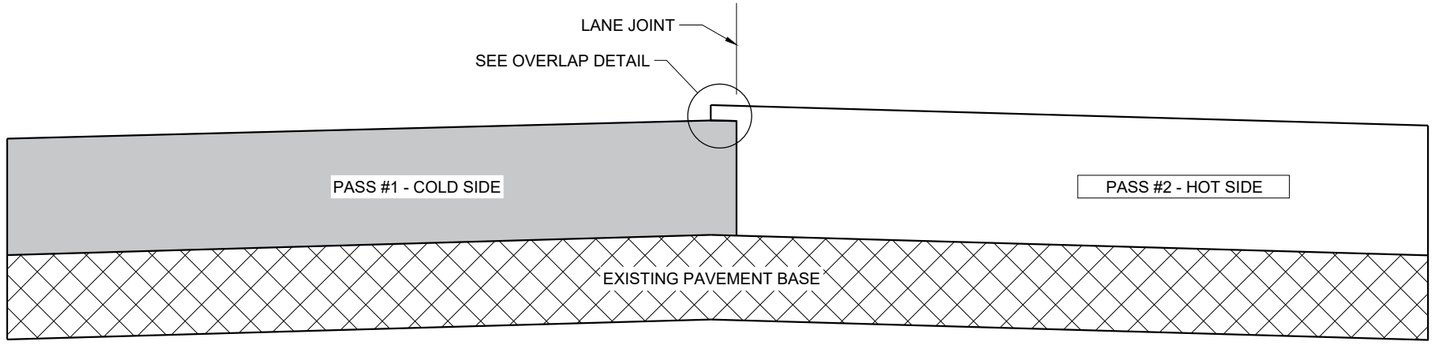

TYPICAL PAVEMENT CROSS SECTION
VERTICAL JOINT (MILLED)

GENERAL NOTES

IN ADDITION TO THE DETAILS PROVIDED IN THIS DRAWING, CONFORM TO STANDARD SPECIFICATION 450.3.2.8 FOR WHEN A NOTCHED WEDGE JOINT IS REQUIRED AND FOR GENERAL JOINT CONSTRUCTION REQUIREMENTS.

FOR ALL LONGITUDINAL JOINTS, ENSURE THE PAVER SCREED OVERLAPS THE PREVIOUSLY PLACED PAVEMENT BY 1" ± 0.5" AND THE HOT SIDE OF THE JOINT REMAINS HIGHER THAN THE COLD SIDE BY APPROXIMATELY 0.1" AFTER FINAL COMPACTION. (IT WILL BE FLUSH WHEN PAVING IN ECHELON.)

ONLY REMOVE THE LONGITUDINAL NOTCHED WEDGE JOINT FOR SMA PAVEMENT OR AS DIRECTED BY THE ENGINEER TO ADDRESS SPECIFIC LENGTHS OF JOINT DAMAGED BY TRAFFIC.

WHEN MILLING BACK OR REMOVING ANY LONGITUDINAL JOINT, LIMIT THE MATERIAL REMOVED TO 2" FROM THE TOP NOTCH OR FROM THE VERTICAL JOINT EDGE ON THE COLD SIDE OF THE JOINT.

USE LONGITUDINAL MILLED JOINT AS PLANS SHOW OR THE AS THE ENGINEER DIRECTS.

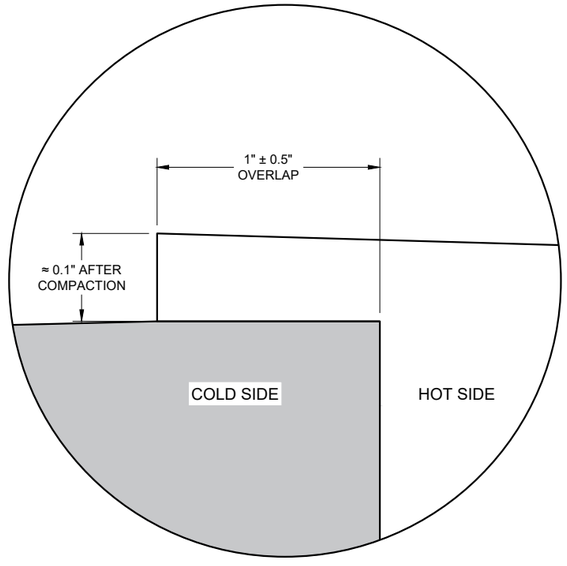

OVERLAP DETAIL (TYPICAL)

6

6

SDD 13C19 - 03

SDD 13C19 - 03

HMA LONGITUDINAL JOINTS

STATE OF WISCONSIN
DEPARTMENT OF TRANSPORTATION

APPROVED
November 2020
DATE

/S/ Steven Hefel
HMA PAVEMENT ENGIN

FHWA

(1) WOOD OR STEEL POSTS (w6X9 OR w6X8.5) MAY BE USED. DO NOT INTERMIX WOOD AND STEEL POSTS. INSTALL STEEL POSTS WITH HOLES ON APPROACHING TRAFFIC SIDE.

(2) USE WOOD OR APPROVED PLASTIC BLOCKOUTS. WOOD BLOCKOUTS MAY BE CONSTRUCTED OUT OF TWO OR MORE WOOD BLOCKOUTS. SEE ALTERNATE WOOD BLOCKOUT DETAIL. DIMENSIONS OF APPROVED PLASTIC BLOCKOUTS MAY VARY.

(3) IF ROCK IS ENCOUNTERED DURING EXCAVATION, PROVIDE A HOLE 12 INCHES IN DIAMETER EXTENDING 20 INCHES DEEP INTO THE ROCK. PLACE APPROXIMATELY 2 1/2" INCHES OF GRANULAR MATERIAL IN THE BOTTOM OF THE HOLE. CUT THE POSTS THE TO LENGTH AMD INSTALL. BACKFILL WITH EXCAVATED MATERIAL AND COMPACT. BACKFILL IS TO BE FREE OF LARGE ROCKS.

(4) WHEN THE DISTANCE FROM BACK OF POST TO SHOULDER HINGE POINT IS LESS THAN 2 FEET INSTALL LONGER POST AT HALF POST SPACING (K).

(5) FOR NEW MGS INSTALLATION TOP OF W-BEAM RAIL TOLERANCE IS ±1". FOR EXISTING MGS INSTALLATION TOP OF W-BEAM IS BETWEEN 27 ¾" TO 32".

(6) WHEN USING STEEL POST AND WOOD BLOCKOUTS INSTALL FOUR 16D GALVANIZED NAILS. INSTALL NAILS AT THE BACK CORNERS OF THE BLOCK AND BEND THE NAILS OVER THE FLANGE OF THE STEEL POST.

(7) TOTAL POST LENGTH FOR TYPE K IS 7' - 0".
TOTAL POST LENGTH FOR OTHER MGS TYPES IS 6' - 0".

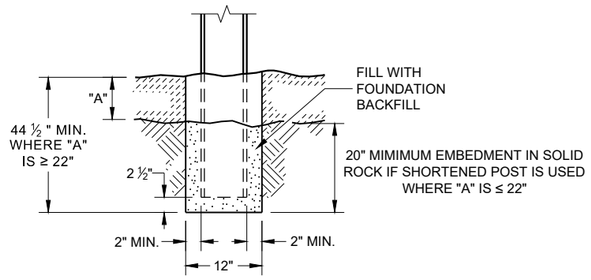

END VIEW
SETTING STEEL OR WOOD POST IN ROCK (3)

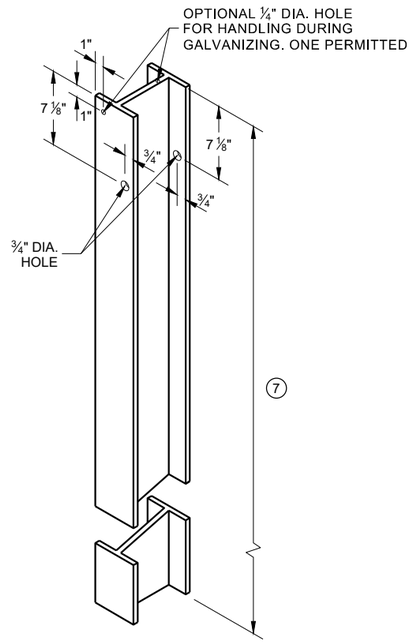

STEEL POST & HOLE PUNCHING DETAIL (W 6 X 9) (1)

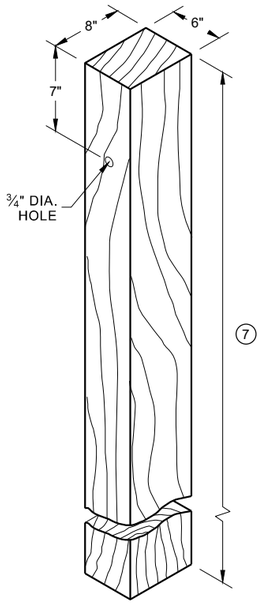

WOOD POST (6" X 8") NOMINAL (1)

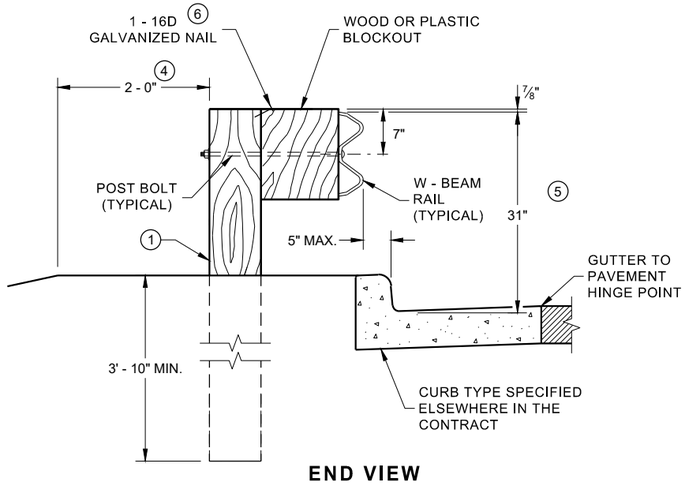

END VIEW
LOCATED ALONG A CURBED ROADWAY

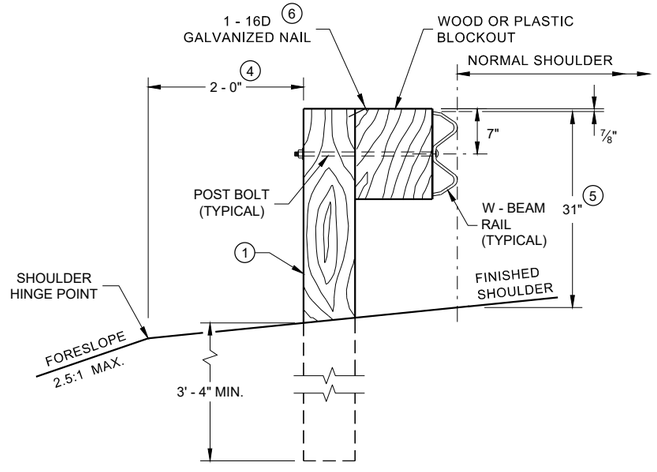

END VIEW
LOCATED ALONG A ROADWAY SHOULDER STANDARD INSTALLATION

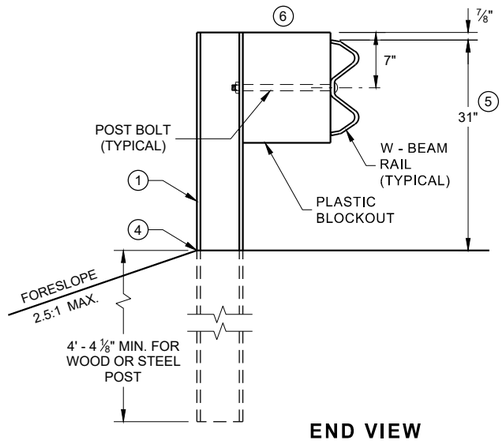

END VIEW
MGS LONGER POST AT HALFPOST SPACING W BEAM (K)

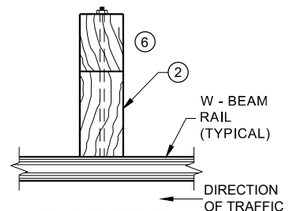

PLAN VIEW
WOOD POST, BLOCKOUT & BEAM

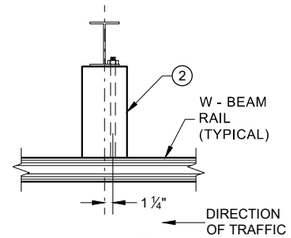

PLAN VIEW
STEEL POST, PLASTIC BLOCKOUT & BEAM

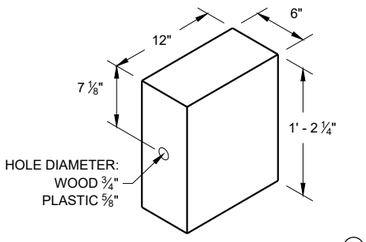

WOOD OR PLASTIC BLOCKOUT (2)

MIDWEST GUARDRAIL SYSTEM (MGS) GUARDRAIL

STATE OF WISCONSIN
DEPARTMENT OF TRANSPORTATION

6

SDD 14B42 - 07a

6

SDD 14B42 - 07a

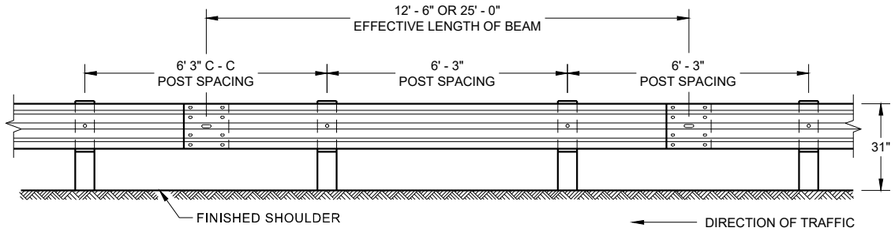

FRONT VIEW
POST SPACING STANDARD INSTALLATION

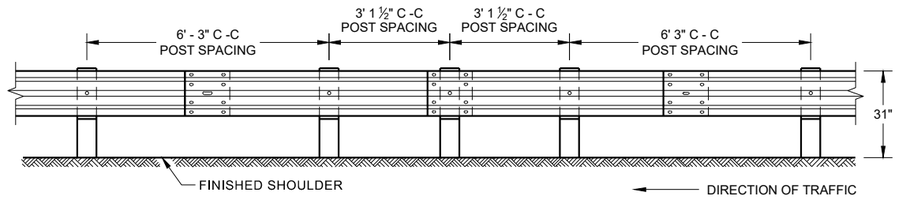

FRONT VIEW
HALF POST SPACING (HS) AND
HALF POST SPACING WITH LONGER POSTS (K)

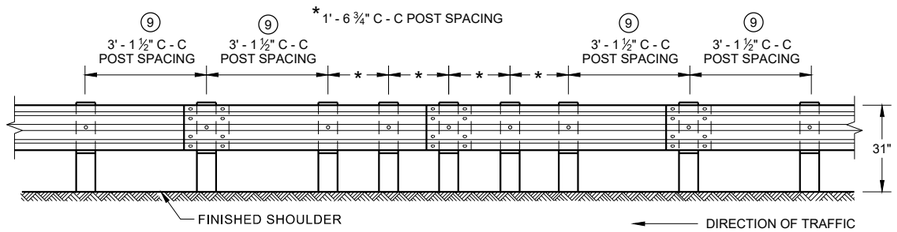

FRONT VIEW
QUARTER POST SPACING (QS)

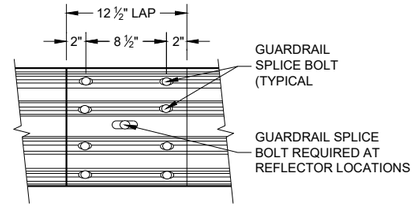

FRONT VIEW
MID-SPAN BEAM SPLICE

GENERAL NOTES

⑧ DO NOT INSTALL REFLECTORS ON THE FIRST 50 FEET OF THE APPROACH END OF THE ENERGY ABSORBING TERMINAL.

⑨ 25 FEET OF HALF POST SPACING IS REQUIRED ON APPROACH AND DEPARTURE ENDS OF QUARTER POST SPACING.

POST BOLTS ARE A ⅝" DIAMETER ASTM A307 GUARDRAIL BOLT. A POST BOLT REQUIRES ⅝" DIAMETER A563A DOUBLE RECESSED (DR) HEAVY HEX NUT AND ⅝" DIAMETER F844 FLAT WASHER. POST BOLTS MAY BE LONGER IF MULTIPLE BLOCKOUTS ARE BEING USED.

GUARD RAIL SPLICE BOLTS ARE A ⅝" DIAMETER ASTM A307 GUARDRAIL HEAD BOLT. A GUARDRAIL SPLICE BOLT REQUIRES ⅝" DIAMETER A563A DOUBLE RECESSED (DR) HEAVY HEX NUT.

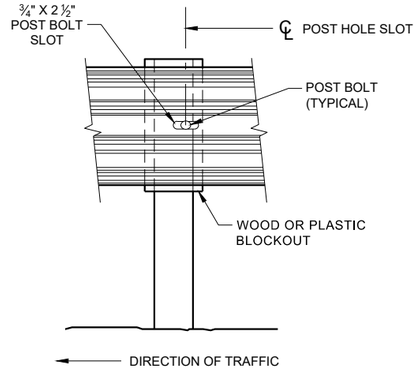

FRONT VIEW AT STEEL POST

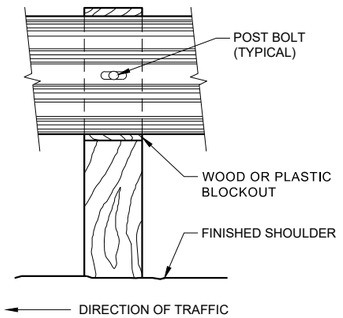

FRONT VIEW AT WOOD POST

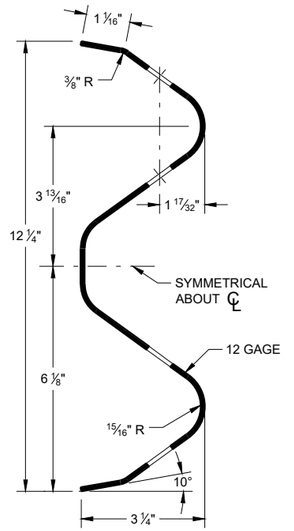

SECTION THRU W-BEAM RAIL

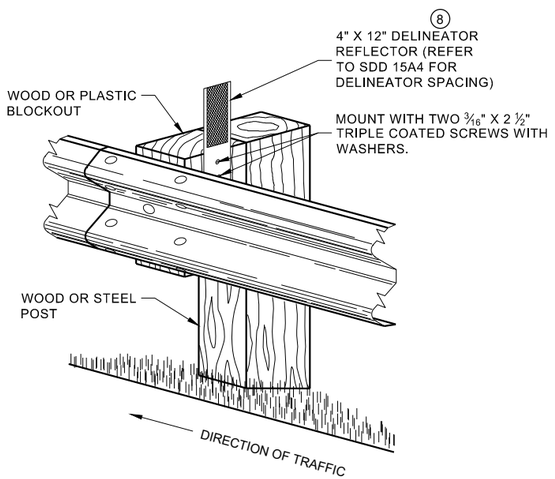

ONE SIDED REFLECTOR DETAIL
AND TYPICAL INSTALLATION

MIDWEST GUARDRAIL SYSTEM
(MGS) GUARDRAIL

STATE OF WISCONSIN
DEPARTMENT OF TRANSPORTATION

6

SDD 14B42 - 07b
SDD 14B42 - 07b

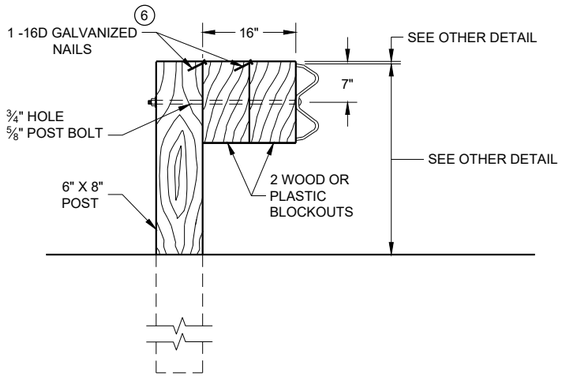

DETAIL FOR 16" BLOCKOUT DEPTH

IT IS ACCEPTABLE TO USE BLOCKOUTS UP TO 16" DEEP TO INCREASE THE POST OFFSET TO AVOID UNDERGROUND OBSTACLES. THERE IS NO LIMIT TO THE NUMBER OF POSTS THAT CAN HAVE ADDITIONAL BLOCKOUTS UP TO 16" DEEP.

NOTE:

1. ALL FILLETS SHALL HAVE A MINIMUM RADIUS OF 3⁄16".
2. IF THE BOLT EXTENDS MORE THAN ¼" FROM THE NUT THE BOLT SHOULD BE TRIMMED BACK.

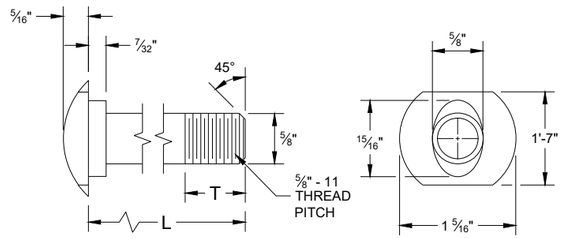

POST BOLT TABLE

L	T (MIN.)
1 ¼"	1 ⅛"
2"	1 ¾"
10"	4"
14"	4 1⁄16"
18"	4"
21"	4 1⁄16"
25"	4"

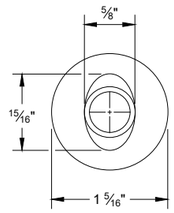

ALTERNATE BOLT HEAD

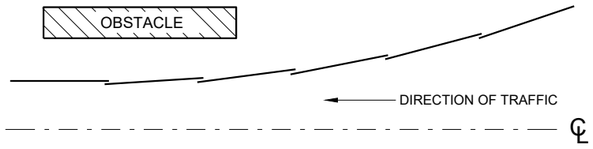

PLAN VIEW
BEAM LAPPING DETAIL

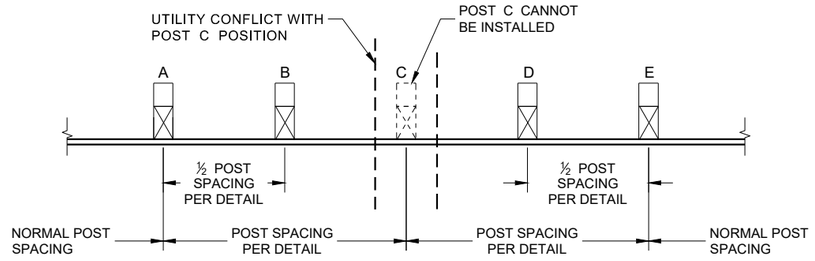

POST DRIVING FOR CONTINUOUS UNDERGROUND OBSTRUCTION

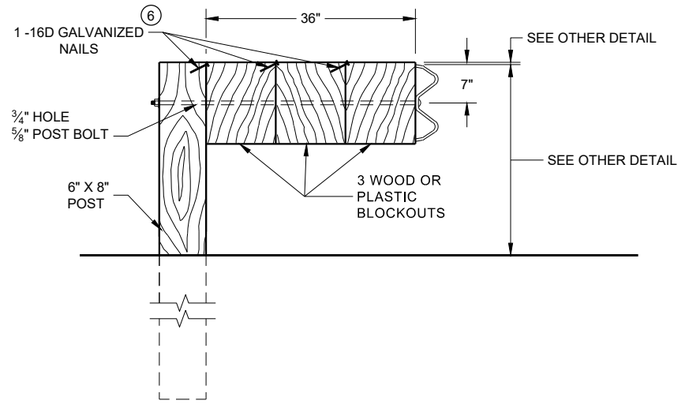

DETAIL FOR 36" BLOCKOUT DEPTH

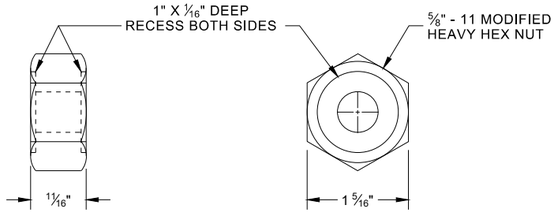

POST BOLT, SPLICE BOLT AND RECESS NUT

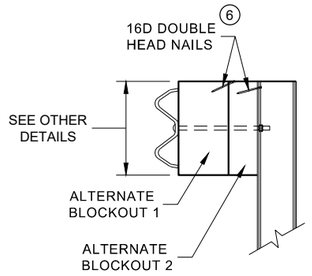

SIDE VIEW

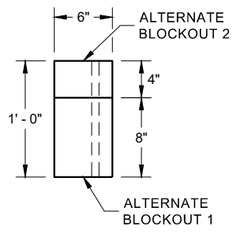

PLAN VIEW

ALTERNATE WOOD BLOCKOUT DETAIL

NOTES: UNDER SPECIAL CIRCUMSTANCES, SUCH AS AVOIDING OBSTACLES THAT ARE NOT RELOCATED, IT IS ACCEPTABLE TO INSTALL ADDITIONAL BLOCKOUTS TO OBTAIN UP TO 36" DEPTH FOR ONE OR TWO POSTS IN A SECTION OF GUARDRAIL.

DO NOT USE 16" OR 36" BLOCKOUTS IF IT CAUSES THE POST TO BE DRIVEN BEYOND SHOULDER HINGE POINT OR CAUSES A FIXED OBJECT TO BE WITHIN THE DEFLECTION DISTANCE OF THE BARRIER.

(6) WHEN USING STEEL POST AD WOOD BLOCKOUTS, INSTALL FOUR 16D GALVANIZED NAILS. INSTALL NAILS AT THE BACK CORNERS OF THE BLOCK AND BEND THE NAILS OVER THE FLANGE OF THE STEEL POST.

MIDWEST GUARDRAIL SYSTEM (MGS) GUARDRAIL

STATE OF WISCONSIN
DEPARTMENT OF TRANSPORTA

6

SDD 14B42 - 07c

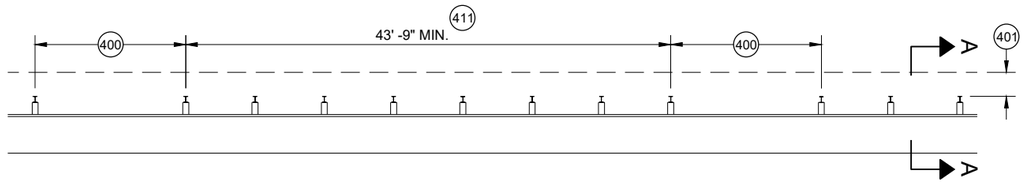

MISSING POST IN MGS GUARDRAIL

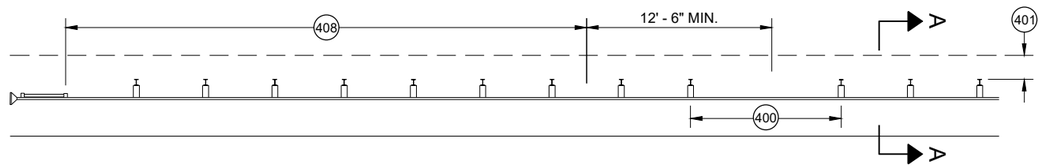

MISSING POST IN MGS GUARDRAIL NEAR EAT

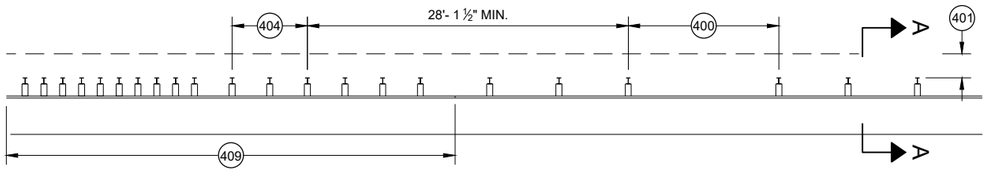

MISSING POST IN MGS GUARDRAIL NEAR AN APPROACH TRANSITION

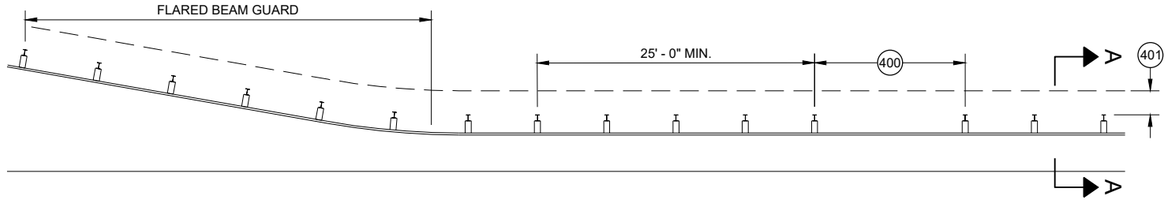

MISSING POST IN MGS GUARDRAIL NEAR FLARED BEAM GUARD

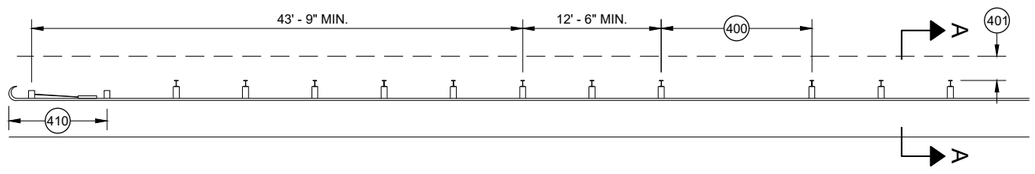

MISSING POST IN MGS GUARDRAIL NEAR A TYPE 2 END TERMINAL

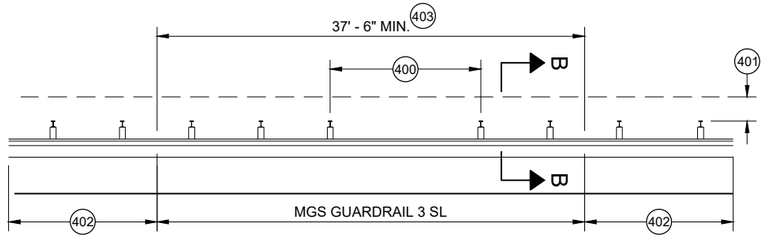

MISSING POST IN SHORT SPAN MGS GUARDRAIL NEAR CURB (SL) 407

(400) MAX SPAN 12' - 6"
(401) 2' MIN.
(402) MGS GUARDRAIL 3
(403) NESTING BEAM GUARD
(404) ASYMMETRIC TRANSITION
(405) SOIL WELL DRAINED AND COMPACTED
(406) SEE OTHER DRAWINGS IN THIS SDD
(407) SEE OTHER DRAWINGS FOR MIN. SPACING BETWEEN SPANS
(408) SEE SDD 14B44
(409) SEE SDD 14B45
(410) SEE SDD 14B47
(411) MINIMUM DISTANCE BETWEEN MISSING POST SPANS.

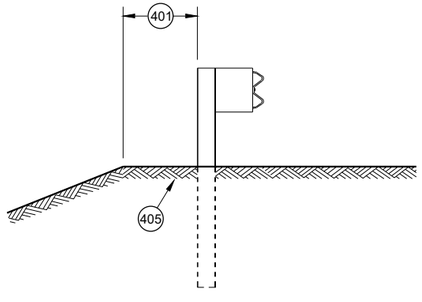

SECTION A - A 406

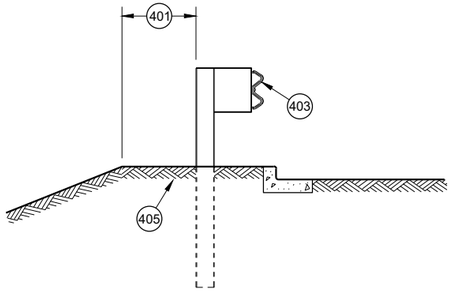

SECTION B - B 406

MIDWEST GUARDRAIL SYSTEM (MGS) GUARDRAIL

STATE OF WISCONSIN
DEPARTMENT OF TRANSPORTATION

APPROVED
May 2021 — DATE
/S/ Rodney Taylor — ROADWAY STANDARDS DEVE UNIT SUPERVISOR

FHWA

6

SDD 14B42 - 07d

GENERAL NOTES

POSTS 1 THROUGH 3 ARE CRT POSTS.
ALL OTHER POSTS SHALL BE WOOD OR STEEL.

SEE SDD 14 B 42 FOR MORE DETAILS.

(A) FLARE FOR MGS EAT SHOWN. IF INSTALLING MGS NO FLARE NEEDED.

(B) VALUES SHOWN ON DRAWING REPRESENT THE MAXIMUM LENGTH. SHORTER DIMENSIONS ARE POSSIBLE. SEE OTHER SECTION OF PLAN FOR MORE INFORMATION.

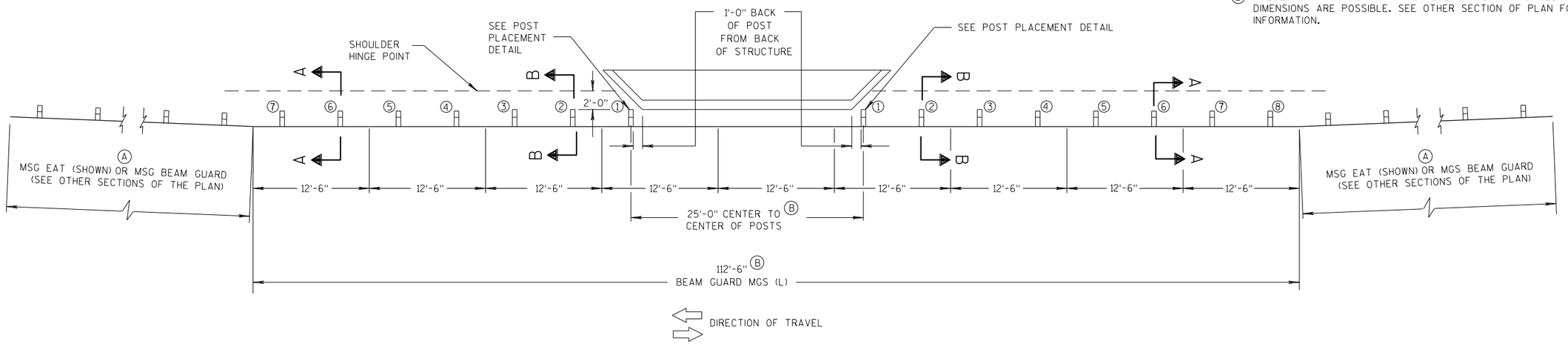

PLAN VIEW

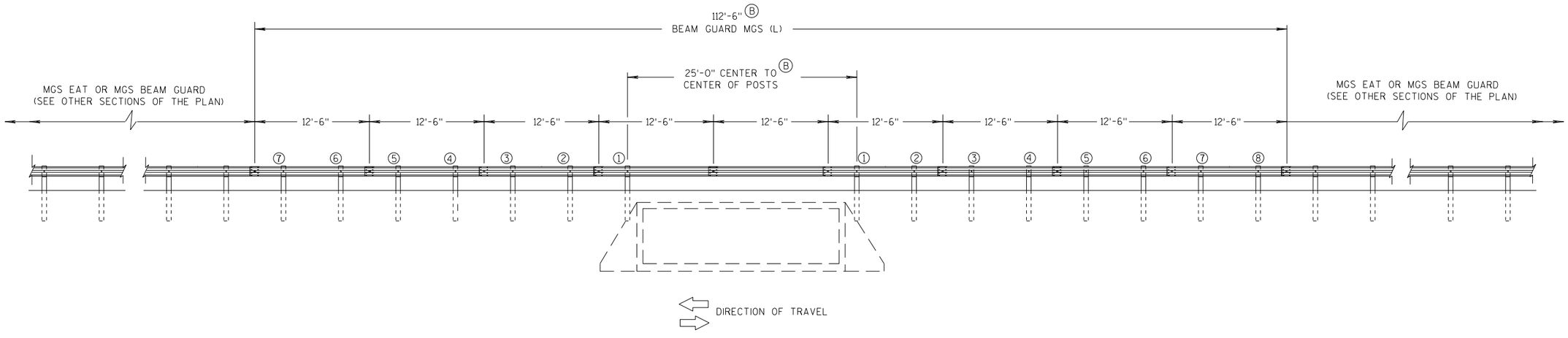

ELEVATION VIEW

MIDWEST GUARDRAIL SYSTEM LONG SPAN MGS (L) TWO-WAY TRAFFIC

MIDWEST GUARDRAIL SYSTEM LONG SPAN MGS (L)

STATE OF WISCONSIN
DEPARTMENT OF TRANSPORTATION

6

S.D.D. 14 B 43-4a

GENERAL NOTES

POSTS 1 THROUGH 3 ARE CRT POSTS.
ALL OTHER POSTS SHALL BE WOOD OR STEEL.

SEE SDD 14 B 42 FOR MORE DETAILS.

(A) FLARE FOR MGS EAT SHOWN. IF INSTALLING MGS NO FLARE NEEDED.

(B) VALUES SHOWN ON DRAWING REPRESENT THE MAXIMUM LENGTH. SHORTER DIMENSIONS ARE POSSIBLE. SEE OTHER SECTION OF PLAN FOR MORE INFORMATION.

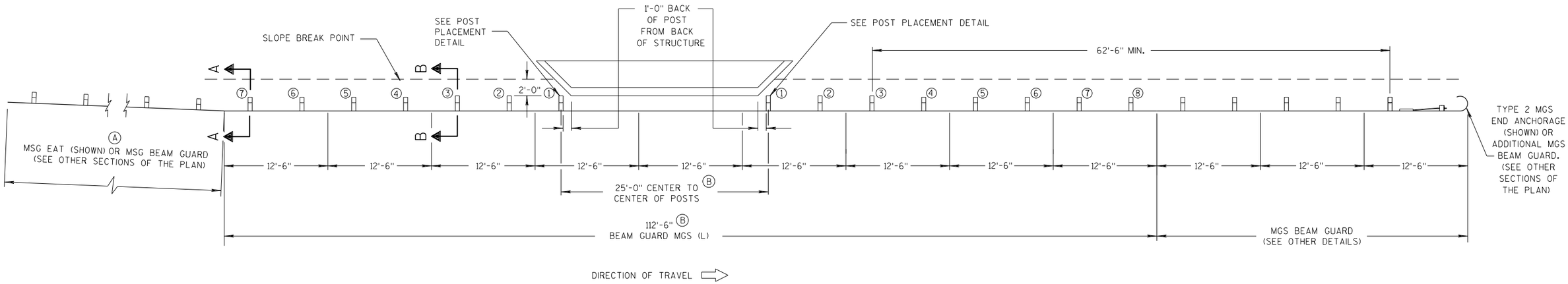

PLAN VIEW

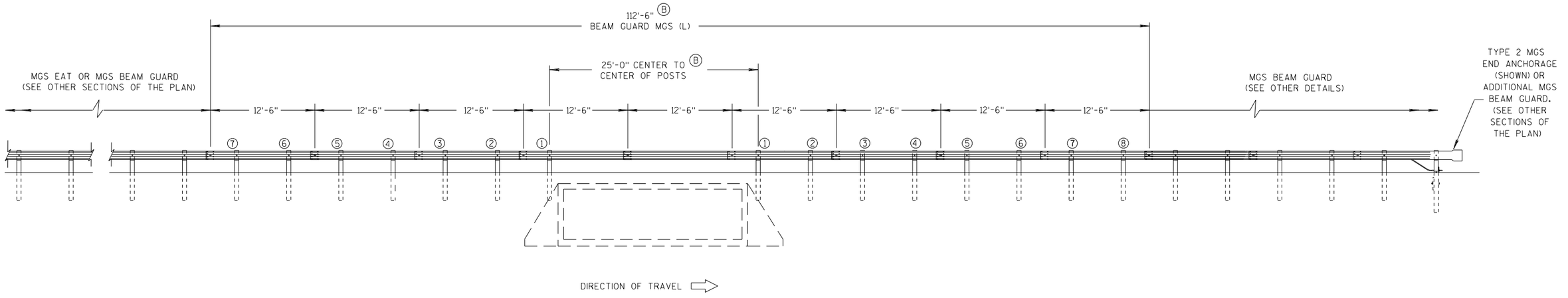

ELEVATION VIEW

MIDWEST GUARDRAIL SYSTEM LONG SPAN MGS (L) ONE-WAY TRAFFIC

MIDWEST GUARDRAIL SYSTEM LONG SPAN MGS (L)

STATE OF WISCONSIN
DEPARTMENT OF TRANSPORTATION

6

S.D.D. 14 B 43-4b

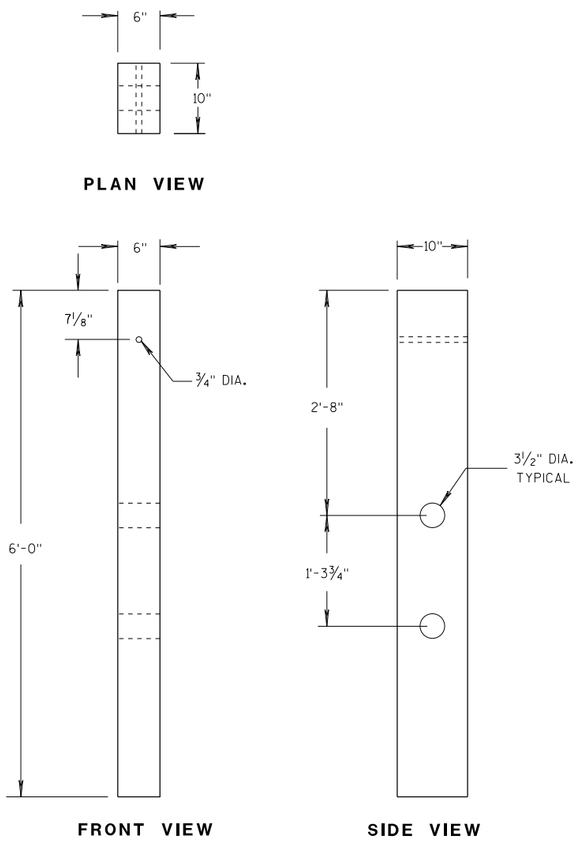

CRT WOOD POST

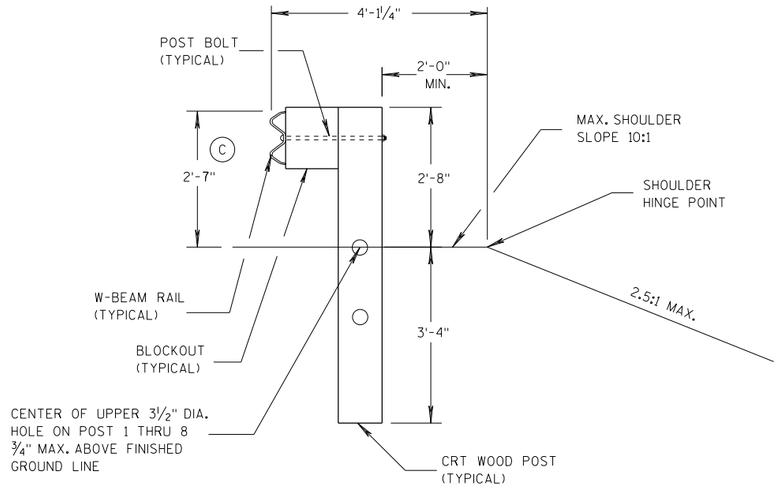

SECTION B-B

POSTS NO. 1-3

SEE OTHER DETAILS

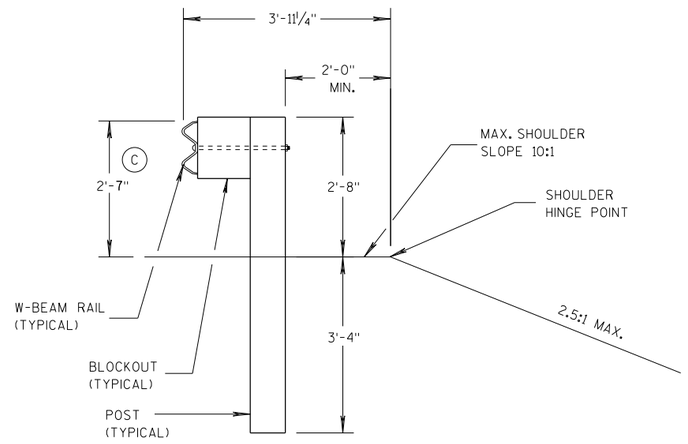

SECTION A-A

POSTS NO. 4-8

SEE OTHER DETAILS

GENERAL NOTES

(C) TOLERANCE FOR TOP OF W-BEAM RAIL IS ± 1".

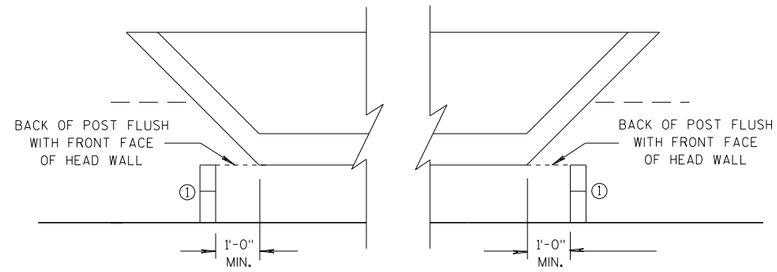

POST PLACEMENT DETAIL

MIDWEST GUARDRAIL SYSTEM
LONG SPAN MGS (L)

STATE OF WISCONSIN
DEPARTMENT OF TRANSPORTATION

APPROVED
07/2018
DATE
FHWA

/S/ Rodney Taylor
ROADWAY STANDARDS DEVELOPMENT ENGINEER

6

S.D.D. 14 B 43-4c

6

S.D.D. 14 B 43-4c

GENERAL NOTES

(A) THE SLOPE IN THE AREA BOUNDED BY THE GRADELINE, THE HINGE POINT LINE (HPL) AND THE CLEAR ZONE LIMITS (CZL) SHALL BE 4:1 OR FLATTER.

(B) AFTER FINAL ASSEMBLY, RECHECK CABLE TO BE SURE IT IS TAUT AND HAS NOT RELAXED

(C) DIFFERENT MANUFACTURERS REQUIRE DIFFERENT PERFORATED W - BEAM RAIL END PANELS. SEE MANUFACTURER'S INFORMATION.

(D) ATTACH ALUMINUM SHEET TO E.A.T. HEAD USING 4 STAINLESS STEEL SELF - TAPPING SCREWS. ONE SCREW PER CORNER.

(E) HARDWARE MAY VARY BETWEEN MANUFACTURER. SEE MANUFACTURER'S DRAWING FOR INFORMATION.

DIMENSIONS MAY VARY, MANUFACTURER'S INFORMATION.

SEE SDD 14B42 FOR MORE INFORMATION.

* DO NOT ATTACH BLOCKOUTS TO POST 1 AND 2.

DO NOT INSTALL REFLECTORS ON THE FIRST 50 FEET OF THE APPROACH END OF THE ENERGY ABSORBING TERMINAL.

SEE MANUFACTURER'S DRAWING FOR SPLICE LOCATION, HARDWARE DIMENSIONS AND INSTALLATION INSTRUCTIONS.

THE CENTER OF THE UPPER 3 ½" DIAMETER HOLE ON POST NUMBER 3 THROUGH POST 9 IS TO BE FLUSH WITH THE GROUND LINE UP TO A MAXIMUM OF 2" ABOVE GROUND LINE. WOOD BLOCKS ON POSTS NUMBERED 3 THROUGH 9 MAY BE ADJUSTED UP TO 3" ABOVE THE TOP OF POST.

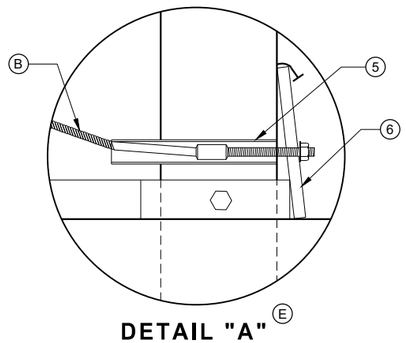

DETAIL "A" (E)

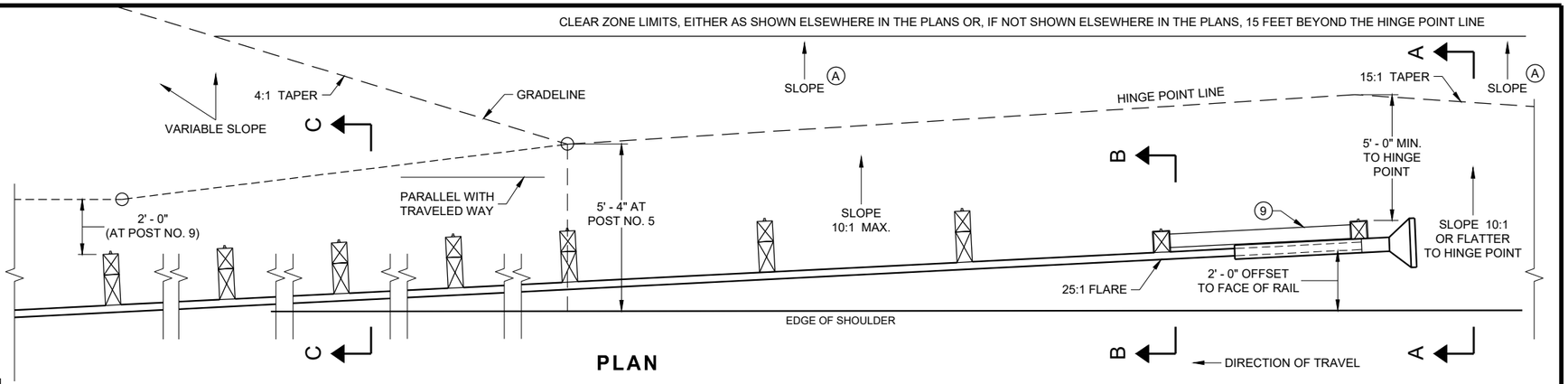

PLAN

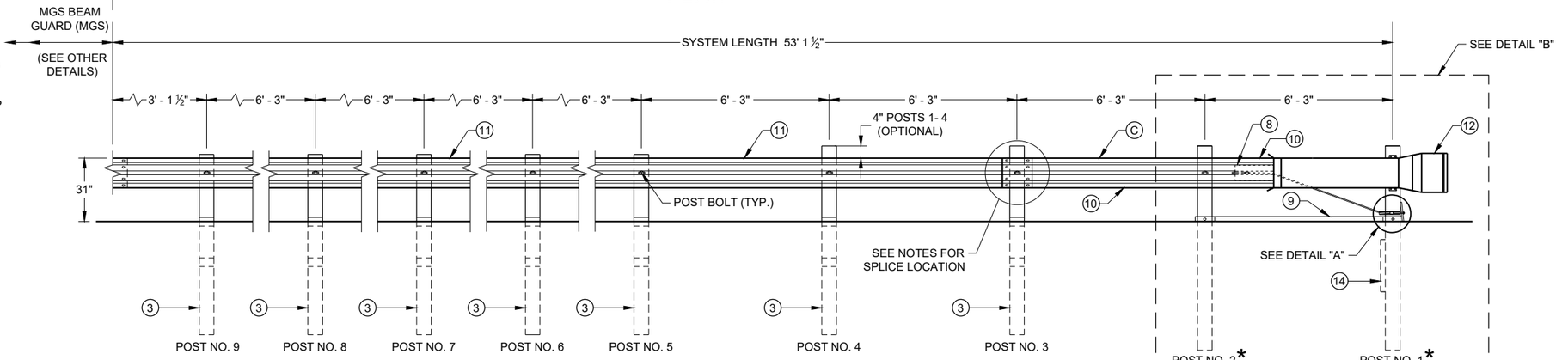

ELEVATION

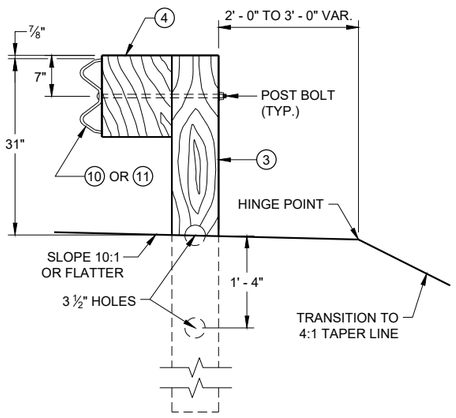

SECTION C - C
TYPICAL AT POST NOS. 3 - 9

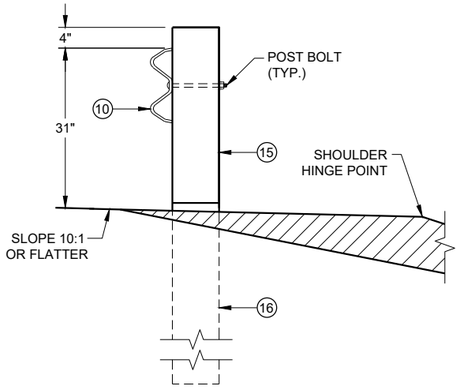

SECTION B - B
TYPICAL AT POST NO. 2*

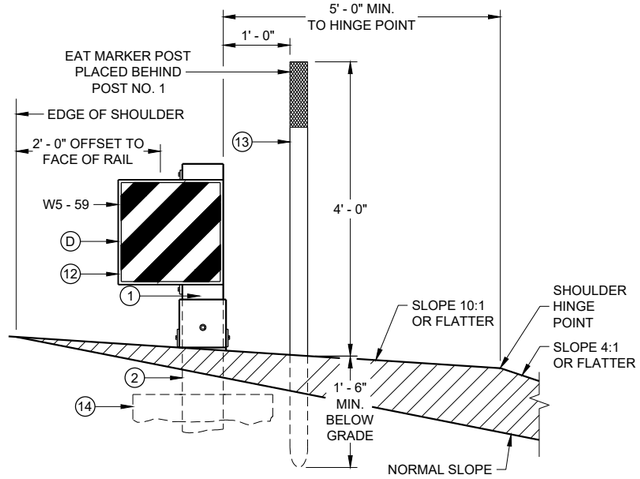

SECTION A - A
TYPICAL AT POST NO. 1*

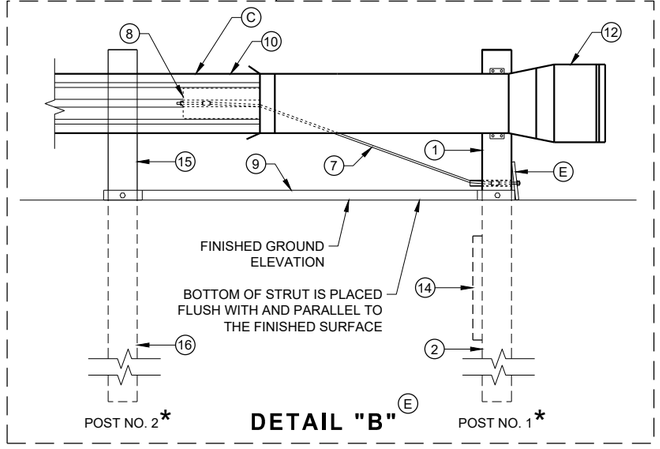

DETAIL "B" (E)

MIDWEST GUARDRAIL SYSTEM
ENERGY ABSORBING TERMINAL (MGS)

STATE OF WISCONSIN
DEPARTMENT OF TRANSPORTATION

SDD 14B44 - 04a

SDD 14B44 - 04a

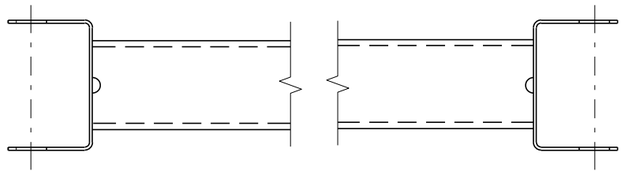

GENERIC GROUND STRUT (9) (E)

BILL OF MATERIALS

PART NO.	DESCRIPTION MATERIALS PROVIDED BY MGS EAT MANUFACTURER. SEE MANUGACTURER'S DETAILS FOR MORE INFORMATION.
(1)	UPPER POST NO. 1 6" X 6" TUBE
(2)	LOWER POST NO. 1
(3)	WOOD CRT
(4)	WOOD BLOCKOUT
(5)	PIPE SLEEVE
(6)	BEARING PLATE
(7)	BCT CABLE ASSEMBLY
(8)	ANCHOR CABLE BOX
(9)	GROUND STRUT
(10)	PERFORATED W-BEAM RAIL END PANEL, 12'-6" LONG.
(11)	STANDARD W-BEAM RAIL. MULTIPLE SECTIONS REQUIRED. SECTIONS VARY IN LENGTH.
(12)	IMPACT HEAD
(13)	EAT MARKER POST - YELLOW (SEE APPROVED PRODUCTS LIST)
(14)	SOIL PLATE
(15)	UPPER POST NO. 2
(16)	LOWER POST NO. 2

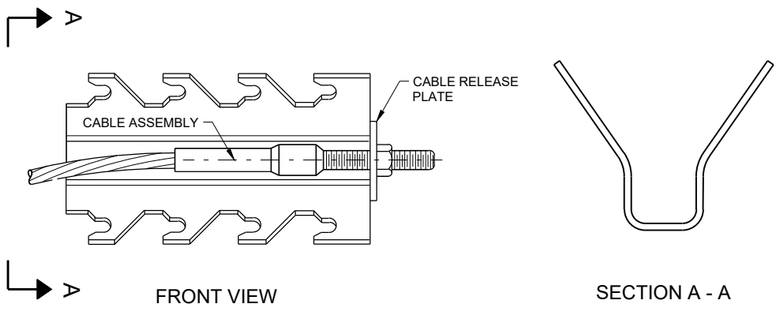

GENERIC ANCHOR CABLE BOX (9) (E)

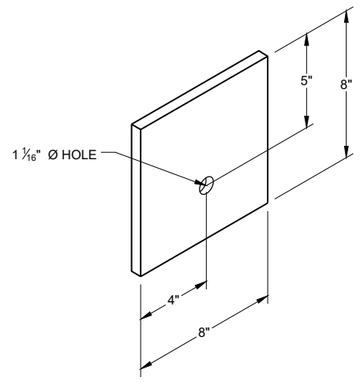

BEARING PLATE (6) (E)

6

6

SDD 14B44 - 04b

SDD 14B44 - 04b

MIDWEST GUARDRAIL SYSTEM
ENERGY ABSORBING TERMINAL
(MGS)

STATE OF WISCONSIN
DEPARTMENT OF TRANSPORTATION

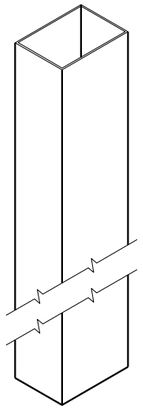

UPPER POST NO. 1 (1) (E)

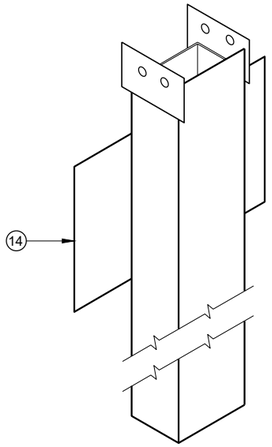

LOWER POST NO. 1 (2) (E)

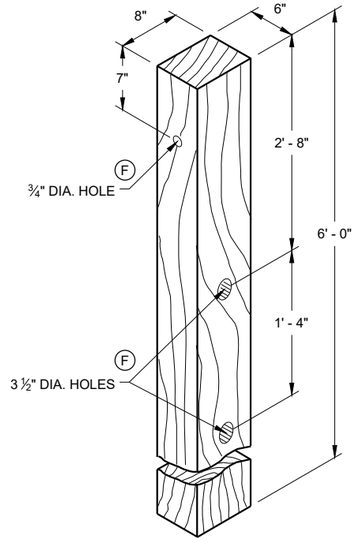

WOOD CRT POST (3) (E)
POSTS NUMBER 3-9

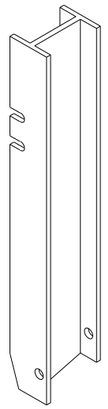

UPPER POST NO. 2 (15) (E)

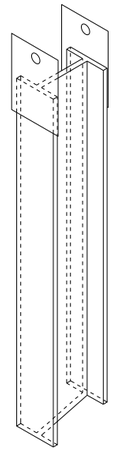

LOWER POST NO. 2 (16) (E)

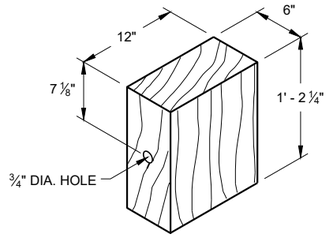

WOOD BLOCKOUT (4)
REQ'D. AT ALL POSTS EXCEPT POST NO'S 1 & 2

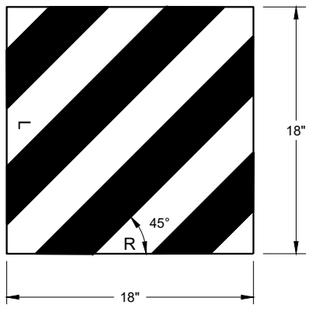

W5 - 59

REFLECTIVE SHEETING DETAIL (E)

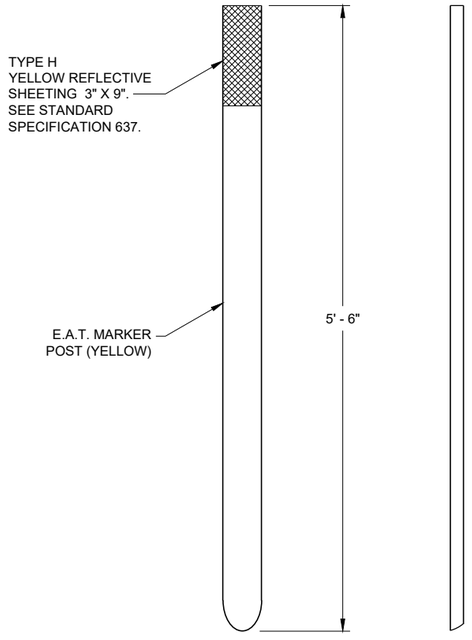

FRONT VIEW SIDE VIEW

E.A.T. MARKER POST (13)

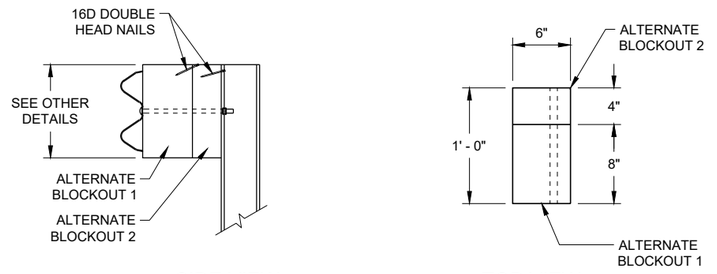

SIDE VIEW TOP VIEW

ALTERNATE WOOD BLOCKOUT DETAIL

MIDWEST GUARDRAIL SYSTEM ENERGY ABSORBING TERMINAL (MGS)

STATE OF WISCONSIN
DEPARTMENT OF TRANSPORTATION

APPROVED
7/2018 — DATE
/S/ Rodney Taylor — ROADWAY STANDARDS DEVE UNIT SUPERVISOR

FHWA

6

SDD 14B44 - 04c

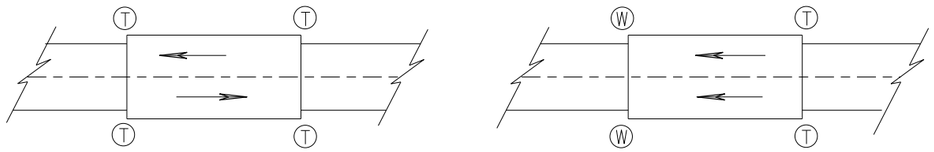

TWO WAY TRAFFIC

ONE WAY TRAFFIC

(T) THRIE BEAM CONNECTION

(W) W-BEAM CONNECTION WHEN REQUIRED

TYPICAL LOCATIONS OF THRIE BEAM AND W-BEAM CONNECTIONS TO BRIDGE

GENERAL NOTES

IF ROCK IS ENCOUNTERED, REMOVE ROCK TO FULL DEPTH OF POST PLUS 2½", AND 12" DIAMETER AROUND POST. SEE 14B42 FOR MORE DETAILS.

TRANSITION USES STEEL POSTS ONLY.

SEE STANDARD DETAIL DRAWING 14 B 42 FOR MORE INFORMATION.

POST 2 THROUGH 17 USES STEEL POST ONLY

(1) BRIDGE RAILING TYPE "W" DOES NOT REQUIRE A TERMINAL CONNECTOR.

(2) OPTIONAL CURB AND GUTTER OR DRAINAGE FEATURE SEE PLAN FOR INFORMATION.

(13) STEEL OR WOOD POST IS ACCEPTABLE AT POST 1. SEE SDD14B42

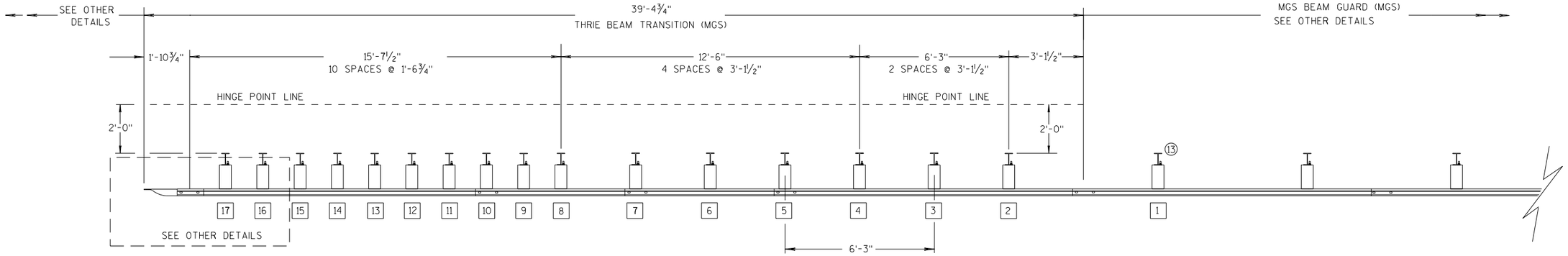

PLAN VIEW

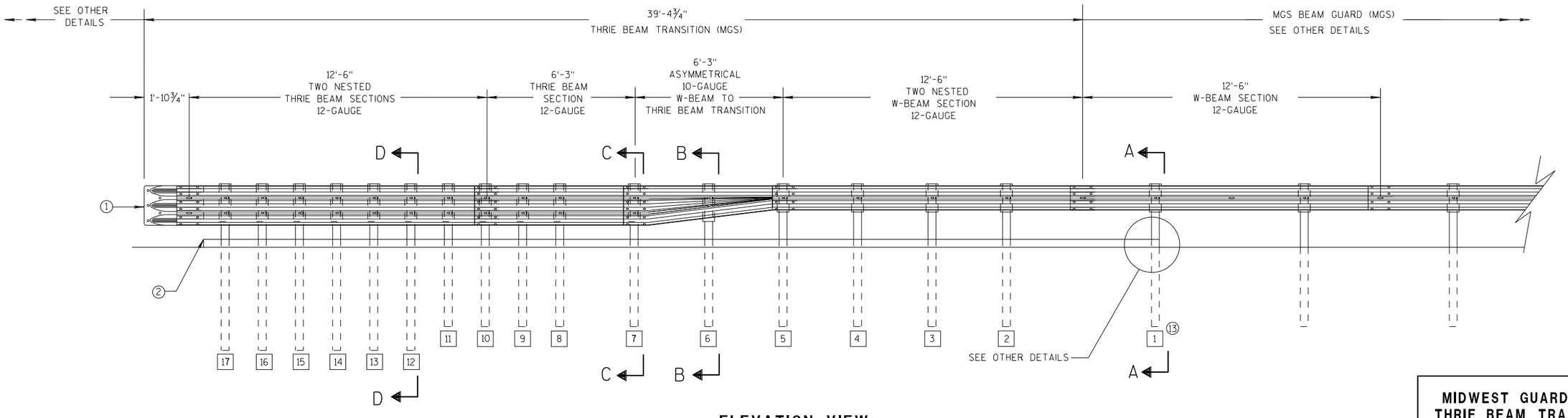

ELEVATION VIEW

MIDWEST GUARDRAIL SYSTEM THRIE BEAM TRANSITION

MIDWEST GUARDRAIL SYSTEM
THRIE BEAM TRANSITION (MGS)

STATE OF WISCONSIN
DEPARTMENT OF TRANSPOR

6

S.D.D. 14 B 45-5a

GENERAL NOTES

(2) OPTIONAL CURB AND GUTTER OR DRAINAGE FEATURE SEE PLAN FOR INFORMATION.

(3) WHEN USING STEEL POSTS AND WOOD BLOCKOUTS INSTALL FOUR 10D GALVANIZED NAILS. INSTALL NAILS AT THE BACK CORNERS OF THE BLOCK AND BEND THE NAILS OVER THE FLANGE OF THE STEEL POST.

(4) TOLERANCE FOR TOP OF W-BEAM RAIL IS ± 1".

(13) STEEL OR WOOD POST IS ACCEPTABLE AT POST 1. SEE SDD 14B42

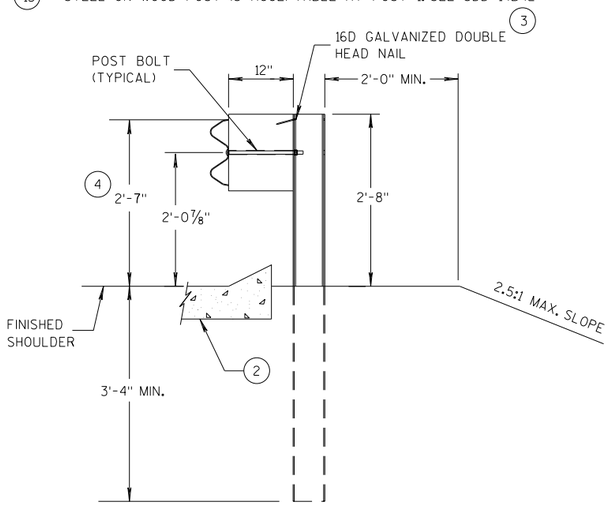

SECTION A-A (13)

POSTS 1-5

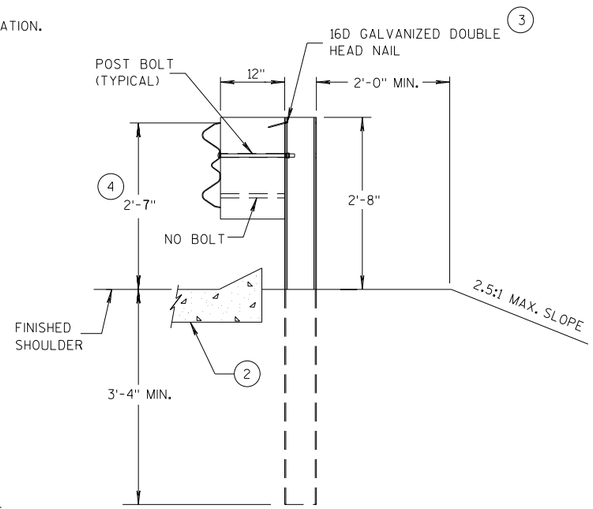

SECTION B-B

POST 6

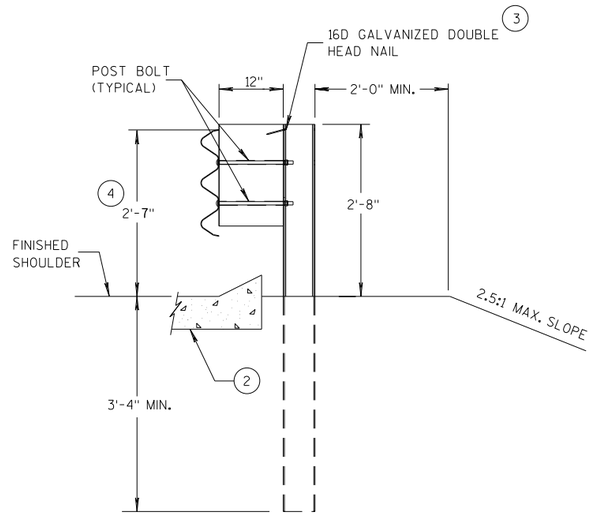

SECTION C-C

POSTS 7-11

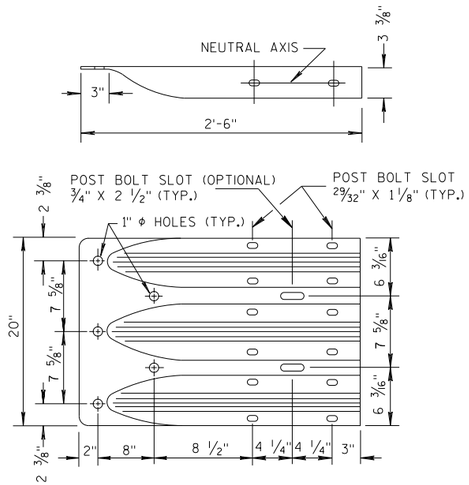

THRIE BEAM TERMINAL CONNECTOR

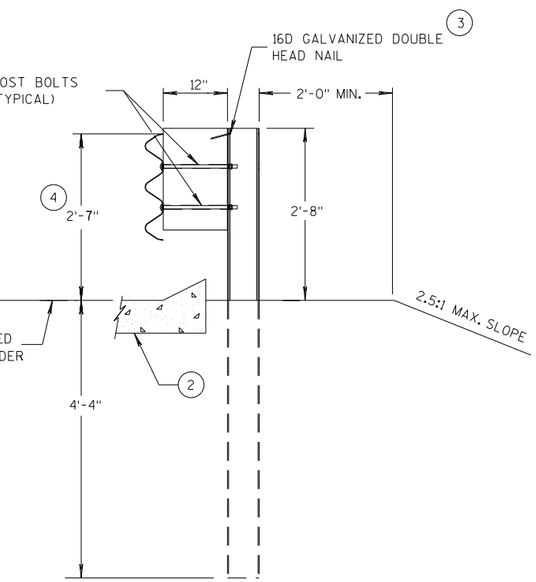

SECTION D-D

POSTS 12-17

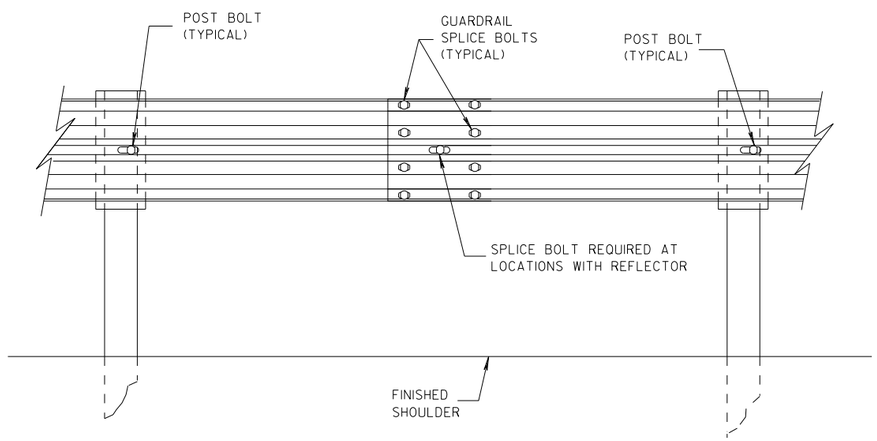

SPLICE DETAIL

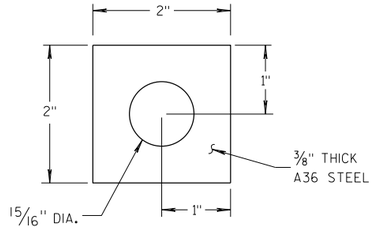

PLATE WASHER DETAIL

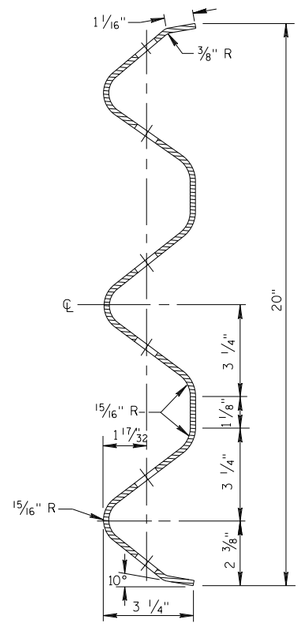

SECTION THRU THRIE BEAM RAIL ELEMENT

MIDWEST GUARDRAIL SYSTEM
THRIE BEAM TRANSITION (MGS)

STATE OF WISCONSIN
DEPARTMENT OF TRANSPOF

6

S.D.D. 14 B 45-5b

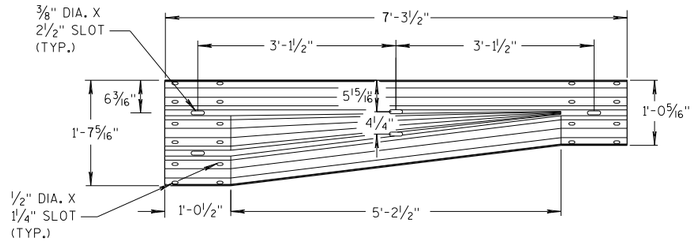

W-BEAM TO THRIE BEAM TRANSITION SECTION

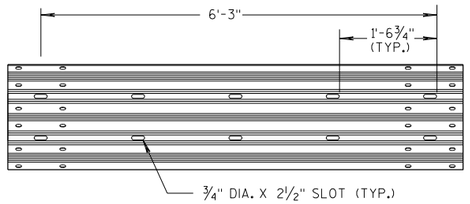

6'-3" THRIE BEAM SECTION

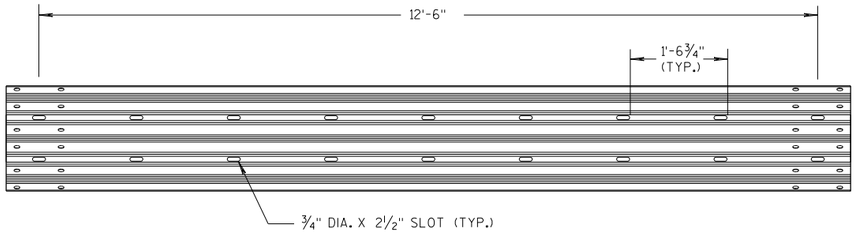

12'-6" THRIE BEAM SECTION

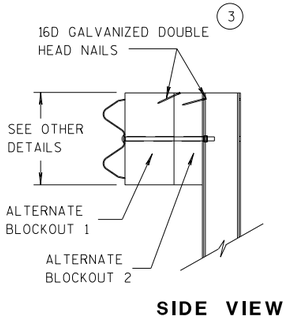

SIDE VIEW

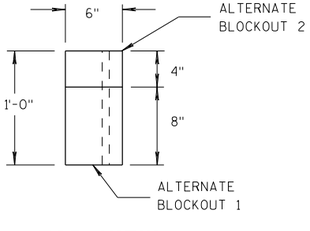

TOP VIEW

ALTERNATE WOOD BLOCKOUT DETAIL

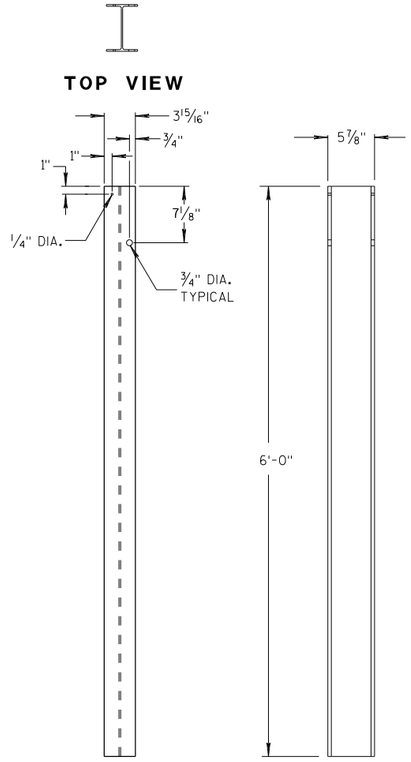

FRONT VIEW SIDE VIEW

STEEL POSTS 1-5 (13)

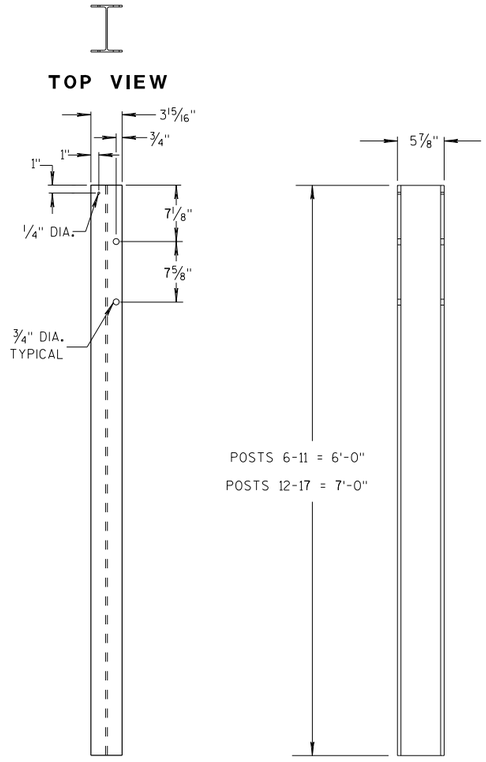

FRONT VIEW SIDE VIEW

STEEL POSTS 6-17

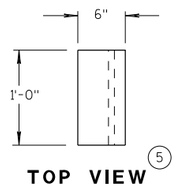

TOP VIEW (5)

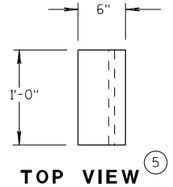

TOP VIEW (5)

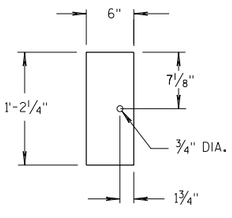

FRONT VIEW

BLOCKOUT POSTS 1-5

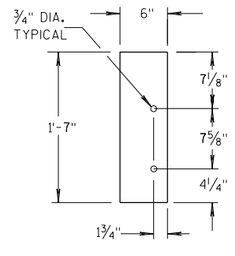

FRONT VIEW

BLOCKOUT POSTS 6-17

GENERAL NOTES

STEEL POSTS ARE W6X9 OR W6X8.5.

BOLT HOLES FOR POST ARE ON FRONT AND OF SIDE OF POST.

(3) WHEN USING STEEL POSTS AND WOOD BLOCKOUTS INSTALL FOUR 16D GALVANIZED NAILS. INSTALL NAILS AT THE BACK CORNERS OF THE BLOCK AND BEND THE NAILS OVER THE FLANGE OF THE STEEL POST.

(5) WOOD BLOCKS MAY BE CONSTRUCTED OUT OF 2 WOOD BLOCKS. SEE ALTERNATE WOOD BLOCK DETAIL.

(13) STEEL OR WOOD POST IS ACCEPTABLE AT POST 1. SEE SDD 14B42.

MIDWEST GUARDRAIL SYSTEM
THRIE BEAM TRANSITION (MGS)

STATE OF WISCONSIN
DEPARTMENT OF TRANSPOR

6

S.D.D. 14 B 45-5c

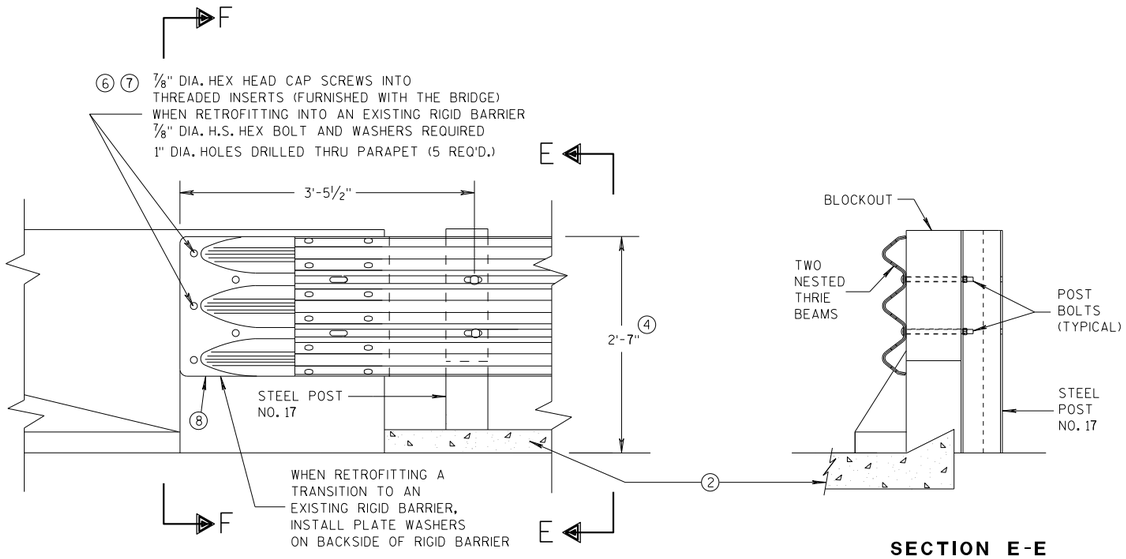

FRONT VIEW

SECTION E-E

THRIE BEAM CONNECTION TO BRIDGE PARAPET WITH SQUARE ENDS

GENERAL NOTES

THESE ARE TYPICAL CONNECTION DETAILS. ADJUST THE POSTION OF CONNECTIONS TO EXISTING BRIDGES TO FIT THE ACTUAL BRIDGE AND SITE DIMENSIONS.

② OPTIONAL CURB AND GUTTER OR DRAINAGE FEATURE SEE PLAN FOR INFORMATION.

④ TOLERANCE FOR TOP OF BEAM IS ± 1".

⑥ DRILLING BOLT HOLES THROUGH THE PARAPET, BOLTS, NUTS, WASHERS AND REPAIRING DAMAGED CONCRETE ARE INCIDENTAL TO THE CONTRACT.

⑦ BOLTS MAY BE A325 BOLTS OR A449 BOLTS. BOLT LENGTH AND THREADING LENGTH ARE TO ALLOW FOR A TIGHT CONNECTION BETWEEN RIGID BARRIER AND THRIE BEAM CONNECTION PLATE. CONTRACTOR IS TO FIELD VERIFY BOLT LENGTH AND THREAD LENGTH. ONE ROUND WASHER REQUIRED BETWEEN BOLT HEAD AND THRIE BEAM CONNECTOR PLATE. BOLTS THAT EXTEND THROUGH THE PARAPET AND OUT THE BACK FACE REQUIRE A HARDENED ROUND STEEL WASHER THAT IS 2" O.D. X 5/32" THICK AND ONE PLATE WASHER. REPAIR ANY DAMAGED CONCRETE FROM BOLT INSTALLATION.

⑧ THE RECESS FOR A W-BEAM CONNECTION, WHICH EXISTS ON SOME PARAPETS OF THIS TYPE, SHALL BE FILLED WITH A TREATED TIMBER BLOCKOUT. BLOCKOUT SIZE IS 1'-6" X 2'-0" X 3 1/2".

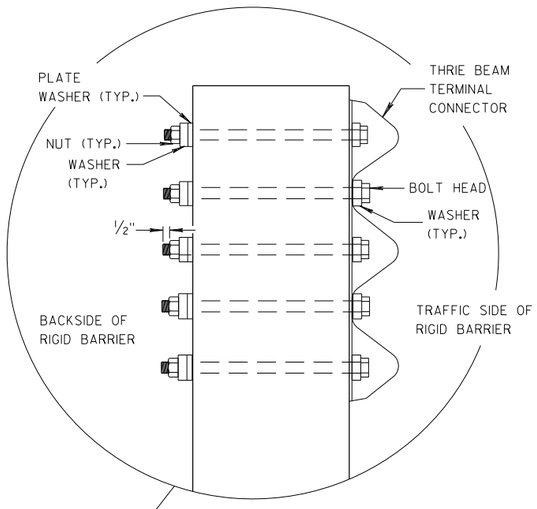

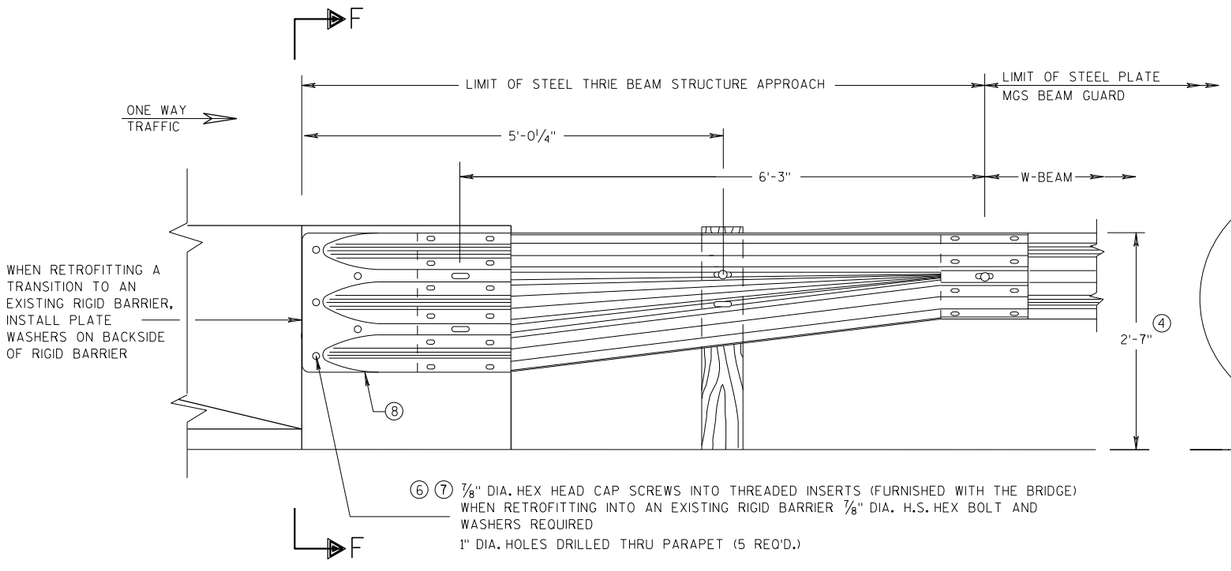

FRONT VIEW

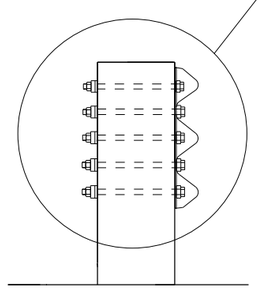

SECTION F-F

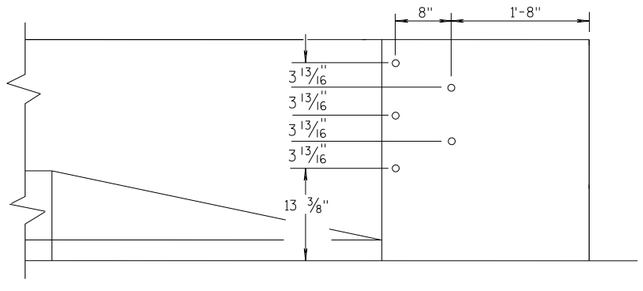

DRILL HOLE LOCATION

W BEAM TRANSITION AND CONNECTION TO BRIDGE PARAPETS WITH SQUARE ENDS

(USE ONLY ON THE TRAFFIC EXIT END OF ONE WAY BRIDGES)

MIDWEST GUARDRAIL SYSTEM
THRIE BEAM TRANSITION (MGS)

STATE OF WISCONSIN
DEPARTMENT OF TRANSPORTATION

APPROVED
07/2018 — DATE
/S/ Rodney Taylor — ROADWAY STANDARDS D UNIT SUPERVIS NT
FHWA

6

S.D.D. 14 B 45-5d

6

S.D.D. 14 B 45-5d

GENERAL NOTES

THESE ARE TYPICAL CONNECTION DETAILS. ADJUST THE POSTION OF CONNECTIONS TO EXISTING BRIDGES TO FIT THE ACTUAL BRIDGE AND SITE DIMENSIONS.

(2) OPTIONAL CURB AND GUTTER OR DRAINAGE FEATURE SEE PLAN FOR INFORMATION.

(4) TOLERANCE FOR TOP OF BEAM IS ± 1".

(6) DRILLING BOLT HOLES THROUGH THE PARAPET, BOLTS, NUTS, WASHERS AND REPAIRING DAMAGED CONCRETE ARE INCIDENTAL TO THE CONTRACT.

(7) BOLTS MAY BE A325 BOLTS OR A449 BOLTS. BOLT LENGTH AND THREADING LENGTH ARE TO ALLOW FOR A TIGHT CONNECTION BETWEEN RIGID BARRIER AND THRIE BEAM CONNECTION PLATE. CONTRACTOR IS TO FIELD VERIFY BOLT LENGTH AND THREAD LENGTH. ONE ROUND WASHER REQUIRED BETWEEN BOLT HEAD AND THRIE BEAM CONNECTOR PLATE. BOLTS THAT EXTEND THROUGH THE PARAPET AND OUT THE BACK FACE REQUIRE A HARDENED ROUND STEEL WASHER THAT IS 2" O.D. X 5/32" THICK AND ONE PLATE WASHER. REPAIR ANY DAMAGED CONCRETE FROM BOLT INSTALLATION.

(8) THE RECESS FOR A W-BEAM CONNECTION, WHICH EXISTS ON SOME PARAPETS OF THIS TYPE, SHALL BE FILLED WITH A TREATED TIMBER BLOCKOUT. BLOCKOUT SIZE IS 1'-6" X 2'-0" X 3 ½".

(9) BOLT, NUT AND WASHERS NOT REQUIRED FOR THIS LOCATION WHEN RETROFITTING AN EXISTING PAPAPET AND THE HOLE IS EITHER ABOVE PARAPET OR WITHIN 4 INCHES OF THE EDGE OF PARAPET.

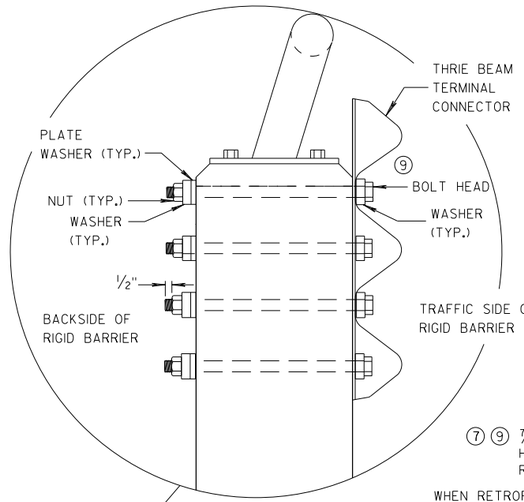

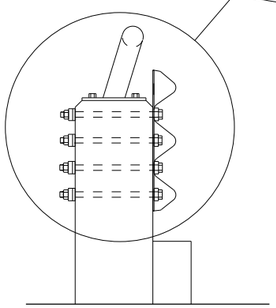

SECTION G-G

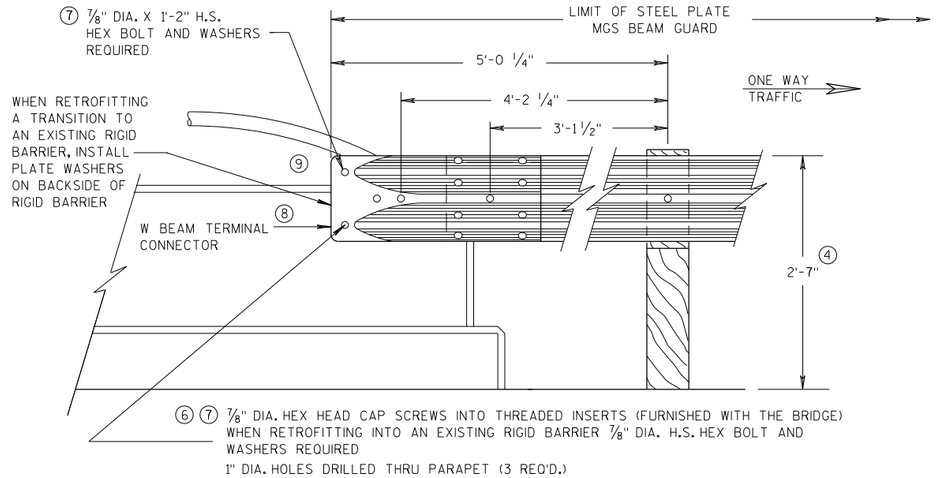

FRONT VIEW

W BEAM CONNECTION TO VERTICAL FACE PARAPET

(USE ONLY ON THE TRAFFIC EXIT END OF ONE WAY BRIDGES)

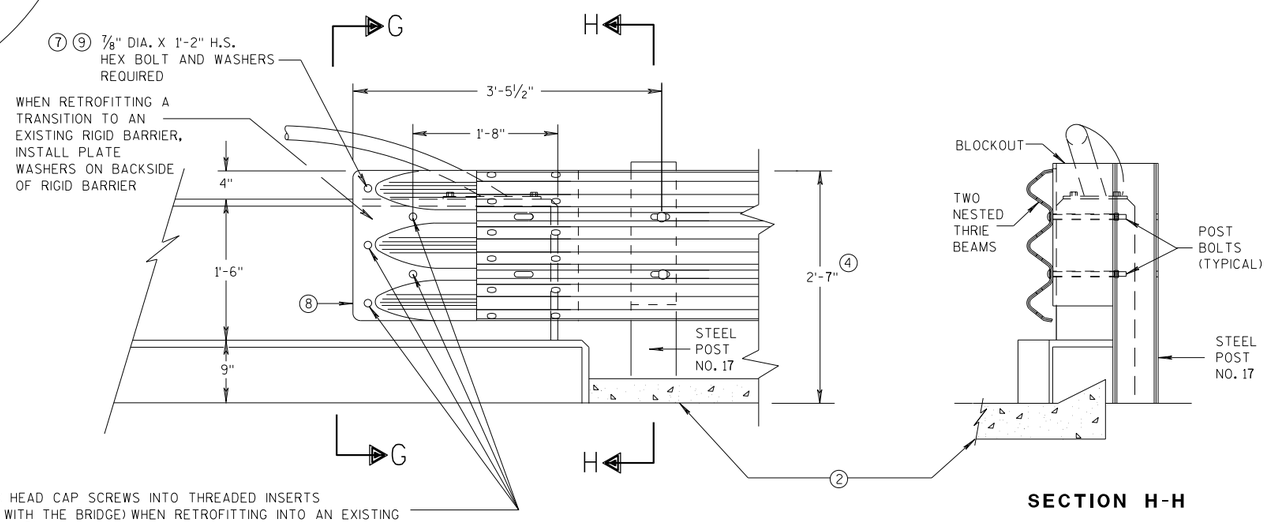

FRONT VIEW

SECTION H-H

THRIE BEAM CONNECTION TO VERTICAL FACED PARAPETS

MIDWEST GUARDRAIL SYSTEM
THRIE BEAM TRANSITION (MGS)

STATE OF WISCONSIN
DEPARTMENT OF TRANSPORTATION

APPROVED
07/2018
DATE
FHWA

/S/ Rodney Taylor
ROADWAY STANDARDS D UNIT SUPERVIS NT

6

S.D.D. 14 B 45-5e

6

S.D.D. 14 B 45-5e

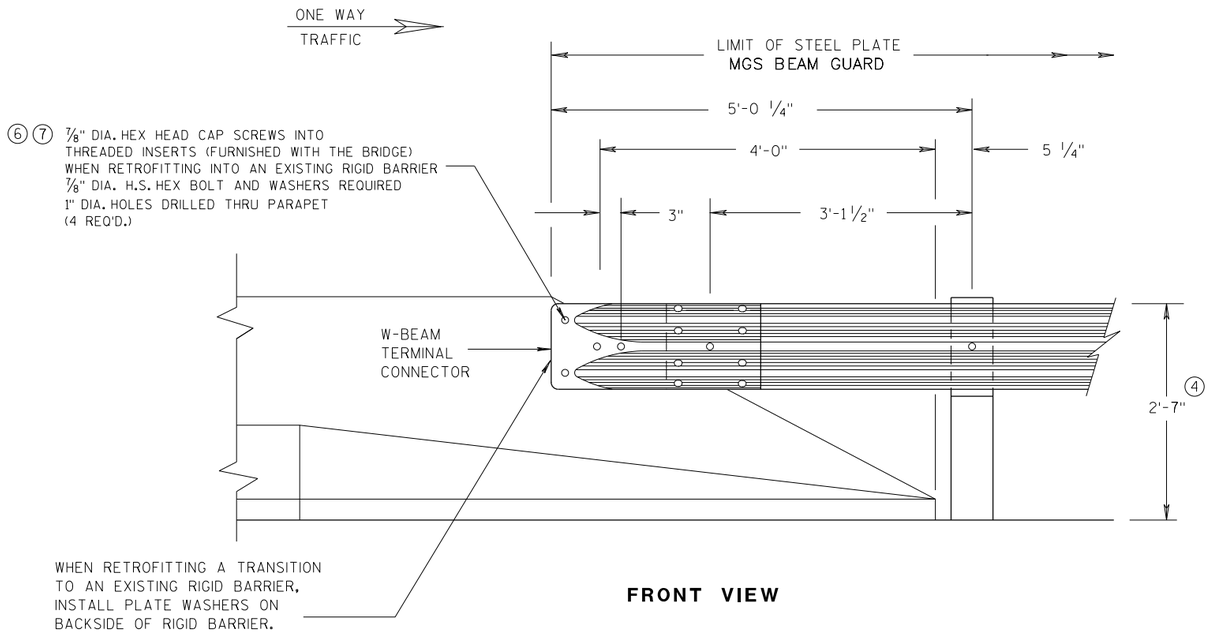

FRONT VIEW

W BEAM CONNECTION TO PARAPETS WITH SLOPED ENDS

(USE ONLY AT TRAFFIC EXIT END OF ONE WAY BRIDGE)

GENERAL NOTES

② OPTIONAL CURB AND GUTTER OR DRAINAGE FEATURE SEE PLAN FOR INFORMATION.

④ TOLERANCE FOR TOP OF BEAM IS ± 1".

⑥ DRILLING BOLT HOLES THROUGH THE PARAPET, BOLTS, NUTS, WASHERS AND REPAIRING DAMAGED CONCRETE ARE INCIDENTAL TO THE CONTRACT.

⑦ BOLTS MAY BE A325 BOLTS OR A449 BOLTS. BOLT LENGTH AND THREADING LENGTH ARE TO ALLOW FOR A TIGHT CONNECTION BETWEEN RIGID BARRIER AND THRIE BEAM CONNECTION PLATE. CONTRACTOR IS TO FIELD VERIFY BOLT LENGTH AND THREAD LENGTH. ONE ROUND WASHER REQUIRED BETWEEN BOLT HEAD AND THRIE BEAM CONNECTOR PLATE. BOLTS THAT EXTEND THROUGH THE PARAPET AND OUT THE BACK FACE REQUIRE A HARDENED ROUND STEEL WASHER THAT IS 2" O.D. X 5/32" THICK AND ONE PLATE WASHER. REPAIR ANY DAMAGED CONCRETE FROM BOLT INSTALLATION.

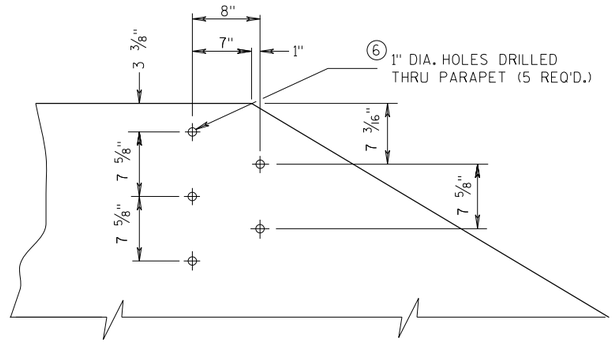

DRILL HOLE LOCATION AND PATTERN FOR THRIE BEAM CONNECTION

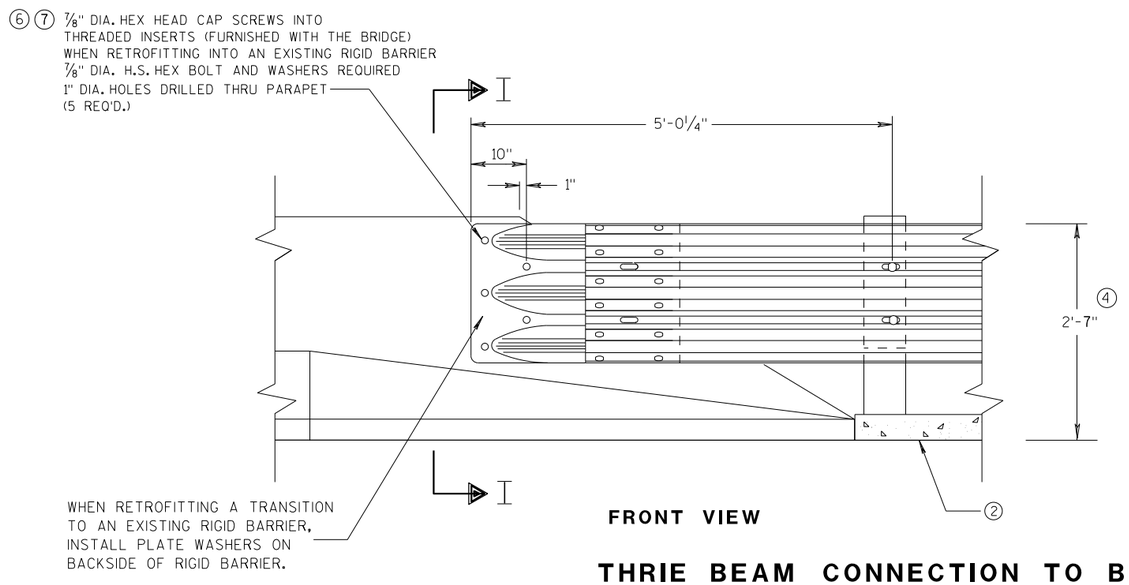

FRONT VIEW

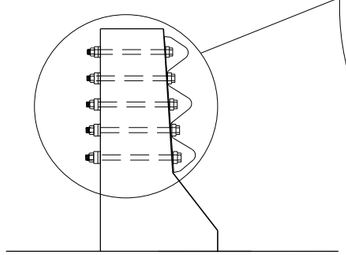

SECTION I-I

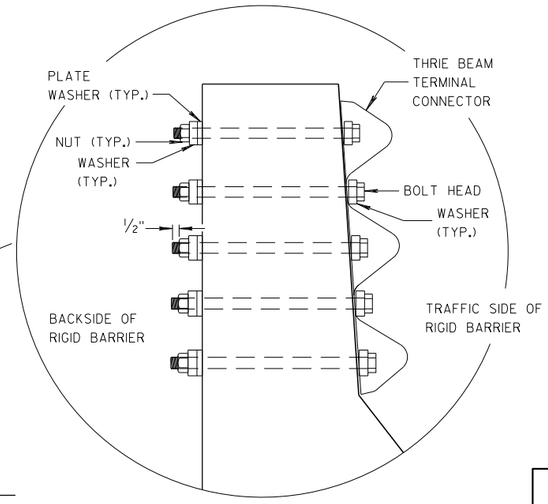

THRIE BEAM CONNECTION TO BRIDGE PARAPETS WITH SLOPED ENDS

MIDWEST GUARDRAIL SYSTEM
THRIE BEAM TRANSITION (MGS)

STATE OF WISCONSIN
DEPARTMENT OF TRANSPORTATION

APPROVED
07/2018 — DATE
/S/ Rodney Taylor
ROADWAY STANDARDS [illegible] UNIT SUPERVI[illegible]ENT
FHWA

6
S.D.D. 14 B 45-5f

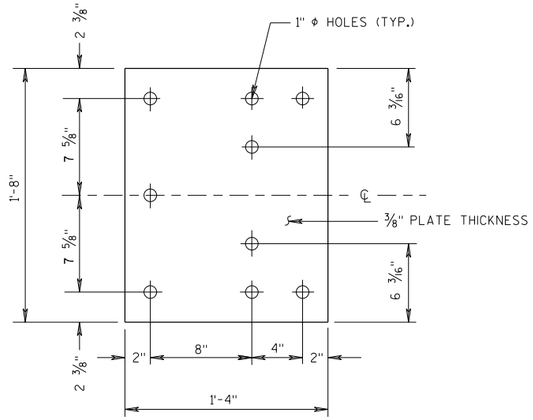

BACK-UP PLATE DETAIL

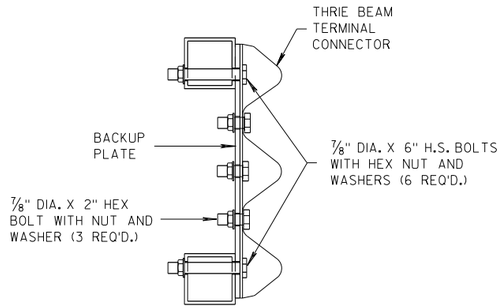

SECTION J-J

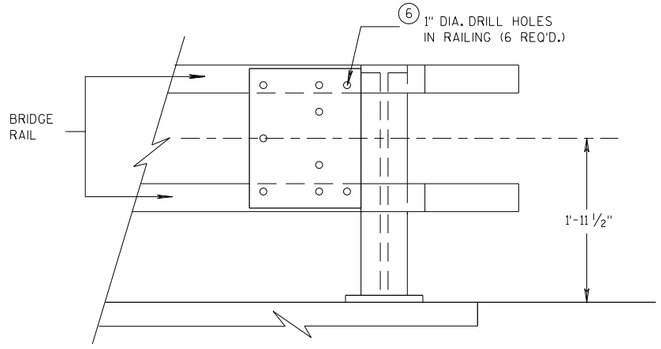

BACK-UP PLATE MOUNTING ONTO BRIDGE RAILING

GENERAL NOTES

④ TOLERANCE FOR TOP OF BEAM IS ± 1".

⑥ DRILLING HOLES THROUGH THE PAPRPET, BOLTS, NUTS, WASHERS AND REPAIRING DAMAGED CONCRETE ARE INCIDENTAL TO THE CONTRACT.

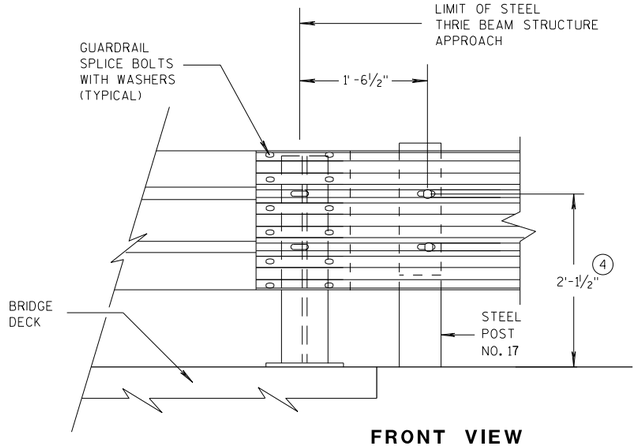

FRONT VIEW

THRIE BEAM CONNECTION TO STEEL RAILING TYPE "W"

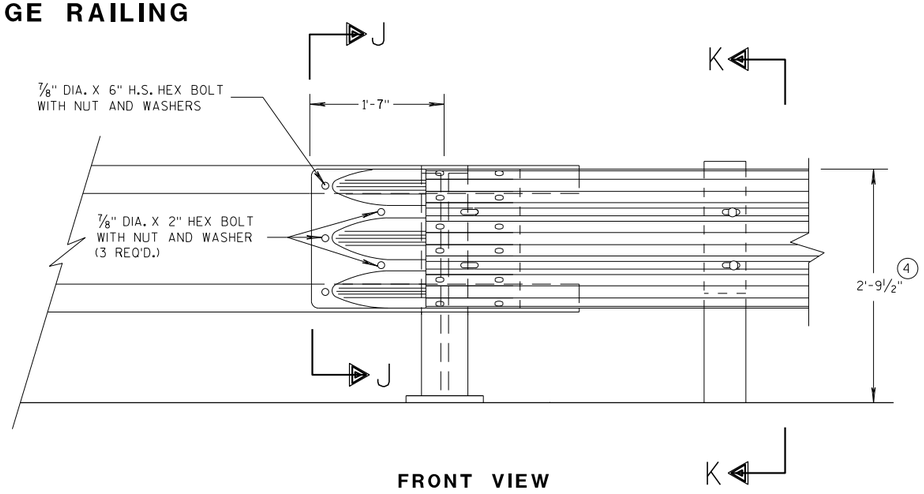

FRONT VIEW

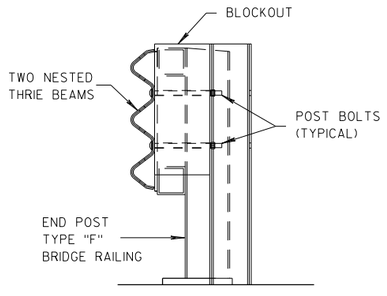

SECTION K-K

THRIE BEAM CONNECTION TO TUBULAR RAILING TYPE "F"

MIDWEST GUARDRAIL SYSTEM
THRIE BEAM TRANSITION (MGS)

STATE OF WISCONSIN
DEPARTMENT OF TRANSPORTATION

APPROVED 07/2018 — DATE — FHWA

/S/ Rodney Taylor — ROADWAY STANDARDS DEVELOPMENT UNIT SUPERVISOR

137

6

S.D.D. 14 B 45-5g

6

S.D.D. 14 B 45-5g

GENERAL NOTES

(4) TOLERANCE FOR TOP OF W-BEAM RAIL IS ± 1".

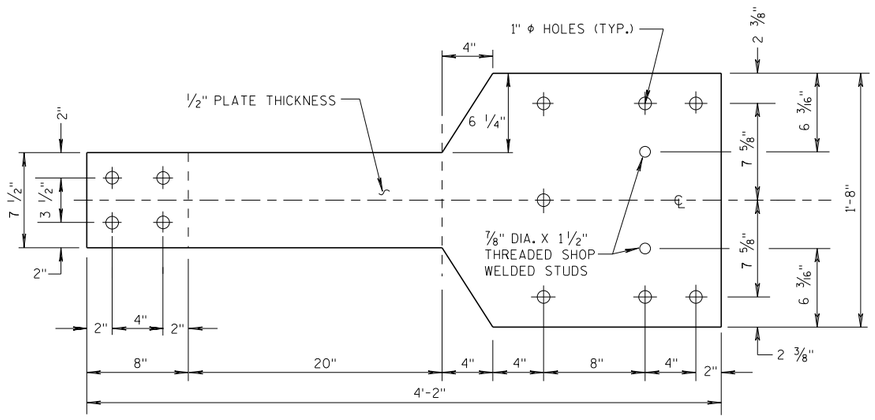

FRONT VIEW

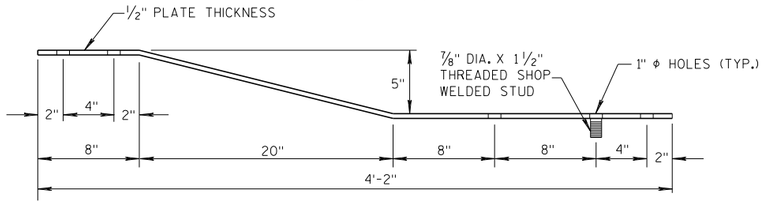

PLAN VIEW

BACK-UP PLATE DETAIL, TYPE "M"

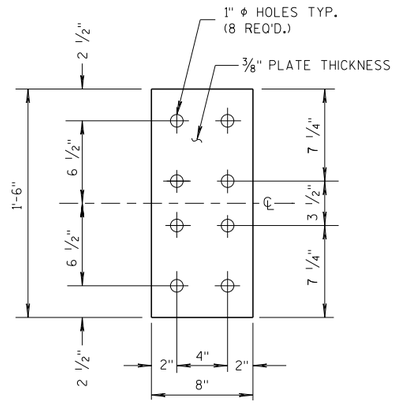

FRONT VIEW

ANCHOR PLATE DETAIL, TYPE "M"

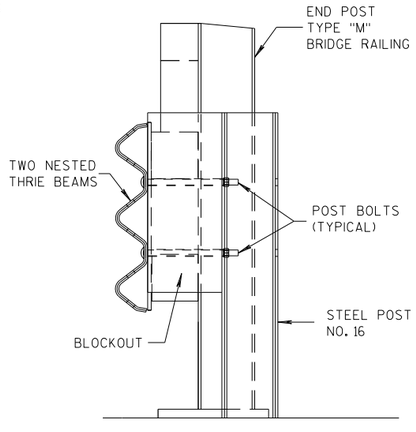

SECTION M-M

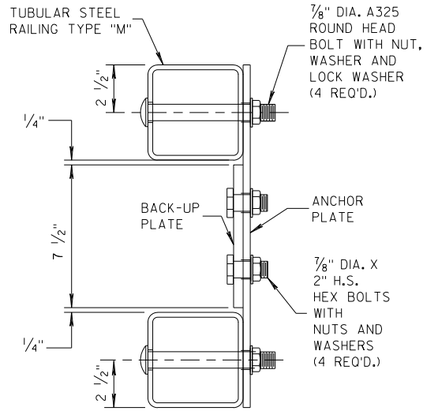

SECTION L-L

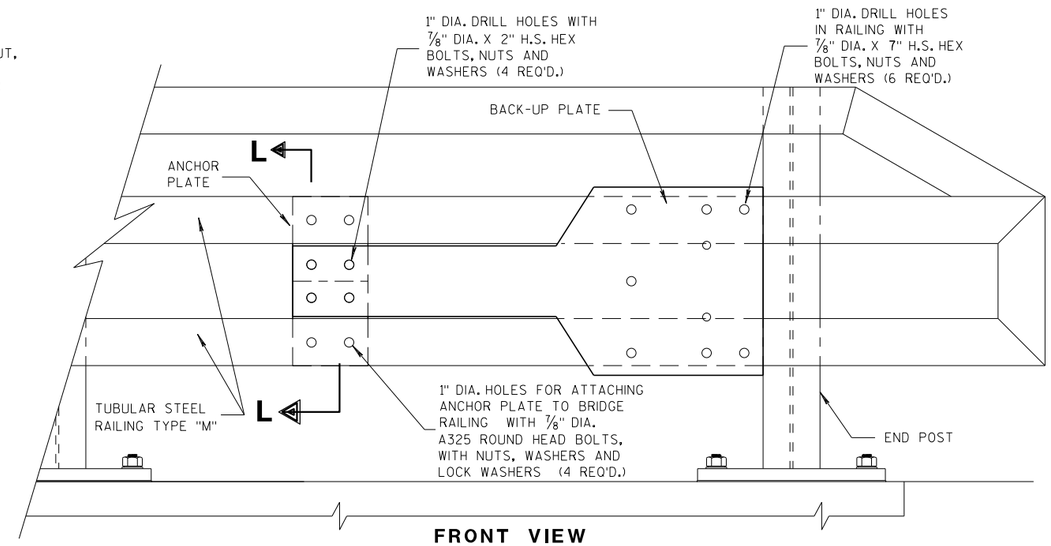

FRONT VIEW

ANCHOR AND BACK-UP PLATE MOUNTING TO BRIDGE RAILING, TYPE "M"

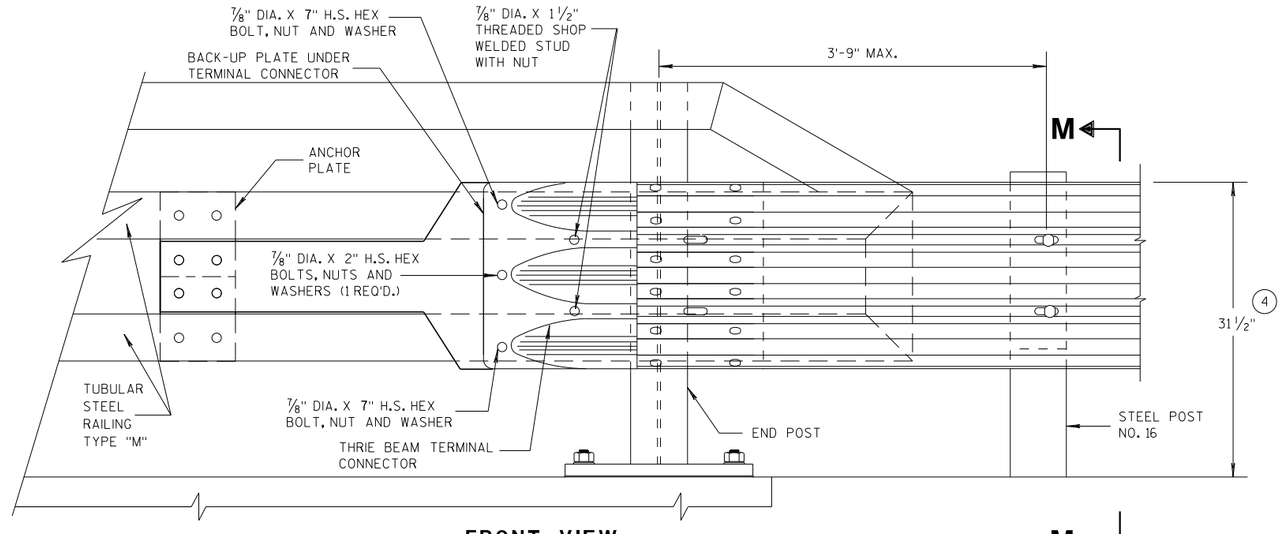

FRONT VIEW

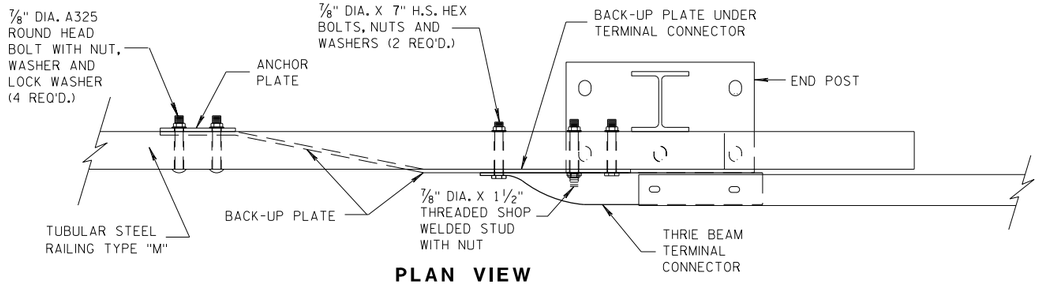

PLAN VIEW

THRIE BEAM CONNECTION TO TUBULAR RAILING, TYPE "M"

MIDWEST GUARDRAIL SYSTEM
THRIE BEAM TRANSITION (MGS)

STATE OF WISCONSIN
DEPARTMENT OF TRANSPORTATION

APPROVED
07/2018 — DATE
/S/ Rodney Taylor — ROADWAY STANDARDS UNIT SUPERVISOR

FHWA

6

S.D.D. 14 B 45-5h

6

S.D.D. 14 B 45-5h

GENERAL NOTES

COVER PLATE PANELS ARE 3/16" THICK.

ALL STIFFENERS ARE 1/4" THICK.

CONNECTOR PLATE SHALL BE FABRICATED FROM ASTM GRADE A36 STEEL AND GALVANIZED.

FOR GALVANIZED REQUIREMENTS, SEE SECTION 614 OF THE STANDARD SPECIFICATIONS.

ALL HOLE DIAMETERS SHALL BE 1".

FOR OPPOSITE SIDE INSTALLATION MIRROR DRAWINGS.

(10) STIFFENERS LOCATED AT THE OUTSIDE EDGES OF THE COVER PLATES SHALL BE WELDED AS FOLLOWS:
SINGLE BEVEL GROOVE WELD ON EXTERNAL SIDES AND 3/16" FILLET WELD BY 1" LONG SPACED AT 2" ON INTERNAL SIDES.

(11) STIFFENERS LOCATED ON THE INSIDE OF THE COVER PLATE SHALL BE WELDED AS FOLLOWS:
3/16" FILLET WELD BY 1" LONG SPACED AT 2".

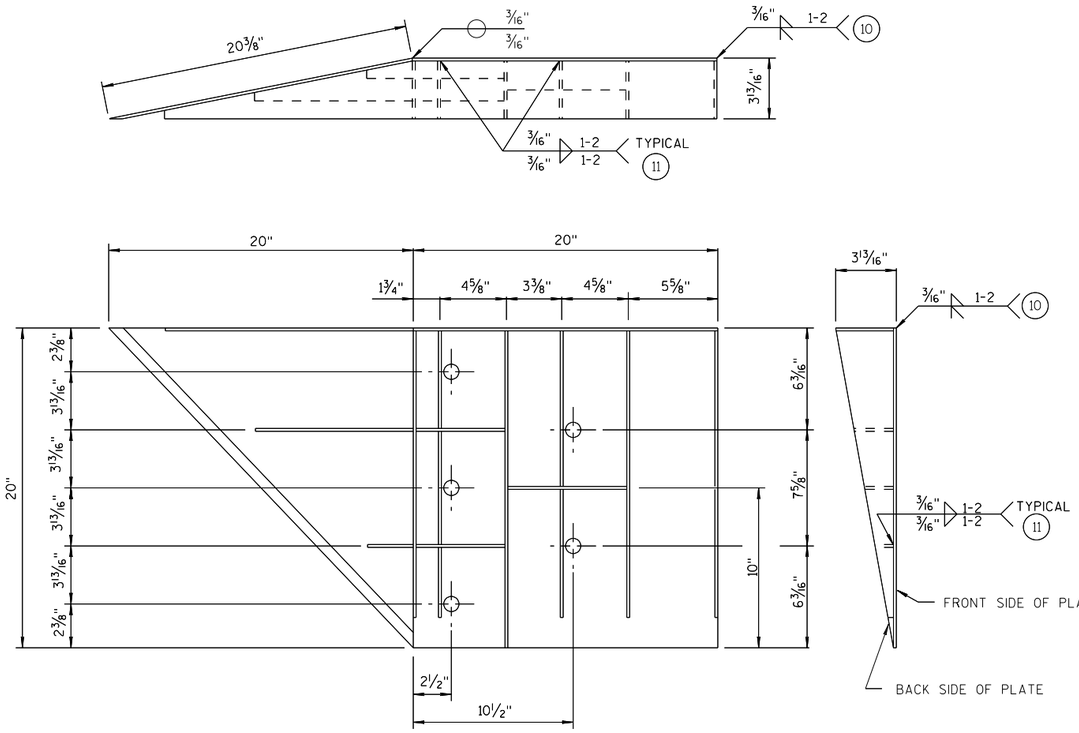

WELDING INSTRUCTION

(VIEWED FROM BACK SIDE OF PLATE)

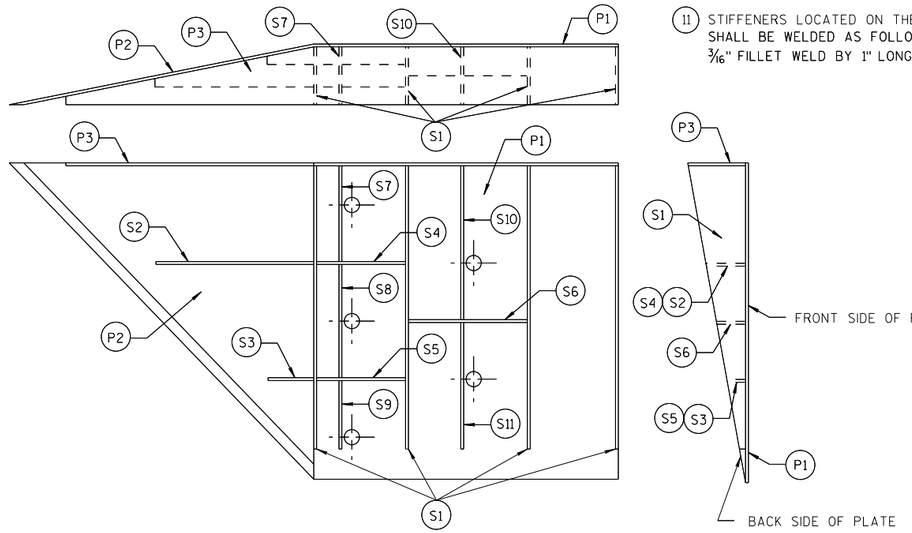

PLATE AND STIFFENER IDENTIFICATION

(VIEWED FROM BACK SIDE OF PLATE)

CONNECTOR PLATE DIMENSION (PER ASSEMBLY)

PLATE	QUANTITY	SHAPE	SIZE (A x B x C x D)	THICKNESS
P1	1		20" x 20"	3/16"
P2	1		20" x 20" x 28 9/16"	3/16"
P3	1		39" x 3 5/8" x 20" x 19 5/16"	3/16"
S1	4		18 7/16" x 3 5/8" x 18 3/4"	1/4"
S2	1		10 1/4" x 2 7/16" x 10 3/8" x 1/2"	1/4"
S3	1		3" x 1 1/16" x 3 1/8" x 1/2"	1/4"
S4	1		6 1/8" x 2 7/16"	1/4"
S5	1		6 1/8" x 1 1/16"	1/4"
S6	1		7 3/4" x 1 3/4"	1/4"
S7	1		2 9/16" x 6" x 3 5/8" x 5 7/8"	1/4"
S8	1		1 5/32" x 7 1/2" x 2 1/2" x 7 3/8"	1/4"
S9	1		6 1/16" x 6 3/16" x 1 3/32"	1/4"
S10	1		1 7/8" x 9 7/8" x 3 5/8" x 9 11/16"	1/4"
S11	1		8 1/2" x 8 3/4" x 1 13/16"	1/4"

SINGLE SLOPE CONNECTION PLATE

MIDWEST GUARDRAIL SYSTEM
THRIE BEAM TRANSITION (MGS)

STATE OF WISCONSIN
DEPARTMENT OF TRANSPORTATION

APPROVED
7/2018
DATE
FHWA

/S/ Rodney Taylor
ROADWAY STANDARDS I
UNIT SUPERVI

6

S.D.D. 14 B 45-5i

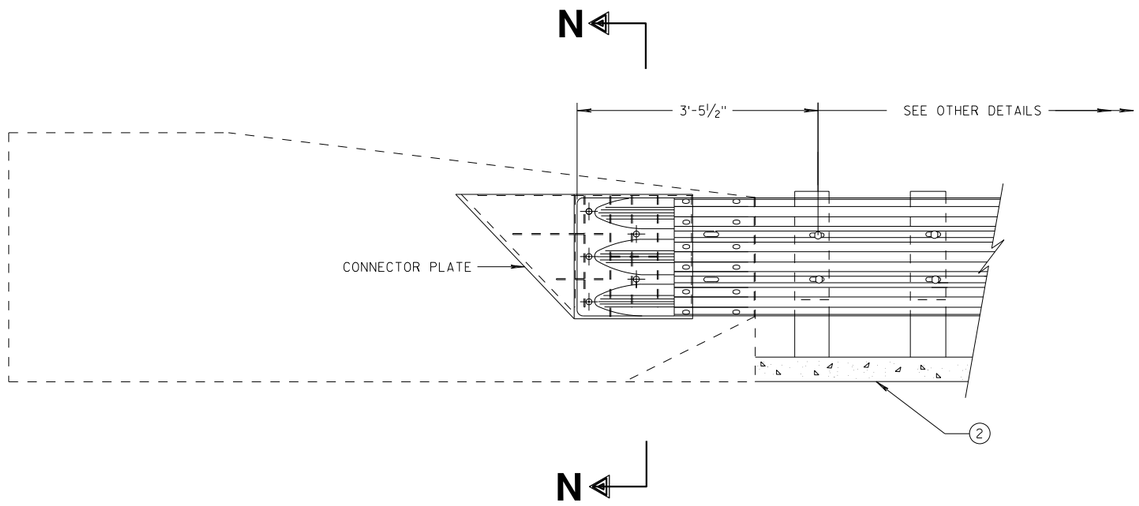

THRIE BEAM CONNECTION TO SINGLE SLOPE BARRIER

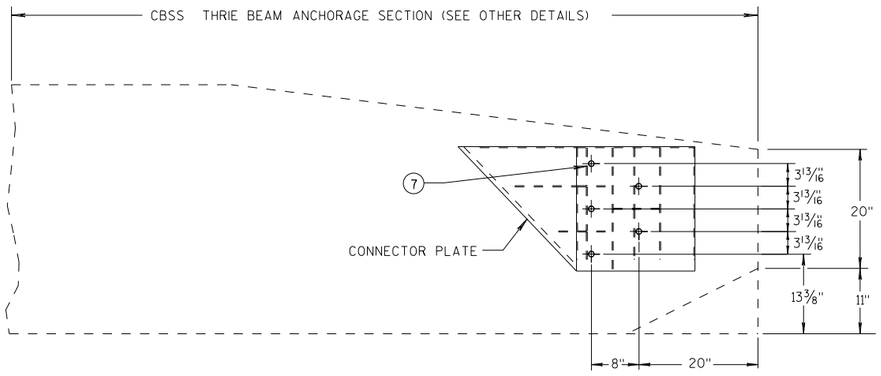

SINGLE SLOPE CONNECTION PLATE PLACEMENT

GENERAL NOTES

CONNECTOR PLATE, DRILLING BOLT HOLES THROUGH THE PARAPET, BOLTS, NUTS, WASHERS AND REPAIRING DAMAGED CONCRETE ARE INCIDENTAL TO THE CONTRACT.

(2) OPTIONAL CURB AND GUTTER OR DRAINAGE FEATURE SEE PLAN FOR INFORMATION.

(7) BOLTS MAY BE A325 BOLTS OR A449 BOLTS. BOLT LENGTH AND THREADING LENGTH ARE TO ALLOW FOR A TIGHT CONNECTION BETWEEN RIGID BARRIER AND THRIE BEAM CONNECTION PLATE. CONTRACTOR IS TO FIELD VERIFY BOLT LENGTH AND THREAD LENGTH. ONE ROUND WASHER REQUIRED BETWEEN BOLT HEAD AND THRIE BEAM CONNECTOR PLATE. BOLTS THAT EXTEND THROUGH THE PARAPET AND OUT THE BACK FACE REQUIRE A HARDENED ROUND STEEL WASHER THAT IS 2" O.D. X 5/32" THICK AND ONE PLATE WASHER. REPAIR ANY DAMAGED CONCRETE FROM BOLT INSTALLATION.

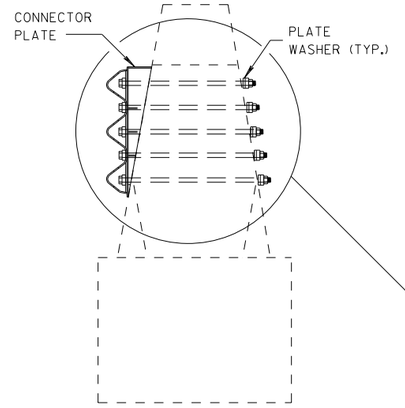

SECTION N-N

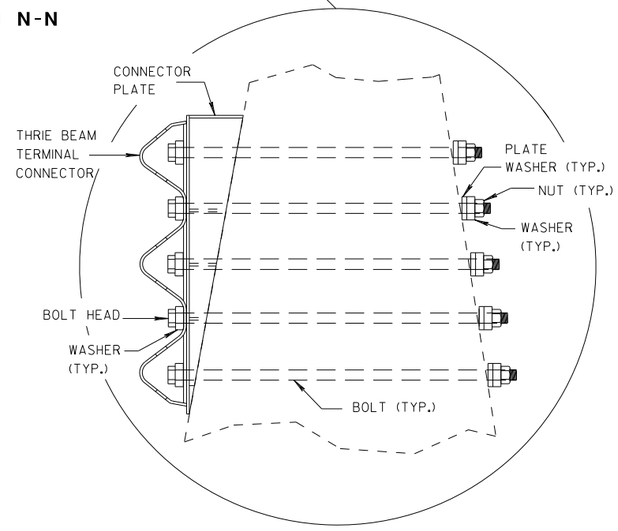

MIDWEST GUARDRAIL SYSTEM
THRIE BEAM TRANSITION (MGS)

STATE OF WISCONSIN
DEPARTMENT OF TRANSPORTATION

APPROVED
7/2018
DATE
FHWA

/S/ Rodney Taylor
ROADWAY STANDARDS DI
UNIT SUPERVIS

6

S.D.D. 14 B 45-5j

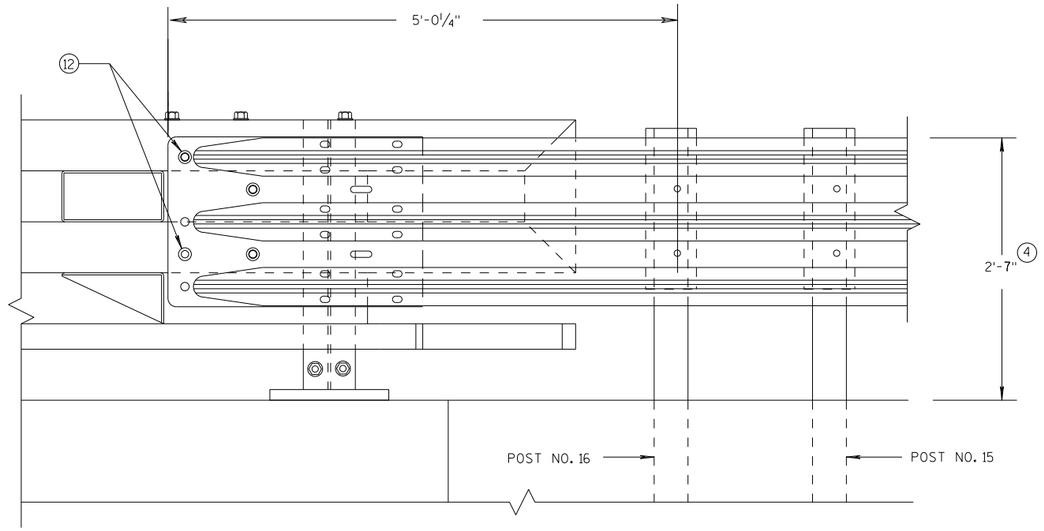

ELEVATION OF DETAIL AT NY3 END POST

THRIE BEAM RAIL ATTACHMENT

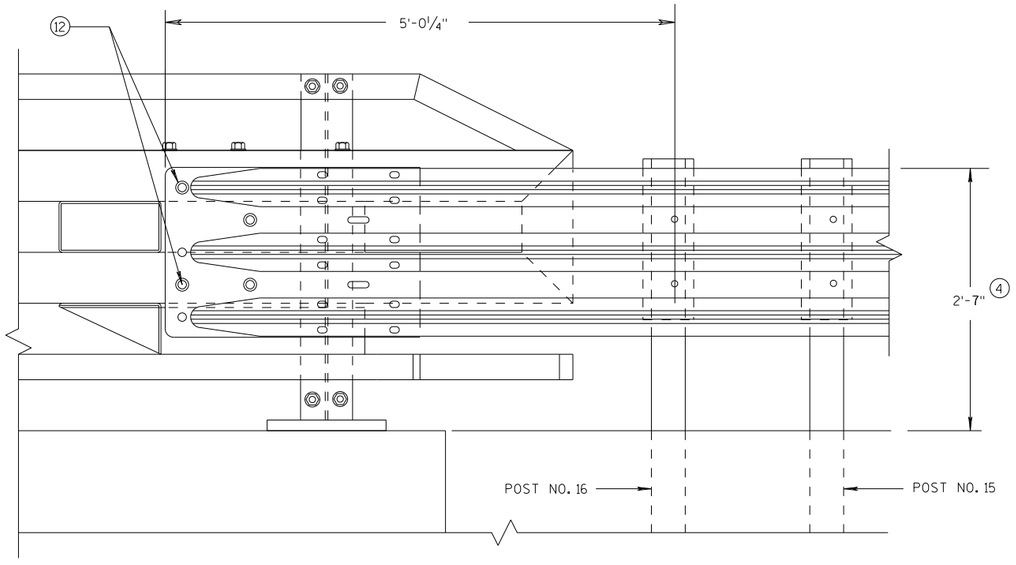

ELEVATION OF DETAIL AT NY4 END POST

THRIE BEAM RAIL ATTACHMENT

GENERAL NOTES

(4) TOLERANCE FOR TOP OF BEAM IS ± 1".

(12) BOLTS MAY BE A325 BOLTS OR A449 BOLTS. BOLT LENGTH AND THREADING LENGTH ARE TO ALLOW FOR A TIGHT CONNECTION BETWEEN RIGID BARRIER AND THRIE BEAM CONNECTION PLATE. CONTRACTOR IS TO FIELD VERIFY BOLT LENGTH AND THREAD LENGTH. ONE ROUND WASHER REQUIRED BETWEEN BOLT HEAD AND THRIE BEAM CONNECTOR PLATE. ON BACKSIDE OF PARAPET ONE ROUND WASHER, AND NUT REQUIRED. BOLT THREAD IS TO EXTEND 1/2-INCH BEYOND NUT.

MIDWEST GUARDRAIL SYSTEM
THRIE BEAM TRANSITION (MGS)

STATE OF WISCONSIN
DEPARTMENT OF TRANSPORTATION

APPROVED
7/2018
DATE
/S/ Rodney Taylor
ROADWAY STANDARDS D
UNIT SUPERVIS
NT
FHWA

6

S.D.D. 14 B 45-5k

6

S.D.D. 14 B 45-5k

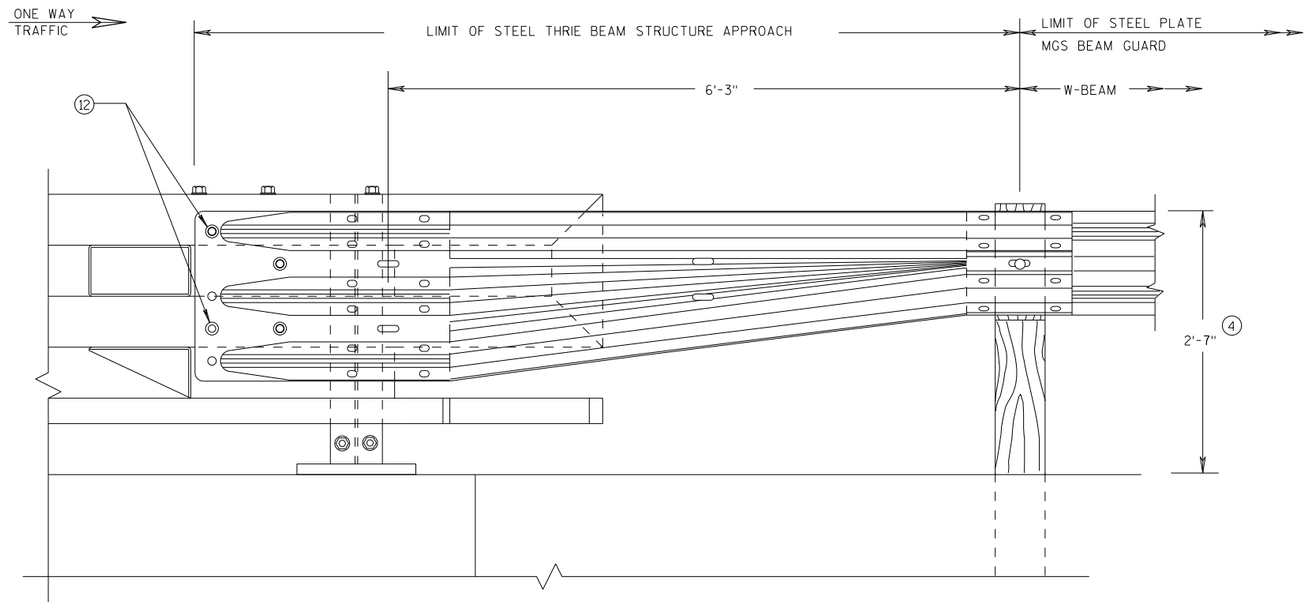

FRONT VIEW

W BEAM TRANSITION AND CONNECTION TO BRIDGE RAILING TYPE "NY3"

(USE ONLY ON THE TRAFFIC EXIT END OF ONE WAY BRIDGES)

GENERAL NOTES

(4) TOLERANCE FOR TOP OF BEAM IS ± 1".

(12) BOLTS MAY BE A325 BOLTS OR A449 BOLTS. BOLT LENGTH AND THREADING LENGTH ARE TO ALLOW FOR A TIGHT CONNECTION BETWEEN RIGID BARRIER AND THRIE BEAM CONNECTION PLATE. CONTRACTOR IS TO FIELD VERIFY BOLT LENGTH AND THREAD LENGTH. ONE ROUND WASHER REQUIRED BETWEEN BOLT HEAD AND THRIE BEAM CONNECTOR PLATE. ON BACKSIDE OF PARAPET ONE ROUND WASHER, AND NUT REQUIRED. BOLT THREAD IS TO EXTEND 1/2-INCH BEYOND NUT.

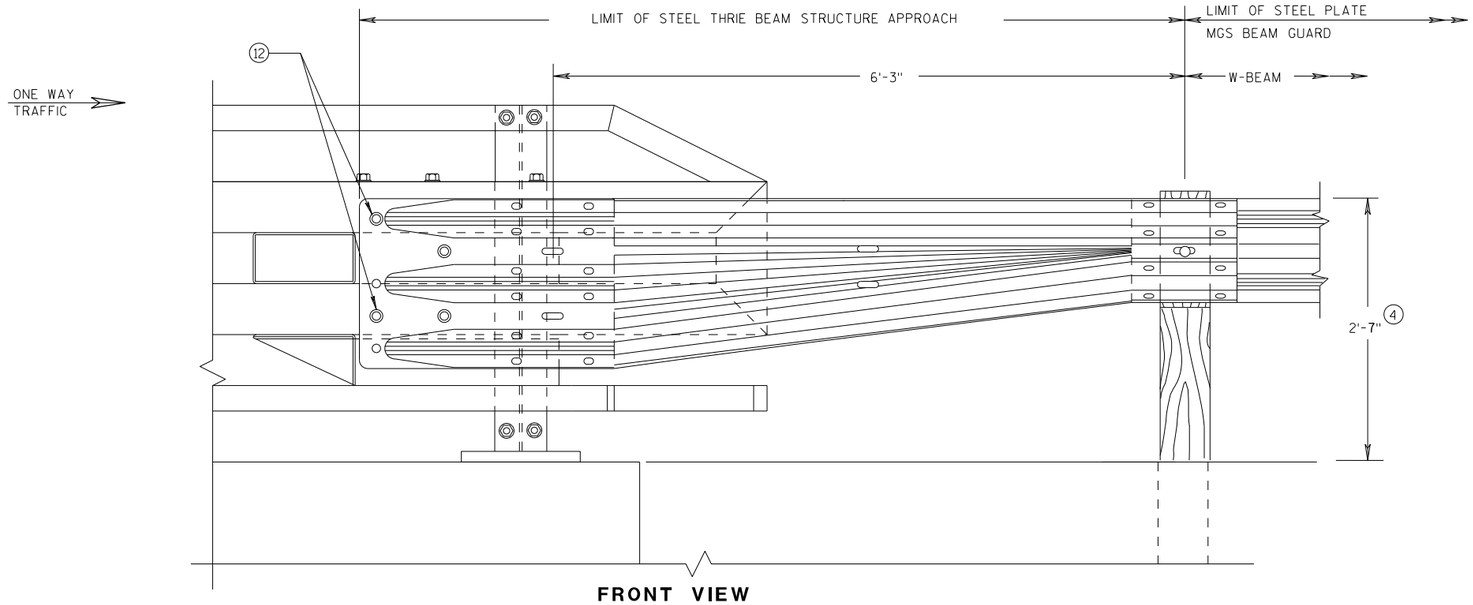

FRONT VIEW

W BEAM TRANSITION AND CONNECTION TO BRIDGE RAILING TYPE "NY4"

(USE ONLY ON THE TRAFFIC EXIT END OF ONE WAY BRIDGES)

MIDWEST GUARDRAIL SYSTEM
THRIE BEAM TRANSITION (MGS)

STATE OF WISCONSIN
DEPARTMENT OF TRANSPORTATION

APPROVED
7/2018 DATE
/S/ Rodney Taylor
ROADWAY STANDARDS D UNIT SUPERVIS
NT
FHWA

6

S.D.D. 14 B 45-5L

6

S.D.D. 14 B 45-5L

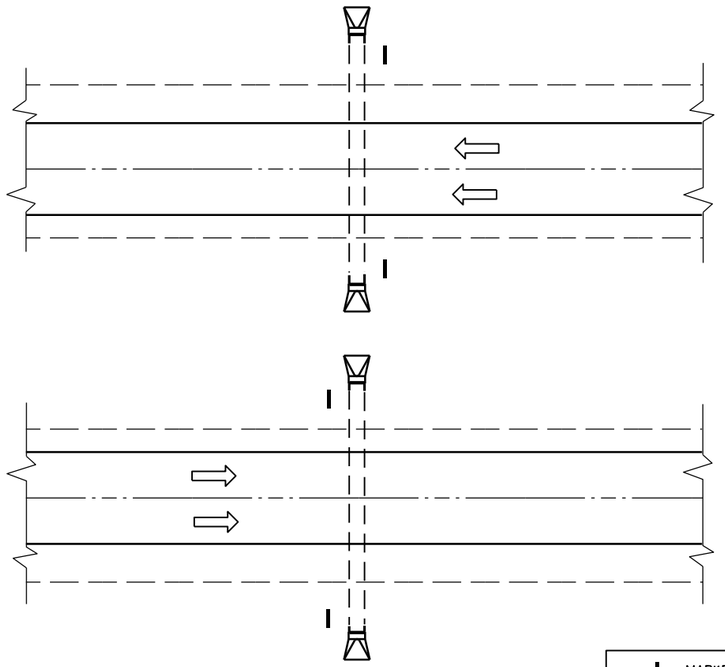

PLAN VIEW

DIVIDED HIGHWAY

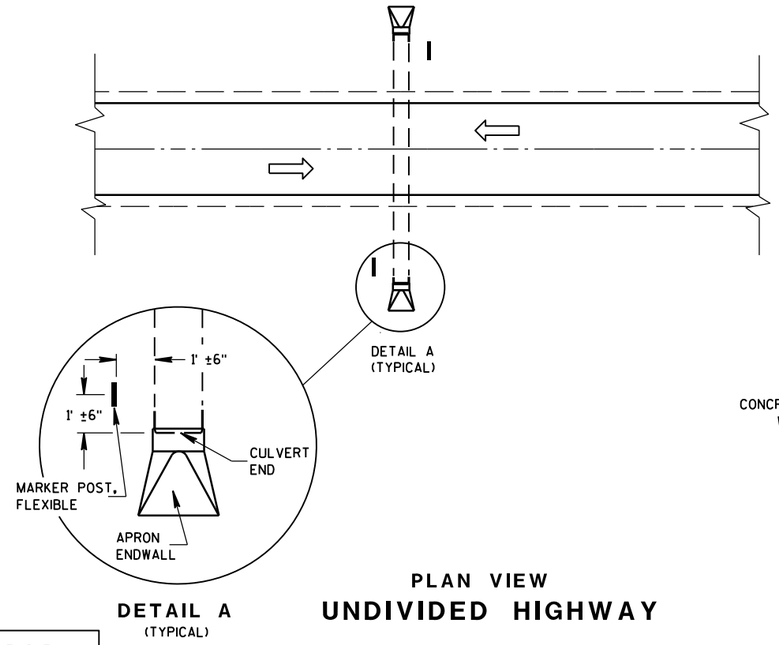

DETAIL A
(TYPICAL)

PLAN VIEW

UNDIVIDED HIGHWAY

MARKER POST, FLEXIBLE

DIRECTION OF TRAFFIC FLOW

GENERAL NOTES

DETAILS OF CONSTRUCTION, MATERIALS AND WORKMANSHIP NOT SHOWN ON THIS DRAWING SHALL CONFORM TO THE PERTINENT REQUIREMENTS OF THE STANDARD SPECIFICATIONS AND THE APPLICABLE SPECIAL PROVISIONS.

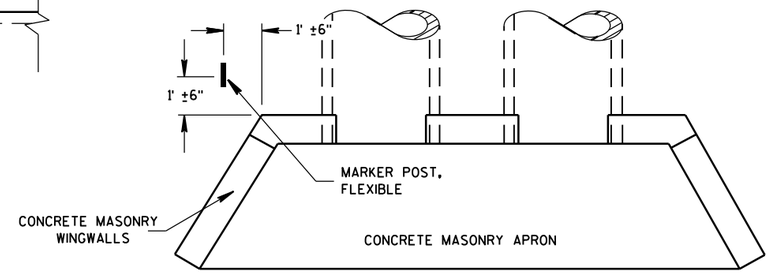

PLAN VIEW

CONCRETE MASONRY ENDWALLS FOR CULVERT PIPE AND PIPE ARCH

FLEXIBLE MARKER POST LOCATION

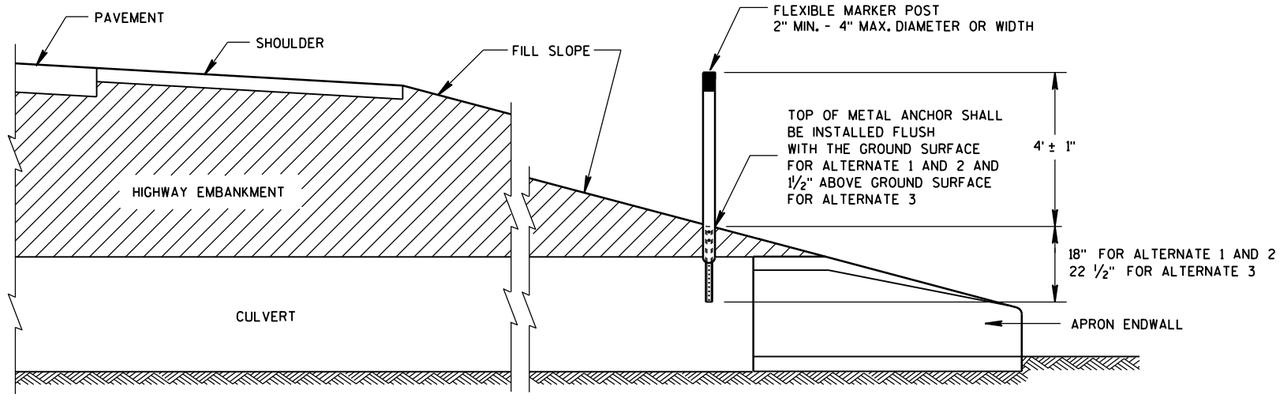

CROSS SECTION

FLEXIBLE MARKER POST

FLEXIBLE MARKER POST FOR CULVERT END

STATE OF WISCONSIN
DEPARTMENT OF TRANSPOI

6

S.D.D. 15 A 3-2a

6

S.D.D. 15 A 3-2a

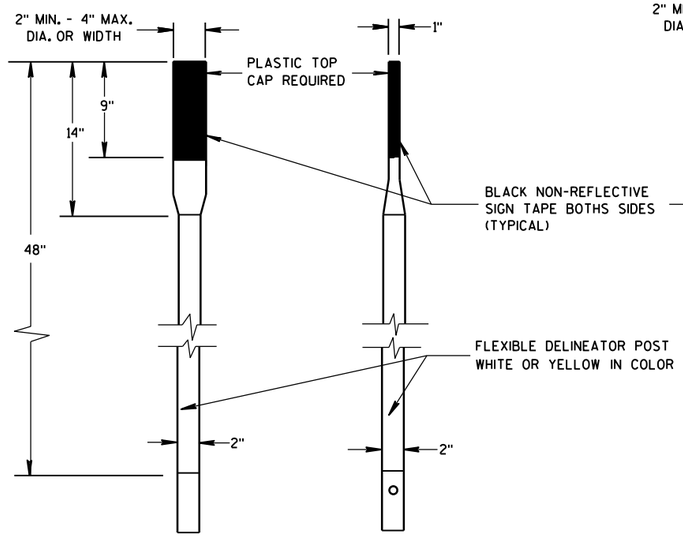

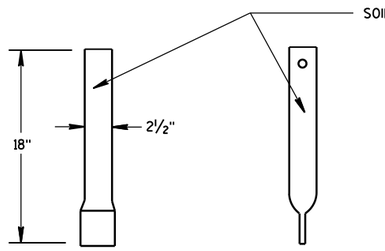

FRONT VIEW SIDE VIEW

ALTERNATE 1

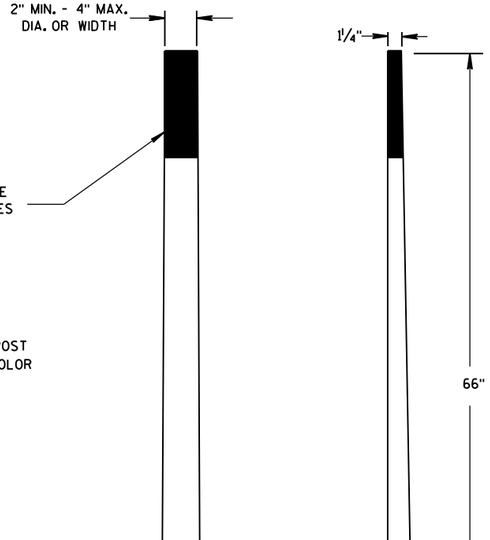

FRONT VIEW SIDE VIEW

ALTERNATE 2

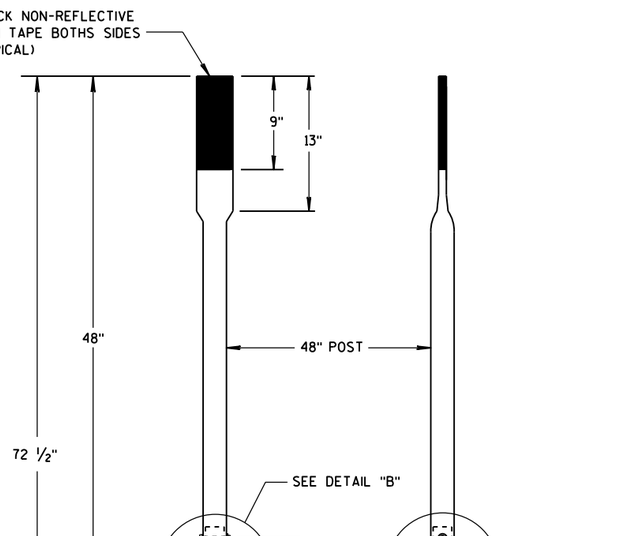

FRONT VIEW SIDE VIEW

ALTERNATE 3

FLEXIBLE MARKER POSTS

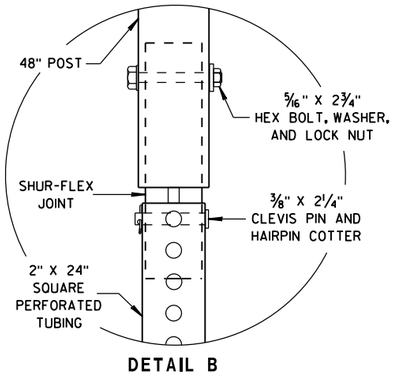

DETAIL B

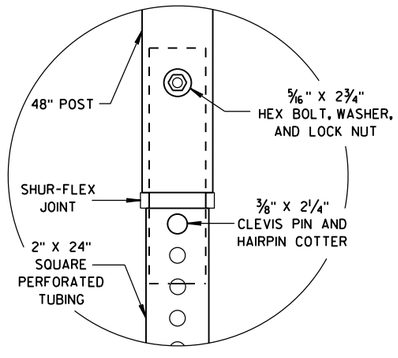

DETAIL C

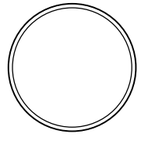

SECTION A-A

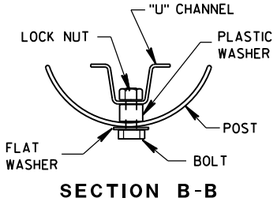

SECTION B-B

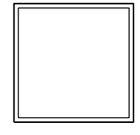

SECTION C-C

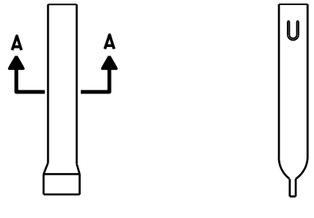

FRONT VIEW SIDE VIEW

ALTERNATE 1

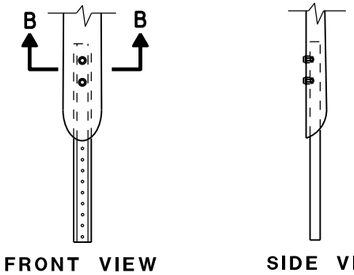

FRONT VIEW SIDE VIEW

ALTERNATE 2

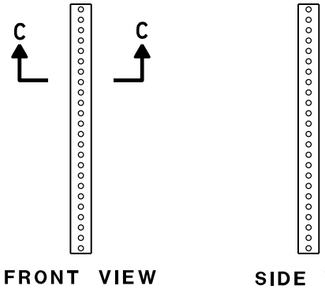

FRONT VIEW SIDE VIEW

ALTERNATE 3

FLEXIBLE MARKER POST ANCHORS

FLEXIBLE MARKER POST
FOR CULVERT END

STATE OF WISCONSIN
DEPARTMENT OF TRANSPORTATION

APPROVED
10/1/2012 — DATE
/S/ Travis Feltes — STATE TRAFFIC ENGINEER
FHWA

6

S.D.D. 15 A 3-2b

6

S.D.D. 15 A 3-2b

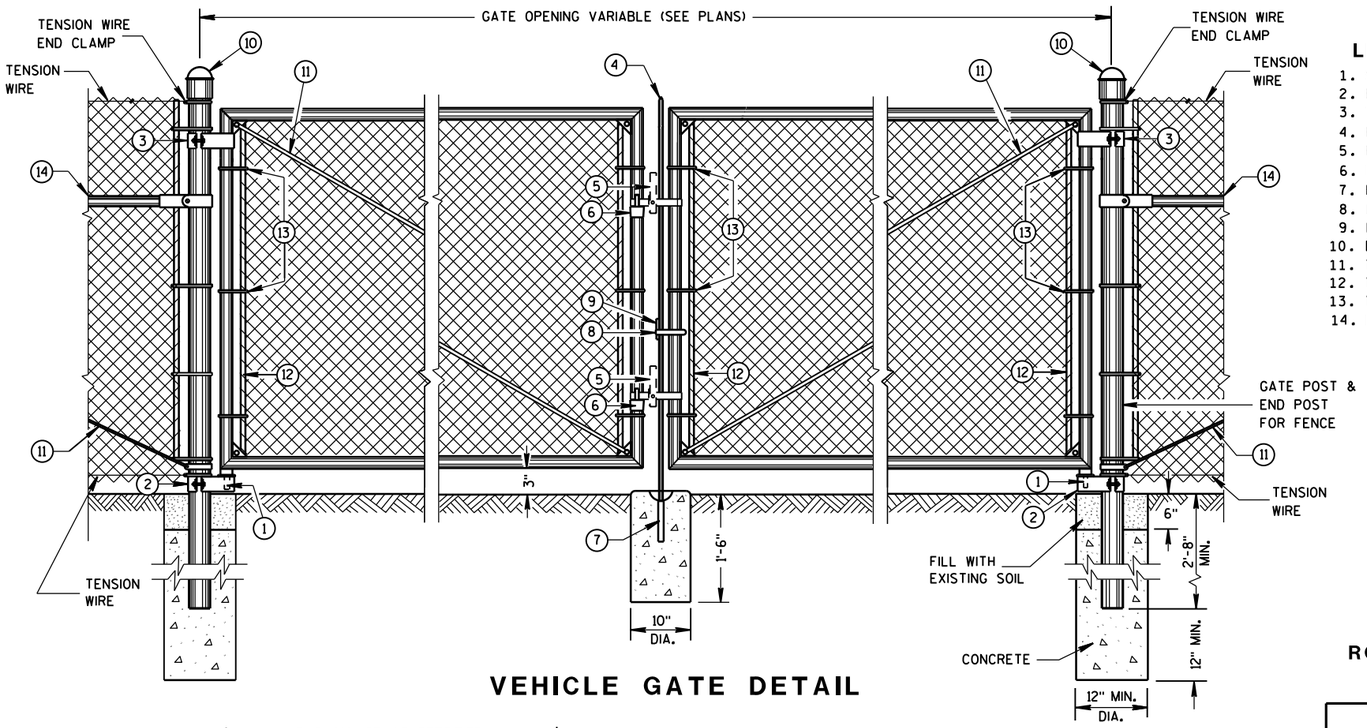

VEHICLE GATE DETAIL

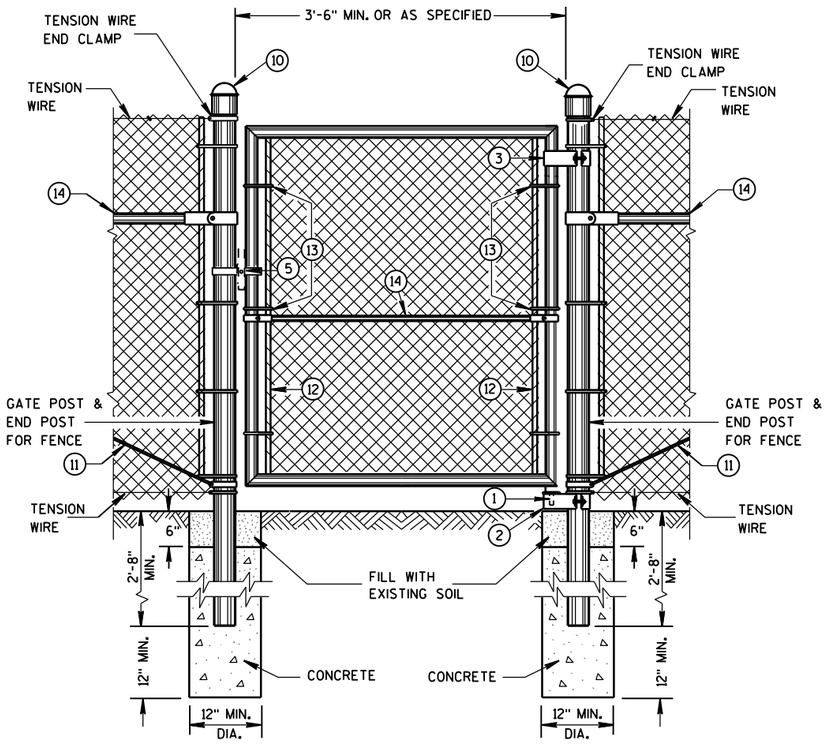

PEDESTRIAN GATE DETAIL

LEGEND

1. STRAIGHT PLUG
2. BOTTOM HINGE
3. TOP HINGE
4. PLUNGER ROD
5. FULCRUM LATCH
6. FORK CATCH *
7. PLUNGER ROD CATCH
8. LOCK KEEPER GUIDE
9. LOCK KEEPER
10. DOME TOPS
11. TRUSS RODS
12. TENSION BAR
13. TENSION BANDS
14. BRACE RAIL

*NOT REQUIRED ON SINGLE SWING PEDESTRIAN GATE

GENERAL NOTES

FENCE POSTS INSTALLED ON CONCRETE WALLS SHALL BE ANCHORED INTO EMBEDDED METAL SLEEVES OR CORED HOLE BY FILLING THE ANNULAR SPACE WITH PEA GRAVEL FOLLOWED BY AN EPOXY RESIN ADHESIVE. THE EPOXY RESIN ADHESIVE SHALL CONFORM TO THE REQUIREMENTS OF AASHTO M 235, CLASS A, B OR C.

USE FENCE FABRIC KNUCKLED AT BOTH SELVAGES.

FOR LEAF GATES GREATER THAN 8 FEET WIDE, INSTALL INTERIOR VERTICAL BRACE RAIL AT 8 FOOT INTERVALS.

FOR FABRIC HEIGHTS GREATER THAN 8 FEET, INSTALL INTERIOR HORIZONTAL BRACE RAILS TO LEAF GATE.

MAXIMUM SAG FOR OUTER GATE MEMBER SHALL NOT EXCEED THE GREATER OF 1% OF THE LEAF GATE WIDTH OR 2 INCHES.

USE TYPE 2, CLASS 3, MARCELLED/CRIMPED, TENSION WIRE PER ASTM A 817.

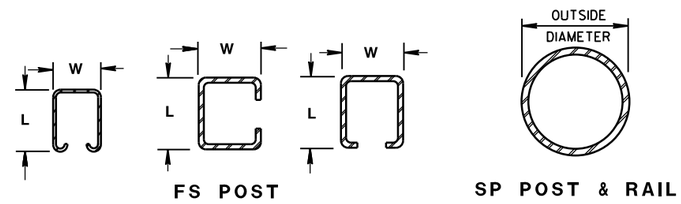

CROSS SECTIONS OF POSTS AND RAILS

REQUIRED FENCE POST SIZES

USE	FABRIC HEIGHTS FEET	POST TYPE
TERMINAL POSTS **	LESS THAN OR EQUAL TO 6 FT.	SP3
	GREATER THAN OR EQUAL TO 6 FT.	SP4
LINE POSTS	LESS THAN OR EQUAL TO 6 FT.	SP2
	LESS THAN OR EQUAL TO 8 FT.	SP3
	GREATER THAN OR EQUAL TO 8 FT.	SP4
	LESS THAN OR EQUAL TO 8 FT.	FS2 OR FS2†
	GREATER THAN OR EQUAL TO 8 FT.	FS3

BRACE RAIL TYPES

USE		TYPE
BRACE RAIL		SP1 OR FS1

** INCLUDES END, CORNER, ANGLE, INTERSECTION AND INTERMEDIATE BRACED POSTS

ROLLED-FORMED STEEL FENCE POST (2.0 OZ./SQ. FT. COATING)

POST TYPE	LENGTH (L) INCH	WIDTH (W) INCH	WEIGHT LBS/FT
FS1	1.625	1.25	1.35
FS2†	1.875	1.625	1.850
FS2	1.875	1.625	2.400
FS3	2.250	1.700	2.780

REQUIRED POST SIZE FOR GATES

USE	LEAF WIDTHS FEET	POST TYPE
GATES	LESS THAN OR EQUAL TO 6 FT.	SP4
	LESS THAN OR EQUAL TO 13 FT.	SP5
	LESS THAN OR EQUAL TO 18 FT.	SP6
	LESS THAN OR EQUAL TO 23 FT.	SP7

ROUND STEEL FENCE POST (1.8 OZ./SQ. FT. COATING)

POST TYPE	OUTSIDE DIMENSION INCH	WALL THICKNESS INCH	WEIGHT LBS/FT
SP1	1.660	0.140	2.270
SP2	1.900	0.145	2.720
SP3	2.375	0.154	3.650
SP4	2.875	0.203	5.800
SP5	4.000	0.226	9.120
SP6	6.625	0.280	18.990
SP7	8.625	0.322	28.580

FENCE CHAIN LINK

STATE OF WISCONSIN
DEPARTMENT OF TRANSPOR

6

S.D.D. 15 B 3-15a

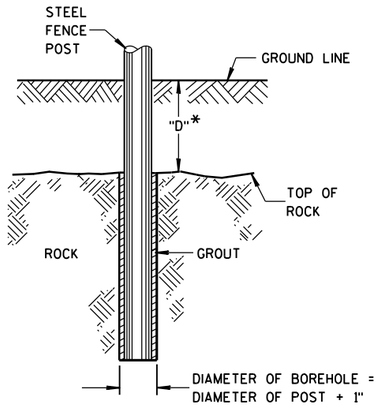

*IF "D" IS LESS THAN 2'-6", DRILL ROCK AND INSTALL GROUT

ROCK INSTALLATION OF LINE POST

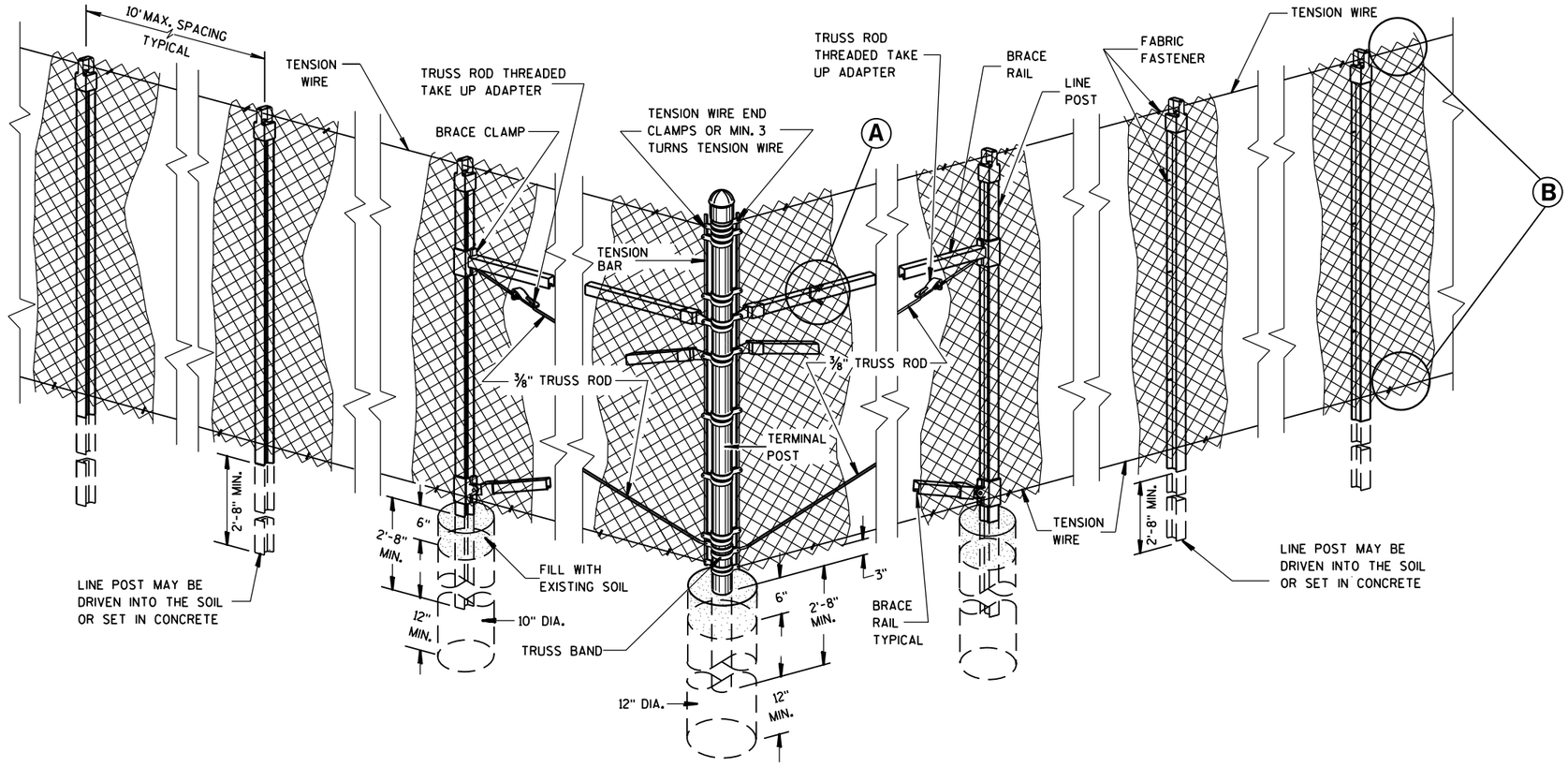

END, CORNER, ANGLE INTERSECTION & INTERMEDIATE BRACED POSTS

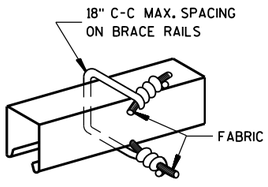

BRACE RAIL

FABRIC FASTENER

Ⓐ

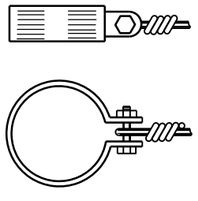

TENSION WIRE END CLAMP

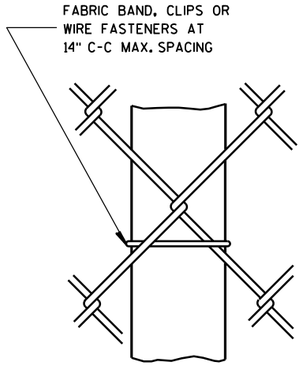

LINE POST

FABRIC FASTENER

AT TOP

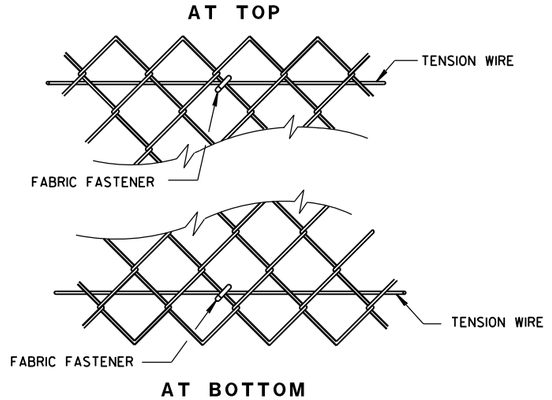

AT BOTTOM

SELVAGES

Ⓑ

FENCE CHAIN LINK

STATE OF WISCONSIN
DEPARTMENT OF TRANSPORTATION

APPROVED
FEB. 2015 DATE
/S/ Jerry H. Zogg
ROADWAY STANDARDS DEVELOPMENT ENGINEER
FHWA

6

S.D.D. 15 B 3-15b

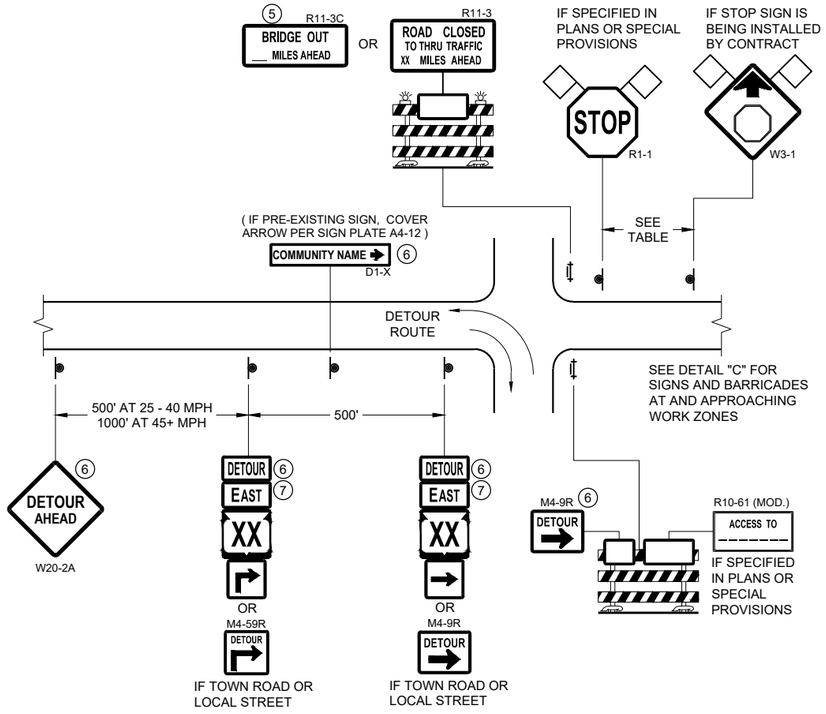

DETAIL A
MAINLINE CLOSURE WITH POSTED DETOUR

WORK ZONE GREATER THAN OR EQUAL TO ½ MILE FROM DETOUR ROUTE (1000 FEET IF URBAN)

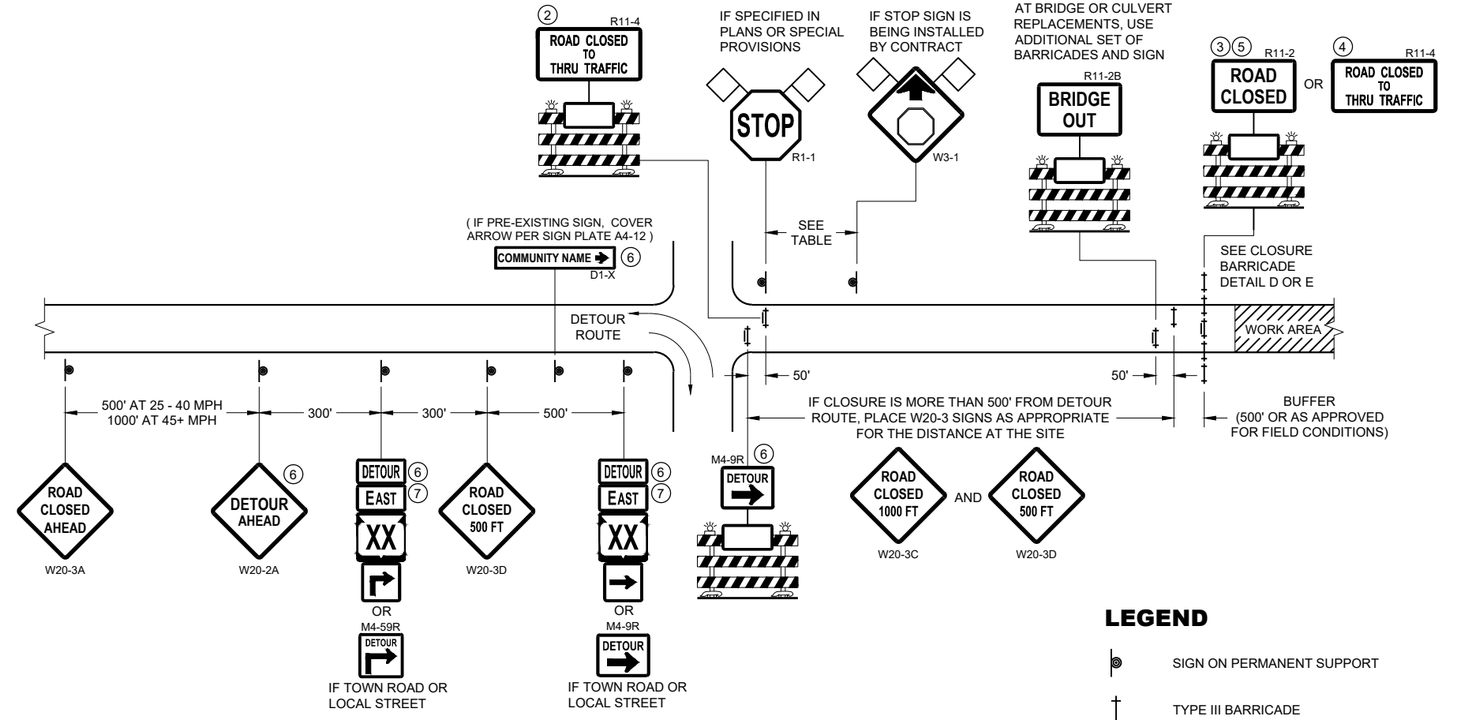

DETAIL B
MAINLINE CLOSURE WITH POSTED DETOUR

WORK ZONE LESS THAN ½ MILE FROM DETOUR ROUTE (1000 FEET IF URBAN)

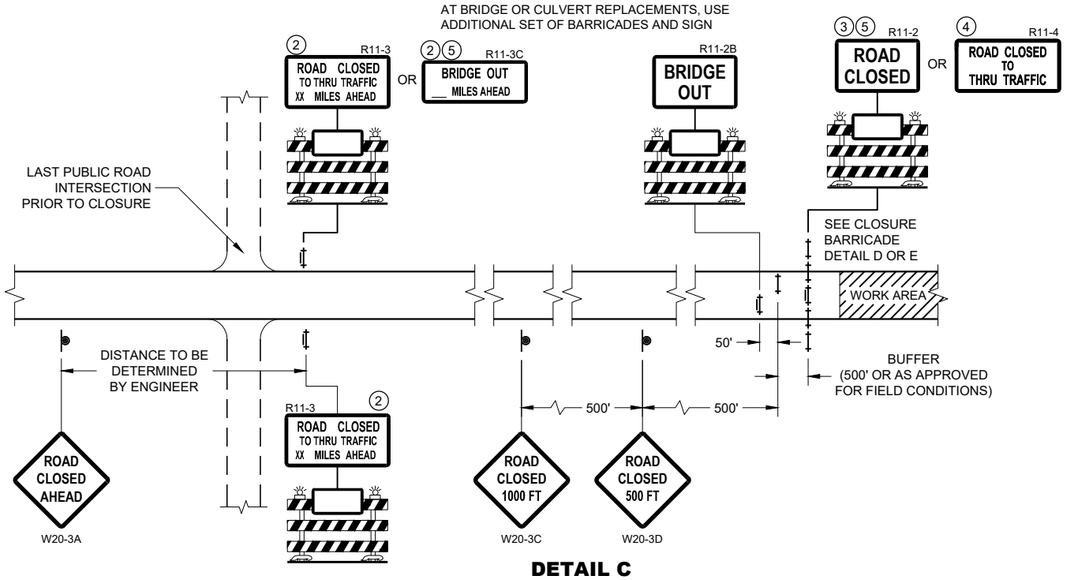

DETAIL C
MAINLINE CLOSURE, NO POSTED DETOUR

SPEED LIMIT (MPH)	"STOP AHEAD" ADVANCE WARNING DISTANCE (FT)
25	200
30	200
35	350
40	350
45	500
50	550
55	750

SEE SDD 15C2-SHEET "b"
FOR GENERAL NOTES
AND FOOTNOTES ① THROUGH ⑦

LEGEND

- SIGN ON PERMANENT SUPPORT
- TYPE III BARRICADE
- TYPE III BARRICADE WITH ATTACHED SIGN
- TYPE "A" WARNING LIGHT (FLASHING)
- WORK AREA
- FLAGS, 16" X 16" MIN. (ORANGE)
- DETOUR — M4 - 8
- EAST — M3 - X
- XX — M1 - 4 OR XX — M1 - 6 OR COUNTY X — M1 - 5A
- M05 - 1 OR M06 - 1

BARRICADES AND SIGNS FOR MAINLINE CLOSURES

STATE OF WISCONSIN
DEPARTMENT OF TRANSPORTATION

APPROVED
May 2023
DATE
/S/ Andrew Heidtke
WORK ZONE ENGINEER

FHWA

6

SDD 15C02 - 09a

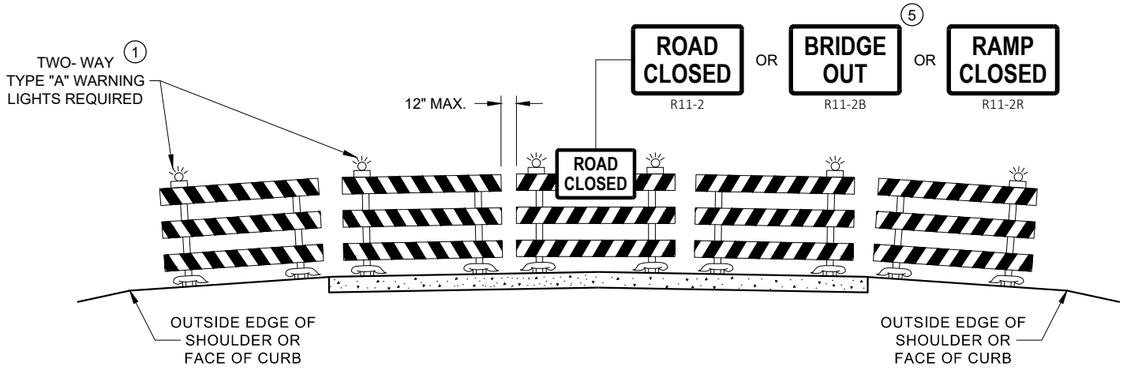

DETAIL D
ROAD CLOSURE BARRICADE DETAIL
APPROACH VIEW

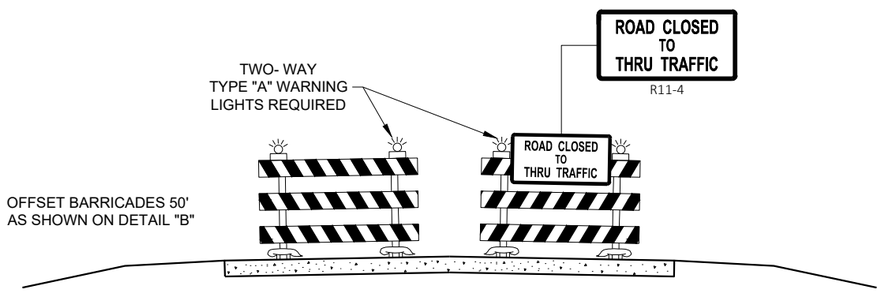

DETAIL E
LANE CLOSURE BARRICADE DETAIL
APPROACH VIEW

SEE SDD 15C2 - SHEET "a" FOR LEGEND

GENERAL NOTES

THE EXACT NUMBER, LOCATION, AND SPACING OF ALL SIGNS AND BARRICADES SHALL BE ADJUSTED TO FIT FIELD CONDITIONS AS APPROVED BY THE ENGINEER.

ANY SIGNS TEMPORARY OR EXISTING, WHICH CONFLICT WITH TRAFFIC CONTROL "IN USE", SHALL BE REMOVED OR COVERED AS NEEDED AND AS APPROVED BY THE ENGINEER.

THE SPACING BETWEEN TRAFFIC CONTROL SIGNS SHOULD BE ADJUSTED TO NOT CONFLICT WITH AND SHOULD PROVIDE A DESIRABLE MINIMUM OF 200 FEET CLEARANCE TO EXISTING SIGNS THAT WILL REMAIN IN PLACE.

BARRICADES THAT MUST BE MOVED FOR A WORK OPERATION SHALL BE IMMEDIATELY RE-ESTABLISHED UPON COMPLETION OF THE OPERATION, OR FOR CONTINUING OPERATIONS, AT THE END OF EACH WORKING DAY.

SIGNS THAT WILL BE IN PLACE LESS THAN 7 CONTINUOUS DAYS AND NIGHTS MAY BE MOUNTED ON PORTABLE SUPPORTS.

ALL TYPE III BARRICADES SHALL HAVE RAILS REFLECTORIZED ON BOTH FACES. STRIPES SHALL BE PROPERLY SLOPED DOWN TOWARD THE TRAFFIC SIDE OR AS SHOWN IN THE ROAD CLOSURE BARRICADE DETAIL "D" FOR FULL ROAD CLOSURES.

TYPE "A" LOW - INTENSITY FLASHING WARNING LIGHTS SHALL BE VISIBLE ON BOTH SIDES OF THE BARRICADE.

THE R11 - 2, R11 - 3, M4 - 9, R11 - 4, AND R10 - 61 SIGNS PLACED ON THE BARRICADES SHALL COVER NO MORE THAN THE TOP RAIL. THE SIGNS SHALL NOT COVER ANY PORTION OF THE MIDDLE RAIL OR BOTTOM RAILS.

"WO" AND "MO" SIGNS ARE THE SAME AS "W" AND "M" SIGNS EXCEPT THE BACKGROUND IS ORANGE.

ALL SIGNS SHALL BE 48" X 48" UNLESS OTHERWISE NOTED BELOW:
- R11 - 2 SHALL BE 48" X 30"
- R11 - 3 SHALL, R11 - 4 AND R10 - 61 SHALL BE 60 " X 30"
- M4 - 9 SHALL BE 30" X 24"
- M3 - X SHALL BE 24" X 12" (36" X 18" IF NEEDED TO MATCH EXISTING SIGNS)
- M4 - 8 SHALL BE 24" X 12" (36" X 18" IF NEEDED TO MATCH EXISTING SIGNS)
- M1 - 4, M1 - 5A AND M1 - 6 SHALL BE 24" X 24" (36" X 36" IF NEEDED TO MATCH EXISTING SIGNS)
- MO5 - 1 AND MO6 - 1 SHALL BE 21" X 21" (30" X 30" IF NEEDED TO MATCH EXISTING SIGNS)
- D1 - X SHALL BE AS SHOWN ON SPECIFIC PROJECT SIGNING DETAIL SHEETS.
- R1 - 1 SHALL BE 36" X 36"

(1) TWO WARNING LIGHTS SHALL BE PROVIDED ON THE CENTER BARRICADE AND A MINIMUM OF ONE WARNING LIGHT SHALL BE PROVIDED ON EACH OF THE OTHER BARRICADES WITHIN THE ROADWAY LIMITS. SPACING OF THE WARNING LIGHTS SHALL BE UNIFORM TO THE EDGE OF ROADWAY AS SHOWN (APPROX. 8 FOOT LIGHT SPACING.

(2) THESE SIGNS AND BARRICADES ARE NOT REQUIRED IF ROAD CLOSURE BEGINS AT AN INTERSECTION.

(3) FOR ROAD CLOSURE WITHOUT LOCAL ACCESS TO PROJECT, SEE ROAD CLOSURE BARRICADE DETAIL "D".

(4) FOR ROAD CLOSURE WITH LOCAL ACCESS TO PROJECT, SEE ROAD CLOSURE BARRICADE DETAIL "E".

(5) FOR BRIDGE OR CULVERT REPLACEMENTS, SUBSTITUTE "BRIDGE OUT" INSTEAD OF "ROAD CLOSED" ON R11 - 2 AND R11 - 3 SIGNS.

(6) INSTALL DETOUR AND COMMUNITY GUIDE SIGNS AND ARROWS ONLY IF SPECIFIED IN THE CONTRACT. IF THERE ARE EXISTING ROUTE MARKER ASSEMBLIES THAT WILL REMAIN IN PLACE, ADJUST THE LOCATION OF THE DETOUR ROUTE SIGNS TO CORRESPOND WITH THE EXISTING ASSEMBLIES. MODIFY EXISTING SIGNS WHERE POSSIBLE. SEE SPECIFIC PROJECT DETOUR SIGNING DETAIL SHEETS. IF DETOUR SIGNS ARE BEING INSTALLED BY OTHERS, PLACE THE CONTRACTED TRAFFIC CONTROL SIGNS TO ALLOW FOR PLACEMENT OF ALL WARNING, DETOUR AND GUIDE SIGNS AS SHOWN.

(7) "EAST" CARDINAL DIRECTION MARKERS AND RIGHT TURN ARROWS ARE SHOWN. USE OTHER CARDINAL DIRECTIONS AND ARROWS AS APPROPRIATE.

BARRICADES AND SIGNS FOR VARIOUS CLOSURES

STATE OF WISCONSIN
DEPARTMENT OF TRANSPORTATION

APPROVED
May 2023
DATE
/S/ Andrew Heidtke
WORK ZONE ENGINEE
FHWA

6

SDD 15C02 - 09b

6

SDD 15C02 - 09b

THIS DRAWING PROVIDES GENERAL GUIDANCE ON TYPICAL DETOUR SIGN LAYOUT AND SPACING. SEE PROJECT DETOUR SIGNING SHEETS FOR SPECIFIC DETAILS FOR EACH PROJECT.

LEGEND

- SIGN ON PERMANENT SUPPORT
- WORK AREA
- DETOUR / EAST — M4 - 8, M3 - X
- XX — M1 - 4; OR XX — M1 - 6; OR COUNTY X — M1 - 5A
- M05 - 1; OR M06 - 1; OR M06 - 1

GENERAL NOTES

THE EXACT NUMBER, LOCATION AND SPACING OF ALL SIGNS SHALL BE ADJUSTED TO FIT FIELD CONDITIONS AS APPROVED BY THE ENGINEER.

IF THERE ARE EXISTING ROUTE MARKER ASSEMBLIES THAT WILL REMAIN IN PLACE, ADJUST THE LOCATION OF THE DETOUR ROUTE SIGNS TO CORRESPOND WITH THE EXISTING ASSEMBLIES. SEE SPECIFIC PROJECT DETOUR SIGNING DETAIL SHEETS. MODIFY EXISTING SIGNS WHERE POSSIBLE.

THE SPACING BETWEEN TRAFFIC CONTROL AND DETOUR SIGNS SHOULD BE ADJUSTED TO NOT CONFLICT WITH AND TO PROVIDE A DESIRABLE MINIMUM OF 200 FEET CLEARANCE TO EXISTING SIGNS THAT WILL REMAIN IN PLACE.

ANY SIGNS TEMPORARY OR EXISTING, WHICH CONFLICT WITH TRAFFIC CONTROL "IN USE" SHALL BE REMOVED OR COVERED AS NEEDED AND AS APPROVED BY THE ENGINEER.

SIGNS THAT WILL BE IN PLACE LESS THAN 7 CONTINUOUS DAYS AND NIGHTS MAY BE MOUNTED ON PORTABLE SUPPORTS.

"MO" SIGNS ARE THE SAME AS "M" SIGNS EXCEPT THE BACKGROUND IS ORANGE.

SIGN SIZES SHALL BE AS FOLLOWS:

- M3-X SHALL BE 24" X 12" (36" X 18" IF NEEDED TO MATCH EXISTING SIGNS)
- M4-8 SHALL BE 24" X 12" (36" X 18" IF NEEDED TO MATCH EXISTING SIGNS)
- M1-4, M1-5A AND M1-6 SHALL BE 24" X 24" (36" X 36" IF NEEDED TO MATCH EXISTING SIGNS)
- M05-1 AND M06-1 SHALL BE 21" X 21" (30" X 30" IF NEEDED TO MATCH EXISTING SIGNS)
- M4-9 AND M4-59 SHALL BE 30" X 24"
- M4-8a SHALL BE 24" X 18"
- G20-51 SHALL BE 60" X 24"
- W20-2A SHALL BE 48" X 48"
- D1-X SHALL BE AS SHOWN ON SPECIFIC PROJECT SIGNING DETAIL SHEETS.

* OPTIONAL SIGNS. SEE SPECIFIC PROJECT DETOUR SIGNING DETAIL SHEETS.

** FOR A TOWN ROAD OR LOCAL STREET DETOURED ONTO A STATE TRUNK HIGHWAY, PLACE A ROAD NAME PLAQUE ABOVE THE M4-9 SIGN AS SPECIFIED IN THE CONTRACT.

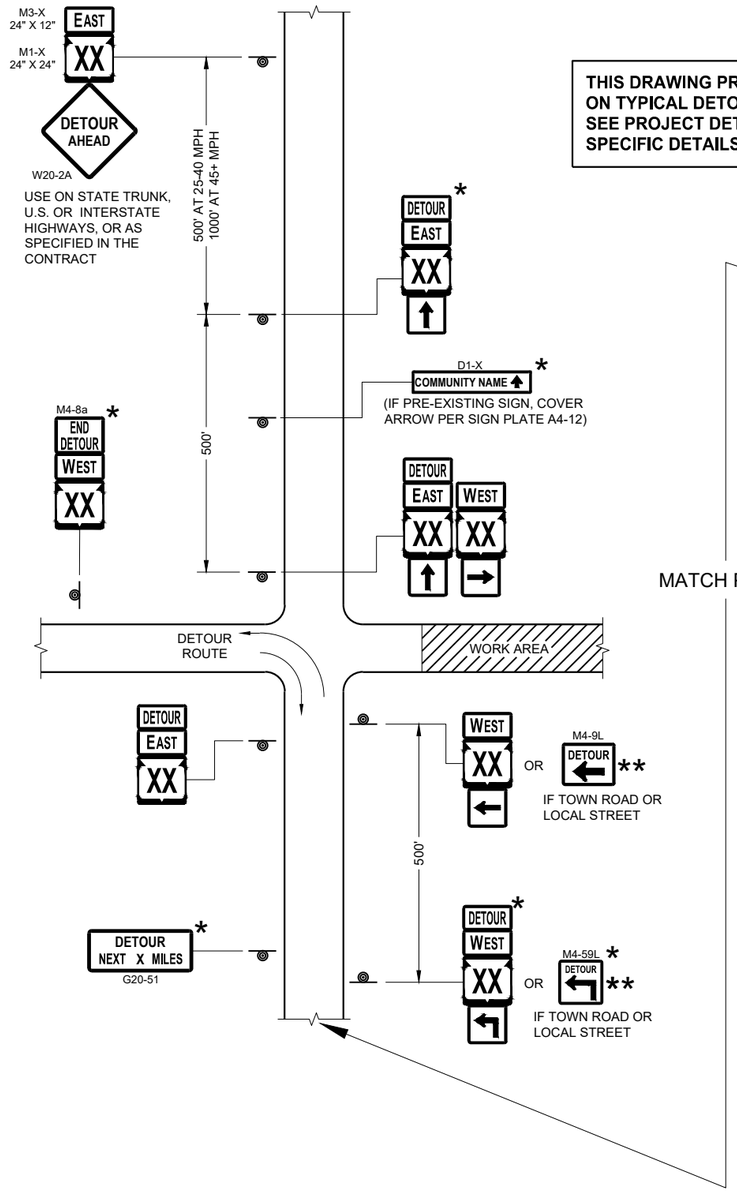

MATCH POINT

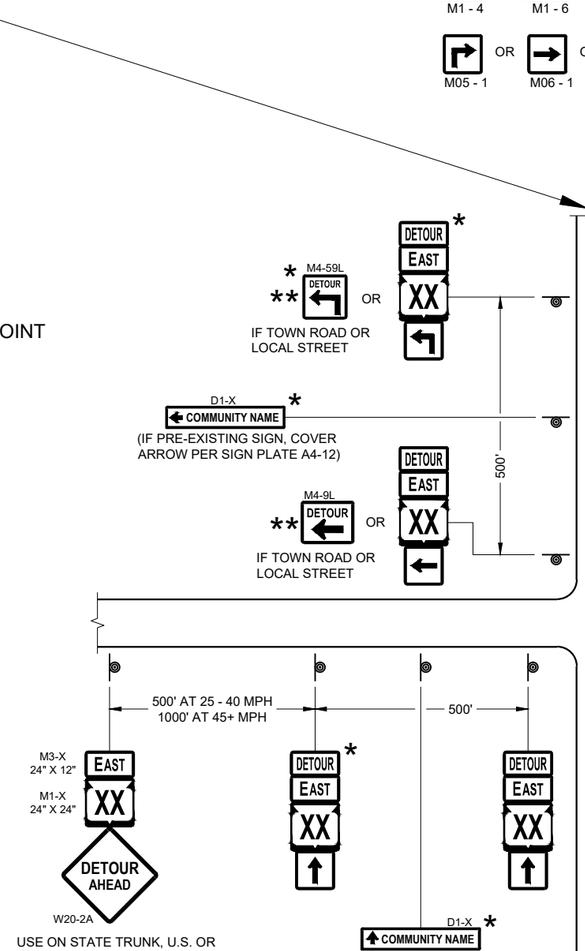

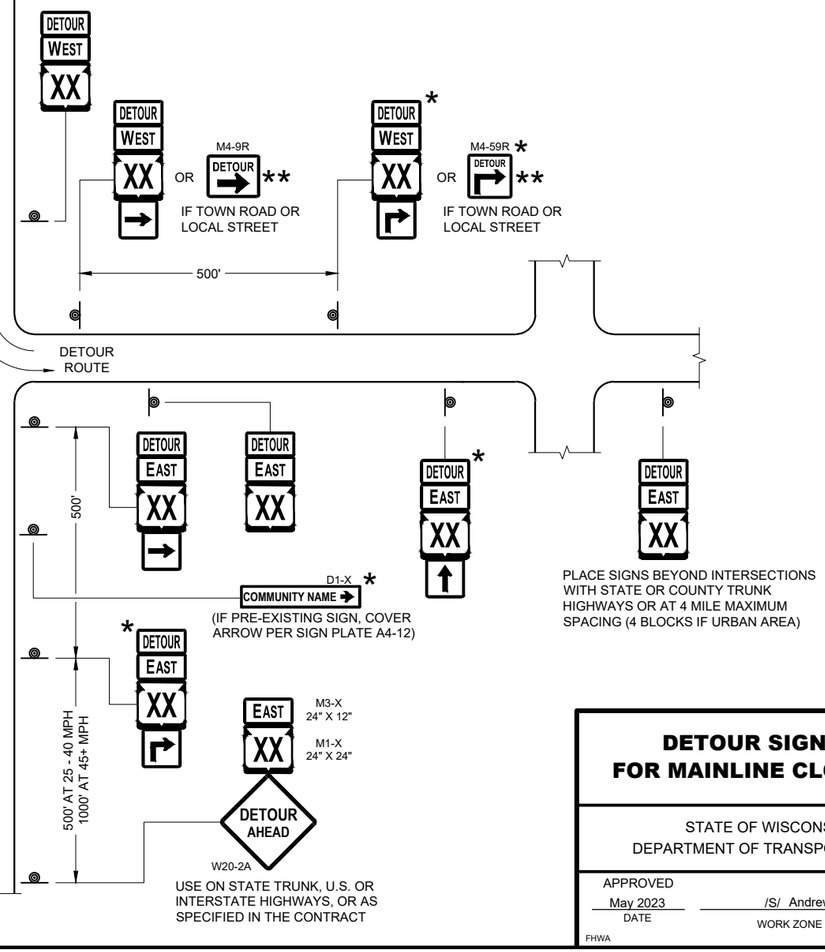

SEE SPECIFIC PROJECT DETOUR SIGNING DETAIL SHEETS AND DETAIL A OR B ON SDD SHEET 15C02 - SHEET "a"

DETAIL F
DETOUR SIGNING

DETOUR SIGNING FOR MAINLINE CLOSURES

STATE OF WISCONSIN
DEPARTMENT OF TRANSPORTATION

APPROVED
May 2023
DATE

/S/ Andrew Heidtke
WORK ZONE ENGINEER

FHWA

6

SDD 15C02 - 09c

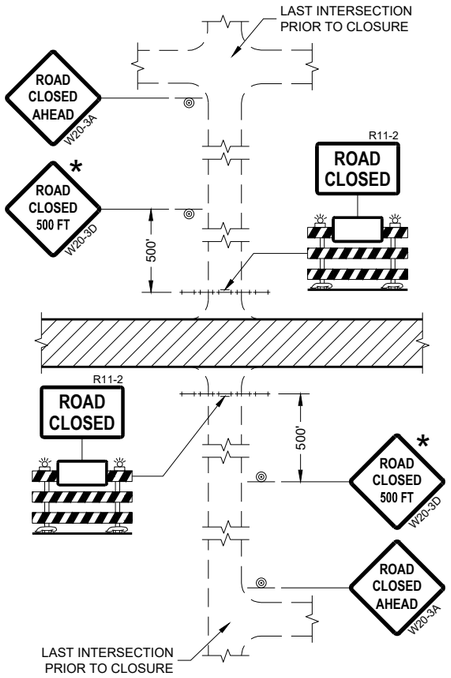

DETAIL 1
(NO ACCESS TO PROJECT)

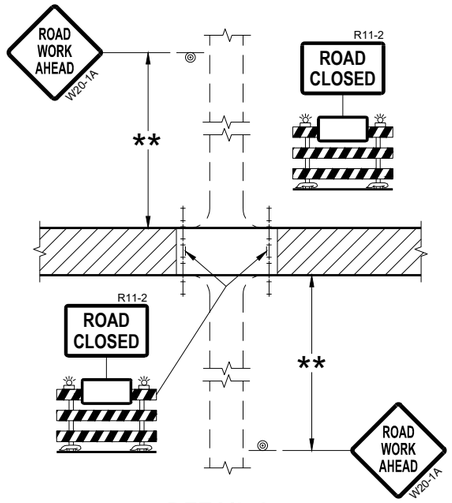

DETAIL 2
(PUBLIC CROSS-TRAFFIC MAINTAINED.
NO ACCESS TO PROJECT)

GENERAL NOTES

THE EXACT NUMBER, LOCATION, AND SPACING OF ALL SIGNS AND BARRICADES SHALL BE ADJUSTED TO FIT FIELD CONDITIONS AS APPROVED BY THE ENGINEER.

ANY SIGNS TEMPORARY OR EXISTING, WHICH CONFLICT WITH TRAFFIC CONTROL "IN USE" SHALL BE REMOVED OR COVERED AS NEEDED AND AS APPROVED BY THE ENGINEER.

THE SPACING BETWEEN TRAFFIC CONTROL SIGNS SHOULD BE ADJUSTED TO NOT CONFLICT WITH AND SHOULD PROVIDE A DESIRABLE MINIMUM OF 200 FEET CLEARANCE (500 FEET DESIRABLE) TO EXISTING SIGNS THAT WILL REMAIN IN PLACE.

IF A "STOP" SIGN MUST BE REMOVED FOR A WORK OPERATION, A TEMPORARY "STOP" SIGN SHALL BE PLACED PRIOR TO THE SIGN REMOVAL, OR A FLAGGER SHALL BE PROVIDED UNTIL THE SIGN IS REESTABLISHED.

BARRICADES THAT MUST BE MOVED FOR A WORK OPERATION SHALL BE IMMEDIATELY REESTABLISHED UPON COMPLETION OF THE OPERATION OR FOR CONTINUING OPERATIONS, AT THE END OF EACH WORKING DAY.

SIGNS THAT WILL BE IN PLACE LESS THAN SEVEN CONTINUOUS DAYS AND NIGHTS MAY BE MOUNTED ON PORTABLE SUPPORTS.

ALL TYPE III BARRICADES SHALL HAVE RAILS REFLECTORIZED ON BOTH FACES. STRIPES SHALL BE PROPERLY SLOPED DOWN TOWARD THE TRAFFIC SIDE OR AS SHOWN IN THE ROAD CLOSURE BARRICADE DETAIL "D" FOR FULL ROAD CLOSURES.

TYPE "A" LOW-INTENSITY FLASHING WARNING LIGHTS SHALL BE VISIBLE ON BOTH SIDES OF THE BARRICADE.

THE R11-2, R11-3, AND R11-4 SIGNS PLACED ON BARRICADES SHALL COVER NO MORE THAN THE TOP RAIL. THE SIGNS SHALL NOT COVER ANY PORTION OF THE MIDDLE OR BOTTOM RAILS.

ALL SIGNS SHALL BE 48" X 48" UNLESS OTHERWISE NOTED BELOW:
R11-2 SHALL BE 48" X 30".
R11-4 AND R11-3 SHALL BE 60" X 30".

* OMIT THE "ROAD CLOSED 500 FT." SIGN IF THE LAST INTERSECTION IS 500 FEET OR LESS FROM THE WORK ZONE.

** 500' MAX. OR AT LAST INTERSECTION, WHICHEVER IS CLOSEST.

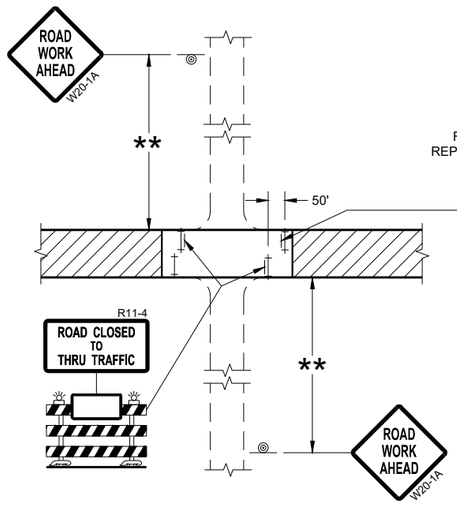

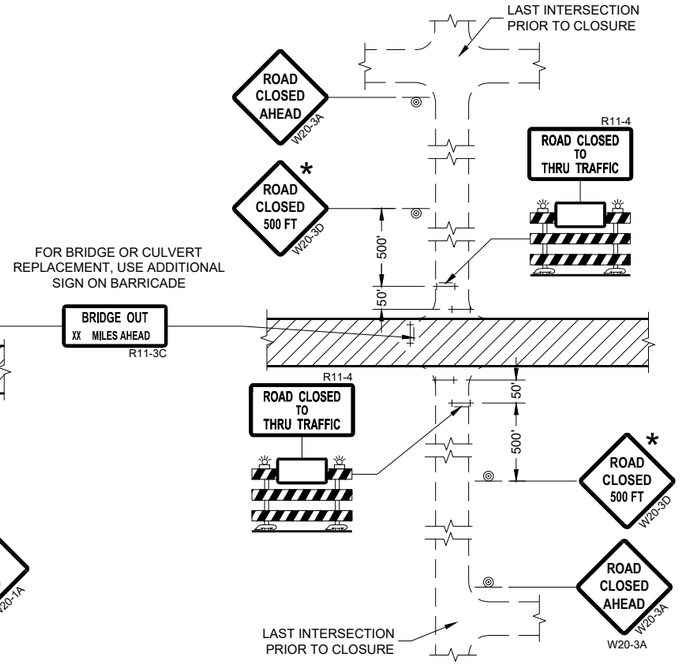

DETAIL 3
(PUBLIC CROSS-TRAFFIC MAINTAINED.
CONTRACTOR, LOCAL BUSINESS AND
RESIDENT ACCESS TO PROJECT)

DETAIL 4
(CONTRACTOR, LOCAL BUSINESS AND
RESIDENT ACCESS TO PROJECT)

LEGEND

- SIGN ON PERMANENT SUPPORT
- TYPE III BARRICADE
- TYPE III BARRICADE WITH ATTACHED SIGN
- TYPE "A" WARNING LIGHT (FLASHING)
- WORK AREA

BARRICADES AND SIGNS FOR SIDEROAD CLOSURES

STATE OF WISCONSIN
DEPARTMENT OF TRANSPORTATION

APPROVED
July 2018
DATE

/S/ Andrew Heidtke
WORK ZONE ENGINEE

FHWA

6

SDD 15C03 - 05

SDD 15C03 - 05

GENERAL NOTES

DETAILS OF CONSTRUCTION NOT SHOWN ON THIS DRAWING SHALL CONFORM TO STANDARD SPECIFICATIONS AND SPECIAL PROVISIONS.

(1) LOCATE THE NO PASSING ZONE W14-3 SIGN WITHIN 50 FEET OF THE "T" MARKING

(2) MEASURE FROM EDGE OF MARKING TO JOINT LINE. THIS DOES NOT INCLUDE SPACE NEEDED FOR GROOVING OPERATIONS.

LEGEND

"T" MARKING

SIGN ON PERMANENT SUPPORT

DIRECTION OF TRAFFIC

*CONFIRM MARKING LINE WIDTH WITH THE MISCELLANEOUS QUANTITIES

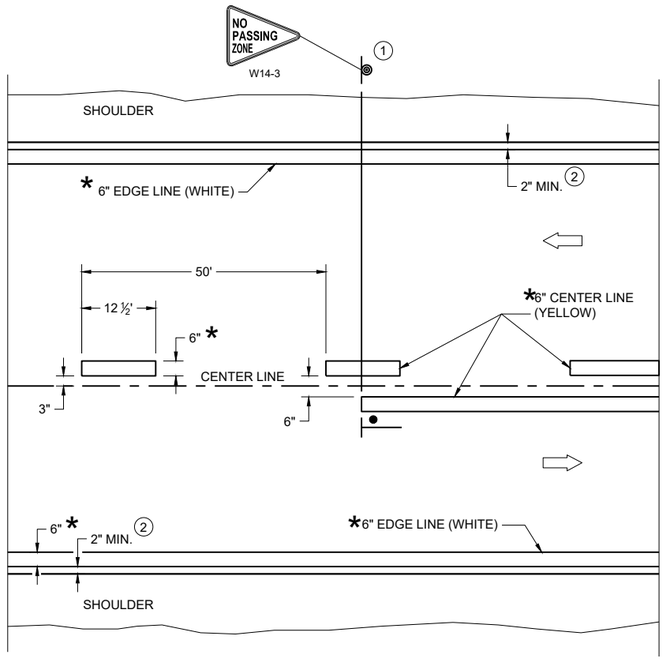

TWO WAY TRAFFIC

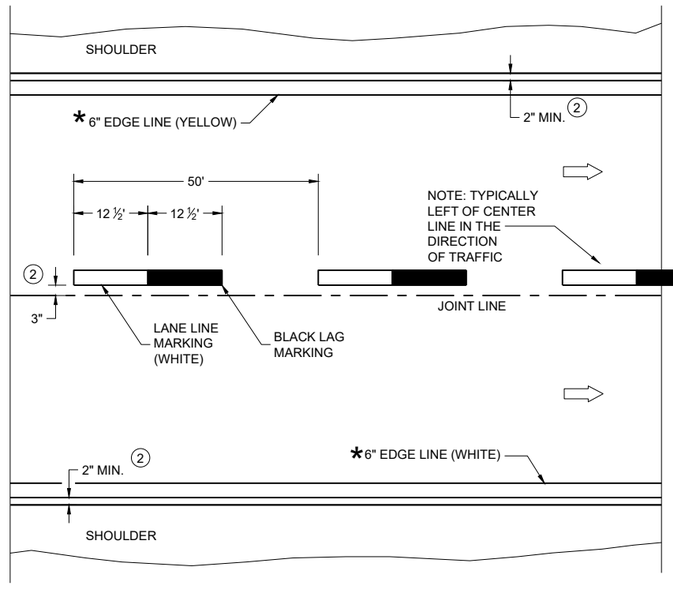

ONE WAY TRAFFIC

PERMANENT PAVEMENT MARKING

PERMANENT LONGITUDINAL PAVEMENT MARKINGS

STATE OF WISCONSIN
DEPARTMENT OF TRANSPORTATION

APPROVED
December 2024
DATE

/S/ Jeannie Silver
Statewide Pavement Marking Engineer

FHWA

6
SDD 15C08-24a

GENERAL NOTES

1. REFLECTIVE SHEETING SHALL FOLLOW THE REQUIREMENTS IN THE APPROVED PRODUCTS LISTING FOR SIGN SHEETING.
2. LOCATION OF WARNING LIGHTS WHEN SHOWN ON THE PLAN.

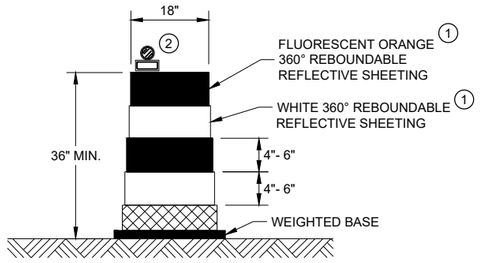

DRUM

BALLAST WIDTHS
RANGE FROM 24"-36"

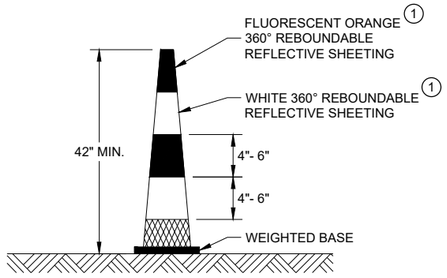

42" CONE

DO NOT USE IN TAPERS
½ SPACING OF DRUMS

BALLAST WIDTHS
RANGE FROM 14"-20"

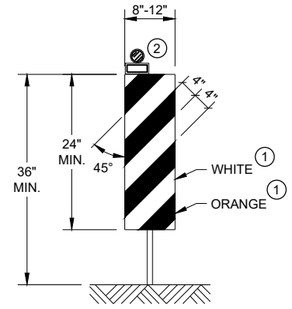

VERTICAL PANEL

THE STRIPES SHALL SLOPE DOWNWARD TO
THE TRAFFIC SIDE FOR CHANNELIZATION.

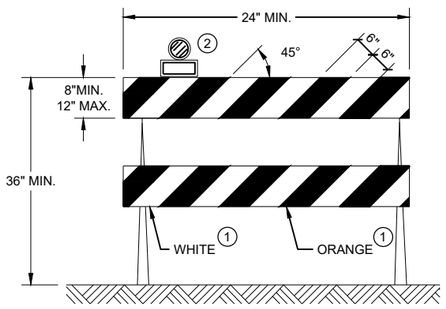

TYPE II BARRICADE

FOR RAILS LESS THAN 36" LONG, 4" WIDE STRIPES
MAY BE USED. ALL STRIPES SHALL SLOPE DOWNWARD
TO THE TRAFFIC SIDE FOR CHANNELIZATION.

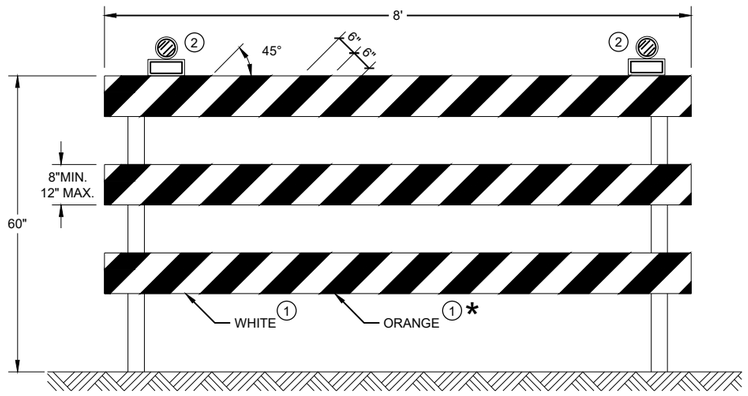

TYPE III BARRICADE

IF SIGN MOUNTED, DO NOT COVER MORE THAN 50% OF THE TOP
TWO RAILS OR 33% OF THE TOTAL AREA OF THE THREE RAILS.

* IF USED FOR A PERMANENT APPLICATION USE RED SHEETING.

CHANNELIZING DEVICES DRUMS, CONES, BARRICADES AND VERTICAL PANELS

STATE OF WISCONSIN
DEPARTMENT OF TRANSPORTATION

APPROVED
November 2022
DATE

/S/ Andrew Heidtke
WORK ZONE ENGINEE

FHWA

6

SDD 15C11 - 10b

6

SDD 15C11 - 10b

LEGEND

V1 LEAD VEHICLE

V2 MARKING VEHICLE

V3 SHADOW VEHICLE

TRUCK MOUNTED ATTENUATOR (TMA)

SIGN ON TEMPORARY SUPPORT

DIRECTION OF TRAFFIC

GENERAL NOTES

ALL VEHICLES SHALL BE EQUIPPED WITH TWO 360 DEGREE HIGH INTENSITY YELLOW FLASHING LIGHTS OR STROBE LIGHTS AND OPERATED WITH HEADLIGHTS TURNED ON.

ALL VEHICLES SHALL BE EQUIPPED WITH REAR FACING TYPE B OR C FLASHING ARROW PANEL OPERATING IN CAUTION MODE. SIGNS PLACED ON VEHICLES MUST NOT OBSCURE THE ARROW PANEL.

ALL SIGNS ARE 48" X 48" UNLESS OTHERWISE SPECIFIED.

DISTANCE BETWEEN VEHICLES MAY VARY ACCORDING TO TERRAIN, SIGHT DISTANCE, PAINT DRYING TIME, AND OTHER FACTORS. WHENEVER ADEQUATE STOPPING SIGHT DISTANCE EXISTS TO THE REAR, SHADOW VEHICLES SHOULD MAINTAIN THE MINIMUM DISTANCE FROM THE WORK VEHICLE AND PROCEED AT THE SAME SPEED AS THE WORK VEHICLE. SHADOW VEHICLES SHOULD SLOW DOWN IN ADVANCE OF VERTICAL AND HORIZONTAL CURVES THAT RESTRICT SIGHT DISTANCE.

THE WORK AND SHADOW VEHICLES SHOULD PULL OVER PERIODICALLY TO ALLOW TRAFFIC TO PASS.

WHEN NO WORK ACTIVITY IS TAKING PLACE, REMOVE OR LAY STATIONARY SIGNS AND SUPPORTS FLAT ON THE GRADE WITH

WORKERS SHALL NOT PERFORM WORK FROM ANY SHADOW OR PROTECTION VEHICLES.

UPRIGHTS ORIENTED PARALLEL TO AND DOWNSTREAM FROM TRAFFIC.

CONES SHOULD BE USED BETWEEN THE MARKING AND SHADOW VEHICLE AT 100 FOOT SPACING. CONES MAY BE OMITTED ON PAINTED LINE IF APPROVED BY THE ENGINEER. CONSIDER PAVEMENT MARKING DRY OR CURE TIMES AND TRAFFIC VOLUME.

CONES SHALL BE A MINIMUM OF 28" FOR WET PAVEMENT MARKING .

(1) SIGNS SHALL BE REPEATED APPROXIMATELY EVERY THREE MILES AND AFTER EVERY MAJOR INTERSECTION.

(2) IF CONSTRUCTION WORK ZONE SIGNS ARE IN PLACE, W20-1A OR W21-63 ARE NOT REQUIRED.

(3) V1 AND V2 CAN BE SWITCHED SO THAT THE MARKER IS THE LEAD VEHICLE.

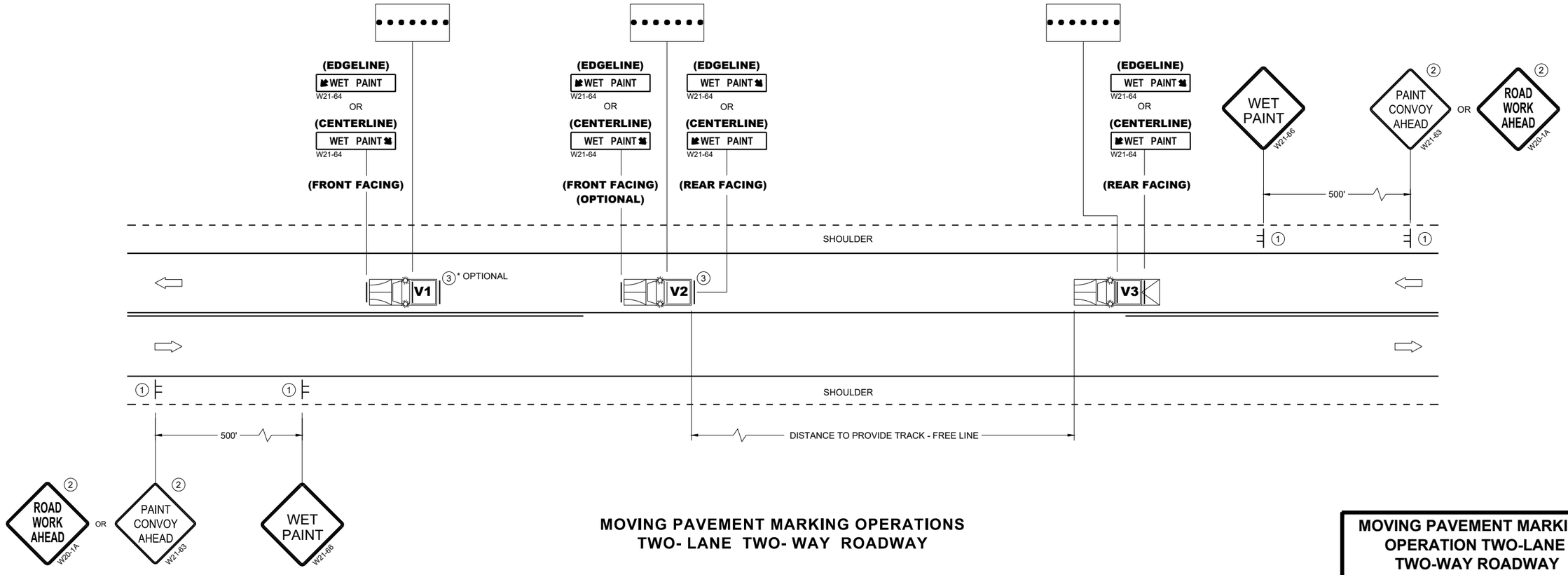

MOVING PAVEMENT MARKING OPERATIONS TWO- LANE TWO- WAY ROADWAY

MOVING PAVEMENT MARKING OPERATION TWO-LANE TWO-WAY ROADWAY

STATE OF WISCONSIN
DEPARTMENT OF TRANSPORTATION

APPROVED
November 2025 — DATE
/S/ Andrew Heidtke — STATE ELECTRICAL ENGINEER

FHWA

6

SDD 15C19-11a

SDD 15C19-11a

GENERAL NOTES

STOP SIGN SHALL BE PLACED A MINIMUM OF 6 FEET TO A MAXIMUM OF 50 FEET FROM THE EDGELINE LOCATION.

1. 18-INCH STOP LINES MAY BE DELETED OR ADDED BY THE REGION MARKING ENGINEER BASED ON VISIBILITY AND SIGHT LINES.
2. NO STOP LINE IS REQUIRED IF STOP SIGN IS LESS THAN OR EQUAL TO 40 FEET FROM THE EDGELINE.
3. NO STOP LINE IS REQUIRED IF STOP SIGN IS LESS THAN OR EQUAL TO 30 FEET FROM THE FLANGE LINE EXTENSION.
4. MOVE CLOSER TO THE EDGE OF TRAVEL LINE AS NEEDED FOR VISIBILITY AND SIGHT LINES (NO CLOSER THAN 4 FEET).
5. LADDER BAR CROSSWALKS SHOULD ONLY BE USED FOR MID BLOCK CROSSINGS. USE 2 - 6" TRANSVERSE LINES.
6. POSTED SPEED LIMITS OF 40 MPH OR GREATER USE A MINIMUM WIDTH OF 8' FOR MIDBLOCK CROSSWALKS

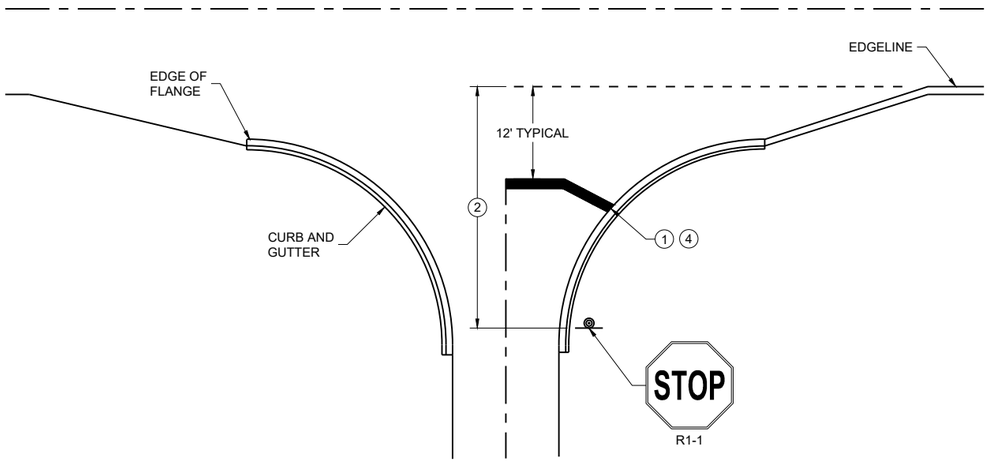

TYPICAL STOP LINE PAVEMENT MARKING WITH CURB AND GUTTER

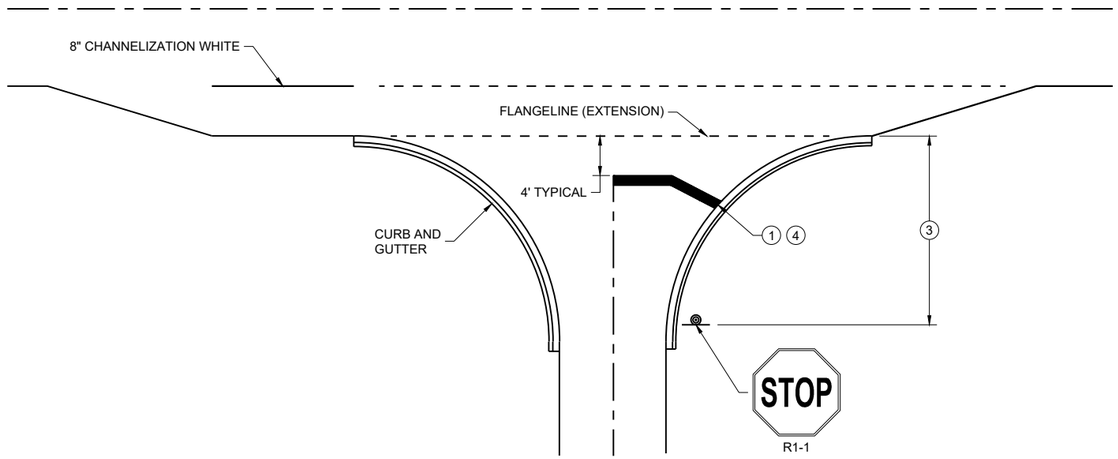

TYPICAL STOP LINE PAVEMENT MARKING FOR SIDE ROADS WITH RIGHT TURN LANE

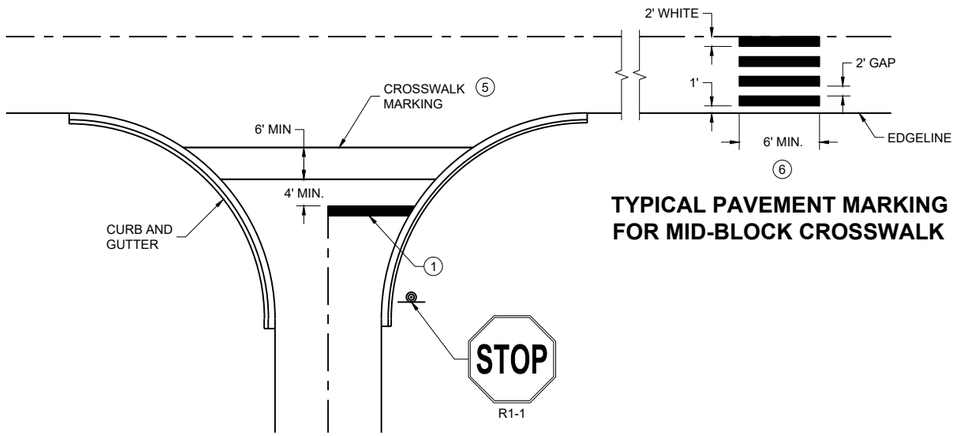

TYPICAL PAVEMENT MARKING FOR MID-BLOCK CROSSWALK 5

TYPICAL STOP LINE PAVEMENT MARKING FOR SIDE ROADS WITH CROSSWALK MARKING

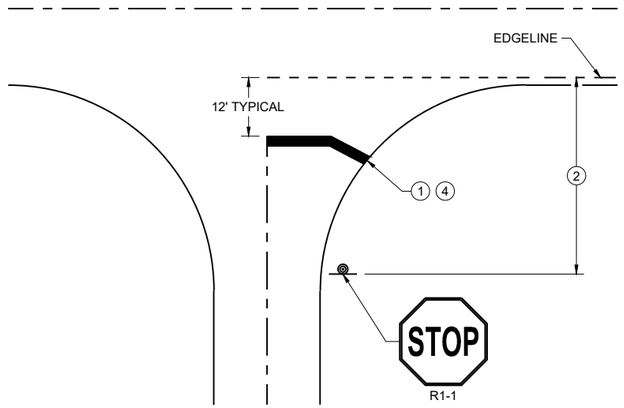

TYPICAL STOP LINE PAVEMENT MARKING WITHOUT CURB AND GUTTER

STOP LINE AND CROSSWALK PAVEMENT MARKING

STATE OF WISCONSIN
DEPARTMENT OF TRANSPORTATION

APPROVED

March 2024 — DATE

/S/ Matthew Rauch — STATE SIGNING AND MARKING ENGINEER

FHWA

6 SDD 15C33-05

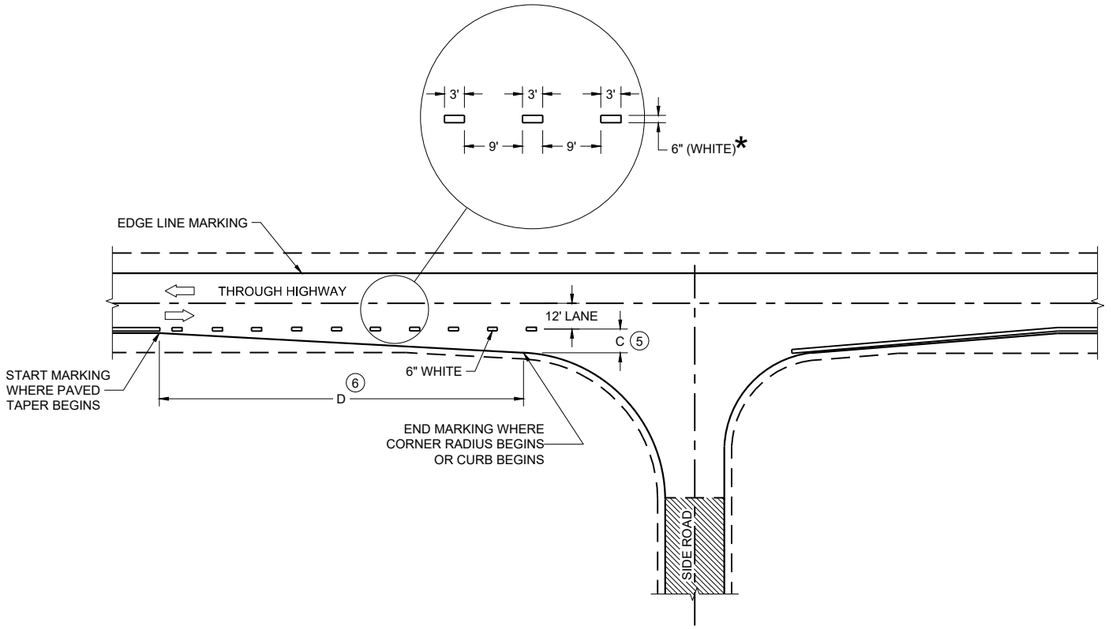

MINOR INTERSECTION

*CONFIRM MARKING LINE WIDTH WITH THE MISCELLANEOUS QUANTITIES

GENERAL NOTES

OMIT EDGE LINES THROUGH INTERSECTIONS. CONTINUE EDGE LINES THROUGH DRIVEWAYS.

1. WHEN DISTANCE "A" IS LESS THAN 250 FEET, OMIT LANE LINE.
2. WHEN DISTANCE "B" IS LESS THAN 100 FEET, OMIT CHANNELIZING LANE LINE.
3. BARRIER LINE ENDS AT SIDE ROAD PAVEMENT / SURFACE EDGE EXTENSION.
4. BARRIER LINE STARTS 500 FEET PRIOR TO THE BYPASS TAPER.
5. WHEN DISTANCE "C" IS LESS THAN 4 FEET, OMIT DOTTED EXTENSION.
6. WHEN DISTANCE "D" IS LESS THAN 50 FEET, OMIT DOTTED EXTENSION.

LEGEND

DIRECTION OF TRAVEL

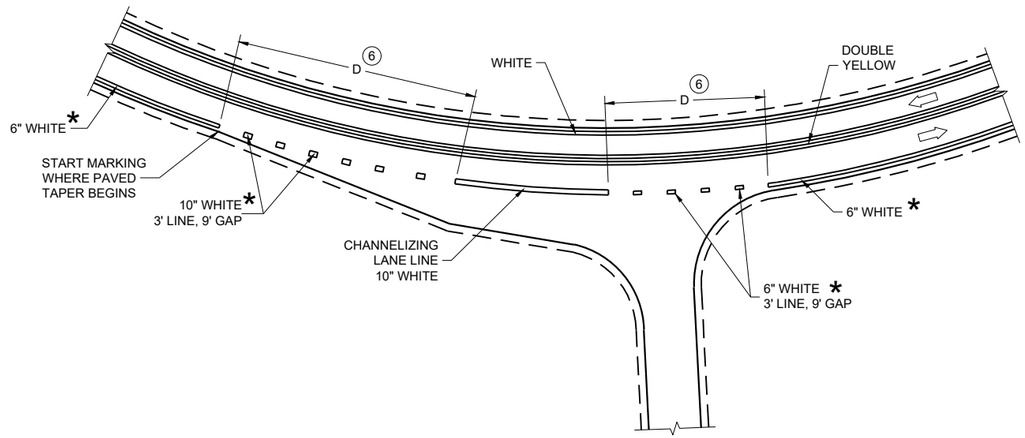

INTERSECTION ON OUTSIDE OF CURVE

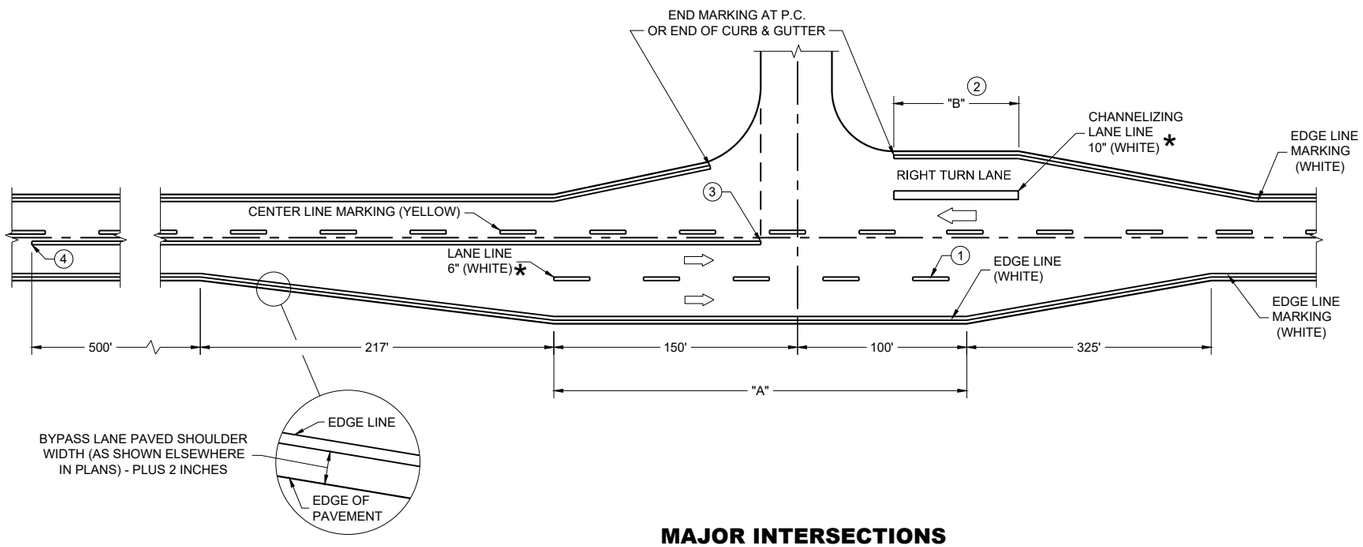

MAJOR INTERSECTIONS

(INTERSECTION WITH FULL RIGHT TURN LANE OR BYPASS LANE)

PAVEMENT MARKING (INTERSECTIONS)

STATE OF WISCONSIN
DEPARTMENT OF TRANSPORTATION

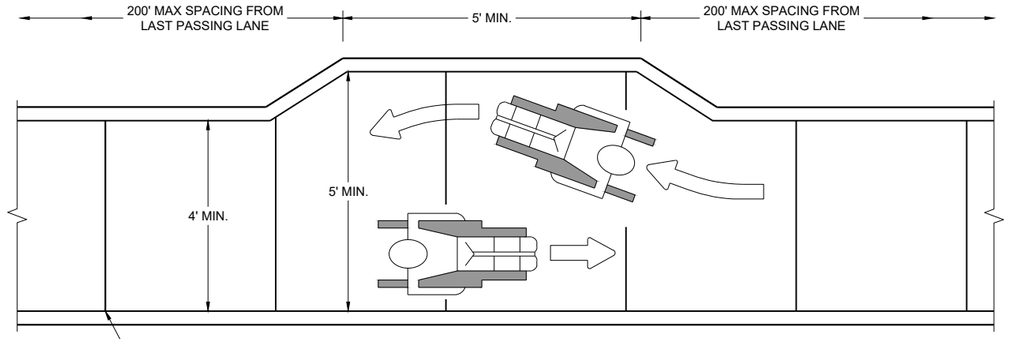

NARROW SIDEWALK PASSING DETAIL

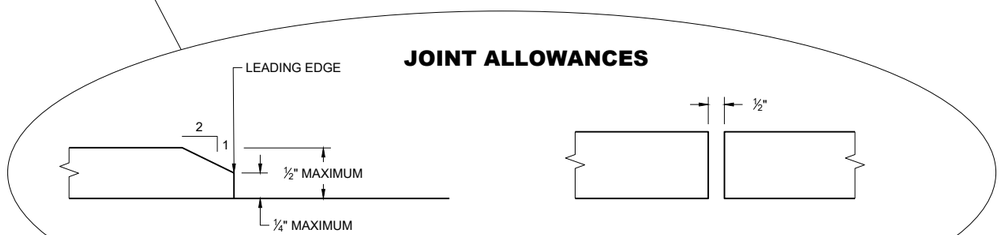

MAXIMUM VERTICAL GAP

MAXIMUM HORIZONTAL GAP

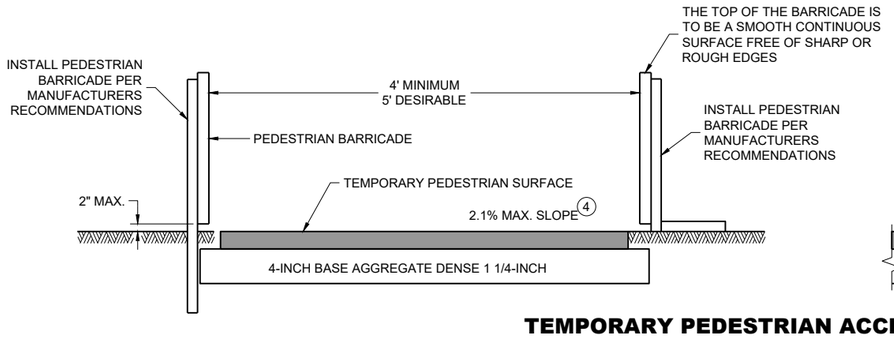

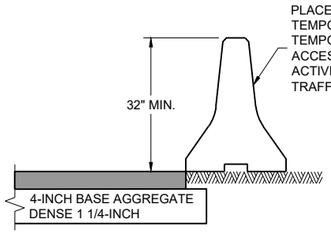

TEMPORARY PEDESTRIAN ACCESS

GENERAL NOTES

BARRICADE DEVICE SELECTED FROM APPROVED PRODUCT LIST

1. REFLECTIVE SHEETING SHALL FOLLOW THE REQUIREMENTS IN THE APPROVED PRODUCTS LISTING FOR SIGN SHEETING.
2. SHEETING REQUIRED ON MORE THAN 50% OF BARRICADE WIDTH.
3. PLACE SHEETING ON BOTH SIDES OF THE BARRICADE.

* USE THIS DETAIL FOR SHEETING PLACEMENT REFERENCE.

4. WHEN THE TEMPORARY PEDESTRIAN ACCESS ROUTE RUNS PARALLEL ON THE ROADWAY SURFACE, THE MAXIMUM CROSS SLOPE WILL MATCH THE EXISTING ROADWAY CROSS SLOPE.
5. WHERE SIGNS FOR TEMPORARY PEDESTRIAN ACCOMMODATIONS ARE SHOWN BEING PLACED BEHIND TEMPORARY PEDESTRIAN BARRICADE, THE SIGNS MAY BE MOUNTED ON THE TEMPORARY PEDESTRIAN BARRICADE INSTEAD. A CORRUGATED POLYPROPYLENE OR POLYETHYLENE PLASTIC SIGN BASE SHALL BE USED IF MOUNTED ON THE BARRICADE. THE TOP OF THE SIGN SHALL BE MOUNTED BELOW THE TOP OF THE BARRICADE TO ALLOW A CONTINUOUS HAND-TRAILING EDGE.

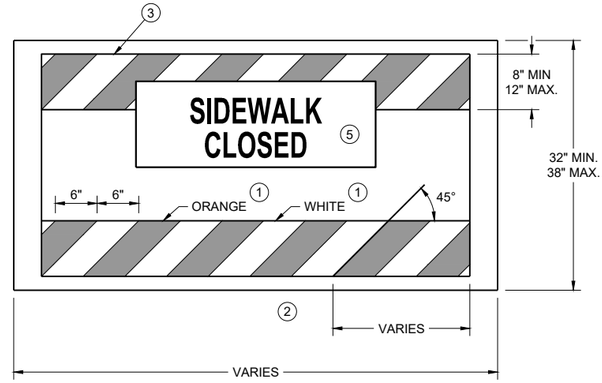

TEMPORARY PEDESTRIAN BARRICADE *

TEMPORARY AUDIBLE MESSAGE DEVICE (TAMD) MESSAGE: "SIDEWALK CLOSED WAIT FOR ASSISTANCE"

TEMPORARY PEDESTRIAN FLAGGING

LEGEND

- TEMPORARY PEDESTRIAN BARRICADE
- AUDIBLE MESSAGE DEVICE
- TEMPORARY SIGN SUPPORT
- WORK AREA

TRAFFIC CONTROL, PEDESTRIAN ACCOMMODATION

STATE OF WISCONSIN
DEPARTMENT OF TRANSPORTATION

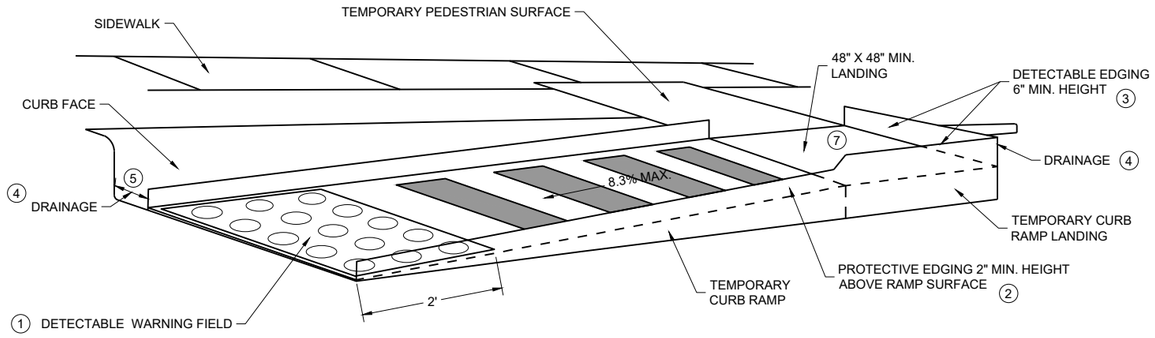

PERSPECTIVE VIEW

GENERAL NOTES

CURB RAMPS SHALL BE 48" MIN. WIDTH WITH A FIRM, STABLE AND SLIP RESISTANT SURFACE.

CURB RAMPS AND LANDINGS SHALL HAVE A 1:48 (2.1%) MAX. CROSS-SLOPE.

CLEAR SPACE OF 48" X 48" SHALL BE PROVIDED ABOVE AND BELOW THE CURB RAMP. LATERAL JOINTS OR GAPS BETWEEN SURFACES SHALL BE LESS THAN ½" WIDTH.

CHANGES BETWEEN SURFACE HEIGHTS SHALL NOT EXCEED ½". LATERAL EDGES MAY BE VERTICAL UP TO ¼" HIGH AND SHALL BE BEVELED AT 1:2 BETWEEN ¼" AND ½".

1. INSTALL CONTRASTING TEMPORARY DETECTABLE WARNING FIELD AT PEDESTRIAN STREET CROSSINGS, AS SHOWN IN THE PLANS.
2. PROTECTIVE EDGING WITH A 2" MIN. HEIGHT SHALL BE INSTALLED WHEN A CURB RAMP OR LANDING PLATFORM HAS A VERTICAL DROP OF 6" OR GREATER OR HAS A SIDE APRON SLOPE STEEPER THAN 1:3 (33%). PROTECTIVE EDGING SHOULD BE CONSIDERED WHEN CURB RAMPS OR LANDING PLATFORMS HAVE A VERTICAL DROP OF 3" OR MORE.
3. DETECTABLE EDGING WITH 6" MIN. HEIGHT AND CONTRASTING COLOR SHALL BE INSTALLED ON ALL CURB RAMP LANDINGS WHERE THE WALKWAY CHANGES DIRECTION (TURNS).
4. DO NOT RESTRICT WATER FLOW IN THE GUTTER SYSTEM.
5. ENSURE CURB RAMP IS OUT OF THE GUTTER PAN.
6. IF ONLY PART OF THE END PANEL OF TEMPORARY PEDESTRIAN BARRICADE PANEL IS NEEDED, EXTEND EXCESS PORTION OF TEMPORARY PEDESTRIAN BARRICADE PANEL HERE.
7. LANDING TO BE SLOPED A MAXIMUM OF 2.1% IN ALL DIRECTIONS OF PEDESTRIAN TRAVEL.

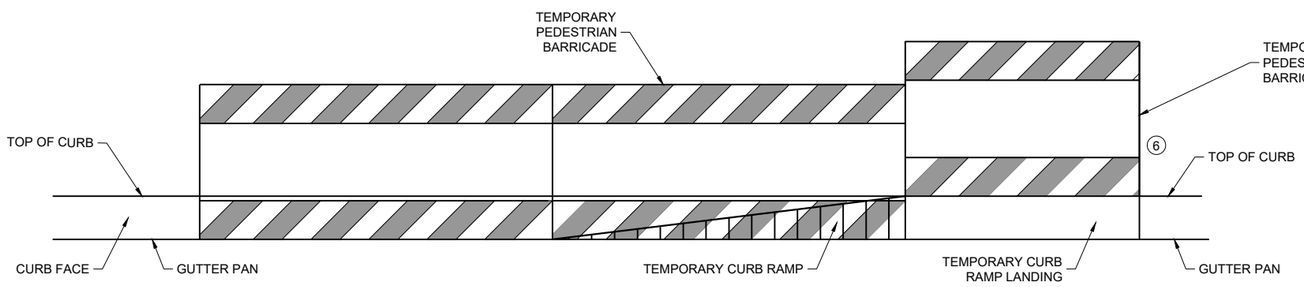

FRONT VIEW

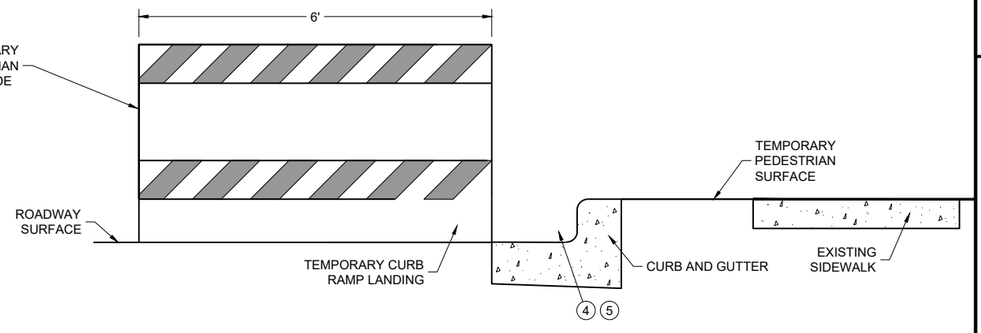

SIDE VIEW

TEMPORARY CURB RAMP PARALLEL TO CURB

TRAFFIC CONTROL, PEDESTRIAN ACCOMMODATION

STATE OF WISCONSIN
DEPARTMENT OF TRANSPORTATION

6

SDD 15D30-12b

6

SDD 15D30-12b

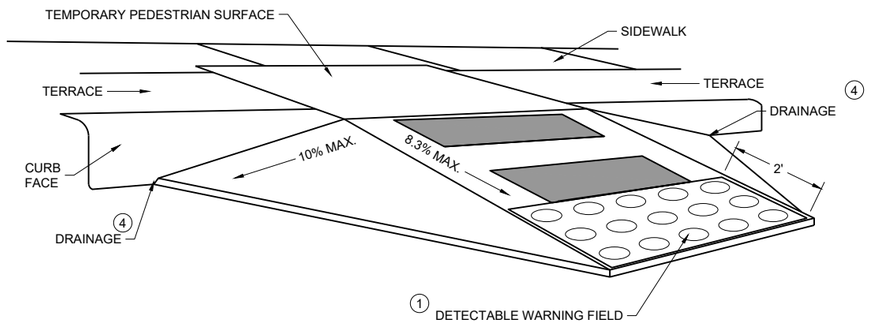

WITH SIDE APRON (5)

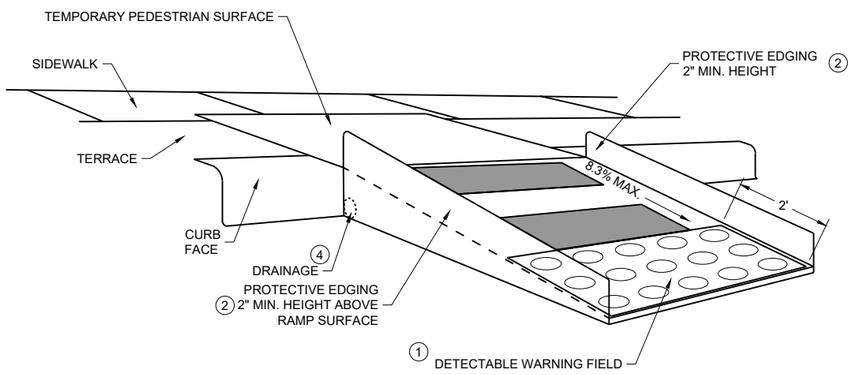

WITH PROTECTIVE EDGE

TEMPORARY CURB RAMP PERPENDICULAR TO CURB

GENERAL NOTES

CURB RAMPS SHALL BE 48" MINIMUM WIDTH WITH A FIRM, STABLE AND SLIP RESISTANT SURFACE.

ALTERNATE SIDEWALK WORK BETWEEN LEFT AND RIGHT SIDE OF ROADWAY TO MAINTAIN PEDESTRIAN ACCESS.

CURB RAMPS AND LANDINGS SHALL HAVE A 1:48 (2.1%) MAX. CROSS-SLOPE.

CLEAR SPACE OF 48" X 48" SHALL BE PROVIDED ABOVE AND BELOW THE CURB RAMP.

LATERAL JOINTS OR GAPS BETWEEN SURFACES SHALL BE LESS THAN ½" WIDTH.

CHANGES BETWEEN SURFACE HEIGHTS SHALL NOT EXCEED ½". LATERAL EDGES MAY BE VERTICAL UP TO ¼" HIGH AND SHALL BE BEVELED AT 1:2 BETWEEN ¼" AND ½".

(1) INSTALL CONTRASTING TEMPORARY DETECTABLE WARNING FIELD AT PEDESTRIAN STREET CROSSINGS, AS SHOWN IN THE PLANS

(2) PROTECTIVE EDGING WITH A 2" MIN. HEIGHT SHALL BE INSTALLED WHEN A CURB RAMP OR LANDING PLATFORM HAS A VERTICAL DROP OF 6" OR GREATER OR HAS A SIDE APRON SLOPE STEEPER THAN 1:3 (33%). PROTECTIVE EDGING SHOULD BE CONSIDERED WHEN CURB RAMPS OR LANDING PLATFORMS HAVE A VERTICAL DROP OF 3" OR MORE.

(3) DETECTABLE EDGING WITH 6" MIN. HEIGHT AND CONTRASTING COLOR SHALL BE INSTALLED ON ALL CURB RAMP LANDINGS WHERE THE WALKWAY CHANGES DIRECTION (TURNS).

(4) DO NOT RESTRICT WATER FLOW IN THE GUTTER SYSTEM.

(5) CAN ONLY BE USED FOR RAMPS WITH 6" OR LESS OF VERTICAL CHANGE.

GENERAL NOTES

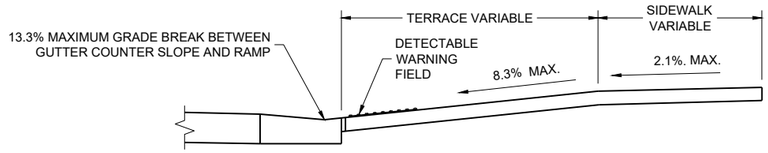

SECTION A - A

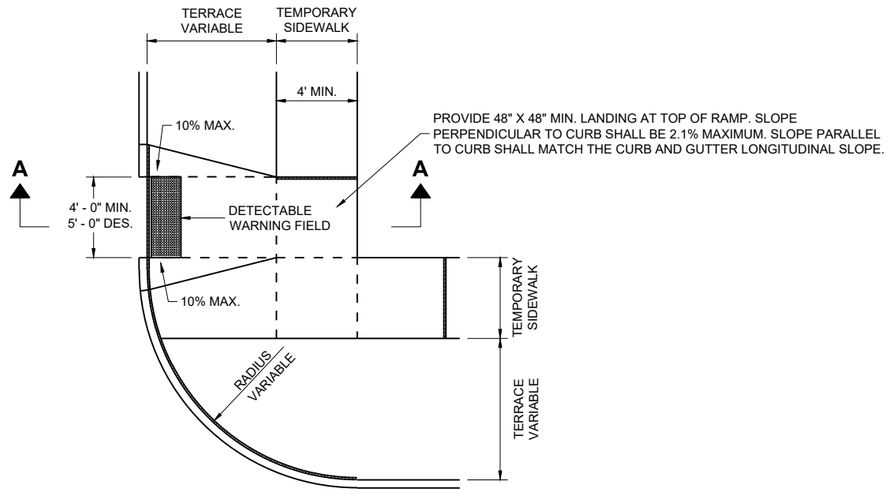

PLAN VIEW
TEMPORARY TYPE 3 RAMP
(OUTSIDE OF CROSSWALK AREA)

6

SDD 15D30-12d

TRAFFIC CONTROL,
PEDESTRIAN ACCOMMODATION

STATE OF WISCONSIN
DEPARTMENT OF TRANSPORTATION

6

SDD 15D30-12d

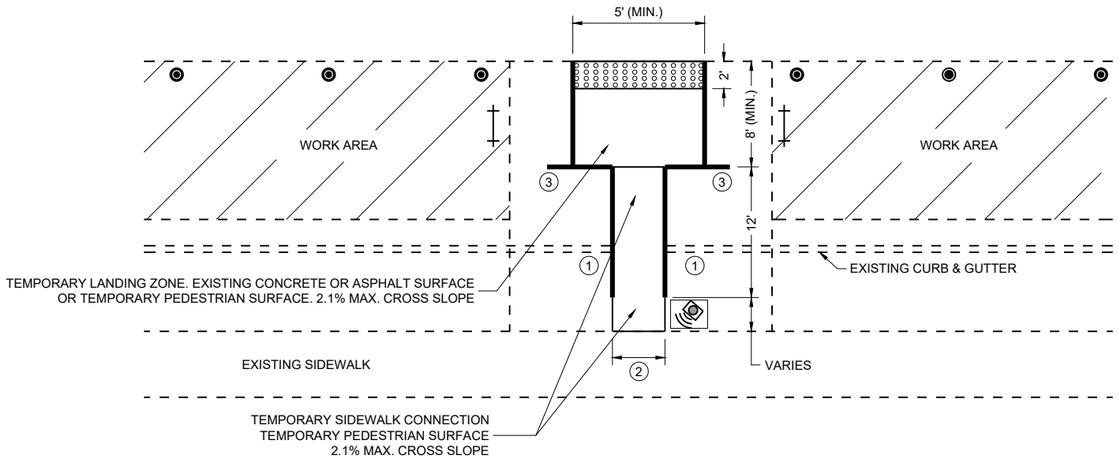

PLAN VIEW

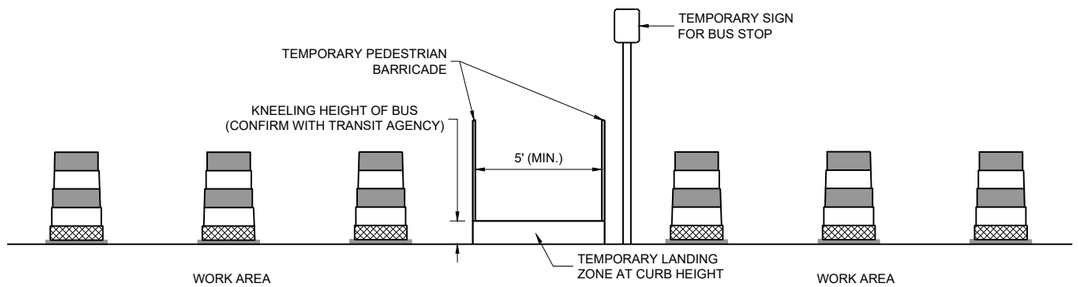

PROFILE VIEW TEMPORARY BUS STOP PAD

GENERAL NOTES

TYPICAL TEMPORARY PEDESTRIAN BARRICADE PANEL IS 6 FEET LONG.

NOTIFY THE BUS COMPANY 7 DAYS IN ADVANCE OF THE BUS STOP RELOCATION.

PROTECTIVE EDGING WITH A 2" MIN. HEIGHT SHALL BE INSTALLED WHEN A CURB RAMP OR LANDING PLATFORM HAS A VERTICAL DROP OF 6" OR GREATER OR HAS A SIDE APRON SLOPE STEEPER THAN 1:3 (33%). PROTECTIVE EDGING SHOULD BE CONSIDERED WHEN CURB RAMPS OR LANDING PLATFORMS HAVE A VERTICAL DROP OF 3" OR MORE.

DETECTABLE EDGING WITH 6" MIN. HEIGHT AND CONTRASTING COLOR SHALL BE INSTALLED ON ALL CURB RAMP LANDINGS WHERE THE WALKWAY CHANGES DIRECTION (TURNS).

LATERAL JOINTS OR GAPS BETWEEN SURFACES SHALL BE LESS THAN ½" WIDTH.

CHANGES BETWEEN SURFACE HEIGHTS SHALL NOT EXCEED ½". LATERAL EDGES MAY BE VERTICAL UP TO ¼" HIGH AND SHALL BE BEVELED AT 1:2 BETWEEN ¼" AND ½".

CURB RAMPS AND LANDINGS SHALL HAVE A 1:48 (2.1%) MAX. CROSS-SLOPE.

(1) DO NOT RESTRICT WATER FLOW IN THE GUTTER SYSTEM.

(2) 5' WIDE MIN. WITH TEMPORARY PEDESTRIAN BARRICADE, 10' WIDE MIN. WITHOUT TEMPORARY PEDESTRIAN BARRICADE.

(3) PLACE EXCESS PORTION OF TEMPORARY PEDESTRIAN BARRICADE INTO THIS SPACE.

LEGEND

- TRAFFIC CONTROL DRUM
- TYPE III BARRICADE
- TEMPORARY PEDESTRIAN BARRICADE
- TEMPORARY DETECTABLE WARNING FIELD
- WORK AREA
- TEMPORARY AUDIBLE MESSAGE DEVICE (EXACT PLACEMENT BASED UPON FIELD CONDITIONS)

6

SDD 15D30-12e

TRAFFIC CONTROL, PEDESTRIAN ACCOMMODATION

STATE OF WISCONSIN
DEPARTMENT OF TRANSPORTATION

LEGEND

- SIGN ON PERMANENT SUPPORT
- SIGN ON TEMPORARY SUPPORT
- UNDER PEDESTRIAN TRAFFIC
- WORK AREA
- TEMPORARY PEDESTRIAN BARRICADE
- DIRECTION OF TRAFFIC
- TEMPORARY AUDIBLE MESSAGE DEVICE (EXACT PLACEMENT BASED UPON FIELD CONDITIONS)

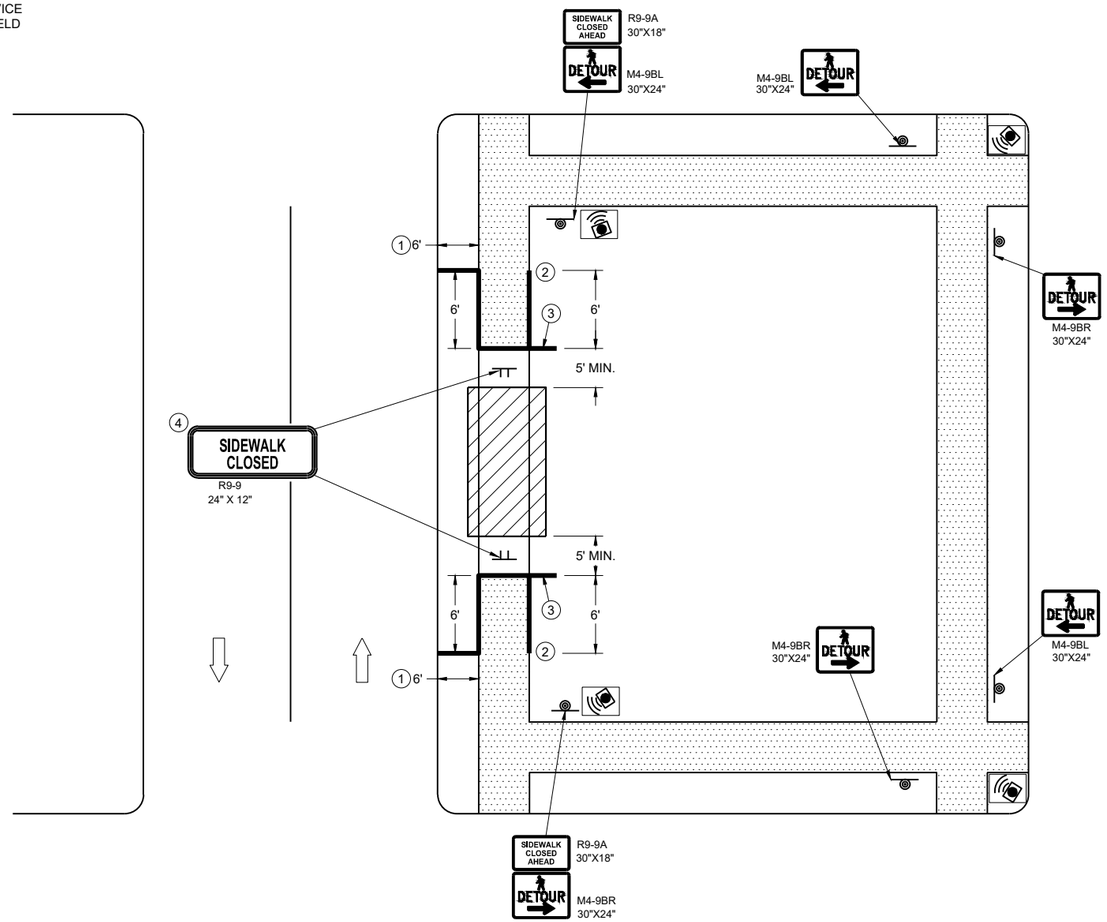

SIDEWALK DETOUR, SIDEWALK ONLY ON ONE SIDE

GENERAL NOTES

WHERE TEMPORARY BARRICADE RUNS PARALLEL ALONG SIDEWALK, PLACE THE FACE OF THE BARRICADE AT THE EDGE OF THE SIDEWALK.

SIGNS THAT REMAIN IN PLACE LESS THAN SEVEN CONTINUOUS DAYS AND NIGHTS MAY BE MOUNTED ON PORTABLE SUPPORTS.

PLACE TEMPORARY PEDESTRIAN BARRICADE TO FIT FIELD CONDITIONS, AVOIDING CONFLICTS WITH DRIVEWAYS AND OTHER EXISTING FEATURES.

1. IF TERRACE IS LESS THAN 6 FEET WIDE, OMIT TEMPORARY PEDESTRIAN BARRICADE FROM THE SIDEWALK TO THE CURB.
2. PLACE BARRICADE CLOSURE SO THAT THE TEMPORARY PEDESTRIAN BARRICADE END IS AT THE LAST OPEN SIDEWALK ACCESS TO RESIDENCES OR BUSINESSES BEFORE THE SIDEWALK CLOSURE.
3. IF TEMPORARY PEDESTRIAN BARRICADE PANEL IS WIDER THAN THE SIDEWALK WIDTH, THE PORTION OF EXCESS PANEL SHOULD EXTEND INTO THE TERRACE.
4. MOUNTING HEIGHT OF 5 FEET FROM THE SURFACE TO THE BOTTOM OF SIGN.

TRAFFIC CONTROL, PEDESTRIAN ACCOMMODATION

STATE OF WISCONSIN
DEPARTMENT OF TRANSPORTATION

LEGEND

- SIGN ON TEMPORARY SUPPORT
- WORK AREA
- UNDER PEDESTRIAN TRAFFIC
- TEMPORARY PEDESTRIAN SURFACE
- TEMPORARY PEDESTRIAN BARRICADE
- OPTIONAL TEMPORARY PEDESTRIAN BARRICADE
- DIRECTION OF TRAFFIC

GENERAL NOTES

TYPICAL TEMPORARY PEDESTRIAN BARRICADE PANEL IS 6 FEET LONG.

WHERE TEMPORARY BARRICADE RUNS PARALLEL ALONG SIDEWALK, PLACE THE FACE OF THE BARRICADE AT THE EDGE OF THE SIDEWALK.

SIGNS THAT REMAIN IN PLACE LESS THAN SEVEN CONTINUOUS DAYS AND NIGHTS MAY BE MOUNTED ON PORTABLE SUPPORTS.

(1) USE TEMPORARY PEDESTRIAN BARRICADE TO SEPARATE PEDESTRIANS FROM DROP OFFS OR FOR ADDITIONAL PEDESTRIAN CHANNELIZATION.

(2) IF TEMPORARY PEDESTRIAN BARRICADE PANEL IS WIDER THAN THE SIDEWALK WIDTH, THE PORTION OF EXCESS PANEL SHOULD EXTEND INTO THE TERRACE.

(3) MOUNTING HEIGHT OF 5 FEET FROM THE SURFACE TO THE BOTTOM OF SIGN.

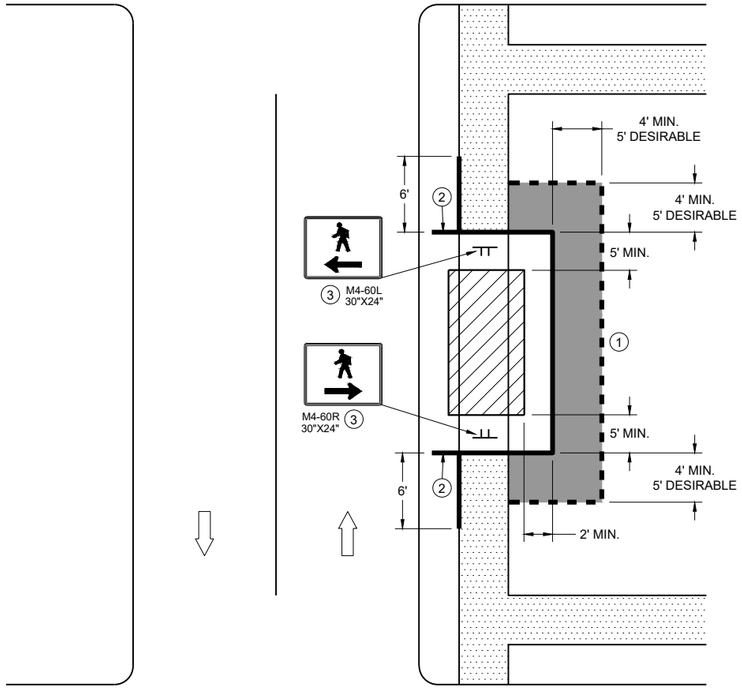

SIDEWALK BYPASS
SINGLE SIDE

6

SDD 15D30-12g

6

SDD 15D30-12g

TRAFFIC CONTROL,
PEDESTRIAN ACCOMMODATION

STATE OF WISCONSIN
DEPARTMENT OF TRANSPORTATION

LEGEND

- SIGN ON TEMPORARY SUPPORT
- TRAFFIC CONTROL DRUM
- WORK AREA
- UNDER PEDESTRIAN TRAFFIC
- TEMPORARY CURB RAMP
- TEMPORARY PEDESTRIAN SURFACE "A"
- TEMPORARY PEDESTRIAN SURFACE "B"
- TEMPORARY PEDESTRIAN BARRICADE
- DIRECTION OF TRAFFIC

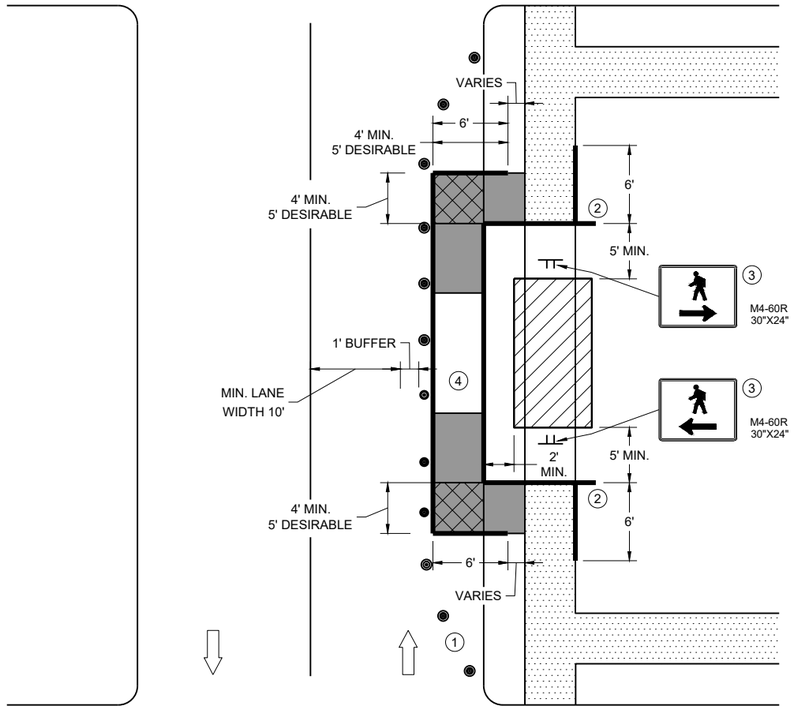

SIDEWALK BYPASS, SINGLE SIDE

GENERAL NOTES

TYPICAL TEMPORARY PEDESTRIAN BARRICADE PANEL IS 6 FEET LONG.

WHERE TEMPORARY BARRICADE RUNS PARALLEL ALONG SIDEWALK, PLACE THE FACE OF THE BARRICADE AT THE EDGE OF THE SIDEWALK.

1. SHOULDER OR LANE CLOSURE ADVANCE WARNING AND BUFFER SPACE REQUIRED.
2. PLACE EXCESS PORTION OF TEMPORARY PEDESTRIAN BARRICADE PANEL PAST THE SIDEWALK ON THE SIDE AWAY FROM THE ROAD.
3. MOUNTING HEIGHT OF 5 FEET FROM THE SURFACE TO THE BOTTOM OF SIGN.
4. USE EXISTING PAVEMENT SURFACE. IF EXISTING PAVEMENT SURFACE HAS BEEN REMOVED, USE A TEMPORARY PEDESTRIAN SURFACE. WHEN THE TEMPORARY PEDESTRIAN ACCESS ROUTE RUNS PARALLEL ON THE ROADWAY SURFACE, THE MAXIMUM CROSS SLOPE WILL MATCH THE EXISTING ROADWAY CROSS SLOPE.

6

SDD 15D30-12h

TRAFFIC CONTROL, PEDESTRIAN ACCOMMODATION

STATE OF WISCONSIN
DEPARTMENT OF TRANSPORTATION

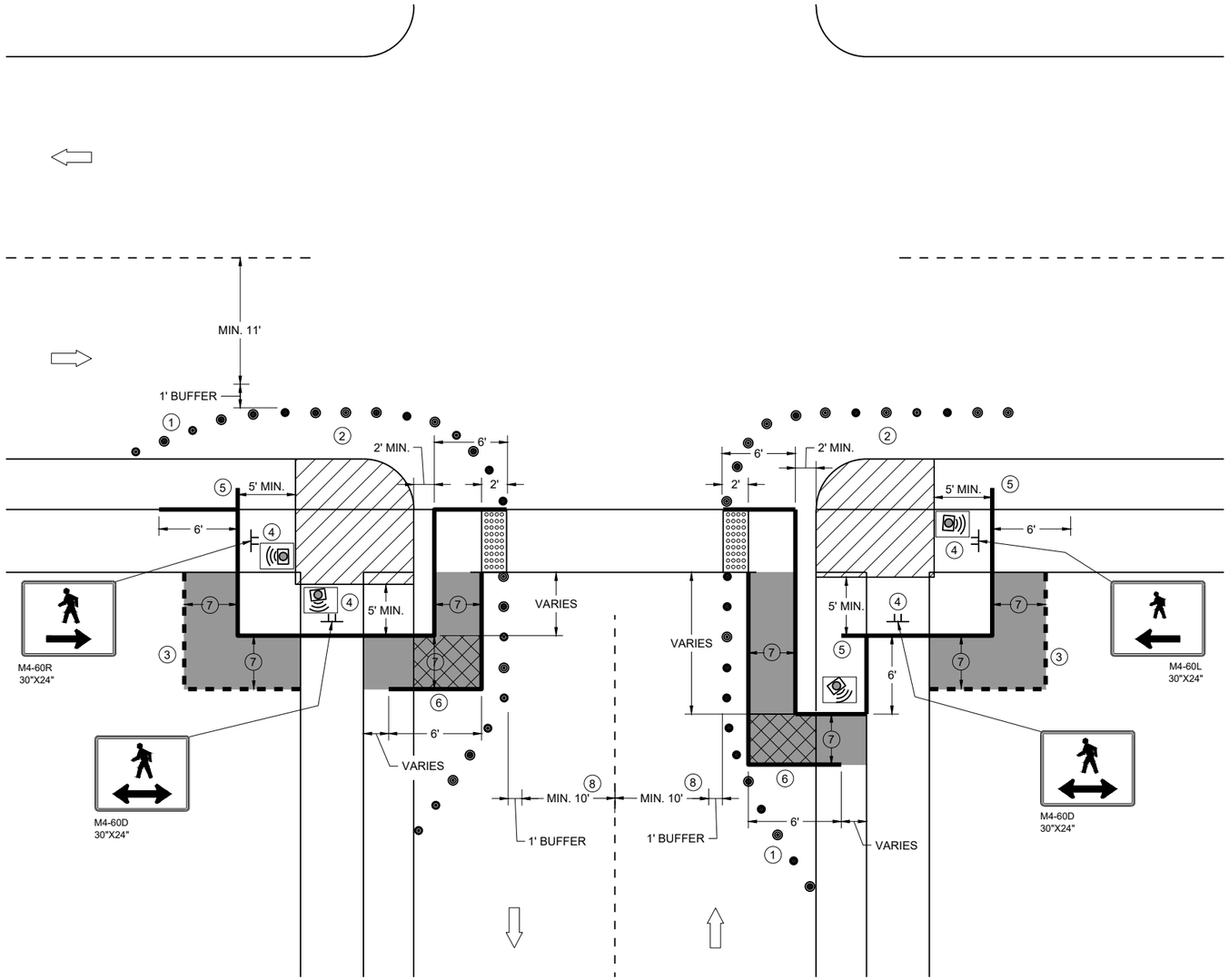

CURB RAMP PEDESTRIAN TRAFFIC CONTROL
SIDEWALK ON SINGLE SIDE

GENERAL NOTES

IF PEDESTRIAN PUSH BUTTONS ARE PRESENT ON THE EXISTING FACILITY, ENSURE THEY ARE MAINTAINED/ACCESSIBLE FOR PEDESTRIAN USE THROUGHOUT THE TEMPORARY PEDESTRIAN ACCOMMODATIONS.

TYPICAL TEMPORARY PEDESTRIAN BARRICADE PANEL IS 6 FEET LONG

WHEN TEMPORARY PEDESTRIAN BARRICADE RUNS PARALLEL ALONG THE SIDEWALK, PLACE THE FACE OF THE BARRICADE AT THE EDGE OF THE SIDEWALK.

WHEN THE TEMPORARY PEDESTRIAN ACCESS ROUTE RUNS PARALLEL ON THE ROADWAY SURFACE, THE MAXIMUM CROSS SLOPE WILL MATCH THE EXISTING ROADWAY CROSS SLOPE.

1. SHOULDER OR LANE CLOSURE ADVANCE WARNING AND PROPER BUFFER SPACE REQUIRED.
2. PROVIDE ADEQUATE SPACE FOR CONTRACTOR OPERATIONS
3. USE TEMPORARY PEDESTRIAN BARRICADE TO SEPARATE PEDESTRIANS FROM DROP OFFS OR FOR ADDITIONAL PEDESTRIAN CHANNELIZATION.
4. MOUNTING HEIGHT OF 5 FEET FROM SIDEWALK SURFACE TO BOTTOM OF SIGN.
5. PLACE EXCESS PORTION OF TEMPORARY PEDESTRIAN BARRICADE PANEL IN THE SIDEWALK TERRACE.
6. IF TEMPORARY PEDESTRIAN BARRICADE DOES NOT REACH THE FACE OF THE CURB, USE AN ADDITIONAL PANEL AND EXTEND INTO THE TERRACE.
7. 4 FEET MINIMUM, 5 FEET DESIRABLE
8. IF MINIMUM LANE WIDTHS CAN'T BE ATTAINED, CURB RAMPS MAY NEED TO BE CONSTRUCTED AT SEPARATE TIMES.

LEGEND

- SIGN ON TEMPORARY SUPPORT
- TRAFFIC CONTROL DRUM
- WORK AREA
- TEMPORARY CURB RAMP
- TEMPORARY PEDESTRIAN SURFACE "A"
- TEMPORARY PEDESTRIAN SURFACE "B"
- TEMPORARY DETECTABLE WARNING FIELD
- TEMPORARY PEDESTRIAN BARRICADE
- OPTIONAL TEMPORARY PEDESTRIAN BARRICADE
- DIRECTION OF TRAFFIC
- TEMPORARY AUDIBLE MESSAGE DEVICE (EXACT PLACEMENT BASED UPON FIELD CONDITIONS)

TRAFFIC CONTROL, PEDESTRIAN ACCOMMODATION

STATE OF WISCONSIN
DEPARTMENT OF TRANSPORTATION

6
SDD 15D30-12i

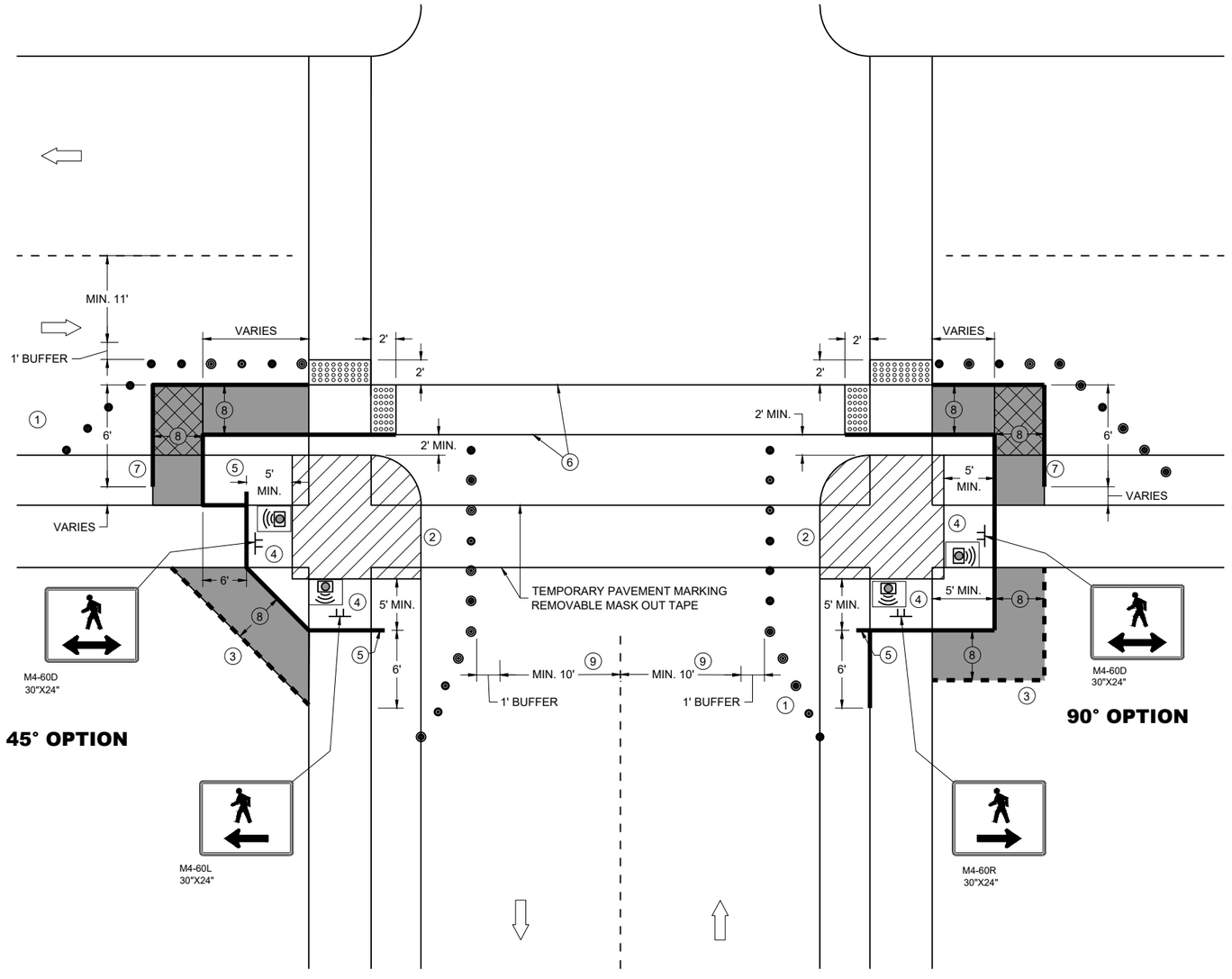

CURB RAMP PEDESTRIAN TRAFFIC CONTROL

GENERAL NOTES

IF PEDESTRIAN PUSH BUTTONS ARE PRESENT ON THE EXISTING FACILITY, ENSURE THEY ARE MAINTAINED/ACCESSIBLE FOR PEDESTRIAN USE THROUGHOUT THE TEMPORARY PEDESTRIAN ACCOMMODATIONS.

TYPICAL TEMPORARY PEDESTRIAN BARRICADE PANEL IS 6 FEET LONG

WHEN TEMPORARY PEDESTRIAN BARRICADE RUNS PARALLEL ALONG THE SIDEWALK, PLACE THE FACE OF THE BARRICADE AT THE EDGE OF THE SIDEWALK.

WHEN THE TEMPORARY PEDESTRIAN ACCESS ROUTE RUNS PARALLEL ON THE ROADWAY SURFACE, THE MAXIMUM CROSS SLOPE WILL MATCH THE EXISTING ROADWAY CROSS SLOPE.

(1) SHOULDER OR LANE CLOSURE ADVANCE WARNING AND PROPER BUFFER SPACE REQUIRED.

(2) PROVIDE ADEQUATE SPACE FOR CONTRACTOR OPERATIONS

(3) USE TEMPORARY PEDESTRIAN BARRICADE TO SEPARATE PEDESTRIANS FROM DROP OFFS OR FOR ADDITIONAL PEDESTRIAN CHANNELIZATION.

(4) MOUNTING HEIGHT OF 5 FEET FROM SIDEWALK SURFACE TO BOTTOM OF SIGN.

(5) PLACE EXCESS PORTION OF TEMPORARY PEDESTRIAN BARRICADE PANEL IN THE SIDEWALK TERRACE.

(6) WHITE 6" TEMPORARY PAVEMENT MARKING

(7) IF TEMPORARY PEDESTRIAN BARRICADE DOES NOT REACH THE FACE OF THE CURB, USE AN ADDITIONAL PANEL AND EXTEND INTO THE TERRACE.

(8) 4 FEET MINIMUM, 5 FEET DESIRABLE

(9) IF MINIMUM LANE WIDTHS CAN'T BE ATTAINED, CURB RAMPS MAY NEED TO BE CONSTRUCTED AT SEPARATE TIMES.

LEGEND

- SIGN ON TEMPORARY SUPPORT
- TRAFFIC CONTROL DRUM
- WORK AREA
- TEMPORARY CURB RAMP
- TEMPORARY PEDESTRIAN SURFACE "A"
- TEMPORARY PEDESTRIAN SURFACE "B"
- TEMPORARY DETECTABLE WARNING FIELD
- TEMPORARY PEDESTRIAN BARRICADE
- OPTIONAL TEMPORARY PEDESTRIAN BARRICADE
- DIRECTION OF TRAFFIC
- TEMPORARY AUDIBLE MESSAGE DEVICE (EXACT PLACEMENT BASED UPON FIELD CONDITIONS)

TRAFFIC CONTROL, PEDESTRIAN ACCOMMODATION

STATE OF WISCONSIN
DEPARTMENT OF TRANSPORTATION

6
SDD 15D30-12j

LEGEND

- SIGN ON PERMANENT SUPPORT
- SIGN ON TEMPORARY SUPPORT
- UNDER PEDESTRIAN TRAFFIC
- WORK AREA
- TEMPORARY PEDESTRIAN BARRICADE
- DIRECTION OF TRAFFIC
- TEMPORARY AUDIBLE MESSAGE DEVICE (EXACT PLACEMENT BASED UPON FIELD CONDITIONS)

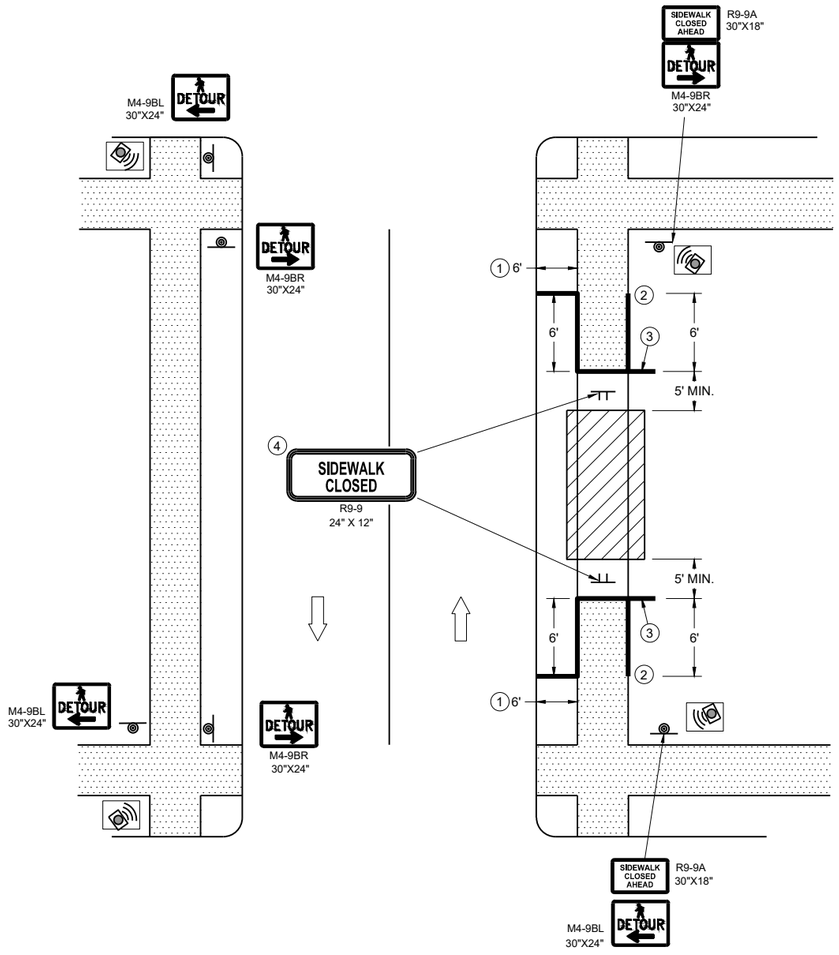

SIDEWALK DETOUR, SIDEWALK ON BOTH SIDES

GENERAL NOTES

WHERE TEMPORARY BARRICADE RUNS PARALLEL ALONG SIDEWALK, PLACE THE FACE OF THE BARRICADE AT THE EDGE OF THE SIDEWALK.

SIGNS THAT REMAIN IN PLACE LESS THAN SEVEN CONTINUOUS DAYS AND NIGHTS MAY BE MOUNTED ON PORTABLE SUPPORTS.

PLACE TEMPORARY PEDESTRIAN BARRICADE TO FIT FIELD CONDITIONS, AVOIDING CONFLICT WITH DRIVEWAYS AND OTHER EXISTING FEATURES.

1. IF TERRACE IS LESS THAN 6 FEET WIDE, OMIT TEMPORARY PEDESTRIAN BARRICADE FROM THE SIDEWALK TO THE CURB.
2. PLACE BARRICADE CLOSURE SO THAT THE TEMPORARY PEDESTRIAN BARRICADE END IS AT THE LAST OPEN SIDEWALK ACCESS TO RESIDENCES OR BUSINESSES BEFORE THE SIDEWALK CLOSURE.
3. IF TEMPORARY PEDESTRIAN BARRICADE PANEL IS WIDER THAN THE SIDEWALK WIDTH, THE PORTION OF EXCESS PANEL SHOULD EXTEND INTO THE TERRACE.
4. MOUNTING HEIGHT OF 5 FEET FROM THE SURFACE TO THE BOTTOM OF SIGN.

TRAFFIC CONTROL, PEDESTRIAN ACCOMMODATION

STATE OF WISCONSIN
DEPARTMENT OF TRANSPORTATION

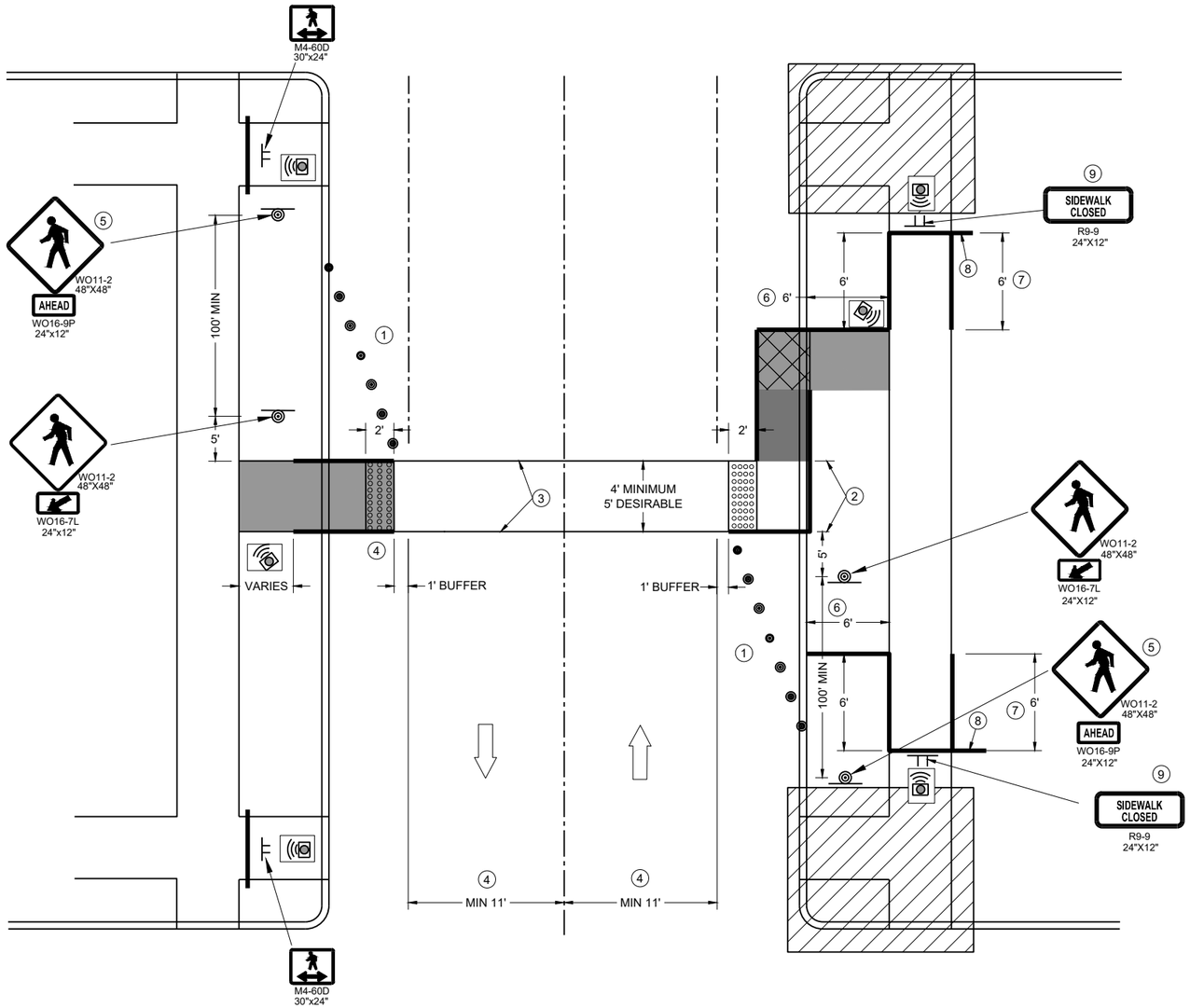

TEMPORARY PEDESTRIAN CROSSING

GENERAL NOTES

TYPICAL TEMPORARY PEDESTRIAN BARRICADE PANEL IS 6 FEET LONG.

SEE OTHER PEDESTRIAN ACCOMMODATION DETAILS FOR SIGNING AND DEVICES FOR DIFFERENT PEDESTRIAN FACILITIES CLOSURES.

WHEN THE TEMPORARY PEDESTRIAN ACCESS ROUTE RUNS PARALLEL ON THE ROADWAY SURFACE, THE MAXIMUM CROSS SLOPE WILL MATCH THE EXISTING ROADWAY CROSS SLOPE.

1. SHOULDER OR LANE CLOSURE ADVANCED WARNING AND PROPER BUFFER SPACE REQUIRED.
2. 4 FEET MINIMUM, 5 FEET DESIRABLE.
3. WHITE 6" TEMPORARY PAVEMENT MARKING.
4. IF MINIMUM LANE WIDTHS CAN'T BE ATTAINED, PERPENDICULAR CURB RAMPS MAY NEED TO BE UTILIZED.
5. IF MINIMUM 100' SPACING FROM THE MID-BLOCK CROSSING CANNOT BE ATTAINED BEFORE THE INTERSECTION, REMOVE THIS SIGN ASSEMBLY.
6. IF TERRACE IS LESS THAN 6 FEET WIDE, OMIT TEMPORARY PEDESTRIAN BARRICADE FROM THE SIDEWALK TO THE CURB.
7. PLACE BARRICADE CLOSURE SO THAT THE TEMPORARY PEDESTRIAN BARRICADE END IS AT THE LAST OPEN SIDEWALK ACCESS TO RESIDENCES OR BUSINESSES BEFORE THE SIDEWALK CLOSURE.
8. IF TEMPORARY PEDESTRIAN BARRICADE PANEL IS WIDER THAN THE SIDEWALK WIDTH, THE PORTION OF THE EXCESS PANEL SHOULD EXTEND INTO THE TERRACE.
9. MOUNTING HEIGHT OF 5 FEET FROM THE SURFACE TO THE BOTTOM OF THE SIGN.

LEGEND

- TRAFFIC CONTROL DRUM
- SIGN ON TEMPORARY SUPPORT
- TEMPORARY CURB RAMP
- TEMPORARY DETECTABLE WARNING FIELD
- TEMPORARY PEDESTRIAN SURFACE "A"
- TEMPORARY PEDESTRIAN SURFACE "B"
- WORK AREA
- TEMPORARY PEDESTRIAN BARRICADE
- DIRECTION OF TRAFFIC
- TEMPORARY AUDIBLE MESSAGE DEVICE (EXACT PLACEMENT BASED UPON FIELD CONDITIONS)

TRAFFIC CONTROL, PEDESTRIAN ACCOMMODATION

STATE OF WISCONSIN
DEPARTMENT OF TRANSPORTATION

APPROVED
November 2025 — DATE
/S/ Andrew Heidtke — WORK ZONE ENGINEER

FHWA

6
SDD 15D30-12I

LEGEND

V1 WORK VEHICLE

V2 SHADOW VEHICLE

TRUCK MOUNTED ATTENUATOR (TMA)

FLASHING ARROW PANEL (CAUTION)

WORK AREA

DIRECTION OF TRAFFIC

POSTED SPEED PRIOR TO WORK STARTING (MPH)	DECISION SIGHT DISTANCE (D)
0 - 25	550'
30	550'
35	700'
40	700'
45	900'
50	900'
55	1200'

GENERAL NOTES

ALL SIGNS ARE 48"X48" UNLESS OTHERWISE NOTED.

MOBILE IS WORK THAT MOVES CONTINUOUSLY OR MOVES AT LEAST THE DECISION SIGHT DISTANCE EVERY 15 MINUTES.

ALL VEHICLES SHALL BE EQUIPPED WITH TWO 360 DEGREE HIGH INTENSITY YELLOW FLASHING LIGHTS OR STROBE LIGHTS AND OPERATED WITH HEADLIGHTS TURNED ON.

ALL ARROW PANELS SHALL BE REAR FACING, TYPE "B" OR "C", AND DISPLAYING THE FLASHING CAUTION MODE. SIGNS PLACED ON VEHICLES MUST NOT OBSCURE THE ARROW PANEL.

USE AN ATTENUATOR ON THE REARMOST VEHICLE THAT BLOCKS ALL OR PART OF THE TRAFFIC LANE.

(1) DISTANCE BETWEEN VEHICLES MAY INCREASE FROM THE ATTENUATOR'S ROLL AHEAD BASED ON TERRAIN, SIGHT DISTANCE, AND OTHER FACTORS. WHENEVER ADEQUATE STOPPING SIGHT DISTANCE EXISTS TO THE REAR, SHADOW VEHICLES SHOULD MAINTAIN THE MINIMUM DISTANCE FROM THE WORK VEHICLE AND PROCEED AT THE SAME SPEED AS THE WORK VEHICLE. SHADOW VEHICLES SHOULD SLOW DOWN IN ADVANCE OF VERTICAL OR HORIZONTAL CURVES THAT RESTRICT SIGHT DISTANCE.

(2) ALIGN LEFT SIDE OF SHADOW VEHICLE WITH EDGE OF WORK AREA.

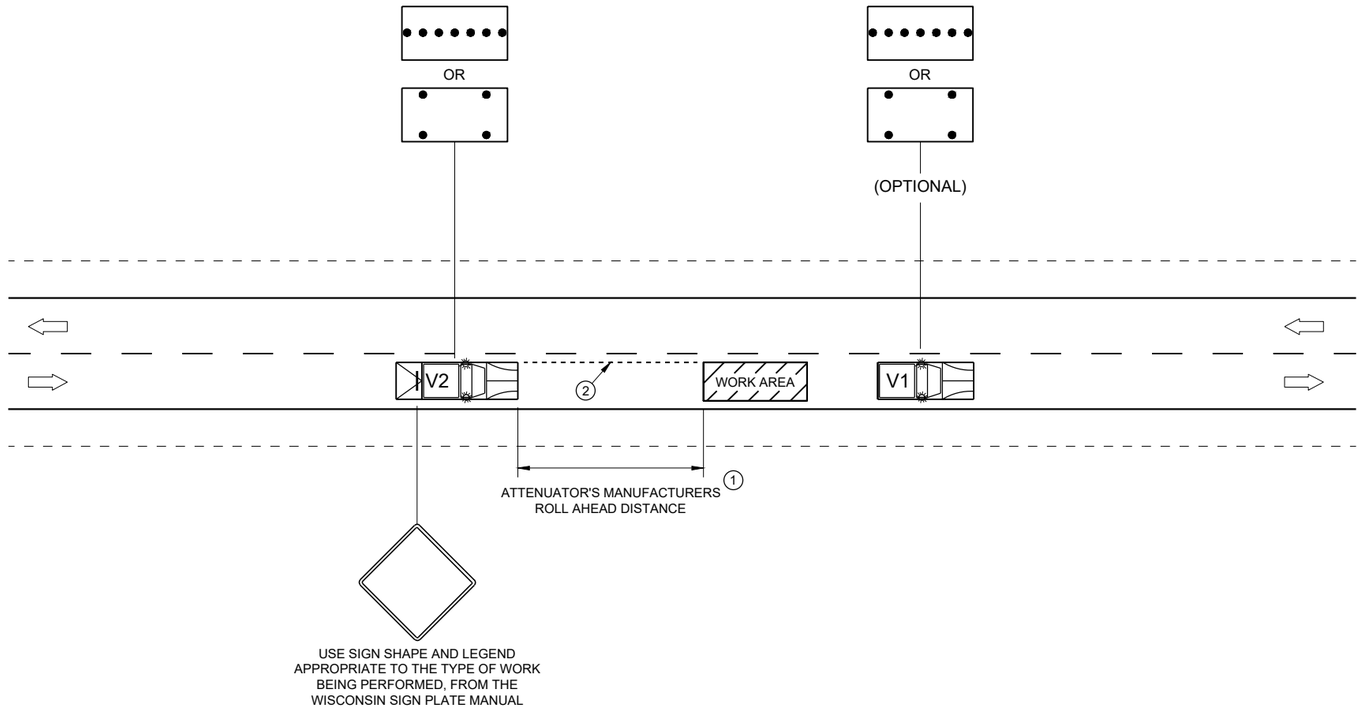

TRAFFIC CONTROL, MOBILE OPERATIONS ON AN UNDIVIDED ROADWAY

STATE OF WISCONSIN
DEPARTMENT OF TRANSPORTATION

APPROVED
February 2021 — DATE
/S/ Andrew Heidtke — STATEWIDE WORK ZONE T SAFETY ENGINEER
FHWA

6

SDD 15D51 - 01

URBAN AREA

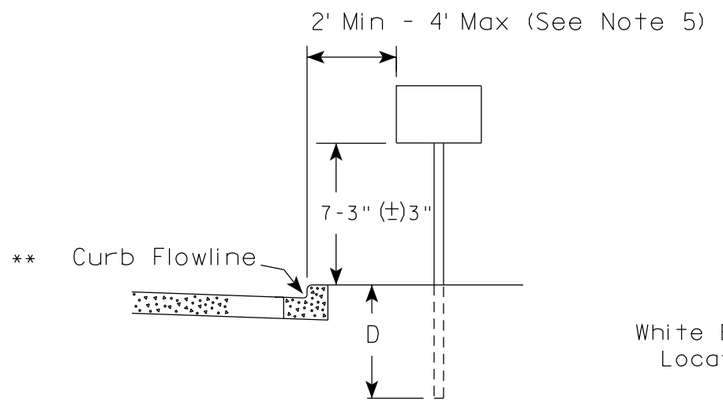

RURAL AREA (See Note 2)

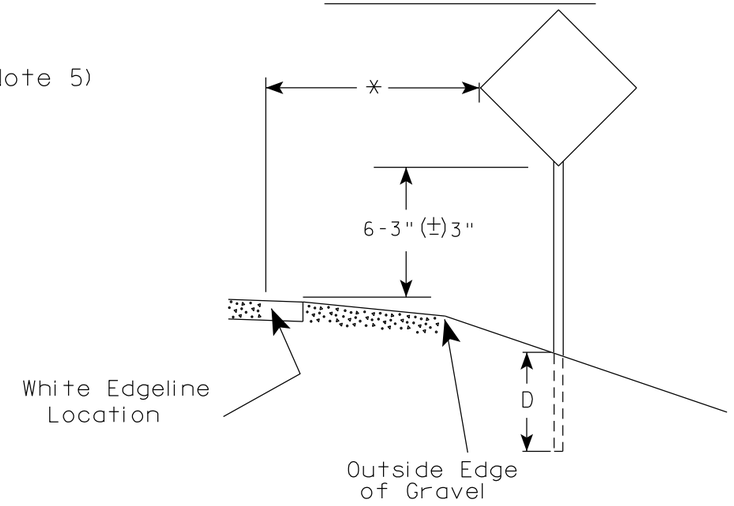

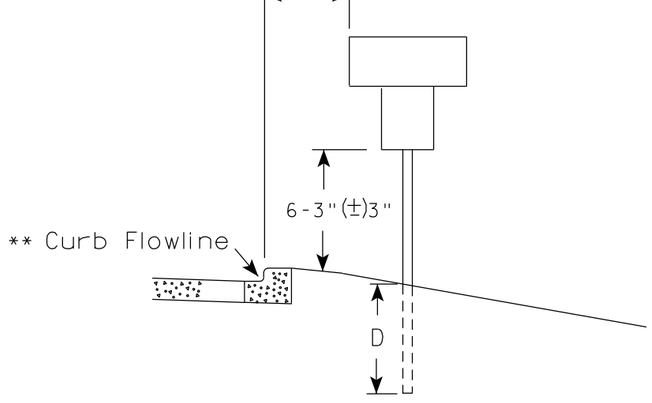

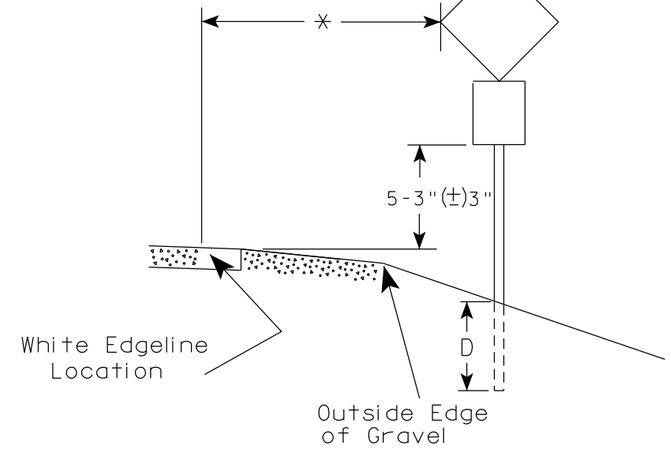

** The existence of curb and gutter does not in itself mandate the vertical clearance illustrated. That height is typically measured where there is sidewalk adjacent to the roadway or parking is permitted. In the absence of sidewalk vertical clearance is measured from the top of the curb. Offset of signs is measured from the flow line.

* 6 feet from edge of a paved shoulder or 12 feet from the edge of pavement (edge line location) or 2 feet from outside edge of gravel, whichever is greater unless directed by project engineer.

POST EMBEDMENT DEPTH

Area of Sign Installation (Sq. Ft.)	D (Min)
20 or Less	4'
Greater than 20	5'

GENERAL NOTES

1. Signs wider than 4 feet or 20 sq.ft or larger, shall be mounted on multiple posts. Refer to plate A4-4.
2. If signs are mounted on or behind barrier wall, see A4-10 sign plate.
   The Double Arrow sign (W12-1D) shall be mounted at a height of 2'-3" (±) 3". The Chevron sign (W1-8), Roundabout Chevron panel (R6-4B), Enhanced Reference Markers, Clearance Markers (W5-52), Mile Markers (D10 series), In Road Object Markers (W5-54) & End of Road Markers (W5-56) shall be mounted at a height of 4'-3" (±) 3".
3. For expressways and freeways, mounting height is 7'- 3" (±) 3" or 6'-3" (±) 3" depending upon existence of a sub-sign.
4. Minimum mounting height for signs mounted on traffic signal poles is 5'- 3" (±) 3".
5. Offset distance shall be consistent with existing signs or consistent throughout length of project.
6. Folding signs shall be mounted at a height of 5'-3" (±) 3" or as directd by the Engineer.

TYPICAL INSTALLATION OF PERMANENT TYPE II SIGNS ON SINGLE POSTS

WISCONSIN DEPT OF TRANSPORTATION

APPROVED Matthew R Rauch
for State Traffic Engineer

DATE 12/6/23 PLATE NO. A4-3.23

PROJECT NO:	HWY:	COUNTY:		SHEET NO: 169	E

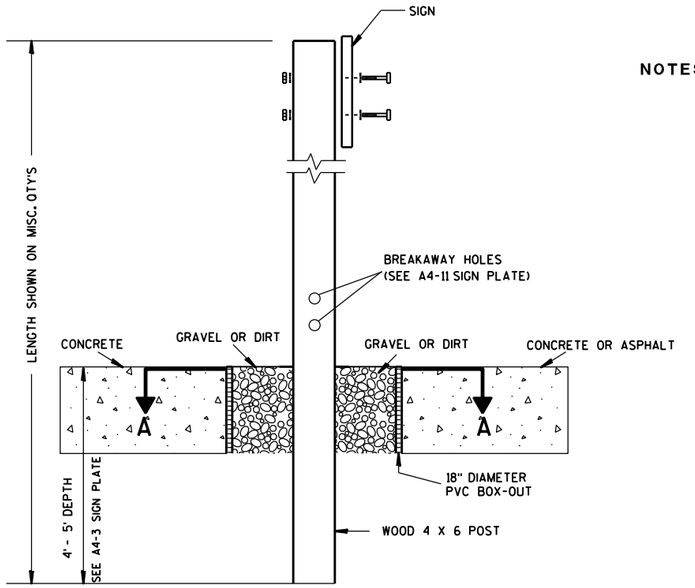

ELEVATION VIEW

DETAIL OF WOOD 4 X 6 SIGN POST IN BOX-OUT

NOTES:
1. ALL MATERIAL TO BE APPROVED BY ENGINEER PRIOR TO INSTALLATION
2. SEE SIGN PLATE A4-8 FOR SIGN HARDWARE REQUIREMENTS
3. 18 INCH X 18 INCH SQUARE BOX-OUTS MAY BE USED FOR INSTALLATIONS IN EXISTING CONCRETE OR ASPHALT LOCATIONS.

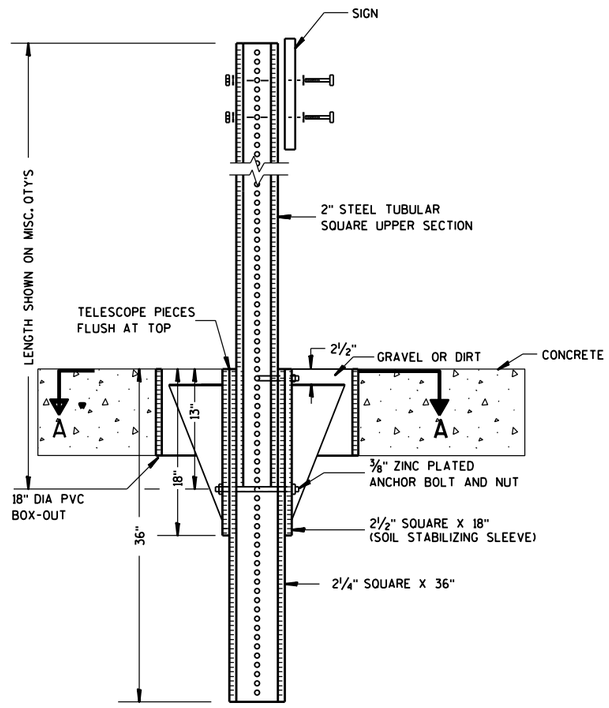

ELEVATION VIEW

DETAIL OF STEEL 2 X 2 SIGN POST IN BOX-OUT

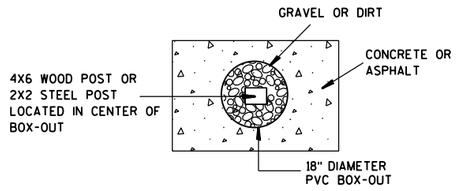

PLAN VIEW

FOR NEW CONCRETE/ASPHALT INSTALLATIONS

SIGN POST BOX-OUTS A4-3B

WISCONSIN DEPT OF TRANSPORTATION

APPROVED Matthew R Rauch
for State Traffic Engineer

DATE 1/27/14 PLATE NO. A4-3B.1

PROJECT NO:	HWY:	COUNTY:		SHEET NO:	E

FILE NAME : C:\CAEFiles\Projects\tr_stdplate\A43B.DGN PLOT DATE : 27-JAN-2014 09:48 PLOT BY : mscsja PLOT NAME : PLOT SCALE : 13.659812:1.000000 WISDOT/CADDS SHEET 42

URBAN AREA

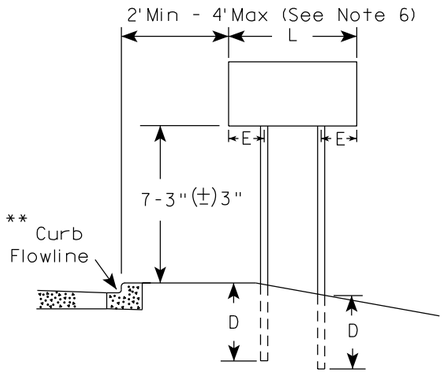

RURAL AREA (See Note 3)

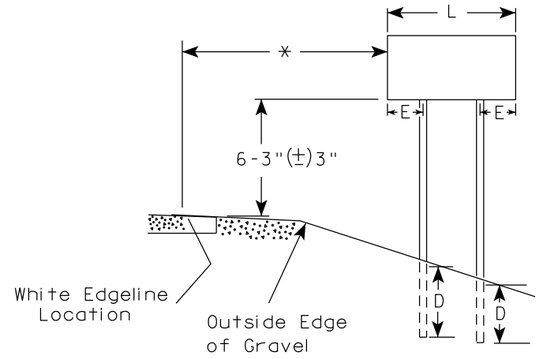

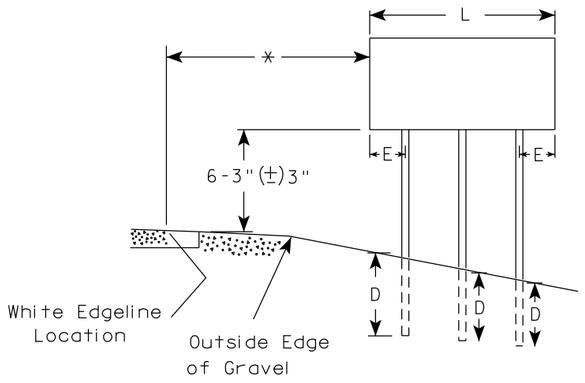

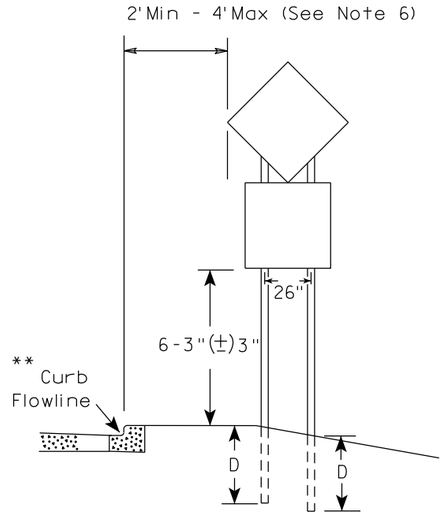

48" DIAMOND WARNING SIGN

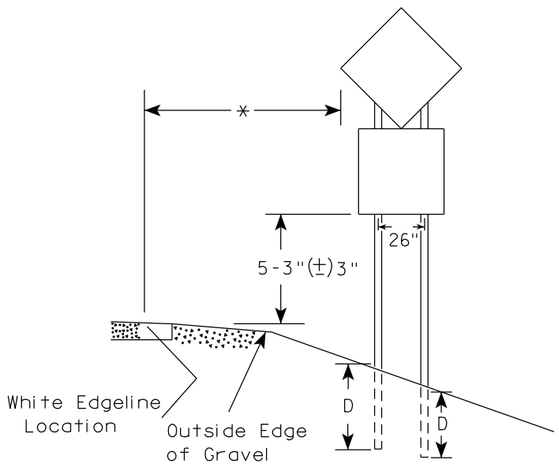

48" DIAMOND WARNING SIGN

SIGN SHAPE OTHER THAN DIAMOND (TWO POSTS REQUIRED)		
	L	E
***	Greater than 48" Less than 60"	12"
	60" to 108"	L/5

SIGN SHAPE OTHER THAN DIAMOND (THREE POSTS REQUIRED)	
L	E
Greater than 108" to 144"	12"

GENERAL NOTES

1. For 3 or 4 post installations, individual post spacing shall be greater than 3'-6".
2. See tables below for required number of posts.
3. For expressways and freeways, mounting height is 7'-3" (±) 3" or 6'-3" (±) 3" depending upon existence of sub-sign.
4. The (±) tolerance for mounting height is 3 inches.
5. J-Assemblies are considered to be one sign for mounting height.
6. Offset distance shall be consistent with existing signs or consistent throughout length of project.
7. Folding signs shall be mounted at a height of 5'-3" (±) 3" or as directed by the engineer.
8. The Double Arrow sign (W12-1) shall be mounted at a height of 2'-3" (±) 3". The Chevron sign (W1-8), Roundabout Chevron panel (R6-4B), Clearance Markers (W5-52), Mile Markers (D10 series), In Road Object Markers (W5-54) & End of Road Markers (W5-56) shall be mounted at a height of 4"-3" (±) 3".

* 6 feet from edge of a paved shoulder or 12 feet from the edge of pavement (edge line location) or 2 feet from outside edge of gravel, whichever is greater unless directed by project engineer.

** The existence of curb and gutter does not in itself mandate the vertical clearance illustrated. That height is typically measured where there is sidewalk adjacent to the roadway or parking is permitted. In the absence of sidewalk vertical clearance is measured from the top of the curb. Offset of signs is measured from the flow line.

*** See A4-3 sign plate for signs 4' or less in width and less than 20 S.F. in area.

POST EMBEDMENT DEPTH

Area of Sign Installation (Sq. Ft.)	D (Min)
20 or Less	4'
Greater than 20	5'

TYPICAL INSTALLATION OF TYPE II SIGNS ON MULTIPLE POSTS

WISCONSIN DEPT OF TRANSPORTATION

APPROVED Matthew R Rauch
for State Traffic Engineer

DATE 12/6/23 PLATE NO. A4-4.16

PROJECT NO:	HWY:	COUNTY:		SHEET NO: 171	E

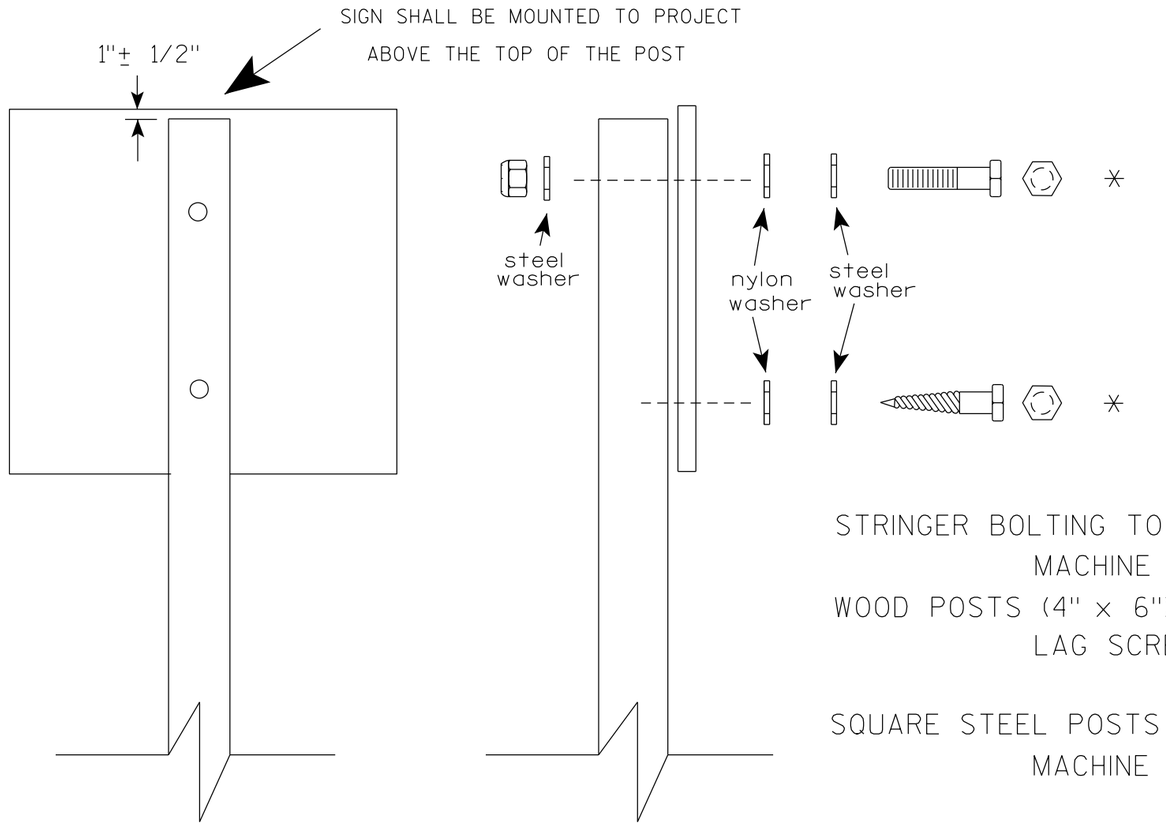

Nuts, bolts and lags used for mounting signs shall have hexagonal heads and shall be either :

a. Hot dip galvanized in accordance with ASTM Designation: A 153, Class D, or SC 3

b. Electro-galvanized in accordance with ASTM Designation : B 633, TYPE III, SC 3.

Threads on bolts and nuts shall be manufactured with sufficient allowance for the cadmium plate or galvanized coating to permit the nuts to run freely on the bolts.

STRINGER BOLTING TO ALUMINUM SIGNS (SEE SIGN PLATE A4-18)

MACHINE BOLTS - 5/16" X 1-3/4" Length w/ lock nuts

WOOD POSTS (4" x 6")

LAG SCREWS - 3/8" X 3" (NO STRINGERS ON BACK OF SIGN)
3/8" X 4" (STRINGERS ON BACK OF SIGN)

SQUARE STEEL POSTS (2" x 2")

MACHINE BOLTS - 3/8" X 3-1/4" Length w/ nuts (NO STRINGER ON BACK OF SIGN)
3/8" X 5" Length w/ nuts (STRINGERS ON BACK OF SIGN)

RIVETS - 9/32" (6605-9-6) BULB-TITE, TRI-FOLD, ALUMINUM BODY/MANDREL
O.D. FLANGE .720-.765 INCH, GRIP RANGE .042-.375 INCH

WASHERS (ALL POSTS) -

1-1/4" O.D. X 3/8" I.D. X 1/16" STEEL
1-1/4" O.D. X 3/8" I.D. X .080 NYLON

* Two different fastening systems are shown for illustration purposes. On any individual sign, either one or the other system shall be used. Actual number of fasteners per sign varies with the sign area, but normally there are two. For a single post installation, all signs greater than 9 sq. ft. require the use of 3 fasteners.

ATTACHMENT OF SIGNS TO POSTS

WISCONSIN DEPT OF TRANSPORTATION

APPROVED Matthew R Rauch
for State Traffic Engineer

DATE 4/1/2020 PLATE NO. A4-8.9

TELESCOPIC TUBING ANCHORS
TWO PIECE SYSTEM

2 1/4 " SQUARE
12 GAUGE
PERFORATED
GALVANIZED FINISH

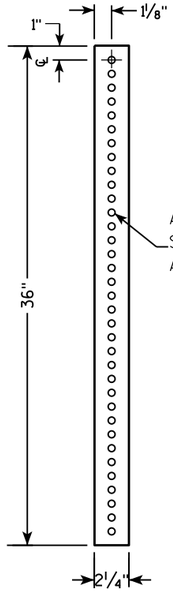

2 1/2 " SQUARE
12 GAUGE
OMNI-DIRECTIONAL
PERFORATED
SOIL STABILIZING SLEEVE
GALVANIZED FINISH

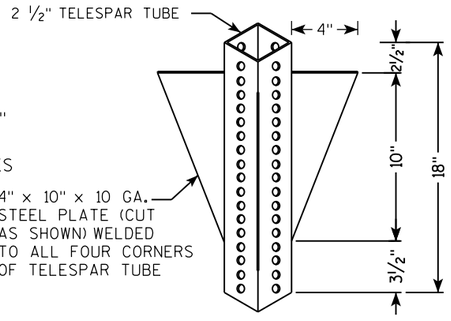

DETAIL OF TUBULAR STEEL SIGN POST
(IN POURED CONCRETE OR ASPHALT)

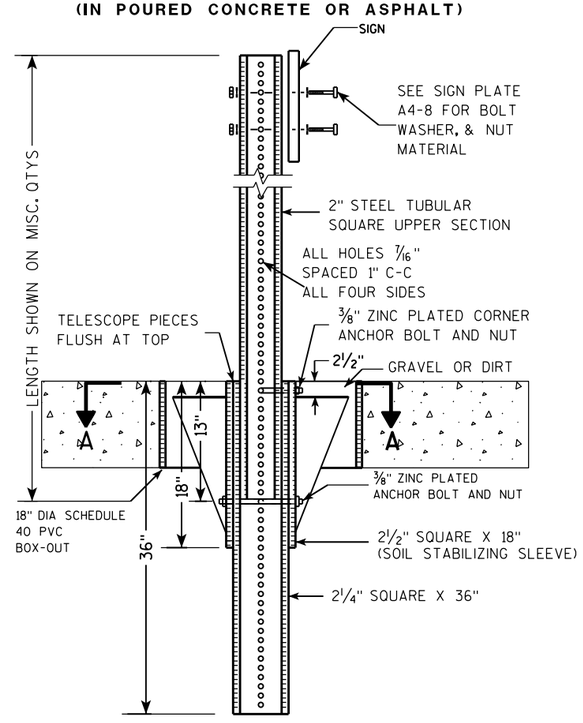

DETAIL OF TUBULAR STEEL SIGN POST
(IN LOCATIONS OTHER THAN POURED CONCRETE OR ASPHALT)

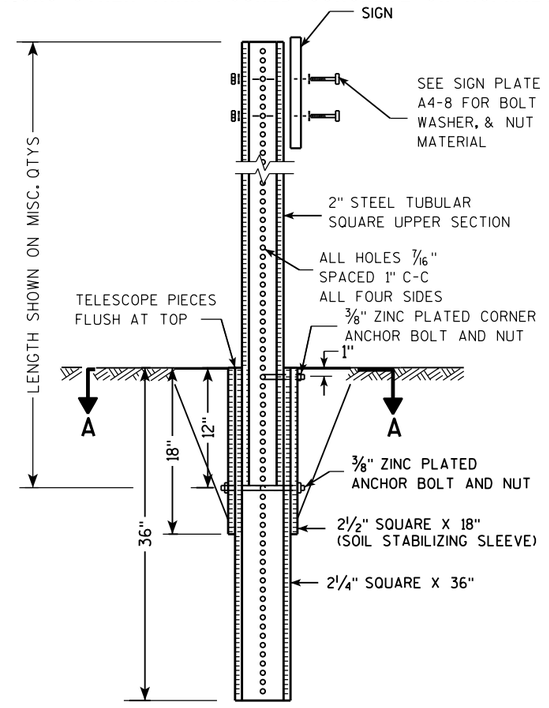

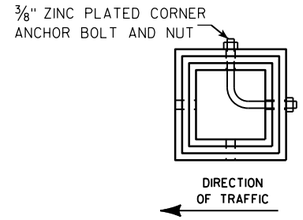

SECTION A-A

Area of Sign Installation (Sq. Ft.)	Number of Required Posts
9 or less	1
Greater than 9 less than or equal to 18	2
Greater than 18 less than or equal to 27	3

Signs wider than 3 feet or larger than 9 sq. ft shall be mounted on multiple posts (see above table).

TUBULAR STEEL
SIGN POST
A4-9

WISCONSIN DEPT OF TRANSPORTATION

APPROVED Matthew R Rauch
for State Traffic Engineer

DATE 2/05/15 PLATE A4-9.9

PROJECT NO:	HWY:	COUNTY:		SHEET NO:	E

FILE NAME : C:\CAEFiles\Projects\tr_stdplate\A49.DGN PLOT DATE : 05-FEB-2015 17:09 PLOT BY : mscsja PLOT NAME : PLOT SCALE : 13.659812:1.000000
WISDOT/CADDS SHEET 42

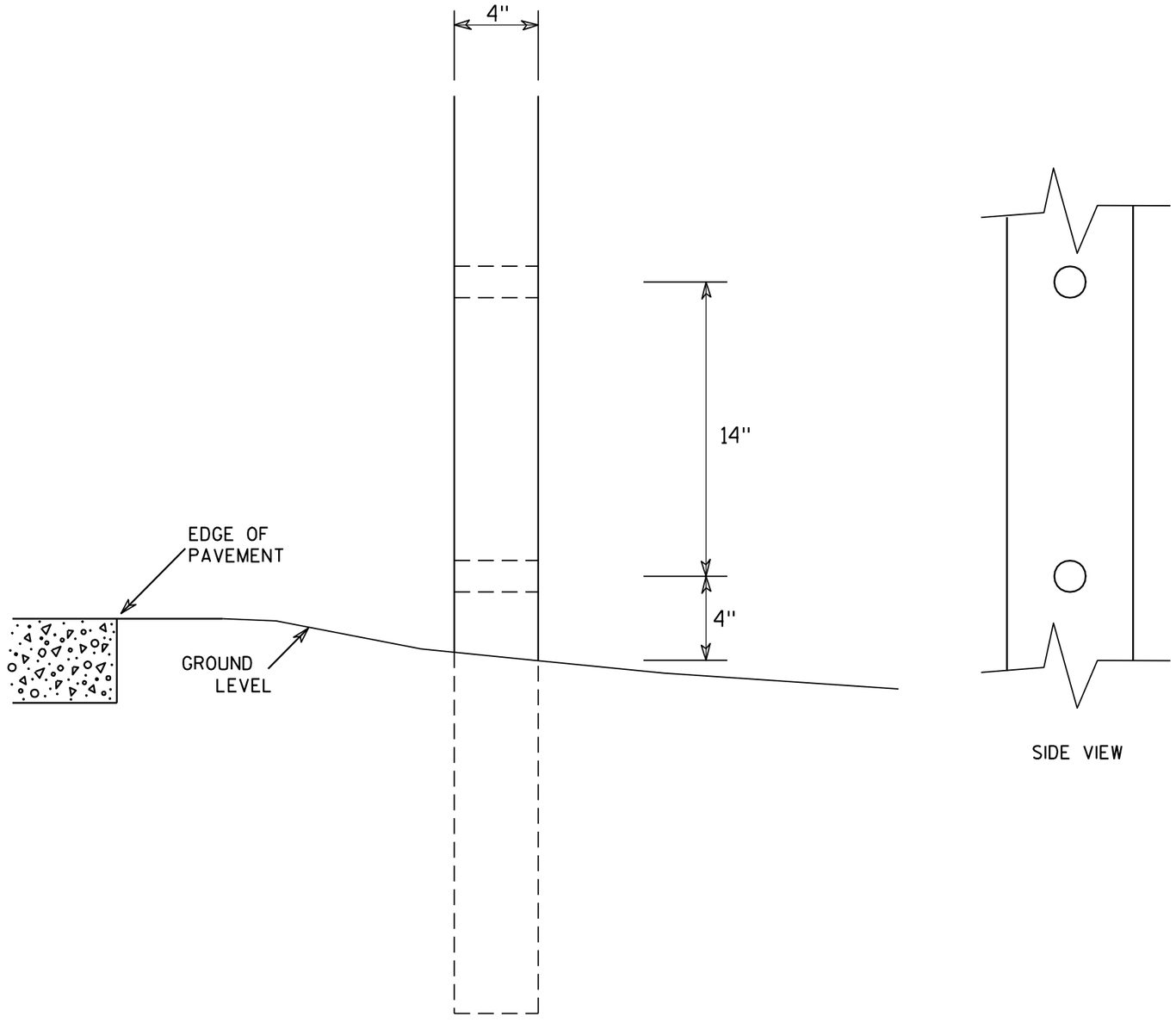

SIDE VIEW

GENERAL NOTES

1. All 4 x 6 Wood Posts shall be modified by having two 1½" diameter holes drilled perpendicular to the roadway centerline.

7

7

4 X 6 WOOD POST MODIFICATIONS

WISCONSIN DEPT OF TRANSPORTATION

APPROVED Chester J Spang
for State Traffic Engineer

DATE 3/27/97 PLATE NO. A4-11.2

PROJECT NO:	HWY:	COUNTY:		SHEET NO: 174	E

SIGN LAYOUT WITH VARIOUS SIZED MESSAGES

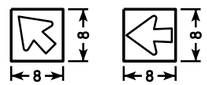

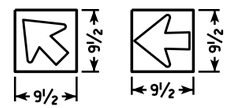

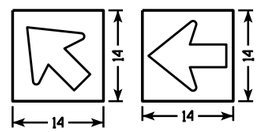

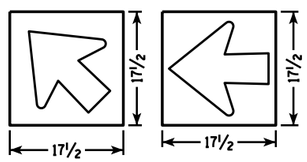

GENERAL NOTES

1. Materials shall conform to Standard Specification Section 637.
   Base - Sheet Aluminum 0.040" Thickness
   Sheeting - Orange Type F Reflective
   Arrow - Black Non-Reflective
2. Arrow signs shall be fastened to permanent sign by either aluminum rivets or aluminum self-tapping sheet metal screws. There shall be a minmum of 2 fasteners used per arrow sign.
3. There shall be a spacer consisting of a 0.08" nylon washer between the back of the arrow sign and the face of the permanent sign.
4. Arrows are per standard plate A1-2
5. Use separate arrow sign for each destination
6. Tilt arrow is always at 45 degrees
7. Arrow is centered on arrow sign

Lower Case Copy Size	Standard Width (Single Arrow)	2 Line Tilt Arrow Cover Width	3 Line Tilt Arrow Cover Width	Height
3¾" Series C	8	9 ½	14 ½	8
4½" Series D & E	9 ½	10	15	9 ½
6" Series D & E	14	16	20 ½	14
8" Series E	17 ½	20 ½	25	17 ½

BEFORE

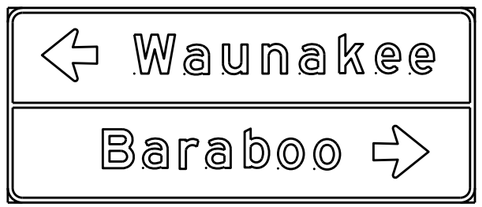

AFTER

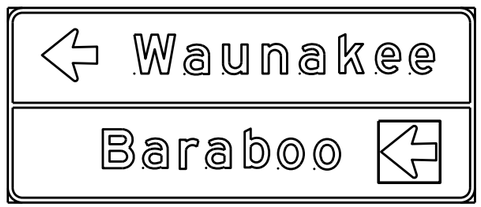

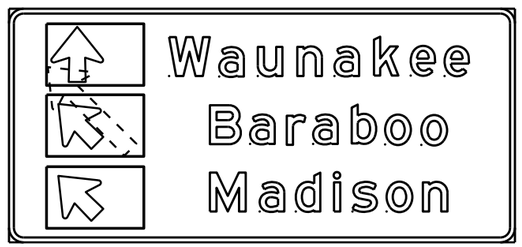

DESTINATION DIRECTIONAL ARROW FOR DETOUR SIGNS

WISCONSIN DEPT OF TRANSPORTATION

APPROVED Matthew R Rauch
for State Traffic Engineer

DATE 10/08/14

A4-12.2

PROJECT NO:

SHEET NO: E

FILE NAME : C:\CAEFiles\Projects\tr_stdplate\A412.DGN PLOT DATE : 08-OCT-2014 11:50 PLOT BY : mscsja

WISDOT/CADDS SHEET 42

BANDING

SINGLE SIGN

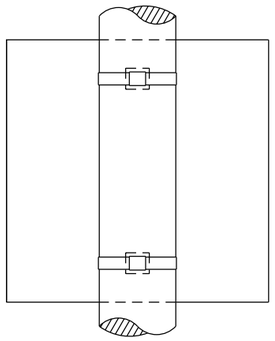

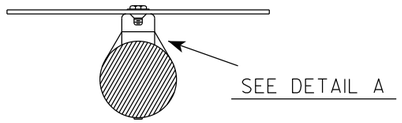

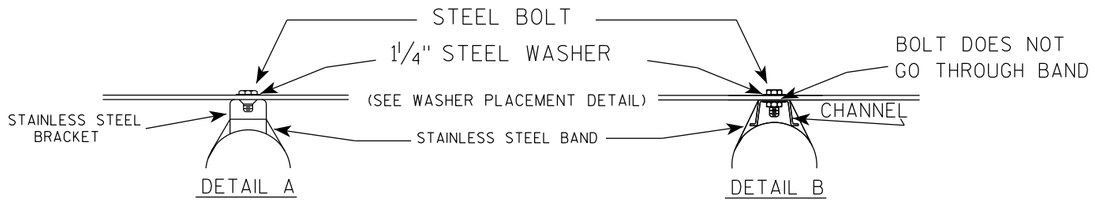

GENERAL NOTES

1. Any sign over 3 feet in width shall use the V-Block banding method. See A5-10 standard plate.
2. Signs 3 feet or greater in height shall have three bracket bands installed. Signs less than 3 feet in height shall have two bracket bands installed.
3. Banding and assembly bracket shall be stainless steel. All bands shall be ¾" in width and 0.025" thickness.
4. ALL SIGN MOUNTING BOLTS AND WASHERS SHALL BE EITHER:
   a. Hot dip or mechanically galvanized in accordance with ASTM Designation: A 153, Class D
   b. Electro-galvanized in accordance with ASTM designation: B 633, Type III, SC 3

"J" ASSEMBLY

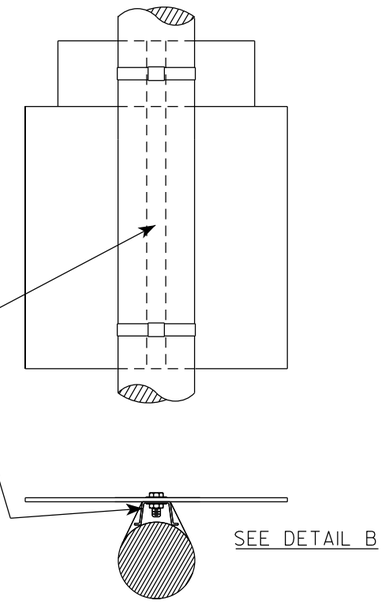

WASHER PLACEMENT

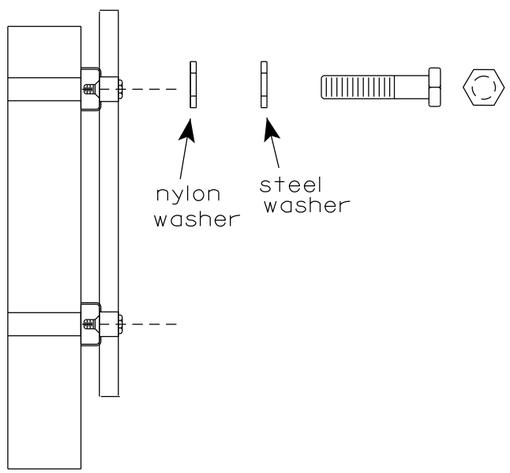

WASHERS (ALL POSTS) -
1-1/4" O.D. X ⅜" I.D. X 1/16" STEEL
1-1/4" O.D. X ⅜" I.D. X .080 NYLON
FOR ALL TYPE H SIGNS

STANDARD SIGN
SIGN BANDING DETAILS

WISCONSIN DEPT OF TRANSPORTATION

APPROVED Matthew R Rauch
for State Traffic Engineer

DATE 6/10/19 PLATE NO. A5-9.4

PROJECT NO:	HWY:	COUNTY:		SHEET NO: 176	E

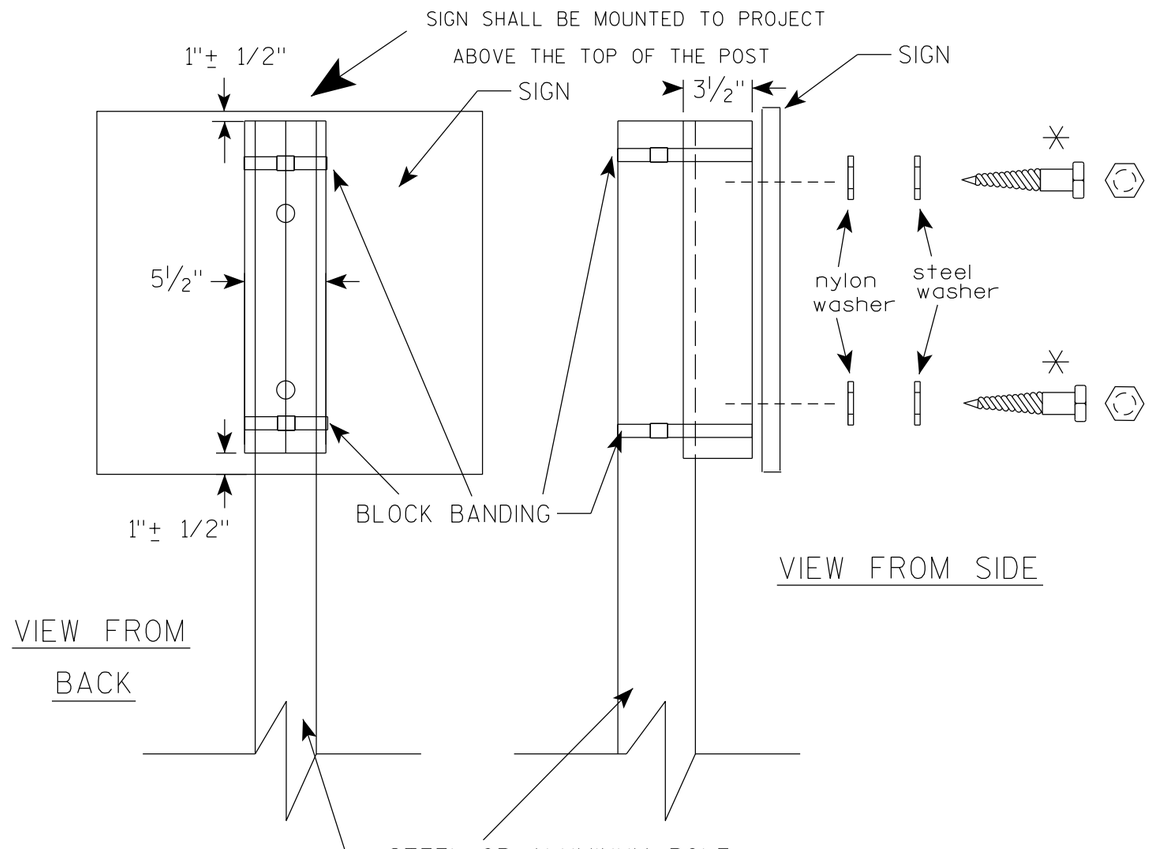

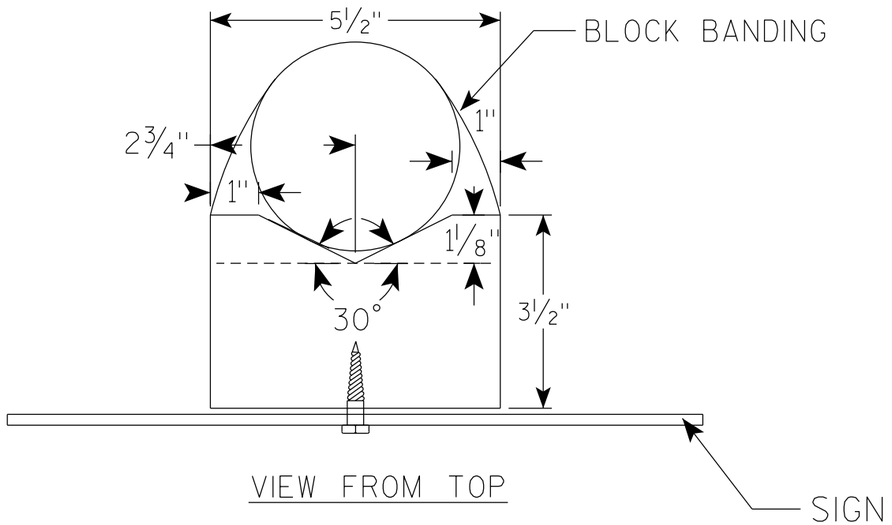

GENERAL NOTES

1. WOOD 4"X6" POST MATERIAL SHALL CONFORM TO 507.2.2 OF THE WisDOT STANDARD SPECIFICATIONS
2. BLOCK BANDING AND CLIPS SHALL BE STAINLESS STEEL, ¾" WIDTH AND 0.025" THICKNESS
3. SIGNS 3' OR GREATER IN HEIGHT SHALL UTILIZE 3 BLOCK BANDS. SIGNS UNDER 3' IN HEIGHT SHALL UTILIZE 2 BLOCK BANDS
4. ACTUAL NUMBER OF FASTENERS PER SIGN VARIES WITH THE SIGN AREA, BUT NORNALLY THERE ARE TWO. FOR SIGNS GREATER THAN 9 S.F. 3 FASTENERS SHALL BE USED.
5. ALL SIGN MOUNTING BOLTS AND WASHERS SHALL BE EITHER:
   a. Hot dip or mechanically galvanized in accordance with ASTM Designation: A 153, Class D
   b. Electro-galvanized in accordance with ASTM Designation : B 633, TYPE III, SC 3
6. ALL BOLTS SHALL HAVE HEXAGONAL HEADS.
7. STEEL WASHERS SHALL BE 1¼" O.D. X ⅜" I.D. X 1/16"
8. NYLON WASHERS SHALL BE 1¼" O.D. X ⅜" I.D. X .080 FOR TYPE H OR TYPE F FACE SIGN

✳ LAG BOLTS SHALL BE ⅜" X 2½"

BLOCK BANDING DETAIL (V-BLOCK OPTION)

WISCONSIN DEPT OF TRANSPORTATION

APPROVED Matthew R Rauch
for State Traffic Engineer

DATE 4/19/2022 PLATE NO. A5-10.3

PROJECT NO:

SHEET NO: 177 E

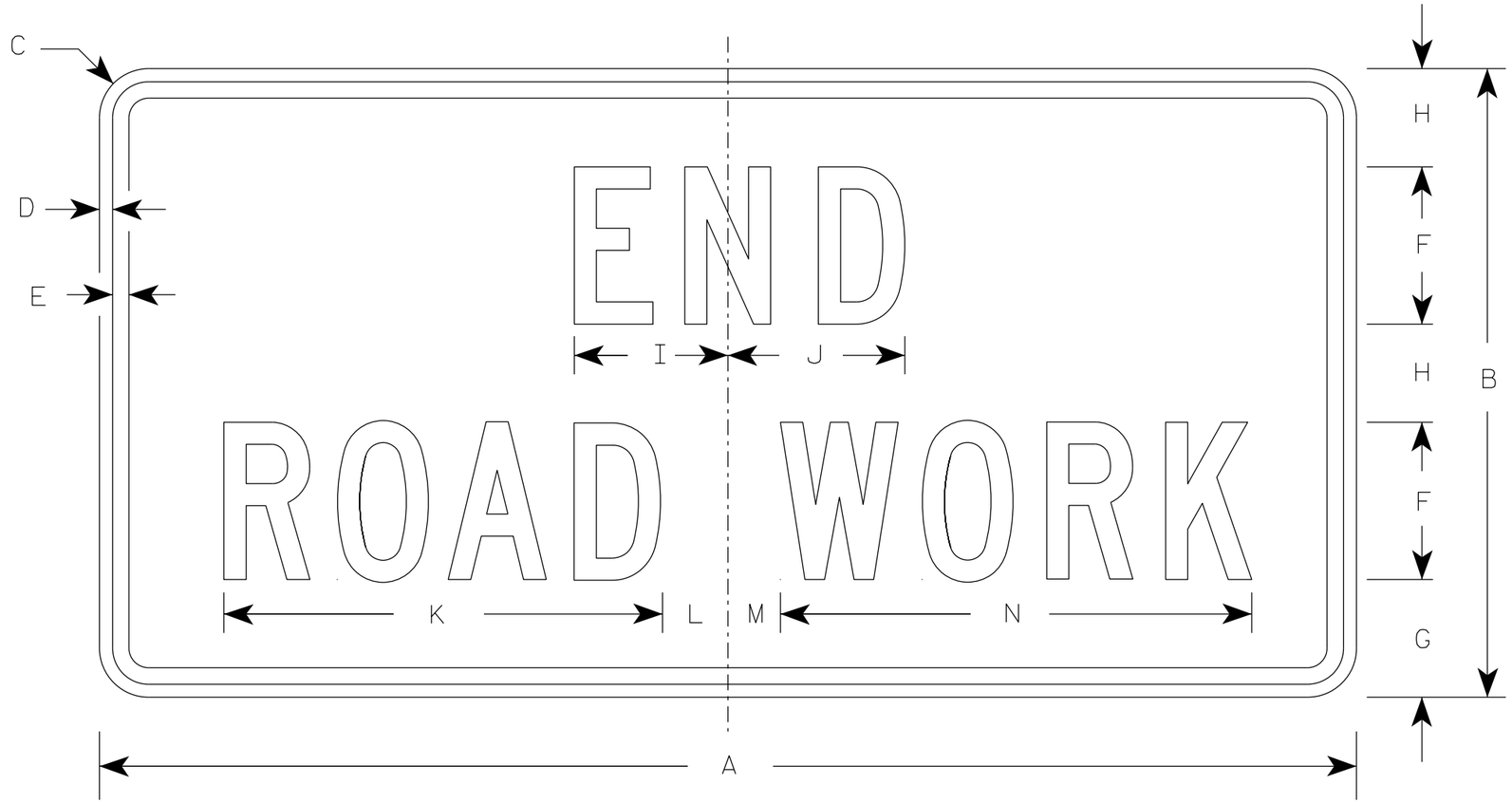

G20-2A

NOTES

1. Sign is Type II - Type F Reflective
2. Color:
   Background - Orange
   Message - Black
3. Message Series - C
4. Corners may be square or rounded when base material is plywood but borders shall be rounded as shown. When base material is metal, the corners and borders shall be rounded.

SIZE	A	B	C	D	E	F	G	H	I	J	K	L	M	N	O	P	Q	R	S	T	U	V	W	X	Y	Z	Area sq. ft.
1	36	18	1 1/2	3/8	1/2	4	3 3/4	2 1/2	4 1/8	4 1/8	11 1/8	2	1	12 1/8													4.5
2	48	24	1 7/8	1/2	5/8	6	4 1/2	3 3/4	5 7/8	6 3/4	16 3/4	2 1/2	1 3/4	18 1/2													8.0
2M	48	24	1 7/8	1/2	5/8	6	4 1/2	3 3/4	5 7/8	6 3/4	16 3/4	2 1/2	1 3/4	18 1/2													8.0
3	48	24	1 7/8	1/2	5/8	6	4 1/2	3 3/4	5 7/8	6 3/4	16 3/4	2 1/2	1 3/4	18 1/2													8.0
4	48	24	1 7/8	1/2	5/8	6	4 1/2	3 3/4	5 7/8	6 3/4	16 3/4	2 1/2	1 3/4	18 1/2													8.0
5	48	24	1 7/8	1/2	5/8	6	4 1/2	3 3/4	5 7/8	6 3/4	16 3/4	2 1/2	1 3/4	18 1/2													8.0

STANDARD SIGN

G20-2A

WISCONSIN DEPT OF TRANSPORTATION

APPROVED Matthew R Rauch
for State Traffic Engineer

DATE 1/26/2023 PLATE NO. G20-2A.10

PROJECT NO: | HWY: | COUNTY: | SHEET NO: E

FILE NAME : C:\CAEfiles\Projects\tr_stdplate\G202A.dgn PLOT DATE : 26-JAN 2023 8:27 PLOT BY : dotc4c PLOT NAME : PLOT SCALE : $$.....plotscale.....$$ WISDOT/CADDS SHEET 42

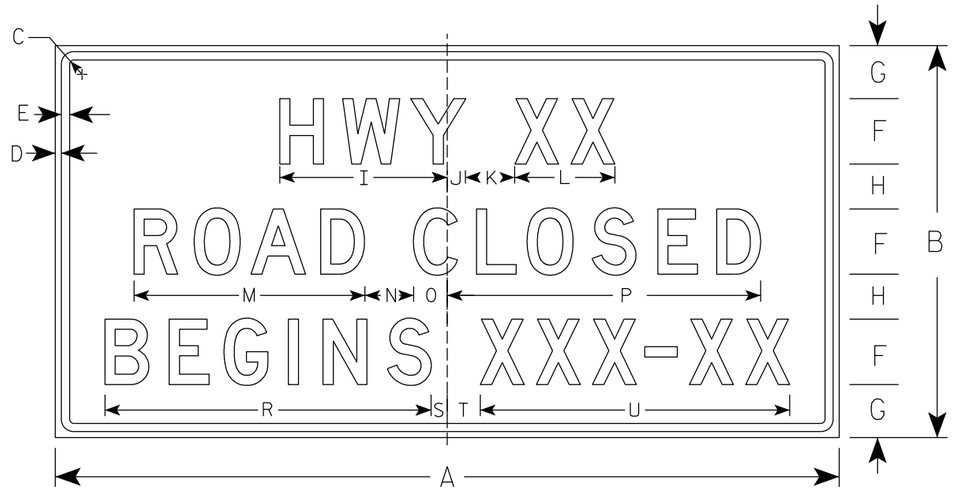

G20-57C

PLAQUE ON .040" ALUMINUM

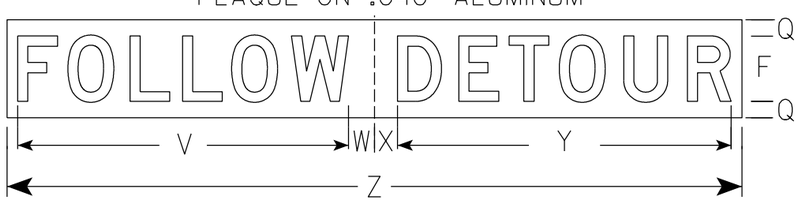

USE ONLY ONCE WHEN ROAD IS CLOSED

NOTES

1. Sign is Type II - Type F Reflective
2. Color:
   Background - Orange
   Message - Black
3. Message Series - D
4. Substitute appropriate numeral and adjust spacing to achieve proper balance.

SIZE	A	B	C	D	E	F	G	H	I	J	K	L	M	N	O	P	Q	R	S	T	U	V	W	X	Y	Z	Area sq. ft.
1																											
2																											
3	72	36	1 1/8	1/2	5/8	6	5	4	15 5/8	1 5/8	5	9 1/4	21 1/8	5	2 7/8	29	2	30	1 3/4	3 1/4	28 3/8	40 1/2	2	2	29 3/4	66	18.0
4	96	48	2 1/4	3/4	1	8	6 1/2	5 1/2	20 5/8	2 1/4	6	12 1/4	28 1/4	6	4 1/8	38 3/8	2	39 7/8	2	4	37 7/8	29 3/4	3 1/8	2 7/8	40 7/8	90	32.0
5																											

STANDARD SIGN
G20-57C

WISCONSIN DEPT OF TRANSPORTATION

APPROVED Matthew R Rauch
for State Traffic Engineer

DATE 9/25/19 PLATE NO. G20-57C.1

PROJECT NO: | HWY: | COUNTY: | SHEET NO: 179 E

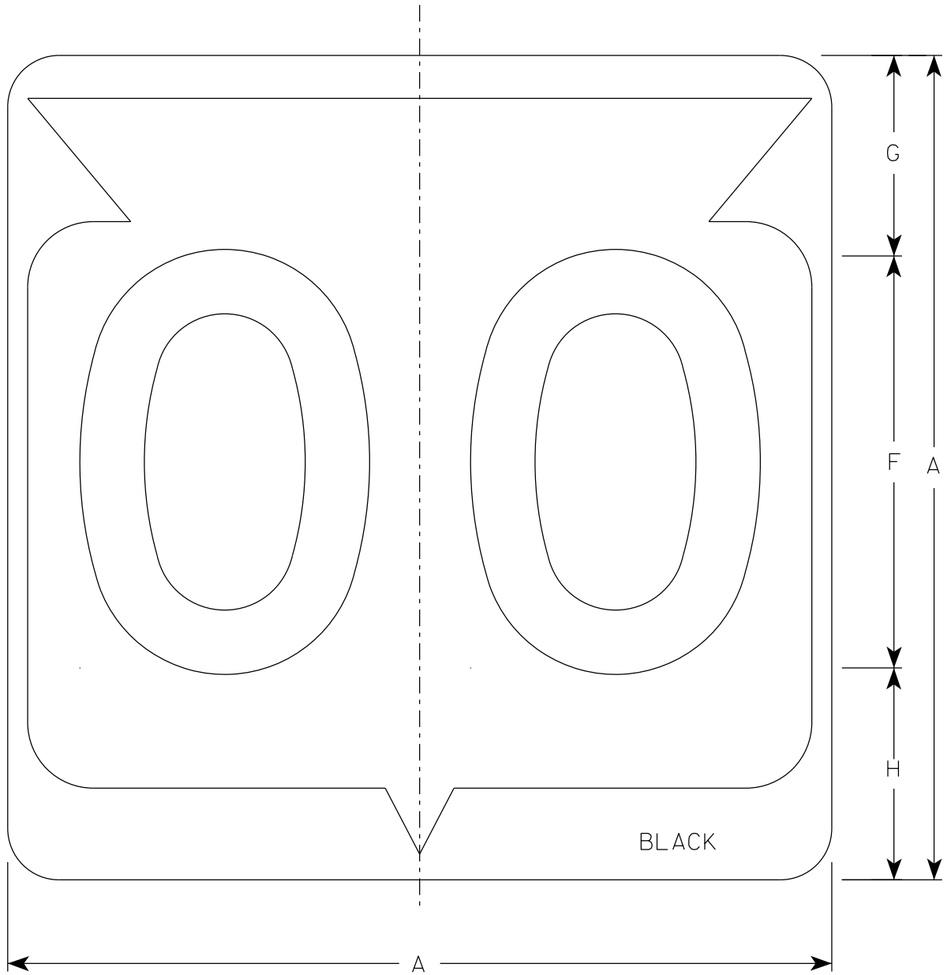

M1-6

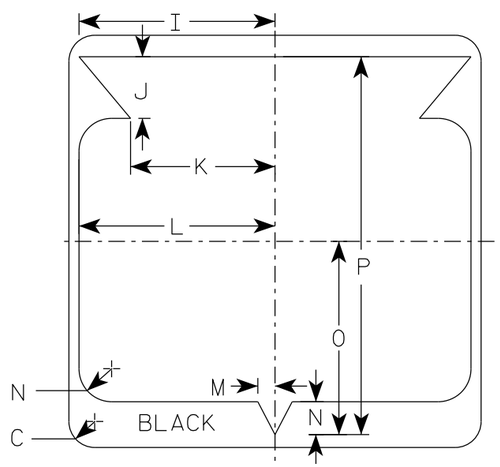

NOTES

1. Sign is Type II - Type H Reflective
2. Color:
   Background - White
   Message - Black
3. Message Series - D except 3 number signs Series C

SIZE	A	B	C	D	E	F	G	H	I	J	K	L	M	N	O	P	Q	R	S	T	U	V	W	X	Y	Z	Area sq. ft.
1																											
2	24		1 1/2			12	5 1/2	6 1/2	10 1/4	2 1/2	8 7/8	11 1/2	1	1 7/8	11 1/4	21 7/8											4.0
2M	24		1 1/2			12	5 1/2	6 1/2	10 1/4	2 1/2	8 7/8	11 1/2	1	1 7/8	11 1/4	21 7/8											4.0
3	36		2 1/4			18	8 3/4	9 1/4	15 3/8	5 3/8	12 5/8	17 1/8	1 1/2	2 7/8	16 7/8	33											9.0
4	36		2 1/4			18	8 3/4	9 1/4	15 3/8	5 3/8	12 5/8	17 1/8	1 1/2	2 7/8	16 7/8	33											9.0
5	36		2 1/4			18	8 3/4	9 1/4	15 3/8	5 3/8	12 5/8	17 1/8	1 1/2	2 7/8	16 7/8	33											9.0

STATE ROUTE MARKER
M1-6 FOR ASSEMBLIES

WISCONSIN DEPT OF TRANSPORTATION

APPROVED Matthew R Rauch
for State Traffic Engineer

DATE 11/8/2022 PLATE NO. M1-6.11

PROJECT NO:	HWY:	COUNTY:		SHEET NO: 180	E

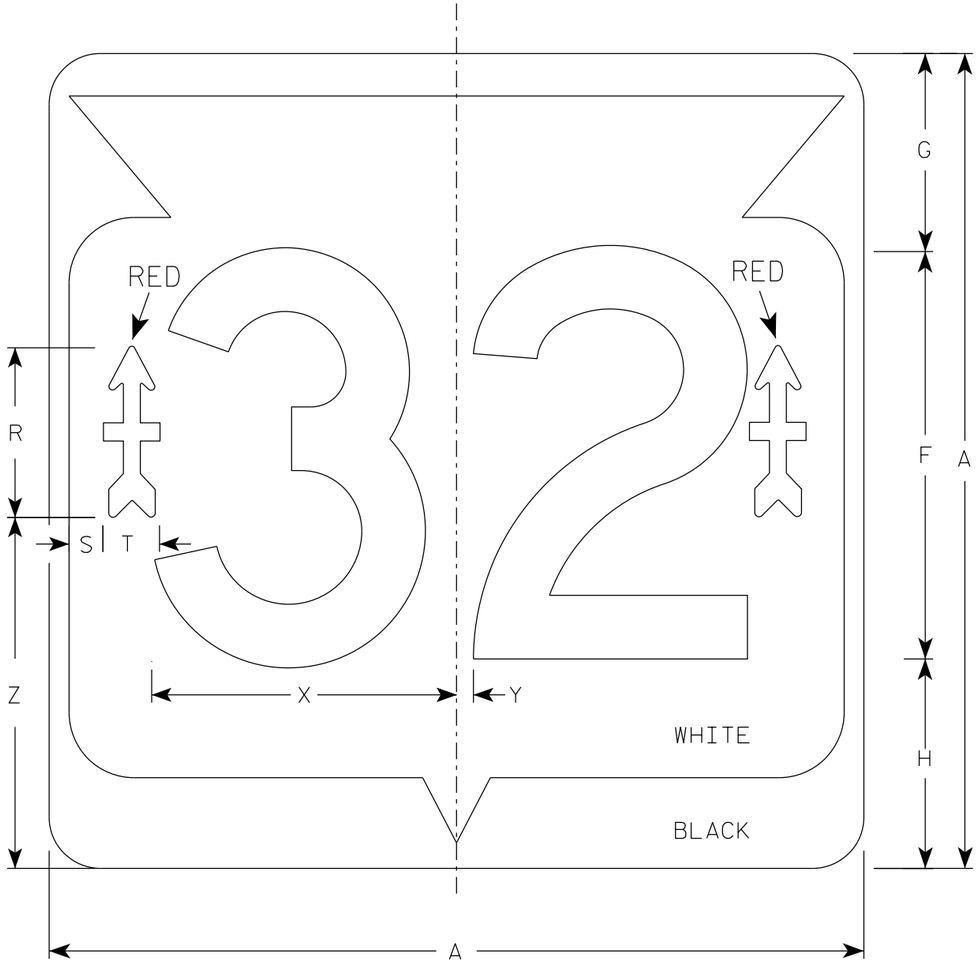

M1-6B

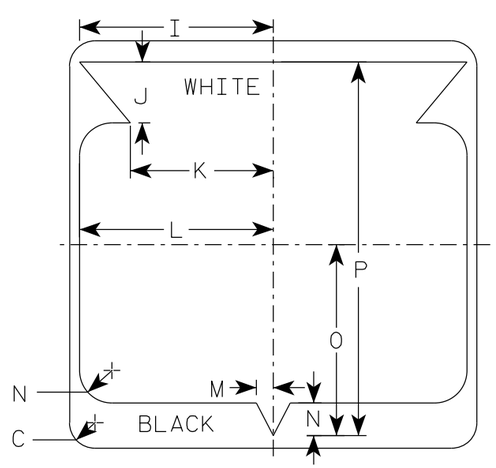

NOTES

1. Sign is Type II - Type H Reflective
2. Color:
   Background - White & Black
   Message - Black
   Arrow - Red
3. Message Series - D

32nd DIVISION ARROW DETAIL

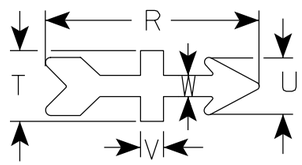

SIZE	A	B	C	D	E	F	G	H	I	J	K	L	M	N	O	P	Q	R	S	T	U	V	W	X	Y	Z	Area sq. ft.
1																											
2	24		1 ½			12	5 ½	6 ½	10 ¼	2 ½	8 ⅞	11 ½	1	1 ⅞	11 ¼	21 ⅞		5 ⅛	¾	1 ⅞	1 ½	⅝	⅝	9	½	10 ½	4.0
2M	24		1 ½			12	5 ½	6 ½	10 ¼	2 ½	8 ⅞	11 ½	1	1 ⅞	11 ¼	21 ⅞		5 ⅛	¾	1 ⅞	1 ½	⅝	⅝	9	½	10 ½	4.0
3	36		2 ¼			18	8 ¾	9 ¼	15 ⅜	5 ⅜	12 ⅝	17 ⅛	1 ½	2 ⅞	16 ⅞	33		7 ½	1 ½	2 ½	2	⅞	¾	13 ½	¾	15 ½	9.0
4	36		2 ¼			18	8 ¾	9 ¼	15 ⅜	5 ⅜	12 ⅝	17 ⅛	1 ½	2 ⅞	16 ⅞	33		7 ½	1 ½	2 ½	2	⅞	¾	13 ½	¾	15 ½	9.0
5	36		2 ¼			18	8 ¾	9 ¼	15 ⅜	5 ⅜	12 ⅝	17 ⅛	1 ½	2 ⅞	16 ⅞	33		7 ½	1 ½	2 ½	2	⅞	¾	13 ½	¾	15 ½	9.0

STATE ROUTE MARKER "32"
M1-6B FOR ASSEMBLIES

WISCONSIN DEPT OF TRANSPORTATION

APPROVED Matthew R Rauch
for State Traffic Engineer

DATE 11/8/2022 PLATE NO. M1-6B.3

PROJECT NO:	HWY:	COUNTY:		SHEET NO: 181	E

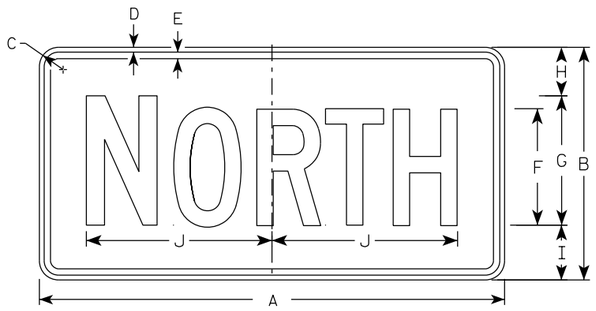

M3-1
MM3-1
MP3-1

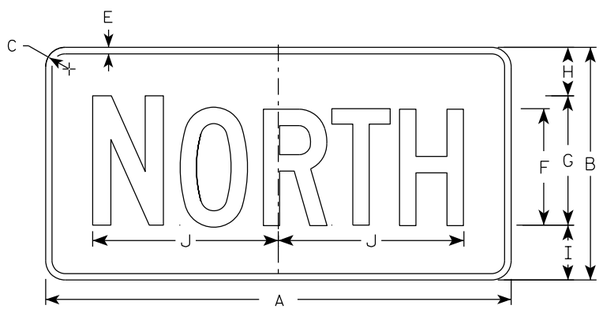

MB3-1
MK3-1
MN3-1

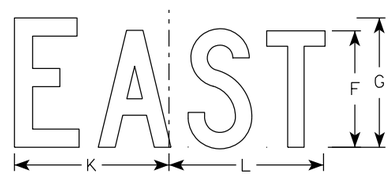

M3-2
MM3-2
MP3-2

MB3-2
MK3-2
MN3-2

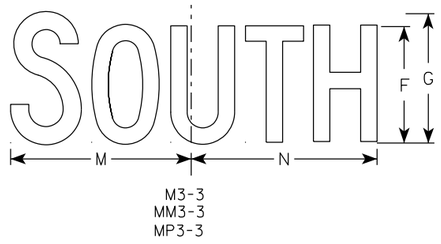

M3-3
MM3-3
MP3-3

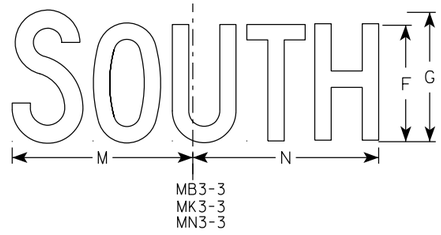

MB3-3
MK3-3
MN3-3

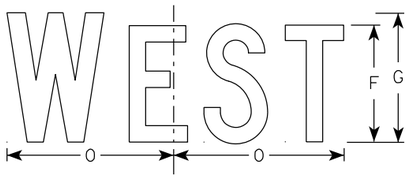

M3-4
MM3-4
MP3-4

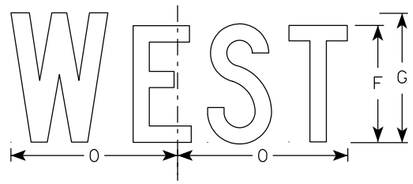

MB3-4
MK3-4
MN3-4

NOTES

1. All Signs Type II - Type H Reflective
2. Color:
   Background - See note 5
   Message - See note 5
3. Message Series - C
4. Corners may be square or rounded when base material is plywood but borders shall be rounded as shown. When base material is metal, the corners and borders shall be rounded.
5. M3-1 thru M3-4 Background - White
   Message - Black
   MB3-1 thru MB3-4 Background - Blue
   Message - White
   MK3-1 thru MK3-4 Background - Green
   Message - White
   MM3-1 thru MM3-4 Background - White
   Message - Green
   MN3-1 thru MN3-4 Background - Brown
   Message - White
   MP3-1 thru MP3-4 Background - White
   Message - Blue
6. Note the first letter of each direction is larger than the remainder of the message.

SIZE	A	B	C	D	E	F	G	H	I	J	K	L	M	N	O	P	Q	R	S	T	U	V	W	X	Y	Z	Area sq. ft.
1																											
2S	24	12	1 1/2	3/8	3/8	6	7	2 1/4	2 3/4	10 1/4	7 7/8	8 3/8	10 1/4	9 3/4	8 3/4												2.00
2M	24	12	1 1/2	3/8	3/8	6	7	2 1/4	2 3/4	10 1/4	7 7/8	8 3/8	10 1/4	9 3/4	8 3/4												2.00
3	36	18	1 1/2	3/8	1/2	9	10	3 3/4	4 1/4	14 3/8	12	12 1/8	14	14 1/8	13												4.5
4	36	18	1 1/2	3/8	1/2	9	10	3 3/4	4 1/4	14 3/8	12	12 1/8	14	14 1/8	13												4.5
5	36	18	1 1/2	3/8	1/2	9	10	3 3/4	4 1/4	14 3/8	12	12 1/8	14	14 1/8	13												4.5

STANDARD SIGNS
M3-1 THRU M3-4
SERIES

WISCONSIN DEPT OF TRANSPORTATION

APPROVED Matthew R Rauch
For State Traffic Engineer

DATE 2/8/2023 PLATE NO. M3-1.15

PROJECT NO: | HWY: | COUNTY: | SHEET NO: 182 | E

NOTES

1. Sign is Type II - Type F Reflective
2. Color:
   Background - Orange
   Message - Black
3. Message Series - B
4. Corners may be square or rounded when base material is plywood but borders shall be rounded as shown. When base material is metal, the corners and borders shall be rounded.

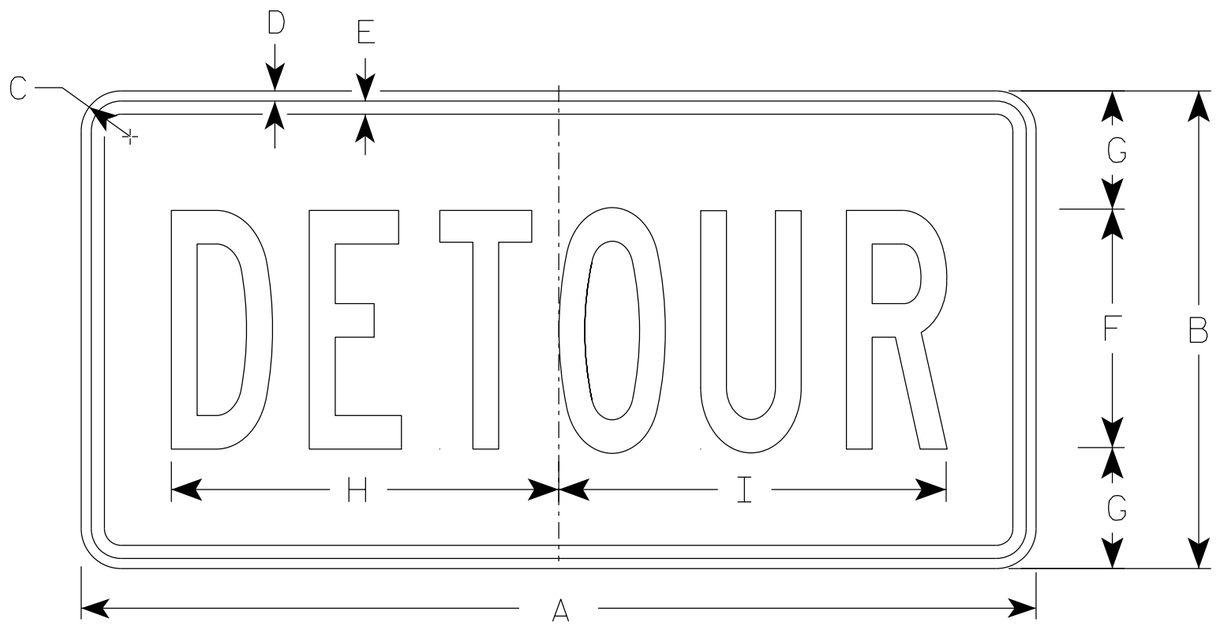

M4-8

SIZE	A	B	C	D	E	F	G	H	I	J	K	L	M	N	O	P	Q	R	S	T	U	V	W	X	Y	Z	Area sq. ft.
1																											
2	24	12	1 1/2	3/8	3/8	6	3	10	10 1/4																		2.0
2M	24	12	1 1/2	3/8	3/8	6	3	10	10 1/4																		2.0
3	36	18	1 1/2	3/8	1/2	9	4 1/2	14 5/8	14 1/2																		4.5
4	36	18	1 1/2	3/8	1/2	9	4 1/2	14 5/8	14 1/2																		4.5
5	36	18	1 1/2	3/8	1/2	9	4 1/2	14 5/8	14 1/2																		4.5

STANDARD SIGN
M4-8

WISCONSIN DEPT OF TRANSPORTATION

APPROVED Matthew R Rauch
for State Traffic Engineer

DATE 2/9/2023 PLATE NO. M4-8.4

PROJECT NO:	HWY:	COUNTY:		SHEET NO: E

FILE NAME : C:\CAEfiles\Projects\tr_stdplate\M48.dgn PLOT DATE : 9-FEB 2023 7:38 PLOT BY : dotc4c PLOT NAME : PLOT SCALE : $$.....plotscale.....$$ WISDOT/CADDS SHEET 42

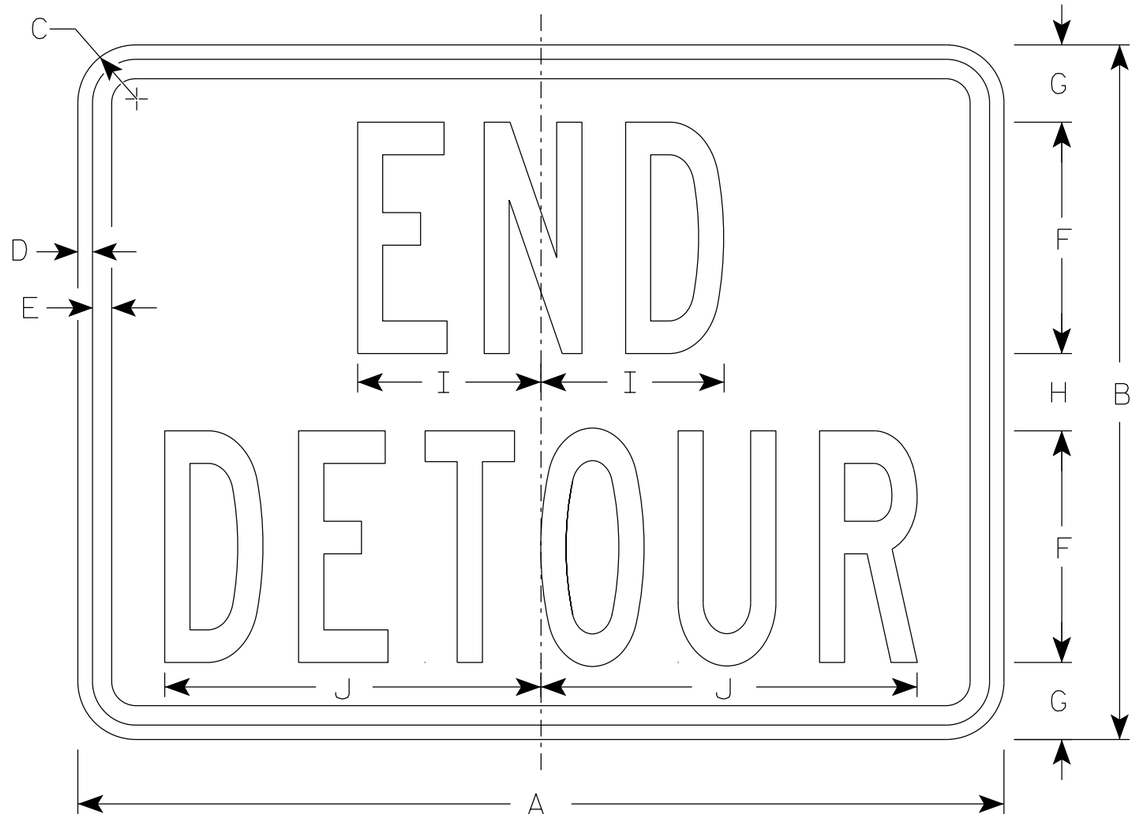

M4-8A

NOTES

1. Sign is Type II - Type F Reflective
2. Color:
   Background - Orange
   Message - Black
3. Message Series - B
4. Corners may be square or rounded when base material is plywood but borders shall be rounded as shown. When base material is metal, the corners and borders shall be rounded.

SIZE	A	B	C	D	E	F	G	H	I	J	K	L	M	N	O	P	Q	R	S	T	U	V	W	X	Y	Z	Area sq. ft.
1																											
2	24	18	1 ½	⅜	½	6	2	2	4 ¾	9 ¾																	3.0
2M	24	18	1 ½	⅜	½	6	2	2	4 ¾	9 ¾																	3.0
3	30	24	1 ½	⅜	½	8	2 ½	3	6 ¾	13																	5.0
4	30	24	1 ½	⅜	½	8	2 ½	3	6 ¾	13																	5.0
5	30	24	1 ½	⅜	½	8	2 ½	3	6 ¾	13																	5.0

STANDARD SIGN
M4-8A

WISCONSIN DEPT OF TRANSPORTATION

APPROVED Matthew R Rauch
for State Traffic Engineer

DATE 2/9/2023 PLATE NO. M4-8A.4

PROJECT NO: | HWY: | COUNTY: | SHEET NO: 184 | E

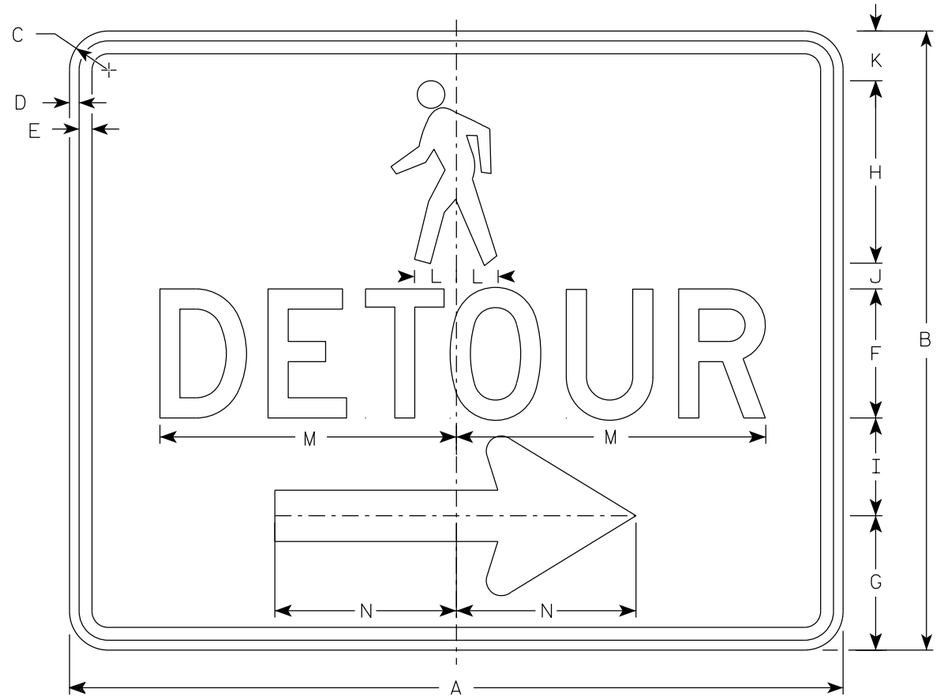

M4-9BR

NOTES

1. Sign is Type II-Type F Reflective
2. Color:
   Background - Orange
   Message - Black
3. Message Series - D
4. Corners may be square or rounded when base material is plywood but borders shall be rounded as shown. When base material is metal, the corners and borders shall be rounded.
5. M4-9BL is the same as M4-9BR except the arrow is reversed.

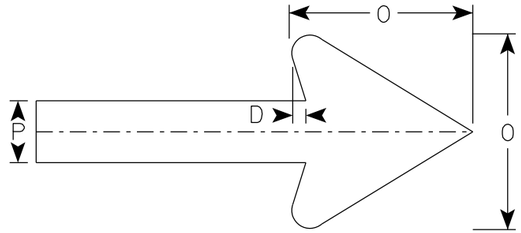

Arrow Detail

SIZE	A	B	C	D	E	F	G	H	I	J	K	L	M	N	O	P	Q	R	S	T	U	V	W	X	Y	Z	Area sq. ft.
1																											
2S	30	24	1 1/2	3/8	1/2	5	5 1/4	7 1/8	3 3/4	1	1 1/8	1 5/8	11 3/4	7	6	2											5.0
2M	30	24	1 1/2	3/8	1/2	5	5 1/4	7 1/8	3 3/4	1	1 1/8	1 5/8	11 3/4	7	6	2											5.0
3																											
4																											
5																											

STANDARD SIGN
M4-9B L&R

WISCONSIN DEPT OF TRANSPORTATION

APPROVED Matthew R Rauch
For State Traffic Engineer

DATE 2/9/2023 PLATE NO. M4-9B.4

PROJECT NO: | HWY: | COUNTY: | SHEET NO: 185 | E

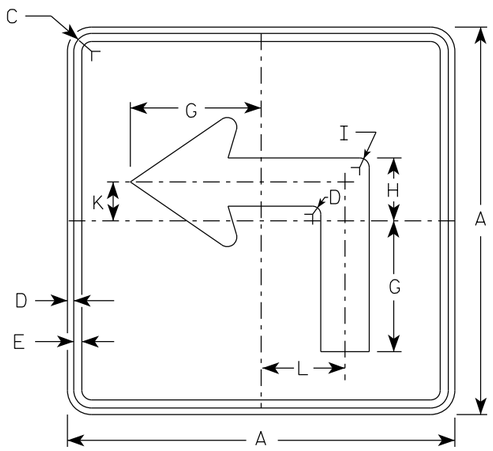

M5-1L
MM5-1L
MO5-1L
MP5-1L

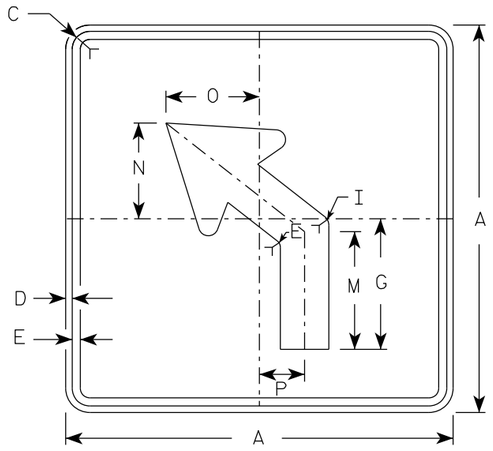

M5-2L
MM5-2L
MO5-2L
MP5-2L

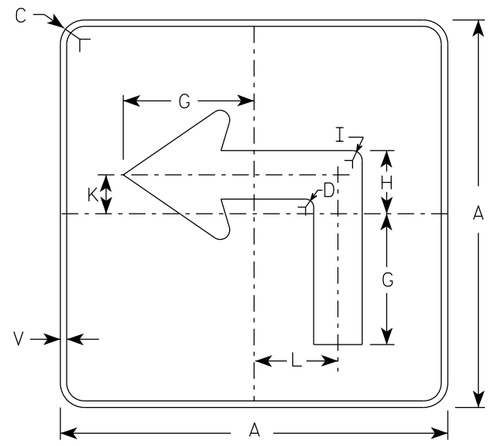

MB5-1L
MK5-1L
MN5-1L
MR5-1L

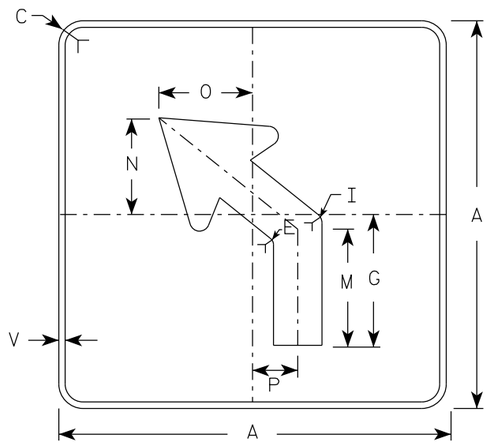

MB5-2L
MK5-2L
MN5-2L
MR5-2L

NOTES

1. Signs are Type II - Type H reflective except as shown
2. Color:
   Background - See note 4
   Message - See note 4
3. Corners may be square or rounded when base material is plywood but borders shall be rounded as shown. When base material is metal, the corners and borders shall be rounded.
4. M5-1 and M5-2 Background - White
   Message - Black
   MB5-1 and MB5-2 Background - Blue
   Message - White
   MK5-1 and MK5-2 Background - Green
   Message - White
   MM5-1 and MM5-2 Background - White
   Message - Green
   MN5-1 and MN5-2 Background - Brown
   Message - White
   MO5-1 and MO5-2 Background - Orange - Type F Reflective
   Message - Black
   MP5-1 and MP5-2 Background - White
   Message - Blue
   MR5-1 and MR5-2 Background - Brown
   Message - Yellow
5. M5-1R same as M5-1L except arrow points right.
6. M5-2R same as M5-2L except arrow tilts right.

ARROW DETAIL

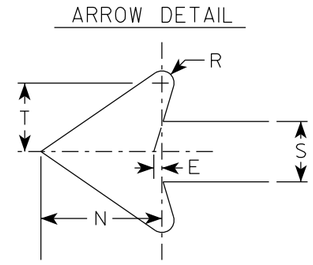

SIZE	A	B	C	D	E	F	G	H	I	J	K	L	M	N	O	P	Q	R	S	T	U	V	W	X	Y	Z	Area sq. ft.
1																											
2S	21		1 1/2	3/8	3/8		7	3 3/8	5/8		2 1/8	4 1/2	6 3/8	5 1/4	5	2 1/2		1/2	2 5/8	3		1/2					3.06
2M	21		1 1/2	3/8	3/8		7	3 3/8	5/8		2 1/8	4 1/2	6 3/8	5 1/4	5	2 1/2		1/2	2 5/8	3		1/2					3.06
3	30		1 7/8	1/2	5/8		10 1/8	4 7/8	7/8		3	6 1/2	9 1/8	7 1/2	7 1/4	3 1/2		3/4	3 3/4	4 1/4		1/2					6.25
4	30		1 7/8	1/2	5/8		10 1/8	4 7/8	7/8		3	6 1/2	9 1/8	7 1/2	7 1/4	3 1/2		3/4	3 3/4	4 1/4		1/2					6.25
5	30		1 7/8	1/2	5/8		10 1/8	4 7/8	7/8		3	6 1/2	9 1/8	7 1/2	7 1/4	3 1/2		3/4	3 3/4	4 1/4		1/2					6.25

STANDARD SIGN
M5-1 & M5-2

WISCONSIN DEPT OF TRANSPORTATION

APPROVED Matthew R Rauch
for State Traffic Engineer

DATE 2/13/2023 PLATE NO. M5-1.15

PROJECT NO: | HWY: | COUNTY: | SHEET NO: 186 | E

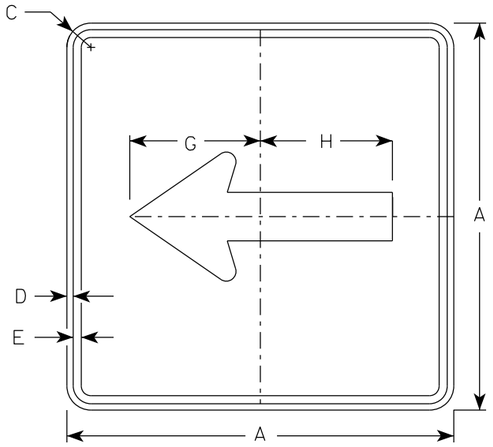

M6-1
MM6-1
MO6-1
MP6-1

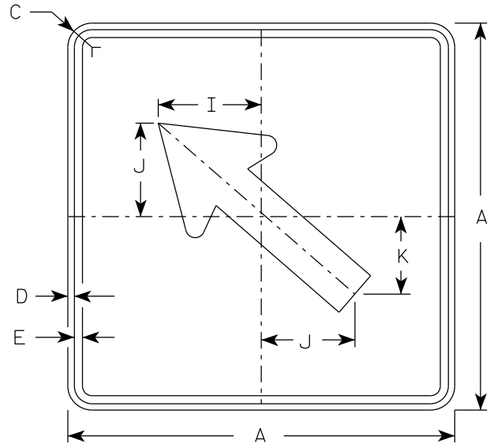

M6-2
MM6-2
MO6-2
MP6-2

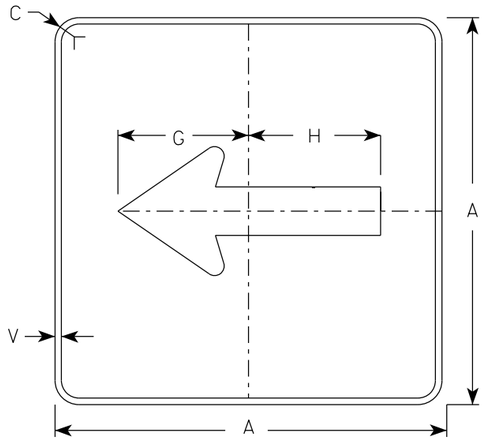

MB6-1
MK6-1
MN6-1
MR6-1

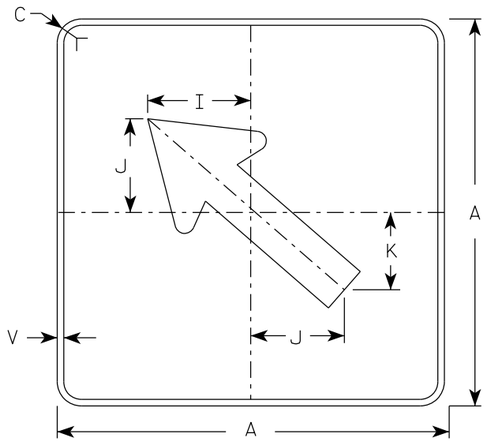

MB6-2
MK6-2
MN6-2
MR6-2

NOTES

1. Signs are Type II - Type H Reflective except as Shown
2. Color:
   Background - See note 4
   Message - See note 4
3. Corners may be square or rounded when base material is plywood but borders shall be rounded as shown. When base material is metal, the corners and borders shall be rounded.
4. M6-1 and M6-2 Background - White
   Message - Black
   MB6-1 and MB6-2 Background - Blue
   Message - White
   MK6-1 and MK6-2 Background - Green
   Message - White
   MM6-1 and MM6-2 Background - White
   Message - Green
   MN6-1 and MN6-2 Background - Brown
   Message - White
   MO6-1 and MO6-2 Background - Orange - Type F Reflective
   Message - Black
   MP6-1 and MP6-2 Background - White
   Message - Blue
   MR6-1 and MR6-2 Background - Brown
   Message - Yellow

ARROW DETAIL

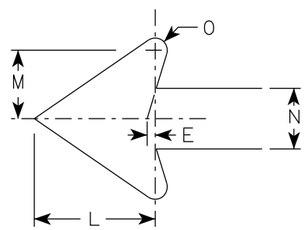

SIZE	A	B	C	D	E	F	G	H	I	J	K	L	M	N	O	P	Q	R	S	T	U	V	W	X	Y	Z	Area sq. ft.
1																											
2S	21		1 1/2	3/8	3/8		7 1/2	7 1/8	5 5/8	5	4 1/4	5 1/4	3	2 5/8	1/2							1/2					3.06
2M	21		1 1/2	3/8	3/8		7 1/2	7 1/8	5 5/8	5	4 1/4	5 1/4	3	2 5/8	1/2							1/2					3.06
3	30		1 7/8	1/2	5/8		10 3/4	10 1/4	8	7 1/4	6	7 1/2	4 1/4	3 3/4	3/4							1/2					6.25
4	30		1 7/8	1/2	5/8		10 3/4	10 1/4	8	7 1/4	6	7 1/2	4 1/4	3 3/4	3/4							1/2					6.25
5	30		1 7/8	1/2	5/8		10 3/4	10 1/4	8	7 1/4	6	7 1/2	4 1/4	3 3/4	3/4							1/2					6.25

STANDARD SIGN
M6-1 & M6-2
SERIES

WISCONSIN DEPT OF TRANSPORTATION

APPROVED Matthew R Rauch
For State Traffic Engineer

DATE 2/13/2023 PLATE NO. M6-1.16

PROJECT NO: | HWY: | COUNTY: | SHEET NO: 187 | E

7

7

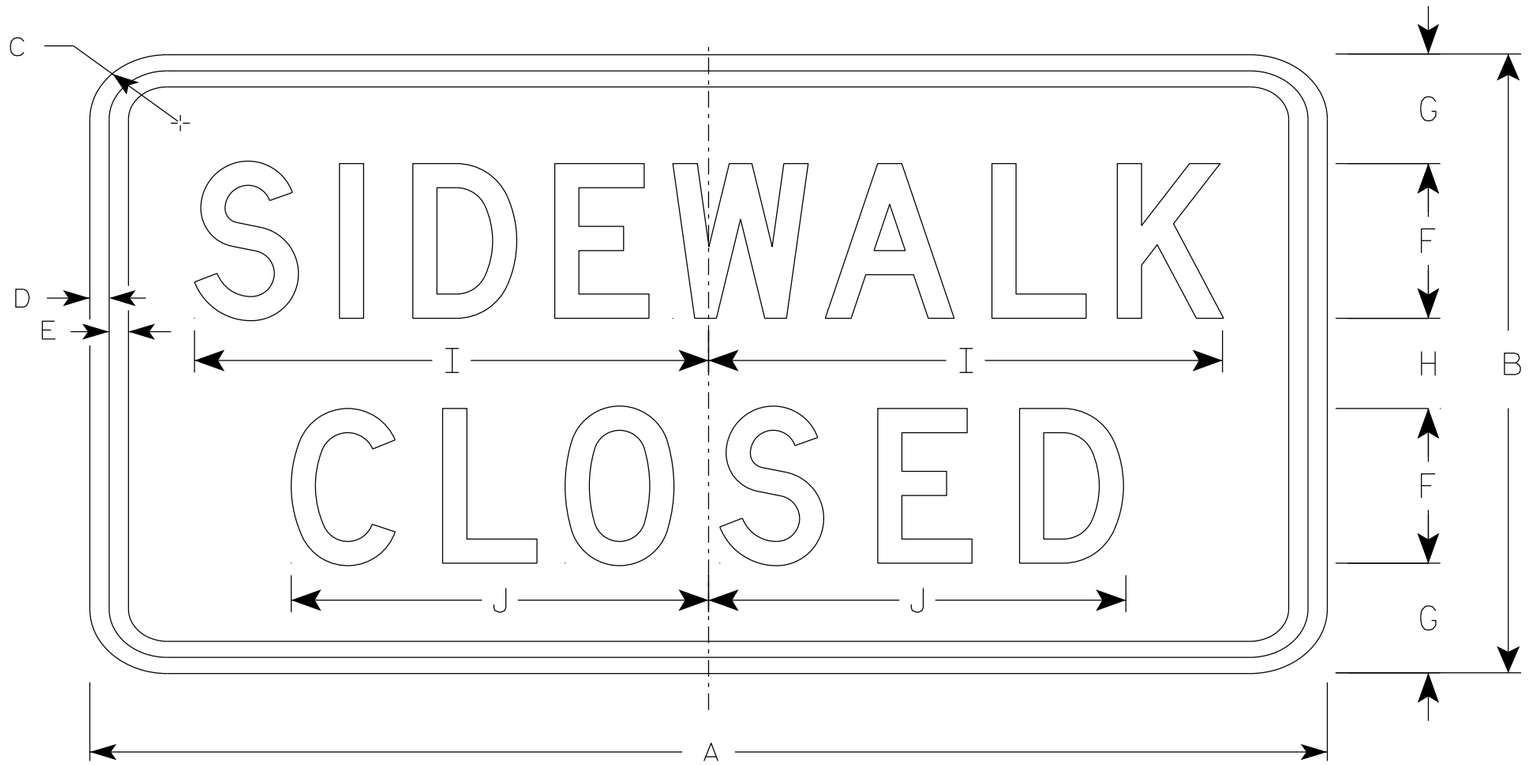

R9-9

NOTES

1. Sign is Type II - Type H Reflective
2. Color:
   Background - White
   Message - Black
3. Message Series - C
4. Use Size 2 for Sidewalks. Use Size 3 for Paths and Trails.

SIZE	A	B	C	D	E	F	G	H	I	J	K	L	M	N	O	P	Q	R	S	T	U	V	W	X	Y	Z	Area sq. ft.
1																											
2S	24	12	1 ½	½	½	3	2 ⅛	1 ¾	10	8 ⅛																	2.0
2M	24	12	1 ½	½	½	3	2 ⅛	1 ¾	10	8 ⅛																	2.0
3	30	18	1 ½	½	½	4	3 ½	3	12 ½	10 ¼																	3.75
4																											
5																											

STANDARD SIGN
R9-9

WISCONSIN DEPT OF TRANSPORTATION

APPROVED Matthew R Rauch
for State Traffic Engineer

DATE 1/24/24 PLATE NO. R9-9.7

PROJECT NO: | HWY: | COUNTY: | SHEET NO: 188 | E

NOTES

1. Sign is Type II - Type H Reflective
2. Color:
   Background - White
   Message - Black
3. Message Series - D

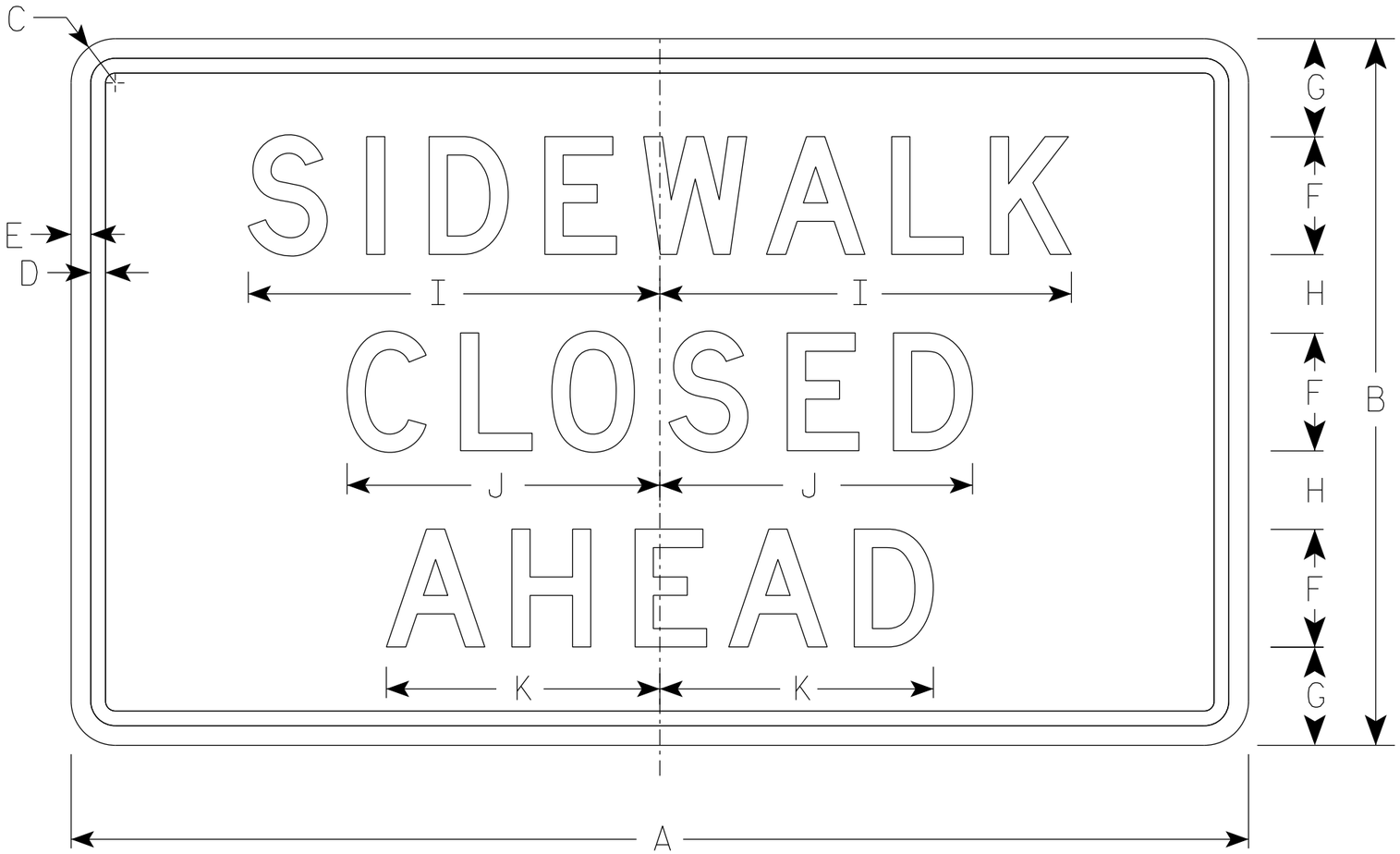

R9-9A

SIZE	A	B	C	D	E	F	G	H	I	J	K	L	M	N	O	P	Q	R	S	T	U	V	W	X	Y	Z	Area sq. ft.
1																											
2S	30	18	1 ½	⅜	½	3	2 ½	2	10 ½	8	7																3.75
2M	30	18	1 ½	⅜	½	3	2 ½	2	10 ½	8	7																3.75
3																											
4																											
5																											

STANDARD SIGN
R9-9A

WISCONSIN DEPT OF TRANSPORTATION

APPROVED Matthew R Rauch
for State Traffic Engineer

DATE 1/24/24 PLATE NO. R9-9A.2

PROJECT NO: | HWY: | COUNTY: | SHEET NO: 189 | E

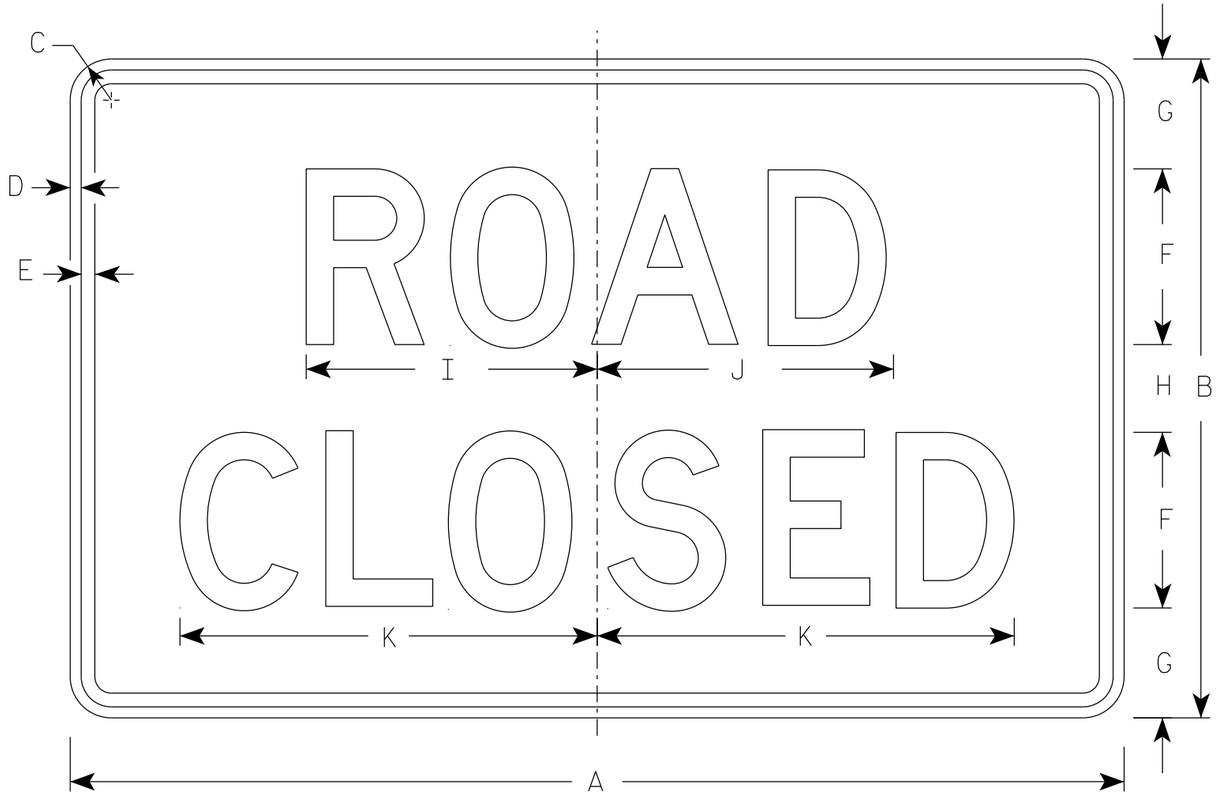

R11-2

NOTES

1. Sign is Type II - Type H Reflective
2. Color:
   Background - White
   Message - Black
3. Message Series - D
4. Corners may be square or rounded when base material is plywood but borders shall be rounded as shown. When base material is metal, the corners and borders shall be rounded.
5. Modify the message as required.

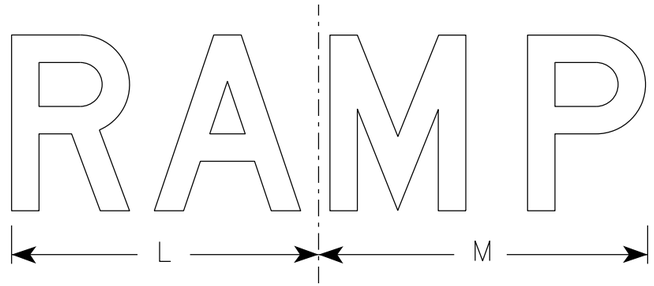

R11-2R

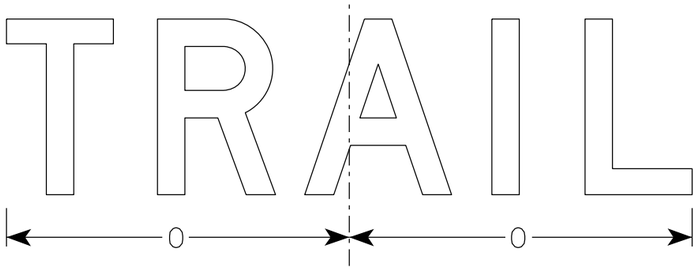

R11-2T

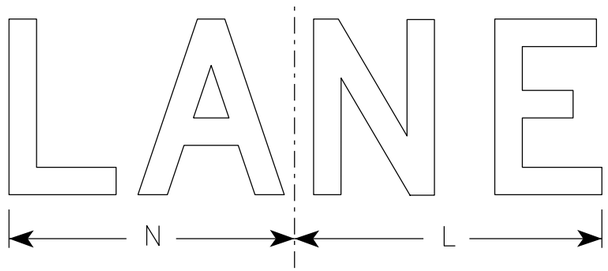

R11-2L

SIZE	A	B	C	D	E	F	G	H	I	J	K	L	M	N	O	P	Q	R	S	T	U	V	W	X	Y	Z	Area sq. ft.
1																											
2S	48	30	1 7/8	1/2	5/8	8	5	4	13 1/4	13 1/2	19	14	15	13	15 5/8												10.0
2M	48	30	1 7/8	1/2	5/8	8	5	4	13 1/4	13 1/2	19	14	15	13	15 5/8												10.0
3	48	30	1 7/8	1/2	5/8	8	5	4	13 1/4	13 1/2	19	14	15	13	15 5/8												10.0
4	48	30	1 7/8	1/2	5/8	8	5	4	13 1/4	13 1/2	19	14	15	13	15 5/8												10.0
5	48	30	1 7/8	1/2	5/8	8	5	4	13 1/4	13 1/2	19	14	15	13	15 5/8												10.0

STANDARD SIGN
R11-2

WISCONSIN DEPT OF TRANSPORTATION

APPROVED Matthew R Rauch
for State Traffic Engineer

DATE 2/5/24 PLATE NO. R11-2.12

PROJECT NO: | HWY: | COUNTY: | SHEET NO: E

7

NOTES

1. Sign is Type II - Type H Reflective
2. Color:
   Background - White
   Message - Black
3. Message Series - C
4. Corners may be square or rounded when base material is plywood but borders shall be rounded as shown. When base material is metal, the corners and borders shall be rounded.
5. Substitute appropriate numerals to nearest quarter mile and optically adjust spacing to achieve proper balance.

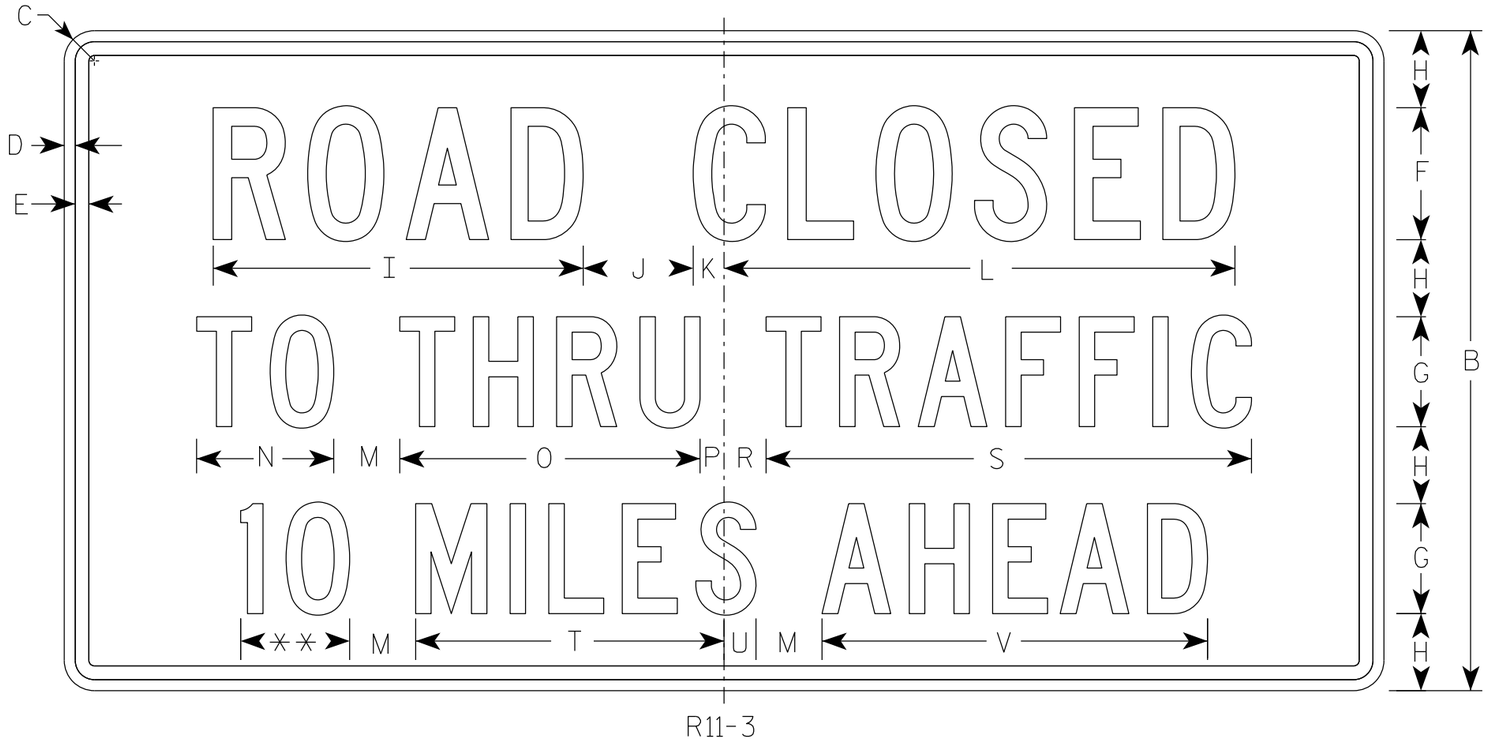

R11-3

** See Note 5

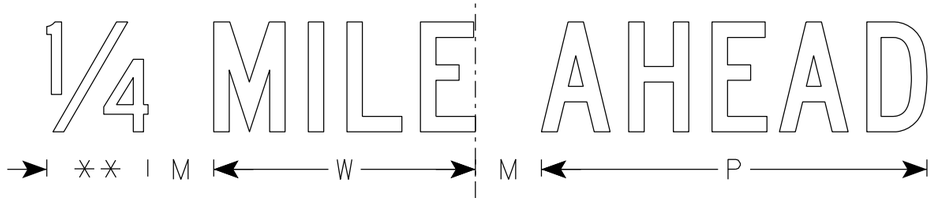

SIZE	A	B	C	D	E	F	G	H	I	J	K	L	M	N	O	P	Q	R	S	T	U	V	W	X	Y	Z	Area sq. ft.
1	36	18	1 1/2	3/8	3/8	4	3	2	11 1/4	3	1 1/8	15 3/8	2	3 3/4	8 1/4	5/8		1 3/8	13 1/4	8 3/8	7/8	10 1/2	7 1/8				4.5
2S	60	30	1 7/8	1/2	5/8	6	5	3 1/2	16 7/8	5	1 3/8	23 1/4	3	6 1/4	13 5/8	1 1/8		1 7/8	22 1/8	14	1 1/2	17 1/2	11 7/8				12.5
2M	60	30	1 7/8	1/2	5/8	6	5	3 1/2	16 7/8	5	1 3/8	23 1/4	3	6 1/4	13 5/8	1 1/8		1 7/8	22 1/8	14	1 1/2	17 1/2	11 7/8				12.5
3																											
4																											
5																											

STANDARD SIGN
R11-3

WISCONSIN DEPT OF TRANSPORTATION

APPROVED Matthew R Rauch
for State Traffic Engineer

DATE 2/5/24 PLATE NO. R11-3.10

PROJECT NO: | HWY: | COUNTY: | SHEET NO: 191 E

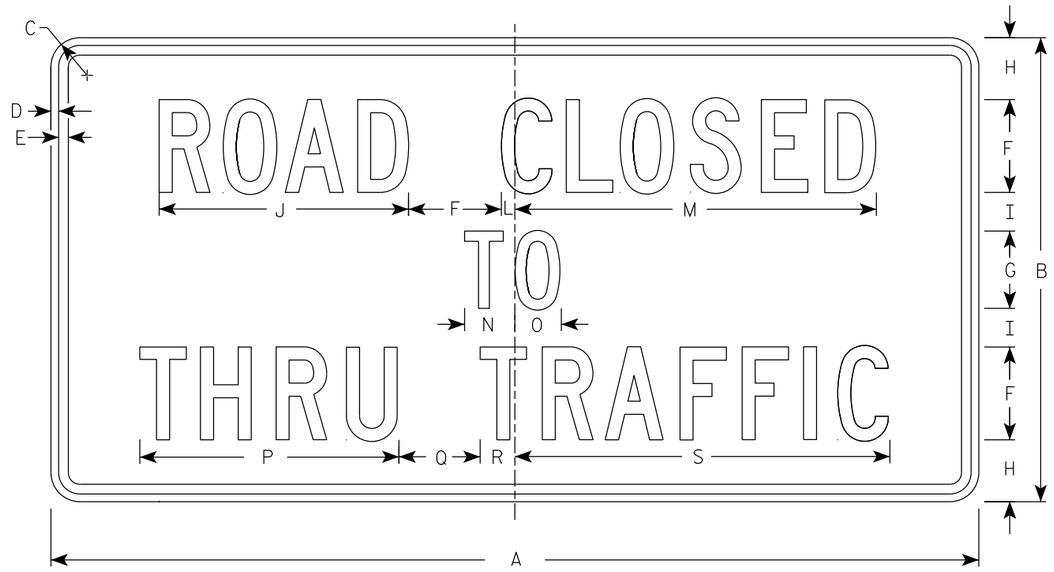

R11-4

NOTES

1. Sign is Type II - Type H Reflective
2. Color:
   Background - White
   Message - Black
3. Message Series - C
4. Corners may be square or rounded when base material is plywood but borders shall be rounded as shown. When base material is metal, the corners and borders shall be rounded.

SIZE	A	B	C	D	E	F	G	H	I	J	K	L	M	N	O	P	Q	R	S	T	U	V	W	X	Y	Z	Area sq. ft.
1																											
2S	60	30	1 7/8	1/2	5/8	6	5	4	2 1/2	16 1/8		7/8	23 3/8	3 1/4	3	16 3/4	5 1/4	2 1/4	24 1/4								12.5
2M	60	30	1 7/8	1/2	5/8	6	5	4	2 1/2	16 1/8		7/8	23 3/8	3 1/4	3	16 3/4	5 1/4	2 1/4	24 1/4								12.5
3																											
4																											
5																											

STANDARD SIGN
R11 - 4

WISCONSIN DEPT OF TRANSPORTATION

APPROVED Matthew R Rauch
for State Traffic Engineer

DATE 2/5/24 PLATE NO. R11-4.4

PROJECT NO: | HWY: | COUNTY: | SHEET NO: 192 | E

7

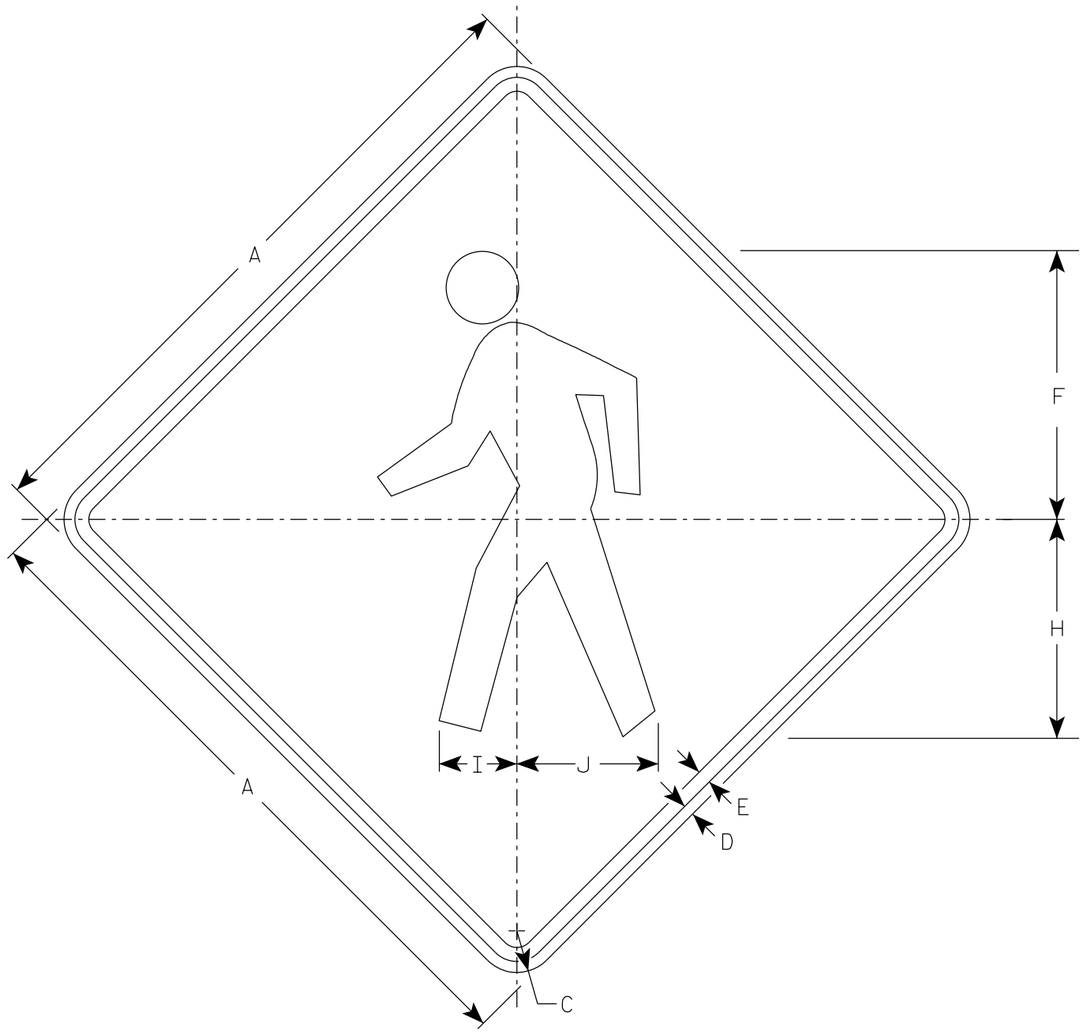

W11-2

NOTES

1. Sign is Type II - Type F Reflective
2. Color:
   Background - Yellow
   Message - Black

SIZE	A	B	C	D	E	F	G	H	I	J	K	L	M	N	O	P	Q	R	S	T	U	V	W	X	Y	Z	Area sq. ft.
1	24		1 1/2	3/8	1/2	9 3/4		7 7/8	2 7/8	5 1/8																	4.0
2S	30		1 7/8	1/2	5/8	12 1/8		9 7/8	3 1/2	6 3/8																	6.25
2M	36		2 1/4	5/8	3/4	14 1/2		11 7/8	4 1/4	7 5/8																	9.0
3	36		2 1/4	5/8	3/4	14 1/2		11 7/8	4 1/4	7 5/8																	9.0
4	48		3	3/4	1	19 3/8		15 3/4	5 5/8	10 1/4																	16.0
5																											

STANDARD SIGN

W11-2

WISCONSIN DEPT OF TRANSPORTATION

APPROVED Matthew R Rauch

For State Traffic Engineer

DATE 6/15/2023 PLATE NO. W11-2.9

PROJECT NO: | HWY: | COUNTY: | SHEET NO: 193 E

NOTES

1. Sign is Type II - Type F Reflective
2. Color:
   Background - Yellow
   Message - Black
3. W16-7R is the same as W16-7L
   except the arrow is reversed along the vertical centerline.

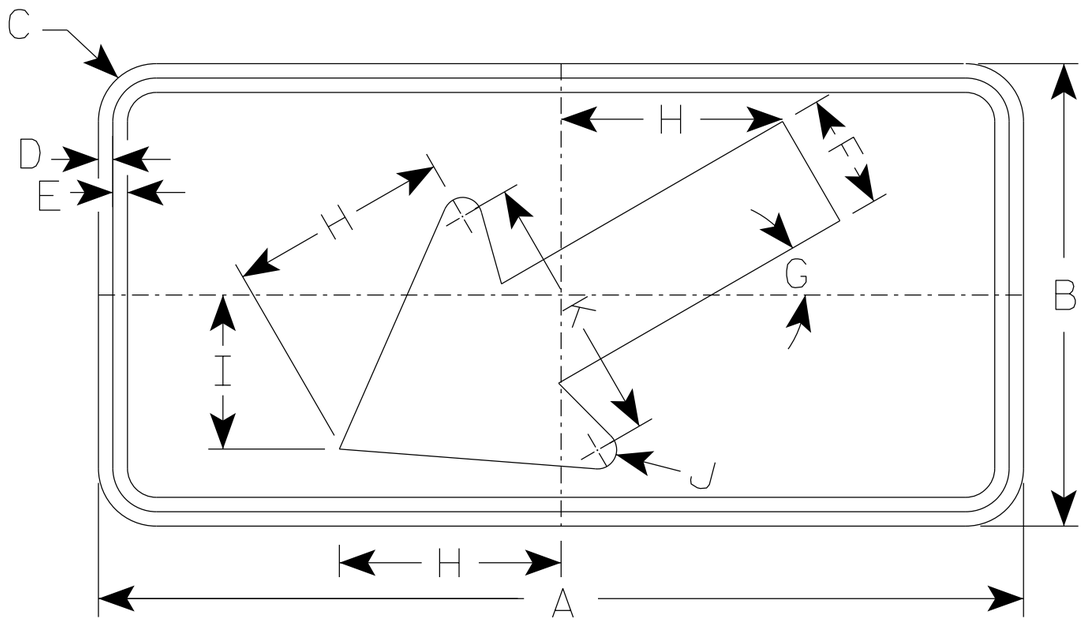

W16-7L

* For 36" x 36" Warning Signs, use 30" x 18" W16-7L signs.
* For 48" x 48" Warning Signs, use 48" x 24" W16-7L signs.

	SIZE	A	B	C	D	E	F	G	H	I	J	K	L	M	N	O	P	Q	R	S	T	U	V	W	X	Y	Z	Area sq. ft.
	1																											
	2S	24	12	1 ½	⅜	⅜	3	30°	5 ¾	4	½	7																2.0
*	2M	30	18	1 ½	⅜	½	4 ½	30°	8 ½	6	⅝	10 ¼																3.75
*	3	30	18	1 ½	⅜	½	4 ½	30°	8 ½	6	⅝	10 ¼																3.75
*	4	48	24	1 ⅞	½	⅝	6	30°	11 ½	8	1	14																8.0
	5																											

STANDARD SIGN
W16-7

WISCONSIN DEPT OF TRANSPORTATION

APPROVED Matthew R Rauch
for State Traffic Engineer

DATE 1/9/2024 PLATE NO. W16-7.9

PROJECT NO: | HWY: | COUNTY: | SHEET NO: 194 E

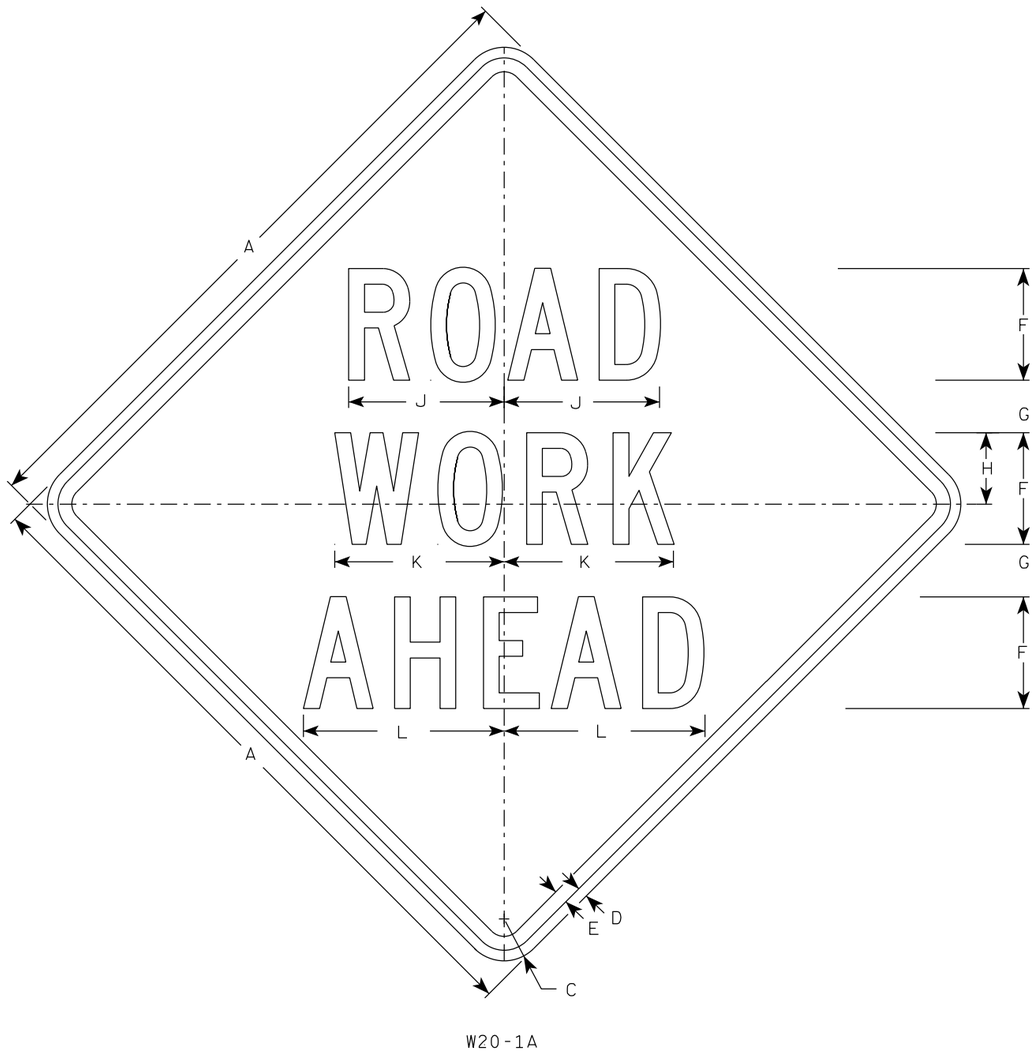

W20-1A

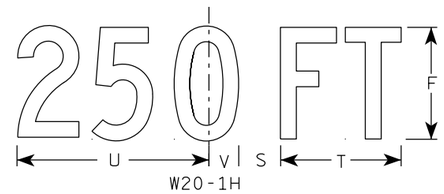

W20-1H

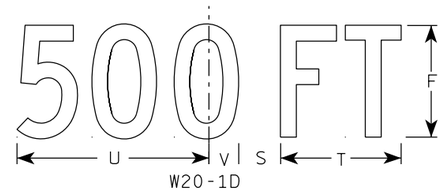

W20-1D

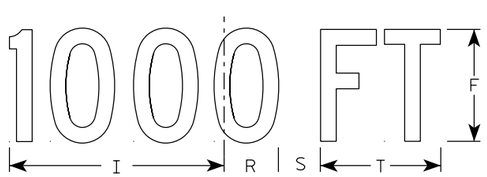

W20-1C

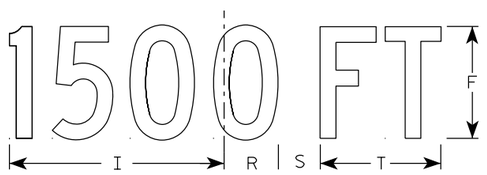

W20-1B

NOTES

1. Sign is Type II - Type F Reflective
2. Color:
   Background - Orange
   Message - Black
3. Message Series - C
4. Corners may be square or rounded when base material is plywood but borders shall be rounded as shown. When base material is metal, the corners and borders shall be rounded.

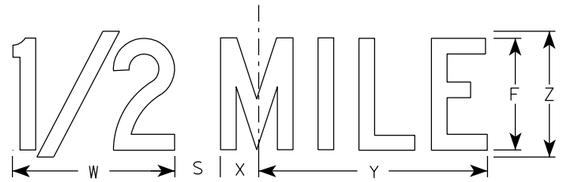

W20-1G

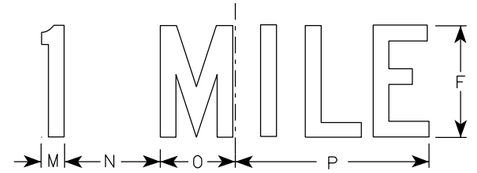

W20-1F

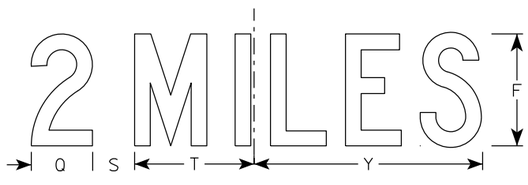

W20-1E

SIZE	A	B	C	D	E	F	G	H	I	J	K	L	M	N	O	P	Q	R	S	T	U	V	W	X	Y	Z	Area sq. ft.
1	36		2 1/4	5/8	3/4	5	2 5/8	3 1/4	10 1/8	7	7 5/8	8 7/8	1 1/8	4 1/2	3 1/2	9	3 1/4	2 1/2	2 1/4	5 5/8	9	1 3/8	8	1 3/4	10 3/4	6	9.0
2S	48		3	3/4	1	8	3 3/4	5 1/8	15 3/8	11 1/8	12 1/8	14 3/8	1 5/8	6 7/8	5 3/8	13 7/8	4 3/8	3 7/8	3	8 5/8	13 3/4	2 1/8	11 7/8	2 3/4	16 3/8	9	16.0
2M	48		3	3/4	1	8	3 3/4	5 1/8	15 3/8	11 1/8	12 1/8	14 3/8	1 5/8	6 7/8	5 3/8	13 7/8	4 3/8	3 7/8	3	8 5/8	13 3/4	2 1/8	11 7/8	2 3/4	16 3/8	9	16.0
3	48		3	3/4	1	8	3 3/4	5 1/8	15 3/8	11 1/8	12 1/8	14 3/8	1 5/8	6 7/8	5 3/8	13 7/8	4 3/8	3 7/8	3	8 5/8	13 3/4	2 1/8	11 7/8	2 3/4	16 3/8	9	16.0
4	48		3	3/4	1	8	3 3/4	5 1/8	15 3/8	11 1/8	12 1/8	14 3/8	1 5/8	6 7/8	5 3/8	13 7/8	4 3/8	3 7/8	3	8 5/8	13 3/4	2 1/8	11 7/8	2 3/4	16 3/8	9	16.0
5	48		3	3/4	1	8	3 3/4	5 1/8	15 3/8	11 1/8	12 1/8	14 3/8	1 5/8	6 7/8	5 3/8	13 7/8	4 3/8	3 7/8	3	8 5/8	13 3/4	2 1/8	11 7/8	2 3/4	16 3/8	9	16.0

STANDARD SIGN
W20-1A, B, C, D, E, F, G & H

WISCONSIN DEPT OF TRANSPORTATION

APPROVED Matthew R Rauch
for State Traffic Engineer

DATE 1/10/2024 PLATE NO. W20-1.12

PROJECT NO:

SHEET NO: 195 E

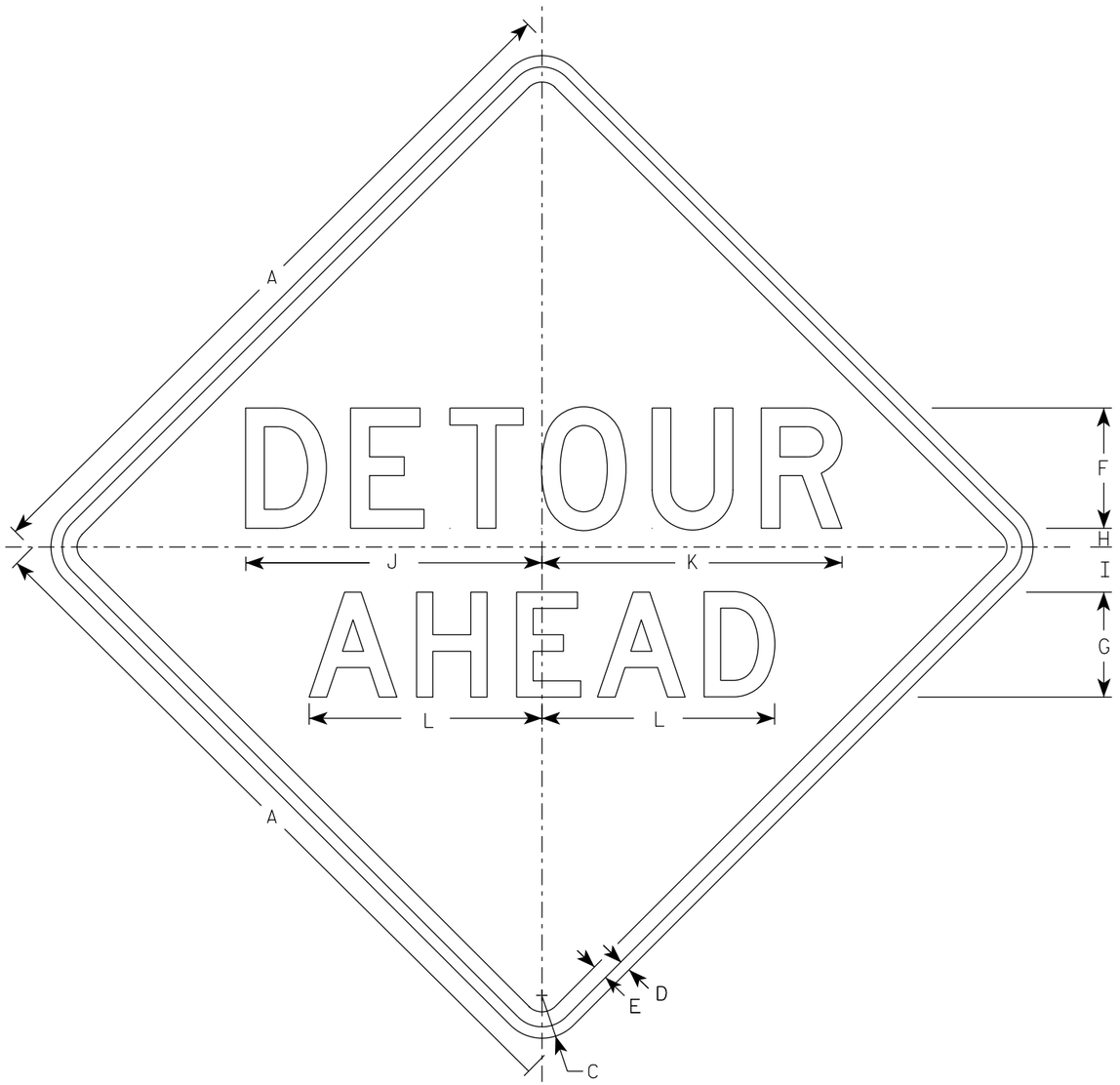

W20-2A

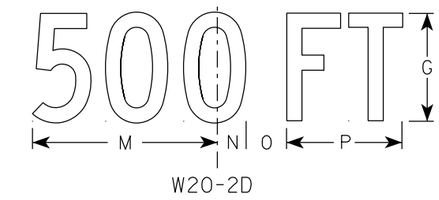

W20-2D

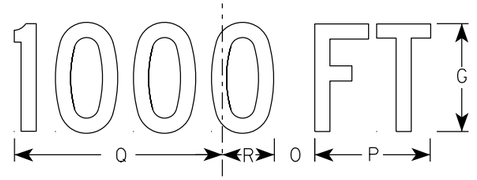

W20-2C

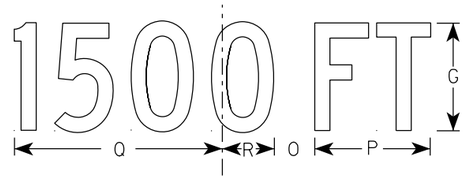

W20-2B

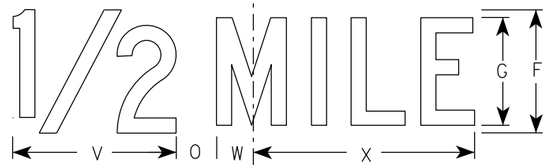

W20-2G

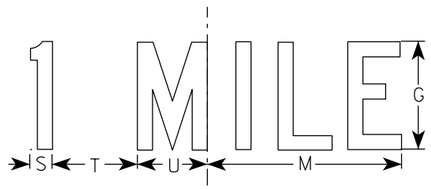

W20-2F

NOTES

1. Sign is Type II - Type F Reflective
2. Color:
   Background - Orange
   Message - Black
3. Message Series - See note 5
4. Corners may be square or rounded when base material is plywood but borders shall be rounded as shown. When base material is metal, the corners and borders shall be rounded.
5. Line 1 is Series D.
   Line 2 is Series D for AHEAD and Series C for all other distances.

SIZE	A	B	C	D	E	F	G	H	I	J	K	L	M	N	O	P	Q	R	S	T	U	V	W	X	Y	Z	Area sq. ft.
1	36		2 1/4	5/8	3/4	6	5	1	2 1/4	14 3/4	15	11 5/8	9	1 3/8	1 7/8	5 5/8	10 1/8	2 1/2	1 1/8	4 1/2	3 1/2	8	1 3/4	10 3/4			9.0
2S	48		3	3/4	1	8	7	1 1/4	3	19 3/4	20	15 1/2	12	1 7/8	2 5/8	7 1/2	13 1/2	3 3/8	1 1/2	6	4 5/8	10 5/8	2 3/8	14 3/8			16.0
2M	48		3	3/4	1	8	7	1 1/4	3	19 3/4	20	15 1/2	12	1 7/8	2 5/8	7 1/2	13 1/2	3 3/8	1 1/2	6	4 5/8	10 5/8	2 3/8	14 3/8			16.0
3	48		3	3/4	1	8	7	1 1/4	3	19 3/4	20	15 1/2	12	1 7/8	2 5/8	7 1/2	13 1/2	3 3/8	1 1/2	6	4 5/8	10 5/8	2 3/8	14 3/8			16.0
4	48		3	3/4	1	8	7	1 1/4	3	19 3/4	20	15 1/2	12	1 7/8	2 5/8	7 1/2	13 1/2	3 3/8	1 1/2	6	4 5/8	10 5/8	2 3/8	14 3/8			16.0
5	48		3	3/4	1	8	7	1 1/4	3	19 3/4	20	15 1/2	12	1 7/8	2 5/8	7 1/2	13 1/2	3 3/8	1 1/2	6	4 5/8	10 5/8	2 3/8	14 3/8			16.0

STANDARD SIGN
W20-2A,B,C,D,F & G

WISCONSIN DEPT OF TRANSPORTATION

APPROVED Matthew R Rauch
For State Traffic Engineer

DATE 1/10/2024 PLATE NO. W20-2.7

PROJECT NO:	HWY:	COUNTY:		SHEET NO: E

FILE NAME : C:\CAEfiles\Projects\tr_stdplate\W202.DGN PLOT DATE : 10-JAN 2024 11:36 PLOT BY : dotc4c PLOT NAME : PLOT SCALE : $$.....plotscale.....$$ WISDOT/CADDS SHEET 42

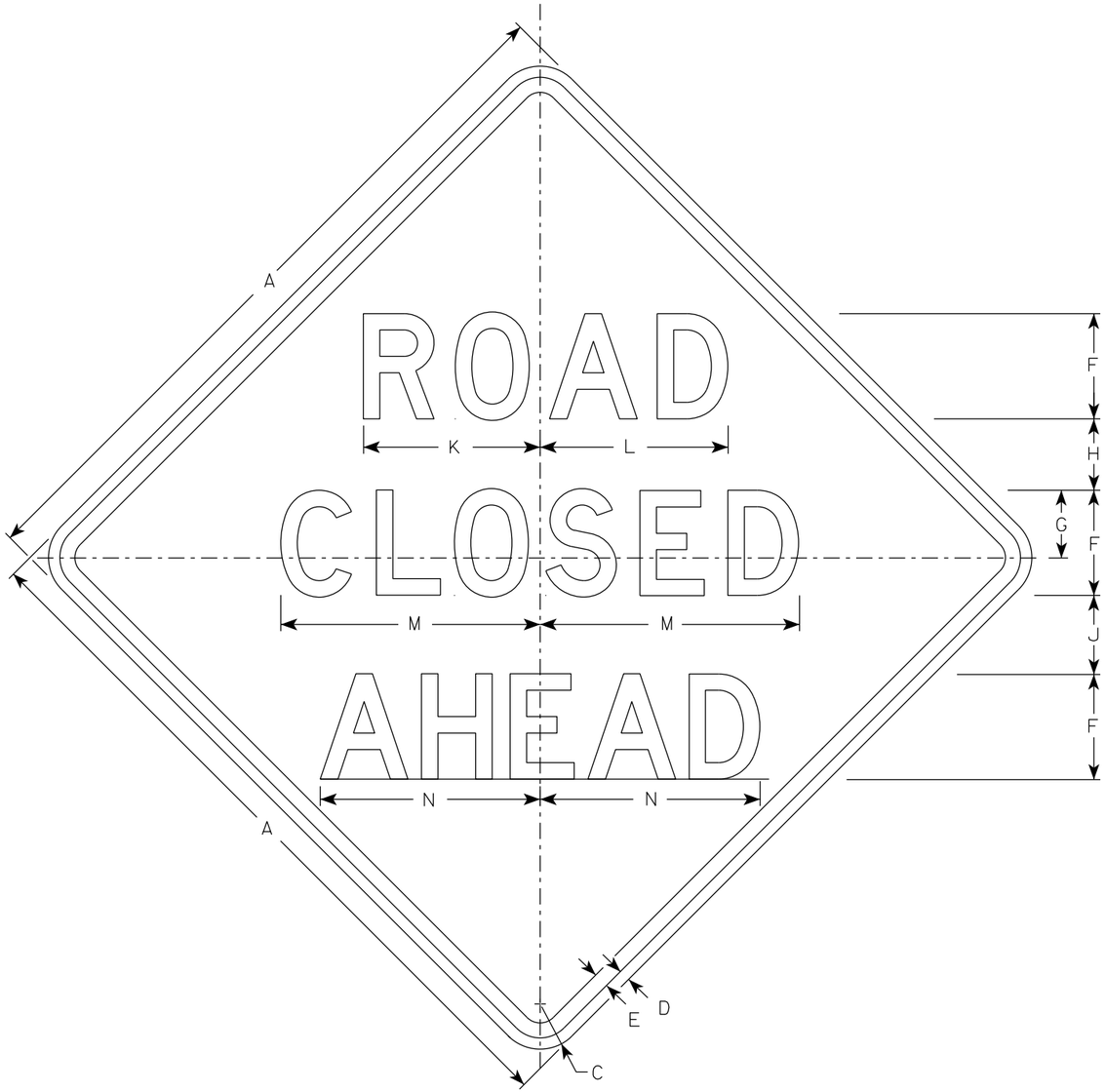

W20-3A

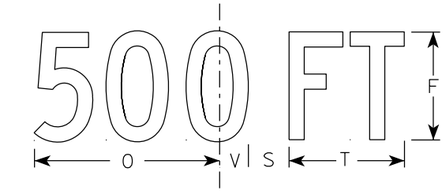

W20-3D

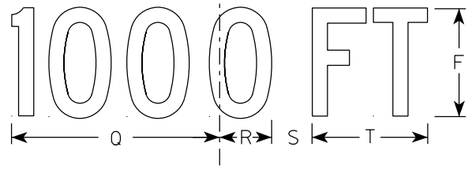

W20-3C

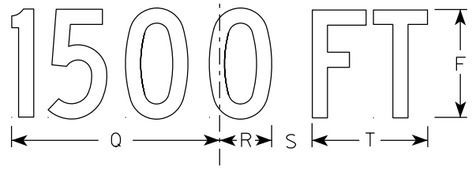

W20-3B

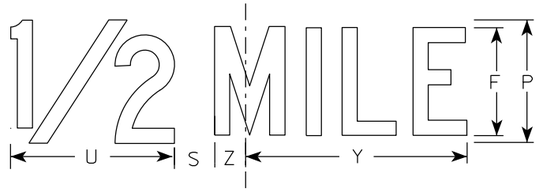

W20-3G

W20-3F

NOTES

1. Sign is Type II - Type F Reflective
2. Color:
   Background - Orange
   Message - Black
3. Message Series - see note 5
4. Corners may be square or rounded when base material is plywood but borders shall be rounded as shown. When base material is metal, the corners and borders shall be rounded.
5. Lines 1 and 2 are Series D.
   Line 3 is Series D for AHEAD and Series C for all other distances.

SIZE	A	B	C	D	E	F	G	H	I	J	K	L	M	N	O	P	Q	R	S	T	U	V	W	X	Y	Z	Area sq. ft.
1	36		2 1/4	5/8	3/4	5	3 3/8	3 1/2	1 1/8	4	8 3/8	8 7/8	12 1/2	11	9	6	10 1/8	2 1/2	1 7/8	5 5/8	8	1 3/8	4 1/2	3 1/2	10 3/4	1 3/4	9.0
2S	48		3	3/4	1	7	4 1/2	4 3/4	1 1/2	5 1/4	11 3/4	12 1/2	17 1/4	14 5/8	12	8	13 1/2	3 3/8	2 5/8	7 1/2	10 5/8	1 7/8	6	4 5/8	14 3/8	2 3/8	16.0
2M	48		3	3/4	1	7	4 1/2	4 3/4	1 1/2	5 1/4	11 3/4	12 1/2	17 1/4	14 5/8	12	8	13 1/2	3 3/8	2 5/8	7 1/2	10 5/8	1 7/8	6	4 5/8	14 3/8	2 3/8	16.0
3	48		3	3/4	1	7	4 1/2	4 3/4	1 1/2	5 1/4	11 3/4	12 1/2	17 1/4	14 5/8	12	8	13 1/2	3 3/8	2 5/8	7 1/2	10 5/8	1 7/8	6	4 5/8	14 3/8	2 3/8	16.0
4	48		3	3/4	1	7	4 1/2	4 3/4	1 1/2	5 1/4	11 3/4	12 1/2	17 1/4	14 5/8	12	8	13 1/2	3 3/8	2 5/8	7 1/2	10 5/8	1 7/8	6	4 5/8	14 3/8	2 3/8	16.0
5	48		3	3/4	1	7	4 1/2	4 3/4	1 1/2	5 1/4	11 3/4	12 1/2	17 1/4	14 5/8	12	8	13 1/2	3 3/8	2 5/8	7 1/2	10 5/8	1 7/8	6	4 5/8	14 3/8	2 3/8	16.0

STANDARD SIGN
W20-3A, B, C, D, F & G

WISCONSIN DEPT OF TRANSPORTATION

APPROVED Matthew R Rauch
for State Traffic Engineer

DATE 1/10/2024 PLATE NO. W20-3.8

PROJECT NO: | HWY: | COUNTY: | SHEET NO: E

FILE NAME : C:\CAEfiles\Projects\tr_stdplate\W203.DGN PLOT DATE : 10-JAN 2024 12:02 PLOT BY : dotc4c PLOT NAME : PLOT SCALE : $$.....plotscale.....$$ WISDOT/CADDS SHEET 42

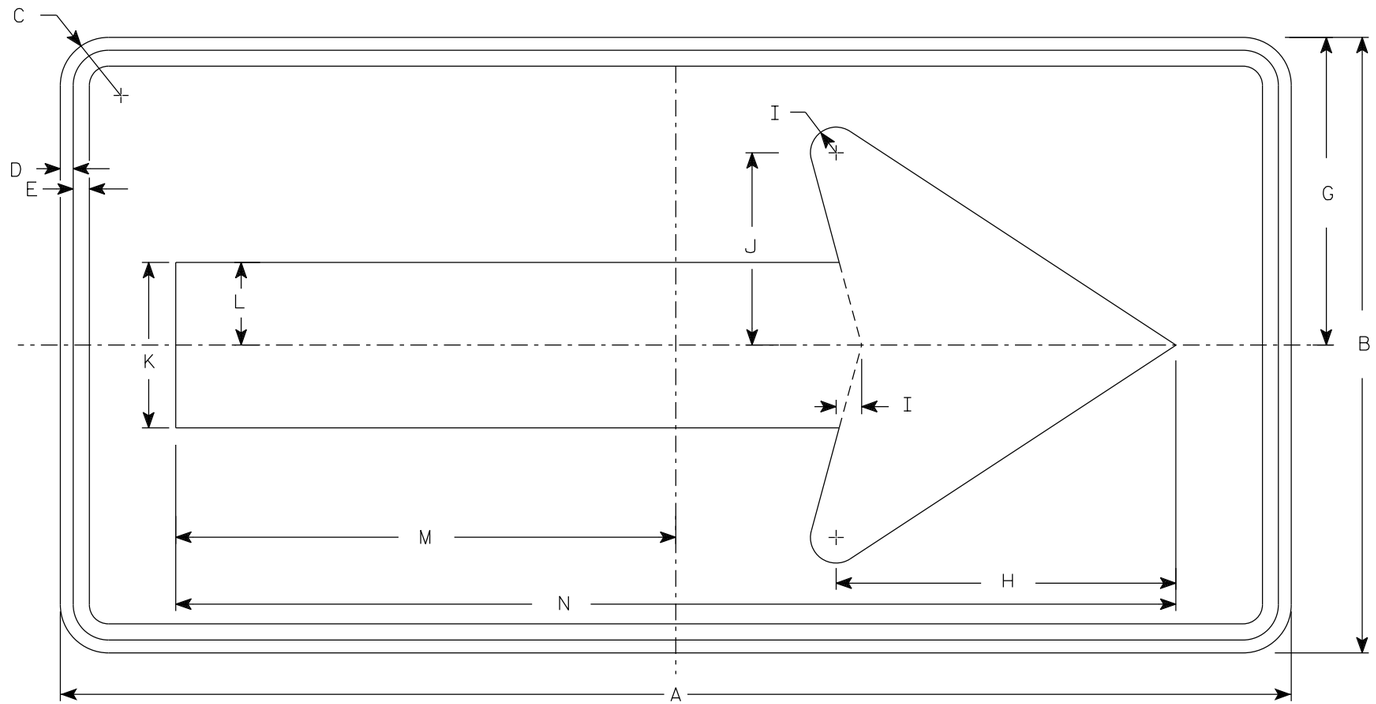

WO1-6

NOTES

1. Sign is Type II - Type F Reflective
2. Color:
   Background - Orange
   Message - Black
3. Corners may be square or rounded when base material is plywood but borders shall be rounded as shown. When base material is metal, the corners and borders shall be rounded.

SIZE	A	B	C	D	E	F	G	H	I	J	K	L	M	N	O	P	Q	R	S	T	U	V	W	X	Y	Z	Area sq. ft.
1																											
2S	48	24	1 7/8	1/2	5/8		12	13 1/4	1	7 1/2	6 1/2	3 1/4	19 1/2	39													8.0
2M	48	24	1 7/8	1/2	5/8		12	13 1/4	1	7 1/2	6 1/2	3 1/4	19 1/2	39													8.0
3	60	30	1 7/8	1/2	5/8		15	16 1/4	1 1/4	9 1/4	8	4	24 3/8	48 3/4													12.5
4	60	30	1 7/8	1/2	5/8		15	16 1/4	1 1/4	9 1/4	8	4	24 3/8	48 3/4													12.5
5	60	30	1 7/8	1/2	5/8		15	16 1/4	1 1/4	9 1/4	8	4	24 3/8	48 3/4													12.5

STANDARD SIGN
WO1-6

WISCONSIN DEPT OF TRANSPORTATION

APPROVED Matthew R Rauch
for State Traffic Engineer

DATE 1/24/2024 PLATE NO. WO1-6.2

PROJECT NO: | HWY: | COUNTY: | SHEET NO: E

FILE NAME : C:\Users\PROJECTS\tr_stdplate\WO16.dgn PLOT DATE : 24-JAN 2024 1:12 PLOT BY : dotc4c PLOT NAME : PLOT SCALE : $$.....plotscale.....$$ WISDOT/CADDS SHEET 42

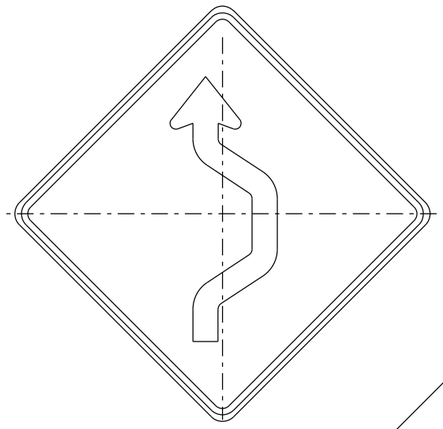

W024-1R

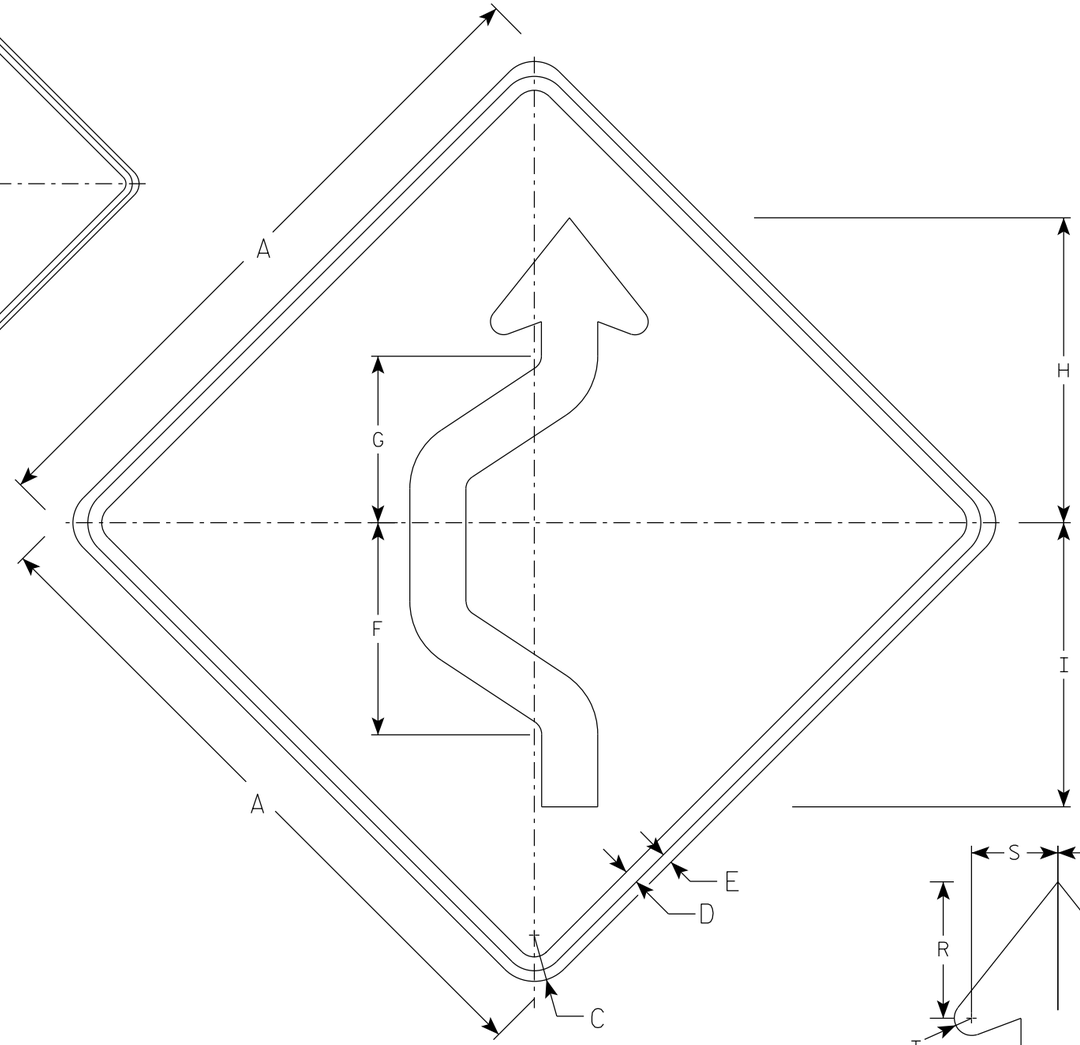

W024-1L

NOTES

1. Sign is Type II - Type F Reflective
2. Color:
   Background - Orange
   Message - Black
3. Corners may be square or rounded when base material is plywood but borders shall be rounded as shown. When base material is metal, the corners and borders shall be rounded.
4. W024-1R is the same as W024-1L except reversed along the vertical centerline.

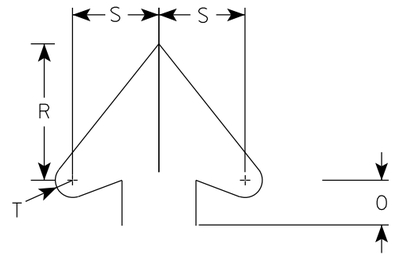

Arrowhead Detail

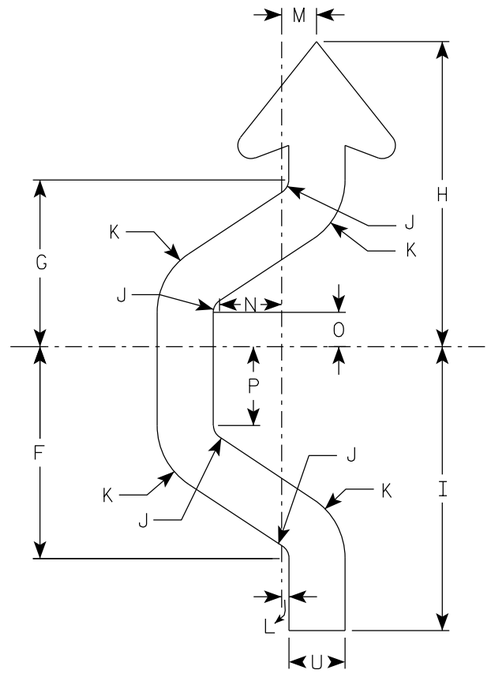

Arrow Detail

SIZE	A	B	C	D	E	F	G	H	I	J	K	L	M	N	O	P	Q	R	S	T	U	V	W	X	Y	Z	Area sq. ft.
1	36		2 1/4	5/8	1/2	11 3/8	8 7/8	16 3/8	15 1/4	3/4	3 3/4	3/8	2	3 3/8	1 7/8	4 1/4		5 1/2	3 1/2	5/8	3						9.0
2S	48		3	1	3/4	15 1/8	11 7/8	21 3/4	20 1/4	1	5	1/2	2 1/2	4 3/8	2 3/8	5 5/8		7 3/8	4 3/4	7/8	4						16.0
2M	48		3	1	3/4	15 1/8	11 7/8	21 3/4	20 1/4	1	5	1/2	2 1/2	4 3/8	2 3/8	5 5/8		7 3/8	4 3/4	7/8	4						16.0
3	48		3	1	3/4	15 1/8	11 7/8	21 3/4	20 1/4	1	5	1/2	2 1/2	4 3/8	2 3/8	5 5/8		7 3/8	4 3/4	7/8	4						16.0
4	48		3	1	3/4	15 1/8	11 7/8	21 3/4	20 1/4	1	5	1/2	2 1/2	4 3/8	2 3/8	5 5/8		7 3/8	4 3/4	7/8	4						16.0
5	48		3	1	3/4	15 1/8	11 7/8	21 3/4	20 1/4	1	5	1/2	2 1/2	4 3/8	2 3/8	5 5/8		7 3/8	4 3/4	7/8	4						16.0

STANDARD SIGN
W024-1 L & R

WISCONSIN DEPT OF TRANSPORTATION

APPROVED Matthew R Rauch
for State Traffic Engineer

DATE 2/1/2024 PLATE NO. W024-1.2

PROJECT NO:	HWY:	COUNTY:		SHEET NO:	E

DIVISION 1 - 32

STATION	REAL STATION	DISTANCE	AREA (SF)			INCREMENTAL VOL (CY) (UNADJUSTED)			CUMULATIVE VOL (CY)		
			CUT	SALVAGED/UNUSABLE PAVEMENT MATERIAL	FILL	CUT	SALVAGED/UNUSABLE PAVEMENT MATERIAL	FILL	CUT 1.00	EXPANDED FILL 1.25	MASS ORDINATE
						NOTE 1	NOTE 2	NOTE 3	NOTE 1		NOTE 8
46+99.01	4699.01	0.00	50.63	47.92	0.04	0	0	0	0	0	0
47+00.00	4700.00	0.99	51.21	47.25	0.04	2	2	0	2	0	0
47+50.00	4750.00	50	47.67	41.78	3.02	92	82	3	94	4	6
48+00.00	4800.00	50	51.82	46.35	0.66	92	82	3	186	8	13
48+03.95	4803.95	3.95	51.59	46.30	0.62	8	7	0	194	8	14
48+29.32	4829.32	25.37	55.94	42.90	0.66	51	42	1	245	9	21
48+47.87	4847.87	18.55	54.13	42.20	1.18	38	29	1	283	10	29
48+50.00	4850.00	2.13	54.32	42.10	1.08	4	3	0	287	10	30
49+00.00	4900.00	50	58.65	36.36	1.36	105	73	2	392	13	60
49+11.51	4911.51	11.51	58.50	39.17	0.35	25	16	0	417	13	69
49+38.13	4938.13	26.62	63.04	42.00	0.06	60	40	0	477	13	89
49+50.00	4950.00	11.87	70.22	40.27	0.00	29	18	0	506	13	100
49+96.18	4996.18	46.18	72.78	40.89	0.28	122	69	0	628	13	153
50+00.00	5000.00	3.82	72.96	40.70	0.16	10	6	0	638	13	157
50+50.00	5050.00	50	83.61	38.76	0.00	145	74	0	783	13	228
50+62.87	5062.87	12.87	83.77	38.78	0.00	40	18	0	823	13	250
51+00.00	5100.00	37.13	93.95	29.88	0.00	122	47	0	945	13	325
51+50.00	5150.00	50	88.63	29.83	0.22	169	55	0	1114	13	439
51+55.87	5155.87	5.87	74.09	47.06	0.00	18	8	0	1132	13	449
51+74.34	5174.34	18.47	72.78	37.64	0.00	50	29	0	1182	13	470
51+75.00	5175.00	0.66	72.77	37.64	0.00	2	1	0	1184	13	471
51+80.00	5180.00	5	74.77	37.64	0.00	14	7	0	1198	13	478
51+85.00	5185.00	5	79.21	37.96	0.00	14	7	0	1212	13	485
51+90.00	5190.00	5	89.70	40.04	0.00	16	7	0	1228	13	494
51+95.00	5195.00	5	85.14	42.15	0.00	16	8	0	1244	13	502
52+00.00	5200.00	5	81.44	40.83	0.01	15	8	0	1259	13	509
52+05.00	5205.00	5	77.86	39.51	0.02	15	7	0	1274	13	517
52+10.00	5210.00	5	74.29	38.19	0.02	14	7	0	1288	13	524
52+15.00	5215.00	5	71.52	35.50	0.02	14	7	0	1302	13	531
52+20.00	5220.00	5	69.80	31.95	0.02	13	6	0	1315	13	538
52+25.00	5225.00	5	66.18	28.99	0.27	13	6	0	1328	13	545
52+30.00	5230.00	5	62.11	29.41	0.18	12	5	0	1340	13	552
52+35.00	5235.00	5	82.45	37.88	0.21	13	6	0	1353	13	559
52+40.00	5240.00	5	90.59	40.22	0.34	16	7	0	1369	13	568
52+45.00	5245.00	5	80.65	39.32	0.28	16	7	0	1385	13	577
52+50.00	5250.00	5	70.18	40.99	0.67	14	7	0	1399	13	584
52+55.00	5255.00	5	64.95	40.90	0.88	13	8	0	1412	13	589
52+60.00	5260.00	5	61.84	40.90	0.77	12	8	0	1424	13	593
52+65.00	5265.00	5	60.21	40.89	0.63	11	8	0	1435	13	596
52+65.89	5265.89	0.89	60.12	40.89	0.62	2	1	0	1437	13	597
52+69.50	5269.50	3.61	59.79	40.89	0.60	8	5	0	1445	13	600
52+97.68	5297.68	28.18	55.18	41.53	1.25	60	43	1	1505	14	615
53+00.00	5300.00	2.32	55.17	41.82	0.78	5	4	0	1510	14	616
53+05.00	5305.00	5	57.59	42.44	0.32	10	8	0	1520	14	618
53+10.00	5310.00	5	65.37	42.63	0.14	11	8	0	1531	14	621
53+15.00	5315.00	5	81.03	39.97	0.02	14	8	0	1545	14	627
53+20.00	5320.00	5	74.68	37.32	0.02	14	7	0	1559	14	634
53+25.00	5325.00	5	69.61	34.67	0.07	13	7	0	1572	14	640
53+30.00	5330.00	5	64.67	32.05	0.10	12	6	0	1584	14	646
53+35.00	5335.00	5	59.37	29.43	0.05	11	6	0	1595	14	651
53+40.00	5340.00	5	62.99	31.18	0.01	11	6	0	1606	14	656
53+45.00	5345.00	5	69.46	33.33	0.00	12	6	0	1618	14	662
53+50.00	5350.00	5	71.36	35.47	0.00	13	6	0	1631	14	669
53+55.00	5355.00	5	74.02	37.64	0.62	13	7	0	1644	14	675
53+60.00	5360.00	5	85.49	35.74	0.80	15	7	0	1659	14	683

NOTES:	
1 - CUT	CUT INCLUDES SALVAGED/UNUSABLE PAVEMENT MATERIAL
2 - SALVAGED/UNUSABLE PAVEMENT MATERIAL	THIS DOES NOT SHOW UP IN CROSS SECTIONS
3 - FILL	DOES NOT INCLUDE UNUSABLE PAVEMENT EXC VOLUME
8 - MASS ORDINATE	CUT - SALVAGED PAVT - (FILL * FILL FACTOR)

9

9

PROJECT NO: 9260-00-71 | HWY: STH 32 | COUNTY: FOREST | EARTHWORK DATA | SHEET 200 | E

CONTINUED FROM PREVIOUS PAGE

DIVISION 1 - 32

STATION	REAL STATION	DISTANCE	AREA (SF)			INCREMENTAL VOL (CY) (UNADJUSTED)			CUMULATIVE VOL (CY)		
			CUT	SALVAGED/UNUSABLE PAVEMENT MATERIAL	FILL	CUT	SALVAGED/UNUSABLE PAVEMENT MATERIAL	FILL	CUT 1.00	EXPANDED FILL 1.25	MASS ORDINATE
						NOTE 1	NOTE 2	NOTE 3	NOTE 1		NOTE 8
53+65.00	5365.00	5	78.82	33.84	0.46	15	6	0	1674	14	692
53+70.00	5370.00	5	70.69	33.31	0.18	14	6	0	1688	14	700
53+75.00	5375.00	5	65.11	33.31	0.10	13	6	0	1701	14	707
53+80.00	5380.00	5	63.69	33.34	0.31	12	6	0	1713	14	713
53+80.76	5380.76	0.76	54.34	33.34	0.01	2	1	0	1715	14	714
54+00.00	5400.00	19.24	66.00	33.34	0.05	43	24	0	1758	14	733
54+25.02	5425.02	25.02	63.19	38.51	0.00	60	33	0	1818	14	760
54+26.12	5426.12	1.1	50.91	38.53	0.00	2	2	0	1820	14	760
54+30.00	5430.00	3.88	64.55	38.55	0.00	8	6	0	1828	14	762
54+35.00	5435.00	5	66.58	38.57	0.00	12	7	0	1840	14	767
54+40.00	5440.00	5	70.32	37.21	0.04	13	7	0	1853	14	773
54+45.00	5445.00	5	75.45	34.23	0.00	13	7	0	1866	14	779
54+50.00	5450.00	5	80.80	34.45	0.00	14	6	0	1880	14	787
54+55.00	5455.00	5	88.67	35.64	0.00	16	6	0	1896	14	797
54+60.00	5460.00	5	72.77	31.15	0.00	15	6	0	1911	14	806
54+65.00	5465.00	5	59.80	25.13	0.00	12	5	0	1923	14	813
54+70.00	5470.00	5	63.19	26.75	0.00	11	5	0	1934	14	819
54+75.00	5475.00	5	66.09	28.09	0.00	12	5	0	1946	14	826
54+80.00	5480.00	5	70.21	29.20	0.00	13	5	0	1959	14	834
54+85.00	5485.00	5	74.71	30.30	0.00	13	6	0	1972	14	841
54+90.00	5490.00	5	79.59	31.41	0.00	14	6	0	1986	14	849
54+95.00	5495.00	5	84.50	32.52	0.00	15	6	0	2001	14	858
55+00.00	5500.00	5	88.82	33.01	0.00	16	6	0	2017	14	868
55+05.00	5505.00	5	79.79	30.13	0.00	16	6	0	2033	14	878
55+10.00	5510.00	5	73.89	29.28	0.09	14	6	0	2047	14	886
55+15.00	5515.00	5	71.05	29.17	0.06	13	5	0	2060	14	894
55+19.64	5519.64	4.64	70.62	29.12	0.04	12	5	0	2072	14	901
55+32.92	5532.92	13.28	72.67	28.99	0.00	35	14	0	2107	14	922
55+50.00	5550.00	17.08	74.82	28.81	0.09	47	18	0	2154	14	951
56+00.00	5600.00	50	111.99	28.42	0.00	173	53	0	2327	14	1071
56+50.00	5650.00	50	124.80	24.51	0.00	219	49	0	2546	14	1241
57+00.00	5700.00	50	120.50	24.52	0.00	227	45	0	2773	14	1423
57+50.00	5750.00	50	109.38	24.16	1.62	213	45	2	2986	16	1589
57+69.75	5769.75	19.75	96.59	24.22	0.00	75	18	1	3061	18	1645
57+70.00	5770.00	0.25	103.35	24.22	2.99	1	0	0	3062	18	1646
57+75.00	5775.00	5	103.32	24.33	3.30	19	4	1	3081	19	1659
57+80.00	5780.00	5	104.41	24.50	2.70	19	5	1	3100	20	1672
57+85.00	5785.00	5	106.94	24.67	1.41	20	5	0	3120	20	1687
57+90.00	5790.00	5	110.68	25.81	0.45	20	5	0	3140	20	1702
57+95.00	5795.00	5	117.10	28.77	0.16	21	5	0	3161	20	1718
58+00.00	5800.00	5	111.91	30.62	0.00	21	5	0	3182	20	1734
58+05.00	5805.00	5	110.75	28.02	0.09	21	5	0	3203	20	1750
58+10.00	5810.00	5	109.41	25.43	0.23	20	5	0	3223	20	1765
58+15.00	5815.00	5	106.10	22.83	0.11	20	4	0	3243	20	1781
58+20.00	5820.00	5	103.03	20.51	0.00	19	4	0	3262	20	1796
58+25.00	5825.00	5	107.56	23.09	0.00	19	4	0	3281	20	1811
58+30.00	5830.00	5	117.97	25.67	0.00	21	5	0	3302	20	1827
58+35.00	5835.00	5	128.43	28.25	0.00	23	5	0	3325	20	1845
58+40.00	5840.00	5	131.03	29.43	0.00	24	5	0	3349	20	1864
58+45.00	5845.00	5	129.40	26.67	0.00	24	5	0	3373	20	1883
58+50.00	5850.00	5	129.25	24.75	0.00	24	5	0	3397	20	1902
58+55.00	5855.00	5	133.58	22.83	0.17	24	4	0	3421	20	1922
58+60.00	5860.00	5	133.02	20.91	0.34	25	4	0	3446	20	1943
58+65.00	5865.00	5	126.68	19.86	0.00	24	4	0	3470	20	1963
58+66.00	5866.00	1	124.52	19.87	0.00	5	1	0	3475	20	1967

NOTES:	
1 - CUT	CUT INCLUDES SALVAGED/UNUSABLE PAVEMENT MATERIAL
2 - SALVAGED/UNUSABLE PAVEMENT MATERIAL	THIS DOES NOT SHOW UP IN CROSS SECTIONS
3 - FILL	DOES NOT INCLUDE UNUSABLE PAVEMENT EXC VOLUME
8 - MASS ORDINATE	CUT - SALVAGED PAVT - (FILL * FILL FACTOR)

9

9

PROJECT NO: 9260-00-71 | HWY: STH 32 | COUNTY: FOREST | EARTHWORK DATA | SHEET 201 | E

FILE NAME : N:\PDS\C3D\92600001\SHEETSPLAN\090101-EW.DWG
LAYOUT NAME - 02

PLOT DATE : 10/27/2025 6:11 PM PLOT BY : MATT PAYNE PLOT NAME : PLOT SCALE : 1" = 1'

WISDOT/CADDS SHEET 49

CONTINUED FROM PREVIOUS PAGE

DIVISION 1 - 32

STATION	REAL STATION	DISTANCE	AREA (SF)			INCREMENTAL VOL (CY) (UNADJUSTED)			CUMULATIVE VOL (CY)		
			CUT	SALVAGED/UNUSABLE PAVEMENT MATERIAL	FILL	CUT	SALVAGED/UNUSABLE PAVEMENT MATERIAL	FILL	CUT 1.00	EXPANDED FILL 1.25	MASS ORDINATE
						NOTE 1	NOTE 2	NOTE 3	NOTE 1		NOTE 8
59+00.00	5900.00	34	109.89	19.78	0.00	148	25	0	3623	20	2090
59+50.00	5950.00	50	190.56	19.77	0.00	278	37	0	3901	20	2331
60+00.00	6000.00	50	126.25	19.93	0.00	293	37	0	4194	20	2587
60+50.00	6050.00	50	106.21	19.93	0.00	215	37	0	4409	20	2765
60+96.13	6096.13	46.13	73.11	19.99	0.00	153	34	0	4562	20	2884
61+00.00	6100.00	3.87	101.52	19.99	0.00	13	3	0	4575	20	2894
61+05.00	6105.00	5	102.72	20.41	0.00	19	4	0	4594	20	2909
61+10.00	6110.00	5	102.45	21.70	0.00	19	4	0	4613	20	2924
61+15.00	6115.00	5	105.72	23.81	0.00	19	4	0	4632	20	2939
61+20.00	6120.00	5	101.26	27.23	0.00	19	5	0	4651	20	2953
61+25.00	6125.00	5	89.56	31.53	0.00	18	5	0	4669	20	2966
61+30.00	6130.00	5	83.08	29.98	0.00	16	6	0	4685	20	2976
61+35.00	6135.00	5	77.61	26.72	0.00	15	5	0	4700	20	2986
61+40.00	6140.00	5	71.59	23.45	0.00	14	5	0	4714	20	2995
61+45.00	6145.00	5	69.20	22.58	0.00	13	4	0	4727	20	3004
61+50.00	6150.00	5	73.36	25.53	0.00	13	4	0	4740	20	3013
61+55.00	6155.00	5	77.31	28.48	0.00	14	5	0	4754	20	3022
61+60.00	6160.00	5	80.90	31.43	0.00	15	6	0	4769	20	3031
61+65.00	6165.00	5	86.94	32.15	0.00	16	6	0	4785	20	3041
61+70.00	6170.00	5	88.49	29.03	0.67	16	6	0	4801	20	3051
61+75.00	6175.00	5	86.66	26.56	1.05	16	5	0	4817	20	3062
61+80.00	6180.00	5	79.79	24.66	5.86	15	5	1	4832	21	3071
61+85.00	6185.00	5	78.89	22.94	6.09	15	4	1	4847	23	3081
61+90.00	6190.00	5	78.55	21.17	5.29	15	4	1	4862	24	3090
61+95.00	6195.00	5	78.06	20.14	3.78	15	4	1	4877	25	3100
62+00.00	6200.00	5	77.52	20.12	2.06	14	4	1	4891	26	3109
62+00.78	6200.78	0.78	77.62	20.12	1.81	2	1	0	4893	26	3110
62+50.00	6250.00	49.22	81.22	19.99	3.04	145	37	4	5038	31	3213
63+00.00	6300.00	50	85.17	22.62	0.94	154	39	4	5192	36	3323
63+15.05	6315.05	15.05	64.73	42.11	0.56	42	18	0	5234	36	3347
63+28.21	6328.21	13.16	77.29	37.96	0.08	35	20	0	5269	36	3362
63+50.00	6350.00	21.79	92.13	22.20	24.74	68	24	10	5337	49	3393
64+00.00	6400.00	50	101.27	23.58	3.25	179	42	26	5516	81	3498
64+20.59	6420.59	20.59	85.73	49.95	0.00	71	28	1	5587	83	3540
64+22.36	6422.36	1.77	85.83	49.95	0.00	6	3	0	5593	83	3543
64+50.00	6450.00	27.64	109.71	22.42	2.44	100	37	1	5693	84	3604
65+00.00	6500.00	50	94.21	36.35	0.03	189	54	2	5882	86	3737
65+23.91	6523.91	23.91	93.19	37.07	0.00	83	33	0	5965	86	3787
65+44.58	6544.58	20.67	79.82	53.28	0.00	66	35	0	6031	86	3818
65+50.00	6550.00	5.42	78.88	53.28	0.00	16	11	0	6047	86	3823
65+84.56	6584.56	34.56	90.12	23.42	0.34	108	49	0	6155	86	3882
65+85.00	6585.00	0.44	90.02	23.42	0.42	1	0	0	6156	86	3883
65+90.00	6590.00	5	89.58	23.44	1.17	17	4	0	6173	86	3896
65+95.00	6595.00	5	89.22	25.31	1.66	17	5	0	6190	86	3908
66+00.00	6600.00	5	90.04	27.52	1.74	17	5	0	6207	86	3920
66+05.00	6605.00	5	91.78	29.74	2.76	17	5	0	6224	86	3932
66+10.00	6610.00	5	97.50	32.04	4.14	18	6	1	6242	88	3943
66+15.00	6615.00	5	99.70	34.92	3.34	18	6	1	6260	89	3953
66+20.00	6620.00	5	96.84	34.78	1.77	18	6	0	6278	89	3965
66+25.00	6625.00	5	90.24	34.93	0.00	17	6	0	6295	89	3976
66+30.00	6630.00	5	78.70	33.25	0.00	16	6	0	6311	89	3986
66+35.00	6635.00	5	69.17	29.12	0.00	14	6	0	6325	89	3994
66+40.00	6640.00	5	60.76	25.47	0.00	12	5	0	6337	89	4001
66+45.00	6645.00	5	63.42	26.98	0.00	11	5	0	6348	89	4007
66+50.00	6650.00	5	72.02	31.71	0.00	13	5	0	6361	89	4015

NOTES:	
1 - CUT	CUT INCLUDES SALVAGED/UNUSABLE PAVEMENT MATERIAL
2 - SALVAGED/UNUSABLE PAVEMENT MATERIAL	THIS DOES NOT SHOW UP IN CROSS SECTIONS
3 - FILL	DOES NOT INCLUDE UNUSABLE PAVEMENT EXC VOLUME
8 - MASS ORDINATE	CUT - SALVAGED PAVT - (FILL * FILL FACTOR)

CONTINUED FROM PREVIOUS PAGE

DIVISION 1 - 32

STATION	REAL STATION	DISTANCE	AREA (SF)			INCREMENTAL VOL (CY) (UNADJUSTED)			CUMULATIVE VOL (CY)		
			CUT	SALVAGED/UNUSABLE PAVEMENT MATERIAL	FILL	CUT	SALVAGED/UNUSABLE PAVEMENT MATERIAL	FILL	CUT 1.00	EXPANDED FILL 1.25	MASS ORDINATE
						NOTE 1	NOTE 2	NOTE 3	NOTE 1		NOTE 8
66+55.00	6655.00	5	79.49	36.43	0.00	14	6	0	6375	89	4023
66+60.00	6660.00	5	85.86	41.14	0.00	15	7	0	6390	89	4031
66+65.00	6665.00	5	98.81	36.01	0.00	17	7	0	6407	89	4041
66+70.00	6670.00	5	93.52	30.66	0.02	18	6	0	6425	89	4053
66+75.00	6675.00	5	83.51	26.29	1.82	16	5	0	6441	89	4064
66+80.00	6680.00	5	81.64	24.08	1.21	15	5	0	6456	89	4074
66+85.00	6685.00	5	76.70	23.29	2.22	15	4	0	6471	89	4085
66+90.00	6690.00	5	76.35	22.51	1.68	14	4	0	6485	89	4095
66+90.47	6690.47	0.47	62.12	22.44	1.97	1	0	0	6486	89	4096
67+00.00	6700.00	9.53	85.92	21.55	56.34	26	8	10	6512	101	4102
67+50.00	6750.00	50	89.08	20.34	1.06	162	39	53	6674	168	4159
67+94.84	6794.84	44.84	90.96	20.25	0.00	149	34	1	6823	169	4272
68+00.00	6800.00	5.16	91.27	20.22	0.00	17	4	0	6840	169	4285
68+50.00	6850.00	50	100.03	20.36	0.00	177	38	0	7017	169	4424
68+92.98	6892.98	42.98	111.46	21.20	0.00	168	33	0	7185	169	4559
69+00.00	6900.00	7.02	100.97	21.82	0.00	28	6	0	7213	169	4581
69+50.00	6950.00	50	106.32	28.55	0.00	192	47	0	7405	169	4726
69+75.00	6975.00	25	103.14	28.77	0.00	97	27	0	7502	169	4796
70+00.00	7000.00	25	103.89	29.01	0.00	96	27	0	7598	169	4865
70+06.05	7006.05	6.05	108.76	22.29	0.00	24	6	0	7622	169	4883
70+23.72	7023.72	17.67	115.87	24.21	0.00	74	15	0	7696	169	4942
70+24.57	7024.57	0.85	115.49	24.91	0.00	4	1	0	7700	169	4945
70+48.72	7048.72	24.15	106.96	25.87	0.00	99	23	0	7799	169	5021
70+49.55	7049.55	0.83	106.97	25.74	0.00	3	1	0	7802	169	5023
70+50.00	7050.00	0.45	106.95	25.70	0.00	2	0	0	7804	169	5025
70+73.72	7073.72	23.72	101.07	24.79	0.43	91	22	0	7895	169	5094
70+74.54	7074.54	0.82	100.81	24.78	0.35	3	1	0	7898	169	5096
71+00.00	7100.00	25.46	93.01	24.36	0.00	91	23	0	7989	169	5164
71+50.00	7150.00	50	82.07	24.75	0.00	162	45	0	8151	169	5281
72+00.00	7200.00	50	77.35	24.95	0.00	148	46	0	8299	169	5383
72+50.00	7250.00	50	75.08	24.91	0.00	141	46	0	8440	169	5478
73+00.00	7300.00	50	68.45	24.63	0.00	133	46	0	8573	169	5565
73+50.00	7350.00	50	57.42	24.88	0.00	117	46	0	8690	169	5636
74+00.00	7400.00	50	55.69	25.31	0.00	105	46	0	8795	169	5695
74+50.00	7450.00	50	54.62	25.61	0.00	102	47	0	8897	169	5750
75+00.00	7500.00	50	53.77	25.99	0.00	100	48	0	8997	169	5802
75+50.00	7550.00	50	51.97	25.73	0.06	98	48	0	9095	169	5852
75+65.63	7565.63	15.63	-10.26	10.26	0.00	12	10	0	9107	169	5854

NOTES:	
1 - CUT	CUT INCLUDES SALVAGED/UNUSABLE PAVEMENT MATERIAL
2 - SALVAGED/UNUSABLE PAVEMENT MATERIAL	THIS DOES NOT SHOW UP IN CROSS SECTIONS
3 - FILL	DOES NOT INCLUDE UNUSABLE PAVEMENT EXC VOLUME
8 - MASS ORDINATE	CUT - SALVAGED PAVT - (FILL * FILL FACTOR)

9

9

PROJECT NO: 9260-00-71 | HWY: STH 32 | COUNTY: FOREST | EARTHWORK DATA | SHEET 203 | E

DIVISION 2 - W RAILWAY LANE

STATION	REAL STATION	DISTANCE	AREA (SF)			INCREMENTAL VOL (CY) (UNADJUSTED)			CUMULATIVE VOL (CY)		
			CUT	SALVAGED/UNUSABLE PAVEMENT MATERIAL	FILL	CUT NOTE 1	SALVAGED/UNUSABLE PAVEMENT MATERIAL NOTE 2	FILL NOTE 3	CUT 1.00 NOTE 1	EXPANDED FILL 1.25	MASS ORDINATE NOTE 8
10+95.00 'RL'	1095.00	0.00	35.00	14.27	0.00	0	0	0	0	0	0
11+00.00 'RL'	1100.00	5	37.16	14.34	0.65	7	3	0	7	0	4
11+25.39 'RL'	1125.39	25.39	51.01	15.19	0.00	41	14	0	48	0	31
11+31.38 'RL'	1131.38	5.99	54.12	15.60	0.00	12	3	0	60	0	40
11+35.00 'RL'	1135.00	3.62	58.13	16.16	0.00	8	2	0	68	0	46
11+40.00 'RL'	1140.00	5	63.14	17.15	0.00	11	3	0	79	0	54
11+45.00 'RL'	1145.00	5	70.45	19.21	0.00	12	3	0	91	0	63
11+50.00 'RL'	1150.00	5	64.32	21.19	0.00	12	4	0	103	0	71
11+55.00 'RL'	1155.00	5	60.56	18.93	0.00	12	4	0	115	0	79
11+60.00 'RL'	1160.00	5	56.30	16.89	0.00	11	3	0	126	0	87
11+65.00 'RL'	1165.00	5	51.63	14.90	0.00	10	3	0	136	0	94
11+70.00 'RL'	1170.00	5	45.52	12.93	0.00	9	3	0	145	0	100
11+75.00 'RL'	1175.00	5	23.23	8.47	0.00	6	2	0	151	0	104
11+80.00 'RL'	1180.00	5	2.82	1.00	0.00	2	1	0	153	0	105

DIVISION 2 - E ELM ST

STATION	REAL STATION	DISTANCE	AREA (SF)			INCREMENTAL VOL (CY) (UNADJUSTED)			CUMULATIVE VOL (CY)		
			CUT	SALVAGED/UNUSABLE PAVEMENT MATERIAL	FILL	CUT NOTE 1	SALVAGED/UNUSABLE PAVEMENT MATERIAL NOTE 2	FILL NOTE 3	CUT 1.00 NOTE 1	EXPANDED FILL 1.25	MASS ORDINATE NOTE 8
10+20.00 'EE'	1020.00	0.00	15.72	7.50	0.00	0	0	0	0	0	0
10+25.00 'EE'	1025.00	5	31.10	16.88	0.00	4	2	0	4	0	2
10+30.00 'EE'	1030.00	5	46.94	26.17	0.00	7	4	0	11	0	5
10+35.00 'EE'	1035.00	5	54.47	29.35	0.03	9	5	0	20	0	9
10+40.00 'EE'	1040.00	5	49.12	25.30	0.00	10	5	0	30	0	14
10+45.00 'EE'	1045.00	5	45.20	24.71	0.00	9	5	0	39	0	18
10+45.51 'EE'	1045.51	0.51	44.82	24.67	0.00	1	0	0	40	0	19
10+65.00 'EE'	1065.00	19.49	27.26	18.65	0.00	26	16	0	66	0	29

DIVISION 2 - W 1ST ST

STATION	REAL STATION	DISTANCE	AREA (SF)			INCREMENTAL VOL (CY) (UNADJUSTED)			CUMULATIVE VOL (CY)		
			CUT	SALVAGED/UNUSABLE PAVEMENT MATERIAL	FILL	CUT NOTE 1	SALVAGED/UNUSABLE PAVEMENT MATERIAL NOTE 2	FILL NOTE 3	CUT 1.00 NOTE 1	EXPANDED FILL 1.25	MASS ORDINATE NOTE 8
11+25.00 'FI'	1125.00	0.00	25.85	14.65	0.00	0	0	0	0	0	0
11+34.58 'FI'	1134.58	9.58	8.24	14.54	0.00	6	5	0	6	0	1
11+35.00 'FI'	1135.00	0.42	32.53	14.53	0.00	0	0	0	6	0	1
11+40.00 'FI'	1140.00	5	34.69	14.83	0.16	6	3	0	12	0	4
11+45.00 'FI'	1145.00	5	39.23	15.27	0.01	7	3	0	19	0	8
11+50.00 'FI'	1150.00	5	46.78	16.91	0.00	8	3	0	27	0	13
11+55.00 'FI'	1155.00	5	44.27	21.81	0.00	8	4	0	35	0	17
11+60.00 'FI'	1160.00	5	44.56	19.24	0.00	8	4	0	43	0	21
11+65.00 'FI'	1165.00	5	41.87	16.74	0.00	8	3	0	51	0	26
11+70.00 'FI'	1170.00	5	37.84	15.25	0.00	7	3	0	58	0	30
11+75.00 'FI'	1175.00	5	21.00	10.55	0.00	5	2	0	63	0	33
11+80.00 'FI'	1180.00	5	7.32	3.34	0.00	3	1	0	66	0	35

NOTES:	
1 - CUT	CUT INCLUDES SALVAGED/UNUSABLE PAVEMENT MATERIAL
2 - SALVAGED/UNUSABLE PAVEMENT MATERIAL	THIS DOES NOT SHOW UP IN CROSS SECTIONS
3 - FILL	DOES NOT INCLUDE UNUSABLE PAVEMENT EXC VOLUME
8 - MASS ORDINATE	CUT - SALVAGED PAVT - (FILL * FILL FACTOR)

DIVISION 2 - W 2ND ST

STATION	REAL STATION	DISTANCE	AREA (SF)			INCREMENTAL VOL (CY) (UNADJUSTED)			CUMULATIVE VOL (CY)		
			CUT	SALVAGED/UNUSABLE PAVEMENT MATERIAL	FILL	CUT NOTE 1	SALVAGED/UNUSABLE PAVEMENT MATERIAL NOTE 2	FILL NOTE 3	CUT 1.00 NOTE 1	EXPANDED FILL 1.25	MASS ORDINATE NOTE 8
11+40.00 'SE'	1140.00	0.00	31.31	13.24	0.00	0	0	0	0	0	0
11+46.64 'SE'	1146.64	6.64	45.35	14.06	0.00	9	3	0	9	0	6
11+50.00 'SE'	1150.00	3.36	53.08	15.06	0.01	6	2	0	15	0	10
11+55.00 'SE'	1155.00	5.00	60.04	17.03	0.00	10	3	0	25	0	17
11+60.00 'SE'	1160.00	5.00	57.45	20.18	0.00	11	3	0	36	0	25
11+65.00 'SE'	1165.00	5.00	47.96	24.20	0.00	10	4	0	46	0	31
11+70.00 'SE'	1170.00	5.00	31.32	24.02	0.00	7	4	0	53	0	34
11+75.00 'SE'	1175.00	5.00	22.76	15.44	0.00	5	4	0	58	0	35
11+80.00 'SE'	1180.00	5.00	11.38	6.86	0.00	3	2	0	61	0	36

DIVISION 2 - W 4TH ST

STATION	REAL STATION	DISTANCE	AREA (SF)			INCREMENTAL VOL (CY) (UNADJUSTED)			CUMULATIVE VOL (CY)		
			CUT	SALVAGED/UNUSABLE PAVEMENT MATERIAL	FILL	CUT NOTE 1	SALVAGED/UNUSABLE PAVEMENT MATERIAL NOTE 2	FILL NOTE 3	CUT 1.00 NOTE 1	EXPANDED FILL 1.25	MASS ORDINATE NOTE 8
11+25.00 'FO'	1125.00	0.00	22.08	13.28	0.00	0	0	0	0	0	0
11+34.70 'FO'	1134.70	9.7	7.59	13.35	0.00	5	5	0	5	0	0
11+35.00 'FO'	1135.00	0.3	30.85	13.36	0.00	0	0	0	5	0	0
11+40.00 'FO'	1140.00	5	34.18	13.54	0.18	6	2	0	11	0	4
11+45.00 'FO'	1145.00	5	40.43	13.75	0.39	7	3	0	18	0	8
11+50.00 'FO'	1150.00	5	45.92	14.62	0.46	8	3	0	26	0	13
11+55.00 'FO'	1155.00	5	53.84	16.49	0.28	9	3	0	35	0	19
11+60.00 'FO'	1160.00	5	49.21	19.41	0.14	10	3	0	45	0	26
11+65.00 'FO'	1165.00	5	35.98	23.87	0.00	8	4	0	53	0	30
11+70.00 'FO'	1170.00	5	26.95	18.76	0.00	6	4	0	59	0	32
11+75.00 'FO'	1175.00	5	18.41	11.53	0.00	4	3	0	63	0	33
11+80.00 'FO'	1180.00	5	7.34	4.31	0.00	2	1	0	65	0	34

NOTES:	
1 - CUT	CUT INCLUDES SALVAGED/UNUSABLE PAVEMENT MATERIAL
2 - SALVAGED/UNUSABLE PAVEMENT MATERIAL	THIS DOES NOT SHOW UP IN CROSS SECTIONS
3 - FILL	DOES NOT INCLUDE UNUSABLE PAVEMENT EXC VOLUME
8 - MASS ORDINATE	CUT - SALVAGED PAVT - (FILL * FILL FACTOR)

9

9

PROJECT NO: 9260-00-71 | HWY: STH 32 | COUNTY: FOREST | EARTHWORK DATA | SHEET 205 | E

FILE NAME : N:\PDS\C3D\92600001\SHEETSPLAN\090101-EW.DWG
LAYOUT NAME - 06

PLOT DATE : 10/27/2025 6:11 PM PLOT BY : MATT PAYNE PLOT NAME : PLOT SCALE : 1" = 1'

WISDOT/CADDS SHEET 49

DIVISION 2 - E 6TH ST

STATION	REAL STATION	DISTANCE	AREA (SF)			INCREMENTAL VOL (CY) (UNADJUSTED)			CUMULATIVE VOL (CY)		
			CUT	SALVAGED/UNUSABLE PAVEMENT MATERIAL	FILL	CUT	SALVAGED/UNUSABLE PAVEMENT MATERIAL	FILL	CUT 1.00	EXPANDED FILL 1.25	MASS ORDINATE
						NOTE 1	NOTE 2	NOTE 3	NOTE 1		NOTE 8
10+20.00 'ES'	1020.00	0.00	11.26	5.12	0.00	0	0	0	0	0	0
10+25.00 'ES'	1025.00	5	28.21	13.64	0.00	4	2	0	4	0	2
10+30.00 'ES'	1030.00	5	42.83	22.17	0.00	7	3	0	11	0	6
10+35.00 'ES'	1035.00	5	56.08	29.42	0.00	9	5	0	20	0	10
10+40.00 'ES'	1040.00	5	63.57	24.94	3.39	11	5	0	31	0	16
10+45.00 'ES'	1045.00	5	56.21	22.15	4.72	11	4	1	42	1	22
10+50.00 'ES'	1050.00	5	51.74	20.74	5.46	10	4	1	52	3	27
10+55.00 'ES'	1055.00	5	48.29	20.27	3.47	9	4	1	61	4	30
10+57.97 'ES'	1057.97	2.97	46.99	20.20	1.34	5	2	0	66	4	33
10+68.00 'ES'	1068.00	10.03	48.23	19.63	0.19	18	7	0	84	4	44

DIVISION 2 - W 6TH ST

STATION	REAL STATION	DISTANCE	AREA (SF)			INCREMENTAL VOL (CY) (UNADJUSTED)			CUMULATIVE VOL (CY)		
			CUT	SALVAGED/UNUSABLE PAVEMENT MATERIAL	FILL	CUT	SALVAGED/UNUSABLE PAVEMENT MATERIAL	FILL	CUT 1.00	EXPANDED FILL 1.25	MASS ORDINATE
						NOTE 1	NOTE 2	NOTE 3	NOTE 1		NOTE 8
11+42.00 'WS'	1142.00	0.00	21.27	13.36	0.00	0	0	0	0	0	0
11+52.53 'WS'	1152.53	10.53	35.49	13.34	0.00	11	5	0	11	0	6
11+55.00 'WS'	1155.00	2.47	36.12	13.35	0.66	3	1	0	14	0	8
11+60.00 'WS'	1160.00	5	36.48	14.07	2.90	7	3	0	21	0	12
11+65.00 'WS'	1165.00	5	48.87	16.38	6.51	8	3	1	29	1	16
11+70.00 'WS'	1170.00	5	48.47	19.90	1.81	9	3	1	38	3	21
11+75.00 'WS'	1175.00	5	28.49	15.60	0.00	7	3	0	45	3	25
11+80.00 'WS'	1180.00	5	6.80	3.26	0.00	3	2	0	48	3	26

NOTES:	
1 - CUT	CUT INCLUDES SALVAGED/UNUSABLE PAVEMENT MATERIAL
2 - SALVAGED/UNUSABLE PAVEMENT MATERIAL	THIS DOES NOT SHOW UP IN CROSS SECTIONS
3 - FILL	DOES NOT INCLUDE UNUSABLE PAVEMENT EXC VOLUME
8 - MASS ORDINATE	CUT - SALVAGED PAVT - (FILL * FILL FACTOR)

9

9

PROJECT NO: 9260-00-71 | HWY: STH 32 | COUNTY: FOREST | EARTHWORK DATA | SHEET 206 | E

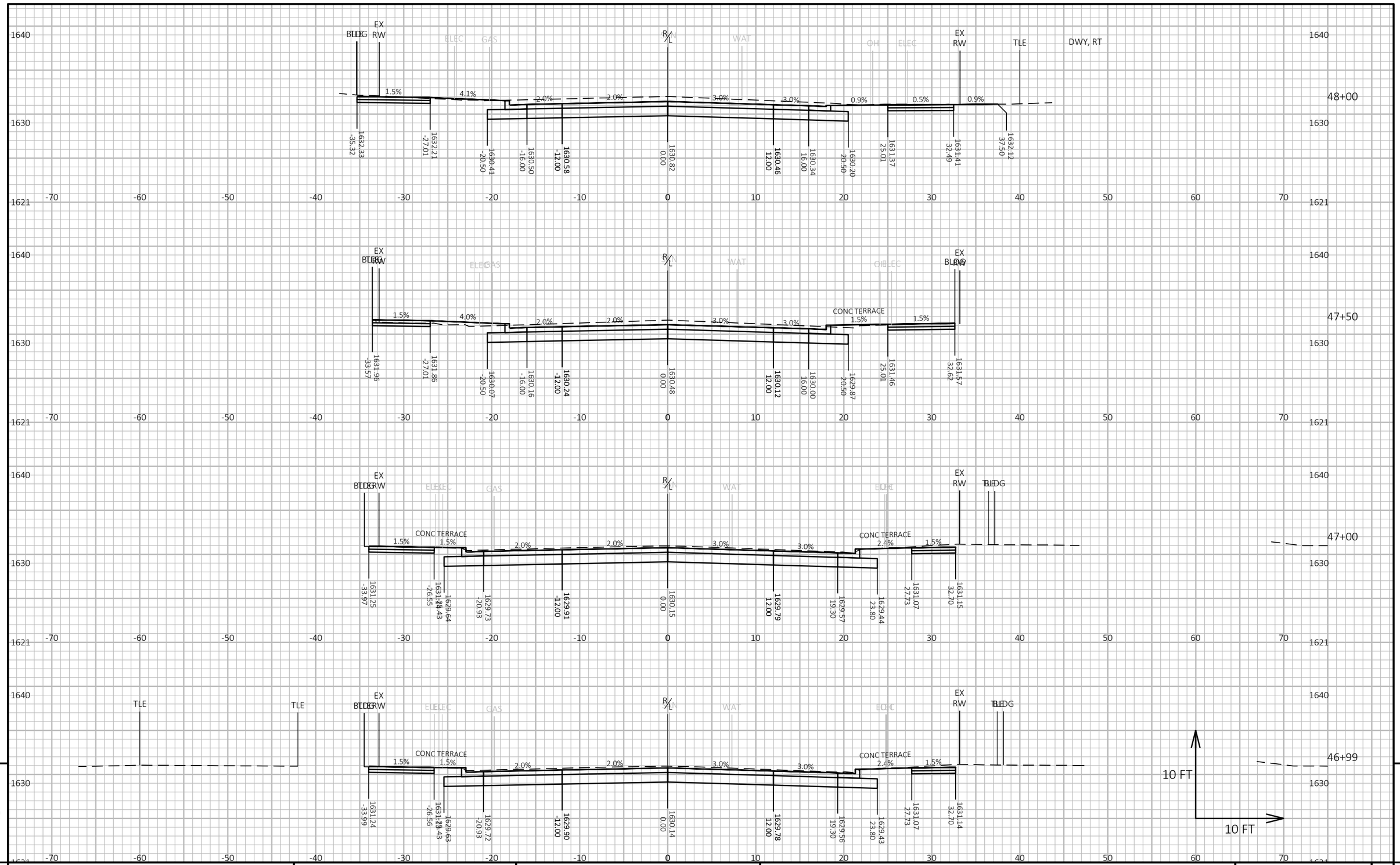

9

9

PROJECT NO: 9260-00-71	HWY: STH 32	COUNTY: FOREST	CROSS SECTIONS: STH 32	SHEET 207	E

FILE NAME : N:\PDS\C3D\92600001\SHEETSPLAN\090201-XS.DWG
LAYOUT NAME - XS-01

PLOT DATE : 10/22/2025 2:29 PM

PLOT BY : MATT PAYNE

PLOT NAME :

PLOT SCALE : 1 IN:10 FT HORZ. / 1 IN:10 FT VERT.

WISDOT/CADDS SHEET 49

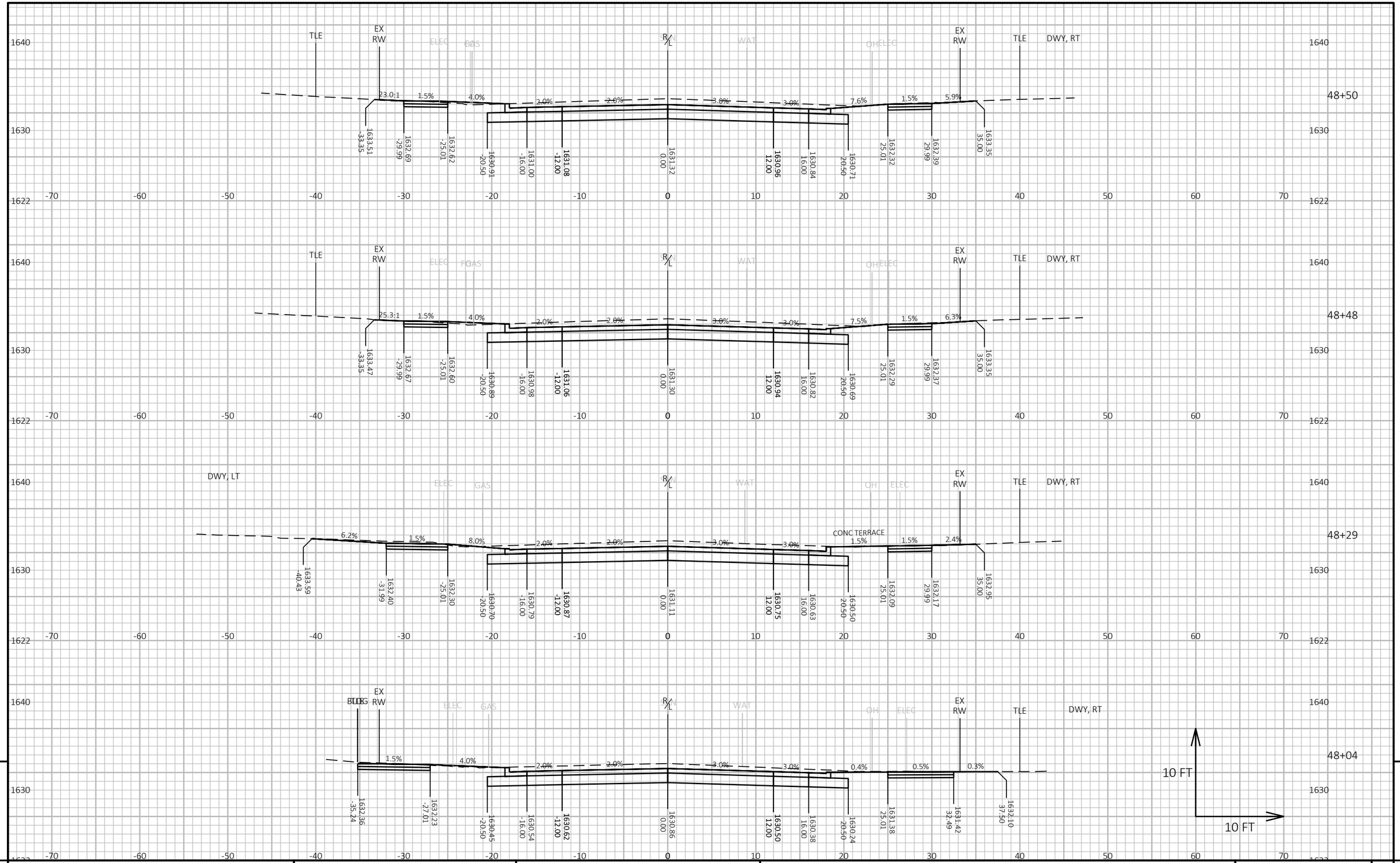

9

9

PROJECT NO: 9260-00-71	HWY: STH 32	COUNTY: FOREST	CROSS SECTIONS: STH 32	SHEET 208	E

FILE NAME : N:\PDS\C3D\92600001\SHEETSPLAN\090201-XS.DWG
LAYOUT NAME - XS-02

PLOT DATE : 10/22/2025 2:30 PM

PLOT BY : MATT PAYNE

PLOT NAME :

PLOT SCALE : 1 IN:10 FT HORZ. / 1 IN:10 FT VERT.

WISDOT/CADDS SHEET 49

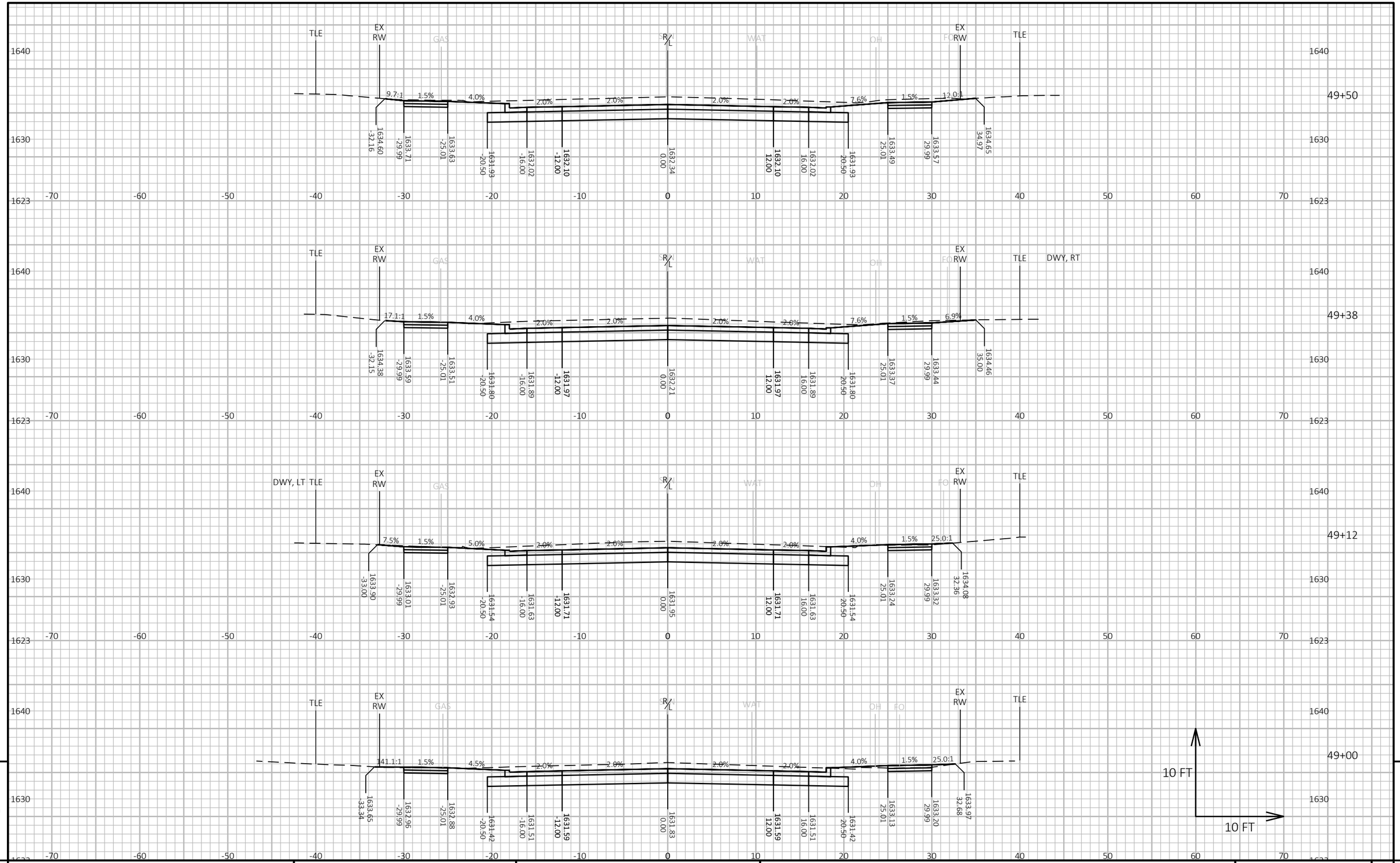

9

9

PROJECT NO: 9260-00-71	HWY: STH 32	COUNTY: FOREST	CROSS SECTIONS: STH 32	SHEET 209	E

FILE NAME : N:\PDS\C3D\92600001\SHEETSPLAN\090201-XS.DWG
LAYOUT NAME - XS-03

PLOT DATE : 10/22/2025 2:30 PM

PLOT BY : MATT PAYNE

PLOT NAME :

PLOT SCALE : 1 IN:10 FT HORZ. / 1 IN:10 FT VERT.

WISDOT/CADDS SHEET 49

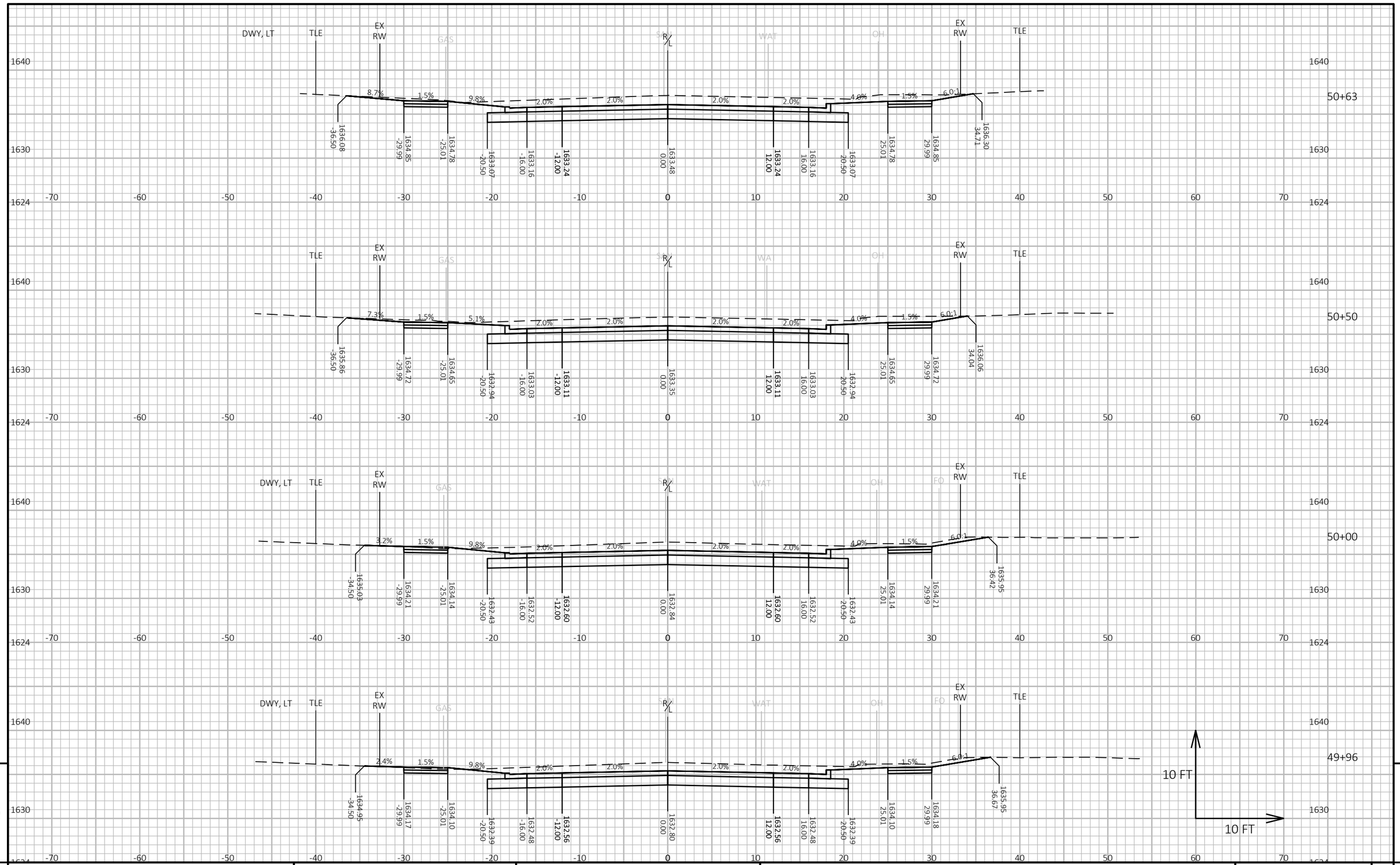

9

9

PROJECT NO: 9260-00-71	HWY: STH 32	COUNTY: FOREST	CROSS SECTIONS: STH 32	SHEET 210	E

FILE NAME : N:\PDS\C3D\92600001\SHEETSPLAN\090201-XS.DWG
LAYOUT NAME - XS-04

PLOT DATE : 10/22/2025 2:30 PM

PLOT BY : MATT PAYNE

PLOT NAME :

PLOT SCALE : 1 IN:10 FT HORZ. / 1 IN:10 FT VERT.

WISDOT/CADDS SHEET 49

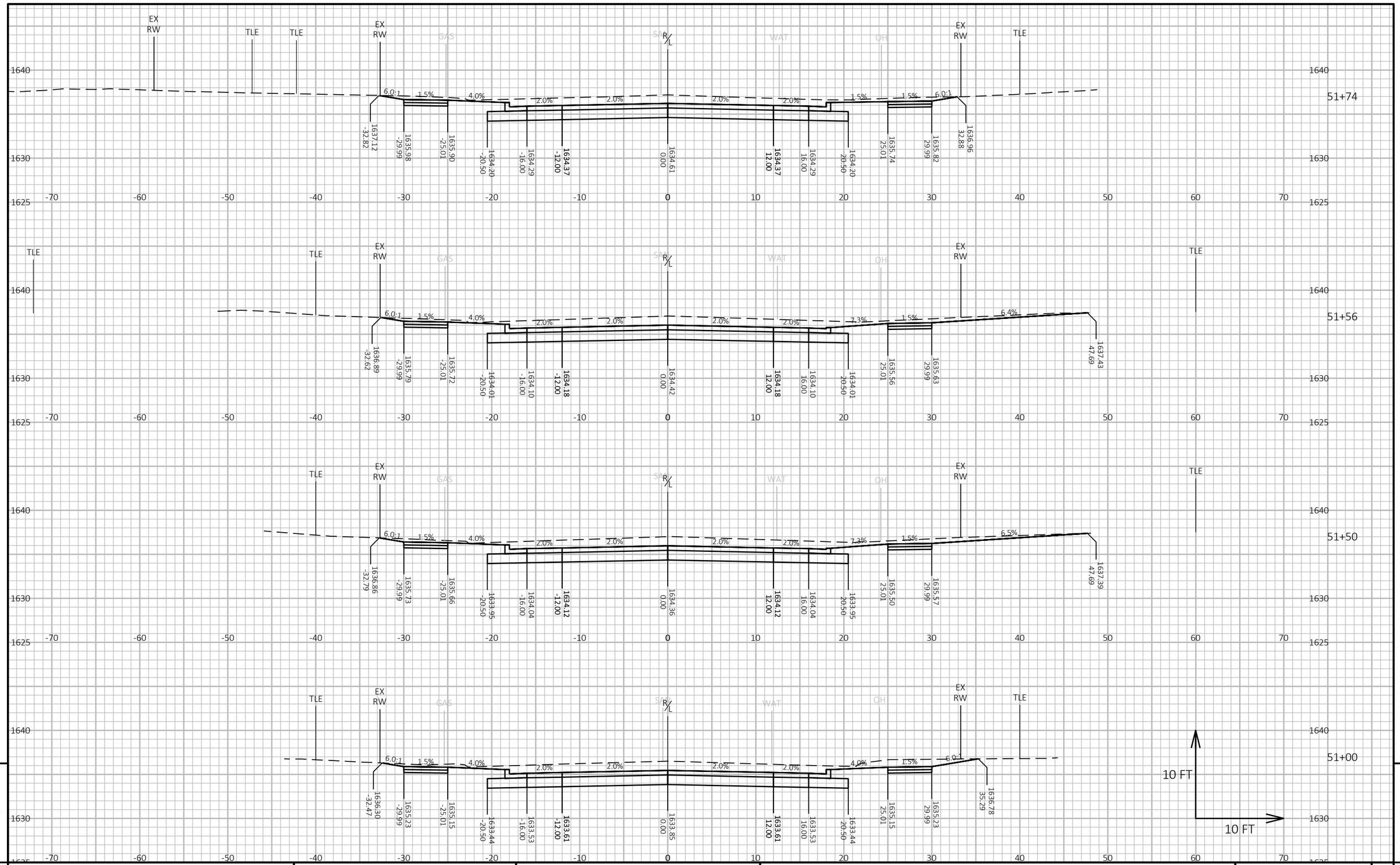

9

9

PROJECT NO: 9260-00-71	HWY: STH 32	COUNTY: FOREST	CROSS SECTIONS: STH 32	SHEET 211	E

FILE NAME : N:\PDS\C3D\92600001\SHEETSPLAN\090201-XS.DWG
LAYOUT NAME - XS-05

PLOT DATE : 10/22/2025 2:30 PM

PLOT BY : MATT PAYNE

PLOT NAME :

PLOT SCALE : 1 IN:10 FT HORZ. / 1 IN:10 FT VERT.

WISDOT/CADDS SHEET 49

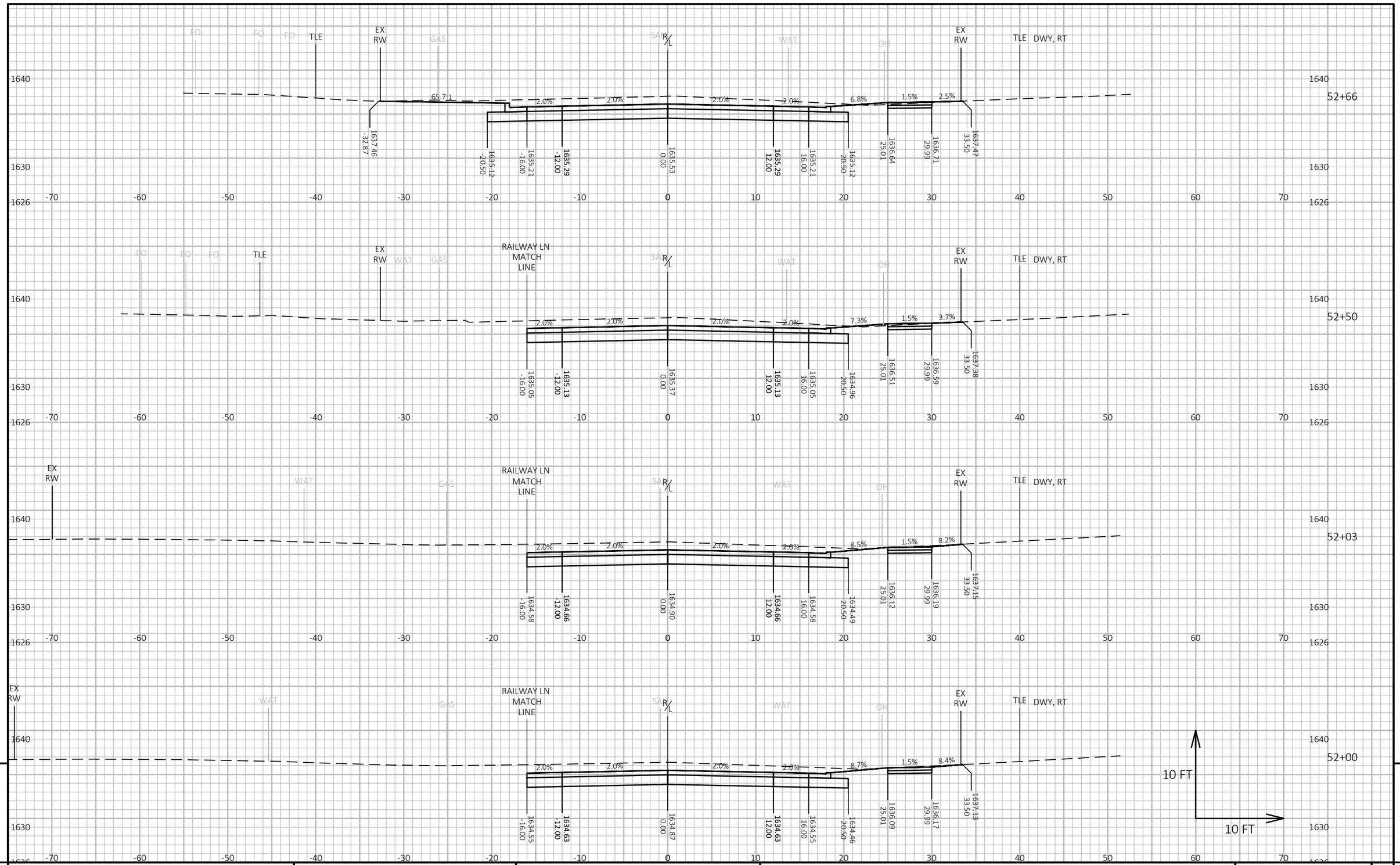

9

9

PROJECT NO: 9260-00-71	HWY: STH 32	COUNTY: FOREST	CROSS SECTIONS: STH 32	SHEET 212	E

FILE NAME : N:\PDS\C3D\92600001\SHEETSPLAN\090201-XS.DWG
LAYOUT NAME - XS-06

PLOT DATE : 10/22/2025 2:30 PM

PLOT BY : MATT PAYNE

PLOT NAME :

PLOT SCALE : 1 IN:10 FT HORZ. / 1 IN:10 FT VERT.

WISDOT/CADDS SHEET 49

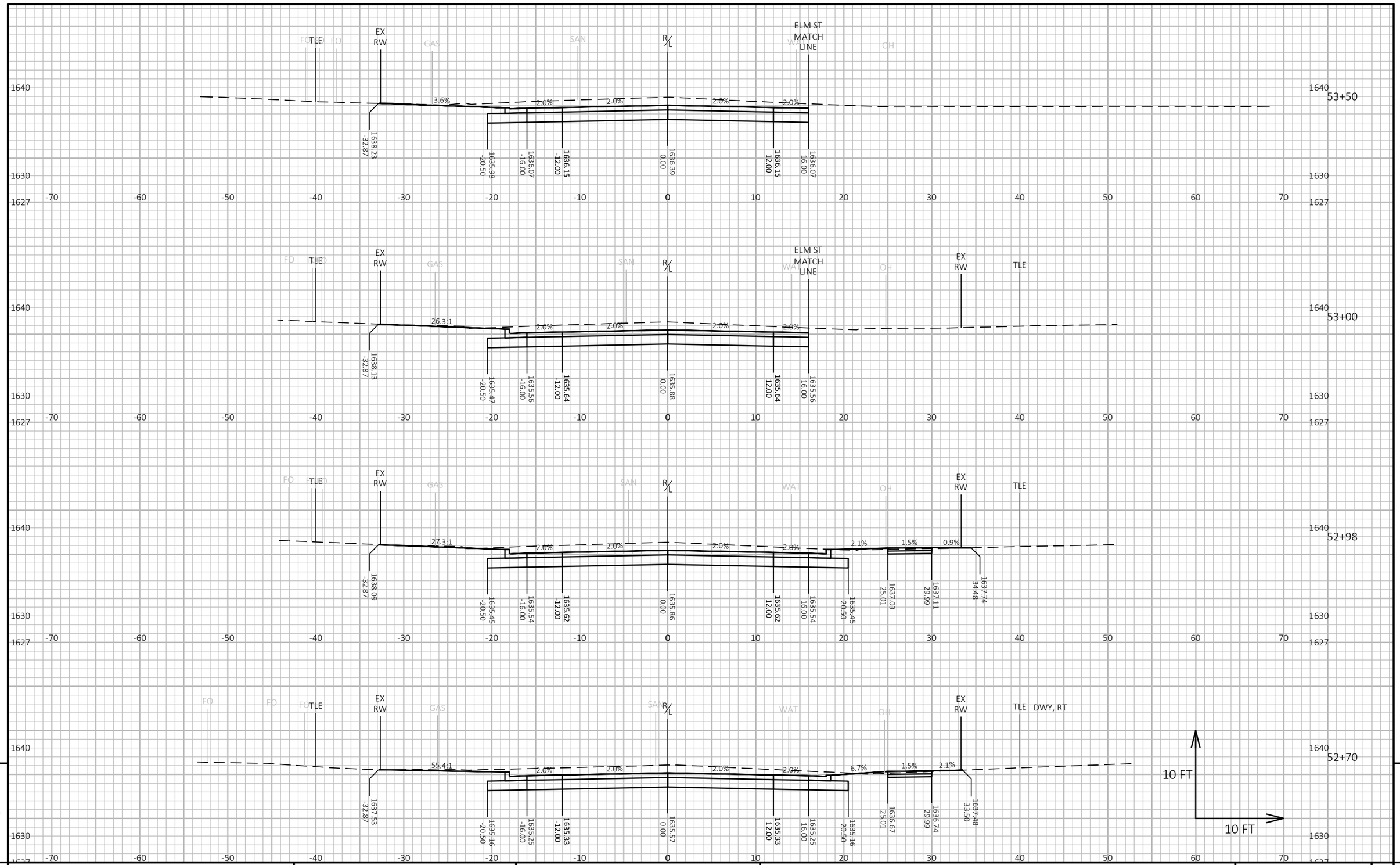

9

9

PROJECT NO: 9260-00-71	HWY: STH 32	COUNTY: FOREST	CROSS SECTIONS: STH 32	SHEET 213	E

FILE NAME : N:\PDS\C3D\92600001\SHEETSPLAN\090201-XS.DWG
LAYOUT NAME - XS-07

PLOT DATE : 10/22/2025 2:30 PM

PLOT BY : MATT PAYNE

PLOT NAME :

PLOT SCALE : 1 IN:10 FT HORZ. / 1 IN:10 FT VERT.

WISDOT/CADDS SHEET 49

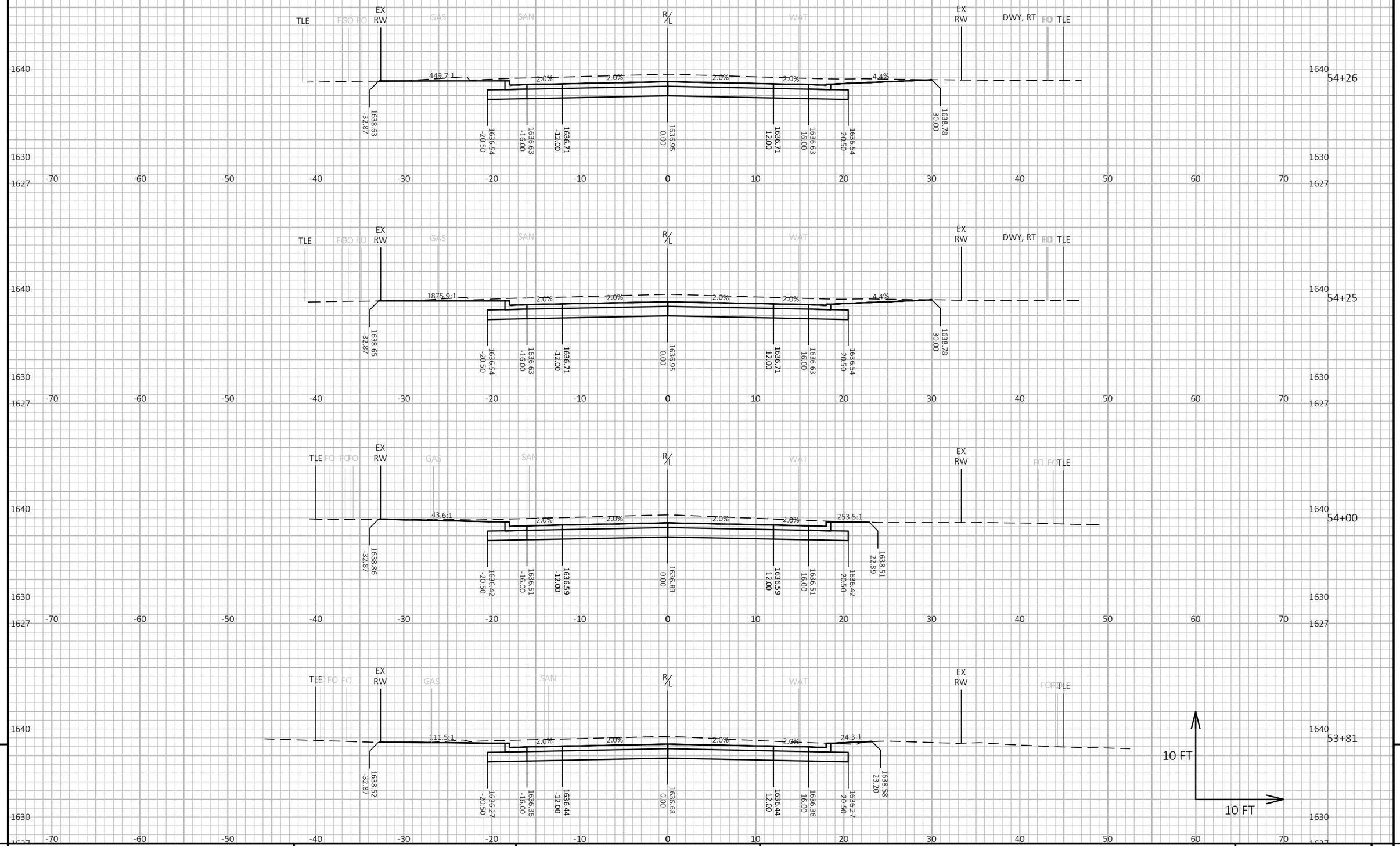

9

9

PROJECT NO: 9260-00-71	HWY: STH 32	COUNTY: FOREST	CROSS SECTIONS: STH 32	SHEET 214	E

FILE NAME : N:\PDS\C3D\92600001\SHEETSPLAN\090201-XS.DWG
LAYOUT NAME - XS-08

PLOT DATE : 10/22/2025 2:30 PM

PLOT BY : MATT PAYNE

PLOT NAME :

PLOT SCALE : 1 IN:10 FT HORZ. / 1 IN:10 FT VERT.

WISDOT/CADDS SHEET 49

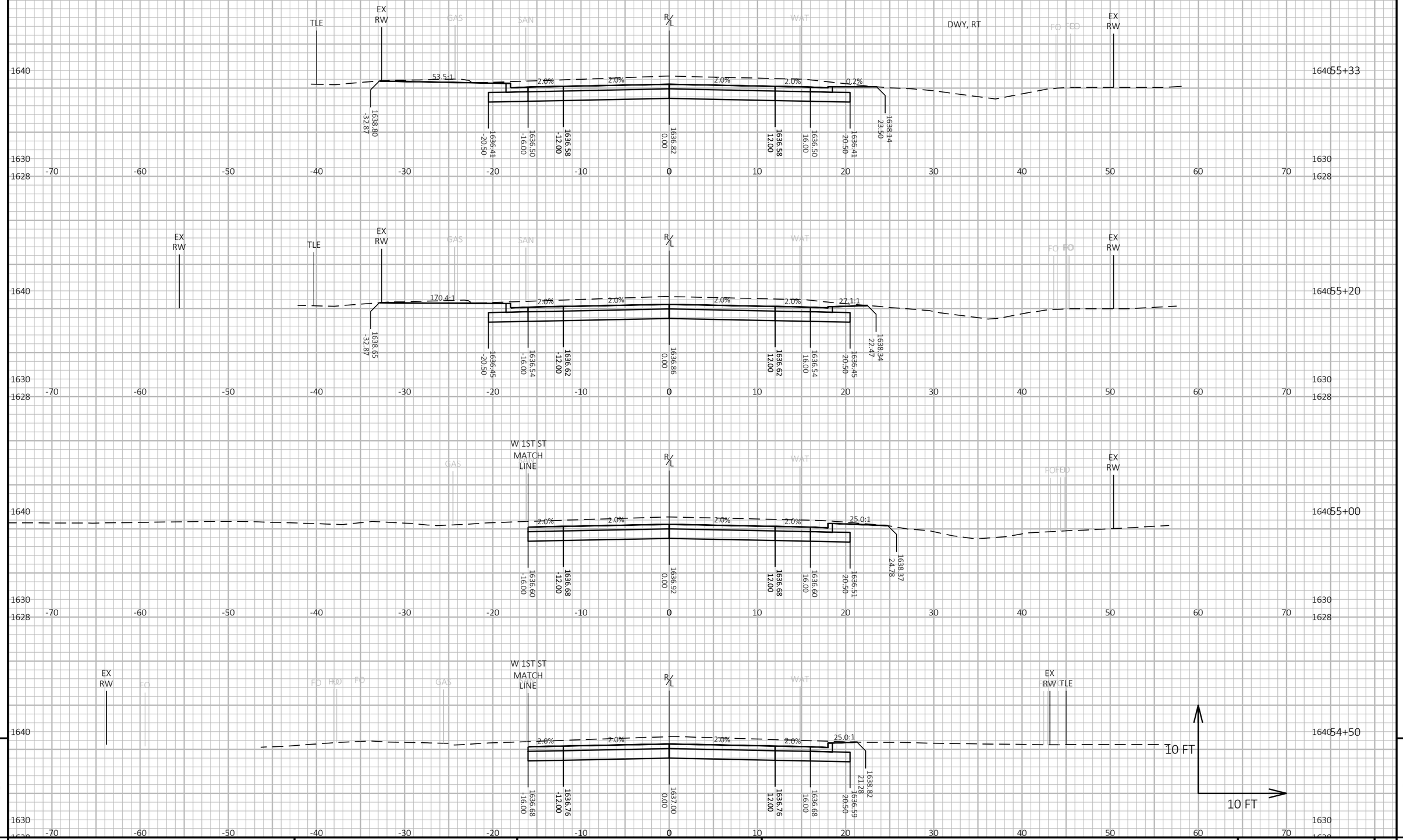

9

9

PROJECT NO: 9260-00-71	HWY: STH 32	COUNTY: FOREST	CROSS SECTIONS: STH 32	SHEET 215	E

FILE NAME : N:\PDS\C3D\92600001\SHEETSPLAN\090201-XS.DWG
LAYOUT NAME - XS-09

PLOT DATE : 10/22/2025 2:31 PM

PLOT BY : MATT PAYNE

PLOT NAME :

PLOT SCALE : 1 IN:10 FT HORZ. / 1 IN:10 FT VERT.

WISDOT/CADDS SHEET 49

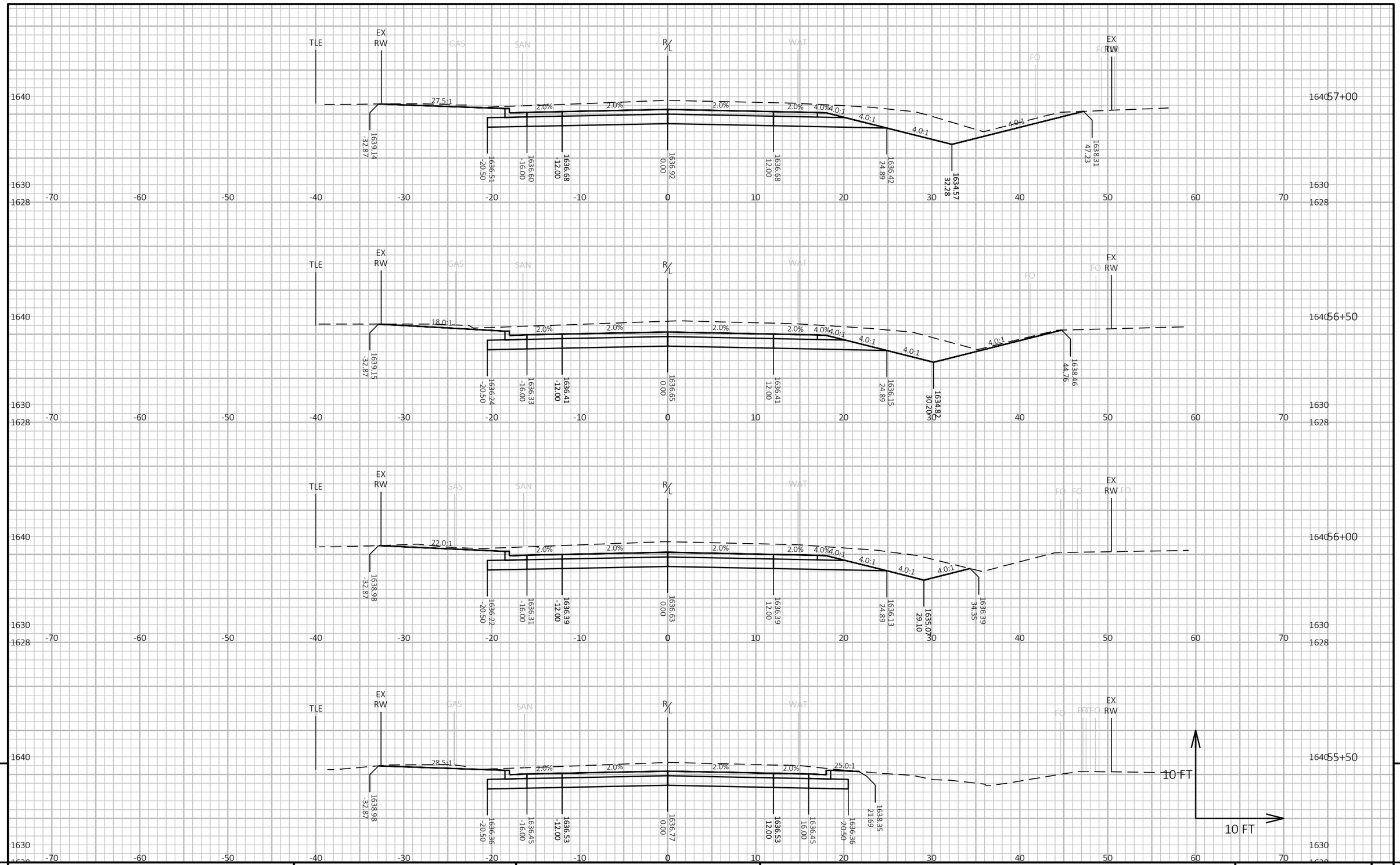

9 9

PROJECT NO: 9260-00-71	HWY: STH 32	COUNTY: FOREST	CROSS SECTIONS: STH 32	SHEET 216	E

FILE NAME : N:\PDS\C3D\92600001\SHEETSPLAN\090201-XS.DWG
LAYOUT NAME - XS-10

PLOT DATE : 10/22/2025 2:31 PM PLOT BY : MATT PAYNE PLOT NAME : PLOT SCALE : 1 IN:10 FT HORZ. / 1 IN:10 FT VERT.

WISDOT/CADDS SHEET 49

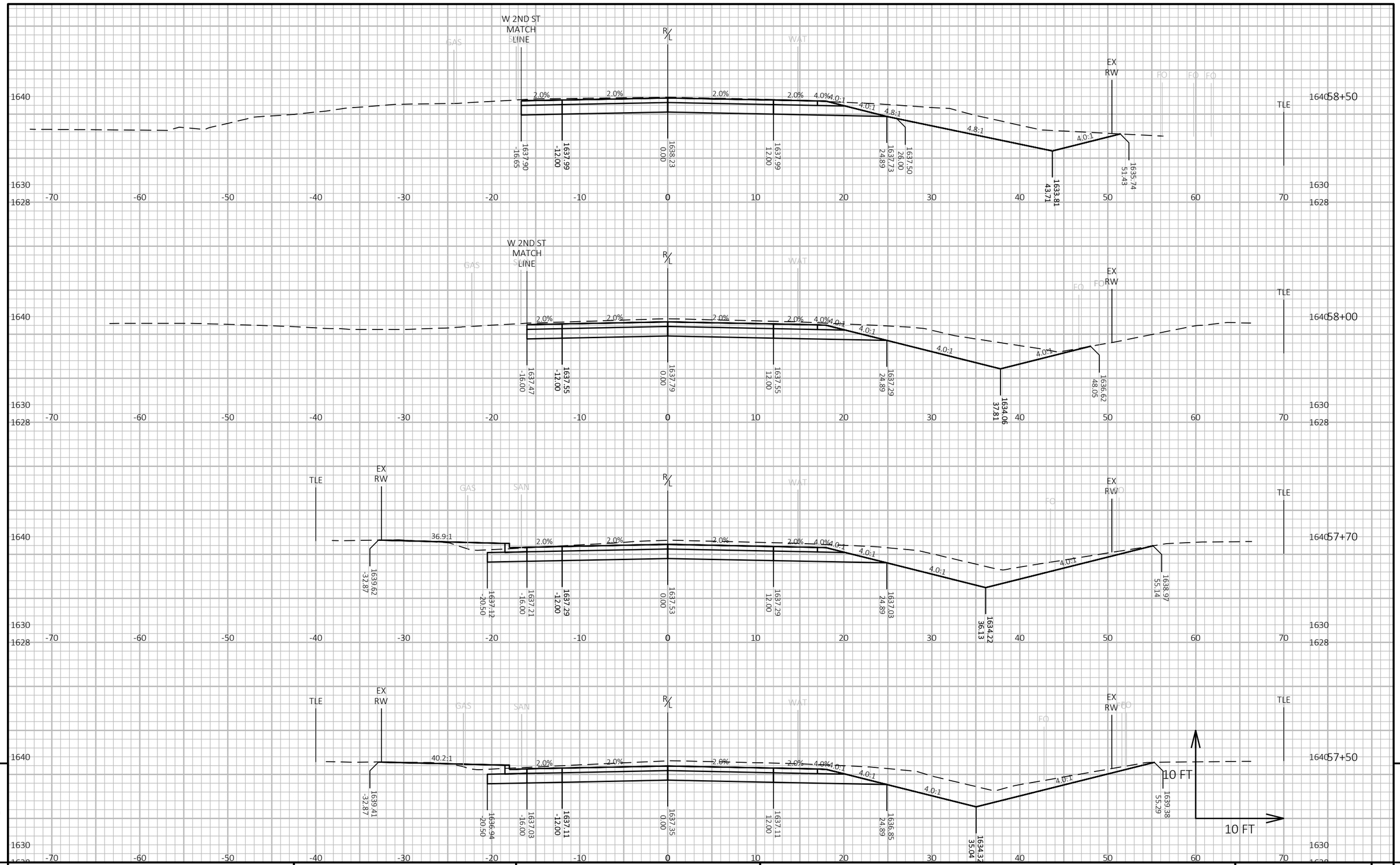

9

9

PROJECT NO: 9260-00-71	HWY: STH 32	COUNTY: FOREST	CROSS SECTIONS: STH 32	SHEET 217	E

FILE NAME : N:\PDS\C3D\92600001\SHEETSPLAN\090201-XS.DWG
LAYOUT NAME - XS-11

PLOT DATE : 10/22/2025 2:31 PM

PLOT BY : MATT PAYNE

PLOT NAME :

PLOT SCALE : 1 IN:10 FT HORZ. / 1 IN:10 FT VERT.

WISDOT/CADDS SHEET 49

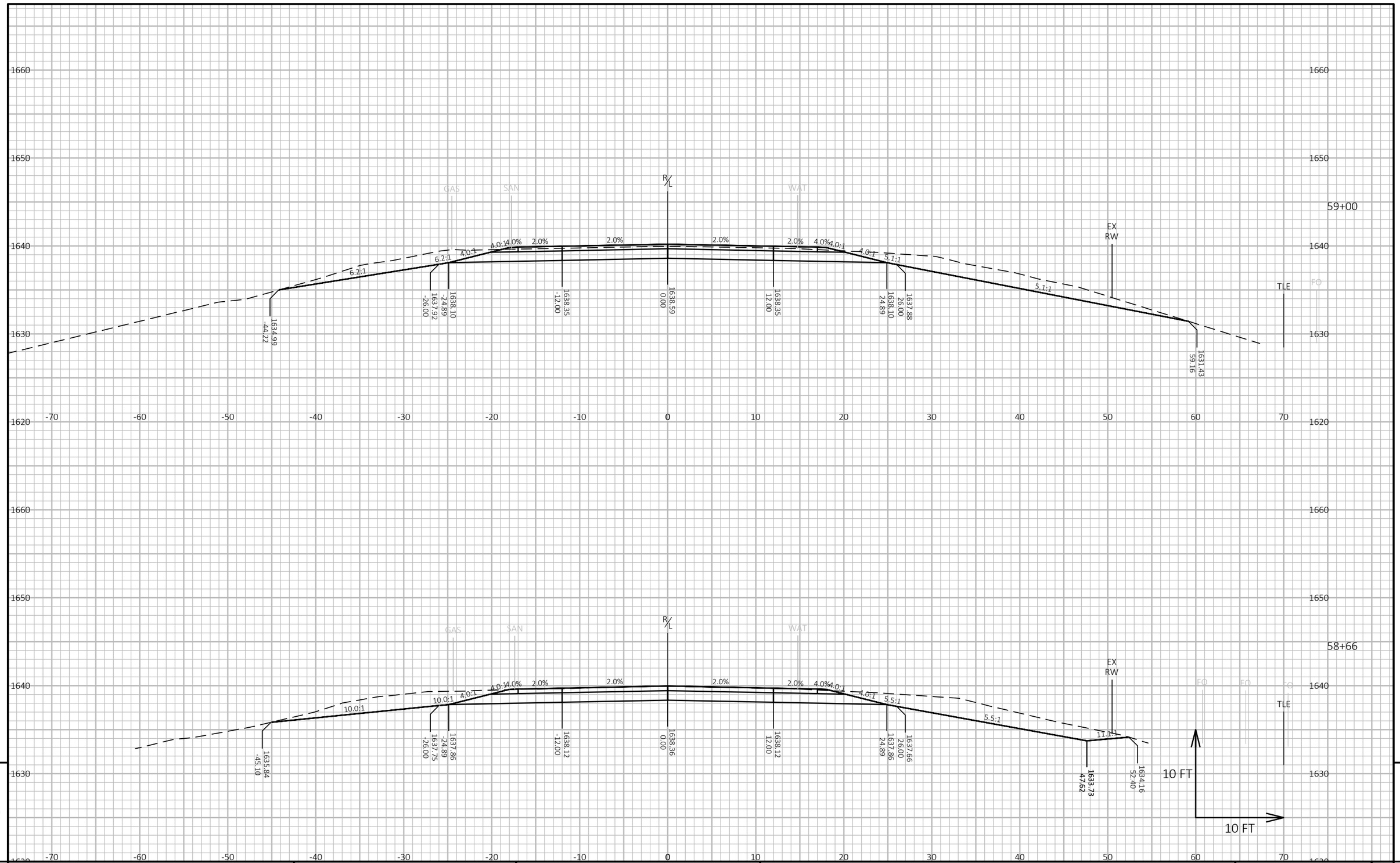

9

9

PROJECT NO: 9260-00-71	HWY: STH 32	COUNTY: FOREST	CROSS SECTIONS: STH 32	SHEET 218	E

FILE NAME : N:\PDS\C3D\92600001\SHEETSPLAN\090201-XS.DWG
LAYOUT NAME - XS-12

PLOT DATE : 10/22/2025 2:31 PM

PLOT BY : MATT PAYNE

PLOT NAME :

PLOT SCALE : 1 IN:10 FT HORZ. / 1 IN:10 FT VERT.

WISDOT/CADDS SHEET 49

SKEWED SECTION - FOR INFORMATIONAL PURPOSES ONLY

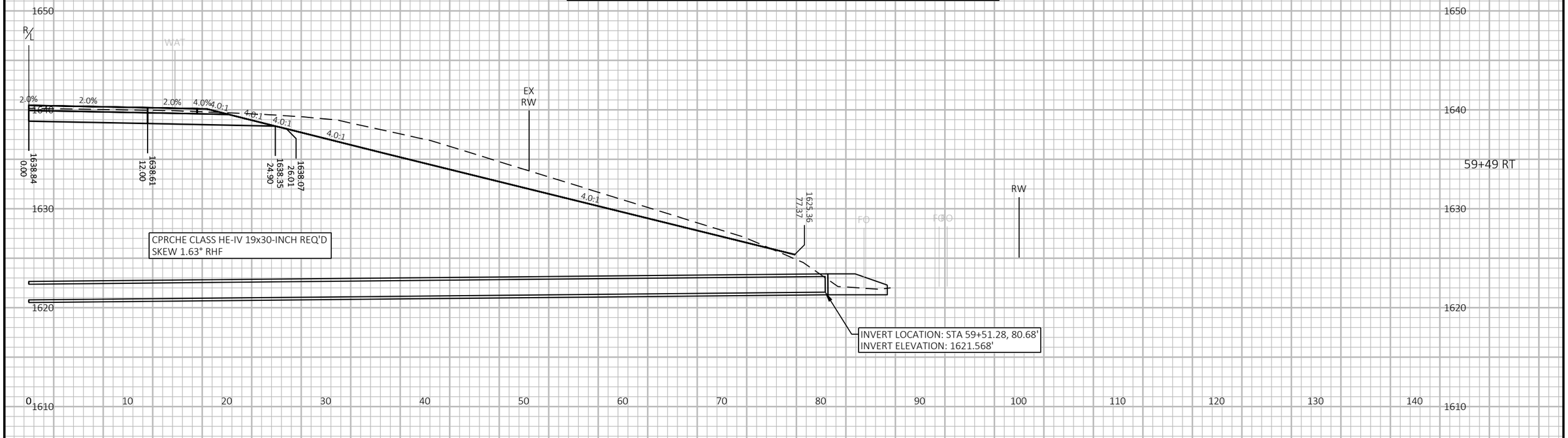

SKEWED SECTION - FOR INFORMATIONAL PURPOSES ONLY

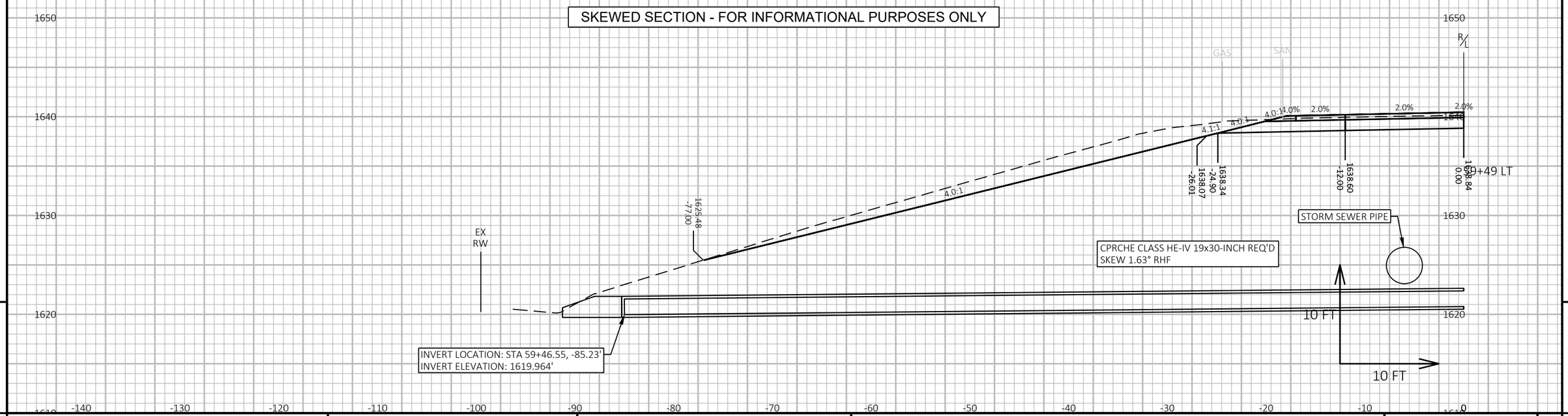

9

9

PROJECT NO: 9260-00-71	HWY: STH 32	COUNTY: FOREST	CROSS SECTIONS: STH 32	SHEET 219	E

FILE NAME : N:\PDS\C3D\92600001\SHEETSPLAN\090201-XS.DWG
LAYOUT NAME - XS-13

PLOT DATE : 10/22/2025 2:31 PM PLOT BY : MATT PAYNE PLOT NAME : PLOT SCALE : 1 IN:10 FT HORZ. / 1 IN:10 FT VERT.

WISDOT/CADDS SHEET 49

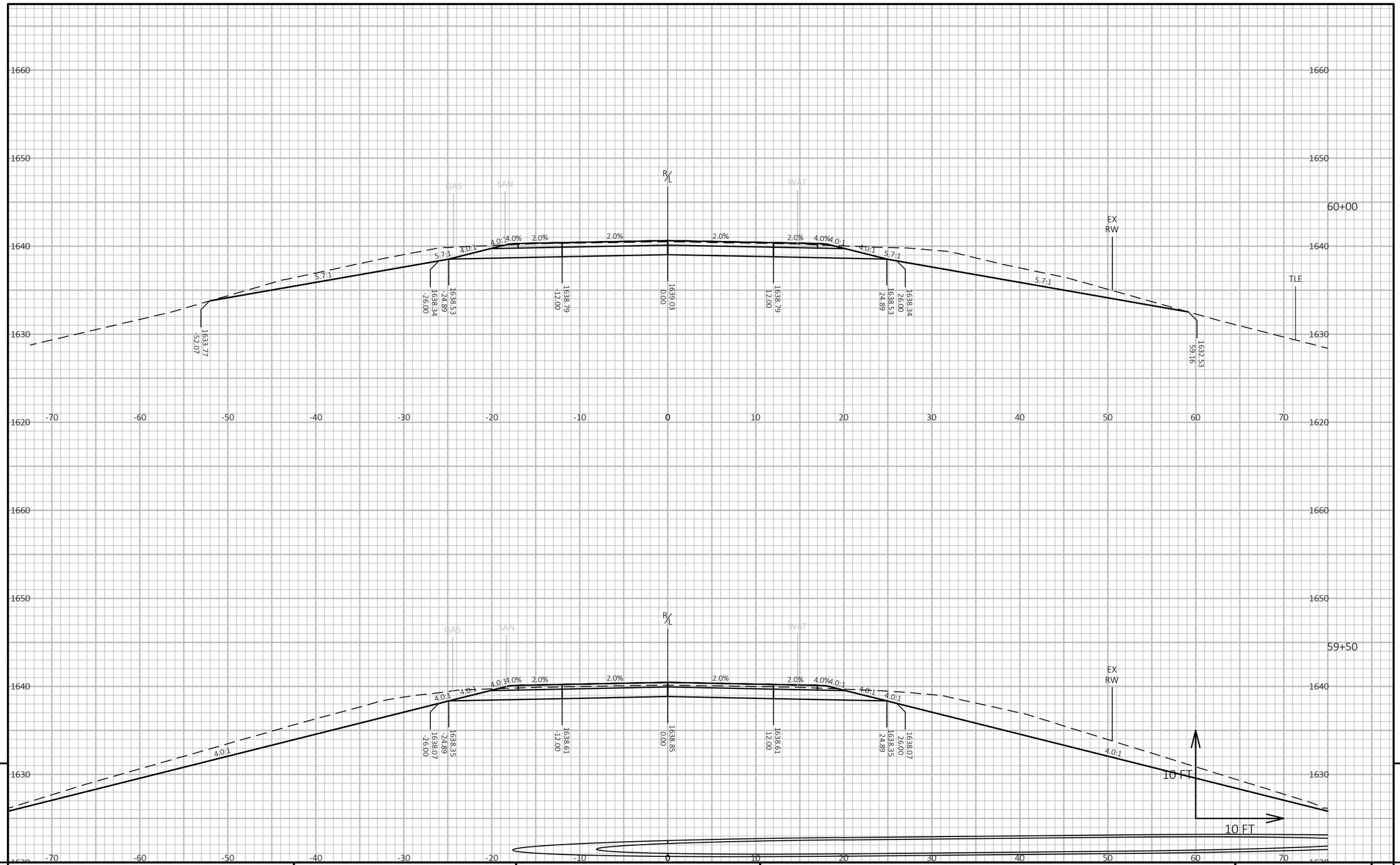

PROJECT NO: 9260-00-71	HWY: STH 32	COUNTY: FOREST	CROSS SECTIONS: STH 32	SHEET 220 E

FILE NAME : N:\PDS\C3D\92600001\SHEETSPLAN\090201-XS.DWG
LAYOUT NAME - XS-14

PLOT DATE : 10/22/2025 2:31 PM

PLOT BY : MATT PAYNE

PLOT NAME :

PLOT SCALE : 1 IN:10 FT HORZ. / 1 IN:10 FT VERT.

WISDOT/CADDS SHEET 49

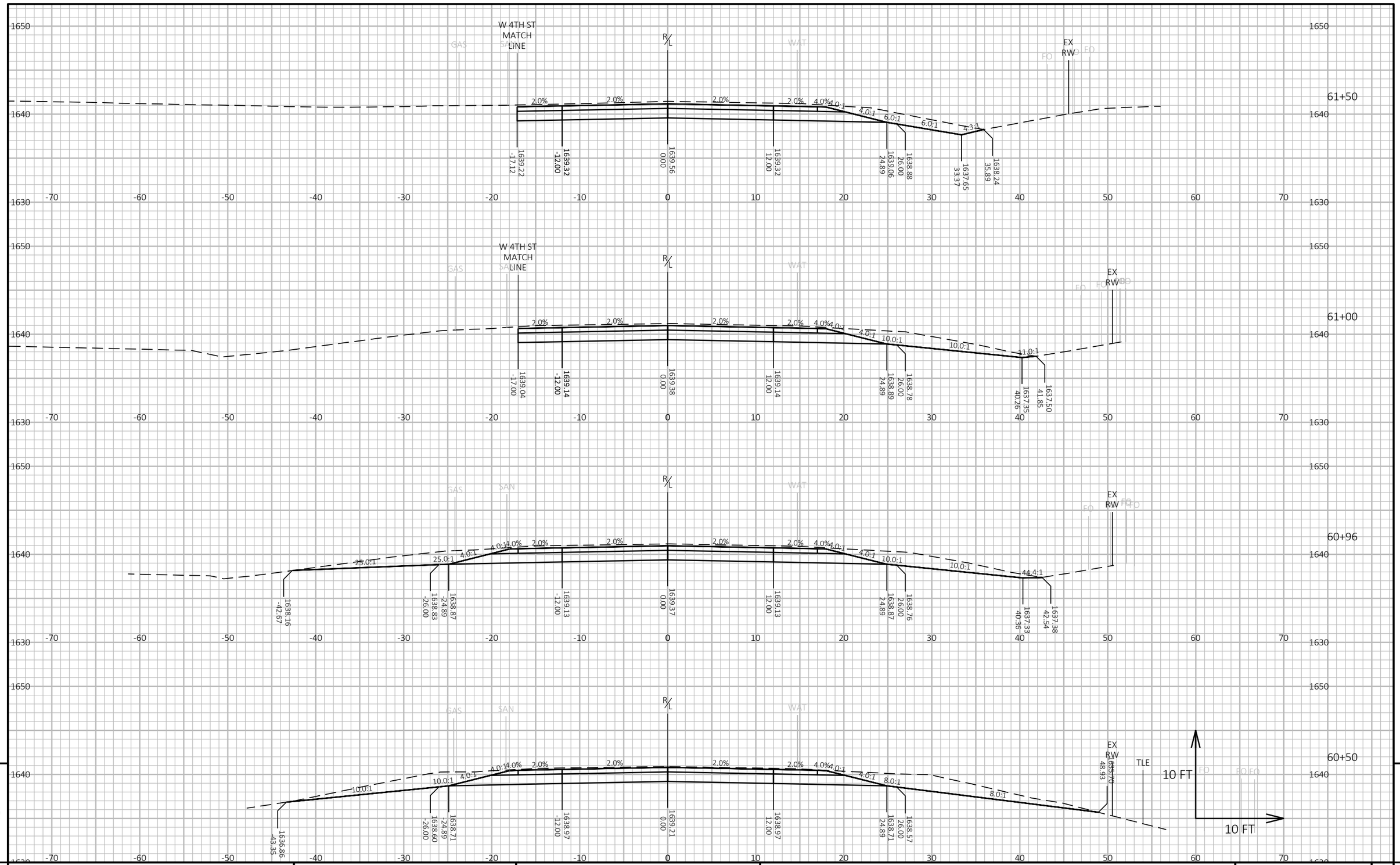

9

9

PROJECT NO: 9260-00-71	HWY: STH 32	COUNTY: FOREST	CROSS SECTIONS: STH 32	SHEET 221	E

FILE NAME : N:\PDS\C3D\92600001\SHEETSPLAN\090201-XS.DWG
LAYOUT NAME - XS-15

PLOT DATE : 10/22/2025 2:31 PM

PLOT BY : MATT PAYNE

PLOT NAME :

PLOT SCALE : 1 IN:10 FT HORZ. / 1 IN:10 FT VERT.

WISDOT/CADDS SHEET 49

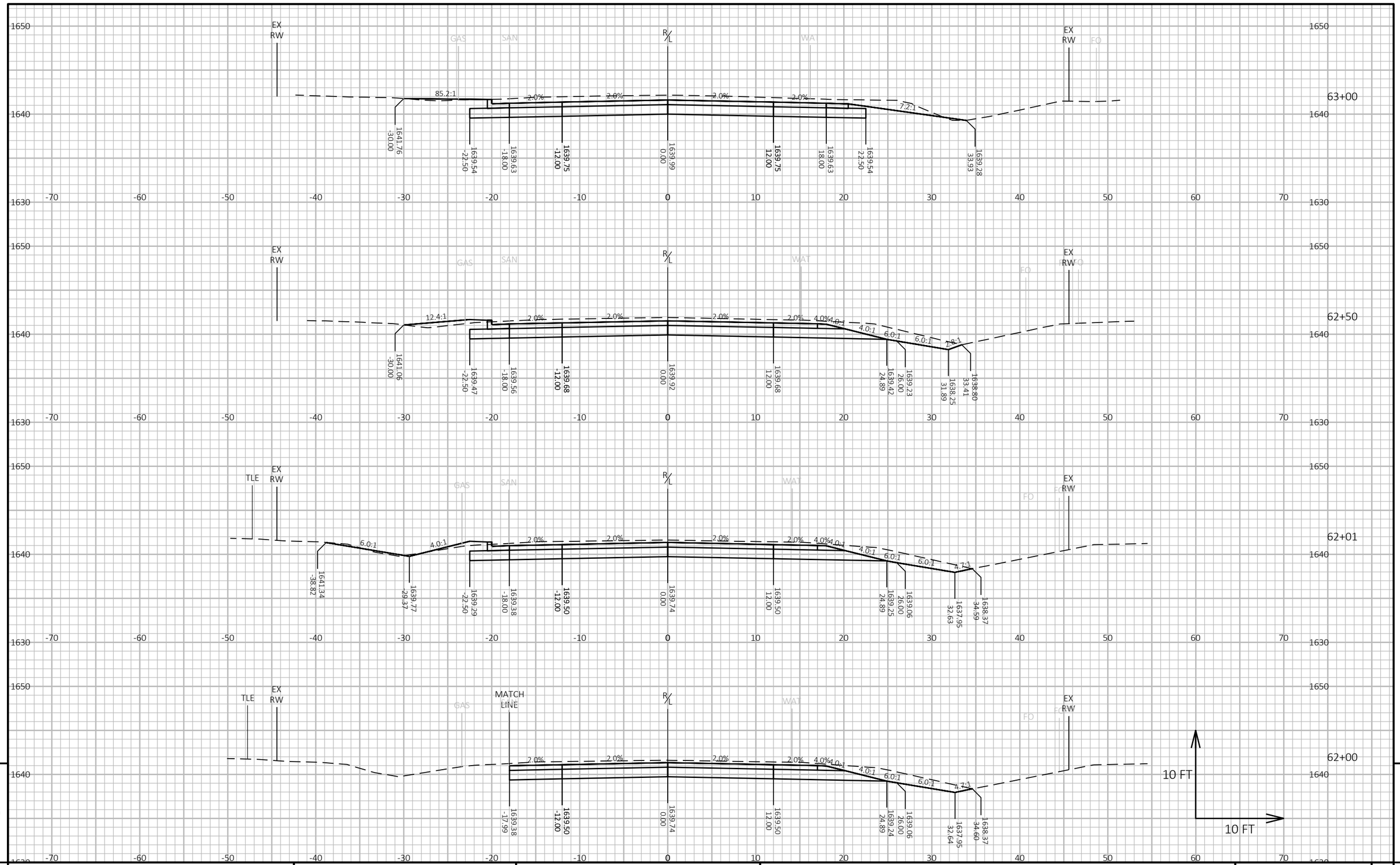

9

9

PROJECT NO: 9260-00-71	HWY: STH 32	COUNTY: FOREST	CROSS SECTIONS: STH 32	SHEET 222	E

FILE NAME : N:\PDS\C3D\92600001\SHEETSPLAN\090201-XS.DWG
LAYOUT NAME - XS-16

PLOT DATE : 10/22/2025 2:32 PM

PLOT BY : MATT PAYNE

PLOT NAME :

PLOT SCALE : 1 IN:10 FT HORZ. / 1 IN:10 FT VERT.

WISDOT/CADDS SHEET 49

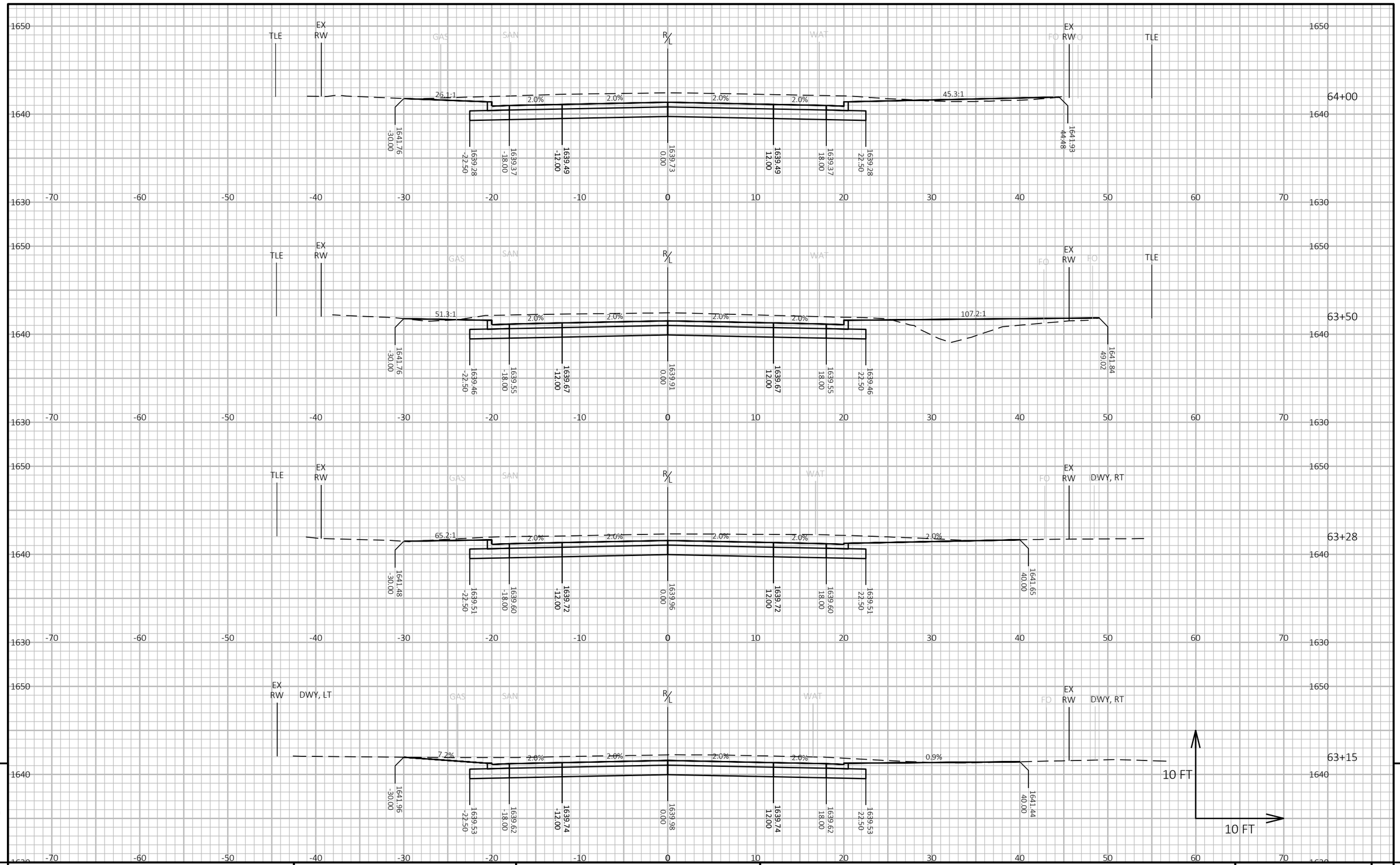

9

9

PROJECT NO: 9260-00-71	HWY: STH 32	COUNTY: FOREST	CROSS SECTIONS: STH 32	SHEET 223	E

FILE NAME : N:\PDS\C3D\92600001\SHEETSPLAN\090201-XS.DWG
LAYOUT NAME - XS-17

PLOT DATE : 10/22/2025 2:32 PM

PLOT BY : MATT PAYNE

PLOT NAME :

PLOT SCALE : 1 IN:10 FT HORZ. / 1 IN:10 FT VERT.

WISDOT/CADDS SHEET 49

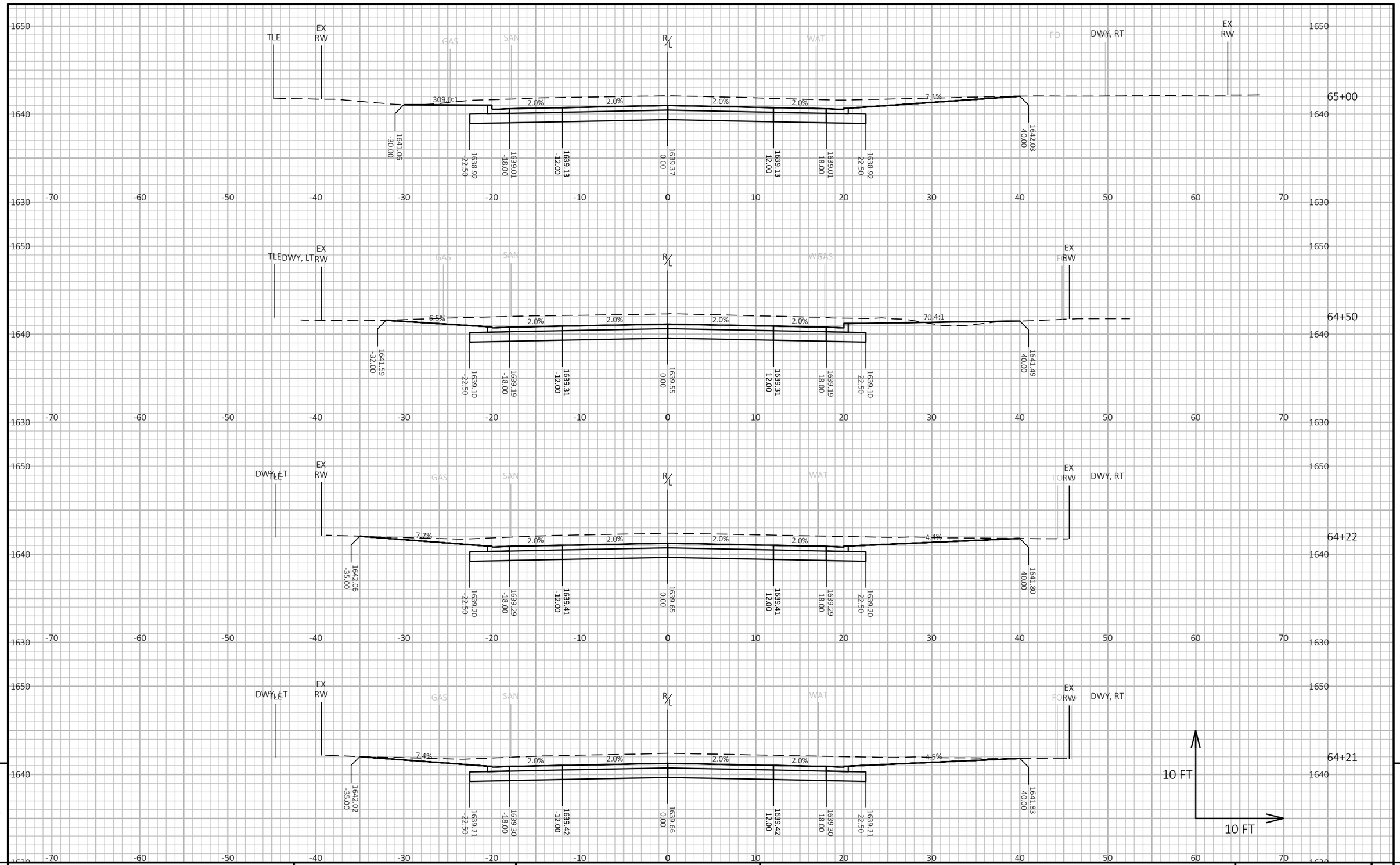

9

9

PROJECT NO: 9260-00-71	HWY: STH 32	COUNTY: FOREST	CROSS SECTIONS: STH 32	SHEET 224	E

FILE NAME : N:\PDS\C3D\92600001\SHEETSPLAN\090201-XS.DWG
LAYOUT NAME - XS-18

PLOT DATE : 10/22/2025 2:32 PM

PLOT BY : MATT PAYNE

PLOT NAME :

PLOT SCALE : 1 IN:10 FT HORZ. / 1 IN:10 FT VERT.

WISDOT/CADDS SHEET 49

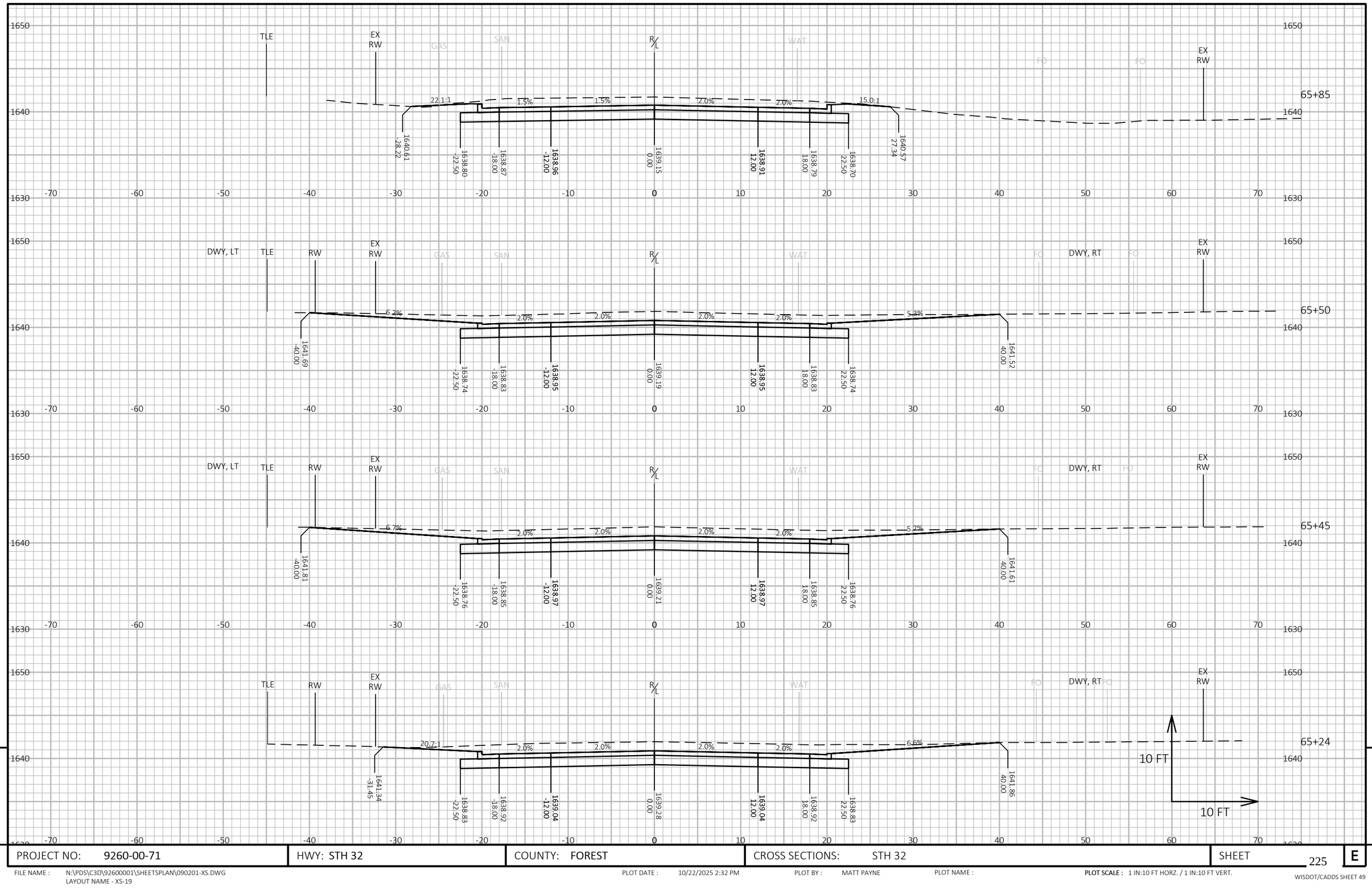

9

9

PROJECT NO: 9260-00-71	HWY: STH 32	COUNTY: FOREST	CROSS SECTIONS: STH 32	SHEET 225	E

FILE NAME : N:\PDS\C3D\92600001\SHEETSPLAN\090201-XS.DWG
LAYOUT NAME - XS-19

PLOT DATE : 10/22/2025 2:32 PM

PLOT BY : MATT PAYNE

PLOT NAME :

PLOT SCALE : 1 IN:10 FT HORZ. / 1 IN:10 FT VERT.

WISDOT/CADDS SHEET 49

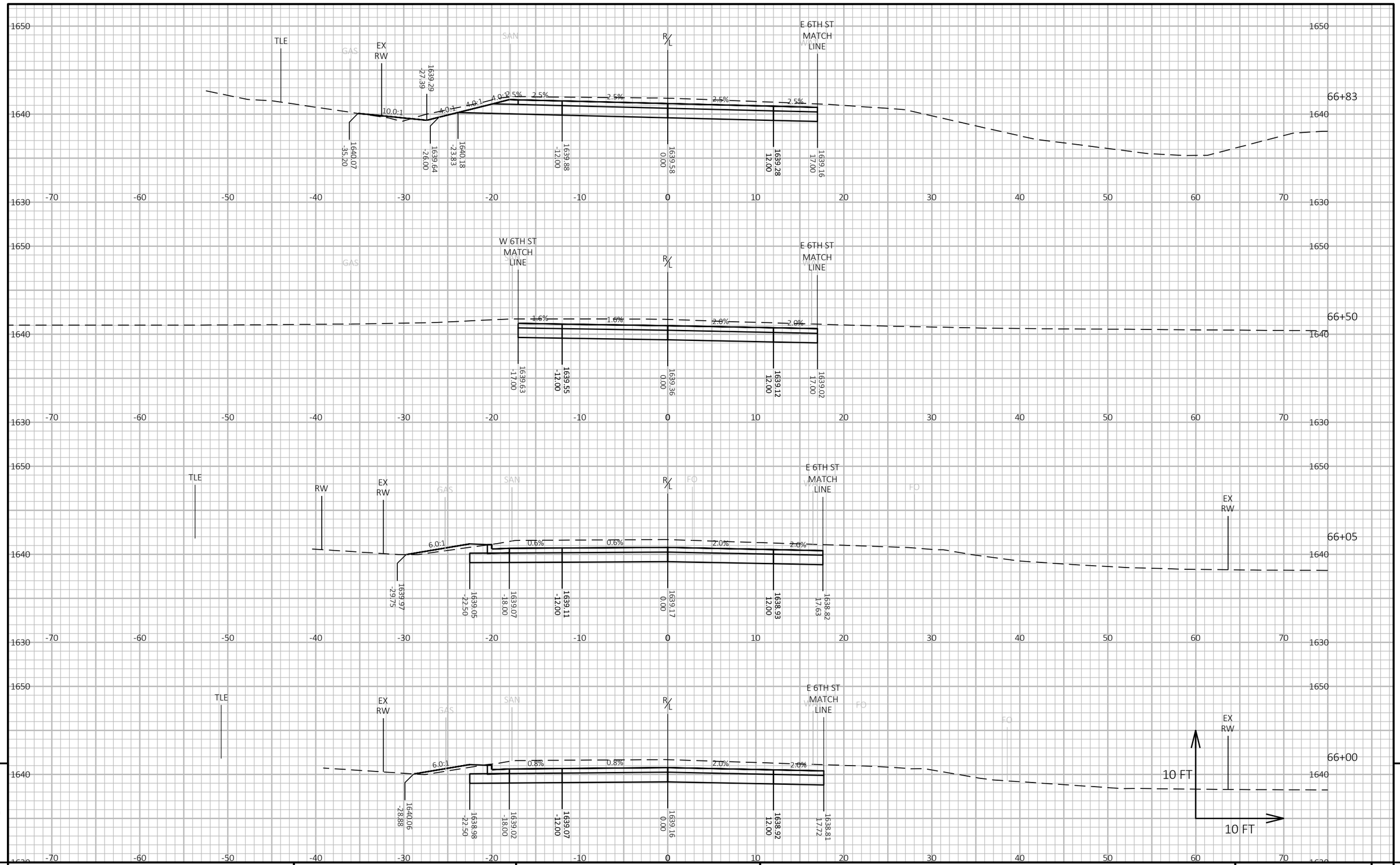

9

9

PROJECT NO: 9260-00-71	HWY: STH 32	COUNTY: FOREST	CROSS SECTIONS: STH 32	SHEET 226	E

FILE NAME : N:\PDS\C3D\92600001\SHEETSPLAN\090201-XS.DWG
LAYOUT NAME - XS-20

PLOT DATE : 10/22/2025 2:32 PM

PLOT BY : MATT PAYNE

PLOT NAME :

PLOT SCALE : 1 IN:10 FT HORZ. / 1 IN:10 FT VERT.

WISDOT/CADDS SHEET 49

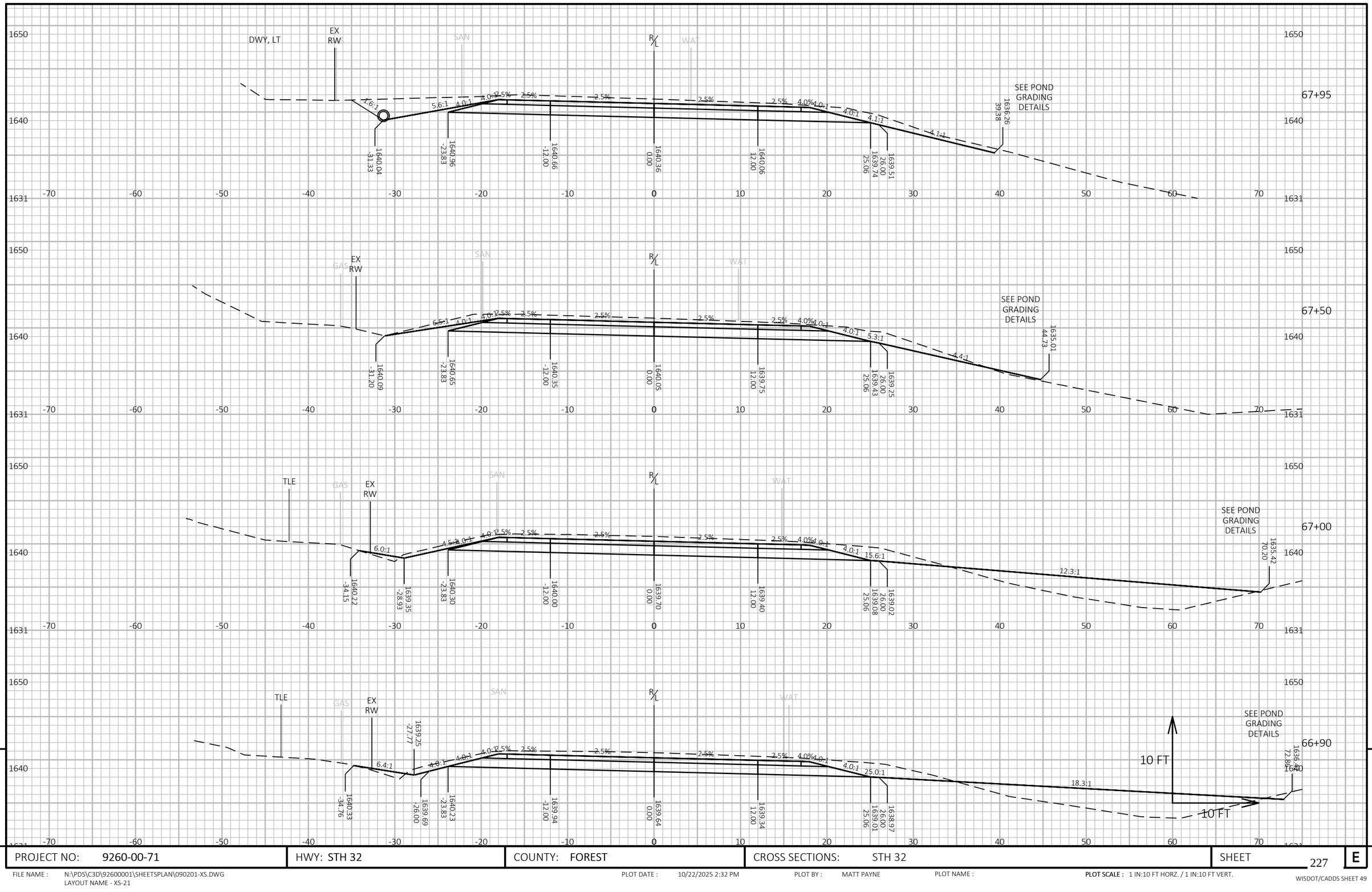

9

9

PROJECT NO: 9260-00-71	HWY: STH 32	COUNTY: FOREST	CROSS SECTIONS: STH 32	SHEET 227	E

FILE NAME : N:\PDS\C3D\92600001\SHEETSPLAN\090201-XS.DWG
LAYOUT NAME - XS-21

PLOT DATE : 10/22/2025 2:32 PM PLOT BY : MATT PAYNE PLOT NAME : **PLOT SCALE :** 1 IN:10 FT HORZ. / 1 IN:10 FT VERT.

WISDOT/CADDS SHEET 49

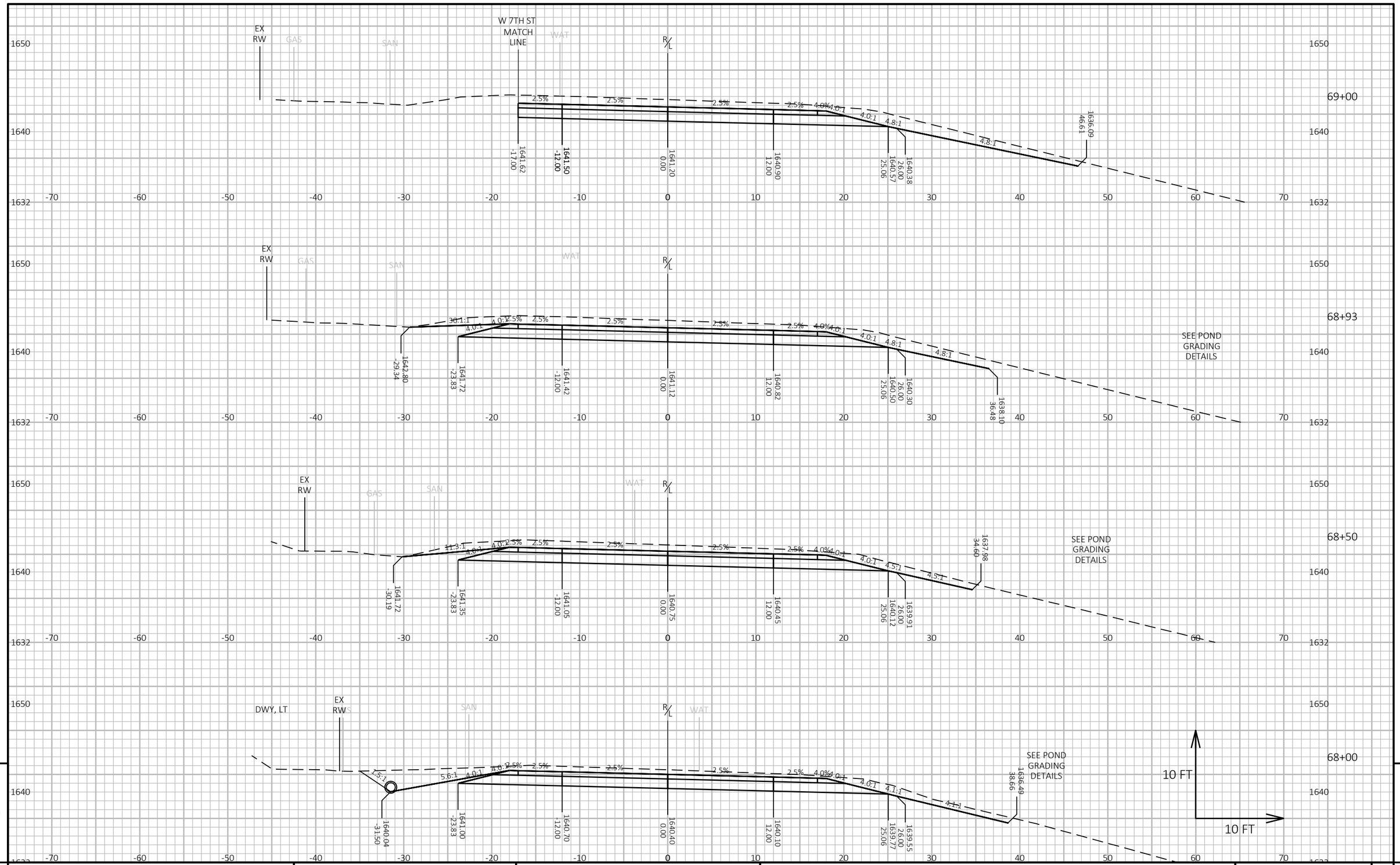

9

9

PROJECT NO: 9260-00-71	HWY: STH 32	COUNTY: FOREST	CROSS SECTIONS: STH 32	SHEET 228	E

FILE NAME : N:\PDS\C3D\92600001\SHEETSPLAN\090201-XS.DWG
LAYOUT NAME - XS-22

PLOT DATE : 10/22/2025 2:32 PM

PLOT BY : MATT PAYNE

PLOT NAME :

PLOT SCALE : 1 IN:10 FT HORZ. / 1 IN:10 FT VERT.

WISDOT/CADDS SHEET 49

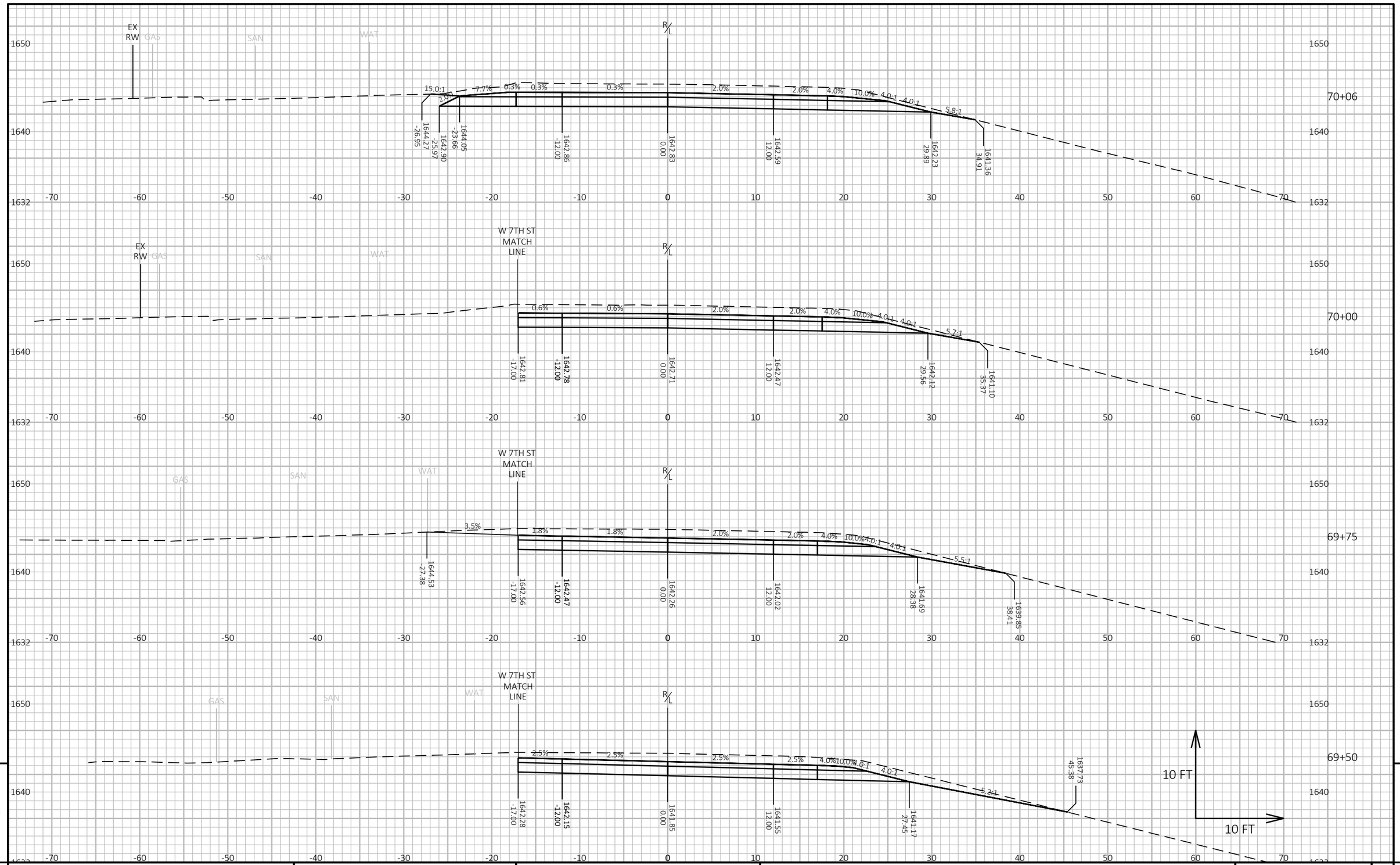

9

9

PROJECT NO: 9260-00-71	HWY: STH 32	COUNTY: FOREST	CROSS SECTIONS: STH 32	SHEET 229	E

FILE NAME : N:\PDS\C3D\92600001\SHEETSPLAN\090201-XS.DWG
LAYOUT NAME - XS-23

PLOT DATE : 10/22/2025 2:33 PM

PLOT BY : MATT PAYNE

PLOT NAME :

PLOT SCALE : 1 IN:10 FT HORZ. / 1 IN:10 FT VERT.

WISDOT/CADDS SHEET 49

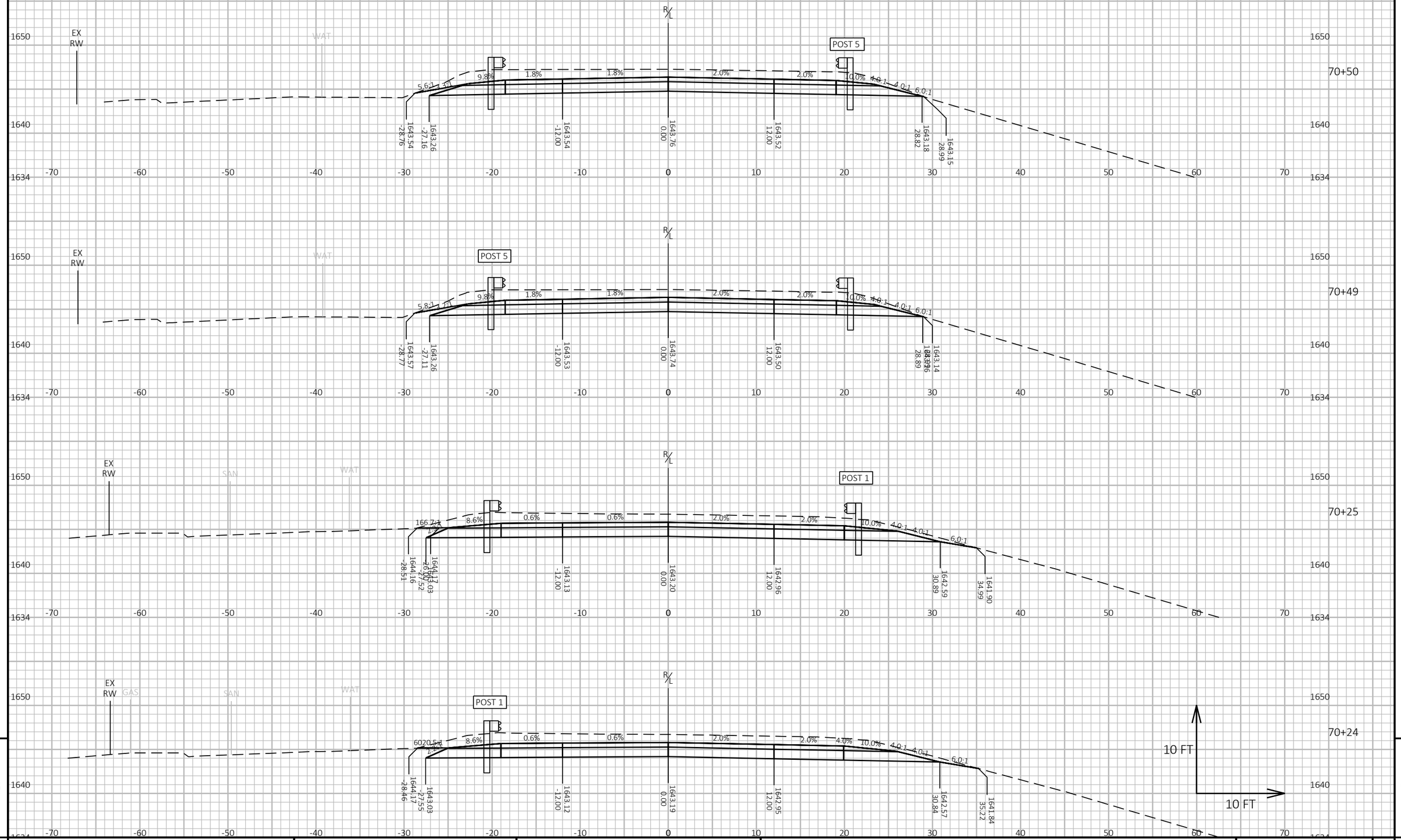

9 9

PROJECT NO: 9260-00-71	HWY: STH 32	COUNTY: FOREST	CROSS SECTIONS: STH 32	SHEET 230	E

FILE NAME : N:\PDS\C3D\92600001\SHEETSPLAN\090201-XS.DWG
LAYOUT NAME - XS-24

PLOT DATE : 10/22/2025 2:33 PM PLOT BY : MATT PAYNE PLOT NAME : **PLOT SCALE :** 1 IN:10 FT HORZ. / 1 IN:10 FT VERT.

WISDOT/CADDS SHEET 49

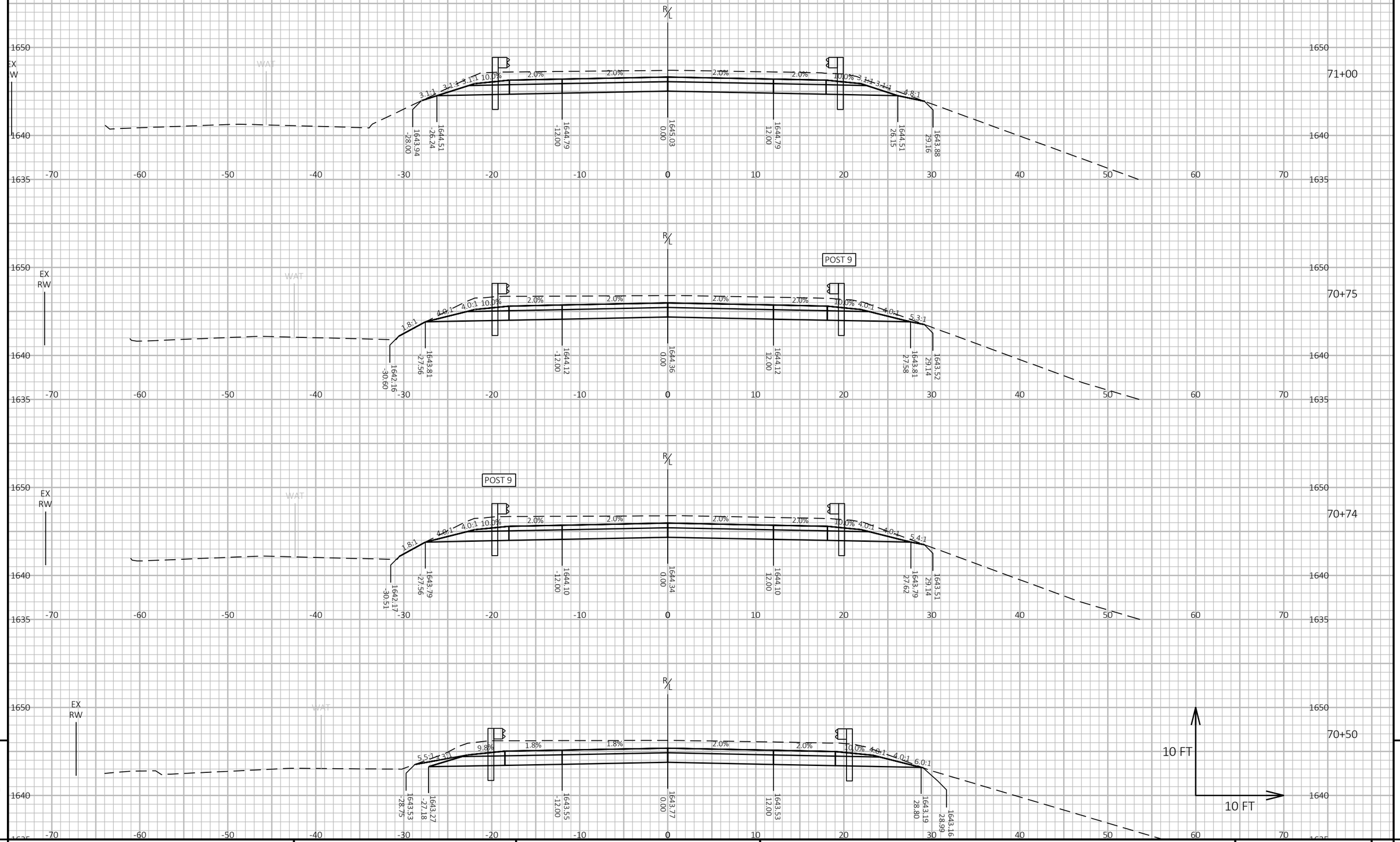

9

9

PROJECT NO: 9260-00-71	HWY: STH 32	COUNTY: FOREST	CROSS SECTIONS: STH 32	SHEET 231	E

FILE NAME : N:\PDS\C3D\92600001\SHEETSPLAN\090201-XS.DWG
LAYOUT NAME - XS-25

PLOT DATE : 10/22/2025 2:33 PM

PLOT BY : MATT PAYNE

PLOT NAME :

PLOT SCALE : 1 IN:10 FT HORZ. / 1 IN:10 FT VERT.

WISDOT/CADDS SHEET 49

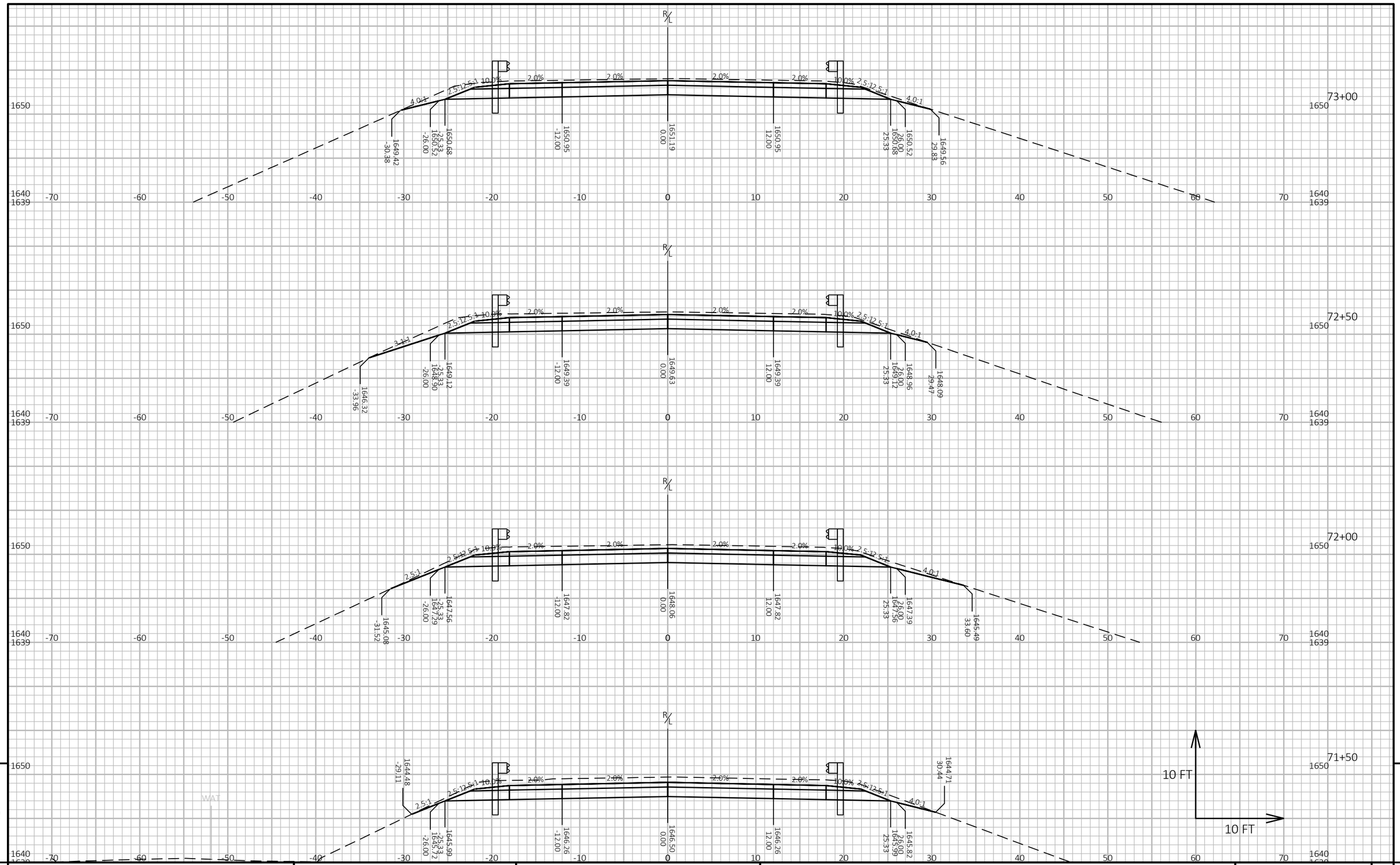

9

9

PROJECT NO: 9260-00-71	HWY: STH 32	COUNTY: FOREST	CROSS SECTIONS: STH 32	SHEET 232	E

FILE NAME : N:\PDS\C3D\92600001\SHEETSPLAN\090201-XS.DWG
LAYOUT NAME - XS-26

PLOT DATE : 10/22/2025 2:33 PM

PLOT BY : MATT PAYNE

PLOT NAME :

PLOT SCALE : 1 IN:10 FT HORZ. / 1 IN:10 FT VERT.

WISDOT/CADDS SHEET 49

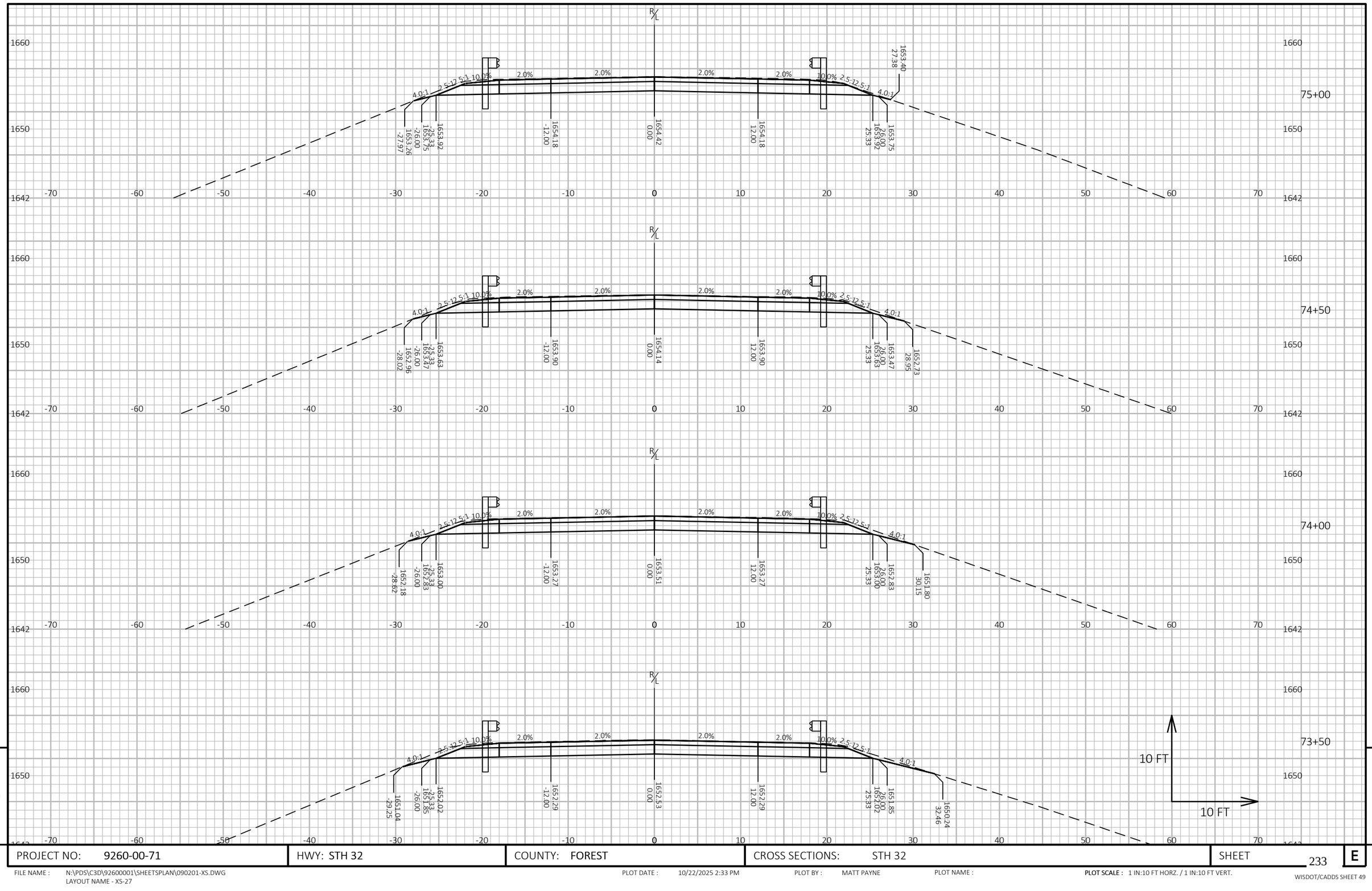

9

9

PROJECT NO: 9260-00-71	HWY: STH 32	COUNTY: FOREST	CROSS SECTIONS: STH 32	SHEET 233	E

FILE NAME : N:\PDS\C3D\92600001\SHEETSPLAN\090201-XS.DWG
LAYOUT NAME - XS-27

PLOT DATE : 10/22/2025 2:33 PM

PLOT BY : MATT PAYNE

PLOT NAME :

PLOT SCALE : 1 IN:10 FT HORZ. / 1 IN:10 FT VERT.

WISDOT/CADDS SHEET 49

END OF PROJECT
MATCH EXISTING

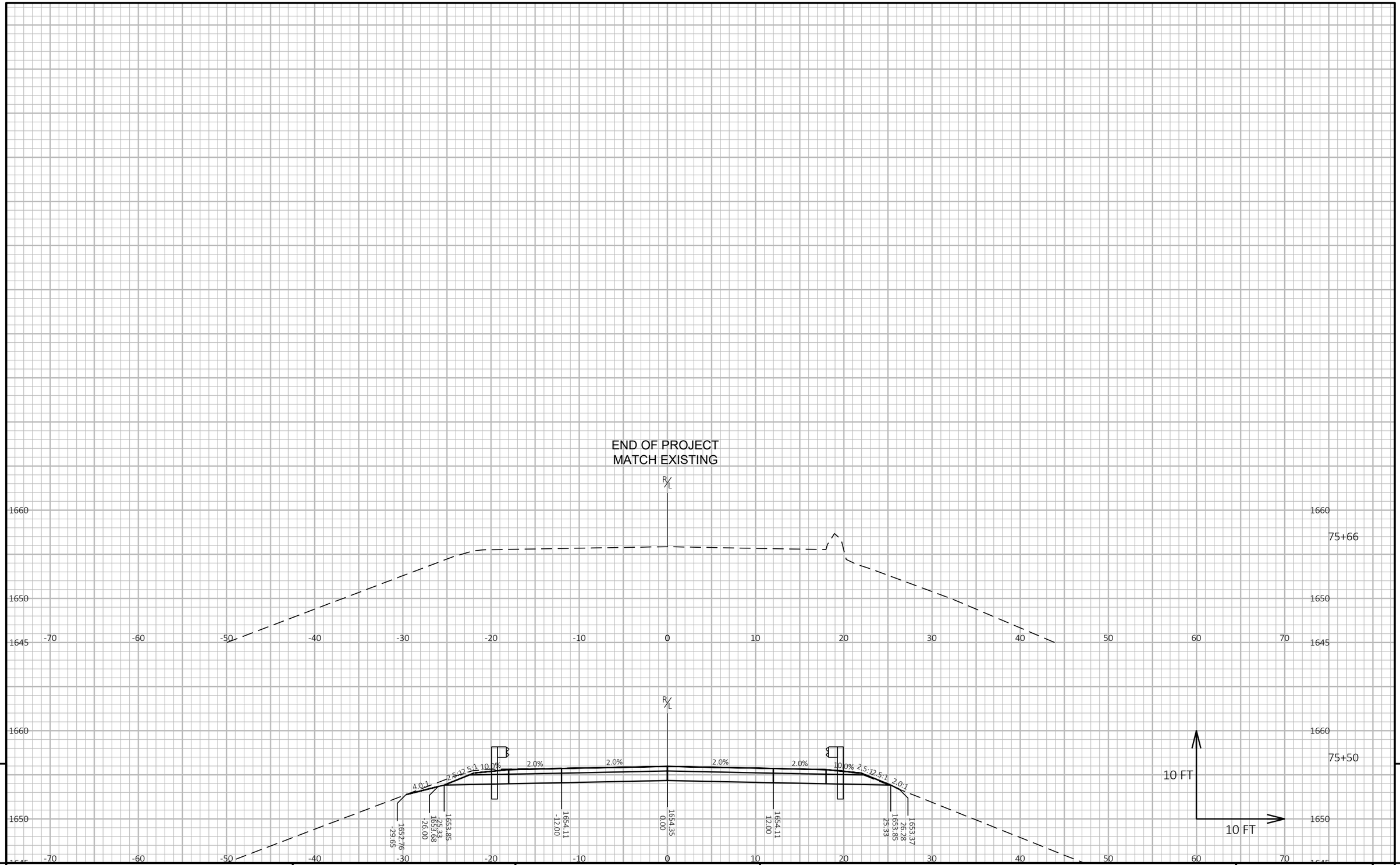

PROJECT NO: 9260-00-71	HWY: STH 32	COUNTY: FOREST	CROSS SECTIONS: STH 32	SHEET 234	E

FILE NAME : N:\PDS\C3D\92600001\SHEETSPLAN\090201-XS.DWG
LAYOUT NAME - XS-28

PLOT DATE : 10/22/2025 2:33 PM PLOT BY : MATT PAYNE PLOT NAME : **PLOT SCALE :** 1 IN:10 FT HORZ. / 1 IN:10 FT VERT.

WISDOT/CADDS SHEET 49

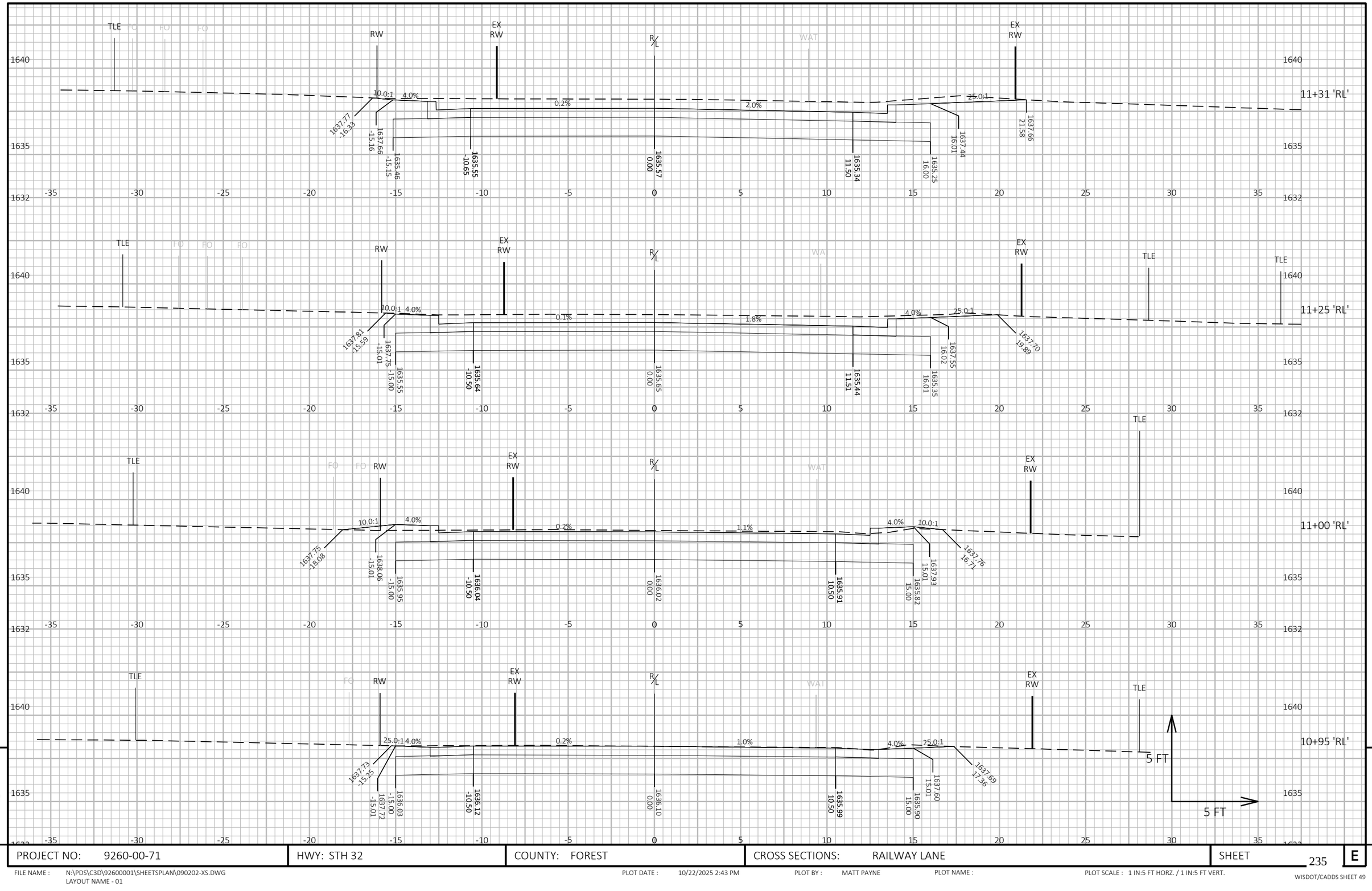

9

9

PROJECT NO: 9260-00-71	HWY: STH 32	COUNTY: FOREST	CROSS SECTIONS: RAILWAY LANE	SHEET 235	E

FILE NAME : N:\PDS\C3D\92600001\SHEETSPLAN\090202-XS.DWG
LAYOUT NAME - 01

PLOT DATE : 10/22/2025 2:43 PM

PLOT BY : MATT PAYNE

PLOT NAME :

PLOT SCALE : 1 IN:5 FT HORZ. / 1 IN:5 FT VERT.

WISDOT/CADDS SHEET 49

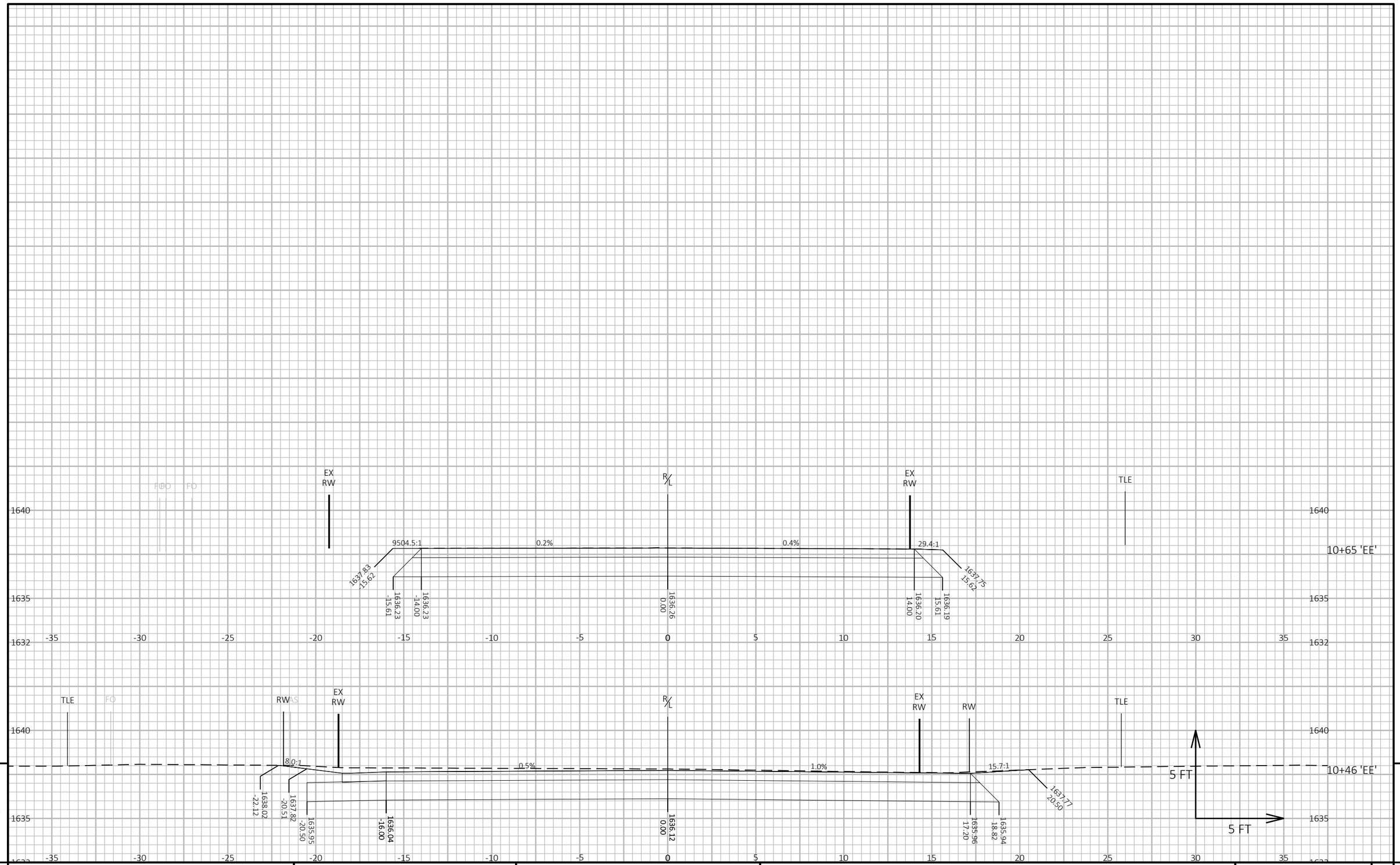

9 9

PROJECT NO: 9260-00-71	HWY: STH 32	COUNTY: FOREST	CROSS SECTIONS: E ELM ST	SHEET 236	E

FILE NAME : N:\PDS\C3D\92600001\SHEETSPLAN\090202-XS.DWG
LAYOUT NAME - 02
PLOT DATE : 10/22/2025 2:43 PM
PLOT BY : MATT PAYNE
PLOT NAME :
PLOT SCALE : 1 IN:5 FT HORZ. / 1 IN:5 FT VERT.
WISDOT/CADDS SHEET 49

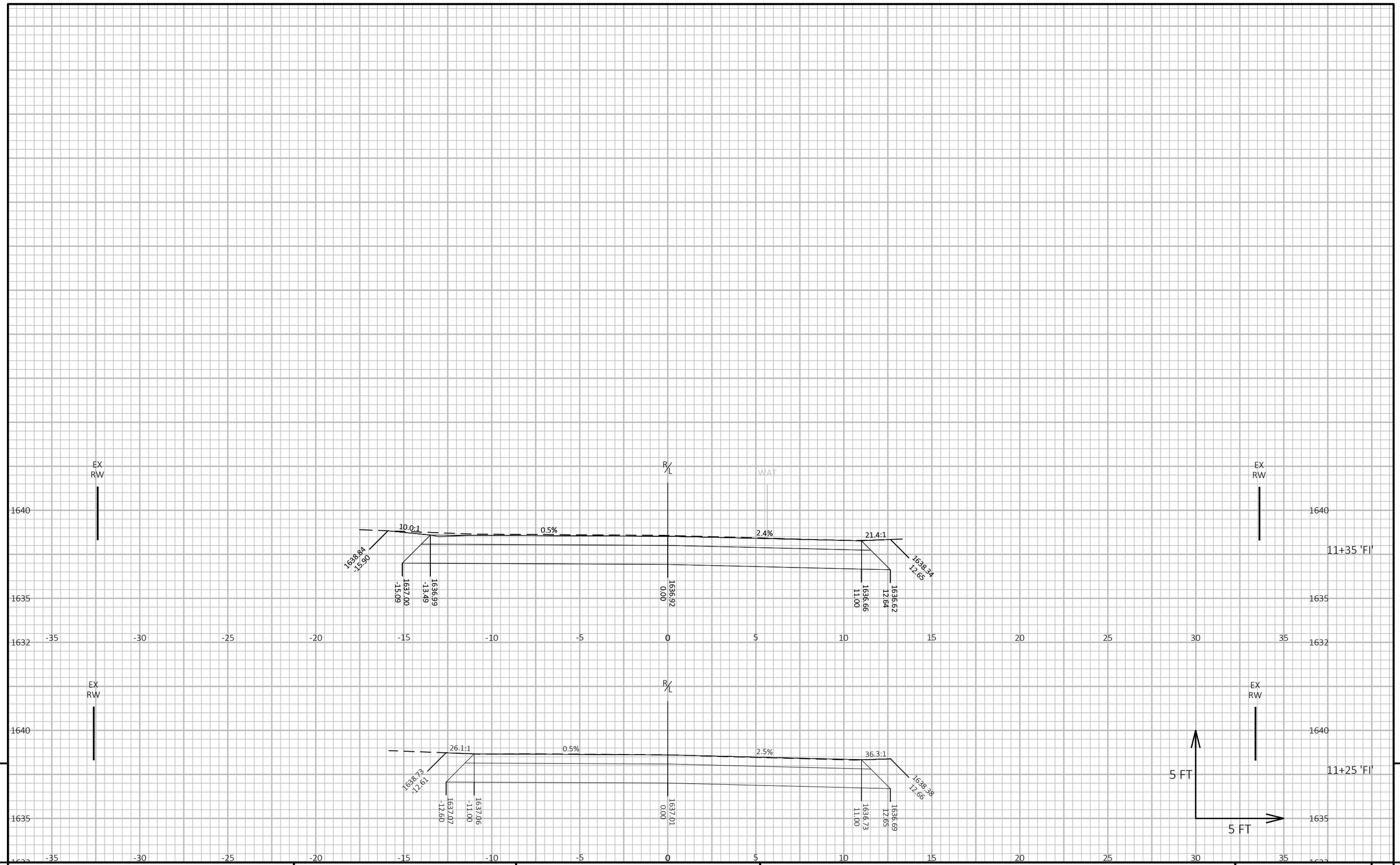

9

9

PROJECT NO: 9260-00-71	HWY: STH 32	COUNTY: FOREST	CROSS SECTIONS: W 1ST ST	SHEET 237	E

FILE NAME : N:\PDS\C3D\92600001\SHEETSPLAN\090202-XS.DWG
LAYOUT NAME - 03

PLOT DATE : 10/22/2025 2:43 PM

PLOT BY : MATT PAYNE

PLOT NAME :

PLOT SCALE : 1 IN:5 FT HORZ. / 1 IN:5 FT VERT.

WISDOT/CADDS SHEET 49

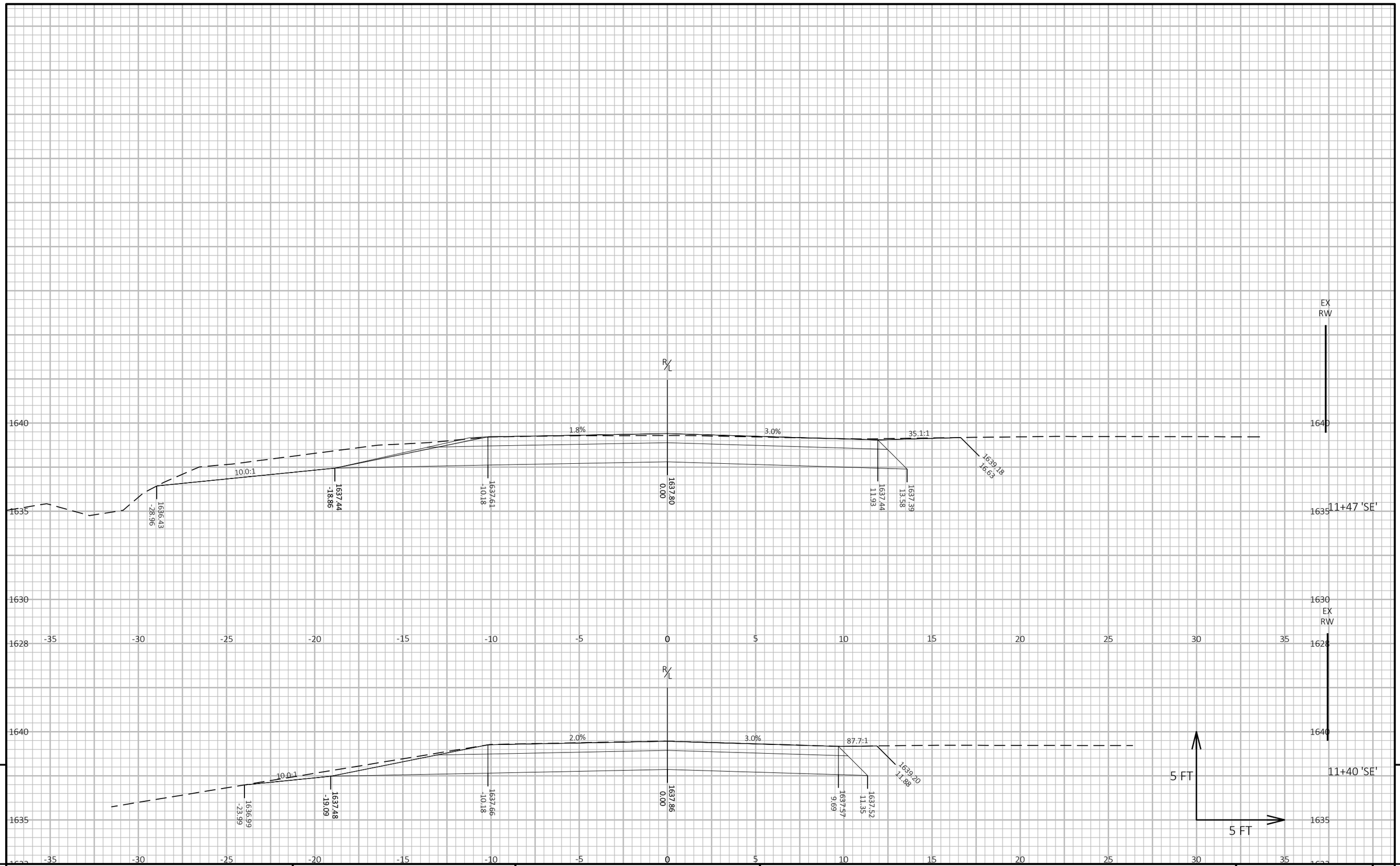

9

9

PROJECT NO: 9260-00-71	HWY: STH 32	COUNTY: FOREST	CROSS SECTIONS: W 2ND ST	SHEET 238	E

FILE NAME : N:\PDS\C3D\92600001\SHEETSPLAN\090202-XS.DWG
LAYOUT NAME - 04

PLOT DATE : 10/22/2025 2:43 PM PLOT BY : MATT PAYNE PLOT NAME : PLOT SCALE : 1 IN:5 FT HORZ. / 1 IN:5 FT VERT.

WISDOT/CADDS SHEET 49

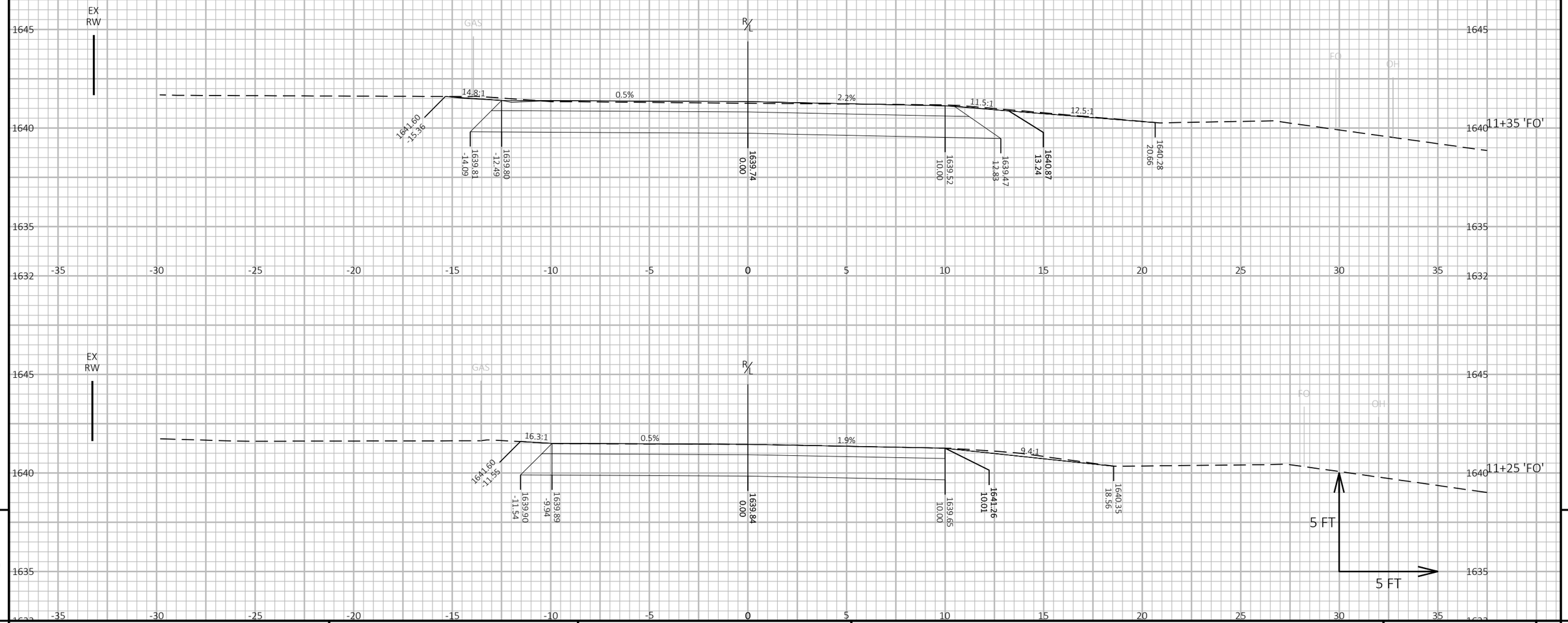

9

9

PROJECT NO: 9260-00-71	HWY: STH 32	COUNTY: FOREST	CROSS SECTIONS: W 4TH ST	SHEET 239	E

FILE NAME : N:\PDS\C3D\92600001\SHEETSPLAN\090202-XS.DWG
LAYOUT NAME - 05

PLOT DATE : 10/22/2025 2:43 PM PLOT BY : MATT PAYNE PLOT NAME : PLOT SCALE : 1 IN:5 FT HORZ. / 1 IN:5 FT VERT.

WISDOT/CADDS SHEET 49

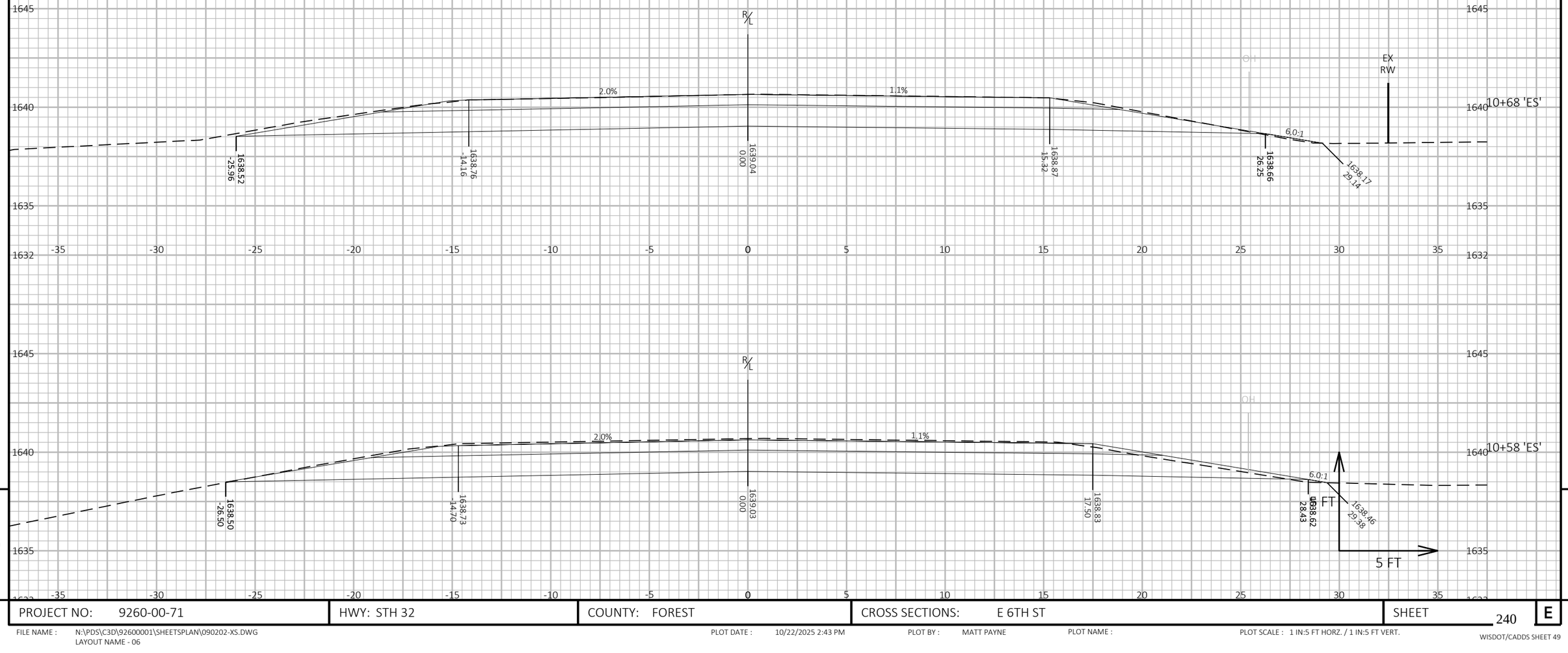

9

PROJECT NO: 9260-00-71	HWY: STH 32	COUNTY: FOREST	CROSS SECTIONS: E 6TH ST	SHEET 240	E

FILE NAME : N:\PDS\C3D\92600001\SHEETSPLAN\090202-XS.DWG
LAYOUT NAME - 06

PLOT DATE : 10/22/2025 2:43 PM PLOT BY : MATT PAYNE PLOT NAME : PLOT SCALE : 1 IN:5 FT HORZ. / 1 IN:5 FT VERT.

WISDOT/CADDS SHEET 49

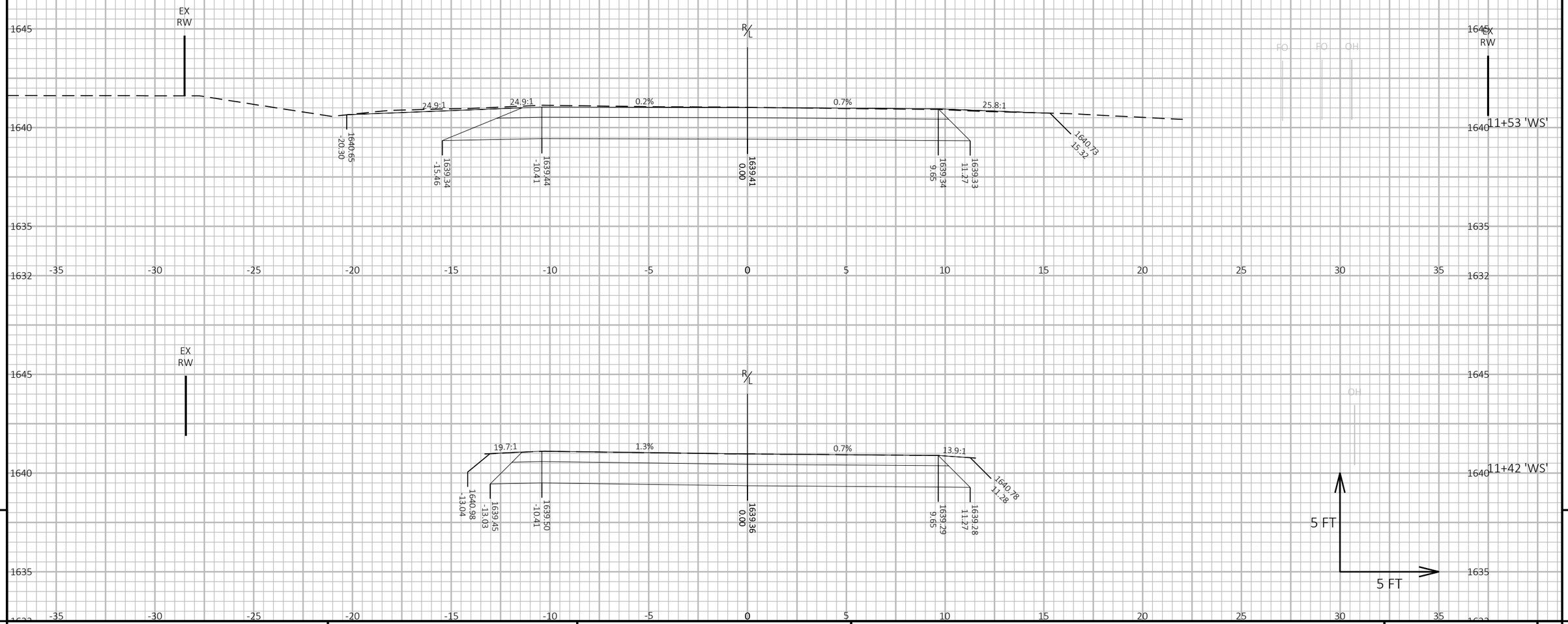

9

9

PROJECT NO: 9260-00-71	HWY: STH 32	COUNTY: FOREST	CROSS SECTIONS: W 6TH ST	SHEET 241	E

FILE NAME : N:\PDS\C3D\92600001\SHEETSPLAN\090202-XS.DWG
LAYOUT NAME - 07

PLOT DATE : 10/22/2025 2:43 PM

PLOT BY : MATT PAYNE

PLOT NAME :

PLOT SCALE : 1 IN:5 FT HORZ. / 1 IN:5 FT VERT.

WISDOT/CADDS SHEET 49

Wisconsin Department of Transportation

Dedicated people creating transportation solutions
through innovation and exceptional service.

http://www.dot.wisconsin.gov