EAU

PROJECT ID: 7120-00-74/76

WITH: N/A

COUNTY: DUNN

FEBRUARY 2026

ORDER OF SHEETS

TOTAL SHEETS = 212

STATE PROJECT	FEDERAL PROJECT	
	PROJECT	CONTRACT
7120-00-74	—	—
7120-00-76	—	—

STATE OF WISCONSIN
DEPARTMENT OF TRANSPORTATION

PLAN OF PROPOSED IMPROVEMENT

DURAND - EAU CLAIRE
CTH O TO 1010TH STREET

STH 85

DUNN COUNTY

STATE PROJECT NUMBER

7120-00-74

DURAND - EAU CLAIRE
BR CHIPPEWA RIVER BRIDGE B-17-0370

STH 85

DUNN COUNTY

STATE PROJECT NUMBER

7120-00-76

N

DESIGN DESIGNATION

A.A.D.T.	2025	=	3,790
A.A.D.T.	2045	=	4,230
D.H.V.	2045	=	478
D.D.		=	60/40
T.		=	12.9%
DESIGN SPEED		=	35-55 mph*
ESALS		=	950,000

* 55 MPH DESIGN SPEED FROM STA. 189+70 TO STA. 310+76
STA. 324+91 TO STA. 375+87

* 45 MPH DESIGN SPEED FROM STA. 310+76 TO STA. 324+91

* 35 MPH DESIGN SPEED FROM STA. 149+76 TO STA. 189+70

EXCEPTION TO NET LENGTH
STA. 163+39.70 - 167+28.31
B-17-226 (TO REMAIN)

C-17-1395
(REMOVE)

BEGIN PROJECT
STA. 149+76.50
Y = 112,991.269
X = 220,118.642

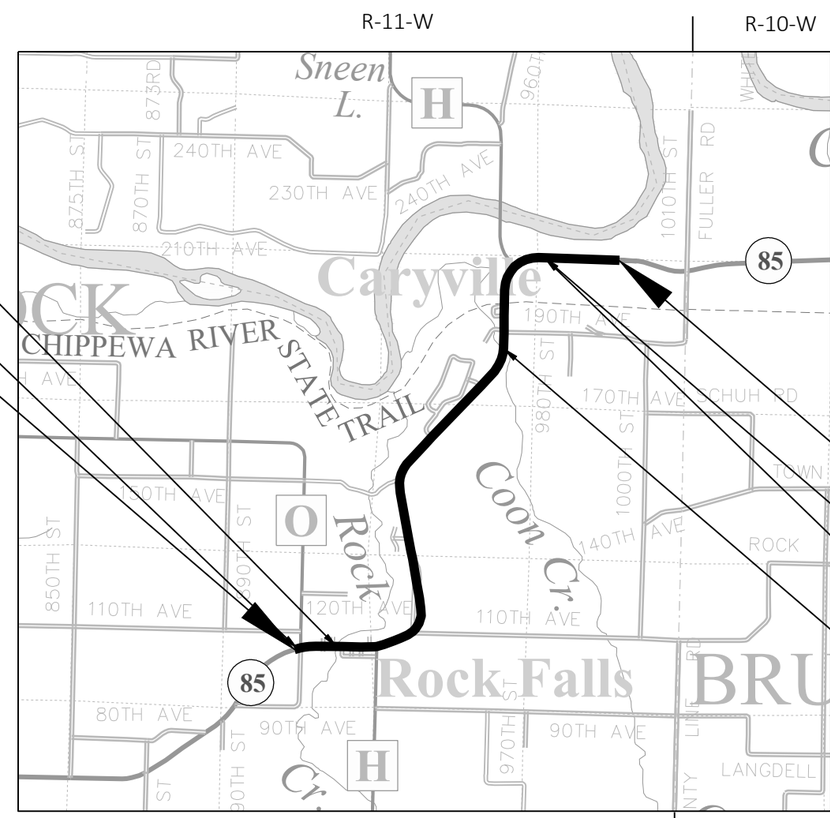

END PROJECT
STA. 375+86.87

B-17-0370
STA. 346+89.32

B-17-0131
(REMOVE)

C-17-0126
(TO REMAIN)

CONVENTIONAL SYMBOLS

PLAN

CORPORATE LIMITS
PROPERTY LINE
LOT LINE
LIMITED HIGHWAY EASEMENT
EXISTING RIGHT OF WAY
PROPOSED OR NEW R/W LINE
SLOPE INTERCEPT
REFERENCE LINE — 300'EB'
EXISTING CULVERT
PROPOSED CULVERT (Box or Pipe)
COMBUSTIBLE FLUIDS — CAUTION
MARSH AREA
WOODED OR SHRUB AREA

PROFILE

GRADE LINE
ORIGINAL GROUND
MARSH OR ROCK PROFILE (To be noted as such) — ROCK
SPECIAL DITCH — LABEL
GRADE ELEVATION — 95.36
CULVERT (Profile View)

UTILITIES

ELECTRIC — E
FIBER OPTIC — FO
GAS — G
SANITARY SEWER — SAN
STORM SEWER — SS
TELEPHONE — T
WATER — W
UTILITY PEDESTAL
POWER POLE
TELEPHONE POLE

LAYOUT

SCALE 0 — 1 MI

TOTAL NET LENGTH OF CENTERLINE = 4.209 MI

HORIZONTAL POSITIONS SHOWN ON THIS PLAN ARE WISCONSIN COORDINATE REFERENCE SYSTEM (WISCRS), DUNN COUNTY, NAD83 (2011), IN U.S. SURVEY FEET. POSITIONS SHOWN ARE GRID COORDINATES, GRID BEARINGS, AND GRID DISTANCES. GRID DISTANCES ARE THE SAME AS GROUND DISTANCES.

ELEVATIONS ARE REFERENCED TO NAVD 88 (2012). GPS DERIVED ELEVATIONS ARE BASED ON GEOID 12A

ORIGINAL PLANS PREPARED BY:

STRAND ASSOCIATES®
910 WEST WINGRA DRIVE
MADISON, WISCONSIN 53715-1943
(608) 251-4843

WISCONSIN
ROBERT A JACK
E-42985
MADISON
WI
PROFESSIONAL ENGINEER
10-20-25

STATE OF WISCONSIN
DEPARTMENT OF TRANSPORTATION

PREPARED BY

Surveyor	SHORT ELLIOTT HENDRICKSON, INC.
Designer	STRAND ASSOCIATES, INC.
Project Manager	JEFF OLSON, P.E.
Regional Examiner	NW REGION
Regional Supervisor	JEFF OLSON, P.E.

APPROVED FOR THE DEPARTMENT Jeffrey G. Olson — Digitally signed by Jeffrey G. Olson Date: 2025.10.20 09:59:56 -05'00'

DATE: _____ (Signature)

E

UTILITIES CONTACTS

* AT&T WISCONSIN - COMMUNICATION LINE
RICK PODOLAK
4TH FLOOR
304 S DEWEY ST
EAU CLAIRE, WI 54701
(715) 839-5565
RP4514@ATT.COM

* DUNN ENERGY COOPERATIVE - ELECTRICITY
LOREN LUZINSKI
N5725 600TH ST
P.O. BOX 220
MENOMONIE, WI 54751
(715) 232-6240
LOREN@DUNNENERGY.COM

* WEST WISCONSIN TELECOM COOPERATIVE - COMMUNICATION LINE
BRADLEY SCHMIDTKNECHT
5808 OLD MILL PLAZA
EAU CLAIRE, WI 54703
(715) 231-0504
BRADS@WWT.NET

DIGGERS HOTLINE
Dial 811 or (800)242-8511
www.DiggersHotline.com
* DENOTES DIGGERS HOTLINE MEMBER

WISCONSIN DNR LIAISON

LEAH NICOL
DNR WEST CENTRAL REGIONAL HEADQUARTERS
1300 WEST CLAIREMONT AVENUE
EAU CLAIRE, WI 54701
PHONE: 715-934-9014
EMAIL: LEAH.NICOL@WISCONSIN.GOV

DESIGN PROJECT MANAGER

JEFF OLSON
WISDOT - NORTHWEST REGION
1701 NORTH 4TH STREET
SUPERIOR, WI 54880
PHONE: 715-395-3032
EMAIL: JEFFREY.OLSON@DOT.WI.GOV

DESIGN PROJECT LEADER

ROBERT JACK, P.E.
STRAND ASSOCIATES, INC.
910 WEST WINGRA DRIVE
MADISON, WI 53715
PHONE: 608-251-4843
EMAIL: ROBERT.JACK@STRAND.COM

STH 85 (MILL AND OVERLAY) - 3.25 INCHES		
LAYER	THICKNESS	TYPE
UPPER	1.5 INCHES	5 MT 58-34 V
LOWER	1.75 INCHES	5 MT 58-34 V

STH 85 (CIR LOCATIONS) - 2.75 INCHES		
LAYER	THICKNESS	TYPE
UPPER	1.5 INCHES	5 MT 58-34 V
LOWER	1.25 INCHES	5 MT 58-34 V

STH 85 (MILL AND OVERLAY) - 2 INCHES		
LAYER	THICKNESS	TYPE
UPPER	2 INCHES	5 MT 58-34 V

INTERSECTIONS (MILL AND OVERLAY) - 2.75 INCHES		
LAYER	THICKNESS	TYPE
UPPER	1.5 INCHES	5 MT 58-34 V
LOWER	1.25 INCHES	5 MT 58-34 V

GENERAL NOTES

THE CENTERLINE OF STH 85 IS APPROXIMATELY THE MAINLINE REFERENCE LINE.

EXACT LOCATIONS AND WIDTHS OF DRIVEWAYS AND PRIVATE FIELD ENTRANCES SHALL BE DETERMINED BY THE ENGINEER IN THE FIELD.

THERE ARE UTILITY FACILITIES WITHIN THE PROJECT AREA THAT ARE NOT SHOWN ON THE PLANS. THE CONTRACTOR SHALL COORDINATE THEIR CONSTRUCTION ACTIVITIES WITH A CALL TO DIGGERS HOTLINE.

ADJUST THE LOCATIONS OF CONTRACT ITEMS UNDER THIS CONTRACT TO AVOID CONFLICT WITH THE EXISTING UTILITY FACILITIES, UNLESS OTHERWISE SPECIFIED IN THE CONTRACT SPECIAL PROVISIONS.

THE CONTRACTOR'S PAVING OPERATIONS SHALL BE CONSISTENT WITH THE PLAN TYPICAL SECTIONS AND CONSTRUCTED TO PREVENT HMA LONGITUDINAL JOINTS FROM BEING LOCATED WITHIN A DRIVING, PASSING, OR TURNING LANE.

ALL EXISTING SIGNS SHALL REMAIN IN PLACE UNLESS THE ENGINEER APPROVES THEIR REMOVAL. ANY SIGNS REMOVED DUE TO CONTRACTOR MEANS AND METHODS SHALL BE REPLACED BY THE CONTRACTOR AT THEIR EXPENSE.

A SAWED JOINT WILL BE REQUIRED WHERE NEW PAVEMENT IS TO MEET AN EXISTING PAVED SURFACE, EXCEPT WHERE NOTED IN THE PLANS.

FOR ADDITIONAL INFORMATION REGARDING EXISTING ASPHALT DEPTH, SEE PAVEMENT CORE DATA. PAVEMENT CORE DATA IS AVAILABLE FROM WISDOT NW REGION BY CONTACTING JEFF OLSON, WISDOT PROJECT SUPERVISOR , AT (715) 395-3032 OR BY EMAIL AT JEFFREY.OLSON@DOT.WI.GOV.

CROSS SECTIONS SHOWN ARE IN GUARDRAIL REMOVAL LOCATIONS WHERE GRADING IS REQUIRED.

HMA PAVEMENT WEIGHT CALCULATIONS ARE BASED ON 112 LBS/SY/IN.

RUNOFF COEFFICIENT TABLE

	HYDROLOGIC SOIL GROUP											
	A			B			C			D		
	SLOPE RANGE (PERCENT)			SLOPE RANGE (PERCENT)			SLOPE RANGE (PERCENT)			SLOPE RANGE (PERCENT)		
LAND USE:	0-2	2-6	6 & OVER	0-2	2-6	6 & OVER	0-2	2-6	6 & OVER	0-2	2-6	6 & OVER
ROW CROPS:	.08 .22	.16 .30	.22 .38	.12 .26	.20 .34	.27 .44	.15 .30	.24 .37	.33 .50	.19 .34	.28 .41	.38 .56
MEDIAN STRIPTURF:	.19 .24	.20 .26	.24 .30	.19 .25	.22 .28	.26 .33	.20 .26	.23 .30	.30 .37	.20 .27	.25 .32	.30 .40
SIDE SLOPETURF:			.25 .32			.27 .34			.28 .36			.30 .38
PAVEMENT:												
ASPHALT:	.70 - .95											
CONCRETE:	.80 - .95											
BRICK:	.70 - .80											
DRIVES, WALKS:	.75 - .85											
ROOFS:	.75 - .95											
GRAVEL ROADS, SHOULDERS:	.40 - .60											

TOTAL PROJECT AREA = 63.95 ACRES
TOTAL AREA EXPECTED TO BE DISTURBED BY CONSTRUCTION ACTIVITIES = 2.61 ACRES

ORDER OF SECTION 2 DETAIL SHEETS

GENERAL NOTES
PROJECT OVERVIEW
TYPICAL SECTIONS
CONSTRUCTION DETAILS
PAVING DETAILS
PLAN DETAILS
CURB RAMP DETAILS
EROSION CONTROL
PAVEMENT MARKING
TRAFFIC CONTROL - ADVANCED WARNING
TRAFFIC CONTROL - TEMPORARY PEDESTRIAN ROUTE
TRAFFIC CONTROL - DETOUR

ABBREVIATION LIST

CIR = COLD-IN-PLACE RECYCLING

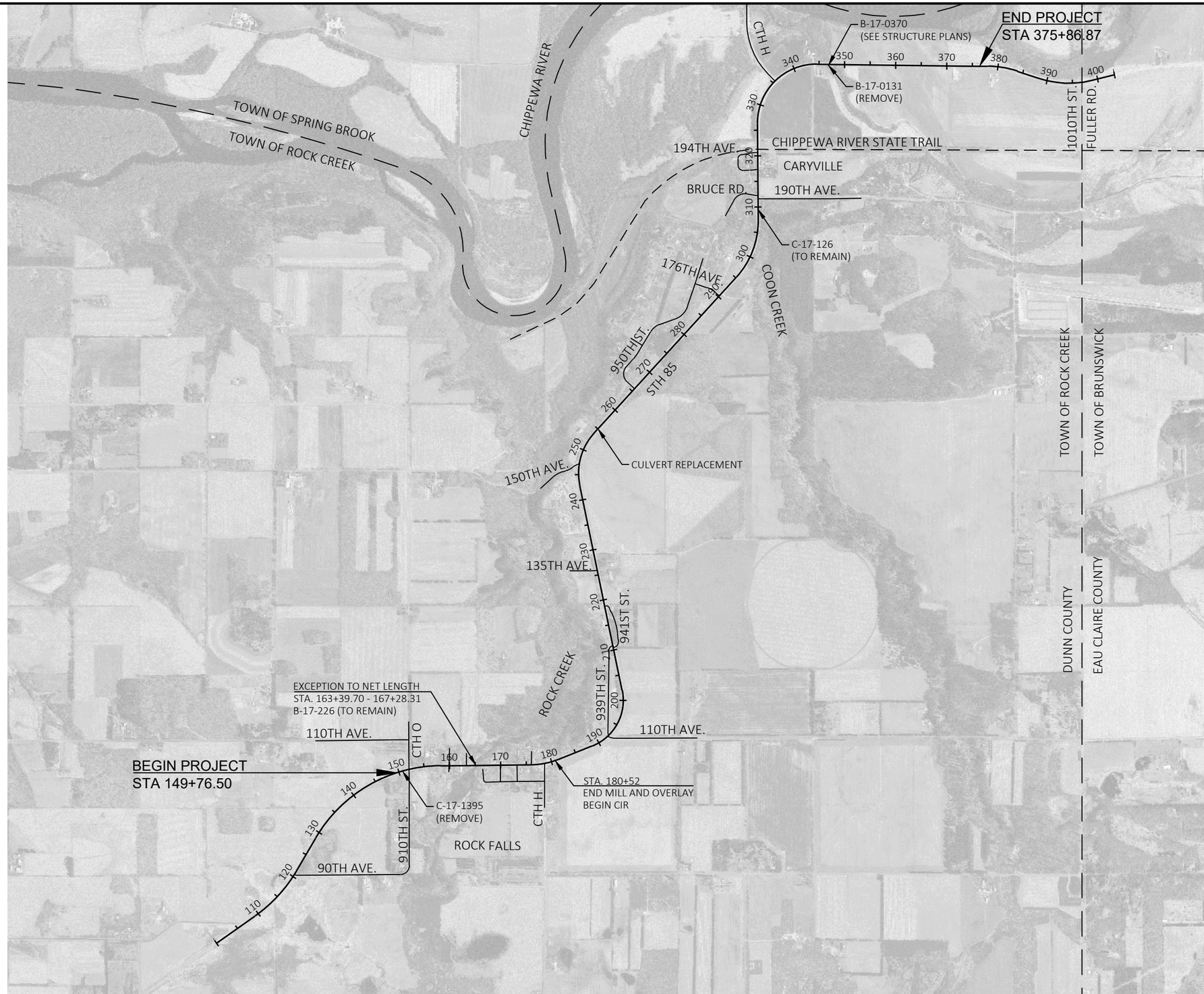

PROJECT NO: 7120-00-74/76	HWY: STH 85	COUNTY: DUNN	PROJECT OVERVIEW	SHEET 3	E

FILE NAME : S:\MAD\1000--1099\1089\989\DRAWINGS\CAD\CIVIL 3D\SHEETSPLAN\020201-PO.DWG
LAYOUT NAME - 020201-po
PLOT DATE : 10/6/2025 8:27 AM PLOT BY : HABERKORN, DEVEN PLOT NAME : PLOT SCALE : 1 IN:2000 FT
WISDOT/CADDS SHEET 42

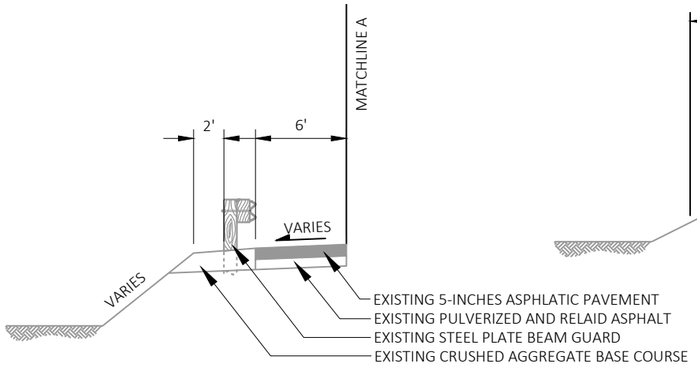

EXISTING TYPICAL SECTION - BEAM GUARD

(MIRRORED FOR RT)

STA. 149+86.19 - STA. 151+55.19 RT
STA. 149+93.57 - STA. 151+46.44 LT

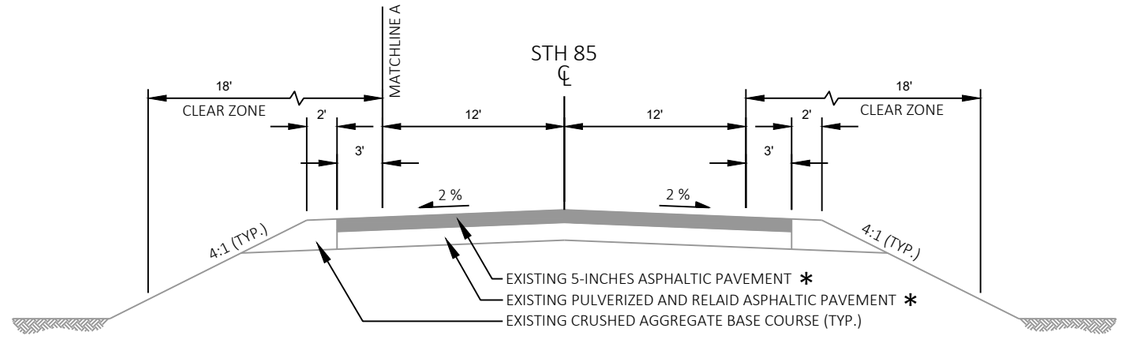

EXISTING TYPICAL SECTION

STA. 149+76 - STA. 159+90

① EXISTING 5-INCHES ASPHALTIC PAVEMENT FROM STA. 169+36 TO STA. 179+04

② EXISTING CURB AND GUTTER 36-INCH SLOPED TYPE D FROM STA. 176+15 TO STA. 179+04

* SEE GENERAL NOTES FOR ADDITIONAL INFORMATION REGARDING THE EXISTING PAVEMENT CORE DATA.

** EXISTING STRUCTURE B-17-226 FROM STA. 163+40 - STA. 167+28

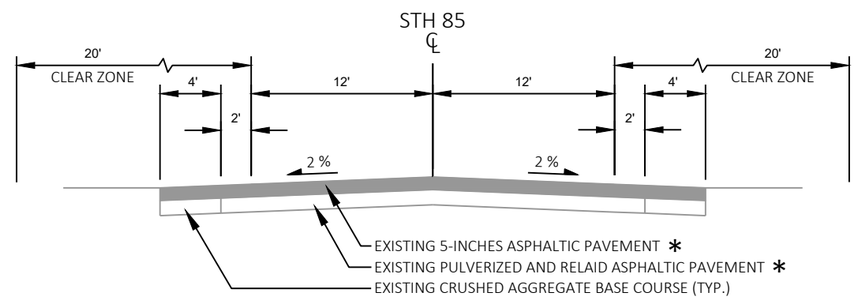

EXISTING TYPICAL SECTION

STA. 159+90 - STA. 163+40 **

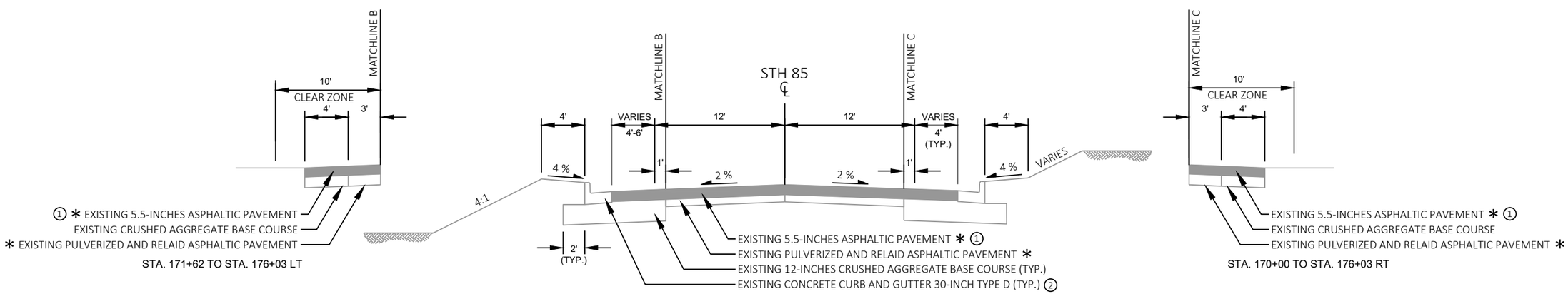

EXISTING TYPICAL SECTION

STA. 167+28 - STA. 179+04 **

PROJECT NO: 7120-00-74	HWY: STH 85	COUNTY: DUNN	EXISTING TYPICAL SECTIONS	SHEET 4	E

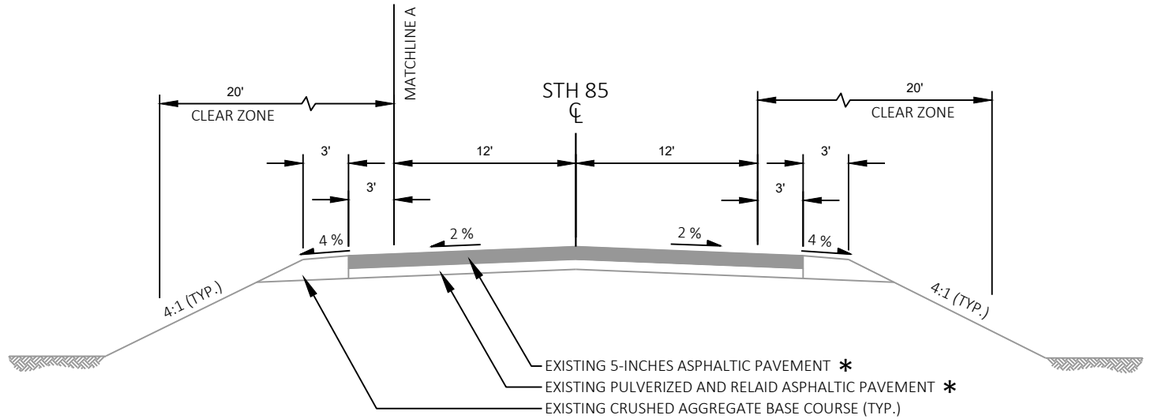

EXISTING TYPICAL SECTION

STA. 179+04 - STA. 325+98
STA. 344+96 - STA. 375+87

* SEE GENERAL NOTES FOR ADDITIONAL INFORMATION REGARDING THE EXISTING PAVEMENT CORE DATA.

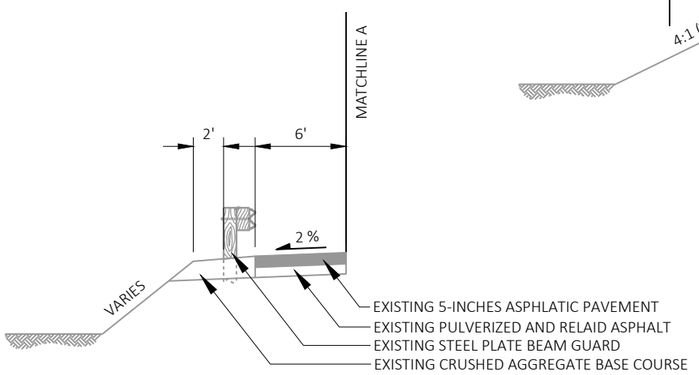

EXISTING TYPICAL SECTION - BEAM GUARD

(MIRRORED FOR RT)

STA. 254+05.55 - STA. 256+10.51 LT
STA. 254+29.37 - STA. 255+83.98 RT
STA. 260+87.88 - STA. 262+29.67 LT
STA. 261+12.20 - STA. 262+42.11 RT
STA. 301+68.06 - STA. 305+86.00 RT
STA. 301+75.08 - STA. 306+85.01 LT
STA. 345+87.71 - STA. 348+67.55 LT
STA. 345+89.08 - STA. 348+68.85 RT

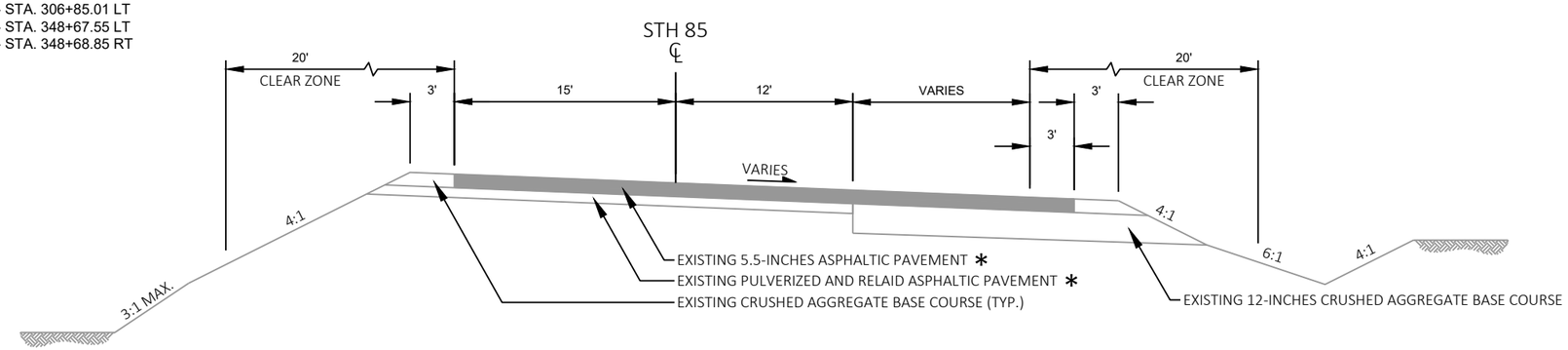

EXISTING TYPICAL SECTION

STA. 325+98 - STA. 344+96

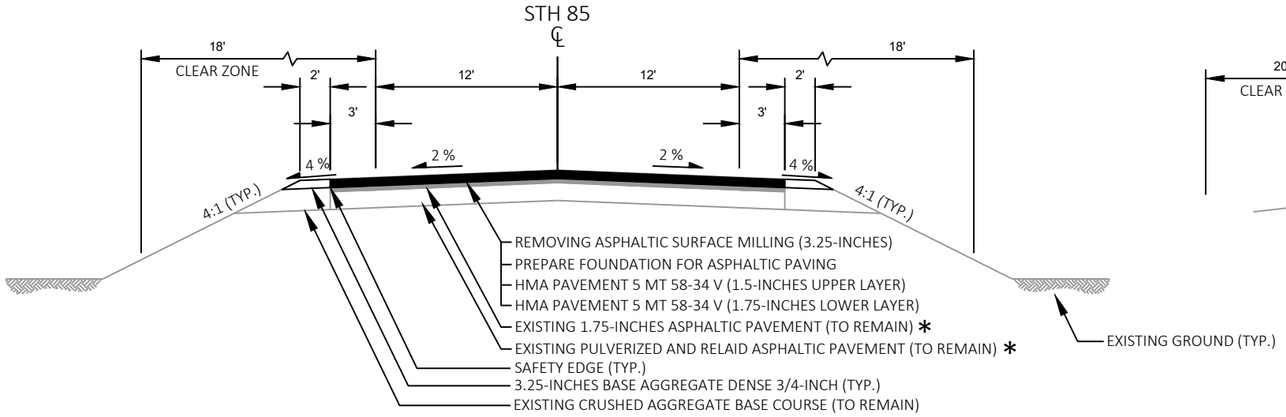

FINISHED TYPICAL SECTION

STA. 149+76 - STA. 159+90

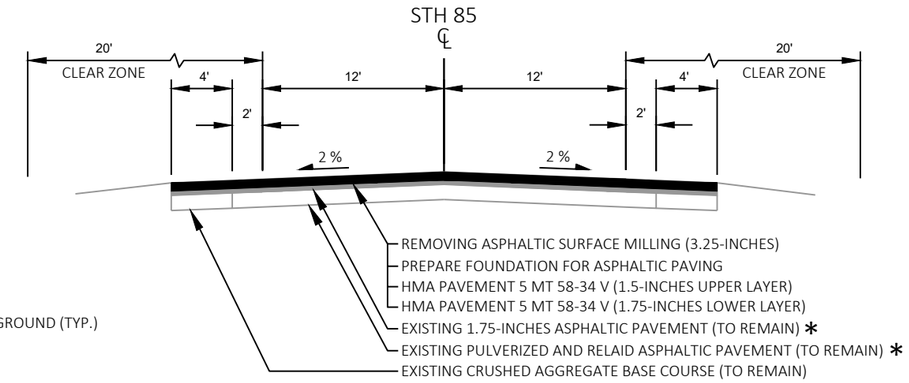

FINISHED TYPICAL SECTION

STA. 159+90 - STA. 163+40 **

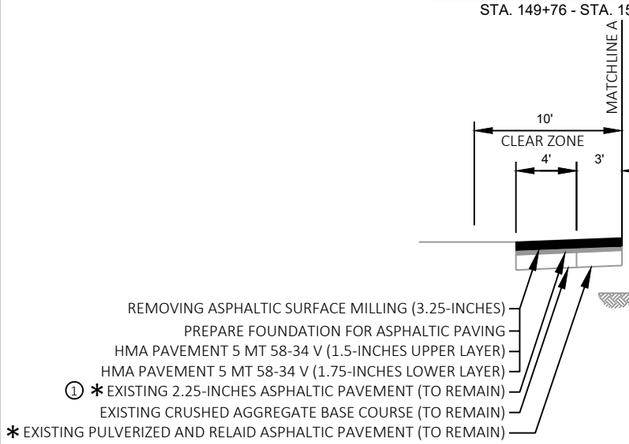

STA. 171+62 TO STA. 176+03 LT

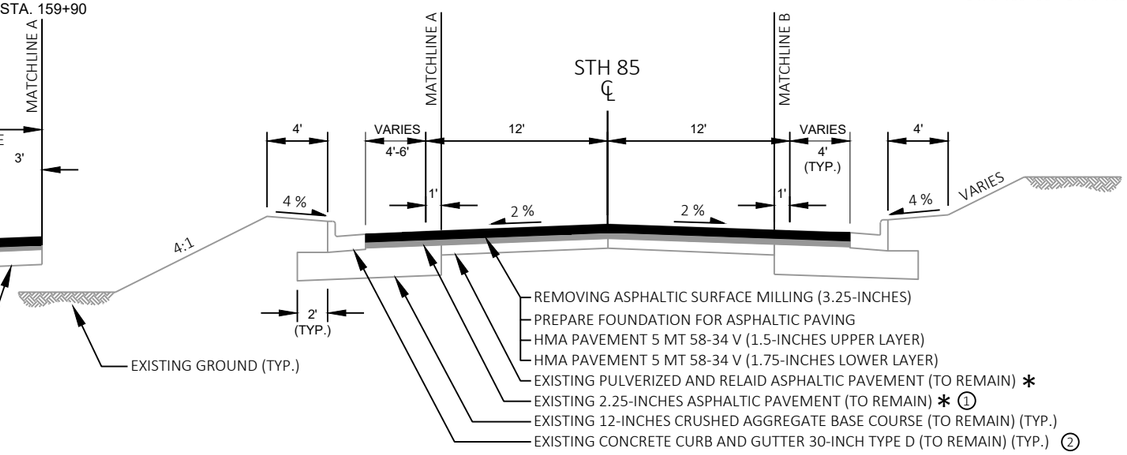

FINISHED TYPICAL SECTION

STA. 167+28 - STA. 179+04 **

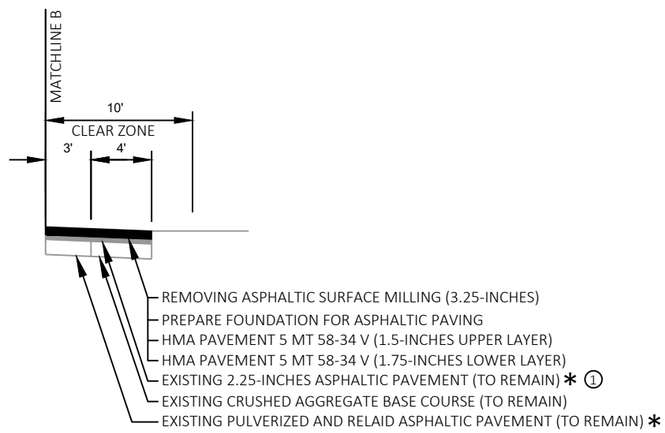

STA. 170+00 TO STA. 176+03 RT

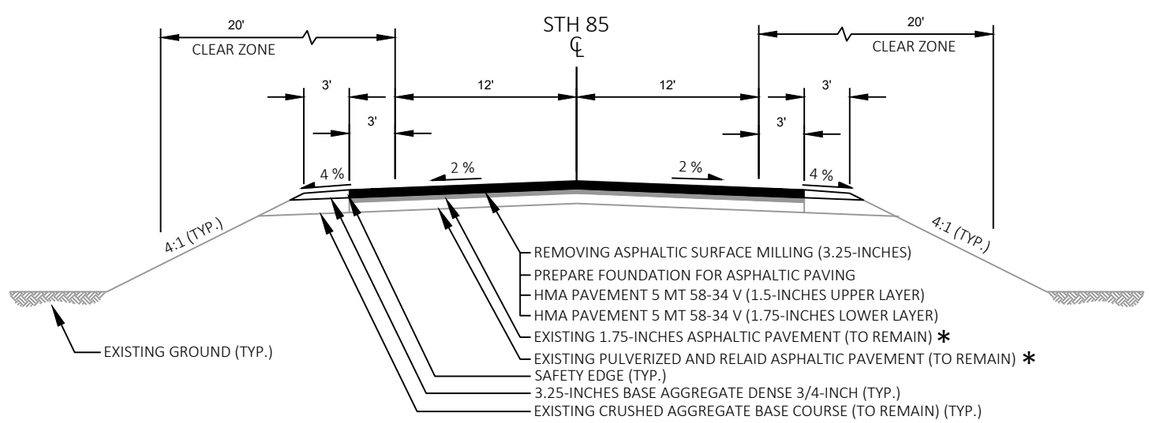

FINISHED TYPICAL SECTION

STA. 179+04 - STA. 180+52

① EXISTING 1.75-INCHES ASPHALTIC PAVEMENT (TO REMAIN) FROM STA. 169+36 TO STA. 179+04

② EXISTING CURB AND GUTTER 36-INCH SLOPED TYPE D (TO REMAIN) (TYP.) FROM STA. 176+15 TO STA. 179+04

* SEE GENERAL NOTES FOR ADDITIONAL INFORMATION REGARDING THE EXISTING PAVEMENT CORE DATA.

** EXISTING STRUCTURE B-17-226 FROM STA. 163+40 - STA. 167+28

PROJECT NO: 7120-00-74	HWY: STH 85	COUNTY: DUNN	FINISHED TYPICAL SECTIONS	SHEET 6	E

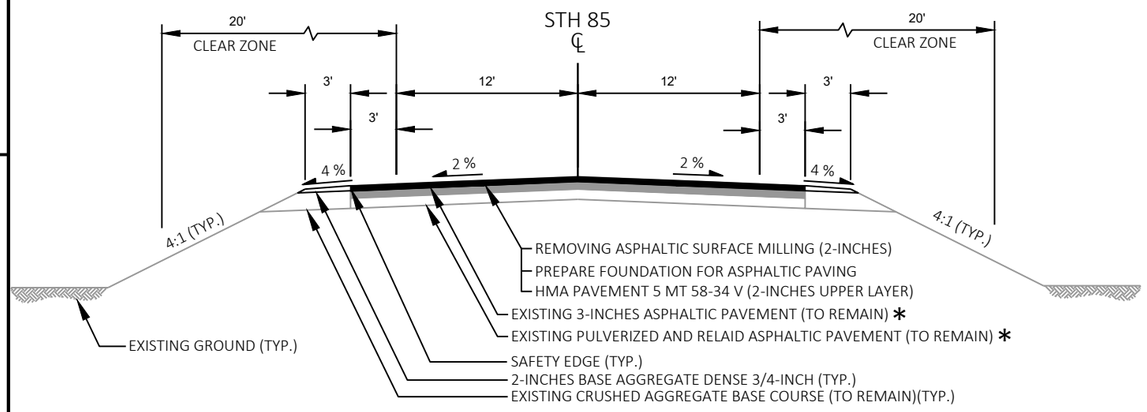

FINISHED TYPICAL SECTION

STA. 319+00 - STA. 324+25

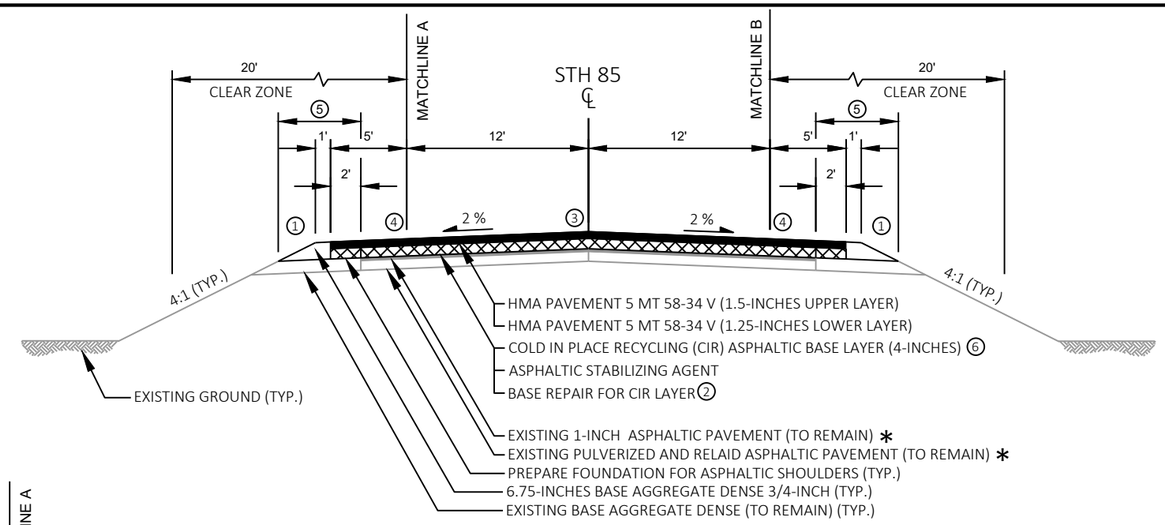

FINISHED TYPICAL SECTION

STA. 180+52 - STA. 319+00 ***
STA. 324+00 - STA. 325+98
STA. 344+96 - STA. 375+87

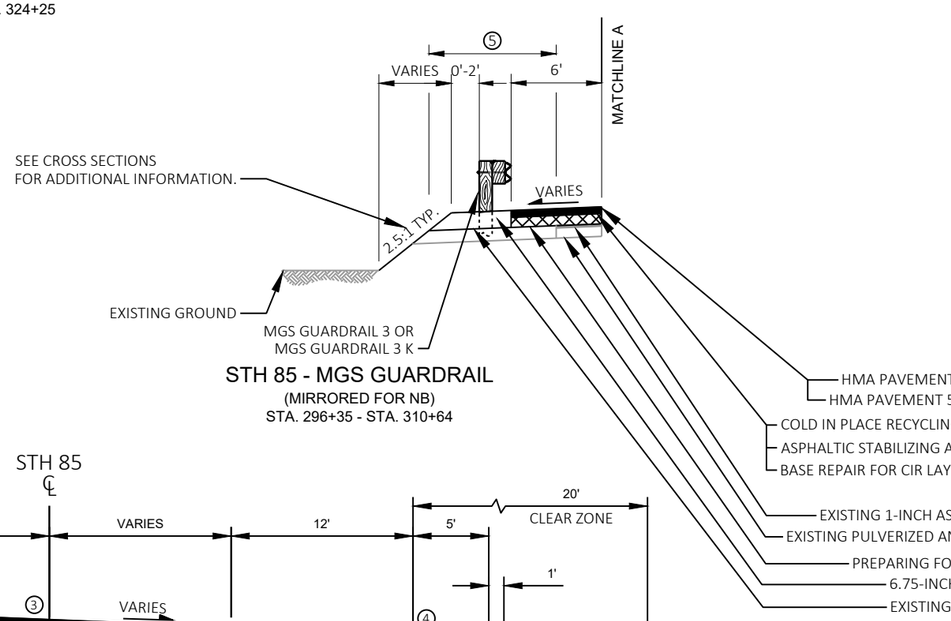

STH 85 - MGS GUARDRAIL

(MIRRORED FOR NB)

STA. 296+35 - STA. 310+64

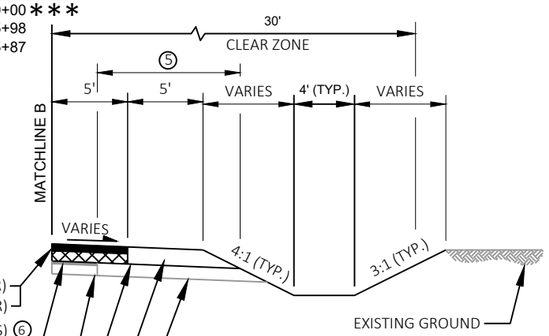

STH 85 - SPECIAL DITCHING

STA. 344+37 - STA. 350+18 **

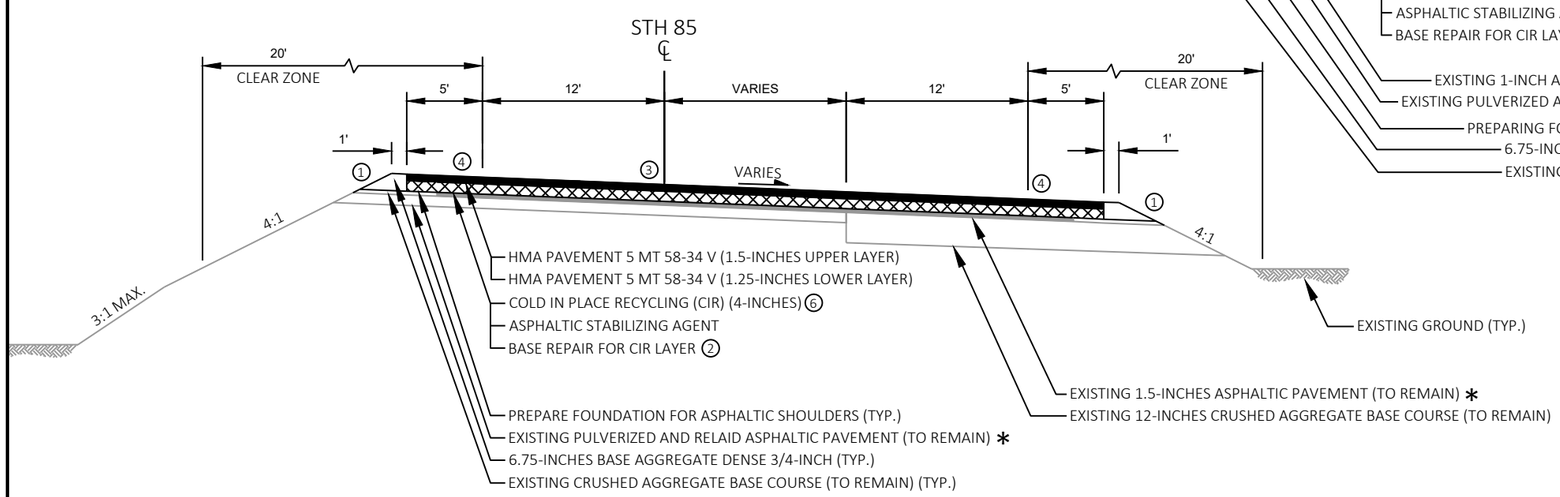

FINISHED TYPICAL SECTION

STA. 325+98 - STA. 344+96

1 4:1 - WHEN EXISTING SIDESLOPE IS FLATTER THAN OR EQUAL TO 4:1.

MATCH EXISTING - WHEN EXISTING SIDESLOPE IS STEEPER THAN 4:1 BUT FLATTER THAN 3:1.

3:1 - WHEN EXISTING SIDESLOPE IS STEEPER THAN 3:1.

2 AS DIRECTED BY THE ENGINEER

3 ASPHALTIC RUMBLE STRIPS, CENTERLINE REQ'D.

4 ASPHALTIC RUMBLE STRIPS, SHOULDER REQ'D.

5 LIMITS FOR PREPARE FOUNDATION ASPHALTIC SHOULDERS (TYP.)

6 30-FOOT-WIDE PAY LIMIT (TYP.)
STA 325+98 - STA 344+96 PAY LIMIT TO MATCH EXISTING TRAVEL LANE AND PAVED SHOULDER DISTANCE.
SPREAD CIR MATERIAL FROM THE EXISTING PAVEMENT WIDTH TO INCLUDE THE FINAL WIDTH OF THE WIDENED SHOULDER PAVEMENT.

* SEE GENERAL NOTES FOR ADDITIONAL INFORMATION REGARDING THE EXISTING PAVEMENT CORE DATA.

** MIRRORED FOR SOUTHBOUND.

*** SPECIAL DITCH GRADING REQUIRED FROM STA 296+50 RT - STA 300+24 RT AND STA 306+30 RT - STA 307+04 RT. SEE CROSS SECTIONS FOR ADDITIONAL INFORMATION.

PROJECT NO: 7120-00-74	HWY: STH 85	COUNTY: DUNN	FINISHED TYPICAL SECTIONS	SHEET 7	E

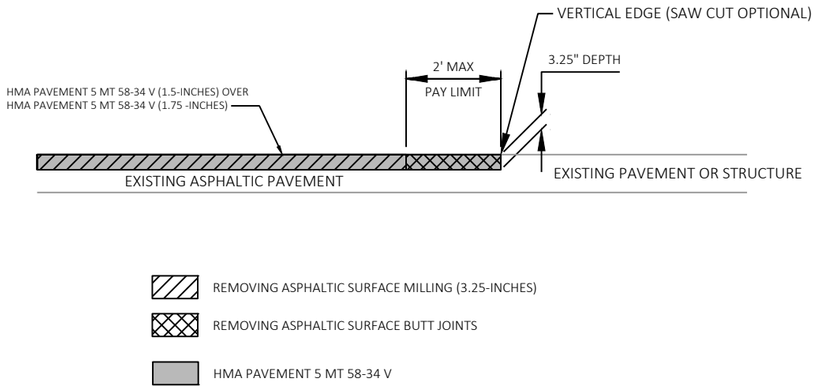

REMOVING ASPHALTIC SURFACE BUTT JOINTS DETAIL (NO PROFILE CHANGE)

STA. 149+76.50 — STA. 167+28.31
910TH ST — SPRUCE ST
CTH O — DAY ST
916TH ST — 929TH ST
919TH ST — CTH H (SOUTH)
STA. 163+39.70

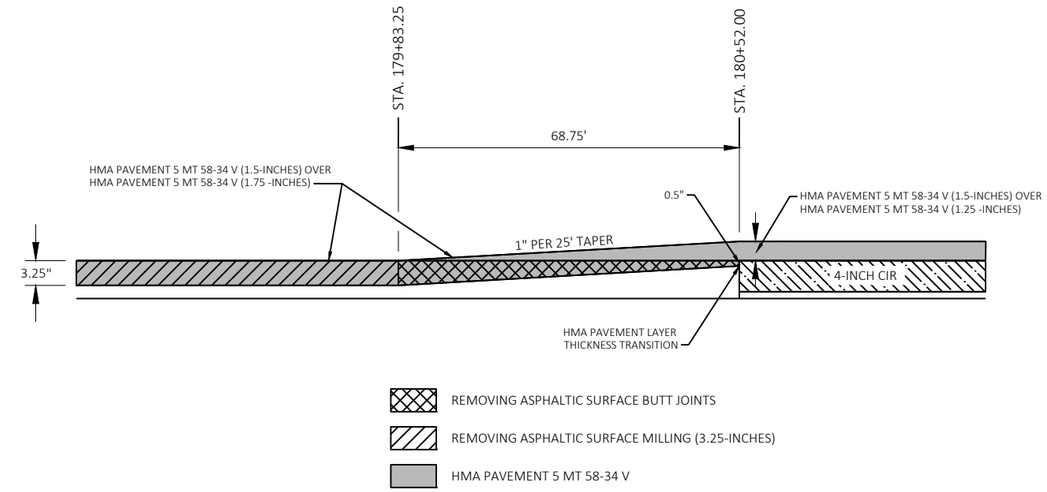

CIR TRANSITION DETAIL - MILL AND OVERLAY (NO PROFILE INCREASE) TO CIR

STA. 179+83.25 - STA. 180+52.00

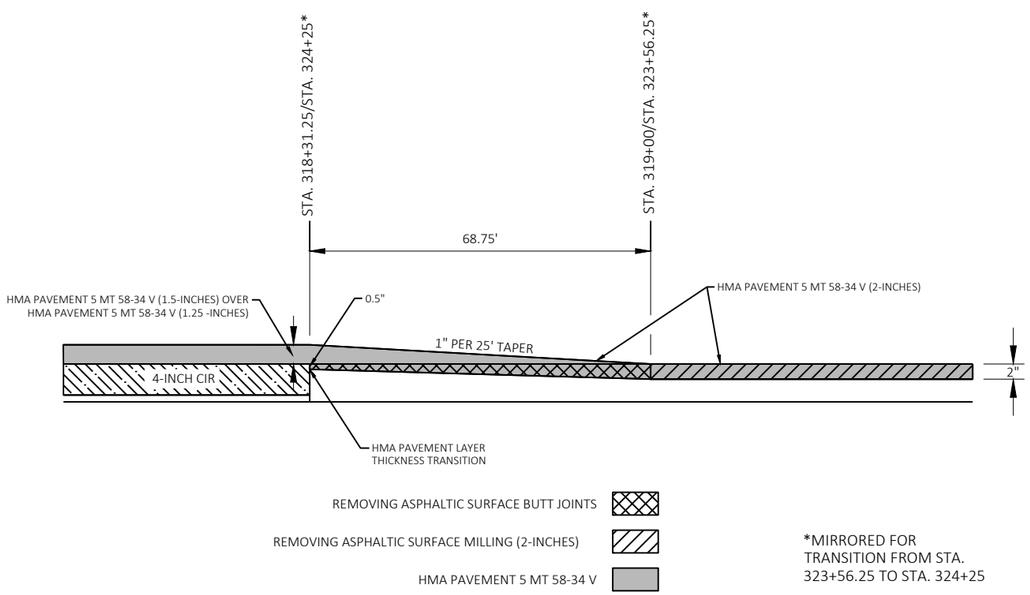

*MIRRORED FOR TRANSITION FROM STA. 323+56.25 TO STA. 324+25

CIR TRANSITION DETAIL - CIR TO MILL AND OVERLAY (NO PROFILE INCREASE)

STA. 318+31.25 - STA. 319+00.00
STA. 323+56.25 - STA. 324+25.00

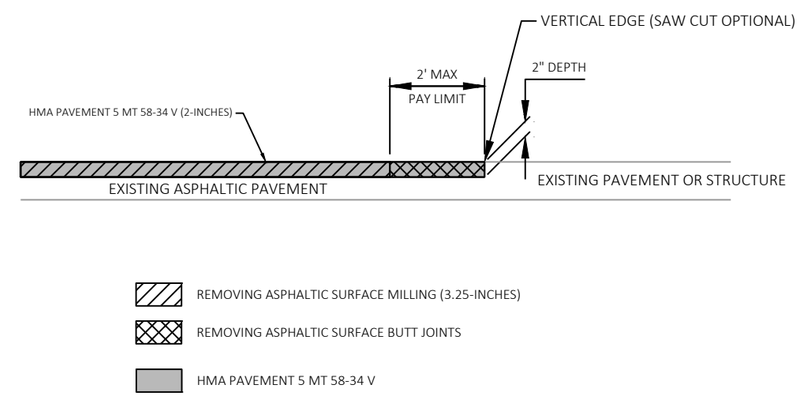

REMOVING ASPHALTIC SURFACE BUTT JOINTS DETAIL (NO PROFILE CHANGE)

194TH AVE

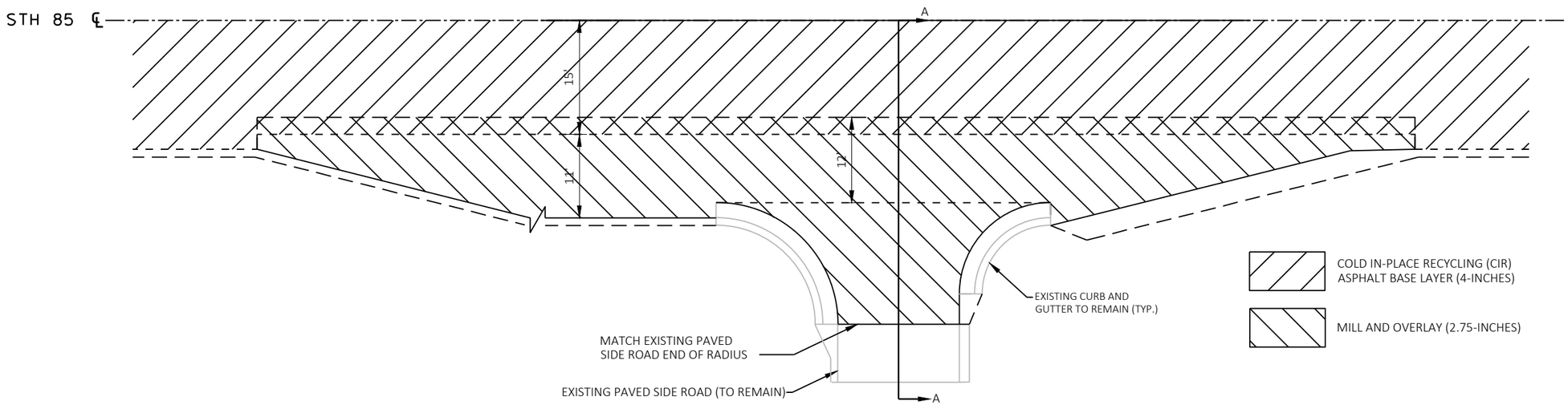

PLAN VIEW

INTERSECTION MILLING AND PAVING

(WITH CURB AND GUTTER AROUND RADII)
950TH ST
176TH AVE
190TH AVE
CTH H

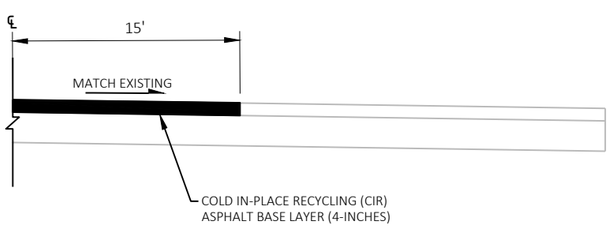

SECTION A-A
(POST CIR OPERATION)

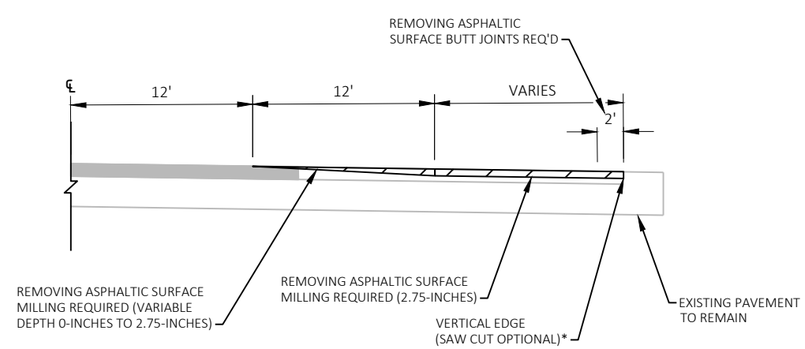

SECTION A-A
(PRIOR TO OVERLAY)

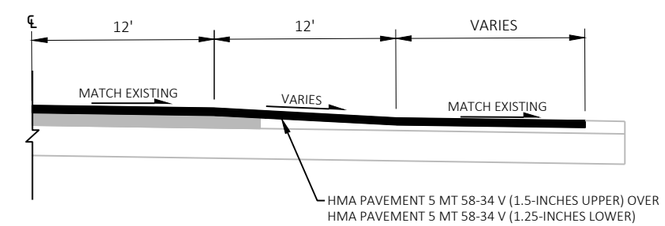

SECTION A-A
(POST OVERLAY)

* REMOVE ANY REMAINING MATERIAL ADJACENT TO VERTICAL EDGE. (SAW CUT AND REMOVING MATERIAL INCLUDED IN BID ITEM REMOVING ASPHALTIC SURFACE BUTT JOINTS)

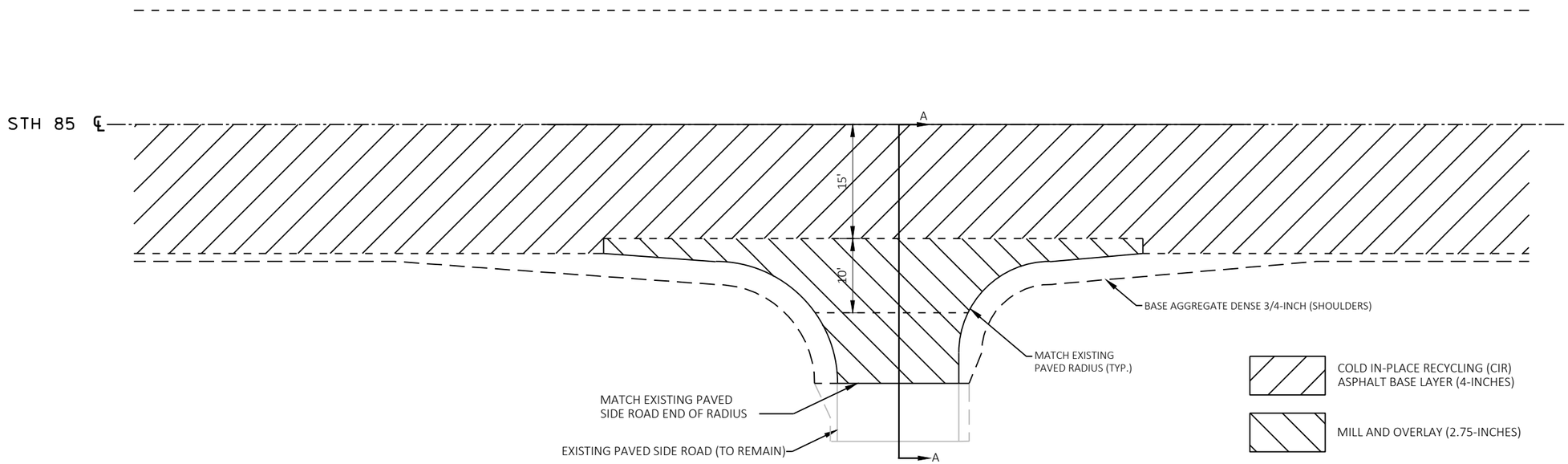

PLAN VIEW

INTERSECTION MILLING AND PAVING

(WITH NO CURB AND GUTTER AROUND RADII)

110TH AVE
939TH ST
941ST ST (NORTH AND SOUTH)
939TH ST
135TH AVE
150TH AVE
BRUCE ROAD

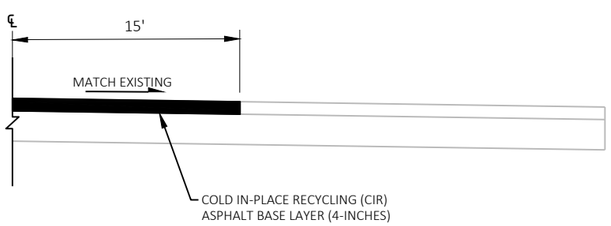

SECTION A-A
(POST CIR OPERATION)

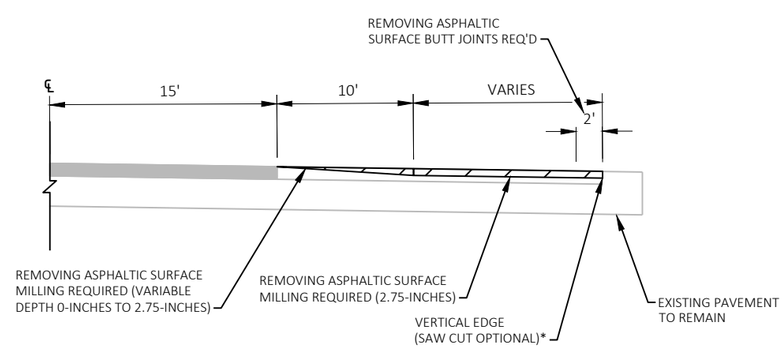

SECTION A-A
(PRIOR TO OVERLAY)

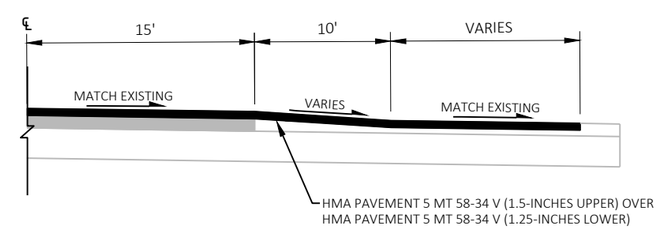

SECTION A-A
(POST OVERLAY)

* REMOVE ANY REMAINING MATERIAL ADJACENT TO VERTICAL EDGE. (SAW CUT AND REMOVING MATERIAL INCLUDED IN BID ITEM REMOVING ASPHALTIC SURFACE BUTT JOINTS)

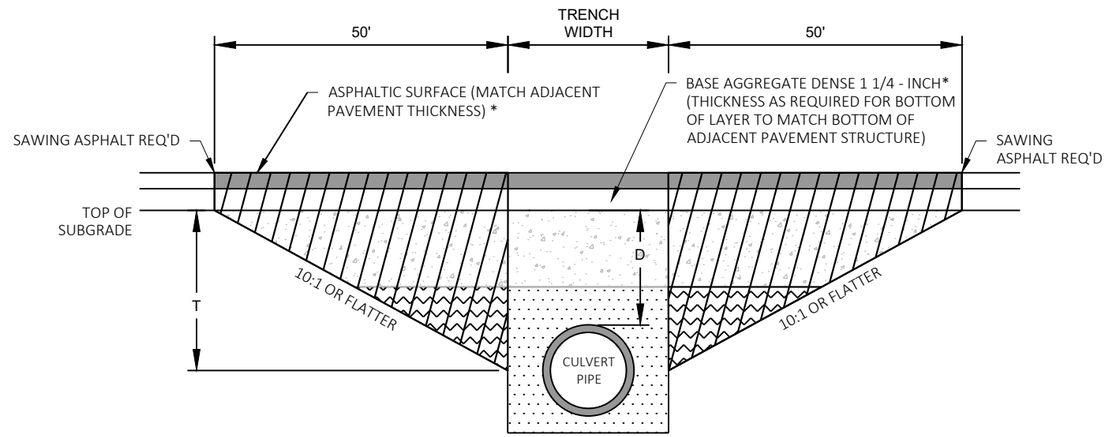

TRANSITION CUT DEPTH (T) = THE LESSER OF DEPTH TO CENTER OF PIPE OR 5 FT.
DO NOT EXTEND TRANSITION CUT BELOW HORIZONTAL CENTER OF PIPE.

DEPTH D < 6 FT

* APPROXIMATELY 6.25" OF ASPHALTIC SURFACE OVER 10.5" OF BAD AT STA 150+70
APPROXIMATELY 6" OF ASPHALTIC SURFACE OVER 12" OF BAD AT STA 255+04

LEGEND

- TRENCH BACKFILL
- TRENCH OR FOUNDATION BACKFILL
- FOUNDATION BACKFILL
- TRANSITION CUT

NOTES

TRANSITION CUT IS PAID AS EXCAVATION COMMON.
TRANSITION CUT WIDTH IS FROM SUBGRADE SHOULDER POINT TO SUBGRADE SHOULDER POINT.
BACKFILL THE TRANSITION CUT AREAS WITH FOUNDATION AND TRENCH BACKFILL AS SPECIFIED IN STANDARD SPEC 520.
PERFORM CULVERT PIPE INSTALLATION BEFORE MAINLINE PAVING OPERATIONS.
PLACE ASPHALTIC SURFACE AFTER CULVERT PIPE INSTALLATION AND BEFORE MAINLINE PAVING OPERATIONS.

CULVERT PIPE TRANSITION

STA (CL)	DEPTH D (FT)	NO. OF PIPE	PIPE DIA (IN)
150+70	2.50	2	42
255+04	3.70	1	36

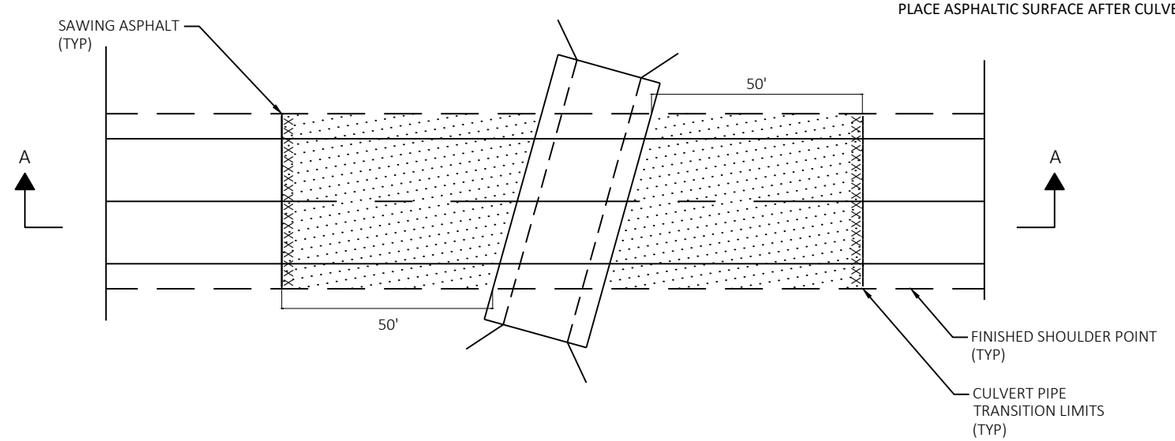

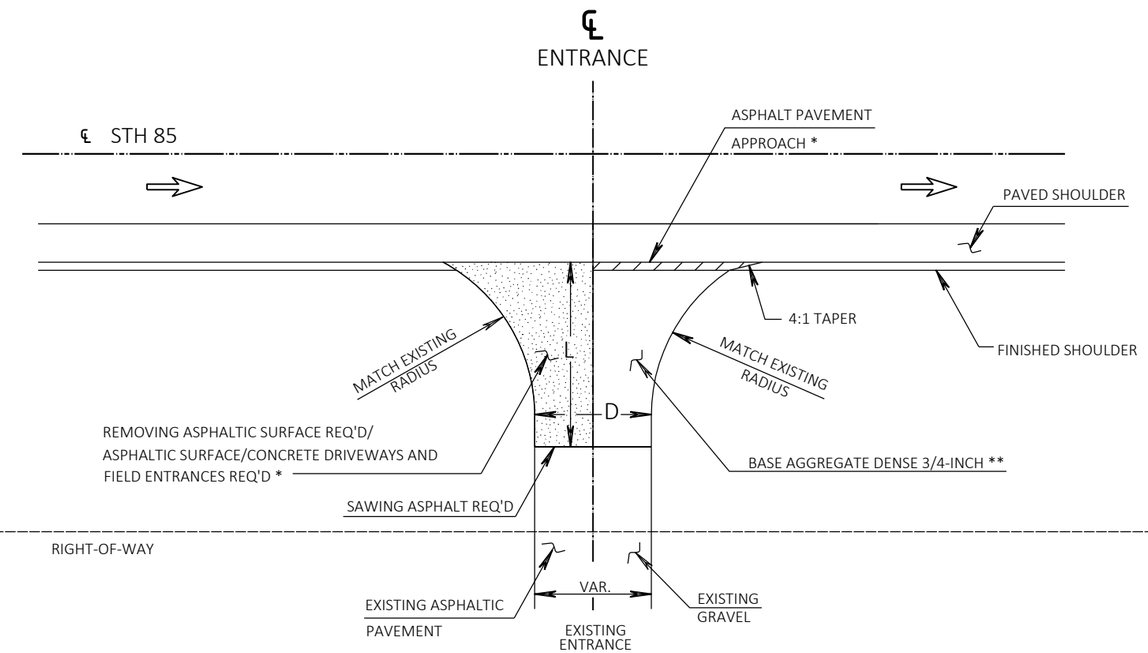

L=10 FT TYPICAL, EXACT LENGTH TO BE
DETERMINED IN THE FIELD BY THE ENGINEER.
BLEND BACK ON THE ENTRANCE FAR
ENOUGH TO GET A SMOOTH PROFILE.

D=MATCH EXISTING WIDTH

* 3-INCHES ASPHALTIC SURFACE DRIVEWAYS AND FIELD ENTRANCES OVER
VARIABLE DEPTH BASE AGGREGATE DENSE 3/4-INCH

**VARIABLE DEPTH BASE AGGREGATE DENSE 3/4-INCH

RURAL DRIVEWAY DETAIL (WITHIN CIR PAVING LIMITS)

(SEE PLAN SHEETS FOR LOCATIONS AND EXISTING MATERIAL TYPE)

* REMOVE ANY REMAINING MATERIAL
ADJACENT TO VERTICAL EDGE. (SAW CUT
AND REMOVING MATERIAL INCLUDED
IN BID ITEM REMOVING ASPHALTIC SURFACE
BUTT JOINTS)

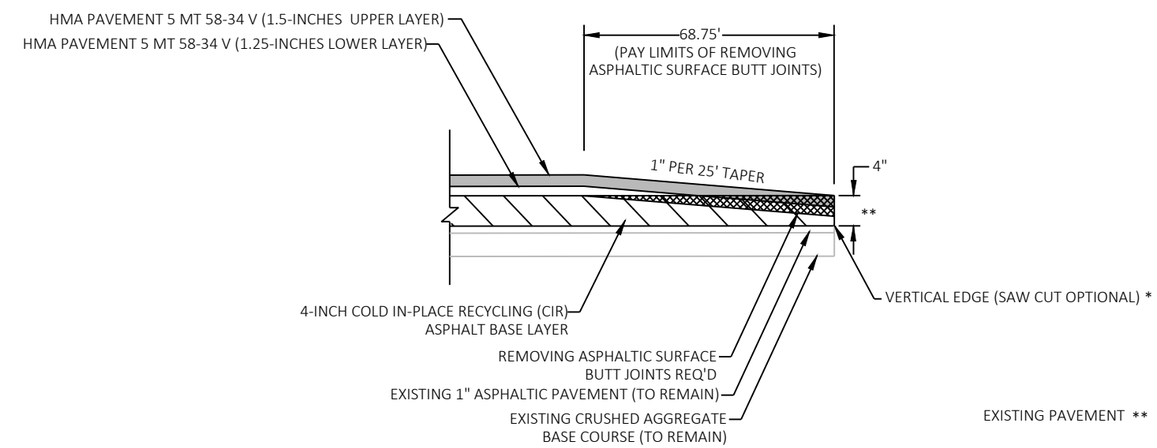

REMOVING ASPHALTIC SURFACE BUTT JOINT DETAIL

STA 375+86.87

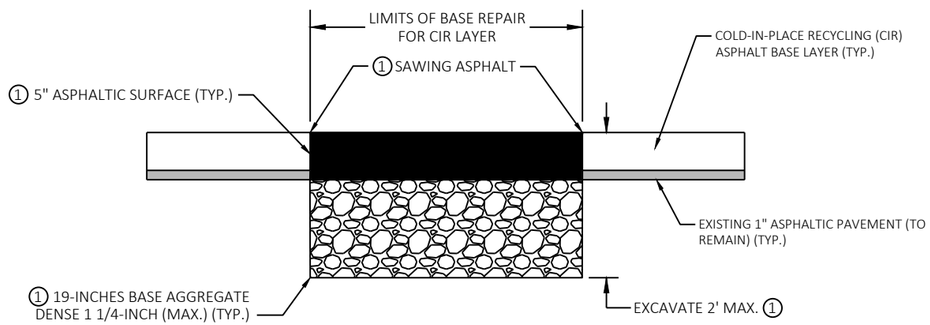

BASE REPAIR FOR CIR LAYER

1 INCLUDED IN BID ITEM BASE REPAIR FOR CIR LAYER

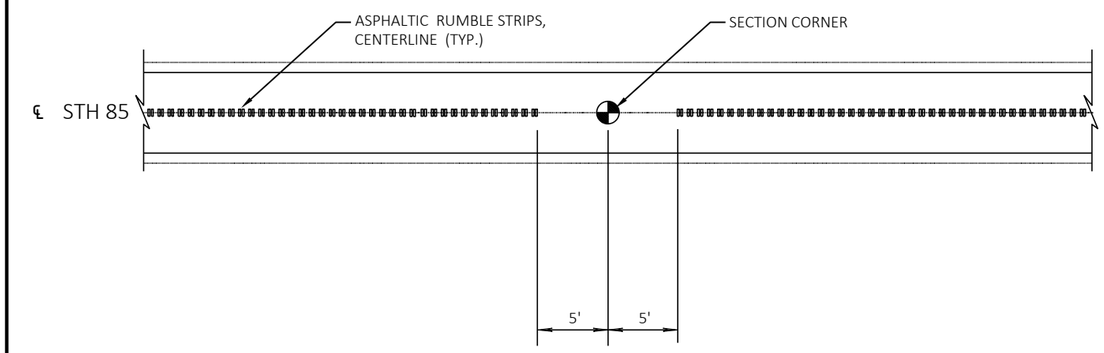

ASPHALTIC CENTER LINE RUMBLE STRIP 2-LANE RURAL AT SECTION CORNER LOCATIONS

STA. 343+80.82

2

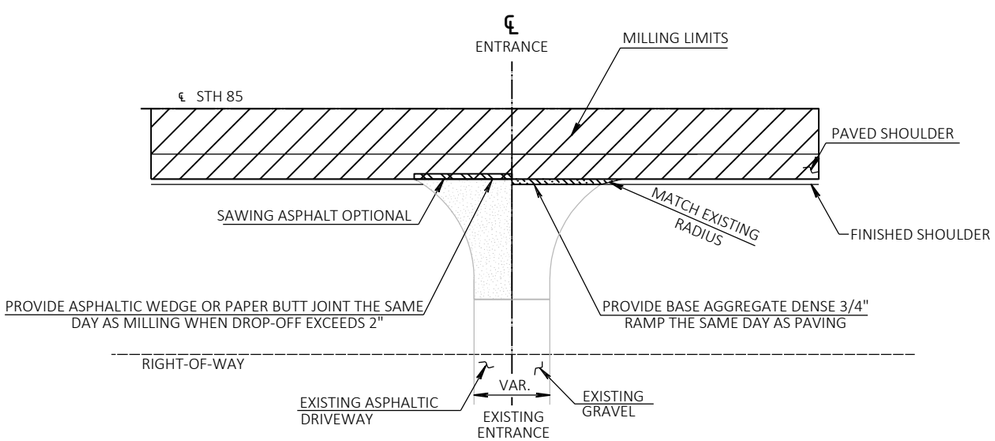

PLAN VIEW

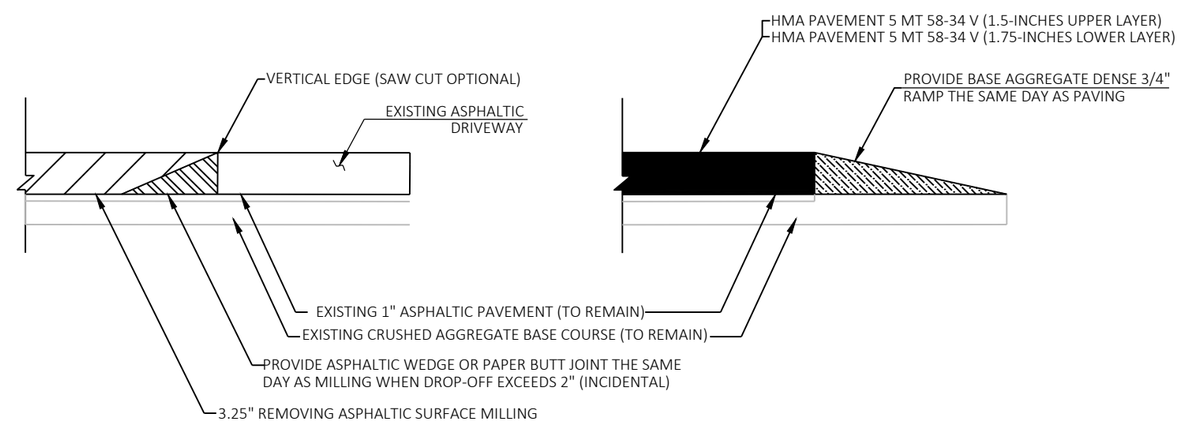

CROSS SECTION VIEW

MILL AND OVERLAY DRIVEWAY PLAN DETAIL (NO PROFILE INCREASE WITH DROP GREATER THAN 2-INCHES)

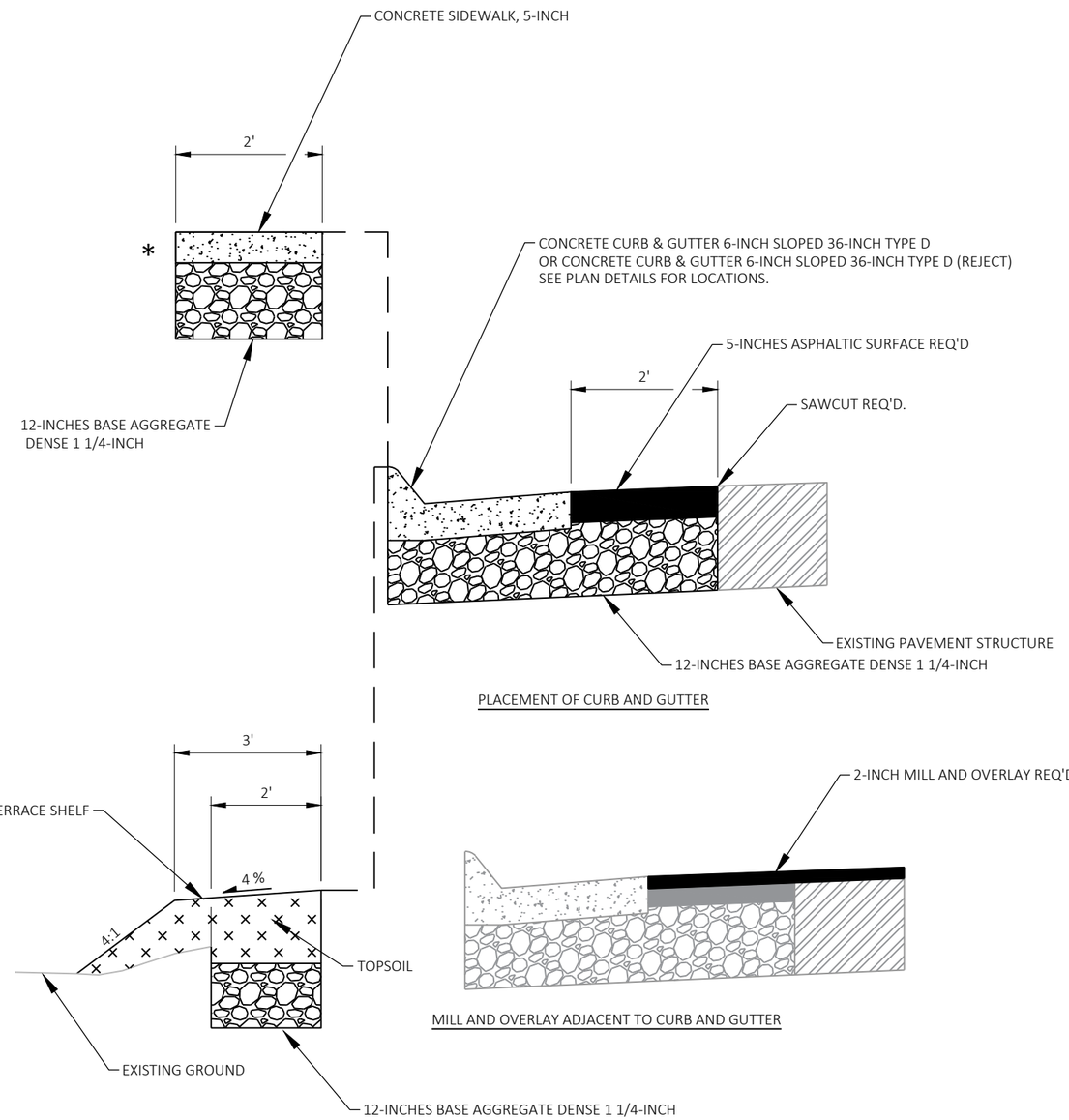

CURB AND GUTTER DETAIL
STA. 319+96 - STA. 321+17

* 36-INCH CURB AND GUTTER 6-INCH SLOPED, TYPE D

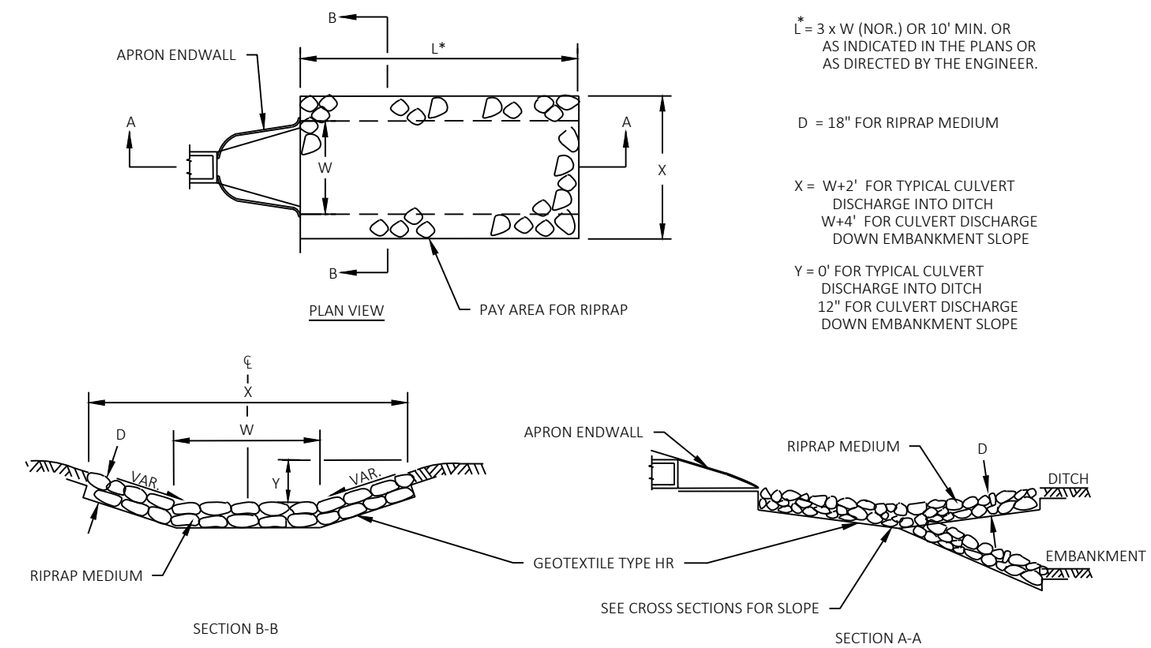

L* = 3 x W (NOR.) OR 10' MIN. OR AS INDICATED IN THE PLANS OR AS DIRECTED BY THE ENGINEER.

D = 18" FOR RIPRAP MEDIUM

X = W+2' FOR TYPICAL CULVERT DISCHARGE INTO DITCH
W+4' FOR CULVERT DISCHARGE DOWN EMBANKMENT SLOPE

Y = 0' FOR TYPICAL CULVERT DISCHARGE INTO DITCH
12" FOR CULVERT DISCHARGE DOWN EMBANKMENT SLOPE

CONSTRUCTION NOTES:

1. EXTEND GEOTEXTILE FABRIC BENEATH THE ENTIRE LENGTH OF THE APRON ENDWALL SECTION. INSTALL ON GRADE PRIOR TO ENDWALL INSTALLATION.
2. COMPLETE GEOTEXTILE FABRIC AND RIPRAP SECTION INSTALLATION PRIOR TO STORM WATER FLOW.

RIPRAP AND GEOTEXTILE DETAIL
AT APRON ENDWALLS

2

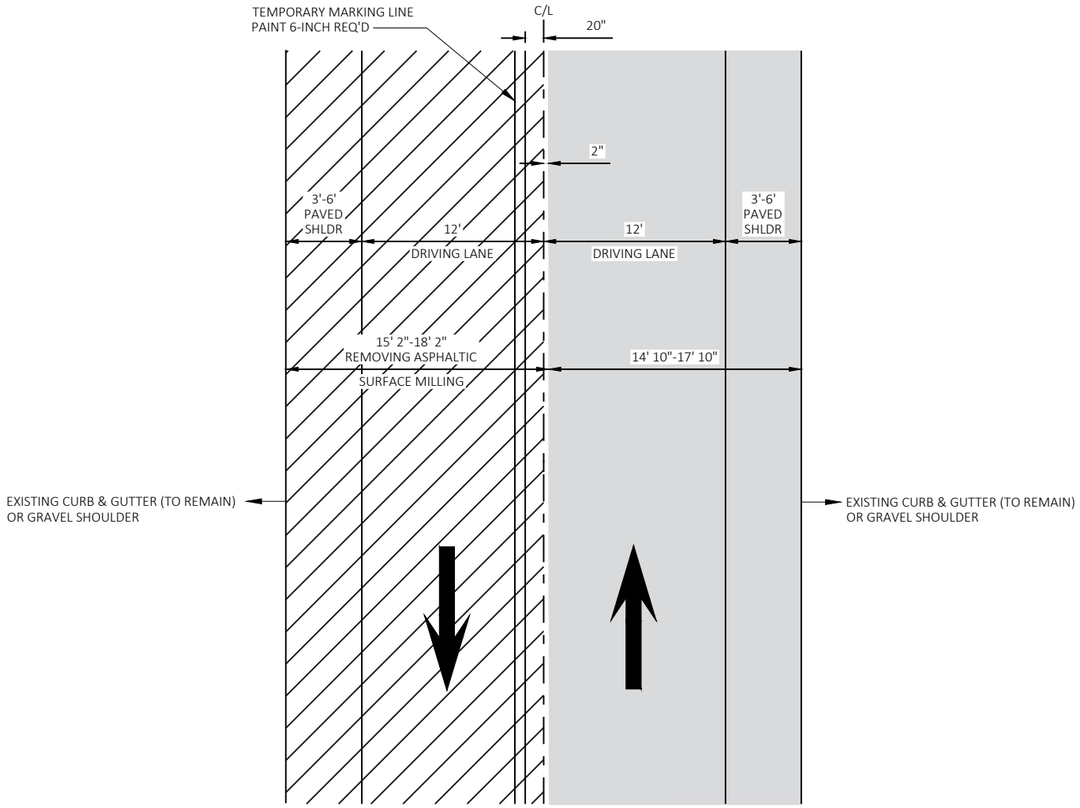

PLAN VIEW

EXISTING ASPHALTIC SURFACE TO REMAIN

FIRST PASS 1.75" HMA PAVEMENT 5 MT 58-34 V PAVING LIMITS

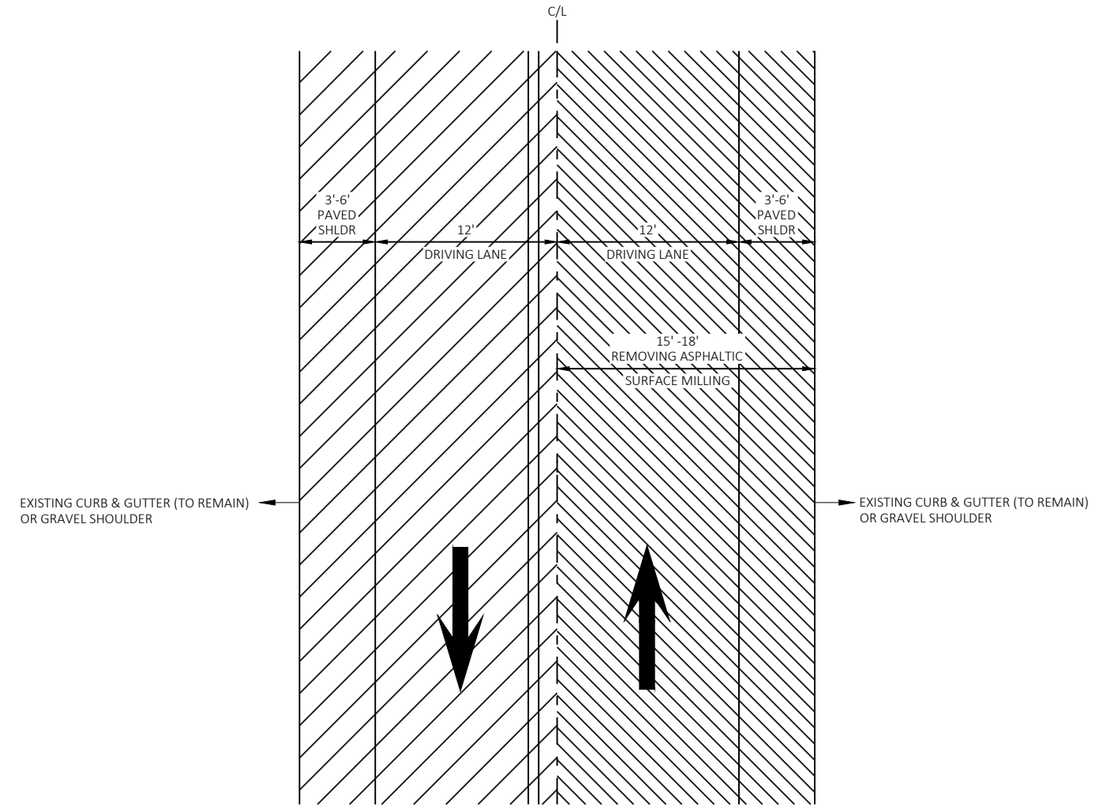

PLAN VIEW

EXISTING ASPHALTIC SURFACE TO REMAIN

FIRST PASS 1.75" HMA PAVEMENT 5 MT 58-34 V PAVING LIMITS

SECOND PASS 1.75" HMA PAVEMENT 5 MT 58-34 V PAVING LIMITS

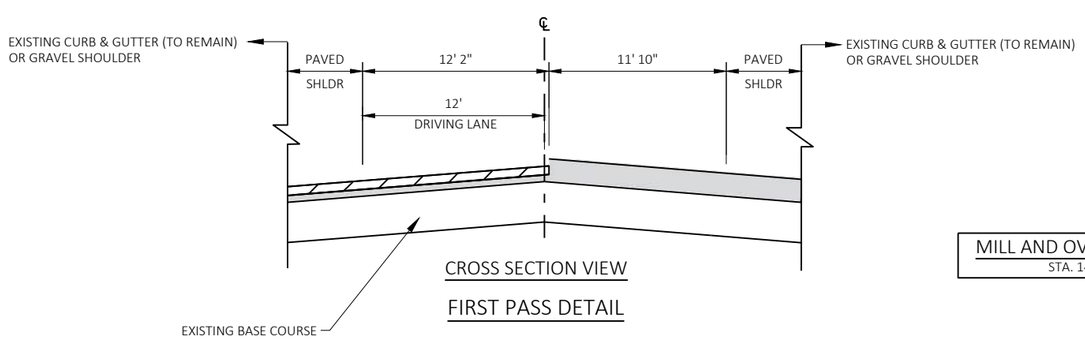

CROSS SECTION VIEW

FIRST PASS DETAIL

MILL AND OVERLAY PAVING DETAIL

STA. 149+76 - STA. 180+52

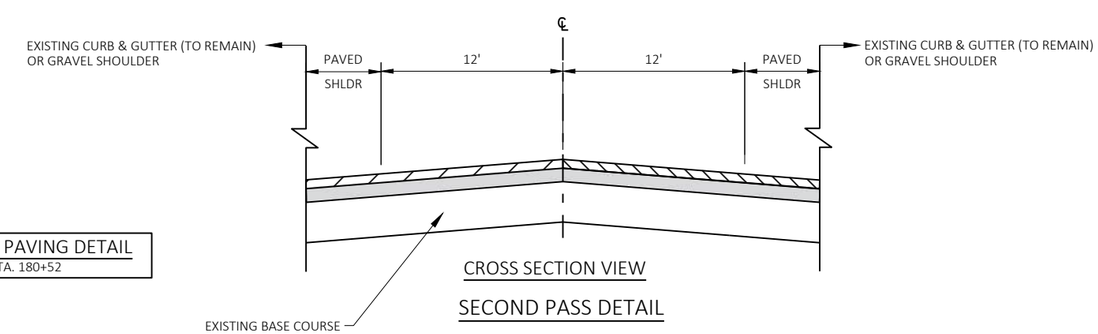

CROSS SECTION VIEW

SECOND PASS DETAIL

2

PROJECT NO: 7120-00-74	HWY: STH 85	COUNTY: DUNN	CONSTRUCTION DETAILS	SHEET 15	E

2

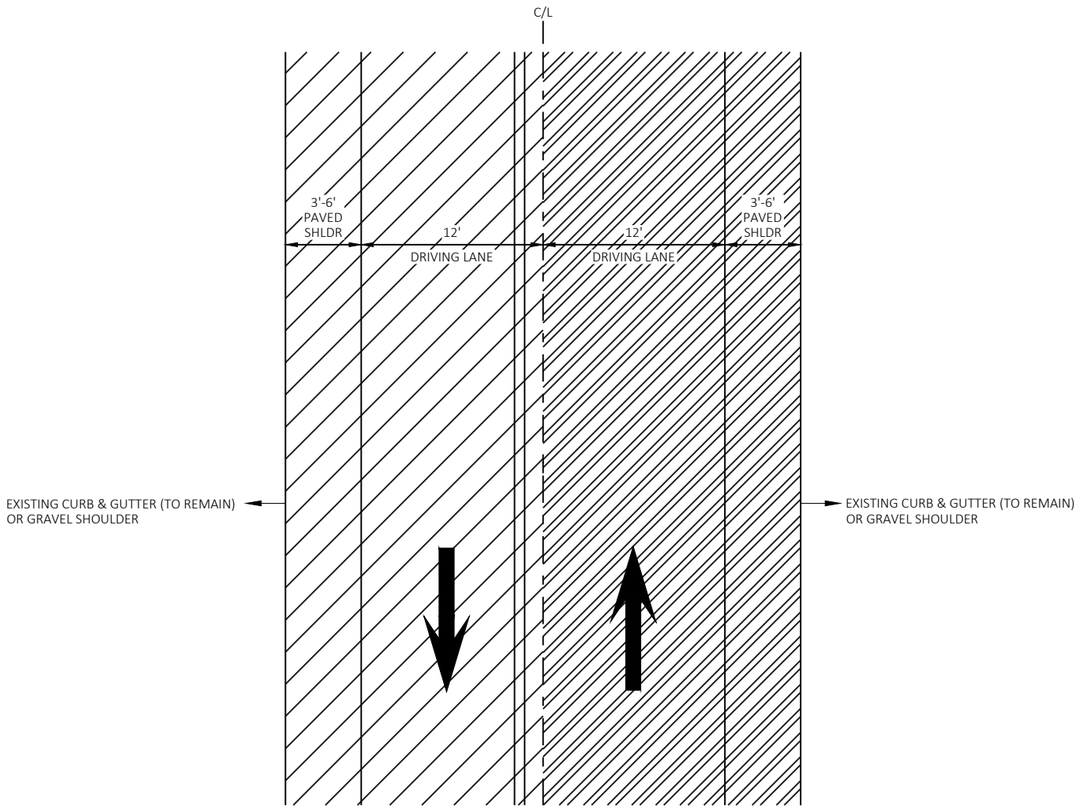

PLAN VIEW

EXISTING ASPHALTIC SURFACE TO REMAIN

FIRST PASS 1.75" HMA PAVEMENT 5 MT 58-34 V PAVING LIMITS

SECOND PASS 1.75" HMA PAVEMENT 5 MT 58-34 V PAVING LIMITS

THIRD PASS 1.5" HMA PAVEMENT 5 MT 58-34 V PAVING LIMITS

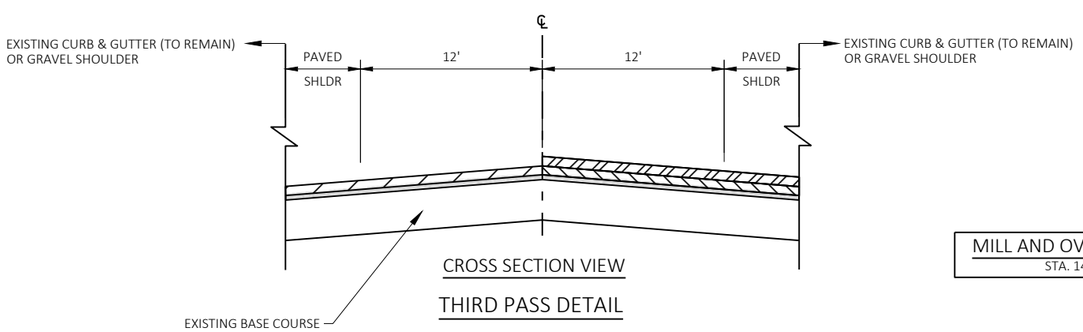

CROSS SECTION VIEW

THIRD PASS DETAIL

MILL AND OVERLAY PAVING DETAIL

STA. 149+76 - STA. 180+52

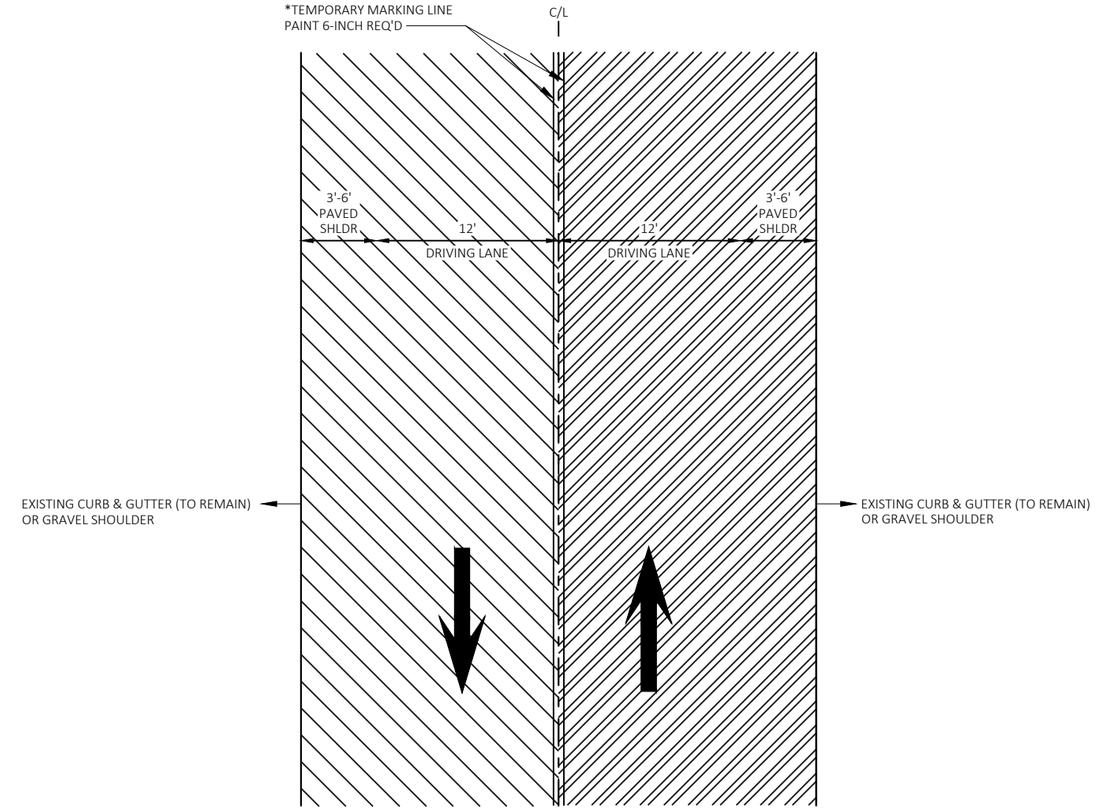

PLAN VIEW

* ALL NEW CENTERLINE PASSING / NO PASSING PAVEMENT MARKING (BEGIN/END) LOCATIONS TO MATCH EXISTING PASSING / NO PASSING MARKING (BEGIN/END) LOCATIONS.

EXISTING ASPHALTIC SURFACE TO REMAIN

FIRST PASS 1.75" HMA PAVEMENT 5 MT 58-34 V PAVING LIMITS

SECOND PASS 1.75" HMA PAVEMENT 5 MT 58-34 V PAVING LIMITS

THIRD PASS 1.5" HMA PAVEMENT 5 MT 58-34 V PAVING LIMITS

FOURTH PASS 1.5" HMA PAVEMENT 5 MT 58-34 V PAVING LIMITS

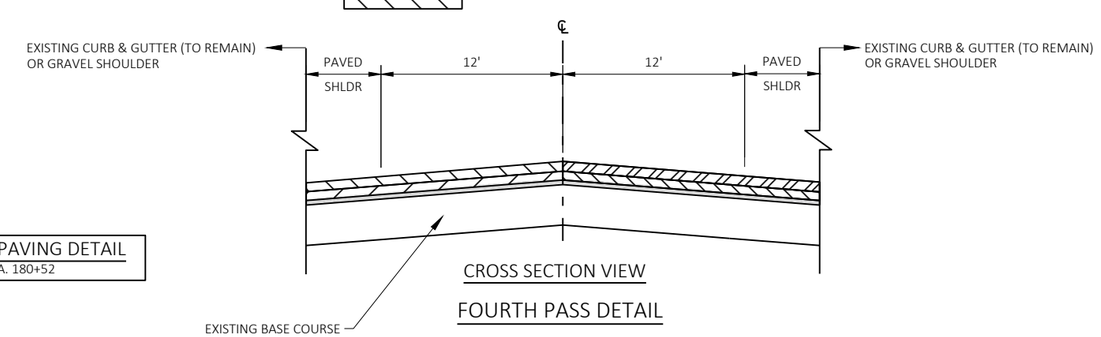

CROSS SECTION VIEW

FOURTH PASS DETAIL

2

PROJECT NO: 7120-00-74	HWY: STH 85	COUNTY: DUNN	CONSTRUCTION DETAILS	SHEET 16	E

2

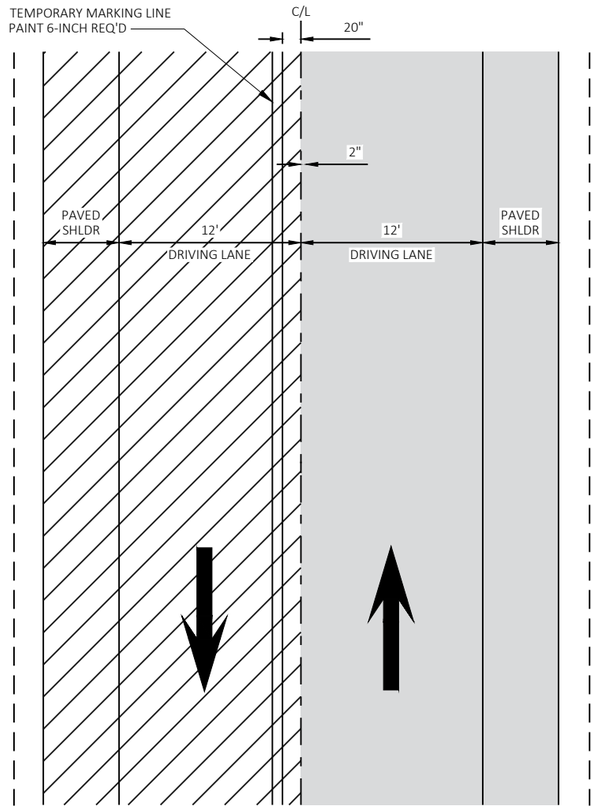

PLAN VIEW

EXISTING COLD-IN-PLACE RECYCLING SURFACE TO REMAIN

FIRST PASS 1.25" HMA PAVEMENT 5 MT 58-34 V PAVING LIMITS

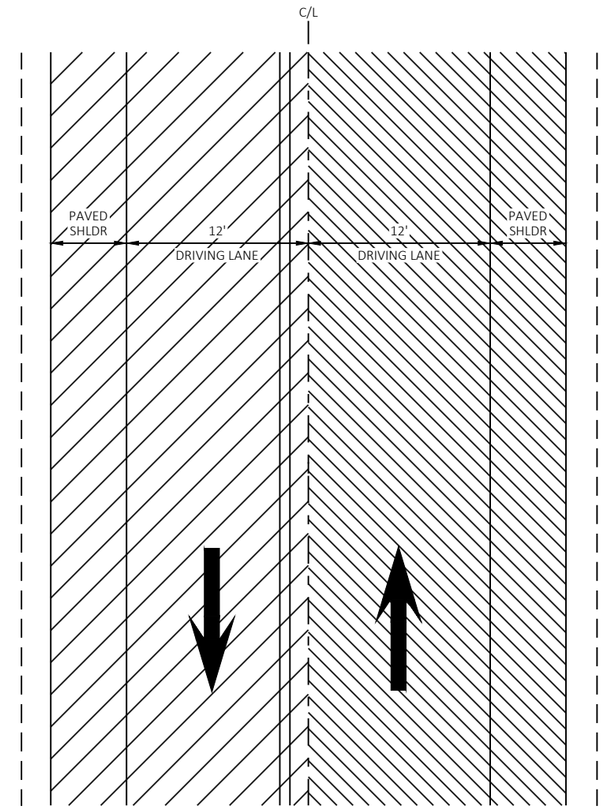

PLAN VIEW

EXISTING COLD-IN-PLACE RECYCLING SURFACE TO REMAIN

FIRST PASS 1.25" HMA PAVEMENT 5 MT 58-34 V PAVING LIMITS

SECOND PASS 1.25" HMA PAVEMENT 5 MT 58-34 V PAVING LIMITS

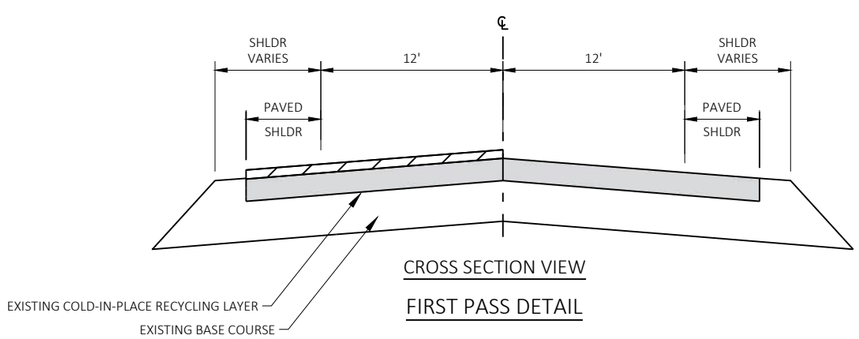

CROSS SECTION VIEW

FIRST PASS DETAIL

OVERLAY PAVING DETAIL CIR LOCATIONS

STA. 180+52 - STA. 375+87

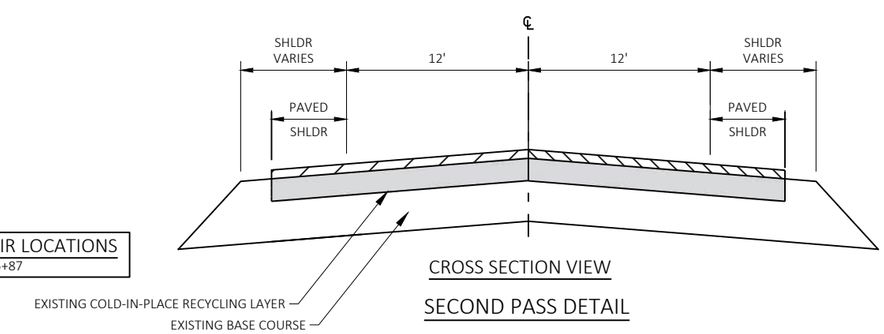

CROSS SECTION VIEW

SECOND PASS DETAIL

2

PROJECT NO: 7120-00-74	HWY: STH 85	COUNTY: DUNN	CONSTRUCTION DETAILS	SHEET 17	E

2

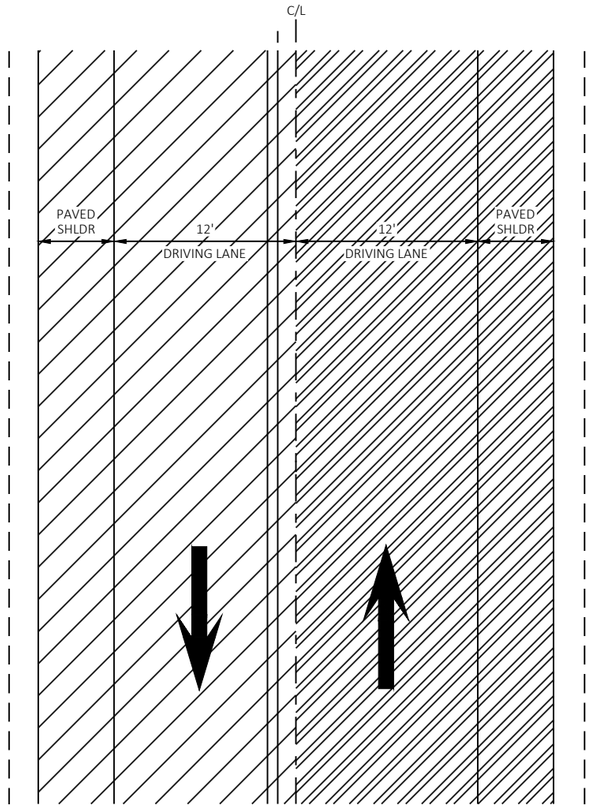

PLAN VIEW

EXISTING COLD-IN-PLACE RECYCLING SURFACE TO REMAIN

FIRST PASS 1.25" HMA PAVEMENT 5 MT 58-34 V PAVING LIMITS

SECOND PASS 1.25" HMA PAVEMENT 5 MT 58-34 V PAVING LIMITS

THIRD PASS 1.5" HMA PAVEMENT 5 MT 58-34 V PAVING LIMITS

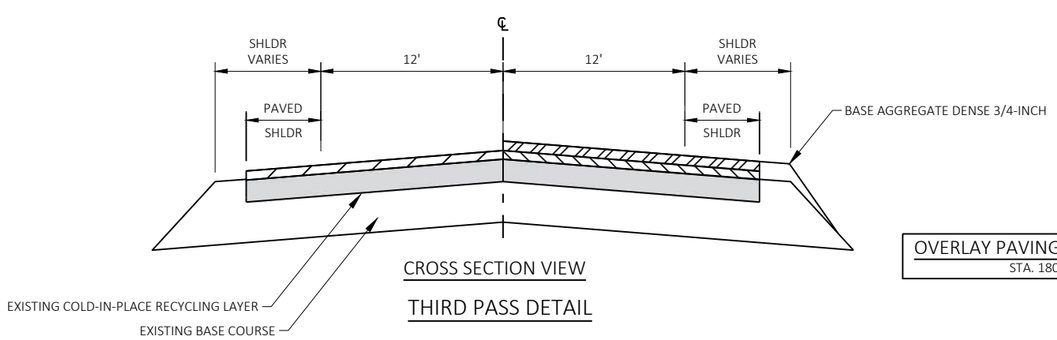

CROSS SECTION VIEW

THIRD PASS DETAIL

OVERLAY PAVING DETAIL CIR LOCATIONS

STA. 180+52 - STA. 375+87

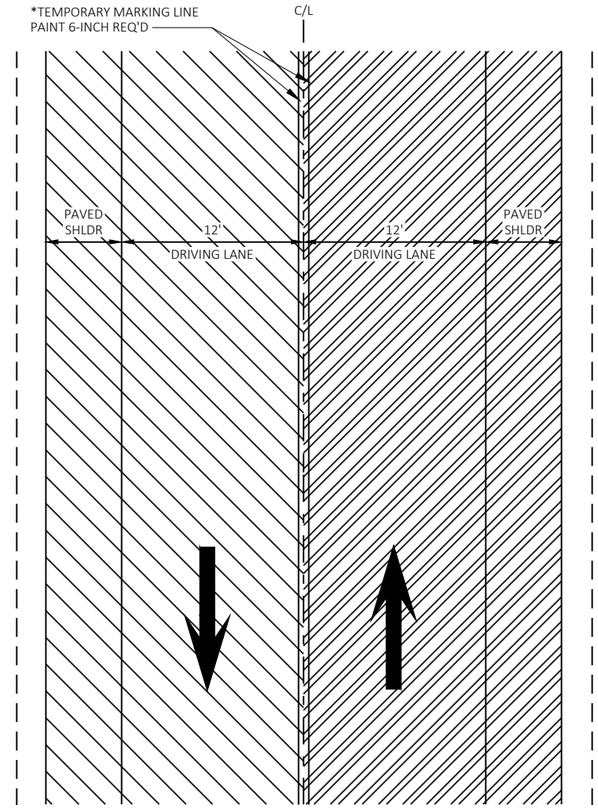

PLAN VIEW

* ALL NEW CENTERLINE PASSING / NO PASSING PAVEMENT MARKING (BEGIN/END) LOCATIONS TO MATCH EXISTING PASSING / NO PASSING MARKING (BEGIN/END) LOCATIONS.

EXISTING COLD-IN-PLACE RECYCLING SURFACE TO REMAIN

FIRST PASS 1.25" HMA PAVEMENT 5 MT 58-34 V PAVING LIMITS

SECOND PASS 1.25" HMA PAVEMENT 5 MT 58-34 V PAVING LIMITS

THIRD PASS 1.5" HMA PAVEMENT 5 MT 58-34 V PAVING LIMITS

FOURTH PASS 1.5" HMA PAVEMENT 5 MT 58-34 V PAVING LIMITS

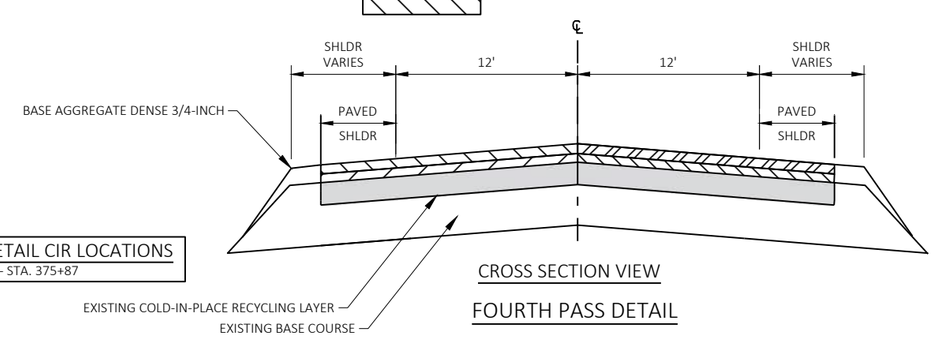

CROSS SECTION VIEW

FOURTH PASS DETAIL

2

PROJECT NO: 7120-00-74	HWY: STH 85	COUNTY: DUNN	CONSTRUCTION DETAILS	SHEET 18	E

2

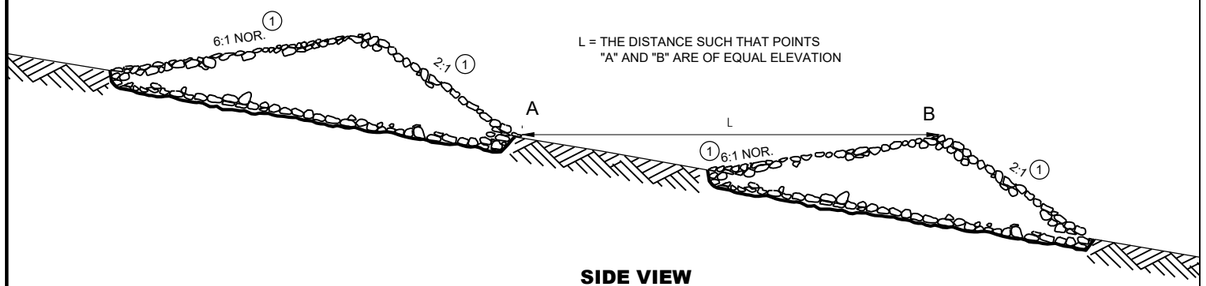

SIDE VIEW

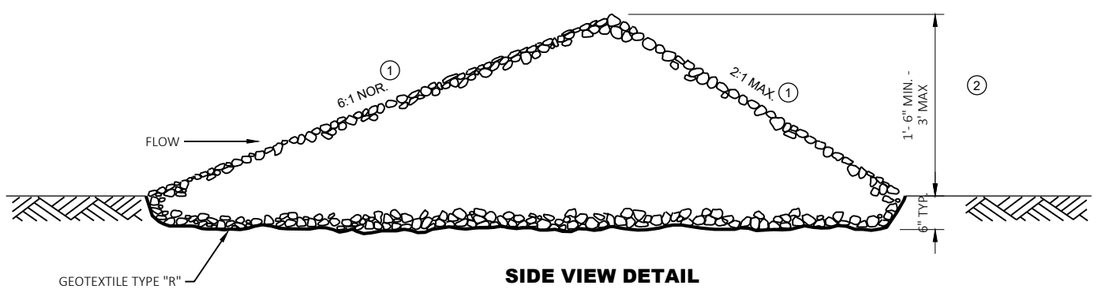

SIDE VIEW DETAIL

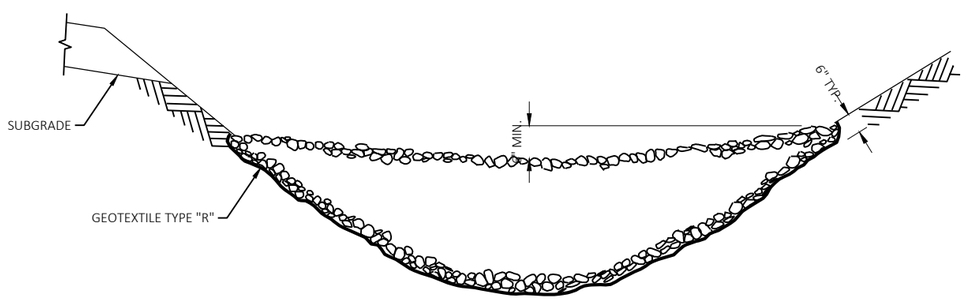

SECTION VIEW

STONE DITCH CHECK

(1) WHEN PLACED WITHIN THE CLEAR ZONE, SLOPED AT 6:1 OR FLATTER.

(2) MEASURED AT THE CENTER OF THE DITCH CHECK.

2

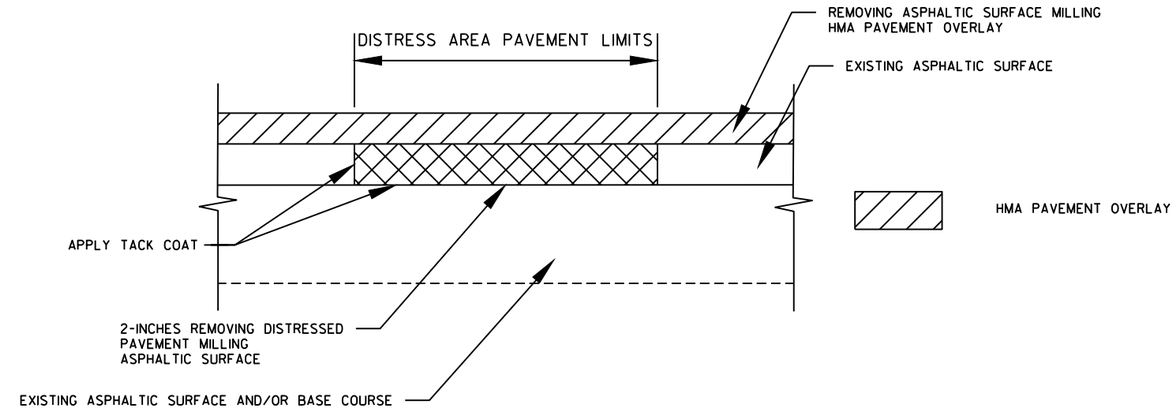

REMOVING DISTRESS PAVEMENT MILLING
SECTION A-A

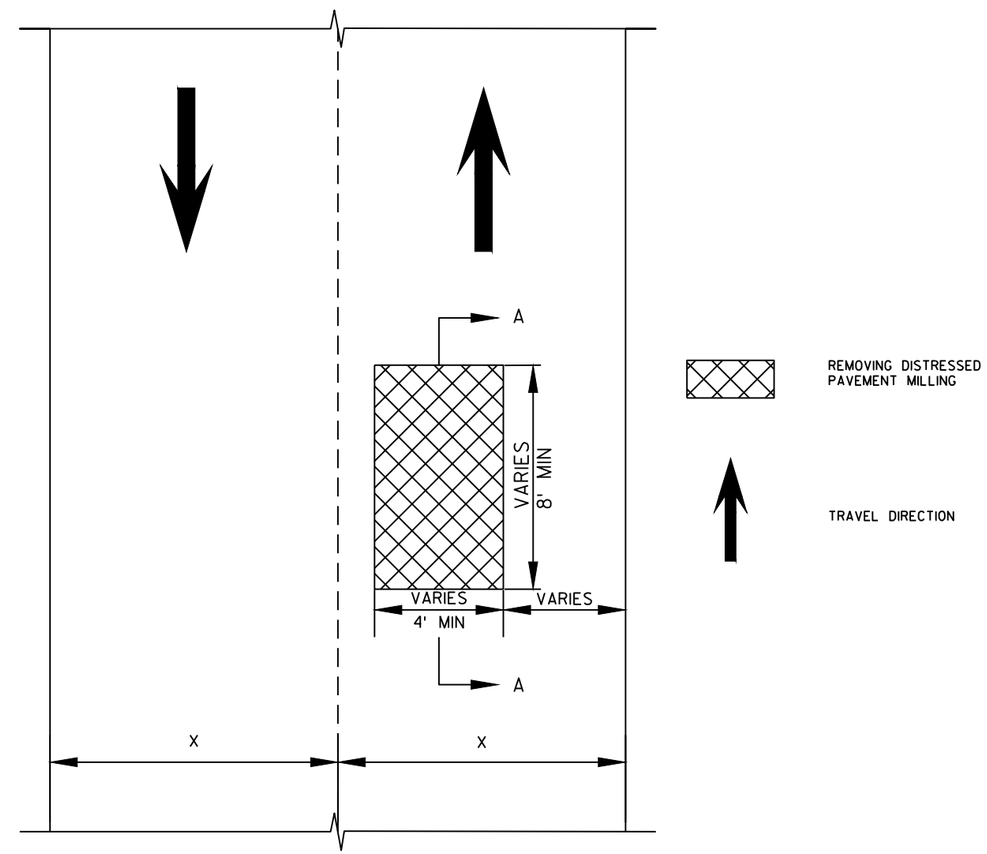

PLAN VIEW

EXACT LOCATION AND LIMITS OF REMOVING DISTRESSED PAVEMENT MILLING TO BE DETERMINED BY THE ENGINEER IN THE FIELD

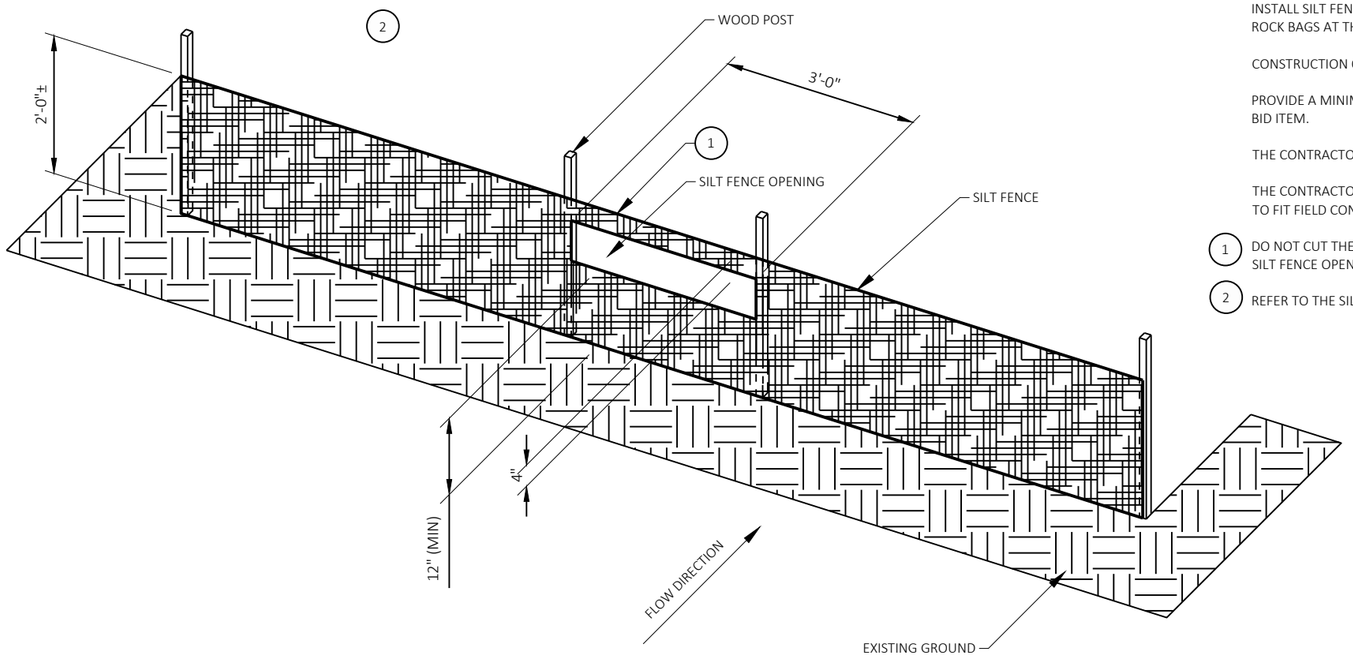

GENERAL NOTES

THE SILT FENCE RELIEF DETAIL IS A SUPPLEMENTAL DETAIL TO THE SILT FENCE STANDARD DETAILS AND SHALL CONFORM TO THE PERTINENT REQUIREMENTS OF THE STANDARD SPECIFICATIONS AND APPLICABLE SPECIAL PROVISIONS.

INSTALL SILT FENCE PRIOR TO CONSTRUCTING THE SILT FENCE OPENING. PRIOR TO CONSTRUCTING THE SILT FENCE OPENING, PLACE ROCK BAGS AT THE SILT FENCE OPENING AS SHOWN IN THIS DETAIL.

CONSTRUCTION OF THE SILT FENCE OPENING SHALL BE INCIDENTAL TO THE COST OF THE SILT FENCE BID ITEM.

PROVIDE A MINIMUM OF 22 ROCK BAGS PER 3 FOOT OPENING. ROCK BAGS SHALL BE PAID UNDER THE ROCK BAGS BID ITEM.

THE CONTRACTOR SHALL LOCATE SILT FENCE RELIEF OPENINGS AT SILT FENCE LOW POINTS AND AS DIRECTED BY THE FIELD ENGINEER.

THE CONTRACTOR SHALL ADJUST THE SILT FENCE RELIEF OPENINGS WITHIN THE SILT FENCE AS NECESSARY TO PROVIDE RELIEF: TO FIT FIELD CONDITIONS AND AS DIRECTED BY THE FIELD ENGINEER.

1. DO NOT CUT THE SUPPORT CORD OR TENSION TAPE WHEN CONSTRUCTING THE SILT FENCE OPENING. KEEP THE TOP OF THE SILT FENCE OPENING 1"± BELOW THE 3" FOLD AT THE SUPPORT CORD OR TENSION TAPE.
2. REFER TO THE SILT FENCE STANDARD DETAILS FOR ALLOWABLE ADJUSTMENTS TO POST SPACING.

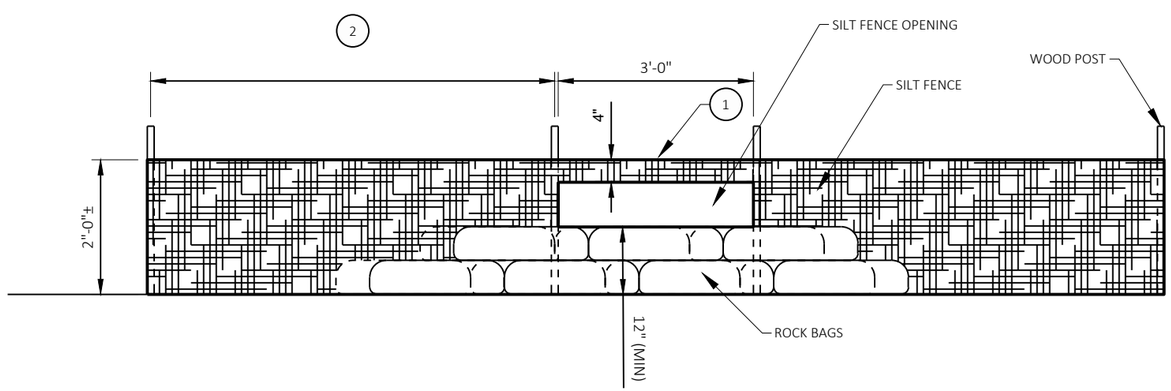

SILT FENCE RELIEF DETAIL

SEE EROSION CONTROL PLANS FOR LOCATIONS

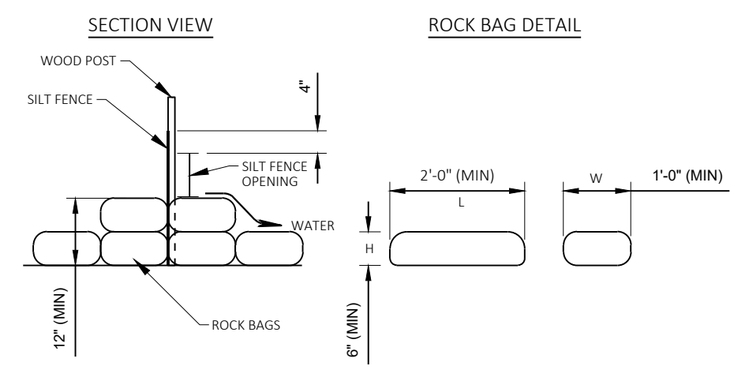

2

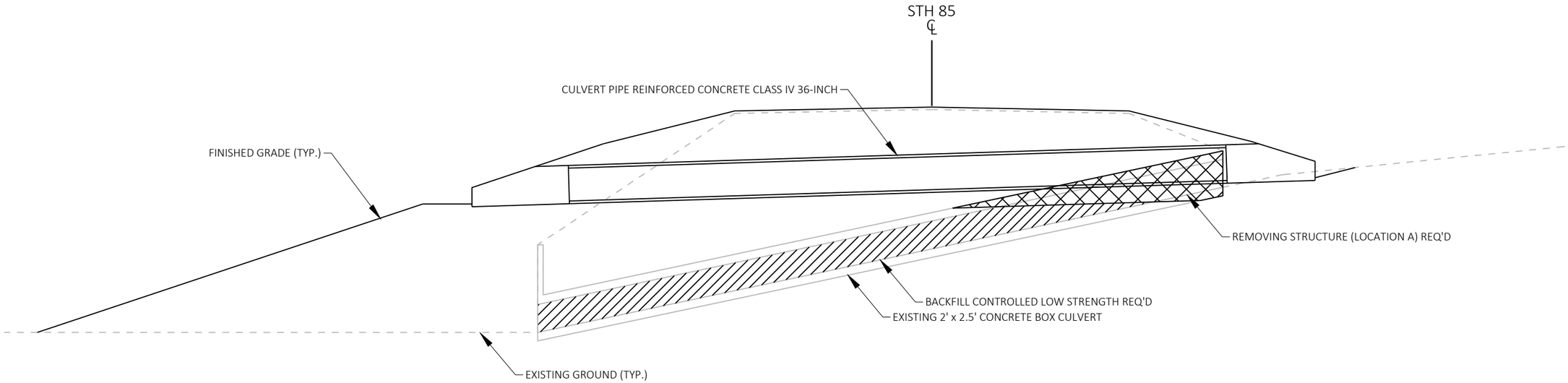

EXISTING STRUCTURE REMOVAL/BACKFILL (LOCATION A)

STA 255+04

NOTES:
REMOVE EXISTING STRUCTURE TO AN ELEVATION WHERE IT DOES NOT INTERFERE WITH PROPOSED WORK AND AS SPECIFIED IN STANDARD SPEC 203.

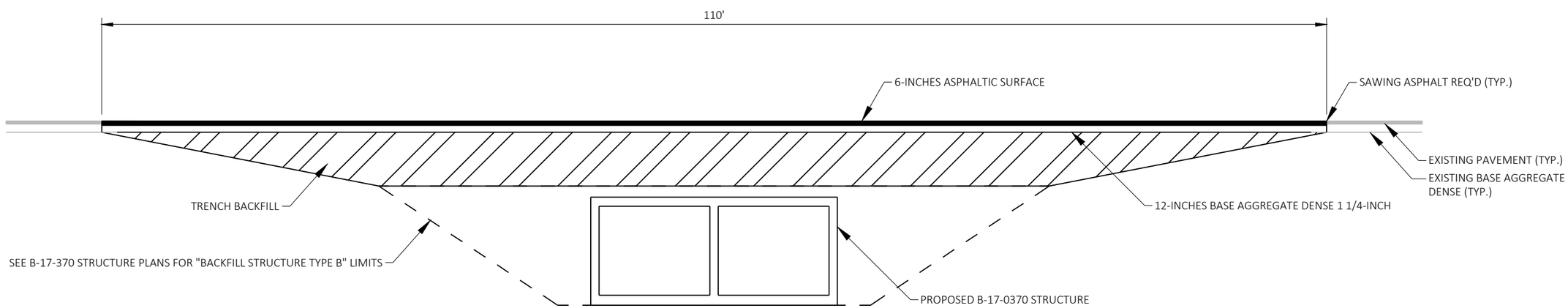

NOTES

TRANSITION CUT IS INCIDENTAL TO EXCAVATION FOR STRUCTURES CULVERTS B-17-0370.
TRANSITION CUT WIDTH IS FROM SUBGRADE SHOULDER POINT TO SUBGRADE SHOULDER POINT.
BACKFILL THE TRANSITION CUT AREAS WITH TRENCH BACKFILL AS SPECIFIED IN STANDARD SPEC 520.
PLACE ASPHALTIC SURFACE AFTER B-17-0370 WORK IS COMPLETED AND BEFORE MAINLINE PAVING OPERATIONS.
SEE B-17-370 STRUCTURE PLANS FOR ADDITIONAL INFORMATION

TRANSITION CUT OVER STRUCTURE B-17-0370

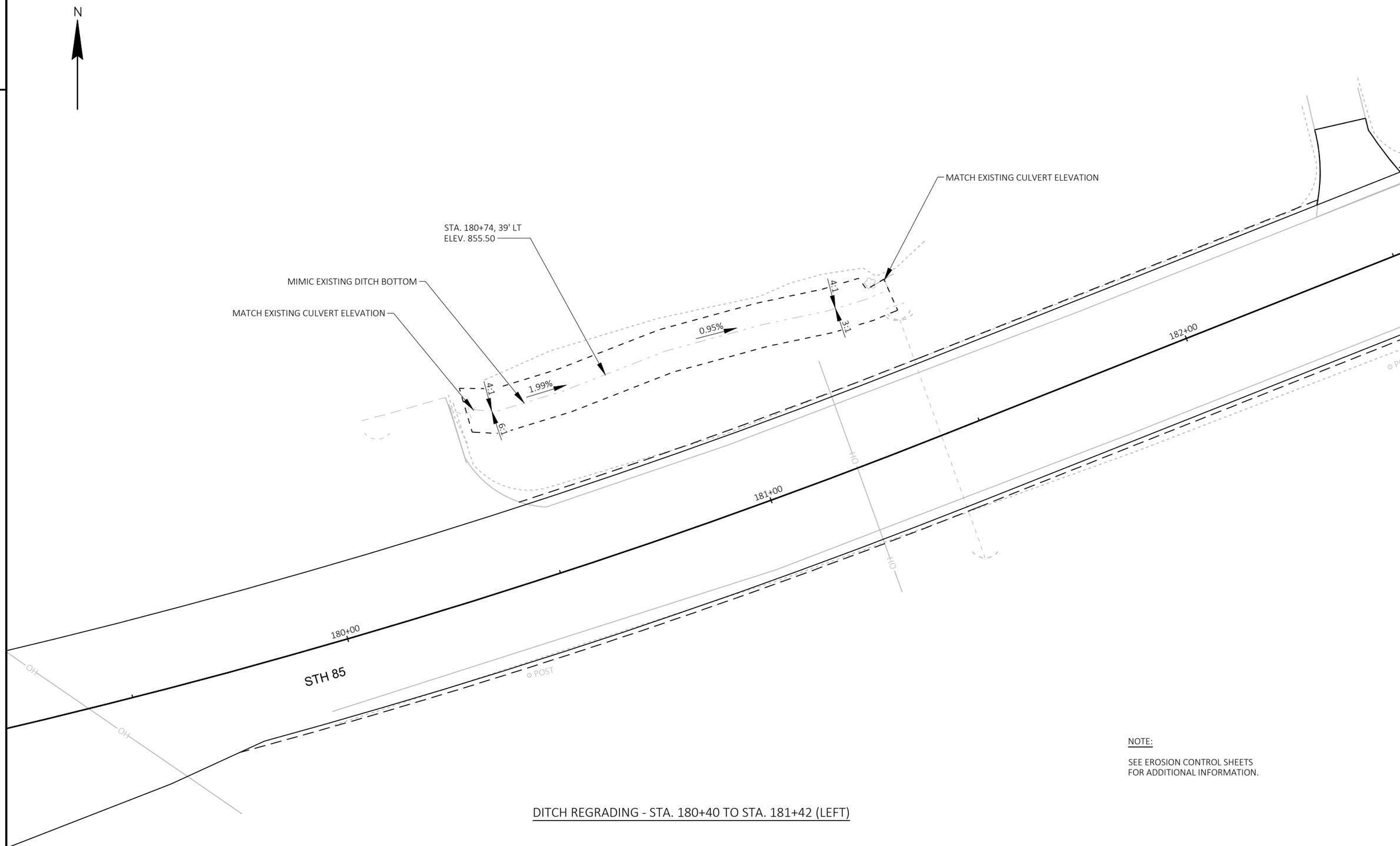

NOTE:

SEE EROSION CONTROL SHEETS
FOR ADDITIONAL INFORMATION.

DITCH REGRADING - STA. 180+40 TO STA. 181+42 (LEFT)

2

LEGEND

- SIGN ON PORTABLE OR PERMANENT SUPPORT
- TEMPORARY PORTABLE RUMBLE STRIP ARRAY
- DIRECTION OF TRAFFIC
- WORK AREA
- FLAGGER, EQUIPPED WITH STOP/SLOW PADDLE FASTENED ON SUPPORT STAFF
- DIGITAL SPEED LIMIT TRAILER (DSLT)

GENERAL NOTES

DETAILS OF TRAFFIC CONTROL DEVICES AND INSTALLATION NOT SHOWN ON THIS DRAWING SHALL CONFORM TO THE PERTINENT REQUIREMENTS OF THE STANDARD SPECIFICATIONS, THE SPECIAL PROVISIONS, AND THE MANUAL ON UNIFORM TRAFFIC CONTROL DEVICES.

ALL SIGNS ARE 48" X 48" UNLESS OTHERWISE NOTED.

"WO" SIGNS ARE THE SAME AS "W" SIGNS EXCEPT THE BACKGROUND IS ORANGE.

THE EXACT NUMBER, LOCATION AND SPACING OF ALL SIGNS, DEVICES, AND LOCATION OF ALL FLAGGERS SHALL BE ADJUSTED TO FIT FIELD CONDITIONS AS APPROVED BY THE ENGINEER.

THE FIRST ADVANCE WARNING SIGN SHOULD TYPICALLY BE LOCATED IN ADVANCE OF THE ANTICIPATED TRAFFIC BACKUP OR QUEUE.

WHEN A SIDE ROAD OR RAMP INTERSECTS THE FACILITY ON WHICH THE WORK IS BEING PERFORMED, ADDITIONAL TRAFFIC CONTROLS SHALL BE PROVIDED AS SPECIFIED IN THE PLANS AND/OR THE SPECIAL PROVISIONS OR AS APPROVED BY THE ENGINEER.

FLAGGING

FLAGGERS SHALL BE IN SIGHT OF EACH OTHER OR IN DIRECT COMMUNICATION AT ALL TIMES. THEY SHALL BE EQUIPPED WITH STOP/SLOW PADDLES FASTENED ON SUPPORT STAFFS. WHEN THE FLAGGING OPERATION IS NOT IN EFFECT REMOVE TEMPORARY PORTABLE RUMBLE STRIPS PRIOR TO COVERING OR REMOVING ALL ADVANCE SIGNING.

(1) FOR MOVING WORK OPERATIONS, REMOVE AND REINSTALL ADVANCE WARNING AREA EVERY 3,500 FEET

(2) SIGN NOT REQUIRED IF FLAGGING OPERATION OCCURS WITHIN A SIGNED ROAD WORK ZONE AREA.

WHEN THE DISTANCE BETWEEN FLAGGERS EXCEEDS 2 MILES, A PILOT CAR IS REQUIRED. WHEN CURVES REDUCE SIGHT DISTANCE BELOW 400', A PILOT CAR IS REQUIRED.

(3) POST NON-CONSTRUCTION SPEED LIMIT.

TEMPORARY PORTABLE RUMBLE STRIPS

UTILIZE TEMPORARY PORTABLE RUMBLE STRIPS ON ALL FLAGGING OPERATIONS.

(4) EACH TEMPORARY PORTABLE RUMBLE STRIP ARRAY CONSISTS OF THREE RUMBLE STRIPS PLACED TRANSVERSE ACROSS THE LANE AT THE LOCATIONS SHOWN. WITHIN EACH ARRAY, SPACING BETWEEN RUMBLE STRIPS SHALL BE 15 FEET ON CENTER

ONLY USE TEMPORARY PORTABLE RUMBLE STRIPS FROM THE APPROVED PRODUCTS LIST.

INSTALL TEMPORARY RUMBLE STRIPS PER MANUFACTURER'S RECOMMENDATIONS.

PLACE ADVANCE SIGNING PRIOR TO INSTALLING TEMPORARY RUMBLE STRIPS.

DO NOT INSTALL TEMPORARY PORTABLE RUMBLE STRIPS ON GRAVEL, MILLED SURFACES, OR ASPHALT THAT HAS BEEN PAVED LESS THAN 12 HOURS.

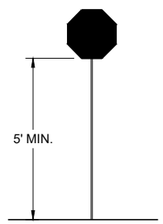

STOP/SLOW PADDLE ON SUPPORT STAFF

SIGN AND TEMPORARY RUMBLE STRIP ARRAY SPACING TABLE

SPEED LIMIT	SPACING "A"
25-30 MPH	200'
35-40 MPH	350'
45-55 MPH	500'

USE OF WO3-4 SIGN IS OPTIONAL. WHEN USED, THIS SIGN SHALL BE LOCATED BETWEEN THE W20-7A AND W20-4A SIGNS, USING SPACING "A".

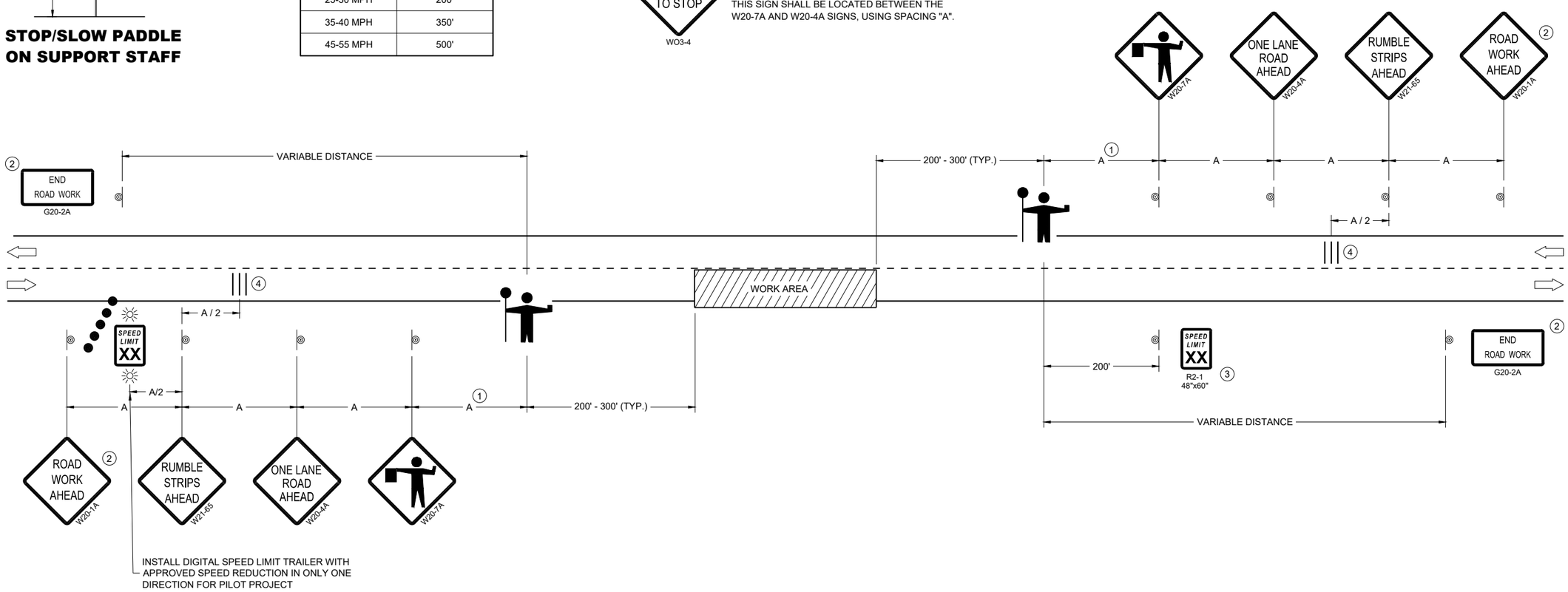

2

PROJECT NO: 7120-00-74	HWY: STH 85	COUNTY: DUNN	CONSTRUCTION DETAIL - TRAFFIC CONTROL, DIGITAL SPEED REDUCTION SYSTEM (DSRS)	SHEET 23	E

2

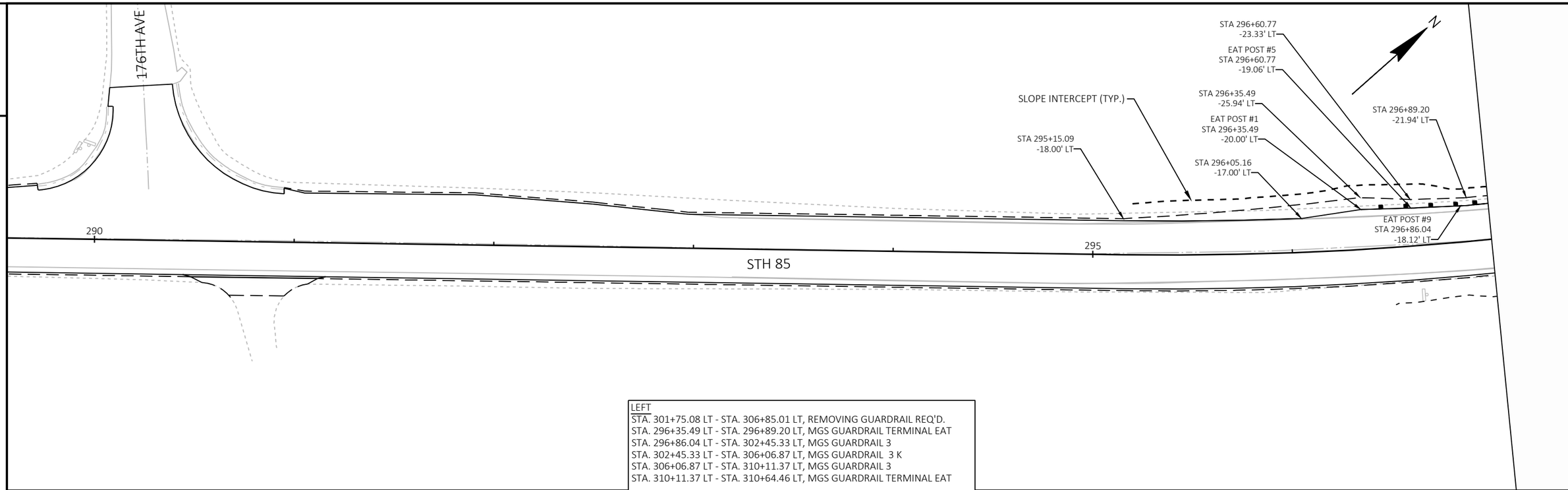

LEFT
STA. 301+75.08 LT - STA. 306+85.01 LT, REMOVING GUARDRAIL REQ'D.
STA. 296+35.49 LT - STA. 296+89.20 LT, MGS GUARDRAIL TERMINAL EAT
STA. 296+86.04 LT - STA. 302+45.33 LT, MGS GUARDRAIL 3
STA. 302+45.33 LT - STA. 306+06.87 LT, MGS GUARDRAIL 3 K
STA. 306+06.87 LT - STA. 310+11.37 LT, MGS GUARDRAIL 3
STA. 310+11.37 LT - STA. 310+64.46 LT, MGS GUARDRAIL TERMINAL EAT

RIGHT
STA. 301+68.06 RT - STA. 305+86.00 RT, REMOVING GUARDRAIL REQ'D.
STA. 299+98.98 RT - STA. 300+51.43 RT, MGS GUARDRAIL TERMINAL EAT
STA. 300+51.43 RT - STA. 301+87.43 RT, MGS GUARDRAIL 3
STA. 301+87.43 RT - STA. 305+33.61 RT, MGS GUARDRAIL 3 K
STA. 305+33.61 RT - STA. 305+86.09 RT, MGS GUARDRAIL TERMINAL EAT

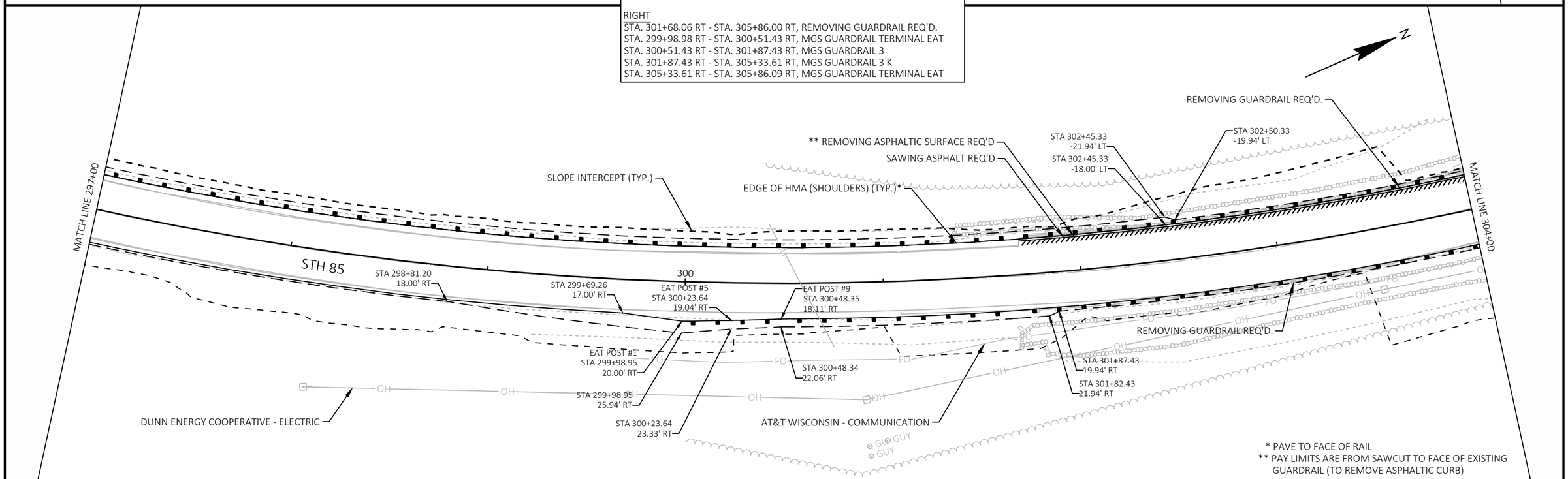

* PAVE TO FACE OF RAIL
** PAY LIMITS ARE FROM SAWCUT TO FACE OF EXISTING GUARDRAIL (TO REMOVE ASPHALTIC CURB)

2

PROJECT NO: 7120-00-74	HWY: STH 85	COUNTY: DUNN	CONSTRUCTION DETAILS - GUARDRAIL LAYOUT	SHEET 24	E

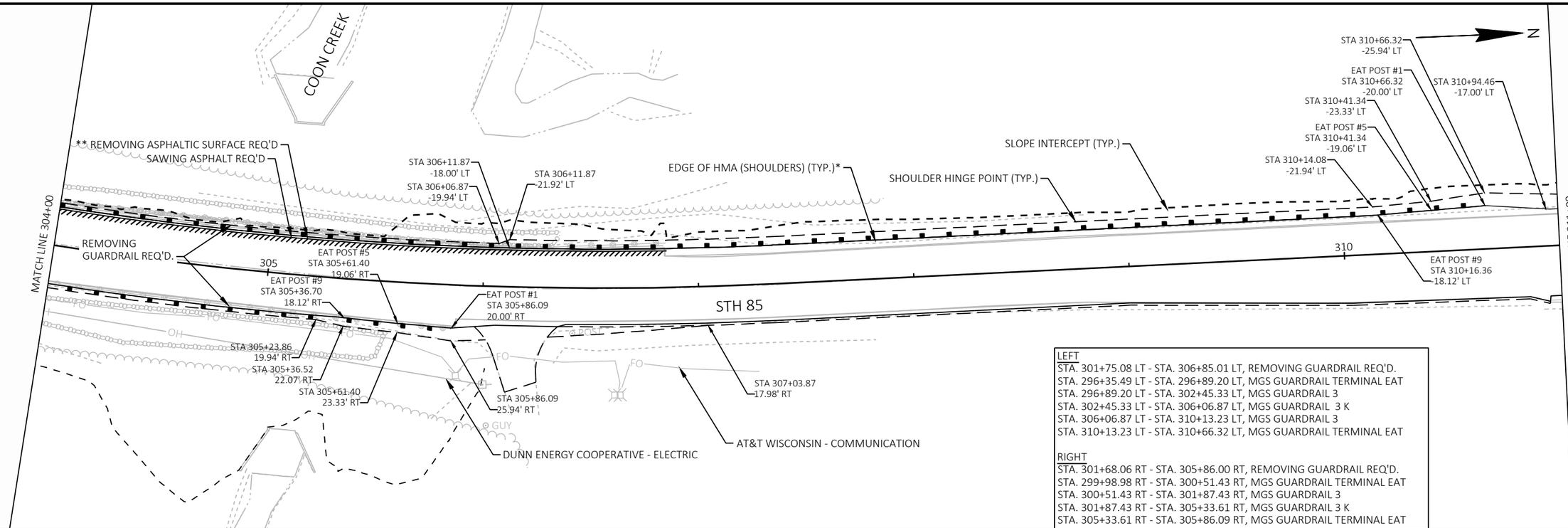

LEFT
STA. 301+75.08 LT - STA. 306+85.01 LT, REMOVING GUARDRAIL REQ'D.
STA. 296+35.49 LT - STA. 296+89.20 LT, MGS GUARDRAIL TERMINAL EAT
STA. 296+89.20 LT - STA. 302+45.33 LT, MGS GUARDRAIL 3
STA. 302+45.33 LT - STA. 306+06.87 LT, MGS GUARDRAIL 3 K
STA. 306+06.87 LT - STA. 310+13.23 LT, MGS GUARDRAIL 3
STA. 310+13.23 LT - STA. 310+66.32 LT, MGS GUARDRAIL TERMINAL EAT

RIGHT
STA. 301+68.06 RT - STA. 305+86.00 RT, REMOVING GUARDRAIL REQ'D.
STA. 299+98.98 RT - STA. 300+51.43 RT, MGS GUARDRAIL TERMINAL EAT
STA. 300+51.43 RT - STA. 301+87.43 RT, MGS GUARDRAIL 3
STA. 301+87.43 RT - STA. 305+33.61 RT, MGS GUARDRAIL 3 K
STA. 305+33.61 RT - STA. 305+86.09 RT, MGS GUARDRAIL TERMINAL EAT

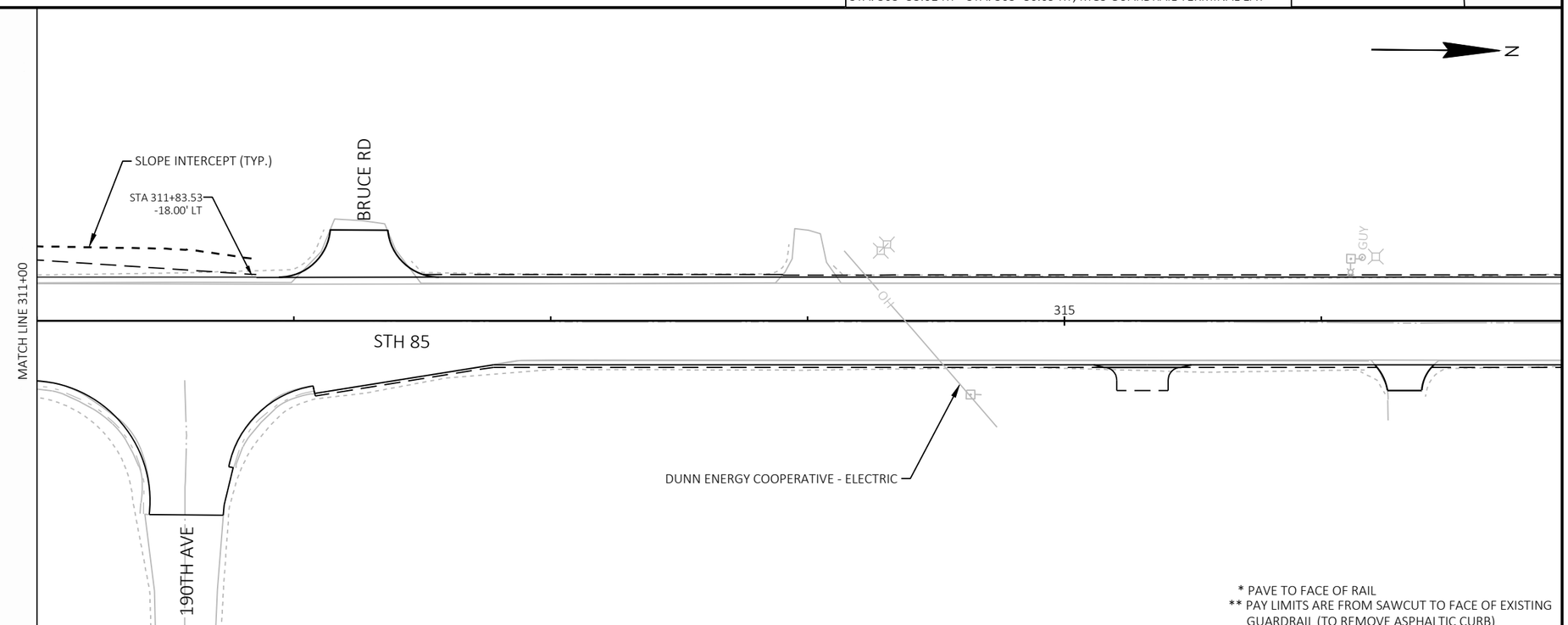

* PAVE TO FACE OF RAIL
** PAY LIMITS ARE FROM SAWCUT TO FACE OF EXISTING GUARDRAIL (TO REMOVE ASPHALTIC CURB)

PROJECT NO: 7120-00-74	HWY: STH 85	COUNTY: DUNN	CONSTRUCTION DETAILS - GUARDRAIL LAYOUT	SHEET 25	E

2

BUTT JOINT REQ'D SEE CONSTRUCTION DETAIL
"REMOVING ASPHALTIC SURFACE BUTT JOINTS DETAIL (NO PROFILE CHANGE)"

REMOVING STRUCTURE (C-17-1395) REQ'D.

BEGIN PROJECT
STA 149+76.50
Y = 112,991.269
X = 220,118.642

CTH O

STH 85

150

155

145

BUTT JOINT REQ'D SEE CONSTRUCTION DETAIL
"REMOVING ASPHALTIC SURFACE BUTT JOINTS DETAIL (NO PROFILE CHANGE)"

BUTT JOINT REQ'D SEE CONSTRUCTION DETAIL
"REMOVING ASPHALTIC SURFACE BUTT JOINTS DETAIL (NO PROFILE CHANGE)"

910TH ST

916TH ST

MATCH LINE 160+00

BUTT JOINT REQ'D SEE CONSTRUCTION DETAIL
"REMOVING ASPHALTIC SURFACE BUTT JOINTS DETAIL (NO PROFILE CHANGE)"

BUTT JOINT REQ'D SEE CONSTRUCTION DETAIL
"REMOVING ASPHALTIC SURFACE BUTT JOINTS DETAIL (NO PROFILE CHANGE)"

N

2

3.25-INCH MILL & OVERLAY
4-INCH CIR BASE LAYER WITH 2.75-INCH OVERLAY
2-INCH MILL & OVERLAY
2.75-INCH INTERSECTION MILL & OVERLAY

N

MATCH LINE 160+00

919TH ST

ROCK CREEK

BUTT JOINT REQ'D SEE CONSTRUCTION DETAIL "REMOVING
ASPHALTIC SURFACE BUTT JOINTS DETAIL (NO PROFILE CHANGE)"

B-17-226

165

170

STH 85

MATCH LINE 175+00

EXCEPTION TO NET LENGTH
STA. 163+39.70 - 167+28.31

BUTT JOINT REQ'D SEE CONSTRUCTION DETAIL "REMOVING
ASPHALTIC SURFACE BUTT JOINTS DETAIL (NO PROFILE CHANGE)"

BUTT JOINT REQ'D SEE CONSTRUCTION DETAIL "REMOVING
ASPHALTIC SURFACE BUTT JOINTS DETAIL (NO PROFILE CHANGE)"

BUTT JOINT REQ'D SEE CONSTRUCTION DETAIL "REMOVING
ASPHALTIC SURFACE BUTT JOINTS DETAIL (NO PROFILE CHANGE)"

GORTON ST

SPRUCE ST

DAY ST

PROJECT NO: 7120-00-74	HWY: STH 85	COUNTY: DUNN	PAVING DETAILS	SHEET 26	E

FILE NAME : S:\MAD\1000--1099\1089\989\DRAWINGS\CAD\CIVIL 3D\SHEETSPLAN\021004-PV.DWG
LAYOUT NAME - 021101-pv
PLOT DATE : 8/28/2025 12:00 PM
PLOT BY : HABERKORN, DEVEN
PLOT NAME :
PLOT SCALE : 1 IN:100 FT
WISDOT/CADDS SHEET 44

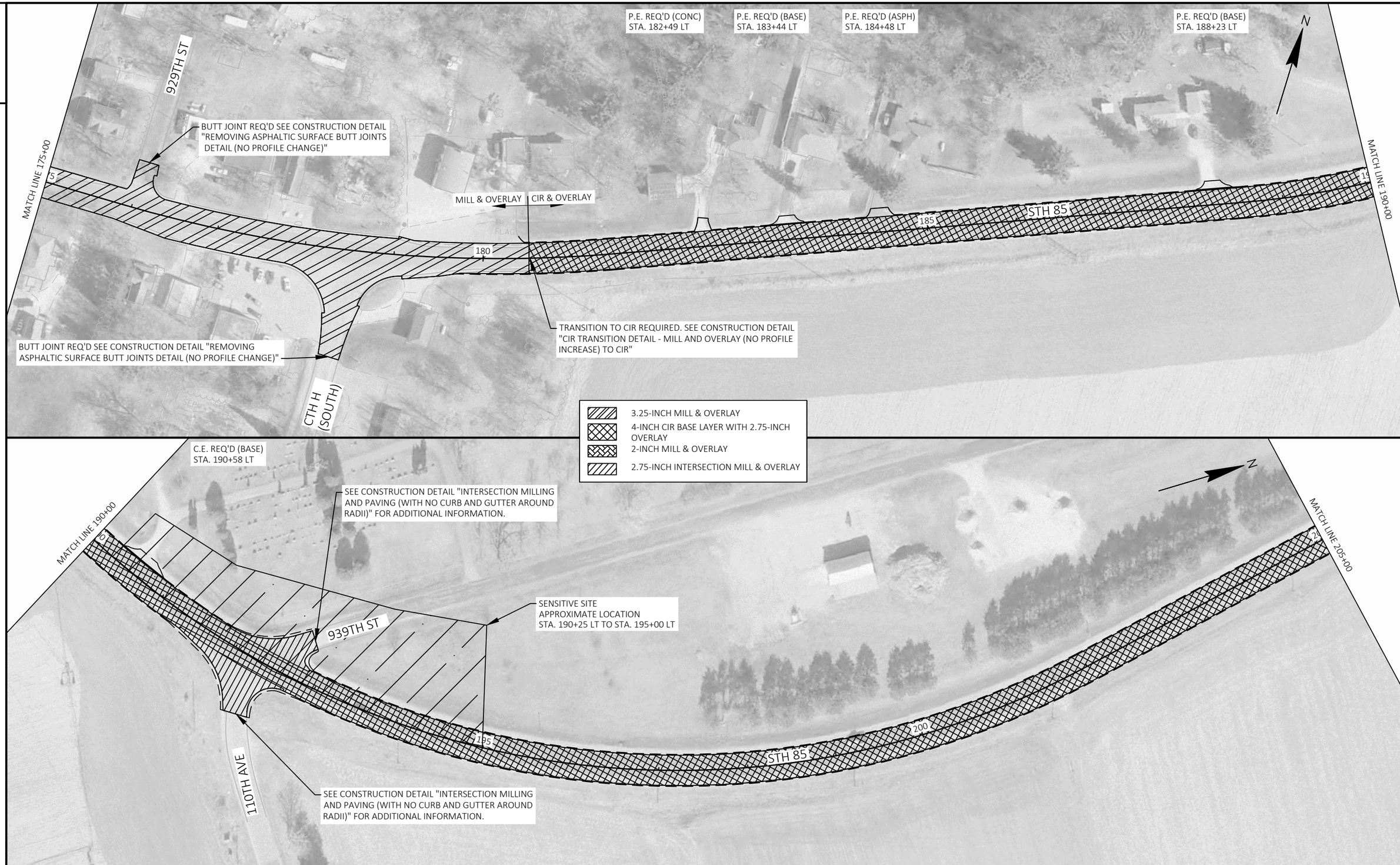

PROJECT NO: 7120-00-74	HWY: STH 85	COUNTY: DUNN	PAVING DETAILS	SHEET 27	E

2

2

PROJECT NO: 7120-00-74	HWY: STH 85	COUNTY: DUNN	PAVING DETAILS	SHEET 28	E

FILE NAME : S:\MAD\1000--1099\1089\989\DRAWINGS\CAD\CIVIL 3D\SHEETSPLAN\021004-PV.DWG
LAYOUT NAME - 021103-pv
PLOT DATE : 8/28/2025 12:00 PM
PLOT BY : HABERKORN, DEVEN
PLOT NAME :
PLOT SCALE : 1 IN:100 FT
WISDOT/CADDS SHEET 44

3.25-INCH MILL & OVERLAY
4-INCH CIR BASE LAYER WITH 2.75-INCH OVERLAY
2-INCH MILL & OVERLAY
2.75-INCH INTERSECTION MILL & OVERLAY

PROJECT NO: 7120-00-74	HWY: STH 85	COUNTY: DUNN	PAVING DETAILS	SHEET 29	E

FILE NAME : S:\MAD\1000--1099\1089\989\DRAWINGS\CAD\CIVIL 3D\SHEETSPLAN\021004-PV.DWG
LAYOUT NAME - 021104-pv
PLOT DATE : 8/28/2025 12:00 PM
PLOT BY : HABERKORN, DEVEN
PLOT NAME :
PLOT SCALE : 1 IN:100 FT

2

3.25-INCH MILL & OVERLAY
4-INCH CIR BASE LAYER WITH 2.75-INCH OVERLAY
2-INCH MILL & OVERLAY
2.75-INCH INTERSECTION MILL & OVERLAY

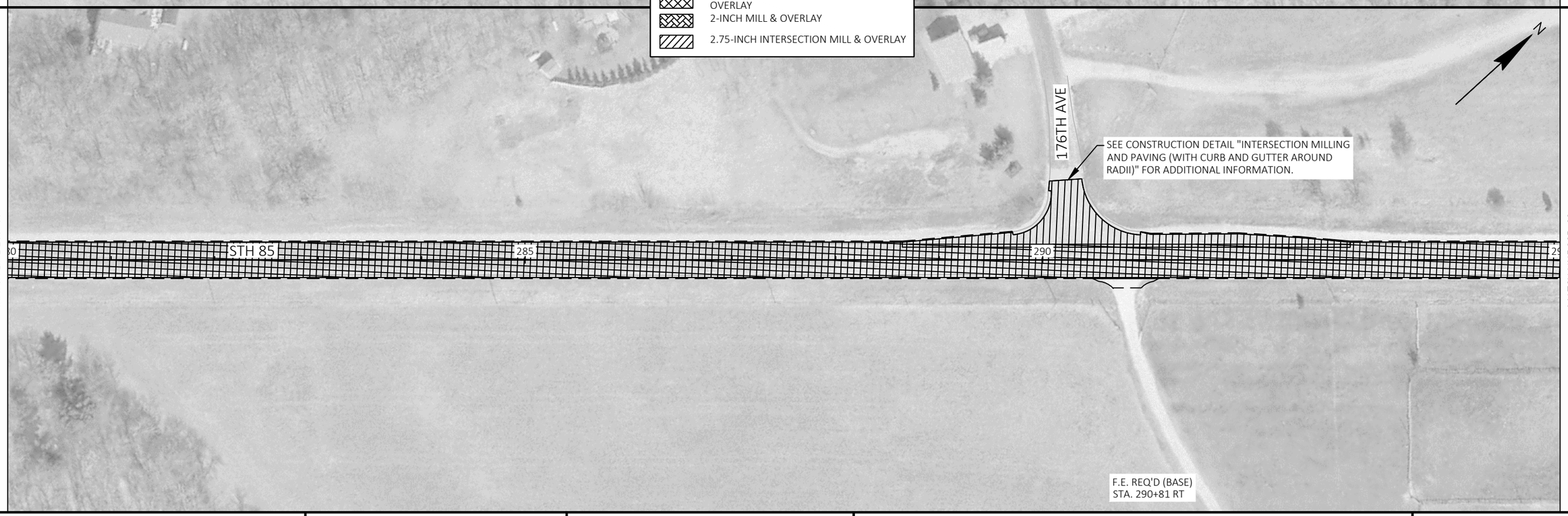

2

PROJECT NO: 7120-00-74	HWY: STH 85	COUNTY: DUNN	PAVING DETAILS	SHEET 30	E

FILE NAME : S:\MAD\1000--1099\1089\989\DRAWINGS\CAD\CIVIL 3D\SHEETSPLAN\021004-PV.DWG
LAYOUT NAME - 021105-pv
PLOT DATE : 8/28/2025 12:00 PM PLOT BY : HABERKORN, DEVEN PLOT NAME : PLOT SCALE : 1 IN:100 FT

WISDOT/CADDS SHEET 44

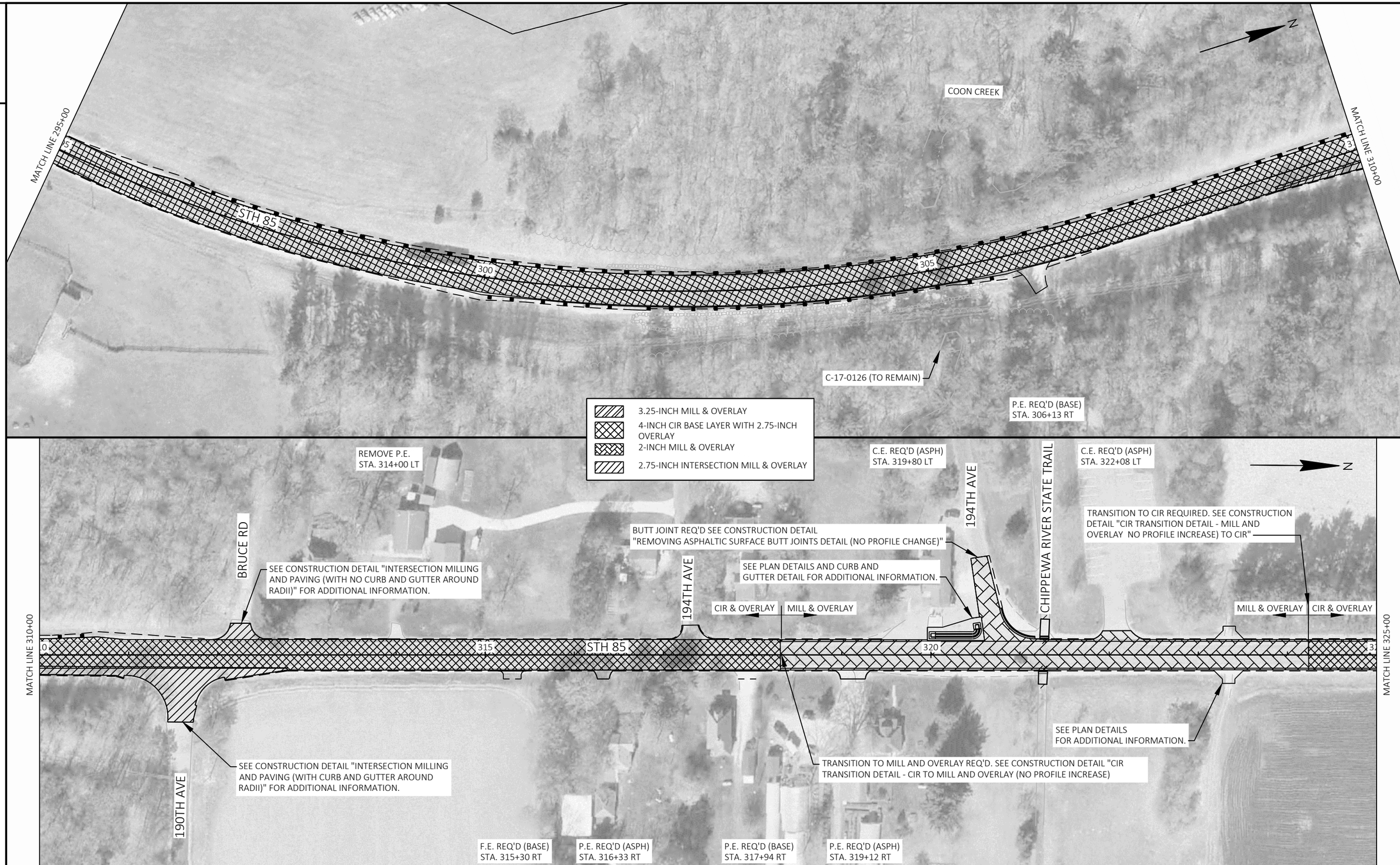

PROJECT NO: 7120-00-74	HWY: STH 85	COUNTY: DUNN	PAVING DETAILS	SHEET 31	E

FILE NAME : S:\MAD\1000--1099\1089\989\DRAWINGS\CAD\CIVIL 3D\SHEETSPLAN\021004-PV.DWG
LAYOUT NAME - 021106-pv
PLOT DATE : 10/6/2025 8:31 AM
PLOT BY : HABERKORN, DEVEN
PLOT NAME :
PLOT SCALE : 1 IN:100 FT

2

PROJECT NO: 7120-00-74	HWY: STH 85	COUNTY: DUNN	PAVING DETAILS	SHEET 32	E

2

MATCH LINE 355+00

F.E. REQ'D (BASE)
STA. 368+56 LT

N

STH 85

360

365

MATCH LINE 370+00

F.E. REQ'D (BASE)
STA. 359+13 RT

F.E. REQ'D (BASE)
STA. 364+15 RT

3.25-INCH MILL & OVERLAY
4-INCH CIR BASE LAYER WITH 2.75-INCH OVERLAY
2-INCH MILL & OVERLAY
2.75-INCH INTERSECTION MILL & OVERLAY

2

MATCH LINE 370+00

N

END PROJECT
STA 375+86.87

375

STH 85

380

385

26
1
12
11
T N E R

EXISTING BERNTSEN MONUMENT
(TIED OUT AND RESET BY OTHERS)
Y = 126,793.831
X = 230,865.040

BUTT JOINT REQ'D SEE CONSTRUCTION DETAIL
"REMOVING ASPHALTIC SURFACE BUTT JOINT DETAIL"

C.E. REQ'D (BASE)
STA. 371+20 RT

PROJECT NO: 7120-00-74	HWY: STH 85	COUNTY: DUNN	PAVING DETAILS	SHEET 33	E

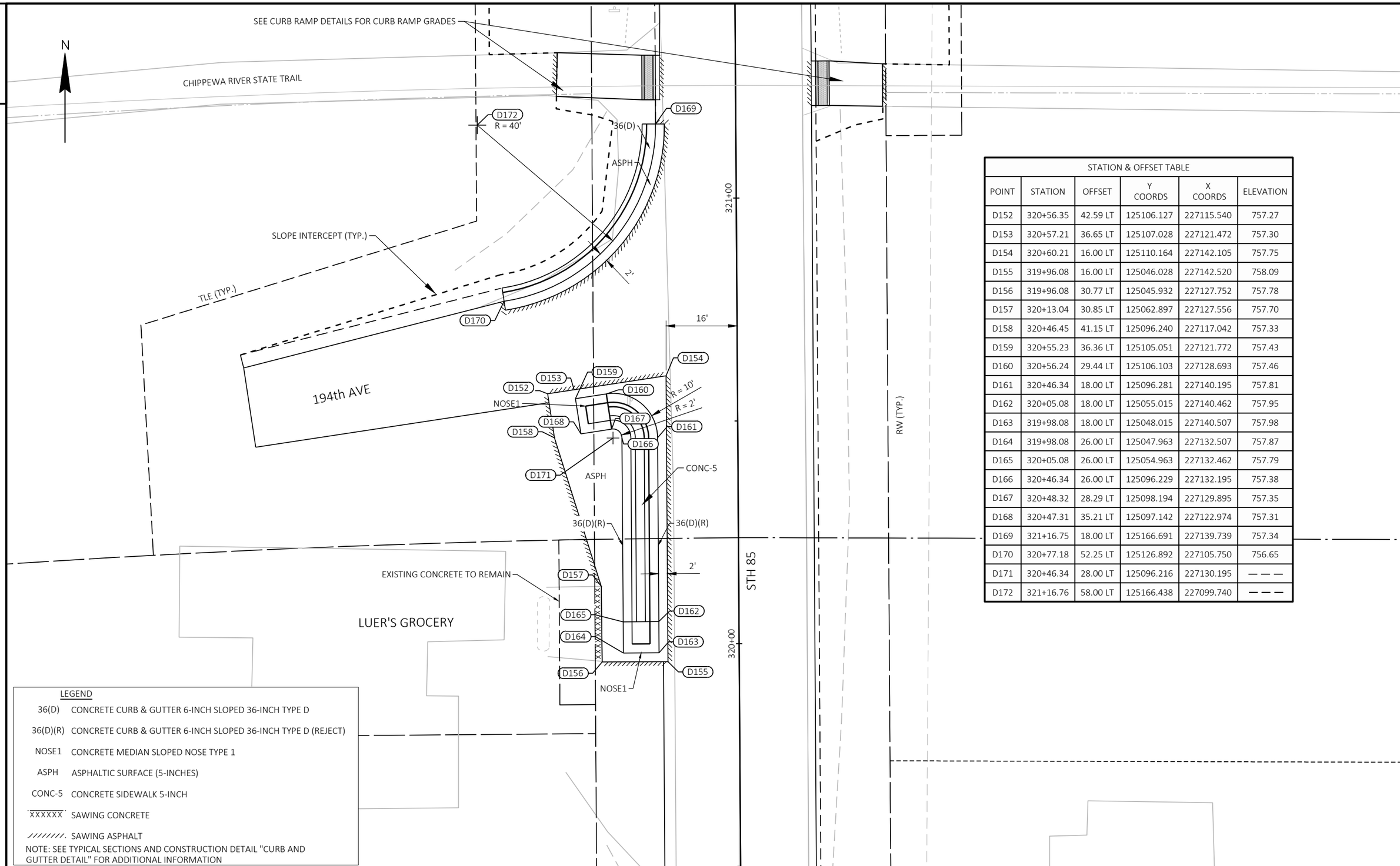

STATION & OFFSET TABLE					
POINT	STATION	OFFSET	Y COORDS	X COORDS	ELEVATION
D152	320+56.35	42.59 LT	125106.127	227115.540	757.27
D153	320+57.21	36.65 LT	125107.028	227121.472	757.30
D154	320+60.21	16.00 LT	125110.164	227142.105	757.75
D155	319+96.08	16.00 LT	125046.028	227142.520	758.09
D156	319+96.08	30.77 LT	125045.932	227127.752	757.78
D157	320+13.04	30.85 LT	125062.897	227127.556	757.70
D158	320+46.45	41.15 LT	125096.240	227117.042	757.33
D159	320+55.23	36.36 LT	125105.051	227121.772	757.43
D160	320+56.24	29.44 LT	125106.103	227128.693	757.46
D161	320+46.34	18.00 LT	125096.281	227140.195	757.81
D162	320+05.08	18.00 LT	125055.015	227140.462	757.95
D163	319+98.08	18.00 LT	125048.015	227140.507	757.98
D164	319+98.08	26.00 LT	125047.963	227132.507	757.87
D165	320+05.08	26.00 LT	125054.963	227132.462	757.79
D166	320+46.34	26.00 LT	125096.229	227132.195	757.38
D167	320+48.32	28.29 LT	125098.194	227129.895	757.35
D168	320+47.31	35.21 LT	125097.142	227122.974	757.31
D169	321+16.75	18.00 LT	125166.691	227139.739	757.34
D170	320+77.18	52.25 LT	125126.892	227105.750	756.65
D171	320+46.34	28.00 LT	125096.216	227130.195	— — —
D172	321+16.76	58.00 LT	125166.438	227099.740	— — —

LEGEND

36(D)	CONCRETE CURB & GUTTER 6-INCH SLOPED 36-INCH TYPE D
36(D)(R)	CONCRETE CURB & GUTTER 6-INCH SLOPED 36-INCH TYPE D (REJECT)
NOSE1	CONCRETE MEDIAN SLOPED NOSE TYPE 1
ASPH	ASPHALTIC SURFACE (5-INCHES)
CONC-5	CONCRETE SIDEWALK 5-INCH
XXXXXX	SAWING CONCRETE
////////	SAWING ASPHALT

NOTE: SEE TYPICAL SECTIONS AND CONSTRUCTION DETAIL "CURB AND GUTTER DETAIL" FOR ADDITIONAL INFORMATION

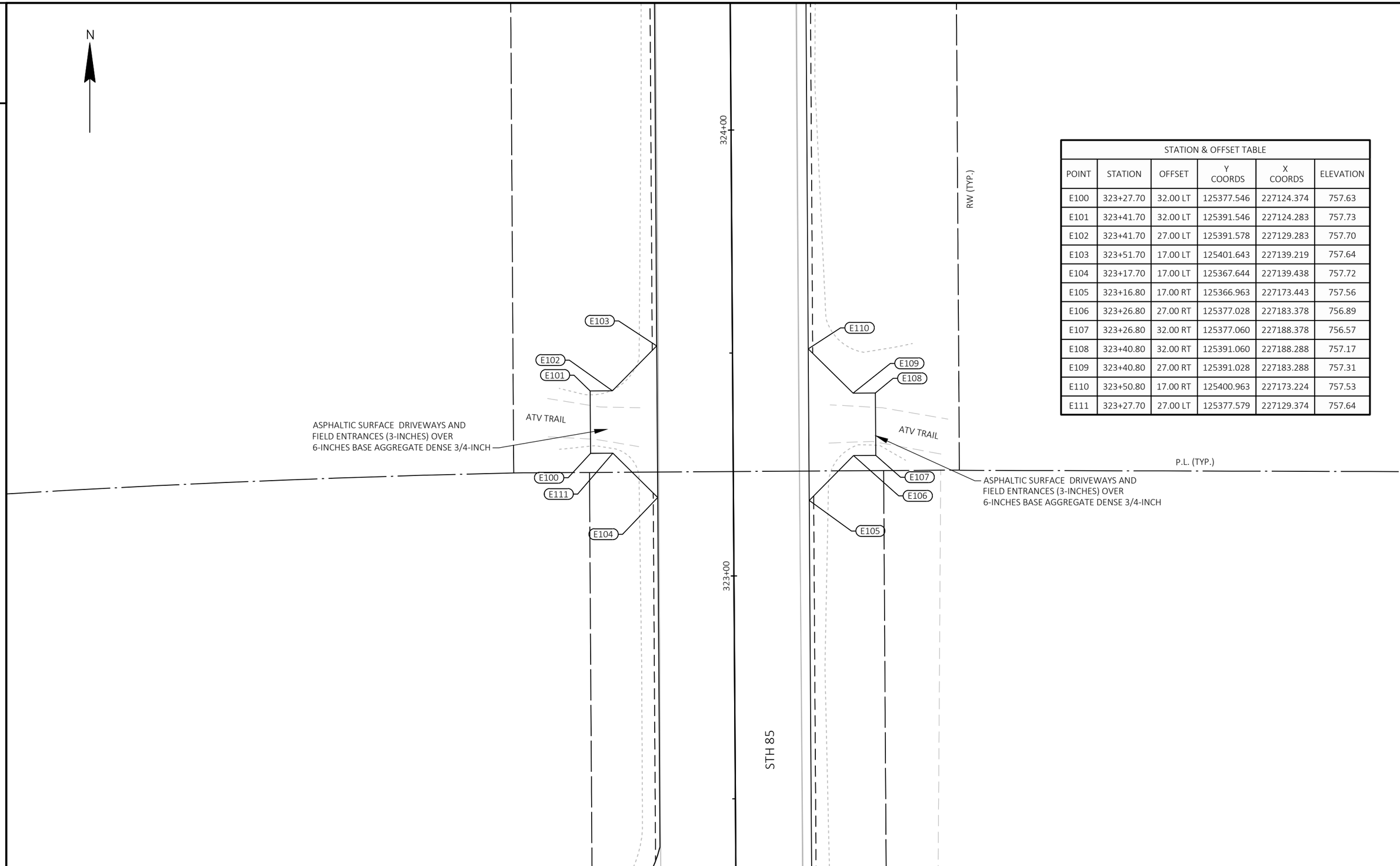

STATION & OFFSET TABLE

POINT	STATION	OFFSET	Y COORDS	X COORDS	ELEVATION
E100	323+27.70	32.00 LT	125377.546	227124.374	757.63
E101	323+41.70	32.00 LT	125391.546	227124.283	757.73
E102	323+41.70	27.00 LT	125391.578	227129.283	757.70
E103	323+51.70	17.00 LT	125401.643	227139.219	757.64
E104	323+17.70	17.00 LT	125367.644	227139.438	757.72
E105	323+16.80	17.00 RT	125366.963	227173.443	757.56
E106	323+26.80	27.00 RT	125377.028	227183.378	756.89
E107	323+26.80	32.00 RT	125377.060	227188.378	756.57
E108	323+40.80	32.00 RT	125391.060	227188.288	757.17
E109	323+40.80	27.00 RT	125391.028	227183.288	757.31
E110	323+50.80	17.00 RT	125400.963	227173.224	757.53
E111	323+27.70	27.00 LT	125377.579	227129.374	757.64

2

CURB RAMP LEGEND

- CURB RAMP DETECTABLE WARNING FIELD NATURAL PATINA
- AS — 3-INCHES ASPHALTIC SURFACE OVER 6-INCHES BASE AGGREGATE DENSE 1/4-INCH
- HMA — HMA PAVEMENT 5 MT 58-34 V (2-INCHES)
- CS — CONCRETE SIDEWALK 5-INCH
- SAWING ASPHALT

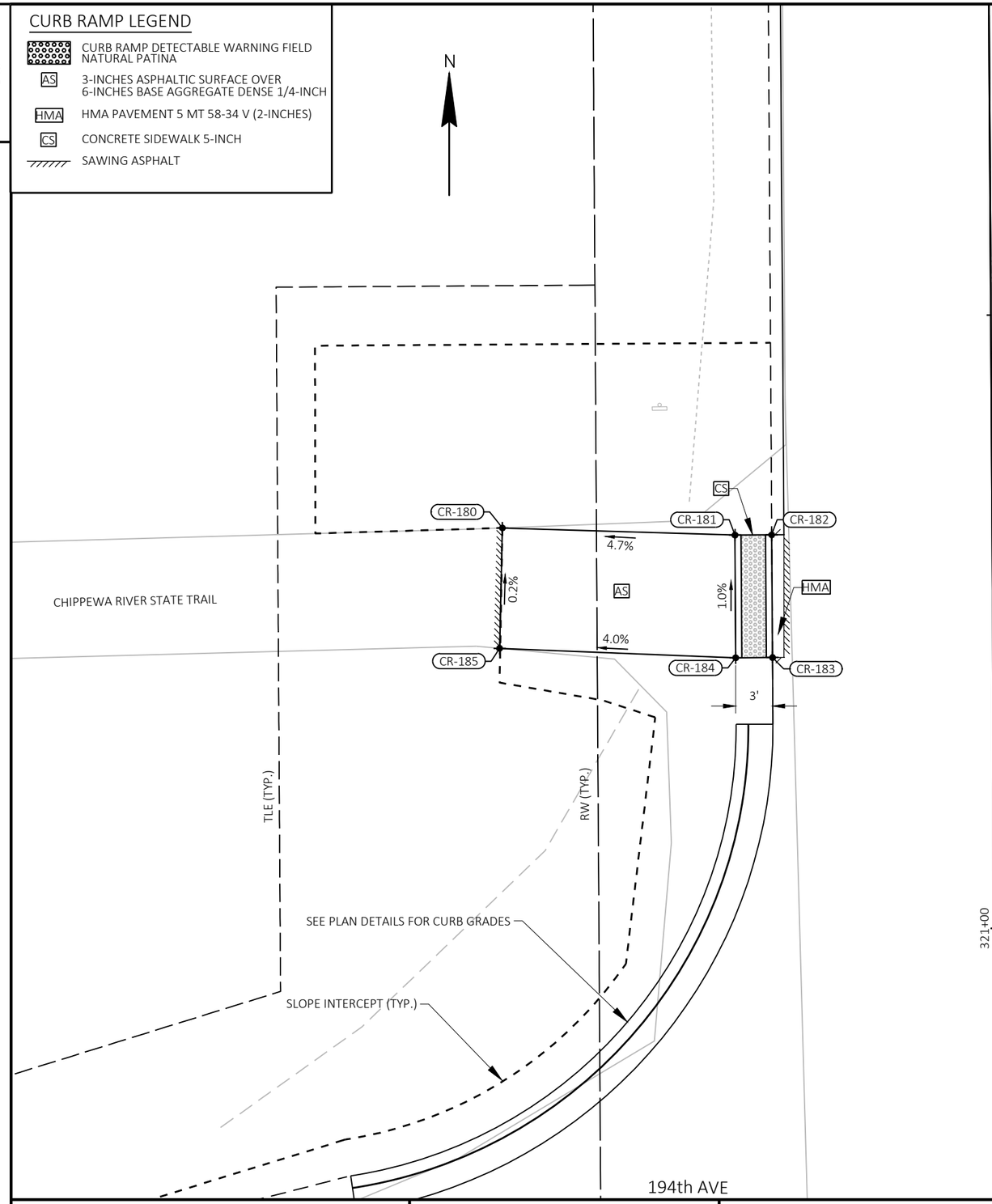

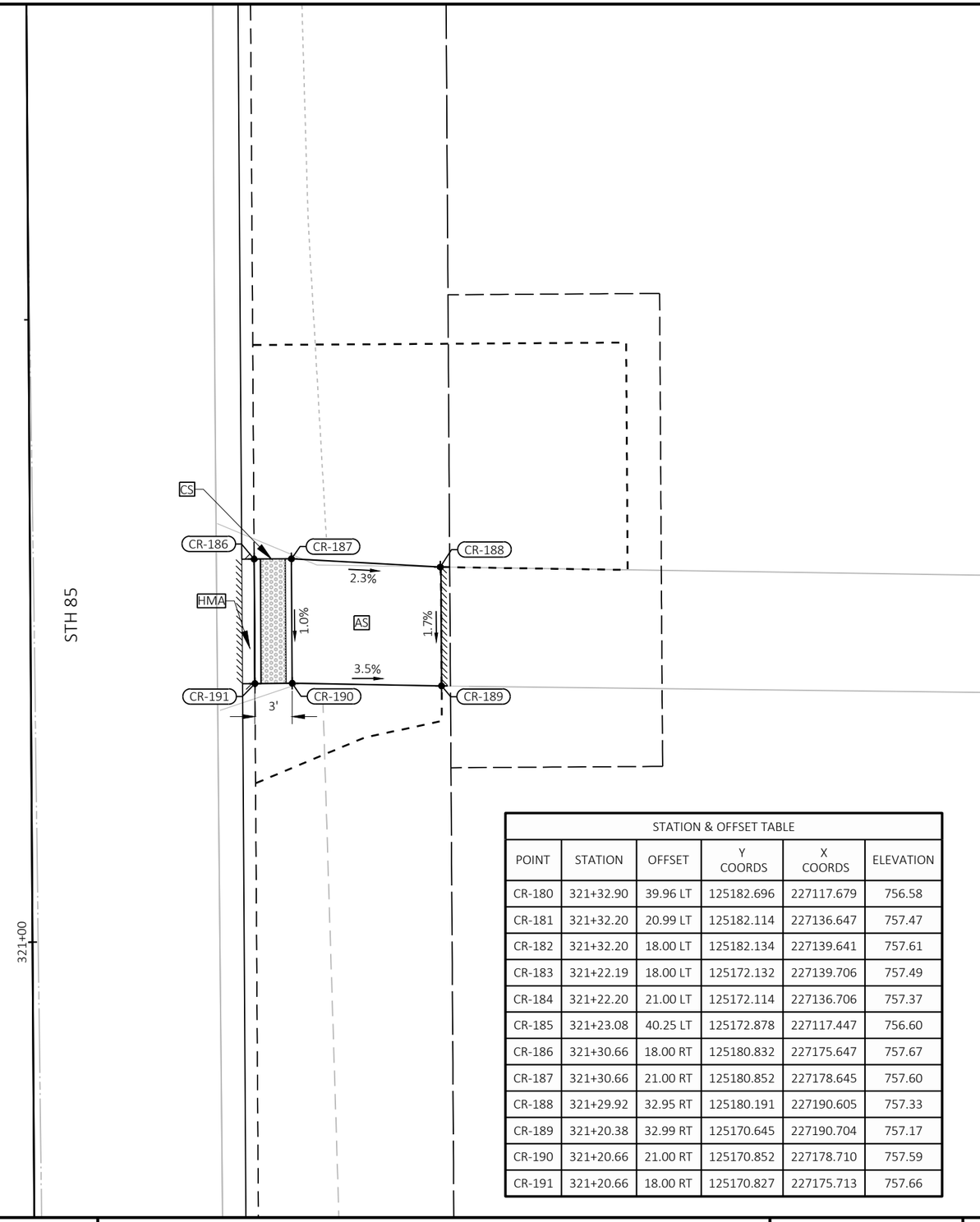

STATION & OFFSET TABLE					
POINT	STATION	OFFSET	Y COORDS	X COORDS	ELEVATION
CR-180	321+32.90	39.96 LT	125182.696	227117.679	756.58
CR-181	321+32.20	20.99 LT	125182.114	227136.647	757.47
CR-182	321+32.20	18.00 LT	125182.134	227139.641	757.61
CR-183	321+22.19	18.00 LT	125172.132	227139.706	757.49
CR-184	321+22.20	21.00 LT	125172.114	227136.706	757.37
CR-185	321+23.08	40.25 LT	125172.878	227117.447	756.60
CR-186	321+30.66	18.00 RT	125180.832	227175.647	757.67
CR-187	321+30.66	21.00 RT	125180.852	227178.645	757.60
CR-188	321+29.92	32.95 RT	125180.191	227190.605	757.33
CR-189	321+20.38	32.99 RT	125170.645	227190.704	757.17
CR-190	321+20.66	21.00 RT	125170.852	227178.710	757.59
CR-191	321+20.66	18.00 RT	125170.827	227175.713	757.66

2

PROJECT NO: 7120-00-74	HWY: STH 85	COUNTY: DUNN	CURB RAMP DETAILS	SHEET 36	E

2

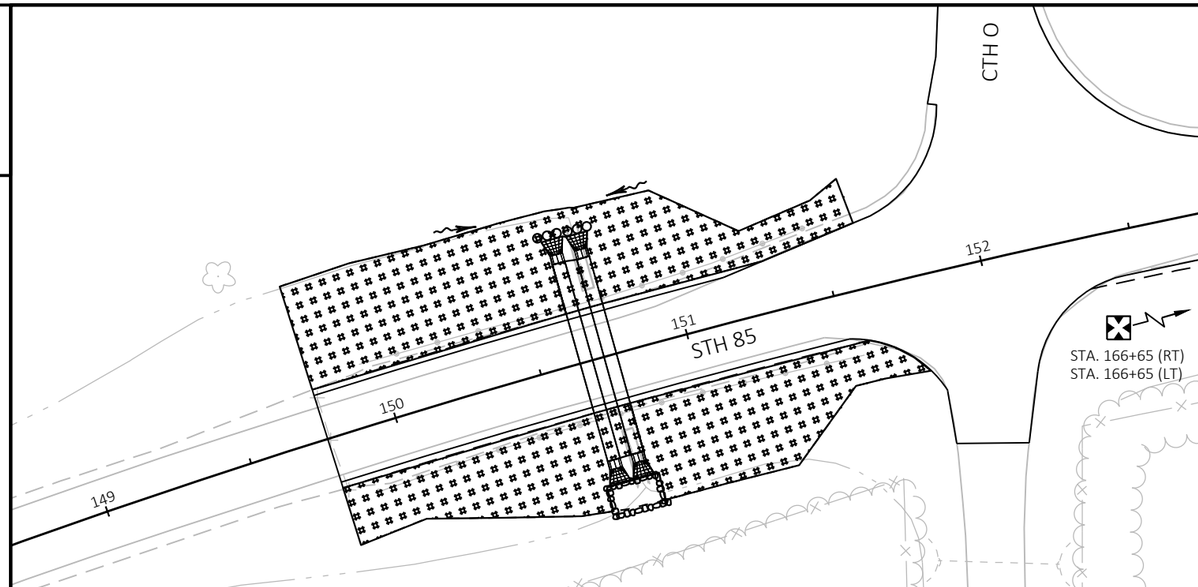

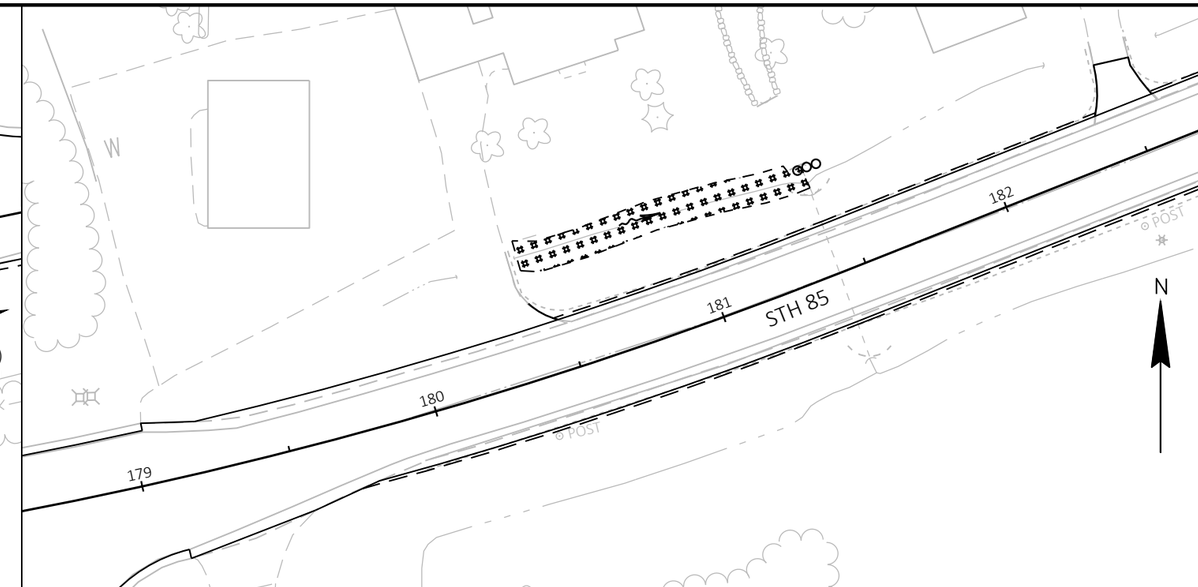

2

LEGEND

- EROSION MAT URBAN CLASS I TYPE B, TOPSOIL, SEEDING MIXTURE NO. 30, SEEDING TEMPORARY, AND FERTILIZER TYPE B
- EROSION MAT CLASS II TYPE C, TOPSOIL, SEEDING MIXTURE NO. 30, SEEDING TEMPORARY, AND FERTILIZER TYPE B
- EROSION MAT CLASS III TYPE C AND CLASS II TYPE C, TOPSOIL, SEEDING MIXTURE NO. 30, SEEDING TEMPORARY, AND FERTILIZER TYPE B
- SURFACE WATER FLOW
- RIPRAP MEDIUM
- SILT FENCE
- TEMPORARY DITCH CHECKS
- INLET PROTECTION TYPE
- STONE DITCH CHECK
- SILT FENCE RELIEF
- CULVERT PIPE CHECKS

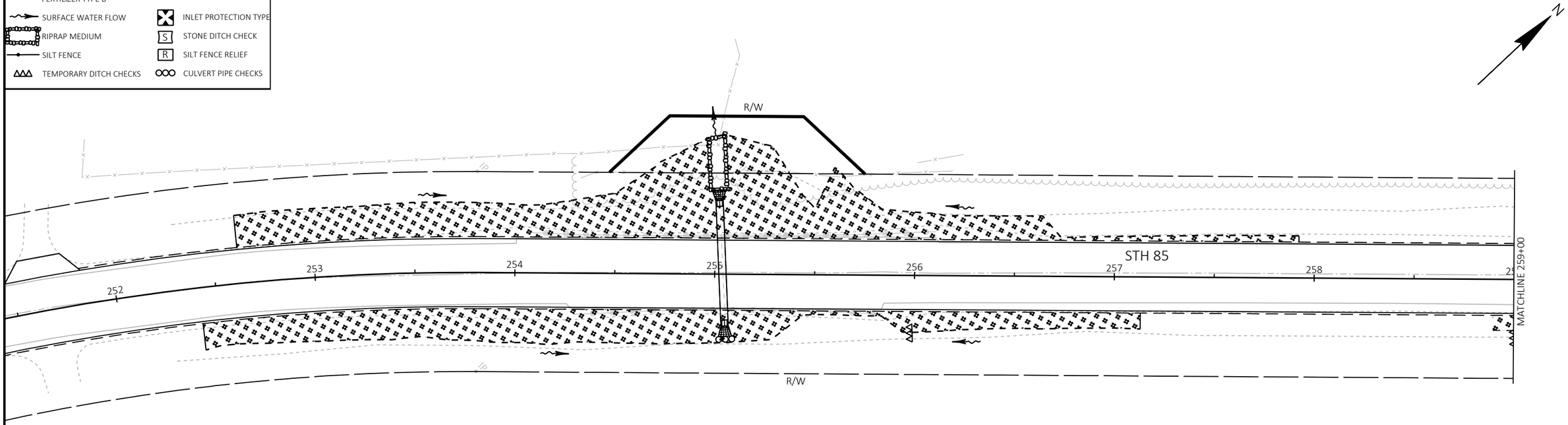

PROJECT NO: 7120-00-74	HWY: STH 85	COUNTY: DUNN	EROSION CONTROL	SHEET 37	E

2

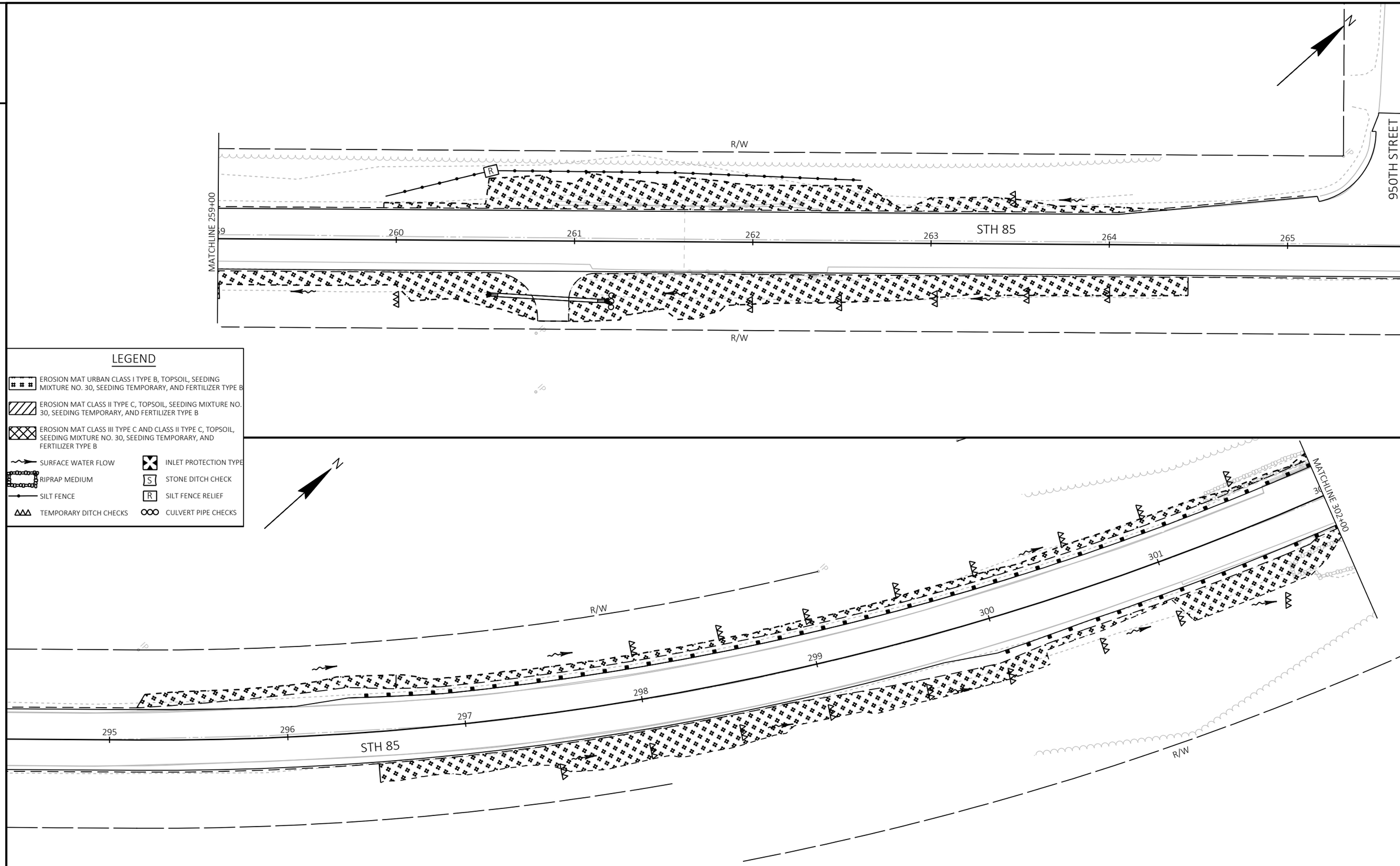

2

PROJECT NO: 7120-00-74	HWY: STH 85	COUNTY: DUNN	EROSION CONTROL	SHEET 38	E

FILE NAME : S:\MAD\1000--1099\1089\989\DRAWINGS\CAD\CIVIL 3D\SHEETSPLAN\022001-EC.DWG
LAYOUT NAME - 022002_ec
PLOT DATE : 8/27/2025 1:06 PM
PLOT BY : JACK, ROBERT A.
PLOT NAME :
PLOT SCALE : ##########

2

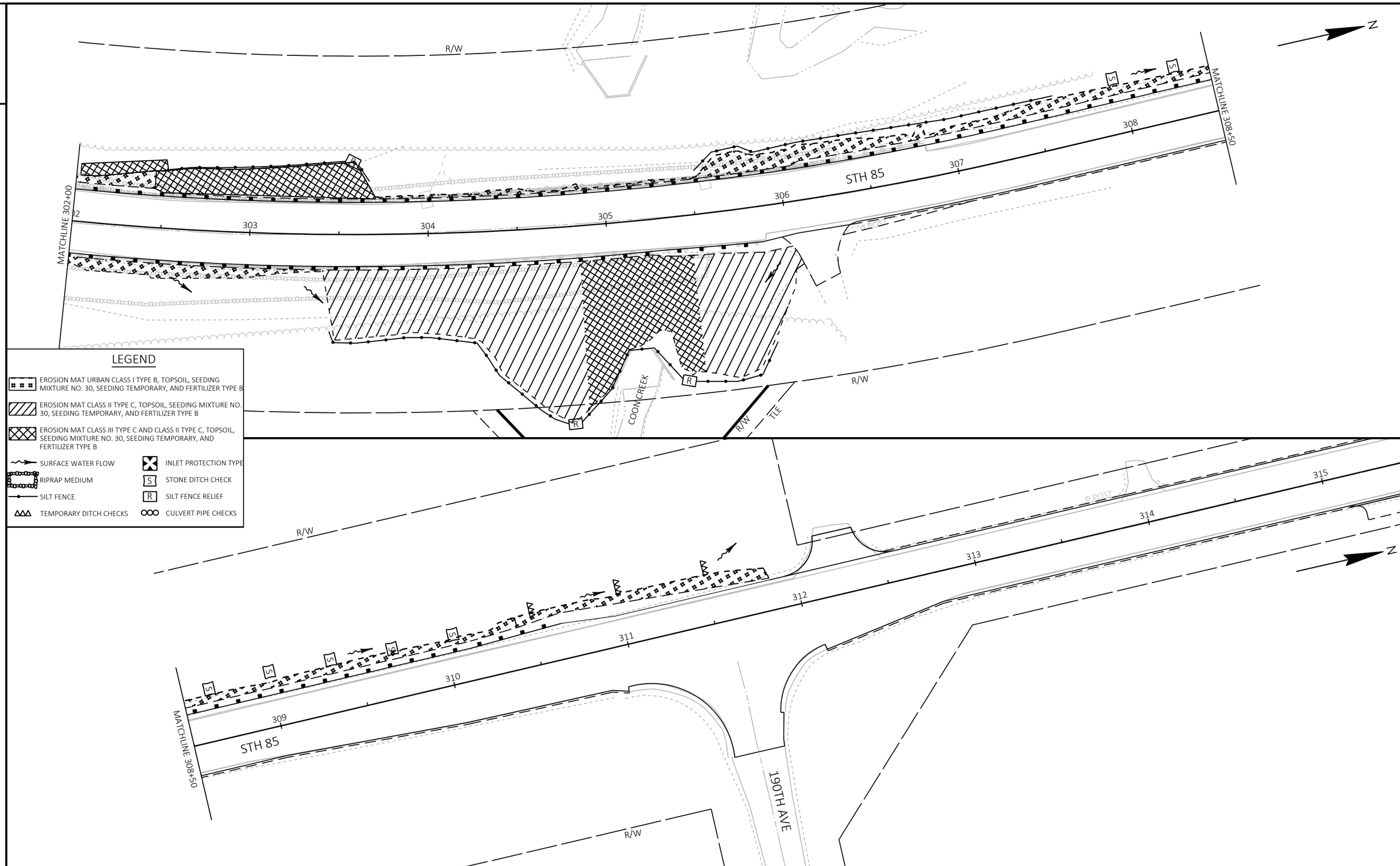

LEGEND

- EROSION MAT URBAN CLASS I TYPE B, TOPSOIL, SEEDING MIXTURE NO. 30, SEEDING TEMPORARY, AND FERTILIZER TYPE B
- EROSION MAT CLASS II TYPE C, TOPSOIL, SEEDING MIXTURE NO. 30, SEEDING TEMPORARY, AND FERTILIZER TYPE B
- EROSION MAT CLASS III TYPE C AND CLASS II TYPE C, TOPSOIL, SEEDING MIXTURE NO. 30, SEEDING TEMPORARY, AND FERTILIZER TYPE B
- SURFACE WATER FLOW
- RIPRAP MEDIUM
- SILT FENCE
- TEMPORARY DITCH CHECKS
- INLET PROTECTION TYPE
- STONE DITCH CHECK
- SILT FENCE RELIEF
- CULVERT PIPE CHECKS

2

PROJECT NO: 7120-00-74	HWY: STH 85	COUNTY: DUNN	EROSION CONTROL	SHEET 39	E

FILE NAME : S:\MAD\1000--1099\1089\989\DRAWINGS\CAD\CIVIL 3D\SHEETSPLAN\022001-EC.DWG
LAYOUT NAME - 022003_ec
PLOT DATE : 8/29/2025 4:31 PM
PLOT BY : HABERKORN, DEVEN
PLOT NAME :
PLOT SCALE : ##########

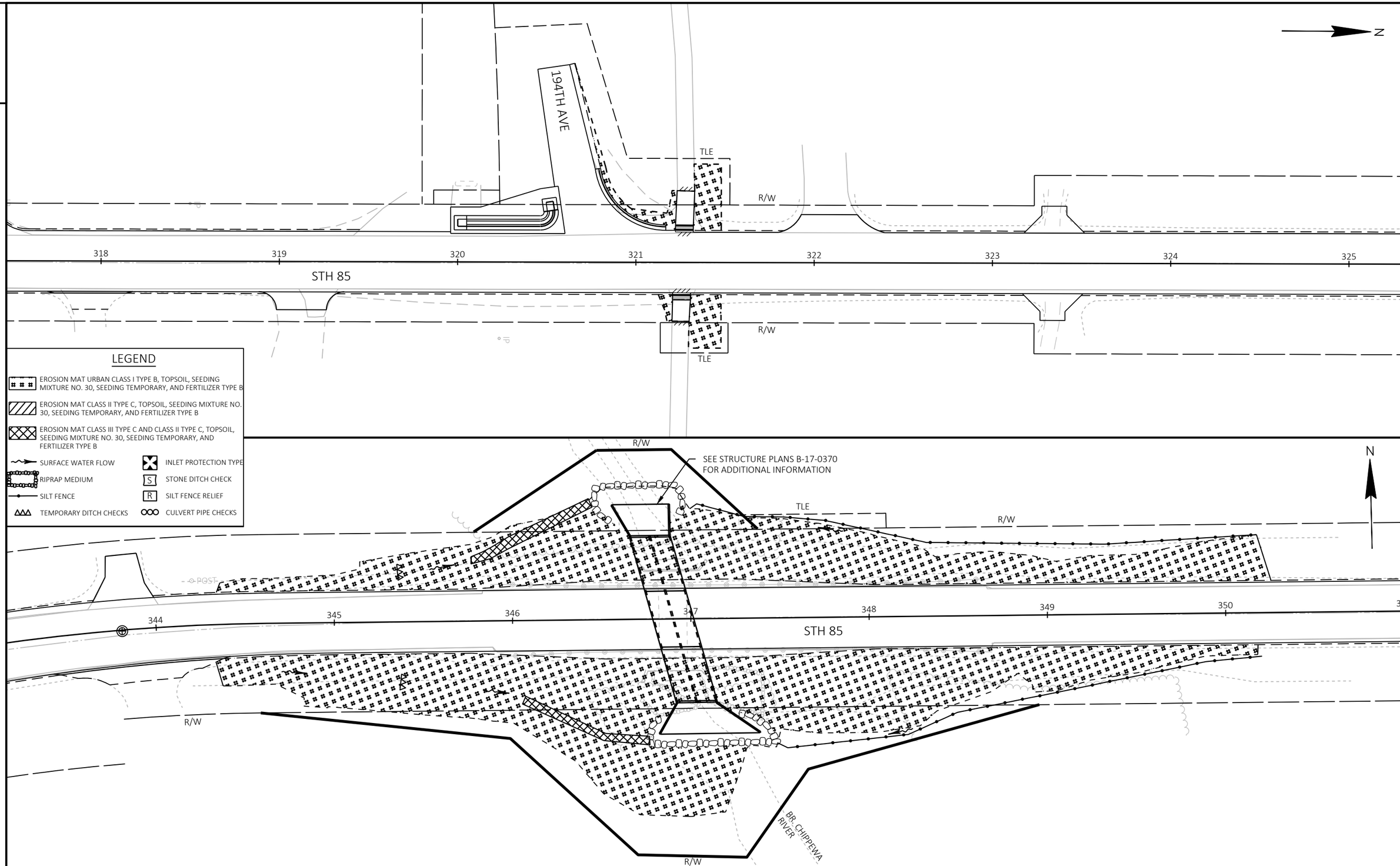

PROJECT NO: 7120-00-74	HWY: STH 85	COUNTY: DUNN	EROSION CONTROL	SHEET 40	E

FILE NAME : S:\MAD\1000--1099\1089\989\DRAWINGS\CAD\CIVIL 3D\SHEETSPLAN\022001-EC.DWG
LAYOUT NAME - 022004_ec
PLOT DATE : 8/27/2025 1:06 PM
PLOT BY : JACK, ROBERT A.
PLOT NAME :
PLOT SCALE : ##########

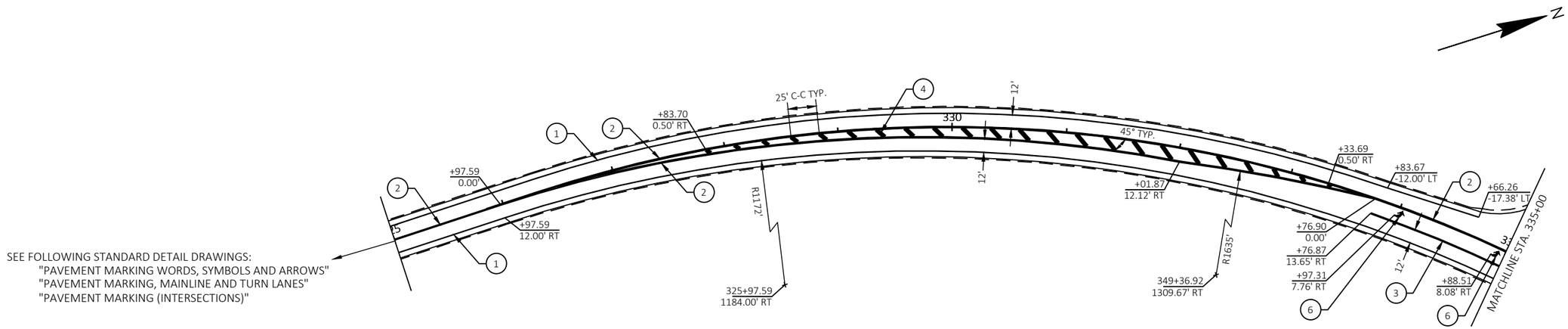

SEE FOLLOWING STANDARD DETAIL DRAWINGS:
"PAVEMENT MARKING WORDS, SYMBOLS AND ARROWS"
"PAVEMENT MARKING, MAINLINE AND TURN LANES"
"PAVEMENT MARKING (INTERSECTIONS)"

LEGEND

1. MARKING LINE GROOVED WET REFLECTIVE EPOXY 6-INCH, (WHITE)
2. MARKING LINE GROOVED WET REFLECTIVE EPOXY 6-INCH, (DOUBLE YELOW)
3. MARKING LINE GROOVED WET REFLECTIVE EPOXY 10-INCH, (WHITE)
4. MARKING DIAGONAL EPOXY 12-INCH, (YELLOW)
5. MARKING STOP LINE EPOXY 18-INCH, (WHITE)
6. MARKING ARROW EPOXY

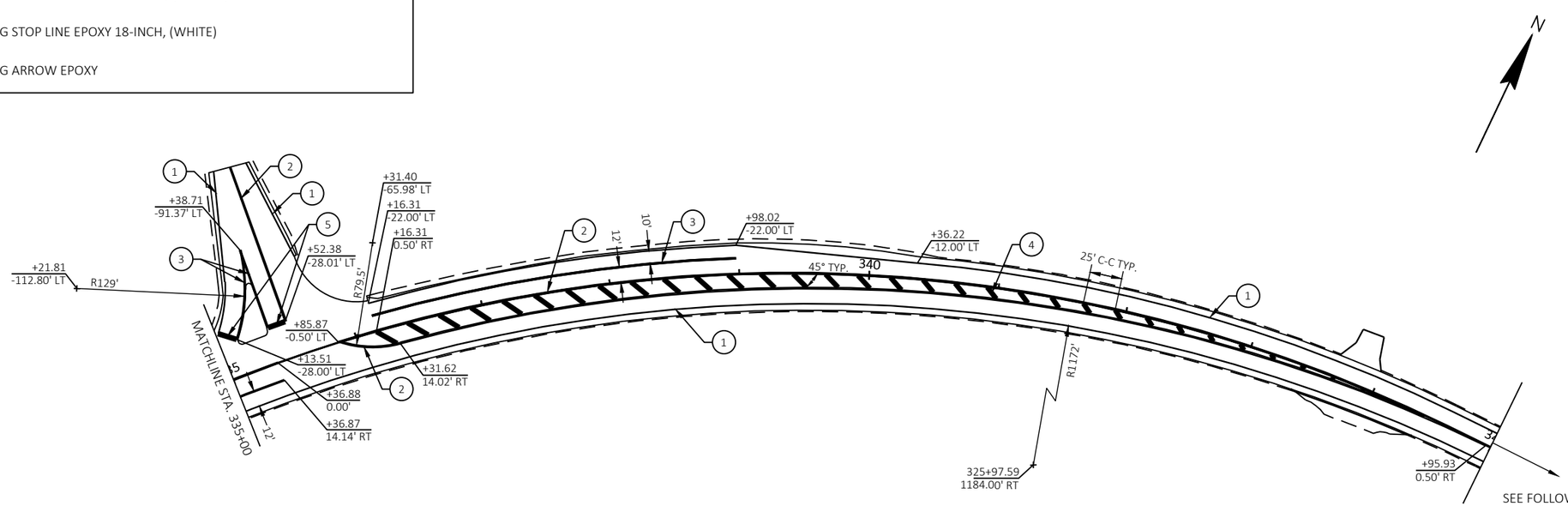

SEE FOLLOWING STANDARD DETAIL DRAWINGS:
"PAVEMENT MARKING WORDS, SYMBOLS AND ARROWS"
"PAVEMENT MARKING, MAINLINE AND TURN LANES"
"PAVEMENT MARKING (INTERSECTIONS)"

PROJECT NO: 7120-00-74	HWY: STH 85	COUNTY: DUNN	PAVEMENT MARKING	SHEET 41	E

2

GENERAL NOTES FOR TRAFFIC CONTROL

ALL SIGN LOCATIONS ARE APPROXIMATE. THE ACTUAL LOCATION WILL BE DETERMINED IN THE FIELD BY THE ENGINEER.

EXISTING TRAFFIC SIGNS MAY REQUIRE RELOCATION DURING STAGES OF CONSTRUCTION AND SHALL BE LOCATED AS REQUIRED BY THE ENGINEER IN THE FIELD AND SHALL BE CONSIDERED INCIDENTAL TO THE TRAFFIC CONTROL ITEM.

DRAWINGS SHOW TRAFFIC CONTROL FOR A TYPICAL SITUATION. ADDITIONAL TRAFFIC CONTROL DEVICES MAY BE REQUIRED AND/OR LAYOUT DETAILS MODIFIED DEPENDING ON CONTRACTOR'S METHODS OR SEQUENCES OF OPERATION.

TEMPORARY OR PERMANENT SIGNS THAT CONFLICT WITH THE TRAFFIC CONTROL PLAN SHALL BE REMOVED OR COVERED.

"WO" SERIES SIGNS ARE "W" SERIES EXCEPT THE BACKGROUND IS ORANGE.

ALL SIGNS ARE 48" X 48" UNLESS OTHERWISE NOTED.

DETAILS OF TRAFFIC CONTROL NOT SHOWN ON THIS DRAWING SHALL CONFORM TO THE PERTINENT REQUIREMENTS OF THE STANDARD SPECIFICATIONS, APPLICABLE SPECIAL PROVISIONS, AND THE WISCONSIN MANUAL ON UNIFORM TRAFFIC CONTROL DEVICES (WMUTCD).

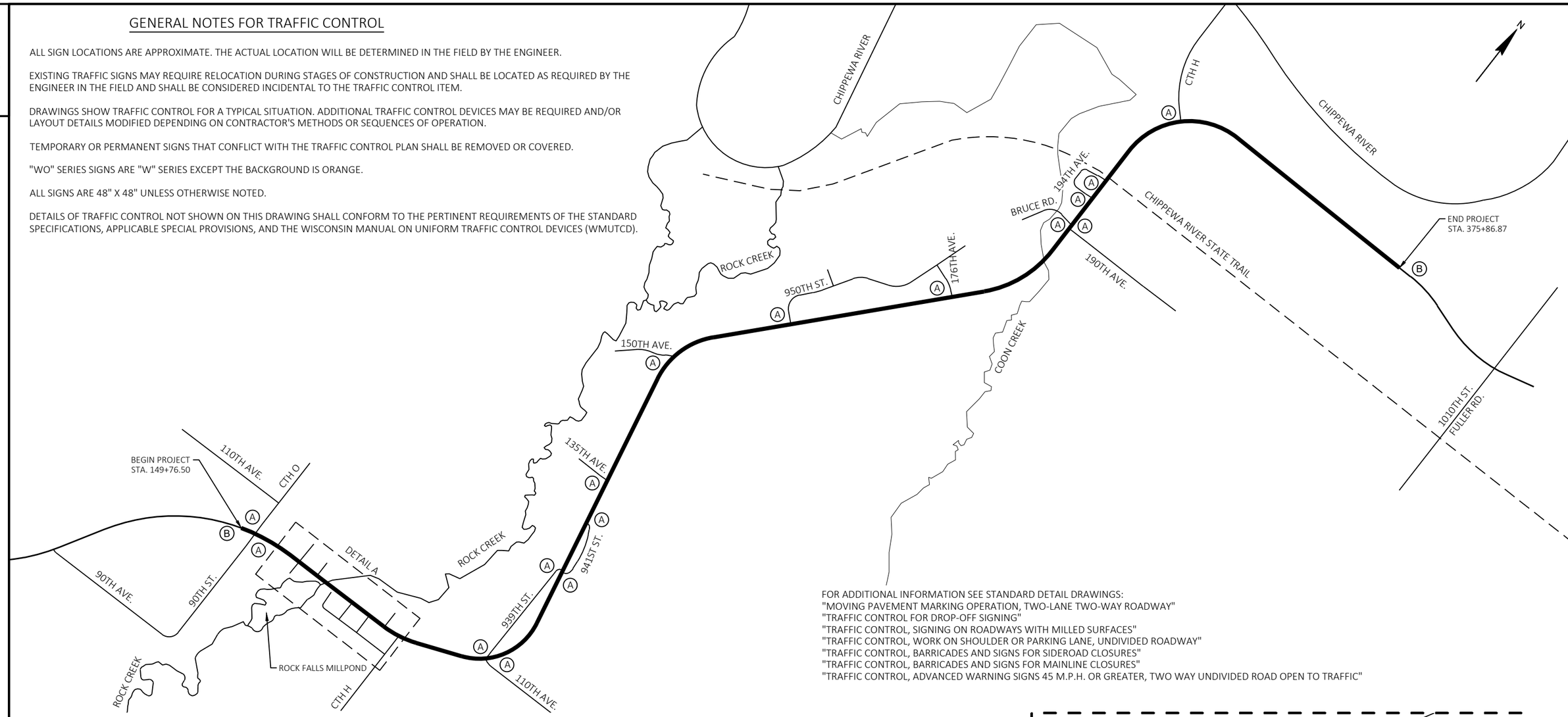

FOR ADDITIONAL INFORMATION SEE STANDARD DETAIL DRAWINGS:
"MOVING PAVEMENT MARKING OPERATION, TWO-LANE TWO-WAY ROADWAY"
"TRAFFIC CONTROL FOR DROP-OFF SIGNING"
"TRAFFIC CONTROL, SIGNING ON ROADWAYS WITH MILLED SURFACES"
"TRAFFIC CONTROL, WORK ON SHOULDER OR PARKING LANE, UNDIVIDED ROADWAY"
"TRAFFIC CONTROL, BARRICADES AND SIGNS FOR SIDEROAD CLOSURES"
"TRAFFIC CONTROL, BARRICADES AND SIGNS FOR MAINLINE CLOSURES"
"TRAFFIC CONTROL, ADVANCED WARNING SIGNS 45 M.P.H. OR GREATER, TWO WAY UNDIVIDED ROAD OPEN TO TRAFFIC"

(A) SEE SDD "BARRICADES AND SIGNS FOR SIDEROAD CLOSURES, DETAIL 4" FOR TYPICAL SIDE ROAD CLOSURE WARNING SIGN AND BARRICADE DETAILS.

(B) SEE SDD "BARRICADES AND SIGNS FOR MAINLINE CLOSURES, DETAIL C" AND "BARRICADES AND SIGNS FOR VARIOUS CLOSURES DETAIL E".

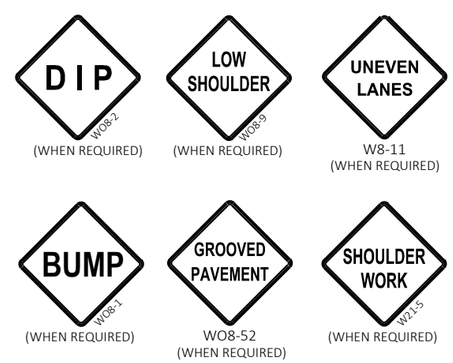

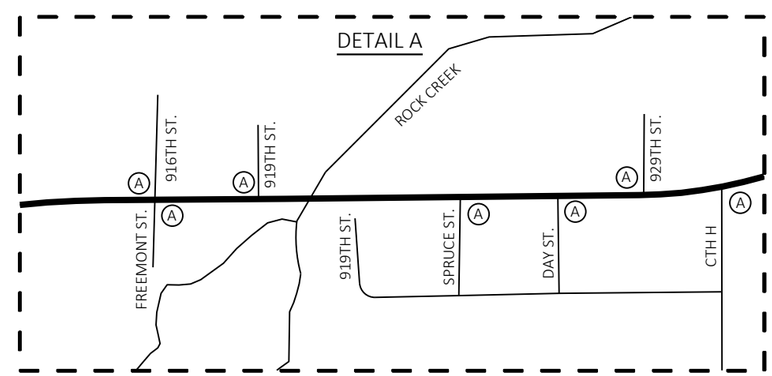

2

PROJECT NO: 7120-00-74/76	HWY: STH 85	COUNTY: DUNN	TRAFFIC CONTROL - ADVANCED WARNING SIGNING	SHEET 42	E

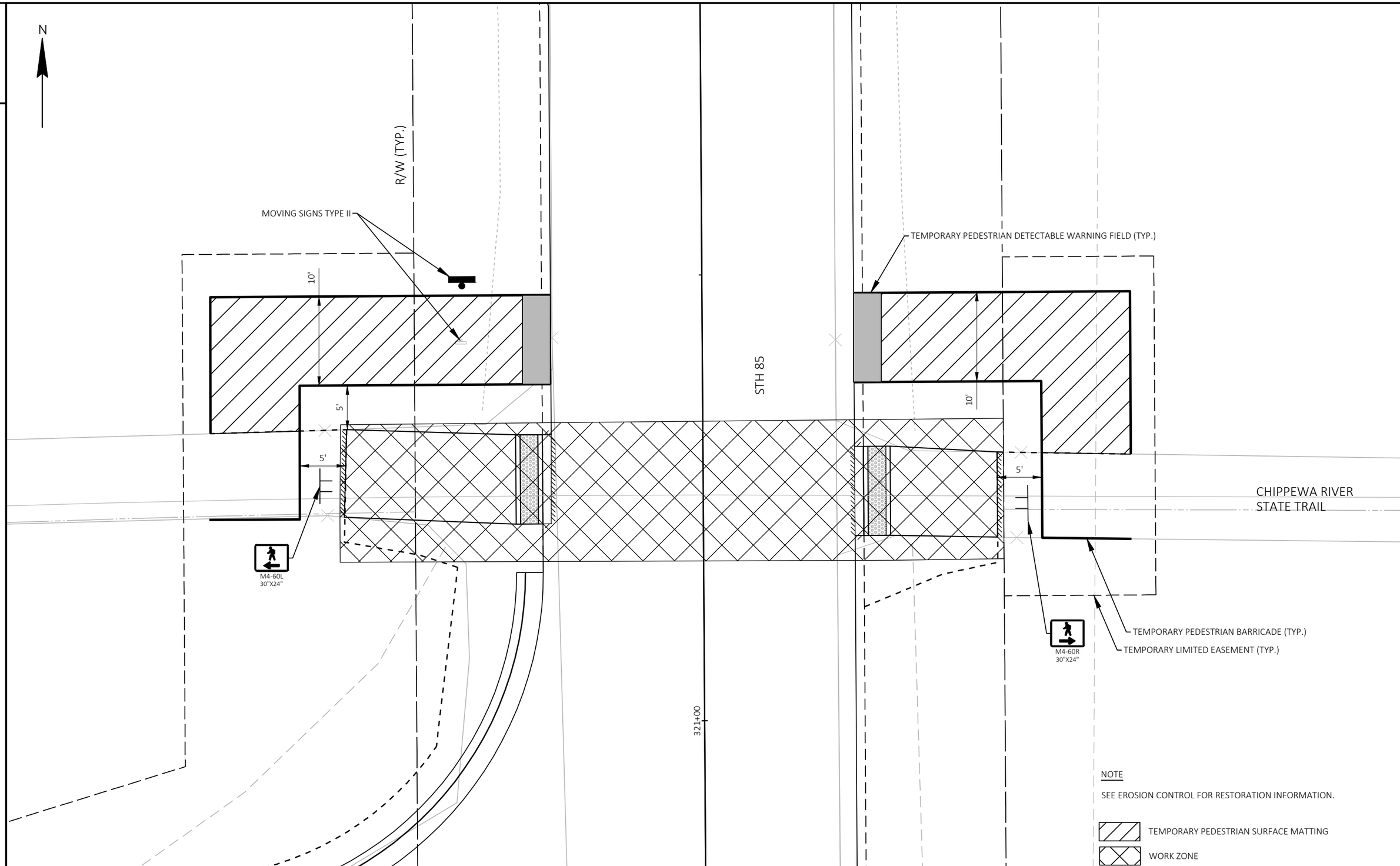

PROJECT NO: 7120-00-74	HWY: STH 85	COUNTY: DUNN	TRAFFIC CONTROL - TEMPORARY PEDESTRIAN ROUTE	SHEET 43	E

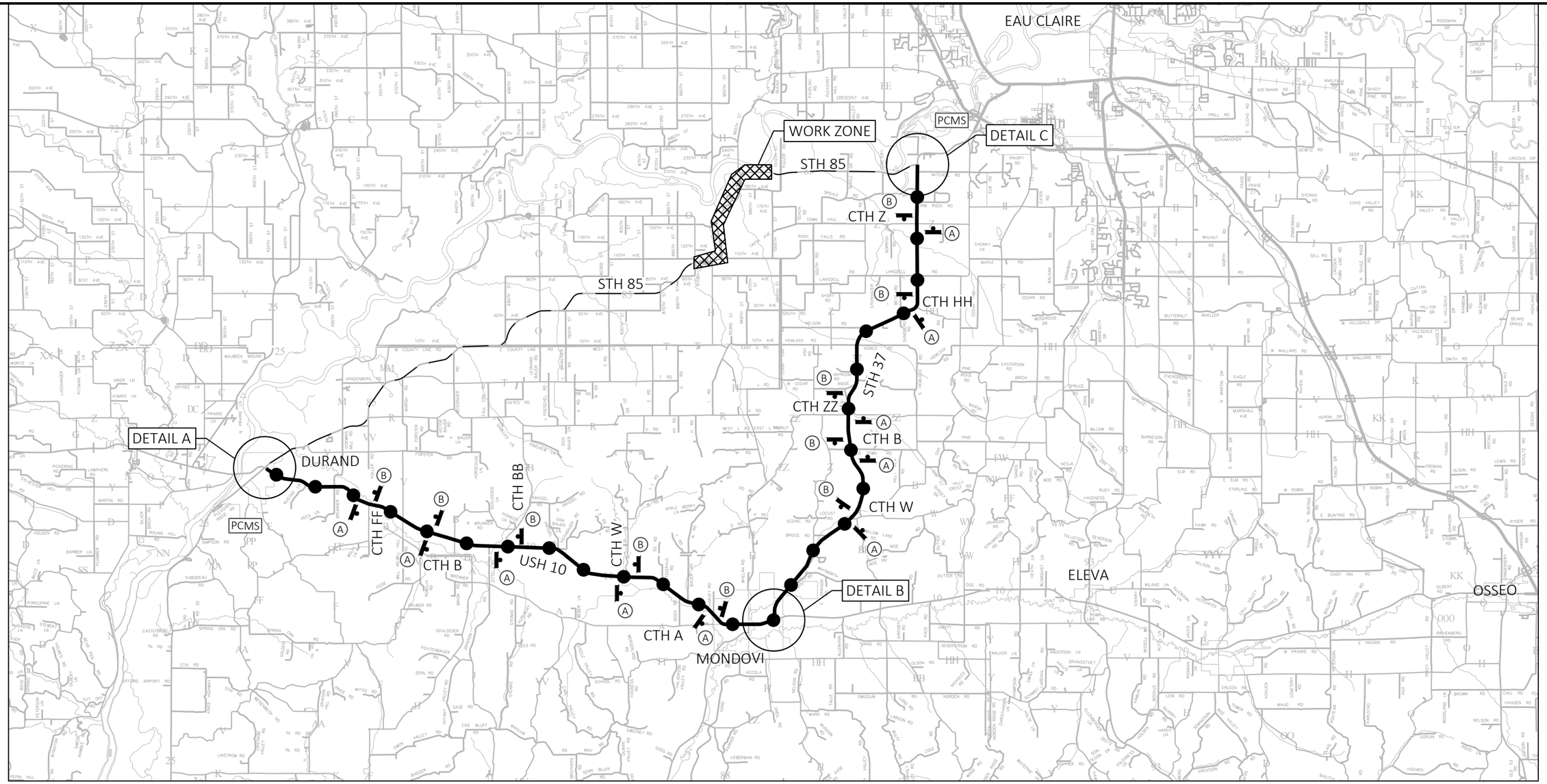

GENERAL NOTES

THE EXACT NUMBER, LOCATION, AND SPACING OF ALL SIGNS AND DEVICES SHALL BE ADJUSTED TO FIT FIELD CONDITIONS.

ALL SIGNS ARE 48" X 48" UNLESS OTHERWISE NOTED.

ANY SIGN, TEMPORARY OR EXISTING, WHICH CONFLICTS WITH THE TRAFFIC CONTROL "IN USE" SHALL BE REMOVED OR COVERED AS NEEDED.

ALL M3 SERIES SIGNS (NORTH, SOUTH, EAST, WEST) WHICH ARE PART OF ANY DETOUR MARKER SIGNING ASSEMBLY OR ATTACHED TO ANY WARNING SIGN SHALL BE BLACK LETTERING ON A WHITE BACKGROUND.

ALL MO5 AND MO6 ARROW SIGNS SHALL BE THE SAME AS "M" SIGNS EXCEPT THAT THE BACKGROUND IS ORANGE.

SIGN LEGEND

A		B	
DETOUR	M4-8 24"X12"	DETOUR	M4-8 24"X12"
EAST	M3-2 24"X12"	WEST	M3-4 24"X12"
85	M1-6 24"X24"	85	M1-6 24"X24"

LEGEND

- DETOUR ROUTE
- SIGN ON PERMANENT SUPPORT
- WORK ZONE
- PCMS — TRAFFIC CONTROL SIGNS PCMS

PCMS MESSAGING	
FRAME 1	FRAME 2
HWY 85 TO CLOSE	XXXDAY DATE

PCMS NOTES:

1. PCMS LOCATION TO BE DETERMINED BY THE ENGINEER IN THE FIELD.
2. PLACE PCMS (PRE-WARN) FOR SEVEN (7) DAYS PRIOR TO CONSTRUCTION.
3. PCMS SHOULD BE PLACED AS FAR AWAY FROM THE LIVE TRAFFIC LANES AS POSSIBLE WITHOUT HAMPERING VISIBILITY.
4. TRAFFIC CONTROL DRUMS SHOULD BE PLACED AHEAD OF PCMS ON THE SHOULDER.

FOR ADDITIONAL INFORMATION SEE STANDARD DETAIL DRAWINGS:
"BARRICADES AND SIGNS FOR MAINLINE, DETOUR, ON RAMP, OFF RAMP CLOSURES AND ADVANCED WIDTH RESTRICTIONS - SHEET A BARRICADES AND SIGNS FOR MAINLINE CLOSURES"
"BARRICADES AND SIGNS FOR MAINLINE, DETOUR, ON RAMP, OFF RAMP CLOSURES AND ADVANCED WIDTH RESTRICTIONS - SHEET B BARRICADES AND SIGNS FOR VARIOUS MAINLINE CLOSURES"
"BARRICADES AND SIGNS FOR MAINLINE, DETOUR, ON RAMP, OFF RAMP CLOSURES AND ADVANCED WIDTH RESTRICTIONS - SHEET C DETOUR SIGNING FOR MAINLINE CLOSURES"

2

DETAIL A

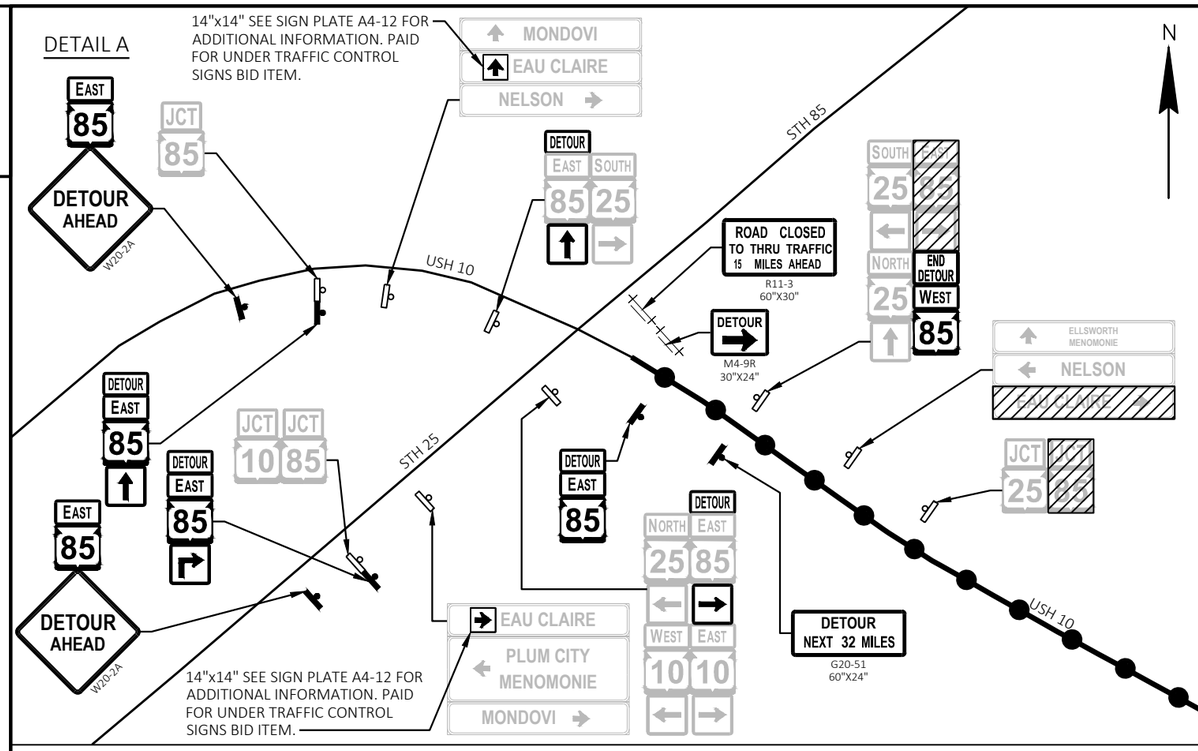

DETAIL B

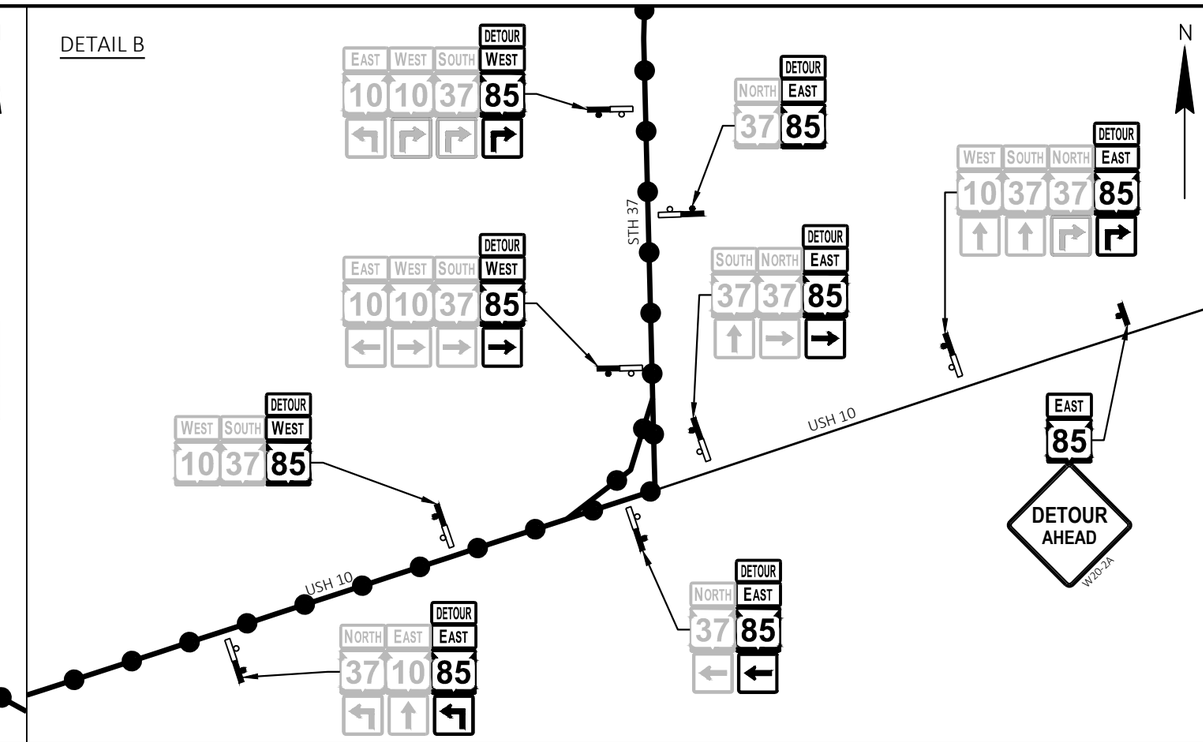

2

DETAIL C

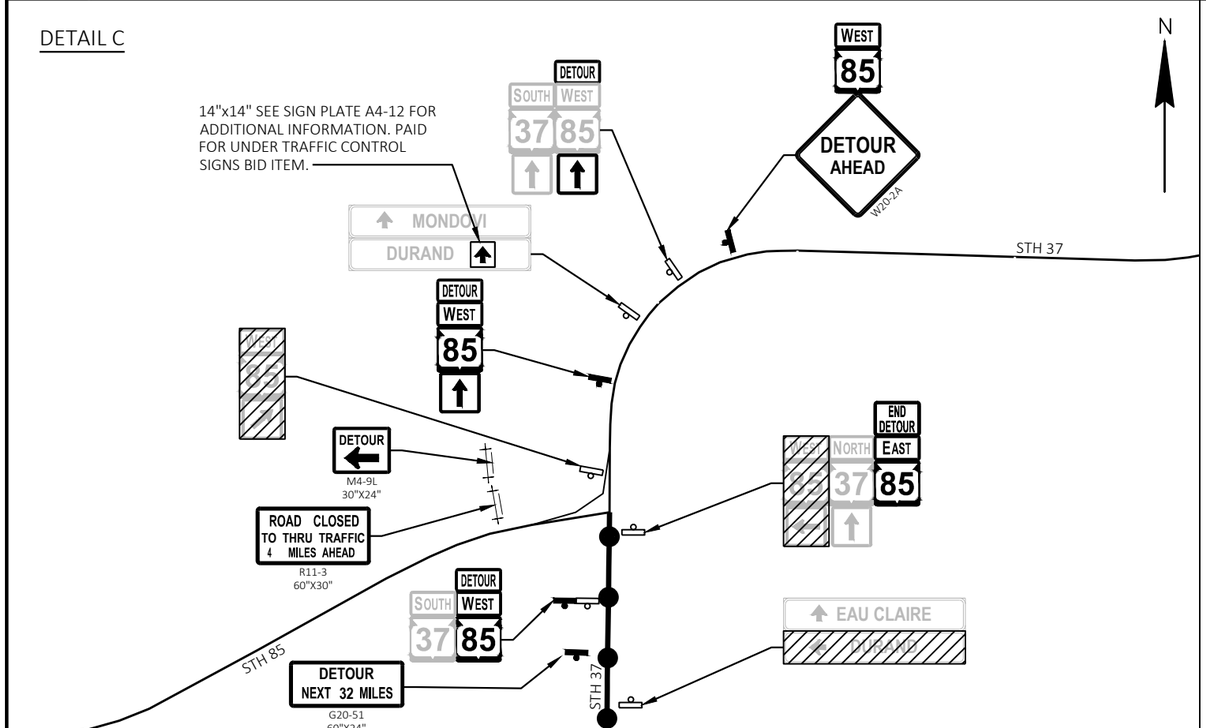

GENERAL NOTES

THE EXACT NUMBER, LOCATION, AND SPACING OF ALL SIGNS AND DEVICES SHALL BE ADJUSTED TO FIT FIELD CONDITIONS.

ALL SIGNS ARE 48" X 48" UNLESS OTHERWISE NOTED.

ANY SIGN, TEMPORARY OR EXISTING, WHICH CONFLICTS WITH THE TRAFFIC CONTROL "IN USE" SHALL BE REMOVED OR COVERED AS NEEDED.

ALL M3 SERIES SIGNS (NORTH, SOUTH, EAST, WEST) WHICH ARE PART OF ANY DETOUR MARKER SIGNING ASSEMBLY OR ATTACHED TO ANY WARNING SIGN SHALL BE BLACK LETTERING ON A WHITE BACKGROUND.

ALL MO5 AND MO6 ARROW SIGNS SHALL BE THE SAME AS "M" SIGNS EXCEPT THAT THE BACKGROUND IS ORANGE.

LEGEND

- DETOUR ROUTE
- EXISTING SIGNS AND POST(S) TO REMAIN
- SIGN(S) ON PERMANENT SUPPORT
- 85 EXISTING SIGN (TYP.)
- TRAFFIC CONTROL COVERING SIGNS TYPE 2 (TYP.)
- TRAFFIC CONTROL BARRICADES TYPE III WITH ATTACHED SIGN (TWO TYPE "A" WARNING LIGHTS)

SIGN LEGEND

DETOUR	M4-8 24"X12"	←	MO6-1 21"X21"
END DETOUR	M4-8A 24"X18"	→	MO6-1 21"X21"
NORTH	M3-1 24"X12"	↑	MO6-1 21"X21"
EAST	M3-2 24"X12"	↰	MO5-1L 21"X21"
SOUTH	M3-3 24"X12"	↱	MO5-1R 21"X21"
WEST	M3-4 24"X12"		
85	M1-6 24"X24"		

FOR ADDITIONAL INFORMATION SEE STANDARD DETAIL DRAWINGS:
"BARRICADES AND SIGNS FOR MAINLINE, DETOUR, ON RAMP, OFF RAMP CLOSURES AND ADVANCED WIDTH RESTRICTIONS - SHEET A BARRICADES AND SIGNS FOR MAINLINE CLOSURES"
"BARRICADES AND SIGNS FOR MAINLINE, DETOUR, ON RAMP, OFF RAMP CLOSURES AND ADVANCED WIDTH RESTRICTIONS - SHEET B BARRICADES AND SIGNS FOR VARIOUS MAINLINE CLOSURES"
"BARRICADES AND SIGNS FOR MAINLINE, DETOUR, ON RAMP, OFF RAMP CLOSURES AND ADVANCED WIDTH RESTRICTIONS - SHEET C DETOUR SIGNING FOR MAINLINE CLOSURES"

Estimate Of Quantities

Line	Item	Item Description	Unit	Total	7120-00-74 Qty	7120-00-76 Qty
0002	201.0105	Clearing	STA	10.000	5.000	5.000
0004	201.0205	Grubbing	STA	10.000	5.000	5.000
0006	203.0220	Removing Structure (structure) 01. C-17-1395	EACH	1.000	1.000	
0008	203.0220	Removing Structure (structure) 02. LOCATION A	EACH	1.000	1.000	
0010	203.0220	Removing Structure (structure) 03. LOCATION B	EACH	1.000	1.000	
0012	203.0220	Removing Structure (structure) 04. B-17-131	EACH	1.000		1.000
0014	204.0110	Removing Asphaltic Surface	SY	164.000	164.000	
0016	204.0115	Removing Asphaltic Surface Butt Joints	SY	1,192.000	1,192.000	
0018	204.0120	Removing Asphaltic Surface Milling	SY	19,110.000	19,110.000	
0020	204.0165	Removing Guardrail	LF	2,440.000	2,440.000	
0022	204.0220	Removing Inlets	EACH	2.000	2.000	
0024	204.0245	Removing Storm Sewer (size) 01. 12-INCH	LF	37.000	37.000	
0026	205.0100	Excavation Common	CY	2,983.000	1,425.000	1,558.000
0028	206.2001	Excavation for Structures Culverts (structure) 01. B-17-0370	EACH	1.000		1.000
0030	208.0100	Borrow	CY	2,791.000	2,791.000	
0032	209.0200.S	Backfill Controlled Low Strength	CY	9.000	9.000	
0034	210.2500	Backfill Structure Type B	TON	2,000.000		2,000.000
0036	211.0101	Prepare Foundation for Asphaltic Paving (project) 01. 7120-00-74	EACH	1.000	1.000	
0038	211.0400	Prepare Foundation for Asphaltic Shoulders	STA	381.000	381.000	
0040	211.0800.S	Base Repair for CIR Layer	CY	200.000	200.000	
0042	213.0100	Finishing Roadway (project) 01. 7120-00-74	EACH	1.000	1.000	
0044	305.0110	Base Aggregate Dense 3/4-Inch	TON	4,740.000	4,740.000	
0046	305.0120	Base Aggregate Dense 1 1/4-Inch	TON	932.000	606.000	326.000
0048	305.0500	Shaping Shoulders	STA	430.000	430.000	
0050	311.0110	Breaker Run	TON	304.000		304.000
0052	327.1000.S	CIR Asphaltic Base Layer	SY	65,800.000	65,800.000	
0054	455.0605	Tack Coat	GAL	11,185.000	11,185.000	
0056	455.0770.S	Asphalt Stabilizing Agent	TON	339.000	339.000	
0058	460.0105.S	HMA Percent Within Limits (PWL) Test Strip Volumetrics	EACH	1.000	1.000	
0060	460.6645	HMA Pavement 5 MT 58-34 V	TON	14,490.000	14,490.000	
0062	460.9000.S	Material Transfer Vehicle	EACH	1.000	1.000	
0064	465.0105	Asphaltic Surface	TON	581.000	441.000	140.000
0066	465.0120	Asphaltic Surface Driveways and Field Entrances	TON	92.000	92.000	
0068	465.0520	Asphaltic Rumble Strips, Shoulder	LF	29,600.000	29,600.000	
0070	465.0560	Asphaltic Rumble Strips, Centerline	LF	13,970.000	13,970.000	
0072	504.0100	Concrete Masonry Culverts	CY	266.000		266.000
0074	505.0400	Bar Steel Reinforcement HS Structures	LB	26,780.000		26,780.000
0076	505.0600	Bar Steel Reinforcement HS Coated Structures	LB	3,360.000		3,360.000
0078	516.0500	Rubberized Membrane Waterproofing	SY	34.000		34.000
0080	522.0418	Culvert Pipe Reinforced Concrete Class IV 18-Inch	LF	56.000	56.000	
0082	522.0436	Culvert Pipe Reinforced Concrete Class IV 36-Inch	LF	58.000	58.000	
0084	522.0442	Culvert Pipe Reinforced Concrete Class IV 42-Inch	LF	136.000	136.000	
0086	522.1018	Apron Endwalls for Culvert Pipe Reinforced Concrete 18-Inch	EACH	2.000	2.000	
0088	522.1036	Apron Endwalls for Culvert Pipe Reinforced Concrete 36-Inch	EACH	2.000	2.000	
0090	522.1042	Apron Endwalls for Culvert Pipe Reinforced Concrete 42-Inch	EACH	4.000	4.000	
0092	601.0557	Concrete Curb & Gutter 6-Inch Sloped 36-Inch Type D	LF	157.000	157.000	
0094	602.0410	Concrete Sidewalk 5-Inch	SF	164.000	164.000	
0096	602.0515	Curb Ramp Detectable Warning Field Natural Patina	SF	40.000	40.000	
0098	602.0810	Concrete Driveway 6-Inch	SY	24.000	24.000	

Estimate Of Quantities

Line	Item	Item Description	Unit	Total	7120-00-74 Qty	7120-00-76 Qty
0100	606.0200	Riprap Medium	CY	23.000	23.000	
0102	606.0300	Riprap Heavy	CY	87.000		87.000
0104	614.0397	Guardrail Mow Strip Emulsified Asphalt	SY	895.000	895.000	
0106	614.2300	MGS Guardrail 3	LF	1,088.000	1,088.000	
0108	614.2330	MGS Guardrail 3 K	LF	713.000	713.000	
0110	614.2610	MGS Guardrail Terminal EAT	EACH	4.000	4.000	
0112	618.0100	Maintenance and Repair of Haul Roads (project) 01. 7120-00-74	EACH	1.000	1.000	
0114	619.1000	Mobilization	EACH	1.000	0.850	0.150
0116	620.0300	Concrete Median Sloped Nose	SF	112.000	112.000	
0118	624.0100	Water	MGAL	90.000	90.000	
0120	625.0100	Topsoil	SY	11,660.000	7,810.000	3,850.000
0122	628.1504	Silt Fence	LF	1,840.000	1,090.000	750.000
0124	628.1520	Silt Fence Maintenance	LF	3,680.000	2,180.000	1,500.000
0126	628.1905	Mobilizations Erosion Control	EACH	12.000	12.000	
0128	628.1910	Mobilizations Emergency Erosion Control	EACH	5.000	5.000	
0130	628.2008	Erosion Mat Urban Class I Type B	SY	13,520.000	8,820.000	4,700.000
0132	628.2027	Erosion Mat Class II Type C	SY	2,410.000	2,310.000	100.000
0134	628.2037	Erosion Mat Class III Type C	SY	940.000	840.000	100.000
0136	628.7010	Inlet Protection Type B	EACH	2.000	2.000	
0138	628.7504	Temporary Ditch Checks	LF	420.000	390.000	30.000
0140	628.7515.S	Stone Ditch Checks	CY	9.000	9.000	
0142	628.7555	Culvert Pipe Checks	EACH	35.000	35.000	
0144	628.7560	Tracking Pads	EACH	3.000	3.000	
0146	628.7570	Rock Bags	EACH	110.000	110.000	
0148	629.0210	Fertilizer Type B	CWT	11.000	8.000	3.000
0150	630.0130	Seeding Mixture No. 30	LB	701.000	488.000	213.000
0152	630.0200	Seeding Temporary	LB	413.000	288.000	125.000
0154	630.0300	Seeding Borrow Pit	LB	77.000	77.000	
0156	630.0500	Seed Water	MGAL	378.000	270.000	108.000
0158	633.5200	Markers Culvert End	EACH	4.000	4.000	
0160	638.2102	Moving Signs Type II	EACH	6.000	6.000	
0162	642.5001	Field Office Type B	EACH	1.000	1.000	
0164	643.0300	Traffic Control Drums	DAY	1,910.000	1,910.000	
0166	643.0420	Traffic Control Barricades Type III	DAY	5,868.000	5,868.000	
0168	643.0705	Traffic Control Warning Lights Type A	DAY	10,866.000	10,866.000	
0170	643.0900	Traffic Control Signs	DAY	28,693.000	28,693.000	
0172	643.0920	Traffic Control Covering Signs Type II	EACH	6.000	6.000	
0174	643.1050	Traffic Control Signs PCMS	DAY	14.000	14.000	
0176	643.3165	Temporary Marking Line Paint 6-Inch	LF	62,400.000	62,400.000	
0178	643.3805	Temporary Marking Stop Line Paint 18-Inch	LF	30.000	30.000	
0180	643.5000	Traffic Control	EACH	1.000	1.000	
0182	644.1440	Temporary Pedestrian Surface Matting	SF	825.000	825.000	
0184	644.1605	Temporary Pedestrian Detectable Warning Field	SF	40.000	40.000	
0186	644.1810	Temporary Pedestrian Barricade	LF	205.000	205.000	
0188	645.0105	Geotextile Type C	SY	456.000		456.000
0190	645.0120	Geotextile Type HR	SY	238.000	58.000	180.000
0192	645.0130	Geotextile Type R	SY	72.000	72.000	
0194	646.2040	Marking Line Grooved Wet Ref Epoxy 6-Inch	LF	74,200.000	74,200.000	
0196	646.4040	Marking Line Grooved Wet Ref Epoxy 10-Inch	LF	1,140.000	1,140.000	

Estimate Of Quantities

Line	Item	Item Description	Unit	Total	7120-00-74 Qty	7120-00-76 Qty
0198	646.5020	Marking Arrow Epoxy	EACH	2.000	2.000	
0200	646.6120	Marking Stop Line Epoxy 18-Inch	LF	30.000	30.000	
0202	646.7120	Marking Diagonal Epoxy 12-Inch	LF	640.000	640.000	
0204	650.5500	Construction Staking Curb Gutter and Curb & Gutter	LF	157.000	157.000	
0206	650.6000	Construction Staking Pipe Culverts	EACH	4.000	4.000	
0208	650.6501	Construction Staking Structure Layout (structure) 01. B-17-0370	EACH	1.000		1.000
0210	650.8000	Construction Staking Resurfacing Reference	LF	22,222.000	22,222.000	
0212	650.9000	Construction Staking Curb Ramps	EACH	2.000	2.000	
0214	650.9911	Construction Staking Supplemental Control (project) 01. 7120-00-74	EACH	1.000	1.000	
0216	650.9920	Construction Staking Slope Stakes	LF	4,024.000	3,443.000	581.000
0218	680.0100	Public Land Reference Monument Verify and Reset	EACH	1.000	1.000	
0220	690.0150	Sawing Asphalt	LF	759.000	691.000	68.000
0222	690.0250	Sawing Concrete	LF	17.000	17.000	
0224	715.0502	Incentive Strength Concrete Structures	DOL	1,596.000		1,596.000
0226	740.0440	Incentive IRI Ride	DOL	16,835.000	16,835.000	
0228	999.2000.S	Installing and Maintaining Bird Deterrent System (station) 01. Station 150+73	EACH	1.000	1.000	
0230	999.2000.S	Installing and Maintaining Bird Deterrent System (station) 02. Station 261+62	EACH	1.000	1.000	
0232	SPV.0045	Special 01. Traffic Control, Digital Speed Reduction System (DSRS)	DAY	21.000	21.000	
0234	SPV.0055	Special 01. Incentive Density PWL HMA Pavement	DOL	9,264.000	9,264.000	
0236	SPV.0055	Special 02. Incentive Air Voids HMA Pavement	DOL	14,481.000	14,481.000	
0238	SPV.0055	Special 03. Incentive Density HMA Pavement Longitudinal Joints	DOL	8,890.000	8,890.000	
0240	SPV.0180	Special 01. Removing Distressed Pavement Milling	SY	1,420.000	1,420.000	

3

CLEARING & GRUBBING SUMMARY

CATEGORY	STATION - STATION	LT/RT	201.0105 CLEARING STA	201.0205 GRUBBING STA
0010	254+00 - 256+00	LT	2	2
	303+00 - 306+00	RT	3	3
	TOTALS		5	5

DRAINAGE REMOVALS

CATEGORY	STATION - STATION	LT/RT	203.0220.01 REMOVING STRUCTURE (C-17-1395) EACH	203.0220.02 REMOVING STRUCTURE (LOCATION A) EACH	203.0220.03 REMOVING STRUCTURE (LOCATION B) EACH	204.0220 REMOVING INLETS EACH	204.0245.01 REMOVING STORM SEWER 12-INCH LF	209.0200.S BACKFILL CONTROLLED LOW STRENGTH CY
0010	150+70 - 150+75	LT/RT	1	---	---	---	---	---
	255+02 - 255+05	LT/RT	---	1	---	---	---	9
	261+62 - 261+62	LT/RT	---	---	1	---	---	---
	303+99 - 304+08	LT	---	---	---	1	18	---
	305+58 - 305+70	LT	---	---	---	1	19	---
	TOTALS		1	1	1	2	37	9

REMOVING ASPHALTIC SURFACE

CATEGORY	STATION - STATION	204.0110 SY	204.0115 BUTT JOINTS SY	204.0120 MILLING SY
0010	149+77 - 200+00	---	340	12,400
	200+00 - 250+00	---	28	710
	250+00 - 300+00	---	14	1,680
	300+00 - 350+00	164	550	4,320
	350+00 - 375+87	---	260	---
TOTALS		164	11,882	19,110

DISTRESSED PAVEMENT SUMMARY

CATEGORY	STATION - STATION	SPV.0180.01 REMOVING DISTRESSED PAVEMENT MILLING SY	455.0605* TACK COAT GAL	465.0105* ASPHALTIC SURFACE TON
0010	UNDISTRIBUTED	1,420	85	160

*ADDITIONAL QUANTITIES LISTED ELSEWHERE

REMOVING GUARDRAIL

CATEGORY	STATION	-	STATION	LOCATION	204.0165 LF
0010	149+87	-	151+55	RT	167
	149+94	-	151+46	LT	154
	254+06	-	256+11	LT	205
	254+29	-	255+84	RT	155
	260+88	-	262+30	LT	142
	261+12	-	262+42	RT	130
	301+68	-	305+86	RT	423
	301+75	-	306+85	LT	504
	345+88	-	348+68	LT	280
	345+89	-	348+69	RT	280
	TOTAL				2,440

3

DIVISION	FROM/TO STATION	LOCATION	205.0100* EXCAVATION COMMON (1) CUT (2)	EBS EXCAVATION	AVAILABLE MATERIAL (3)	UNEXPANDED FILL	EXPANDED FILL (4) FACTOR 1.25	MASS ORDINATE +/- (5)	WASTE	208.0100 BORROW	COMMENT
7120-00-74 ID											
BEGIN PROJECT REMOVAL	149+76.50/151+59.96	LT/RT	27	---	27	253	316	-289		289	
DITCH REGRADING	180+42.59/181+42.00	LT	3	---	3	2	3	0		0	
LOCATION A/B REMOVAL	252+41.59/264+44.29	LT/RT	141	---	141	659	824	-683		683	
COON CREEK	295+15.09/311+85.39	LT/RT	14	---	14	1,515	1,894	-1,880		1,880	
7120-00-74 ID SUBTOTAL			185		185	2,429	3,036	-2,852		2,852	
7120-00-76 ID											
B-13-0370 GRADING	344+36.53/350+17.73	LT/RT	1,558	---	1,558	1,198	1,498	61		0	
7120-00-76 ID SUBTOTAL			1,558		1,558	1,198	1,498	61		0	
GRAND TOTAL			1,743		1,743	3,627	4,534	-2,791		2,791	
TOTAL COMMON EXC			1,743								

* ADDITIONAL QUANTITIES LISTED ELSEWHERE

NOTES:
(1) COMMON EXCAVATION IS THE SUM OF THE CUT AND EBS EXCAVATION COLUMNS. ITEM NUMBER 205.0100
(2) SALVAGED/UNSUABLE PAVEMENT MATERIAL IS INCLUDED IN CUT.
(3) AVAILABLE MATERIAL = CUT

3

BASE AGGREGATE DENSE SUMMARY

CATEGORY	STATION - STATION	305.0110* BASE AGGREGATE DENSE 3/4-INCH TON	305.0120* BASE AGGREGATE DENSE 1 1/4-INCH TON	624.0100 WATER (FOR COMPACTION) MGAL
0010	149+77 - 200+00	550	---	10
	200+00 - 250+00	1,070	---	20
	250+00 - 300+00	1,070	---	20
	300+00 - 350+00	1,280	140	30
	350+00 - 375+87	550	---	10
	TOTALS	4,520	140	90

*ADDITIONAL QUANTITIES LISTED ELSEWHERE

PREPARE FOUNDATION FOR ASPHALTIC SHOULDERS

CATEGORY	STATION - STATION	211.0400 STA
0020	180+00 - 200+00	40
	200+00 - 250+00	100
	250+00 - 300+00	100
	300+00 - 319+00	38
	324+25 - 350+00	52
	350+00 - 375+87	52
	TOTAL	381

SHAPING SHOULDERS

CATEGORY	STATION - STATION	305.0500 STA
0010	149+77 - 200+00	40
	200+00 - 250+00	100
	250+00 - 300+00	100
	300+00 - 350+00	90
	350+00 - 375+87	100
	TOTALS	430

3

COLD IN-PLACE RECYCLING (CIR) SUMMARY

CATEGORY	STATION - STATION	LOCATION	211.0800.S BASE REPAIR FOR CIR LAYER CY	327.1000.S CIR ASPHALTIC BASE LAYER SY	455.0770.S ASPHALT STABILIZING AGENT TON
0010	149+77 - 200+00	LT/RT	---	6,500	33
	200+00 - 250+00	LT/RT	---	16,700	86
	250+00 - 300+00	LT/RT	---	16,700	86
	300+00 - 350+00	LT/RT	---	17,300	89
	350+00 - 375+87	LT/RT	---	8,600	44
	UNDISTRIBUTED	LT/RT	200	---	---
	TOTALS		200	65,800	339

HMA PAVEMENT SUMMARY

CATEGORY	STATION - STATION	LOCATION	455.0605* TACK COAT GAL	460.6645 HMA PAVEMENT 5 MT 58-34 V TON	465.0105* ASPHALTIC SURFACE TON
0010	149+77 - 200+00	LT/RT	2,290	3,270	---
	200+00 - 250+00	LT/RT	2,080	2,680	---
	250+00 - 300+00	LT/RT	2,180	2,800	---
	300+00 - 350+00	LT/RT	2,600	3,250	31
	350+00 - 375+87	LT/RT	1,030	1,330	---
	CATEGORY 0010 SUBTOTALS		10,180	13,330	31
0020	149+77 - 200+00	LT/RT	100	120	---
	200+00 - 250+00	LT/RT	260	330	---
	250+00 - 300+00	LT/RT	230	300	---
	300+00 - 350+00	LT/RT	190	230	---
	350+00 - 375+87	LT/RT	140	180	---
	CATEGORY 0020 SUBTOTALS		920	1,160	---
	GRAND TOTALS		11,100	14,490	31

HMA PAVEMENT WEIGHT CALCULATIONS ARE BASED ON 112 LBS/SY/IN.
TACK CALCULATIONS ARE BASED ON 0.06 GALLONS PER SQUARE YARD. TACK TO BE APPLIED ON CIR LAYER AND LOWER 5 MT LAYER FOR MAINLINE.
*ADDITIONAL QUANTITIES LISTED ELSEWHERE

3

PWL MIXTURE USE TABLE

THE FOLLOWING ACCEPTANCE CRITERIA ARE APPLICABLE FOR THIS PROJECT:

LOCATION	STATION - STATION	MIXTURE USE	UNDERLYING SURFACE	BID ITEM	TONS	THICKNESS	QUALITY MANAGEMENT PROGRAM TO BE USED FOR: MIXTURE ACCEPTANCE	DENSITY ACCEPTANCE
12-FOOT DRIVING LANES	149+77 - 180+52	LOWER LAYER	MILLED EXISTING HMA SURFACE	5 MT 58-34 V	702	1.75"	INCENTIVE AIR VOIDS HMA PAVEMENT (CORE ONLY PROJECT) SPV.0055.02	INCENTIVE DENSITY PWL HMA PAVEMENT (CORE ONLY PROJECT) SPV.0055.01
12-FOOT DRIVING LANES	180+52 - 319+00 324+00 - 375+87	LOWER LAYER	CIR PAVEMENT	5 MT 58-34 V	3,550	1.25"	INCENTIVE AIR VOIDS HMA PAVEMENT (CORE ONLY PROJECT) SPV.0055.02	INCENTIVE DENSITY PWL HMA PAVEMENT (CORE ONLY PROJECT) SPV.0055.01
12-FOOT DRIVING LANES	319+00 - 324+00	UPPER LAYER	MILLED EXISTING HMA SURFACE	5 MT 58-34 V	149	2"	INCENTIVE AIR VOIDS HMA PAVEMENT (CORE ONLY PROJECT) SPV.0055.02	INCENTIVE DENSITY PWL HMA PAVEMENT (CORE ONLY PROJECT) SPV.0055.01
12-FOOT DRIVING LANES	149+77 - 319+00 324+00 - 375+87	UPPER LAYER	5 MT 58-34 V	5 MT 58-34 V	4,862	1.5"	INCENTIVE AIR VOIDS HMA PAVEMENT (CORE ONLY PROJECT) SPV.0055.02	INCENTIVE DENSITY PWL HMA PAVEMENT (CORE ONLY PROJECT) SPV.0055.01
OUTSIDE SHOULDERS	149+77 - 180+52	LOWER LAYER	MILLED EXISTING HMA SURFACE	5 MT 58-34 V	235	1.75"	INCENTIVE AIR VOIDS HMA PAVEMENT (CORE ONLY PROJECT) SPV.0055.02	DEPARTMENT ACCEPTANCE (SS 460.3.3.2) *NOT ELIGIBLE FOR INCENTIVE
OUTSIDE SHOULDERS	180+52 - 319+00 324+00 - 375+87	LOWER LAYER	CIR PAVEMENT	5 MT 58-34 V	1,559	1.25"	INCENTIVE AIR VOIDS HMA PAVEMENT (CORE ONLY PROJECT) SPV.0055.02	DEPARTMENT ACCEPTANCE (SS 460.3.3.2) *NOT ELIGIBLE FOR INCENTIVE
OUTSIDE SHOULDERS	149+77 - 319+00 324+00 - 375+87	UPPER LAYER	5 MT 58-34 V	5 MT 58-34 V	2,071	1.5"	INCENTIVE AIR VOIDS HMA PAVEMENT (CORE ONLY PROJECT) SPV.0055.02	DEPARTMENT ACCEPTANCE (SS 460.3.3.2) *NOT ELIGIBLE FOR INCENTIVE
OUTSIDE SHOULDERS/SIDE ROADS	319+00 - 324+00	UPPER LAYER	MILLED EXISTING HMA SURFACE	5 MT 58-34 V	90	2"	INCENTIVE AIR VOIDS HMA PAVEMENT (CORE ONLY PROJECT) SPV.0055.02	DEPARTMENT ACCEPTANCE (SS 460.3.3.2) *NOT ELIGIBLE FOR INCENTIVE
TURN LANES/SIDE ROADS	180+52 - 319+00 324+00 - 375+87	LOWER LAYER	MILLED EXISTING HMA SURFACE	5 MT 58-34 V	358	1.25"	INCENTIVE AIR VOIDS HMA PAVEMENT (CORE ONLY PROJECT) SPV.0055.02	DEPARTMENT ACCEPTANCE (SS 460.3.3.2) *NOT ELIGIBLE FOR INCENTIVE
TURN LANES/SIDE ROADS	149+77 - 180+52	LOWER LAYER	MILLED EXISTING HMA SURFACE	5 MT 58-34 V	256	1.75"	INCENTIVE AIR VOIDS HMA PAVEMENT (CORE ONLY PROJECT) SPV.0055.02	DEPARTMENT ACCEPTANCE (SS 460.3.3.2) *NOT ELIGIBLE FOR INCENTIVE
TURN LANES/SIDE ROADS	149+77 - 319+00 324+00 - 375+87	UPPER LAYER	5 MT 58-34 V	5 MT 58-34 V	648	1.5"	INCENTIVE AIR VOIDS HMA PAVEMENT (CORE ONLY PROJECT) SPV.0055.02	DEPARTMENT ACCEPTANCE (SS 460.3.3.2) *NOT ELIGIBLE FOR INCENTIVE
CULVERT REPLACEMENTS	--- - ---	CULVERT PATCHES	BASE AGGREGATE DENSE 1 1/4-INCH	ASPHALTIC SURFACE	344	VARIES	SS 465	ORDINARY COMPACTION (SS 450.3.2.6.2)

3

DRIVEWAYS AND FIELD ENTRANCES SUMMARY

CATEGORY	STATION	LOCATION	305.0110* BASE AGGREGATE DENSE 3/4-INCH TON	465.0120 ASPHALTIC SURFACE DRIVEWAYS AND FIELD ENTRANCES TON	602.0810 CONCRETE DRIVEWAY 6-INCH SY
0010	182+49	LT	---	---	24
	183+44	LT	4	1	---
	184+48	LT	5	5	---
	188+23	LT	5	1	---
	190+58	lt	7	1	---
	214+76	LT	5	4	---
	218+03	LT	6	1	---
	225+91	RT	4	4	---
	229+29	RT	10	1	---
	233+91	LT	13	2	---
	251+65	LT	6	6	---
	260+85	RT	17	1	---
	279+48	RT	6	1	---
	290+81	RT	8	1	---
	306+13	RT	13	1	---
	315+30	RT	4	1	---
	316+33	RT	3	3	---
	317+94	RT	4	1	---
	319+12	RT	6	6	---
	320+34	LT	14	13	---
	322+05	LT	8	8	---
	323+34	LT	6	6	---
	323+34	RT	6	6	---
	343+83	LT	11	11	---
	343+93	RT	11	2	---
	352+72	RT	6	1	---
	352+72	LT	5	1	---
	359+13	RT	6	1	---
	364+15	RT	6	1	---
	368+56	LT	6	1	---
	371+20	RT	9	1	---
	TOTALS		220	92	24

*ADDITIONAL QUANTITIES LISTED ELSEWHERE
ASPHALT WEIGHT CALCULATIONS ARE BASED ON 112 LBS/SY/IN.
BASE AGGREGATE DENSE 3/4-IN WEIGHT CALCULATIONS ARE BASED ON 2.1 TON/CY

ASPHALTIC RUMBLE STRIPS, CENTERLINE

CATEGORY	STATION - STATION	LOCATION	465.0560 LF
0010	149+77 - 200+00	LT/RT	630
	200+00 - 250+00	LT/RT	3,360
	250+00 - 300+00	LT/RT	4,200
	300+00 - 350+00	LT/RT	3,190
	350+00 - 375+87	LT/RT	2,590
	TOTAL		13,970

ASPHALTIC RUMBLE STRIPS, SHOULDER

CATEGORY	STATION - STATION	LOCATION	465.0520 LF
0020	149+77 - 200+00	LT/RT	1,290
	200+00 - 250+00	LT/RT	8,520
	250+00 - 300+00	LT/RT	8,770
	300+00 - 350+00	LT/RT	6,060
	350+00 - 375+87	LT/RT	4,960
	TOTAL		29,600

3

3

CULVERT PIPE SUMMARY

CATEGORY	DOWNSTATION STATION	DOWNSTATION OFFSET	UPSTATION STATION	UPSTATION OFFSET	522.1018 APRON ENDWALLS FOR CULVERT PIPE REINFORCED CONCRETE 18-INCH EACH	522.1036 APRON ENDWALLS FOR CULVERT PIPE REINFORCED CONCRETE 36-INCH EACH	522.1042 APRON ENDWALLS FOR CULVERT PIPE REINFORCED CONCRETE 42-INCH EACH	522.0418 CULVERT PIPE REINFORCED CONCRETE CLASS IV 18-INCH LF	522.0436 CULVERT PIPE REINFORCED CONCRETE CLASS IV 36-INCH LF	522.0442 CULVERT PIPE REINFORCED CONCRETE CLASS IV 42-INCH LF	633.5200 MARKERS CULVERT END EACH	606.0200 RIPRAP MEDIUM CY	645.0120 GEOTEXTILE TYPE HR SY
0010	150+65.6	33.6', RT	150+65.6	33.8', LT	---	---	2	---	---	68	2	10	30
	150+73.7	33.5', RT	150+73.7	33.3', LT	---	---	2	---	---	68	---	---	---
	255+02.3	33.9', LT	255+05.0	22.9', RT	---	2	---	---	58	---	2	13	38
	260+57.2	30.5', RT	261+13.3	33.4', RT	2	---	---	56	---	---	---	---	---
	TOTALS				2	2	4	56	58	136	4	23	68

3

CULVERT PIPE TRANSITIONS

CATEGORY	STATION	SIDE	205.0100* EXCAVATION COMMON CY	305.0120* BASE AGGREGATE DENSE 1 1/4-INCH TON	465.0105* ASPHALTIC SURFACE TON	690.0150* SAWING ASPHALT LF
0010	150+26 - 151+12	LT/RT	540	223	133	69
	254+66 - 255+42	LT/RT	700	243	117	72
	TOTALS		1,240	466	250	141

*ADDITIONAL QUANTITIES LISTED ELSEWHERE

CONCRETE SUMMARY

CATEGORY	STATION - STATION	LOCATION	601.0557 CONCRETE CURB & GUTTER 6-INCH SLOPED 36-INCH TYPE D LF	602.0410 CONCRETE SIDEWALK 5-INCH SF	602.0515 CURB RAMP DETECTABLE WARNING FIELD NATURAL PATINA SF	620.0300 CONCRETE MEDIAN SLOPED NOSE SF
0010	320+05 - 320+54	LT	103	104	---	112
	320+79 - 321+17	LT	54	---	---	---
	321+21 - 321+32	LT/RT	---	60	40	---
	TOTALS		157	164	40	112

GUARDRAIL SUMMARY

CATEGORY	STATION - STATION	LOCATION	614.2300 MGS GUARDRAIL 3 LF	614.2330 MGS GUARDRAIL 3 K LF	614.2610 TERMINAL EAT EACH
0010	296+40.00 - 310+64.46	LT	950	363	2
	299+98.95 - 305+86.11	RT	138	350	2
	TOTALS		1088	713	4

3

EROSION CONTROL MOBILIZATION SUMMARY

CATEGORY	PROJECT	628.1905 MOBILIZATIONS EROSION CONTROL EACH	628.1910 MOBILIZATIONS EMERGENCY EROSION CONTROL EACH
0010	7120-00-74	12	5

STONE DITCH CHECK SUMMARY

CATEGORY	PROJECT	628.7515.S STONE DITCH CHECKS CY	645.0130 GEOTEXTILE TYPE R SY	REMARKS
0010	307+91 - 310+05	9	58	PERMANENT

MOVING SIGNS TYPE II

CATEGORY	APPROX STATION	LOCATION	638.2102 EACH	REMARKS
0010	296+65	RT	1	SCHOOL BUS STOP AHEAD
	305+00	RT	1	SPEED REDUCTION AHEAD 45 MPH
	310+73	LT	1	SPEED LIMIT 55 MPH
	321+43	LT	1	PEDESTRIAN CROSSING/DIAGONAL ARROW/NO PASSING ZONE
	348+45	LT	1	ROAD CURVES LEFT
	349+75	RT	1	NO PASSING ZONE
	TOTAL		6	

FINISHING SUMMARY

CATEGORY	STATION - STATION	LOCATION	614.0397 GUARDRAIL MOW STRIP EMULSIFIED ASPHALT SY	625.0100 TOPSOIL SY	628.1504 SILT FENCE LF	628.1520 SILT FENCE MAINTENANCE LF	628.2008 EROSION MAT URBAN CLASS I TYBE B SY	628.2027 EROSION MAT CLASS II TYPE C SY	628.2037 EROSION MAT CLASS III TYPE C SY	628.7010 INLET PROTECTION TYPE B EACH	628.7504 TEMPORARY DITCH CHECKS LF	628.7555 CULVERT PIPE CHECKS EACH	628.7560 TRACKING PADS EACH	628.7570 ROCK BAGS EACH	630.0130 SEEDING MIXTURE NO. 30 LB	630.0200 SEEDING TEMPORARY LB	630.0300 SEEDING BORROW PIT LB	**630.0500 SEED WATER MGAL	629.0210 FERTILIZER TYPE B CWT
0010	149+77 - 200+00	LT/RT	---	1,230	---	---	1,230	---	---	2	---	19	---	---	60	30	---	28	1
	200+00 - 250+00	LT/RT	---	---	---	---	---	---	---	---	---	---	---	---	---	---	---	---	---
	250+00 - 300+00	LT/RT	160	3,730	270	540	3,730	---	---	---	190	9	---	22	170	100	---	84	2
	300+00 - 350+00	LT/RT	734	2,850	600	1,200	990	1,850	670	---	120	---	---	66	160	100	---	79	2
	350+00 - 375+87	LT/RT		---	---	---	---	---	---	---	---	---	---	---	---	---	---	---	---
	BORROW PIT		---	---	---	---	1,380	---	---	---	---	---	1	---	---	---	62	31	1
	UNDISTRIBUTED		---	---	220	440	1,490	460	170	---	80	7	2	22	98	58	15	48	1
	TOTALS		895	7,810	1,090	2,180	8,820	2,310	840	2	390	35	3	110	488	288	77	270	8

**SEED WATER QUANTITY INCULDED FOR 4 WEEKS OF WATERING

3

PEDESTRIAN TRAFFIC CONTROL SUMMARY

CATEGORY	LOCATION	644.1440 TEMPORARY PEDESTRIAN SURFACE MATTING SF	644.1605 TEMPORARY PEDESTRIAN DETECTABLE WARNING FIELD SF	644.1810 TEMPORARY PEDESTRIAN BARRICADE LF
0010	CHIPPEWA RIVER STATE TRAIL	825	40	205

TEMPORARY PAVEMENT MARKING SUMMARY

CATEGORY	STATION - STATION	643.3165 TEMPORARY MARKING LINE PAINT 6-INCH (YELLOW) LF	643.3165 TEMPORARY MARKING LINE PAINT 6-INCH (YELLOW) (SKIP) (12.5', 37.5' GAP) LF	643.3805 TEMPORARY MARKING STOP LINE PAINT 18-INCH LF
0010	149+77 - 200+00	13,800	1,200	---
	200+00 - 250+00	6,600	2,400	---
	250+00 - 300+00	12,200	2,000	---
	300+00 - 350+00	20,000	1,400	30
	350+00 - 375+87	1,400	1,400	---
	SUBTOTALS	54,000	8,400	30
	ITEM TOTALS	62,400		30

3

TRAFFIC CONTROL SUMMARY

CATEGORY	LOCATION	DURATION (DAYS)	643.0300 TRAFFIC CONTROL DRUMS QTY	643.0300 TRAFFIC CONTROL DRUMS DAY	643.0420 TRAFFIC CONTROL BARRICADES TYPE III QTY	643.0420 TRAFFIC CONTROL BARRICADES TYPE III DAY	643.0705 TRAFFIC CONTROL WARNING LIGHTS TYPE A QTY	643.0705 TRAFFIC CONTROL WARNING LIGHTS TYPE A DAY	643.0900 TRAFFIC CONTROL SIGNS QTY	643.0900 TRAFFIC CONTROL SIGNS DAY	643.0920 TRAFFIC CONTROL COVERING SIGNS TYPE II CYCLES	643.0920 TRAFFIC CONTROL COVERING SIGNS TYPE II QTY	643.0920 TRAFFIC CONTROL COVERING SIGNS TYPE II EACH	643.1050 TRAFFIC CONTROL SIGNS PCMS QTY	643.1050 TRAFFIC CONTROL SIGNS PCMS DAY
0010	DETOUR ROUTES	87	10	870	18	1,566	26	2,262	151	13,137	1	6	6	2	14
	SIDEROADS (DETOUR)	87	---	---	46	4,002	92	8,004	138	12,006	---	---	---	---	---
	ADVANCED WARNING	50	---	---	---	---	---	---	43	2,150	---	---	---	---	---
	UNDISTRIBUTED			1,040	---	300	---	600	---	1,400	---	---	---	---	---
	TOTALS			1,910		5,868		10,866		28,693			6		14

3

PAVEMENT MARKING SUMMARY

CATEGORY	STATION - STATION	646.2040 MARKING LINE GROOVED WET REF EPOXY 6-INCH (YELLOW) LF	(YELLOW) (SKIP) (12.5', 37.5' GAP) LF	(WHITE) LF	646.4040 MARKING LINE GROOVED WET REF EPOXY 10-INCH LF	646.5020 MARKING ARROW EPOXY EACH	646.6120 MARKING STOP LINE EPOXY 18-INCH (WHITE) LF	646.7120 MARKING DIAGONAL EPOXY 12-INCH (YELLOW) LF
0010	149+77 - 200+00	6,900	600	8,500	220	---	---	---
	200+00 - 250+00	3,300	1,200	9,700	---	---	---	---
	250+00 - 300+00	6,100	1,000	9,800	250	---	---	---
	300+00 - 350+00	10,000	700	9,800	670	2	30	640
	350+00 - 375+87	700	700	5,200	---	---	---	---
	SUBTOTALS	27,000	4,200	43,000	1,140	2	30	640
	ITEM TOTALS		74,200		1,140	2	30	640

PUBLIC LAND SURVEY MONUMENT VERIFY AND RESET

CATEGORY	STATION	680.0100 EACH
0010	343+81	1

SAWING ASPHALT

CATEGORY	STATION - STATION	LOCATION	690.0150* LF
0010	301+75 - 306+85	LT	510
	321+21 - 321+32	LT/RT	40
		TOTAL	550

*ADDITIONAL QUANTITIES LISTED ELSEWHERE

SAWING CONCRETE

CATEGORY	STATION - STATION	LOCATION	690.0250 LF
0010	319+96 - 320+13	LT	17

TRAFFIC CONTROL, DIGITAL SPEED REDUCTION SYSTEM (DSRS)

CATEGORY	STATION - STATION	LOCATION	SPV.0045.01 DAY
0030	149+77 - 375+87	RT	21

CONSTRUCTION STAKING SUMMARY

CATEGORY	STATION - STATION	LOCATION	650.5500 CONSTRUCTION STAKING CURB GUTTER AND CURB & GUTTER LF	650.6000 CONSTRUCTION STAKING PIPE CULVERTS EACH	650.8000 CONSTRUCTION STAKING RESURFACING REFERENCE LF	650.9000 CONSTRUCTION STAKING CURB RAMPS EACH	650.9920 CONSTRUCTION STAKING SLOPE STAKES LF
0010	149+77 - 200+00	LT/RT	---	2	4,635	---	174
	200+00 - 250+00	LT/RT	---	---	5,000	---	---
	250+00 - 300+00	LT/RT	---	2	5,000	---	1,585
	300+00 - 350+00	LT/RT	157	---	5,000	2	1,684
	350+00 - 375+87	LT/RT	---	---	2,587	---	---
	TOTALS		157	4	22,222	2	3,443

INSTALLING AND MAINTAINING BIRD DETERRENT SYSTEM

CATEGORY	STATION	LOCATION	999.2000.S.01 STATION 150+73 EACH	999.2000.S.02 STATION 261+62 EACH
0010	150+83	LT/RT	1	---
	261+62	LT/RT	---	1
		TOTALS	1	1

3

3

CLEARING & GRUBBING SUMMARY

CATEGORY	STATION - STATION	LT/RT	201.0105 CLEARING STA	201.0205 GRUBBING STA
0010	345+00 - 350+00	LT	5	5

B-17-0370 TRANSITION

CATEGORY	STATION	SIDE	305.0120 BASE AGGREGATE DENSE 1 1/4-INCH TON	465.0105 ASPHALTIC SURFACE TON	690.0150 SAWING ASPHALT LF
0010	346+95	LT/RT	326	140	68

3

FINISHING SUMMARY

CATEGORY	STATION - STATION	LOCATION	625.0100 TOPSOIL SY	628.1504 SILT FENCE LF	628.1520 SILT FENCE MAINTENANCE LF	628.2008 EROSION MAT URBAN CLASS I TYBE B SY	628.2027 EROSION MAT CLASS II TYPE C SY	628.2037 EROSION MAT CLASS III TYPE C SY	628.7504 TEMPORARY DITCH CHECKS LF	630.0130 SEEDING MIXTURE NO. 30 LB	630.0200 SEEDING TEMPORARY LB	**630.0500 SEED WATER MGAL	629.0210 FERTILIZER TYPE B CWT
0010	B-17-0370	LT/RT	3,850	600	1,200	3,760	80	80	20	170	100	86	2
	UNDISTRIBUTED		---	150	300	940	20	20	10	43	25	22	1
	TOTALS		3,850	750	1,500	4,700	100	100	30	213	125	108	3

**SEED WATER QUANTITY INCULDED FOR 4 WEEKS OF WATERING

CONSTRUCTION STAKING SLOPE STAKES

CATEGORY	STATION - STATION	LOCATION	650.9920 LF
0010	344+37 - 350+18	LT/RT	581

CONSTRUCTION STAKING STRUCTURE LAYOUT

CATEGORY	STRUCTURE	650.6501 EACH
0010	B-17-370	1

STATE OF WISCONSIN
DEPARTMENT OF TRANSPORTATION
TRANSPORTATION PROJECT PLAT TITLE SHEET
7120-00-74
DURAND - EAU CLAIRE
CTH O TO 1010TH STREET
STH 85
DUNN COUNTY

CONVENTIONAL SYMBOLS

SECTION LINE
QUARTER LINE
SIXTEENTH LINE
NEW REFERENCE LINE
NEW R/W LINE
EXISTING R/W OR HE LINE
PROPERTY LINE
LOT, TIE & OTHER MINOR LINES
SLOPE INTERCEPT
CORPORATE LIMITS
UNDERGROUND FACILITY (COMMUNICATIONS, ELECTRIC, ETC)
NEW R/W (FEE OR HE) (HATCHING VARIES BY OWNER)
TEMPORARY LIMITED EASEMENT AREA
EASEMENT AREA (PERMANENT LIMITED OR RESTRICTED DEVELOPMENT)
TRANSMISSION STRUCTURES
BUILDING
TO BE REMOVED
BRIDGE
CULVERT

SECTION CORNER SYMBOL
SECTION CORNER MONUMENT
GEODETIC SURVEY MONUMENT
SIXTEENTH CORNER MONUMENT
SIGN
OFF-PREMISE SIGN
R/W MONUMENT (TO BE SET)
NON-MONUMENTED R/W POINT
FOUND IRON PIN (3/4-INCH CAPPED REBAR UNLESS NOTED)

	COMPENSABLE	NON COMPENSABLE
ELECTRIC POLE		
TELEPHONE POLE		
PEDESTAL (LABEL TYPE) (TV, TEL, ELEC, ETC.)		

ACCESS RESTRICTED BY ACQUISITION
NO ACCESS (BY STATUTORY AUTHORITY)
ACCESS RESTRICTED (BY PREVIOUS PROJECT OR CONTROL)
NO ACCESS (NEW HIGHWAY)
PARCEL NUMBER 25
UTILITY NUMBER 40
PARALLEL OFFSETS

CONVENTIONAL ABBREVIATIONS

ACCESS RIGHTS	AR	POINT OF INTERSECTION	PI
ACRES	AC	PROPERTY LINE	PL
AHEAD	AH	RECORDED AS	(100')
ALUMINUM	ALUM	REEL / IMAGE	R/I
AND OTHERS	ET AL	REFERENCE LINE	R/L
BACK	BK	REMAINING	REM
BLOCK	BLK	RESTRICTIVE DEVELOPMENT EASEMENT	RDE
CENTERLINE	C/L	RIGHT	RT
CERTIFIED SURVEY MAP	CSM	RIGHT OF WAY	R/W
CONCRETE	CONC	SECTION	SEC
COUNTY	CO	SEPTIC VENT	SEPV
COUNTY TRUNK HIGHWAY	CTH	SQUARE FEET	SF
DISTANCE	DIST	STATE TRUNK HIGHWAY	STH
CORNER	COR	STATION	STA
DOCUMENT NUMBER	DOC	TELEPHONE PEDESTAL	TP
EASEMENT	EASE	TEMPORARY LIMITED EASEMENT	TLE
EXISTING	EX	TRANSPORTATION PROJECT PLAT	TPP
GAS VALVE	GV	UNITED STATES HIGHWAY	USH
GRID NORTH	GN	VOLUME	V
HIGHWAY EASEMENT	HE		
IDENTIFICATION	ID		
LAND CONTRACT	LC		
LEFT	LT		
MONUMENT	MON		
NATIONAL GEODETIC SURVEY	NGS		
NUMBER	NO		
OUTLOT	OL		
PAGE	P		
POINT OF TANGENCY	PT		
PERMANENT LIMITED EASEMENT	PLE		
POINT OF BEGINNING	POB		
POINT OF CURVATURE	PC		
POINT OF COMPOUND CURVE	PCC		

CURVE DATA

LONG CHORD	LCH
LONG CHORD BEARING	LCB
RADIUS	R
DEGREE OF CURVE	D
CENTRAL ANGLE	Δ/DELTA
LENGTH OF CURVE	L
TANGENT	T
DIRECTION AHEAD	DA
DIRECTION BACK	DB

CONVENTIONAL UTILITY SYMBOLS

W	WATER
G	GAS
T	TELEPHONE
OH	OVERHEAD TRANSMISSION LINES
E	ELECTRIC
TV	CABLE TELEVISION
FO	FIBER OPTIC
FM	FORCE MAIN
SAN	SANITARY SEWER
SS	STORM SEWER

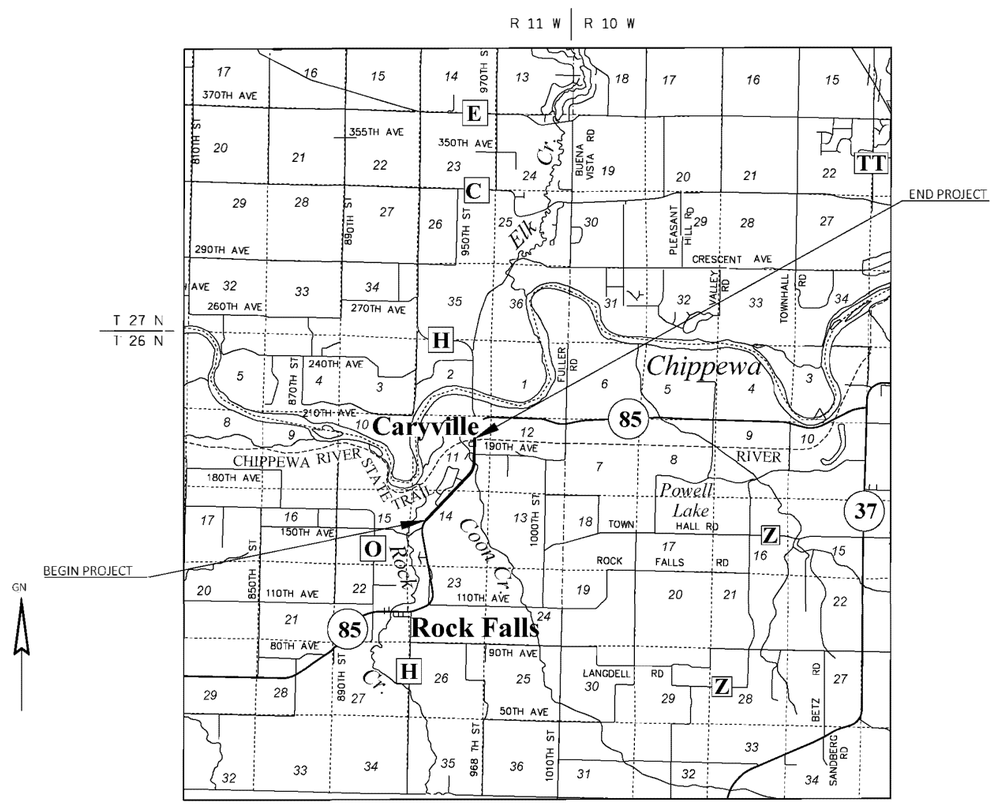

LAYOUT
SCALE 0 1 MI.

THE NOTES, CONVENTIONAL SIGNS, AND ABBREVIATIONS ARE ASSOCIATED WITH EACH TRANSPORTATION PROJECT PLAT FOR PROJECT 7120-00-24.

NOTES:

POSITIONS SHOWN ON THIS PLAT ARE WISCONSIN COORDINATE REFERENCE SYSTEM COORDINATES (WISCRS), DUNN COUNTY, NAD83(2011), IN U.S. SURVEY FEET. VALUES ARE GRID COORDINATES, GRID BEARINGS, AND GRID DISTANCES. GRID DISTANCES MAY BE USED AS GROUND DISTANCES.

ALL NEW RIGHT-OF-WAY MONUMENTS WILL BE TYPE 2 (TYPICALLY ¾" X 24" IRON REBARS), UNLESS OTHERWISE NOTED, AND WILL BE PLACED PRIOR TO THE COMPLETION OF THE PROJECT.

ALL RIGHT-OF-WAY LINES DEPICTED IN THE NON-ACQUISITION AREAS ARE INTENDED TO RE-ESTABLISH EXISTING RIGHT-OF-WAY LINES AS DETERMINED FROM PREVIOUS PROJECTS, OTHER RECORDED DOCUMENTS, CENTERLINE OF EXISTING PAVEMENTS AND/OR EXISTING OCCUPATIONAL LINES.

RIGHT-OF-WAY BOUNDARIES ARE DEFINED WITH COURSES OF THE PERIMETER OF THE HIGHWAY LANDS REFERENCED TO THE U.S. PUBLIC LAND SURVEY SYSTEM OR OTHER "SURVEYS" OF PUBLIC RECORD.

DIMENSIONING FOR THE NEW RIGHT-OF-WAY IS MEASURED ALONG AND PERPENDICULAR TO THE NEW REFERENCE LINES.

A TEMPORARY LIMITED EASEMENT (TLE) IS A RIGHT FOR CONSTRUCTION PURPOSES, AS DEFINED HEREIN, INCLUDING THE RIGHT TO OPERATE NECESSARY EQUIPMENT THEREON, THE RIGHT OF INGRESS AND EGRESS, AS LONG AS REQUIRED FOR SUCH PUBLIC PURPOSE, INCLUDING THE RIGHT TO PRESERVE, PROTECT, REMOVE, OR PLANT THEREON ANY VEGETATION THAT THE HIGHWAY AUTHORITIES MAY DEEM DESIRABLE. ALL TLE(S) ON THIS PLAT EXPIRE AT THE COMPLETION OF THE CONSTRUCTION PROJECT FOR WHICH THIS INSTRUMENT IS GIVEN.

A PERMANENT LIMITED EASEMENT (PLE) IS A RIGHT FOR CONSTRUCTION AND MAINTENANCE PURPOSES, AS DEFINED HEREIN, INCLUDING THE RIGHT TO OPERATE NECESSARY EQUIPMENT THEREON AND THE RIGHT OF INGRESS AND EGRESS, AS LONG AS REQUIRED FOR SUCH PUBLIC PURPOSE, INCLUDING THE RIGHT TO PRESERVE, PROTECT, REMOVE, OR PLANT THEREON ANY VEGETATION THAT THE HIGHWAY AUTHORITIES MAY DEEM DESIRABLE, BUT WITHOUT PREJUDICE TO THE OWNER'S RIGHTS TO MAKE OR CONSTRUCT IMPROVEMENTS ON SAID LANDS OR TO FLATTEN THE SLOPES, PROVIDING SAID ACTIVITIES WILL NOT IMPAIR OR OTHERWISE ADVERSELY AFFECT THE HIGHWAY FACILITIES.

AN EASEMENT FOR HIGHWAY PURPOSES (HE), AS LONG AS SO USED, INCLUDING THE RIGHT TO PRESERVE, PROTECT, REMOVE, OR PLANT THEREON ANY VEGETATION THAT THE HIGHWAY AUTHORITIES MAY DEEM DESIRABLE.

PROPERTY LINES SHOWN ON THIS PLAT FOR PROPERTIES BEING IMPACTED ARE DRAWN FROM DATA DERIVED FROM FILED/RECORDED MAPS AND DOCUMENTS OF PUBLIC RECORD. THIS PLAT MAY NOT BE A TRUE REPRESENTATION OF EXISTING PROPERTY LINES, EXCLUDING RIGHT-OF-WAY, AND SHOULD NOT BE USED AS A SUBSTITUTE FOR AN ACCURATE FIELD SURVEY.

FOR THE CURRENT ACCESS/DRIVEWAY INFORMATION, CONTACT THE PLANNING UNIT OF THE WISCONSIN DEPARTMENT OF TRANSPORTATION OFFICE IN EAU CLAIRE.

PARCEL AND UTILITY IDENTIFICATION NUMBERS MAY NOT POINT TO ALL AREAS OF ACQUISITION, AS NOTED ON THE TPP DETAIL PAGES.

INFORMATION FOR THE BASIS OF EXISTING HIGHWAY RIGHT-OF-WAY POINTS OF REFERENCE AND ACCESS CONTROL ARE LISTED ON THE TPP DETAIL PAGES.

PROJECT NUMBER 7120-00-24-4 01
SHEET 2 OF 2

674150

DUNN COUNTY, WI
REGISTER OF DEEDS
HEATHER M. KUHN

RECORDED ON
11/20/2024 11:48 AM

REC FEE: 25.00
PAGES: 2
The above recording information verifies that this document has been electronically recorded and returned to the submitter.

TRANSPORTATION PROJECT PLAT NO: 7120-00-24-4.01

THAT PART OF LOT 2, CSM 2640 RECORDED IN VOLUME 11 ON PAGE 180 AS DOCUMENT NUMBER 485642 AND PART OF LOT 1, CSM 4966 RECORDED IN VOLUME 25 ON PAGE 96 AS DOCUMENT NUMBER 667318 ALL BEING LOCATED IN THE SOUTHWEST 1/4 OF THE NORTHWEST 1/4, SECTION 14, TOWNSHIP 26 NORTH, RANGE 11 WEST, TOWN OF ROCK CREEK, DUNN COUNTY, WISCONSIN

RELOCATION ORDER STH 85 DURAND - EAU CLAIRE (CTH O TO 1010TH STREET) DUNN COUNTY

TO PROPERLY ESTABLISH, LAY OUT, WIDEN, ENLARGE, EXTEND, CONSTRUCT, RECONSTRUCT, IMPROVE, OR MAINTAIN A PORTION OF THE HIGHWAY DESIGNATED ABOVE, THE STATE OF WISCONSIN DEPARTMENT OF TRANSPORTATION DEEMS IT NECESSARY TO RELOCATE OR CHANGE SAID HIGHWAY AND ACQUIRE CERTAIN LANDS AND INTERESTS OR RIGHTS IN LANDS FOR THE ABOVE PROJECT.

TO EFFECT THIS CHANGE, PURSUANT TO AUTHORITY GRANTED UNDER SUBSECTIONS 84.02 (3), 84.09, AND 84.30, WISCONSIN STATUTES, THE DEPARTMENT OF TRANSPORTATION HEREBY ORDERS THAT:

1. THAT PORTION OF SAID HIGHWAY AS SHOWN ON THIS PLAT IS LAID OUT AND ESTABLISHED TO THE LINES AND WIDTHS AS SO SHOWN FOR THE ABOVE PROJECT.
2. THE LANDS OR INTERESTS OR RIGHTS IN LANDS AS SHOWN ON THIS PLAT ARE REQUIRED BY THE DEPARTMENT FOR THE ABOVE PROJECT AND SHALL BE ACQUIRED IN THE NAME OF THE STATE OF WISCONSIN, PURSUANT TO THE PROVISIONS OF SUBSECTION 84.09 (1) OR (2), WISCONSIN STATUTES.

SCHEDULE OF LANDS & INTERESTS REQUIRED

OWNER'S NAMES ARE SHOWN FOR REFERENCE PURPOSES ONLY AND ARE SUBJECT TO CHANGE PRIOR TO THE TRANSFER OF LAND INTERESTS TO THE DEPARTMENT

PARCEL NUMBER	OWNERS	INTERESTS REQUIRED	FEE R/W S.F REQUIRED NEW	EXISTING	TOTAL	TLE S.F.
1	CLAYTON T. RZEPIEJEWSKI	FEE	1754	---	1754	---
2	KEVIN W. TRAUN & PAULINE L. GRAHAM-TRAUN	FEE	1023	---	1023	---

UTILITY INTERESTS REQUIRED

UTILITY NUMBER	UTILITY OWNER(S)	INTERESTS REQUIRED
100	DUNN ENERGY COOP.	RELEASE OF RIGHTS
101	WEST WISCONSIN TELCOM COOPERATIVE INC.	RELEASE OF RIGHTS

STRAND ASSOCIATES, INC. ®
910 WEST WINGRA DRIVE, MADISON, WI 53715
(608) 251-4843

I, HEATHER S. BARTELT PROFESSIONAL LAND SURVEYOR, HEREBY CERTIFY THAT IN FULL COMPLIANCE WITH THE PROVISIONS OF SECTION 84.095 OF THE WISCONSIN STATUTES AND UNDER THE DIRECTION OF THE DEPARTMENT OF TRANSPORTATION I HAVE SURVEYED AND MAPPED THIS TRANSPORTATION PROJECT PLAT AND SUCH PLAT CORRECTLY REPRESENTS ALL EXTERIOR BOUNDARIES OF THE SURVEYED LAND.

WISCONSIN HEATHER S. BARTELT S-2797 MADISON WI LAND SURVEYOR

SIGNATURE: Heather Bartelt DATE: 11/19/24
PRINT NAME: HEATHER S. BARTELT
REGISTRATION NUMBER: S-2797

THIS PLAT AND RELOCATION ORDER ARE APPROVED FOR THE WISCONSIN DEPARTMENT OF TRANPORTATION

SIGNATURE: Aaron Gustafson DATE: 11/20/24
PRINT NAME: AARON GUSTAFSON

RESERVED FOR REGISTER OF DEEDS
PROJECT NUMBER 7120-00-24-4.01
SHEET 1 OF 2

4

POSITIONS SHOWN ON THIS PLAT ARE WISCONSIN COORDINATE REFERENCE SYSTEM COORDINATES (WISCRS), DUNN COUNTY, NAD83(2011), IN U.S. SURVEY FEET. VALUES ARE GRID COORDINATES, GRID BEARINGS, AND GRID DISTANCES. GRID DISTANCES MAY BE USED AS GROUND DISTANCES.

ALL NEW RIGHT-OF-WAY MONUMENTS WIL BE TYPE 2 (TYPICALLY 3/4" X 24" IRON REBARS) UNLESS OTHERWISE NOTED, AND WILL BE PLACED PRIOR TO THE COMPLETION OF THE PROJECT.

FOR ADDITIONAL INFORMATION REFER TO THE TITLE SHEET, RECORDED IN THE OFFICE OF REGISTER OF DEEDS IN DUNN COUNTY AS SHEET 2 OF 2 OF THIS DOCUMENT.

FOR CURRENT ACCESS/DRIVEWAY INFORMATION, CONTACT THE PLANNING UNIT OF THE THE WISCONSIN DEPARTMENT OF TRANSPORTATION IN EAU CLAIRE.

FOUND MONUMENT INFORMATION SHOWN REPRESENTS TYPE AND LOCATION OF EXISTING MONUMENTS WITHOUT OPINION AS TO THEIR VALIDITY AND USE AS A PROPERTY CORNER.

EXISTING HIGHWAY RIGHT-OF-WAY ON STH 85 BASED ON PREVIOUS PROJECTS: DJ 6307

EXISTING ACCESS CONTROL ON STH 85 BASED ON CSM 2640 & CSM 4966.

(100) DUNN ENERGY COOP.
BLANKET EASEMENT
NW 1/4 SEC. 14
DOC. 318143
PARCELS 1 & 2

(100) DUNN ENERGY COOP.
BLANKET EASEMENT
NE-NW SEC. 14
NW-NW SEC. 14
SW-NW SEC. 14
SE-NW SEC. 14
NW-NE SEC. 14
DOC. 196112
PARCELS 1 & 2

(101) WEST WISCONSIN TELCOM COOPERATIVE INC.
DOC. 54616
PARCEL 1

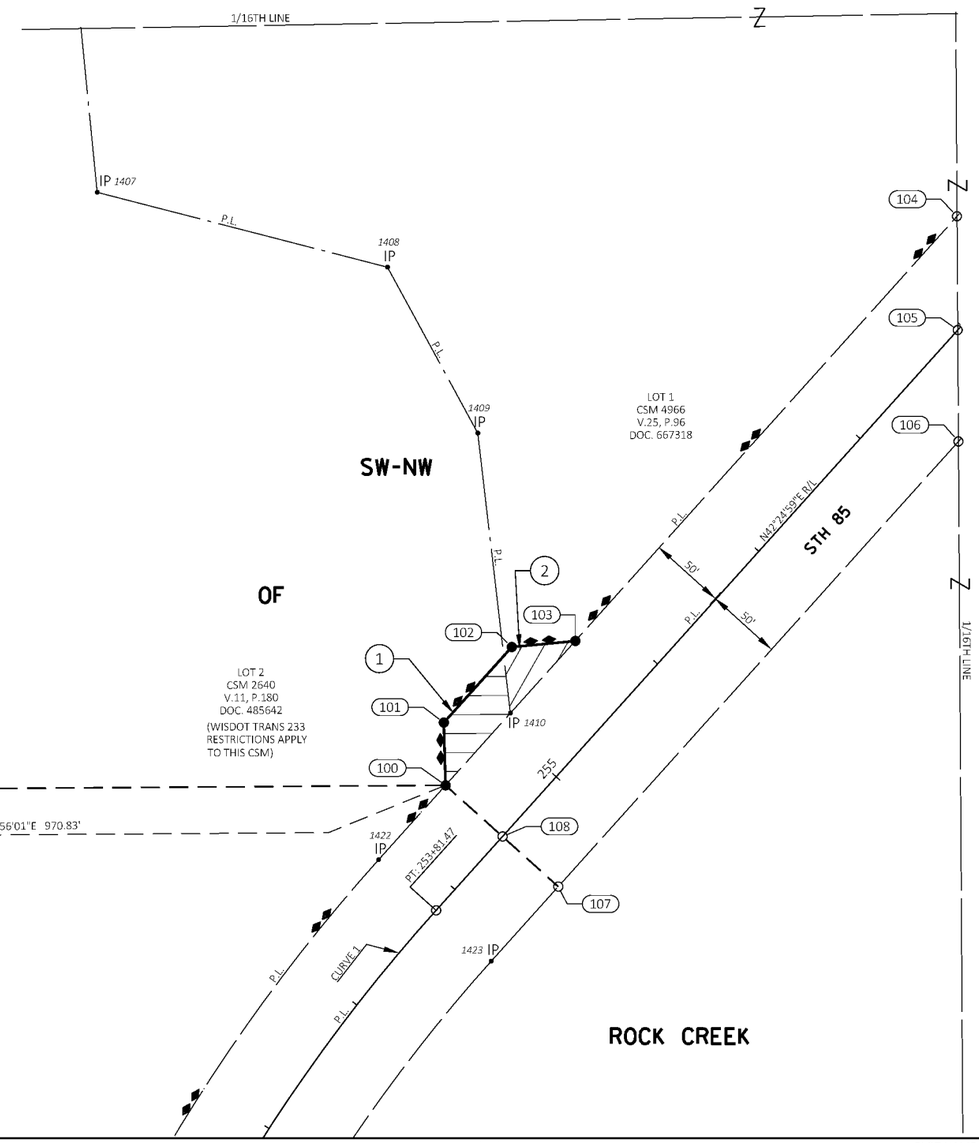

CURVE 1
PI STA = 248+83.65
Y = 119188.184
X = 223555.320
DELTA = 54°06'22" RT
D = 4°59'27"
T = 586.27'
L = 1084.09'
R = 1148.00'
PC STA = 242+97.38
Y = 118614.070
X = 223674.106
PT STA = 253+81.47
Y = 119621.008
X = 223950.769
DB = N11°41'23"W
DA = N42°24'59"E

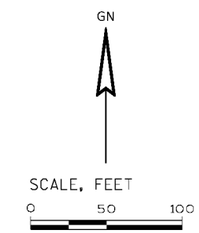

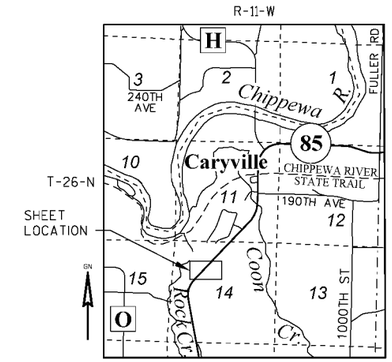

COURSE TABLE		
COURSE	BEARING	DISTANCE
100 - 101	N01° 06' 00"W	41.37'
101 - 102	N42° 24' 59"E	67.00'
102 - 103	N84° 59' 57"E	42.10'
103 - 104	N42° 24' 58"E	376.77'
104 - 105	S00° 06' 28"W	75.05'
105 - 106	S00° 06' 28"W	73.51'
106 - 107	S42° 24' 58"W	394.90'
107 - 108	N47° 35' 02"W	49.49'
108 - 100	N47° 35' 02"W	50.51'

STATION & OFFSET TABLE		
POINT	STATION	OFFSET
100	254+47.00	-50.51'
101	254+77.00	-79.00'
102	255+44.00	-79.00'
103	255+75.00	-50.52'
104	259+51.76	-50.52'
105	258+96.26	0.00'
106	258+41.90	49.48'
107	254+47.00	49.49'
108	254+47.00	0.00'

FOUND MONUMENT TABLE			
POINT	Y COORDS	X COORDS	IP TYPE
1407	120096.607	223731.065	1" IP
1408	120045.623	223922.187	1" IP
1409	119935.639	223980.851	1" IP
1410	119750.737	224000.855	1" IP
1422	119654.567	223913.050	CAPPED RBR.
1423	119587.160	223986.830	CAPPED RBR.

674359

DUNN COUNTY, WI
REGISTER OF DEEDS
HEATHER M. KUHN

RECORDED ON
12/03/2024 03:36 PM

REC FEE: 25.00
PAGES: 1
The above recording information verifies that this document has been electronically recorded and returned to the submitter.

TRANSPORTATION PROJECT PLAT NO: 7120-00-24-4.02

THAT PART OF THE NORTHEAST 1/4 OF THE SOUTHEAST 1/4, SECTION 11, TOWNSHIP 26 NORTH, RANGE 11 WEST, TOWN OF ROCK CREEK, DUNN COUNTY, WISCONSIN

RELOCATION ORDER STH 85 DURAND - EAU CLAIRE (CTH O TO 1010TH STREET) DUNN COUNTY

TO PROPERLY ESTABLISH, LAY OUT, WIDEN, ENLARGE, EXTEND, CONSTRUCT, RECONSTRUCT, IMPROVE, OR MAINTAIN A PORTION OF THE HIGHWAY DESIGNATED ABOVE, THE STATE OF WISCONSIN DEPARTMENT OF TRANSPORTATION DEEMS IT NECESSARY TO RELOCATE OR CHANGE SAID HIGHWAY AND ACQUIRE CERTAIN LANDS AND INTERESTS OR RIGHTS IN LANDS FOR THE ABOVE PROJECT.

TO EFFECT THIS CHANGE, PURSUANT TO AUTHORITY GRANTED UNDER SUBSECTIONS 84.02 (3), 84.09, AND 84.30, WISCONSIN STATUTES, THE DEPARTMENT OF TRANSPORTATION HEREBY ORDERS THAT:

1. THAT PORTION OF SAID HIGHWAY AS SHOWN ON THIS PLAT IS LAID OUT AND ESTABLISHED TO THE LINES AND WIDTHS AS SO SHOWN FOR THE ABOVE PROJECT.
2. THE LANDS OR INTERESTS OR RIGHTS IN LANDS AS SHOWN ON THIS PLAT ARE REQUIRED BY THE DEPARTMENT FOR THE ABOVE PROJECT AND SHALL BE ACQUIRED IN THE NAME OF THE STATE OF WISCONSIN, PURSUANT TO THE PROVISIONS OF SUBSECTION 84.09 (1) OR (2), WISCONSIN STATUTES.

SCHEDULE OF LANDS & INTERESTS REQUIRED

OWNER'S NAMES ARE SHOWN FOR REFERENCE PURPOSES ONLY AND ARE SUBJECT TO CHANGE PRIOR TO THE TRANSFER OF LAND INTERESTS TO THE DEPARTMENT

PARCEL NUMBER	OWNERS	INTERESTS REQUIRED	FEE R/W S.F REQUIRED NEW	EXISTING	TOTAL	TLE S.F.
3	CHRISTOPHER D. HARSH	FEE,TLE	5134	14871	20005	2149

UTILITY INTERESTS REQUIRED

THE PURPOSE OF ALL TLE'S ARE FOR SLOPE GRADING UNLESS OTHERWISE NOTED.

UTILITY NUMBER	UTILITY OWNER(S)	INTERESTS REQUIRED
100	DUNN ENERGY COOP.	RELEASE OF RIGHTS
101	WEST WISCONSIN TELCOM COOPERATIVE INC.	RELEASE OF RIGHTS

(100) DUNN ENERGY COOP.
BLANKET EASEMENT
NE-SE SEC. 11
DOC. 196113
PARCEL 3

(101) WEST WISCONSIN TELCOM COOPERATIVE INC.
BLANKET EASEMENT
NORTH 1/2 OF THE NE-SE
DOC. 378642
PARCEL 3

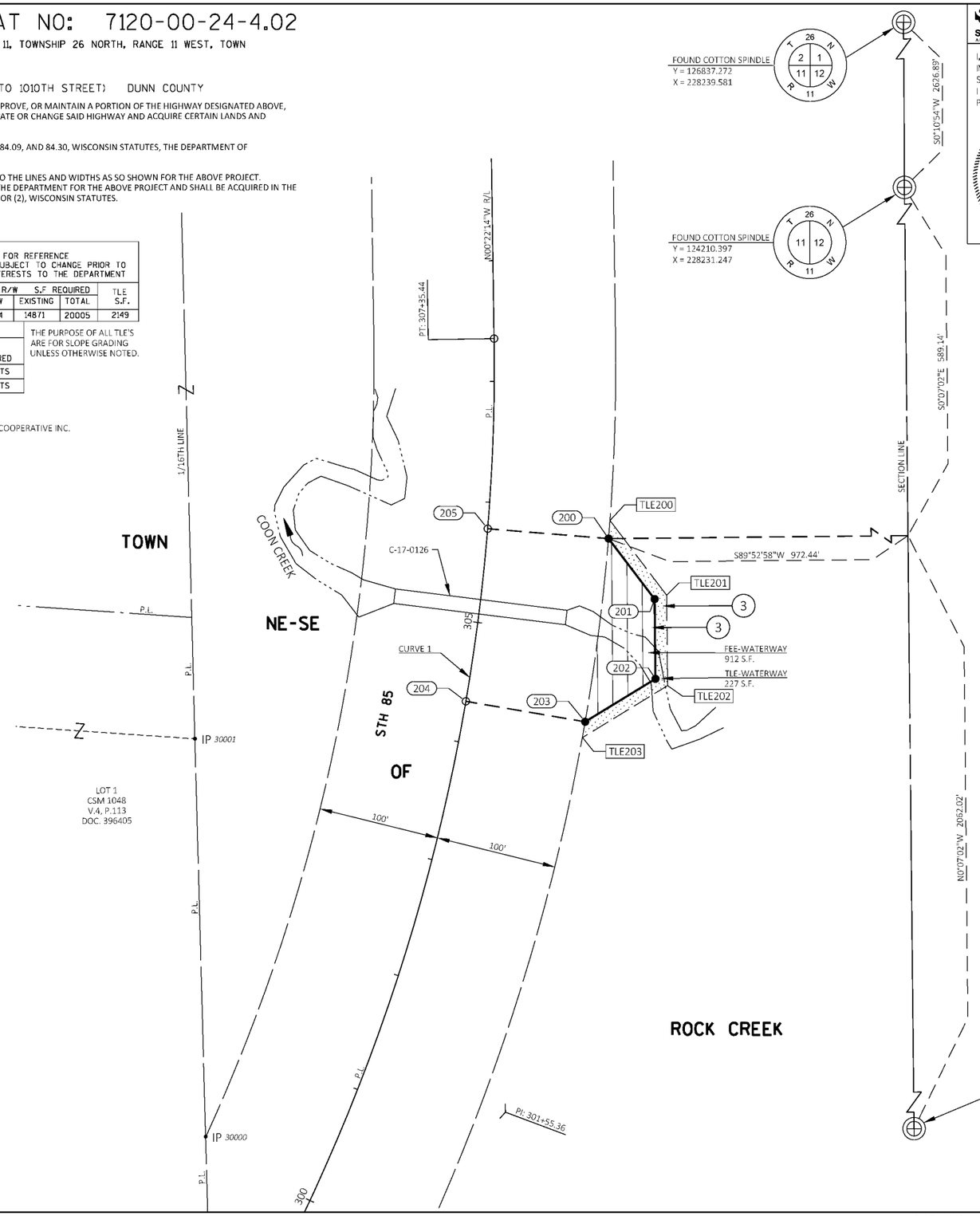

FOUND MONUMENT TABLE			
POINT	Y COORDS	X COORDS	IP TYPE
30000	123127.055	226922.616	3/4" RBR.
30001	123456.433	226916.411	1" IP

COURSE TABLE		
COURSE	BEARING	DISTANCE
200 - 201	S36° 50' 18"E	62.90'
201 - 202	S00° 07' 23"E	66.03'
202 - 203	S59° 04' 49"W	68.13'
203 - 204	N79° 48' 03"W	100.11'
204 - 205	SEE CURVE 1 DATA	
205 - 200	S84° 51' 00"E	100.30'

CURVE 1
R=1634.00'
L=143.99'
LCB=N7°40'28"E
LCH=143.95'

STATION & OFFSET TABLE		
POINT	STATION	OFFSET
200	305+78.00	100.30'
201	305+35.00	143.00'
202	304+75.00	152.00'
203	304+34.00	100.11'
204	304+34.00	0.00'
205	305+78.00	0.00'

STATION & OFFSET TABLE		
POINT	STATION	OFFSET
TLE200	305+92.17	100.32'
TLE201	305+38.82	152.58'
TLE202	304+71.30	162.76'
TLE203	304+21.63	100.10'

STRAND ASSOCIATES, INC. ®
910 WEST WINGRA DRIVE, MADISON, WI 53715
(608) 251-4843

I, HEATHER S. BARTELT PROFESSIONAL LAND SURVEYOR, HEREBY CERTIFY THAT IN FULL COMPLIANCE WITH THE PROVISIONS OF SECTION 84.095 OF THE WISCONSIN STATUTES AND UNDER THE DIRECTION OF THE DEPARTMENT OF TRANSPORTATION I HAVE SURVEYED AND MAPPED THIS TRANSPORTATION PROJECT PLAT AND SUCH PLAT CORRECTLY REPRESENTS ALL EXTERIOR BOUNDARIES OF THE SURVEYED LAND.

WISCONSIN HEATHER S. BARTELT S-2797 MADISON WI LAND SURVEYOR

SIGNATURE: Heather Bartelt DATE: 12/3/24
PRINT NAME: HEATHER S. BARTELT
REGISTRATION NUMBER: S-2797

THIS PLAT AND RELOCATION ORDER ARE APPROVED FOR THE WISCONSIN DEPARTMENT OF TRANPORTATION

SIGNATURE: Aaron Gustafson DATE: 12/3/24
PRINT NAME: AARON GUSTAFSON

RESERVED FOR REGISTER OF DEEDS
PROJECT NUMBER 7120-00-24-4.02

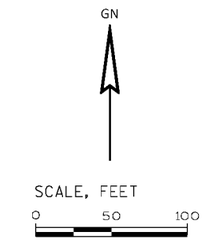

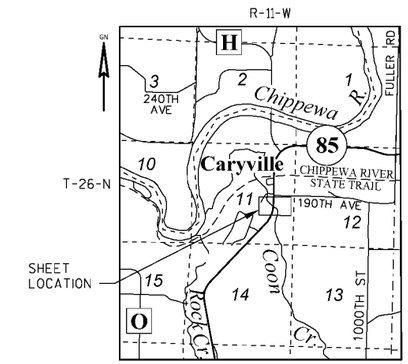

PI STA = 301+55.36
Y = 123145.393
X = 227170.816
DELTA = 42°47'13" LT
D = 3°30'23"
T = 640.14'
L = 1220.23'
R = 1634.00'
PC STA = 295+15.21
Y = 122672.799
X = 226739.031
PT STA = 307+35.44
Y = 123785.524
X = 227166.674
DB = N42°24'59"E

ALIGNMENT SUB-CURVE
PC 295+15.21 TO STA. 304+34.00
R=1634.00'
L=918.79'
LCB=N26°18'28"E
LCH=906.74'

ALIGNMENT SUB-CURVE
STA. 305+78.00 TO PT. 307+35.44
R=1634.00'
L=157.44'
LCB=N2°23'23"E
LCH=157.38'

POSITIONS SHOWN ON THIS PLAT ARE WISCONSIN COORDINATE REFERENCE SYSTEM COORDINATES (WISCRS), DUNN COUNTY, NAD83(2011), IN U.S. SURVEY FEET. VALUES ARE GRID COORDINATES, GRID BEARINGS, AND GRID DISTANCES. GRID DISTANCES MAY BE USED AS GROUND DISTANCES.

ALL NEW RIGHT-OF-WAY MONUMENTS WIL BE TYPE 2 (TYPICALLY 3/4" X 24" IRON REBARS) UNLESS OTHERWISE NOTED, AND WILL BE PLACED PRIOR TO THE COMPLETION OF THE PROJECT.

FOR ADDITIONAL INFORMATION REFER TO THE TITLE SHEET, RECORDED IN THE OFFICE OF REGISTER OF DEEDS IN DUNN COUNTY AS SHEET 2 OF 2 OF DOCUMENT 674150.

FOR CURRENT ACCESS/DRIVEWAY INFORMATION, CONTACT THE PLANNING UNIT OF THE THE WISCONSIN DEPARTMENT OF TRANSPORTATION IN EAU CLAIRE.

FOUND MONUMENT INFORMATION SHOWN REPRESENTS TYPE AND LOCATION OF EXISTING MONUMENTS WITHOUT OPINION AS TO THEIR VALIDITY AND USE AS A PROPERTY CORNER.

EXISTING HIGHWAY RIGHT-OF-WAY ON STH 85 BASED ON PREVIOUS PROJECTS: DJ 6307

674360

DUNN COUNTY, WI
REGISTER OF DEEDS
HEATHER M. KUHN

RECORDED ON
12/03/2024 03:40 PM

REC FEE: 25.00
PAGES: 1
The above recording information verifies that this document has been electronically recorded and returned to the submitter.

TRANSPORTATION PROJECT PLAT NO: 7120-00-24-4.03

THAT PART OF 194TH AVENUE (PRESUMED TO BE VACATED) BEING LOCATED IN AND INCLUDING OTHER LANDS IN THE SOUTHEAST 1/4 OF THE NORTHEAST 1/4, SECTION 11, TOWNSHIP 26 NORTH, RANGE 11 WEST, TOWN OF ROCK CREEK, DUNN COUNTY, WISCONSIN

RELOCATION ORDER STH 85 DURAND - EAU CLAIRE (CTH O TO 1010TH STREET) DUNN COUNTY

TO PROPERLY ESTABLISH, LAY OUT, WIDEN, ENLARGE, EXTEND, CONSTRUCT, RECONSTRUCT, IMPROVE, OR MAINTAIN A PORTION OF THE HIGHWAY DESIGNATED ABOVE, THE STATE OF WISCONSIN DEPARTMENT OF TRANSPORTATION DEEMS IT NECESSARY TO RELOCATE OR CHANGE SAID HIGHWAY AND ACQUIRE CERTAIN LANDS AND INTERESTS OR RIGHTS IN LANDS FOR THE ABOVE PROJECT.

TO EFFECT THIS CHANGE, PURSUANT TO AUTHORITY GRANTED UNDER SUBSECTIONS 84.02 (3), 84.09, AND 84.30, WISCONSIN STATUTES, THE DEPARTMENT OF TRANSPORTATION HEREBY ORDERS THAT:

1. THAT PORTION OF SAID HIGHWAY AS SHOWN ON THIS PLAT IS LAID OUT AND ESTABLISHED TO THE LINES AND WIDTHS AS SO SHOWN FOR THE ABOVE PROJECT.
2. THE LANDS OR INTERESTS OR RIGHTS IN LANDS AS SHOWN ON THIS PLAT ARE REQUIRED BY THE DEPARTMENT FOR THE ABOVE PROJECT AND SHALL BE ACQUIRED IN THE NAME OF THE STATE OF WISCONSIN, PURSUANT TO THE PROVISIONS OF SUBSECTION 84.09 (1) OR (2), WISCONSIN STATUTES.

STRAND ASSOCIATES, INC. ®
910 WEST WINGRA DRIVE, MADISON, WI 53715
(608) 251-4843

I, HEATHER S. BARTELT PROFESSIONAL LAND SURVEYOR, HEREBY CERTIFY THAT IN FULL COMPLIANCE WITH THE PROVISIONS OF SECTION 84.095 OF THE WISCONSIN STATUTES AND UNDER THE DIRECTION OF THE DEPARTMENT OF TRANSPORTATION I HAVE SURVEYED AND MAPPED THIS TRANSPORTATION PROJECT PLAT AND SUCH PLAT CORRECTLY REPRESENTS ALL EXTERIOR BOUNDARIES OF THE SURVEYED LAND.

WISCONSIN HEATHER S. BARTELT S-2797 MADISON WI LAND SURVEYOR

SIGNATURE: Heather Bartelt DATE: 12/3/24
PRINT NAME: HEATHER S. BARTELT
REGISTRATION NUMBER: S-2797

THIS PLAT AND RELOCATION ORDER ARE APPROVED FOR THE WISCONSIN DEPARTMENT OF TRANPORTATION

SIGNATURE: Aaron Gustafson DATE: 12/3/24
PRINT NAME: AARON GUSTAFSON

RESERVED FOR REGISTER OF DEEDS
PROJECT NUMBER 7120-00-24-4.03

4

SCHEDULE OF LANDS & INTERESTS REQUIRED

OWNER'S NAMES ARE SHOWN FOR REFERENCE PURPOSES ONLY AND ARE SUBJECT TO CHANGE PRIOR TO THE TRANSFER OF LAND INTERESTS TO THE DEPARTMENT

PARCEL NUMBER	OWNERS	INTERESTS REQUIRED	FEE R/W S.F REQUIRED NEW	EXISTING	TOTAL	TLE S.F.
4	WISCONSIN DEPARTMENT OF NATURAL RESOURCES	TLE	---	---	---	8577
5	UNKNOWN OWNER	TLE	---	---	---	296

UTILITY INTERESTS REQUIRED

THE PURPOSE OF ALL TLE'S ARE FOR SLOPE GRADING UNLESS OTHERWISE NOTED.

UTILITY NUMBER	UTILITY OWNER(S)	INTERESTS REQUIRED
100	DUNN ENERGY COOP.	RELEASE OF RIGHTS

(100) DUNN ENERGY COOP.
BLANKET EASEMENT
SE-NE (UNPLATTED PORTION) SEC. 11
DOC. 196113
PARCEL 4

FOUND MONUMENT TABLE			
POINT	Y COORDS	X COORDS	IP TYPE
1413	124899.711	227127.140	1.5" IP
1414	124793.157	227126.807	1.5" IP
30014	125073.740	227201.207	3/4" RBR.
30016	124768.643	227199.902	3/4" RBR.

COURSE TABLE		
COURSE	BEARING	DISTANCE
300 - 301	N89° 38' 11"E	33.73'
301 - 302	S00° 21' 49"E	336.89'
302 - 303	S89° 38' 11"W	33.69'
303 - 304	S89° 38' 11"W	32.31'
304 - 305	N00° 21' 49"W	336.89'
305 - 300	N89° 38' 11"E	32.27'

CURVE 1
R=2764.79'
L=99.04'
Δ=2°03'09"
LCB=S87°55'34"W
LCH=99.04'

STATION & OFFSET TABLE		
POINT	STATION	OFFSET
300	323+23.41	0.00'
301	323+23.41	33.73'
302	319+86.51	33.69'
303	319+86.52	0.00'
304	319+86.52	-32.31'
305	323+23.42	-32.27'

STATION & OFFSET TABLE		
POINT	STATION	OFFSET
TLE300	321+51.79	33.71'
TLE301	321+51.79	50.71'
TLE302	321+13.79	50.71'
TLE303	319+86.52	-40.31'
TLE304	320+23.52	-40.30'
TLE305	320+20.68	-131.30'
TLE306	320+72.36	-133.76'
TLE307	320+95.23	-58.30'
TLE308	321+52.65	-58.29'
TLE309	321+52.65	-32.29'
TLE310	321+13.79	-33.71'

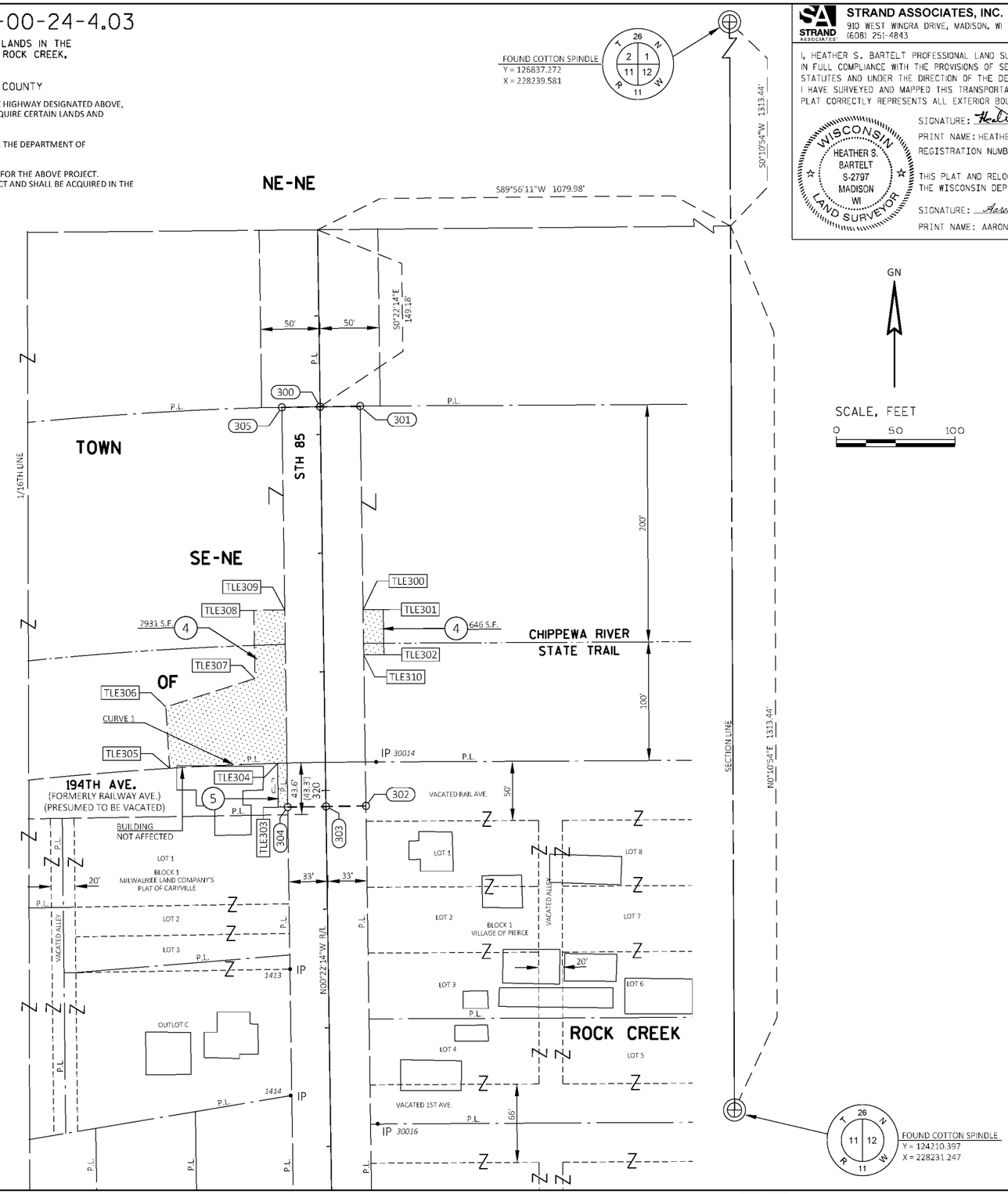

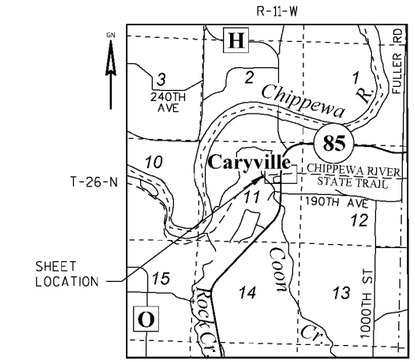

POSITIONS SHOWN ON THIS PLAT ARE WISCONSIN COORDINATE REFERENCE SYSTEM COORDINATES (WISCRS), DUNN COUNTY, NAD83(2011), IN U.S. SURVEY FEET. VALUES ARE GRID COORDINATES, GRID BEARINGS, AND GRID DISTANCES. GRID DISTANCES MAY BE USED AS GROUND DISTANCES.

ALL NEW RIGHT-OF-WAY MONUMENTS WIL BE TYPE 2 (TYPICALLY 3/4" X 24" IRON REBARS) UNLESS OTHERWISE NOTED, AND WILL BE PLACED PRIOR TO THE COMPLETION OF THE PROJECT.

FOR ADDITIONAL INFORMATION REFER TO THE TITLE SHEET, RECORDED IN THE OFFICE OF REGISTER OF DEEDS IN DUNN COUNTY AS SHEET 2 OF 2 OF DOCUMENT 674150.

FOR CURRENT ACCESS/DRIVEWAY INFORMATION, CONTACT THE PLANNING UNIT OF THE THE WISCONSIN DEPARTMENT OF TRANSPORTATION IN EAU CLAIRE.

FOUND MONUMENT INFORMATION SHOWN REPRESENTS TYPE AND LOCATION OF EXISTING MONUMENTS WITHOUT OPINION AS TO THEIR VALIDITY AND USE AS A PROPERTY CORNER.

EXISTING HIGHWAY RIGHT-OF-WAY ON STH 85 BASED ON PREVIOUS PROJECTS: DJ 6307, PLAT OF CARYVILLE, AND VILLAGE OF PIERCE.

EXISTING RIGHT-OF-WAY ON CHIPPEWA RIVER STATE TRAIL BASED ON PREVIOUS PROJECT: DJ 6307, PLAT OF CARYVILLE, VILLAGE OF PIERCE, AND C. M. ST. P. & P. RAILROAD MAP V.W.10 PAGE S-9.

674202

DUNN COUNTY, WI
REGISTER OF DEEDS
HEATHER M. KUHN

RECORDED ON
11/22/2024 01:26 PM

REC FEE: 25.00
PAGES: 2
The above recording information verifies that this document has been electronically recorded and returned to the submitter.

TRANSPORTATION PROJECT PLAT NO: 7120-00-26-4.01

THAT PART OF LOT 1, CSM 3816 RECORDED IN VOLUME 18 ON PAGE 96 AS DOCUMENT NUMBER 572157 BEING LOCATED IN AND INCLUDING OTHER LANDS IN GOVERNMENT LOT 10, SECTION 1, AND THAT PART OF THE NORTHWEST 1/4 OF THE NORTHWEST 1/4, SECTION 12, ALL IN TOWNSHIP 26 NORTH, RANGE 11 WEST, TOWN OF ROCK CREEK, DUNN COUNTY, WISCONSIN

RELOCATION ORDER STH 85 DURAND - EAU CLAIRE (BR CHIPPEWA RIVER BRIDGE B-17-0370) DUNN COUNTY

TO PROPERLY ESTABLISH, LAY OUT, WIDEN, ENLARGE, EXTEND, CONSTRUCT, RECONSTRUCT, IMPROVE, OR MAINTAIN A PORTION OF THE HIGHWAY DESIGNATED ABOVE, THE STATE OF WISCONSIN DEPARTMENT OF TRANSPORTATION DEEMS IT NECESSARY TO RELOCATE OR CHANGE SAID HIGHWAY AND ACQUIRE CERTAIN LANDS AND INTERESTS OR RIGHTS IN LANDS FOR THE ABOVE PROJECT.

TO EFFECT THIS CHANGE, PURSUANT TO AUTHORITY GRANTED UNDER SUBSECTIONS 84.02 (3), 84.09, AND 84.30, WISCONSIN STATUTES, THE DEPARTMENT OF TRANSPORTATION HEREBY ORDERS THAT:

1. THAT PORTION OF SAID HIGHWAY AS SHOWN ON THIS PLAT IS LAID OUT AND ESTABLISHED TO THE LINES AND WIDTHS AS SO SHOWN FOR THE ABOVE PROJECT.
2. THE LANDS OR INTERESTS OR RIGHTS IN LANDS AS SHOWN ON THIS PLAT ARE REQUIRED BY THE DEPARTMENT FOR THE ABOVE PROJECT AND SHALL BE ACQUIRED IN THE NAME OF THE STATE OF WISCONSIN, PURSUANT TO THE PROVISIONS OF SUBSECTION 84.09 (1) OR (2), WISCONSIN STATUTES.

SCHEDULE OF LANDS & INTERESTS REQUIRED

OWNER'S NAMES ARE SHOWN FOR REFERENCE PURPOSES ONLY AND ARE SUBJECT TO CHANGE PRIOR TO THE TRANSFER OF LAND INTERESTS TO THE DEPARTMENT

PARCEL NUMBER	OWNERS	INTERESTS REQUIRED	FEE R/W	S.F REQUIRED		TLE S.F.
			NEW	EXISTING	TOTAL	
1	PAUL ALLAN HAYDEN REVOCABLE LIVING TRUST	FEE	4436	---	4436	---
2	DONALD D. JAQUISH JR. REVOCABLE GRANTOR TRUST	FEE,TLE	127	---	127	626
3	BRENDSEL REVOCABLE TRUST	FEE	13952	---	13952	---

UTILITY INTERESTS REQUIRED

UTILITY NUMBER	UTILITY OWNER(S)	INTERESTS REQUIRED
100	DUNN ENERGY COOP	RELEASE OF RIGHTS

THE PURPOSE OF ALL TLE'S ARE FOR SLOPE GRADING UNLESS OTHERWISE NOTED.

(100) DUNN ENERGY COOP
BLANKET EASEMENT
NW-NW SEC. 12
DOC. 388094
PARCEL 3

(100) DUNN ENERGY COOP
BLANKET EASEMENT
NW 1/4 SEC. 12 NORTH OF R/R
DOC. 196120
PARCEL 3

STRAND ASSOCIATES, INC. ®
910 WEST WINGRA DRIVE, MADISON, WI 53715
(608) 251-4843

I, HEATHER S. BARTELT PROFESSIONAL LAND SURVEYOR, HEREBY CERTIFY THAT IN FULL COMPLIANCE WITH THE PROVISIONS OF SECTION 84.095 OF THE WISCONSIN STATUTES AND UNDER THE DIRECTION OF THE DEPARTMENT OF TRANSPORTATION I HAVE SURVEYED AND MAPPED THIS TRANSPORTATION PROJECT PLAT AND SUCH PLAT CORRECTLY REPRESENTS ALL EXTERIOR BOUNDARIES OF THE SURVEYED LAND.

WISCONSIN HEATHER S. BARTELT S-2797 MADISON WI LAND SURVEYOR

SIGNATURE: Heather Bartelt DATE: 11/21/24
PRINT NAME: HEATHER S. BARTELT
REGISTRATION NUMBER: S-2797

THIS PLAT AND RELOCATION ORDER ARE APPROVED FOR THE WISCONSIN DEPARTMENT OF TRANPORTATION

SIGNATURE: Aaron Gustafson DATE: 11/21/24
PRINT NAME: AARON GUSTAFSON

RESERVED FOR REGISTER OF DEEDS
PROJECT NUMBER 7120-00-26-4.01
SHEET 1 OF 2

4

COURSE TABLE		
COURSE	BEARING	DISTANCE
100 - 101	N00° 21' 28"E	0.59'
101 - 102	N00° 21' 28"E	50.23'
102 - 103	SEE CURVE 1 DATA	
103 - 104	S89° 12' 27"E	120.21'
104 - 105	N57° 46' 20"E	82.96'
105 - 106	S89° 13' 30"E	42.00'
106 - 107	S46° 03' 39"E	66.13'
107 - 108	S89° 12' 27"E	156.77'
108 - 109	S00° 46' 30"W	49.72'
109 - 110	S00° 46' 30"W	5.01'
110 - 111	S00° 46' 30"W	45.27'
111 - 112	S75° 49' 24"W	134.55'
112 - 113	S36° 19' 00"W	60.22'
113 - 114	N87° 20' 49"W	61.03'
114 - 115	N46° 18' 50"W	96.94'
115 - 116	N82° 45' 30"W	140.72'
116 - 117	SEE CURVE 2 DATA	
117 - 100	N00° 10' 54"E	49.35'

STATION & OFFSET TABLE		
POINT	STATION	OFFSET
100	343+80.82	0.59'
101	343+80.85	0.00'
102	343+83.91	-50.13'
103	344+58.38	-49.85'
104	345+78.42	-49.81'
105	346+48.00	-95.00'
106	346+90.00	-95.00'
107	347+38.23	-49.76'
108	348+95.00	-49.72'
109	348+95.00	0.00'
110	348+95.00	5.01'
111	348+95.00	50.28'
112	347+65.00	85.00'
113	347+30.00	134.00'
114	346+69.00	132.00'
115	345+98.00	66.00'
116	344+58.00	50.14'
117	343+77.70	49.85'

STATION & OFFSET TABLE		
POINT	STATION	OFFSET
TLE100	347+29.47	-57.98'
TLE101	348+10.00	-57.95'
TLE102	348+10.11	-49.74'

FOUND MONUMENT TABLE			
POINT	Y COORDS	X COORDS	IP TYPE
30010	126966.224	228534.953	3/4" RBR.
30011	126885.803	228587.698	3/4" RBR.

CURVE 1
R=1195.92'
L=77.71'
LCB=N88°55'51"E
LCH=77.70'

CURVE 2
R=1095.92'
L=76.81'
LCB=S88°47'05"W
LCH=76.79'

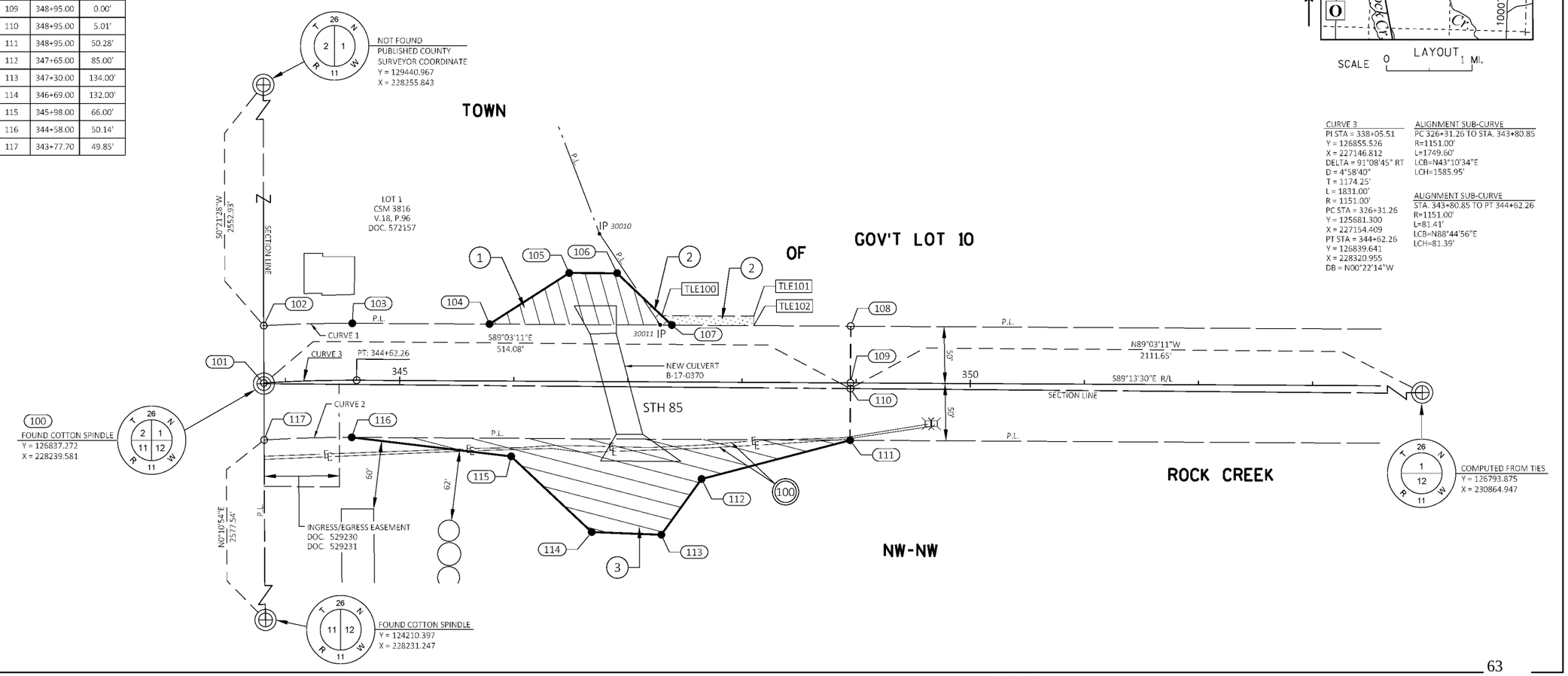

CURVE 3
PI STA = 338+05.51
Y = 126855.526
X = 227146.812
DELTA = 91°08'45" RT
D = 4°58'40"
T = 1174.25'
L = 1831.00'
R = 1151.00'
PC STA = 326+31.26
Y = 125681.300
X = 227154.409
PT STA = 344+62.26
Y = 126839.641
X = 228320.955
DB = N00°22'14"W

ALIGNMENT SUB-CURVE
PC 326+31.26 TO STA. 343+80.85
R=1151.00'
L=1749.60'
LCB=N43°10'34"E
LCH=1585.95'

ALIGNMENT SUB-CURVE
STA. 343+80.85 TO PT 344+62.26
R=1151.00'
L=81.41'
LCB=N88°44'56"E
LCH=81.39'

POSITIONS SHOWN ON THIS PLAT ARE WISCONSIN COORDINATE REFERENCE SYSTEM COORDINATES (WISCRS), DUNN COUNTY, NAD83(2011), IN U.S. SURVEY FEET. VALUES ARE GRID COORDINATES, GRID BEARINGS, AND GRID DISTANCES. GRID DISTANCES MAY BE USED AS GROUND DISTANCES.

ALL NEW RIGHT-OF-WAY MONUMENTS WIL BE TYPE 2 (TYPICALLY 3/4" X 24" IRON REBARS) UNLESS OTHERWISE NOTED, AND WILL BE PLACED PRIOR TO THE COMPLETION OF THE PROJECT.

FOR ADDITIONAL INFORMATION REFER TO THE TITLE SHEET, RECORDED IN THE OFFICE OF REGISTER OF DEEDS IN DUNN COUNTY AS SHEET 2 OF 2 OF THIS DOCUMENT.

FOR CURRENT ACCESS/DRIVEWAY INFORMATION, CONTACT THE PLANNING UNIT OF THE THE WISCONSIN DEPARTMENT OF TRANSPORTATION OFFICE IN EAU CLAIRE.

FOUND MONUMENT INFORMATION SHOWN REPRESENTS TYPE AND LOCATION OF EXISTING MONUMENTS WITHOUT OPINION AS TO THEIR VALIDITY AND USE AS A PROPERTY CORNER.

STRUCTURE B-17-0370 IS FOR AN UN-NAMED BRANCH OF THE CHIPPEWA RIVER WHICH WAS DRY AT THE DATE OF SURVEY ON 2/29/2024

EXISTING HIGHWAY RIGHT-OF-WAY ON STH 85 BASED ON PREVIOUS PROJECT: DJ 6307

STATE OF WISCONSIN
DEPARTMENT OF TRANSPORTATION
TRANSPORTATION PROJECT PLAT TITLE SHEET
7120-00-26
DURAND - EAU CLAIRE
BR CHIPPEWA RIVER BRIDGE B-17-0370
STH 85
DUNN COUNTY

CONVENTIONAL SYMBOLS

SECTION LINE
QUARTER LINE
SIXTEENTH LINE
NEW REFERENCE LINE
NEW R/W LINE
EXISTING R/W OR HE LINE
PROPERTY LINE
LOT, TIE & OTHER MINOR LINES
SLOPE INTERCEPT
CORPORATE LIMITS
UNDERGROUND FACILITY (COMMUNICATIONS, ELECTRIC, ETC)
NEW R/W (FEE OR HE) (HATCHING VARIES BY OWNER)
TEMPORARY LIMITED EASEMENT AREA
EASEMENT AREA (PERMANENT LIMITED OR RESTRICTED DEVELOPMENT)
TRANSMISSION STRUCTURES
BUILDING
TO BE REMOVED
BRIDGE
CULVERT

SECTION CORNER SYMBOL
SECTION CORNER MONUMENT
GEODETIC SURVEY MONUMENT
SIXTEENTH CORNER MONUMENT
SIGN
OFF-PREMISE SIGN
R/W MONUMENT (TO BE SET)
NON-MONUMENTED R/W POINT
FOUND IRON PIN (3/4-INCH CAPPED REBAR UNLESS NOTED)

	COMPENSABLE	NON-COMPENSABLE
ELECTRIC POLE		
TELEPHONE POLE		
PEDESTAL (LABEL TYPE) (TV, TEL, ELEC, ETC.)		

ACCESS RESTRICTED BY ACQUISITION
NO ACCESS (BY STATUTORY AUTHORITY)
ACCESS RESTRICTED (BY PREVIOUS PROJECT OR CONTROL)
NO ACCESS (NEW HIGHWAY)
PARCEL NUMBER 25
UTILITY NUMBER 40
PARALLEL OFFSETS

CONVENTIONAL ABBREVIATIONS

ACCESS RIGHTS	AR	POINT OF INTERSECTION	PI
ACRES	AC	PROPERTY LINE	PL
AHEAD	AH	RECORDED AS	(100')
ALUMINUM	ALUM	REEL / IMAGE	R/I
AND OTHERS	ET AL	REFERENCE LINE	R/L
BACK	BK	REMAINING	REM
BLOCK	BLK	RESTRICTIVE DEVELOPMENT EASEMENT	RDE
CENTERLINE	C/L	RIGHT	RT
CERTIFIED SURVEY MAP	CSM	RIGHT OF WAY	R/W
CONCRETE	CONC	SECTION	SEC
COUNTY	CO	SEPTIC VENT	SEPV
COUNTY TRUNK HIGHWAY	CTH	SQUARE FEET	SF
DISTANCE	DIST	STATE TRUNK HIGHWAY	STH
CORNER	COR	STATION	STA
DOCUMENT NUMBER	DOC	TELEPHONE PEDESTAL	TP
EASEMENT	EASE	TEMPORARY LIMITED EASEMENT	TLE
EXISTING	EX	TRANSPORTATION PROJECT PLAT	TPP
GAS VALVE	GV	UNITED STATES HIGHWAY	USH
GRID NORTH	GN	VOLUME	V
HIGHWAY EASEMENT	HE		
IDENTIFICATION	ID		
LAND CONTRACT	LC		
LEFT	LT		
MONUMENT	MON		
NATIONAL GEODETIC SURVEY	NGS		
NUMBER	NO		
OUTLOT	OL		
PAGE	P		
POINT OF TANGENCY	PT		
PERMANENT LIMITED EASEMENT	PLE		
POINT OF BEGINNING	POB		
POINT OF CURVATURE	PC		
POINT OF COMPOUND CURVE	PCC		

CURVE DATA

LONG CHORD	LCH
LONG CHORD BEARING	LCB
RADIUS	R
DEGREE OF CURVE	D
CENTRAL ANGLE	Δ/DELTA
LENGTH OF CURVE	L
TANGENT	T
DIRECTION AHEAD	DA
DIRECTION BACK	DB

CONVENTIONAL UTILITY SYMBOLS

W	WATER
G	GAS
T	TELEPHONE
OH	OVERHEAD TRANSMISSION LINES
E	ELECTRIC
TV	CABLE TELEVISION
FO	FIBER OPTIC
FM	FORCE MAIN
SAN	SANITARY SEWER
SS	STORM SEWER

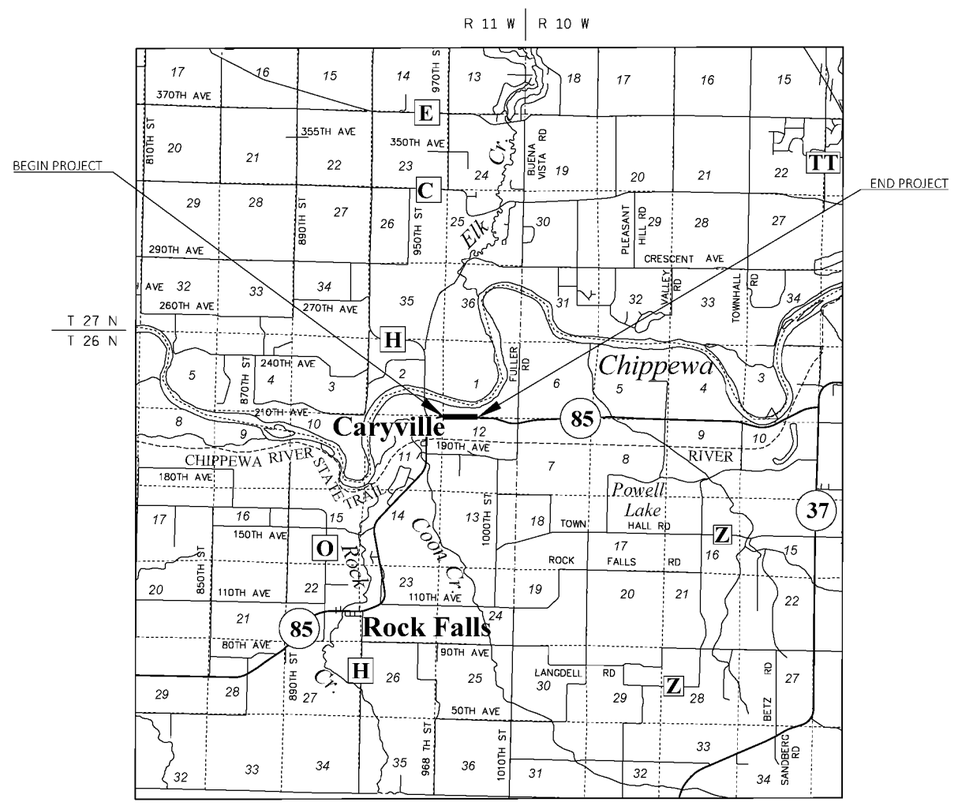

LAYOUT
SCALE 0 1 MI.

THE NOTES,CONVENTIONAL SIGNS, AND ABBREVIATIONS ARE ASSOCIATED WITH EACH TRANSPORTATION PROJECT PLAT FOR PROJECT 7120-00-26.

NOTES:

POSITIONS SHOWN ON THIS PLAT ARE WISCONSIN COORDINATE REFERENCE SYSTEM COORDINATES (WISCRS), DUNN COUNTY, NAD83(2011), IN U.S. SURVEY FEET. VALUES ARE GRID COORDINATES, GRID BEARINGS, AND GRID DISTANCES. GRID DISTANCES MAY BE USED AS GROUND DISTANCES.

ALL NEW RIGHT-OF-WAY MONUMENTS WILL BE TYPE 2 (TYPICALLY ¾" X 24" IRON REBARS), UNLESS OTHERWISE NOTED, AND WILL BE PLACED PRIOR TO THE COMPLETION OF THE PROJECT.

ALL RIGHT-OF-WAY LINES DEPICTED IN THE NON-ACQUISITION AREAS ARE INTENDED TO RE-ESTABLISH EXISTING RIGHT-OF-WAY LINES AS DETERMINED FROM PREVIOUS PROJECTS, OTHER RECORDED DOCUMENTS, CENTERLINE OF EXISTING PAVEMENTS AND/OR EXISTING OCCUPATIONAL LINES.

RIGHT-OF-WAY BOUNDARIES ARE DEFINED WITH COURSES OF THE PERIMETER OF THE HIGHWAY LANDS REFERENCED TO THE U.S. PUBLIC LAND SURVEY SYSTEM OR OTHER "SURVEYS" OF PUBLIC RECORD.

DIMENSIONING FOR THE NEW RIGHT-OF-WAY IS MEASURED ALONG AND PERPENDICULAR TO THE NEW REFERENCE LINES.

A TEMPORARY LIMITED EASEMENT (TLE) IS A RIGHT FOR CONSTRUCTION PURPOSES, AS DEFINED HEREIN, INCLUDING THE RIGHT TO OPERATE NECESSARY EQUIPMENT THEREON, THE RIGHT OF INGRESS AND EGRESS, AS LONG AS REQUIRED FOR SUCH PUBLIC PURPOSE, INCLUDING THE RIGHT TO PRESERVE, PROTECT, REMOVE, OR PLANT THEREON ANY VEGETATION THAT THE HIGHWAY AUTHORITIES MAY DEEM DESIRABLE. ALL (TLEs) ON THIS PLAT EXPIRE AT THE COMPLETION OF THE CONSTRUCTION PROJECT FOR WHICH THIS INSTRUMENT IS GIVEN.

A PERMANENT LIMITED EASEMENT (PLE) IS A RIGHT FOR CONSTRUCTION AND MAINTENANCE PURPOSES, AS DEFINED HEREIN, INCLUDING THE RIGHT TO OPERATE NECESSARY EQUIPMENT THEREON AND THE RIGHT OF INGRESS AND EGRESS, AS LONG AS REQUIRED FOR SUCH PUBLIC PURPOSE, INCLUDING THE RIGHT TO PRESERVE, PROTECT, REMOVE, OR PLANT THEREON ANY VEGETATION THAT THE HIGHWAY AUTHORITIES MAY DEEM DESIRABLE, BUT WITHOUT PREJUDICE TO THE OWNER'S RIGHTS TO MAKE OR CONSTRUCT IMPROVEMENTS ON SAID LANDS OR TO FLATTEN THE SLOPES, PROVIDING SAID ACTIVITIES WILL NOT IMPAIR OR OTHERWISE ADVERSELY AFFECT THE HIGHWAY FACILITIES.

AN EASEMENT FOR HIGHWAY PURPOSES (HE), AS LONG AS SO USED, INCLUDING THE RIGHT TO PRESERVE, PROTECT, REMOVE, OR PLANT THEREON ANY VEGETATION THAT THE HIGHWAY AUTHORITIES MAY DEEM DESIRABLE.

PROPERTY LINES SHOWN ON THIS PLAT FOR PROPERTIES BEING IMPACTED ARE DRAWN FROM DATA DERIVED FROM FILED/RECORDED MAPS AND DOCUMENTS OF PUBLIC RECORD. THIS PLAT MAY NOT BE A TRUE REPRESENTATION OF EXISTING PROPERTY LINES, EXCLUDING RIGHT-OF-WAY, AND SHOULD NOT BE USED AS A SUBSTITUTE FOR AN ACCURATE FIELD SURVEY.

FOR THE CURRENT ACCESS/DRIVEWAY INFORMATION, CONTACT THE PLANNING UNIT OF THE WISCONSIN DEPARTMENT OF TRANSPORTATION OFFICE IN EAU CLAIRE.

PARCEL AND UTILITY IDENTIFICATION NUMBERS MAY NOT POINT TO ALL AREAS OF ACQUISITION, AS NOTED ON THE TPP DETAIL PAGES.

INFORMATION FOR THE BASIS OF EXISTING HIGHWAY RIGHT-OF-WAY POINTS OF REFERENCE AND ACCESS CONTROL ARE LISTED ON THE TPP DETAIL PAGES.

PROJECT NUMBER 7120-00-26-4.01
SHEET 2 OF 2

675521

DUNN COUNTY, WI
REGISTER OF DEEDS
HEATHER M. KUHN

RECORDED ON
03/10/2025 12:26 PM

REC FEE: 25.00
PAGES: 1
The above recording information verifies that this document has been electronically recorded and returned to the submitter.

TRANSPORTATION PROJECT PLAT NO: 7120-00-26-4.01
AMENDMENT NO. 1

ADDS UTILITY NUMBER 101 TO TRANSPORTATION PROJECT PLAT NO: 7120-00-26-4.01 RECORDED AS DOCUMENT NUMBER 674202.

THAT PART OF LOT 1, CSM 3816 RECORDED IN VOLUME 18 ON PAGE 96 AS DOCUMENT NUMBER 572157 BEING LOCATED IN AND INCLUDING OTHER LANDS IN GOVERNMENT LOT 10, SECTION 1, AND THAT PART OF THE NORTHWEST 1/4 OF THE NORTHWEST 1/4, SECTION 12, ALL IN TOWNSHIP 26 NORTH, RANGE 11 WEST, TOWN OF ROCK CREEK, DUNN COUNTY, WISCONSIN

RELOCATION ORDER STH 85 DURAND - EAU CLAIRE (BR CHIPPEWA RIVER BRIDGE B-17-0370) DUNN COUNTY

TO PROPERLY ESTABLISH, LAY OUT, WIDEN, ENLARGE, EXTEND, CONSTRUCT, RECONSTRUCT, IMPROVE, OR MAINTAIN A PORTION OF THE HIGHWAY DESIGNATED ABOVE, THE STATE OF WISCONSIN DEPARTMENT OF TRANSPORTATION DEEMS IT NECESSARY TO RELOCATE OR CHANGE SAID HIGHWAY AND ACQUIRE CERTAIN LANDS AND INTERESTS OR RIGHTS IN LANDS FOR THE ABOVE PROJECT.

TO EFFECT THIS CHANGE, PURSUANT TO AUTHORITY GRANTED UNDER SUBSECTIONS 84.02 (3), 84.09, AND 84.30, WISCONSIN STATUTES, THE DEPARTMENT OF TRANSPORTATION HEREBY ORDERS THAT:

1. THAT PORTION OF SAID HIGHWAY AS SHOWN ON THIS PLAT IS LAID OUT AND ESTABLISHED TO THE LINES AND WIDTHS AS SO SHOWN FOR THE ABOVE PROJECT.
2. THE LANDS OR INTERESTS OR RIGHTS IN LANDS AS SHOWN ON THIS PLAT ARE REQUIRED BY THE DEPARTMENT FOR THE ABOVE PROJECT AND SHALL BE ACQUIRED IN THE NAME OF THE STATE OF WISCONSIN, PURSUANT TO THE PROVISIONS OF SUBSECTION 84.09 (1) OR (2), WISCONSIN STATUTES.

SCHEDULE OF LANDS & INTERESTS REQUIRED

OWNER'S NAMES ARE SHOWN FOR REFERENCE PURPOSES ONLY AND ARE SUBJECT TO CHANGE PRIOR TO THE TRANSFER OF LAND INTERESTS TO THE DEPARTMENT

PARCEL NUMBER	OWNERS	INTERESTS REQUIRED	FEE R/W S.F REQUIRED NEW	EXISTING	TOTAL	TLE S.F.
1	PAUL ALLAN HAYDEN REVOCABLE LIVING TRUST	FEE	4436	---	4436	---
2	DONALD D. JAQUISH JR. REVOCABLE GRANTOR TRUST	FEE,TLE	127	---	127	626
3	BRENDSEL REVOCABLE TRUST	FEE	13952	---	13952	---

UTILITY INTERESTS REQUIRED

UTILITY NUMBER	UTILITY OWNER(S)	INTERESTS REQUIRED
100	DUNN ENERGY COOP	RELEASE OF RIGHTS
101	AT&T WISCONSIN	RELEASE OF RIGHTS

THE PURPOSE OF ALL TLE'S ARE FOR SLOPE GRADING UNLESS OTHERWISE NOTED.

(100) DUNN ENERGY COOP
BLANKET EASEMENT
NW-NW SEC. 12
DOC. 388094
PARCEL 3

(100) DUNN ENERGY COOP
BLANKET EASEMENT
NW 1/4 SEC. 12 NORTH OF R/R
DOC. 196120
PARCEL 3

(101) AT&T WISCONSIN
NO RECORDED EASEMENT
PARCEL 3

STRAND ASSOCIATES, INC. ®
910 WEST WINGRA DRIVE, MADISON, WI 53715
(608) 251-4843

I, HEATHER S. BARTELT PROFESSIONAL LAND SURVEYOR, HEREBY CERTIFY THAT IN FULL COMPLIANCE WITH THE PROVISIONS OF SECTION 84.095 OF THE WISCONSIN STATUTES AND UNDER THE DIRECTION OF THE DEPARTMENT OF TRANSPORTATION I HAVE SURVEYED AND MAPPED THIS TRANSPORTATION PROJECT PLAT AND SUCH PLAT CORRECTLY REPRESENTS ALL EXTERIOR BOUNDARIES OF THE SURVEYED LAND.

WISCONSIN HEATHER S. BARTELT S-2797 MADISON WI LAND SURVEYOR

SIGNATURE: Heather Bartelt DATE: 3/3/25
PRINT NAME: HEATHER S. BARTELT
REGISTRATION NUMBER: S-2797

THIS PLAT AND RELOCATION ORDER ARE APPROVED FOR THE WISCONSIN DEPARTMENT OF TRANPORTATION

SIGNATURE: Aaron Gustafson DATE: 3/4/2025
PRINT NAME: AARON GUSTAFSON

RESERVED FOR REGISTER OF DEEDS
PROJECT NUMBER 7120-00-26-4.01
AMENDMENT NO. 1

4

COURSE TABLE		
COURSE	BEARING	DISTANCE
100 - 101	N00° 21' 28"E	0.59'
101 - 102	N00° 21' 28"E	50.23'
102 - 103	SEE CURVE 1 DATA	
103 - 104	S89° 12' 27"E	120.21'
104 - 105	N57° 46' 20"E	82.96'
105 - 106	S89° 13' 30"E	42.00'
106 - 107	S46° 03' 39"E	66.13'
107 - 108	S89° 12' 27"E	156.77'
108 - 109	S00° 46' 30"W	49.72'
109 - 110	S00° 46' 30"W	5.01'
110 - 111	S00° 46' 30"W	45.27'
111 - 112	S75° 49' 24"W	134.55'
112 - 113	S36° 19' 00"W	60.22'
113 - 114	N87° 20' 49"W	61.03'
114 - 115	N46° 18' 50"W	96.94'
115 - 116	N82° 45' 30"W	140.72'
116 - 117	SEE CURVE 2 DATA	
117 - 100	N00° 10' 54"E	49.35'

STATION & OFFSET TABLE		
POINT	STATION	OFFSET
100	343+80.82	0.59'
101	343+80.85	0.00'
102	343+83.91	-50.13'
103	344+58.38	-49.85'
104	345+78.42	-49.81'
105	346+48.00	-95.00'
106	346+90.00	-95.00'
107	347+38.23	-49.76'
108	348+95.00	-49.72'
109	348+95.00	0.00'
110	348+95.00	5.01'
111	348+95.00	50.28'
112	347+65.00	85.00'
113	347+30.00	134.00'
114	346+69.00	132.00'
115	345+98.00	66.00'
116	344+58.00	50.14'
117	343+77.70	49.85'

STATION & OFFSET TABLE		
POINT	STATION	OFFSET
TLE100	347+29.47	-57.98'
TLE101	348+10.00	-57.95'
TLE102	348+10.11	-49.74'

FOUND MONUMENT TABLE			
POINT	Y COORDS	X COORDS	IP TYPE
30010	126966.224	228534.953	3/4" RBR.
30011	126885.803	228587.698	3/4" RBR.

CURVE 1
R=1195.92'
L=77.71'
LCB=N88°55'51"E
LCH=77.70'

CURVE 2
R=1095.92'
L=76.81'
LCB=S88°47'05"W
LCH=76.79'

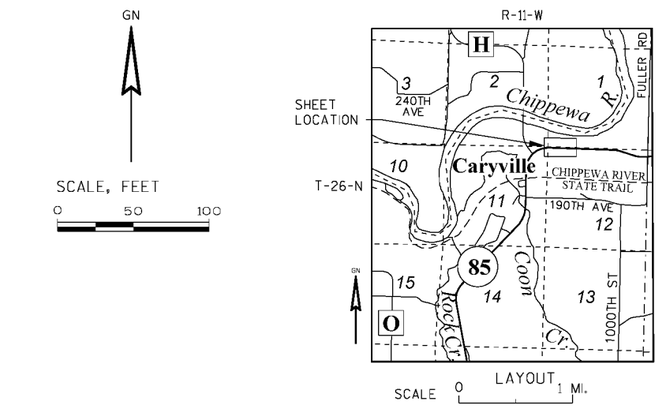

CURVE 3
PI STA = 338+05.51
Y = 126855.526
X = 227146.812
DELTA = 91°08'45" RT
D = 4°58'40"
T = 1174.25'
L = 1831.00'
R = 1151.00'
PC STA = 326+31.26
Y = 125681.300
X = 227154.409
PT STA = 344+62.26
Y = 126839.641
X = 228320.955
DB = N00°22'14"W

ALIGNMENT SUB-CURVE
PC 326+31.26 TO STA. 343+80.85
R=1151.00'
L=1749.60'
LCB=N43°10'34"E
LCH=1585.95'

ALIGNMENT SUB-CURVE
STA. 343+80.85 TO PT 344+62.26
R=1151.00'
L=81.41'
LCB=N88°44'56"E
LCH=81.39'

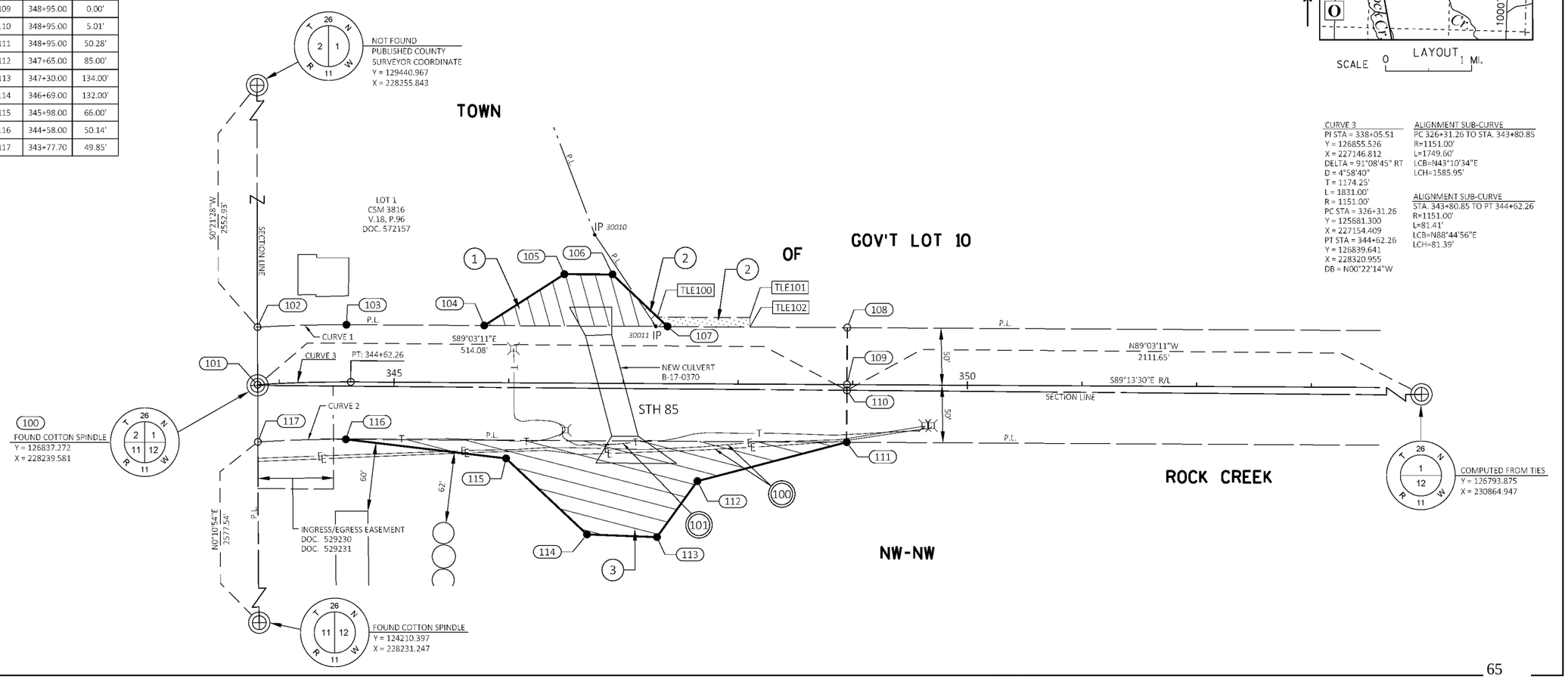

POSITIONS SHOWN ON THIS PLAT ARE WISCONSIN COORDINATE REFERENCE SYSTEM COORDINATES (WISCRS), DUNN COUNTY, NAD83(2011), IN U.S. SURVEY FEET. VALUES ARE GRID COORDINATES, GRID BEARINGS, AND GRID DISTANCES. GRID DISTANCES MAY BE USED AS GROUND DISTANCES.

ALL NEW RIGHT-OF-WAY MONUMENTS WIL BE TYPE 2 (TYPICALLY 3/4" X 24" IRON REBARS) UNLESS OTHERWISE NOTED, AND WILL BE PLACED PRIOR TO THE COMPLETION OF THE PROJECT.

FOR ADDITIONAL INFORMATION REFER TO THE TITLE SHEET, RECORDED IN THE OFFICE OF REGISTER OF DEEDS IN DUNN COUNTY AS SHEET 2 OF 2 OF DOCUMENT 674202.

FOR CURRENT ACCESS/DRIVEWAY INFORMATION, CONTACT THE PLANNING UNIT OF THE THE WISCONSIN DEPARTMENT OF TRANSPORTATION OFFICE IN EAU CLAIRE.

FOUND MONUMENT INFORMATION SHOWN REPRESENTS TYPE AND LOCATION OF EXISTING MONUMENTS WITHOUT OPINION AS TO THEIR VALIDITY AND USE AS A PROPERTY CORNER.

STRUCTURE B-17-0370 IS FOR AN UN-NAMED BRANCH OF THE CHIPPEWA RIVER WHICH WAS DRY AT THE DATE OF SURVEY ON 2/29/2024

EXISTING HIGHWAY RIGHT-OF-WAY ON STH 85 BASED ON PREVIOUS PROJECT: DJ 6307

FILE NAME : S:\MAD\1000--1099\1089\989\DRAWINGS\CAD\CIVIL 3D\RW\DWG\71200026\040101_RP.DWG PLOT DATE : 3/3/2025 1:47 PM PLOT BY : BARTELT, HEATHER PLOT NAME :
APPRAISAL PLAT DATE : 3/3/25

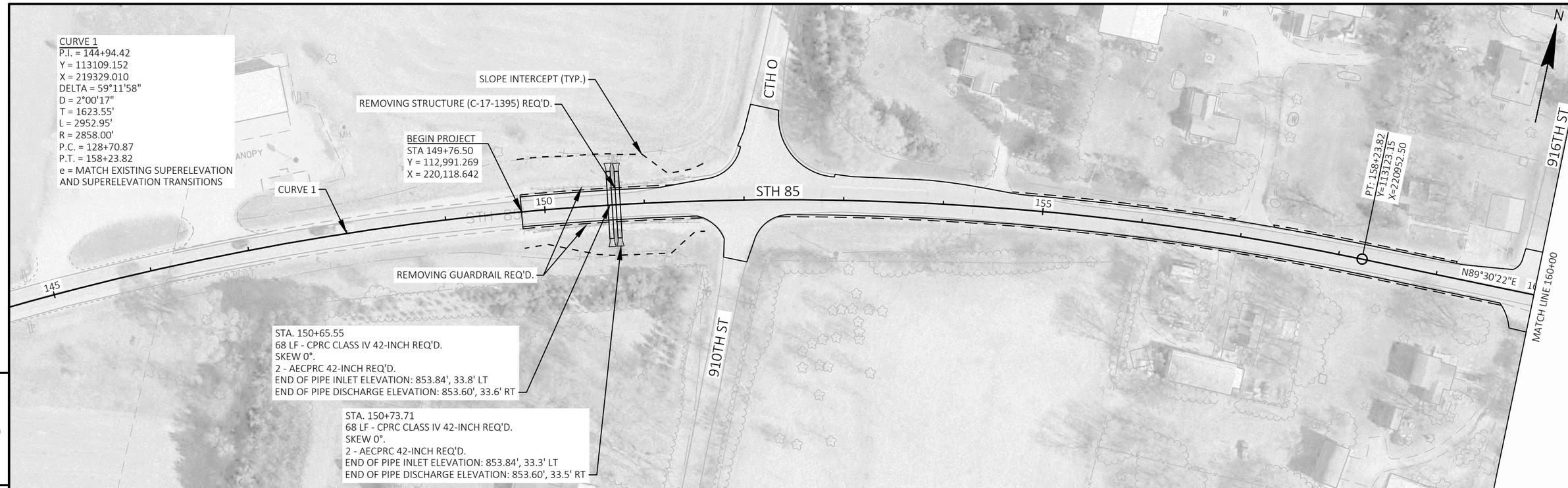

5

5

PROJECT NO: 7120-00-74	HWY: STH 85	COUNTY: DUNN	PLAN	SHEET 66	E

FILE NAME : S:\MAD\1000--1099\1089\989\DRAWINGS\CAD\CIVIL 3D\SHEETSPLAN\050201-PN.DWG
LAYOUT NAME - 050201-pn
PLOT DATE : 8/29/2025 11:14 AM
PLOT BY : HABERKORN, DEVEN
PLOT NAME :
PLOT SCALE : 1 IN:100 FT

WISDOT/CADDS SHEET 44

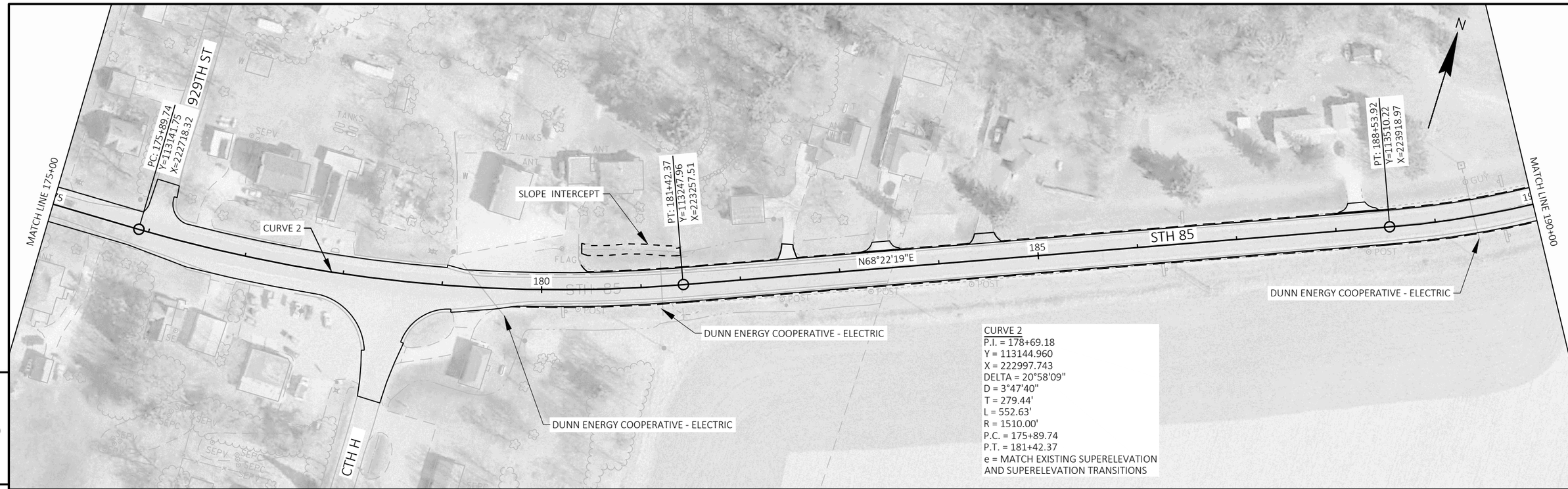

CURVE 2
P.I. = 178+69.18
Y = 113144.960
X = 222997.743
DELTA = 20°58'09"
D = 3°47'40"
T = 279.44'
L = 552.63'
R = 1510.00'
P.C. = 175+89.74
P.T. = 181+42.37
e = MATCH EXISTING SUPERELEVATION
AND SUPERELEVATION TRANSITIONS

5

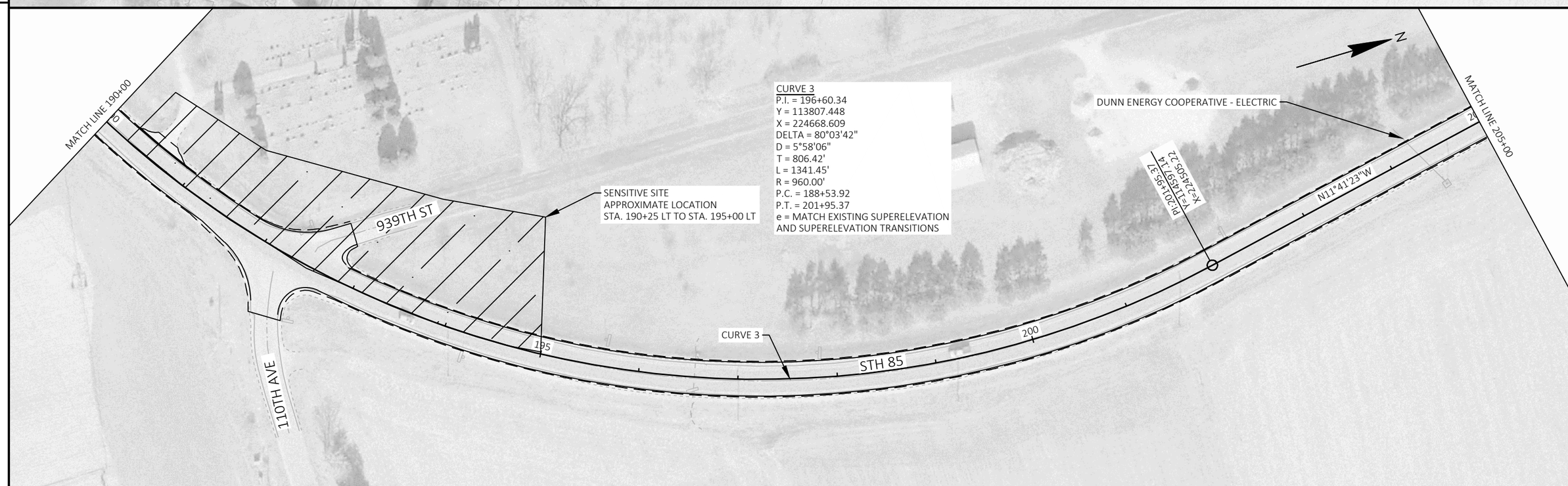

5

PROJECT NO: 7120-00-74	HWY: STH 85	COUNTY: DUNN	PLAN	SHEET 67	E

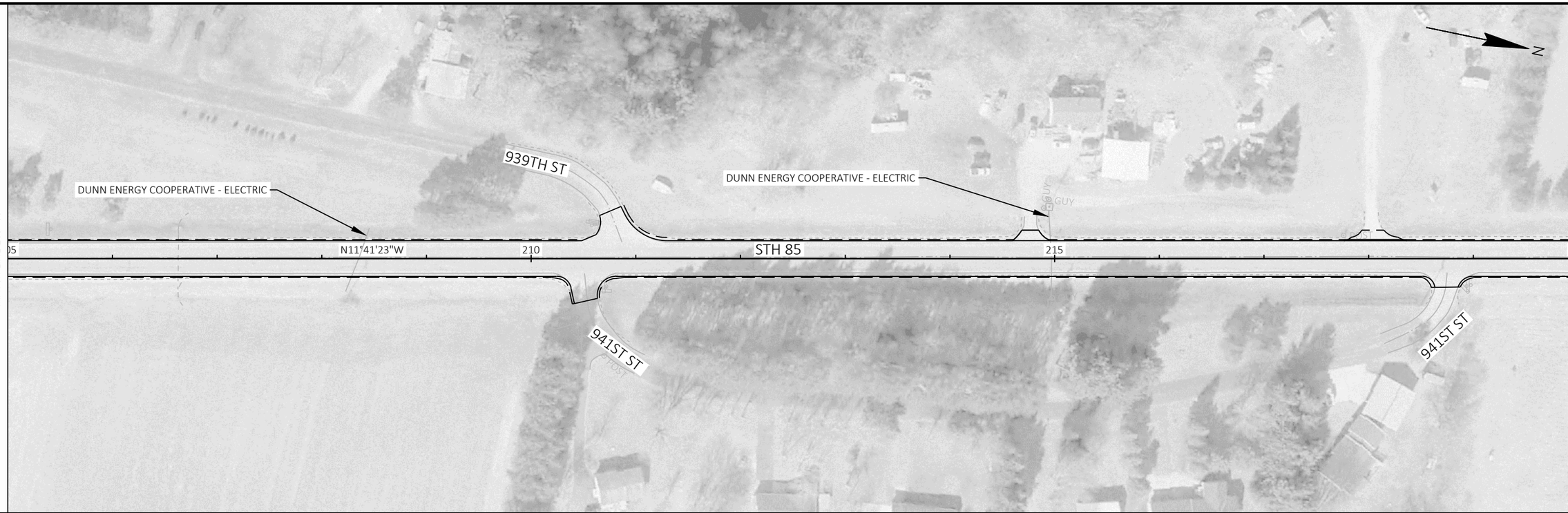

5

5

BENCH MARKS						
NO.	STATION	OFFSET	X	Y	ELEV.	DESCRIPTION
HMOD 1	233+47.58	45.40 LT	223822.09	117674.77	842.11	MON DJ4643

PROJECT NO: 7120-00-74	HWY: STH 85	COUNTY: DUNN	PLAN	SHEET 68	E

5

5

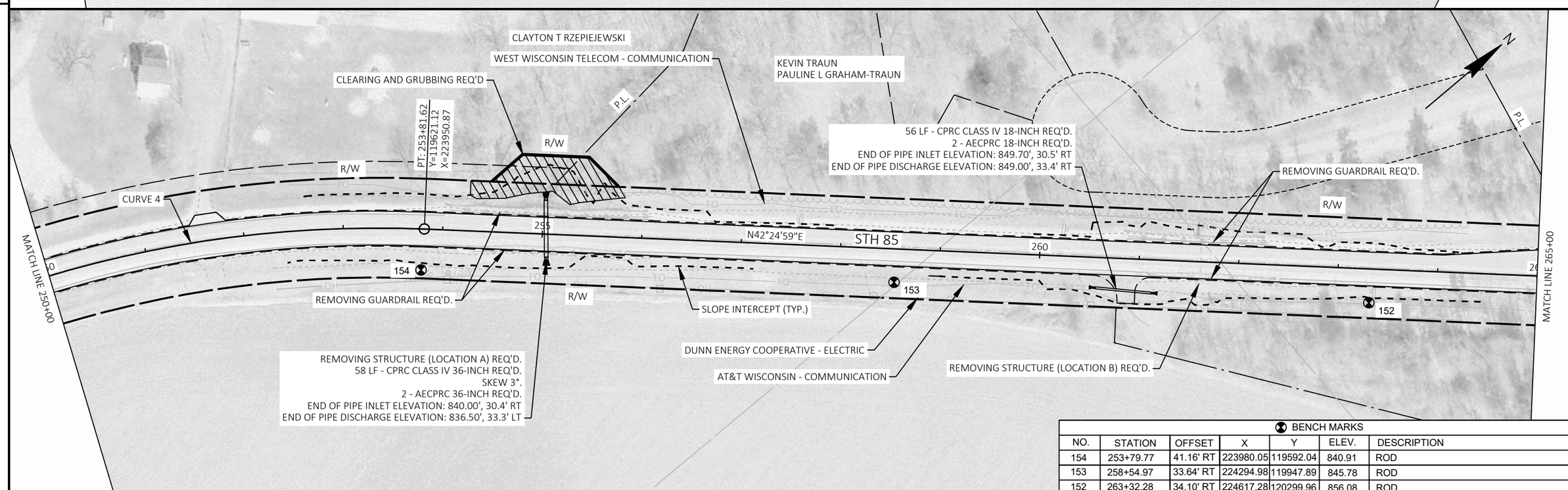

BENCH MARKS

NO.	STATION	OFFSET	X	Y	ELEV.	DESCRIPTION
154	253+79.77	41.16' RT	223980.05	119592.04	840.91	ROD
153	258+54.97	33.64' RT	224294.98	119947.89	845.78	ROD
152	263+32.28	34.10' RT	224617.28	120299.96	856.08	ROD

5

5

PROJECT NO: 7120-00-74	HWY: STH 85	COUNTY: DUNN	PLAN	SHEET 70	E

FILE NAME : S:\MAD\1000--1099\1089\989\DRAWINGS\CAD\CIVIL 3D\SHEETSPLAN\050201-PN.DWG
LAYOUT NAME - 050205-pn
PLOT DATE : 8/29/2025 11:14 AM PLOT BY : HABERKORN, DEVEN PLOT NAME : PLOT SCALE : 1 IN:100 FT

WISDOT/CADDS SHEET 44

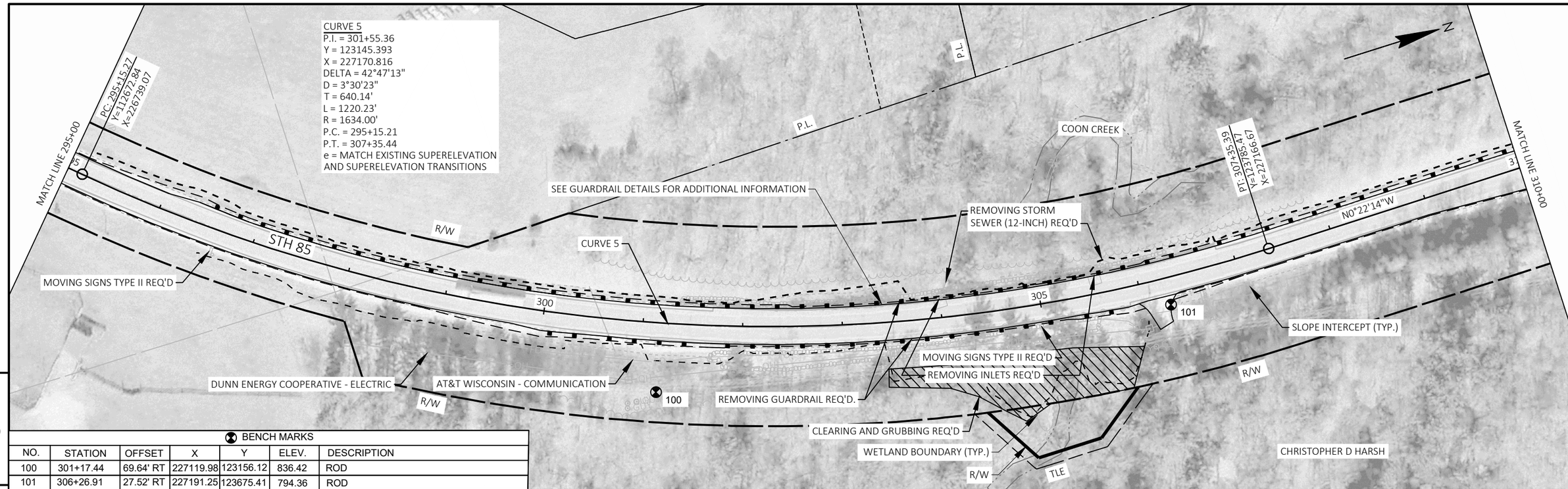

5

BENCH MARKS						
NO.	STATION	OFFSET	X	Y	ELEV.	DESCRIPTION
100	301+17.44	69.64' RT	227119.98	123156.12	836.42	ROD
101	306+26.91	27.52' RT	227191.25	123675.41	794.36	ROD

5

PROJECT NO: 7120-00-74	HWY: STH 85	COUNTY: DUNN	PLAN	SHEET 71	E

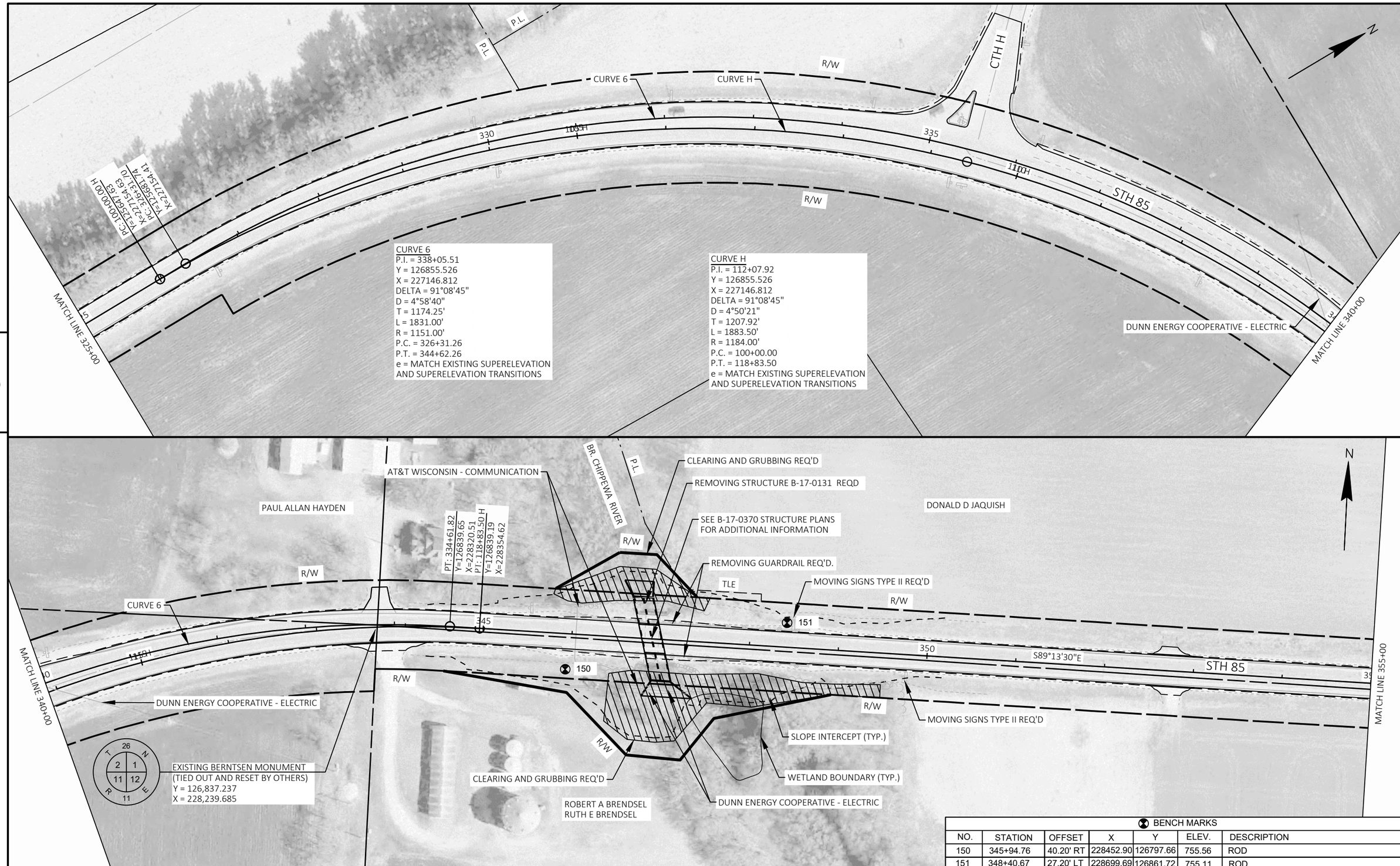

BENCH MARKS

NO.	STATION	OFFSET	X	Y	ELEV.	DESCRIPTION
150	345+94.76	40.20' RT	228452.90	126797.66	755.56	ROD
151	348+40.67	27.20' LT	228699.69	126861.72	755.11	ROD

PROJECT NO: 7120-00-74/76	HWY: STH 85	COUNTY: DUNN	PLAN	SHEET 72	E

FILE NAME : S:\MAD\1000--1099\1089\989\DRAWINGS\CAD\CIVIL 3D\SHEETSPLAN\050201-PN.DWG
LAYOUT NAME - 050207-pn
PLOT DATE : 10/6/2025 8:38 AM PLOT BY : HABERKORN, DEVEN PLOT NAME : PLOT SCALE : 1 IN:100 FT

WISDOT/CADDS SHEET 44

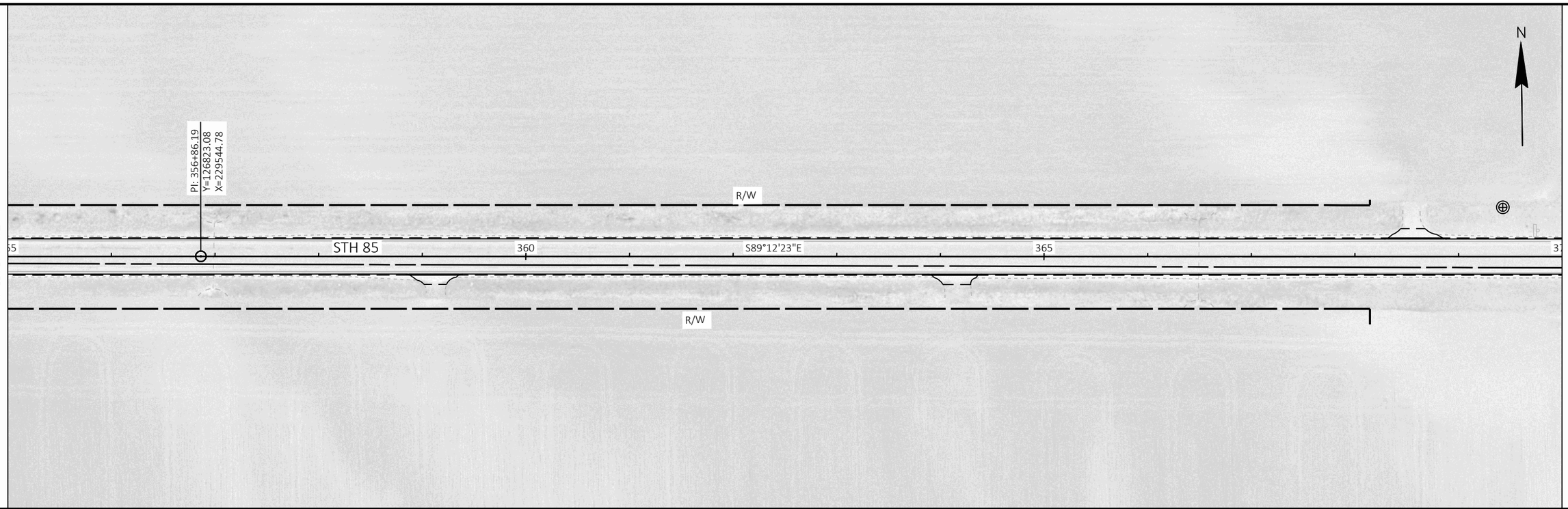

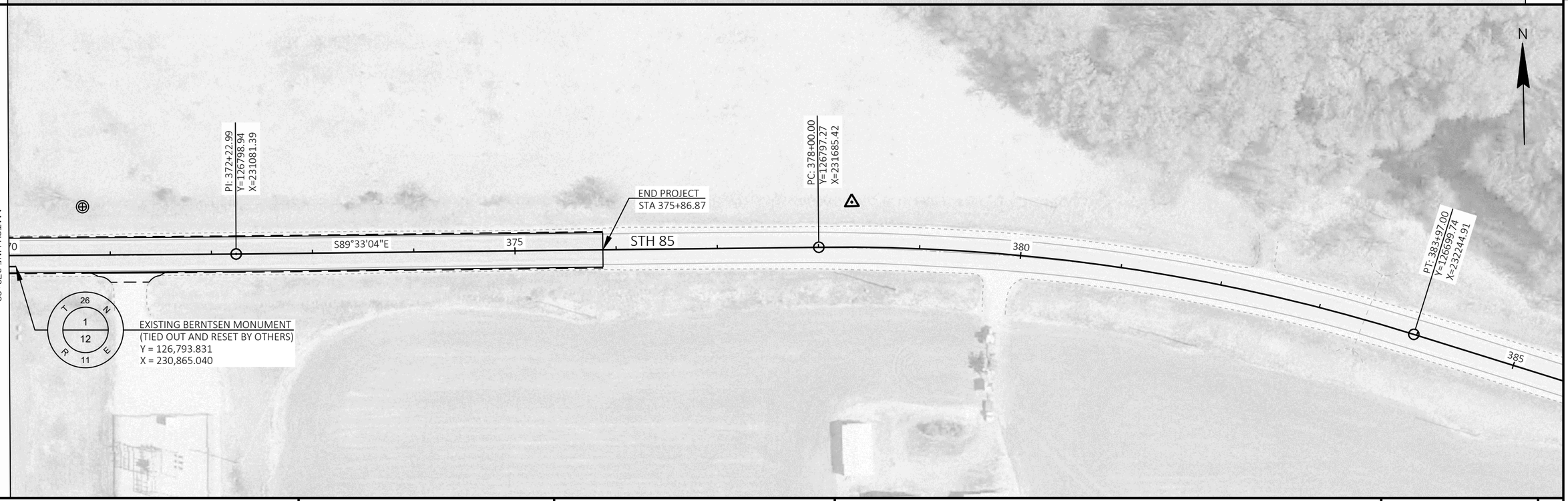

PROJECT NO: 7120-00-74	HWY: STH 85	COUNTY: DUNN	PLAN	SHEET 73	E

FILE NAME : S:\MAD\1000--1099\1089\989\DRAWINGS\CAD\CIVIL 3D\SHEETSPLAN\050201-PN.DWG
LAYOUT NAME - 050208-pn
PLOT DATE : 8/29/2025 11:14 AM
PLOT BY : HABERKORN, DEVEN
PLOT NAME :
PLOT SCALE : 1 IN:100 FT

Standard Detail Drawing List

08D01-24A	CONCRETE CURB & GUTTER
08D01-24B	CONCRETE CURB, TIES AND CURB AND GUTTER APPLICATIONS
08D05-22G	CURB RAMPS RECTANGULAR AND RADIAL DETECTABLE WARNING PLATES
08E08-03	TYPICAL INSTALLATIONS OF EROSION BALES / TEMPORARY DITCH CHECKS
08E09-06	SILT FENCE
08E10-02	INLET PROTECTION TYPE A, B, C AND D
08E14-01	TRACKING PAD
08E15-01	CULVERT PIPE CHECK
08F01-11	APRON ENDWALLS FOR CULVERT PIPE
08F04-08	JOINT TIES FOR CONCRETE PIPE AND CONCRETE COLLAR DETAIL
11B02-02	CONCRETE MEDIAN NOSE
12A03-10	NAME PLATE (STRUCTURES)
13A10-03A	SHOULDER RUMBLE STRIPS - ASPHALT
13A10-03G	SHOULDER AND EDGE LINE RUMBLE STRIPS - CROSSINGS, INTERSECTIONS, BRIDGES, DRIVEWAYS
13A11-04A	CENTERLINE RUMBLE STRIPS - ASPHALT
13A11-04D	CENTERLINE RUMBLE STRIPS - INTERSECTIONS, DRIVEWAYS, BRIDGES, RAILROADS
13C19-03	HMA LONGITUDINAL JOINTS
14B28-04A	GUARDRAIL MOW STRIP
14B28-04B	GUARDRAIL MOW STRIP
14B42-07A	MIDWEST GUARDRAIL SYSTEM (MGS) GUARDRAIL
14B42-07B	MIDWEST GUARDRAIL SYSTEM (MGS) GUARDRAIL
14B42-07C	MIDWEST GUARDRAIL SYSTEM (MGS) GUARDRAIL
14B42-07D	MIDWEST GUARDRAIL SYSTEM (MGS) GUARDRAIL
14B44-04A	MIDWEST GUARDRAIL SYSTEM ENERGY ABSORBING TERMINAL (MGS)
14B44-04B	MIDWEST GUARDRAIL SYSTEM ENERGY ABSORBING TERMINAL (MGS)
14B44-04C	MIDWEST GUARDRAIL SYSTEM ENERGY ABSORBING TERMINAL (MGS)
15A03-02A	FLEXIBLE MARKER POST FOR CULVERT END
15A03-02B	FLEXIBLE MARKER POST FOR CULVERT END
15C02-09A	BARRICADES AND SIGNS FOR MAINLINE CLOSURES
15C02-09B	BARRICADES AND SIGNS FOR VARIOUS CLOSURES
15C02-09C	DETOUR SIGNING FOR MAINLINE CLOSURES
15C02-09H	MODIFIED ROUTE ASSEMBLY FOR DETOUR SIGNING
15C03-05	BARRICADES AND SIGNS FOR SIDEROAD CLOSURES
15C04-05	TRAFFIC CONTROL, ADVANCE WARNING SIGNS 45 M.P.H. OR GREATER TWO-WAY UNDIVIDED ROAD OPEN TO TRAFFIC
15C05-05	TRAFFIC CONTROL, ADVANCE WARNING SIGNS 40 M.P.H. OR LESS TWO-WAY UNDIVIDED ROAD OPEN TO TRAFFIC
15C07-16C	PAVEMENT MARKING ARROWS
15C08-24A	PERMANENT LONGITUDINAL PAVEMENT MARKINGS
15C08-24B	TEMPORARY LONGITUDINAL PAVEMENT MARKING
15C08-24C	PAVEMENT MARKING (TURN LANES)
15C08-24D	PAVEMENT MARKING (TURN LANES)
15C11-10B	CHANNELIZING DEVICES DRUMS, CONES, BARRICADES AND VERTICAL PANELS
15C19-10A	MOVING PAVEMENT MARKING OPERATION TWO-LANE TWO-WAY ROADWAY
15C33-05	STOP LINE AND CROSSWALK PAVEMENT MARKING
15C35-06A	PAVEMENT MARKING (INTERSECTIONS)
15D28-04	TRAFFIC CONTROL, WORK ON SHOULDER OR PARKING LANE, UNDIVIDED ROADWAY
15D30-11A	TRAFFIC CONTROL, PEDESTRIAN ACCOMMODATION
15D30-11B	TRAFFIC CONTROL, PEDESTRIAN ACCOMMODATION
15D30-11I	TRAFFIC CONTROL, PEDESTRIAN ACCOMMODATION
15D30-11J	TRAFFIC CONTROL, PEDESTRIAN ACCOMMODATION
15D39-03	TRAFFIC CONTROL, DROP-OFF SIGNING
15D44-02	TRAFFIC CONTROL, SIGNING ON ROADWAYS WITH MILLED SURFACES

6

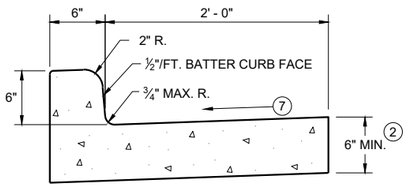

TYPES A (1) & D

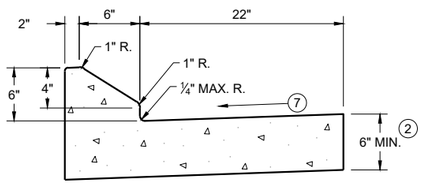

6" SLOPED CURB TYPES G (1) & J

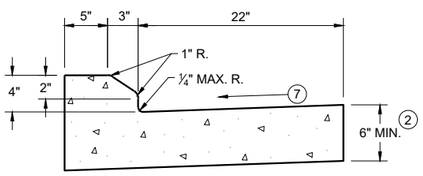

4" SLOPED CURB TYPES G (1) & J

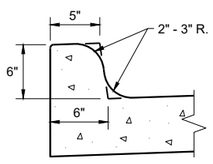

TYPES K (1) & L
(OPTIONAL CURB SHAPE)

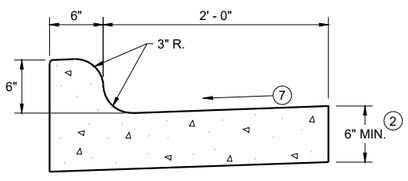

TYPES K (1) & L

CONCRETE CURB AND GUTTER 30"

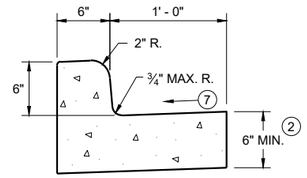

TYPES A (1) & D

CONCRETE CURB AND GUTTER 18"

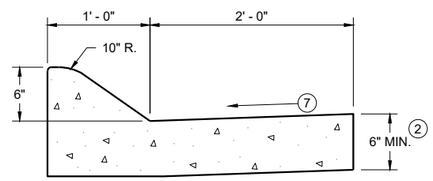

6" SLOPED CURB TYPES A (1) & D

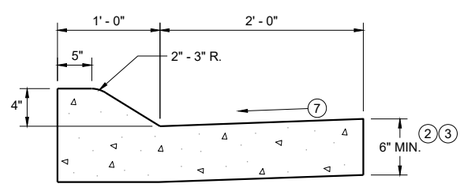

4" SLOPED CURB TYPES A (1) & D

CONCRETE CURB AND GUTTER 36"

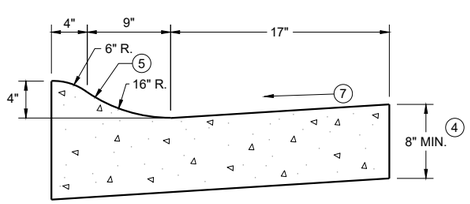

4" SLOPED CURB TYPES R (1) & T
CONCRETE CURB AND GUTTER 30"

TBT & TBTT	X
30"	22"
36"	28"

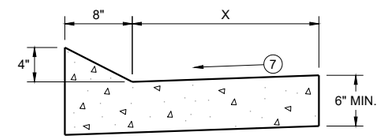

TYPES TBT & TBTT (1)

CONCRETE CURB AND GUTTER

PAVEMENT THICKNESS AND MAXIMUM CONCRETE PANEL WIDTH TABLE

PAVEMENT THICKNESS	MAXIMUM PANEL WIDTH
LESS THAN 10"	12'
10" & ABOVE	15'

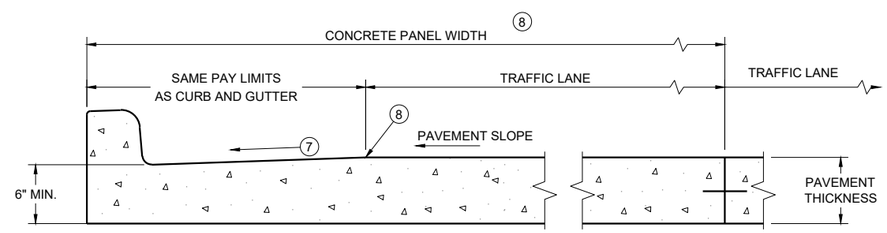

PARTIAL SECTION OF PAVEMENT WITH INTEGRAL CURB AND GUTTER *

* BIKE LANE IS NOT SHOWN

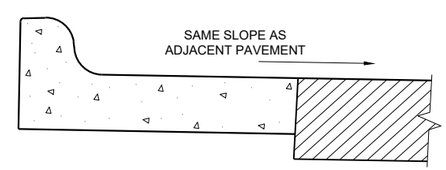

REVERSE SLOPE GUTTER (6)
(TYPICAL FOR ALL CURB & GUTTER TYPES)

GENERAL NOTES

DETAILS OF CONSTRUCTION AND WORKMANSHIP NOT SHOWN ON THIS DRAWING SHALL CONFORM TO THE PERTINENT REQUIREMENTS OF THE CONTRACT.

PAVEMENT TIES AND TIE BARS SHALL BE EPOXY COATED IN CONFORMANCE WITH SUBSECTION 505.2.6.2 OF THE STANDARD SPECIFICATIONS.

INTEGRAL CURB AND GUTTER SHALL CONFORM TO THE DETAILS SHOWN FOR CONCRETE CURB AND GUTTER INCLUDING THE TRANSVERSE GUTTER SLOPE.

UNLESS OTHERWISE SHOWN ON THE TYPICAL CROSS SECTIONS, THE BASE AGGREGATE AND COMMON EXCAVATION LIMITS ARE 2' - 0" BEHIND THE BACK OF CURBS.

(1) TIE BARS ARE REQUIRED FOR CURB AND GUTTERS TYPES A, G, K, R, AND TBTT.

(2) THE BOTTOM OF CURB AND GUTTER MAY BE CONSTRUCTED EITHER LEVEL OR PARALLEL TO THE SLOPE OF THE SUBGRADE OR BASE AGGREGATE PROVIDED A 6" MINIMUM GUTTER THICKNESS IS MAINTAINED.

(3) USE 8" MINIMUM GUTTER THICKNESS WHEN USED WITH AN ADJACENT CONCRETE TRUCK APRON PLACED BEHIND BACK OF CURB.

(4) THE BOTTOM OF CURB AND GUTTER MAY BE CONSTRUCTED EITHER LEVEL OR PARALLEL TO THE SLOPE OF THE SUBGRADE OR BASE AGGREGATE PROVIDED A 8" MINIMUM GUTTER THICKNESS IS MAINTAINED.

(5) UNLESS OTHERWISE NOTED, FOR STAKING PURPOSES THE FACE OF CURB IS 6" FROM THE BACK OF CURB.

(6) WHEN REVERSE SLOPE GUTTER IS REQUIRED, THE LOCATION(S) WILL BE SHOWN ELSEWHERE IN THE PLAN.

(7) USE 4% GUTTER CROSS SLOPE UNLESS OTHERWISE NOTED IN THE PLANS.

(8) INCLUDE LONGITUDINAL JOINT AND TIE BARS ALONG LANE EDGE WHEN CONCRETE PANEL WIDTH EXCEEDS THE MAXIMUM WIDTH PER TABLE BELOW. LONGITUDINAL JOINT(S) ARE NOT ALLOWED WITHIN TRAFFIC LANES AND BIKE LANES. LONGITUDINAL JOINT MAY BE SAWED.

(9) SLOPE TO BE REVERSE SLOPE MATCHING THE SLOPE OF THE PAVEMENT AND THE CIRCULATORY ROADWAY

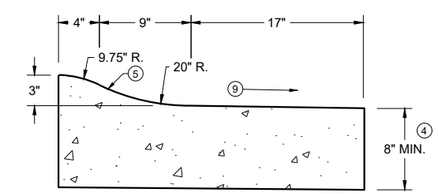

3" SLOPED CURB TYPES R (1) & T

CONCRETE CURB AND GUTTER

STATE OF WISCONSIN
DEPARTMENT OF TRANSPORTATION

6

SDD 08D01-24a

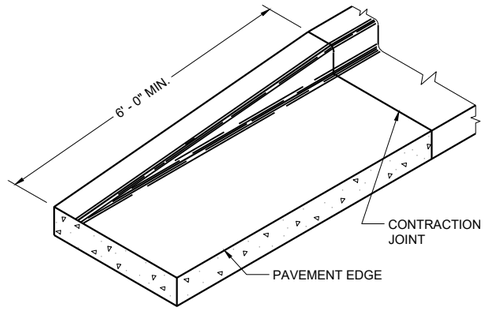

END SECTION CURB AND GUTTER

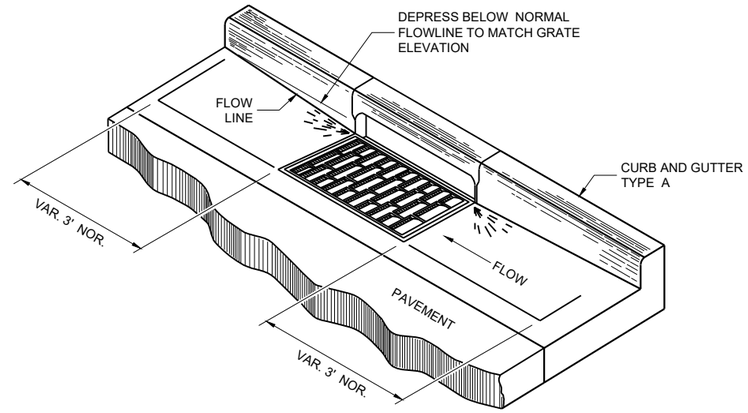

DETAIL OF CURB AND GUTTER AT INLETS

(TYPICAL H INLET COVER SHOWN)

GENERAL NOTES

DETAILS OF CONSTRUCTION AND WORKMANSHIP NOT SHOWN ON THIS DRAWING SHALL CONFORM TO THE PERTINENT REQUIREMENTS OF THE CONTRACT.

PAVEMENT TIES AND TIE BARS SHALL BE EPOXY COATED IN CONFORMANCE WITH SUBSECTION 505.2.6.2 OF THE STANDARD SPECIFICATIONS.

UNLESS OTHERWISE SHOWN ON THE TYPICAL CROSS SECTIONS, THE BASE AGGREGATE AND COMMON EXCAVATION LIMITS ARE 2' - 0" BEHIND THE BACK OF CURBS.

(1) TIE BARS ARE REQUIRED FOR CURB AND GUTTERS TYPES A, G, K, R, AND TBTT.

(2) THE BOTTOM OF CURB AND GUTTER MAY BE CONSTRUCTED EITHER LEVEL OR PARALLEL TO THE SLOPE OF THE SUBGRADE OR BASE AGGREGATE PROVIDED A 6" MINIMUM GUTTER THICKNESS IS MAINTAINED.

(10) REFER TO SDD 08D18 AND 08D19 FOR ADDITIONAL DRIVEWAY ENTRANCE CURB DETAILS.

(11) PLACE 1" THICK EXPANSION JOINT MATERIAL BETWEEN VERTICAL FACE CURB TYPES EXTENDING FROM THE TOP OF CURB TO 1 INCH BELOW THE ADJOINING CONCRETE SURFACE. RIGID CONCRETE STRUCTURES INCLUDE RAISED CONCRETE MEDIANS, CONCRETE SAFETY ISLANDS, SPLITTER ISLANDS, OR LOCATIONS IDENTIFIED ON THE PLANS.

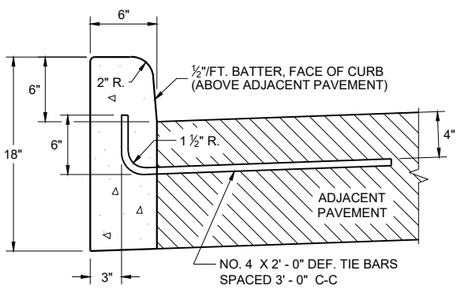

TYPES A (1) & D

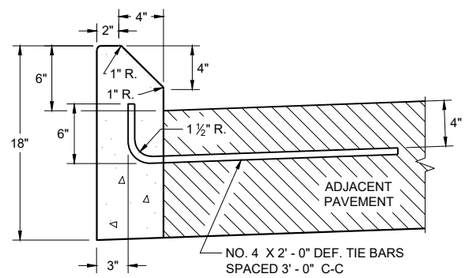

TYPES G (1) & J

CONCRETE CURB

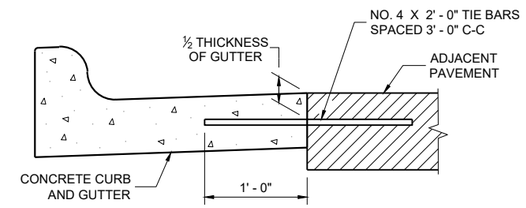

TYPICAL TIE BAR LOCATION (1)

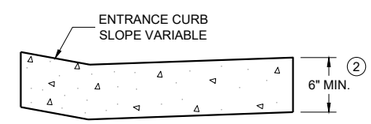

DRIVEWAY ENTRANCE CURB (10)

(WHEN DIRECTED BY THE ENGINEER)

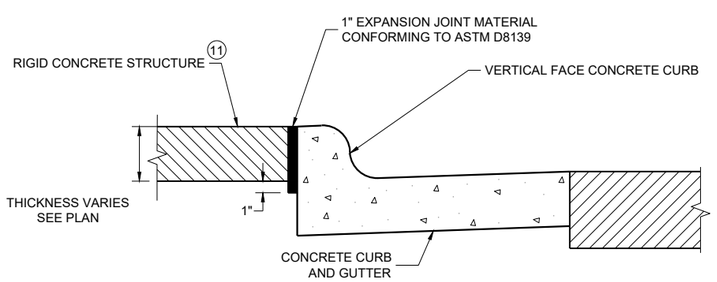

EXPANSION JOINT DETAIL FOR VERTICAL CURB ABUTTING A RIGID STRUCTURE (11)

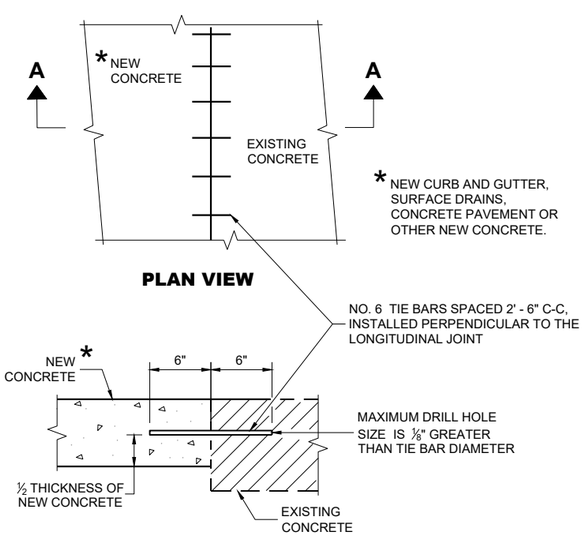

PLAN VIEW

SECTION A - A

TIE BARS DRILLED INTO EXISTING PAVEMENT

CONCRETE CURB, TIES AND CURB AND GUTTER APPLICATIONS

STATE OF WISCONSIN
DEPARTMENT OF TRANSPORTATION

APPROVED
February 2025 — DATE
/S/ Rodnery Taylor — ROADWAY STANDARDS DEVELOPMENT UNIT SUPERVISOR

FHWA

6
SDD 08D01-24b

	MIN.	MAX.
A	1.6"	2.4"
B	0.65"	1.5"
C	*	*
D	0.9"	1.4"

* THE C DIMENSION IS 50% TO 65% OF THE D DIMENSION.

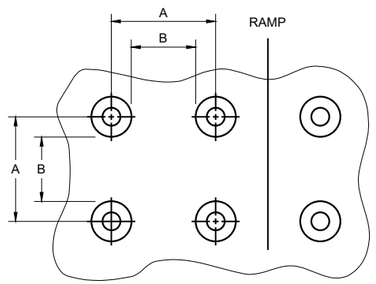

PLAN VIEW

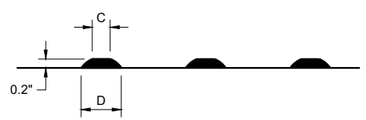

ELEVATION VIEW

TRUNCATED DOMES
DETECTABLE WARNING PATTERN DETAIL

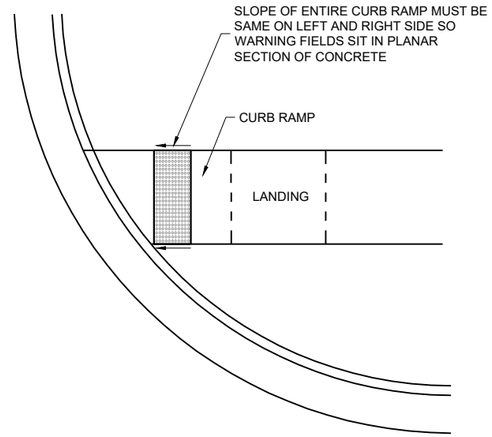

DETECTABLE WARNING FIELD
PLANAR INSTALLATION

GENERAL NOTES

DETECTABLE WARNING FIELDS THAT ARE INSTALLED AT A CURB RAMP SHALL BE FROM THE SAME MANUFACTURER.

PLACE ALL DETECTABLE WARNING FIELD SYSTEMS IN ACCORDANCE TO THE MANUFACTURER'S RECOMMENDATION.

FIELD CUTS AT INTERMEDIATE JOINTS WITHIN THE RADIAL DETECTABLE WARNING FILED ARE PROHIBITED.

DETERMINE FINAL RADIAL WARNING FIELD CONFIGURATION AND ITS INDIVIDUAL PLATE LOCATIONS. PERFORM PRE-LAYOUT PRIOR TO PLACEMENT IN PLASTIC CONCRETE. FOLLOW MANUFACTURER'S PRODUCT LIST AND INSTALLATION RECOMMENDATIONS.

FOR RADIAL DETECTABLE WARNING FIELD APPLICATIONS WHERE STANDARD RADIAL PLATES ARE NOT AVAILABLE AT AN INTERSECTION CURB RADIUS, A COMBINATION OF SQUARE OR RECTANGULAR PLATES AND RADIAL PLATES MAY BE USED TO FORM RADIAL CONFIGURATION. RADIAL WEDGE PLATES IN COMBINATION WITH SQUARE PLATES ARE ALSO ACCEPTABLE. FOLLOW MANUFACTURER'S RECOMMENDATIONS.

REFER TO CONTRACT AND STANDARD SPECIFICATIONS FOR FIELD CUTTING REQUIREMENTS.

DO NOT EMBED IN CONCRETE ANY FIELD-CUT PLATES WITH CUT EDGES SHORTER THAN 6 INCHES. CONSULT WITH MANUFACTURER FOR RE-DRILLING AND ANCHORING REQUIREMENTS OF FIELD-CUT PLATES.

(15) FIELD SAW CUTS ALONG RADIAL DETECTABLE WARNING PLATES WILL BE NECESSARY TO MATCH EACH CURB RAMP EDGE. AVOID CUTTING THROUGH DOMES WHENEVER POSSIBLE. MAKE FIELD CUTS TRUE TO LINE AND WITHIN ⅛" DEVIATION. SMOOTH EDGES OF FIELD CUT PLATES.

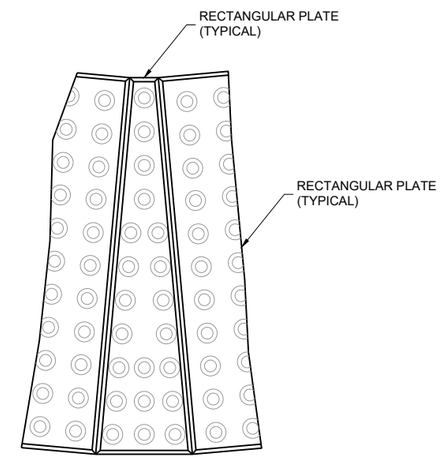

PLAN VIEW
RADIAL WEDGE PLATE CONNECTION DETAIL

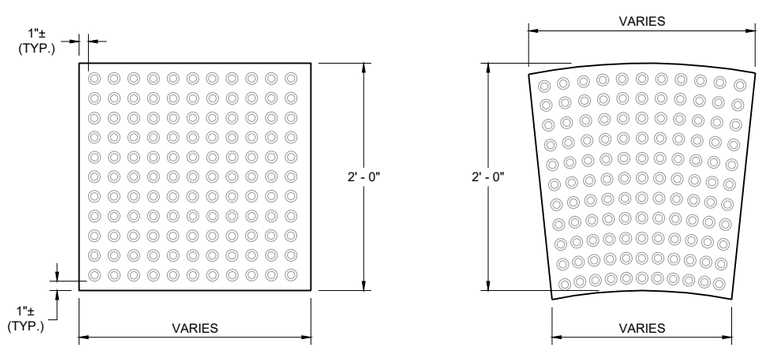

RECTANGULAR PLATES **RADIAL PLATES**

PLAN VIEW
DETECTABLE WARNING FIELDS (TYPICAL)

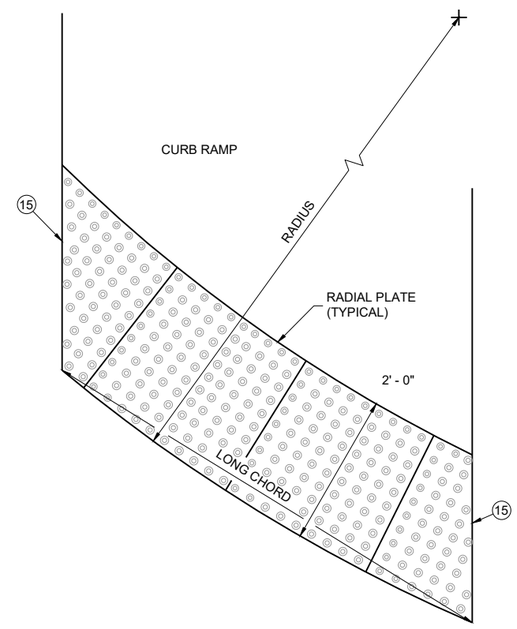

PLAN VIEW
RADIAL DETECTABLE WARNING FIELD ATTRIBUTES

CURB RAMPS
RECTANGULAR AND RADIAL DETECTABLE WARNING PLATES

STATE OF WISCONSIN
DEPARTMENT OF TRANSPORTATION

APPROVED
February 2025 — DATE
/S/ Rodney Taylor — <position>
FHWA

6

SDD 08D05-22g

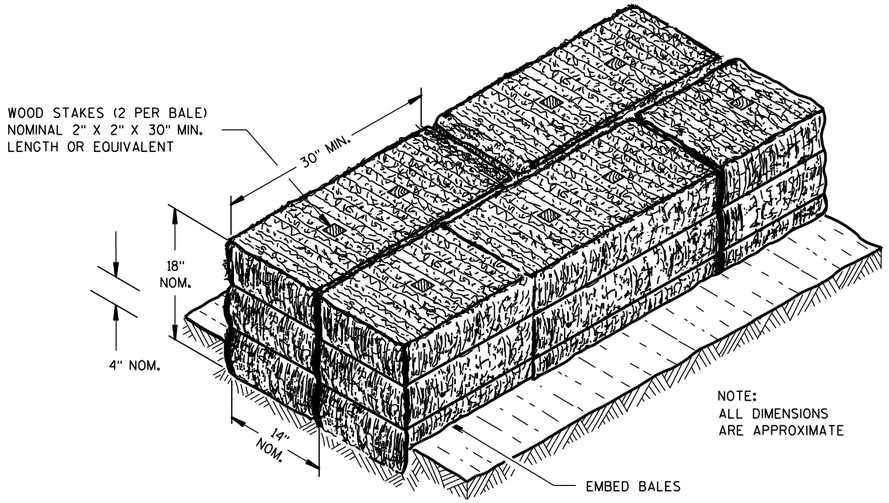

SECTION A-A

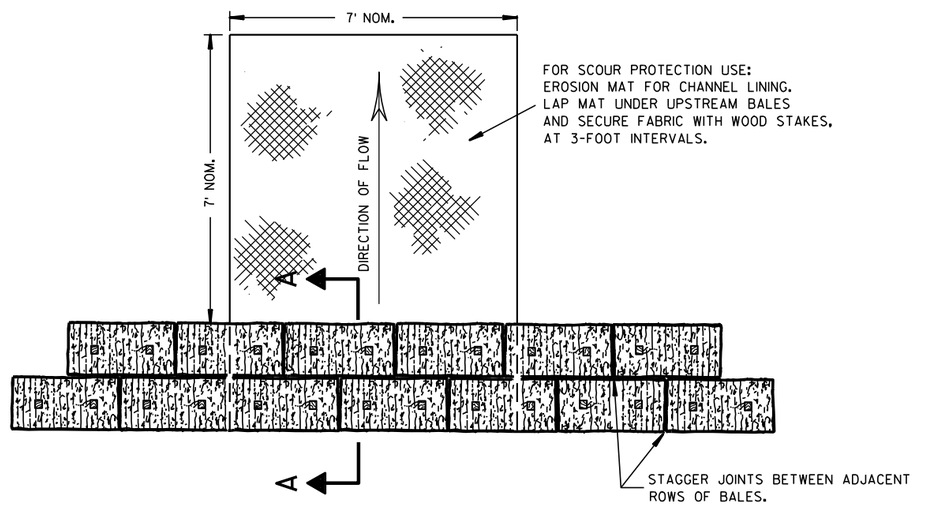

PLAN VIEW

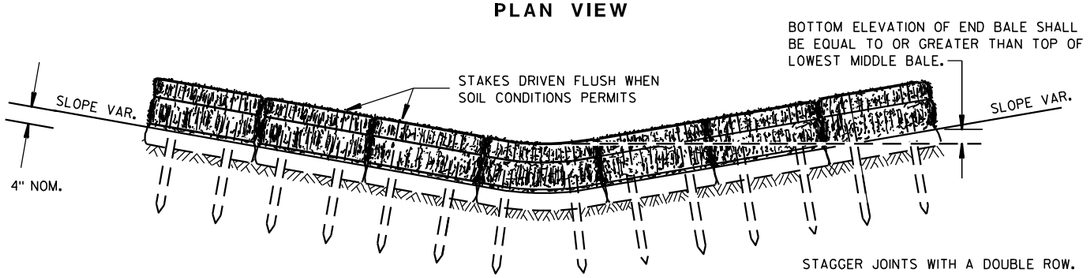

FRONT ELEVATION

TEMPORARY DITCH CHECK USING EROSION BALES ①

GENERAL NOTES

DETAILS OF CONSTRUCTION, MATERIALS AND WORKMANSHIP NOT SHOWN ON THIS DRAWING SHALL CONFORM TO THE PERTINENT REQUIREMENTS OF THE STANDARD SPECIFICATIONS AND THE APPLICABLE SPECIAL PROVISIONS.

① TEMPORARY DITCH CHECKS EITHER EROSION BALES OR MANUFACTURED SHALL BE PAID FOR UNDER THE BID ITEM OF TEMPORARY DITCH CHECK. THE DEPARTMENT WILL NOT PAY FOR TEMPORARY DITCH CHECKS CONSTRUCTED OF A SINGLE ROW OF EROSION BALES.

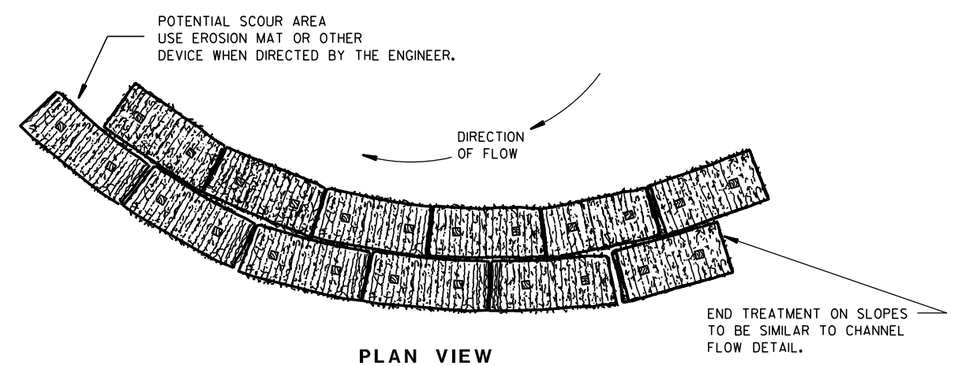

PLAN VIEW

WHEN ALTERING THE DIRECTION OF FLOW

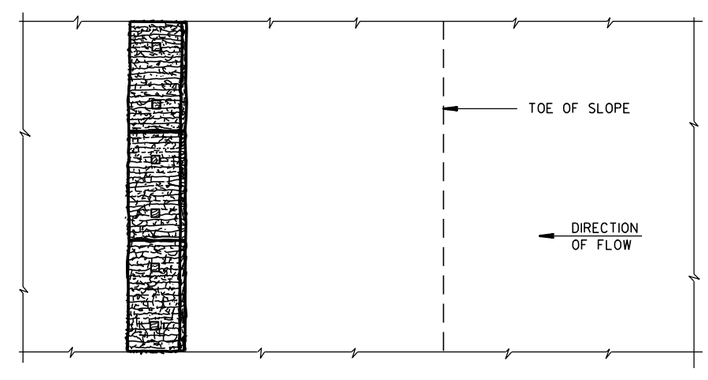

PLAN VIEW

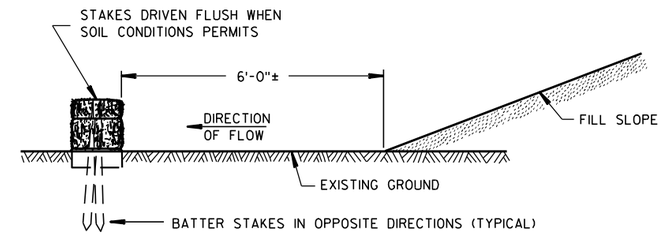

FRONT ELEVATION

WHEN EXISTING GROUND SLOPES AWAY FROM FILL SLOPE

EROSION BALES FOR SHEET FLOW

TYPICAL INSTALLATIONS OF EROSION BALES / TEMPORARY DITCH CHECKS

STATE OF WISCONSIN
DEPARTMENT OF TRANSPORTATION

APPROVED

6/04/02 — DATE

/S/ Beth Cann — CHIEF ROADWAY DEVELOPMENT ENGINEER

FHWA

6

6

S.D.D. 8 E 8-3

S.D.D. 8 E 8-3

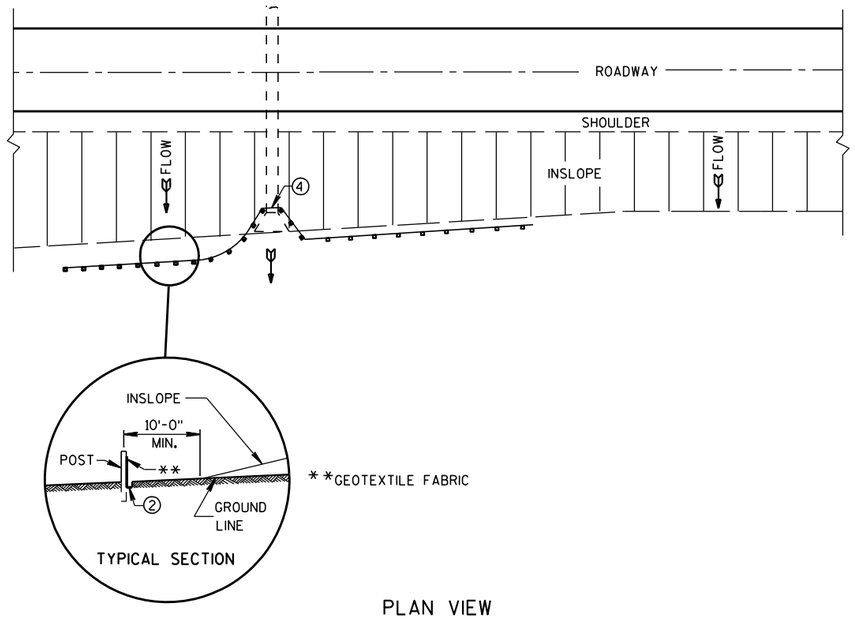

PLAN VIEW

TYPICAL APPLICATION OF SILT FENCE

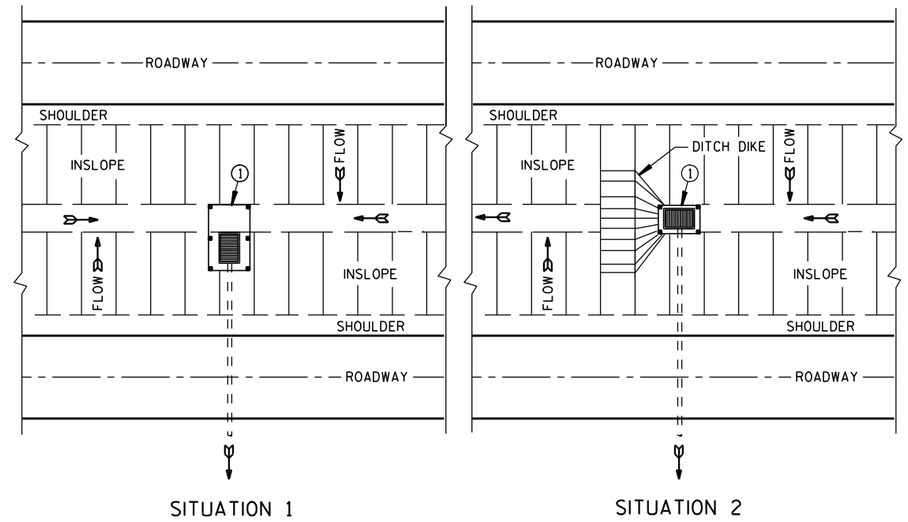

PLAN VIEW

SILT FENCE AT MEDIAN SURFACE DRAINS

GENERAL NOTES

DETAILS OF CONSTRUCTION NOT SHOWN ON THIS DRAWING SHALL CONFORM TO THE PERTINENT REQUIREMENTS OF THE STANDARD SPECIFICATIONS AND APPLICABLE SPECIAL PROVISIONS.

① HORIZONTAL BRACE REQUIRED WITH 2" X 4" WOODEN FRAME OR EQUIVALENT AT TOP OF POSTS.

② FOR MANUAL INSTALLATIONS THE TRENCH SHALL BE A MINIMUM OF 4" WIDE & 6" DEEP TO BURY AND ANCHOR THE GEOTEXTILE FABRIC. FOLD MATERIAL TO FIT TRENCH AND BACKFILL & COMPACT TRENCH WITH EXCAVATED SOIL.

③ WOOD POSTS SHALL BE A MINIMUM SIZE OF 1⅛" X 1⅛" OF OAK OR HICKORY.

④ SILT FENCE TO EXTEND ACROSS THE TOP OF THE PIPE.

⑤ CONSTRUCT SILT FENCE FROM A CONTINUOUS ROLL IF POSSIBLE BY CUTTING LENGTHS TO AVOID JOINTS. IF A JOINT IS NECESSARY USE ONE OF THE FOLLOWING TWO METHODS; A) OVERLAP THE END POSTS AND TWIST, OR ROTATE, AT LEAST 180 DEGREES. B) HOOK THE END OF EACH SILT FENCE LENGTH.

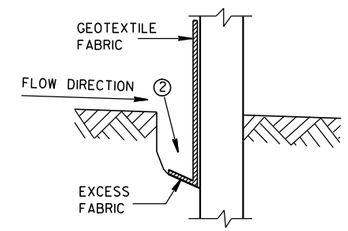

TRENCH DETAIL

NOTE: ADDITIONAL POST DEPTH OR TIE BACKS MAY BE REQUIRED IN UNSTABLE SOILS

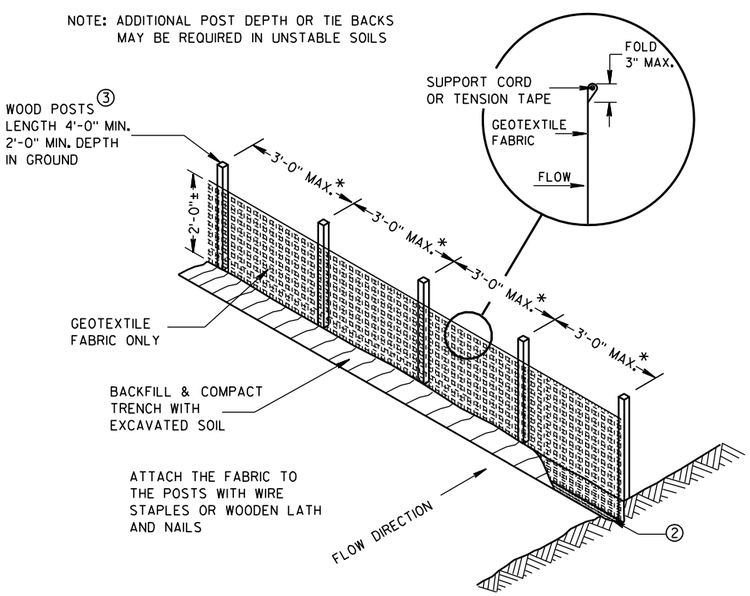

*NOTE: 8'-0" POST SPACING ALLOWED IF A WOVEN GEOTEXTILE FABRIC IS USED.

SILT FENCE

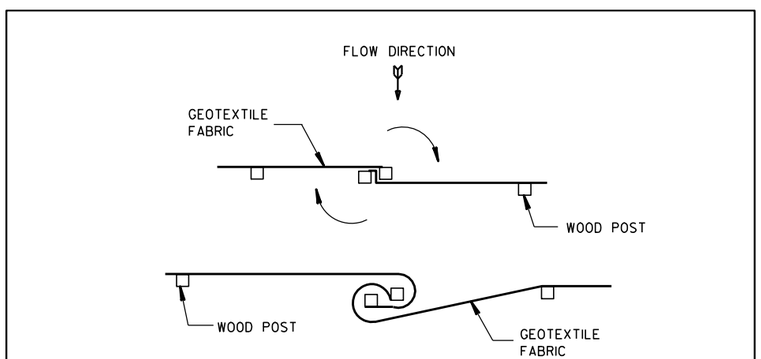

TWIST METHOD

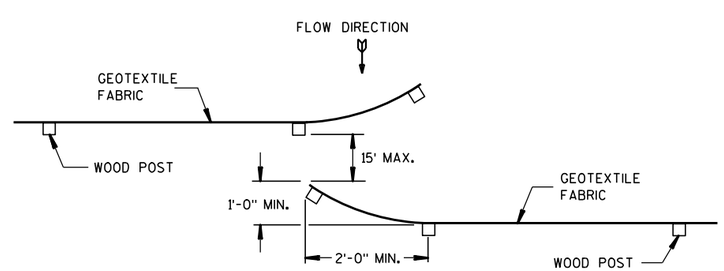

HOOK METHOD

JOINING TWO LENGTHS OF SILT FENCE ⑤

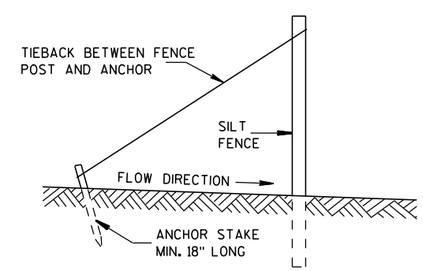

SILT FENCE TIE BACK

(WHEN REQUIRED BY THE ENGINEER)

SILT FENCE
STATE OF WISCONSIN DEPARTMENT OF TRANSPORTATION
APPROVED 4-29-05 /S/ Beth Cann----- DATE CHIEF ROADWAY DEVELOP ENGINEER FHWA

6

6

S.D.D. 8 E 9-6

S.D.D. 8 E 9-6

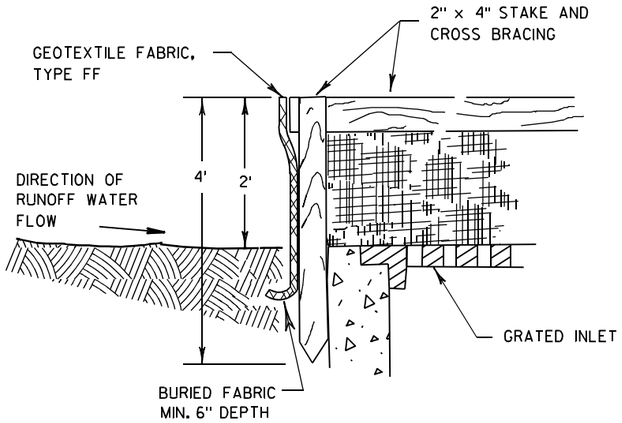

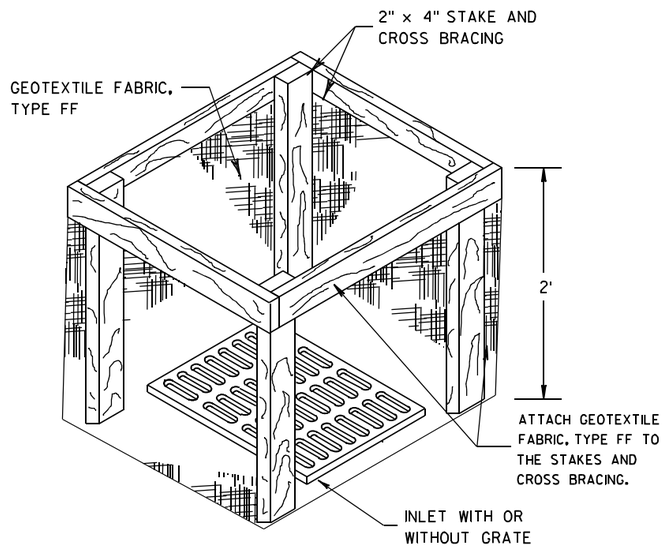

INLET PROTECTION, TYPE A

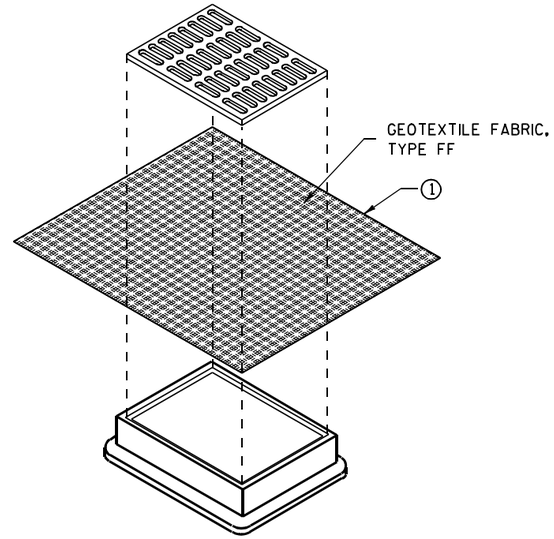

INLET PROTECTION, TYPE B (WITHOUT CURB BOX)

(CAN BE INSTALLED IN ANY INLET WITHOUT A CURB BOX)

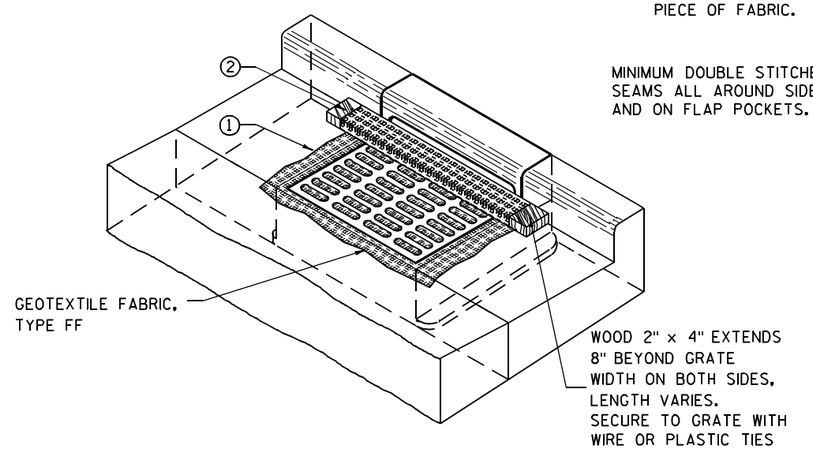

INLET PROTECTION, TYPE C (WITH CURB BOX)

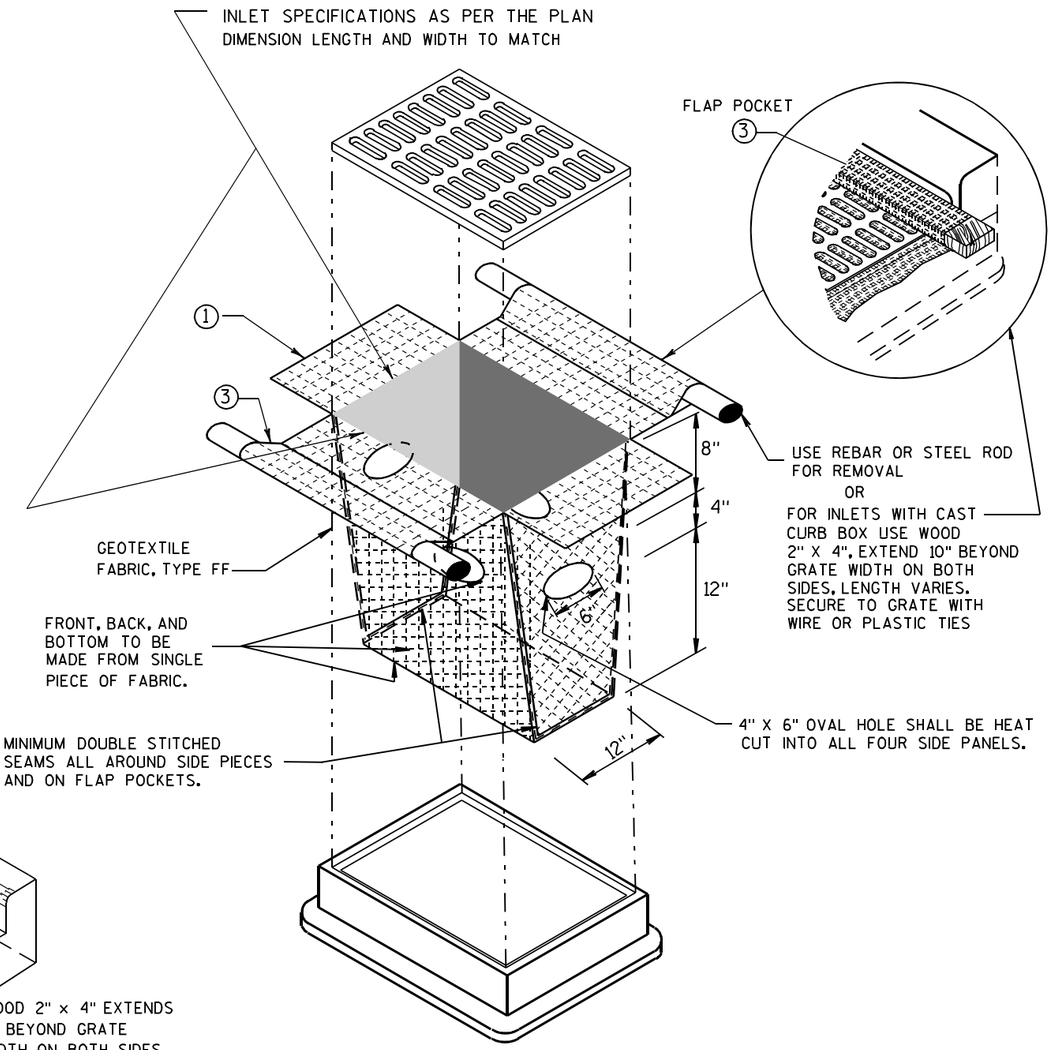

INLET PROTECTION, TYPE D

(CAN BE INSTALLED IN ANY INLET TYPE WITH OR WITHOUT A CURB BOX AS PER NOTE 2)

GENERAL NOTES

INLET PROTECTION DEVICES SHALL BE MAINTAINED OR REPLACED AT THE DIRECTION OF THE ENGINEER.

MANUFACTURED ALTERNATIVES APPROVED AND LISTED ON THE DEPARTMENT'S EROSION CONTROL PRODUCT ACCEPTABILITY LIST MAY BE SUBSTITUTED.

WHEN REMOVING OR MAINTAINING INLET PROTECTION, CARE SHALL BE TAKEN SO THAT THE SEDIMENT TRAPPED ON THE GEOTEXTILE FABRIC DOES NOT FALL INTO THE INLET. ANY MATERIAL FALLING INTO THE INLET SHALL BE REMOVED IMMEDIATELY.

1 FINISHED SIZE, INCLUDING FLAP POCKETS WHERE REQUIRED, SHALL EXTEND A MINIMUM OF 10" AROUND THE PERIMETER TO FACILITATE MAINTENANCE OR REMOVAL.

2 FOR INLET PROTECTION, TYPE C (WITH CURB BOX), AN ADDITIONAL 18" OF FABRIC IS WRAPPED AROUND THE WOOD AND SECURED WITH STAPLES. THE WOOD SHALL NOT BLOCK THE ENTIRE HEIGHT OF THE CURB BOX OPENING.

3 FLAP POCKETS SHALL BE LARGE ENOUGH TO ACCEPT WOOD 2X4.

INSTALLATION NOTES

TYPE B & C

TRIM EXCESS FABRIC IN THE FLOW LINE TO WITHIN 3" OF THE GRATE.

THE CONTRACTOR SHALL DEMONSTRATE A METHOD OF MAINTENANCE, USING A SEWN FLAP, HAND HOLDS OR OTHER METHOD TO PREVENT ACCUMULATED SEDIMENT FROM ENTERING THE INLET.

TYPE D

DO NOT INSTALL INLET PROTECTION TYPE D IN INLETS SHALLOWER THAN 30", MEASURED FROM THE BOTTOM OF THE INLET TO THE TOP OF THE GRATE.

TRIM EXCESS FABRIC IN THE FLOW LINE TO WITHIN 3" OF THE GRATE.

THE INSTALLED BAG SHALL HAVE A MINIMUM SIDE CLEARANCE, BETWEEN THE INLET WALLS AND THE BAG, MEASURED AT THE BOTTOM OF THE OVERFLOW HOLES, OF 3". WHERE NECESSARY THE CONTRACTOR SHALL CINCH THE BAG, USING PLASTIC ZIP TIES, TO ACHIEVE THE 3" CLEARANCE. THE TIES SHALL BE PLACED AT A MAXIMUM OF 4" FROM THE BOTTOM OF THE BAG.

INLET PROTECTION TYPE A, B, C, AND D

STATE OF WISCONSIN
DEPARTMENT OF TRANSPORTATION

APPROVED
10/16/02 — DATE
/S/ Beth Cannon — CHIEF ROADWAY DEVELOPMENT ENGINEER
FHWA

6

S.D.D. 8 E 10-2

GENERAL NOTES

DETAILS OF CONSTRUCTION, MATERIALS AND WORKMANSHIP NOT SHOWN ON THIS DRAWING SHALL CONFORM TO THE PERTINENT REQUIREMENTS OF THE STANDARD SPECIFICATIONS AND THE APPLICABLE SPECIAL PROVISIONS.

TRACKING PAD SHALL BE INSPECTED DAILY. DEFICIENT AREAS SHALL BE REPAIRED OR REPLACED IMMEDIATELY.

TRACKING PAD TO BE REMOVED AFTER CONSTRUCTION IS COMPLETED.

TRACKING PAD SHALL BE THE FULL WIDTH OF THE EGRESS POINT.

SURFACE WATER MUST BE PREVENTED FROM PASSING THROUGH THE TRACKING PAD. FLOWS SHALL BE DIVERTED AWAY, AROUND OR CONVEYED UNDER THE TRACKING PAD.

CULVERT PIPE OR OTHER BMP USED TO DIVERT WATER AWAY, AROUND OR UNDER THE TRACKING PAD SHALL BE DESIGNED TO CONVEY THE 2 YEAR - 24 HOUR EVENT.

THE COST OF ADDITIONAL BMP TO DIVERT WATER ARE INCIDENTAL TO THE TRACKING PAD BID ITEM.

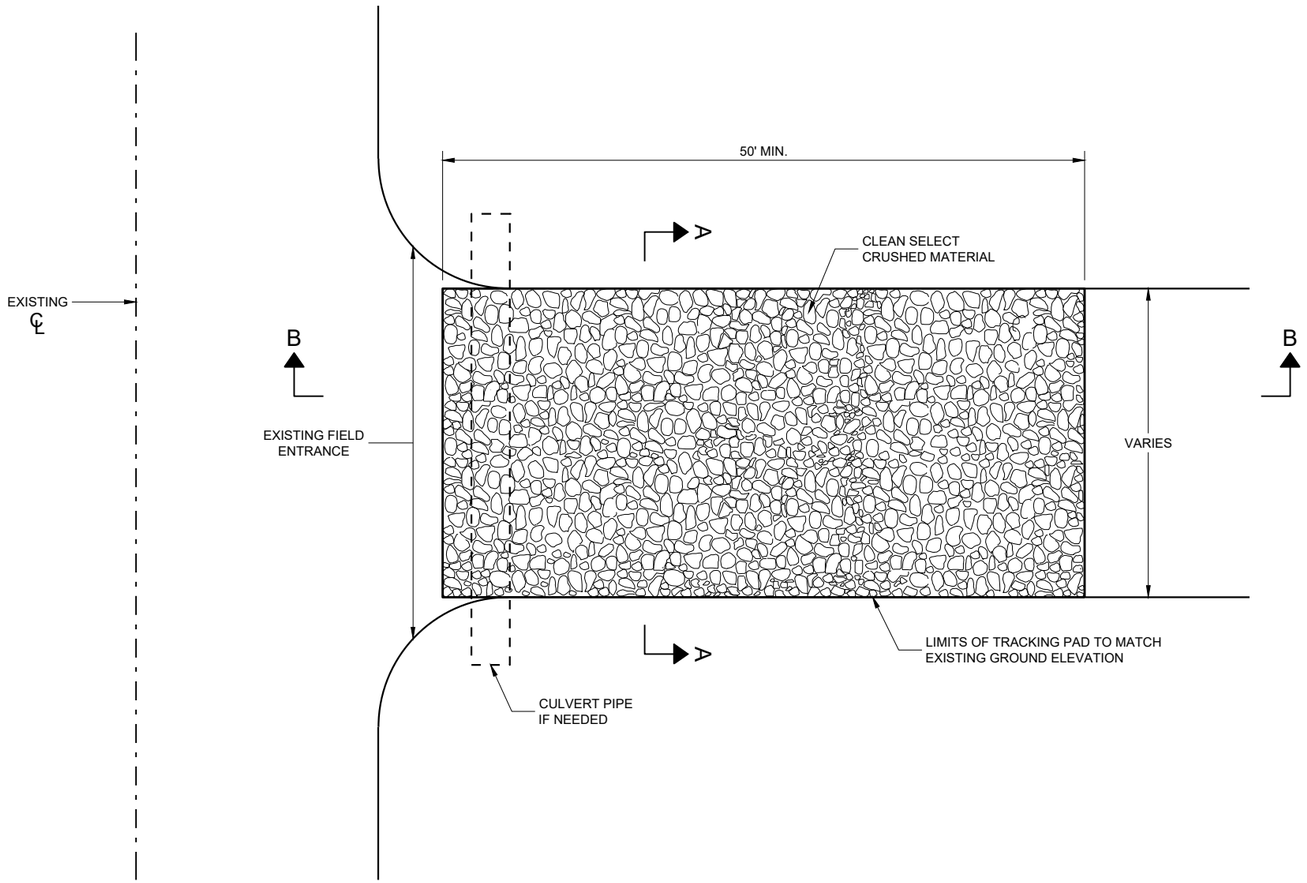

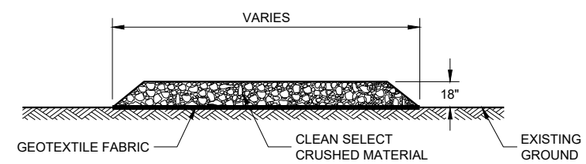

SECTION A - A

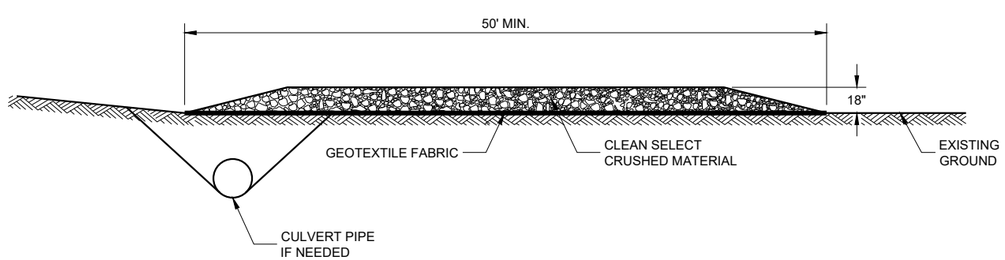

SECTION B - B

TRACKING PAD

STATE OF WISCONSIN
DEPARTMENT OF TRANSPORTATION

APPROVED
3/24/2011 — DATE
/S/ Jerry H. Zogg — ROADWAY STANDARDS DEVE ENGINEER
FHWA

6

6

SDD 08E14 - 01

SDD 08E14 - 01

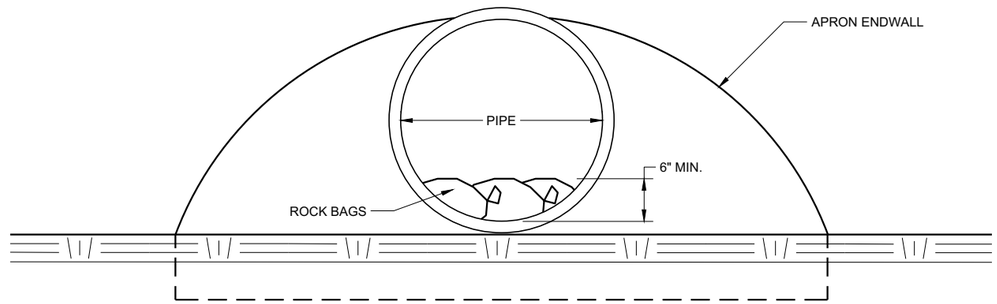

END VIEW

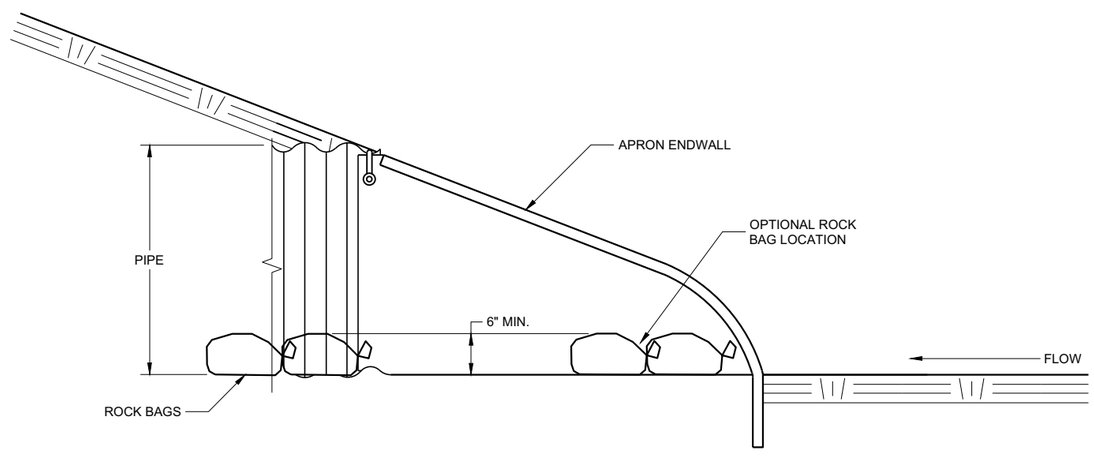

SIDE VIEW

CULVERT PIPE CHECK

(INSTALL ON INLET END ONLY)

CULVERT PIPE CHECK

STATE OF WISCONSIN
DEPARTMENT OF TRANSPORTATION

APPROVED
May 2019 — DATE
/S/ Daniel Schave — EROSION CONTROL ENGI
FHWA

6

6

SDD 08E15 - 01

SDD 08E15 - 01

METAL APRON ENDWALLS

PIPE DIA. (IN.)	MIN. THICK. (Inches) STEEL	MIN. THICK. (Inches) ALUM.	DIMENSIONS (Inches) A (±1")	B (MAX.)	H (±1")	L (±1 1/2")	L1 ①	L2 ①	W (±2")	APPROX. SLOPE	BODY
12	.064	.060	6	6	6	21	12	17 1/2	24	2 1/2 to 1	1 Pc.
15	.064	.060	7	8	6	26	14	21 3/4	30	2 1/2 to 1	1 Pc.
18	.064	.060	8	10	6	31	15	28 1/4	36	2 1/2 to 1	1 Pc.
21	.064	.060	9	12	6	36	18	29 5/8	42	2 1/2 to 1	1 Pc.
24	.064	.075	10	13	6	41	18	37 1/4	48	2 1/2 to 1	1 Pc.
30	.079	.075	12	16	8	51	18	52 1/4	60	2 1/2 to 1	1 Pc.
36	.079	.105	14	19	9	60	24	59 3/4	72	2 1/2 to 1	2 Pc.
42	.109	.105	16	22	11	69	24	75 5/8	84	2 1/2 to 1	2 Pc.
48	.109	.105	18	27	12	78	24	81	90	2 1/4 to 1	3 Pc.
54	.109	.105	18	30	12	84	30	85 1/2	102	2 1/4 to 1	3 Pc.
60	.109×	.105×	18	33	12	87	—	—	114	2 to 1	3 Pc.
66	.109×	.105×	18	36	12	87	—	—	120	2 to 1	3 Pc.
72	.109×	.105×	18	39	12	87	—	—	126	2 to 1	3 Pc.
78	.109×	.105×	18	42	12	87	—	—	132	1 1/2 to 1	3 Pc.
84	.109×	.105×	18	45	12	87	—	—	138	1 1/2 to 1	3 Pc.
90	.109×	.105×	18	37	12	87	—	—	144	1 1/2 to 1	3 Pc.
96	.109×	.105×	18	35	12	87	—	—	150	1 1/2 to 1	3 Pc.

× EXCEPT CENTER PANEL
SEE GENERAL NOTES

REINFORCED CONCRETE APRON ENDWALLS

PIPE DIA. (IN.)	DIMENSIONS (Inches) T	A	B	C	D	E	G	APPROX. SLOPE
12	2	4	24	48 7/8	72 7/8	24	2	3 to 1
15	2 1/4	6	27	46	73	30	2 1/4	3 to 1
18	2 1/2	9	27	46	73	36	2 1/2	3 to 1
21	2 3/4	9	36	37 1/2	73 1/2	42	2 3/4	3 to 1
24	3	9 1/2	43 1/2	30	73 1/2	48	3	3 to 1
27	3 1/4	10 1/2	49 1/2	24	73 1/2	54	3 1/4	3 to 1
30	3 1/2	12	54	19 3/4	73 1/2	60	3 1/2	3 to 1
36	4	15	63	34 3/4	97 3/4	72	4	3 to 1
42	4 1/2	21	63	35	98	78	4 1/2	3 to 1
48	5	24	72	26	98	84	5	3 to 1
54	5 1/2	27	65	*33 1/4-**35	*98 1/4-**100	90	5 1/2	2 2/5 to 1
60	6	*30-**35	60	39	99	96	5	2 to 1
66	6 1/2	*24-**30	*72-**78	*21-**27	99	102	5 1/2	2 to 1
72	7	*24-**36	78	21	99	108	6	2 to 1
78	7 1/2	*24-**36	78	21	99	114	6 1/2	2 to 1
84	8	36	90 1/2	21	111 1/2	120	6 1/2	1 1/2 to 1
90	8 1/2	41	87 1/2	24	111 1/2	132	6 1/2	1 1/2 to 1

*MINIMUM
**MAXIMUM

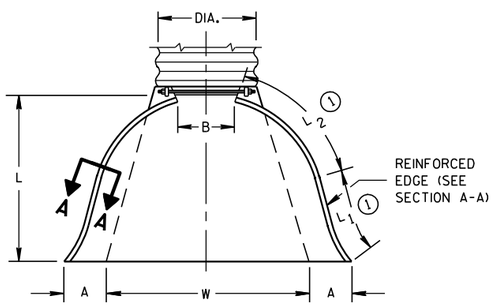

PLAN VIEW

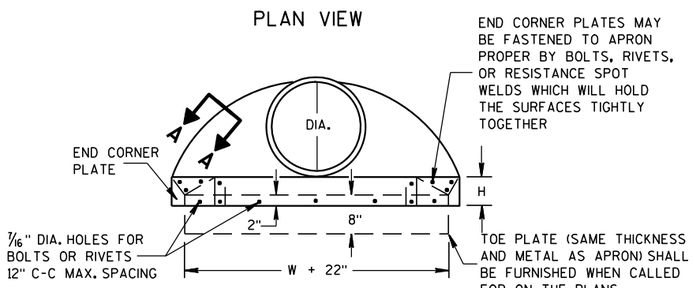

END VIEW

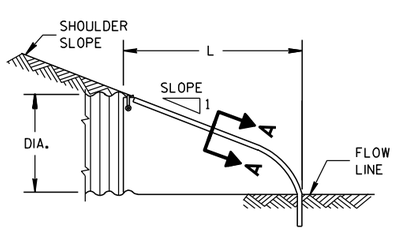

SIDE ELEVATION

METAL ENDWALLS

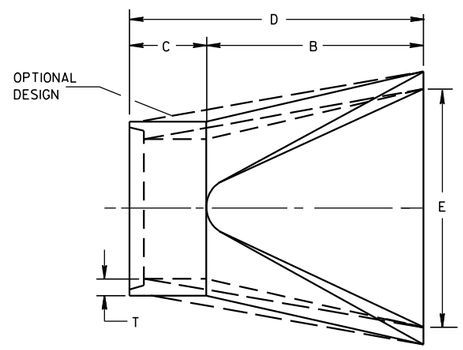

PLAN

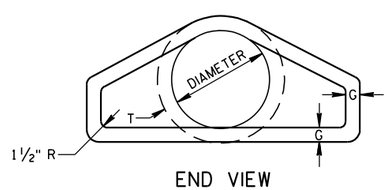

END VIEW

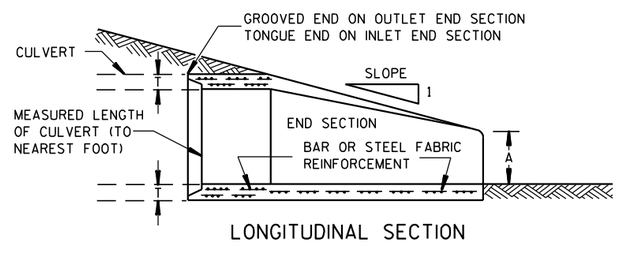

LONGITUDINAL SECTION

CONCRETE ENDWALLS

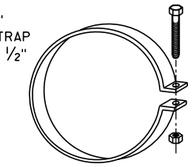

ALTERNATE FOR TYPE 1 CONNECTION

END SECTION CONNECTOR STRAP

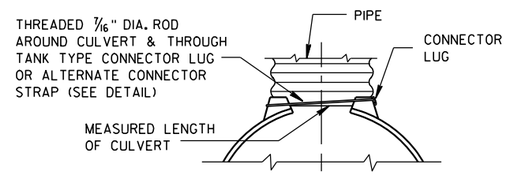

TYPE 1
FOR 12" THRU 24" CORR. PIPE

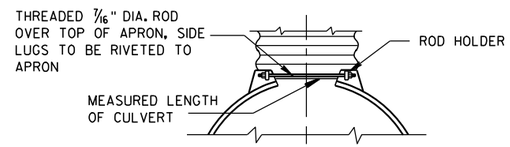

TYPE 2
FOR 30" THRU 96" CORR. PIPE

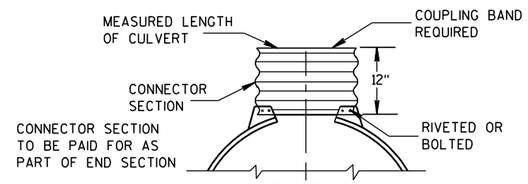

TYPE 3
FOR 42" THRU 96" CORR. PIPE

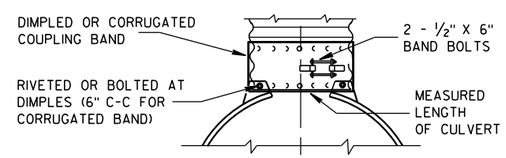

TYPE 5
ALTERNATE FOR:
ALL SIZES CORRUGATED CIRCULAR PIPE

NOTE: DIMPLED BAND FITS OVER OUTSIDE OF ENDWALL, AND CORRUGATED BAND FITS INSIDE ENDWALL. DIMPLED BAND MAY BE USED WITH HELICALLY CORRUGATED PIPE.

FOR CIRCUMFERENTIALLY CORRUGATED PIPE USE ENDWALL CONNECTION DETAILS 1, 2, 3 OR 5 AS APPLICABLE.

FOR HELICALLY CORRUGATED PIPE USE ENDWALL CONNECTION DETAILS 1, 2 OR 5.

FOR HELICALLY CORRUGATED PIPES WITH TWO CIRCUMFERENTIAL CORRUGATIONS AT EACH END USE ENDWALL CONNECTION DETAILS 1, 2 OR 3.

CONNECTION DETAILS

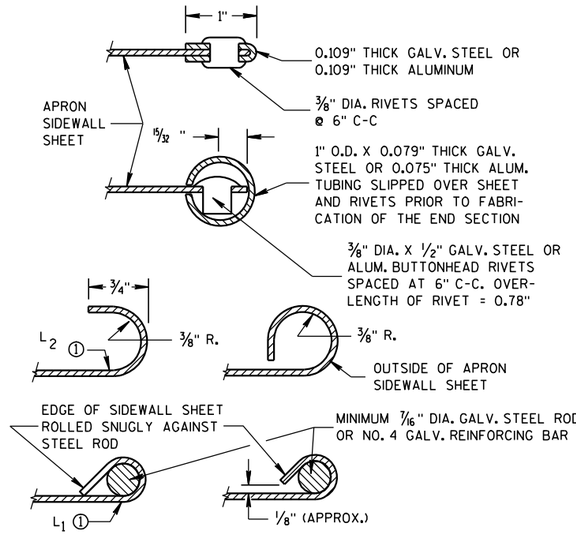

SECTION A-A

GENERAL NOTES

DETAILS OF CONSTRUCTION, MATERIALS AND WORKMANSHIP NOT SHOWN ON THIS DRAWING SHALL CONFORM TO THE PERTINENT REQUIREMENTS OF THE STANDARD SPECIFICATIONS AND THE APPLICABLE SPECIAL PROVISIONS.

CONCRETE CULVERT ENDWALLS MAY NOT BE USED WITH GALVANIZED STEEL OR ALUMINUM CULVERT PIPE OR VISE VERSA. GALVANIZED STEEL OR ALUMINUM ENDWALLS SHALL NORMALLY BE INSTALLED ON CULVERT PIPE OF THE SAME METAL.

ALL THREE PIECE STEEL APRON ENDWALLS FOR 60" DIAMETER PIPE AND LARGER SHALL HAVE 0.109" SIDES AND 0.138" CENTER PANELS. ALL THREE PIECE ALUMINUM APRON ENDWALLS FOR 60" DIAMETER PIPE AND LARGER SHALL HAVE 0.105" SIDES AND 0.134" CENTER PANELS. THE WIDTH OF CENTER PANELS SHALL BE GREATER THAN 20 PERCENT OF THE PIPE PERIMETER.

LAP SEAMS SHALL BE TIGHTLY JOINED BY GALVANIZED RIVETS OR BOLTS FOR STEEL UNITS AND ALUMINUM RIVETS AND BOLTS FOR ALUMINUM UNITS. FOR THE 60" THROUGH 96" DIAMETER APRON ENDWALL SIZES, THE REINFORCED EDGES AND CENTER PANEL SEAMS SHALL BE FURTHER REINFORCED WITH GALVANIZED STEEL OR ALUMINUM STIFFENER ANGLES. THE ANGLES SHALL BE ATTACHED BY GALVANIZED NUTS AND BOLTS FOR STEEL UNITS AND ALUMINUM NUTS AND BOLTS FOR ALUMINUM UNITS.

WHERE TWO OR MORE PIPES WITH APRON ENDWALLS ARE LAID ADJACENT TO EACH OTHER, THEY SHALL BE SEPARATED BY A DISTANCE SUFFICIENT TO PROVIDE A MINIMUM CLEARANCE OF 6 INCHES BETWEEN APRON ENDWALLS.

① FOR PIPE SIZES UP TO 60" DIAMETER, A 180° ROLLED EDGE MAY BE USED INSTEAD OF STEEL ROD REINFORCEMENT. SEE SECTION A-A.

APRON ENDWALLS FOR CULVERT PIPE

STATE OF WISCONSIN
DEPARTMENT OF TRANSPORTATION

APPROVED
11/30/94 — DATE
/S/ Rory L. Rhinesmith — CHIEF ROADWAY DEVELOPMENT ENGINEER
FHWA

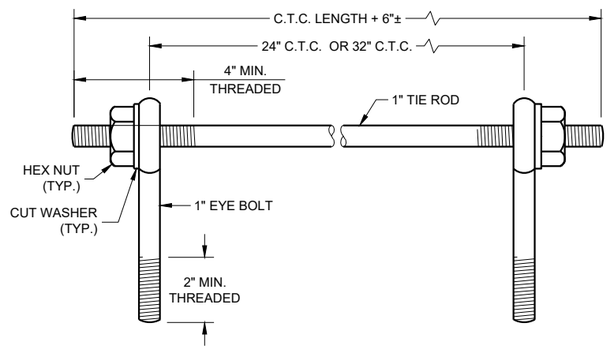

EYE BOLTS AND TIE ROD

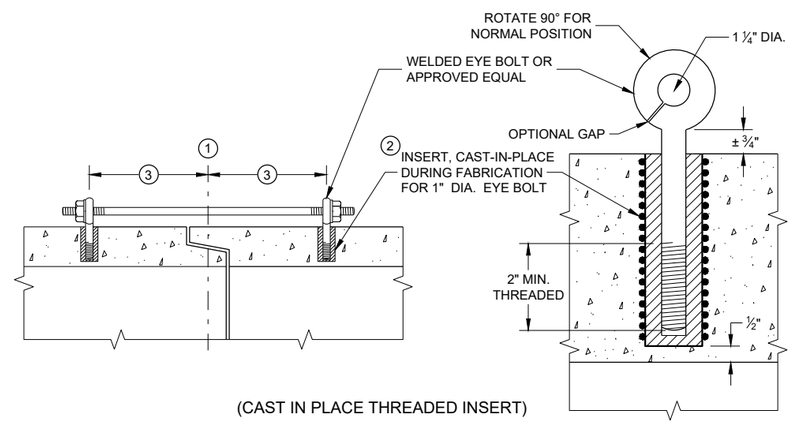

(CAST IN PLACE THREADED INSERT)

LONGITUDINAL SECTIONS

EYE BOLT AND TIE ROD ASSEMBLY (ALTERNATE NO. 1)

GENERAL NOTES

DETAILS OF CONSTRUCTION, MATERIALS, AND WORKMANSHIP NOT SHOWN ON THIS DRAWING SHALL CONFORM TO THE PERTINENT REQUIREMENTS OF THE STANDARD SPECIFICATIONS AND APPLICABLE SPECIAL PROVISIONS.

CONCRETE CULVERT AND STORM SEWER PIPE SHALL BE TIED TOGETHER IN THE MANNER ILLUSTRATED BY THIS DETAIL AT LOCATIONS DESIGNATED IN THE STANDARD SPECIFICATIONS AND THE PLAN. THE CONTRACTOR MAY USE EITHER ALTERNATE 1, 2 OR 3 FOR DRAINAGE STRUCTURES. ONLY ALTERNATE 1 AND 3 MAY BE USED FOR CATTLE PASSES, UNLESS OTHERWISE STATED IN THE CONTRACT. THE MATERIALS, FABRICATION AND WORK NECESSARY TO TIE THE PIPE BY THIS DETAIL WILL BE CONSIDERED INCIDENTAL TO THE PIPE AND APRON ENDWALLS IF REQUIRED.

DETAILED DRAWINGS FOR PROPOSED ALTERNATE DESIGNS FOR JOINT TIES SHALL BE SUBMITTED TO THE ENGINEER FOR APPROVAL.

JOINT TIES TO BE HOT-DIP GALVANIZED PER ASTM A 153.

1. CENTER LINE OF TONGUE AND GROOVE OR BELL AND SPIGOT JOINTS.
2. THE INSIDE OF THE THREADED INSERTS SHALL BE CLEAN TO ALLOW THE INSERTION OF THREADED EYE BOLTS.
3. HOLES SHALL BE CAST-IN-PLACE OR DRILLED PER THE APPLICABLE DETAIL, AND EQUAL DISTANCE FROM THE CENTERLINE OF THE JOINT.
4. BOLT PROJECTION INSIDE OF PIPE SHALL NOT EXCEED 2 INCHES.
5. OPENING TO BE ROD DIAMETER PLUS 1 INCH.
6. LENGTH ADEQUATE TO EXTEND TO WITHIN ½ INCH OF THE INNER SURFACE OF THE PIPE.
7. EYE BOLT LENGTH DETERMINED BY WALL THICKNESS, BELL THICKNESS AND BOLT PROJECTION INSIDE PIPE.

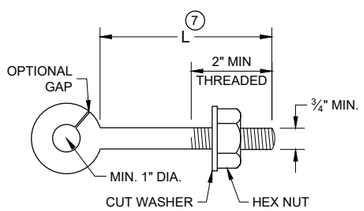

EYE BOLT 7

NOTE: TWO EYE BOLTS MAY BE USED WITH A 30" OR 38" LONG THREADED ROD IN LIEU OF THE 90° BENT TIE ROD.

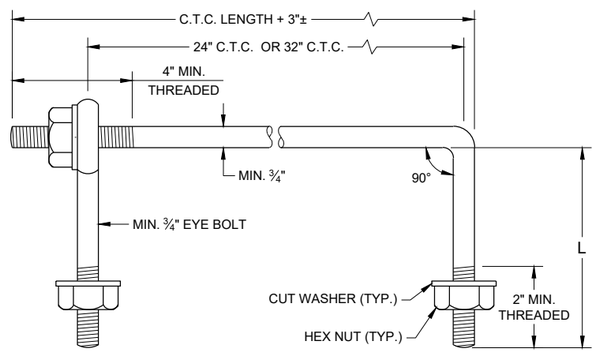

EYE BOLT AND TIE ROD

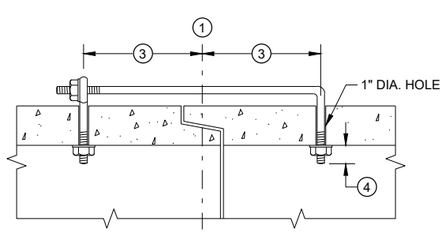

(TONGUE AND GROOVE PIPE)

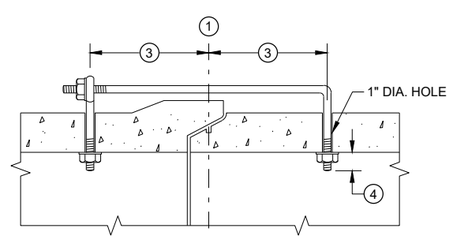

(MODIFIED BELL PIPE)

LONGITUDINAL SECTION

(JOINT TIES FOR 18" TO 66" DIA. CONCRETE PIPE)

EYE BOLT AND TIE ROD ASSEMBLY (ALTERNATE NO. 2)

ADJUSTABLE TIE ROD TABLE

PIPE DIAMETER	TIE ROD DIAMETER	D	L_1	N
12 - 60	⅝	⅝	5	½
66 - 84	¾	¾	5	½
90 - 144	1	1	7	1 7/16

DIMENSIONS SHOWN ARE IN INCHES

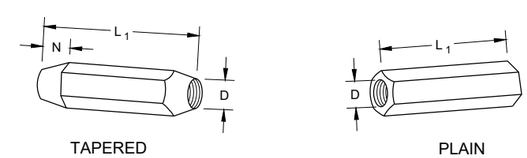

RIGHT AND LEFT THREADS

SLEEVE NUTS

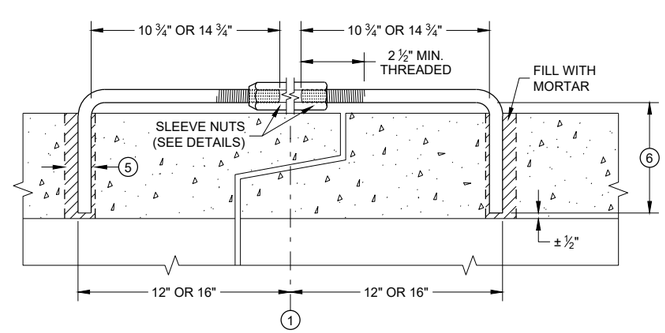

LONGITUDINAL SECTION

ADJUSTABLE TIE ROD (ALTERNATE NO. 3)

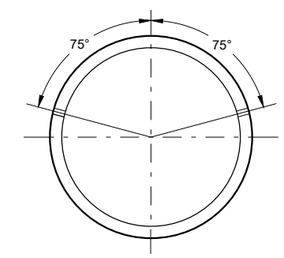

PLACEMENT OF (2) CAST-IN-PLACE INSERTS OR HOLES DURING FABRICATION FOR PIPE SECTIONS REQUIRING TIE RODS

TRANSVERSE SECTION

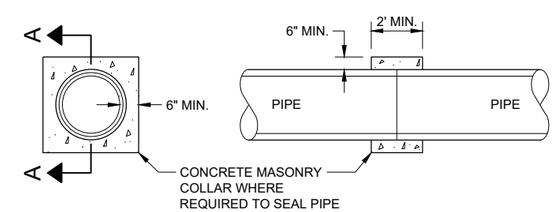

SECTION A - A

CONCRETE COLLAR DETAIL

JOINT TIES FOR CONCRETE PIPE AND CONCRETE COLLAR DETAIL

STATE OF WISCONSIN
DEPARTMENT OF TRANSPORTATION

APPROVED
November 2021 — DATE
/S/ Rodney Taylor — ROADWAY STANDARDS DEVE ENGINEER
FHWA

6

SDD 08F04 - 08

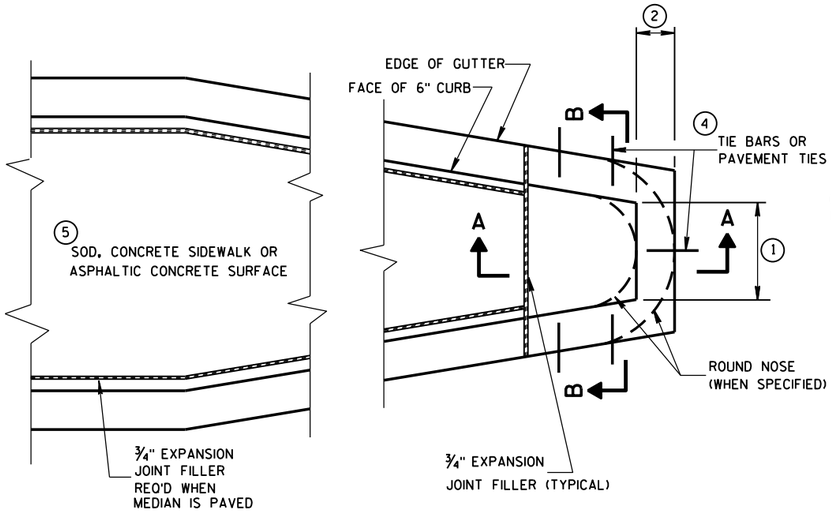

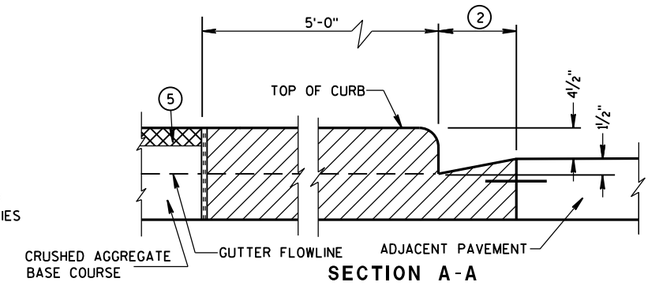

SECTION A-A

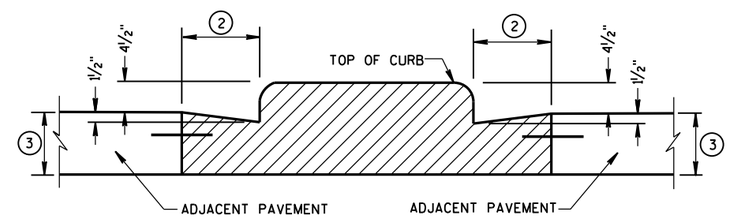

SECTION B-B

CONCRETE MEDIAN BLUNT NOSE DETAIL

GENERAL NOTES

DETAILS OF CONSTRUCTION, MATERIALS AND WORKMANSHIP NOT SHOWN ON THIS DRAWING SHALL CONFORM TO THE PERTINENT REQUIREMENTS OF THE STANDARD SPECIFICATIONS AND THE APPLICABLE SPECIAL PROVISIONS.

1. SEE PLAN FOR MEDIAN NOSE WIDTH AND RADIUS (FOR ROUND NOSE ALTERNATE).
2. WIDTH OF GUTTER TO MATCH EXISTING ADJACENT GUTTER OR AS SPECIFIED ELSEWHERE IN THE PLAN.
3. DEPTH EQUAL TO ADJACENT PAVEMENT. ADJACENT PAVEMENT STRUCTURE DETAILS ARE SHOWN ON THE PLAN. TYPICAL OPTIONS ARE:
   (1) NEW OR EXISTING CONCRETE PAVEMENT.
   (2) ASPHALTIC CONCRETE PAVEMENT OVER NEW OR EXISTING CONCRETE BASE COURSE.
   (3) ASPHALTIC CONCRETE PAVEMENT OVER CRUSHED AGGREGATE BASE COURSE.
4. TIE BARS OR PAVEMENT TIES REQUIRED IN NEW CONCRETE PAVEMENT OR CONCRETE BASE COURSE. TIE BARS SHALL BE NO. 4 X 2'-0" SPACED AT 2'-0" C-C.

   PAVEMENT TIES REQUIRED IN EXISTING CONCRETE BASE COURSE. PAVEMENT TIES SHALL BE NO. 6 X 1'-0" SPACED AT 3'-0" C-C INSTALLED ON A HORIZONTAL SKEW OF 6:1. THE DIRECTION OF SKEW SHALL ALTERNATE AFTER EVERY ONE OR TWO BARS.
5. SURFACE TYPE AND DETAILS ARE SHOWN ELSEWHERE IN THE PLAN.

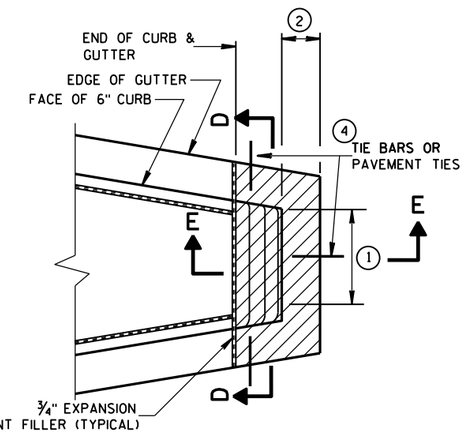

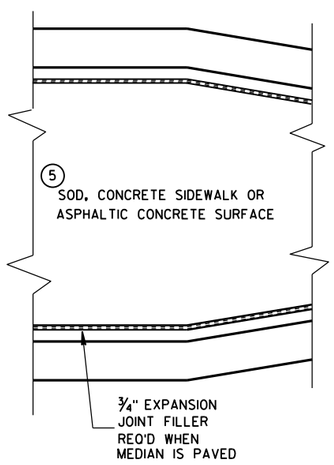

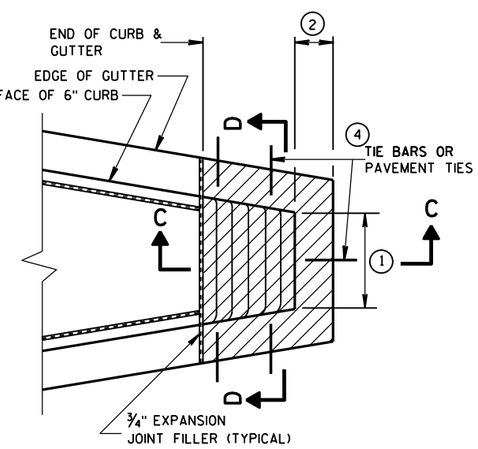

CONCRETE MEDIAN SLOPED NOSE TYPE 1

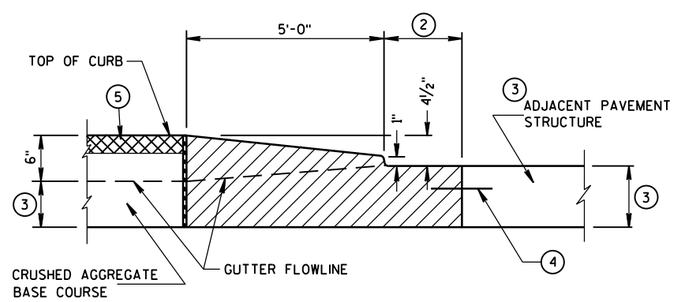

SECTION C-C

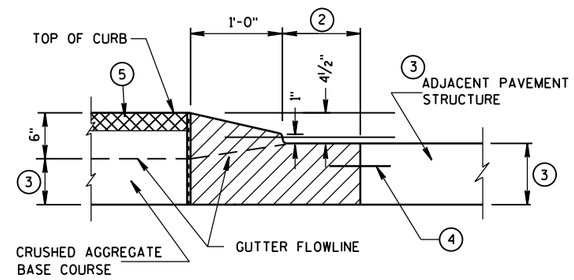

SECTION E-E

CONCRETE MEDIAN SLOPED NOSE TYPE 2

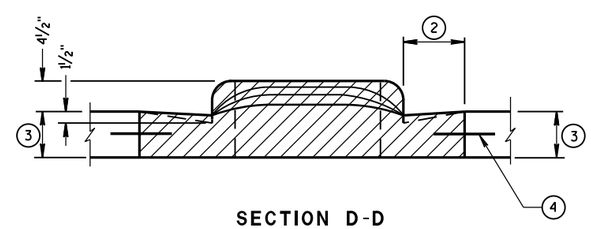

SECTION D-D

CONCRETE MEDIAN NOSE	
STATE OF WISCONSIN DEPARTMENT OF TRANSPORTATION	
APPROVED 6/8/2006 DATE	/S/ Jerry H. Zogg ROADWAY STANDARDS DEVELOPMENT ENGINEER

FHWA

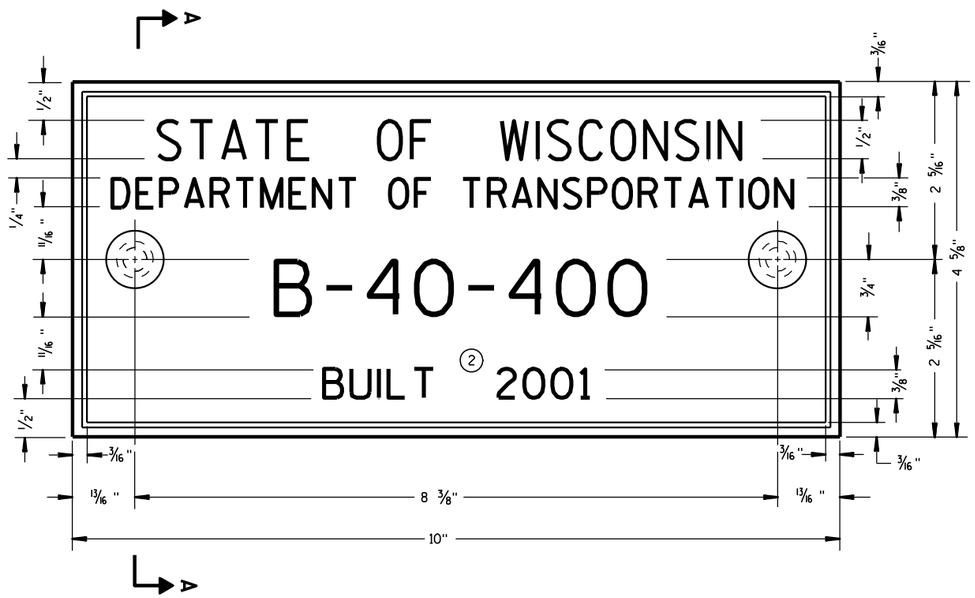

TYPICAL NAME PLATE

(BRIDGES, CULVERTS, AND RETAINING WALLS)

GENERAL NOTES

NAME PLATES TO BE INSTALLED ON BRIDGES, CULVERTS, AND RETAINING WALLS SHALL CONFORM TO THE REQUIREMENTS OF SECTION 502.3.11 OF THE STANDARD SPECIFICATIONS.

THE BRIDGE NUMBER AND YEAR BUILT SHOWN ON THIS DRAWING ARE EXAMPLES ONLY. SEE CONSTRUCTION PLANS FOR INDIVIDUAL NUMBERING AND YEAR BUILT.

(1) EPOXY RESIN SHALL BE FROM AN APPROVED MANUFACTURER AND USED IN ACCORDANCE WITH MANUFACTURER'S RECOMMENDATIONS.

(2) REHABILITATION OF AN EXISTING STRUCTURE SHOULD USE THE DATE OF ORIGINAL STRUCTURE CONSTRUCTION.

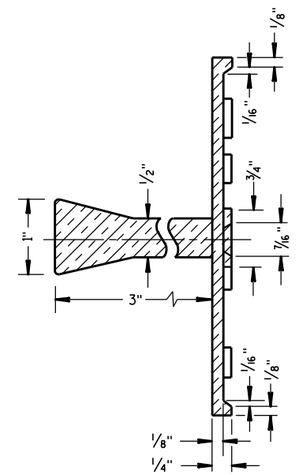

SECTION A-A

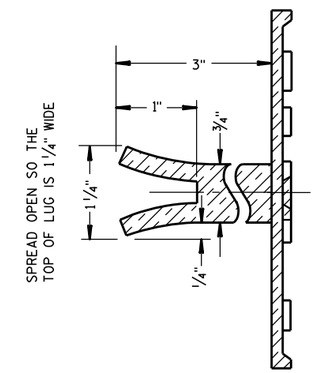

ALTERNATE LUG

FOR MULTI-UNIT STRUCTURES
LINE 3 ABOVE SHALL READ

B = BRIDGE
C = CULVERT
R = RETAINING WALL

COUNTY NO.

BRIDGE NO.

UNIT NO. FOR MULTIPLE
UNIT BRIDGE

B-40-400-1A

NUMBERING DESIGNATION
MULTI-UNIT STRUCTURES

(1) ADHERE ANCHOR LUG TO PRECAST RETAINING WALL WITH EPOXY RESIN.

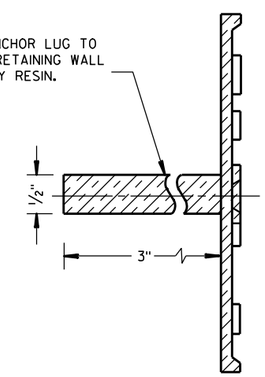

ALTERNATE LUG

(FOR ATTACHMENT TO PRECAST STRUCTURES)

NAME PLATE (STRUCTURES)		
STATE OF WISCONSIN DEPARTMENT OF TRANSPORTATION		
APPROVED		
3/26/10 DATE	/S/ Scot Beck CHIEF STRUCTURAL DEVELOPER	
FHWA		

6

6

S.D.D. 12 A 3-10

S.D.D. 12 A 3-10

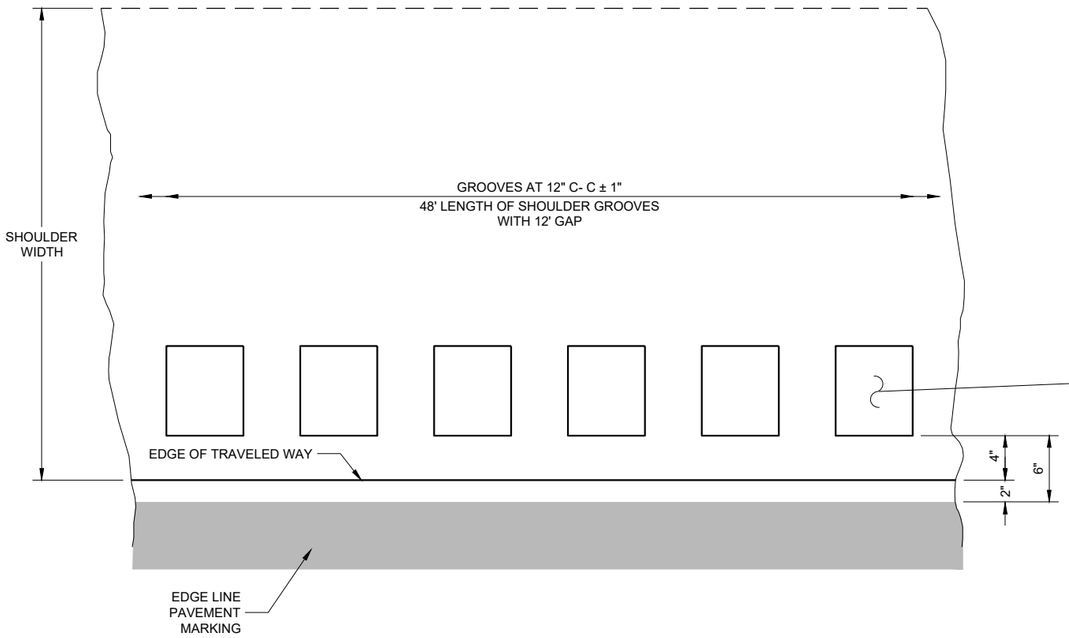

PLAN DETAIL VIEW
SHOULDER WITH GROOVES

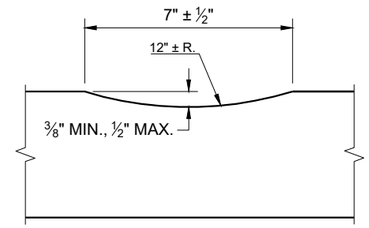

SECTION A - A

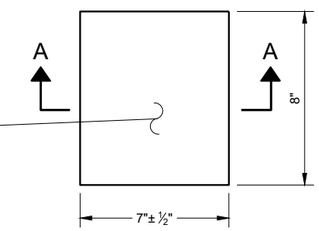

PLAN VIEW
(SINGLE GROOVE)

GENERAL NOTES

DO NOT MILL SHOULDER GROOVES THROUGH INTERSECTIONS, MARKED CROSSWALKS, NON-MOTORIZED PATH CROSSINGS, ETC. REFER TO SDD 13A10 SHEETS "g" AND "h".

SHOULDER GROOVES MAY BE OMITTED IN AREAS WITH HIGH CONCENTRATIONS OF DRIVEWAYS WHEN DIRECTED BY THE ENGINEER.

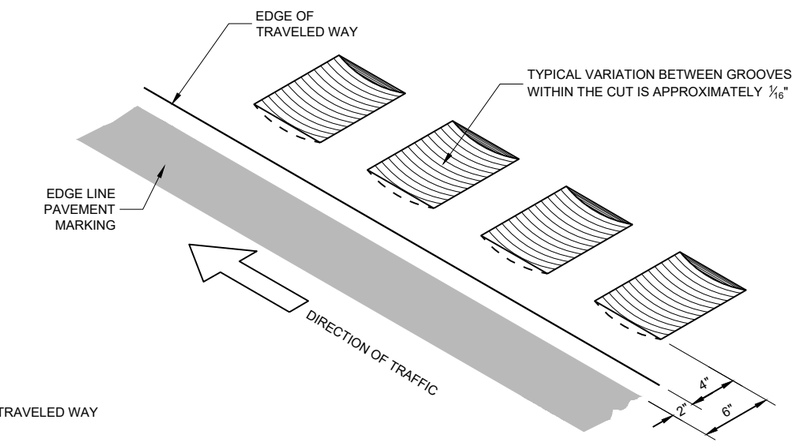

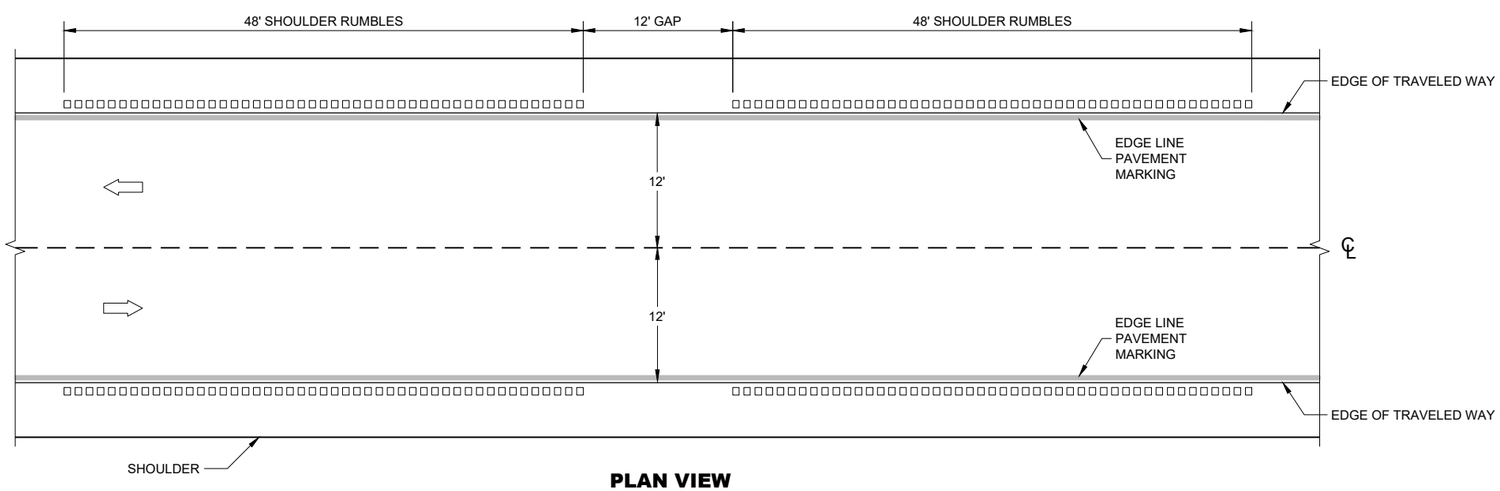

PLAN VIEW

SHOULDER RUMBLE STRIPS - ASPHALT

SHOULDER RUMBLE STRIPS ASPHALT

STATE OF WISCONSIN
DEPARTMENT OF TRANSPORTA

6

SDD 13A10 - 03a

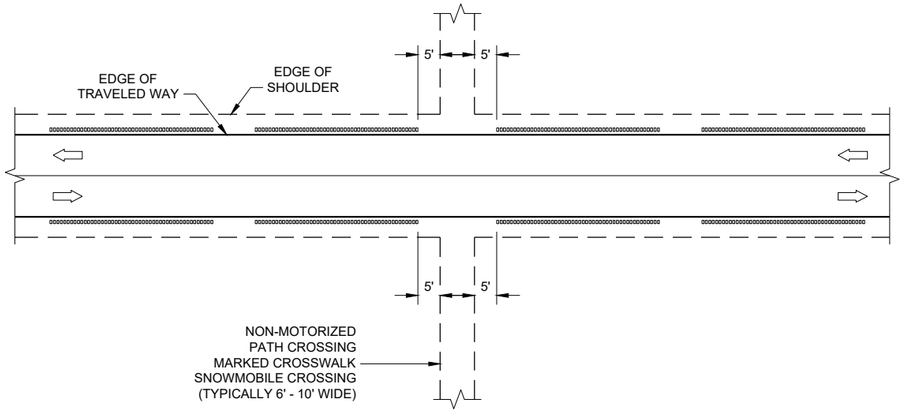

GROOVES AT MISCELLANEOUS CROSSINGS

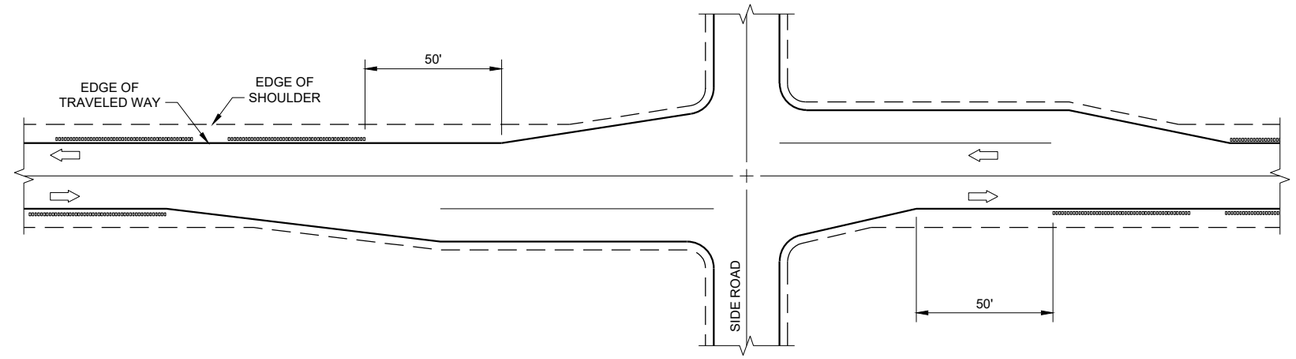

GROOVES AT RIGHT TURN LANE

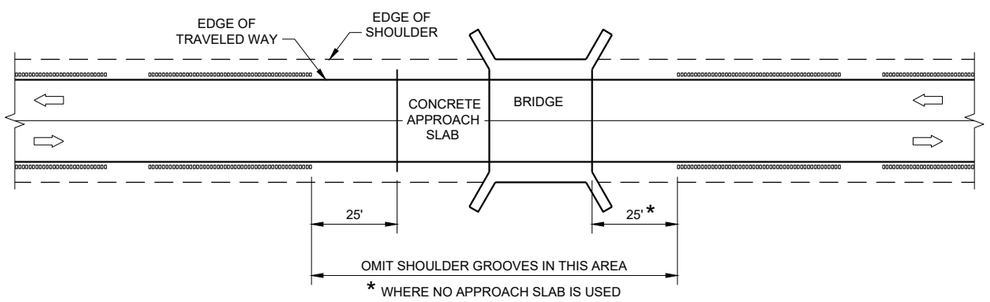

GROOVES AT BRIDGES

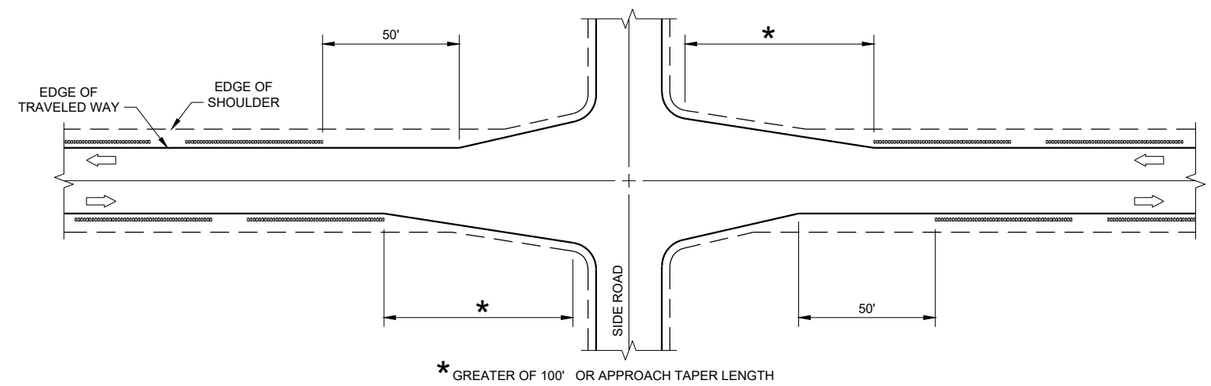

GROOVES AT INTERSECTIONS WITH APPROACH TAPER

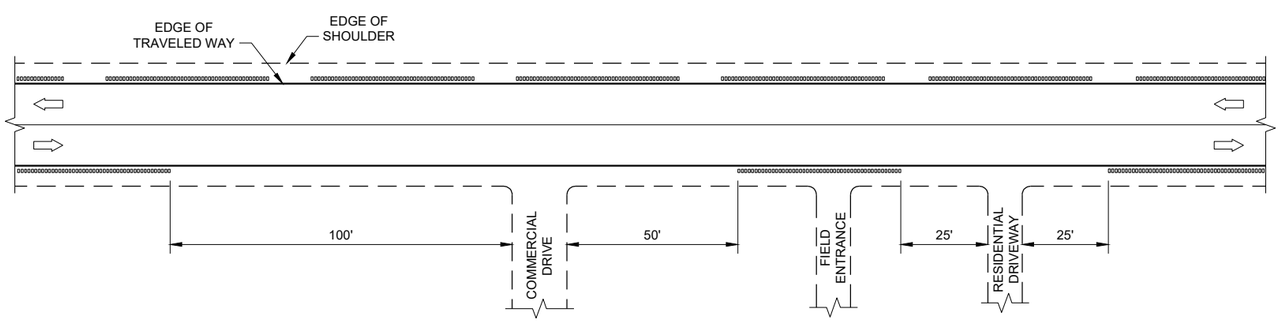

GROOVES AT DRIVEWAYS (1)

GENERAL NOTES

(1) SHOULDER GROOVES MAY BE OMITTED IN AREAS WITH HIGH CONCENTRATIONS OF DRIVEWAYS. WHEN DIRECTED BY THE ENGINEER.

SHOULDER AND EDGE LINE RUMBLE STRIPS CROSSINGS, INTERSECTIONS, BRIDGES, DRIVEWAYS

STATE OF WISCONSIN
DEPARTMENT OF TRANSPORTAT

6

SDD 13A10 - 03g

GENERAL NOTES

DO NOT MILL SHOULDER GROOVES THROUGH INTERSECTIONS, MARKED CROSSWALKS, NON-MOTORIZED PATH CROSSINGS, ETC. REFER TO SDD 13A11 SHEETS "d" AND "e".

CENTERLINE GROOVES MAY BE OMITTED IN AREAS WITH HIGH CONCENTRATIONS OF DRIVEWAYS WHEN DIRECTED BY THE ENGINEER.

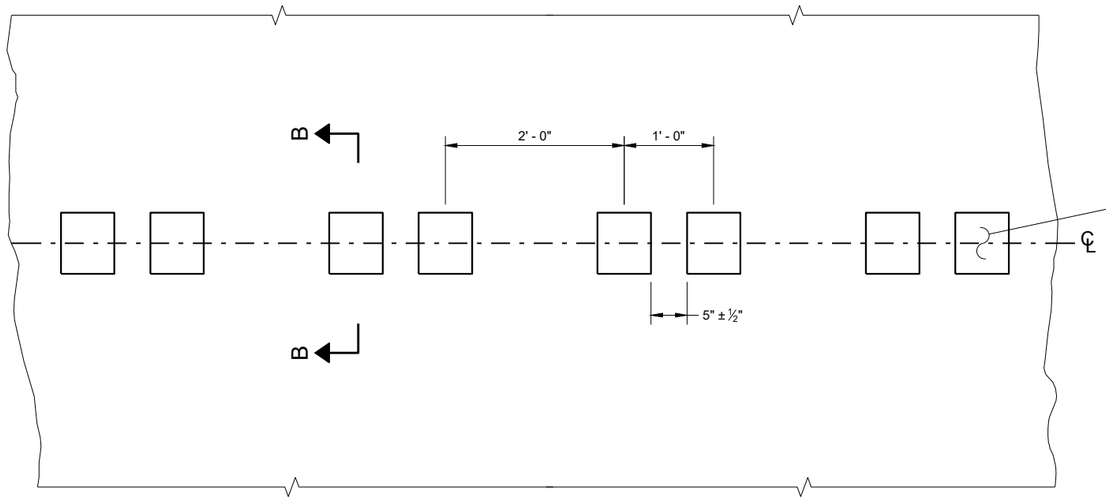

PLAN DETAIL VIEW

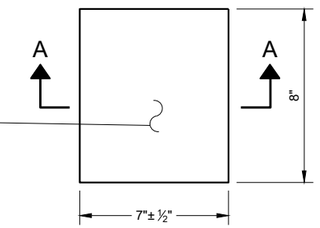

PLAN VIEW
(SINGLE GROOVE)

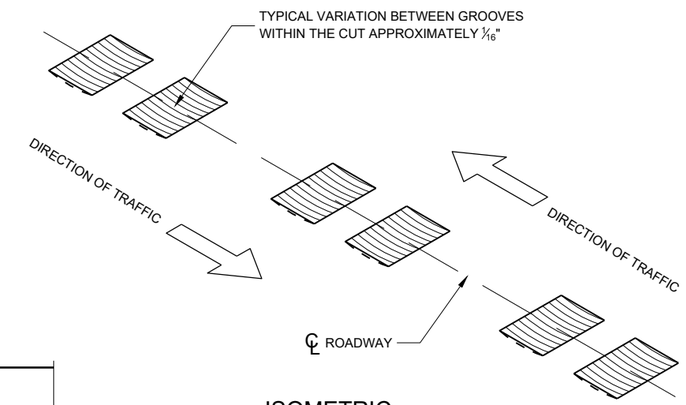

ISOMETRIC

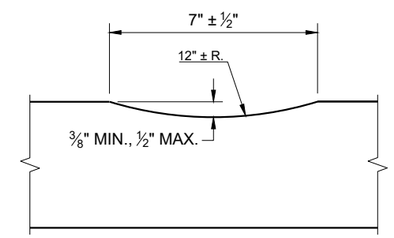

SECTION A - A

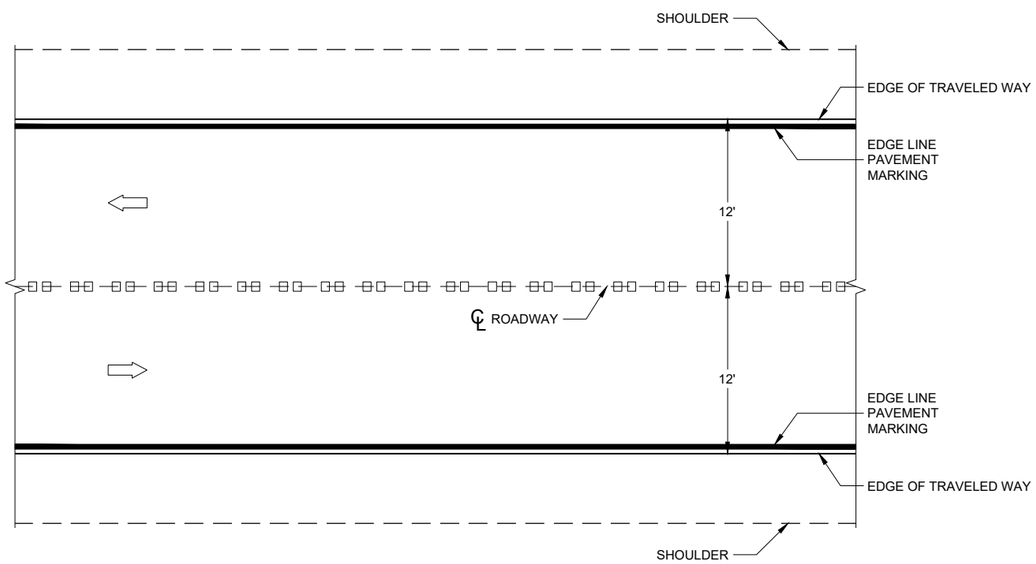

PLAN VIEW

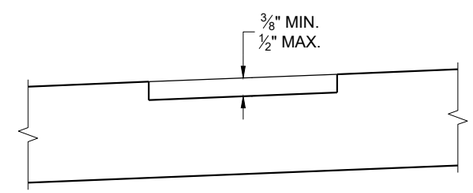

SECTION B - B
SUPERELEVATED ROADWAY

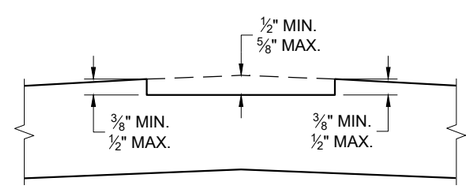

SECTION B - B
CROWNED ROADWAY

CENTERLINE RUMBLE STRIPS - ASPHALT

6

SDD 13A11 - 04a

CENTERLINE RUMBLE STRIPS - ASPHALT

STATE OF WISCONSIN
DEPARTMENT OF TRANSPORTAT

6

SDD 13A11 - 04a

GENERAL NOTES

1. CENTERLINE GROOVES MAY BE OMITTED IN AREAS WITH HIGH CONCENTRATIONS OF DRIVEWAYS WHEN DIRECTED BY THE ENGINEER.

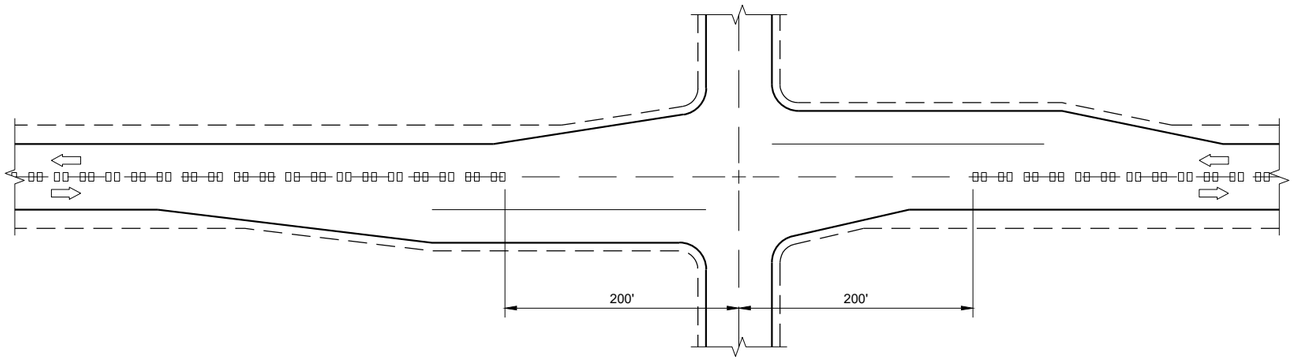

CENTERLINE GROOVES AT INTERSECTIONS

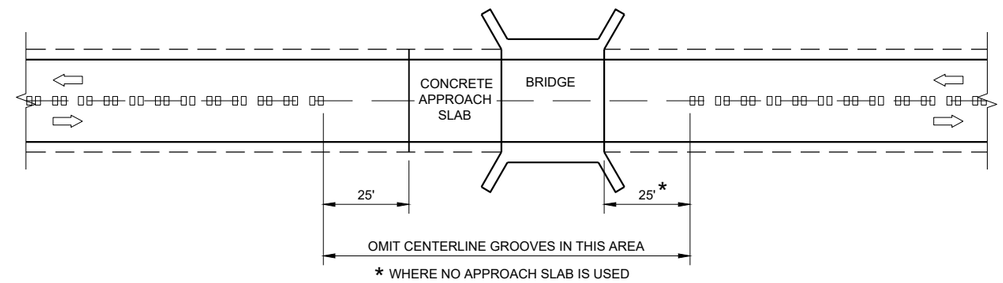

CENTERLINE GROOVES AT BRIDGES

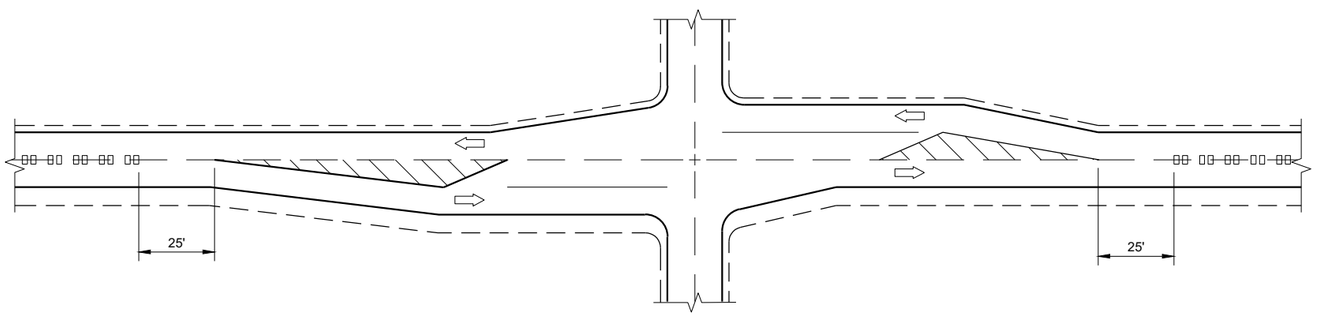

CENTERLINE GROOVES AT INTERSECTIONS (WITH LEFT TURN LANES)

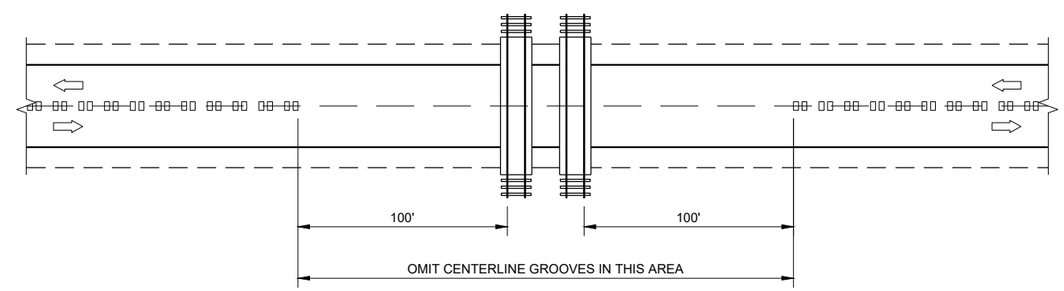

CENTERLINE GROOVES AT RAILROADS

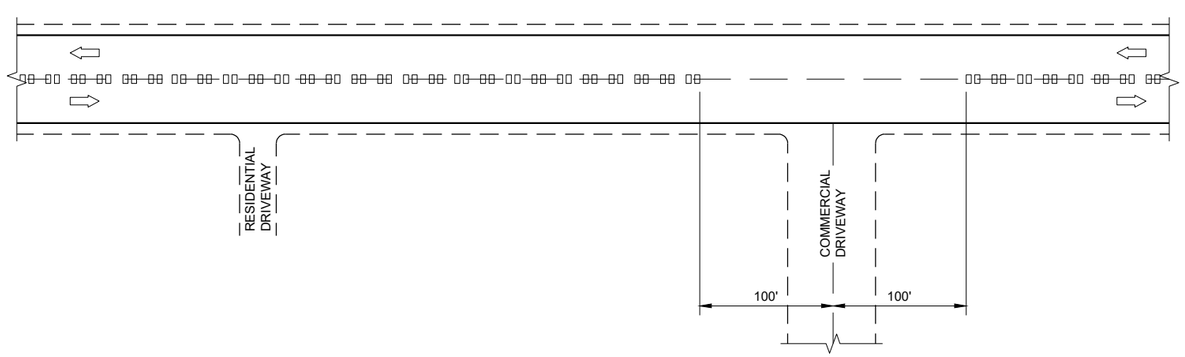

CENTERLINE GROOVES AT DRIVEWAYS (1)

6

SDD 13A11 - 04d

CENTER LINE RUMBLE STRIPS - INTERSECTIONS, DRIVEWAYS, BRIDGES, RAIL ROADS

STATE OF WISCONSIN
DEPARTMENT OF TRANSPORTATION

APPROVED
May 2023 — DATE
/S/ John Jenkins — ROADWAY STANDARDS DEVE ENGINEER
FHWA

6

SDD 13A11 - 04d

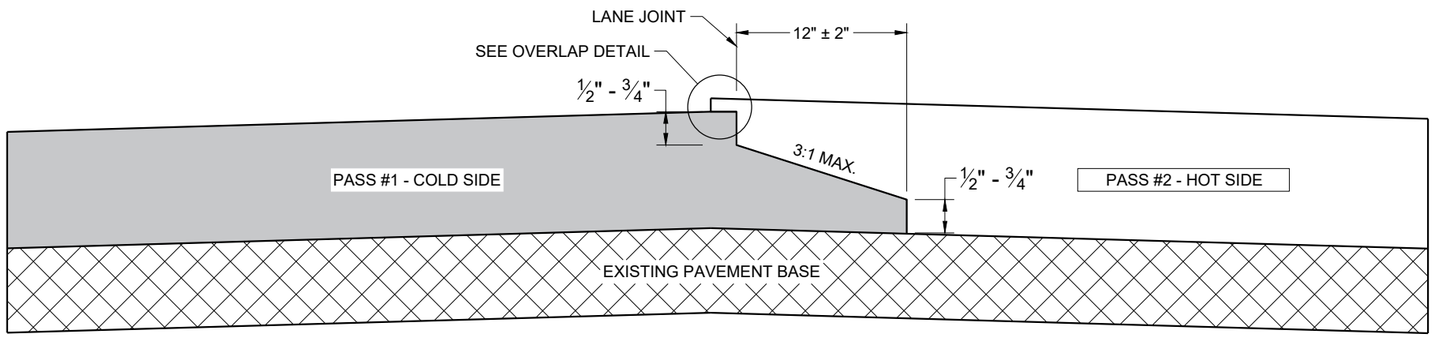

TYPICAL PAVEMENT CROSS SECTION
NOTCHED WEDGE JOINT

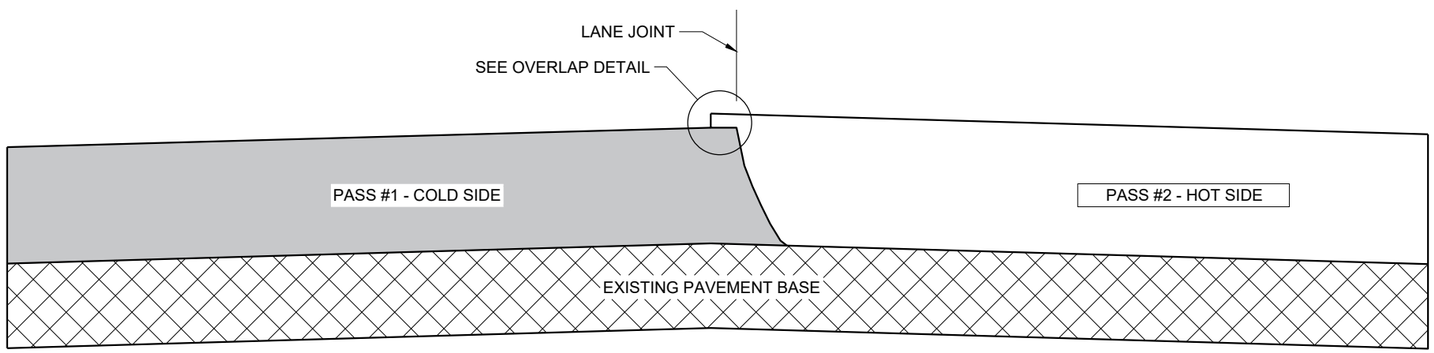

TYPICAL PAVEMENT CROSS SECTION
VERTICAL JOINT

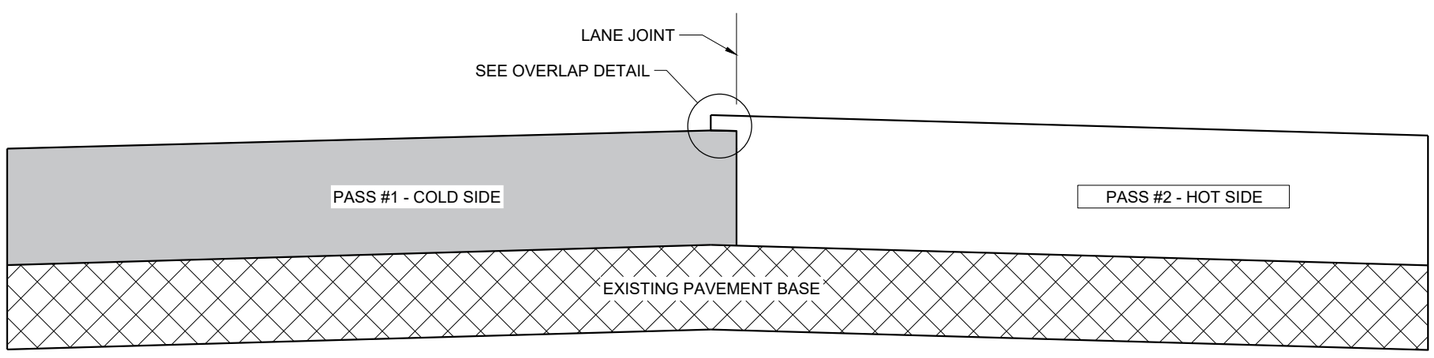

TYPICAL PAVEMENT CROSS SECTION
VERTICAL JOINT (MILLED)

GENERAL NOTES

IN ADDITION TO THE DETAILS PROVIDED IN THIS DRAWING, CONFORM TO STANDARD SPECIFICATION 450.3.2.8 FOR WHEN A NOTCHED WEDGE JOINT IS REQUIRED AND FOR GENERAL JOINT CONSTRUCTION REQUIREMENTS.

FOR ALL LONGITUDINAL JOINTS, ENSURE THE PAVER SCREED OVERLAPS THE PREVIOUSLY PLACED PAVEMENT BY 1" ± 0.5" AND THE HOT SIDE OF THE JOINT REMAINS HIGHER THAN THE COLD SIDE BY APPROXIMATELY 0.1" AFTER FINAL COMPACTION. (IT WILL BE FLUSH WHEN PAVING IN ECHELON.)

ONLY REMOVE THE LONGITUDINAL NOTCHED WEDGE JOINT FOR SMA PAVEMENT OR AS DIRECTED BY THE ENGINEER TO ADDRESS SPECIFIC LENGTHS OF JOINT DAMAGED BY TRAFFIC.

WHEN MILLING BACK OR REMOVING ANY LONGITUDINAL JOINT, LIMIT THE MATERIAL REMOVED TO 2" FROM THE TOP NOTCH OR FROM THE VERTICAL JOINT EDGE ON THE COLD SIDE OF THE JOINT.

USE LONGITUDINAL MILLED JOINT AS PLANS SHOW OR THE AS THE ENGINEER DIRECTS.

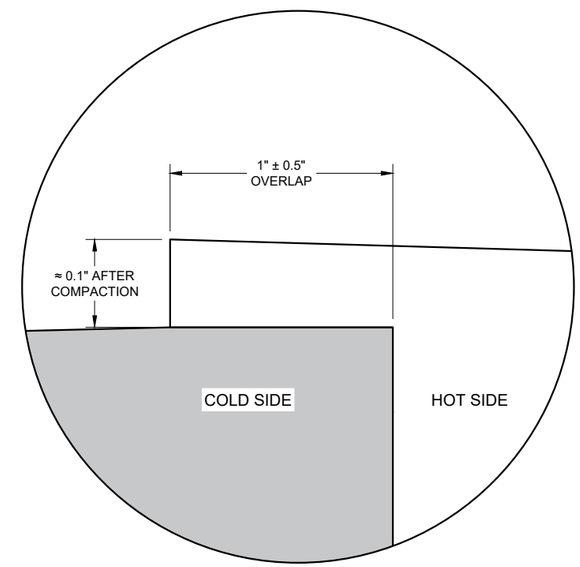

OVERLAP DETAIL (TYPICAL)

6

6

SDD 13C19 - 03

SDD 13C19 - 03

HMA LONGITUDINAL JOINTS

STATE OF WISCONSIN
DEPARTMENT OF TRANSPORTATION

APPROVED
November 2020 /S/ Steven Hefel
DATE HMA PAVEMENT ENGIN
FHWA

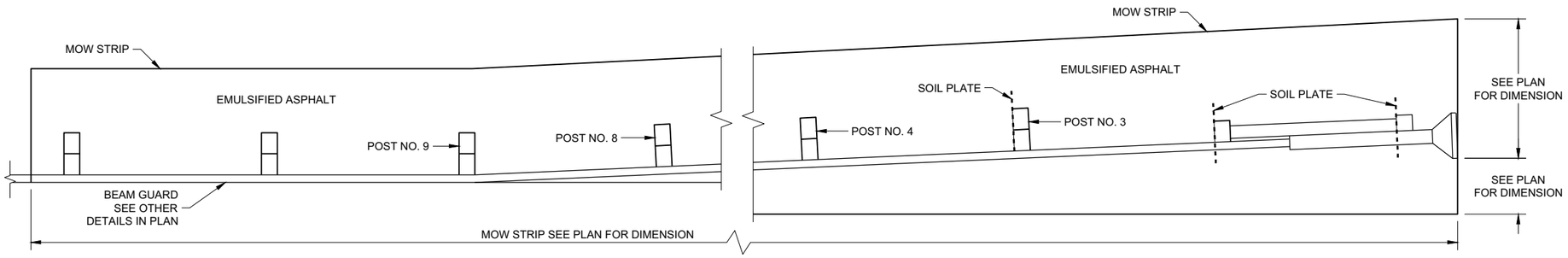

PLAN VIEW
MOW STRIP LAYOUT FOR ENERGY ABSORBING TERMINAL

GENERAL NOTES

ONLY USE STEEL POSTS IN CONCRETE AND ASPHALT MOW STRIPS.

1. CONTROLLED LOW-STRENGTH BACKFILL OR EMULSIFIED ASPHALT.
2. DEPTH OF MOW STRIP:
   ASPHALT - 4"
   CONCRETE - 4"
   EMULSIFIED ASPHALT - 1" OR LESS
3. FOR EMULSIFIED ASPHALT, MOW STRIP STRIP LEAVE OUTS NOT REQUIRED. (TYPICAL FOR ALL POSTS)

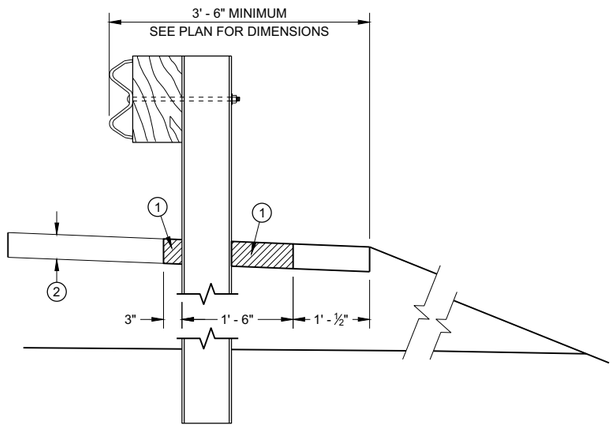

SECTION A - A

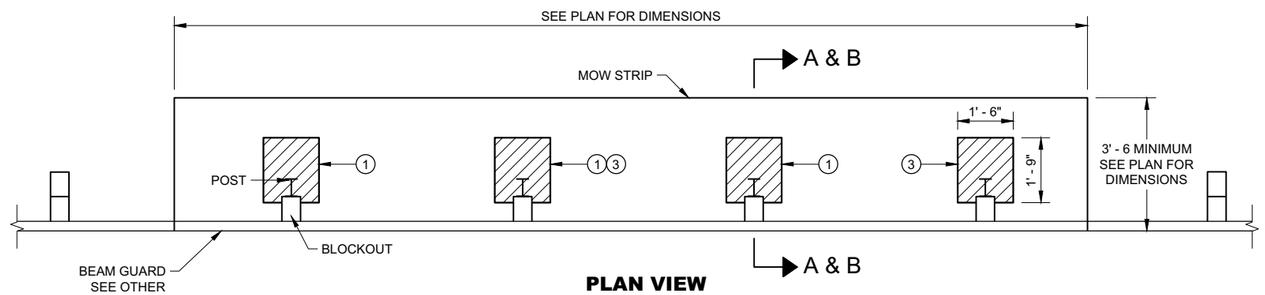

PLAN VIEW
MOW STRIP FOR TYPICAL BLOCKOUT LAYOUT

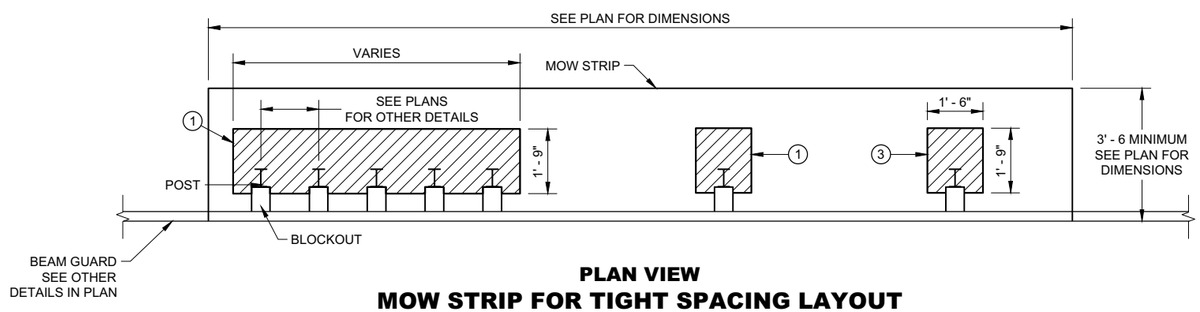

PLAN VIEW
MOW STRIP FOR TIGHT SPACING LAYOUT

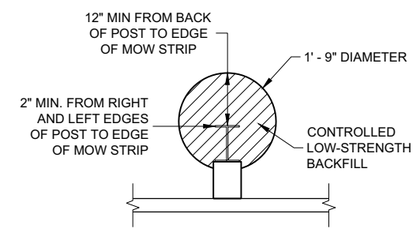

ALTERNATIVE HMA
MOW STRIP DESIGN

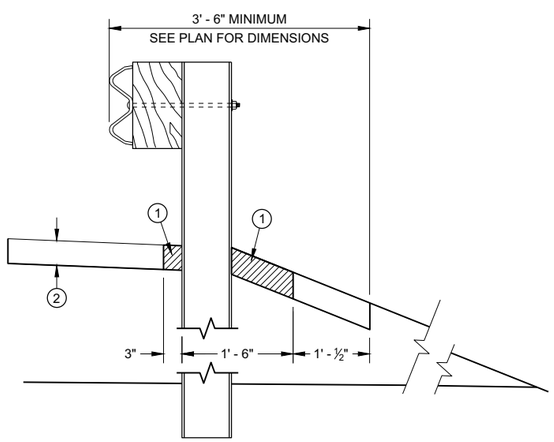

SECTION B - B

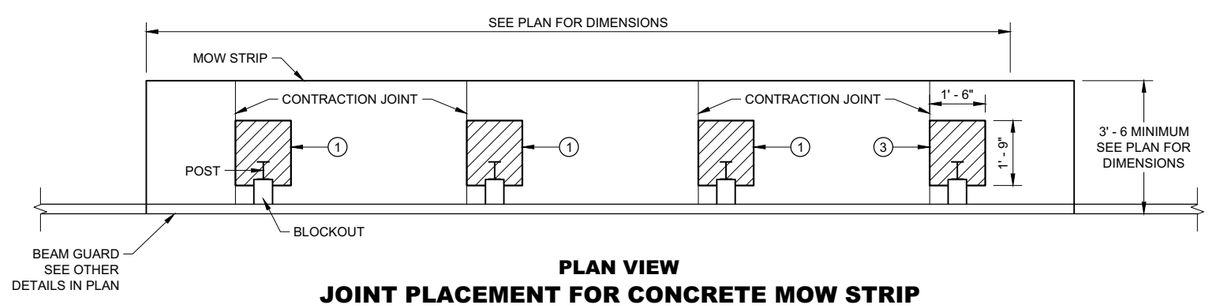

PLAN VIEW
JOINT PLACEMENT FOR CONCRETE MOW STRIP

GUARDRAIL MOW STRIP

STATE OF WISCONSIN
DEPARTMENT OF TRANSPORTA

6

SDD 14B28 - 04a

LEGEND

CONCRETE, ASPHALT, OR EMULSIFIED ASPHALT MOW STRIP (SEE OTHER DETAILS)

EMULSIFIED ASPHALT MOW STRIP (SEE OTHER DETAILS)

GENERAL NOTES

EXISTING THRIE BEAM BULLNOSES MAY HAVE WOOD POSTS. NEW THRIE BEAM BULLNOSE WILL HAVE STEEL POSTS.

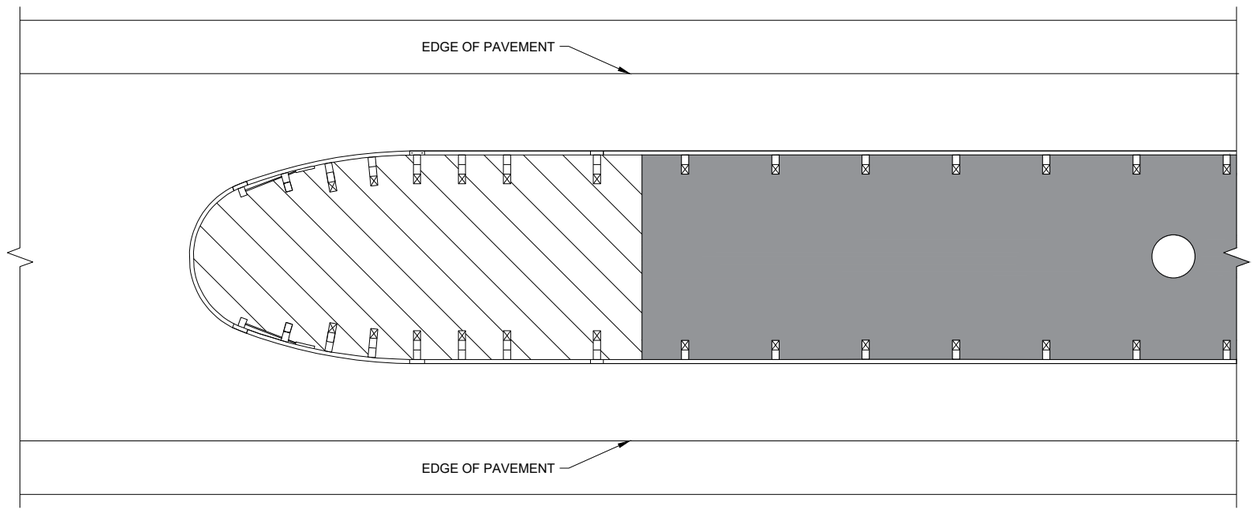

THRIE BEAM BULLNOSE

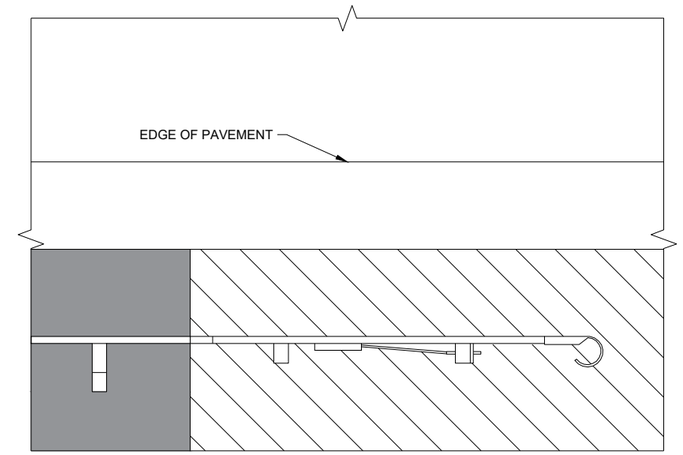

TYPE 2 TERMINAL

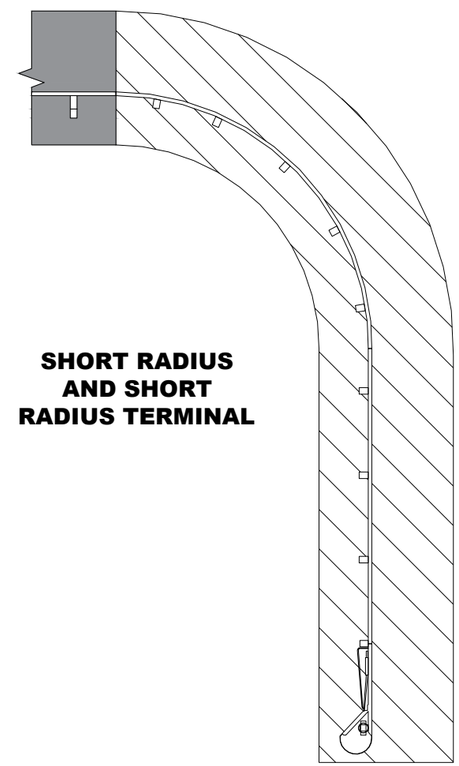

SHORT RADIUS AND SHORT RADIUS TERMINAL

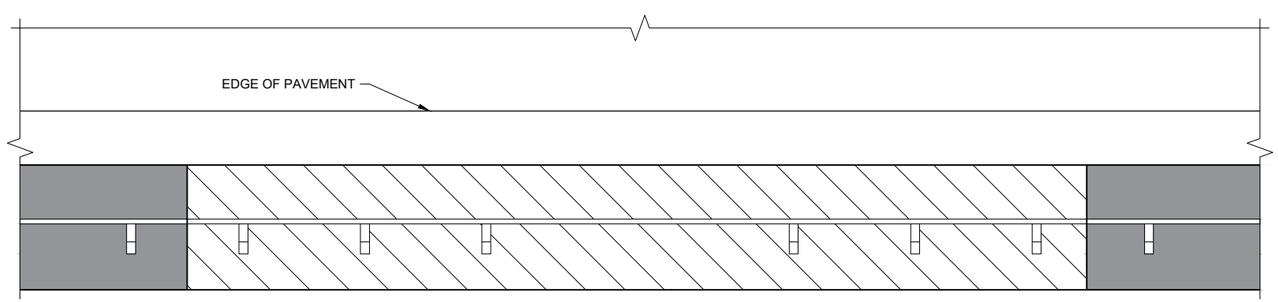

LONG - SPAN

6

SDD 14B28 - 04b

GUARDRAIL MOW STRIP

STATE OF WISCONSIN
DEPARTMENT OF TRANSPORTATION

APPROVED
August 2020 — DATE
/S/ Rodney Taylor — ROADWAY STANDARDS DEVE ENGINEER
FHWA

6

SDD 14B28 - 04b

1. WOOD OR STEEL POSTS (w6X9 OR w6X8.5) MAY BE USED. DO NOT INTERMIX WOOD AND STEEL POSTS. INSTALL STEEL POSTS WITH HOLES ON APPROACHING TRAFFIC SIDE.
2. USE WOOD OR APPROVED PLASTIC BLOCKOUTS. WOOD BLOCKOUTS MAY BE CONSTRUCTED OUT OF TWO OR MORE WOOD BLOCKOUTS. SEE ALTERNATE WOOD BLOCKOUT DETAIL. DIMENSIONS OF APPROVED PLASTIC BLOCKOUTS MAY VARY.
3. IF ROCK IS ENCOUNTERED DURING EXCAVATION, PROVIDE A HOLE 12 INCHES IN DIAMETER EXTENDING 20 INCHES DEEP INTO THE ROCK. PLACE APPROXIMATELY 2 1/2" INCHES OF GRANULAR MATERIAL IN THE BOTTOM OF THE HOLE. CUT THE POSTS THE TO LENGTH AMD INSTALL. BACKFILL WITH EXCAVATED MATERIAL AND COMPACT. BACKFILL IS TO BE FREE OF LARGE ROCKS.
4. WHEN THE DISTANCE FROM BACK OF POST TO SHOULDER HINGE POINT IS LESS THAN 2 FEET INSTALL LONGER POST AT HALF POST SPACING (K).
5. FOR NEW MGS INSTALLATION TOP OF W-BEAM RAIL TOLERANCE IS ±1". FOR EXISTING MGS INSTALLATION TOP OF W-BEAM IS BETWEEN 27 ¾" TO 32".
6. WHEN USING STEEL POST AND WOOD BLOCKOUTS INSTALL FOUR 16D GALVANIZED NAILS. INSTALL NAILS AT THE BACK CORNERS OF THE BLOCK AND BEND THE NAILS OVER THE FLANGE OF THE STEEL POST.
7. TOTAL POST LENGTH FOR TYPE K IS 7' - 0". TOTAL POST LENGTH FOR OTHER MGS TYPES IS 6' - 0".

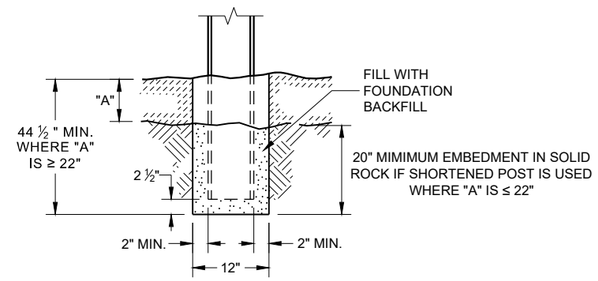

END VIEW
SETTING STEEL OR WOOD POST IN ROCK (3)

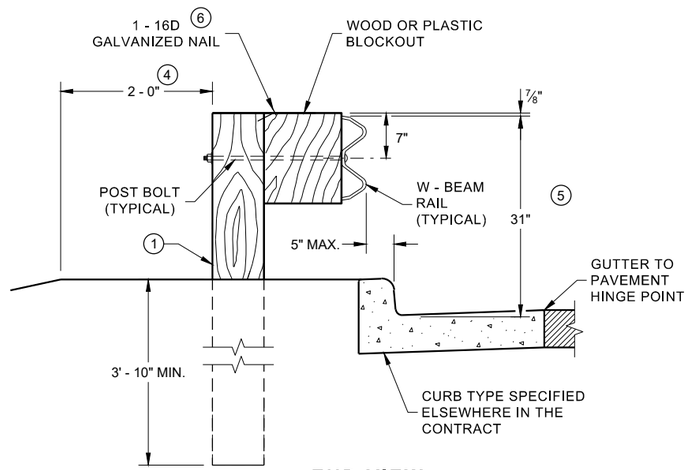

END VIEW
LOCATED ALONG A CURBED ROADWAY

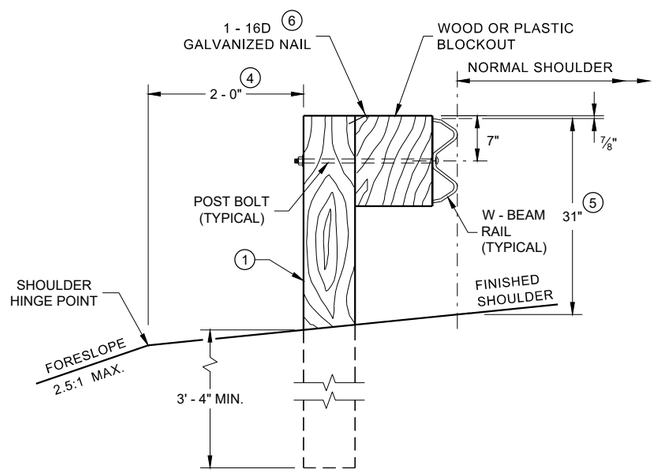

END VIEW
LOCATED ALONG A ROADWAY SHOULDER STANDARD INSTALLATION

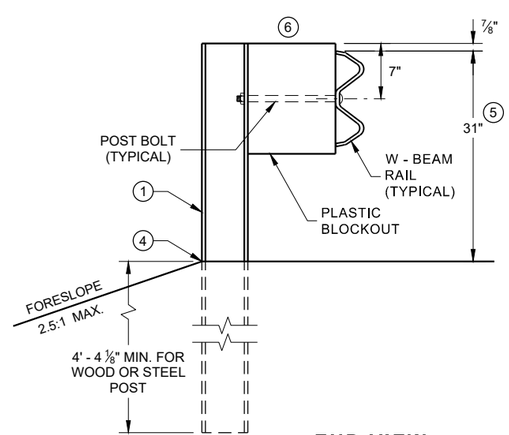

END VIEW
MGS LONGER POST AT HALFPOST SPACING W BEAM (K)

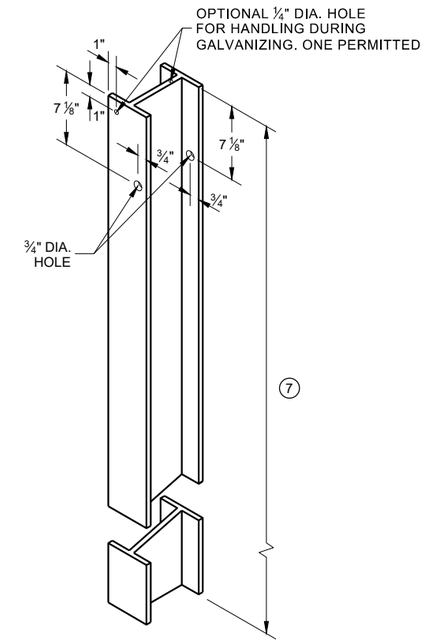

STEEL POST & HOLE PUNCHING DETAIL (W 6 X 9) (1)

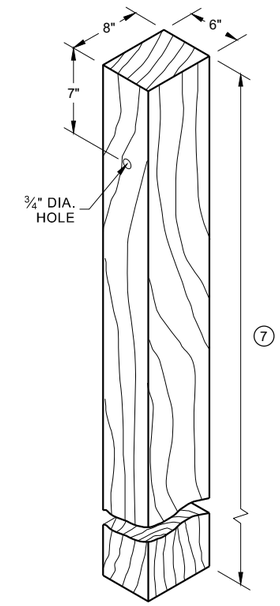

WOOD POST (6" X 8") NOMINAL (1)

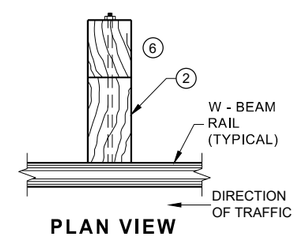

PLAN VIEW WOOD POST, BLOCKOUT & BEAM

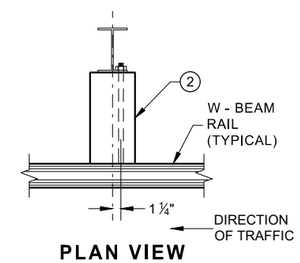

PLAN VIEW STEEL POST, PLASTIC BLOCKOUT & BEAM

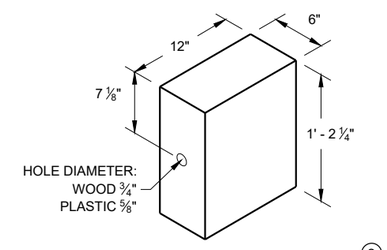

WOOD OR PLASTIC BLOCKOUT (2)

MIDWEST GUARDRAIL SYSTEM (MGS) GUARDRAIL

STATE OF WISCONSIN
DEPARTMENT OF TRANSPORTA

6

SDD 14B42 - 07a

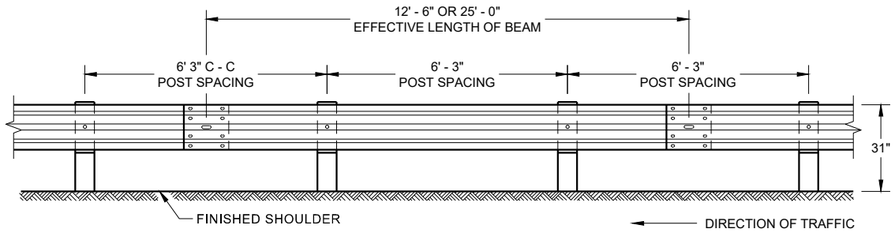

FRONT VIEW
POST SPACING STANDARD INSTALLATION

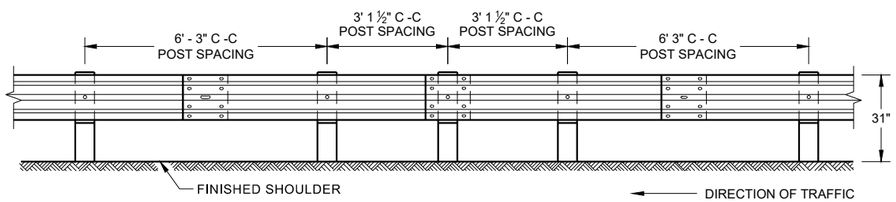

FRONT VIEW
HALF POST SPACING (HS) AND HALF POST SPACING WITH LONGER POSTS (K)

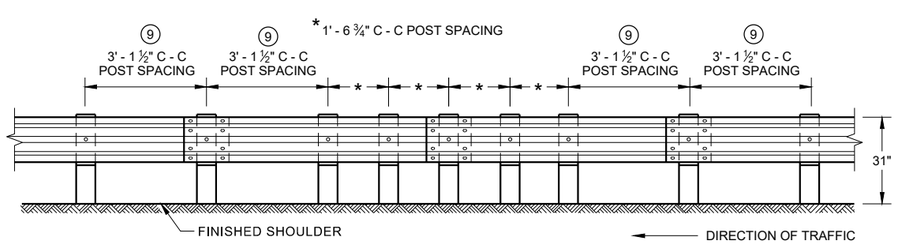

FRONT VIEW
QUARTER POST SPACING (QS)

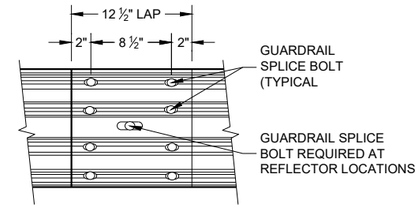

FRONT VIEW
MID-SPAN BEAM SPLICE

GENERAL NOTES

(8) DO NOT INSTALL REFLECTORS ON THE FIRST 50 FEET OF THE APPROACH END OF THE ENERGY ABSORBING TERMINAL.

(9) 25 FEET OF HALF POST SPACING IS REQUIRED ON APPROACH AND DEPARTURE ENDS OF QUARTER POST SPACING.

POST BOLTS ARE A ⅝" DIAMETER ASTM A307 GUARDRAIL BOLT. A POST BOLT REQUIRES ⅝" DIAMETER A563A DOUBLE RECESSED (DR) HEAVY HEX NUT AND ⅝" DIAMETER F844 FLAT WASHER. POST BOLTS MAY BE LONGER IF MULTIPLE BLOCKOUTS ARE BEING USED.

GUARD RAIL SPLICE BOLTS ARE A ⅝" DIAMETER ASTM A307 GUARDRAIL HEAD BOLT. A GUARDRAIL SPLICE BOLT REQUIRES ⅝" DIAMETER A563A DOUBLE RECESSED (DR) HEAVY HEX NUT.

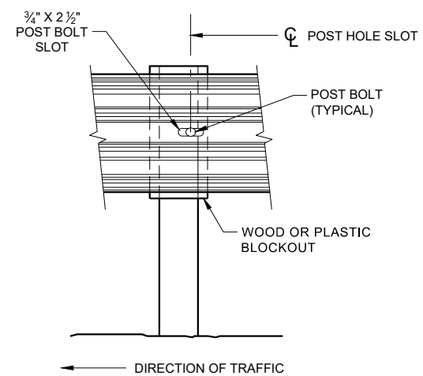

FRONT VIEW AT STEEL POST

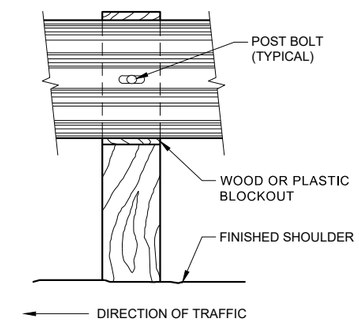

FRONT VIEW AT WOOD POST

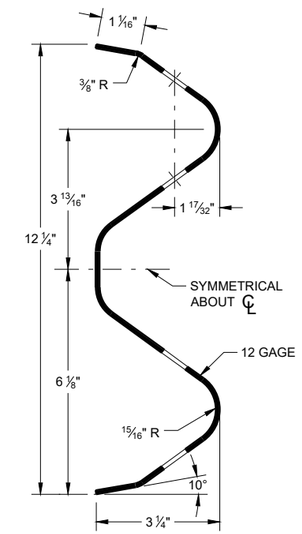

SECTION THRU W-BEAM RAIL

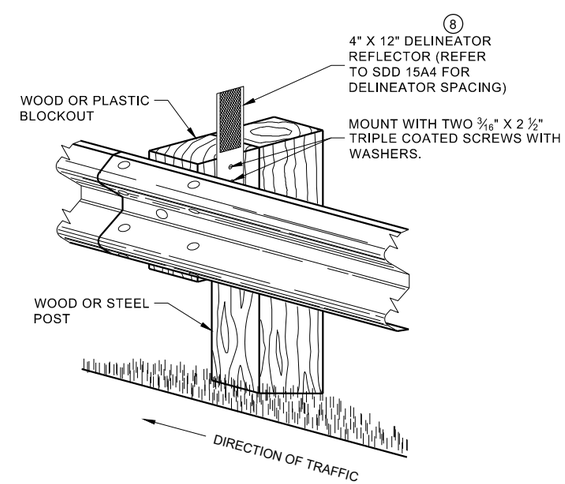

ONE SIDED REFLECTOR DETAIL AND TYPICAL INSTALLATION

MIDWEST GUARDRAIL SYSTEM (MGS) GUARDRAIL

STATE OF WISCONSIN
DEPARTMENT OF TRANSPORTAT

6

SDD 14B42 - 07b

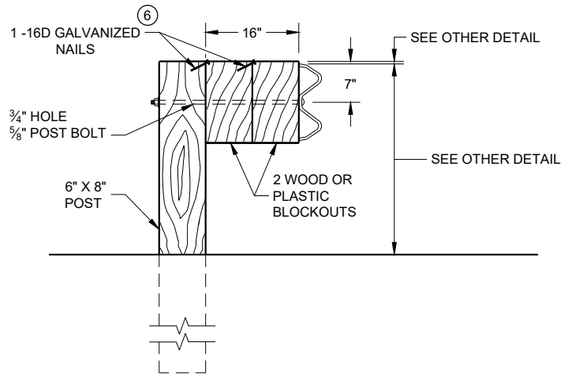

DETAIL FOR 16" BLOCKOUT DEPTH

IT IS ACCEPTABLE TO USE BLOCKOUTS UP TO 16" DEEP TO INCREASE THE POST OFFSET TO AVOID UNDERGROUND OBSTACLES. THERE IS NO LIMIT TO THE NUMBER OF POSTS THAT CAN HAVE ADDITIONAL BLOCKOUTS UP TO 16" DEEP.

NOTE:

1. ALL FILLETS SHALL HAVE A MINIMUM RADIUS OF 3/16".
2. IF THE BOLT EXTENDS MORE THAN ¼" FROM THE NUT THE BOLT SHOULD BE TRIMMED BACK.

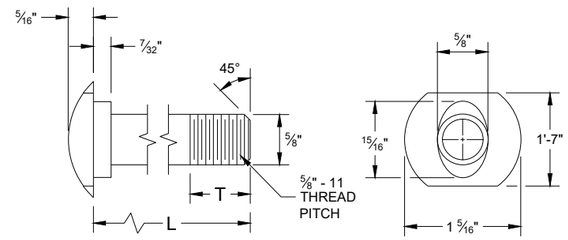

POST BOLT TABLE

L	T (MIN.)
1 ¼"	1 ⅛"
2"	1 ¾"
10"	4"
14"	4 1/16"
18"	4"
21"	4 1/16"
25"	4"

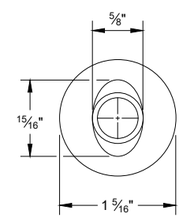

ALTERNATE BOLT HEAD

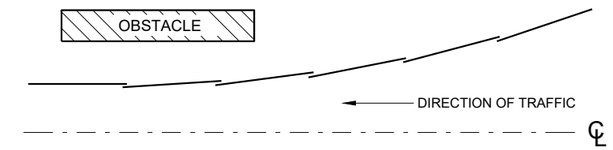

PLAN VIEW
BEAM LAPPING DETAIL

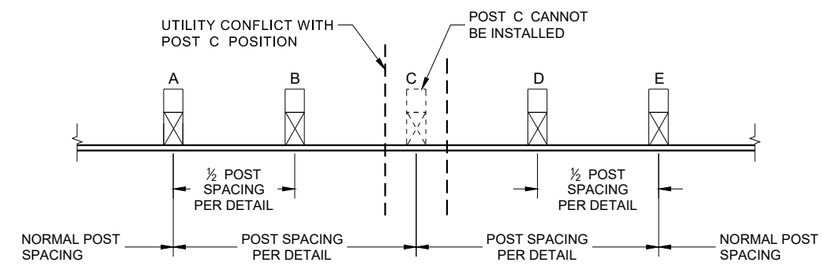

POST DRIVING FOR CONTINUOUS UNDERGROUND OBSTRUCTION

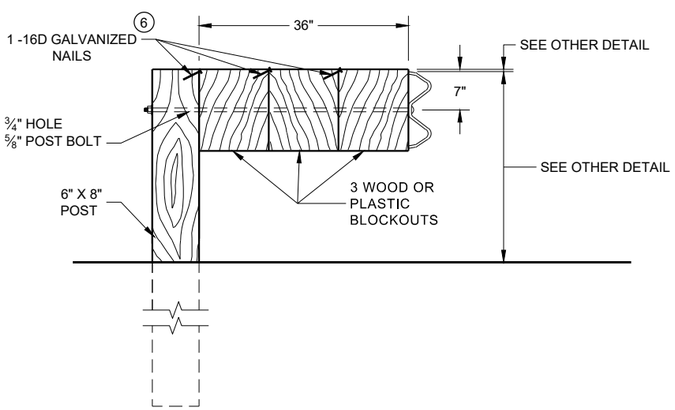

DETAIL FOR 36" BLOCKOUT DEPTH

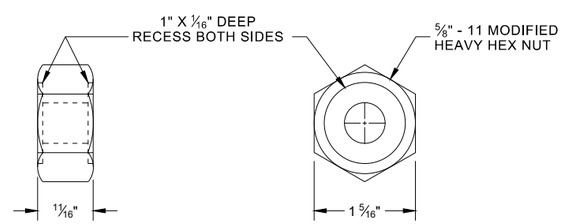

POST BOLT, SPLICE BOLT AND RECESS NUT

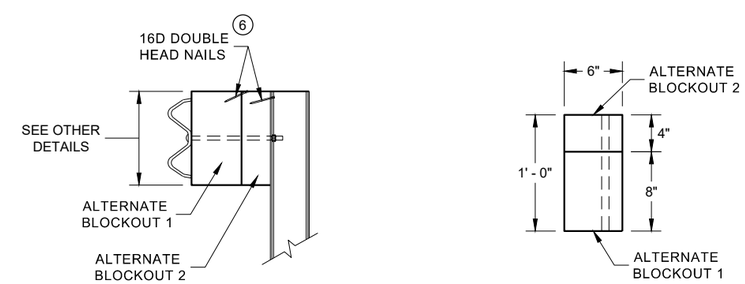

SIDE VIEW

PLAN VIEW

ALTERNATE WOOD BLOCKOUT DETAIL

NOTES: UNDER SPECIAL CIRCUMSTANCES, SUCH AS AVOIDING OBSTACLES THAT ARE NOT RELOCATED, IT IS ACCEPTABLE TO INSTALL ADDITIONAL BLOCKOUTS TO OBTAIN UP TO 36" DEPTH FOR ONE OR TWO POSTS IN A SECTION OF GUARDRAIL.

DO NOT USE 16" OR 36" BLOCKOUTS IF IT CAUSES THE POST TO BE DRIVEN BEYOND SHOULDER HINGE POINT OR CAUSES A FIXED OBJECT TO BE WITHIN THE DEFLECTION DISTANCE OF THE BARRIER.

(6) WHEN USING STEEL POST AD WOOD BLOCKOUTS, INSTALL FOUR 16D GALVANIZED NAILS. INSTALL NAILS AT THE BACK CORNERS OF THE BLOCK AND BEND THE NAILS OVER THE FLANGE OF THE STEEL POST.

MIDWEST GUARDRAIL SYSTEM (MGS) GUARDRAIL

STATE OF WISCONSIN
DEPARTMENT OF TRANSPORTA

6

SDD 14B42 - 07c

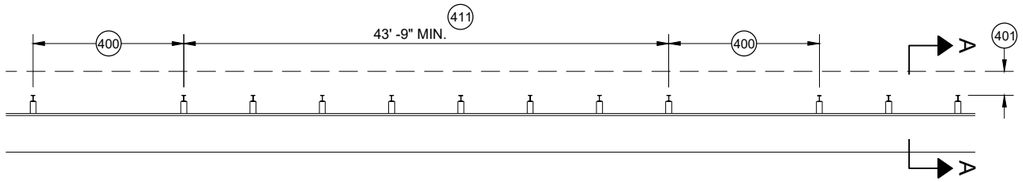

MISSING POST IN MGS GUARDRAIL

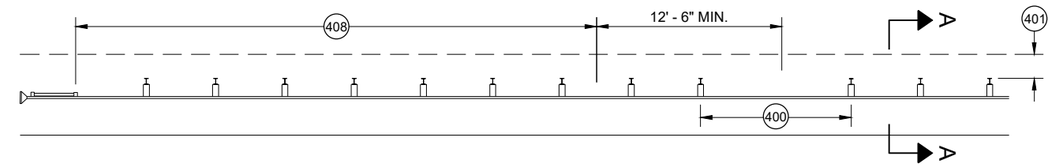

MISSING POST IN MGS GUARDRAIL NEAR EAT

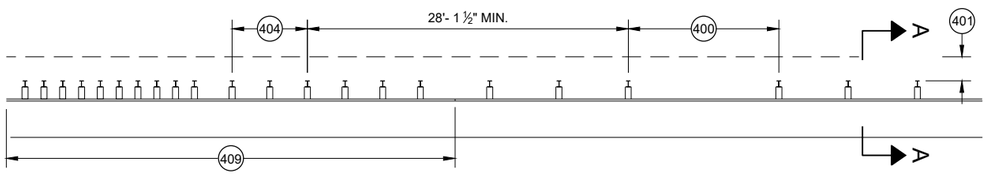

MISSING POST IN MGS GUARDRAIL NEAR AN APPROACH TRANSITION

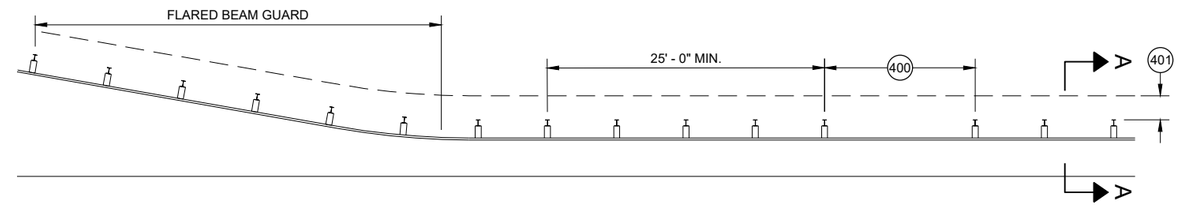

MISSING POST IN MGS GUARDRAIL NEAR FLARED BEAM GUARD

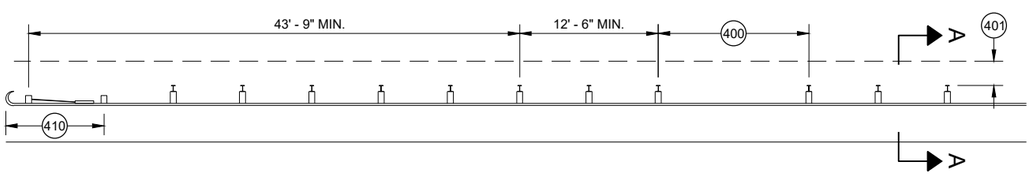

MISSING POST IN MGS GUARDRAIL NEAR A TYPE 2 END TERMINAL

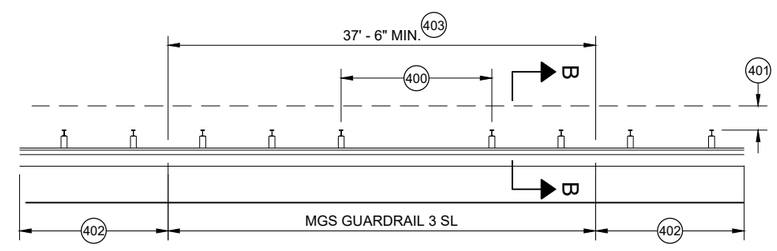

MISSING POST IN SHORT SPAN MGS GUARDRAIL NEAR CURB (SL) 407

400 MAX SPAN 12' - 6"
401 2' MIN.
402 MGS GUARDRAIL 3
403 NESTING BEAM GUARD
404 ASYMMETRIC TRANSITION
405 SOIL WELL DRAINED AND COMPACTED
406 SEE OTHER DRAWINGS IN THIS SDD
407 SEE OTHER DRAWINGS FOR MIN. SPACING BETWEEN SPANS
408 SEE SDD 14B44
409 SEE SDD 14B45
410 SEE SDD 14B47
411 MINIMUM DISTANCE BETWEEN MISSING POST SPANS.

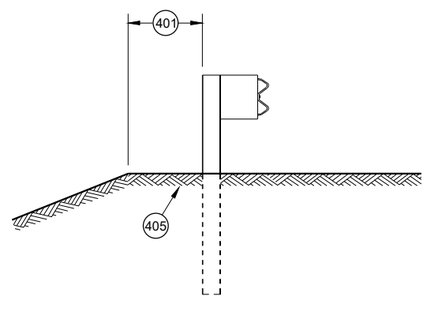

SECTION A - A 406

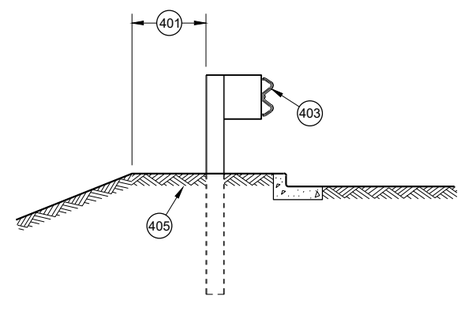

SECTION B - B 406

MIDWEST GUARDRAIL SYSTEM (MGS) GUARDRAIL

STATE OF WISCONSIN
DEPARTMENT OF TRANSPORTATION

APPROVED
May 2021 — DATE
/S/ Rodney Taylor — ROADWAY STANDARDS DEVE UNIT SUPERVISOR
FHWA

6

SDD 14B42 - 07d

GENERAL NOTES

(A) THE SLOPE IN THE AREA BOUNDED BY THE GRADELINE, THE HINGE POINT LINE (HPL) AND THE CLEAR ZONE LIMITS (CZL) SHALL BE 4:1 OR FLATTER.

(B) AFTER FINAL ASSEMBLY, RECHECK CABLE TO BE SURE IT IS TAUT AND HAS NOT RELAXED

(C) DIFFERENT MANUFACTURERS REQUIRE DIFFERENT PERFORATED W - BEAM RAIL END PANELS. SEE MANUFACTURER'S INFORMATION.

(D) ATTACH ALUMINUM SHEET TO E.A.T. HEAD USING 4 STAINLESS STEEL SELF - TAPPING SCREWS. ONE SCREW PER CORNER.

(E) HARDWARE MAY VARY BETWEEN MANUFACTURER. SEE MANUFACTURER'S DRAWING FOR INFORMATION.

DIMENSIONS MAY VARY, MANUFACTURER'S INFORMATION.

SEE SDD 14B42 FOR MORE INFORMATION.

* DO NOT ATTACH BLOCKOUTS TO POST 1 AND 2.

DO NOT INSTALL REFLECTORS ON THE FIRST 50 FEET OF THE APPROACH END OF THE ENERGY ABSORBING TERMINAL.

SEE MANUFACTURER'S DRAWING FOR SPLICE LOCATION, HARDWARE DIMENSIONS AND INSTALLATION INSTRUCTIONS.

THE CENTER OF THE UPPER 3 ½" DIAMETER HOLE ON POST NUMBER 3 THROUGH POST 9 IS TO BE FLUSH WITH THE GROUND LINE UP TO A MAXIMUM OF 2" ABOVE GROUND LINE. WOOD BLOCKS ON POSTS NUMBERED 3 THROUGH 9 MAY BE ADJUSTED UP TO 3" ABOVE THE TOP OF POST.

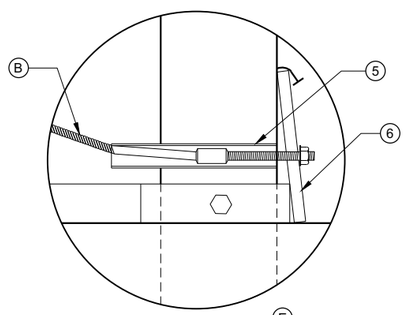

DETAIL "A" (E)

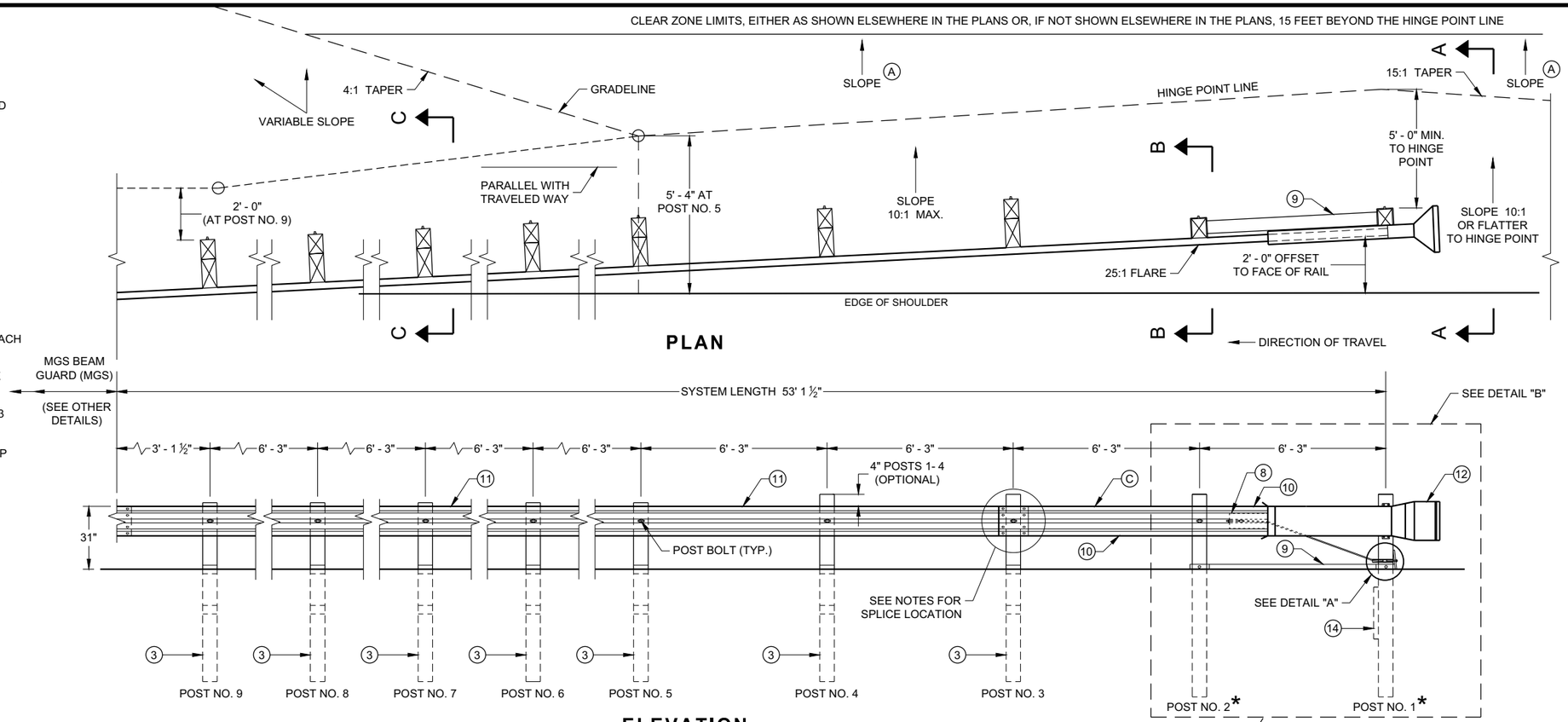

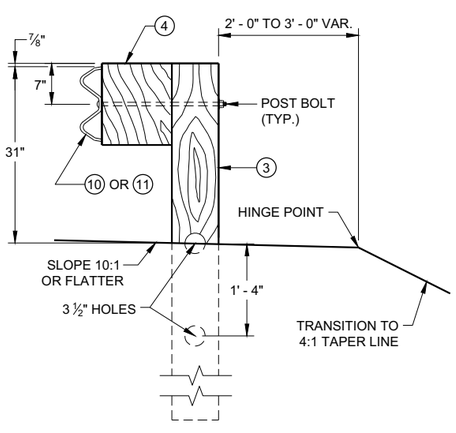

SECTION C - C
TYPICAL AT POST NOS. 3 - 9

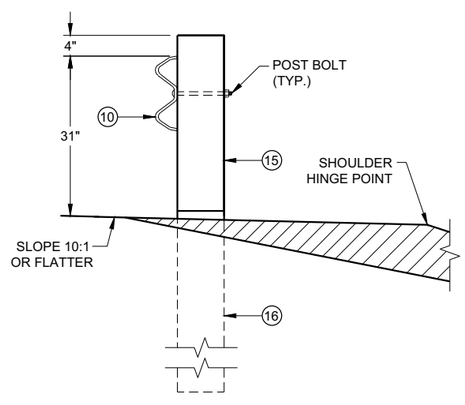

SECTION B - B
TYPICAL AT POST NO. 2*

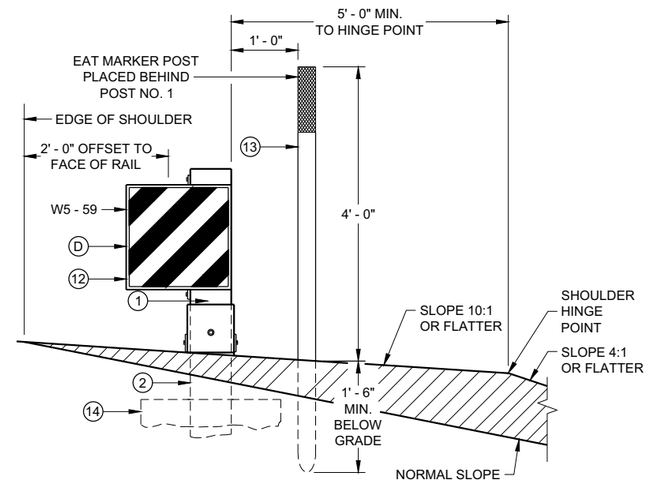

SECTION A - A
TYPICAL AT POST NO. 1*

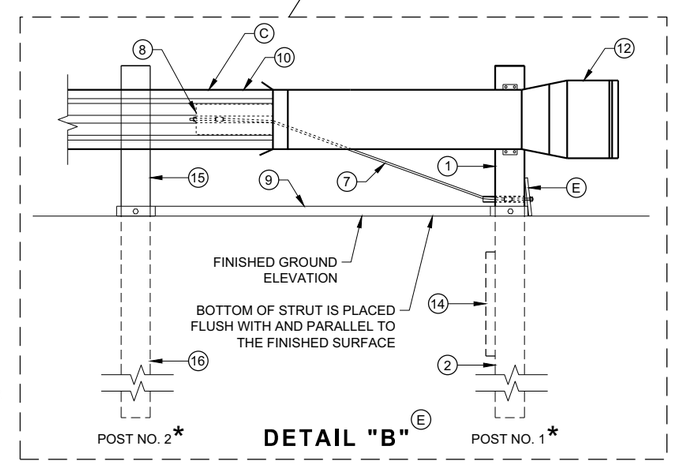

DETAIL "B" (E)

MIDWEST GUARDRAIL SYSTEM ENERGY ABSORBING TERMINAL (MGS)

STATE OF WISCONSIN
DEPARTMENT OF TRANSPORTATION

6

SDD 14B44 - 04a

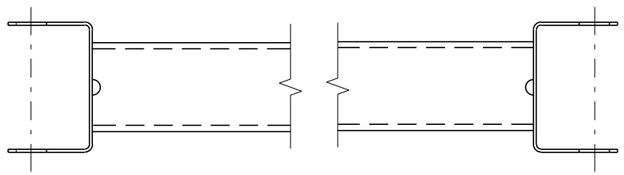

GENERIC GROUND STRUT 9 E

BILL OF MATERIALS

PART NO.	DESCRIPTION MATERIALS PROVIDED BY MGS EAT MANUFACTURER. SEE MANUGACTURER'S DETAILS FOR MORE INFORMATION.
1	UPPER POST NO. 1 6" X 6" TUBE
2	LOWER POST NO. 1
3	WOOD CRT
4	WOOD BLOCKOUT
5	PIPE SLEEVE
6	BEARING PLATE
7	BCT CABLE ASSEMBLY
8	ANCHOR CABLE BOX
9	GROUND STRUT
10	PERFORATED W-BEAM RAIL END PANEL, 12'-6" LONG.
11	STANDARD W-BEAM RAIL. MULTIPLE SECTIONS REQUIRED. SECTIONS VARY IN LENGTH.
12	IMPACT HEAD
13	EAT MARKER POST - YELLOW (SEE APPROVED PRODUCTS LIST)
14	SOIL PLATE
15	UPPER POST NO. 2
16	LOWER POST NO. 2

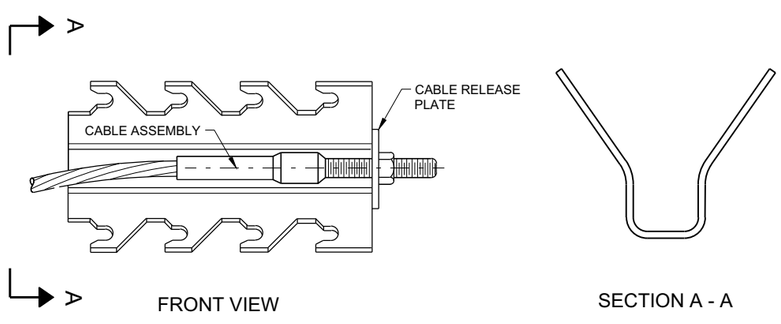

GENERIC ANCHOR CABLE BOX 9 E

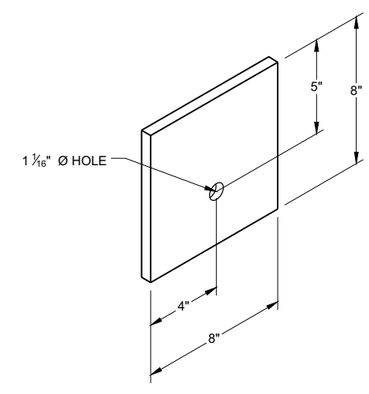

BEARING PLATE 6 E

6

6

SDD 14B44 - 04b

SDD 14B44 - 04b

MIDWEST GUARDRAIL SYSTEM ENERGY ABSORBING TERMINAL (MGS)

STATE OF WISCONSIN
DEPARTMENT OF TRANSPORTAT

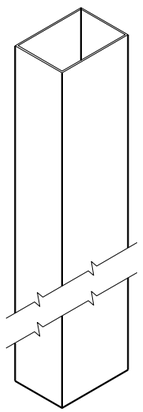

UPPER POST NO. 1 (1) (E)

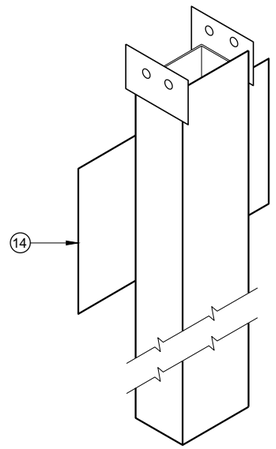

LOWER POST NO. 1 (2) (E)

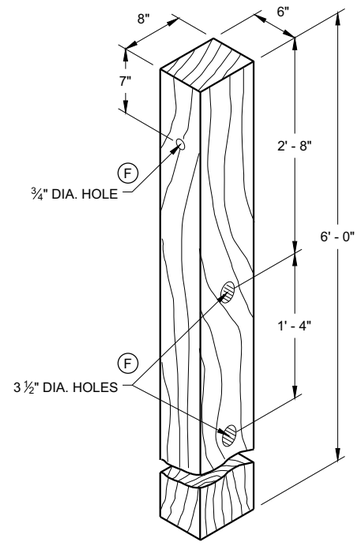

WOOD CRT POST (3) (E)

POSTS NUMBER 3-9

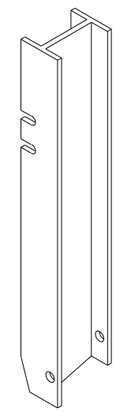

UPPER POST NO. 2 (15) (E)

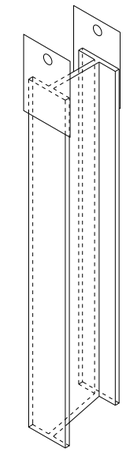

LOWER POST NO. 2 (16) (E)

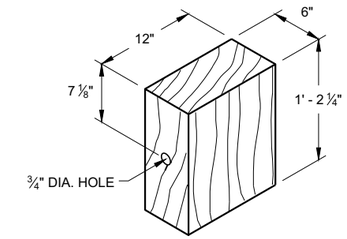

WOOD BLOCKOUT (4)

REQ'D. AT ALL POSTS EXCEPT POST NO'S 1 & 2

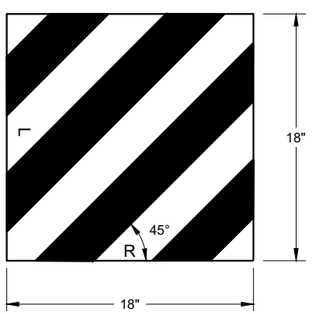

W5 - 59

REFLECTIVE SHEETING DETAIL (E)

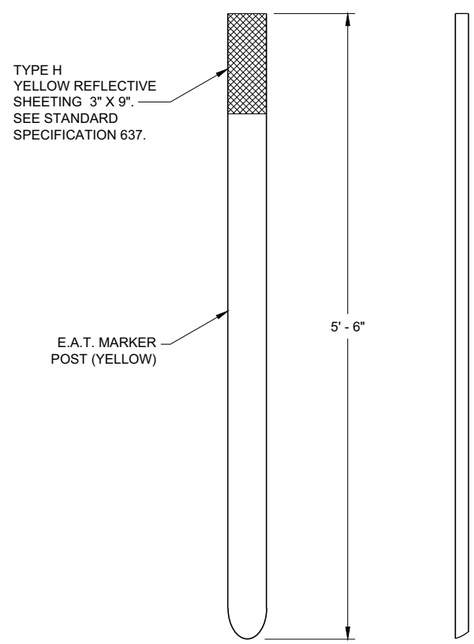

FRONT VIEW SIDE VIEW

E.A.T. MARKER POST (13)

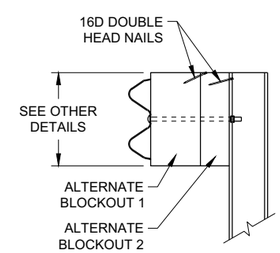

SIDE VIEW

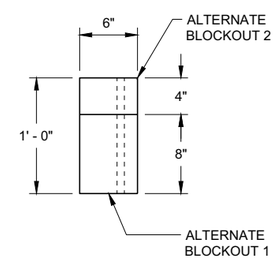

TOP VIEW

ALTERNATE WOOD BLOCKOUT DETAIL

6

6

SDD 14B44 - 04c

SDD 14B44 - 04c

MIDWEST GUARDRAIL SYSTEM ENERGY ABSORBING TERMINAL (MGS)

STATE OF WISCONSIN
DEPARTMENT OF TRANSPORTATION

APPROVED

7/2018 — DATE

/S/ Rodney Taylor — ROADWAY STANDARDS DEVE UNIT SUPERVISOR

FHWA

GENERAL NOTES

DETAILS OF CONSTRUCTION, MATERIALS AND WORKMANSHIP NOT SHOWN ON THIS DRAWING SHALL CONFORM TO THE PERTINENT REQUIREMENTS OF THE STANDARD SPECIFICATIONS AND THE APPLICABLE SPECIAL PROVISIONS.

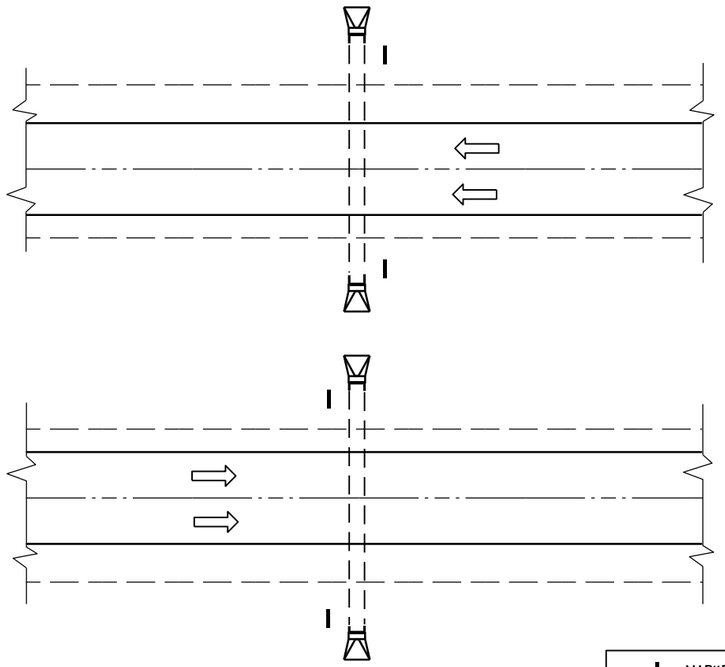

PLAN VIEW

DIVIDED HIGHWAY

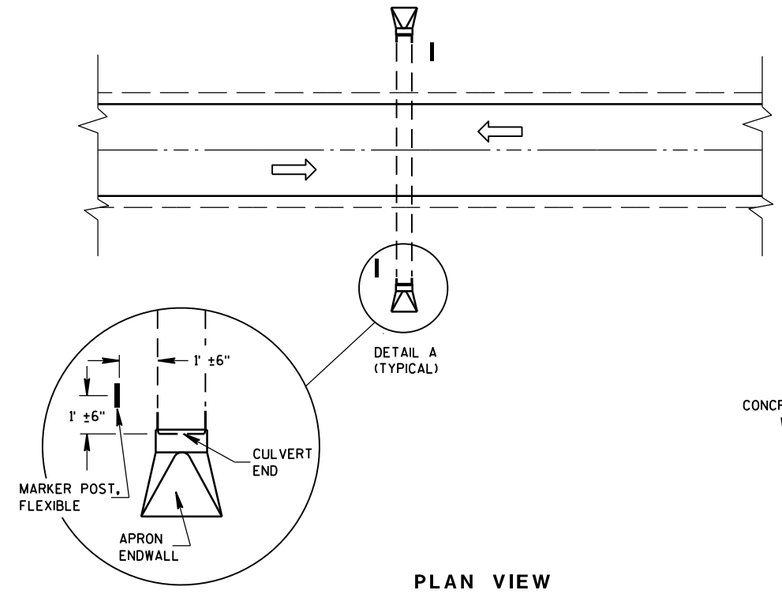

DETAIL A
(TYPICAL)

PLAN VIEW

UNDIVIDED HIGHWAY

MARKER POST, FLEXIBLE

DIRECTION OF TRAFFIC FLOW

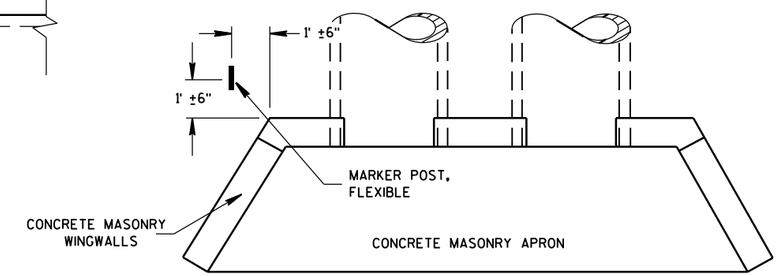

PLAN VIEW

CONCRETE MASONRY ENDWALLS FOR CULVERT PIPE AND PIPE ARCH

FLEXIBLE MARKER POST LOCATION

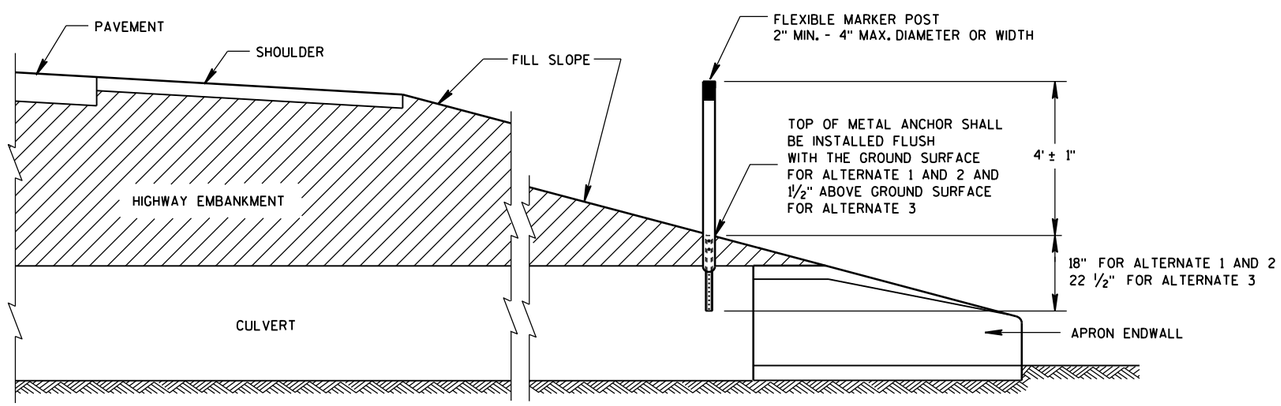

CROSS SECTION

FLEXIBLE MARKER POST

FLEXIBLE MARKER POST FOR CULVERT END

STATE OF WISCONSIN
DEPARTMENT OF TRANSPOR

6

6

S.D.D. 15 A 3-2a

S.D.D. 15 A 3-2a

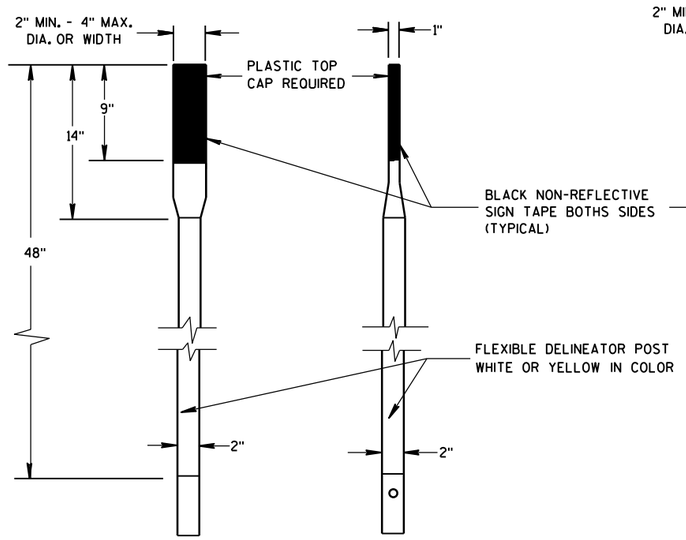

FRONT VIEW SIDE VIEW

ALTERNATE 1

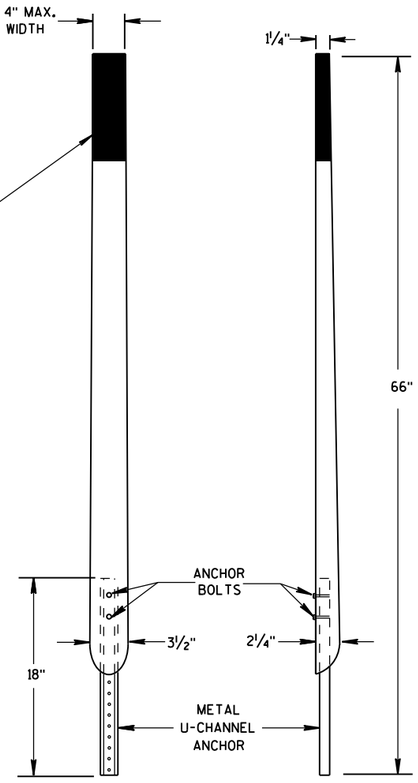

FRONT VIEW SIDE VIEW

ALTERNATE 2

FLEXIBLE MARKER POSTS

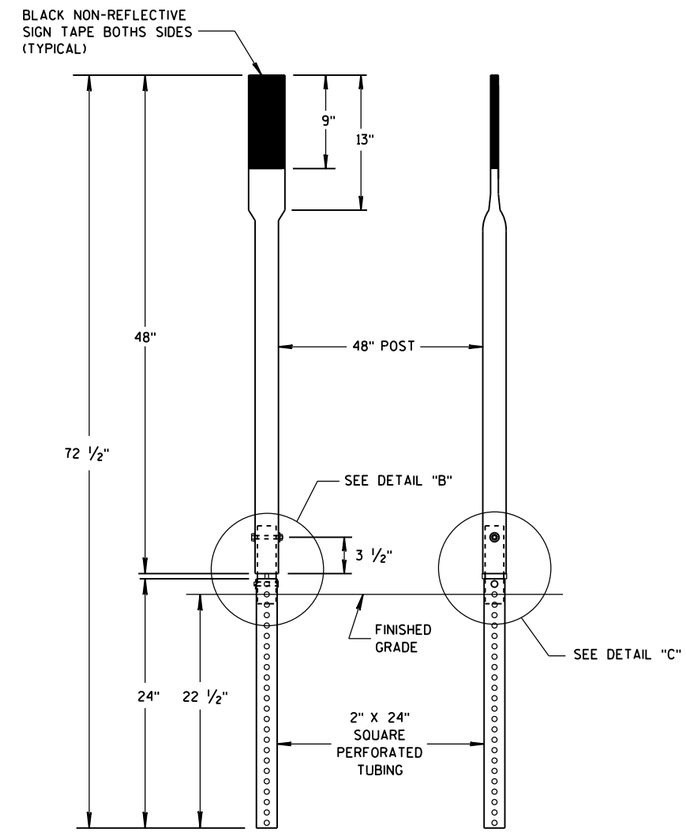

FRONT VIEW SIDE VIEW

ALTERNATE 3

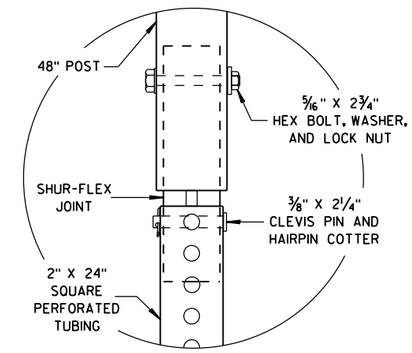

DETAIL B

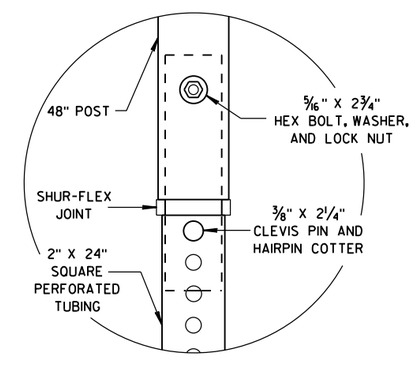

DETAIL C

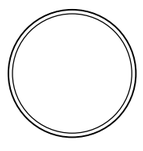

SECTION A-A

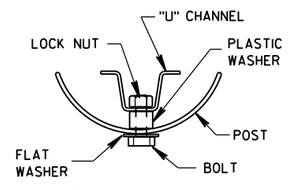

SECTION B-B

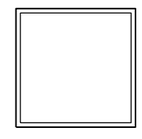

SECTION C-C

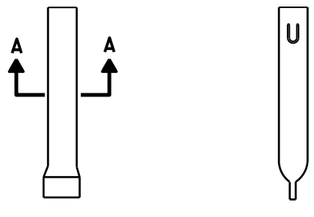

FRONT VIEW SIDE VIEW

ALTERNATE 1

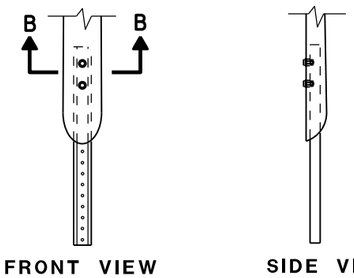

FRONT VIEW SIDE VIEW

ALTERNATE 2

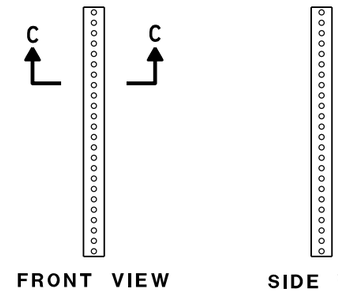

FRONT VIEW SIDE VIEW

ALTERNATE 3

FLEXIBLE MARKER POST ANCHORS

FLEXIBLE MARKER POST
FOR CULVERT END

STATE OF WISCONSIN
DEPARTMENT OF TRANSPORTATION

APPROVED
10/1/2012 /S/ Travis Feltes
DATE STATE TRAFFIC ENGINEER
FHWA

6

6

S.D.D. 15 A 3-2b

S.D.D. 15 A 3-2b

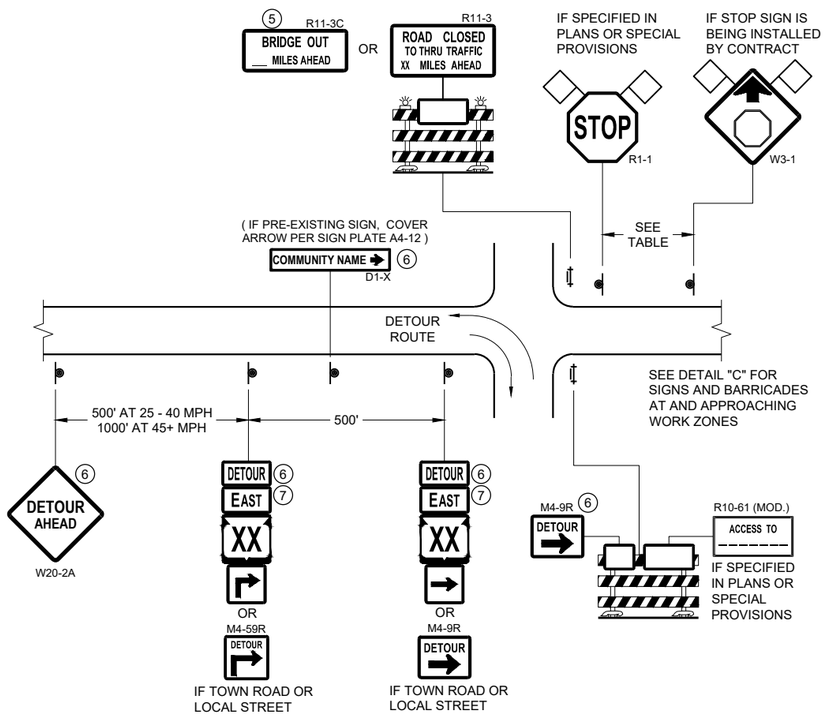

DETAIL A
MAINLINE CLOSURE WITH POSTED DETOUR
WORK ZONE GREATER THAN OR EQUAL TO ½ MILE FROM DETOUR ROUTE (1000 FEET IF URBAN)

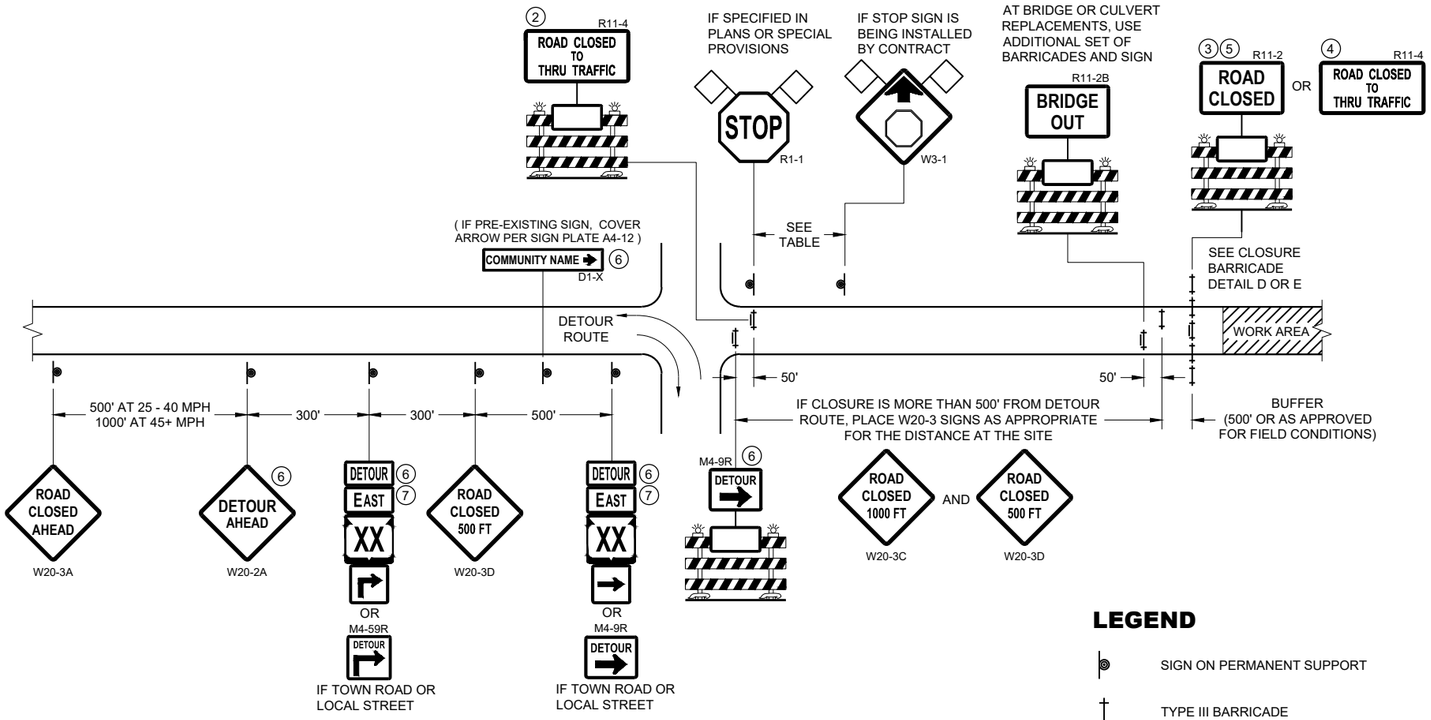

DETAIL B
MAINLINE CLOSURE WITH POSTED DETOUR
WORK ZONE LESS THAN ½ MILE FROM DETOUR ROUTE (1000 FEET IF URBAN)

LEGEND

- SIGN ON PERMANENT SUPPORT
- TYPE III BARRICADE
- TYPE III BARRICADE WITH ATTACHED SIGN
- TYPE "A" WARNING LIGHT (FLASHING)
- WORK AREA
- FLAGS, 16" X 16" MIN. (ORANGE)
- DETOUR — M4 - 8
- EAST — M3 - X
- XX (M1 - 4) OR XX (M1 - 6) OR COUNTY X (M1 - 5A)
- M05 - 1 OR M06 - 1

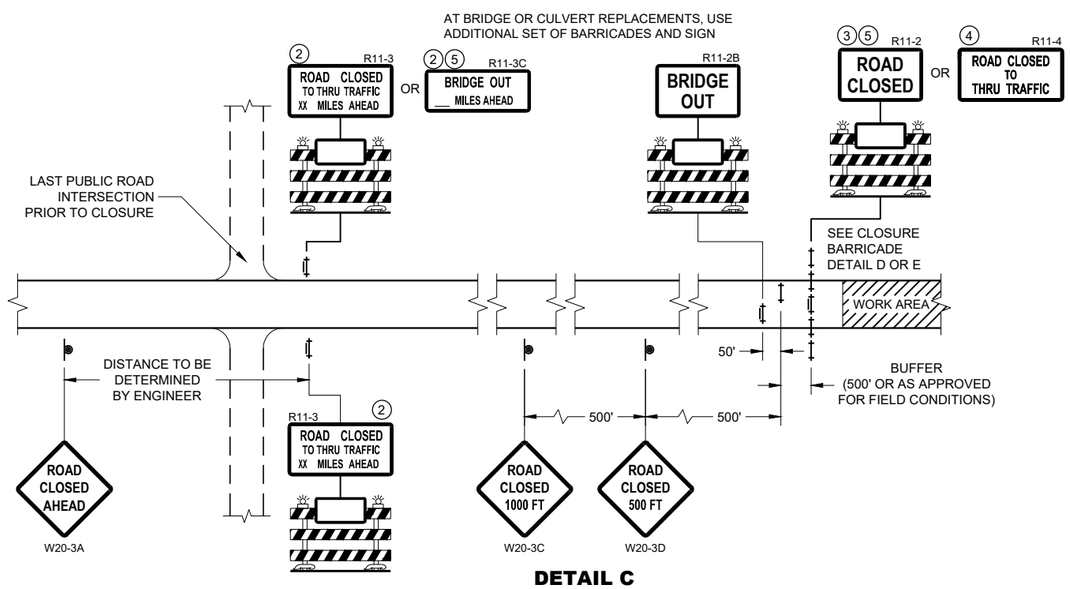

DETAIL C
MAINLINE CLOSURE, NO POSTED DETOUR

SPEED LIMIT (MPH)	"STOP AHEAD" ADVANCE WARNING DISTANCE (FT)
25	200
30	200
35	350
40	350
45	500
50	550
55	750

SEE SDD 15C2-SHEET "b" FOR GENERAL NOTES AND FOOTNOTES 1 THROUGH 7

BARRICADES AND SIGNS FOR MAINLINE CLOSURES

STATE OF WISCONSIN
DEPARTMENT OF TRANSPORTATION

APPROVED
May 2023 — DATE
/S/ Andrew Heidtke — WORK ZONE ENGINEER

FHWA

6

SDD 15C02 - 09a

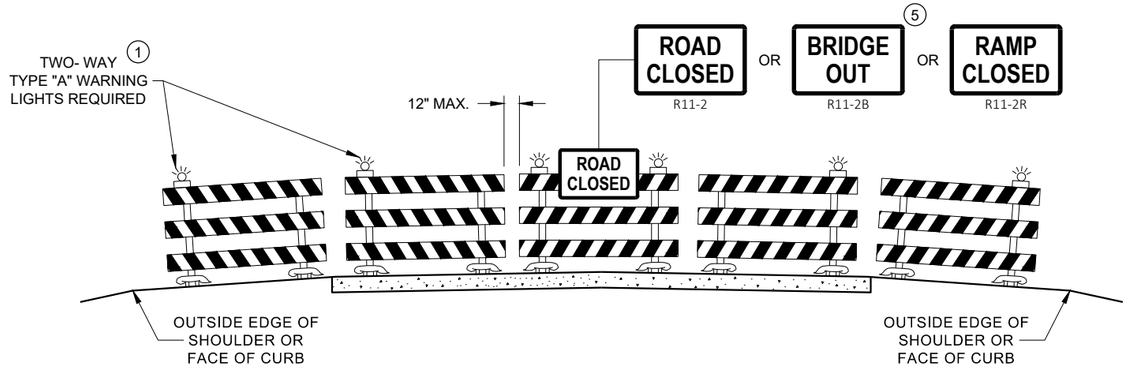

DETAIL D
ROAD CLOSURE BARRICADE DETAIL
APPROACH VIEW

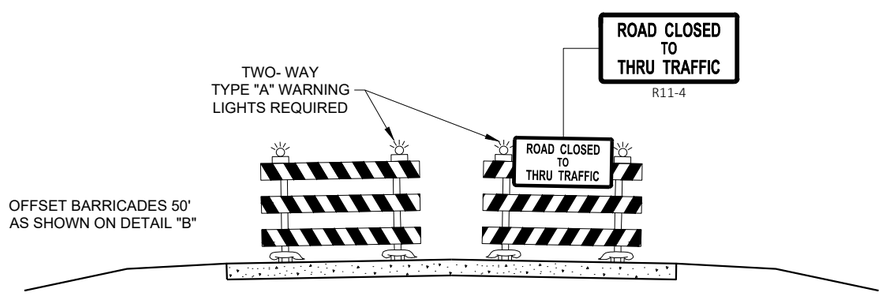

DETAIL E
LANE CLOSURE BARRICADE DETAIL
APPROACH VIEW

SEE SDD 15C2 - SHEET "a" FOR LEGEND

GENERAL NOTES

THE EXACT NUMBER, LOCATION, AND SPACING OF ALL SIGNS AND BARRICADES SHALL BE ADJUSTED TO FIT FIELD CONDITIONS AS APPROVED BY THE ENGINEER.

ANY SIGNS TEMPORARY OR EXISTING, WHICH CONFLICT WITH TRAFFIC CONTROL "IN USE", SHALL BE REMOVED OR COVERED AS NEEDED AND AS APPROVED BY THE ENGINEER.

THE SPACING BETWEEN TRAFFIC CONTROL SIGNS SHOULD BE ADJUSTED TO NOT CONFLICT WITH AND SHOULD PROVIDE A DESIRABLE MINIMUM OF 200 FEET CLEARANCE TO EXISTING SIGNS THAT WILL REMAIN IN PLACE.

BARRICADES THAT MUST BE MOVED FOR A WORK OPERATION SHALL BE IMMEDIATELY RE-ESTABLISHED UPON COMPLETION OF THE OPERATION, OR FOR CONTINUING OPERATIONS, AT THE END OF EACH WORKING DAY.

SIGNS THAT WILL BE IN PLACE LESS THAN 7 CONTINUOUS DAYS AND NIGHTS MAY BE MOUNTED ON PORTABLE SUPPORTS.

ALL TYPE III BARRICADES SHALL HAVE RAILS REFLECTORIZED ON BOTH FACES. STRIPES SHALL BE PROPERLY SLOPED DOWN TOWARD THE TRAFFIC SIDE OR AS SHOWN IN THE ROAD CLOSURE BARRICADE DETAIL "D" FOR FULL ROAD CLOSURES.

TYPE "A" LOW - INTENSITY FLASHING WARNING LIGHTS SHALL BE VISIBLE ON BOTH SIDES OF THE BARRICADE.

THE R11 - 2, R11 - 3, M4 - 9, R11 - 4, AND R10 - 61 SIGNS PLACED ON THE BARRICADES SHALL COVER NO MORE THAN THE TOP RAIL. THE SIGNS SHALL NOT COVER ANY PORTION OF THE MIDDLE RAIL OR BOTTOM RAILS.

"WO" AND "MO" SIGNS ARE THE SAME AS "W" AND "M" SIGNS EXCEPT THE BACKGROUND IS ORANGE.

ALL SIGNS SHALL BE 48" X 48" UNLESS OTHERWISE NOTED BELOW:
- R11 - 2 SHALL BE 48" X 30"
- R11 - 3 SHALL, R11 - 4 AND R10 - 61 SHALL BE 60 " X 30"
- M4 - 9 SHALL BE 30" X 24"
- M3 - X SHALL BE 24" X 12" (36" X 18" IF NEEDED TO MATCH EXISTING SIGNS)
- M4 - 8 SHALL BE 24" X 12" (36" X 18" IF NEEDED TO MATCH EXISTING SIGNS)
- M1 - 4, M1 - 5A AND M1 - 6 SHALL BE 24" X 24" (36" X 36" IF NEEDED TO MATCH EXISTING SIGNS)
- MO5 - 1 AND MO6 - 1 SHALL BE 21" X 21" (30" X 30" IF NEEDED TO MATCH EXISTING SIGNS)
- D1 - X SHALL BE AS SHOWN ON SPECIFIC PROJECT SIGNING DETAIL SHEETS.
- R1 - 1 SHALL BE 36" X 36"

1. TWO WARNING LIGHTS SHALL BE PROVIDED ON THE CENTER BARRICADE AND A MINIMUM OF ONE WARNING LIGHT SHALL BE PROVIDED ON EACH OF THE OTHER BARRICADES WITHIN THE ROADWAY LIMITS. SPACING OF THE WARNING LIGHTS SHALL BE UNIFORM TO THE EDGE OF ROADWAY AS SHOWN (APPROX. 8 FOOT LIGHT SPACING.
2. THESE SIGNS AND BARRICADES ARE NOT REQUIRED IF ROAD CLOSURE BEGINS AT AN INTERSECTION.
3. FOR ROAD CLOSURE WITHOUT LOCAL ACCESS TO PROJECT, SEE ROAD CLOSURE BARRICADE DETAIL "D".
4. FOR ROAD CLOSURE WITH LOCAL ACCESS TO PROJECT, SEE ROAD CLOSURE BARRICADE DETAIL "E".
5. FOR BRIDGE OR CULVERT REPLACEMENTS, SUBSTITUTE "BRIDGE OUT" INSTEAD OF "ROAD CLOSED" ON R11 - 2 AND R11 - 3 SIGNS.
6. INSTALL DETOUR AND COMMUNITY GUIDE SIGNS AND ARROWS ONLY IF SPECIFIED IN THE CONTRACT. IF THERE ARE EXISTING ROUTE MARKER ASSEMBLIES THAT WILL REMAIN IN PLACE, ADJUST THE LOCATION OF THE DETOUR ROUTE SIGNS TO CORRESPOND WITH THE EXISTING ASSEMBLIES. MODIFY EXISTING SIGNS WHERE POSSIBLE. SEE SPECIFIC PROJECT DETOUR SIGNING DETAIL SHEETS. IF DETOUR SIGNS ARE BEING INSTALLED BY OTHERS, PLACE THE CONTRACTED TRAFFIC CONTROL SIGNS TO ALLOW FOR PLACEMENT OF ALL WARNING, DETOUR AND GUIDE SIGNS AS SHOWN.
7. "EAST" CARDINAL DIRECTION MARKERS AND RIGHT TURN ARROWS ARE SHOWN. USE OTHER CARDINAL DIRECTIONS AND ARROWS AS APPROPRIATE.

BARRICADES AND SIGNS FOR VARIOUS CLOSURES

STATE OF WISCONSIN
DEPARTMENT OF TRANSPORTATION

APPROVED
May 2023 — DATE
/S/ Andrew Heidtke — WORK ZONE ENGINEE
FHWA

THIS DRAWING PROVIDES GENERAL GUIDANCE ON TYPICAL DETOUR SIGN LAYOUT AND SPACING. SEE PROJECT DETOUR SIGNING SHEETS FOR SPECIFIC DETAILS FOR EACH PROJECT.

LEGEND

- SIGN ON PERMANENT SUPPORT
- WORK AREA
- DETOUR — M4 - 8
- EAST — M3 - X
- XX — M1 - 4 OR XX — M1 - 6 OR COUNTY X — M1 - 5A
- M05 - 1 OR M06 - 1 OR M06 - 1

GENERAL NOTES

THE EXACT NUMBER, LOCATION AND SPACING OF ALL SIGNS SHALL BE ADJUSTED TO FIT FIELD CONDITIONS AS APPROVED BY THE ENGINEER.

IF THERE ARE EXISTING ROUTE MARKER ASSEMBLIES THAT WILL REMAIN IN PLACE, ADJUST THE LOCATION OF THE DETOUR ROUTE SIGNS TO CORRESPOND WITH THE EXISTING ASSEMBLIES. SEE SPECIFIC PROJECT DETOUR SIGNING DETAIL SHEETS. MODIFY EXISTING SIGNS WHERE POSSIBLE.

THE SPACING BETWEEN TRAFFIC CONTROL AND DETOUR SIGNS SHOULD BE ADJUSTED TO NOT CONFLICT WITH AND TO PROVIDE A DESIRABLE MINIMUM OF 200 FEET CLEARANCE TO EXISTING SIGNS THAT WILL REMAIN IN PLACE.

ANY SIGNS TEMPORARY OR EXISTING, WHICH CONFLICT WITH TRAFFIC CONTROL "IN USE" SHALL BE REMOVED OR COVERED AS NEEDED AND AS APPROVED BY THE ENGINEER.

SIGNS THAT WILL BE IN PLACE LESS THAN 7 CONTINUOUS DAYS AND NIGHTS MAY BE MOUNTED ON PORTABLE SUPPORTS.

"MO" SIGNS ARE THE SAME AS "M" SIGNS EXCEPT THE BACKGROUND IS ORANGE.

SIGN SIZES SHALL BE AS FOLLOWS:

M3-X SHALL BE 24" X 12" (36" X 18" IF NEEDED TO MATCH EXISTING SIGNS)
M4-8 SHALL BE 24" X 12" (36" X 18" IF NEEDED TO MATCH EXISTING SIGNS)
M1-4, M1-5A AND M1-6 SHALL BE 24" X 24" (36" X 36" IF NEEDED TO MATCH EXISTING SIGNS)
M05-1 AND M06-1 SHALL BE 21" X 21" (30" X 30" IF NEEDED TO MATCH EXISTING SIGNS)
M4-9 AND M4-59 SHALL BE 30" X 24"
M4-8a SHALL BE 24" X 18"
G20-51 SHALL BE 60" X 24"
W20-2A SHALL BE 48" X 48"
D1-X SHALL BE AS SHOWN ON SPECIFIC PROJECT SIGNING DETAIL SHEETS.

* OPTIONAL SIGNS. SEE SPECIFIC PROJECT DETOUR SIGNING DETAIL SHEETS.

** FOR A TOWN ROAD OR LOCAL STREET DETOURED ONTO A STATE TRUNK HIGHWAY, PLACE A ROAD NAME PLAQUE ABOVE THE M4-9 SIGN AS SPECIFIED IN THE CONTRACT.

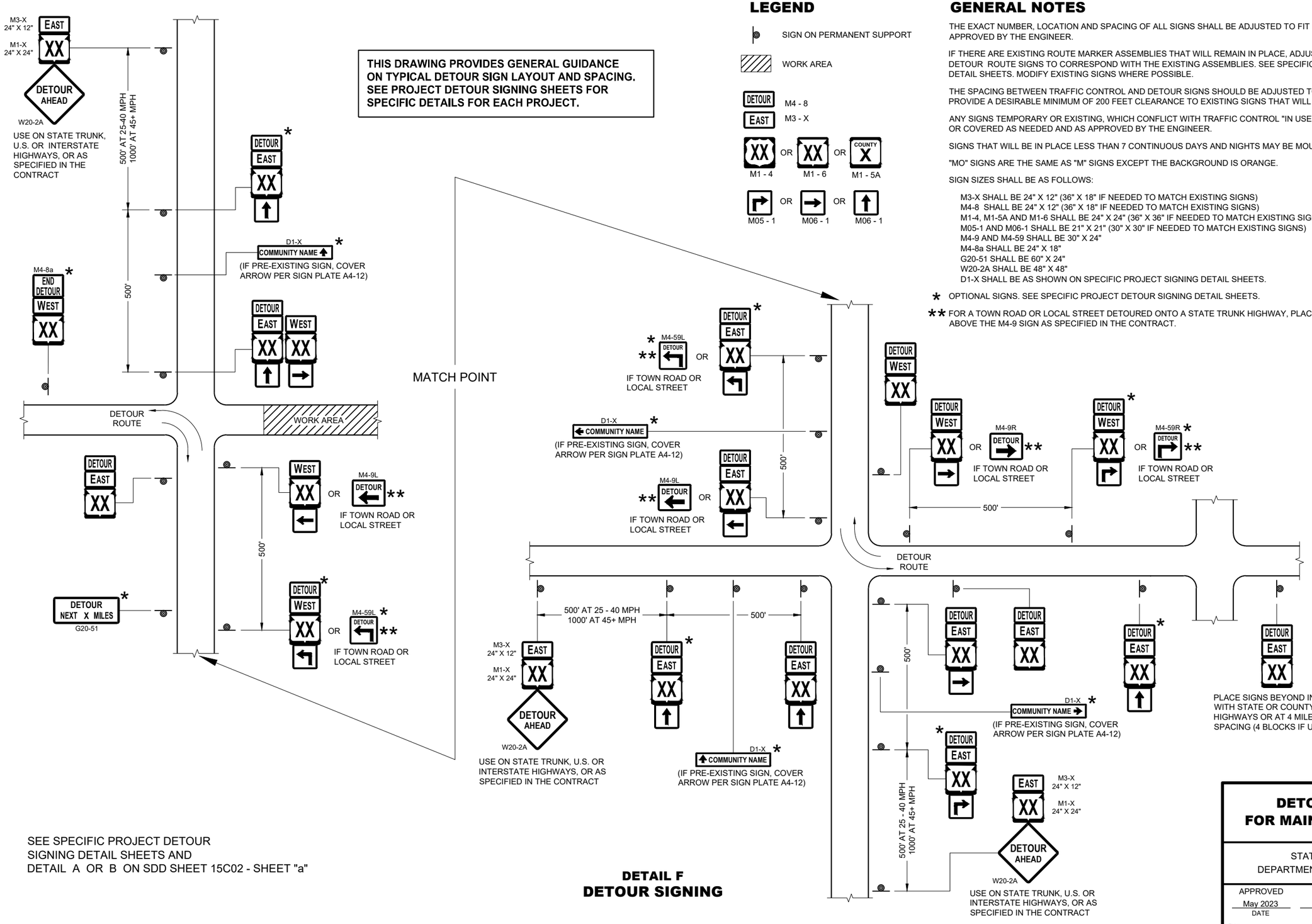

SEE SPECIFIC PROJECT DETOUR SIGNING DETAIL SHEETS AND DETAIL A OR B ON SDD SHEET 15C02 - SHEET "a"

DETAIL F
DETOUR SIGNING

DETOUR SIGNING FOR MAINLINE CLOSURES

STATE OF WISCONSIN
DEPARTMENT OF TRANSPORTATION

APPROVED
May 2023 — DATE
/S/ Andrew Heidtke — WORK ZONE ENGINEER
FHWA

6

SDD 15C02 - 09c

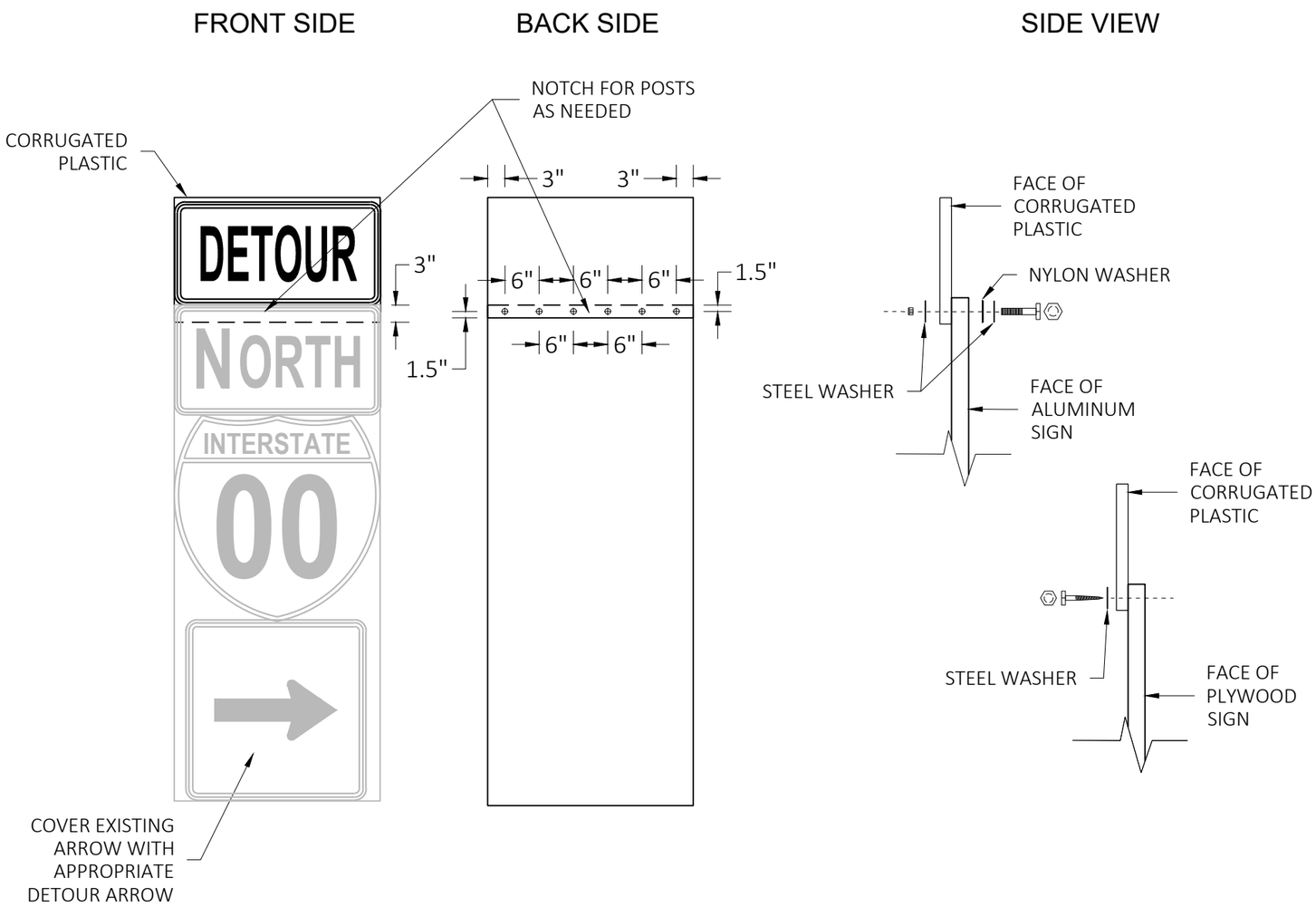

GENERAL NOTES

CELLS OF CORRUGATED PLASTIC SHALL BE VERTICALLY ORIENTED.

PROVIDE A 0.4-INCH THICK BASE CORRUGATED PLASTIC WITH A 0.035-INCH WALL THICKNESS AND 0.4-INCH CELL SIZE.

FOR 36" WIDE SIGNS: USE 6 FASTENERS AS SHOWN.

FOR 24" WIDE SIGNS: USE 4 FASTENERS WITH EDGE SPACING AS SHOWN AND 6" SPACING BETWEEN FASTENERS.

METAL WASHERS, NUTS, BOLTS AND LAGS SHALL HAVE HEXAGONAL HEADS AND SHALL BE EITHER:

A. HOT DIP GALVANIZED IN ACCORDANCE WITH ASTM DESIGNATION: A 153, CLASS D, OR SC 3.

B. ELECTRO-GALVANIZED IN ACCORDANCE WITH ASTM DESIGNATION: B 633, TYPE III, SC3

THREADS ON BOLTS AND NUTS SHALL BE MANUFACTURED WITH SUFFICIENT ALLOWANCE FOR THE CADMIUM PLATE OR GALVANIZED COATING TO PERMIT THE NUTS TO RUN FREELY ON THE BOLTS.

PLYWOOD SIGNS:
LAG SCREWS - 5/16" x 1"
ALUMINUM SIGNS:
MACHINE BOLTS - 5/16" x 1-1/4" LENGTH W/NUTS
WASHERS:
1-1/4" O.D. x 3/8" I.D. x 1/16" STEEL
1-1/4" O.D. x 3/8" I.D. x .080 NYLON

MODIFIED ROUTE ASSEMBLY FOR DETOUR SIGNING

MODIFIED ROUTE ASSEMBLY FOR DETOUR SIGNING

STATE OF WISCONSIN
DEPARTMENT OF TRANSPORTATION

APPROVED
May 2023 — DATE
/S/ Andrew Heidtke — ROADWAY STANDARDS DEVEL ENGINEER
FHWA

6

SDD 15C02-09h

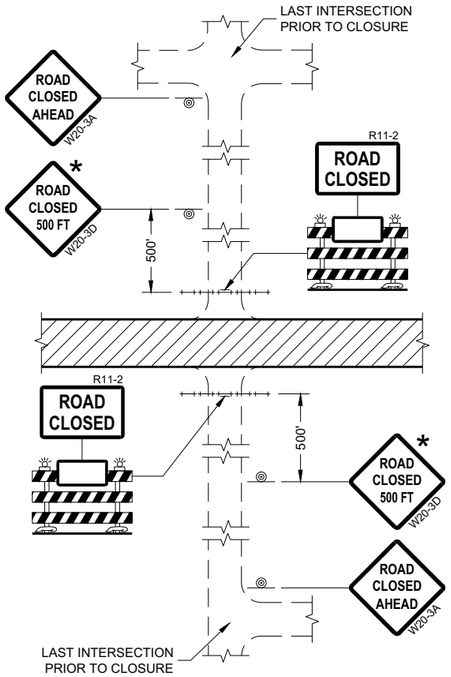

DETAIL 1
(NO ACCESS TO PROJECT)

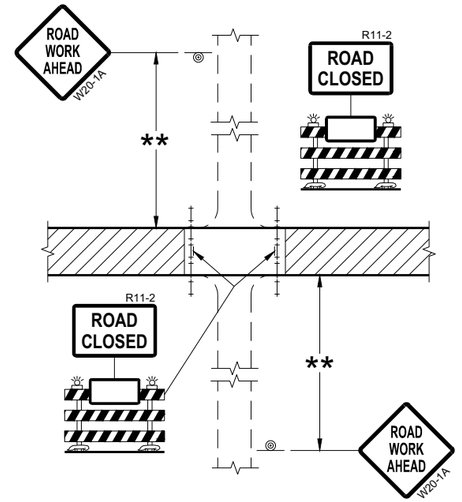

DETAIL 2
(PUBLIC CROSS-TRAFFIC MAINTAINED.
NO ACCESS TO PROJECT)

GENERAL NOTES

THE EXACT NUMBER, LOCATION, AND SPACING OF ALL SIGNS AND BARRICADES SHALL BE ADJUSTED TO FIT FIELD CONDITIONS AS APPROVED BY THE ENGINEER.

ANY SIGNS TEMPORARY OR EXISTING, WHICH CONFLICT WITH TRAFFIC CONTROL "IN USE" SHALL BE REMOVED OR COVERED AS NEEDED AND AS APPROVED BY THE ENGINEER.

THE SPACING BETWEEN TRAFFIC CONTROL SIGNS SHOULD BE ADJUSTED TO NOT CONFLICT WITH AND SHOULD PROVIDE A DESIRABLE MINIMUM OF 200 FEET CLEARANCE (500 FEET DESIRABLE) TO EXISTING SIGNS THAT WILL REMAIN IN PLACE.

IF A "STOP" SIGN MUST BE REMOVED FOR A WORK OPERATION, A TEMPORARY "STOP" SIGN SHALL BE PLACED PRIOR TO THE SIGN REMOVAL, OR A FLAGGER SHALL BE PROVIDED UNTIL THE SIGN IS REESTABLISHED.

BARRICADES THAT MUST BE MOVED FOR A WORK OPERATION SHALL BE IMMEDIATELY REESTABLISHED UPON COMPLETION OF THE OPERATION OR FOR CONTINUING OPERATIONS, AT THE END OF EACH WORKING DAY.

SIGNS THAT WILL BE IN PLACE LESS THAN SEVEN CONTINUOUS DAYS AND NIGHTS MAY BE MOUNTED ON PORTABLE SUPPORTS.

ALL TYPE III BARRICADES SHALL HAVE RAILS REFLECTORIZED ON BOTH FACES. STRIPES SHALL BE PROPERLY SLOPED DOWN TOWARD THE TRAFFIC SIDE OR AS SHOWN IN THE ROAD CLOSURE BARRICADE DETAIL "D" FOR FULL ROAD CLOSURES.

TYPE "A" LOW-INTENSITY FLASHING WARNING LIGHTS SHALL BE VISIBLE ON BOTH SIDES OF THE BARRICADE.

THE R11-2, R11-3, AND R11-4 SIGNS PLACED ON BARRICADES SHALL COVER NO MORE THAN THE TOP RAIL. THE SIGNS SHALL NOT COVER ANY PORTION OF THE MIDDLE OR BOTTOM RAILS.

ALL SIGNS SHALL BE 48" X 48" UNLESS OTHERWISE NOTED BELOW:
R11-2 SHALL BE 48" X 30".
R11-4 AND R11-3 SHALL BE 60" X 30".

* OMIT THE "ROAD CLOSED 500 FT." SIGN IF THE LAST INTERSECTION IS 500 FEET OR LESS FROM THE WORK ZONE.

** 500' MAX. OR AT LAST INTERSECTION, WHICHEVER IS CLOSEST.

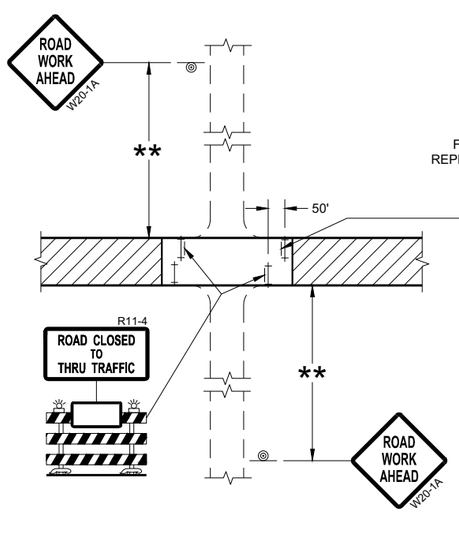

DETAIL 3
(PUBLIC CROSS-TRAFFIC MAINTAINED.
CONTRACTOR, LOCAL BUSINESS AND
RESIDENT ACCESS TO PROJECT)

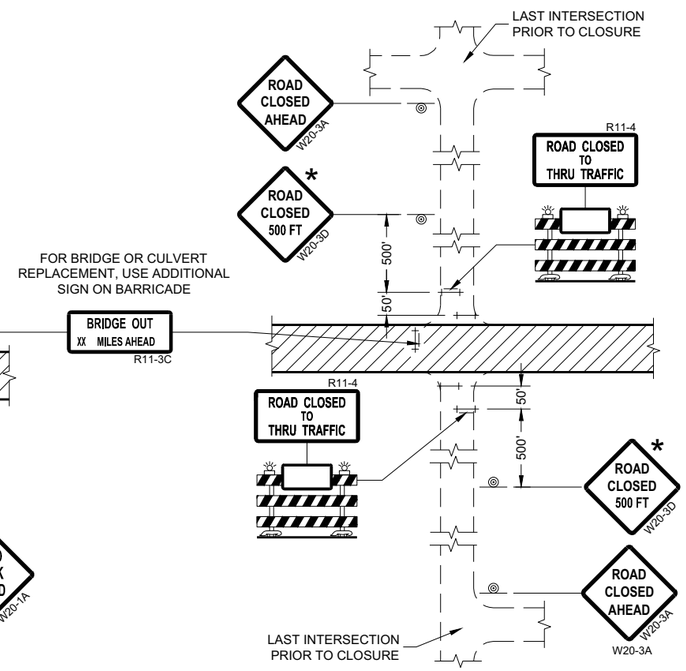

DETAIL 4
(CONTRACTOR, LOCAL BUSINESS AND
RESIDENT ACCESS TO PROJECT)

LEGEND

- SIGN ON PERMANENT SUPPORT
- TYPE III BARRICADE
- TYPE III BARRICADE WITH ATTACHED SIGN
- TYPE "A" WARNING LIGHT (FLASHING)
- WORK AREA

BARRICADES AND SIGNS FOR SIDEROAD CLOSURES

STATE OF WISCONSIN
DEPARTMENT OF TRANSPORTATION

APPROVED
July 2018 — DATE
/S/ Andrew Heidtke — WORK ZONE ENGINEE
FHWA

6

SDD 15C03 - 05

GENERAL NOTES

THE EXACT NUMBER, LOCATION, AND SPACING OF ALL SIGNS AND DEVICES SHALL BE ADJUSTED TO FIT FIELD CONDITIONS.

THE SPACING BETWEEN TRAFFIC CONTROL SIGNS SHOULD BE ADJUSTED TO NOT CONFLICT WITH AND SHOULD PROVIDE A MINIMUM OF 200 FEET (500 FEET DESIRABLE) CLEARANCE TO EXISTING SIGNS THAT WILL REMAIN IN PLACE.

ALL SIGNS ARE 48" X 48" UNLESS OTHERWISE NOTED.

SIGNS THAT WILL BE IN PLACE LESS THAN SEVEN CONTINUOUS DAYS AND NIGHTS MAY BE MOUNTED ON PORTABLE SUPPORTS.

IF A "STOP" SIGN MUST BE REMOVED FOR A WORK OPERATION, A TEMPORARY "STOP" SIGN SHALL BE PLACED PRIOR TO THE SIGN REMOVAL, OR A FLAGGER SHALL BE PROVIDED UNTIL THE SIGN IS REESTABLISHED.

* OMIT G20-1 SIGNS IF LENGTH OF WORK AREA IS 2 MILES OR LESS

** PLACE AN ADDITIONAL W20-1A "ROAD WORK AHEAD" SIGN IF WORK AREA WITHIN THE PROJECT IS SEPARATED BY MORE THAN 2 MILES FROM PREVIOUS WORK AREA.

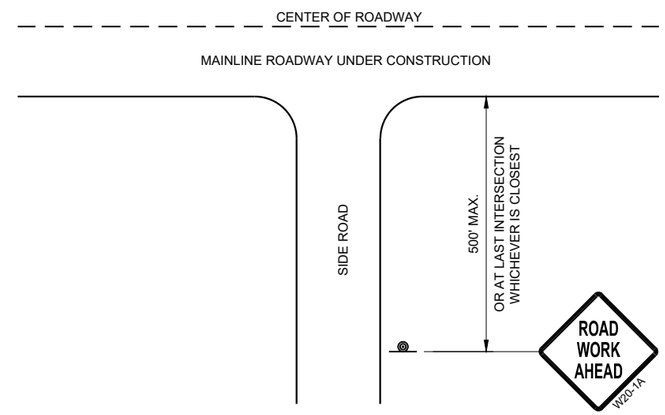

TYPICAL SIDE ROAD APPROACH WARNING SIGN DETAIL

LEGEND

- SIGN ON PERMANENT SUPPORT
- DIRECTION OF TRAFFIC
- WORK AREA

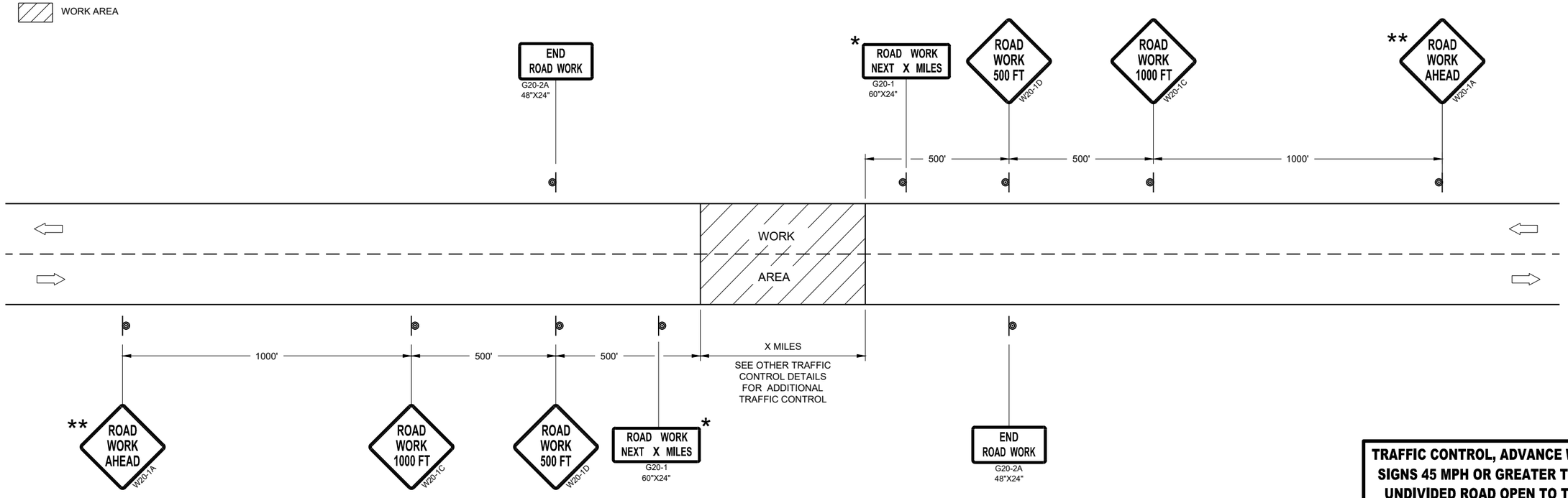

TRAFFIC CONTROL, ADVANCE WARNING SIGNS 45MPH OR GREATER

TRAFFIC CONTROL, ADVANCE WARNING SIGNS 45 MPH OR GREATER TWO-WAY UNDIVIDED ROAD OPEN TO TRAFFIC

STATE OF WISCONSIN
DEPARTMENT OF TRANSPORTATION

APPROVED
July 2018 — DATE
/S/ Andrew Heidtke — WORK ZONE ENGINEE
FHWA

6
SDD 15C04 - 05

GENERAL NOTES

THE EXACT NUMBER, LOCATION, AND SPACING OF ALL SIGNS AND DEVICES SHALL BE ADJUSTED TO FIT FIELD CONDITIONS.

THE SPACING BETWEEN TRAFFIC CONTROL SIGNS SHOULD BE ADJUSTED TO NOT CONFLICT WITH AND SHOULD PROVIDE A MINIMUM OF 200 FEET (500 FEET DESIRABLE) CLEARANCE TO EXISTING SIGNS THAT WILL REMAIN IN PLACE.

ALL SIGNS ARE 48" X 48" UNLESS OTHERWISE NOTED. IF NECESSARY DUE TO SPACE CONSTRAINTS, 36"X36" SIGNS MAY BE USED INSTEAD OF 48" X 48" SIGNS.

SIGNS THAT WILL BE IN PLACE LESS THAN SEVEN CONTINUOUS DAYS AND NIGHTS MAY BE MOUNTED ON PORTABLE SUPPORTS.

IF A "STOP" SIGN MUST BE REMOVED FOR A WORK OPERATION, A TEMPORARY "STOP" SIGN SHALL BE PLACED PRIOR TO THE SIGN REMOVAL, OR A FLAGGER SHALL BE PROVIDED UNTIL THE SIGN IS REESTABLISHED.

* THE THIRD W20-1 SIGN IS REQUIRED ONLY IF THERE IS AN INTERSECTION BETWEEN THE "ROAD WORK 500 FEET" SIGN AND THE WORK ZONE. ADJUST THE PLACEMENT OF THIS SIGN BASED ON INTERSECTION LOCATION AND OTHER FIELD CONDITIONS.

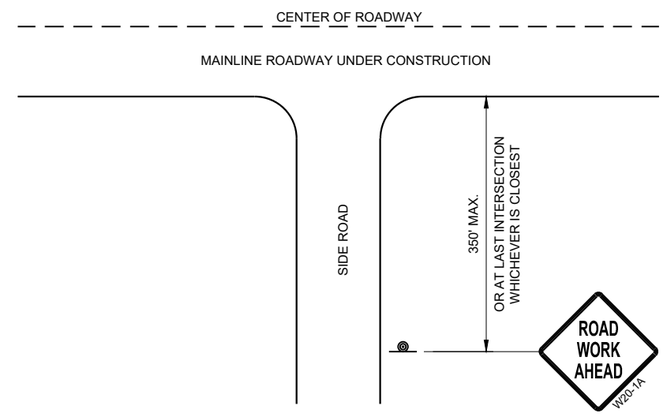

TYPICAL SIDE ROAD APPROACH WARNING SIGN DETAIL

LEGEND

- SIGN ON PERMANENT SUPPORT
- DIRECTION OF TRAFFIC
- WORK AREA

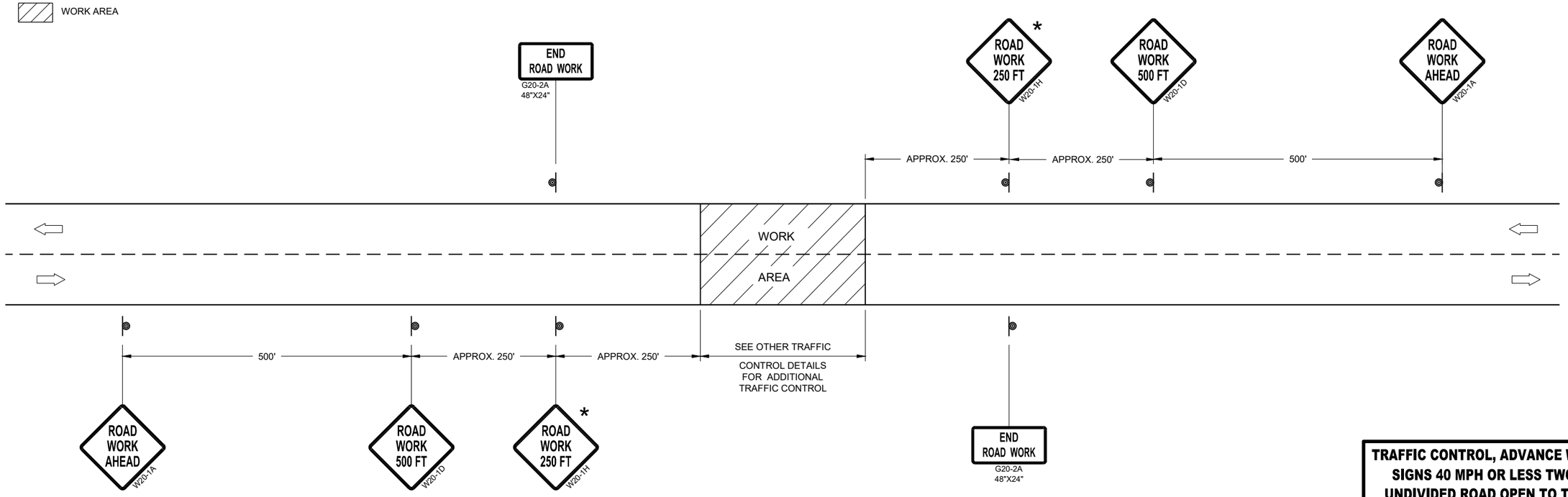

TRAFFIC CONTROL, ADVANCE WARNING SIGNS 40MPH OR LESS

TRAFFIC CONTROL, ADVANCE WARNING SIGNS 40 MPH OR LESS TWO-WAY UNDIVIDED ROAD OPEN TO TRAFFIC

STATE OF WISCONSIN
DEPARTMENT OF TRANSPORTATION

APPROVED
July 2018 — DATE
/S/ Andrew Heidtke — WORK ZONE ENGINEE
FHWA

6

SDD 15C05 - 05

6

SDD 15C05 - 05

GENERAL NOTES

DETAILS OF INSTALLATION, MATERIALS AND WORKMANSHIP NOT SHOWN ON THIS DRAWING SHALL CONFORM TO THE PERTINENT REQUIREMENTS OF THE STANDARD SPECIFICATIONS AND APPLICABLE SPECIAL PROVISIONS.

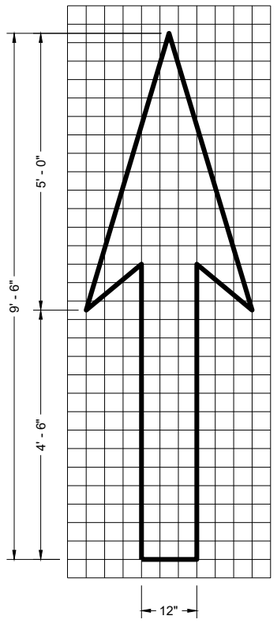

TYPE 1

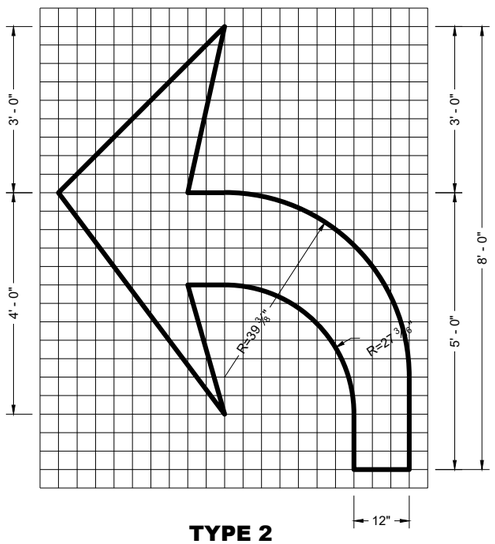

TYPE 2

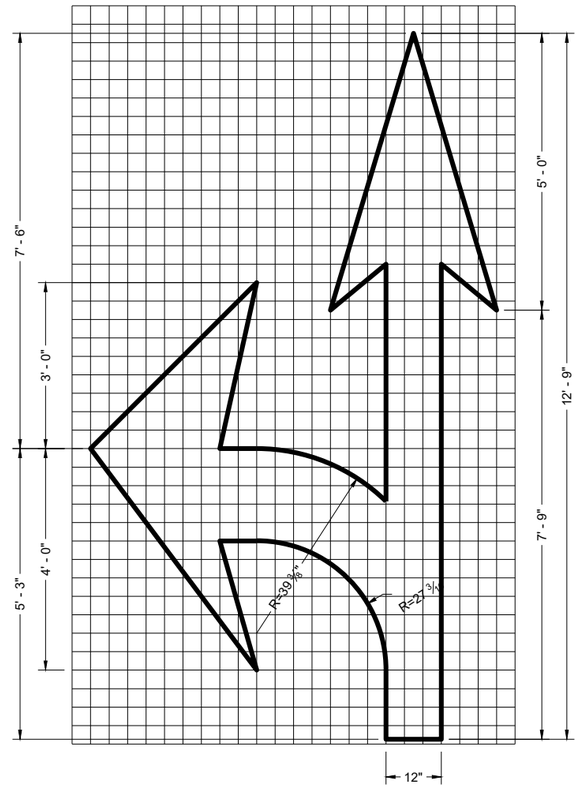

TYPE 3

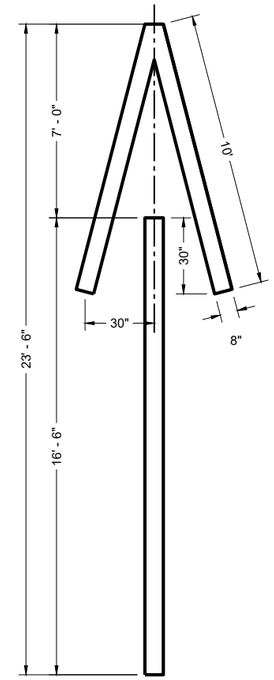

TYPE 4

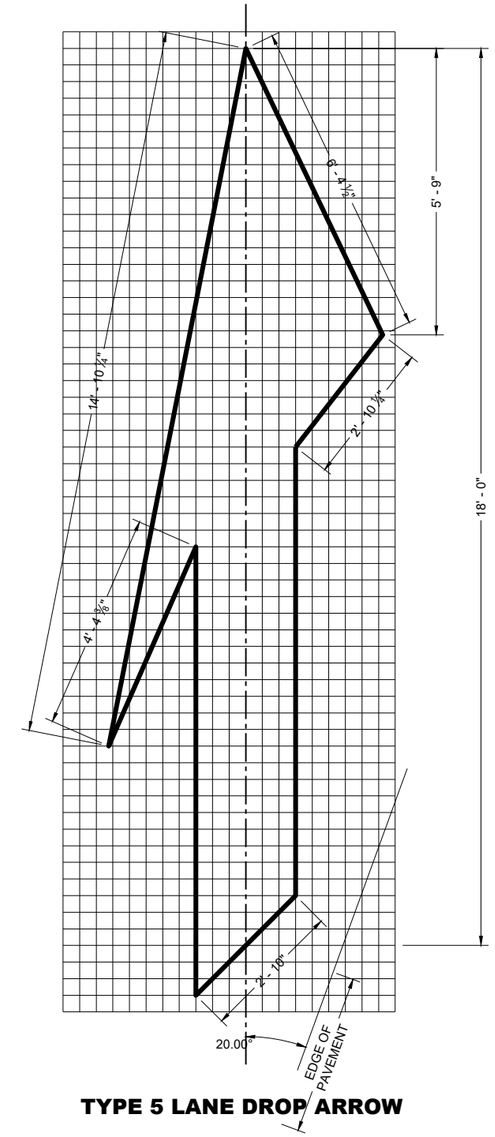

TYPE 5 LANE DROP ARROW

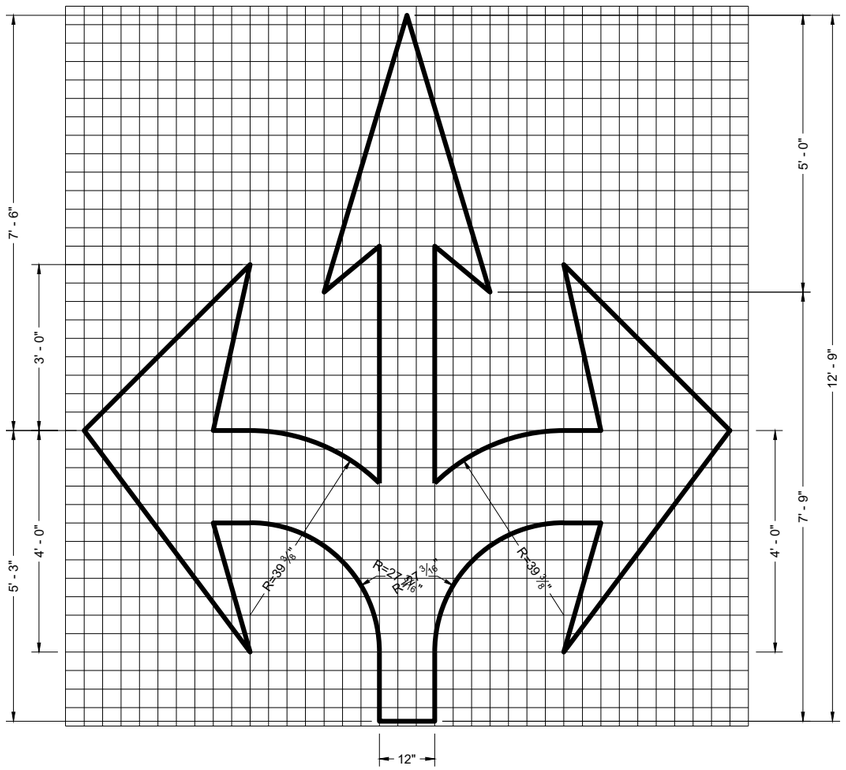

TYPE 6

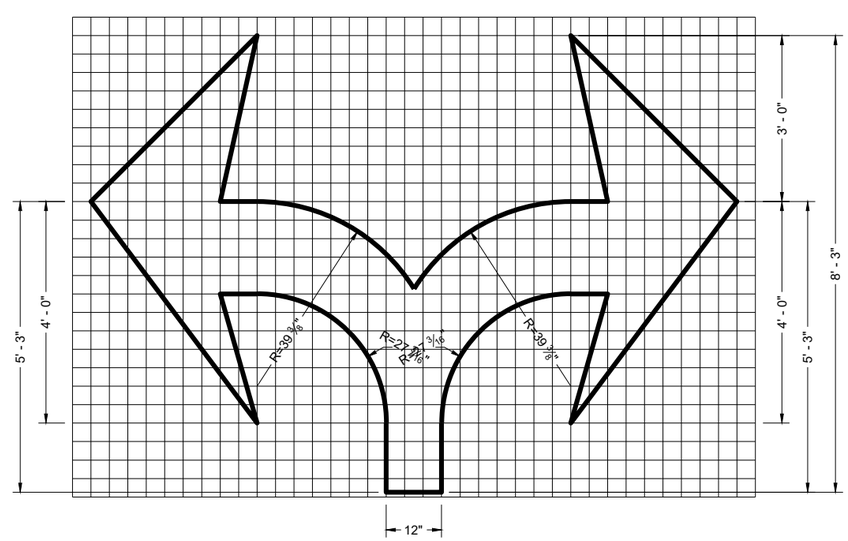

TYPE 7

6

SDD 15C07-16c

PAVEMENT MARKING ARROWS

STATE OF WISCONSIN
DEPARTMENT OF TRANSPORTATION

APPROVED
November 2024 — DATE
/S/ Jeannie Silver — STATE SIGNING AND MARKING ENGINEER

FHWA

6

SDD 15C07-16c

*CONFIRM MARKING LINE WIDTH WITH THE MISCELLANEOUS QUANTITIES

GENERAL NOTES

DETAILS OF CONSTRUCTION NOT SHOWN ON THIS DRAWING SHALL CONFORM TO STANDARD SPECIFICATIONS AND SPECIAL PROVISIONS.

1. LOCATE THE NO PASSING ZONE W14-3 SIGN WITHIN 50 FEET OF THE "T" MARKING
2. MEASURE FROM EDGE OF MARKING TO JOINT LINE. THIS DOES NOT INCLUDE SPACE NEEDED FOR GROOVING OPERATIONS.

LEGEND

"T" MARKING

SIGN ON PERMANENT SUPPORT

DIRECTION OF TRAFFIC

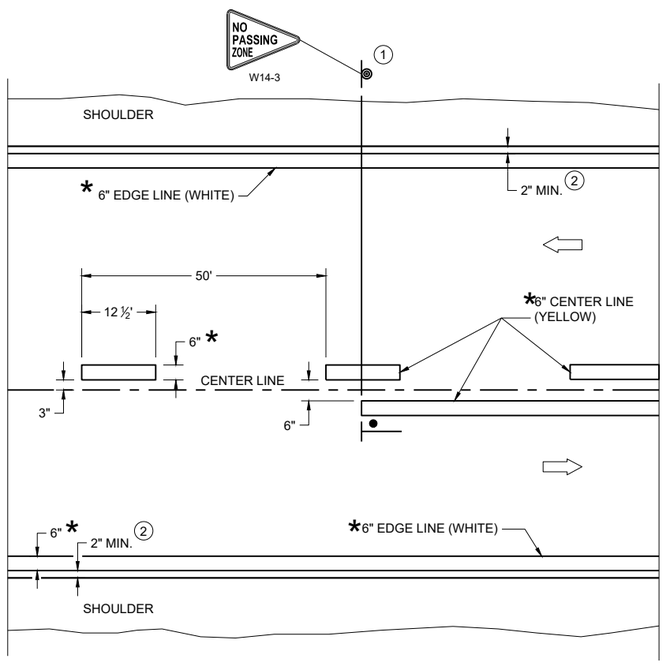

TWO WAY TRAFFIC

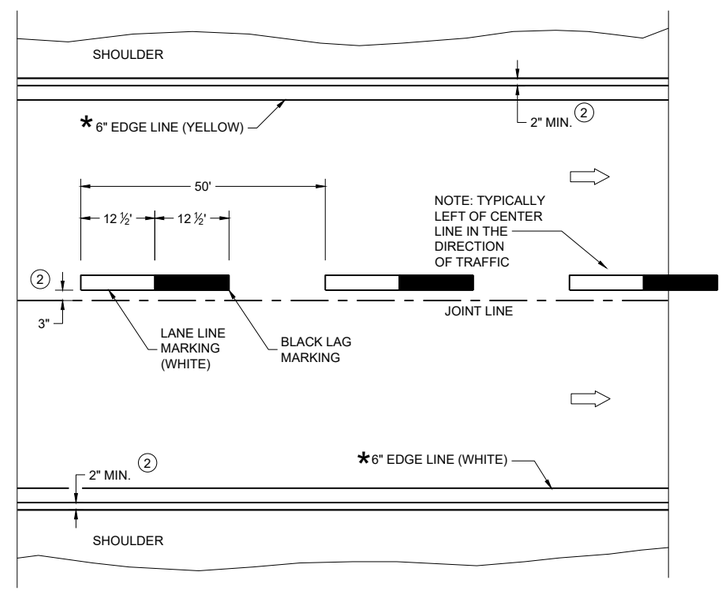

ONE WAY TRAFFIC

PERMANENT PAVEMENT MARKING

6

SDD 15C08-24a

PERMANENT LONGITUDINAL PAVEMENT MARKINGS

STATE OF WISCONSIN
DEPARTMENT OF TRANSPORTATION

APPROVED
December 2024 — DATE
/S/ Jeannie Silver — Statewide Pavement Marking Engineer
FHWA

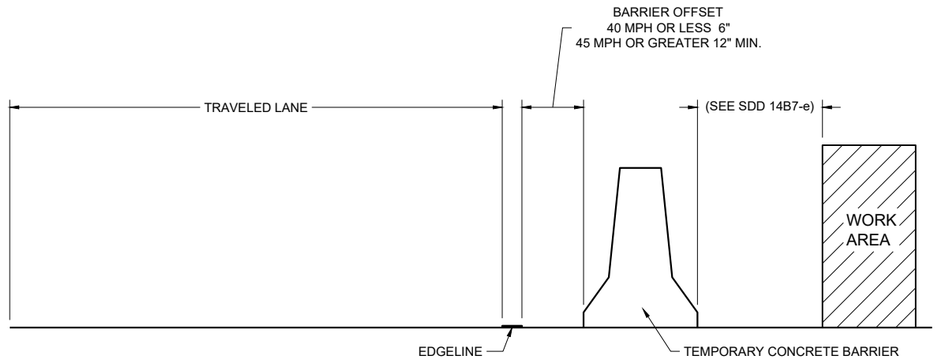

TEMPORARY BARRIER OFFSET FROM EDGELINE

GENERAL NOTES

DETAILS OF CONSTRUCTION NOT SHOWN ON THIS DRAWING SHALL CONFORM TO STANDARD SPECIFICATIONS AND SPECIAL PROVISIONS.

LEGEND

DIRECTION OF TRAFFIC

*CONFIRM MARKING LINE WIDTH WITH THE MISCELLANEOUS QUANTITIES

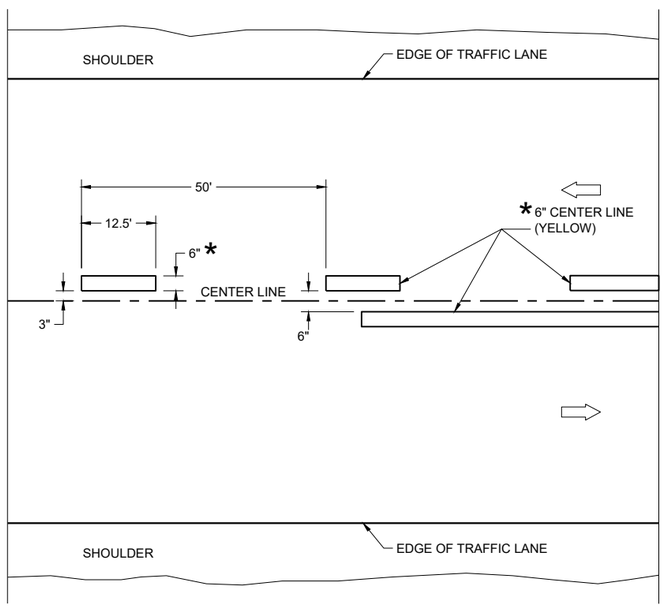

TWO WAY TRAFFIC

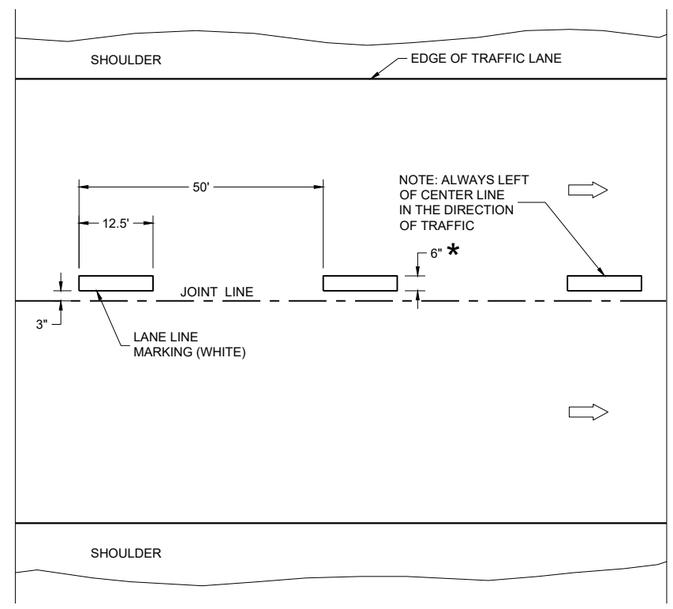

ONE WAY TRAFFIC

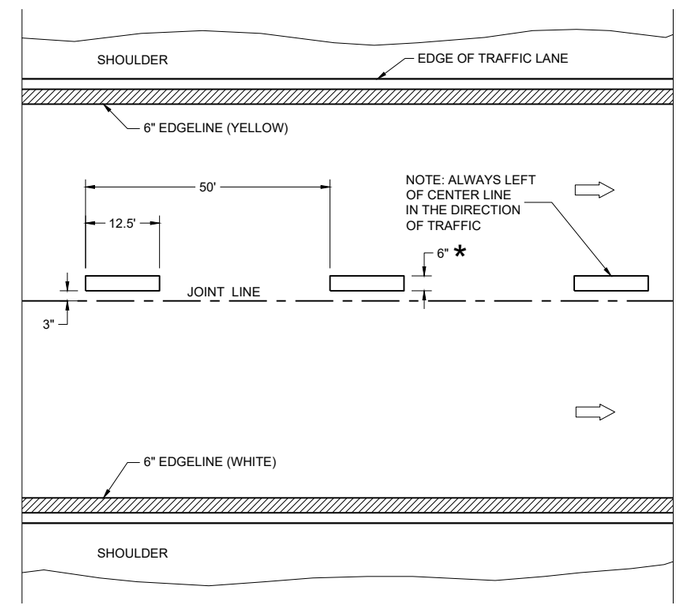

FREEWAYS AND EXPRESSWAYS

TEMPORARY PAVEMENT MARKING

TEMPORARY LONGITUDINAL PAVEMENT MARKING
STATE OF WISCONSIN DEPARTMENT OF TRANSPORTATION
APPROVED December 2024 — DATE /S/ Jeannie Silver — Statewide Pavement Marking Engineer FHWA

6

SDD 15C08-24b

6

SDD 15C08-24b

GENERAL NOTES

1. A SET OF ARROWS IS REQUIRED EVERY 400 FEET OR NEAR INTERSECTIONS OR DRIVEWAYS WITH TURNING TRAFFIC.
2. 10" WHITE
3. TURN BAY LENGTH OF LESS THAN 48' DOES NOT REQUIRE PAVEMENT ARROWS OR TEXT.

⇨ DIRECTION OF TRAFFIC

*CONFIRM MARKING LINE WIDTH WITH THE MISCELLANEOUS QUANTITIES

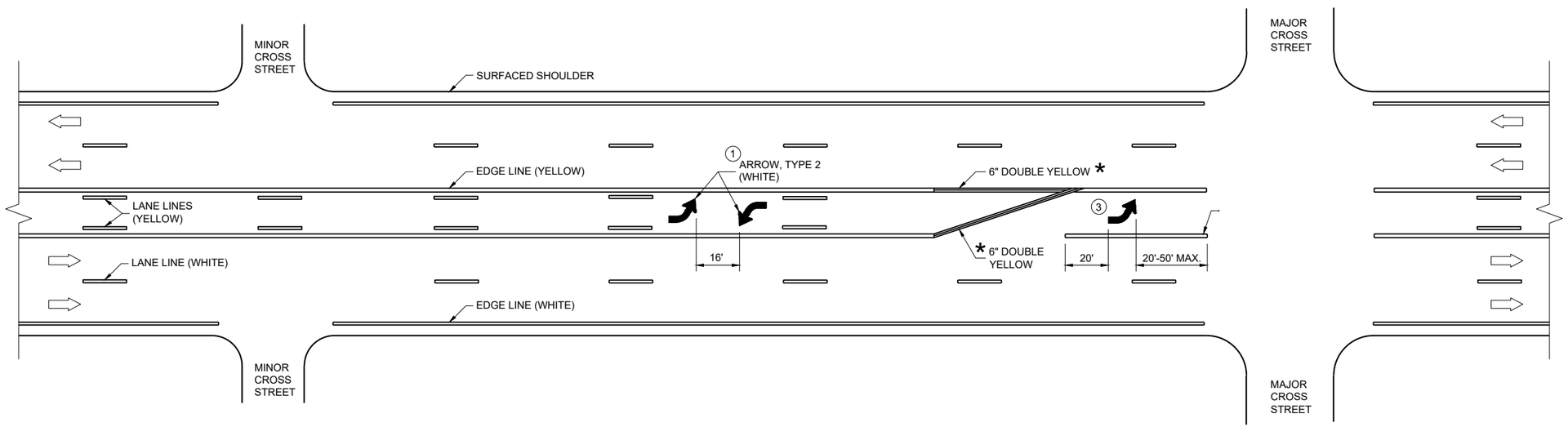

TWO WAY LEFT TURN LANE

PAVEMENT MARKING (TURN LANES)

STATE OF WISCONSIN
DEPARTMENT OF TRANSPORTATION

6
SDD 15C08-24c

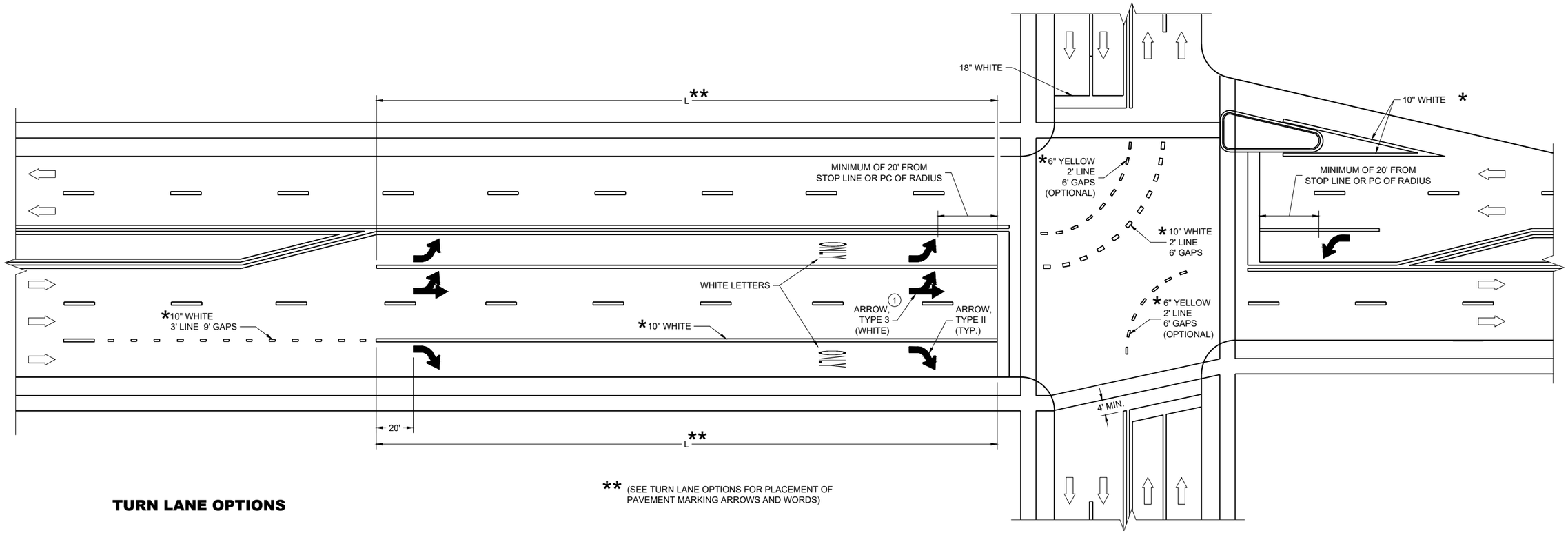

** (SEE TURN LANE OPTIONS FOR PLACEMENT OF PAVEMENT MARKING ARROWS AND WORDS)

TURN LANE OPTIONS

LENGTH OF TURN BAY (**L**) OF 0 - 47' DOES NOT REQUIRE PAVEMENT MARKING ARROWS OR WORDS

L = 48 - 87'

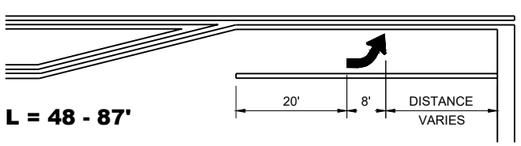

L = 88 - 166'

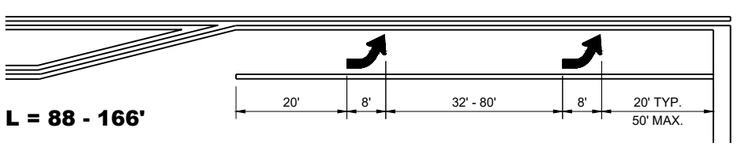

L = >166'

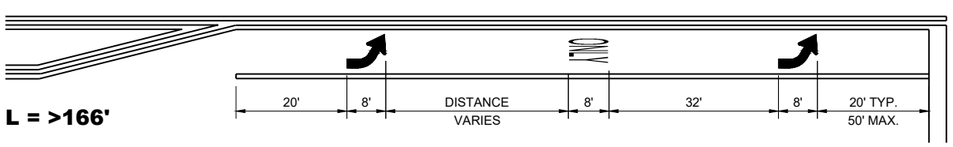

GENERAL NOTES

(1) QUANTITY AND LOCATION OF TYPE 3 ARROWS ARE THE SAME AS THE TYPE II ARROWS IN THE ADJACENT TURN LANE. FOR TURN LANES WITH A PHYSICAL SEPARATION IN THE SAME DIRECTION OF TRAVEL, THE ARROWS AND "ONLY" MARKING MAY BE ELIMINATED.

⇨ DIRECTION OF TRAFFIC

L = LENGTH OF TURN BAY

*CONFIRM MARKING LINE WIDTH WITH THE MISCELLANEOUS QUANTITIES

PAVEMENT MARKING (TURN LANES)

STATE OF WISCONSIN
DEPARTMENT OF TRANSPORTATION

6
SDD 15C08-24d

GENERAL NOTES

1. REFLECTIVE SHEETING SHALL FOLLOW THE REQUIREMENTS IN THE APPROVED PRODUCTS LISTING FOR SIGN SHEETING.
2. LOCATION OF WARNING LIGHTS WHEN SHOWN ON THE PLAN.

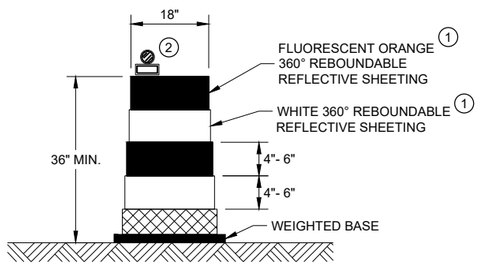

DRUM

BALLAST WIDTHS
RANGE FROM 24"-36"

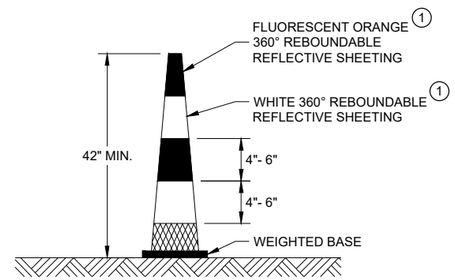

42" CONE

DO NOT USE IN TAPERS
½ SPACING OF DRUMS

BALLAST WIDTHS
RANGE FROM 14"-20"

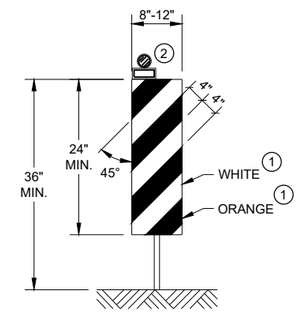

VERTICAL PANEL

THE STRIPES SHALL SLOPE DOWNWARD TO
THE TRAFFIC SIDE FOR CHANNELIZATION.

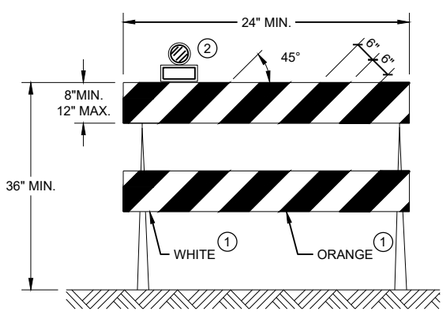

TYPE II BARRICADE

FOR RAILS LESS THAN 36" LONG, 4" WIDE STRIPES
MAY BE USED. ALL STRIPES SHALL SLOPE DOWNWARD
TO THE TRAFFIC SIDE FOR CHANNELIZATION.

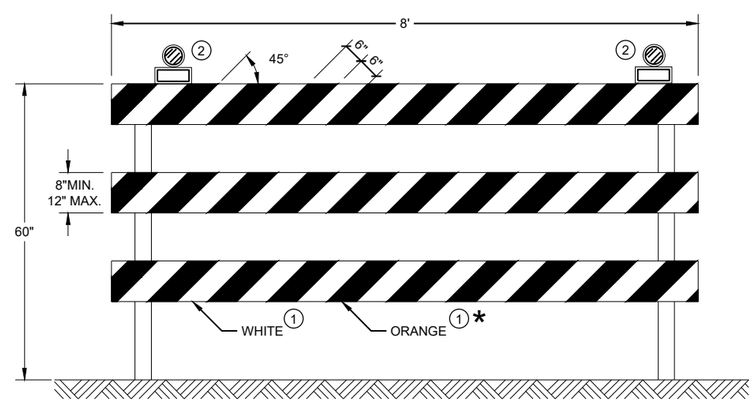

TYPE III BARRICADE

IF SIGN MOUNTED, DO NOT COVER MORE THAN 50% OF THE TOP
TWO RAILS OR 33% OF THE TOTAL AREA OF THE THREE RAILS.

* IF USED FOR A PERMANENT APPLICATION USE RED SHEETING.

CHANNELIZING DEVICES
DRUMS, CONES, BARRICADES
AND VERTICAL PANELS

STATE OF WISCONSIN
DEPARTMENT OF TRANSPORTATION

APPROVED
November 2022 /S/ Andrew Heidtke
DATE WORK ZONE ENGINEE
FHWA

6

6

SDD 15C11 - 10b

SDD 15C11 - 10b

LEGEND

V1 LEAD VEHICLE

V2 MARKING VEHICLE

V3 SHADOW VEHICLE

TRUCK MOUNTED ATTENUATOR (TMA)

SIGN ON TEMPORARY SUPPORT

DIRECTION OF TRAFFIC

GENERAL NOTES

ALL VEHICLES SHALL BE EQUIPPED WITH TWO 360 DEGREE HIGH INTENSITY YELLOW FLASHING LIGHTS OR STROBE LIGHTS AND OPERATED WITH HEADLIGHTS TURNED ON.

ALL VEHICLES SHALL BE EQUIPPED WITH REAR FACING TYPE B OR C FLASHING ARROW PANEL OPERATING IN CAUTION MODE. SIGNS PLACED ON VEHICLES MUST NOT OBSCURE THE ARROW PANEL.

ALL SIGNS ARE 48" X 48" UNLESS OTHERWISE SPECIFIED.

DISTANCE BETWEEN VEHICLES MAY VARY ACCORDING TO TERRAIN, SIGHT DISTANCE, PAINT DRYING TIME, AND OTHER FACTORS. WHENEVER ADEQUATE STOPPING SIGHT DISTANCE EXISTS TO THE REAR, SHADOW VEHICLES SHOULD MAINTAIN THE MINIMUM DISTANCE FROM THE WORK VEHICLE AND PROCEED AT THE SAME SPEED AS THE WORK VEHICLE. SHADOW VEHICLES SHOULD SLOW DOWN IN ADVANCE OF VERTICAL AND HORIZONTAL CURVES THAT RESTRICT SIGHT DISTANCE.

THE WORK AND SHADOW VEHICLES SHOULD PULL OVER PERIODICALLY TO ALLOW TRAFFIC TO PASS.

WHEN NO WORK ACTIVITY IS TAKING PLACE, REMOVE OR LAY STATIONARY SIGNS AND SUPPORTS FLAT ON THE GRADE WITH

WORKERS SHALL NOT PERFORM WORK FROM ANY SHADOW OR PROTECTION VEHICLES.

UPRIGHTS ORIENTED PARALLEL TO AND DOWNSTREAM FROM TRAFFIC.

CONES SHOULD BE USED BETWEEN THE MARKING AND SHADOW VEHICLE AT 100 FOOT SPACING. CONES MAY BE OMITTED ON PAINTED LINE IF APPROVED BY THE ENGINEER. CONSIDER PAVEMENT MARKING DRY OR CURE TIMES AND TRAFFIC VOLUME.

CONES SHALL BE A MINIMUM OF 28" FOR WET PAVEMENT MARKING .

(1) SIGNS SHALL BE REPEATED APPROXIMATELY EVERY THREE MILES AND AFTER EVERY MAJOR INTERSECTION.

(2) IF CONSTRUCTION WORK ZONE SIGNS ARE IN PLACE, W20-1A OR W21-63 ARE NOT REQUIRED.

(3) V1 AND V2 CAN BE SWITCHED SO THAT THE MARKER IS THE LEAD VEHICLE.

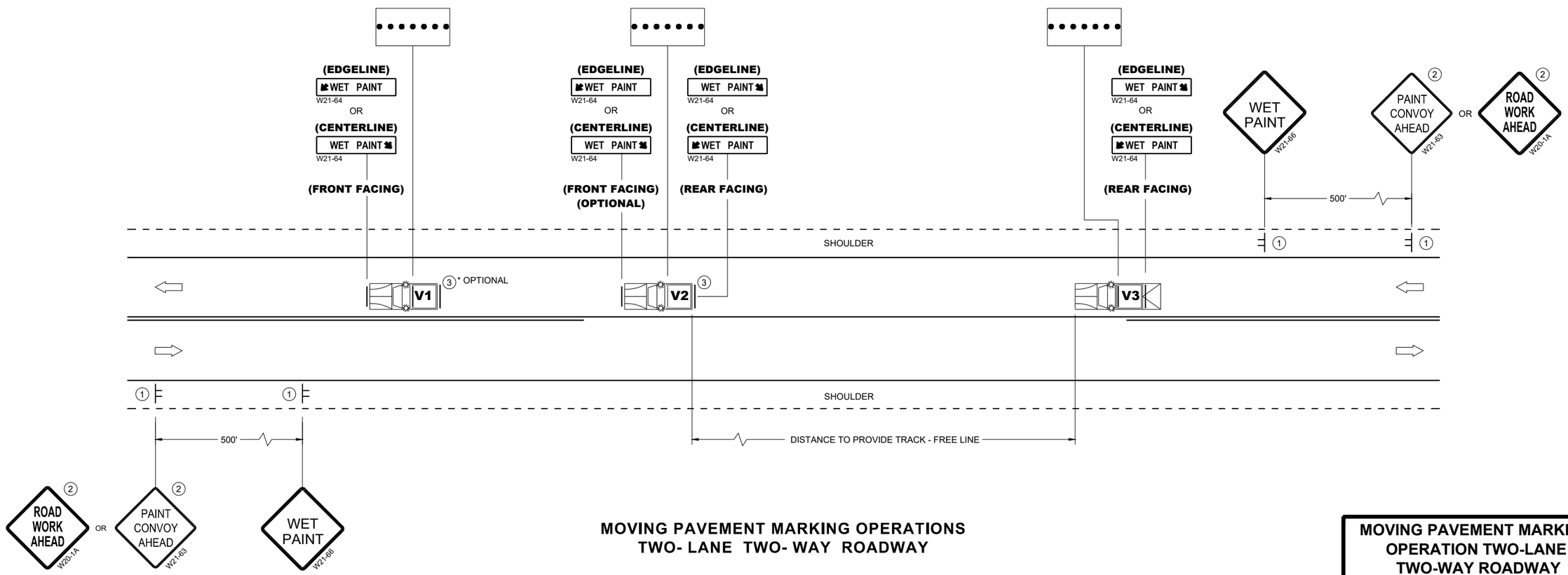

MOVING PAVEMENT MARKING OPERATIONS
TWO- LANE TWO- WAY ROADWAY

MOVING PAVEMENT MARKING OPERATION TWO-LANE TWO-WAY ROADWAY

STATE OF WISCONSIN
DEPARTMENT OF TRANSPORTATION

APPROVED
November 2025 — DATE
/S/ Andrew Heidtke — STATE ELECTRICAL ENGINEER

FHWA

6

SDD 15C19-11a

6

SDD 15C19-11a

GENERAL NOTES

STOP SIGN SHALL BE PLACED A MINIMUM OF 6 FEET TO A MAXIMUM OF 50 FEET FROM THE EDGELINE LOCATION.

1. 18-INCH STOP LINES MAY BE DELETED OR ADDED BY THE REGION MARKING ENGINEER BASED ON VISIBILITY AND SIGHT LINES.
2. NO STOP LINE IS REQUIRED IF STOP SIGN IS LESS THAN OR EQUAL TO 40 FEET FROM THE EDGELINE.
3. NO STOP LINE IS REQUIRED IF STOP SIGN IS LESS THAN OR EQUAL TO 30 FEET FROM THE FLANGE LINE EXTENSION.
4. MOVE CLOSER TO THE EDGE OF TRAVEL LINE AS NEEDED FOR VISIBILITY AND SIGHT LINES (NO CLOSER THAN 4 FEET).
5. LADDER BAR CROSSWALKS SHOULD ONLY BE USED FOR MID BLOCK CROSSINGS. USE 2 - 6" TRANSVERSE LINES.
6. POSTED SPEED LIMITS OF 40 MPH OR GREATER USE A MINIMUM WIDTH OF 8' FOR MIDBLOCK CROSSWALKS

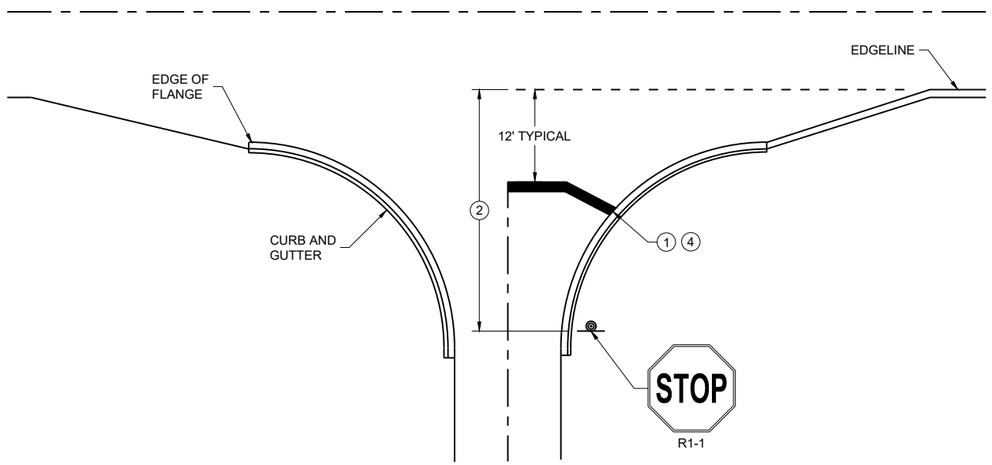

TYPICAL STOP LINE PAVEMENT MARKING WITH CURB AND GUTTER

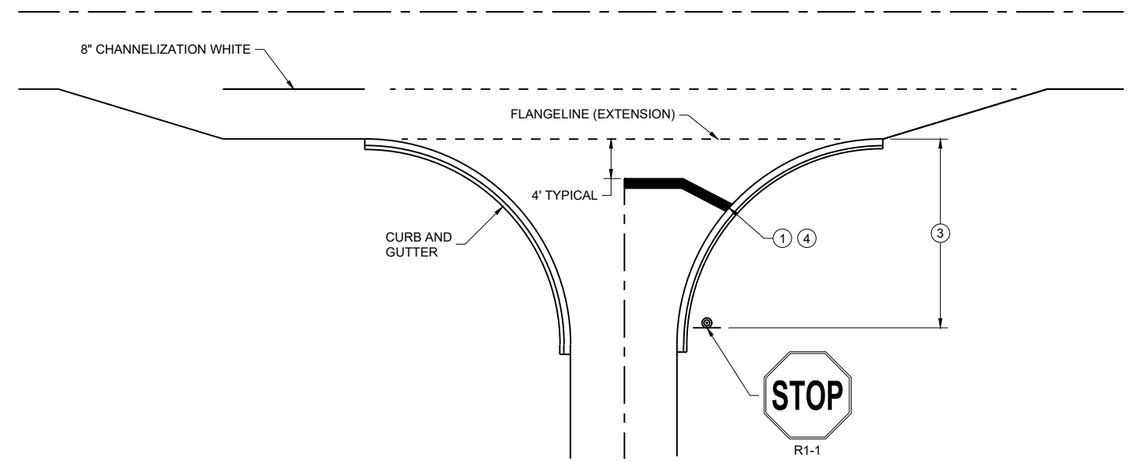

TYPICAL STOP LINE PAVEMENT MARKING FOR SIDE ROADS WITH RIGHT TURN LANE

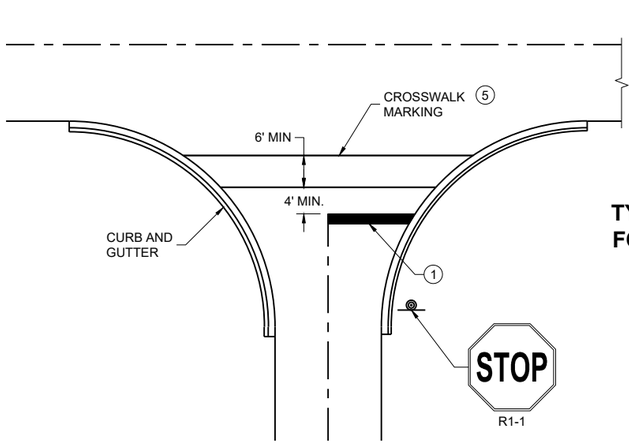

TYPICAL STOP LINE PAVEMENT MARKING FOR SIDE ROADS WITH CROSSWALK MARKING

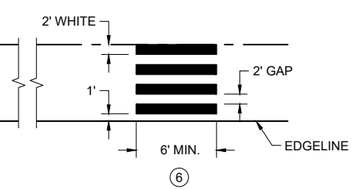

TYPICAL PAVEMENT MARKING FOR MID-BLOCK CROSSWALK 5

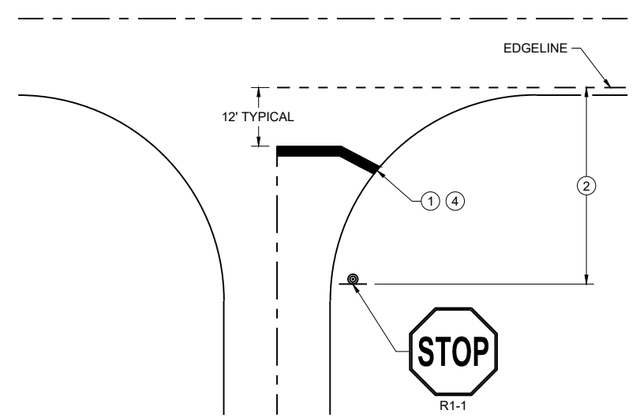

TYPICAL STOP LINE PAVEMENT MARKING WITHOUT CURB AND GUTTER

STOP LINE AND CROSSWALK PAVEMENT MARKING

STATE OF WISCONSIN
DEPARTMENT OF TRANSPORTATION

APPROVED
March 2024 — DATE
/S/ Matthew Rauch — STATE SIGNING AND MARKING ENGINEER

FHWA

6
SDD 15C33-05

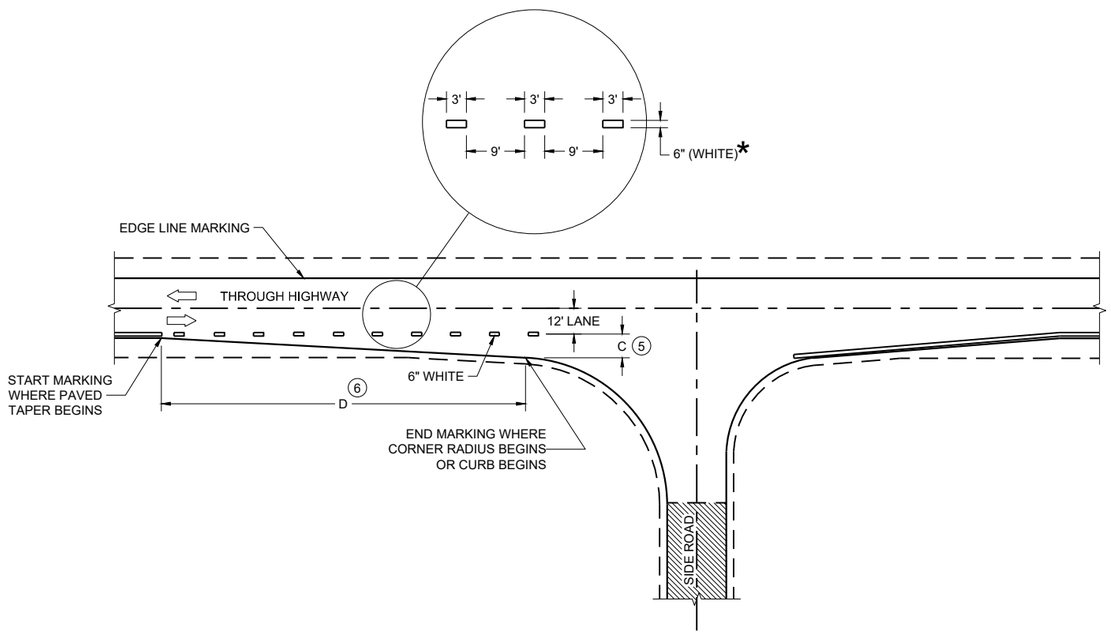

MINOR INTERSECTION

*CONFIRM MARKING LINE WIDTH WITH THE MISCELLANEOUS QUANTITIES

GENERAL NOTES

OMIT EDGE LINES THROUGH INTERSECTIONS. CONTINUE EDGE LINES THROUGH DRIVEWAYS.

1. WHEN DISTANCE "A" IS LESS THAN 250 FEET, OMIT LANE LINE.
2. WHEN DISTANCE "B" IS LESS THAN 100 FEET, OMIT CHANNELIZING LANE LINE.
3. BARRIER LINE ENDS AT SIDE ROAD PAVEMENT / SURFACE EDGE EXTENSION.
4. BARRIER LINE STARTS 500 FEET PRIOR TO THE BYPASS TAPER.
5. WHEN DISTANCE "C" IS LESS THAN 4 FEET, OMIT DOTTED EXTENSION.
6. WHEN DISTANCE "D" IS LESS THAN 50 FEET, OMIT DOTTED EXTENSION.

LEGEND

⇨ DIRECTION OF TRAVEL

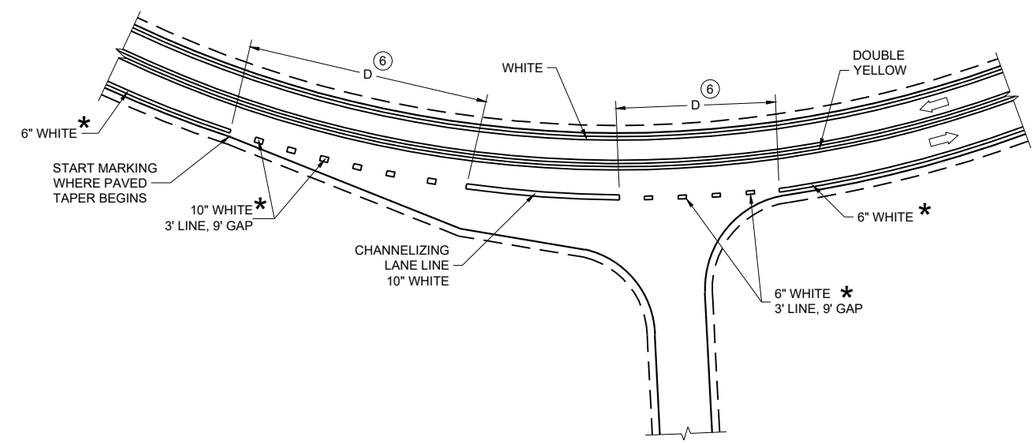

INTERSECTION ON OUTSIDE OF CURVE

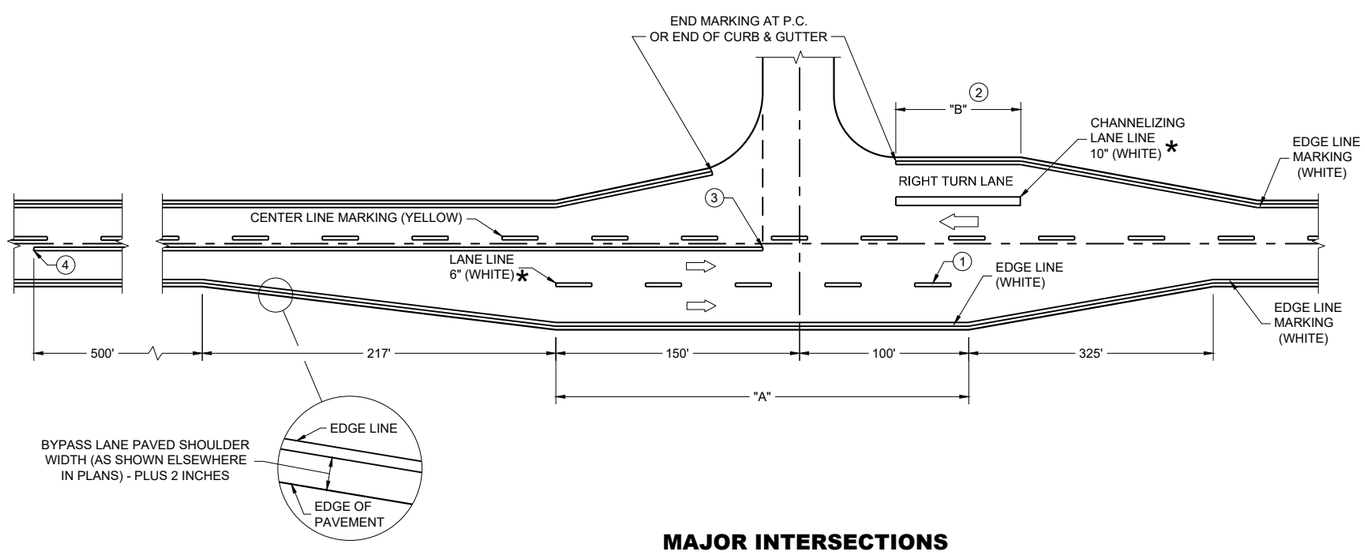

MAJOR INTERSECTIONS

(INTERSECTION WITH FULL RIGHT TURN LANE OR BYPASS LANE)

PAVEMENT MARKING (INTERSECTIONS)

STATE OF WISCONSIN
DEPARTMENT OF TRANSPORTATION

6
SDD 15C35-06a

LEGEND

SIGN ON PERMANENT SUPPORT

TRAFFIC CONTROL DRUM

DIRECTION OF TRAFFIC

WORK ZONE

GENERAL NOTES

ALL SIGNS ARE 48"X48" UNLESS OTHERWISE NOTED. IF NECESSARY DUE TO SPACE CONSTRAINTS IN URBAN AREAS, 36" X 36" SIGNS MAY BE USED IF APPROVED BY THE REGIONAL TRAFFIC UNIT.

"WO" SIGN IS THE SAME AS "W" SIGN EXCEPT THE BACKGROUND IS ORANGE.

ANY SIGNS TEMPORARY OR EXISTING, WHICH CONFLICT WITH THE TRAFFIC CONTROL "IN USE" SHALL BE REMOVED OR COVERED AS NEEDED AND AS APPROVED BY THE ENGINEER.

THE EXACT NUMBER, LOCATION, AND SPACING OF ALL SIGNS AND DEVICES SHALL BE ADJUSTED TO FIT FIELD CONDITIONS AS APPROVED BY THE ENGINEER.

CHANNELIZING DEVICES PLACED ADJACENT TO WORK AREA SHALL BE PULLED BACK FROM THE TRAVEL LANE WHEN WORK IS NOT IN PROGRESS.

SIGNS THAT WILL BE IN PLACE LESS THAN 7 CONTINUOUS DAYS AND NIGHTS MAY BE MOUNTED ON PORTABLE SUPPORTS.

W20-1A AND G20-2A SIGNS ARE NOT REQUIRED IF THE WORK AREA IS WITHIN A LARGER WORK ZONE WHERE THESE SIGNS ARE ALREADY PRESENT. G20-2A SIGNS MAY ALSO BE OMITTED IF DURATION OF WORK IS LESS THAN 7 CONTINUOUS DAYS AND NIGHTS.

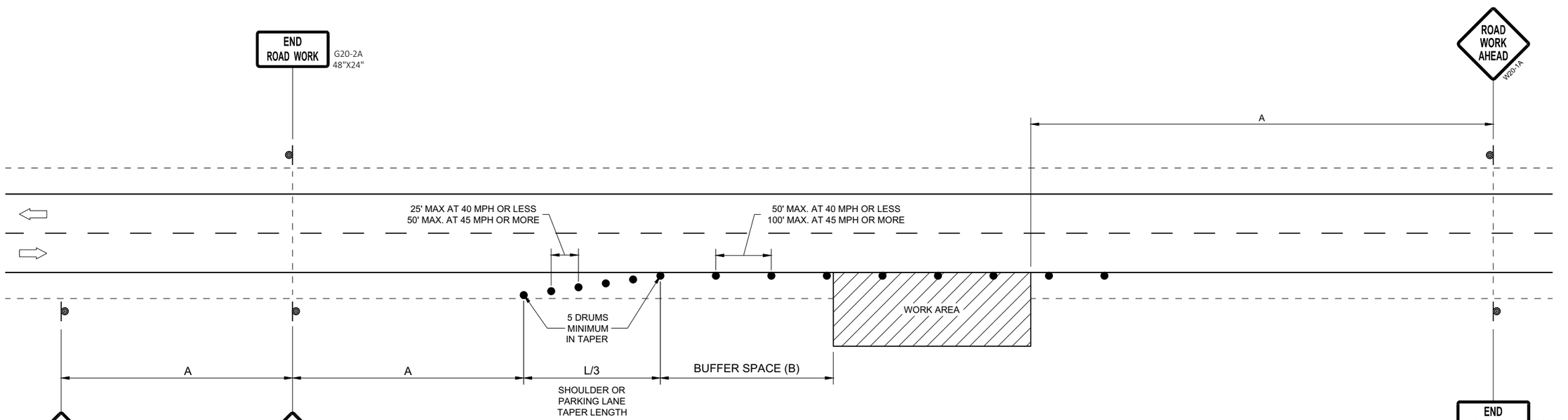

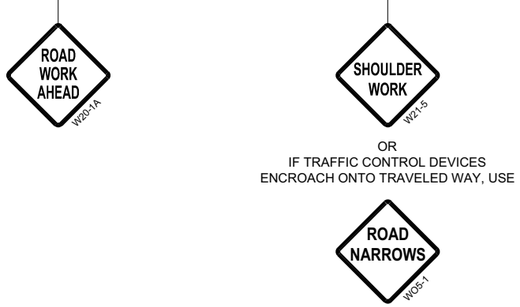

POSTED SPEED LIMIT PRIOR TO WORK STARTING (MPH)	ADVANCE WARNING SIGN SPACING (A) FEET	SHOULDER TAPER L / 3 W, LATERAL OFFSET (FT)						BUFFER SPACE (B) FEET
		3	4	5	6	7	8	
25	200'	10	14	17	21	24	28	55
30	200'	15	20	25	30	35	40	85
35	350'	20	27	34	40	47	54	120
40	350'	26	35	44	53	62	70	170
45	500'	45	59	74	89	104	119	220
50	500'	50	66	83	99	116	132	280
55	500'	54	73	91	109	127	145	335'

TRAFFIC CONTROL, WORK ON SHOULDER OR PARKING LANE, UNDIVIDED ROADWAY

STATE OF WISCONSIN
DEPARTMENT OF TRANSPORTATION

APPROVED
May 2020 — DATE
/S/ Andrew Heidtke — STATEWIDE WORK ZONE T SAFETY ENGINEER
FHWA

6
SDD 15D28 - 04

GENERAL NOTES

BARRICADE DEVICE SELECTED FROM APPROVED PRODUCT LIST

1. REFLECTIVE SHEETING SHALL FOLLOW THE REQUIREMENTS IN THE APPROVED PRODUCTS LISTING FOR SIGN SHEETING.
2. SHEETING REQUIRED ON MORE THAN 50% OF BARRICADE WIDTH.
3. PLACE SHEETING ON BOTH SIDES OF THE BARRICADE.

* USE THIS DETAIL FOR SHEETING PLACEMENT REFERENCE.

4. WHEN THE TEMPORARY PEDESTRIAN ACCESS ROUTE RUNS PARALLEL ON THE ROADWAY SURFACE, THE MAXIMUM CROSS SLOPE WILL MATCH THE EXISTING ROADWAY CROSS SLOPE.
5. WHERE SIGNS FOR TEMPORARY PEDESTRIAN ACCOMMODATIONS ARE SHOWN BEING PLACED BEHIND TEMPORARY PEDESTRIAN BARRICADE, THE SIGNS MAY BE MOUNTED ON THE TEMPORARY PEDESTRIAN BARRICADE INSTEAD. A CORRUGATED POLYPROPYLENE OR POLYETHYLENE PLASTIC SIGN BASE SHALL BE USED IF MOUNTED ON THE BARRICADE. THE TOP OF THE SIGN SHALL BE MOUNTED BELOW THE TOP OF THE BARRICADE TO ALLOW A CONTINUOUS HAND-TRAILING EDGE.

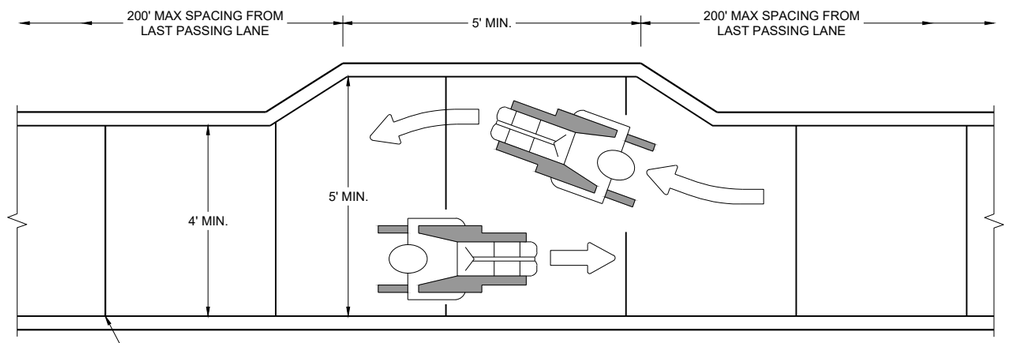

NARROW SIDEWALK PASSING DETAIL

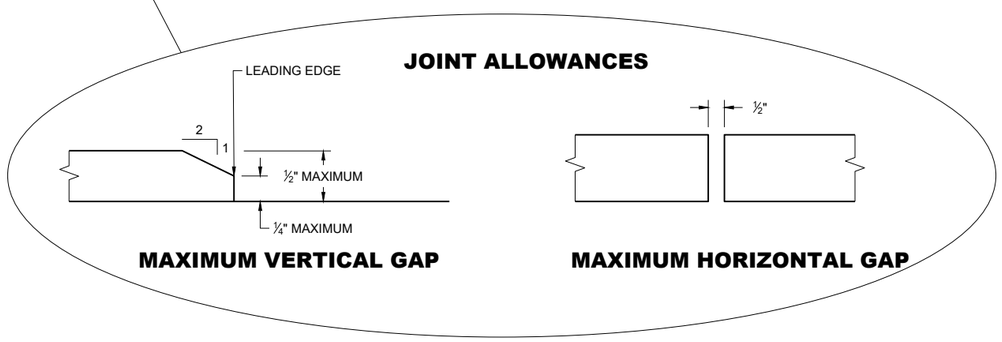

MAXIMUM VERTICAL GAP

MAXIMUM HORIZONTAL GAP

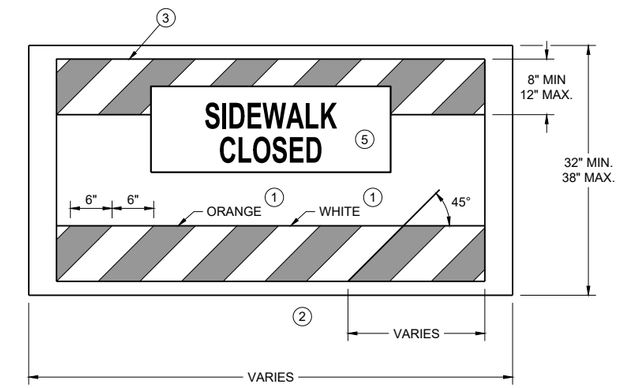

TEMPORARY PEDESTRIAN BARRICADE *

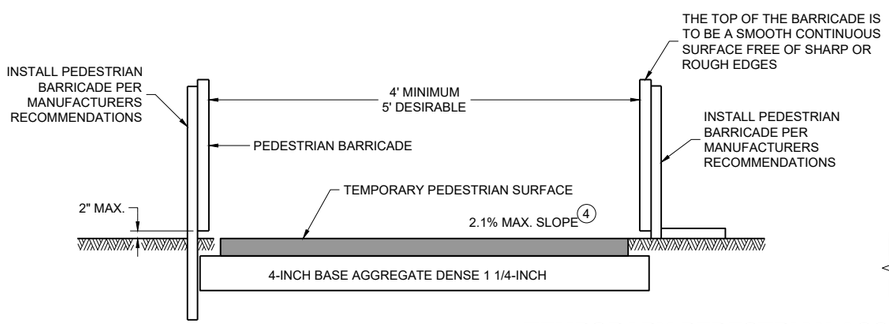

TEMPORARY PEDESTRIAN ACCESS

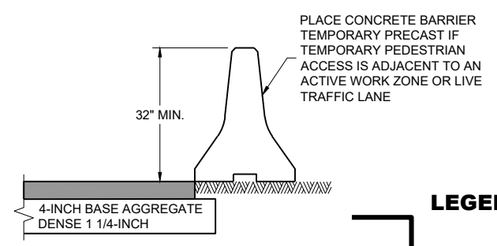

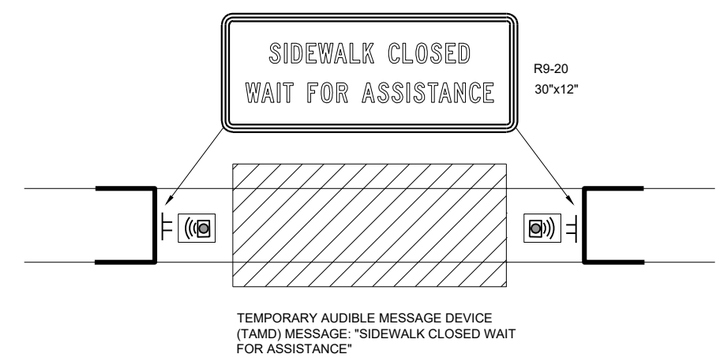

TEMPORARY PEDESTRIAN FLAGGING

LEGEND

- TEMPORARY PEDESTRIAN BARRICADE
- AUDIBLE MESSAGE DEVICE
- TEMPORARY SIGN SUPPORT
- WORK AREA

TRAFFIC CONTROL, PEDESTRIAN ACCOMMODATION

STATE OF WISCONSIN
DEPARTMENT OF TRANSPORTATION

6

SDD 15D30-12a

GENERAL NOTES

CURB RAMPS SHALL BE 48" MIN. WIDTH WITH A FIRM, STABLE AND SLIP RESISTANT SURFACE.

CURB RAMPS AND LANDINGS SHALL HAVE A 1:48 (2.1%) MAX. CROSS-SLOPE.

CLEAR SPACE OF 48" X 48" SHALL BE PROVIDED ABOVE AND BELOW THE CURB RAMP.
LATERAL JOINTS OR GAPS BETWEEN SURFACES SHALL BE LESS THAN ½" WIDTH.

CHANGES BETWEEN SURFACE HEIGHTS SHALL NOT EXCEED ½". LATERAL EDGES MAY BE VERTICAL UP TO ¼" HIGH AND SHALL BE BEVELED AT 1:2 BETWEEN ¼" AND ½".

1. INSTALL CONTRASTING TEMPORARY DETECTABLE WARNING FIELD AT PEDESTRIAN STREET CROSSINGS, AS SHOWN IN THE PLANS.
2. PROTECTIVE EDGING WITH A 2" MIN. HEIGHT SHALL BE INSTALLED WHEN A CURB RAMP OR LANDING PLATFORM HAS A VERTICAL DROP OF 6" OR GREATER OR HAS A SIDE APRON SLOPE STEEPER THAN 1:3 (33%). PROTECTIVE EDGING SHOULD BE CONSIDERED WHEN CURB RAMPS OR LANDING PLATFORMS HAVE A VERTICAL DROP OF 3" OR MORE.
3. DETECTABLE EDGING WITH 6" MIN. HEIGHT AND CONTRASTING COLOR SHALL BE INSTALLED ON ALL CURB RAMP LANDINGS WHERE THE WALKWAY CHANGES DIRECTION (TURNS).
4. DO NOT RESTRICT WATER FLOW IN THE GUTTER SYSTEM.
5. ENSURE CURB RAMP IS OUT OF THE GUTTER PAN.
6. IF ONLY PART OF THE END PANEL OF TEMPORARY PEDESTRIAN BARRICADE PANEL IS NEEDED, EXTEND EXCESS PORTION OF TEMPORARY PEDESTRIAN BARRICADE PANEL HERE.
7. LANDING TO BE SLOPED A MAXIMUM OF 2.1% IN ALL DIRECTIONS OF PEDESTRIAN TRAVEL.

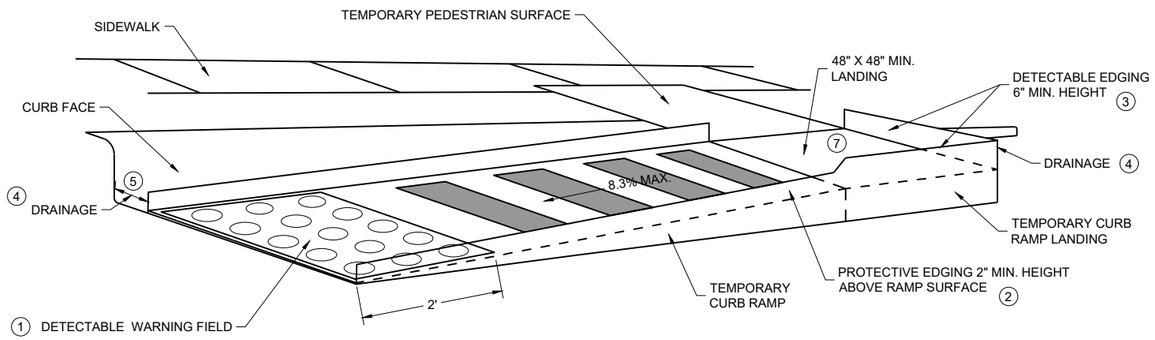

PERSPECTIVE VIEW

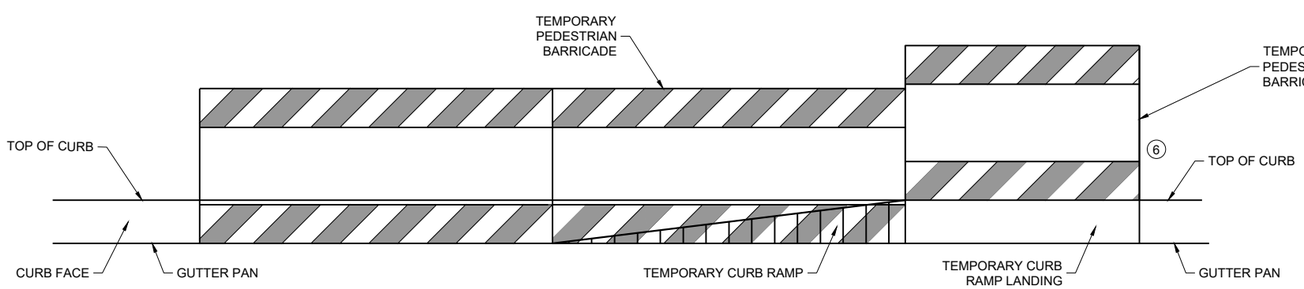

FRONT VIEW

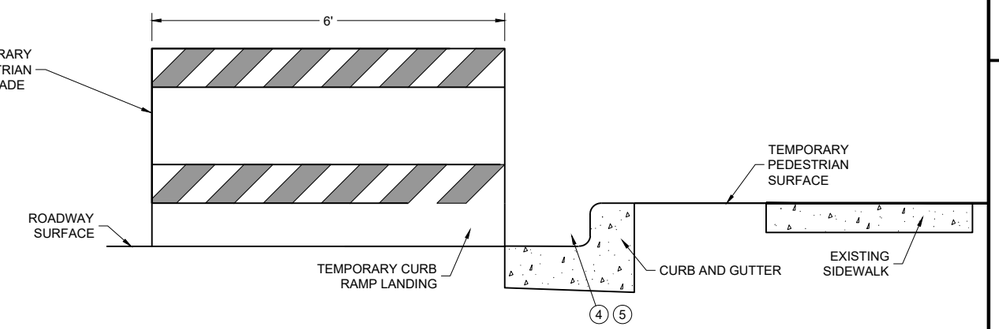

SIDE VIEW

TEMPORARY CURB RAMP PARALLEL TO CURB

6

SDD 15D30-12b

TRAFFIC CONTROL, PEDESTRIAN ACCOMMODATION

STATE OF WISCONSIN
DEPARTMENT OF TRANSPORTATION

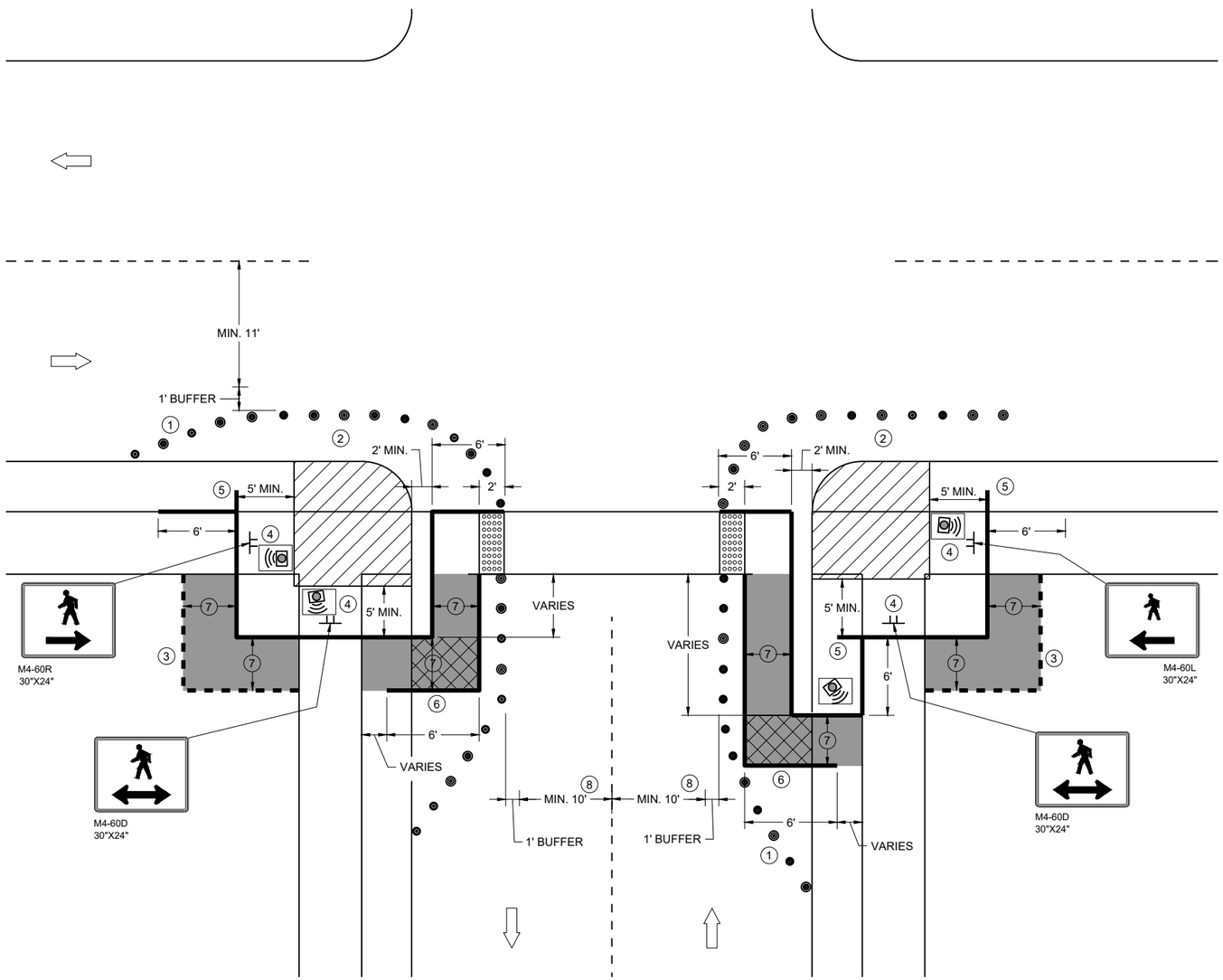

CURB RAMP PEDESTRIAN TRAFFIC CONTROL
SIDEWALK ON SINGLE SIDE

GENERAL NOTES

IF PEDESTRIAN PUSH BUTTONS ARE PRESENT ON THE EXISTING FACILITY, ENSURE THEY ARE MAINTAINED/ACCESSIBLE FOR PEDESTRIAN USE THROUGHOUT THE TEMPORARY PEDESTRIAN ACCOMMODATIONS.

TYPICAL TEMPORARY PEDESTRIAN BARRICADE PANEL IS 6 FEET LONG

WHEN TEMPORARY PEDESTRIAN BARRICADE RUNS PARALLEL ALONG THE SIDEWALK, PLACE THE FACE OF THE BARRICADE AT THE EDGE OF THE SIDEWALK.

WHEN THE TEMPORARY PEDESTRIAN ACCESS ROUTE RUNS PARALLEL ON THE ROADWAY SURFACE, THE MAXIMUM CROSS SLOPE WILL MATCH THE EXISTING ROADWAY CROSS SLOPE.

1. SHOULDER OR LANE CLOSURE ADVANCE WARNING AND PROPER BUFFER SPACE REQUIRED.
2. PROVIDE ADEQUATE SPACE FOR CONTRACTOR OPERATIONS
3. USE TEMPORARY PEDESTRIAN BARRICADE TO SEPARATE PEDESTRIANS FROM DROP OFFS OR FOR ADDITIONAL PEDESTRIAN CHANNELIZATION.
4. MOUNTING HEIGHT OF 5 FEET FROM SIDEWALK SURFACE TO BOTTOM OF SIGN.
5. PLACE EXCESS PORTION OF TEMPORARY PEDESTRIAN BARRICADE PANEL IN THE SIDEWALK TERRACE.
6. IF TEMPORARY PEDESTRIAN BARRICADE DOES NOT REACH THE FACE OF THE CURB, USE AN ADDITIONAL PANEL AND EXTEND INTO THE TERRACE.
7. 4 FEET MINIMUM, 5 FEET DESIRABLE
8. IF MINIMUM LANE WIDTHS CAN'T BE ATTAINED, CURB RAMPS MAY NEED TO BE CONSTRUCTED AT SEPARATE TIMES.

LEGEND

- SIGN ON TEMPORARY SUPPORT
- TRAFFIC CONTROL DRUM
- WORK AREA
- TEMPORARY CURB RAMP
- TEMPORARY PEDESTRIAN SURFACE "A"
- TEMPORARY PEDESTRIAN SURFACE "B"
- TEMPORARY DETECTABLE WARNING FIELD
- TEMPORARY PEDESTRIAN BARRICADE
- OPTIONAL TEMPORARY PEDESTRIAN BARRICADE
- DIRECTION OF TRAFFIC
- TEMPORARY AUDIBLE MESSAGE DEVICE (EXACT PLACEMENT BASED UPON FIELD CONDITIONS)

TRAFFIC CONTROL, PEDESTRIAN ACCOMMODATION

STATE OF WISCONSIN
DEPARTMENT OF TRANSPORTATION

6
SDD 15D30-12i

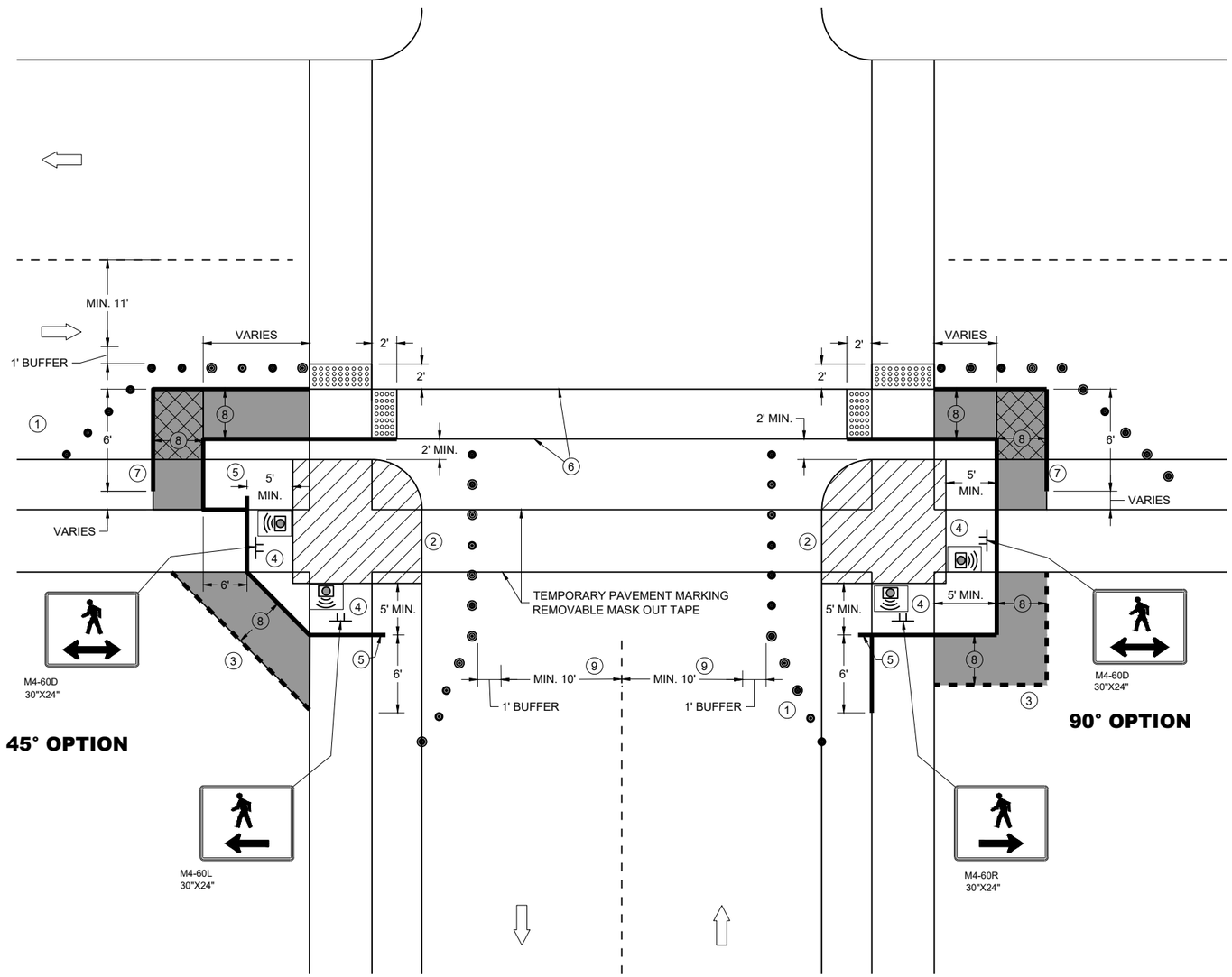

CURB RAMP PEDESTRIAN TRAFFIC CONTROL

GENERAL NOTES

IF PEDESTRIAN PUSH BUTTONS ARE PRESENT ON THE EXISTING FACILITY, ENSURE THEY ARE MAINTAINED/ACCESSIBLE FOR PEDESTRIAN USE THROUGHOUT THE TEMPORARY PEDESTRIAN ACCOMMODATIONS.

TYPICAL TEMPORARY PEDESTRIAN BARRICADE PANEL IS 6 FEET LONG

WHEN TEMPORARY PEDESTRIAN BARRICADE RUNS PARALLEL ALONG THE SIDEWALK, PLACE THE FACE OF THE BARRICADE AT THE EDGE OF THE SIDEWALK.

WHEN THE TEMPORARY PEDESTRIAN ACCESS ROUTE RUNS PARALLEL ON THE ROADWAY SURFACE, THE MAXIMUM CROSS SLOPE WILL MATCH THE EXISTING ROADWAY CROSS SLOPE.

1. SHOULDER OR LANE CLOSURE ADVANCE WARNING AND PROPER BUFFER SPACE REQUIRED.
2. PROVIDE ADEQUATE SPACE FOR CONTRACTOR OPERATIONS
3. USE TEMPORARY PEDESTRIAN BARRICADE TO SEPARATE PEDESTRIANS FROM DROP OFFS OR FOR ADDITIONAL PEDESTRIAN CHANNELIZATION.
4. MOUNTING HEIGHT OF 5 FEET FROM SIDEWALK SURFACE TO BOTTOM OF SIGN.
5. PLACE EXCESS PORTION OF TEMPORARY PEDESTRIAN BARRICADE PANEL IN THE SIDEWALK TERRACE.
6. WHITE 6" TEMPORARY PAVEMENT MARKING
7. IF TEMPORARY PEDESTRIAN BARRICADE DOES NOT REACH THE FACE OF THE CURB, USE AN ADDITIONAL PANEL AND EXTEND INTO THE TERRACE.
8. 4 FEET MINIMUM, 5 FEET DESIRABLE
9. IF MINIMUM LANE WIDTHS CAN'T BE ATTAINED, CURB RAMPS MAY NEED TO BE CONSTRUCTED AT SEPARATE TIMES.

LEGEND

- SIGN ON TEMPORARY SUPPORT
- TRAFFIC CONTROL DRUM
- WORK AREA
- TEMPORARY CURB RAMP
- TEMPORARY PEDESTRIAN SURFACE "A"
- TEMPORARY PEDESTRIAN SURFACE "B"
- TEMPORARY DETECTABLE WARNING FIELD
- TEMPORARY PEDESTRIAN BARRICADE
- OPTIONAL TEMPORARY PEDESTRIAN BARRICADE
- DIRECTION OF TRAFFIC
- TEMPORARY AUDIBLE MESSAGE DEVICE (EXACT PLACEMENT BASED UPON FIELD CONDITIONS)

TRAFFIC CONTROL, PEDESTRIAN ACCOMMODATION

STATE OF WISCONSIN
DEPARTMENT OF TRANSPORTATION

6
SDD 15D30-12j

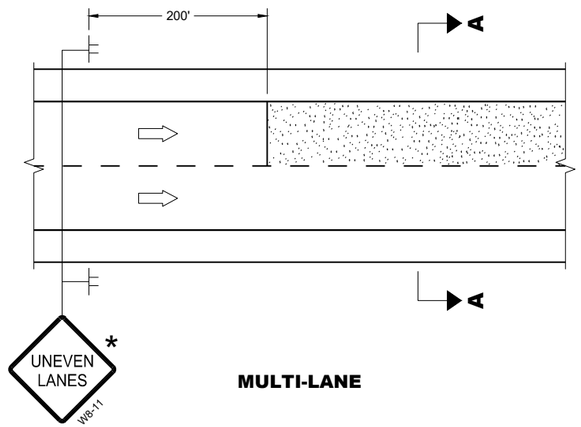

MULTI-LANE

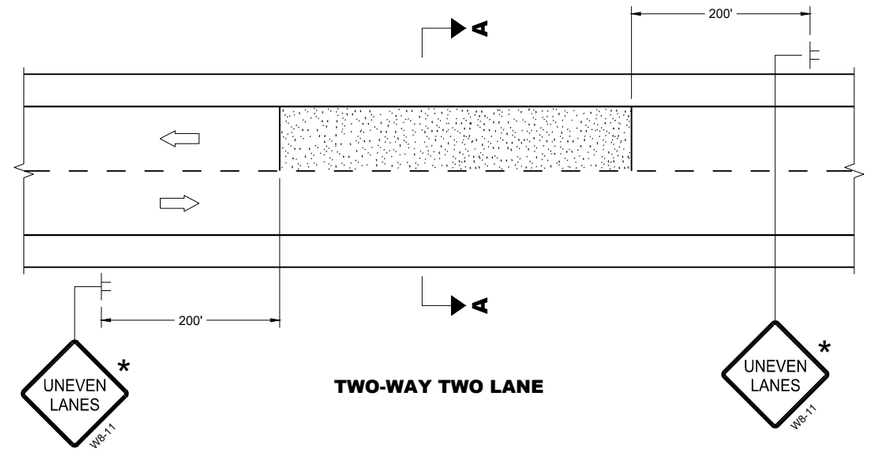

TWO-WAY TWO LANE

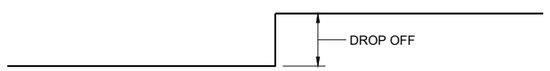

SECTION A - A

OR

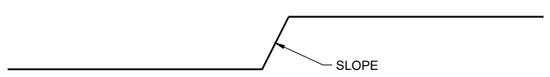

SECTION A - A

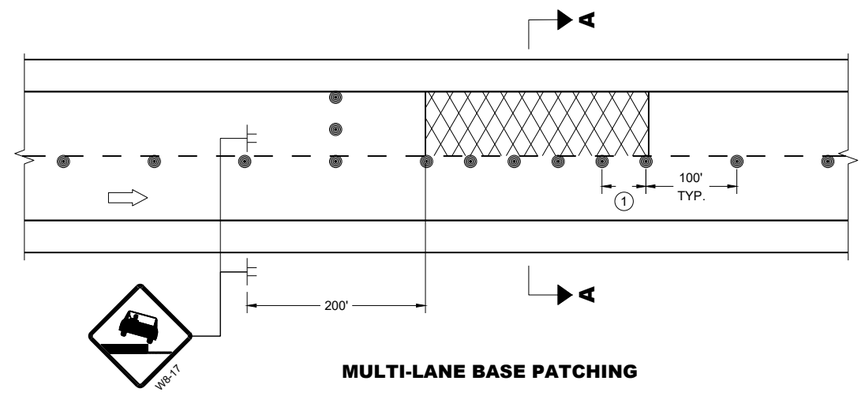

MULTI-LANE BASE PATCHING

ADJACENT LANE DROP-OFFS

GENERAL NOTES

FOR SPOT LOCATIONS USE ENGINEERING JUDGEMENT WHEN PLACING ADDITIONAL SIGNS.

ALL SIGNS ARE 48" X 48" UNLESS OTHERWISE NOTED.

"WO" SIGNS ARE THE SAME AS "W" SIGNS EXCEPT THE BACKGROUND IS ORANGE.

WARNING LIGHTS ARE NOT REQUIRED IF THE LANE CLOSURE IS A DAYTIME ONLY OPERATION.

* IF THE DROP-OFF IS CONTINUOUS ALONG THE PROJECT, PLACE ADDITIONAL SIGNS EVERY 1 MILE AND AFTER EVERY ENTRANCE RAMP.

(1) USE CLOSER SPACING WHEN DELINEATING DROP-OFF.

LEGEND

- SIGN ON TEMPORARY SUPPORT
- TRAFFIC CONTROL DRUM
- TYPE III BARRICADE WITH ATTACHED SIGN
- TYPE "A" WARNING LIGHT (FLASHING)
- DIRECTION OF TRAFFIC
- WORK AREA WITH DROP-OFF
- MILLED SURFACE

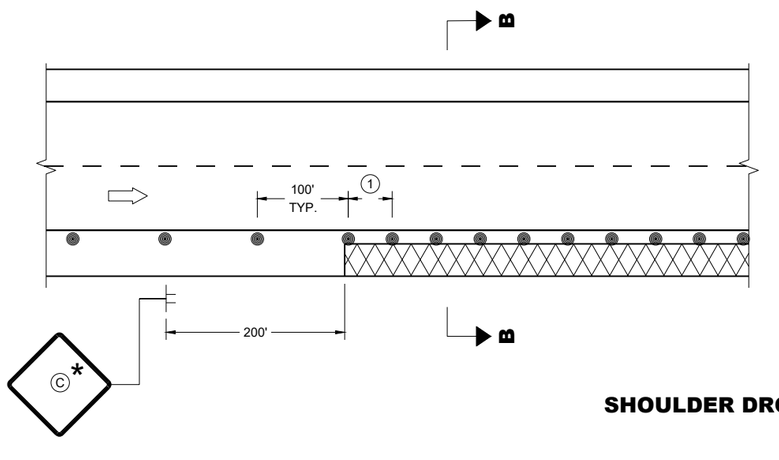

SHOULDER DROP-OFFS

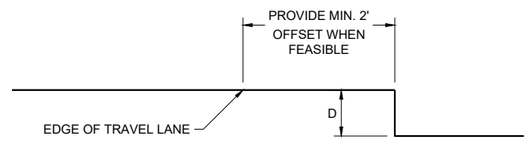

SECTION B - B

D	SIGN (C)
< 2" WITH A SLOPE STEEPER THAN 3:1	LOW SHOULDER WO8-9
2" < 6" WITH A SLOPE STEEPER THAN 3:1	SHOULDER DROP - OFF W8-9A **PROVIDE A 3:1 OR FLATTER SLOPE OF MATERIAL ADJACENT TO THE PAVEMENT**

TRAFFIC CONTROL, DROP-OFF SIGNING

STATE OF WISCONSIN
DEPARTMENT OF TRANSPORTATION

APPROVED
February 2025 — DATE
/S/ Andrew Heidtke — WORK ZONE ENGINEER

FHWA

6

SDD 15D39-03

GENERAL NOTES

DRAWING NOT TO SCALE. ALL SIGNS AND POSTS ON THIS SHEET SHALL BE PAID FOR WITH 'TRAFFIC CONTROL SIGNS' BID ITEM. ALL SIDE ROADS WHICH ARE UNDER CONSTRUCTION OF CURB AND GUTTER AND/OR GRADING SHALL BE ADEQUATELY SIGNED.

ALL SIGNS AND DEVICES SHALL BE IN CONFORMANCE WITH THE WISCONSIN MANUAL OF UNIFORM TRAFFIC CONTROL DEVICES (WMUTCD). SIGN LAYOUTS SHALL BE IN ACCORDANCE WITH THE WISDOT STANDARD SIGN PLATES.

"WO" SIGNS ARE THE SAME AS "W" SIGNS EXCEPT THAT THE BACKGROUND IS ORANGE.

ALL SIGNS ARE 48" X 48" UNLESS OTHERWISE NOTED.

THE EXACT NUMBER, LOCATION AND SPACING OF ALL SIGNS AND DEVICES SHALL BE ADJUSTED TO FIT FIELD CONDITIONS AS DIRECTED BY THE ENGINEER.

ALL SIGNS INAPPROPRIATE TO THE STATUS OF THE CONTROL ZONE, INCLUDING PRE-EXISTING SIGNS IN THE VICINITY, SHALL BE COVERED OR REMOVED AS DIRECTED BY THE ENGINEER.

SEE 15C34 FOR ADDITIONAL TRAFFIC CONTROL SIGNING WHEN CENTERLINE PAVEMENT MAKINGS ARE MISSING. 'DO NOT PASS' SIGNS MUST BE INSTALLED ON THE SAME DAY AS MILLING OPERATIONS.

(1) PLACE SIGNS 350' IN ADVANCE OF MILLED SURFACES AND AT 1 MILE INTERVALS, OR AS DIRECTED BY THE ENGINEER.

(2) PLACE SIGN 200' MIN. FROM INTERSECTION AND 200' MIN. AFTER ADVANCE WARNING SIGN SHOWN IN SDD 15C04.

LEGEND

SIGN ON TEMPORARY SUPPORT

DIRECTION OF TRAFFIC

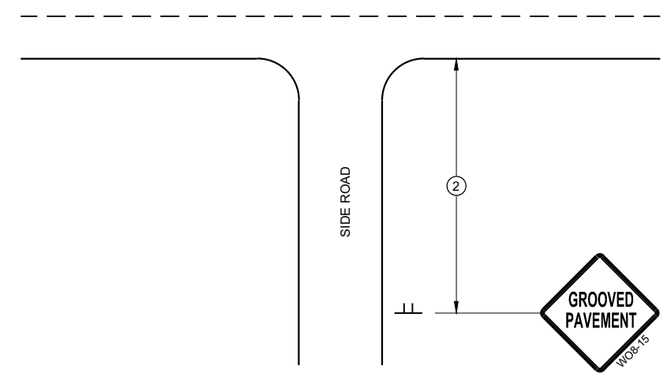

TYPICAL SIDE ROAD APPROACH SIGN DETAIL

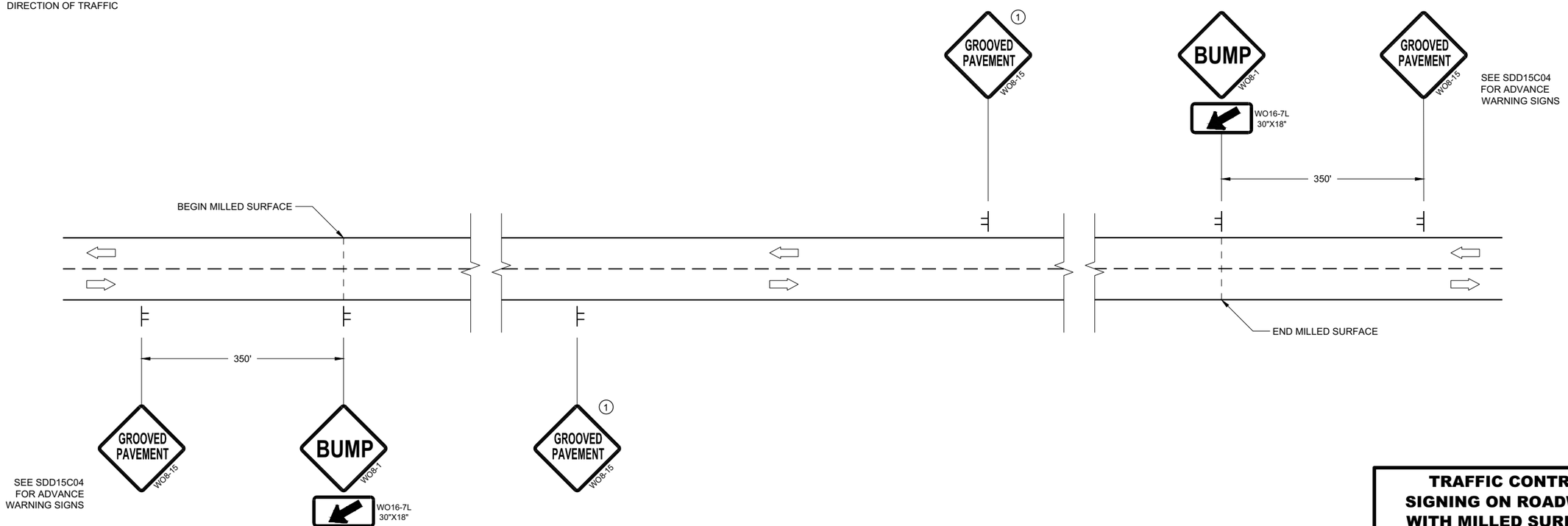

DETAIL FOR SIGNING ON MILLED SURFACES

TRAFFIC CONTROL, SIGNING ON ROADWAYS WITH MILLED SURFACES

STATE OF WISCONSIN
DEPARTMENT OF TRANSPORTATION

APPROVED
February 2020 — DATE
/S/ Andrew Heidtke — WORK ZONE ENGINEE
FHWA

6

SDD 15D44 - 02

URBAN AREA

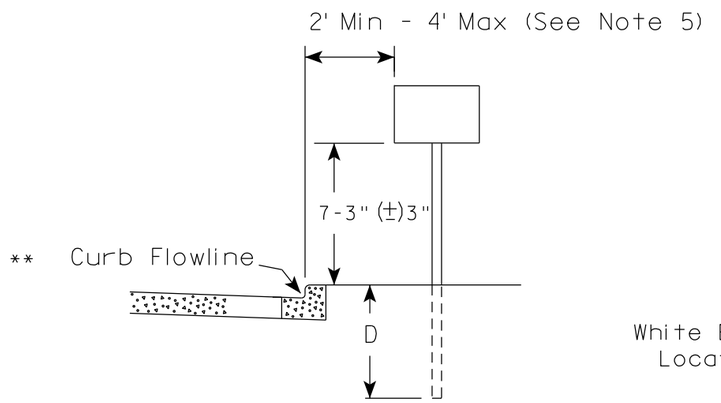

RURAL AREA (See Note 2)

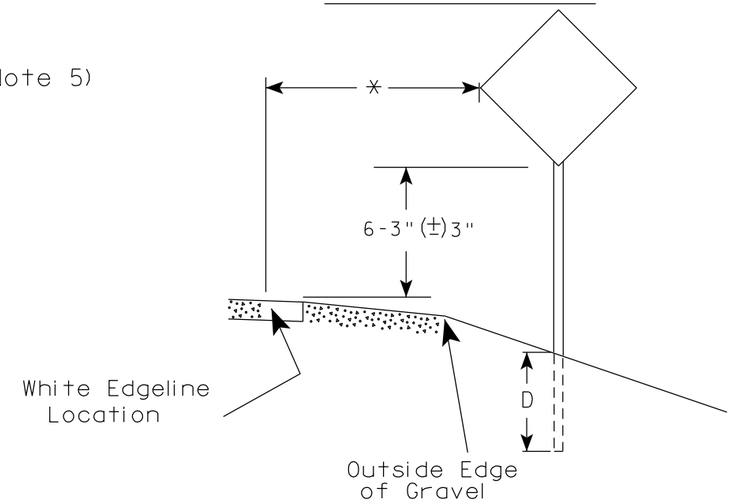

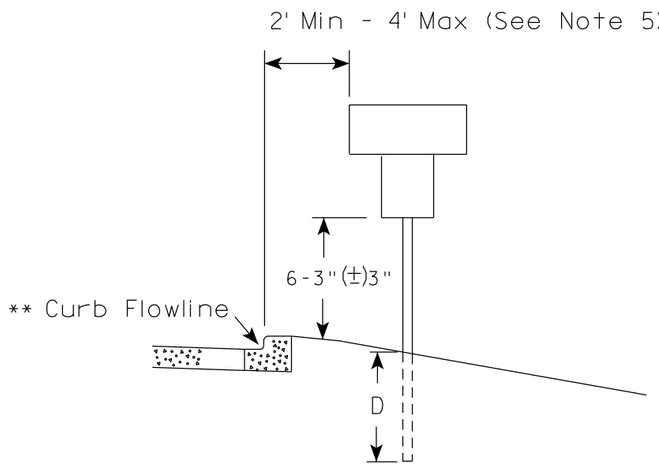

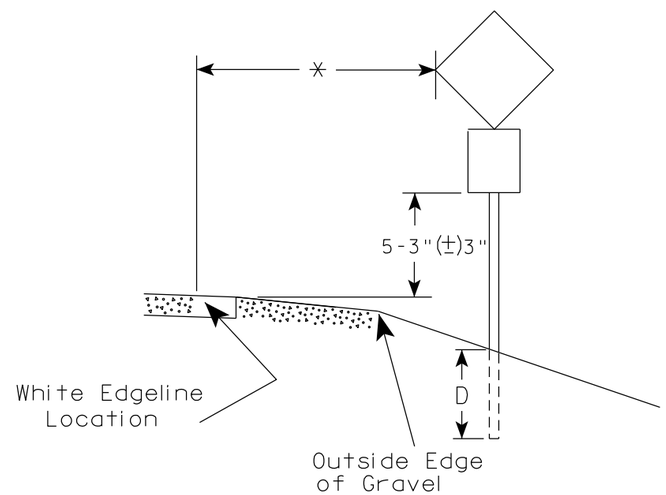

** The existence of curb and gutter does not in itself mandate the vertical clearance illustrated. That height is typically measured where there is sidewalk adjacent to the roadway or parking is permitted. In the absence of sidewalk vertical clearance is measured from the top of the curb. Offset of signs is measured from the flow line.

* 6 feet from edge of a paved shoulder or 12 feet from the edge of pavement (edge line location) or 2 feet from outside edge of gravel, whichever is greater unless directed by project engineer.

GENERAL NOTES

1. Signs wider than 4 feet or 20 sq.ft or larger, shall be mounted on multiple posts. Refer to plate A4-4.
2. If signs are mounted on or behind barrier wall, see A4-10 sign plate.
   The Double Arrow sign (W12-1D) shall be mounted at a height of 2'-3" (±) 3". The Chevron sign (W1-8), Roundabout Chevron panel (R6-4B), Enhanced Reference Markers, Clearance Markers (W5-52), Mile Markers (D10 series), In Road Object Markers (W5-54) & End of Road Markers (W5-56) shall be mounted at a height of 4'-3" (±) 3".
3. For expressways and freeways, mounting height is 7'- 3" (±) 3" or 6'-3" (±) 3" depending upon existence of a sub-sign.
4. Minimum mounting height for signs mounted on traffic signal poles is 5'- 3" (±) 3".
5. Offset distance shall be consistent with existing signs or consistent throughout length of project.
6. Folding signs shall be mounted at a height of 5'-3" (±) 3" or as directd by the Engineer.

POST EMBEDMENT DEPTH

Area of Sign Installation (Sq. Ft.)	D (Min)
20 or Less	4'
Greater than 20	5'

TYPICAL INSTALLATION OF PERMANENT TYPE II SIGNS ON SINGLE POSTS

WISCONSIN DEPT OF TRANSPORTATION

APPROVED Matthew R Rauch
for State Traffic Engineer

DATE 12/6/23 PLATE NO. A4-3.23

7 7

PROJECT NO:	HWY:	COUNTY:		SHEET NO: 126	E

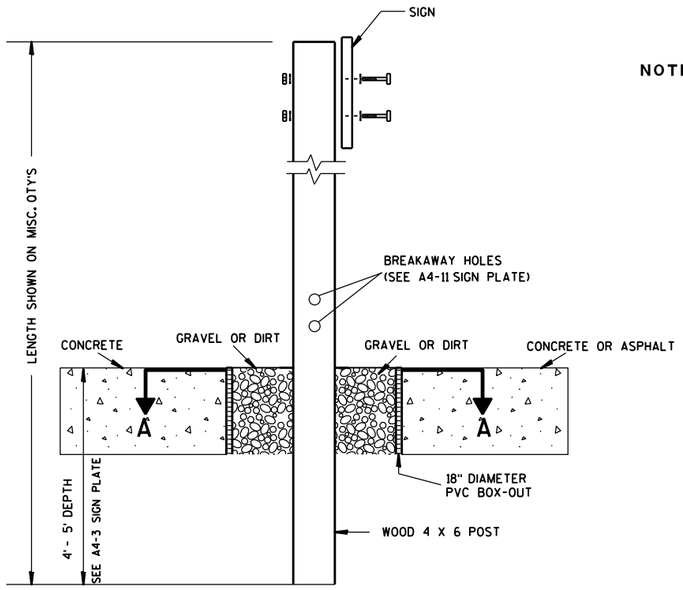

ELEVATION VIEW

DETAIL OF WOOD 4 X 6 SIGN POST IN BOX-OUT

NOTES:
1. ALL MATERIAL TO BE APPROVED BY ENGINEER PRIOR TO INSTALLATION
2. SEE SIGN PLATE A4-8 FOR SIGN HARDWARE REQUIREMENTS
3. 18 INCH X 18 INCH SQUARE BOX-OUTS MAY BE USED FOR INSTALLATIONS IN EXISTING CONCRETE OR ASPHALT LOCATIONS.

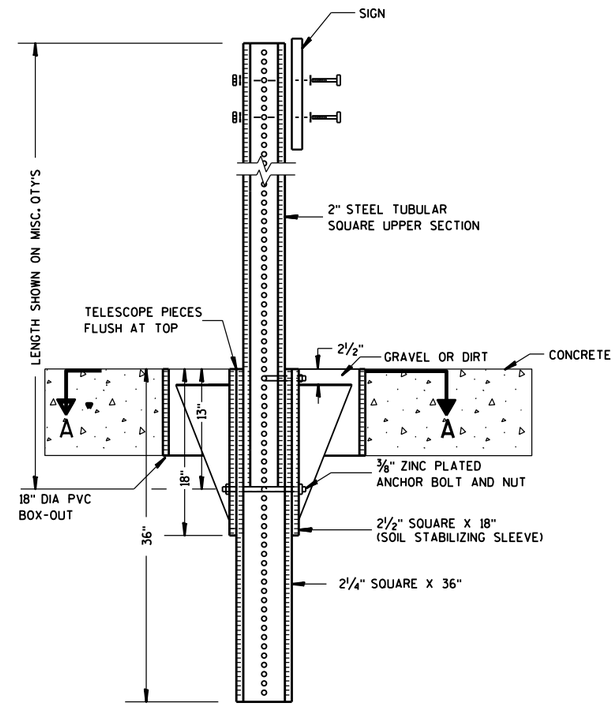

ELEVATION VIEW

DETAIL OF STEEL 2 X 2 SIGN POST IN BOX-OUT

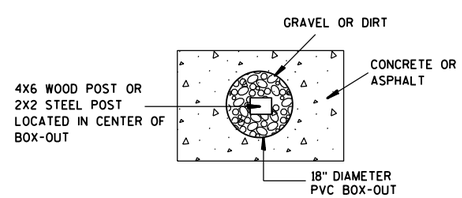

PLAN VIEW

FOR NEW CONCRETE/ASPHALT INSTALLATIONS

SIGN POST
BOX-OUTS
A4-3B

WISCONSIN DEPT OF TRANSPORTATION

APPROVED Matthew R Rauch
for State Traffic Engineer

DATE 1/27/14 PLATE NO. A4-3B.1

PROJECT NO:	HWY:	COUNTY:		SHEET NO:	E

URBAN AREA

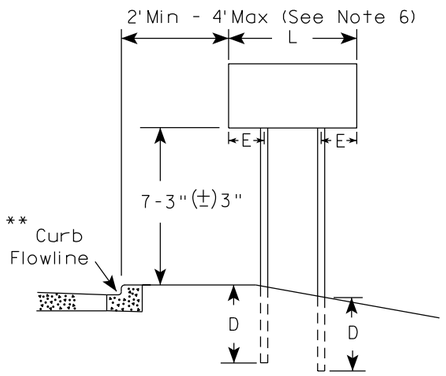

RURAL AREA (See Note 3)

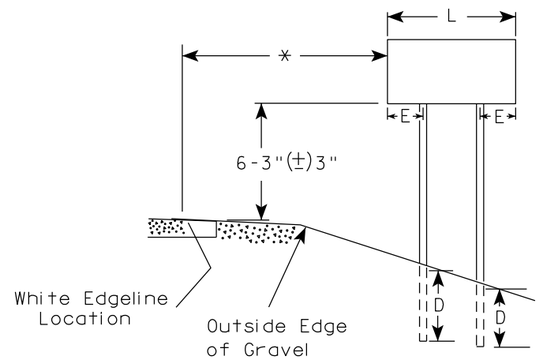

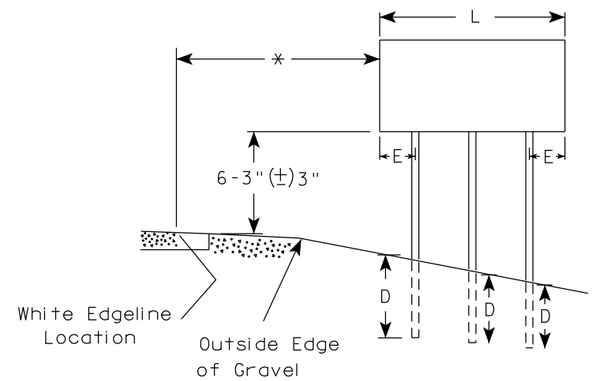

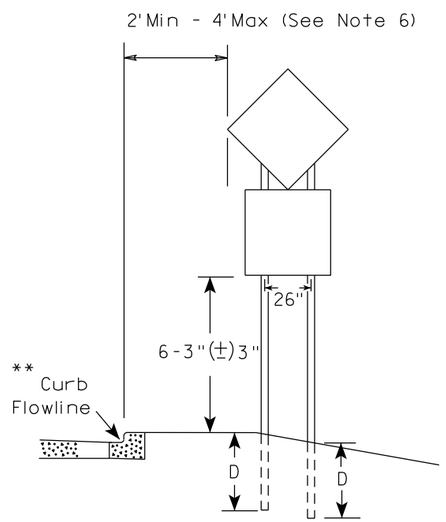

48" DIAMOND WARNING SIGN

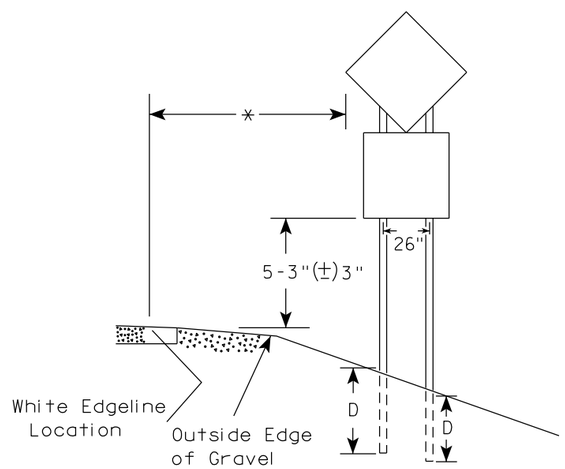

48" DIAMOND WARNING SIGN

GENERAL NOTES

1. For 3 or 4 post installations, individual post spacing shall be greater than 3'-6".
2. See tables below for required number of posts.
3. For expressways and freeways, mounting height is 7'-3" (±) 3" or 6'-3" (±) 3" depending upon existence of sub-sign.
4. The (±) tolerance for mounting height is 3 inches.
5. J-Assemblies are considered to be one sign for mounting height.
6. Offset distance shall be consistent with existing signs or consistent throughout length of project.
7. Folding signs shall be mounted at a height of 5'-3" (±) 3" or as directed by the engineer.
8. The Double Arrow sign (W12-1) shall be mounted at a height of 2'-3" (±) 3". The Chevron sign (W1-8), Roundabout Chevron panel (R6-4B), Clearance Markers (W5-52), Mile Markers (D10 series), In Road Object Markers (W5-54) & End of Road Markers (W5-56) shall be mounted at a height of 4"-3" (±) 3".

* 6 feet from edge of a paved shoulder or 12 feet from the edge of pavement (edge line location) or 2 feet from outside edge of gravel, whichever is greater unless directed by project engineer.

** The existence of curb and gutter does not in itself mandate the vertical clearance illustrated. That height is typically measured where there is sidewalk adjacent to the roadway or parking is permitted. In the absence of sidewalk vertical clearance is measured from the top of the curb. Offset of signs is measured from the flow line.

*** See A4-3 sign plate for signs 4' or less in width and less than 20 S.F. in area.

SIGN SHAPE OTHER THAN DIAMOND (TWO POSTS REQUIRED)	
L	E
*** Greater than 48" Less than 60"	12"
60" to 108"	L/5

SIGN SHAPE OTHER THAN DIAMOND (THREE POSTS REQUIRED)	
L	E
Greater than 108" to 144"	12"

POST EMBEDMENT DEPTH

Area of Sign Installation (Sq. Ft.)	D (Min)
20 or Less	4'
Greater than 20	5'

TYPICAL INSTALLATION OF TYPE II SIGNS ON MULTIPLE POSTS

WISCONSIN DEPT OF TRANSPORTATION

APPROVED Matthew R Rauch
for State Traffic Engineer

DATE 12/6/23 PLATE NO. A4-4.16

PROJECT NO:	HWY:	COUNTY:		SHEET NO: 128	E

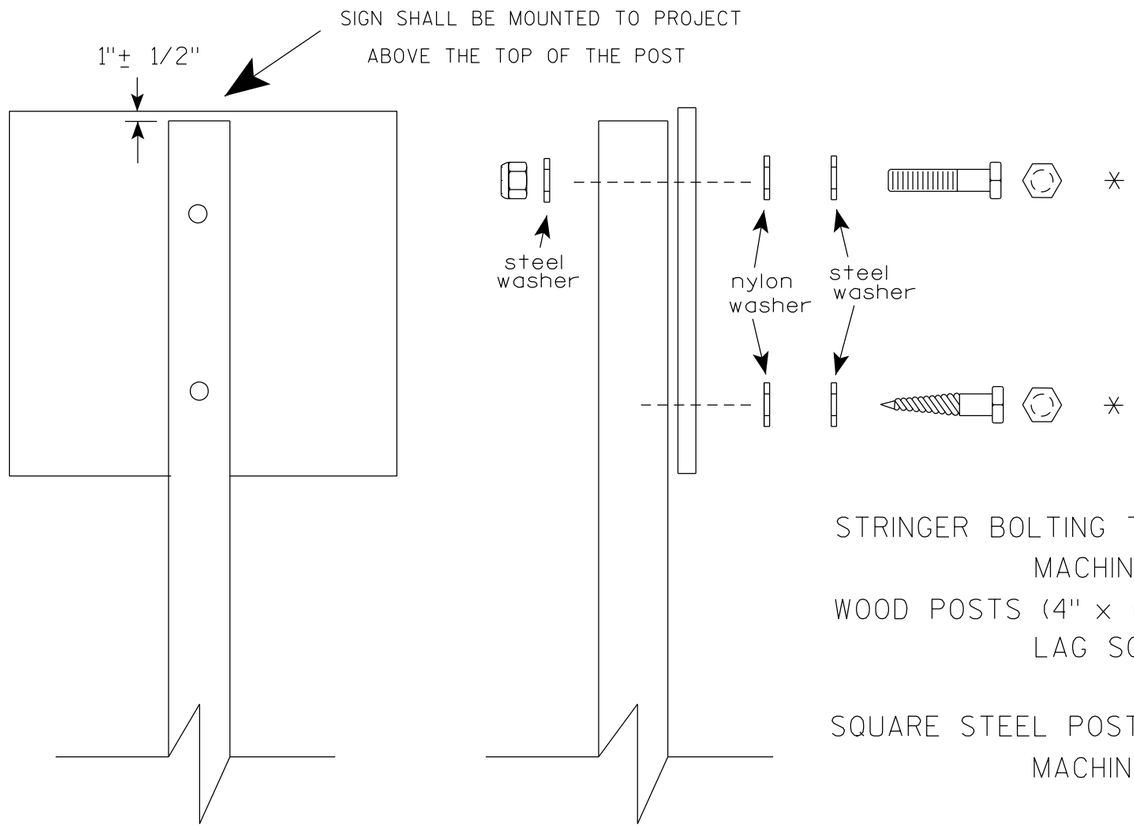

Nuts, bolts and lags used for mounting signs shall have hexagonal heads and shall be either :

a. Hot dip galvanized in accordance with ASTM Designation: A 153, Class D, or SC 3

b. Electro-galvanized in accordance with ASTM Designation : B 633, TYPE III, SC 3.

Threads on bolts and nuts shall be manufactured with sufficient allowance for the cadmium plate or galvanized coating to permit the nuts to run freely on the bolts.

STRINGER BOLTING TO ALUMINUM SIGNS (SEE SIGN PLATE A4-18)

MACHINE BOLTS - 5/16" X 1-3/4" Length w/ lock nuts

WOOD POSTS (4" x 6")

LAG SCREWS - 3/8" X 3" (NO STRINGERS ON BACK OF SIGN)
3/8" X 4" (STRINGERS ON BACK OF SIGN)

SQUARE STEEL POSTS (2" x 2")

MACHINE BOLTS - 3/8" X 3-1/4" Length w/ nuts (NO STRINGER ON BACK OF SIGN)
3/8" X 5" Length w/ nuts (STRINGERS ON BACK OF SIGN)

RIVETS - 9/32 " (6605-9-6) BULB-TITE, TRI-FOLD, ALUMINUM BODY/MANDREL
O.D. FLANGE .720-.765 INCH, GRIP RANGE .042-.375 INCH

WASHERS (ALL POSTS) -

1-1/4" O.D. X 3/8" I.D. X 1/16" STEEL
1-1/4" O.D. X 3/8" I.D. X .080 NYLON

* Two different fastening systems are shown for illustration purposes. On any individual sign, either one or the other system shall be used. Actual number of fasteners per sign varies with the sign area, but normally there are two. For a single post installation, all signs greater than 9 sq. ft. require the use of 3 fasteners.

ATTACHMENT OF SIGNS TO POSTS

WISCONSIN DEPT OF TRANSPORTATION

APPROVED Matthew R Rauch
for State Traffic Engineer

DATE 4/1/2020 PLATE NO. A4-8.9

TELESCOPIC TUBING ANCHORS
TWO PIECE SYSTEM

2 1/4 " SQUARE
12 GAUGE
PERFORATED
GALVANIZED FINISH

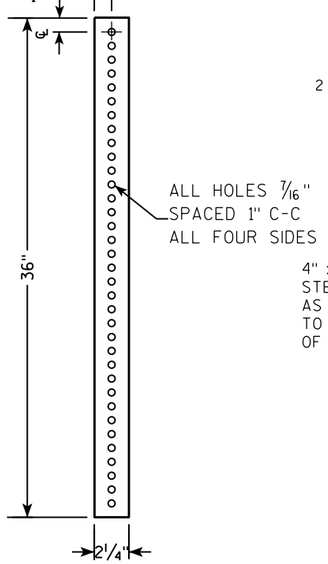

2 1/2 " SQUARE
12 GAUGE
OMNI-DIRECTIONAL
PERFORATED
SOIL STABILIZING SLEEVE
GALVANIZED FINISH

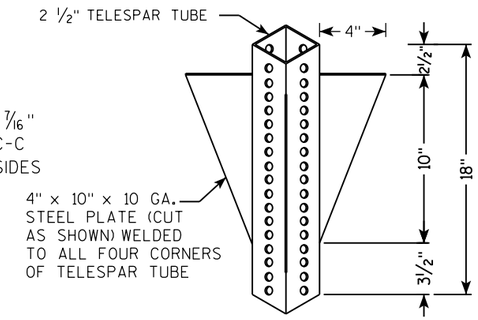

DETAIL OF TUBULAR STEEL SIGN POST
(IN POURED CONCRETE OR ASPHALT)

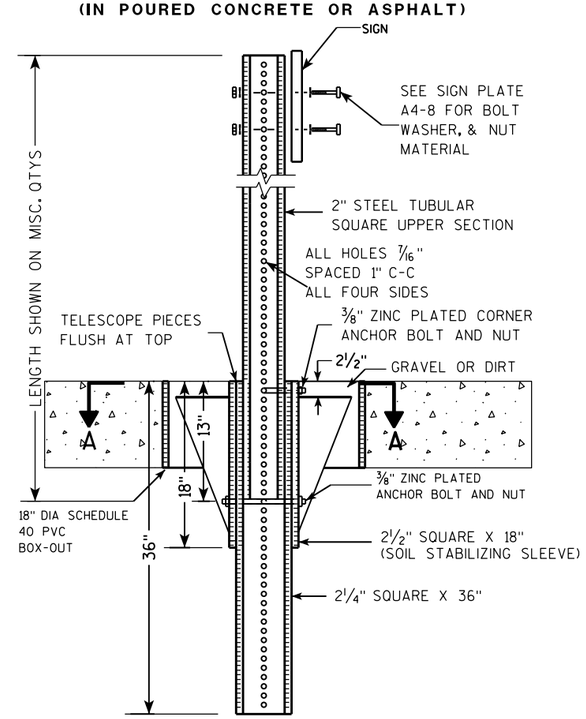

DETAIL OF TUBULAR STEEL SIGN POST
(IN LOCATIONS OTHER THAN POURED CONCRETE OR ASPHALT)

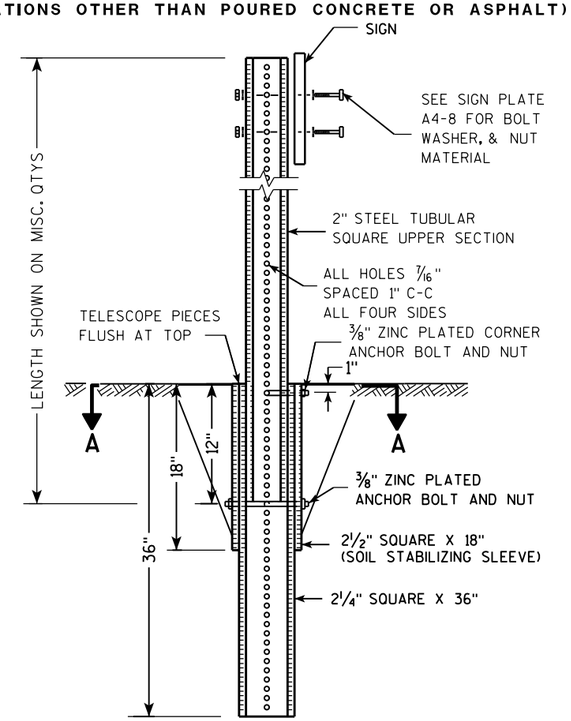

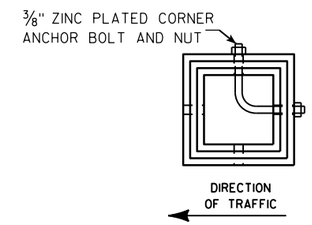

SECTION A-A

Area of Sign Installation (Sq. Ft.)	Number of Required Posts
9 or less	1
Greater than 9 less than or equal to 18	2
Greater than 18 less than or equal to 27	3

Signs wider than 3 feet or larger than 9 sq. ft shall be mounted on multiple posts (see above table).

TUBULAR STEEL
SIGN POST
A4-9

WISCONSIN DEPT OF TRANSPORTATION

APPROVED Matthew R Rauch
for State Traffic Engineer

DATE 2/05/15 PLATE A4-9.9

7 7

PROJECT NO:	HWY:	COUNTY:		SHEET NO:	E

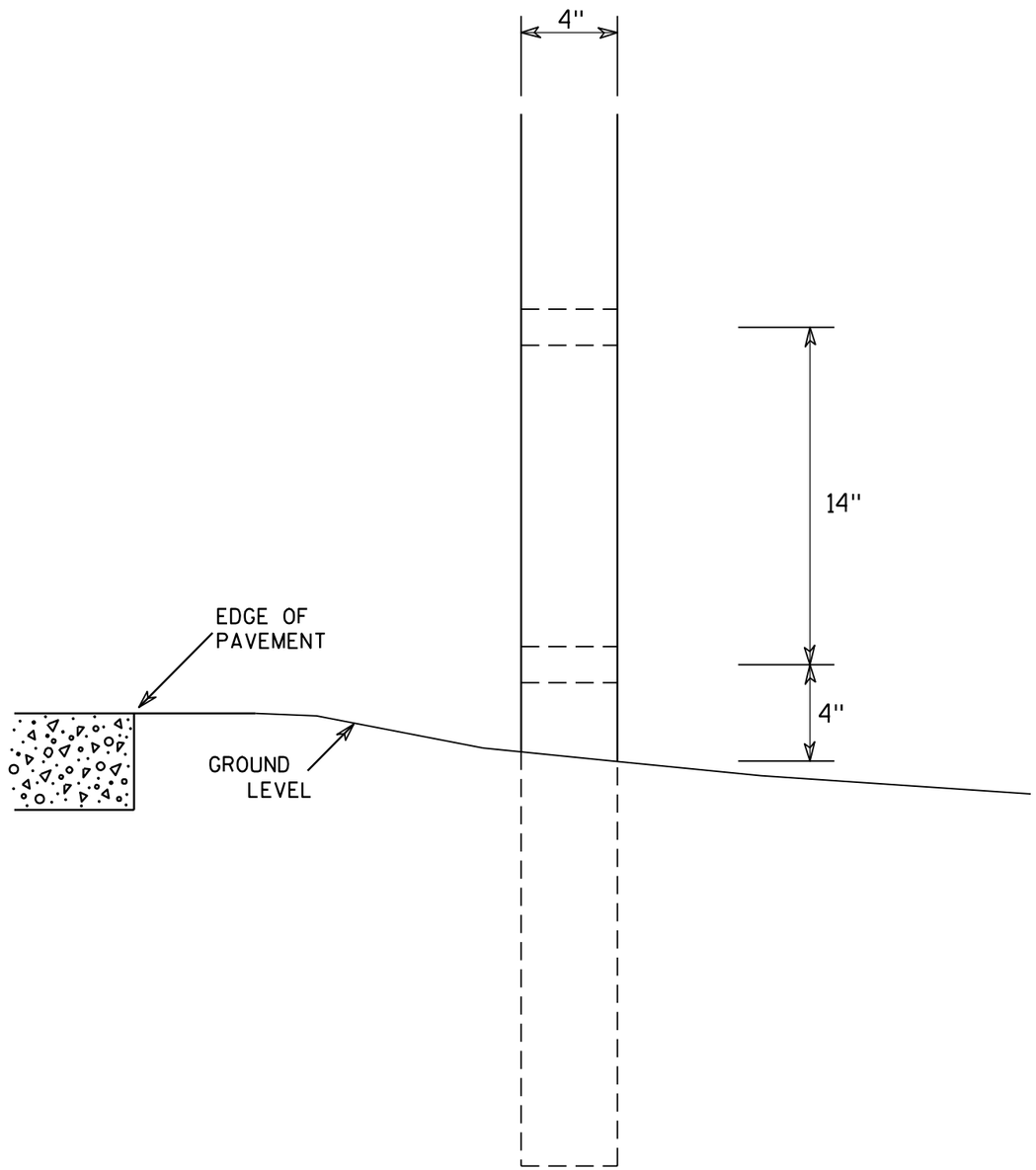

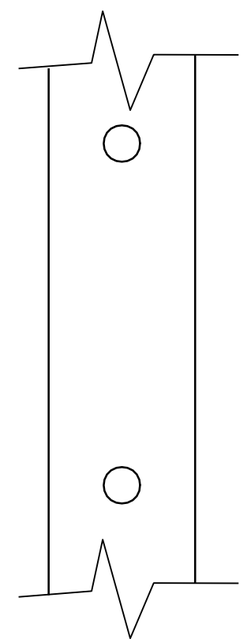

SIDE VIEW

GENERAL NOTES

1. All 4 x 6 Wood Posts shall be modified by having two 1½" diameter holes drilled perpendicular to the roadway centerline.

4 X 6 WOOD POST MODIFICATIONS

WISCONSIN DEPT OF TRANSPORTATION

APPROVED Chester J Spang for State Traffic Engineer

DATE 3/27/97 PLATE NO. A4-11.2

PROJECT NO:	HWY:	COUNTY:		SHEET NO: 131	E

SIGN LAYOUT WITH VARIOUS SIZED MESSAGES

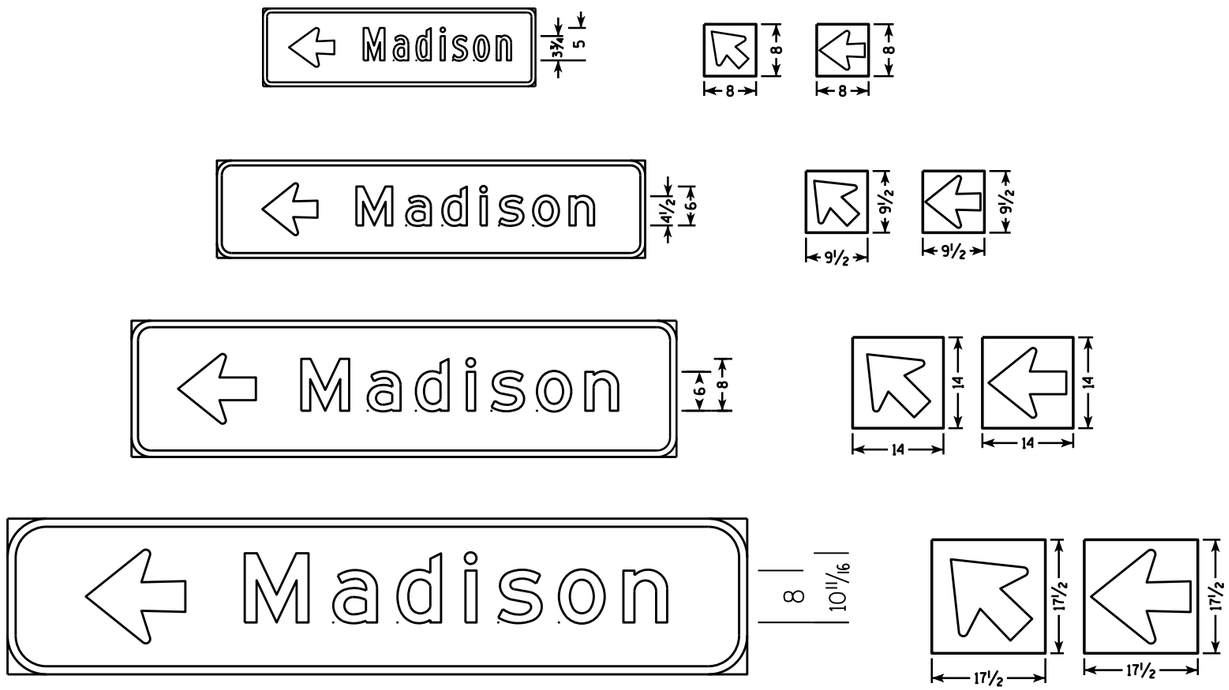

GENERAL NOTES

1. Materials shall conform to Standard Specification Section 637.
   Base - Sheet Aluminum 0.040" Thickness
   Sheeting - Orange Type F Reflective
   Arrow - Black Non-Reflective
2. Arrow signs shall be fastened to permanent sign by either aluminum rivets or aluminum self-tapping sheet metal screws. There shall be a minmum of 2 fasteners used per arrow sign.
3. There shall be a spacer consisting of a 0.08" nylon washer between the back of the arrow sign and the face of the permanent sign.
4. Arrows are per standard plate A1-2
5. Use separate arrow sign for each destination
6. Tilt arrow is always at 45 degrees
7. Arrow is centered on arrow sign

Lower Case Copy Size	Standard Width (Single Arrow)	2 Line Tilt Arrow Cover Width	3 Line Tilt Arrow Cover Width	Height
3¾" Series C	8	9 ½	14 ½	8
4½" Series D & E	9 ½	10	15	9 ½
6" Series D & E	14	16	20 ½	14
8" Series E	17 ½	20 ½	25	17 ½

BEFORE

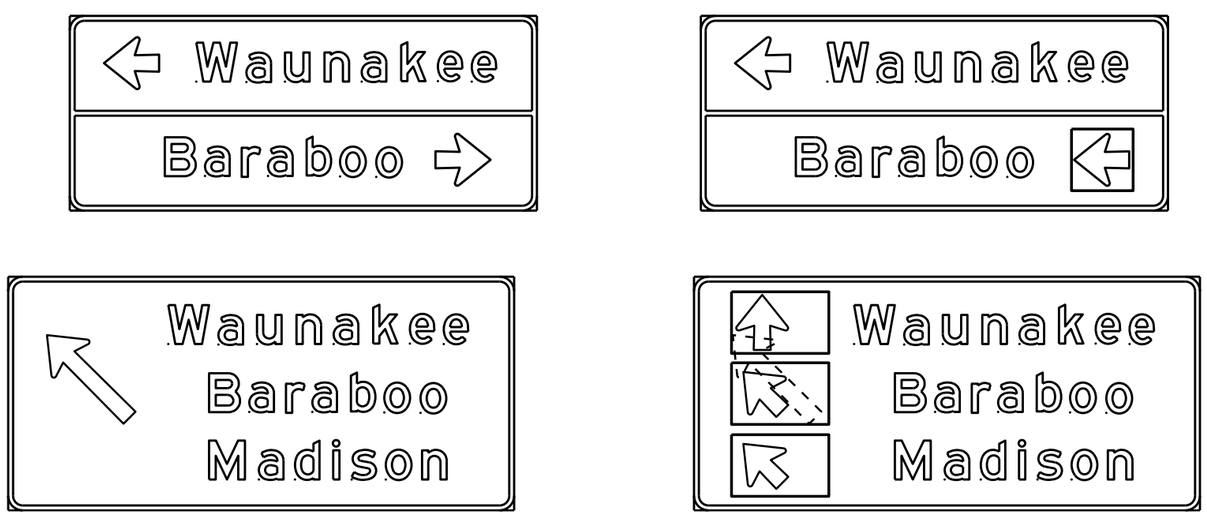

AFTER

DESTINATION DIRECTIONAL ARROW FOR DETOUR SIGNS

WISCONSIN DEPT OF TRANSPORTATION

APPROVED Matthew R Rauch
for State Traffic Engineer

DATE 10/08/14

A4-12.2

PROJECT NO:

SHEET NO: E

BANDING

SINGLE SIGN

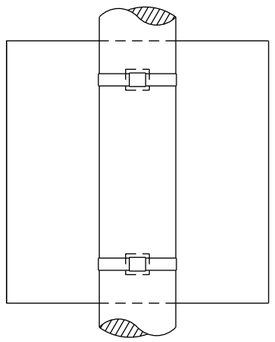

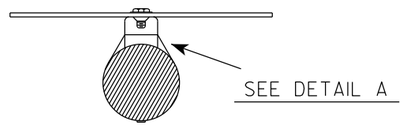

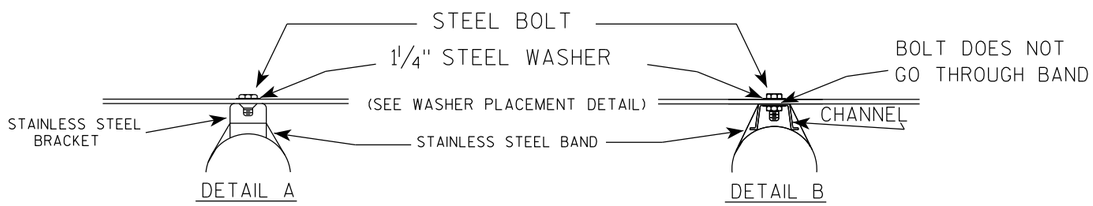

WASHER PLACEMENT

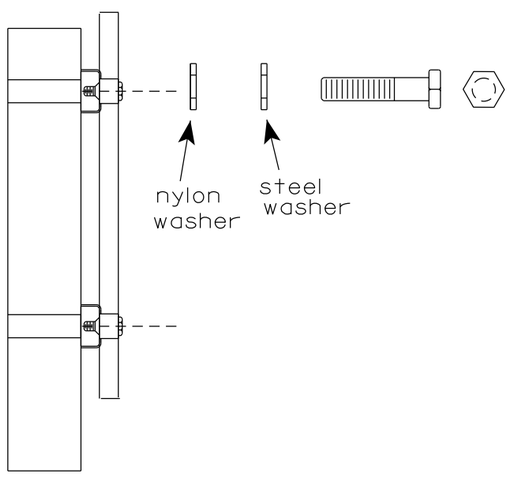

WASHERS (ALL POSTS) -
1-1/4" O.D. X 3/8" I.D. X 1/16" STEEL
1-1/4" O.D. X 3/8" I.D. X .080 NYLON
FOR ALL TYPE H SIGNS

GENERAL NOTES

1. Any sign over 3 feet in width shall use the V-Block banding method. See A5-10 standard plate.
2. Signs 3 feet or greater in height shall have three bracket bands installed. Signs less than 3 feet in height shall have two bracket bands installed.
3. Banding and assembly bracket shall be stainless steel. All bands shall be 3/4" in width and 0.025" thickness.
4. ALL SIGN MOUNTING BOLTS AND WASHERS SHALL BE EITHER:
   a. Hot dip or mechanically galvanized in accordance with ASTM Designation: A 153, Class D
   b. Electro-galvanized in accordance with ASTM designation: B 633, Type III, SC 3

"J" ASSEMBLY

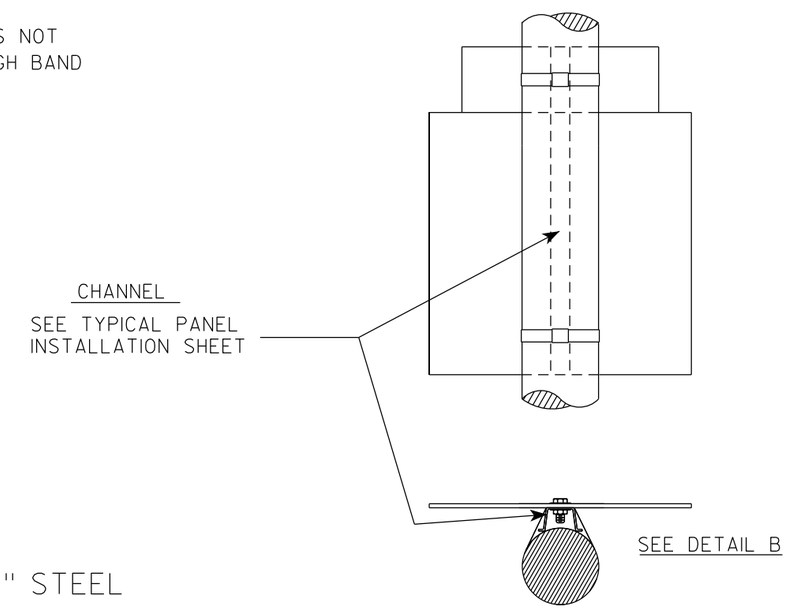

STANDARD SIGN
SIGN BANDING DETAILS

WISCONSIN DEPT OF TRANSPORTATION

APPROVED Matthew R Rauch for State Traffic Engineer

DATE 6/10/19 PLATE NO. A5-9.4

PROJECT NO:	HWY:	COUNTY:		SHEET NO: 133	E

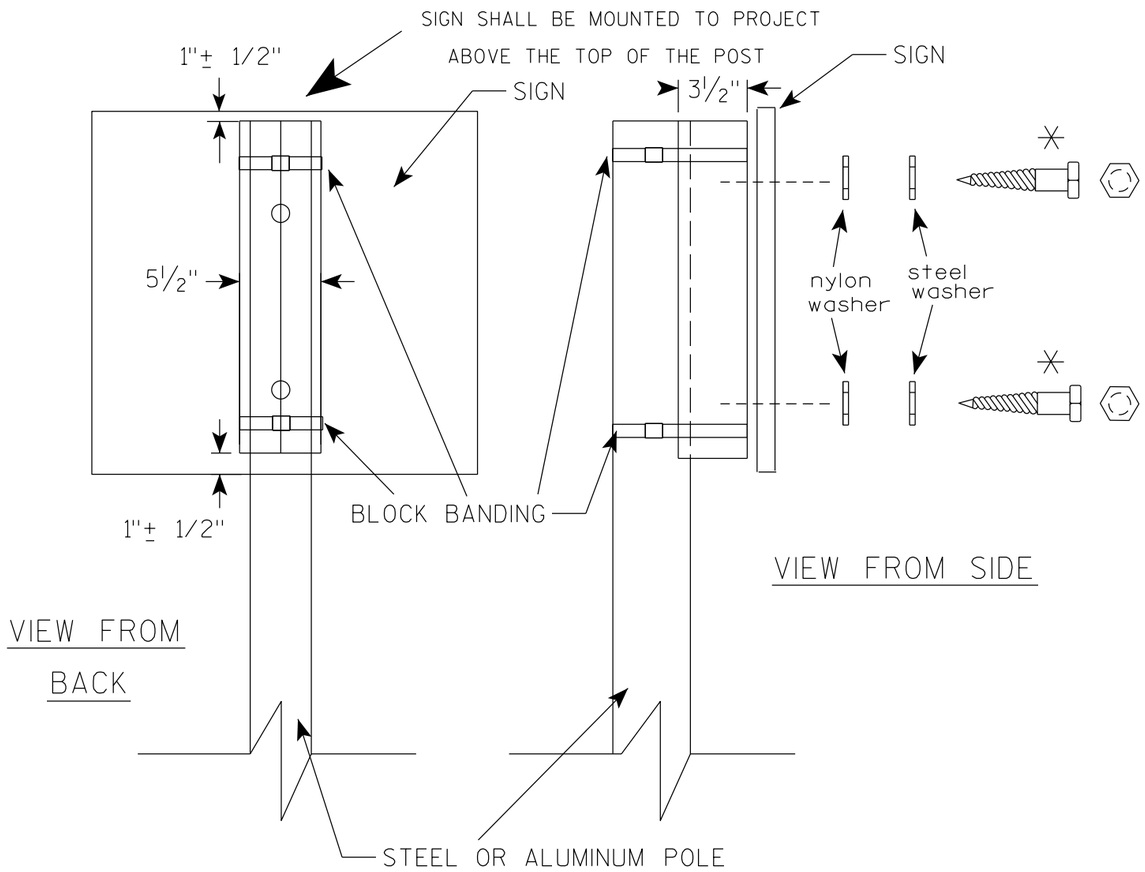

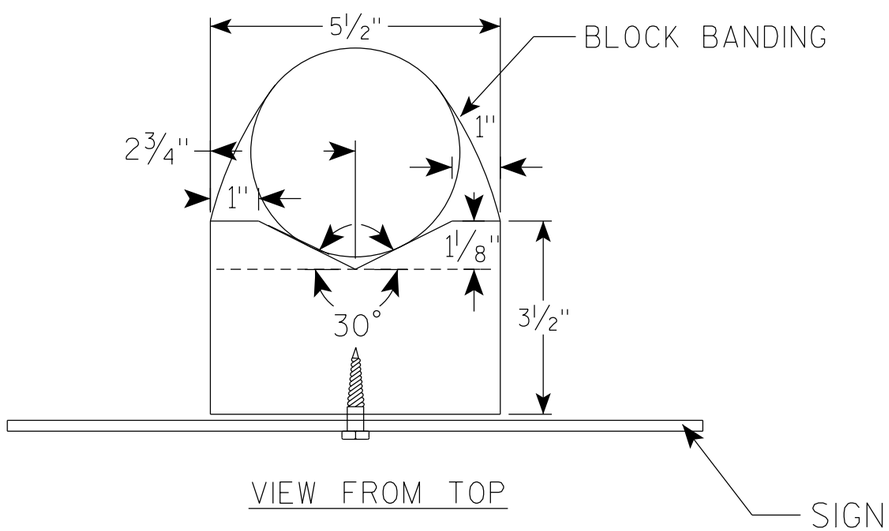

GENERAL NOTES

1. WOOD 4"X6" POST MATERIAL SHALL CONFORM TO 507.2.2 OF THE WisDOT STANDARD SPECIFICATIONS
2. BLOCK BANDING AND CLIPS SHALL BE STAINLESS STEEL, 3/4" WIDTH AND 0.025" THICKNESS
3. SIGNS 3' OR GREATER IN HEIGHT SHALL UTILIZE 3 BLOCK BANDS. SIGNS UNDER 3' IN HEIGHT SHALL UTILIZE 2 BLOCK BANDS
4. ACTUAL NUMBER OF FASTENERS PER SIGN VARIES WITH THE SIGN AREA, BUT NORNALLY THERE ARE TWO. FOR SIGNS GREATER THAN 9 S.F. 3 FASTENERS SHALL BE USED.
5. ALL SIGN MOUNTING BOLTS AND WASHERS SHALL BE EITHER:
   a. Hot dip or mechanically galvanized in accordance with ASTM Designation: A 153, Class D
   b. Electro-galvanized in accordance with ASTM Designation : B 633, TYPE III, SC 3
6. ALL BOLTS SHALL HAVE HEXAGONAL HEADS.
7. STEEL WASHERS SHALL BE 1 1/4" O.D. X 3/8" I.D. X 1/16"
8. NYLON WASHERS SHALL BE 1 1/4" O.D. X 3/8" I.D. X .080 FOR TYPE H OR TYPE F FACE SIGN

✳ LAG BOLTS SHALL BE 3/8" X 2 1/2"

7

7

BLOCK BANDING DETAIL
(V-BLOCK OPTION)

WISCONSIN DEPT OF TRANSPORTATION

APPROVED Matthew R Rauch
for State Traffic Engineer

DATE 4/19/2022 PLATE NO. A5-10.3

PROJECT NO:				SHEET NO: 134	E

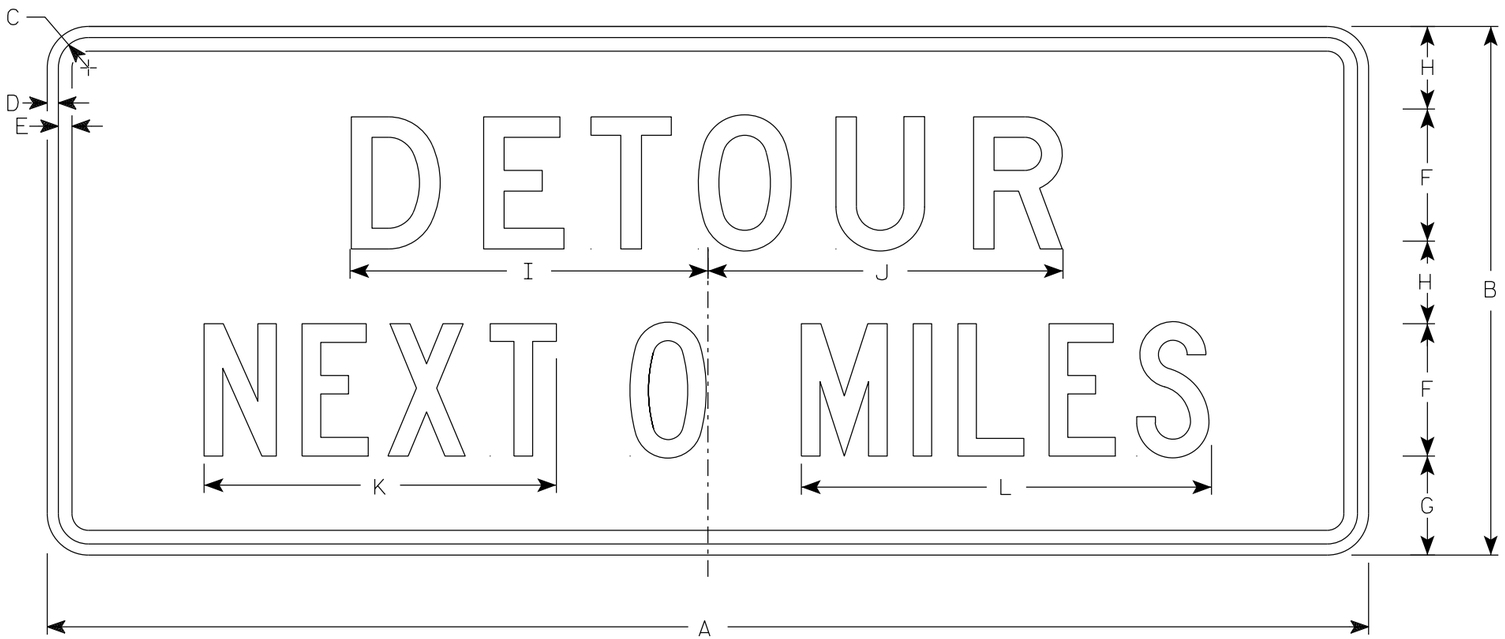

G20-51

NOTES

1. Sign is Type II - Type F Reflective
2. Color:
   Background - Orange
   Message - Black
3. Message Series - Line 1 is D and Line 2 is C
4. Corners may be square or rounded when base material is plywood but borders shall be rounded as shown. When base material is metal, the corners and borders shall be rounded.
5. Round distance to nearest whole Mile and substitute appropriate numerals and optically adjust spacing to achieve proper balance

SIZE	A	B	C	D	E	F	G	H	I	J	K	L	M	N	O	P	Q	R	S	T	U	V	W	X	Y	Z	Area sq. ft.
1																											
2	60	24	1 7/8	1/2	5/8	6	4 1/2	3 3/4	16 1/4	16 1/8	16	18 5/8															10.0
2M	60	24	1 7/8	1/2	5/8	6	4 1/2	3 3/4	16 1/4	16 1/8	16	18 5/8															10.0
3	60	24	1 7/8	1/2	5/8	6	4 1/2	3 3/4	16 1/4	16 1/8	16	18 5/8															10.0
4	60	24	1 7/8	1/2	5/8	6	4 1/2	3 3/4	16 1/4	16 1/8	16	18 5/8															10.0
5	60	24	1 7/8	1/2	5/8	6	4 1/2	3 3/4	16 1/4	16 1/8	16	18 5/8															10.0

STANDARD SIGN
G20-51

WISCONSIN DEPT OF TRANSPORTATION

APPROVED Matthew R Rauch
for State Traffic Engineer

DATE 1/26/2023 PLATE NO. G20-51.3

PROJECT NO: | HWY: | COUNTY: | SHEET NO: 135 | E

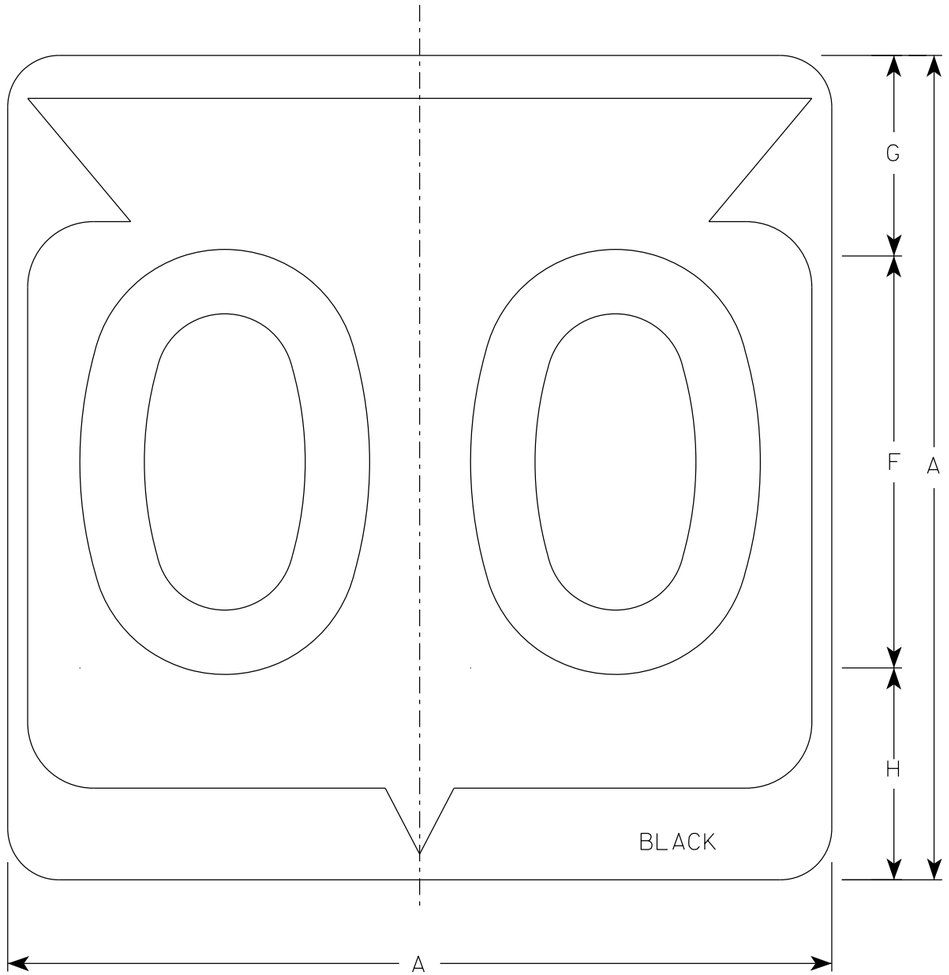

M1-6

NOTES

1. Sign is Type II - Type H Reflective
2. Color:
   Background - White
   Message - Black
3. Message Series - D except 3 number signs Series C

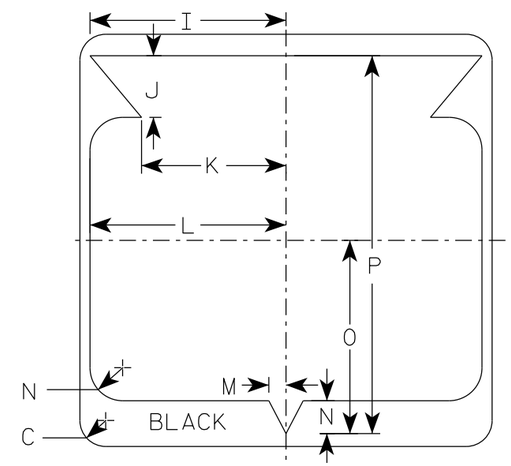

SIZE	A	B	C	D	E	F	G	H	I	J	K	L	M	N	O	P	Q	R	S	T	U	V	W	X	Y	Z	Area sq. ft.
1																											
2	24		1 1/2			12	5 1/2	6 1/2	10 1/4	2 1/2	8 7/8	11 1/2	1	1 7/8	11 1/4	21 7/8											4.0
2M	24		1 1/2			12	5 1/2	6 1/2	10 1/4	2 1/2	8 7/8	11 1/2	1	1 7/8	11 1/4	21 7/8											4.0
3	36		2 1/4			18	8 3/4	9 1/4	15 3/8	5 3/8	12 5/8	17 1/8	1 1/2	2 7/8	16 7/8	33											9.0
4	36		2 1/4			18	8 3/4	9 1/4	15 3/8	5 3/8	12 5/8	17 1/8	1 1/2	2 7/8	16 7/8	33											9.0
5	36		2 1/4			18	8 3/4	9 1/4	15 3/8	5 3/8	12 5/8	17 1/8	1 1/2	2 7/8	16 7/8	33											9.0

STATE ROUTE MARKER
M1-6 FOR ASSEMBLIES

WISCONSIN DEPT OF TRANSPORTATION

APPROVED Matthew R Rauch
for State Traffic Engineer

DATE 11/8/2022 PLATE NO. M1-6.11

PROJECT NO:	HWY:	COUNTY:		SHEET NO: 136	E

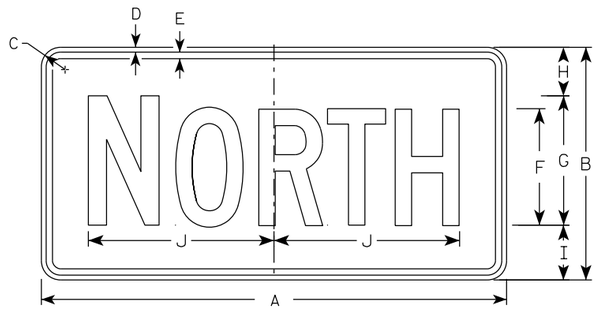

M3-1
MM3-1
MP3-1

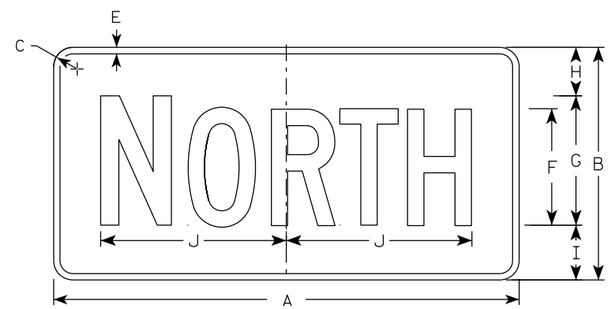

MB3-1
MK3-1
MN3-1

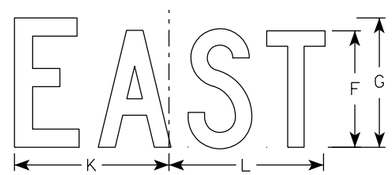

M3-2
MM3-2
MP3-2

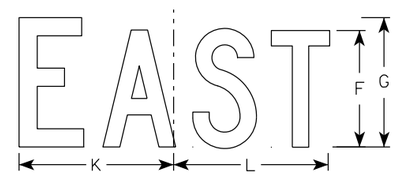

MB3-2
MK3-2
MN3-2

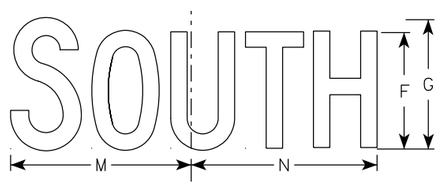

M3-3
MM3-3
MP3-3

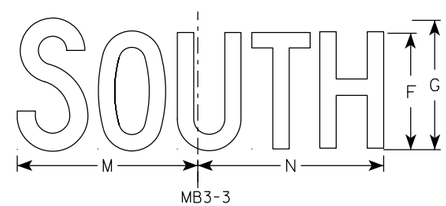

MB3-3
MK3-3
MN3-3

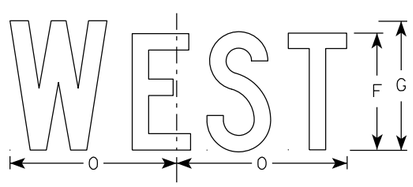

M3-4
MM3-4
MP3-4

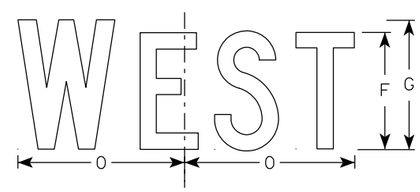

MB3-4
MK3-4
MN3-4

NOTES

1. All Signs Type II - Type H Reflective
2. Color:
   Background - See note 5
   Message - See note 5
3. Message Series - C
4. Corners may be square or rounded when base material is plywood but borders shall be rounded as shown. When base material is metal, the corners and borders shall be rounded.
5. M3-1 thru M3-4 Background - White
   Message - Black
   MB3-1 thru MB3-4 Background - Blue
   Message - White
   MK3-1 thru MK3-4 Background - Green
   Message - White
   MM3-1 thru MM3-4 Background - White
   Message - Green
   MN3-1 thru MN3-4 Background - Brown
   Message - White
   MP3-1 thru MP3-4 Background - White
   Message - Blue
6. Note the first letter of each direction is larger than the remainder of the message.

SIZE	A	B	C	D	E	F	G	H	I	J	K	L	M	N	O	P	Q	R	S	T	U	V	W	X	Y	Z	Area sq. ft.
1																											
2S	24	12	1 1/2	3/8	3/8	6	7	2 1/4	2 3/4	10 1/4	7 7/8	8 3/8	10 1/4	9 3/4	8 3/4												2.00
2M	24	12	1 1/2	3/8	3/8	6	7	2 1/4	2 3/4	10 1/4	7 7/8	8 3/8	10 1/4	9 3/4	8 3/4												2.00
3	36	18	1 1/2	3/8	1/2	9	10	3 3/4	4 1/4	14 3/8	12	12 1/8	14	14 1/8	13												4.5
4	36	18	1 1/2	3/8	1/2	9	10	3 3/4	4 1/4	14 3/8	12	12 1/8	14	14 1/8	13												4.5
5	36	18	1 1/2	3/8	1/2	9	10	3 3/4	4 1/4	14 3/8	12	12 1/8	14	14 1/8	13												4.5

STANDARD SIGNS
M3-1 THRU M3-4
SERIES

WISCONSIN DEPT OF TRANSPORTATION

APPROVED Matthew R Rauch
For State Traffic Engineer

DATE 2/8/2023 PLATE NO. M3-1.15

PROJECT NO: | HWY: | COUNTY: | SHEET NO: 137 | E

NOTES

1. Sign is Type II - Type F Reflective
2. Color:
   Background - Orange
   Message - Black
3. Message Series - B
4. Corners may be square or rounded when base material is plywood but borders shall be rounded as shown. When base material is metal, the corners and borders shall be rounded.

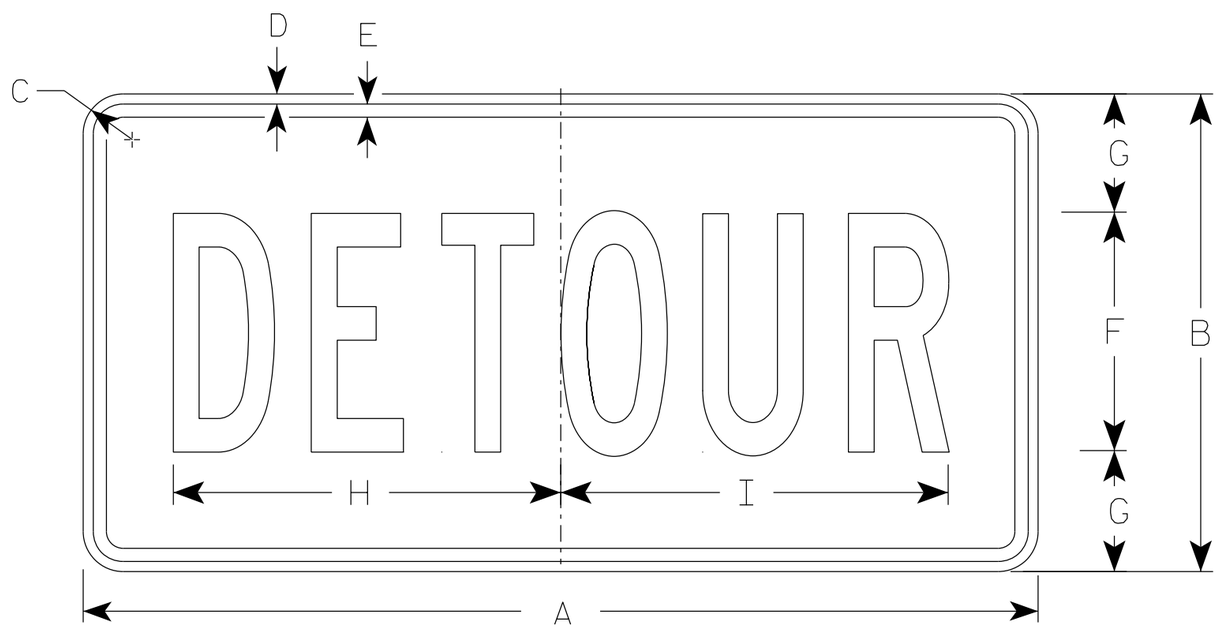

M4-8

SIZE	A	B	C	D	E	F	G	H	I	J	K	L	M	N	O	P	Q	R	S	T	U	V	W	X	Y	Z	Area sq. ft.
1																											
2	24	12	1 1/2	3/8	3/8	6	3	10	10 1/4																		2.0
2M	24	12	1 1/2	3/8	3/8	6	3	10	10 1/4																		2.0
3	36	18	1 1/2	3/8	1/2	9	4 1/2	14 5/8	14 1/2																		4.5
4	36	18	1 1/2	3/8	1/2	9	4 1/2	14 5/8	14 1/2																		4.5
5	36	18	1 1/2	3/8	1/2	9	4 1/2	14 5/8	14 1/2																		4.5

STANDARD SIGN
M4-8

WISCONSIN DEPT OF TRANSPORTATION

APPROVED Matthew R Rauch
for State Traffic Engineer

DATE 2/9/2023 PLATE NO. M4-8.4

PROJECT NO:	HWY:	COUNTY:		SHEET NO:	E

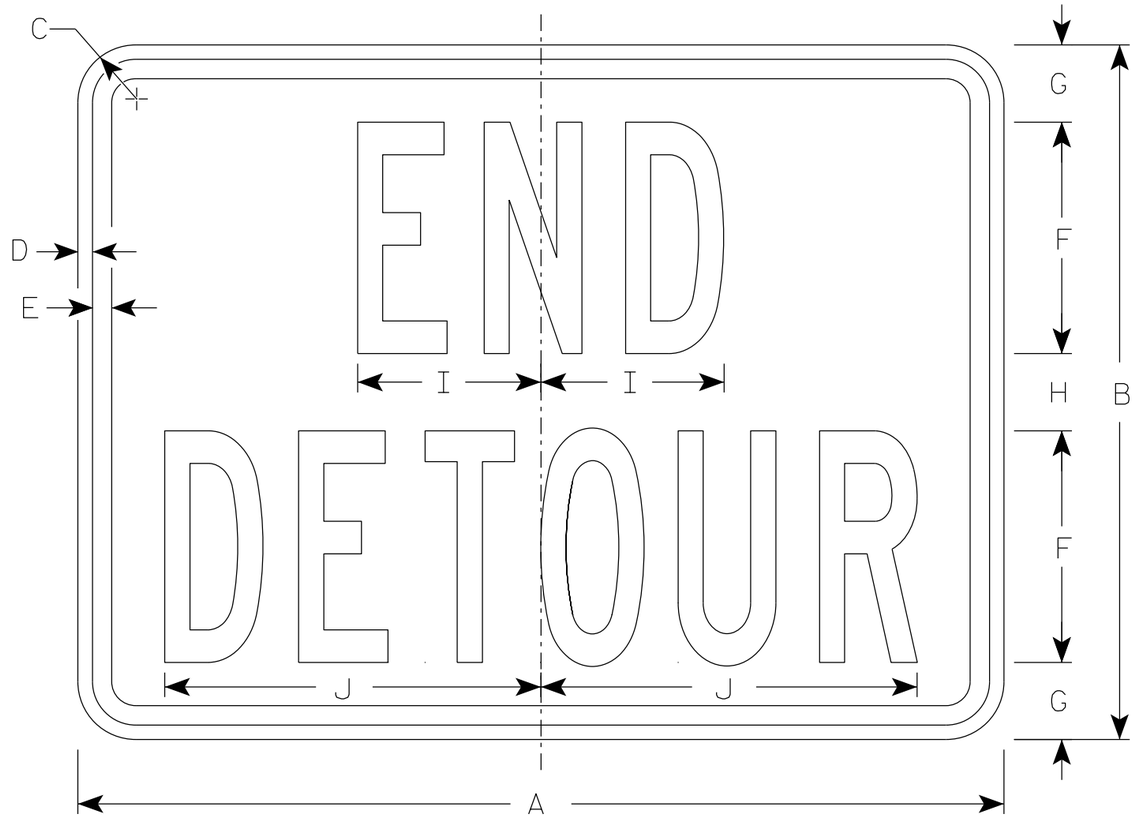

M4-8A

NOTES

1. Sign is Type II - Type F Reflective
2. Color:
   Background - Orange
   Message - Black
3. Message Series - B
4. Corners may be square or rounded when base material is plywood but borders shall be rounded as shown. When base material is metal, the corners and borders shall be rounded.

SIZE	A	B	C	D	E	F	G	H	I	J	K	L	M	N	O	P	Q	R	S	T	U	V	W	X	Y	Z	Area sq. ft.
1																											
2	24	18	1 1/2	3/8	1/2	6	2	2	4 3/4	9 3/4																	3.0
2M	24	18	1 1/2	3/8	1/2	6	2	2	4 3/4	9 3/4																	3.0
3	30	24	1 1/2	3/8	1/2	8	2 1/2	3	6 3/4	13																	5.0
4	30	24	1 1/2	3/8	1/2	8	2 1/2	3	6 3/4	13																	5.0
5	30	24	1 1/2	3/8	1/2	8	2 1/2	3	6 3/4	13																	5.0

STANDARD SIGN
M4-8A

WISCONSIN DEPT OF TRANSPORTATION

APPROVED Matthew R Rauch
for State Traffic Engineer

DATE 2/9/2023 PLATE NO. M4-8A.4

PROJECT NO: | HWY: | COUNTY: | SHEET NO: 139 | E

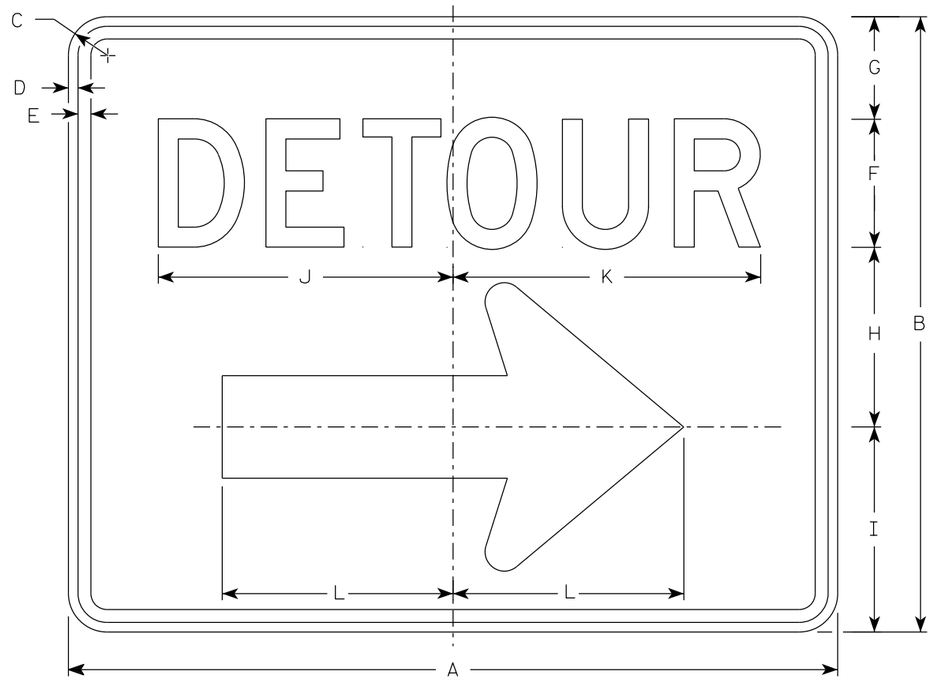

M4-9R

NOTES

1. Sign is Type II - Type F Reflective
2. Color:
   Background - Orange
   Message - Black
3. Message Series - D
4. Corners may be square or rounded when base material is plywood but borders shall be rounded as shown. When base material is metal, the corners and borders shall be rounded.
4. M4-9L is the same as M4-9R except the arrow is reversed.

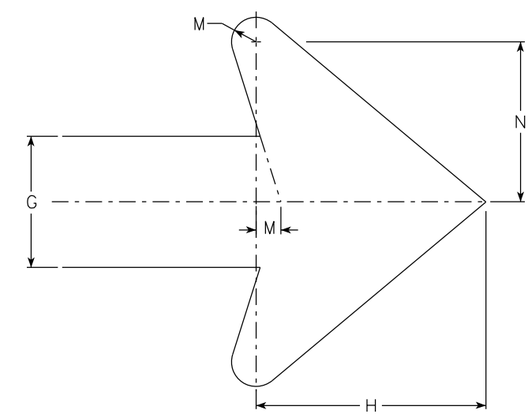

Arrow Detail

SIZE	A	B	C	D	E	F	G	H	I	J	K	L	M	N	O	P	Q	R	S	T	U	V	W	X	Y	Z	Area sq. ft.
1																											
2	30	24	1 1/2	3/8	1/2	5	4	7	8	11 1/2	12	9	3/4	4 7/8													5.00
2M	30	24	1 1/2	3/8	1/2	5	4	7	8	11 1/2	12	9	3/4	4 7/8													5.00
3	30	24	1 1/2	3/8	1/2	5	4	7	8	11 1/2	12	9	3/4	4 7/8													5.00
4	48	36	1 7/8	1/2	5/8	8	6	10 1/2	11 5/8	20 5/8	20 1/2	13 1/4	1 1/8	6 7/8													12.0
5	48	36	1 7/8	1/2	5/8	8	6	10 1/2	11 5/8	20 5/8	20 1/2	13 1/4	1 1/8	6 7/8													12.0

STANDARD SIGN
M4-9 R & L

WISCONSIN DEPT OF TRANSPORTATION

APPROVED Matthew R Rauch
For State Traffic Engineer

DATE 2/9/2023 PLATE NO. M4-9R.6

PROJECT NO: | HWY: | COUNTY: | SHEET NO: E

FILE NAME : C:\CAEfiles\Projects\tr_stdplate\M49R.dgn PLOT DATE : 21-MARCH 2023 1:40 PLOT BY : dotc4c PLOT NAME : PLOT SCALE : $$.....plotscale.....$$ WISDOT/CADDS SHEET 42

NOTES

1. Sign is Type II- Type F Reflective
2. Color:
   Background - Orange
   Message - Black
3. Corners may be square or rounded when base material is plywood but borders shall be rounded as shown. When base material is metal, the corners and borders shall be rounded.
4. M4-60L is the same as M4-60R except the arrow is reversed.

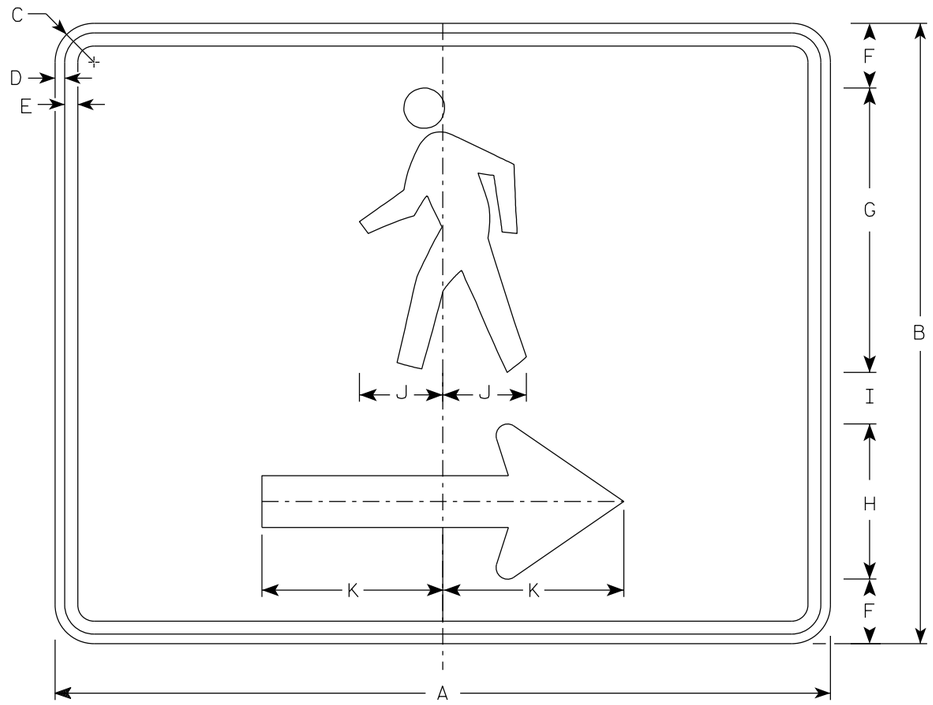

M4-60R

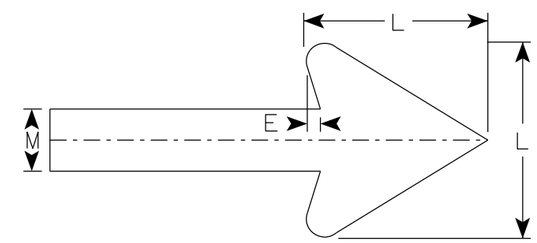

Arrow Detail

SIZE	A	B	C	D	E	F	G	H	I	J	K	L	M	N	O	P	Q	R	S	T	U	V	W	X	Y	Z	Area sq. ft.
1																											
2S	30	24	1 1/2	3/8	1/2	2 1/2	11	6	2	3 1/4	7	6	2														5.00
2M	30	24	1 1/2	3/8	1/2	2 1/2	11	6	2	3 1/4	7	6	2														5.00
3																											
4																											
5																											

STANDARD SIGN
M4-60 L&R

WISCONSIN DEPT OF TRANSPORTATION

APPROVED Matthew R Rauch
For State Traffic Engineer

DATE 2/14/2023 PLATE NO. M4-60.2

PROJECT NO: | HWY: | COUNTY: | SHEET NO: 141 | E

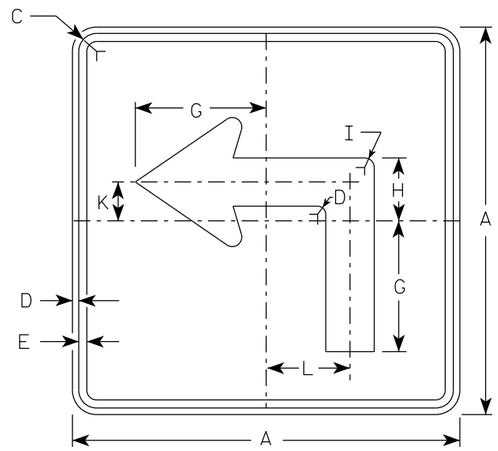

M5-1L
MM5-1L
MO5-1L
MP5-1L

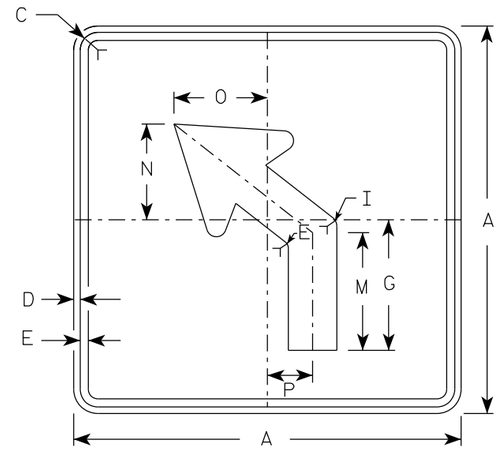

M5-2L
MM5-2L
MO5-2L
MP5-2L

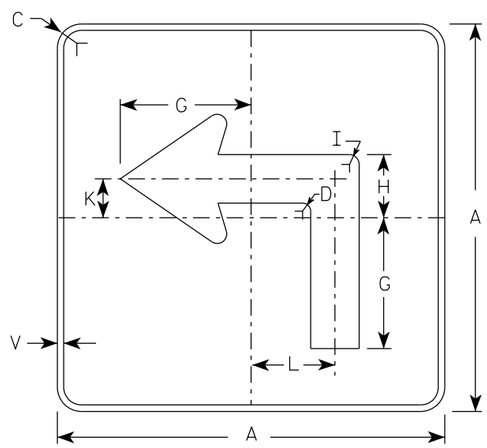

MB5-1L
MK5-1L
MN5-1L
MR5-1L

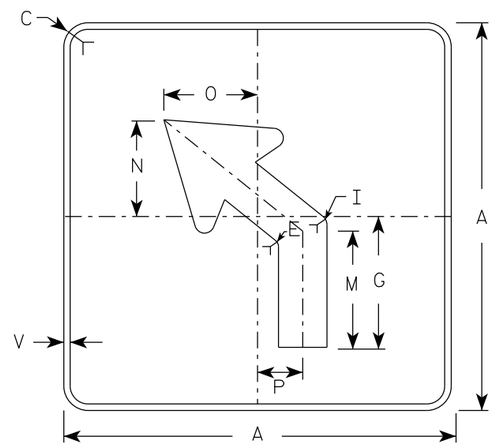

MB5-2L
MK5-2L
MN5-2L
MR5-2L

NOTES

1. Signs are Type II - Type H reflective except as shown
2. Color:
   Background - See note 4
   Message - See note 4
3. Corners may be square or rounded when base material is plywood but borders shall be rounded as shown. When base material is metal, the corners and borders shall be rounded.
4. M5-1 and M5-2 Background - White
   Message - Black
   MB5-1 and MB5-2 Background - Blue
   Message - White
   MK5-1 and MK5-2 Background - Green
   Message - White
   MM5-1 and MM5-2 Background - White
   Message - Green
   MN5-1 and MN5-2 Background - Brown
   Message - White
   MO5-1 and MO5-2 Background - Orange - Type F Reflective
   Message - Black
   MP5-1 and MP5-2 Background - White
   Message - Blue
   MR5-1 and MR5-2 Background - Brown
   Message - Yellow
5. M5-1R same as M5-1L except arrow points right.
6. M5-2R same as M5-2L except arrow tilts right.

ARROW DETAIL

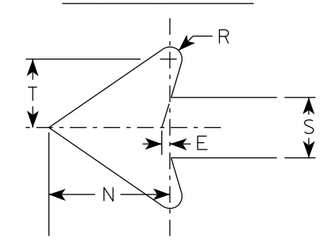

SIZE	A	B	C	D	E	F	G	H	I	J	K	L	M	N	O	P	Q	R	S	T	U	V	W	X	Y	Z	Area sq. ft.
1																											
2S	21		1 1/2	3/8	3/8		7	3 3/8	5/8		2 1/8	4 1/2	6 3/8	5 1/4	5	2 1/2		1/2	2 5/8	3		1/2					3.06
2M	21		1 1/2	3/8	3/8		7	3 3/8	5/8		2 1/8	4 1/2	6 3/8	5 1/4	5	2 1/2		1/2	2 5/8	3		1/2					3.06
3	30		1 7/8	1/2	5/8		10 1/8	4 7/8	7/8		3	6 1/2	9 1/8	7 1/2	7 1/4	3 1/2		3/4	3 3/4	4 1/4		1/2					6.25
4	30		1 7/8	1/2	5/8		10 1/8	4 7/8	7/8		3	6 1/2	9 1/8	7 1/2	7 1/4	3 1/2		3/4	3 3/4	4 1/4		1/2					6.25
5	30		1 7/8	1/2	5/8		10 1/8	4 7/8	7/8		3	6 1/2	9 1/8	7 1/2	7 1/4	3 1/2		3/4	3 3/4	4 1/4		1/2					6.25

STANDARD SIGN
M5-1 & M5-2

WISCONSIN DEPT OF TRANSPORTATION

APPROVED Matthew R Rauch
for State Traffic Engineer

DATE 2/13/2023 PLATE NO. M5-1.15

PROJECT NO: | HWY: | COUNTY: | SHEET NO: 142 | E

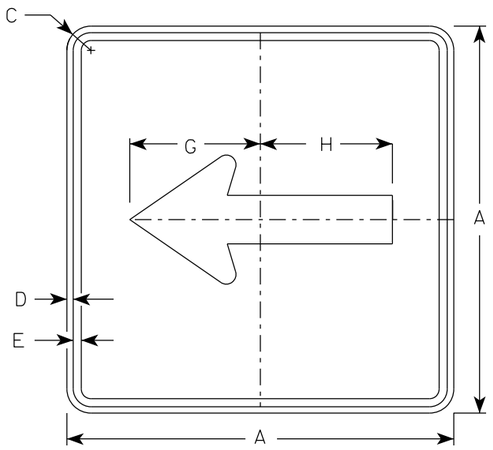

M6-1
MM6-1
MO6-1
MP6-1

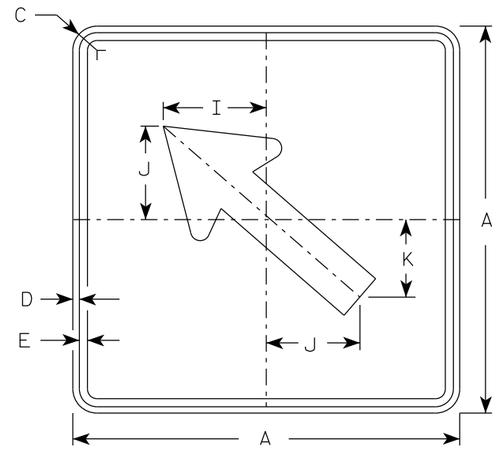

M6-2
MM6-2
MO6-2
MP6-2

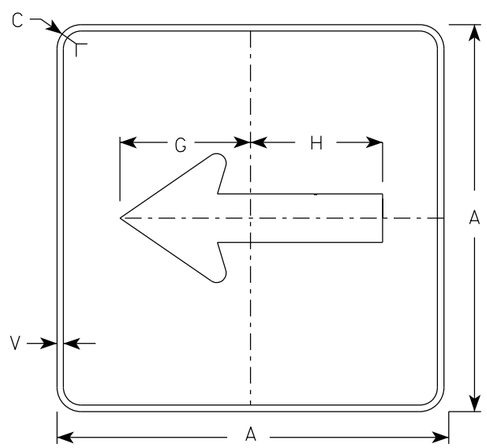

MB6-1
MK6-1
MN6-1
MR6-1

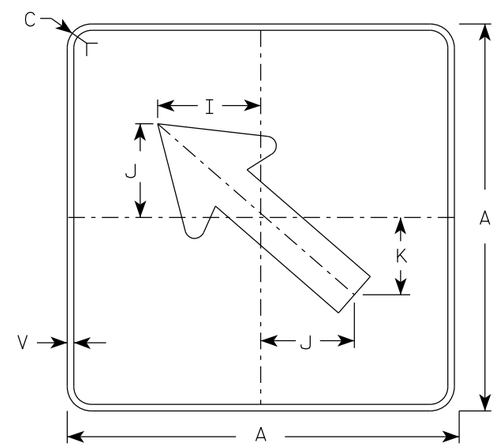

MB6-2
MK6-2
MN6-2
MR6-2

NOTES

1. Signs are Type II - Type H Reflective except as Shown
2. Color:
   Background - See note 4
   Message - See note 4
3. Corners may be square or rounded when base material is plywood but borders shall be rounded as shown. When base material is metal, the corners and borders shall be rounded.
4. M6-1 and M6-2 Background - White
   Message - Black
   MB6-1 and MB6-2 Background - Blue
   Message - White
   MK6-1 and MK6-2 Background - Green
   Message - White
   MM6-1 and MM6-2 Background - White
   Message - Green
   MN6-1 and MN6-2 Background - Brown
   Message - White
   MO6-1 and MO6-2 Background - Orange - Type F Reflective
   Message - Black
   MP6-1 and MP6-2 Background - White
   Message - Blue
   MR6-1 and MR6-2 Background - Brown
   Message - Yellow

ARROW DETAIL

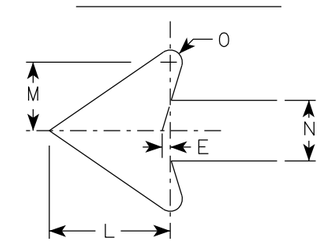

SIZE	A	B	C	D	E	F	G	H	I	J	K	L	M	N	O	P	Q	R	S	T	U	V	W	X	Y	Z	Area sq. ft.
1																											
2S	21		1 1/2	3/8	3/8		7 1/2	7 1/8	5 5/8	5	4 1/4	5 1/4	3	2 5/8	1/2							1/2					3.06
2M	21		1 1/2	3/8	3/8		7 1/2	7 1/8	5 5/8	5	4 1/4	5 1/4	3	2 5/8	1/2							1/2					3.06
3	30		1 7/8	1/2	5/8		10 3/4	10 1/4	8	7 1/4	6	7 1/2	4 1/4	3 3/4	3/4							1/2					6.25
4	30		1 7/8	1/2	5/8		10 3/4	10 1/4	8	7 1/4	6	7 1/2	4 1/4	3 3/4	3/4							1/2					6.25
5	30		1 7/8	1/2	5/8		10 3/4	10 1/4	8	7 1/4	6	7 1/2	4 1/4	3 3/4	3/4							1/2					6.25

STANDARD SIGN
M6-1 & M6-2
SERIES

WISCONSIN DEPT OF TRANSPORTATION

APPROVED Matthew R Rauch
for State Traffic Engineer

DATE 2/13/2023 PLATE NO. M6-1.16

PROJECT NO: | HWY: | COUNTY: | SHEET NO: 143 | E

NOTES

1. Sign is Type II - Type H Reflective
2. Color:
   Background - White
   Message - Black
3. Message Series - C
4. Corners may be square or rounded when base material is plywood but borders shall be rounded as shown. When base material is metal, the corners and borders shall be rounded.
5. Substitute appropriate numerals to nearest quarter mile and optically adjust spacing to achieve proper balance.

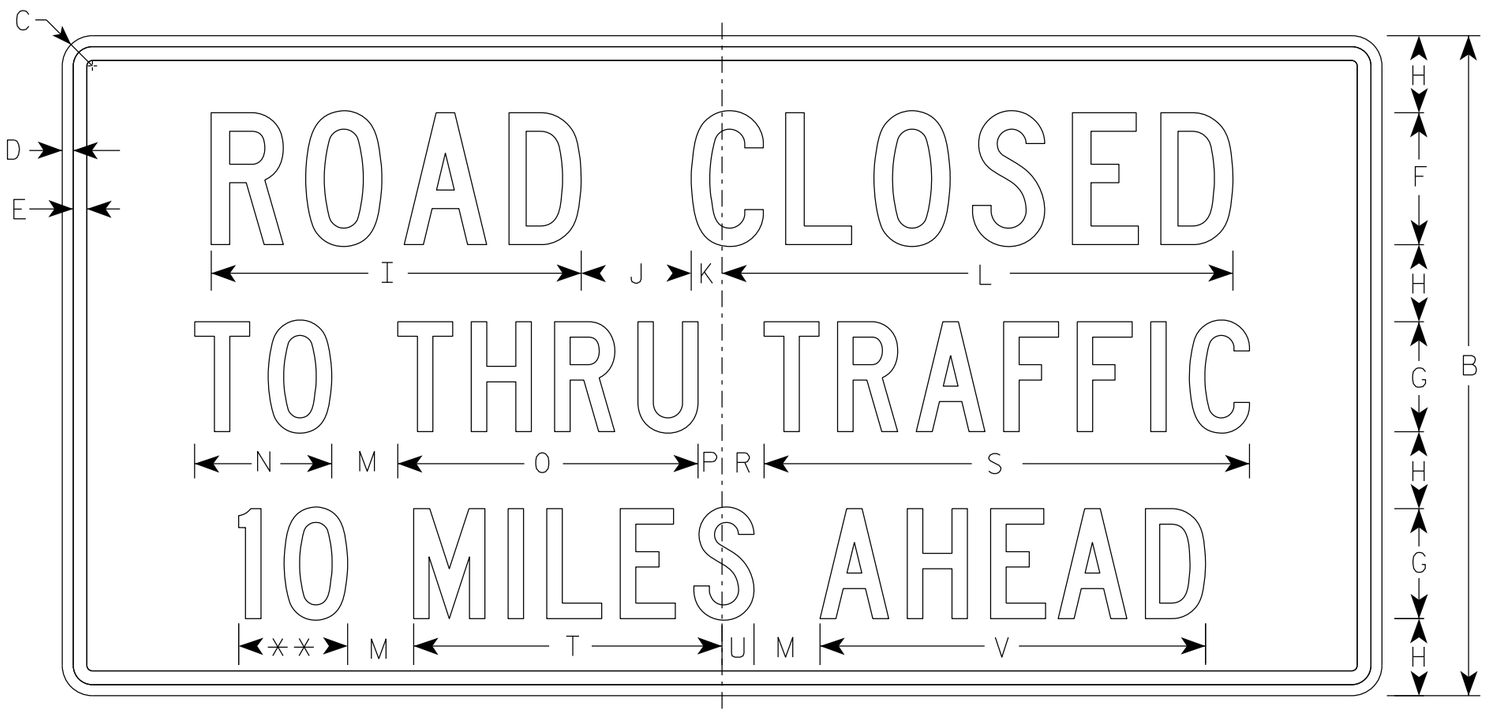

R11-3

** See Note 5

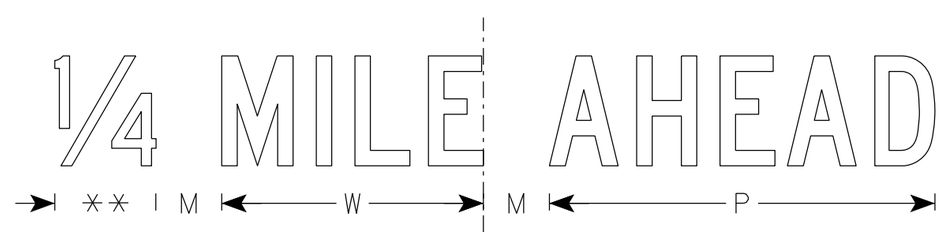

SIZE	A	B	C	D	E	F	G	H	I	J	K	L	M	N	O	P	Q	R	S	T	U	V	W	X	Y	Z	Area sq. ft.
1	36	18	1 1/2	3/8	3/8	4	3	2	11 1/4	3	1 1/8	15 3/8	2	3 3/4	8 1/4	5/8		1 3/8	13 1/4	8 3/8	7/8	10 1/2	7 1/8				4.5
2S	60	30	1 7/8	1/2	5/8	6	5	3 1/2	16 7/8	5	1 3/8	23 1/4	3	6 1/4	13 5/8	1 1/8		1 7/8	22 1/8	14	1 1/2	17 1/2	11 7/8				12.5
2M	60	30	1 7/8	1/2	5/8	6	5	3 1/2	16 7/8	5	1 3/8	23 1/4	3	6 1/4	13 5/8	1 1/8		1 7/8	22 1/8	14	1 1/2	17 1/2	11 7/8				12.5
3																											
4																											
5																											

STANDARD SIGN
R11-3

WISCONSIN DEPT OF TRANSPORTATION

APPROVED Matthew R Rauch
for State Traffic Engineer

DATE 2/5/24 PLATE NO. R11-3.10

PROJECT NO: | HWY: | COUNTY: | SHEET NO: 144 | E

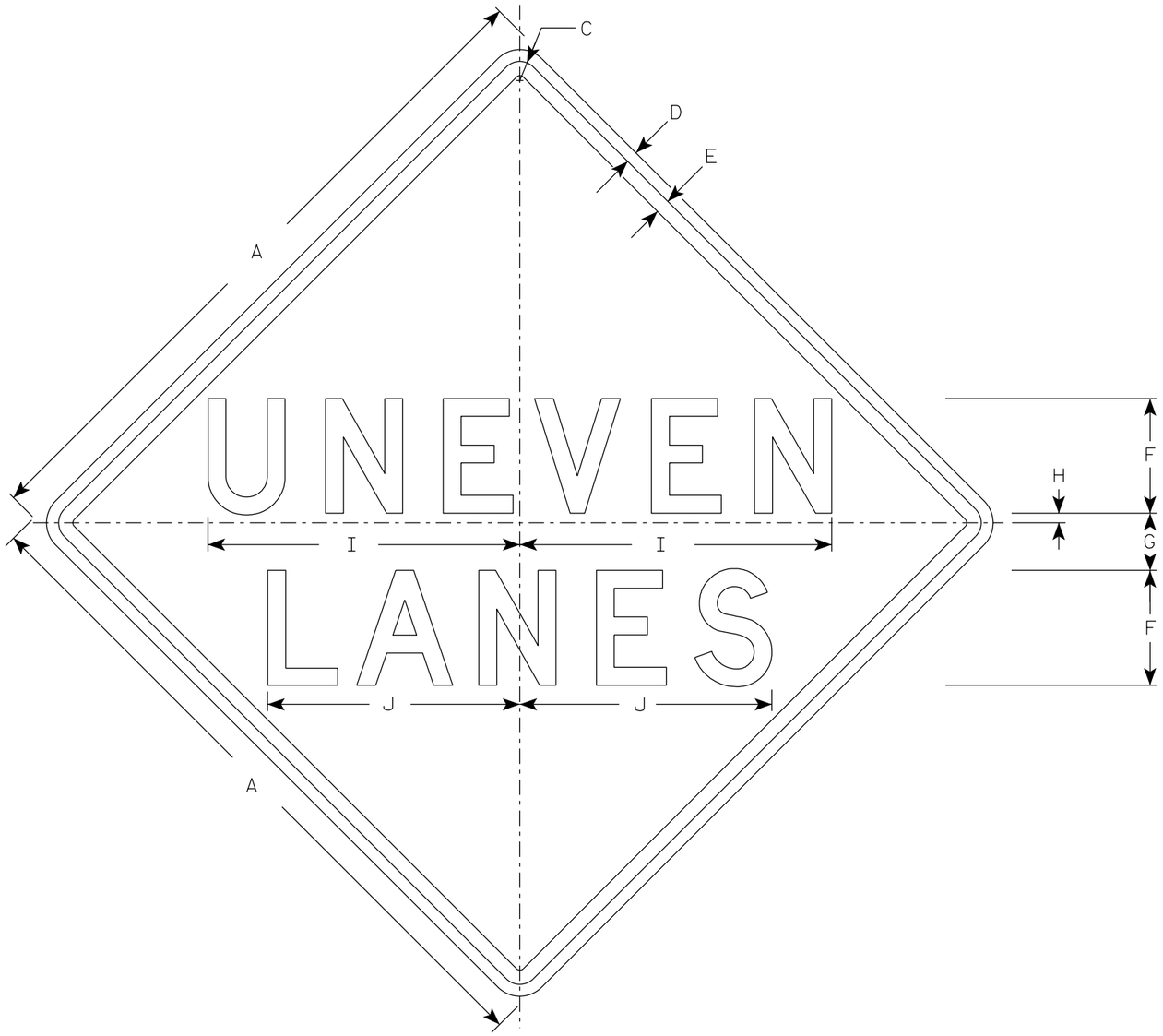

W8-11

NOTES

1. Sign is Type II - Type F Reflective
2. Color:
   Background - Orange
   Message - Black
3. Message Series - D
4. Corners may be square or rounded when base material is plywood but borders shall be rounded as shown. When base material is metal, the corners and borders shall be rounded.

SIZE	A	B	C	D	E	F	G	H	I	J	K	L	M	N	O	P	Q	R	S	T	U	V	W	X	Y	Z	Area sq. ft.
1	36		2 1/4	5/8	3/4	6	3	1/2	16 3/8	13 1/4																	9.0
2S	48		3	3/4	1	8	4	1	21 3/4	17 5/8																	16.0
2M	48		3	3/4	1	8	4	1	21 3/4	17 5/8																	16.0
3	48		3	3/4	1	8	4	1	21 3/4	17 5/8																	16.0
4	48		3	3/4	1	8	4	1	21 3/4	17 5/8																	16.0
5	48		3	3/4	1	8	4	1	21 3/4	17 5/8																	16.0

STANDARD SIGN
W8-11

WISCONSIN DEPT OF TRANSPORTATION

APPROVED Matthew R Rauch
for State Traffic Engineer

DATE 10/26/2023 PLATE NO. W8-11.6

PROJECT NO: | HWY: | COUNTY: | SHEET NO: | E

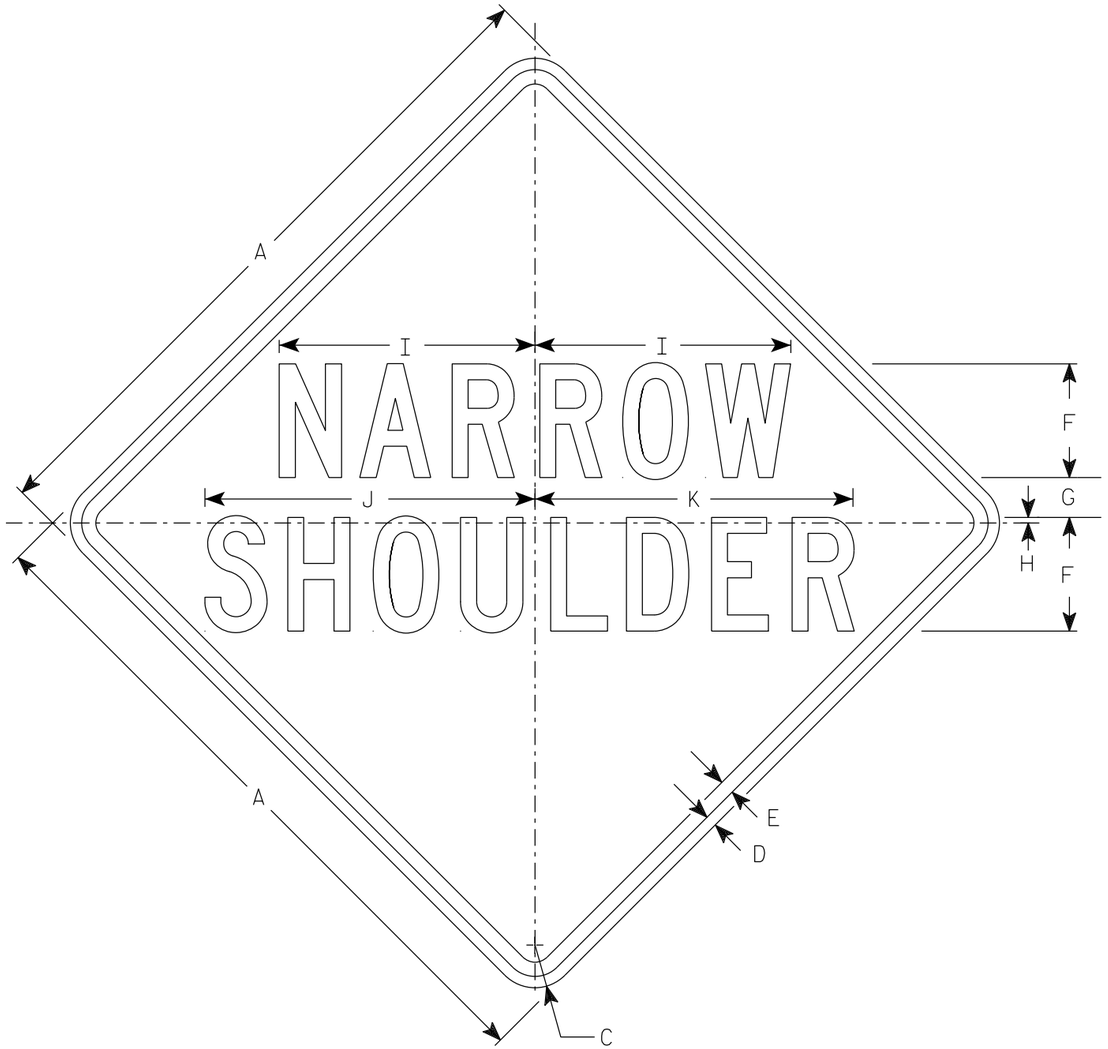

W8-57

NOTES

1. Sign is Type II - Type F Reflective
2. Color:
   Background - Yellow
   Message - Black
3. Message Series - C

SIZE	A	B	C	D	E	F	G	H	I	J	K	L	M	N	O	P	Q	R	S	T	U	V	W	X	Y	Z	Area sq. ft.
1	24		1 1/2	3/8	3/8	4	1 3/8	1/4	9	11 5/8	11																4.0
2S	30		1 7/8	1/2	5/8	5	1 3/4	1/4	11 1/4	14 1/2	14																6.25
2M	36		2 1/4	5/8	3/4	6	2	3/8	13 1/2	17 1/2	16 3/4																9.0
3	36		2 1/4	5/8	3/4	6	2	3/8	13 1/2	17 1/2	16 3/4																9.0
4																											
5																											

STANDARD SIGN
W8-57

WISCONSIN DEPT OF TRANSPORTATION

APPROVED Matthew R Rauch
for State Traffic Engineer

DATE 11/7/2023 PLATE NO. W8-57.8

PROJECT NO: | HWY: | COUNTY: | SHEET NO: | E

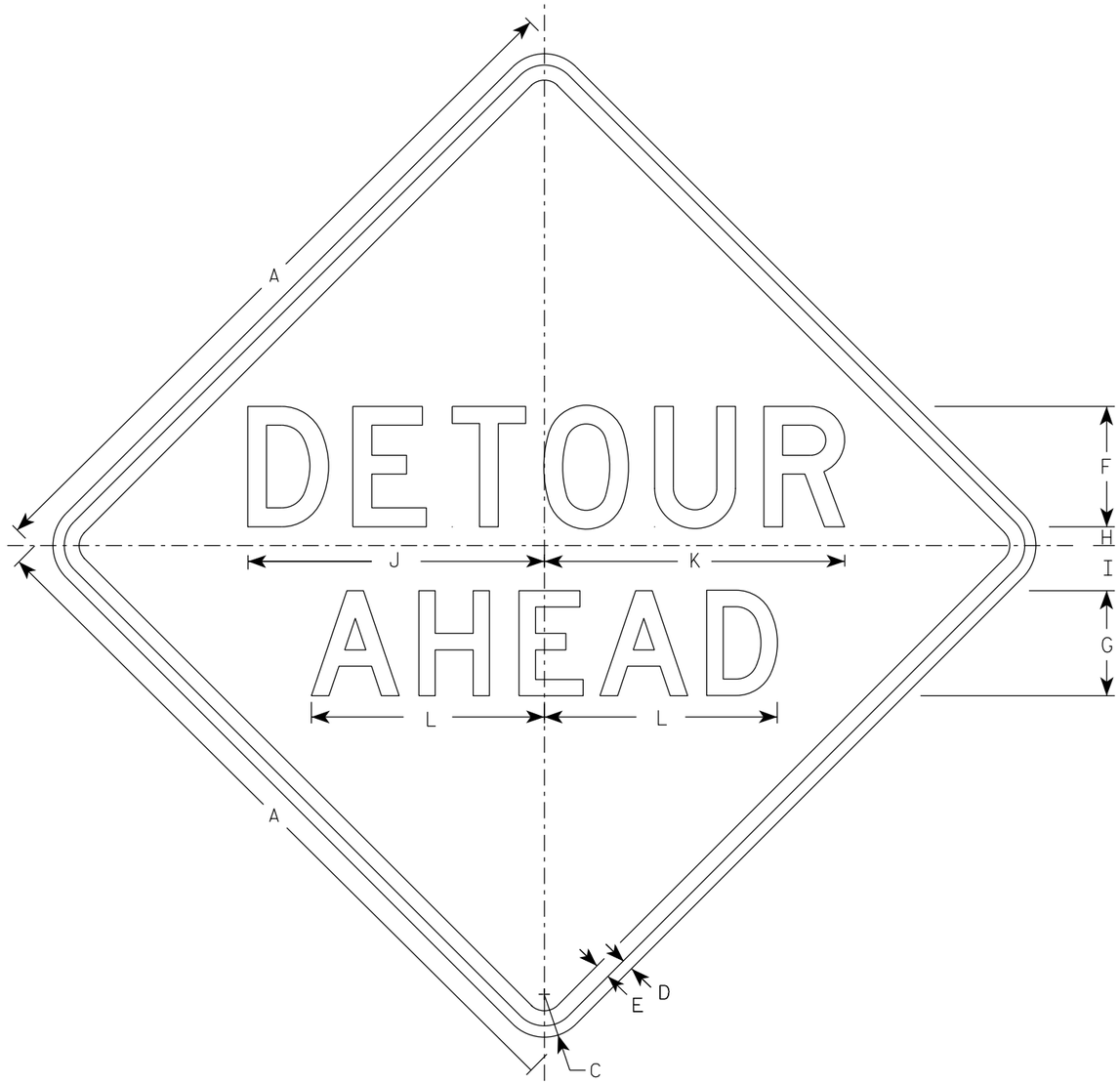

W20-2A

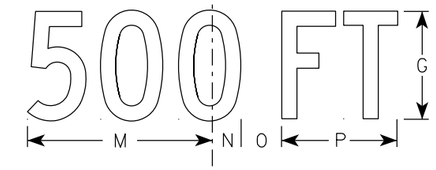

W20-2D

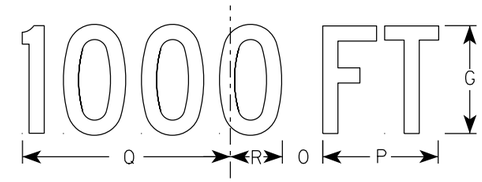

W20-2C

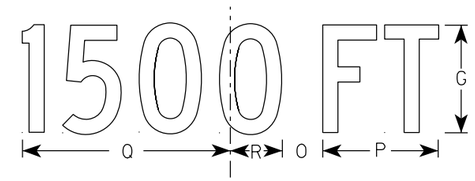

W20-2B

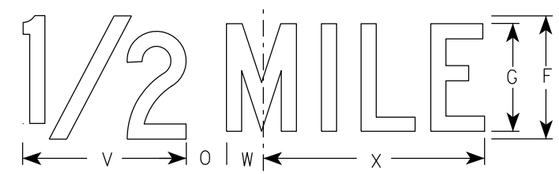

W20-2G

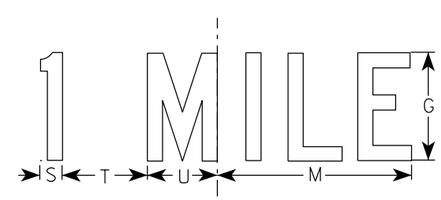

W20-2F

NOTES

1. Sign is Type II - Type F Reflective
2. Color:
   Background - Orange
   Message - Black
3. Message Series - See note 5
4. Corners may be square or rounded when base material is plywood but borders shall be rounded as shown. When base material is metal, the corners and borders shall be rounded.
5. Line 1 is Series D.
   Line 2 is Series D for AHEAD and Series C for all other distances.

SIZE	A	B	C	D	E	F	G	H	I	J	K	L	M	N	O	P	Q	R	S	T	U	V	W	X	Y	Z	Area sq. ft.
1	36		2 1/4	5/8	3/4	6	5	1	2 1/4	14 3/4	15	11 5/8	9	1 3/8	1 7/8	5 5/8	10 1/8	2 1/2	1 1/8	4 1/2	3 1/2	8	1 3/4	10 3/4			9.0
2S	48		3	3/4	1	8	7	1 1/4	3	19 3/4	20	15 1/2	12	1 7/8	2 5/8	7 1/2	13 1/2	3 3/8	1 1/2	6	4 5/8	10 5/8	2 3/8	14 3/8			16.0
2M	48		3	3/4	1	8	7	1 1/4	3	19 3/4	20	15 1/2	12	1 7/8	2 5/8	7 1/2	13 1/2	3 3/8	1 1/2	6	4 5/8	10 5/8	2 3/8	14 3/8			16.0
3	48		3	3/4	1	8	7	1 1/4	3	19 3/4	20	15 1/2	12	1 7/8	2 5/8	7 1/2	13 1/2	3 3/8	1 1/2	6	4 5/8	10 5/8	2 3/8	14 3/8			16.0
4	48		3	3/4	1	8	7	1 1/4	3	19 3/4	20	15 1/2	12	1 7/8	2 5/8	7 1/2	13 1/2	3 3/8	1 1/2	6	4 5/8	10 5/8	2 3/8	14 3/8			16.0
5	48		3	3/4	1	8	7	1 1/4	3	19 3/4	20	15 1/2	12	1 7/8	2 5/8	7 1/2	13 1/2	3 3/8	1 1/2	6	4 5/8	10 5/8	2 3/8	14 3/8			16.0

STANDARD SIGN
W20-2A,B,C,D,F & G

WISCONSIN DEPT OF TRANSPORTATION

APPROVED Matthew R Rauch
For State Traffic Engineer

DATE 1/10/2024 PLATE NO. W20-2.7

PROJECT NO: | HWY: | COUNTY: | SHEET NO: E

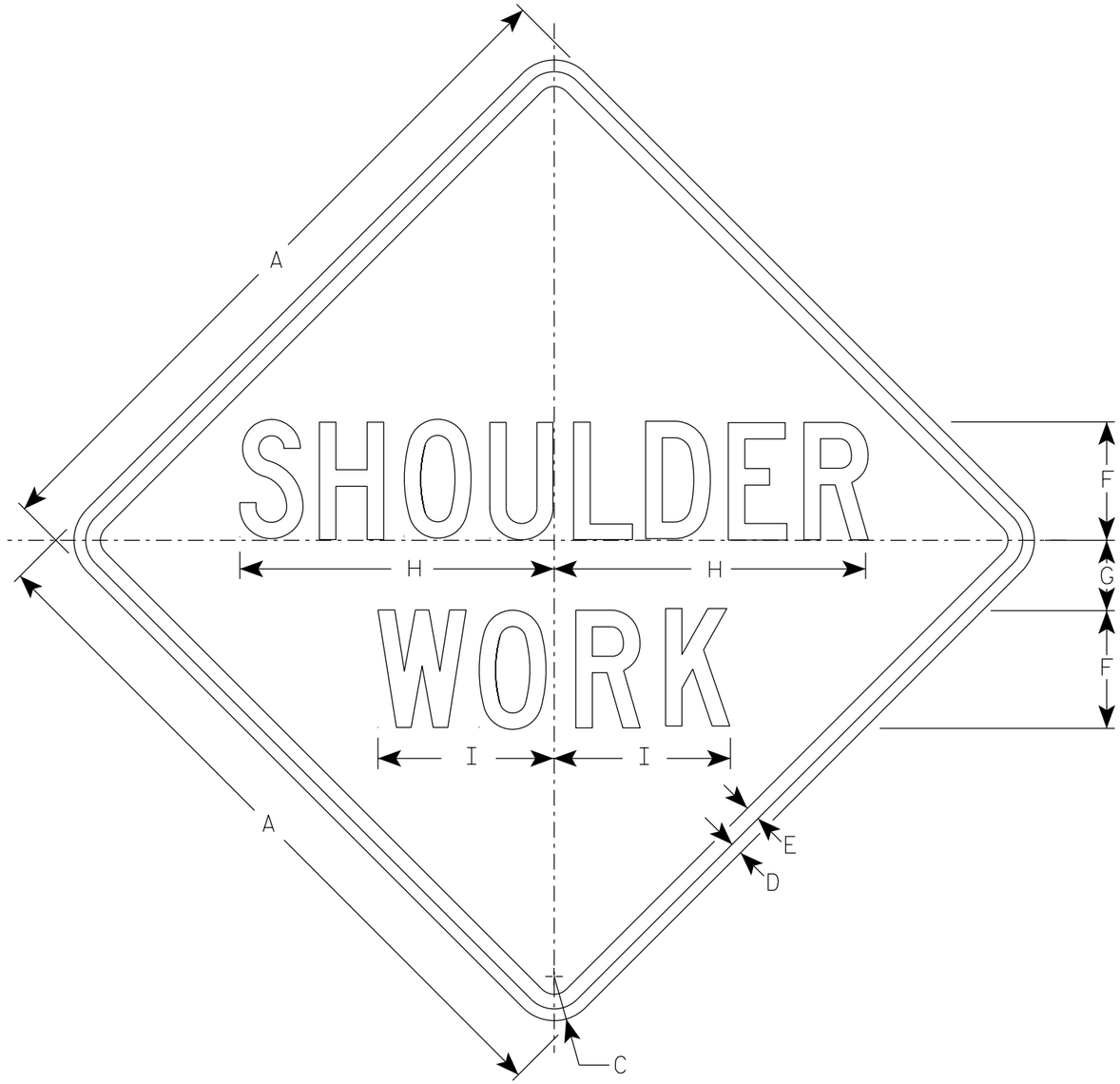

W21-5

NOTES

1. Sign is Type II - Type F Reflective
2. Color:
   Background - Orange
   Message - Black
3. Message Series - C

SIZE	A	B	C	D	E	F	G	H	I	J	K	L	M	N	O	P	Q	R	S	T	U	V	W	X	Y	Z	Area sq. ft.
1	36		2 1/4	5/8	3/4	6	3 1/2	16	9																		9.0
2S	48		3	3/4	1	8	5	21 3/8	11 1/4																		16.0
2M	48		3	3/4	1	8	5	21 3/8	11 1/4																		16.0
3	48		3	3/4	1	8	5	21 3/8	11 1/4																		16.0
4	48		3	3/4	1	8	5	21 3/8	11 1/4																		16.0
5	48		3	3/4	1	8	5	21 3/8	11 1/4																		16.0

STANDARD SIGN
W21-5

WISCONSIN DEPT OF TRANSPORTATION

APPROVED Matthew R Rauch
for State Traffic Engineer

DATE 1/11/2024 PLATE NO. W21-5.7

PROJECT NO: | HWY: | COUNTY: | SHEET NO: 148 | E

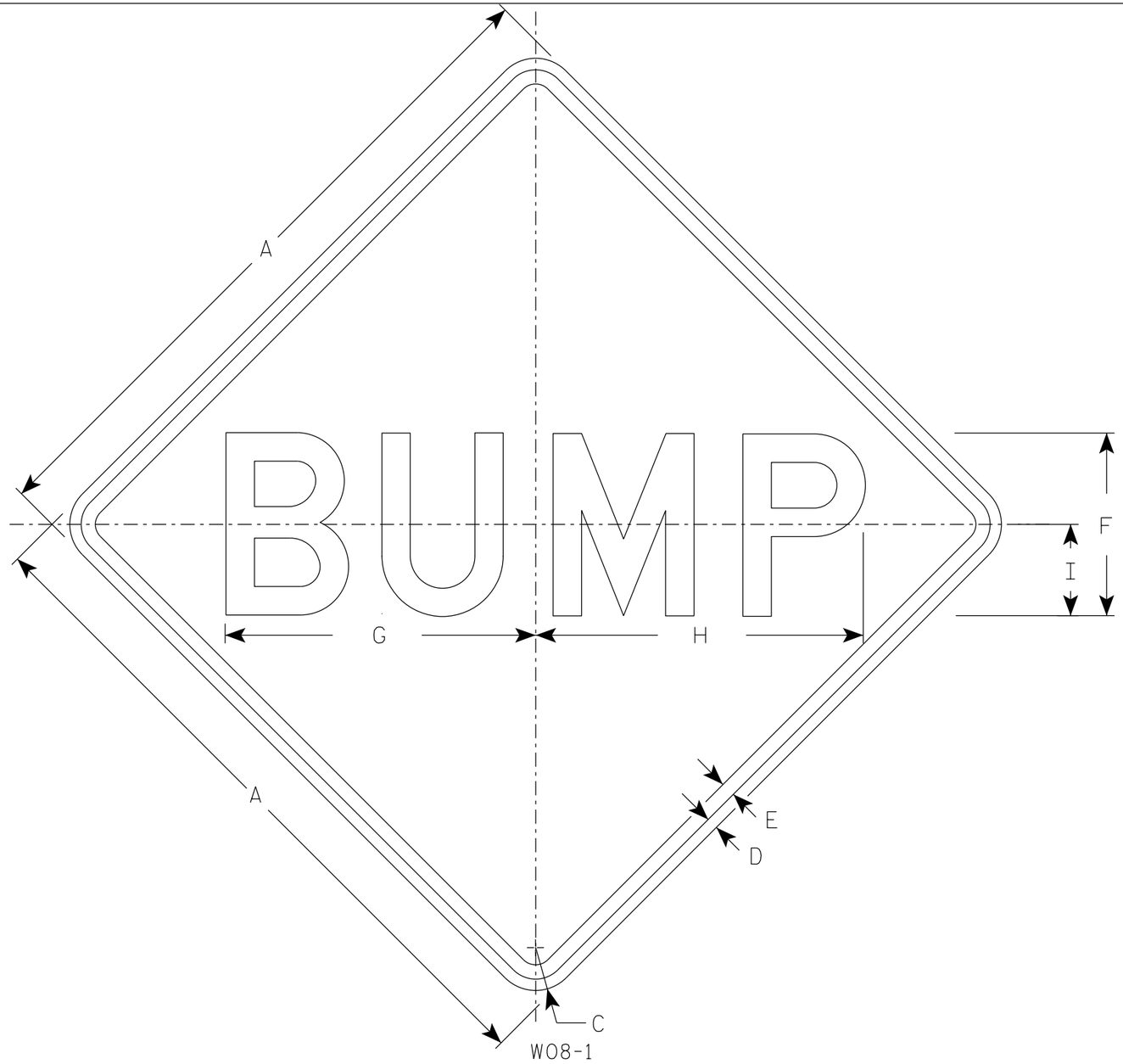

NOTES

1. Sign is Type II - Type F Reflective
2. Color:
   Background - Orange
   Message - Black
3. Message Series - D
4. Corners may be square or rounded when base material is plywood but borders shall be rounded as shown. When base material is metal, the corners and borders shall be rounded.

SIZE	A	B	C	D	E	F	G	H	I	J	K	L	M	N	O	P	Q	R	S	T	U	V	W	X	Y	Z	Area sq. ft.
1	36		2 1/4	5/8	3/4	10	16 7/8	17 7/8	5																		9.0
2S	48		3	3/4	1	12	20 3/8	21 5/8	6																		16.0
2M	48		3	3/4	1	12	20 3/8	21 5/8	6																		16.0
3	48		3	3/4	1	12	20 3/8	21 5/8	6																		16.0
4	48		3	3/4	1	12	20 3/8	21 5/8	6																		16.0
5	48		3	3/4	1	12	20 3/8	21 5/8	6																		16.0

STANDARD SIGN
W08-1

WISCONSIN DEPT OF TRANSPORTATION

APPROVED Matthew R Rauch
for State Traffic Engineer

DATE 1/30/2024 PLATE NO. W08-1.2

PROJECT NO: | HWY: | COUNTY: | SHEET NO: 149 | E

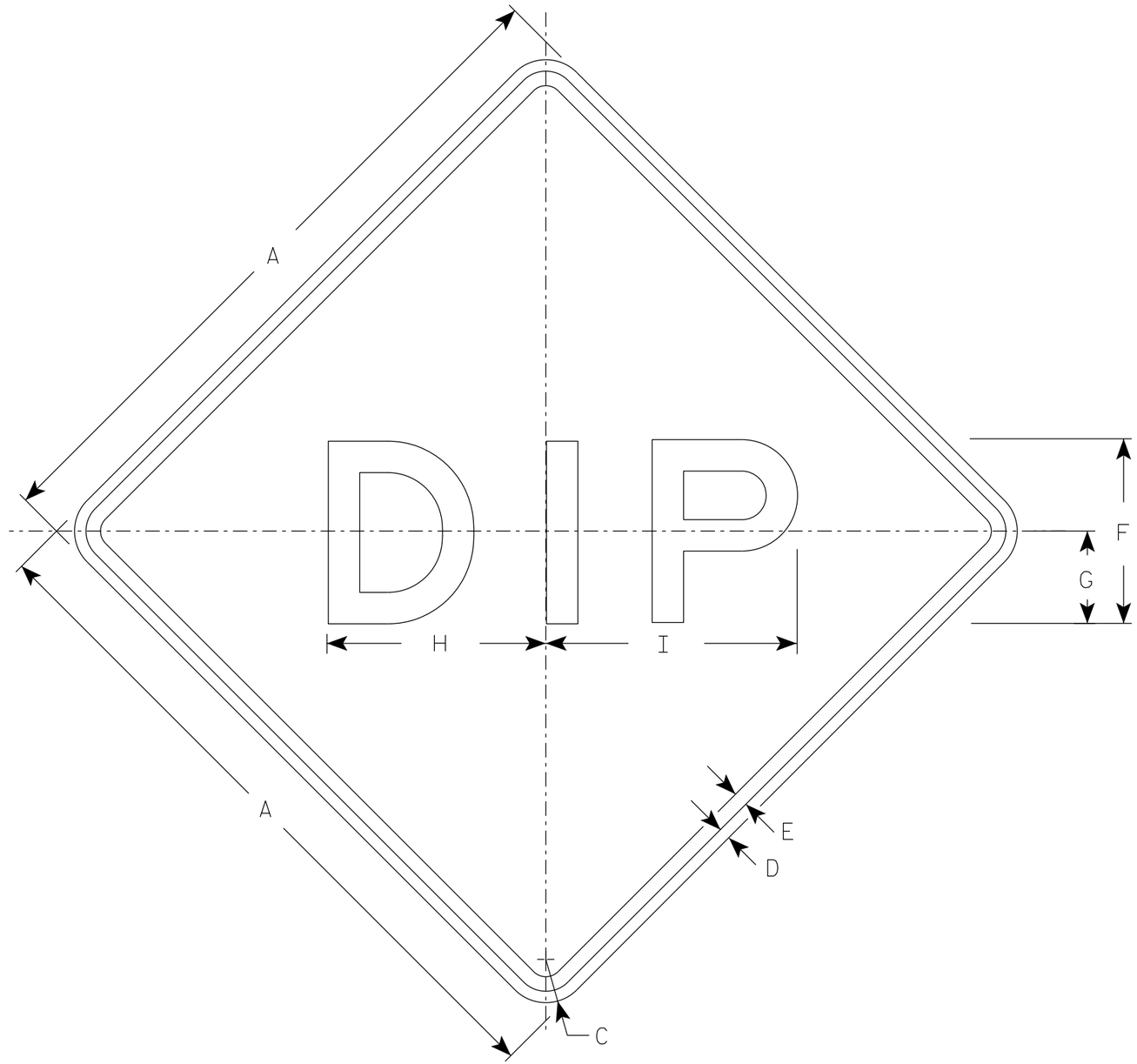

W08-2

NOTES

1. Sign is Type II - Type F Reflective
2. Color:
   Background - Orange
   Message - Black
3. Message Series - E
4. Corners may be square or rounded when base material is plywood but borders shall be rounded as shown. When base material is metal, the corners and borders shall be rounded.

SIZE	A	B	C	D	E	F	G	H	I	J	K	L	M	N	O	P	Q	R	S	T	U	V	W	X	Y	Z	Area sq. ft.
1	36		2 1/4	5/8	3/4	10	5	11 7/8	13 1/2																		9.0
2S	48		3	3/4	1	12	6	14 1/4	16 1/4																		16.0
2M	48		3	3/4	1	12	6	14 1/4	16 1/4																		16.0
3	48		3	3/4	1	12	6	14 1/4	16 1/4																		16.0
4	48		3	3/4	1	12	6	14 1/4	16 1/4																		16.0
5	48		3	3/4	1	12	6	14 1/4	16 1/4																		16.0

STANDARD SIGN
W08-2

WISCONSIN DEPT OF TRANSPORTATION

APPROVED Matthew R Rauch
for State Traffic Engineer

DATE 1/30/2024 PLATE NO. W08-2.3

PROJECT NO: | HWY: | COUNTY: | SHEET NO: 150 | E

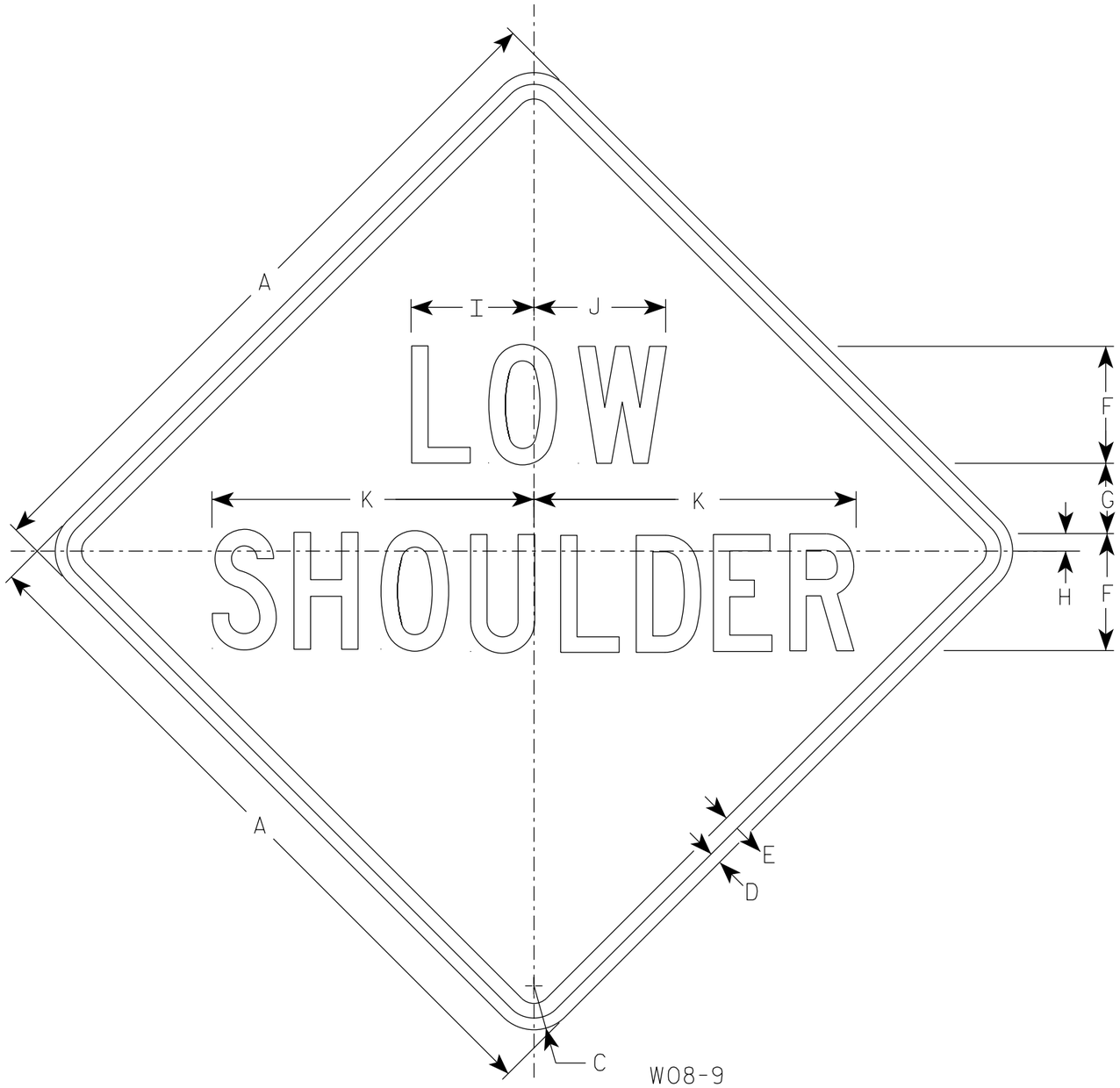

W08-9

NOTES

1. Sign is Type II - Type F Reflective
2. Color:
   Background - Orange
   Message - Black
3. Message Series - C
4. Corners may be square or rounded when base material is plywood but borders shall be rounded as shown. When base material is metal, the corners and borders shall be rounded.

SIZE	A	B	C	D	E	F	G	H	I	J	K	L	M	N	O	P	Q	R	S	T	U	V	W	X	Y	Z	Area sq. ft.
1	36		2 1/4	5/8	3/4	6	3 1/2	1	6 1/4	6 3/4	16 1/2																9.0
2S	48		3	3/4	1	8	5	1 1/4	8 1/4	9	21 7/8																16.0
2M	48		3	3/4	1	8	5	1 1/4	8 1/4	9	21 7/8																16.0
3	48		3	3/4	1	8	5	1 1/4	8 1/4	9	21 7/8																16.0
4	48		3	3/4	1	8	5	1 1/4	8 1/4	9	21 7/8																16.0
5	48		3	3/4	1	8	5	1 1/4	8 1/4	9	21 7/8																16.0

STANDARD SIGN
W08-9

WISCONSIN DEPT OF TRANSPORTATION

APPROVED Matthew R Rauch
For State Traffic Engineer

DATE 1/31/2024 PLATE NO. W08-9.2

PROJECT NO: | HWY: | COUNTY: | SHEET NO: 151 | E

STATE PROJECT NUMBER

7120-00-76

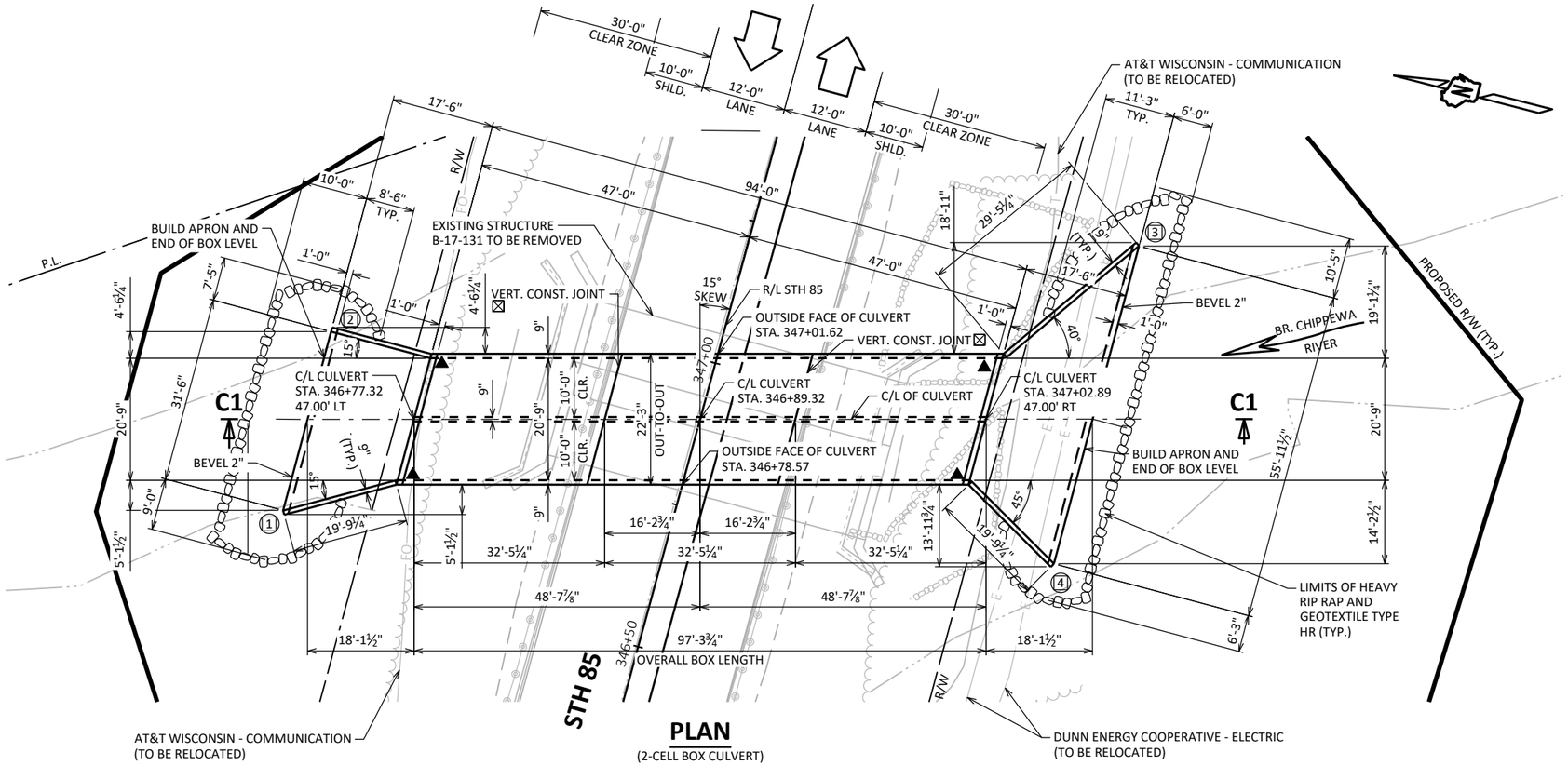

PLAN

(2-CELL BOX CULVERT)

DESIGN DATA

LIVE LOAD:

DESIGN LOADING: HL-93
INVENTORY RATING: RF = 1.44
OPERATING RATING: RF = 1.87
WISCONSIN STANDARD PERMIT VEHICLE (WIS-SPV): 250 (KIPS)

MATERIAL PROPERTIES:

CONCRETE MASONRY ——— f'_c = 3,500 PSI
HIGH STRENGTH BAR STEEL REINFORCEMENT——— f_y = 60,000 PSI

EARTH LOAD:

DESIGN FOR FILL HEIGHT RANGE OF 7 TO 8 FEET.

HYDRAULIC DATA

100-YEAR FREQUENCY:

Q_{100}= 240 C.F.S.
V_{100}= 3.5 F.P.S.
HW_{100}= EL. 746.29
WATERWAY AREA = 69 SQ. FT.
DRAINAGE AREA = 4.61 SQ. MI.
ROADWAY OVERTOPPING = N/A
SCOUR CRITICAL CODE = 8

2-YEAR FREQUENCY:

Q_2= 73 C.F.S.
V_2= 1.6 F.P.S.
HW_2= EL. 744.19

NOTE:

IN THE BACK WATER OF THE CHIPPEWA RIVER-HW100 IS ABOUT EL. 757.70 PER DUNN CO. FIRM 55033C0493C EFFECTIVE 12/02/2011.

TRAFFIC DATA

A.D.T. (2045)= 4,230
R.D.S. = 60 MPH

LEGEND

(#) INDICATES WING NUMBER.

☒ 18" MIN. WIDTH RUBBERIZED MEMBRANE WATERPROOFING UP WALLS AND ACROSS TOP SLAB.

✳ GIVEN ELEVATION IS THE CONSTRUCTION INVERT. THE EFFECTIVE INVERT IS EXPECTED TO BE 1.0 FT HIGHER AFTER THE STREAMBED SILTS IN.

▲ SEE WORKING POINT CORNER DETAILS ON SHEET 6.

LIST OF DRAWINGS:

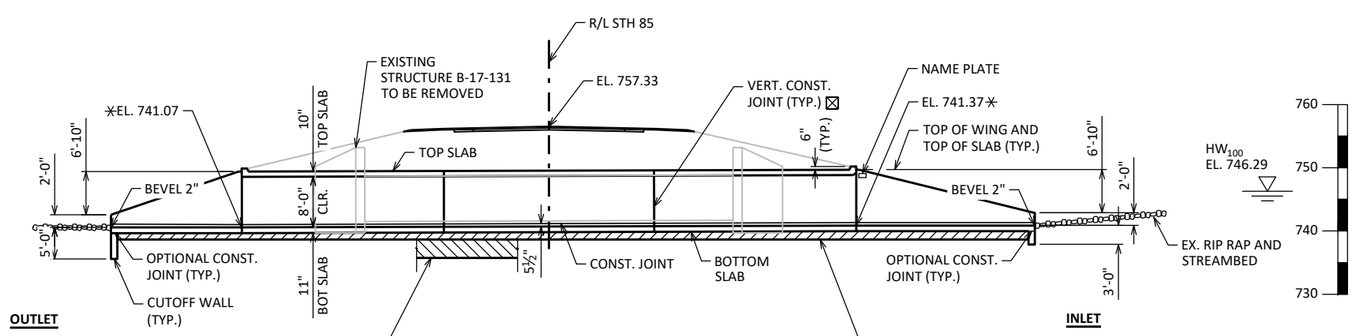

SECTION C1

(2-CELL BOX CULVERT, LOOKING EAST)

STRUCTURE DESIGN CONTACTS:

DESIGN CONSULTANT CONTACT:
KEITH BEHREND (608) 251-4843

BUREAU OF STRUCTURES CONTACT:
AARON BONK (608) 261-0261

WISCONSIN
KEITH R BEHREND
E-42073
VERONA WI
PROFESSIONAL ENGINEER
Keith Behrend
9/24/2025

NO.	DATE	REVISION	BY

STRAND ASSOCIATES®
MADISON, WISCONSIN 53715
(608)-251-4843
(608) 251-8655 FAX
WWW.STRAND.COM

STATE OF WISCONSIN
DEPARTMENT OF TRANSPORTATION

ACCEPTED JLR 11/10/25
CHIEF STRUCTURES DESIGN ENGINEER DATE

STRUCTURE B-17-370

STH 85 OVER BR CHIPPEWA RIVER

COUNTY	TOWN
DUNN	ROCK CREEK

DESIGN SPEC.
AASHTO LRFD BRIDGE DESIGN SPECIFICATION

DESIGNED BY	DESIGNED CK'D	DRAWN BY	PLANS CK'D
IJB	KRB	ZHC	KRB

GENERAL PLAN

SHEET 1 OF 9
152

I.D. DATE:

8

8

STATE PROJECT NUMBER
7120-00-76

TOTAL ESTIMATED QUANTITIES

BID NUMBER	BID ITEM	UNIT	TOTAL
203.0220	REMOVING STRUCTURE B-17-131	EACH	1
206.2001	EXCAVATION FOR STRUCTURES CULVERTS B-17-370	EACH	1
210.2500	BACKFILL STRUCTURE TYPE B	TON	2,000
311.0110	BREAKER RUN	TON	304
504.0100	CONCRETE MASONRY CULVERTS	CY	266
505.0400	BAR STEEL REINFORCEMENT HS STRUCTURES	LB	26,780
505.0600	BAR STEEL REINFORCEMENT HS COATED STRUCTURES	LB	3,360
516.0500	RUBBERIZED MEMBRANE WATERPROOFING	SY	34
606.0300	RIPRAP HEAVY	CY	87
645.0105	GEOTEXTILE TYPE C	SY	456
645.0120	GEOTEXTILE TYPE HR	SY	180
	NON-BID ITEMS		
	NAME PLATE	EACH	1
	FILLER	SIZE	3/4"

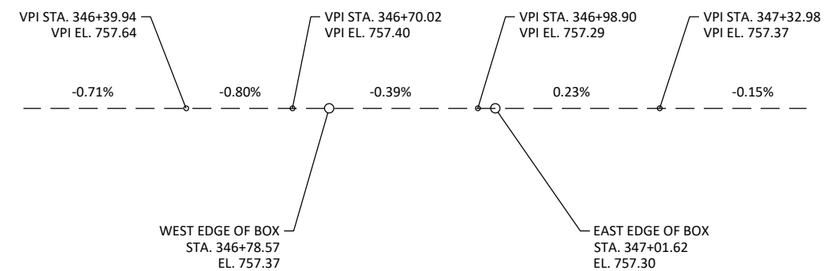

PROFILE GRADE LINE

NOTE: PROFILE IS EQUAL TO EXISTING PROFILE PLUS 2.75" OVERLAY.

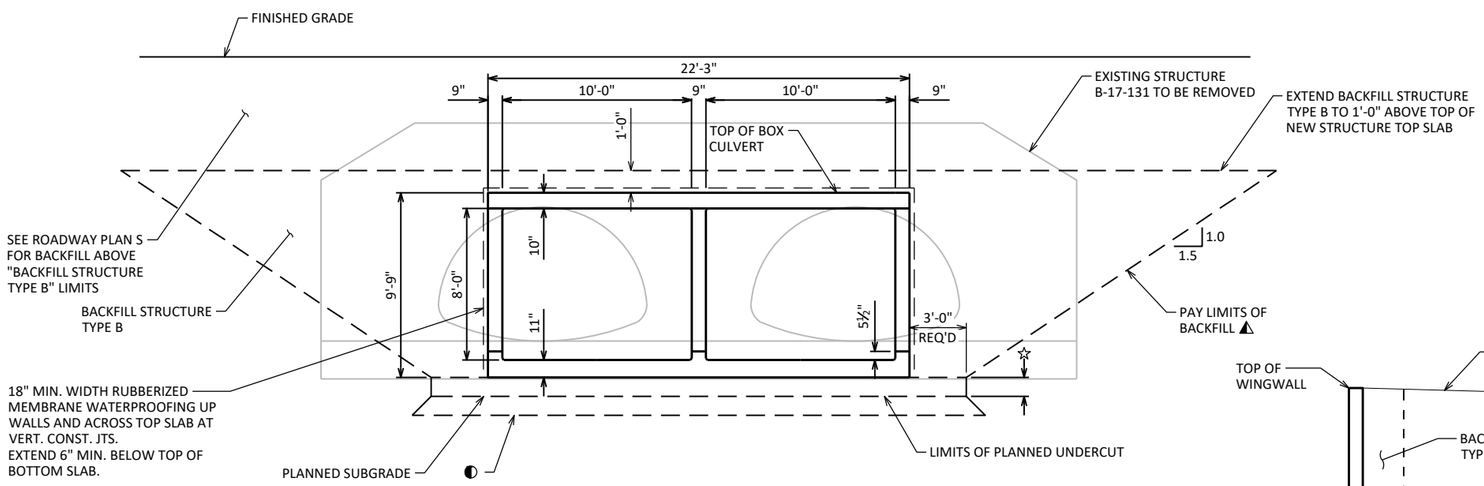

TYPICAL SECTION THRU BOX CULVERT

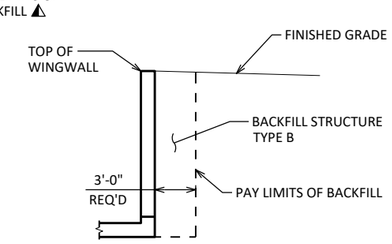

TYPICAL SECTION THRU BOX CULVERT WINGWALL

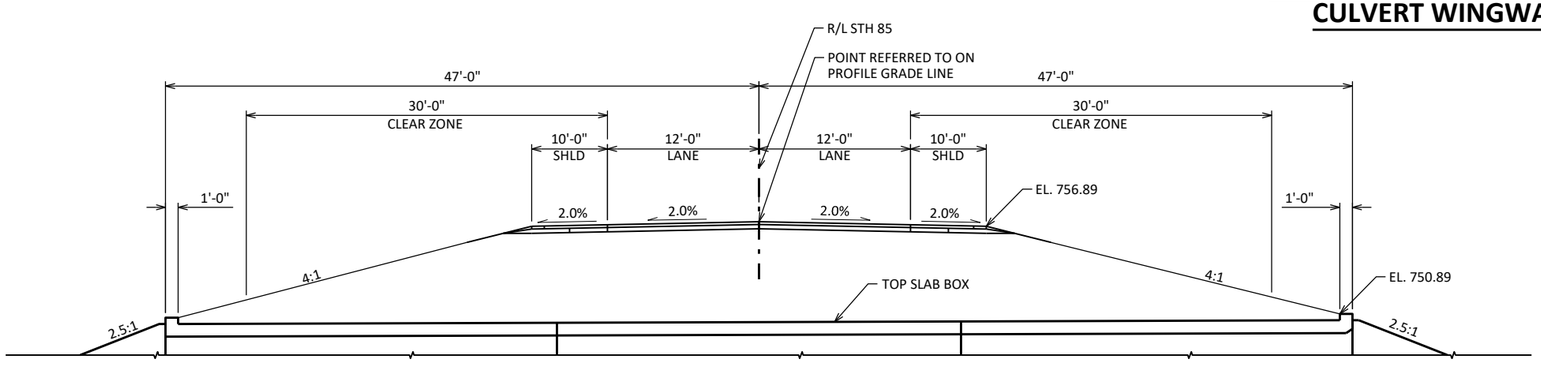

CROSS SECTION THRU ROADWAY ON BOX CULVERT

(LOOKING EAST, NORMAL TO ROAD)

GENERAL NOTES

DRAWINGS SHALL NOT BE SCALED.

BAR STEEL REINFORCEMENT SHALL BE EMBEDDED 2" CLEAR UNLESS OTHERWISE SHOWN OR NOTED.

THE FIRST OR FIRST TWO DIGITS OF THE BAR MARK SIGNIFIES THE BAR SIZE.

BEVEL EXPOSED EDGES OF CONCRETE ¾" UNLESS OTHERWISE NOTED.

THE UPPER LIMITS OF "EXCAVATION FOR STRUCTURES CULVERTS B-17-370" SHALL BE THE EXISTING GROUNDLINE.

THE ALTERNATE CUT-OFF WALL MAY BE USED IN LIEU OF THE CAST-IN-PLACE CONCRETE CUT-OFF WALL. PAYMENT SHALL BE BASED ON CONCRETE CUT-OFF WALLS.

THE CONCRETE IN THE CUT-OFF WALL MAY BE PLACED UNDERWATER IF THE EXCAVATION CANNOT BE DEWATERED.

THE CONTRACTOR MAY FURNISH A PRECAST CONCRETE BOX CULVERT IN LIEU OF THE CAST-IN-PLACE BOX CULVERT WITH THE ACCEPTANCE OF THE SHOP DRAWINGS BY THE STRUCTURES DESIGN SECTION. THE PRECAST CONCRETE BOX CULVERT SHALL CONFORM TO PRECAST DETAILS IN CHAPTER 36 STANDARDS OF THE CURRENT WISCONSIN DOT BRIDGE MANUAL AND SPECIAL PROVISIONS. PAYMENT FOR THE PRECAST CULVERT SYSTEM SHALL BE BASED ON THE QUANTITIES AND PRICES BID FOR THE ITEMS LISTED IN THE "TOTAL ESTIMATED QUANTITIES" FOR THE CAST-IN-PLACE CULVERT SYSTEM. ADDITIONAL ITEMS REQUIRED FOR THE PRECAST SYSTEM SHALL BE INCIDENTAL TO "CONCRETE MASONRY CULVERTS".

THE BACKFILL QUANTITIES ARE BASED ON THE PAY LIMITS SHOWN ON THE PLANS AND MAY NOT REFLECT ACTUAL PLACED QUANTITIES. "BACKFILL STRUCTURE TYPE B" REQUIRED ON THE BOX CULVERT SIDES AND BEHIND APRON WINGS FOR 3 FEET. BACKFILL PLACED BEYOND PAY LIMITS OR EXCEEDING PLAN QUANTITIES SHALL BE INCIDENTAL TO EXCAVATION FOR STRUCTURES.

IN LIEU OF USING BREAKER RUN FOR THE BOX CONSTRUCTION PLATFORM, THE CONTRACTOR MAY ELECT TO SUBSTITUTE COARSE AGGREGATE AASHTO NO. 67 OR AASHTO NO. 4 IN ACCORDANCE WITH STANDARD SPEC 310 AND 604, RESPECTIVELY, SELECT CRUSHED MATERIAL OR OTHER GRANULAR MATERIAL AS APPROVED BY THE ENGINEER. THE CONTRACTOR IS RESPONSIBLE FOR BASE STABILITY WITH ANY SUBSTITUTED MATERIAL. THE REGION GEOTECHNICAL ENGINEER MAY BE CONTACTED TO DETERMINE IF "OTHER GRANULAR MATERIAL" IS ACCEPTABLE.

PRECAST ELEMENTS SHALL BE PLACED ON A BEDDING OF "BACKFILL STRUCTURE TYPE B" OF 6" MINIMUM DEPTH AND AS APPROVED BY THE ENGINEER.

LEGEND

◭ BACKFILL PAY LIMITS. BACKFILL BEYOND BACKFILL PAY LIMITS SHALL BE INCIDENTAL TO EXCAVATION FOR STRUCTURES. LIMITS OF EXCAVATION SHALL BE DETERMINED BY THE CONTRACTOR.

☆ UNDER CUT 1'-0". EXCAVATION FOR UNDER CUT TO BE INCLUDED IN EXCAVATION FOR STRUCTURES. PLACE "GEOTEXTILE TYPE C" AND BACKFILL WITH "BREAKER RUN" AS SHOWN.

◐ EXCAVATION BELOW SUBGRADE (EBS) MAY BE REQUIRED BELOW THE BOX AND/OR APRONS WHERE SOFT, LOOSE, OR OTHERWISE UNSUITABLE MATERIALS ARE PRESENT AT THE PLANNED SUBGRADE. WHERE EBS IS REQUIRED, EXTEND EXCAVATION OUT ONE FOOT LATERALLY FOR EACH FOOT REMOVED BELOW THE STRUCTURE, ON EITHER SIDE OF THE BOX AND/OR APRONS. COORDINATE SUITABILITY OF THE EXISTING SOILS AT THE PLANNED SUBGRADE WITH ENGINEER. THE REGION GEOTECHNICAL ENGINEER MAY BE CONTACTED IF NEEDED TO ASSIST IN THE SUITABILITY DETERMINATION. EBS APPROXIMATELY 1'-0" DEEP FOR APPROXIMATELY ¼ THE TOTAL LENGTH OF THE STRUCTURE. EXCAVATION FOR EBS TO BE PAID FOR AS EXTRA WORK UNDER EXCAVATION FOR STRUCTURES BID ITEM. PLACE GEOTEXTILE TYPE 'C' AND BACKFILL WITH BREAKER RUN.

8

8

NO.	DATE	REVISION	BY

STATE OF WISCONSIN
DEPARTMENT OF TRANSPORTATION

STRUCTURE B-17-370

DRAWN BY ZHC | PLANS CK'D KRB

CROSS SECTION, QUANTITIES, NOTES & DETAILS

SHEET 2

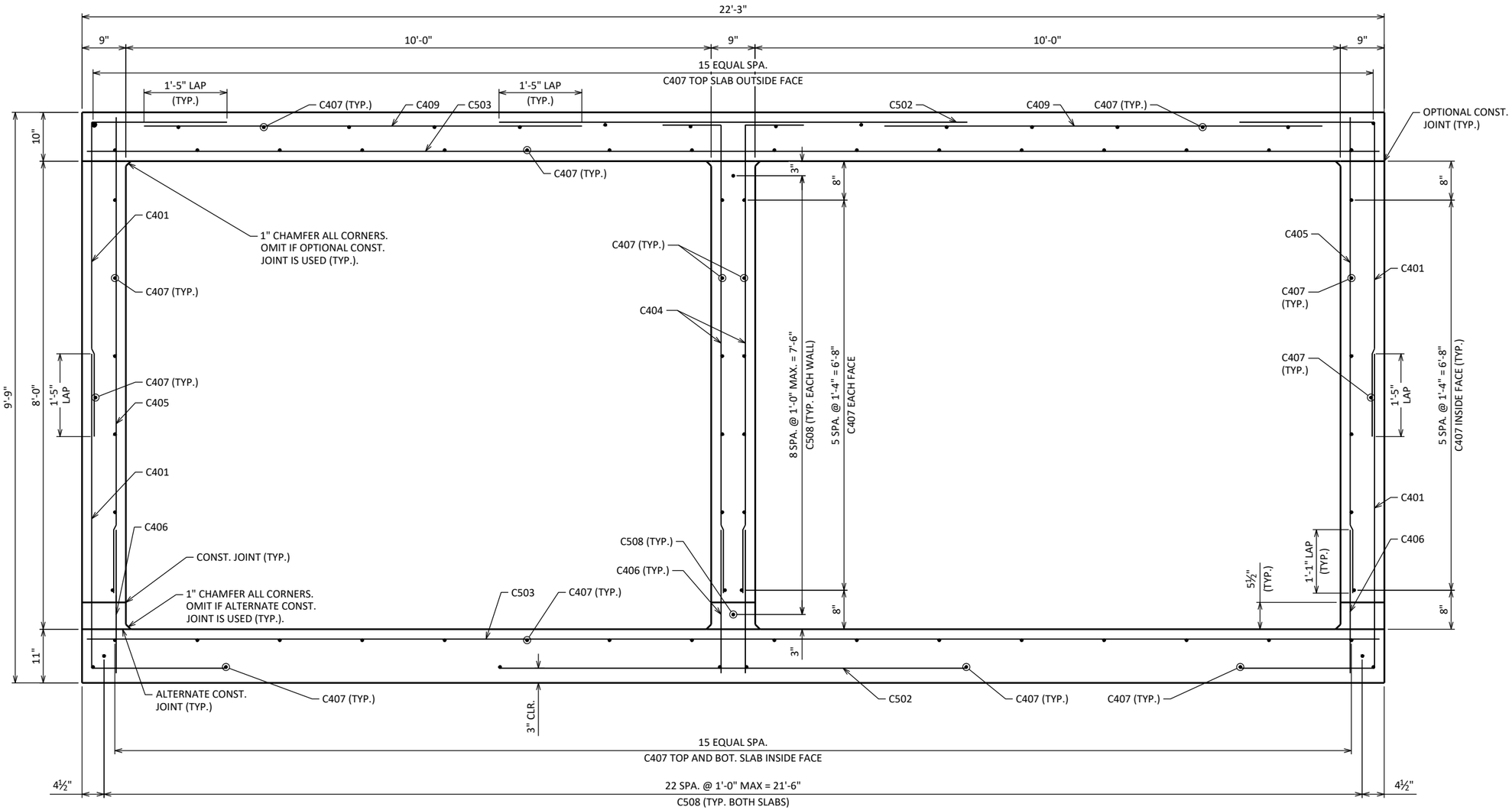

TYPICAL SECTION THRU BOX

NOTE: PROVIDE C508 BARS ACROSS CONST. JOINT IN ALL WALLS/SLABS PER BOX CONST. JOINT DETAIL SHOWN ON SHEET 8.

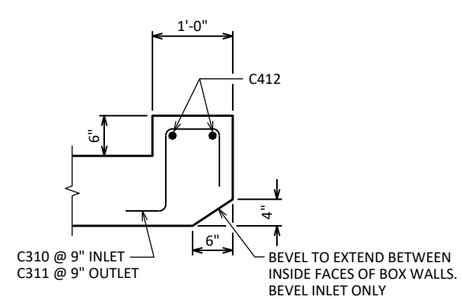

TYPICAL SECTION THRU HEADERS

8

8

NO.	DATE	REVISION	BY

STATE OF WISCONSIN
DEPARTMENT OF TRANSPORTATION

STRUCTURE B-17-370

DRAWN BY ZHC | PLANS CK'D KRB

BOX DETAILS

SHEET 3
154

STATE PROJECT NUMBER
7120-00-76

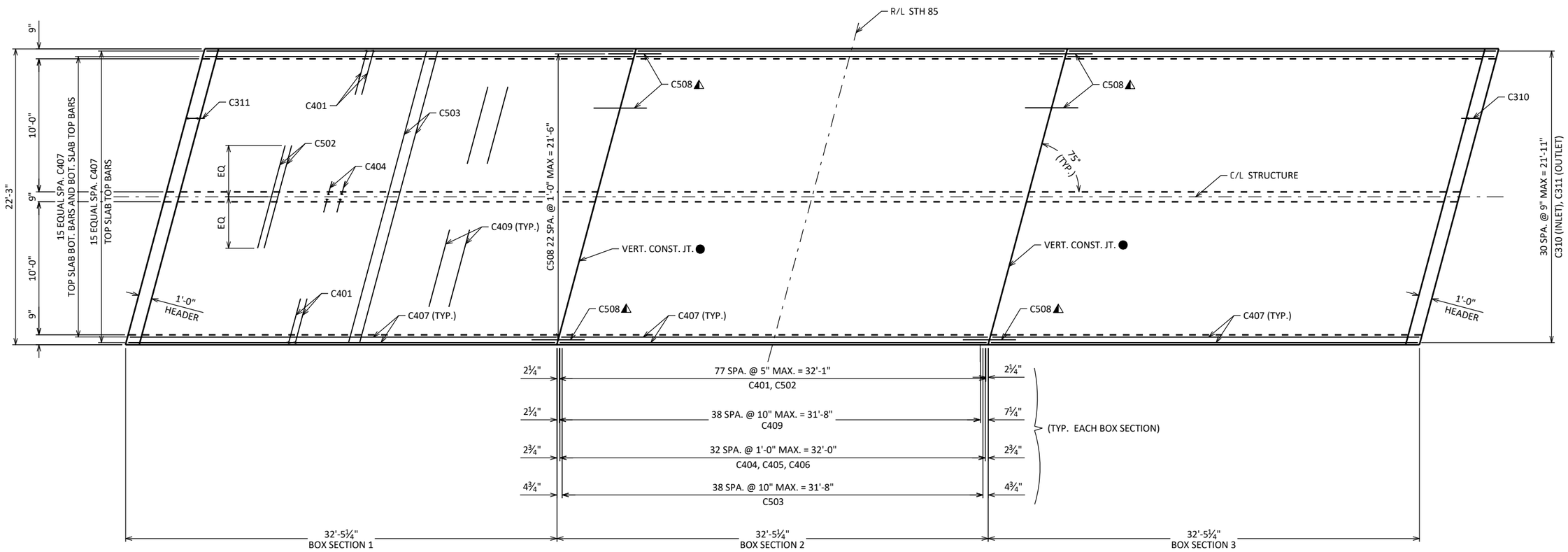

8

8

PLAN

LEGEND

● 18" MIN. WIDTH RUBBERIZED MEMBRANE WATERPROOFING UP WALLS AND ACROSS TOP SLAB.

⚠ PROVIDE C508 BARS ACROSS CONST. JOINT IN ALL WALLS AND SLABS PER BOX CONST. JOINT DETAIL SHOWN ON SHEET 8.

NO.	DATE	REVISION	BY

STATE OF WISCONSIN
DEPARTMENT OF TRANSPORTATION

STRUCTURE B-17-370

DRAWN BY ZHC | PLANS CK'D KRB

REINFORCEMENT LAYOUT

SHEET 4

STATE PROJECT NUMBER
7120-00-76

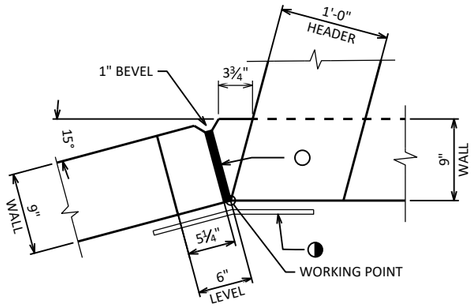

CORNER "A"

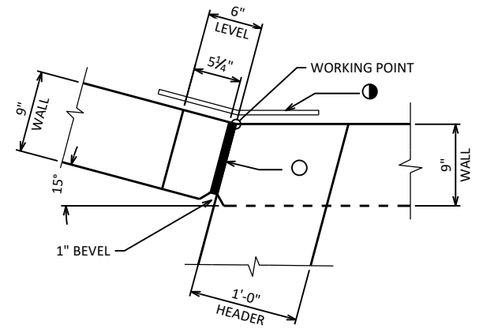

CORNER "B"

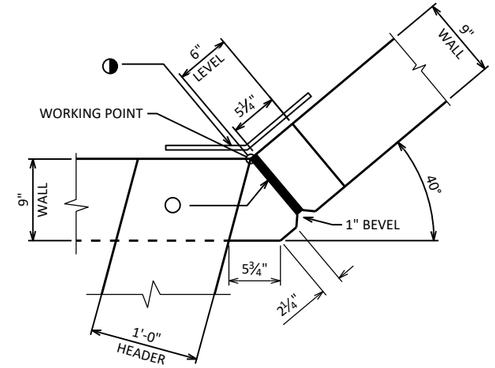

CORNER "C"

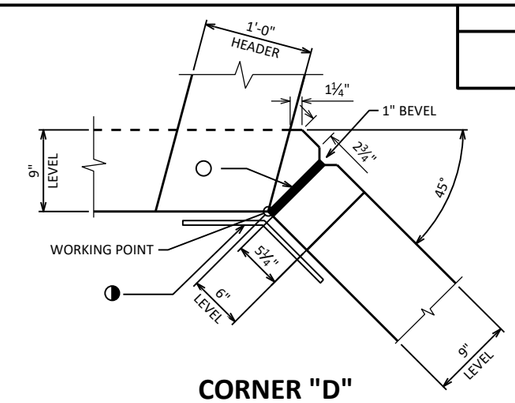

CORNER "D"

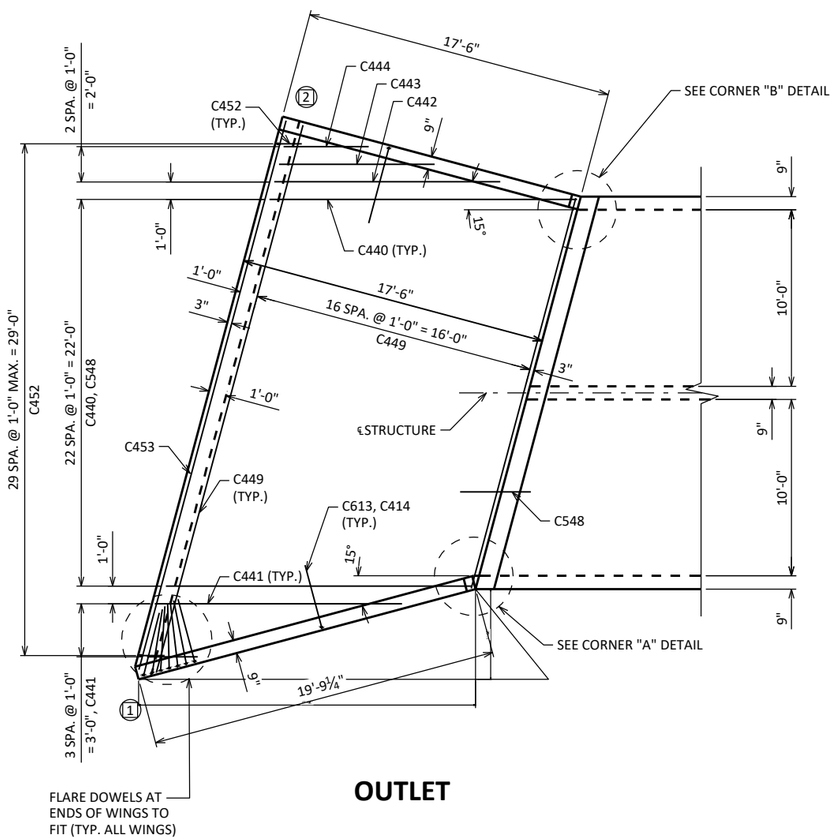

OUTLET

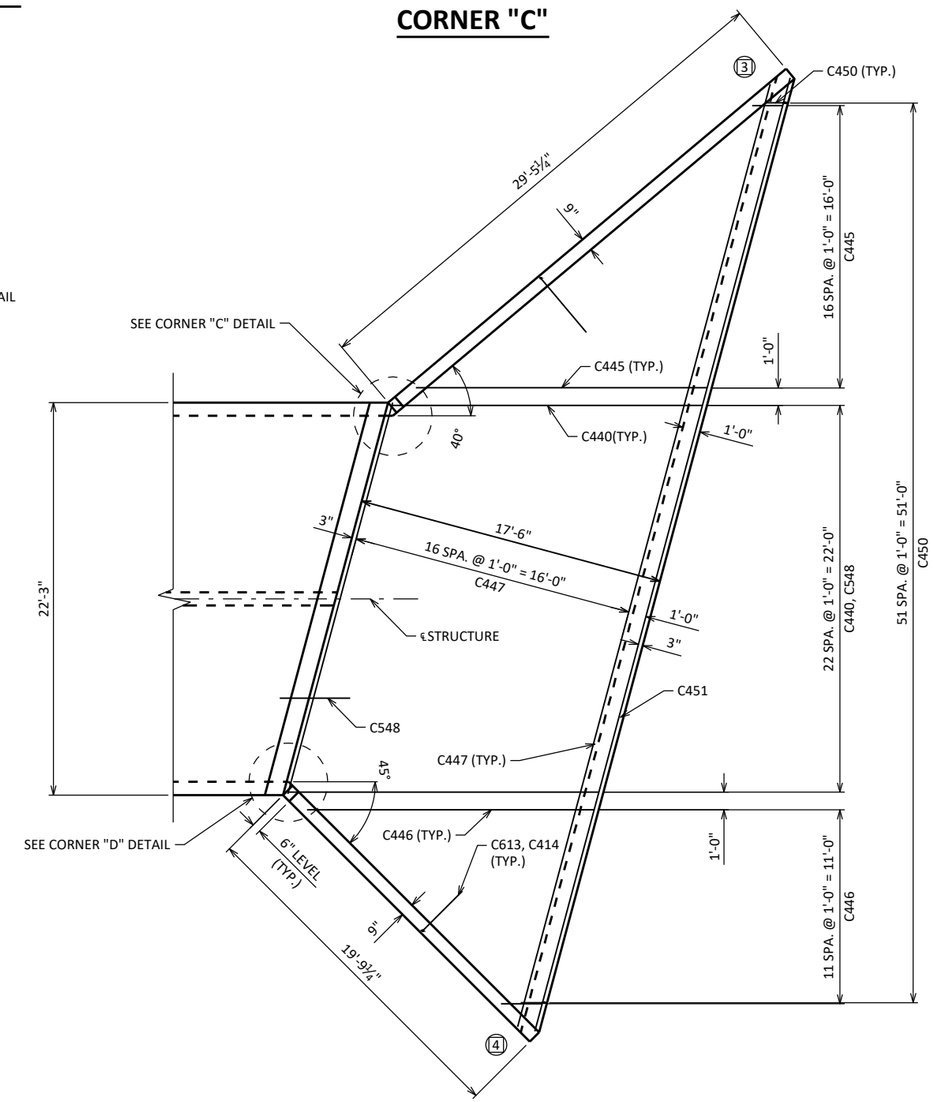

INLET

PLAN OF APRONS

LEGEND

- ○ 3/4" FILLER TO EXTEND FROM HORIZONTAL CONSTRUCTION JOINT TO TOP OF WING.
- ◑ RUBBERIZED MEMBRANE WATERPROOFING TO EXTEND FROM HORIZONTAL CONSTRUCTION JOINT TO TOP OF WALL.
- (#) INDICATES WING NUMBER.

8

8

NO.	DATE	REVISION	BY

STATE OF WISCONSIN
DEPARTMENT OF TRANSPORTATION

STRUCTURE B-17-370

DRAWN BY ZHC | PLANS CK'D KRB

APRON PLAN

SHEET 5

STATE PROJECT NUMBER

1120-00-76

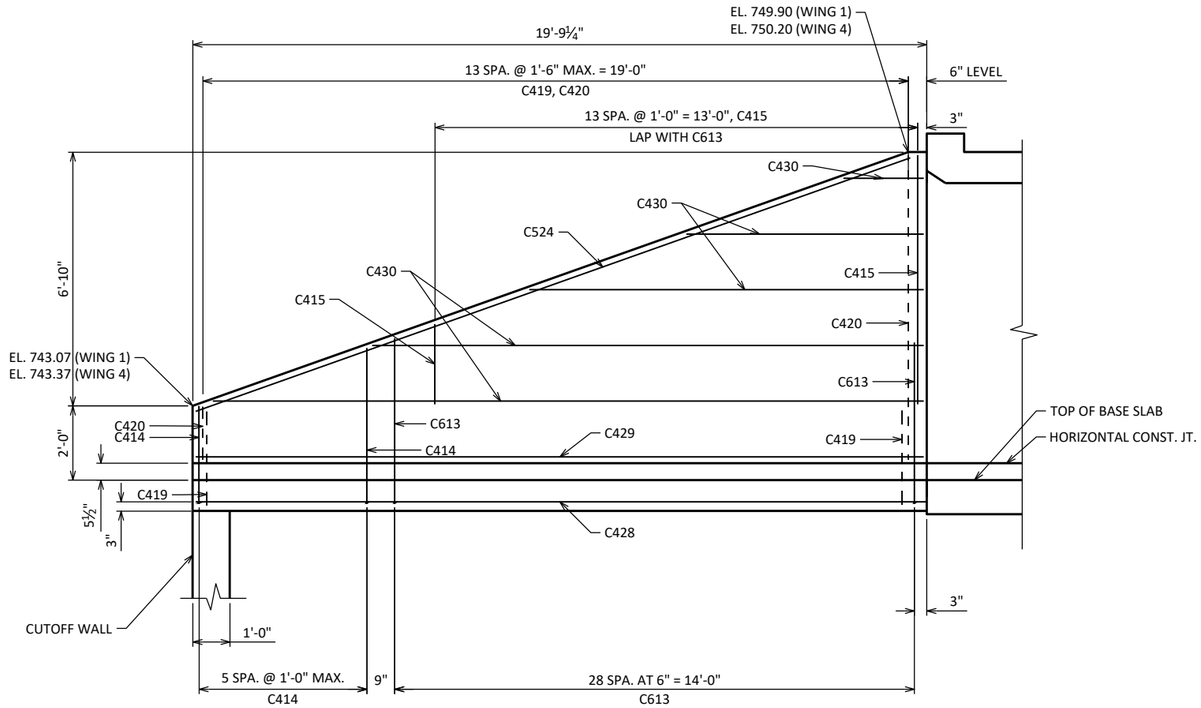

ELEVATION - WINGS 1 AND 4

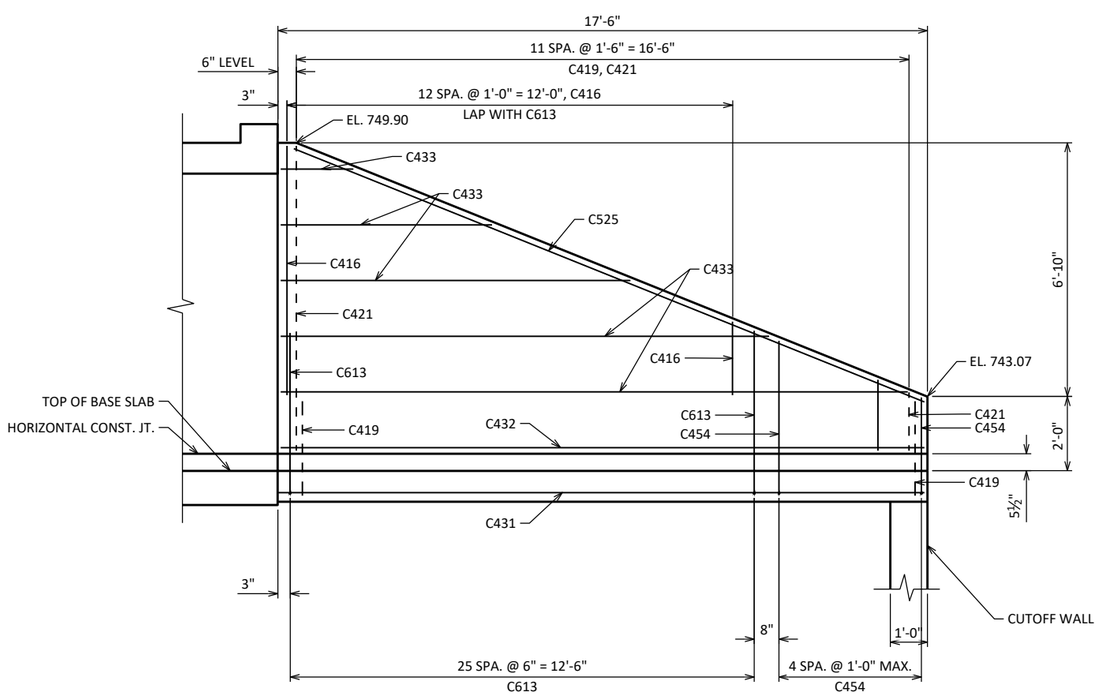

ELEVATION - WING 2

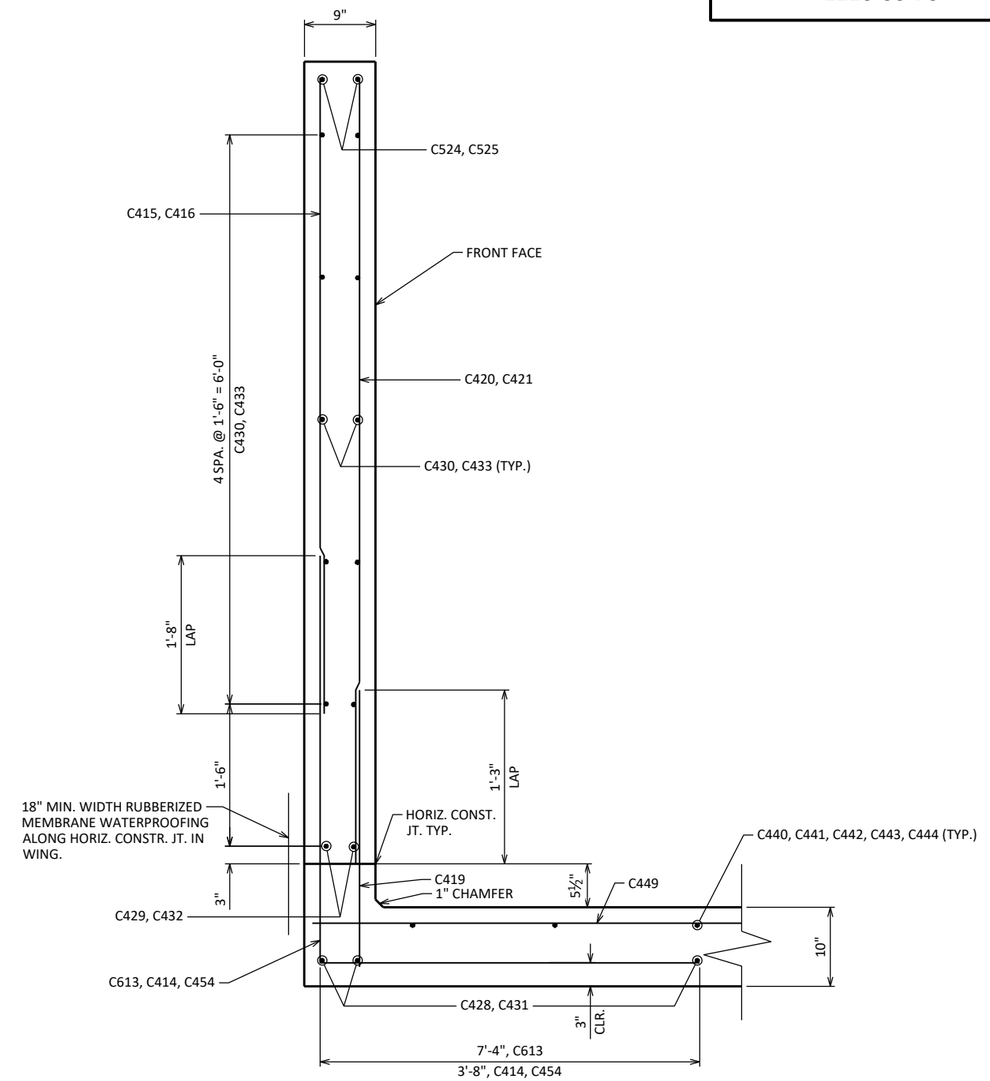

TYP. SECTION THRU WINGS 1, 2, & 4

8

8

NO.	DATE	REVISION	BY

STATE OF WISCONSIN
DEPARTMENT OF TRANSPORTATION

STRUCTURE B-17-370

DRAWN BY ZHC | PLANS CK'D KRB

WINGS 1, 2, & 4 DETAILS

SHEET 6

STATE PROJECT NUMBER

7120-00-76

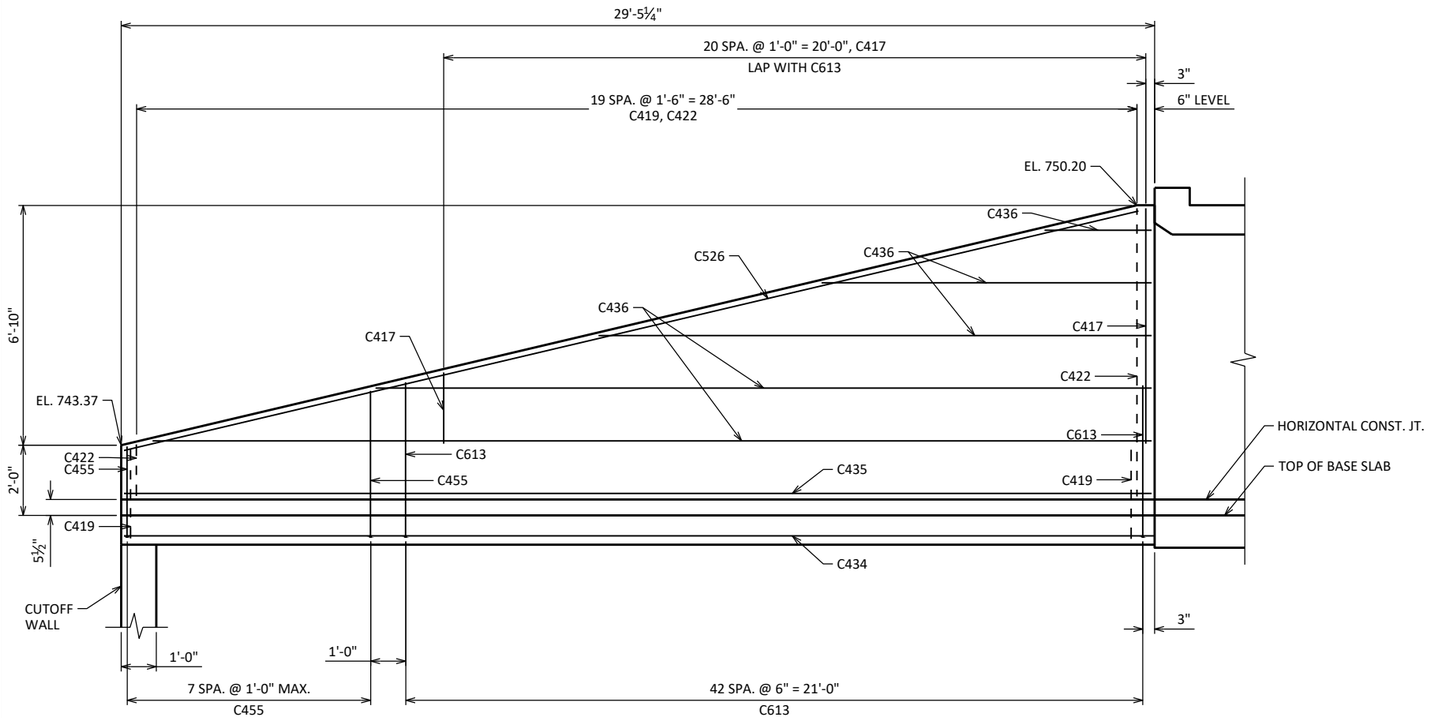

ELEVATION - WING 3

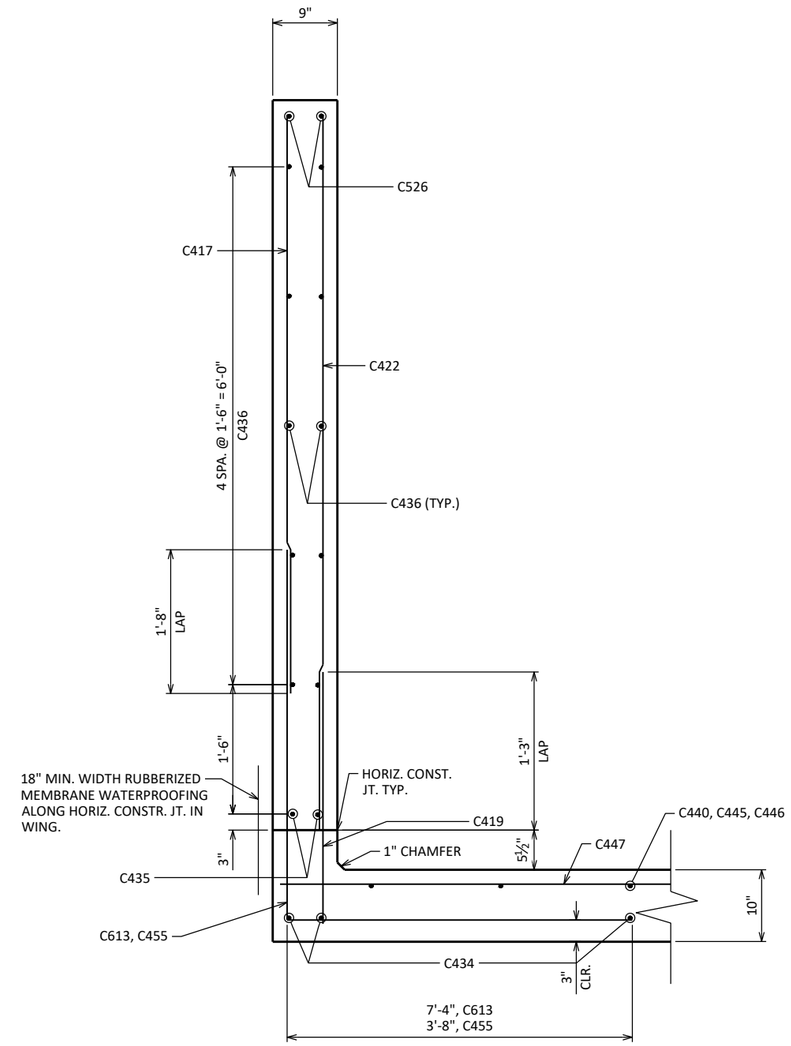

TYP. SECTION THRU WING 3

8

8

NO.	DATE	REVISION	BY

STATE OF WISCONSIN
DEPARTMENT OF TRANSPORTATION

STRUCTURE B-17-370

DRAWN BY ZHC | PLANS CK'D KRB

WING 3 DETAIL

SHEET 7

STATE PROJECT NUMBER
7120-00-76

BOX CULVERT BILL OF BARS UNCOATED: 26,780 LBS COATED: 3,360 LBS

	BAR MARK	NO. REQ'D	LENGTH	BENT	COAT	BAR SERIES	LOCATION
	C401	936	7'-8"	X			BOX OUTSIDE CORNERS
	C502	468	8'-0"				BOX SLAB TRANSVERSE TOP AND BOT.
	C503	234	22'-8"				BOX SLAB TRANSVERSE TOP AND BOT.
	C404	198	9'-1"	X			BOX INT. WALL VERT.
	C405	198	8'-2"				BOX EXT. WALL VERT.
	C406	396	2'-5"				BOX WALL DOWELS
	C407	246	32'-1"				BOX SLAB AND WALL T&S LONG.
	C508	146	4'-0"				BOX CONST. JOINT
	C409	234	7'-11"				BOX TOP SLAB EXT. FACE TRANSVERSE T&S.
	C310	31	2'-7"	X			BOX HEADER INLET
	C311	31	2'-11"	X			BOX HEADER OUTLET
	C412	4	22'-8"				BOX HEADER INLET AND OUTLET
	C613	127	11'-6"	X	X		ALL WINGS VERT. B.F.
*	C414	12	6'-11"	X	X	X	WINGS 1 & 4 VERT. B.F.
*	C415	28	4'-4"		X	X	WINGS 1 & 4 VERT. B.F.
*	C416	13	4'-3"		X	X	WING 2 VERT. B.F.
*	C417	21	4'-4"		X	X	WING 3 VERT. B.F.
	C419	60	2'-4"		X		ALL WINGS VERT. F.F.
*	C420	28	4'-10"		X	X	WINGS 1 & 4 VERT. F.F.
*	C421	12	4'-10"		X	X	WING 2 VERT. F.F.
*	C422	20	4'-10"		X	X	WING 3 VERT. F.F.
	C524	4	20'-5"		X		WINGS 1 & 4 HORIZ. TOP
	C525	2	18'-3"		X		WING 2 HORIZ. TOP
	C526	2	29'-8"		X		WING 3 HORIZ. TOP
	C428	6	19'-7"				WINGS 1 & 4 HORIZ. APRON
	C429	4	19'-5"		X		WINGS 1 & 4 HORIZ. E.F.
*	C430	20	10'-1"		X	X	WINGS 1 & 4 HORIZ. E.F.
	C431	3	17'-4"				WING 2 HORIZ. APRON
	C432	2	17'-2"		X		WING 2 HORIZ. E.F
*	C433	10	8'-11"		X	X	WING 2 HORIZ. E.F.
	C434	3	29'-3"				WING 3 HORIZ. APRON
	C435	2	29'-1"		X		WING 3 HORIZ. E.F
*	C436	10	14'-9"		X	X	WING 3 HORIZ. E.F.
	C440	46	17'-7"				APRON SLAB INLET AND OUTLET
*	C441	4	9'-1"			X	APRON SLAB OUTLET WING 1
	C442	1	13'-9"				APRON SLAB OUTLET WING 2
	C443	1	9'-9"				APRON SLAB OUTLET WING 2
	C444	1	5'-9"				APRON SLAB OUTLET WING 2
*	C445	17	9'-6"			X	APRON SLAB OUTLET WING 3
*	C446	12	9'-7"			X	APRON SLAB OUTLET WING 4
*	C447	17	39'-2"			X	APRON SLAB INLET
	C548	46	4'-0"				APRON CONST. JOINT
*	C449	17	27'-6"			X	APRON SLAB OUTLET
	C450	52	3'-1"	X			CUT OFF WALL INLET
	C451	8	29'-0"				CUT OFF WALL INLET
	C452	30	5'-1"	X			CUT OFF WALL OUTLET
	C453	6	32'-3"				CUT OFF WALL OUTLET
*	C454	5	6'-10"	X	X	X	WING 2 VERT. B.F.
*	C455	8	6'-11"	X	X	X	WING 3 VERT. B.F.

BENDING DIMENSIONS ARE OUT-TO-OUT OF BARS.

* BAR WITH SERIES. LENGTH SHOWN FOR BAR SERIES IS AN AVERAGE LENGTH AND SHOULD ONLY BE USED FOR BAR WEIGHT CALCULATIONS. SEE BAR SERIES TABLE FOR ACTUAL LENGTHS.

BAR SERIES TABLE

BAR MARK	NO. REQ'D	LENGTH
C414	2 SERIES OF 6	6'-1" TO 7'-8"
C415	2 SERIES OF 14	2'-0" TO 6'-8"
C416	1 SERIES OF 13	1'-10" TO 6'-8"
C417	1 SERIES OF 21	1'-11" TO 6'-8"
C420	2 SERIES OF 14	1'-5" TO 8'-2"
C421	1 SERIES OF 12	1'-6" TO 8'-2"
C422	1 SERIES OF 20	1'-6" TO 8'-2"
C430	4 SERIES OF 5	1'-7" TO 18'-6"
C433	2 SERIES OF 5	1'-5" TO 16'-4"
C436	2 SERIES OF 5	1'-5" TO 28'-0"
C441	1 SERIES OF 4	3'-10" TO 14'-3"
C445	1 SERIES OF 17	2'-1" TO 16'-10"
C446	1 SERIES OF 12	2'-7" TO 16'-7"
C447	1 SERIES OF 17	22'-11" TO 55'-4"
C449	1 SERIES OF 17	22'-10" TO 32'-2"
C454	1 SERIES OF 5	6'-1" TO 7'-7"
C455	1 SERIES OF 8	6'-1" TO 7'-9"

BUNDLE AND TAG EACH SERIES SEPARATELY.

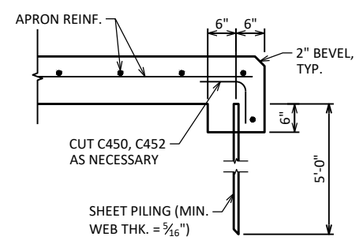

ALTERNATE CUT-OFF WALL

THE ABOVE ALTERNATIVE MAY BE USED IN LIEU OF CAST-IN-PLACE CONCRETE CUT-OFF WALLS. PAYMENT WILL BE BASED ON THE CONCRETE CUT-OFF WALLS.

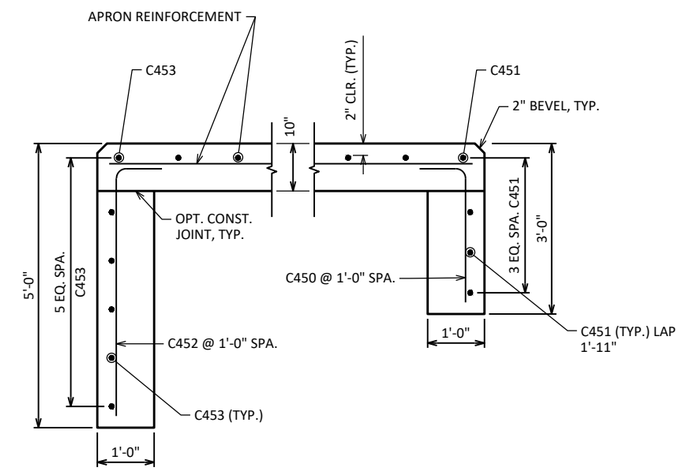

CUT-OFF WALLS

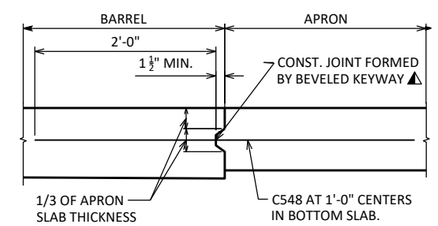

APRON CONNECTION DETAIL

LEGEND

IN LIEU OF CONSTRUCTION JOINTS IN THE BOTTOM SLAB, THE CONTRACTOR MAY USE 2" DEEP SAW CUTS WITHIN 12 HOURS AFTER POURING. #5 BARS 4'-0" AT 1'-0" CENTERS REQUIRED.

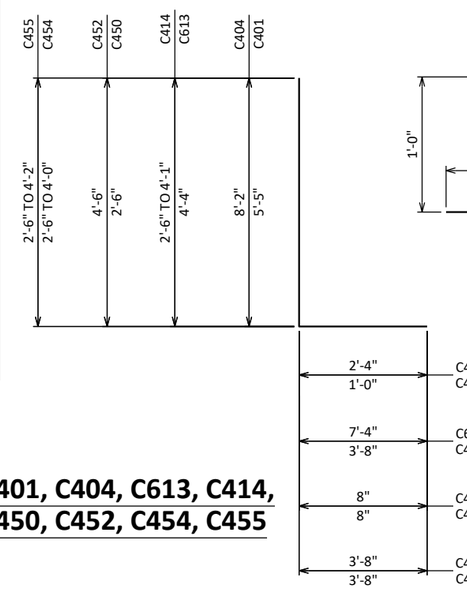

C401, C404, C613, C414, C450, C452, C454, C455

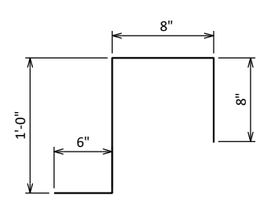

C310

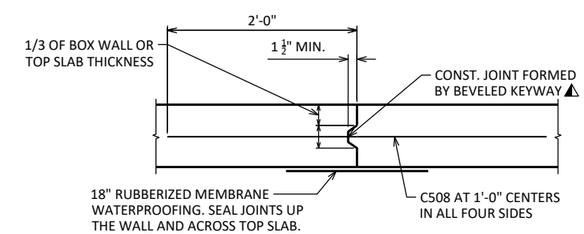

BOX CONSTRUCTION JOINT DETAIL

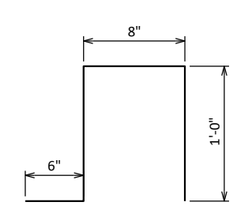

C311

8

8

NO.	DATE	REVISION	BY

STATE OF WISCONSIN
DEPARTMENT OF TRANSPORTATION

STRUCTURE B-17-370

DRAWN BY ZHC PLANS CK'D KRB

BILL OF BARS & REINFORCEMENT DETAILS

SHEET 8

BORING #	DATE COMPLETED	NORTHING (Y)	EASTING (X)
B-1	12/12/2023	126,850	228,595
B-2	12/12/2023	126,824	228,520
HA-1	11/10/2023	126,875	228,551
HA-2	11/10/2023	126,874	228,539
HA-3	11/10/2023	126,889	228,536
HA-4	11/10/2023	126,794	228,556
HA-5	11/10/2023	126,779	228,575
BORINGS COMPLETED BY: GESTRA ENGINEERING, INC.			
REPORT COMPLETED BY: GESTRA ENGINEERING, INC.			
ALL COORDINATES REFERENCED TO WCCS NAD 83(91) DUNN COUNTY			

BORINGS PERFORMED AND REPORT COMPLETED BY:
GESTRA ENGINEERING, INC.
191 W. EDGERTON AVE.
MILWAUKEE, WI 53207

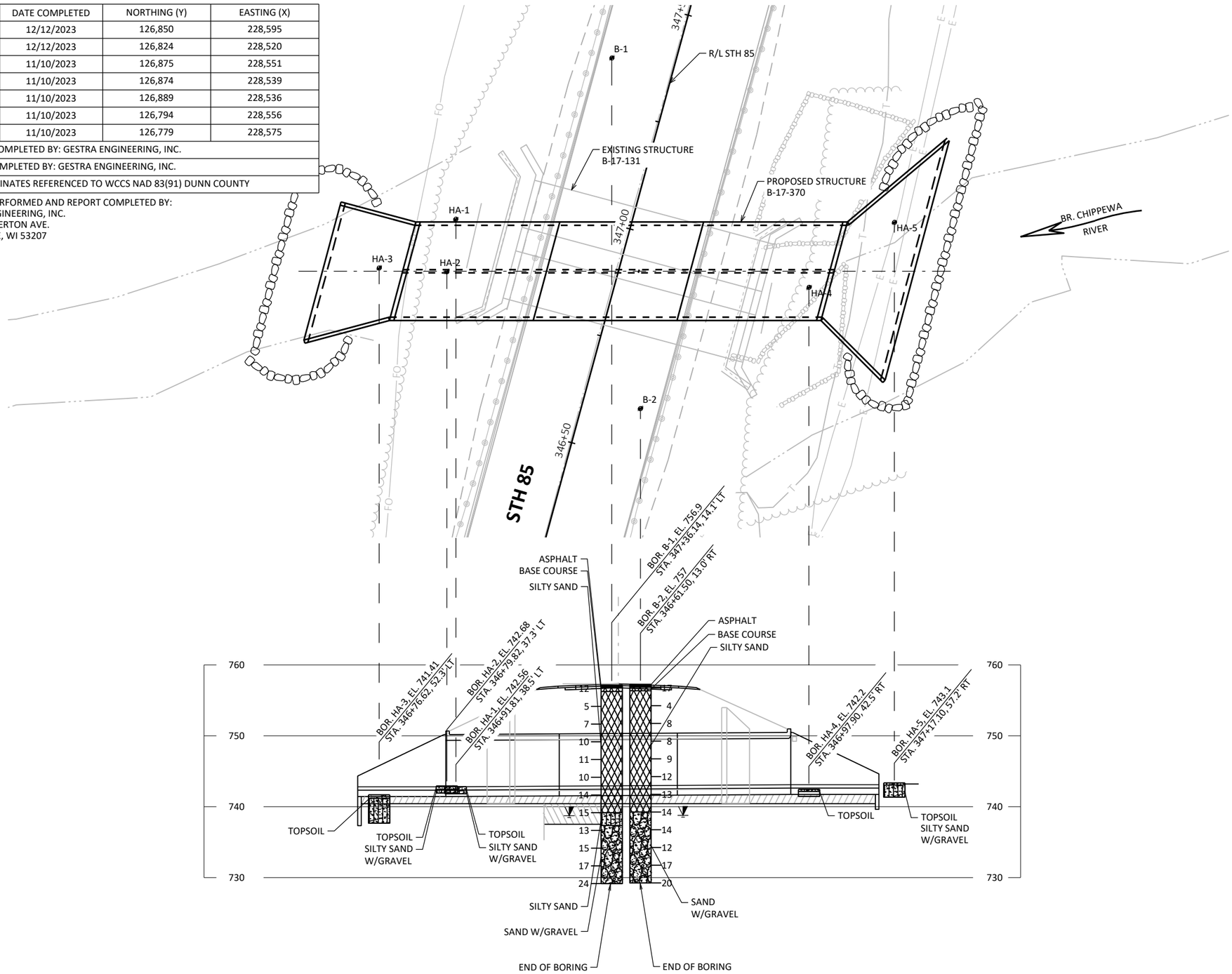

STATE PROJECT NUMBER

7120-00-76

MATERIAL SYMBOLS

ASPHALT, TOPSOIL, PEAT, CONCRETE, FILL, GRAVEL, SAND, CLAY, SILT, BOULDERS OR COBBLES, LIMESTONE, BEDROCK (UNKNOWN), SHALE, SANDSTONE, IGNEOUS/ META

LEGEND OF BORING

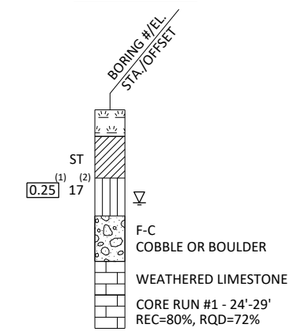

(1) UNCONFINED STRENGTH, AS DETERMINED BY A POCKET PENETROMETER (TSF)

(2) UNLESS OTHERWISE, SPECIFIED THE SPT 'N' VALUE IS BASED ON AASHTO T-206, STANDARD PENETRATION TEST. THE SPT 'N' VALUE PRESENTED HAS NOT BEEN CORRECTED FOR OVERBURDEN PRESSURE OR HAMMER EFFICIENCY.

GROUND WATER ELEVATION

AT TIME OF DRILLING
END OF DRILLING
AFTER DRILLING

ABBREVIATIONS

F-FINE M-MEDIUM C-COARSE ST-SHELBY TUBE

SUBSURFACE EXPLORATION FOR FOUNDATION DESIGN AND BIDDERS INFORMATION

BORINGS WERE COMPLETED AT POINTS APPROXIMATELY AS INDICATED ON THIS DRAWING TO OBTAIN INFORMATION CONCERNING THE CHARACTER OF SUBSURFACE MATERIALS FOUND AT THE SITE. BECAUSE THE INVESTIGATED DEPTHS ARE LIMITED AND THE AREA OF THE BORINGS IS VERY SMALL IN RELATION TO THE ENTIRE SITE, THE WISCONSIN DEPARTMENT OF TRANSPORTATION DOES NOT WARRANT SIMILAR SUBSURFACE CONDITIONS BELOW, BETWEEN, OR BEYOND THESE BORINGS. VARIATIONS IN SOIL CONDITIONS SHOULD BE EXPECTED AND FLUCTUATIONS IN GROUNDWATER LEVELS MAY OCCUR.

NO.	DATE	REVISION	BY

STATE OF WISCONSIN
DEPARTMENT OF TRANSPORTATION

STRUCTURE B-17-370

DRAWN BY ZHC PLANS CK'D KRB

SUBSURFACE EXPLORATION

SHEET 9
160

8

8

7120-00-74 ID - BEGIN PROJECT REMOVAL

STATION	DISTANCE	AREA (SF)		INCREMENTAL VOL (CY) (UNADJUSTED)		CUMULATIVE VOL (CY)		
		CUT	FILL	CUT NOTE 1	FILL NOTE 2	CUT 1.00 NOTE 1	EXPANDED FILL 1.25	MASS ORDINATE NOTE 3
149+76.50	0.00	11.83	13.64	0	0	0	0	0
150+00.00	23.50	12.96	10.76	11	11	11	14	-3
150+25.00	25.00	3.81	27.13	8	18	19	36	-17
150+50.00	25.00	0.67	54.02	2	38	21	84	-63
150+65.54	15.54	0.12	73.77	0	37	21	130	-109
150+73.71	8.17	0.12	225.90	0	45	21	186	-165
150+75.00	1.29	0.15	70.72	0	7	21	195	-174
151+00.00	25.00	0.76	51.92	0	57	21	266	-245
151+25.00	25.00	4.39	18.11	2	32	23	306	-283
151+50.00	25.00	3.04	0.00	3	8	26	316	-290
151+59.96	9.96	2.23	0.17	1	0	27	316	-289
		COLUMN TOTALS		27	253			

7120-00-74 ID - LOCATION A/B REMOVAL

STATION	DISTANCE	AREA (SF)		INCREMENTAL VOL (CY) (UNADJUSTED)		CUMULATIVE VOL (CY)		
		CUT	FILL	CUT NOTE 1	FILL NOTE 2	CUT 1.00 NOTE 1	EXPANDED FILL 1.25	MASS ORDINATE NOTE 3
252+41.59	0.00	0.00	2.01	0	0	0	0	0
252+62.36	20.77	0.00	10.49	0	5	0	6	-6
253+00.00	37.64	0.00	11.11	0	15	0	25	-25
253+50.00	50.00	0.01	13.68	0	23	0	54	-54
254+00.00	50.00	4.61	6.45	4	19	4	78	-74
254+50.00	50.00	1.11	24.91	5	29	9	114	-105
255+00.00	50.00	0.00	249.66	1	254	10	431	-421
255+50.00	50.00	0.13	6.36	0	237	10	728	-718
256+00.00	50.00	4.41	0.43	4	6	14	735	-721
256+50.00	50.00	2.84	1.67	7	2	21	738	-717
257+00.00	50.00	3.16	1.95	6	3	27	741	-714
257+50.00	50.00	0.00	0.02	3	2	30	744	-714
257+92.32	42.32	0.00	0.03	0	0	30	744	-714
258+89.50	0.00	0.00	1.22	0	0	30	744	-714
259+00.00	10.50	0.00	1.18	0	0	30	744	-714
259+50.00	50.00	0.00	1.45	0	2	30	746	-716
260+00.00	50.00	0.00	1.19	0	2	30	749	-719
260+50.00	50.00	4.78	0.38	4	1	34	750	-716
261+00.00	50.00	35.08	0.00	37	0	71	750	-679
261+50.00	50.00	2.95	8.63	35	8	106	760	-654
262+00.00	50.00	4.31	11.73	7	19	113	784	-671
262+50.00	50.00	12.49	0.30	16	11	129	798	-669
263+00.00	50.00	0.24	3.59	12	4	141	803	-662
263+50.00	50.00	0.00	2.60	0	6	141	810	-669
264+00.00	50.00	0.00	3.42	0	6	141	818	-677
264+32.22	32.22	0.00	2.97	0	4	141	823	-682
264+44.29	12.07	0.00	3.03	0	1	141	824	-683
		COLUMN TOTALS		141	659			

NOTES:	
1 - CUT	CUT INCLUDES SALVAGED/UNUSABLE PAVEMENT MATERIAL
2 - FILL	DOES NOT INCLUDE UNUSABLE PAVEMENT EXC VOLUME
3 - MASS ORDINATE	MASS ORDINATE = CUT - EXPANDED FILL

7120-00-74 ID - COON CREEK

STATION	DISTANCE	AREA (SF) CUT	AREA (SF) FILL	INCREMENTAL VOL (CY) (UNADJUSTED) CUT NOTE 1	INCREMENTAL VOL (CY) (UNADJUSTED) FILL NOTE 2	CUMULATIVE VOL (CY) CUT 1.00 NOTE 1	CUMULATIVE VOL (CY) EXPANDED FILL 1.25	CUMULATIVE VOL (CY) MASS ORDINATE NOTE 3
295+15.09	0.00	0.00	1.16	0	0	0	0	0
295+50.00	34.91	0.00	1.29	0	2	0	3	-3
296+00.00	50.00	0.00	1.55	0	3	0	6	-6
296+35.49	35.49	0.00	2.73	0	3	0	10	-10
296+50.00	14.51	0.00	8.01	0	3	0	14	-14
296+62.35	12.35	0.00	8.49	0	4	0	19	-19
296+89.20	26.85	0.00	4.91	0	7	0	28	-28
297+00.00	10.80	0.00	4.96	0	2	0	30	-30
297+50.00	50.00	0.00	6.62	0	11	0	44	-44
298+00.00	50.00	0.00	12.18	0	17	0	65	-65
298+50.00	50.00	0.00	12.18	0	23	0	94	-94
298+81.20	31.20	0.00	8.52	0	12	0	109	-109
299+00.00	18.80	0.00	9.78	0	6	0	116	-116
299+50.00	50.00	0.00	17.54	0	25	0	148	-148
299+98.95	48.95	0.00	14.15	0	29	0	184	-184
300+00.00	1.05	0.00	14.14	0	1	0	185	-185
300+25.18	25.18	0.00	1.72	0	7	0	194	-194
300+50.00	24.82	0.00	2.77	0	2	0	196	-196
300+51.43	1.43	0.00	2.87	0	0	0	196	-196
301+00.00	48.57	0.00	2.26	0	5	0	203	-203
301+50.00	50.00	0.76	0.07	1	2	1	205	-204
302+00.00	50.00	0.73	0.69	1	1	2	206	-204
302+50.00	50.00	3.39	13.19	4	13	6	223	-217
303+00.00	50.00	1.09	22.61	4	33	10	264	-254
303+50.00	50.00	0.00	99.10	1	113	11	405	-394
304+00.00	50.00	0.04	78.23	0	164	11	610	-599
304+50.00	50.00	0.43	293.08	0	344	11	1040	-1029
305+00.00	50.00	0.40	64.46	1	331	12	1454	-1442
305+13.17	13.17	0.10	45.52	0	27	12	1488	-1476
305+33.61	20.44	0.03	52.86	0	37	12	1534	-1522
305+50.00	16.39	0.00	143.28	0	60	12	1609	-1597
305+61.42	11.42	0.00	148.28	0	62	12	1686	-1674
305+86.00	24.58	0.78	6.54	0	70	12	1774	-1762
306+00.00	14.00	1.54	1.85	1	2	13	1776	-1763
306+50.00	50.00	0.00	13.69	1	14	14	1794	-1780
307+00.00	50.00	0.00	14.32	0	26	14	1826	-1812
307+03.56	3.56	0.00	10.52	0	2	14	1829	-1815
307+28.78	25.22	0.00	5.55	0	8	14	1839	-1825
307+50.00	21.22	0.00	3.44	0	4	14	1844	-1830
308+00.00	50.00	0.00	3.70	0	7	14	1853	-1839
308+50.00	50.00	0.00	2.89	0	6	14	1860	-1846
309+00.00	50.00	0.00	1.76	0	4	14	1865	-1851
309+50.00	50.00	0.00	2.56	0	4	14	1870	-1856
310+00.00	50.00	0.00	1.23	0	4	14	1875	-1861
310+14.49	14.49	0.00	1.75	0	1	14	1876	-1862
310+39.48	24.99	0.00	2.75	0	2	14	1879	-1865
310+50.00	10.52	0.00	2.48	0	1	14	1880	-1866
310+64.46	14.46	0.00	2.07	0	1	14	1881	-1867
311+00.00	35.54	0.00	2.97	0	3	14	1885	-1871
311+50.00	50.00	0.00	2.03	0	5	14	1891	-1877
311+83.53	33.53	0.00	0.68	0	2	14	1894	-1880
		COLUMN TOTALS		14	1,515			

NOTES:	
1 - CUT	CUT INCLUDES SALVAGED/UNUSABLE PAVEMENT MATERIAL
2 - FILL	DOES NOT INCLUDE UNUSABLE PAVEMENT EXC VOLUME
3 - MASS ORDINATE	MASS ORDINATE = CUT - EXPANDED FILL

7120-00-76 ID - B-13-0370 GRADING

STATION	DISTANCE	AREA (SF)		INCREMENTAL VOL (CY) (UNADJUSTED)		CUMULATIVE VOL (CY)		
		CUT	FILL	CUT	FILL	CUT	EXPANDED FILL	MASS ORDINATE
						1.00	1.25	
				NOTE 1	NOTE 2	NOTE 1		NOTE 3
344+36.53	0.00	0.00	4.76	0	0	0	0	0
344+50.00	13.47	0.03	5.28	0	3	0	4	-4
345+00.00	50.00	15.59	2.87	14	8	14	14	0
345+50.00	50.00	50.33	0.44	61	3	75	18	58
346+00.00	50.00	103.31	0.58	142	1	217	19	198
346+50.00	50.00	369.00	133.67	437	124	654	174	480
347+00.00	50.00	284.15	226.56	605	334	1259	591	668
347+50.00	50.00	0.00	126.04	263	326	1522	999	523
348+00.00	50.00	0.90	107.56	1	216	1523	1269	254
348+50.00	50.00	9.82	27.99	10	126	1533	1426	107
349+00.00	50.00	7.66	9.66	16	35	1549	1470	79
349+50.00	50.00	1.05	1.06	8	10	1557	1483	75
350+00.00	50.00	0.00	6.57	1	7	1558	1491	67
350+17.73	17.73	0.00	9.62	0	5	1558	1498	61
		COLUMN TOTALS		1,558	1,198			

NOTES:	
1 - CUT	CUT INCLUDES SALVAGED/UNUSABLE PAVEMENT MATERIAL
2 - FILL	DOES NOT INCLUDE UNUSABLE PAVEMENT EXC VOLUME
3 - MASS ORDINATE	MASS ORDINATE = CUT - EXPANDED FILL

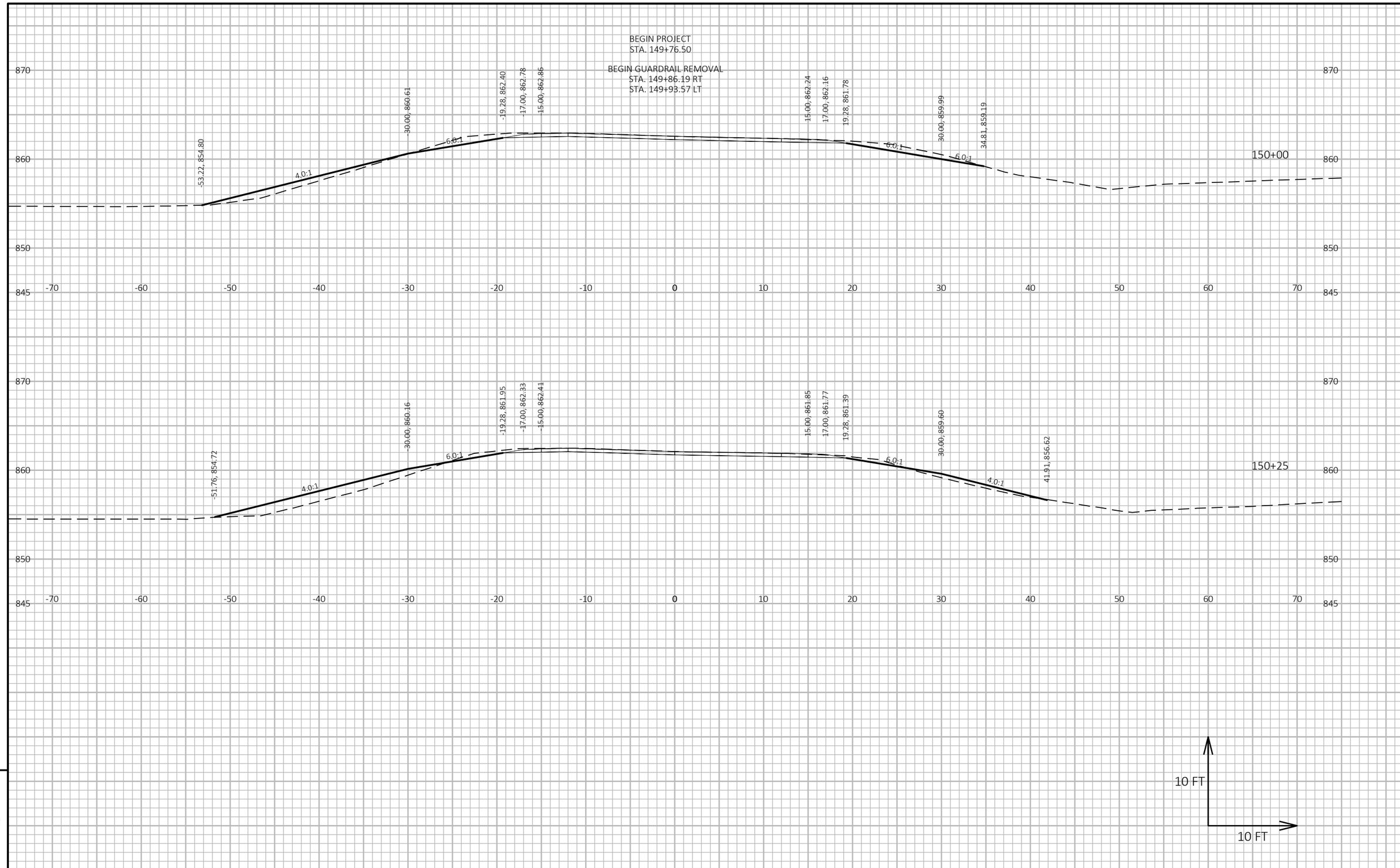

9

9

PROJECT NO: 7120-00-74	HWY: STH 85	COUNTY: DUNN	CROSS SECTIONS: STH 85	SHEET 164	E

FILE NAME : S:\MAD\1000--1099\1089\989\DRAWINGS\CAD\CIVIL 3D\SHEETSPLAN\090201-XS.DWG
LAYOUT NAME - 090201-xs-1

PLOT DATE : 12/16/2025 2:49 PM PLOT BY : HABERKORN, DEVEN PLOT NAME : PLOT SCALE : 1 IN:10 FT HORZ. / 1 IN:10 FT VERT.

WISDOT/CADDS SHEET 49

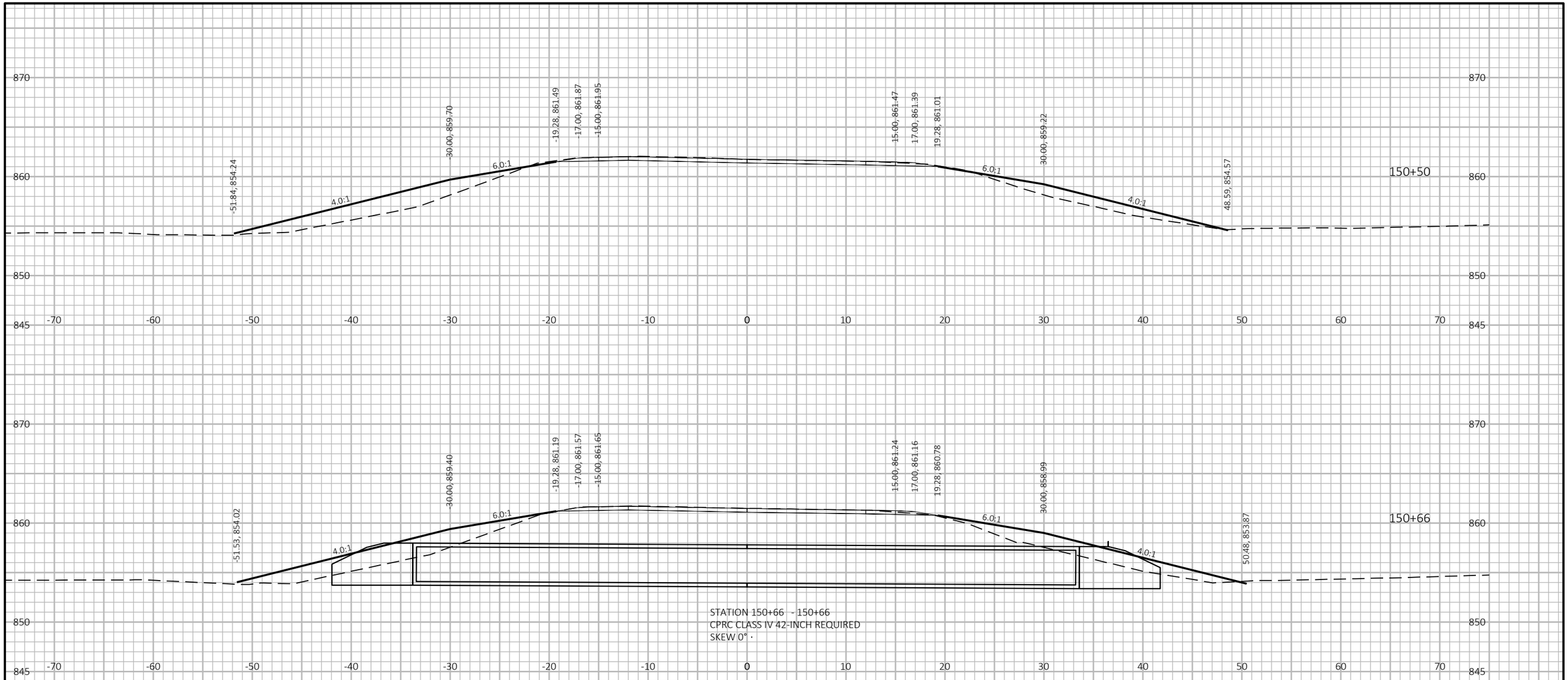

9

9

PROJECT NO: 7120-00-74	HWY: STH 85	COUNTY: DUNN	CROSS SECTIONS: STH 85	SHEET 165	E

FILE NAME : S:\MAD\1000--1099\1089\989\DRAWINGS\CAD\CIVIL 3D\SHEETSPLAN\090201-XS.DWG
LAYOUT NAME - 090201-xs-2

PLOT DATE : 12/16/2025 2:49 PM PLOT BY : HABERKORN, DEVEN PLOT NAME : PLOT SCALE : 1 IN:10 FT HORZ. / 1 IN:10 FT VERT.

WISDOT/CADDS SHEET 49

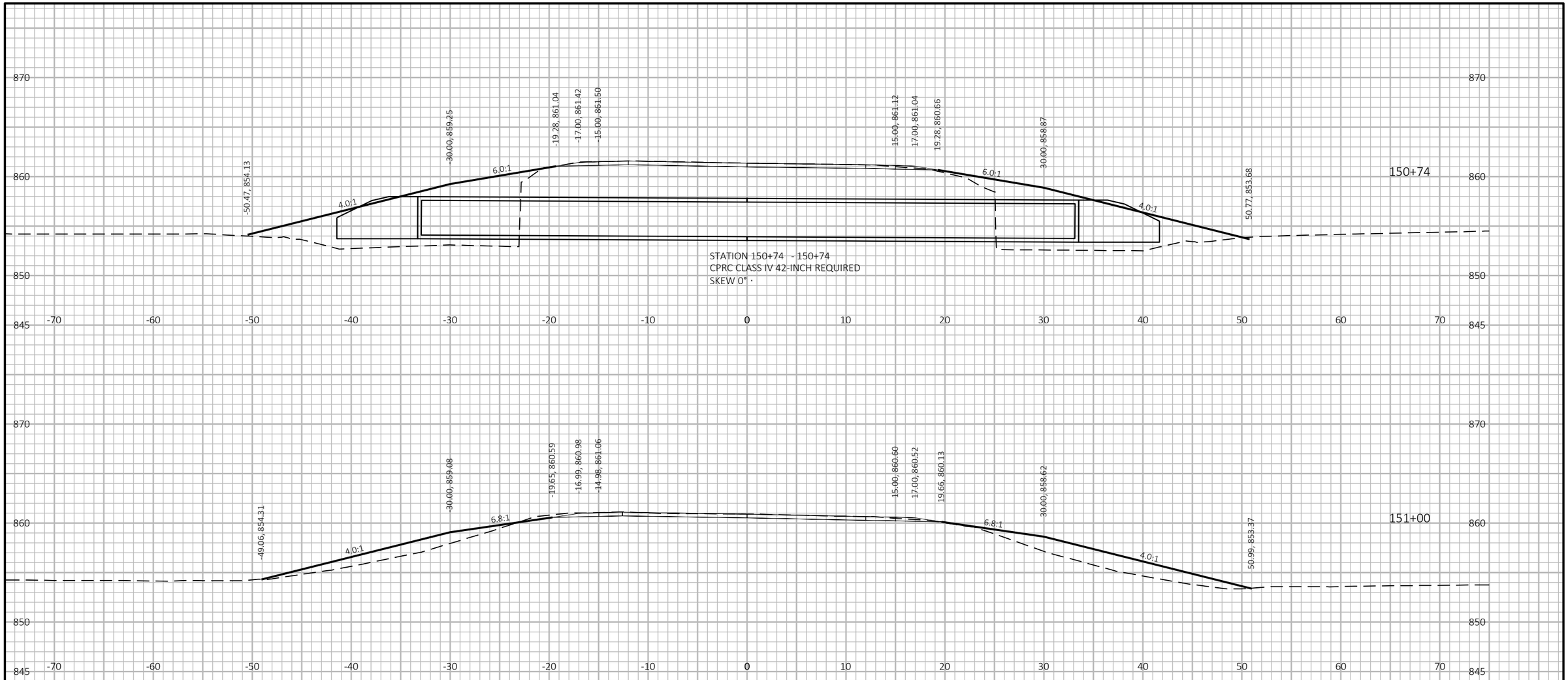

9

9

PROJECT NO: 7120-00-74	HWY: STH 85	COUNTY: DUNN	CROSS SECTIONS: STH 85	SHEET 166	E

FILE NAME : S:\MAD\1000--1099\1089\989\DRAWINGS\CAD\CIVIL 3D\SHEETSPLAN\090201-XS.DWG
LAYOUT NAME - 090201-xs-3

PLOT DATE : 12/16/2025 2:49 PM PLOT BY : HABERKORN, DEVEN PLOT NAME : PLOT SCALE : 1 IN:10 FT HORZ. / 1 IN:10 FT VERT.

WISDOT/CADDS SHEET 49

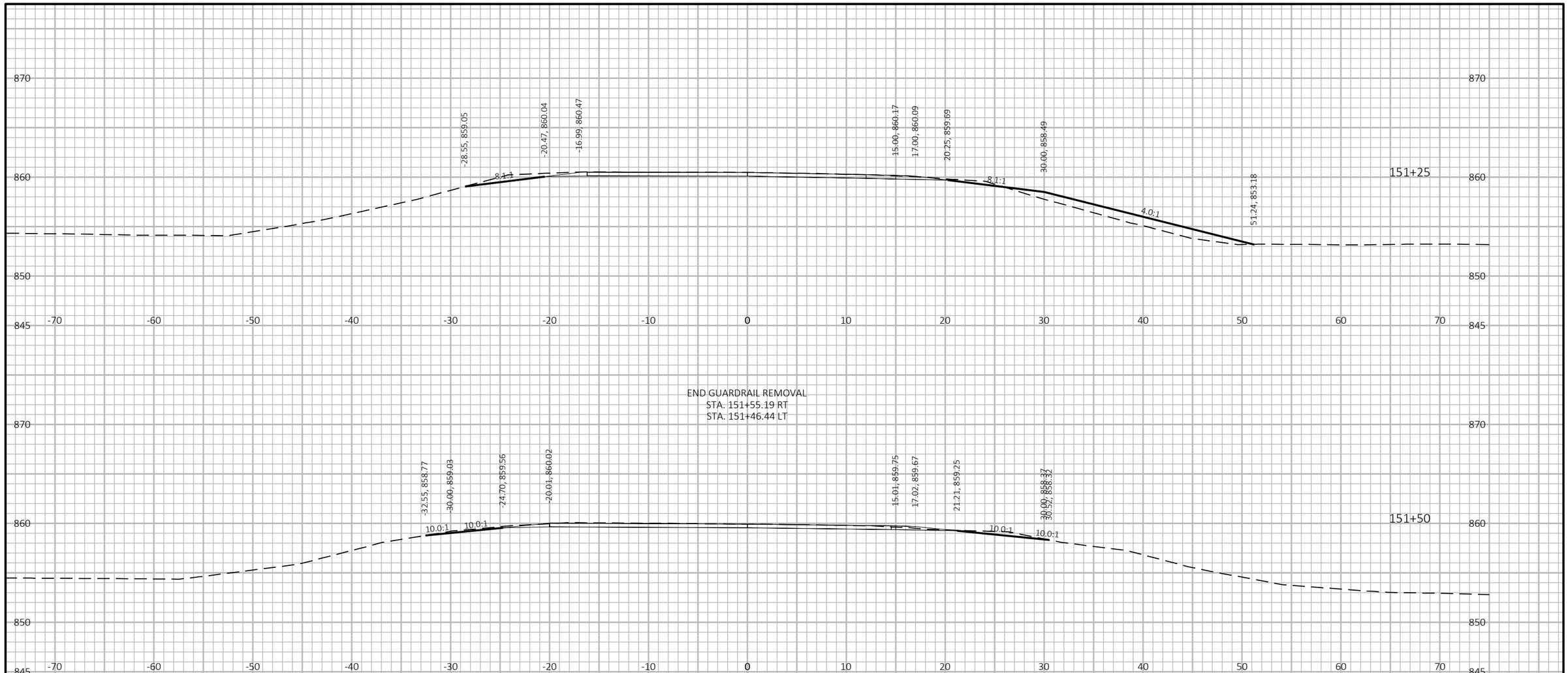

END GUARDRAIL REMOVAL
STA. 151+55.19 RT
STA. 151+46.44 LT

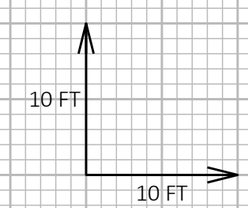

9

9

PROJECT NO: 7120-00-74	HWY: STH 85	COUNTY: DUNN	CROSS SECTIONS: STH 85	SHEET 167	E

FILE NAME : S:\MAD\1000--1099\1089\989\DRAWINGS\CAD\CIVIL 3D\SHEETSPLAN\090201-XS.DWG
LAYOUT NAME - 090201-xs-4
PLOT DATE : 12/16/2025 2:49 PM
PLOT BY : HABERKORN, DEVEN
PLOT NAME :
PLOT SCALE : 1 IN:10 FT HORZ. / 1 IN:10 FT VERT.
WISDOT/CADDS SHEET 49

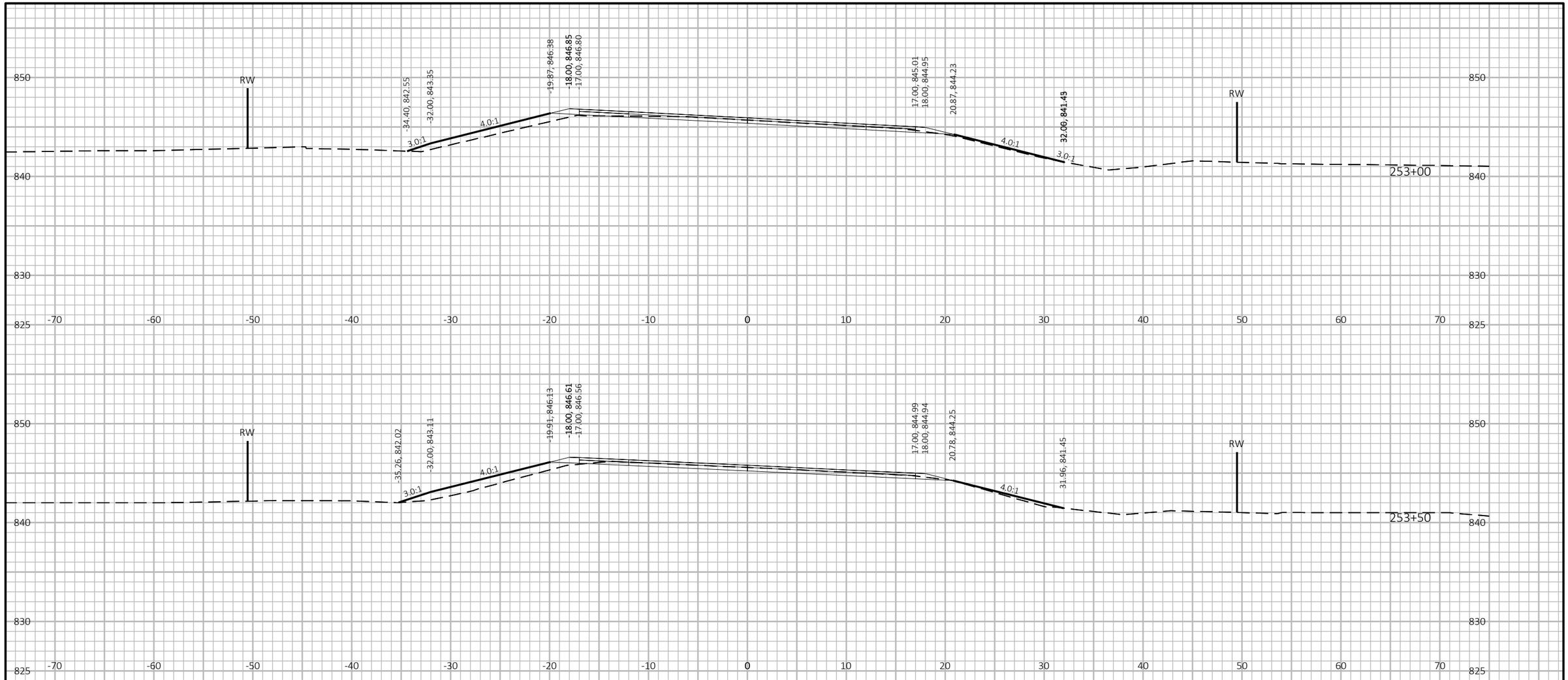

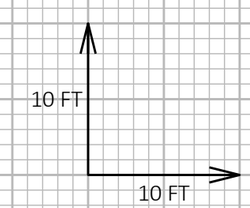

9

9

PROJECT NO: 7120-00-74	HWY: STH 85	COUNTY: DUNN	CROSS SECTIONS: STH 85	SHEET 168	E

FILE NAME : S:\MAD\1000--1099\1089\989\DRAWINGS\CAD\CIVIL 3D\SHEETSPLAN\090201-XS.DWG
LAYOUT NAME - 090201-xs-06
PLOT DATE : 12/16/2025 2:49 PM
PLOT BY : HABERKORN, DEVEN
PLOT NAME :
PLOT SCALE : 1 IN:10 FT HORZ. / 1 IN:10 FT VERT.
WISDOT/CADDS SHEET 49

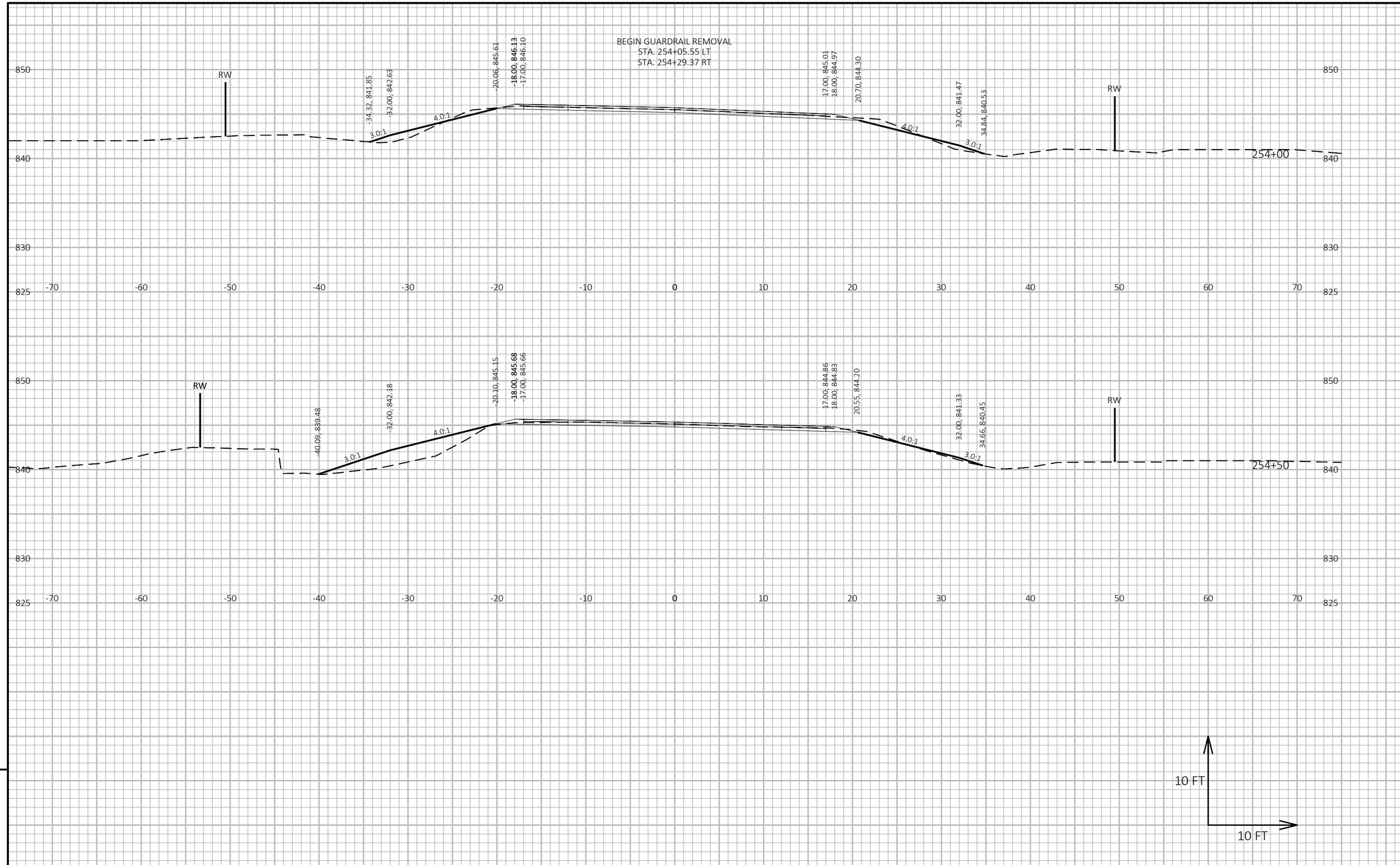

9

9

PROJECT NO: 7120-00-74	HWY: STH 85	COUNTY: DUNN	CROSS SECTIONS: STH 85	SHEET 169	E

FILE NAME : S:\MAD\1000--1099\1089\989\DRAWINGS\CAD\CIVIL 3D\SHEETSPLAN\090201-XS.DWG
LAYOUT NAME - 090201-xs-07

PLOT DATE : 12/16/2025 2:49 PM PLOT BY : HABERKORN, DEVEN PLOT NAME : **PLOT SCALE :** 1 IN:10 FT HORZ. / 1 IN:10 FT VERT.

WISDOT/CADDS SHEET 49

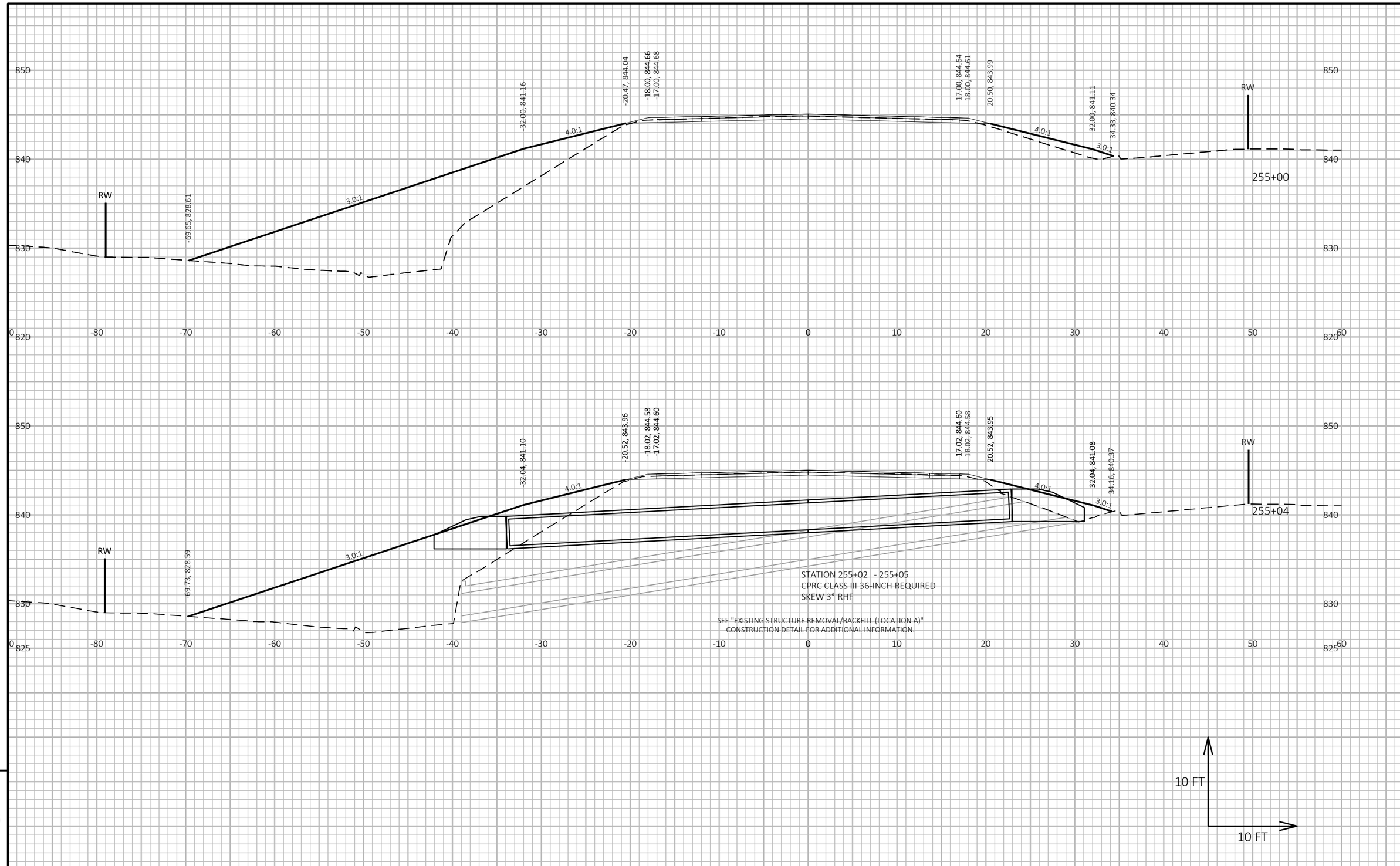

9

9

PROJECT NO: 7120-00-74	HWY: STH 85	COUNTY: DUNN	CROSS SECTIONS: STH 85	SHEET 170	E

FILE NAME : S:\MAD\1000--1099\1089\989\DRAWINGS\CAD\CIVIL 3D\SHEETSPLAN\090201-XS.DWG
LAYOUT NAME - 090201-xs-08

PLOT DATE : 12/16/2025 2:49 PM PLOT BY : HABERKORN, DEVEN PLOT NAME : **PLOT SCALE :** 1 IN:10 FT HORZ. / 1 IN:10 FT VERT.

WISDOT/CADDS SHEET 49

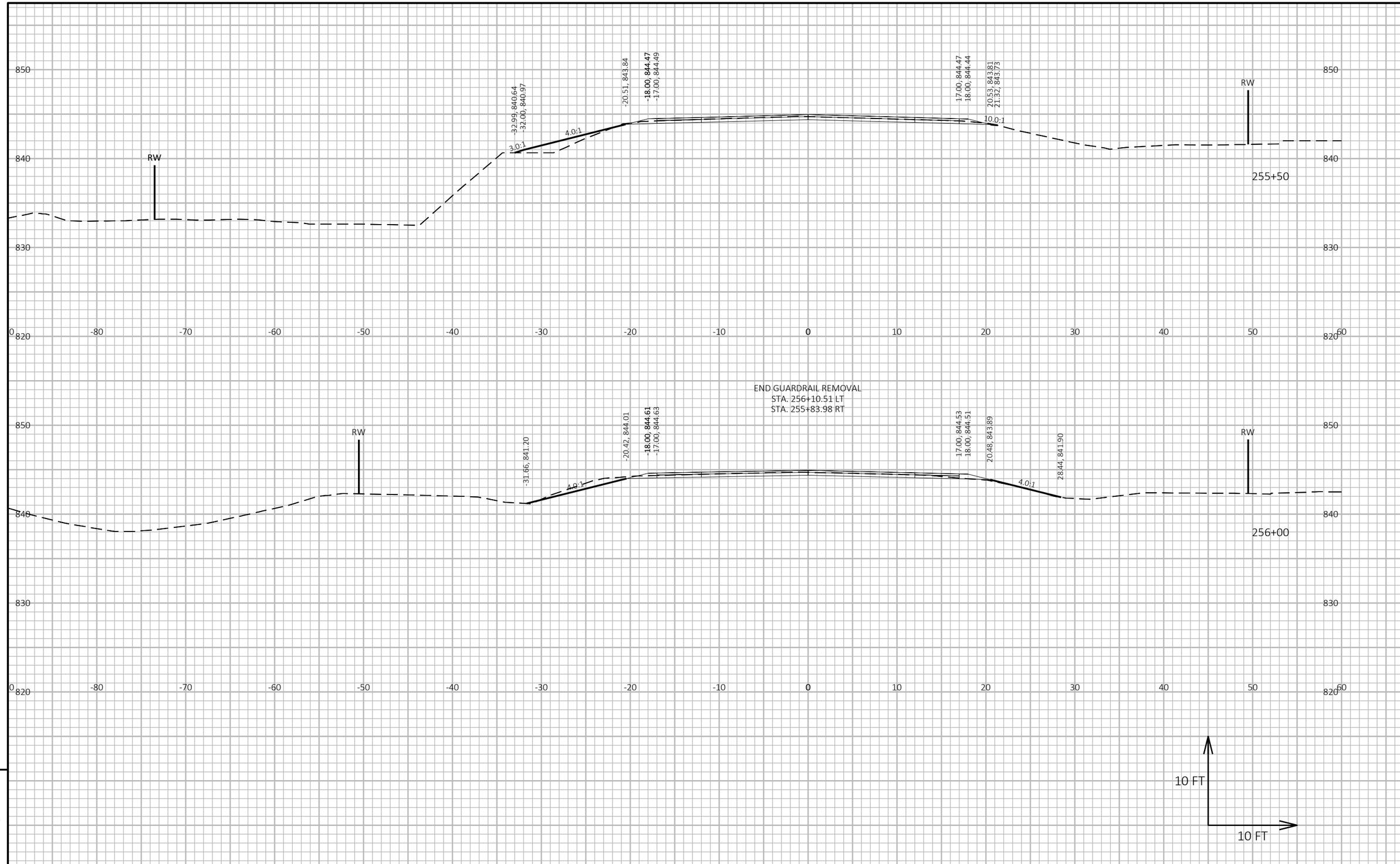

9

9

PROJECT NO: 7120-00-74	HWY: STH 85	COUNTY: DUNN	CROSS SECTIONS: STH 85	SHEET 171	E

FILE NAME : S:\MAD\1000--1099\1089\989\DRAWINGS\CAD\CIVIL 3D\SHEETSPLAN\090201-XS.DWG
LAYOUT NAME - 090201-xs-09

PLOT DATE : 12/16/2025 2:49 PM PLOT BY : HABERKORN, DEVEN PLOT NAME : PLOT SCALE : 1 IN:10 FT HORZ. / 1 IN:10 FT VERT.

WISDOT/CADDS SHEET 49

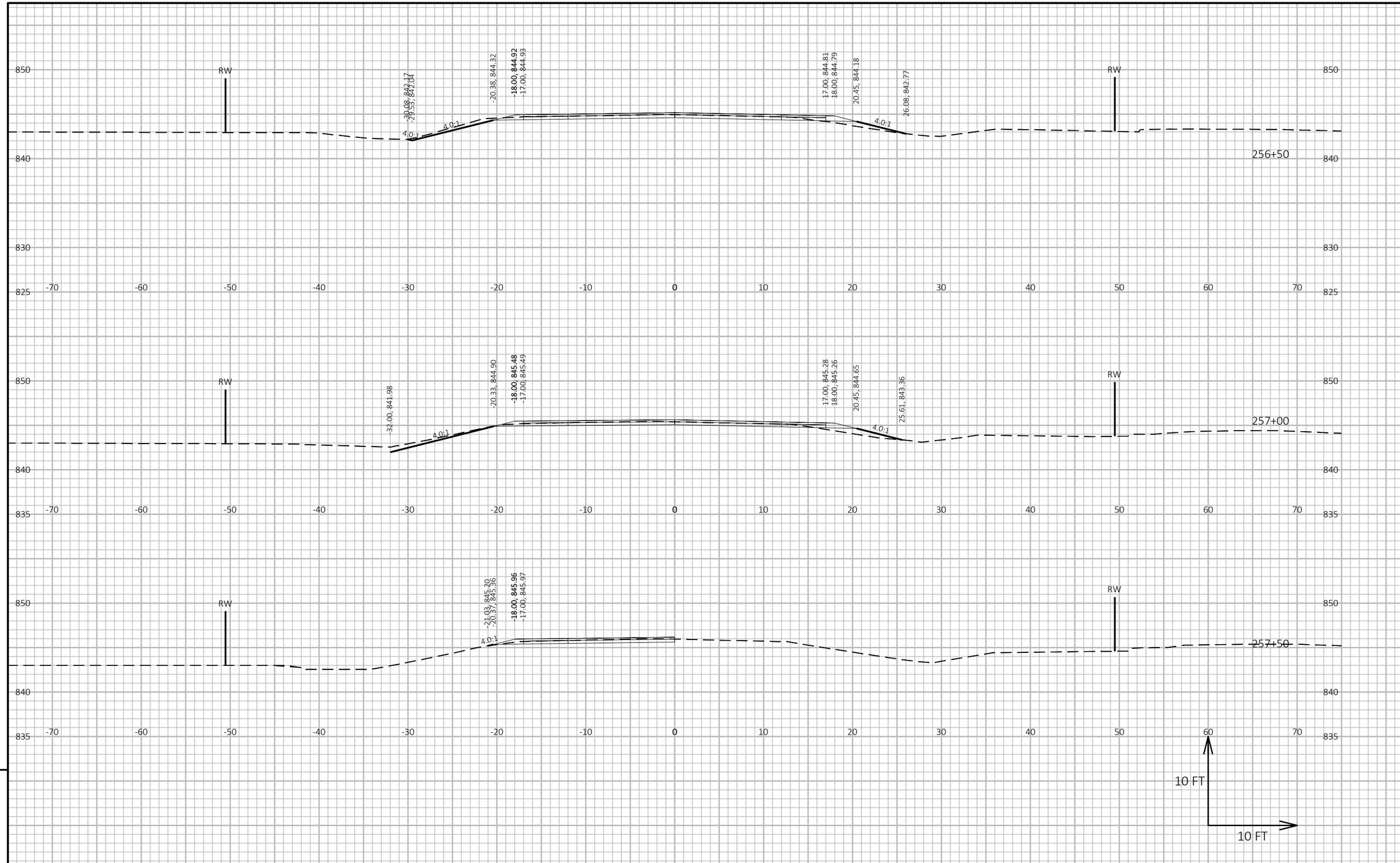

9

9

PROJECT NO: 7120-00-74	HWY: STH 85	COUNTY: DUNN	CROSS SECTIONS: STH 85	SHEET 172	E

FILE NAME : S:\MAD\1000--1099\1089\989\DRAWINGS\CAD\CIVIL 3D\SHEETSPLAN\090201-XS.DWG
LAYOUT NAME - 090201-xs-10

PLOT DATE : 12/16/2025 2:49 PM PLOT BY : HABERKORN, DEVEN PLOT NAME : PLOT SCALE : 1 IN:10 FT HORZ. / 1 IN:10 FT VERT.

WISDOT/CADDS SHEET 49

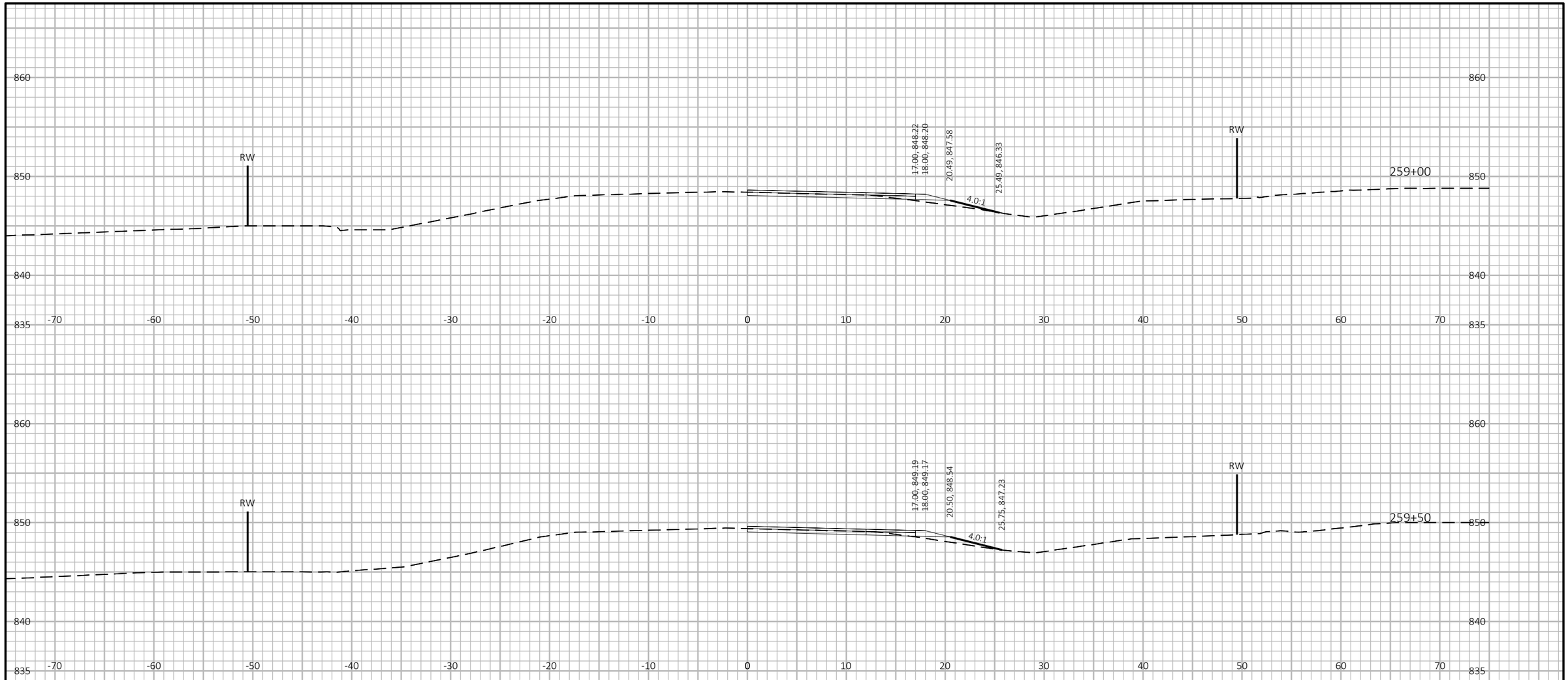

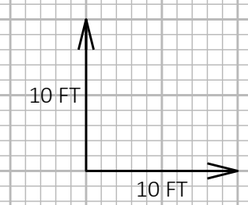

9

9

PROJECT NO: 7120-00-74	HWY: STH 85	COUNTY: DUNN	CROSS SECTIONS: STH 85	SHEET 173	E

FILE NAME : S:\MAD\1000--1099\1089\989\DRAWINGS\CAD\CIVIL 3D\SHEETSPLAN\090201-XS.DWG
LAYOUT NAME - 090201-xs-11

PLOT DATE : 12/16/2025 2:49 PM PLOT BY : HABERKORN, DEVEN PLOT NAME : PLOT SCALE : 1 IN:10 FT HORZ. / 1 IN:10 FT VERT.

WISDOT/CADDS SHEET 49

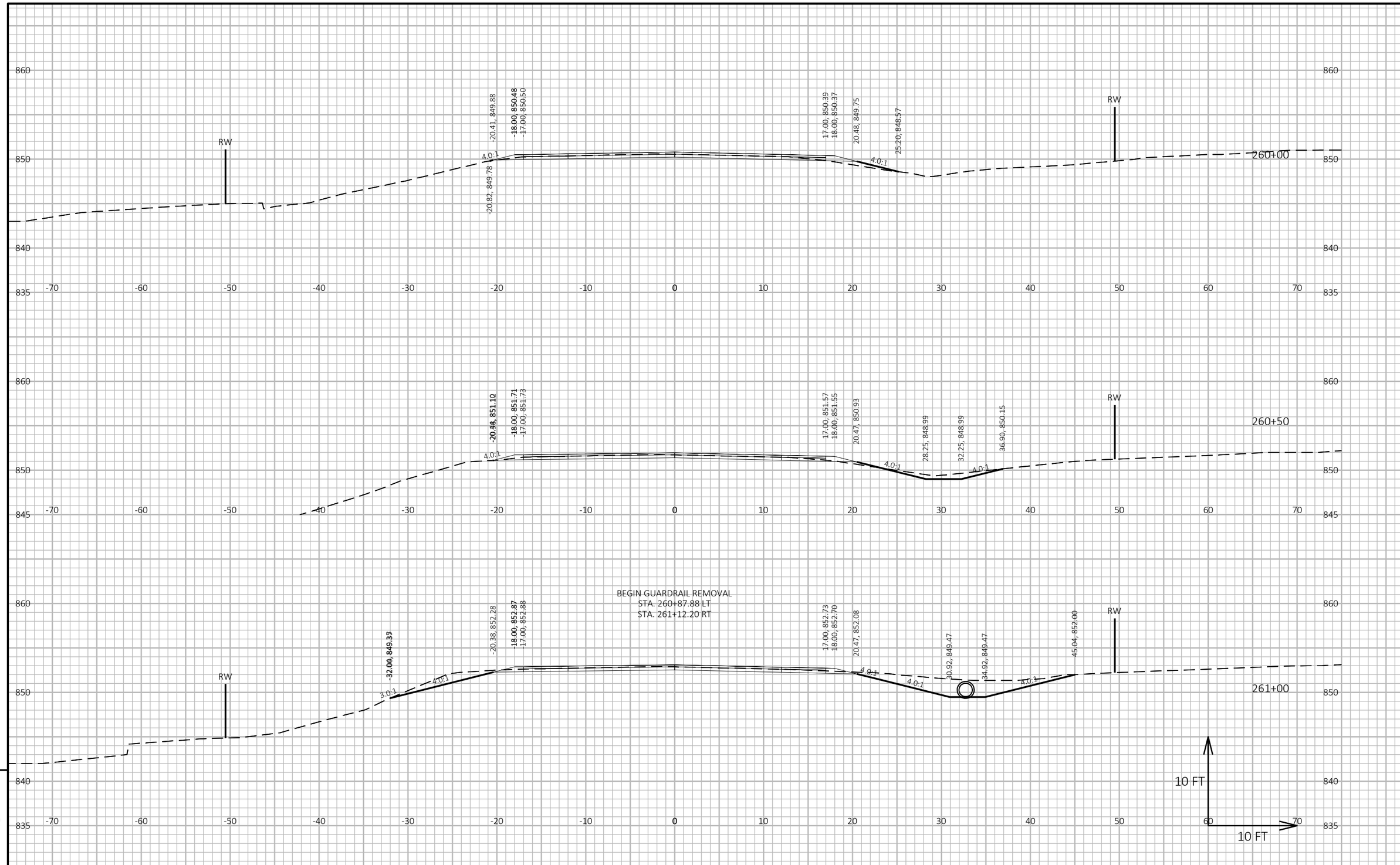

9

9

PROJECT NO: 7120-00-74	HWY: STH 85	COUNTY: DUNN	CROSS SECTIONS: STH 85	SHEET 174	E

FILE NAME : S:\MAD\1000--1099\1089\989\DRAWINGS\CAD\CIVIL 3D\SHEETSPLAN\090201-XS.DWG
LAYOUT NAME - 090201-xs-12

PLOT DATE : 12/16/2025 2:49 PM PLOT BY : HABERKORN, DEVEN PLOT NAME : **PLOT SCALE :** 1 IN:10 FT HORZ. / 1 IN:10 FT VERT.

WISDOT/CADDS SHEET 49

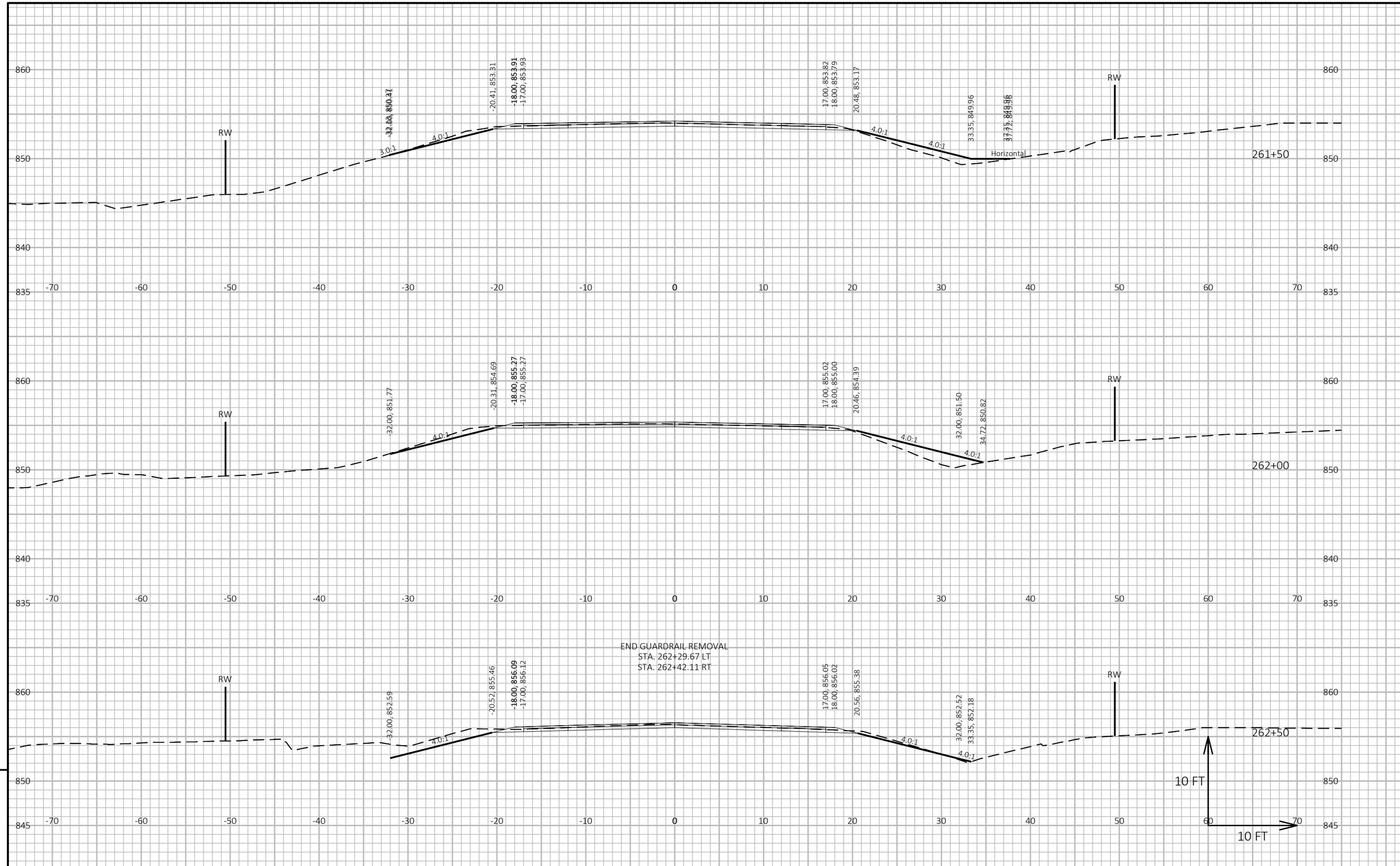

9

9

PROJECT NO: 7120-00-74	HWY: STH 85	COUNTY: DUNN	CROSS SECTIONS: STH 85	SHEET 175	E

FILE NAME : S:\MAD\1000--1099\1089\989\DRAWINGS\CAD\CIVIL 3D\SHEETSPLAN\090201-XS.DWG
LAYOUT NAME - 090201-xs-13

PLOT DATE : 12/16/2025 2:49 PM PLOT BY : HABERKORN, DEVEN PLOT NAME : **PLOT SCALE :** 1 IN:10 FT HORZ. / 1 IN:10 FT VERT.

WISDOT/CADDS SHEET 49

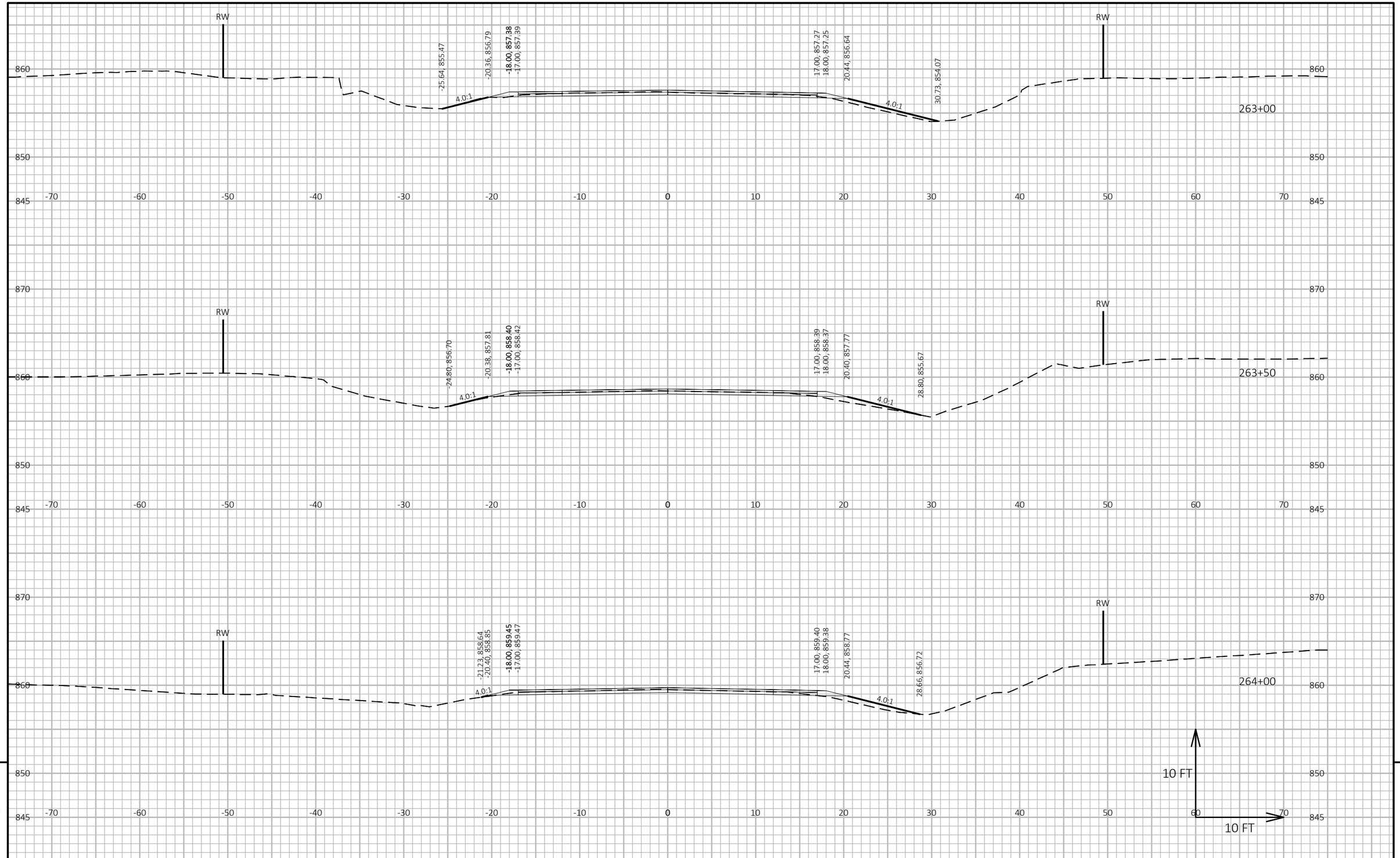

PROJECT NO: 7120-00-74	HWY: STH 85	COUNTY: DUNN	CROSS SECTIONS: STH 85	SHEET 176	E

FILE NAME : S:\MAD\1000--1099\1089\989\DRAWINGS\CAD\CIVIL 3D\SHEETSPLAN\090201-XS.DWG
LAYOUT NAME - 090201-xs-14
PLOT DATE : 12/16/2025 2:49 PM
PLOT BY : HABERKORN, DEVEN
PLOT NAME :
PLOT SCALE : 1 IN:10 FT HORZ. / 1 IN:10 FT VERT.
WISDOT/CADDS SHEET 49

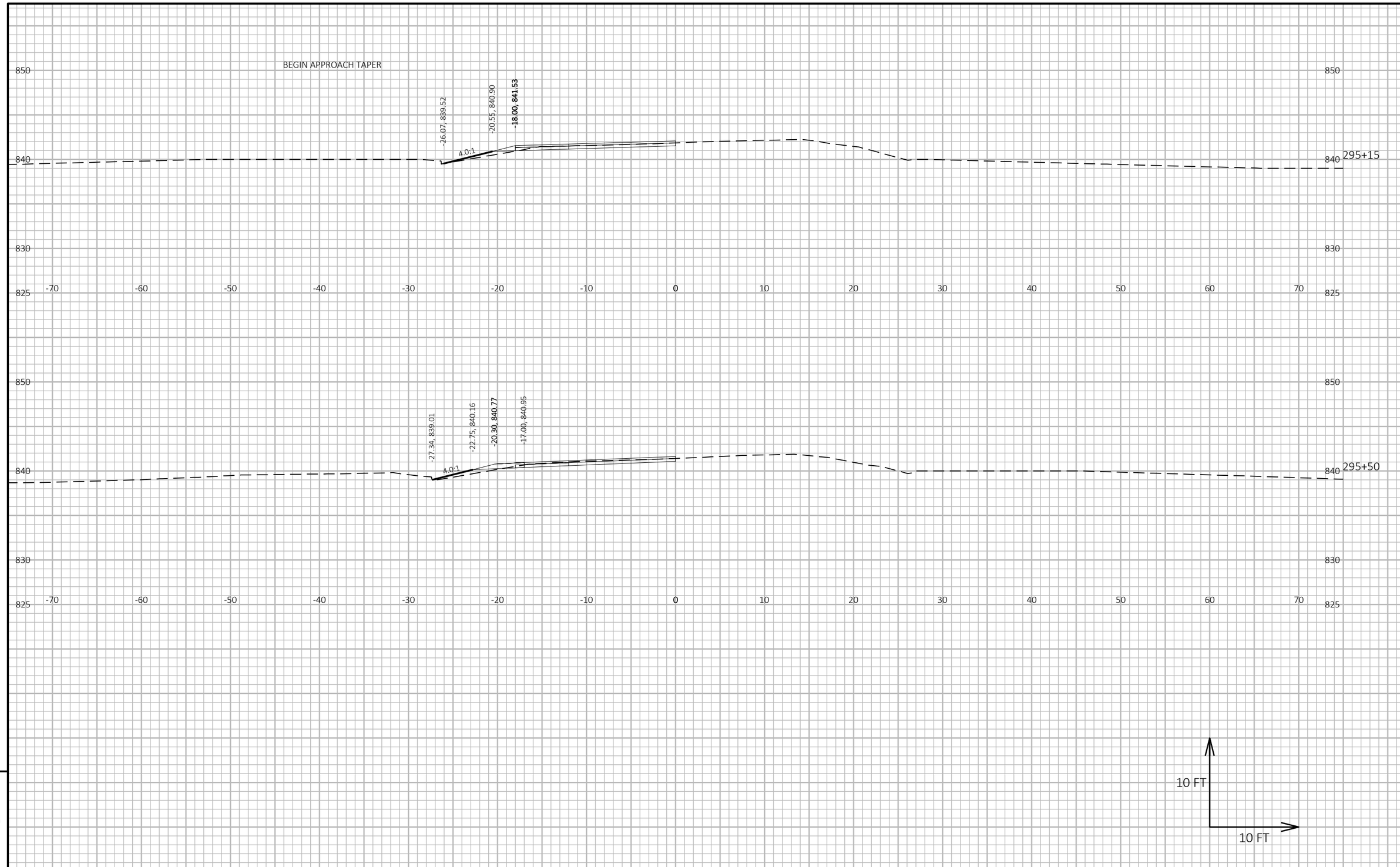

9

9

PROJECT NO: 7120-00-74	HWY: STH 85	COUNTY: DUNN	CROSS SECTIONS: STH 85	SHEET 177	E

FILE NAME : S:\MAD\1000--1099\1089\989\DRAWINGS\CAD\CIVIL 3D\SHEETSPLAN\090201-XS.DWG
LAYOUT NAME - 090201-xs-15

PLOT DATE : 12/16/2025 2:50 PM PLOT BY : HABERKORN, DEVEN PLOT NAME : **PLOT SCALE :** 1 IN:10 FT HORZ. / 1 IN:10 FT VERT.

WISDOT/CADDS SHEET 49

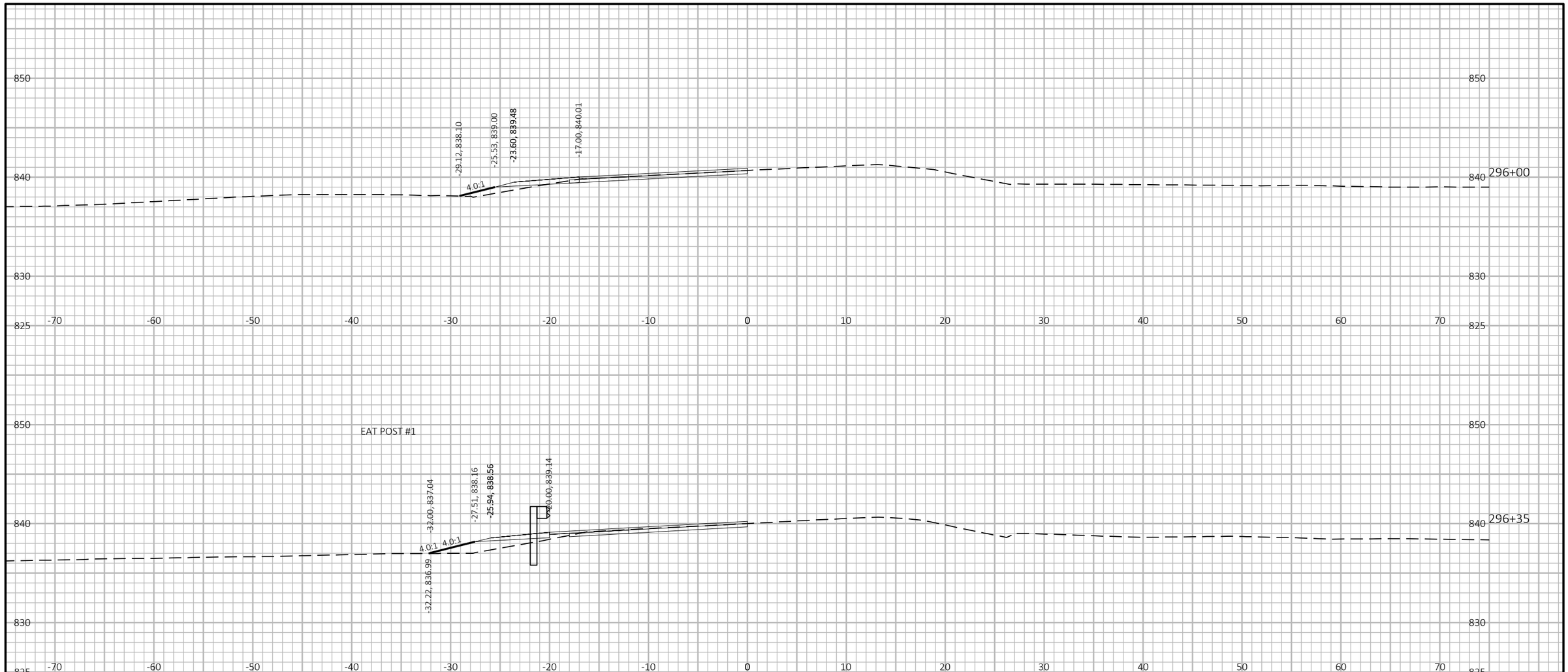

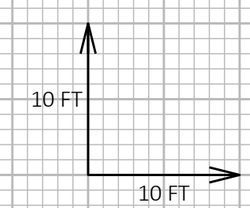

9

9

PROJECT NO: 7120-00-74	HWY: STH 85	COUNTY: DUNN	CROSS SECTIONS: STH 85	SHEET 178	E

FILE NAME : S:\MAD\1000--1099\1089\989\DRAWINGS\CAD\CIVIL 3D\SHEETSPLAN\090201-XS.DWG
LAYOUT NAME - 090201-xs-16

PLOT DATE : 12/16/2025 2:50 PM PLOT BY : HABERKORN, DEVEN PLOT NAME : **PLOT SCALE :** 1 IN:10 FT HORZ. / 1 IN:10 FT VERT.

WISDOT/CADDS SHEET 49

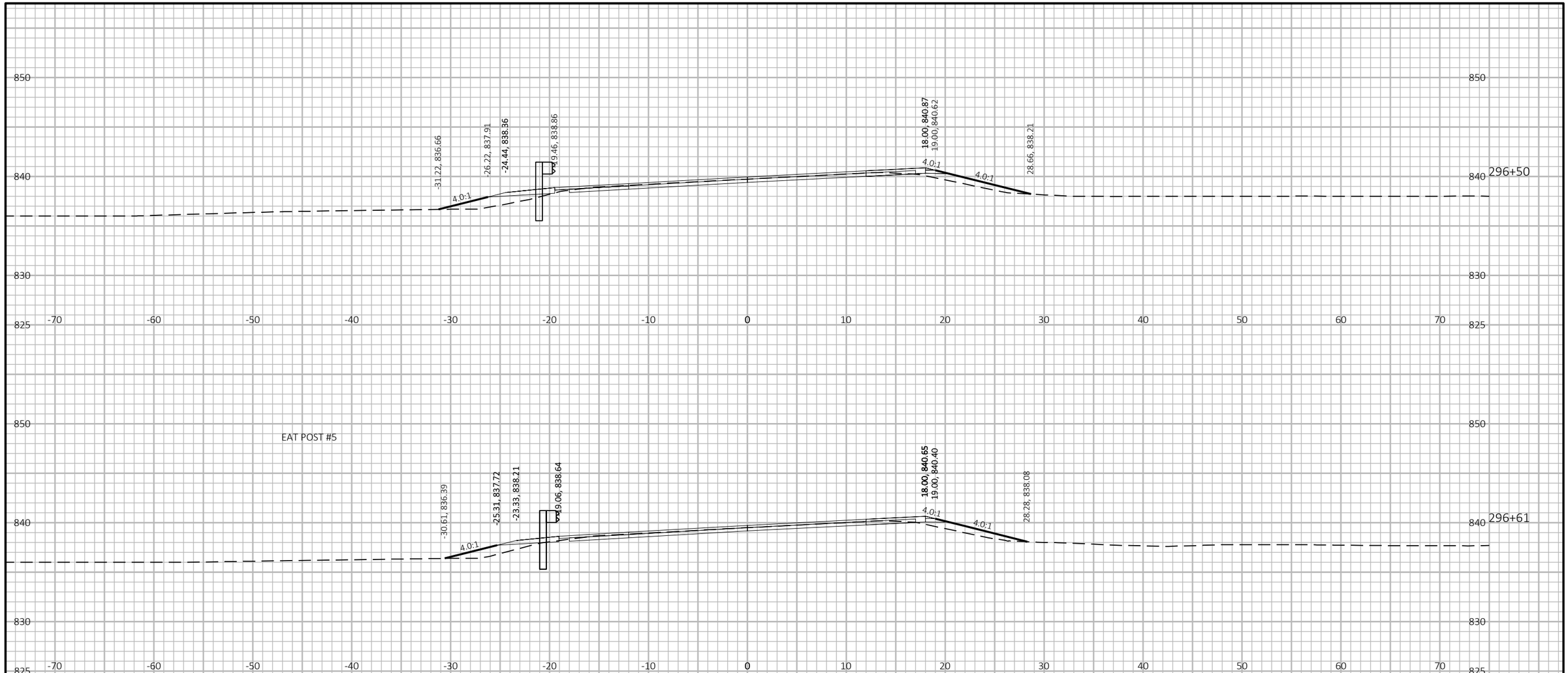

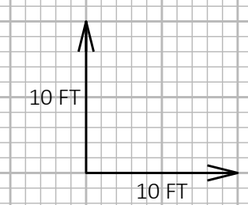

9

9

PROJECT NO: 7120-00-74	HWY: STH 85	COUNTY: DUNN	CROSS SECTIONS: STH 85	SHEET 179	E

FILE NAME : S:\MAD\1000--1099\1089\989\DRAWINGS\CAD\CIVIL 3D\SHEETSPLAN\090201-XS.DWG
LAYOUT NAME - 090201-xs-17

PLOT DATE : 12/16/2025 2:50 PM PLOT BY : HABERKORN, DEVEN PLOT NAME : **PLOT SCALE :** 1 IN:10 FT HORZ. / 1 IN:10 FT VERT.

WISDOT/CADDS SHEET 49

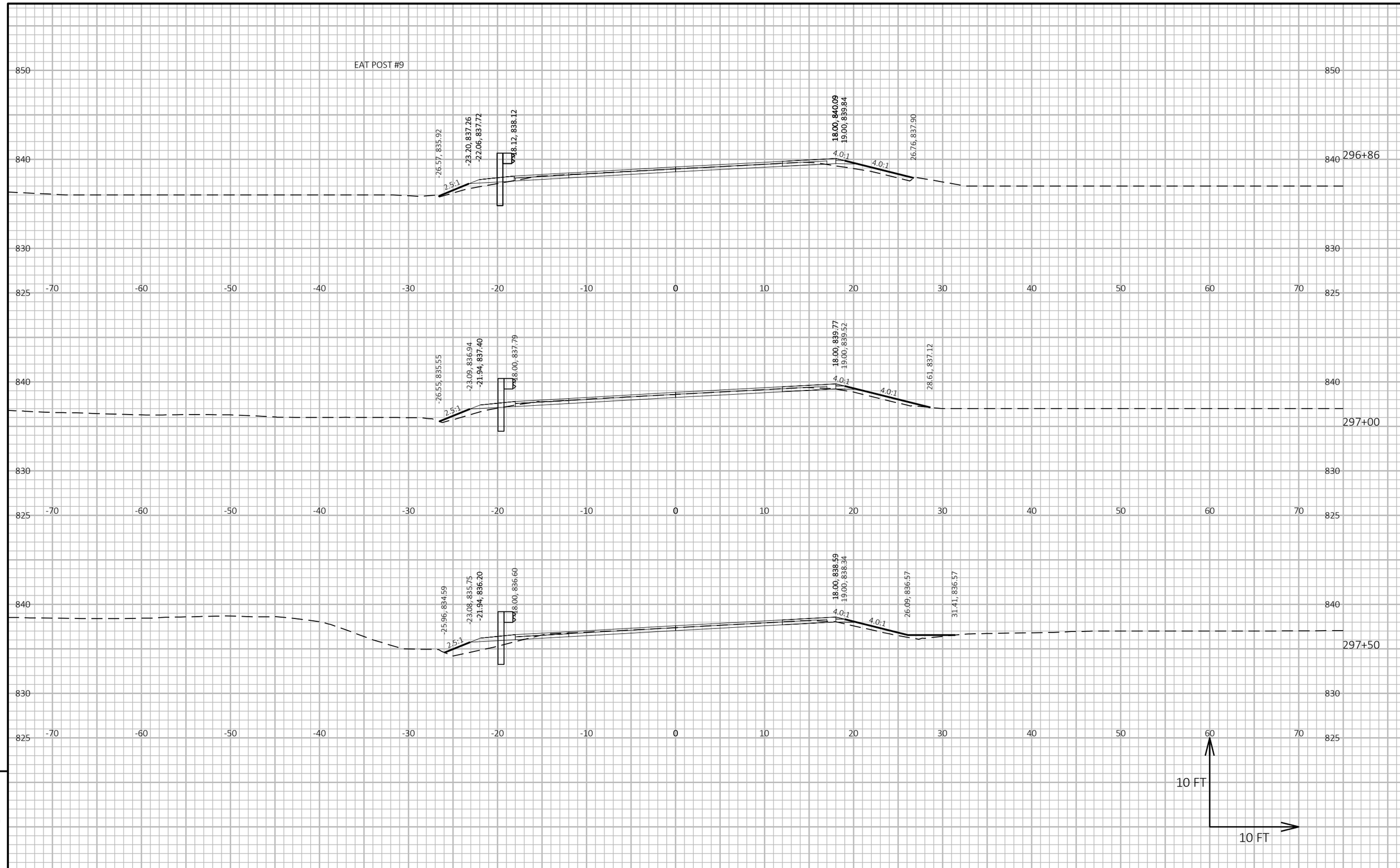

9

9

PROJECT NO: 7120-00-74	HWY: STH 85	COUNTY: DUNN	CROSS SECTIONS: STH 85	SHEET 180	E

FILE NAME : S:\MAD\1000--1099\1089\989\DRAWINGS\CAD\CIVIL 3D\SHEETSPLAN\090201-XS.DWG
LAYOUT NAME - 090201-xs-18

PLOT DATE : 12/16/2025 2:50 PM PLOT BY : HABERKORN, DEVEN PLOT NAME : PLOT SCALE : 1 IN:10 FT HORZ. / 1 IN:10 FT VERT.

WISDOT/CADDS SHEET 49

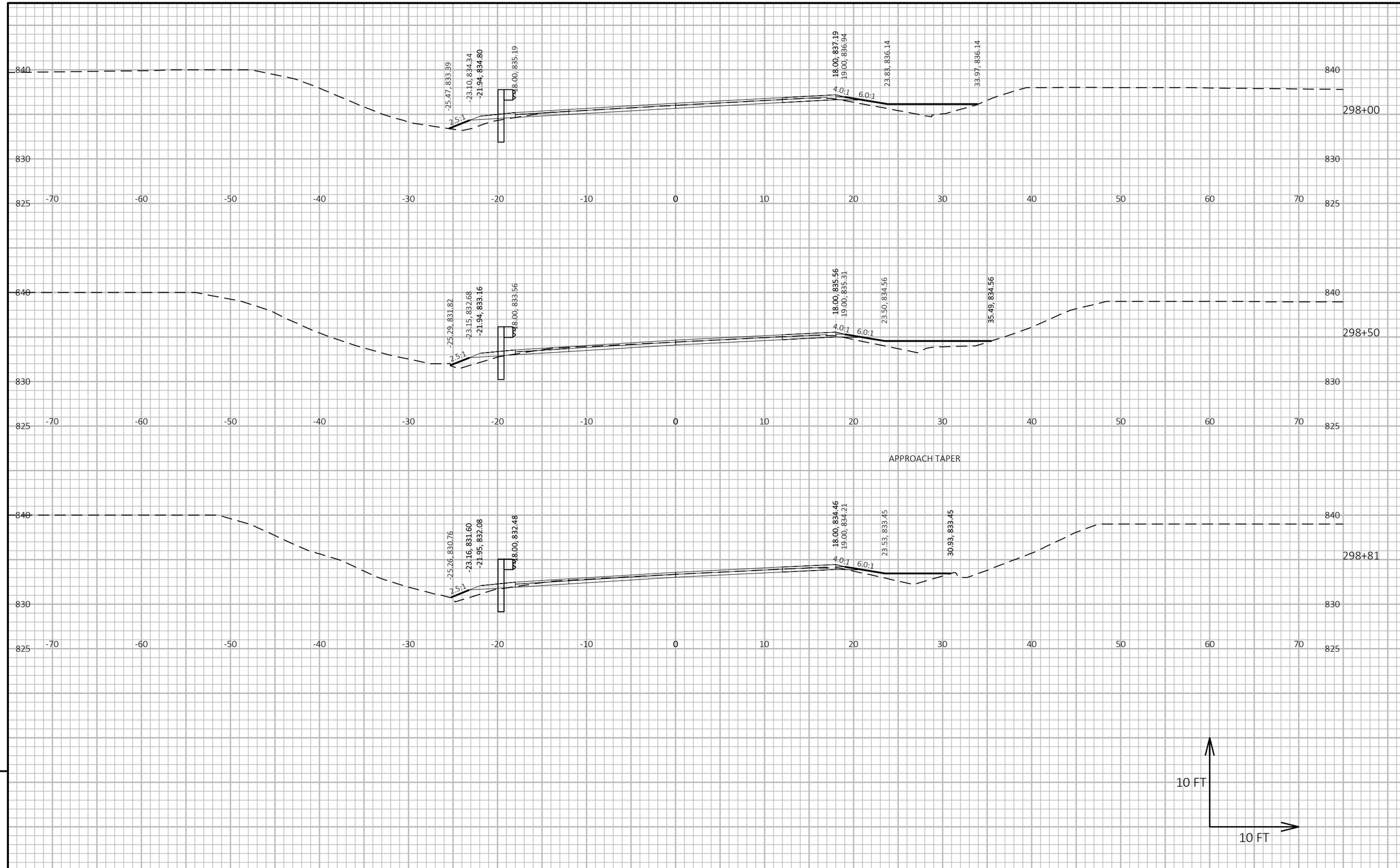

9

9

PROJECT NO: 7120-00-74	HWY: STH 85	COUNTY: DUNN	CROSS SECTIONS: STH 85	SHEET 181	E

FILE NAME : S:\MAD\1000--1099\1089\989\DRAWINGS\CAD\CIVIL 3D\SHEETSPLAN\090201-XS.DWG
LAYOUT NAME - 090201-xs-19

PLOT DATE : 12/16/2025 2:50 PM PLOT BY : HABERKORN, DEVEN PLOT NAME : **PLOT SCALE :** 1 IN:10 FT HORZ. / 1 IN:10 FT VERT.

WISDOT/CADDS SHEET 49

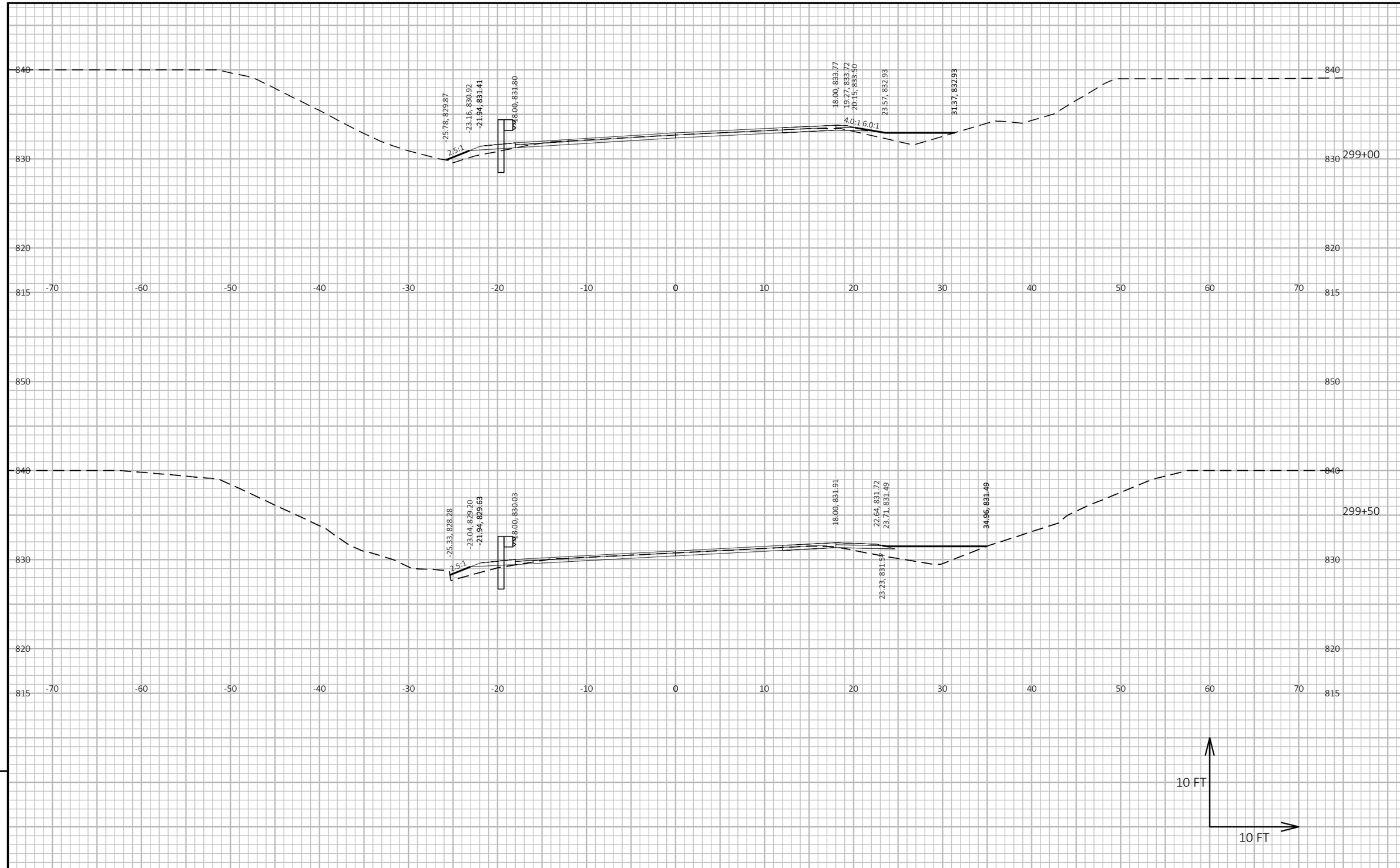

9

9

PROJECT NO: 7120-00-74	HWY: STH 85	COUNTY: DUNN	CROSS SECTIONS: STH 85	SHEET 182	E

FILE NAME : S:\MAD\1000--1099\1089\989\DRAWINGS\CAD\CIVIL 3D\SHEETSPLAN\090201-XS.DWG
LAYOUT NAME - 090201-xs-20

PLOT DATE : 12/16/2025 2:50 PM PLOT BY : HABERKORN, DEVEN PLOT NAME : PLOT SCALE : 1 IN:10 FT HORZ. / 1 IN:10 FT VERT.

WISDOT/CADDS SHEET 49

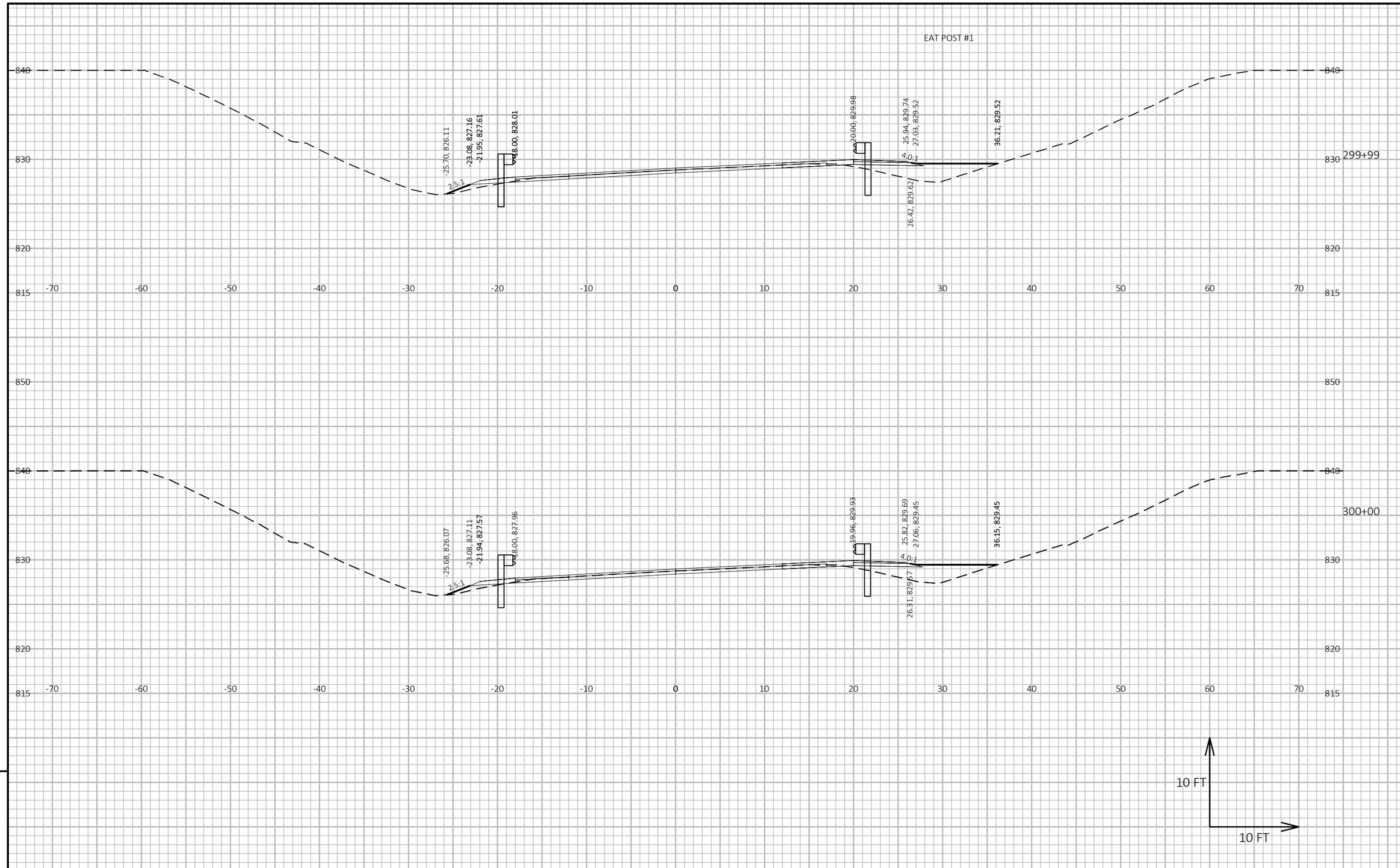

9

9

PROJECT NO: 7120-00-74	HWY: STH 85	COUNTY: DUNN	CROSS SECTIONS: STH 85	SHEET 183	E

FILE NAME : S:\MAD\1000--1099\1089\989\DRAWINGS\CAD\CIVIL 3D\SHEETSPLAN\090201-XS.DWG
LAYOUT NAME - 090201-xs-21

PLOT DATE : 12/16/2025 2:50 PM PLOT BY : HABERKORN, DEVEN PLOT NAME : PLOT SCALE : 1 IN:10 FT HORZ. / 1 IN:10 FT VERT.

WISDOT/CADDS SHEET 49

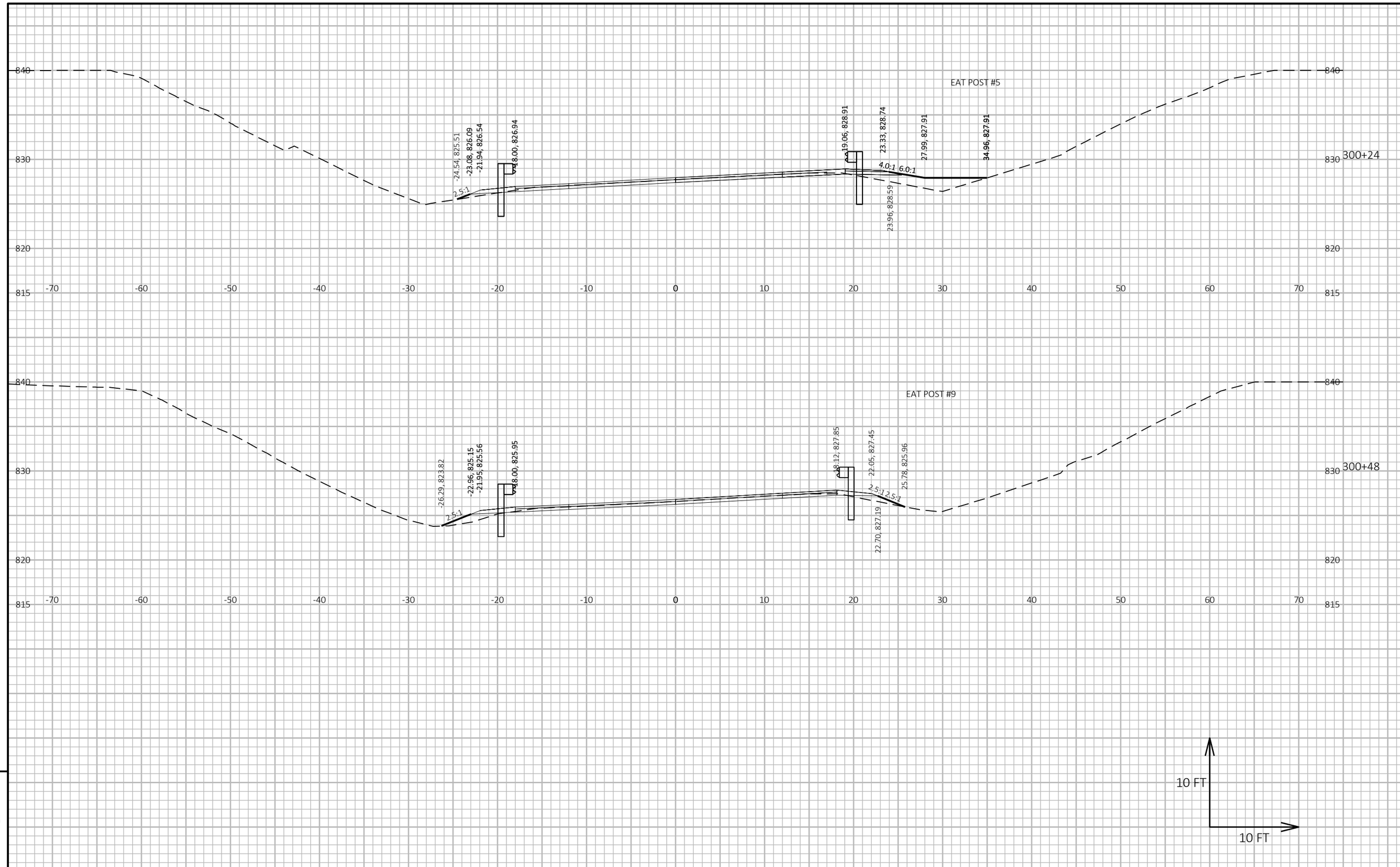

9

9

PROJECT NO: 7120-00-74	HWY: STH 85	COUNTY: DUNN	CROSS SECTIONS: STH 85	SHEET 184	E

FILE NAME : S:\MAD\1000--1099\1089\989\DRAWINGS\CAD\CIVIL 3D\SHEETSPLAN\090201-XS.DWG
LAYOUT NAME - 090201-xs-22

PLOT DATE : 12/16/2025 2:50 PM PLOT BY : HABERKORN, DEVEN PLOT NAME : **PLOT SCALE :** 1 IN:10 FT HORZ. / 1 IN:10 FT VERT.

WISDOT/CADDS SHEET 49

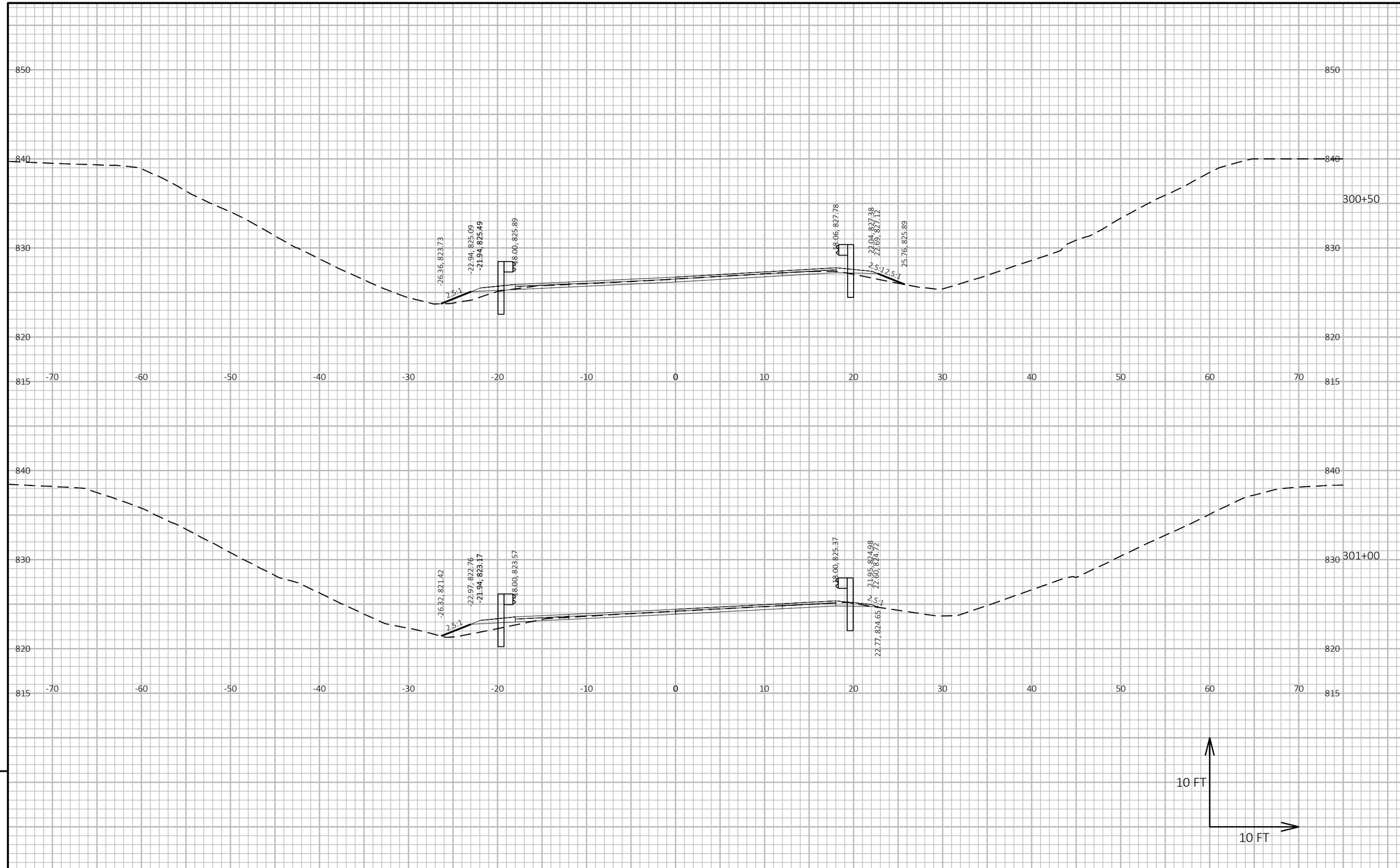

9

9

PROJECT NO: 7120-00-74	HWY: STH 85	COUNTY: DUNN	CROSS SECTIONS: STH 85	SHEET 185	E

FILE NAME : S:\MAD\1000--1099\1089\989\DRAWINGS\CAD\CIVIL 3D\SHEETSPLAN\090201-XS.DWG
LAYOUT NAME - 090201-xs-23

PLOT DATE : 12/16/2025 2:50 PM PLOT BY : HABERKORN, DEVEN PLOT NAME : PLOT SCALE : 1 IN:10 FT HORZ. / 1 IN:10 FT VERT.

WISDOT/CADDS SHEET 49

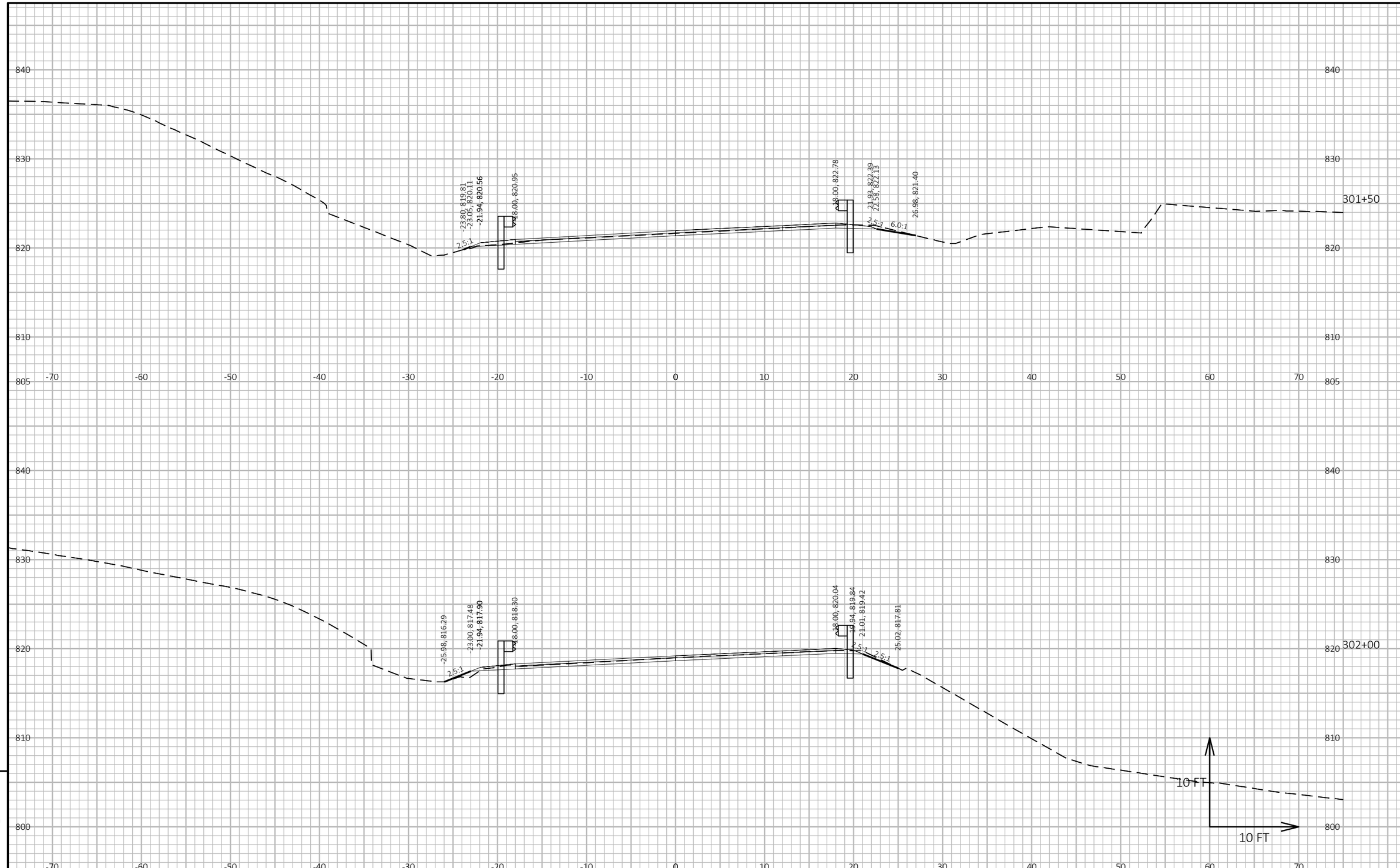

PROJECT NO: 7120-00-74	HWY: STH 85	COUNTY: DUNN	CROSS SECTIONS: STH 85	SHEET 186	E

FILE NAME : S:\MAD\1000--1099\1089\989\DRAWINGS\CAD\CIVIL 3D\SHEETSPLAN\090201-XS.DWG
LAYOUT NAME - 090201-xs-24

PLOT DATE : 12/16/2025 2:50 PM PLOT BY : HABERKORN, DEVEN PLOT NAME : PLOT SCALE : 1 IN:10 FT HORZ. / 1 IN:10 FT VERT.

WISDOT/CADDS SHEET 49

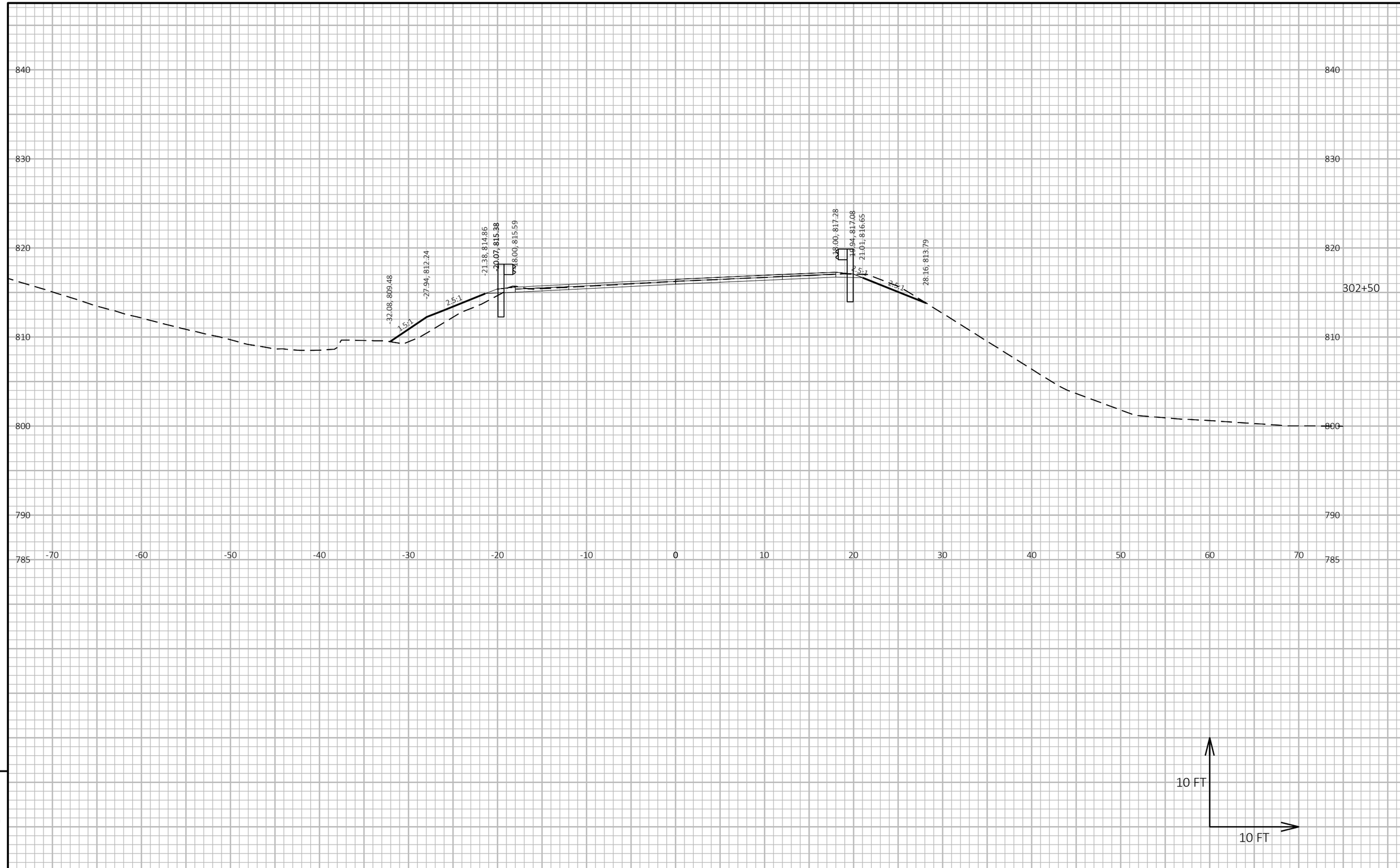

9

9

PROJECT NO: 7120-00-74	HWY: STH 85	COUNTY: DUNN	CROSS SECTIONS: STH 85	SHEET 187	E

FILE NAME : S:\MAD\1000--1099\1089\989\DRAWINGS\CAD\CIVIL 3D\SHEETSPLAN\090201-XS.DWG
LAYOUT NAME - 090201-xs-25

PLOT DATE : 12/16/2025 2:50 PM PLOT BY : HABERKORN, DEVEN PLOT NAME : PLOT SCALE : 1 IN:10 FT HORZ. / 1 IN:10 FT VERT.

WISDOT/CADDS SHEET 49

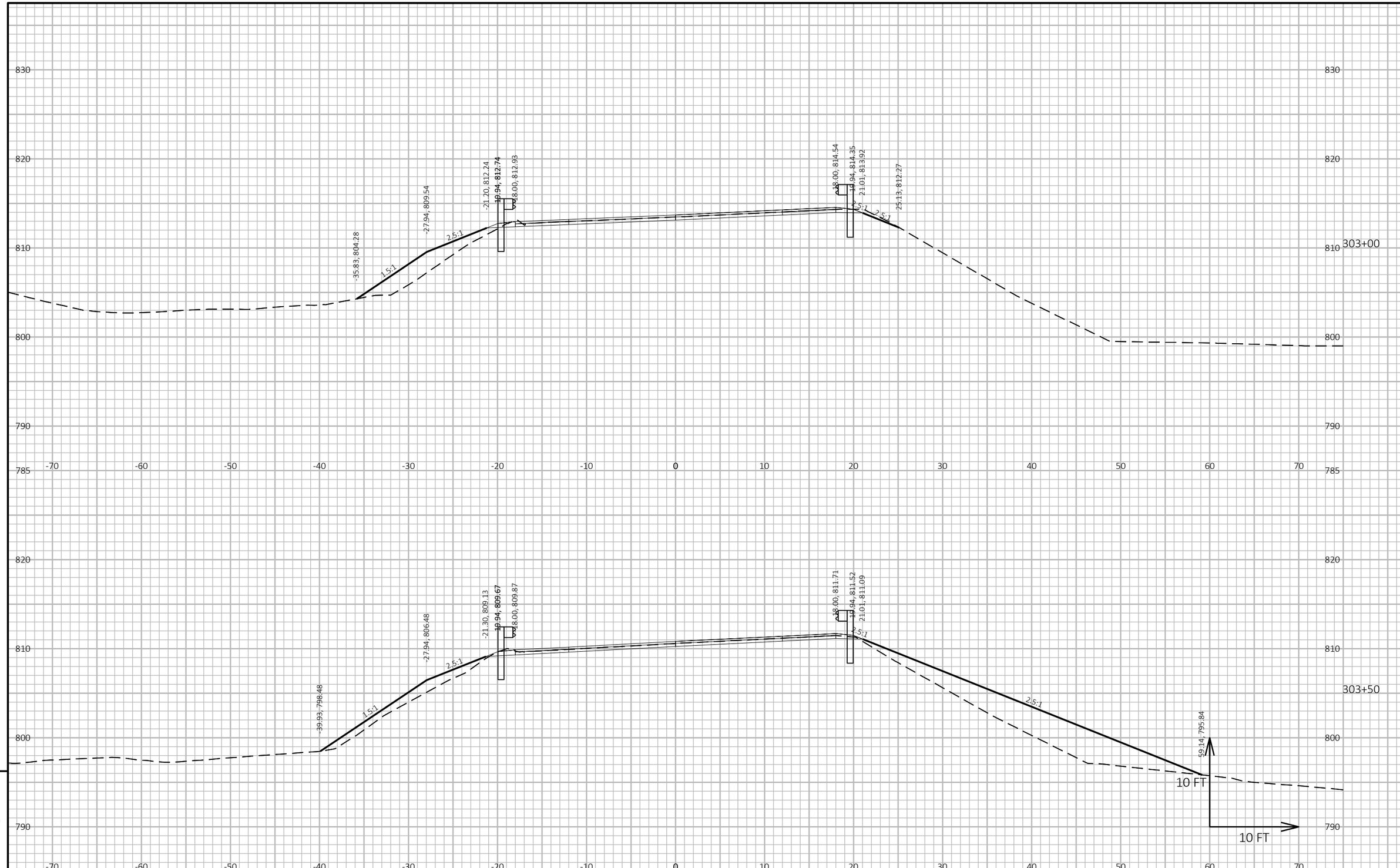

9

9

PROJECT NO: 7120-00-74	HWY: STH 85	COUNTY: DUNN	CROSS SECTIONS: STH 85	SHEET 188	E

FILE NAME : S:\MAD\1000--1099\1089\989\DRAWINGS\CAD\CIVIL 3D\SHEETSPLAN\090201-XS.DWG
LAYOUT NAME - 090201-xs-26

PLOT DATE : 12/16/2025 2:50 PM PLOT BY : HABERKORN, DEVEN PLOT NAME : PLOT SCALE : 1 IN:10 FT HORZ. / 1 IN:10 FT VERT.

WISDOT/CADDS SHEET 49

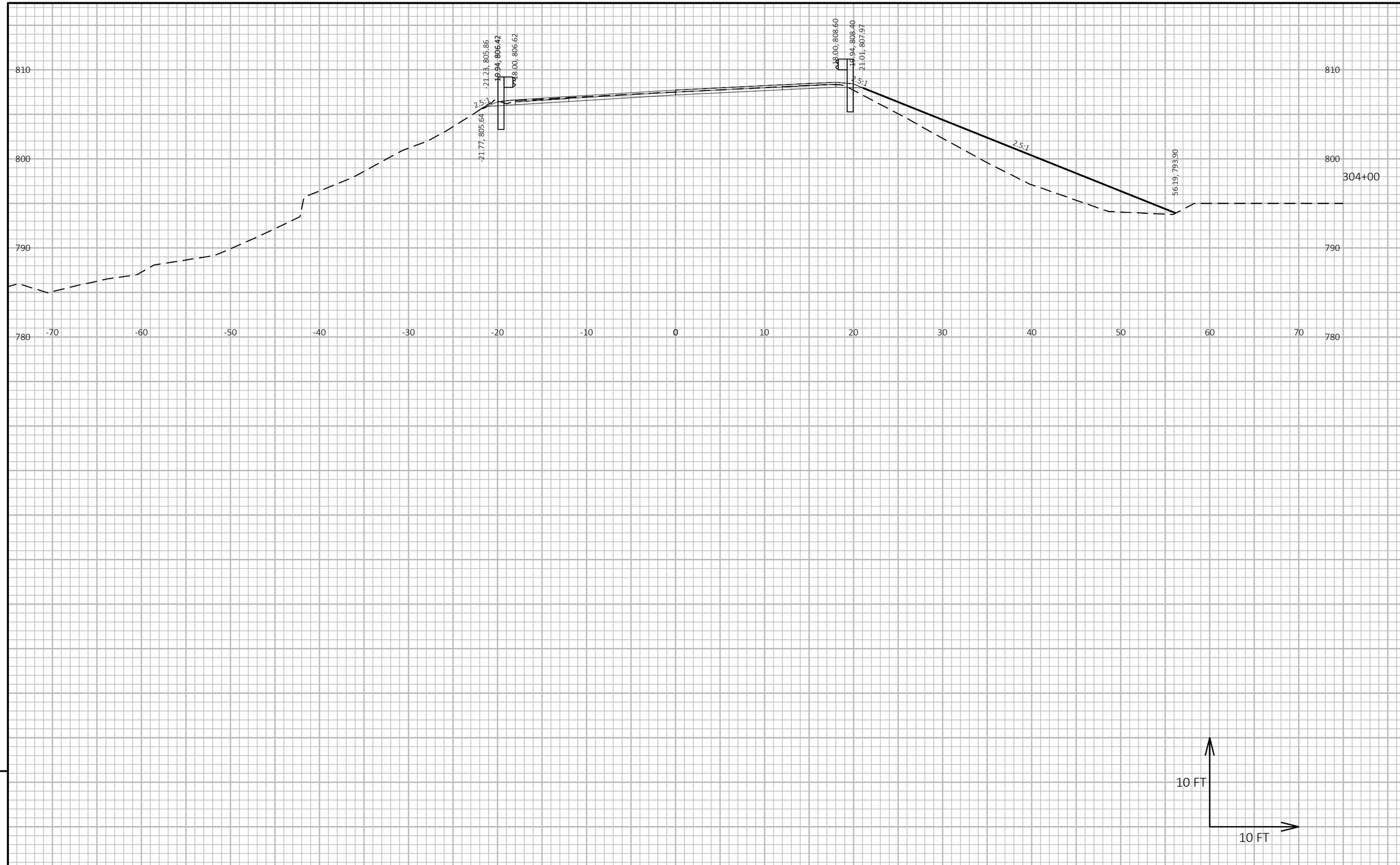

9

9

PROJECT NO: 7120-00-74	HWY: STH 85	COUNTY: DUNN	CROSS SECTIONS: STH 85	SHEET 189	E

FILE NAME : S:\MAD\1000--1099\1089\989\DRAWINGS\CAD\CIVIL 3D\SHEETSPLAN\090201-XS.DWG
LAYOUT NAME - 090201-xs-27

PLOT DATE : 12/16/2025 2:50 PM PLOT BY : HABERKORN, DEVEN PLOT NAME : **PLOT SCALE :** 1 IN:10 FT HORZ. / 1 IN:10 FT VERT.

WISDOT/CADDS SHEET 49

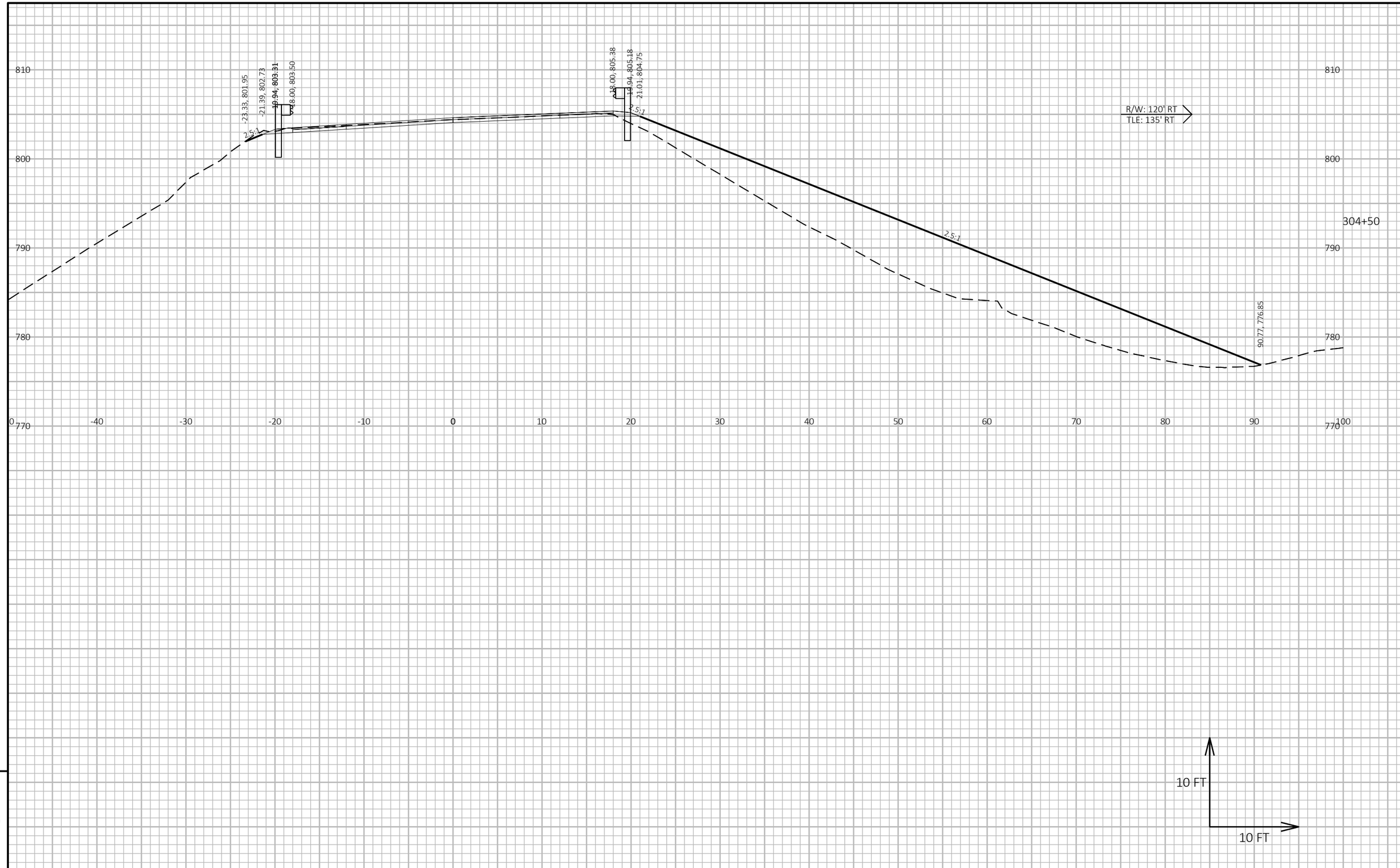

9

9

PROJECT NO: 7120-00-74	HWY: STH 85	COUNTY: DUNN	CROSS SECTIONS: STH 85	SHEET 190	E

FILE NAME : S:\MAD\1000--1099\1089\989\DRAWINGS\CAD\CIVIL 3D\SHEETSPLAN\090201-XS.DWG
LAYOUT NAME - 090201-xs-27a

PLOT DATE : 12/16/2025 2:50 PM PLOT BY : HABERKORN, DEVEN PLOT NAME : PLOT SCALE : 1 IN:10 FT HORZ. / 1 IN:10 FT VERT.

WISDOT/CADDS SHEET 49

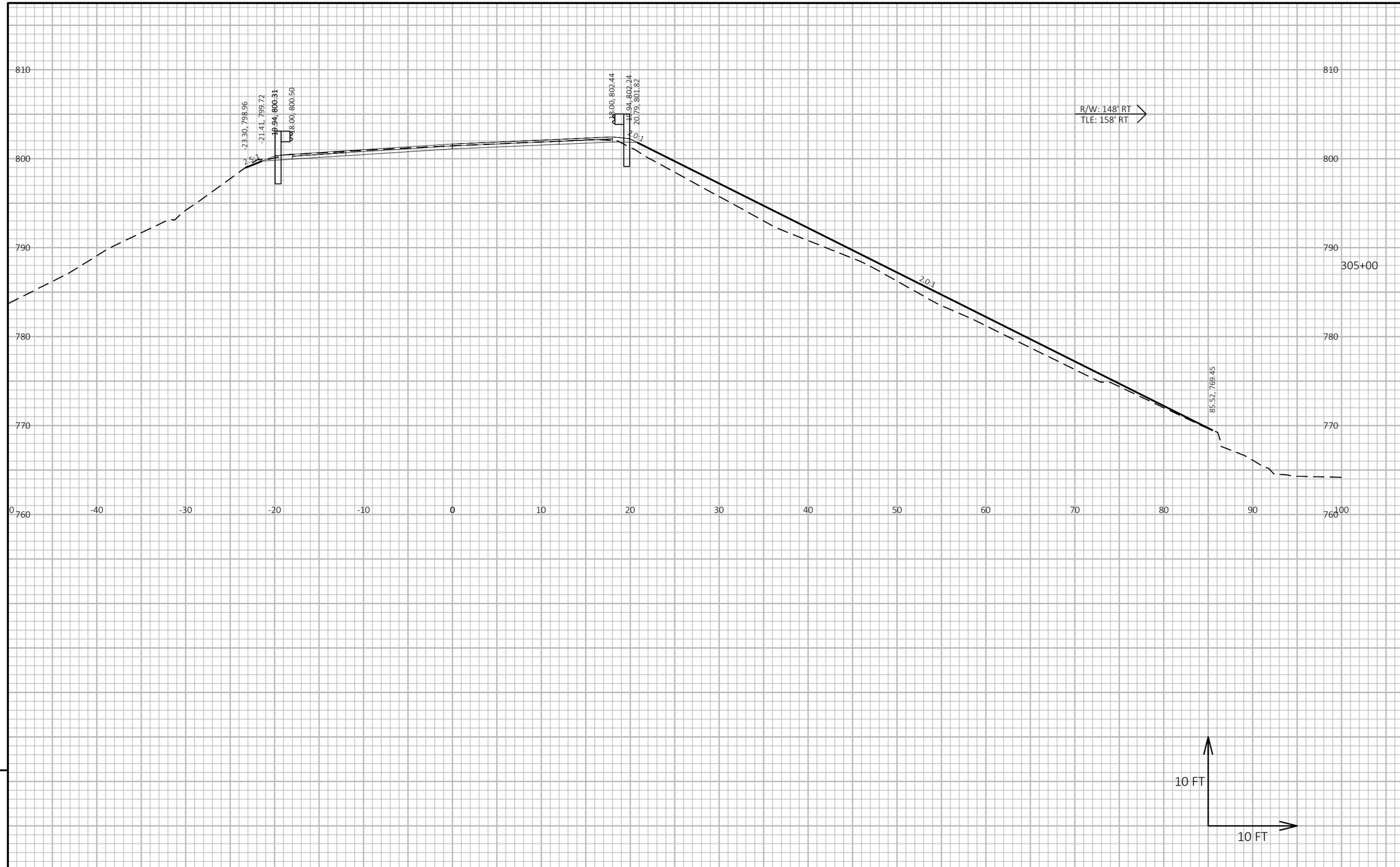

9

9

PROJECT NO: 7120-00-74	HWY: STH 85	COUNTY: DUNN	CROSS SECTIONS: STH 85	SHEET 191	E

FILE NAME : S:\MAD\1000--1099\1089\989\DRAWINGS\CAD\CIVIL 3D\SHEETSPLAN\090201-XS.DWG
LAYOUT NAME - 090201-xs-28

PLOT DATE : 12/16/2025 2:50 PM PLOT BY : HABERKORN, DEVEN PLOT NAME : **PLOT SCALE :** 1 IN:10 FT HORZ. / 1 IN:10 FT VERT.

WISDOT/CADDS SHEET 49

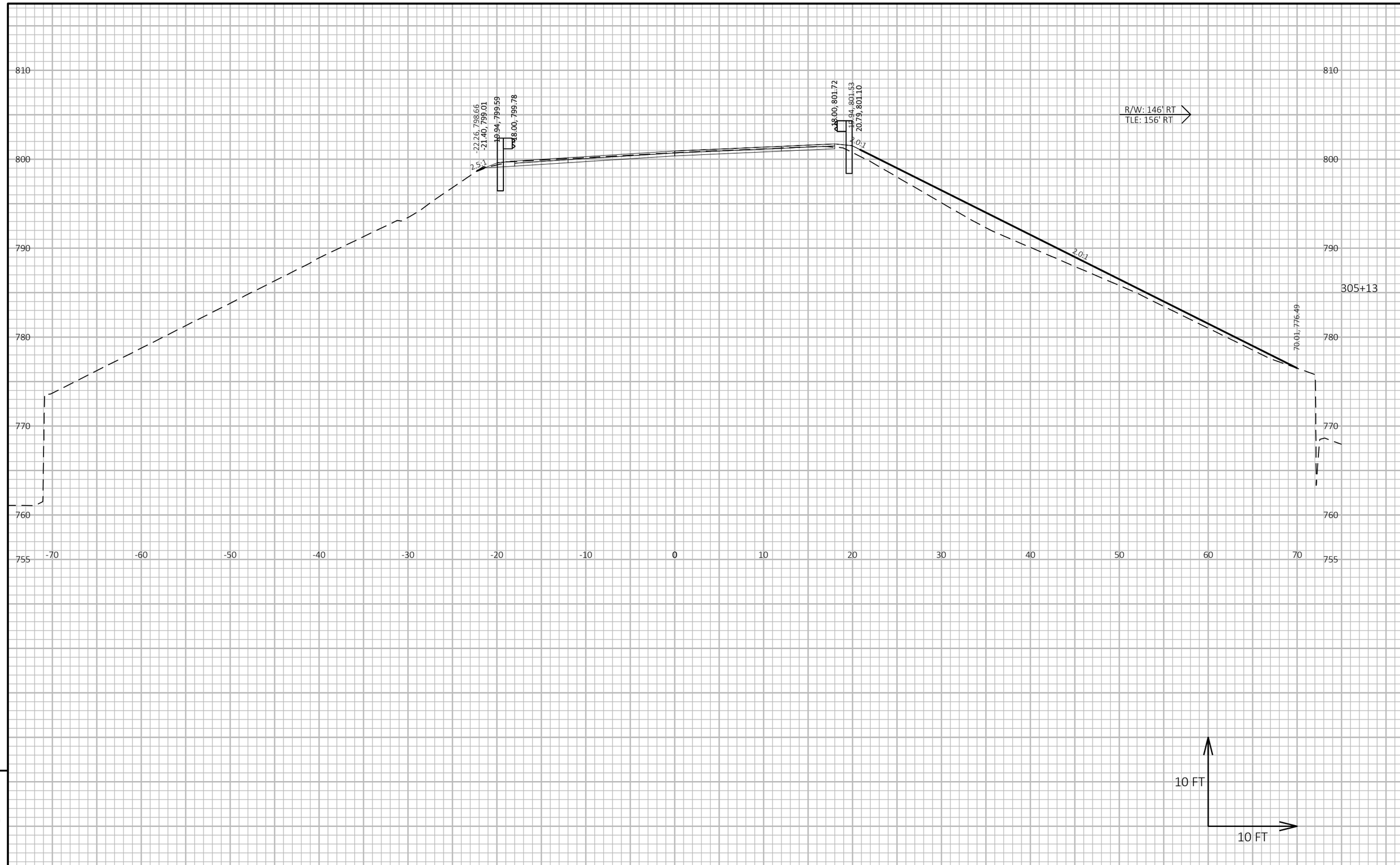

9

9

PROJECT NO: 7120-00-74	HWY: STH 85	COUNTY: DUNN	CROSS SECTIONS: STH 85	SHEET 192	E

FILE NAME : S:\MAD\1000--1099\1089\989\DRAWINGS\CAD\CIVIL 3D\SHEETSPLAN\090201-XS.DWG
LAYOUT NAME - 090201-xs-28 (2)

PLOT DATE : 12/16/2025 2:50 PM PLOT BY : HABERKORN, DEVEN PLOT NAME : PLOT SCALE : 1 IN:10 FT HORZ. / 1 IN:10 FT VERT.

WISDOT/CADDS SHEET 49

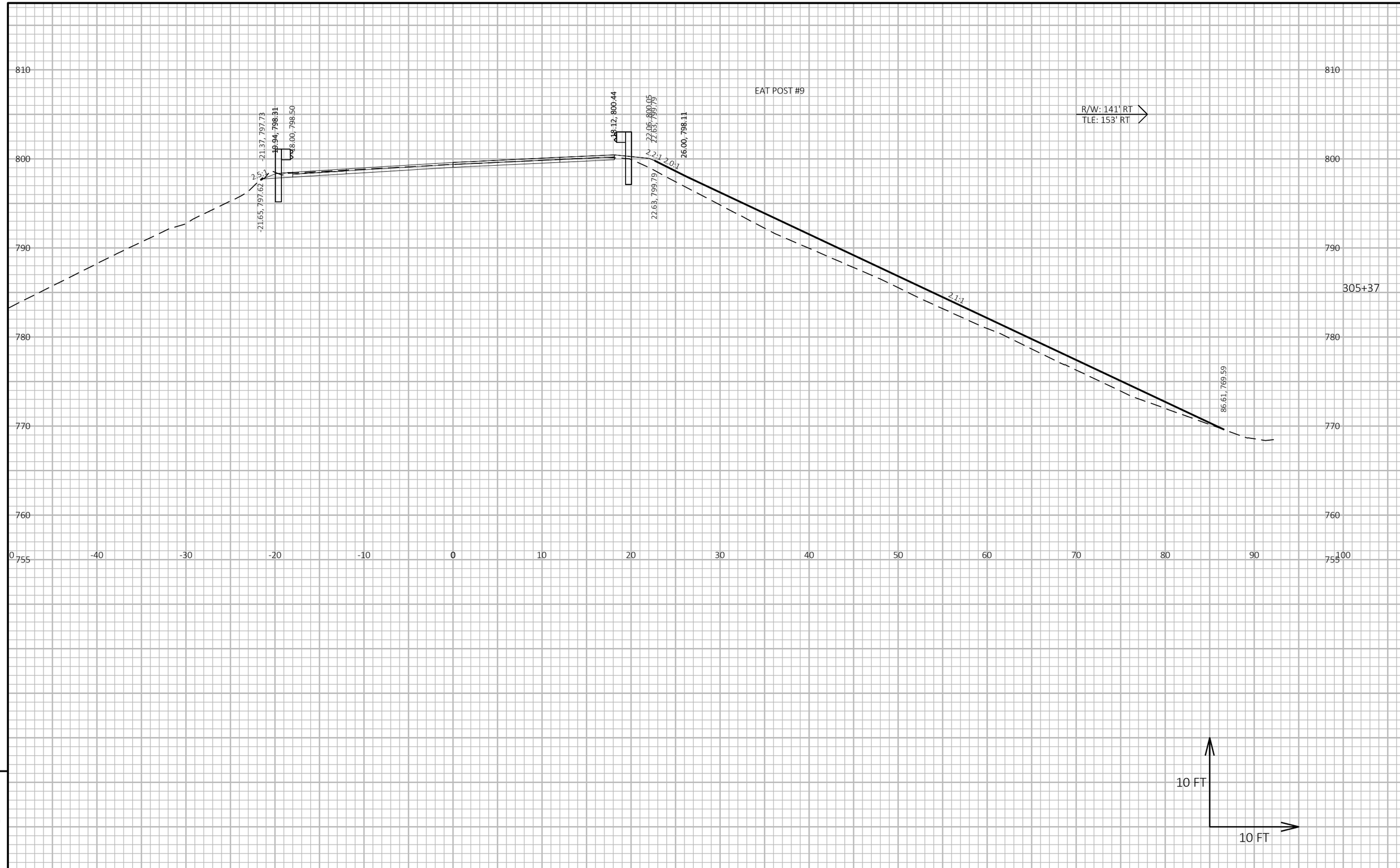

9

9

PROJECT NO: 7120-00-74	HWY: STH 85	COUNTY: DUNN	CROSS SECTIONS: STH 85	SHEET 193	E

FILE NAME : S:\MAD\1000--1099\1089\989\DRAWINGS\CAD\CIVIL 3D\SHEETSPLAN\090201-XS.DWG
LAYOUT NAME - 090201-xs-29

PLOT DATE : 12/16/2025 2:50 PM PLOT BY : HABERKORN, DEVEN PLOT NAME :

PLOT SCALE : 1 IN:10 FT HORZ. / 1 IN:10 FT VERT.

WISDOT/CADDS SHEET 49

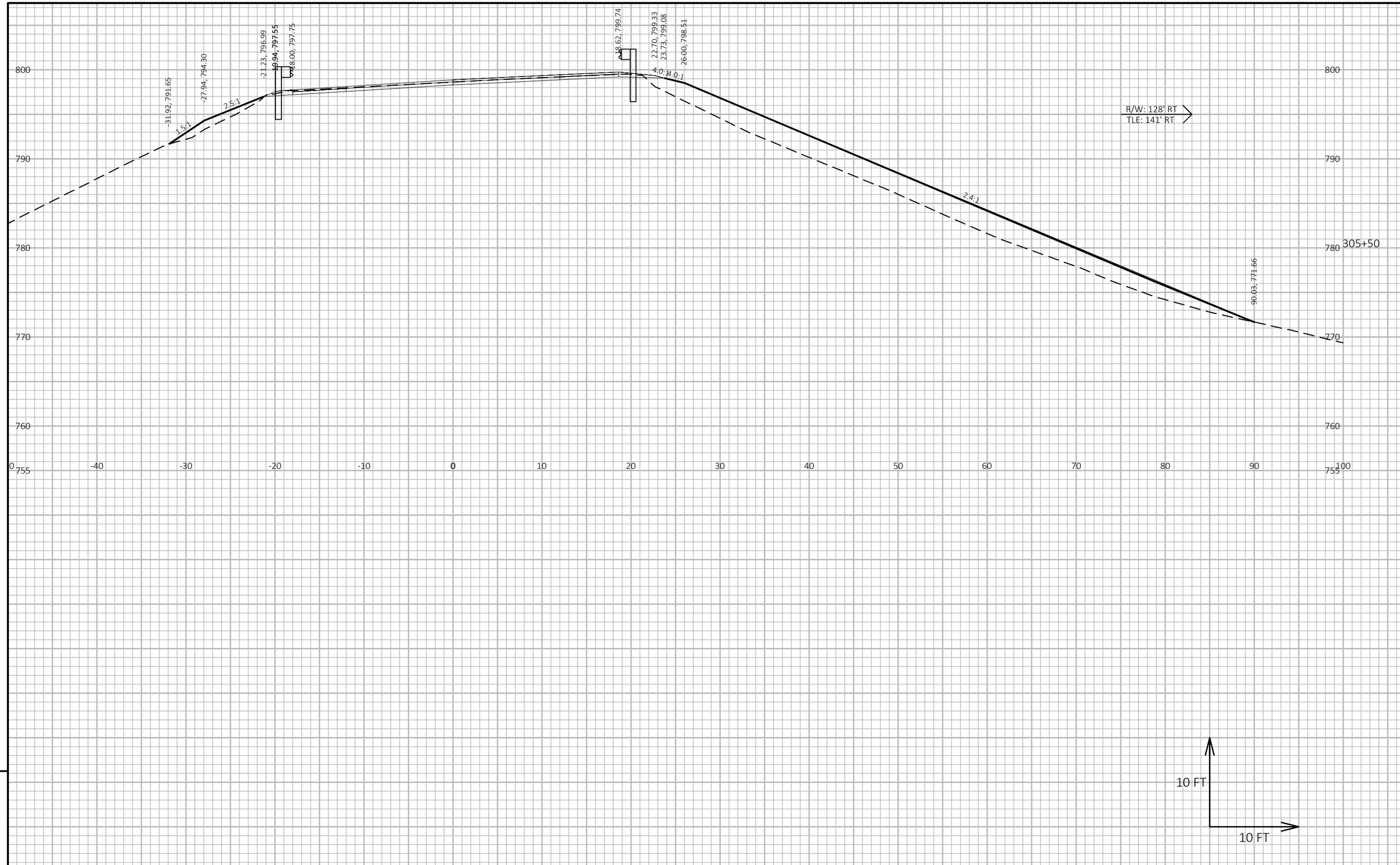

9

9

PROJECT NO: 7120-00-74	HWY: STH 85	COUNTY: DUNN	CROSS SECTIONS: STH 85	SHEET 194	E

FILE NAME : S:\MAD\1000--1099\1089\989\DRAWINGS\CAD\CIVIL 3D\SHEETSPLAN\090201-XS.DWG
LAYOUT NAME - 090201-xs-29 (2)

PLOT DATE : 12/16/2025 2:50 PM PLOT BY : HABERKORN, DEVEN PLOT NAME : **PLOT SCALE :** 1 IN:10 FT HORZ. / 1 IN:10 FT VERT.

WISDOT/CADDS SHEET 49

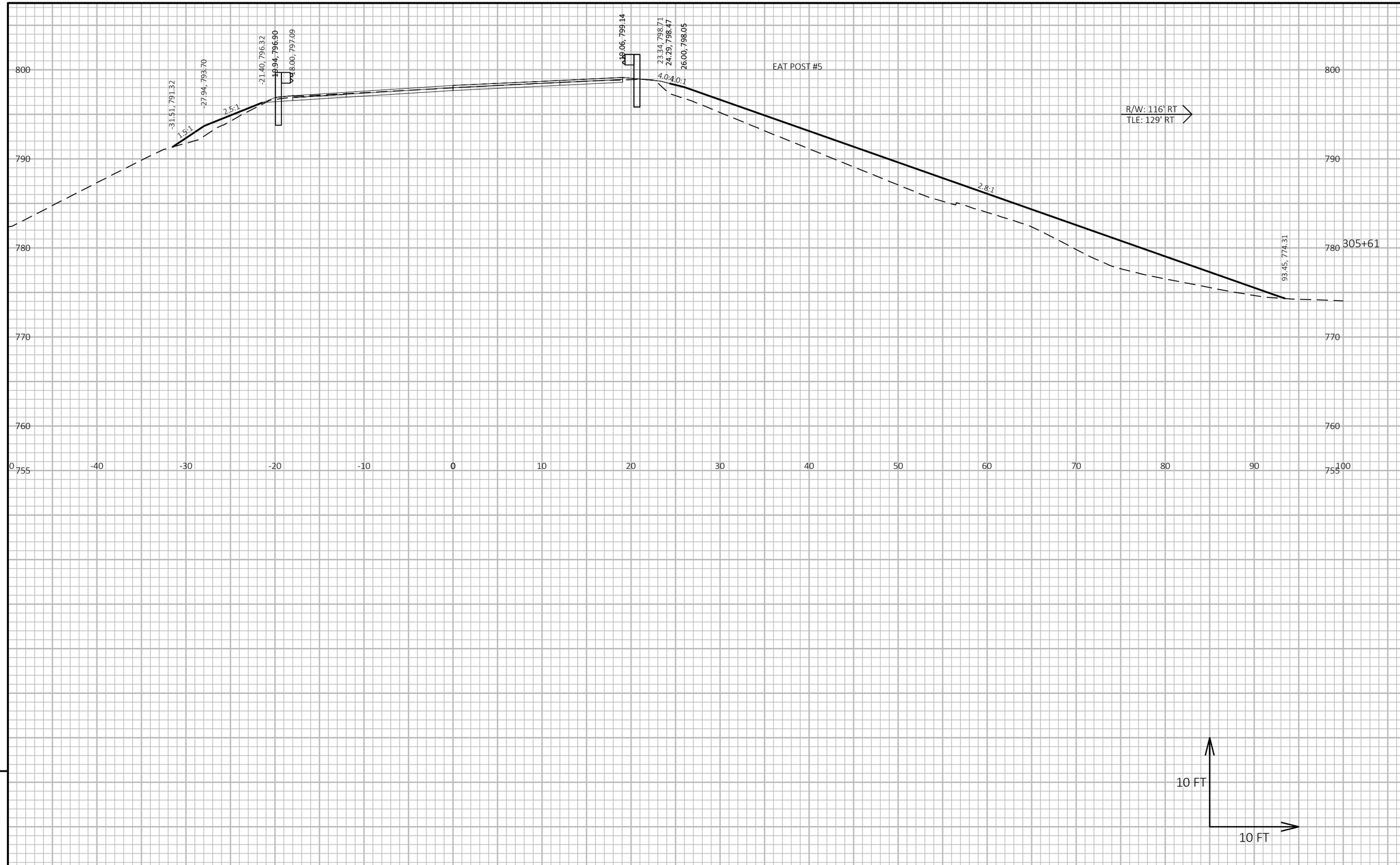

9

9

PROJECT NO: 7120-00-74	HWY: STH 85	COUNTY: DUNN	CROSS SECTIONS: STH 85	SHEET 195	E

FILE NAME : S:\MAD\1000--1099\1089\989\DRAWINGS\CAD\CIVIL 3D\SHEETSPLAN\090201-XS.DWG
LAYOUT NAME - 090201-xs-30

PLOT DATE : 12/16/2025 2:50 PM PLOT BY : HABERKORN, DEVEN PLOT NAME : **PLOT SCALE :** 1 IN:10 FT HORZ. / 1 IN:10 FT VERT.

WISDOT/CADDS SHEET 49

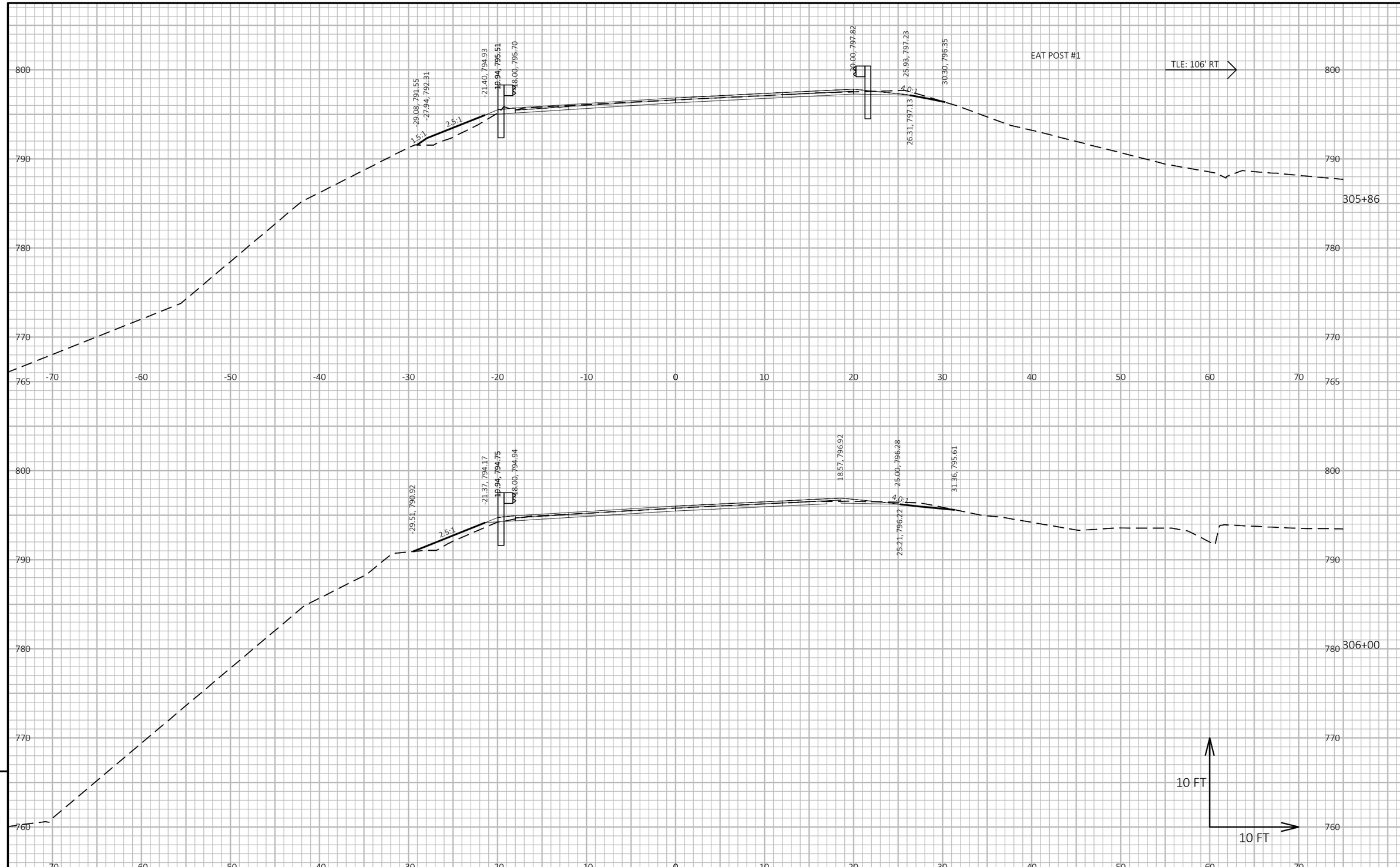

9

9

PROJECT NO: 7120-00-74	HWY: STH 85	COUNTY: DUNN	CROSS SECTIONS: STH 85	SHEET 196	E

FILE NAME : S:\MAD\1000--1099\1089\989\DRAWINGS\CAD\CIVIL 3D\SHEETSPLAN\090201-XS.DWG
LAYOUT NAME - 090201-xs-31

PLOT DATE : 12/16/2025 2:50 PM PLOT BY : HABERKORN, DEVEN PLOT NAME : **PLOT SCALE :** 1 IN:10 FT HORZ. / 1 IN:10 FT VERT.

WISDOT/CADDS SHEET 49

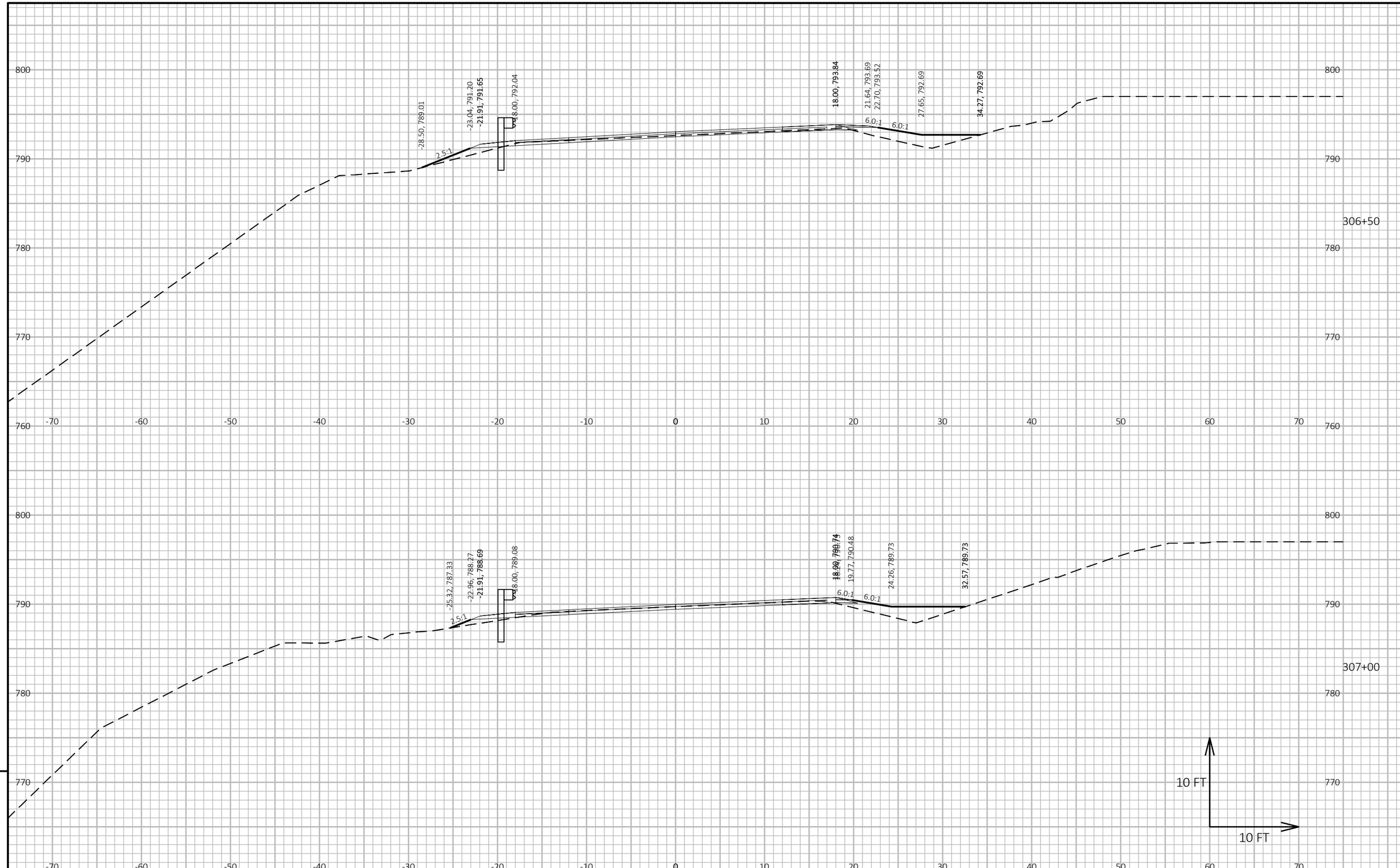

9

9

PROJECT NO: 7120-00-74	HWY: STH 85	COUNTY: DUNN	CROSS SECTIONS: STH 85	SHEET 197	E

FILE NAME : S:\MAD\1000--1099\1089\989\DRAWINGS\CAD\CIVIL 3D\SHEETSPLAN\090201-XS.DWG
LAYOUT NAME - 090201-xs-32

PLOT DATE : 12/16/2025 2:50 PM PLOT BY : HABERKORN, DEVEN PLOT NAME : PLOT SCALE : 1 IN:10 FT HORZ. / 1 IN:10 FT VERT.

WISDOT/CADDS SHEET 49

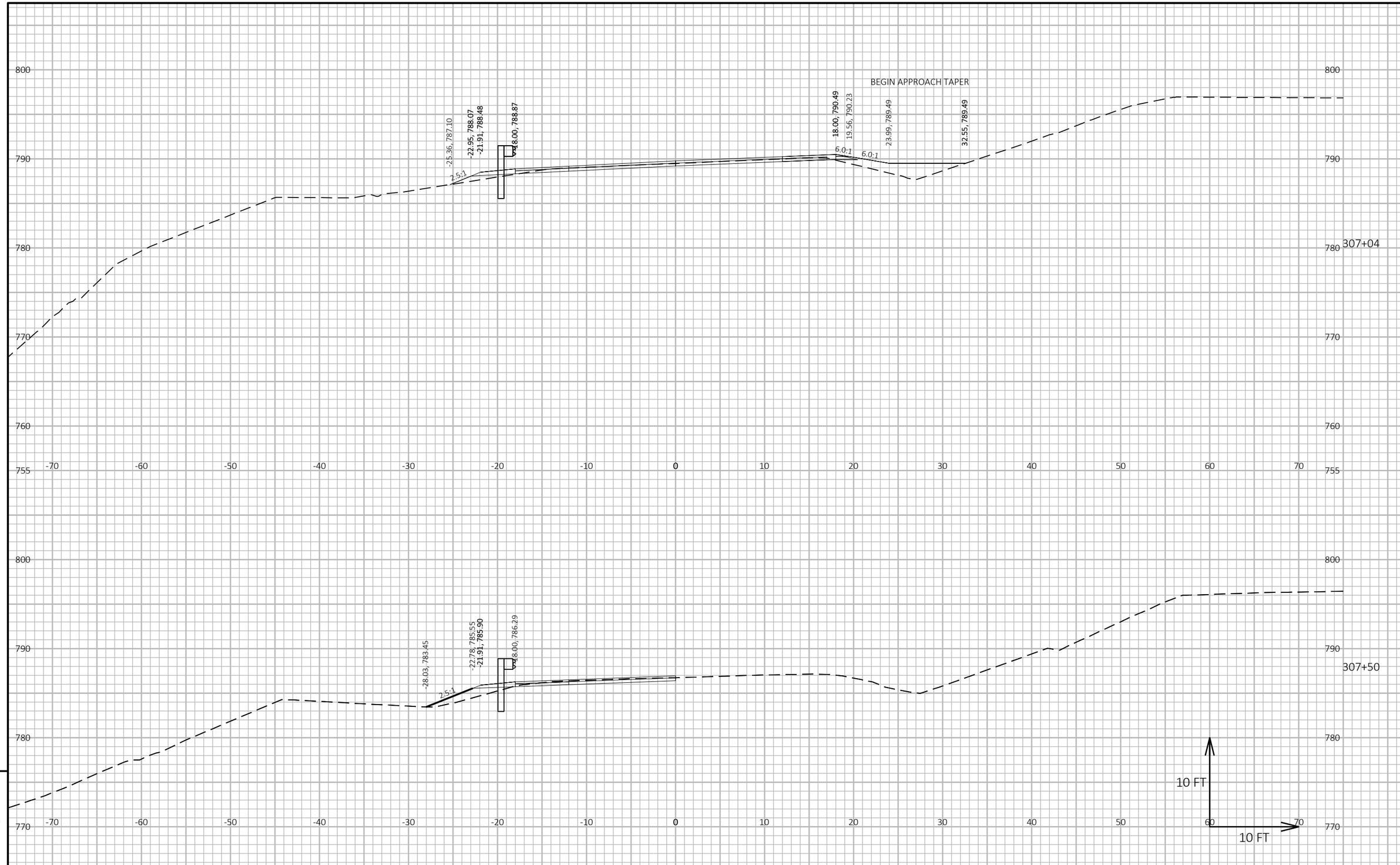

9

9

PROJECT NO: 7120-00-74	HWY: STH 85	COUNTY: DUNN	CROSS SECTIONS: STH 85	SHEET 198	E

FILE NAME : S:\MAD\1000--1099\1089\989\DRAWINGS\CAD\CIVIL 3D\SHEETSPLAN\090201-XS.DWG
LAYOUT NAME - 090201-xs-33

PLOT DATE : 12/16/2025 2:50 PM PLOT BY : HABERKORN, DEVEN PLOT NAME : PLOT SCALE : 1 IN:10 FT HORZ. / 1 IN:10 FT VERT.

WISDOT/CADDS SHEET 49

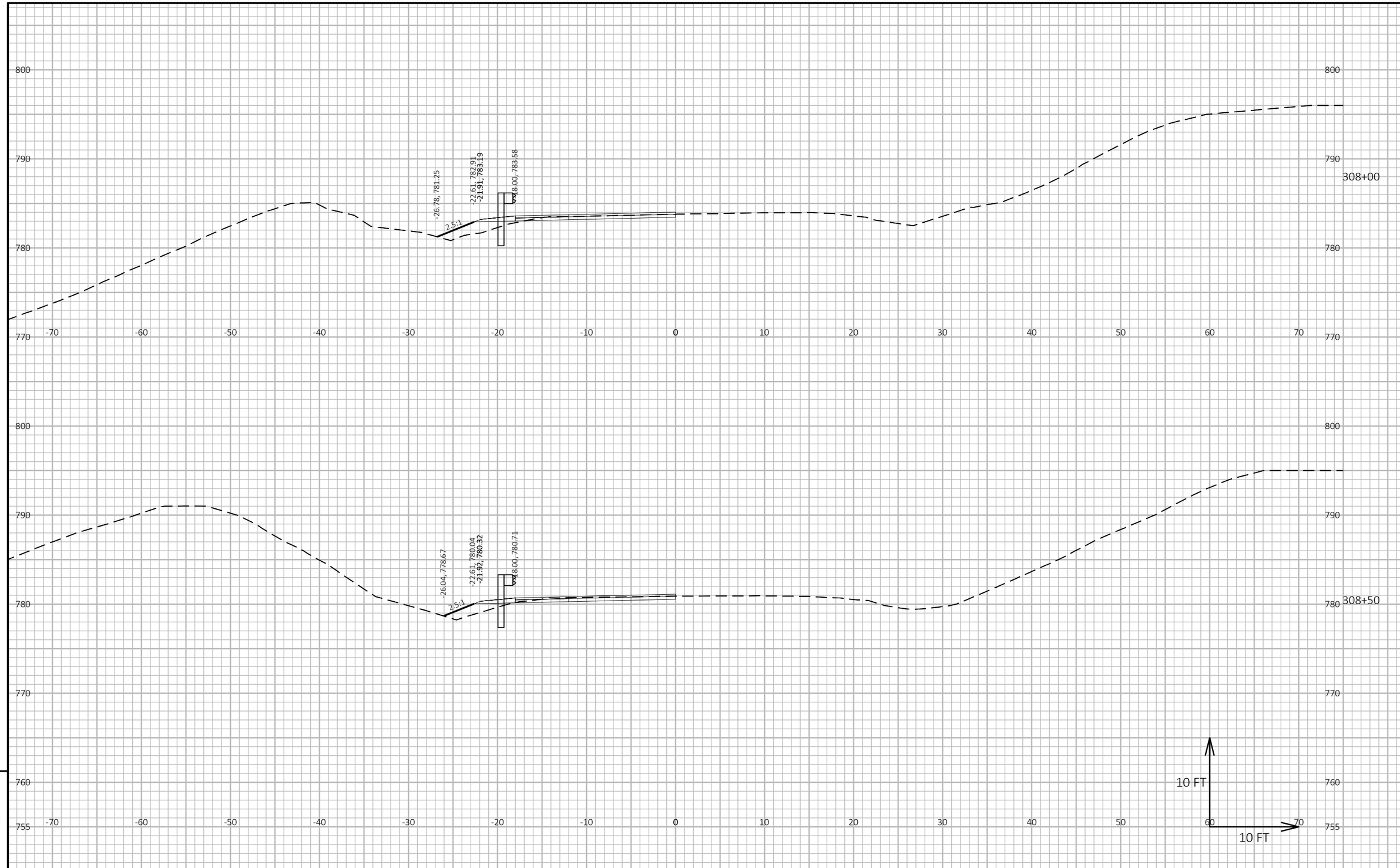

9

9

PROJECT NO: 7120-00-74	HWY: STH 85	COUNTY: DUNN	CROSS SECTIONS: STH 85	SHEET 199	E

FILE NAME : S:\MAD\1000--1099\1089\989\DRAWINGS\CAD\CIVIL 3D\SHEETSPLAN\090201-XS.DWG
LAYOUT NAME - 090201-xs-34

PLOT DATE : 12/16/2025 2:50 PM PLOT BY : HABERKORN, DEVEN PLOT NAME : PLOT SCALE : 1 IN:10 FT HORZ. / 1 IN:10 FT VERT.

WISDOT/CADDS SHEET 49

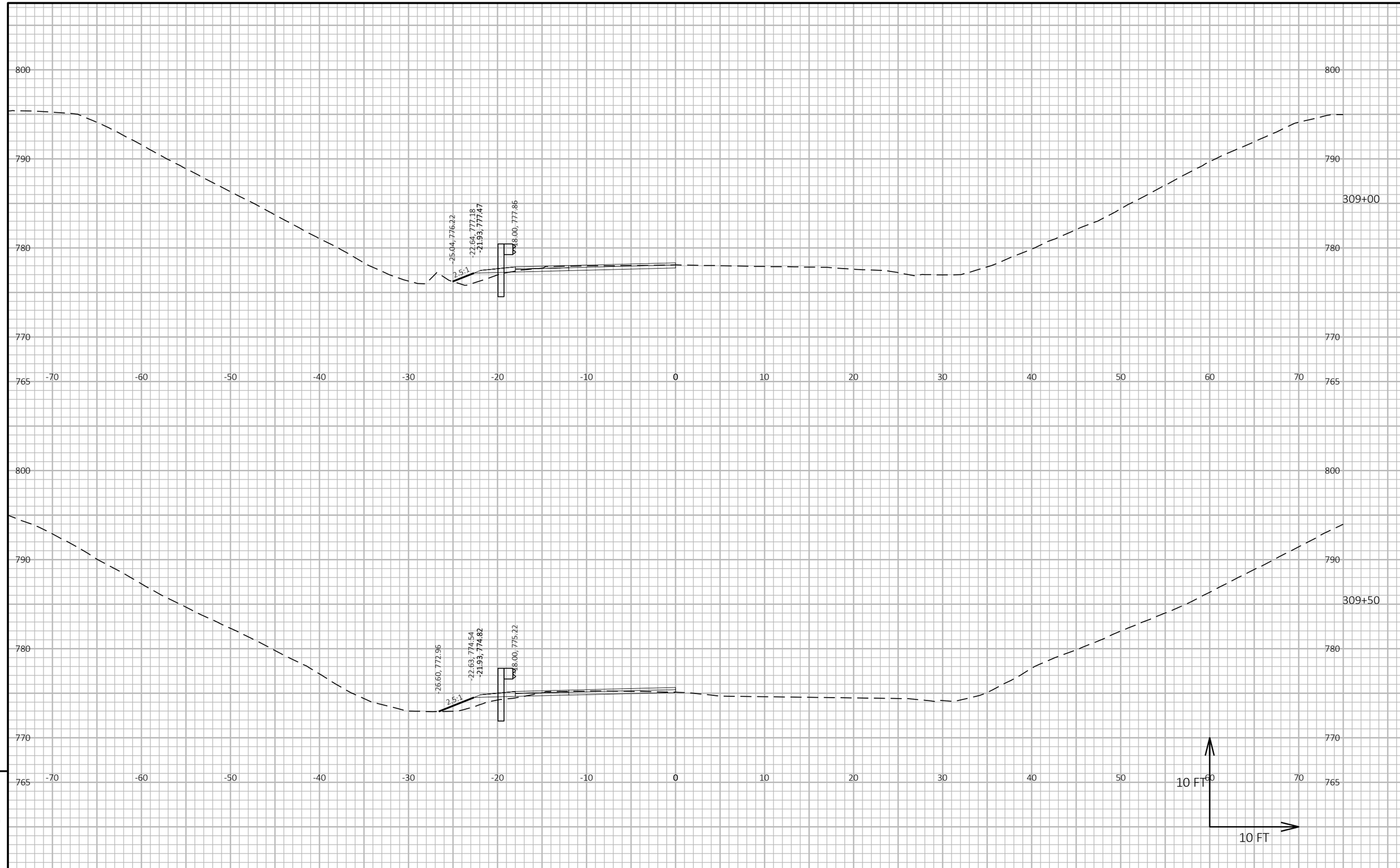

9

9

PROJECT NO: 7120-00-74	HWY: STH 85	COUNTY: DUNN	CROSS SECTIONS: STH 85	SHEET 200	E

FILE NAME : S:\MAD\1000--1099\1089\989\DRAWINGS\CAD\CIVIL 3D\SHEETSPLAN\090201-XS.DWG
LAYOUT NAME - 090201-xs-35

PLOT DATE : 12/16/2025 2:50 PM PLOT BY : HABERKORN, DEVEN PLOT NAME : PLOT SCALE : 1 IN:10 FT HORZ. / 1 IN:10 FT VERT.

WISDOT/CADDS SHEET 49

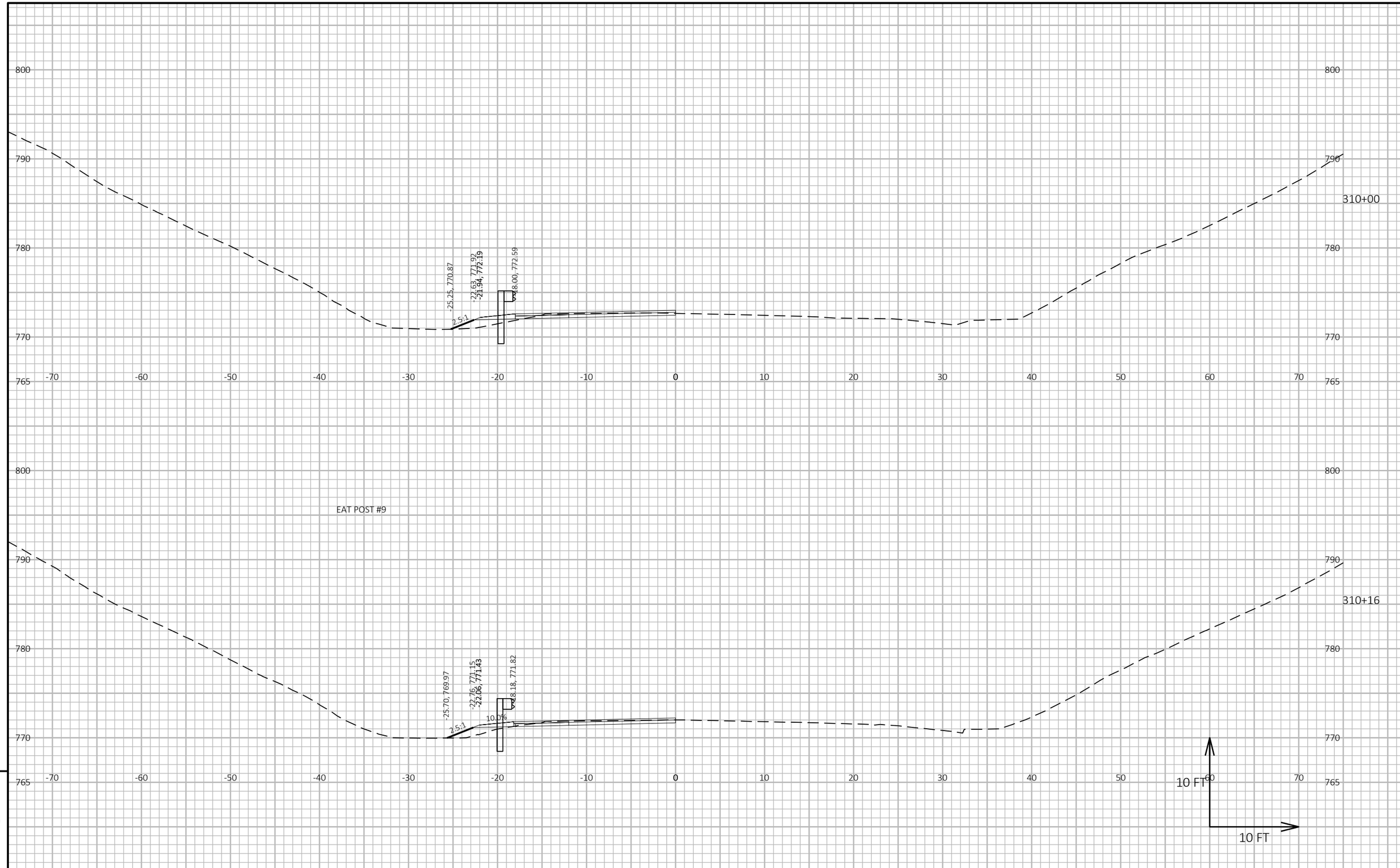

PROJECT NO: 7120-00-74	HWY: STH 85	COUNTY: DUNN	CROSS SECTIONS: STH 85	SHEET 201	E

FILE NAME : S:\MAD\1000--1099\1089\989\DRAWINGS\CAD\CIVIL 3D\SHEETSPLAN\090201-XS.DWG
LAYOUT NAME - 090201-xs-36

PLOT DATE : 12/17/2025 8:45 AM PLOT BY : HABERKORN, DEVEN PLOT NAME : PLOT SCALE : 1 IN:10 FT HORZ. / 1 IN:10 FT VERT.

WISDOT/CADDS SHEET 49

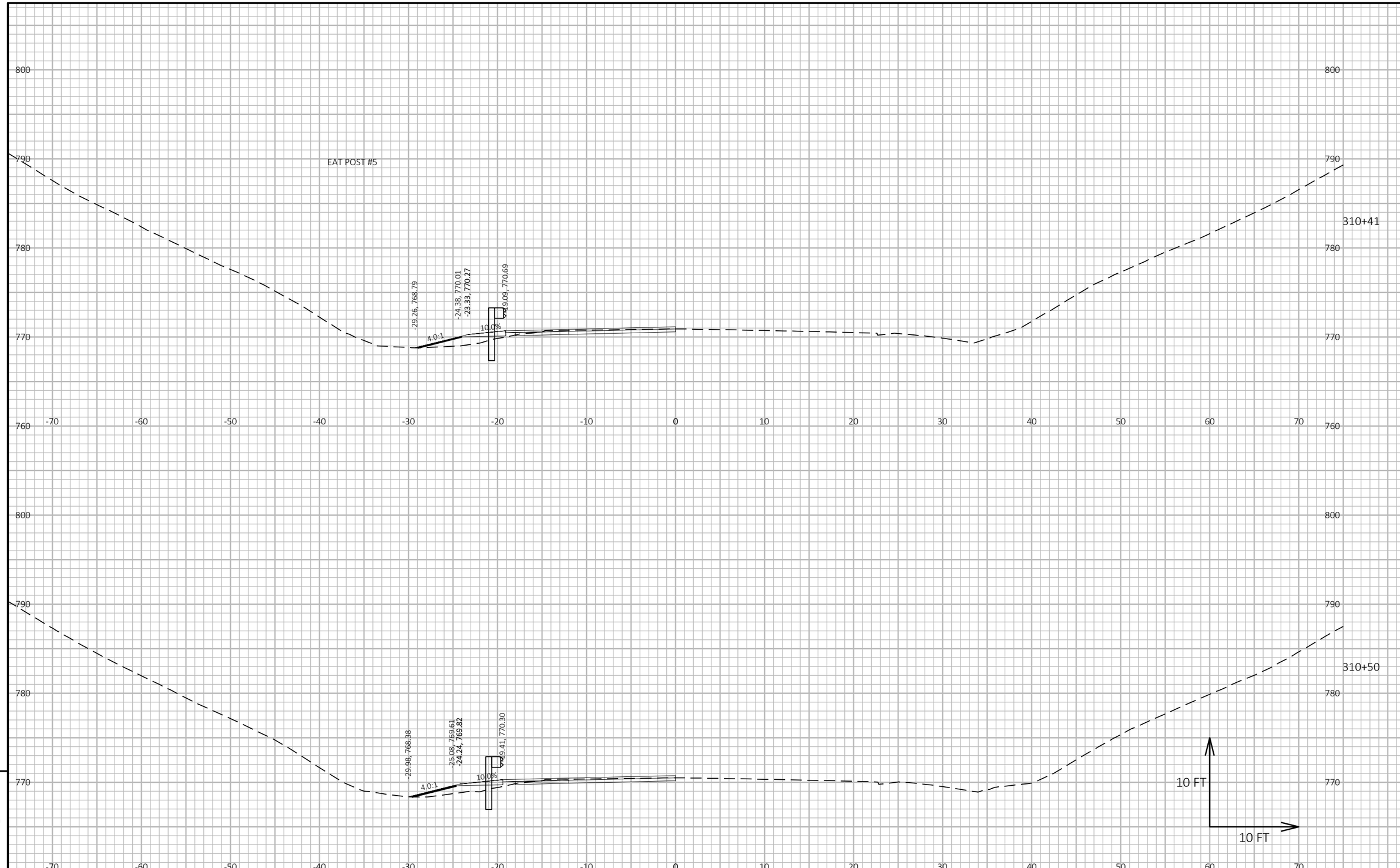

9

9

PROJECT NO: 7120-00-74	HWY: STH 85	COUNTY: DUNN	CROSS SECTIONS: STH 85	SHEET 202	E

FILE NAME : S:\MAD\1000--1099\1089\989\DRAWINGS\CAD\CIVIL 3D\SHEETSPLAN\090201-XS.DWG
LAYOUT NAME - 090201-xs-37

PLOT DATE : 12/17/2025 8:48 AM

PLOT BY : HABERKORN, DEVEN

PLOT NAME :

PLOT SCALE : 1 IN:10 FT HORZ. / 1 IN:10 FT VERT.

WISDOT/CADDS SHEET 49

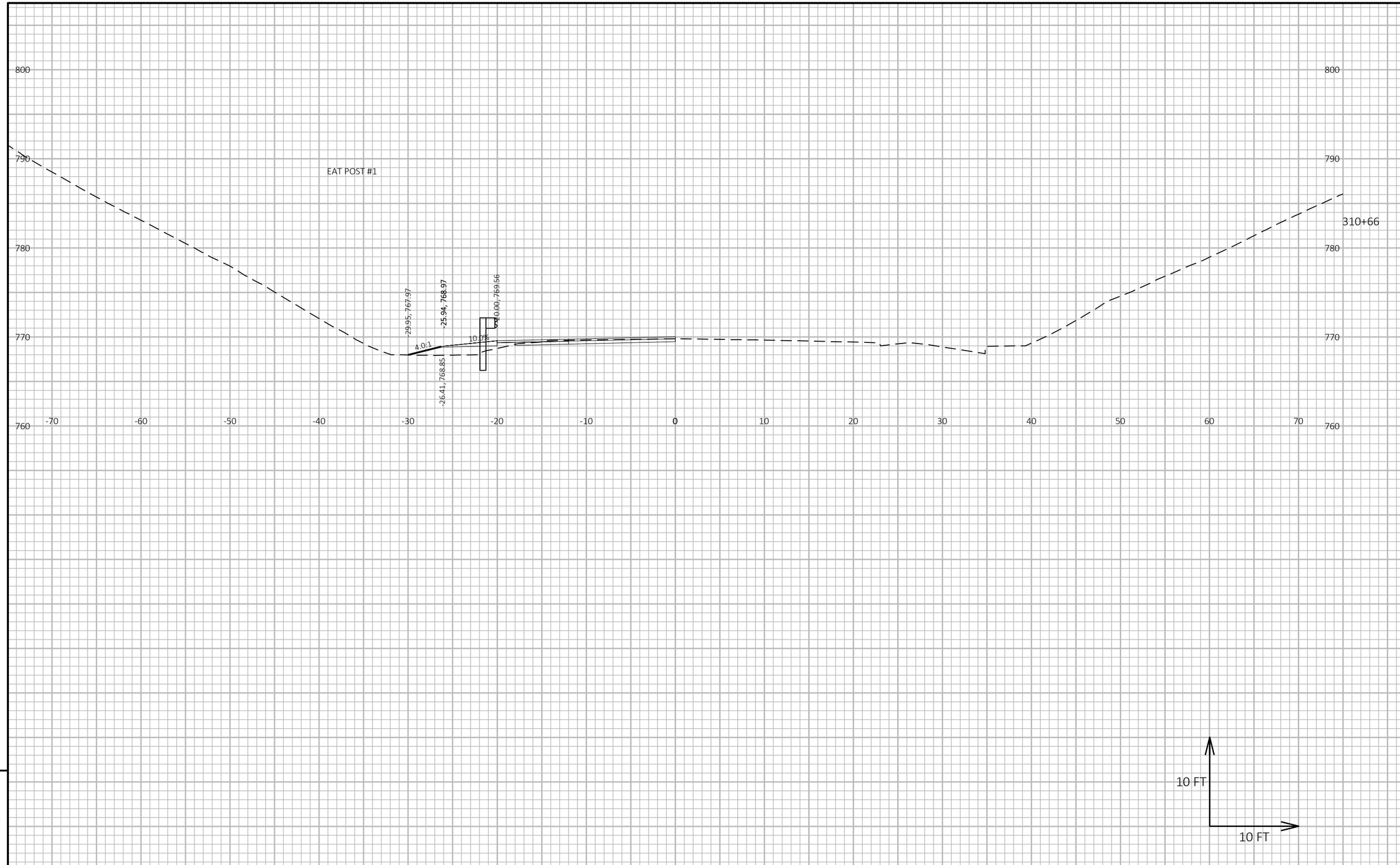

9

9

PROJECT NO: 7120-00-74	HWY: STH 85	COUNTY: DUNN	CROSS SECTIONS: STH 85	SHEET 203	E

FILE NAME : S:\MAD\1000--1099\1089\989\DRAWINGS\CAD\CIVIL 3D\SHEETSPLAN\090201-XS.DWG
LAYOUT NAME - 090201-xs-38

PLOT DATE : 12/17/2025 8:48 AM PLOT BY : HABERKORN, DEVEN PLOT NAME : **PLOT SCALE :** 1 IN:10 FT HORZ. / 1 IN:10 FT VERT.

WISDOT/CADDS SHEET 49

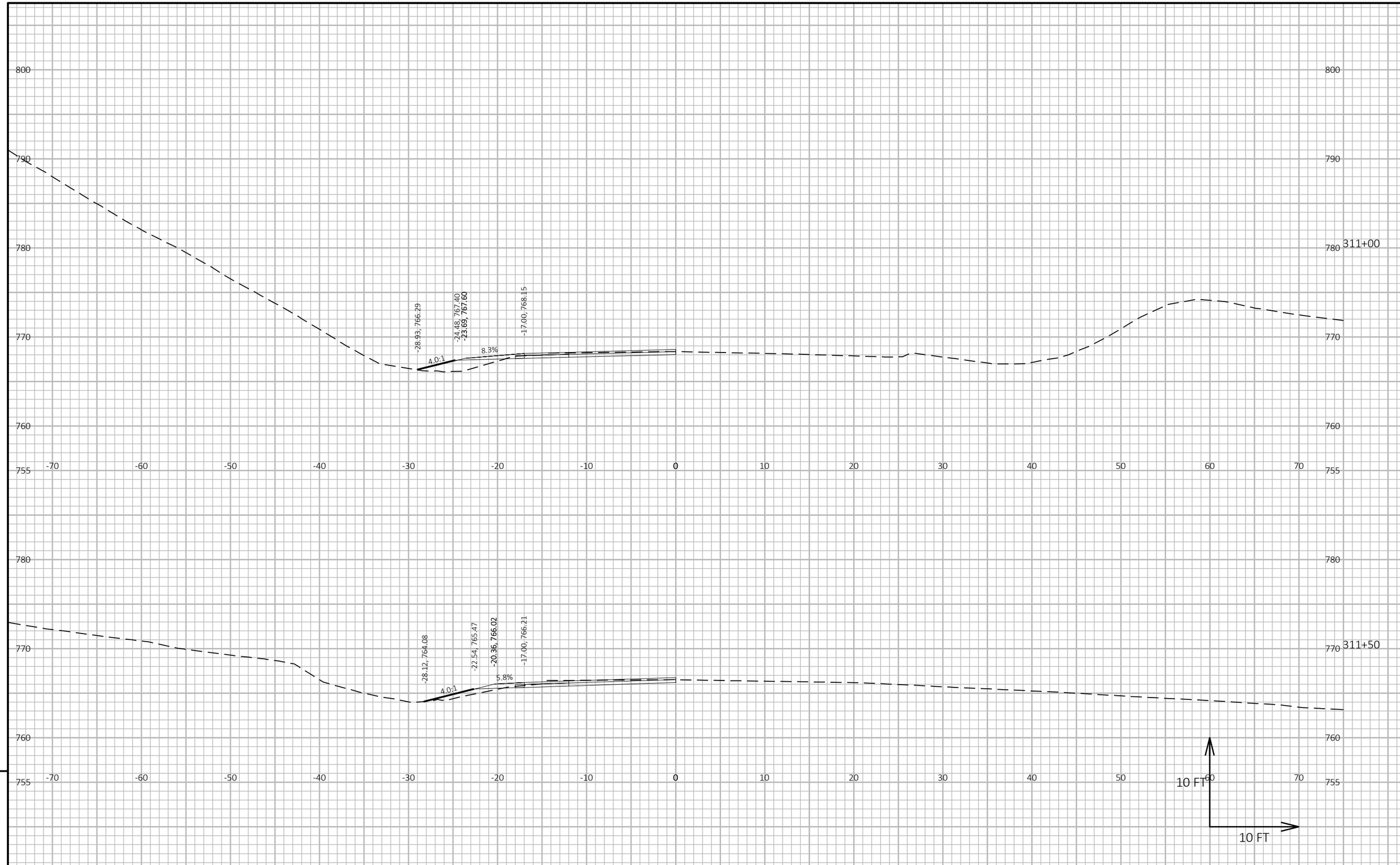

9

9

PROJECT NO: 7120-00-74	HWY: STH 85	COUNTY: DUNN	CROSS SECTIONS: STH 85	SHEET 204	E

FILE NAME : S:\MAD\1000--1099\1089\989\DRAWINGS\CAD\CIVIL 3D\SHEETSPLAN\090201-XS.DWG
LAYOUT NAME - 090201-xs-39

PLOT DATE : 12/17/2025 8:49 AM PLOT BY : HABERKORN, DEVEN PLOT NAME : PLOT SCALE : 1 IN:10 FT HORZ. / 1 IN:10 FT VERT.

WISDOT/CADDS SHEET 49

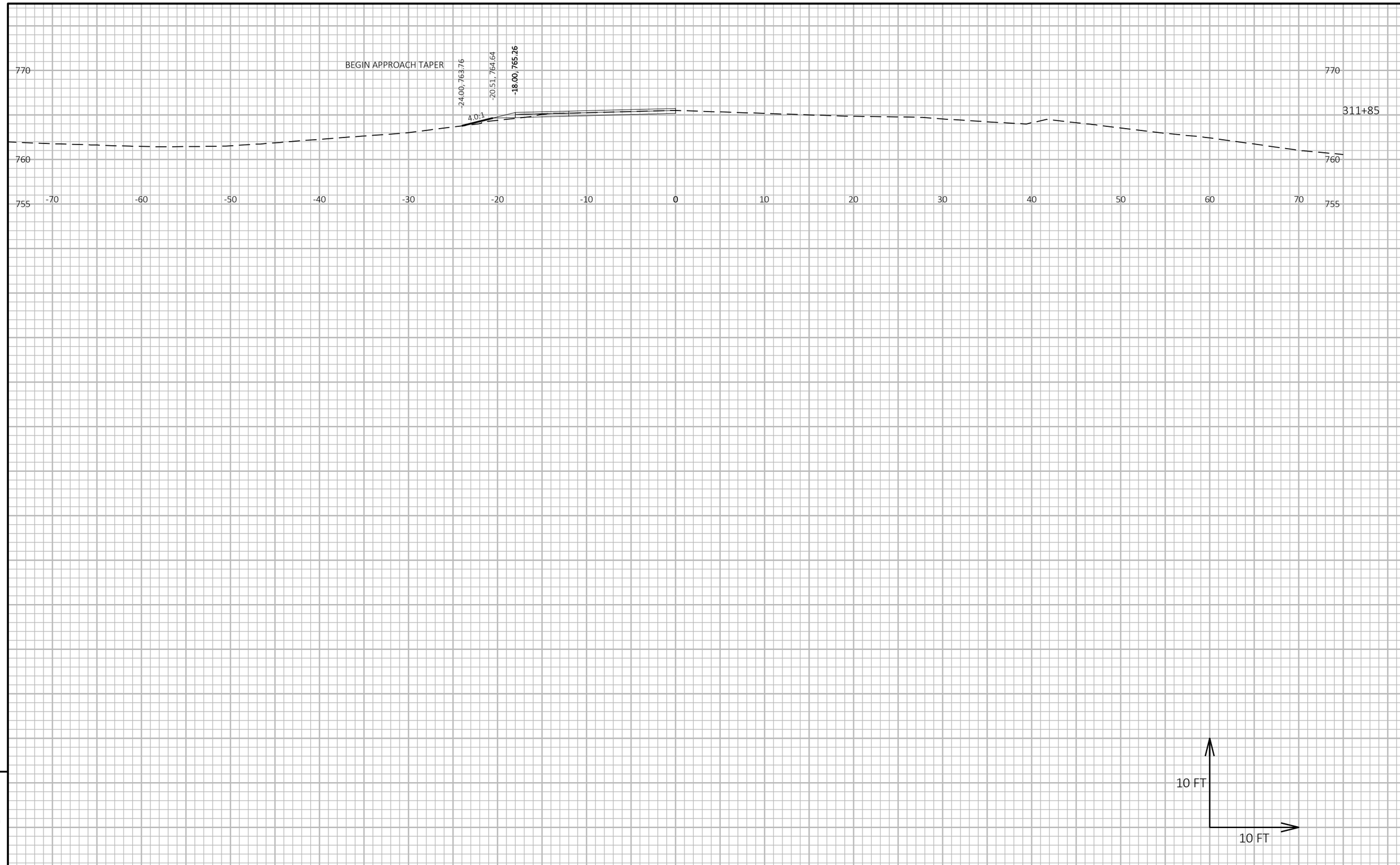

9

9

PROJECT NO: 7120-00-74	HWY: STH 85	COUNTY: DUNN	CROSS SECTIONS: STH 85	SHEET 205	E

FILE NAME : S:\MAD\1000--1099\1089\989\DRAWINGS\CAD\CIVIL 3D\SHEETSPLAN\090201-XS.DWG
LAYOUT NAME - 090201-xs-40

PLOT DATE : 12/17/2025 8:49 AM PLOT BY : HABERKORN, DEVEN PLOT NAME : **PLOT SCALE :** 1 IN:10 FT HORZ. / 1 IN:10 FT VERT.

WISDOT/CADDS SHEET 49

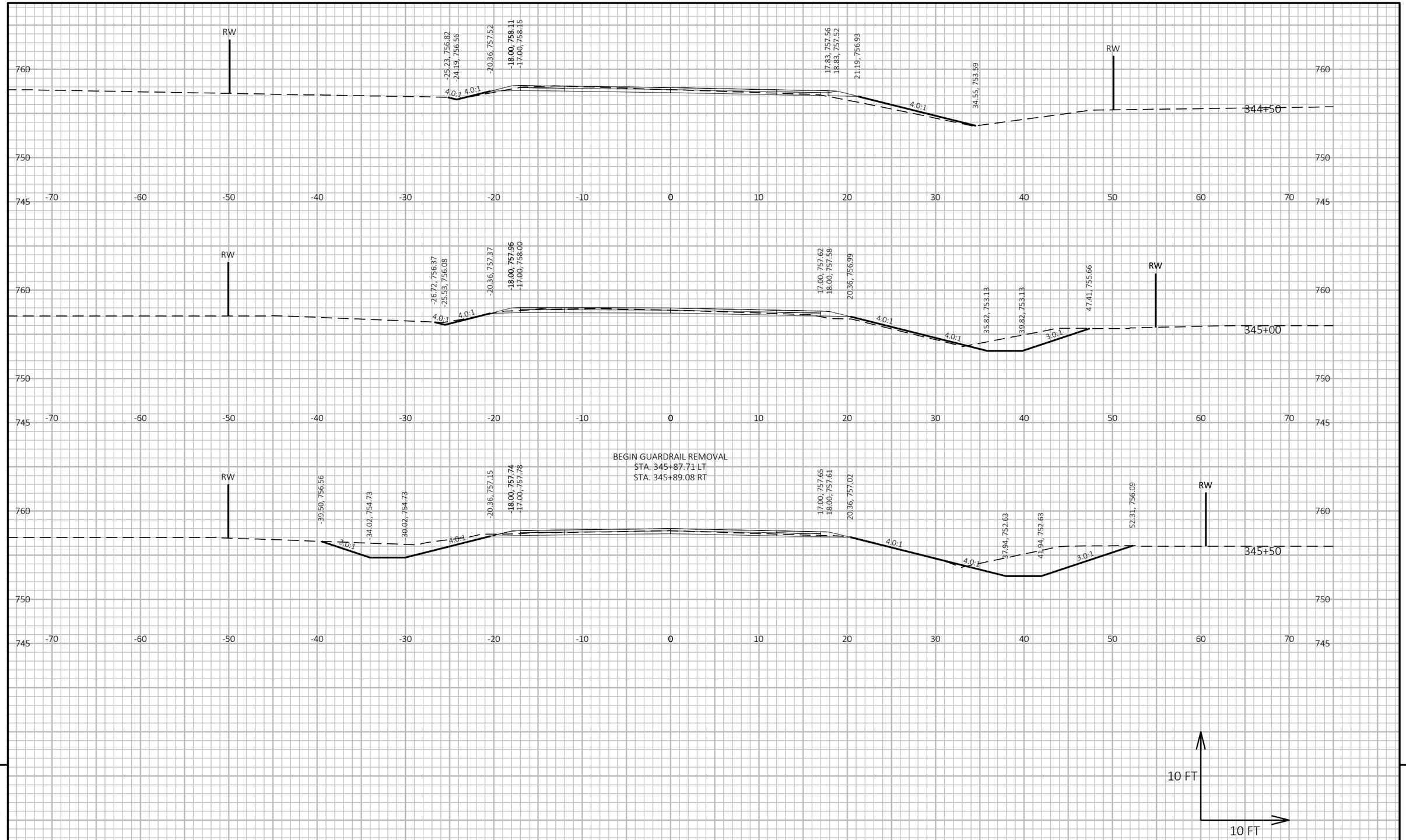

9

9

PROJECT NO: 7120-00-74	HWY: STH 85	COUNTY: DUNN	CROSS SECTIONS: STH 85	SHEET 206	E

FILE NAME : S:\MAD\1000--1099\1089\989\DRAWINGS\CAD\CIVIL 3D\SHEETSPLAN\090201-XS.DWG
LAYOUT NAME - 090201-xs-44

PLOT DATE : 12/16/2025 2:50 PM PLOT BY : HABERKORN, DEVEN PLOT NAME : PLOT SCALE : 1 IN:10 FT HORZ. / 1 IN:10 FT VERT.

WISDOT/CADDS SHEET 49

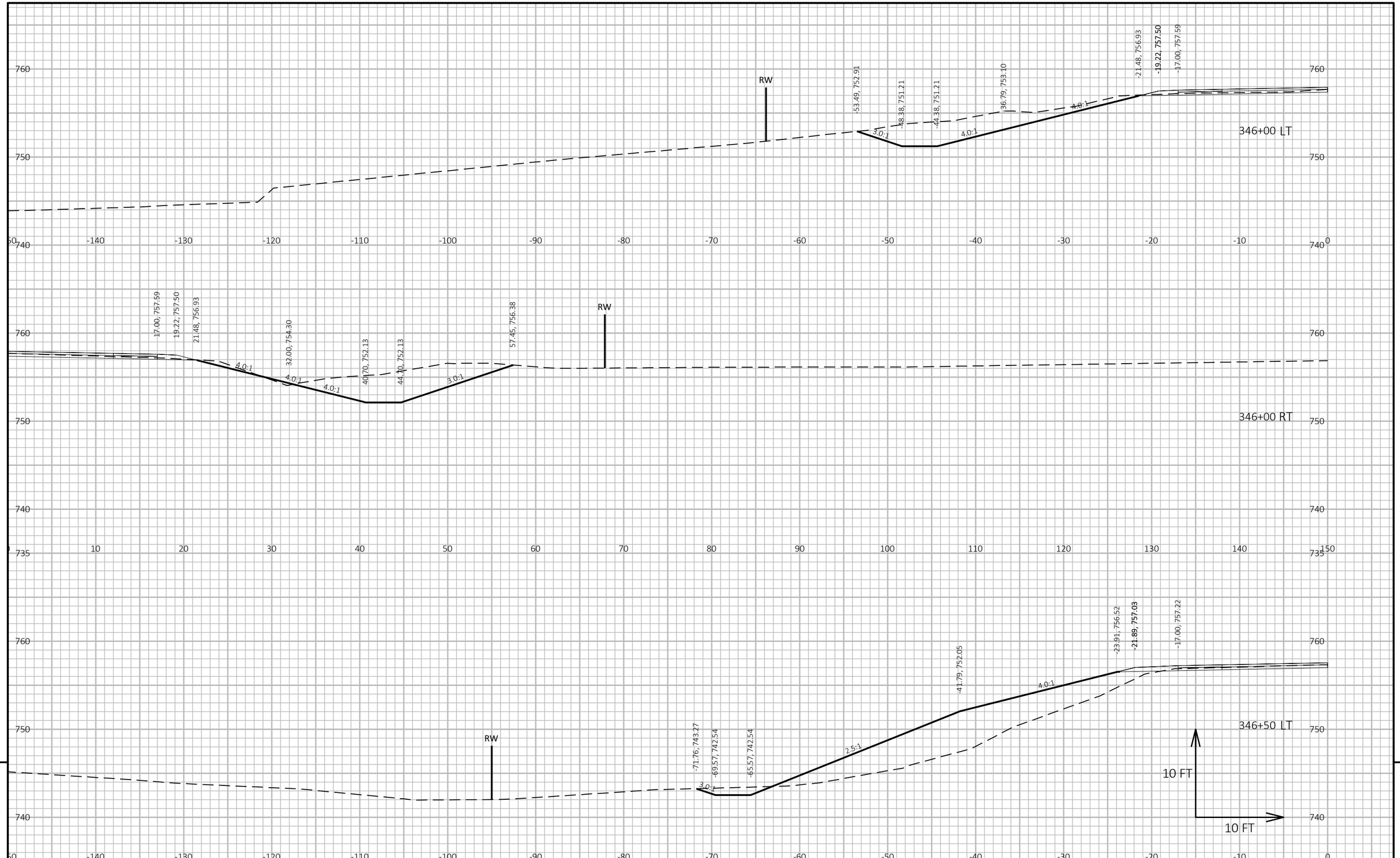

PROJECT NO: 7120-00-74	HWY: STH 85	COUNTY: DUNN	CROSS SECTIONS: STH 85	SHEET 207	E

FILE NAME : S:\MAD\1000--1099\1089\989\DRAWINGS\CAD\CIVIL 3D\SHEETSPLAN\090201-XS.DWG
LAYOUT NAME - 090201-xs-45
PLOT DATE : 12/16/2025 2:50 PM
PLOT BY : HABERKORN, DEVEN
PLOT NAME :
PLOT SCALE : 1 IN:10 FT HORZ. / 1 IN:10 FT VERT.
WISDOT/CADDS SHEET 49

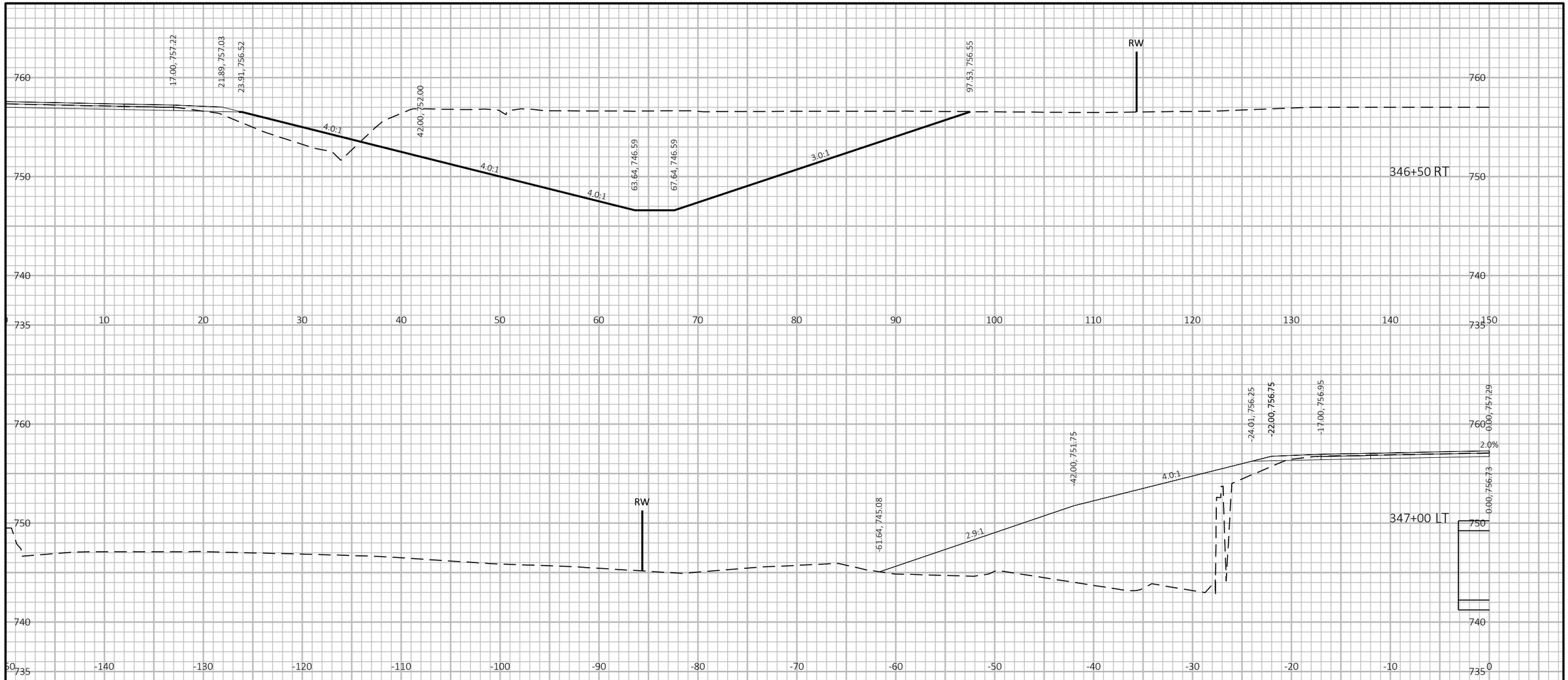

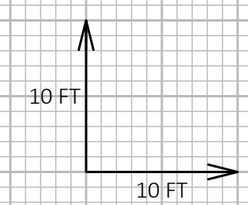

9

9

PROJECT NO: 7120-00-74	HWY: STH 85	COUNTY: DUNN	CROSS SECTIONS: STH 85	SHEET 208	E

FILE NAME : S:\MAD\1000--1099\1089\989\DRAWINGS\CAD\CIVIL 3D\SHEETSPLAN\090201-XS.DWG
LAYOUT NAME - 090201-xs-46

PLOT DATE : 12/16/2025 2:50 PM PLOT BY : HABERKORN, DEVEN PLOT NAME : PLOT SCALE : 1 IN:10 FT HORZ. / 1 IN:10 FT VERT.

WISDOT/CADDS SHEET 49

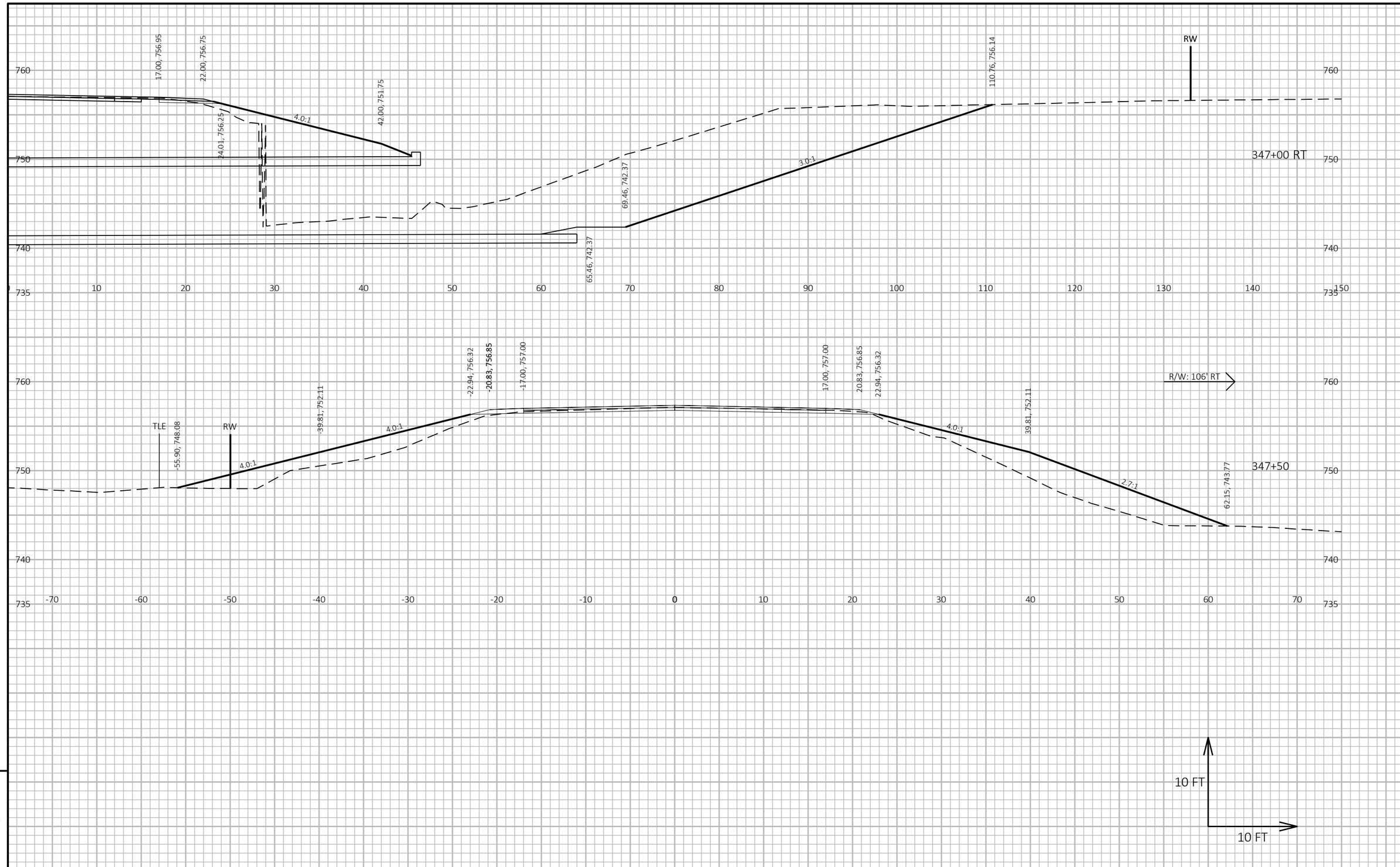

9

9

PROJECT NO: 7120-00-74	HWY: STH 85	COUNTY: DUNN	CROSS SECTIONS: STH 85	SHEET 209	E

FILE NAME : S:\MAD\1000--1099\1089\989\DRAWINGS\CAD\CIVIL 3D\SHEETSPLAN\090201-XS.DWG
LAYOUT NAME - 090201-xs-47
PLOT DATE : 12/16/2025 2:50 PM
PLOT BY : HABERKORN, DEVEN
PLOT NAME :
PLOT SCALE : 1 IN:10 FT HORZ. / 1 IN:10 FT VERT.
WISDOT/CADDS SHEET 49

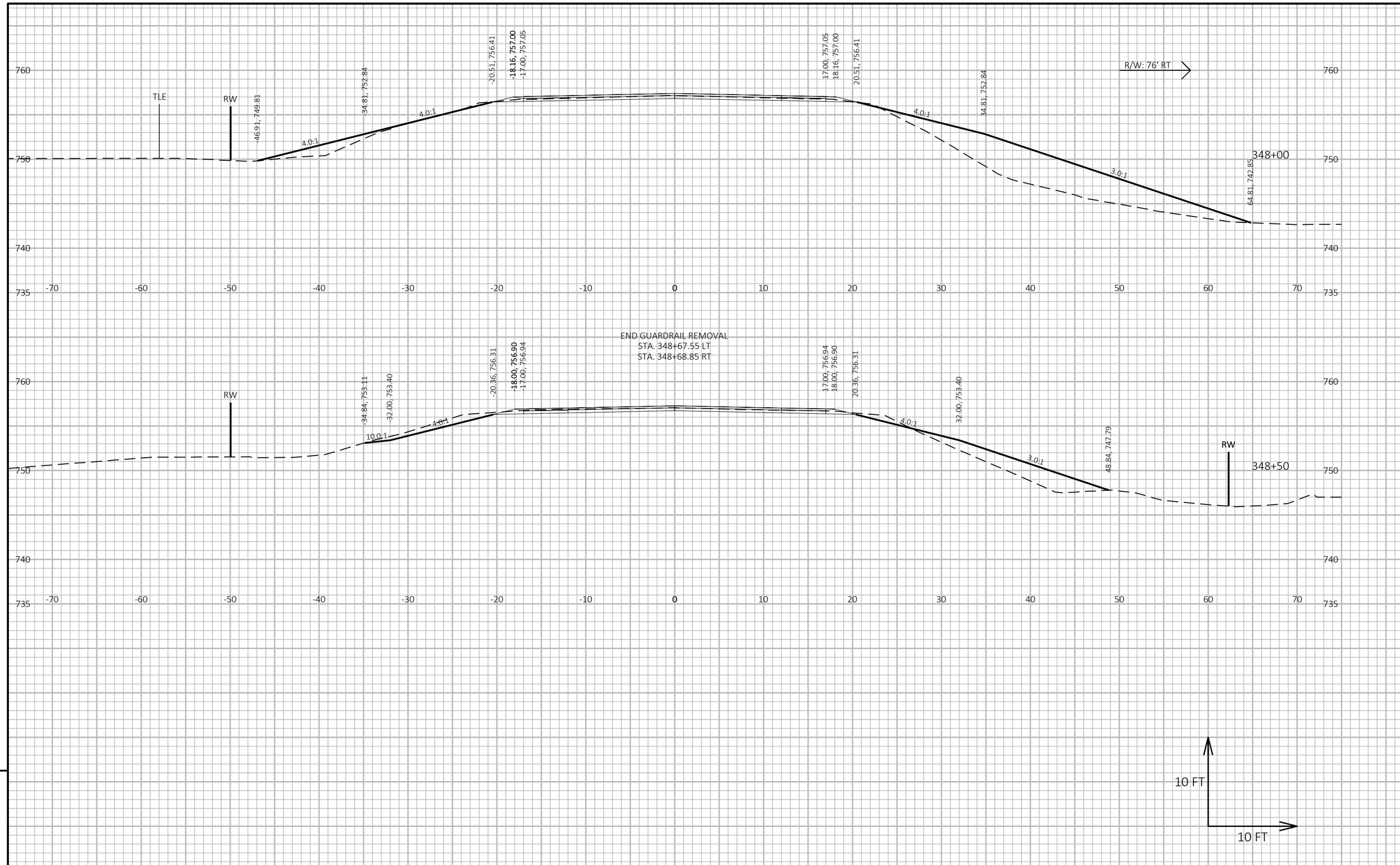

9

9

PROJECT NO: 7120-00-74	HWY: STH 85	COUNTY: DUNN	CROSS SECTIONS: STH 85	SHEET 210	E

FILE NAME : S:\MAD\1000--1099\1089\989\DRAWINGS\CAD\CIVIL 3D\SHEETSPLAN\090201-XS.DWG
LAYOUT NAME - 090201-xs-48

PLOT DATE : 12/16/2025 2:50 PM PLOT BY : HABERKORN, DEVEN PLOT NAME : PLOT SCALE : 1 IN:10 FT HORZ. / 1 IN:10 FT VERT.

WISDOT/CADDS SHEET 49

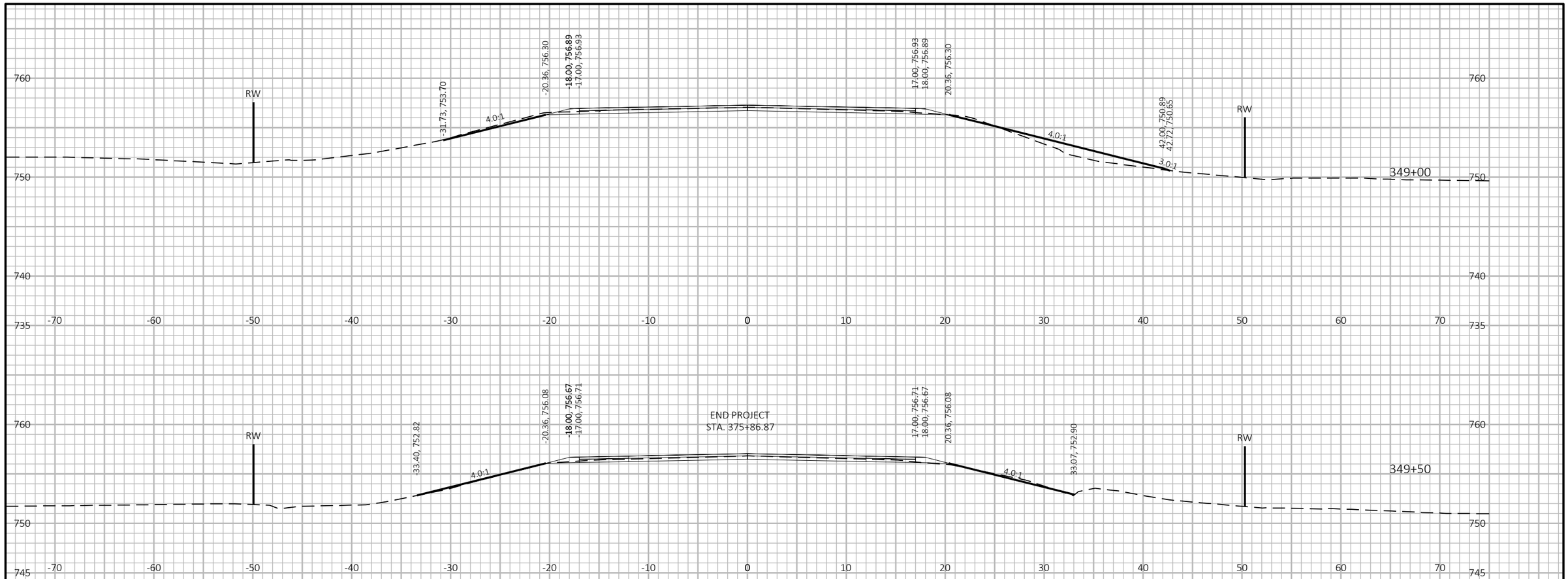

9

9

PROJECT NO: 7120-00-74	HWY: STH 85	COUNTY: DUNN	CROSS SECTIONS: STH 85	SHEET 211	E

FILE NAME : S:\MAD\1000--1099\1089\989\DRAWINGS\CAD\CIVIL 3D\SHEETSPLAN\090201-XS.DWG
LAYOUT NAME - 090201-xs-49

PLOT DATE : 12/16/2025 2:50 PM PLOT BY : HABERKORN, DEVEN PLOT NAME : PLOT SCALE : 1 IN:10 FT HORZ. / 1 IN:10 FT VERT.

WISDOT/CADDS SHEET 49

Wisconsin Department of Transportation

Dedicated people creating transportation solutions through innovation and exceptional service.

http://www.dot.wisconsin.gov