WKE

PROJECT ID: 2717-03-71

WITH: N/A

COUNTY: WAUKESHA

JANUARY 2026

ORDER OF SHEETS

TOTAL SHEETS = 194

STATE PROJECT	FEDERAL PROJECT	
	PROJECT	CONTRACT
2717-03-71	WISC 2026145	1

STATE OF WISCONSIN
DEPARTMENT OF TRANSPORTATION

PLAN OF PROPOSED IMPROVEMENT

SILVERNAIL FRONTAGE ROAD

MAPLE AVENUE TO ELMHURST ROAD

OFF SYS
WAUKESHA COUNTY

STATE PROJECT NUMBER
2717-03-71

DESIGN DESIGNATION			SILVERNAIL FRONTAGE ROAD
A.A.D.T.	(2028)	=	3100
A.A.D.T.	(2048)	=	3300
D.H.V.	(2048)	=	152
D.D.		=	59%-41%
T.		=	5.4%
DESIGN SPEED		=	55
ESALS		=	300,000

BEGIN PROJECT
STA 100+43.55
X=651766.35
Y=174592.66

END PROJECT
STA 165+46.36

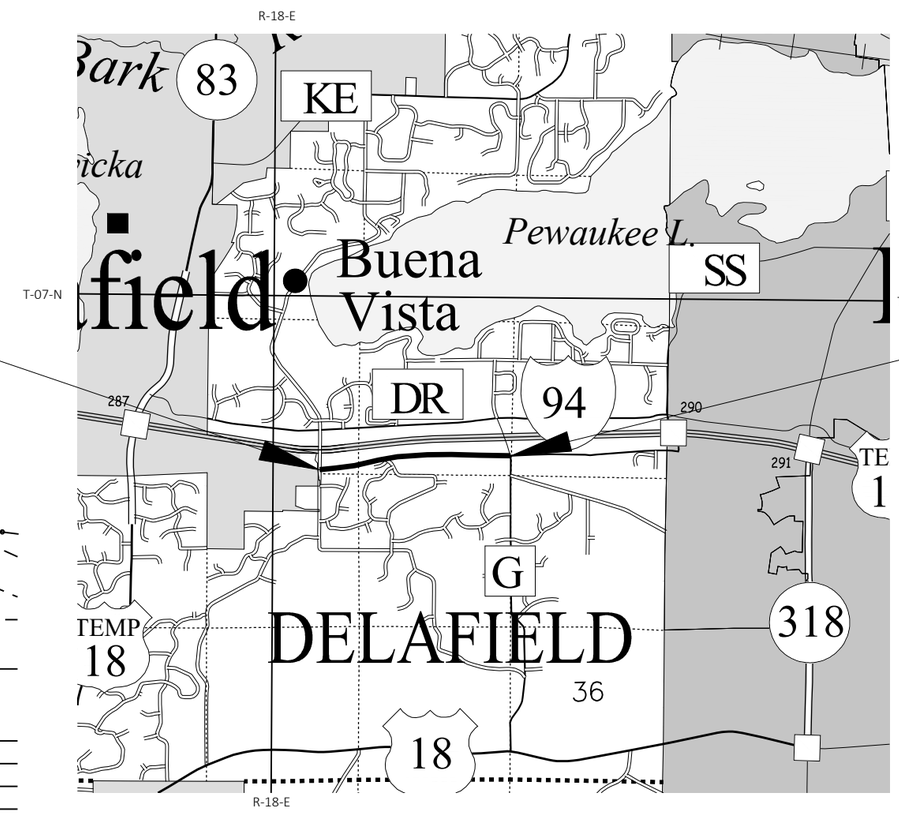

LAYOUT

SCALE 0 1 MI

TOTAL NET LENGTH OF CENTERLINE = 1.232 MI

HORIZONTAL POSITIONS SHOWN ON THIS PLAN ARE WISCONSIN COORDINATE REFERENCE SYSTEM (WISCRS), WAUKESHA COUNTY, NAD83 (2011), IN U.S. SURVEY FEET. POSITIONS SHOWN ARE GRID COORDINATES, GRID BEARINGS, AND GRID DISTANCES. GRID DISTANCES ARE THE SAME AS GROUND DISTANCES.

ELEVATIONS ARE REFERENCED TO NAVD 88 (2012). GPS DERIVED ELEVATIONS ARE BASED ON GEOID 12A

CONVENTIONAL SYMBOLS

PLAN

- CORPORATE LIMITS
- PROPERTY LINE
- LOT LINE
- LIMITED HIGHWAY EASEMENT
- EXISTING RIGHT OF WAY
- PROPOSED OR NEW R/W LINE
- SLOPE INTERCEPT
- REFERENCE LINE (300'EB')
- EXISTING CULVERT
- PROPOSED CULVERT (Box or Pipe)
- COMBUSTIBLE FLUIDS (CAUTION)
- MARSH AREA
- WOODED OR SHRUB AREA

PROFILE

- GRADE LINE
- ORIGINAL GROUND
- MARSH OR ROCK PROFILE (To be noted as such) (ROCK)
- SPECIAL DITCH (LABEL)
- GRADE ELEVATION (95.36)
- CULVERT (Profile View)

UTILITIES

- ELECTRIC (E)
- FIBER OPTIC (FO)
- GAS (G)
- SANITARY SEWER (SAN)
- STORM SEWER (SS)
- TELEPHONE (T)
- WATER (W)
- UTILITY PEDESTAL
- POWER POLE
- TELEPHONE POLE

STATE OF WISCONSIN
DEPARTMENT OF TRANSPORTATION

PREPARED BY

Surveyor	
Designer	WAYNE MANYEN
Project Manager	CHRISTOPHER ZACHARIAS, P.E.
Regional Examiner	WIS DOT
Regional Supervisor	WILLIAM S. MOHR, P.E.

APPROVED FOR THE DEPARTMENT

DATE: 08/01/2025 (Signature)

E

STANDARD ABBREVIATIONS

ABUT	ABUTMENT
AC	ACRE
AGG	AGGREGATE
AH	AHEAD
∠	ANGLE
AADT	ANNUAL AVERAGE DAILY TRAFFIC
AEW	APRON ENDWALL
ASPH	ASPHALTIC
BK	BACK
BC	BACK OF CURB
BAD	BASE AGGREGATE DENSE
BL OR B/L	BASE LINE
BM	BENCH MARK
CB	CATCH BASIN
CL OR C/L	CENTER LINE
Δ	CENTRAL ANGLE OR DELTA
CE	COMMERCIAL ENTRANCE
CONC	CONCRETE
CSW	CONCRETE SIDEWALK
CONST	CONSTRUCTION
CP	CONTROL POINT
CO	COUNTY
CTH	COUNTY TRUCK HIGHWAY
CY	CUBIC YARD
CP	CULVERT PIPE
CPCA	CULVERT PIPE CORRUGATED ALUMINUM
CPCPE	CULVERT PIPE CORRUGATED POLYETHYLENE
CPCPP	CULVERT PIPE CORRUGATED POLYPROPYLENE
CPCS	CULVERT PIPE CORRUGATED STEEL
CPCSAC	CULVERT PIPE CORRUGATED STEEL ALUMINUM COATED
CPCSPC	CULVERT PIPE CORRUGATED STEEL POLYMER COATED
CPRC	CULVERT PIPE REINFORCED CONCRETE
CPRCHE	CULVERT PIPE REINFORCED CONCRETE HORIZONTAL ELLIPTICAL
CPS	CULVERT PIPE SALVAGED
CPT	CULVERT PIPE TEMPORARY
C & G	CURB AND GUTTER
D	DEGREE OF CURVE
DHV	DESIGN HOUR VOLUME
DIA	DIAMETER
DD	DIRECTIONAL DISTRIBUTION
DE	DRAINAGE EASEMENT
DWY	DRIVEWAY
EA	EACH
EB	EASTBOUND
EL OR ELEV	ELEVATION
EMB	EMBANKMENT
EW	ENDWALL
EAT	ENERGY ABSORBING TERMINAL
ESALS	EQUIVALENT SINGLE AXLE LOADS
EXC	EXCAVATION
EBS	EXCAVATION BELOW SUBGRADE
EXIST	EXISTING
FERT	FERTILIZER
FE	FIELD ENTRANCE
FL OR F/L	FLOW LINE
FT	FOOT
FTMS	FREE TRAFFIC MANAGEMENT SYSTEM
HES	HIGH EARLY STRENGTH
HE	HIGHWAY EASEMENT
CWT	HUNDRED WEIGHT
IN DIA	INCH DIAMETER
INL	INLET
ID	INSIDE DIAMETER
INTERS	INTERSECTION
IH	INTERSTATE HIGHWAY
INV	INVERT
JT	JOINT
LT	LEFT
LHF	LEFT HAND FORWARD
L	LENGTH OF CURVE
LF	LINEAR FOOT
LC	LONG CHORD OF CURVE
LS	LUMP SUM
MGAL	ONE THOUSAND GALLONS
MH	MANHOLE
ML OR M/L	MATCH LINE
NOM	NOMINAL
NC	NORMAL CROWN
NB	NORTHBOUND
NO	NUMBER
OD	OUTSIDE DIAMETER
PAVT	PAVEMENT
PLE	PERMANENT LIMITED EASEMENT
PC	POINT OF CURVATURE
PI	POINT OF INTERSECTION
PT	POINT OF TANGENCY
PCC	PORTLAND CEMENT CONCRETE
LB	POUND
PSI	POUNDS PER SQUARE INCH
PE	PRIVATE ENTRANCE
PROJ	PROJECT
PL	PROPERTY LINE
PRW	PROPOSED RIGHT OF WAY
R	RADIUS
RL OR R/L	REFERENCE LINE
REQD	REQUIRED
RT	RIGHT
RHF	RIGHT HAND FORWARD
R/W	RIGHT OF WAY
RD	ROAD
RDWY	ROADWAY
SHLDR	SHOULDER
SI	SLOPE INTERCEPT
SW	SIDEWALK
SB	SOUTHBOUND
SPECS	SPECIFICATIONS
SF	SQUARE FEET
SY	SQUARE YARD
SDD	STANDARD DETAIL DRAWINGS
STH	STATE TRUNK HIGHWAY
STA	STATION
SSPC	STORM SEWER PIPE COMPOSITE
SSCPE	STORM SEWER PIPE CORRUGATED POLYETHYLENE
SSCPP	STORM SEWER PIPE CORRUGATED POLYPROPYLENE
SSPNRC	STORM SEWER PIPE NON-REINFORCED CONCRETE
SSPRC	STORM SEWER PIPE REINFORCED CONCRETE
SSPRC	STORM SEWER PIPE REINFORCED CONCRETE
SSPRCHE	STORM SEWER PIPE REINFORCED CONCRETE HORIZONTAL ELLIPTICAL
SE	SUPERELEVATION
SL OR S/L	SURVEY LINE
TEMP	TEMPORARY
TI	TEMPORARY INTEREST
TLE	TEMPORARY LIMITED EASEMENT
TC	TOP OF CURB
TL OR T/L	TRANSIT LINE
T	TRUCKS (PERCENT OF)
TYP	TYPICAL
USH	UNITED STATES HIGHWAY
VAR	VARIABLE
VC	VERTICAL CURVE
VPC	VERTICAL POINT OF CURVATURE
VPI	VERTICAL POINT OF INTERSECTION
VPT	VERTICAL POINT OF TANGENCY
W	WEST
WB	WESTBOUND

ORDER OF SECTION 2 DETAIL SHEETS

SILVERNAIL 5-INCHES		
LAYER	THICKNESS	TYPE
UPPER	2-INCHES	4 LT 58-28 H
LOWER	3-INCHES	3 LT 58-28 S

GENERAL NOTES

THE LOCATIONS OF EXISTING AND PROPOSED UTILITY INSTALLATIONS AS SHOWN ON THE PLANS ARE APPROXIMATE. THERE MAY BE OTHER UTILITY INSTALLATIONS WITHIN THE PROJECT AREA THAT ARE NOT SHOWN.

CONTRACTOR WILL BE RESPONSIBLE FOR RESHAPING AND SEEDING ANY PREVIOUSLY GRASSED AREAS WHICH ARE DISTURBED BY OPERATIONS, OUTSIDE OF THE NORMAL CONSTRUCTION LIMITS.

NO TREES OR SHRUBS ARE TO BE REMOVED WITHOUT THE APPROVAL OF THE ENGINEER.

RIGHT OF WAY INFORMATION SHOWN ON THE PLANS IS FROM THE WAUKESHA COUNTY GIS SYSTEM AND IS APPROXIMATE.

THE CONTRACTOR IS TO WORK WITH UTMOST CARE AND PROTECT ALL SURVEY MARKERS. REMOVAL OF ANY SURVEY MARKER IS TO BE WITH THE APPROVAL OF THE ENGINEER.

WHEN THE QUANTITY OF THE ITEMS OF BASE AGGREGATE, SUBBASE OR HMA PAVEMENT IS MEASURED FOR PAYMENT BY THE TON OR CUBIC YARD, THE DEPTH OR THICKNESS OF THE LAYERS SHOWN ON THE PLAN IS APPROXIMATE AND THE ACTUAL THICKNESS WILL DEPEND ON THE DISTRIBUTION OF THE MATERIAL AS DIRECTED BY THE ENGINEER.

EROSION CONTROL FEATURES AS SHOWN IN THE PLANS ARE AT APPROXIMATE LOCATIONS. EXACT LOCATIONS WILL BE DETERMINED BY THE CONTRACTOR'S EROSION CONTROL IMPLEMENTATION PLAN (ECIP) AND APPROVED BY THE ENGINEER. MAINTAIN EROSION CONTROL MEASURES UNTIL SUCH A TIME AS THE ENGINEER DETERMINES THE MEASURE IS NO LONGER NECESSARY.

CURVE DATA IS BASED ON THE RADIUS DEFINITION.

PAVEMENT REMOVAL WILL BE TO THE NEAREST JOINT OR A SAWED EDGE WILL BE REQUIRED AS DIRECTED BY THE ENGINEER.

THE EXACT LOCATION AND WIDTH OF DRIVEWAYS SHALL BE DETERMINED BY THE ENGINEER IN THE FIELD. DRIVEWAYS SHALL BE REPLACED IN KIND. COMMERCIAL DRIVEWAYS SHALL BE A MINIMUM OF 30 FEET WIDE UNLESS SHOWN OTHERWISE IN THE PLANS. ALL RESIDENTIAL DRIVEWAYS SHALL BE A MAXIMUM OF 20 FEET WIDE.

PIPE ELEVATIONS, LENGTHS, AND LOCATIONS AS SHOWN ON THE PLANS, MAY BE ADJUSTED TO FIT EXISTING FIELD CONDITIONS AS DIRECTED BY THE ENGINEER.

THE PROPOSED SHOULDER WIDTH SHOWN IN THE TYPICAL SECTIONS ARE MINIMUM WIDTH. PERPETUATE EXISTING SHOULDERS THAT ARE WIDER THAN WHAT IS SHOWN IN THE TYPICAL SECTIONS.

THE CONTRACTOR'S PAVING OPERATION SHALL BE CONSISTENT WITH THE TYPICAL SECTIONS AND CONSTRUCTED TO PREVENT LONGITUDINAL JOINTS FROM BEING LOCATED WITHIN A DRIVING, TURNING, PASSING, OR PARKING LANE.

SAWCUTS, AS SHOWN ON THE PLANS, ARE SUGGESTED LOCATIONS AND MAY BE ADJUSTED AT THE DISCRETION OF THE ENGINEER TO BETTER SUIT FIELD CONDITIONS.

CONTRACTOR SHALL MAINTAIN ACCESS TO ALL DRIVEWAYS AT ALL TIMES EXCEPT WHEN PAVING OR PIPE LAYING OPERATIONS REQUIRE THE DRIVEWAY TO BE CLOSED. ACCESS TO DRIVEWAYS SHALL BE RE-ESTABLISHED IMMEDIATELY AFTER OPERATIONS ARE COMPLETED. ACCESS SHALL BE PROVIDED DURING ALL NON-WORKING HOURS.

TRAFFIC CONTROL DEVICES SHALL BE ADJUSTED TO FIT FIELD CONDITIONS AS DIRECTED BY THE ENGINEER.

PRIOR TO ORDERING DRAINAGE PIPES, THE CONTRACTOR SHALL FIELD VERIFY RELATED DRAINAGE INFORMATION IN THE PLAN WITH THE ENGINEER.

DO NOT DRIVE OR STORE EQUIPMENT, OR STORE CONSTRUCTION MATERIALS IN ENVIRONMENTALLY SENSITIVE AREAS, WETLANDS OR WATERWAYS.

2

UTILITIES CONTACTS

ATC MANAGEMENT, INC.
ELECTRICITY-TRANSMISSION
CHRIS DAILEY
P.O. BOX 47
WAUKESHA, WI 53187
PHONE: 262-506-6884
EMAIL: CDAILEY@ATCLLC.COM

VERIZON BUSINESS
COMMUNICATION LINE
RJ CICATELLO JR.
15725 WEST RYERSON ROAD
NEW BERLIN, WI 53151
PHONE: 262-232-1323
EMAIL: RANDY.CICATELLO@VERIZON.COM

WE ENERGIES
GAS/PETROLEUM
JACOB HULBERT
500 S 116TH STREET
WEST ALLIS, WI 53214
PHONE: 262-968-5718, DISPATCH: 800-261-5325
EMAIL: JACOB.HULBERT@WE-ENERGIES.COM

EVERSTREAM
COMMUNICATION LINE
ABBY STEIN
324 E WISCONSIN AVE, SUITE 730
MILWAUKEE, WI 53202
PHONE: 262-442-9427
EMAIL: ASTEIN@EVERSTREAM.NET

BRIGHTSPEED OF WESTERN WISCONSIN, LLC
COMMUNICATION LINE
SCOTT HEINZELMAN
144 N PEART ST
BERLIN, WI 54923
PHONE: 608-716-5964
EMAIL: SCOTT.HEINZELMAN@BRIGHTSPEED.COM

MIDWEST FIBER NETWORKS LLC
COMMUNICATION LINE
CORY SCHMUKI
6070 NORTH FLINT ROAD
GLENDALE, WI 53209
PHONE: 414-459-3561
EMAIL: CSCHMUKI@MIDWESTFIBERNETWORKS.COM

SPECTRUM
COMMUNICATION LINE
NEAL LONG
1320 N. DR. MARTIN LUTHER KING JR DRIVE
MILWAUKEE, WI 53212
PHONE: 414-430-7189
EMAIL: NEAL.LONG@CHARTER.COM

WE ENERGIES
ELECTRICITY
STEVE KING
S13W33800 HWY 18
DELAFIELD, WI 53018
PHONE: 262-968-5768
EMAIL: STEVE.KING@WE-ENERGIES.COM

WISCONSIN DNR LIAISON

CRAIG WEBSTER
SOUTHERN REGION
141 NW BARSTOW ST
WAUKESHA, WI 53188
PHONE: 262-574-2141
EMAIL: CRAIG.WEBSTER@WISCONSIN.GOV

REGION SURVEY COORDINATOR

THOMAS LIPSKY, PLS
SOUTHEAST REGION
141 NW BARSTOW ST
WAUKESHA, WI 53188
PHONE: 262-548-6737
EMAIL: THOMAS.LIPSKY@DOT.WI.GOV

CITY OF DELAFIELD

TOM HAFNER
PUBLIC WORKS DIRECTOR
500 GENESEE ST.
DELAFIELD, WI 53018
PHONE: 262-303-4626
EMAIL: THAFNER@CI.DELAFIELD.WI.US

TOWN OF DELAFIELD

DAVE REITER
TOWN ENGINEER
16745 WEST BLUEMOUND ROAD
BROOKFIELD, WI 53005
PHONE: 262-646-2398
EMAIL: PLANNER@TOWNOFDELAFIELD.ORG

WISDOT

ERIC PEREA
STREET LIGHTING
141 NW BARSTOW STREET
WAUKESHEA, WI 53188
PHONE: 262-574-5422
EMAIL: ERIC.PEREA@DOT.WI.GOV

DESIGN PROJECT MANAGER

CHRISTOPHER ZACHARIAS
SOUTHEAST REGION
141 NW BARSTOW ST
WAUKESHA, WI 53188
PHONE: 262-548-6716
EMAIL: CHRISTOPHER.ZACHARIAS@DOT.WI.GOV

WISDOT ATR PULL BOXES

CHAD BIGLER
TRAVEL SURVEY SHOP, 3633 PIERSTORFF ST
P.O. BOX 2583
MADISON, WI 53704-2583
PHONE: 262-548-7740
EMAIL: CHAD.BIGLER@DOT.WI.GOV

WAUKESHA COUNTY DPW

BRETT WALLACE
ENGINEERING SERVICES
515 W MORELAND BLVD
WAUKESHA, WI 53188
PHONE: 608-535-7413
EMAIL: BWALLACE@WAUKESHACOUNTY.GOV

WISDOT

JOYCE MURPHY
WISCONSIN SIGNAL
141 NW BARSTOW STREET
WAUKESHA, WI 53188
PHONE: 262-548-5933
EMAIL: JOYCE.MURPHY@DOT.WI.GOV

2

DIGGERS HOTLINE
Dial 811 or (800)242-8511
www.DiggersHotline.com

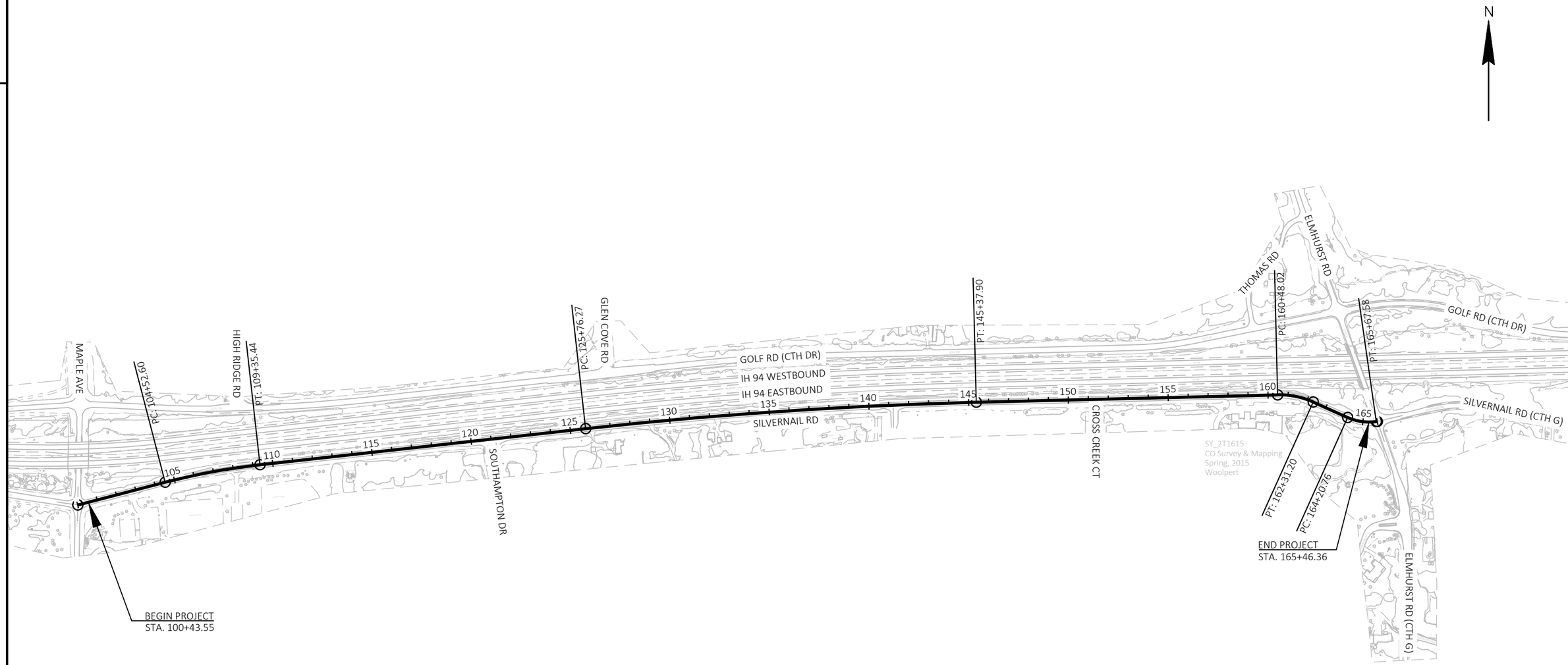
N
MAPLE AVE
PC: 104+52.60
HIGH RIDGE RD
PT: 109+35.44
GLEN COVE RD
PC: 125+76.27
GOLF RD (CTH DR)
IH 94 WESTBOUND
IH 94 EASTBOUND
SILVERNAIL RD
SOUTHAMPTON DR
PT: 145+37.90
CROSS CREEK CT
THOMAS RD
PC: 160+48.02
ELMHURST RD
PT: 161+55.58
GOLF RD (CTH DR)
SILVERNAIL RD (CTH G)
105
110
115
120
125
130
135
140
145
150
155
160
165
SY_2T1615
CO Survey & Mapping
Spring, 2015
Woolpert
PT: 162+31.20
PC: 164+20.76
END PROJECT
STA. 165+46.36
ELMHURST RD (CTH G)
BEGIN PROJECT
STA. 100+43.55

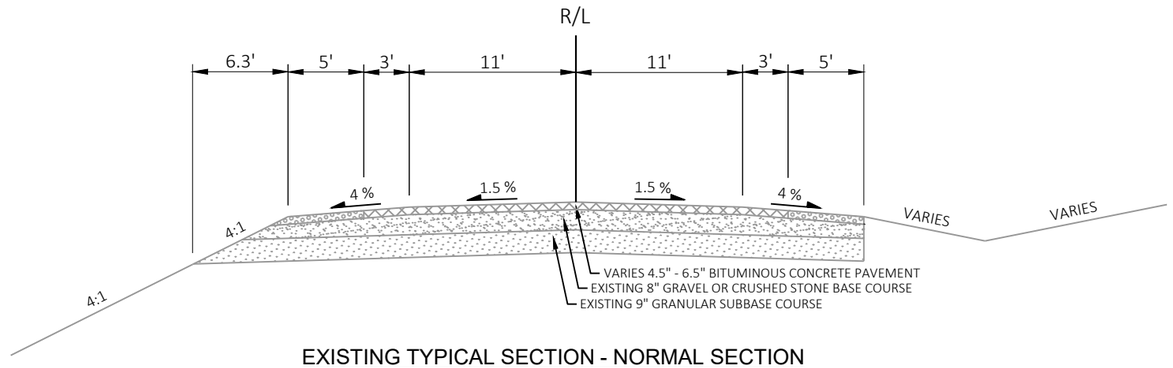

EXISTING TYPICAL SECTION - NORMAL SECTION

SILVERNAIL FRONTAGE ROAD
STA 100+43.55 - 165+46.36

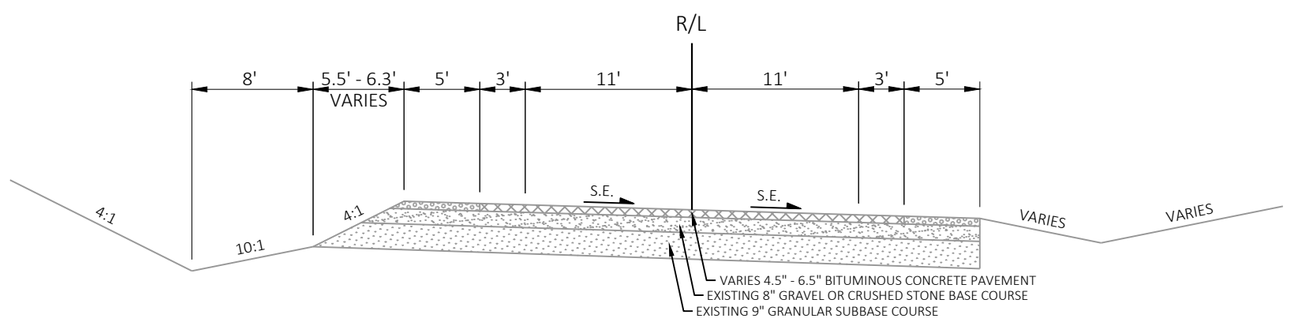

EXISTING TYPICAL SECTION - SUPERELEVATED SECTION

SILVERNAIL FRONTAGE ROAD

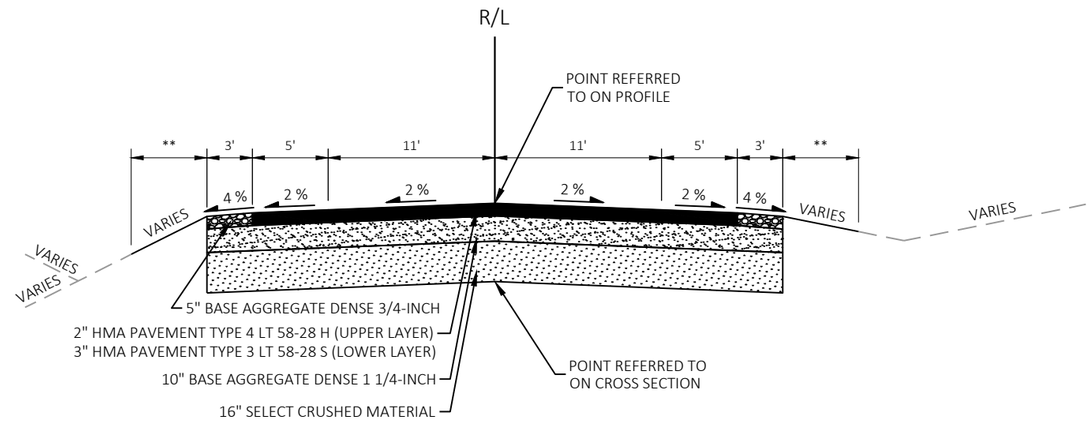

FINISHED TYPICAL SECTION- NORMAL SECTION ***

SILVERNAIL FRONTAGE ROAD
STA 100+43.55 - 165+46.36

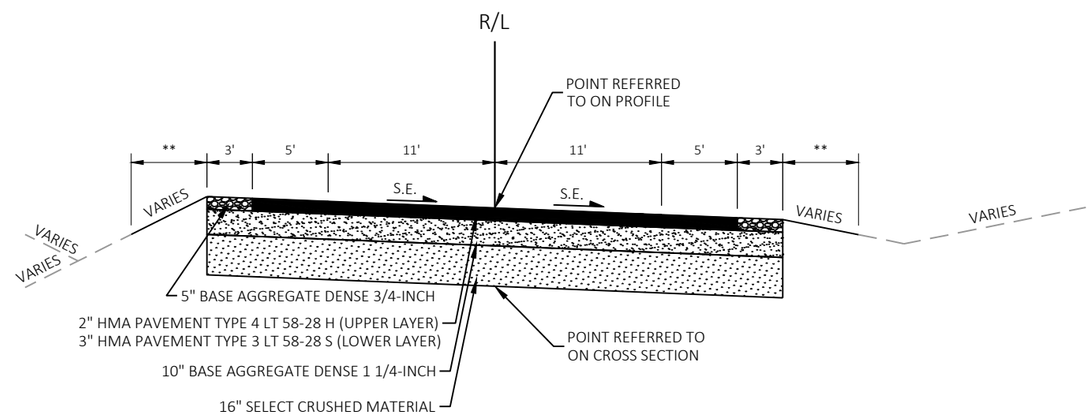

FINISHED TYPICAL SECTION- SUPERELEVATED SECTION

SILVERNAIL FRONTAGE ROAD

NOTE:

** LENGTH VARIES, 5' TYPICAL, BLEND AGGREGATE SHOULDER FORESLOPE TO MATCH EXITING.

*** APPLIES TO ADJACENT RECONSTRUCTION LIMITS AT ADJACENT SIDE ROADS: SOUTHAMPTON DR AND CROSS CREEK CT

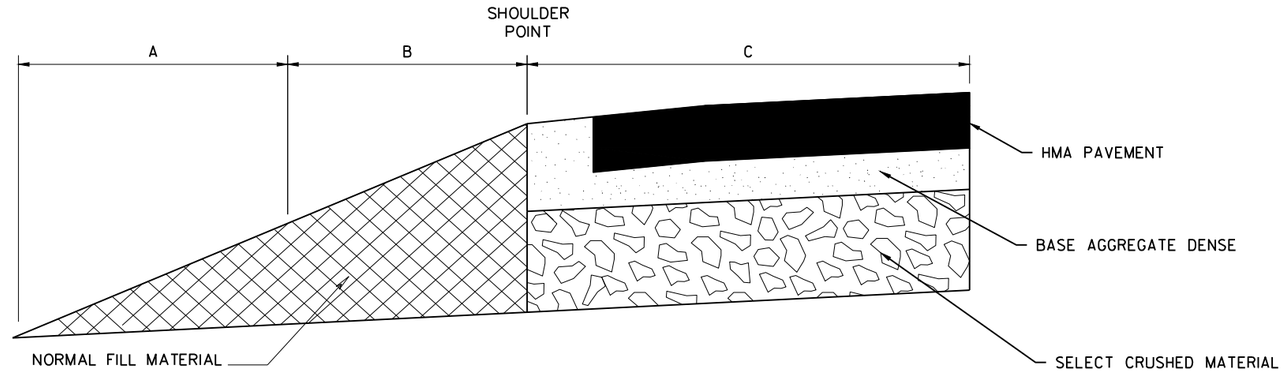

TYPICAL HALF SECTION WITHOUT RELIEF TRENCH

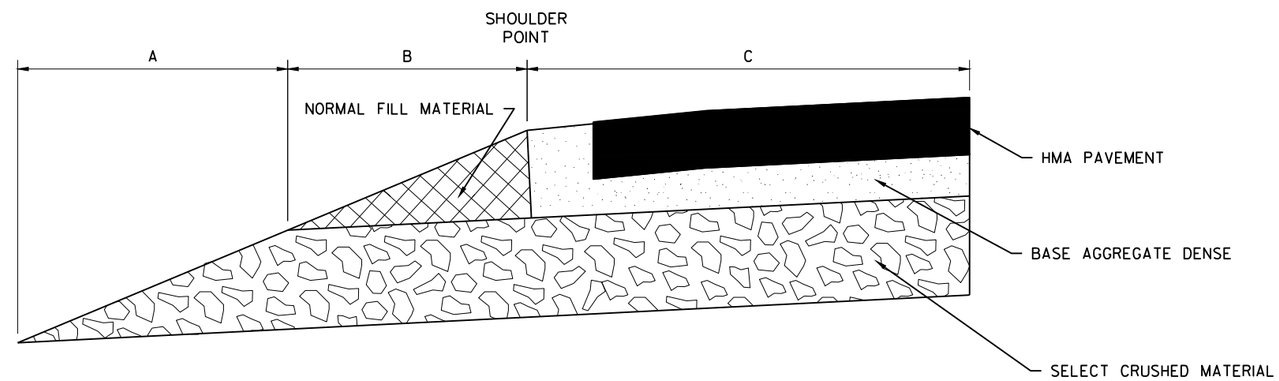

TYPICAL HALF SECTION WITH RELIEF TRENCH

RELIEF TRENCH LOCATIONS

101+00 LT
102+50 LT
105+00 RT
107+50 RT
110+00 RT
112+50 RT
115+00 RT
117+50 LT
120+00 LT
122+50 LT
125+00 LT/RT
127+50 LT
130+00 LT
132+50 LT
135+00 LT
137+50 LT
140+00 LT
142+50 LT
145+00 LT
147+50 LT
150+00 LT
152+50 LT
155+00 LT
157+50 LT
160+00 LT
162+50 LT
165+00 LT

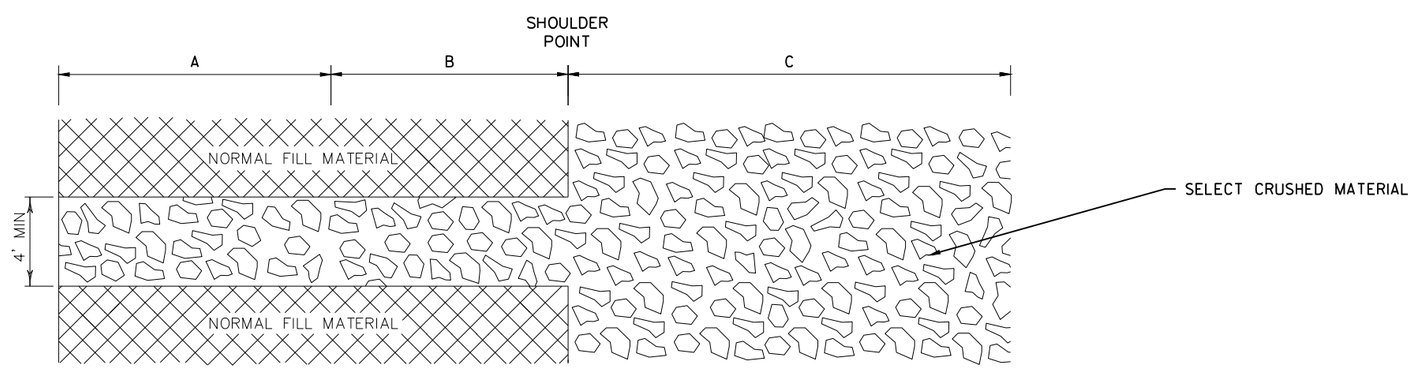

RELIEF TRENCH PLAN VIEW

RELIEF TRENCH

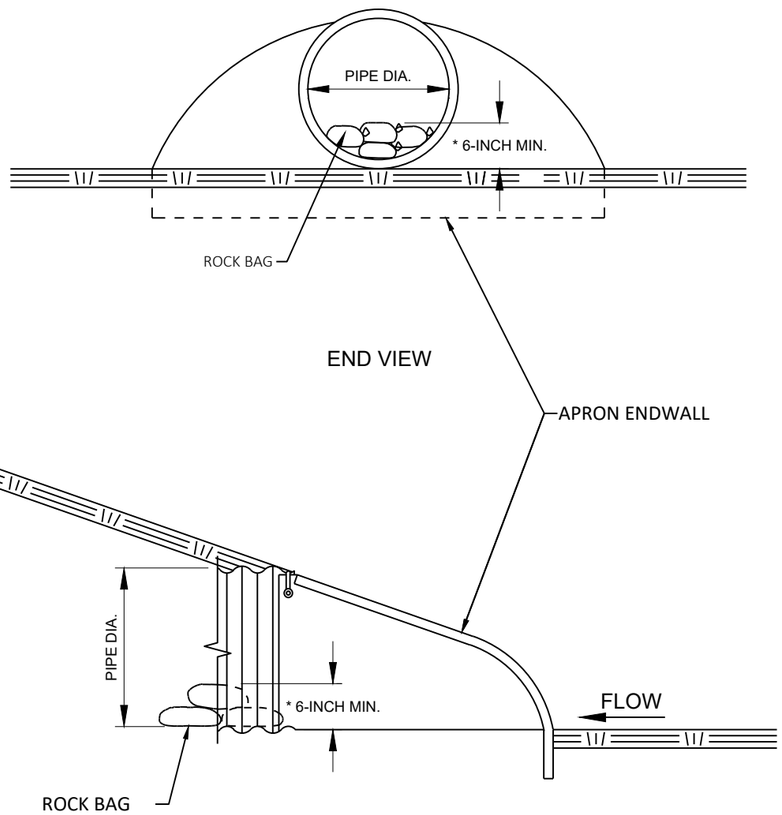

*OR AS DIRECTED BY THE ENGINEER

CULVERT PIPE CHECKS

ESTIMATED BAG SIZE 18" X 12" X 6"	
PIPE SIZE	ESTIMATED NUMBER OF BAGS
12"	1
15"	2
18"	2
24"	3
30"	5
36"	7
42"	7
48"	10
54"	10
60"	13
66"	14
72"	16
17"X13"	2
30"X19"	5
38"X24"	7
45"X29"	10
53"X34"	10
60"X38"	13
76"X48"	18
27' WIDE BOX CULVERT	36

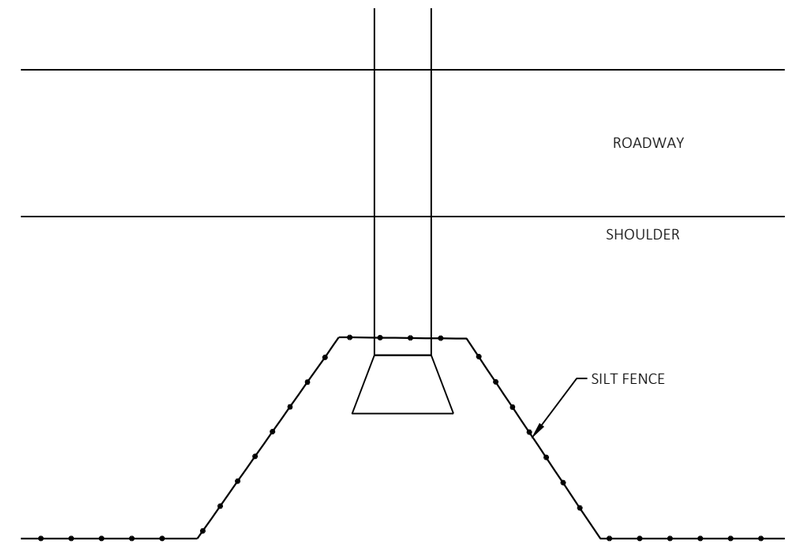

NOTE
SEE SILT FENCE SDD FOR ADDITIONAL INFORMATION

TYPICAL SILT FENCE DETAIL AT PIPE INLET

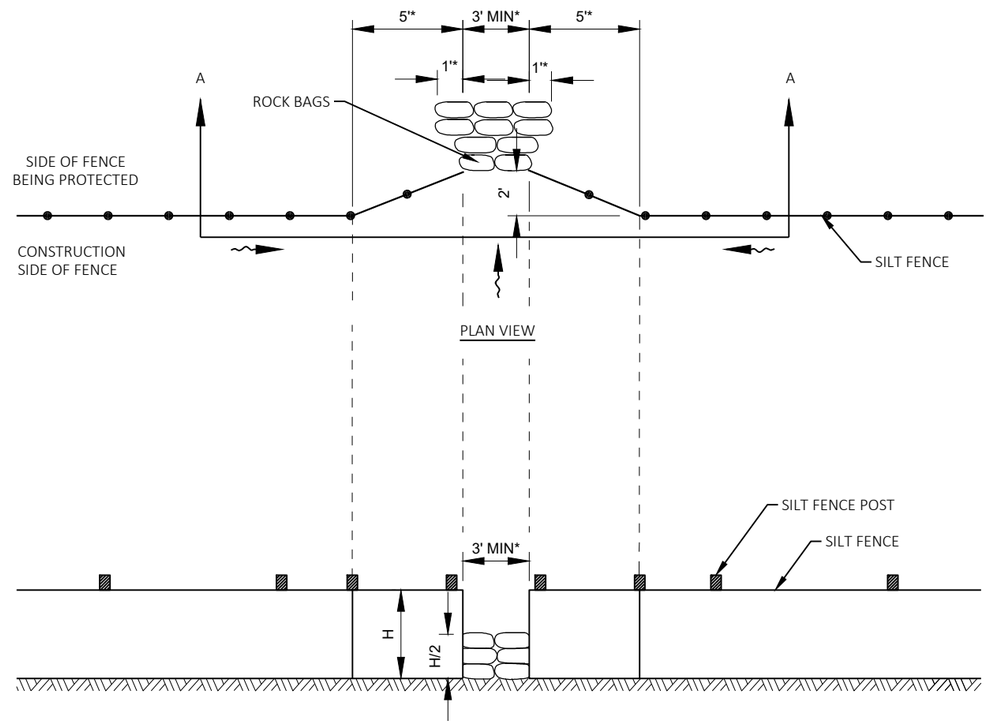

* DIMENSIONS MAY BE ADJUSTED TO FIT FIELD CONDITIONS AS DIRECTED BY THE ENGINEER.

SILT FENCE DRAINAGE RELIEF DETAIL

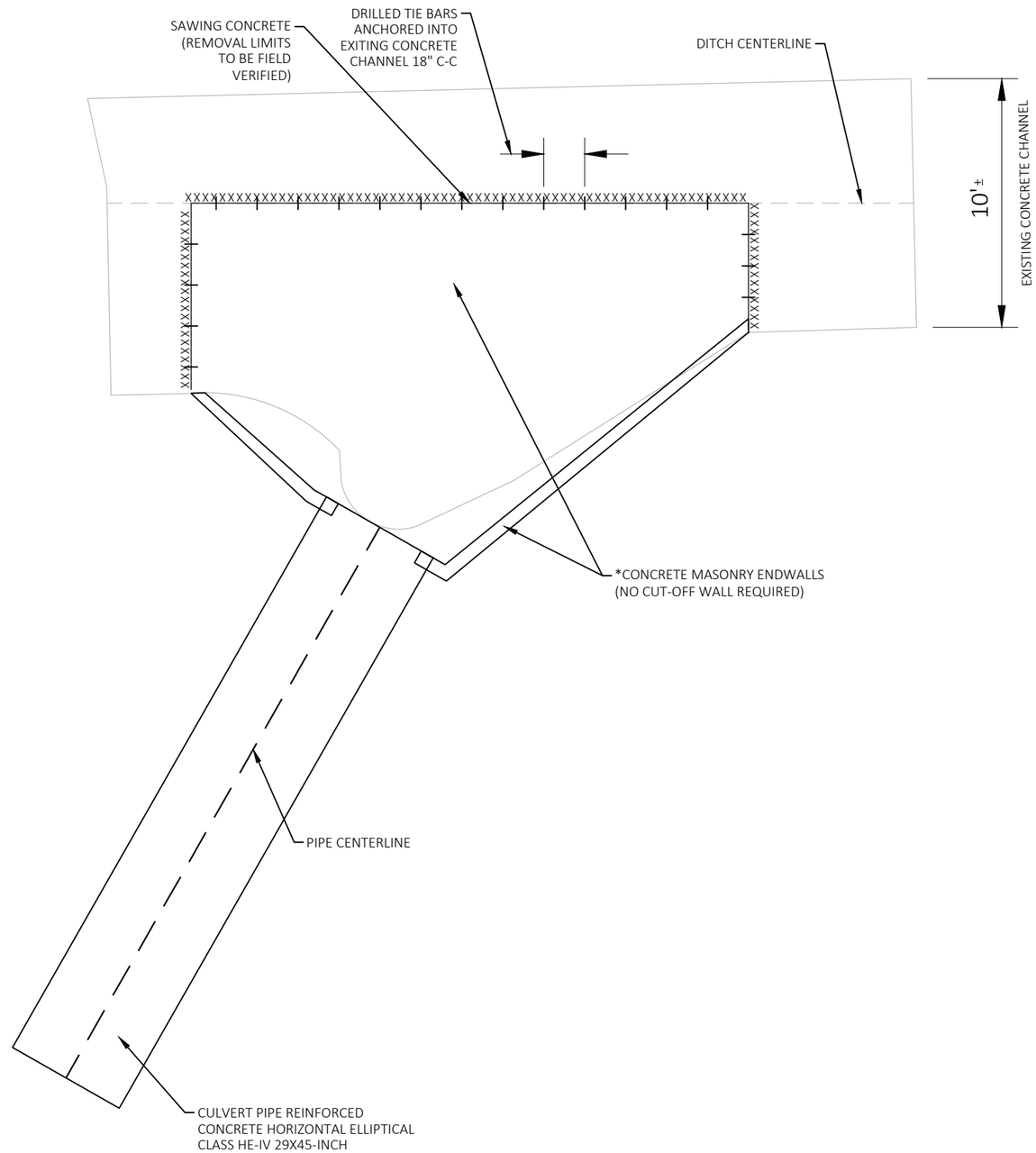

CONCRETE MASONRY ENDWALLS DETAIL AT CONCRETE CHANNEL LOCATION

STA 158+00 LT
(NOT TO SCALE)

NOTES

* PAID FOR AS CONCRETE MASONRY ENDWALLS

CONFORM TO EXISTING CONCRETE SWALE (FIELD VERIFY EXITING OUTFALL ELEVATION AND DIMENSIONS)

2

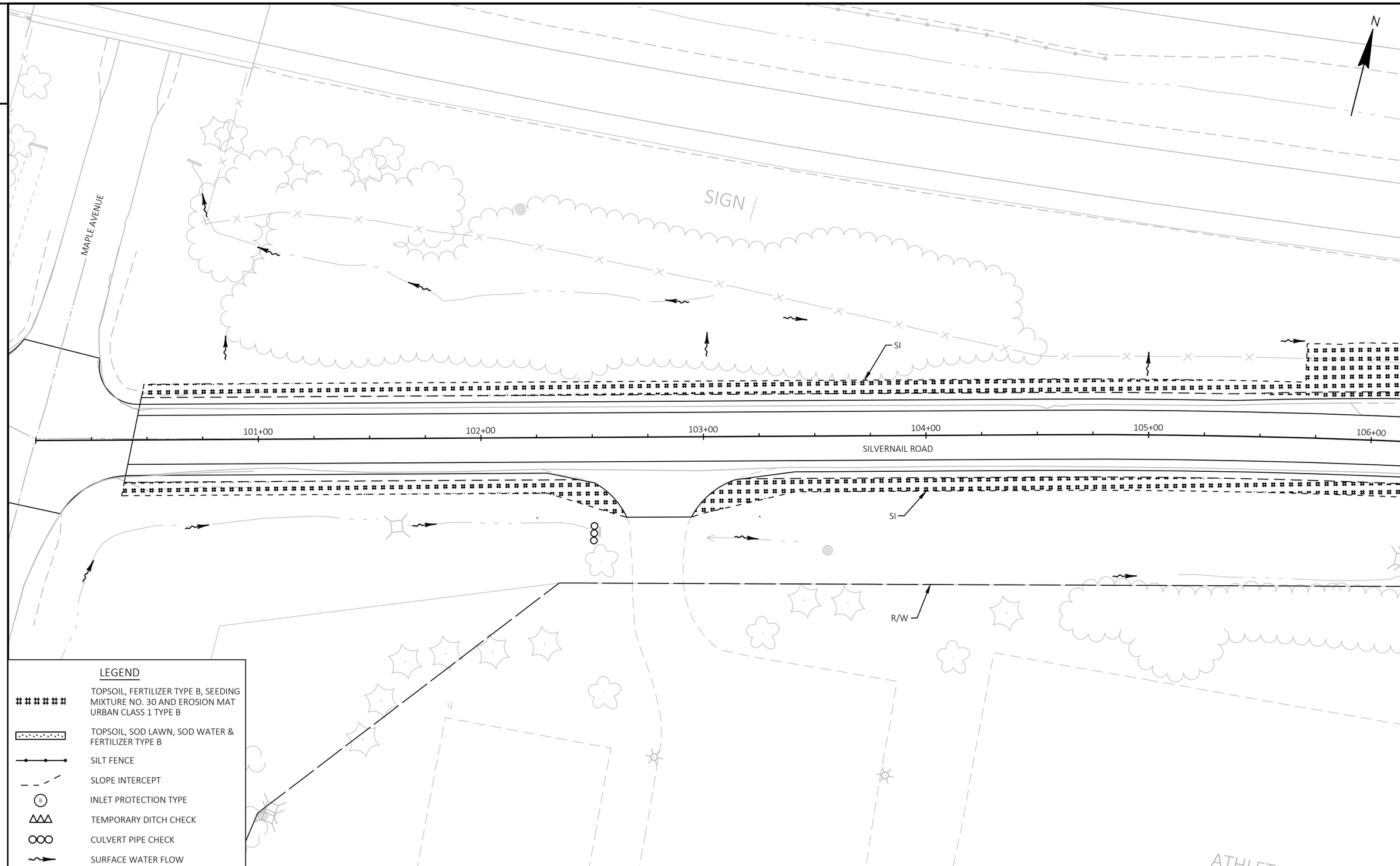

2

PROJECT NO: 2717-03-71	HWY: SILVERNAIL FRONTAGE ROAD	COUNTY: WAUKESHA	EROSION CONTROL	SHEET 11	E

FILE NAME : N:\PDS\C3D\27170301\SHEETS\022001_EC.DWG
LAYOUT NAME - 022001_EC
PLOT DATE : 8/1/2025 9:11 AM
PLOT BY : FILTZ, DEAN J
PLOT NAME :
PLOT SCALE : 1 IN:40 FT
WISDOT/CADDS SHEET 42

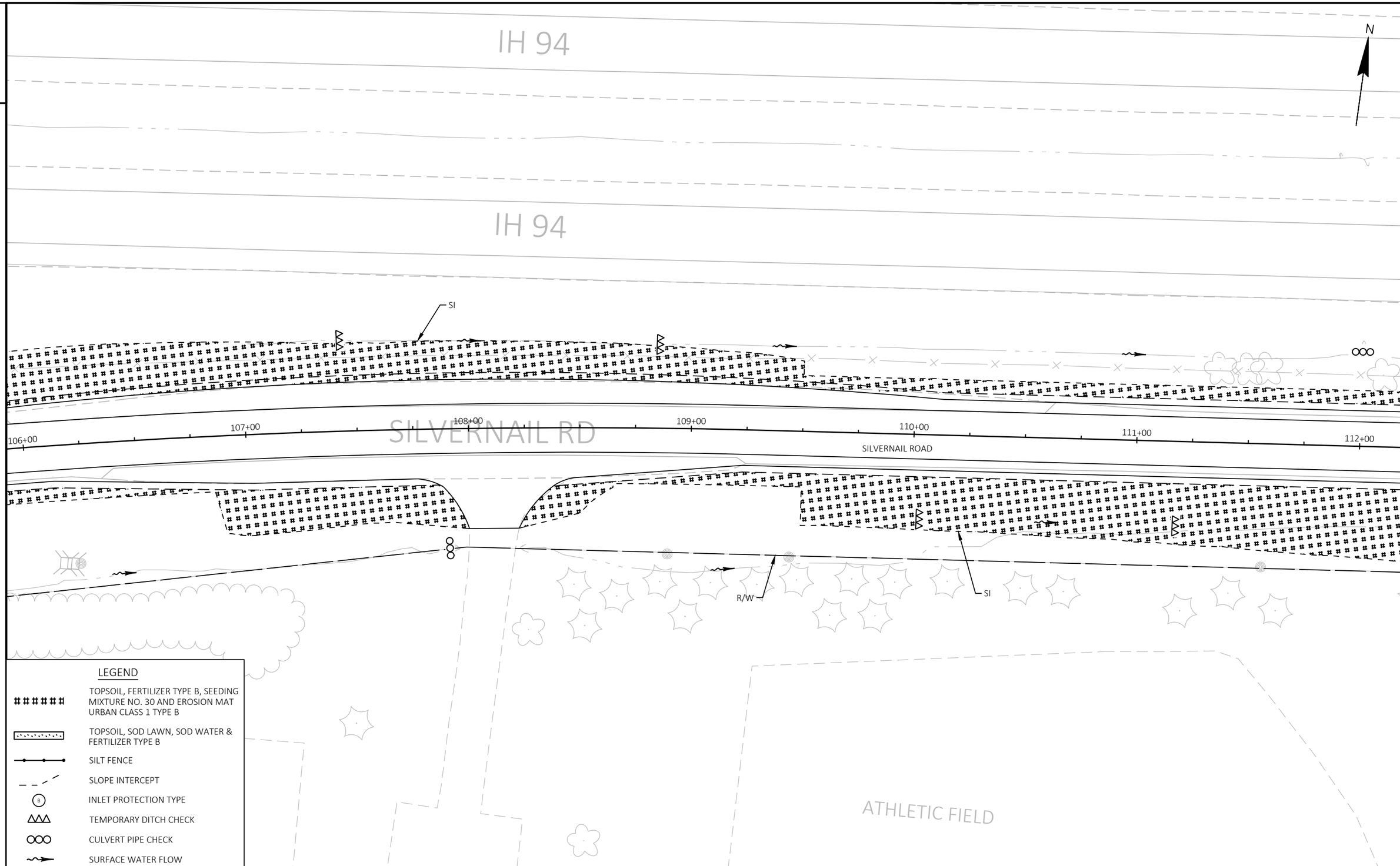

PROJECT NO: 2717-03-71	HWY: SILVERNAIL FRONTAGE ROAD	COUNTY: WAUKESHA	EROSION CONTROL	SHEET 12	E

FILE NAME : N:\PDS\C3D\27170301\SHEETS\022001_EC.DWG
LAYOUT NAME - 022002_EC
PLOT DATE : 8/1/2025 9:11 AM
PLOT BY : FILTZ, DEAN J
PLOT NAME :
PLOT SCALE : 1 IN:40 FT
WISDOT/CADDS SHEET 42

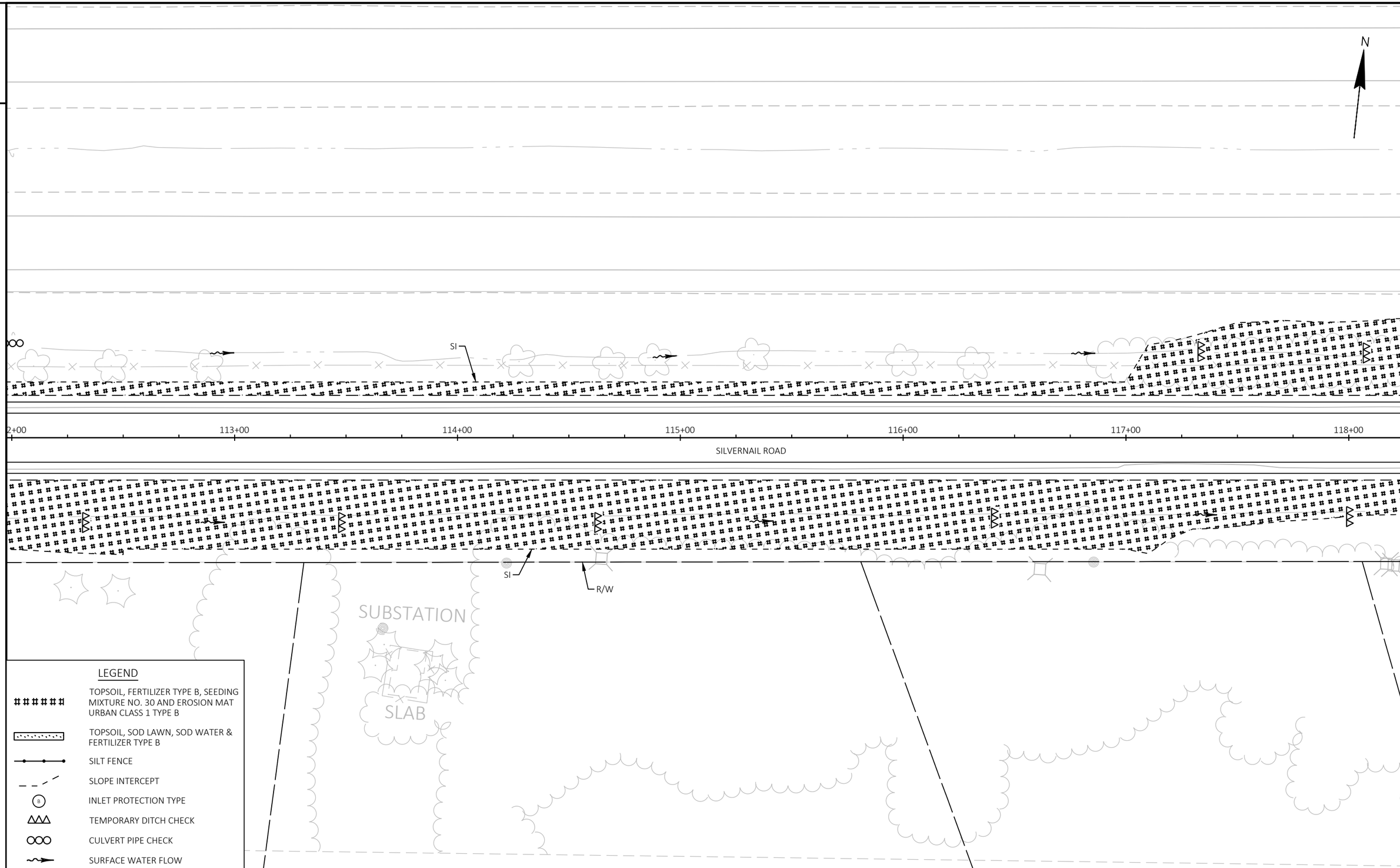

PROJECT NO: 2717-03-71	HWY: SILVERNAIL FRONTAGE ROAD	COUNTY: WAUKESHA	EROSION CONTROL	SHEET 13	E

FILE NAME : N:\PDS\C3D\27170301\SHEETS\022001_EC.DWG
LAYOUT NAME - 022003_EC
PLOT DATE : 8/1/2025 9:11 AM
PLOT BY : FILTZ, DEAN J
PLOT NAME :
PLOT SCALE : 1 IN:40 FT
WISDOT/CADDS SHEET 42

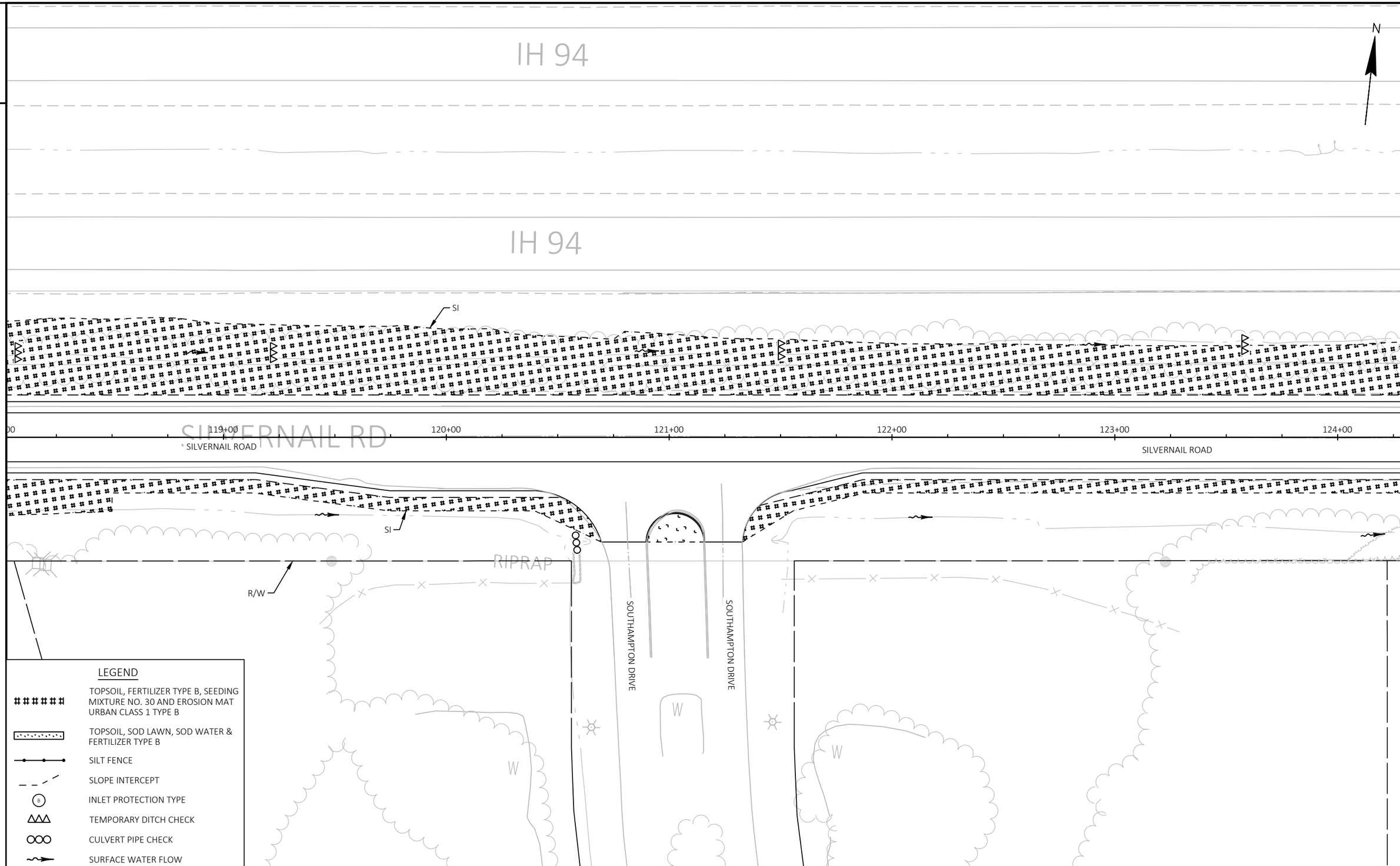

PROJECT NO: 2717-03-71	HWY: SILVERNAIL FRONTAGE ROAD	COUNTY: WAUKESHA	EROSION CONTROL	SHEET 14	E

FILE NAME : N:\PDS\C3D\27170301\SHEETS\022001_EC.DWG
LAYOUT NAME - 022004_EC
PLOT DATE : 8/1/2025 9:11 AM
PLOT BY : FILTZ, DEAN J
PLOT NAME :
PLOT SCALE : 1 IN:40 FT
WISDOT/CADDS SHEET 42

2

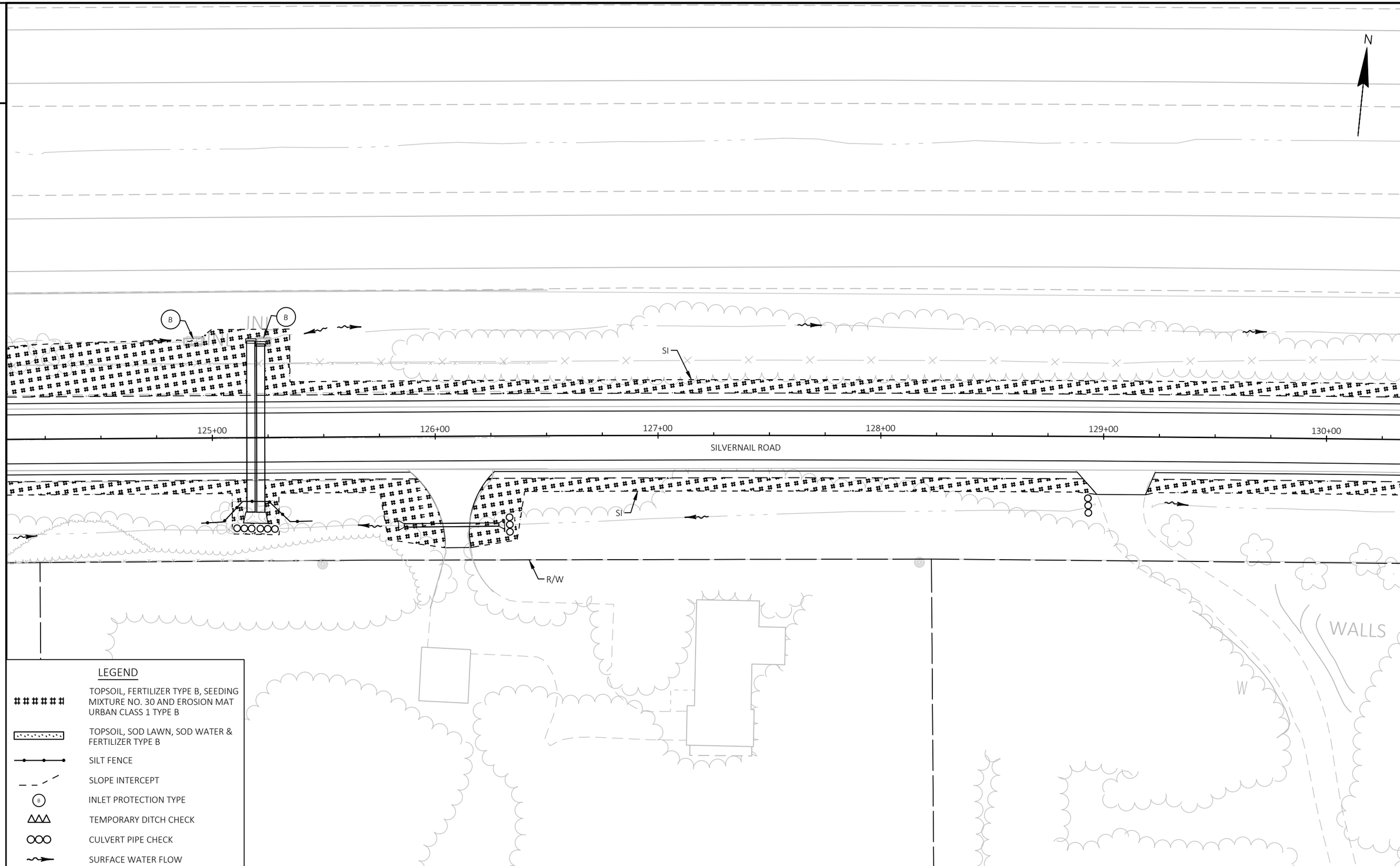

2

PROJECT NO: 2717-03-71	HWY: SILVERNAIL FRONTAGE ROAD	COUNTY: WAUKESHA	EROSION CONTROL	SHEET 15	E

FILE NAME : N:\PDS\C3D\27170301\SHEETS\022001_EC.DWG
LAYOUT NAME - 022005_EC
PLOT DATE : 8/1/2025 9:12 AM
PLOT BY : FILTZ, DEAN J
PLOT NAME :
PLOT SCALE : 1 IN:40 FT
WISDOT/CADDS SHEET 42

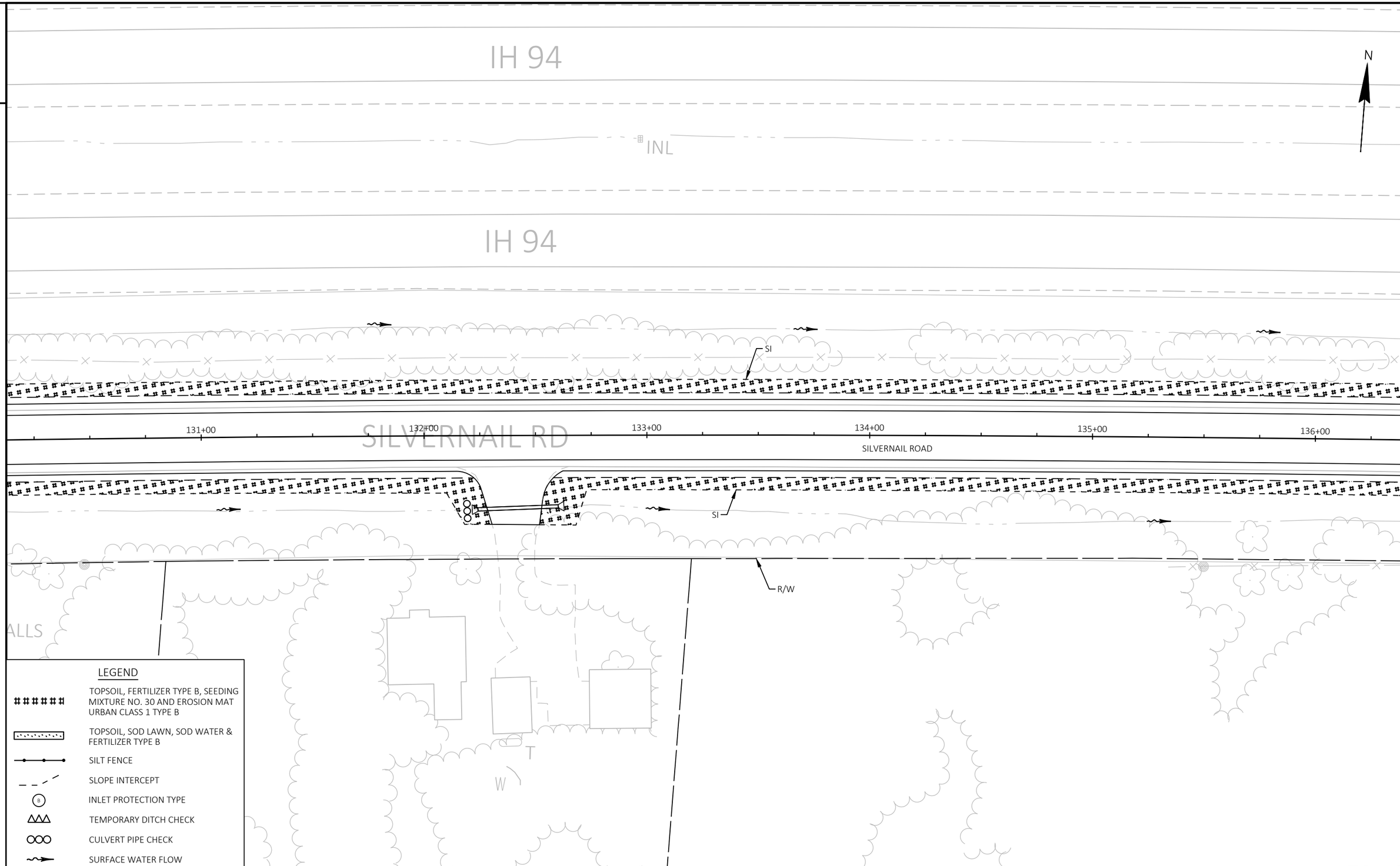

PROJECT NO: 2717-03-71	HWY: SILVERNAIL FRONTAGE ROAD	COUNTY: WAUKESHA	EROSION CONTROL	SHEET 16	E

FILE NAME : N:\PDS\C3D\27170301\SHEETS\022001_EC.DWG
LAYOUT NAME - 022006_EC
PLOT DATE : 8/1/2025 9:12 AM
PLOT BY : FILTZ, DEAN J
PLOT NAME :
PLOT SCALE : 1 IN:40 FT
WISDOT/CADDS SHEET 42

2

2

N

WETLAND BOUNDARY

SI

137+00

138+00

139+00

140+00

141+00

142+00

SILVERNAIL ROAD

SI

R/W

FOUND

U/C

RUINS

FOUND

WALLS

LEGEND

TOPSOIL, FERTILIZER TYPE B, SEEDING MIXTURE NO. 30 AND EROSION MAT URBAN CLASS 1 TYPE B

TOPSOIL, SOD LAWN, SOD WATER & FERTILIZER TYPE B

SILT FENCE

SLOPE INTERCEPT

INLET PROTECTION TYPE

TEMPORARY DITCH CHECK

CULVERT PIPE CHECK

SURFACE WATER FLOW

PROJECT NO: 2717-03-71	HWY: SILVERNAIL FRONTAGE ROAD	COUNTY: WAUKESHA	EROSION CONTROL	SHEET 17	E

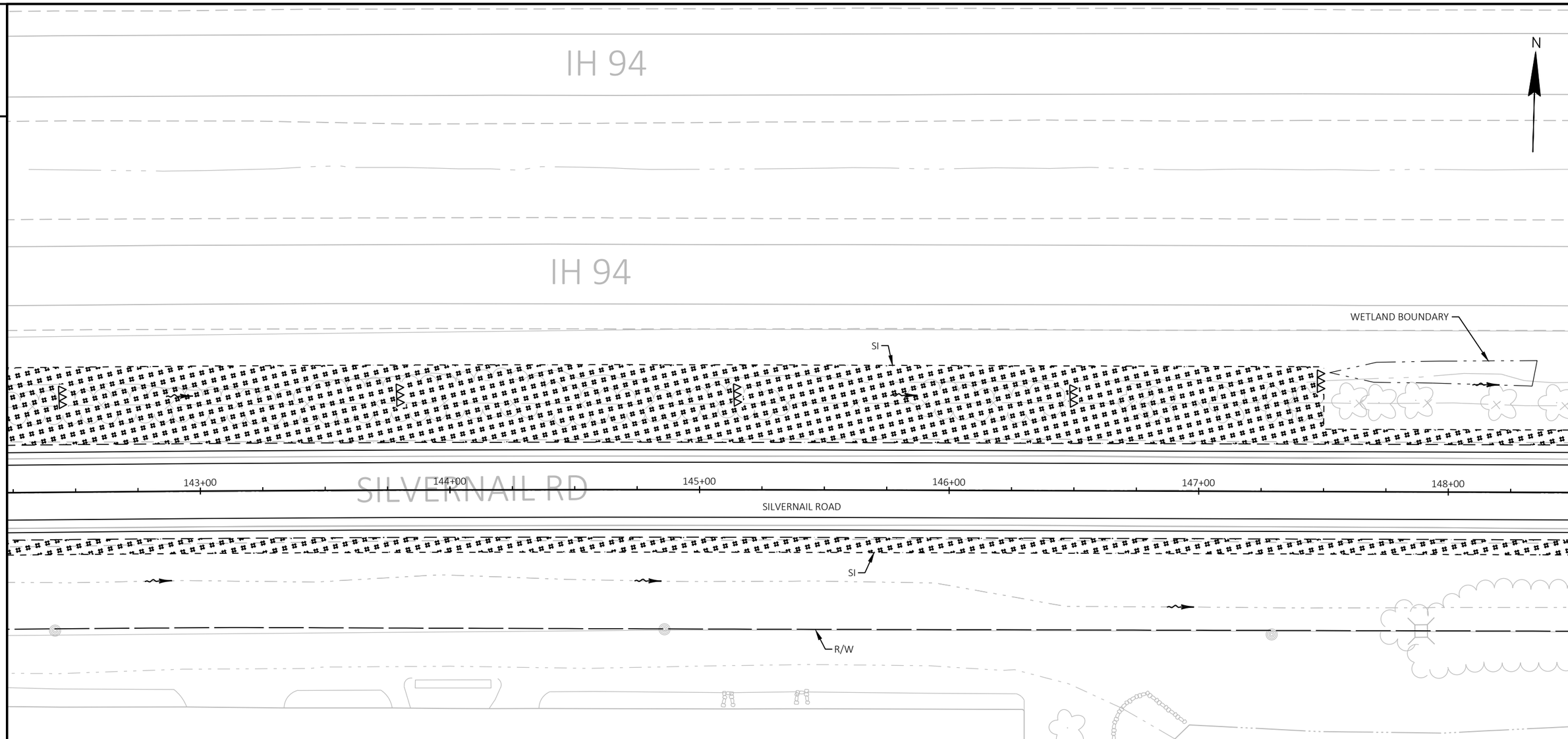

LEGEND

- TOPSOIL, FERTILIZER TYPE B, SEEDING MIXTURE NO. 30 AND EROSION MAT URBAN CLASS 1 TYPE B
- TOPSOIL, SOD LAWN, SOD WATER & FERTILIZER TYPE B
- SILT FENCE
- SLOPE INTERCEPT
- INLET PROTECTION TYPE
- TEMPORARY DITCH CHECK
- CULVERT PIPE CHECK
- SURFACE WATER FLOW

PROJECT NO: 2717-03-71	HWY: SILVERNAIL FRONTAGE ROAD	COUNTY: WAUKESHA	EROSION CONTROL	SHEET 18	E

2

2

N

WETLAND BOUNDARY

SIGN

WETLAND BOUNDARY

SI

149+00

150+00

151+00

152+00

153+00

154+00

SILVERNAIL ROAD

SI

R/W

CROSS CREEK CT

CROSS CREEK CT

LEGEND

TOPSOIL, FERTILIZER TYPE B, SEEDING MIXTURE NO. 30 AND EROSION MAT URBAN CLASS 1 TYPE B

TOPSOIL, SOD LAWN, SOD WATER & FERTILIZER TYPE B

SILT FENCE

SLOPE INTERCEPT

INLET PROTECTION TYPE

TEMPORARY DITCH CHECK

CULVERT PIPE CHECK

SURFACE WATER FLOW

PROJECT NO: 2717-03-71	HWY: SILVERNAIL FRONTAGE ROAD	COUNTY: WAUKESHA	EROSION CONTROL	SHEET 19	E

FILE NAME : N:\PDS\C3D\27170301\SHEETS\022001_EC.DWG
LAYOUT NAME - 022009_EC

PLOT DATE : 8/1/2025 9:12 AM PLOT BY : FILTZ, DEAN J PLOT NAME : PLOT SCALE : 1 IN:40 FT

WISDOT/CADDS SHEET 42

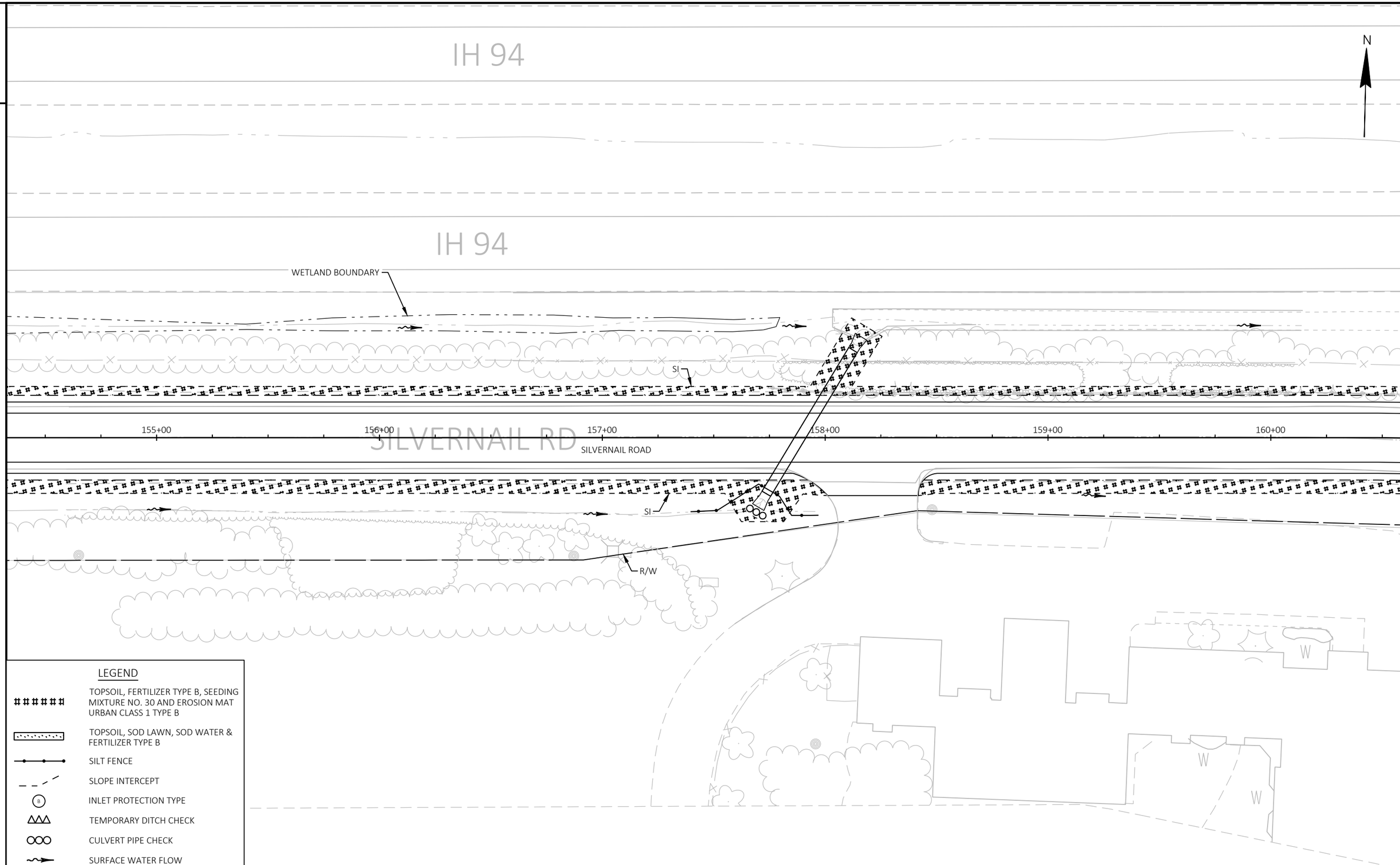

LEGEND

- TOPSOIL, FERTILIZER TYPE B, SEEDING MIXTURE NO. 30 AND EROSION MAT URBAN CLASS 1 TYPE B
- TOPSOIL, SOD LAWN, SOD WATER & FERTILIZER TYPE B
- SILT FENCE
- SLOPE INTERCEPT
- INLET PROTECTION TYPE
- TEMPORARY DITCH CHECK
- CULVERT PIPE CHECK
- SURFACE WATER FLOW

PROJECT NO: 2717-03-71	HWY: SILVERNAIL FRONTAGE ROAD	COUNTY: WAUKESHA	EROSION CONTROL	SHEET 20	E

FILE NAME : N:\PDS\C3D\27170301\SHEETS\022001_EC.DWG
LAYOUT NAME - 022010_EC
PLOT DATE : 8/1/2025 9:12 AM
PLOT BY : FILTZ, DEAN J
PLOT NAME :
PLOT SCALE : 1 IN:40 FT
WISDOT/CADDS SHEET 42

2

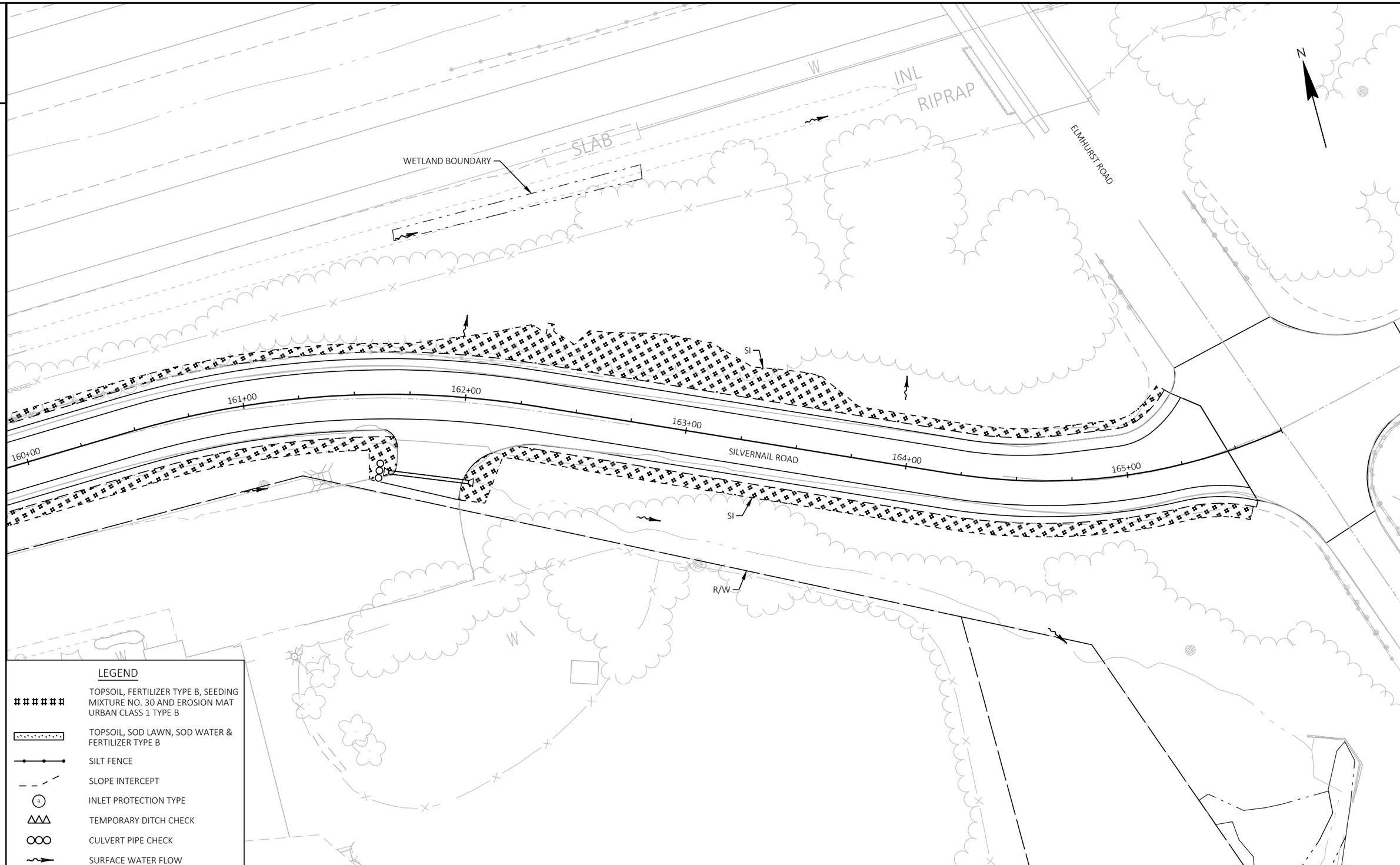

2

PROJECT NO: 2717-03-71	HWY: SILVERNAIL FRONTAGE ROAD	COUNTY: WAUKESHA	EROSION CONTROL	SHEET 21	E

FILE NAME : N:\PDS\C3D\27170301\SHEETS\022001_EC.DWG
LAYOUT NAME - 022011_EC
PLOT DATE : 8/1/2025 9:13 AM
PLOT BY : FILTZ, DEAN J
PLOT NAME :
PLOT SCALE : 1 IN:40 FT

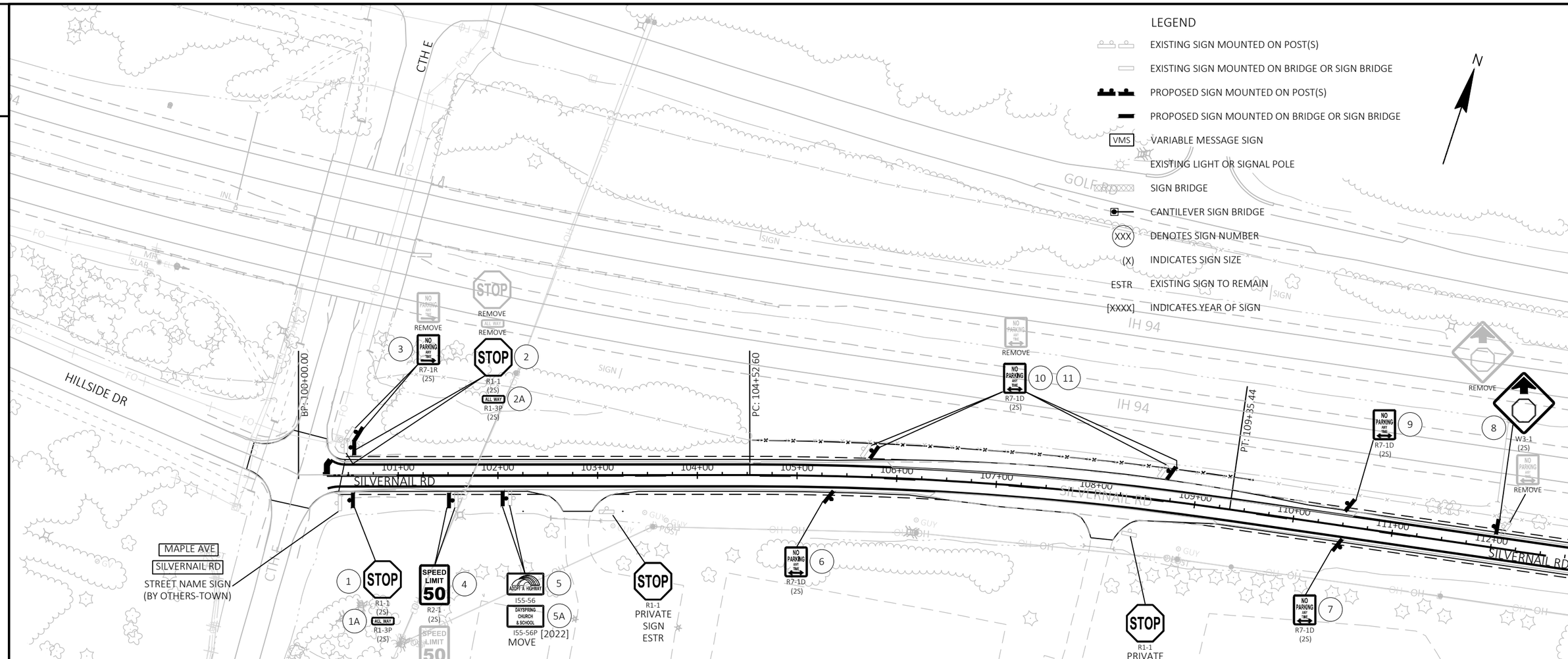

Signing notes

Type II aluminum signs removed under the contract shall be delivered to the County sign shop. Contact the following individual at the sign shop for distribution county location.

Signing Coordinator	County(s)	Phone #
• Bree Johns-Konkel	Milwaukee, Racine, Ozaukee, Washington	414-750-2814
• Chuck Saldivar	Kenosha, Walworth, Waukesha	414-750-1682

Signs shall be carefully removed from sign supports. The signs shall be palletized for handling with a forklift (see standard spec 638.3.4). The Regional sign shop (General phone # 414-266-1164) shall be notified three working days prior to delivery of the signs.

When an existing stop sign support is to be removed and a new stop sign and support erected, the work shall be done concurrently. For other signs and supports that are to be removed and new signs and supports erected, the removal of the existing sign/support and erection of the new sign/support should be done as concurrently as possible. In no case shall a new sign/support be down for more than 24 hours and there shall not be more than one sign of the same legend missing in a row.

Wood posts sizes, for type II signs are estimated lengths and the actual length will be determined in the field.

Street name signs are property of the municipality (city, village or town). The municipality shall be contacted to remove their street name signs prior to construction and it is their responsibility to reinstall the old signs or replace them following construction. WisDOT does not furnish or install street name signs. The street name signs shall not be placed on top of the STOP signs.

Box out or coring of concrete for sign posts is incidental to the post.

SHEET 1 OF 6

PROJECT NO: 2717-03-71	HWY: SILVERNAIL RD	COUNTY: WAUKESHA	PERMANENT SIGNING PLAN	SHEET 22	E

LEGEND

- EXISTING SIGN MOUNTED ON POST(S)
- EXISTING SIGN MOUNTED ON BRIDGE OR SIGN BRIDGE
- PROPOSED SIGN MOUNTED ON POST(S)
- PROPOSED SIGN MOUNTED ON BRIDGE OR SIGN BRIDGE
- VMS — VARIABLE MESSAGE SIGN
- EXISTING LIGHT OR SIGNAL POLE
- SIGN BRIDGE
- CANTILEVER SIGN BRIDGE
- XXX — DENOTES SIGN NUMBER
- (X) — INDICATES SIGN SIZE
- ESTR — EXISTING SIGN TO REMAIN
- [XXXX] — INDICATES YEAR OF SIGN

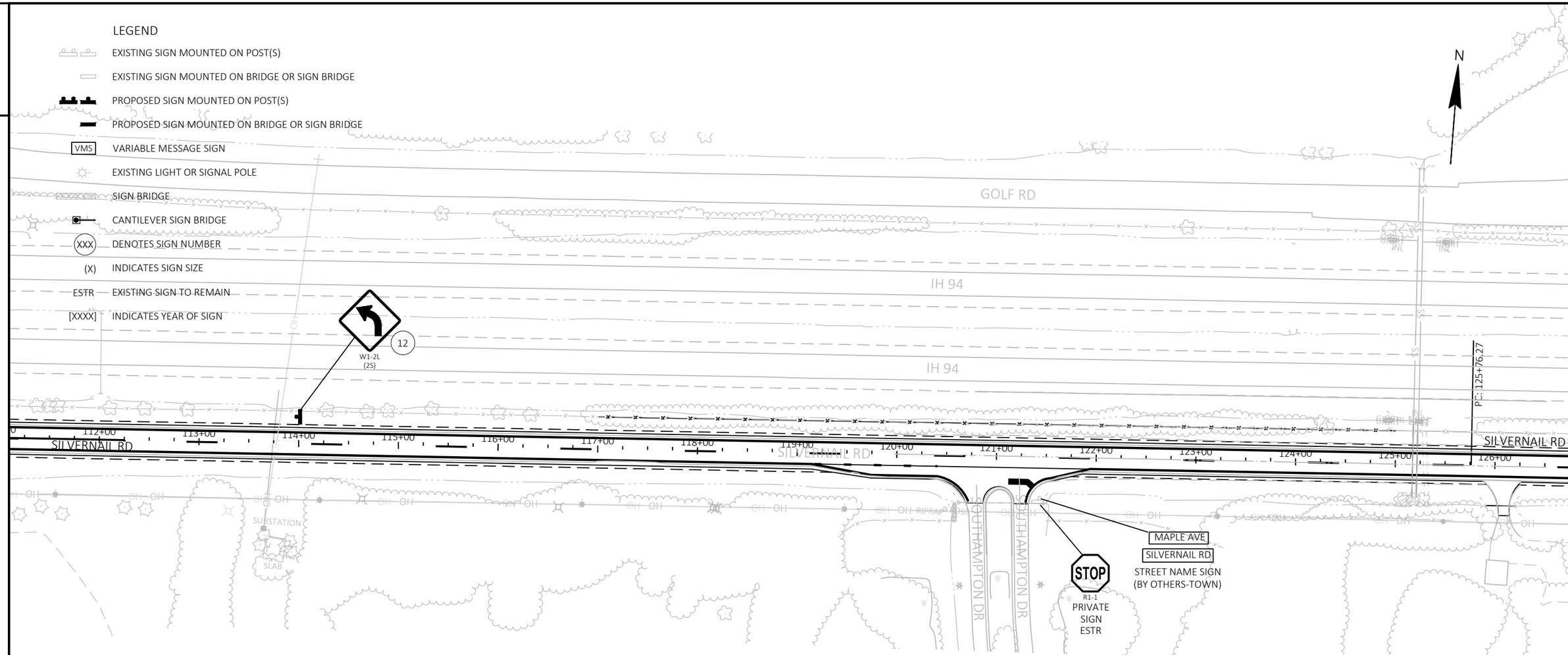

SHEET 2 OF 5

PROJECT NO: 2717-03-71	HWY: SILVERNAIL RD	COUNTY: WAUKESHA	PERMANENT SIGNING PLAN	SHEET 23	E

FILE NAME : N:\PDS\C3D\CAD\27170301\SIGN\023201_PS.DWG
LAYOUT NAME - 02
PLOT DATE : 3/31/2025 8:26 AM
PLOT BY : MARTENS, KAREN L
PLOT NAME :
PLOT SCALE : 1 IN:100 FT

2

LEGEND

- EXISTING SIGN MOUNTED ON POST(S)
- EXISTING SIGN MOUNTED ON BRIDGE OR SIGN BRIDGE
- PROPOSED SIGN MOUNTED ON POST(S)
- PROPOSED SIGN MOUNTED ON BRIDGE OR SIGN BRIDGE
- VMS — VARIABLE MESSAGE SIGN
- EXISTING LIGHT OR SIGNAL POLE
- SIGN BRIDGE
- CANTILEVER SIGN BRIDGE
- XXX — DENOTES SIGN NUMBER
- (X) — INDICATES SIGN SIZE
- ESTR — EXISTING SIGN TO REMAIN
- [XXXX] — INDICATES YEAR OF SIGN

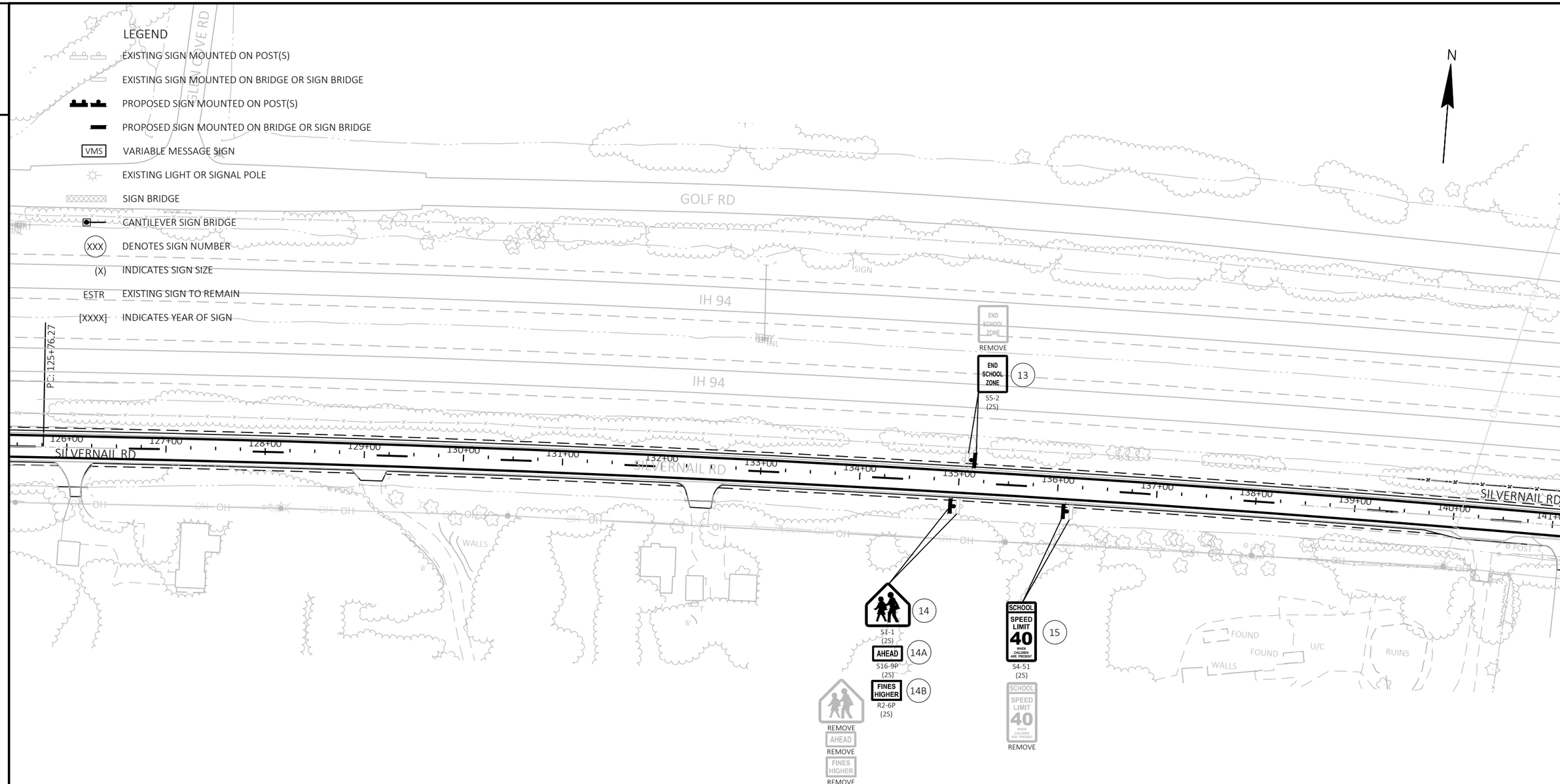

SHEET 3 OF 5

PROJECT NO: 2717-03-71	HWY: SILVERNAIL RD	COUNTY: WAUKESHA	PERMANENT SIGNING PLAN	SHEET 24	E

FILE NAME : N:\PDS\C3D\CAD\27170301\SIGN\023201_PS.DWG
LAYOUT NAME - 03
PLOT DATE : 3/31/2025 8:26 AM
PLOT BY : MARTENS, KAREN L
PLOT NAME :
PLOT SCALE : 1 IN:100 FT
WISDOT/CADDS SHEET 42

2

LEGEND

- EXISTING SIGN MOUNTED ON POST(S)
- EXISTING SIGN MOUNTED ON BRIDGE OR SIGN BRIDGE
- PROPOSED SIGN MOUNTED ON POST(S)
- PROPOSED SIGN MOUNTED ON BRIDGE OR SIGN BRIDGE
- VMS — VARIABLE MESSAGE SIGN
- EXISTING LIGHT OR SIGNAL POLE
- SIGN BRIDGE
- CANTILEVER SIGN BRIDGE
- (XXX) DENOTES SIGN NUMBER
- (X) INDICATES SIGN SIZE
- ESTR EXISTING SIGN TO REMAIN
- [XXXX] INDICATES YEAR OF SIGN

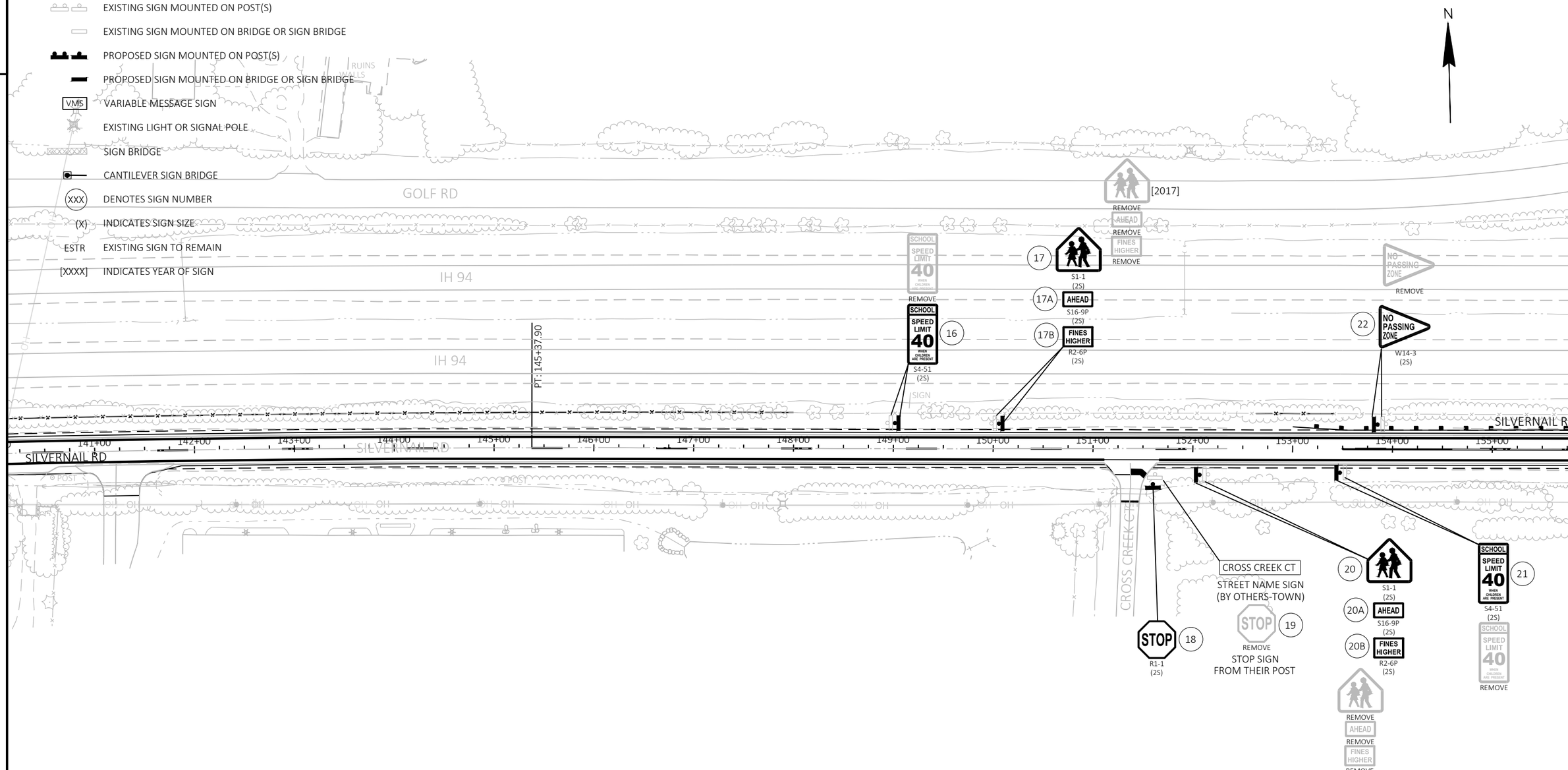

SHEET 4 OF 6

PROJECT NO: 2717-03-71	HWY: SILVERNAIL RD	COUNTY: WAUKESHA	PERMANENT SIGNING PLAN	SHEET 25	E

FILE NAME : N:\PDS\C3D\CAD\27170301\SIGN\023201_PS.DWG
LAYOUT NAME - 04
PLOT DATE : 3/31/2025 8:26 AM
PLOT BY : MARTENS, KAREN L
PLOT NAME :
PLOT SCALE : 1 IN:100 FT
WISDOT/CADDS SHEET 42

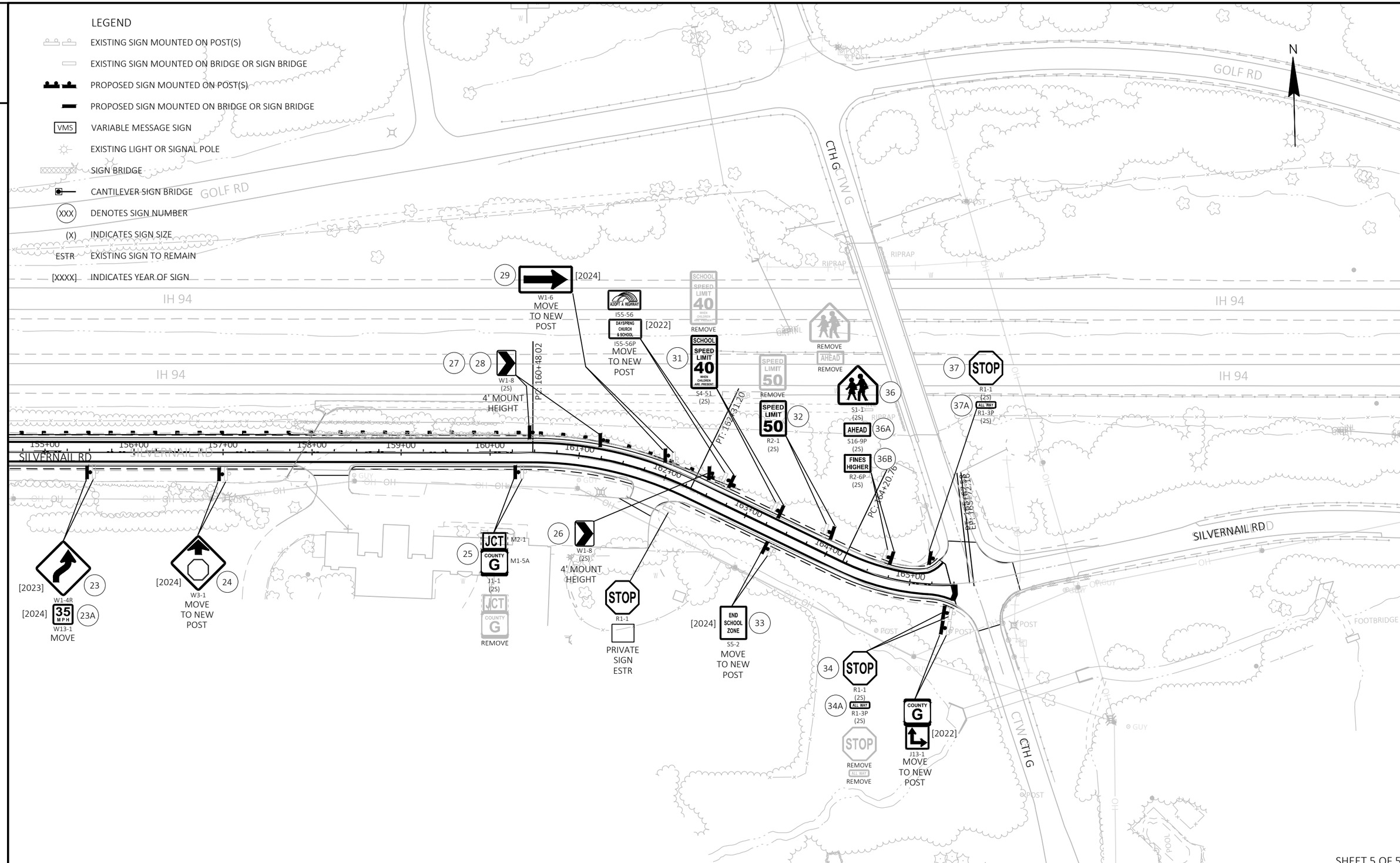

PROJECT NO: 2717-03-71	HWY: SILVERNAIL RD	COUNTY: WAUKESHA	PERMANENT SIGNING PLAN	SHEET 26	E

FILE NAME : N:\PDS\C3D\CAD\27170301\SIGN\023201_PS.DWG
LAYOUT NAME - 05
PLOT DATE : 3/31/2025 8:26 AM
PLOT BY : MARTENS, KAREN L
PLOT NAME :
PLOT SCALE : 1 IN:100 FT
WISDOT/CADDS SHEET 42

LEGEND

- 7 MARKING STOP LINE EPOXY 18-INCH (WHITE)
- 36 MARKING LINE GROOVED WET REF EPOXY 6-INCH (DASHED YELLOW) (12.5 FT LINE 37.5 FT SKIP)
- 180 MARKING LINE EPOXY 4-INCH (WHITE)
- 181 MARKING LINE EPOXY 4-INCH (YELLOW)
- 183 MARKING LINE GROOVED WET REF EPOXY 6-INCH (WHITE)
- 184 MARKING LINE GROOVED WET REF EPOXY 6-INCH (YELLOW)
- 185 MARKING LINE GROOVED WET REF EPOXY 10-INCH (WHITE)
- 219 MARKING LINE GROOVED WET REF EPOXY 10-INCH (DOT PATTERN) (WHITE) (3 FT LINE 9 FT SKIP)
- 250 MARKING DIAGONAL EPOXY 12-INCH (YELLOW)

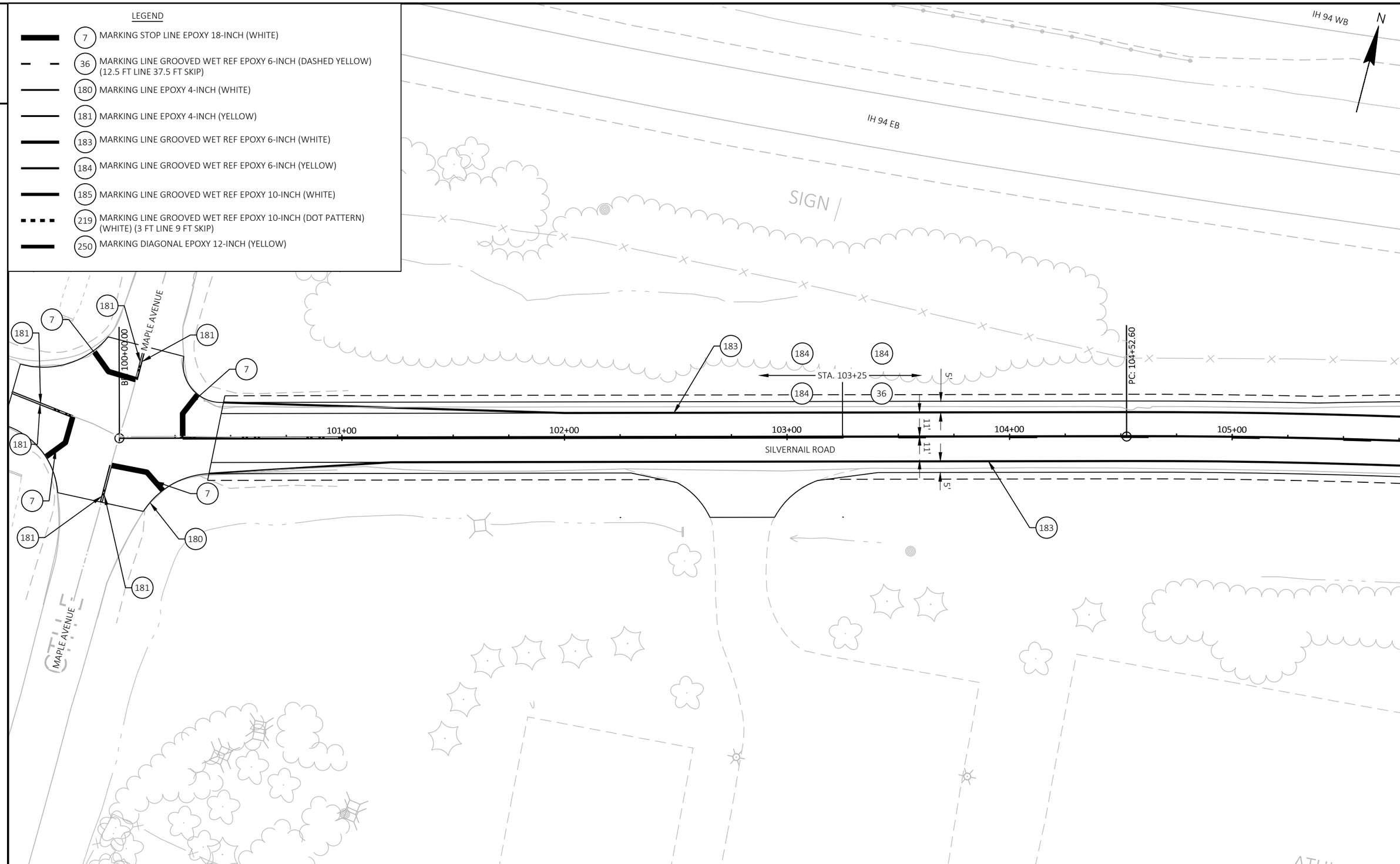

2

LEGEND

- 7 MARKING STOP LINE EPOXY 18-INCH (WHITE)
- 36 MARKING LINE GROOVED WET REF EPOXY 6-INCH (DASHED YELLOW) (12.5 FT LINE 37.5 FT SKIP)
- 180 MARKING LINE EPOXY 4-INCH (WHITE)
- 181 MARKING LINE EPOXY 4-INCH (YELLOW)
- 183 MARKING LINE GROOVED WET REF EPOXY 6-INCH (WHITE)
- 184 MARKING LINE GROOVED WET REF EPOXY 6-INCH (YELLOW)
- 185 MARKING LINE GROOVED WET REF EPOXY 10-INCH (WHITE)
- 219 MARKING LINE GROOVED WET REF EPOXY 10-INCH (DOT PATTERN) (WHITE) (3 FT LINE 9 FT SKIP)
- 250 MARKING DIAGONAL EPOXY 12-INCH (YELLOW)

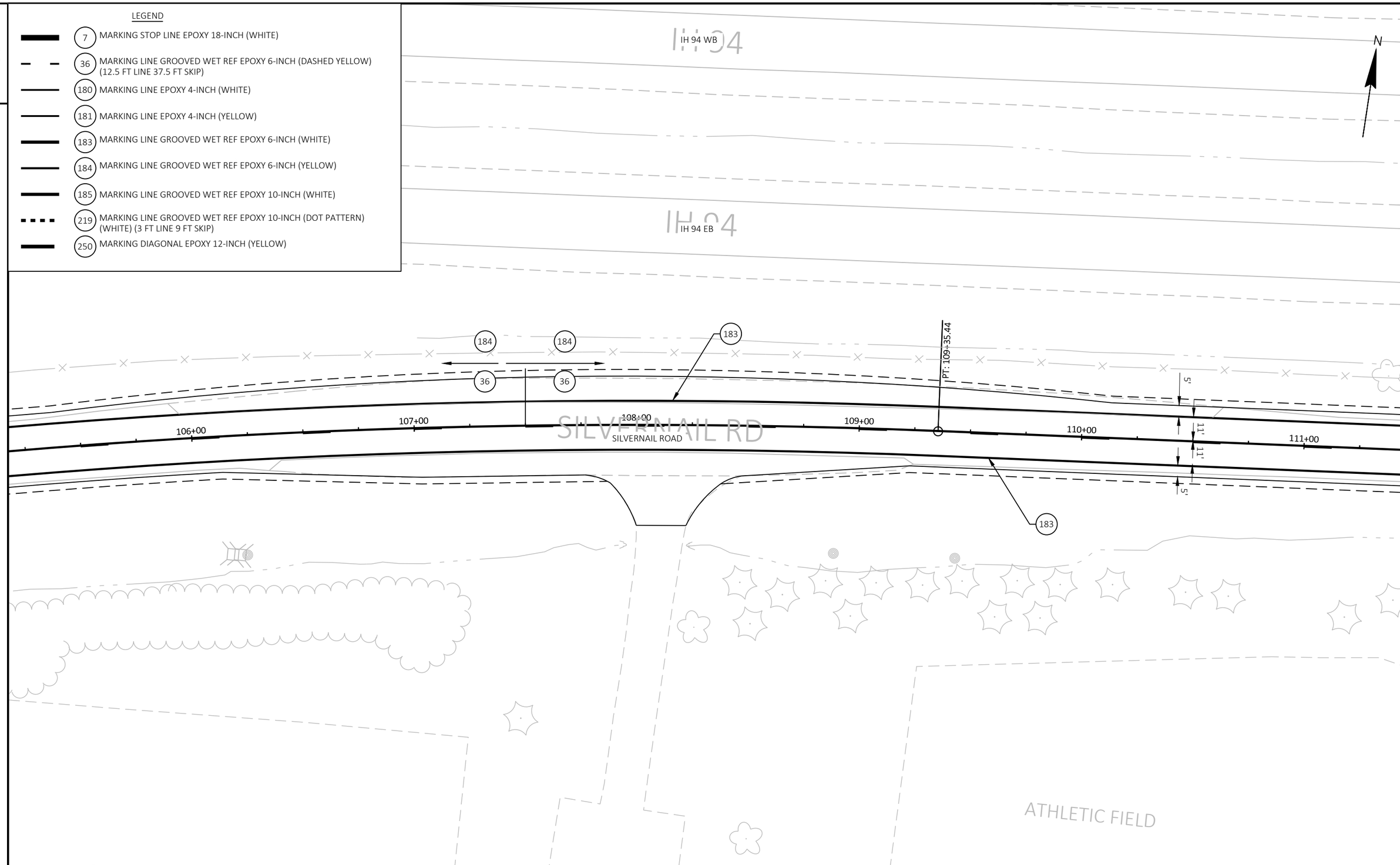

2

PROJECT NO: 2717-03-71	HWY: SILVERNAIL FRONTAGE ROAD	COUNTY: WAUKESHA	PAVEMENT MARKING	SHEET 28	E

FILE NAME : N:\PDS\C3D\27170301\SHEETS\024501_PM.DWG
LAYOUT NAME - 024502_PM
PLOT DATE : 11/14/2025 9:25 AM
PLOT BY : RITTMEYER, JOSEPH Z
PLOT NAME :
PLOT SCALE : 1 IN:40 FT
WISDOT/CADDS SHEET 42

2

LEGEND

- 7 MARKING STOP LINE EPOXY 18-INCH (WHITE)
- 36 MARKING LINE GROOVED WET REF EPOXY 6-INCH (DASHED YELLOW) (12.5 FT LINE 37.5 FT SKIP)
- 180 MARKING LINE EPOXY 4-INCH (WHITE)
- 181 MARKING LINE EPOXY 4-INCH (YELLOW)
- 183 MARKING LINE GROOVED WET REF EPOXY 6-INCH (WHITE)
- 184 MARKING LINE GROOVED WET REF EPOXY 6-INCH (YELLOW)
- 185 MARKING LINE GROOVED WET REF EPOXY 10-INCH (WHITE)
- 219 MARKING LINE GROOVED WET REF EPOXY 10-INCH (DOT PATTERN) (WHITE) (3 FT LINE 9 FT SKIP)
- 250 MARKING DIAGONAL EPOXY 12-INCH (YELLOW)

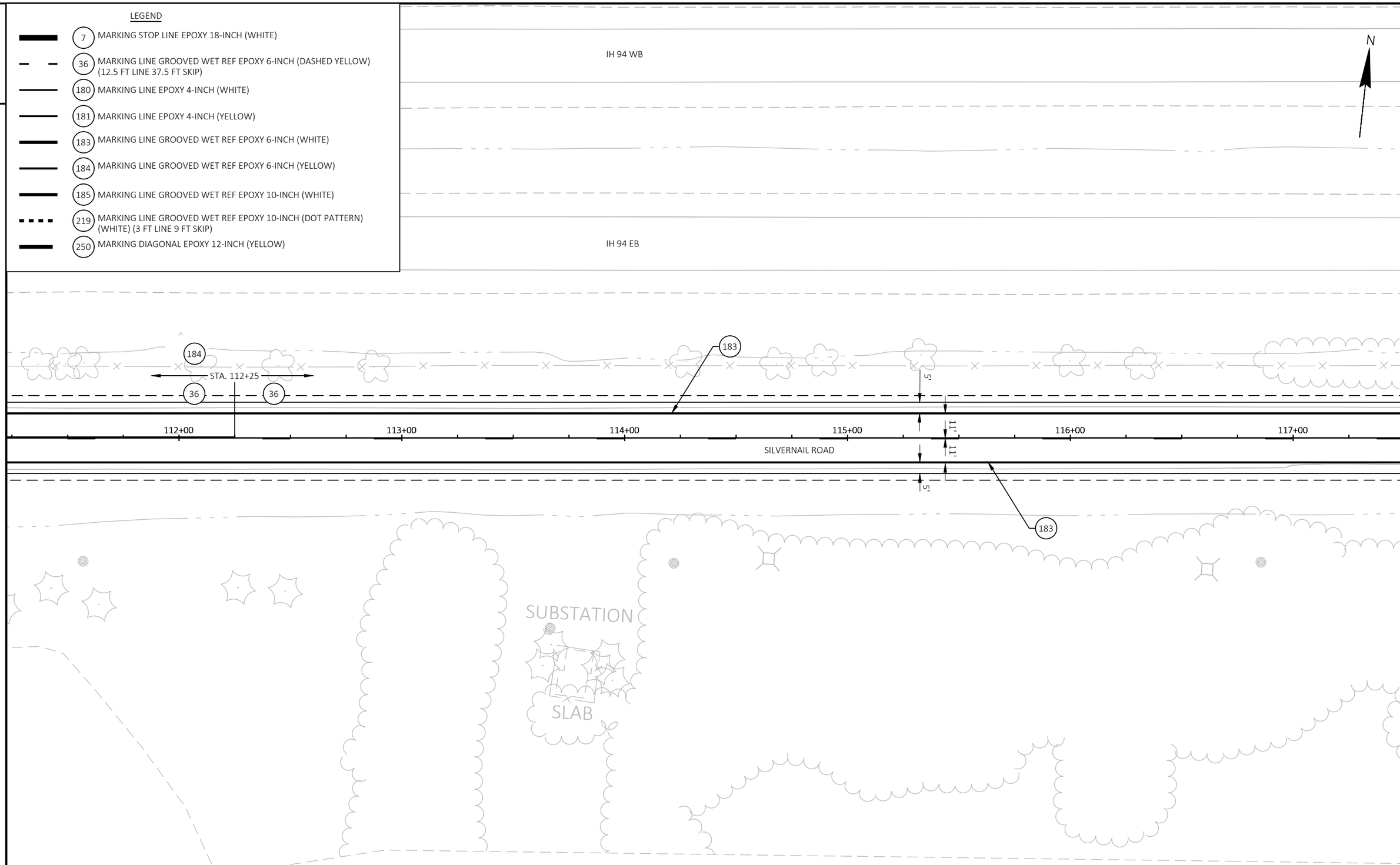

2

PROJECT NO: 2717-03-71	HWY: SILVERNAIL FRONTAGE ROAD	COUNTY: WAUKESHA	PAVEMENT MARKING	SHEET 29	E

FILE NAME : N:\PDS\C3D\27170301\SHEETS\024501_PM.DWG
LAYOUT NAME - 024503_PM
PLOT DATE : 11/14/2025 9:25 AM
PLOT BY : RITTMEYER, JOSEPH Z
PLOT NAME :
PLOT SCALE : 1 IN:40 FT
WISDOT/CADDS SHEET 42

2

LEGEND

- 7 MARKING STOP LINE EPOXY 18-INCH (WHITE)
- 36 MARKING LINE GROOVED WET REF EPOXY 6-INCH (DASHED YELLOW) (12.5 FT LINE 37.5 FT SKIP)
- 180 MARKING LINE EPOXY 4-INCH (WHITE)
- 181 MARKING LINE EPOXY 4-INCH (YELLOW)
- 183 MARKING LINE GROOVED WET REF EPOXY 6-INCH (WHITE)
- 184 MARKING LINE GROOVED WET REF EPOXY 6-INCH (YELLOW)
- 185 MARKING LINE GROOVED WET REF EPOXY 10-INCH (WHITE)
- 219 MARKING LINE GROOVED WET REF EPOXY 10-INCH (DOT PATTERN) (WHITE) (3 FT LINE 9 FT SKIP)
- 250 MARKING DIAGONAL EPOXY 12-INCH (YELLOW)

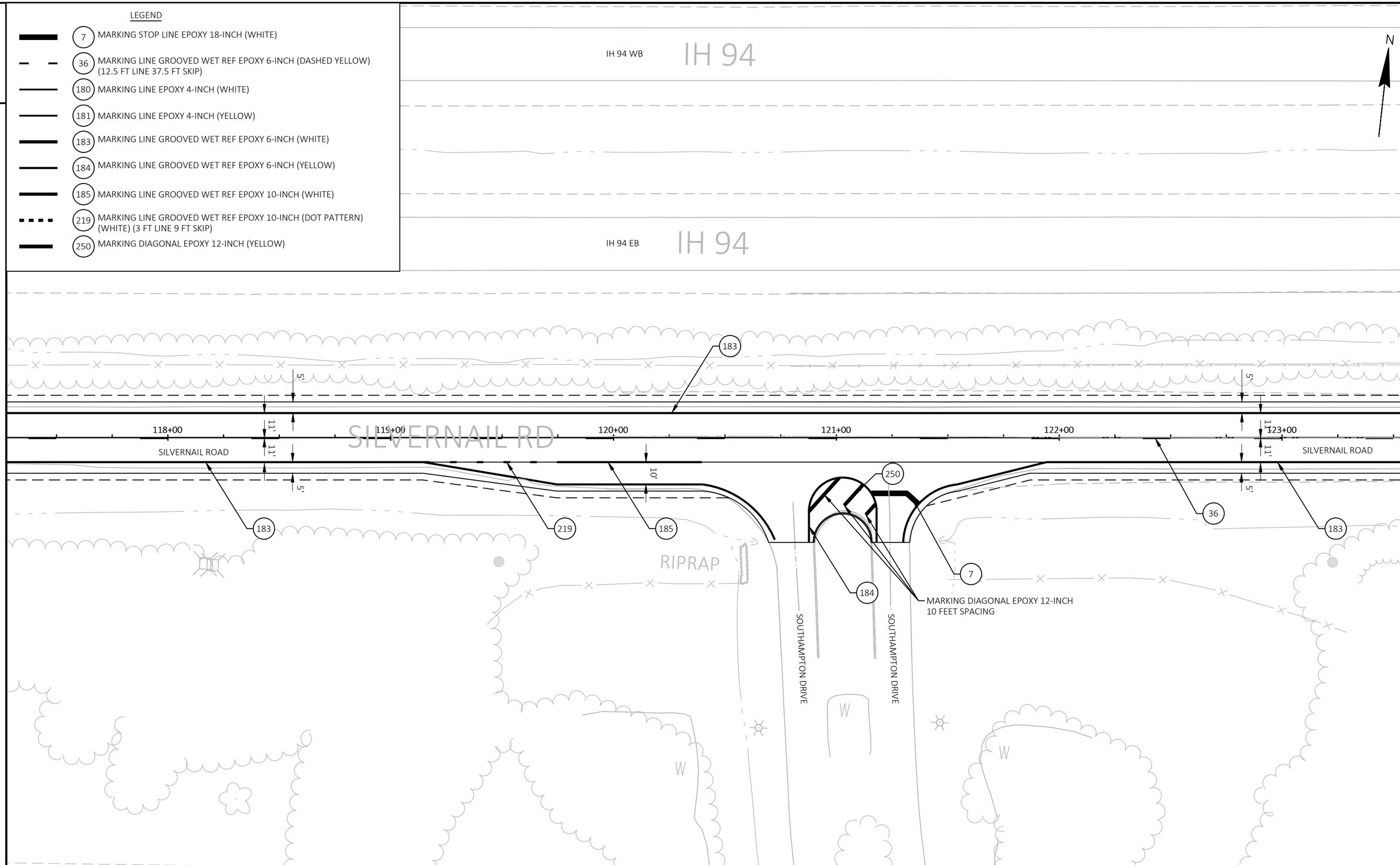

2

PROJECT NO: 2717-03-71	HWY: SILVERNAIL FRONTAGE ROAD	COUNTY: WAUKESHA	PAVEMENT MARKING	SHEET 30	E

FILE NAME : N:\PDS\C3D\27170301\SHEETS\024501_PM.DWG
LAYOUT NAME - 024504_PM
PLOT DATE : 11/14/2025 9:26 AM
PLOT BY : RITTMEYER, JOSEPH Z
PLOT NAME :
PLOT SCALE : 1 IN:40 FT

2

LEGEND

- 7 MARKING STOP LINE EPOXY 18-INCH (WHITE)
- 36 MARKING LINE GROOVED WET REF EPOXY 6-INCH (DASHED YELLOW) (12.5 FT LINE 37.5 FT SKIP)
- 180 MARKING LINE EPOXY 4-INCH (WHITE)
- 181 MARKING LINE EPOXY 4-INCH (YELLOW)
- 183 MARKING LINE GROOVED WET REF EPOXY 6-INCH (WHITE)
- 184 MARKING LINE GROOVED WET REF EPOXY 6-INCH (YELLOW)
- 185 MARKING LINE GROOVED WET REF EPOXY 10-INCH (WHITE)
- 219 MARKING LINE GROOVED WET REF EPOXY 10-INCH (DOT PATTERN) (WHITE) (3 FT LINE 9 FT SKIP)
- 250 MARKING DIAGONAL EPOXY 12-INCH (YELLOW)

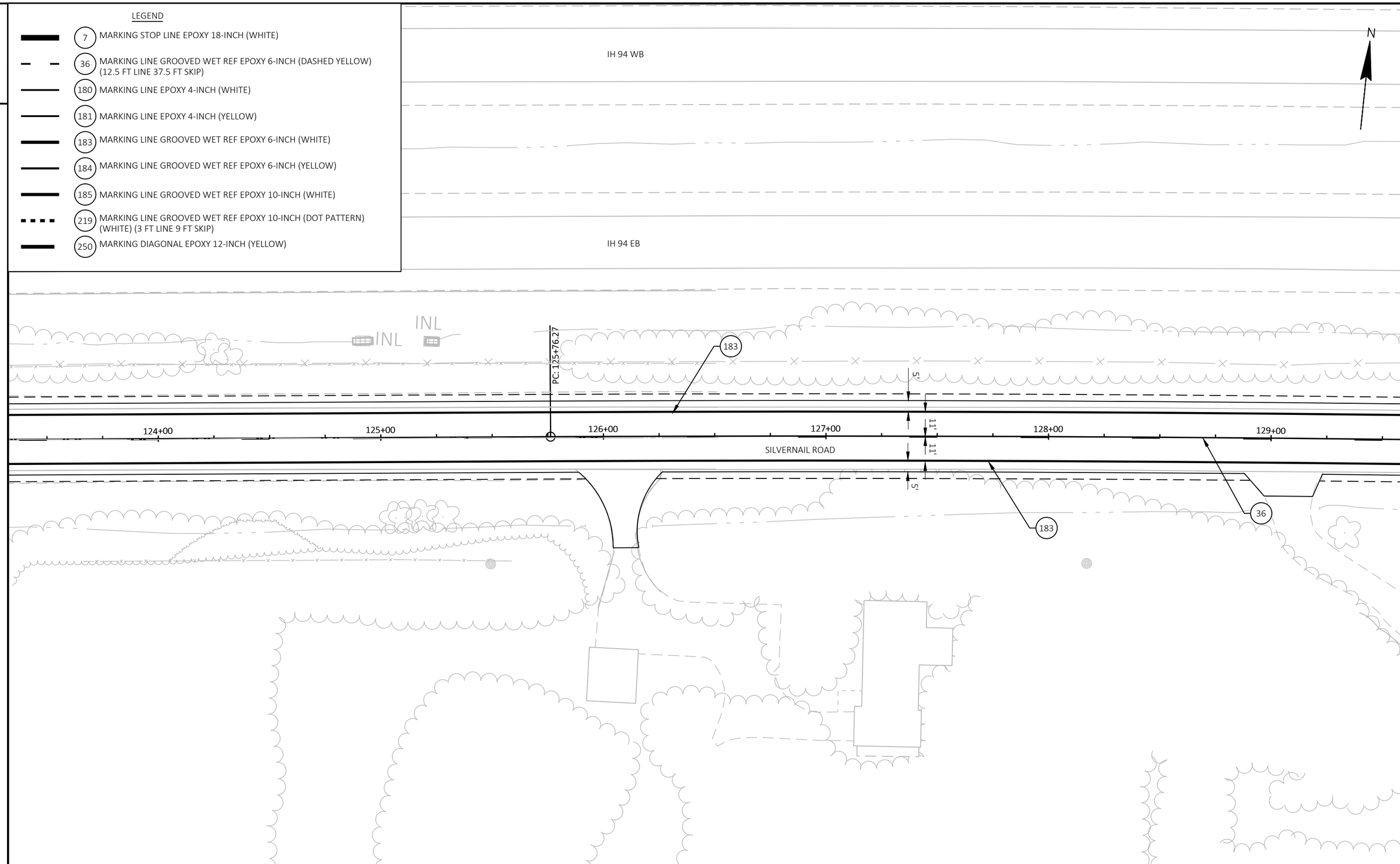

2

PROJECT NO: 2717-03-71	HWY: SILVERNAIL FRONTAGE ROAD	COUNTY: WAUKESHA	PAVEMENT MARKING	SHEET 31	E

FILE NAME : N:\PDS\C3D\27170301\SHEETS\024501_PM.DWG
LAYOUT NAME - 024505_PM
PLOT DATE : 11/14/2025 9:26 AM
PLOT BY : RITTMEYER, JOSEPH Z
PLOT NAME :
PLOT SCALE : 1 IN:40 FT
WISDOT/CADDS SHEET 42

LEGEND

- 7 MARKING STOP LINE EPOXY 18-INCH (WHITE)
- 36 MARKING LINE GROOVED WET REF EPOXY 6-INCH (DASHED YELLOW) (12.5 FT LINE 37.5 FT SKIP)
- 180 MARKING LINE EPOXY 4-INCH (WHITE)
- 181 MARKING LINE EPOXY 4-INCH (YELLOW)
- 183 MARKING LINE GROOVED WET REF EPOXY 6-INCH (WHITE)
- 184 MARKING LINE GROOVED WET REF EPOXY 6-INCH (YELLOW)
- 185 MARKING LINE GROOVED WET REF EPOXY 10-INCH (WHITE)
- 219 MARKING LINE GROOVED WET REF EPOXY 10-INCH (DOT PATTERN) (WHITE) (3 FT LINE 9 FT SKIP)
- 250 MARKING DIAGONAL EPOXY 12-INCH (YELLOW)

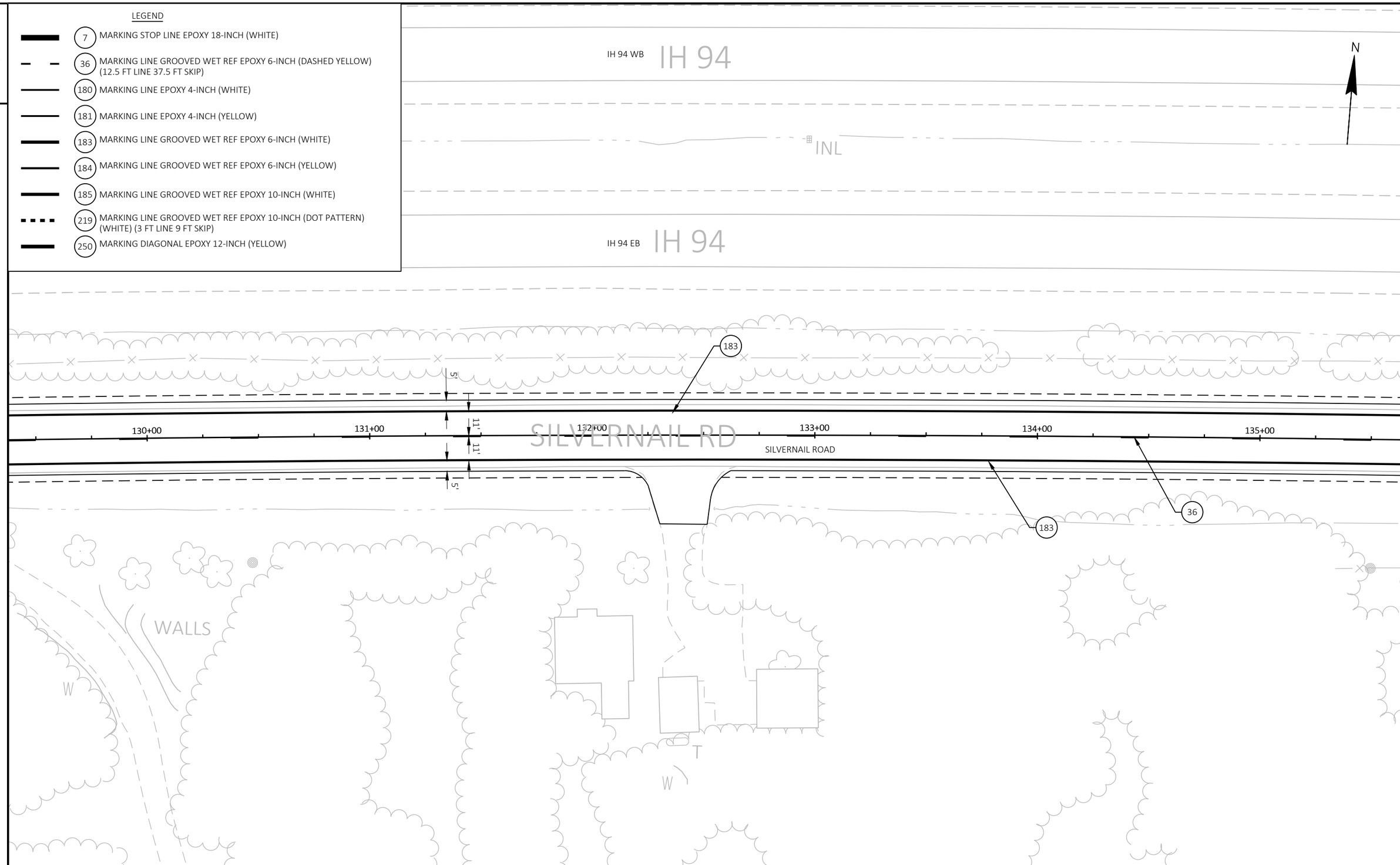

PROJECT NO: 2717-03-71	HWY: SILVERNAIL FRONTAGE ROAD	COUNTY: WAUKESHA	PAVEMENT MARKING	SHEET 32	E

2

LEGEND

- 7 MARKING STOP LINE EPOXY 18-INCH (WHITE)
- 36 MARKING LINE GROOVED WET REF EPOXY 6-INCH (DASHED YELLOW) (12.5 FT LINE 37.5 FT SKIP)
- 180 MARKING LINE EPOXY 4-INCH (WHITE)
- 181 MARKING LINE EPOXY 4-INCH (YELLOW)
- 183 MARKING LINE GROOVED WET REF EPOXY 6-INCH (WHITE)
- 184 MARKING LINE GROOVED WET REF EPOXY 6-INCH (YELLOW)
- 185 MARKING LINE GROOVED WET REF EPOXY 10-INCH (WHITE)
- 219 MARKING LINE GROOVED WET REF EPOXY 10-INCH (DOT PATTERN) (WHITE) (3 FT LINE 9 FT SKIP)
- 250 MARKING DIAGONAL EPOXY 12-INCH (YELLOW)

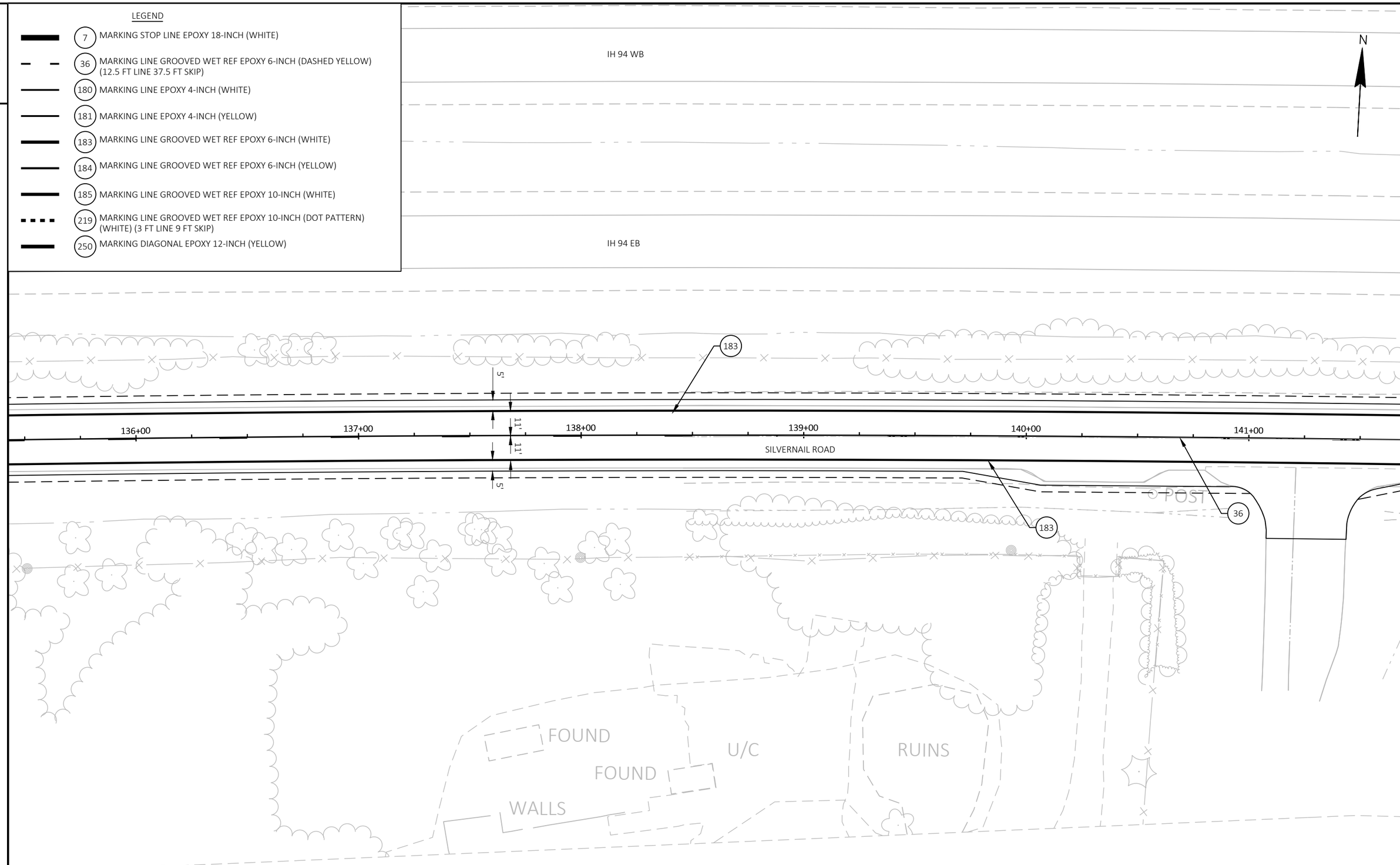

2

PROJECT NO: 2717-03-71	HWY: SILVERNAIL FRONTAGE ROAD	COUNTY: WAUKESHA	PAVEMENT MARKING	SHEET 33	E

FILE NAME : N:\PDS\C3D\27170301\SHEETS\024501_PM.DWG
LAYOUT NAME - 024507_PM
PLOT DATE : 11/14/2025 9:27 AM
PLOT BY : RITTMEYER, JOSEPH Z
PLOT NAME :
PLOT SCALE : 1 IN:40 FT
WISDOT/CADDS SHEET 42

2

LEGEND

- 7 MARKING STOP LINE EPOXY 18-INCH (WHITE)
- 36 MARKING LINE GROOVED WET REF EPOXY 6-INCH (DASHED YELLOW) (12.5 FT LINE 37.5 FT SKIP)
- 180 MARKING LINE EPOXY 4-INCH (WHITE)
- 181 MARKING LINE EPOXY 4-INCH (YELLOW)
- 183 MARKING LINE GROOVED WET REF EPOXY 6-INCH (WHITE)
- 184 MARKING LINE GROOVED WET REF EPOXY 6-INCH (YELLOW)
- 185 MARKING LINE GROOVED WET REF EPOXY 10-INCH (WHITE)
- 219 MARKING LINE GROOVED WET REF EPOXY 10-INCH (DOT PATTERN) (WHITE) (3 FT LINE 9 FT SKIP)
- 250 MARKING DIAGONAL EPOXY 12-INCH (YELLOW)

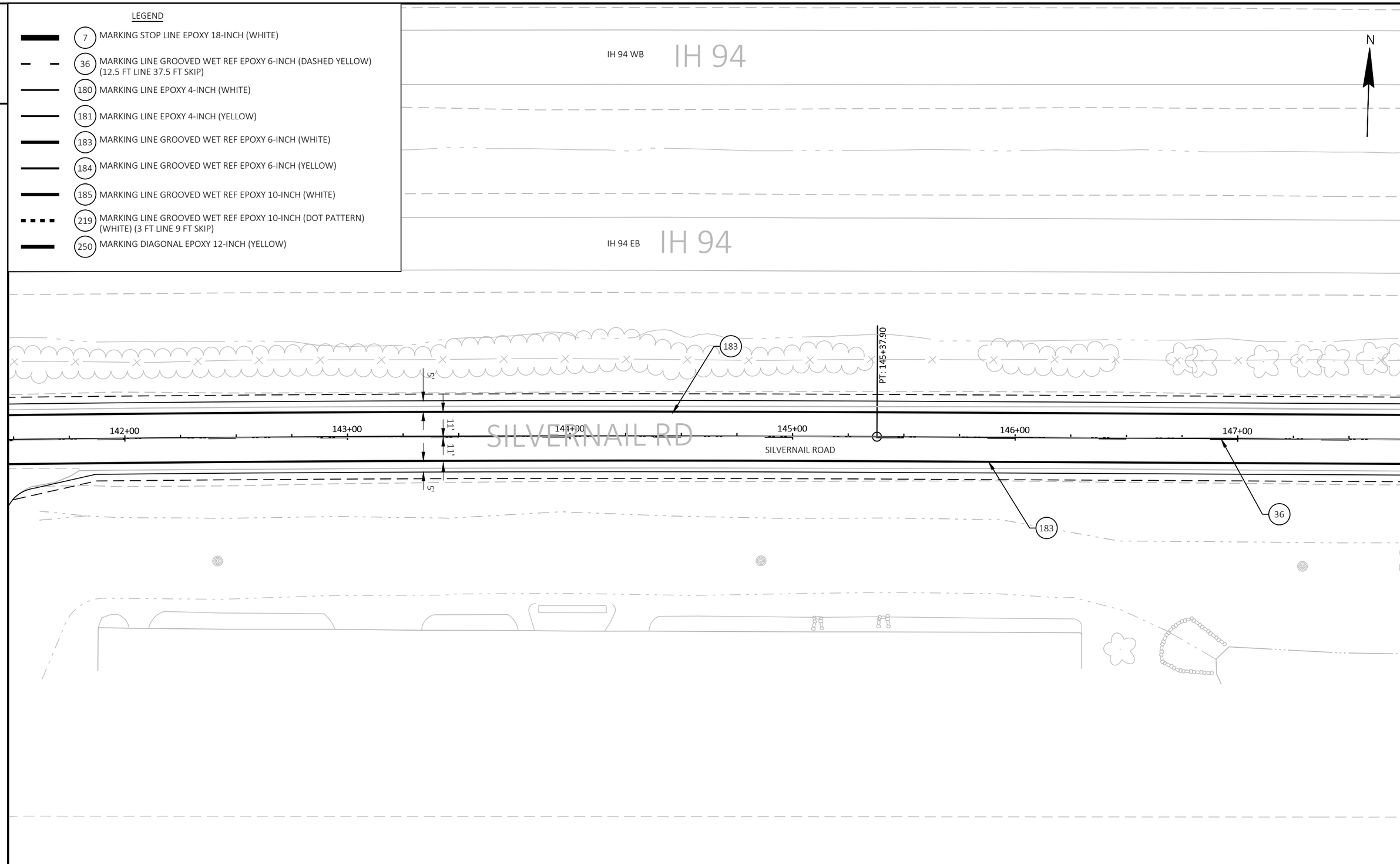

2

PROJECT NO: 2717-03-71	HWY: SILVERNAIL FRONTAGE ROAD	COUNTY: WAUKESHA	PAVEMENT MARKING	SHEET 34	E

FILE NAME : N:\PDS\C3D\27170301\SHEETS\024501_PM.DWG
LAYOUT NAME - 024508_PM
PLOT DATE : 11/14/2025 9:28 AM
PLOT BY : RITTMEYER, JOSEPH Z
PLOT NAME :
PLOT SCALE : 1 IN:40 FT
WISDOT/CADDS SHEET 42

2

LEGEND

- 7 MARKING STOP LINE EPOXY 18-INCH (WHITE)
- 36 MARKING LINE GROOVED WET REF EPOXY 6-INCH (DASHED YELLOW) (12.5 FT LINE 37.5 FT SKIP)
- 180 MARKING LINE EPOXY 4-INCH (WHITE)
- 181 MARKING LINE EPOXY 4-INCH (YELLOW)
- 183 MARKING LINE GROOVED WET REF EPOXY 6-INCH (WHITE)
- 184 MARKING LINE GROOVED WET REF EPOXY 6-INCH (YELLOW)
- 185 MARKING LINE GROOVED WET REF EPOXY 10-INCH (WHITE)
- 219 MARKING LINE GROOVED WET REF EPOXY 10-INCH (DOT PATTERN) (WHITE) (3 FT LINE 9 FT SKIP)
- 250 MARKING DIAGONAL EPOXY 12-INCH (YELLOW)

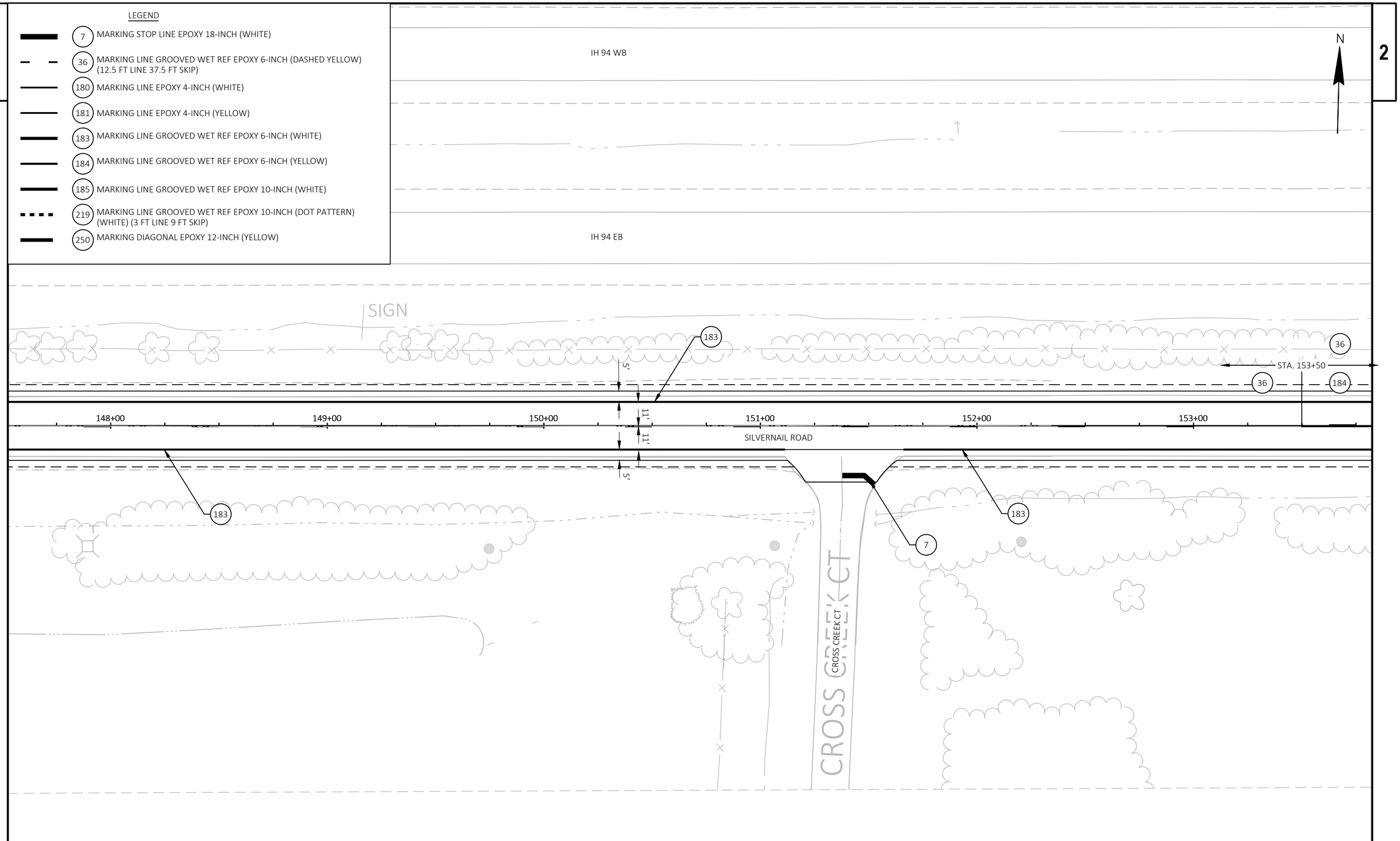

2

PROJECT NO: 2717-03-71	HWY: SILVERNAIL FRONTAGE ROAD	COUNTY: WAUKESHA	PAVEMENT MARKING	SHEET 35	E

FILE NAME : N:\PDS\C3D\27170301\SHEETS\024501_PM.DWG
LAYOUT NAME - 024509_PM
PLOT DATE : 11/14/2025 9:28 AM
PLOT BY : RITTMEYER, JOSEPH Z
PLOT NAME :
PLOT SCALE : 1 IN:40 FT

WISDOT/CADDS SHEET 42

LEGEND

- 7 MARKING STOP LINE EPOXY 18-INCH (WHITE)
- 36 MARKING LINE GROOVED WET REF EPOXY 6-INCH (DASHED YELLOW) (12.5 FT LINE 37.5 FT SKIP)
- 180 MARKING LINE EPOXY 4-INCH (WHITE)
- 181 MARKING LINE EPOXY 4-INCH (YELLOW)
- 183 MARKING LINE GROOVED WET REF EPOXY 6-INCH (WHITE)
- 184 MARKING LINE GROOVED WET REF EPOXY 6-INCH (YELLOW)
- 185 MARKING LINE GROOVED WET REF EPOXY 10-INCH (WHITE)
- 219 MARKING LINE GROOVED WET REF EPOXY 10-INCH (DOT PATTERN) (WHITE) (3 FT LINE 9 FT SKIP)
- 250 MARKING DIAGONAL EPOXY 12-INCH (YELLOW)

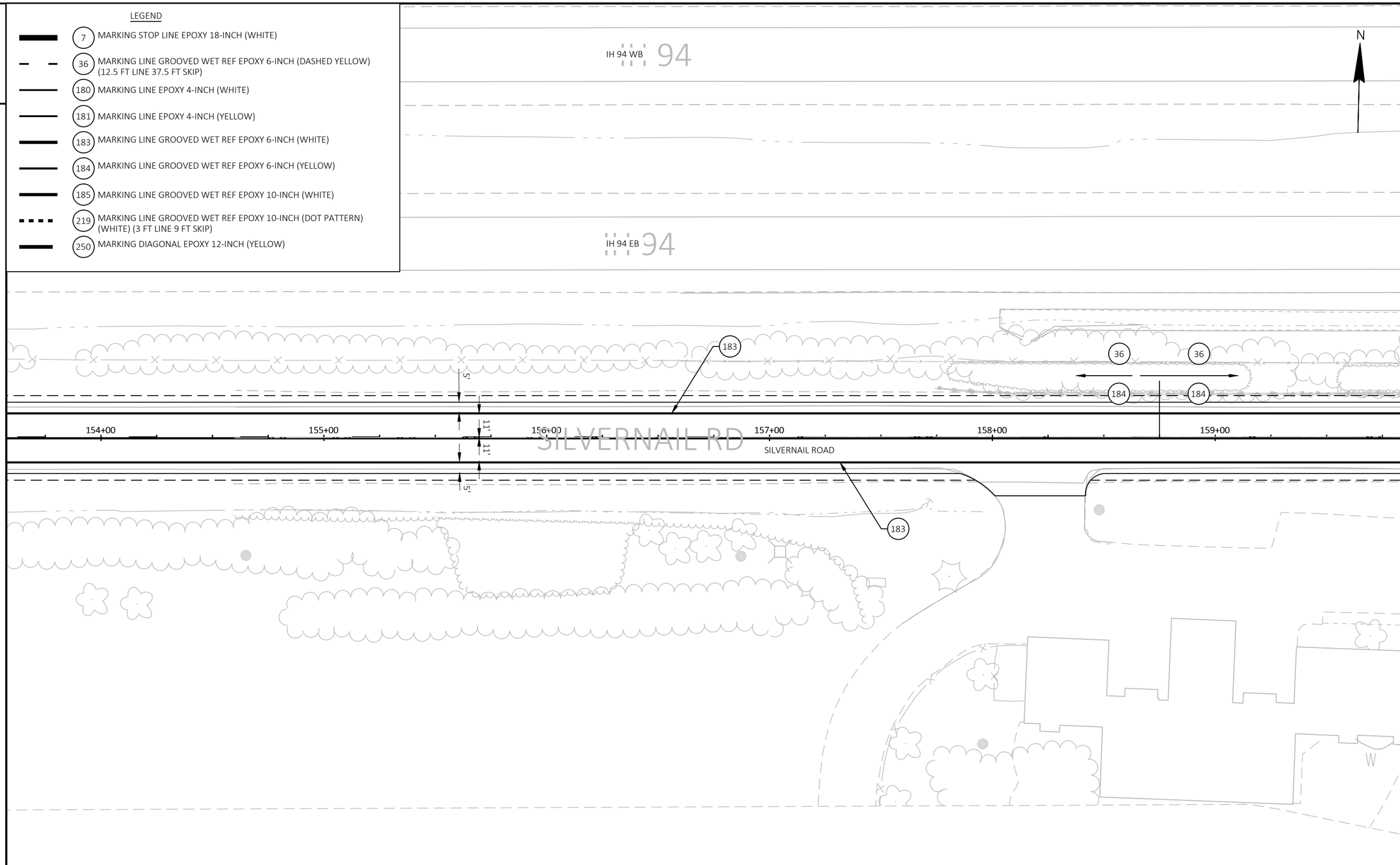

PROJECT NO: 2717-03-71	HWY: SILVERNAIL FRONTAGE ROAD	COUNTY: WAUKESHA	PAVEMENT MARKING	SHEET 36	E

FILE NAME : N:\PDS\C3D\27170301\SHEETS\024501_PM.DWG
LAYOUT NAME - 024510_PM
PLOT DATE : 11/14/2025 9:29 AM
PLOT BY : RITTMEYER, JOSEPH Z
PLOT NAME :
PLOT SCALE : 1 IN:40 FT
WISDOT/CADDS SHEET 42

2

LEGEND

- 7 MARKING STOP LINE EPOXY 18-INCH (WHITE)
- 36 MARKING LINE GROOVED WET REF EPOXY 6-INCH (DASHED YELLOW) (12.5 FT LINE 37.5 FT SKIP)
- 180 MARKING LINE EPOXY 4-INCH (WHITE)
- 181 MARKING LINE EPOXY 4-INCH (YELLOW)
- 183 MARKING LINE GROOVED WET REF EPOXY 6-INCH (WHITE)
- 184 MARKING LINE GROOVED WET REF EPOXY 6-INCH (YELLOW)
- 185 MARKING LINE GROOVED WET REF EPOXY 10-INCH (WHITE)
- 219 MARKING LINE GROOVED WET REF EPOXY 10-INCH (DOT PATTERN) (WHITE) (3 FT LINE 9 FT SKIP)
- 250 MARKING DIAGONAL EPOXY 12-INCH (YELLOW)

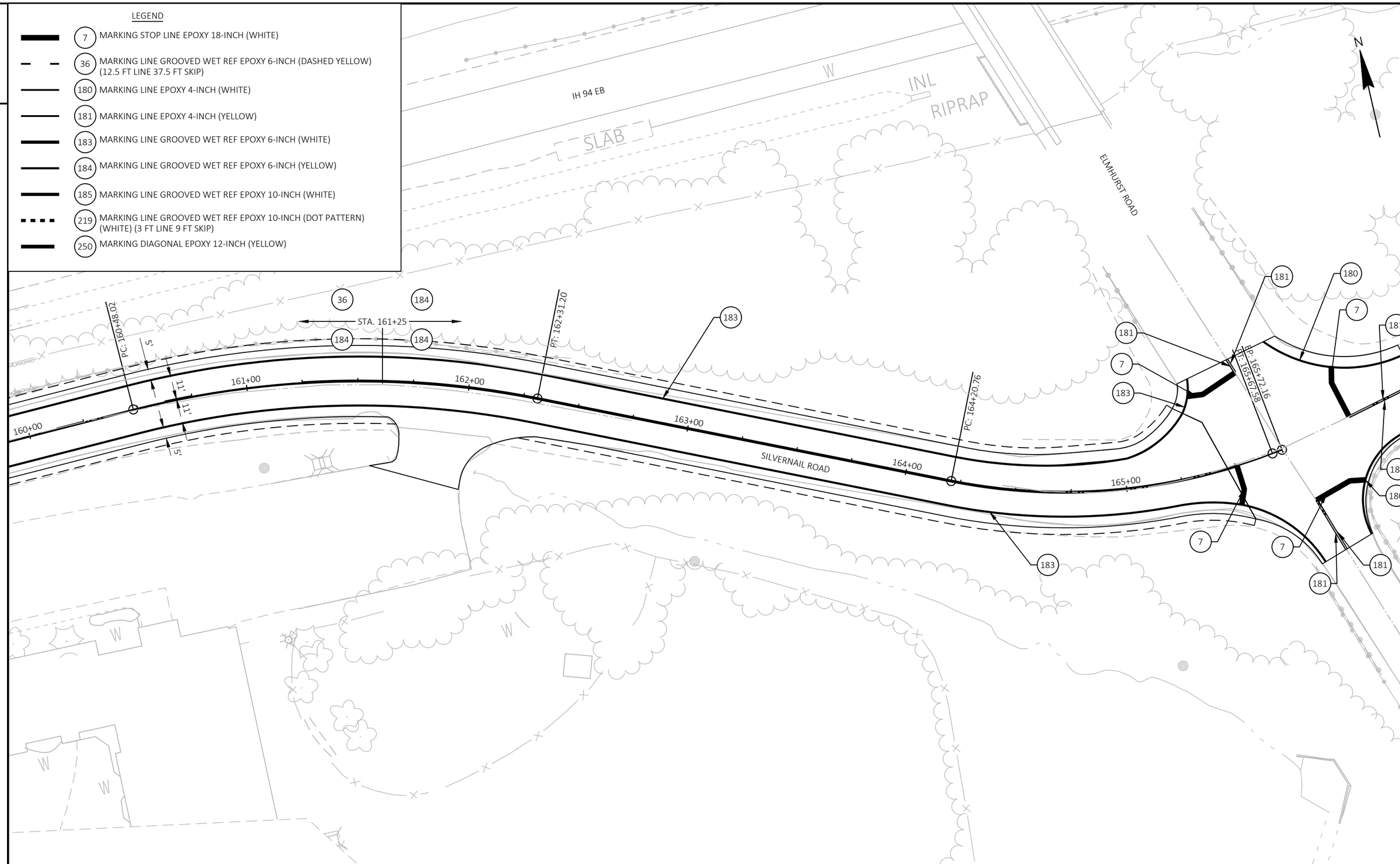

PROJECT NO: 2717-03-71	HWY: SILVERNAIL FRONTAGE ROAD	COUNTY: WAUKESHA	PAVEMENT MARKING	SHEET 37	E

FILE NAME : N:\PDS\C3D\27170301\SHEETS\024501_PM.DWG
LAYOUT NAME - 024511_PM
PLOT DATE : 11/14/2025 9:49 AM
PLOT BY : RITTMEYER, JOSEPH Z
PLOT NAME :
PLOT SCALE : 1 IN:40 FT
WISDOT/CADDS SHEET 42

GENERAL NOTES FOR TRAFFIC CONTROL

1) THE EXACT NUMBER, LOCATION, AND SPACING OF ALL SIGNS AND DEVICES SHALL BE ADJUSTED TO FIT FIELD CONDITIONS AS DIRECTED BY THE ENGINEER.

2) A FLAGGER MAY BE REQUIRED WHERE CONSTRUCTION VEHICLES ENTER OR LEAVE WORK AREAS IF WARRANTED BY CONDITIONS OR AS DIRECTED BY THE ENGINEER. FLAGGING IS NOT PERMITTED ON FREEWAY LANES.

3) ALL SIGNS ARE 48" X 48" UNLESS OTHERWISE NOTED.

4) "WO" SIGNS ARE THE SAME AS "W" SIGNS EXCEPT THE BACKGROUND IS ORANGE.

5) FOR NIGHTTIME OPERATION ALL DRUMS IN TAPERS SHALL HAVE A TYPE C STEADY BURN WARNING LIGHT.

6) ALL TYPE III BARRICADES SHALL BE 8' WIDE, UNLESS OTHERWISE NOTED, AND EQUIPPED WITH TWO TYPE "A" (LOW INTENSITY FLASHING) LIGHTS.

7) TRAFFIC CONTROL DRUM SPACING SHALL BE 100' UNLESS OTHERWISE NOTED.

8) 16" X 16" ORANGE FLAGS SHALL BE INCIDENTAL TO TRAFFIC CONTROL SIGN BID ITEM.

9) ANY SIGNS TEMPORARY OR EXISTING, WHICH CONFLICT WITH TRAFFIC CONTROL "IN USE" SHALL BE REMOVED OR COVERED AS NEEDED AND AS APPROVED BY THE ENGINEER.

10) DO NOT PLACE ANY ITEMS WITHIN 50 FEET OF RAILROAD RIGHT-OF-WAY.

TRAFFIC CONTROL LEGEND

- TYPE III BARRICADE WITH TWO TYPE "A" WARNING LIGHTS
- TYPE III BARRICADE WTH TWO TYPE "A" WARNING LIGHTS AND ATTACHED SIGN
- TRAFFIC CONTROL DRUM
- TRAFFIC CONTROL DRUM WITH TYPE C STEADY BURN LIGHT
- CONNECTED ARROW BOARD
- SIGN ON PERMANENT SUPPORT
- SIGN ON TEMPORARY SUPPORT
- CONCRETE BARRIER TEMPORARY PRECAST
- WORK AREA
- DIRECTION OF TRAFFIC
- MB — PORTABLE CHANGEABLE MESSAGE BOARD
- CC — CRASH CUSHION
- (S) — WZ START LOCATION MARKER
- (E) — WZ END LOCATION MARKER

GENERAL NOTES FOR TRAFFIC CONTROL

1) THE EXACT NUMBER, LOCATION, AND SPACING OF ALL SIGNS AND DEVICES SHALL BE ADJUSTED TO FIT FIELD CONDITIONS AS DIRECTED BY THE ENGINEER.

2) A FLAGGER MAY BE REQUIRED WHERE CONSTRUCTION VEHICLES ENTER OR LEAVE WORK AREAS IF WARRANTED BY CONDITIONS OR AS DIRECTED BY THE ENGINEER. FLAGGING IS NOT PERMITTED ON FREEWAY LANES.

3) ALL SIGNS ARE 48" X 48" UNLESS OTHERWISE NOTED.

4) "WO" SIGNS ARE THE SAME AS "W" SIGNS EXCEPT THE BACKGROUND IS ORANGE.

5) FOR NIGHTTIME OPERATION ALL DRUMS IN TAPERS SHALL HAVE A TYPE C STEADY BURN WARNING LIGHT.

6) ALL TYPE III BARRICADES SHALL BE 8' WIDE, UNLESS OTHERWISE NOTED, AND EQUIPPED WITH TWO TYPE "A" (LOW INTENSITY FLASHING) LIGHTS.

7) TRAFFIC CONTROL DRUM SPACING SHALL BE 100' UNLESS OTHERWISE NOTED.

8) 16" X 16" ORANGE FLAGS SHALL BE INCIDENTAL TO TRAFFIC CONTROL SIGN BID ITEM.

9) ANY SIGNS TEMPORARY OR EXISTING, WHICH CONFLICT WITH TRAFFIC CONTROL "IN USE" SHALL BE REMOVED OR COVERED AS NEEDED AND AS APPROVED BY THE ENGINEER.

TRAFFIC CONTROL LEGEND

- TYPE III BARRICADE WITH TWO TYPE "A" WARNING LIGHTS
- TYPE III BARRICADE WTH TWO TYPE "A" WARNING LIGHTS AND ATTACHED SIGN
- TRAFFIC CONTROL DRUM
- TRAFFIC CONTROL DRUM WITH TYPE C STEADY BURN LIGHT
- CONNECTED ARROW BOARD
- SIGN ON PERMANENT SUPPORT
- SIGN ON TEMPORARY SUPPORT
- CONCRETE BARRIER TEMPORARY PRECAST
- WORK AREA
- DIRECTION OF TRAFFIC
- MB — PORTABLE CHANGEABLE MESSAGE BOARD
- CC — CRASH CUSHION
- (S) — WZ START LOCATION MARKER
- (E) — WZ END LOCATION MARKER

2

NOTES:

REFER TO SDD "BARRICADES AND SIGNS FOR MAINLINE CLOSURES", SDD "BARRICADES AND SIGNS FOR SIDEROAD CLOSURES", SDD "TRAFFIC CONTROL, SHOULDER CLOSURE ON DIVIDED ROADWAY, SPEEDS GREATER THAN 40 MPH"

2

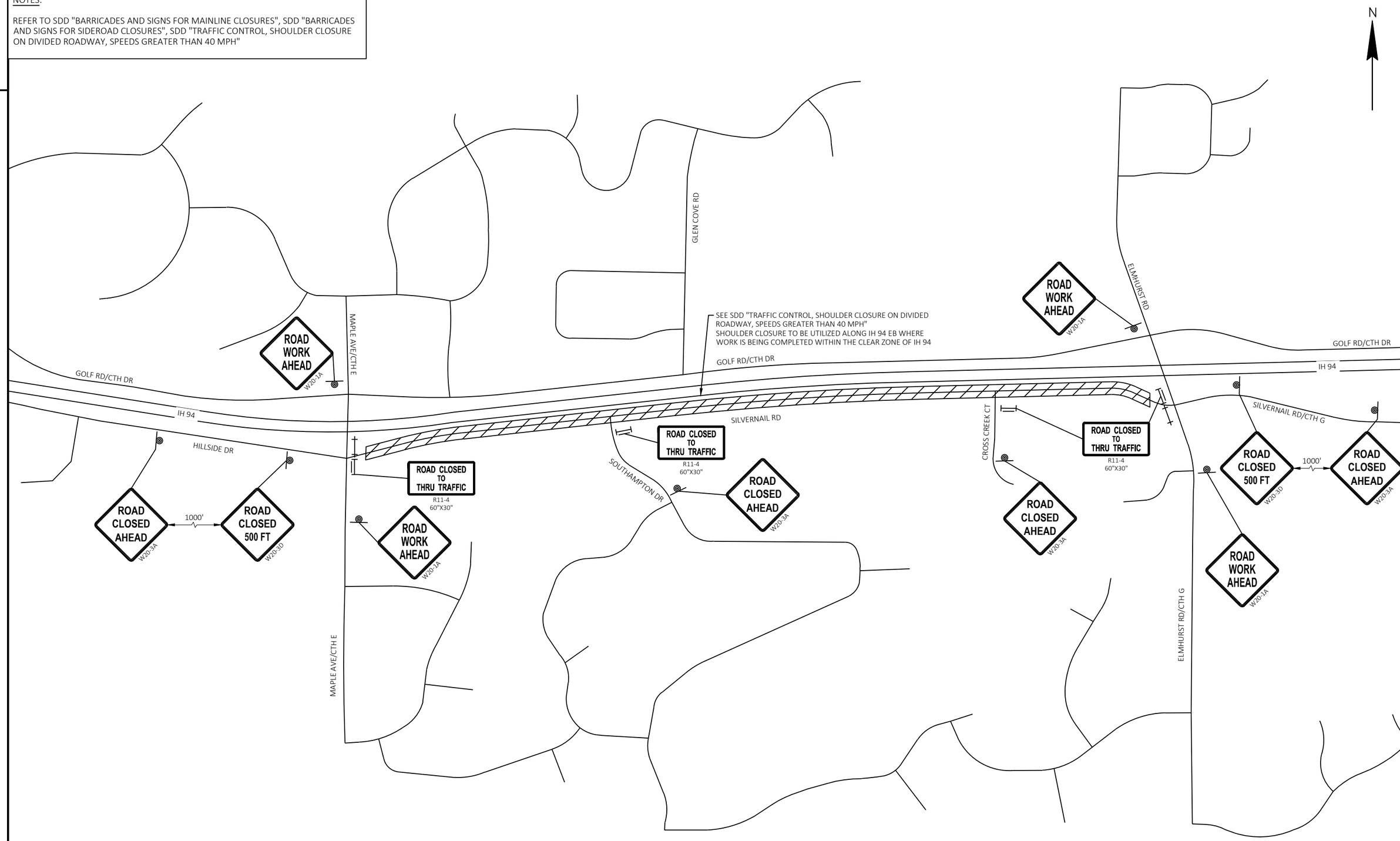

PROJECT NO: 2717-03-71	HWY: SILVERNAIL FRONTAGE ROAD	COUNTY: WAUKESHA	TRAFFIC CONTROL - SILVERNAIL ROAD	SHEET 40	E

FILE NAME : N:\PDS\C3D\27170301\SHEETS\026001_S1.DWG
LAYOUT NAME - 026001_S1
PLOT DATE : 7/8/2025 7:54 AM
PLOT BY : FILTZ, DEAN J
PLOT NAME :
PLOT SCALE : 1 IN:700 FT

2

GENERAL NOTES:

SIGN LOCATIONS ARE APPROXIMATE, THE ACTUAL LOCATION AND SPACING MAY BE ADJUSTED AS DIRECTED BY THE ENGINEER TO MEET FIELD CONDITION.

ALL SIGNS, TEMPORARY OR EXISTING, IN CONFLICT WITH THE TRAFFIC CONTROL "IN USE" SHALL BE COVERED AS DIRECTED BY THE ENGINEER.

THE SPACING BETWEEN TRAFFIC CONTROL SIGNS SHOULD BE ADJUSTED TO NOT CONFLICT WITH AND SHOULD PROVIDE A DESIRABLE MINIMUM OF 200 FEET CLEARANCE TO EXISTING SIGNS THAT WILL REMAIN IN PLACE.

"WO" AND "MO" SIGNS ARE THE SAME AS "W" AND "M" SIGNS EXCEPT THE BACKGROUND IS ORANGE.

ANY "STOP" SIGNS THAT ARE REMOVED FOR A CONSTRUCTION OPERATION SHALL BE IMMEDIATELY RE-ESTABLISHED.

ALL SIGNS SHALL BE PLACED IN ACCORDANCE WITH THE MANUAL ON UNIFORM TRAFFIC CONTROL DEVICES.

SIGN LAYOUTS SHALL BE PLACED IN ACCORDANCE WITH THE FEDERAL HIGHWAY ADMINISTRATION MANUAL OF STANDARD HIGHWAY SIGNS UNLESS OTHERWISE PROVIDED IN THE PLAN.

DETOUR SIGNS SHALL BE COVERED OR REMOVED WHEN DETOUR IS NOT IN USE OR AS DIRECTED BY THE ENGINEER.

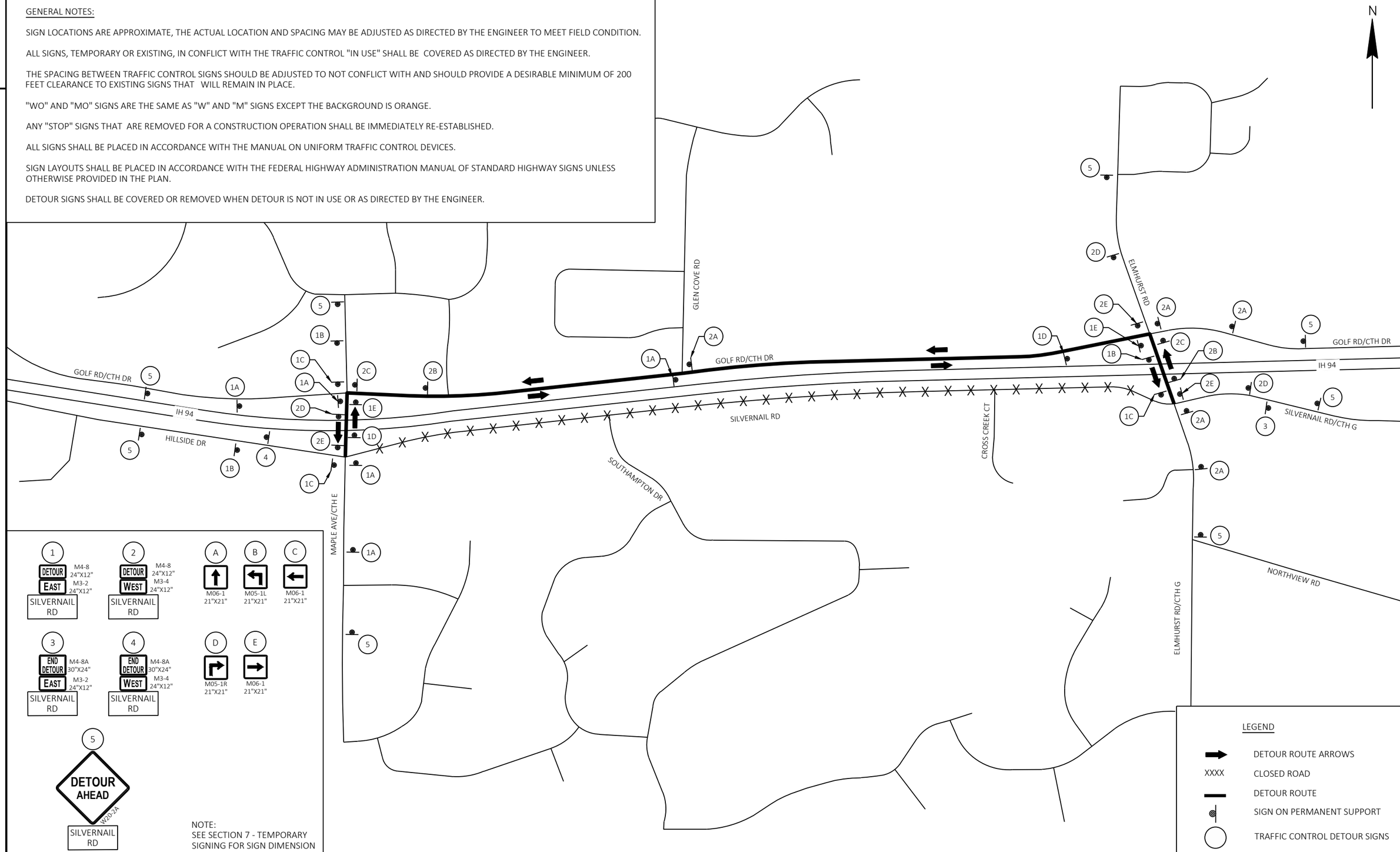

2

PROJECT NO: 2717-03-71	HWY: SILVERNAIL FRONTAGE ROAD	COUNTY: WAUKESHA	DETOUR - SILVERNAIL ROAD	SHEET 41	E

FILE NAME : N:\PDS\C3D\27170301\SHEETS\027001_DT.DWG
LAYOUT NAME - 027001_DT
PLOT DATE : 7/8/2025 7:55 AM
PLOT BY : FILTZ, DEAN J
PLOT NAME :
PLOT SCALE : 1 IN:700 FT

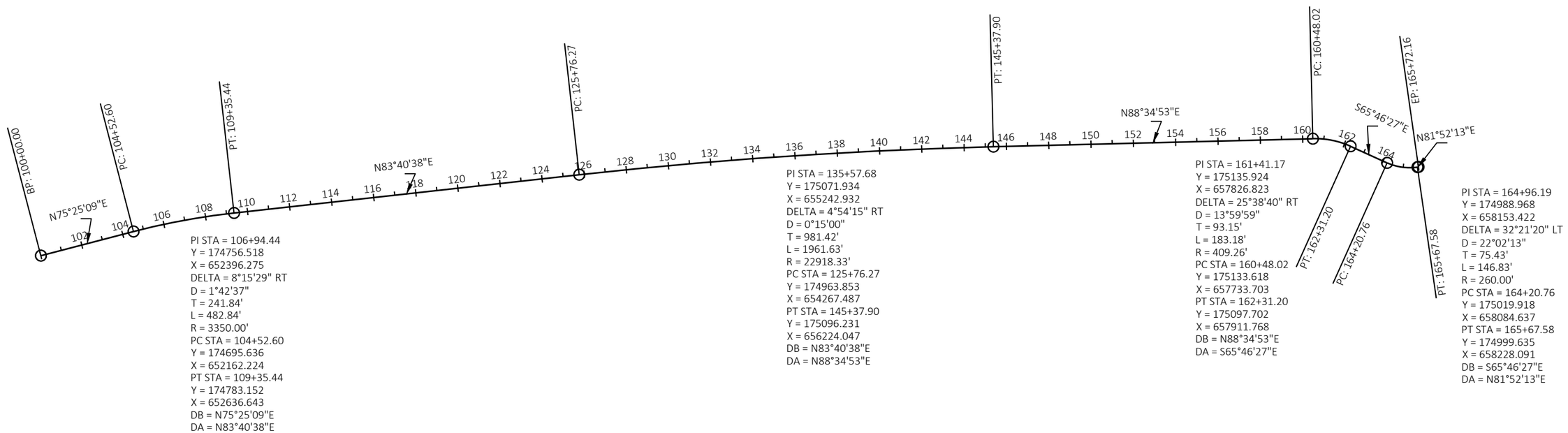

PROJECT NO: 2717-03-71	HWY: SILVERNAIL FRONTAGE ROAD	COUNTY: WAUKESHA	ALIGNMENT LAYOUT	SHEET 42	E

2

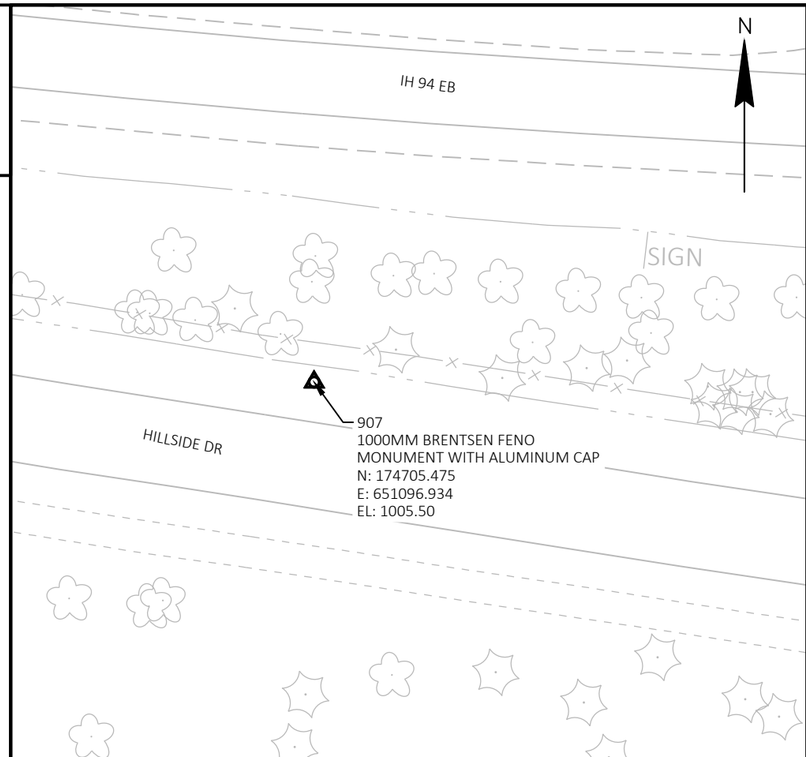

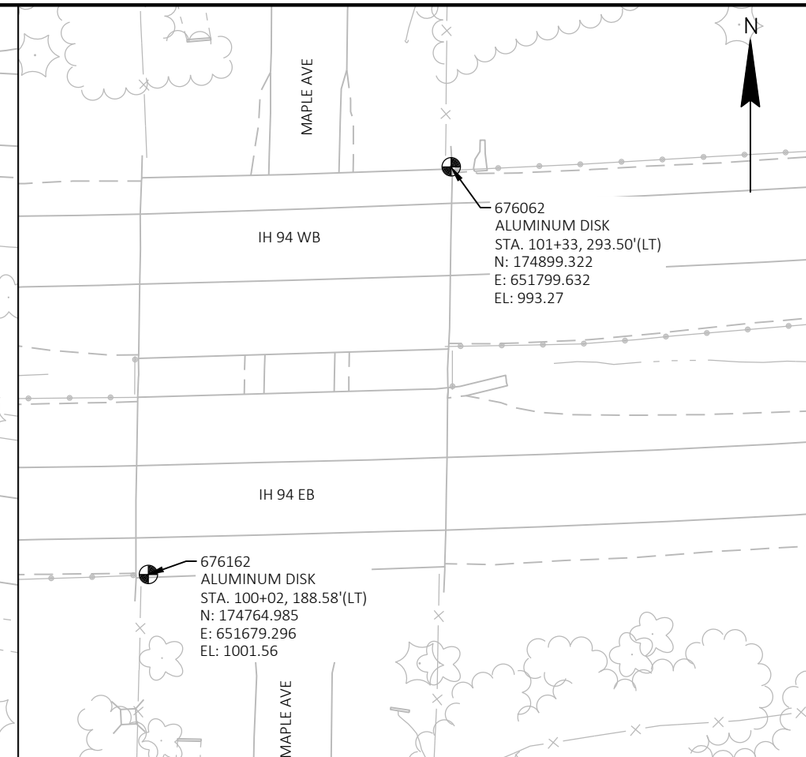

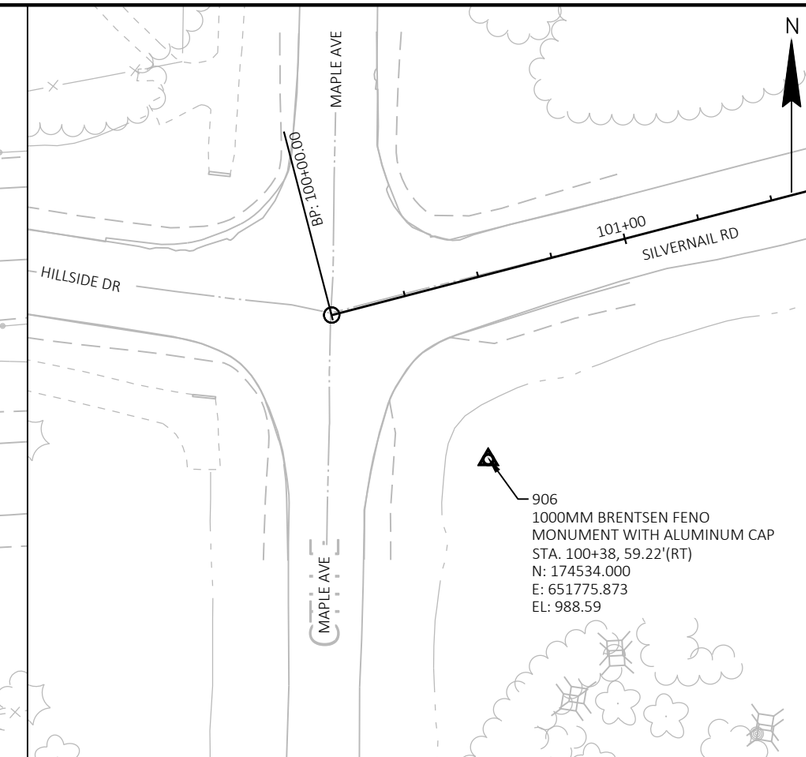

2

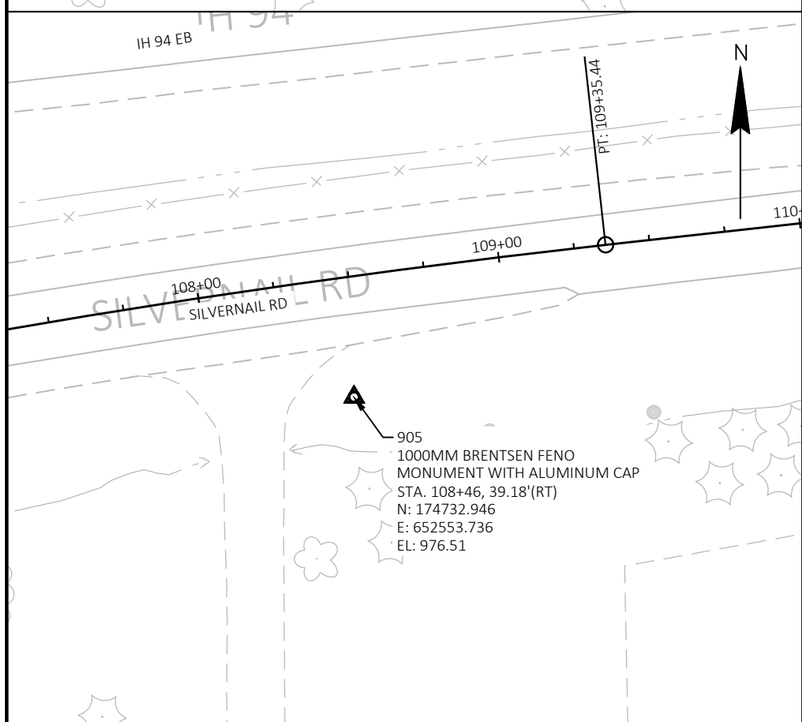

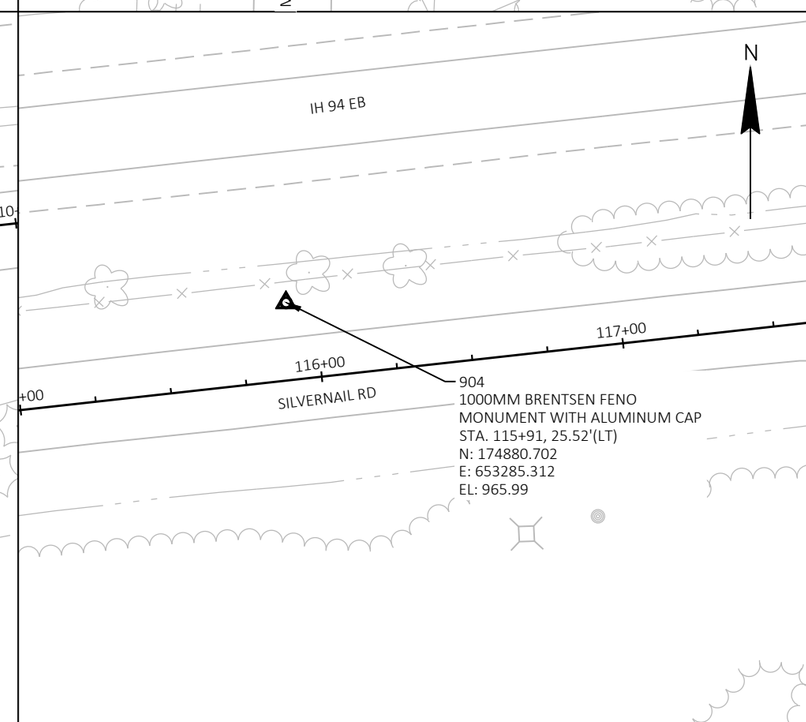

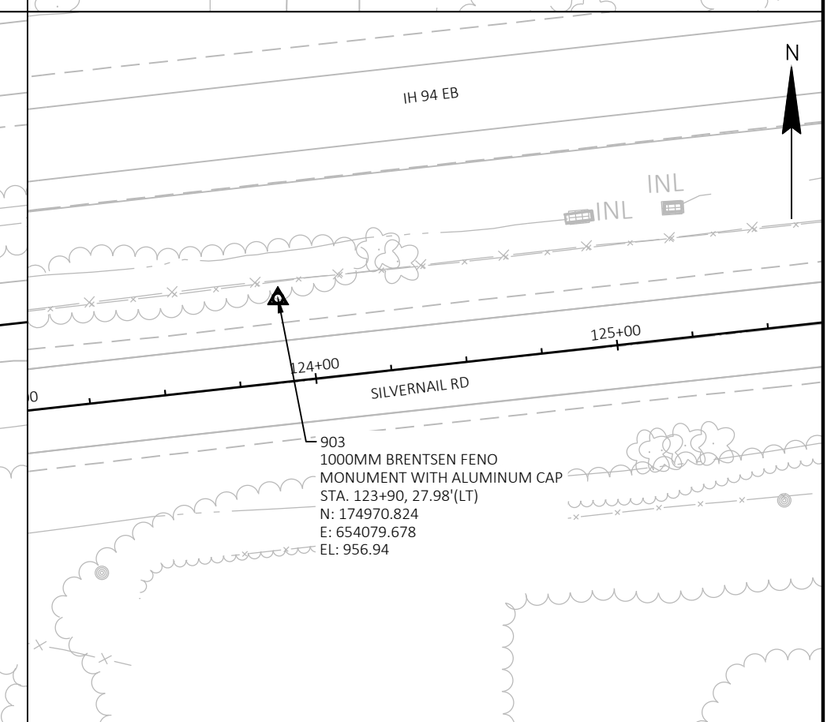

PROJECT NO: 2717-03-71	HWY: SILVERNAIL FRONTAGE ROAD	COUNTY: WAUKESHA	ALIGNMENT LAYOUT - SURVEY CONTROL	SHEET 43	E

2

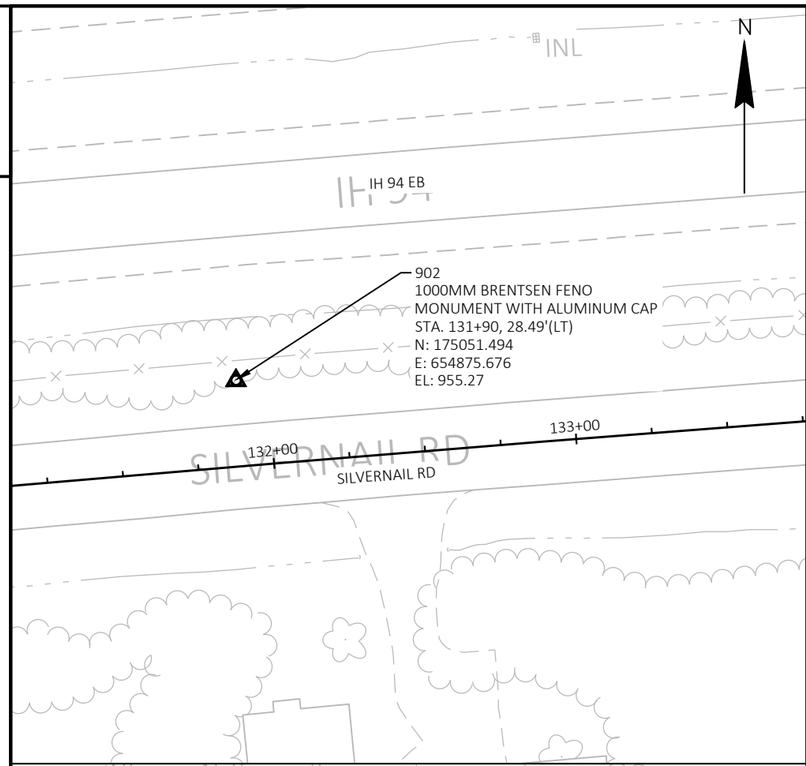

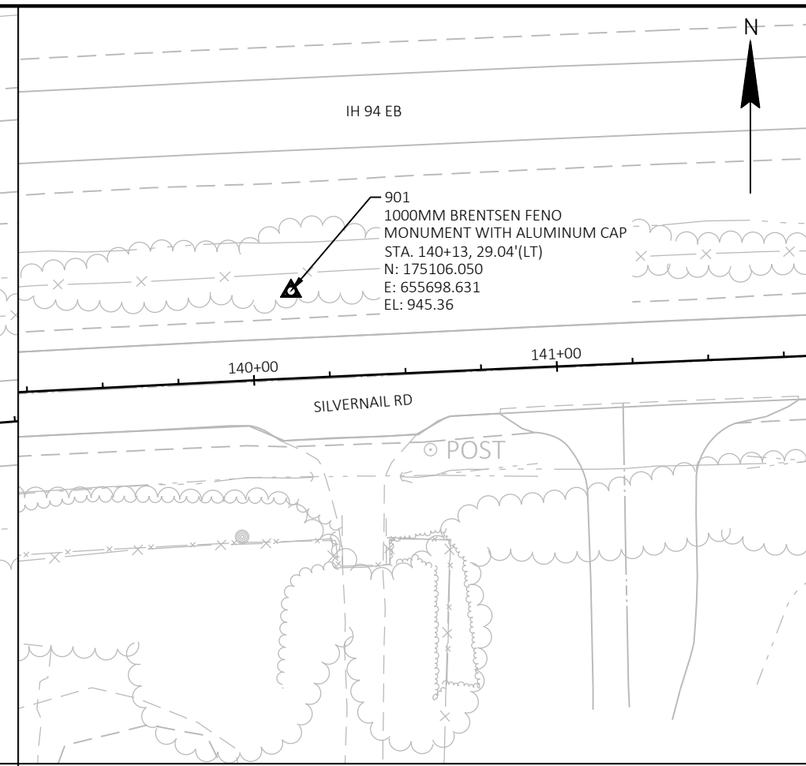

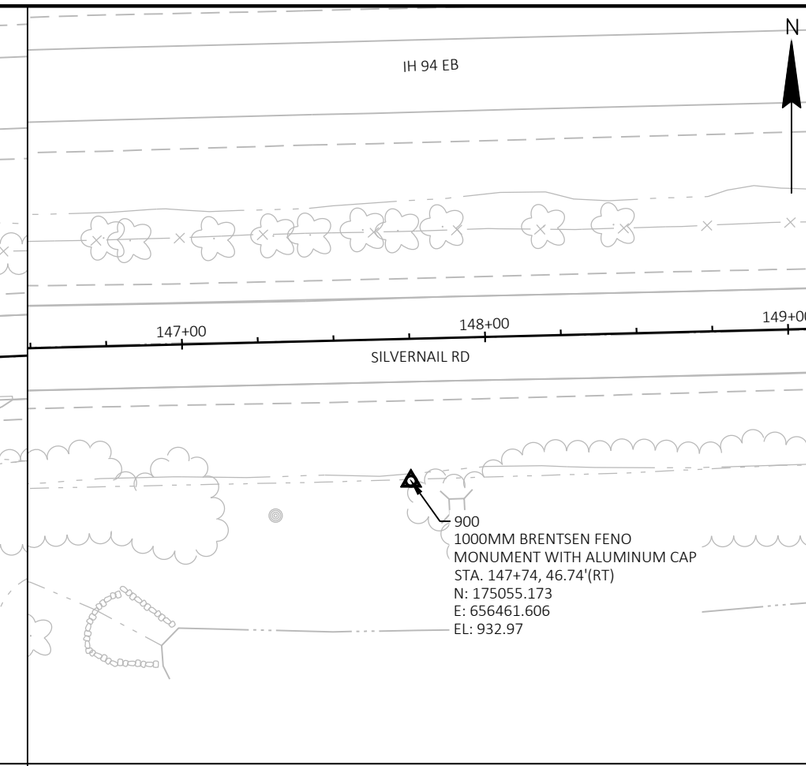

2

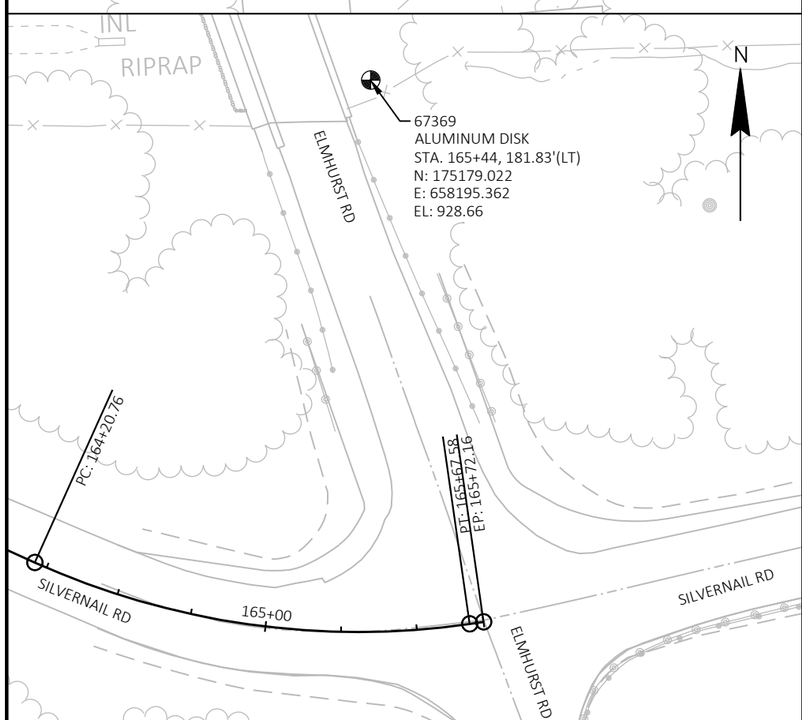

PROJECT NO: 2717-03-71	HWY: SILVERNAIL FRONTAGE ROAD	COUNTY: WAUKESHA	ALIGNMENT LAYOUT - SURVEY CONTROL	SHEET 44	E

FILE NAME : N:\PDS\C3D\27170301\SHEETS\027221_CP.DWG
LAYOUT NAME - 027222_CP
PLOT DATE : 7/6/2025 3:11 PM
PLOT BY : MANYEN, WAYNE
PLOT NAME :
PLOT SCALE : ##########
WISDOT/CADDS SHEET 42

Estimate Of Quantities

2717-03-71

Line	Item	Item Description	Unit	Total	Qty
0002	201.0105	Clearing	STA	11.000	11.000
0004	201.0120	Clearing	ID	67.000	67.000
0006	201.0205	Grubbing	STA	11.000	11.000
0008	201.0220	Grubbing	ID	67.000	67.000
0010	203.0100	Removing Small Pipe Culverts	EACH	6.000	6.000
0012	204.0120	Removing Asphaltic Surface Milling	SY	1,400.000	1,400.000
0014	204.0130	Removing Curb	LF	42.000	42.000
0016	204.0165	Removing Guardrail	LF	476.000	476.000
0018	204.0170	Removing Fence	LF	2,962.000	2,962.000
0020	205.0100	Excavation Common	CY	26,389.000	26,389.000
0022	213.0100	Finishing Roadway (project) .01 2717-03-71	EACH	1.000	1.000
0024	305.0110	Base Aggregate Dense 3/4-Inch	TON	1,280.000	1,280.000
0026	305.0120	Base Aggregate Dense 1 1/4-Inch	TON	14,650.000	14,650.000
0028	312.0110	Select Crushed Material	TON	27,425.000	27,425.000
0030	371.2000.S	QMP Base Aggregate Dense 1 1/4-Inch Compaction	EACH	16.000	16.000
0032	416.0610	Drilled Tie Bars	EACH	25.000	25.000
0034	455.0605	Tack Coat	GAL	1,400.000	1,400.000
0036	460.2000	Incentive Density HMA Pavement	DOL	4,610.000	4,610.000
0038	460.5223	HMA Pavement 3 LT 58-28 S	TON	4,200.000	4,200.000
0040	460.5424	HMA Pavement 4 LT 58-28 H	TON	3,000.000	3,000.000
0042	465.0120	Asphaltic Surface Driveways and Field Entrances	TON	110.000	110.000
0044	504.0900	Concrete Masonry Endwalls	CY	11.000	11.000
0046	520.8000	Concrete Collars for Pipe	EACH	2.000	2.000
0048	521.1018	Apron Endwalls for Culvert Pipe Steel 18-Inch	EACH	6.000	6.000
0050	521.3118	Culvert Pipe Corrugated Steel 18-Inch	LF	114.000	114.000
0052	522.0436	Culvert Pipe Reinforced Concrete Class IV 36-Inch	LF	153.000	153.000
0054	522.2429	Culvert Pipe Reinforced Concrete Horizontal Elliptical Class HE-IV 29x45-Inch	LF	75.000	75.000
0056	522.2629	Apron Endwalls for Culvert Pipe Reinforced Concrete Horizontal Elliptical 29x45-Inch	EACH	1.000	1.000
0058	601.0110	Concrete Curb Type D	LF	42.000	42.000
0060	614.0397	Guardrail Mow Strip Emulsified Asphalt	SY	390.000	390.000
0062	614.2300	MGS Guardrail 3	LF	887.500	887.500
0064	614.2610	MGS Guardrail Terminal EAT	EACH	2.000	2.000
0066	616.0100	Fence Woven Wire (height) .01 4 feet	LF	2,962.000	2,962.000
0068	618.0100	Maintenance and Repair of Haul Roads (project) .01 2717-03-71	EACH	1.000	1.000
0070	619.1000	Mobilization	EACH	1.000	1.000
0072	624.0100	Water	MGAL	320.000	320.000
0074	625.0100	Topsoil	SY	20,425.000	20,425.000
0076	627.0200	Mulching	SY	20,425.000	20,425.000
0078	628.1104	Erosion Bales	EACH	25.000	25.000
0080	628.1504	Silt Fence	LF	250.000	250.000
0082	628.1520	Silt Fence Maintenance	LF	250.000	250.000
0084	628.1905	Mobilizations Erosion Control	EACH	12.000	12.000
0086	628.1910	Mobilizations Emergency Erosion Control	EACH	6.000	6.000
0088	628.2008	Erosion Mat Urban Class I Type B	SY	20,425.000	20,425.000
0090	628.7010	Inlet Protection Type B	EACH	3.000	3.000
0092	628.7504	Temporary Ditch Checks	LF	525.000	525.000
0094	628.7555	Culvert Pipe Checks	EACH	75.000	75.000
0096	628.7560	Tracking Pads	EACH	2.000	2.000
0098	629.0210	Fertilizer Type B	CWT	13.000	13.000

Estimate Of Quantities

2717-03-71

Line	Item	Item Description	Unit	Total	Qty
0100	630.0130	Seeding Mixture No. 30	LB	925.000	925.000
0102	630.0200	Seeding Temporary	LB	563.000	563.000
0104	630.0500	Seed Water	MGAL	463.000	463.000
0106	631.0300	Sod Water	MGAL	1.000	1.000
0108	631.1000	Sod Lawn	SY	39.000	39.000
0110	633.5200	Markers Culvert End	EACH	4.000	4.000
0112	634.0618	Posts Wood 4x6-Inch X 18-FT	EACH	37.000	37.000
0114	637.2210	Signs Type II Reflective H	SF	132.400	132.400
0116	637.2230	Signs Type II Reflective F	SF	91.810	91.810
0118	638.2102	Moving Signs Type II	EACH	11.000	11.000
0120	638.2602	Removing Signs Type II	EACH	21.000	21.000
0122	638.3000	Removing Small Sign Supports	EACH	28.000	28.000
0124	642.5401	Field Office Type D	EACH	1.000	1.000
0126	643.0300	Traffic Control Drums	DAY	10,500.000	10,500.000
0128	643.0420	Traffic Control Barricades Type III	DAY	1,260.000	1,260.000
0130	643.0705	Traffic Control Warning Lights Type A	DAY	2,520.000	2,520.000
0132	643.0810	Traffic Control Connected Arrow Boards	DAY	210.000	210.000
0134	643.0900	Traffic Control Signs	DAY	25,830.000	25,830.000
0136	643.1000	Traffic Control Signs Fixed Message	SF	150.000	150.000
0138	643.5000	Traffic Control	EACH	1.000	1.000
0140	646.1020	Marking Line Epoxy 4-Inch	LF	394.000	394.000
0142	646.2040	Marking Line Grooved Wet Ref Epoxy 6-Inch	LF	17,674.000	17,674.000
0144	646.4040	Marking Line Grooved Wet Ref Epoxy 10-Inch	LF	80.000	80.000
0146	646.6120	Marking Stop Line Epoxy 18-Inch	LF	231.000	231.000
0148	646.7120	Marking Diagonal Epoxy 12-Inch	LF	41.000	41.000
0150	648.0100	Locating No-Passing Zones	MI	1.250	1.250
0152	650.4500	Construction Staking Subgrade	LF	6,572.000	6,572.000
0154	650.5000	Construction Staking Base	LF	6,572.000	6,572.000
0156	650.5500	Construction Staking Curb Gutter and Curb & Gutter	LF	42.000	42.000
0158	650.6000	Construction Staking Pipe Culverts	EACH	3.000	3.000
0160	650.9911	Construction Staking Supplemental Control (project) .01 2717-03-71	EACH	1.000	1.000
0162	650.9920	Construction Staking Slope Stakes	LF	6,572.000	6,572.000
0164	690.0150	Sawing Asphalt	LF	590.000	590.000
0166	690.0250	Sawing Concrete	LF	33.000	33.000
0168	740.0440	Incentive IRI Ride	DOL	4,926.000	4,926.000
0170	ASP.1T0A	On-the-Job Training Apprentice at $5.00/HR	HRS	1,800.000	1,800.000
0172	ASP.1T0G	On-the-Job Training Graduate at $5.00/HR	HRS	2,100.000	2,100.000

3

CLEARING AND GRUBBING

CATEGORY	ROADWAY	STATION	TO	STATION	OFFSET	201.0105 CLEARING STA	201.0120 CLEARING ID	201.0205 GRUBBING STA	201.0220 GRUBBING ID	COMMENT
0010	PROJECT ID 2717-03-71									
	MAINLINE									
		113+00	--	117+00	RT	4	--	4	--	CLEARING AND GRUBBING TO SLOPE INTERCEPT
		125+00	--	126+00	RT	1	--	1	--	CLEARING AND GRUBBING TO SLOPE INTERCEPT
		127+19	--	127+19	41' RT	--	44	--	44	
		127+19	--	127+19	45' RT	--	23	--	23	
		158+00	--	161+00	LT	3	--	3	--	CLEARING AND GRUBBING TO R/W FENCE
		161+00	--	164+00	LT	3	--	3	--	CLEARING AND GRUBBING TO SLOPE INTERCEPT
	CONTRACT TOTAL:					11	67	11	67	

REMOVING ASPHALTIC SURFACE

CATEGORY	ROADWAY	STATION	TO STATION	204.0120 REMOVING ASPHALTIC SURFACE MILLING SY
0010	PROJECT ID 2717-03-71			
	INTERSECTION			
	MAPLE AVENUE	100+00	100+50	600
	ELMHURST ROAD	165+00	165+72	800
	CONTRACT TOTAL:			1,400

3

REMOVING CURB

CATEGORY	ROADWAY	STATION	TO STATION	204.0130 REMOVING CURB LF
0010	PROJECT ID 2717-03-71			
	MAINLINE			
		120+75	121+25	42
	CONTRACT TOTAL:			42

REMOVING GUARDRAIL

CATEGORY	ROADWAY	STATION	TO STATION	LOCATION	204.0165 REMOVING GUARDRAIL LF
0010	PROJECT ID 2717-03-71				
	MAINLINE				
		153+00	163+00	WB	476
	CONTRACT TOTAL:				476

REMOVING FENCE

CATEGORY	ROADWAY	STATION	TO STATION	LOCATION	204.0170 REMOVING FENCE LF
0010	PROJECT ID 2717-03-71				
	MAINLINE				
		100+00	110+00	WB	420
		110+00	126+00	WB	878
		126+00	156+00	WB	1,604
		156+00	165+67	WB	60
	CONTRACT TOTAL:				2,962

BASE AGGREGATE ITEMS

CATEGORY	ROADWAY	STATION	TO STATION	305.0110 BASE AGGREGATE DENSE 3/4-INCH TON	305.0120 BASE AGGREGATE DENSE 1 1/4 INCH TON	312.0110 SELECT CRUSHED MATERIAL TON	371.2000.S QMP BASE AGGREGATE DENSE 1 1/4-INCH COMPACTION EACH
0010	PROJECT ID 2717-03-71						
	SILVERNAIL	100+00	165+72	1,280	14,650	25,525	16
	UNDISTRIBUTED (EBS BACKFILL)			--	--	1,900	--
	CONTRACT TOTAL:			1,280	14,650	27,425	16

3

3

EARTHWORK SUMMARY

CATEGORY	STATION FROM	STATION TO	LOCATION	205.0100 EXCAVATION COMMON (1) CUT (2) CY	205.0100 EXCAVATION COMMON (1) EBS EXCAVATION** (3) CY	SALVAGED/UNUSABLE PAVEMENT MATERIAL (4) CY	AVAILABLE MATERIAL (5) CY	UNEXPANDED FILL CY	EXPANDED FILL (13) FACTOR 1.25 CY	MASS ORDINATE +/- (14) CY
0010	101+00.00	165+00.00	SILVERNAIL	25,161	1,000	1,000	24,161	580	725	23,581
	101+00.00	165+00.00	RELEIF TRENCH	228	0	0	228	21	26	207
TOTALS					26,389	1,000	24,389	601	751	23,788

NOTES:
(1) COMMON EXCAVATION IS THE SUM OF THE CUT AND EBS EXCAVATION COLUMNS. ITEM NUMBER 205.0100
(2) SALVAGED/UNSUABLE PAVEMENT MATERIAL IS INCLUDED IN CUT.
(3) EBS EXCAVATION TO BE BACKFILLED WITH SELECT CRUSHED MATERIAL. SOILS REMOVED AS EBS MUST BE WASTED OFF SITE AND NOT RESUSED AS FILL.
(4) SALVAGED/UNUSABLE PAVEMENT MATERIAL
(5) AVAILABLE MATERIAL = CUT - SALVAGED/UNUSUABLE PAVEMENT MATERIAL
(13) EXPANDED FILL FACTOR = 1.25; EXPANDED FILL = UNEXPANDED FILL * FILL FACTOR
(14) THE MASS ORDINATE + OR - QTY CALCULATED FOR THE DIVISION. PLUS QUANTITY INDICATES AN EXCESS OF MATERIAL WITHIN THE DIVISION. MINUS INDICATES A SHORTAGE OF MATERIAL WITHIN THE DIVISION.
**UNDISTRIBUTED EBS EXCAVATION

3

FINISHING ROADWAY

CATEGORY	LOCATION	213.0100.01 FINISHING ROADWAY 2717-03-71 EACH
0010	PROJECT ID 2717-03-71	
	PROJECT	1
	CONTRACT TOTAL:	1

ASPHALTIC PAVEMENT ITEMS

CATEGORY	ROADWAY	STATION	TO STATION	455.0605 TACK COAT GAL	460.5223 HMA PAVEMENT 3 LT 58-28 S TON	460.5424 HMA PAVEMENT 4 LT 58-28 H TON	460.2000 INCENTIVE DENSITY HMA PAVEMENT DOL	465.0120 ASPHALTIC SURFACE DRIVEWAYS AND FIELD ENTRANCES TON	740.0440 INCENTIVE IRI RIDE DOL
0010	PROJECT ID 2717-03-71								
	MAINLINE								
		100+00	165+72	1,400	4,200	3,000	4,610	110	4,926
	CONTRACT TOTAL:			1,400	4,200	3,000	4,610	110	4,926

3

REMOVING CULVERT PIPE SUMMARY

CATEGORY	ROADWAY	STATION	LOCATION	203.0100 REMOVING SMALL PIPE CULVERTS EACH	REMARKS
0010	PROJECT ID 2717-03-				
	SILVERNAIL	125+17	LT/RT	1	SILVERNAIL MAINLINE 36 INCH CMCP (PLASTIC LINED)
	SILVERNAIL	125+22	LT/RT	1	SILVERNAIL MAINLINE 36 INCH CMCP
	SILVERNAIL	126+06	RT	1	DRIVEWAY 18 INCH CMCP
	SILVERNAIL	132+40	RT	1	DRIVEWAY 18 INCH CMCP
	SILVERNAIL	157+89	LT/RT	1	SILVERNAIL MAINLINE 28X42 INCH ELLIPICAL CMCP
	SILVERNAIL	161+85	RT	1	DRIVEWAY 18 INCH CMCP
	CONTRACT TOTAL:			6	

CONCRETE ENDWALLS

CATEGORY	ROADWAY	STATION	LOCATION	416.0610 DRILLED TIE BARS EACH	504.0900 CONCRETE MASONRY ENDWALLS CY
0010	PROJECT ID 2717-03-				
	SILVERNAIL	125+20	36' RT	--	2
		158+00	42' LT	25	9
	CONTRACT TOTAL:			25	11

DRIVEWAY CULVERT PIPE SUMMARY

CATEGORY	ROADWAY	STATION	LOCATION	521.1018 APRON ENDWALLS FOR CULVER PIPE STEEL 18-INCH EACH	521.3118 CULVERT PIPE CORRUGATED STEEL 18-INCH LF	STEEL THICKNESS (INCHES)
0010	PROJECT ID 2717-03-					
	SILVERNAIL	126+06	RT	2	42	0.064
	SILVERNAIL	132+40	RT	2	36	0.064
	SILVERNAIL	161+85	RT	2	36	0.064
	CONTRACT TOTAL:			6	114	

3

CROSS CULVERT PIPE SUMMARY

CATEGORY	ROADWAY	STATION	LOCATION	520.8000 CONCRETE COLLARS FOR PIPE EACH	522.0436 ** CULVERT PIPE REINFORCED CONCRETE CLASS IV 36-INCH LF	522.2429 CULVERT PIPE REINFORCED CONCRETE HORIZONTAL ELLIPTICAL CLASS HE-IV 29X45-INCH LF	522.2629 APRON ENDWALLS FOR CULVERT PIPE REINFORCED CONCRETE HORIZONTAL ELLIPTICAL 29X45-INCH EACH	633.5200 MARKERS CULVERT END EACH	*** JOINT TIES EACH	CULVERT PIPE INVERT ELEVATION * INLET	* DISCH	* SLOPE	REMARKS
0010	PROJECT ID 2717-03-71												
	SILVERNAIL	125+17	43.4' LT	1	77	--	--	--	--	--	952.80	--	--
		125+17	33.3' RT	--	--	--	--	1	--	953.97	--	1.52%	CROSS ROAD CULVERT
	SILVERNAIL	125+22	42.1' LT	1	76	--	--	--	--	--	951.41	--	--
		125+22	33.5' RT	--	--	--	--	1	--	953.70	--	3.01%	CROSS ROAD CULVERT
	SILVERNAIL	158+13	39.3' LT	--	--	75	--	1	3	--	912.24	--	--
		157+74	25.1' RT	--	--	--	1	1	3	918.14	--	7.87%	CROSS ROAD CULVERT
	CONTRACT TOTAL:			2	153	75	1	4					

NOTES:
* TO BE VERIFIED BY ENGINEER
** CONNECTION TO EXISTING CMP IS INCIDENTAL TO ITEM 522.0436
*** NON-BID ITEM INFORMATION ONLY

CURB & GUTTER ITEMS

CATEGORY	ROADWAY	STATION	TO STATION	601.0110 CONCRETE CURB TYPE D LF
0010	PROJECT ID 2717-03-71			
		120+75	121+25	42
	CONTRACT TOTAL:			42

GUARDRAIL ITEMS

CATEGORY	ROADWAY	STATION	TO STATION	LOCATION	614.0397 GUARDRAIL MOW STRIP EMULSIFIED ASPHALT SY	614.2300 MGS GUARDRAIL 3 LF	614.2610 MGS GUARDRAIL TERMINAL EAT EACH
0010	PROJECT ID 2717-03-71						
	SILVERNAIL ROAD	153+00	163+00	WB	390	887.5	2
	CONTRACT TOTAL:				390	887.5	2

3

FENCE

CATEGORY	ROADWAY	STATION	TO STATION	LOCATION	616.0100 FENCE WOVEN WIRE 4 FT LF
0010	PROJECT ID 2717-03-71				
	MAINLINE				
		100+00	110+00	WB	420
		110+00	126+00	WB	878
		126+00	156+00	WB	1,604
		156+00	165+67	WB	60
	CONTRACT TOTAL:				2,962

MAINTENANCE AND REPAIR

CATEGORY	LOCATION	618.0100 MAINTENANCE AND REPAIR OF HAUL ROADS EACH
0010	PROJECT ID 2717-03-71	
	PROJECT	1
	CONTRACT TOTAL:	1

WATER

CATEGORY	LOCATION	624.0100 WATER MGAL
0010	PROJECT ID 2717-03-71	
	SILVERNAIL	320
	CONTRACT TOTAL:	320

3

RESTORATION ITEMS

CATEGORY	ROADWAY	STATION	TO STATION	625.0100 TOPSOIL SY	627.0200 MULCHING SY	628.2008 EROSION MAT URBAN CLASS I TYPE B SY	629.0210 FERTILIZER TYPE B CWT	630.0130 SEEDING MIXTURE NO. 30 LB	630.0200 SEEDING TEMPORARY LB	630.0500 SEED WATER MGAL	631.0300 SOD WATER MGAL	631.1000 SOD LAWN SY
0010	PROJECT ID 2717-03-71											
	SILVERNAIL	100+44	165+46	16,340	16,340	16,340	10	740	450	370	1	31
	UNDISTRIBUTED			4,085	4,085	4,085	3	185	113	93	--	8
	CONTRACT TOTAL:			20,425	20,425	20,425	13	925	563	463	1	39

FIELD OFFICE

CATEGORY	LOCATION	642.5401 FIELD OFFICE TYPE D EACH
0010	PROJECT ID 2717-03-71	
	PROJECT	1
	CONTRACT TOTAL:	1

EROSION CONTROL ITEMS

CATEGORY	ROADWAY	STATION	TO STATION	LOCATION	628.1104 EROSION BALES EACH	628.1504 SILT FENCE LF	628.1520 SILT FENCE MAINTENANCE LF	628.1905 MOBILIZATIONS EROSION CONTROL EACH	628.1910 MOBILIZATIONS EMERGENCY EROSION CONTROL EACH	628.7010 INLET PROTECTION TYPE B EACH	628.7504 TEMPORARY DITCH CHECKS LF	628.7555 CULVERT PIPE CHECKS EACH	628.7560 TRACKING PADS EACH
0010	PROJECT ID 2717-03-71												
	SILVERNAIL	100+44	165+46	LT/RT	--	200	200	--	--	2	420	60	--
	UNDISTRIBUTED				25	50	50	12	6	1	105	15	2
	CONTRACT TOTAL:				25	250	250	12	6	3	525	75	2

3

TYPE II PERMANENT SIGNING

2717-03-71 Silvernail Road

SIGN NO.	SIGN CODE & SIGN SIZE	SIGN MESSAGE	TYPE II SIGN SIZE W [IN.]	X x	H [IN.]	637.2210 SIGNS TYPE II REFLC H [SF]	637.2230 SIGNS TYPE II REFLECTIVE F [SF]	638.2602 REMOVING SIGNS TYPE II [EA]	638.3000 REMOVING SMALL SIGN SUPPORTS [EA]	638.2102 MOVING SIGNS TYPE II (EA)	634.0618 POSTS WOOD 4"X 6"X18' [EA]	MOUNT ON SAME POST AS SIGN #	REMARKS / NEW SIGN LOCATION
1	R1-1(2S)		30	X	30	5.180					1		
1A	R1-3P(2S)		18	X	6	0.750						1	
2	R1-1(2S)		30	X	30	5.180		1	1		1		INCLUDES REMOVAL OF PLAQUE
2A	R1-3P(2S)		18	X	6	0.750						2	REMOVAL PART OF SIGN # 2
3	R7-1R(2S)		18	X	24	3.000		1	1		1		
4	R2-1(2S)	SPEED LIMIT 50	24	X	30	5.000		1	1		1		
5	I55-56	ADOPT A HIGHWAY							1	1	1		YEAR 2022 SIGN
5A	I55-56P	DAYSPRING CHURCH AND SCHOOL								1		5	YEAR 2022 SIGN
6	R7-1D(2S)		18	X	24	3.000					1		
7	R7-1D(2S)		18	X	24	3.000					1		
8	W3-1(2S)		36	X	36		9.000	1	1				REMOVE R7-1D PART OF # 8 REMOVAL
9	R7-1D(2S)		18	X	24	3.000					1		
10	R7-1D(2S)		18	X	24	3.000		1	1		1		
11	R7-1D(2S)		18	X	24	3.000		1	1		1		
12	W1-2L(2S)		30	X	30		6.250				1		
13	S5-2(2S)		24	X	30	5.000		1	1		1		
14	S1-1(2S)		36	X	36		6.750	1	1		1		REMOVAL INCLUDES S16-9P AND R2-6P
14A	S16-9P(2S)		30	X	18		3.750					14	
14B	R2-6P(2S)		24	X	18	3.000						14	
15	S4-51(2S)	SPEED LIMIT 40	24	X	48	8.000		1	1		1		
16	S4-51(2S)	SPEED LIMIT 40	24	X	48	8.000		1	1		1		
17	S1-1(2S)		36	X	36		6.750	1	1		1		REMOVAL INCLUDES S16-9P AND R2-6P
17A	S16-9P(2S)		30	X	18		3.750					17	
17B	R2-6P(2S)		24	X	18	3.000						17	
18	R1-1(2S)		30	X	30	5.180					1		
19	R1-1							1					DECORATIVE POST REMAINS - STREET NAME SIGN - TOWN SIGN
20	S1-1(2S)		36	X	36		6.750	1	1		1		REMOVAL INCLUDES REMOVING S16-9P AND R2-6P
20A	S16-9P(2S)		30	X	18		3.750					20	
20B	R2-6P(2S)		24	X	18	3.000						20	
21	S4-51(2S)	SPEED LIMIT 40	24	X	48	8.000		1	1		1		
22	W14-3(2S)		48	X	36		5.560	1	1		1		
23	W1-4R								1	1	1		YEAR 2023 SIGN
23A	W13-1									1		23	YEAR 2024 SIGN
24	W3-1(2S)								1	1	1		YEAR 2024 SIGN
25	J1-1(2S)		24	X	39	6.500			1	1	1		
	M2-1		21	X	15								
	M1-5A	CTH G	24	X	24								
26	W1-8(2S)		18	X	24		3.000				1		4 FOOT MOUNTING HEIGHT
27	W1-8(2S)		18	X	24		3.000				1		4 FOOT MOUNTING HEIGHT
28	W1-8(2S)		18	X	24		3.000				1		4 FOOT MOUNTING HEIGHT
29	W1-6								1	1	1		
30	I55-56	ADOPT A HIGHWAY							1	1	1		2022 SIGN
30A	I55-56P	DAYSPRING CHURCH AND SCHOOL								1		30	2022 SIGN

SHEET 1 OF 2

PROJECT NO: 2717-03-71	HWY: SILVERNAIL ROAD	COUNTY: WAUKESHA	MISCELLANEOUS QUANTITIES – PERMANENT SIGNING	SHEET:	E

3

SIGN NO.	SIGN CODE & SIZE	SIGN MESSAGE	TYPE II SIGN SIZE W [IN.]	X x	H [IN.]	637.2210 SIGNS TYPE II REFLC H [SF]	637.2230 SIGNS TYPE II REFLECTIVE F [SF]	638.2602 REMOVING SIGNS TYPE II [EA]	638.3000 REMOVING SMALL SIGN SUPPORTS [EA]	638.2102 MOVING SIGNS TYPE II (EA)	634.0618 POSTS WOOD 4"X 6"X18' [EA]	MOUNT ON SAME POST AS SIGN #	REMARKS / NEW SIGN LOCATION
31	S4-51(2S)	SPEED LIMIT 40	24	X	48	8.000		1	1		1		
32	R2-1(2S)	SPEED LIMIT 50	24	X	30	5.000		1	1		1		
33	S5-2								1	1	1		2024 SIGN
34	R1-1(2S)		30	X	30	5.180		1	1		1		INCLUDES REMOVAL OF PLAQUE
34A	R1-3P(2S)		18	X	6	0.750						34	
35	J13-1								1	1	1		2022 SIGN
36	S1-1(2S)		36	X	36		6.750	1	1		1		INCLUDES REMOVAL OF S16-9P AND R2-6P
36A	S16-9P(2S)		30	X	18		3.750					36	
36B	R2-6P(2S)		24	X	18	3.000						36	
37	R1-1(2S)		30	X	30	5.180					1		
37A	R1-3P(2S)		18	X	6	0.750						37	
		UNDISTRIBUTED				20.000	20.000	2	2		2	--	--
TOTALS						132.400	91.810	21	28	11	37		

3

SHEET 2 OF 2

3

TRAFFIC CONTROL ITEMS

CATEGORY	STAGE	LOCATION	STATION TO STATION	STAGE DURATION DAYS	643.0300 TRAFFIC CONTROL DRUMS EACH	643.0300 TRAFFIC CONTROL DRUMS DAY	643.0420 TRAFFIC CONTROL BARRICADES TYPE III EACH	643.0420 TRAFFIC CONTROL BARRICADES TYPE III DAY	643.0705 TRAFFIC CONTROL WARNING LIGHTS TYPE A EACH	643.0705 TRAFFIC CONTROL WARNING LIGHTS TYPE A DAY	643.0810 TRAFFIC CONTROL CONNECTED ARROW BOARDS EACH	643.0810 TRAFFIC CONTROL CONNECTED ARROW BOARDS DAY	643.0900 TRAFFIC CONTROL SIGNS EACH	643.0900 TRAFFIC CONTROL SIGNS DAY	643.1000 TRAFFIC CONTROL SIGNS FIXED MESSAGE SF
0010	1	PROJECT ID 2717-03-71													
		SILVERNAIL	100+44 - 165+46	168	--	--	6	1,008	12	2,016	--	--	13	2,184	--
		IH 94 EB		168	50	8,400	--	--	--	--	1	168	8	1,344	--
		DETOUR		168	--	--	--	--	--	--	--	--	102	17,136	150
		UNDISTRIBUTED				2,100		252		504		42		5,166	
		CONTRACT TOTAL:				10,500		1,260		2,520		210		25,830	150

TRAFFIC CONTROL

CATEGORY	LOCATION	643.5000 TRAFFIC CONTROL EACH
0010	PROJECT ID 2717-03-71	
	PROJECT	1
	CONTRACT TOTAL:	1

3

PAVEMENT MARKING ITEMS

CATEGORY	LOCATION	STATION TO STATION	646.1020 MARKING LINE EPOXY 4-INCH WHITE LF	646.1020 MARKING LINE EPOXY 4-INCH YELLOW LF	646.2040 MARKING LINE GROOVED WET REF EPOXY 6-INCH 12.5 FT LINE 37.5 FT SKIP WHITE LF	646.2040 YELLOW LF	646.2040 YELLOW LF	646.4040 MARKING LINE GROOVED WET REF EPOXY 10-INCH 3 FT LINE 9 FT SKIP WHITE LF	646.4040 WHITE LF	646.6120 MARKING STOP LINE EPOXY 18-INCH WHITE LF	646.7120 MARKING DIAGONAL EPOXY 12-INCH YELLOW LF
	MAINLINE										
0010	SILVERNAIL										
		100+00 165+72	136	258	12,976	3,248	1,450	65	15	231	41
	SUBTOTAL		136	258	12,976	3,248	1,450	65	15	231	41
	CONTRACT TOTAL:		394		17,674			80		231	41

LOCATING NO-PASSING ZONES

CATEGORY	ROADWAY	STATION TO STATION	648.0100 LOCATING NO-PASSING ZONES MI
0010	PROJECT ID 2717-03-71		
	SILVERNAIL	100+00 165+72	1.25
	CONTRACT TOTAL:		1.25

CONSTRUCTION STAKING

CATEGORY	LOCATION	650.4500 CONSTRUCTION STAKING SUBGRADE LF	650.5000 CONSTRUCTION STAKING BASE LF	650.5500 CONSTRUCTION STAKING CURB GUTTER AND CURB & GUTTER LF	650.6000 CONSTRUCTION STAKING PIPE CULVERTS EACH	650.9911.01 CONSTRUCTION STAKING SUPPLEMENTAL CONTROL (2717-03-71) EACH	650.9920 CONSTRUCTION STAKING SLOPE STAKES LF
0010	SILVERNAIL	6,572	6,572	42	3	1	6,572
	CONTRACT TOTAL:	6,572	6,572	42	3	1	6,572

SAWCUTTING ITEMS

CATEGORY	ROADWAY	STATION TO STATION	690.0150 SAWING ASPHALT LF	690.0250 SAWING CONCRETE LF
0010	PROJECT ID 2300-08-70			
	MAINLINE			
	SILVERNAIL	100+00 165+72	590	--
		157+75 158+25	--	33
	CONTRACT TOTAL:		590	33

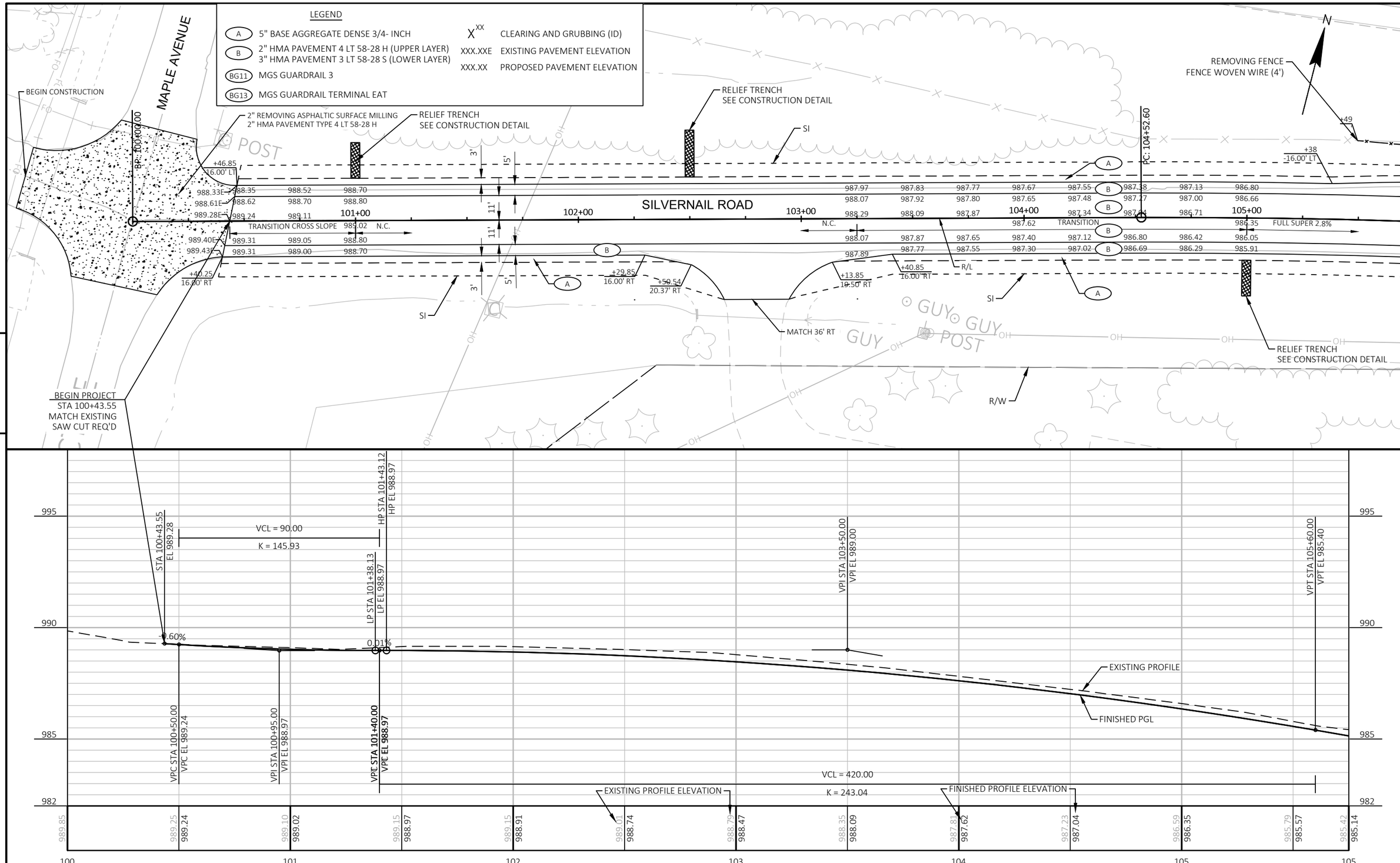

PROJECT NO: 2717-03-71	HWY: SILVERNAIL FRONTAGE ROAD	COUNTY: WAUKESHA	PLAN AND PROFILE: PLAN AND PROFILE	SHEET 55	E

FILE NAME : N:\PDS\C3D\27170301\SHEETS\050101_PP.DWG
LAYOUT NAME - 050101_PP
PLOT DATE : 8/1/2025 8:38 AM
PLOT BY : FILTZ, DEAN J
PLOT NAME :
PLOT SCALE : 1 IN:40 FT
WISDOT/CADDS SHEET 44

LEGEND

A	5" BASE AGGREGATE DENSE 3/4- INCH	X^XX	CLEARING AND GRUBBING (ID)
B	2" HMA PAVEMENT 4 LT 58-28 H (UPPER LAYER) 3" HMA PAVEMENT 3 LT 58-28 S (LOWER LAYER)	XXX.XXE	EXISTING PAVEMENT ELEVATION
		XXX.XX	PROPOSED PAVEMENT ELEVATION
BG11	MGS GUARDRAIL 3		
BG13	MGS GUARDRAIL TERMINAL EAT		

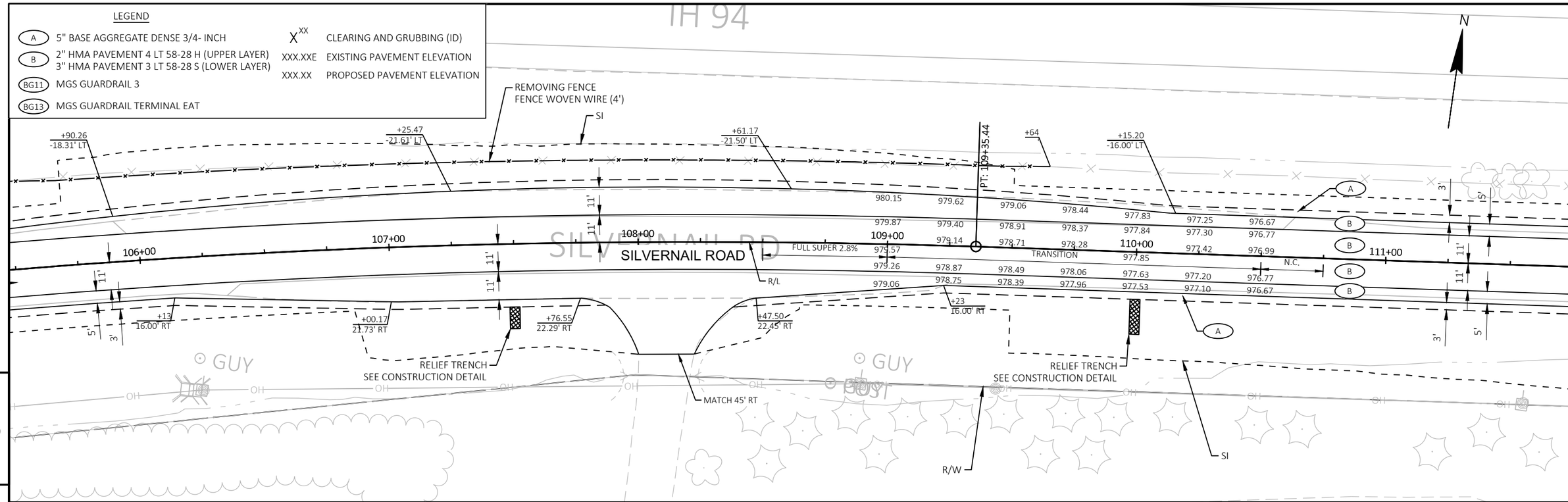

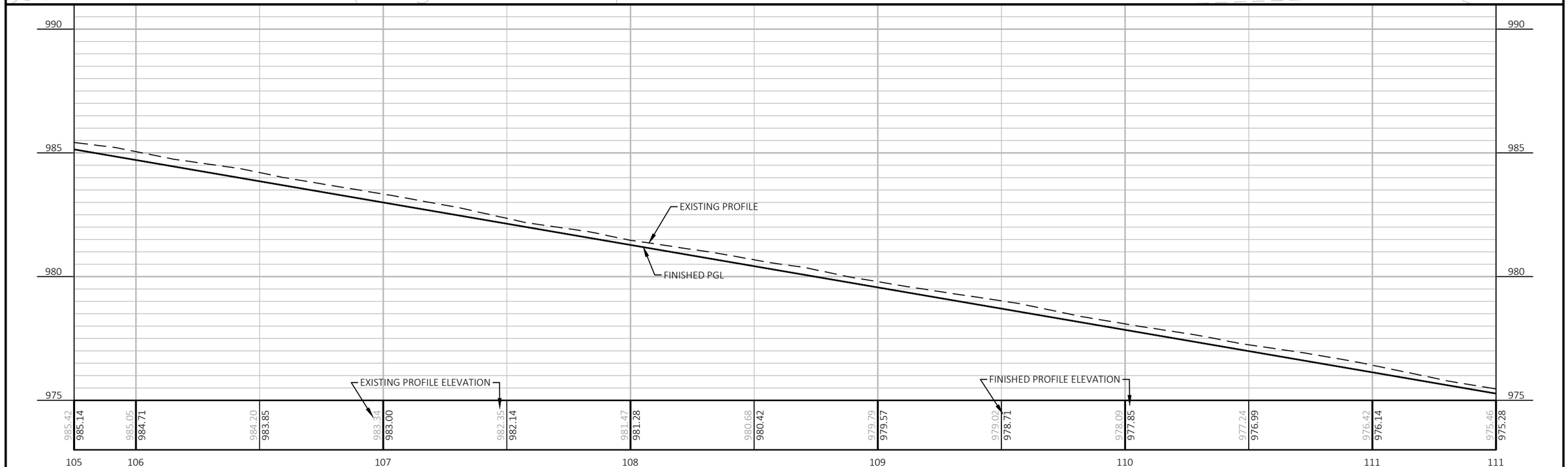

PROJECT NO: 2717-03-71	HWY: SILVERNAIL FRONTAGE ROAD	COUNTY: WAUKESHA	PLAN AND PROFILE: PLAN AND PROFILE	SHEET 56	E

LEGEND

A	5" BASE AGGREGATE DENSE 3/4- INCH
B	2" HMA PAVEMENT 4 LT 58-28 H (UPPER LAYER) 3" HMA PAVEMENT 3 LT 58-28 S (LOWER LAYER)
BG11	MGS GUARDRAIL 3
BG13	MGS GUARDRAIL TERMINAL EAT
X^XX	CLEARING AND GRUBBING (ID)
XXX.XXE	EXISTING PAVEMENT ELEVATION
XXX.XX	PROPOSED PAVEMENT ELEVATION

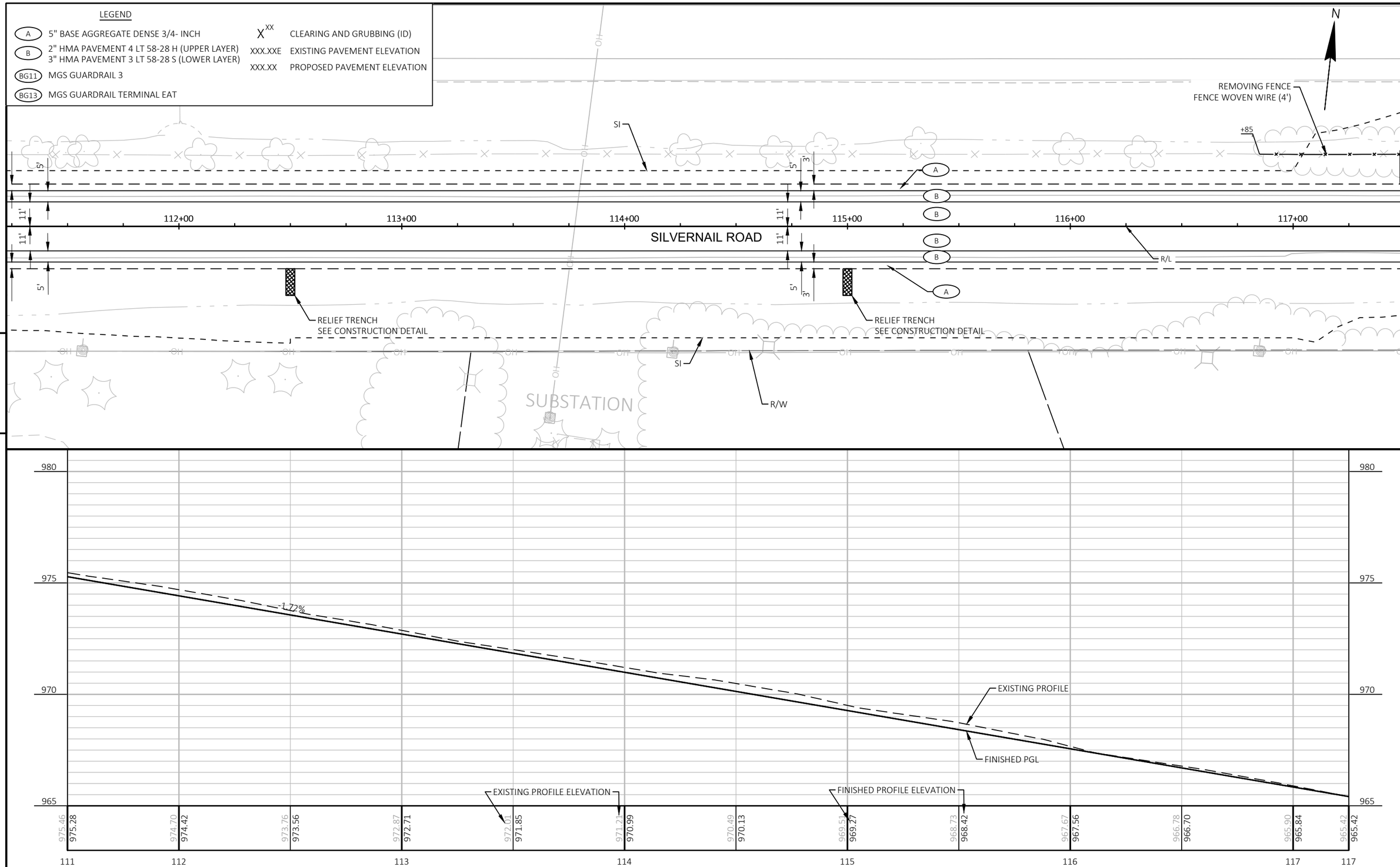

PROJECT NO: 2717-03-71	HWY: SILVERNAIL FRONTAGE ROAD	COUNTY: WAUKESHA	PLAN AND PROFILE: PLAN AND PROFILE	SHEET 57	E

FILE NAME : N:\PDS\C3D\27170301\SHEETS\050101_PP.DWG
LAYOUT NAME - 050103_PP
PLOT DATE : 8/1/2025 8:38 AM
PLOT BY : FILTZ, DEAN J
PLOT NAME :
PLOT SCALE : 1 IN:40 FT
WISDOT/CADDS SHEET 44

LEGEND

A — 5" BASE AGGREGATE DENSE 3/4- INCH	X^{XX} — CLEARING AND GRUBBING (ID)
B — 2" HMA PAVEMENT 4 LT 58-28 H (UPPER LAYER) 3" HMA PAVEMENT 3 LT 58-28 S (LOWER LAYER)	XXX.XXE — EXISTING PAVEMENT ELEVATION
	XXX.XX — PROPOSED PAVEMENT ELEVATION
BG11 — MGS GUARDRAIL 3	
BG13 — MGS GUARDRAIL TERMINAL EAT	

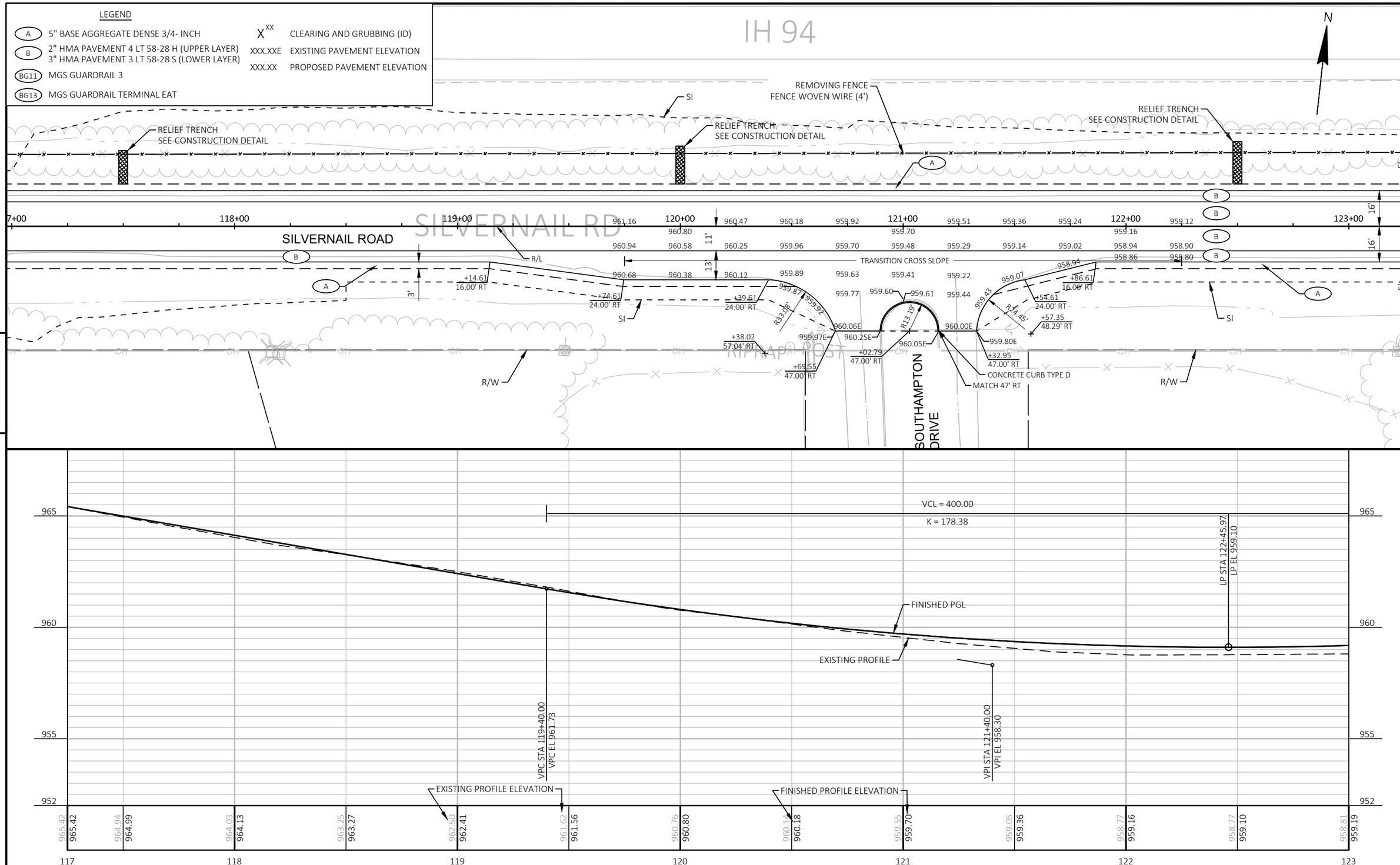

PROJECT NO: 2717-03-71	HWY: SILVERNAIL FRONTAGE ROAD	COUNTY: WAUKESHA	PLAN AND PROFILE: PLAN AND PROFILE	SHEET 58	E

FILE NAME : N:\PDS\C3D\27170301\SHEETS\050101_PP.DWG
LAYOUT NAME - 050104_PP
PLOT DATE : 8/1/2025 8:39 AM
PLOT BY : FILTZ, DEAN J
PLOT NAME :
PLOT SCALE : 1 IN:40 FT

WISDOT/CADDS SHEET 44

LEGEND

- (A) 5" BASE AGGREGATE DENSE 3/4- INCH
- (B) 2" HMA PAVEMENT 4 LT 58-28 H (UPPER LAYER) 3" HMA PAVEMENT 3 LT 58-28 S (LOWER LAYER)
- (BG11) MGS GUARDRAIL 3
- (BG13) MGS GUARDRAIL TERMINAL EAT
- X^XX CLEARING AND GRUBBING (ID)
- XXX.XXE EXISTING PAVEMENT ELEVATION
- XXX.XX PROPOSED PAVEMENT ELEVATION

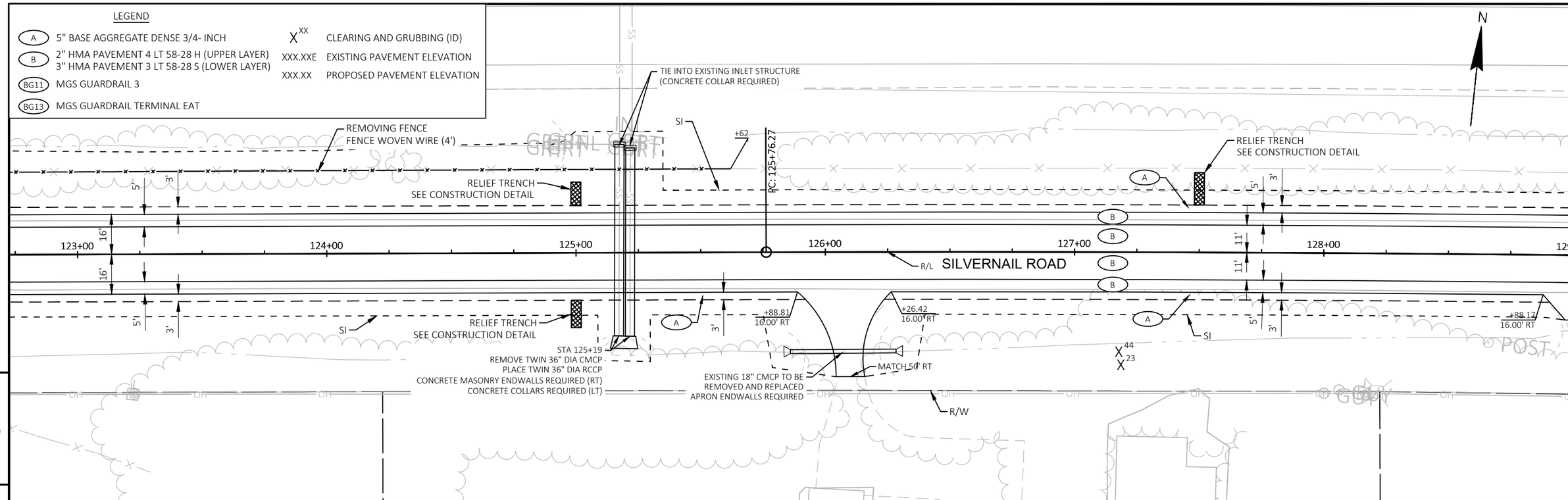

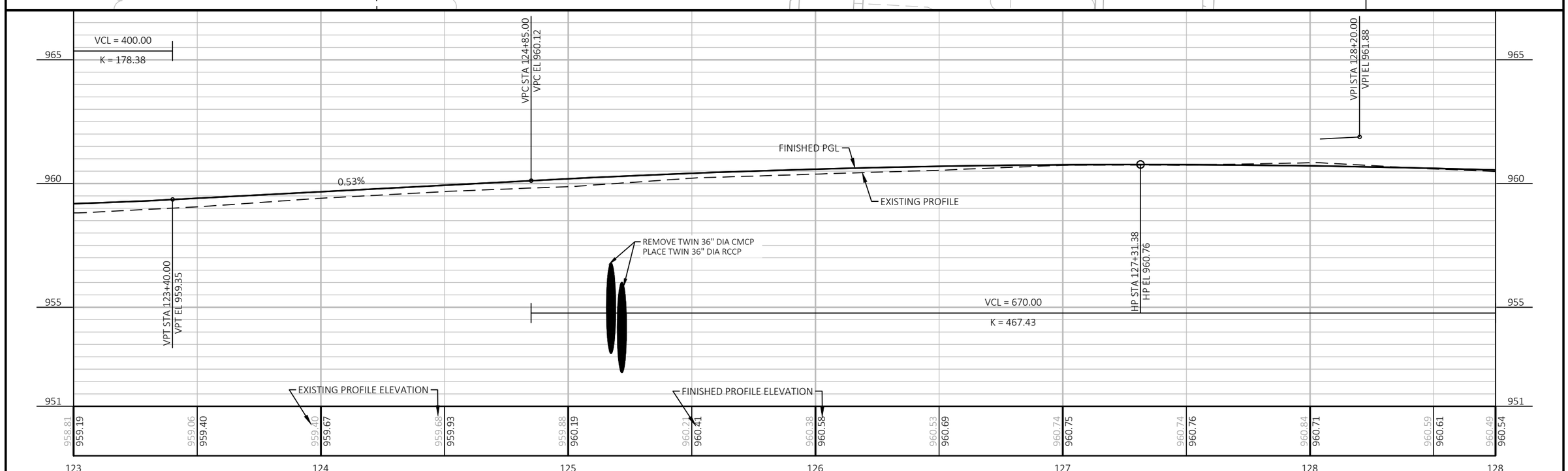

PROJECT NO: 2717-03-71	HWY: SILVERNAIL FRONTAGE ROAD	COUNTY: WAUKESHA	PLAN AND PROFILE: PLAN AND PROFILE	SHEET 59	E

FILE NAME : N:\PDS\C3D\27170301\SHEETS\050101_PP.DWG
LAYOUT NAME - 050105_PP
PLOT DATE : 8/1/2025 8:39 AM
PLOT BY : FILTZ, DEAN J
PLOT NAME :
PLOT SCALE : 1 IN:40 FT

LEGEND

A	5" BASE AGGREGATE DENSE 3/4- INCH	X^{XX}	CLEARING AND GRUBBING (ID)
B	2" HMA PAVEMENT 4 LT 58-28 H (UPPER LAYER) 3" HMA PAVEMENT 3 LT 58-28 S (LOWER LAYER)	XXX.XXE	EXISTING PAVEMENT ELEVATION
		XXX.XX	PROPOSED PAVEMENT ELEVATION
BG11	MGS GUARDRAIL 3		
BG13	MGS GUARDRAIL TERMINAL EAT		

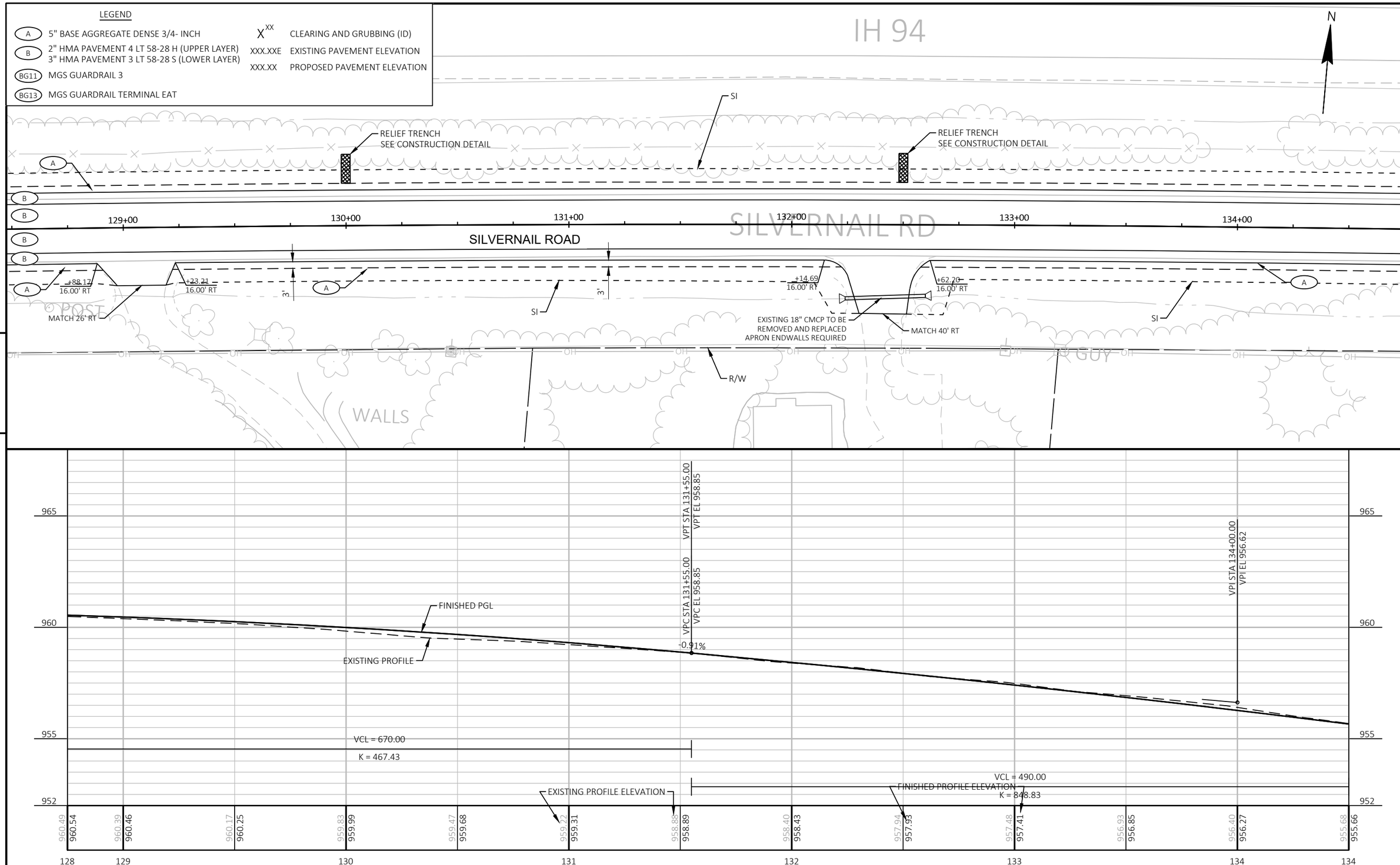

PROJECT NO: 2717-03-71	HWY: SILVERNAIL FRONTAGE ROAD	COUNTY: WAUKESHA	PLAN AND PROFILE: PLAN AND PROFILE	SHEET 60	E

FILE NAME : N:\PDS\C3D\27170301\SHEETS\050101_PP.DWG
LAYOUT NAME - 050106_PP
PLOT DATE : 8/1/2025 8:39 AM
PLOT BY : FILTZ, DEAN J
PLOT NAME :
PLOT SCALE : 1 IN:40 FT
WISDOT/CADDS SHEET 44

LEGEND

A	5" BASE AGGREGATE DENSE 3/4- INCH	X^{XX}	CLEARING AND GRUBBING (ID)
B	2" HMA PAVEMENT 4 LT 58-28 H (UPPER LAYER) 3" HMA PAVEMENT 3 LT 58-28 S (LOWER LAYER)	XXX.XXE	EXISTING PAVEMENT ELEVATION
		XXX.XX	PROPOSED PAVEMENT ELEVATION
BG11	MGS GUARDRAIL 3		
BG13	MGS GUARDRAIL TERMINAL EAT		

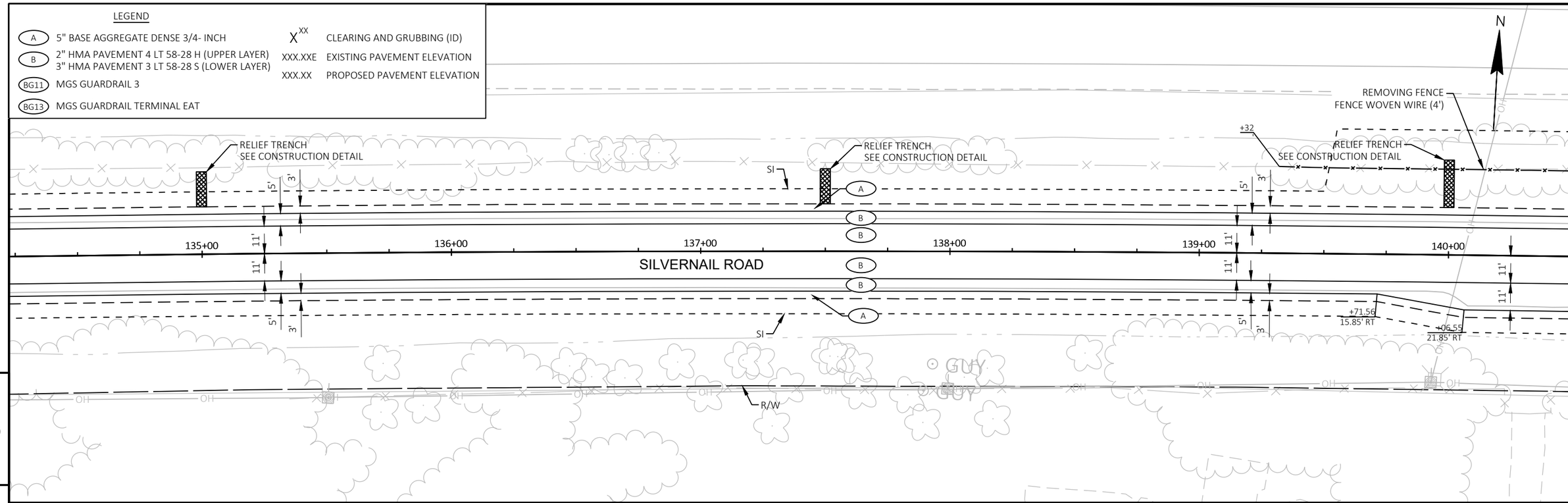

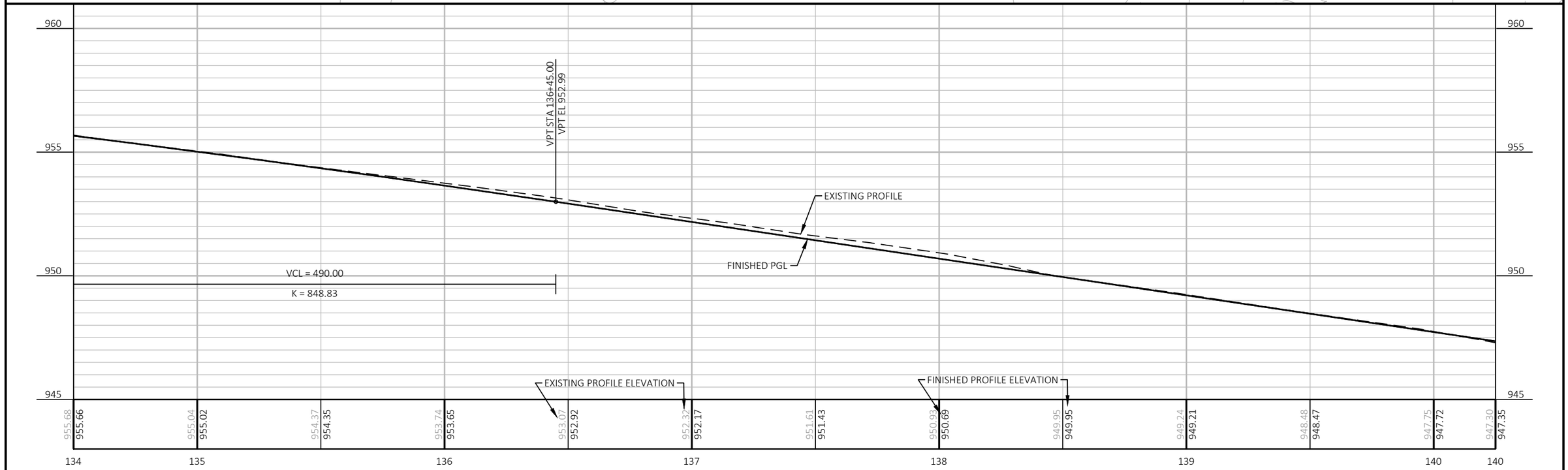

PROJECT NO: 2717-03-71	HWY: SILVERNAIL FRONTAGE ROAD	COUNTY: WAUKESHA	PLAN AND PROFILE: PLAN AND PROFILE	SHEET 61	E

FILE NAME : N:\PDS\C3D\27170301\SHEETS\050101_PP.DWG
LAYOUT NAME - 050107_PP
PLOT DATE : 8/1/2025 8:39 AM
PLOT BY : FILTZ, DEAN J
PLOT NAME :
PLOT SCALE : 1 IN:40 FT

LEGEND

A	5" BASE AGGREGATE DENSE 3/4- INCH	X^{XX}	CLEARING AND GRUBBING (ID)
B	2" HMA PAVEMENT 4 LT 58-28 H (UPPER LAYER) 3" HMA PAVEMENT 3 LT 58-28 S (LOWER LAYER)	XXX.XXE	EXISTING PAVEMENT ELEVATION
		XXX.XX	PROPOSED PAVEMENT ELEVATION
BG11	MGS GUARDRAIL 3		
BG13	MGS GUARDRAIL TERMINAL EAT		

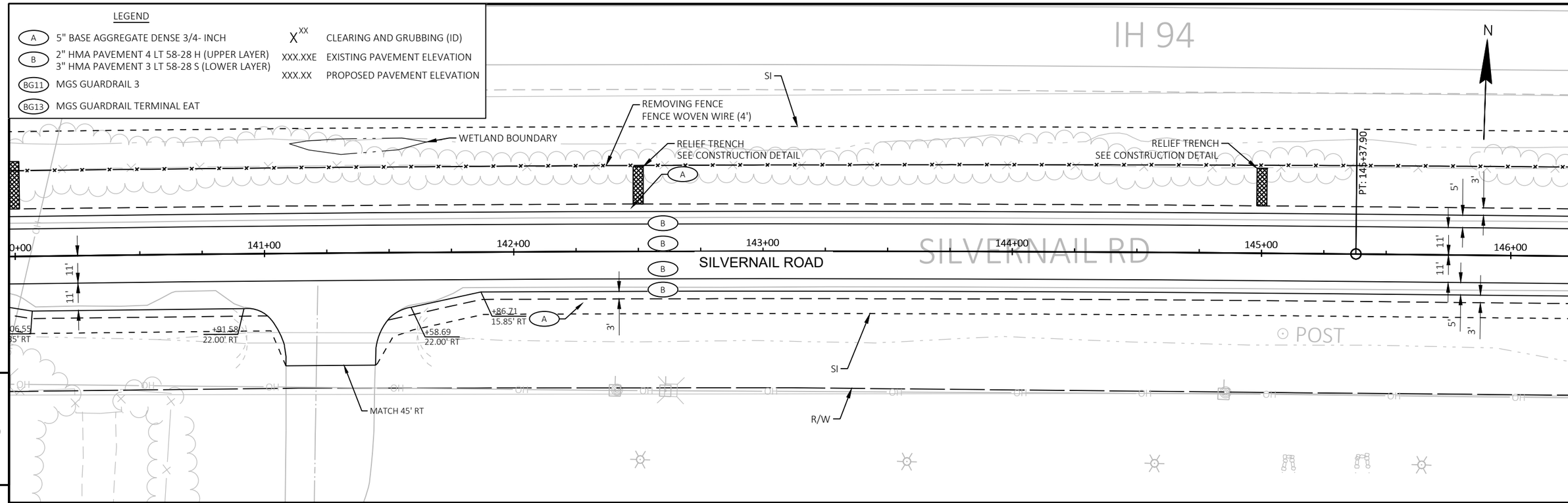

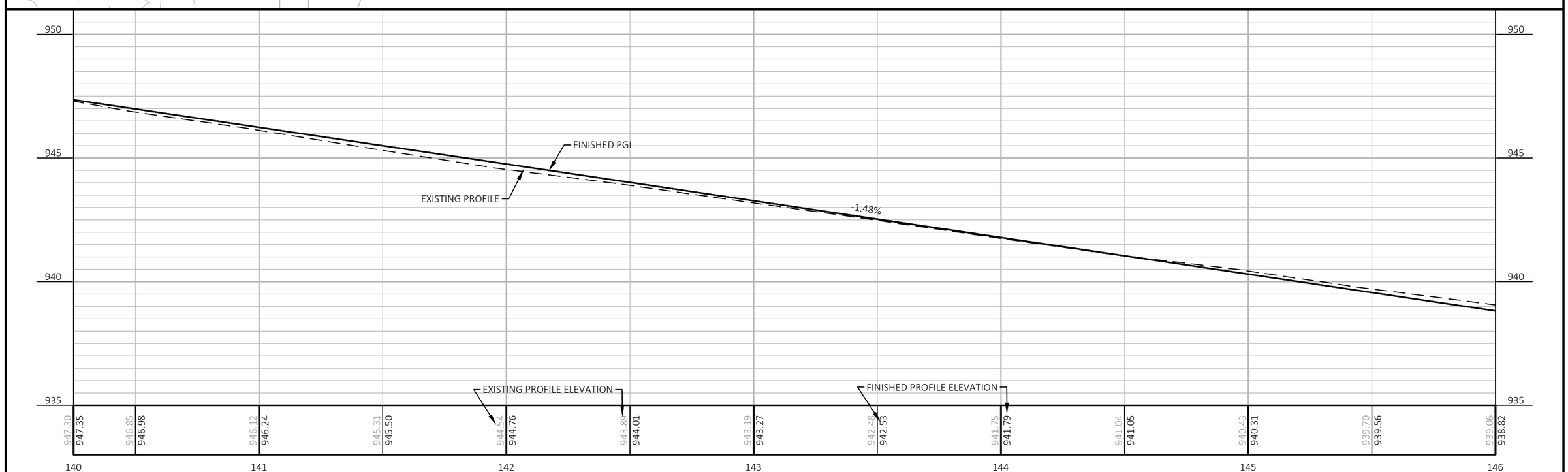

PROJECT NO: 2717-03-71	HWY: SILVERNAIL FRONTAGE ROAD	COUNTY: WAUKESHA	PLAN AND PROFILE: PLAN AND PROFILE	SHEET 62	E

FILE NAME : N:\PDS\C3D\27170301\SHEETS\050101_PP.DWG
LAYOUT NAME - 050108_PP
PLOT DATE : 8/1/2025 8:39 AM
PLOT BY : FILTZ, DEAN J
PLOT NAME :
PLOT SCALE : 1 IN:40 FT

LEGEND

A	5" BASE AGGREGATE DENSE 3/4- INCH
B	2" HMA PAVEMENT 4 LT 58-28 H (UPPER LAYER) 3" HMA PAVEMENT 3 LT 58-28 S (LOWER LAYER)
BG11	MGS GUARDRAIL 3
BG13	MGS GUARDRAIL TERMINAL EAT
X^XX	CLEARING AND GRUBBING (ID)
XXX.XXE	EXISTING PAVEMENT ELEVATION
XXX.XX	PROPOSED PAVEMENT ELEVATION

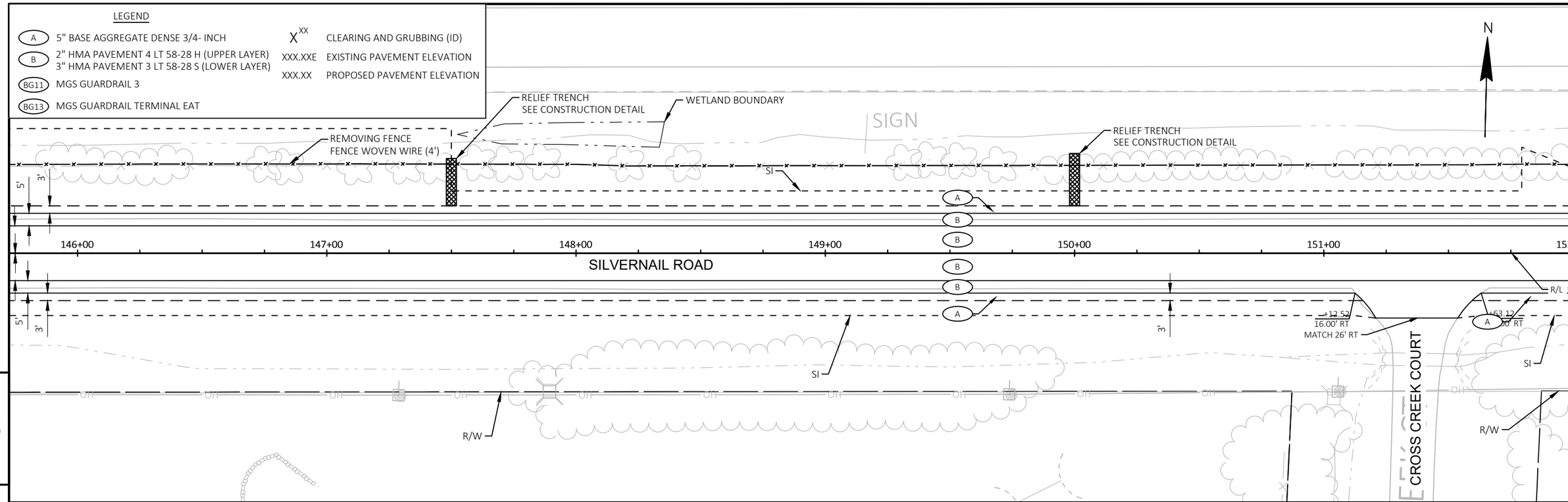

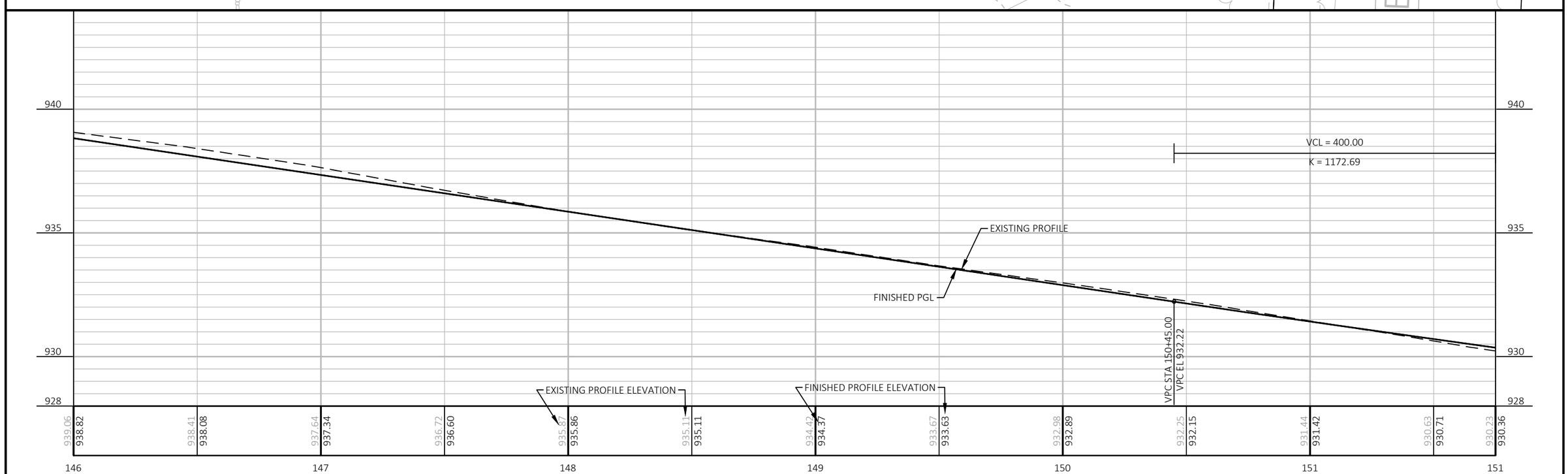

PROJECT NO: 2717-03-71	HWY: SILVERNAIL FRONTAGE ROAD	COUNTY: WAUKESHA	PLAN AND PROFILE: PLAN AND PROFILE	SHEET 63	E

FILE NAME : N:\PDS\C3D\27170301\SHEETS\050101_PP.DWG
LAYOUT NAME - 050109_PP
PLOT DATE : 8/1/2025 8:39 AM
PLOT BY : FILTZ, DEAN J
PLOT NAME :
PLOT SCALE : 1 IN:40 FT

LEGEND

A	5" BASE AGGREGATE DENSE 3/4- INCH
B	2" HMA PAVEMENT 4 LT 58-28 H (UPPER LAYER) 3" HMA PAVEMENT 3 LT 58-28 S (LOWER LAYER)
BG11	MGS GUARDRAIL 3
BG13	MGS GUARDRAIL TERMINAL EAT
X^XX	CLEARING AND GRUBBING (ID)
XXX.XXE	EXISTING PAVEMENT ELEVATION
XXX.XX	PROPOSED PAVEMENT ELEVATION

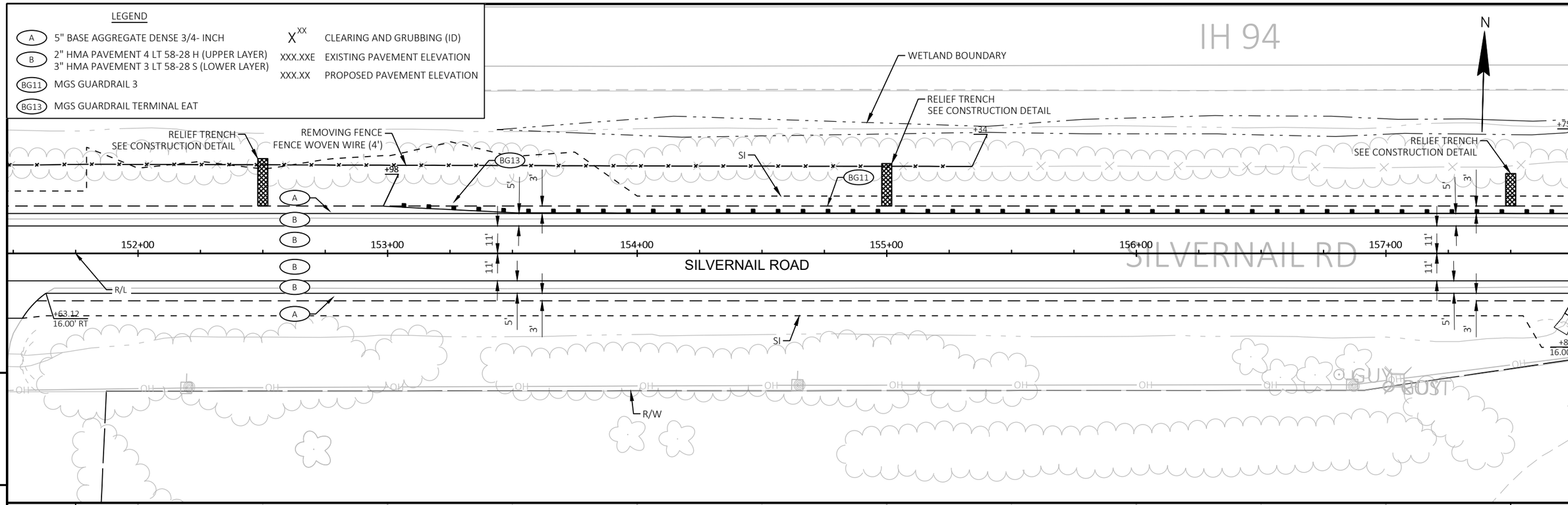

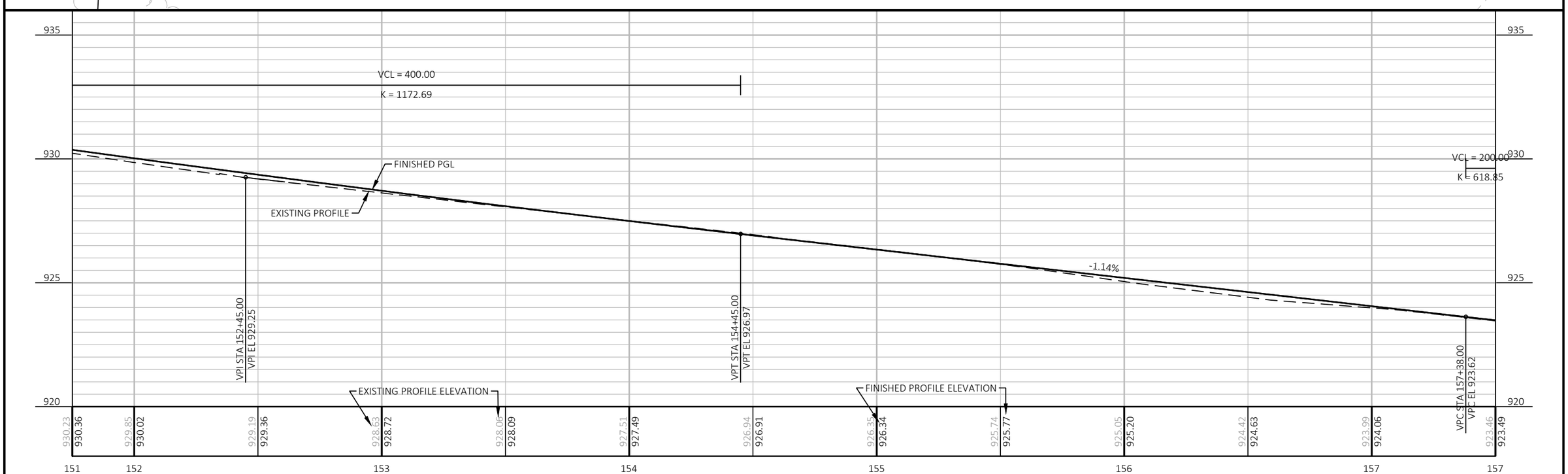

PROJECT NO: 2717-03-71	HWY: SILVERNAIL FRONTAGE ROAD	COUNTY: WAUKESHA	PLAN AND PROFILE: PLAN AND PROFILE	SHEET 64	E

FILE NAME : N:\PDS\C3D\27170301\SHEETS\050101_PP.DWG
LAYOUT NAME - 050110_PP
PLOT DATE : 8/1/2025 8:40 AM
PLOT BY : FILTZ, DEAN J
PLOT NAME :
PLOT SCALE : 1 IN:40 FT
WISDOT/CADDS SHEET 44

LEGEND

(A) 5" BASE AGGREGATE DENSE 3/4- INCH	X^XX CLEARING AND GRUBBING (ID)
(B) 2" HMA PAVEMENT 4 LT 58-28 H (UPPER LAYER) 3" HMA PAVEMENT 3 LT 58-28 S (LOWER LAYER)	XXX.XXE EXISTING PAVEMENT ELEVATION
(BG11) MGS GUARDRAIL 3	XXX.XX PROPOSED PAVEMENT ELEVATION
(BG13) MGS GUARDRAIL TERMINAL EAT	

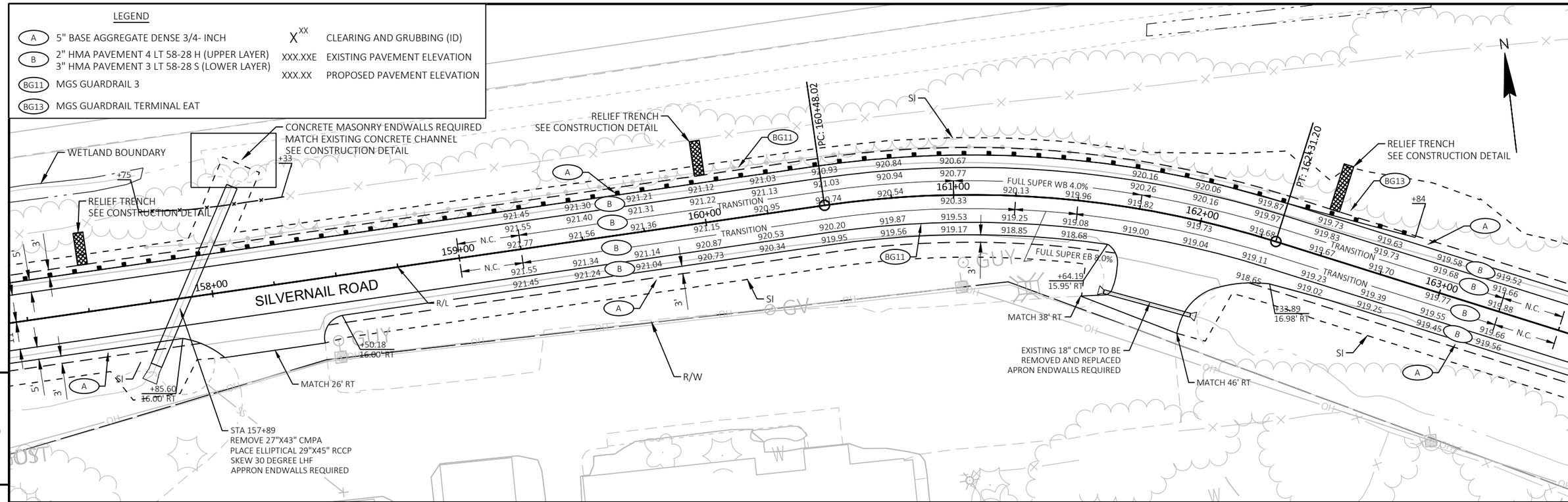

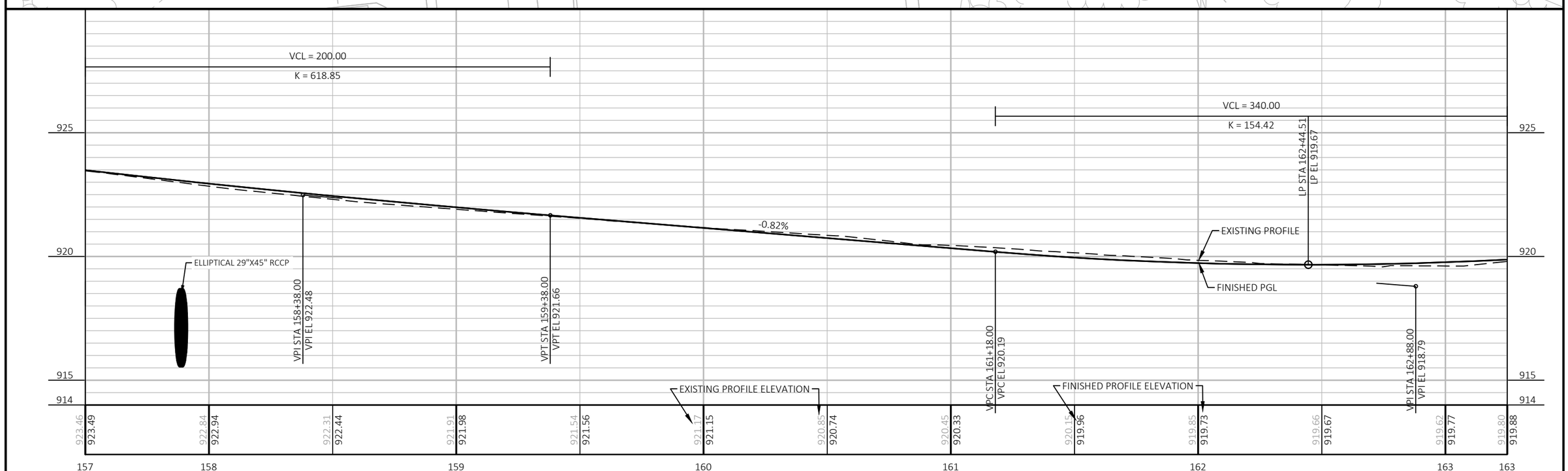

PROJECT NO: 2717-03-71	HWY: SILVERNAIL FRONTAGE ROAD	COUNTY: WAUKESHA	PLAN AND PROFILE: PLAN AND PROFILE	SHEET 65	E

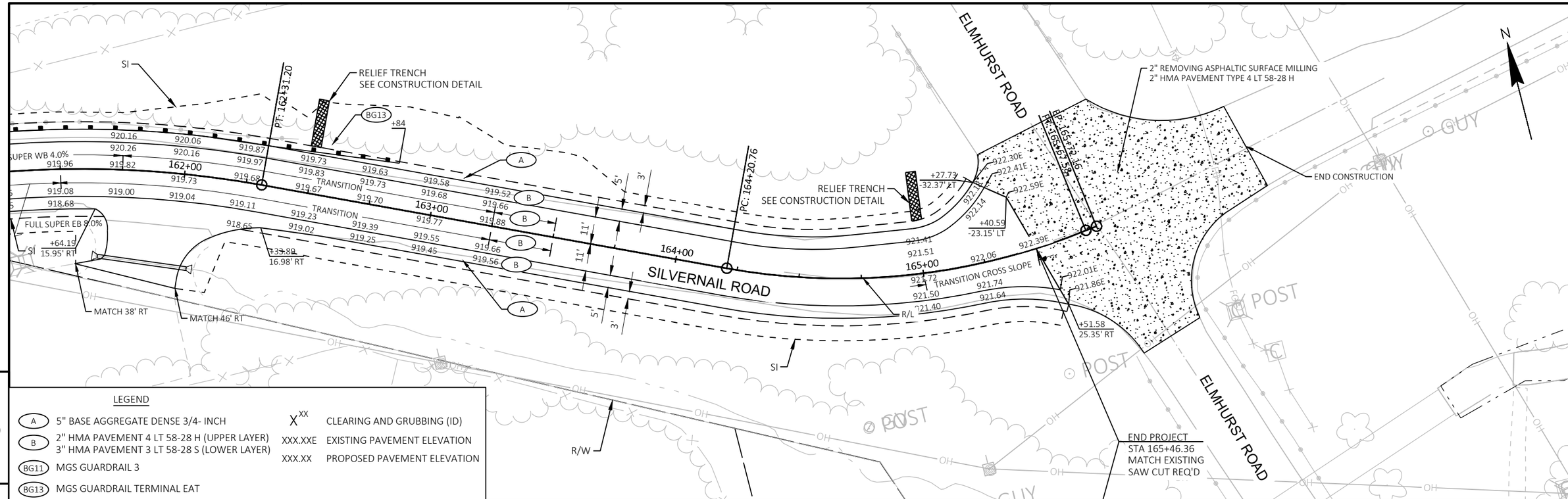

LEGEND

(A) 5" BASE AGGREGATE DENSE 3/4- INCH	X^XX CLEARING AND GRUBBING (ID)
(B) 2" HMA PAVEMENT 4 LT 58-28 H (UPPER LAYER) 3" HMA PAVEMENT 3 LT 58-28 S (LOWER LAYER)	XXX.XXE EXISTING PAVEMENT ELEVATION
	XXX.XX PROPOSED PAVEMENT ELEVATION
(BG11) MGS GUARDRAIL 3	
(BG13) MGS GUARDRAIL TERMINAL EAT	

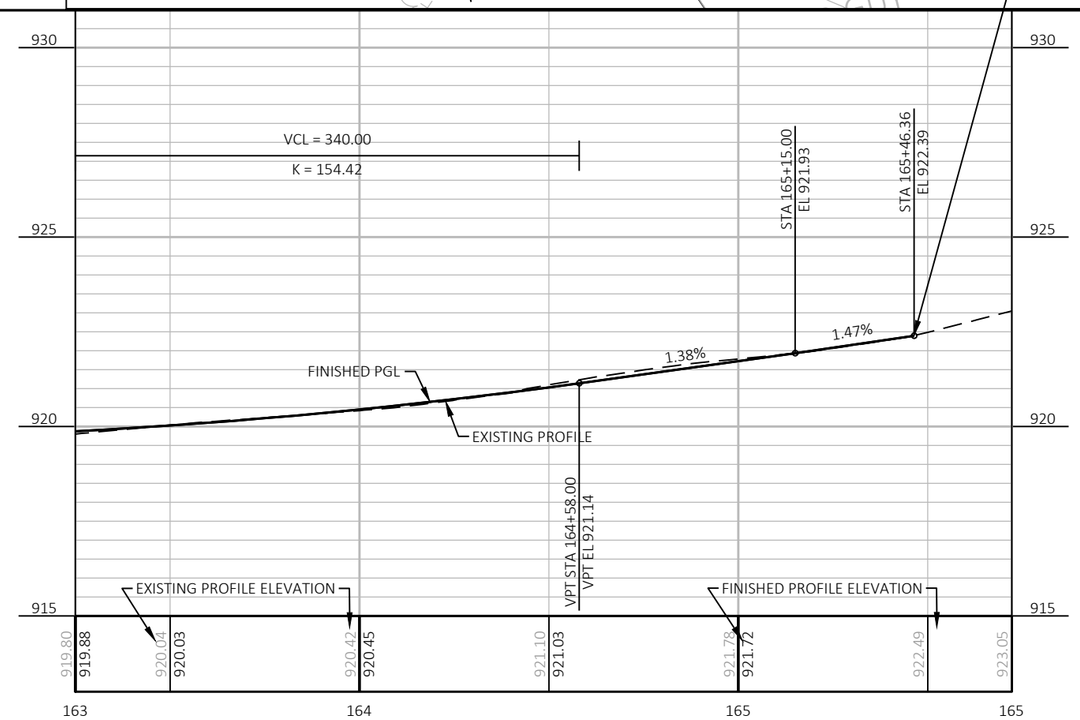

PROJECT NO: 2717-03-71	HWY: SILVERNAIL FRONTAGE ROAD	COUNTY: WAUKESHA	PLAN AND PROFILE: PLAN AND PROFILE	SHEET 66	E

Standard Detail Drawing List

08D01-24A	CONCRETE CURB & GUTTER
08D01-24B	CONCRETE CURB, TIES AND CURB AND GUTTER APPLICATIONS
08D21-01	DRIVEWAYS WITHOUT CURB & GUTTER
08E08-03	TYPICAL INSTALLATIONS OF EROSION BALES / TEMPORARY DITCH CHECKS
08E09-06	SILT FENCE
08E10-02	INLET PROTECTION TYPE A, B, C AND D
08E14-01	TRACKING PAD
08E15-01	CULVERT PIPE CHECK
08F01-11	APRON ENDWALLS FOR CULVERT PIPE
08F02-01	APRON ENDWALLS FOR PIPE ARCH AND ELLIPTICAL PIPE
08F04-08	JOINT TIES FOR CONCRETE PIPE AND CONCRETE COLLAR DETAIL
08F10-02	CONCRETE MASONRY ENDWALLS FOR CULVERT PIPE AND PIPE ARCH
14B28-04A	GUARDRAIL MOW STRIP
14B28-04B	GUARDRAIL MOW STRIP
14B42-07A	MIDWEST GUARDRAIL SYSTEM (MGS) GUARDRAIL
14B42-07B	MIDWEST GUARDRAIL SYSTEM (MGS) GUARDRAIL
14B42-07C	MIDWEST GUARDRAIL SYSTEM (MGS) GUARDRAIL
14B42-07D	MIDWEST GUARDRAIL SYSTEM (MGS) GUARDRAIL
14B44-04A	MIDWEST GUARDRAIL SYSTEM ENERGY ABSORBING TERMINAL (MGS)
14B44-04B	MIDWEST GUARDRAIL SYSTEM ENERGY ABSORBING TERMINAL (MGS)
14B44-04C	MIDWEST GUARDRAIL SYSTEM ENERGY ABSORBING TERMINAL (MGS)
15A03-02A	FLEXIBLE MARKER POST FOR CULVERT END
15A03-02B	FLEXIBLE MARKER POST FOR CULVERT END
15B01-08A	FENCE WOVEN WIRE
15B01-08B	FENCE WOVEN WIRE
15C02-09A	BARRICADES AND SIGNS FOR MAINLINE CLOSURES
15C02-09B	BARRICADES AND SIGNS FOR VARIOUS CLOSURES
15C02-09C	DETOUR SIGNING FOR MAINLINE CLOSURES
15C03-05	BARRICADES AND SIGNS FOR SIDEROAD CLOSURES
15C08-24A	PERMANENT LONGITUDINAL PAVEMENT MARKINGS
15C08-24C	PAVEMENT MARKING (TURN LANES)
15C08-24D	PAVEMENT MARKING (TURN LANES)
15C11-10B	CHANNELIZING DEVICES DRUMS, CONES, BARRICADES AND VERTICAL PANELS
15C18-09A	MEDIAN ISLAND PAVEMENT MARKINGS
15C18-09B	PAVEMENT MARKINGS, MEDIAN ISLAND NOSE
15C33-05	STOP LINE AND CROSSWALK PAVEMENT MARKING
15C35-06A	PAVEMENT MARKING (INTERSECTIONS)
15C35-06B	PAVEMENT MARKING AND SIGNING (CLIMBING LANE & PASSING LANE)
15C35-06C	PAVEMENT MARKING AND SIGNING (CLIMBING LANE & PASSING LANE)
15D27-04	TRAFFIC CONTROL, SHOULDER CLOSURE ON DIVIDED ROADWAY, SPEEDS GREATER THAN 40 MPH
15D45-03	TRAFFIC CONTROL, SIGNING ON ROADWAYS WITH LOOSE GRAVEL

6

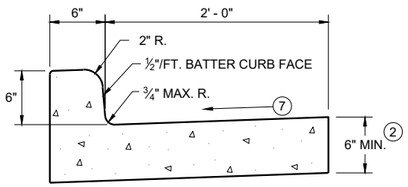

TYPES A (1) & D

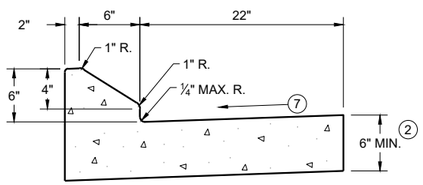

6" SLOPED CURB TYPES G (1) & J

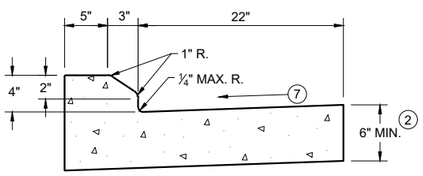

4" SLOPED CURB TYPES G (1) & J

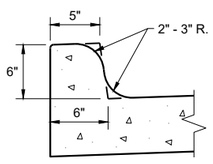

TYPES K (1) & L
(OPTIONAL CURB SHAPE)

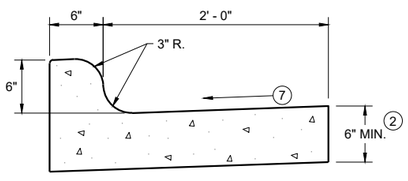

TYPES K (1) & L

CONCRETE CURB AND GUTTER 30"

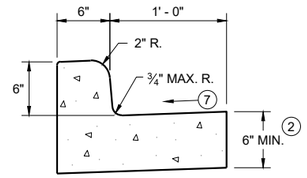

TYPES A (1) & D

CONCRETE CURB AND GUTTER 18"

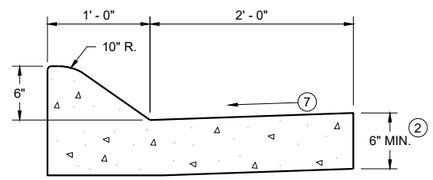

6" SLOPED CURB TYPES A (1) & D

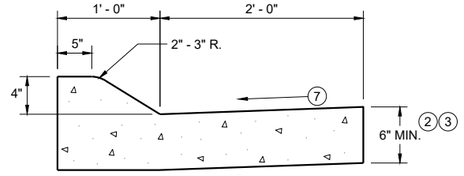

4" SLOPED CURB TYPES A (1) & D

CONCRETE CURB AND GUTTER 36"

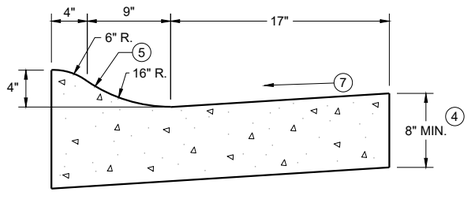

4" SLOPED CURB TYPES R (1) & T
CONCRETE CURB AND GUTTER 30"

TBT & TBTT	X
30"	22"
36"	28"

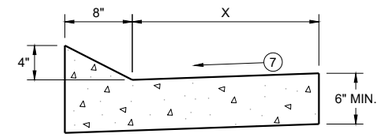

TYPES TBT & TBTT (1)

CONCRETE CURB AND GUTTER

PAVEMENT THICKNESS AND MAXIMUM CONCRETE PANEL WIDTH TABLE

PAVEMENT THICKNESS	MAXIMUM PANEL WIDTH
LESS THAN 10"	12'
10" & ABOVE	15'

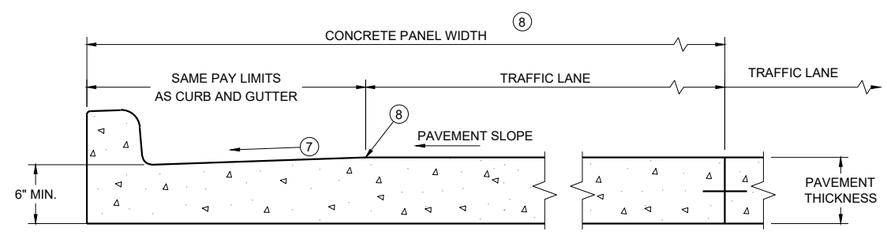

PARTIAL SECTION OF PAVEMENT WITH INTEGRAL CURB AND GUTTER *

* BIKE LANE IS NOT SHOWN

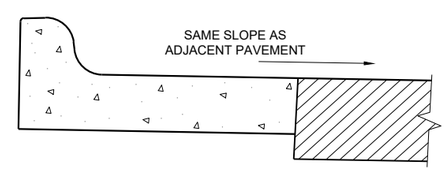

REVERSE SLOPE GUTTER (6)
(TYPICAL FOR ALL CURB & GUTTER TYPES)

GENERAL NOTES

DETAILS OF CONSTRUCTION AND WORKMANSHIP NOT SHOWN ON THIS DRAWING SHALL CONFORM TO THE PERTINENT REQUIREMENTS OF THE CONTRACT.

PAVEMENT TIES AND TIE BARS SHALL BE EPOXY COATED IN CONFORMANCE WITH SUBSECTION 505.2.6.2 OF THE STANDARD SPECIFICATIONS.

INTEGRAL CURB AND GUTTER SHALL CONFORM TO THE DETAILS SHOWN FOR CONCRETE CURB AND GUTTER INCLUDING THE TRANSVERSE GUTTER SLOPE.

UNLESS OTHERWISE SHOWN ON THE TYPICAL CROSS SECTIONS, THE BASE AGGREGATE AND COMMON EXCAVATION LIMITS ARE 2' - 0" BEHIND THE BACK OF CURBS.

(1) TIE BARS ARE REQUIRED FOR CURB AND GUTTERS TYPES A, G, K, R, AND TBTT.

(2) THE BOTTOM OF CURB AND GUTTER MAY BE CONSTRUCTED EITHER LEVEL OR PARALLEL TO THE SLOPE OF THE SUBGRADE OR BASE AGGREGATE PROVIDED A 6" MINIMUM GUTTER THICKNESS IS MAINTAINED.

(3) USE 8" MINIMUM GUTTER THICKNESS WHEN USED WITH AN ADJACENT CONCRETE TRUCK APRON PLACED BEHIND BACK OF CURB.

(4) THE BOTTOM OF CURB AND GUTTER MAY BE CONSTRUCTED EITHER LEVEL OR PARALLEL TO THE SLOPE OF THE SUBGRADE OR BASE AGGREGATE PROVIDED A 8" MINIMUM GUTTER THICKNESS IS MAINTAINED.

(5) UNLESS OTHERWISE NOTED, FOR STAKING PURPOSES THE FACE OF CURB IS 6" FROM THE BACK OF CURB.

(6) WHEN REVERSE SLOPE GUTTER IS REQUIRED, THE LOCATION(S) WILL BE SHOWN ELSEWHERE IN THE PLAN.

(7) USE 4% GUTTER CROSS SLOPE UNLESS OTHERWISE NOTED IN THE PLANS.

(8) INCLUDE LONGITUDINAL JOINT AND TIE BARS ALONG LANE EDGE WHEN CONCRETE PANEL WIDTH EXCEEDS THE MAXIMUM WIDTH PER TABLE BELOW. LONGITUDINAL JOINT(S) ARE NOT ALLOWED WITHIN TRAFFIC LANES AND BIKE LANES. LONGITUDINAL JOINT MAY BE SAWED.

(9) SLOPE TO BE REVERSE SLOPE MATCHING THE SLOPE OF THE PAVEMENT AND THE CIRCULATORY ROADWAY

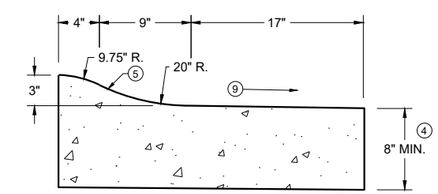

3" SLOPED CURB TYPES R (1) & T

CONCRETE CURB AND GUTTER

STATE OF WISCONSIN
DEPARTMENT OF TRANSPORTATION

6

SDD 08D01-24a

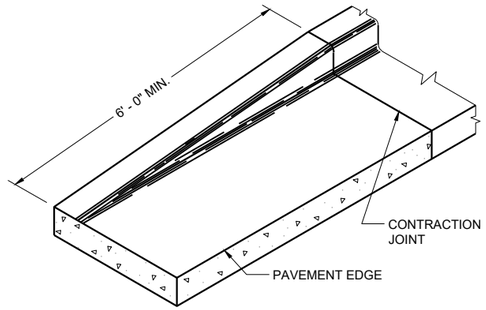

END SECTION CURB AND GUTTER

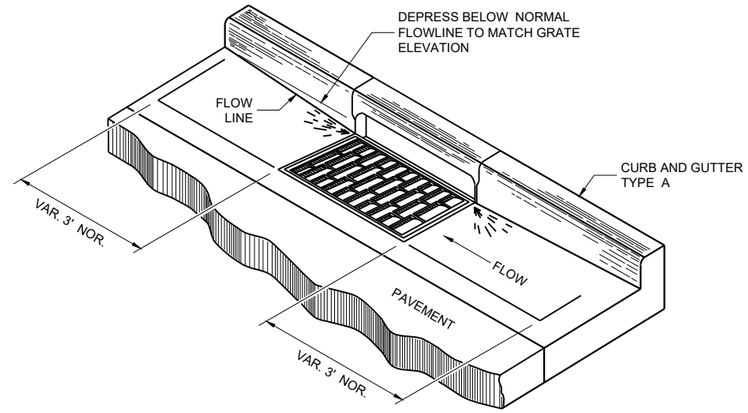

DETAIL OF CURB AND GUTTER AT INLETS

(TYPICAL H INLET COVER SHOWN)

GENERAL NOTES

DETAILS OF CONSTRUCTION AND WORKMANSHIP NOT SHOWN ON THIS DRAWING SHALL CONFORM TO THE PERTINENT REQUIREMENTS OF THE CONTRACT.

PAVEMENT TIES AND TIE BARS SHALL BE EPOXY COATED IN CONFORMANCE WITH SUBSECTION 505.2.6.2 OF THE STANDARD SPECIFICATIONS.

UNLESS OTHERWISE SHOWN ON THE TYPICAL CROSS SECTIONS, THE BASE AGGREGATE AND COMMON EXCAVATION LIMITS ARE 2' - 0" BEHIND THE BACK OF CURBS.

(1) TIE BARS ARE REQUIRED FOR CURB AND GUTTERS TYPES A, G, K, R, AND TBTT.

(2) THE BOTTOM OF CURB AND GUTTER MAY BE CONSTRUCTED EITHER LEVEL OR PARALLEL TO THE SLOPE OF THE SUBGRADE OR BASE AGGREGATE PROVIDED A 6" MINIMUM GUTTER THICKNESS IS MAINTAINED.

(10) REFER TO SDD 08D18 AND 08D19 FOR ADDITIONAL DRIVEWAY ENTRANCE CURB DETAILS.

(11) PLACE 1" THICK EXPANSION JOINT MATERIAL BETWEEN VERTICAL FACE CURB TYPES EXTENDING FROM THE TOP OF CURB TO 1 INCH BELOW THE ADJOINING CONCRETE SURFACE. RIGID CONCRETE STRUCTURES INCLUDE RAISED CONCRETE MEDIANS, CONCRETE SAFETY ISLANDS, SPLITTER ISLANDS, OR LOCATIONS IDENTIFIED ON THE PLANS.

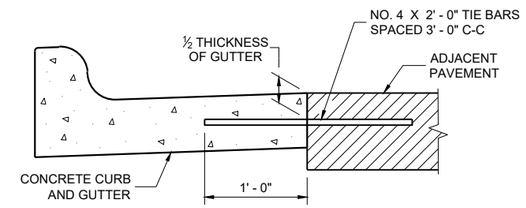

TYPICAL TIE BAR LOCATION (1)

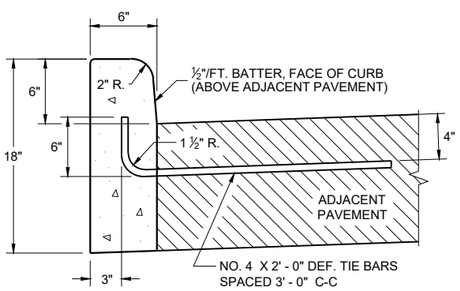

TYPES A (1) & D

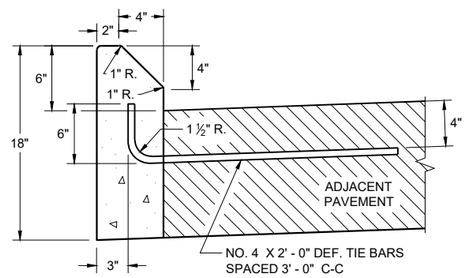

TYPES G (1) & J

CONCRETE CURB

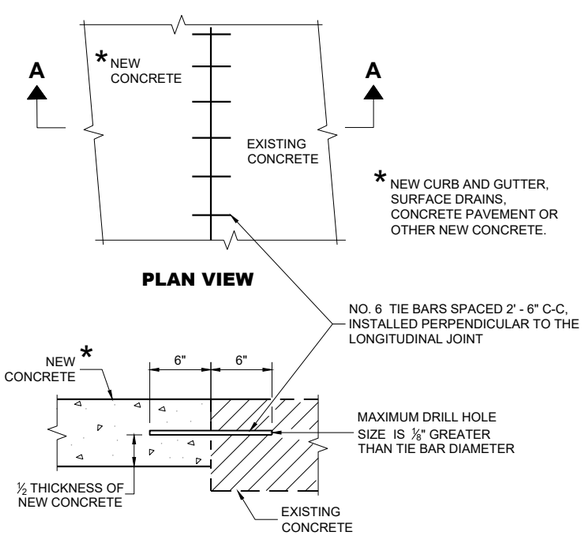

PLAN VIEW

SECTION A - A

TIE BARS DRILLED INTO EXISTING PAVEMENT

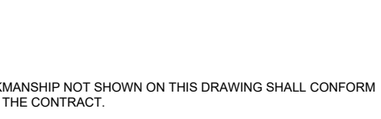

DRIVEWAY ENTRANCE CURB (10)

(WHEN DIRECTED BY THE ENGINEER)

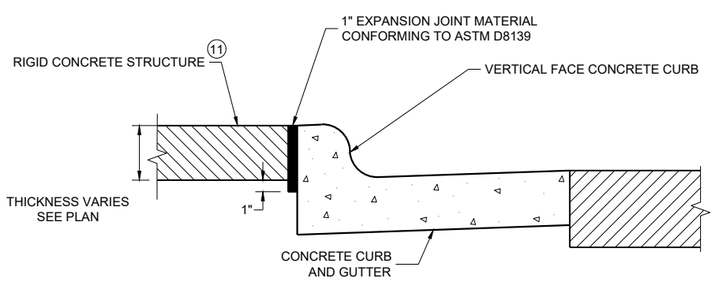

EXPANSION JOINT DETAIL FOR VERTICAL CURB ABUTTING A RIGID STRUCTURE (11)

CONCRETE CURB, TIES AND CURB AND GUTTER APPLICATIONS

STATE OF WISCONSIN
DEPARTMENT OF TRANSPORTATION

APPROVED
February 2025 — DATE
/S/ Rodnery Taylor — ROADWAY STANDARDS DEVELOPMENT UNIT SUPERVISOR
FHWA

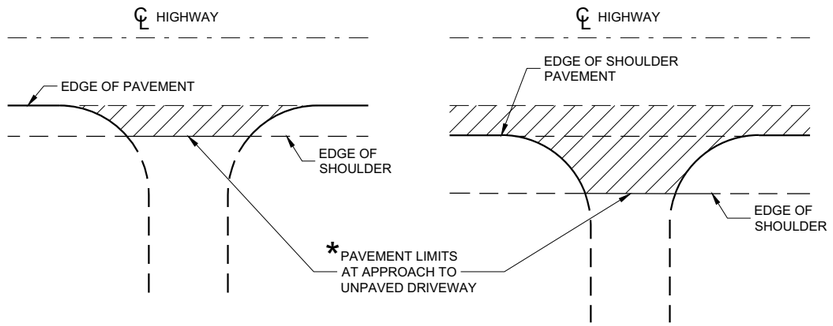

* WHERE DRIVEWAY IS PAVED, APPROACH PAVEMENT SHOULD BE EXTENDED TO MATCH DRIVEWAY PAVEMENT.

PLAN VIEW
(UNPAVED SHOULDER ON HIGHWAY)

PLAN VIEW
(PAVED SHOULDER ON HIGHWAY)

RURAL DRIVEWAY INTERSECTION DETAIL
(NO CURB AND GUTTER OR SIDEWALK)

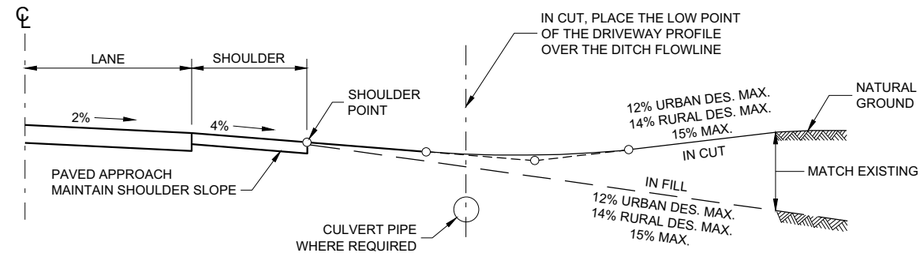

TYPICAL DRIVEWAY PROFILES

6

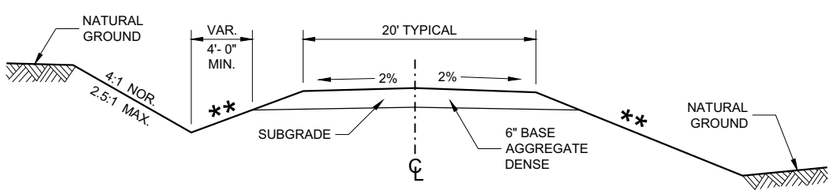

IN CUT **IN FILL**

TYPICAL CROSS SECTION FOR PRIVATE DRIVE OR FIELD ENTRANCE AGGREGATE SURFACE

** SLOPE CAN VARY WITH SPEED. SEE 11-45-30.6.2

POSTED SPEED MPH	MAX. SLOPE
<35	4:1
≥ 35 TO < 60	6:1
≥60	10:1

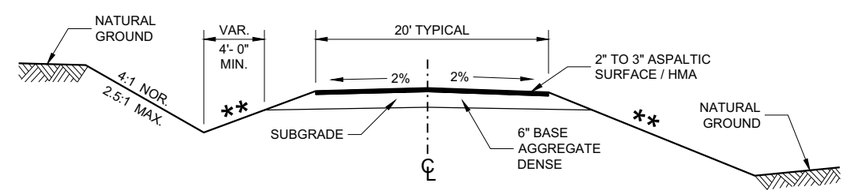

IN CUT **IN FILL**

TYPICAL CROSS SECTION FOR PRIVATE DRIVE OR FIELD ENTRANCE ASPHALTIC SURFACE

DRIVEWAYS WITHOUT CURB AND GUTTER

STATE OF WISCONSIN
DEPARTMENT OF TRANSPORTATION

APPROVED
December 2017 — DATE
/S/ Rodney Taylor — ROADWAY STANDARDS DEVE UNIT SUPERVISOR
FHWA

SDD 08D21 - 01

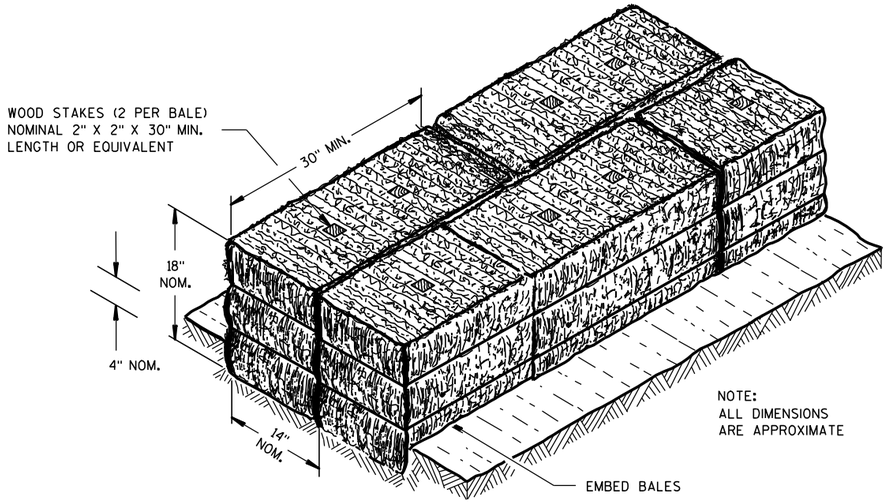

SECTION A-A

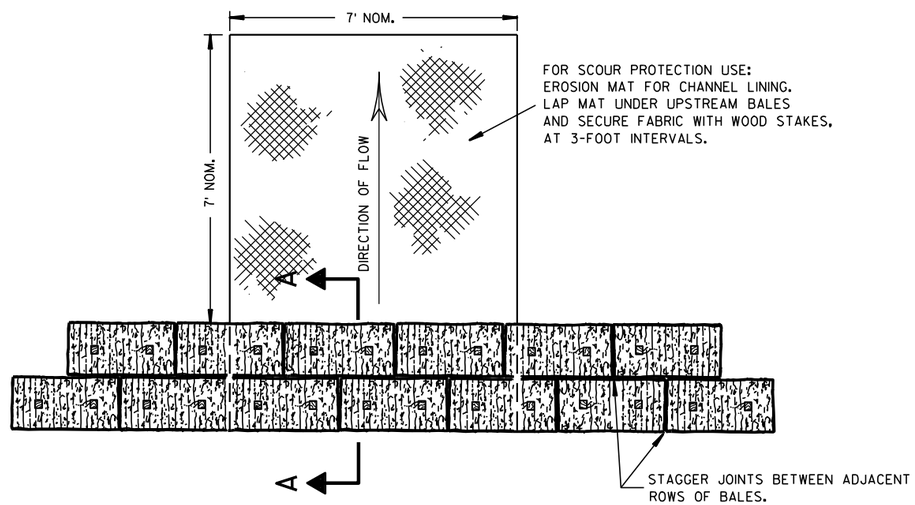

PLAN VIEW

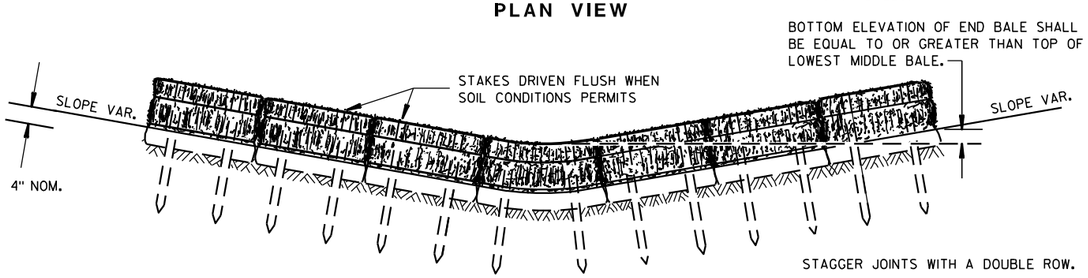

FRONT ELEVATION

TEMPORARY DITCH CHECK USING EROSION BALES ①

GENERAL NOTES

DETAILS OF CONSTRUCTION, MATERIALS AND WORKMANSHIP NOT SHOWN ON THIS DRAWING SHALL CONFORM TO THE PERTINENT REQUIREMENTS OF THE STANDARD SPECIFICATIONS AND THE APPLICABLE SPECIAL PROVISIONS.

① TEMPORARY DITCH CHECKS EITHER EROSION BALES OR MANUFACTURED SHALL BE PAID FOR UNDER THE BID ITEM OF TEMPORARY DITCH CHECK. THE DEPARTMENT WILL NOT PAY FOR TEMPORARY DITCH CHECKS CONSTRUCTED OF A SINGLE ROW OF EROSION BALES.

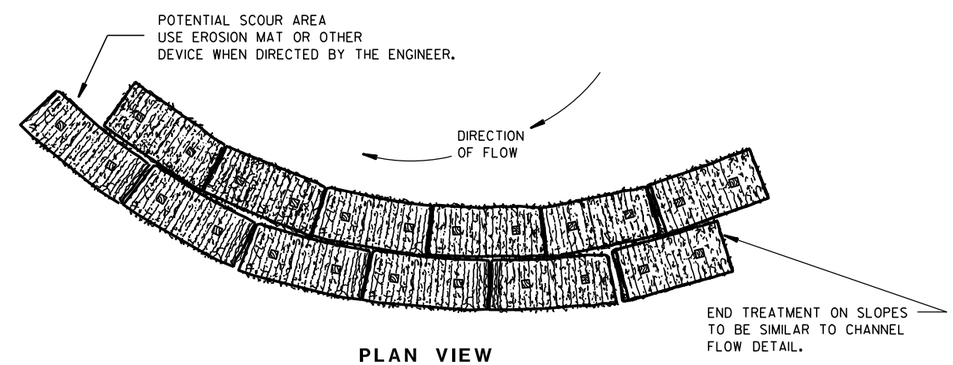

PLAN VIEW

WHEN ALTERING THE DIRECTION OF FLOW

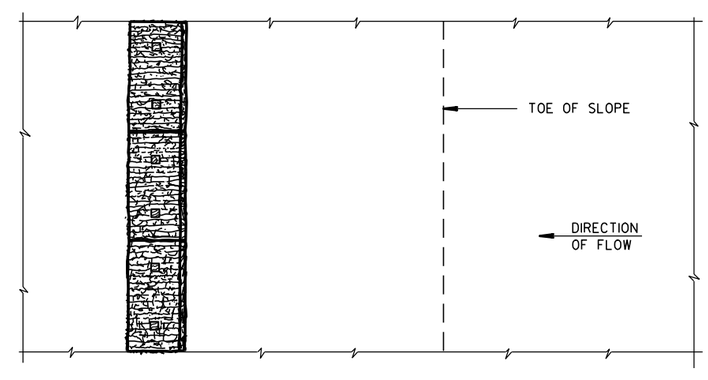

PLAN VIEW

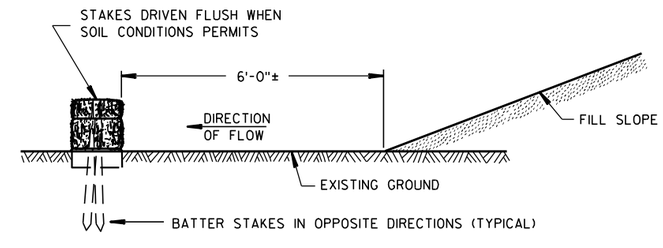

FRONT ELEVATION

WHEN EXISTING GROUND SLOPES AWAY FROM FILL SLOPE

EROSION BALES FOR SHEET FLOW

TYPICAL INSTALLATIONS OF EROSION BALES / TEMPORARY DITCH CHECKS

STATE OF WISCONSIN
DEPARTMENT OF TRANSPORTATION

APPROVED
6/04/02 — DATE
/S/ Beth Cann — CHIEF ROADWAY DEVELOPMENT ENGINEER
FHWA

6

6

S.D.D. 8 E 8-3

S.D.D. 8 E 8-3

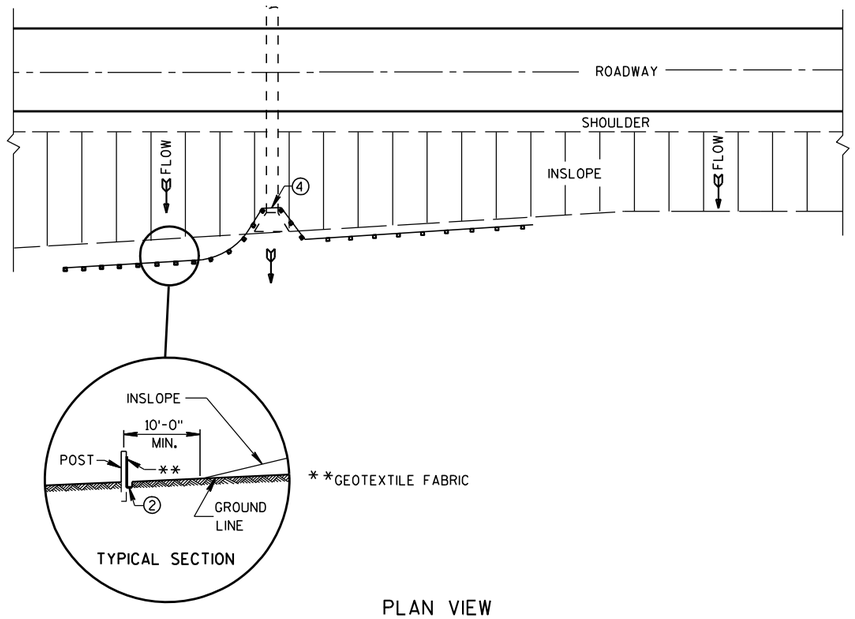

PLAN VIEW

TYPICAL APPLICATION OF SILT FENCE

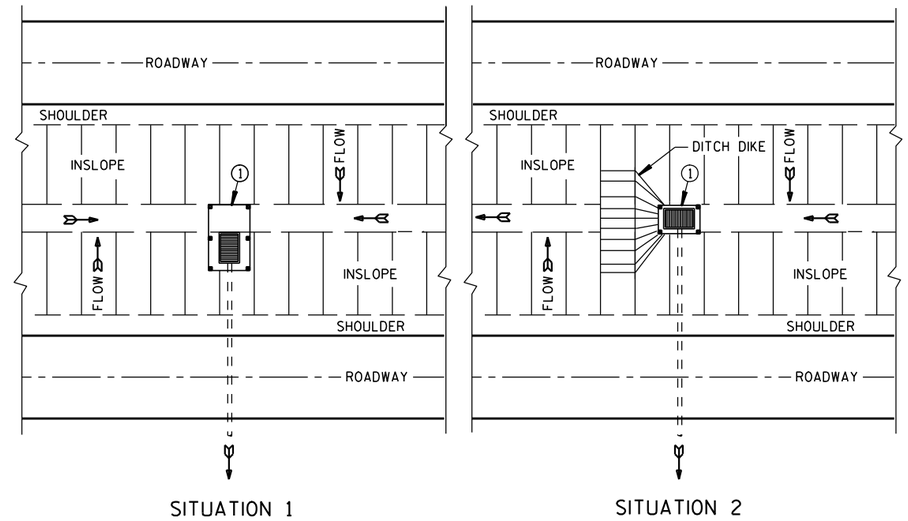

PLAN VIEW

SILT FENCE AT MEDIAN SURFACE DRAINS

GENERAL NOTES

DETAILS OF CONSTRUCTION NOT SHOWN ON THIS DRAWING SHALL CONFORM TO THE PERTINENT REQUIREMENTS OF THE STANDARD SPECIFICATIONS AND APPLICABLE SPECIAL PROVISIONS.

① HORIZONTAL BRACE REQUIRED WITH 2" X 4" WOODEN FRAME OR EQUIVALENT AT TOP OF POSTS.

② FOR MANUAL INSTALLATIONS THE TRENCH SHALL BE A MINIMUM OF 4" WIDE & 6" DEEP TO BURY AND ANCHOR THE GEOTEXTILE FABRIC. FOLD MATERIAL TO FIT TRENCH AND BACKFILL & COMPACT TRENCH WITH EXCAVATED SOIL.

③ WOOD POSTS SHALL BE A MINIMUM SIZE OF 1⅛" X 1⅛" OF OAK OR HICKORY.

④ SILT FENCE TO EXTEND ACROSS THE TOP OF THE PIPE.

⑤ CONSTRUCT SILT FENCE FROM A CONTINUOUS ROLL IF POSSIBLE BY CUTTING LENGTHS TO AVOID JOINTS. IF A JOINT IS NECESSARY USE ONE OF THE FOLLOWING TWO METHODS; A) OVERLAP THE END POSTS AND TWIST, OR ROTATE, AT LEAST 180 DEGREES. B) HOOK THE END OF EACH SILT FENCE LENGTH.

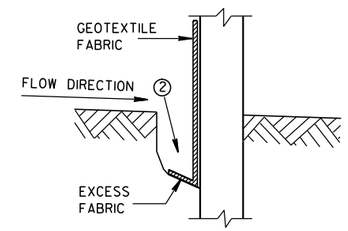

TRENCH DETAIL

NOTE: ADDITIONAL POST DEPTH OR TIE BACKS MAY BE REQUIRED IN UNSTABLE SOILS

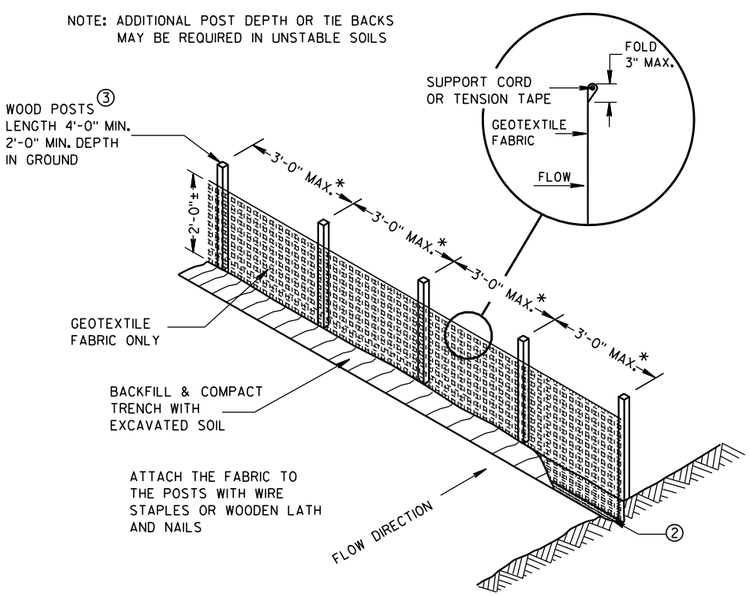

*NOTE: 8'-0" POST SPACING ALLOWED IF A WOVEN GEOTEXTILE FABRIC IS USED.

SILT FENCE

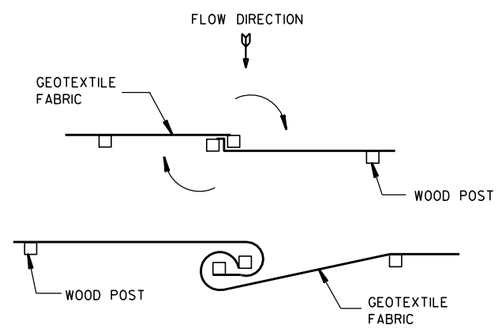

TWIST METHOD

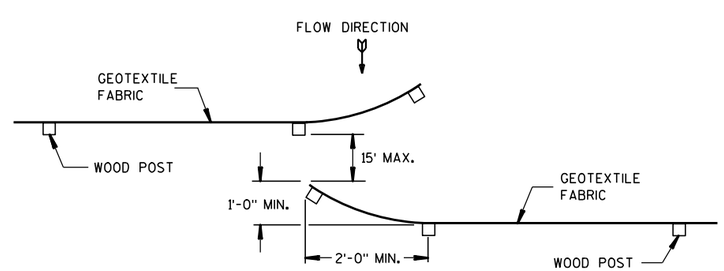

HOOK METHOD

JOINING TWO LENGTHS OF SILT FENCE ⑤

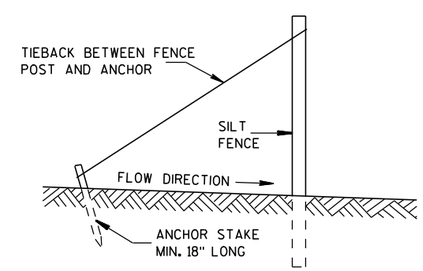

SILT FENCE TIE BACK

(WHEN REQUIRED BY THE ENGINEER)

SILT FENCE
STATE OF WISCONSIN DEPARTMENT OF TRANSPORTATION
APPROVED 4-29-05 DATE — /S/ Beth Cann-- CHIEF ROADWAY DEVELOP ENGINEER FHWA

6

6

S.D.D. 8 E 9-6

S.D.D. 8 E 9-6

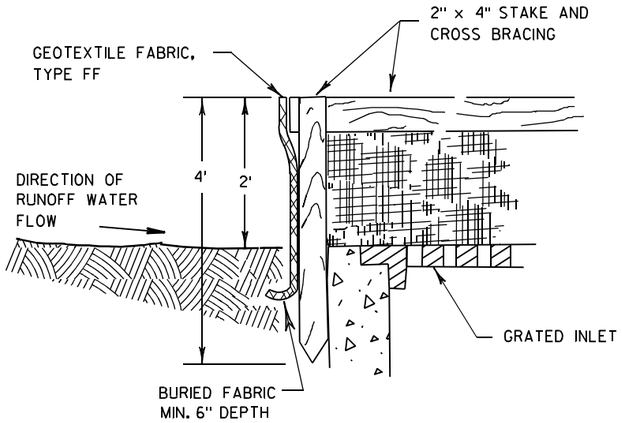

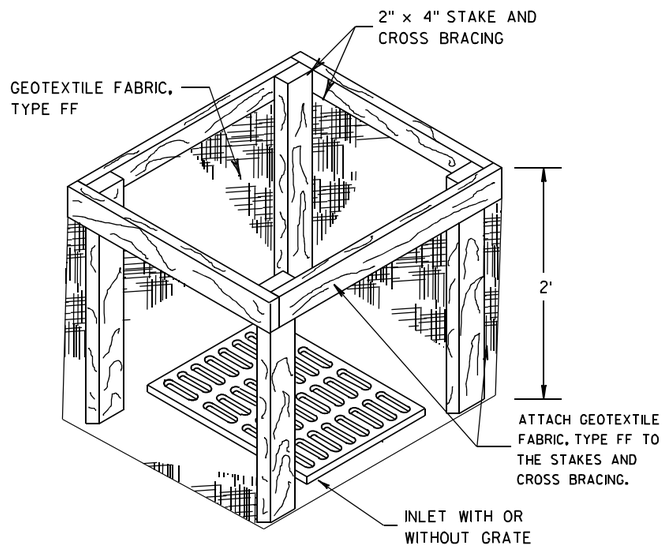

INLET PROTECTION, TYPE A

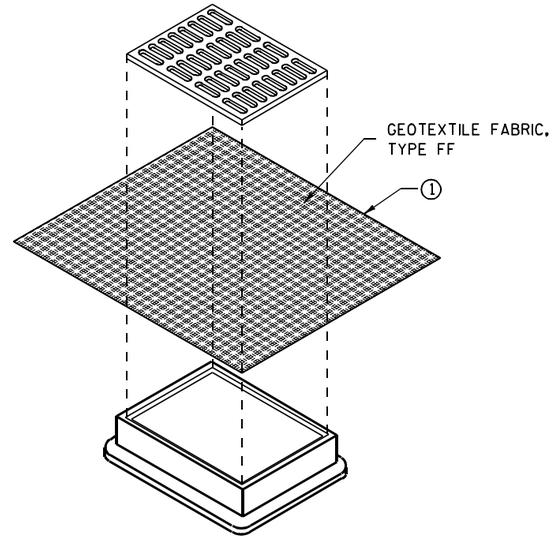

INLET PROTECTION, TYPE B (WITHOUT CURB BOX)

(CAN BE INSTALLED IN ANY INLET WITHOUT A CURB BOX)

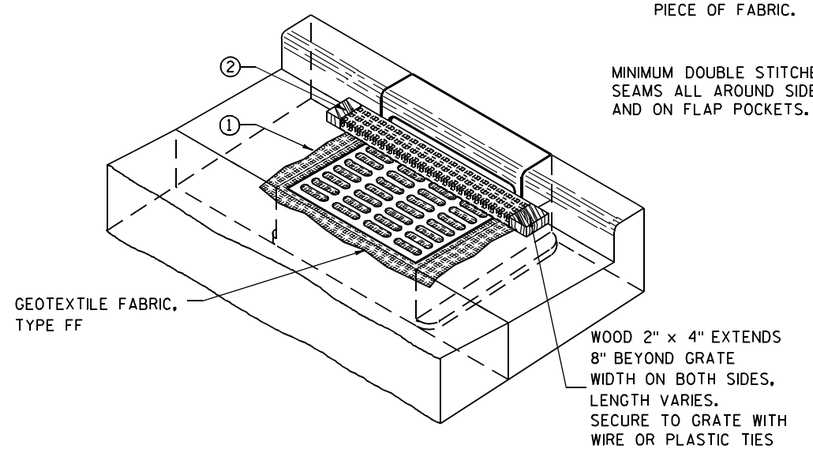

INLET PROTECTION, TYPE C (WITH CURB BOX)

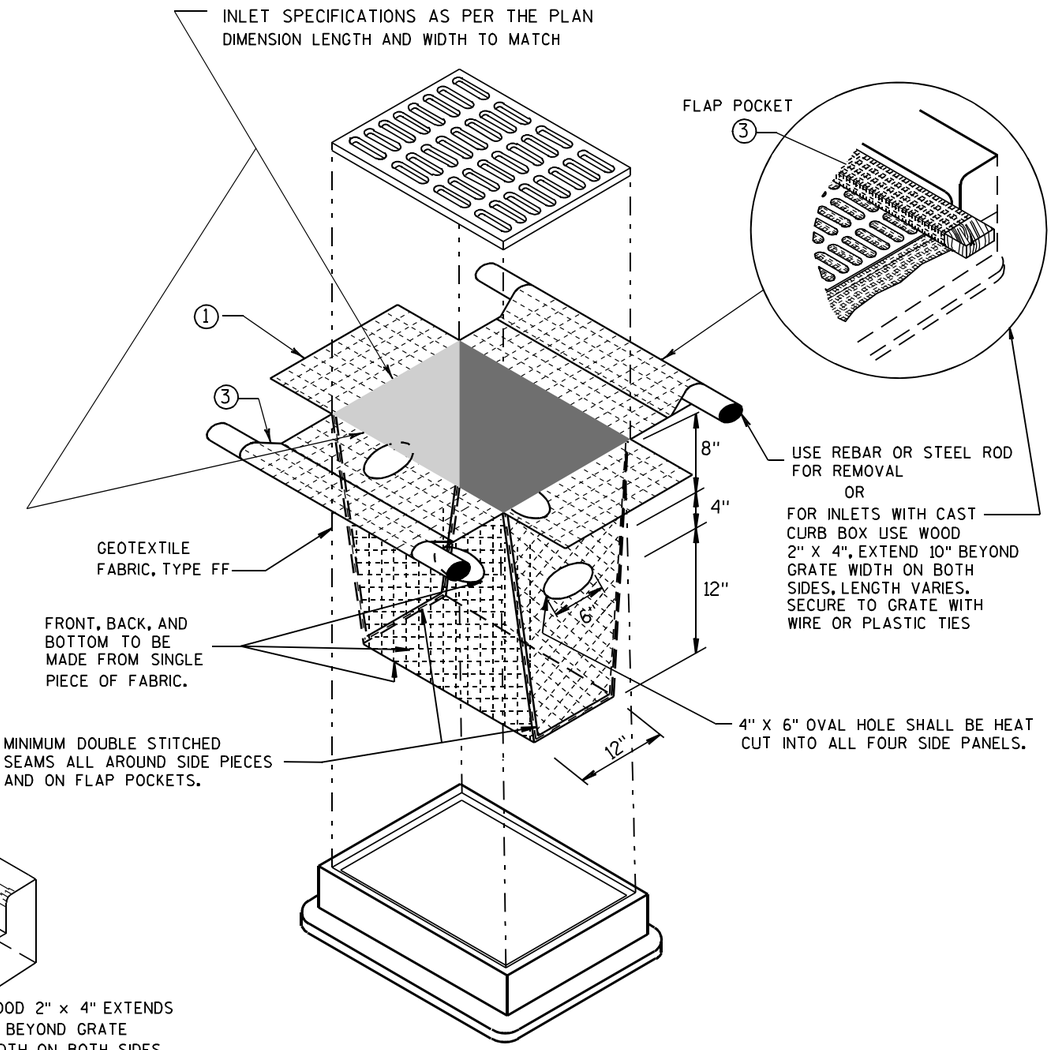

INLET PROTECTION, TYPE D

(CAN BE INSTALLED IN ANY INLET TYPE WITH OR WITHOUT A CURB BOX AS PER NOTE 2)

GENERAL NOTES

INLET PROTECTION DEVICES SHALL BE MAINTAINED OR REPLACED AT THE DIRECTION OF THE ENGINEER.

MANUFACTURED ALTERNATIVES APPROVED AND LISTED ON THE DEPARTMENT'S EROSION CONTROL PRODUCT ACCEPTABILITY LIST MAY BE SUBSTITUTED.

WHEN REMOVING OR MAINTAINING INLET PROTECTION, CARE SHALL BE TAKEN SO THAT THE SEDIMENT TRAPPED ON THE GEOTEXTILE FABRIC DOES NOT FALL INTO THE INLET. ANY MATERIAL FALLING INTO THE INLET SHALL BE REMOVED IMMEDIATELY.

1 FINISHED SIZE, INCLUDING FLAP POCKETS WHERE REQUIRED, SHALL EXTEND A MINIMUM OF 10" AROUND THE PERIMETER TO FACILITATE MAINTENANCE OR REMOVAL.

2 FOR INLET PROTECTION, TYPE C (WITH CURB BOX), AN ADDITIONAL 18" OF FABRIC IS WRAPPED AROUND THE WOOD AND SECURED WITH STAPLES. THE WOOD SHALL NOT BLOCK THE ENTIRE HEIGHT OF THE CURB BOX OPENING.

3 FLAP POCKETS SHALL BE LARGE ENOUGH TO ACCEPT WOOD 2X4.

INSTALLATION NOTES

TYPE B & C

TRIM EXCESS FABRIC IN THE FLOW LINE TO WITHIN 3" OF THE GRATE.

THE CONTRACTOR SHALL DEMONSTRATE A METHOD OF MAINTENANCE, USING A SEWN FLAP, HAND HOLDS OR OTHER METHOD TO PREVENT ACCUMULATED SEDIMENT FROM ENTERING THE INLET.

TYPE D

DO NOT INSTALL INLET PROTECTION TYPE D IN INLETS SHALLOWER THAN 30", MEASURED FROM THE BOTTOM OF THE INLET TO THE TOP OF THE GRATE.

TRIM EXCESS FABRIC IN THE FLOW LINE TO WITHIN 3" OF THE GRATE.

THE INSTALLED BAG SHALL HAVE A MINIMUM SIDE CLEARANCE, BETWEEN THE INLET WALLS AND THE BAG, MEASURED AT THE BOTTOM OF THE OVERFLOW HOLES, OF 3". WHERE NECESSARY THE CONTRACTOR SHALL CINCH THE BAG, USING PLASTIC ZIP TIES, TO ACHIEVE THE 3" CLEARANCE. THE TIES SHALL BE PLACED AT A MAXIMUM OF 4" FROM THE BOTTOM OF THE BAG.

INLET PROTECTION TYPE A, B, C, AND D

STATE OF WISCONSIN
DEPARTMENT OF TRANSPORTATION

APPROVED
10/16/02 — DATE
/S/ Beth Cannestra — CHIEF ROADWAY DEVELOPMENT ENGINEER
FHWA

6
S.D.D. 8 E 10-2

GENERAL NOTES

DETAILS OF CONSTRUCTION, MATERIALS AND WORKMANSHIP NOT SHOWN ON THIS DRAWING SHALL CONFORM TO THE PERTINENT REQUIREMENTS OF THE STANDARD SPECIFICATIONS AND THE APPLICABLE SPECIAL PROVISIONS.

TRACKING PAD SHALL BE INSPECTED DAILY. DEFICIENT AREAS SHALL BE REPAIRED OR REPLACED IMMEDIATELY.

TRACKING PAD TO BE REMOVED AFTER CONSTRUCTION IS COMPLETED.

TRACKING PAD SHALL BE THE FULL WIDTH OF THE EGRESS POINT.

SURFACE WATER MUST BE PREVENTED FROM PASSING THROUGH THE TRACKING PAD. FLOWS SHALL BE DIVERTED AWAY, AROUND OR CONVEYED UNDER THE TRACKING PAD.

CULVERT PIPE OR OTHER BMP USED TO DIVERT WATER AWAY, AROUND OR UNDER THE TRACKING PAD SHALL BE DESIGNED TO CONVEY THE 2 YEAR - 24 HOUR EVENT.

THE COST OF ADDITIONAL BMP TO DIVERT WATER ARE INCIDENTAL TO THE TRACKING PAD BID ITEM.

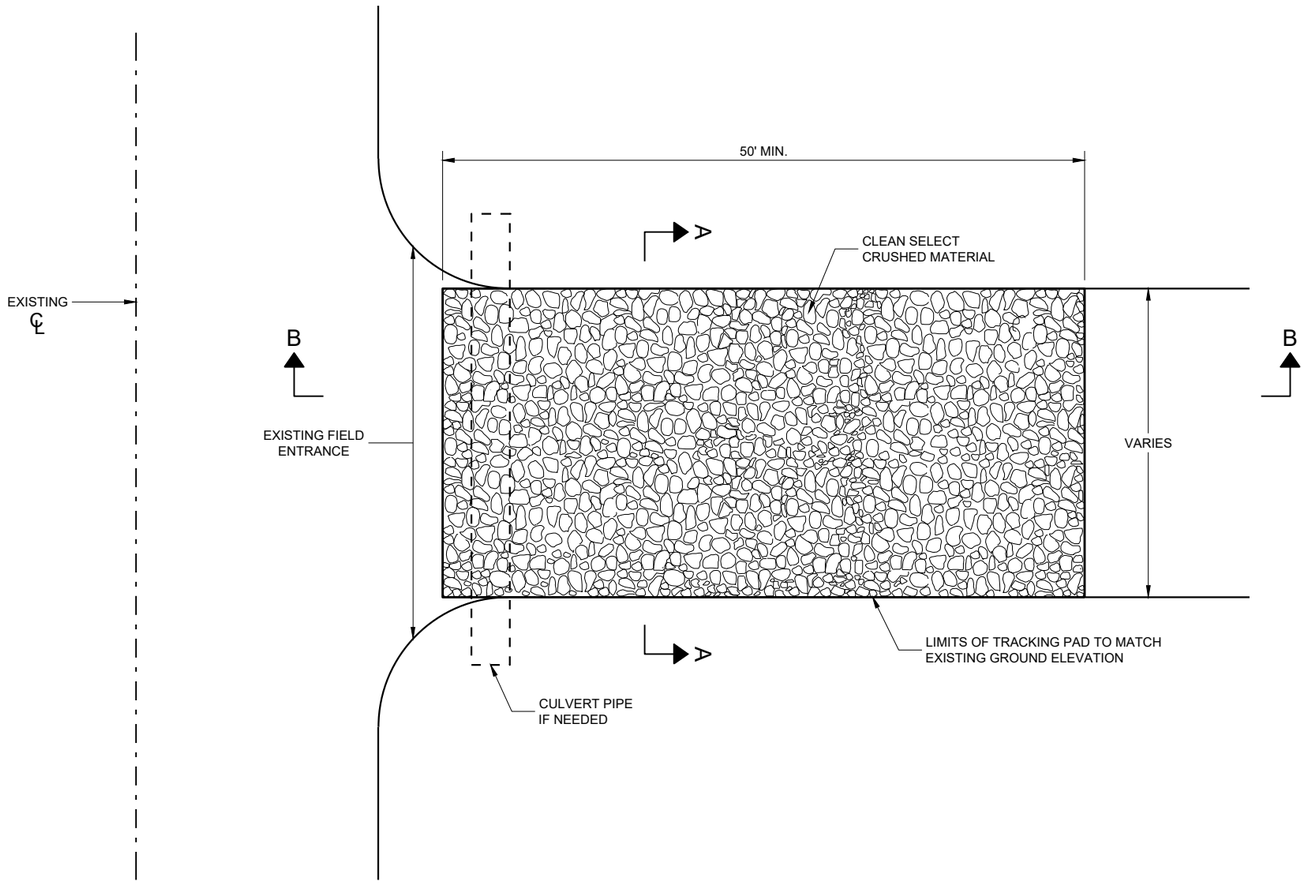

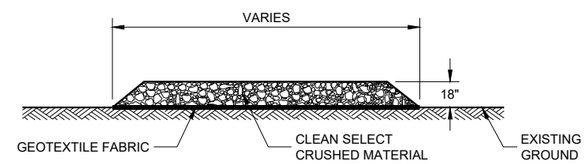

SECTION A - A

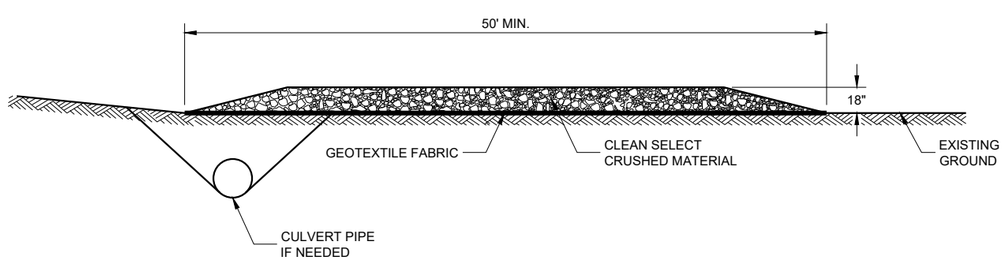

SECTION B - B

TRACKING PAD

STATE OF WISCONSIN
DEPARTMENT OF TRANSPORTATION

APPROVED
3/24/2011 — DATE
/S/ Jerry H. Zogg — ROADWAY STANDARDS DEVE ENGINEER
FHWA

6

6

SDD 08E14 - 01

SDD 08E14 - 01

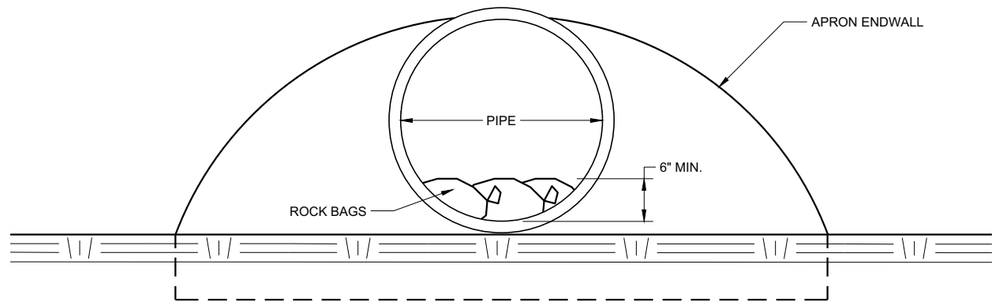

END VIEW

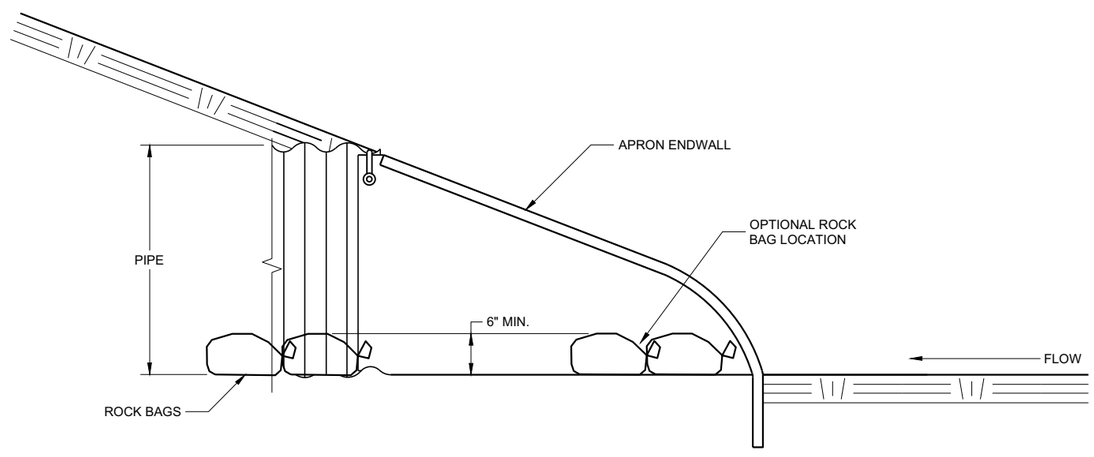

SIDE VIEW

CULVERT PIPE CHECK

(INSTALL ON INLET END ONLY)

CULVERT PIPE CHECK

STATE OF WISCONSIN
DEPARTMENT OF TRANSPORTATION

APPROVED
May 2019 — DATE
/S/ Daniel Schave — EROSION CONTROL ENGI
FHWA

6

6

SDD 08E15 - 01

SDD 08E15 - 01

METAL APRON ENDWALLS

PIPE DIA. (IN.)	MIN. THICK. (Inches) STEEL	MIN. THICK. (Inches) ALUM.	DIMENSIONS (Inches) A (±1")	B (MAX.)	H (±1")	L (±1 1/2")	L1 ①	L2 ①	W (±2")	APPROX. SLOPE	BODY
12	.064	.060	6	6	6	21	12	17 1/2	24	2 1/2 to 1	1 Pc.
15	.064	.060	7	8	6	26	14	21 3/4	30	2 1/2 to 1	1 Pc.
18	.064	.060	8	10	6	31	15	28 1/4	36	2 1/2 to 1	1 Pc.
21	.064	.060	9	12	6	36	18	29 5/8	42	2 1/2 to 1	1 Pc.
24	.064	.075	10	13	6	41	18	37 1/4	48	2 1/2 to 1	1 Pc.
30	.079	.075	12	16	8	51	18	52 1/4	60	2 1/2 to 1	1 Pc.
36	.079	.105	14	19	9	60	24	59 3/4	72	2 1/2 to 1	2 Pc.
42	.109	.105	16	22	11	69	24	75 5/8	84	2 1/2 to 1	2 Pc.
48	.109	.105	18	27	12	78	24	81	90	2 1/4 to 1	3 Pc.
54	.109	.105	18	30	12	84	30	85 1/2	102	2 1/4 to 1	3 Pc.
60	.109×	.105×	18	33	12	87	—	—	114	2 to 1	3 Pc.
66	.109×	.105×	18	36	12	87	—	—	120	2 to 1	3 Pc.
72	.109×	.105×	18	39	12	87	—	—	126	2 to 1	3 Pc.
78	.109×	.105×	18	42	12	87	—	—	132	1 1/2 to 1	3 Pc.
84	.109×	.105×	18	45	12	87	—	—	138	1 1/2 to 1	3 Pc.
90	.109×	.105×	18	37	12	87	—	—	144	1 1/2 to 1	3 Pc.
96	.109×	.105×	18	35	12	87	—	—	150	1 1/2 to 1	3 Pc.

× EXCEPT CENTER PANEL
SEE GENERAL NOTES

REINFORCED CONCRETE APRON ENDWALLS

PIPE DIA. (IN.)	DIMENSIONS (Inches) T	A	B	C	D	E	G	APPROX. SLOPE
12	2	4	24	48 7/8	72 7/8	24	2	3 to 1
15	2 1/4	6	27	46	73	30	2 1/4	3 to 1
18	2 1/2	9	27	46	73	36	2 1/2	3 to 1
21	2 3/4	9	36	37 1/2	73 1/2	42	2 3/4	3 to 1
24	3	9 1/2	43 1/2	30	73 1/2	48	3	3 to 1
27	3 1/4	10 1/2	49 1/2	24	73 1/2	54	3 1/4	3 to 1
30	3 1/2	12	54	19 3/4	73 1/2	60	3 1/2	3 to 1
36	4	15	63	34 3/4	97 3/4	72	4	3 to 1
42	4 1/2	21	63	35	98	78	4 1/2	3 to 1
48	5	24	72	26	98	84	5	3 to 1
54	5 1/2	27	65	*33 1/4-**35	*98 1/4-**100	90	5 1/2	2 2/5 to 1
60	6	*30-**35	60	39	99	96	5	2 to 1
66	6 1/2	*24-**30	*72-**78	*21-**27	99	102	5 1/2	2 to 1
72	7	*24-**36	78	21	99	108	6	2 to 1
78	7 1/2	*24-**36	78	21	99	114	6 1/2	2 to 1
84	8	36	90 1/2	21	111 1/2	120	6 1/2	1 1/2 to 1
90	8 1/2	41	87 1/2	24	111 1/2	132	6 1/2	1 1/2 to 1

*MINIMUM
**MAXIMUM

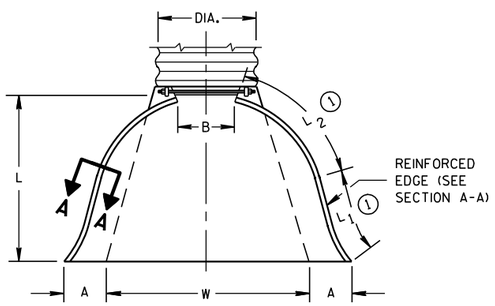

PLAN VIEW

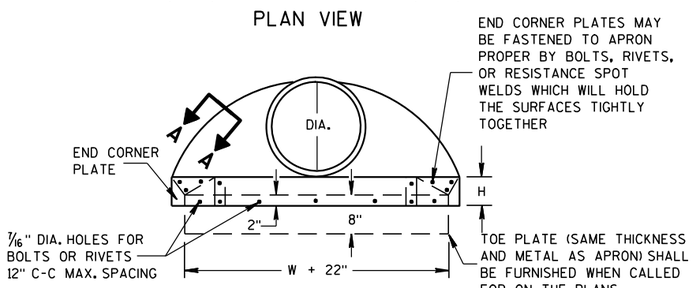

END VIEW

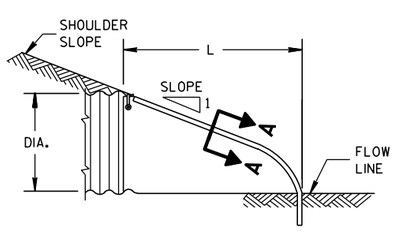

SIDE ELEVATION

METAL ENDWALLS

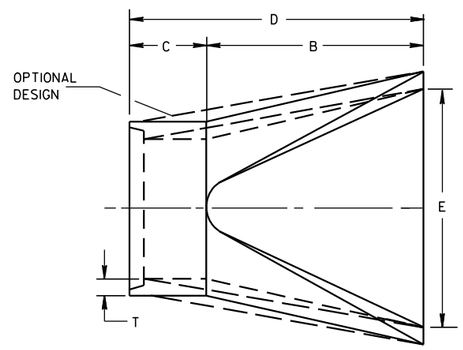

PLAN

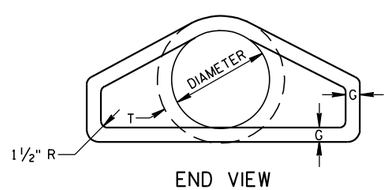

END VIEW

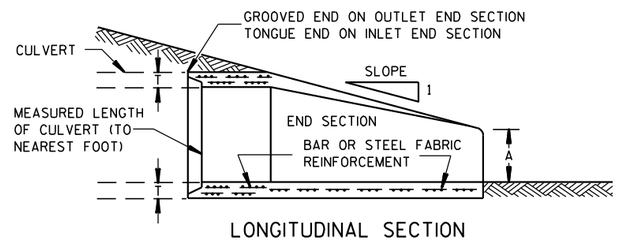

LONGITUDINAL SECTION

CONCRETE ENDWALLS

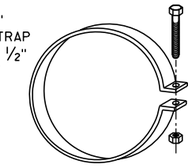

ALTERNATE FOR TYPE 1 CONNECTION

END SECTION CONNECTOR STRAP

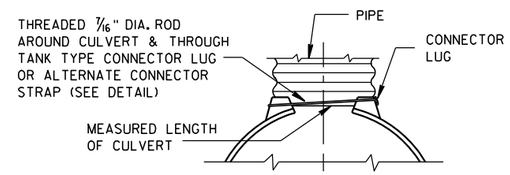

TYPE 1
FOR 12" THRU 24" CORR. PIPE

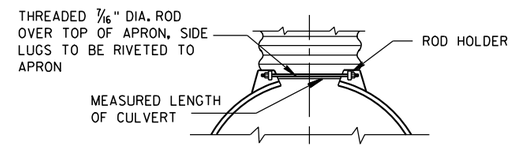

TYPE 2
FOR 30" THRU 96" CORR. PIPE

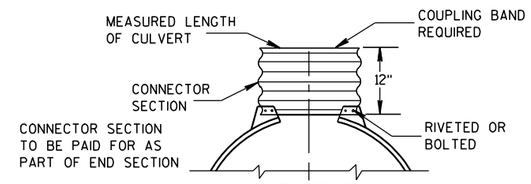

TYPE 3
FOR 42" THRU 96" CORR. PIPE

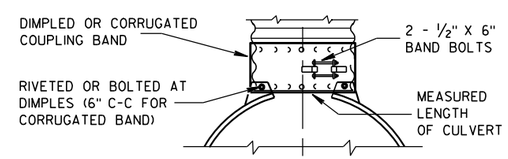

TYPE 5
ALTERNATE FOR:
ALL SIZES CORRUGATED CIRCULAR PIPE

NOTE: DIMPLED BAND FITS OVER OUTSIDE OF ENDWALL, AND CORRUGATED BAND FITS INSIDE ENDWALL. DIMPLED BAND MAY BE USED WITH HELICALLY CORRUGATED PIPE.

FOR CIRCUMFERENTIALLY CORRUGATED PIPE USE ENDWALL CONNECTION DETAILS 1, 2, 3 OR 5 AS APPLICABLE.

FOR HELICALLY CORRUGATED PIPE USE ENDWALL CONNECTION DETAILS 1, 2 OR 5.

FOR HELICALLY CORRUGATED PIPES WITH TWO CIRCUMFERENTIAL CORRUGATIONS AT EACH END USE ENDWALL CONNECTION DETAILS 1, 2 OR 3.

CONNECTION DETAILS

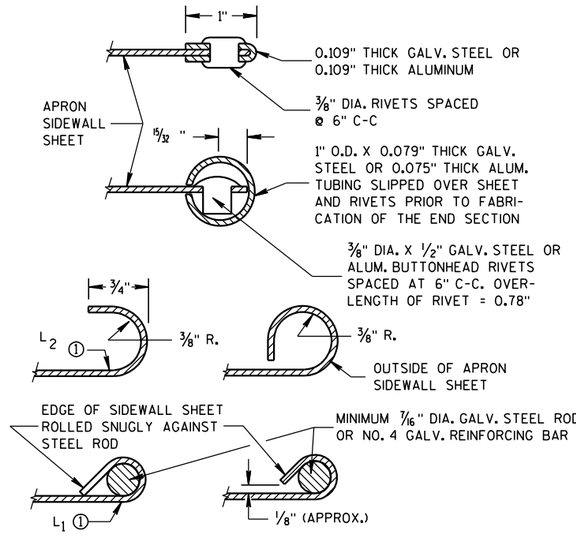

SECTION A-A

GENERAL NOTES

DETAILS OF CONSTRUCTION, MATERIALS AND WORKMANSHIP NOT SHOWN ON THIS DRAWING SHALL CONFORM TO THE PERTINENT REQUIREMENTS OF THE STANDARD SPECIFICATIONS AND THE APPLICABLE SPECIAL PROVISIONS.

CONCRETE CULVERT ENDWALLS MAY NOT BE USED WITH GALVANIZED STEEL OR ALUMINUM CULVERT PIPE OR VISE VERSA. GALVANIZED STEEL OR ALUMINUM ENDWALLS SHALL NORMALLY BE INSTALLED ON CULVERT PIPE OF THE SAME METAL.

ALL THREE PIECE STEEL APRON ENDWALLS FOR 60" DIAMETER PIPE AND LARGER SHALL HAVE 0.109" SIDES AND 0.138" CENTER PANELS. ALL THREE PIECE ALUMINUM APRON ENDWALLS FOR 60" DIAMETER PIPE AND LARGER SHALL HAVE 0.105" SIDES AND 0.134" CENTER PANELS. THE WIDTH OF CENTER PANELS SHALL BE GREATER THAN 20 PERCENT OF THE PIPE PERIMETER.

LAP SEAMS SHALL BE TIGHTLY JOINED BY GALVANIZED RIVETS OR BOLTS FOR STEEL UNITS AND ALUMINUM RIVETS AND BOLTS FOR ALUMINUM UNITS. FOR THE 60" THROUGH 96" DIAMETER APRON ENDWALL SIZES, THE REINFORCED EDGES AND CENTER PANEL SEAMS SHALL BE FURTHER REINFORCED WITH GALVANIZED STEEL OR ALUMINUM STIFFENER ANGLES. THE ANGLES SHALL BE ATTACHED BY GALVANIZED NUTS AND BOLTS FOR STEEL UNITS AND ALUMINUM NUTS AND BOLTS FOR ALUMINUM UNITS.

WHERE TWO OR MORE PIPES WITH APRON ENDWALLS ARE LAID ADJACENT TO EACH OTHER, THEY SHALL BE SEPARATED BY A DISTANCE SUFFICIENT TO PROVIDE A MINIMUM CLEARANCE OF 6 INCHES BETWEEN APRON ENDWALLS.

① FOR PIPE SIZES UP TO 60" DIAMETER, A 180° ROLLED EDGE MAY BE USED INSTEAD OF STEEL ROD REINFORCEMENT. SEE SECTION A-A.

APRON ENDWALLS FOR CULVERT PIPE

STATE OF WISCONSIN
DEPARTMENT OF TRANSPORTATION

APPROVED
11/30/94 — DATE
/S/ Rory L. Rhinesmith — CHIEF ROADWAY DEVELOPMENT ENGINEER
FHWA

6
S.D.D. 8 F 1-11

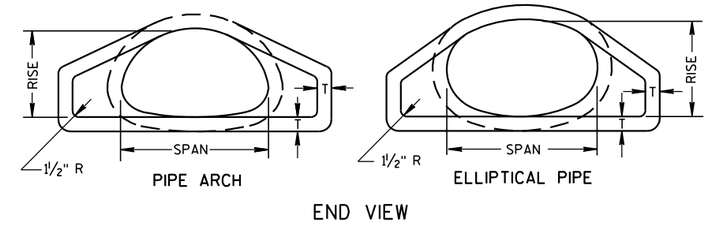

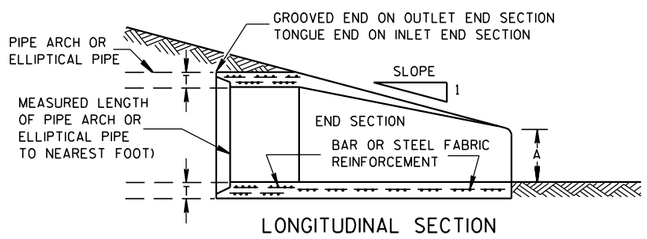

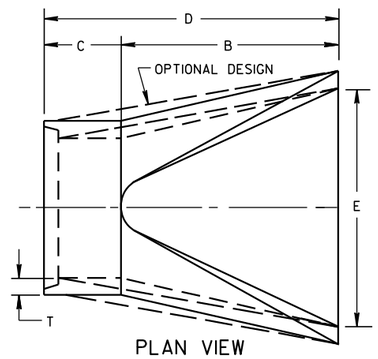

CONCRETE ENDWALLS

2- ⅔" X ½" CORRUGATIONS														
EQUIV. DIA. (Inches)	(Inches)		MIN. THICK. (Inches)		DIMENSIONS (Inches)							APPROX. SLOPE	BODY
	SPAN	RISE	STEEL	ALUM.	A (±1")	B (MAX.)	H (±1")	L (±1½")	L1 ①	L2 ①	W (±2")		
15	17	13	.064	.060	7	9	6	19	14	16	30	2½ to 1	1 Pc.
18	21	15	.064	.060	7	10	6	23	14	19⅜	36	2½ to 1	1 Pc.
21	24	18	.064	.060	8	12	6	28	18	21¾	42	2½ to 1	1 Pc.
24	28	20	.064	.060	9	14	6	32	18	27½	48	2½ to 1	1 Pc.
30	35	24	.079	.075	10	16	6	39	18	37⅝	60	2½ to 1	1 Pc.
36	42	29	.079	.075	12	18	8	46	24	45⅜	75	2½ to 1	1 Pc.
42	49	33	.109	.105	13	21	9	53	24	54¾	85	2½ to 1	2 Pc.
48	57	38	.109	.105	18	26	12	63	24	68	90	2½ to 1	3 Pc.
54	64	43	.109	.105	18	30	12	70	24	72¾	102	2¼ to 1	3 Pc.
60	71	47	.109*	.105*	18	33	12	77	30	82¼	114	2¼ to 1	3 Pc.
66	77	52	.109*	.105*	18	36	12	77	—	—	126	2 to 1	3 Pc.
72	83	57	.109*	.105*	18	39	12	77	—	—	138	2 to 1	3 Pc.

3" X 1" CORRUGATIONS														
EQUIV. DIA. (Inches)	(Inches)		MIN. THICK. (Inches)		DIMENSIONS (Inches)							APPROX. SLOPE	BODY
	SPAN	RISE	STEEL	ALUM.	A (±1")	B (MAX.)	H (±1")	L (±1½")	L1 ①	L2 ①	W (±2")		
48	53	41	.109	.105	18	26	12	63	24	72¾	90	2½ to 1	2 Pc.
54	60	46	.109	.105	18	30	12	70	30	82¼	102	2 to 1	2 Pc.
60	66	51	.109*	.105*	18	33	12	77	—	—	114	1½ to 1	3 Pc.
66	73	55	.109*	.105*	18	36	12	77	—	—	126	1½ to 1	3 Pc.
72	81	59	.109*	.105*	18	39	12	77	—	—	138	2 to 1	3 Pc.
78	87	63	.109*	.105*	22	38	12	77	—	—	148	1½ to 1	3 Pc.
84	95	67	.109*	.105*	22	34	12	77	—	—	162	1½ to 1	3 Pc.
90	103	71	.109*	.105*	22	38	12	77	—	—	174	1½ to 1	3 Pc.
96	112	75	.109*	.105*	24	40	12	77	—	—	174	1½ to 1	3 Pc.

NOTE: ALL SPLICES TO BE LAP RIVETED OR BOLTED.

* EXCEPT CENTER PANEL SEE GENERAL NOTES

REINFORCED CONCRETE PIPE ARCH									
EQUIV. DIA. (Inches)	DIMENSIONS (Inches)								APPROX. SLOPE
	** SPAN	** RISE	T	A	B	C	D	E	
24	29	18	3	8½	39	33	72	48	3 to 1
30	36	22	3½	9½	50	46	96	60	3 to 1
36	44	27	4	11⅛	60	36	96	72	3 to 1
42	51	31	4½	15 13/16	60	36	96	78	3 to 1
48	58	36	5	21	60	36	96	84	3 to 1
54	65	40	5½	25½	60	36	96	90	3 to 1
60	73	45	6	31	60	36	96	96	3 to 1
72	88	54	7	31	60	39	99	120	2 to 1
84	102	62	8	28½	83	19	102	144	2 to 1

REINFORCED CONCRETE ELLIPTICAL PIPE									
EQUIV. DIA. (Inches)	DIMENSIONS (Inches)								APPROX. SLOPE
	** SPAN	** RISE	T	A	B	C	D	E	
24	30	19	3¼	8½	39	33	72	48	3 to 1
30	38	24	3¾	9½	54	18	72	60	3 to 1
36	45	29	4½	11⅛	60	24	84	72	2½ to 1
42	53	34	5	15¾	60	36	96	78	2½ to 1
48	60	38	5½	21	60	36	96	84	2½ to 1
54	68	43	6	25½	60	36	96	90	2½ to 1
60	76	48	6½	30	60	36	96	96	2½ to 1

**NOMINAL SIZE

GENERAL NOTES

DETAILS OF CONSTRUCTION, MATERIALS AND WORKMANSHIP NOT SHOWN ON THIS DRAWING SHALL CONFORM TO THE PERTINENT REQUIREMENTS OF THE STANDARD SPECIFICATIONS AND THE APPLICABLE SPECIAL PROVISIONS.

CONCRETE APRON ENDWALLS MAY NOT BE USED WITH GALVANIZED STEEL OR ALUMINUM CULVERT PIPE OR VISE VERSA. GALVANIZED STEEL OR ALUMINUM APRON ENDWALLS SHALL NORMALLY BE INSTALLED ON CULVERT PIPE OF THE SAME METAL.

ALL THREE PIECE STEEL APRON ENDWALLS FOR 66" X 51" PIPE ARCH AND LARGER SHALL HAVE 0.109" SIDES AND 0.138" CENTER PANELS. ALL THREE PIECE ALUMINUM APRON ENDWALLS FOR 66" X 51" PIPE ARCH AND LARGER SHALL HAVE 0.105" SIDES AND 0.134" CENTER PANELS. THE WIDTH OF CENTER PANELS SHALL BE GREATER THAN 20 PERCENT OF THE PIPE ARCH PERIMETER.

LAP SEAMS SHALL BE TIGHTLY JOINED BY GALVANIZED RIVETS OR BOLTS FOR STEEL UNITS AND ALUMINUM RIVETS AND BOLTS FOR ALUMINUM UNITS. FOR THE 77" X 52" THROUGH 112" X 75" APRON ENDWALL SIZES, THE REINFORCED EDGES AND CENTER PANEL SEAMS SHALL BE FURTHER REINFORCED WITH GALVANIZED STEEL OR ALUMINUM STIFFENER ANGLES. THE ANGLES SHALL BE ATTACHED BY GALVANIZED NUTS AND BOLTS FOR STEEL UNITS AND ALUMINUM NUTS AND BOLTS FOR ALUMINUM UNITS.

WHERE TWO OR MORE PIPES WITH APRON ENDWALLS ARE LAID ADJACENT TO EACH OTHER, THEY SHALL BE SEPARATED BY A DISTANCE SUFFICIENT TO PROVIDE A MINIMUM CLEARANCE OF 6 INCHES BETWEEN APRON ENDWALLS.

① FOR PIPE ARCH SIZES UP TO 73" X 55" A 180° ROLLED EDGE MAY BE USED INSTEAD OF STEEL ROD REINFORCEMENT. SEE SECTION A-A.

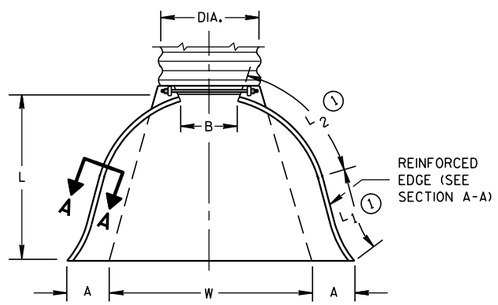

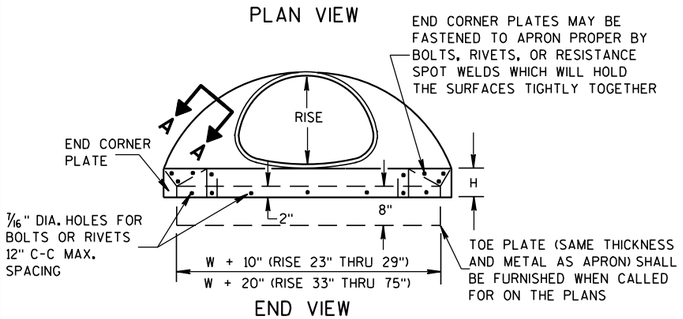

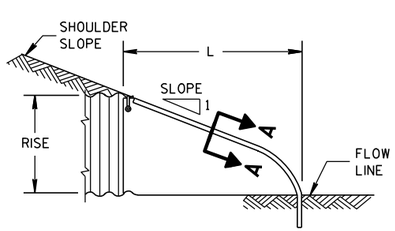

SIDE ELEVATION

METAL ENDWALLS

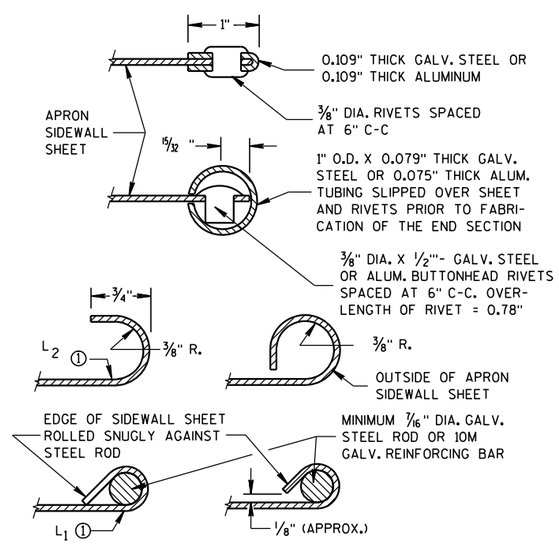

SECTION A-A

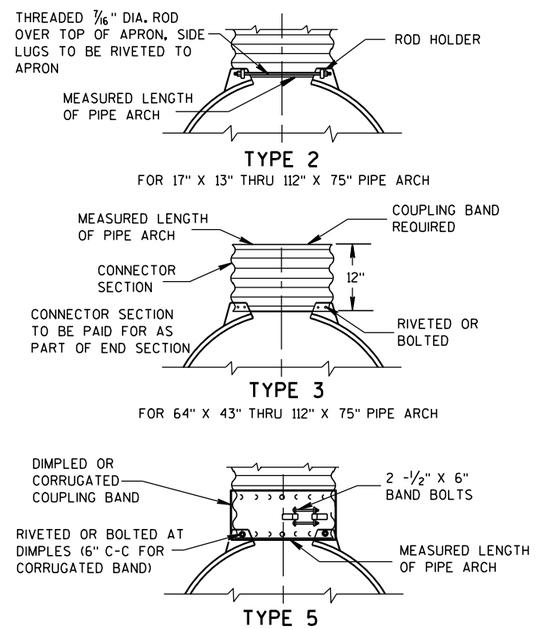

NOTE: DIMPLED BAND FITS OVER OUTSIDE OF ENDWALL, AND CORRUGATED BAND FITS INSIDE ENDWALL.

CONNECTION DETAILS

APRON ENDWALLS FOR PIPE ARCH AND ELLIPTICAL PIPE

STATE OF WISCONSIN
DEPARTMENT OF TRANSPORTATION

APPROVED
11/30/94 — DATE
/S/ Rory L. Rhinesmith — CHIEF ROADWAY DEVELOPMENT ENGINEER
FHWA

6

S.D.D. 8 F 2-1

6

S.D.D. 8 F 2-1

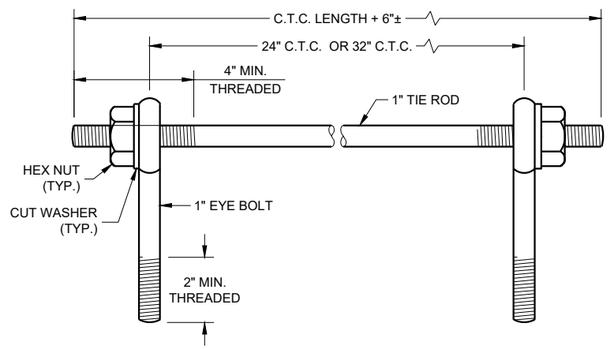

EYE BOLTS AND TIE ROD

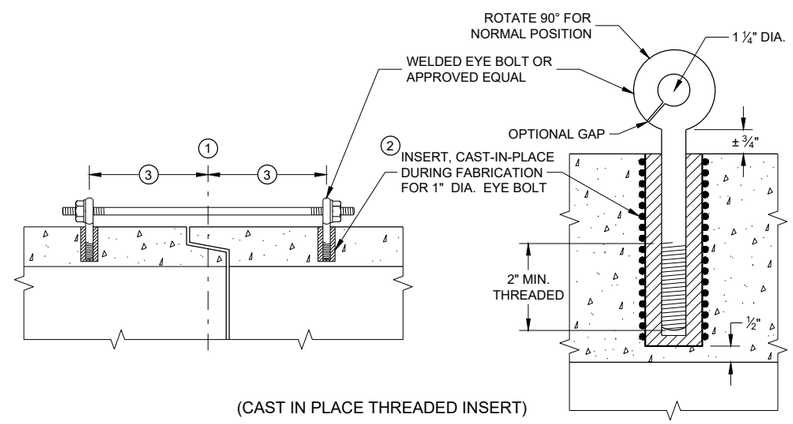

(CAST IN PLACE THREADED INSERT)

LONGITUDINAL SECTIONS

EYE BOLT AND TIE ROD ASSEMBLY (ALTERNATE NO. 1)

GENERAL NOTES

DETAILS OF CONSTRUCTION, MATERIALS, AND WORKMANSHIP NOT SHOWN ON THIS DRAWING SHALL CONFORM TO THE PERTINENT REQUIREMENTS OF THE STANDARD SPECIFICATIONS AND APPLICABLE SPECIAL PROVISIONS.

CONCRETE CULVERT AND STORM SEWER PIPE SHALL BE TIED TOGETHER IN THE MANNER ILLUSTRATED BY THIS DETAIL AT LOCATIONS DESIGNATED IN THE STANDARD SPECIFICATIONS AND THE PLAN. THE CONTRACTOR MAY USE EITHER ALTERNATE 1, 2 OR 3 FOR DRAINAGE STRUCTURES. ONLY ALTERNATE 1 AND 3 MAY BE USED FOR CATTLE PASSES, UNLESS OTHERWISE STATED IN THE CONTRACT. THE MATERIALS, FABRICATION AND WORK NECESSARY TO TIE THE PIPE BY THIS DETAIL WILL BE CONSIDERED INCIDENTAL TO THE PIPE AND APRON ENDWALLS IF REQUIRED.

DETAILED DRAWINGS FOR PROPOSED ALTERNATE DESIGNS FOR JOINT TIES SHALL BE SUBMITTED TO THE ENGINEER FOR APPROVAL.

JOINT TIES TO BE HOT-DIP GALVANIZED PER ASTM A 153.

1. CENTER LINE OF TONGUE AND GROOVE OR BELL AND SPIGOT JOINTS.
2. THE INSIDE OF THE THREADED INSERTS SHALL BE CLEAN TO ALLOW THE INSERTION OF THREADED EYE BOLTS.
3. HOLES SHALL BE CAST-IN-PLACE OR DRILLED PER THE APPLICABLE DETAIL, AND EQUAL DISTANCE FROM THE CENTERLINE OF THE JOINT.
4. BOLT PROJECTION INSIDE OF PIPE SHALL NOT EXCEED 2 INCHES.
5. OPENING TO BE ROD DIAMETER PLUS 1 INCH.
6. LENGTH ADEQUATE TO EXTEND TO WITHIN ½ INCH OF THE INNER SURFACE OF THE PIPE.
7. EYE BOLT LENGTH DETERMINED BY WALL THICKNESS, BELL THICKNESS AND BOLT PROJECTION INSIDE PIPE.

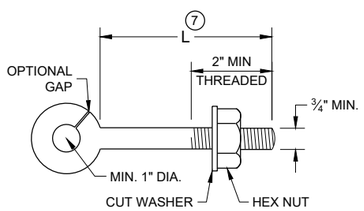

EYE BOLT 7

NOTE: TWO EYE BOLTS MAY BE USED WITH A 30" OR 38" LONG THREADED ROD IN LIEU OF THE 90° BENT TIE ROD.

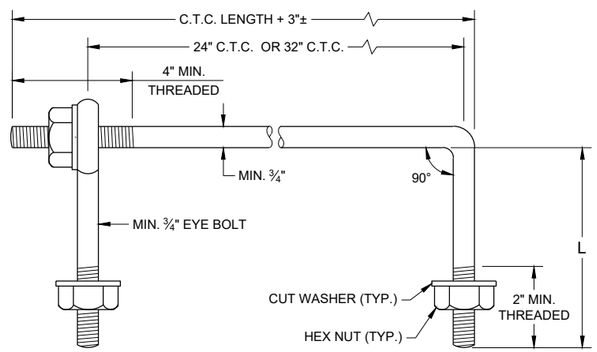

EYE BOLT AND TIE ROD

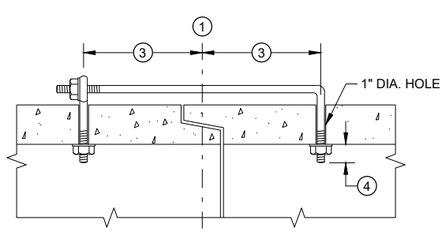

(TONGUE AND GROOVE PIPE)

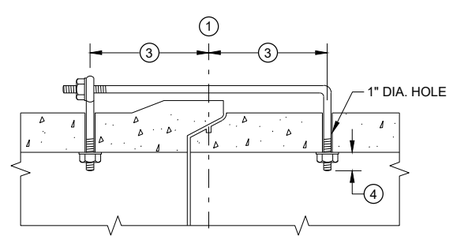

(MODIFIED BELL PIPE)

LONGITUDINAL SECTION

(JOINT TIES FOR 18" TO 66" DIA. CONCRETE PIPE)

EYE BOLT AND TIE ROD ASSEMBLY (ALTERNATE NO. 2)

ADJUSTABLE TIE ROD TABLE

PIPE DIAMETER	TIE ROD DIAMETER	D	L_1	N
12 - 60	⅝	⅝	5	½
66 - 84	¾	¾	5	½
90 - 144	1	1	7	1 7/16

DIMENSIONS SHOWN ARE IN INCHES

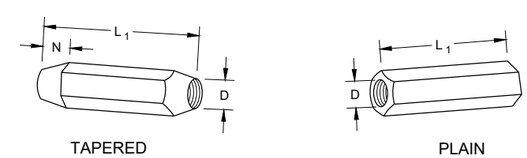

RIGHT AND LEFT THREADS

SLEEVE NUTS

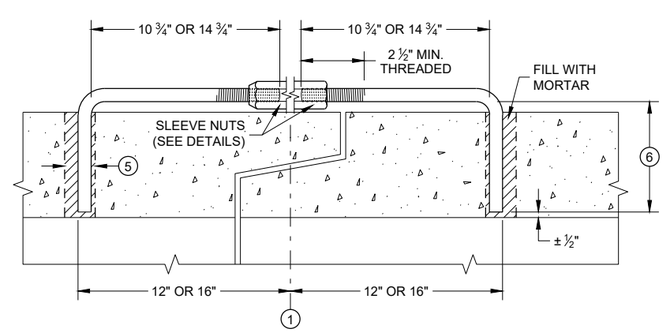

LONGITUDINAL SECTION

ADJUSTABLE TIE ROD (ALTERNATE NO. 3)

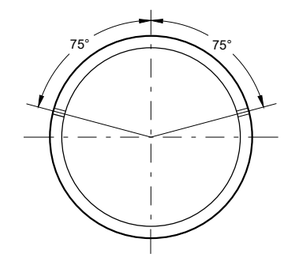

PLACEMENT OF (2) CAST-IN-PLACE INSERTS OR HOLES DURING FABRICATION FOR PIPE SECTIONS REQUIRING TIE RODS

TRANSVERSE SECTION

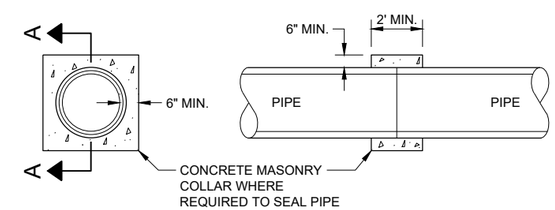

SECTION A - A

CONCRETE COLLAR DETAIL

JOINT TIES FOR CONCRETE PIPE AND CONCRETE COLLAR DETAIL

STATE OF WISCONSIN
DEPARTMENT OF TRANSPORTATION

APPROVED
November 2021 — DATE
/S/ Rodney Taylor — ROADWAY STANDARDS DEVE ENGINEER
FHWA

6

SDD 08F04 - 08

GENERAL NOTES

DETAILS OF CONSTRUCTION, MATERIALS AND WORKMANSHIP NOT SHOWN ON THIS DRAWING SHALL CONFORM TO THE PERTINENT REQUIREMENTS OF THE STANDARD SPECIFICATIONS AND THE APPLICABLE SPECIAL PROVISIONS.

FILL SLOPES FLATTER THAN 2 ½:1 SHALL BE WARPED TO MEET THE TOP OF THE WINGWALLS.

ALL STEEL REINFORCEMENT AND WELDED STEEL WIRE FABRIC SHALL BE EMBEDDED 2 INCHES CLEAR UNLESS OTHERWISE NOTED.

(1) MINIMUM REINFORCEMENT SHALL BE 6" X 6" - W4.0 X W4.0 OR NO. 3 BARS SPACED 12" C-C IN BOTH DIRECTIONS.

(2) THE SPACE BETWEEN PIPES SHALL BE AS FOLLOWS:

DIAMETER OR SPAN	SPACE
UP TO AND INCLUDING 48"	2' - 0"
OVER 48" TO 72"	½ DIA. OR SPAN
OVER 72"	3' - 0"

(3) LIMITS OF TRENCH BACKFILL

(4) LIMITS OF FOUNDATION BACKFILL

(5) FOUNDATION AND TRENCH BACKFILL ARE MATERIALS INCLUDED IN PAYMENT FOR CULVERT PIPE, PIPE ARCH, CULVERT PIPE REINFORCED CONCRETE HORIZONTAL ELLIPSE OR CONCRETE MASONRY ENDWALLS.

(6) DO NOT PLACE FOUNDATION BACK FILL OR ANY OTHER GRANULAR BACKFILL AROUND OR BELOW CUT OFF WALL. POUR CUT OFF WALL AGAINST NATIVE SOIL

(7) MINIMUM HEIGHT SHALL BE THE GREATER OF 1'- 0" OR ¼ HEIGHT OF CULVERT PIPE.

TRENCH BACKFILL

FOUNDATION BACKFILL

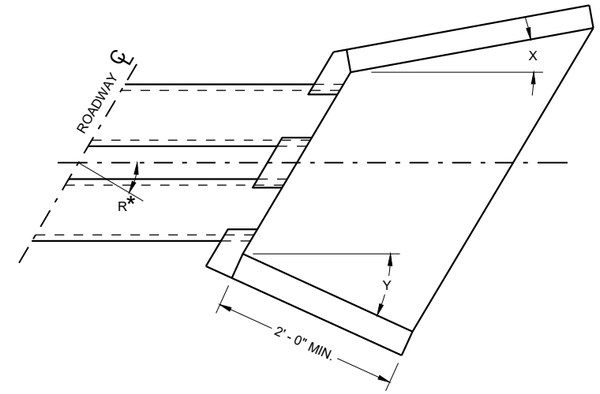

WINGWALL ANGLE DETAILS

INLET			OUTLET		
R*	X	Y	R*	X	Y
0 - 7°	30°	30°	0 - 15°	15°	15°
8 - 22°	25°	30°	16 - 45°	10°	15°
23 - 37°	20°	30°	46 - 75°	5°	15°
38 - 52°	15°	30°	OVER 75°	0°	15°
53 - 67°	10°	30°			
68 - 82°	5°	30°			
OVER 82°	0°	30°			

R* = NUMBER OF DEGREES RIGHT OR LEFT HAND FORWARD

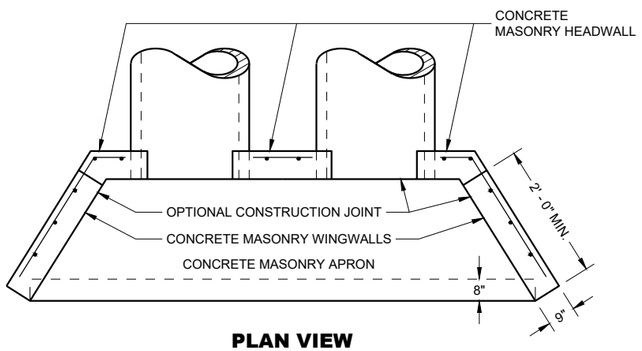

PLAN VIEW

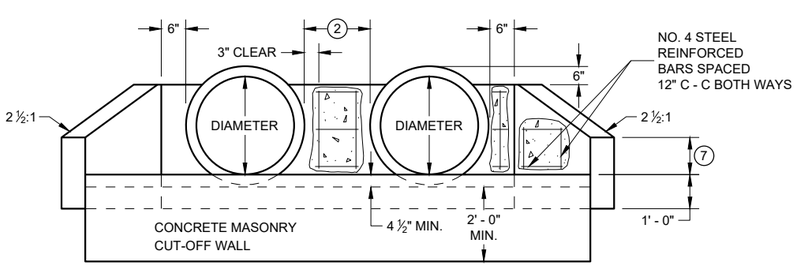

END VIEW
CIRCULAR PIPE

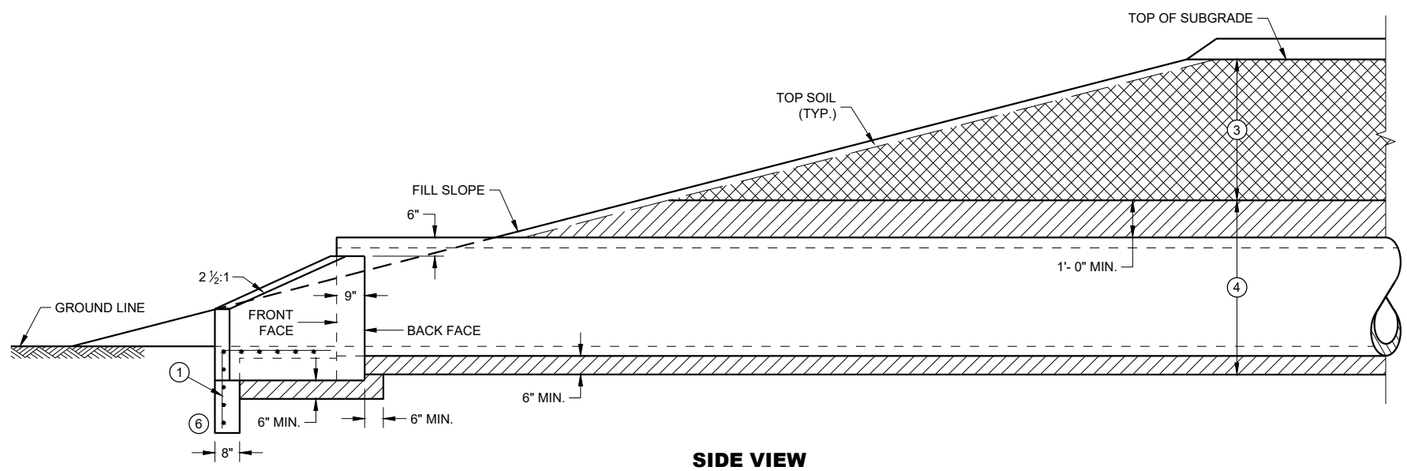

SIDE VIEW
CIRCULAR PIPE, PIPE ARCH OR HORIZONTAL ELLIPSE

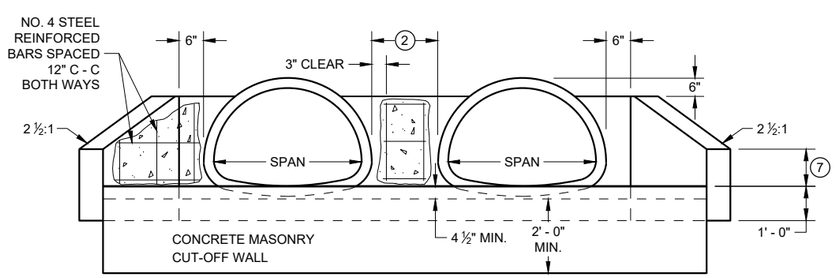

END VIEW
PIPE ARCH

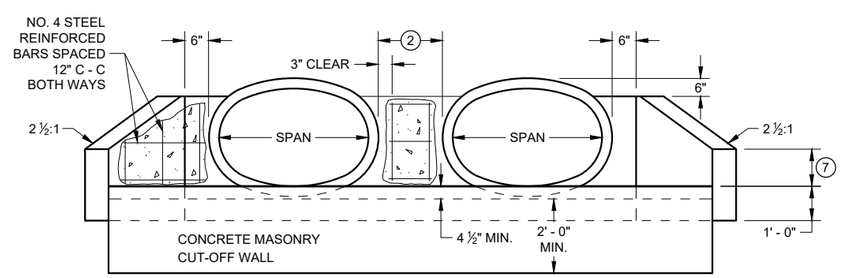

END VIEW
HORIZONTAL ELLIPSE

CONCRETE MASONRY ENDWALLS FOR CULVERT PIPE AND PIPE ARCH

STATE OF WISCONSIN
DEPARTMENT OF TRANSPORTATION

APPROVED
May 2022 — DATE
/S/ Rodney Taylor — ROADWAY STANDARDS DEVE ENGINEER
FHWA

6

SDD 08F10 - 02

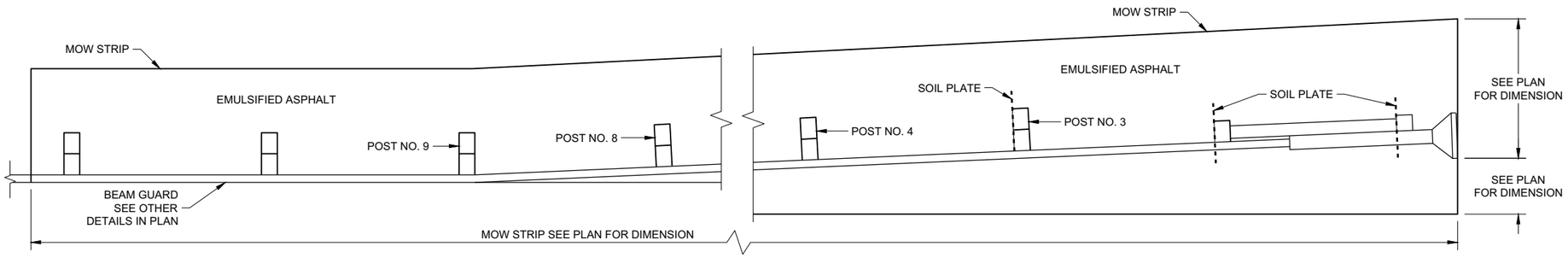

PLAN VIEW

MOW STRIP LAYOUT FOR ENERGY ABSORBING TERMINAL

GENERAL NOTES

ONLY USE STEEL POSTS IN CONCRETE AND ASPHALT MOW STRIPS.

1. CONTROLLED LOW-STRENGTH BACKFILL OR EMULSIFIED ASPHALT.
2. DEPTH OF MOW STRIP:
   ASPHALT - 4"
   CONCRETE - 4"
   EMULSIFIED ASPHALT - 1" OR LESS
3. FOR EMULSIFIED ASPHALT, MOW STRIP STRIP LEAVE OUTS NOT REQUIRED. (TYPICAL FOR ALL POSTS)

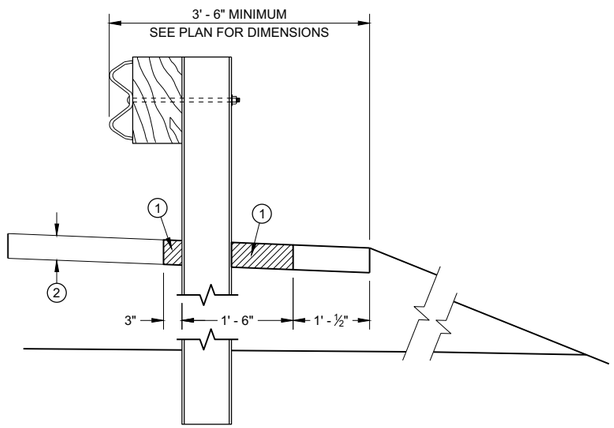

SECTION A - A

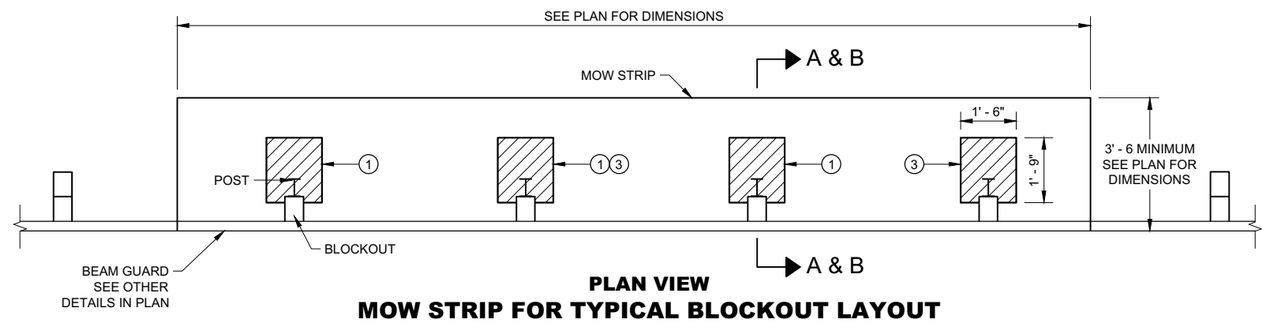

PLAN VIEW

MOW STRIP FOR TYPICAL BLOCKOUT LAYOUT

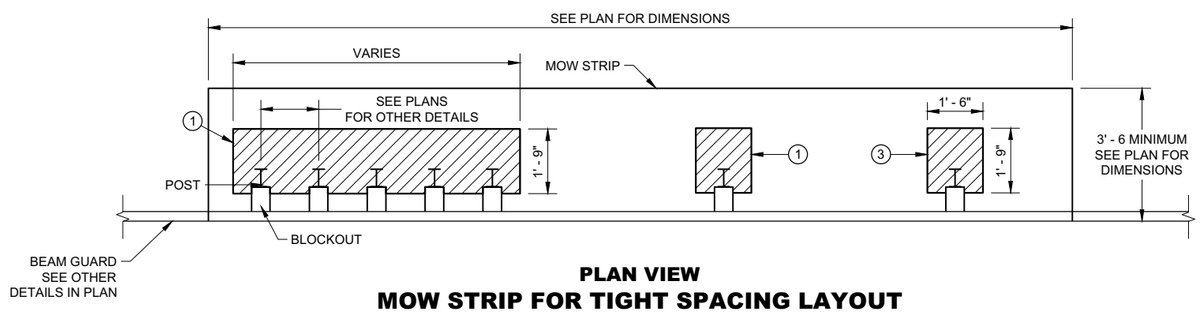

PLAN VIEW

MOW STRIP FOR TIGHT SPACING LAYOUT

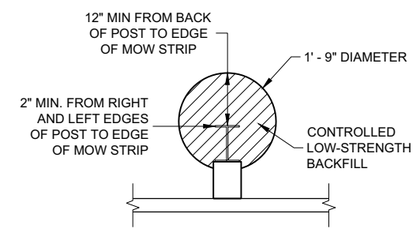

ALTERNATIVE HMA MOW STRIP DESIGN

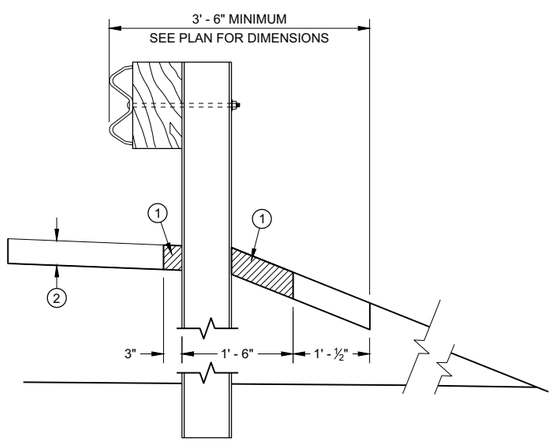

SECTION B - B

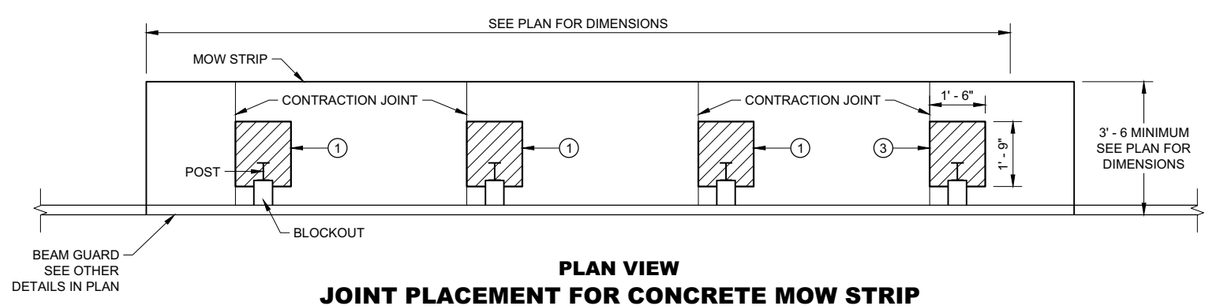

PLAN VIEW

JOINT PLACEMENT FOR CONCRETE MOW STRIP

GUARDRAIL MOW STRIP

STATE OF WISCONSIN
DEPARTMENT OF TRANSPORTATION

6

6

SDD 14B28 - 04a

SDD 14B28 - 04a

LEGEND

CONCRETE, ASPHALT, OR EMULSIFIED ASPHALT MOW STRIP (SEE OTHER DETAILS)

EMULSIFIED ASPHALT MOW STRIP (SEE OTHER DETAILS)

GENERAL NOTES

EXISTING THRIE BEAM BULLNOSES MAY HAVE WOOD POSTS. NEW THRIE BEAM BULLNOSE WILL HAVE STEEL POSTS.

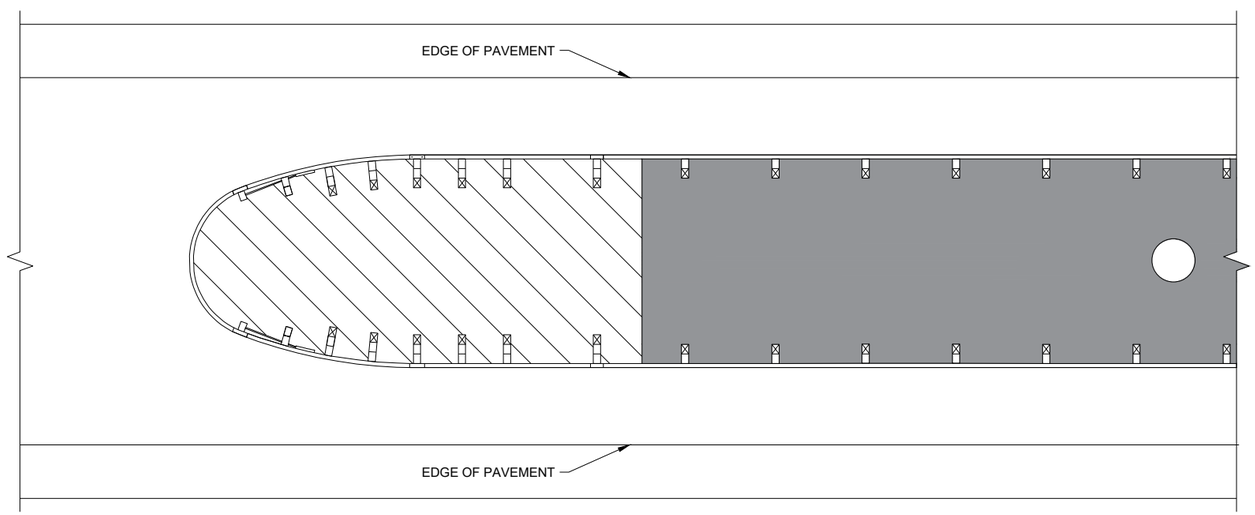

THRIE BEAM BULLNOSE

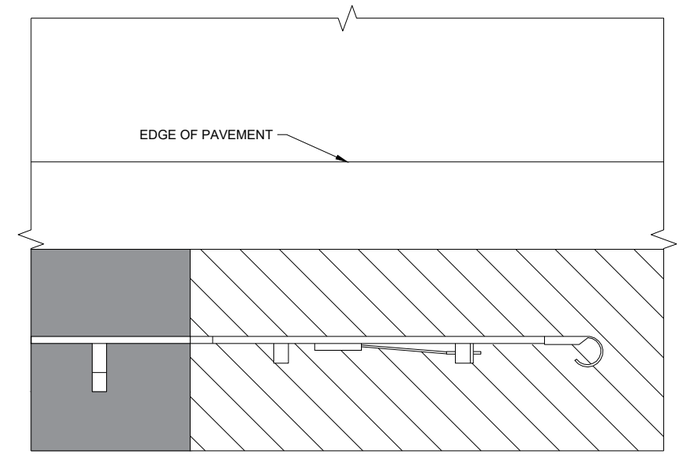

TYPE 2 TERMINAL

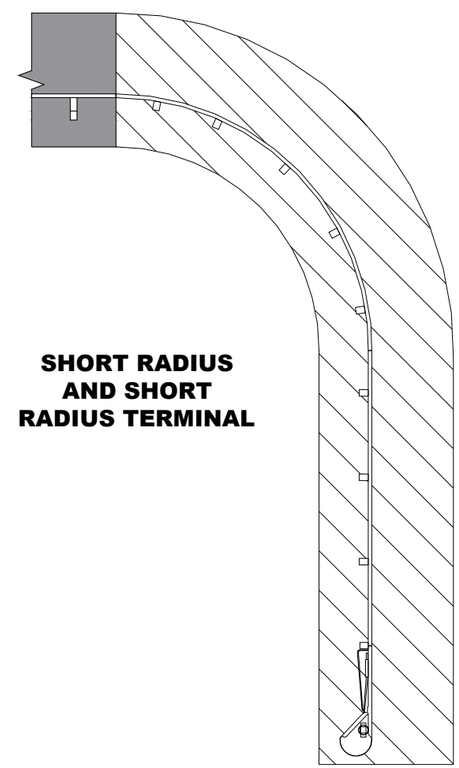

SHORT RADIUS AND SHORT RADIUS TERMINAL

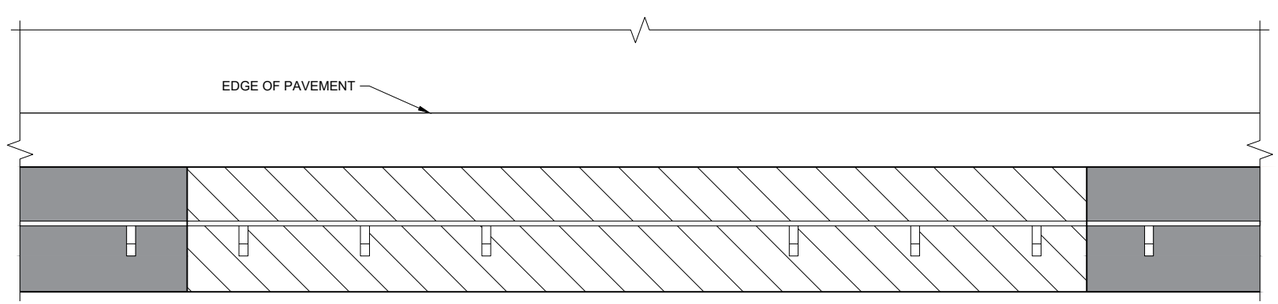

LONG - SPAN

GUARDRAIL MOW STRIP

STATE OF WISCONSIN
DEPARTMENT OF TRANSPORTATION

APPROVED
August 2020 — DATE
/S/ Rodney Taylor — ROADWAY STANDARDS DEVE ENGINEER
FHWA

6

SDD 14B28 - 04b

6

SDD 14B28 - 04b

1. WOOD OR STEEL POSTS (w6X9 OR w6X8.5) MAY BE USED. DO NOT INTERMIX WOOD AND STEEL POSTS. INSTALL STEEL POSTS WITH HOLES ON APPROACHING TRAFFIC SIDE.
2. USE WOOD OR APPROVED PLASTIC BLOCKOUTS. WOOD BLOCKOUTS MAY BE CONSTRUCTED OUT OF TWO OR MORE WOOD BLOCKOUTS. SEE ALTERNATE WOOD BLOCKOUT DETAIL. DIMENSIONS OF APPROVED PLASTIC BLOCKOUTS MAY VARY.
3. IF ROCK IS ENCOUNTERED DURING EXCAVATION, PROVIDE A HOLE 12 INCHES IN DIAMETER EXTENDING 20 INCHES DEEP INTO THE ROCK. PLACE APPROXIMATELY 2 1/2" INCHES OF GRANULAR MATERIAL IN THE BOTTOM OF THE HOLE. CUT THE POSTS THE TO LENGTH AMD INSTALL. BACKFILL WITH EXCAVATED MATERIAL AND COMPACT. BACKFILL IS TO BE FREE OF LARGE ROCKS.
4. WHEN THE DISTANCE FROM BACK OF POST TO SHOULDER HINGE POINT IS LESS THAN 2 FEET INSTALL LONGER POST AT HALF POST SPACING (K).
5. FOR NEW MGS INSTALLATION TOP OF W-BEAM RAIL TOLERANCE IS ±1". FOR EXISTING MGS INSTALLATION TOP OF W-BEAM IS BETWEEN 27 ¾" TO 32".
6. WHEN USING STEEL POST AND WOOD BLOCKOUTS INSTALL FOUR 16D GALVANIZED NAILS. INSTALL NAILS AT THE BACK CORNERS OF THE BLOCK AND BEND THE NAILS OVER THE FLANGE OF THE STEEL POST.
7. TOTAL POST LENGTH FOR TYPE K IS 7' - 0". TOTAL POST LENGTH FOR OTHER MGS TYPES IS 6' - 0".

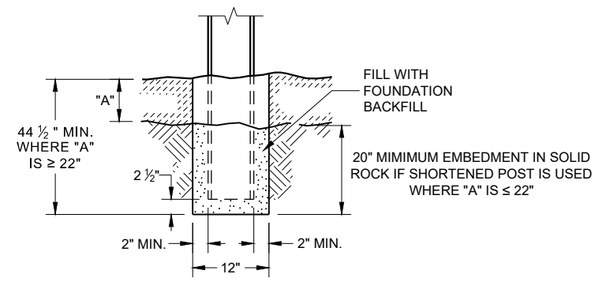

END VIEW
SETTING STEEL OR WOOD POST IN ROCK (3)

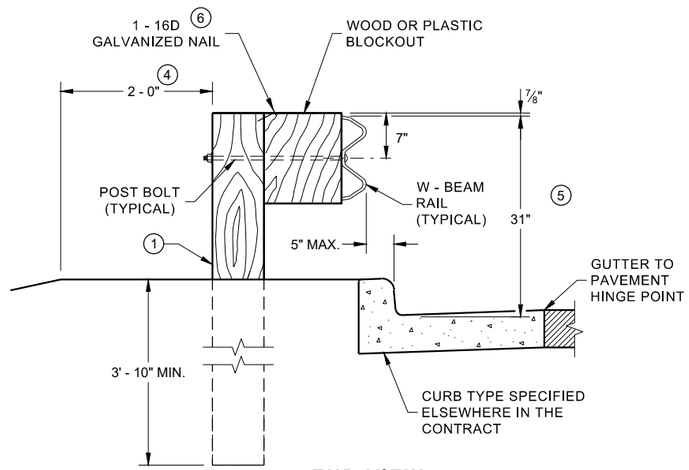

END VIEW
LOCATED ALONG A CURBED ROADWAY

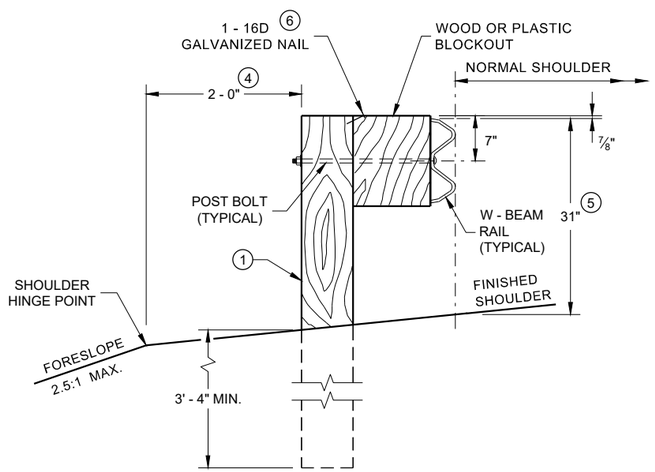

END VIEW
LOCATED ALONG A ROADWAY SHOULDER STANDARD INSTALLATION

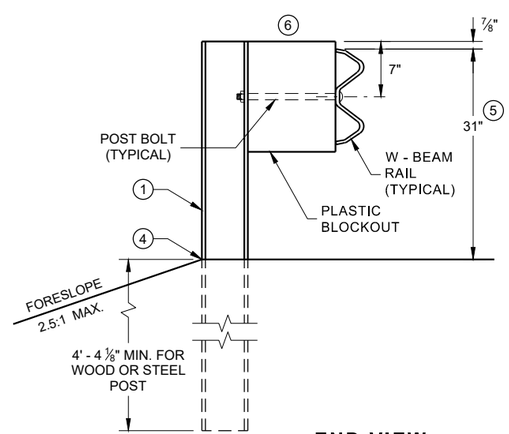

END VIEW
MGS LONGER POST AT HALFPOST SPACING W BEAM (K)

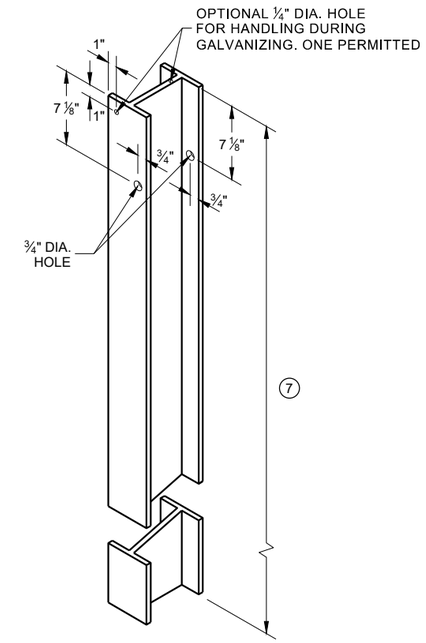

STEEL POST & HOLE PUNCHING DETAIL (W 6 X 9) (1)

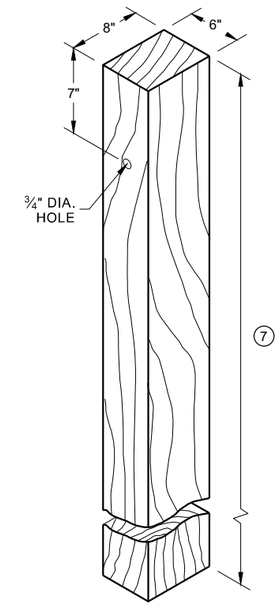

WOOD POST (6" X 8") NOMINAL (1)

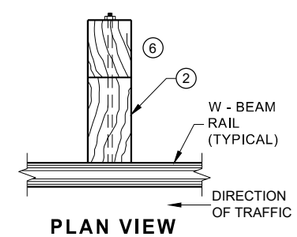

PLAN VIEW WOOD POST, BLOCKOUT & BEAM

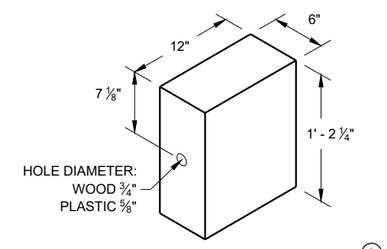

WOOD OR PLASTIC BLOCKOUT (2)

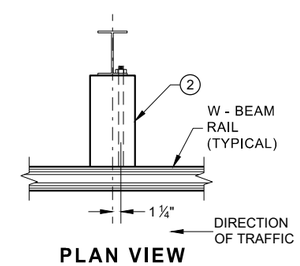

PLAN VIEW STEEL POST, PLASTIC BLOCKOUT & BEAM

MIDWEST GUARDRAIL SYSTEM (MGS) GUARDRAIL

STATE OF WISCONSIN
DEPARTMENT OF TRANSPORTA

6

SDD 14B42 - 07a

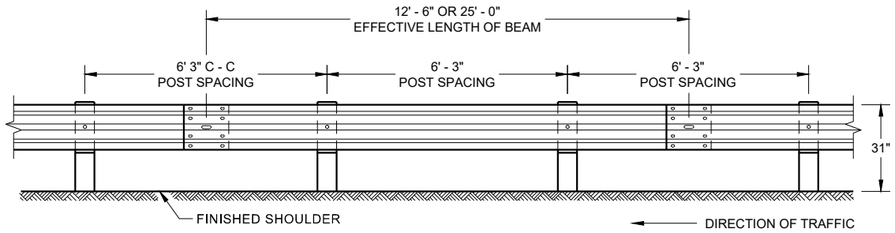

FRONT VIEW
POST SPACING STANDARD INSTALLATION

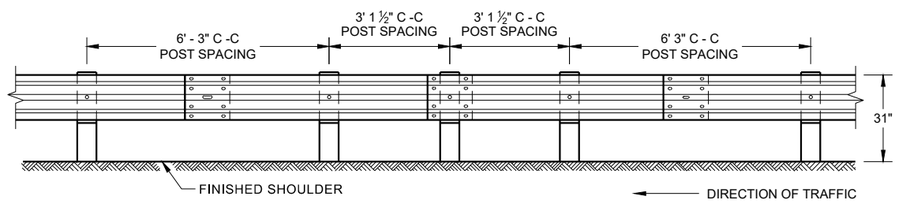

FRONT VIEW
HALF POST SPACING (HS) AND HALF POST SPACING WITH LONGER POSTS (K)

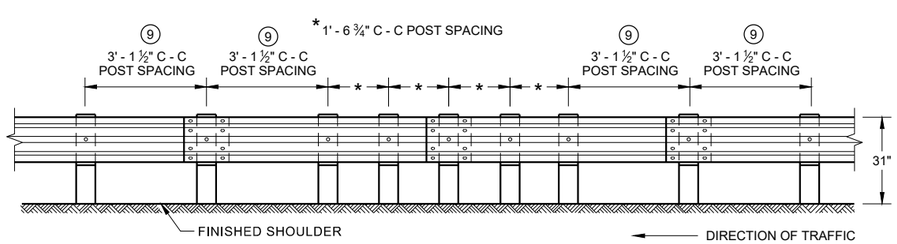

FRONT VIEW
QUARTER POST SPACING (QS)

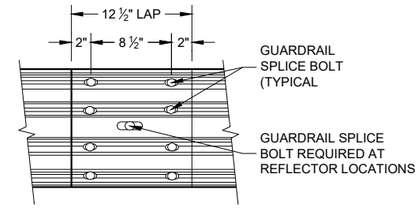

FRONT VIEW
MID-SPAN BEAM SPLICE

GENERAL NOTES

(8) DO NOT INSTALL REFLECTORS ON THE FIRST 50 FEET OF THE APPROACH END OF THE ENERGY ABSORBING TERMINAL.

(9) 25 FEET OF HALF POST SPACING IS REQUIRED ON APPROACH AND DEPARTURE ENDS OF QUARTER POST SPACING.

POST BOLTS ARE A ⅝" DIAMETER ASTM A307 GUARDRAIL BOLT. A POST BOLT REQUIRES ⅝" DIAMETER A563A DOUBLE RECESSED (DR) HEAVY HEX NUT AND ⅝" DIAMETER F844 FLAT WASHER. POST BOLTS MAY BE LONGER IF MULTIPLE BLOCKOUTS ARE BEING USED.

GUARD RAIL SPLICE BOLTS ARE A ⅝" DIAMETER ASTM A307 GUARDRAIL HEAD BOLT. A GUARDRAIL SPLICE BOLT REQUIRES ⅝" DIAMETER A563A DOUBLE RECESSED (DR) HEAVY HEX NUT.

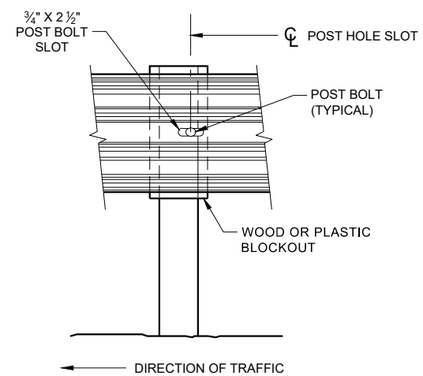

FRONT VIEW AT STEEL POST

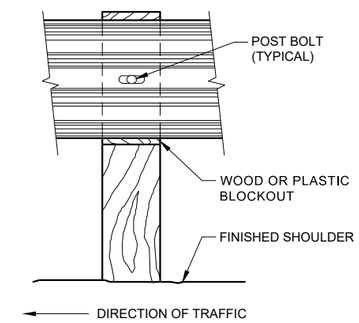

FRONT VIEW AT WOOD POST

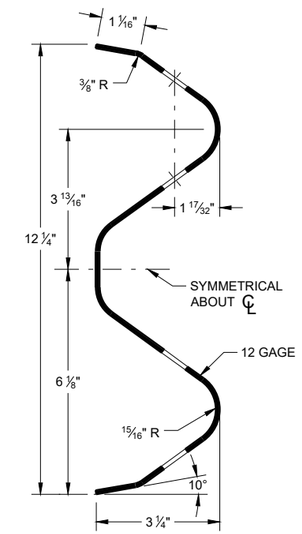

SECTION THRU W-BEAM RAIL

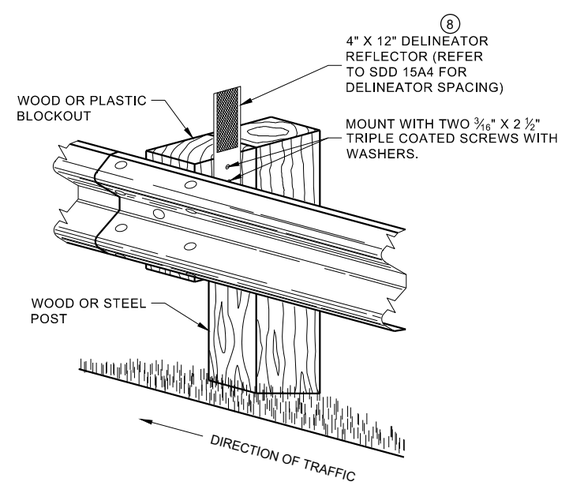

ONE SIDED REFLECTOR DETAIL AND TYPICAL INSTALLATION

MIDWEST GUARDRAIL SYSTEM (MGS) GUARDRAIL

STATE OF WISCONSIN
DEPARTMENT OF TRANSPORTAT

6

SDD 14B42 - 07b

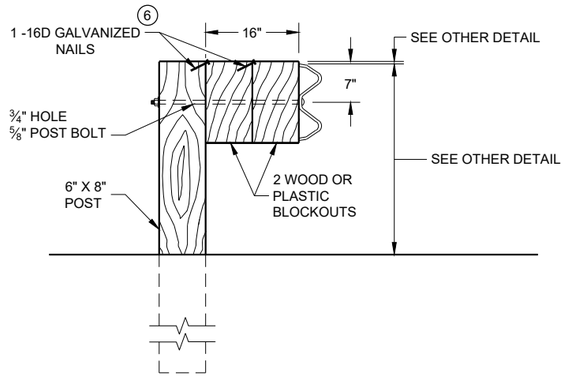

DETAIL FOR 16" BLOCKOUT DEPTH

IT IS ACCEPTABLE TO USE BLOCKOUTS UP TO 16" DEEP TO INCREASE THE POST OFFSET TO AVOID UNDERGROUND OBSTACLES. THERE IS NO LIMIT TO THE NUMBER OF POSTS THAT CAN HAVE ADDITIONAL BLOCKOUTS UP TO 16" DEEP.

NOTE:

1. ALL FILLETS SHALL HAVE A MINIMUM RADIUS OF 3/16".
2. IF THE BOLT EXTENDS MORE THAN ¼" FROM THE NUT THE BOLT SHOULD BE TRIMMED BACK.

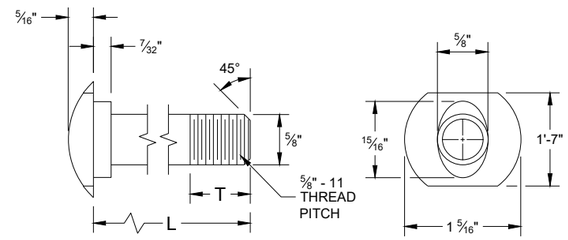

POST BOLT TABLE

L	T (MIN.)
1 ¼"	1 ⅛"
2"	1 ¾"
10"	4"
14"	4 1/16"
18"	4"
21"	4 1/16"
25"	4"

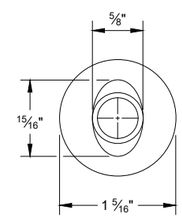

ALTERNATE BOLT HEAD

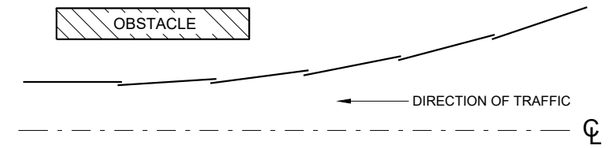

PLAN VIEW
BEAM LAPPING DETAIL

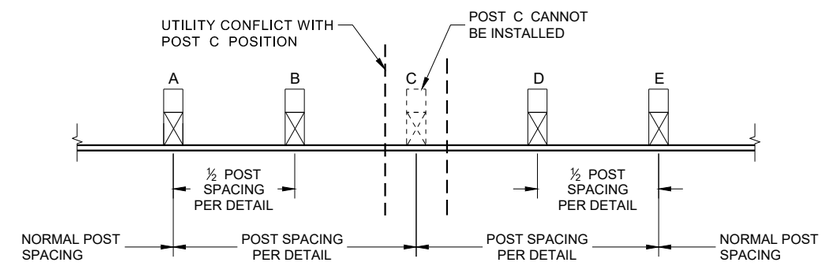

POST DRIVING FOR CONTINUOUS UNDERGROUND OBSTRUCTION

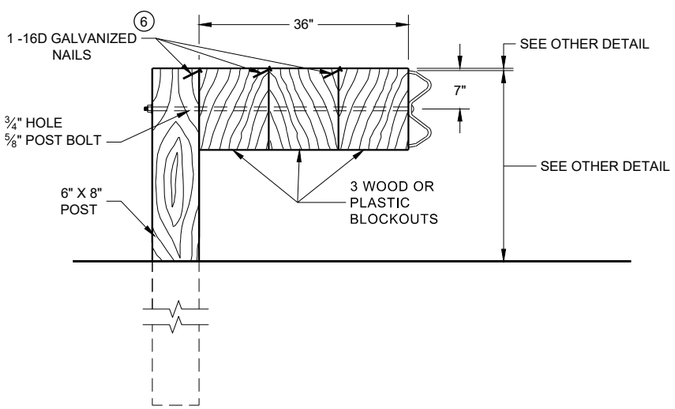

DETAIL FOR 36" BLOCKOUT DEPTH

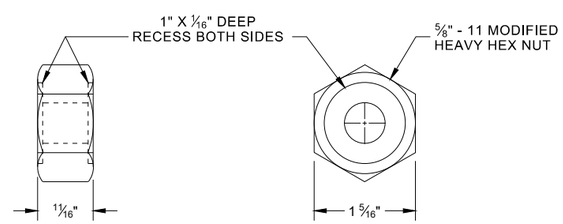

POST BOLT, SPLICE BOLT AND RECESS NUT

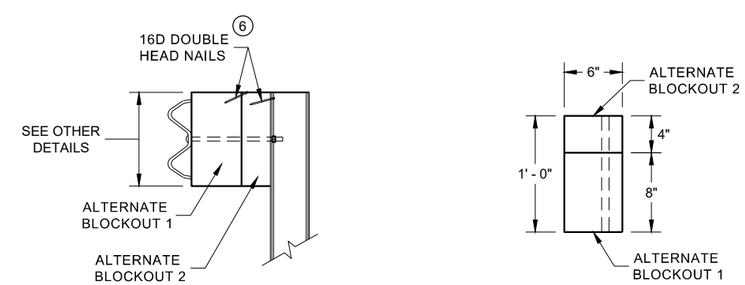

SIDE VIEW

PLAN VIEW

ALTERNATE WOOD BLOCKOUT DETAIL

NOTES: UNDER SPECIAL CIRCUMSTANCES, SUCH AS AVOIDING OBSTACLES THAT ARE NOT RELOCATED, IT IS ACCEPTABLE TO INSTALL ADDITIONAL BLOCKOUTS TO OBTAIN UP TO 36" DEPTH FOR ONE OR TWO POSTS IN A SECTION OF GUARDRAIL.

DO NOT USE 16" OR 36" BLOCKOUTS IF IT CAUSES THE POST TO BE DRIVEN BEYOND SHOULDER HINGE POINT OR CAUSES A FIXED OBJECT TO BE WITHIN THE DEFLECTION DISTANCE OF THE BARRIER.

(6) WHEN USING STEEL POST AD WOOD BLOCKOUTS, INSTALL FOUR 16D GALVANIZED NAILS. INSTALL NAILS AT THE BACK CORNERS OF THE BLOCK AND BEND THE NAILS OVER THE FLANGE OF THE STEEL POST.

MIDWEST GUARDRAIL SYSTEM (MGS) GUARDRAIL

STATE OF WISCONSIN
DEPARTMENT OF TRANSPORTA

6

SDD 14B42 - 07c

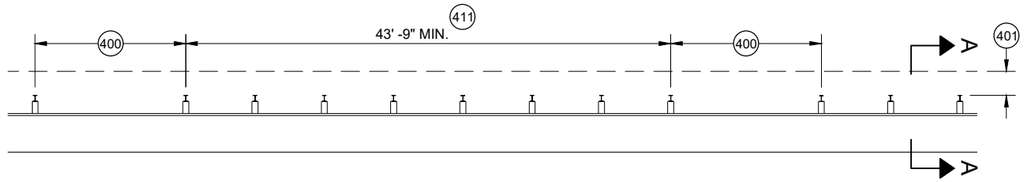

MISSING POST IN MGS GUARDRAIL

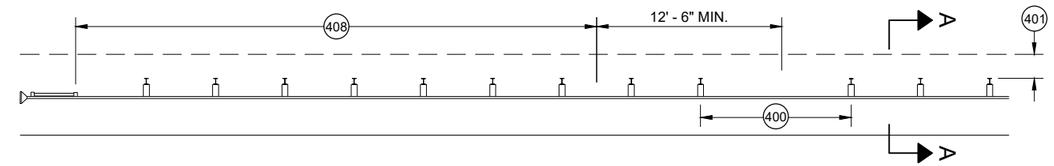

MISSING POST IN MGS GUARDRAIL NEAR EAT

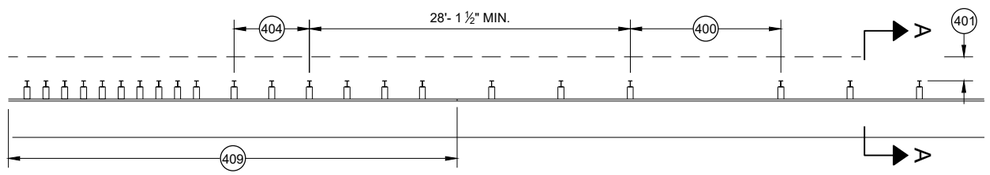

MISSING POST IN MGS GUARDRAIL NEAR AN APPROACH TRANSITION

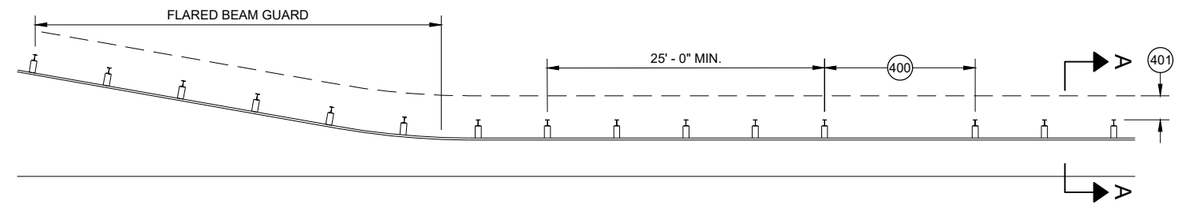

MISSING POST IN MGS GUARDRAIL NEAR FLARED BEAM GUARD

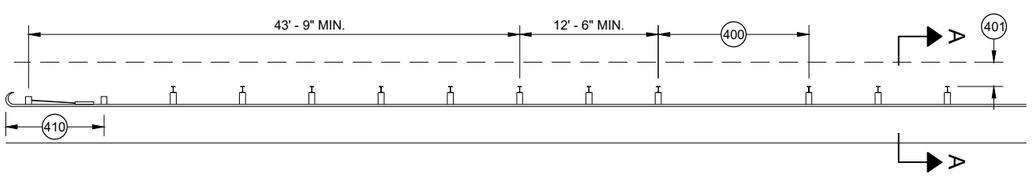

MISSING POST IN MGS GUARDRAIL NEAR A TYPE 2 END TERMINAL

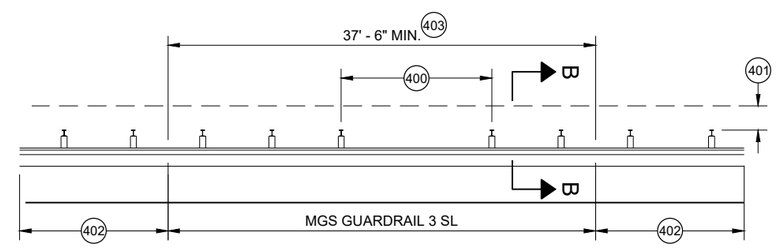

MISSING POST IN SHORT SPAN MGS GUARDRAIL NEAR CURB (SL) 407

400 MAX SPAN 12' - 6"
401 2' MIN.
402 MGS GUARDRAIL 3
403 NESTING BEAM GUARD
404 ASYMMETRIC TRANSITION
405 SOIL WELL DRAINED AND COMPACTED
406 SEE OTHER DRAWINGS IN THIS SDD
407 SEE OTHER DRAWINGS FOR MIN. SPACING BETWEEN SPANS
408 SEE SDD 14B44
409 SEE SDD 14B45
410 SEE SDD 14B47
411 MINIMUM DISTANCE BETWEEN MISSING POST SPANS.

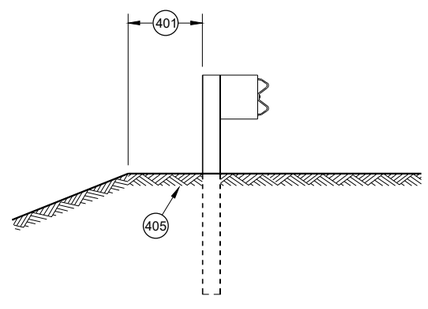

SECTION A - A 406

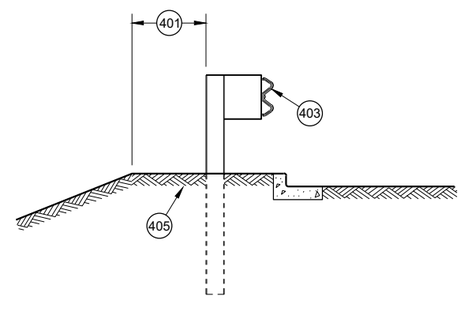

SECTION B - B 406

MIDWEST GUARDRAIL SYSTEM (MGS) GUARDRAIL

STATE OF WISCONSIN
DEPARTMENT OF TRANSPORTATION

APPROVED
May 2021 — DATE
/S/ Rodney Taylor — ROADWAY STANDARDS DEVE UNIT SUPERVISOR
FHWA

6

SDD 14B42 - 07d

GENERAL NOTES

(A) THE SLOPE IN THE AREA BOUNDED BY THE GRADELINE, THE HINGE POINT LINE (HPL) AND THE CLEAR ZONE LIMITS (CZL) SHALL BE 4:1 OR FLATTER.

(B) AFTER FINAL ASSEMBLY, RECHECK CABLE TO BE SURE IT IS TAUT AND HAS NOT RELAXED

(C) DIFFERENT MANUFACTURERS REQUIRE DIFFERENT PERFORATED W - BEAM RAIL END PANELS. SEE MANUFACTURER'S INFORMATION.

(D) ATTACH ALUMINUM SHEET TO E.A.T. HEAD USING 4 STAINLESS STEEL SELF - TAPPING SCREWS. ONE SCREW PER CORNER.

(E) HARDWARE MAY VARY BETWEEN MANUFACTURER. SEE MANUFACTURER'S DRAWING FOR INFORMATION.

DIMENSIONS MAY VARY, MANUFACTURER'S INFORMATION.

SEE SDD 14B42 FOR MORE INFORMATION.

* DO NOT ATTACH BLOCKOUTS TO POST 1 AND 2.

DO NOT INSTALL REFLECTORS ON THE FIRST 50 FEET OF THE APPROACH END OF THE ENERGY ABSORBING TERMINAL.

SEE MANUFACTURER'S DRAWING FOR SPLICE LOCATION, HARDWARE DIMENSIONS AND INSTALLATION INSTRUCTIONS.

THE CENTER OF THE UPPER 3 ½" DIAMETER HOLE ON POST NUMBER 3 THROUGH POST 9 IS TO BE FLUSH WITH THE GROUND LINE UP TO A MAXIMUM OF 2" ABOVE GROUND LINE. WOOD BLOCKS ON POSTS NUMBERED 3 THROUGH 9 MAY BE ADJUSTED UP TO 3" ABOVE THE TOP OF POST.

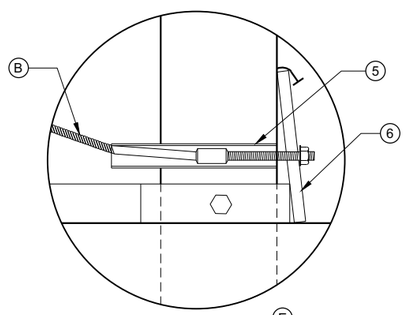

DETAIL "A" (E)

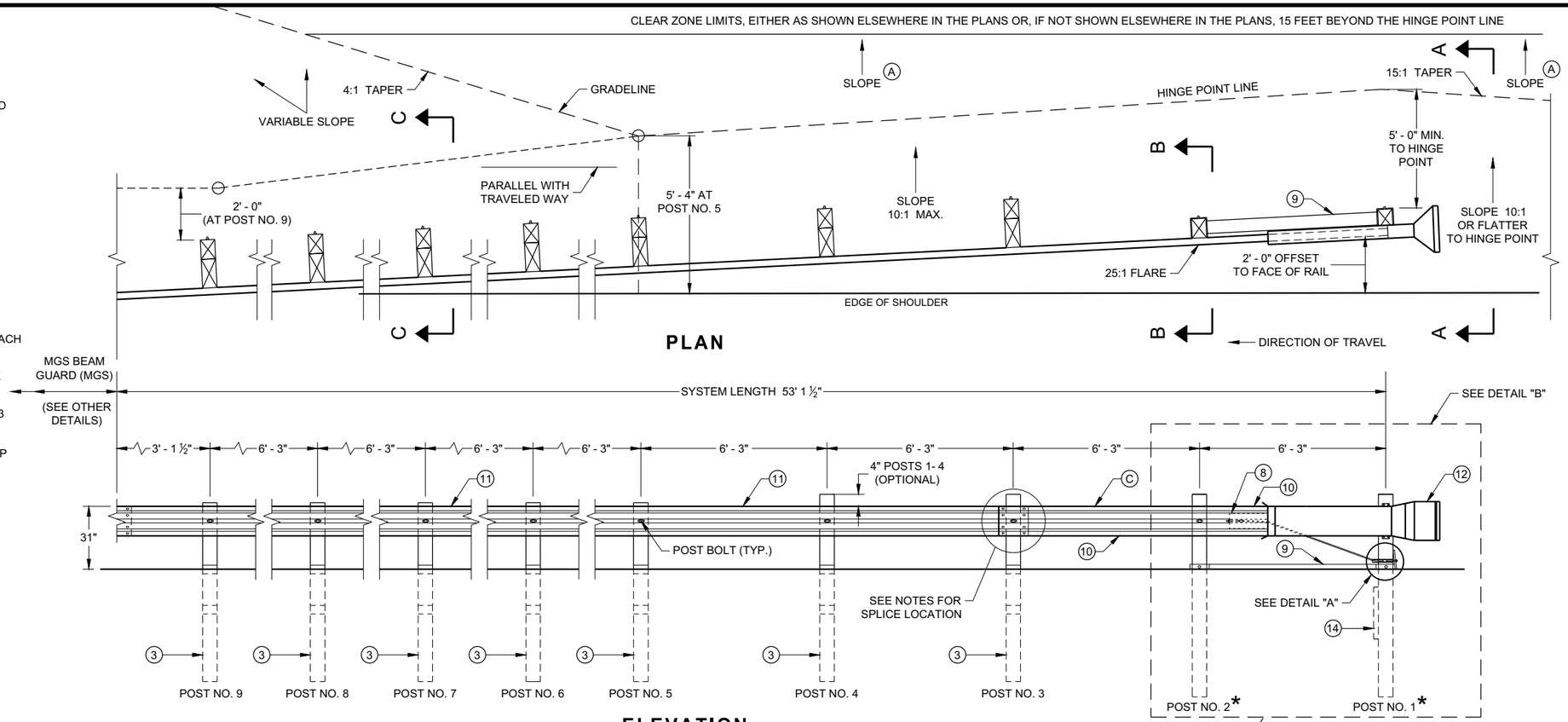

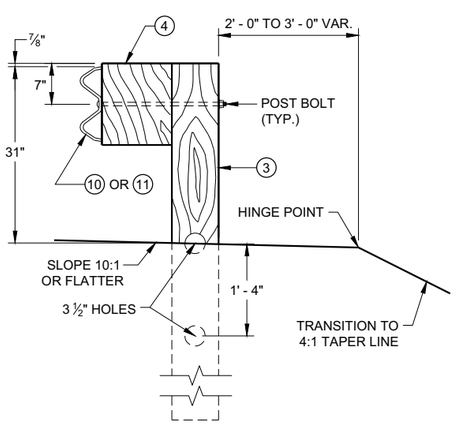

SECTION C - C
TYPICAL AT POST NOS. 3 - 9

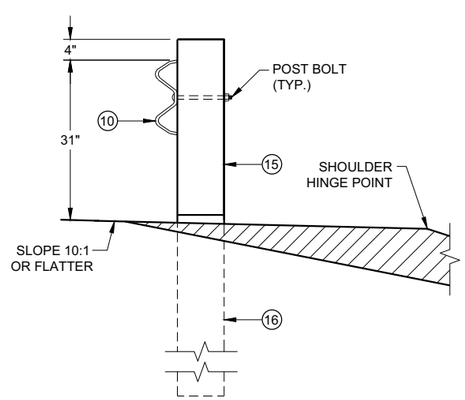

SECTION B - B
TYPICAL AT POST NO. 2*

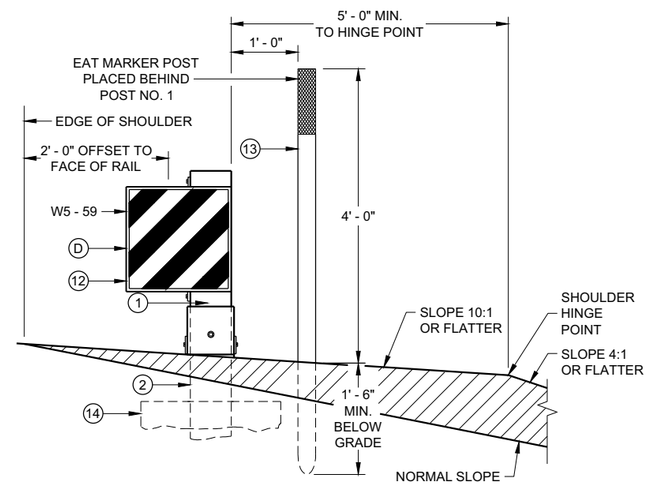

SECTION A - A
TYPICAL AT POST NO. 1*

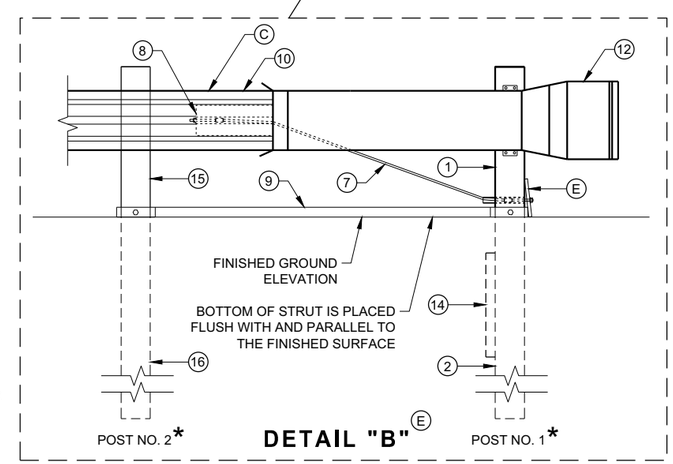

DETAIL "B" (E)

MIDWEST GUARDRAIL SYSTEM ENERGY ABSORBING TERMINAL (MGS)

STATE OF WISCONSIN
DEPARTMENT OF TRANSPORTATION

6

6

SDD 14B44 - 04a

SDD 14B44 - 04a

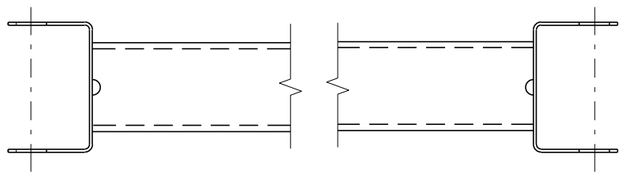

GENERIC GROUND STRUT (9)(E)

BILL OF MATERIALS

PART NO.	DESCRIPTION MATERIALS PROVIDED BY MGS EAT MANUFACTURER. SEE MANUGACTURER'S DETAILS FOR MORE INFORMATION.
1	UPPER POST NO. 1 6" X 6" TUBE
2	LOWER POST NO. 1
3	WOOD CRT
4	WOOD BLOCKOUT
5	PIPE SLEEVE
6	BEARING PLATE
7	BCT CABLE ASSEMBLY
8	ANCHOR CABLE BOX
9	GROUND STRUT
10	PERFORATED W-BEAM RAIL END PANEL, 12'-6" LONG.
11	STANDARD W-BEAM RAIL. MULTIPLE SECTIONS REQUIRED. SECTIONS VARY IN LENGTH.
12	IMPACT HEAD
13	EAT MARKER POST - YELLOW (SEE APPROVED PRODUCTS LIST)
14	SOIL PLATE
15	UPPER POST NO. 2
16	LOWER POST NO. 2

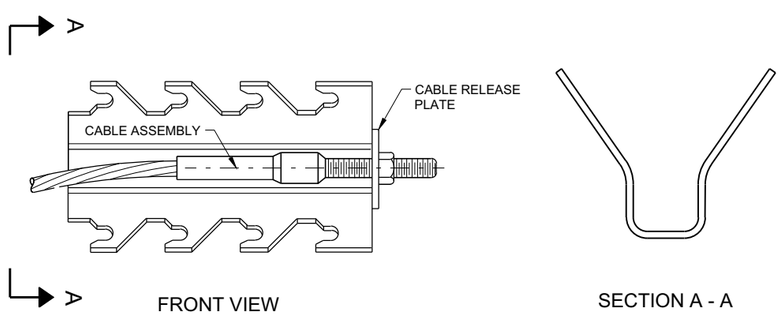

GENERIC ANCHOR CABLE BOX (9)(E)

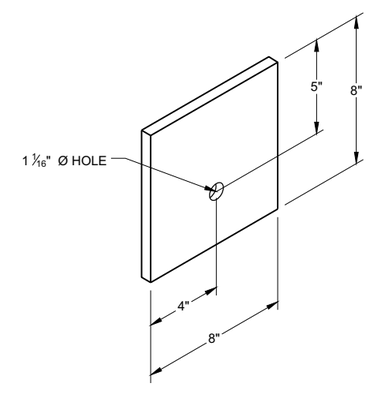

BEARING PLATE (6)(E)

6

6

SDD 14B44 - 04b

SDD 14B44 - 04b

MIDWEST GUARDRAIL SYSTEM ENERGY ABSORBING TERMINAL (MGS)

STATE OF WISCONSIN
DEPARTMENT OF TRANSPORTAT

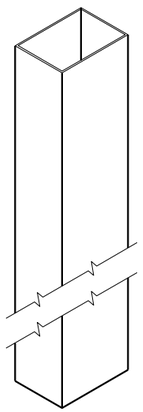

UPPER POST NO. 1 (1) (E)

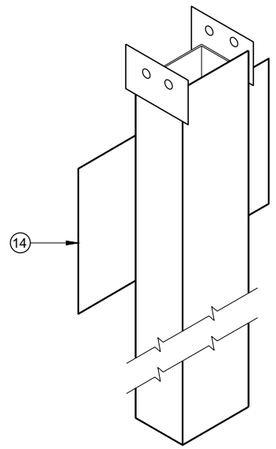

LOWER POST NO. 1 (2) (E)

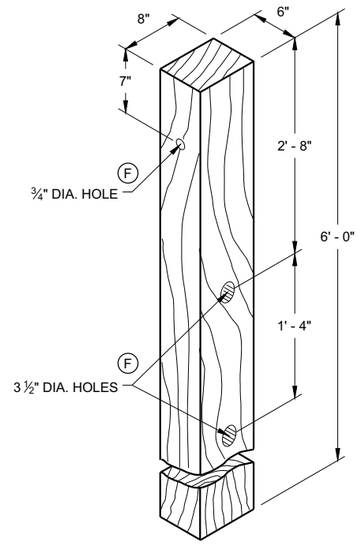

WOOD CRT POST (3) (E)

POSTS NUMBER 3-9

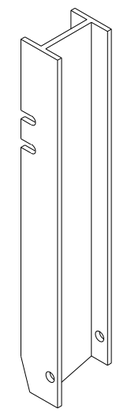

UPPER POST NO. 2 (15) (E)

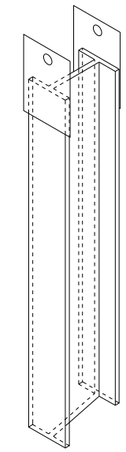

LOWER POST NO. 2 (16) (E)

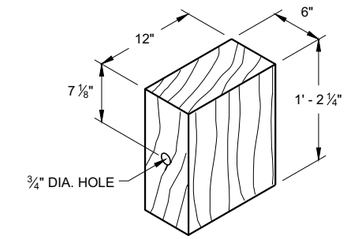

WOOD BLOCKOUT (4)

REQ'D. AT ALL POSTS EXCEPT POST NO'S 1 & 2

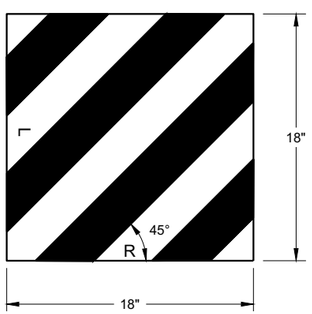

W5 - 59

REFLECTIVE SHEETING DETAIL (E)

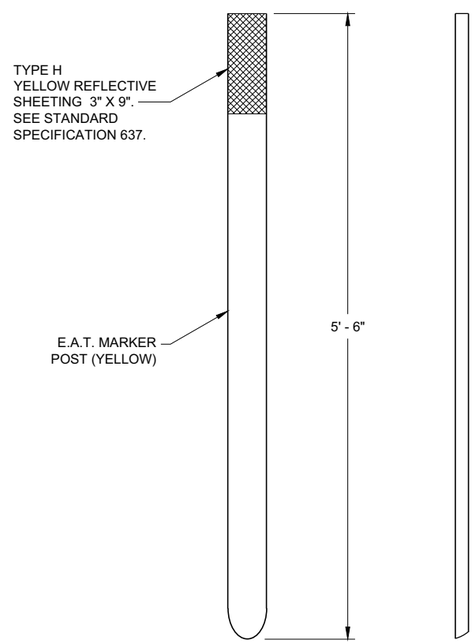

FRONT VIEW SIDE VIEW

E.A.T. MARKER POST (13)

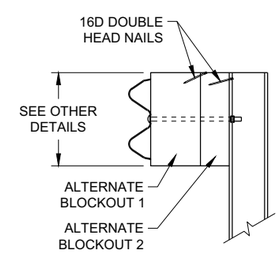

SIDE VIEW

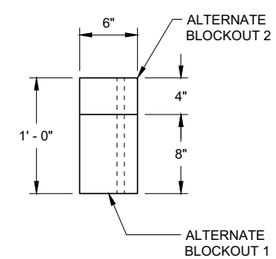

TOP VIEW

ALTERNATE WOOD BLOCKOUT DETAIL

6

6

SDD 14B44 - 04c

SDD 14B44 - 04c

MIDWEST GUARDRAIL SYSTEM ENERGY ABSORBING TERMINAL (MGS)

STATE OF WISCONSIN
DEPARTMENT OF TRANSPORTATION

APPROVED

7/2018 — DATE

/S/ Rodney Taylor — ROADWAY STANDARDS DEVE UNIT SUPERVISOR

FHWA

GENERAL NOTES

DETAILS OF CONSTRUCTION, MATERIALS AND WORKMANSHIP NOT SHOWN ON THIS DRAWING SHALL CONFORM TO THE PERTINENT REQUIREMENTS OF THE STANDARD SPECIFICATIONS AND THE APPLICABLE SPECIAL PROVISIONS.

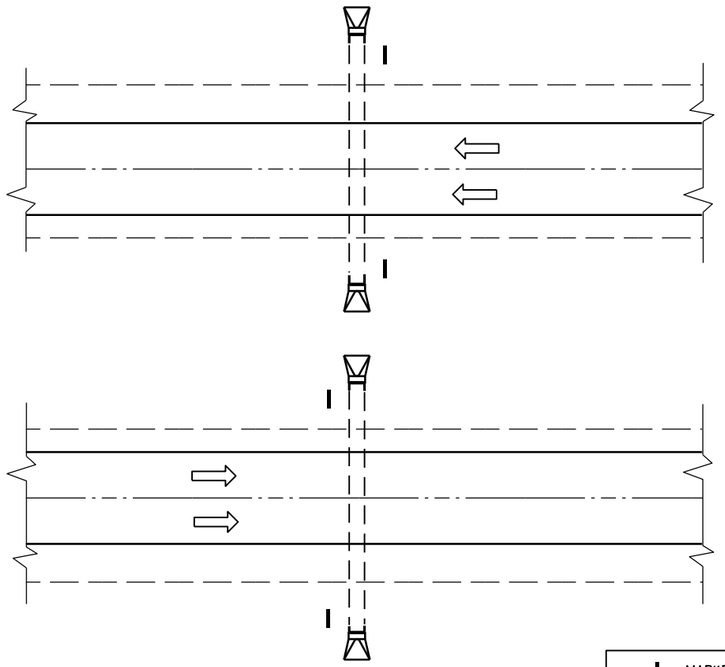

PLAN VIEW

DIVIDED HIGHWAY

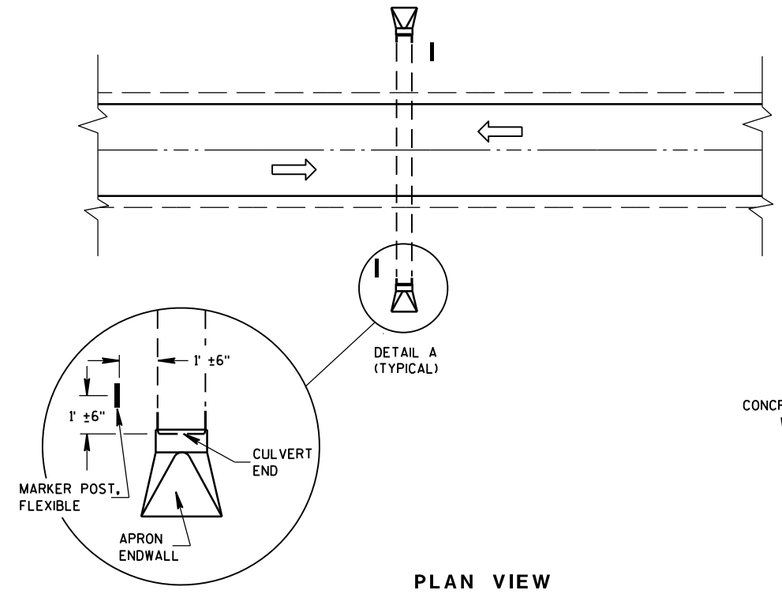

DETAIL A
(TYPICAL)

PLAN VIEW

UNDIVIDED HIGHWAY

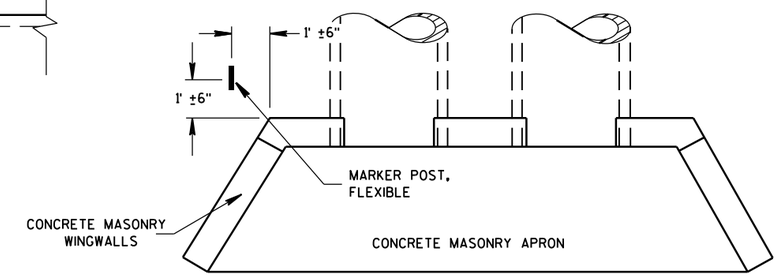

PLAN VIEW

CONCRETE MASONRY ENDWALLS FOR CULVERT PIPE AND PIPE ARCH

MARKER POST, FLEXIBLE

DIRECTION OF TRAFFIC FLOW

FLEXIBLE MARKER POST LOCATION

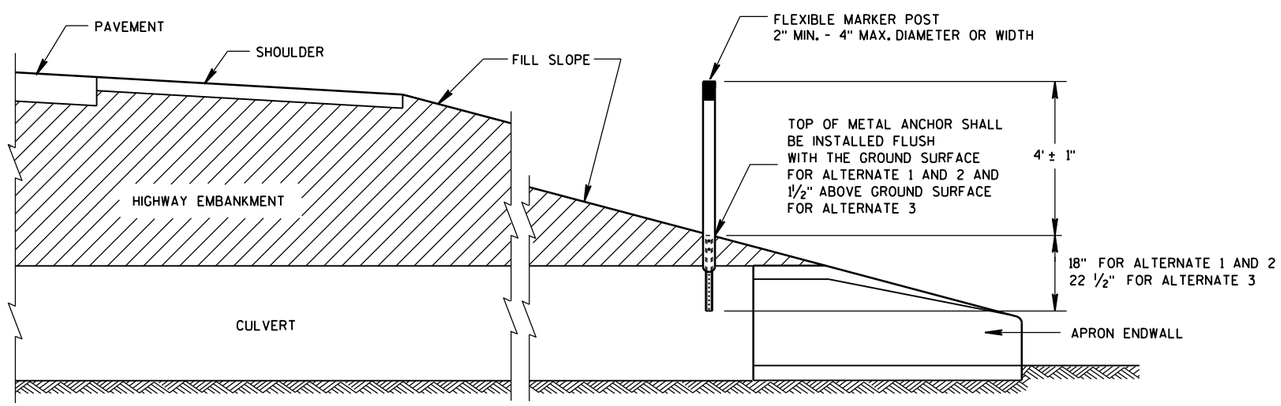

CROSS SECTION

FLEXIBLE MARKER POST

FLEXIBLE MARKER POST FOR CULVERT END

STATE OF WISCONSIN
DEPARTMENT OF TRANSPORTATION

6

S.D.D. 15 A 3-2a

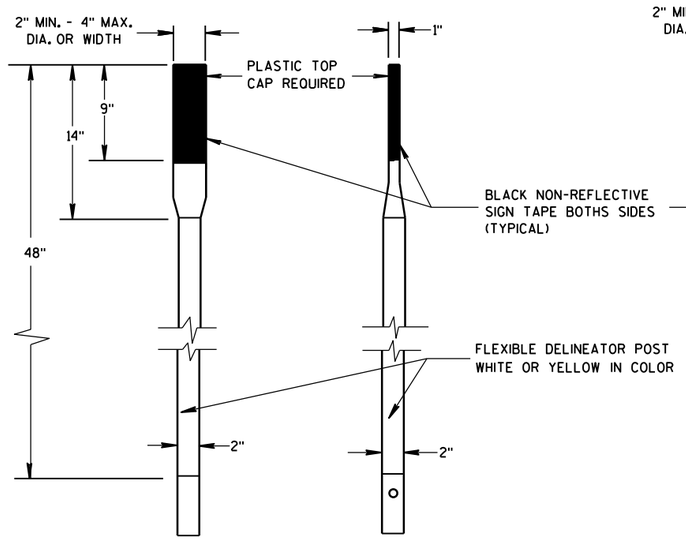

FRONT VIEW SIDE VIEW

ALTERNATE 1

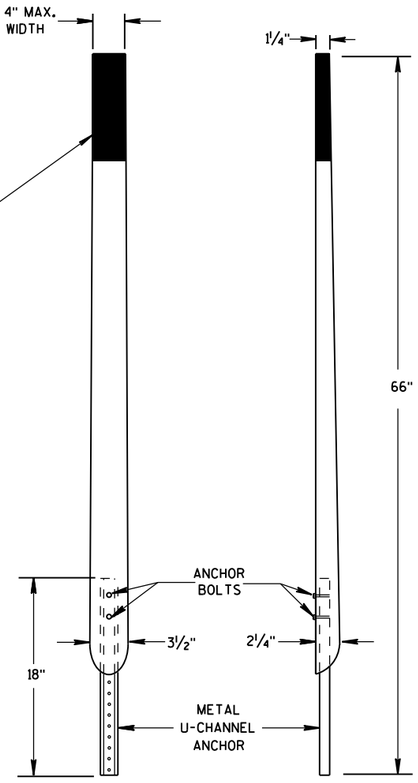

FRONT VIEW SIDE VIEW

ALTERNATE 2

FLEXIBLE MARKER POSTS

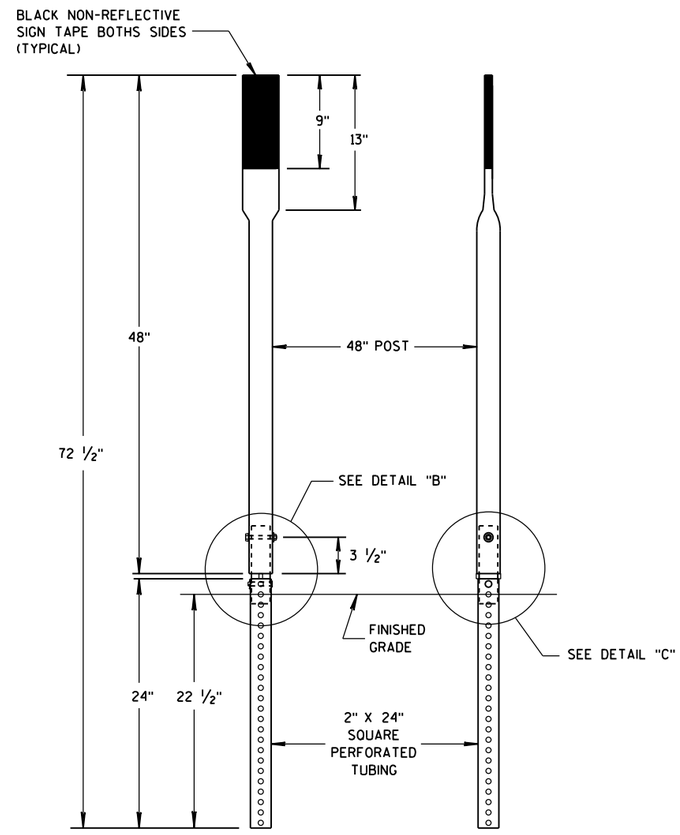

FRONT VIEW SIDE VIEW

ALTERNATE 3

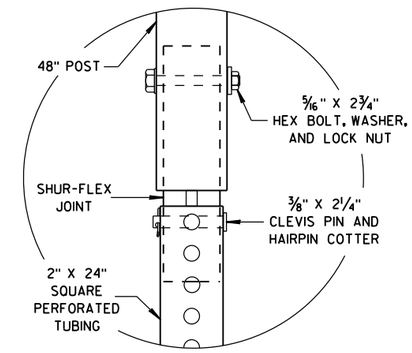

DETAIL B

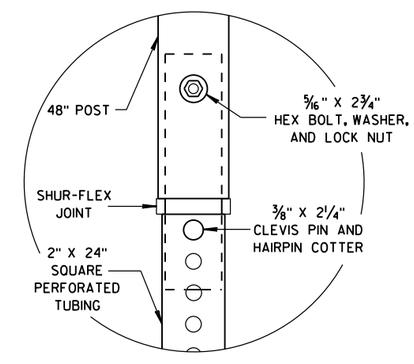

DETAIL C

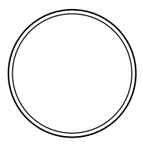

SECTION A-A

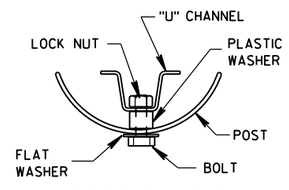

SECTION B-B

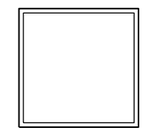

SECTION C-C

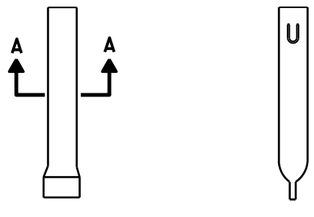

FRONT VIEW SIDE VIEW

ALTERNATE 1

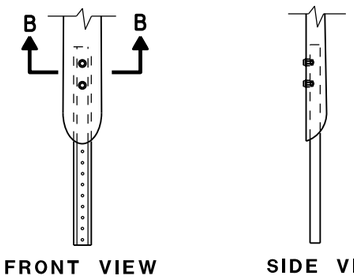

FRONT VIEW SIDE VIEW

ALTERNATE 2

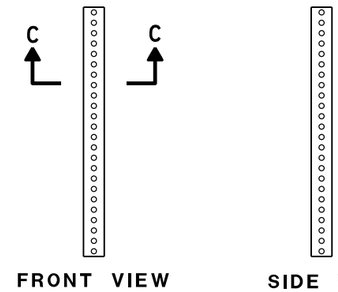

FRONT VIEW SIDE VIEW

ALTERNATE 3

FLEXIBLE MARKER POST ANCHORS

FLEXIBLE MARKER POST
FOR CULVERT END

STATE OF WISCONSIN
DEPARTMENT OF TRANSPORTATION

APPROVED
10/1/2012 /S/ Travis Feltes
DATE STATE TRAFFIC ENGINEER
FHWA

6

6

S.D.D. 15 A 3-2b

S.D.D. 15 A 3-2b

NOTE: PULL OR STRETCHER POST ASSEMBLIES SHALL BE PLACED MIDWAY BETWEEN END POSTS AND CORNER POSTS WHERE A RUN OF FENCE EXCEEDS 660' BUT IS LESS THAN 1,320'. FOR RUNS OF FENCE IN EXCESS OF 1,320' MAXIMUM SPACING OF PULL OR STRETCHER POST ASSEMBLIES SHALL BE 660'± C-C.

ILLUSTRATION SHOWS POSITION OF STANDARD STEEL BRACE, DOUBLE STRAND GALVANIZED WIRE, AND THE POST TO BE EMBEDDED IN CONCRETE WHEN WIRE FENCE IS INSTALLED FROM LEFT TO RIGHT. THE BRACES SHALL BE POSITIONED ON THE OPPOSITE DIAGONALS AND THE OPPOSITE POST SHALL BE EMBEDDED IN CONCRETE WHEN WIRE FENCE IS INSTALLED FROM RIGHT TO LEFT.

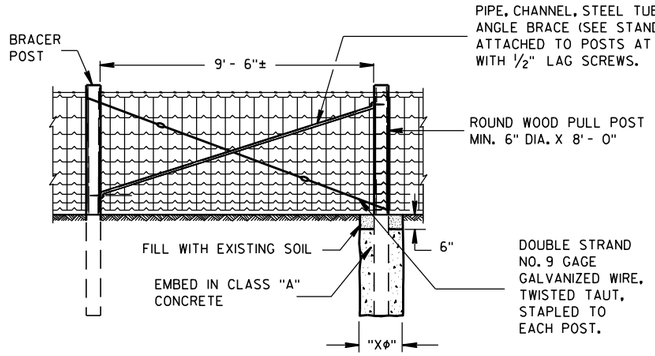

PULL OR STRETCHER POSTS ASSEMBLY

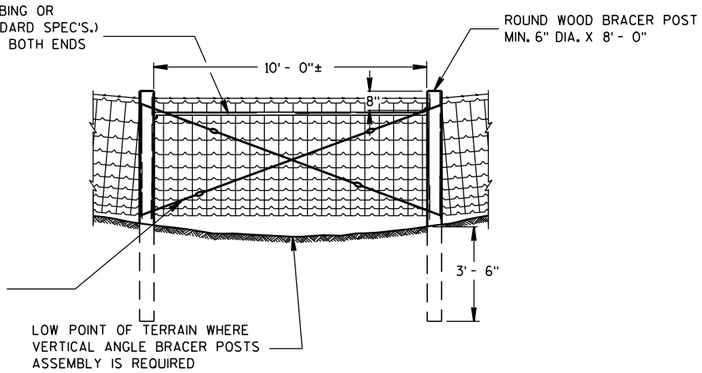

VERTICAL ANGLE BRACER POSTS ASSEMBLY

GENERAL NOTES

"XΦ" = DIAMETER OF THE POST PLUS 12".

FENCE STAPLES SHOULD NEVER BE DRIVEN VERTICALLY INTO WOOD POSTS (WITH BOTH LEGS PARALLEL WITH THE WOOD GRAIN). DOING SO CAN SEPARATE THE GRAIN AND SIGNIFICANTLY REDUCE THE HOLDING POWER. ROTATING THE STAPLES SLIGHTLY OFF VERTICAL STRADDLES THE GRAIN AND PROVIDES MORE RESISTANCE TO PULL-OUT.

DO NOT STAPLE WIRE TIGHT TO THE LINE POSTS. ALLOW MOVEMENT OF WIRE FOR EXPANSION AND CONTRACTION. STAPLE ARRANGEMENT SHALL BE THE SAME FOR ALL OTHER POSTS EXCEPT THAT THEY SHALL BE DRIVEN TIGHT TO POSTS. ALL STAPLES SHALL BE 2" X 9 GAGE AND SHALL BE MANUFACTURED FROM GALVANIZED WIRE OR HOT DIP GALVANIZED AFTER FORMING. STAPLES SHALL HAVE SLASH-CUT POINTS.

FENCE SHALL BE LOCATED 3'-0" INSIDE THE RIGHT OF WAY LINE UNLESS OTHERWISE INDICATED ON THE PLANS.

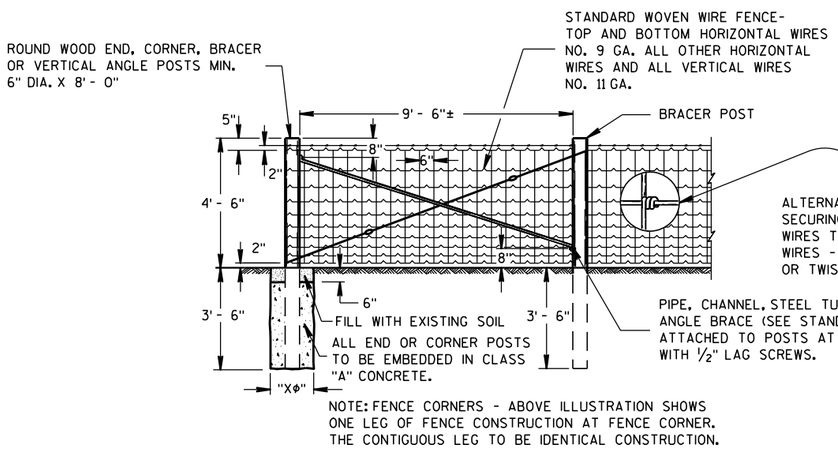

END OR CORNER POSTS ASSEMBLY

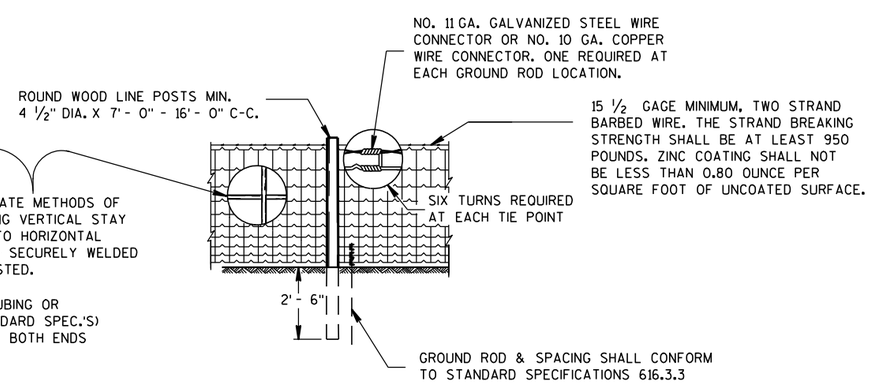

LINE FENCE CONSTRUCTION

GENERAL ROADSIDE VIEW OF WOVEN WIRE FENCE

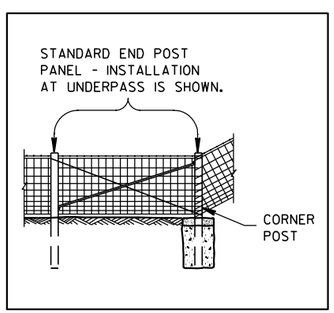

ALTERNATE FENCE DESIGN AT STRUCTURE

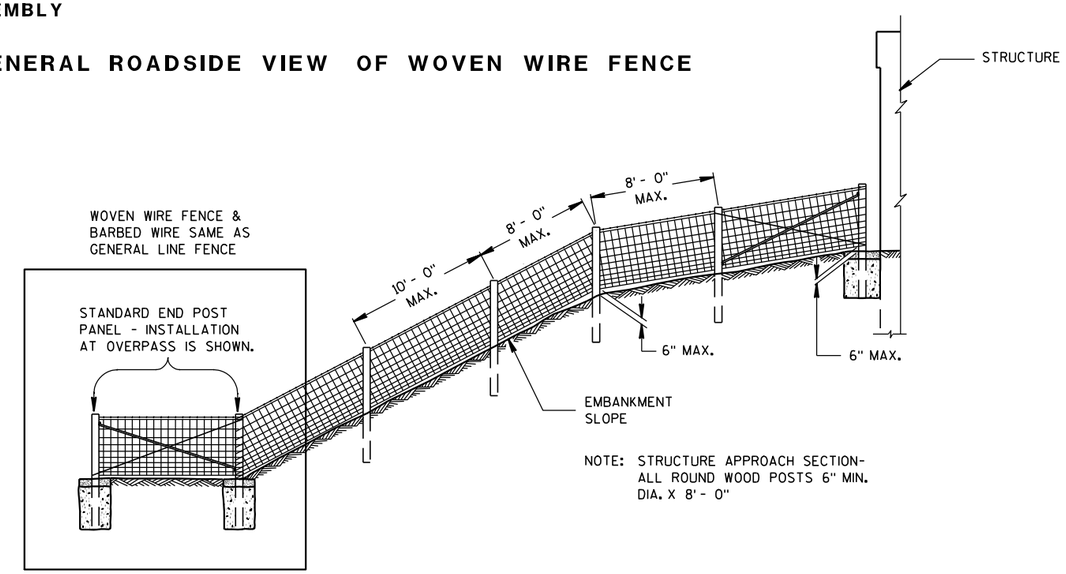

FENCE DESIGN AT STRUCTURE APPROACH

FENCE WOVEN WIRE

STATE OF WISCONSIN
DEPARTMENT OF TRANSPORTATION

6

6

S.D.D. 15 B 1-8a

S.D.D. 15 B 1-8a

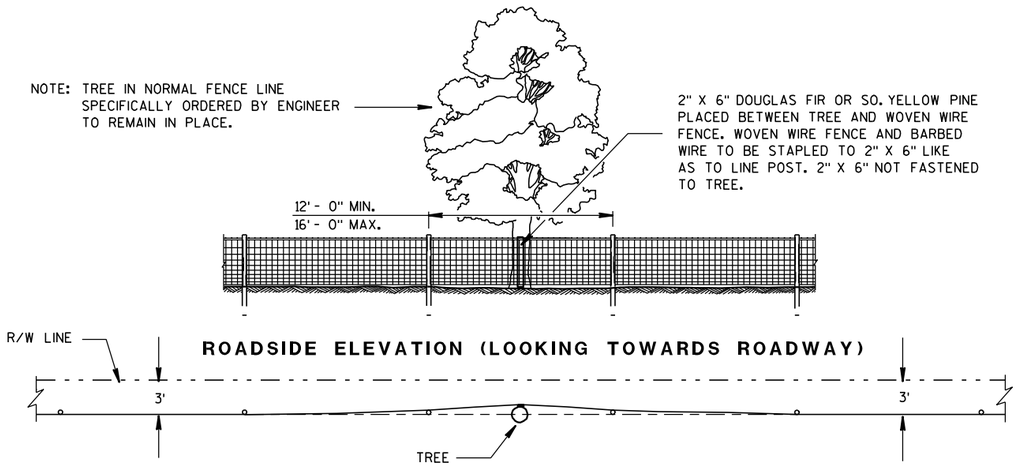

PLAN VIEW

FENCE DESIGN AT TREES REMAINING IN NORMAL FENCE LINE

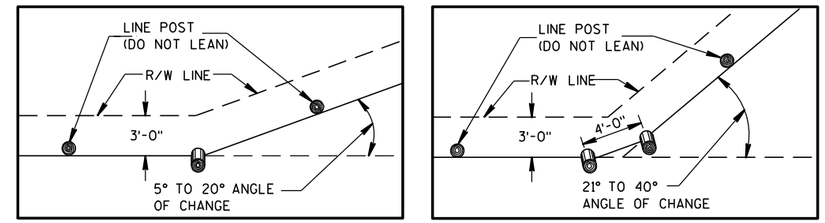

PLAN VIEW
SINGLE POST CORNER

PLAN VIEW
DOUBLE POST CORNER

RIGHT OF WAY LINE CHANGE 40° AND LESS

NOTE: SINGLE AND DOUBLE POSTS SHALL BE A MIN. 6" DIA. X 8'-0" WITH A LEAN OF 4" TOWARD THE OUTSIDE OF THE CURVE.

WHEN THE RIGHT OF WAY LINE CHANGE IS MORE THAN 40° USE THE CORNER OR STRETCHER POSTS ASSEMBLY.

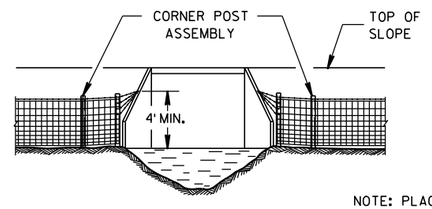

NOTE: PLACE A MINIMUM OF 4 STRANDS OF BARBED WIRE, 6" MAXIMUM CENTERS IN FAN SHAPE CONNECTED TO AN EYE BOLT ON WINGWALL OR SET A LONE POST WHEN NECESSARY TO CONNECT BARBED WIRE.

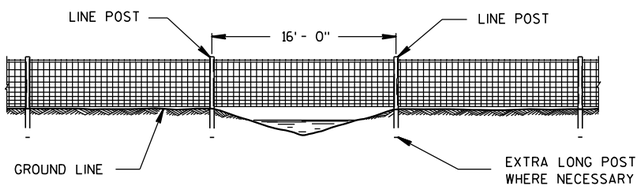

FENCE CONSTRUCTION OVER STREAM COURSES OF 15 FT. OR LESS IN WIDTH

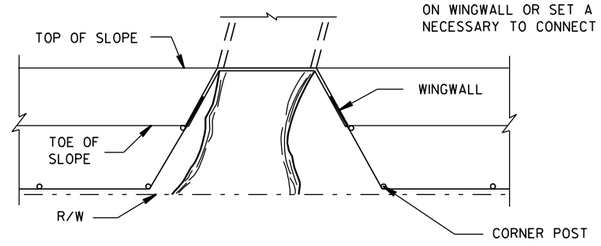

FENCE INSTALLATION TO WINGWALLS

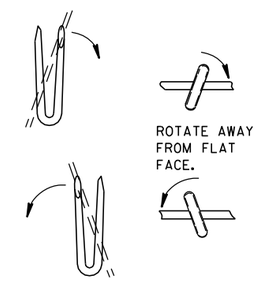

LINE POST

NOTE: WHEN POSTS ARE DRIVEN THE SMALL END SHALL BE DOWN.

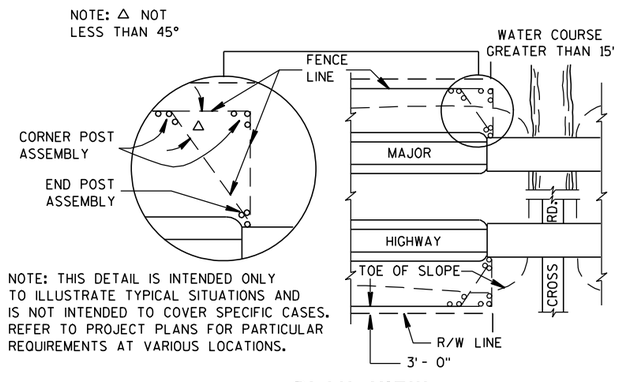

PLAN VIEW

MAJOR HIGHWAY OVERPASS OR STREAM COURSE CROSSING OF GREATER THAN 15 FT. IN WIDTH

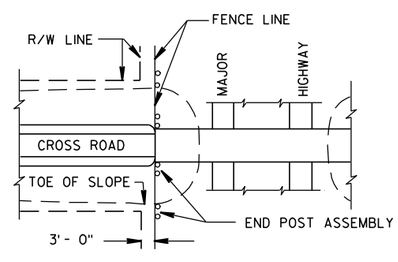

PLAN VIEW

MAJOR HIGHWAY UNDERPASS

FENCE LOCATION AT STRUCTURES

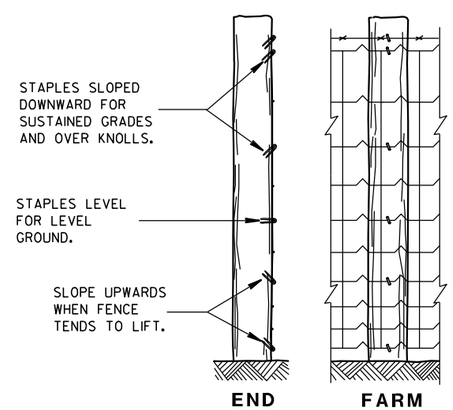

END ELEVATION

FARM SIDE ELEVATION

FENCE MOUNTING DETAIL

FENCE WOVEN WIRE

STATE OF WISCONSIN
DEPARTMENT OF TRANSPORTATION

APPROVED
4/4/2008 /S/ Jerry H. 7---
DATE ROADWAY STANDARDS DEVELOPMENT ENGINEER
FHWA

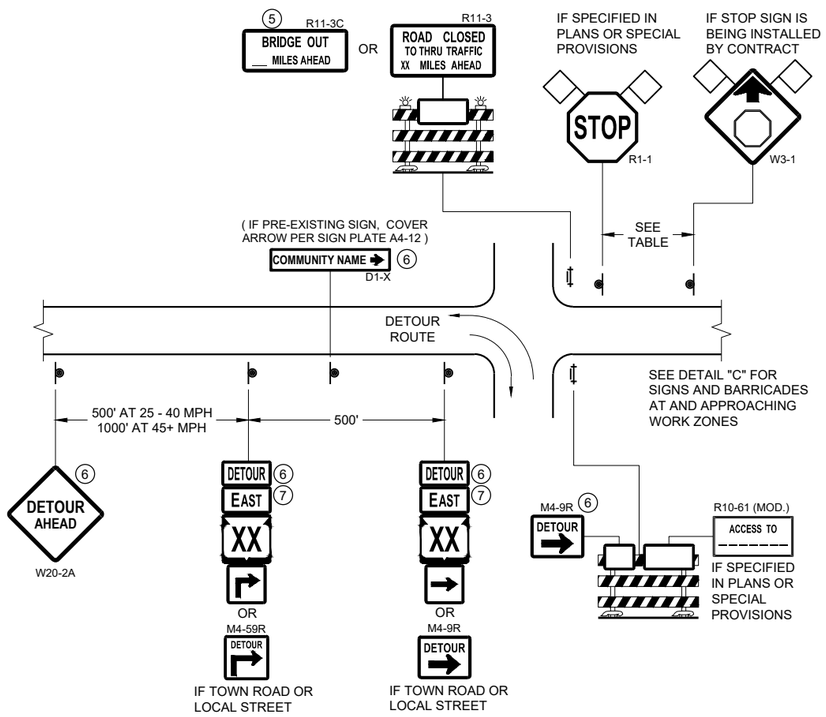

DETAIL A
MAINLINE CLOSURE WITH POSTED DETOUR

WORK ZONE GREATER THAN OR EQUAL TO ½ MILE FROM DETOUR ROUTE (1000 FEET IF URBAN)

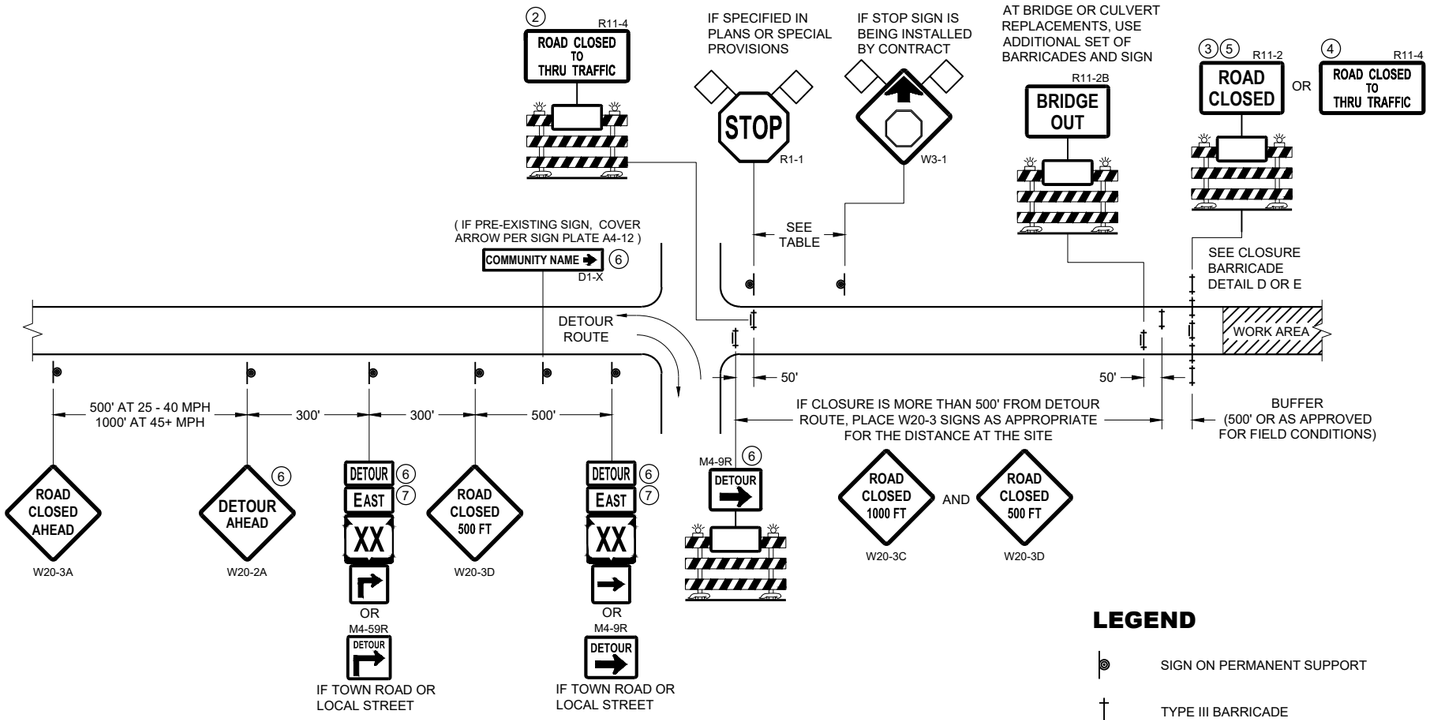

DETAIL B
MAINLINE CLOSURE WITH POSTED DETOUR

WORK ZONE LESS THAN ½ MILE FROM DETOUR ROUTE (1000 FEET IF URBAN)

LEGEND

- SIGN ON PERMANENT SUPPORT
- TYPE III BARRICADE
- TYPE III BARRICADE WITH ATTACHED SIGN
- TYPE "A" WARNING LIGHT (FLASHING)
- WORK AREA
- FLAGS, 16" X 16" MIN. (ORANGE)
- DETOUR — M4 - 8
- EAST — M3 - X
- XX (M1 - 4) OR XX (M1 - 6) OR COUNTY X (M1 - 5A)
- M05 - 1 OR M06 - 1

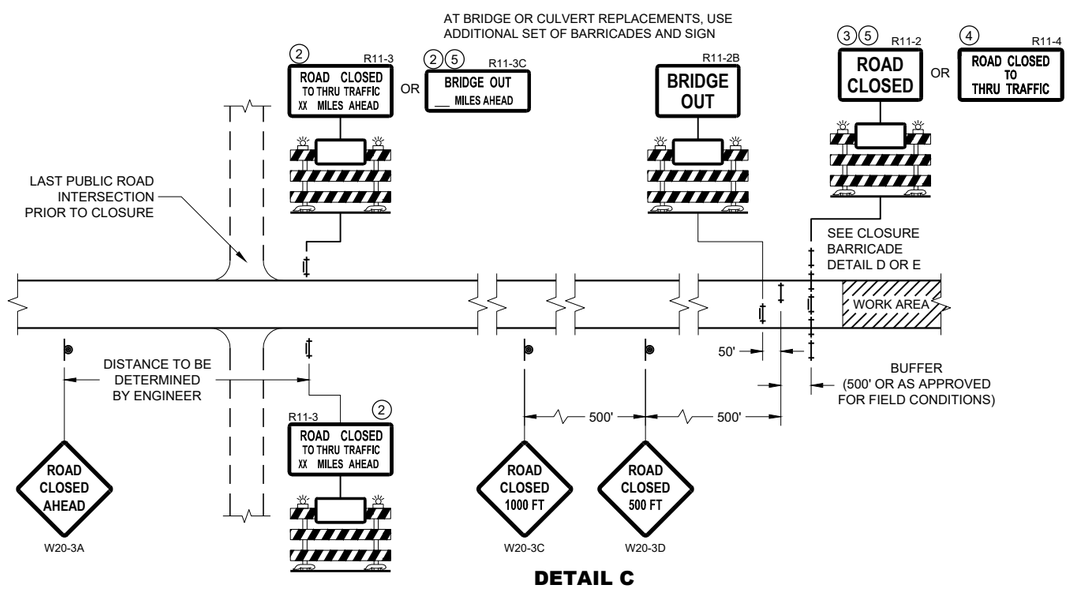

DETAIL C
MAINLINE CLOSURE, NO POSTED DETOUR

SPEED LIMIT (MPH)	"STOP AHEAD" ADVANCE WARNING DISTANCE (FT)
25	200
30	200
35	350
40	350
45	500
50	550
55	750

SEE SDD 15C2-SHEET "b" FOR GENERAL NOTES AND FOOTNOTES 1 THROUGH 7

BARRICADES AND SIGNS FOR MAINLINE CLOSURES

STATE OF WISCONSIN
DEPARTMENT OF TRANSPORTATION

APPROVED
May 2023 — DATE
/S/ Andrew Heidtke — WORK ZONE ENGINEER

FHWA

6

SDD 15C02 - 09a

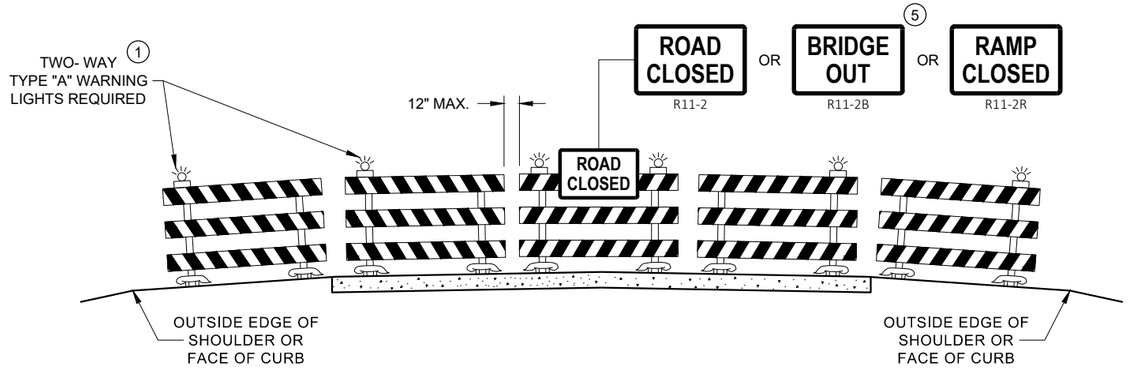

DETAIL D
ROAD CLOSURE BARRICADE DETAIL
APPROACH VIEW

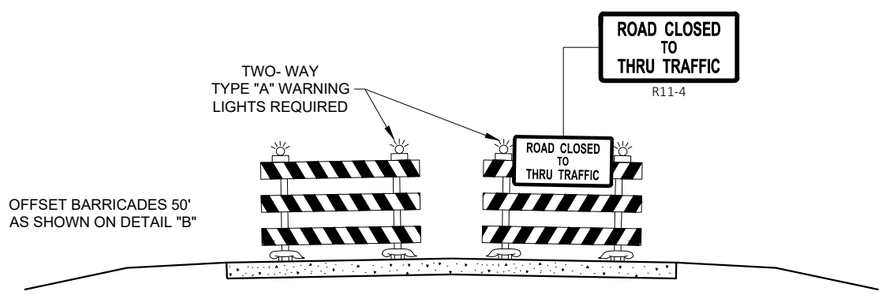

DETAIL E
LANE CLOSURE BARRICADE DETAIL
APPROACH VIEW

SEE SDD 15C2 - SHEET "a" FOR LEGEND

GENERAL NOTES

THE EXACT NUMBER, LOCATION, AND SPACING OF ALL SIGNS AND BARRICADES SHALL BE ADJUSTED TO FIT FIELD CONDITIONS AS APPROVED BY THE ENGINEER.

ANY SIGNS TEMPORARY OR EXISTING, WHICH CONFLICT WITH TRAFFIC CONTROL "IN USE", SHALL BE REMOVED OR COVERED AS NEEDED AND AS APPROVED BY THE ENGINEER.

THE SPACING BETWEEN TRAFFIC CONTROL SIGNS SHOULD BE ADJUSTED TO NOT CONFLICT WITH AND SHOULD PROVIDE A DESIRABLE MINIMUM OF 200 FEET CLEARANCE TO EXISTING SIGNS THAT WILL REMAIN IN PLACE.

BARRICADES THAT MUST BE MOVED FOR A WORK OPERATION SHALL BE IMMEDIATELY RE-ESTABLISHED UPON COMPLETION OF THE OPERATION, OR FOR CONTINUING OPERATIONS, AT THE END OF EACH WORKING DAY.

SIGNS THAT WILL BE IN PLACE LESS THAN 7 CONTINUOUS DAYS AND NIGHTS MAY BE MOUNTED ON PORTABLE SUPPORTS.

ALL TYPE III BARRICADES SHALL HAVE RAILS REFLECTORIZED ON BOTH FACES. STRIPES SHALL BE PROPERLY SLOPED DOWN TOWARD THE TRAFFIC SIDE OR AS SHOWN IN THE ROAD CLOSURE BARRICADE DETAIL "D" FOR FULL ROAD CLOSURES.

TYPE "A" LOW - INTENSITY FLASHING WARNING LIGHTS SHALL BE VISIBLE ON BOTH SIDES OF THE BARRICADE.

THE R11 - 2, R11 - 3, M4 - 9, R11 - 4, AND R10 - 61 SIGNS PLACED ON THE BARRICADES SHALL COVER NO MORE THAN THE TOP RAIL. THE SIGNS SHALL NOT COVER ANY PORTION OF THE MIDDLE RAIL OR BOTTOM RAILS.

"WO" AND "MO" SIGNS ARE THE SAME AS "W" AND "M" SIGNS EXCEPT THE BACKGROUND IS ORANGE.

ALL SIGNS SHALL BE 48" X 48" UNLESS OTHERWISE NOTED BELOW:
- R11 - 2 SHALL BE 48" X 30"
- R11 - 3 SHALL, R11 - 4 AND R10 - 61 SHALL BE 60 " X 30"
- M4 - 9 SHALL BE 30" X 24"
- M3 - X SHALL BE 24" X 12" (36" X 18" IF NEEDED TO MATCH EXISTING SIGNS)
- M4 - 8 SHALL BE 24" X 12" (36" X 18" IF NEEDED TO MATCH EXISTING SIGNS)
- M1 - 4, M1 - 5A AND M1 - 6 SHALL BE 24" X 24" (36" X 36" IF NEEDED TO MATCH EXISTING SIGNS)
- MO5 - 1 AND MO6 - 1 SHALL BE 21" X 21" (30" X 30" IF NEEDED TO MATCH EXISTING SIGNS)
- D1 - X SHALL BE AS SHOWN ON SPECIFIC PROJECT SIGNING DETAIL SHEETS.
- R1 - 1 SHALL BE 36" X 36"

1. TWO WARNING LIGHTS SHALL BE PROVIDED ON THE CENTER BARRICADE AND A MINIMUM OF ONE WARNING LIGHT SHALL BE PROVIDED ON EACH OF THE OTHER BARRICADES WITHIN THE ROADWAY LIMITS. SPACING OF THE WARNING LIGHTS SHALL BE UNIFORM TO THE EDGE OF ROADWAY AS SHOWN (APPROX. 8 FOOT LIGHT SPACING.
2. THESE SIGNS AND BARRICADES ARE NOT REQUIRED IF ROAD CLOSURE BEGINS AT AN INTERSECTION.
3. FOR ROAD CLOSURE WITHOUT LOCAL ACCESS TO PROJECT, SEE ROAD CLOSURE BARRICADE DETAIL "D".
4. FOR ROAD CLOSURE WITH LOCAL ACCESS TO PROJECT, SEE ROAD CLOSURE BARRICADE DETAIL "E".
5. FOR BRIDGE OR CULVERT REPLACEMENTS, SUBSTITUTE "BRIDGE OUT" INSTEAD OF "ROAD CLOSED" ON R11 - 2 AND R11 - 3 SIGNS.
6. INSTALL DETOUR AND COMMUNITY GUIDE SIGNS AND ARROWS ONLY IF SPECIFIED IN THE CONTRACT. IF THERE ARE EXISTING ROUTE MARKER ASSEMBLIES THAT WILL REMAIN IN PLACE, ADJUST THE LOCATION OF THE DETOUR ROUTE SIGNS TO CORRESPOND WITH THE EXISTING ASSEMBLIES. MODIFY EXISTING SIGNS WHERE POSSIBLE. SEE SPECIFIC PROJECT DETOUR SIGNING DETAIL SHEETS. IF DETOUR SIGNS ARE BEING INSTALLED BY OTHERS, PLACE THE CONTRACTED TRAFFIC CONTROL SIGNS TO ALLOW FOR PLACEMENT OF ALL WARNING, DETOUR AND GUIDE SIGNS AS SHOWN.
7. "EAST" CARDINAL DIRECTION MARKERS AND RIGHT TURN ARROWS ARE SHOWN. USE OTHER CARDINAL DIRECTIONS AND ARROWS AS APPROPRIATE.

BARRICADES AND SIGNS FOR VARIOUS CLOSURES

STATE OF WISCONSIN
DEPARTMENT OF TRANSPORTATION

APPROVED
May 2023 — DATE
/S/ Andrew Heidtke — WORK ZONE ENGINEE
FHWA

THIS DRAWING PROVIDES GENERAL GUIDANCE ON TYPICAL DETOUR SIGN LAYOUT AND SPACING. SEE PROJECT DETOUR SIGNING SHEETS FOR SPECIFIC DETAILS FOR EACH PROJECT.

LEGEND

- SIGN ON PERMANENT SUPPORT
- WORK AREA
- DETOUR — M4 - 8
- EAST — M3 - X
- XX — M1 - 4 OR XX — M1 - 6 OR COUNTY X — M1 - 5A
- M05 - 1 OR M06 - 1 OR M06 - 1

GENERAL NOTES

THE EXACT NUMBER, LOCATION AND SPACING OF ALL SIGNS SHALL BE ADJUSTED TO FIT FIELD CONDITIONS AS APPROVED BY THE ENGINEER.

IF THERE ARE EXISTING ROUTE MARKER ASSEMBLIES THAT WILL REMAIN IN PLACE, ADJUST THE LOCATION OF THE DETOUR ROUTE SIGNS TO CORRESPOND WITH THE EXISTING ASSEMBLIES. SEE SPECIFIC PROJECT DETOUR SIGNING DETAIL SHEETS. MODIFY EXISTING SIGNS WHERE POSSIBLE.

THE SPACING BETWEEN TRAFFIC CONTROL AND DETOUR SIGNS SHOULD BE ADJUSTED TO NOT CONFLICT WITH AND TO PROVIDE A DESIRABLE MINIMUM OF 200 FEET CLEARANCE TO EXISTING SIGNS THAT WILL REMAIN IN PLACE.

ANY SIGNS TEMPORARY OR EXISTING, WHICH CONFLICT WITH TRAFFIC CONTROL "IN USE" SHALL BE REMOVED OR COVERED AS NEEDED AND AS APPROVED BY THE ENGINEER.

SIGNS THAT WILL BE IN PLACE LESS THAN 7 CONTINUOUS DAYS AND NIGHTS MAY BE MOUNTED ON PORTABLE SUPPORTS.

"MO" SIGNS ARE THE SAME AS "M" SIGNS EXCEPT THE BACKGROUND IS ORANGE.

SIGN SIZES SHALL BE AS FOLLOWS:

M3-X SHALL BE 24" X 12" (36" X 18" IF NEEDED TO MATCH EXISTING SIGNS)
M4-8 SHALL BE 24" X 12" (36" X 18" IF NEEDED TO MATCH EXISTING SIGNS)
M1-4, M1-5A AND M1-6 SHALL BE 24" X 24" (36" X 36" IF NEEDED TO MATCH EXISTING SIGNS)
M05-1 AND M06-1 SHALL BE 21" X 21" (30" X 30" IF NEEDED TO MATCH EXISTING SIGNS)
M4-9 AND M4-59 SHALL BE 30" X 24"
M4-8a SHALL BE 24" X 18"
G20-51 SHALL BE 60" X 24"
W20-2A SHALL BE 48" X 48"
D1-X SHALL BE AS SHOWN ON SPECIFIC PROJECT SIGNING DETAIL SHEETS.

* OPTIONAL SIGNS. SEE SPECIFIC PROJECT DETOUR SIGNING DETAIL SHEETS.

** FOR A TOWN ROAD OR LOCAL STREET DETOURED ONTO A STATE TRUNK HIGHWAY, PLACE A ROAD NAME PLAQUE ABOVE THE M4-9 SIGN AS SPECIFIED IN THE CONTRACT.

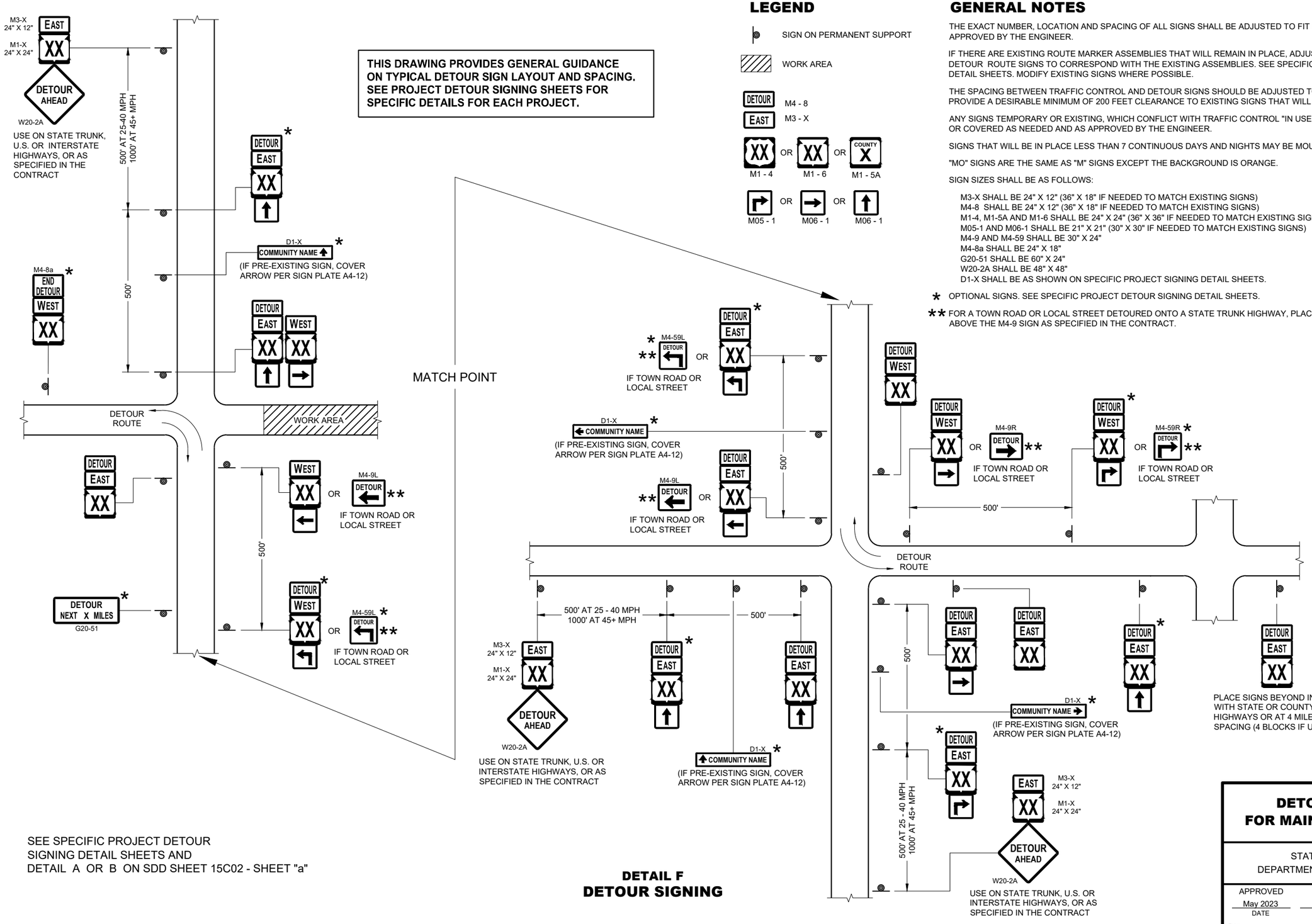

SEE SPECIFIC PROJECT DETOUR SIGNING DETAIL SHEETS AND DETAIL A OR B ON SDD SHEET 15C02 - SHEET "a"

DETAIL F
DETOUR SIGNING

DETOUR SIGNING FOR MAINLINE CLOSURES

STATE OF WISCONSIN
DEPARTMENT OF TRANSPORTATION

APPROVED
May 2023 — DATE
/S/ Andrew Heidtke — WORK ZONE ENGINEER
FHWA

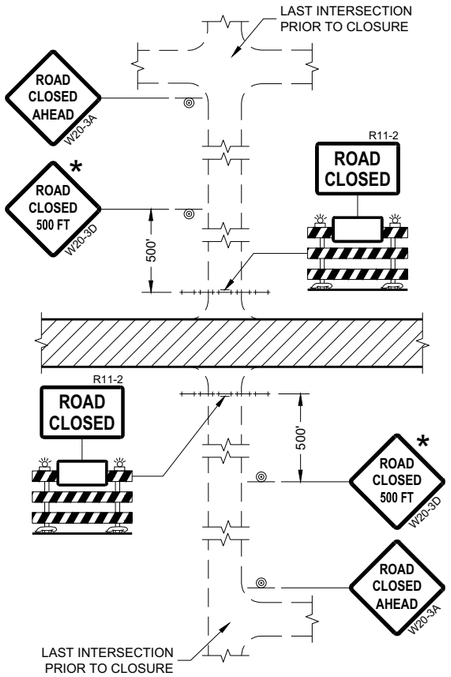

DETAIL 1
(NO ACCESS TO PROJECT)

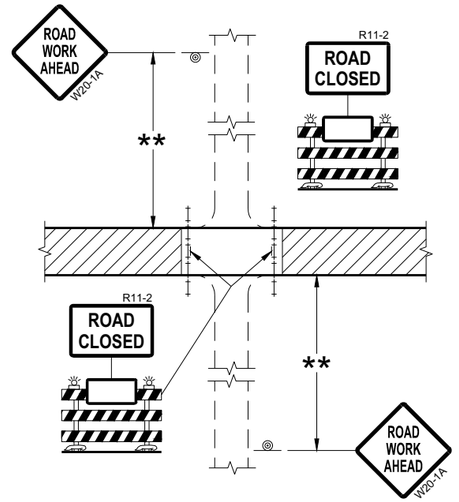

DETAIL 2
(PUBLIC CROSS-TRAFFIC MAINTAINED.
NO ACCESS TO PROJECT)

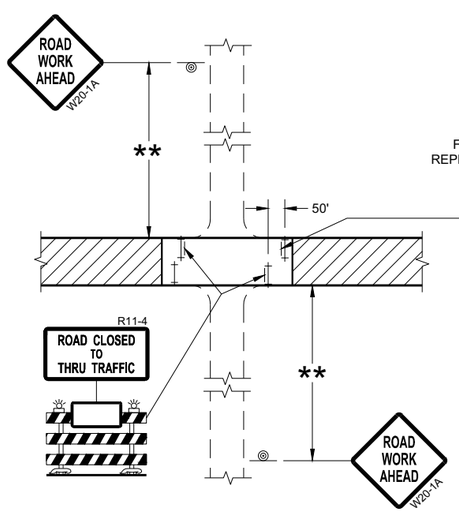

DETAIL 3
(PUBLIC CROSS-TRAFFIC MAINTAINED.
CONTRACTOR, LOCAL BUSINESS AND
RESIDENT ACCESS TO PROJECT)

FOR BRIDGE OR CULVERT
REPLACEMENT, USE ADDITIONAL
SIGN ON BARRICADE

BRIDGE OUT
XX MILES AHEAD
R11-3C

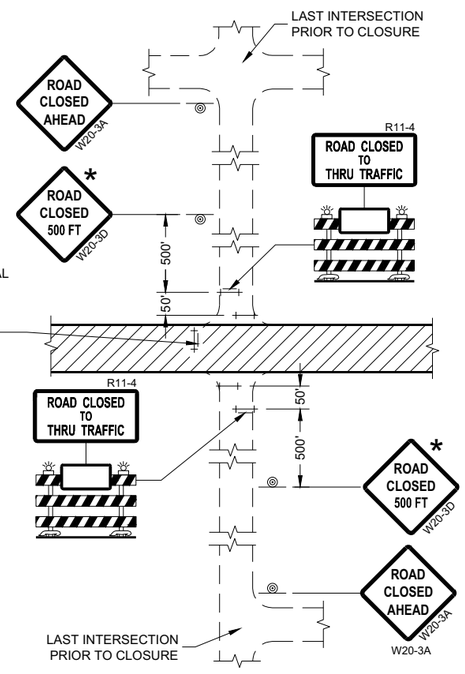

DETAIL 4
(CONTRACTOR, LOCAL BUSINESS AND
RESIDENT ACCESS TO PROJECT)

GENERAL NOTES

THE EXACT NUMBER, LOCATION, AND SPACING OF ALL SIGNS AND BARRICADES SHALL BE ADJUSTED TO FIT FIELD CONDITIONS AS APPROVED BY THE ENGINEER.

ANY SIGNS TEMPORARY OR EXISTING, WHICH CONFLICT WITH TRAFFIC CONTROL "IN USE" SHALL BE REMOVED OR COVERED AS NEEDED AND AS APPROVED BY THE ENGINEER.

THE SPACING BETWEEN TRAFFIC CONTROL SIGNS SHOULD BE ADJUSTED TO NOT CONFLICT WITH AND SHOULD PROVIDE A DESIRABLE MINIMUM OF 200 FEET CLEARANCE (500 FEET DESIRABLE) TO EXISTING SIGNS THAT WILL REMAIN IN PLACE.

IF A "STOP" SIGN MUST BE REMOVED FOR A WORK OPERATION, A TEMPORARY "STOP" SIGN SHALL BE PLACED PRIOR TO THE SIGN REMOVAL, OR A FLAGGER SHALL BE PROVIDED UNTIL THE SIGN IS REESTABLISHED.

BARRICADES THAT MUST BE MOVED FOR A WORK OPERATION SHALL BE IMMEDIATELY REESTABLISHED UPON COMPLETION OF THE OPERATION OR FOR CONTINUING OPERATIONS, AT THE END OF EACH WORKING DAY.

SIGNS THAT WILL BE IN PLACE LESS THAN SEVEN CONTINUOUS DAYS AND NIGHTS MAY BE MOUNTED ON PORTABLE SUPPORTS.

ALL TYPE III BARRICADES SHALL HAVE RAILS REFLECTORIZED ON BOTH FACES. STRIPES SHALL BE PROPERLY SLOPED DOWN TOWARD THE TRAFFIC SIDE OR AS SHOWN IN THE ROAD CLOSURE BARRICADE DETAIL "D" FOR FULL ROAD CLOSURES.

TYPE "A" LOW-INTENSITY FLASHING WARNING LIGHTS SHALL BE VISIBLE ON BOTH SIDES OF THE BARRICADE.

THE R11-2, R11-3, AND R11-4 SIGNS PLACED ON BARRICADES SHALL COVER NO MORE THAN THE TOP RAIL. THE SIGNS SHALL NOT COVER ANY PORTION OF THE MIDDLE OR BOTTOM RAILS.

ALL SIGNS SHALL BE 48" X 48" UNLESS OTHERWISE NOTED BELOW:
R11-2 SHALL BE 48" X 30".
R11-4 AND R11-3 SHALL BE 60" X 30".

* OMIT THE "ROAD CLOSED 500 FT." SIGN IF THE LAST INTERSECTION IS 500 FEET OR LESS FROM THE WORK ZONE.

** 500' MAX. OR AT LAST INTERSECTION, WHICHEVER IS CLOSEST.

LEGEND

- SIGN ON PERMANENT SUPPORT
- TYPE III BARRICADE
- TYPE III BARRICADE WITH ATTACHED SIGN
- TYPE "A" WARNING LIGHT (FLASHING)
- WORK AREA

6

6

BARRICADES AND SIGNS FOR SIDEROAD CLOSURES

STATE OF WISCONSIN
DEPARTMENT OF TRANSPORTATION

APPROVED
July 2018 — DATE
/S/ Andrew Heidtke — WORK ZONE ENGINEE
FHWA

SDD 15C03 - 05

SDD 15C03 - 05

*CONFIRM MARKING LINE WIDTH WITH THE MISCELLANEOUS QUANTITIES

GENERAL NOTES

DETAILS OF CONSTRUCTION NOT SHOWN ON THIS DRAWING SHALL CONFORM TO STANDARD SPECIFICATIONS AND SPECIAL PROVISIONS.

1. LOCATE THE NO PASSING ZONE W14-3 SIGN WITHIN 50 FEET OF THE "T" MARKING
2. MEASURE FROM EDGE OF MARKING TO JOINT LINE. THIS DOES NOT INCLUDE SPACE NEEDED FOR GROOVING OPERATIONS.

LEGEND

"T" MARKING

SIGN ON PERMANENT SUPPORT

DIRECTION OF TRAFFIC

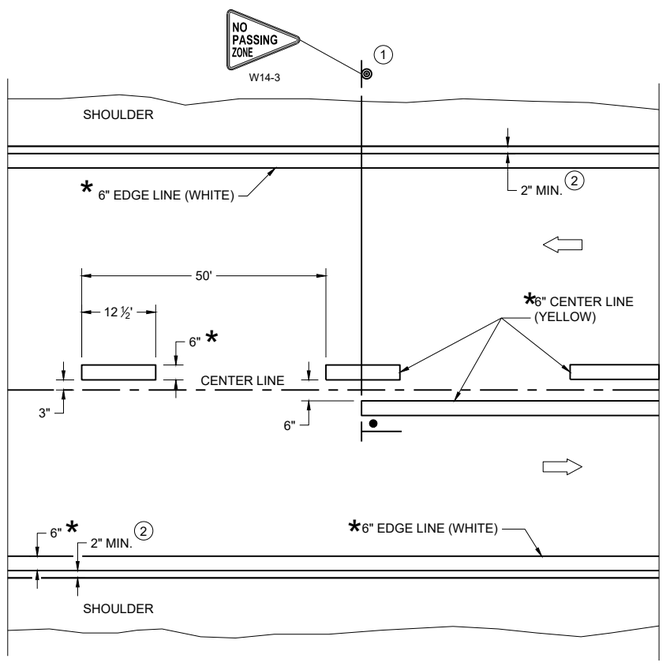

TWO WAY TRAFFIC

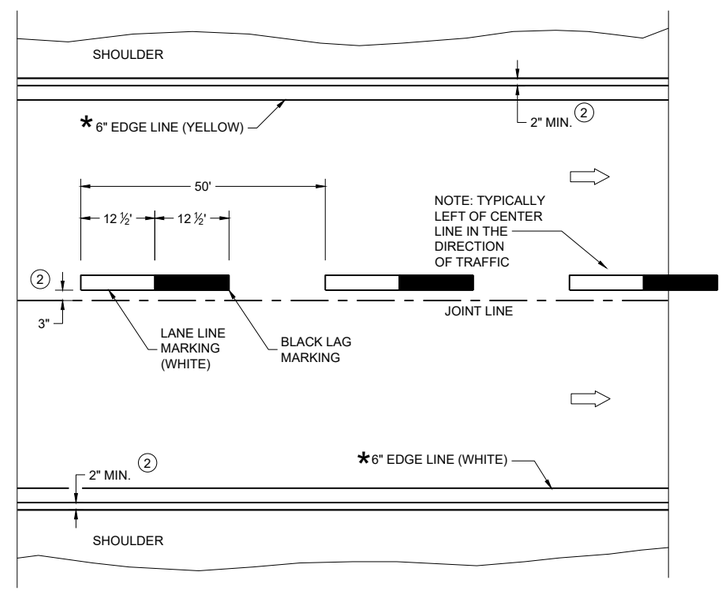

ONE WAY TRAFFIC

PERMANENT PAVEMENT MARKING

6

SDD 15C08-24a

PERMANENT LONGITUDINAL PAVEMENT MARKINGS

STATE OF WISCONSIN
DEPARTMENT OF TRANSPORTATION

APPROVED
December 2024 — DATE
/S/ Jeannie Silver — Statewide Pavement Marking Engineer
FHWA

6

SDD 15C08-24a

GENERAL NOTES

1. A SET OF ARROWS IS REQUIRED EVERY 400 FEET OR NEAR INTERSECTIONS OR DRIVEWAYS WITH TURNING TRAFFIC.
2. 10" WHITE
3. TURN BAY LENGTH OF LESS THAN 48' DOES NOT REQUIRE PAVEMENT ARROWS OR TEXT.

⇨ DIRECTION OF TRAFFIC

*CONFIRM MARKING LINE WIDTH WITH THE MISCELLANEOUS QUANTITIES

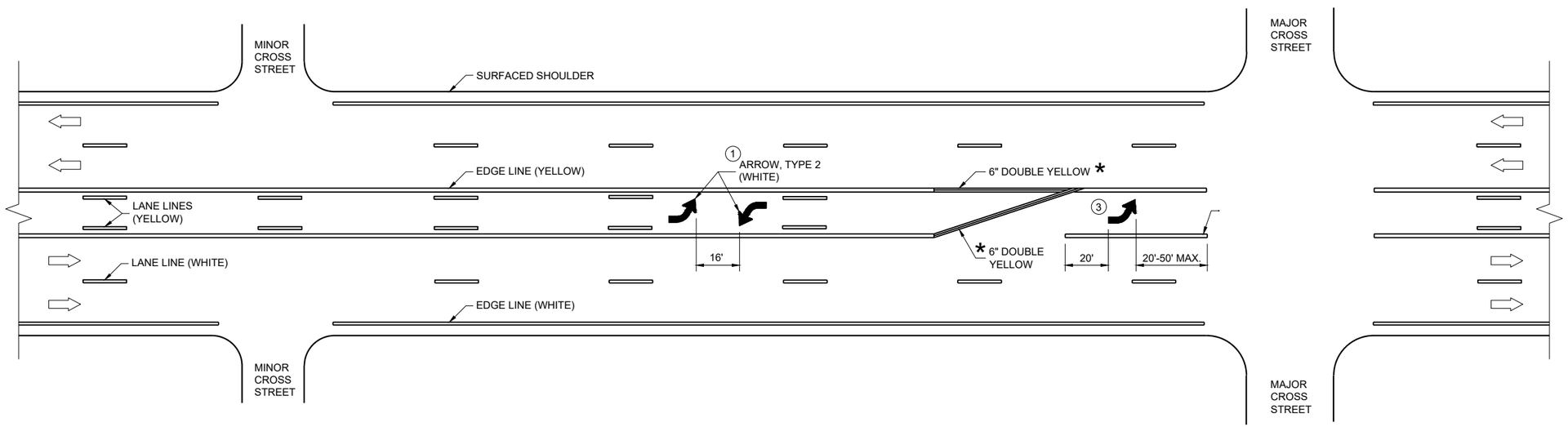

TWO WAY LEFT TURN LANE

PAVEMENT MARKING (TURN LANES)

STATE OF WISCONSIN
DEPARTMENT OF TRANSPORTATION

6
SDD 15C08-24c

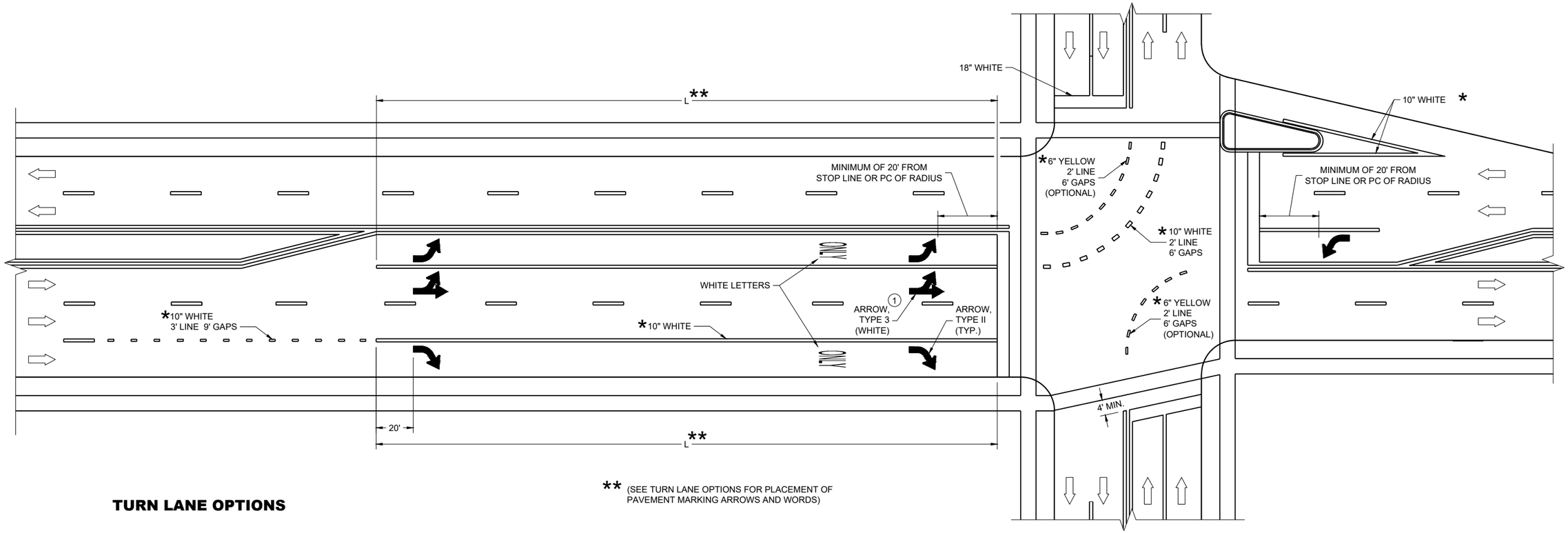

** (SEE TURN LANE OPTIONS FOR PLACEMENT OF PAVEMENT MARKING ARROWS AND WORDS)

TURN LANE OPTIONS

LENGTH OF TURN BAY (**L**) OF 0 - 47' DOES NOT REQUIRE PAVEMENT MARKING ARROWS OR WORDS

L = 48 - 87'

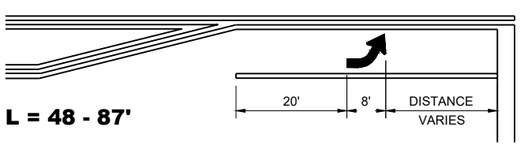

L = 88 - 166'

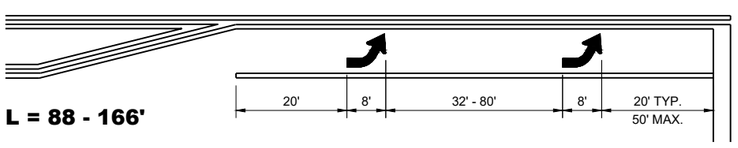

L = >166'

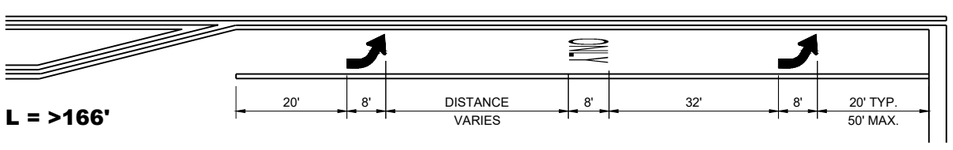

GENERAL NOTES

1 QUANTITY AND LOCATION OF TYPE 3 ARROWS ARE THE SAME AS THE TYPE II ARROWS IN THE ADJACENT TURN LANE. FOR TURN LANES WITH A PHYSICAL SEPARATION IN THE SAME DIRECTION OF TRAVEL, THE ARROWS AND "ONLY" MARKING MAY BE ELIMINATED.

⇨ DIRECTION OF TRAFFIC

L = LENGTH OF TURN BAY

*CONFIRM MARKING LINE WIDTH WITH THE MISCELLANEOUS QUANTITIES

PAVEMENT MARKING (TURN LANES)

STATE OF WISCONSIN
DEPARTMENT OF TRANSPORTATION

6
SDD 15C08-24d

GENERAL NOTES

1. REFLECTIVE SHEETING SHALL FOLLOW THE REQUIREMENTS IN THE APPROVED PRODUCTS LISTING FOR SIGN SHEETING.
2. LOCATION OF WARNING LIGHTS WHEN SHOWN ON THE PLAN.

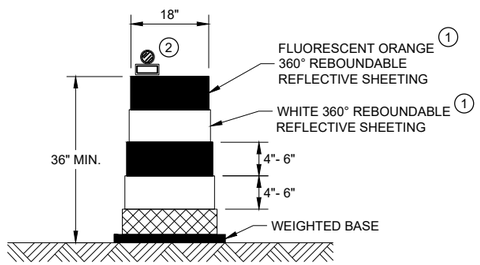

DRUM

BALLAST WIDTHS
RANGE FROM 24"-36"

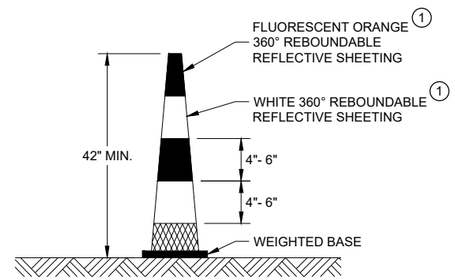

42" CONE

DO NOT USE IN TAPERS
½ SPACING OF DRUMS

BALLAST WIDTHS
RANGE FROM 14"-20"

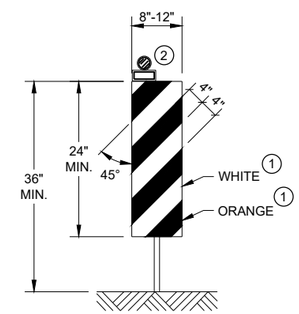

VERTICAL PANEL

THE STRIPES SHALL SLOPE DOWNWARD TO
THE TRAFFIC SIDE FOR CHANNELIZATION.

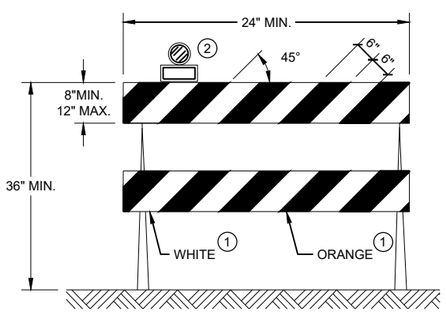

TYPE II BARRICADE

FOR RAILS LESS THAN 36" LONG, 4" WIDE STRIPES
MAY BE USED. ALL STRIPES SHALL SLOPE DOWNWARD
TO THE TRAFFIC SIDE FOR CHANNELIZATION.

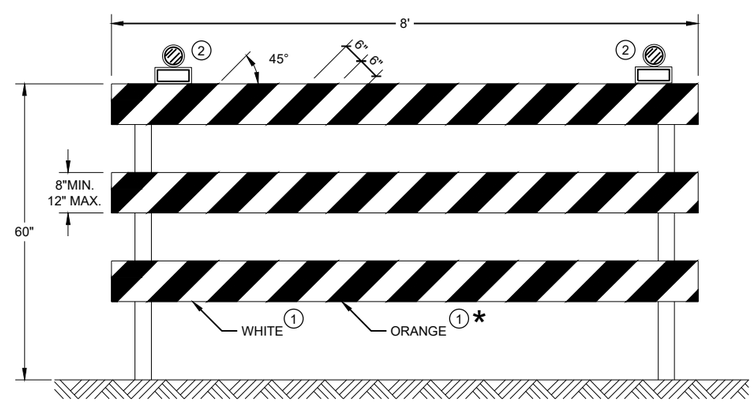

TYPE III BARRICADE

IF SIGN MOUNTED, DO NOT COVER MORE THAN 50% OF THE TOP
TWO RAILS OR 33% OF THE TOTAL AREA OF THE THREE RAILS.

* IF USED FOR A PERMANENT APPLICATION USE RED SHEETING.

CHANNELIZING DEVICES
DRUMS, CONES, BARRICADES
AND VERTICAL PANELS

STATE OF WISCONSIN
DEPARTMENT OF TRANSPORTATION

APPROVED
November 2022 /S/ Andrew Heidtke
DATE WORK ZONE ENGINEE
FHWA

6

6

SDD 15C11 - 10b

SDD 15C11 - 10b

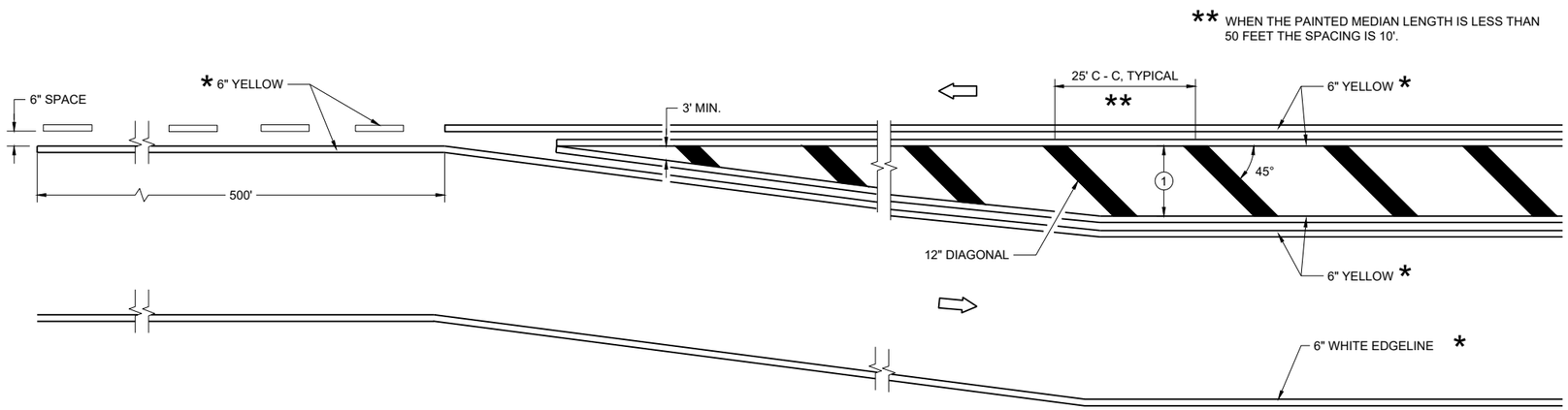

MEDIAN ISLAND DETAIL

GENERAL NOTES

1. DIAGONALS ARE OPTIONAL WHEN PAINTED ISLAND IS LESS THAN 6 FEET AT THE WIDEST POINT. OMIT DIAGONALS IF WIDTH IS LESS THAN 4 FEET.

⇨ DIRECTION OF TRAVEL

*CONFIRM MARKING LINE WIDTH WITH THE MISCELLANEOUS QUANTITIES

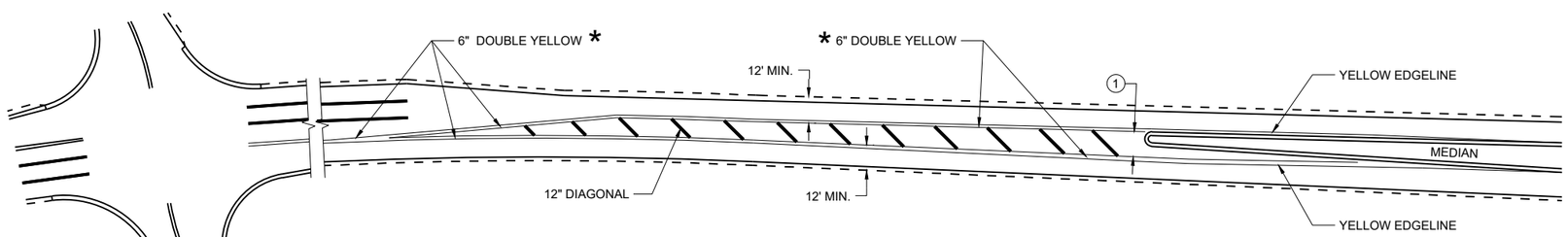

APPROACH MARKINGS FOR OTHER MEDIAN TYPES

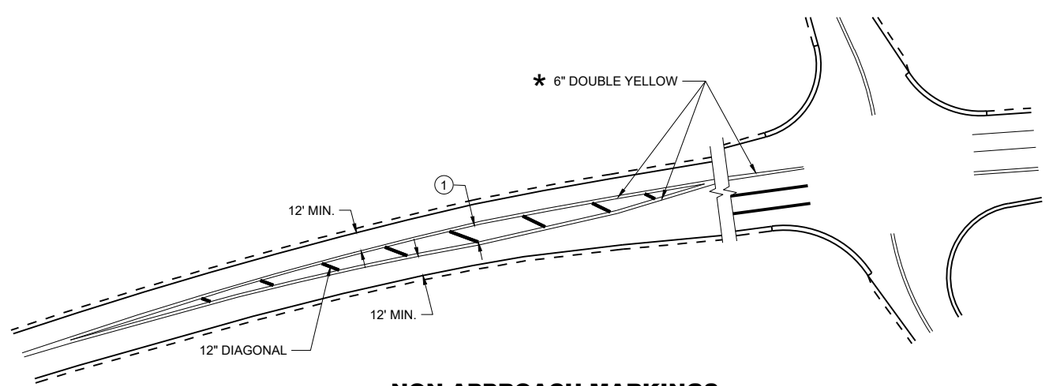

NON-APPROACH MARKINGS

MEDIAN ISLAND PAVEMENT MARKINGS

STATE OF WISCONSIN
DEPARTMENT OF TRANSPORTATION

APPROVED
August 2024 — DATE
/S/ Jeannie Silver — Statewide Pavement Marking Engineer
FHWA

6

SDD 15C18-09a

6

SDD 15C18-09a

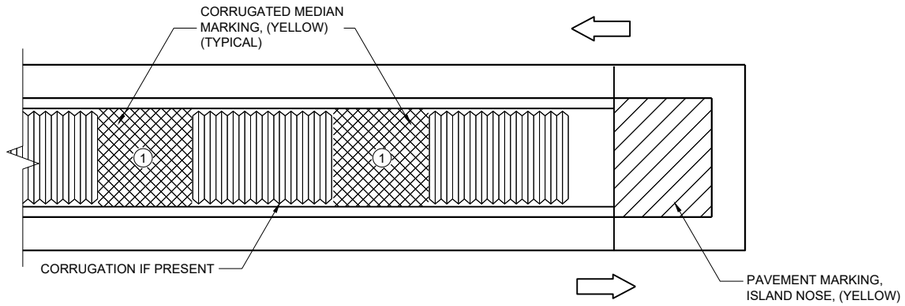

MEDIAN ISLAND WITH SQUARE BLUNT NOSE

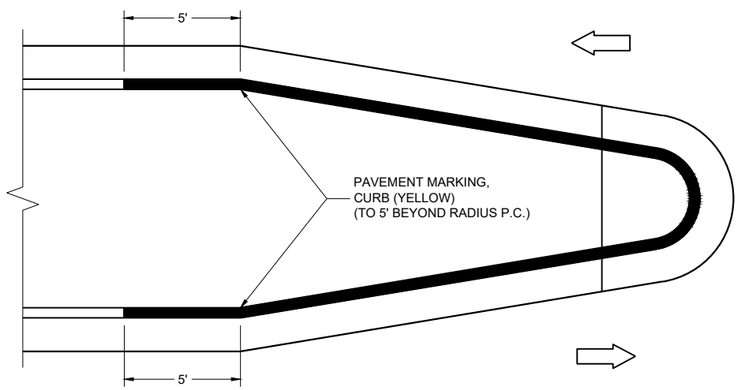

MEDIAN ISLAND WITH ROUND BLUNT NOSE

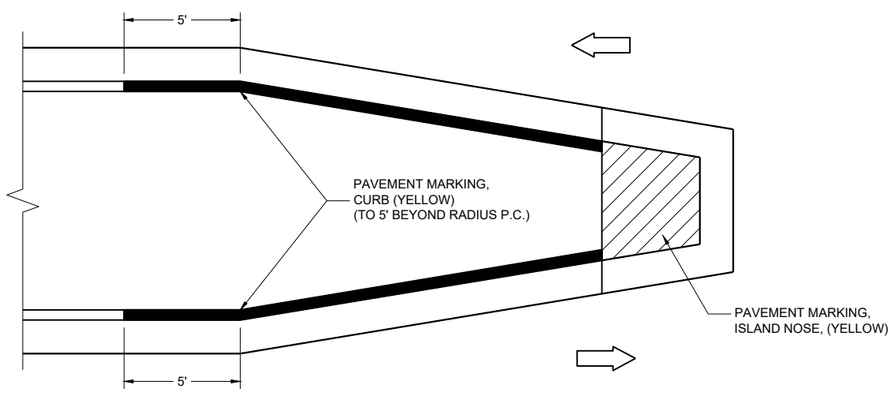

MEDIAN ISLAND WITH SLOPED NOSE

TYPICAL PLACEMENT OF PAVEMENT MARKING ON MEDIAN ISLANDS

GENERAL NOTES

WHEN CONCRETE CORRUGATED MEDIAN IS CONSTRUCTED TO SEPARATE TRAFFIC OPERATING IN THE OPPOSING DIRECTION, YELLOW PAVEMENT MARKING SHALL BE APPLIED TO THE FLAT PORTION OF THE CONCRETE CORRUGATED MEDIAN. THE ITEM OF PAVEMENT MARKING, CONCRETE CORRUGATED MEDIAN, WILL BE MEASURED IN PLACE AND ACCEPTED IN ACCORDANCE WITH THE CONTRACT AND PAID FOR AT THE CONTRACT UNIT PRICE PER SQUARE FOOT.

(1) APPLY PAVEMENT MARKING TO THE FLAT PORTION OF CORRUGATED MEDIAN.

ISLAND NOSE MARKING

CURB MARKING

CORRUGATED MEDIAN MARKING

DIRECTION OF TRAVEL

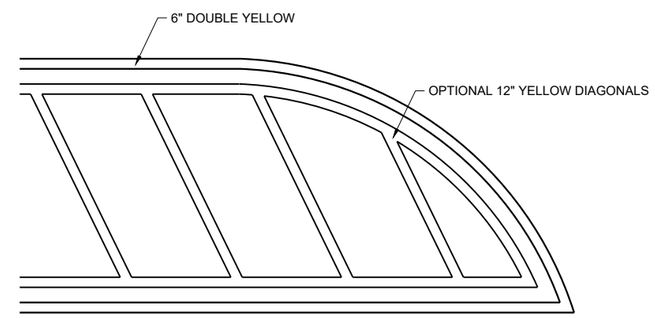

FLUSH MEDIAN ISLAND NOSE

PAVEMENT MARKINGS, MEDIAN ISLAND NOSE

STATE OF WISCONSIN
DEPARTMENT OF TRANSPORTATION

APPROVED
August 2024 — DATE
/S/ Jeannie Silver — Statewide Pavement Marking Engineer
FHWA

6

SDD 15C18-09b

GENERAL NOTES

STOP SIGN SHALL BE PLACED A MINIMUM OF 6 FEET TO A MAXIMUM OF 50 FEET FROM THE EDGELINE LOCATION.

1. 18-INCH STOP LINES MAY BE DELETED OR ADDED BY THE REGION MARKING ENGINEER BASED ON VISIBILITY AND SIGHT LINES.
2. NO STOP LINE IS REQUIRED IF STOP SIGN IS LESS THAN OR EQUAL TO 40 FEET FROM THE EDGELINE.
3. NO STOP LINE IS REQUIRED IF STOP SIGN IS LESS THAN OR EQUAL TO 30 FEET FROM THE FLANGE LINE EXTENSION.
4. MOVE CLOSER TO THE EDGE OF TRAVEL LINE AS NEEDED FOR VISIBILITY AND SIGHT LINES (NO CLOSER THAN 4 FEET).
5. LADDER BAR CROSSWALKS SHOULD ONLY BE USED FOR MID BLOCK CROSSINGS. USE 2 - 6" TRANSVERSE LINES.
6. POSTED SPEED LIMITS OF 40 MPH OR GREATER USE A MINIMUM WIDTH OF 8' FOR MIDBLOCK CROSSWALKS

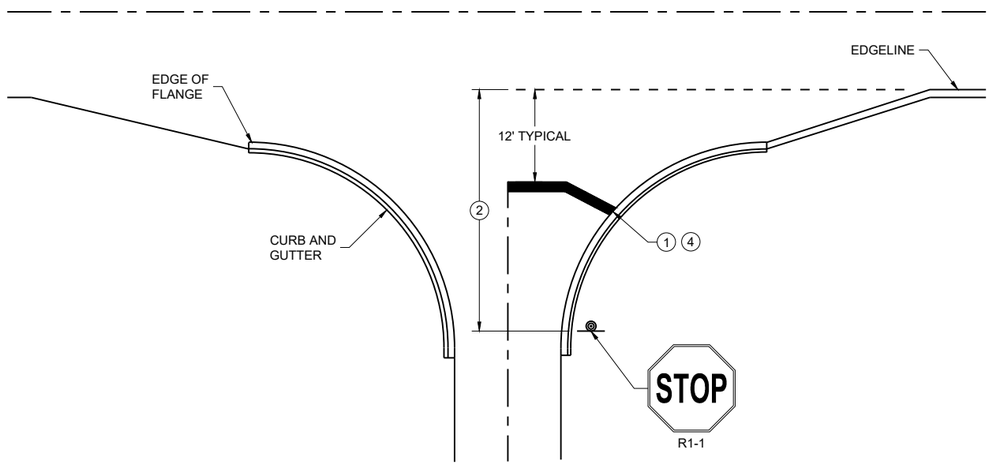

TYPICAL STOP LINE PAVEMENT MARKING WITH CURB AND GUTTER

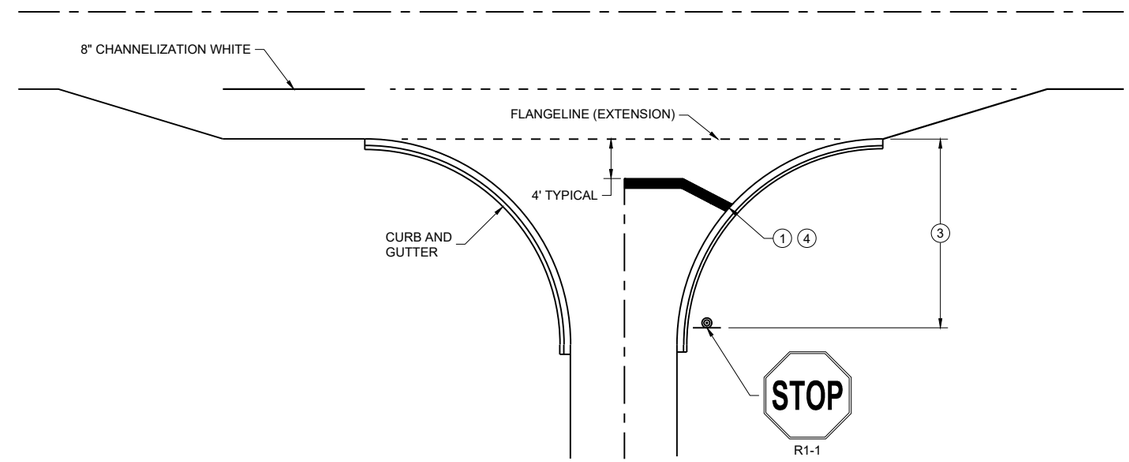

TYPICAL STOP LINE PAVEMENT MARKING FOR SIDE ROADS WITH RIGHT TURN LANE

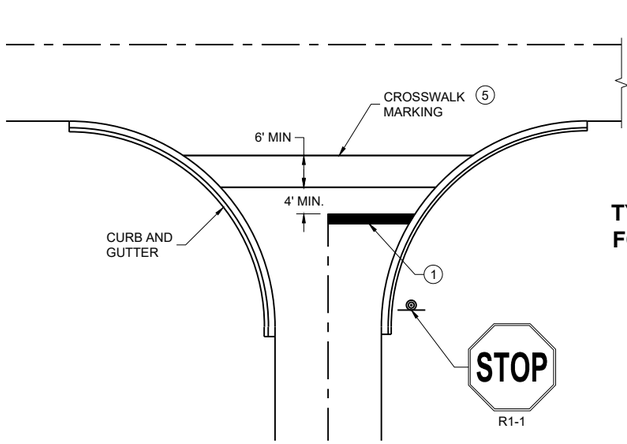

TYPICAL STOP LINE PAVEMENT MARKING FOR SIDE ROADS WITH CROSSWALK MARKING

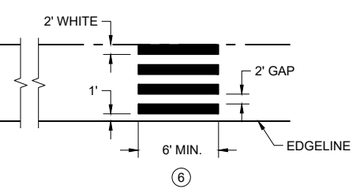

TYPICAL PAVEMENT MARKING FOR MID-BLOCK CROSSWALK 5

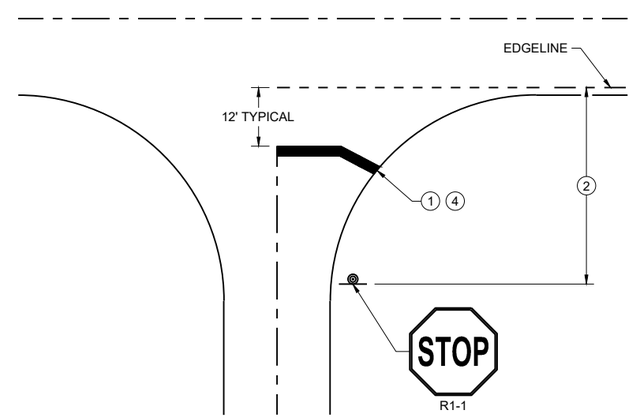

TYPICAL STOP LINE PAVEMENT MARKING WITHOUT CURB AND GUTTER

STOP LINE AND CROSSWALK PAVEMENT MARKING

STATE OF WISCONSIN
DEPARTMENT OF TRANSPORTATION

APPROVED
March 2024 — DATE
/S/ Matthew Rauch — STATE SIGNING AND MARKING ENGINEER
FHWA

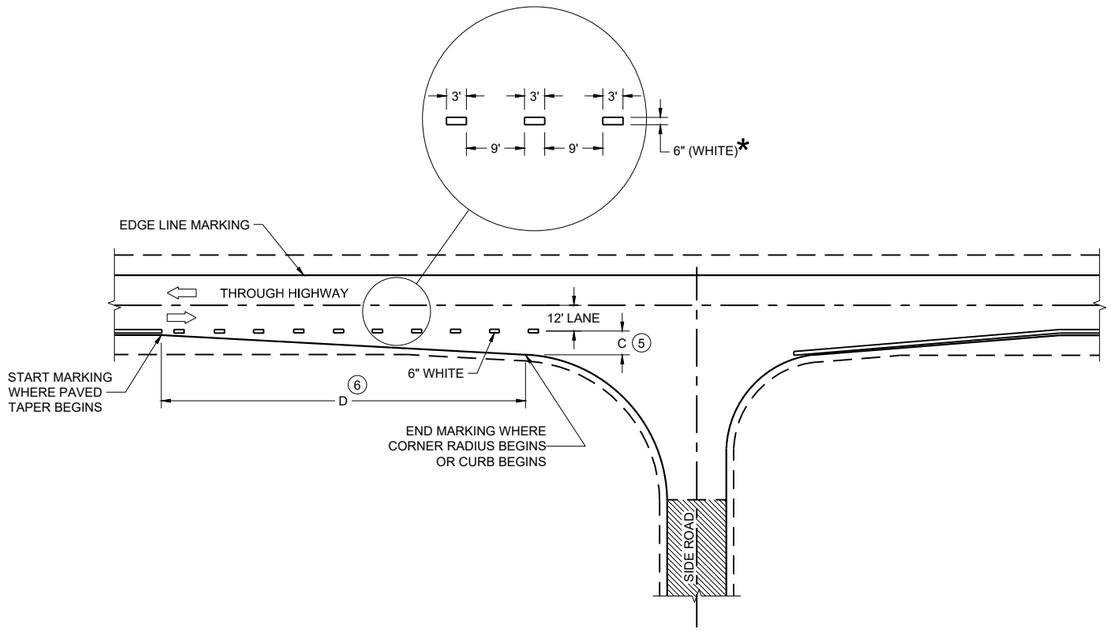

MINOR INTERSECTION

*CONFIRM MARKING LINE WIDTH WITH THE MISCELLANEOUS QUANTITIES

GENERAL NOTES

OMIT EDGE LINES THROUGH INTERSECTIONS. CONTINUE EDGE LINES THROUGH DRIVEWAYS.

1. WHEN DISTANCE "A" IS LESS THAN 250 FEET, OMIT LANE LINE.
2. WHEN DISTANCE "B" IS LESS THAN 100 FEET, OMIT CHANNELIZING LANE LINE.
3. BARRIER LINE ENDS AT SIDE ROAD PAVEMENT / SURFACE EDGE EXTENSION.
4. BARRIER LINE STARTS 500 FEET PRIOR TO THE BYPASS TAPER.
5. WHEN DISTANCE "C" IS LESS THAN 4 FEET, OMIT DOTTED EXTENSION.
6. WHEN DISTANCE "D" IS LESS THAN 50 FEET, OMIT DOTTED EXTENSION.

LEGEND

⇨ DIRECTION OF TRAVEL

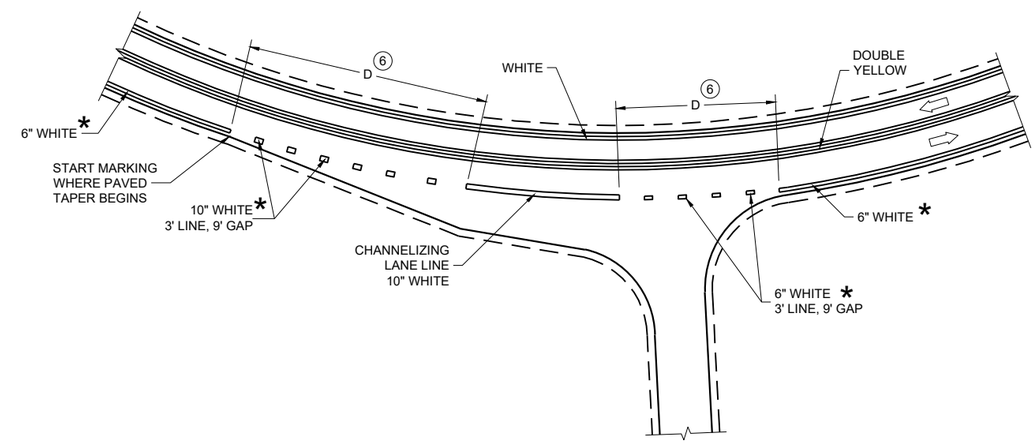

INTERSECTION ON OUTSIDE OF CURVE

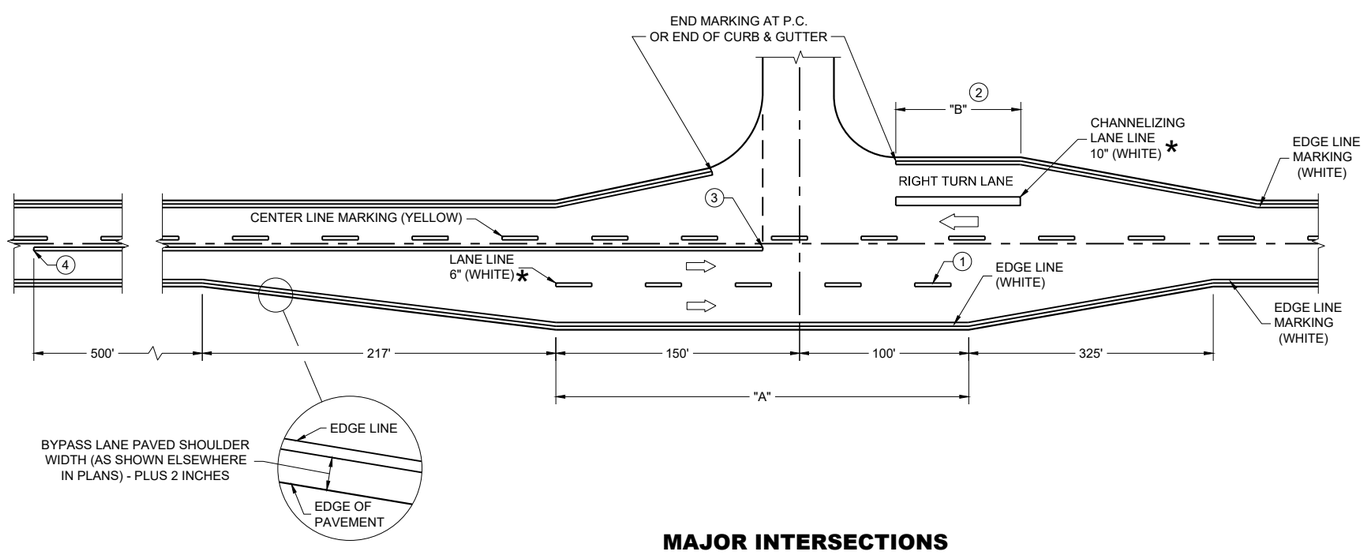

MAJOR INTERSECTIONS

(INTERSECTION WITH FULL RIGHT TURN LANE OR BYPASS LANE)

PAVEMENT MARKING (INTERSECTIONS)

STATE OF WISCONSIN
DEPARTMENT OF TRANSPORTATION

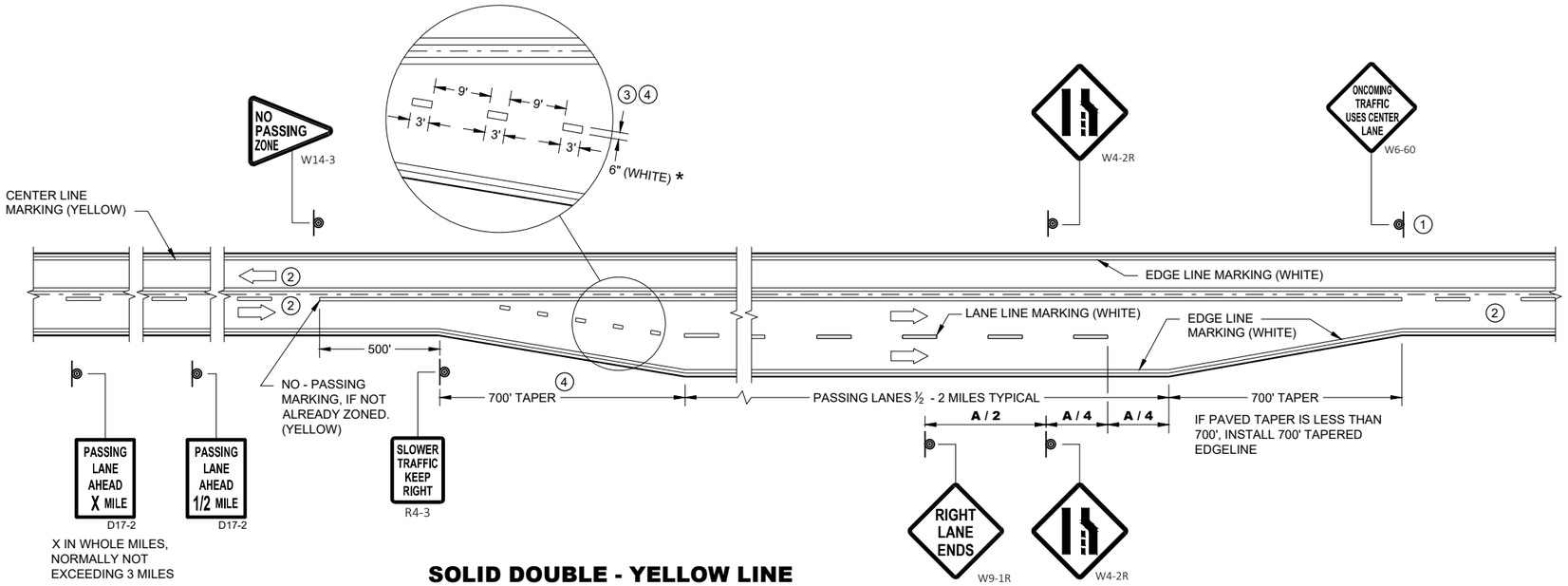

SOLID DOUBLE - YELLOW LINE (THROUGHOUT ENTIRE PASSING / CLIMBING LANE)

GENERAL NOTES

1. SIGN SHALL BE REPEATED AT 1 MILE INCREMENTS OR AT THE DISCRETION OF THE REGIONAL TRAFFIC ENGINEER.
2. THERE MAY BE SOLID YELLOW ON THE CENTERLINE DUE TO SIGHT CONDITIONS.
3. THE TAPER LENGTH OF THE DOTTED LINE PAVEMENT MARKING SHALL BE 700 FEET, 3' LINE, 9' GAP, EXCEPT RETRACE THE EXISTING LINE - GAP PATTERN WHERE EXISTING MARKINGS ARE IN PLACE.
4. WHEN THE ENTRANCE TAPER IS LESS THAN 700 FEET OR THE SHOULDER WIDTH IN THE PASSING / CLIMBING LANE IS LESS THAN THE ADJACENT HIGHWAY, DO NOT INSTALL DOTTED LINE PAVEMENT MARKING.
5. REPEAT EVERY 1 MILE UP UNTIL R4-53.

ARROW SYMBOL (⇨) SHOWS DIRECTION OF TRAVEL

DISTANCE TABLE

POSTED OR 85th PERCENTILE SPEED	DISTANCE "A"
45	775
50	885
55	990

* CONFIRM MARKING LINE WIDTH WITH THE MISCELLANEOUS QUANTITIES

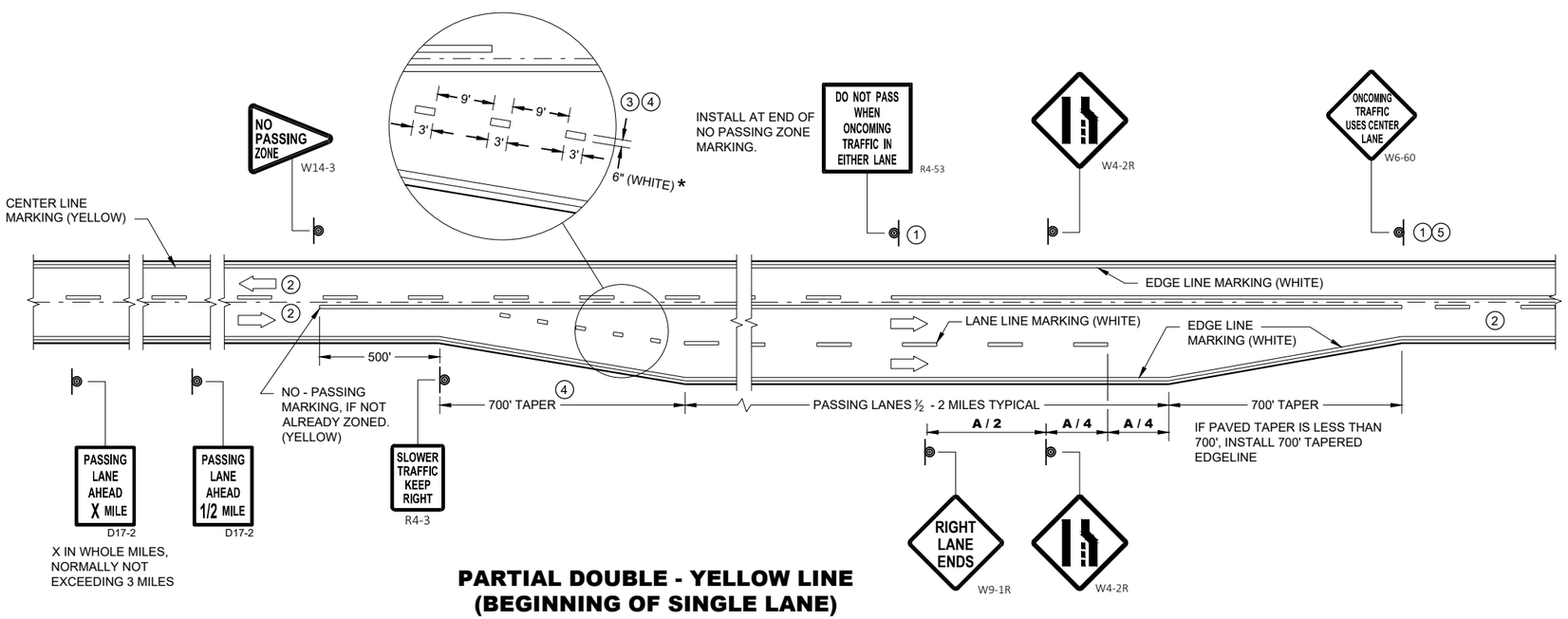

PARTIAL DOUBLE - YELLOW LINE (BEGINNING OF SINGLE LANE)

PAVEMENT MARKING & SIGNING (CLIMBING LANE & PASSING LANE)

STATE OF WISCONSIN
DEPARTMENT OF TRANSPORTAT

6

SDD 15C35-06b

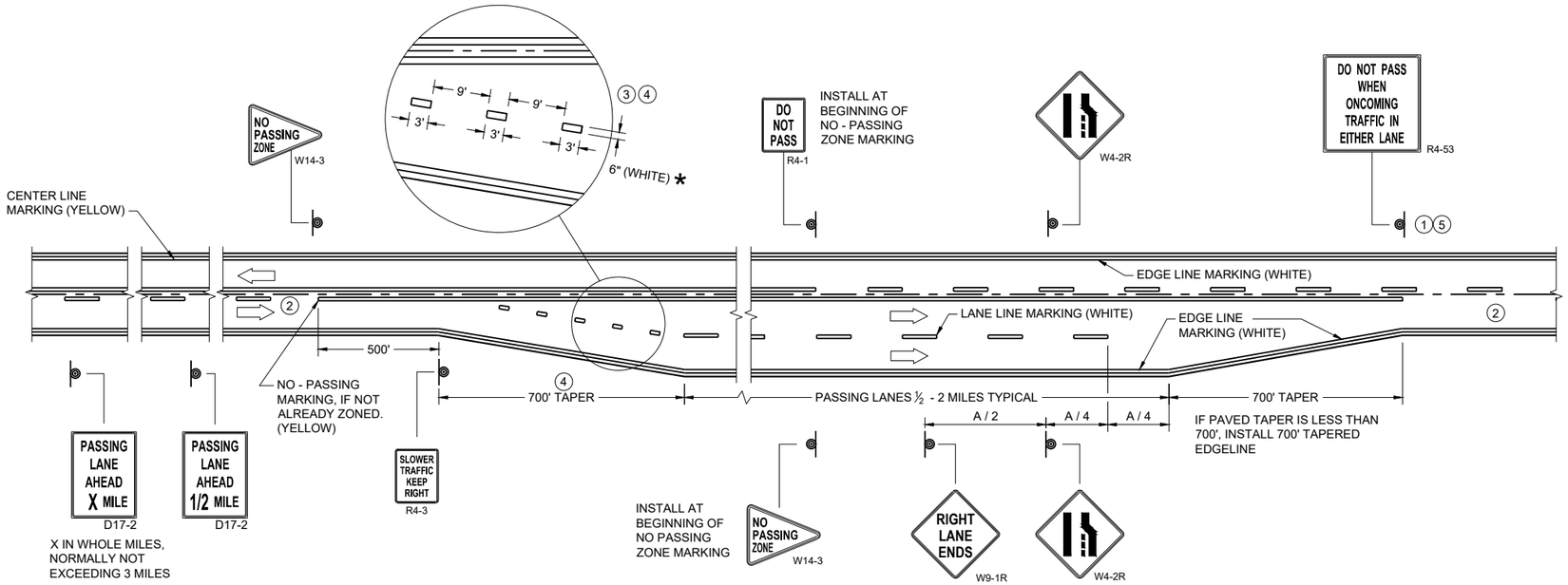

SOLID DOUBLE - YELLOW LINE
(END OF SINGLE LANE)

GENERAL NOTES

1. SIGN SHALL BE REPEATED AT 1 MILE INCREMENTS OR AT THE DISCRETION OF THE REGIONAL TRAFFIC ENGINEER.
2. THERE MAY BE SOLID YELLOW ON THE CENTERLINE DUE TO SIGHT CONDITIONS.
3. THE TAPER LENGTH OF THE DOTTED LINE PAVEMENT MARKING SHALL BE 700 FEET, 3' LINE, 9' GAP, EXCEPT RETRACE THE EXISTING LINE - GAP PATTERN WHERE EXISTING MARKINGS ARE IN PLACE.
4. WHEN THE ENTRANCE TAPER IS LESS THAN 700 FEET OR THE SHOULDER WIDTH IN THE PASSING / CLIMBING LANE IS LESS THAN THE ADJACENT HIGHWAY, DO NOT INSTALL DOTTED LINE PAVEMENT MARKING.
5. REPEAT EVERY ONE MILE UP UNTIL NO PASSING ZONE.

ARROW SYMBOL (⇨) SHOWS DIRECTION OF TRAVEL

DISTANCE TABLE

POSTED OR 85th PERCENTILE SPEED	DISTANCE "A"
45	775
50	885
55	990

*CONFIRM MARKING LINE WIDTH WITH THE MISCELLANEOUS QUANTITIES

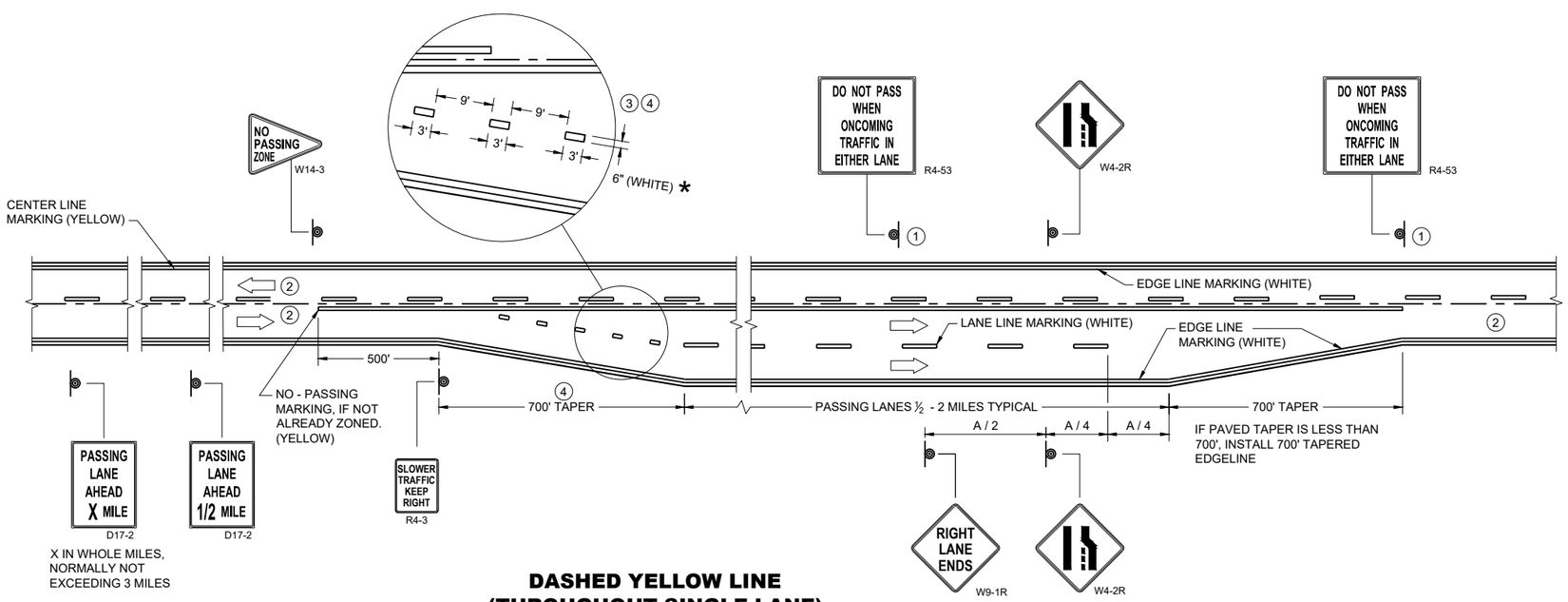

DASHED YELLOW LINE
(THROUGHOUT SINGLE LANE)

PAVEMENT MARKING & SIGNING (CLIMBING LANE & PASSING LANE)

STATE OF WISCONSIN
DEPARTMENT OF TRANSPORTATION

APPROVED
May 2023 — DATE
/S/ Jeannie Silver — Statewide Pavement Marking Engineer
FHWA

6

SDD 15C35-06c

LEGEND

- SIGN ON PERMANENT SUPPORT
- TRAFFIC CONTROL DRUM
- DIRECTION OF TRAFFIC
- CONNECTED ARROW BOARD
- WORK AREA
- ((S)) WZ START LOCATION MARKER
- ((E)) WZ END LOCATION MARKER

GENERAL NOTES

THIS DETAIL IS TYPICAL FOR CLOSING THE RIGHT SHOULDER. FOR CLOSING THE LEFT SHOULDER, REVERSE THE TRAFFIC CONTROL.

THIS DETAIL MAY BE USED FOR DIVIDED ROADWAYS WITH ANY NUMBER OF TRAVEL LANES.

ALL SIGNS ARE 48"X48" UNLESS OTHERWISE NOTED.

ANY SIGNS TEMPORARY OR EXISTING, WHICH CONFLICT WITH THE TRAFFIC CONTROL "IN USE" SHALL BE REMOVED OR COVERED AS NEEDED AND AS APPROVED BY THE ENGINEER.

THE EXACT NUMBER, LOCATION, AND SPACING OF ALL SIGNS AND DEVICES SHALL BE ADJUSTED TO FIT FIELD CONDITIONS AS APPROVED BY THE ENGINEER.

WHEN A RAMP OR SIDE ROAD INTERSECTS THE FACILITY ON WHICH THE WORK IS BEING PERFORMED, ADDITIONAL TRAFFIC CONTROLS SHALL BE PROVIDED AS SPECIFIED IN THE PLANS AND/OR SPECIAL PROVISIONS OR AS APPROVED BY THE ENGINEER.

CHANNELIZING DEVICES PLACED ADJACENT TO WORK AREA SHALL BE PULLED BACK FROM THE TRAVEL LANE WHEN WORK IS NOT IN PROGRESS.

SIGNS THAT WILL BE IN PLACE LESS THAN 7 CONTINUOUS DAYS AND NIGHTS MAY BE MOUNTED ON PORTABLE SUPPORTS.

SIGN LAYOUTS SHALL BE IN ACCORDANCE WITH THE FHWA'S MANUAL OF STANDARD HIGHWAY SIGNS OR THE WISCONSIN STANDARD SIGN PLATES.

(1) FOR SHORT DURATION SHOULDER WORK OF LESS THAN ONE HOUR THE W21-5A SIGN MAY BE OMITTED.

(2) IF ALREADY PRESENT WITHIN PROJECT , DO NOT INCLUDE ADDITIONAL DEVICE.

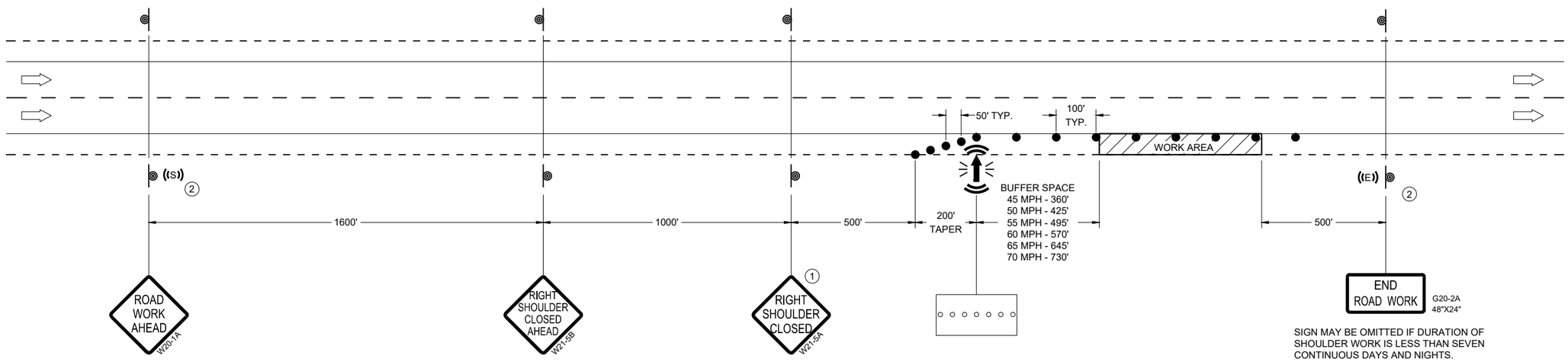

TRAFFIC CONTROL, SHOULDER CLOSURE ON DIVIDED ROADWAY, SPEEDS GREATER THAN 40 MPH

STATE OF WISCONSIN
DEPARTMENT OF TRANSPORTATION

APPROVED

Noveber 2025	/S/ Andrew Heidtke
DATE	STATEWIDE WORK ZONE TRAFFIC SAFETY ENGINEER

FHWA

6
SDD 15D27-05

GENERAL NOTES

DRAWING NOT TO SCALE. ALL SIGNS AND POSTS ON THIS SHEET SHALL BE PAID FOR WITH 'TRAFFIC CONTROL SIGNS' BID ITEM. ALL SIDE ROADS WHICH ARE UNDER CONSTRUCTION OF CURB AND GUTTER AND/OR GRADING SHALL BE ADEQUATELY SIGNED.

ALL SIGNS AND DEVICES SHALL BE IN CONFORMANCE WITH THE WISCONSIN MANUAL OF UNIFORM TRAFFIC CONTROL DEVICES (WMUTCD). SIGN LAYOUTS SHALL BE IN ACCORDANCE WITH THE WISDOT STANDARD SIGN PLATES.

"WO" SIGNS ARE THE SAME AS "W" SIGNS EXCEPT THAT THE BACKGROUND IS ORANGE.

ALL SIGNS ARE 48" X 48" UNLESS OTHERWISE NOTED.

THE EXACT NUMBER, LOCATION AND SPACING OF ALL SIGNS AND DEVICES SHALL BE ADJUSTED TO FIT FIELD CONDITIONS AS DIRECTED BY THE ENGINEER.

ALL SIGNS INAPPROPRIATE TO THE STATUS OF THE CONTROL ZONE, INCLUDING PRE-EXISTING SIGNS IN THE VICINITY, SHALL BE COVERED OR REMOVED AS DIRECTED BY THE ENGINEER.

SEE 15C34 FOR ADDITIONAL TRAFFIC CONTROL SIGNING WHEN CENTERLINE PAVEMENT MAKINGS ARE MISSING. 'DO NOT PASS' SIGNS MUST BE INSTALLED ON THE SAME DAY AS MILLING OPERATIONS.

1. PLACE SIGNS 350' IN ADVANCE OF CHIP SEALED OR LOOSE GRAVEL SURFACES AND AT 1 MILE INTERVALS, OR AS DIRECTED BY THE ENGINEER.
2. PLACE SIGN 200' MIN. FROM INTERSECTION AND 200' MIN. AFTER ADVANCE WARNING SIGN SHOWN IN SDD 15C04.
3. ADD WO8-1 OR WO8-2 SIGN WHEN THE CONDITION IS PRESENT.

LEGEND

SIGN ON TEMPORARY SUPPORT

DIRECTION OF TRAFFIC

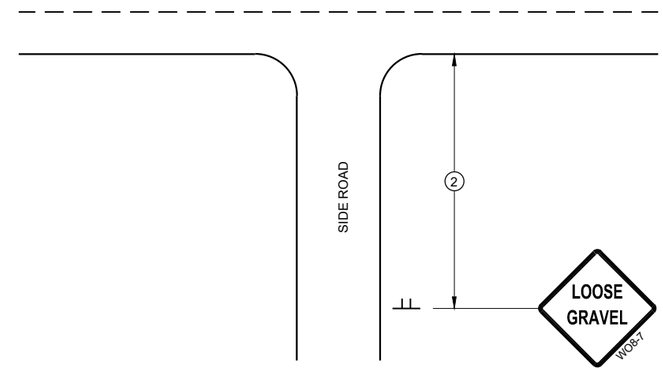

TYPICAL SIDE ROAD APPROACH SIGN DETAIL

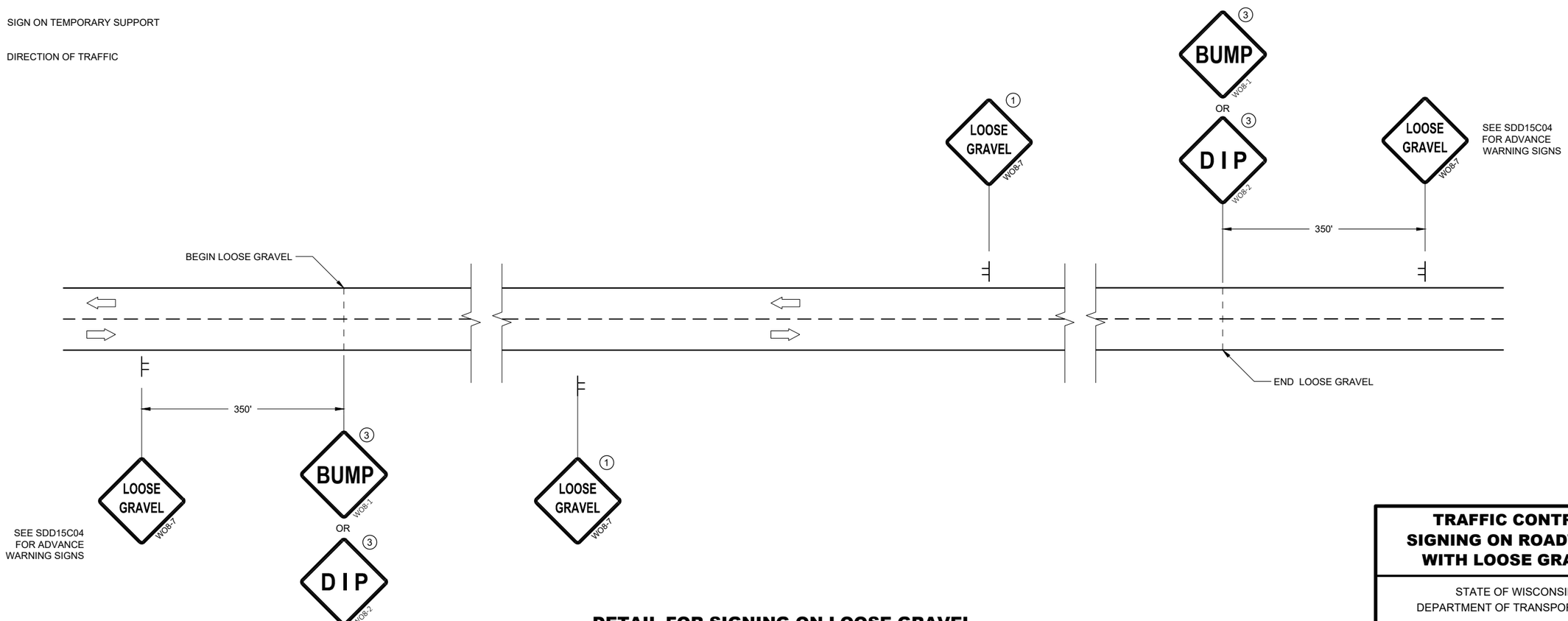

DETAIL FOR SIGNING ON LOOSE GRAVEL OR CHIP SEALED SURFACES

TRAFFIC CONTROL SIGNING ON ROADWAYS WITH LOOSE GRAVEL

STATE OF WISCONSIN
DEPARTMENT OF TRANSPORTATION

APPROVED
February 2021 — DATE
/S/ Andrew Heidtke — WORK ZONE ENGINEE
FHWA

6

SDD 15D45 - 03

TYPICAL ASSEMBLIES

J1-1

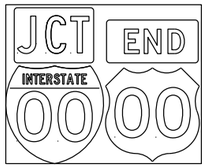

J1-2

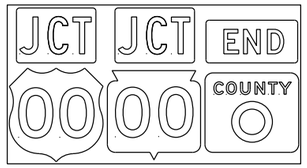

J1-3

JR1-1

J2-1

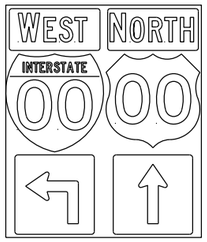

J2-2

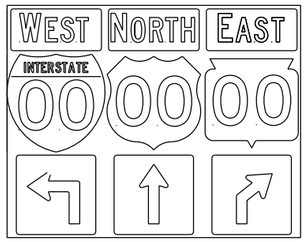

J2-3

JV

(Typical Vertical J-Assembly
See Note 10 and 11)

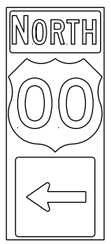

J3-1

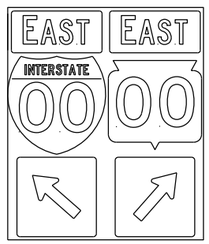

J3-2

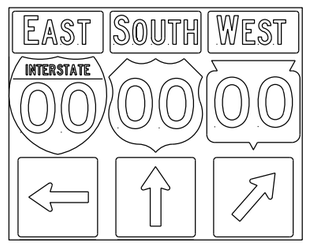

J3-3

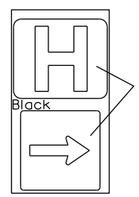

JH-1

Blue Background

J4-1

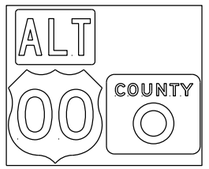

J4-2

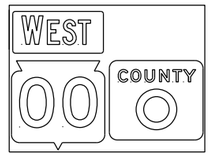

J4-2

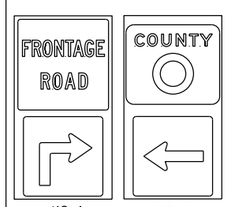

J12-1 J13-1

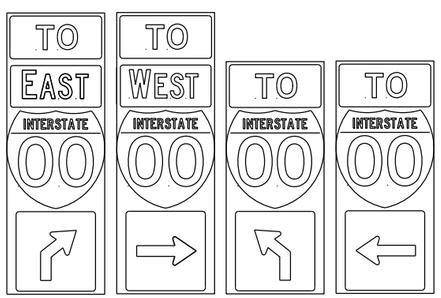

J32-1 J33-1 J22-1 J23-1 JR13-1 JR23-1 JR99-1

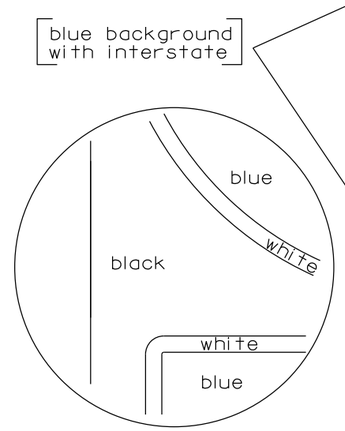

blue background
with interstate

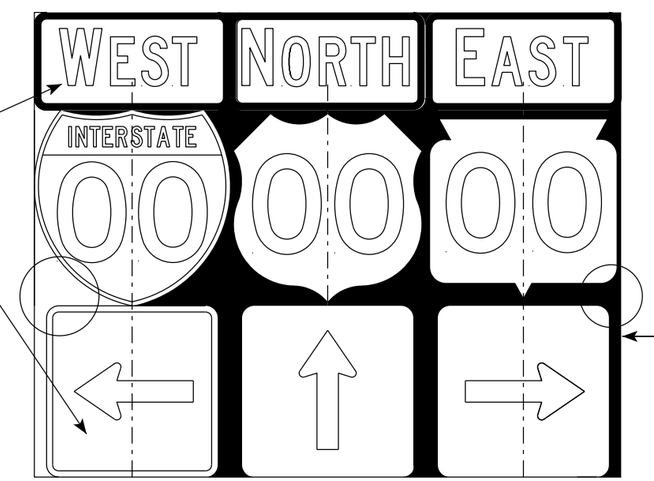

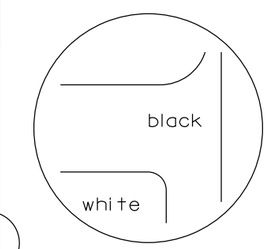

black background

NOTES

1. Signs are Type II - Type H Reflective
2. Color:
   Background - Black Non-reflective
   Message - see Note 4
3. Message Series - See Note 4
4. The colors and message spacing on each marker shall be according to the applicable route marker panel specifications.
5. Certain marker heads require the component pieces to be the same color. As an example, all the components used with an M1-1 Interstate marker shall be blue.
6. Single panel j-assemblies shall only be used with route marker shields that are same size. If the route marker shields are different size use multiple piece component.
7. Route assemblies that have 24 inch route shields and have dimensions greater than 48 inches (both vertical and horizontal) shall have one horizontal splice between the arrows and route shields. Vertical splices shall not be used on route assemblies with a horizontal dimension of 144 inches or less. The contractor shall not use more than one vertical joint per sign and the joint shall be between route shields.
8. Route assemblies that have 36 inch shields and have dimensions greater than 48 inchs (both vertical and horizontal) shall have two horizontal splices. One horizontal splice shall be between the cardinal direction and route shields and the other horizontal splice shall be between the arrows and route shields. Vertical splices shall not be used on route assemblies with a horizontal dimension of 144 or less. The contractor shall not use more than one vertical joint per sign and the joint shall be between route shields.
9. All Vertical J Assemblies are given a Sign Code of JV
10. For JV Assemblies that have a mixture of Interstate and Non-Interstate shields, arrows and cardinals shall be white on blue.
11. For JV Assemblies that have a mixture of Non-Interstate and Auto-Tour shields, arrows and cardinals shall be black on white.

ROUTE MARKERS & COMPONENTS
IN TYPICAL ASSEMBLIES

WISCONSIN DEPT OF TRANSPORTATION

APPROVED Matthew R Rauch
for State Traffic Engineer

DATE 6/7/23 PLATE NO. A2-1S.10

PROJECT NO:

SHEET NO: 109 E

URBAN AREA

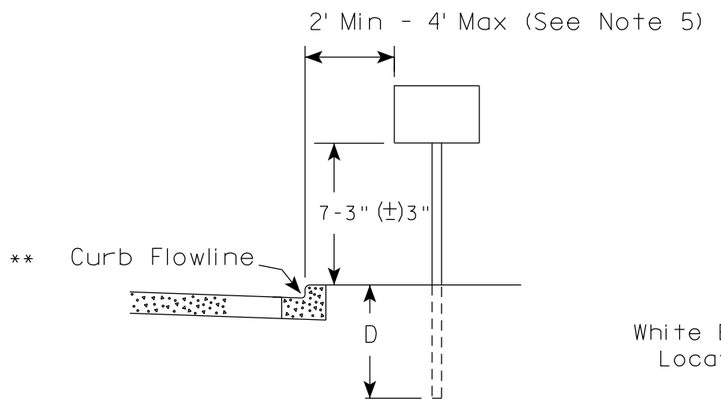

RURAL AREA (See Note 2)

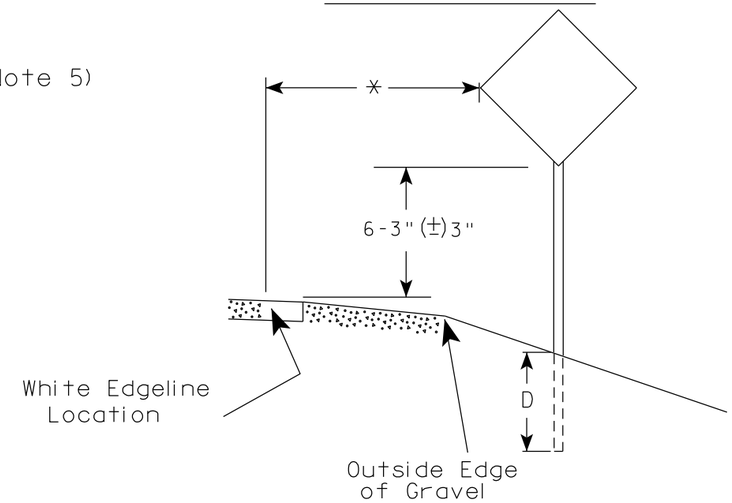

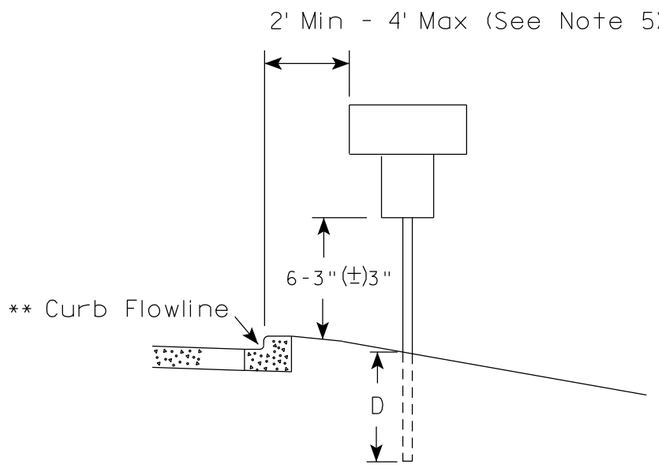

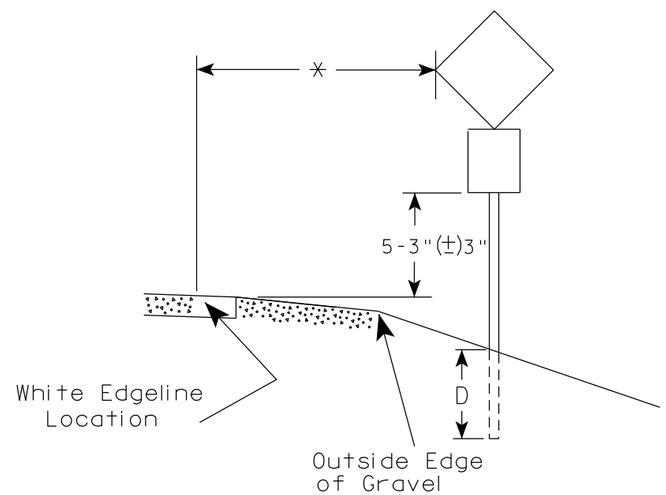

** The existence of curb and gutter does not in itself mandate the vertical clearance illustrated. That height is typically measured where there is sidewalk adjacent to the roadway or parking is permitted. In the absence of sidewalk vertical clearance is measured from the top of the curb. Offset of signs is measured from the flow line.

* 6 feet from edge of a paved shoulder or 12 feet from the edge of pavement (edge line location) or 2 feet from outside edge of gravel, whichever is greater unless directed by project engineer.

GENERAL NOTES

1. Signs wider than 4 feet or 20 sq.ft or larger, shall be mounted on multiple posts. Refer to plate A4-4.
2. If signs are mounted on or behind barrier wall, see A4-10 sign plate.
   The Double Arrow sign (W12-1D) shall be mounted at a height of 2'-3" (±) 3". The Chevron sign (W1-8), Roundabout Chevron panel (R6-4B), Enhanced Reference Markers, Clearance Markers (W5-52), Mile Markers (D10 series), In Road Object Markers (W5-54) & End of Road Markers (W5-56) shall be mounted at a height of 4'-3" (±) 3".
3. For expressways and freeways, mounting height is 7'- 3" (±) 3" or 6'-3" (±) 3" depending upon existence of a sub-sign.
4. Minimum mounting height for signs mounted on traffic signal poles is 5'- 3" (±) 3".
5. Offset distance shall be consistent with existing signs or consistent throughout length of project.
6. Folding signs shall be mounted at a height of 5'-3" (±) 3" or as directd by the Engineer.

POST EMBEDMENT DEPTH

Area of Sign Installation (Sq. Ft.)	D (Min)
20 or Less	4'
Greater than 20	5'

TYPICAL INSTALLATION OF PERMANENT TYPE II SIGNS ON SINGLE POSTS

WISCONSIN DEPT OF TRANSPORTATION

APPROVED Matthew R Rauch
for State Traffic Engineer

DATE 12/6/23 PLATE NO. A4-3.23

7 7

PROJECT NO:	HWY:	COUNTY:		SHEET NO: 110	E

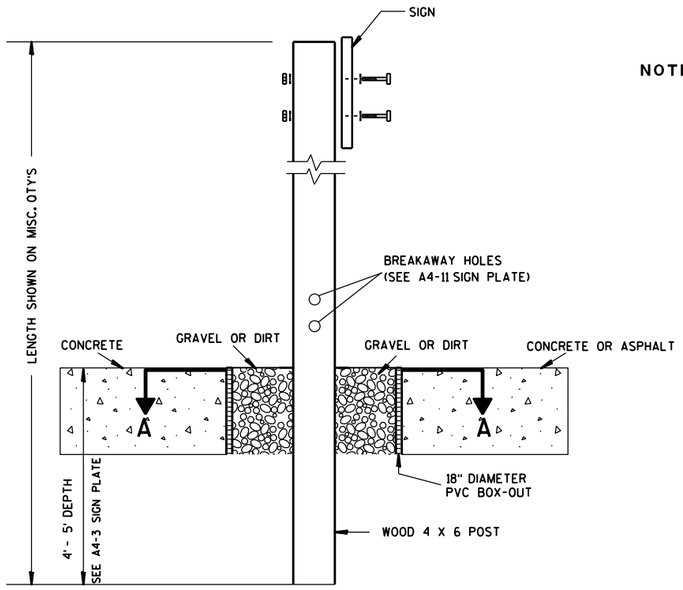

ELEVATION VIEW

DETAIL OF WOOD 4 X 6 SIGN POST IN BOX-OUT

NOTES:
1. ALL MATERIAL TO BE APPROVED BY ENGINEER PRIOR TO INSTALLATION
2. SEE SIGN PLATE A4-8 FOR SIGN HARDWARE REQUIREMENTS
3. 18 INCH X 18 INCH SQUARE BOX-OUTS MAY BE USED FOR INSTALLATIONS IN EXISTING CONCRETE OR ASPHALT LOCATIONS.

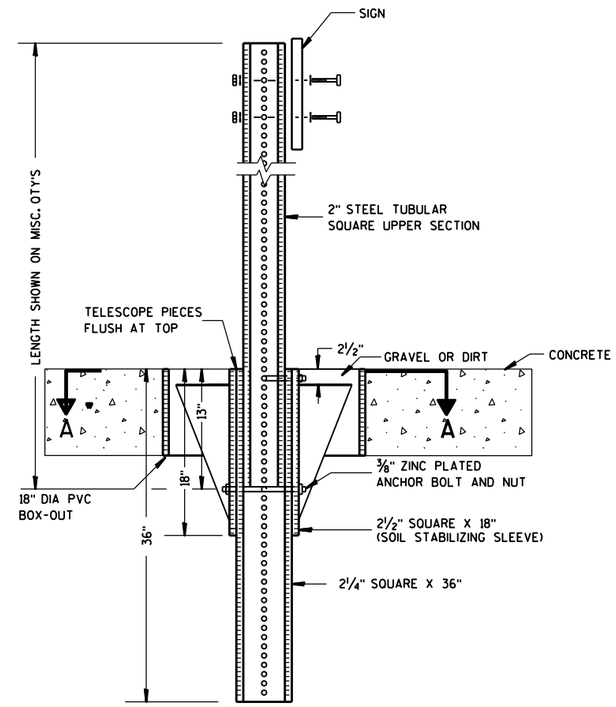

ELEVATION VIEW

DETAIL OF STEEL 2 X 2 SIGN POST IN BOX-OUT

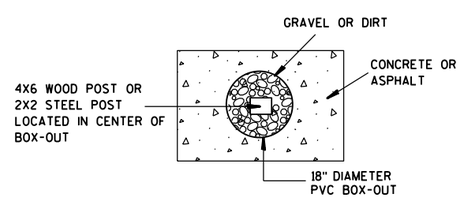

PLAN VIEW

FOR NEW CONCRETE/ASPHALT INSTALLATIONS

SIGN POST
BOX-OUTS
A4-3B

WISCONSIN DEPT OF TRANSPORTATION

APPROVED Matthew R Rauch
for State Traffic Engineer

DATE 1/27/14 PLATE NO. A4-3B.1

PROJECT NO:	HWY:	COUNTY:		SHEET NO:	E

URBAN AREA

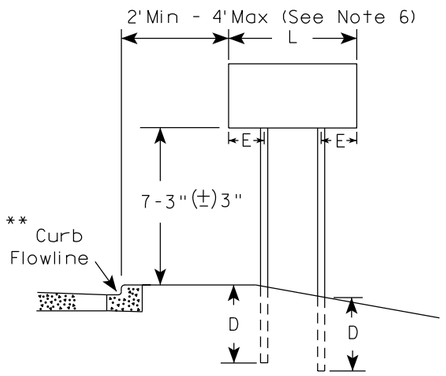

RURAL AREA (See Note 3)

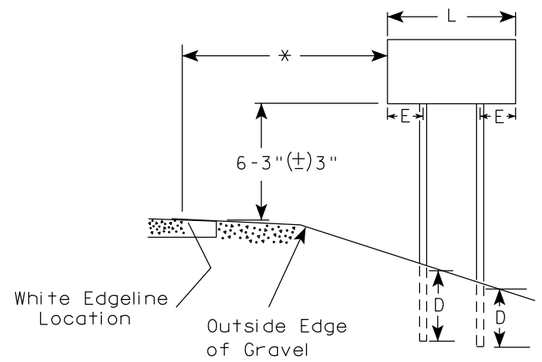

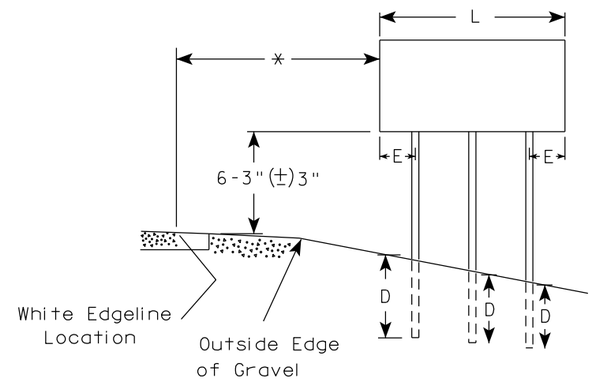

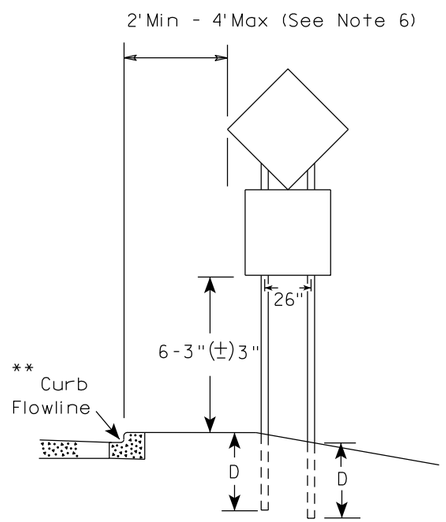

48" DIAMOND WARNING SIGN

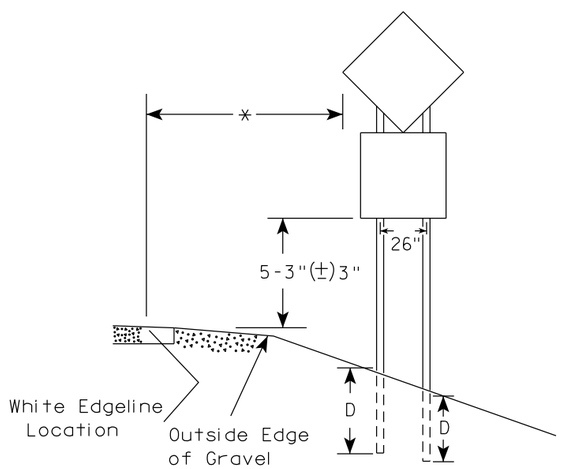

48" DIAMOND WARNING SIGN

GENERAL NOTES

1. For 3 or 4 post installations, individual post spacing shall be greater than 3'-6".
2. See tables below for required number of posts.
3. For expressways and freeways, mounting height is 7'-3" (±) 3" or 6'-3" (±) 3" depending upon existence of sub-sign.
4. The (±) tolerance for mounting height is 3 inches.
5. J-Assemblies are considered to be one sign for mounting height.
6. Offset distance shall be consistent with existing signs or consistent throughout length of project.
7. Folding signs shall be mounted at a height of 5'-3" (±) 3" or as directed by the engineer.
8. The Double Arrow sign (W12-1) shall be mounted at a height of 2'-3" (±) 3". The Chevron sign (W1-8), Roundabout Chevron panel (R6-4B), Clearance Markers (W5-52), Mile Markers (D10 series), In Road Object Markers (W5-54) & End of Road Markers (W5-56) shall be mounted at a height of 4"-3" (±) 3".

* 6 feet from edge of a paved shoulder or 12 feet from the edge of pavement (edge line location) or 2 feet from outside edge of gravel, whichever is greater unless directed by project engineer.

** The existence of curb and gutter does not in itself mandate the vertical clearance illustrated. That height is typically measured where there is sidewalk adjacent to the roadway or parking is permitted. In the absence of sidewalk vertical clearance is measured from the top of the curb. Offset of signs is measured from the flow line.

*** See A4-3 sign plate for signs 4' or less in width and less than 20 S.F. in area.

SIGN SHAPE OTHER THAN DIAMOND (TWO POSTS REQUIRED)	
L	E
*** Greater than 48" Less than 60"	12"
60" to 108"	L/5

SIGN SHAPE OTHER THAN DIAMOND (THREE POSTS REQUIRED)	
L	E
Greater than 108" to 144"	12"

POST EMBEDMENT DEPTH

Area of Sign Installation (Sq. Ft.)	D (Min)
20 or Less	4'
Greater than 20	5'

TYPICAL INSTALLATION OF TYPE II SIGNS ON MULTIPLE POSTS

WISCONSIN DEPT OF TRANSPORTATION

APPROVED Matthew R Rauch
for State Traffic Engineer

DATE 12/6/23 PLATE NO. A4-4.16

PROJECT NO:	HWY:	COUNTY:		SHEET NO: 112	E

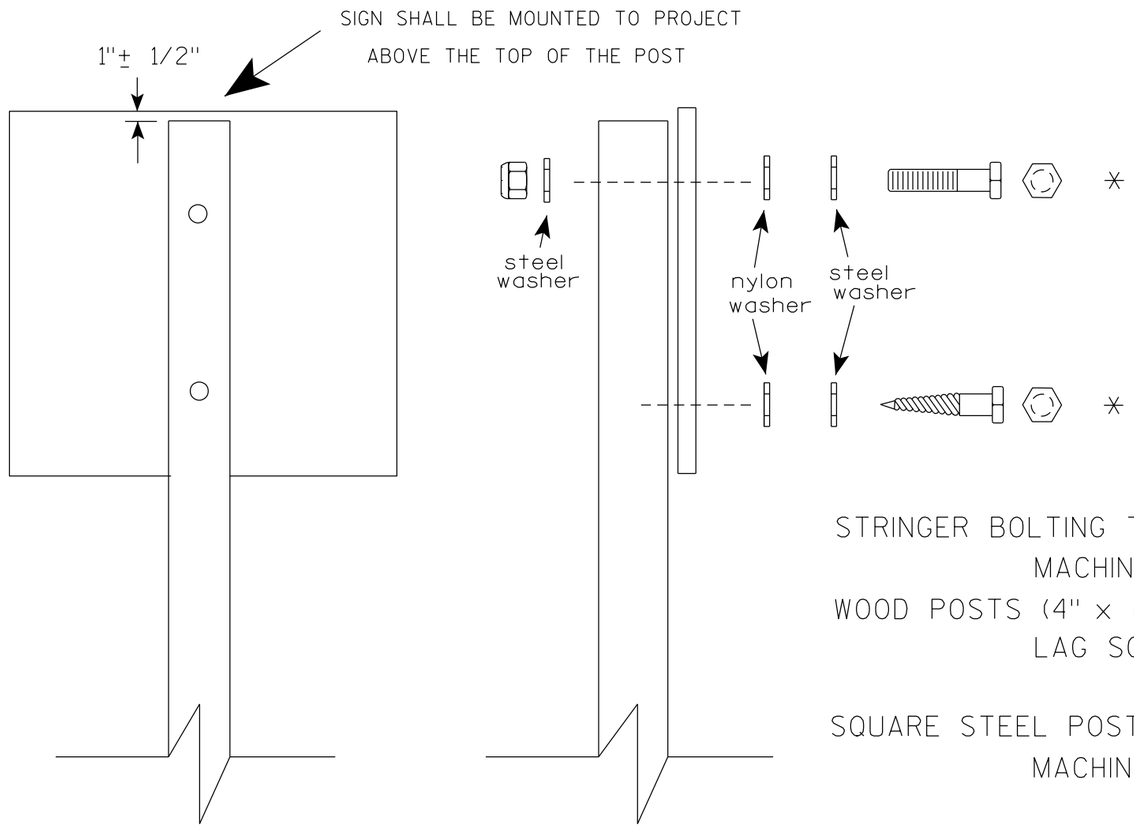

Nuts, bolts and lags used for mounting signs shall have hexagonal heads and shall be either :

a. Hot dip galvanized in accordance with ASTM Designation: A 153, Class D, or SC 3

b. Electro-galvanized in accordance with ASTM Designation : B 633, TYPE III, SC 3.

Threads on bolts and nuts shall be manufactured with sufficient allowance for the cadmium plate or galvanized coating to permit the nuts to run freely on the bolts.

STRINGER BOLTING TO ALUMINUM SIGNS (SEE SIGN PLATE A4-18)

MACHINE BOLTS - 5/16" X 1-3/4" Length w/ lock nuts

WOOD POSTS (4" x 6")

LAG SCREWS - 3/8" X 3" (NO STRINGERS ON BACK OF SIGN)
3/8" X 4" (STRINGERS ON BACK OF SIGN)

SQUARE STEEL POSTS (2" x 2")

MACHINE BOLTS - 3/8" X 3-1/4" Length w/ nuts (NO STRINGER ON BACK OF SIGN)
3/8" X 5" Length w/ nuts (STRINGERS ON BACK OF SIGN)

RIVETS - 9/32 " (6605-9-6) BULB-TITE, TRI-FOLD, ALUMINUM BODY/MANDREL
O.D. FLANGE .720-.765 INCH, GRIP RANGE .042-.375 INCH

WASHERS (ALL POSTS) -

1-1/4" O.D. X 3/8" I.D. X 1/16" STEEL
1-1/4" O.D. X 3/8" I.D. X .080 NYLON

* Two different fastening systems are shown for illustration purposes. On any individual sign, either one or the other system shall be used. Actual number of fasteners per sign varies with the sign area, but normally there are two. For a single post installation, all signs greater than 9 sq. ft. require the use of 3 fasteners.

ATTACHMENT OF SIGNS TO POSTS

WISCONSIN DEPT OF TRANSPORTATION

APPROVED Matthew R Rauch
for State Traffic Engineer

DATE 4/1/2020 PLATE NO. A4-8.9

TELESCOPIC TUBING ANCHORS
TWO PIECE SYSTEM

2 1/4 " SQUARE
12 GAUGE
PERFORATED
GALVANIZED FINISH

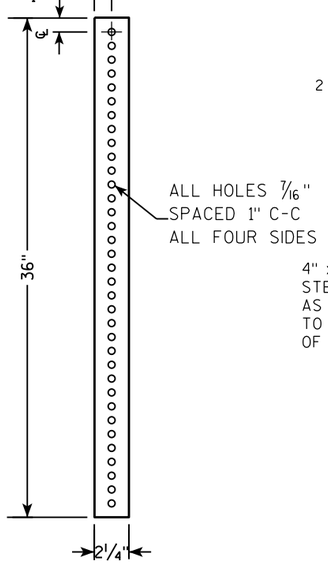

2 1/2 " SQUARE
12 GAUGE
OMNI-DIRECTIONAL
PERFORATED
SOIL STABILIZING SLEEVE
GALVANIZED FINISH

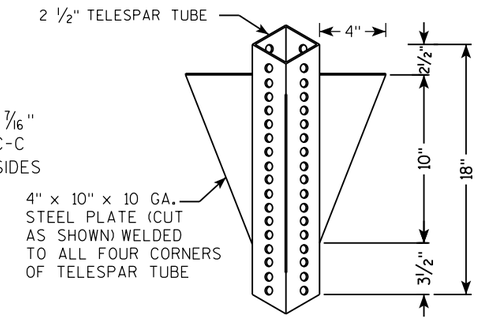

DETAIL OF TUBULAR STEEL SIGN POST
(IN POURED CONCRETE OR ASPHALT)

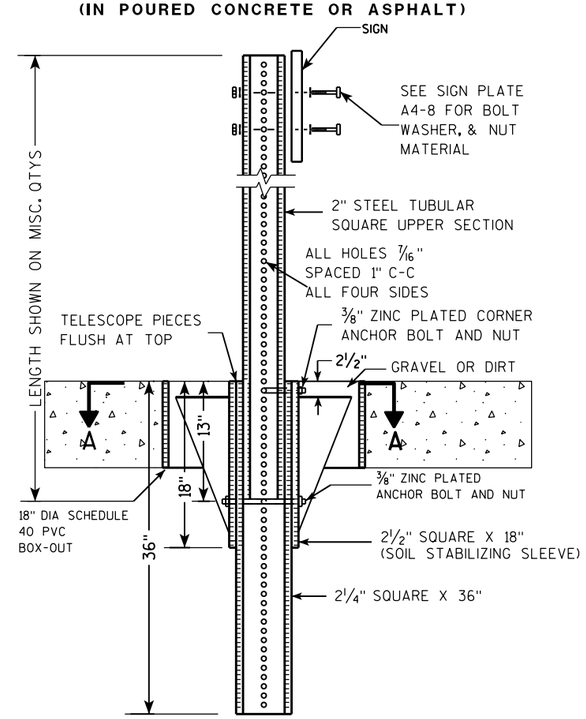

DETAIL OF TUBULAR STEEL SIGN POST
(IN LOCATIONS OTHER THAN POURED CONCRETE OR ASPHALT)

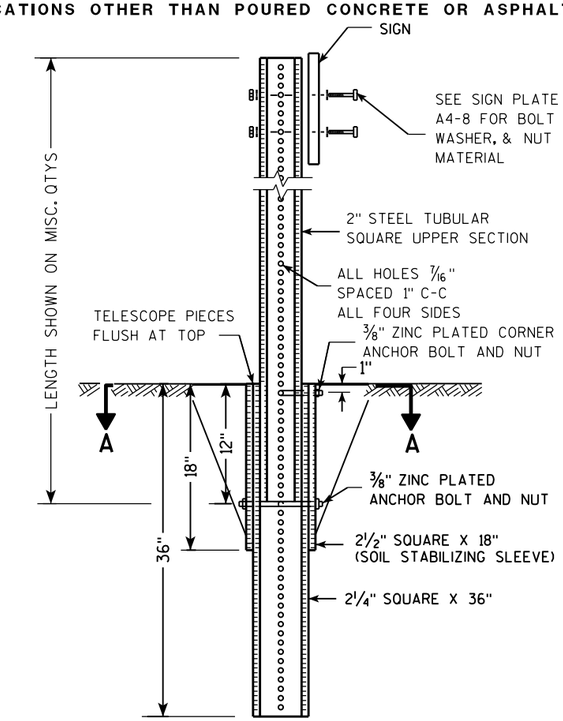

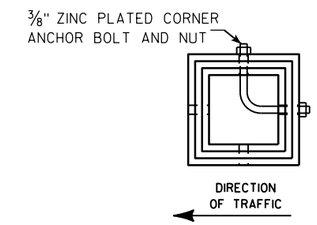

SECTION A-A

Area of Sign Installation (Sq. Ft.)	Number of Required Posts
9 or less	1
Greater than 9 less than or equal to 18	2
Greater than 18 less than or equal to 27	3

Signs wider than 3 feet or larger than 9 sq. ft shall be mounted on multiple posts (see above table).

TUBULAR STEEL
SIGN POST
A4-9

WISCONSIN DEPT OF TRANSPORTATION

APPROVED Matthew R Rauch
for State Traffic Engineer

DATE 2/05/15 PLATE A4-9.9

PROJECT NO:	HWY:	COUNTY:		SHEET NO:	E

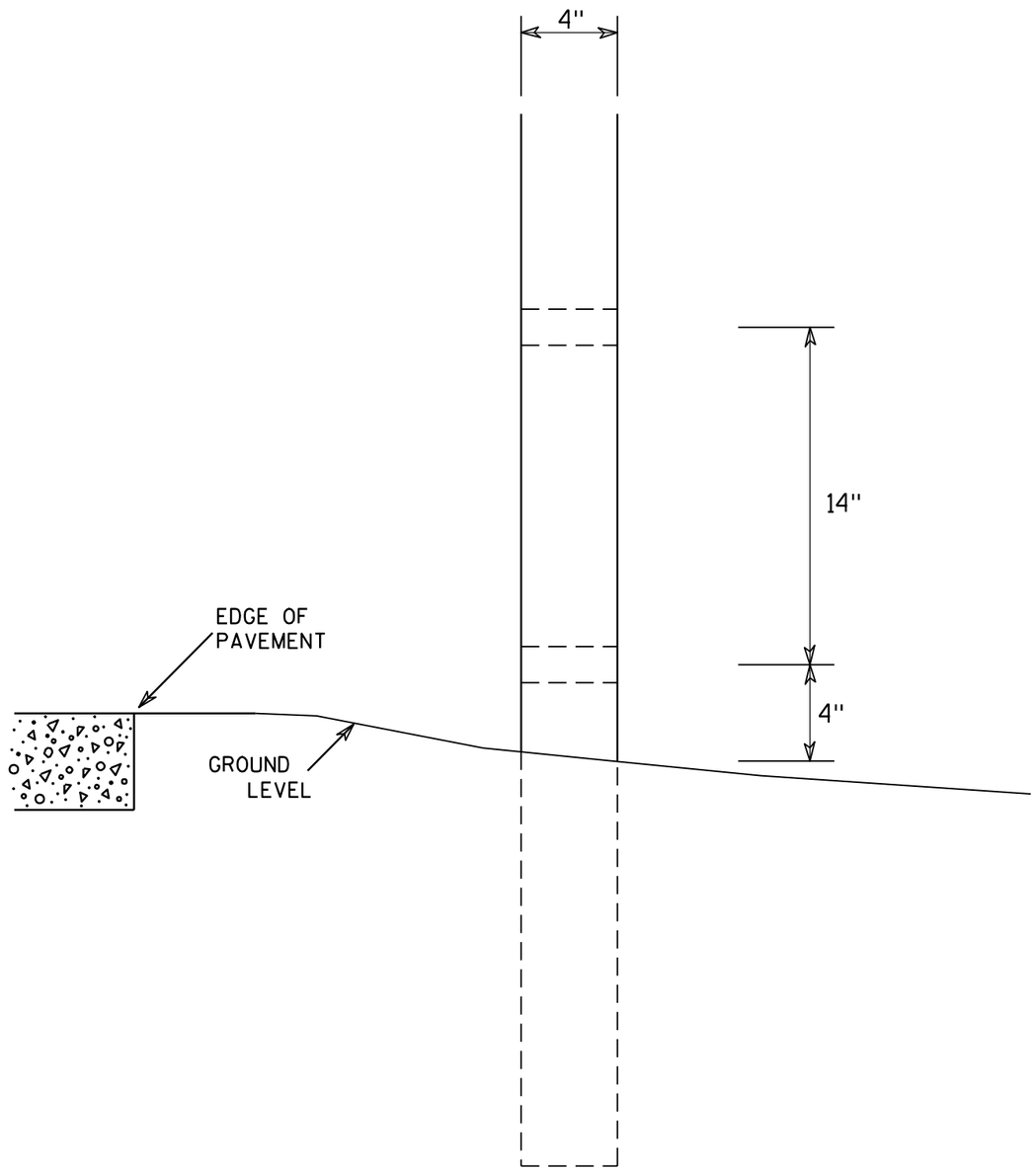

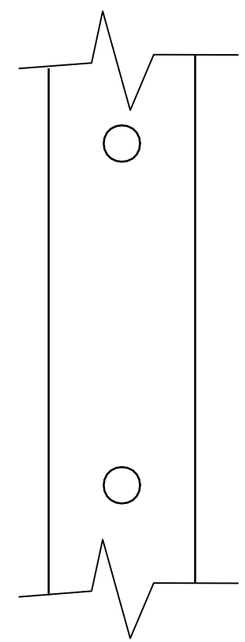

SIDE VIEW

GENERAL NOTES

1. All 4 x 6 Wood Posts shall be modified by having two 1½" diameter holes drilled perpendicular to the roadway centerline.

4 X 6 WOOD POST MODIFICATIONS

WISCONSIN DEPT OF TRANSPORTATION

APPROVED Chester J Spang for State Traffic Engineer

DATE 3/27/97 PLATE NO. A4-11.2

PROJECT NO:	HWY:	COUNTY:		SHEET NO: 115	E

BANDING

SINGLE SIGN

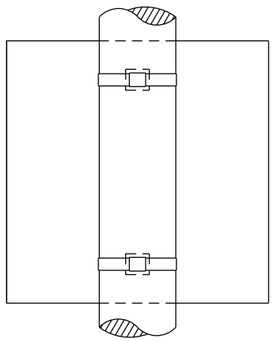

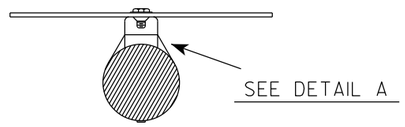

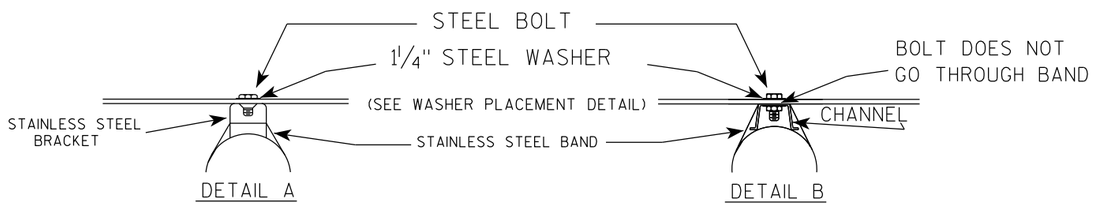

WASHER PLACEMENT

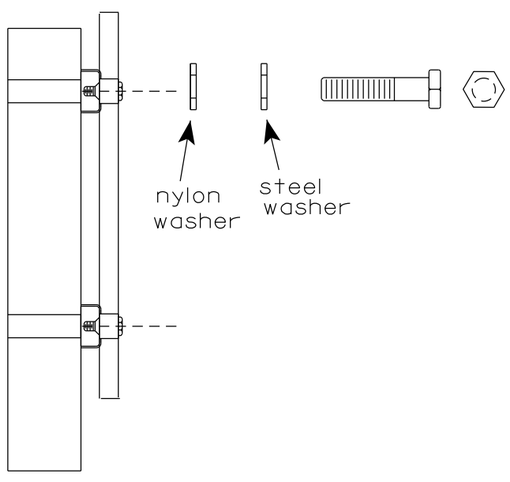

WASHERS (ALL POSTS) -
1-1/4" O.D. X 3/8" I.D. X 1/16" STEEL
1-1/4" O.D. X 3/8" I.D. X .080 NYLON
FOR ALL TYPE H SIGNS

GENERAL NOTES

1. Any sign over 3 feet in width shall use the V-Block banding method. See A5-10 standard plate.
2. Signs 3 feet or greater in height shall have three bracket bands installed. Signs less than 3 feet in height shall have two bracket bands installed.
3. Banding and assembly bracket shall be stainless steel. All bands shall be 3/4" in width and 0.025" thickness.
4. ALL SIGN MOUNTING BOLTS AND WASHERS SHALL BE EITHER:
   a. Hot dip or mechanically galvanized in accordance with ASTM Designation: A 153, Class D
   b. Electro-galvanized in accordance with ASTM designation: B 633, Type III, SC 3

"J" ASSEMBLY

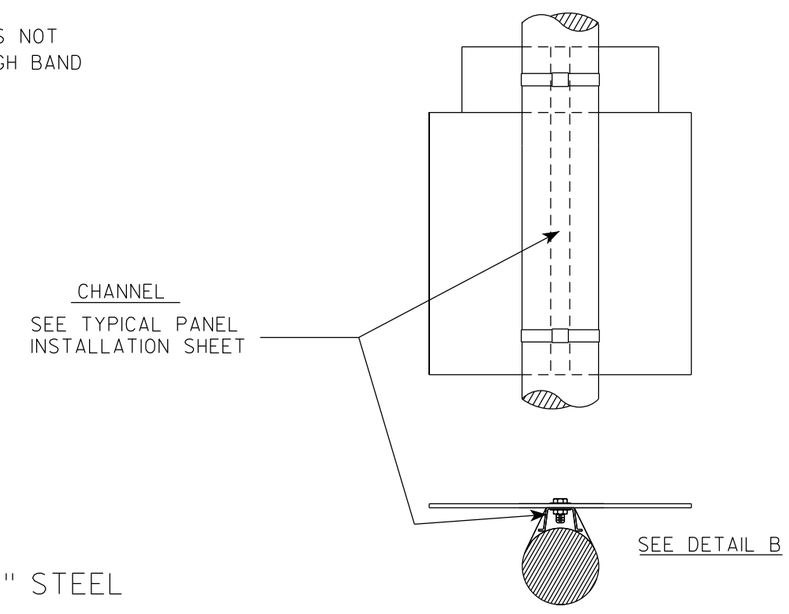

STANDARD SIGN
SIGN BANDING DETAILS

WISCONSIN DEPT OF TRANSPORTATION

APPROVED Matthew R Rauch for State Traffic Engineer

DATE 6/10/19 PLATE NO. A5-9.4

PROJECT NO:	HWY:	COUNTY:		SHEET NO: 116	E

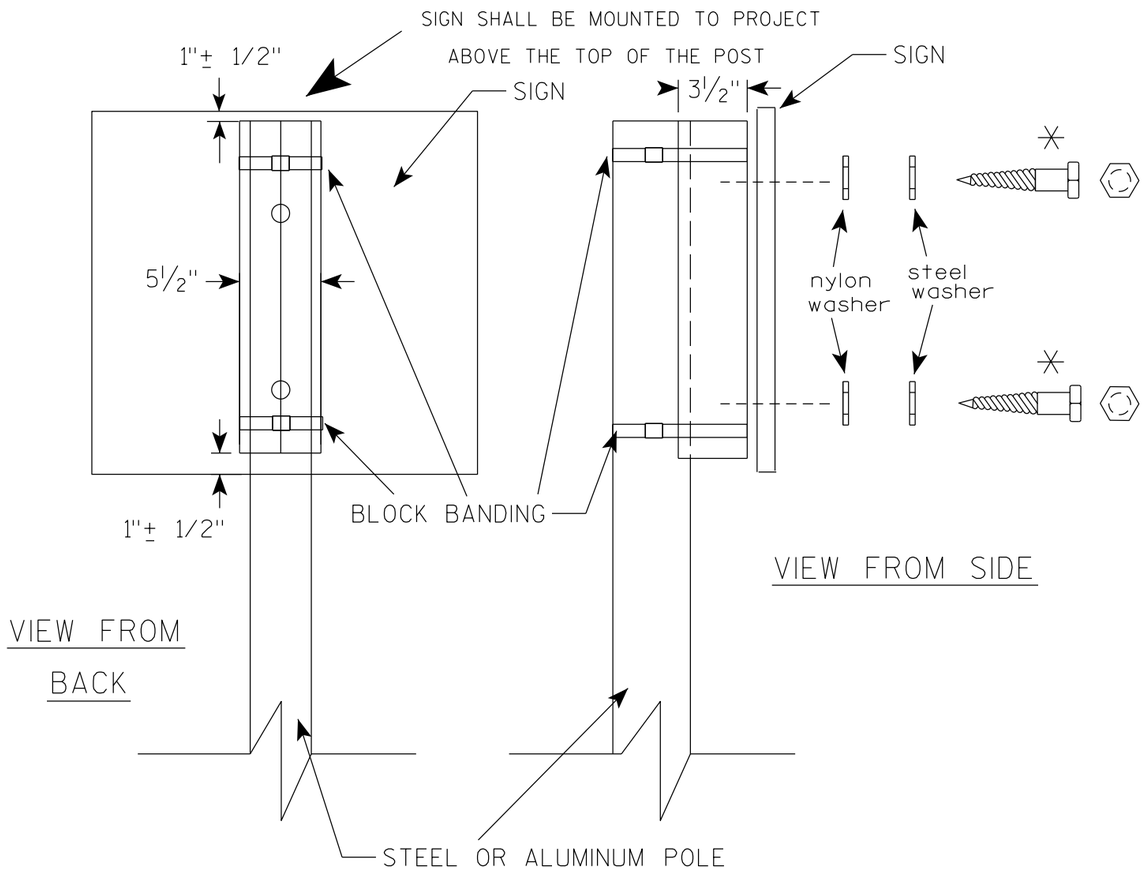

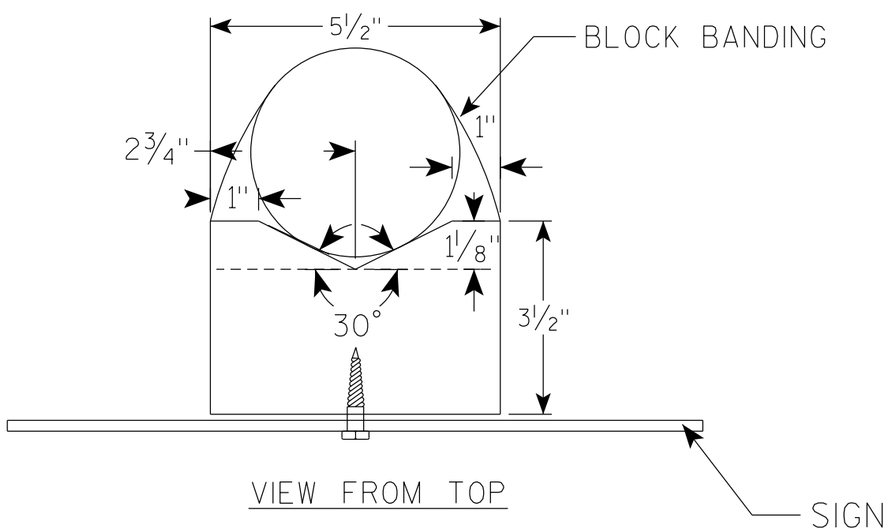

GENERAL NOTES

1. WOOD 4"X6" POST MATERIAL SHALL CONFORM TO 507.2.2 OF THE WisDOT STANDARD SPECIFICATIONS
2. BLOCK BANDING AND CLIPS SHALL BE STAINLESS STEEL, 3/4" WIDTH AND 0.025" THICKNESS
3. SIGNS 3' OR GREATER IN HEIGHT SHALL UTILIZE 3 BLOCK BANDS. SIGNS UNDER 3' IN HEIGHT SHALL UTILIZE 2 BLOCK BANDS
4. ACTUAL NUMBER OF FASTENERS PER SIGN VARIES WITH THE SIGN AREA, BUT NORNALLY THERE ARE TWO. FOR SIGNS GREATER THAN 9 S.F. 3 FASTENERS SHALL BE USED.
5. ALL SIGN MOUNTING BOLTS AND WASHERS SHALL BE EITHER:
   a. Hot dip or mechanically galvanized in accordance with ASTM Designation: A 153, Class D
   b. Electro-galvanized in accordance with ASTM Designation : B 633, TYPE III, SC 3
6. ALL BOLTS SHALL HAVE HEXAGONAL HEADS.
7. STEEL WASHERS SHALL BE 1 1/4" O.D. X 3/8" I.D. X 1/16"
8. NYLON WASHERS SHALL BE 1 1/4" O.D. X 3/8" I.D. X .080 FOR TYPE H OR TYPE F FACE SIGN

✳ LAG BOLTS SHALL BE 3/8" X 2 1/2"

7

7

BLOCK BANDING DETAIL
(V-BLOCK OPTION)

WISCONSIN DEPT OF TRANSPORTATION

APPROVED Matthew R Rauch
for State Traffic Engineer

DATE 4/19/2022 PLATE NO. A5-10.3

PROJECT NO:				SHEET NO: 117	E

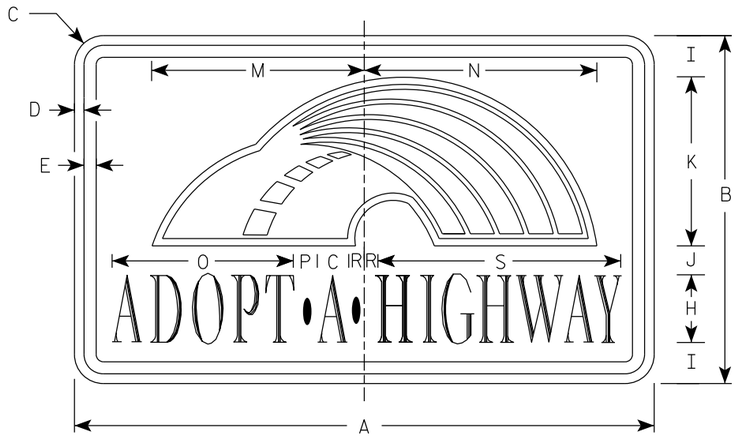

I55-56

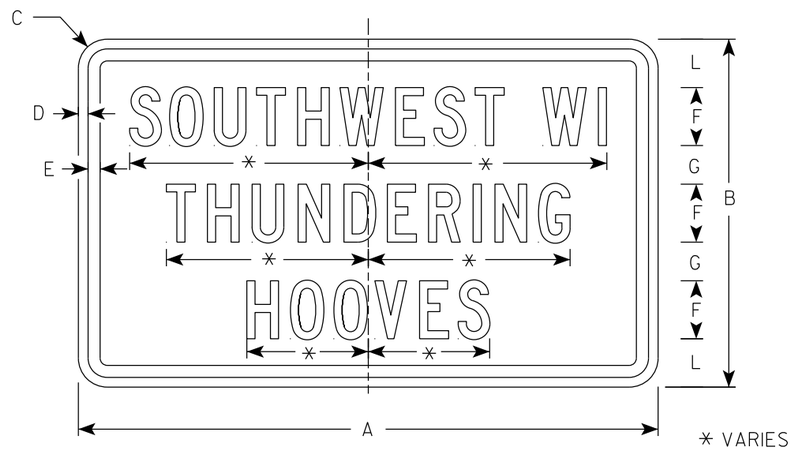

I55-56P

NOTES

1. Sign is Type II - Type H Reflective
2. Color:
   Background - Blue
   Message - White
   Rainbow detail - See Below
3. Message Series - Adopt a Highway - Dutch 8011L
   All other Text - Series C
4. Contractor shall provide and install a new post bracket in accordance with the I55-56B sign detail.

Background Colors of Symbol*

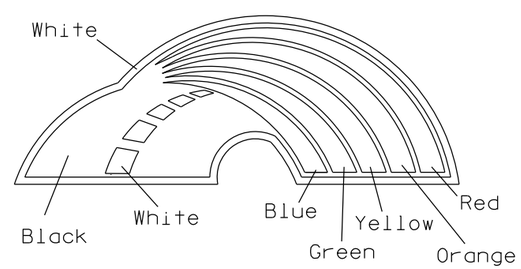

*1/4" Black Border between each color of rainbow and border of rainbow

*3/8" White Border surrounds the whole image of the rainbow

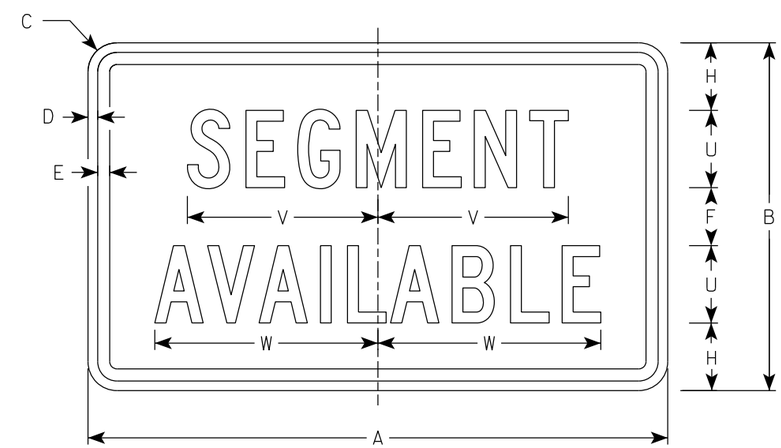

I55-56S

SIZE	A	B	C	D	E	F	G	H	I	J	K	L	M	N	O	P	Q	R	S	T	U	V	W	X	Y	Z	Area sq. ft.
1																											
2	30	18	1 1/2	1/2	5/8	3	2	3 1/2	2 1/4	1 1/2	8 1/2	2 1/2	11	12	9 3/8	1 1/4		3/4	12 5/8	7 1/2	4	9 7/8	11 1/2				3.75
3																											
4																											
5																											

STANDARD SIGN
I55-56

WISCONSIN DEPT OF TRANSPORTATION

APPROVED Matthew R Rauch
for State Traffic Engineer

DATE 3/13/2025 PLATE NO. 155-56.5

PROJECT NO: | HWY: | COUNTY: | SHEET NO: 118 | E

ISOMETRIC VIEW

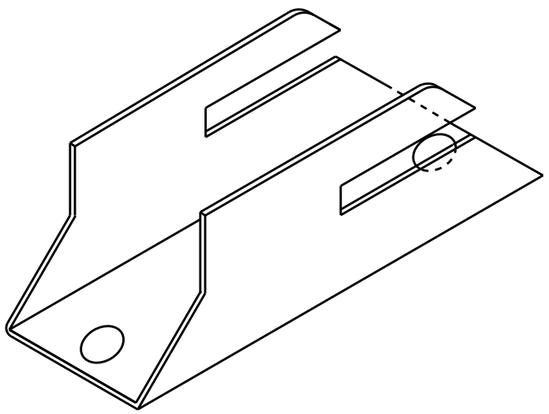

TOP VIEW

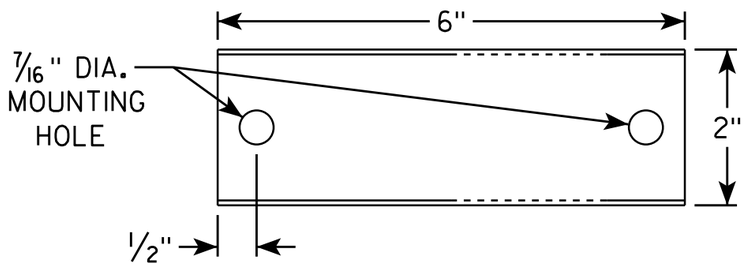

SIDE VIEW

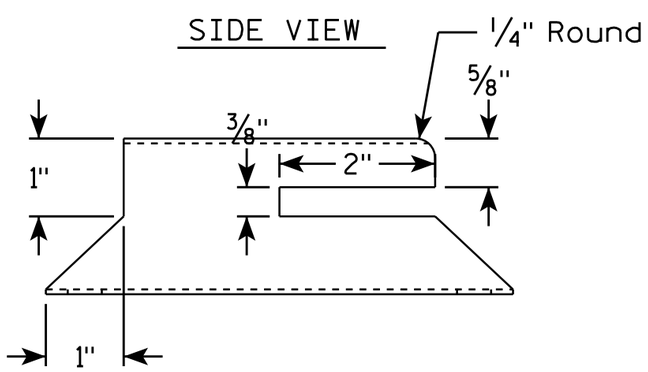

END VIEW

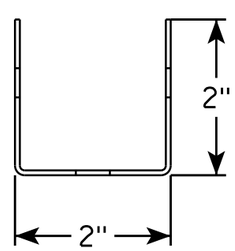

NOTES

1. Must be capable of permanent attachment to a wood or steel channel sign post utilizing the fastening hardware specified on the A4-8 sign plate.
2. Shall be entirely primed and painted with two coats of a black powder coated enamel paint.
3. Shall be made with 12 gauge steel, and incorporate no welds, no hinged components, no threaded lock-type components, and no parts which are loose or can be separated from the main body.
4. Shall have rounded edges with at least 1/8" radii.
5. Shall not have unrounded and uncoated metal edges which can contact the back surface of the roll-up sign.
6. Top of bracket shall be mounted 2' below the bottom of the I55-56 sign.
7. Cost of bracket and fastening hardware shall be incidental to the I55-56 sign.

SIDE VIEW

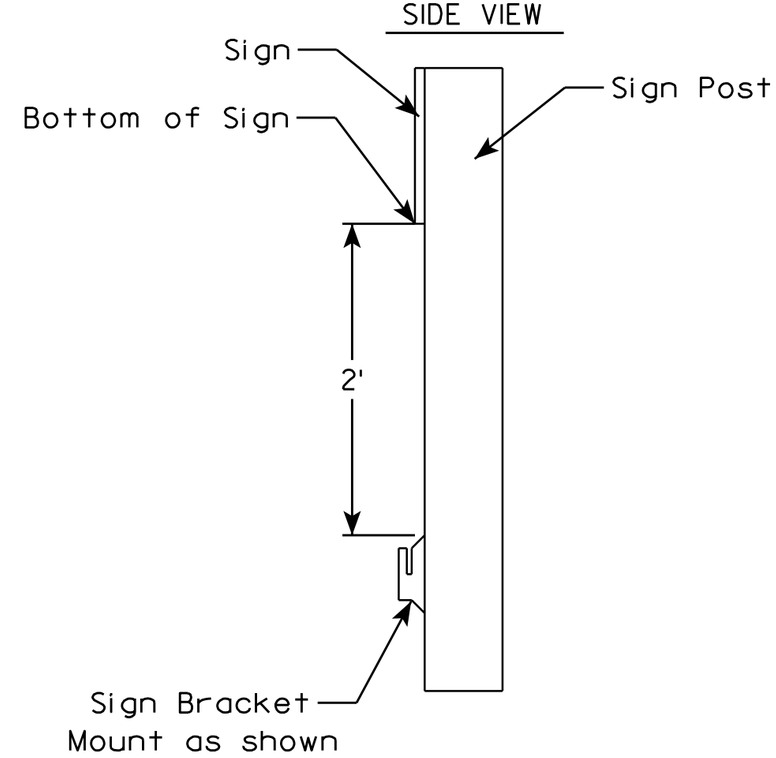

ROLLUP SIGN BRACKET
I55-56B

WISCONSIN DEPT OF TRANSPORTATION

APPROVED Matthew R Rauch
for State Traffic Engineer

DATE 4/26/16 PLATE I55-56B.2

PROJECT NO:	HWY:	COUNTY:		SHEET NO:	E

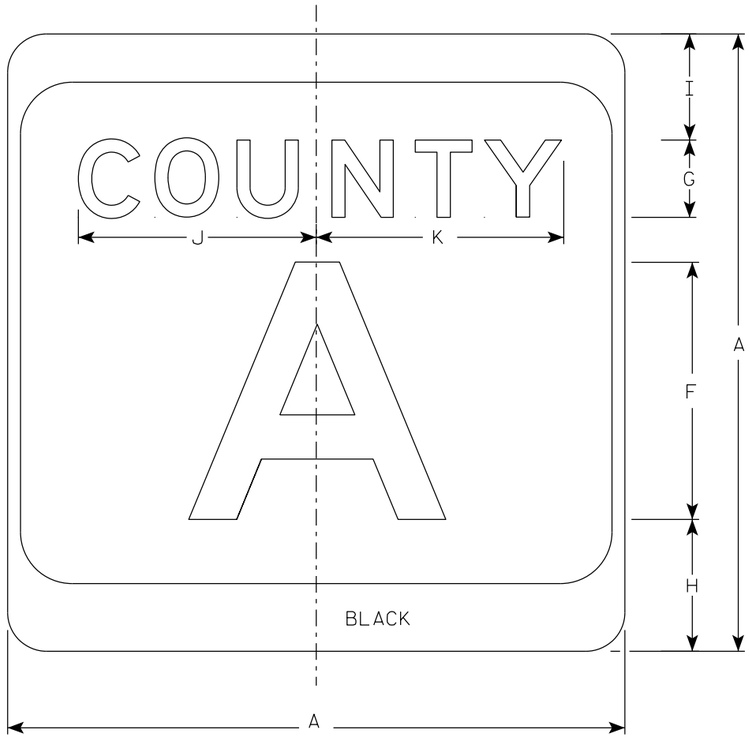

M1-5A

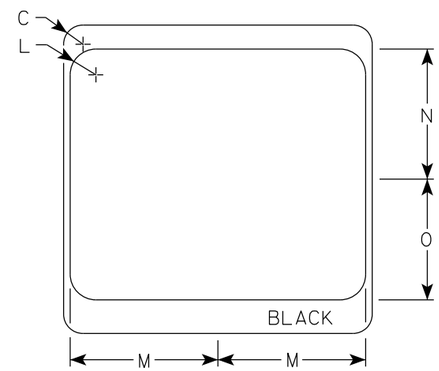

NOTES

1. Sign is Type II - Type H Reflective
2. Color:
   Background - White & Black
   Message - Black
3. Message Series - see Note 4
4. Message Series E for 1 letter.
   Message Series D for 2 letters unless message is too big then Series C.
   Message Series C for 3 letters unless message is too big then Series B.
5. Substitute appropriate letters & optically center to achieve proper balance.

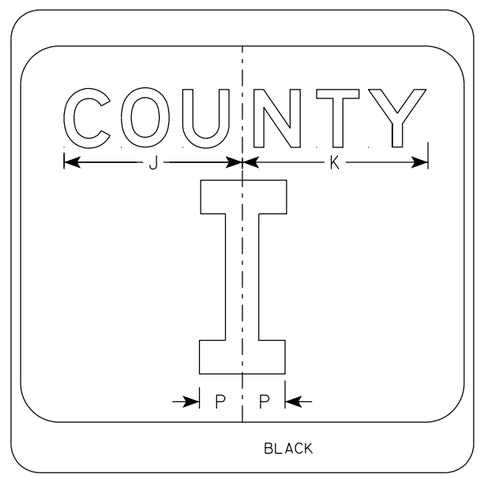

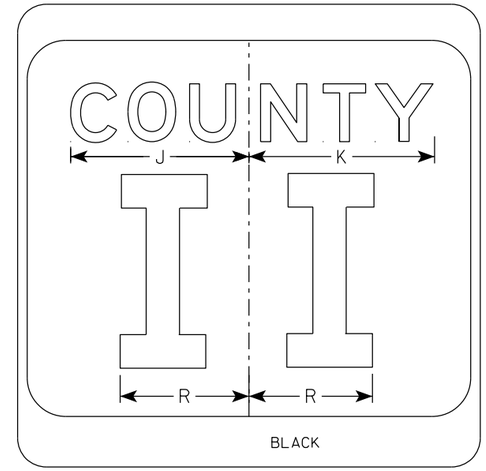

SIZE	A	B	C	D	E	F	G	H	I	J	K	L	M	N	O	P	Q	R	S	T	U	V	W	X	Y	Z	Area sq. ft.
1																											
2	24		1 1/2			10	3	5 1/8	4 1/8	9 1/4	9 5/8	2	11 1/2	10 1/8	9 3/8	2 1/4		6 5/8									4.0
2M	24		1 1/2			10	3	5 1/8	4 1/8	9 1/4	9 5/8	2	11 1/2	10 1/8	9 3/8	2 1/4		6 5/8									4.0
3	36		2 1/4			16	4	7 5/8	5 5/8	12 1/4	12 7/8	3	17 1/8	15 1/4	14	3 3/8		10									9.0
4	36		2 1/4			16	4	7 5/8	5 5/8	12 1/4	12 7/8	3	17 1/8	15 1/4	14	3 3/8		10									9.0
5	36		2 1/4			16	4	7 5/8	5 5/8	12 1/4	12 7/8	3	17 1/8	15 1/4	14	3 3/8		10									9.0

CTH MARKER
M1-5A FOR ASSEMBLIES

WISCONSIN DEPT OF TRANSPORTATION

APPROVED Matthew R Rauch
for State Traffic Engineer

DATE 11/8/2022 PLATE NO. M1-5A.9

PROJECT NO: | HWY: | COUNTY: | SHEET NO: E

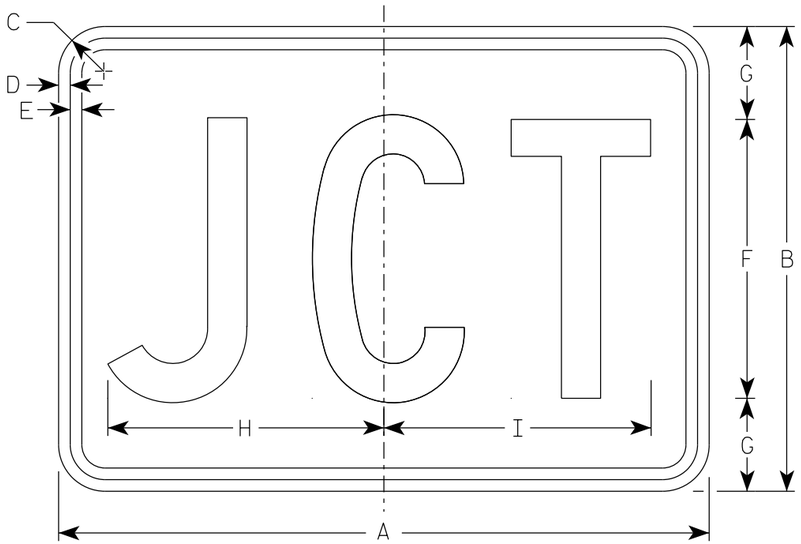

M2-1
MM2-1
MP2-1

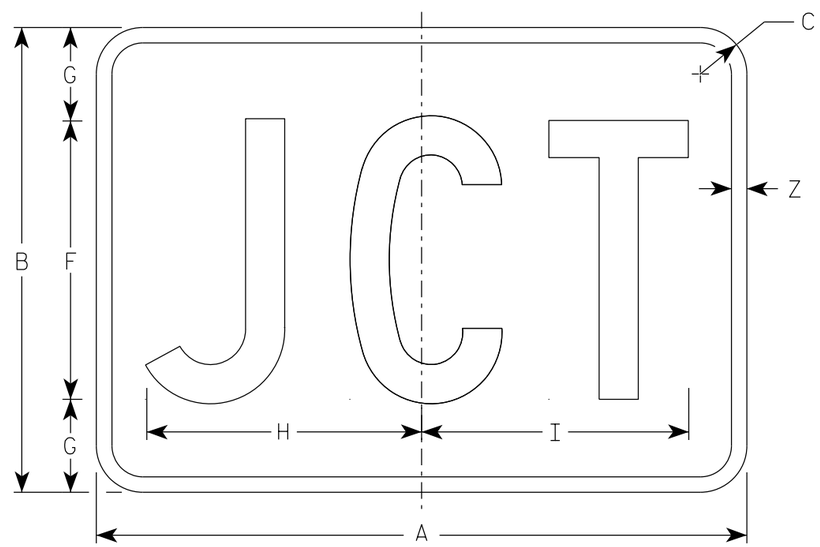

MB2-1
MK2-1
MN2-1
MR2-1

NOTES

1. Sign is Type II - Type H Reflective
2. Color:
   Background - See note 5
   Message - See note 5
3. Message Series - C
4. M2-1 Background - White
   Message - Black
   MB2-1 Background - Blue
   Message - White
   MK2-1 Background - Green
   Message - White
   MM2-1 Background - White
   Message - Green
   MN2-1 Background - Brown
   Message - White
   MP2-1 Background - White
   Message - Blue
   MR2-1 Background - Brown
   Message - Yellow

SIZE	A	B	C	D	E	F	G	H	I	J	K	L	M	N	O	P	Q	R	S	T	U	V	W	X	Y	Z	Area sq. ft.
1																											
2S	21	15	1 1/2	3/8	3/8	9	3	8 7/8	8 5/8																	1/2	2.20
2M	21	15	1 1/2	3/8	3/8	9	3	8 7/8	8 5/8																	1/2	2.20
3	30	21	1 1/2	3/8	3/8	13	4	12 7/8	12 3/8																	1/2	4.40
4	30	21	1 1/2	3/8	3/8	13	4	12 7/8	12 3/8																	1/2	4.40
5	30	21	1 1/2	3/8	3/8	13	4	12 7/8	12 3/8																	1/2	4.40

STANDARD SIGN
M2-1

WISCONSIN DEPT OF TRANSPORTATION

APPROVED Matthew R Rauch
For State Traffic Engineer

DATE 2/8/2023 PLATE NO. M2-1.14

PROJECT NO: | HWY: | COUNTY: | SHEET NO: 121 | E

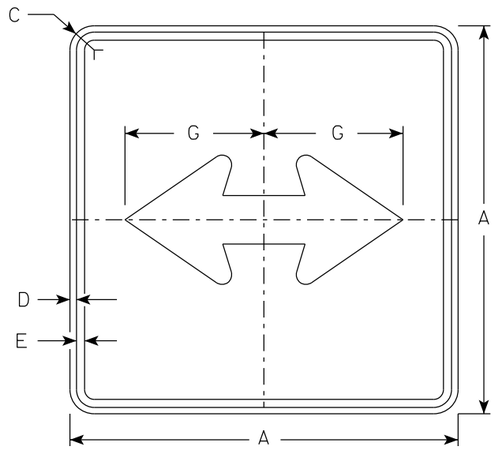

M6-4
MM6-4
MO6-4
MP6-4

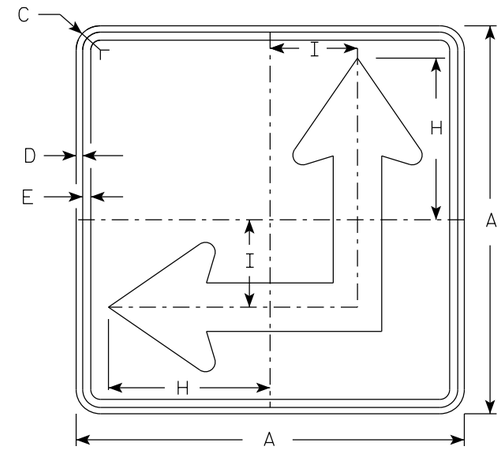

M6-6
MM6-6
MO6-6
MP6-6

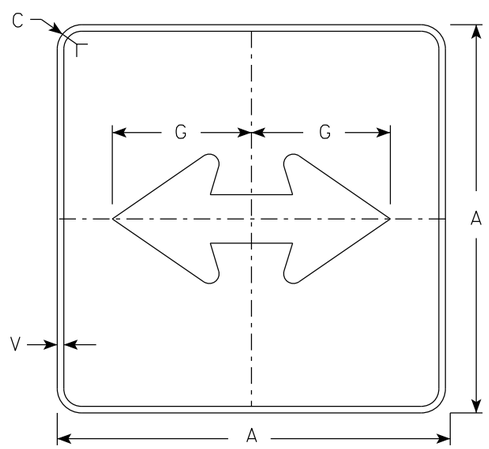

MB6-4
MK6-4
MN6-4
MR6-4

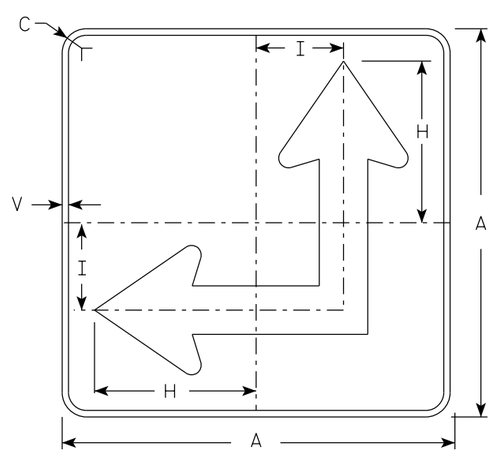

MB6-6
MK6-6
MN6-6
MR6-6

NOTES

1. Signs are Type II - Type H Reflective except as Shown
2. Color:
   Background - See Note 4
   Message - See Note 4
3. Corners may be square or rounded when base material is plywood but borders shall be rounded as shown. When base material is metal, the corners and borders shall be rounded.
4. M6-4 and M6-6 Background - White
   Message - Black
   MB6-4 and MB6-6 Background - Blue
   Message - White
   MK6-4 and MK6-6 Background - Green
   Message - White
   MM6-4 and MM6-6 Background - White
   Message - Green
   MN6-4 and MN6-6 Background - Brown
   Message - White
   MO6-4 and MO6-6 Background - Orange - Type F Reflective
   Message - Black
   MP6-4 and MP6-6 Background - White
   Message - Blue
   MR6-4 and MR6-6 Background - Brown
   Message - Yellow
5. M6-6R same as M6-6L except arrow points ahead and right.

ARROW DETAIL

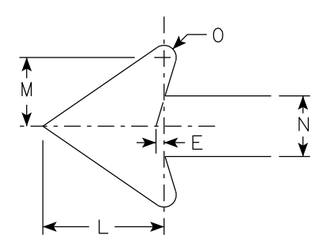

SIZE	A	B	C	D	E	F	G	H	I	J	K	L	M	N	O	P	Q	R	S	T	U	V	W	X	Y	Z	Area sq. ft.
1																											
2S	21		1 1/2	3/8	3/8		7 1/2	8 3/4	4 1/4			5 1/4	3	2 5/8	1/2							1/2					3.06
2M	21		1 1/2	3/8	3/8		7 1/2	8 3/4	4 1/4			5 1/4	3	2 5/8	1/2							1/2					3.06
3	30		1 7/8	1/2	5/8		10 3/4	12 1/2	6 3/4			7 1/2	4 1/4	3 3/4	3/4							1/2					6.25
4	30		1 7/8	1/2	5/8		10 3/4	12 1/2	6 3/4			7 1/2	4 1/4	3 3/4	3/4							1/2					6.25
5	30		1 7/8	1/2	5/8		10 3/4	12 1/2	6 3/4			7 1/2	4 1/4	3 3/4	3/4							1/2					6.25

STANDARD SIGN
M6-4 & M6-6
SERIES

WISCONSIN DEPT OF TRANSPORTATION

APPROVED Matthew R Rauch
for State Traffic Engineer

DATE 2/13/2023 PLATE NO. M6-4.11

PROJECT NO: | HWY: | COUNTY: | SHEET NO: 122 | E

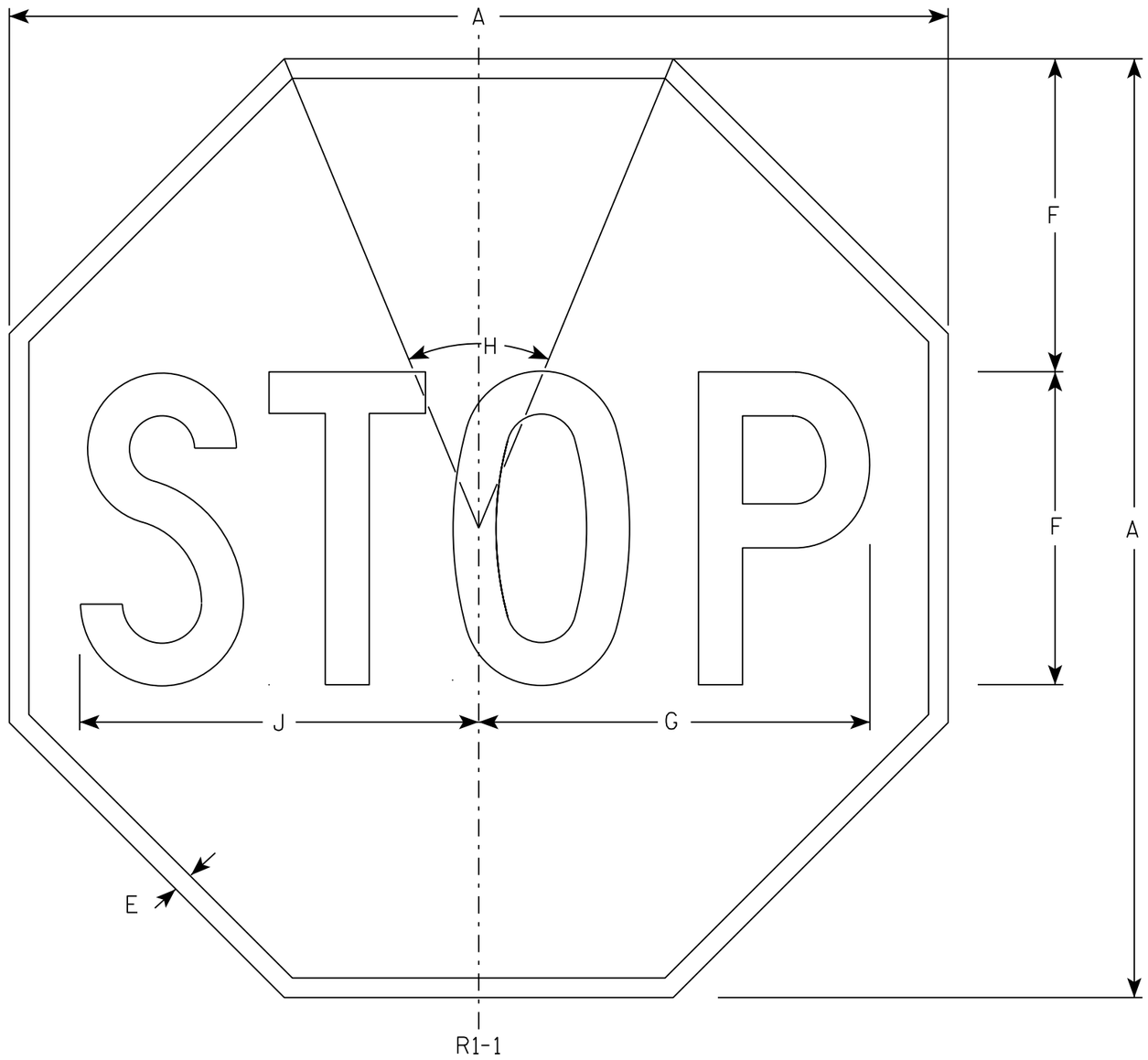

NOTES

1. Sign is Type II - Type H Reflective - reference WIS DOT Standard Specification for HIGHWAY and STRUCTURE CONSTRUCTION latest edition.
2. Color:
   Background - Red
   Message - White
3. Message Series - C

SIZE	A	B	C	D	E	F	G	H	I	J	K	L	M	N	O	P	Q	R	S	T	U	V	W	X	Y	Z	Area sq. ft.
1	30				5/8	10	12 1/2	45°		12 3/4																	5.18
2S	30				5/8	10	12 1/2	45°		12 3/4																	5.18
2M	36				3/4	12	15	45°		15 3/8																	7.46
3	36				3/4	12	15	45°		15 3/8																	7.46
4	48				1	16	20	45°		20 1/2																	13.25
5	48				1	16	20	45°		20 1/2																	13.25
6	18				3/8	6	7 3/4	45°		7 3/4																	1.86
7	12				1/4	4	5	45°		5 1/8																	0.78

STANDARD SIGN
R1-1

WISCONSIN DEPT OF TRANSPORTATION

APPROVED Matthew R Rauch
for State Traffic Engineer

DATE 11/12/15 PLATE NO. R1-1.13

PROJECT NO: | HWY: | COUNTY: | SHEET NO: 123 | E

NOTES

1. Sign is Type II - Type H Reflective
2. Color:
   Background - Red
   Message - White
3. Message Series - C
4. For 30"x30" R1-1 use 18"x6" R1-3P sign
   For 36"x36" R1-1 use 24"x9" R1-3P sign
   For 48"x48" R1-1 use 30"x12" R1-3P sign

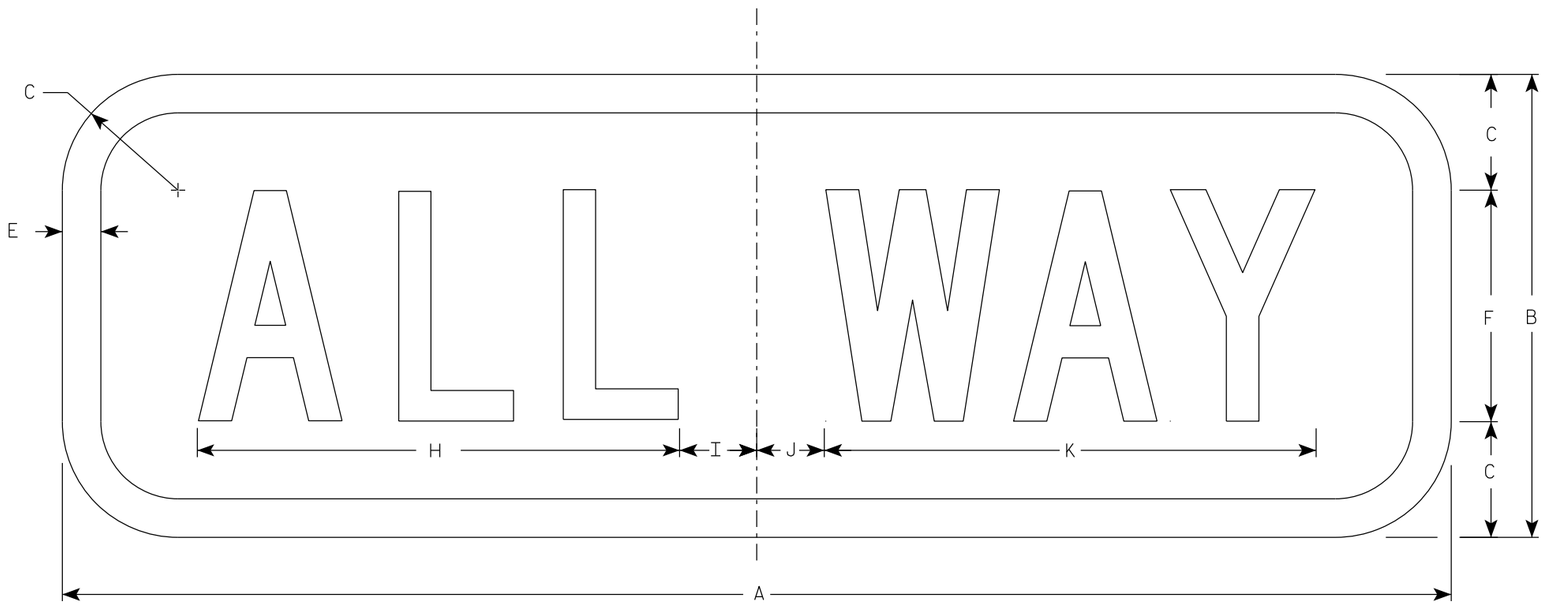

R1-3P

SIZE	A	B	C	D	E	F	G	H	I	J	K	L	M	N	O	P	Q	R	S	T	U	V	W	X	Y	Z	Area sq. ft.
1	18	6	1 1/2		1/2	3		6 1/4	1 1/4	7/8	6 3/8																0.75
2S	18	6	1 1/2		1/2	3		6 1/4	1 1/4	7/8	6 3/8																0.75
2M	24	9	1 1/2		1/2	5		9 1/4	1 1/4	3/4	9 3/4																1.5
3	24	9	1 1/2		1/2	5		9 1/4	1 1/4	3/4	9 3/4																1.5
4	30	12	1 1/2		5/8	6		11	2 1/4	1 1/2	11 3/4																2.5
5	30	12	1 1/2		5/8	6		11	2 1/4	1 1/2	11 3/4																2.5

STANDARD SIGN

R1-3P

WISCONSIN DEPT OF TRANSPORTATION

APPROVED Matthew R Rauch
for State Traffic Engineer

DATE 1/19/23 PLATE NO. R1-3P.4

PROJECT NO: | HWY: | COUNTY: | SHEET NO: 124 | E

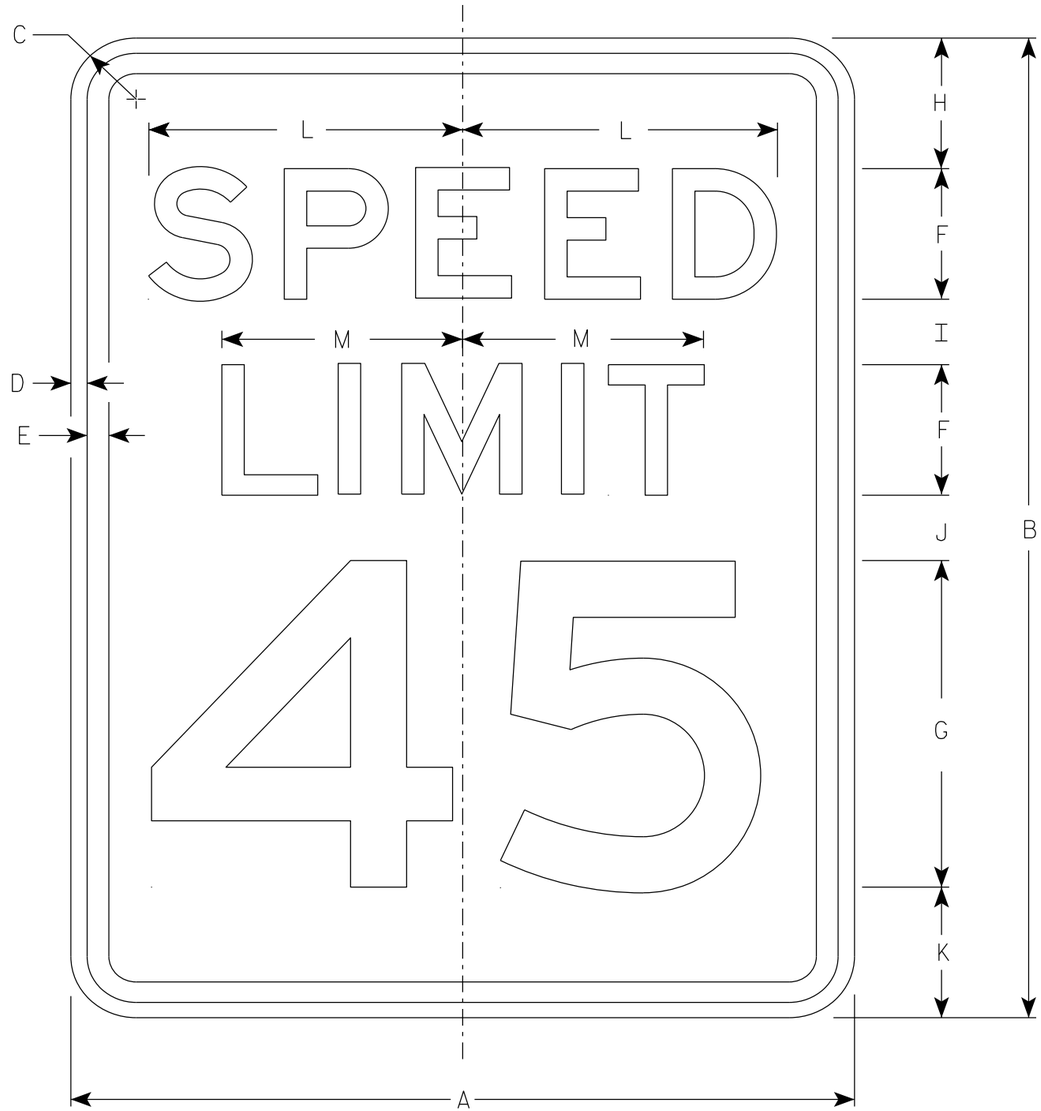

R2-1

NOTES

1. Sign is Type II - Type H Reflective
2. Color:
   Background - White
   Message - Black
3. Message Series - E
4. Substitute appropriate numerals and optically adjust spacing to achieve proper balance.

SIZE	A	B	C	D	E	F	G	H	I	J	K	L	M	N	O	P	Q	R	S	T	U	V	W	X	Y	Z	Area sq. ft.
1	18	24	1 1/2	3/8	1/2	3	8	3	2	2	3	7 1/4	5 1/2														3.0
2S	24	30	1 1/2	3/8	1/2	4	10	3	2 1/4	3 3/8	3 3/8	9 5/8	7 3/8														5.0
2M	30	36	1 7/8	1/2	5/8	5	12	5	2 1/2	2 1/2	4	12	9 1/4														7.5
3	36	48	1 7/8	1/2	5/8	6	14	6	5	5	6	14 3/8	11														12.0
4	36	48	1 7/8	1/2	5/8	6	14	6	5	5	6	14 3/8	11														12.0
5	48	60	3	3/4	1	8	20	6	4 1/2	6 3/4	6 3/4	19 1/4	14 5/8														20.0

STANDARD SIGN
R2-1

WISCONSIN DEPT OF TRANSPORTATION

APPROVED Matthew R Rauch
for State Traffic Engineer

DATE 2/1/23 PLATE NO. R2-1.14

PROJECT NO: | HWY: | COUNTY: | SHEET NO: 125 | E

NOTES

1. Sign is Type II - Type H Reflective
2. Color:
   Background - White
   Message - Black
3. Message Series - D

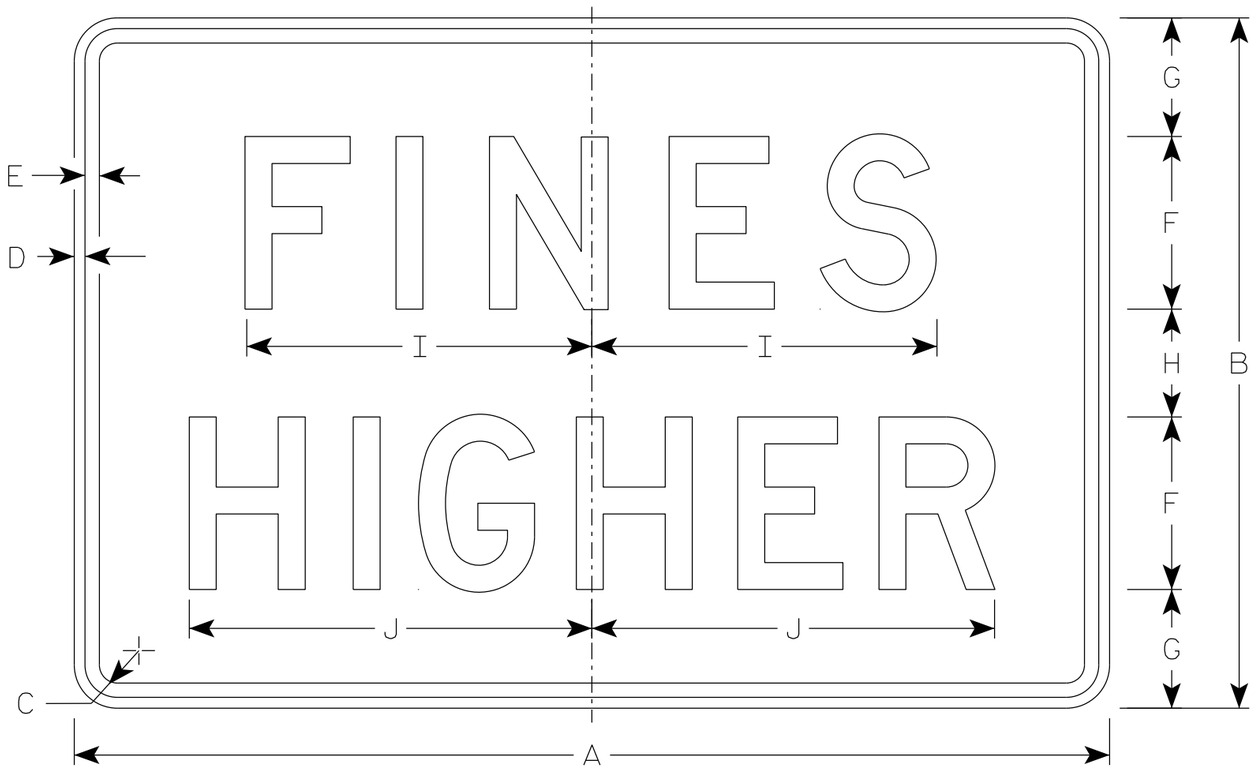

R2-6P

SIZE	A	B	C	D	E	F	G	H	I	J	K	L	M	N	O	P	Q	R	S	T	U	V	W	X	Y	Z	Area sq. ft.
1																											
2S	24	18	1 1/2	3/8	3/8	4	3 1/2	3	7 5/8	9 1/4																	3.0
2M	24	18	1 1/2	3/8	3/8	4	3 1/2	3	7 5/8	9 1/4																	3.0
3	36	24	1 1/2	3/8	1/2	6	4 1/8	3 3/4	12	14																	6.0
4	36	24	1 1/2	3/8	1/2	6	4 1/8	3 3/4	12	14																	6.0
5	48	36	1 7/8	1/2	5/8	8	7	6	15 1/8	19																	12.0

STANDARD SIGN
R2-6P

WISCONSIN DEPT OF TRANSPORTATION

APPROVED Matthew R Rauch
for State Traffic Engineer

DATE 2/1/23 PLATE NO. R2-6P.3

PROJECT NO:	HWY:	COUNTY:		SHEET NO: 126	E

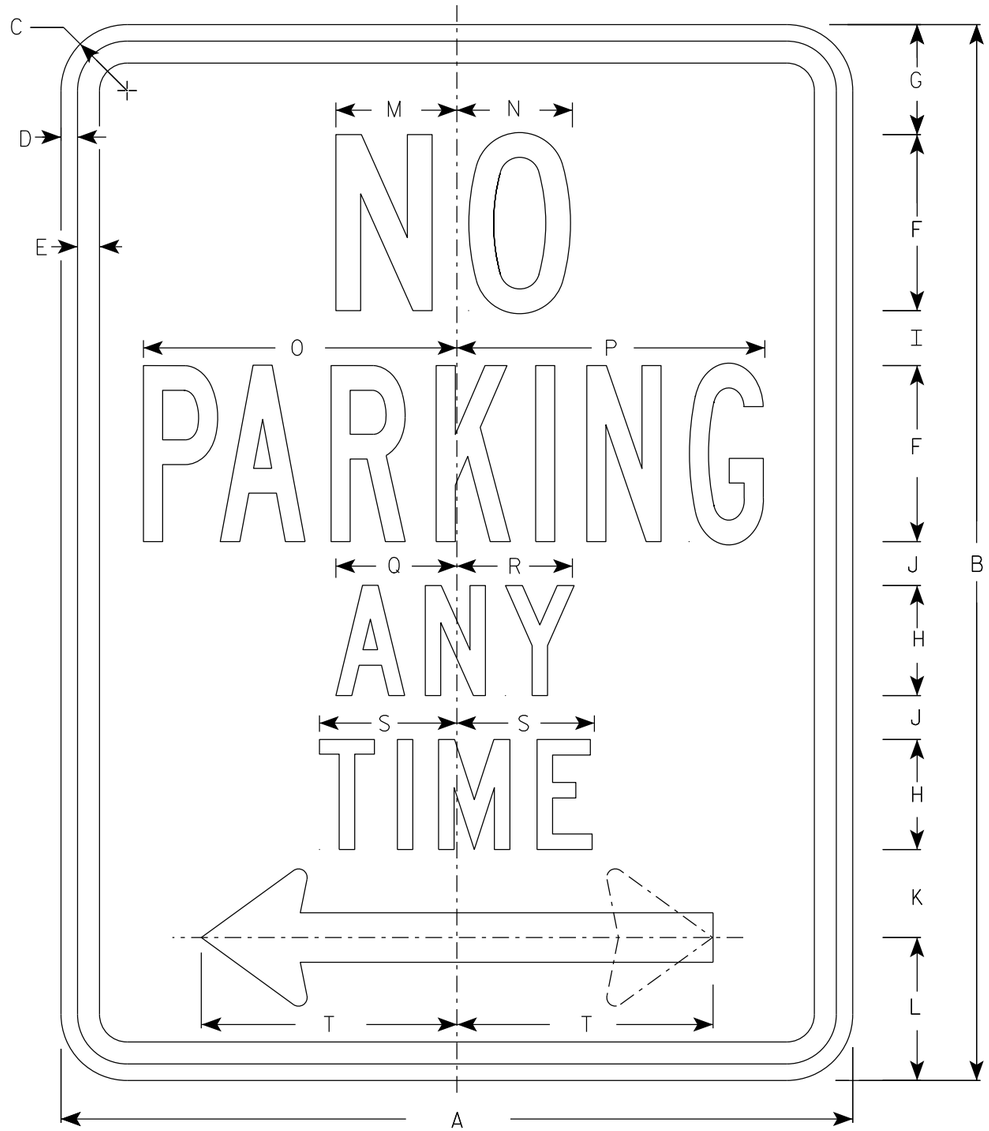

R7-1

NOTES

1. Sign is Type II - Type H Reflective
2. Color:
   Background - White
   Message - Red
3. Message Series - See Note 4
4. Lines 1, 3 and 4 are series C, line 2 is series B.
5. R7-1D (double arrow)
   R7-1L (left arrow)
   R7-1R (right arrow)

ARROW DETAIL

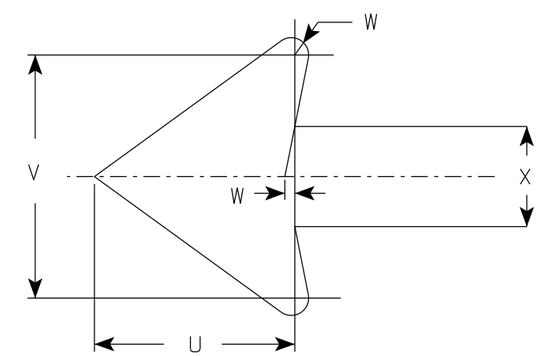

SIZE	A	B	C	D	E	F	G	H	I	J	K	L	M	N	O	P	Q	R	S	T	U	V	W	X	Y	Z	Area sq. ft.
1	12	18	1 1/2	3/8	3/8	3	1 7/8	2	7/8	5/8	1 1/2	2 1/2	2	2	4 7/8	4 7/8	2 1/4	2 1/8	2 1/2	3 7/8	1 1/2	1 3/4	1/8	3/4			1.5
2S	18	24	1 1/2	3/8	1/2	4	2 1/2	2 1/2	1 1/4	1	2	3 1/4	2 3/4	2 5/8	7 1/8	7	2 3/4	2 5/8	3 1/8	5 7/8	2 1/4	2 5/8	1/4	1 1/8			3.0
2M	24	30	1 1/2	3/8	1/2	5	3	3	2	1 1/4	2 1/2	4	3 1/4	3 3/8	9 1/4	9 1/4	3 1/4	3 1/4	3 3/4	7 3/4	3	3 1/2	1/4	1 1/2			5.0
3	24	30	1 1/2	3/8	1/2	5	3	3	2	1 1/4	2 1/2	4	3 1/4	3 3/8	9 1/4	9 1/4	3 1/4	3 1/4	3 3/4	7 3/4	3	3 1/2	1/4	1 1/2			5.0
4																											
5																											

STANDARD SIGN
R7-1

WISCONSIN DEPT OF TRANSPORTATION

APPROVED Matthew R Rauch
for State Traffic Engineer

DATE 10/26/23 PLATE NO. R7-1.11

PROJECT NO:	HWY:	COUNTY:		SHEET NO:	E

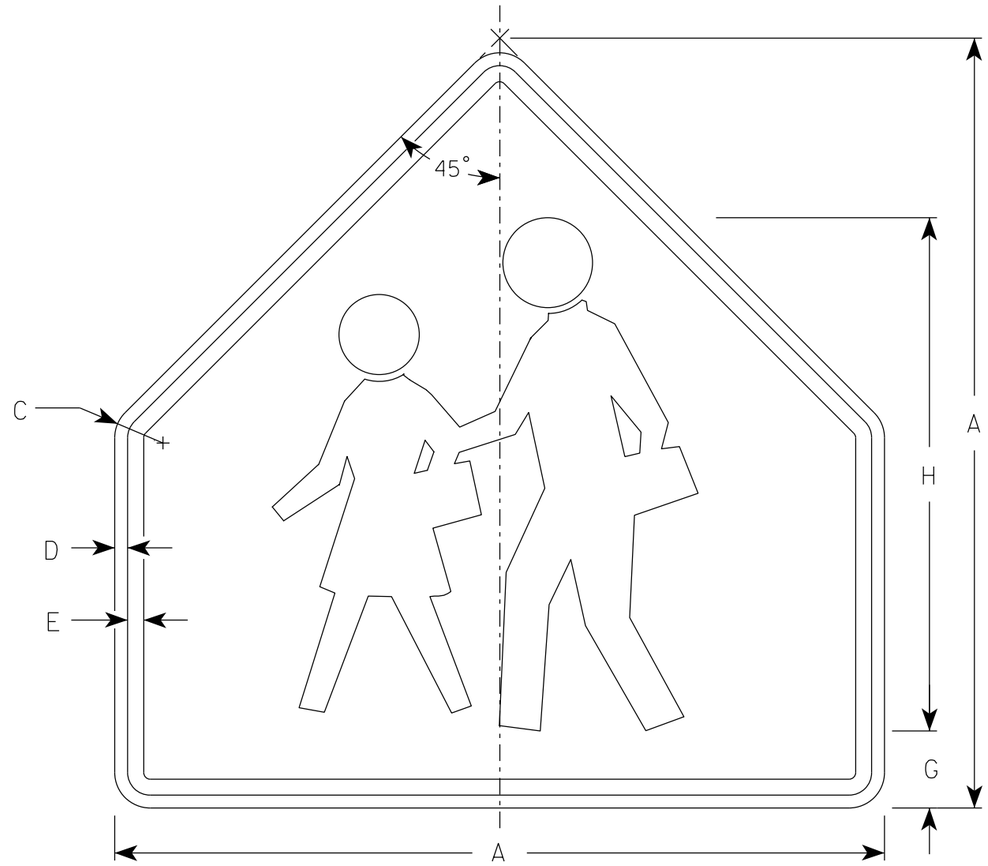

S1-1

NOTES

1. Sign is Type II - Type F Reflective
2. Color:
   Background - Yellow-Green
   Message - Black

SIZE	A	B	C	D	E	F	G	H	I	J	K	L	M	N	O	P	Q	R	S	T	U	V	W	X	Y	Z	Area sq. ft.
1	30		1 3/8	1/2	5/8		3	20																			4.69
2S	36		1 5/8	5/8	3/4		3 1/2	24																			6.75
2M	36		1 5/8	5/8	3/4		3 1/2	24																			6.75
3	36		1 5/8	5/8	3/4		3 1/2	24																			6.75
4	48		1 7/8	3/4	1		4 3/4	32																			12
5																											

STANDARD SIGN
S1-1

WISCONSIN DEPT OF TRANSPORTATION

APPROVED Matthew R Rauch
for State Traffic Engineer

DATE 2/16/2023 PLATE NO. S1-1.9

PROJECT NO: | HWY: | COUNTY: | SHEET NO: | E

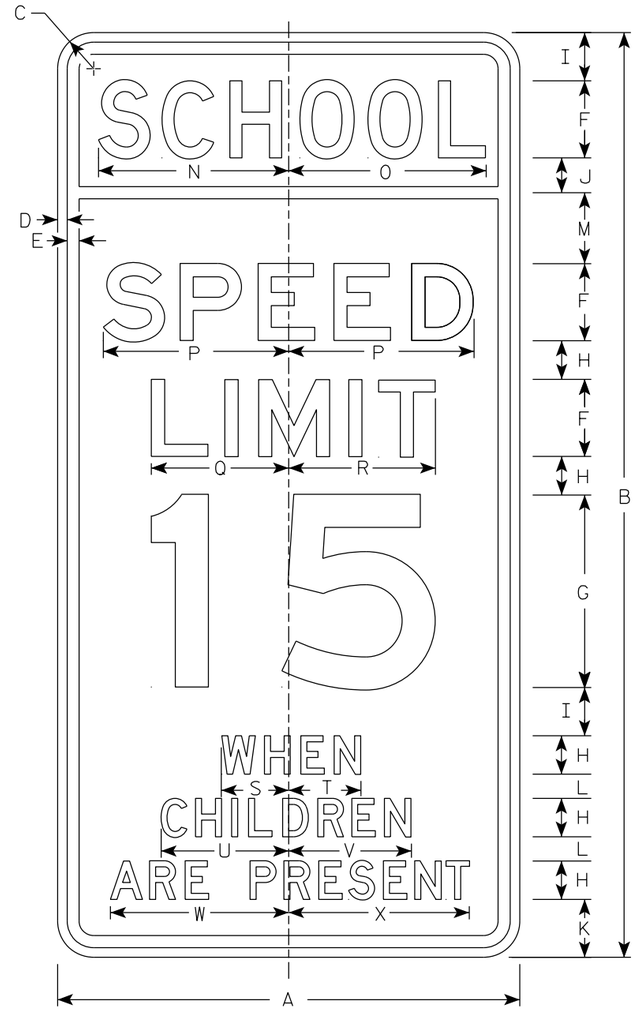

S4-51

NOTES

1. Sign is Type II - See Note 2 for Sheeting Type
2. Color:
   Background - See Note 4
   Message - Black
3. Message Series - See Note 5
4. Top panel (SCHOOL) background - Yellow Green - Type F Reflective
   Lower panel background - White - Type SH Reflective
5. From top to bottom:
   Lines 1, 5, 6 & 7 are series D
   Lines 2, 3 & 4 are series E
6. Line 4 substitute appropriate numerals and adjust spacing to achieve proper balance.

SIZE	A	B	C	D	E	F	G	H	I	J	K	L	M	N	O	P	Q	R	S	T	U	V	W	X	Y	Z	Area sq. ft.
1																											
2S	24	48	1 7/8	1/2	5/8	4	10	2	2 1/2	1 3/4	3	1 1/4	3 3/4	9 7/8	10 1/4	9 5/8	7 1/8	7 5/8	3 1/2	3 3/8	6 5/8	6 3/8	9 1/4	9 3/8			8.00
2M	24	48	1 7/8	1/2	5/8	4	10	2	2 1/2	1 3/4	3	1 1/4	3 3/4	9 7/8	10 1/4	9 5/8	7 1/8	7 5/8	3 1/2	3 3/8	6 5/8	6 3/8	9 1/4	9 3/8			8.00
3	36	72	3	3/4	1	6	15	3	3 3/4	2 3/4	4 1/2	1 7/8	5 1/2	15	15 1/4	14 1/2	11 1/4	11 1/2	5 1/2	5 3/4	10	9 3/4	14	14 1/8			18.00
4																											
5																											

STANDARD SIGN
S4-51

WISCONSIN DEPT OF TRANSPORTATION

APPROVED Matthew R Rauch
for State Traffic Engineer

DATE 2/22/2023 PLATE NO. S4-51.11

PROJECT NO:	HWY:	COUNTY:		SHEET NO: 129	E

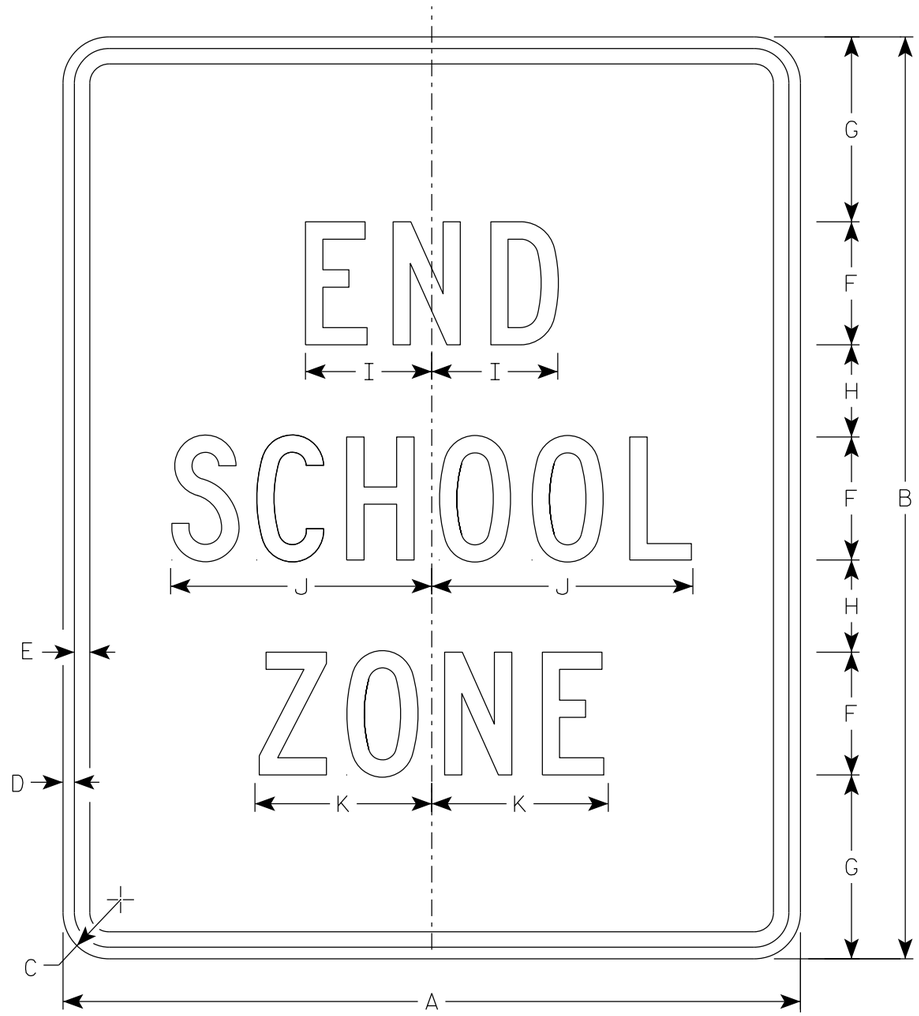

S5-2

NOTES

1. Sign is Type II - Type H Reflective
2. Color:
   Background - White
   Message - Black
3. Message Series - C

SIZE	A	B	C	D	E	F	G	H	I	J	K	L	M	N	O	P	Q	R	S	T	U	V	W	X	Y	Z	Area sq. ft.
1																											
2S	24	30	1 1/2	3/8	1/2	4	6	3	4 1/8	8 1/2	5 3/4																5.0
2M	24	30	1 1/2	3/8	1/2	4	6	3	4 1/8	8 1/2	5 3/4																5.0
3	36	42	1 7/8	5/8	3/4	6	7	5	6 1/8	12 5/8	8 5/8																10.5
4																											
5																											

STANDARD SIGN
S5-2

WISCONSIN DEPT OF TRANSPORTATION

APPROVED Matthew R Rauch
for State Traffic Engineer

DATE 2/23/2023 PLATE NO. S5-2.3

PROJECT NO: | HWY: | COUNTY: | SHEET NO: | E

NOTES

1. Sign is Type II - Type F Reflective
2. Color:
   Background - Yellow-Green
   Message - Black
3. Message Series - C

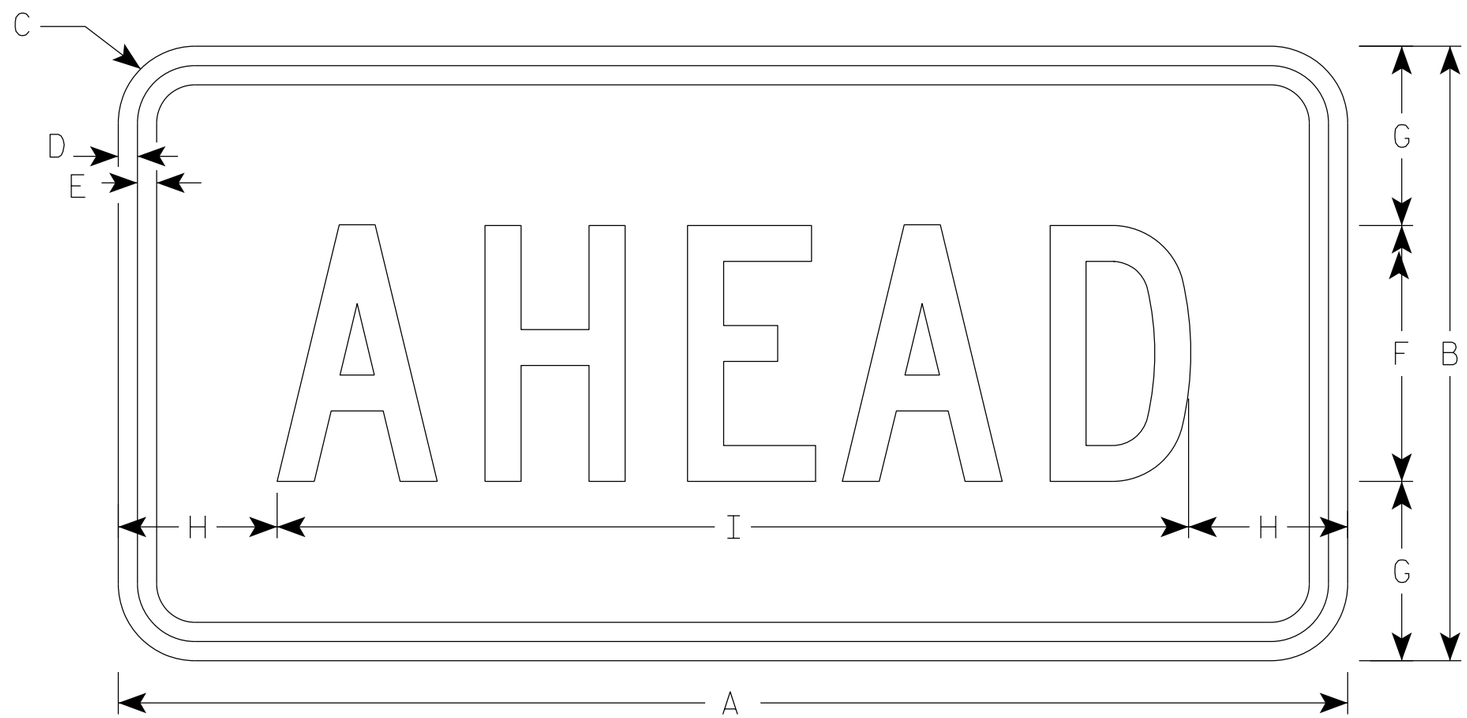

S16-9P

SIZE	A	B	C	D	E	F	G	H	I	J	K	L	M	N	O	P	Q	R	S	T	U	V	W	X	Y	Z	Area sq. ft.
1	24	12	1 1/2	3/8	3/8	5	3 1/2	3 1/8	17 3/4																		2.0
2S	30	18	1 1/2	3/8	1/2	7	5 1/2	2 3/4	24 1/2																		3.75
2M	30	18	1 1/2	3/8	1/2	7	5 1/2	2 3/4	24 1/2																		3.75
3	30	18	1 1/2	3/8	1/2	7	3 1/2	2 3/4	24 1/2																		3.75
4	48	24	1 7/8	1/2	5/8	10	7	6 1/8	35 3/4																		8.0
5																											

STANDARD SIGN
S16-9P

WISCONSIN DEPT OF TRANSPORTATION

APPROVED Matthew R Rauch
for State Traffic Engineer

DATE 2/23/2023 PLATE NO. S16-9P.2

PROJECT NO: | HWY: | COUNTY: | SHEET NO: | E

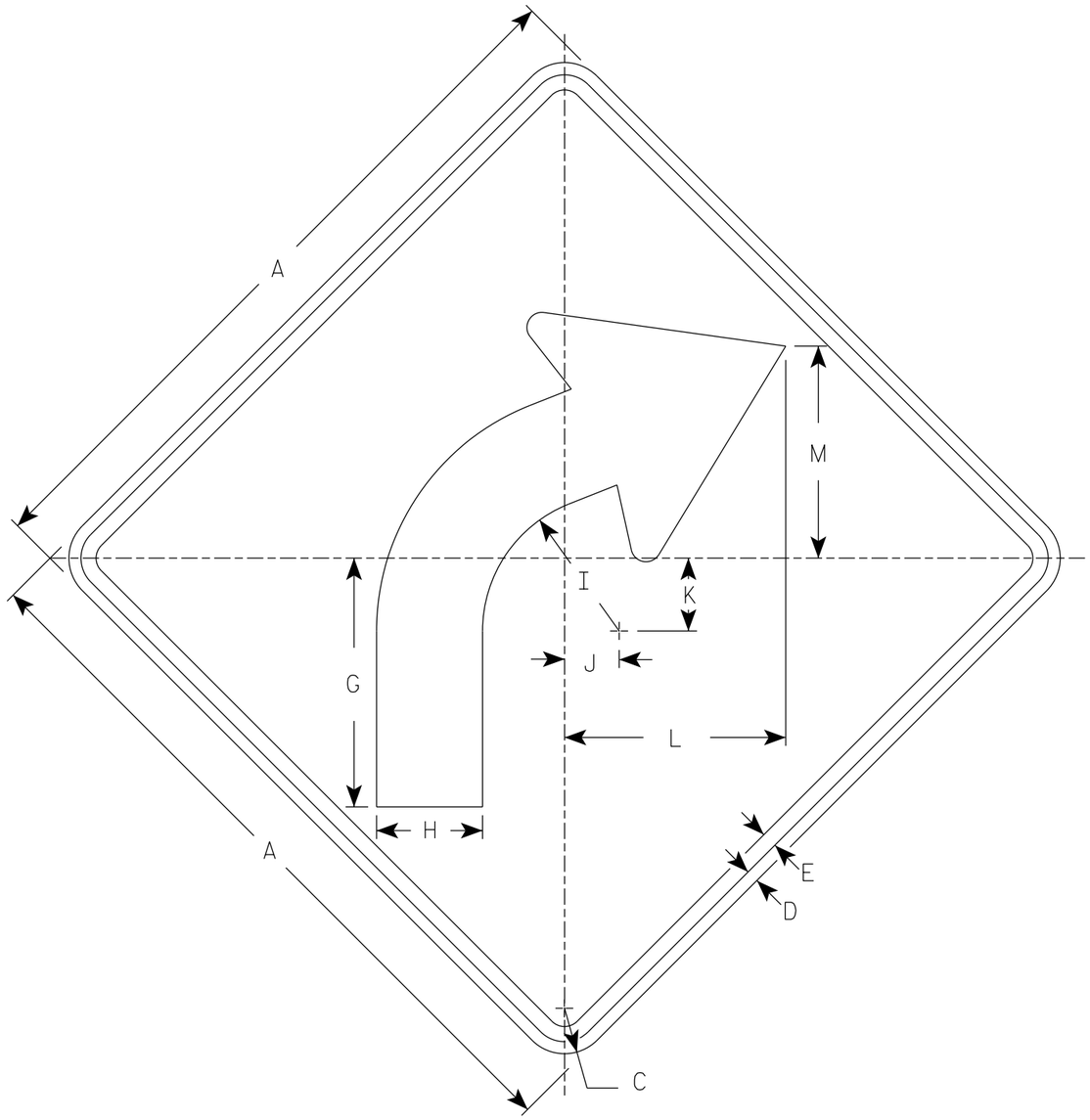

W1-2R

NOTES

1. Sign is Type II - Type F Reflective
2. Color:
   Background - Yellow
   Message - Black
3. W1-2L is the same as W1-2R except the arrow is reversed along the vertical centerline.

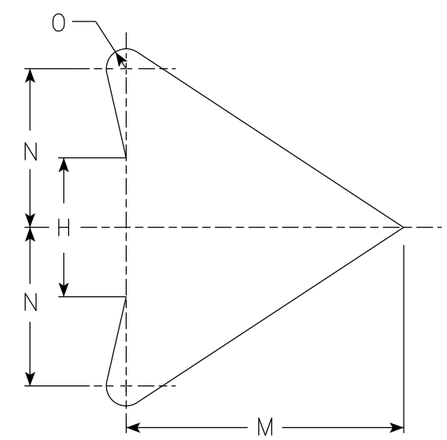

ARROW DETAIL

SIZE	A	B	C	D	E	F	G	H	I	J	K	L	M	N	O	P	Q	R	S	T	U	V	W	X	Y	Z	Area sq. ft.
1	24		1 1/2	3/8	1/2		8 1/4	3 1/2	4 1/2	1 3/4	2 3/8	7 1/4	7	4	1/2												4.0
2S	30		1 7/8	1/2	5/8		10 1/4	4 3/8	5 5/8	2 1/4	3	9 1/8	8 3/4	5	5/8												6.25
2M	36		2 1/4	5/8	3/4		12 3/8	5 1/4	6 3/4	2 5/8	3 1/2	10 7/8	10 1/2	6	3/4												9.0
3	36		2 1/4	5/8	3/4		12 3/8	5 1/4	6 3/4	2 5/8	3 1/2	10 7/8	10 1/2	6	3/4												9.0
4	36		2 1/4	5/8	3/4		12 3/8	5 1/4	6 3/4	2 5/8	3 1/2	10 7/8	10 1/2	6	3/4												9.0
5	48		3	3/4	1		16 1/2	7	9	3 1/2	4 5/8	14 1/2	14	8	1												16.0

STANDARD SIGN
W1-2

WISCONSIN DEPT OF TRANSPORTATION

APPROVED Matthew R Rauch
for State Traffic Engineer

DATE 3/23/2023 PLATE NO. W1-2.11

PROJECT NO: | HWY: | COUNTY: | SHEET NO: 132 | E

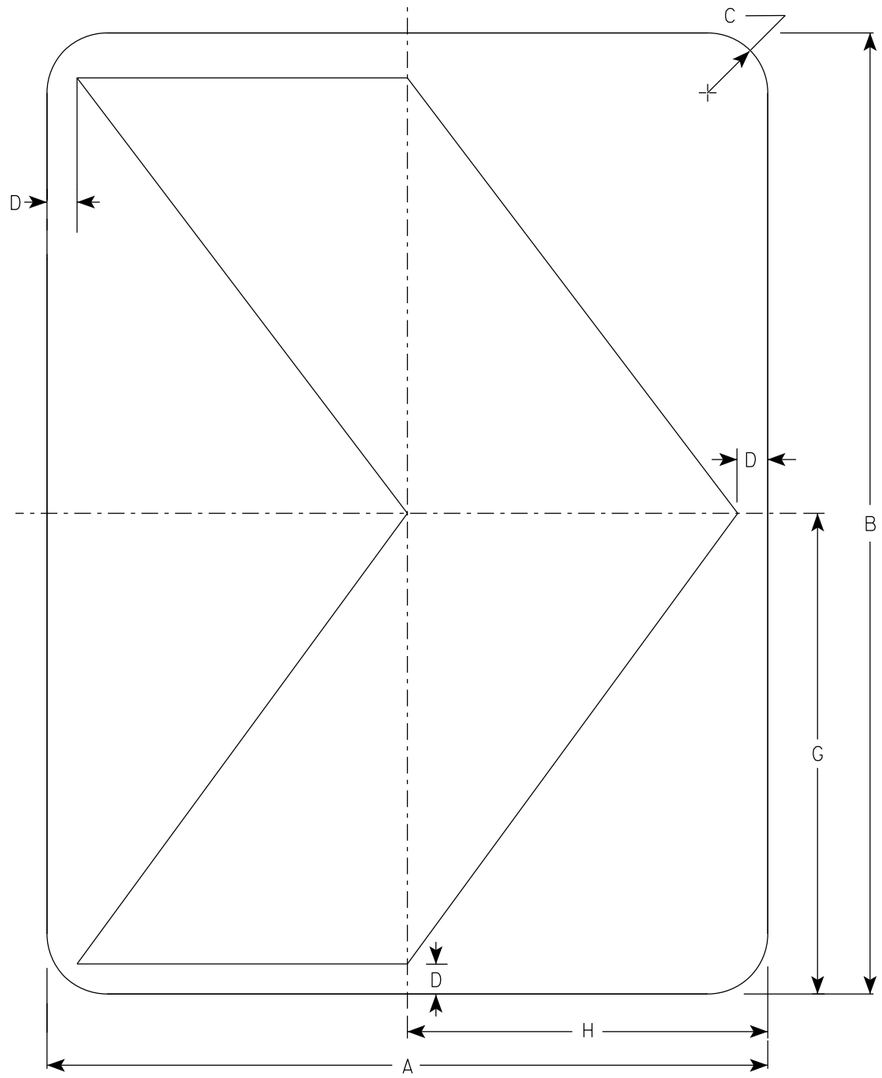

W1-8

NOTES

1. Sign is Type II - Type F Reflective
2. Color:
   Background - Yellow
   Message - Black

SIZE	A	B	C	D	E	F	G	H	I	J	K	L	M	N	O	P	Q	R	S	T	U	V	W	X	Y	Z	Area sq. ft.
1	12	18	1 1/2	1/2			9	6																			1.5
2S	18	24	1 1/2	3/4			12	9																			3.0
2M	18	24	1 1/2	3/4			12	9																			3.0
3	24	30	1 1/2	1			15	12																			5.0
4	30	36	1 7/8	1 1/4			18	15																			7.5
5	36	48	1 7/8	1 1/2			24	18																			12.0

STANDARD SIGN
W1-8

WISCONSIN DEPT OF TRANSPORTATION

APPROVED Matthew R Rauch
for State Traffic Engineer

DATE 5/11/2023 PLATE NO. W1-8.7

PROJECT NO:

SHEET NO: 133 E

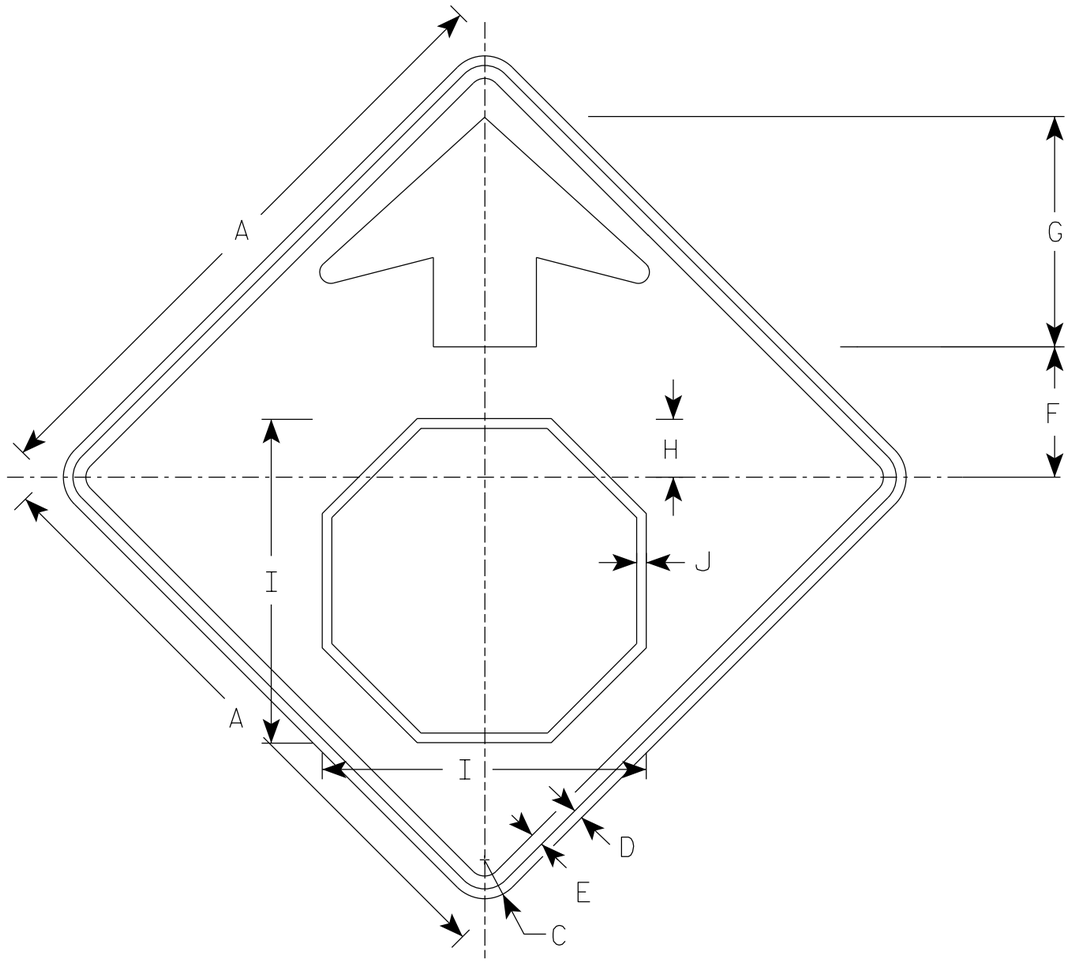

W3-1

NOTES

1. Sign is Type II - Type F Reflective
2. Color:
   Background - Yellow
   Arrow & Border - Black
   Stop Symbol - White Border on Red Background

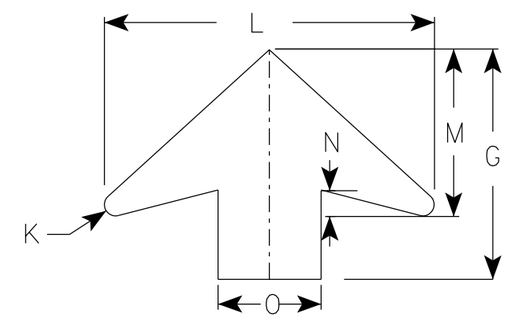

ARROW DETAIL

SIZE	A	B	C	D	E	F	G	H	I	J	K	L	M	N	O	P	Q	R	S	T	U	V	W	X	Y	Z	Area sq. ft.
1	30		1 7/8	1/2	5/8	6 1/4	11 1/4	2 7/8	15 3/4	1/2	1/2	16	8	1 1/4	5												6.25
2S	36		2 1/4	5/8	3/4	7 1/2	13 1/2	3 1/2	19	5/8	5/8	19 1/4	9 3/4	1 5/8	6												9.0
2M	36		2 1/4	5/8	3/4	7 1/2	13 1/2	3 1/2	19	5/8	5/8	19 1/4	9 3/4	1 5/8	6												9.0
3	36		2 1/4	5/8	3/4	7 1/2	13 1/2	3 1/2	19	5/8	5/8	19 1/4	9 3/4	1 5/8	6												9.0
4	48		3	3/4	1	10	17 7/8	4 1/2	25 1/8	3/4	7/8	25 5/8	13	2	8												16.0
5	48		3	3/4	1	10	17 7/8	4 1/2	25 1/8	3/4	7/8	25 5/8	13	2	8												16.0

STANDARD SIGN
W3-1

WISCONSIN DEPT OF TRANSPORTATION

APPROVED Matthew R Rauch
for State Traffic Engineer

DATE 8/17/2023 PLATE NO. W3-1.13

PROJECT NO:

SHEET NO: 134 E

NOTES

1. Sign is Type II- Type F Reflective
2. Color:
   Background - Yellow
   Message - Black
3. Message Series - Lines 1 and 2 are Series D.
   Line 3 is series C.
4. Corners and borders shall be rounded on all base materials for this sign.

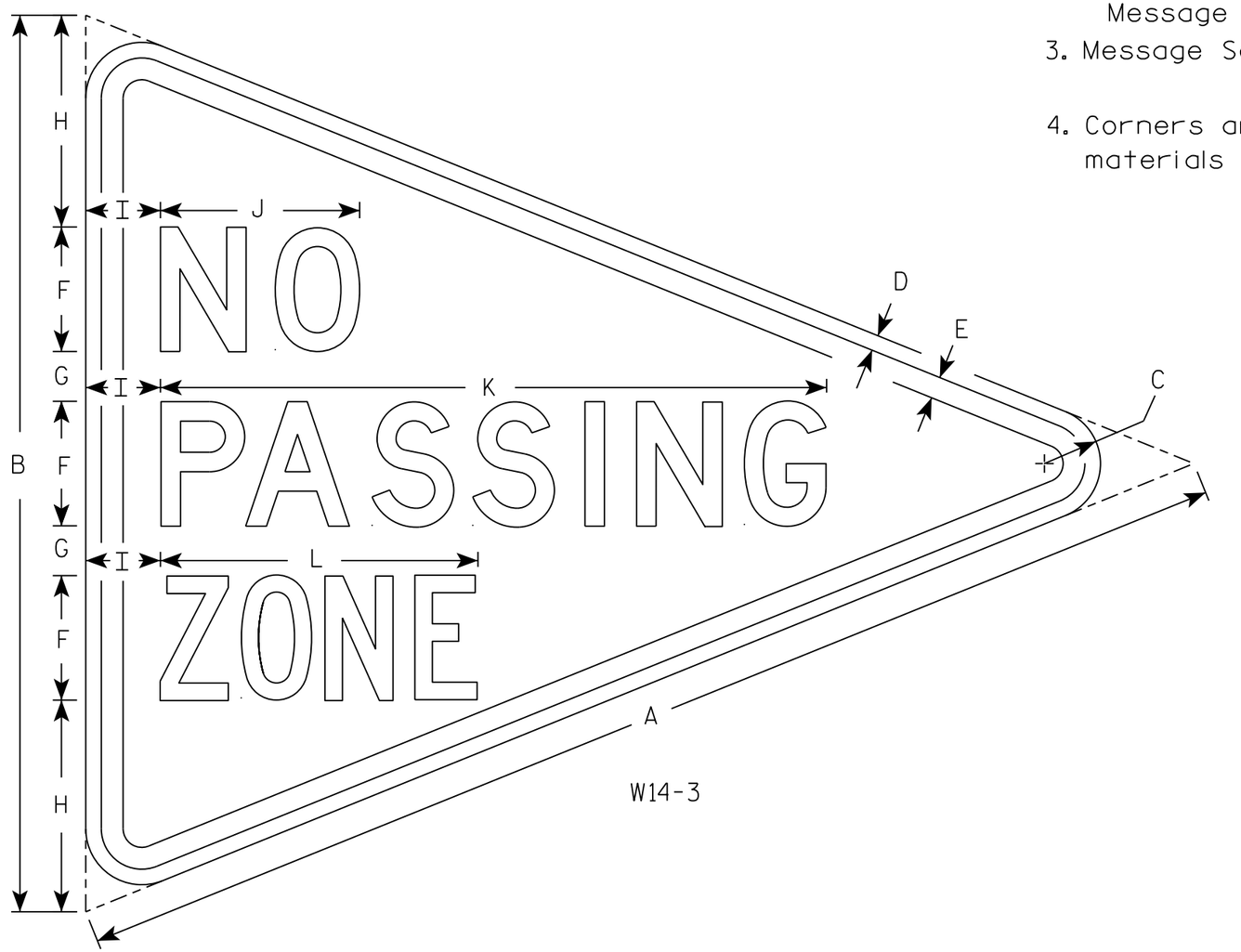

W14-3

SIZE	A	B	C	D	E	F	G	H	I	J	K	L	M	N	O	P	Q	R	S	T	U	V	W	X	Y	Z	Area sq. ft.
1																											
2S	48	36	2 1/4	5/8	7/8	5	2	8 1/2	3	8	26 3/4	12 3/4															5.56
2M																											
3																											
4																											
5																											

STANDARD SIGN
W14-3

WISCONSIN DEPT OF TRANSPORTATION

APPROVED Matthew R Rauch
for State Traffic Engineer

DATE 3/21/17 PLATE NO. W14-3.10

PROJECT NO: | HWY: | COUNTY: | SHEET NO: 135 | E

NOTES

1. Fixed Message Sign Type II - Type F Reflective
2. Color:
   Background - Orange
   Message - Black
3. Message Series - C

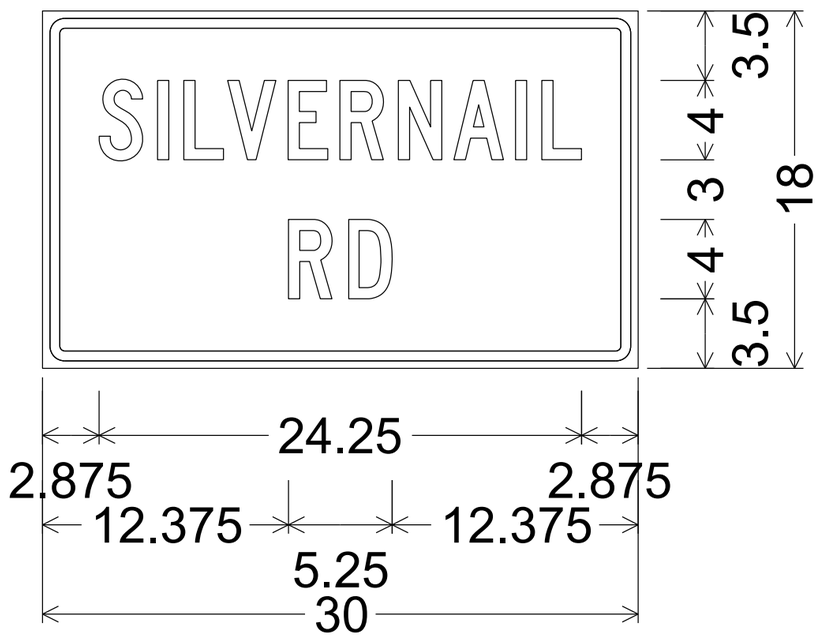

1.125" Radius, 0.500" Border, 0.375" Indent

7

7

DIVISION 1 - SILVERNAIL_2717-03-71

STATION	REAL STATION	DISTANCE	AREA (SF)		INCREMENTAL VOL (CY) (UNADJUSTED)		CUMULATIVE VOL (CY)		
			CUT	FILL	CUT	FILL	CUT	EXPANDED FILL	MASS ORDINATE
							1.00	1.25	
					NOTE 1	NOTE 3	NOTE 1		NOTE 8
100+43.55	10043.55	0.00	98.17	0.00	0	0	0	0	0
101+00.00	10100.00	56.45	100.21	0.39	207	0	0	0	207
101+50.00	10150.00	50.00	102.39	0.75	188	1	188	1	394
102+00.00	10200.00	50.00	106.93	0.16	194	1	382	3	587
102+50.00	10250.00	50.00	115.03	0.00	206	0	588	3	793
102+79.85	10279.85	29.85	112.27	0.00	126	0	714	3	919
103+00.00	10300.00	20.15	114.60	0.00	85	0	799	3	1004
103+50.00	10350.00	50.00	107.80	0.12	206	0	1005	3	1210
104+00.00	10400.00	50.00	103.10	0.49	195	1	1200	4	1403
104+50.00	10450.00	50.00	99.25	0.89	187	1	1387	5	1589
105+00.00	10500.00	50.00	100.26	1.05	185	2	1572	8	1772
105+50.00	10550.00	50.00	102.41	1.39	188	2	1760	10	1957
106+00.00	10600.00	50.00	108.19	8.29	195	9	1955	21	2141
106+50.00	10650.00	50.00	121.43	13.89	213	21	2168	48	2328
107+00.00	10700.00	50.00	134.19	19.74	237	31	2405	86	2526
107+50.00	10750.00	50.00	132.41	16.44	247	34	2652	129	2730
108+00.00	10800.00	50.00	135.28	10.85	248	25	2900	160	2947
108+12.16	10812.16	12.16	135.93	11.50	61	5	2961	166	3002
108+50.00	10850.00	37.84	129.83	10.96	186	16	3147	186	3168
109+00.00	10900.00	50.00	115.04	7.29	227	17	3374	208	3374
109+50.00	10950.00	50.00	109.29	1.64	208	8	3582	218	3572
110+00.00	11000.00	50.00	121.62	0.16	214	2	3796	220	3783
110+50.00	11050.00	50.00	126.26	0.12	230	0	4026	220	4013
111+00.00	11100.00	50.00	124.31	0.52	232	1	4258	221	4244
111+50.00	11150.00	50.00	126.36	0.59	232	1	4490	223	4475
112+00.00	11200.00	50.00	134.40	0.25	241	1	4731	224	4714
112+50.00	11250.00	50.00	134.92	0.41	249	1	4980	225	4962
113+00.00	11300.00	50.00	133.71	0.22	249	1	5229	226	5210
113+50.00	11350.00	50.00	130.17	0.53	244	1	5473	228	5453
114+00.00	11400.00	50.00	140.61	0.12	251	1	5724	229	5702
114+50.00	11450.00	50.00	149.44	0.09	269	0	5993	229	5971
115+00.00	11500.00	50.00	145.05	0.08	273	0	6266	229	6244
115+50.00	11550.00	50.00	131.72	0.38	256	0	6522	229	6500
116+00.00	11600.00	50.00	124.61	0.70	237	1	6759	230	6736
116+50.00	11650.00	50.00	116.31	0.95	223	2	6982	233	6957
117+00.00	11700.00	50.00	108.95	0.73	209	2	7191	235	7163
117+50.00	11750.00	50.00	122.23	0.85	214	1	7405	236	7376
118+00.00	11800.00	50.00	114.87	1.20	220	2	7625	239	7593
118+50.00	11850.00	50.00	115.30	1.74	213	3	7838	243	7803
119+00.00	11900.00	50.00	120.74	0.55	219	2	8057	245	8019
119+50.00	11950.00	50.00	133.51	1.80	235	2	8292	248	8252
120+00.00	12000.00	50.00	136.15	3.27	250	5	8542	254	8495
120+50.00	12050.00	50.00	124.61	0.71	241	4	8783	259	8731
120+78.62	12078.62	28.62	183.35	0.95	163	1	8946	260	8893
121+00.00	12100.00	21.38	146.43	1.04	131	1	9077	261	9023
121+25.49	12125.49	25.49	176.00	1.31	152	1	9229	263	9174

NOTES:	
1 - CUT	CUT INCLUDES SALVAGED/UNUSABLE PAVEMENT MATERIAL
2 - SALVAGED/UNUSABLE PAVEMENT MATERIAL	THIS DOES NOT SHOW UP IN CROSS SECTIONS
8 - MASS ORDINATE	DOES NOT INCLUDE UNUSABLE PAVEMENT EXC VOLUME
8 - MASS ORDINATE	WILL BE BACKFILLED WITH GRANULAR BACKFILL (OR CUT, OR BORROW)
8 - MASS ORDINATE	WILL BE BACKFILLED WITH GRANULAR BACKFILL (OR CUT, OR BORROW)
8 - MASS ORDINATE	REDUCED MARSH EXCAVATION THAT CAN BE USED IN FILL

121+50.00	12150.00	24.51	108.90	1.74	129	1	9358	264	9301
122+00.00	12200.00	50.00	85.00	5.94	180	7	9538	273	9473
122+50.00	12250.00	50.00	83.73	6.90	156	12	9694	288	9614
123+00.00	12300.00	50.00	81.59	8.81	153	15	9847	306	9748
123+50.00	12350.00	50.00	83.10	5.10	152	13	9999	323	9884
124+00.00	12400.00	50.00	85.57	8.21	156	12	10155	338	10025
124+50.00	12450.00	50.00	86.16	13.42	159	20	10314	363	10159
125+00.00	12500.00	50.00	100.13	2.88	172	15	10486	381	10312
125+50.00	12550.00	50.00	88.64	1.73	175	4	10661	386	10482
126+00.00	12600.00	50.00	88.60	1.50	164	3	10825	390	10642
126+09.97	12609.97	9.97	89.38	2.08	33	1	10858	391	10674
126+50.00	12650.00	40.03	88.53	1.48	132	3	10990	395	10802
127+00.00	12700.00	50.00	93.98	1.48	169	3	11159	399	10967
127+50.00	12750.00	50.00	94.32	1.09	174	2	11333	401	11139
128+00.00	12800.00	50.00	95.49	1.31	176	2	11509	404	11312
128+50.00	12850.00	50.00	93.26	1.18	175	2	11684	406	11485
129+00.00	12900.00	50.00	92.11	1.24	172	2	11856	409	11654
129+07.99	12907.99	7.99	91.54	1.40	27	0	11883	409	11681
129+50.00	12950.00	42.01	88.70	2.46	140	3	12023	413	11818
130+00.00	13000.00	50.00	86.65	2.81	162	5	12185	419	11973
130+50.00	13050.00	50.00	88.01	2.35	162	5	12347	425	12129
131+00.00	13100.00	50.00	91.37	1.96	166	4	12513	430	12290
131+50.00	13150.00	50.00	94.61	1.10	172	3	12685	434	12458
132+00.00	13200.00	50.00	96.26	1.07	177	2	12862	436	12633
132+40.99	13240.99	40.99	100.76	2.06	150	2	13012	439	12780
132+50.00	13250.00	9.01	99.25	2.82	33	1	13045	440	12812
133+00.00	13300.00	50.00	95.80	1.84	181	4	13226	445	12988
133+50.00	13350.00	50.00	95.95	1.52	178	3	13404	449	13162
134+00.00	13400.00	50.00	96.97	1.32	179	3	13583	453	13338
134+50.00	13450.00	50.00	96.05	1.43	179	3	13762	456	13513
135+00.00	13500.00	50.00	95.18	1.74	177	3	13939	460	13686
135+50.00	13550.00	50.00	93.86	1.53	175	3	14114	464	13857
136+00.00	13600.00	50.00	97.39	1.28	177	3	14291	468	14031
136+50.00	13650.00	50.00	97.70	1.40	181	2	14472	470	14209
137+00.00	13700.00	50.00	98.50	1.46	182	3	14654	474	14387
137+50.00	13750.00	50.00	100.60	0.94	184	2	14838	476	14569
138+00.00	13800.00	50.00	103.31	0.55	189	1	15027	478	14757
138+50.00	13850.00	50.00	96.28	1.14	185	2	15212	480	14939
139+00.00	13900.00	50.00	97.14	0.81	179	2	15391	483	15116
139+50.00	13950.00	50.00	97.23	0.63	180	1	15571	484	15294
140+00.00	14000.00	50.00	123.40	1.27	204	2	15775	486	15496
140+50.00	14050.00	50.00	121.55	1.53	227	3	16002	490	15719
141+00.00	14100.00	50.00	118.78	2.42	223	4	16225	495	15937
141+25.51	14125.51	25.51	117.23	2.04	111	2	16336	498	16046
141+50.00	14150.00	24.49	116.48	1.66	106	2	16442	500	16149
142+00.00	14200.00	50.00	96.80	1.99	197	3	16639	504	16342
142+50.00	14250.00	50.00	100.95	1.82	183	4	16822	509	16520
143+00.00	14300.00	50.00	103.62	1.82	189	3	17011	513	16706
143+50.00	14350.00	50.00	105.75	2.09	194	4	17205	518	16895
144+00.00	14400.00	50.00	105.32	1.66	195	3	17400	521	17086
144+50.00	14450.00	50.00	108.76	1.36	198	3	17598	525	17280
145+00.00	14500.00	50.00	113.36	0.78	206	2	17804	528	17484
145+50.00	14550.00	50.00	113.65	1.10	210	2	18014	530	17691
146+00.00	14600.00	50.00	113.89	1.42	211	2	18225	533	17900
146+50.00	14650.00	50.00	117.03	1.61	214	3	18439	536	18110

NOTES:	
1 - CUT	CUT INCLUDES SALVAGED/UNUSABLE PAVEMENT MATERIAL
2 - SALVAGED/UNUSABLE PAVEMENT MATERIAL	THIS DOES NOT SHOW UP IN CROSS SECTIONS
8 - MASS ORDINATE	DOES NOT INCLUDE UNUSABLE PAVEMENT EXC VOLUME
8 - MASS ORDINATE	WILL BE BACKFILLED WITH GRANULAR BACKFILL (OR CUT, OR BORROW)
8 - MASS ORDINATE	WILL BE BACKFILLED WITH GRANULAR BACKFILL (OR CUT, OR BORROW)
8 - MASS ORDINATE	REDUCED MARSH EXCAVATION THAT CAN BE USED IN FILL

147+00.00	14700.00	50.00	115.11	0.49	215	2	18654	539	18322
147+50.00	14750.00	50.00	101.59	0.66	201	1	18855	540	18522
148+00.00	14800.00	50.00	95.83	1.27	183	2	19038	543	18703
148+50.00	14850.00	50.00	94.76	1.54	176	3	19214	546	18875
149+00.00	14900.00	50.00	96.99	0.90	178	2	19392	549	19050
149+50.00	14950.00	50.00	96.93	0.79	180	2	19572	551	19228
150+00.00	15000.00	50.00	100.35	0.65	183	1	19755	553	19410
150+50.00	15050.00	50.00	99.29	0.83	185	1	19940	554	19593
151+00.00	15100.00	50.00	97.23	0.74	182	1	20122	555	19774
151+37.67	15137.67	37.67	96.85	0.85	135	1	20257	556	19908
151+50.00	15150.00	12.33	94.37	0.86	44	0	20301	556	19952
152+00.00	15200.00	50.00	84.57	3.46	166	4	20467	561	20113
152+50.00	15250.00	50.00	79.87	5.11	152	8	20619	571	20255
152+98.51	15298.51	48.51	90.70	10.75	153	14	20772	589	20390
153+23.52	15323.52	25.01	88.59	13.18	83	11	20855	603	20460
153+48.50	15348.50	24.98	86.22	7.03	81	9	20936	614	20529
154+00.00	15400.00	51.50	86.96	1.76	165	8	21101	624	20684
154+50.00	15450.00	50.00	86.19	2.00	160	3	21261	628	20841
155+00.00	15500.00	50.00	89.41	1.26	163	3	21424	631	21000
155+50.00	15550.00	50.00	87.76	1.91	164	3	21588	635	21160
156+00.00	15600.00	50.00	82.84	3.27	158	5	21746	641	21312
156+50.00	15650.00	50.00	79.96	3.95	151	7	21897	650	21454
157+00.00	15700.00	50.00	84.87	2.79	153	6	22050	658	21600
157+50.00	15750.00	50.00	86.44	1.46	159	4	22209	663	21754
158+00.00	15800.00	50.00	85.87	1.24	160	2	22369	665	21911
158+21.52	15821.52	21.52	86.44	0.51	69	1	22438	666	21979
158+50.00	15850.00	28.48	86.00	1.20	91	1	22529	668	22069
159+00.00	15900.00	50.00	90.34	0.88	163	2	22692	670	22229
159+50.00	15950.00	50.00	94.21	0.35	171	1	22863	671	22399
160+00.00	16000.00	50.00	92.43	0.62	173	1	23036	673	22571
160+50.00	16050.00	50.00	97.34	0.14	176	1	23212	674	22745
161+00.00	16100.00	50.00	99.88	0.00	183	0	23395	674	22928
161+50.00	16150.00	50.00	104.78	0.00	189	0	23584	674	23117
161+87.68	16187.68	37.68	105.12	0.00	146	0	23730	674	23263
162+00.00	16200.00	12.32	101.77	0.00	47	0	23777	674	23310
162+34.26	16234.26	34.26	89.37	6.66	121	4	23898	679	23426
162+50.00	16250.00	15.74	88.82	3.69	52	3	23950	683	23475
162+59.24	16259.24	9.24	88.82	5.51	30	2	23980	685	23502
162+84.26	16284.26	25.02	89.66	15.94	83	10	24063	698	23573
163+00.00	16300.00	15.74	84.89	12.29	51	8	24114	708	23614
163+50.00	16350.00	50.00	91.62	0.77	163	12	24277	723	23762
164+00.00	16400.00	50.00	89.34	0.49	168	1	24445	724	23928
164+50.00	16450.00	50.00	93.74	0.30	170	1	24615	725	24097
165+00.00	16500.00	50.00	93.76	0.14	174	0	24789	725	24271
165+46.36	16546.36	46.36	98.17	0.00	165	0	24954	725	24436
			COLUMN TOTALS		25,161	580			

NOTES:	
1 - CUT	CUT INCLUDES SALVAGED/UNUSABLE PAVEMENT MATERIAL
2 - SALVAGED/UNUSABLE PAVEMENT MATERIAL	THIS DOES NOT SHOW UP IN CROSS SECTIONS
8 - MASS ORDINATE	DOES NOT INCLUDE UNUSABLE PAVEMENT EXC VOLUME
8 - MASS ORDINATE	WILL BE BACKFILLED WITH GRANULAR BACKFILL (OR CUT, OR BORROW)
8 - MASS ORDINATE	WILL BE BACKFILLED WITH GRANULAR BACKFILL (OR CUT, OR BORROW)
8 - MASS ORDINATE	REDUCED MARSH EXCAVATION THAT CAN BE USED IN FILL

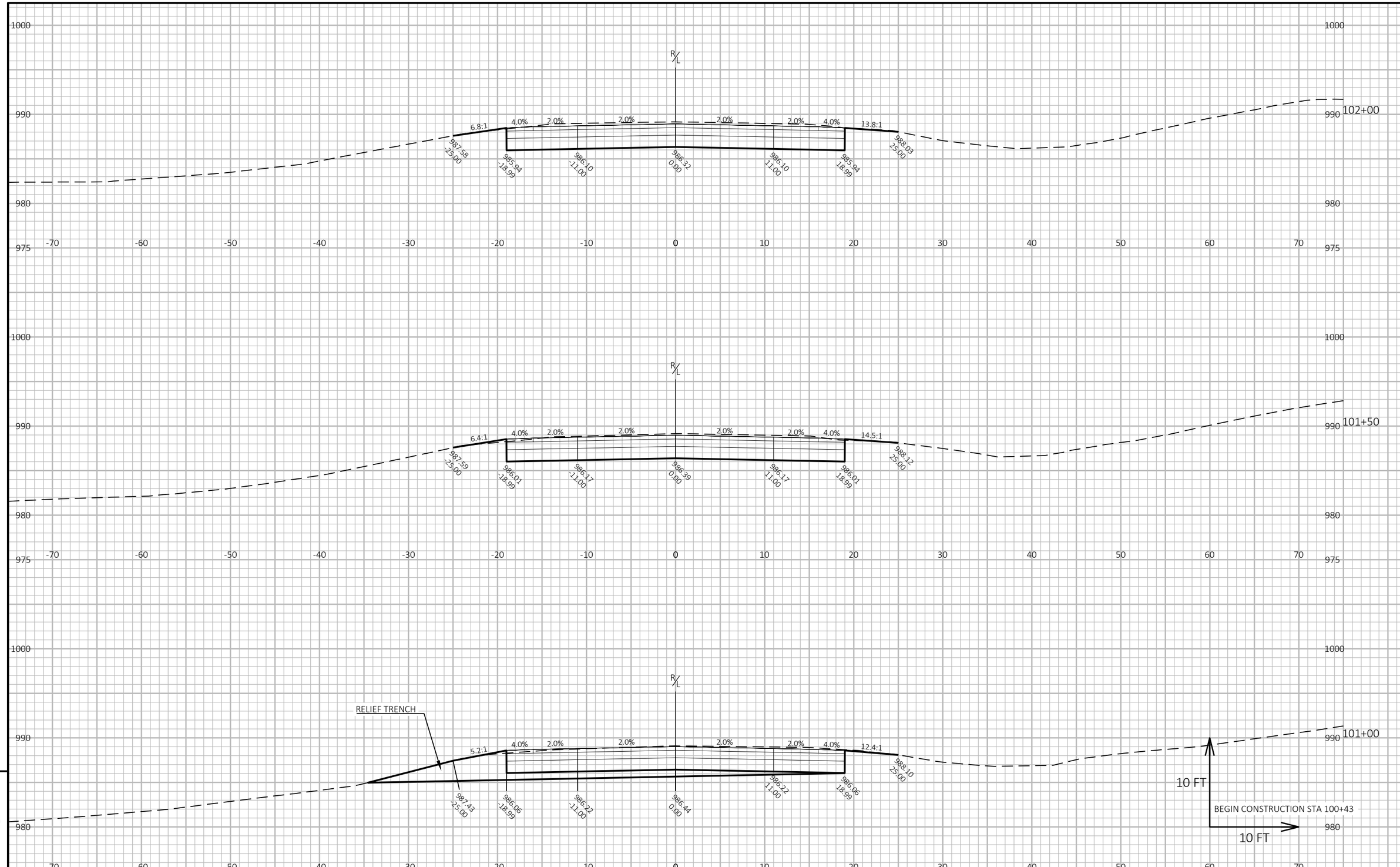

PROJECT NO: 2717-03-71	HWY: SILVERNAIL FRONTAGE ROAD	COUNTY: WAUKESHA	CROSS SECTIONS: CROSS SECTIONS-SILVERNAIL	SHEET 140	E

FILE NAME : N:\PDS\C3D\27170301\DSGN\CRDR\XS\090201_XS.DWG
LAYOUT NAME - 090201_XS
PLOT DATE : 7/28/2025 3:46 PM
PLOT BY : MANYEN, WAYNE
PLOT NAME :
PLOT SCALE : 1 IN:10 FT HORZ. / 1 IN:10 FT VERT.
WISDOT/CADDS SHEET 49

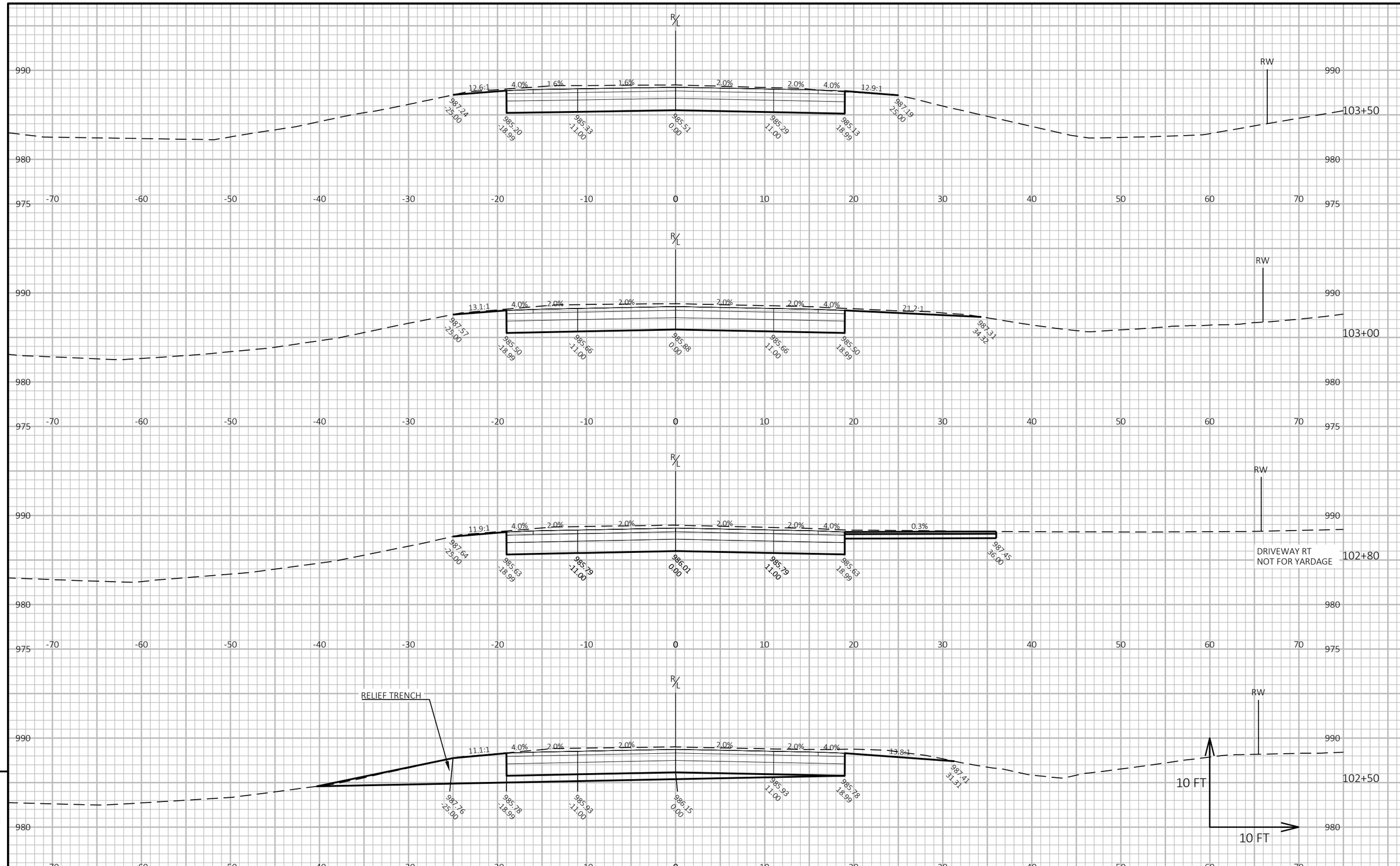

9

9

PROJECT NO: 2717-03-71	HWY: SILVERNAIL FRONTAGE ROAD	COUNTY: WAUKESHA	CROSS SECTIONS: CROSS SECTIONS-SILVERNAIL	SHEET 141	E

FILE NAME : N:\PDS\C3D\27170301\DSGN\CRDR\XS\090201_XS.DWG
LAYOUT NAME - 090202_XS
PLOT DATE : 7/28/2025 3:47 PM
PLOT BY : MANYEN, WAYNE
PLOT NAME :
PLOT SCALE : 1 IN:10 FT HORZ. / 1 IN:10 FT VERT.
WISDOT/CADDS SHEET 49

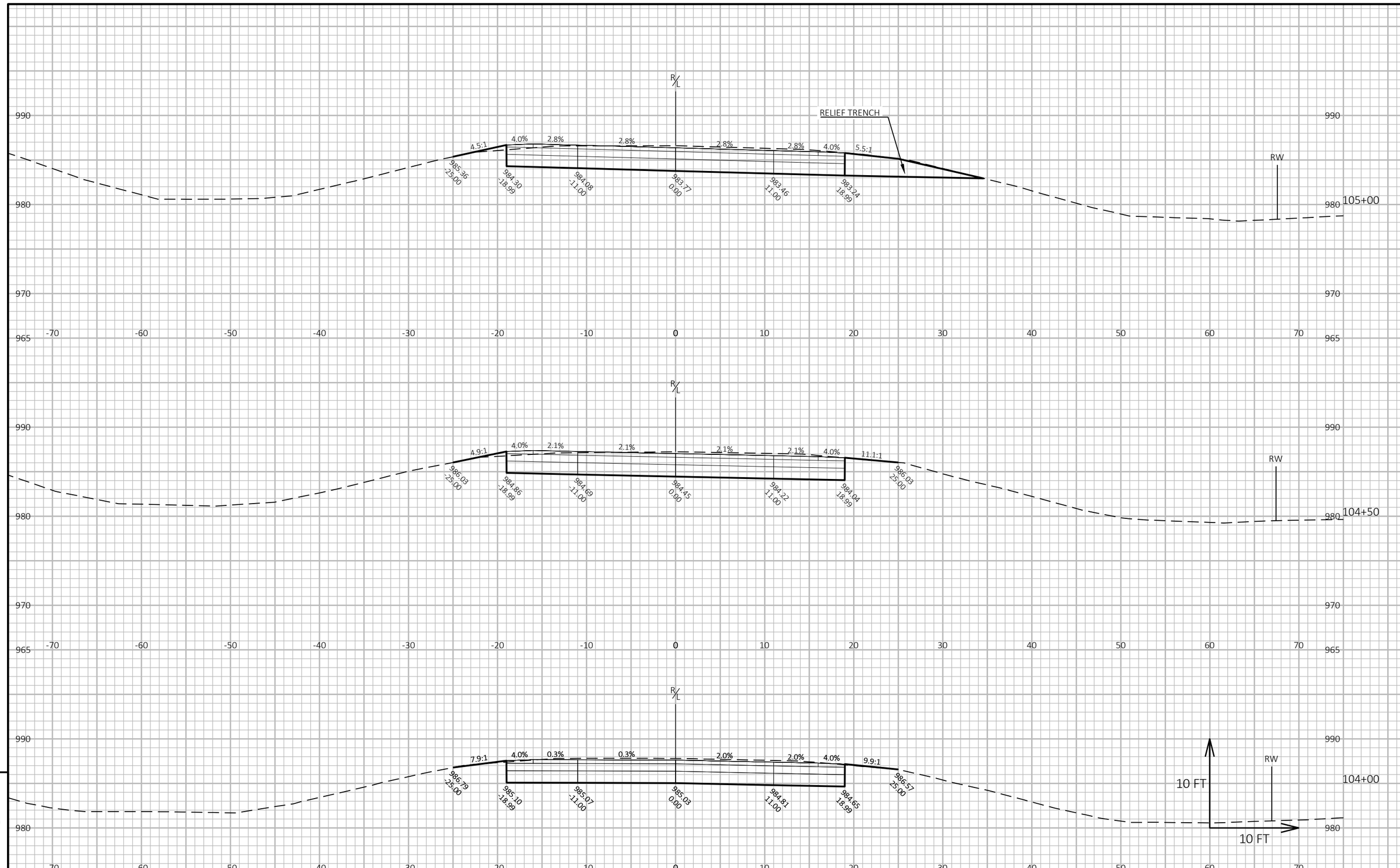

9

9

PROJECT NO: 2717-03-71	HWY: SILVERNAIL FRONTAGE ROAD	COUNTY: WAUKESHA	CROSS SECTIONS: CROSS SECTIONS-SILVERNAIL	SHEET 142	E

FILE NAME : N:\PDS\C3D\27170301\DSGN\CRDR\XS\090201_XS.DWG
LAYOUT NAME - 090203_XS

PLOT DATE : 7/28/2025 3:47 PM

PLOT BY : MANYEN, WAYNE

PLOT NAME :

PLOT SCALE : 1 IN:10 FT HORZ. / 1 IN:10 FT VERT.

WISDOT/CADDS SHEET 49

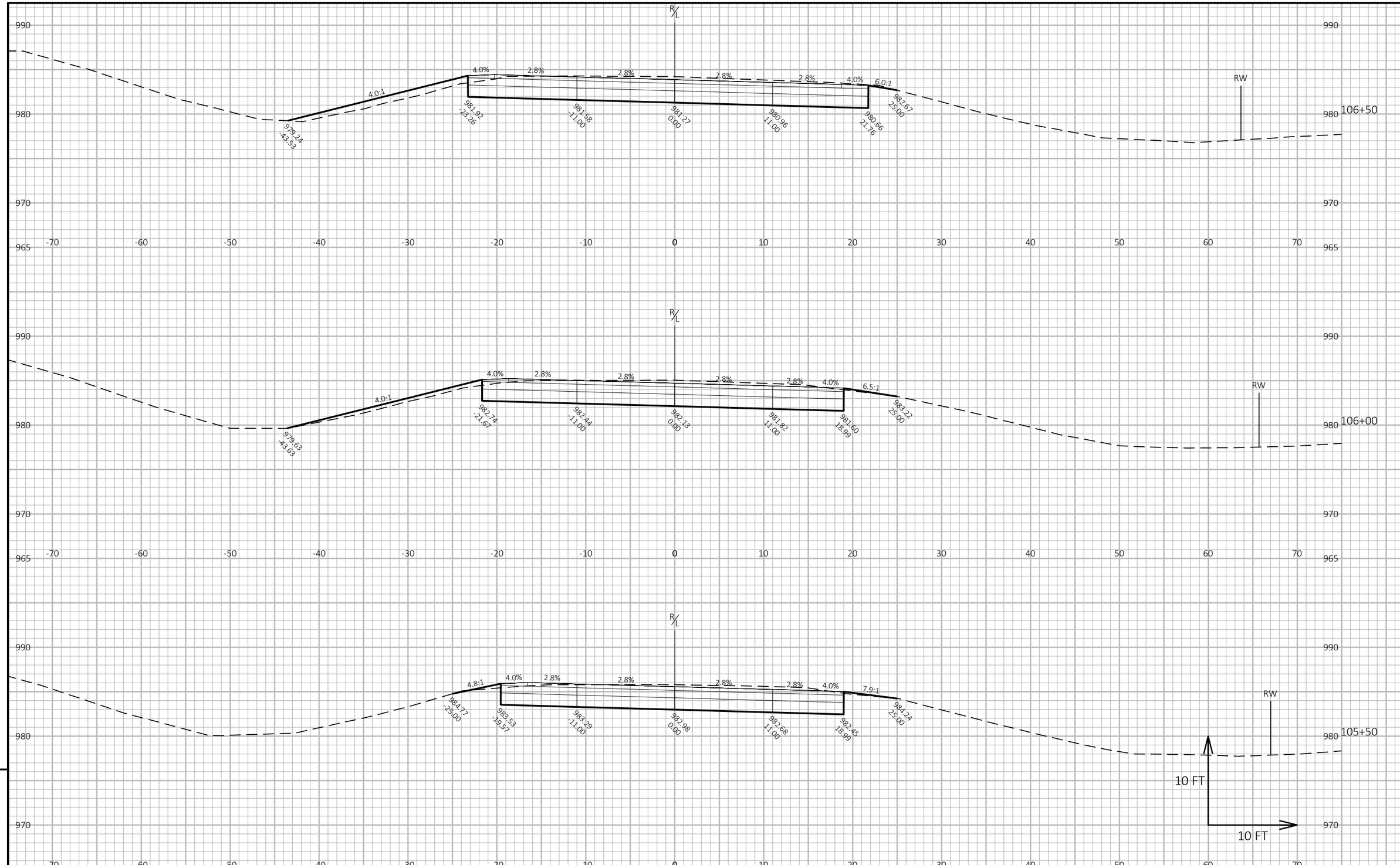

9

9

PROJECT NO: 2717-03-71	HWY: SILVERNAIL FRONTAGE ROAD	COUNTY: WAUKESHA	CROSS SECTIONS: CROSS SECTIONS-SILVERNAIL	SHEET 143	E

FILE NAME : N:\PDS\C3D\27170301\DSGN\CRDR\XS\090201_XS.DWG
LAYOUT NAME - 090204_XS

PLOT DATE : 7/28/2025 3:47 PM PLOT BY : MANYEN, WAYNE PLOT NAME : **PLOT SCALE :** 1 IN:10 FT HORZ. / 1 IN:10 FT VERT.

WISDOT/CADDS SHEET 49

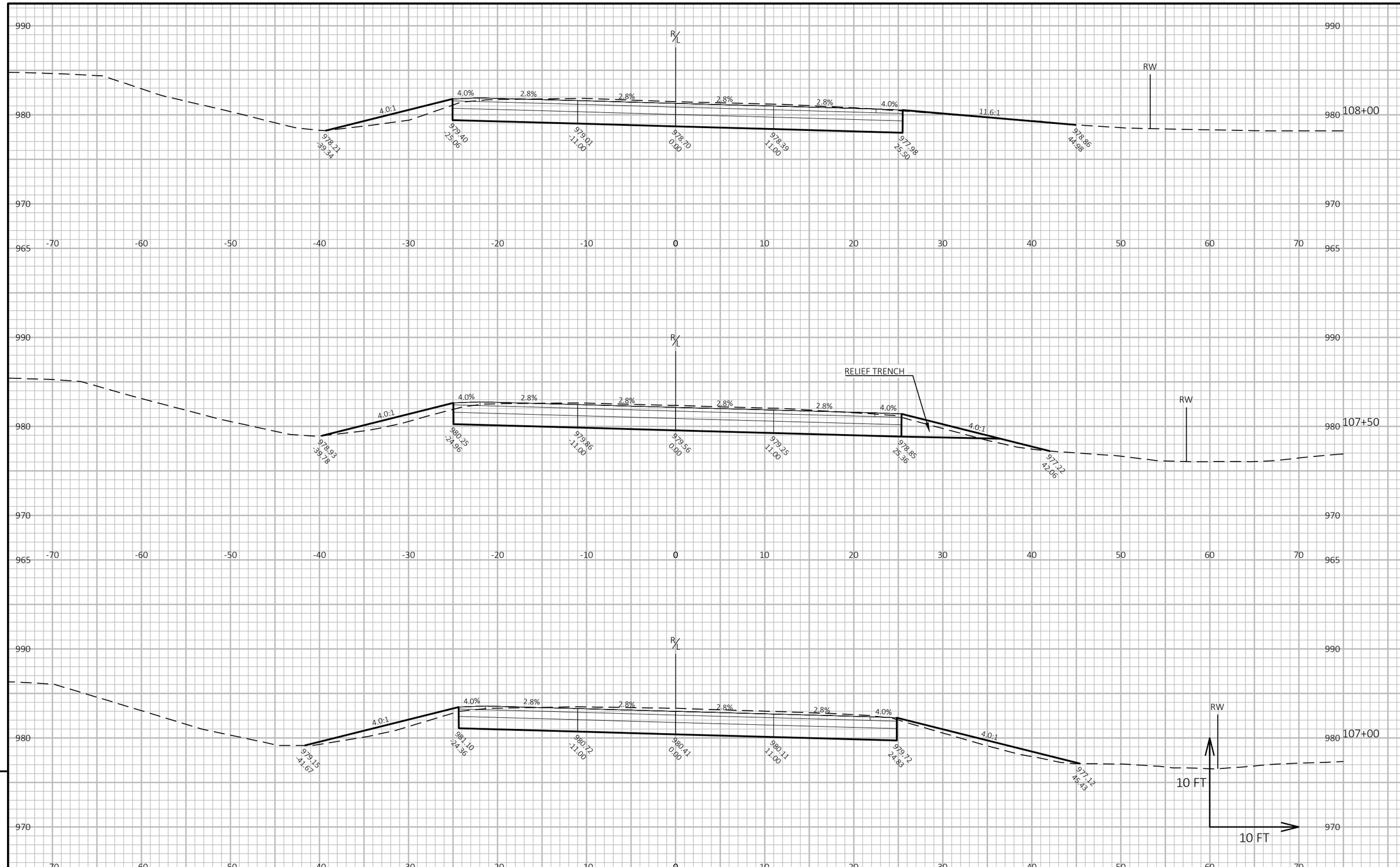

9

9

PROJECT NO: 2717-03-71	HWY: SILVERNAIL FRONTAGE ROAD	COUNTY: WAUKESHA	CROSS SECTIONS: CROSS SECTIONS-SILVERNAIL	SHEET 144	E

FILE NAME : N:\PDS\C3D\27170301\DSGN\CRDR\XS\090201_XS.DWG
LAYOUT NAME - 090205_XS

PLOT DATE : 7/28/2025 3:47 PM PLOT BY : MANYEN, WAYNE PLOT NAME : **PLOT SCALE :** 1 IN:10 FT HORZ. / 1 IN:10 FT VERT.

WISDOT/CADDS SHEET 49

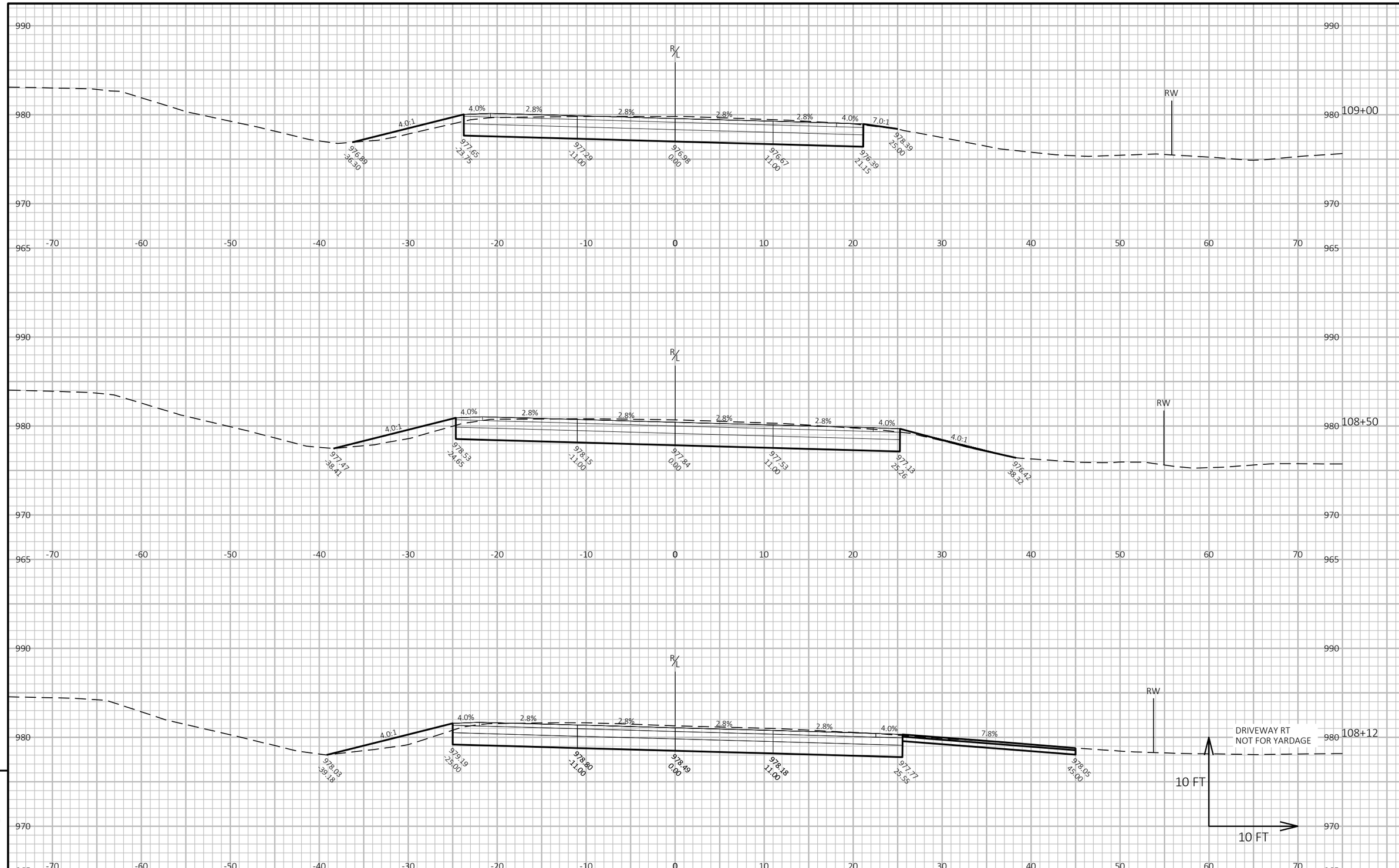

9

9

PROJECT NO: 2717-03-71	HWY: SILVERNAIL FRONTAGE ROAD	COUNTY: WAUKESHA	CROSS SECTIONS: CROSS SECTIONS-SILVERNAIL	SHEET 145	E

FILE NAME : N:\PDS\C3D\27170301\DSGN\CRDR\XS\090201_XS.DWG
LAYOUT NAME - 090206_XS

PLOT DATE : 7/28/2025 3:48 PM PLOT BY : MANYEN, WAYNE PLOT NAME : **PLOT SCALE :** 1 IN:10 FT HORZ. / 1 IN:10 FT VERT.

WISDOT/CADDS SHEET 49

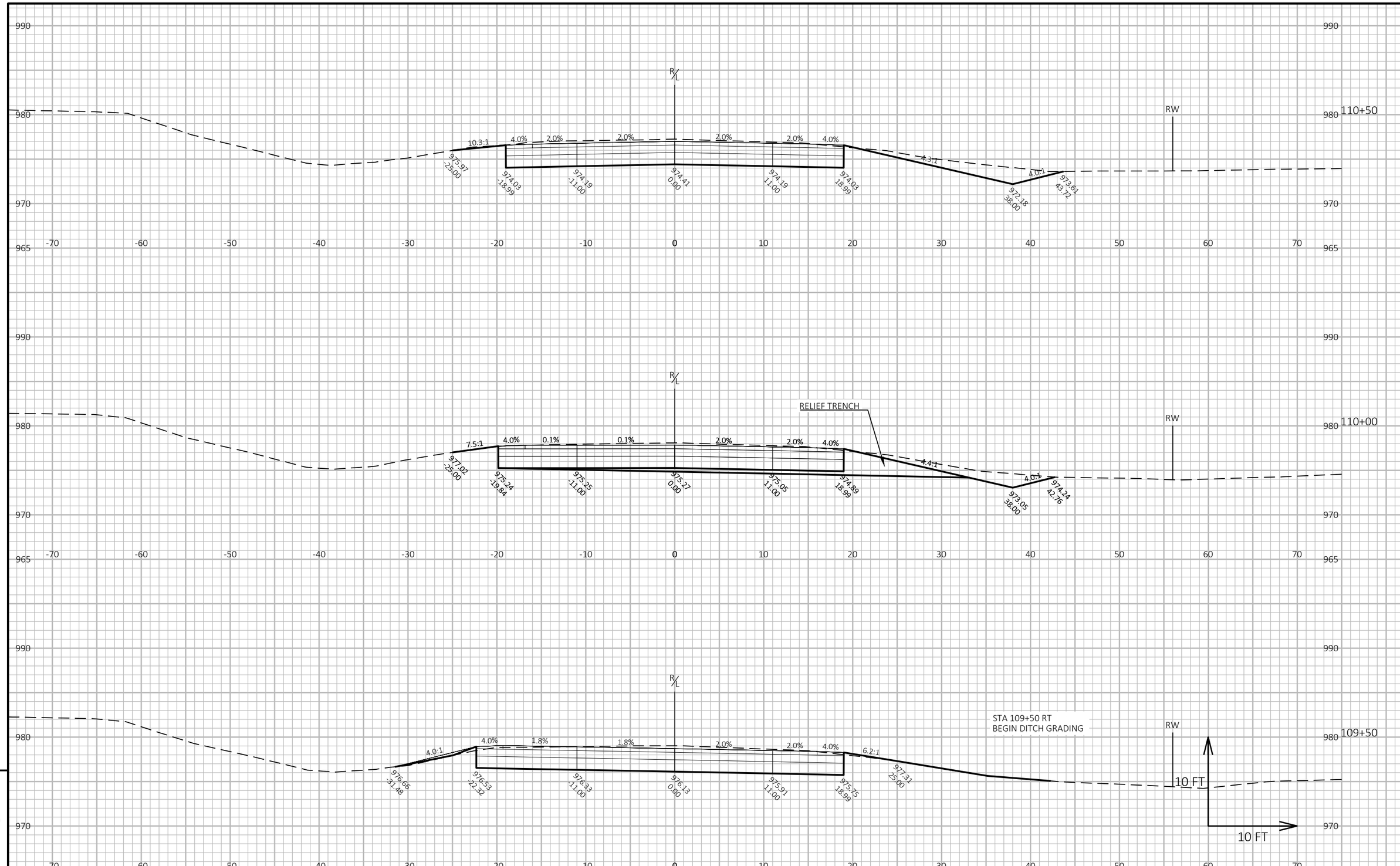

9

9

PROJECT NO: 2717-03-71	HWY: SILVERNAIL FRONTAGE ROAD	COUNTY: WAUKESHA	CROSS SECTIONS: CROSS SECTIONS-SILVERNAIL	SHEET 146	E

FILE NAME : N:\PDS\C3D\27170301\DSGN\CRDR\XS\090201_XS.DWG
LAYOUT NAME - 090207_XS

PLOT DATE : 7/28/2025 3:48 PM PLOT BY : MANYEN, WAYNE PLOT NAME : **PLOT SCALE :** 1 IN:10 FT HORZ. / 1 IN:10 FT VERT.

WISDOT/CADDS SHEET 49

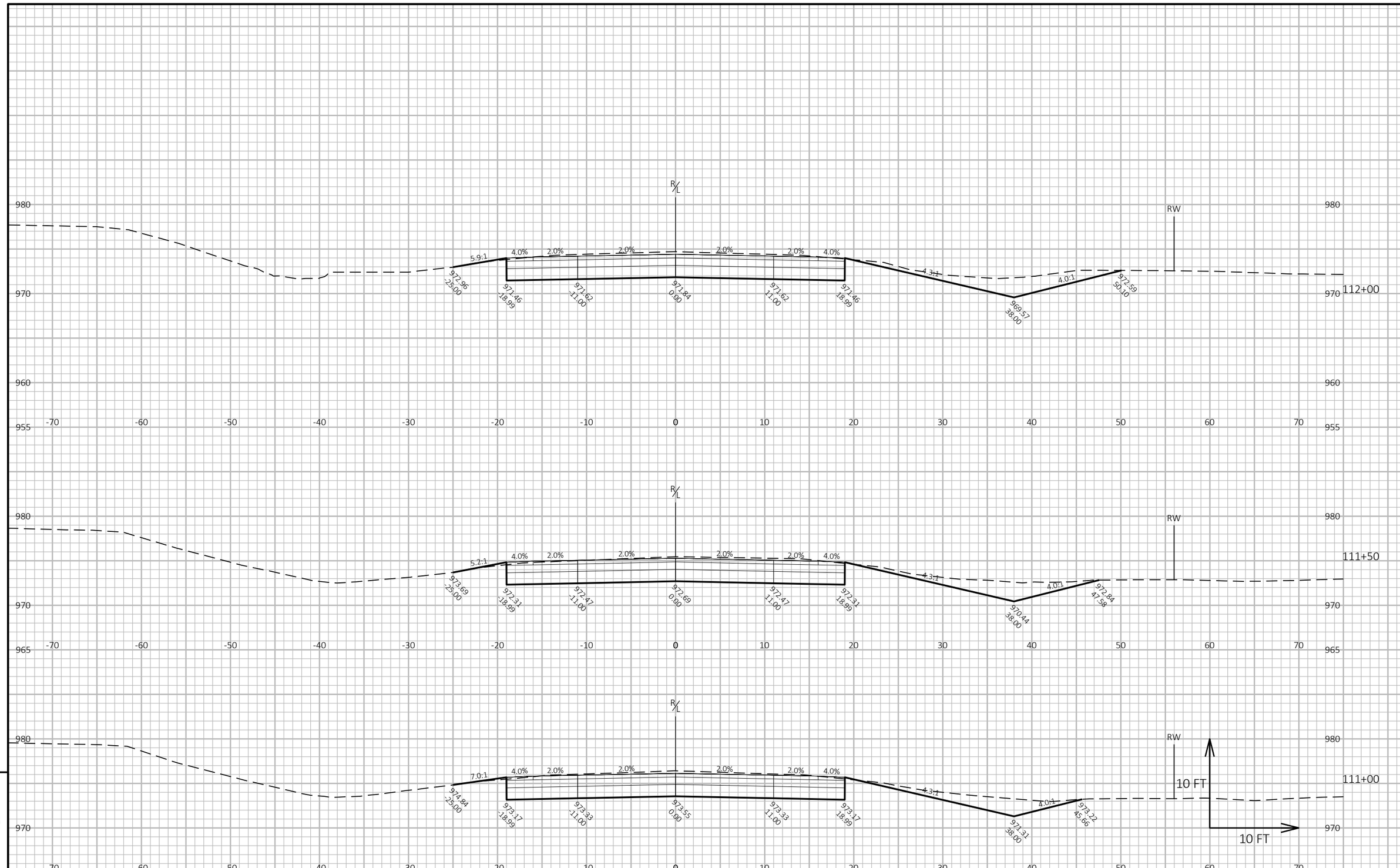

PROJECT NO: 2717-03-71	HWY: SILVERNAIL FRONTAGE ROAD	COUNTY: WAUKESHA	CROSS SECTIONS: CROSS SECTIONS-SILVERNAIL	SHEET 147	E

FILE NAME : N:\PDS\C3D\27170301\DSGN\CRDR\XS\090201_XS.DWG
LAYOUT NAME - 090208_XS
PLOT DATE : 7/28/2025 3:48 PM
PLOT BY : MANYEN, WAYNE
PLOT NAME :
PLOT SCALE : 1 IN:10 FT HORZ. / 1 IN:10 FT VERT.
WISDOT/CADDS SHEET 49

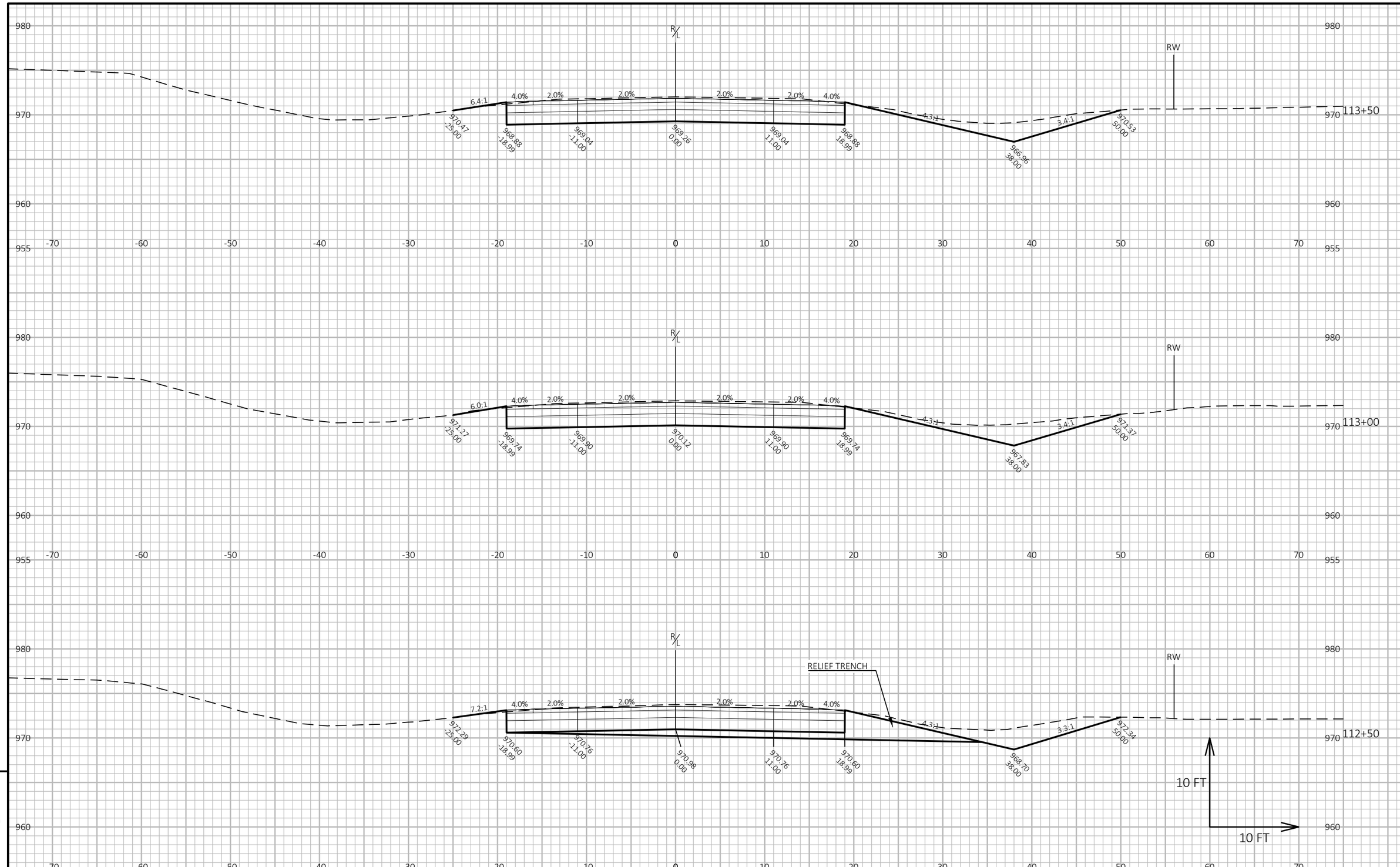

9

9

PROJECT NO: 2717-03-71	HWY: SILVERNAIL FRONTAGE ROAD	COUNTY: WAUKESHA	CROSS SECTIONS: CROSS SECTIONS-SILVERNAIL	SHEET 148	E

FILE NAME : N:\PDS\C3D\27170301\DSGN\CRDR\XS\090201_XS.DWG
LAYOUT NAME - 090209_XS

PLOT DATE : 7/28/2025 3:48 PM PLOT BY : MANYEN, WAYNE PLOT NAME : **PLOT SCALE :** 1 IN:10 FT HORZ. / 1 IN:10 FT VERT.

WISDOT/CADDS SHEET 49

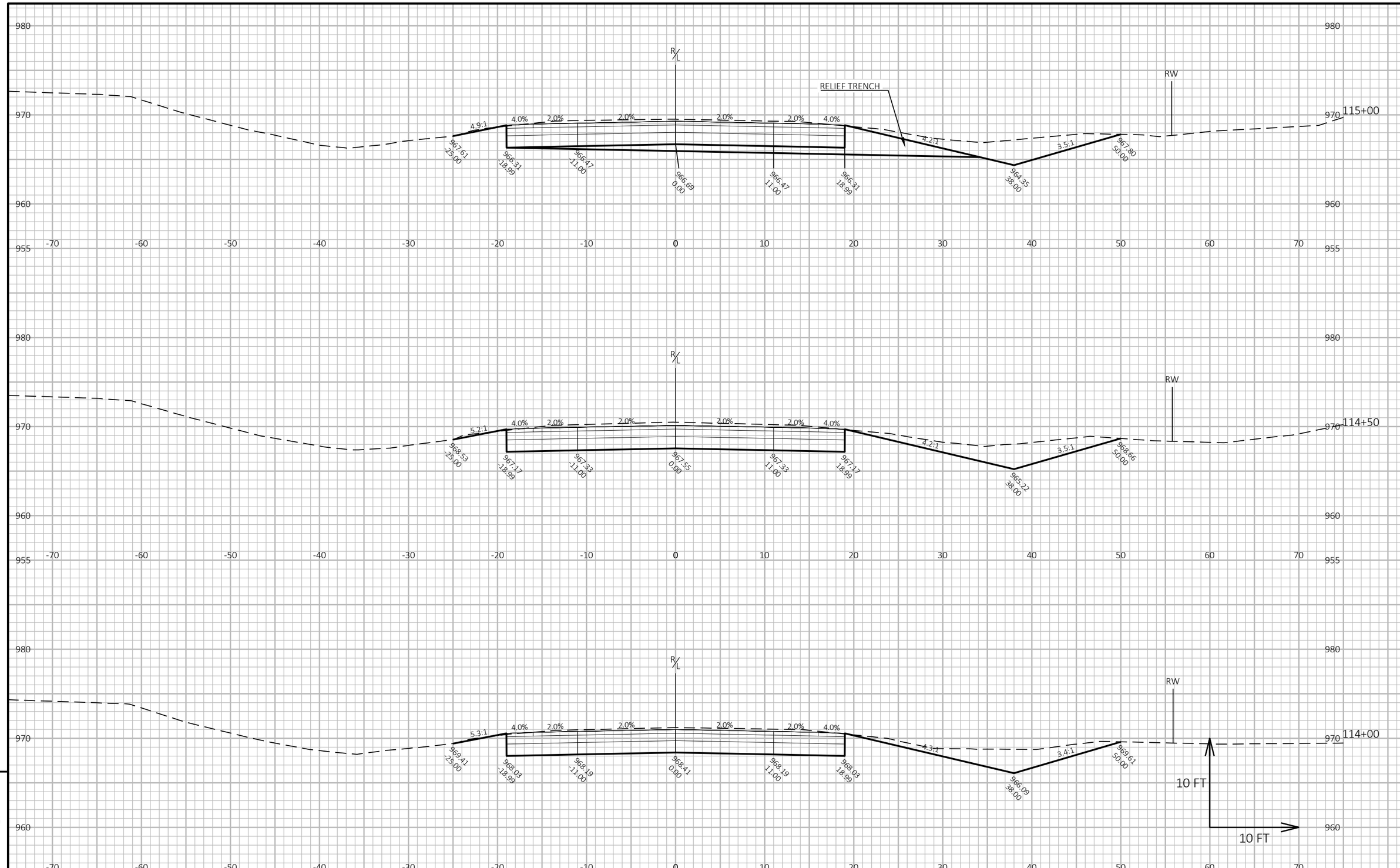

9

9

PROJECT NO: 2717-03-71	HWY: SILVERNAIL FRONTAGE ROAD	COUNTY: WAUKESHA	CROSS SECTIONS: CROSS SECTIONS-SILVERNAIL	SHEET 149	E

FILE NAME : N:\PDS\C3D\27170301\DSGN\CRDR\XS\090201_XS.DWG
LAYOUT NAME - 090210_XS

PLOT DATE : 7/28/2025 3:49 PM PLOT BY : MANYEN, WAYNE PLOT NAME : **PLOT SCALE :** 1 IN:10 FT HORZ. / 1 IN:10 FT VERT.

WISDOT/CADDS SHEET 49

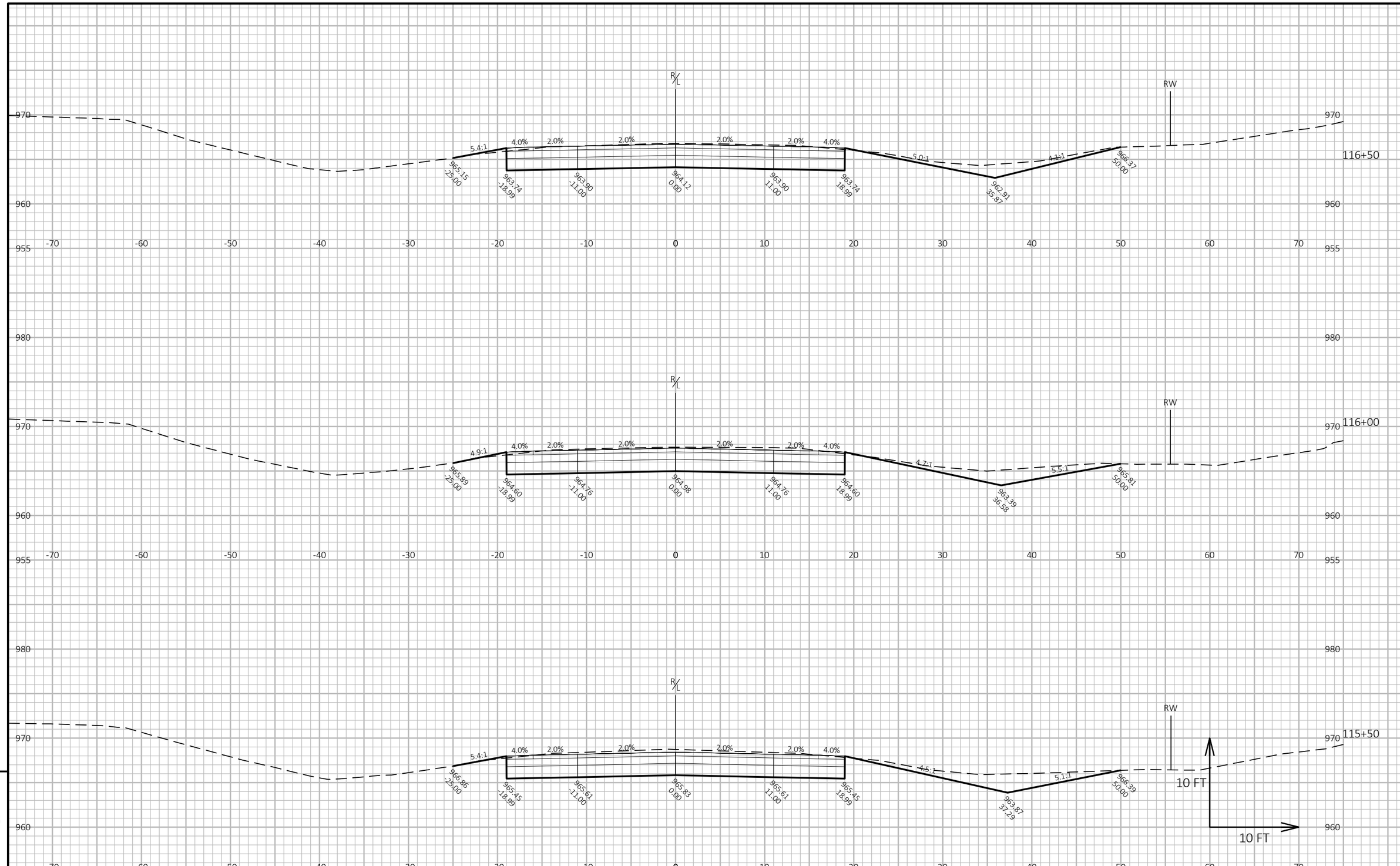

PROJECT NO: 2717-03-71	HWY: SILVERNAIL FRONTAGE ROAD	COUNTY: WAUKESHA	CROSS SECTIONS: CROSS SECTIONS-SILVERNAIL	SHEET 150	E

FILE NAME : N:\PDS\C3D\27170301\DSGN\CRDR\XS\090201_XS.DWG
LAYOUT NAME - 090211_XS
PLOT DATE : 7/28/2025 3:49 PM
PLOT BY : MANYEN, WAYNE
PLOT NAME :
PLOT SCALE : 1 IN:10 FT HORZ. / 1 IN:10 FT VERT.
WISDOT/CADDS SHEET 49

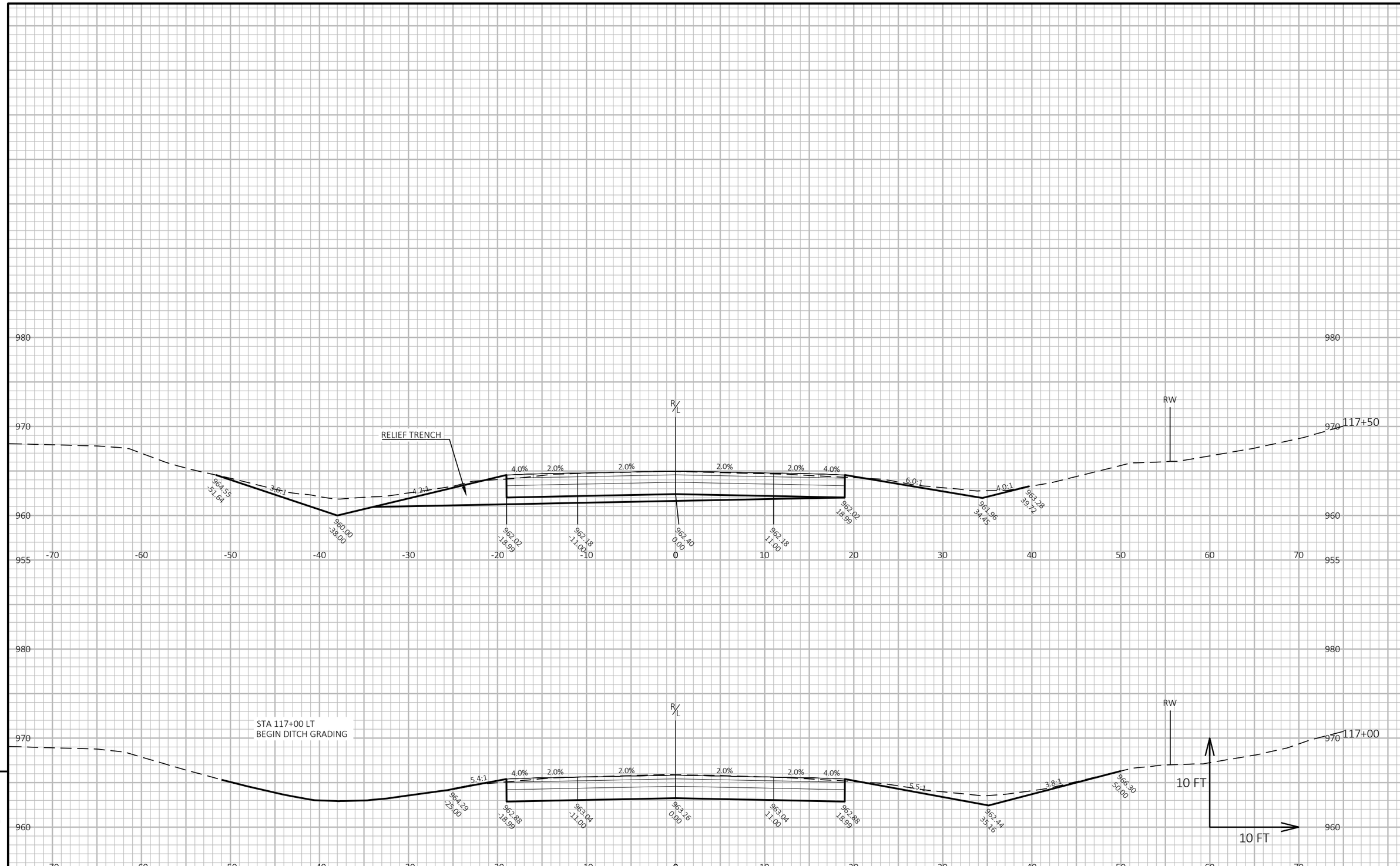

9

9

PROJECT NO: 2717-03-71	HWY: SILVERNAIL FRONTAGE ROAD	COUNTY: WAUKESHA	CROSS SECTIONS: CROSS SECTIONS-SILVERNAIL	SHEET 151	E

FILE NAME : N:\PDS\C3D\27170301\DSGN\CRDR\XS\090201_XS.DWG
LAYOUT NAME - 090212_XS
PLOT DATE : 7/28/2025 3:49 PM
PLOT BY : MANYEN, WAYNE
PLOT NAME :
PLOT SCALE : 1 IN:10 FT HORZ. / 1 IN:10 FT VERT.

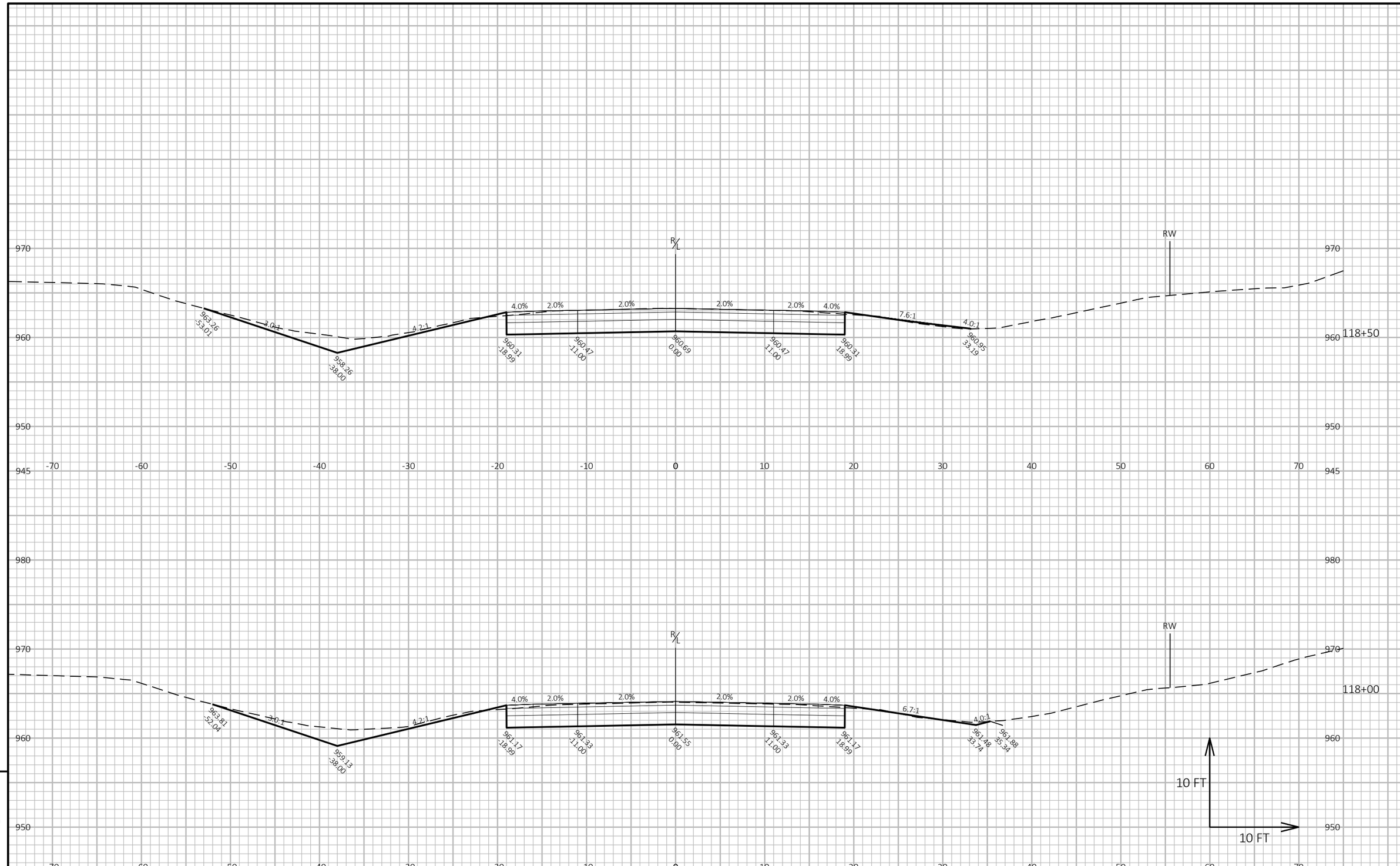

9

9

PROJECT NO: 2717-03-71	HWY: SILVERNAIL FRONTAGE ROAD	COUNTY: WAUKESHA	CROSS SECTIONS: CROSS SECTIONS-SILVERNAIL	SHEET 152	E

FILE NAME : N:\PDS\C3D\27170301\DSGN\CRDR\XS\090201_XS.DWG
LAYOUT NAME - 090213_XS

PLOT DATE : 7/28/2025 3:50 PM PLOT BY : MANYEN, WAYNE PLOT NAME : **PLOT SCALE :** 1 IN:10 FT HORZ. / 1 IN:10 FT VERT.

WISDOT/CADDS SHEET 49

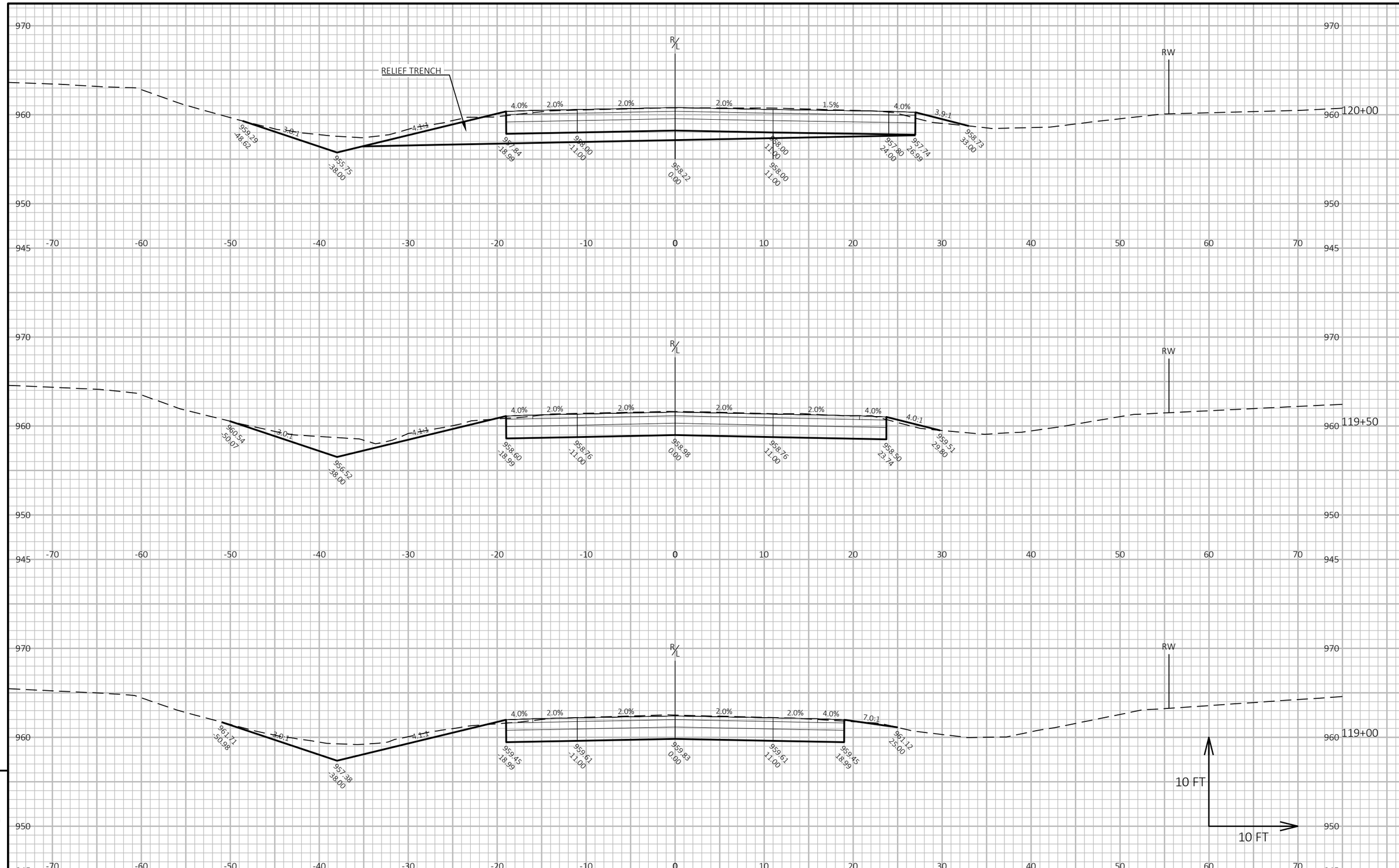

9

9

PROJECT NO: 2717-03-71	HWY: SILVERNAIL FRONTAGE ROAD	COUNTY: WAUKESHA	CROSS SECTIONS: CROSS SECTIONS-SILVERNAIL	SHEET 153	E

FILE NAME : N:\PDS\C3D\27170301\DSGN\CRDR\XS\090201_XS.DWG
LAYOUT NAME - 090214_XS

PLOT DATE : 7/28/2025 3:50 PM PLOT BY : MANYEN, WAYNE PLOT NAME : **PLOT SCALE :** 1 IN:10 FT HORZ. / 1 IN:10 FT VERT.

WISDOT/CADDS SHEET 49

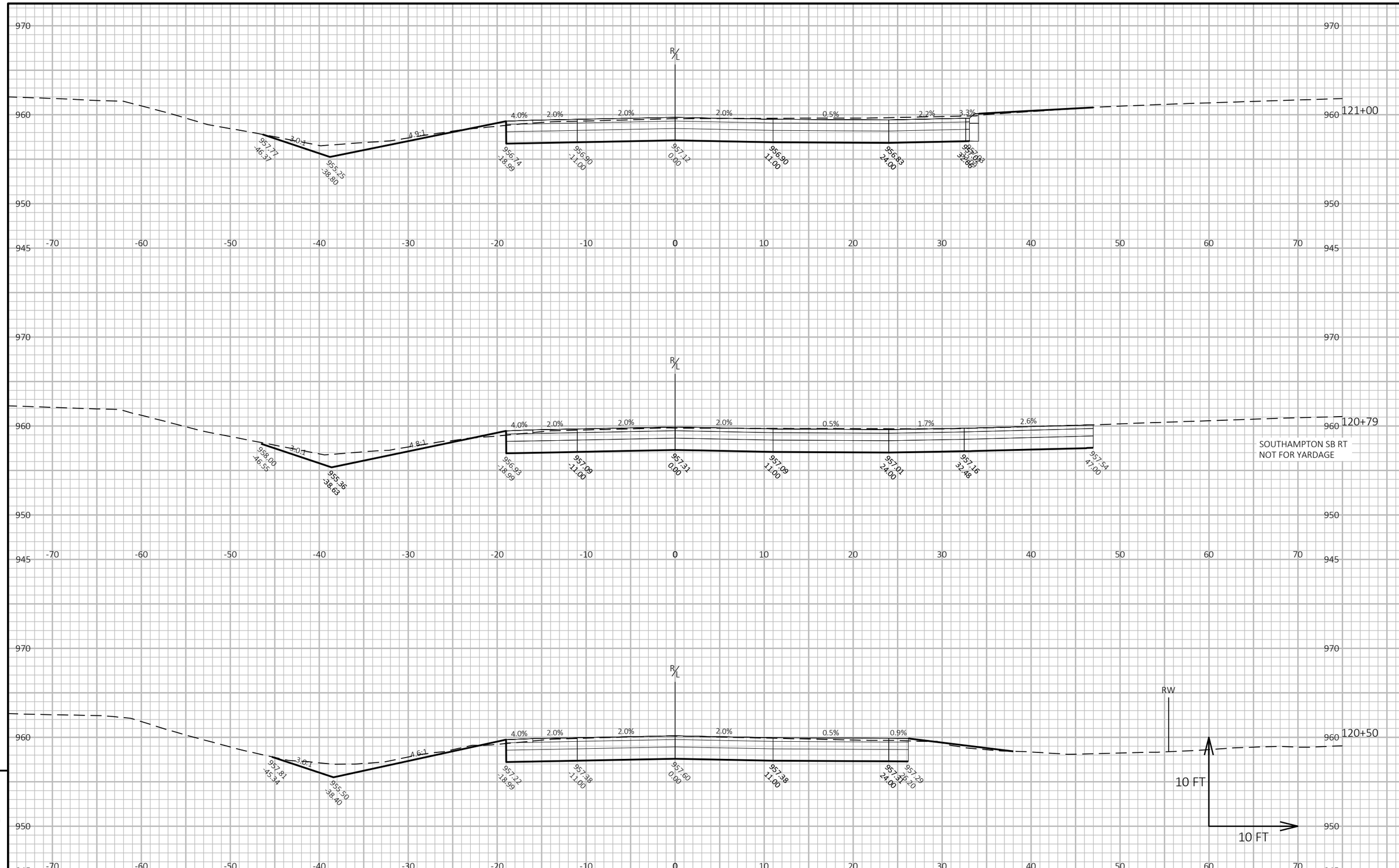

PROJECT NO: 2717-03-71	HWY: SILVERNAIL FRONTAGE ROAD	COUNTY: WAUKESHA	CROSS SECTIONS: CROSS SECTIONS-SILVERNAIL	SHEET 154	E

FILE NAME : N:\PDS\C3D\27170301\DSGN\CRDR\XS\090201_XS.DWG
LAYOUT NAME - 090215_XS

PLOT DATE : 7/28/2025 3:50 PM PLOT BY : MANYEN, WAYNE PLOT NAME : **PLOT SCALE :** 1 IN:10 FT HORZ. / 1 IN:10 FT VERT.

WISDOT/CADDS SHEET 49

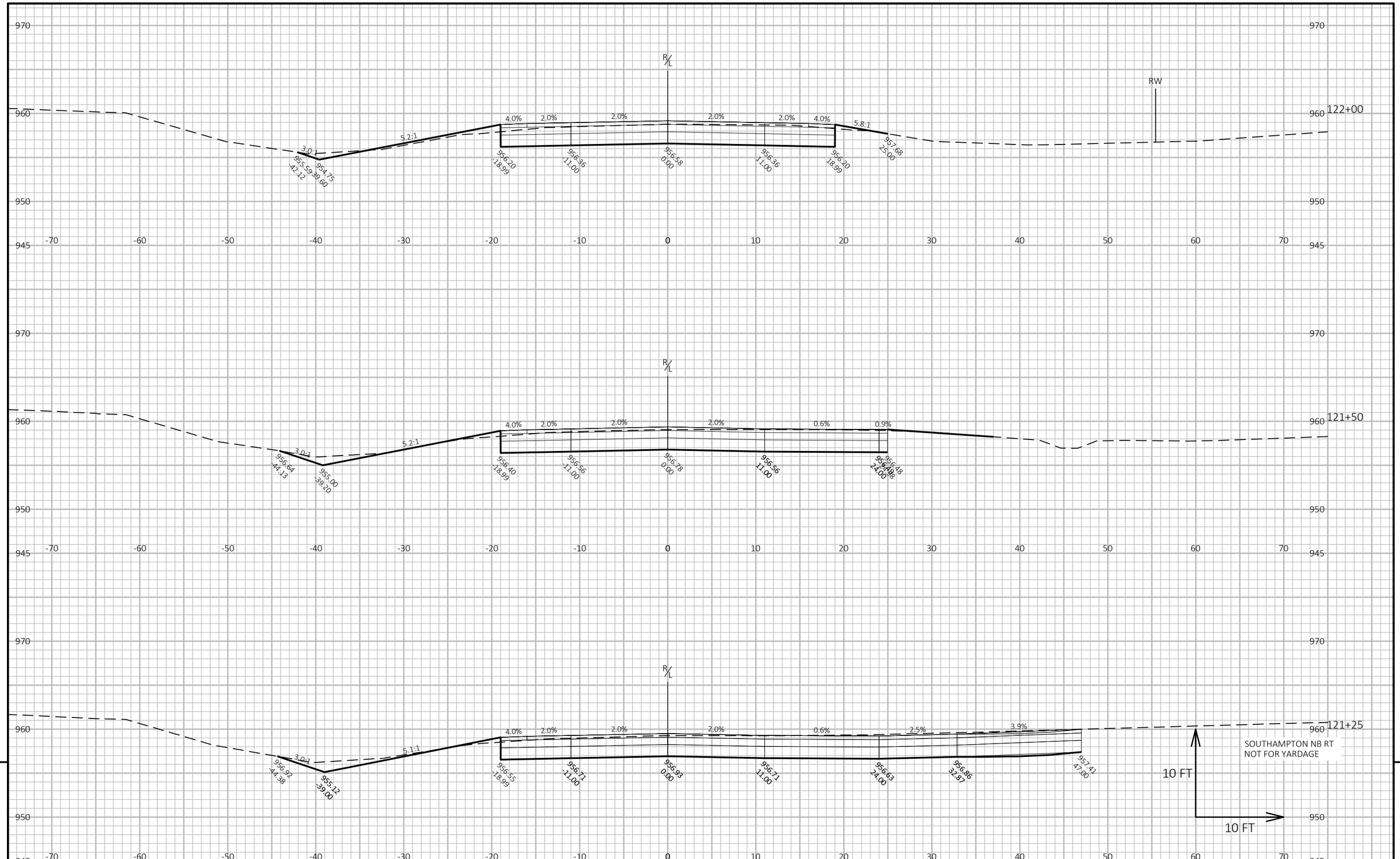

9

9

PROJECT NO: 2717-03-71	HWY: SILVERNAIL FRONTAGE ROAD	COUNTY: WAUKESHA	CROSS SECTIONS: CROSS SECTIONS-SILVERNAIL	SHEET 155	E

FILE NAME : N:\PDS\C3D\27170301\DSGN\CRDR\XS\090201_XS.DWG
LAYOUT NAME - 090216_XS

PLOT DATE : 7/28/2025 3:51 PM PLOT BY : MANYEN, WAYNE PLOT NAME : **PLOT SCALE :** 1 IN:10 FT HORZ. / 1 IN:10 FT VERT.

WISDOT/CADDS SHEET 49

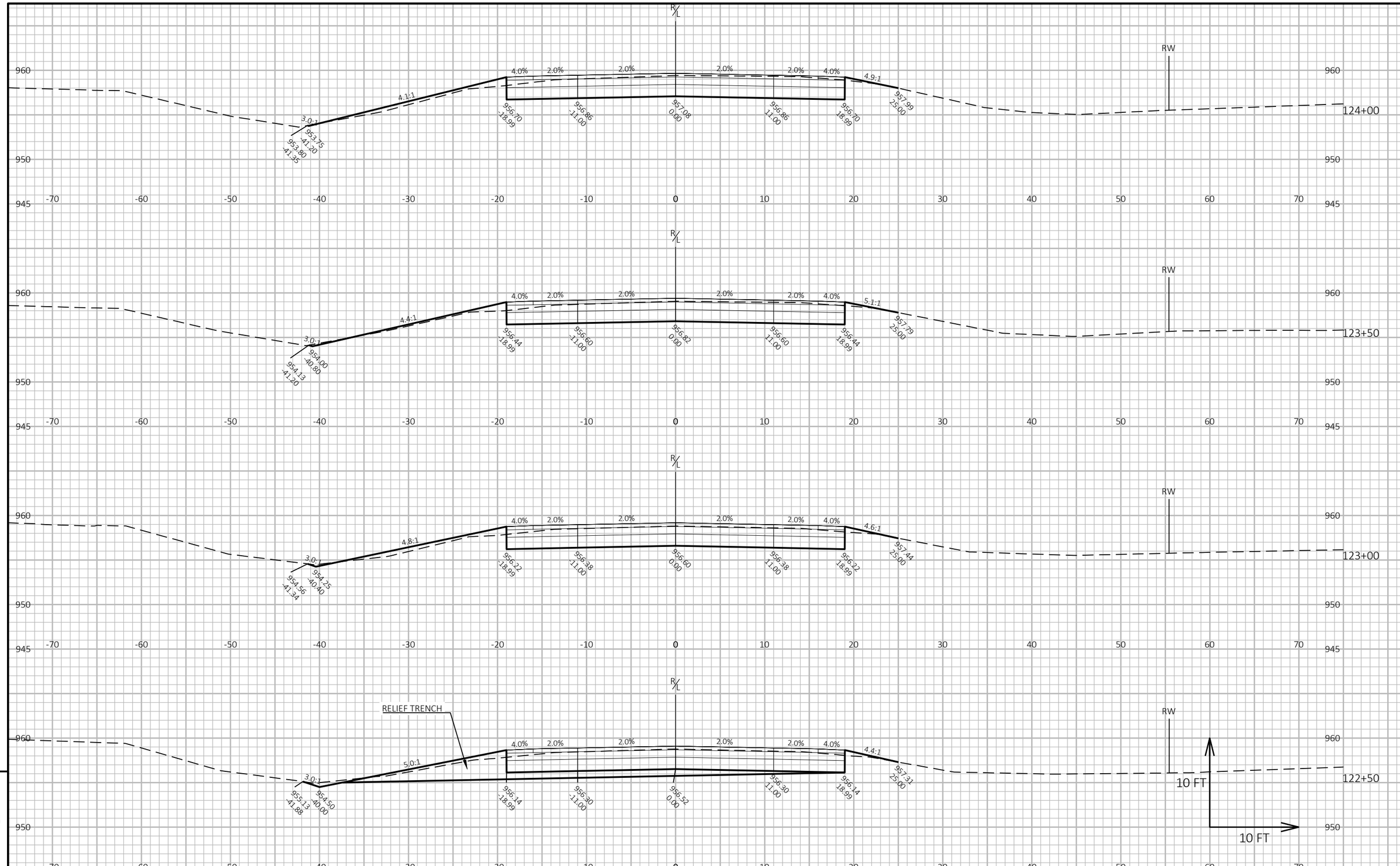

9

9

PROJECT NO: 2717-03-71	HWY: SILVERNAIL FRONTAGE ROAD	COUNTY: WAUKESHA	CROSS SECTIONS: CROSS SECTIONS-SILVERNAIL	SHEET 156	E

FILE NAME : N:\PDS\C3D\27170301\DSGN\CRDR\XS\090201_XS.DWG
LAYOUT NAME - 090217_XS
PLOT DATE : 7/28/2025 3:51 PM
PLOT BY : MANYEN, WAYNE
PLOT NAME :
PLOT SCALE : 1 IN:10 FT HORZ. / 1 IN:10 FT VERT.
WISDOT/CADDS SHEET 49

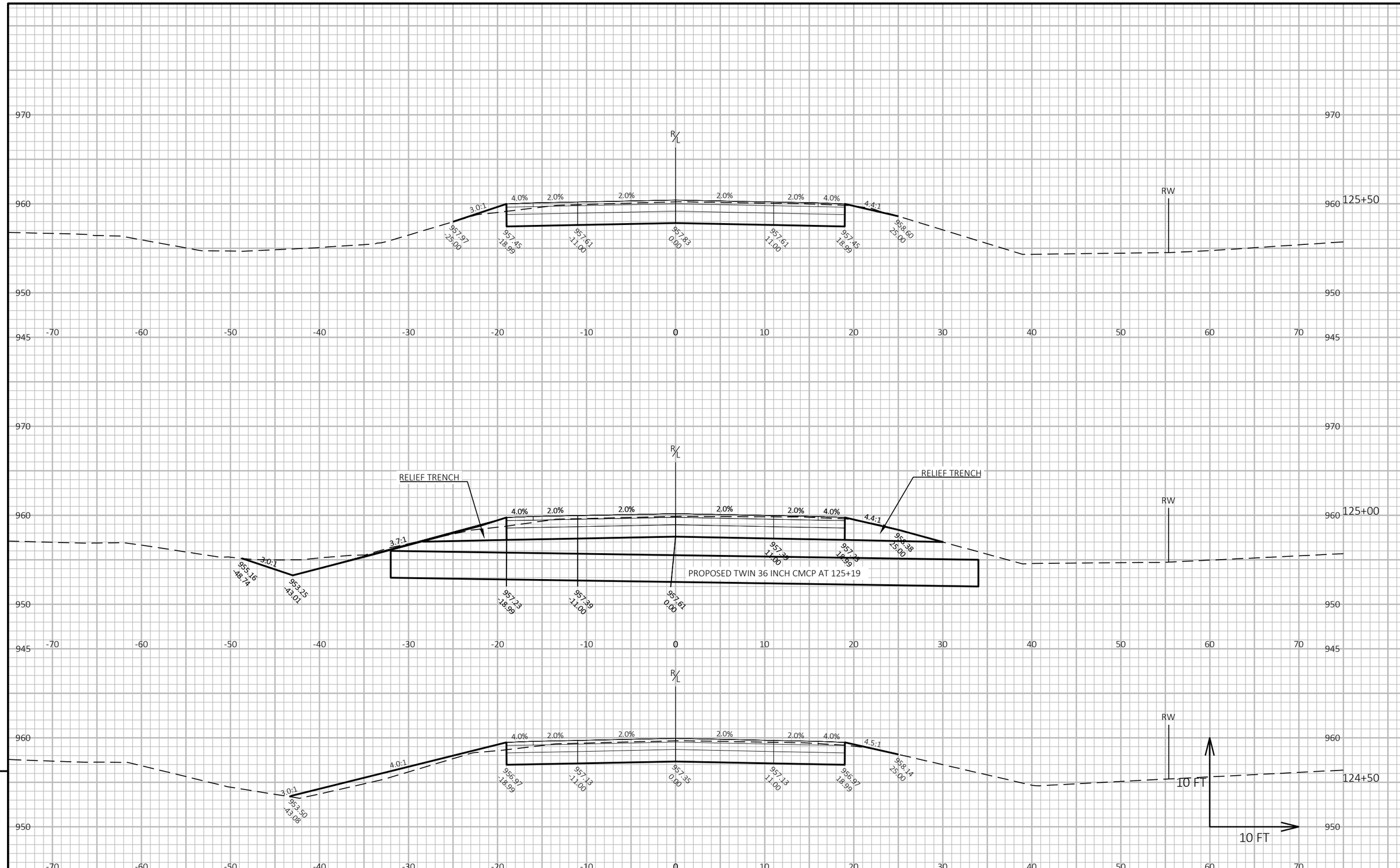

9

9

PROJECT NO: 2717-03-71	HWY: SILVERNAIL FRONTAGE ROAD	COUNTY: WAUKESHA	CROSS SECTIONS: CROSS SECTIONS-SILVERNAIL	SHEET 157	E

FILE NAME : N:\PDS\C3D\27170301\DSGN\CRDR\XS\090201_XS.DWG
LAYOUT NAME - 090218_XS

PLOT DATE : 7/28/2025 3:51 PM

PLOT BY : MANYEN, WAYNE

PLOT NAME :

PLOT SCALE : 1 IN:10 FT HORZ. / 1 IN:10 FT VERT.

WISDOT/CADDS SHEET 49

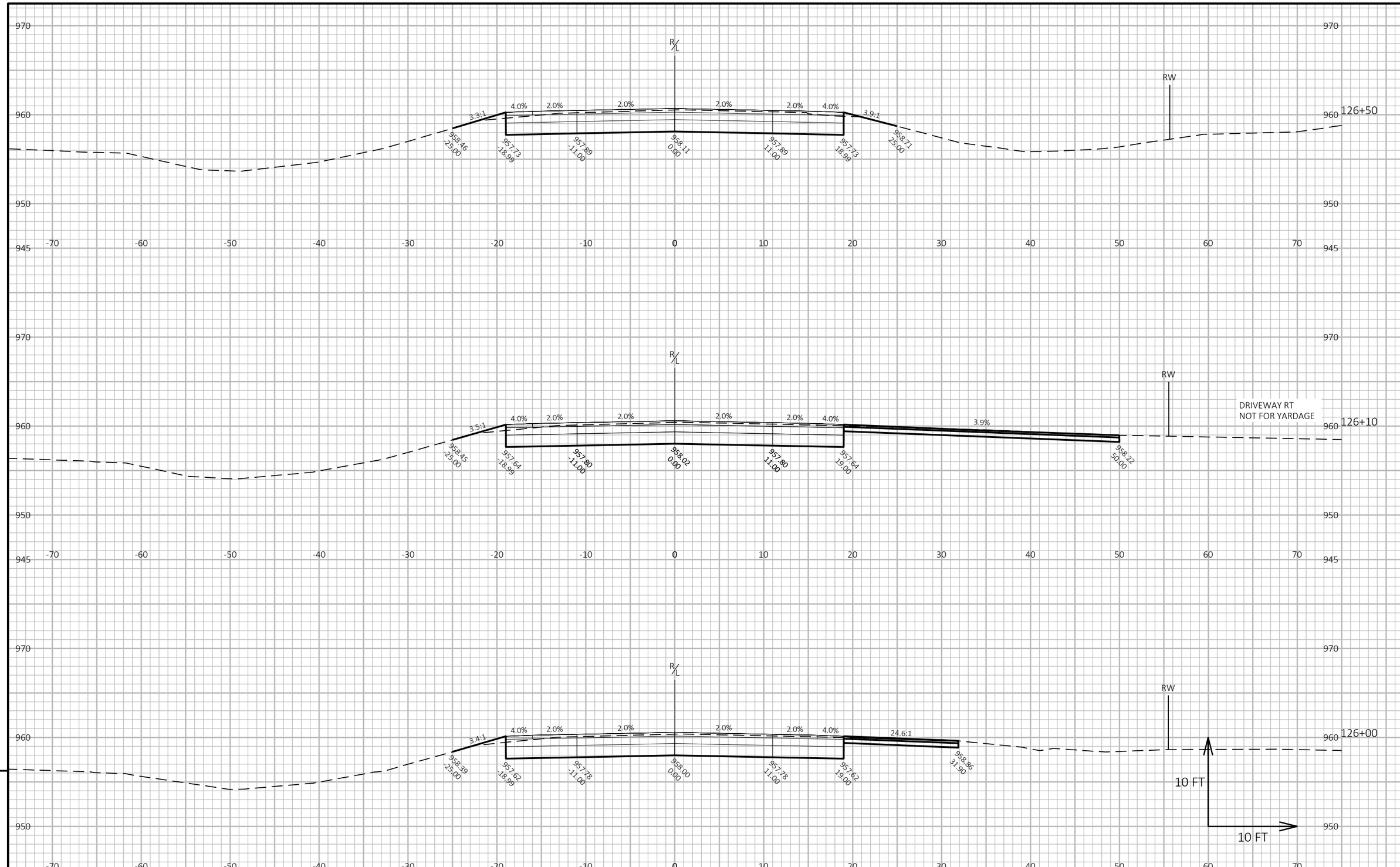

9

9

PROJECT NO: 2717-03-71	HWY: SILVERNAIL FRONTAGE ROAD	COUNTY: WAUKESHA	CROSS SECTIONS: CROSS SECTIONS-SILVERNAIL	SHEET 158	E

FILE NAME : N:\PDS\C3D\27170301\DSGN\CRDR\XS\090201_XS.DWG
LAYOUT NAME - 090219_XS
PLOT DATE : 7/28/2025 3:52 PM
PLOT BY : MANYEN, WAYNE
PLOT NAME :
PLOT SCALE : 1 IN:10 FT HORZ. / 1 IN:10 FT VERT.
WISDOT/CADDS SHEET 49

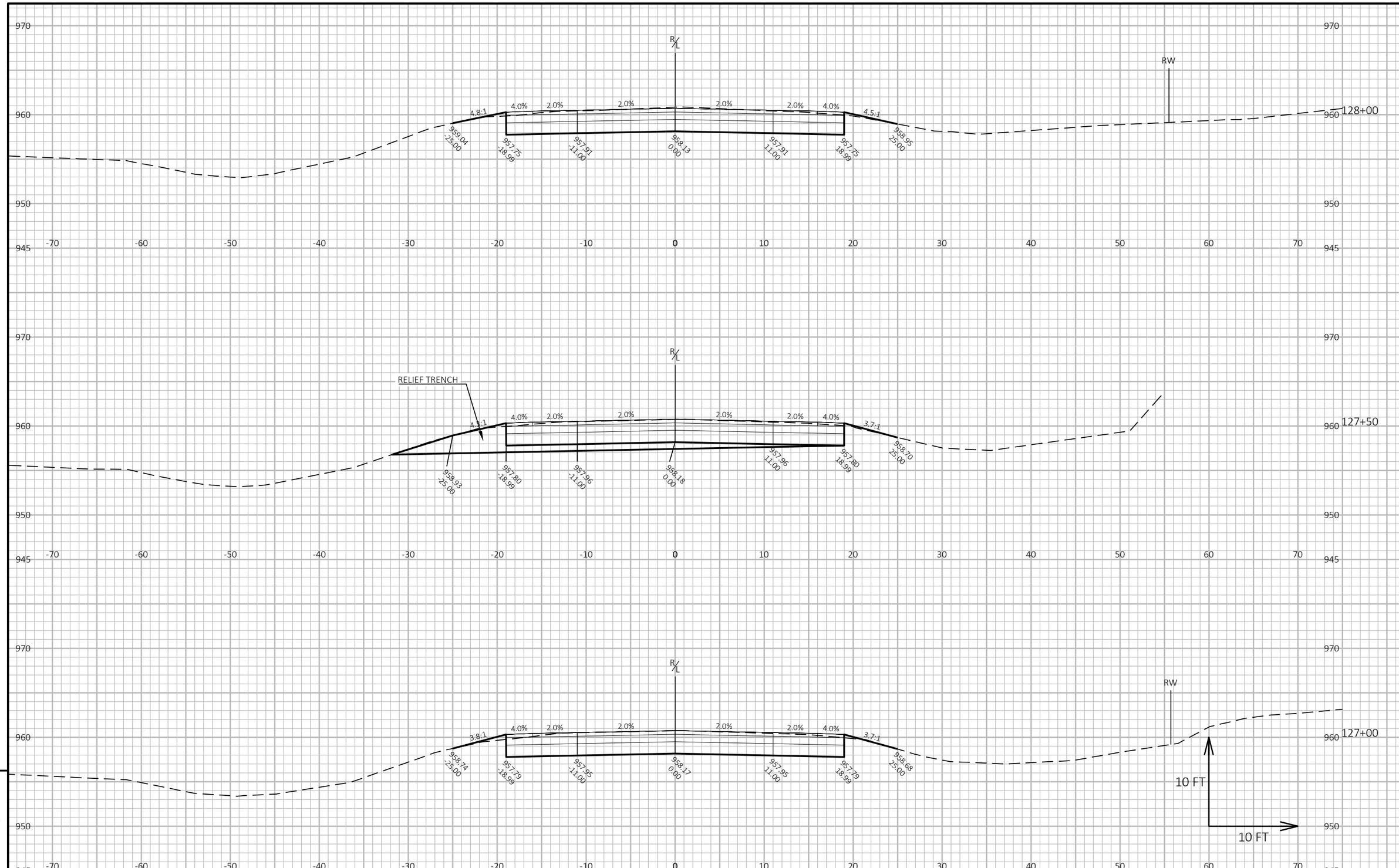

9

9

PROJECT NO: 2717-03-71	HWY: SILVERNAIL FRONTAGE ROAD	COUNTY: WAUKESHA	CROSS SECTIONS: CROSS SECTIONS-SILVERNAIL	SHEET 159	E

FILE NAME : N:\PDS\C3D\27170301\DSGN\CRDR\XS\090201_XS.DWG
LAYOUT NAME - 090220_XS

PLOT DATE : 7/28/2025 3:52 PM PLOT BY : MANYEN, WAYNE PLOT NAME : **PLOT SCALE :** 1 IN:10 FT HORZ. / 1 IN:10 FT VERT.

WISDOT/CADDS SHEET 49

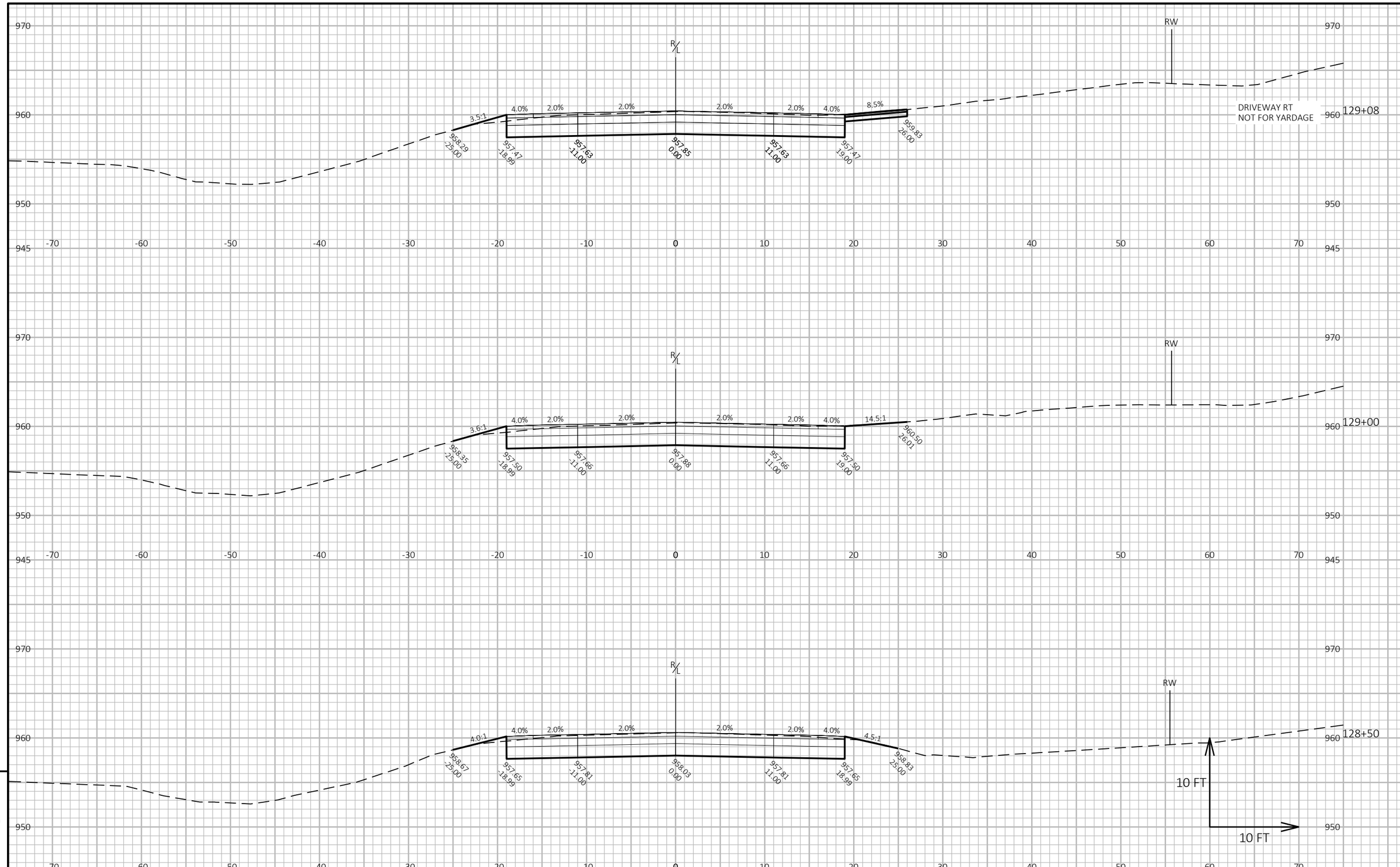

9

9

PROJECT NO: 2717-03-71	HWY: SILVERNAIL FRONTAGE ROAD	COUNTY: WAUKESHA	CROSS SECTIONS: CROSS SECTIONS-SILVERNAIL	SHEET 160	E

FILE NAME : N:\PDS\C3D\27170301\DSGN\CRDR\XS\090201_XS.DWG
LAYOUT NAME - 090221_XS
PLOT DATE : 7/28/2025 3:52 PM
PLOT BY : MANYEN, WAYNE
PLOT NAME :
PLOT SCALE : 1 IN:10 FT HORZ. / 1 IN:10 FT VERT.
WISDOT/CADDS SHEET 49

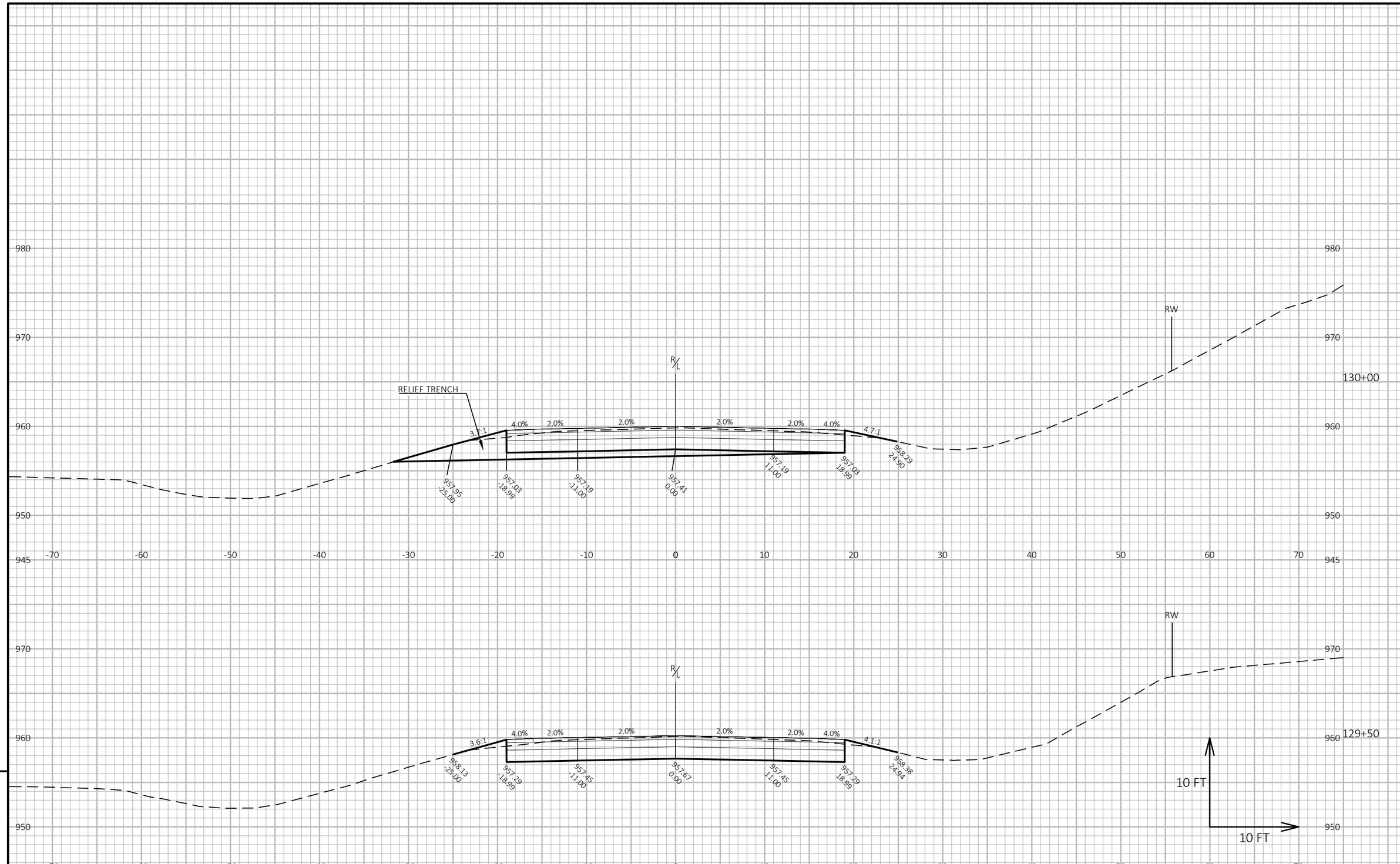

PROJECT NO: 2717-03-71	HWY: SILVERNAIL FRONTAGE ROAD	COUNTY: WAUKESHA	CROSS SECTIONS: CROSS SECTIONS-SILVERNAIL	SHEET 161	E

FILE NAME : N:\PDS\C3D\27170301\DSGN\CRDR\XS\090201_XS.DWG
LAYOUT NAME - 090222_XS
PLOT DATE : 7/28/2025 3:53 PM
PLOT BY : MANYEN, WAYNE
PLOT NAME :
PLOT SCALE : 1 IN:10 FT HORZ. / 1 IN:10 FT VERT.
WISDOT/CADDS SHEET 49

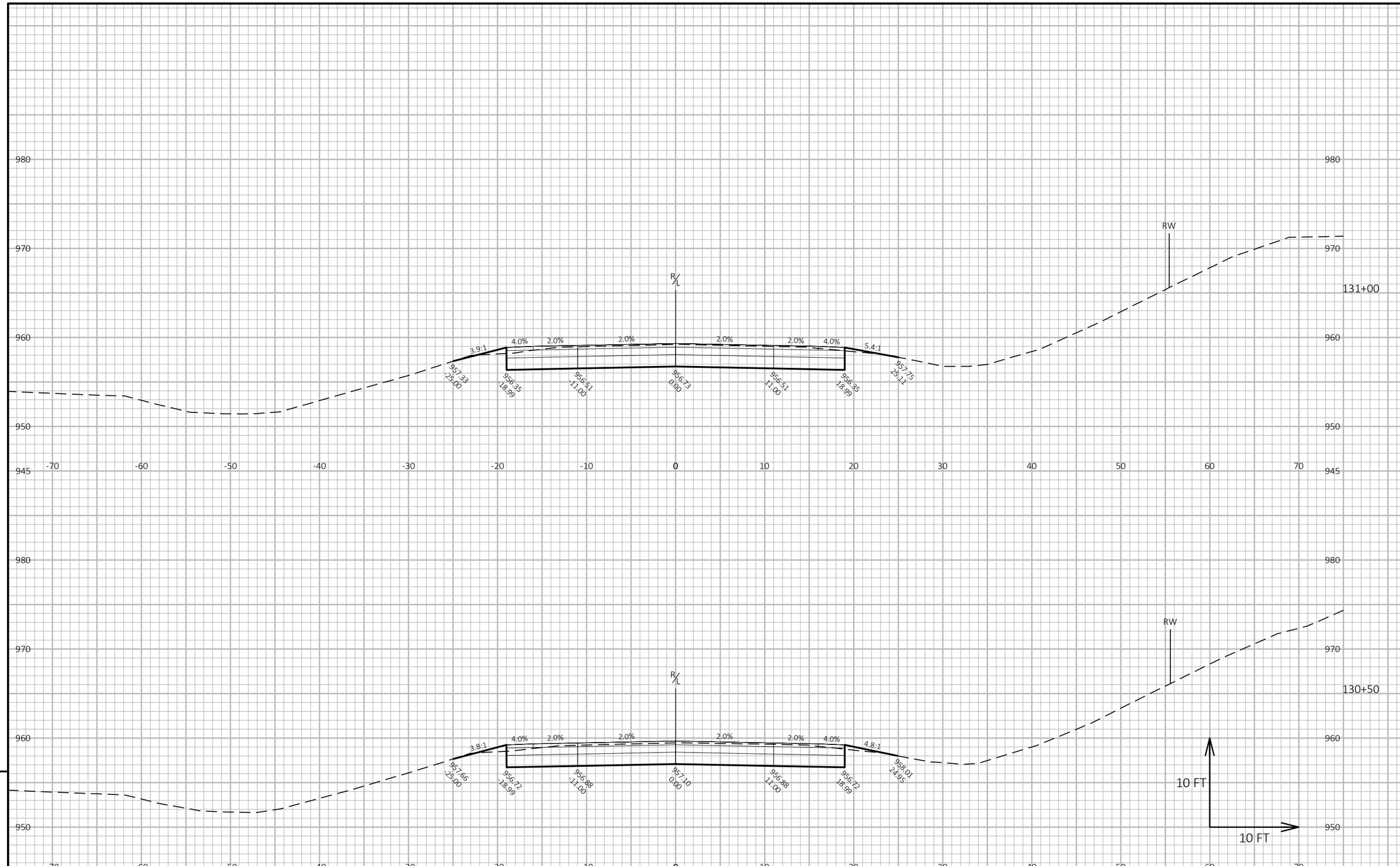

PROJECT NO: 2717-03-71	HWY: SILVERNAIL FRONTAGE ROAD	COUNTY: WAUKESHA	CROSS SECTIONS: CROSS SECTIONS-SILVERNAIL	SHEET 162	E

FILE NAME : N:\PDS\C3D\27170301\DSGN\CRDR\XS\090201_XS.DWG
LAYOUT NAME - 090223_XS
PLOT DATE : 7/28/2025 3:53 PM
PLOT BY : MANYEN, WAYNE
PLOT NAME :
PLOT SCALE : 1 IN:10 FT HORZ. / 1 IN:10 FT VERT.
WISDOT/CADDS SHEET 49

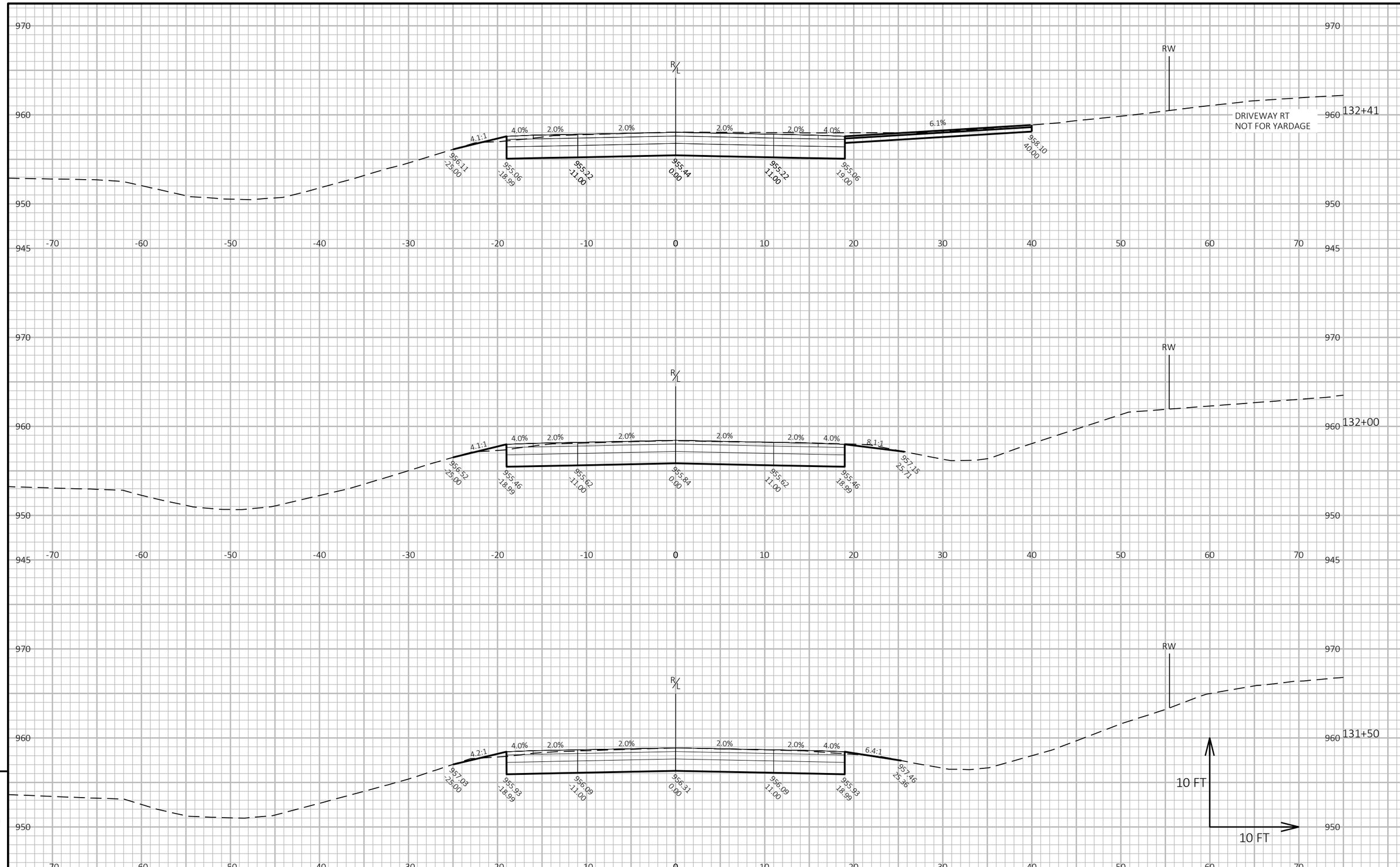

9

9

PROJECT NO: 2717-03-71	HWY: SILVERNAIL FRONTAGE ROAD	COUNTY: WAUKESHA	CROSS SECTIONS: CROSS SECTIONS-SILVERNAIL	SHEET 163	E

FILE NAME : N:\PDS\C3D\27170301\DSGN\CRDR\XS\090201_XS.DWG
LAYOUT NAME - 090224_XS

PLOT DATE : 7/28/2025 3:53 PM PLOT BY : MANYEN, WAYNE PLOT NAME : **PLOT SCALE :** 1 IN:10 FT HORZ. / 1 IN:10 FT VERT.

WISDOT/CADDS SHEET 49

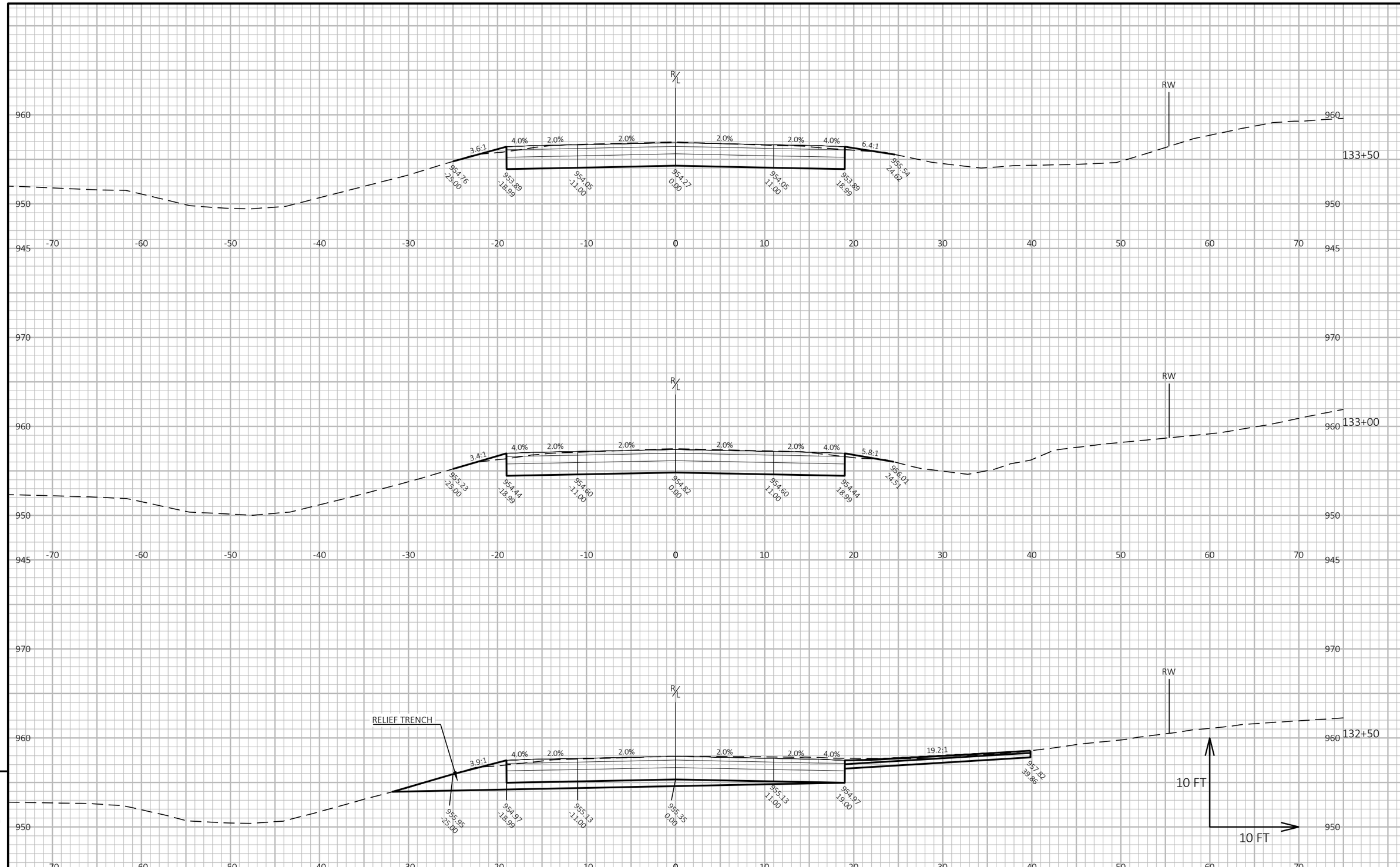

9

9

PROJECT NO: 2717-03-71	HWY: SILVERNAIL FRONTAGE ROAD	COUNTY: WAUKESHA	CROSS SECTIONS: CROSS SECTIONS-SILVERNAIL	SHEET 164	E

FILE NAME : N:\PDS\C3D\27170301\DSGN\CRDR\XS\090201_XS.DWG
LAYOUT NAME - 090225_XS

PLOT DATE : 7/28/2025 3:54 PM PLOT BY : MANYEN, WAYNE PLOT NAME : **PLOT SCALE :** 1 IN:10 FT HORZ. / 1 IN:10 FT VERT.

WISDOT/CADDS SHEET 49

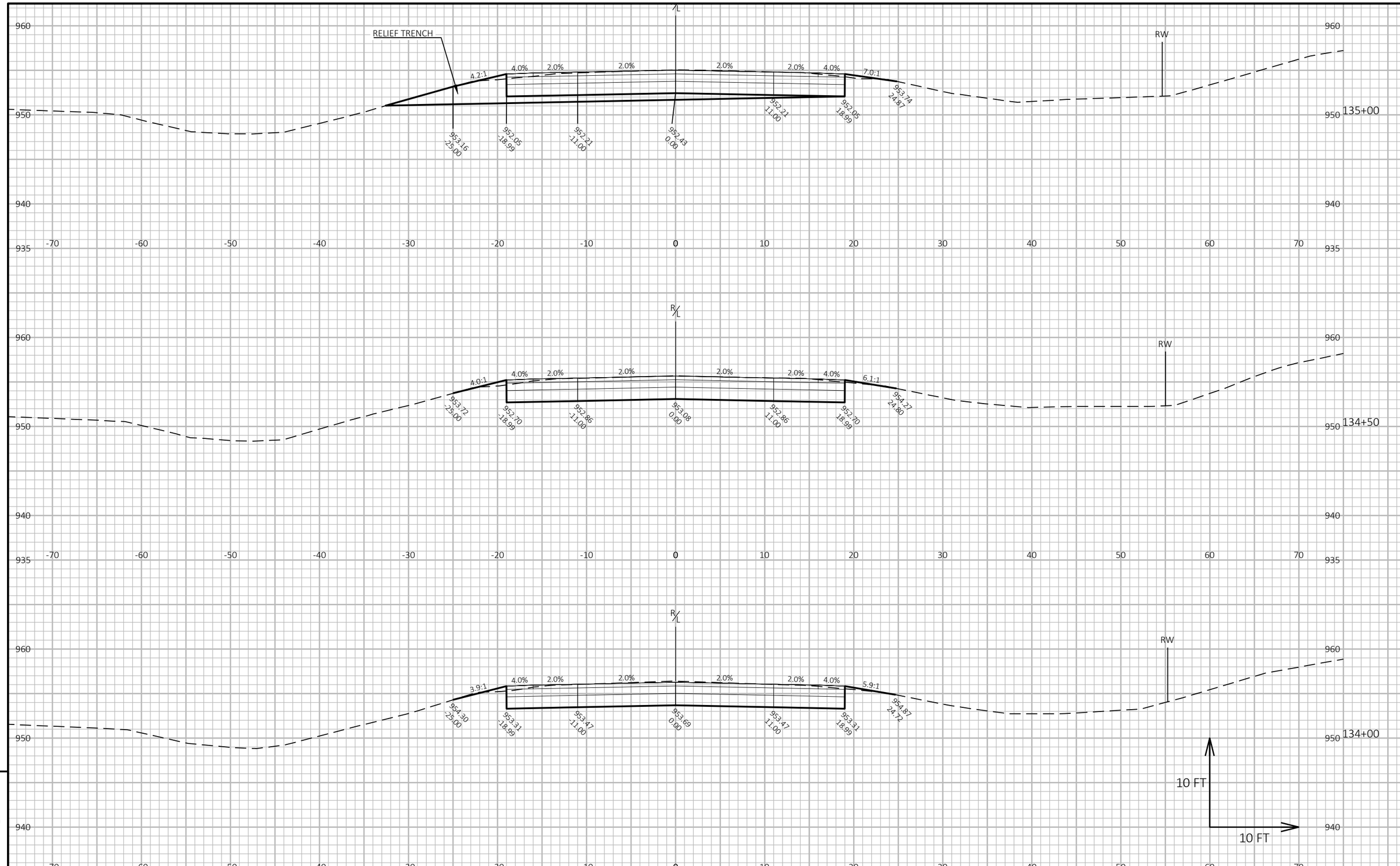

9

9

PROJECT NO: 2717-03-71	HWY: SILVERNAIL FRONTAGE ROAD	COUNTY: WAUKESHA	CROSS SECTIONS: CROSS SECTIONS-SILVERNAIL	SHEET 165	E

FILE NAME : N:\PDS\C3D\27170301\DSGN\CRDR\XS\090201_XS.DWG
LAYOUT NAME - 090226_XS
PLOT DATE : 7/28/2025 3:54 PM
PLOT BY : MANYEN, WAYNE
PLOT NAME :
PLOT SCALE : 1 IN:10 FT HORZ. / 1 IN:10 FT VERT.
WISDOT/CADDS SHEET 49

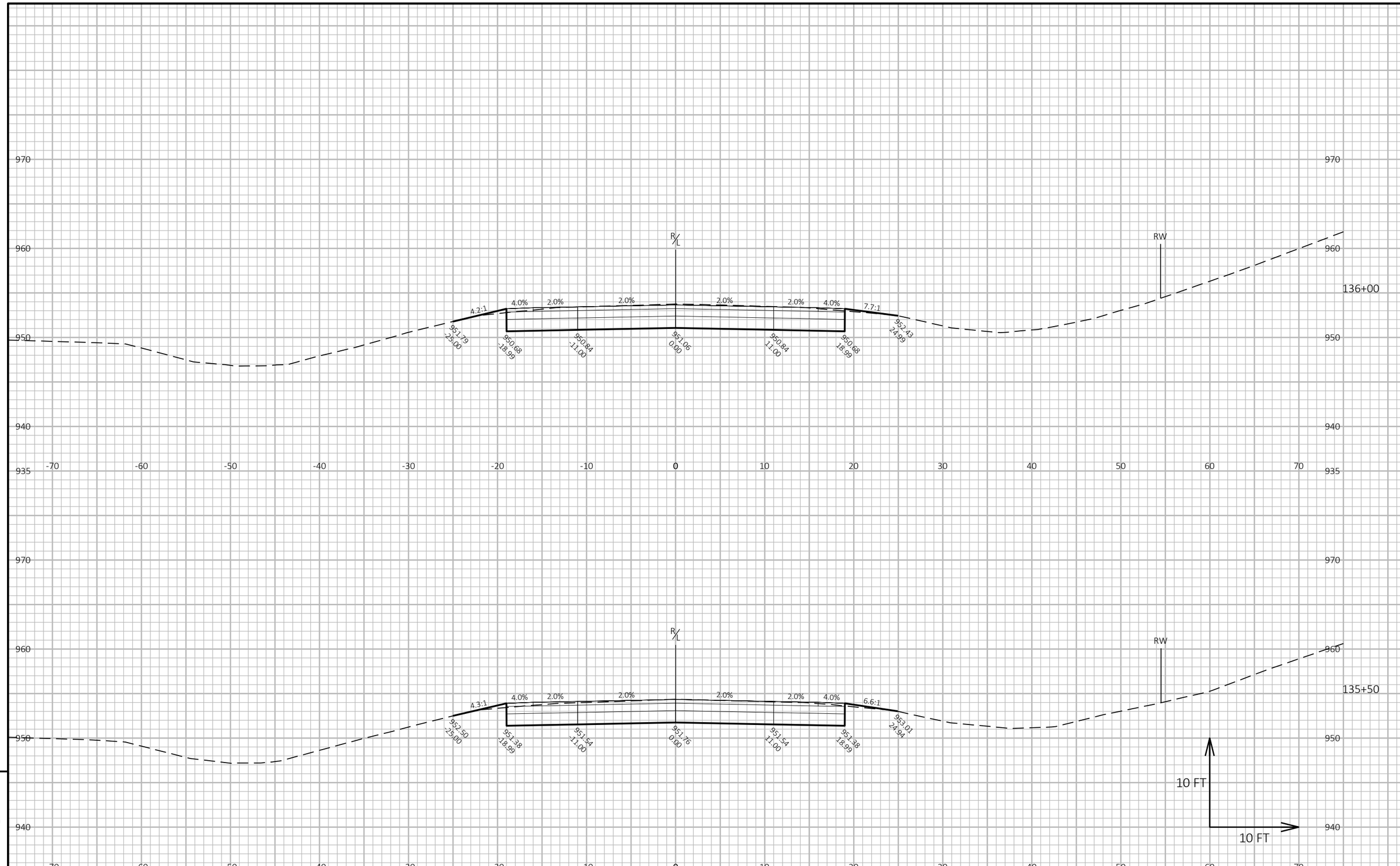

PROJECT NO: 2717-03-71	HWY: SILVERNAIL FRONTAGE ROAD	COUNTY: WAUKESHA	CROSS SECTIONS: CROSS SECTIONS-SILVERNAIL	SHEET 166	E

FILE NAME : N:\PDS\C3D\27170301\DSGN\CRDR\XS\090201_XS.DWG
LAYOUT NAME - 090227_XS
PLOT DATE : 7/28/2025 3:54 PM
PLOT BY : MANYEN, WAYNE
PLOT NAME :
PLOT SCALE : 1 IN:10 FT HORZ. / 1 IN:10 FT VERT.
WISDOT/CADDS SHEET 49

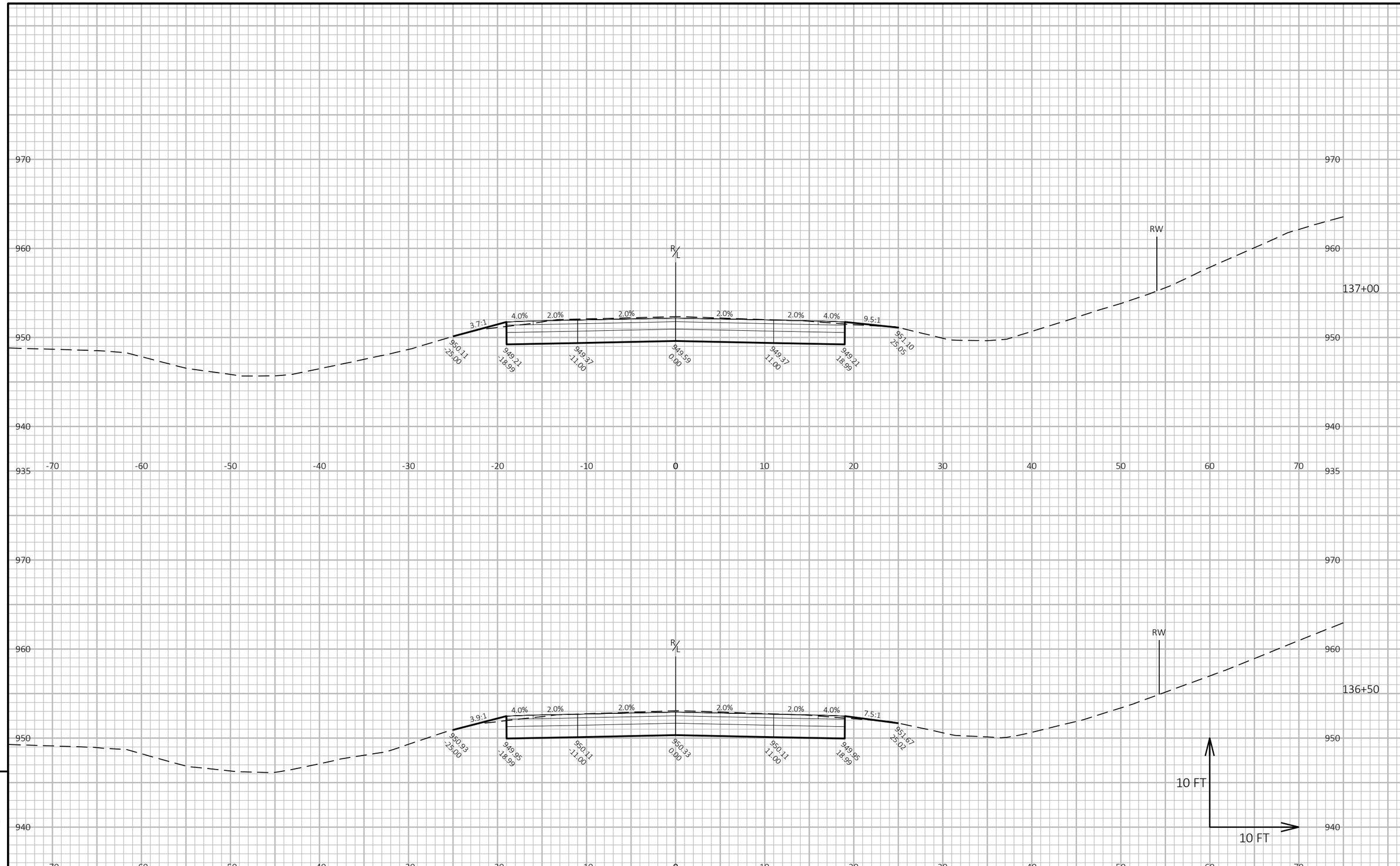

9

9

PROJECT NO: 2717-03-71	HWY: SILVERNAIL FRONTAGE ROAD	COUNTY: WAUKESHA	CROSS SECTIONS: CROSS SECTIONS-SILVERNAIL	SHEET 167	E

FILE NAME : N:\PDS\C3D\27170301\DSGN\CRDR\XS\090201_XS.DWG
LAYOUT NAME - 090228_XS

PLOT DATE : 7/28/2025 3:55 PM PLOT BY : MANYEN, WAYNE PLOT NAME : **PLOT SCALE :** 1 IN:10 FT HORZ. / 1 IN:10 FT VERT.

WISDOT/CADDS SHEET 49

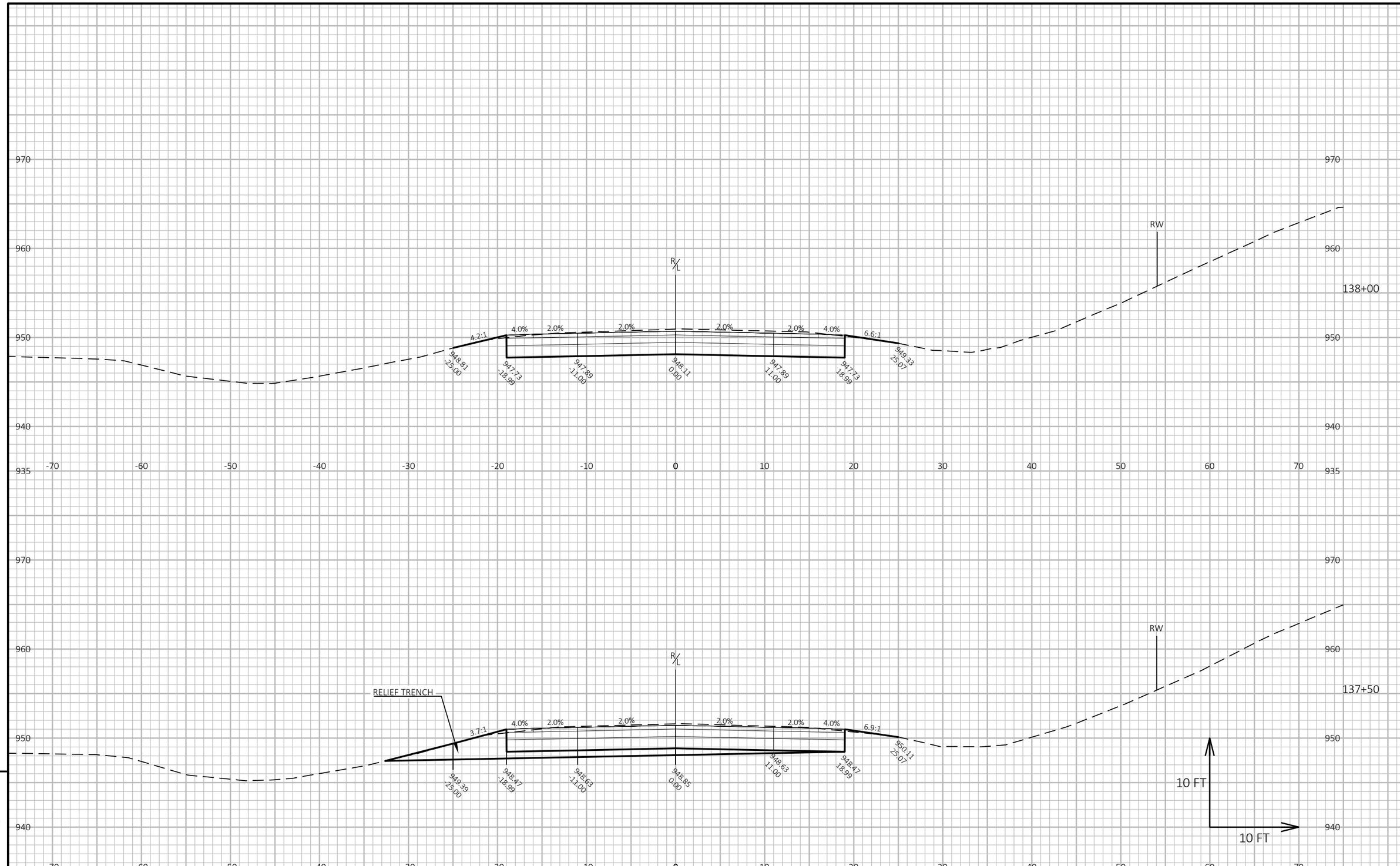

9

9

PROJECT NO: 2717-03-71	HWY: SILVERNAIL FRONTAGE ROAD	COUNTY: WAUKESHA	CROSS SECTIONS: CROSS SECTIONS-SILVERNAIL	SHEET 168	E

FILE NAME : N:\PDS\C3D\27170301\DSGN\CRDR\XS\090201_XS.DWG
LAYOUT NAME - 090229_XS

PLOT DATE : 7/28/2025 3:55 PM PLOT BY : MANYEN, WAYNE PLOT NAME : **PLOT SCALE :** 1 IN:10 FT HORZ. / 1 IN:10 FT VERT.

WISDOT/CADDS SHEET 49

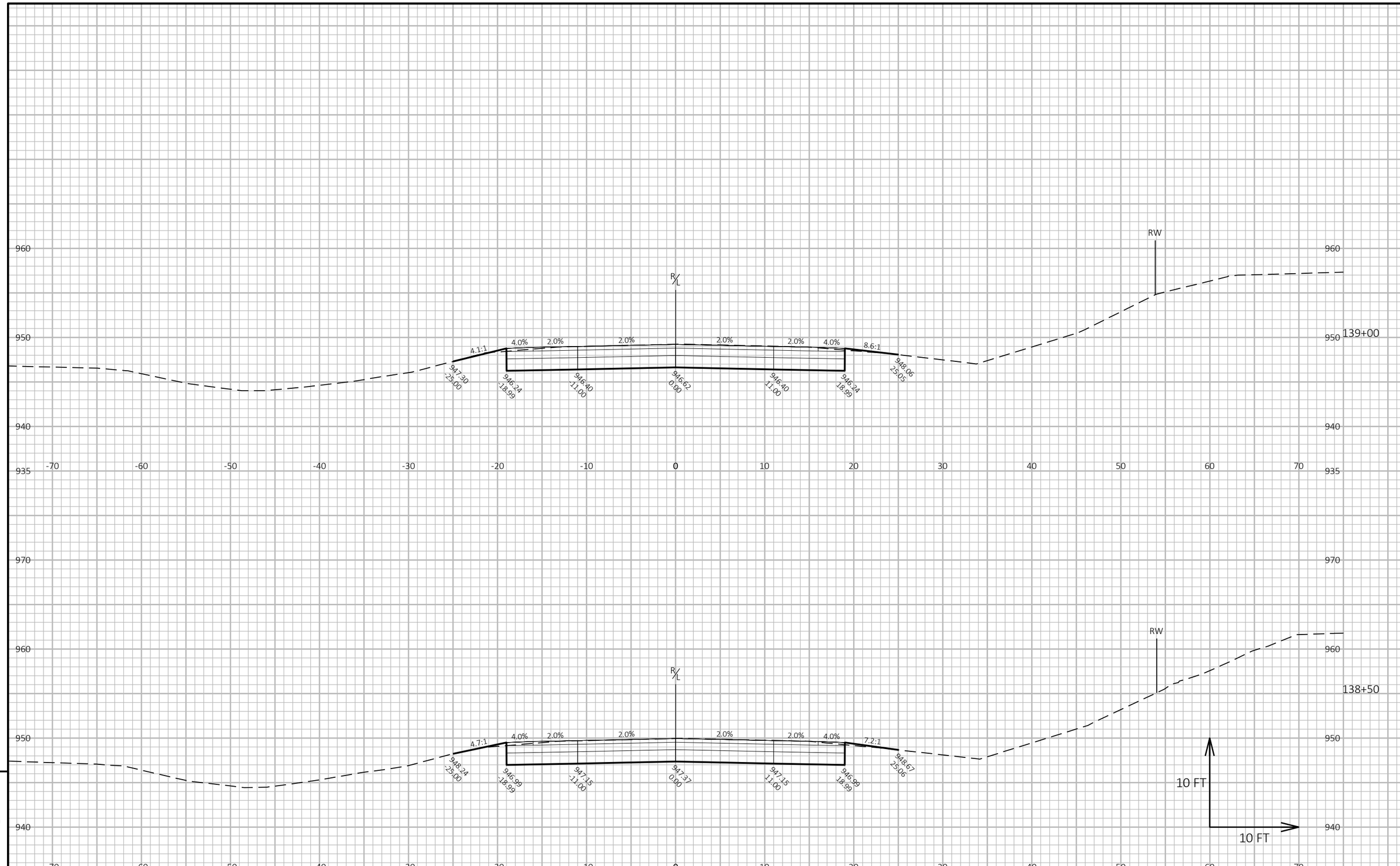

PROJECT NO: 2717-03-71	HWY: SILVERNAIL FRONTAGE ROAD	COUNTY: WAUKESHA	CROSS SECTIONS: CROSS SECTIONS-SILVERNAIL	SHEET 169	E

FILE NAME : N:\PDS\C3D\27170301\DSGN\CRDR\XS\090201_XS.DWG
LAYOUT NAME - 090230_XS
PLOT DATE : 7/28/2025 3:55 PM
PLOT BY : MANYEN, WAYNE
PLOT NAME :
PLOT SCALE : 1 IN:10 FT HORZ. / 1 IN:10 FT VERT.
WISDOT/CADDS SHEET 49

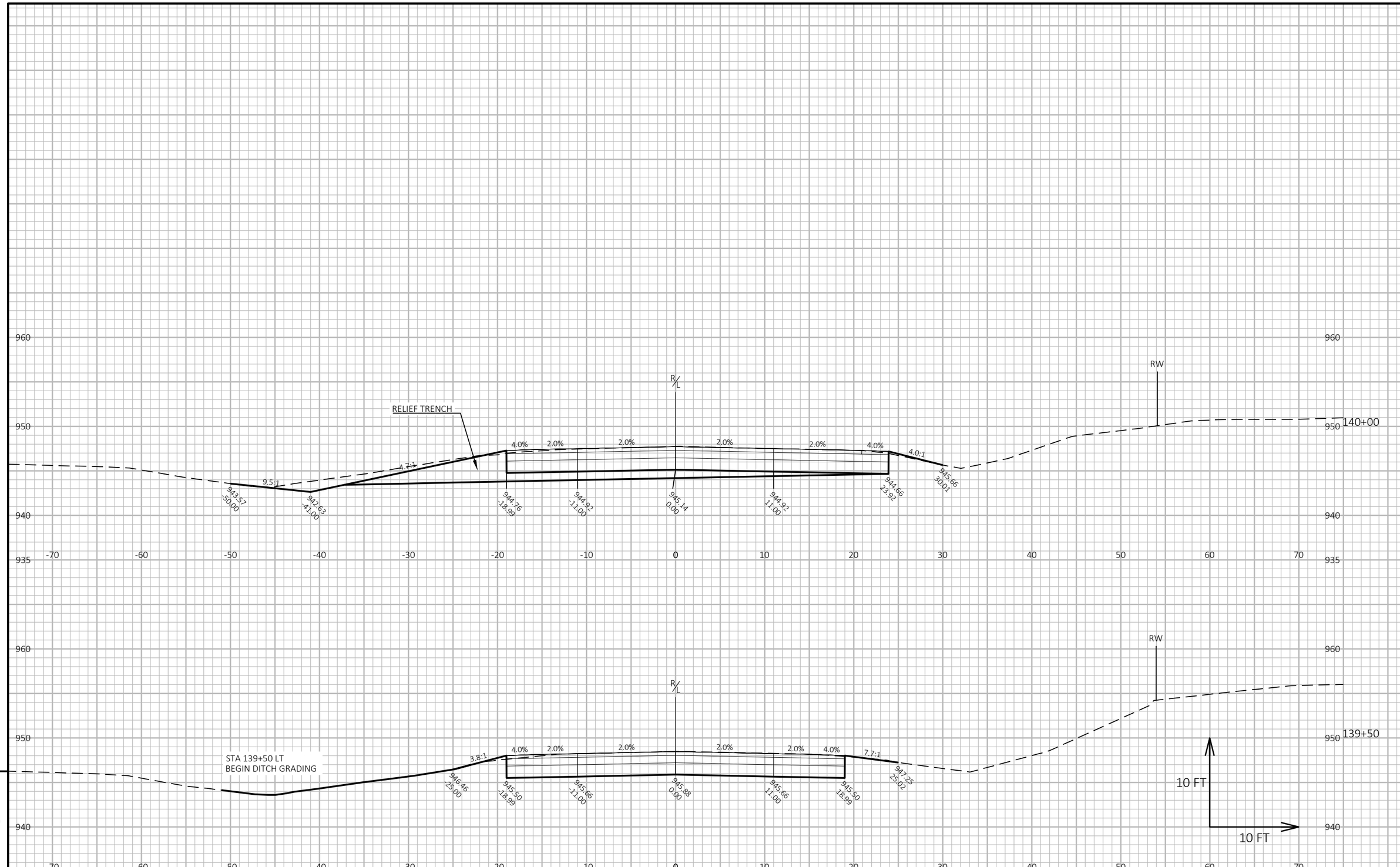

9

9

PROJECT NO: 2717-03-71	HWY: SILVERNAIL FRONTAGE ROAD	COUNTY: WAUKESHA	CROSS SECTIONS: CROSS SECTIONS-SILVERNAIL	SHEET 170	E

FILE NAME : N:\PDS\C3D\27170301\DSGN\CRDR\XS\090201_XS.DWG
LAYOUT NAME - 090231_XS

PLOT DATE : 7/28/2025 3:56 PM PLOT BY : MANYEN, WAYNE PLOT NAME : **PLOT SCALE :** 1 IN:10 FT HORZ. / 1 IN:10 FT VERT.

WISDOT/CADDS SHEET 49

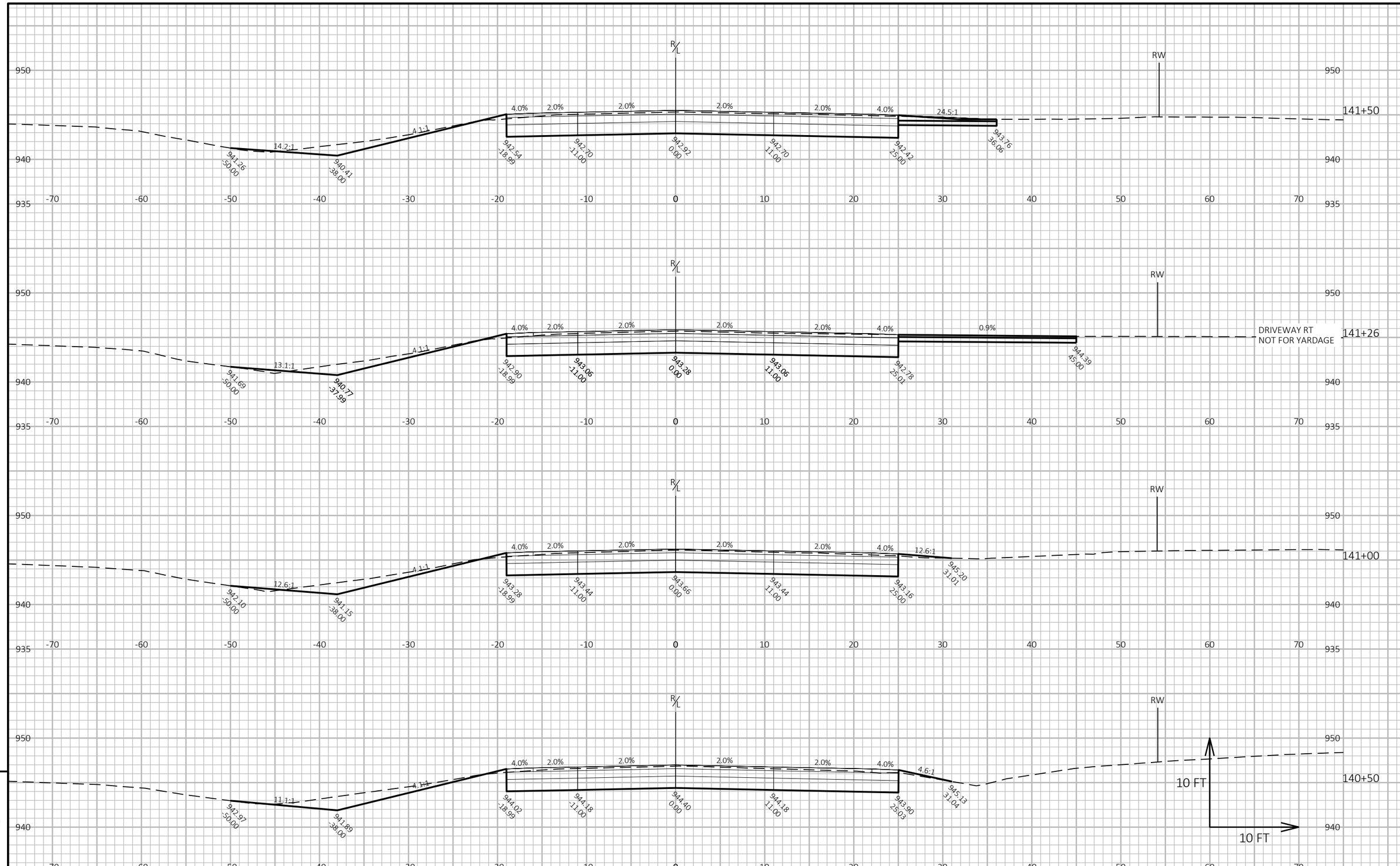

9

9

PROJECT NO: 2717-03-71	HWY: SILVERNAIL FRONTAGE ROAD	COUNTY: WAUKESHA	CROSS SECTIONS: CROSS SECTIONS-SILVERNAIL	SHEET 171	E

FILE NAME : N:\PDS\C3D\27170301\DSGN\CRDR\XS\090201_XS.DWG
LAYOUT NAME - 090232_XS
PLOT DATE : 7/28/2025 3:56 PM
PLOT BY : MANYEN, WAYNE
PLOT NAME :
PLOT SCALE : 1 IN:10 FT HORZ. / 1 IN:10 FT VERT.
WISDOT/CADDS SHEET 49

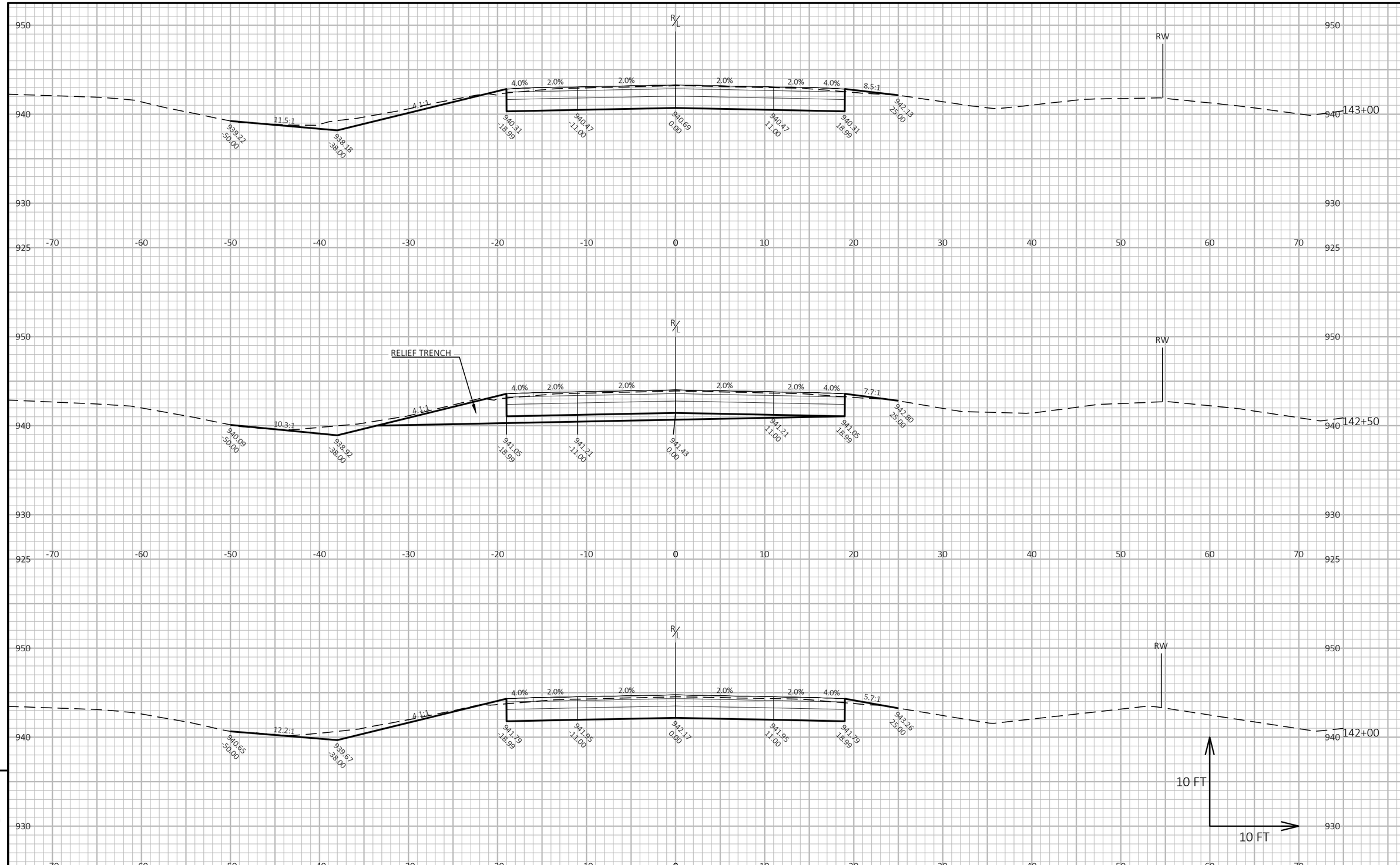

9

9

PROJECT NO: 2717-03-71	HWY: SILVERNAIL FRONTAGE ROAD	COUNTY: WAUKESHA	CROSS SECTIONS: CROSS SECTIONS-SILVERNAIL	SHEET 172	E

FILE NAME : N:\PDS\C3D\27170301\DSGN\CRDR\XS\090201_XS.DWG
LAYOUT NAME - 090233_XS

PLOT DATE : 7/28/2025 3:56 PM PLOT BY : MANYEN, WAYNE PLOT NAME : **PLOT SCALE :** 1 IN:10 FT HORZ. / 1 IN:10 FT VERT.

WISDOT/CADDS SHEET 49

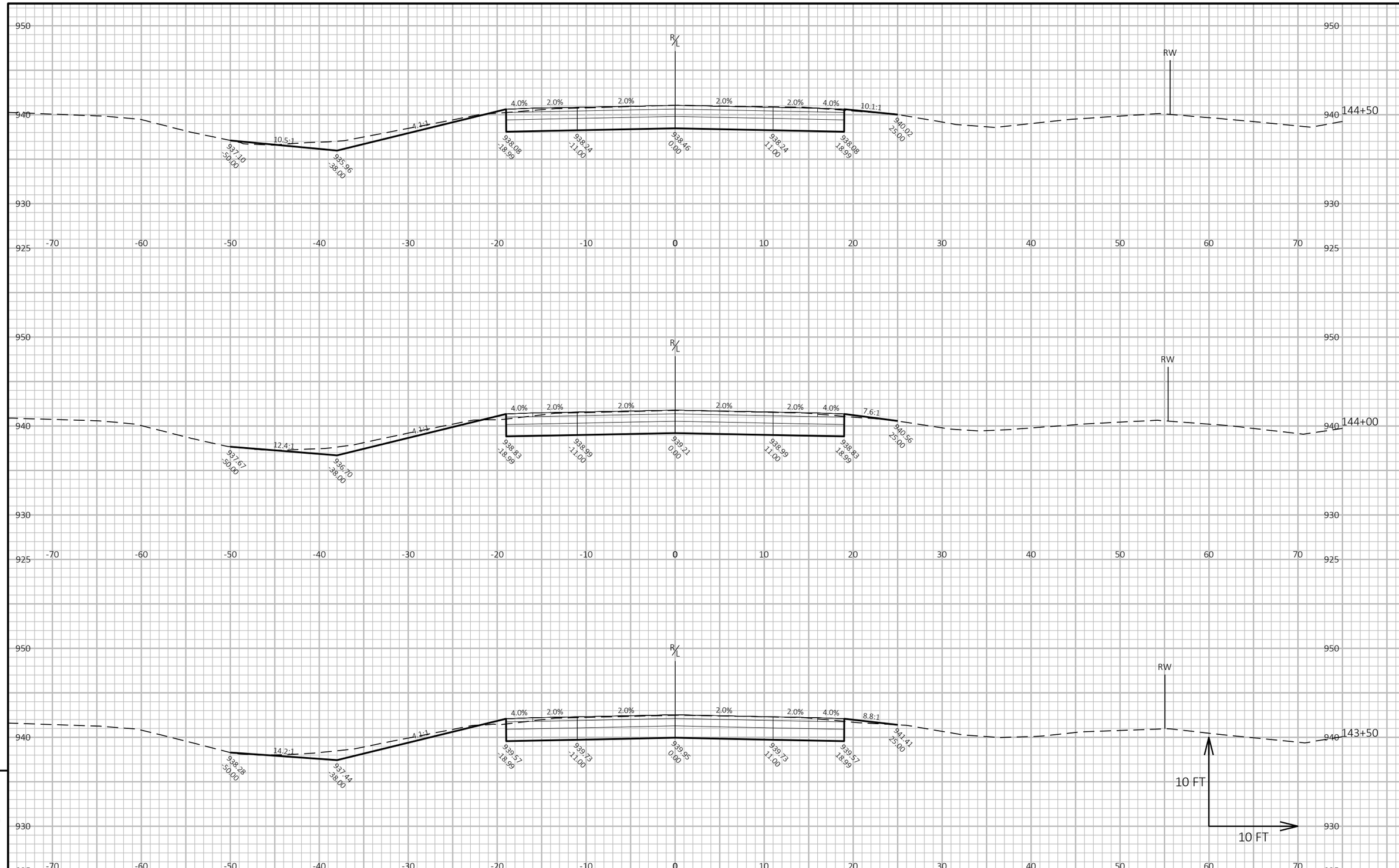

9

9

PROJECT NO: 2717-03-71	HWY: SILVERNAIL FRONTAGE ROAD	COUNTY: WAUKESHA	CROSS SECTIONS: CROSS SECTIONS-SILVERNAIL	SHEET 173	E

FILE NAME : N:\PDS\C3D\27170301\DSGN\CRDR\XS\090201_XS.DWG
LAYOUT NAME - 090234_XS

PLOT DATE : 7/28/2025 3:57 PM PLOT BY : MANYEN, WAYNE PLOT NAME : **PLOT SCALE :** 1 IN:10 FT HORZ. / 1 IN:10 FT VERT.

WISDOT/CADDS SHEET 49

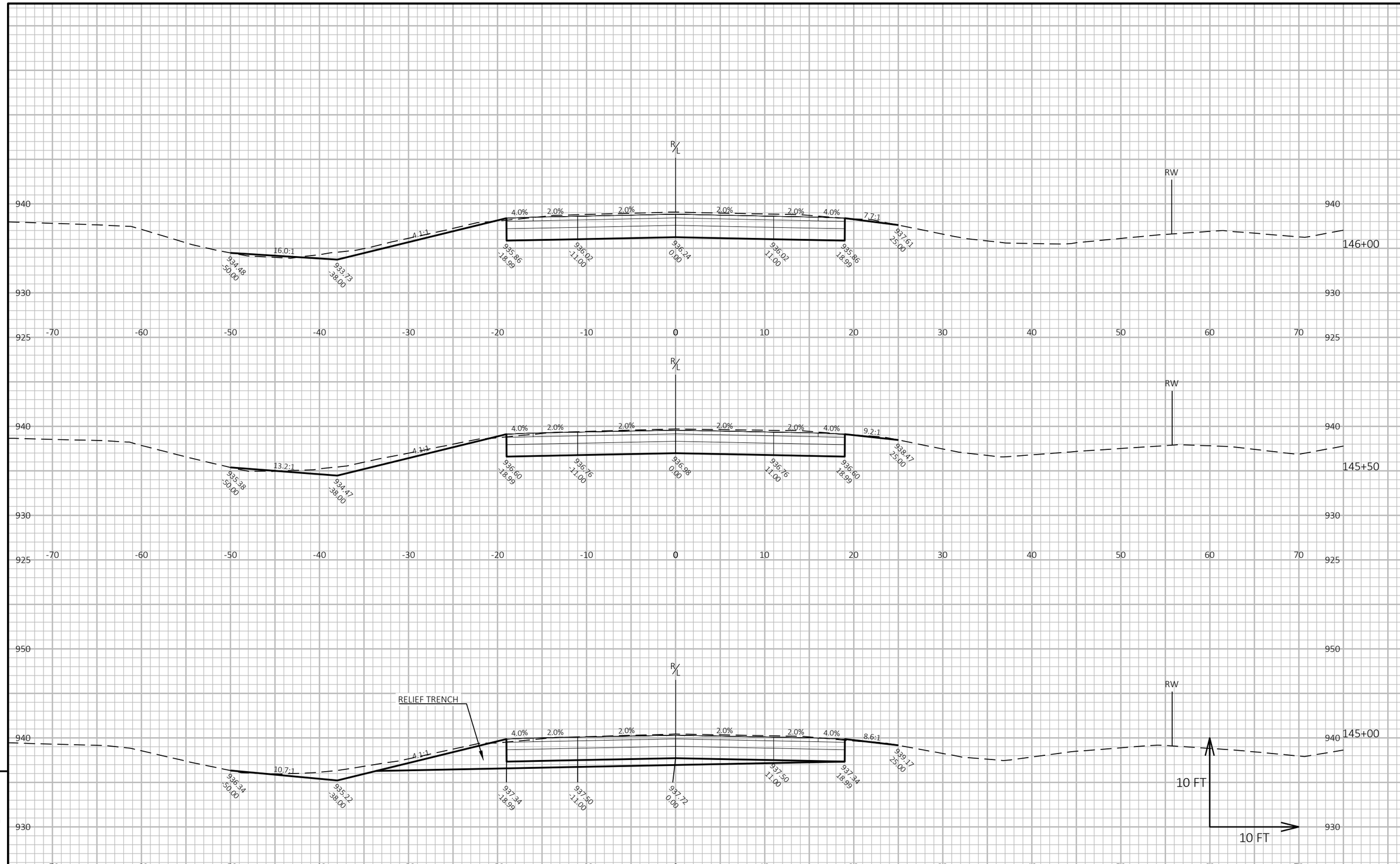

9

9

PROJECT NO: 2717-03-71	HWY: SILVERNAIL FRONTAGE ROAD	COUNTY: WAUKESHA	CROSS SECTIONS: CROSS SECTIONS-SILVERNAIL	SHEET 174	E

FILE NAME : N:\PDS\C3D\27170301\DSGN\CRDR\XS\090201_XS.DWG
LAYOUT NAME - 090235_XS

PLOT DATE : 7/28/2025 3:57 PM PLOT BY : MANYEN, WAYNE PLOT NAME : **PLOT SCALE :** 1 IN:10 FT HORZ. / 1 IN:10 FT VERT.

WISDOT/CADDS SHEET 49

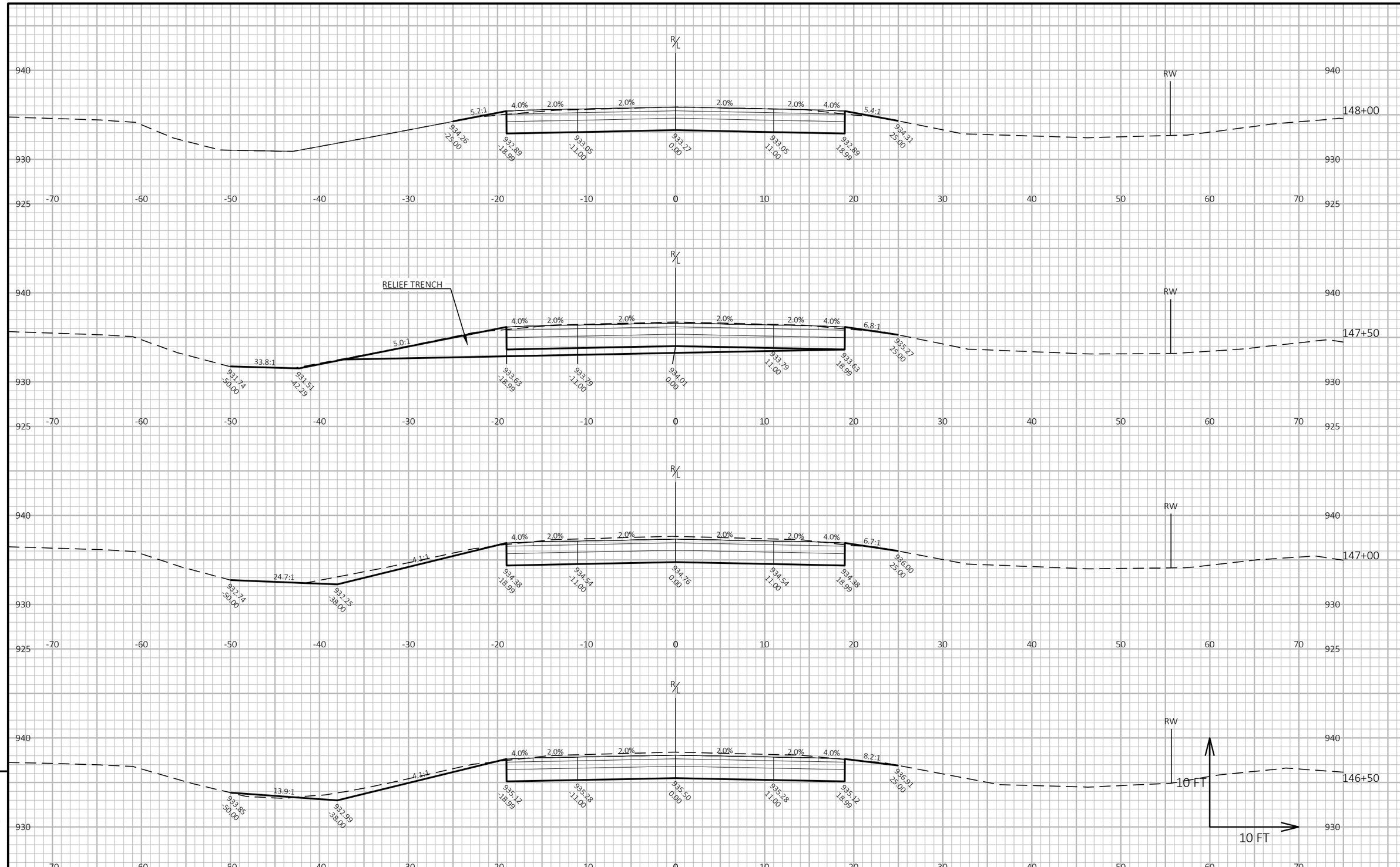

9

9

PROJECT NO: 2717-03-71	HWY: SILVERNAIL FRONTAGE ROAD	COUNTY: WAUKESHA	CROSS SECTIONS: CROSS SECTIONS-SILVERNAIL	SHEET 175	E

FILE NAME : N:\PDS\C3D\27170301\DSGN\CRDR\XS\090201_XS.DWG
LAYOUT NAME - 090236_XS

PLOT DATE : 7/28/2025 3:58 PM

PLOT BY : MANYEN, WAYNE

PLOT NAME :

PLOT SCALE : 1 IN:10 FT HORZ. / 1 IN:10 FT VERT.

WISDOT/CADDS SHEET 49

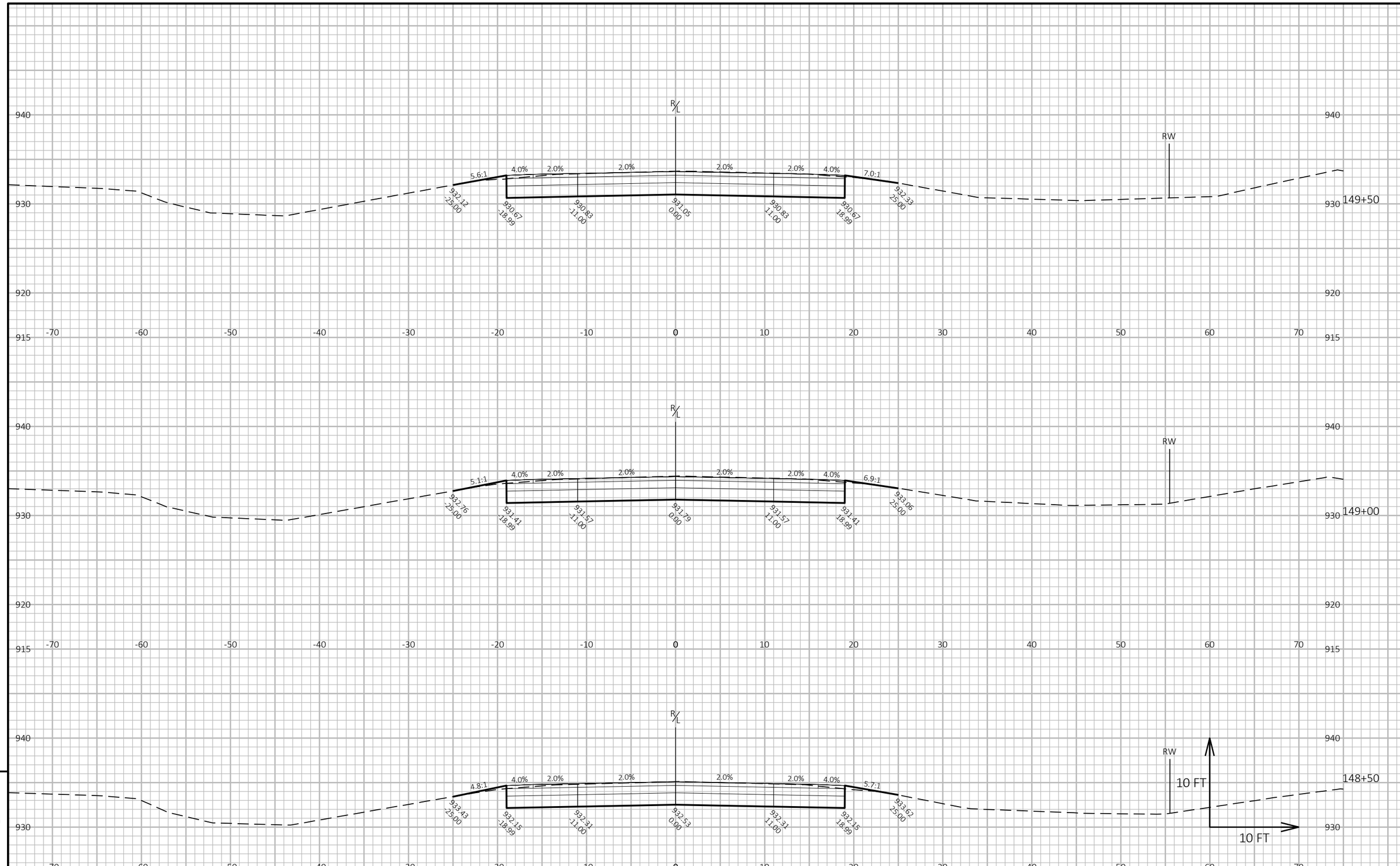

9

9

PROJECT NO: 2717-03-71	HWY: SILVERNAIL FRONTAGE ROAD	COUNTY: WAUKESHA	CROSS SECTIONS: CROSS SECTIONS-SILVERNAIL	SHEET 176	E

FILE NAME : N:\PDS\C3D\27170301\DSGN\CRDR\XS\090201_XS.DWG
LAYOUT NAME - 090237_XS

PLOT DATE : 7/28/2025 3:58 PM PLOT BY : MANYEN, WAYNE PLOT NAME : **PLOT SCALE :** 1 IN:10 FT HORZ. / 1 IN:10 FT VERT.

WISDOT/CADDS SHEET 49

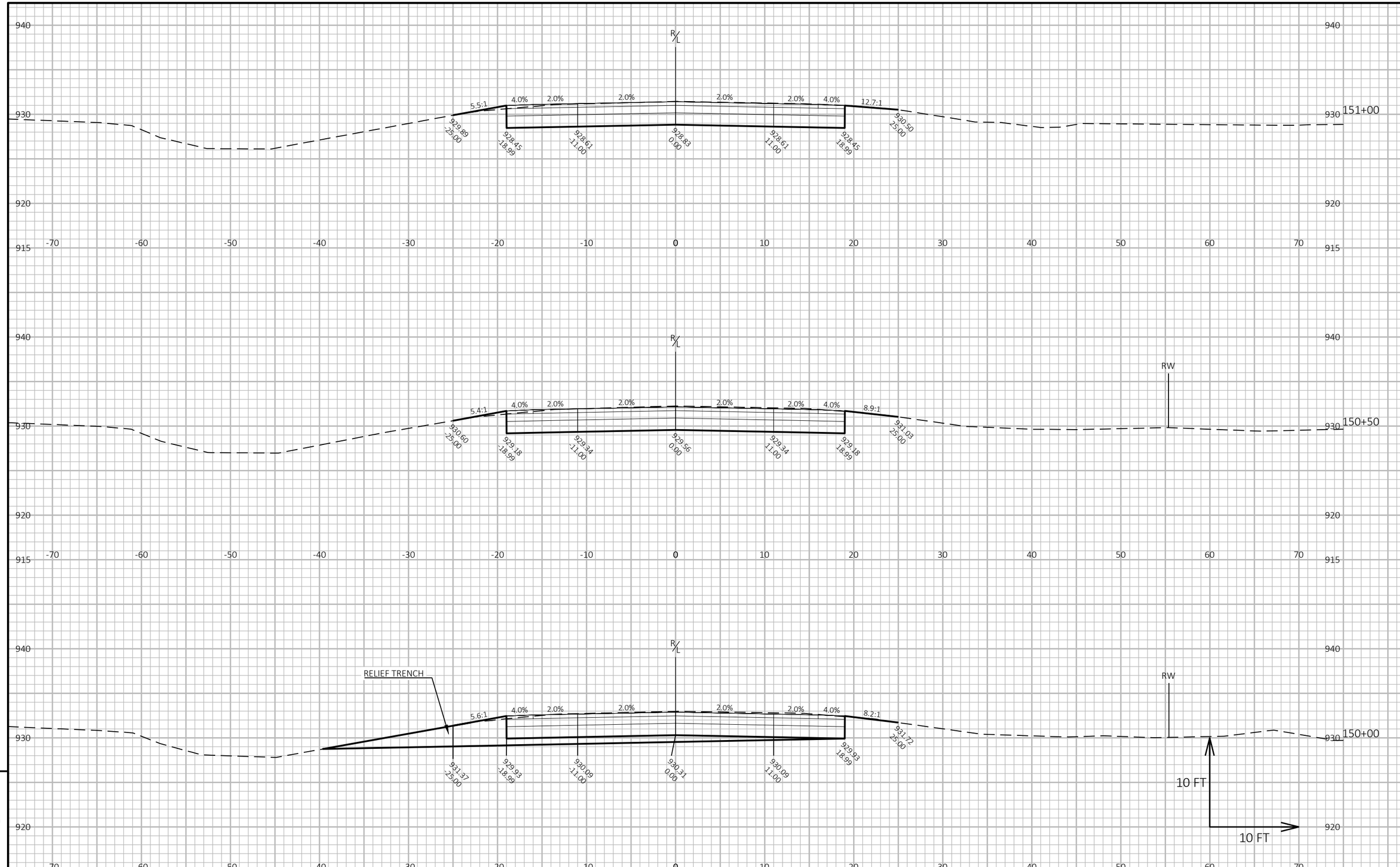

PROJECT NO: 2717-03-71	HWY: SILVERNAIL FRONTAGE ROAD	COUNTY: WAUKESHA	CROSS SECTIONS: CROSS SECTIONS-SILVERNAIL	SHEET 177	E

FILE NAME : N:\PDS\C3D\27170301\DSGN\CRDR\XS\090201_XS.DWG
LAYOUT NAME - 090238_XS
PLOT DATE : 7/28/2025 3:58 PM
PLOT BY : MANYEN, WAYNE
PLOT NAME :
PLOT SCALE : 1 IN:10 FT HORZ. / 1 IN:10 FT VERT.
WISDOT/CADDS SHEET 49

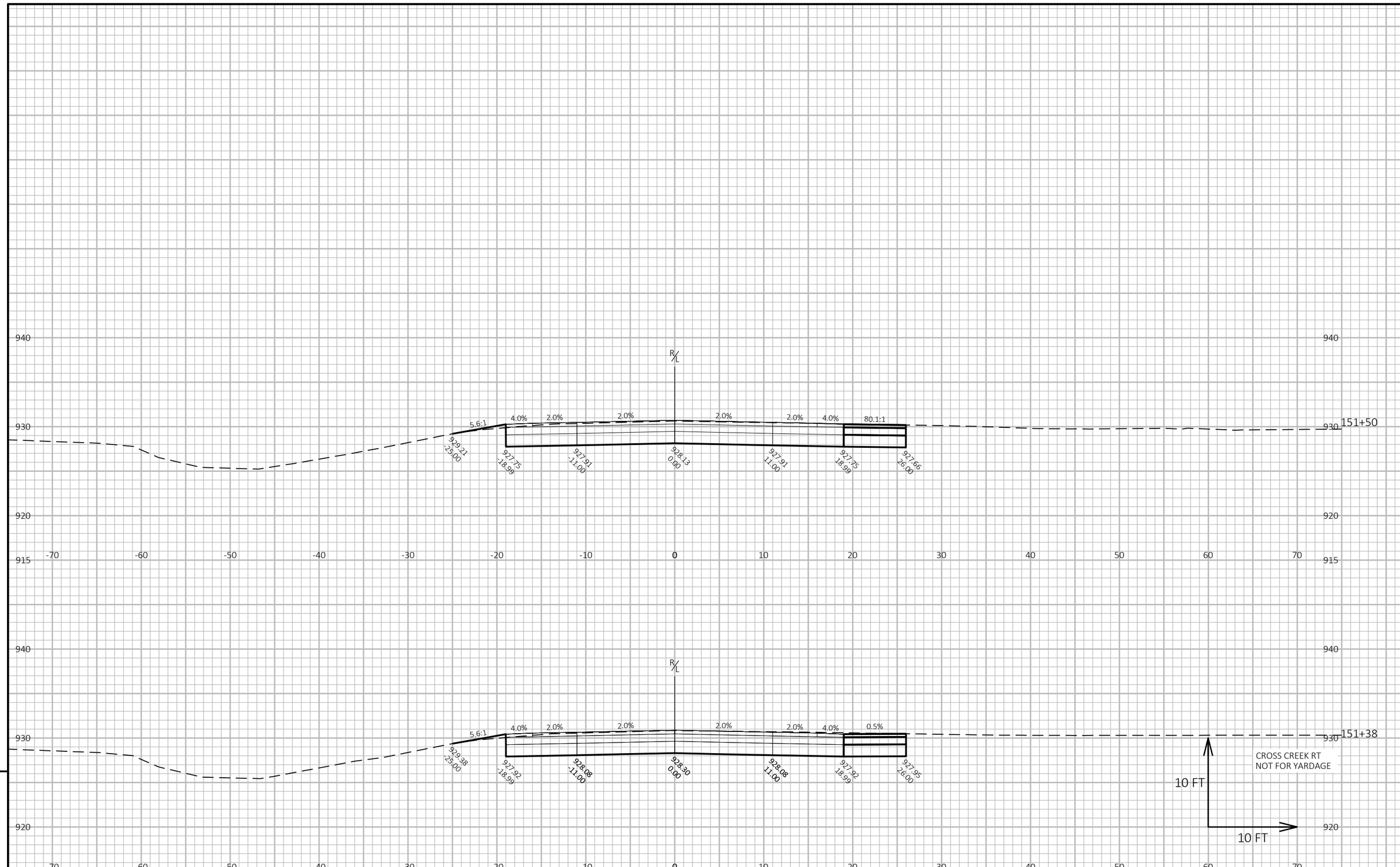

9

9

PROJECT NO: 2717-03-71	HWY: SILVERNAIL FRONTAGE ROAD	COUNTY: WAUKESHA	CROSS SECTIONS: CROSS SECTIONS-SILVERNAIL	SHEET 178	E

FILE NAME : N:\PDS\C3D\27170301\DSGN\CRDR\XS\090201_XS.DWG
LAYOUT NAME - 090239_XS

PLOT DATE : 7/28/2025 3:59 PM PLOT BY : MANYEN, WAYNE PLOT NAME : **PLOT SCALE :** 1 IN:10 FT HORZ. / 1 IN:10 FT VERT.

WISDOT/CADDS SHEET 49

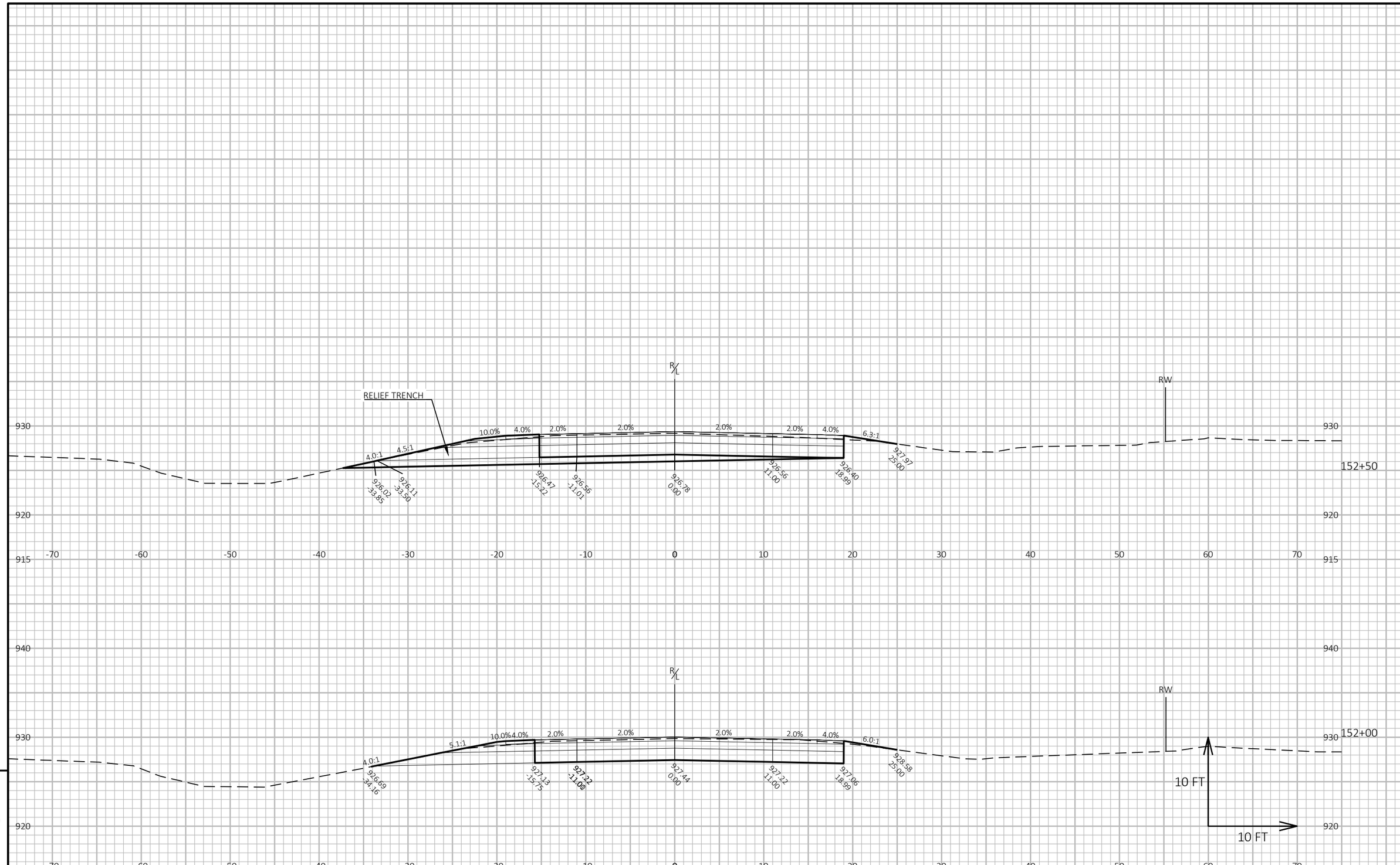

9

9

PROJECT NO: 2717-03-71	HWY: SILVERNAIL FRONTAGE ROAD	COUNTY: WAUKESHA	CROSS SECTIONS: CROSS SECTIONS-SILVERNAIL	SHEET 179	E

FILE NAME : N:\PDS\C3D\27170301\DSGN\CRDR\XS\090201_XS.DWG
LAYOUT NAME - 090240_XS

PLOT DATE : 7/28/2025 3:59 PM PLOT BY : MANYEN, WAYNE PLOT NAME : **PLOT SCALE :** 1 IN:10 FT HORZ. / 1 IN:10 FT VERT.

WISDOT/CADDS SHEET 49

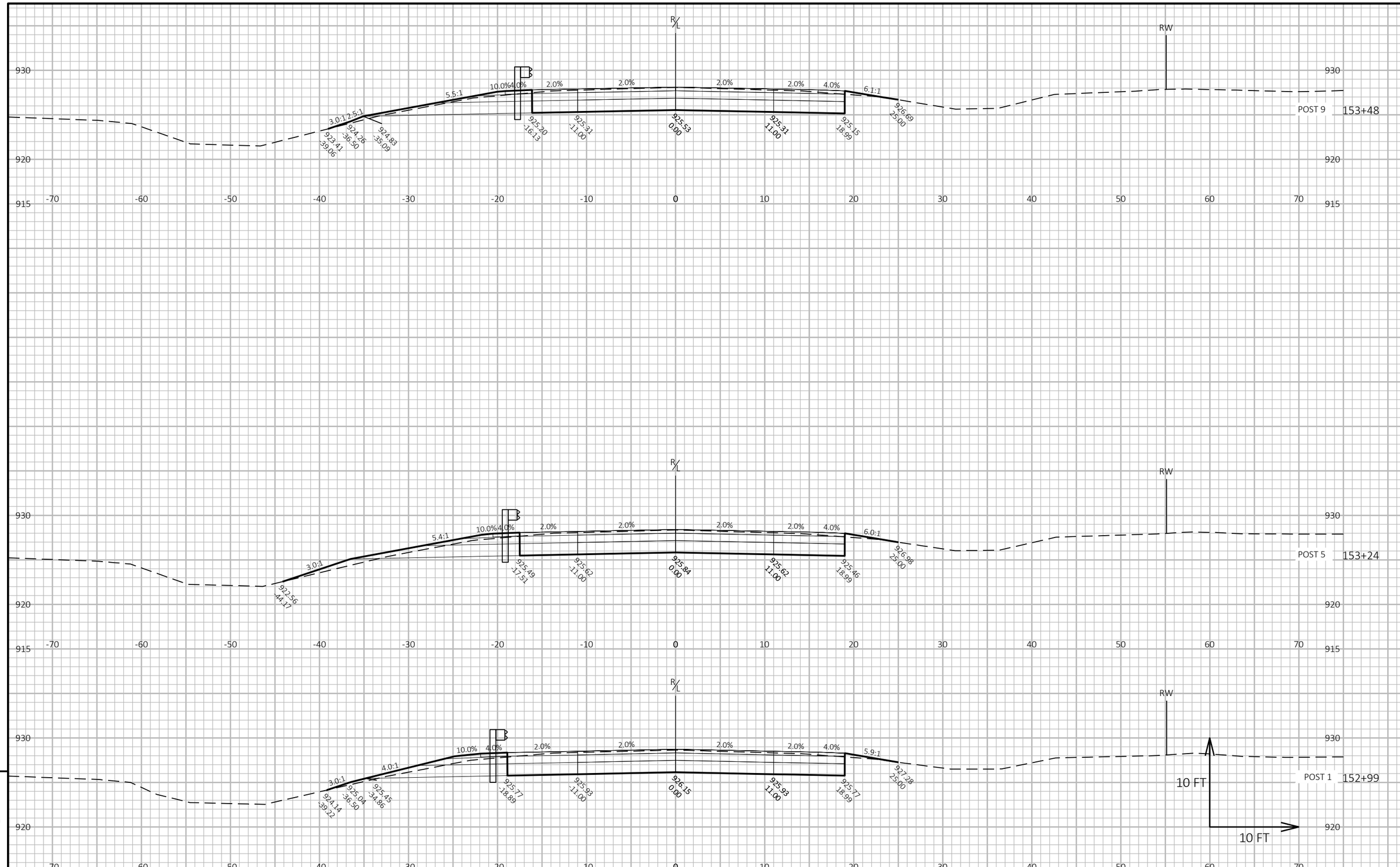

9

9

PROJECT NO: 2717-03-71	HWY: SILVERNAIL FRONTAGE ROAD	COUNTY: WAUKESHA	CROSS SECTIONS: CROSS SECTIONS-SILVERNAIL	SHEET 180	E

FILE NAME : N:\PDS\C3D\27170301\DSGN\CRDR\XS\090201_XS.DWG
LAYOUT NAME - 090241_XS
PLOT DATE : 11/14/2025 3:01 PM
PLOT BY : MANYEN, WAYNE
PLOT NAME :
PLOT SCALE : 1 IN:10 FT HORZ. / 1 IN:10 FT VERT.
WISDOT/CADDS SHEET 49

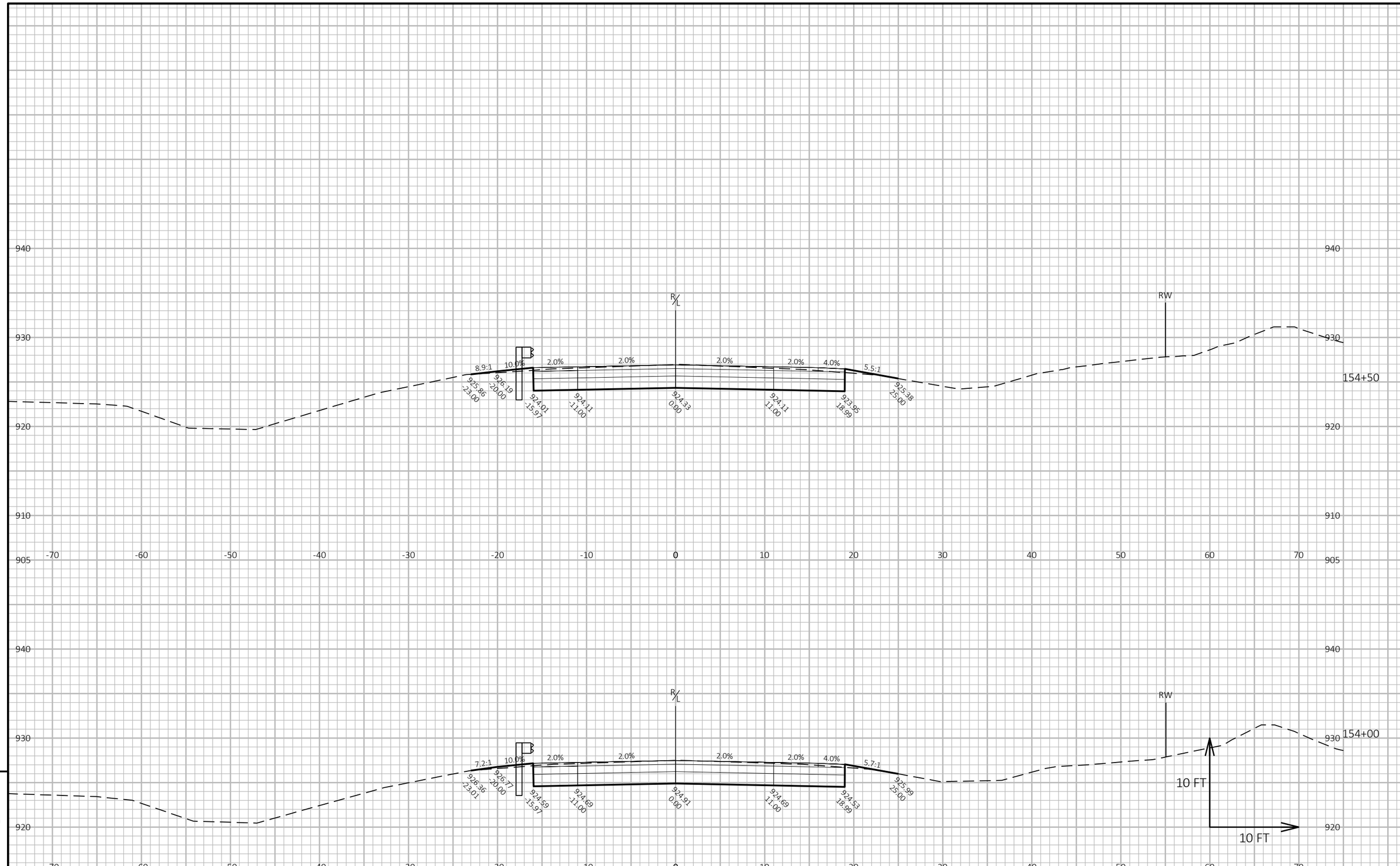

PROJECT NO: 2717-03-71	HWY: SILVERNAIL FRONTAGE ROAD	COUNTY: WAUKESHA	CROSS SECTIONS: CROSS SECTIONS-SILVERNAIL	SHEET 181	E

FILE NAME : N:\PDS\C3D\27170301\DSGN\CRDR\XS\090201_XS.DWG
LAYOUT NAME - 090242_XS
PLOT DATE : 7/28/2025 4:00 PM
PLOT BY : MANYEN, WAYNE
PLOT NAME :
PLOT SCALE : 1 IN:10 FT HORZ. / 1 IN:10 FT VERT.
WISDOT/CADDS SHEET 49

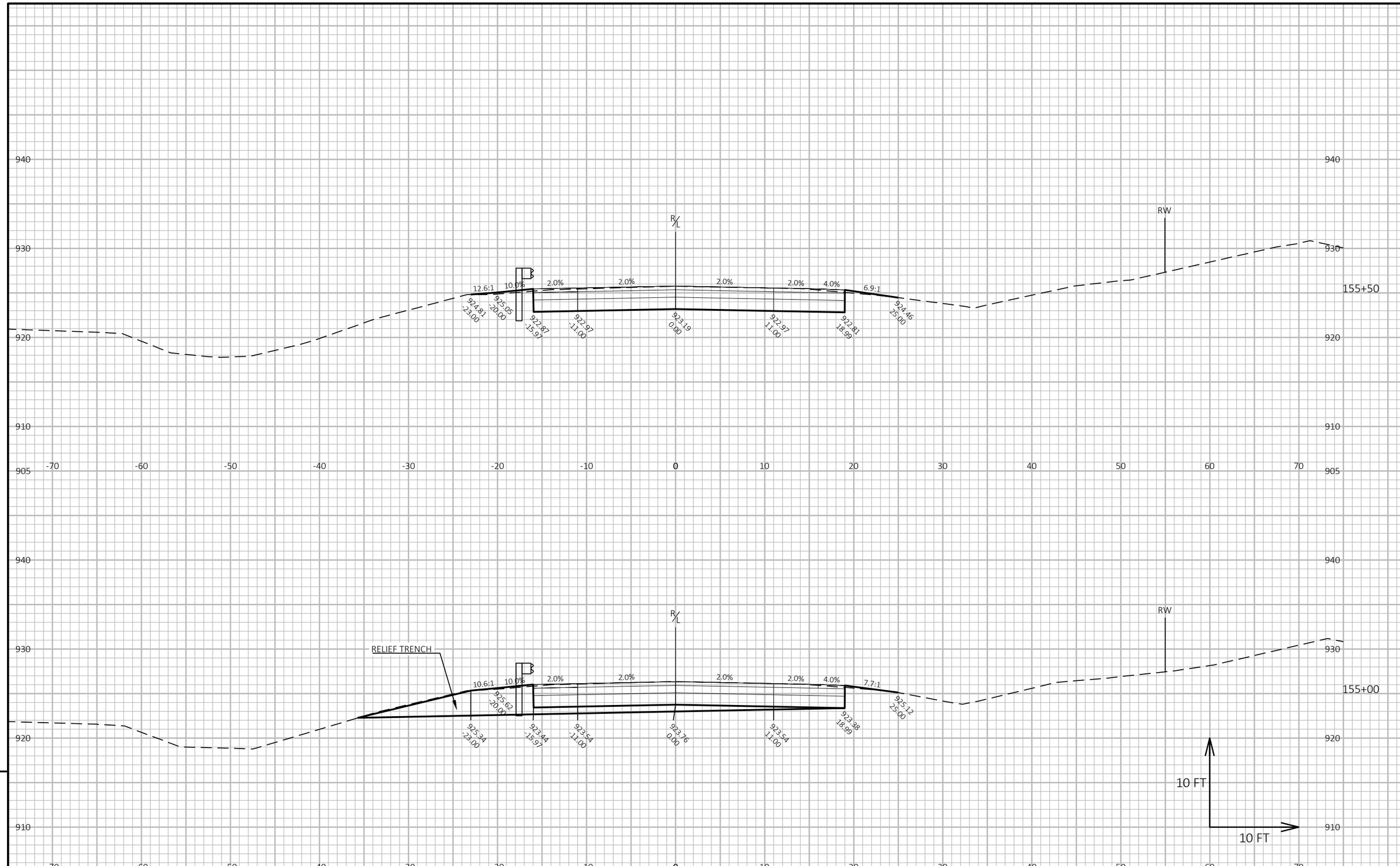

PROJECT NO: 2717-03-71	HWY: SILVERNAIL FRONTAGE ROAD	COUNTY: WAUKESHA	CROSS SECTIONS: CROSS SECTIONS-SILVERNAIL	SHEET 182	E

FILE NAME : N:\PDS\C3D\27170301\DSGN\CRDR\XS\090201_XS.DWG
LAYOUT NAME - 090243_XS
PLOT DATE : 7/28/2025 4:00 PM
PLOT BY : MANYEN, WAYNE
PLOT NAME :
PLOT SCALE : 1 IN:10 FT HORZ. / 1 IN:10 FT VERT.
WISDOT/CADDS SHEET 49

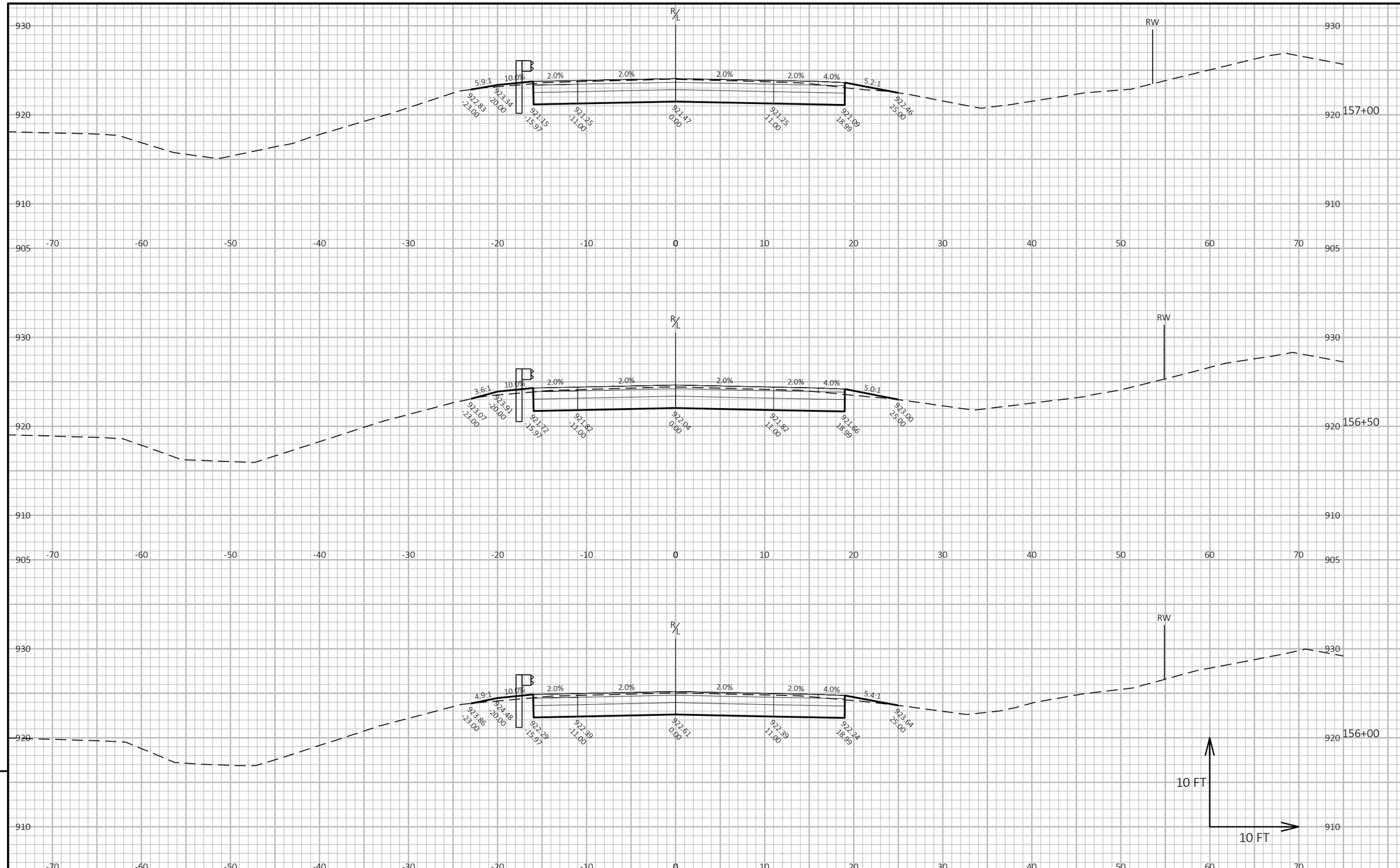

9

9

PROJECT NO: 2717-03-71	HWY: SILVERNAIL FRONTAGE ROAD	COUNTY: WAUKESHA	CROSS SECTIONS: CROSS SECTIONS-SILVERNAIL	SHEET 183	E

FILE NAME : N:\PDS\C3D\27170301\DSGN\CRDR\XS\090201_XS.DWG
LAYOUT NAME - 090244_XS

PLOT DATE : 7/28/2025 4:00 PM PLOT BY : MANYEN, WAYNE PLOT NAME : **PLOT SCALE :** 1 IN:10 FT HORZ. / 1 IN:10 FT VERT.

WISDOT/CADDS SHEET 49

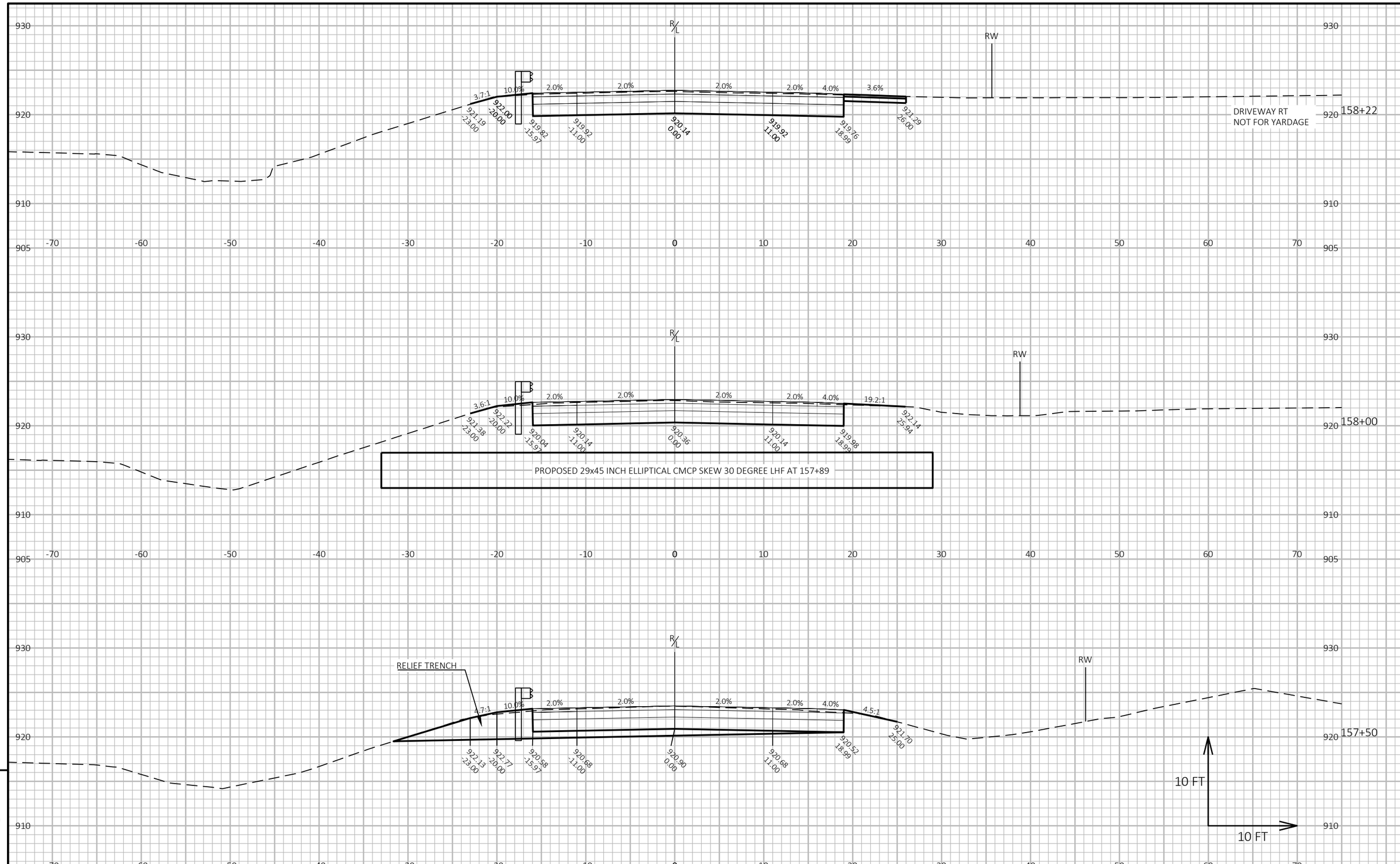

9

9

PROJECT NO: 2717-03-71	HWY: SILVERNAIL FRONTAGE ROAD	COUNTY: WAUKESHA	CROSS SECTIONS: CROSS SECTIONS-SILVERNAIL	SHEET 184	E

FILE NAME : N:\PDS\C3D\27170301\DSGN\CRDR\XS\090201_XS.DWG
LAYOUT NAME - 090245_XS
PLOT DATE : 7/28/2025 4:01 PM
PLOT BY : MANYEN, WAYNE
PLOT NAME :
PLOT SCALE : 1 IN:10 FT HORZ. / 1 IN:10 FT VERT.
WISDOT/CADDS SHEET 49

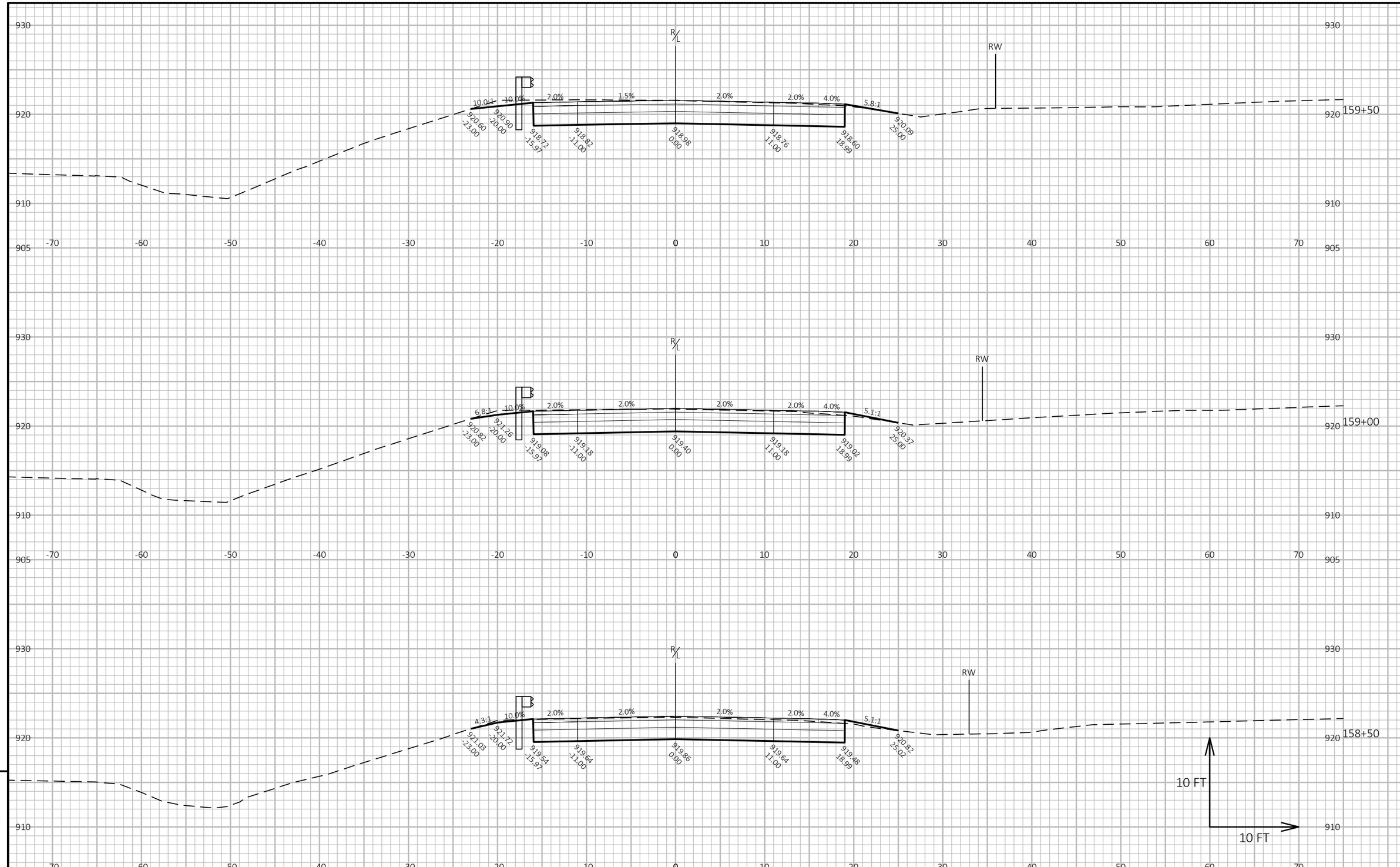

9

9

PROJECT NO: 2717-03-71	HWY: SILVERNAIL FRONTAGE ROAD	COUNTY: WAUKESHA	CROSS SECTIONS: CROSS SECTIONS-SILVERNAIL	SHEET 185	E

FILE NAME : N:\PDS\C3D\27170301\DSGN\CRDR\XS\090201_XS.DWG
LAYOUT NAME - 090246_XS

PLOT DATE : 7/28/2025 4:01 PM PLOT BY : MANYEN, WAYNE PLOT NAME : **PLOT SCALE :** 1 IN:10 FT HORZ. / 1 IN:10 FT VERT.

WISDOT/CADDS SHEET 49

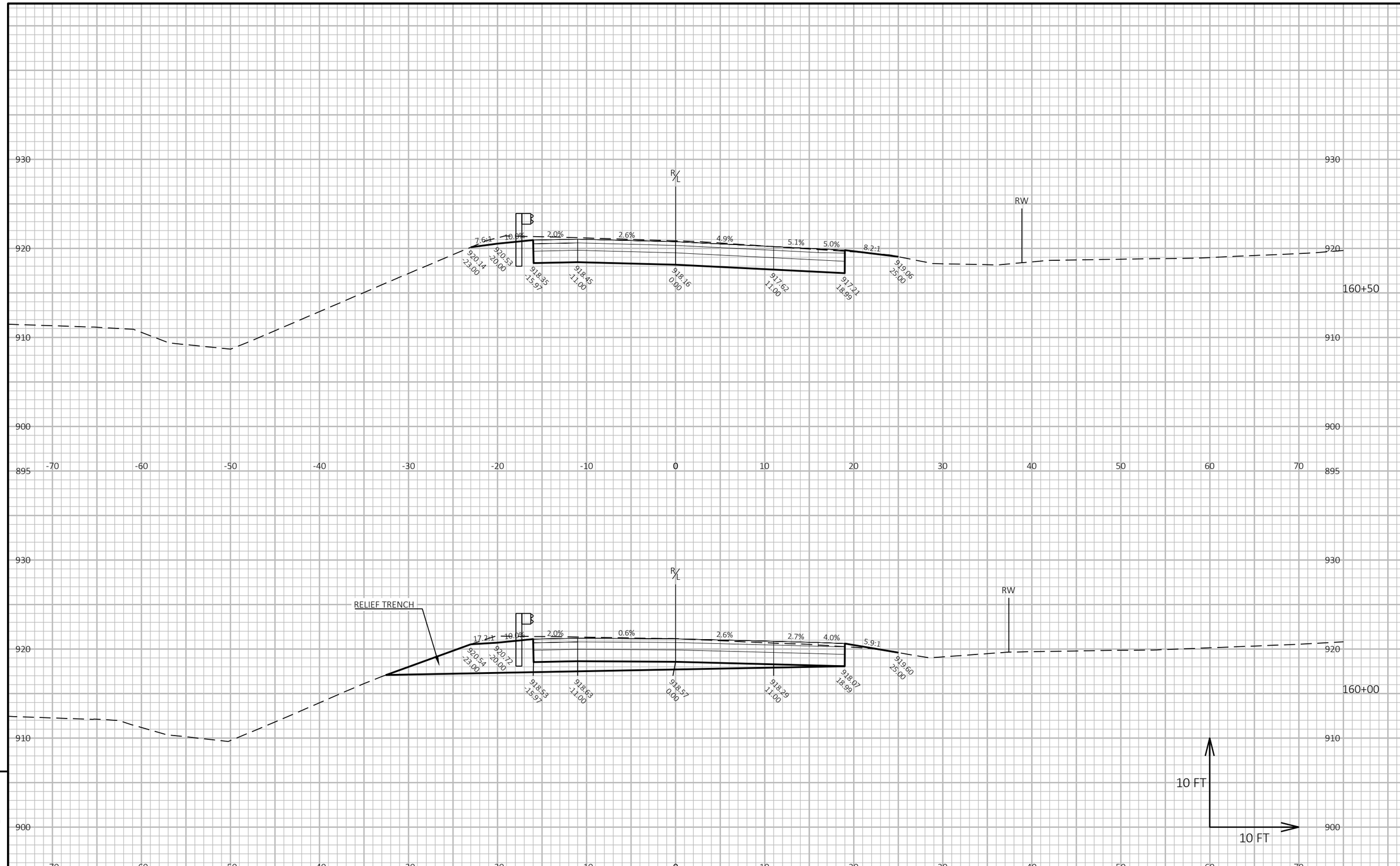

PROJECT NO: 2717-03-71	HWY: SILVERNAIL FRONTAGE ROAD	COUNTY: WAUKESHA	CROSS SECTIONS: CROSS SECTIONS-SILVERNAIL	SHEET 186	E

FILE NAME : N:\PDS\C3D\27170301\DSGN\CRDR\XS\090201_XS.DWG
LAYOUT NAME - 090247_XS
PLOT DATE : 7/28/2025 4:01 PM
PLOT BY : MANYEN, WAYNE
PLOT NAME :
PLOT SCALE : 1 IN:10 FT HORZ. / 1 IN:10 FT VERT.
WISDOT/CADDS SHEET 49

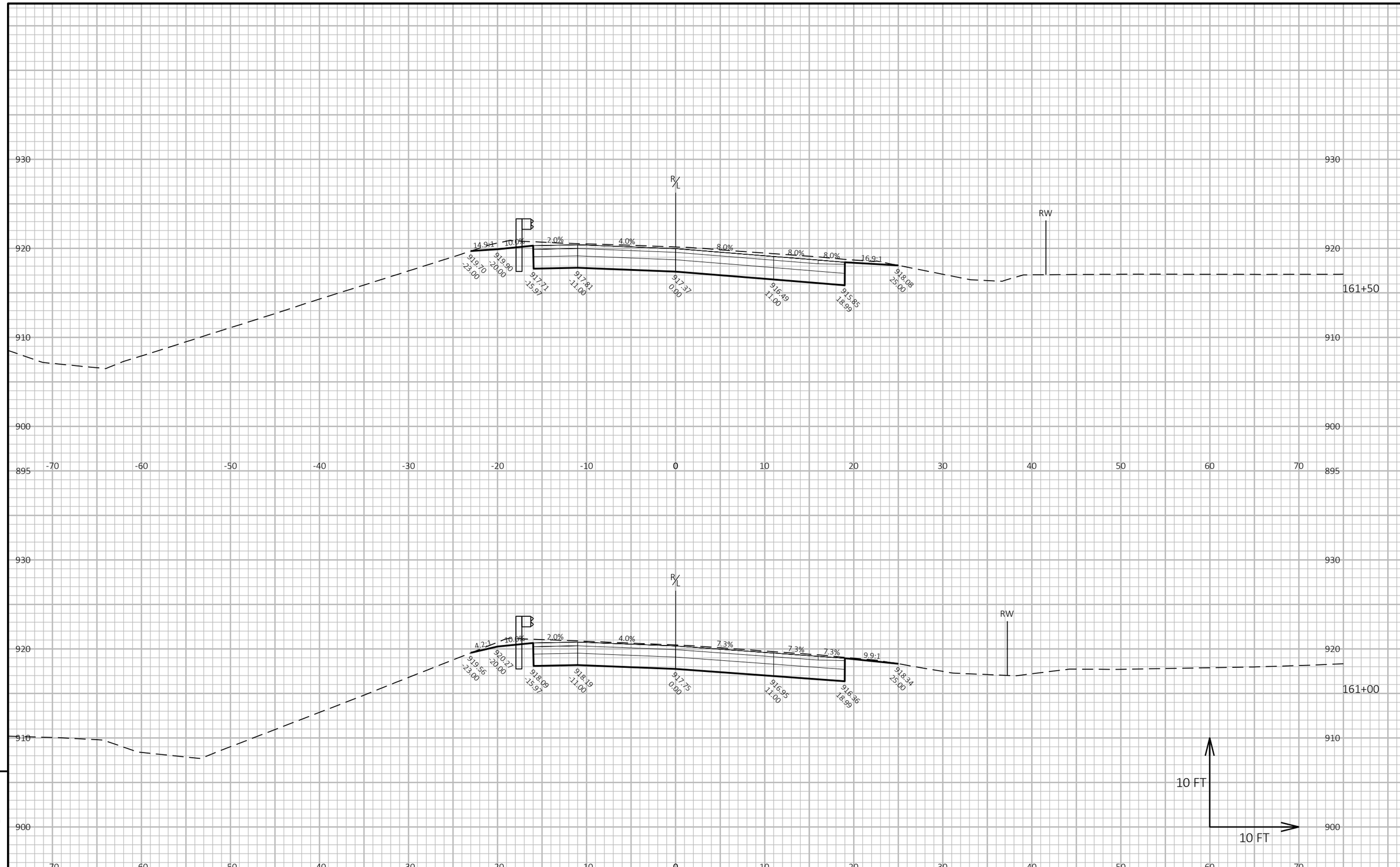

9

9

PROJECT NO: 2717-03-71	HWY: SILVERNAIL FRONTAGE ROAD	COUNTY: WAUKESHA	CROSS SECTIONS: CROSS SECTIONS-SILVERNAIL	SHEET 187	E

FILE NAME : N:\PDS\C3D\27170301\DSGN\CRDR\XS\090201_XS.DWG
LAYOUT NAME - 090248_XS
PLOT DATE : 7/28/2025 4:02 PM
PLOT BY : MANYEN, WAYNE
PLOT NAME :
PLOT SCALE : 1 IN:10 FT HORZ. / 1 IN:10 FT VERT.
WISDOT/CADDS SHEET 49

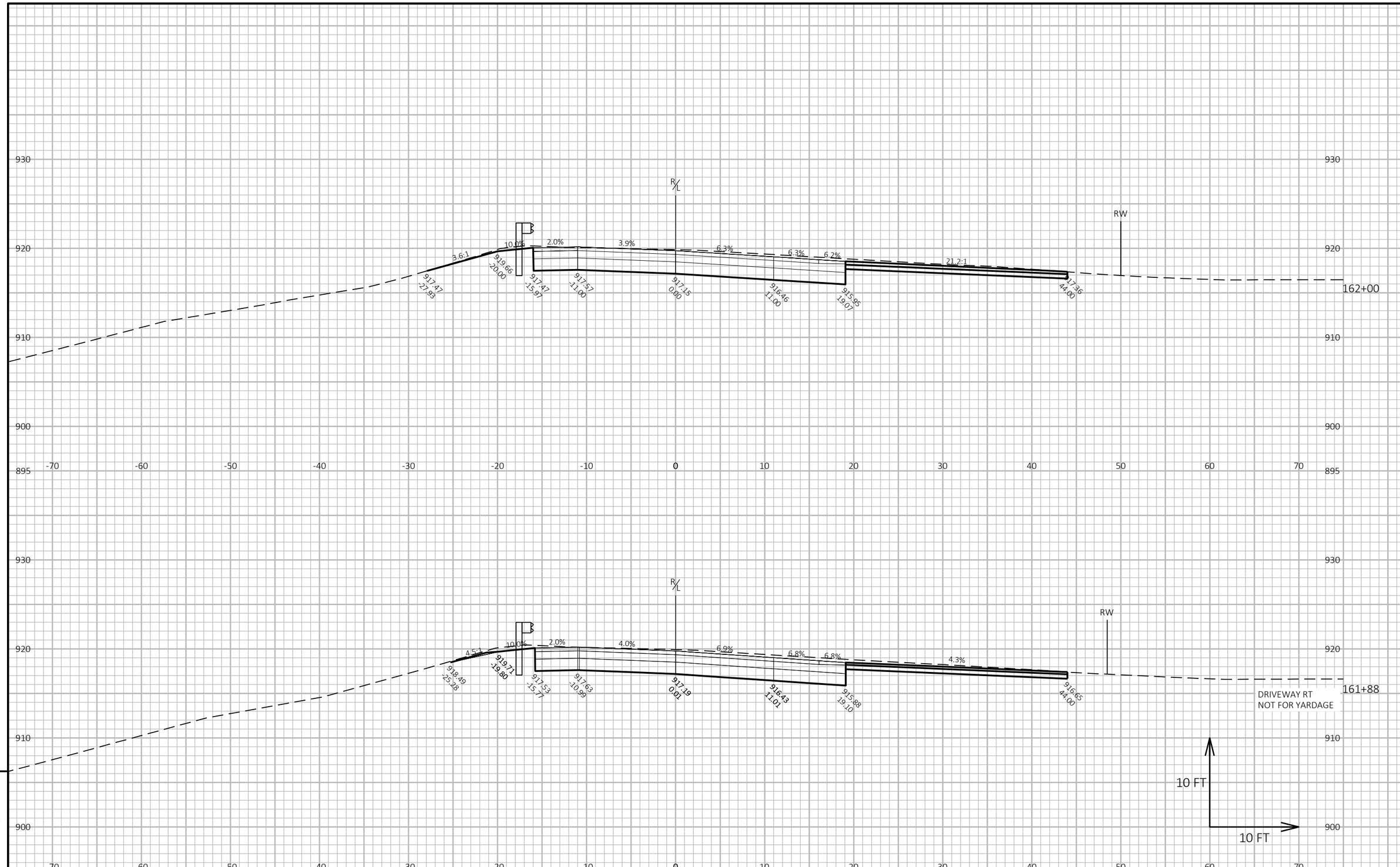

9

9

PROJECT NO: 2717-03-71	HWY: SILVERNAIL FRONTAGE ROAD	COUNTY: WAUKESHA	CROSS SECTIONS: CROSS SECTIONS-SILVERNAIL	SHEET 188	E

FILE NAME : N:\PDS\C3D\27170301\DSGN\CRDR\XS\090201_XS.DWG
LAYOUT NAME - 090249_XS

PLOT DATE : 7/28/2025 4:02 PM

PLOT BY : MANYEN, WAYNE

PLOT NAME :

PLOT SCALE : 1 IN:10 FT HORZ. / 1 IN:10 FT VERT.

WISDOT/CADDS SHEET 49

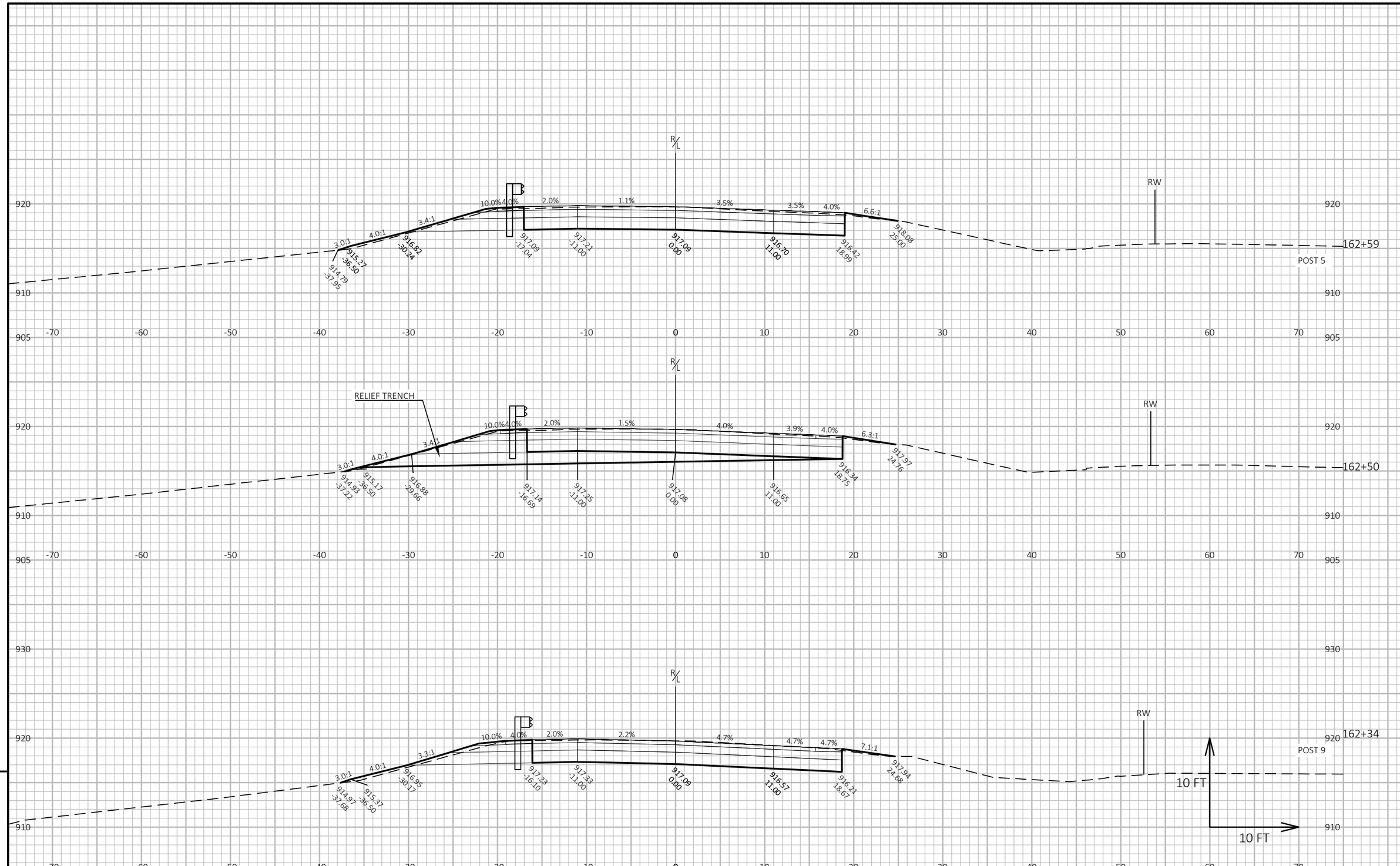

9

9

PROJECT NO: 2717-03-71	HWY: SILVERNAIL FRONTAGE ROAD	COUNTY: WAUKESHA	CROSS SECTIONS: CROSS SECTIONS-SILVERNAIL	SHEET 189	E

FILE NAME : N:\PDS\C3D\27170301\DSGN\CRDR\XS\090201_XS.DWG
LAYOUT NAME - 090250_XS

PLOT DATE : 11/14/2025 3:17 PM PLOT BY : MANYEN, WAYNE PLOT NAME : **PLOT SCALE :** 1 IN:10 FT HORZ. / 1 IN:10 FT VERT.

WISDOT/CADDS SHEET 49

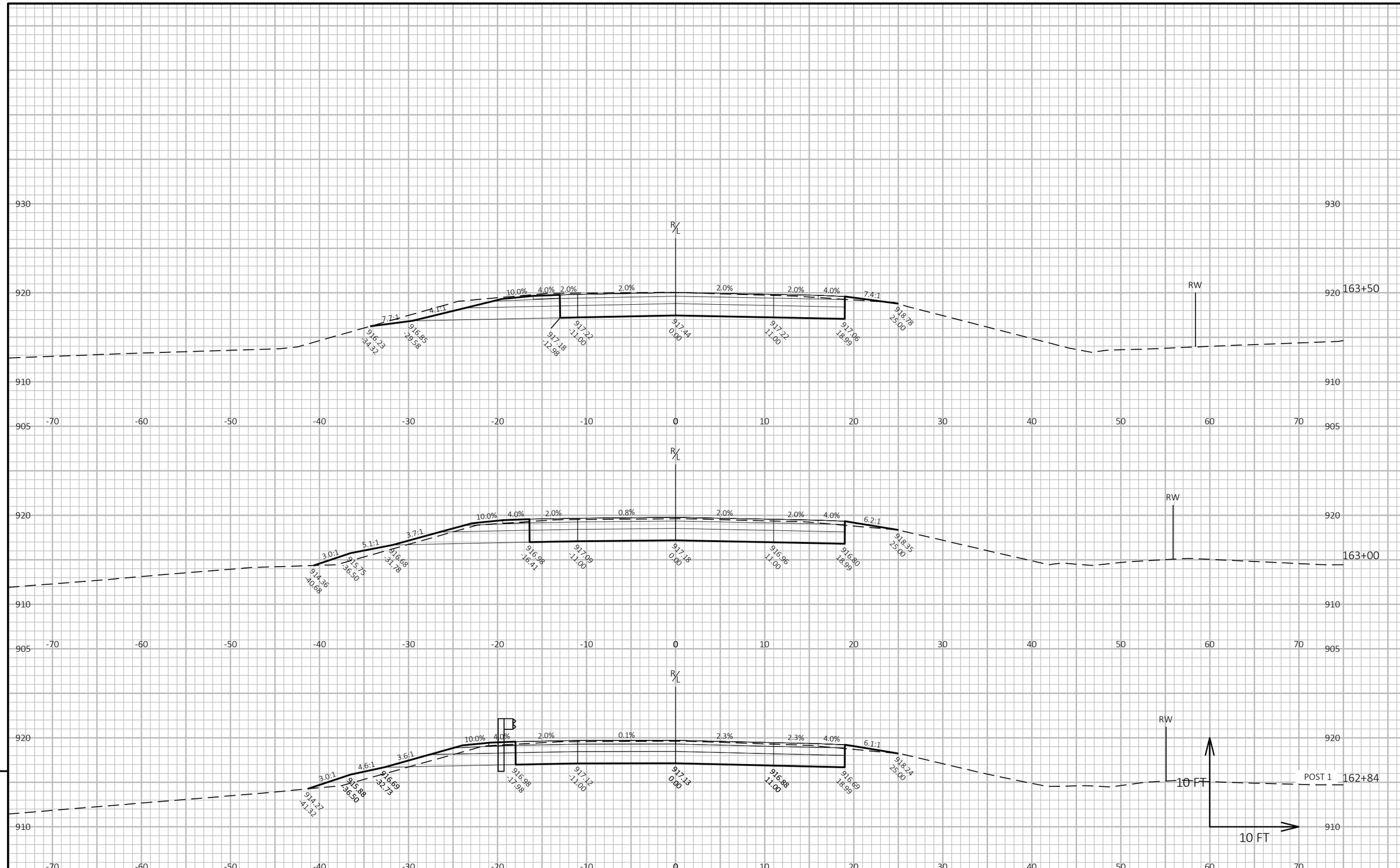

PROJECT NO: 2717-03-71	HWY: SILVERNAIL FRONTAGE ROAD	COUNTY: WAUKESHA	CROSS SECTIONS: CROSS SECTIONS-SILVERNAIL	SHEET 190	E

FILE NAME : N:\PDS\C3D\27170301\DSGN\CRDR\XS\090201_XS.DWG
LAYOUT NAME - 090251_XS

PLOT DATE : 11/14/2025 3:18 PM PLOT BY : MANYEN, WAYNE PLOT NAME : **PLOT SCALE :** 1 IN:10 FT HORZ. / 1 IN:10 FT VERT.

WISDOT/CADDS SHEET 49

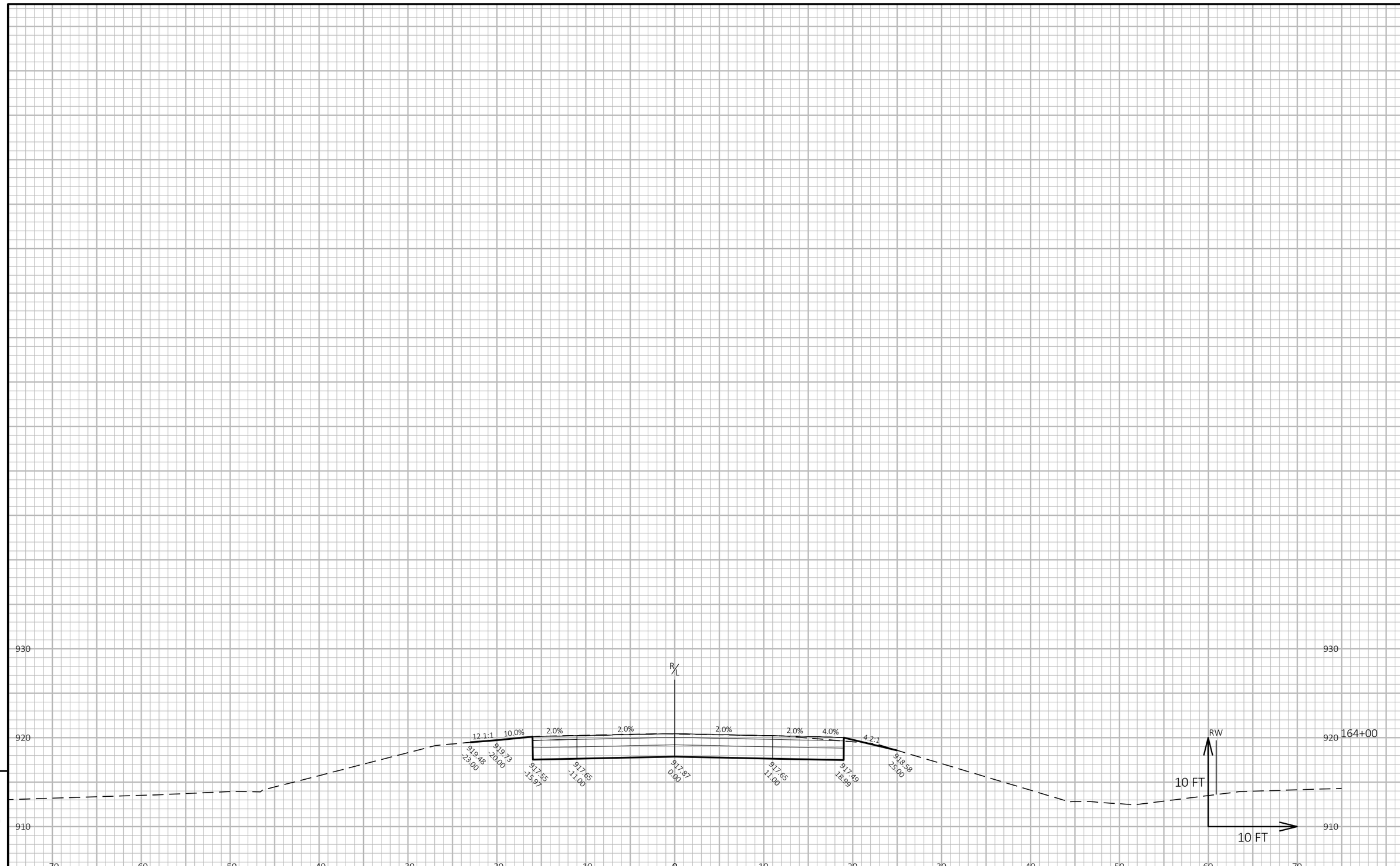

9

9

PROJECT NO: 2717-03-71	HWY: SILVERNAIL FRONTAGE ROAD	COUNTY: WAUKESHA	CROSS SECTIONS: CROSS SECTIONS-SILVERNAIL	SHEET 191	E

FILE NAME : N:\PDS\C3D\27170301\DSGN\CRDR\XS\090201_XS.DWG
LAYOUT NAME - 090252_XS

PLOT DATE : 7/28/2025 4:03 PM PLOT BY : MANYEN, WAYNE PLOT NAME : **PLOT SCALE :** 1 IN:10 FT HORZ. / 1 IN:10 FT VERT.

WISDOT/CADDS SHEET 49

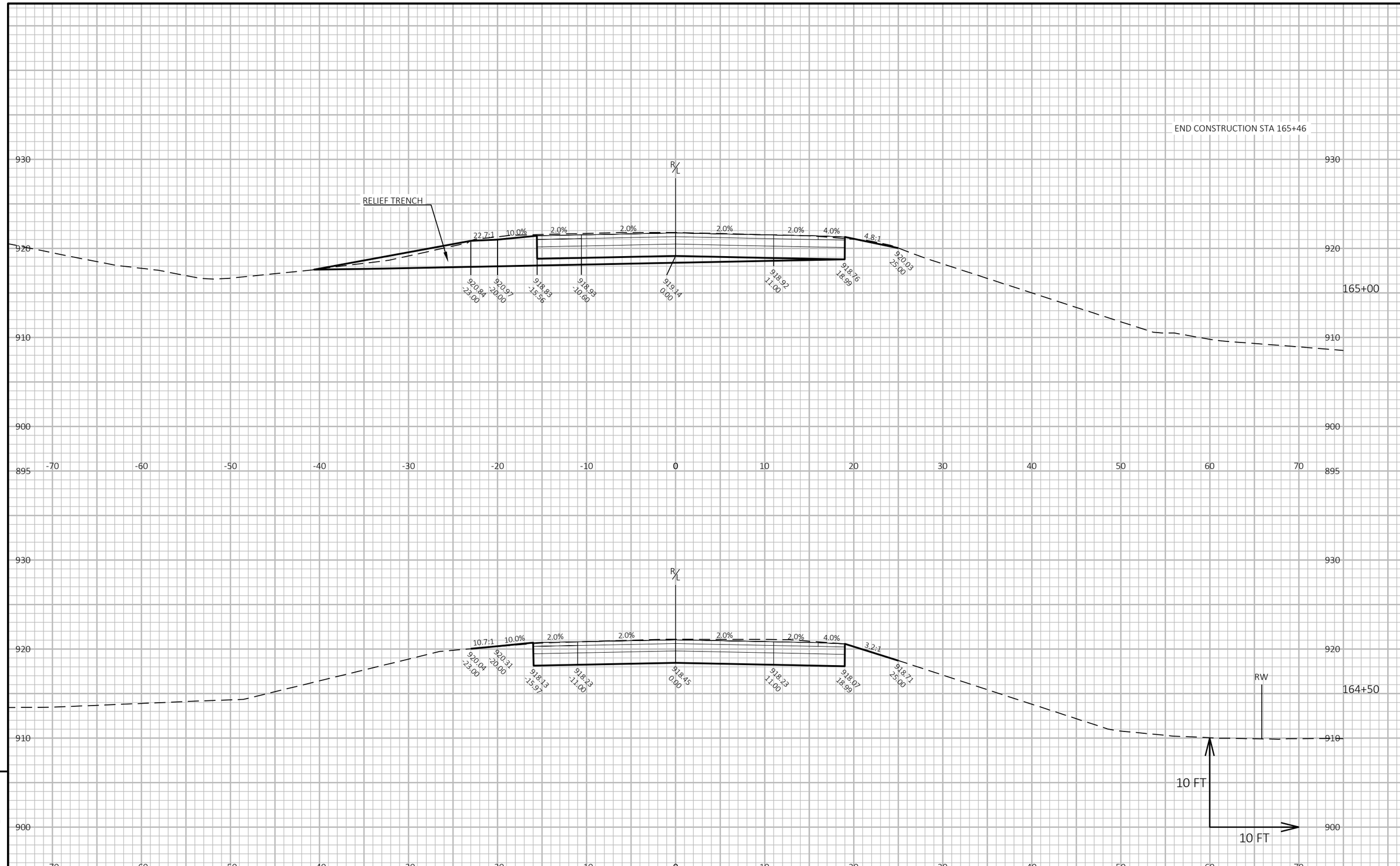

9

9

PROJECT NO: 2717-03-71	HWY: SILVERNAIL FRONTAGE ROAD	COUNTY: WAUKESHA	CROSS SECTIONS: CROSS SECTIONS-SILVERNAIL	SHEET 192	E

FILE NAME : N:\PDS\C3D\27170301\DSGN\CRDR\XS\090201_XS.DWG
LAYOUT NAME - 090253_XS
PLOT DATE : 7/28/2025 4:03 PM
PLOT BY : MANYEN, WAYNE
PLOT NAME :
PLOT SCALE : 1 IN:10 FT HORZ. / 1 IN:10 FT VERT.
WISDOT/CADDS SHEET 49

Notes

Wisconsin Department of Transportation

Dedicated people creating transportation solutions through innovation and exceptional service.

http://www.dot.wisconsin.gov