WKE

PROJECT ID: 1080-05-70

COUNTY: WALWORTH

JANUARY 2026

ORDER OF SHEETS

TOTAL SHEETS = 128

STATE PROJECT	FEDERAL PROJECT	
	PROJECT	CONTRACT
1080-05-70	WISC 2026143	1

STATE OF WISCONSIN
DEPARTMENT OF TRANSPORTATION

PLAN OF PROPOSED IMPROVEMENT

ELKHORN - RICHMOND

CTH NN TO SHERIDAN SPRINGS

USH 12
WALWORTH COUNTY

STATE PROJECT NUMBER
1080-05-70

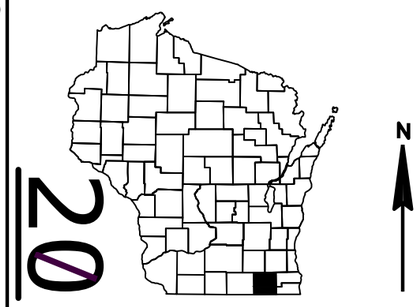

N

DESIGN DESIGNATION

A.A.D.T.	2025	=	19,710
A.A.D.T.		=	
D.H.V.		=	
D.D.		=	
T.		=	
DESIGN SPEED		=	
ESALS		=	

END PROJECT
STA 749'WB'+00

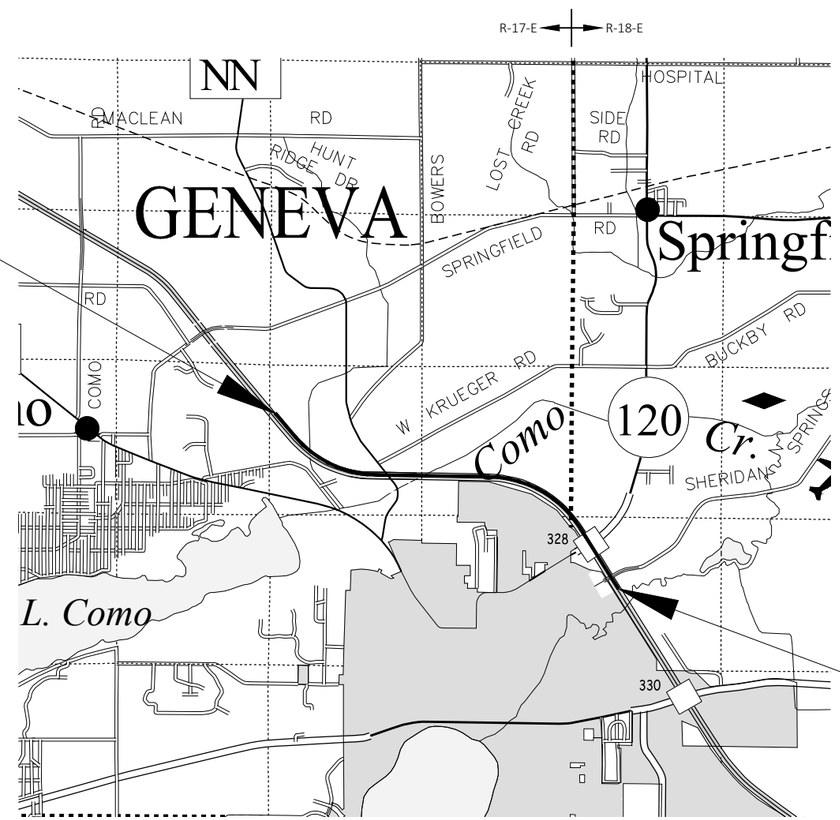

BEGIN PROJECT
STA 604'WB'+00
Y= 340833.1364
X= 796447.4562

CONVENTIONAL SYMBOLS

PLAN

- CORPORATE LIMITS
- PROPERTY LINE
- LOT LINE
- LIMITED HIGHWAY EASEMENT
- EXISTING RIGHT OF WAY
- PROPOSED OR NEW R/W LINE
- SLOPE INTERCEPT
- REFERENCE LINE (300'EB')
- EXISTING CULVERT
- PROPOSED CULVERT (Box or Pipe)
- COMBUSTIBLE FLUIDS (CAUTION)
- MARSH AREA
- WOODED OR SHRUB AREA

PROFILE

- GRADE LINE
- ORIGINAL GROUND
- MARSH OR ROCK PROFILE (To be noted as such) (ROCK)
- SPECIAL DITCH (LABEL)
- GRADE ELEVATION (95.36)
- CULVERT (Profile View)

UTILITIES

- ELECTRIC (E)
- FIBER OPTIC (FO)
- GAS (G)
- SANITARY SEWER (SAN)
- STORM SEWER (SS)
- TELEPHONE (T)
- WATER (W)
- UTILITY PEDESTAL
- POWER POLE
- TELEPHONE POLE

LAYOUT

SCALE 0 — 1.0 MI

TOTAL NET LENGTH OF CENTERLINE = 2.746 MI

HORIZONTAL POSITIONS SHOWN ON THIS PLAN ARE WISCONSIN COUNTY COORDINATE SYSTEM (WCCS), WALWORTH COUNTY, NAD83 (2011), IN U.S. SURVEY FEET. POSITIONS SHOWN ARE GRID COORDINATES, GRID BEARINGS, AND GRID DISTANCES. GRID DISTANCES ARE THE SAME AS GROUND DISTANCES.

ELEVATIONS ARE REFERENCED TO NAVD 88 (2012). GPS DERIVED ELEVATIONS ARE BASED ON GEOID 12A

STATE OF WISCONSIN
DEPARTMENT OF TRANSPORTATION

PREPARED BY

Surveyor	DAAR
Designer	WISDOT
Project Manager	CHRISTINE HANNA P.E.
Regional Examiner	REGIONAL EXAMINER
Regional Supervisor	WILLIAM S. MOHR P.E.

APPROVED FOR THE DEPARTMENT

DATE: 11/20/25 Christine Hanna (Signature)

E

2

STANDARD ABBREVIATIONS

ABUT	ABUTMENT	LT	LEFT
AC	ACRE	LHF	LEFT HAND FORWARD
AGG	AGGREGATE	L	LENGTH OF CURVE
AH	AHEAD	LF	LINEAR FOOT
∠	ANGLE	LC	LONG CHORD OF CURVE
AADT	ANNUAL AVERAGE DAILY TRAFFIC	LS	LUMP SUM
AEW	APRON ENDWALL	MGAL	ONE THOUSAND GALLONS
ASPH	ASPHALTIC	MH	MANHOLE
BK	BACK	ML OR M/L	MATCH LINE
BC	BACK OF CURB	NOM	NOMINAL
BAD	BASE AGGREGATE DENSE	NC	NORMAL CROWN
BL OR B/L	BASE LINE	NB	NORTHBOUND
BM	BENCH MARK	NO	NUMBER
CB	CATCH BASIN	OD	OUTSIDE DIAMETER
CL OR C/L	CENTER LINE	PAVT	PAVEMENT
Δ	CENTRAL ANGLE OR DELTA	PLE	PERMANENT LIMITED EASEMENT
CE	COMMERCIAL ENTRANCE	PC	POINT OF CURVATURE
CONC	CONCRETE	PI	POINT OF INTERSECTION
CSW	CONCRETE SIDEWALK	PT	POINT OF TANGENCY
CONST	CONSTRUCTION	PCC	PORTLAND CEMENT CONCRETE
CP	CONTROL POINT	LB	POUND
CO	COUNTY	PSI	POUNDS PER SQUARE INCH
CTH	COUNTY TRUCK HIGHWAY	PE	PRIVATE ENTRANCE
CY	CUBIC YARD	PROJ	PROJECT
CP	CULVERT PIPE	PL	PROPERTY LINE
CPCA	CULVERT PIPE CORRUGATED ALUMINUM	PRW	PROPOSED RIGHT OF WAY
CPCPE	CULVERT PIPE CORRUGATED POLYETHYLENE	R	RADIUS
CPCPP	CULVERT PIPE CORRUGATED POLYPROPYLENE	RL OR R/L	REFERENCE LINE
CPCS	CULVERT PIPE CORRUGATED STEEL	REQD	REQUIRED
CPCSAC	CULVERT PIPE CORRUGATED STEEL ALUMINUM COATED	RT	RIGHT
CPCSPC	CULVERT PIPE CORRUGATED STEEL POLYMER COATED	RHF	RIGHT HAND FORWARD
CPRC	CULVERT PIPE REINFORCED CONCRETE	R/W	RIGHT OF WAY
CPRCHE	CULVERT PIPE REINFORCED CONCRETE HORIZONTAL ELLIPTICAL	RD	ROAD
CPS	CULVERT PIPE SALVAGED	RDWY	ROADWAY
CPT	CULVERT PIPE TEMPORARY	SHLDR	SHOULDER
C & G	CURB AND GUTTER	SW	SIDEWALK
D	DEGREE OF CURVE	SB	SOUTHBOUND
DHV	DESIGN HOUR VOLUME	SPECS	SPECIFICATIONS
DIA	DIAMETER	SF	SQUARE FEET
DD	DIRECTIONAL DISTRIBUTION	SY	SQUARE YARD
DE	DRAINAGE EASEMENT	SDD	STANDARD DETAIL DRAWINGS
DWY	DRIVEWAY	STH	STATE TRUNK HIGHWAY
EA	EACH	STA	STATION
EB	EASTBOUND	SSPC	STORM SEWER PIPE COMPOSITE
EL OR ELEV	ELEVATION	SSCPE	STORM SEWER PIPE CORRUGATED POLYETHYLENE
EMB	EMBANKMENT	SSCPP	STORM SEWER PIPE CORRUGATED POLYPROPYLENE
EW	ENDWALL	SSPNRC	STORM SEWER PIPE NON-REINFORCED CONCRETE
EAT	ENERGY ABSORBING TERMINAL	SSPRC	STORM SEWER PIPE REINFORCED CONCRETE
ESALS	EQUIVALENT SINGLE AXLE LOADS	SSPRC	STORM SEWER PIPE REINFORCED CONCRETE
EXC	EXCAVATION	SSPRCHE	STORM SEWER PIPE REINFORCED CONCRETE HORIZONTAL ELLIPTICAL
EBS	EXCAVATION BELOW SUBGRADE	SE	SUPERELEVATION
EXIST	EXISTING	SL OR S/L	SURVEY LINE
FERT	FERTILIZER	TEMP	TEMPORARY
FE	FIELD ENTRANCE	TI	TEMPORARY INTEREST
FL OR F/L	FLOW LINE	TLE	TEMPORARY LIMITED EASEMENT
FT	FOOT	TC	TOP OF CURB
FTMS	FREE TRAFFIC MANAGEMENT SYSTEM	TL OR T/L	TRANSIT LINE
HES	HIGH EARLY STRENGTH	T	TRUCKS (PERCENT OF)
HE	HIGHWAY EASEMENT	TYP	TYPICAL
CWT	HUNDRED WEIGHT	USH	UNITED STATES HIGHWAY
IN DIA	INCH DIAMETER	VAR	VARIABLE
INL	INLET	VC	VERTICAL CURVE
ID	INSIDE DIAMETER	VPC	VERTICAL POINT OF CURVATURE
INTERS	INTERSECTION	VPI	VERTICAL POINT OF INTERSECTION
IH	INTERSTATE HIGHWAY	VPT	VERTICAL POINT OF TANGENCY
INV	INVERT	W	WEST
JT	JOINT	WB	WESTBOUND

ORDER OF SECTION 2 DETAIL SHEETS

GENERAL NOTES

THE LOCATIONS OF EXISTING AND PROPOSED UTILITY INSTALLATIONS AS SHOWN ON THE PLANS ARE APPROXIMATE. THERE MAY BE OTHER UTILITY INSTALLATIONS WITHIN THE PROJECT AREA THAT ARE NOT SHOWN.

THE LOCATION OF EXISTING UTILITY FACILITIES LOCATED WITHIN THE PROJECT ARE NOT SHOWN ON THE PLANS.

THERE ARE UTILITY FACILITIES WITHIN THE PROJECT AREA THAT ARE NOT SHOWN ON THE PLANS. THE CONTRACTOR SHALL COORDINATE THEIR CONSTRUCTION ACTIVITIES WITH A CALL TO DIGGERS HOTLINE.

CONTRACTOR WILL BE RESPONSIBLE FOR RESHAPING AND SEEDING ANY PREVIOUSLY GRASSED AREAS WHICH ARE DISTURBED BY OPERATIONS, OUTSIDE OF THE NORMAL CONSTRUCTION LIMITS.

NO TREES OR SHRUBS ARE TO BE REMOVED WITHOUT THE APPROVAL OF THE ENGINEER.

RIGHT OF WAY INFORMATION SHOWN ON THE PLANS IS APPROXIMATE.

CONTACT THE PROJECT ENGINEER AND THE SOUTHEASTERN WISCONSIN REGIONAL PLANNING COMMISSION (SEWRPC), AT LEAST TWO WEEKS PRIOR TO WORK NEAR ANY PUBLIC SURVEY MONUMENT.

TOPSOIL SHALL BE PLACED 1-INCH BELOW THE TOP OF ADJACENT CONCRETE CURBS OR SIDEWALKS.

EROSION CONTROL FEATURES AS SHOWN IN THE PLANS ARE AT APPROXIMATE LOCATIONS. EXACT LOCATIONS WILL BE DETERMINED BY THE CONTRACTOR'S EROSION CONTROL IMPLEMENTATION PLAN (ECIP) AND APPROVED BY THE ENGINEER. MAINTAIN EROSION CONTROL MEASURES UNTIL SUCH A TIME AS THE ENGINEER DETERMINES THE MEASURE IS NO LONGER NECESSARY.

RESTORE AREAS, AS DESIGNATED BY THE ENGINEER, IMMEDIATELY AFTER GRADING IS COMPLETED WITHIN THOSE AREAS. SEED, FERTILIZE, AND MULCH/EROSION MAT SALVAGED TOPSOILED AREAS, AS DESIGNATED BY THE ENGINEER, WITHIN FIVE (5) CALENDAR DAYS AFTER PLACEMENT OF SALVAGED TOPSOIL. IF GRADED AREAS ARE LEFT EXPOSED FOR MORE THAN FOURTEEN (14) CALENDAR DAYS, SEED THOSE AREAS WITH TEMPORARY SEED AND MULCH WITHIN 4 DAYS OF INITIAL AND ANY REPEATED DISTURBANCES.

ANY AND ALL DISTURBED AREAS, NOT PLANNED TO BE PERMANENTLY RESTORED IN 14-DAYS OF INITIAL DISTURBANCE, SHALL BE SEEDED AND MULCHED WITHIN 7-DAYS OF INITIAL AND REPEATED DISTURBANCES.

STOCKPILE EXCESS MATERIAL OR SPOILS ON UPLAND AREAS AWAY FROM WETLANDS, FLOODPLAINS AND WATERWAYS. STOCKPILED MATERIAL SHALL BE PROTECTED AGAINST EROSION. IF STOCKPILED MATERIAL IS LEFT FOR MORE THAN FOURTEEN (14) CALENDAR DAYS, APPLY TEMPORARY SEED AND MULCH TO THE STOCKPILE WITHIN 4 DAYS OF INITIAL AND ANY REPEATED DISTURBANCES.

PIPE AND INLET ELEVATIONS AS SHOWN ON THE PLANS MAY BE ADJUSTED BY THE ENGINEER TO FIT EXISTING FIELD CONDITIONS

PIPE ELEVATIONS, LENGTHS AND LOCATIONS AS SHOWN ON THE PLANS, MAY BE ADJUSTED TO FIT EXISTING FIELD CONDITIONS AS DIRECTED BY THE ENGINEER.

THE PROPOSED SHOULDER WIDTH SHOWN IN THE TYPICAL SECTIONS ARE MINIMUM WIDTH. PERPETUATE EXISTING SHOULDERS THAT ARE WIDER THAN WHAT IS SHOWN IN THE TYPICAL SECTIONS.

PRIOR TO PLACEMENT OF BEAM GUARD THE SHOULDERS SHALL BE IN PLACE, SHAPED AND COMPACTED.

CONTRACTOR SHALL MAINTAIN ACCESS TO ALL DRIVEWAYS AT ALL TIMES EXCEPT WHEN PAVING OR PIPE LAYING OPERATIONS REQUIRE THE DRIVEWAY TO BE CLOSED. ACCESS TO DRIVEWAYS SHALL BE RE-ESTABLISHED IMMEDIATELY AFTER OPERATIONS ARE COMPLETED. ACCESS SHALL BE PROVIDED DURING ALL NON-WORKING HOURS.

TRAFFIC CONTROL DEVICES SHALL BE ADJUSTED TO FIT FIELD CONDITIONS AS DIRECTED BY THE ENGINEER.

2

2

UTILITIES CONTACTS

AT&T WISCONSIN
COMMUNICATION LINE
NATHAN GIBERT
411 7TH STREET
RACINE, WI 53403
PHONE: 262-720-8235
EMAIL: NG952W@ATT.COM

ALLIANT ENERGY
ELECTRICITY
AUSTIN KROHN
400 B KOOPMAN LANE
ELKHORN, WI 53121
PHONE: 262-741-0934
EMAIL: ELKHORN_ENGINEERING@ALLIANTENERGY.COM

LAKE GENEVA UTILITY COMMISSION
SEWER
JOSH GAJEWSKI
361 MAIN ST, P.O. BOX 187
LAKE GENEVA, WI 53147-0187
PHONE: 262-248-2311 x 403
EMAIL: JGAJEWSKI@LGUTILITIES.ORG

ATC MANAGEMENT, INC
ELECTRICITY-TRANSMISSION
CHRIS DAILEY
W 234 N 2000 RIDGEVIEW PARKWAY CT, P.O. BOX 47
WAUKESHA, WI 53187-0047
PHONE: 262-506-6884
EMAIL: CDAILEY@ATCLLC.COM

EVERSTREAM
COMMUNICATION LINE
SHAD GARCIA
324 E WISCONSIN AVE, SUITE 730
MILWAUKEE, WI 53202
PHONE: 414-522-6685
EMAIL: SGARCIA@EVERSTREAM.NET

LAKE GENEVA UTILITY COMMISSION
WATER
JOSH GAJEWSKI
361 MAIN ST, P.O. BOX 187
LAKE GENEVA, WI 53147-0187
PHONE: 262-248-2311 x 403
EMAIL: JGAJEWSKI@LGUTILITIES.ORG

WE ENERGIES
GAS/PETROLEUM
SCOTT HOLSTEIN
700 S KANE STREET
BURLINGTON, WI 53105
PHONE: 262-763-1084
EMAIL: SCOTT.HOLSTEIN@WE-ENERGIES.COM

SPECTRUM
COMMUNICATION LINE
JAY CHAPMAN
1320 N DR MLK DRIVE
MILWAUKEE, WI 53212
PHONE: 414-908-4793
EMAIL: JAY.CHAPMAN@CHARTER.COM

DIGGERS HOTLINE
Dial 811 or (800)242-8511
www.DiggersHotline.com

2

WISCONSIN DNR LIAISON

CRAIG WEBSTER
SOUTHEAST REGION
141 NW BARSTOW ST STE 180
WAUKESHA, WI, 53188
PHONE: 414-303-3011
EMAIL: CRAIG.WEBSTER@WISCONSIN.GOV

DESIGN PROJECT MANAGER

CHRISTINE HANNA
SOUTHEAST REGION
141 NW BARSTOW ST
WAUKESHA, WI, 53188
PHONE: 414-750-1555
EMAIL: CHRISTINE.HANNA@DOT.WI.GOV

CITY OF LAKE GENEVA

TOM EARLE
DEPARTMENT OF PUBLIC WORKS - ROAD FACILITY
1065 CAREY STREET
LAGE GENEVA,WI 53147
PHONE: 262-248-6644
EMAIL: EMAIL@EMAIL.COM

WALWORTH COUNTY

RICHARD HOUGH
ROAD FACILITY
W4097 COUNTY ROAD NN
ELKHORN, WI 53211
PHONE: 262-741-3104
EMAIL: RHOUGH@CO.WALWORTH.WI.US

SEWRPC

ROB MERRY
SOUTHEASTERN WISCONSIN REGIONAL PLANNING COMMISSION
W239 N1812 ROCKWOOD DRIVE P.O. BOX 1607
WAUKESHA, WI 53187-1607
PHONE: 262-953-4289
EMAIL: RMERRY@SEWRPC.ORG

PROJECT NO: 1080-05-70	HWY: USH 12	COUNTY: WALWORTH	PROJECT OVERVIEW	SHEET 4	E

FILE NAME : N:\PDS\C3D\10800500\SHEETS\020201-PO.DWG
LAYOUT NAME - Plan 1 IN 2000 FT
PLOT DATE : 4/1/2025 10:44 AM
PLOT BY : MANYEN, WAYNE
PLOT NAME :
PLOT SCALE : ############
WISDOT/CADDS SHEET 42

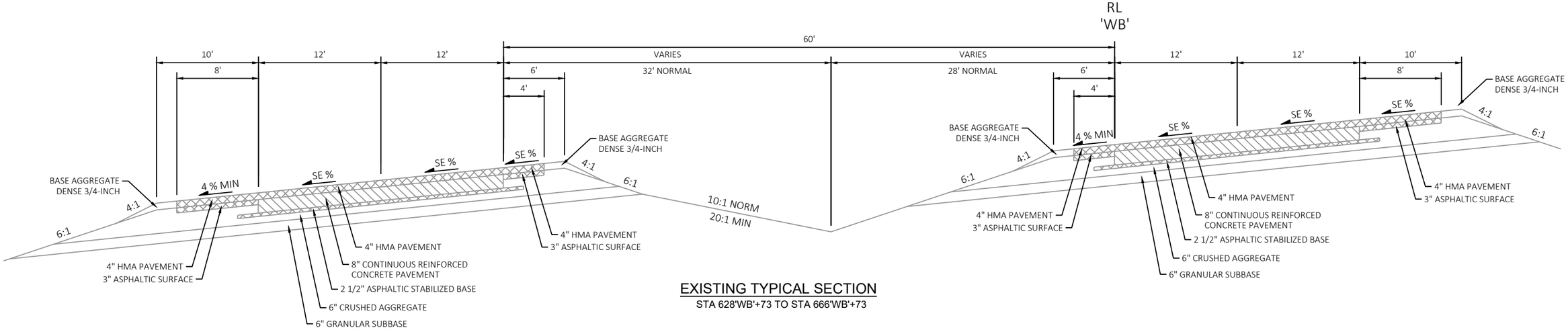

EXISTING TYPICAL SECTION

STA 628'WB'+73 TO STA 666'WB'+73

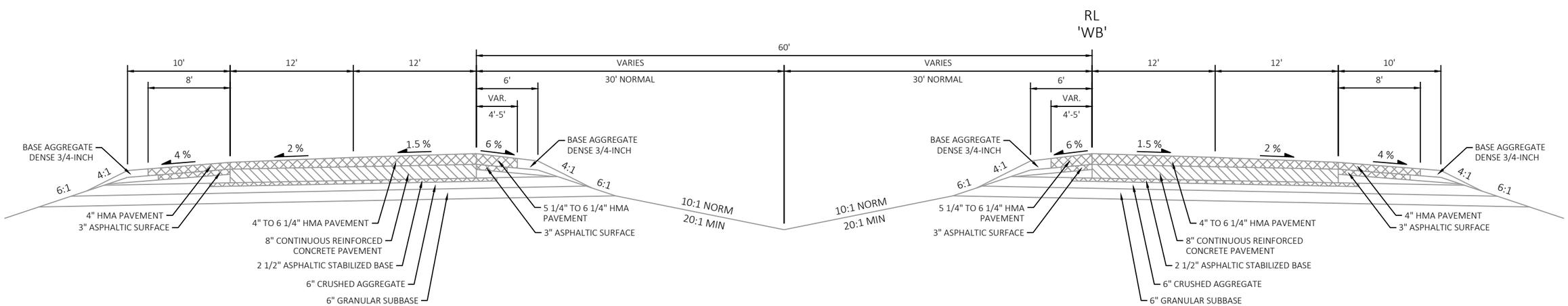

EXISTING TYPICAL SECTION

STA 604'WB'+00 TO STA 628'WB'+73
STA 666'WB'+73 TO STA 702'WB'+00

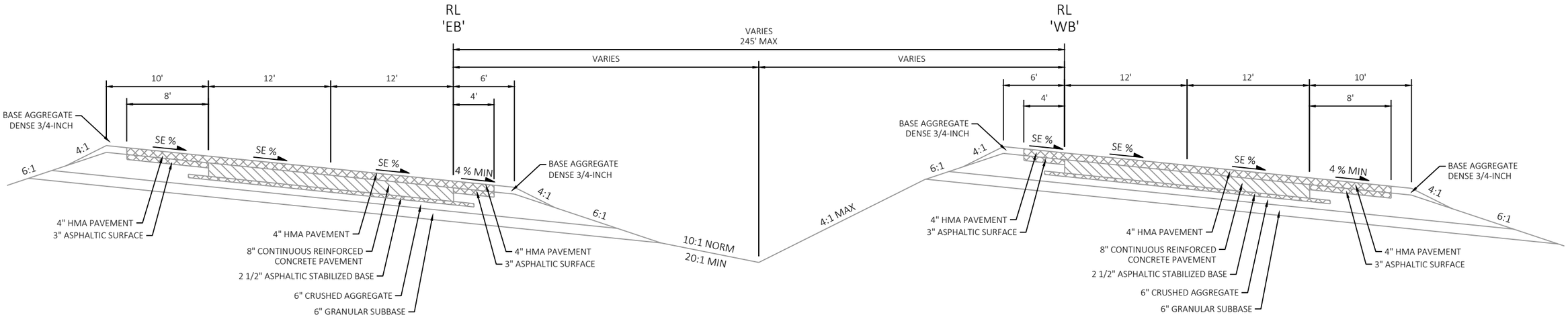

EXISTING TYPICAL SECTION

STA 706'WB'+10 TO STA 738'WB'+10

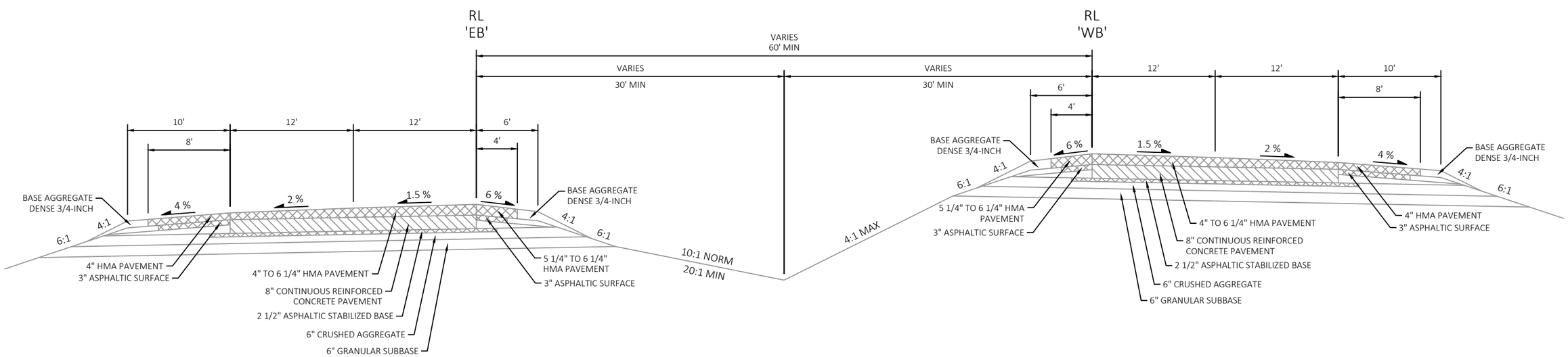

EXISTING TYPICAL SECTION

STA 702'WB'+00 TO STA 706'WB'+10
STA 738'WB'+10 TO STA 749'WB'+00

PROJECT NO: 1080-05-70	HWY: USH 12	COUNTY: WALWORTH	TYPICAL SECTIONS	SHEET 6	E

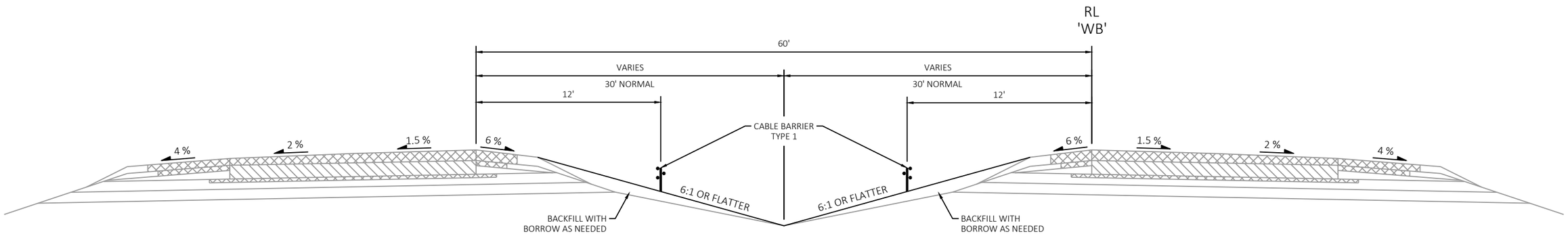

FINISHED SE TYPICAL SECTION

STA 604'WB'+00 TO STA 628'WB'+73
STA 666'WB'+73 TO STA 701'WB'+00

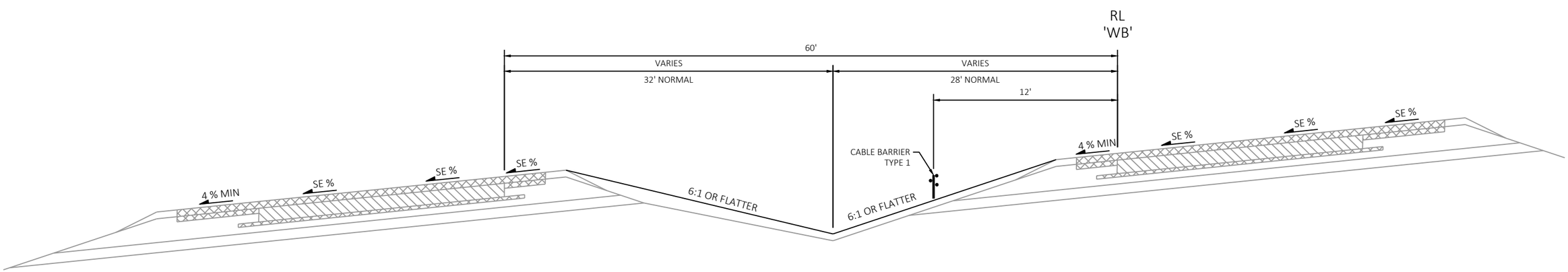

FINISHED TYPICAL SECTION

STA 628'WB'+73 TO STA 666'WB'+73

PROJECT NO: 1080-05-70	HWY: USH 12	COUNTY: WALWORTH	TYPICAL SECTIONS	SHEET 7	E

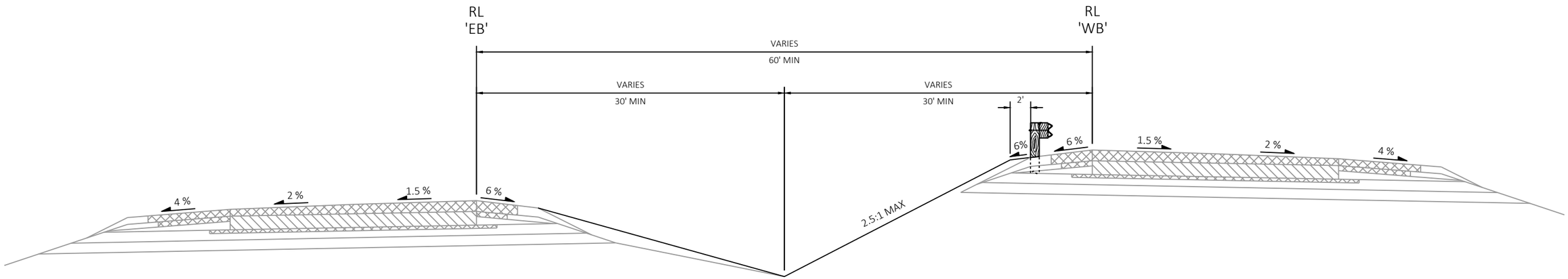

FINISHED TYPICAL SECTION

STA 704'WB'+00 TO STA 706'WB'+10
STA 738'WB'+10 TO STA 749'WB'+00

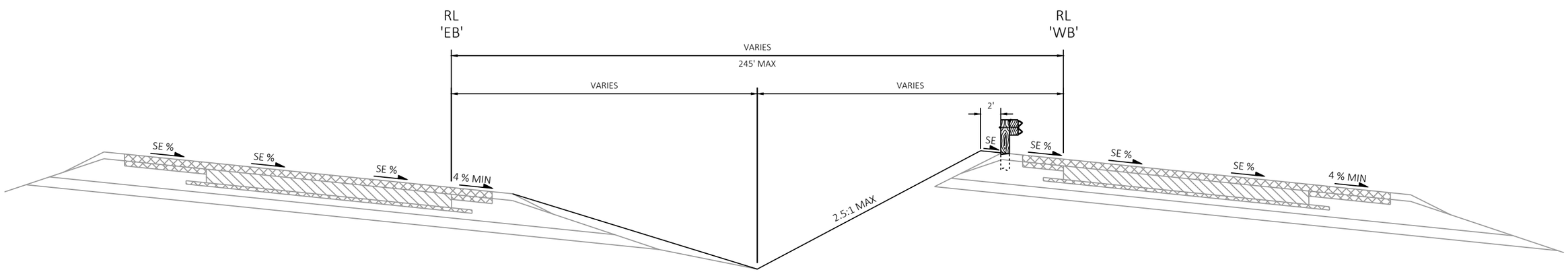

FINISHED TYPICAL SECTION

STA 706'WB'+10 TO STA 738'WB'+10

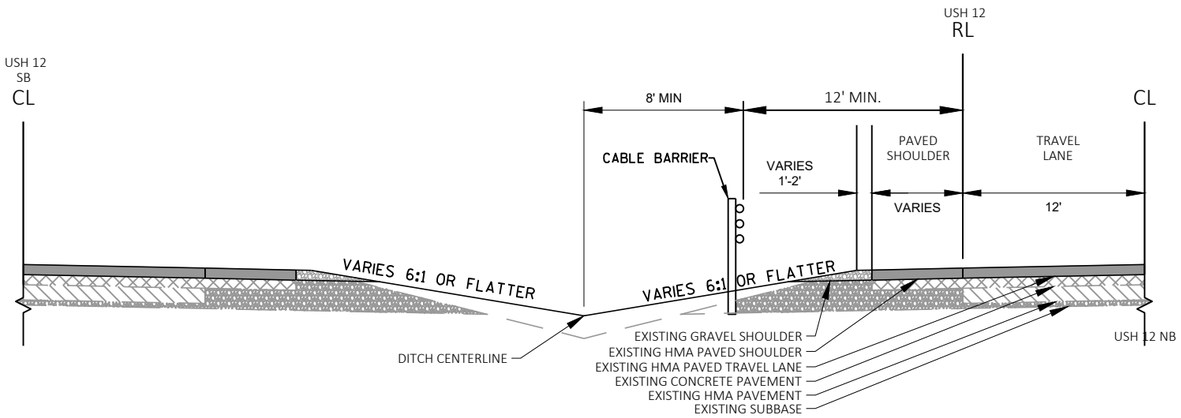

CABLE BARRIER LAYOUT DETAIL

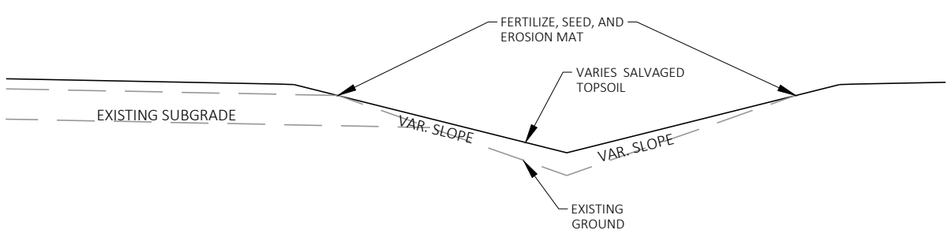

DITCH SHAPING DETAL

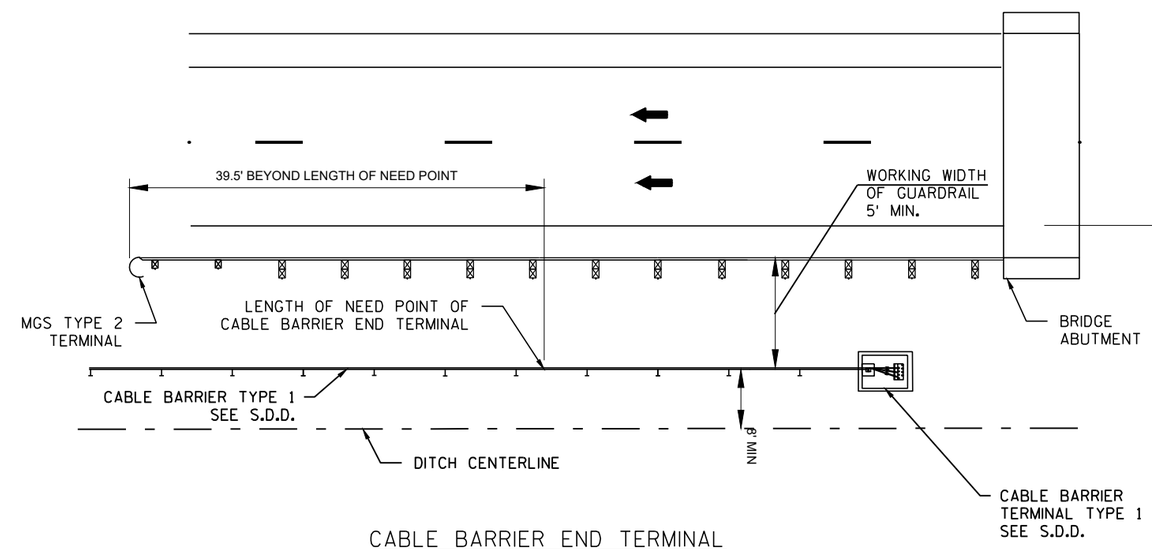

CABLE BARRIER END TERMINAL
AT MGS TYPE 2 TERMINAL

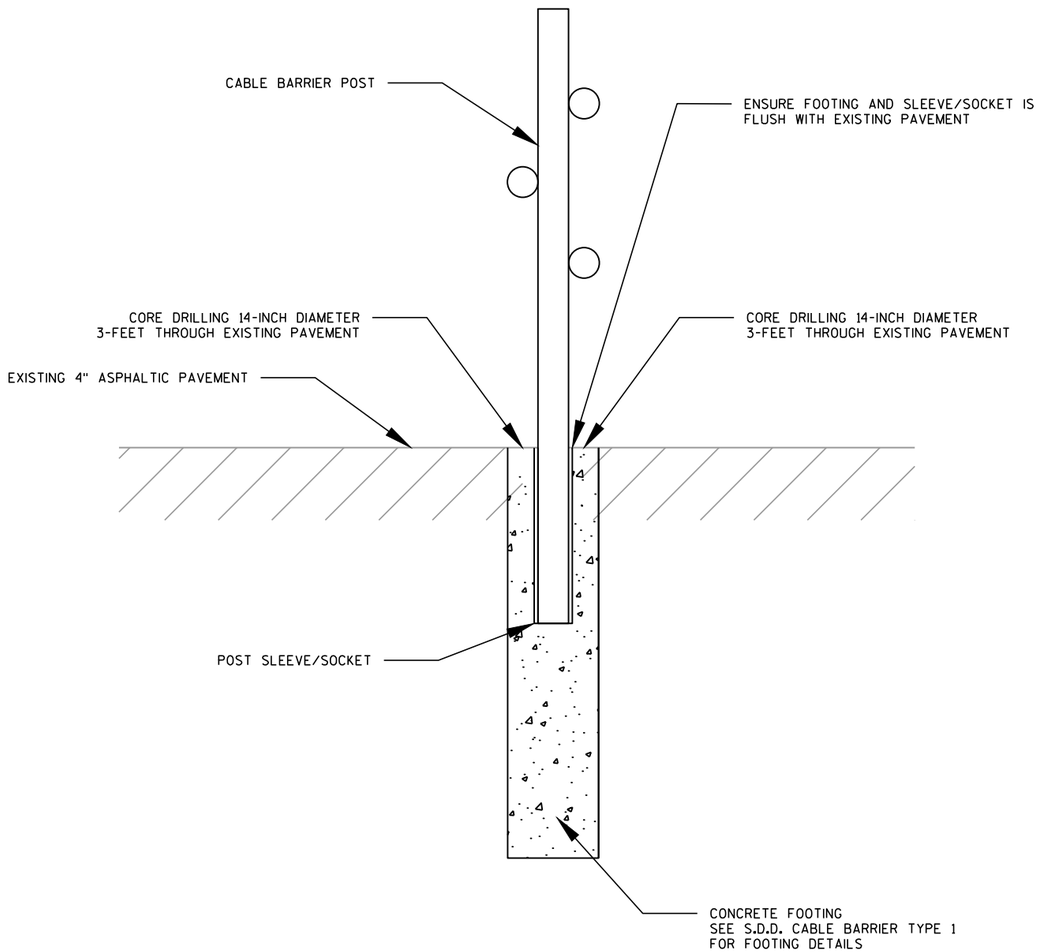

CABLE BARRIER FOOTING IN PAVEMENT
AT EMERGENCY CROSSOVER

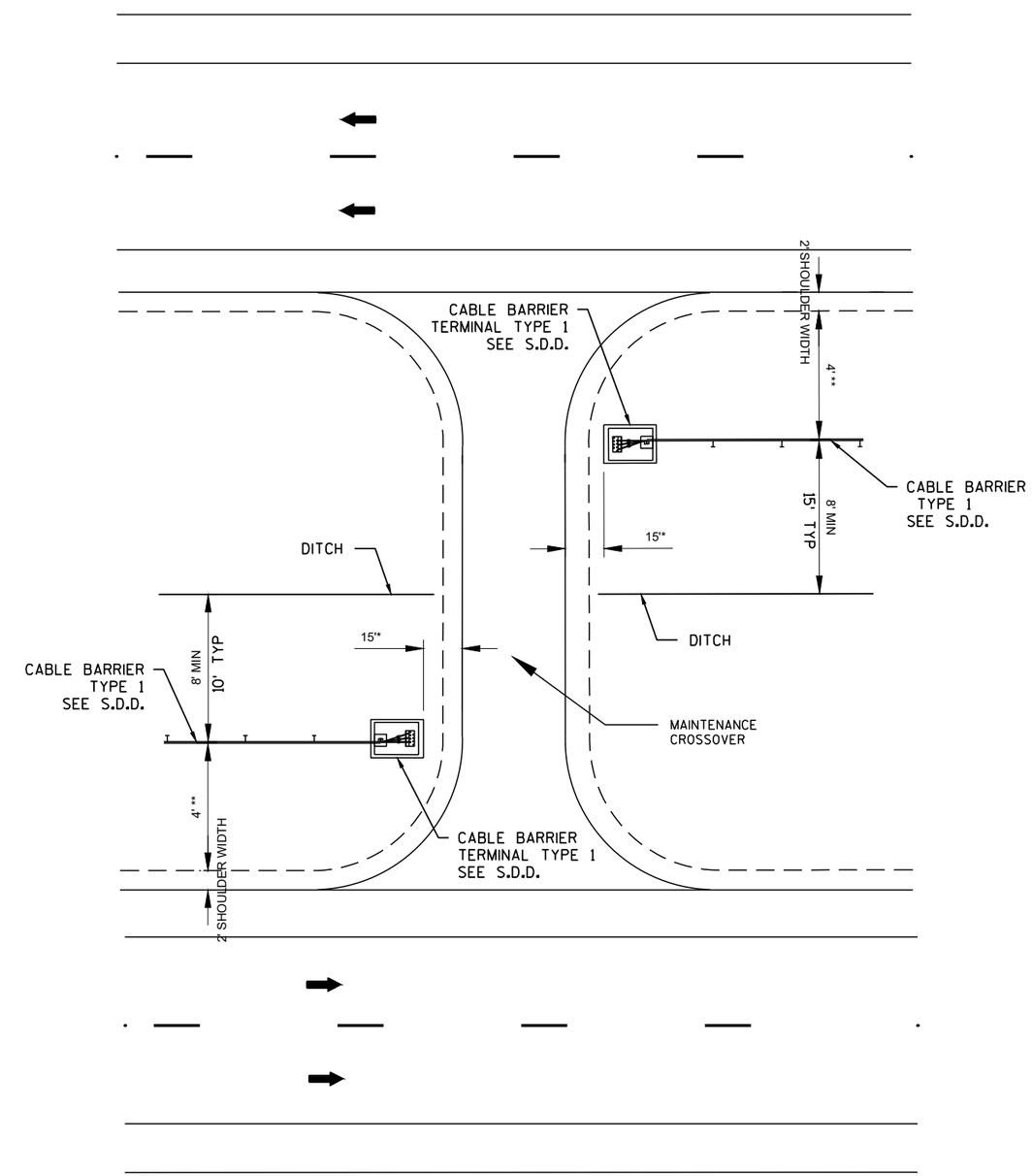

CABLE BARRIER END TERMINAL
AT MAINTENANCE CROSSOVER

* DISTANCE MEASURED FROM EDGE OF ASPHALT

** DISTANCE MEASURED FROM SHOULDER BREAK POINT

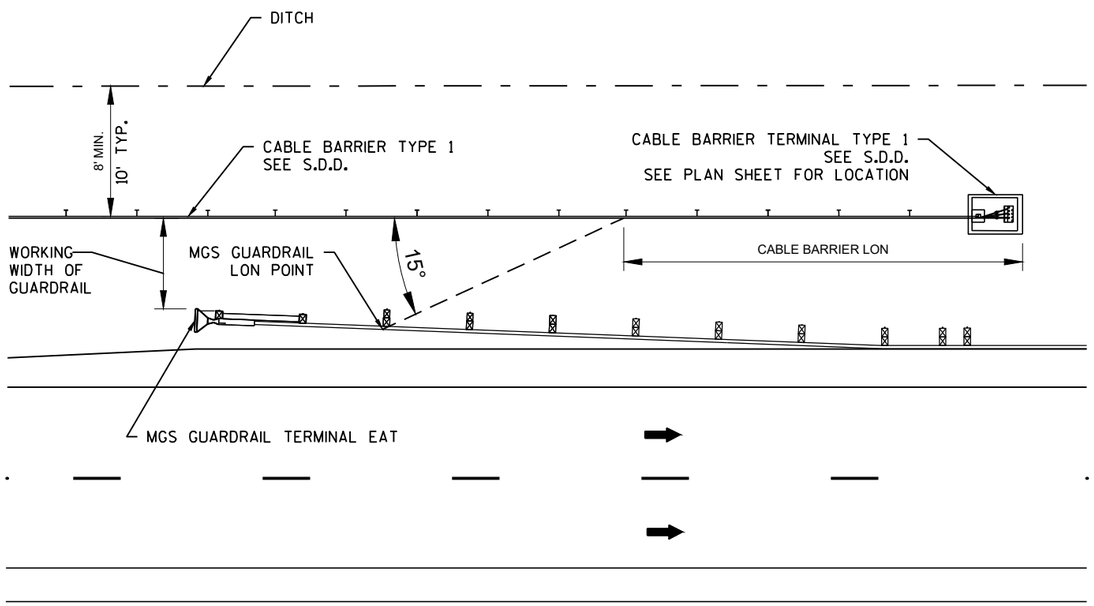

CABLE BARRIER END TERMINAL
AT MGS GUARDRAIL TERMINAL EAT

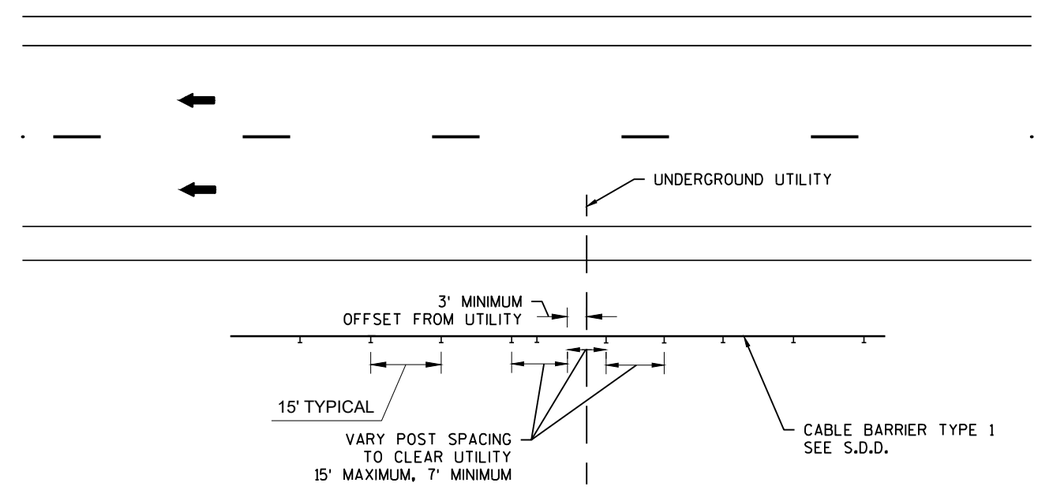

CABLE BARRIER AT
UNDERGROUND UTILITY

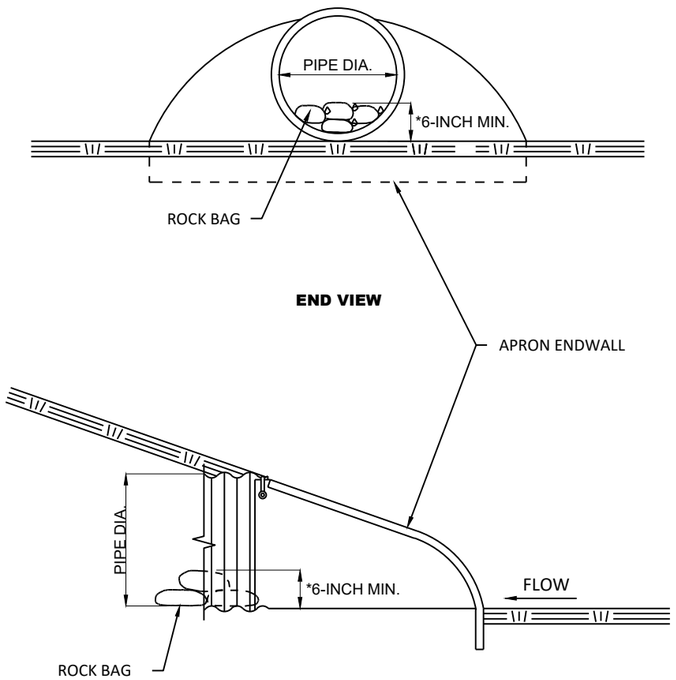

CULVERT PIPE CHECKS

*OR AS DIRECTED BY THE ENGINEER

ESTIMATED BAG SIZE 18" X 12" X 6"	
PIPE SIZE	**ESTIMATED NUMBER OF BAGS**
12"	1
15"	2
18"	2
24"	3
30"	5
36"	7
42"	7
48"	10
54"	10
60"	13
66"	14
72"	16
17"X13"	2
30"X19"	5
38"X24"	7
45"X29"	10
53"X34"	10
60"X38"	13
76"X48"	18
27' WIDE BOX CULVERT	36

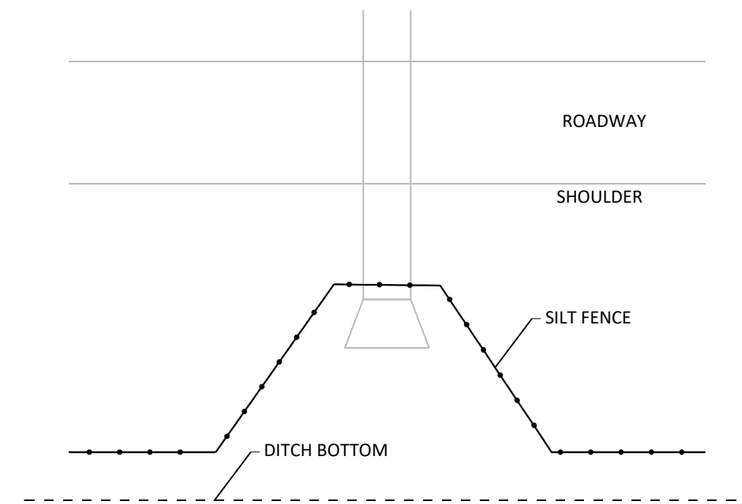

TYPICAL SILT FENCE DETAIL AT PIPE INLET

NOTE
SEE SILT FENCE SDD FOR ADDITIONAL INFORMATION.

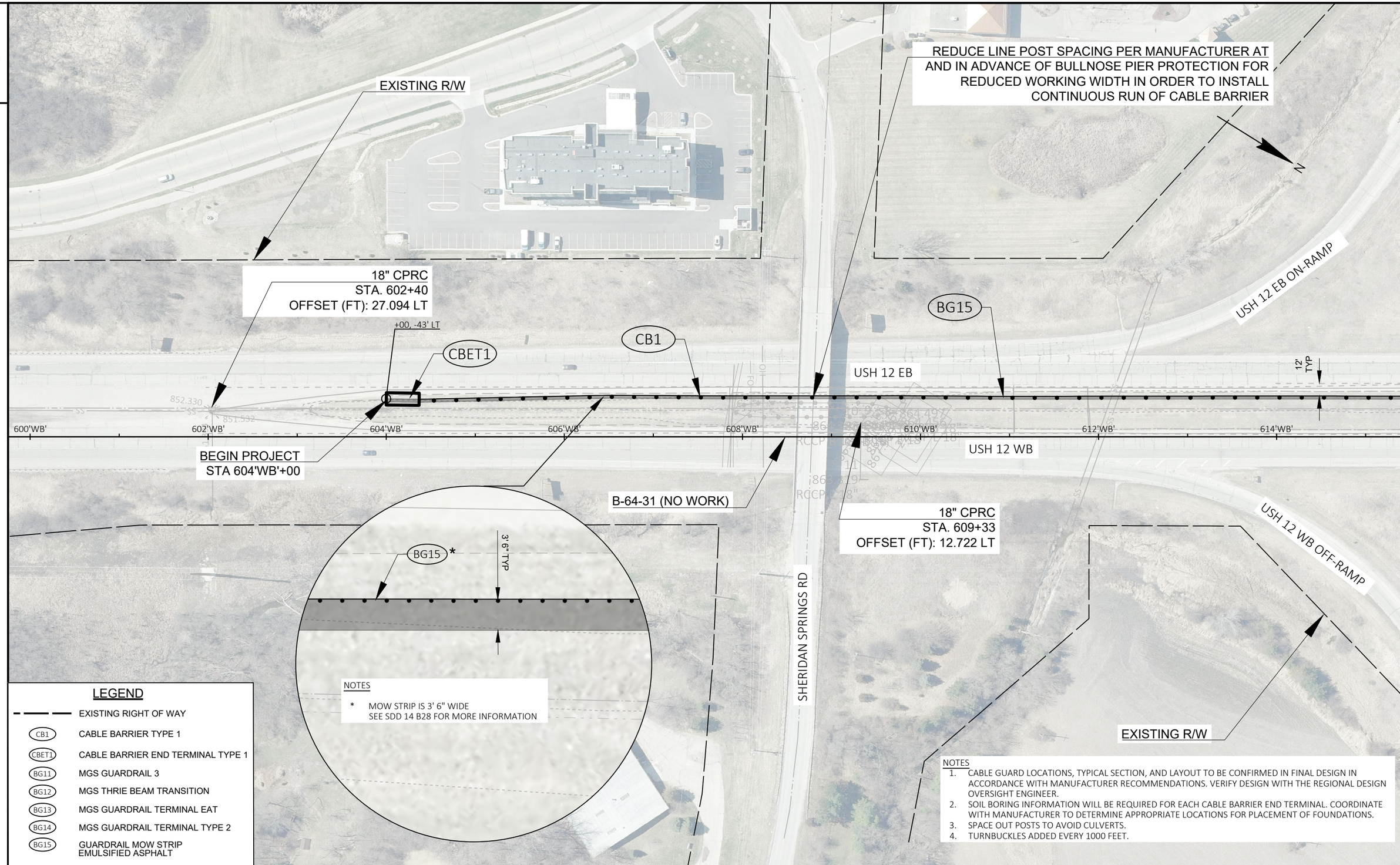

NOTES

1. CABLE GUARD LOCATIONS, TYPICAL SECTION, AND LAYOUT TO BE CONFIRMED IN FINAL DESIGN IN ACCORDANCE WITH MANUFACTURER RECOMMENDATIONS. VERIFY DESIGN WITH THE REGIONAL DESIGN OVERSIGHT ENGINEER.
2. SOIL BORING INFORMATION WILL BE REQUIRED FOR EACH CABLE BARRIER END TERMINAL. COORDINATE WITH MANUFACTURER TO DETERMINE APPROPRIATE LOCATIONS FOR PLACEMENT OF FOUNDATIONS.
3. SPACE OUT POSTS TO AVOID CULVERTS.
4. TURNBUCKLES ADDED EVERY 1000 FEET.

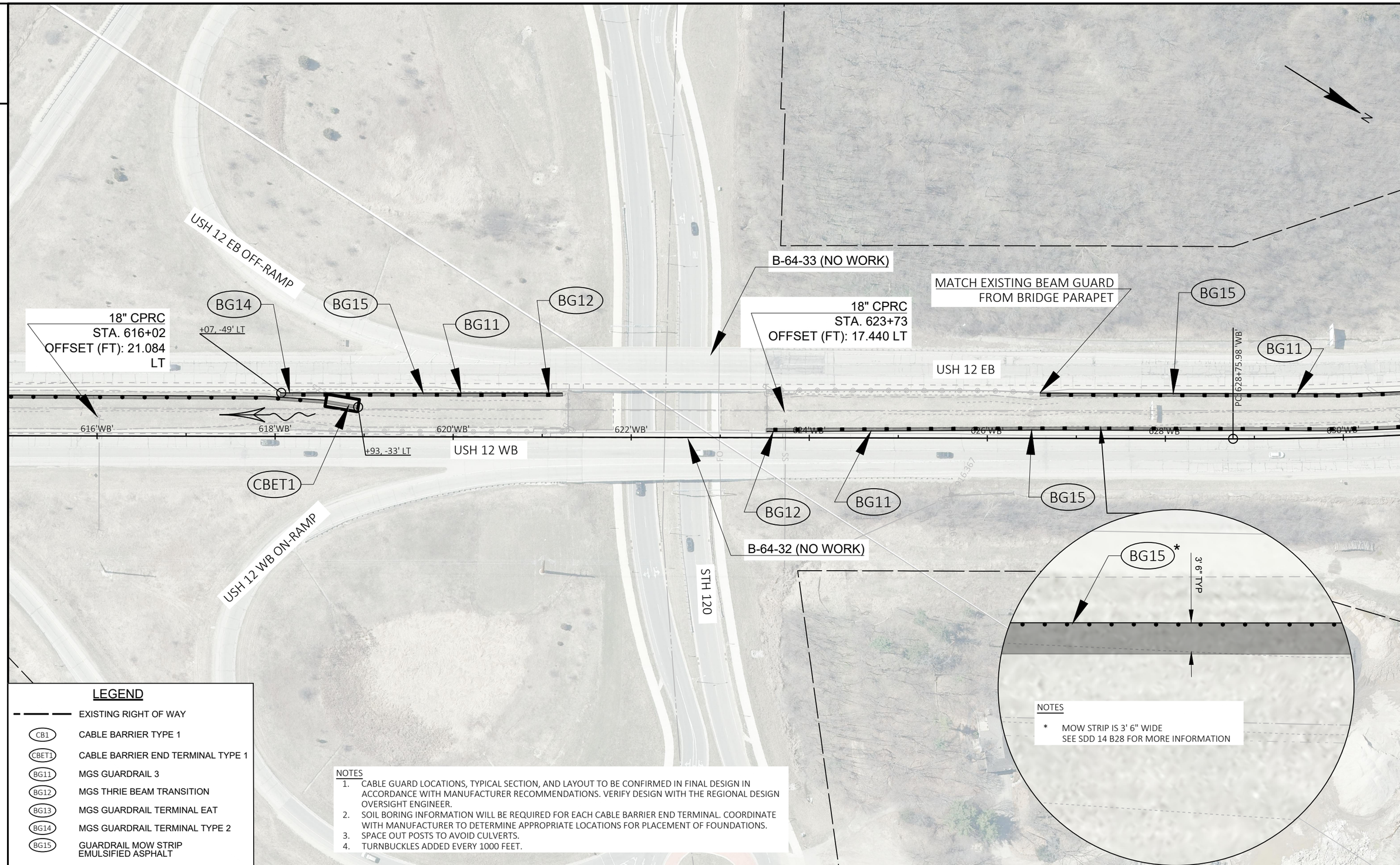

LEGEND

- EXISTING RIGHT OF WAY
- CB1 — CABLE BARRIER TYPE 1
- CBET1 — CABLE BARRIER END TERMINAL TYPE 1
- BG11 — MGS GUARDRAIL 3
- BG12 — MGS THRIE BEAM TRANSITION
- BG13 — MGS GUARDRAIL TERMINAL EAT
- BG14 — MGS GUARDRAIL TERMINAL TYPE 2
- BG15 — GUARDRAIL MOW STRIP EMULSIFIED ASPHALT

NOTES

1. CABLE GUARD LOCATIONS, TYPICAL SECTION, AND LAYOUT TO BE CONFIRMED IN FINAL DESIGN IN ACCORDANCE WITH MANUFACTURER RECOMMENDATIONS. VERIFY DESIGN WITH THE REGIONAL DESIGN OVERSIGHT ENGINEER.
2. SOIL BORING INFORMATION WILL BE REQUIRED FOR EACH CABLE BARRIER END TERMINAL. COORDINATE WITH MANUFACTURER TO DETERMINE APPROPRIATE LOCATIONS FOR PLACEMENT OF FOUNDATIONS.
3. SPACE OUT POSTS TO AVOID CULVERTS.
4. TURNBUCKLES ADDED EVERY 1000 FEET.

PROJECT NO: 1080-05-70	HWY: USH 12	COUNTY: WALWORTH	PLAN DETAILS	SHEET 14	E

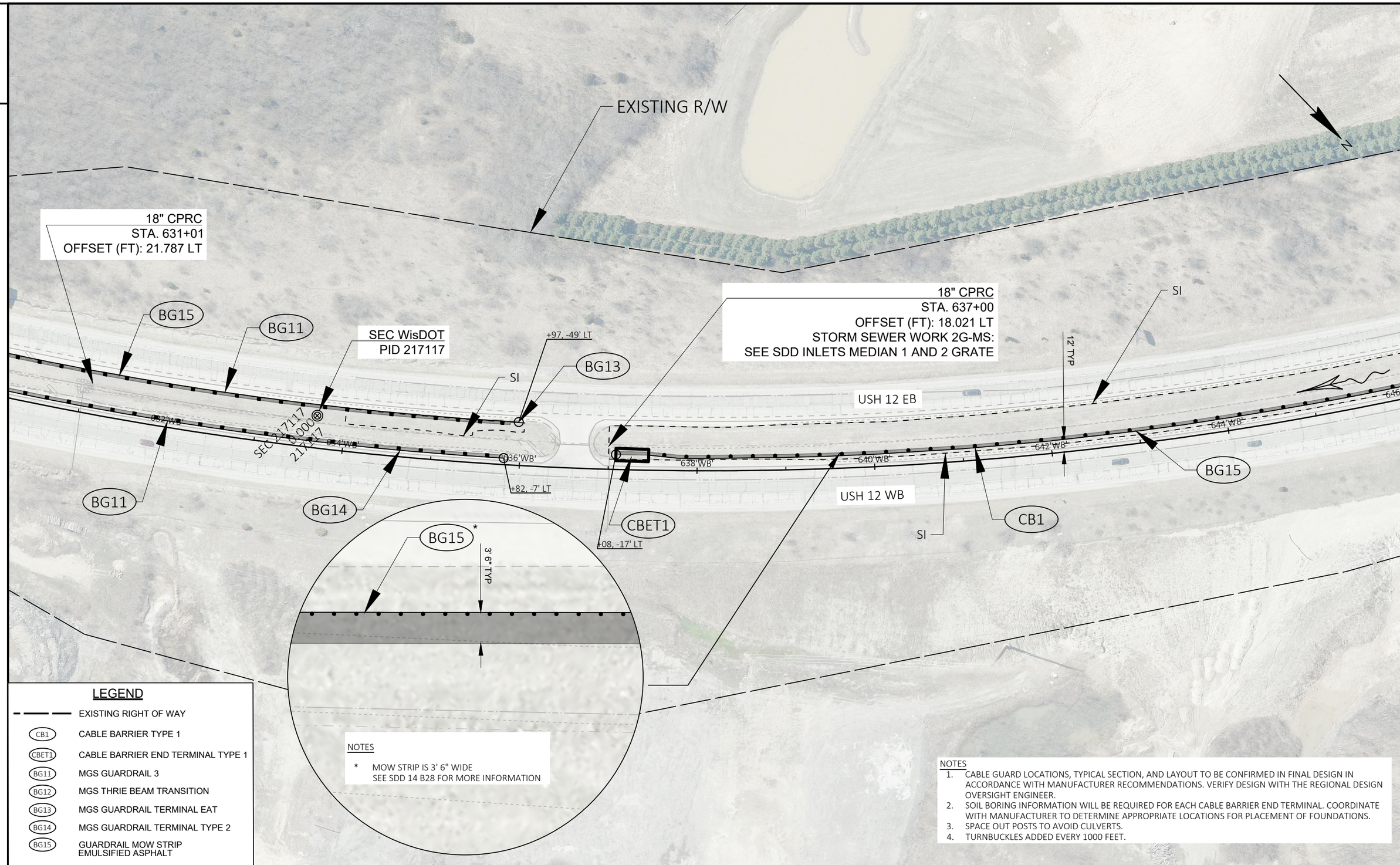

PROJECT NO: 1080-05-70	HWY: USH 12	COUNTY: WALWORTH	PLAN DETAILS	SHEET 15	E

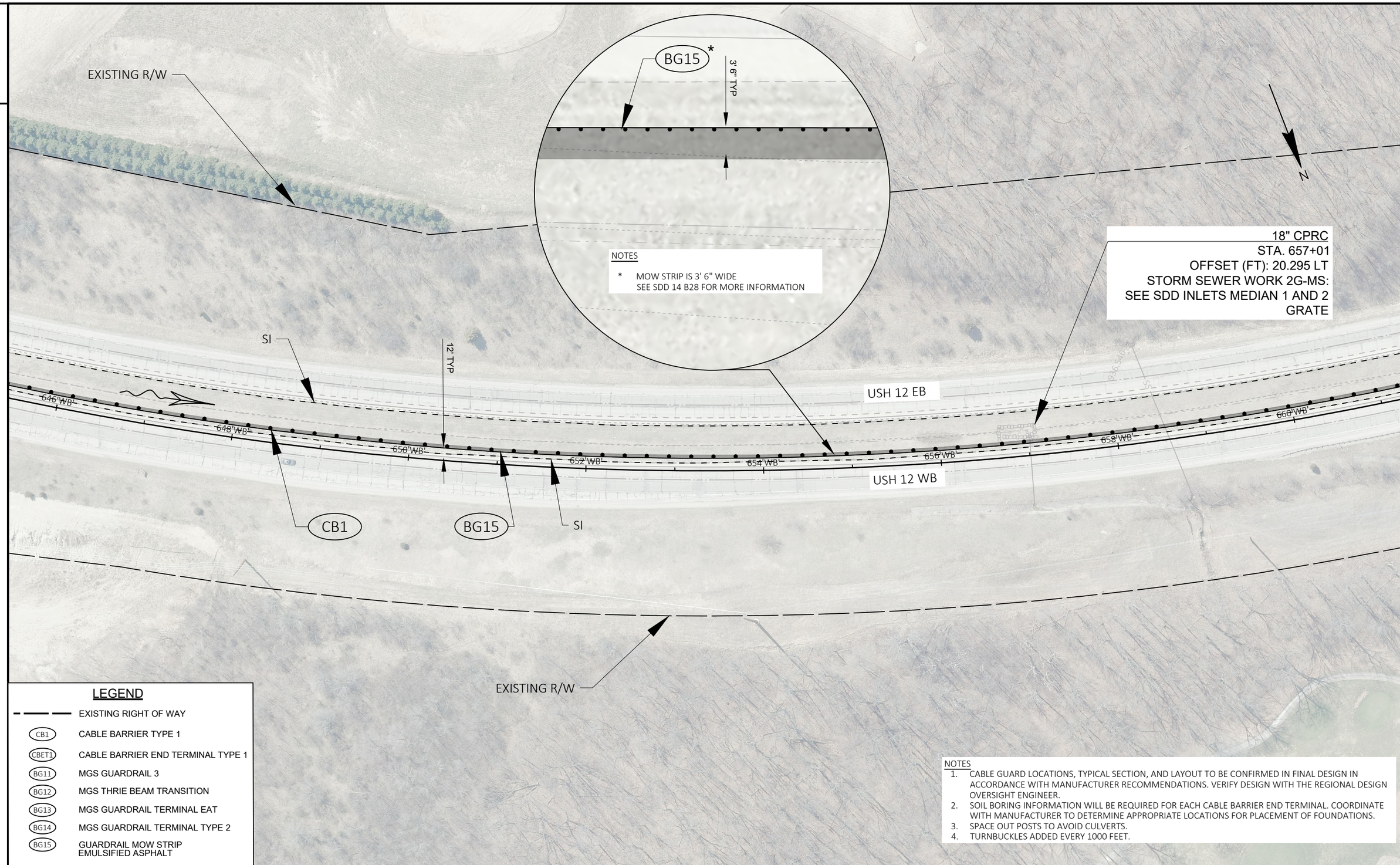

NOTES
1. CABLE GUARD LOCATIONS, TYPICAL SECTION, AND LAYOUT TO BE CONFIRMED IN FINAL DESIGN IN ACCORDANCE WITH MANUFACTURER RECOMMENDATIONS. VERIFY DESIGN WITH THE REGIONAL DESIGN OVERSIGHT ENGINEER.
2. SOIL BORING INFORMATION WILL BE REQUIRED FOR EACH CABLE BARRIER END TERMINAL. COORDINATE WITH MANUFACTURER TO DETERMINE APPROPRIATE LOCATIONS FOR PLACEMENT OF FOUNDATIONS.
3. SPACE OUT POSTS TO AVOID CULVERTS.
4. TURNBUCKLES ADDED EVERY 1000 FEET.

2

2

EXISTING R/W

N

18" CPRC
STA. 667+01
OFFSET (FT): 25.684 LT
STORM SEWER WORK 2G-MS:
SEE SDD INLETS MEDIAN 1 AND 2 GRATE

SI

12'

USH 12 EB

PT: 666+75.68 'WB'

662'WB' 664'WB' 666'WB' 668'WB' 670'WB' 672'WB' 674'WB' 676'WB'

USH 12 WB

CB1

BG15

BG15 *

3' 6" TYP

SI

EXISTING R/W

NOTES

* MOW STRIP IS 3' 6" WIDE
SEE SDD 14 B28 FOR MORE INFORMATION

NOTES

1. CABLE GUARD LOCATIONS, TYPICAL SECTION, AND LAYOUT TO BE CONFIRMED IN FINAL DESIGN IN ACCORDANCE WITH MANUFACTURER RECOMMENDATIONS. VERIFY DESIGN WITH THE REGIONAL DESIGN OVERSIGHT ENGINEER.
2. SOIL BORING INFORMATION WILL BE REQUIRED FOR EACH CABLE BARRIER END TERMINAL. COORDINATE WITH MANUFACTURER TO DETERMINE APPROPRIATE LOCATIONS FOR PLACEMENT OF FOUNDATIONS.
3. SPACE OUT POSTS TO AVOID CULVERTS.
4. TURNBUCKLES ADDED EVERY 1000 FEET.

LEGEND

— — —	EXISTING RIGHT OF WAY
CB1	CABLE BARRIER TYPE 1
CBET1	CABLE BARRIER END TERMINAL TYPE 1
BG11	MGS GUARDRAIL 3
BG12	MGS THRIE BEAM TRANSITION
BG13	MGS GUARDRAIL TERMINAL EAT
BG14	MGS GUARDRAIL TERMINAL TYPE 2
BG15	GUARDRAIL MOW STRIP EMULSIFIED ASPHALT

PROJECT NO: 1080-05-70	HWY: USH 12	COUNTY: WALWORTH	PLAN DETAILS	SHEET 17	E

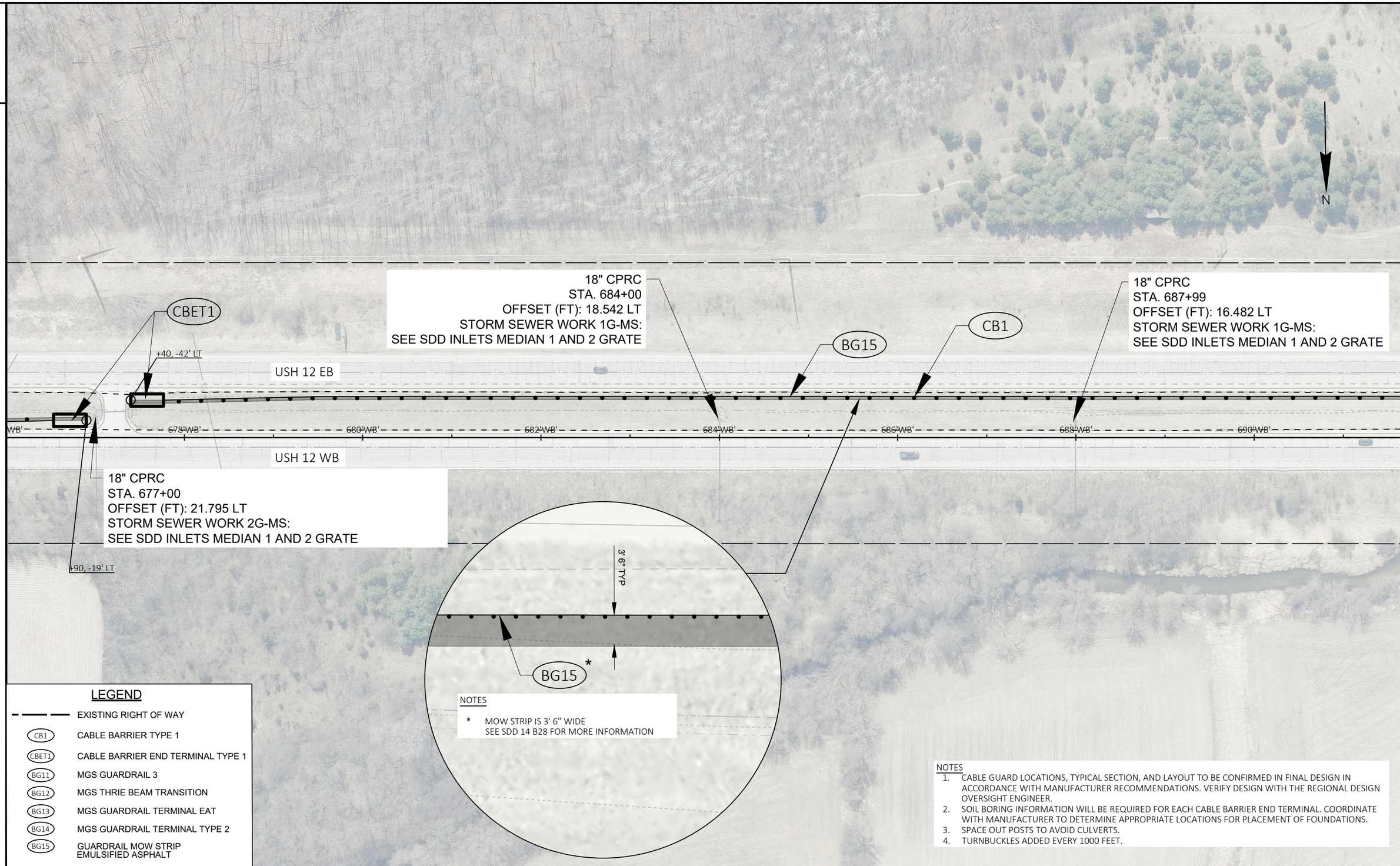

PROJECT NO: 1080-05-70	HWY: USH 12	COUNTY: WALWORTH	PLAN DETAILS	SHEET 18	E

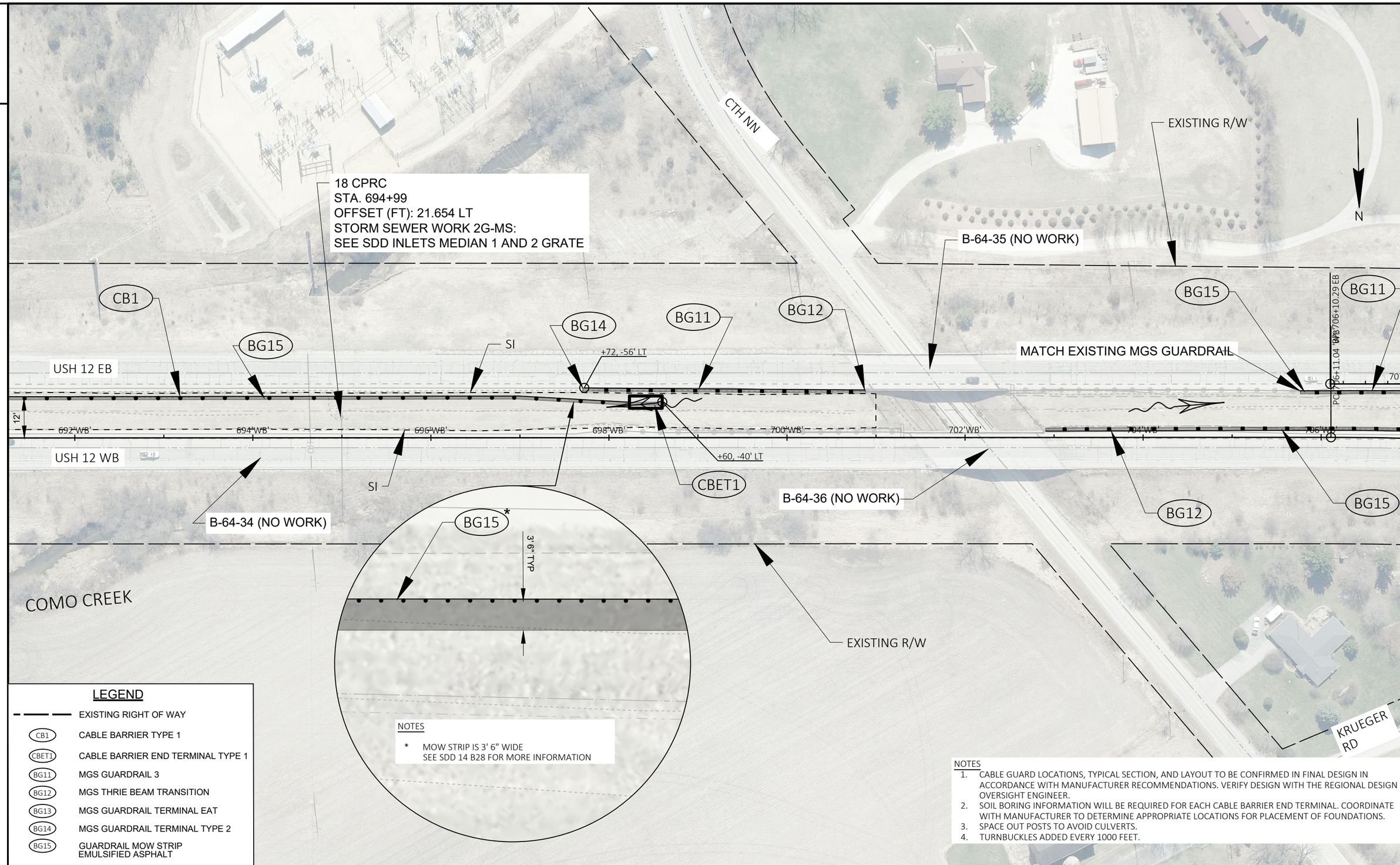

LEGEND

- EXISTING RIGHT OF WAY
- CB1 — CABLE BARRIER TYPE 1
- CBET1 — CABLE BARRIER END TERMINAL TYPE 1
- BG11 — MGS GUARDRAIL 3
- BG12 — MGS THRIE BEAM TRANSITION
- BG13 — MGS GUARDRAIL TERMINAL EAT
- BG14 — MGS GUARDRAIL TERMINAL TYPE 2
- BG15 — GUARDRAIL MOW STRIP EMULSIFIED ASPHALT

NOTES

* MOW STRIP IS 3' 6" WIDE
SEE SDD 14 B28 FOR MORE INFORMATION

NOTES

1. CABLE GUARD LOCATIONS, TYPICAL SECTION, AND LAYOUT TO BE CONFIRMED IN FINAL DESIGN IN ACCORDANCE WITH MANUFACTURER RECOMMENDATIONS. VERIFY DESIGN WITH THE REGIONAL DESIGN OVERSIGHT ENGINEER.
2. SOIL BORING INFORMATION WILL BE REQUIRED FOR EACH CABLE BARRIER END TERMINAL. COORDINATE WITH MANUFACTURER TO DETERMINE APPROPRIATE LOCATIONS FOR PLACEMENT OF FOUNDATIONS.
3. SPACE OUT POSTS TO AVOID CULVERTS.
4. TURNBUCKLES ADDED EVERY 1000 FEET.

PROJECT NO: 1080-05-70	HWY: USH 12	COUNTY: WALWORTH	PLAN DETAILS	SHEET 19	E

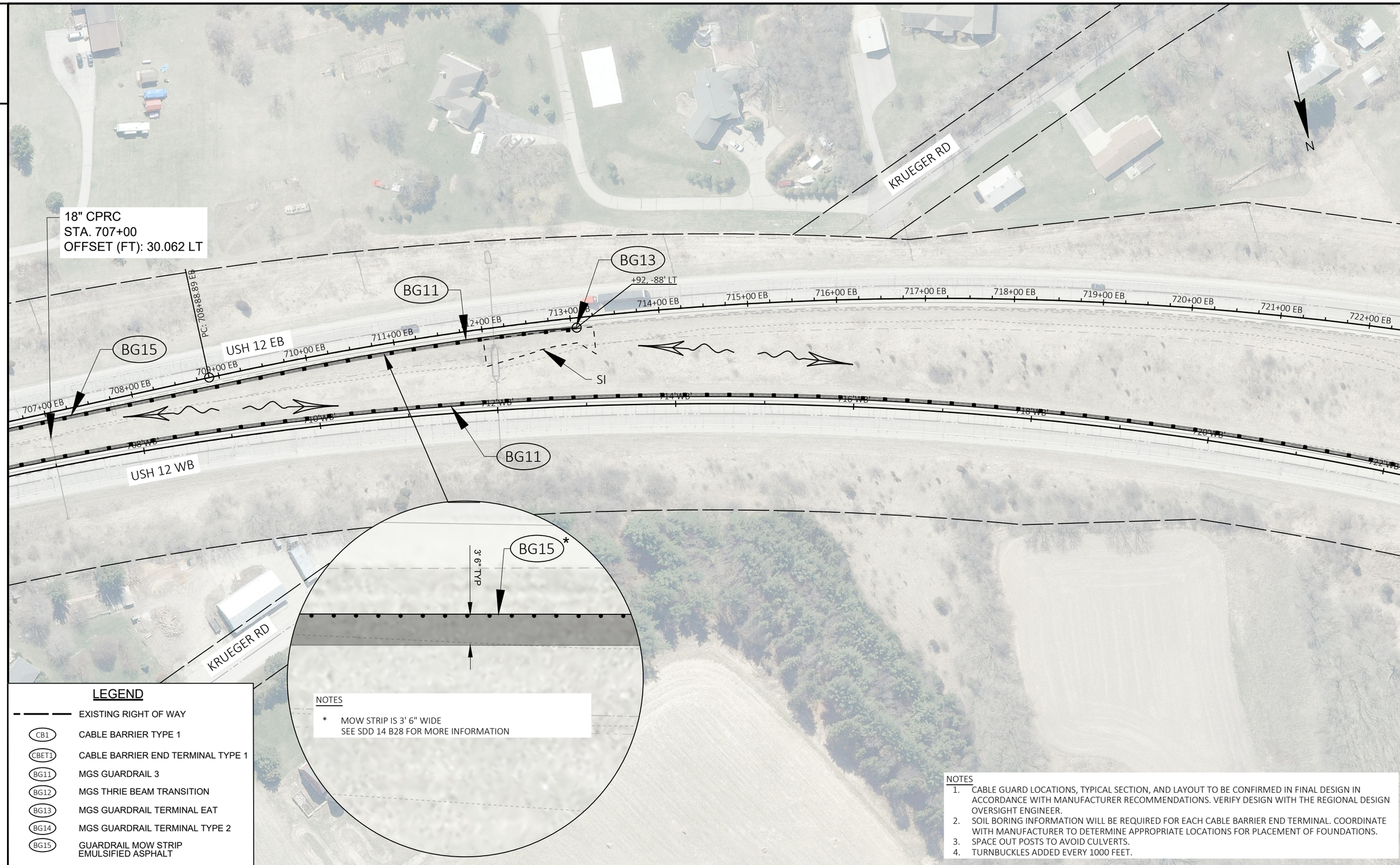

NOTES

1. CABLE GUARD LOCATIONS, TYPICAL SECTION, AND LAYOUT TO BE CONFIRMED IN FINAL DESIGN IN ACCORDANCE WITH MANUFACTURER RECOMMENDATIONS. VERIFY DESIGN WITH THE REGIONAL DESIGN OVERSIGHT ENGINEER.
2. SOIL BORING INFORMATION WILL BE REQUIRED FOR EACH CABLE BARRIER END TERMINAL. COORDINATE WITH MANUFACTURER TO DETERMINE APPROPRIATE LOCATIONS FOR PLACEMENT OF FOUNDATIONS.
3. SPACE OUT POSTS TO AVOID CULVERTS.
4. TURNBUCKLES ADDED EVERY 1000 FEET.

PROJECT NO: 1080-05-70	HWY: USH 12	COUNTY: WALWORTH	PLAN DETAILS	SHEET 20	E

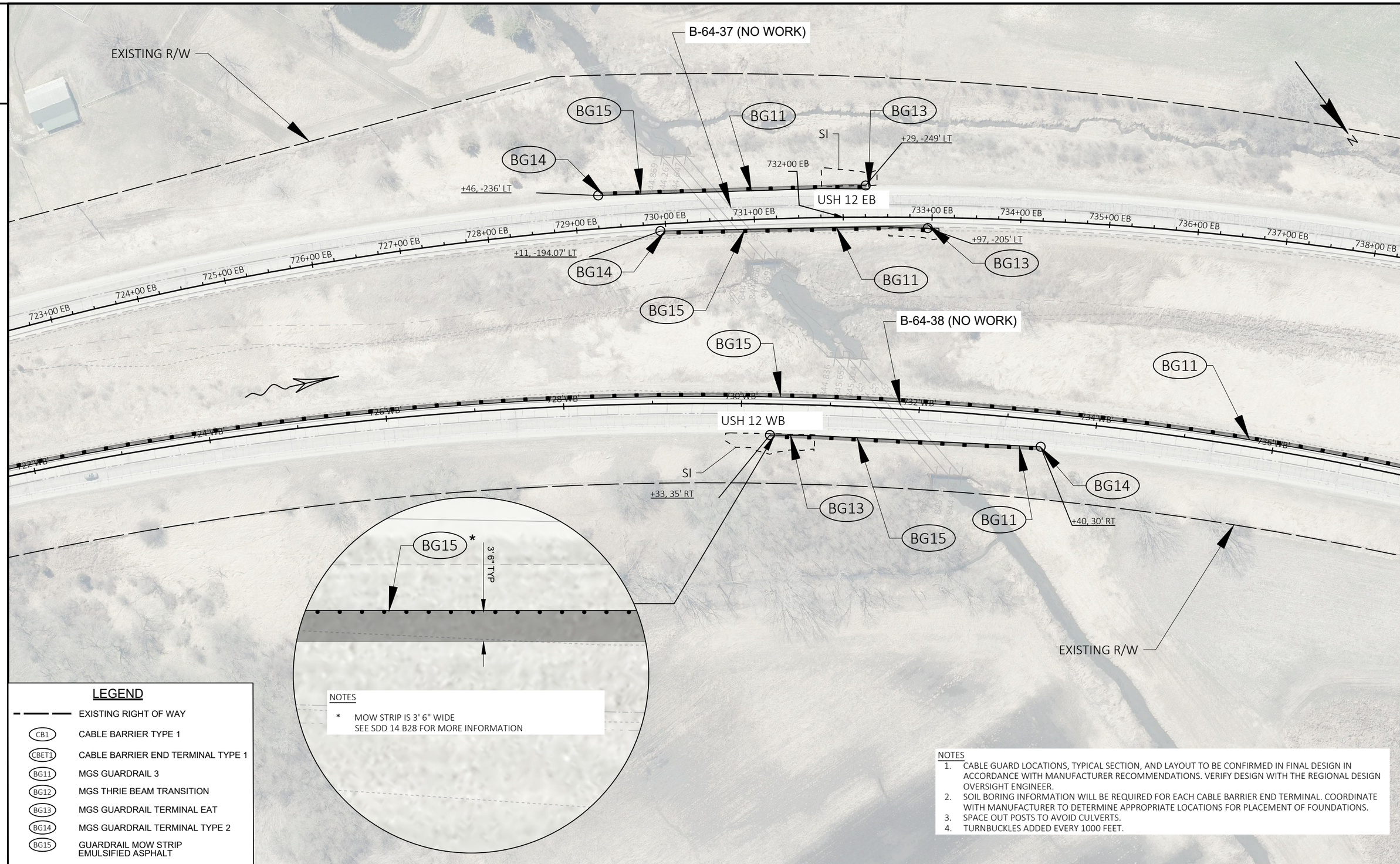

NOTES

* MOW STRIP IS 3' 6" WIDE
SEE SDD 14 B28 FOR MORE INFORMATION

LEGEND

- EXISTING RIGHT OF WAY
- CB1 — CABLE BARRIER TYPE 1
- CBET1 — CABLE BARRIER END TERMINAL TYPE 1
- BG11 — MGS GUARDRAIL 3
- BG12 — MGS THRIE BEAM TRANSITION
- BG13 — MGS GUARDRAIL TERMINAL EAT
- BG14 — MGS GUARDRAIL TERMINAL TYPE 2
- BG15 — GUARDRAIL MOW STRIP EMULSIFIED ASPHALT

NOTES

1. CABLE GUARD LOCATIONS, TYPICAL SECTION, AND LAYOUT TO BE CONFIRMED IN FINAL DESIGN IN ACCORDANCE WITH MANUFACTURER RECOMMENDATIONS. VERIFY DESIGN WITH THE REGIONAL DESIGN OVERSIGHT ENGINEER.
2. SOIL BORING INFORMATION WILL BE REQUIRED FOR EACH CABLE BARRIER END TERMINAL. COORDINATE WITH MANUFACTURER TO DETERMINE APPROPRIATE LOCATIONS FOR PLACEMENT OF FOUNDATIONS.
3. SPACE OUT POSTS TO AVOID CULVERTS.
4. TURNBUCKLES ADDED EVERY 1000 FEET.

PROJECT NO: 1080-05-70	HWY: USH 12	COUNTY: WALWORTH	PLAN DETAILS	SHEET 21	E

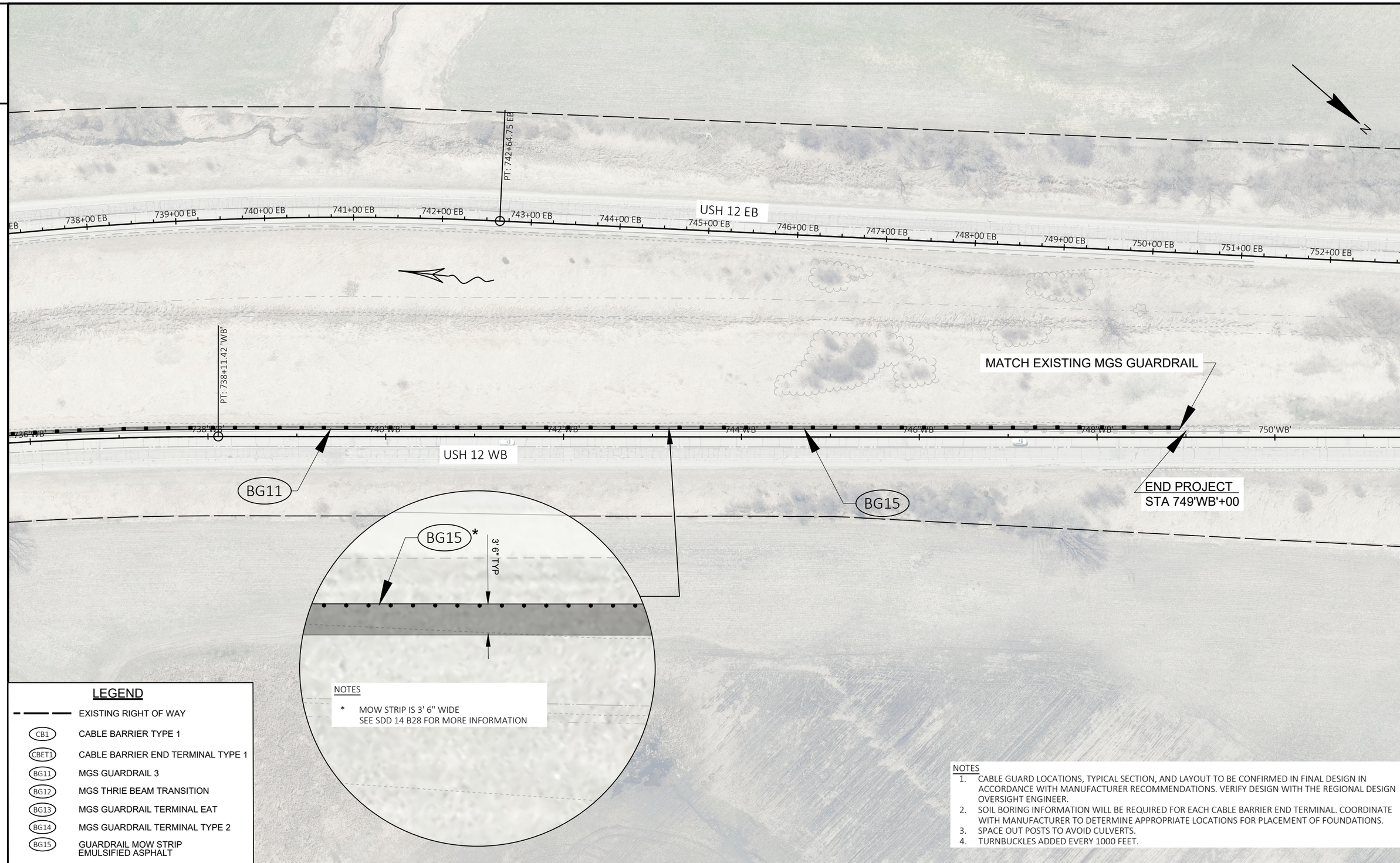

NOTES

1. CABLE GUARD LOCATIONS, TYPICAL SECTION, AND LAYOUT TO BE CONFIRMED IN FINAL DESIGN IN ACCORDANCE WITH MANUFACTURER RECOMMENDATIONS. VERIFY DESIGN WITH THE REGIONAL DESIGN OVERSIGHT ENGINEER.
2. SOIL BORING INFORMATION WILL BE REQUIRED FOR EACH CABLE BARRIER END TERMINAL. COORDINATE WITH MANUFACTURER TO DETERMINE APPROPRIATE LOCATIONS FOR PLACEMENT OF FOUNDATIONS.
3. SPACE OUT POSTS TO AVOID CULVERTS.
4. TURNBUCKLES ADDED EVERY 1000 FEET.

PROJECT NO: 1080-05-70	HWY: USH 12	COUNTY: WALWORTH	PLAN DETAILS	SHEET 22	E

2

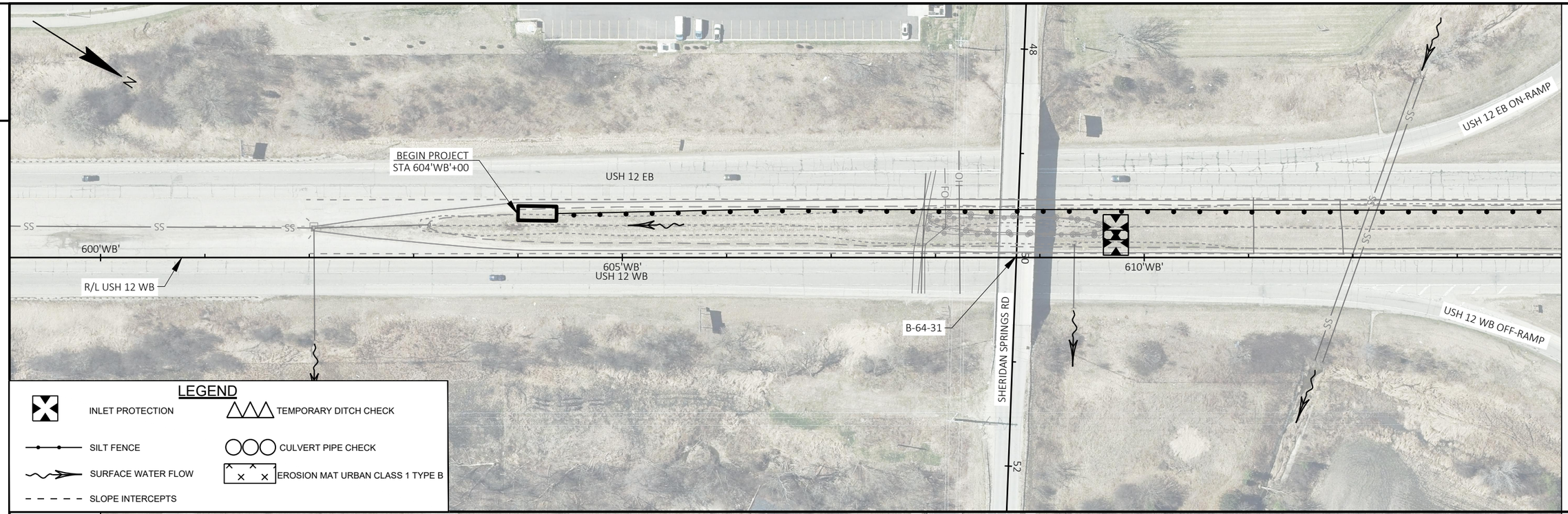

2

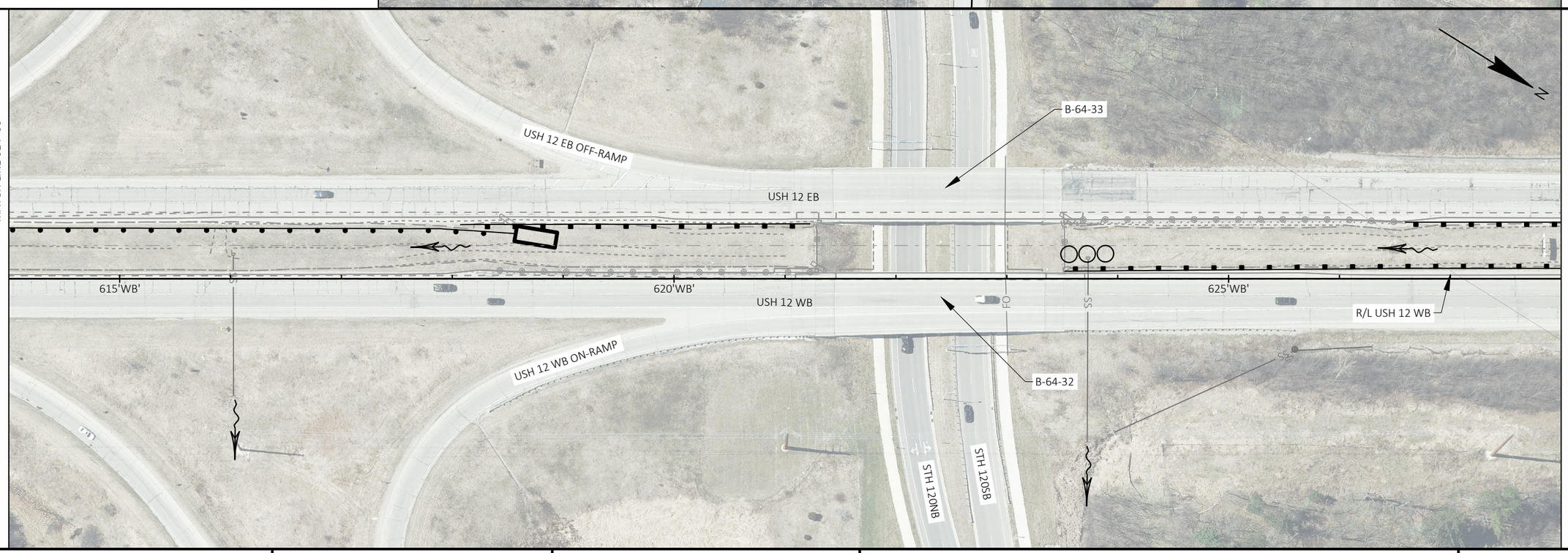

PROJECT NO: 1080-05-70	HWY: USH 12	COUNTY: WALWORTH	EROSION CONTROL	SHEET 23	E

FILE NAME : C:\OD\ONEDRIVE - CORRE, INC\1000-00-76_2022 VARIOUS SE REGION PROJECTS\500_CADD\501_C3D_2022\10800500\SHEETS\022001-EC.DWG
LAYOUT NAME - 01
PLOT DATE : 11/19/2025 4:55 PM
PLOT BY : JESSICA LEWIS, PE
PLOT NAME :
PLOT SCALE : 1 IN:100 FT

2

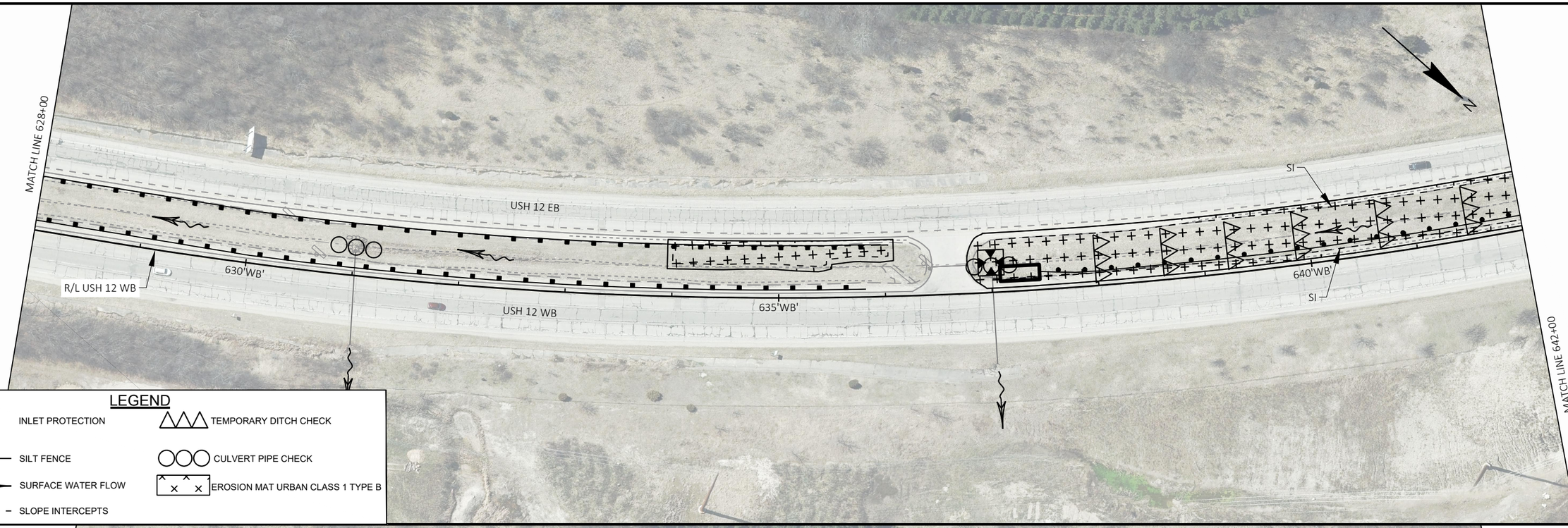

LEGEND

- INLET PROTECTION
- TEMPORARY DITCH CHECK
- SILT FENCE
- CULVERT PIPE CHECK
- SURFACE WATER FLOW
- EROSION MAT URBAN CLASS 1 TYPE B
- SLOPE INTERCEPTS

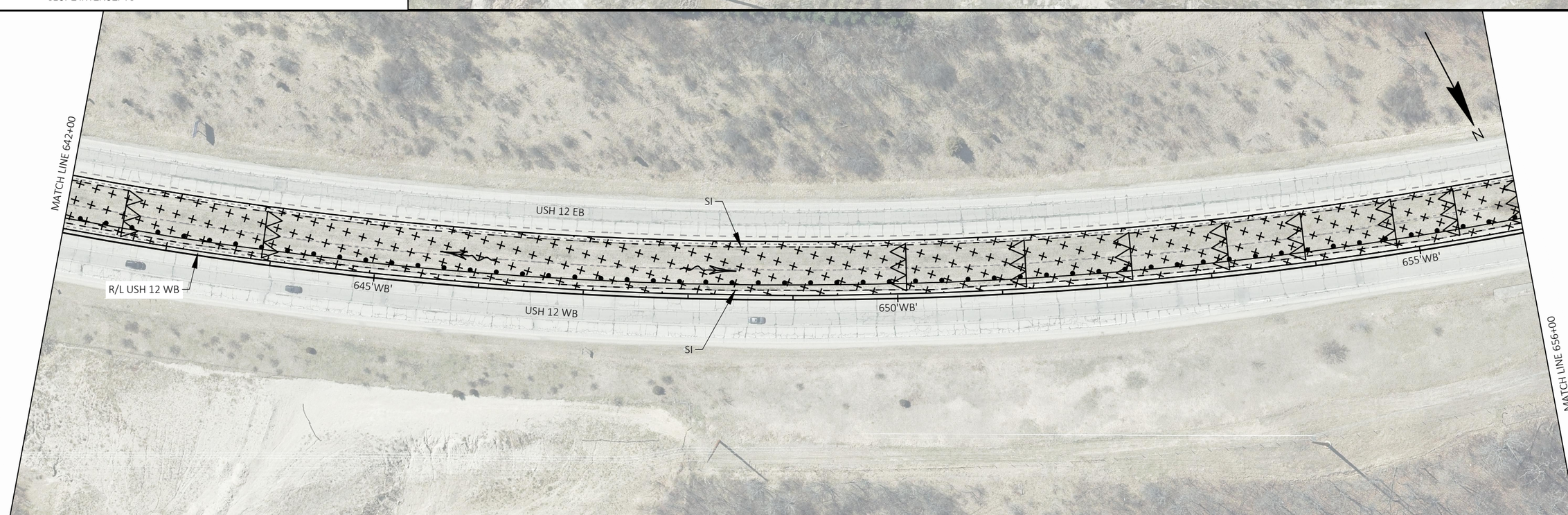

2

PROJECT NO: 1080-05-70	HWY: USH 12	COUNTY: WALWORTH	EROSION CONTROL	SHEET 24	E

FILE NAME : C:\OD\ONEDRIVE - CORRE, INC\1000-00-76_2022 VARIOUS SE REGION PROJECTS\500_CADD\501_C3D_2022\10800500\SHEETS\022001-EC.DWG
LAYOUT NAME - 02
PLOT DATE : 11/19/2025 4:55 PM PLOT BY : JESSICA LEWIS, PE PLOT NAME : PLOT SCALE : 1 IN:100 FT

2

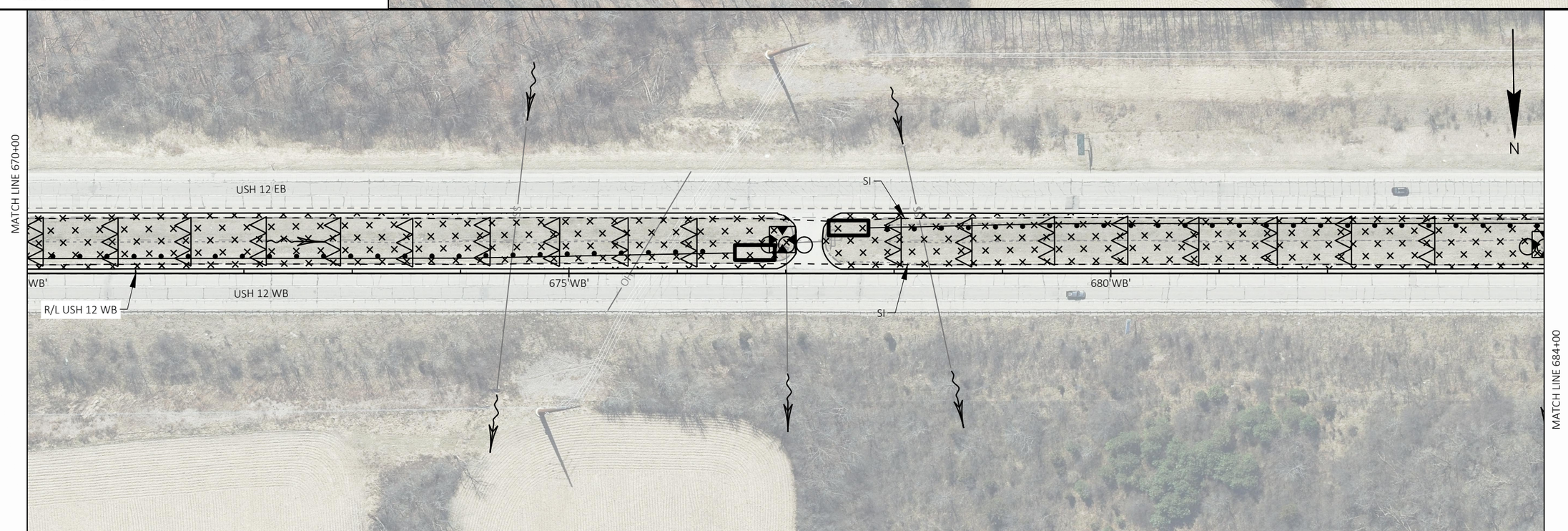

2

PROJECT NO: 1080-05-70	HWY: USH 12	COUNTY: WALWORTH	EROSION CONTROL	SHEET 25	E

FILE NAME : C:\OD\ONEDRIVE - CORRE, INC\1000-00-76_2022 VARIOUS SE REGION PROJECTS\500_CADD\501_C3D_2022\10800500\SHEETS\022001-EC.DWG
LAYOUT NAME - 03
PLOT DATE : 11/19/2025 4:55 PM PLOT BY : JESSICA LEWIS, PE PLOT NAME : PLOT SCALE : 1 IN:100 FT
WISDOT/CADDS SHEET 44

2

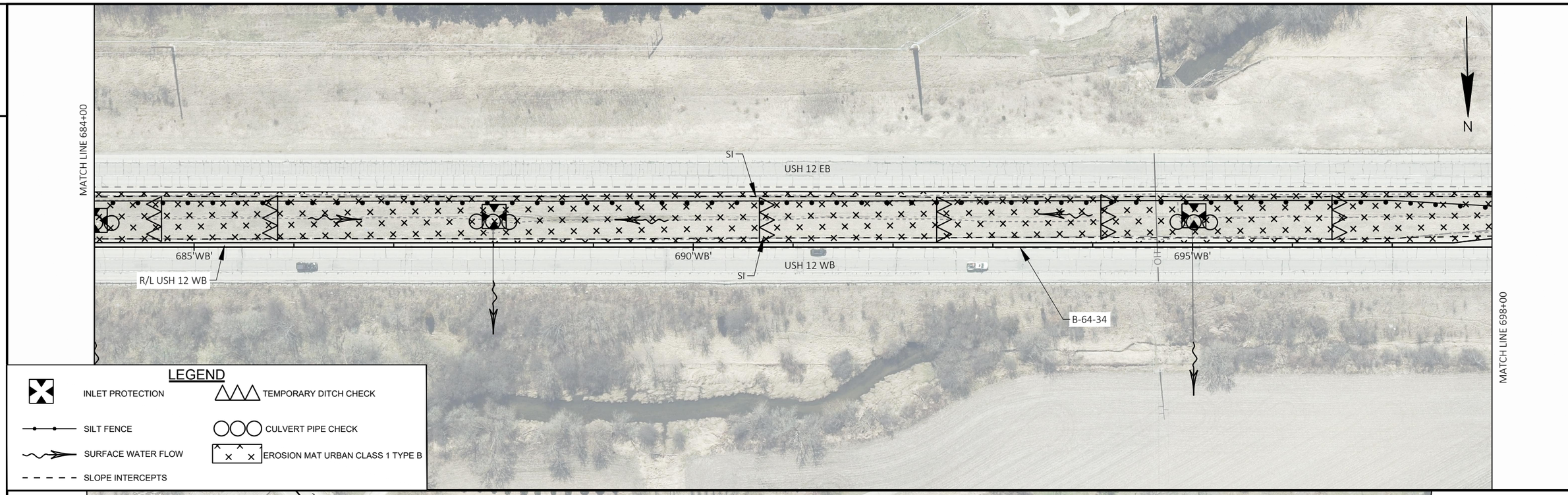

LEGEND

- INLET PROTECTION
- TEMPORARY DITCH CHECK
- SILT FENCE
- CULVERT PIPE CHECK
- SURFACE WATER FLOW
- EROSION MAT URBAN CLASS 1 TYPE B
- SLOPE INTERCEPTS

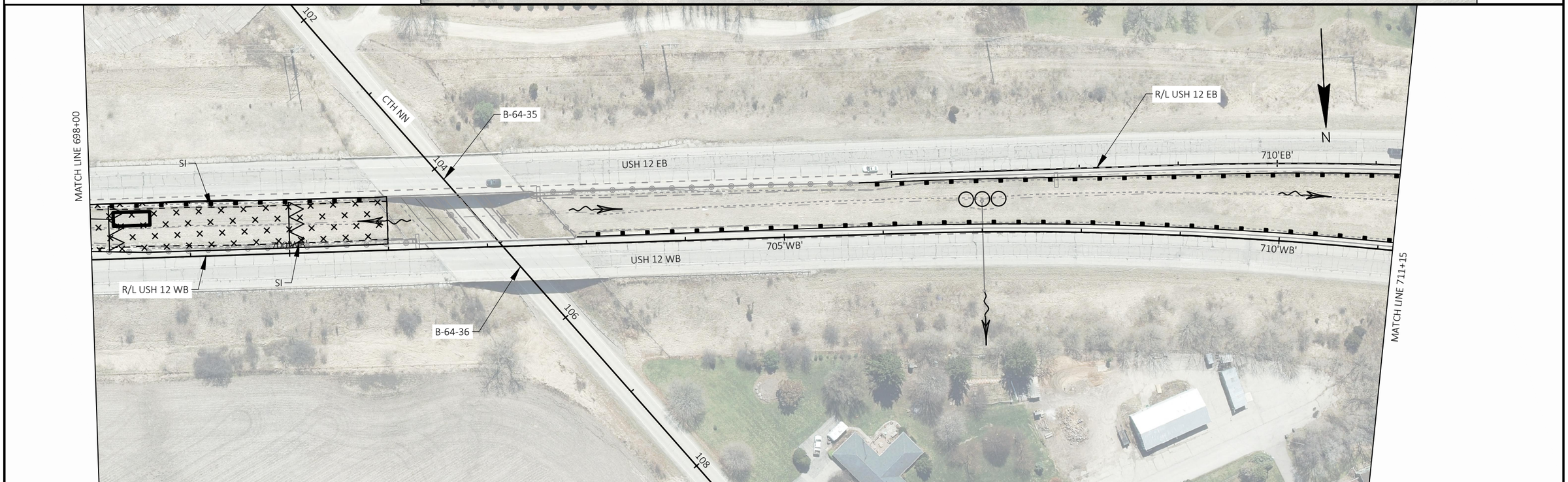

2

PROJECT NO: 1080-05-70	HWY: USH 12	COUNTY: WALWORTH	EROSION CONTROL	SHEET 26	E

FILE NAME : C:\OD\ONEDRIVE - CORRE, INC\1000-00-76_2022 VARIOUS SE REGION PROJECTS\500_CADD\501_C3D_2022\10800500\SHEETS\022001-EC.DWG
LAYOUT NAME - 04
PLOT DATE : 11/19/2025 4:55 PM PLOT BY : JESSICA LEWIS, PE PLOT NAME : PLOT SCALE : 1 IN:100 FT

LEGEND

- INLET PROTECTION
- TEMPORARY DITCH CHECK
- SILT FENCE
- CULVERT PIPE CHECK
- SURFACE WATER FLOW
- EROSION MAT URBAN CLASS 1 TYPE B
- SLOPE INTERCEPTS

2

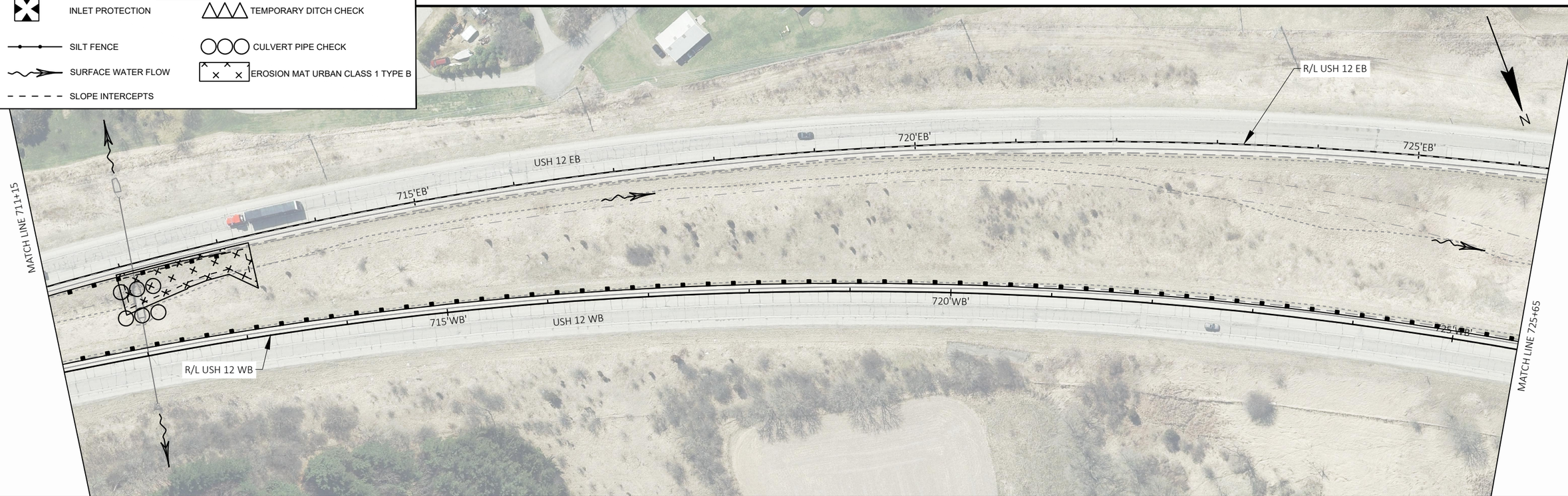

2

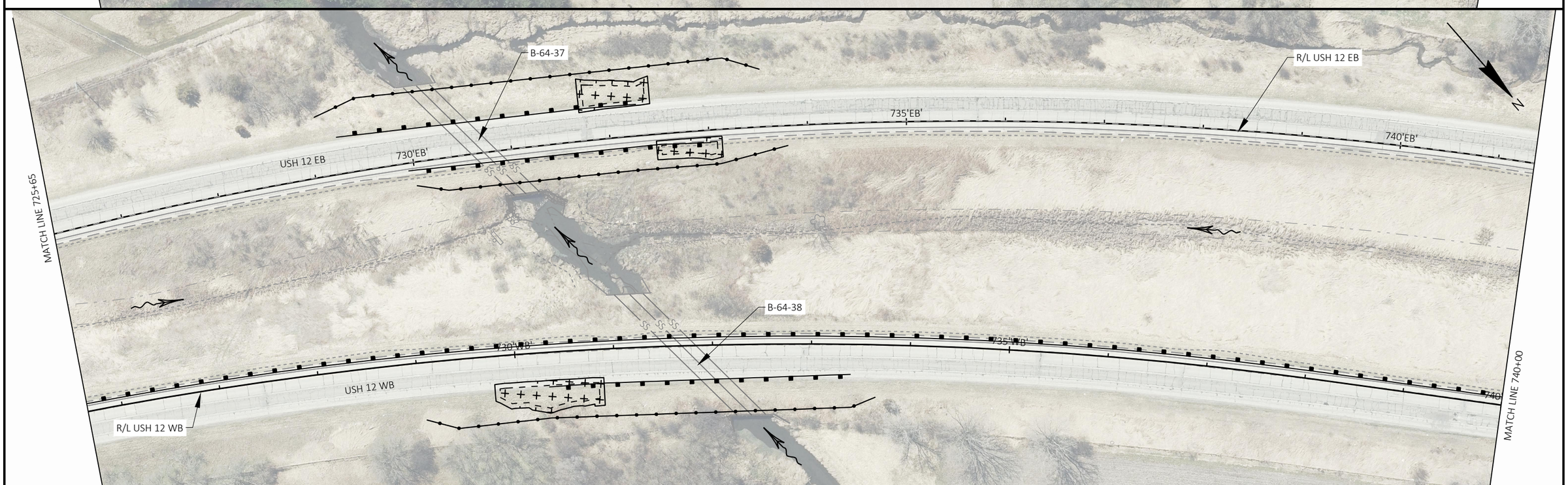

PROJECT NO: 1080-05-70	HWY: USH 12	COUNTY: WALWORTH	EROSION CONTROL	SHEET 27	E

FILE NAME : C:\OD\ONEDRIVE - CORRE, INC\1000-00-76_2022 VARIOUS SE REGION PROJECTS\500_CADD\501_C3D_2022\10800500\SHEETS\022001-EC.DWG
LAYOUT NAME - 05
PLOT DATE : 11/19/2025 4:56 PM PLOT BY : JESSICA LEWIS, PE PLOT NAME : PLOT SCALE : 1 IN:100 FT

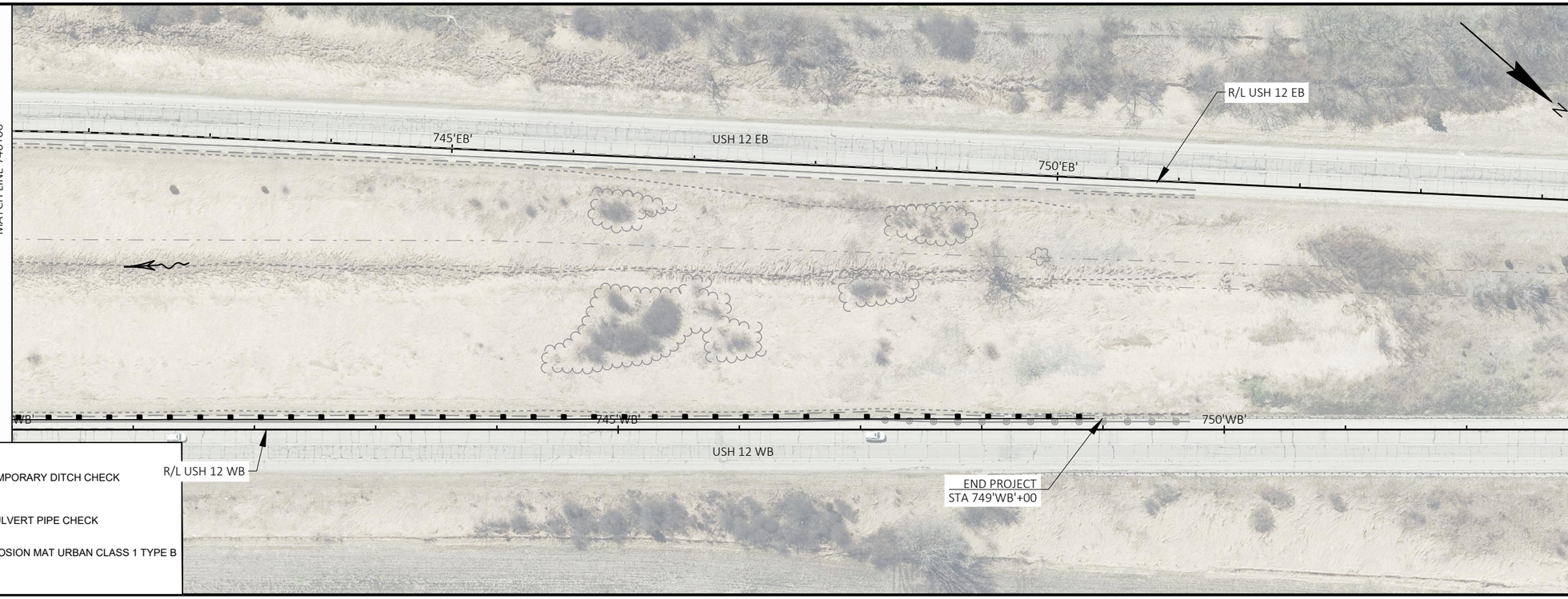

LEGEND

- INLET PROTECTION
- TEMPORARY DITCH CHECK
- SILT FENCE
- CULVERT PIPE CHECK
- SURFACE WATER FLOW
- EROSION MAT URBAN CLASS 1 TYPE B
- SLOPE INTERCEPTS

INTENTIONALLY LEFT BLANK

PROJECT NO: 1080-05-70	HWY: USH 12	COUNTY: WALWORTH	EROSION CONTROL	SHEET 28	E

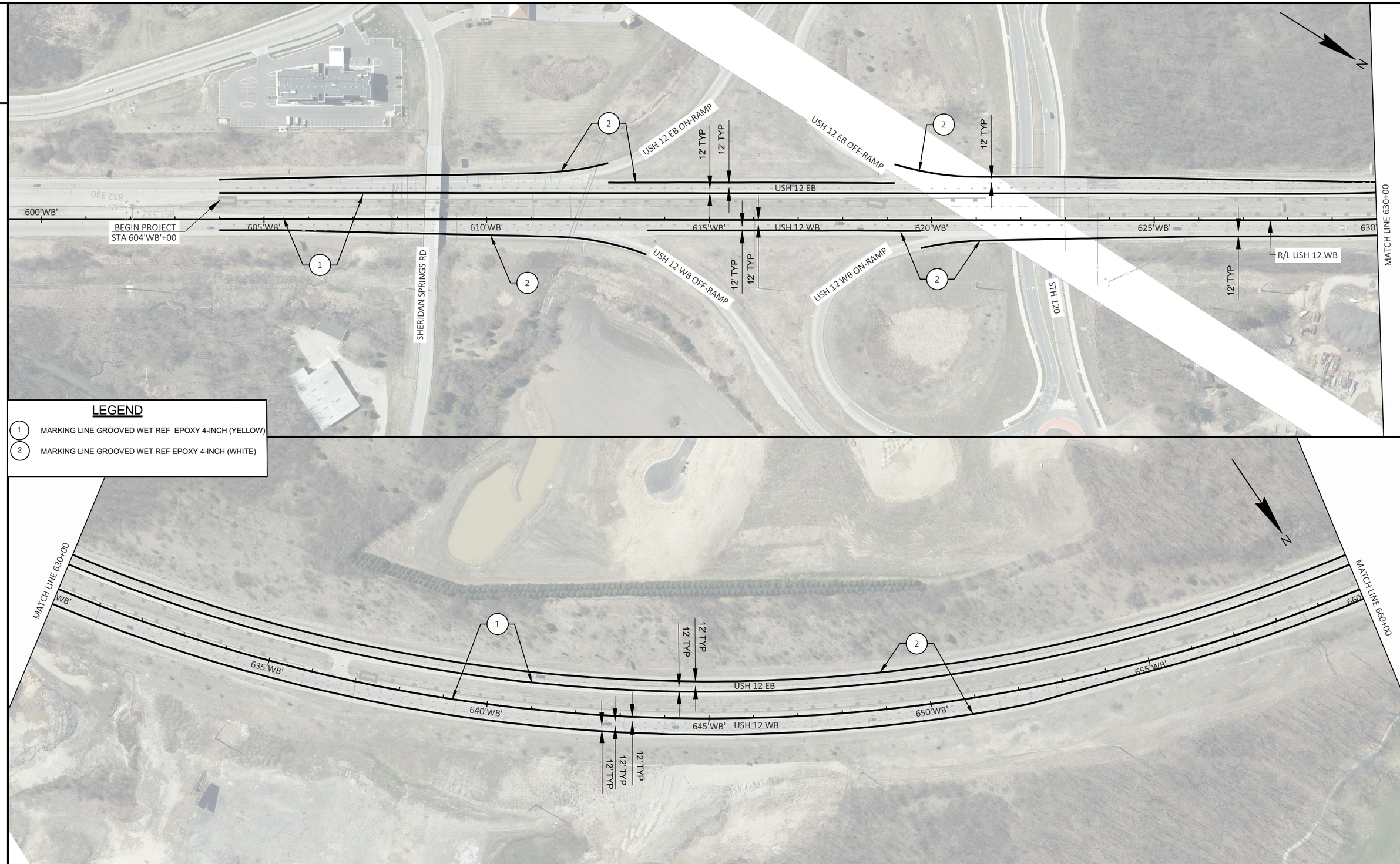

LEGEND

1. MARKING LINE GROOVED WET REF EPOXY 4-INCH (YELLOW)
2. MARKING LINE GROOVED WET REF EPOXY 4-INCH (WHITE)

PROJECT NO: 1080-05-70	HWY: USH 12	COUNTY: WALWORTH	PAVEMENT MARKING	SHEET 29	E

FILE NAME : N:\PDS\C3D\10800500\SHEETS\024501-PM.DWG
LAYOUT NAME - 01
PLOT DATE : 7/1/2025 10:42 AM
PLOT BY : FIGUEROA, EMILIO J
PLOT NAME :
PLOT SCALE : 1 IN:200 FT

2

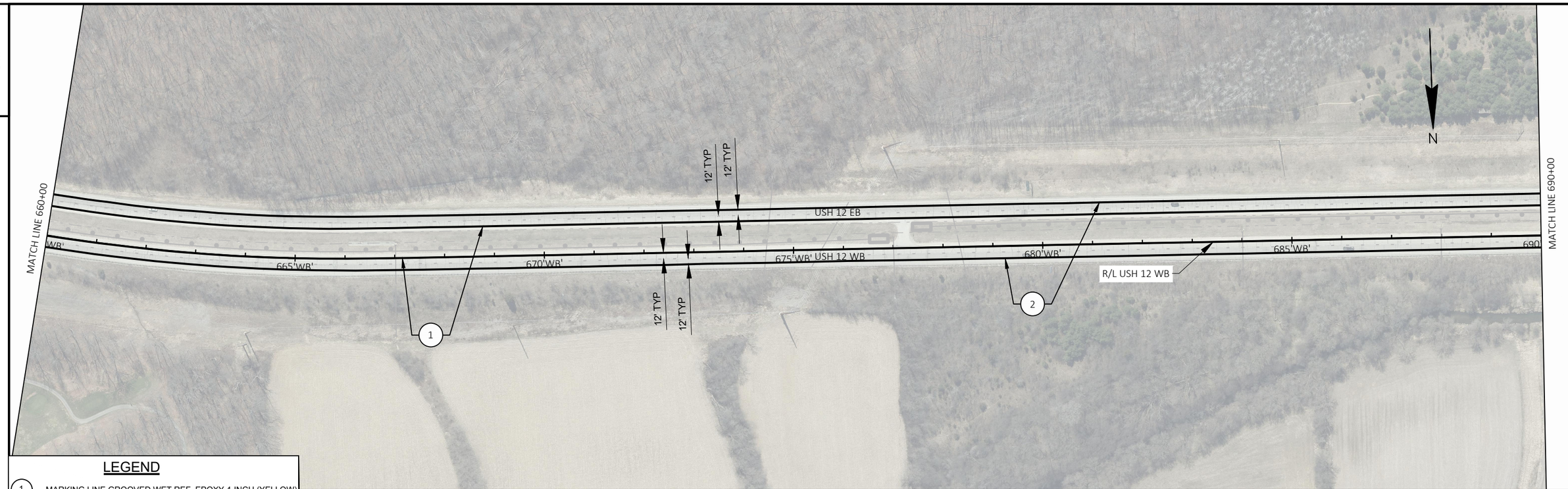

LEGEND

1. MARKING LINE GROOVED WET REF EPOXY 4-INCH (YELLOW)
2. MARKING LINE GROOVED WET REF EPOXY 4-INCH (WHITE)

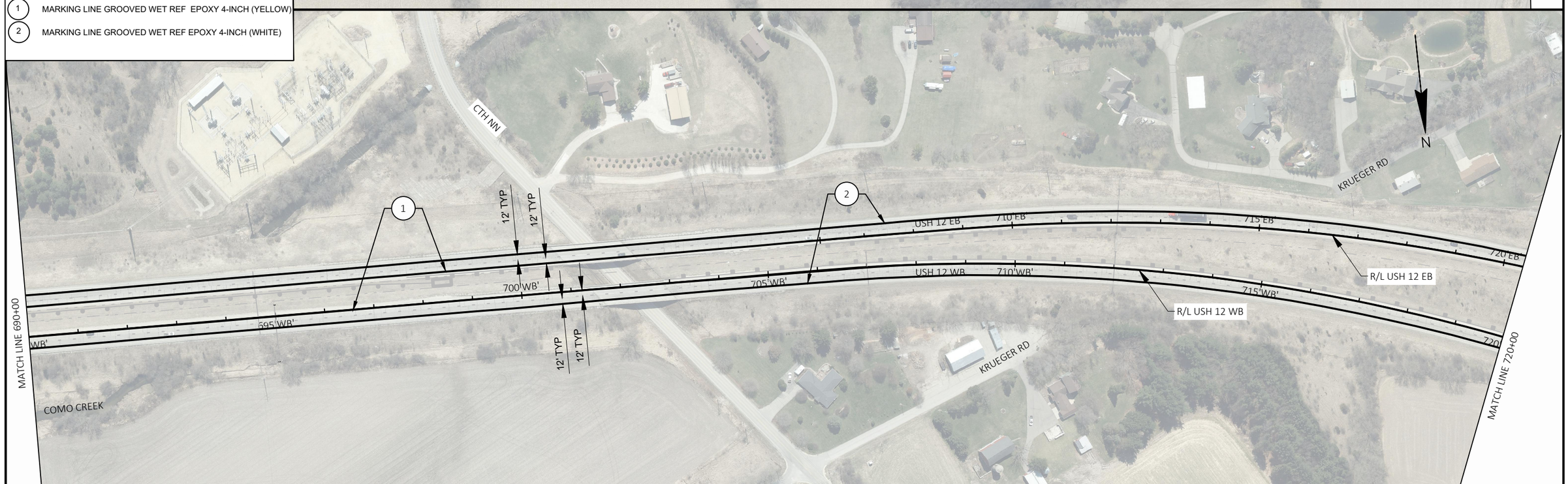

PROJECT NO: 1080-05-70	HWY: USH 12	COUNTY: WALWORTH	PAVEMENT MARKING	SHEET 30	E

FILE NAME : N:\PDS\C3D\10800500\SHEETS\024501-PM.DWG
LAYOUT NAME - 02
PLOT DATE : 7/1/2025 10:42 AM
PLOT BY : FIGUEROA, EMILIO J
PLOT NAME :
PLOT SCALE : 1 IN:200 FT

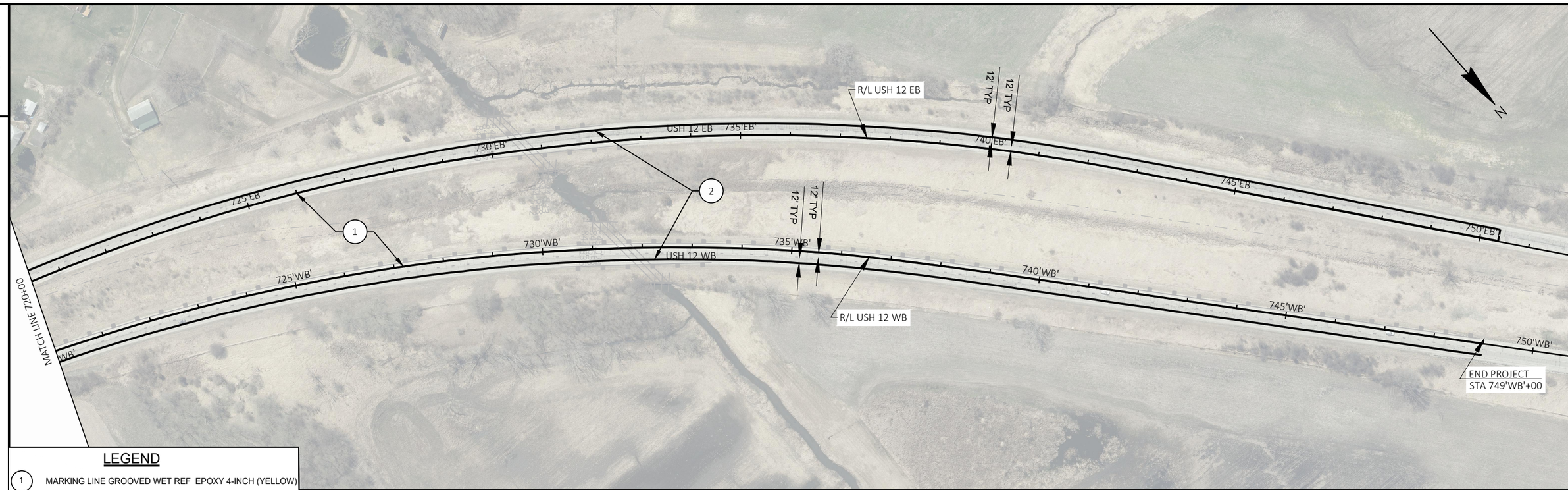

LEGEND

1. MARKING LINE GROOVED WET REF EPOXY 4-INCH (YELLOW)
2. MARKING LINE GROOVED WET REF EPOXY 4-INCH (WHITE)

INTENTIONALLY LEFT BLANK

PROJECT NO: 1080-05-70	HWY: USH 12	COUNTY: WALWORTH	PAVEMENT MARKING	SHEET 31	E

2

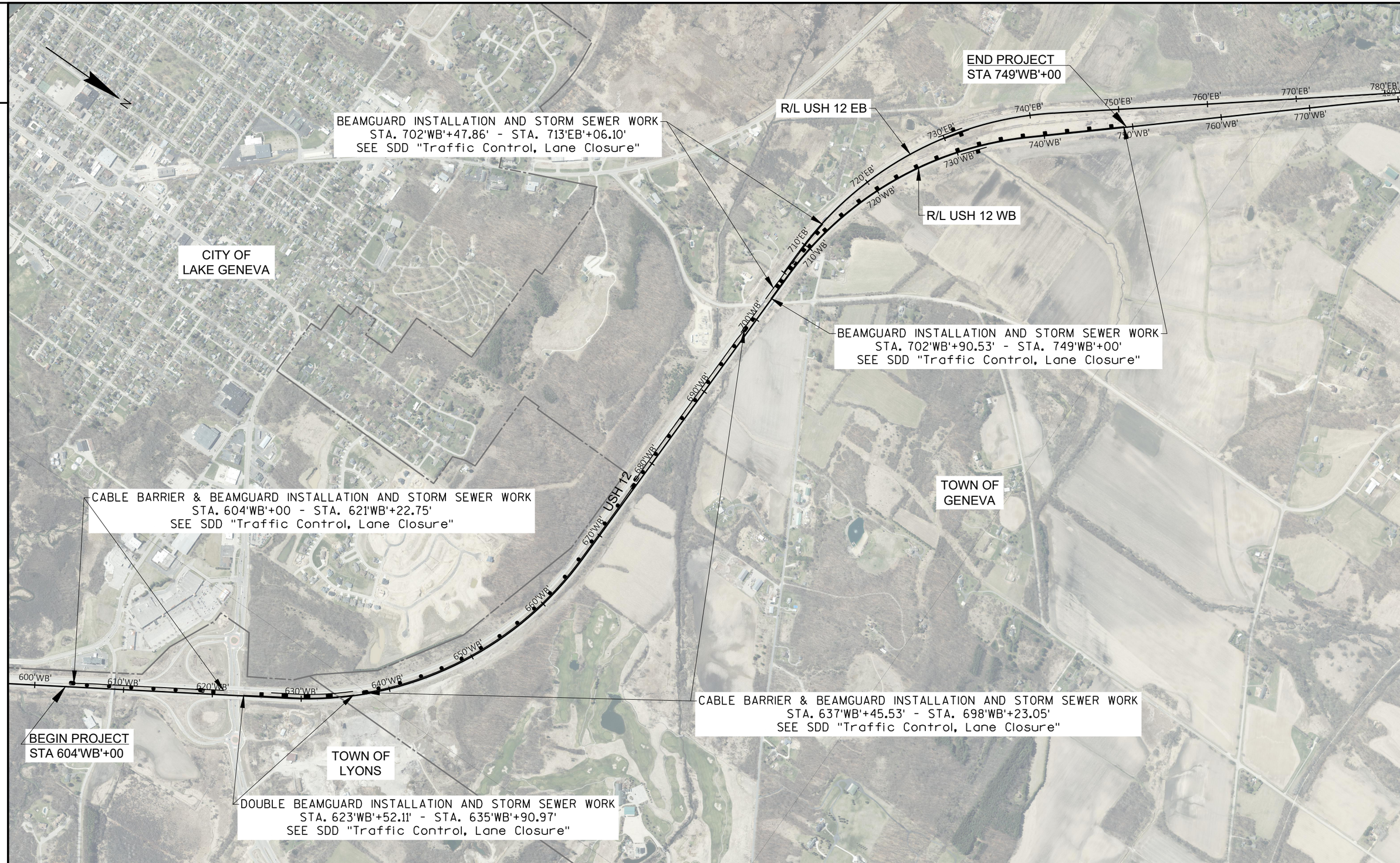

2

PROJECT NO: 1080-05-70	HWY: USH 12	COUNTY: WALWORTH	TRAFFIC CONTROL OVERVIEW	SHEET 32	E

FILE NAME : N:\PDS\C3D\10800500\SHEETS\022201-TC.DWG
LAYOUT NAME - Plan 1 IN 2000 FT
PLOT DATE : 3/12/2024 9:29 AM
PLOT BY : MANYEN, WAYNE
PLOT NAME :
PLOT SCALE : ############

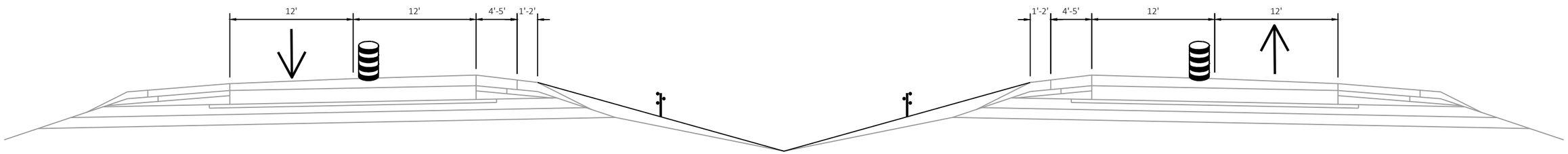

STAGE 1 TRAFFIC CONTROL, INSIDE LANE CLOSURE

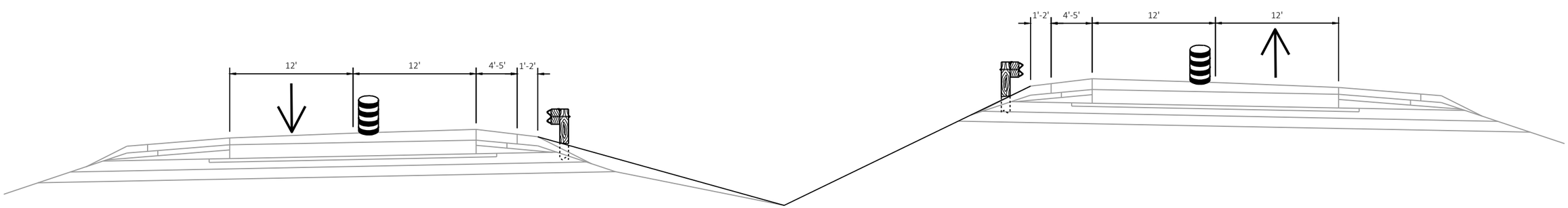

STAGE 1 TRAFFIC CONTROL, INSIDE LANE CLOSURE

2

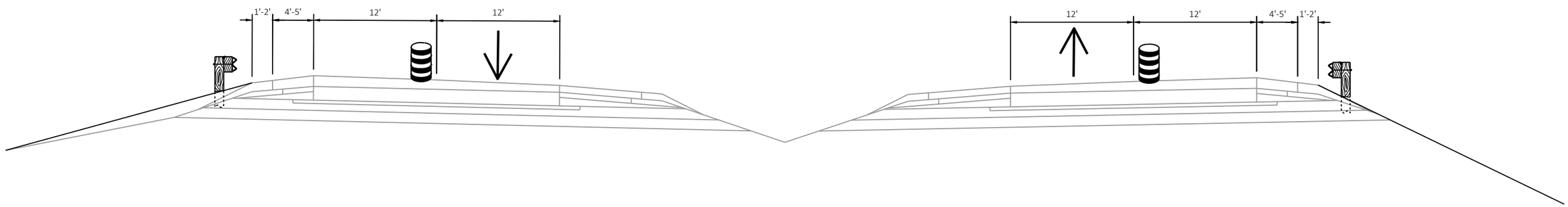

STAGE 2 TRAFFIC CONTROL, OUTSIDE LANE CLOSURE

PROJECT NO: 1080-05-70	HWY: USH 12	COUNTY: WALWORTH	STAGE CONSTRUCTION	SHEET 34	E

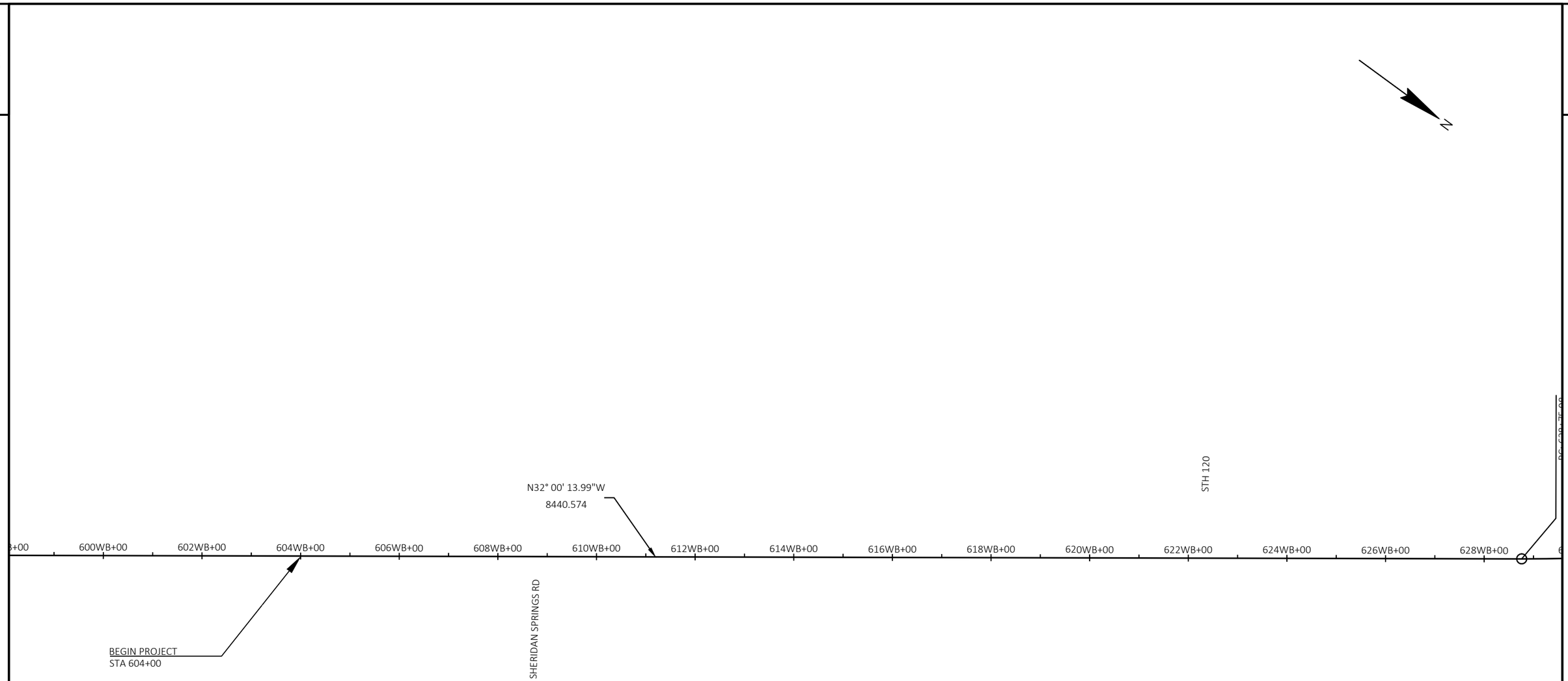

PROJECT NO: 1080-05-70	HWY: USH 12	COUNTY: WALWORTH	ALIGNMENT LAYOUT	SHEET 35	E

FILE NAME : N:\PDS\C3D\10800500\SHEETS\027201-AD.DWG
LAYOUT NAME - 1
PLOT DATE : 9/19/2024 1:29 AM
PLOT BY : GARCIA CHOQUE, JOSE
PLOT NAME :
PLOT SCALE : 1 IN:200 FT
WISDOT/CADDS SHEET 42

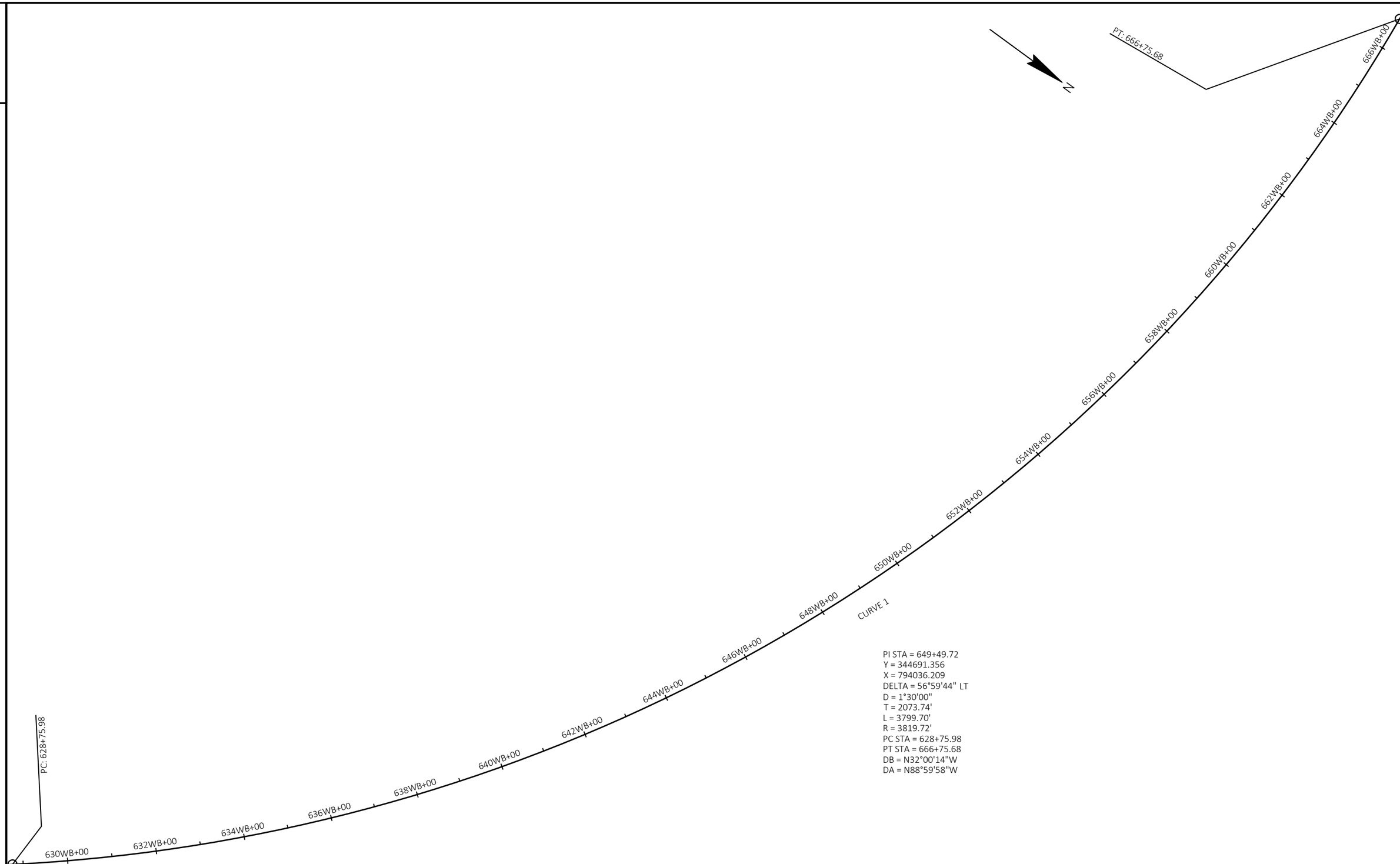

PROJECT NO: 1080-05-70	HWY: USH 12	COUNTY: WALWORTH	ALIGNMENT LAYOUT	SHEET 36	E

2

2

N

668WB+00 670WB+00 672WB+00 674WB+00 676WB+00 678WB+00 680WB+00 682WB+00 684WB+00 686WB+00 688WB+00 690WB+00 692WB+00 694WB+00 696WB+00 698WB+0

N88° 59' 57.62"W
3935.366

PROJECT NO: 1080-05-70	HWY: USH 12	COUNTY: WALWORTH	ALIGNMENT LAYOUT	SHEET 37	E

FILE NAME : N:\PDS\C3D\10800500\SHEETS\027201-AD.DWG
LAYOUT NAME - 3
PLOT DATE : 9/19/2024 1:29 AM
PLOT BY : GARCIA CHOQUE, JOSE
PLOT NAME :
PLOT SCALE : 1 IN:200 FT
WISDOT/CADDS SHEET 42

2

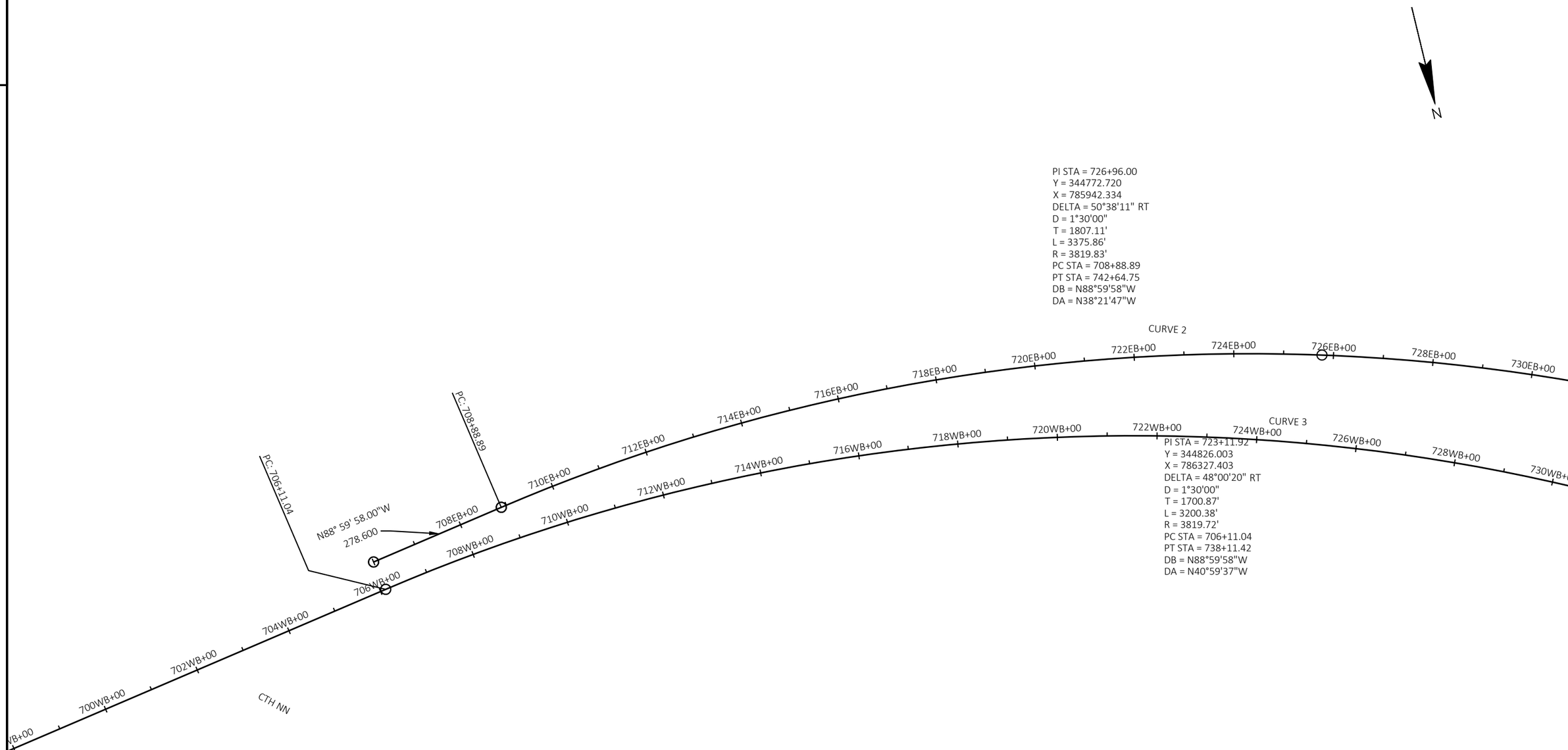

PROJECT NO: 1080-05-70	HWY: USH 12	COUNTY: WALWORTH	ALIGNMENT LAYOUT	SHEET 38	E

FILE NAME : N:\PDS\C3D\10800500\SHEETS\027201-AD.DWG
LAYOUT NAME - 4
PLOT DATE : 9/19/2024 1:29 AM
PLOT BY : GARCIA CHOQUE, JOSE
PLOT NAME :
PLOT SCALE : 1 IN:200 FT
WISDOT/CADDS SHEET 42

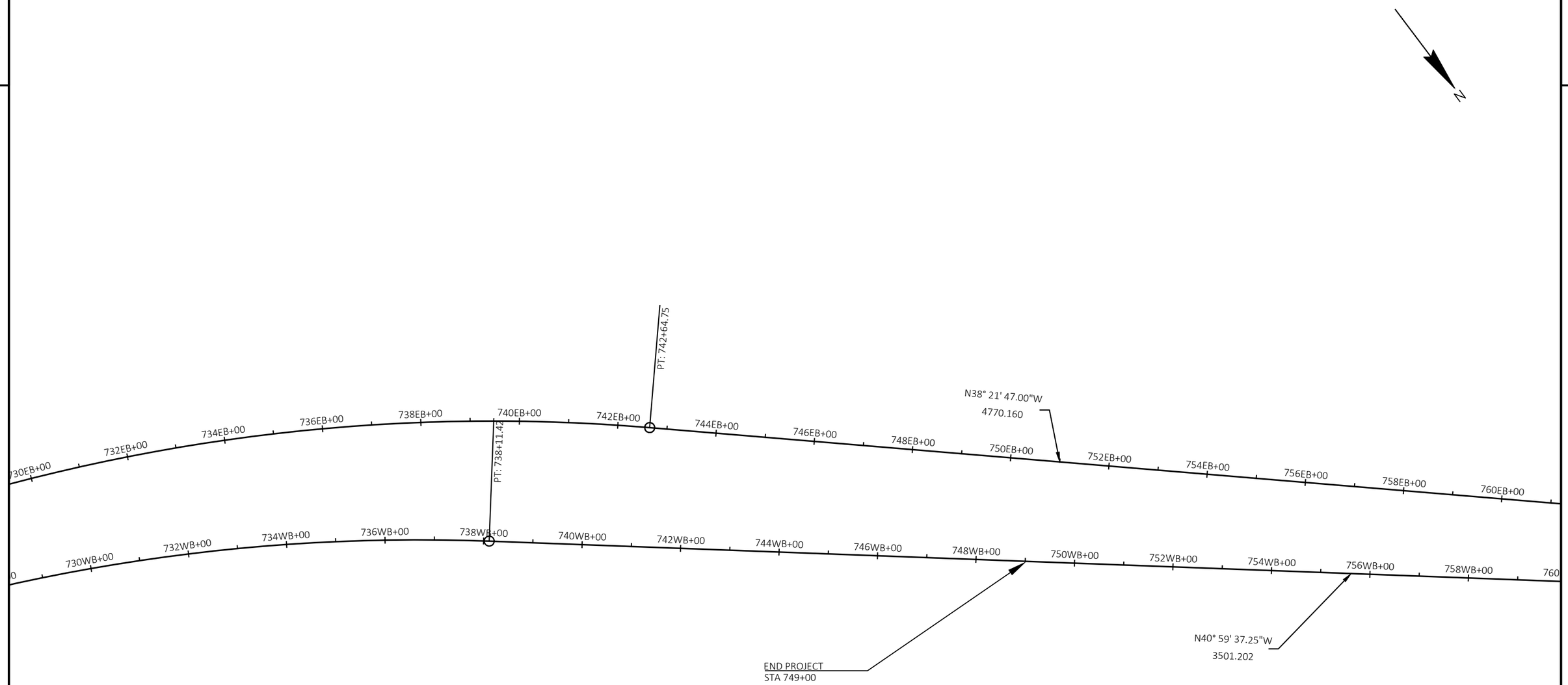

PROJECT NO: 1080-05-70	HWY: USH 12	COUNTY: WALWORTH	ALIGNMENT LAYOUT	SHEET 39	E

2

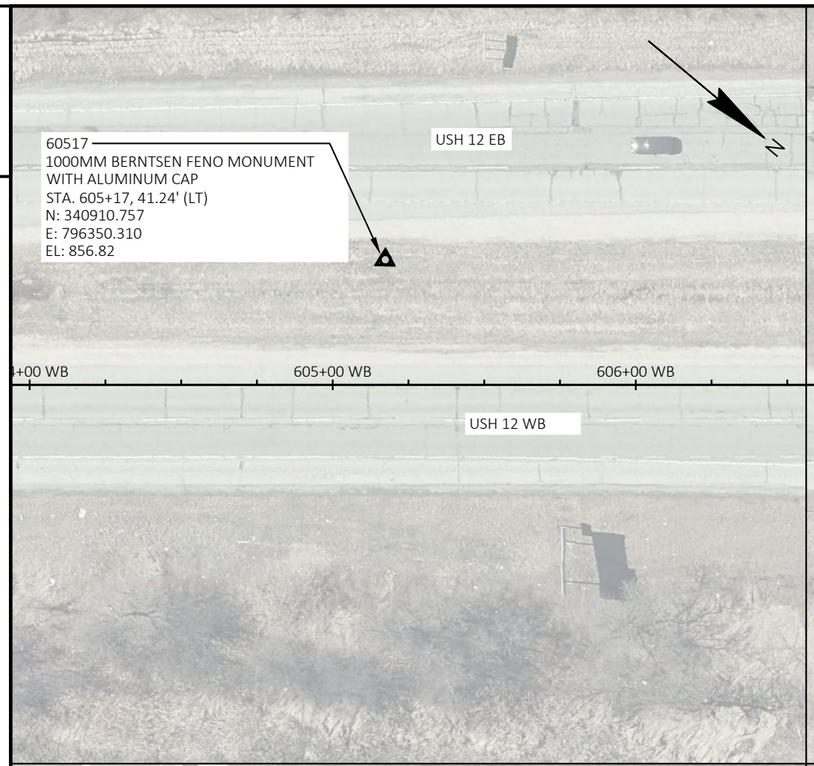

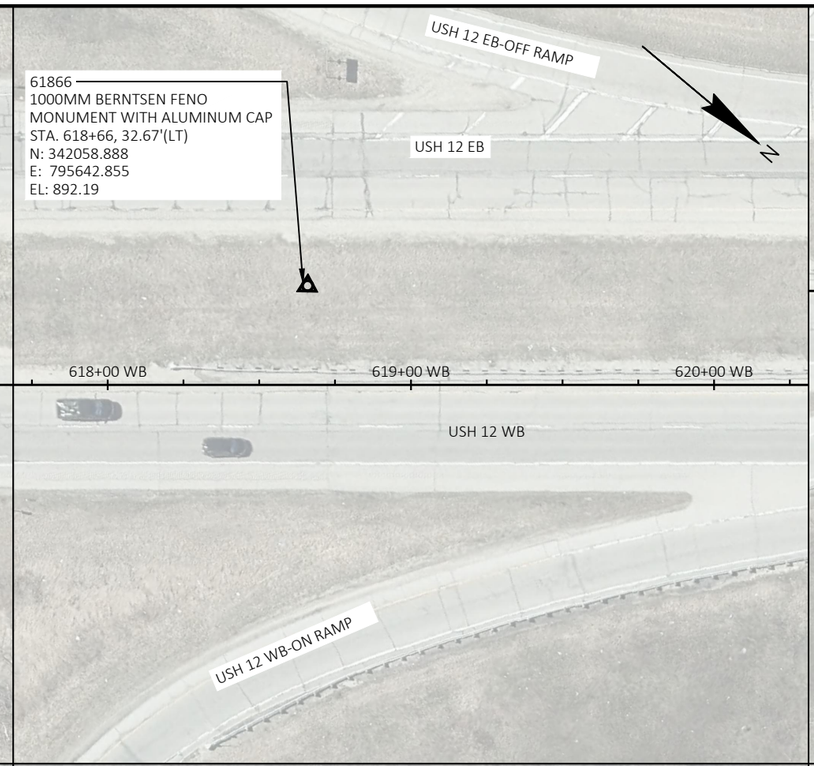

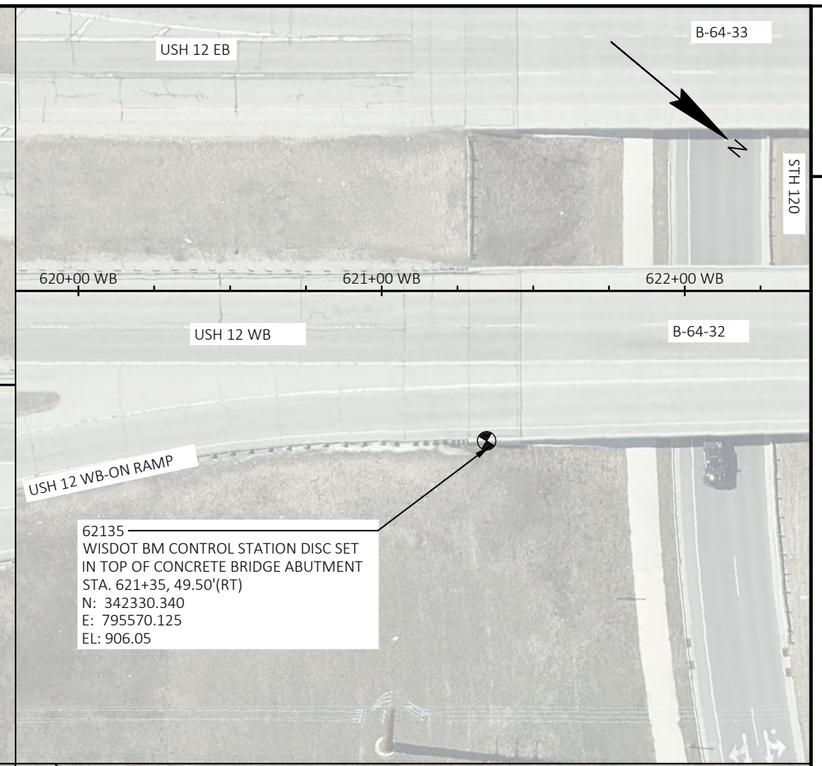

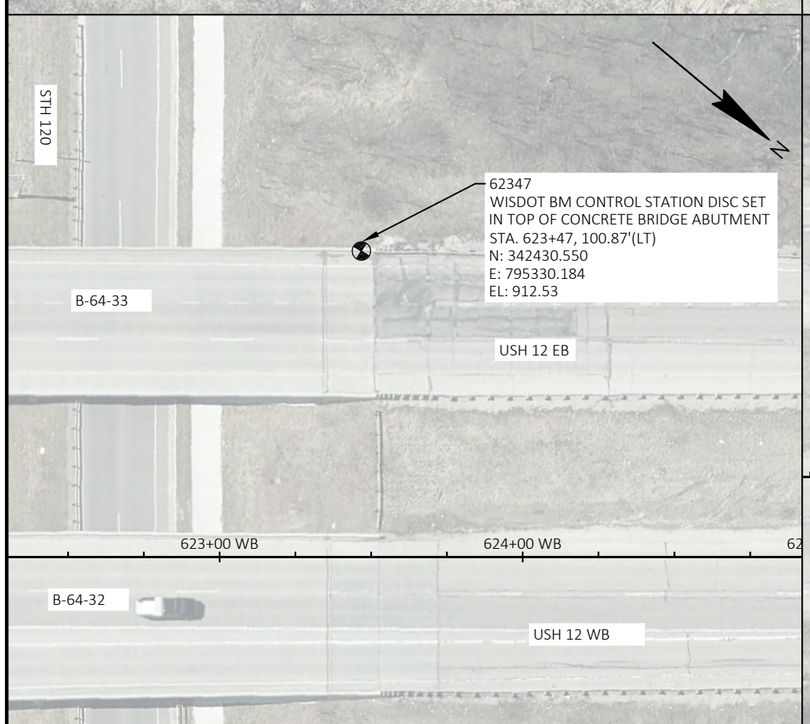

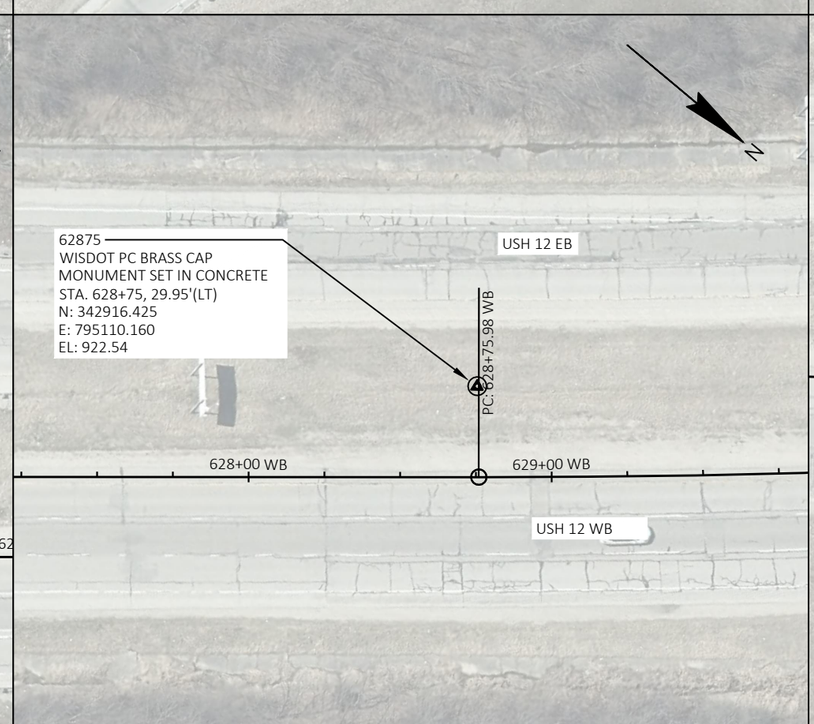

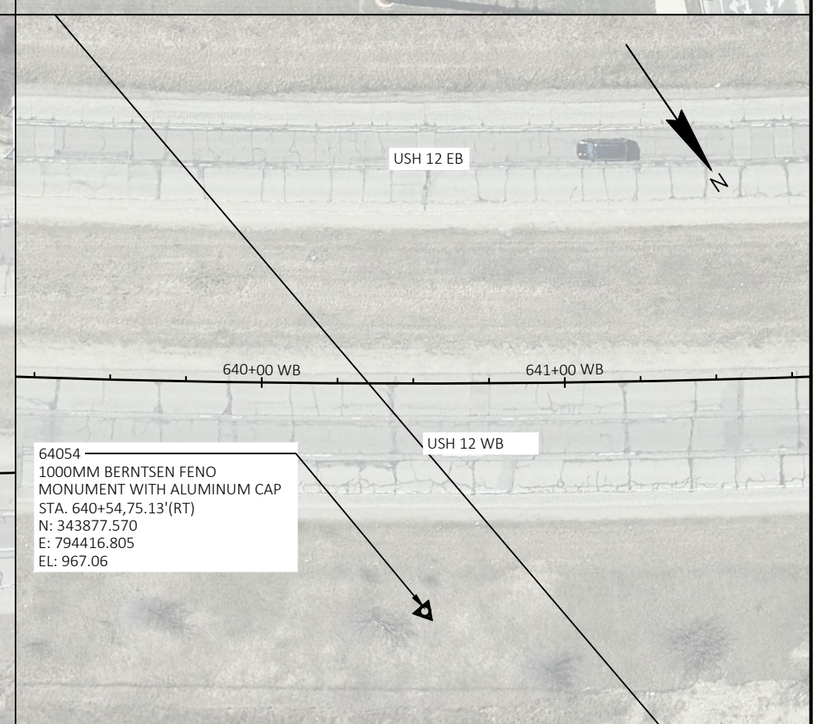

2

PROJECT NO: 1080-05-70	HWY: USH 12	COUNTY: WALWORTH	ALIGNMENT LAYOUT - SURVEY CONTROL	SHEET 40	E

2

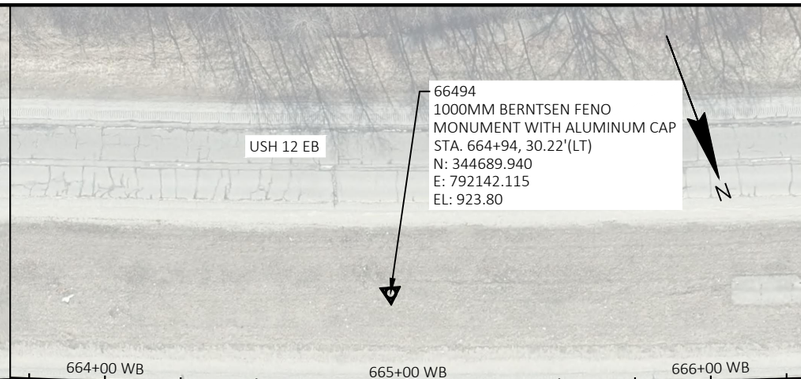

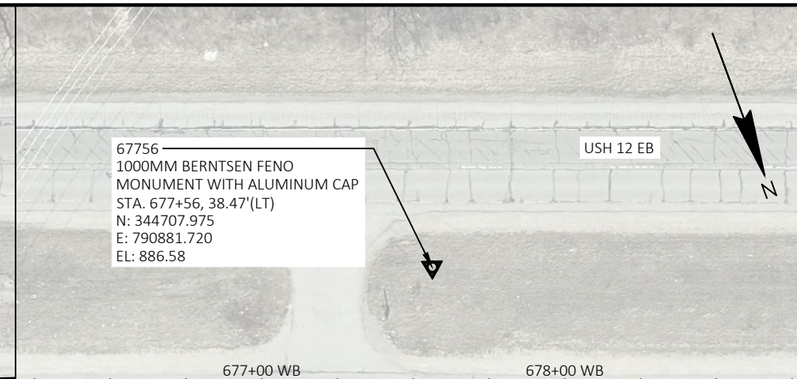

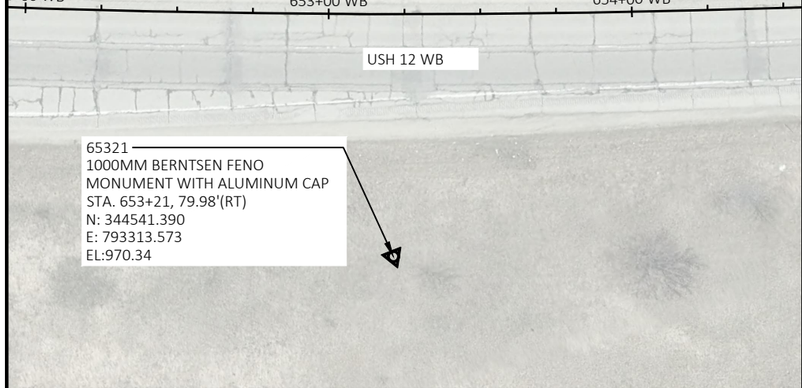

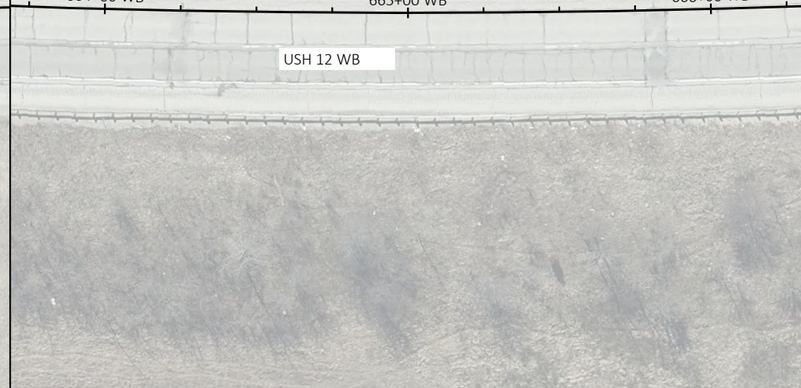

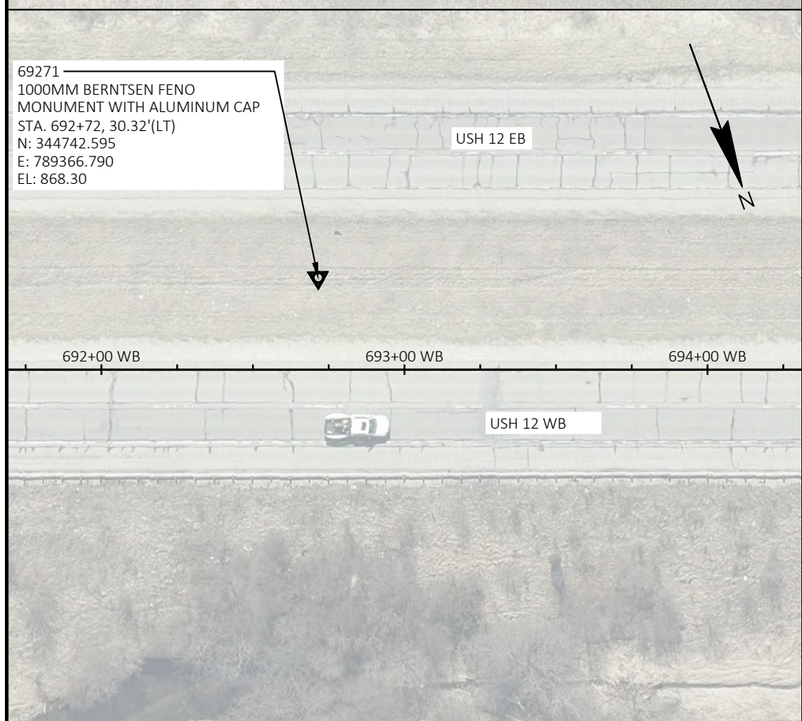

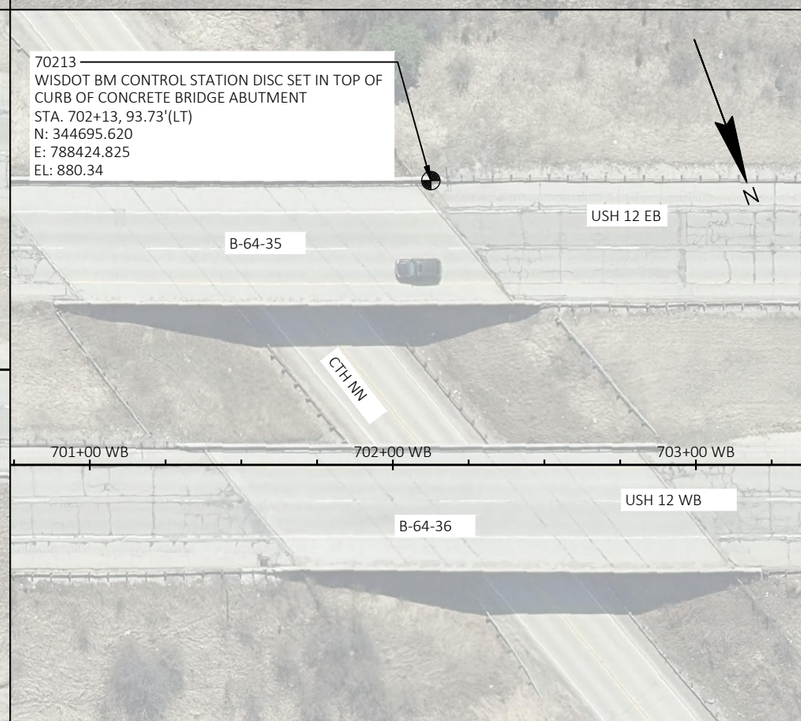

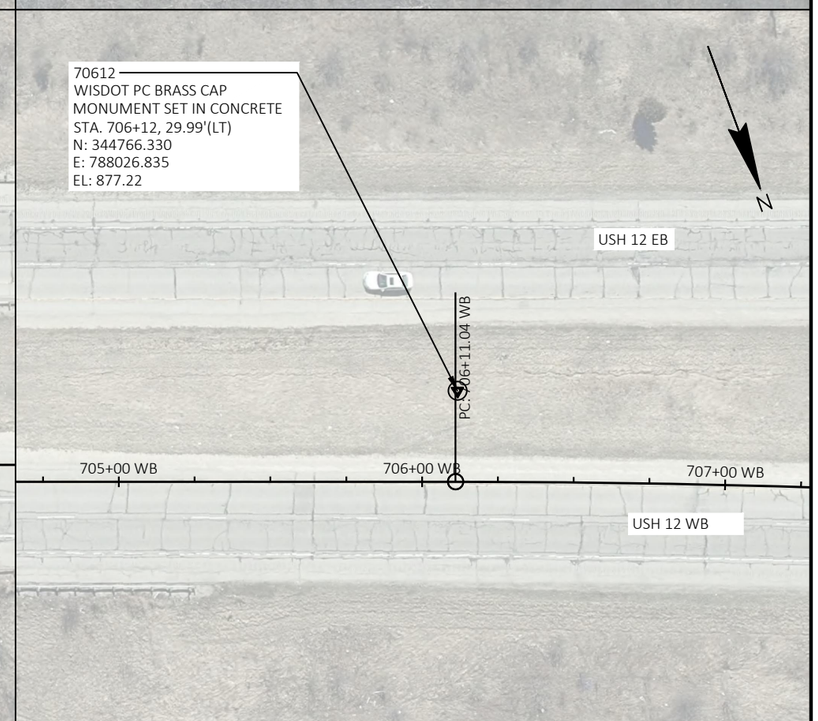

2

PROJECT NO: 1080-05-70	HWY: USH 12	COUNTY: WALWORTH	ALIGNMENT LAYOUT - SURVEY CONTROL	SHEET 41	E

2

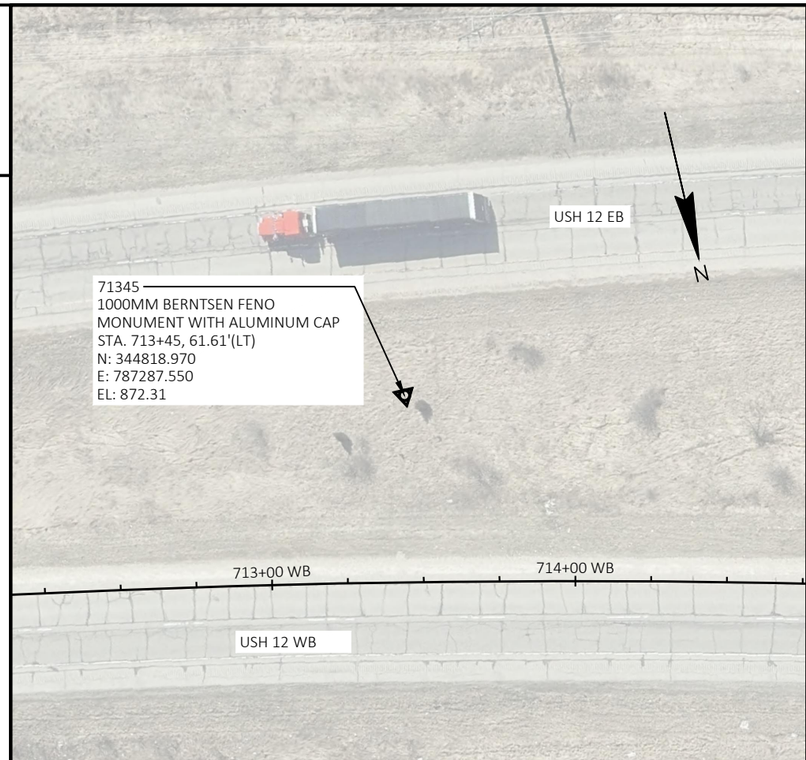

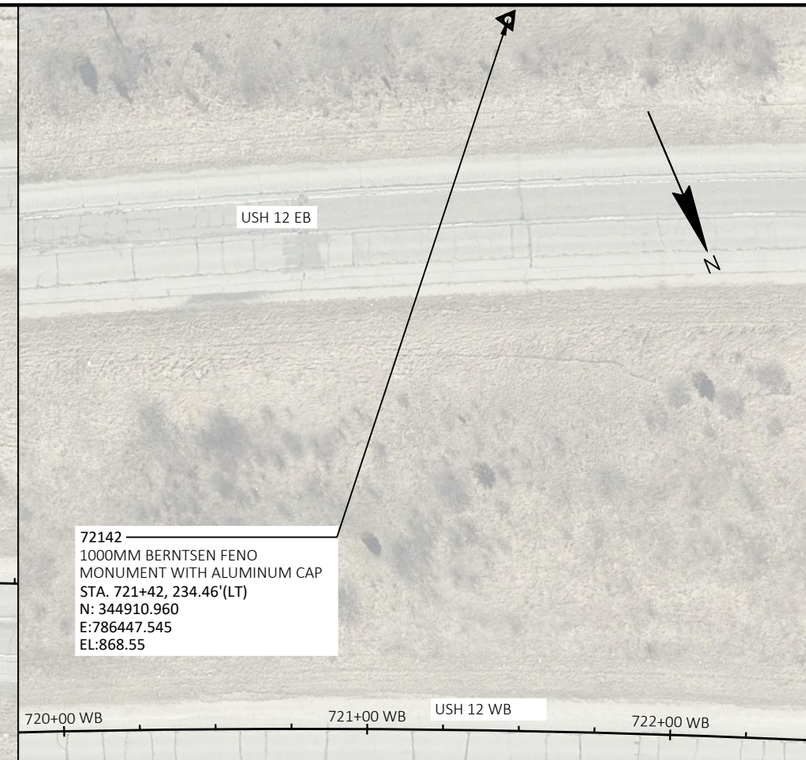

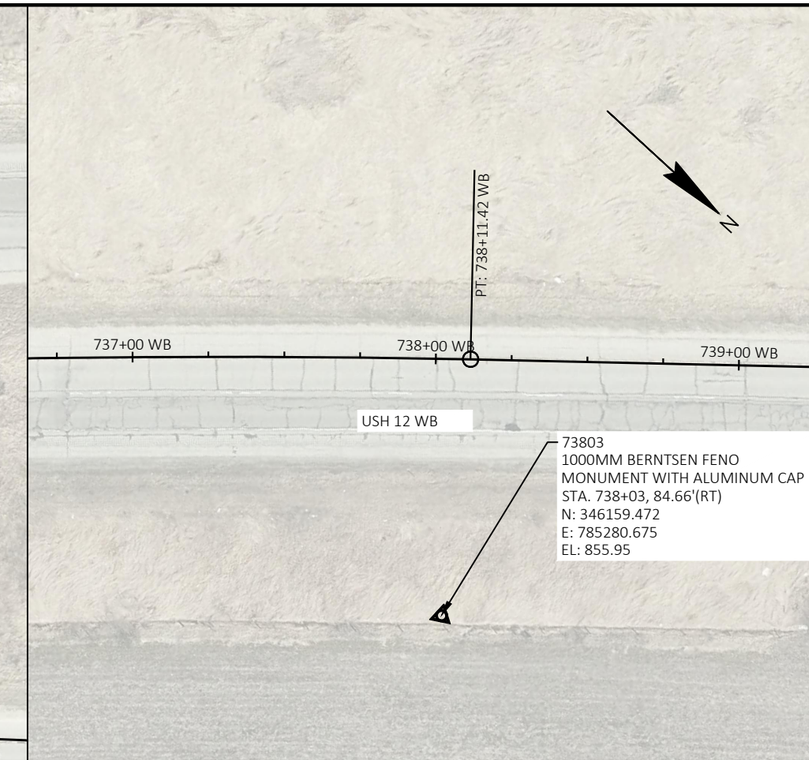

2

PROJECT NO: 1080-05-70	HWY: USH 12	COUNTY: WALWORTH	ALIGNMENT LAYOUT - SURVEY CONTROL	SHEET 42	E

Estimate Of Quantities

1080-05-70

Line	Item	Item Description	Unit	Total	Qty
0002	204.9060.S	Removing (item description) .01 Apron Endwalls	EACH	7.000	7.000
0004	205.0100	Excavation Common	CY	115.000	115.000
0006	208.0100	Borrow	CY	12,291.000	12,291.000
0008	520.8000	Concrete Collars for Pipe	EACH	7.000	7.000
0010	522.0418	Culvert Pipe Reinforced Concrete Class IV 18-Inch	LF	32.000	32.000
0012	611.0642	Inlet Covers Type MS	EACH	12.000	12.000
0014	611.3901	Inlets Median 1 Grate	EACH	2.000	2.000
0016	611.3902	Inlets Median 2 Grate	EACH	5.000	5.000
0018	613.1100.S	Cable Barrier Type 1	LF	7,378.000	7,378.000
0020	613.1200.S	Cable Barrier End Terminal Type 1	EACH	6.000	6.000
0022	614.0397	Guardrail Mow Strip Emulsified Asphalt	SY	6,464.000	6,464.000
0024	614.2300	MGS Guardrail 3	LF	8,525.000	8,525.000
0026	614.2500	MGS Thrie Beam Transition	LF	157.600	157.600
0028	614.2610	MGS Guardrail Terminal EAT	EACH	5.000	5.000
0030	614.2620	MGS Guardrail Terminal Type 2	EACH	6.000	6.000
0032	619.1000	Mobilization	EACH	1.000	1.000
0034	625.0100	Topsoil	SY	47,501.000	47,501.000
0036	627.0200	Mulching	SY	47,501.000	47,501.000
0038	628.1504	Silt Fence	LF	1,619.000	1,619.000
0040	628.1520	Silt Fence Maintenance	LF	1,619.000	1,619.000
0042	628.1905	Mobilizations Erosion Control	EACH	8.000	8.000
0044	628.1910	Mobilizations Emergency Erosion Control	EACH	2.000	2.000
0046	628.2008	Erosion Mat Urban Class I Type B	SY	47,501.000	47,501.000
0048	628.6510	Soil Stabilizer Type B	ACRE	8.000	8.000
0050	628.7005	Inlet Protection Type A	EACH	9.000	9.000
0052	628.7504	Temporary Ditch Checks	LF	3,935.000	3,935.000
0054	628.7555	Culvert Pipe Checks	EACH	50.000	50.000
0056	629.0210	Fertilizer Type B	CWT	30.000	30.000
0058	630.0130	Seeding Mixture No. 30	LB	855.000	855.000
0060	630.0200	Seeding Temporary	LB	1,283.000	1,283.000
0062	630.0500	Seed Water	MGAL	1,067.000	1,067.000
0064	634.0618	Posts Wood 4x6-Inch X 18-FT	EACH	8.000	8.000
0066	637.2210	Signs Type II Reflective H	SF	40.000	40.000
0068	637.2230	Signs Type II Reflective F	SF	40.000	40.000
0070	638.2102	Moving Signs Type II	EACH	8.000	8.000
0072	638.2602	Removing Signs Type II	EACH	2.000	2.000
0074	638.3000	Removing Small Sign Supports	EACH	4.000	4.000
0076	642.5401	Field Office Type D	EACH	1.000	1.000
0078	643.0300	Traffic Control Drums	DAY	41,613.000	41,613.000
0080	643.0420	Traffic Control Barricades Type III	DAY	198.000	198.000
0082	643.0705	Traffic Control Warning Lights Type A	DAY	396.000	396.000
0084	643.0715	Traffic Control Warning Lights Type C	DAY	3,361.000	3,361.000
0086	643.0810	Traffic Control Connected Arrow Boards	DAY	198.000	198.000
0088	643.0900	Traffic Control Signs	DAY	1,782.000	1,782.000
0090	643.1220	Traffic Control Connected Work Zone Start and End Location Markers	DAY	158.000	158.000
0092	643.3170	Temporary Marking Line Epoxy 6-Inch	LF	4,200.000	4,200.000
0094	643.4100	Traffic Control Interim Lane Closure	EACH	4.000	4.000
0096	643.5000	Traffic Control	EACH	1.000	1.000
0098	646.1040	Marking Line Grooved Wet Ref Epoxy 4-Inch	LF	58,180.000	58,180.000

Estimate Of Quantities

1080-05-70

Line	Item	Item Description	Unit	Total	Qty
0100	ASP.1T0A	On-the-Job Training Apprentice at $5.00/HR	HRS	750.000	750.000
0102	ASP.1T0G	On-the-Job Training Graduate at $5.00/HR	HRS	1,800.000	1,800.000
0104	SPV.0060	Special .01 Section Corner Monuments	EACH	1.000	1.000

3

STORM SEWER ADJUSTMENTS

CATEGORY	ROADWAY	STATION	LOCATION	204.9060.S.01 REMOVING APRON ENDWALLS EACH	520.8000 CONCRETE COLLARS FOR PIPE EACH	522.0418 CULVERT PIPE REINFORCED CONCRETE CLASS IV 18-INCH LF	611.0642 INLET COVERS TYPE MS EACH	611.3901 INLETS MEDIAN 1 GRATE EACH	611.3902 INLETS MEDIAN 2 GRATE EACH	INLET COVER SLOPE FOR INFORMATION	628.7005 INLET PROTECTION TYPE A EACH
0010	**PROJECT ID 1080-05-70**										
	USH 12	637WB+00	MEDIAN FLOWLINE	1	1	4	2	--	1	SINGLE	1
		657WB+01	MEDIAN FLOWLINE	1	1	4	2	--	1	TWO	1
		667WB+01	MEDIAN FLOWLINE	1	1	4	2	--	1	TWO	1
		677WB+00	MEDIAN FLOWLINE	1	1	4	2	--	1	SINGLE	1
		684WB+00	MEDIAN FLOWLINE	1	1	4	1	1	--	NO	1
		687WB+99	MEDIAN FLOWLINE	1	1	4	1	1	--	NO	1
		694WB+99	MEDIAN FLOWLINE	1	1	4	2	--	1	TWO	1
		UNDISTRIBUTED		--	--	4	--	--	--	--	2
	CONTRACT TOTAL:			7	7	32	12	2	5		9

CABLE BARRIER ITEMS

CATEGORY	ROADWAY	STATION	TO STATION	LOCATION	613.1100.S CABLE BARRIER TYPE 1 LF	613.1200.S CABLE BARRIER END TERMINAL TYPE 1 EACH	614.0397 * GUARDRAIL MOW STRIP EMULSIFIED ASPHALT SY
0010	**PROJECT ID 1080-05-70**						
	USH 12	604WB+00	618WB+95	EB	1,440	2	581
		637WB+08	676WB+90	WB	3,927	2	1544
		677WB+94	698WB+60	EB	2,011	2	825
	CONTRACT TOTAL:				7,378	6	2950

GUARDRAIL ITEMS

CATEGORY	ROADWAY	STATION	TO STATION	LOCATION	614.0397 * GUARDRAIL MOW STRIP EMULSIFIED ASPHALT SY	614.2300 MGS GUARDRAIL 3 LF	614.2500 MGS THRIE BEAM TRANSITION LF	614.2610 MGS GUARDRAIL TERMINAL EAT EACH	614.2620 MGS GUARDRAIL TERMINAL TYPE 2 EACH
0010	**PROJECT ID 1080-05-70**								
	USH 12	618WB+07	621WB+23	EB	124	262.5	39.4	--	1
		626WB+59	635WB+87	EB	358	875.0	--	1	--
		623WB+52	635WB+81	WB	478	1,175.0	39.4	--	1
		697WB+71	700WB+88	EB	124	262.5	39.4	--	1
		705WB+77	712WB+92	EB	284	675.0	--	1	--
		702WB+91	748WB+93	WB	1794	4,562.5	39.4	--	--
		728WB+49	731WB+29	EB	117	237.5	--	1	1
		729WB+17	731WB+97	EB	116	237.5	--	1	1
		730WB+38	733WB+37	WB	119	237.5	--	1	1
	CONTRACT TOTAL:				3514	8,525	157.6	5	6

NOTE:
* QUANTITIES ELSE WHERE IN THE PLAN

3

MOBILIZATION

CATEGORY	LOCATION	619.1000 MOBILIZATION EACH
0010	**PROJECT ID 1080-05-70**	
	PROJECT	1
	CONTRACT TOTAL:	1

CULVERT PIPE CHECKS

CATEGORY	ROADWAY	STATION	TO	STATION	628.7555 CULVERT PIPE CHECKS EACH
0010	**PROJECT ID 1080-05-70**				
	USH 12	604WB+00		635WB+50	4
		635WB+50		675WB+50	6
		675WB+50		700WB+50	8
		700WB+50		749WB+50	22
	UNDISTRIBUTED				10
	SUBTOTAL				50
	CONTRACT TOTAL:				50

3

EROSION CONTROL ITEMS

CATEGORY	ROADWAY	STATION	TO	STATION	628.1504 SILT FENCE LF	628.1520 SILT FENCE MAINTENANCE LF	628.1905 MOBILIZATIONS EROSION CONTROL EACH	628.1910 MOBILIZATIONS EMERGENCY EROSION CONTROL EACH	628.2008 EROSION MAT URBAN CLASS I TYPE B SY	628.7504 TEMPORARY DITCH CHECKS LF
0010	**PROJECT ID 1080-05-70**									
	USH 12	604WB+00		636WB+00	--	--	--	--	597	--
		636WB+00		675WB+50	--	--	--	--	21,681	2,219
		675WB+50		700WB+50	--	--	--	--	13,978	929
		700WB+50		749WB+50	1,295	1,295	--	--	1,745	--
	UNDISTRIBUTED				324	324	8	2	9,500	787
	CONTRACT TOTAL:				1,619	1,619	8	2	47,501	3,935

RESTORATION ITEMS

CATEGORY	ROADWAY	STATION	TO	STATION	625.0100 TOPSOIL SY	627.0200 MULCHING SY	628.6510 SOIL STABILIZER TYPE B ACRE	629.0210 FERTILIZER TYPE B CWT	630.0130 SEEDING MIXTURE NO. 30 LB	630.0200 SEEDING TEMPORARY LB	630.0500 SEED WATER MGAL
0010	**PROJECT ID 1080-05-70**										
	USH 12	604WB+00		636WB+00	597	597	--	0	11	16	13
		636WB+00		675WB+50	22,253	22,253	--	14	401	601	500
		675WB+50		700WB+50	13,406	13,406	--	9	241	362	301
		700WB+50		749WB+50	1,745	1,745	--	1	31	47	39
	UNDISTRIBUTED				9,500	9,500	8	6	171	257	214
	CONTRACT TOTAL:				47,501	47,501	8	30	855	1,283	1,067

SECTION CORNER MONUMENTS

CATEGORY	LOCATION	SPV.0060.01 SECTION CORNER MONUMENTS EACH
0010	**PROJECT ID 1100-27-70**	
	UNDISTRIBUTED	1
	CONTRACT TOTAL:	1

TYPE II PERMANENT SIGNING 1080-05-70 USH 12

SIGN NO.	SIGN CODE & SIZE	SIGN MESSAGE	SIGN SIZE W [IN.] x H [IN.]	637.2210 SIGNS TYPE II REFLECTIVE H [SF]	637.2230 SIGNS TYPE II RELFECTIVE F [SF]	638.2102 MOVING SIGNS TYPE II [EA]	638.2602 REMOVING SIGNS TYPE II (EA)	638.3000 REM SMALL SIGN SUP [EA]	634.0618 POSTS WOOD 4" X 6" X 18' [EA]	MOUNT ON SAME POST AS SIGN #	REMARKS / NEW SIGN LOCATION
NA	R3-4	NO U TURN				1		1	1		BACK TO BACK SIGNS - MOVE STATION 636+50
NA	R3-4	NO U TURN				1		1	1		BACK TO BACK SIGNS - MOVE STATION 636+50
UNDISTRIBUTED				40.000	40.000	6	2	2	6		
TOTALS				40.000	40.000	8	2	4	8	--	--

SHEET: 1 OF 1

3

FIELD OFFICE

CATEGORY	LOCATION	642.5401 FIELD OFFICE TYPE D EACH
0010	**PROJECT ID 1080-05-70**	
	PROJECT	1
	CONTRACT TOTAL:	1

TRAFFIC CONTROL CLOSURES

CATEGORY	STAGE	LOCATION	643.4100 TRAFFIC CONTROL INTERIM LANE CLOSURE EACH
0010	1	**PROJECT ID 1080-05-70**	
		USH 12	2
		STAGE 1 TOTAL:	2
0010	2	**PROJECT ID 1080-05-70**	
		USH 12	2
		STAGE 2 TOTAL:	2
		CONTRACT TOTAL:	4

TRAFFIC CONTROL

CATEGORY	LOCATION	643.5000 TRAFFIC CONTROL EACH
0010	**PROJECT ID 1080-05-70**	
	PROJECT	1
	CONTRACT TOTAL:	1

PAVEMENT MARKING ITEMS

CATEGORY	LOCATION	STATION	TO	STATION	646.1040 MARKING LINE GROOVED WET REF EPOXY 4-INCH WHITE LF	YELLOW LF
	MAINLINE					
0010	USH 12					
		604WB+00		635WB+50	6,306	6,289
		635WB+50		675WB+50	7,958	7,952
		675WB+50		700WB+50	5,000	5,000
		700WB+50		749WB+50	9,838	9,837
	SUBTOTAL				29,102	29,078
	CONTRACT TOTAL:				58,180	

3

TRAFFIC CONTROL ITEMS

CATEGORY	STAGE	LOCATION	STATION	TO	STATION	STAGE DURATION DAYS	643.0300 TRAFFIC CONTROL DRUMS EACH	643.0300 TRAFFIC CONTROL DRUMS DAY	643.0420 TRAFFIC CONTROL BARRICADES TYPE III EACH	643.0420 TRAFFIC CONTROL BARRICADES TYPE III DAY	643.0705 TRAFFIC CONTROL WARNING LIGHTS TYPE A EACH	643.0705 TRAFFIC CONTROL WARNING LIGHTS TYPE A DAY	643.0715 TRAFFIC CONTROL WARNING LIGHTS TYPE C EACH	643.0715 TRAFFIC CONTROL WARNING LIGHTS TYPE C DAY
0010	1	**PROJECT ID 1080-05-70**												
		USH 12	604+00	-	749+00	75	440	33,000	2	150	4	300	34	2,550
		STAGE 1 TOTAL:					440	33,000	2	150	4	300	34	2,550
0010	2	**PROJECT ID 1080-05-70**												
		USH 12	728+00	-	734+00	4	72	288	2	8	4	16	34	136
		STAGE 2 TOTAL:					72	288	2	8	4	16	34	136
		PROJECT ID 1080-05-70					512	33,288	4	158	8	316	68	2,686
		UNDISTRIBUTED						8,325		40		80		675
		CONTRACT TOTAL:						41,613		198		396		3,361

TRAFFIC CONTROL ITEMS

CATEGORY	STAGE	LOCATION	STATION	TO	STATION	STAGE DURATION DAYS	643.0810 TRAFFIC CONTROL CONNECTED ARROW BOARD EACH	643.0810 TRAFFIC CONTROL CONNECTED ARROW BOARD DAY	643.0900 TRAFFIC CONTROL SIGNS EACH	643.0900 TRAFFIC CONTROL SIGNS DAY	643.3170 TEMPORARY MARKING LINE EPOXY 6-INCH WHITE LF	643.3170 TEMPORARY MARKING LINE EPOXY 6-INCH YELLOW LF	643.122 TRAFFIC CONTROL CONNECTED WORK ZONE START AND END LOCATION MARKERS DAY
0010	1	**PROJECT ID 1080-05-70**											
		USH 12	604+00	-	749+00	75	2	150	18	1,350	0	1,680	150
		STAGE 1 TOTAL:					2	150	18	1,350	0	1,680	150
0010	2	**PROJECT ID 1080-05-70**											
		USH 12	728+00	-	734+00	4	2	8	18	72	1680	0	8
		STAGE 2 TOTAL:					2	8	18	72	1,680	0	8
		PROJECT ID 1080-05-70					4	158	36	1,422	1,680	1,680	158
		UNDISTRIBUTED						40		360	420	420	
		CONTRACT TOTAL:						198		1,782	4,200		158

3

3

DIVISION	FROM/TO STATION	LOCATION	205.0100 EXCAVATION COMMON (1) CUT (2)	AVAILABLE MATERIAL (5)	UNEXPANDED FILL	EXPANDED FILL (13) FACTOR 1.25	MASS ORDINATE +/- (14)	208.0100 BORROW
DIVISION 1								
USH 12	634+10.00/732+10.00		115	115	9,925	12,406	-12,291	
DIVISION 1 SUBTOTAL			115	115	9,925	12,406	-12,291	12,291
GRAND TOTAL			115	115	9,925	12,406	-12,291	12,291
TOTAL COMMON EXC			115					

NOTES:
(1) COMMON EXCAVATION IS THE SUM OF THE CUT AND EBS EXCAVATION COLUMNS. ITEM NUMBER 205.0100
5) AVAILABLE MATERIAL = CUT - SALVAGED/UNUSUABLE PAVEMENT MATERIAL
(13) EXPANDED FILL FACTOR = 1.25
(14) THE MASS ORDINATE + OR - QTY CALCULATED FOR THE DIVISION. PLUS QUANTITY INDICATES AN EXCESS OF MATERIAL WITHIN THE DIVISION. MINUS INDICATES A SHORTAGE OF MATERIAL WITHIN TI

Standard Detail Drawing List

08A05-22B	INLET COVERS TYPE B, B-A, C, MS, MS-A, DW & WM
08C08-03	INLETS MEDIAN 1 AND 2 GRATE
08E08-03	TYPICAL INSTALLATIONS OF EROSION BALES / TEMPORARY DITCH CHECKS
08E09-06	SILT FENCE
08E10-02	INLET PROTECTION TYPE A, B, C AND D
08E15-01	CULVERT PIPE CHECK
08F04-08	JOINT TIES FOR CONCRETE PIPE AND CONCRETE COLLAR DETAIL
14B28-04A	GUARDRAIL MOW STRIP
14B28-04B	GUARDRAIL MOW STRIP
14B42-07A	MIDWEST GUARDRAIL SYSTEM (MGS) GUARDRAIL
14B42-07B	MIDWEST GUARDRAIL SYSTEM (MGS) GUARDRAIL
14B42-07C	MIDWEST GUARDRAIL SYSTEM (MGS) GUARDRAIL
14B42-07D	MIDWEST GUARDRAIL SYSTEM (MGS) GUARDRAIL
14B44-04A	MIDWEST GUARDRAIL SYSTEM ENERGY ABSORBING TERMINAL (MGS)
14B44-04B	MIDWEST GUARDRAIL SYSTEM ENERGY ABSORBING TERMINAL (MGS)
14B44-04C	MIDWEST GUARDRAIL SYSTEM ENERGY ABSORBING TERMINAL (MGS)
14B45-05A	MIDWEST GUARDRAIL SYSTEM THRIE BEAM TRANSITION (MGS)
14B45-05B	MIDWEST GUARDRAIL SYSTEM THRIE BEAM TRANSITION (MGS)
14B45-05C	MIDWEST GUARDRAIL SYSTEM THRIE BEAM TRANSITION (MGS)
14B45-05D	MIDWEST GUARDRAIL SYSTEM THRIE BEAM TRANSITION (MGS)
14B45-05E	MIDWEST GUARDRAIL SYSTEM THRIE BEAM TRANSITION (MGS)
14B45-05F	MIDWEST GUARDRAIL SYSTEM THRIE BEAM TRANSITION (MGS)
14B45-05G	MIDWEST GUARDRAIL SYSTEM THRIE BEAM TRANSITION (MGS)
14B45-05H	MIDWEST GUARDRAIL SYSTEM THRIE BEAM TRANSITION (MGS)
14B45-05I	MIDWEST GUARDRAIL SYSTEM THRIE BEAM TRANSITION (MGS)
14B45-05J	MIDWEST GUARDRAIL SYSTEM THRIE BEAM TRANSITION (MGS)
14B45-05K	MIDWEST GUARDRAIL SYSTEM THRIE BEAM TRANSITION (MGS)
14B45-05L	MIDWEST GUARDRAIL SYSTEM THRIE BEAM TRANSITION (MGS)
14B47-06A	MIDWEST GUARDRAIL SYSTEM (MGS) TYPE 2 TERMINAL
14B47-06B	MIDWEST GUARDRAIL SYSTEM (MGS) TYPE 2 TERMINAL
14B47-06C	MIDWEST GUARDRAIL SYSTEM (MGS) TYPE 2 TERMINAL
14B47-06D	MIDWEST GUARDRAIL SYSTEM (MGS) TYPE 2 TERMINAL
14B47-06E	MIDWEST GUARDRAIL SYSTEM (MGS) TYPE 2 TERMINAL
14B47-06F	MIDWEST GUARDRAIL SYSTEM (MGS) TYPE 2 TERMINAL
14B47-06G	MIDWEST GUARDRAIL SYSTEM (MGS) TYPE 2 TERMINAL
14B52-03A	CABLE BARRIER TYPE 1 LAYOUT
14B52-03B	CABLE BARRIER TYPE 1 LAYOUT
14B52-03C	CABLE BARRIER TYPE 1 LAYOUT
15C08-24A	PERMANENT LONGITUDINAL PAVEMENT MARKINGS
15C08-24B	TEMPORARY LONGITUDINAL PAVEMENT MARKING
15C11-10B	CHANNELIZING DEVICES DRUMS, CONES, BARRICADES AND VERTICAL PANELS
15C19-10C	MOVING PAVEMENT MARKING OPERATION MULTI-LANE DIVIDED ROADWAY
15D12-15A	TRAFFIC CONTROL, VEHICLE ENTRANCE/EXIT OR HAUL ROAD

6

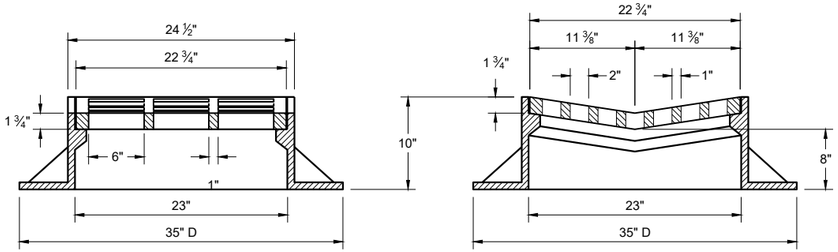

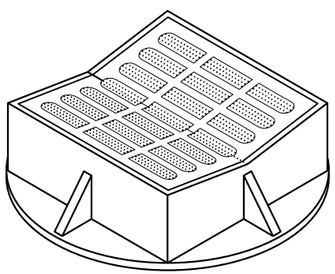

TYPE "B"

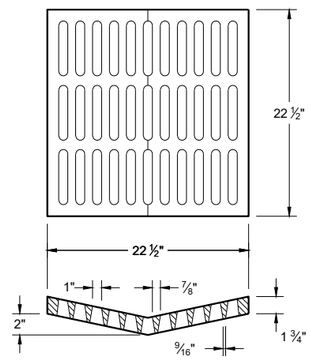

ALTERNATIVE GRATE FOR TYPE "B" COVER

USE WHERE PEDESTRIAN OF BICYCLE TRAFFIC IS POSSIBLE

NOTED AS TYPE B - A ON THE DRAINAGE TABLE

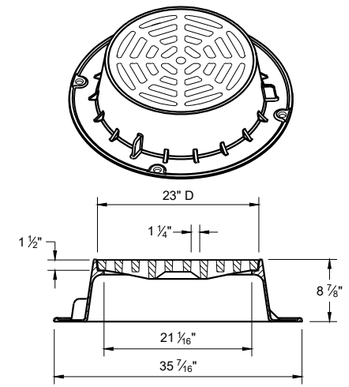

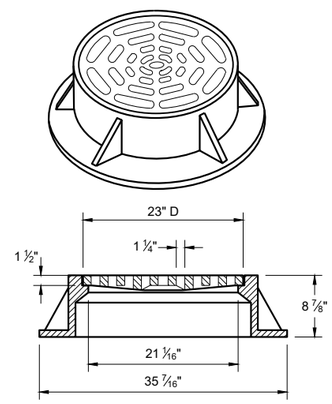

TYPE "C"

NOTE: EITHER CASTING IS ACCEPTABLE

GENERAL NOTES

DETAILS OF CONSTRUCTION, MATERIALS AND WORKMANSHIP NOT SHOWN ON THIS DRAWING SHALL CONFORM TO THE PERTINENT REQUIREMENTS OF THE STANDARD SPECIFICATIONS AND THE APPLICABLE SPECIAL PROVISIONS.

DETAIL DRAWINGS FOR PROPOSED ALTERNATE DESIGNS FOR CATCH BASIN, MANHOLE AND INLET COVERS SHALL BE SUBMITTED TO THE ENGINEER FOR APPROVAL PROVIDING THAT SUCH ALTERNATE DESIGNS MAKE PROVISION FOR EQUIVALENT CAPACITY AND STRENGTH.

ROUND FRAMES AND COVERS SHALL HAVE CONTINUOUSLY MACHINED BEARING SURFACES TO PREVENT ROCKING AND RATTLING.

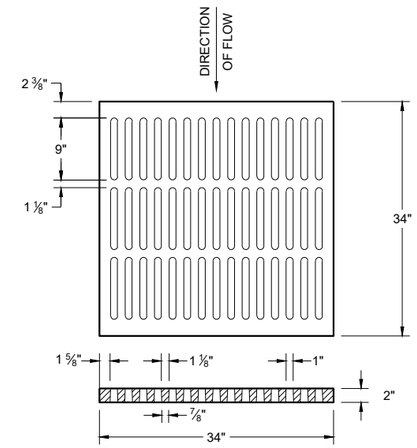

ALTERNATIVE TYPE "MS"

USE WHERE PEDESTRIAN OF BICYCLE TRAFFIC IS PERMITTED

NOTED AS TYPE MS-A ON THE DRAINAGE TABLE

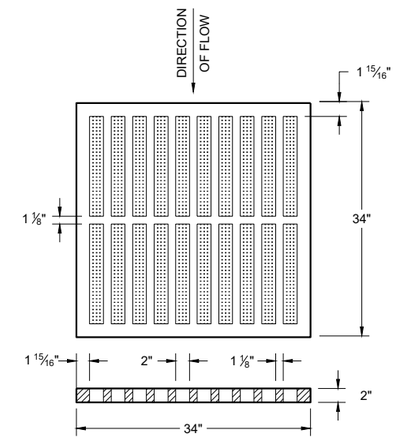

TYPE "MS"

USE ON FREEWAYS AND EXPRESSWAYS

NOTED AS TYPE MS ON THE DRAINAGE TABLE

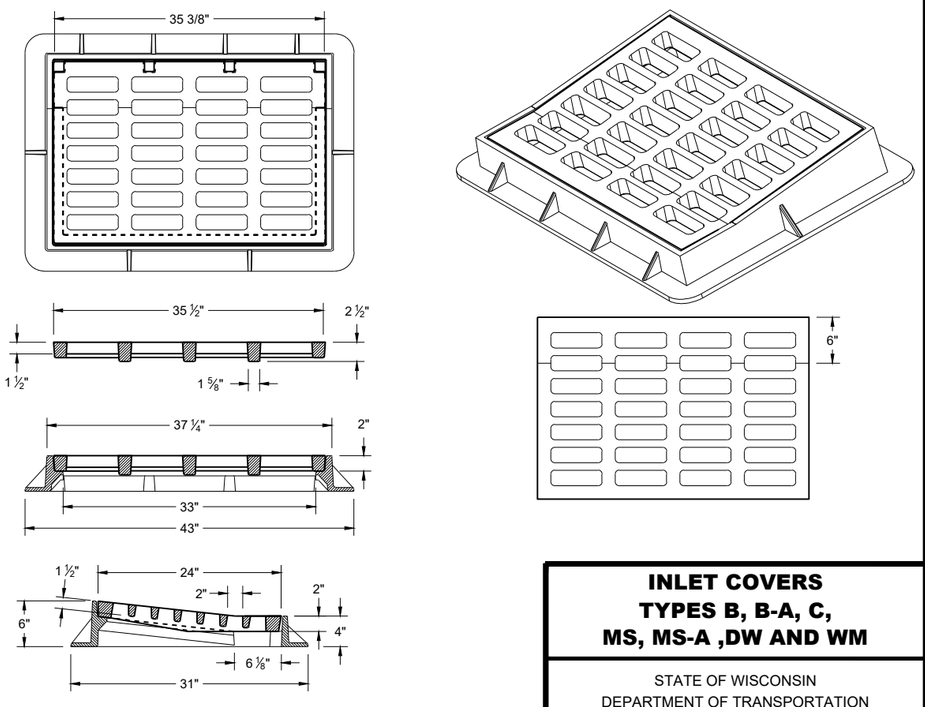

TYPE "DW"

NOTES: FOR USE IN A SUMP CONDITION. THIS OPTION IS ONLY TO BE USED IF NO OTHER INLETS ARE APPLICABLE.

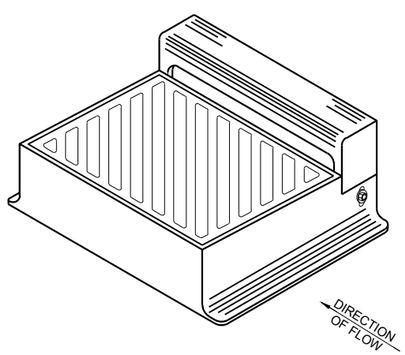

DIAGONAL SLOTS SHALL BE ORIENTEDTO THE DIRECTION OF FLOW AS ILLUSTRATED.
GRATES ARE MANUFACTURED TO BE REVERSIBLE.

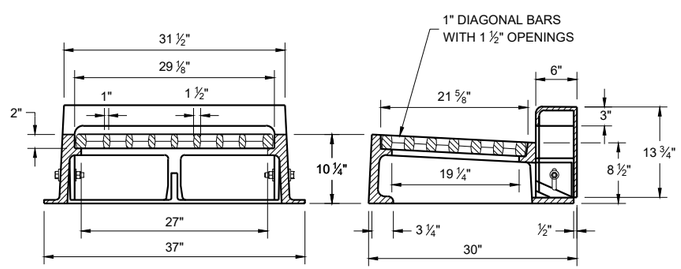

TYPE "WM"

NOTE: CURB BOX HEIGHT ADJUSTABLE 6" - 9"

INLET COVERS
TYPES B, B-A, C,
MS, MS-A ,DW AND WM

STATE OF WISCONSIN
DEPARTMENT OF TRANSPORTATION

APPROVED
February 2025 — DATE
/S/ Rodney Taylor — ROADWAY STANDARDS DEVELOPMENT UNIT SUPERVISOR
FHWA

6

SDD 08A05-22b

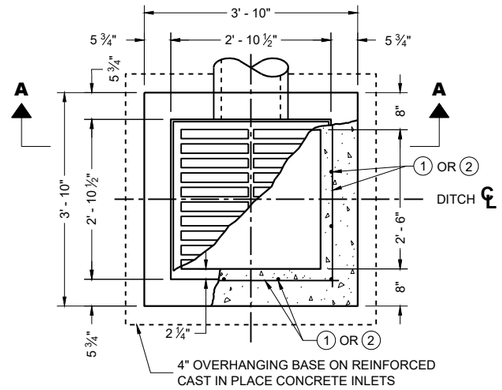

PLAN VIEW

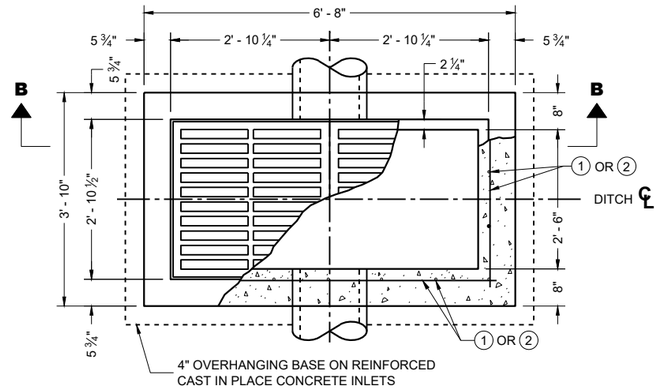

PLAN VIEW

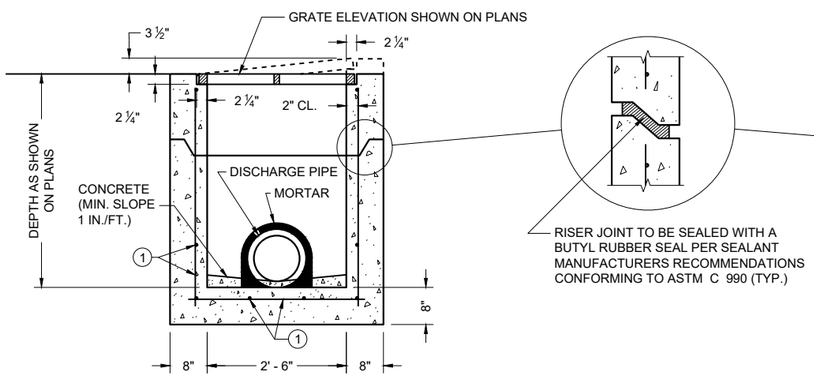

PRECAST REINFORCED CONCRETE SECTION A - A

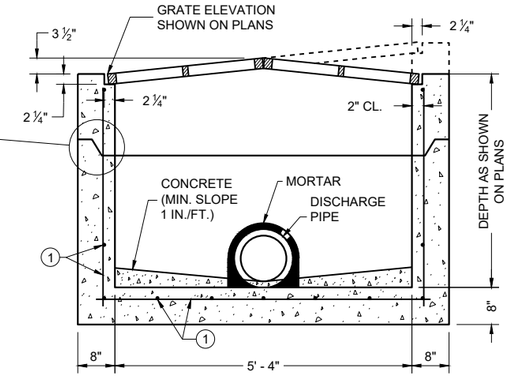

PRECAST REINFORCED CONCRETE SECTION B - B

GENERAL NOTES

DETAILS OF CONSTRUCTION, MATERIALS AND WORKMANSHIP N0T SHOWN ON THIS DRAWING SHALL CONFORM TO THE PERTINENT REQUIREMENTS OF THE STANDARD SPECIFICATIONS AND THE APPLICABLE SPECIAL PROVISIONS.

UNLESS OTHERWISE AUTHORIZED IN WRITING BY THE ENGINEER, THE CONTRACTOR SHALL NOT ORDER AND DELIVER PRECAST INLET UNITS REQUIRED FOR THE PROJECT UNTIL A LIST OF SIZES IS FURNISHED BY THE ENGINEER.

DETAILED DRAWINGS FOR PROPOSED ALTERNATE DESIGNS FOR INLETS WHICH MAY INCLUDE PRECAST REINFORCED CONCRETE INLETS, SHALL BE SUBMITTED TO THE ENGINEER FOR APPROVAL PROVIDING THAT SUCH ALTERNATE DESIGNS MAKE PROVISION FOR EQUIVALENT CAPACITY AND STRENGTH.

ALL MEDIAN INLETS ARE DESIGNATED ON THE PLANS AS "INLETS, 1G-MS", ETC. THE FIRST NUMBER AND LETTER DESIGNATE THE TYPE OF STRUCTURE, AND THE FOLLOWING LETTERS DESIGNATE THE TYPE OF COVER TO BE USED TO COMPRISE THE COMPLETE UNIT.

BASES SHALL BE PLACED ON A BED OF MATERIAL AT LEAST 6 INCHES IN DEPTH, WHICH MEETS THE REQUIREMENTS OF FOUNDATION BACKFILL. THIS BEDDING SHALL BE COMPACTED AND PROVIDE UNIFORM SUPPORT FOR THE ENTIRE AREA OF THE BASE.

ALL PRECAST INLET UNITS SHALL CONFORM TO THE PERTINENT REQUIREMENTS OF ASTM C 913.

ALL BAR STEEL REINFORCEMENT SHALL BE EMBEDDED 2 INCHES CLEAR UNLESS OTHERWISE SHOWN OR NOTED.

PRECAST REINFORCED RISERS SHALL HAVE A TONGUE AND GROOVE JOINT WITH TONGUE UP OR DOWN.

MAXIMUM INSIDE PIPE DIAMETER DETERMINED BY 3" CLEARANCE ON EACH SIDE OF THE OUTSIDE WALL OF THE PIPE. SEE DETAIL "A". ASSUMES PIPE ENTERS PERPENDICULAR TO THE STRUCTURE.

1. FOR PRECAST INLETS AND REINFORCED CONCRETE BASES PROVIDE REINFORCING STEEL IN ACCORDANCE TO ASTM C 913.
2. CONTRACTOR TO PROVIDE DRAWING(S) STAMPED BY A PROFESSIONAL ENGINEER FOR STEEL REINFORCING DESIGN FOR CAST-IN-PLACE STRUCTURES.

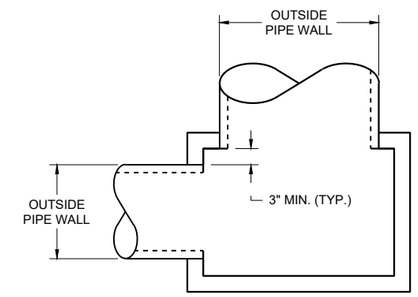

DETAIL "A"

PIPE MATRIX

INLET SIZE	MAXIMUM INSIDE PIPE DIAMETER	
	WIDTH (IN)	LENGTH (IN)
1 GRATE	18	18
2 GRATE	18	42

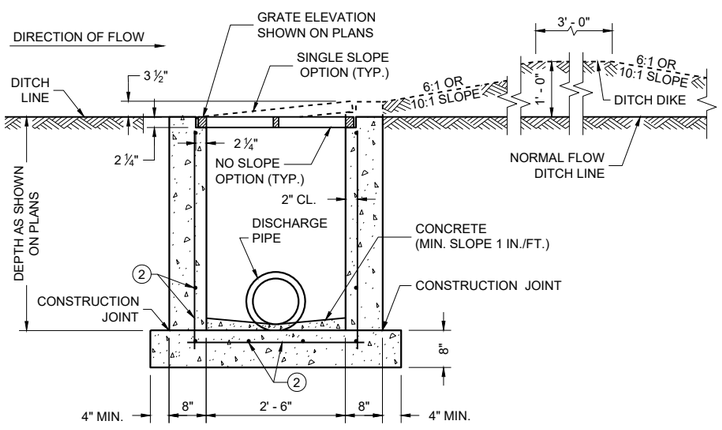

REINFORCED CAST IN PLACE CONCRETE SECTION A - A

INLETS MEDIAN 1 GRATE

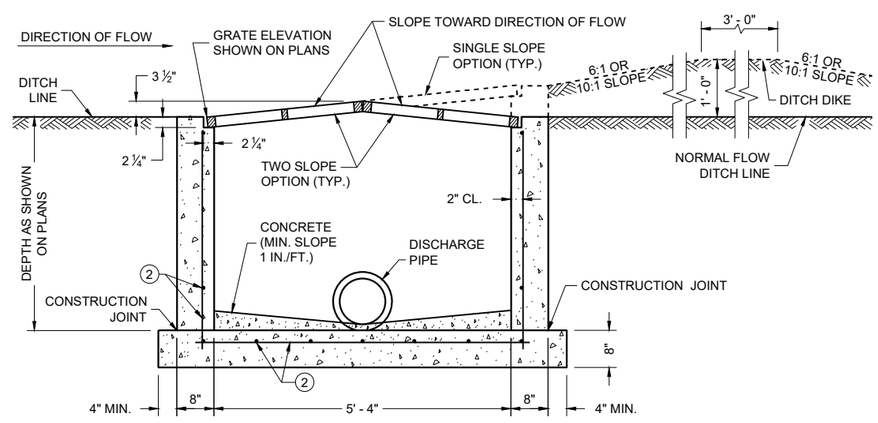

REINFORCED CAST IN PLACE CONCRETE SECTION B - B

INLETS MEDIAN 2 GRATE

INLETS
MEDIAN 1 AND 2 GRATE

STATE OF WISCONSIN
DEPARTMENT OF TRANSPORTATION

APPROVED
December 2023 — DATE
/S/ Rodney Taylor — ROADWAY STANDARDS DEVELOPMENT UNIT SUPERVISOR
FHWA

6
SDD 08C08-03

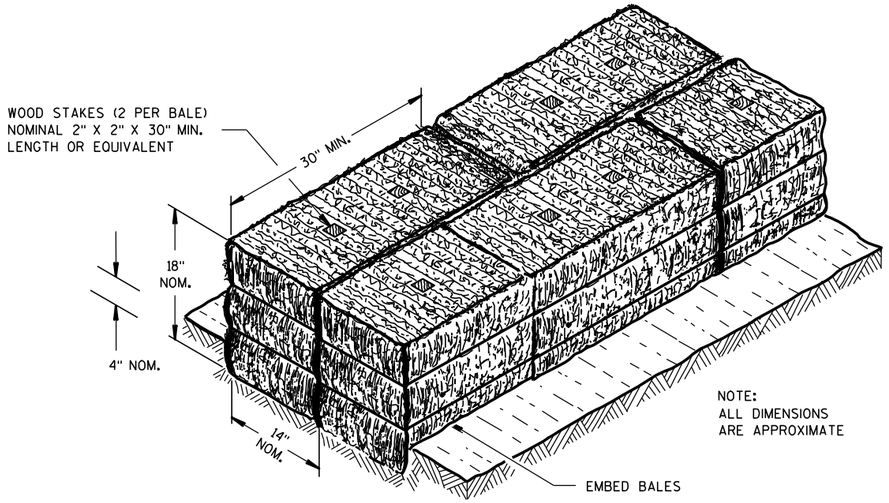

SECTION A-A

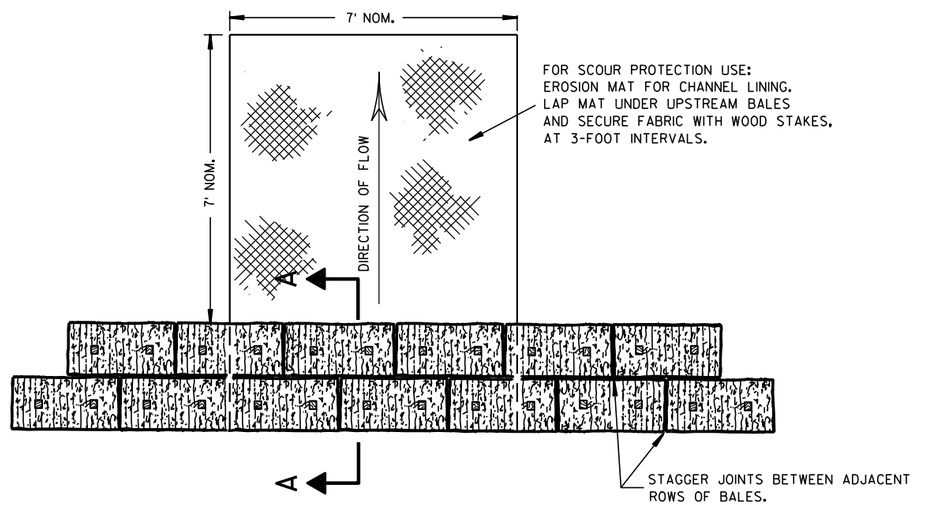

PLAN VIEW

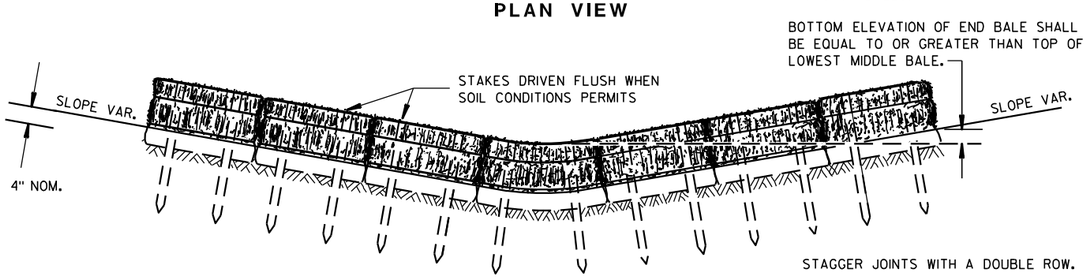

FRONT ELEVATION

TEMPORARY DITCH CHECK USING EROSION BALES ①

GENERAL NOTES

DETAILS OF CONSTRUCTION, MATERIALS AND WORKMANSHIP NOT SHOWN ON THIS DRAWING SHALL CONFORM TO THE PERTINENT REQUIREMENTS OF THE STANDARD SPECIFICATIONS AND THE APPLICABLE SPECIAL PROVISIONS.

① TEMPORARY DITCH CHECKS EITHER EROSION BALES OR MANUFACTURED SHALL BE PAID FOR UNDER THE BID ITEM OF TEMPORARY DITCH CHECK. THE DEPARTMENT WILL NOT PAY FOR TEMPORARY DITCH CHECKS CONSTRUCTED OF A SINGLE ROW OF EROSION BALES.

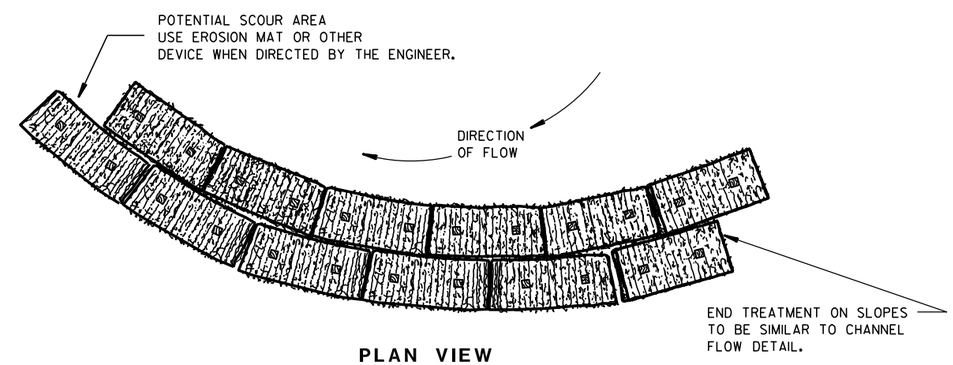

PLAN VIEW

WHEN ALTERING THE DIRECTION OF FLOW

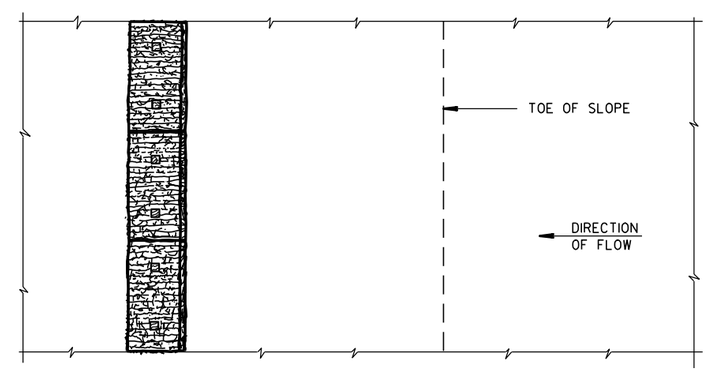

PLAN VIEW

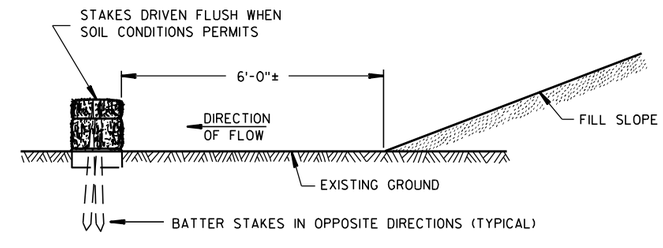

FRONT ELEVATION

WHEN EXISTING GROUND SLOPES AWAY FROM FILL SLOPE

EROSION BALES FOR SHEET FLOW

TYPICAL INSTALLATIONS OF EROSION BALES / TEMPORARY DITCH CHECKS

STATE OF WISCONSIN
DEPARTMENT OF TRANSPORTATION

APPROVED
6/04/02 — DATE
/S/ Beth Cann... — CHIEF ROADWAY DEVELOP... ...GINEER
FHWA

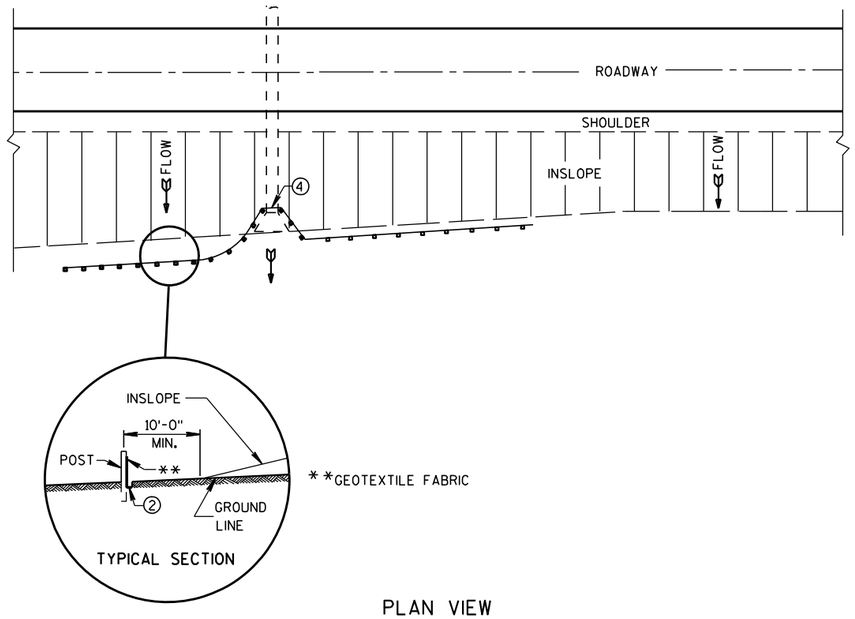

PLAN VIEW

TYPICAL APPLICATION OF SILT FENCE

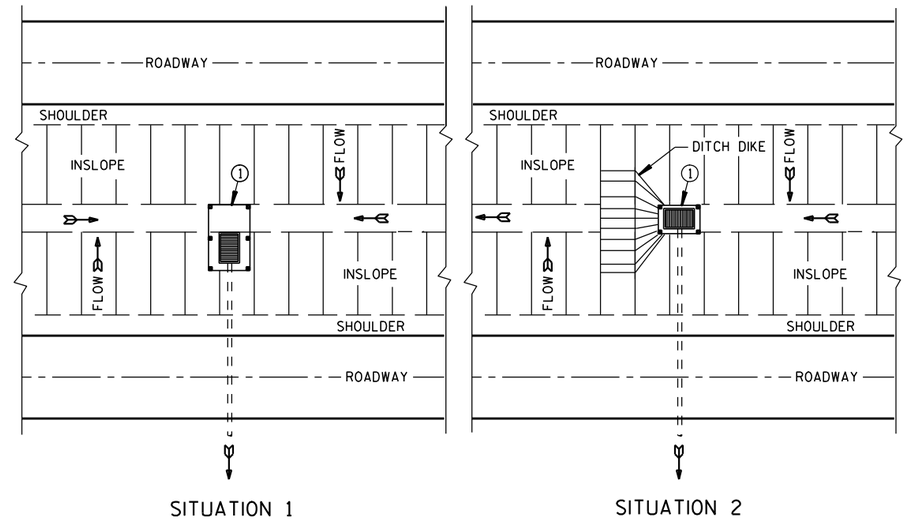

PLAN VIEW

SILT FENCE AT MEDIAN SURFACE DRAINS

GENERAL NOTES

DETAILS OF CONSTRUCTION NOT SHOWN ON THIS DRAWING SHALL CONFORM TO THE PERTINENT REQUIREMENTS OF THE STANDARD SPECIFICATIONS AND APPLICABLE SPECIAL PROVISIONS.

① HORIZONTAL BRACE REQUIRED WITH 2" X 4" WOODEN FRAME OR EQUIVALENT AT TOP OF POSTS.

② FOR MANUAL INSTALLATIONS THE TRENCH SHALL BE A MINIMUM OF 4" WIDE & 6" DEEP TO BURY AND ANCHOR THE GEOTEXTILE FABRIC. FOLD MATERIAL TO FIT TRENCH AND BACKFILL & COMPACT TRENCH WITH EXCAVATED SOIL.

③ WOOD POSTS SHALL BE A MINIMUM SIZE OF 1⅛" X 1⅛" OF OAK OR HICKORY.

④ SILT FENCE TO EXTEND ACROSS THE TOP OF THE PIPE.

⑤ CONSTRUCT SILT FENCE FROM A CONTINUOUS ROLL IF POSSIBLE BY CUTTING LENGTHS TO AVOID JOINTS. IF A JOINT IS NECESSARY USE ONE OF THE FOLLOWING TWO METHODS; A) OVERLAP THE END POSTS AND TWIST, OR ROTATE, AT LEAST 180 DEGREES. B) HOOK THE END OF EACH SILT FENCE LENGTH.

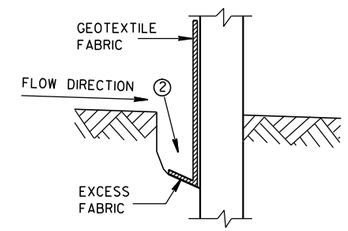

TRENCH DETAIL

NOTE: ADDITIONAL POST DEPTH OR TIE BACKS MAY BE REQUIRED IN UNSTABLE SOILS

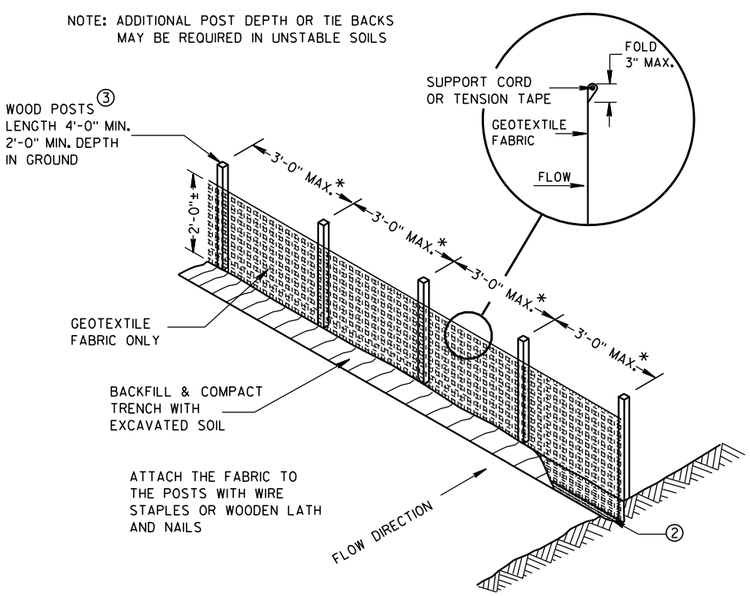

*NOTE: 8'-0" POST SPACING ALLOWED IF A WOVEN GEOTEXTILE FABRIC IS USED.

SILT FENCE

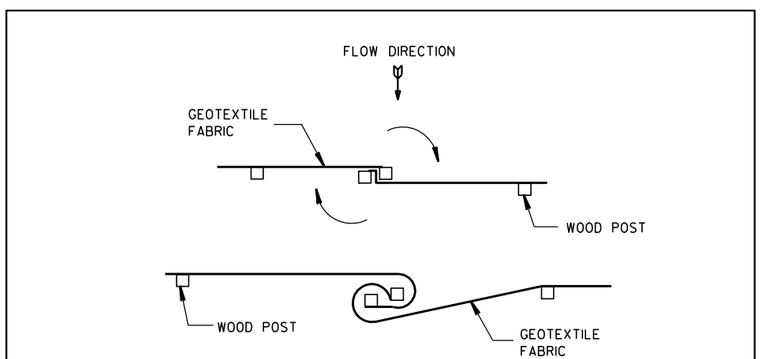

TWIST METHOD

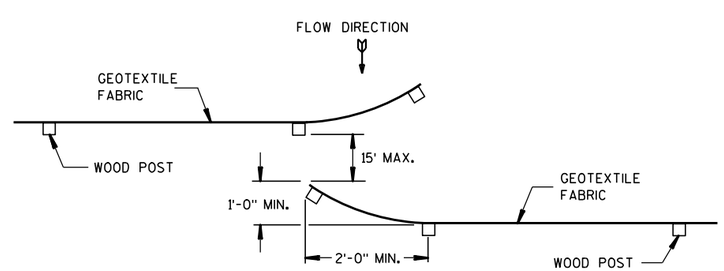

HOOK METHOD

JOINING TWO LENGTHS OF SILT FENCE ⑤

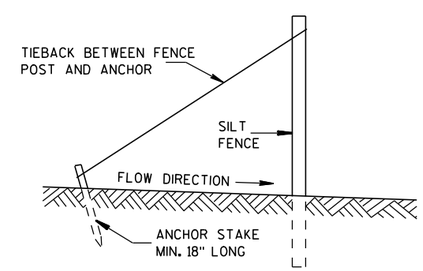

SILT FENCE TIE BACK

(WHEN REQUIRED BY THE ENGINEER)

SILT FENCE
STATE OF WISCONSIN DEPARTMENT OF TRANSPORTATION
APPROVED 4-29-05 /S/ Beth Cann----- DATE CHIEF ROADWAY DEVELOP ENGINEER FHWA

6

6

S.D.D. 8 E 9-6

S.D.D. 8 E 9-6

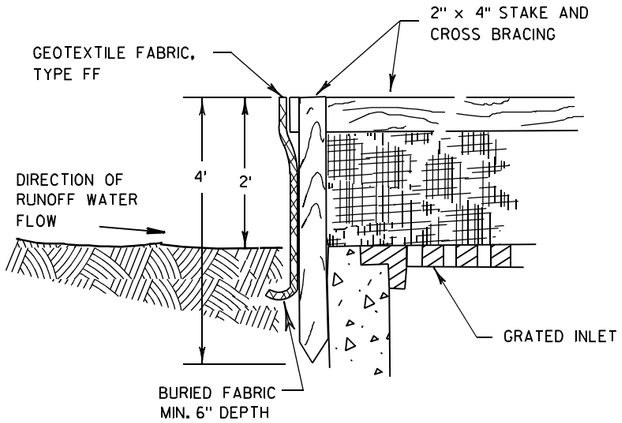

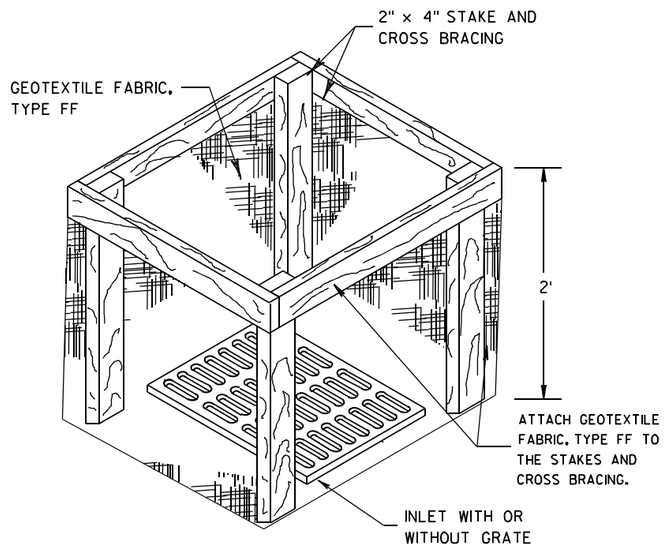

INLET PROTECTION, TYPE A

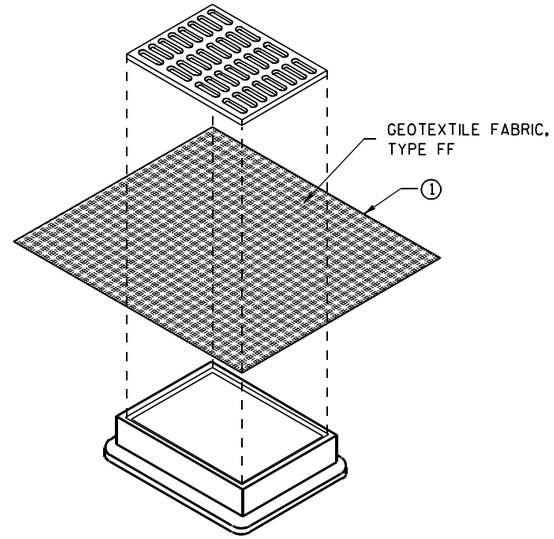

INLET PROTECTION, TYPE B (WITHOUT CURB BOX)

(CAN BE INSTALLED IN ANY INLET WITHOUT A CURB BOX)

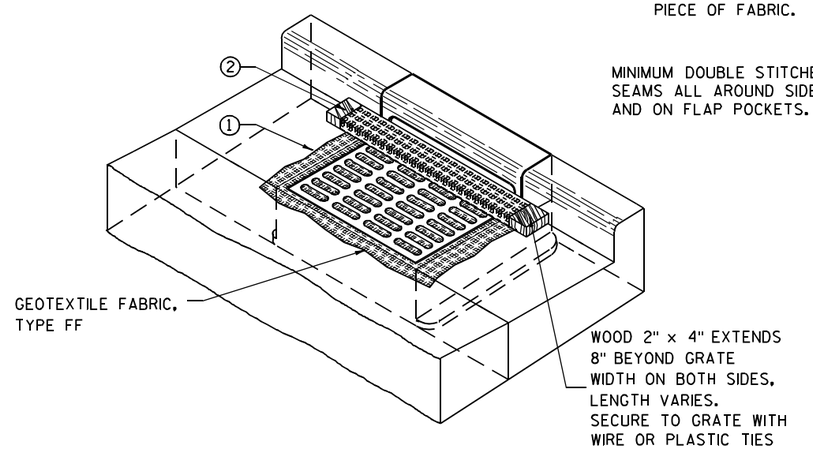

INLET PROTECTION, TYPE C (WITH CURB BOX)

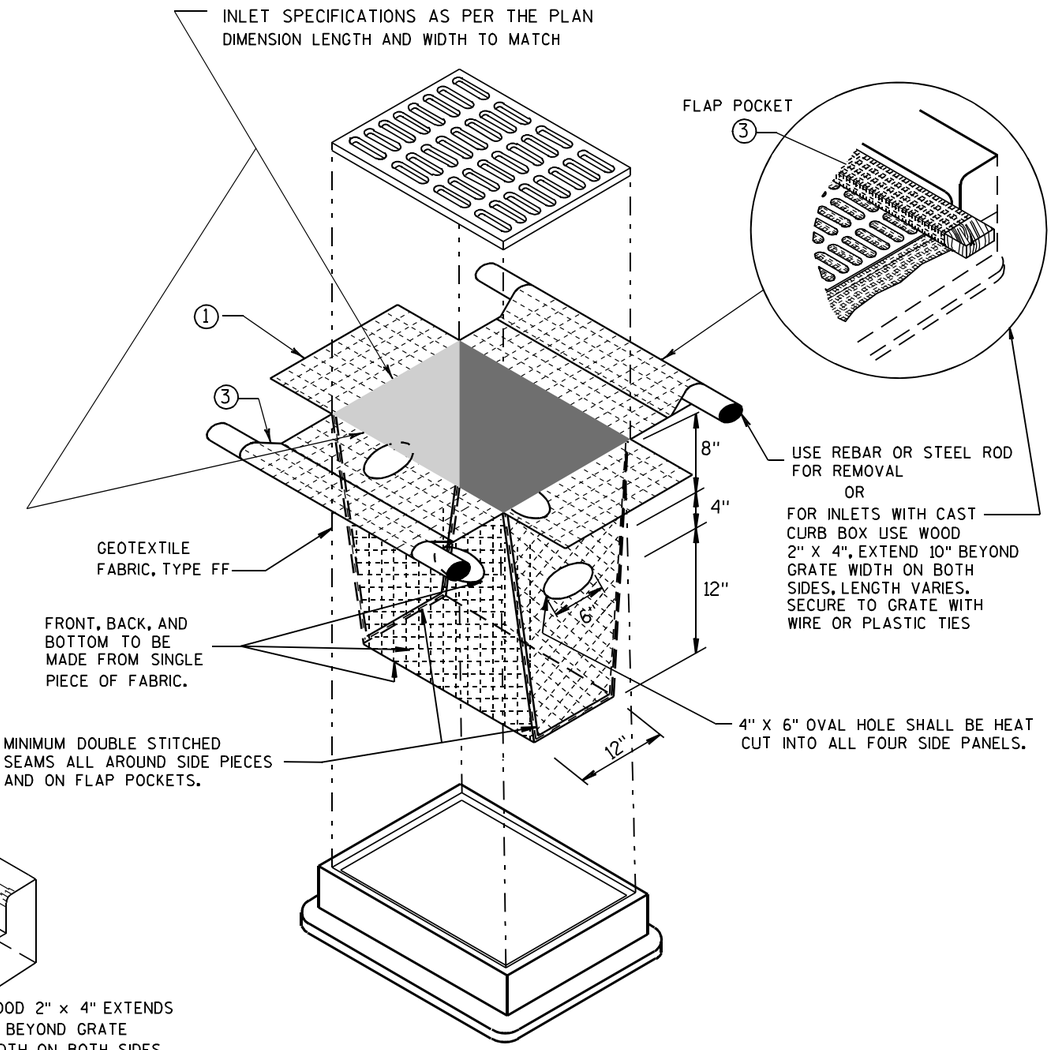

INLET PROTECTION, TYPE D

(CAN BE INSTALLED IN ANY INLET TYPE WITH OR WITHOUT A CURB BOX AS PER NOTE 2)

GENERAL NOTES

INLET PROTECTION DEVICES SHALL BE MAINTAINED OR REPLACED AT THE DIRECTION OF THE ENGINEER.

MANUFACTURED ALTERNATIVES APPROVED AND LISTED ON THE DEPARTMENT'S EROSION CONTROL PRODUCT ACCEPTABILITY LIST MAY BE SUBSTITUTED.

WHEN REMOVING OR MAINTAINING INLET PROTECTION, CARE SHALL BE TAKEN SO THAT THE SEDIMENT TRAPPED ON THE GEOTEXTILE FABRIC DOES NOT FALL INTO THE INLET. ANY MATERIAL FALLING INTO THE INLET SHALL BE REMOVED IMMEDIATELY.

1 FINISHED SIZE, INCLUDING FLAP POCKETS WHERE REQUIRED, SHALL EXTEND A MINIMUM OF 10" AROUND THE PERIMETER TO FACILITATE MAINTENANCE OR REMOVAL.

2 FOR INLET PROTECTION, TYPE C (WITH CURB BOX), AN ADDITIONAL 18" OF FABRIC IS WRAPPED AROUND THE WOOD AND SECURED WITH STAPLES. THE WOOD SHALL NOT BLOCK THE ENTIRE HEIGHT OF THE CURB BOX OPENING.

3 FLAP POCKETS SHALL BE LARGE ENOUGH TO ACCEPT WOOD 2X4.

INSTALLATION NOTES

TYPE B & C

TRIM EXCESS FABRIC IN THE FLOW LINE TO WITHIN 3" OF THE GRATE.

THE CONTRACTOR SHALL DEMONSTRATE A METHOD OF MAINTENANCE, USING A SEWN FLAP, HAND HOLDS OR OTHER METHOD TO PREVENT ACCUMULATED SEDIMENT FROM ENTERING THE INLET.

TYPE D

DO NOT INSTALL INLET PROTECTION TYPE D IN INLETS SHALLOWER THAN 30", MEASURED FROM THE BOTTOM OF THE INLET TO THE TOP OF THE GRATE.

TRIM EXCESS FABRIC IN THE FLOW LINE TO WITHIN 3" OF THE GRATE.

THE INSTALLED BAG SHALL HAVE A MINIMUM SIDE CLEARANCE, BETWEEN THE INLET WALLS AND THE BAG, MEASURED AT THE BOTTOM OF THE OVERFLOW HOLES, OF 3". WHERE NECESSARY THE CONTRACTOR SHALL CINCH THE BAG, USING PLASTIC ZIP TIES, TO ACHIEVE THE 3" CLEARANCE. THE TIES SHALL BE PLACED AT A MAXIMUM OF 4" FROM THE BOTTOM OF THE BAG.

INLET PROTECTION TYPE A, B, C, AND D

STATE OF WISCONSIN
DEPARTMENT OF TRANSPORTATION

APPROVED
10/16/02 — DATE
/S/ Beth Cannestra — CHIEF ROADWAY DEVELOPMENT ENGINEER
FHWA

6

S.D.D. 8 E 10-2

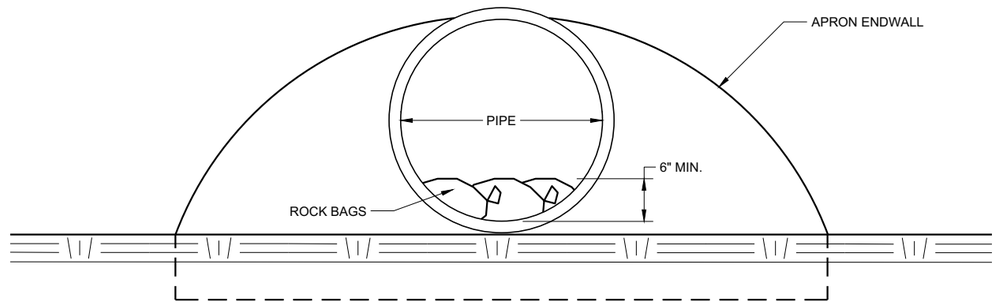

END VIEW

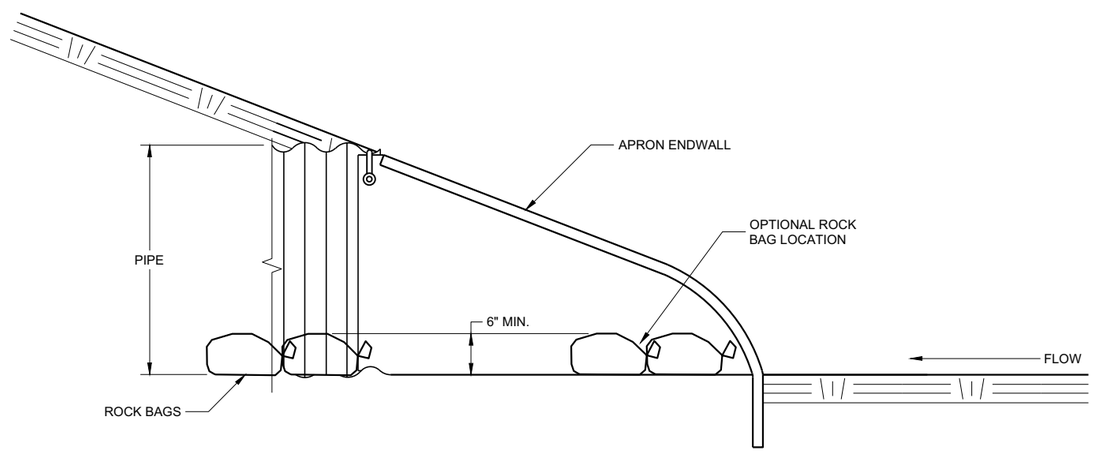

SIDE VIEW

CULVERT PIPE CHECK

(INSTALL ON INLET END ONLY)

CULVERT PIPE CHECK

STATE OF WISCONSIN
DEPARTMENT OF TRANSPORTATION

APPROVED
May 2019 — DATE
/S/ Daniel Schave — EROSION CONTROL ENGI
FHWA

6

SDD 08E15 - 01

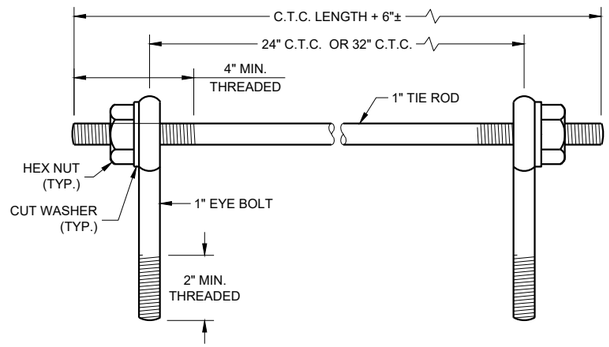

EYE BOLTS AND TIE ROD

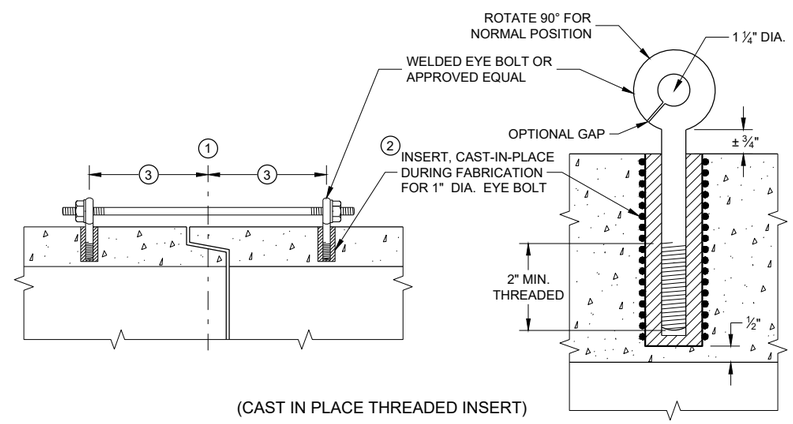

(CAST IN PLACE THREADED INSERT)

LONGITUDINAL SECTIONS

EYE BOLT AND TIE ROD ASSEMBLY (ALTERNATE NO. 1)

GENERAL NOTES

DETAILS OF CONSTRUCTION, MATERIALS, AND WORKMANSHIP NOT SHOWN ON THIS DRAWING SHALL CONFORM TO THE PERTINENT REQUIREMENTS OF THE STANDARD SPECIFICATIONS AND APPLICABLE SPECIAL PROVISIONS.

CONCRETE CULVERT AND STORM SEWER PIPE SHALL BE TIED TOGETHER IN THE MANNER ILLUSTRATED BY THIS DETAIL AT LOCATIONS DESIGNATED IN THE STANDARD SPECIFICATIONS AND THE PLAN. THE CONTRACTOR MAY USE EITHER ALTERNATE 1, 2 OR 3 FOR DRAINAGE STRUCTURES. ONLY ALTERNATE 1 AND 3 MAY BE USED FOR CATTLE PASSES, UNLESS OTHERWISE STATED IN THE CONTRACT. THE MATERIALS, FABRICATION AND WORK NECESSARY TO TIE THE PIPE BY THIS DETAIL WILL BE CONSIDERED INCIDENTAL TO THE PIPE AND APRON ENDWALLS IF REQUIRED.

DETAILED DRAWINGS FOR PROPOSED ALTERNATE DESIGNS FOR JOINT TIES SHALL BE SUBMITTED TO THE ENGINEER FOR APPROVAL.

JOINT TIES TO BE HOT-DIP GALVANIZED PER ASTM A 153.

1. CENTER LINE OF TONGUE AND GROOVE OR BELL AND SPIGOT JOINTS.
2. THE INSIDE OF THE THREADED INSERTS SHALL BE CLEAN TO ALLOW THE INSERTION OF THREADED EYE BOLTS.
3. HOLES SHALL BE CAST-IN-PLACE OR DRILLED PER THE APPLICABLE DETAIL, AND EQUAL DISTANCE FROM THE CENTERLINE OF THE JOINT.
4. BOLT PROJECTION INSIDE OF PIPE SHALL NOT EXCEED 2 INCHES.
5. OPENING TO BE ROD DIAMETER PLUS 1 INCH.
6. LENGTH ADEQUATE TO EXTEND TO WITHIN ½ INCH OF THE INNER SURFACE OF THE PIPE.
7. EYE BOLT LENGTH DETERMINED BY WALL THICKNESS, BELL THICKNESS AND BOLT PROJECTION INSIDE PIPE.

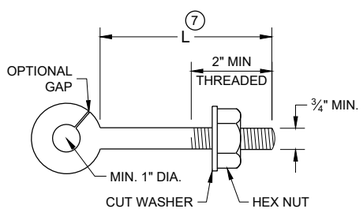

EYE BOLT 7

NOTE: TWO EYE BOLTS MAY BE USED WITH A 30" OR 38" LONG THREADED ROD IN LIEU OF THE 90° BENT TIE ROD.

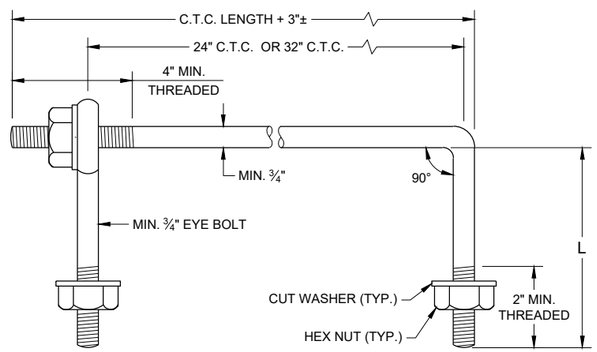

EYE BOLT AND TIE ROD

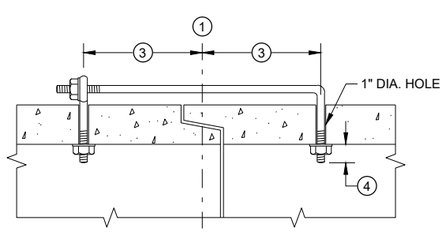

(TONGUE AND GROOVE PIPE)

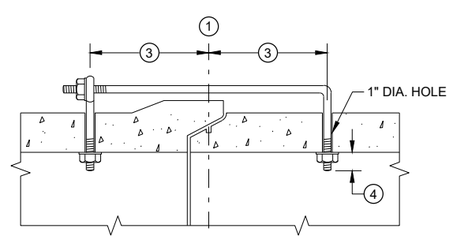

(MODIFIED BELL PIPE)

LONGITUDINAL SECTION

(JOINT TIES FOR 18" TO 66" DIA. CONCRETE PIPE)

EYE BOLT AND TIE ROD ASSEMBLY (ALTERNATE NO. 2)

ADJUSTABLE TIE ROD TABLE

PIPE DIAMETER	TIE ROD DIAMETER	D	L_1	N
12 - 60	⅝	⅝	5	½
66 - 84	¾	¾	5	½
90 - 144	1	1	7	1 7/16

DIMENSIONS SHOWN ARE IN INCHES

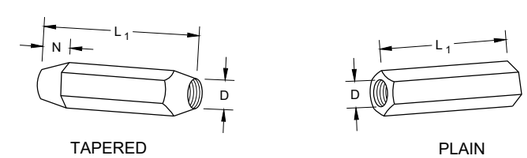

RIGHT AND LEFT THREADS

SLEEVE NUTS

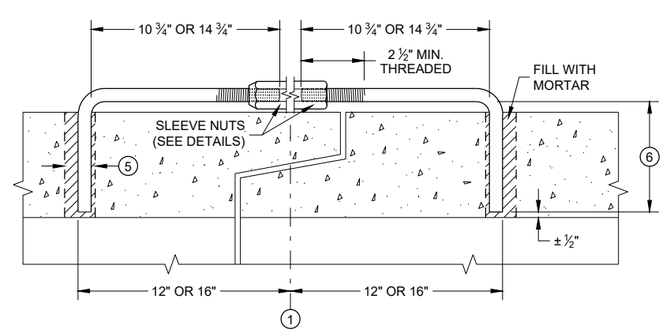

LONGITUDINAL SECTION

ADJUSTABLE TIE ROD (ALTERNATE NO. 3)

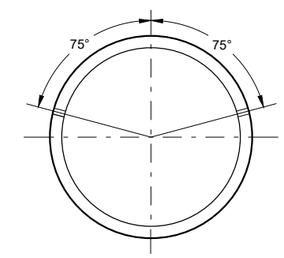

PLACEMENT OF (2) CAST-IN-PLACE INSERTS OR HOLES DURING FABRICATION FOR PIPE SECTIONS REQUIRING TIE RODS

TRANSVERSE SECTION

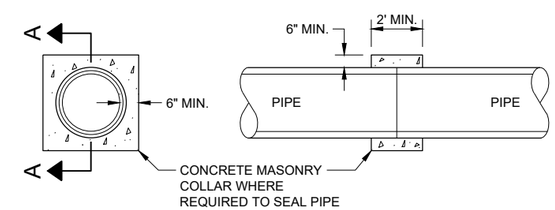

SECTION A - A

CONCRETE COLLAR DETAIL

JOINT TIES FOR CONCRETE PIPE AND CONCRETE COLLAR DETAIL

STATE OF WISCONSIN
DEPARTMENT OF TRANSPORTATION

APPROVED
November 2021 — DATE
/S/ Rodney Taylor — ROADWAY STANDARDS DEVE ENGINEER
FHWA

6

SDD 08F04 - 08

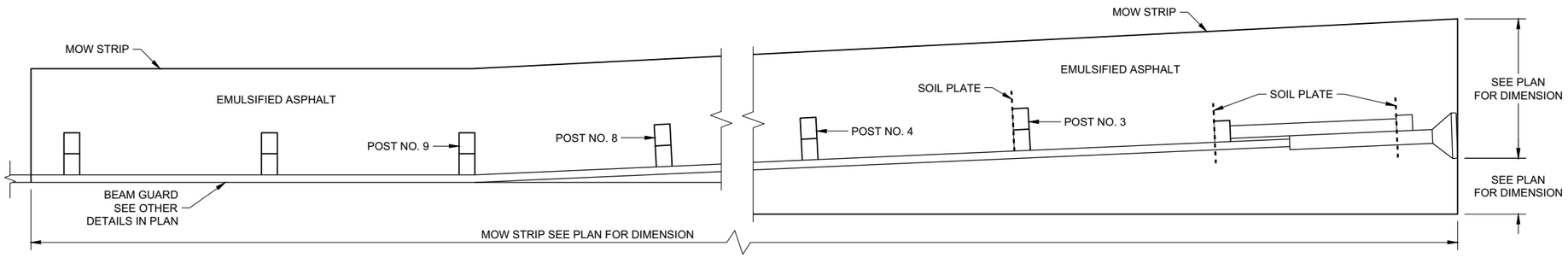

PLAN VIEW
MOW STRIP LAYOUT FOR ENERGY ABSORBING TERMINAL

GENERAL NOTES

ONLY USE STEEL POSTS IN CONCRETE AND ASPHALT MOW STRIPS.

1. CONTROLLED LOW-STRENGTH BACKFILL OR EMULSIFIED ASPHALT.
2. DEPTH OF MOW STRIP:
   ASPHALT - 4"
   CONCRETE - 4"
   EMULSIFIED ASPHALT - 1" OR LESS
3. FOR EMULSIFIED ASPHALT, MOW STRIP STRIP LEAVE OUTS NOT REQUIRED. (TYPICAL FOR ALL POSTS)

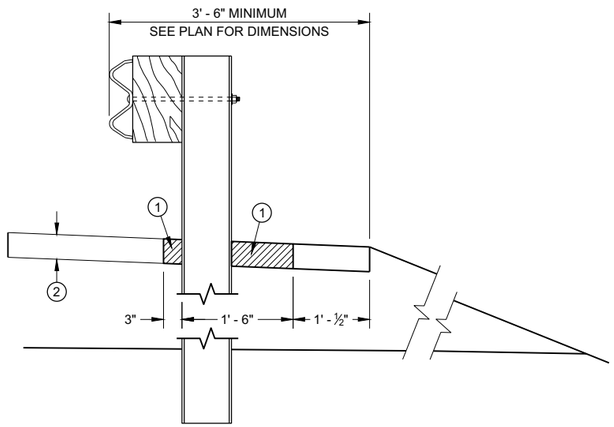

SECTION A - A

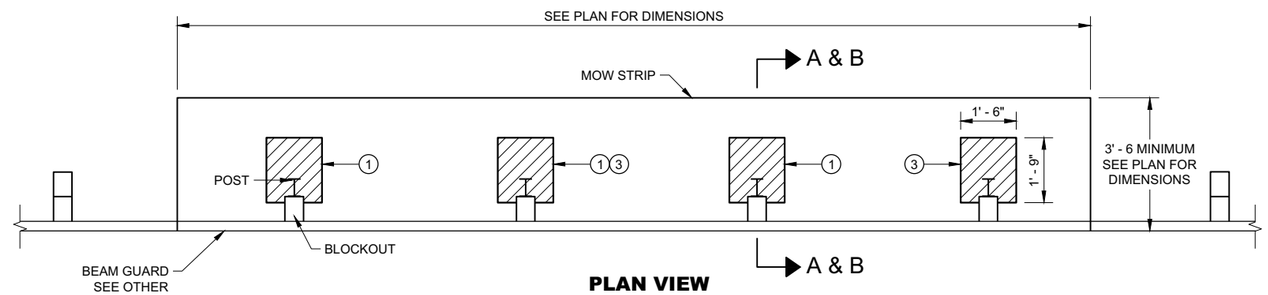

PLAN VIEW
MOW STRIP FOR TYPICAL BLOCKOUT LAYOUT

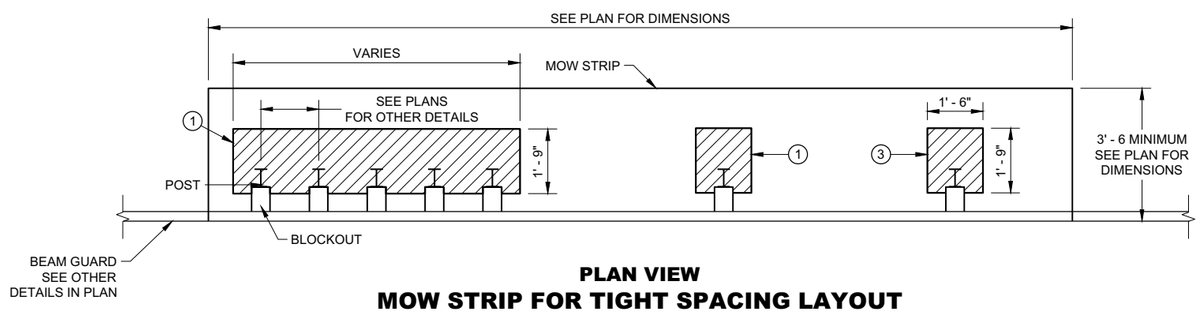

PLAN VIEW
MOW STRIP FOR TIGHT SPACING LAYOUT

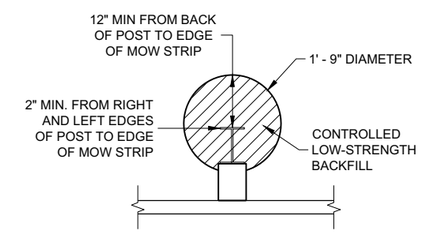

ALTERNATIVE HMA MOW STRIP DESIGN

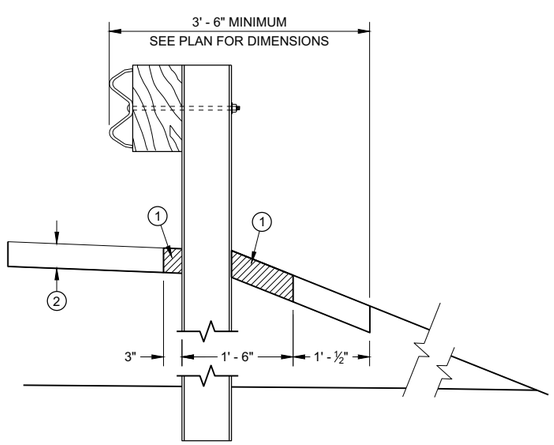

SECTION B - B

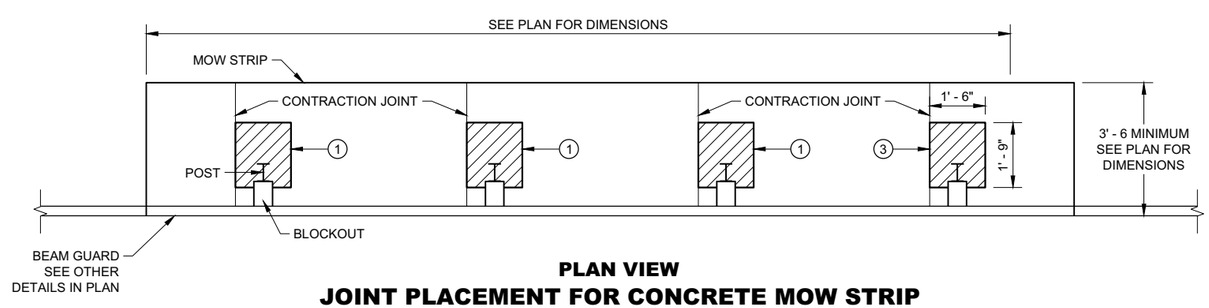

PLAN VIEW
JOINT PLACEMENT FOR CONCRETE MOW STRIP

GUARDRAIL MOW STRIP

STATE OF WISCONSIN
DEPARTMENT OF TRANSPORTATION

6

SDD 14B28 - 04a

LEGEND

CONCRETE, ASPHALT, OR EMULSIFIED ASPHALT MOW STRIP (SEE OTHER DETAILS)

EMULSIFIED ASPHALT MOW STRIP (SEE OTHER DETAILS)

GENERAL NOTES

EXISTING THRIE BEAM BULLNOSES MAY HAVE WOOD POSTS. NEW THRIE BEAM BULLNOSE WILL HAVE STEEL POSTS.

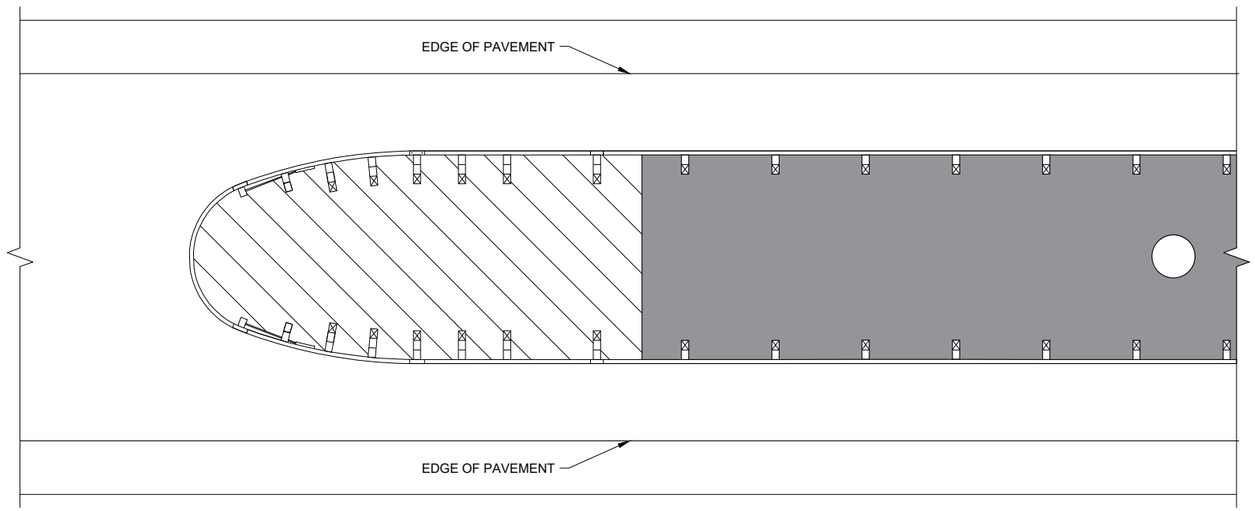

THRIE BEAM BULLNOSE

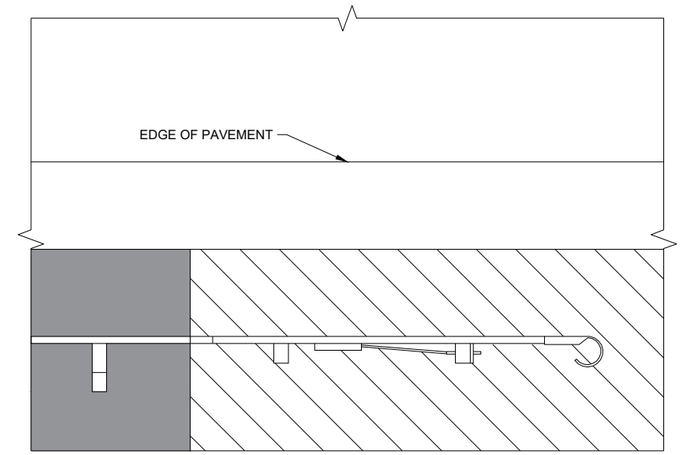

TYPE 2 TERMINAL

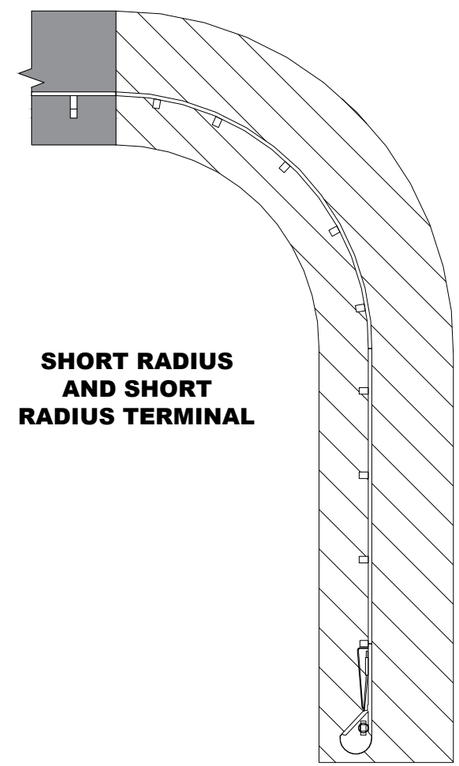

SHORT RADIUS AND SHORT RADIUS TERMINAL

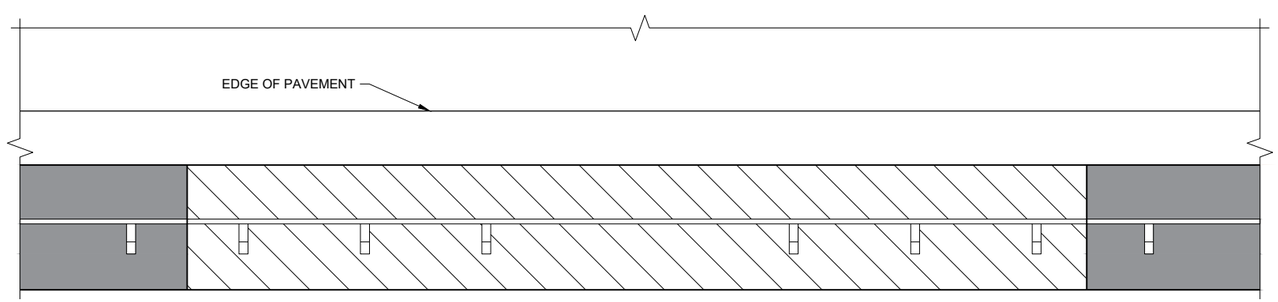

LONG - SPAN

GUARDRAIL MOW STRIP

STATE OF WISCONSIN
DEPARTMENT OF TRANSPORTATION

APPROVED
August 2020 — DATE
/S/ Rodney Taylor — ROADWAY STANDARDS DEVE ENGINEER
FHWA

6

SDD 14B28 - 04b

6

SDD 14B28 - 04b

1. WOOD OR STEEL POSTS (w6X9 OR w6X8.5) MAY BE USED. DO NOT INTERMIX WOOD AND STEEL POSTS. INSTALL STEEL POSTS WITH HOLES ON APPROACHING TRAFFIC SIDE.
2. USE WOOD OR APPROVED PLASTIC BLOCKOUTS. WOOD BLOCKOUTS MAY BE CONSTRUCTED OUT OF TWO OR MORE WOOD BLOCKOUTS. SEE ALTERNATE WOOD BLOCKOUT DETAIL. DIMENSIONS OF APPROVED PLASTIC BLOCKOUTS MAY VARY.
3. IF ROCK IS ENCOUNTERED DURING EXCAVATION, PROVIDE A HOLE 12 INCHES IN DIAMETER EXTENDING 20 INCHES DEEP INTO THE ROCK. PLACE APPROXIMATELY 2 1/2" INCHES OF GRANULAR MATERIAL IN THE BOTTOM OF THE HOLE. CUT THE POSTS THE TO LENGTH AMD INSTALL. BACKFILL WITH EXCAVATED MATERIAL AND COMPACT. BACKFILL IS TO BE FREE OF LARGE ROCKS.
4. WHEN THE DISTANCE FROM BACK OF POST TO SHOULDER HINGE POINT IS LESS THAN 2 FEET INSTALL LONGER POST AT HALF POST SPACING (K).
5. FOR NEW MGS INSTALLATION TOP OF W-BEAM RAIL TOLERANCE IS ±1". FOR EXISTING MGS INSTALLATION TOP OF W-BEAM IS BETWEEN 27 ¾" TO 32".
6. WHEN USING STEEL POST AND WOOD BLOCKOUTS INSTALL FOUR 16D GALVANIZED NAILS. INSTALL NAILS AT THE BACK CORNERS OF THE BLOCK AND BEND THE NAILS OVER THE FLANGE OF THE STEEL POST.
7. TOTAL POST LENGTH FOR TYPE K IS 7' - 0". TOTAL POST LENGTH FOR OTHER MGS TYPES IS 6' - 0".

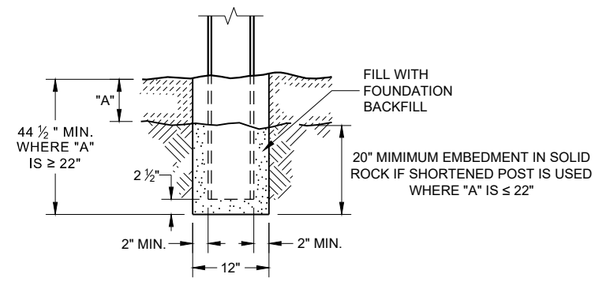

END VIEW
SETTING STEEL OR WOOD POST IN ROCK (3)

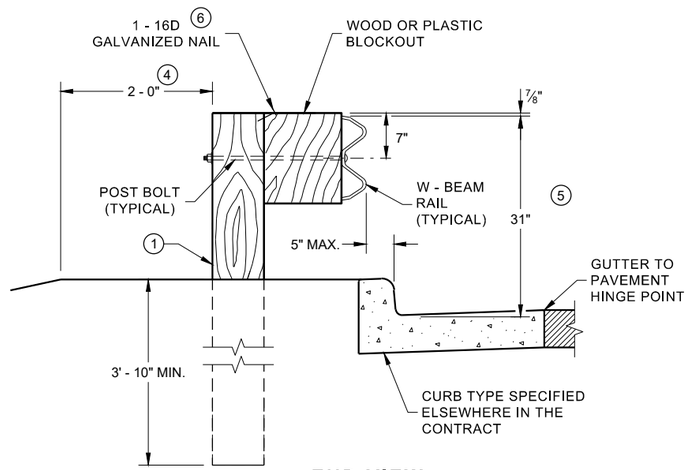

END VIEW
LOCATED ALONG A CURBED ROADWAY

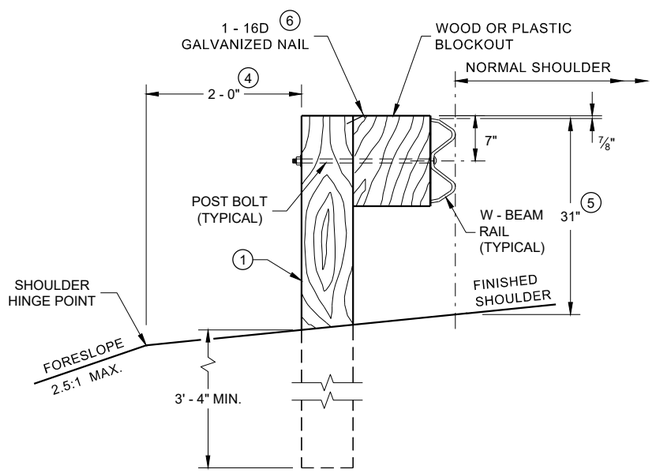

END VIEW
LOCATED ALONG A ROADWAY SHOULDER STANDARD INSTALLATION

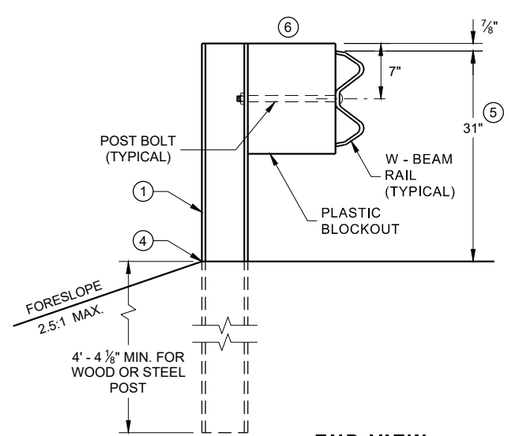

END VIEW
MGS LONGER POST AT HALFPOST SPACING W BEAM (K)

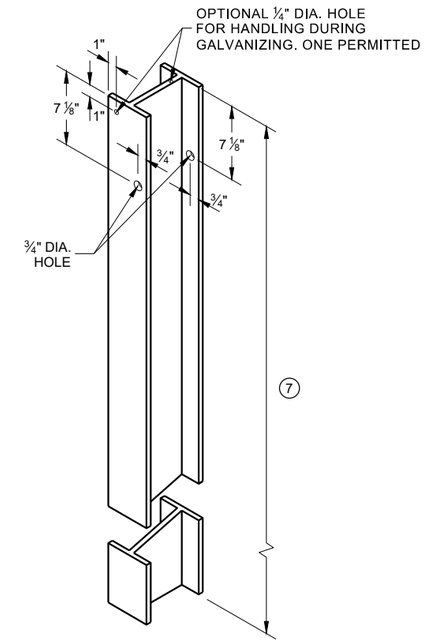

STEEL POST & HOLE PUNCHING DETAIL (W 6 X 9) (1)

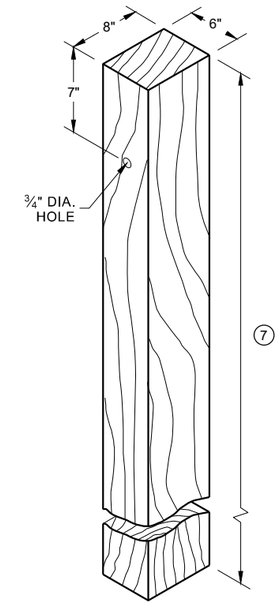

WOOD POST (6" X 8") NOMINAL (1)

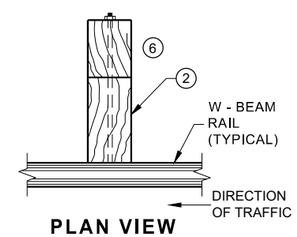

PLAN VIEW WOOD POST, BLOCKOUT & BEAM

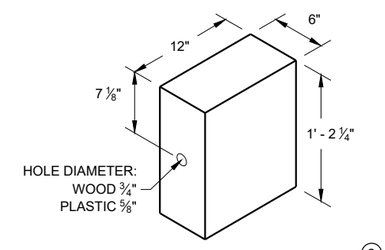

WOOD OR PLASTIC BLOCKOUT (2)

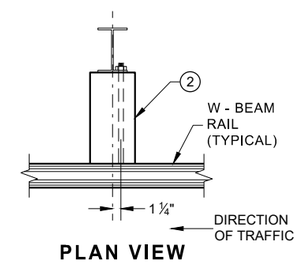

PLAN VIEW STEEL POST, PLASTIC BLOCKOUT & BEAM

MIDWEST GUARDRAIL SYSTEM (MGS) GUARDRAIL

STATE OF WISCONSIN
DEPARTMENT OF TRANSPORTA

6

SDD 14B42 - 07a

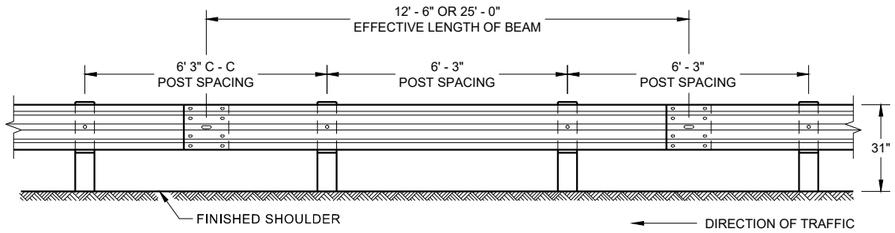

FRONT VIEW
POST SPACING STANDARD INSTALLATION

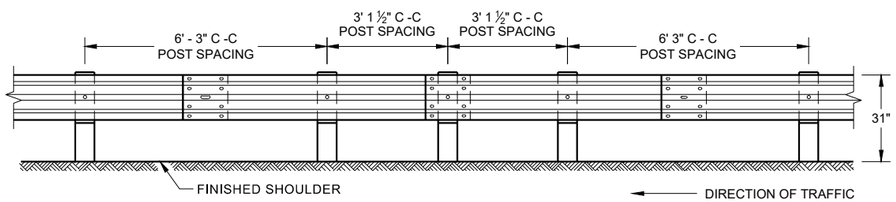

FRONT VIEW
HALF POST SPACING (HS) AND HALF POST SPACING WITH LONGER POSTS (K)

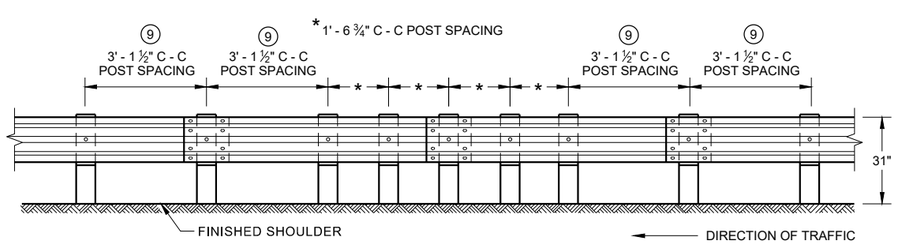

FRONT VIEW
QUARTER POST SPACING (QS)

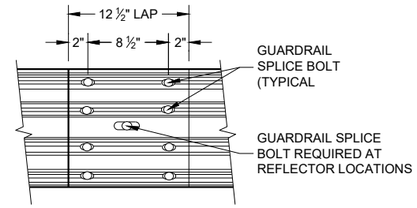

FRONT VIEW
MID-SPAN BEAM SPLICE

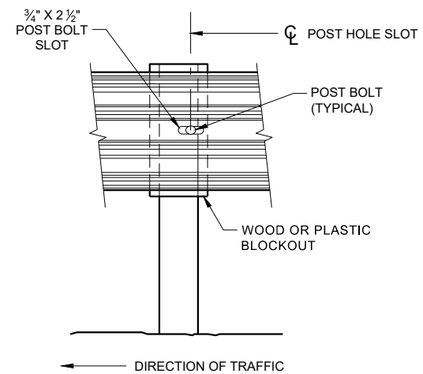

FRONT VIEW AT STEEL POST

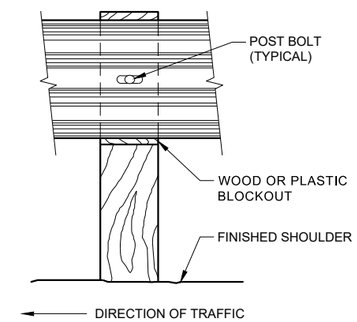

FRONT VIEW AT WOOD POST

GENERAL NOTES

8. DO NOT INSTALL REFLECTORS ON THE FIRST 50 FEET OF THE APPROACH END OF THE ENERGY ABSORBING TERMINAL.

9. 25 FEET OF HALF POST SPACING IS REQUIRED ON APPROACH AND DEPARTURE ENDS OF QUARTER POST SPACING.

POST BOLTS ARE A ⅝" DIAMETER ASTM A307 GUARDRAIL BOLT. A POST BOLT REQUIRES ⅝" DIAMETER A563A DOUBLE RECESSED (DR) HEAVY HEX NUT AND ⅝" DIAMETER F844 FLAT WASHER. POST BOLTS MAY BE LONGER IF MULTIPLE BLOCKOUTS ARE BEING USED.

GUARD RAIL SPLICE BOLTS ARE A ⅝" DIAMETER ASTM A307 GUARDRAIL HEAD BOLT. A GUARDRAIL SPLICE BOLT REQUIRES ⅝" DIAMETER A563A DOUBLE RECESSED (DR) HEAVY HEX NUT.

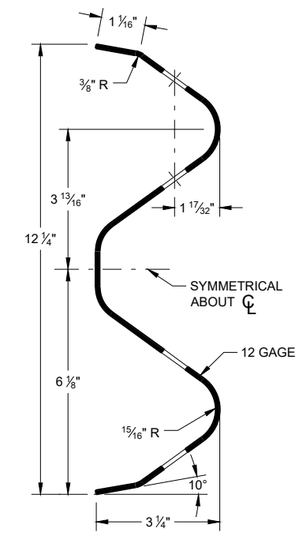

SECTION THRU W-BEAM RAIL

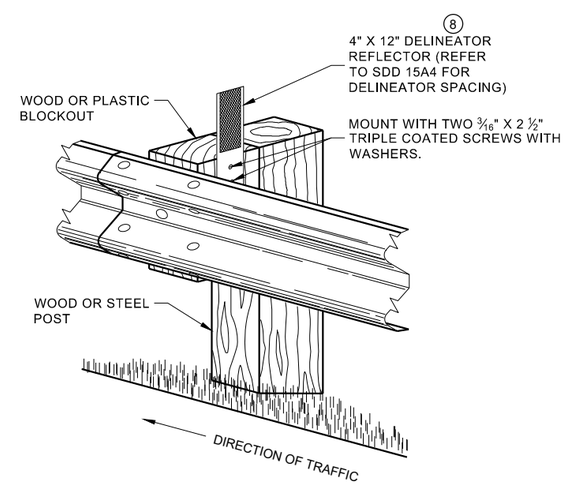

ONE SIDED REFLECTOR DETAIL AND TYPICAL INSTALLATION

MIDWEST GUARDRAIL SYSTEM (MGS) GUARDRAIL

STATE OF WISCONSIN
DEPARTMENT OF TRANSPORTAT

6

SDD 14B42 - 07b

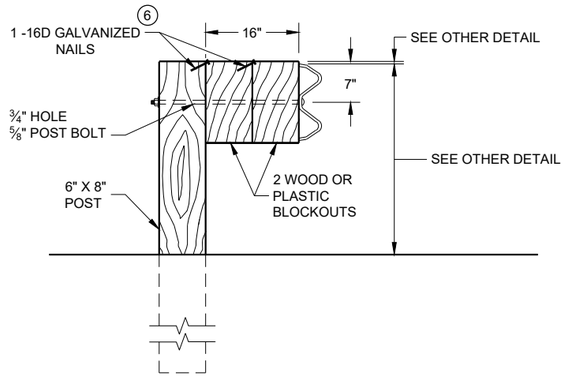

DETAIL FOR 16" BLOCKOUT DEPTH

IT IS ACCEPTABLE TO USE BLOCKOUTS UP TO 16" DEEP TO INCREASE THE POST OFFSET TO AVOID UNDERGROUND OBSTACLES. THERE IS NO LIMIT TO THE NUMBER OF POSTS THAT CAN HAVE ADDITIONAL BLOCKOUTS UP TO 16" DEEP.

NOTE:

1. ALL FILLETS SHALL HAVE A MINIMUM RADIUS OF 3/16".
2. IF THE BOLT EXTENDS MORE THAN ¼" FROM THE NUT THE BOLT SHOULD BE TRIMMED BACK.

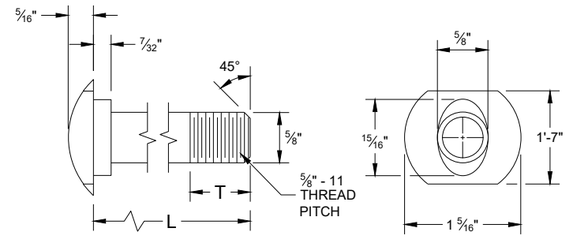

POST BOLT TABLE

L	T (MIN.)
1 ¼"	1 ⅛"
2"	1 ¾"
10"	4"
14"	4 1/16"
18"	4"
21"	4 1/16"
25"	4"

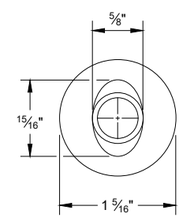

ALTERNATE BOLT HEAD

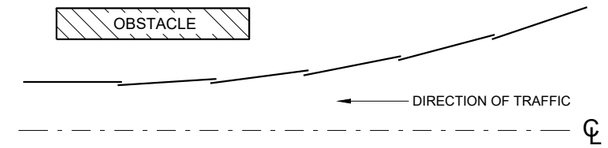

PLAN VIEW
BEAM LAPPING DETAIL

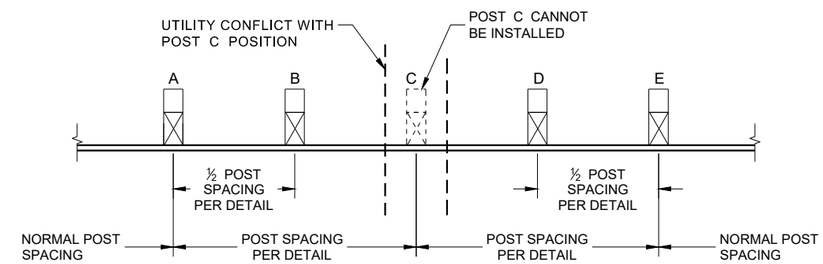

POST DRIVING FOR CONTINUOUS UNDERGROUND OBSTRUCTION

6

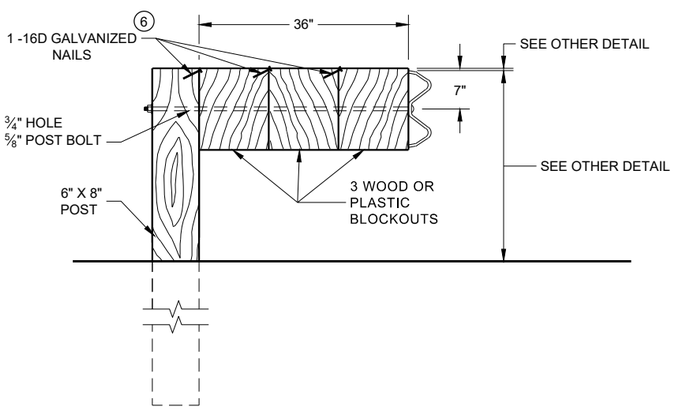

DETAIL FOR 36" BLOCKOUT DEPTH

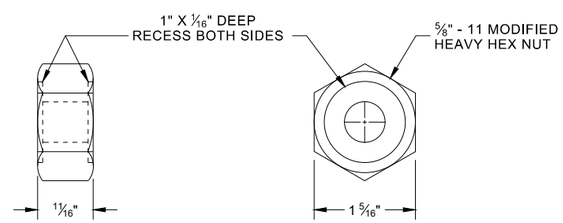

POST BOLT, SPLICE BOLT AND RECESS NUT

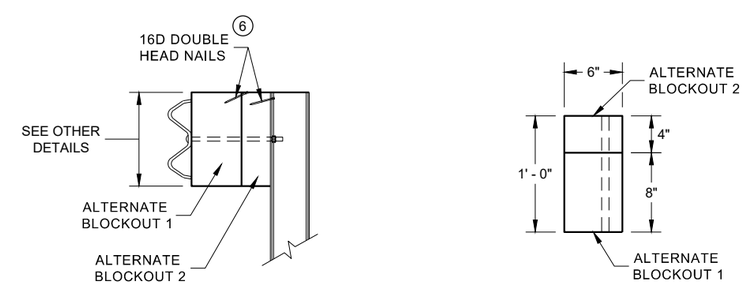

SIDE VIEW

PLAN VIEW

ALTERNATE WOOD BLOCKOUT DETAIL

NOTES: UNDER SPECIAL CIRCUMSTANCES, SUCH AS AVOIDING OBSTACLES THAT ARE NOT RELOCATED, IT IS ACCEPTABLE TO INSTALL ADDITIONAL BLOCKOUTS TO OBTAIN UP TO 36" DEPTH FOR ONE OR TWO POSTS IN A SECTION OF GUARDRAIL.

DO NOT USE 16" OR 36" BLOCKOUTS IF IT CAUSES THE POST TO BE DRIVEN BEYOND SHOULDER HINGE POINT OR CAUSES A FIXED OBJECT TO BE WITHIN THE DEFLECTION DISTANCE OF THE BARRIER.

(6) WHEN USING STEEL POST AD WOOD BLOCKOUTS, INSTALL FOUR 16D GALVANIZED NAILS. INSTALL NAILS AT THE BACK CORNERS OF THE BLOCK AND BEND THE NAILS OVER THE FLANGE OF THE STEEL POST.

MIDWEST GUARDRAIL SYSTEM (MGS) GUARDRAIL

STATE OF WISCONSIN
DEPARTMENT OF TRANSPORTA

SDD 14B42 - 07c

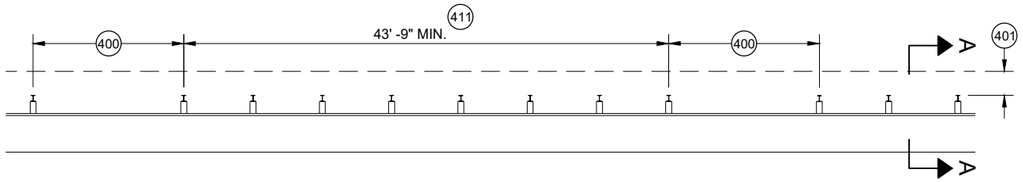

MISSING POST IN MGS GUARDRAIL

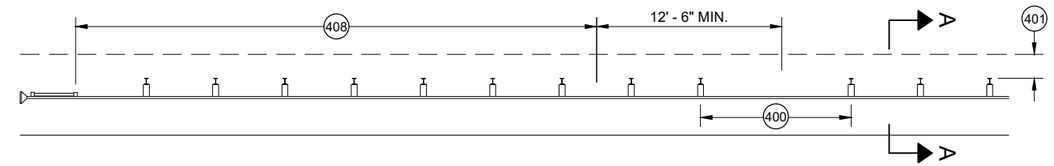

MISSING POST IN MGS GUARDRAIL NEAR EAT

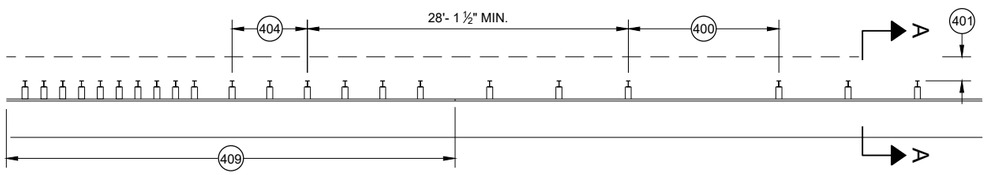

MISSING POST IN MGS GUARDRAIL NEAR AN APPROACH TRANSITION

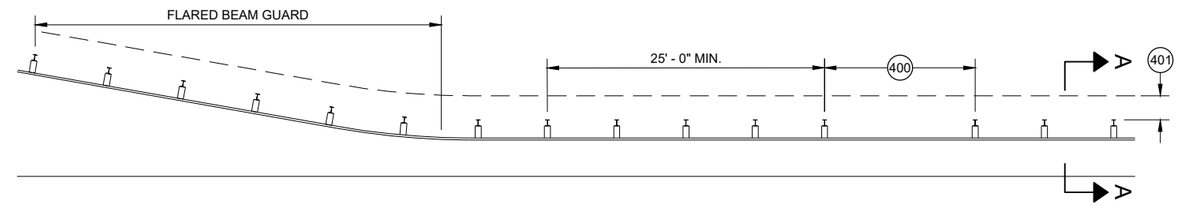

MISSING POST IN MGS GUARDRAIL NEAR FLARED BEAM GUARD

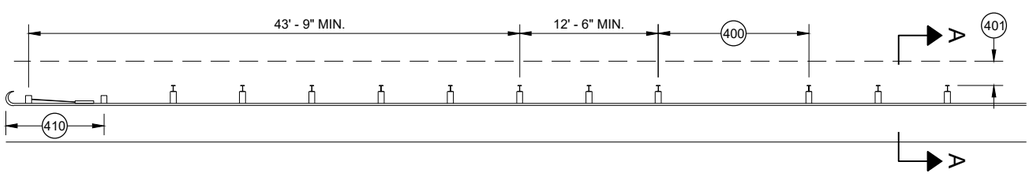

MISSING POST IN MGS GUARDRAIL NEAR A TYPE 2 END TERMINAL

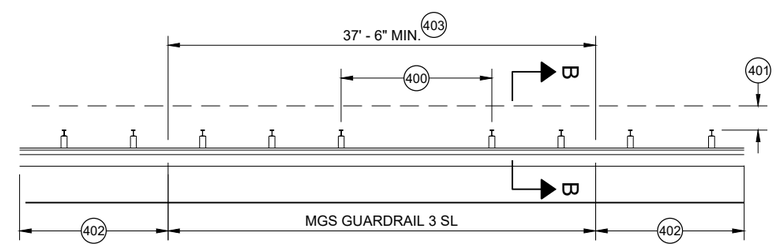

MISSING POST IN SHORT SPAN MGS GUARDRAIL NEAR CURB (SL) 407

400 MAX SPAN 12' - 6"
401 2' MIN.
402 MGS GUARDRAIL 3
403 NESTING BEAM GUARD
404 ASYMMETRIC TRANSITION
405 SOIL WELL DRAINED AND COMPACTED
406 SEE OTHER DRAWINGS IN THIS SDD
407 SEE OTHER DRAWINGS FOR MIN. SPACING BETWEEN SPANS
408 SEE SDD 14B44
409 SEE SDD 14B45
410 SEE SDD 14B47
411 MINIMUM DISTANCE BETWEEN MISSING POST SPANS.

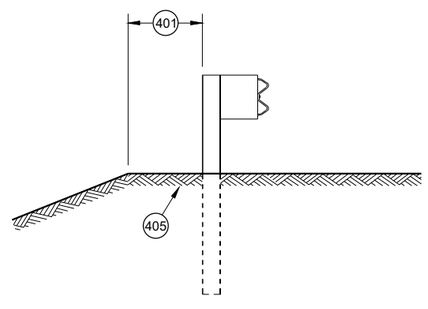

SECTION A - A 406

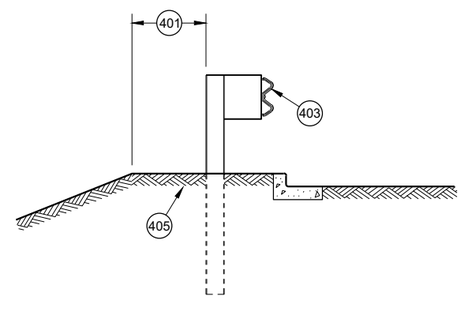

SECTION B - B 406

MIDWEST GUARDRAIL SYSTEM (MGS) GUARDRAIL

STATE OF WISCONSIN
DEPARTMENT OF TRANSPORTATION

APPROVED
May 2021 — DATE
/S/ Rodney Taylor — ROADWAY STANDARDS DEVE UNIT SUPERVISOR
FHWA

6

SDD 14B42 - 07d

GENERAL NOTES

(A) THE SLOPE IN THE AREA BOUNDED BY THE GRADELINE, THE HINGE POINT LINE (HPL) AND THE CLEAR ZONE LIMITS (CZL) SHALL BE 4:1 OR FLATTER.

(B) AFTER FINAL ASSEMBLY, RECHECK CABLE TO BE SURE IT IS TAUT AND HAS NOT RELAXED

(C) DIFFERENT MANUFACTURERS REQUIRE DIFFERENT PERFORATED W - BEAM RAIL END PANELS. SEE MANUFACTURER'S INFORMATION.

(D) ATTACH ALUMINUM SHEET TO E.A.T. HEAD USING 4 STAINLESS STEEL SELF - TAPPING SCREWS. ONE SCREW PER CORNER.

(E) HARDWARE MAY VARY BETWEEN MANUFACTURER. SEE MANUFACTURER'S DRAWING FOR INFORMATION.

DIMENSIONS MAY VARY, MANUFACTURER'S INFORMATION.

SEE SDD 14B42 FOR MORE INFORMATION.

* DO NOT ATTACH BLOCKOUTS TO POST 1 AND 2.

DO NOT INSTALL REFLECTORS ON THE FIRST 50 FEET OF THE APPROACH END OF THE ENERGY ABSORBING TERMINAL.

SEE MANUFACTURER'S DRAWING FOR SPLICE LOCATION, HARDWARE DIMENSIONS AND INSTALLATION INSTRUCTIONS.

THE CENTER OF THE UPPER 3 ½" DIAMETER HOLE ON POST NUMBER 3 THROUGH POST 9 IS TO BE FLUSH WITH THE GROUND LINE UP TO A MAXIMUM OF 2" ABOVE GROUND LINE. WOOD BLOCKS ON POSTS NUMBERED 3 THROUGH 9 MAY BE ADJUSTED UP TO 3" ABOVE THE TOP OF POST.

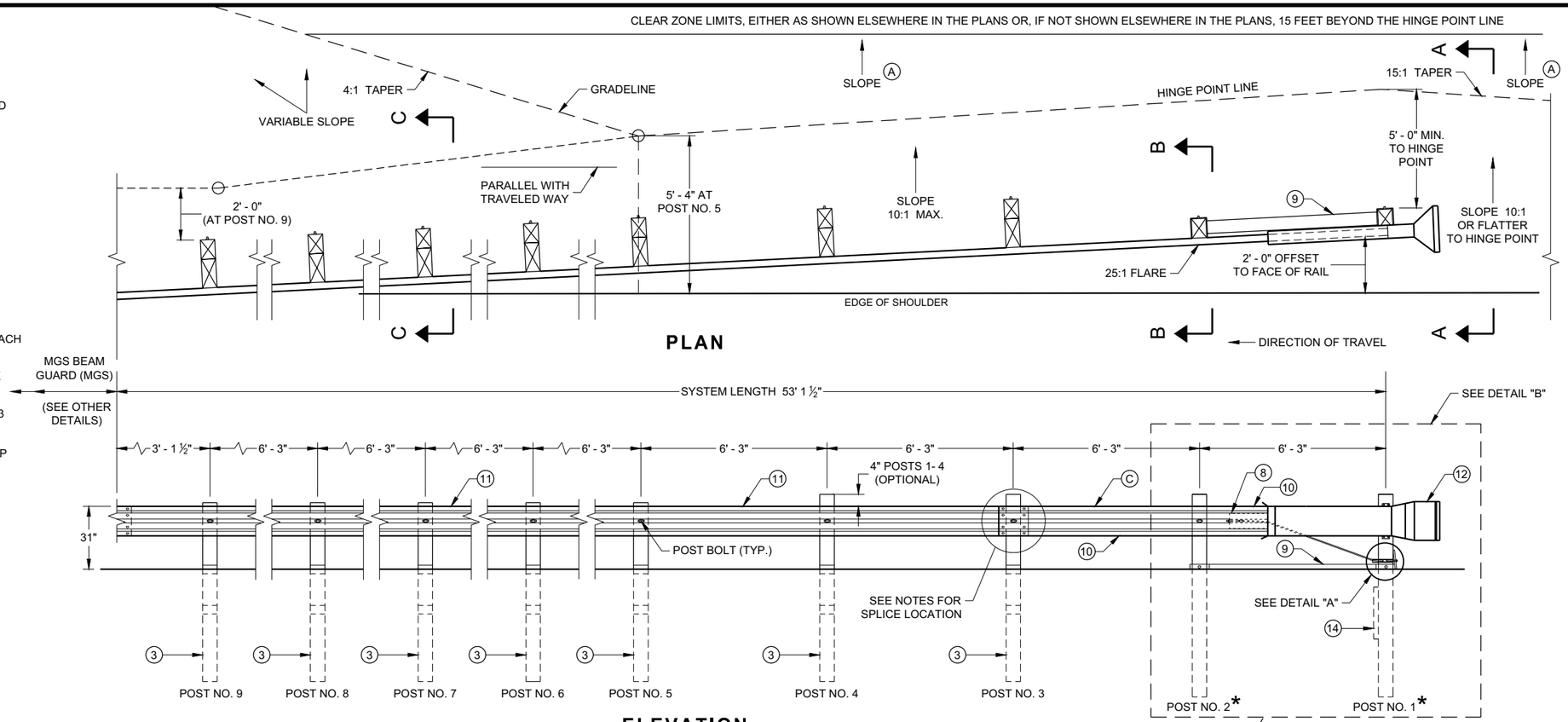

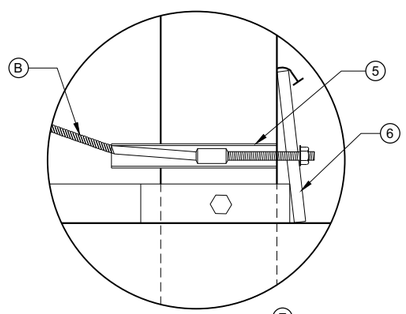

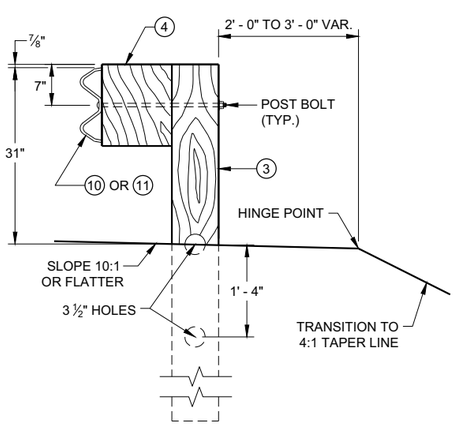

SECTION C - C
TYPICAL AT POST NOS. 3 - 9

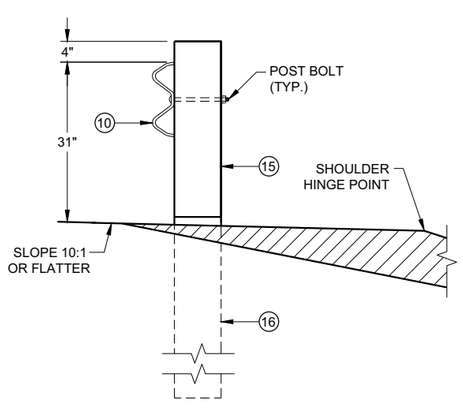

SECTION B - B
TYPICAL AT POST NO. 2*

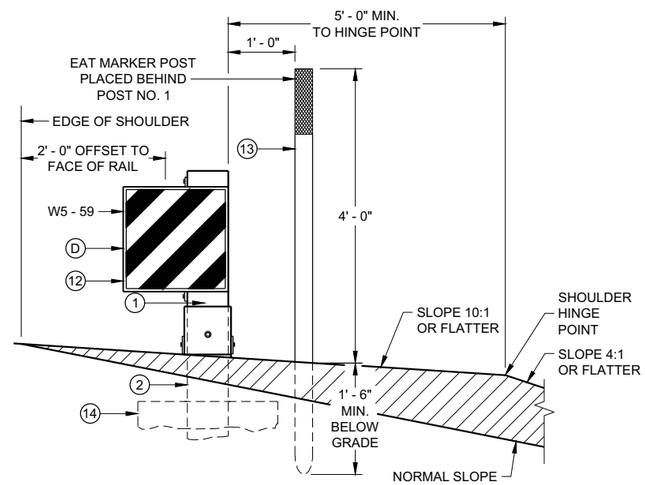

SECTION A - A
TYPICAL AT POST NO. 1*

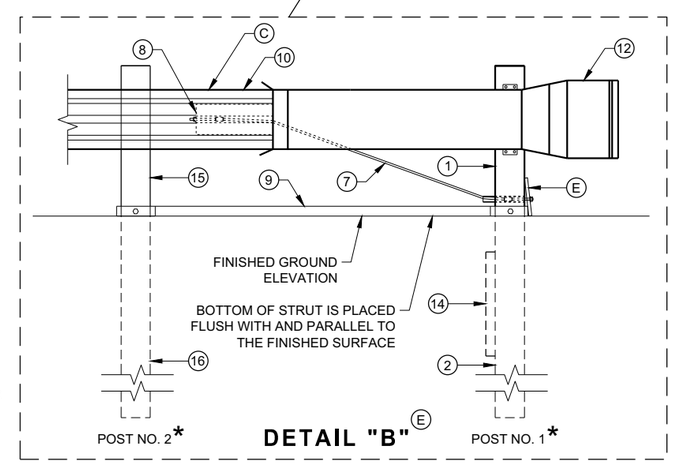

MIDWEST GUARDRAIL SYSTEM ENERGY ABSORBING TERMINAL (MGS)

STATE OF WISCONSIN
DEPARTMENT OF TRANSPORTATION

6

SDD 14B44 - 04a

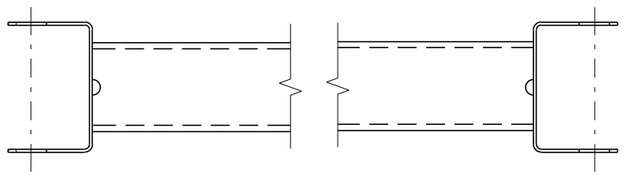

GENERIC GROUND STRUT (9)(E)

BILL OF MATERIALS

PART NO.	DESCRIPTION MATERIALS PROVIDED BY MGS EAT MANUFACTURER. SEE MANUGACTURER'S DETAILS FOR MORE INFORMATION.
1	UPPER POST NO. 1 6" X 6" TUBE
2	LOWER POST NO. 1
3	WOOD CRT
4	WOOD BLOCKOUT
5	PIPE SLEEVE
6	BEARING PLATE
7	BCT CABLE ASSEMBLY
8	ANCHOR CABLE BOX
9	GROUND STRUT
10	PERFORATED W-BEAM RAIL END PANEL, 12'-6" LONG.
11	STANDARD W-BEAM RAIL. MULTIPLE SECTIONS REQUIRED. SECTIONS VARY IN LENGTH.
12	IMPACT HEAD
13	EAT MARKER POST - YELLOW (SEE APPROVED PRODUCTS LIST)
14	SOIL PLATE
15	UPPER POST NO. 2
16	LOWER POST NO. 2

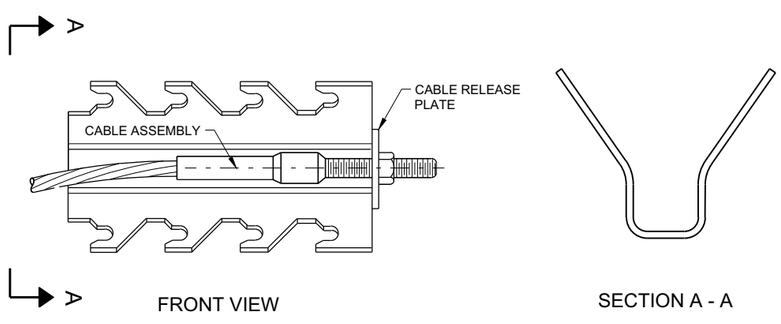

GENERIC ANCHOR CABLE BOX (9)(E)

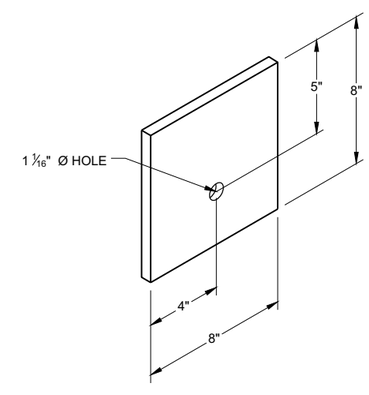

BEARING PLATE (6)(E)

MIDWEST GUARDRAIL SYSTEM ENERGY ABSORBING TERMINAL (MGS)

STATE OF WISCONSIN
DEPARTMENT OF TRANSPORTAT

6

SDD 14B44 - 04b

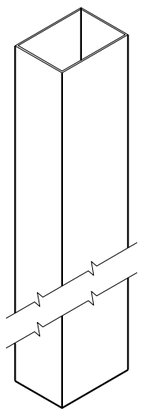

UPPER POST NO. 1 (1) (E)

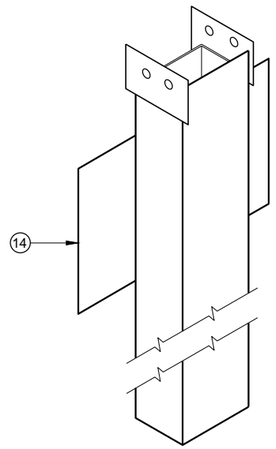

LOWER POST NO. 1 (2) (E)

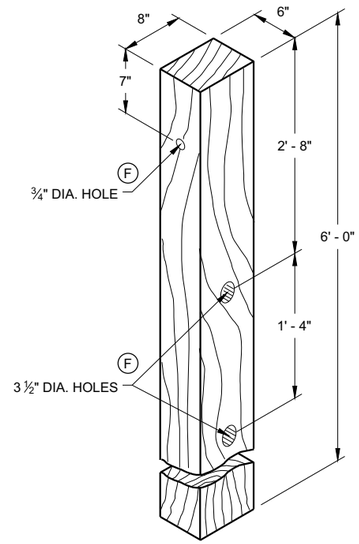

WOOD CRT POST (3) (E)

POSTS NUMBER 3-9

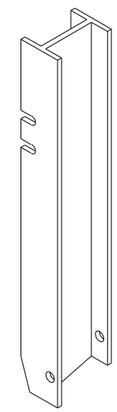

UPPER POST NO. 2 (15) (E)

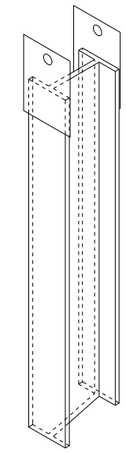

LOWER POST NO. 2 (16) (E)

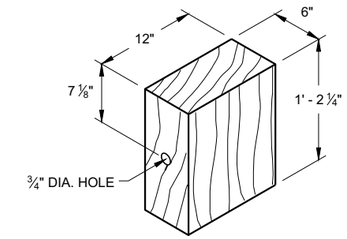

WOOD BLOCKOUT (4)

REQ'D. AT ALL POSTS EXCEPT POST NO'S 1 & 2

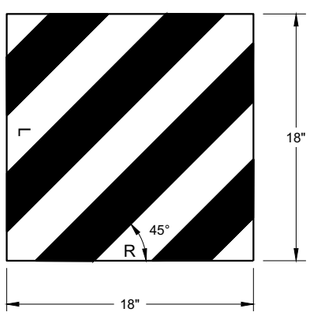

W5 - 59

REFLECTIVE SHEETING DETAIL (E)

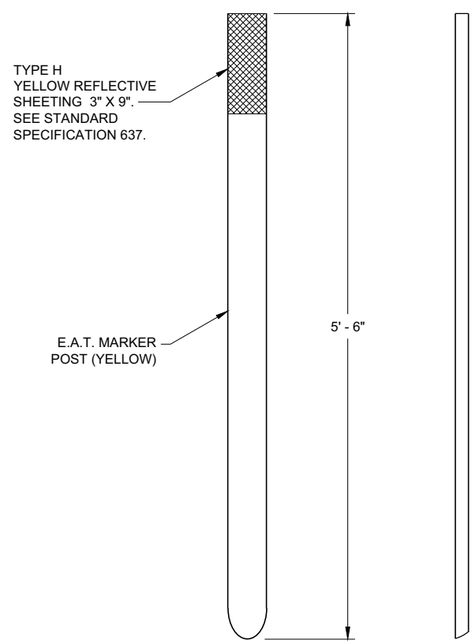

FRONT VIEW SIDE VIEW

E.A.T. MARKER POST (13)

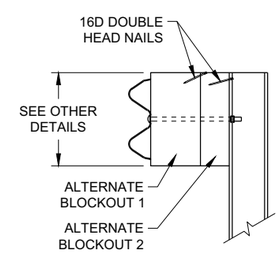

SIDE VIEW

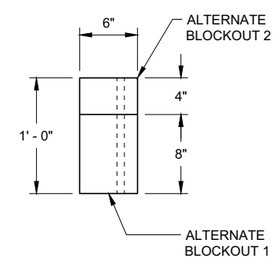

TOP VIEW

ALTERNATE WOOD BLOCKOUT DETAIL

MIDWEST GUARDRAIL SYSTEM ENERGY ABSORBING TERMINAL (MGS)

STATE OF WISCONSIN
DEPARTMENT OF TRANSPORTATION

APPROVED
7/2018 — DATE
/S/ Rodney Taylor — ROADWAY STANDARDS DEVE UNIT SUPERVISOR
FHWA

6

6

SDD 14B44 - 04c

SDD 14B44 - 04c

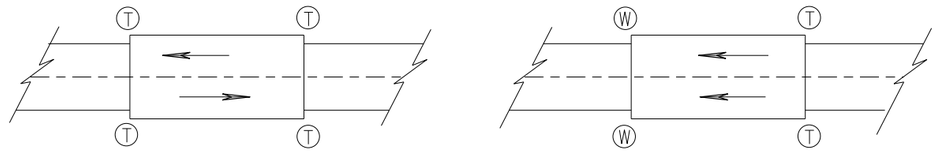

TWO WAY TRAFFIC **ONE WAY TRAFFIC**

(T) THRIE BEAM CONNECTION

(W) W-BEAM CONNECTION WHEN REQUIRED

TYPICAL LOCATIONS OF THRIE BEAM AND W-BEAM CONNECTIONS TO BRIDGE

GENERAL NOTES

IF ROCK IS ENCOUNTERED, REMOVE ROCK TO FULL DEPTH OF POST PLUS 2½", AND 12" DIAMETER AROUND POST. SEE 14B42 FOR MORE DETAILS.

TRANSITION USES STEEL POSTS ONLY.

SEE STANDARD DETAIL DRAWING 14 B 42 FOR MORE INFORMATION.

POST 2 THROUGH 17 USES STEEL POST ONLY

(1) BRIDGE RAILING TYPE "W" DOES NOT REQUIRE A TERMINAL CONNECTOR.

(2) OPTIONAL CURB AND GUTTER OR DRAINAGE FEATURE SEE PLAN FOR INFORMATION.

(13) STEEL OR WOOD POST IS ACCEPTABLE AT POST 1. SEE SDD14B42

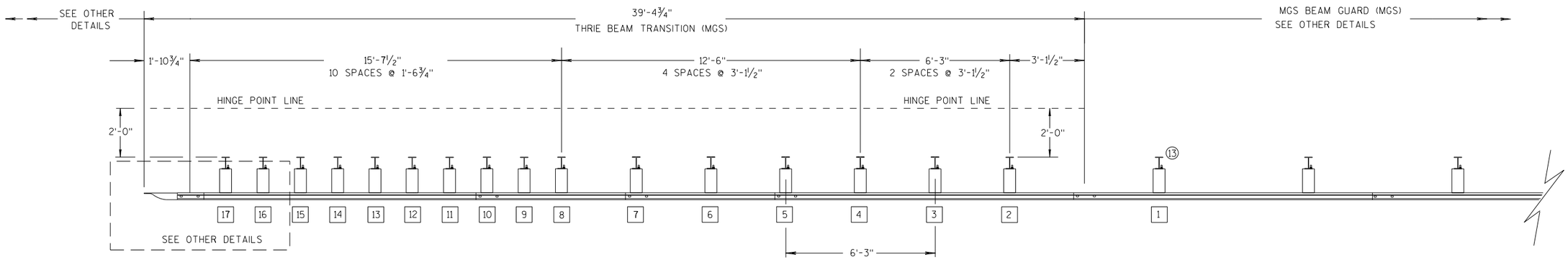

PLAN VIEW

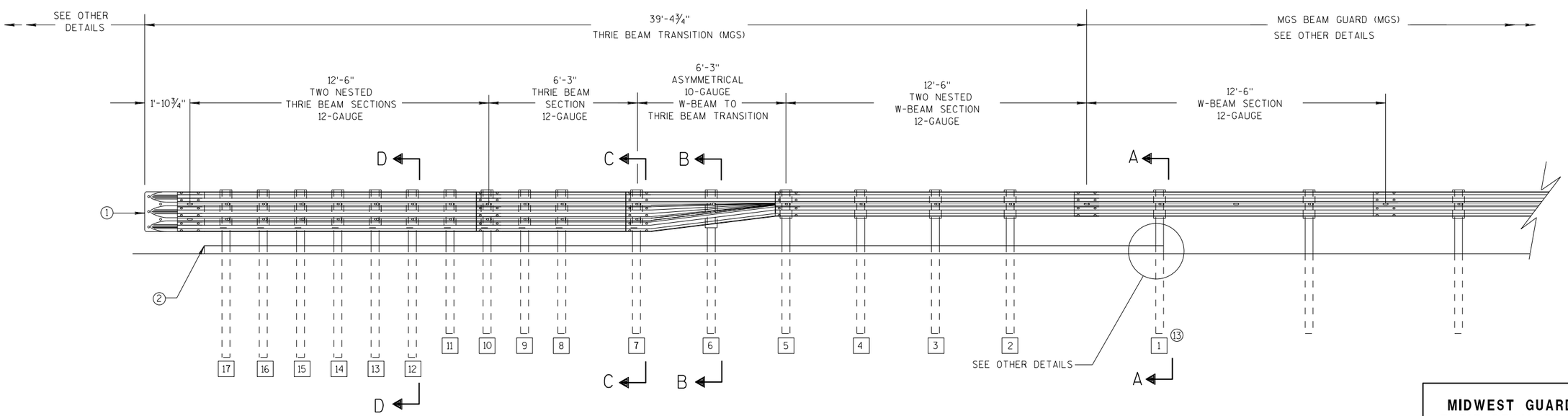

ELEVATION VIEW

MIDWEST GUARDRAIL SYSTEM THRIE BEAM TRANSITION

MIDWEST GUARDRAIL SYSTEM THRIE BEAM TRANSITION (MGS)

STATE OF WISCONSIN
DEPARTMENT OF TRANSPOR

6

S.D.D. 14 B 45-5a

GENERAL NOTES

(2) OPTIONAL CURB AND GUTTER OR DRAINAGE FEATURE SEE PLAN FOR INFORMATION.

(3) WHEN USING STEEL POSTS AND WOOD BLOCKOUTS INSTALL FOUR 10D GALVANIZED NAILS. INSTALL NAILS AT THE BACK CORNERS OF THE BLOCK AND BEND THE NAILS OVER THE FLANGE OF THE STEEL POST.

(4) TOLERANCE FOR TOP OF W-BEAM RAIL IS ± 1".

(13) STEEL OR WOOD POST IS ACCEPTABLE AT POST 1. SEE SDD 14B42

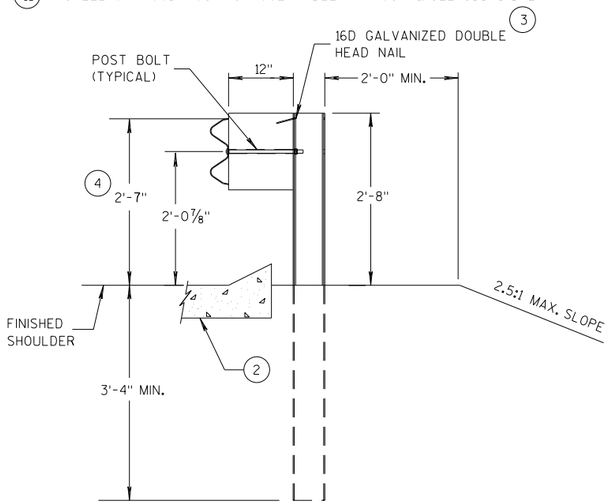

SECTION A-A (13)

POSTS 1-5

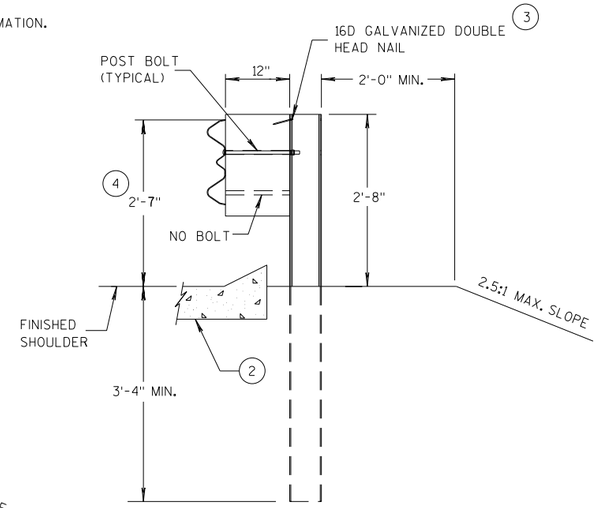

SECTION B-B

POST 6

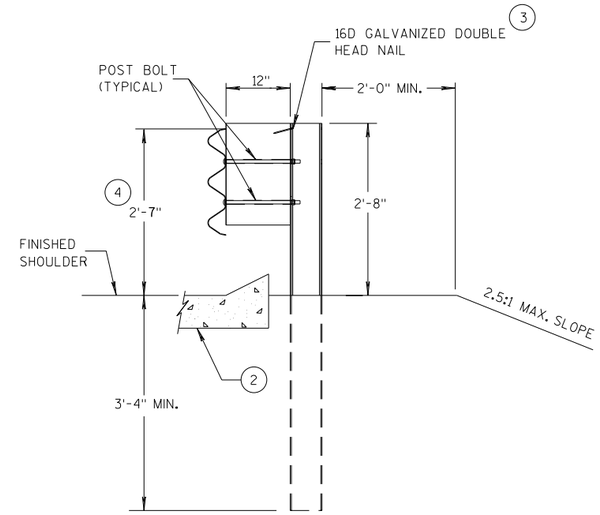

SECTION C-C

POSTS 7-11

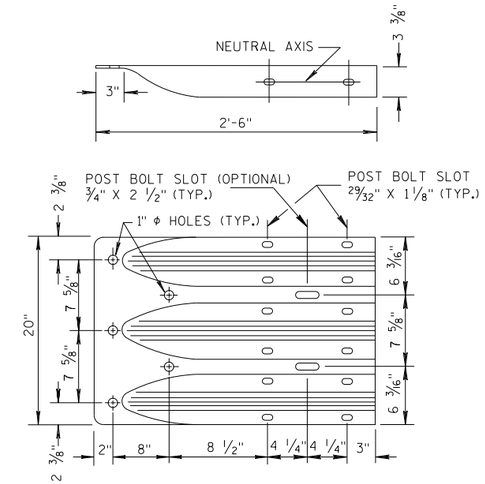

THRIE BEAM TERMINAL CONNECTOR

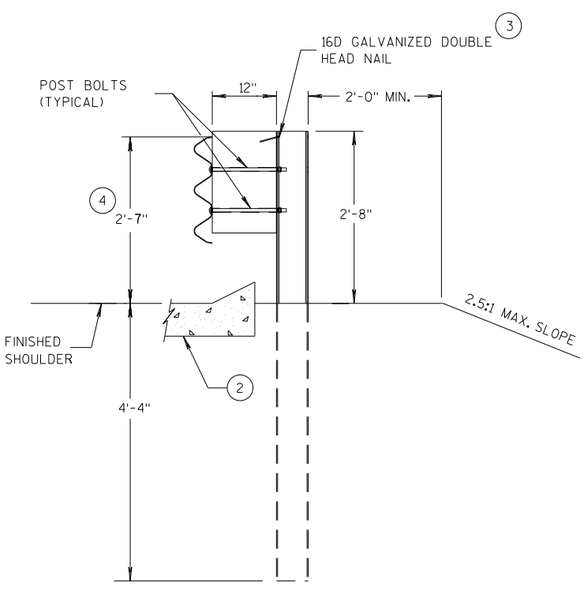

SECTION D-D

POSTS 12-17

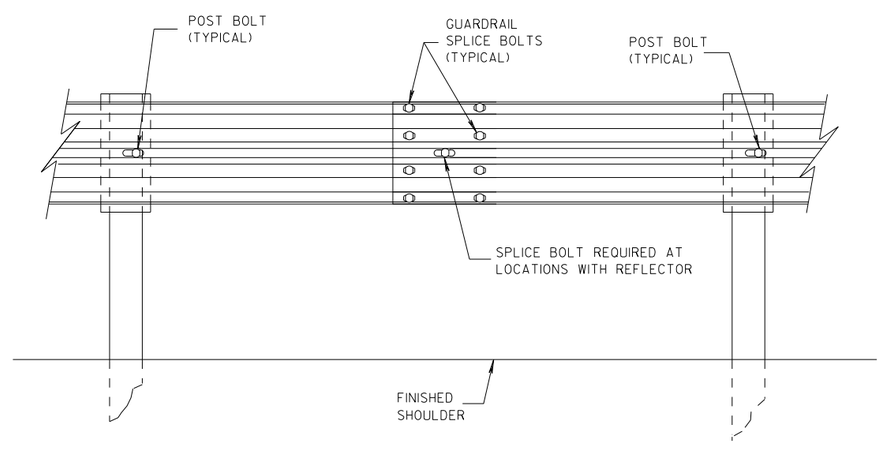

SPLICE DETAIL

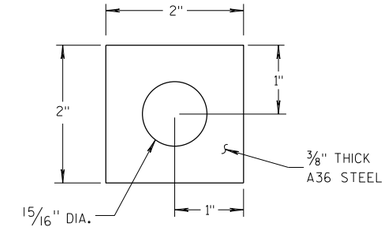

PLATE WASHER DETAIL

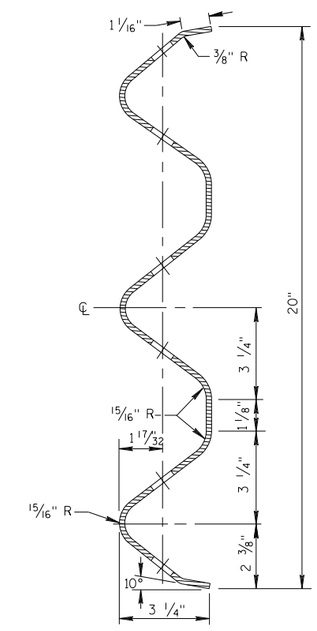

SECTION THRU THRIE BEAM RAIL ELEMENT

MIDWEST GUARDRAIL SYSTEM
THRIE BEAM TRANSITION (MGS)

STATE OF WISCONSIN
DEPARTMENT OF TRANSPORT

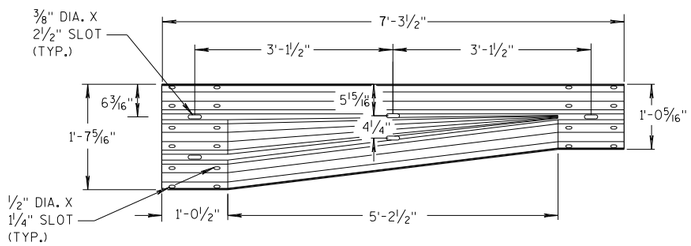

W-BEAM TO THRIE BEAM TRANSITION SECTION

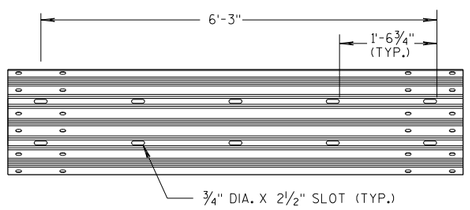

6'-3" THRIE BEAM SECTION

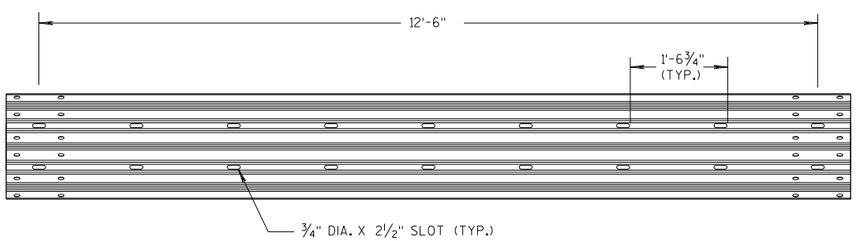

12'-6" THRIE BEAM SECTION

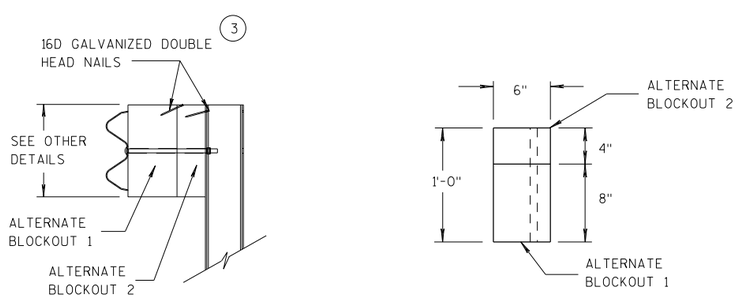

SIDE VIEW TOP VIEW

ALTERNATE WOOD BLOCKOUT DETAIL

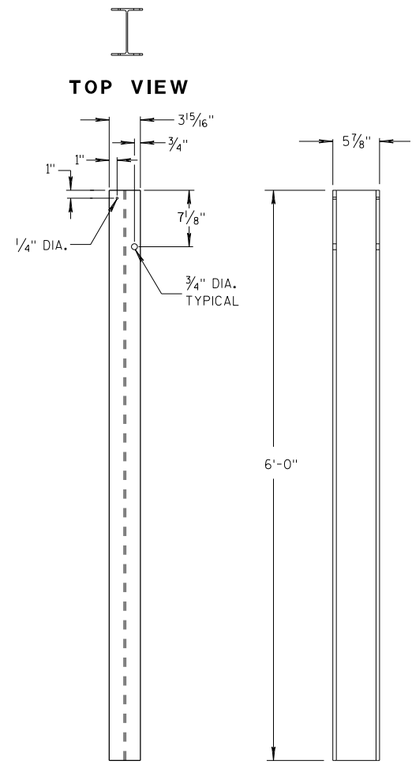

FRONT VIEW SIDE VIEW

STEEL POSTS 1-5 (13)

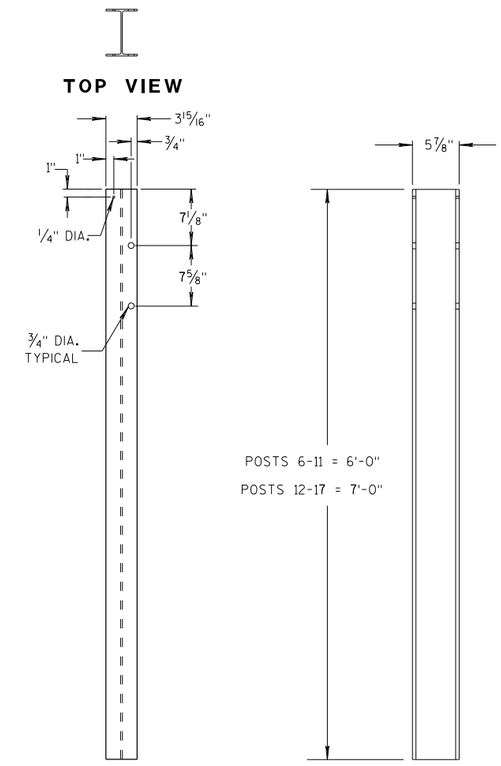

FRONT VIEW SIDE VIEW

STEEL POSTS 6-17

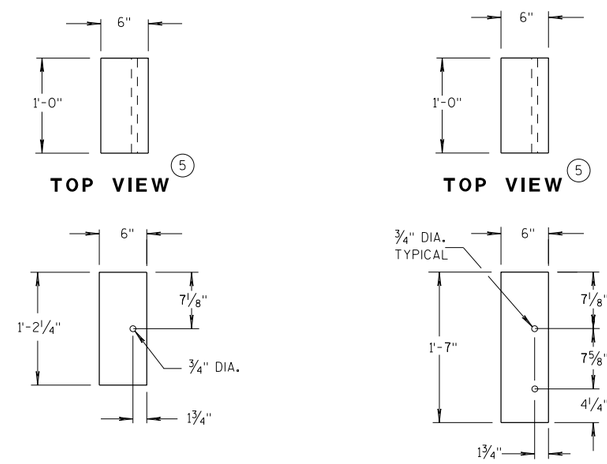

FRONT VIEW FRONT VIEW

BLOCKOUT POSTS 1-5

BLOCKOUT POSTS 6-17

GENERAL NOTES

STEEL POSTS ARE W6X9 OR W6X8.5.

BOLT HOLES FOR POST ARE ON FRONT AND OF SIDE OF POST.

(3) WHEN USING STEEL POSTS AND WOOD BLOCKOUTS INSTALL FOUR 16D GALVANIZED NAILS. INSTALL NAILS AT THE BACK CORNERS OF THE BLOCK AND BEND THE NAILS OVER THE FLANGE OF THE STEEL POST.

(5) WOOD BLOCKS MAY BE CONSTRUCTED OUT OF 2 WOOD BLOCKS. SEE ALTERNATE WOOD BLOCK DETAIL.

(13) STEEL OR WOOD POST IS ACCEPTABLE AT POST 1. SEE SDD 14B42.

MIDWEST GUARDRAIL SYSTEM THRIE BEAM TRANSITION (MGS)

STATE OF WISCONSIN
DEPARTMENT OF TRANSPOR

6

S.D.D. 14 B 45-5c

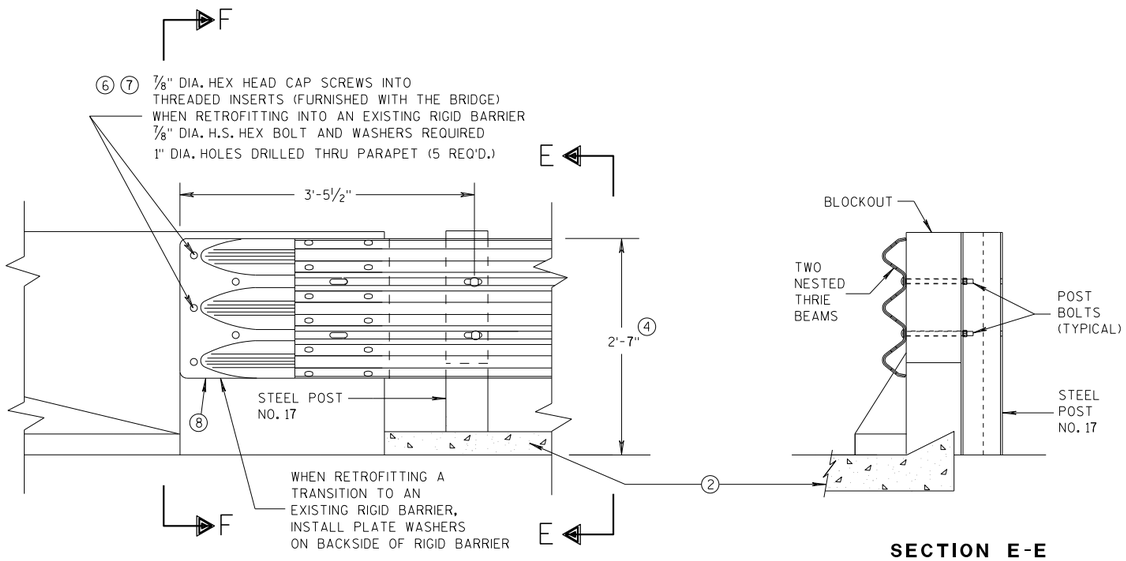

FRONT VIEW

SECTION E-E

THRIE BEAM CONNECTION TO BRIDGE PARAPET WITH SQUARE ENDS

GENERAL NOTES

THESE ARE TYPICAL CONNECTION DETAILS. ADJUST THE POSTION OF CONNECTIONS TO EXISTING BRIDGES TO FIT THE ACTUAL BRIDGE AND SITE DIMENSIONS.

② OPTIONAL CURB AND GUTTER OR DRAINAGE FEATURE SEE PLAN FOR INFORMATION.

④ TOLERANCE FOR TOP OF BEAM IS ± 1".

⑥ DRILLING BOLT HOLES THROUGH THE PARAPET, BOLTS, NUTS, WASHERS AND REPAIRING DAMAGED CONCRETE ARE INCIDENTAL TO THE CONTRACT.

⑦ BOLTS MAY BE A325 BOLTS OR A449 BOLTS. BOLT LENGTH AND THREADING LENGTH ARE TO ALLOW FOR A TIGHT CONNECTION BETWEEN RIGID BARRIER AND THRIE BEAM CONNECTION PLATE. CONTRACTOR IS TO FIELD VERIFY BOLT LENGTH AND THREAD LENGTH. ONE ROUND WASHER REQUIRED BETWEEN BOLT HEAD AND THRIE BEAM CONNECTOR PLATE. BOLTS THAT EXTEND THROUGH THE PARAPET AND OUT THE BACK FACE REQUIRE A HARDENED ROUND STEEL WASHER THAT IS 2" O.D. X 5/32" THICK AND ONE PLATE WASHER. REPAIR ANY DAMAGED CONCRETE FROM BOLT INSTALLATION.

⑧ THE RECESS FOR A W-BEAM CONNECTION, WHICH EXISTS ON SOME PARAPETS OF THIS TYPE, SHALL BE FILLED WITH A TREATED TIMBER BLOCKOUT. BLOCKOUT SIZE IS 1'-6" X 2'-0" X 3 1/2".

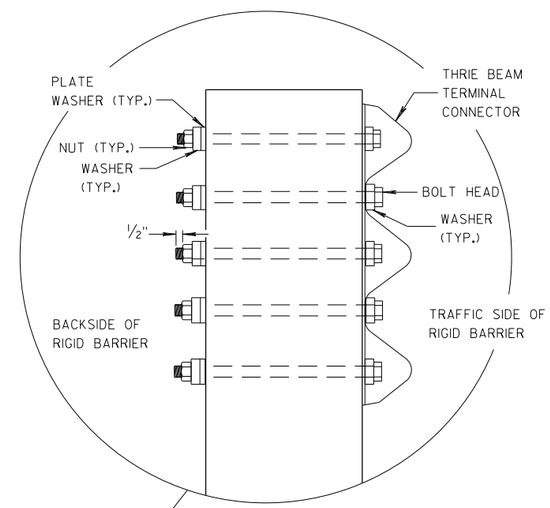

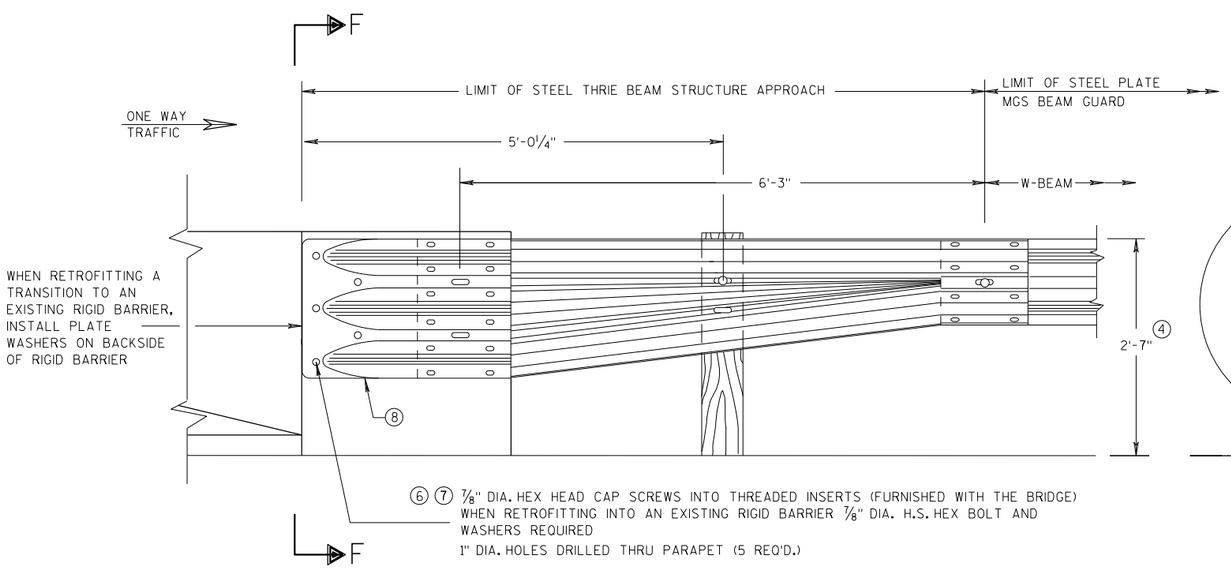

FRONT VIEW

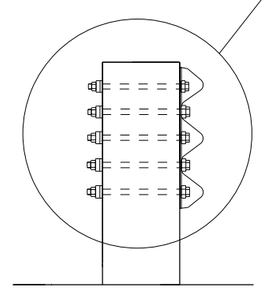

SECTION F-F

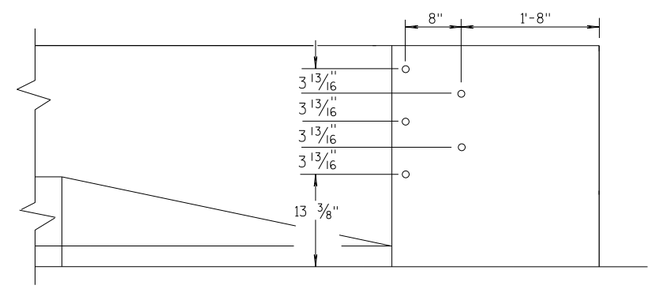

DRILL HOLE LOCATION

W BEAM TRANSITION AND CONNECTION TO BRIDGE PARAPETS WITH SQUARE ENDS

(USE ONLY ON THE TRAFFIC EXIT END OF ONE WAY BRIDGES)

MIDWEST GUARDRAIL SYSTEM THRIE BEAM TRANSITION (MGS)

STATE OF WISCONSIN
DEPARTMENT OF TRANSPORTATION

APPROVED
07/2018 — DATE
/S/ Rodney Taylor — ROADWAY STANDARDS DEVELOPMENT UNIT SUPERVISOR
FHWA

6

S.D.D. 14 B 45-5d

GENERAL NOTES

THESE ARE TYPICAL CONNECTION DETAILS. ADJUST THE POSTION OF CONNECTIONS TO EXISTING BRIDGES TO FIT THE ACTUAL BRIDGE AND SITE DIMENSIONS.

(2) OPTIONAL CURB AND GUTTER OR DRAINAGE FEATURE SEE PLAN FOR INFORMATION.

(4) TOLERANCE FOR TOP OF BEAM IS ± 1".

(6) DRILLING BOLT HOLES THROUGH THE PARAPET, BOLTS, NUTS, WASHERS AND REPAIRING DAMAGED CONCRETE ARE INCIDENTAL TO THE CONTRACT.

(7) BOLTS MAY BE A325 BOLTS OR A449 BOLTS. BOLT LENGTH AND THREADING LENGTH ARE TO ALLOW FOR A TIGHT CONNECTION BETWEEN RIGID BARRIER AND THRIE BEAM CONNECTION PLATE. CONTRACTOR IS TO FIELD VERIFY BOLT LENGTH AND THREAD LENGTH. ONE ROUND WASHER REQUIRED BETWEEN BOLT HEAD AND THRIE BEAM CONNECTOR PLATE. BOLTS THAT EXTEND THROUGH THE PARAPET AND OUT THE BACK FACE REQUIRE A HARDENED ROUND STEEL WASHER THAT IS 2" O.D. X 5/32" THICK AND ONE PLATE WASHER. REPAIR ANY DAMAGED CONCRETE FROM BOLT INSTALLATION.

(8) THE RECESS FOR A W-BEAM CONNECTION, WHICH EXISTS ON SOME PARAPETS OF THIS TYPE, SHALL BE FILLED WITH A TREATED TIMBER BLOCKOUT. BLOCKOUT SIZE IS 1'-6" X 2'-0" X 3 1/2".

(9) BOLT, NUT AND WASHERS NOT REQUIRED FOR THIS LOCATION WHEN RETROFITTING AN EXISTING PAPAPET AND THE HOLE IS EITHER ABOVE PARAPET OR WITHIN 4 INCHES OF THE EDGE OF PARAPET.

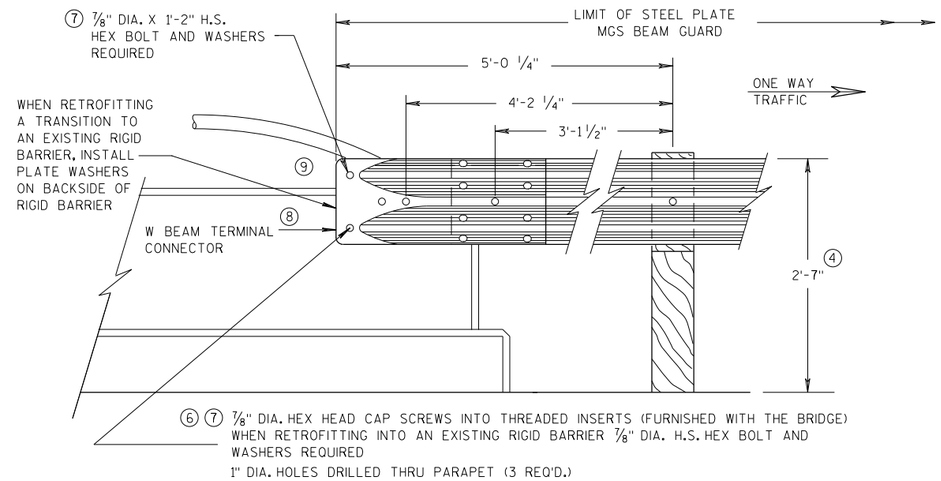

FRONT VIEW

W BEAM CONNECTION TO VERTICAL FACE PARAPET

(USE ONLY ON THE TRAFFIC EXIT END OF ONE WAY BRIDGES)

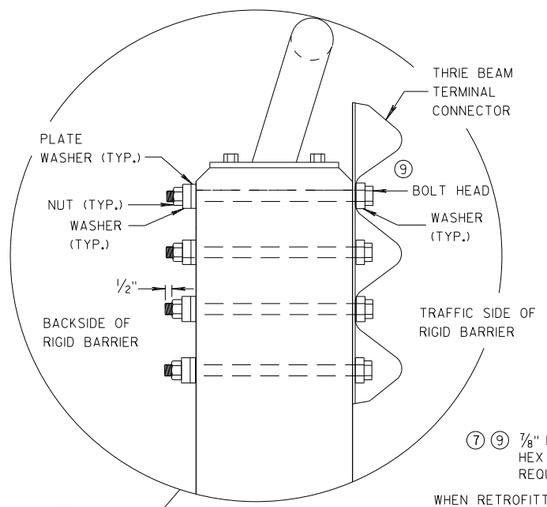

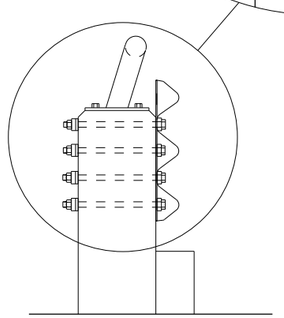

SECTION G-G

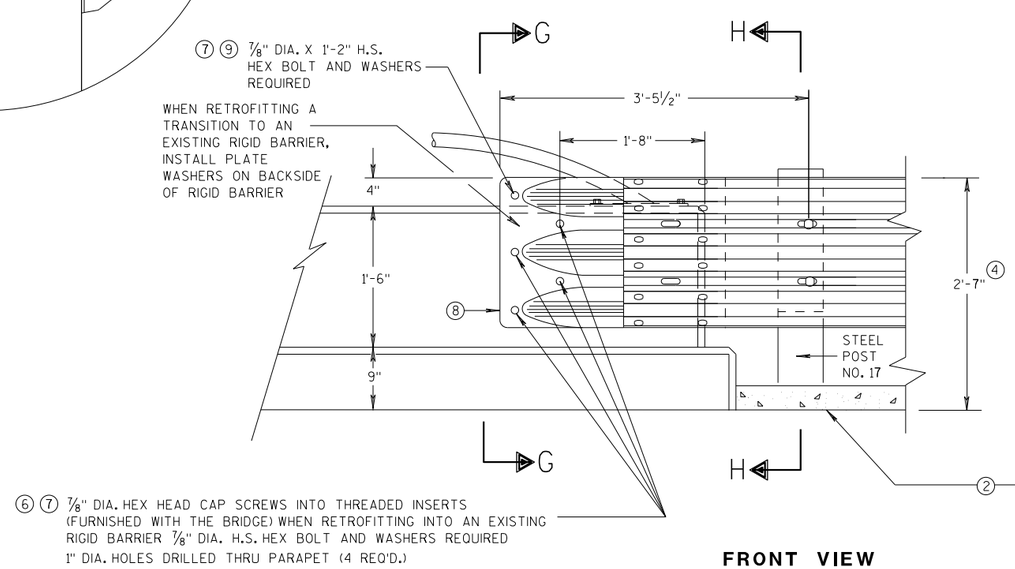

FRONT VIEW

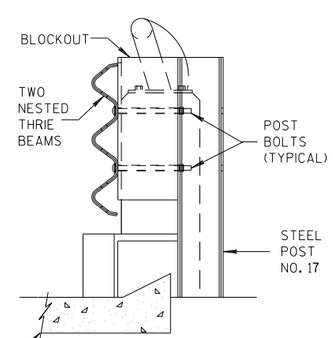

SECTION H-H

THRIE BEAM CONNECTION TO VERTICAL FACED PARAPETS

MIDWEST GUARDRAIL SYSTEM
THRIE BEAM TRANSITION (MGS)

STATE OF WISCONSIN
DEPARTMENT OF TRANSPORTATION

APPROVED 07/2018 — DATE
/S/ Rodney Taylor
ROADWAY STANDARDS D[illegible] UNIT SUPERVI[illegible]
FHWA

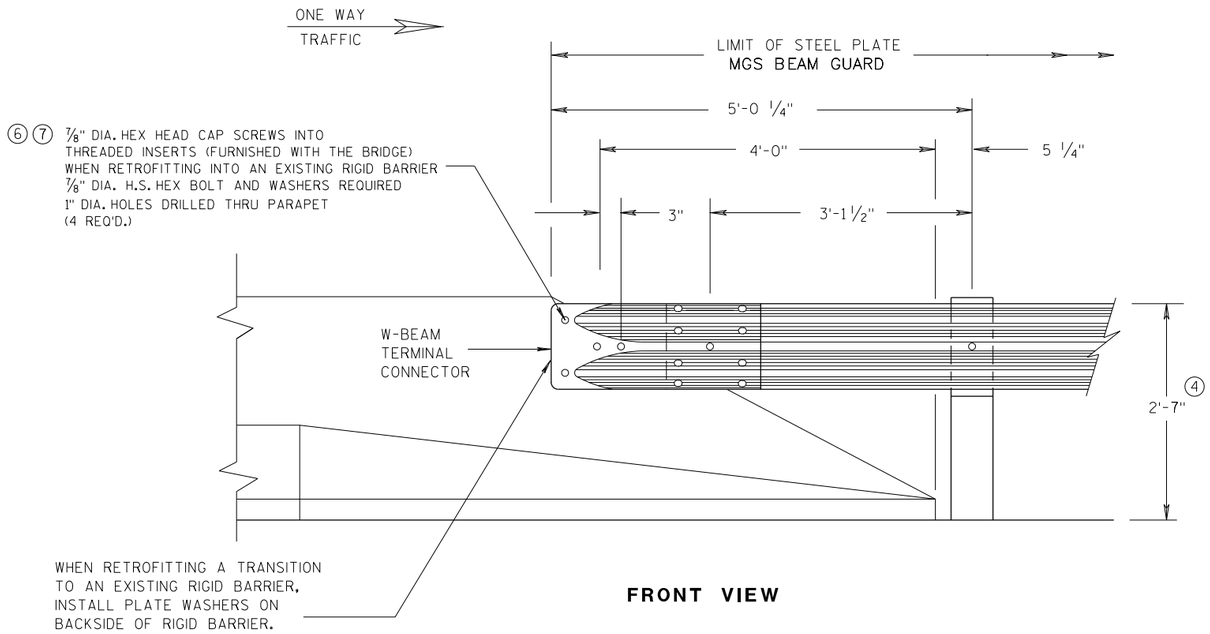

FRONT VIEW

W BEAM CONNECTION TO PARAPETS WITH SLOPED ENDS

(USE ONLY AT TRAFFIC EXIT END OF ONE WAY BRIDGE)

GENERAL NOTES

② OPTIONAL CURB AND GUTTER OR DRAINAGE FEATURE SEE PLAN FOR INFORMATION.

④ TOLERANCE FOR TOP OF BEAM IS ± 1".

⑥ DRILLING BOLT HOLES THROUGH THE PARAPET, BOLTS, NUTS, WASHERS AND REPAIRING DAMAGED CONCRETE ARE INCIDENTAL TO THE CONTRACT.

⑦ BOLTS MAY BE A325 BOLTS OR A449 BOLTS. BOLT LENGTH AND THREADING LENGTH ARE TO ALLOW FOR A TIGHT CONNECTION BETWEEN RIGID BARRIER AND THRIE BEAM CONNECTION PLATE. CONTRACTOR IS TO FIELD VERIFY BOLT LENGTH AND THREAD LENGTH. ONE ROUND WASHER REQUIRED BETWEEN BOLT HEAD AND THRIE BEAM CONNECTOR PLATE. BOLTS THAT EXTEND THROUGH THE PARAPET AND OUT THE BACK FACE REQUIRE A HARDENED ROUND STEEL WASHER THAT IS 2" O.D. X 5/32" THICK AND ONE PLATE WASHER. REPAIR ANY DAMAGED CONCRETE FROM BOLT INSTALLATION.

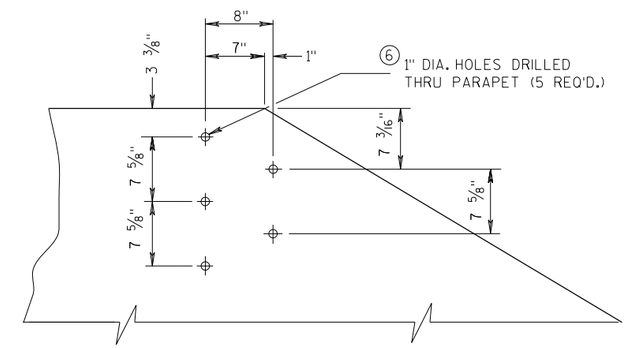

DRILL HOLE LOCATION AND PATTERN FOR THRIE BEAM CONNECTION

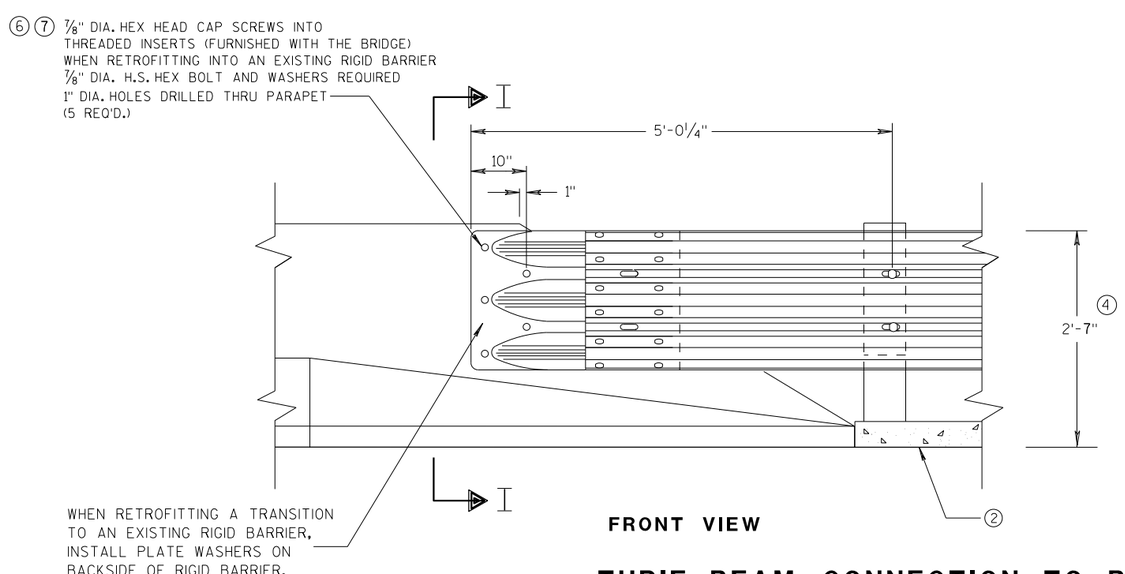

FRONT VIEW

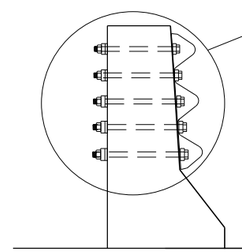

SECTION I-I

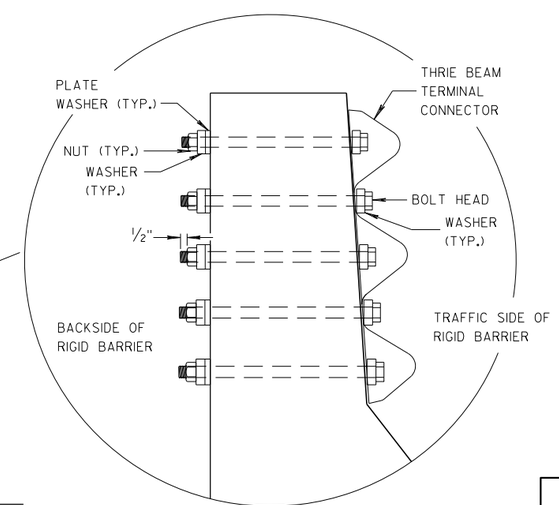

THRIE BEAM CONNECTION TO BRIDGE PARAPETS WITH SLOPED ENDS

MIDWEST GUARDRAIL SYSTEM THRIE BEAM TRANSITION (MGS)

STATE OF WISCONSIN
DEPARTMENT OF TRANSPORTATION

APPROVED
07/2018 /S/ Rodney Taylor
DATE ROADWAY STANDARDS DEVELOPMENT UNIT SUPERVISOR
FHWA

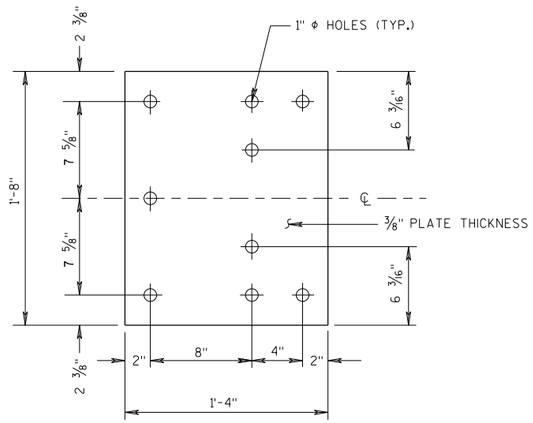

BACK-UP PLATE DETAIL

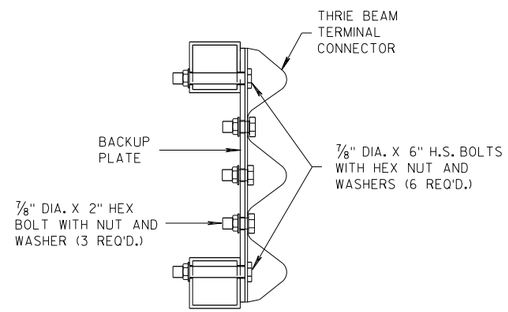

SECTION J-J

GENERAL NOTES

(4) TOLERANCE FOR TOP OF BEAM IS ± 1".

(6) DRILLING HOLES THROUGH THE PAPRPET, BOLTS, NUTS, WASHERS AND REPAIRING DAMAGED CONCRETE ARE INCIDENTAL TO THE CONTRACT.

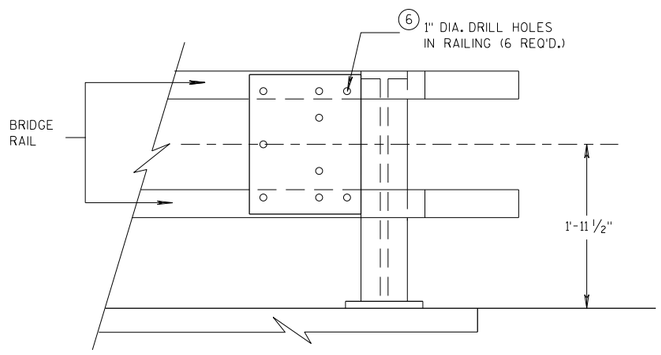

BACK-UP PLATE MOUNTING ONTO BRIDGE RAILING

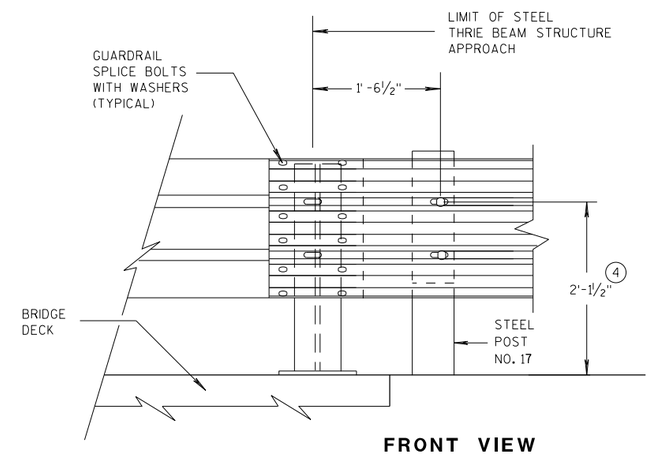

FRONT VIEW

THRIE BEAM CONNECTION TO STEEL RAILING TYPE "W"

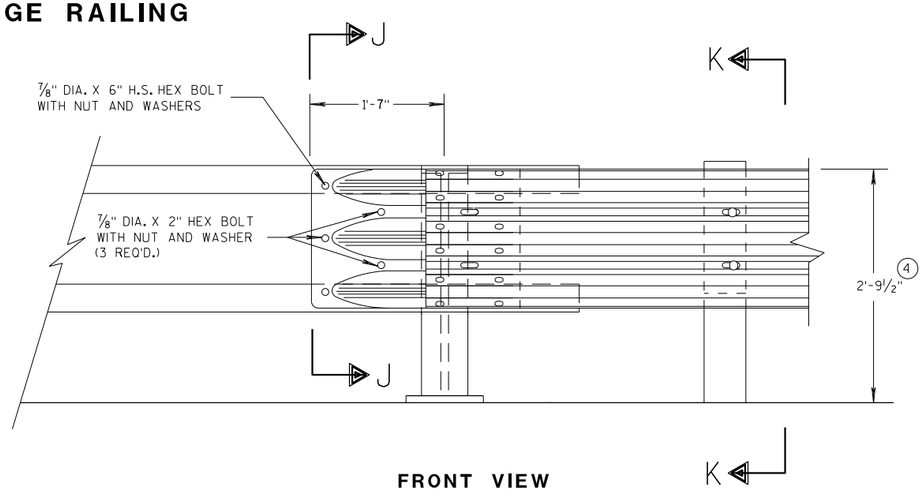

FRONT VIEW

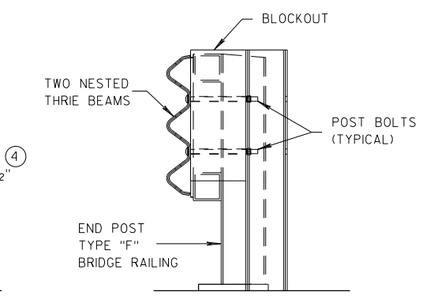

SECTION K-K

THRIE BEAM CONNECTION TO TUBULAR RAILING TYPE "F"

MIDWEST GUARDRAIL SYSTEM THRIE BEAM TRANSITION (MGS)

STATE OF WISCONSIN
DEPARTMENT OF TRANSPORTATION

APPROVED 07/2018 — DATE — FHWA

/S/ Rodney Taylor — ROADWAY STANDARDS DEVELOPMENT UNIT SUPERVISOR

S.D.D. 14 B 45-5g

GENERAL NOTES

(4) TOLERANCE FOR TOP OF W-BEAM RAIL IS ± 1".

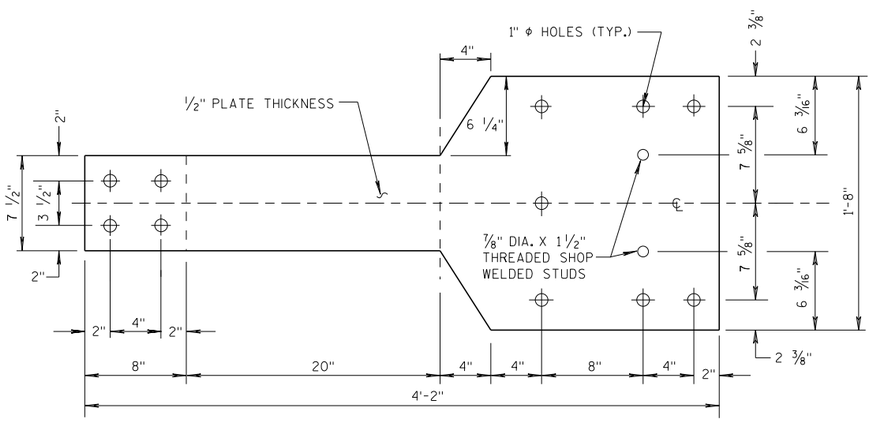

FRONT VIEW

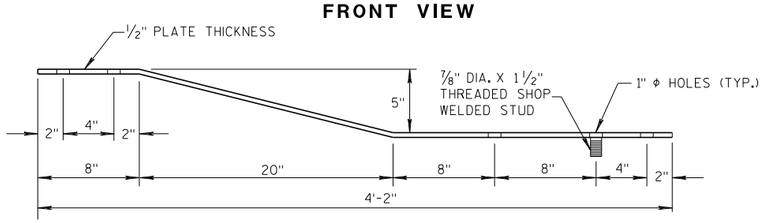

PLAN VIEW

BACK-UP PLATE DETAIL, TYPE "M"

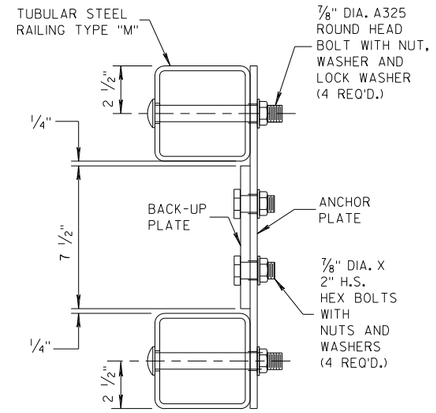

SECTION L-L

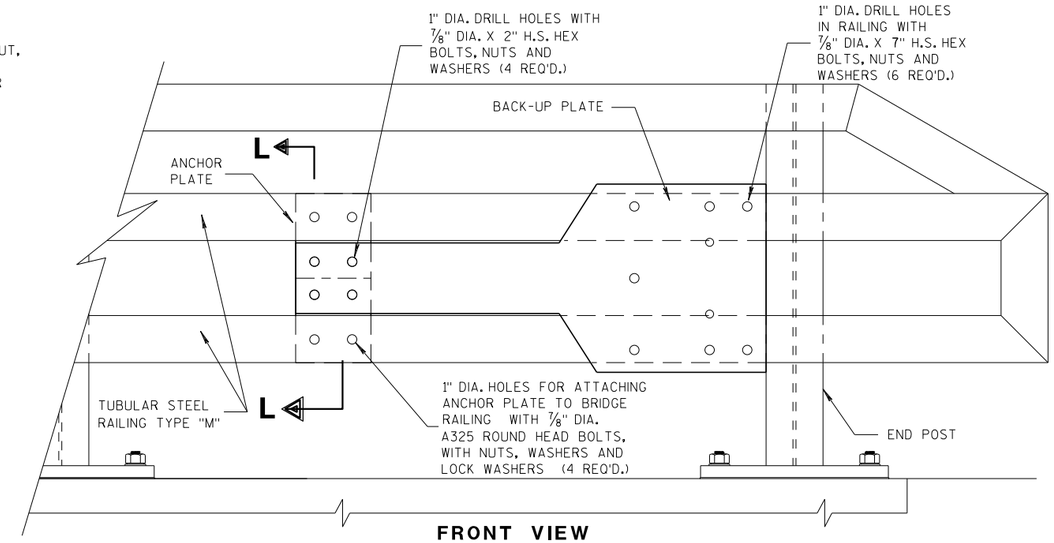

FRONT VIEW

ANCHOR AND BACK-UP PLATE MOUNTING TO BRIDGE RAILING, TYPE "M"

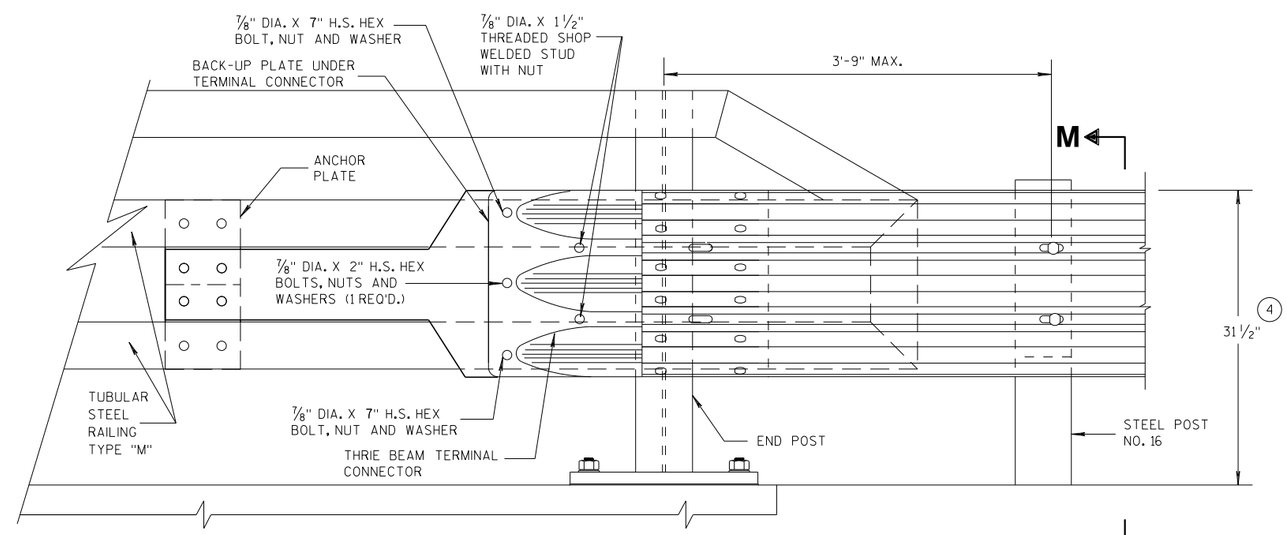

FRONT VIEW

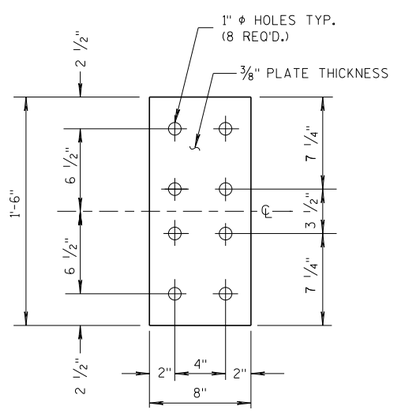

FRONT VIEW

ANCHOR PLATE DETAIL, TYPE "M"

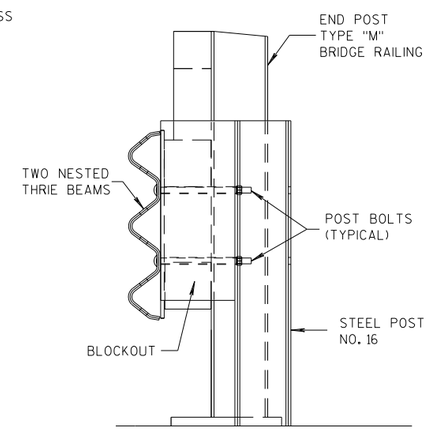

SECTION M-M

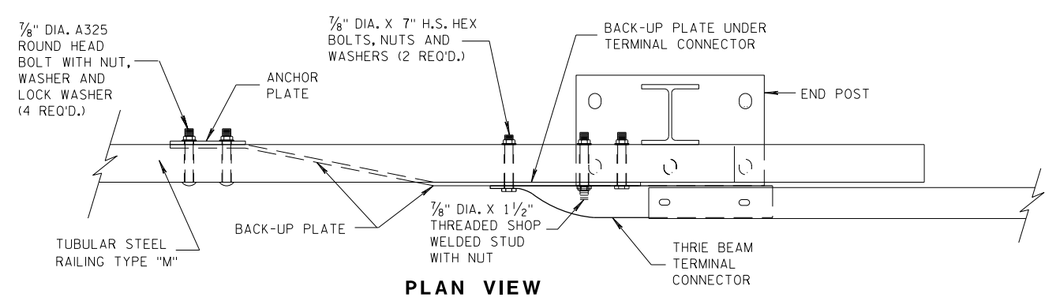

PLAN VIEW

THRIE BEAM CONNECTION TO TUBULAR RAILING, TYPE "M"

MIDWEST GUARDRAIL SYSTEM THRIE BEAM TRANSITION (MGS)

STATE OF WISCONSIN
DEPARTMENT OF TRANSPORTATION

APPROVED
07/2018 — DATE
/S/ Rodney Taylor — ROADWAY STANDARDS DEVELOPMENT UNIT SUPERVISOR
FHWA

GENERAL NOTES

COVER PLATE PANELS ARE 3/16" THICK.

ALL STIFFENERS ARE 1/4" THICK.

CONNECTOR PLATE SHALL BE FABRICATED FROM ASTM GRADE A36 STEEL AND GALVANIZED.

FOR GALVANIZED REQUIREMENTS, SEE SECTION 614 OF THE STANDARD SPECIFICATIONS.

ALL HOLE DIAMETERS SHALL BE 1".

FOR OPPOSITE SIDE INSTALLATION MIRROR DRAWINGS.

(10) STIFFENERS LOCATED AT THE OUTSIDE EDGES OF THE COVER PLATES SHALL BE WELDED AS FOLLOWS:
SINGLE BEVEL GROOVE WELD ON EXTERNAL SIDES AND 3/16" FILLET WELD BY 1" LONG SPACED AT 2" ON INTERNAL SIDES.

(11) STIFFENERS LOCATED ON THE INSIDE OF THE COVER PLATE SHALL BE WELDED AS FOLLOWS:
3/16" FILLET WELD BY 1" LONG SPACED AT 2".

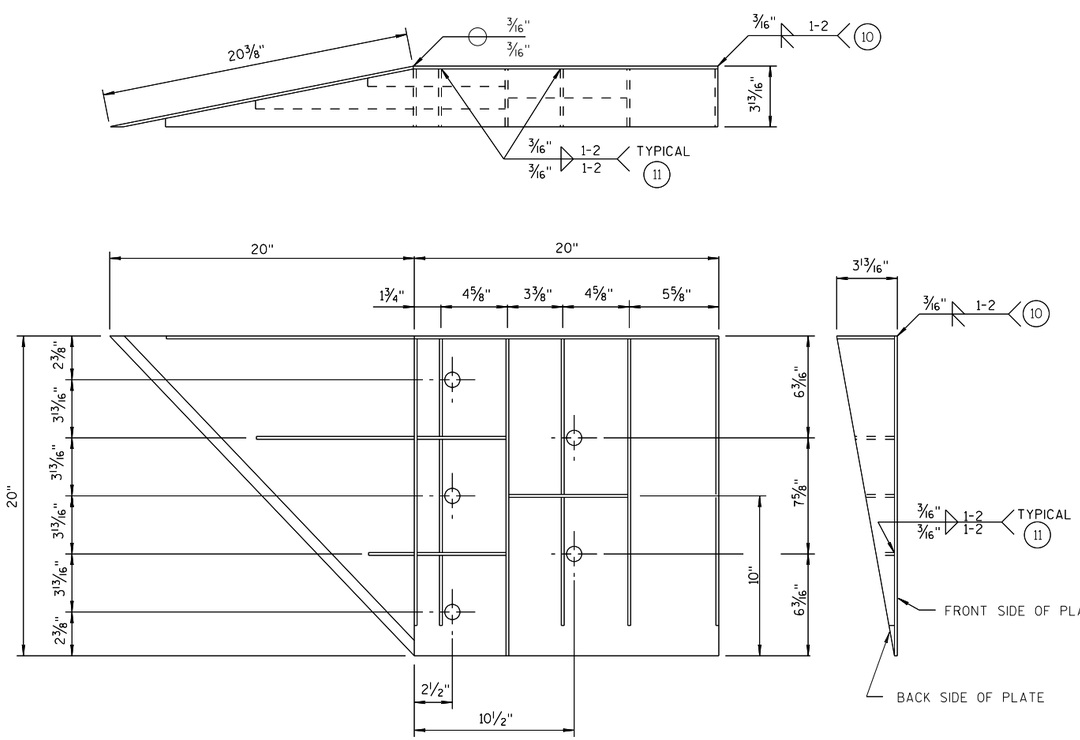

WELDING INSTRUCTION

(VIEWED FROM BACK SIDE OF PLATE)

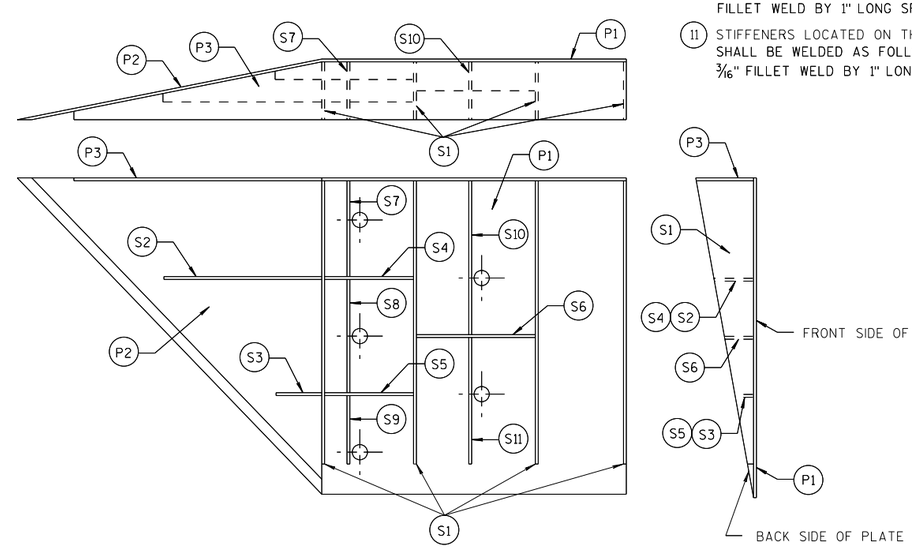

PLATE AND STIFFENER IDENTIFICATION

(VIEWED FROM BACK SIDE OF PLATE)

CONNECTOR PLATE DIMENSION (PER ASSEMBLY)				
PLATE	QUANTITY	SHAPE	SIZE (A x B x C x D)	THICKNESS
P1	1		20" x 20"	3/16"
P2	1		20" x 20" x 28 9/16"	3/16"
P3	1		39" x 3 5/8" x 20" x 19 5/16"	3/16"
S1	4		18 7/16" x 3 5/8" x 18 3/4"	1/4"
S2	1		10 1/4" x 2 7/16" x 10 3/8" x 1/2"	1/4"
S3	1		3" x 1 1/16" x 3 1/8" x 1/2"	1/4"
S4	1		6 1/8" x 2 7/16"	1/4"
S5	1		6 1/8" x 1 1/16"	1/4"
S6	1		7 3/4" x 1 3/4"	1/4"
S7	1		2 9/16" x 6" x 3 5/8" x 5 7/8"	1/4"
S8	1		1 5/32" x 7 1/2" x 2 1/2" x 7 3/8"	1/4"
S9	1		6 1/16" x 6 3/16" x 1 3/32"	1/4"
S10	1		1 7/8" x 9 7/8" x 3 5/8" x 9 11/16"	1/4"
S11	1		8 1/2" x 8 3/4" x 1 13/16"	1/4"

SINGLE SLOPE CONNECTION PLATE

MIDWEST GUARDRAIL SYSTEM THRIE BEAM TRANSITION (MGS)

STATE OF WISCONSIN
DEPARTMENT OF TRANSPORTATION

APPROVED
7/2018 /S/ Rodney Taylor
DATE ROADWAY STANDARDS DEVELOPMENT UNIT SUPERVISOR
FHWA

6
S.D.D. 14 B 45-5i

GENERAL NOTES

CONNECTOR PLATE, DRILLING BOLT HOLES THROUGH THE PARAPET, BOLTS, NUTS, WASHERS AND REPAIRING DAMAGED CONCRETE ARE INCIDENTAL TO THE CONTRACT.

(2) OPTIONAL CURB AND GUTTER OR DRAINAGE FEATURE SEE PLAN FOR INFORMATION.

(7) BOLTS MAY BE A325 BOLTS OR A449 BOLTS. BOLT LENGTH AND THREADING LENGTH ARE TO ALLOW FOR A TIGHT CONNECTION BETWEEN RIGID BARRIER AND THRIE BEAM CONNECTION PLATE. CONTRACTOR IS TO FIELD VERIFY BOLT LENGTH AND THREAD LENGTH. ONE ROUND WASHER REQUIRED BETWEEN BOLT HEAD AND THRIE BEAM CONNECTOR PLATE. BOLTS THAT EXTEND THROUGH THE PARAPET AND OUT THE BACK FACE REQUIRE A HARDENED ROUND STEEL WASHER THAT IS 2" O.D. X 5/32" THICK AND ONE PLATE WASHER. REPAIR ANY DAMAGED CONCRETE FROM BOLT INSTALLATION.

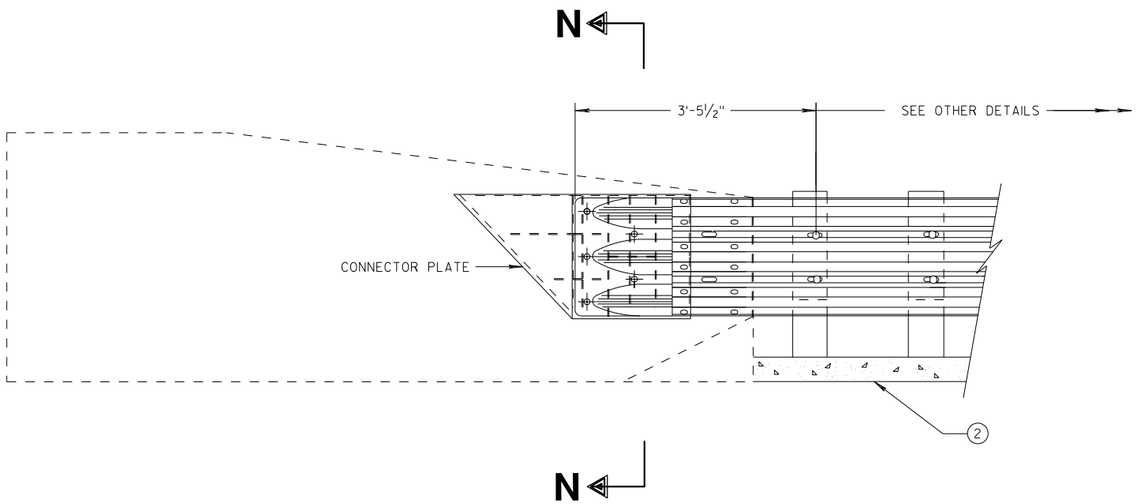

THRIE BEAM CONNECTION TO SINGLE SLOPE BARRIER

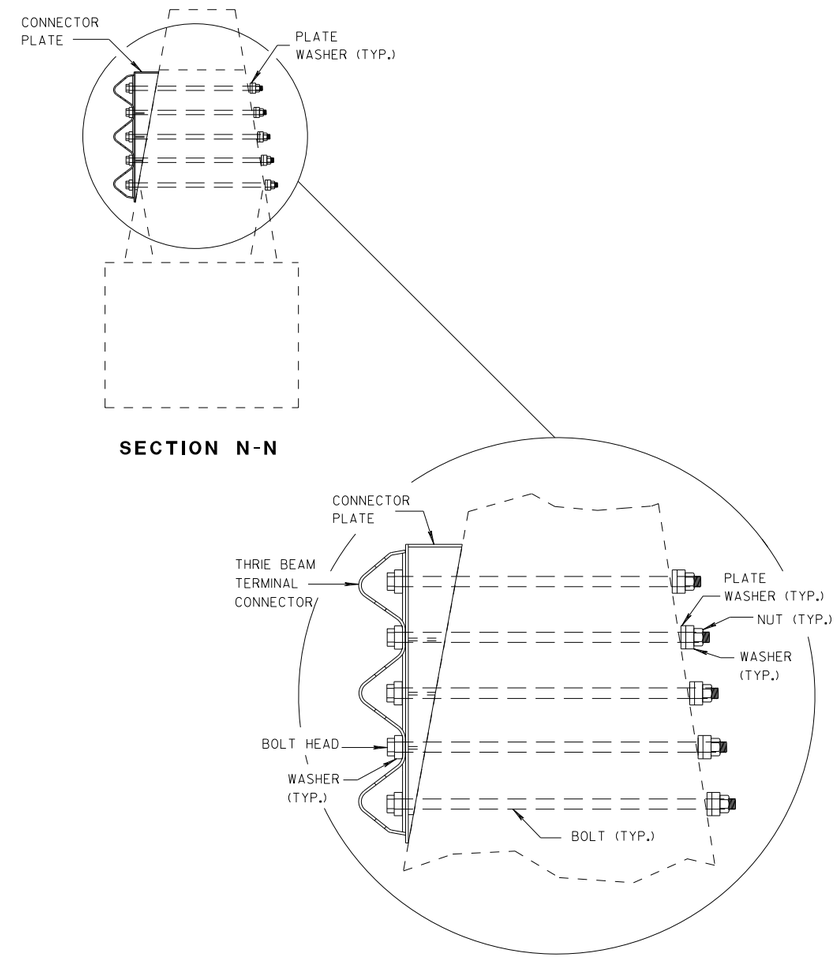

SECTION N-N

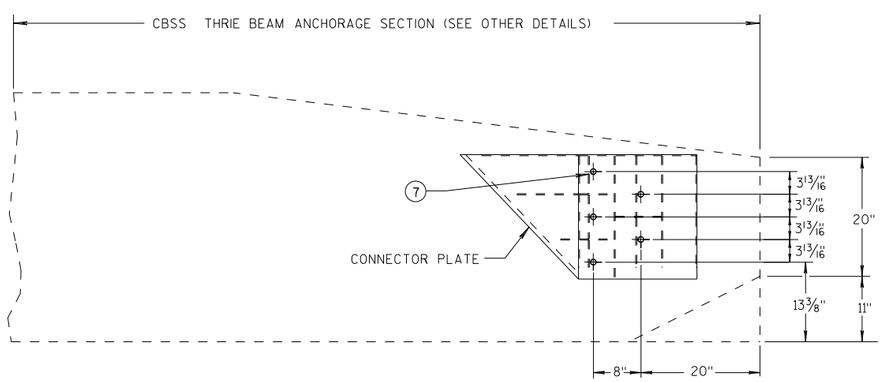

SINGLE SLOPE CONNECTION PLATE PLACEMENT

MIDWEST GUARDRAIL SYSTEM THRIE BEAM TRANSITION (MGS)

STATE OF WISCONSIN
DEPARTMENT OF TRANSPORTATION

APPROVED
7/2018 — DATE
/S/ Rodney Taylor — ROADWAY STANDARDS DEVELOPMENT UNIT SUPERVISOR
FHWA

6
S.D.D. 14 B 45-5j

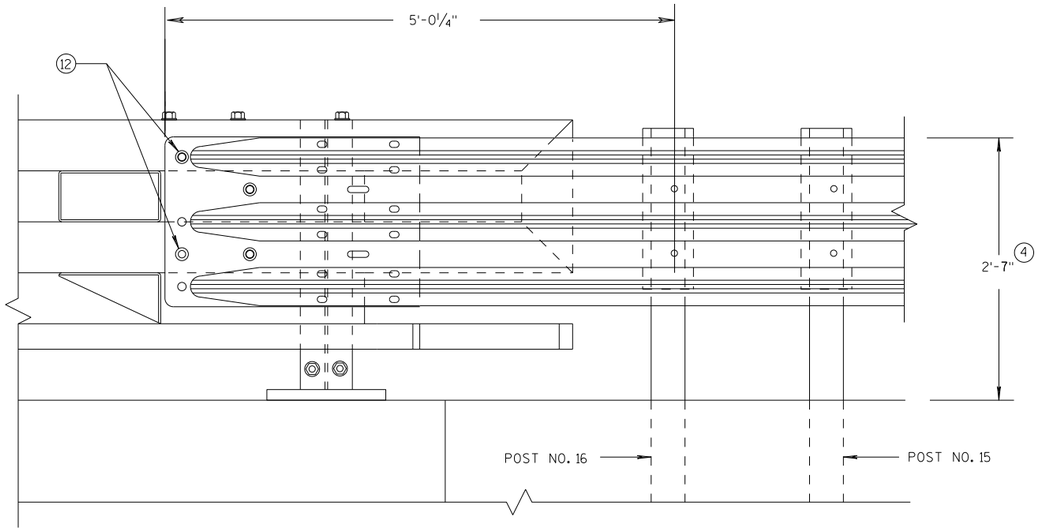

ELEVATION OF DETAIL AT NY3 END POST

THRIE BEAM RAIL ATTACHMENT

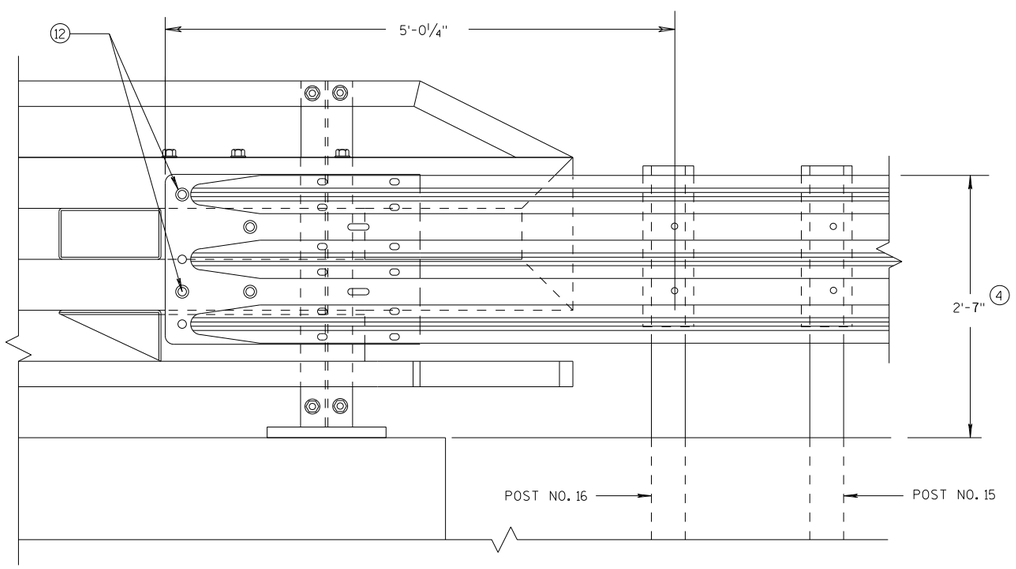

ELEVATION OF DETAIL AT NY4 END POST

THRIE BEAM RAIL ATTACHMENT

GENERAL NOTES

(4) TOLERANCE FOR TOP OF BEAM IS ± 1".

(12) BOLTS MAY BE A325 BOLTS OR A449 BOLTS. BOLT LENGTH AND THREADING LENGTH ARE TO ALLOW FOR A TIGHT CONNECTION BETWEEN RIGID BARRIER AND THRIE BEAM CONNECTION PLATE. CONTRACTOR IS TO FIELD VERIFY BOLT LENGTH AND THREAD LENGTH. ONE ROUND WASHER REQUIRED BETWEEN BOLT HEAD AND THRIE BEAM CONNECTOR PLATE. ON BACKSIDE OF PARAPET ONE ROUND WASHER, AND NUT REQUIRED. BOLT THREAD IS TO EXTEND ½-INCH BEYOND NUT.

MIDWEST GUARDRAIL SYSTEM
THRIE BEAM TRANSITION (MGS)

STATE OF WISCONSIN
DEPARTMENT OF TRANSPORTATION

APPROVED
7/2018
DATE
/S/ Rodney Taylor
ROADWAY STANDARDS D
UNIT SUPERVIS
NT
FHWA

6
S.D.D. 14 B 45-5k

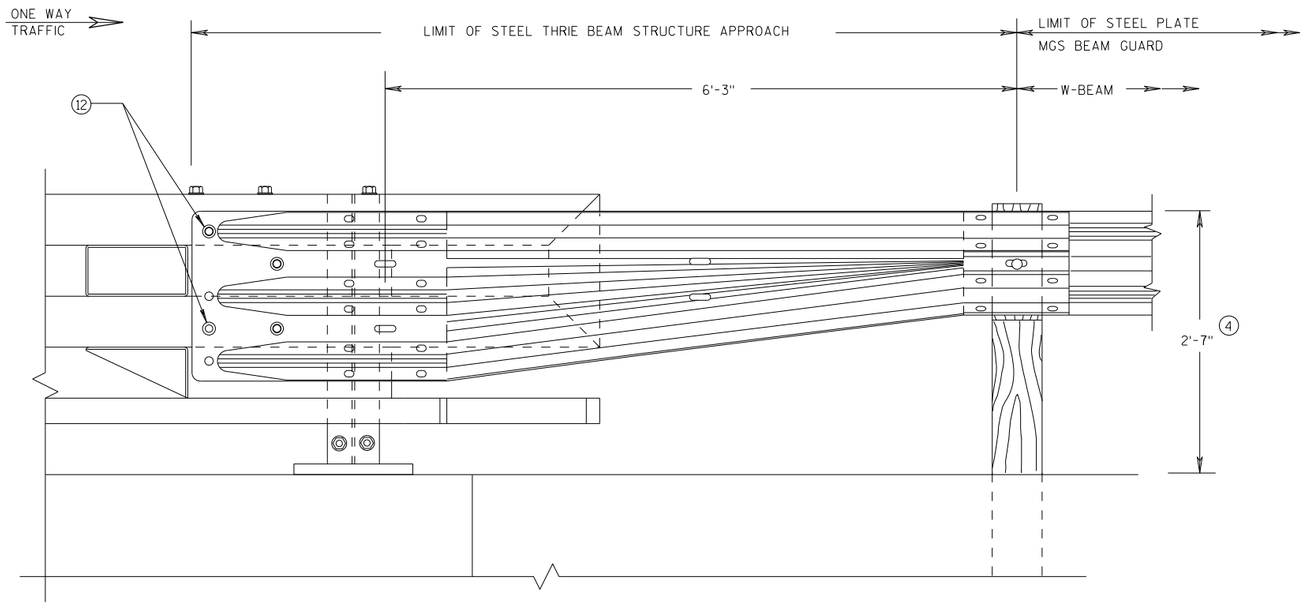

FRONT VIEW

W BEAM TRANSITION AND CONNECTION TO BRIDGE RAILING TYPE "NY3"

(USE ONLY ON THE TRAFFIC EXIT END OF ONE WAY BRIDGES)

GENERAL NOTES

(4) TOLERANCE FOR TOP OF BEAM IS ± 1".

(12) BOLTS MAY BE A325 BOLTS OR A449 BOLTS. BOLT LENGTH AND THREADING LENGTH ARE TO ALLOW FOR A TIGHT CONNECTION BETWEEN RIGID BARRIER AND THRIE BEAM CONNECTION PLATE. CONTRACTOR IS TO FIELD VERIFY BOLT LENGTH AND THREAD LENGTH. ONE ROUND WASHER REQUIRED BETWEEN BOLT HEAD AND THRIE BEAM CONNECTOR PLATE. ON BACKSIDE OF PARAPET ONE ROUND WASHER, AND NUT REQUIRED. BOLT THREAD IS TO EXTEND ½-INCH BEYOND NUT.

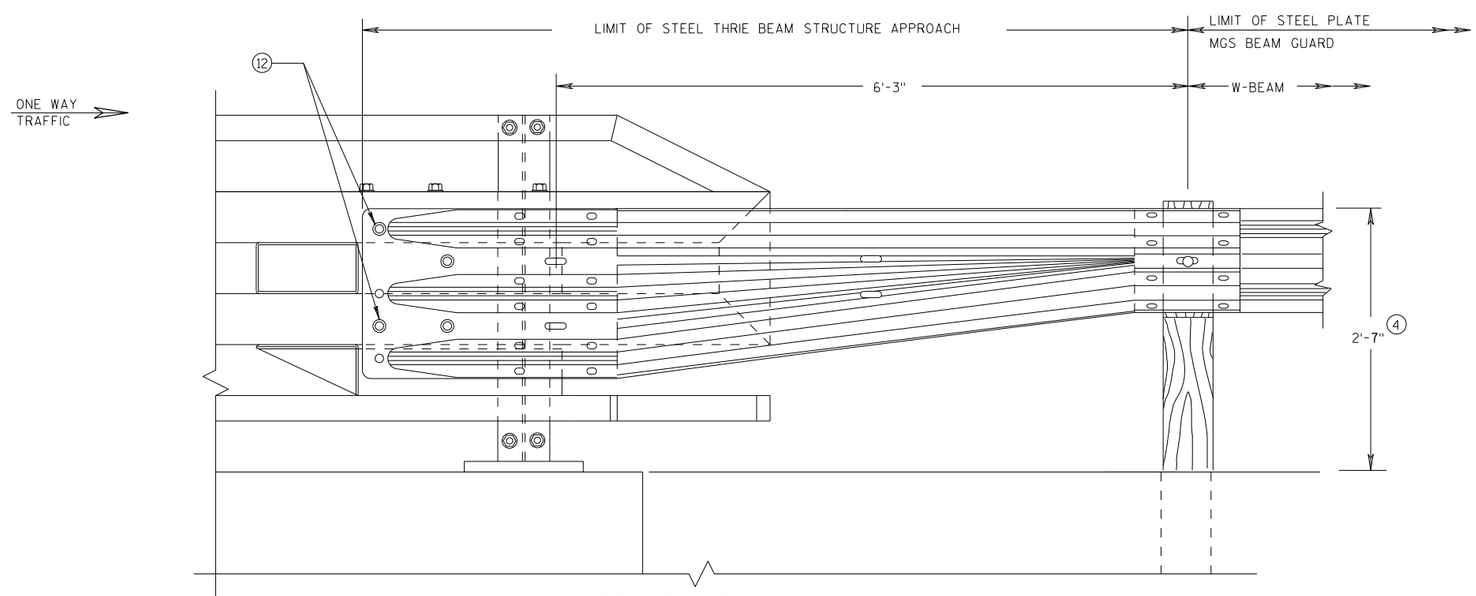

FRONT VIEW

W BEAM TRANSITION AND CONNECTION TO BRIDGE RAILING TYPE "NY4"

(USE ONLY ON THE TRAFFIC EXIT END OF ONE WAY BRIDGES)

MIDWEST GUARDRAIL SYSTEM THRIE BEAM TRANSITION (MGS)

STATE OF WISCONSIN
DEPARTMENT OF TRANSPORTATION

APPROVED
7/2018 — DATE
/S/ Rodney Taylor — ROADWAY STANDARDS DEVELOPMENT UNIT SUPERVISOR
NT
FHWA

6

S.D.D. 14 B 45-5L

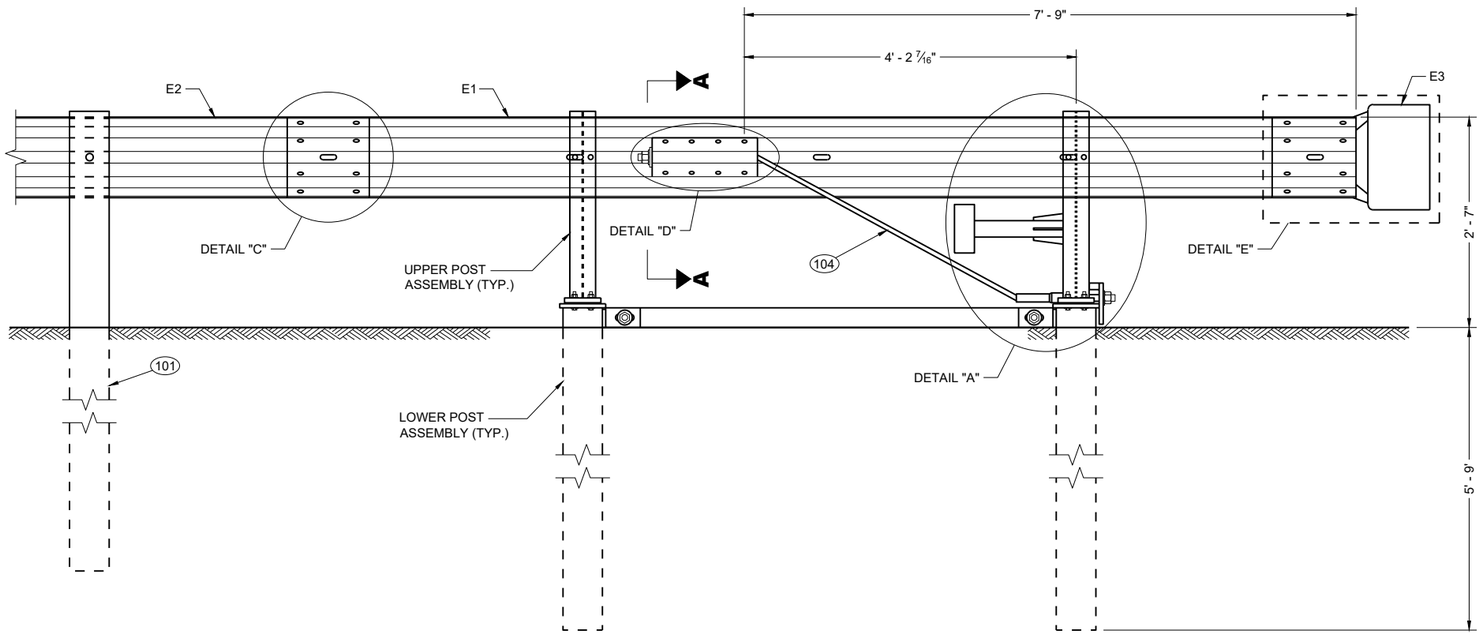

BACK VIEW

TYPE 2 TERMINAL

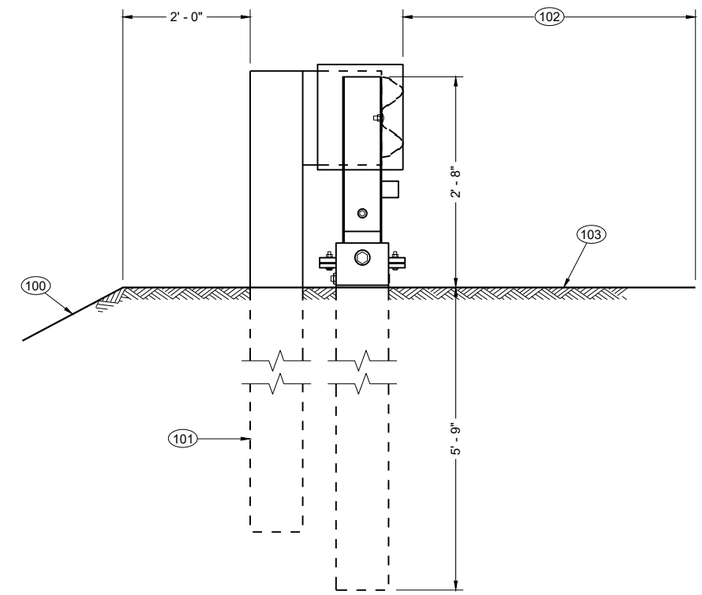

SIDE VIEW

TYPE 2 TERMINAL

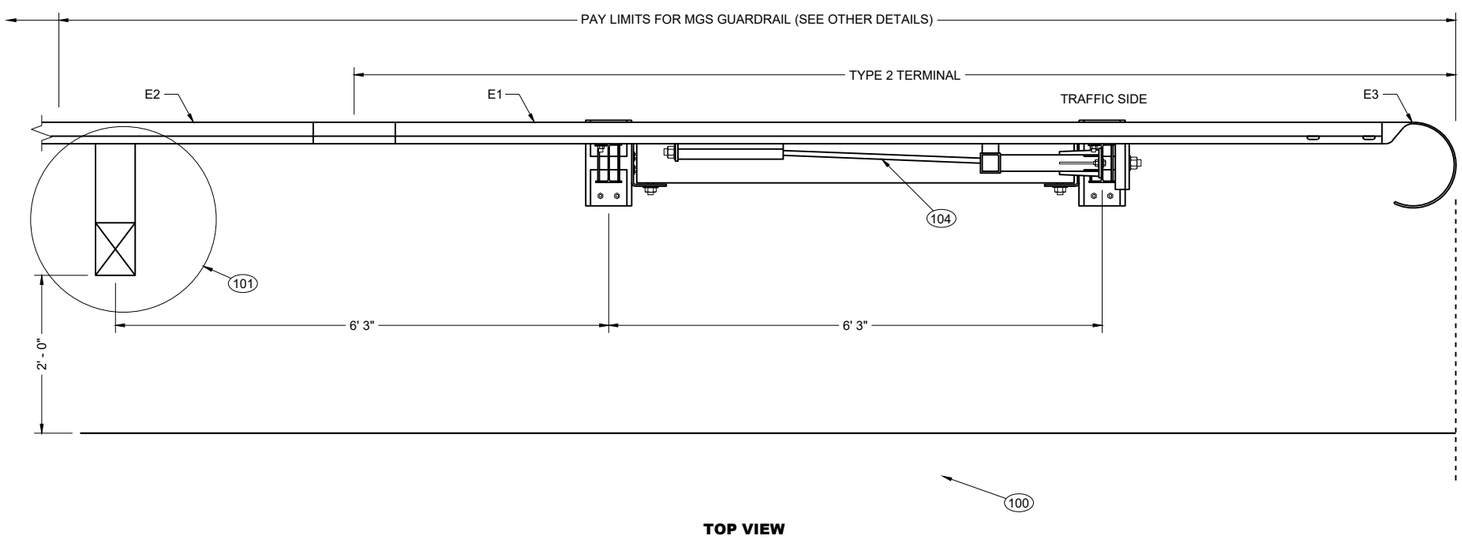

TOP VIEW

TYPE 2 TERMINAL

GENERAL NOTES

SEE SDD 14B42 FOR MORE INFORMATION

100 MAXIMUM SLOPE IS 2.5:1.

101 SEE SDD 14B42 FOR MORE INFORMATION.

102 SHOULDER

103 MAXIMUM SLOPE IS 10:1.

104 AFTER ASSEMBLY, CABLE IS TO BE TIGHTENED WITHOUT TWISTING THE CABLE.

MIDWEST GUARDRAIL SYSTEM (MGS)
TYPE 2 TERMINAL

STATE OF WISCONSIN
DEPARTMENT OF TRANSPORTATION

6

SDD 14B47-07a

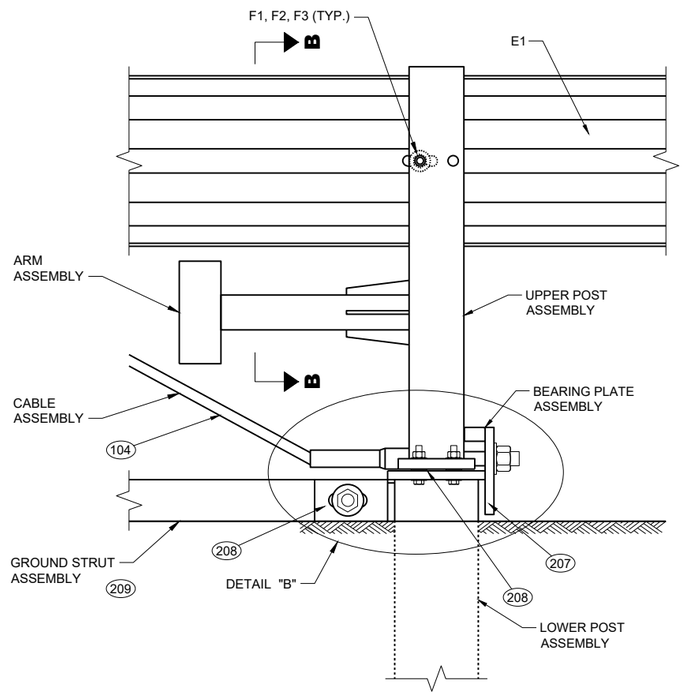

DETAIL "A"

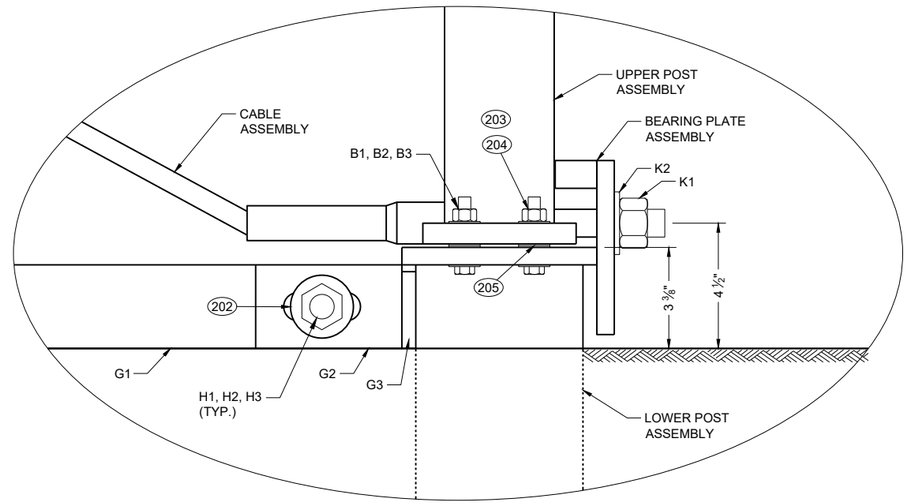

DETAIL "B"

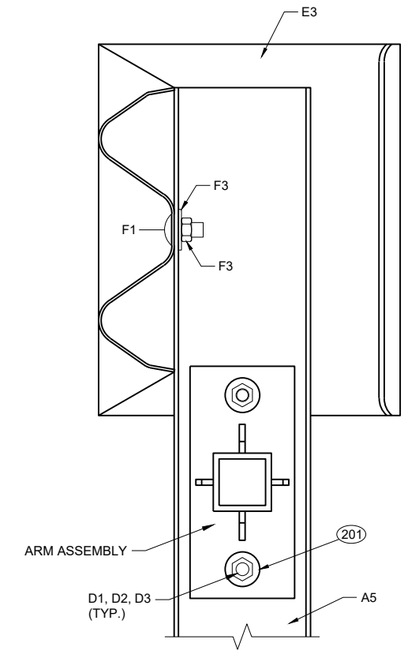

SECTION B - B

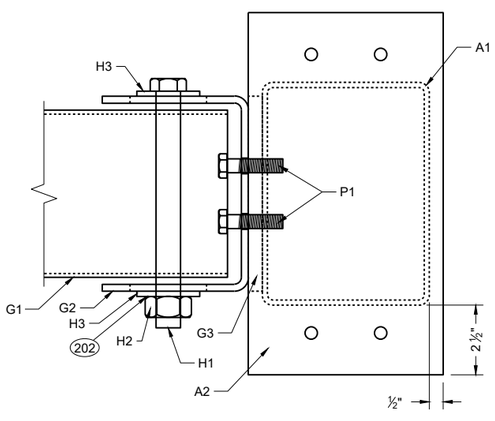

TOP VIEW

GROUND STRUT CONNECTION DETAIL

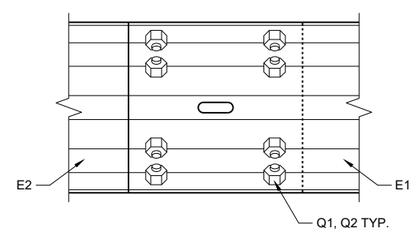

DETAIL "C"

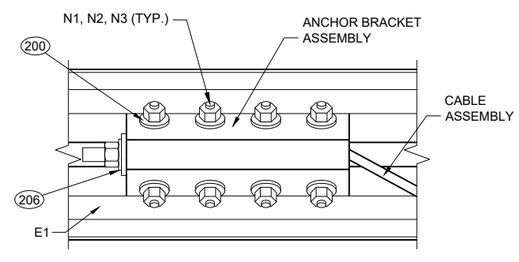

DETAIL "D"

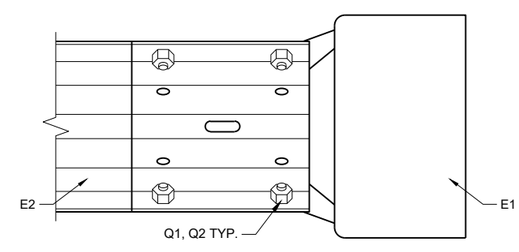

DETAIL "E"

GENERAL NOTES

200 INSTALL ONE WASHER UNDER BOLT HEAD AND RAIL AND ON WASHER BETWEEN NUT AND ANCHOR BRACKET ASSEMBLY.

201 INSTALL ONE WASHER UNDER BOLT HEAD AND UPPER POST ASSEMBLY AND ONE WASHER BETWEEN NUT AND ARM PLATE.

202 INSTALL ONE WASHER UNDER BOLT HEAD AND GROUND STRUT CONNECTOR AND ONE WASHER BETWEEN NUT AND GROUND STRUT CONNECTOR.

203 INSTALL ONE WASHER UNDER BOLT HEAD AND LOWER POST ASSEMBLY AND ONE WASHER BETWEEN NUT AND UPPER POST ASSEMBLY.

204 TORQUE VALUE IS BETWEEN 60 - 75 FT-LB.

205 TWO WASHERS BETWEEN UPPER AND LOWER POST ASSEMBLY.

206 INSTALL ONE WASHER BETWEEN NUT AND ANCHOR BRACKET ASSEMBLY.

207 NO MATERIAL IS TO BE PLACED AGAINST THE VERTICAL FACES OF BEARING PLATE.

208 PREVENT OR REMOVE MATERIALS THAT BLOCK ACCESS TO BOLTS FOR POST ASSEMBLIES AND GROUND STRUT.

209 PREVENT OR REMOVE MATERIALS THAT IMPEDE REMOVAL OF GROUND STRUT.

MIDWEST GUARDRAIL SYSTEM (MGS) TYPE 2 TERMINAL

STATE OF WISCONSIN
DEPARTMENT OF TRANSPORTATION

6

SDD 14B47-07b

GENERAL NOTES

300 TAP FOR 1/2" AFTER GALVANIZATION

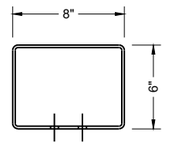

TOP VIEW

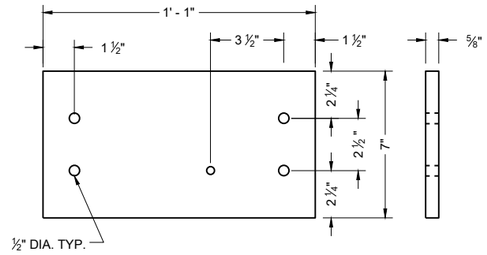

LOWER PLATE (A2)

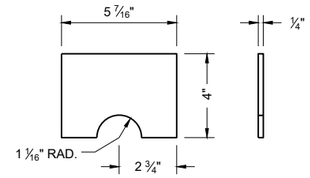

POST GUSSET (A3)

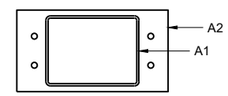

PLAN VIEW

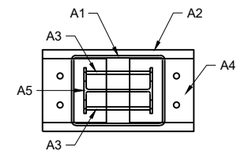

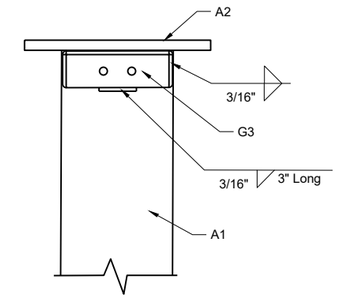

WELDING DETAIL
G3 AND A1

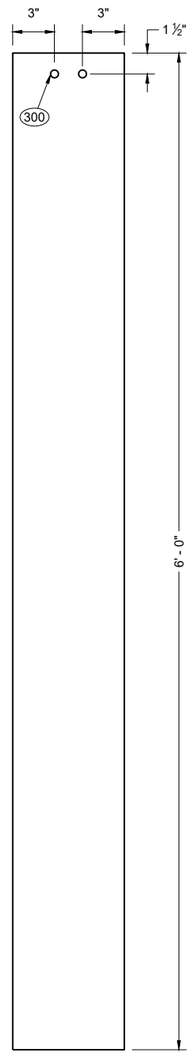

SIDE VIEW

FOUNDATION
TUBE (A1)

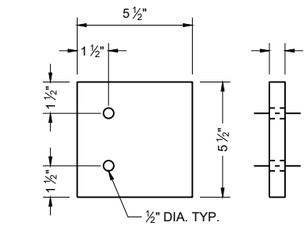

UPPER PLATE (A4)

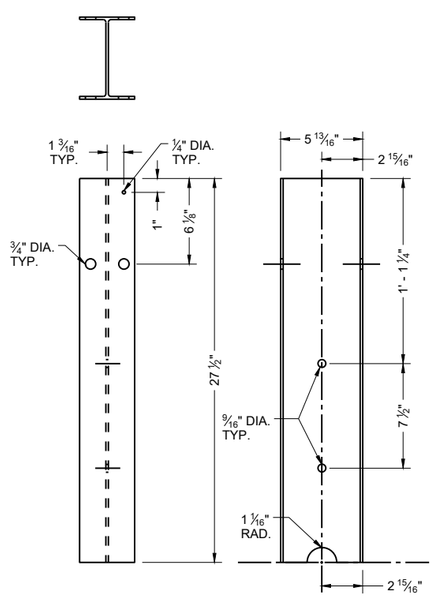

FRONT VIEW SIDE VIEW

TYPE 2 POST (A5)

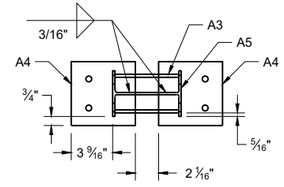

PLAN VIEW

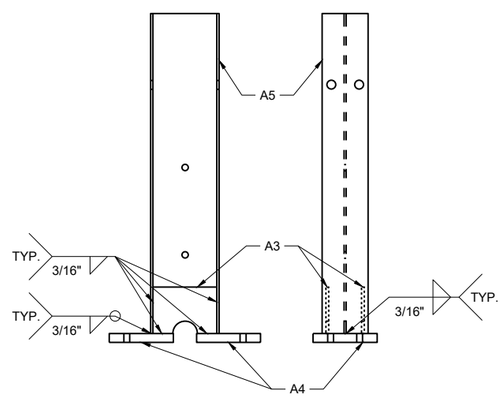

SIDE VIEW FRONT VIEW

UPPER POST ASSEMBLY

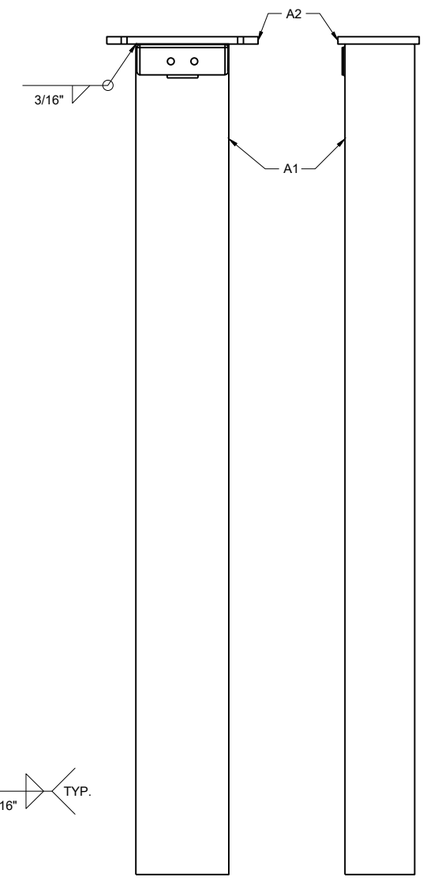

FRONT VIEW SIDE VIEW

LOWER POST ASSEMBLY

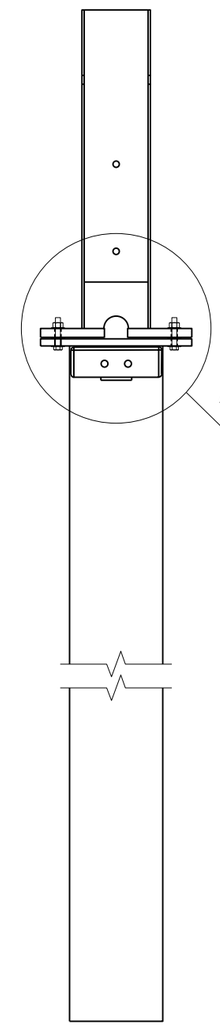

ASSEMBLED POST

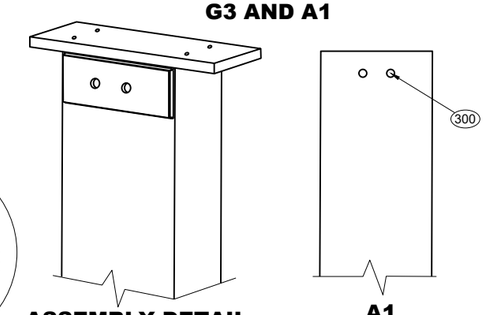

ASSEMBLY DETAIL
ISOMETRIC

A1

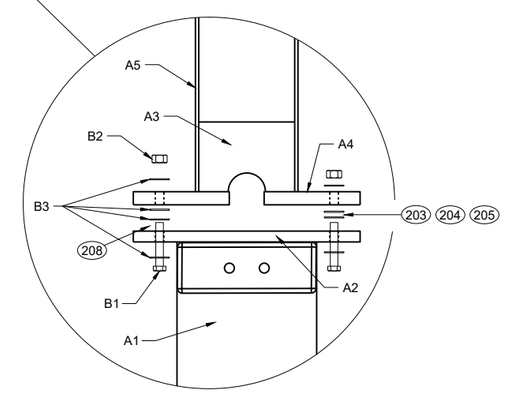

POST CONNECTION DETAIL

6

6

SDD 14B47-07c

SDD 14B47-07c

MIDWEST GUARDRAIL SYSTEM (MGS) TYPE 2 TERMINAL

STATE OF WISCONSIN
DEPARTMENT OF TRANSPORTATION

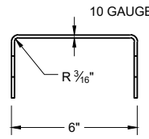

SIDE VIEW

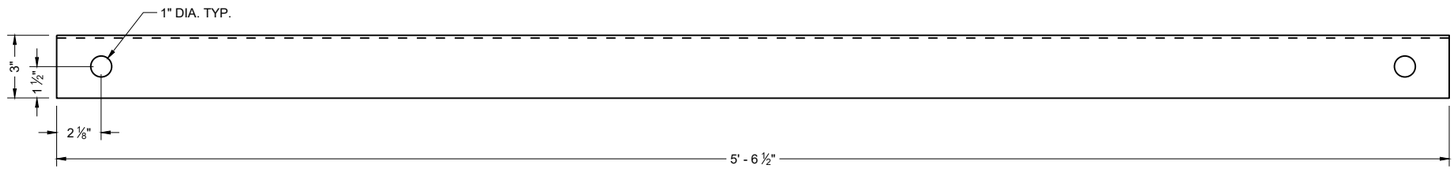

FRONT VIEW

GROUND STRUT CHANNEL (G1)

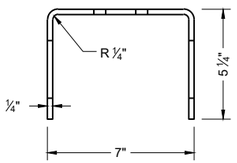

TOP VIEW

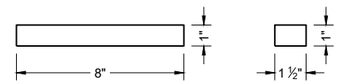

BEARING PLATE FLANGE (L2)

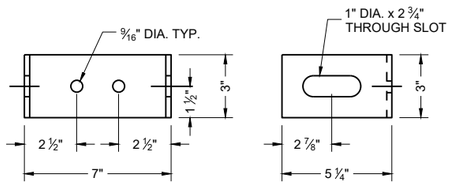

FRONT VIEW SIDE VIEW

GROUND STRUT CONNECTOR (G2)

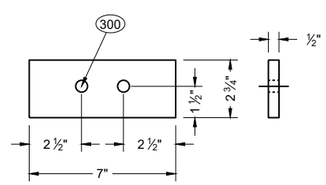

GROUND STRUT PLATE (G3)

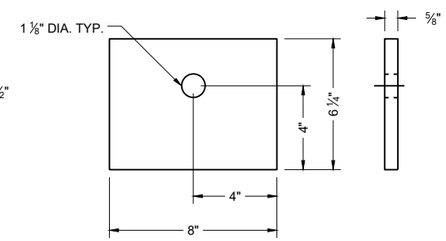

BEARING PLATE (L1)

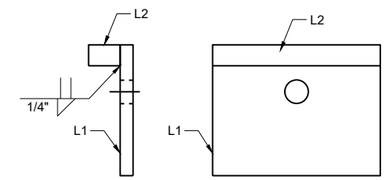

SIDE VIEW FRONT VIEW

BEARING PLATE ASSEMBLY

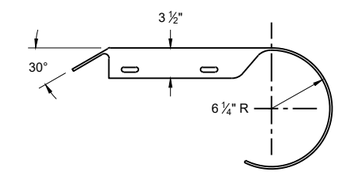

PLAN VIEW

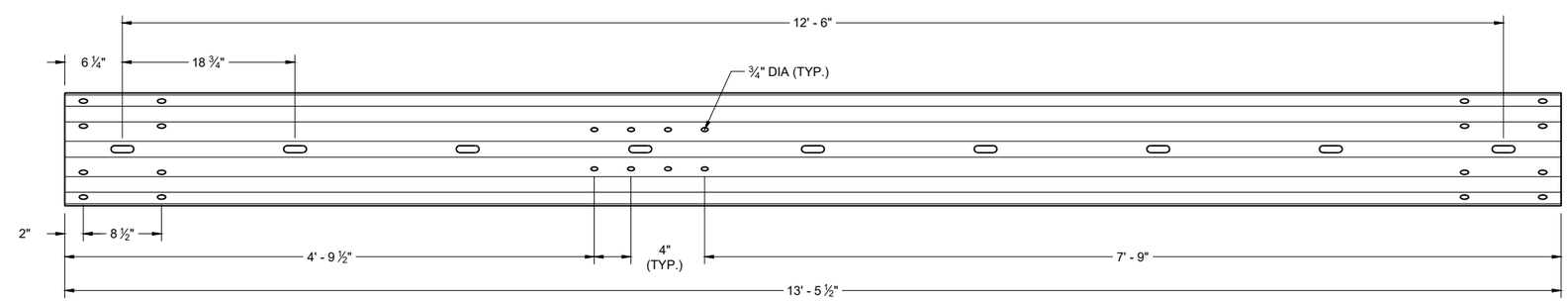

TYPE 2 GUARDRAIL (E1)

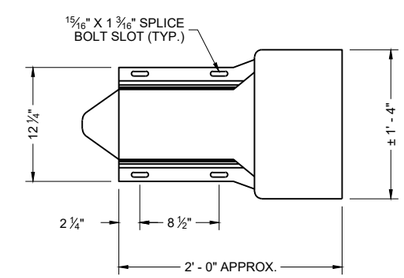

ELEVATION VIEW

ROUNDED BUFFER END (E3)

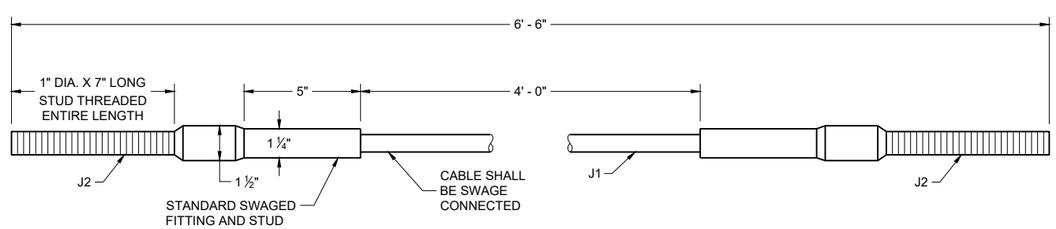

CABLE ASSEMBLY

MIDWEST GUARDRAIL SYSTEM (MGS) TYPE 2 TERMINAL

STATE OF WISCONSIN
DEPARTMENT OF TRANSPORTATION

6

SDD 14B47-07d

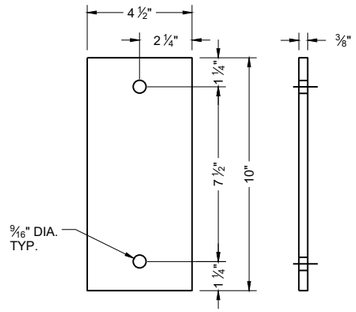

ARM PLATE (C1)

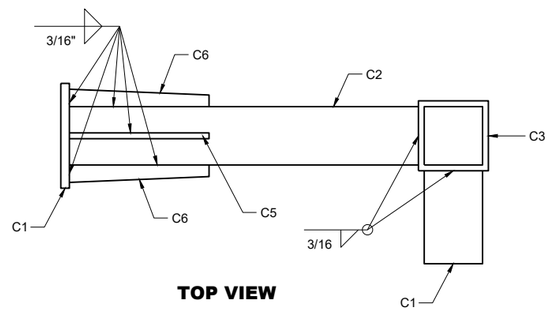

TOP VIEW
ARM ASSEMBLY

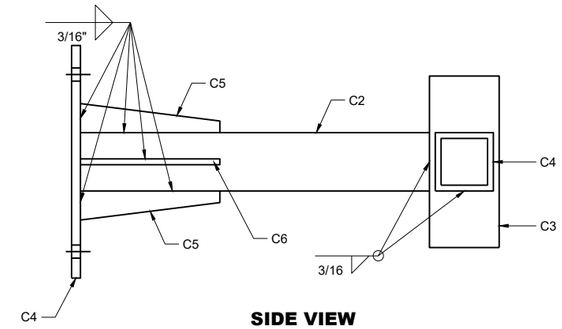

SIDE VIEW
ARM ASSEMBLY

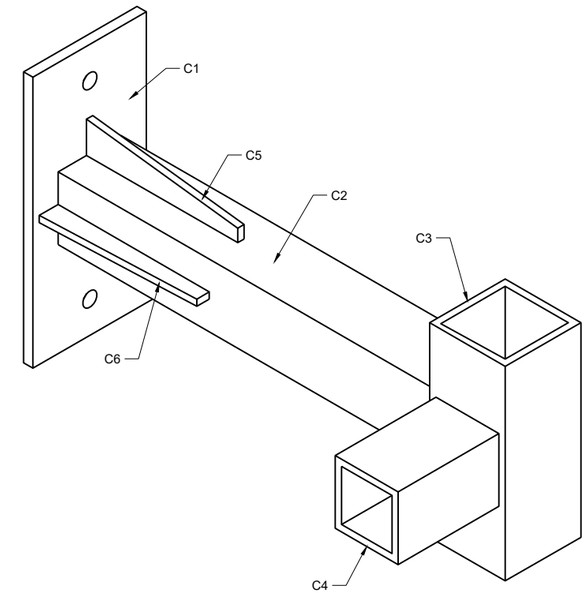

ISOMETRIC VIEW
ARM ASSEMBLY

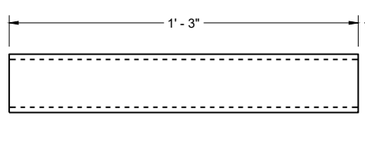

ARM TUBE 1 (C2)

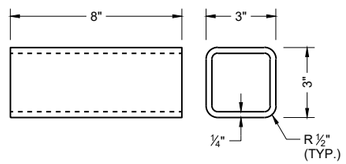

ARM TUBE 2 (C3)

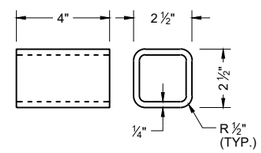

ARM TUBE 3 (C4)

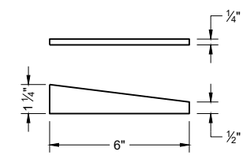

ARM GUSSET PLATE 1 (C5)

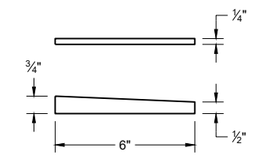

ARM GUSSET PLATE 2 (C6)

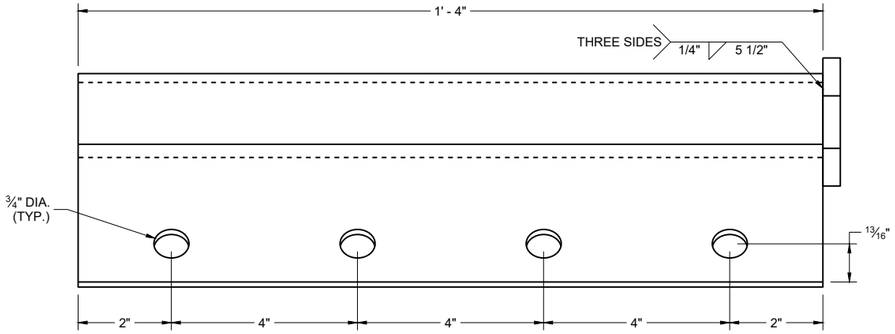

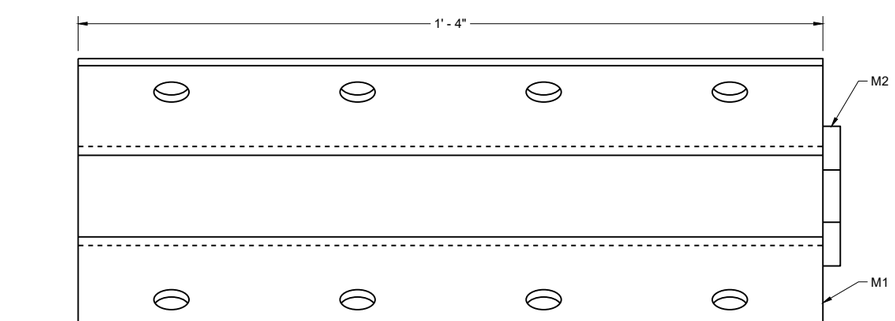

ANCHOR BRACKET (M1, M2)

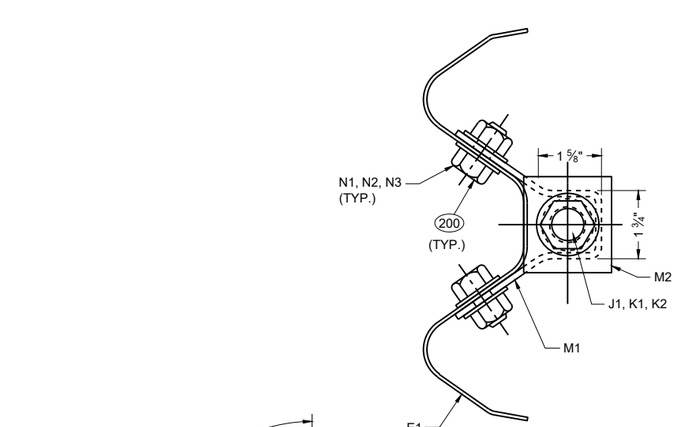

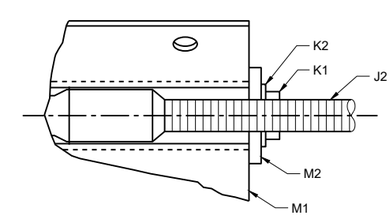

SECTION A - A

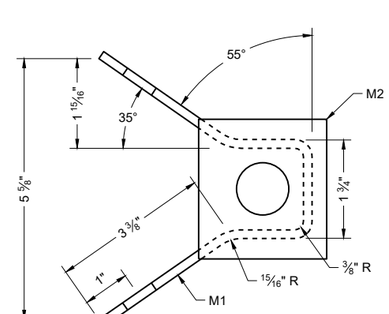

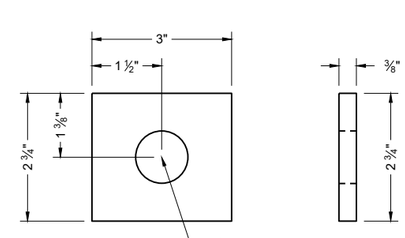

ANCHOR BRACKET BEARING PLATE (M2)

MIDWEST GUARDRAIL SYSTEM (MGS) TYPE 2 TERMINAL

STATE OF WISCONSIN
DEPARTMENT OF TRANSPORTATION

6

6

SDD 14B47-07e

SDD 14B47-07e

BILL OF MATERIALS - TYPE 2 TERMINAL (MGS)

PART	DESCRIPTION	MATERIALS SPECIFICATIONS	NOTES
A1	TYPE 2 FOUNDATION TUBE	AASHTO M111 / ASTM A123 ASTM A500 GRADE B OR ASTM A-501	TS 8" x 6" x 3/16"
A2	LOWER PLATE	AASHTO M111 / ASTM A123 ASTM A36 MIN. STRENGTH 36 KSI, OR ASTM A529 MAX. STRENGTH 50 KSI, OR ASTM A572 MAX STRENGTH 50 KSI, OR ASTM A709 MAX STRENGTH 50 KSI, OR ASTM A992 MAX STRENGTH 50 KSI	5/8" THICKNESS
A3	POST GUSSET	AASHTO M111 / ASTM A123 ASTM A36 MIN. STRENGTH 36 KSI, OR ASTM A529 MAX. STRENGTH 50 KSI, OR ASTM A572 MAX STRENGTH 50 KSI, OR ASTM A709 MAX STRENGTH 50 KSI, OR ASTM A992 MAX STRENGTH 50 KSI	1/4" THICKNESS
A4	UPPER PLATE	AASHTO M111 / ASTM A123 ASTM A36 MIN. STRENGTH 36 KSI, OR ASTM A529 MAX. STRENGTH 50 KSI, OR ASTM A572 MAX STRENGTH 50 KSI, OR ASTM A709 MAX STRENGTH 50 KSI, OR ASTM A992 MAX STRENGTH 50 KSI	3/4" THICKNESS
A5	TYPE 2 POST	AASHTO M111 / ASTM A123 ASTM A36 MIN. STRENGTH 36 KSI, OR ASTM A529 MAX. STRENGTH 50 KSI, OR ASTM A572 MAX STRENGTH 50 KSI, OR ASTM A709 MAX STRENGTH 50 KSI, OR ASTM A992 MAX STRENGTH 50 KSI, w6x9 or w6x8.5	
B1	BREAKAWAY BOLT	HOT DIP AASHTO M232 CLASS / ASTM A153 CLASS C / ASTM F2329 C OR MECHANICAL GAL. TO AASHTO M298 CLASS 50 TYPE 1 / ASTM B695 CLASS 50 TYPE 1 UNC HEAVY HEX HEAD ASTM F3125 GRADE A325 TYPE 1 HEAVY HEX HEAD OR SAE J429 GRADE 5 HEAVY HEX HEAD / ASTM A449 TYPE 1 HEAVY HEX HEAD. BOLTS MAY BE FULLY THREADED . PROVIDE ENOUGH THREADING FOR PROPER TIGHTENING OF BOLT.	7/16" DIA.
B2	BREAKAWAY BOLT WASHER	HOT DIP AASHTO M232 CLASS / ASTM A153 CLASS C / ASTM F2329 C OR MECHANICAL GAL. TO AASHTO M298 CLASS 50 TYPE 1 / ASTM B695 CLASS 50 TYPE 1 F436 TYPE 1 (HARDEN WASHER ONLY)	7/16" DIA.
B3	BREAKAWAY BOLT NUT	HOT DIP AASHTO M232 CLASS / ASTM A153 CLASS C / ASTM F2329 C OR MECHANICAL GAL. TO AASHTO M298 CLASS 50 TYPE 1 / ASTM B695 CLASS 50 TYPE 1 UNC OVER TAP NUTS AS SPECIFIED IN AASHTO 291/ASTM A 563 HEAVY HEX HEAD ASTM A563DH OR SAE J995 GRADE 5	
C1	ARM ASSEMBLY PLATE	AASHTO M111 / ASTM A123 ASTM A36 MIN. STRENGTH 36 KSI, OR ASTM A529 MAX. STRENGTH 50 KSI, OR ASTM A572 MAX STRENGTH 50 KSI, OR ASTM A709 MAX STRENGTH 50 KSI, OR ASTM A992 MAX STRENGTH 50 KSI	3/8" THICKNESS
C2	ARM ASSEMBLY TUBE 1	AASHTO M111 / ASTM A123 ASTM A500 GRADE B OR ASTM A-501	TS 8" x 6" x 3/16"
C3	ARM ASSEMBLY TUBE 2	AASHTO M111 / ASTM A123 ASTM A500 GRADE B OR ASTM A-501	TS 3" x 3" x 1/4"
C4	ARM ASSEMBLY TUBE 3	AASHTO M111 / ASTM A123 ASTM A500 GRADE B OR ASTM A-501	TS 2 1/2" x 2 1/2" X 1/4"
C5	ARM ASSEMBLY GUSSET PLATE 1	AASHTO M111 / ASTM A123 ASTM A36 MIN. STRENGTH 36 KSI, OR ASTM A529 MAX. STRENGTH 50 KSI, OR ASTM A572 MAX STRENGTH 50 KSI, OR ASTM A709 MAX STRENGTH 50 KSI, OR ASTM A992 MAX STRENGTH 50 KSI	1/4" THICKNESS
C6	ARM ASSEMBLY GUSSET PLATE 2	AASHTO M111 / ASTM A123 ASTM A36 MIN. STRENGTH 36 KSI, OR ASTM A529 MAX. STRENGTH 50 KSI, OR ASTM A572 MAX STRENGTH 50 KSI, OR ASTM A709 MAX STRENGTH 50 KSI, OR ASTM A992 MAX STRENGTH 50 KSI	1/4" THICKNESS
D1	ARM ASSEMBLY BOLT	HOT DIP AASHTO M232 CLASS / ASTM A153 CLASS C / ASTM F2329 C OR MECHANICAL GAL. TO AASHTO M298 CLASS 50 TYPE 1 / ASTM B695 CLASS 50 TYPE 1 UNC HEAVY HEX HEAD ASTM A307 GRADE B OR SAE J429 GRADE 2 OR ASTM F1554 GRADE 36	1/2" DIA.
D2	ARM ASSEMBLY WASHER	HOT DIP AASHTO M232 CLASS / ASTM A153 CLASS C / ASTM F2329 C OR MECHANICAL GAL. TO AASHTO M298 CLASS 50 TYPE 1 / ASTM B695 CLASS 50 TYPE 1 F436 TYPE 1 (HARDEN WASHER ONLY)	1/2" DIA.
D3	ARM ASSEMBLY NUT	HOT DIP AASHTO M232 CLASS / ASTM A153 CLASS C / ASTM F2329 C OR MECHANICAL GAL. TO AASHTO M298 CLASS 50 TYPE 1 / ASTM B695 CLASS 50 TYPE 1 UNC OVER TAP NUTS AS SPECIFIED IN AASHTO 291 / ASTM A 563 HEAVY HEX HEAD ASTM A563DH OR SAE J995 GRADE 5	1/2" DIA.
E1	TYPE 2 GUARD RAIL	AASHTO M180 CLASS A TYPE 2 12 GAUGE APPROVED PRODUCER	
E2	BEAM GUARD RAIL	AASHTO M180 CLASS A TYPE 2 12 GAUGE APPROVED PRODUCER	
E3	BEAM GUARD ROUNDED BUFFER END	AASHTO M180 CLASS A TYPE 2 12 GAUGE APPROVED PRODUCER	
F1	POST BOLT	HOT DIP AASHTO M232 CLASS / ASTM A153 CLASS C / ASTM F2329 C OR MECHANICAL GAL. TO AASHTO M298 CLASS 50 TYPE 1 / ASTM B695 CLASS 50 TYPE 1 UNC UNC HEAVY HEX HEAD ASTM A307 GRADE B OR SAE J429 GRADE 2 OR ASTM F1554 GRADE 36	5/8" DIA.
F2	POST BOLT WASHER	HOT DIP AASHTO M232 CLASS / ASTM A153 CLASS C / ASTM F2329 C OR MECHANICAL GAL. TO AASHTO M298 CLASS 50 TYPE 1 / ASTM B695 CLASS 50 TYPE 1 F436 TYPE 1 (HARDEN WASHER ONLY)	5/8" DIA.
F3	POST BOLT NUT	HOT DIP AASHTO M232 CLASS / ASTM A153 CLASS C / ASTM F2329 C OR MECHANICAL GAL. TO AASHTO M298 CLASS 50 TYPE 1 / ASTM B695 CLASS 50 TYPE 1 UNC OVER TAP NUTS AS SPECIFIED IN AASHTO 291/ASTM A 563 AASHTO M180 RECESSED HEAVY HEX HEAD ASTM A563DH OR SAE J995 GRADE 5	
G1	GROUND STRUT CHANNEL	AASHTO M111 / ASTM A123 ASTM A36 MIN. STRENGTH 36 KSI, OR ASTM A529 MAX. STRENGTH 50 KSI, OR ASTM A572 MAX STRENGTH 50 KSI, OR ASTM A709 MAX STRENGTH 50 KSI, OR ASTM A992 MAX STRENGTH 50 KSI	1/2" x 11 3/4" x 10 GAUGE
G2	GROUND STRUT CONNECTOR	AASHTO M111 / ASTM A123 ASTM A36 MIN. STRENGTH 36 KSI, OR ASTM A529 MAX. STRENGTH 50 KSI, OR ASTM A572 MAX STRENGTH 50 KSI, OR ASTM A709 MAX STRENGTH 50 KSI, OR ASTM A992 MAX STRENGTH 50 KSI	1/4" THICKNESS
G3	GROUND STRUT PLATE	AASHTO M111 / ASTM A123 ASTM A36 MIN. STRENGTH 36 KSI, OR ASTM A529 MAX. STRENGTH 50 KSI, OR ASTM A572 MAX STRENGTH 50 KSI, OR ASTM A709 MAX STRENGTH 50 KSI, OR ASTM A992 MAX STRENGTH 50 KSI	1/2" THICKNESS

MIDWEST GUARDRAIL SYSTEM (MGS) TYPE 2 TERMINAL

STATE OF WISCONSIN
DEPARTMENT OF TRANSPORTATION

6

SDD 14B47-07f

BILL OF MATERIALS - TYPE 2 TERMINAL (MGS)

PART	DESCRIPTION	MATERIALS SPECIFICATIONS	NOTES
H1	GROUND STRUT BOLT	HOT DIP AASHTO M232 CLASS / ASTM A153 CLASS C / ASTM F2329 C OR MECHANICAL GAL. TO AASHTO M298 CLASS 50 TYPE 1 / ASTM B695 CLASS 50 TYPE 1 UNC HEAVY HEX HEAD ASTM A307 GRADE B OR SAE J429 GRADE 2 OR ASTM F1554 GRADE 36	7/8" DIA.
H2	GROUND STRUT BOLT WASHER	HOT DIP AASHTO M232 CLASS / ASTM A153 CLASS C / ASTM F2329 C OR MECHANICAL GAL. TO AASHTO M298 CLASS 50 TYPE 1/ ASTM B695 CLASS 50 TYPE 1 F436 TYPE 1 (HARDEN WASHER ONLY)	7/8" DIA.
H3	GROUND STRUT BOLT NUT	HOT DIP AASHTO M232 CLASS / ASTM A153 CLASS C / ASTM F2329 C OR MECHANICAL GAL. TO AASHTO M298 CLASS 50 TYPE 1 / ASTM B695 CLASS 50 TYPE 1 UNC HEAVY HEX HEAD 5/8" ASTM A307 GRADE B OR SAE J429 GRADE 2 OR ASTM F1554 GRADE 36	
J1	BCT CABLE	AASHTO M30 / ASTM A741 6 x 19 INDEPENDENT WIRE CORE (IWRC) IMPROVED PLOW STEEL (IPS), 6 x 19 INDEPENDENT WIRE CORE (IWRC) IMPROVED PLOW STEEL (IPS) TYPE II OR IIC, CLASS C ZINC COATED MIN. BREAKING STRENGTH OF 42.7 KIPS	3/4" DIA.
J2	BCT CABLE	UNC 1" ASTM A576 GRADE 1035 SWAGE FITTINGS ARE TO BE FACTORY SWEDGED. MIN BREAKING STRENGTH OF 42.7 KIPS ASME B30.26 "FORGED, CAST, OR DIE STAMPED WITH THE FOLLOWING IN TO CONNECTION: NAME OF MANUFACTURE OR TRADEMARK OF CONNECTION'S MANUFACTURER, SIZE OR RATED LOAD, GRADE FOR ALLOY EYEBOLTS."	
K1	CABLE ASSEMBLY NUT	HOT DIP AASHTO M232 CLASS / ASTM A153 CLASS C / ASTM F2329 C OR MECHANICAL GAL. TO AASHTO M298 CLASS 50 TYPE 1 / ASTM B695 CLASS 50 TYPE 1 UNC OVER TAP NUTS AS SPECIFIED IN AASHTO 291 / ASTM A 563 HEAVY HEX HEAD ASTM A563DH OR SAE J995 GRADE 5	1" DIA.
K2	CABLE ASSEMBLY WASHER	HOT DIP AASHTO M232 CLASS / ASTM A153 CLASS C / ASTM F2329 C OR MECHANICAL GAL. TO AASHTO M298 CLASS 50 TYPE 1	1" DIA.
L1	BEARING PLATE	AASHTO M111 / ASTM A123 ASTM A36 MIN. STRENGTH 36 KSI, OR ASTM A529 MAX. STRENGTH 50 KSI, OR ASTM A572 MAX STRENGTH 50 KSI, OR ASTM A709 MAX STRENGTH 50 KSI, OR ASTM A992 MAX STRENGTH 50 KSI	5/8" THICKNESS
L2	BEARING PLATE FLANGE	AASHTO M111 / ASTM A123 ASTM A36 MIN. STRENGTH 36 KSI, OR ASTM A529 MAX. STRENGTH 50 KSI, OR ASTM A572 MAX STRENGTH 50 KSI, OR ASTM A709 MAX STRENGTH 50 KSI, OR ASTM A992 MAX STRENGTH 50 KSI	1" THICKNESS
M1	BEAM GUARD ANCHOR BRACKET	AASHTO M111 / ASTM A123 ASTM A36 MIN. STRENGTH 36 KSI, OR ASTM A529 MAX. STRENGTH 50 KSI, OR ASTM A572 MAX STRENGTH 50 KSI, OR ASTM A709 MAX STRENGTH 50 KSI, OR ASTM A992 MAX STRENGTH 50 KSI	
M2	BEAM GUARD ANCHOR END PLATE	AASHTO M111 / ASTM A123 ASTM A36 MIN. STRENGTH 36 KSI, OR ASTM A529 MAX. STRENGTH 50 KSI, OR ASTM A572 MAX STRENGTH 50 KSI, OR ASTM A709 MAX STRENGTH 50 KSI, OR ASTM A992 MAX STRENGTH 50 KSI	3/8" THICKNESS
N1	ANCHOR BRACKET BOLT	HOT DIP AASHTO M232 CLASS / ASTM A153 CLASS C / ASTM F2329 C OR MECHANICAL GAL. TO AASHTO M298 CLASS 50 TYPE 1 / ASTM B695 CLASS 50 TYPE 1 UNC AASHTO M180 HEAD ASTM A307 GRADE B OR SAE J429 GRADE 2 OR ASTM F1554 GRADE 36	5/8" DIA.
N2	ANCHOR BRACKET BOLT WASHER	HOT DIP AASHTO M232 CLASS / ASTM A153 CLASS C / ASTM F2329 C OR MECHANICAL GAL. TO AASHTO M298 CLASS 50 TYPE 1/ ASTM B695 CLASS 50 TYPE 1 F436 TYPE 1 (HARDEN WASHER ONLY)	5/8" DIA.
N3	ANCHOR BRACKET BOLT NUT	HOT DIP AASHTO M232 CLASS / ASTM A153 CLASS C / ASTM F2329 C OR MECHANICAL GAL. TO AASHTO M298 CLASS 50 TYPE 1 / ASTM B695 CLASS 50 TYPE 1 UNC OVER TAP NUTS AS SPECIFIED IN AASHTO 291 /ASTM A 563 HEAVY HEX HEAD ASTM A563DH OR SAE J995 GRADE 5	
P1	FOUNDATION TUBE BOLT	HOT DIP AASHTO M232 CLASS / ASTM A153 CLASS C / ASTM F2329 C OR MECHANICAL GAL. TO AASHTO M298 CLASS 50 TYPE 1/ ASTM B695 CLASS 50 TYPE 1 UNC OVER TAP NUTS AS SPECIFIED IN AASHTO 291 / ASTM A 563 HEAVY HEX HEAD ASTM A563DH OR SAE J995 GRADE 5	1/2" DIA.
Q1	SPLICE BOLT	HOT DIP AASHTO M232 CLASS / ASTM A153 CLASS C / ASTM F2329 C OR MECHANICAL GAL. TO AASHTO M298 CLASS 50 TYPE 1 / ASTM B695 CLASS 50 TYPE 1 UNC AASHTO M180 HEAD ASTM A307 GRADE B OR SAE J429 GRADE 2 OR ASTM F1554 GRADE 36	
Q2	SPLICE NUT	HOT DIP AASHTO M232 CLASS / ASTM A153 CLASS C / ASTM F2329 C OR MECHANICAL GAL. TO AASHTO M298 CLASS 50 TYPE 1 / ASTM B695 CLASS 50 TYPE 1 UNC OVER TAP NUTS AS SPECIFIED IN AASHTO 291 / ASTM A 563 AASHTO M180 RECESSED HEAVY HEX HEAD ASTM A563DH OR SAE J995 GRADE 5	5/8" DIA.

MIDWEST GUARDRAIL SYSTEM (MGS) TYPE 2 TERMINAL

STATE OF WISCONSIN
DEPARTMENT OF TRANSPORTATION

APPROVED
June 2025 — DATE
/S/ Rodney Taylor — <position>
FHWA

6

SDD 14B47-07g

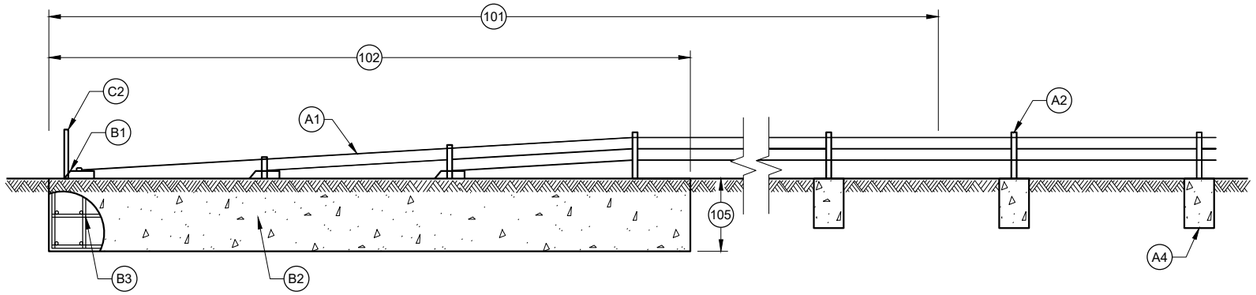

PROFILE VIEW

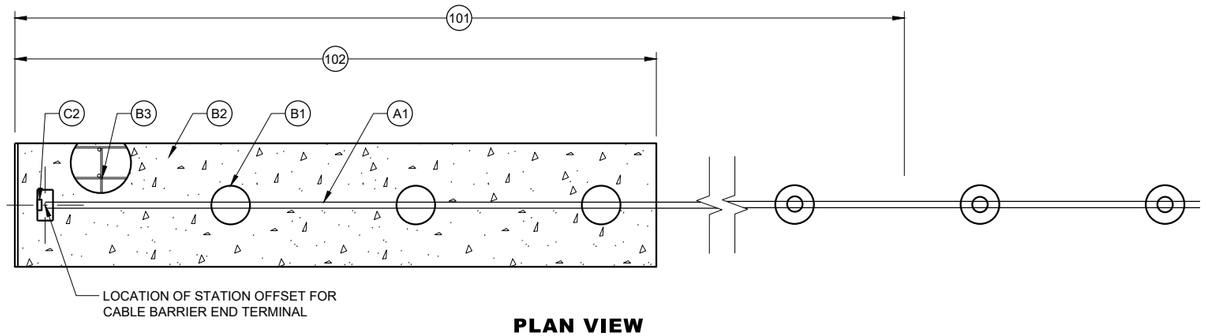

PLAN VIEW

TRANSITION FROM CABLE BARRIER TERMINAL TO CABLE BARRIER LINE POSTS

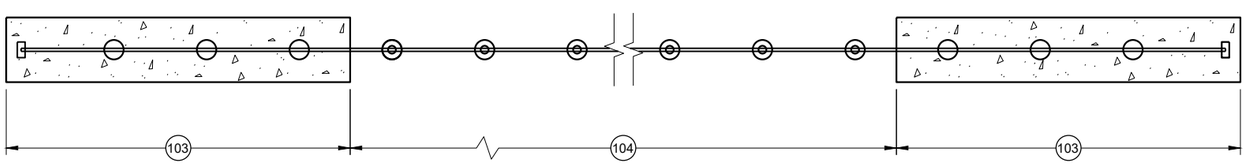

TYPICAL PLAN VIEW

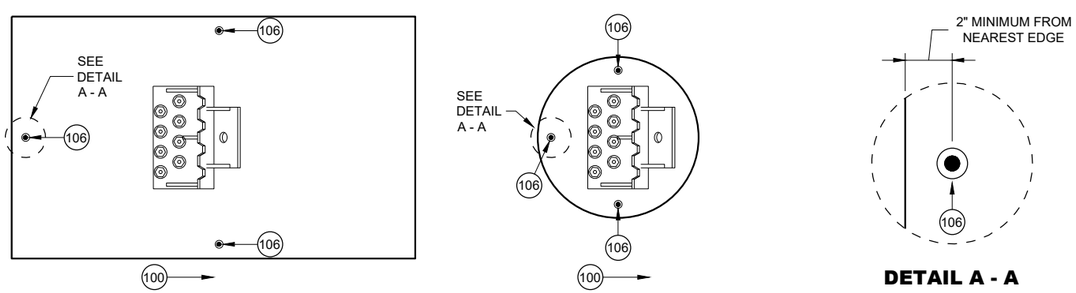

DETAIL A - A

ANCHOR MONITOR POINTS FOR CABLE BARRIER END TERMINAL ANCHORS

GENERAL NOTES

DRAWINGS ARE GENERAL IN NATURE. SEE MANUFACTURER'S INFORMATION FOR MORE DETAIL.

PROVIDE 2 INCH CLEAR COVER FROM OUTER EDGE OF CONCRETE FOOTINGS TO REINFORCEMENT.

INSTALL LINE POSTS PLUMB. LINE POSTS ARE TO BE EASILY REMOVED BY HAND AND HOLD CABLES AT THE PROPER ELEVATION.

PROVIDE CABLE BARRIER SYSTEM FROM APPROVED PRODUCT LIST.

PROVIDE A SYSTEM TO HAVE THE WORKING WIDTH INDICATED IN PLAN.

PROVIDE DOCUMENTATION HOW POST SPACING, RADIUS OF CURVE AND ANCHOR SPACING INFLUENCES WORKING WIDTH TO CONSTRUCTION STAFF.

CONSTRUCT SHAFTS VERTICALLY. VERTICAL TOLERANCE OF SHAFT IS $\frac{1}{8}$" PER FOOT OF DEPTH. SHAFTS ARE TO MINIMIZE DISTURBANCE TO ADJACENT SOILS.

SECURE STEEL REINFORCEMENT AND STEEL SLEEVE PRIOR TO PLACEMENT OF CONCRETE. MAINTAIN CLEAR DISTANCE BETWEEN SOIL AND REINFORCEMENT CAGE.

PLACE CONCRETE IN ONE CONTINUOUS POUR FOR EACH FOOTING. USE VIBRATION TO CONSOLIDATE CONCRETE.

PROVIDE CASING AS NECESSARY TO PREVENT INTRUSION OF UNCONSOLIDATED MATERIALS OR WATER. USE CASINGS WHEN THERE IS 3 OR MORE INCHES OF WATER IN EXCAVATION.

PROVIDE WISCONSIN PROFESSIONAL ENGINEER SIGNED AND APPROVED FOOTING DESIGN USING A CASING AND CONSTRUCTION SEQUENCE. PROJECT ENGINEER WILL REVIEW AND APPROVED CASING DESIGN AND CONSTRUCTION SEQUENCE. CASING IS TO HAVE INTIMATE CONTACT WITH SHAFT SIDEWALL. CASING IT TO WITHSTAND INSERTION STRESS, REMOVAL STRESS, CONCRETE PRESSURE AND SOIL PRESSURE. REMOVE CASING DURING CONCRETE PLACEMENT OR IMMEDIATELY AFTER CONCRETE PLACEMENT. NO TEMPORARY CASING MAY REMAIN IN-PLACE.

PROVIDE WISCONSIN PROFESSIONAL ENGINEER SIGNED AND APPROVED FOOTING DESIGN AND CONSTRUCTION SEQUENCE WHEN OVER EXCAVATION IS REQUIRED NEAR A FOOTING. PROJECT ENGINEER WILL REVIEW AND APPROVED DESIGN AND CONSTRUCTION SEQUENCE.

FINISH TOP OF FOOTINGS TO THE DIMENSIONS INDICATED IN PLAN. REMOVE EXCESS CONCRETE.

DESIGN POST FOOTINGS SO THAT LINE POST FOOTING MOVE LESS THAN 1 INCH WHEN LINE POST IS IMPACTED BY A NCHRP 350 TL-3 SMALL CAR.

USE MARINE GRADE ANTI-SEIZE LUBRICANT FOR THREADING FITTINGS THAT IS ACCEPTABLE FOR USE ON GALVANIZED STEEL.

(100) DIRECTION THAT THE CABLE PULLS THE END ANCHOR FOOTING

(101) LOCATION OF LENGTH OF NEED POINT FOR CABLE BARRIER END TERMINAL VARIES. (SEE MANUFACTURER'S INFORMATION)

(102) PAY LIMIT FOR CABLE BARRIER END TERMINAL. LENGTH OF CABLE BARRIER END TERMINAL VARIES. (SEE MANUFACTURER'S INFORMATION)

(103) CABLE BARRIER END TERMINAL

(104) CABLE BARRIER AND LINE POSTS

(105) IN SOIL MINIMUM DEPTH OF CABLE BARRIER END TERMINAL FOOTING IS 60 INCHES. DEEPER FOOTINGS PER MANUFACTURER'S RECOMMENDATION ARE ACCEPTABLE.

(106) ANCHOR MONITOR POINTS ARE GALVANIZED SURVEY NAIL, OR MASONRY NAIL, PLACED INTO CONCRETE FOOTING BEFORE HARDENING. IF THERE ARE MULTIPLE ANCHOR POINTS WITHIN A PAY LIMIT FOR A CABLE BARRIER END TERMINAL, EACH ANCHOR POINT NEEDS THREE ANCHOR MONITOR POINTS.

CABLE BARRIER TYPE 1 LAYOUT

STATE OF WISCONSIN
DEPARTMENT OF TRANSPORTAT

6

SDD 14B52 - 03a

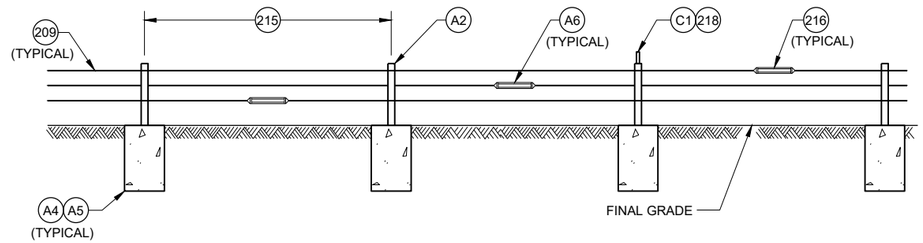

PROFILE VIEW
LINE POST INSTALLATION

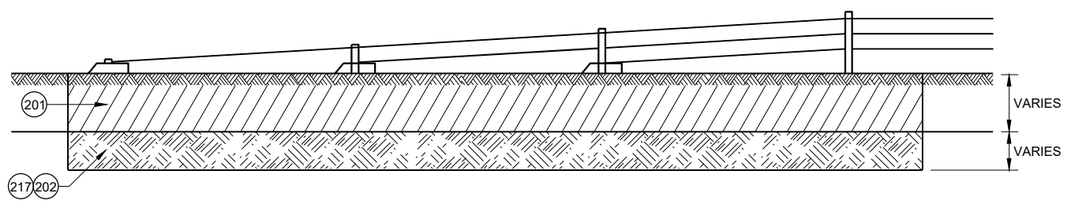

CABLE BARRIER END TERMINAL ROCK EXCAVATION DETAIL

GENERAL NOTES

201 SOIL TO BE EXCAVATED FOR CABLE BARRIER END TERMINAL (VARIES)

202 ROCK TO BE EXCAVATED FOR CABLE BARRIER END TERMINAL (VARIES)

203 SOIL TO BE EXCAVATED FOR LINE POST (VARIES)

204 ROCK TO BE EXCAVATED FOR LINE POST (VARIES)

205 EXCAVATE AND GRADE LINE FOR LINE POST FOOTINGS. INSTALL LINE POST FOOTING TO MINIMIZE 4 INCH TALL OBJECT ON 5 FOOT CHORD.

206 2 INCHES OF CLEAR COVER FROM EDGE OF CONCRETE TO REINFORCEMENT.

207 DIAMETER OF LINE POST FOOTING VARIES. SEE MANUFACTURERS' INFORMATION.

208 MINIMUM DEPTH OF LINE POST FOOTING IS 4' - 0" IN SOIL. DEEPER FOOTINGS PER MANUFACTURER'S RECOMMENDATION ARE ACCEPTABLE.

209 NUMBER AND LOCATION OF CABLES VARY. SEE MANUFACTURERS' INFORMATION.

210 LINE POST DIMENSIONS AND CONNECTION HARDWARE VARY. SEE MANUFACTURERS' INFORMATION.

211 LANE OF ROADWAY (VARIES). SEE PLAN FOR MORE INFORMATION.

212 PAVED SHOULDER (VARIES). SEE PLAN FOR MORE INFORMATION.

213 GRAVEL SHOULDER (VARIES). SEE PLAN FOR MORE INFORMATION.

214 CABLE BARRIER OFFSET FROM CENTERLINE OF MEDIAN DITCH (8 FOOT MINIMUM). SEE PLAN FOR MORE INFORMATION.

215 MAXIMUM POST SPACING IS 15 FEET.

216 STAGGER TURNBUCKLES (TYPICAL).

217 SEE MANUFACTURER'S DESIGN WHEN ROCK IS ENCOUNTERED.

218 LINE POST DELINEATOR SPACING IS 100 FEET.

219 MINIMUM LINE POST FOOTING REINFORCEMENT SHOWN. MANUFACTURER IS TO INDICATE REINFORCEMENT IS ADEQUATE FOR THEIR SYSTEM. IF REINFORCEMENT IS NOT ADEQUATE, PROVIDE FOOTING DESIGN WITH A ADEQUATE REINFORCEMENT.

6

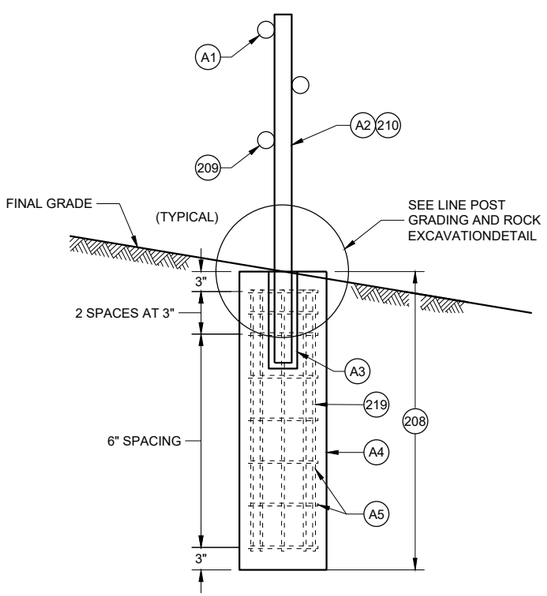

CROSS SECTION

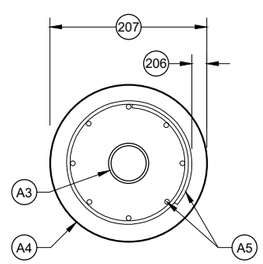

PROFILE VIEW
(LINE POSTS AND CABLES NOT SHOWN)

LINE POST DETAILS

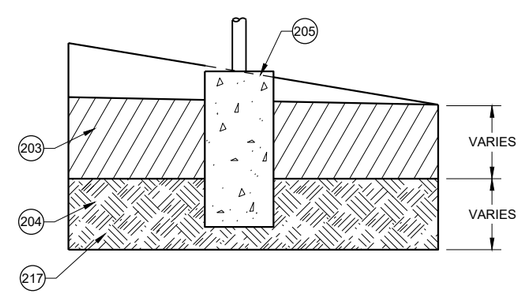

LINE POST GRADING AND ROCK EXCAVATION DETAIL

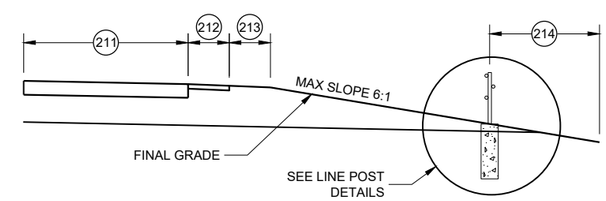

CABLE BARRIER OFFSET FROM DITCH LINE

CABLE BARRIER TYPE 1 LAYOUT

STATE OF WISCONSIN
DEPARTMENT OF TRANSPORTAT 88

SDD 14B52 - 03b

6

SDD 14B52 - 03b

BILL OF MATERIALS

PART NUMBER	QTY.	DESCRIPTION	MATERIALS SPECIFICATIONS
A1	3 OR 4	¾" 3x7 PRESTRECHED GALVANIZED STEEL WIRE ROPE	AASHTO M30 TYPE 1 CLASS A OR ASTM A741 TYPE 1 CLASS A WITH MINIMUM BREAKING STRENGTH = 39 KIPS (173.5 KN)
A2	1 PER LINE POST	GALVANIZED REMOVABLE STEEL LINE POST	SEE MANUFACTURER'S INFORMATION ON DIMENSIONS AND MATERIAL REQUIREMENTS.
			ASTM A123 (GALVANIZATION).
A3	1 PER LINE POST	GALVANIZED STEEL SLEEVE	SEE MANUFACTURER'S INFORMATION ON DIMENSIONS AND MATERIAL REQUIREMENTS.
			ASTM A123 (GALVANIZATION).
A4	VARIES	CONCRETE FOR LINE POST FOOTING	A, A-FA.A-T, OR A-IP OF STANDARD SPECIFICATION 501.2 OR AS MANUFACTURER SPECIFIES.
			STANDARD SPECIFICATION 716 QMP FOR CLASS II ANCILLARY CONCRETE
			SEE MANUFACTURER'S INFORMATION ON DIMENSIONS.
A5	MINIMUM REINFORCEMENT: 8 HORIZONTAL LOOP BARS 8 VERTICAL BARS	EPOXY COATED STEEL REINFORCEMENT	STANDARD SPECIFICATION 505.
			ALL BARS ARE NO. 4 BARS
A6	VARIES	TURNBUCKLES AND OTHER CABLE CONNECTING HARDWARE	SEE MANUFACTURER'S INFORMATION ON DIMENSIONS.
			MINIMUM BREAKING STRENGTH OF TURNBUCKLES AND CONNECTION HARDWARE IS EQUAL TO CABLE.
			TURNBUCKLES AND OTHER CABLE CONNECTION HARDWARE IS FIELD SWAGED PER MANUFACTURER'S RECOMMENDATION AND DETAILS.
			PROVIDE DOCUMENTATION THAT THE FITTINGS ARE STRONGER THAN THE CABLE BARRIER. DOCUMENTATION IS TO INCLUDE: MANUFACTURER NAME, TESTING RESULTS, AND DATE OF TESTING.
B1	VARIES	CABLE CONNECTION TO CABLE BARRIER END TERMINAL	SEE MANUFACTURER'S INFORMATION ON DIMENSIONS AND MATERIAL REQUIREMENTS.
B2	VARIES	CONCRETE FOR CABLE BARRIER END TERMINAL	A, A-FA.A-T, OR A-IP OF STANDARD SPECIFICATION 501.2.
			STANDARD SPECIFICATION 716 QMP FOR CLASS II ANCILLARY CONCRETE
B3	VARIES	EPOXY COATED STEEL REINFORCEMENT	STANDARD SPECIFICATION 505.
C1	VARIES	LINE POST DELINEATOR	REFLECTIVE SHEETING TYPE SH. SEE APPROVED PRODUCT LIST YELLOW.
C2	VARIES	CABLE BARRIER END TERMINAL DELINEATOR	REFLECTIVE SHEETING TYPE SH. SEE APPROVED PRODUCT LIST OBJECT MARKER TYPE 3 PATTERN

6

6

SDD 14B52 - 03c

CABLE BARRIER TYPE 1 LAYOUT

STATE OF WISCONSIN
DEPARTMENT OF TRANSPORTATION

APPROVED
May 2022 — DATE
/S/ Rodney Taylor — ROADWAY STANDARDS DEVE ENGINEER
FHWA

SDD 14B52 - 03c

*CONFIRM MARKING LINE WIDTH WITH THE MISCELLANEOUS QUANTITIES

GENERAL NOTES

DETAILS OF CONSTRUCTION NOT SHOWN ON THIS DRAWING SHALL CONFORM TO STANDARD SPECIFICATIONS AND SPECIAL PROVISIONS.

1. LOCATE THE NO PASSING ZONE W14-3 SIGN WITHIN 50 FEET OF THE "T" MARKING
2. MEASURE FROM EDGE OF MARKING TO JOINT LINE. THIS DOES NOT INCLUDE SPACE NEEDED FOR GROOVING OPERATIONS.

LEGEND

"T" MARKING

SIGN ON PERMANENT SUPPORT

DIRECTION OF TRAFFIC

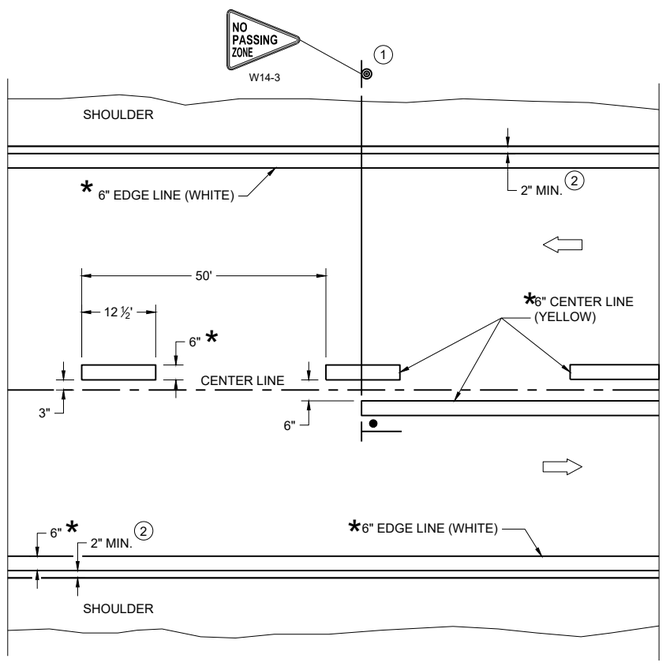

TWO WAY TRAFFIC

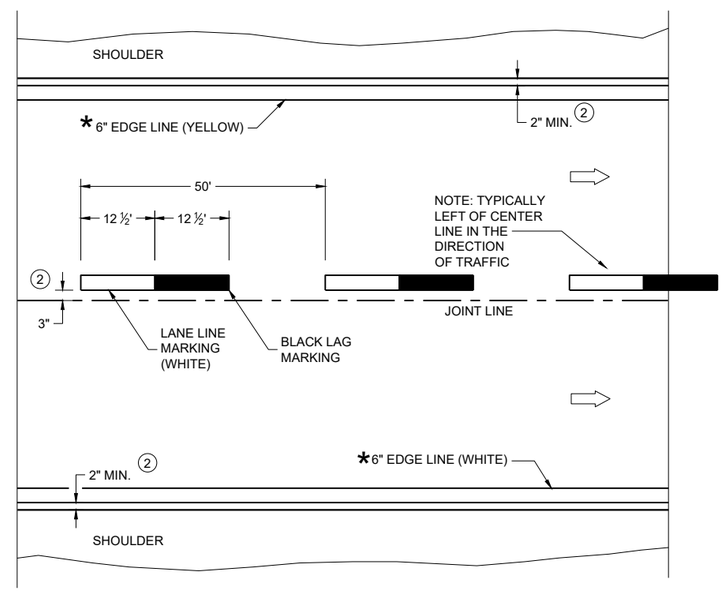

ONE WAY TRAFFIC

PERMANENT PAVEMENT MARKING

6

6

SDD 15C08-24a

SDD 15C08-24a

PERMANENT LONGITUDINAL PAVEMENT MARKINGS

STATE OF WISCONSIN
DEPARTMENT OF TRANSPORTATION

APPROVED
December 2024 — DATE
/S/ Jeannie Silver — Statewide Pavement Marking Engineer
FHWA

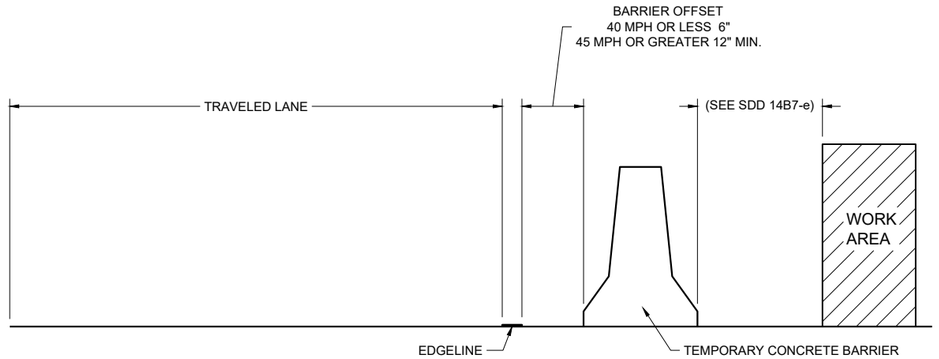

TEMPORARY BARRIER OFFSET FROM EDGELINE

GENERAL NOTES

DETAILS OF CONSTRUCTION NOT SHOWN ON THIS DRAWING SHALL CONFORM TO STANDARD SPECIFICATIONS AND SPECIAL PROVISIONS.

LEGEND

DIRECTION OF TRAFFIC

*CONFIRM MARKING LINE WIDTH WITH THE MISCELLANEOUS QUANTITIES

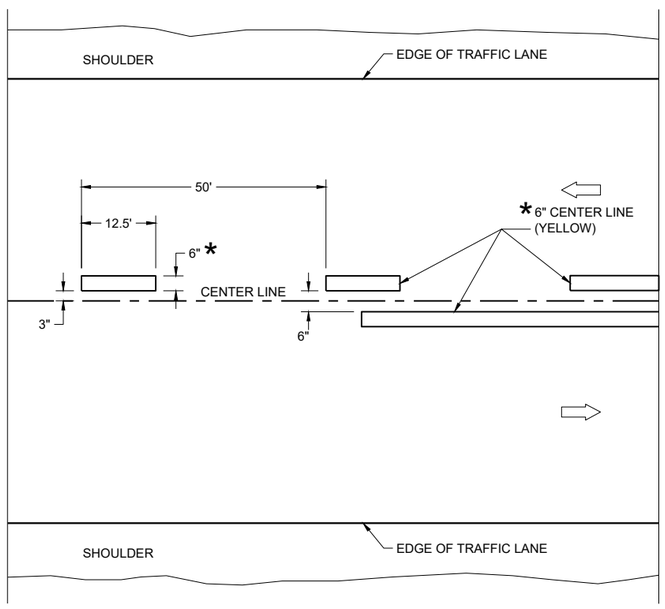

TWO WAY TRAFFIC

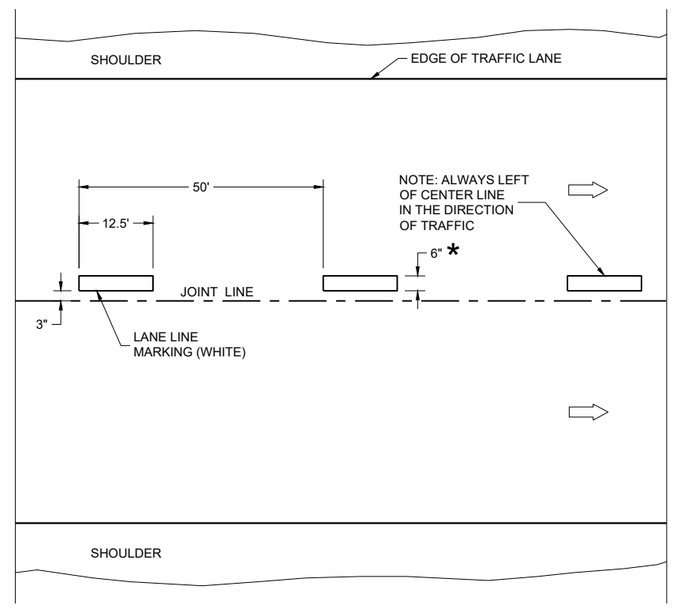

ONE WAY TRAFFIC

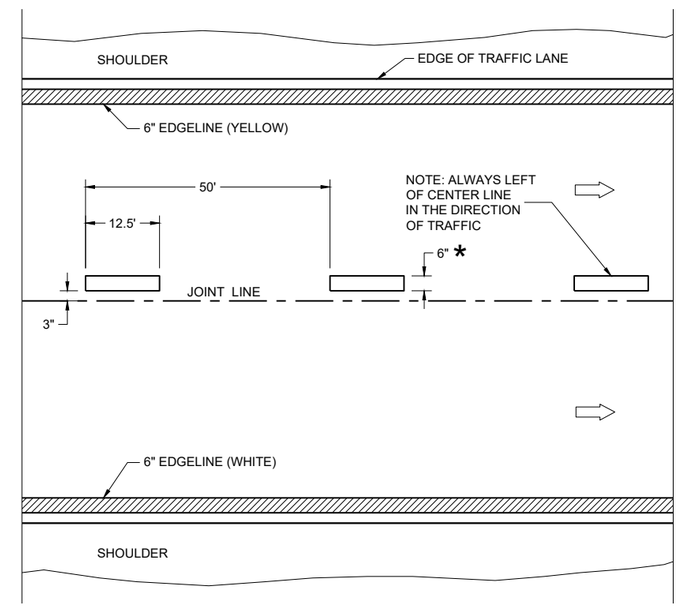

FREEWAYS AND EXPRESSWAYS

TEMPORARY PAVEMENT MARKING

TEMPORARY LONGITUDINAL PAVEMENT MARKING
STATE OF WISCONSIN DEPARTMENT OF TRANSPORTATION
APPROVED December 2024 — DATE /S/ Jeannie Silver — Statewide Pavement Marking Engineer FHWA

6

SDD 15C08-24b

6

SDD 15C08-24b

GENERAL NOTES

1. REFLECTIVE SHEETING SHALL FOLLOW THE REQUIREMENTS IN THE APPROVED PRODUCTS LISTING FOR SIGN SHEETING.
2. LOCATION OF WARNING LIGHTS WHEN SHOWN ON THE PLAN.

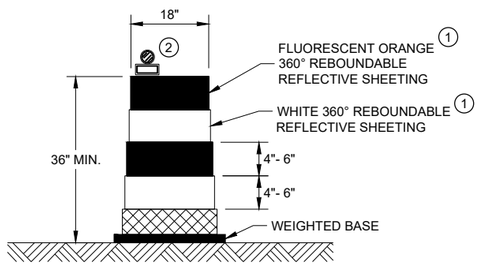

DRUM

BALLAST WIDTHS
RANGE FROM 24"-36"

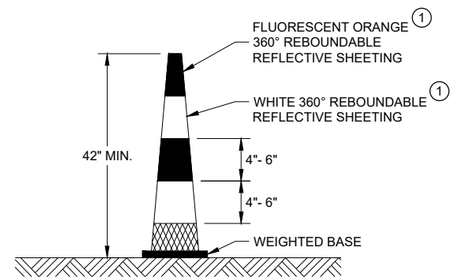

42" CONE

DO NOT USE IN TAPERS
½ SPACING OF DRUMS

BALLAST WIDTHS
RANGE FROM 14"-20"

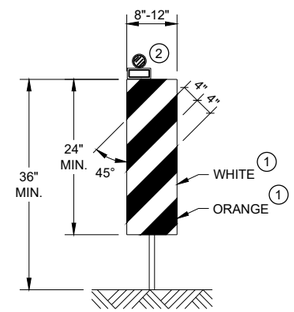

VERTICAL PANEL

THE STRIPES SHALL SLOPE DOWNWARD TO
THE TRAFFIC SIDE FOR CHANNELIZATION.

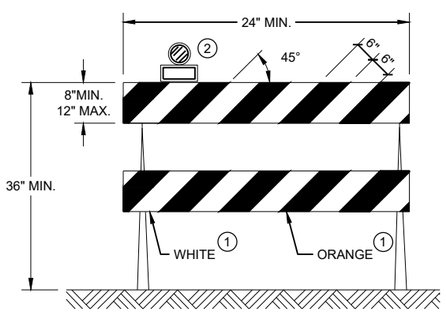

TYPE II BARRICADE

FOR RAILS LESS THAN 36" LONG, 4" WIDE STRIPES
MAY BE USED. ALL STRIPES SHALL SLOPE DOWNWARD
TO THE TRAFFIC SIDE FOR CHANNELIZATION.

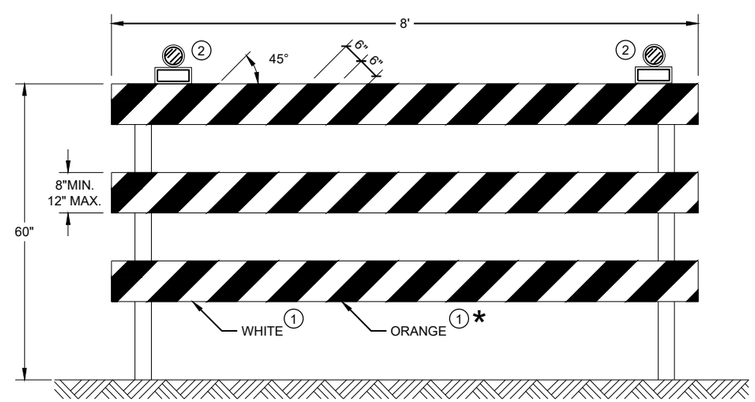

TYPE III BARRICADE

IF SIGN MOUNTED, DO NOT COVER MORE THAN 50% OF THE TOP
TWO RAILS OR 33% OF THE TOTAL AREA OF THE THREE RAILS.

* IF USED FOR A PERMANENT APPLICATION USE RED SHEETING.

CHANNELIZING DEVICES
DRUMS, CONES, BARRICADES
AND VERTICAL PANELS

STATE OF WISCONSIN
DEPARTMENT OF TRANSPORTATION

APPROVED
November 2022 — /S/ Andrew Heidtke
DATE — WORK ZONE ENGINEE
FHWA

6

6

SDD 15C11 - 10b

SDD 15C11 - 10b

LEGEND

V1 MARKING VEHICLE

V2 SHADOW VEHICLE

V3 TRAIL VEHICLE

TRUCK MOUNTED ATTENUATOR (TMA)

SIGN ON TEMPORARY SUPPORT

DIRECTION OF TRAFFIC

ARROW PANEL (CAUTION)

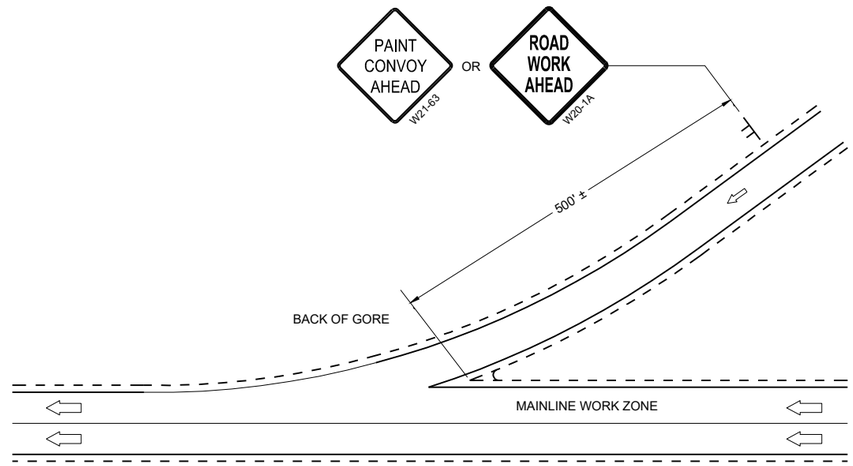

GENERAL NOTES

ALL VEHICLES SHALL BE EQUIPPED WITH TWO 360 DEGREE HIGH INTENSITY YELLOW FLASHING LIGHTS OR STROBE LIGHTS AND OPERATED WITH HEADLIGHTS TURNED ON.

ALL VEHICLES SHALL BE EQUIPPED WITH REAR FACING TYPE B OR C FLASHING ARROW PANEL. SIGNS PLACED ON VEHICLES MUST NOT OBSCURE THE ARROW PANEL.

ALL SIGNS ARE 48" X 48" UNLESS OTHERWISE SPECIFIED.

DISTANCE BETWEEN VEHICLES MAY VARY ACCORDING TO TERRAIN, SIGHT DISTANCE, PAINT DRYING TIME, AND OTHER FACTORS. WHENEVER ADEQUATE STOPPING SIGHT DISTANCE EXISTS TO THE REAR, SHADOW VEHICLES SHOULD MAINTAIN THE MINIMUM DISTANCE FROM THE WORK VEHICLE AND PROCEED AT THE SAME SPEED AS THE WORK VEHICLE. SHADOW VEHICLES SHOULD SLOW DOWN IN ADVANCE OF VERTICAL AND HORIZONTAL CURVES THAT RESTRICT SIGHT DISTANCE.

WHEN WORK ACTIVITY BLOCKS THE LEFT LANE, REVERSE TRAFFIC CONTROL.

WHEN A RAMP INTERSECTS THE FACILITY ON WHICH THE WORK IS BEING PERFORMED, PROVIDE ADDITIONAL TRAFFIC CONTROLS AS SPECIFIED IN THE CONTRACT OR AS APPROVED BY THE ENGINEER.

USE AN ATTENUATOR ON THE REARMOST VEHICLE THAT BLOCKS ALL OR PART OF THE TRAFFIC LANE.

IF THE SHOULDER IS TOO NARROW TO ACCOMMODATE THE LAST TRAILING VEHICLE, THE VEHICLE SHOULD STRADDLE THE EDGE LINE.

WHEN NO WORK ACTIVITY IS TAKING PLACE, REMOVE OR LAY STATIONARY SIGNS AND SUPPORTS FLAT ON THE GRADE WITH UPRIGHTS ORIENTED PARALLEL TO AND DOWNSTREAM FROM TRAFFIC

CONES SHOULD BE USED BETWEEN THE MARKING AND SHADOW VEHICLE AT 100 FOOT SPACING. CONES MAY BE OMITTED ON PAINTED LINE IF APPROVED BY THE ENGINEER. CONSIDER PAVEMENT MARKING DRY OR CURE TIMES AND TRAFFIC VOLUME.

CONES SHALL BE A MINIMUM HEIGHT OF 28" FOR WET PAVEMENT MARKINGS

WORKERS SHALL NOT PERFORM WORK FROM ANY SHADOW OR PROTECTION VEHICLES.

(1) SIGNS SHALL BE REPEATED APPROXIMATELY EVERY THREE MILES AND AFTER EVERY ON RAMP.

(2) IF CONSTRUCTION WORK ZONE SIGNS ARE IN PLACE, W20-1A OR W21-63 ARE NOT REQUIRED.

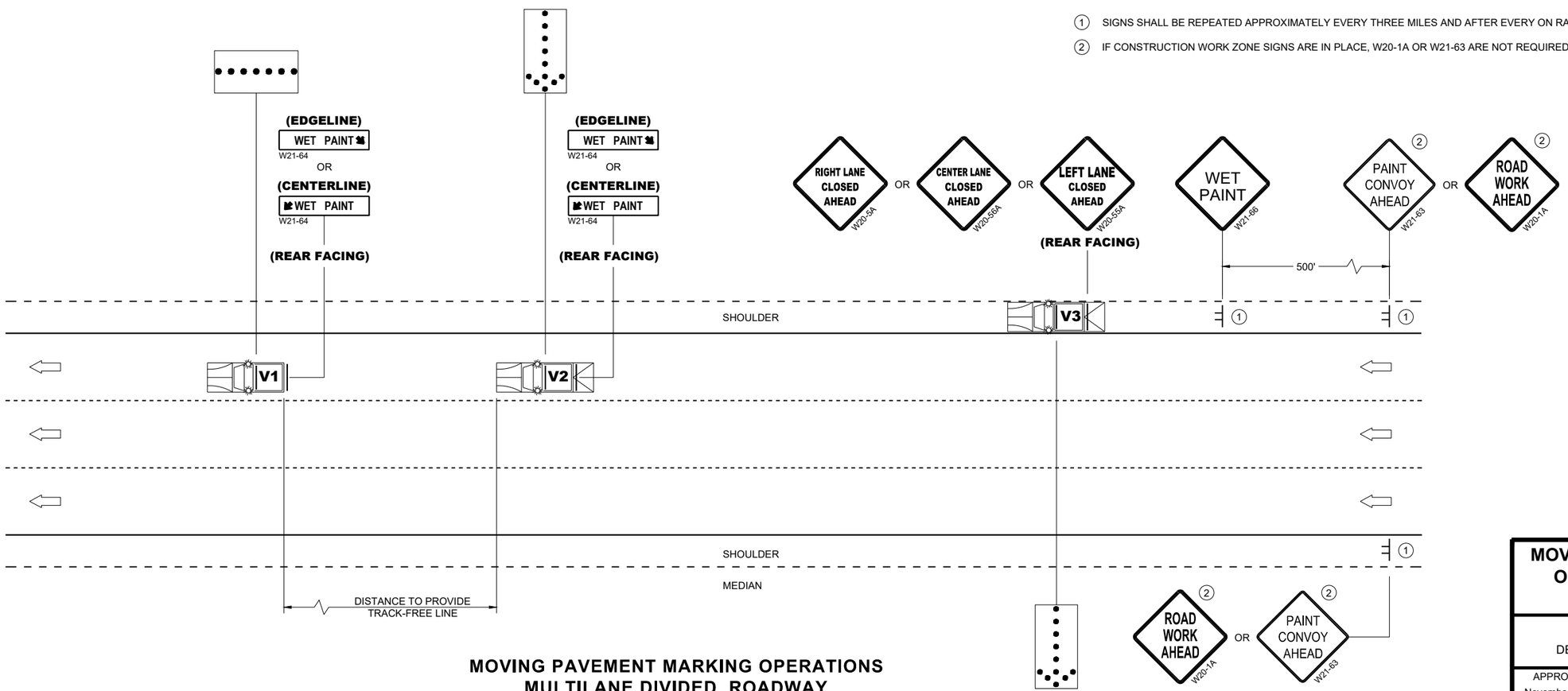

MOVING PAVEMENT MARKING OPERATIONS
MULTILANE DIVIDED ROADWAY

MOVING PAVEMENT MARKING OPERATION MULTI-LANE DIVIDED ROADWAY

STATE OF WISCONSIN
DEPARTMENT OF TRANSPORTATION

APPROVED
November 2025 — DATE
/S/ Andrew Heidtke — STATE ELECTRICAL ENGINEER

FHWA

6

SDD 15C19-11c

GENERAL NOTES

THE EXACT NUMBER, LOCATION, AND SPACING OF ALL SIGNS AND DEVICES SHALL BE ADJUSTED TO FIT FIELD CONDITIONS AS APPROVED BY THE ENGINEER.

THE SPACING BETWEEN SIGNS SHOULD BE ADJUSTED TO NOT CONFLICT WITH AND TO PROVIDE A MINIMUM OF 200 FEET (500 FEET DESIRABLE) CLEARANCE TO EXISTING SIGNS.

THIS LANE CLOSURE IS TYPICAL FOR CLOSING RIGHT LANE - REVERSE FOR CLOSING LEFT LANE.

ALL SIGNS ARE 48" x 48" UNLESS OTHERWISE NOTED.

"WO" IS THE SAME AS "W" EXCEPT THE BACKGROUND IS ORANGE.

ANY SIGNS TEMPORARY OR EXISTING, WHICH CONFLICT WITH TRAFFIC CONTROL "IN USE" SHALL BE REMOVED OR COVERED AS NEEDED OR AS APPROVED BY THE ENGINEER.

FOR A LANE CLOSURE THAT IS IN PLACE LESS THAN 7 CONTINUOUS DAYS AND NIGHTS, THE ADVANCED WARNING SIGNS MAY BE MOUNTED ON PORTABLE SUPPORTS.

REMOVE PAVEMENT MARKINGS AND PLACE TEMPORARY PAVEMENT MARKING LINE IF LANE CLOSURE IS TO BE IN PLACE 4 OR MORE CONTINUOUS DAYS AND NIGHTS.

IF THE HORIZONTAL ALIGNMENT IS SUCH THAT A CURVE MAY REQUIRE ADDITIONAL DELINEATION, THE DEVICE SPACING MAY BE DECREASED TO 50 FEET.

WARNING LIGHTS ARE NOT REQUIRED IF THE LANE CLOSURE IS A DAYTIME ONLY OPERATION.

ADJUSTMENTS IN BUFFER SPACE NEED TO BE INCORPORATED WHEN THE LANE CLOSURE OCCURS NEAR AN INTERCHANGE EXIT OR ENTRANCE RAMP OR INTERSECTION. THE LANE CLOSURE MUST TAKE PLACE FAR ENOUGH IN ADVANCE OF AN EXIT OR ENTRANCE RAMP TO STILL ALLOW FOR ADEQUATE BUFFER SPACE. THE MINIMUM LENGTH OF THE BUFFER SPACE BEFORE AN EXIT RAMP SHOULD BE ONE HALF THE LENGTH OF THE TRANSITION AREA. THE ENTRANCE RAMP SHOULD BE FOLLOWED BY THE ORIGINAL BUFFER SPACE LENGTH OF 800 FEET DESIRABLE PRIOR TO ANOTHER TRAFFIC CONTROL CHANGE SUCH AS A CROSSOVER MANEUVER.

CONSIDER ROADWAY GEOMETRICS WHEN LOCATING SIGNS AND ARROW BOARD SO THE DRIVER HAS A CLEAR VIEW OF THE ARROW BOARD AND LANE CLOSURE DRUMS.

(1) DRUMS IN A CLOSED LANE THAT MUST BE MOVED FOR A WORK OPERATION SHALL BE IMMEDIATELY REESTABLISHED UPON COMPLETION OF THE OPERATION, OR FOR CONTINUING OPERATIONS, AT THE END OF EACH WORKING DAY.

LEGEND

- SIGN ON PERMANENT SUPPORT
- TRAFFIC CONTROL DRUM
- TRAFFIC CONTROL DRUM WITH TYPE "C" STEADY BURN LIGHT
- TYPE III BARRICADE WITH ATTACHED SIGN
- TYPE "A" WARNING LIGHT (FLASHING)
- REMOVING PAVEMENT MARKINGS
- DIRECTION OF TRAFFIC
- WORK AREA
- CONNECTED ARROW BOARD
- (S) WZ START LOCATION MARKER
- (E) WZ END LOCATION MARKER

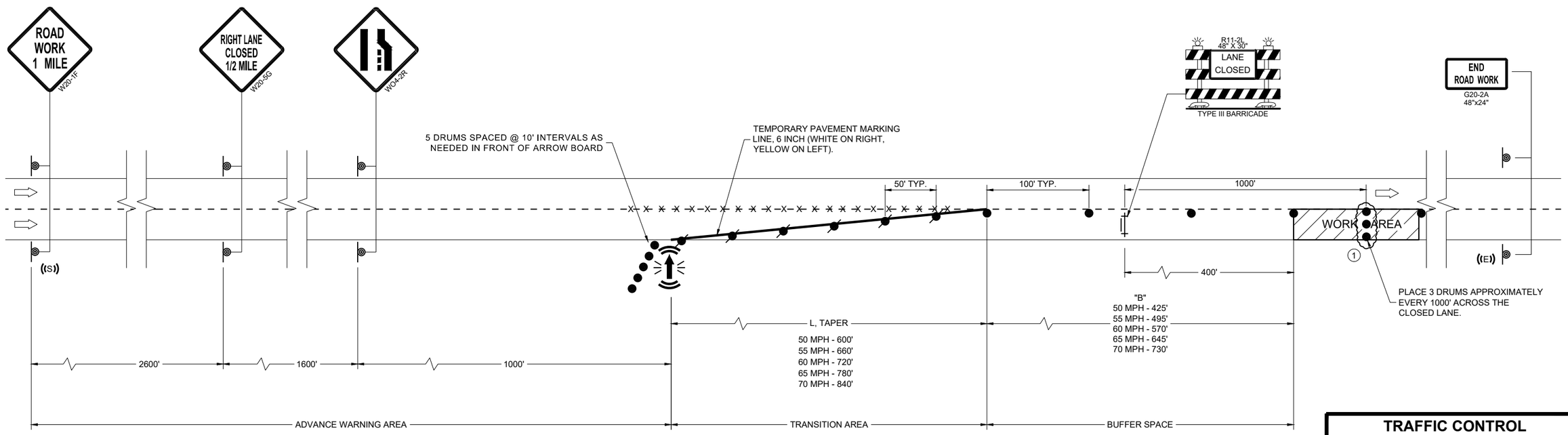

TRAFFIC CONTROL LANE CLOSURE

STATE OF WISCONSIN
DEPARTMENT OF TRANSPORTATION

APPROVED
November 2025 /S/ Andrew Heidtke
DATE ROADWAY STANDARDS DEVELOPMENT UNIT SUPERVISOR

FHWA

6

SDD 15D12-16a

URBAN AREA

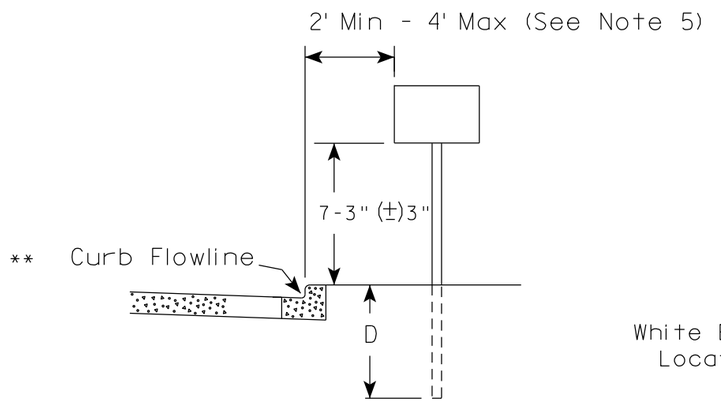

RURAL AREA (See Note 2)

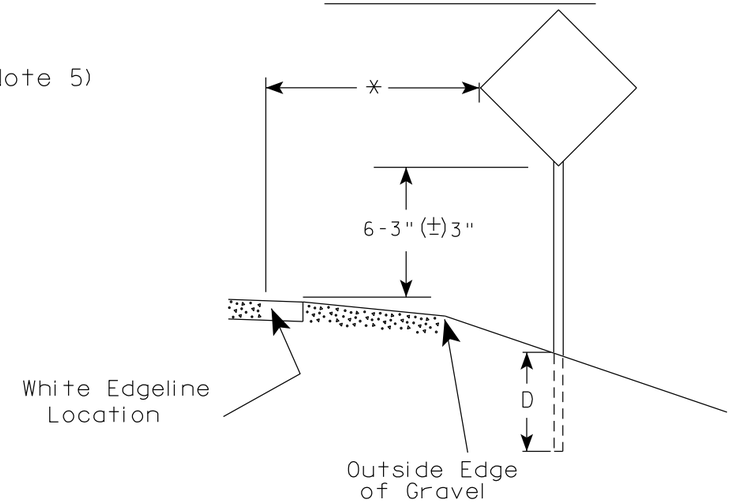

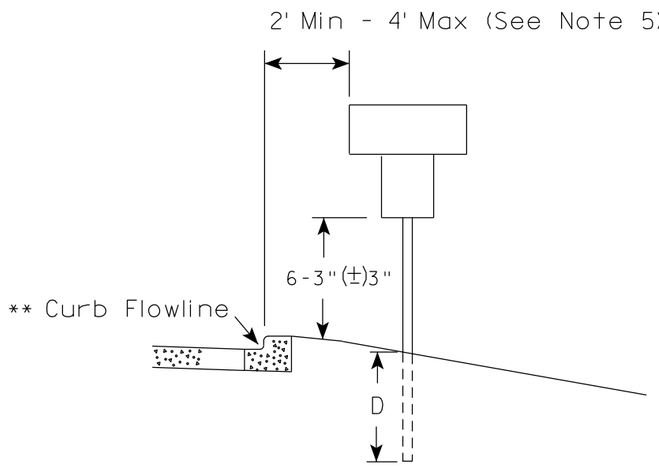

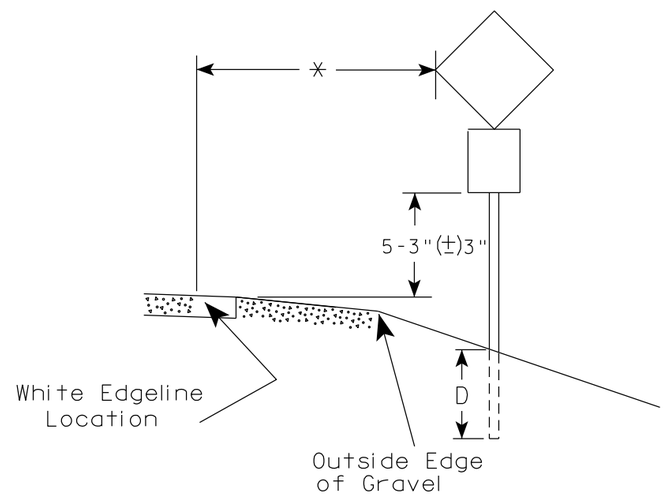

** The existence of curb and gutter does not in itself mandate the vertical clearance illustrated. That height is typically measured where there is sidewalk adjacent to the roadway or parking is permitted. In the absence of sidewalk vertical clearance is measured from the top of the curb. Offset of signs is measured from the flow line.

* 6 feet from edge of a paved shoulder or 12 feet from the edge of pavement (edge line location) or 2 feet from outside edge of gravel, whichever is greater unless directed by project engineer.

GENERAL NOTES

1. Signs wider than 4 feet or 20 sq.ft or larger, shall be mounted on multiple posts. Refer to plate A4-4.
2. If signs are mounted on or behind barrier wall, see A4-10 sign plate.
   The Double Arrow sign (W12-1D) shall be mounted at a height of 2'-3" (±) 3". The Chevron sign (W1-8), Roundabout Chevron panel (R6-4B), Enhanced Reference Markers, Clearance Markers (W5-52), Mile Markers (D10 series), In Road Object Markers (W5-54) & End of Road Markers (W5-56) shall be mounted at a height of 4'-3" (±) 3".
3. For expressways and freeways, mounting height is 7'- 3" (±) 3" or 6'-3" (±) 3" depending upon existence of a sub-sign.
4. Minimum mounting height for signs mounted on traffic signal poles is 5'- 3" (±) 3".
5. Offset distance shall be consistent with existing signs or consistent throughout length of project.
6. Folding signs shall be mounted at a height of 5'-3" (±) 3" or as directd by the Engineer.

POST EMBEDMENT DEPTH

Area of Sign Installation (Sq. Ft.)	D (Min)
20 or Less	4'
Greater than 20	5'

TYPICAL INSTALLATION OF PERMANENT TYPE II SIGNS ON SINGLE POSTS

WISCONSIN DEPT OF TRANSPORTATION

APPROVED Matthew R Rauch
for State Traffic Engineer

DATE 12/6/23 PLATE NO. A4-3.23

7 7

PROJECT NO:	HWY:	COUNTY:		SHEET NO: 95	E

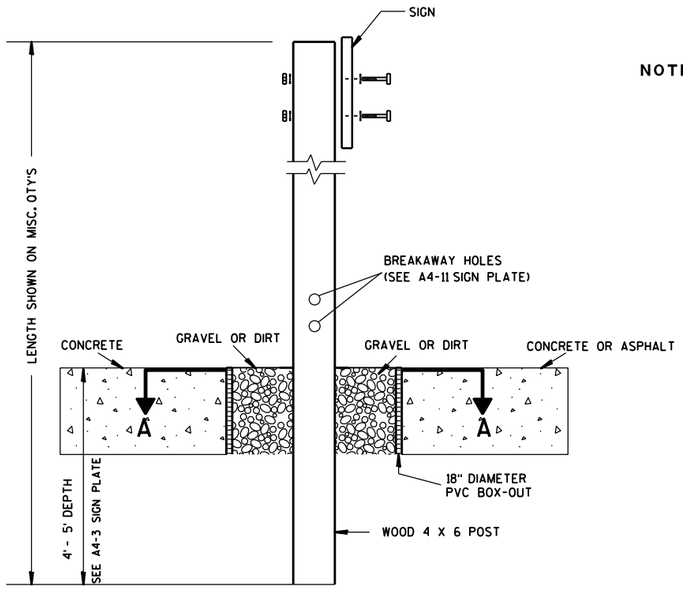

ELEVATION VIEW

DETAIL OF WOOD 4 X 6 SIGN POST IN BOX-OUT

NOTES:
1. ALL MATERIAL TO BE APPROVED BY ENGINEER PRIOR TO INSTALLATION
2. SEE SIGN PLATE A4-8 FOR SIGN HARDWARE REQUIREMENTS
3. 18 INCH X 18 INCH SQUARE BOX-OUTS MAY BE USED FOR INSTALLATIONS IN EXISTING CONCRETE OR ASPHALT LOCATIONS.

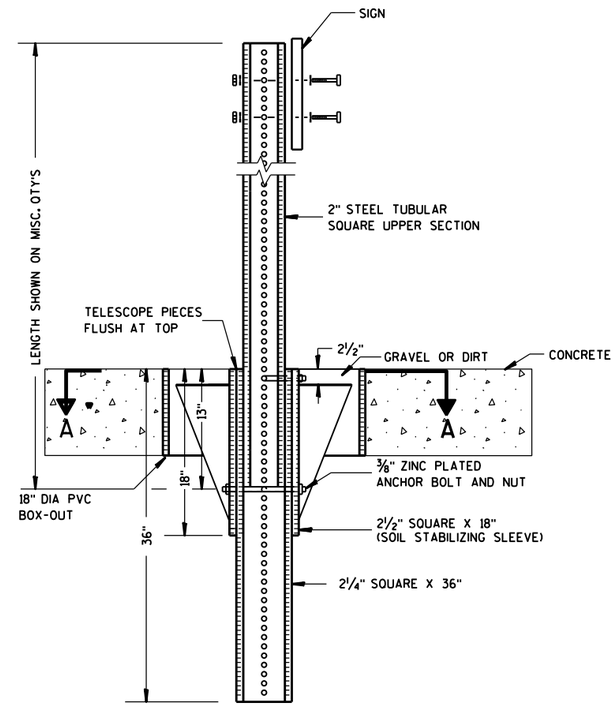

ELEVATION VIEW

DETAIL OF STEEL 2 X 2 SIGN POST IN BOX-OUT

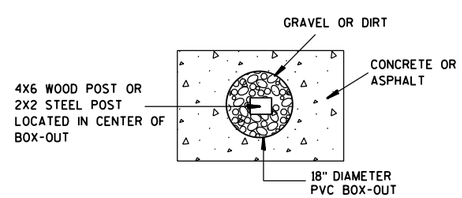

PLAN VIEW

FOR NEW CONCRETE/ASPHALT INSTALLATIONS

SIGN POST
BOX-OUTS
A4-3B

WISCONSIN DEPT OF TRANSPORTATION

APPROVED Matthew R Rauch
for State Traffic Engineer

DATE 1/27/14 PLATE NO. A4-3B.1

PROJECT NO:	HWY:	COUNTY:		SHEET NO:	E

URBAN AREA

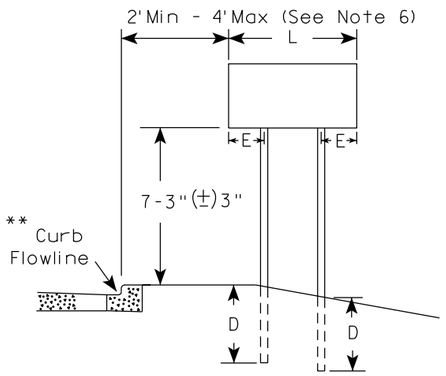

RURAL AREA (See Note 3)

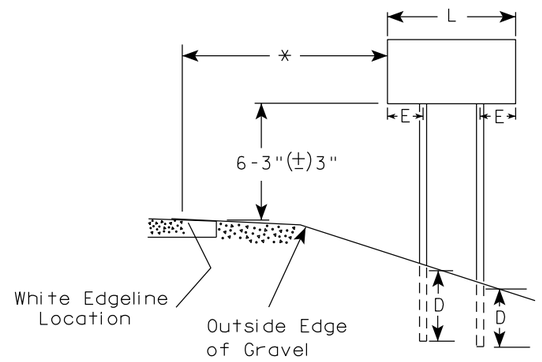

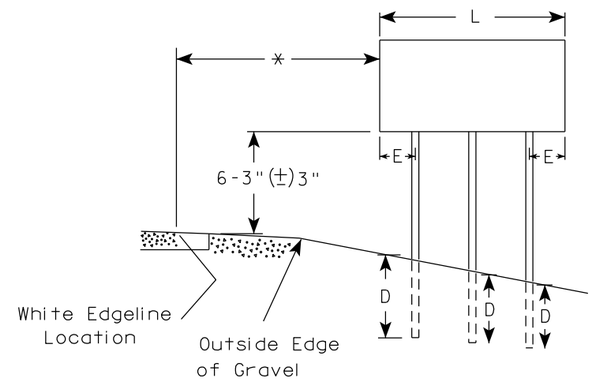

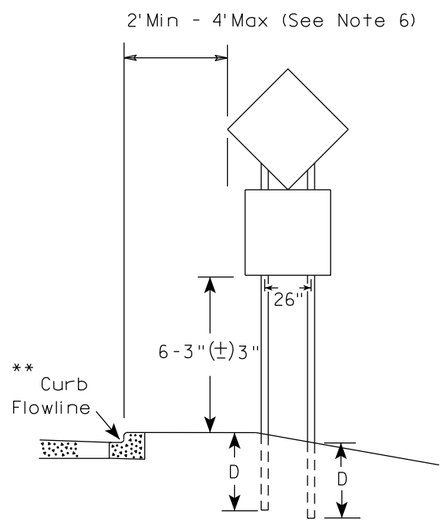

48" DIAMOND WARNING SIGN

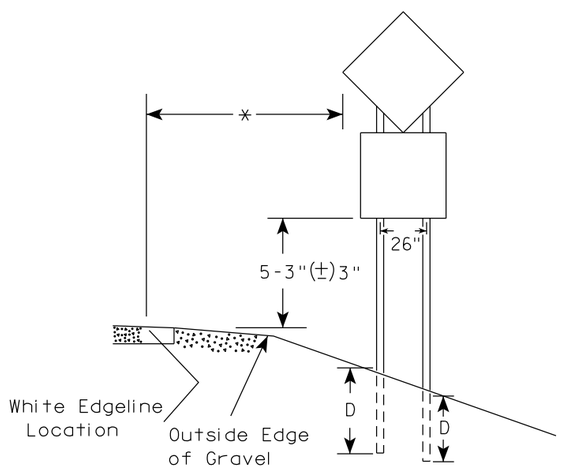

48" DIAMOND WARNING SIGN

GENERAL NOTES

1. For 3 or 4 post installations, individual post spacing shall be greater than 3'-6".
2. See tables below for required number of posts.
3. For expressways and freeways, mounting height is 7'-3" (±) 3" or 6'-3" (±) 3" depending upon existence of sub-sign.
4. The (±) tolerance for mounting height is 3 inches.
5. J-Assemblies are considered to be one sign for mounting height.
6. Offset distance shall be consistent with existing signs or consistent throughout length of project.
7. Folding signs shall be mounted at a height of 5'-3" (±) 3" or as directed by the engineer.
8. The Double Arrow sign (W12-1) shall be mounted at a height of 2'-3" (±) 3". The Chevron sign (W1-8), Roundabout Chevron panel (R6-4B), Clearance Markers (W5-52), Mile Markers (D10 series), In Road Object Markers (W5-54) & End of Road Markers (W5-56) shall be mounted at a height of 4"-3" (±) 3".

* 6 feet from edge of a paved shoulder or 12 feet from the edge of pavement (edge line location) or 2 feet from outside edge of gravel, whichever is greater unless directed by project engineer.

** The existence of curb and gutter does not in itself mandate the vertical clearance illustrated. That height is typically measured where there is sidewalk adjacent to the roadway or parking is permitted. In the absence of sidewalk vertical clearance is measured from the top of the curb. Offset of signs is measured from the flow line.

*** See A4-3 sign plate for signs 4' or less in width and less than 20 S.F. in area.

SIGN SHAPE OTHER THAN DIAMOND (TWO POSTS REQUIRED)	
L	E
*** Greater than 48" Less than 60"	12"
60" to 108"	L/5

SIGN SHAPE OTHER THAN DIAMOND (THREE POSTS REQUIRED)	
L	E
Greater than 108" to 144"	12"

POST EMBEDMENT DEPTH

Area of Sign Installation (Sq. Ft.)	D (Min)
20 or Less	4'
Greater than 20	5'

TYPICAL INSTALLATION OF TYPE II SIGNS ON MULTIPLE POSTS

WISCONSIN DEPT OF TRANSPORTATION

APPROVED Matthew R Rauch
for State Traffic Engineer

DATE 12/6/23 PLATE NO. A4-4.16

7

7

PROJECT NO:	HWY:	COUNTY:		SHEET NO: 97	E

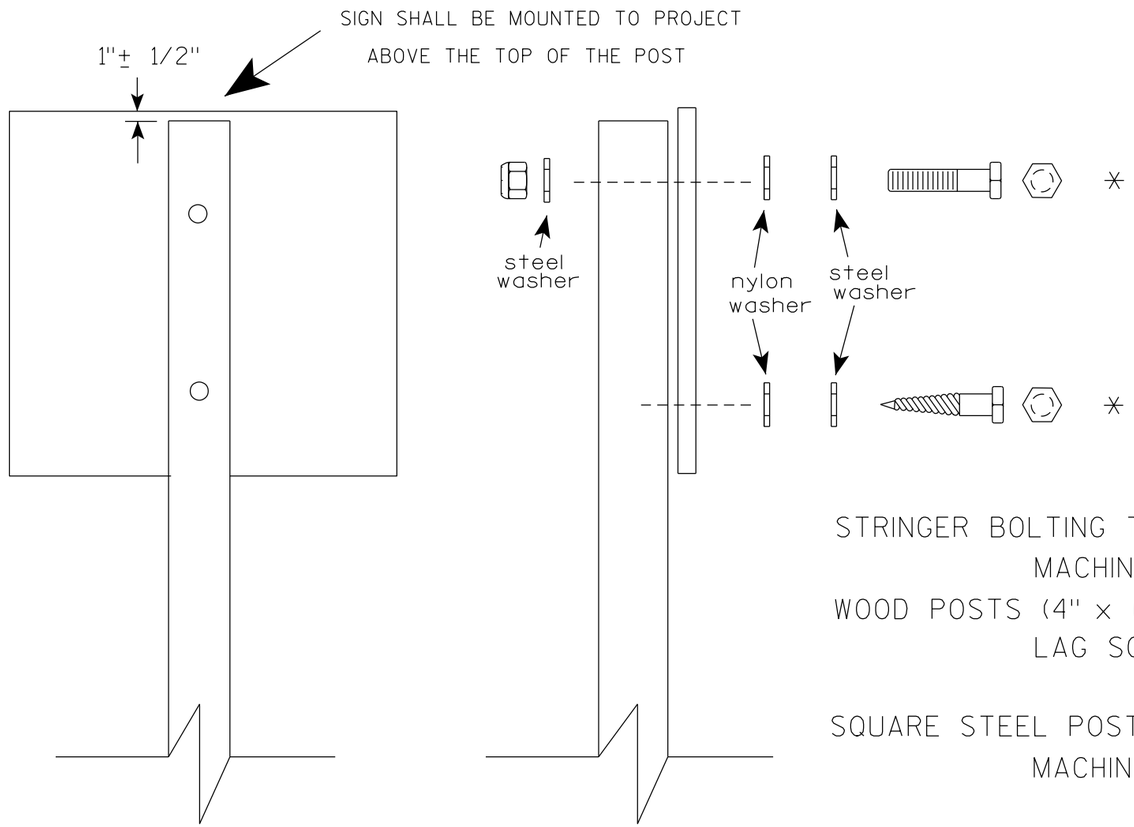

Nuts, bolts and lags used for mounting signs shall have hexagonal heads and shall be either :

a. Hot dip galvanized in accordance with ASTM Designation: A 153, Class D, or SC 3

b. Electro-galvanized in accordance with ASTM Designation : B 633, TYPE III, SC 3.

Threads on bolts and nuts shall be manufactured with sufficient allowance for the cadmium plate or galvanized coating to permit the nuts to run freely on the bolts.

STRINGER BOLTING TO ALUMINUM SIGNS (SEE SIGN PLATE A4-18)

MACHINE BOLTS - 5/16" X 1-3/4" Length w/ lock nuts

WOOD POSTS (4" x 6")

LAG SCREWS - 3/8" X 3" (NO STRINGERS ON BACK OF SIGN)
3/8" X 4" (STRINGERS ON BACK OF SIGN)

SQUARE STEEL POSTS (2" x 2")

MACHINE BOLTS - 3/8" X 3-1/4" Length w/ nuts (NO STRINGER ON BACK OF SIGN)
3/8" X 5" Length w/ nuts (STRINGERS ON BACK OF SIGN)

RIVETS - 9/32 " (6605-9-6) BULB-TITE, TRI-FOLD, ALUMINUM BODY/MANDREL
O.D. FLANGE .720-.765 INCH, GRIP RANGE .042-.375 INCH

WASHERS (ALL POSTS) -

1-1/4" O.D. X 3/8" I.D. X 1/16" STEEL
1-1/4" O.D. X 3/8" I.D. X .080 NYLON

* Two different fastening systems are shown for illustration purposes. On any individual sign, either one or the other system shall be used. Actual number of fasteners per sign varies with the sign area, but normally there are two. For a single post installation, all signs greater than 9 sq. ft. require the use of 3 fasteners.

ATTACHMENT OF SIGNS TO POSTS

WISCONSIN DEPT OF TRANSPORTATION

APPROVED Matthew R Rauch
for State Traffic Engineer

DATE 4/1/2020 PLATE NO. A4-8.9

TELESCOPIC TUBING ANCHORS
TWO PIECE SYSTEM

2 1/4 " SQUARE
12 GAUGE
PERFORATED
GALVANIZED FINISH

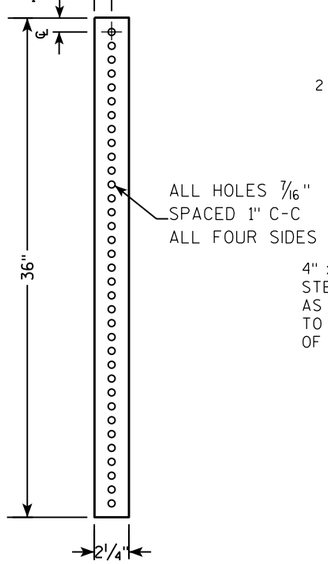

2 1/2 " SQUARE
12 GAUGE
OMNI-DIRECTIONAL
PERFORATED
SOIL STABILIZING SLEEVE
GALVANIZED FINISH

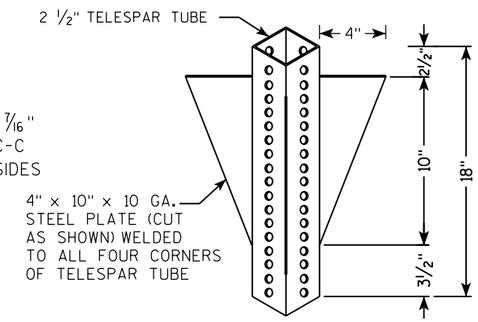

DETAIL OF TUBULAR STEEL SIGN POST
(IN POURED CONCRETE OR ASPHALT)

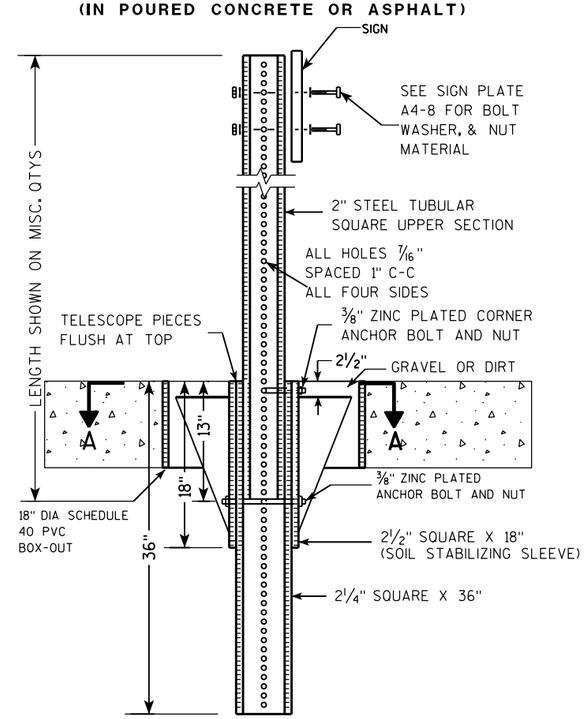

DETAIL OF TUBULAR STEEL SIGN POST
(IN LOCATIONS OTHER THAN POURED CONCRETE OR ASPHALT)

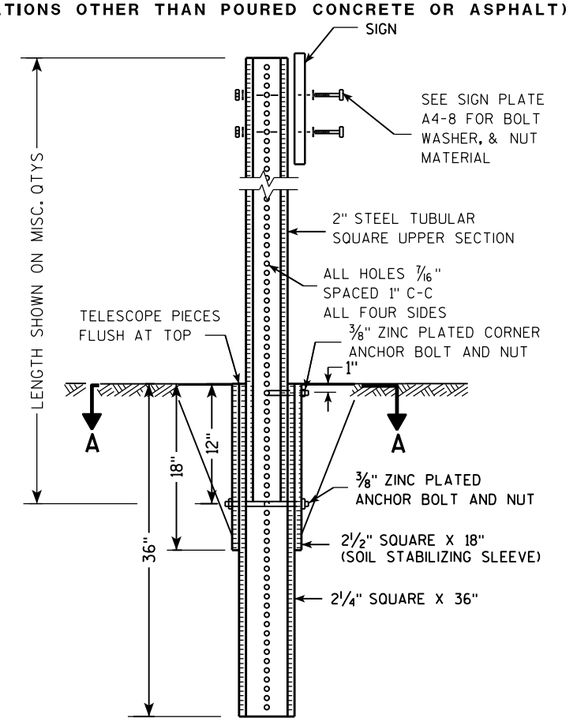

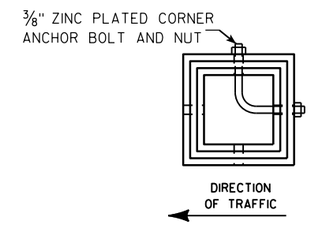

SECTION A-A

Area of Sign Installation (Sq. Ft.)	Number of Required Posts
9 or less	1
Greater than 9 less than or equal to 18	2
Greater than 18 less than or equal to 27	3

Signs wider than 3 feet or larger than 9 sq. ft shall be mounted on multiple posts (see above table).

TUBULAR STEEL
SIGN POST
A4-9

WISCONSIN DEPT OF TRANSPORTATION

APPROVED Matthew R Rauch
for State Traffic Engineer

DATE 2/05/15 PLATE 99 A4-9.9

PROJECT NO:	HWY:	COUNTY:		SHEET NO:	E

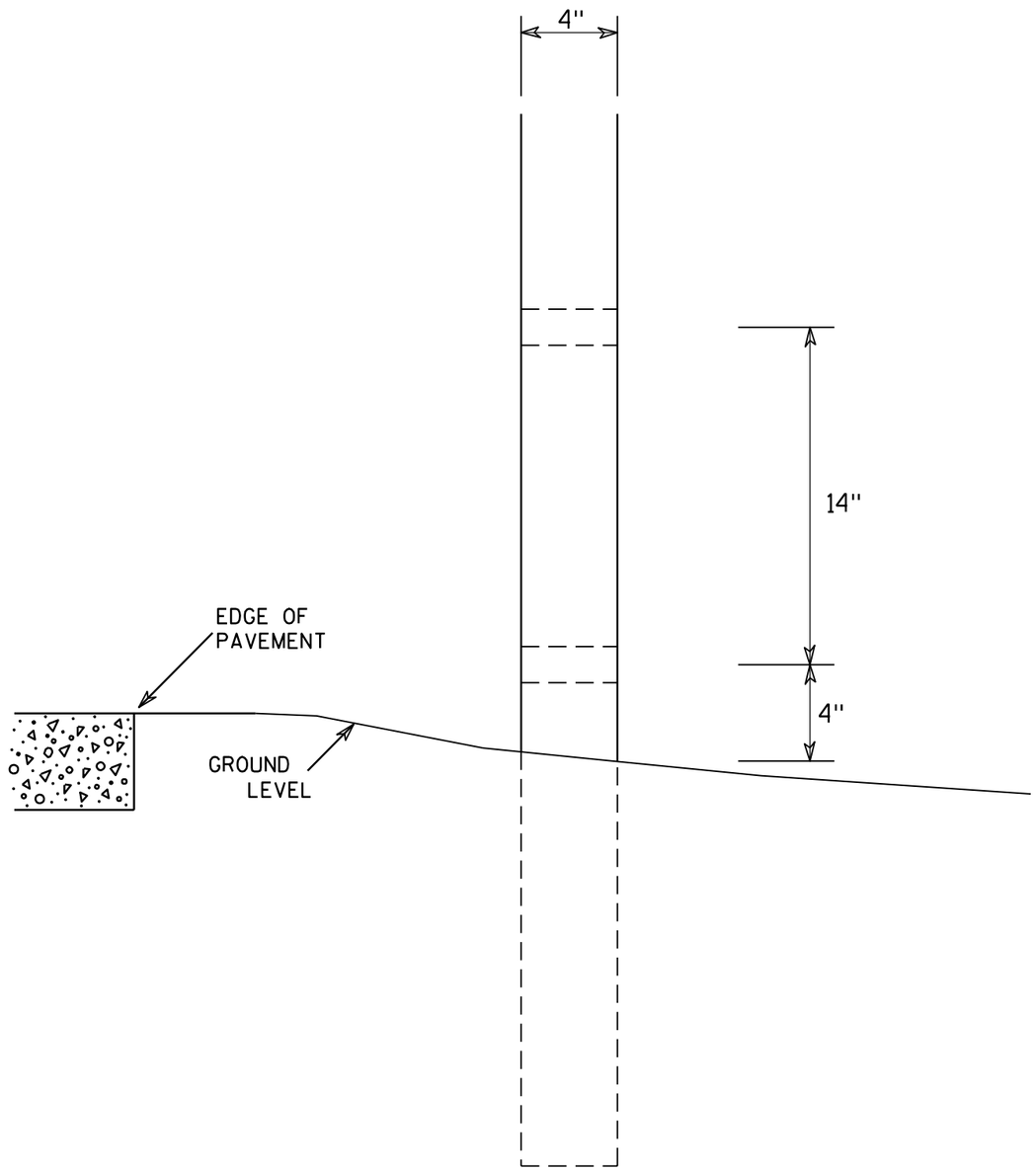

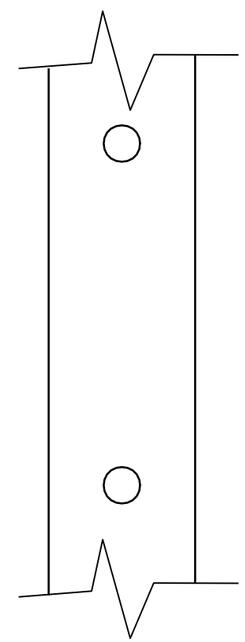

SIDE VIEW

GENERAL NOTES

1. All 4 x 6 Wood Posts shall be modified by having two 1½" diameter holes drilled perpendicular to the roadway centerline.

4 X 6 WOOD POST MODIFICATIONS

WISCONSIN DEPT OF TRANSPORTATION

APPROVED Chester J Spang for State Traffic Engineer

DATE 3/27/97 PLATE NO. A4-11.2

PROJECT NO:	HWY:	COUNTY:		SHEET NO: 100	E

BANDING

SINGLE SIGN

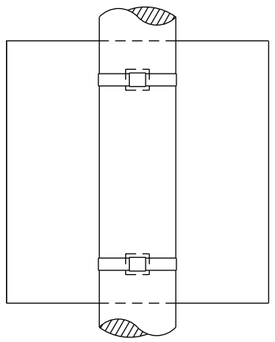

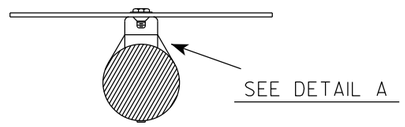

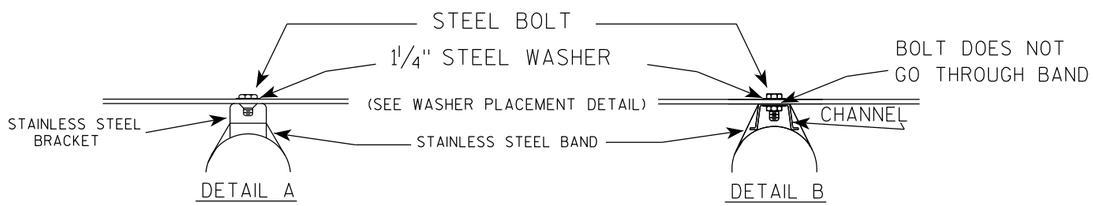

WASHER PLACEMENT

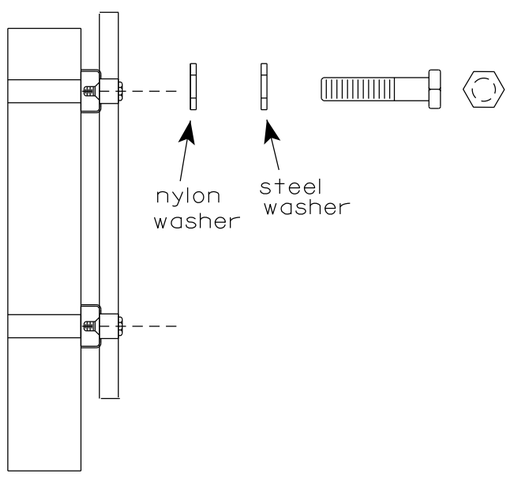

WASHERS (ALL POSTS) -
1-1/4" O.D. X 3/8" I.D. X 1/16" STEEL
1-1/4" O.D. X 3/8" I.D. X .080 NYLON
FOR ALL TYPE H SIGNS

GENERAL NOTES

1. Any sign over 3 feet in width shall use the V-Block banding method. See A5-10 standard plate.
2. Signs 3 feet or greater in height shall have three bracket bands installed. Signs less than 3 feet in height shall have two bracket bands installed.
3. Banding and assembly bracket shall be stainless steel. All bands shall be 3/4" in width and 0.025" thickness.
4. ALL SIGN MOUNTING BOLTS AND WASHERS SHALL BE EITHER:
   a. Hot dip or mechanically galvanized in accordance with ASTM Designation: A 153, Class D
   b. Electro-galvanized in accordance with ASTM designation: B 633, Type III, SC 3

"J" ASSEMBLY

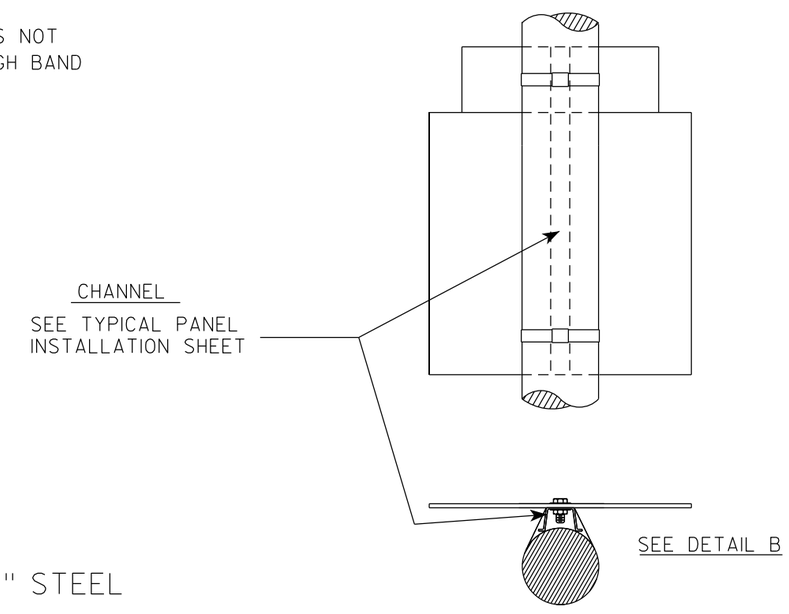

STANDARD SIGN
SIGN BANDING DETAILS

WISCONSIN DEPT OF TRANSPORTATION

APPROVED Matthew R Rauch for State Traffic Engineer

DATE 6/10/19 PLATE NO. A5-9.4

PROJECT NO:	HWY:	COUNTY:		SHEET NO: 101	E

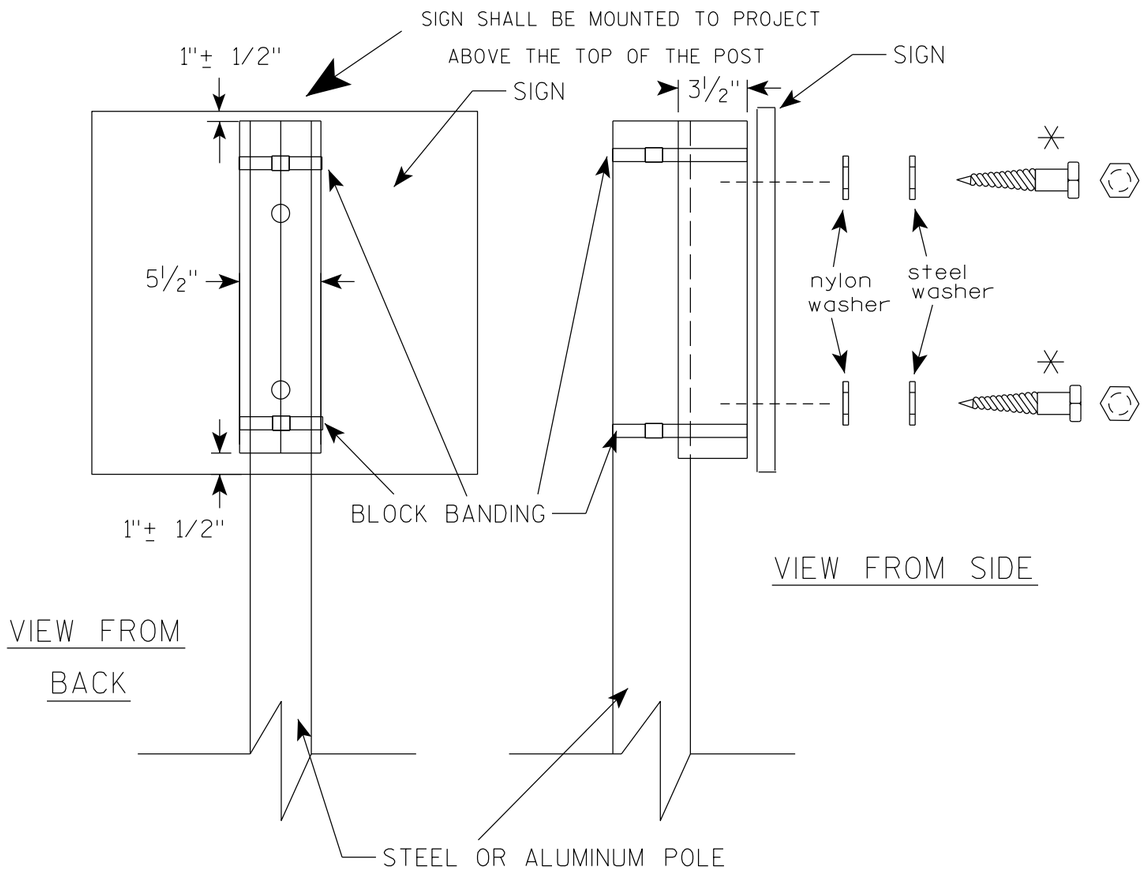

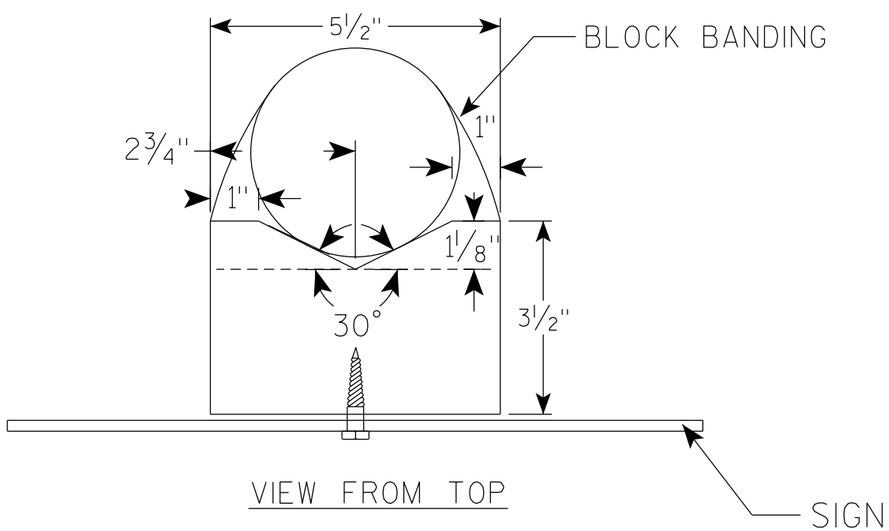

GENERAL NOTES

1. WOOD 4"X6" POST MATERIAL SHALL CONFORM TO 507.2.2 OF THE WisDOT STANDARD SPECIFICATIONS
2. BLOCK BANDING AND CLIPS SHALL BE STAINLESS STEEL, 3/4" WIDTH AND 0.025" THICKNESS
3. SIGNS 3' OR GREATER IN HEIGHT SHALL UTILIZE 3 BLOCK BANDS. SIGNS UNDER 3' IN HEIGHT SHALL UTILIZE 2 BLOCK BANDS
4. ACTUAL NUMBER OF FASTENERS PER SIGN VARIES WITH THE SIGN AREA, BUT NORNALLY THERE ARE TWO. FOR SIGNS GREATER THAN 9 S.F. 3 FASTENERS SHALL BE USED.
5. ALL SIGN MOUNTING BOLTS AND WASHERS SHALL BE EITHER:
   a. Hot dip or mechanically galvanized in accordance with ASTM Designation: A 153, Class D
   b. Electro-galvanized in accordance with ASTM Designation : B 633, TYPE III, SC 3
6. ALL BOLTS SHALL HAVE HEXAGONAL HEADS.
7. STEEL WASHERS SHALL BE 1 1/4" O.D. X 3/8" I.D. X 1/16"
8. NYLON WASHERS SHALL BE 1 1/4" O.D. X 3/8" I.D. X .080 FOR TYPE H OR TYPE F FACE SIGN

✳ LAG BOLTS SHALL BE 3/8" X 2 1/2"

7

7

BLOCK BANDING DETAIL
(V-BLOCK OPTION)

WISCONSIN DEPT OF TRANSPORTATION

APPROVED Matthew R Rauch
for State Traffic Engineer

DATE 4/19/2022 PLATE NO. A5-10.3

PROJECT NO:				SHEET NO: 102	E

DIVISION 1 - ALIGNMENT 12 RL

STATION	REAL STATION	DISTANCE	AREA (SF)		INCREMENTAL VOL (CY) (UNADJUSTED)		CUMULATIVE VOL (CY)		
			CUT	FILL	CUT	FILL	CUT	EXPANDED FILL	MASS ORDINATE
							1.00	1.25	
					NOTE 1	NOTE 3	NOTE 1		NOTE 8
634+10.00	63410.00	0.00	0.00	9.40	0	0	0	0	0
634+20.00	63420.00	10	0.00	10.56	0	4	0	5	-5
634+30.00	63430.00	10	0.00	10.22	0	4	0	10	-10
634+40.00	63440.00	10	0.03	9.41	0	4	0	15	-15
634+50.00	63450.00	10	0.00	11.34	0	4	0	20	-20
634+60.00	63460.00	10	0.00	10.48	0	4	0	25	-25
634+70.00	63470.00	10	0.00	10.12	0	4	0	30	-30
634+80.00	63480.00	10	0.00	9.37	0	4	0	35	-35
634+90.00	63490.00	10	0.00	9.63	0	4	0	40	-40
635+00.00	63500.00	10	0.00	9.29	0	4	0	45	-45
635+10.00	63510.00	10	0.00	11.93	0	4	0	50	-50
635+20.00	63520.00	10	0.00	11.03	0	4	0	55	-55
635+30.00	63530.00	10	0.00	12.79	0	4	0	60	-60
635+40.00	63540.00	10	0.00	12.34	0	5	0	66	-66
635+50.00	63550.00	10	0.00	6.84	0	4	0	71	-71
635+60.00	63560.00	10	0.00	5.27	0	2	0	74	-74
635+70.00	63570.00	10	0.00	5.20	0	2	0	76	-76
635+80.00	63580.00	10	0.00	6.83	0	2	0	79	-79
635+90.00	63590.00	10	0.00	6.20	0	2	0	81	-81
636+00.00	63600.00	10	0.00	8.14	0	3	0	85	-85
637+00.00	63700.00	100	0.00	17.47	0	47	0	144	-144
637+50.00	63750.00	50	0.00	24.04	0	38	0	191	-191
638+00.00	63800.00	50	0.00	25.86	0	46	0	249	-249
638+50.00	63850.00	50	0.00	25.39	0	47	0	308	-308
639+00.00	63900.00	50	0.00	29.70	0	51	0	371	-371
639+50.00	63950.00	50	0.00	34.44	0	59	0	445	-445
640+00.00	64000.00	50	0.00	43.09	0	72	0	535	-535
640+50.00	64050.00	50	0.00	42.67	0	79	0	634	-634
641+00.00	64100.00	50	0.00	40.91	0	77	0	730	-730
641+50.00	64150.00	50	0.00	41.40	0	76	0	825	-825
642+00.00	64200.00	50	0.00	44.81	0	80	0	925	-925
642+50.00	64250.00	50	0.00	38.27	0	77	0	1021	-1021
643+00.00	64300.00	50	0.00	37.55	0	70	0	1109	-1109
643+50.00	64350.00	50	0.00	40.10	0	72	0	1199	-1199
644+00.00	64400.00	50	0.00	40.77	0	75	0	1293	-1293
644+50.00	64450.00	50	0.00	42.25	0	77	0	1389	-1389
645+00.00	64500.00	50	0.00	43.92	0	80	0	1489	-1489
645+50.00	64550.00	50	0.00	36.62	0	75	0	1583	-1583
646+00.00	64600.00	50	0.00	41.93	0	73	0	1674	-1674
646+50.00	64650.00	50	0.00	45.02	0	81	0	1775	-1775
647+00.00	64700.00	50	0.00	39.64	0	78	0	1873	-1873
647+50.00	64750.00	50	0.02	36.52	0	71	0	1961	-1961
648+00.00	64800.00	50	0.00	41.73	0	72	0	2051	-2051
648+50.00	64850.00	50	0.00	47.87	0	83	0	2155	-2155
649+00.00	64900.00	50	0.00	46.80	0	88	0	2265	-2265
649+50.00	64950.00	50	0.00	45.51	0	85	0	2371	-2371
650+00.00	65000.00	50	0.00	43.20	0	82	0	2474	-2474
650+50.00	65050.00	50	0.00	42.88	0	80	0	2574	-2574
651+00.00	65100.00	50	0.00	46.24	0	83	0	2678	-2678
651+50.00	65150.00	50	0.00	41.72	0	81	0	2779	-2779

NOTES:	
1 - CUT	CUT INCLUDES SALVAGED/UNUSABLE PAVEMENT MATERIAL
3 - FILL	DOES NOT INCLUDE UNUSABLE PAVEMENT EXC VOLUME

652+00.00	65200.00	50	0.00	42.38	0	78	0	2876	-2876
652+50.00	65250.00	50	0.00	40.53	0	77	0	2973	-2973
653+00.00	65300.00	50	0.00	36.67	0	71	0	3061	-3061
653+50.00	65350.00	50	0.00	37.24	0	68	0	3146	-3146
654+00.00	65400.00	50	0.00	34.41	0	66	0	3229	-3229
654+50.00	65450.00	50	0.00	42.11	0	71	0	3318	-3318
655+00.00	65500.00	50	0.00	40.04	0	76	0	3413	-3413
655+50.00	65550.00	50	0.00	44.08	0	78	0	3510	-3510
656+00.00	65600.00	50	0.00	38.62	0	77	0	3606	-3606
656+50.00	65650.00	50	0.00	44.85	0	77	0	3703	-3703
657+00.00	65700.00	50	0.00	40.10	0	79	0	3801	-3801
657+50.00	65750.00	50	0.00	27.83	0	63	0	3880	-3880
658+00.00	65800.00	50	0.00	30.75	0	54	0	3948	-3948
658+50.00	65850.00	50	0.00	34.86	0	61	0	4024	-4024
659+00.00	65900.00	50	0.00	37.39	0	67	0	4108	-4108
659+50.00	65950.00	50	0.00	36.85	0	69	0	4194	-4194
660+00.00	66000.00	50	0.00	36.51	0	68	0	4279	-4279
660+50.00	66050.00	50	0.00	36.60	0	68	0	4364	-4364
661+00.00	66100.00	50	0.00	38.09	0	69	0	4450	-4450
661+50.00	66150.00	50	0.00	38.51	0	71	0	4539	-4539
662+00.00	66200.00	50	0.00	44.42	0	77	0	4635	-4635
662+50.00	66250.00	50	0.00	43.01	0	81	0	4736	-4736
663+00.00	66300.00	50	0.00	34.54	0	72	0	4826	-4826
663+50.00	66350.00	50	0.00	41.02	0	70	0	4914	-4914
664+00.00	66400.00	50	0.00	42.41	0	77	0	5010	-5010
664+50.00	66450.00	50	0.00	39.10	0	75	0	5104	-5104
665+00.00	66500.00	50	0.00	38.74	0	72	0	5194	-5194
665+50.00	66550.00	50	0.00	32.45	0	66	0	5276	-5276
666+00.00	66600.00	50	0.00	34.00	0	62	0	5354	-5354
666+50.00	66650.00	50	0.00	36.55	0	65	0	5435	-5435
667+00.00	66700.00	50	0.00	31.83	0	63	0	5514	-5514
667+50.00	66750.00	50	0.14	25.05	0	53	0	5580	-5580
668+00.00	66800.00	50	0.00	41.53	0	62	0	5658	-5658
668+50.00	66850.00	50	0.00	45.71	0	81	0	5759	-5759
669+00.00	66900.00	50	0.00	40.55	0	80	0	5859	-5859
669+50.00	66950.00	50	0.00	38.81	0	73	0	5950	-5950
670+00.00	67000.00	50	0.00	38.48	0	72	0	6040	-6040
670+50.00	67050.00	50	0.00	40.10	0	73	0	6131	-6131
671+00.00	67100.00	50	0.00	42.22	0	76	0	6226	-6226
671+50.00	67150.00	50	0.00	43.24	0	79	0	6325	-6325
672+00.00	67200.00	50	0.00	43.98	0	81	0	6426	-6426
672+50.00	67250.00	50	0.00	38.99	0	77	0	6523	-6523
673+00.00	67300.00	50	0.00	34.58	0	68	0	6608	-6608
673+50.00	67350.00	50	0.00	36.31	0	66	0	6690	-6690
674+00.00	67400.00	50	0.00	32.56	0	64	0	6770	-6770
674+50.00	67450.00	50	0.00	33.81	0	61	0	6846	-6846
675+00.00	67500.00	50	0.00	37.31	0	66	0	6929	-6929
675+50.00	67550.00	50	0.00	37.26	0	69	0	7015	-7015
676+00.00	67600.00	50	0.00	38.43	0	70	0	7103	-7103
676+50.00	67650.00	50	0.00	41.56	0	74	0	7195	-7195

9

NOTES:	
1 - CUT	CUT INCLUDES SALVAGED/UNUSABLE PAVEMENT MATERIAL
3 - FILL	DOES NOT INCLUDE UNUSABLE PAVEMENT EXC VOLUME

9

677+00.00	67700.00	50	0.02	25.36	0	62	0	7273	-7273
677+50.00	67750.00	50	0.00	27.99	0	49	0	7334	-7334
678+00.00	67800.00	50	0.00	53.15	0	75	0	7428	-7428
678+50.00	67850.00	50	0.00	54.42	0	100	0	7553	-7553
679+00.00	67900.00	50	0.00	45.35	0	92	0	7668	-7668
679+50.00	67950.00	50	0.00	42.48	0	81	0	7769	-7769
680+00.00	68000.00	50	0.00	38.78	0	75	0	7863	-7863
680+50.00	68050.00	50	0.00	41.93	0	75	0	7956	-7956
681+00.00	68100.00	50	0.00	39.04	0	75	0	8050	-8050
681+50.00	68150.00	50	0.00	37.93	0	71	0	8139	-8139
682+00.00	68200.00	50	0.00	38.88	0	71	0	8228	-8228
682+50.00	68250.00	50	0.00	47.28	0	80	0	8328	-8328
683+00.00	68300.00	50	0.00	54.23	0	94	0	8445	-8445
683+50.00	68350.00	50	0.00	47.21	0	94	0	8563	-8563
684+00.00	68400.00	50	0.00	29.02	0	71	0	8651	-8651
684+50.00	68450.00	50	0.00	30.13	0	55	0	8720	-8720
685+00.00	68500.00	50	0.00	36.99	0	62	0	8798	-8798
685+50.00	68550.00	50	0.00	42.05	0	73	0	8889	-8889
686+00.00	68600.00	50	0.00	38.93	0	75	0	8983	-8983
686+50.00	68650.00	50	0.00	40.40	0	73	0	9074	-9074
687+00.00	68700.00	50	0.00	39.87	0	74	0	9166	-9166
687+50.00	68750.00	50	0.00	39.86	0	74	0	9259	-9259
688+00.00	68800.00	50	0.00	43.54	0	77	0	9355	-9355
688+50.00	68850.00	50	0.00	34.53	0	72	0	9445	-9445
689+00.00	68900.00	50	0.00	36.46	0	66	0	9528	-9528
689+50.00	68950.00	50	0.00	30.94	0	62	0	9605	-9605
690+00.00	69000.00	50	0.00	35.14	0	61	0	9681	-9681
690+50.00	69050.00	50	0.00	33.62	0	64	0	9761	-9761
691+00.00	69100.00	50	0.00	33.70	0	62	0	9839	-9839
691+50.00	69150.00	50	0.00	34.97	0	64	0	9919	-9919
692+00.00	69200.00	50	0.00	34.38	0	64	0	9999	-9999
692+50.00	69250.00	50	0.00	33.30	0	63	0	10078	-10078
693+00.00	69300.00	50	0.00	41.04	0	69	0	10164	-10164
693+50.00	69350.00	50	0.00	44.57	0	79	0	10263	-10263
694+00.00	69400.00	50	0.00	41.32	0	80	0	10363	-10363
694+50.00	69450.00	50	0.00	25.42	0	62	0	10440	-10440
695+00.00	69500.00	50	0.00	31.75	0	53	0	10506	-10506
695+50.00	69550.00	50	0.00	34.04	0	61	0	10583	-10583
696+00.00	69600.00	50	0.00	35.88	0	65	0	10664	-10664
696+50.00	69650.00	50	0.00	40.12	0	70	0	10751	-10751
697+00.00	69700.00	50	0.00	33.77	0	68	0	10836	-10836
697+50.00	69750.00	50	0.00	38.30	0	67	0	10920	-10920
698+00.00	69800.00	50	0.00	39.50	0	72	0	11010	-11010
698+50.00	69850.00	50	0.00	28.89	0	63	0	11089	-11089
699+00.00	69900.00	50	0.00	27.54	0	52	0	11154	-11154
699+50.00	69950.00	50	0.29	24.92	0	49	0	11215	-11215
700+00.00	70000.00	50	0.00	32.29	0	53	0	11281	-11281
700+50.00	70050.00	50	0.05	30.78	0	58	0	11354	-11354
701+00.00	70100.00	50	6.64	16.30	6	44	6	11409	-11403
701+50.00	70150.00	50	0.00	0.00	6	15	12	11428	-11416

9

NOTES:	
1 - CUT	CUT INCLUDES SALVAGED/UNUSABLE PAVEMENT MATERIAL
3 - FILL	DOES NOT INCLUDE UNUSABLE PAVEMENT EXC VOLUME

9

711+90.00	71190.00	1040	0.00	24.09	0	464	12	12008	-11996
712+00.00	71200.00	10	0.00	69.37	0	17	12	12029	-12017
712+10.00	71210.00	10	0.00	40.87	0	20	12	12054	-12042
712+20.00	71220.00	10	0.00	24.55	0	12	12	12069	-12057
712+30.00	71230.00	10	0.00	20.13	0	8	12	12079	-12067
712+40.00	71240.00	10	0.00	15.42	0	7	12	12088	-12076
712+50.00	71250.00	10	0.00	12.79	0	5	12	12094	-12082
712+60.00	71260.00	10	0.00	9.23	0	4	12	12099	-12087
712+70.00	71270.00	10	0.03	7.99	0	3	12	12103	-12091
712+80.00	71280.00	10	0.14	5.94	0	3	12	12106	-12094
712+90.00	71290.00	10	0.36	5.44	0	2	12	12109	-12097
713+00.00	71300.00	10	0.62	4.41	0	2	12	12111	-12099
713+10.00	71310.00	10	2.79	3.73	1	2	13	12114	-12101
729+82.40	72982.40	1672.4	0.00	2.00	86	177	99	12335	-12236
729+90.00	72990.00	7.6	0.00	4.28	0	1	99	12336	-12237
730+00.00	73000.00	10	0.01	9.19	0	2	99	12339	-12240
730+10.00	73010.00	10	0.00	8.87	0	3	99	12343	-12244
730+20.00	73020.00	10	0.01	15.94	0	5	99	12349	-12250
730+30.00	73030.00	10	0.00	19.18	0	7	99	12358	-12259
730+40.00	73040.00	10	0.00	14.99	0	6	99	12365	-12266
730+50.00	73050.00	10	0.00	12.35	0	5	99	12371	-12272
730+60.00	73060.00	10	0.00	12.09	0	5	99	12378	-12279
730+70.00	73070.00	10	0.00	11.84	0	4	99	12383	-12284
730+80.00	73080.00	10	0.00	11.90	0	4	99	12388	-12289
730+90.00	73090.00	10	6.34	4.15	1	3	100	12391	-12291
731+00.00	73100.00	10	6.54	2.43	2	1	102	12393	-12291
731+10.00	73110.00	10	7.60	1.40	3	1	105	12394	-12289
731+20.00	73120.00	10	7.65	1.13	3	0	108	12394	-12286
731+30.00	73130.00	10	8.10	0.31	3	0	111	12394	-12283
731+40.00	73140.00	10	6.30	1.36	3	0	114	12394	-12280
731+50.00	73150.00	10	0.00	0.00	1	0	115	12394	-12279
731+60.00	73160.00	10	0.00	3.93	0	1	115	12395	-12280
731+70.00	73170.00	10	0.00	3.72	0	1	115	12396	-12281
731+80.00	73180.00	10	0.00	4.36	0	1	115	12398	-12283
731+90.00	73190.00	10	0.00	6.72	0	2	115	12400	-12285
732+00.00	73200.00	10	0.00	8.52	0	3	115	12404	-12289
732+10.00	73210.00	10	0.00	0.00	0	2	115	12406	-12291

NOTES:	
1 - CUT	CUT INCLUDES SALVAGED/UNUSABLE PAVEMENT MATERIAL
3 - FILL	DOES NOT INCLUDE UNUSABLE PAVEMENT EXC VOLUME

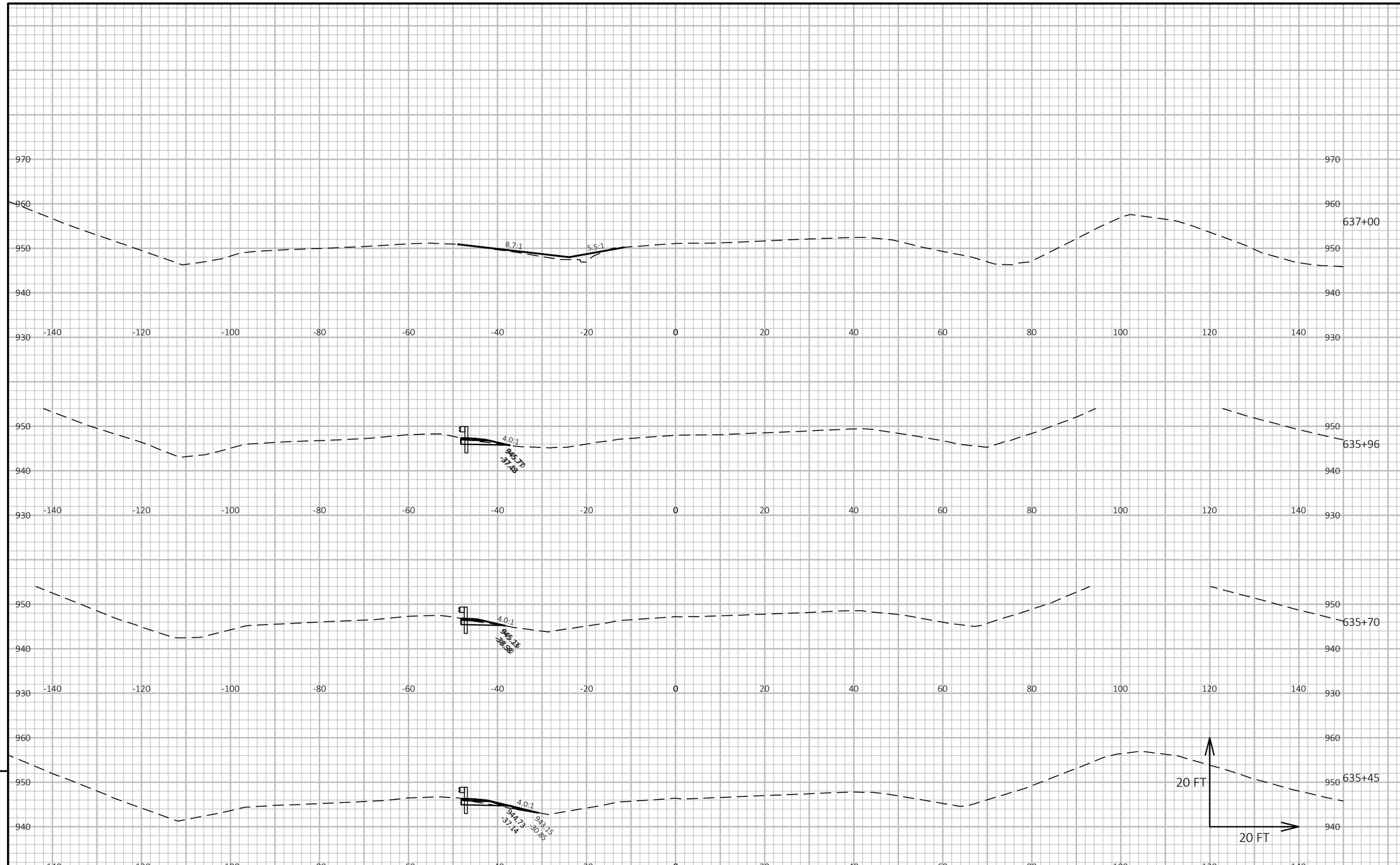

PROJECT NO: 1080-05-70	HWY: USH 12	COUNTY: WALWORTH	CROSS SECTIONS: USH 12	SHEET 107	E

FILE NAME : N:\PDS\C3D\10800500\DSGN\CRDR\EXISTING CONDITIONS\090201_XS.DWG
LAYOUT NAME - 090201_XS
PLOT DATE : 7/31/2025 12:40 PM
PLOT BY : MANYEN, WAYNE
PLOT NAME :
PLOT SCALE : 1 IN:20 FT HORZ. / 1 IN:20 FT VERT.
WISDOT/CADDS SHEET 49

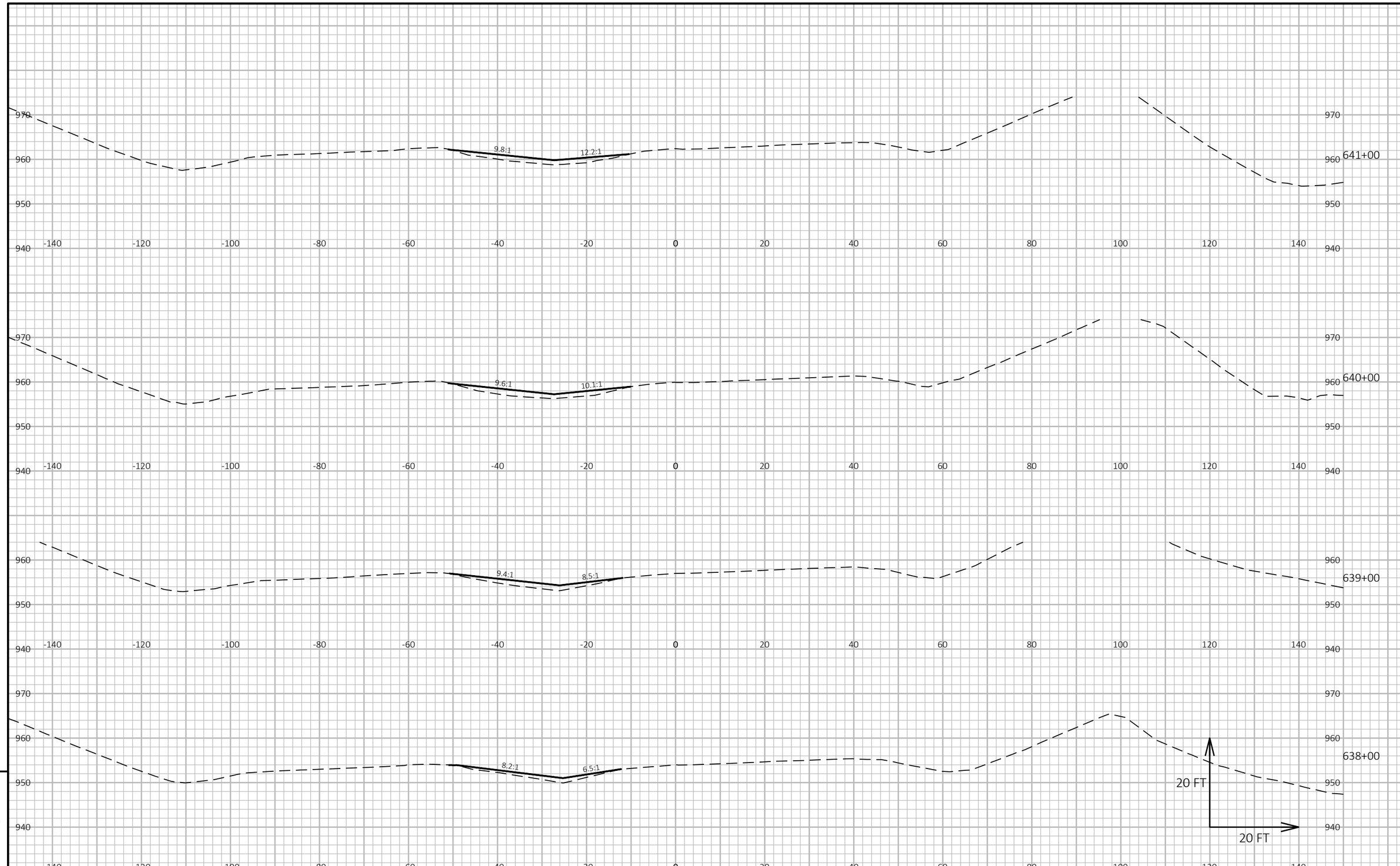

PROJECT NO: 1080-05-70	HWY: USH 12	COUNTY: WALWORTH	CROSS SECTIONS: USH 12	SHEET 108	E

FILE NAME : N:\PDS\C3D\10800500\DSGN\CRDR\EXISTING CONDITIONS\090201_XS.DWG
LAYOUT NAME - 090202_XS
PLOT DATE : 7/31/2025 12:40 PM
PLOT BY : MANYEN, WAYNE
PLOT NAME :
PLOT SCALE : 1 IN:20 FT HORZ. / 1 IN:20 FT VERT.
WISDOT/CADDS SHEET 49

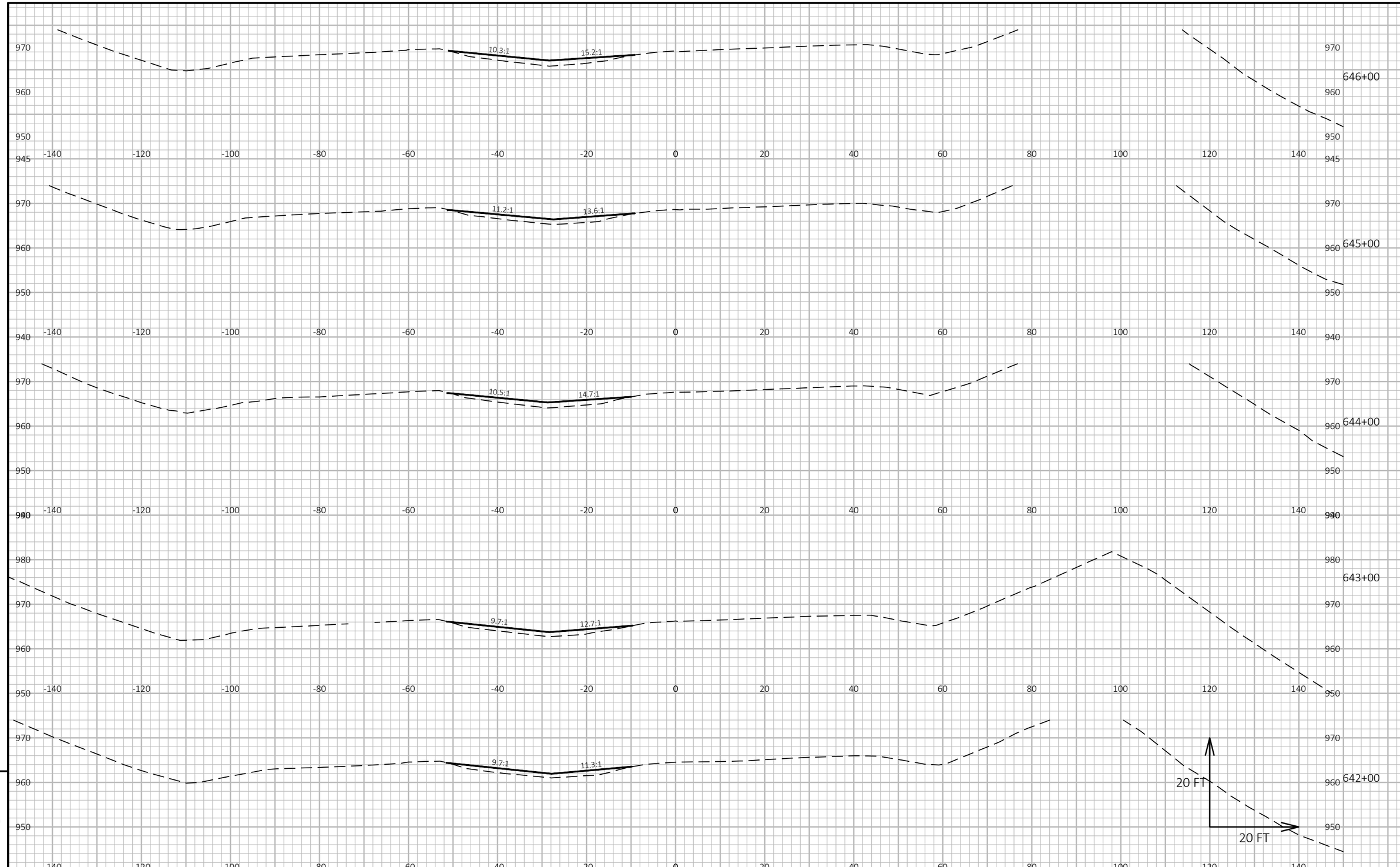

9

9

PROJECT NO: 1080-05-70	HWY: USH 12	COUNTY: WALWORTH	CROSS SECTIONS: USH 12	SHEET 109	E

FILE NAME : N:\PDS\C3D\10800500\DSGN\CRDR\EXISTING CONDITIONS\090201_XS.DWG
LAYOUT NAME - 090203_XS

PLOT DATE : 7/31/2025 12:40 PM PLOT BY : MANYEN, WAYNE PLOT NAME : PLOT SCALE : 1 IN:20 FT HORZ. / 1 IN:20 FT VERT.

WISDOT/CADDS SHEET 49

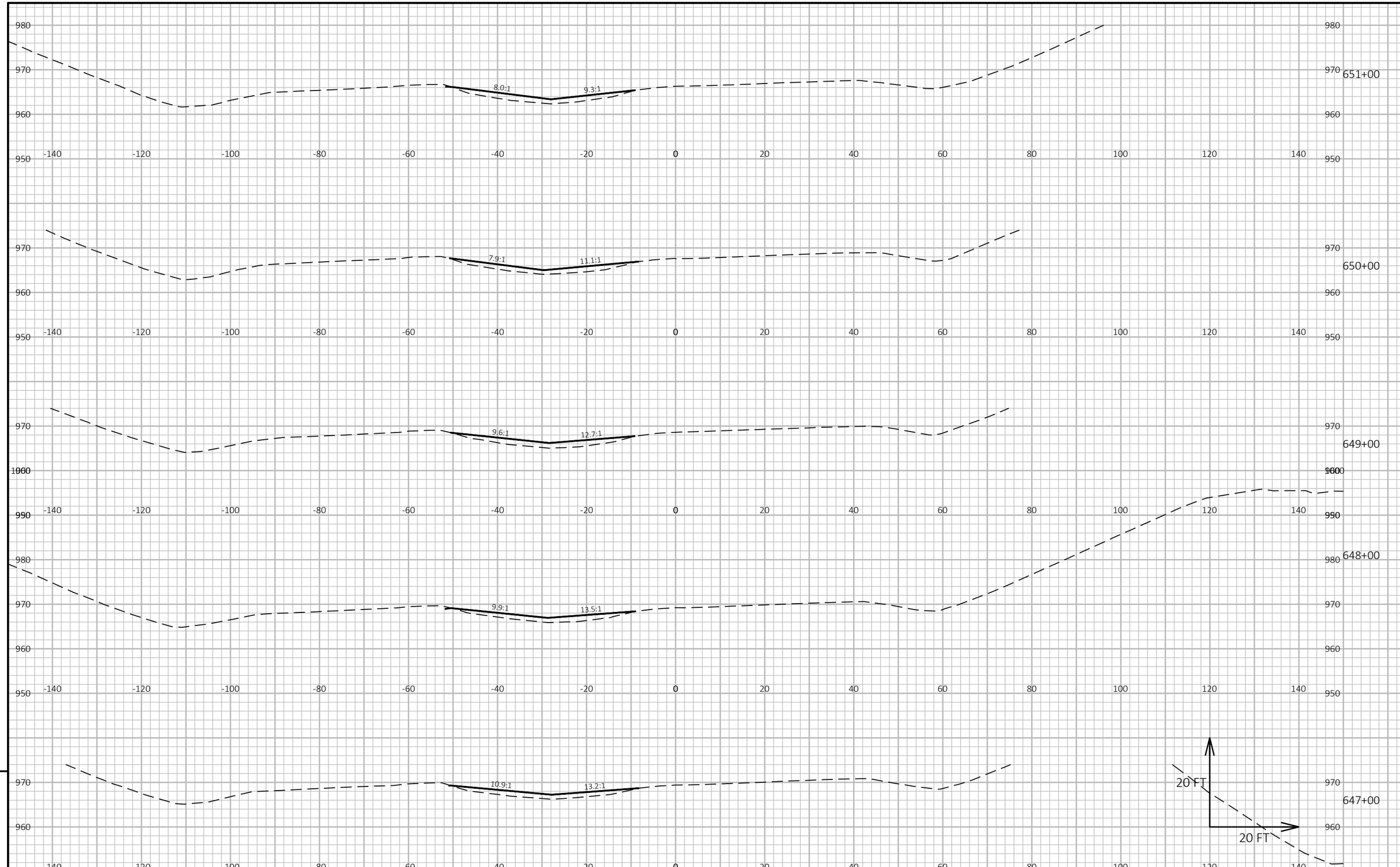

PROJECT NO: 1080-05-70	HWY: USH 12	COUNTY: WALWORTH	CROSS SECTIONS: USH 12	SHEET 110	E

FILE NAME : N:\PDS\C3D\10800500\DSGN\CRDR\EXISTING CONDITIONS\090201_XS.DWG
LAYOUT NAME - 090204_XS
PLOT DATE : 7/31/2025 12:40 PM PLOT BY : MANYEN, WAYNE PLOT NAME : PLOT SCALE : 1 IN:20 FT HORZ. / 1 IN:20 FT VERT.

WISDOT/CADDS SHEET 49

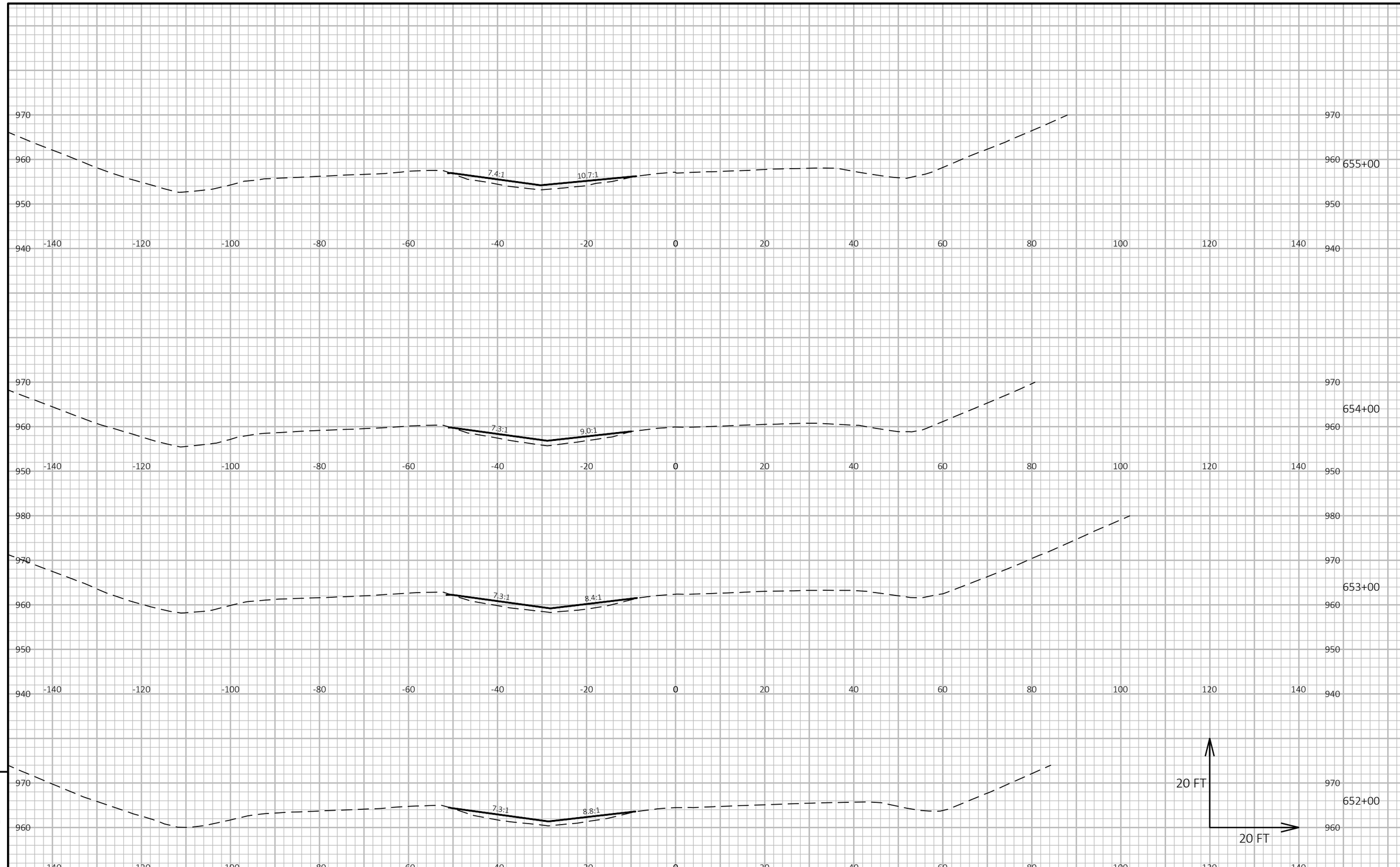

9

9

PROJECT NO: 1080-05-70	HWY: USH 12	COUNTY: WALWORTH	CROSS SECTIONS: USH 12	SHEET 111	E

FILE NAME : N:\PDS\C3D\10800500\DSGN\CRDR\EXISTING CONDITIONS\090201_XS.DWG
LAYOUT NAME - 090205_XS
PLOT DATE : 7/31/2025 12:40 PM
PLOT BY : MANYEN, WAYNE
PLOT NAME :
PLOT SCALE : 1 IN:20 FT HORZ. / 1 IN:20 FT VERT.
WISDOT/CADDS SHEET 49

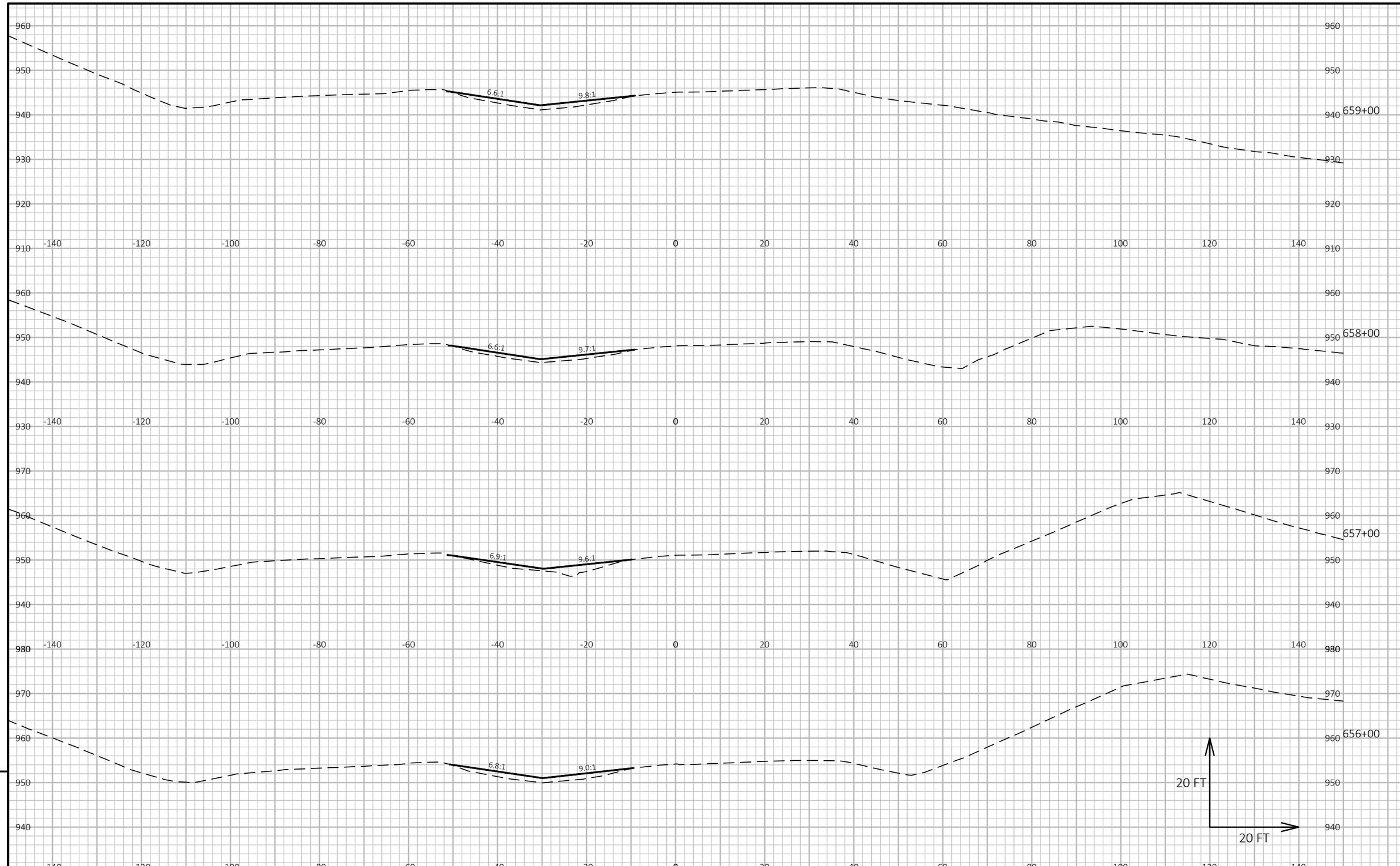

9

9

PROJECT NO: 1080-05-70	HWY: USH 12	COUNTY: WALWORTH	CROSS SECTIONS: USH 12	SHEET 112	E

FILE NAME : N:\PDS\C3D\10800500\DSGN\CRDR\EXISTING CONDITIONS\090201_XS.DWG
LAYOUT NAME - 090206_XS
PLOT DATE : 7/31/2025 12:40 PM
PLOT BY : MANYEN, WAYNE
PLOT NAME :
PLOT SCALE : 1 IN:20 FT HORZ. / 1 IN:20 FT VERT.
WISDOT/CADDS SHEET 49

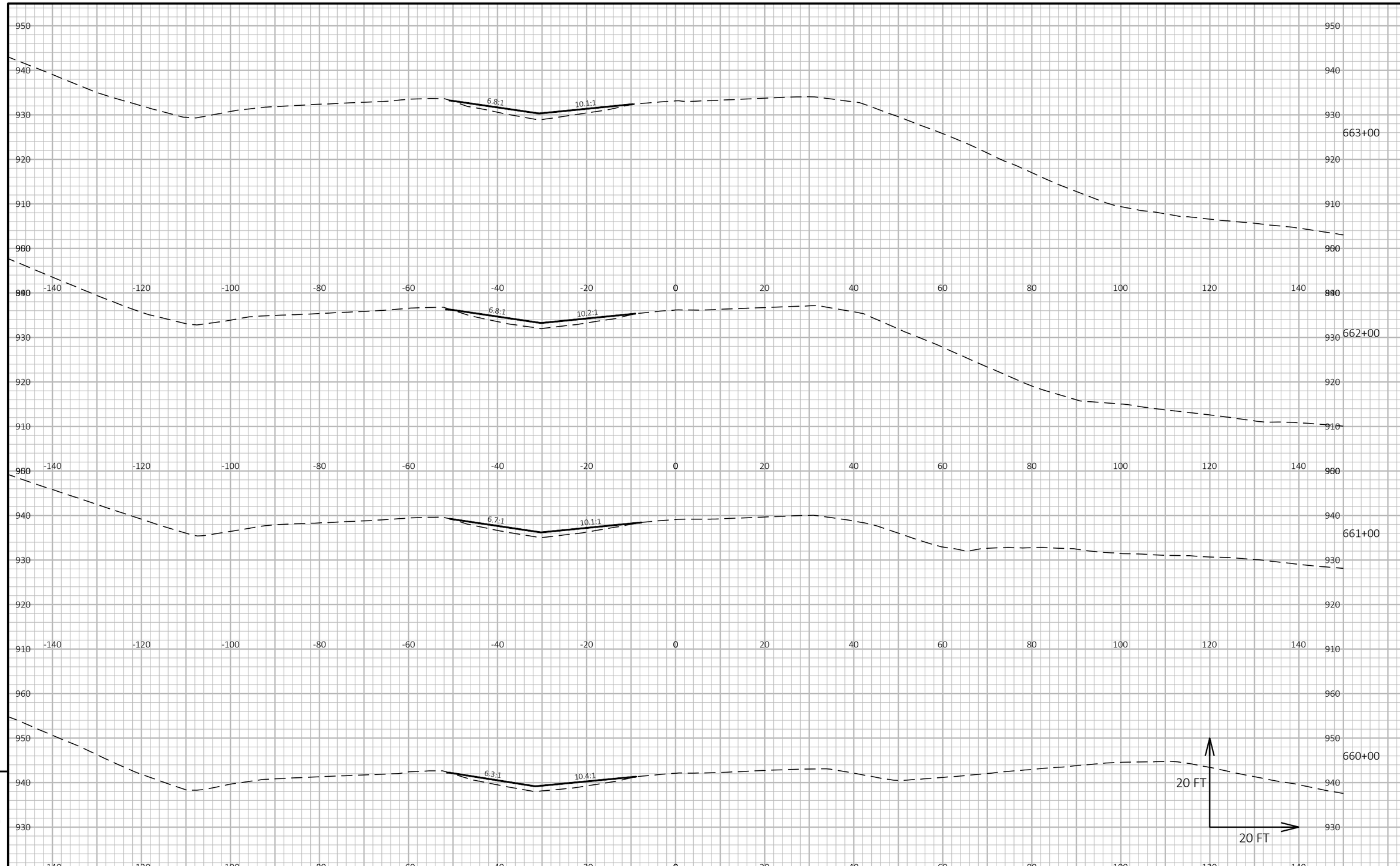

PROJECT NO: 1080-05-70	HWY: USH 12	COUNTY: WALWORTH	CROSS SECTIONS: USH 12	SHEET 113	E

FILE NAME : N:\PDS\C3D\10800500\DSGN\CRDR\EXISTING CONDITIONS\090201_XS.DWG
LAYOUT NAME - 090207_XS
PLOT DATE : 7/31/2025 12:40 PM
PLOT BY : MANYEN, WAYNE
PLOT NAME :
PLOT SCALE : 1 IN:20 FT HORZ. / 1 IN:20 FT VERT.
WISDOT/CADDS SHEET 49

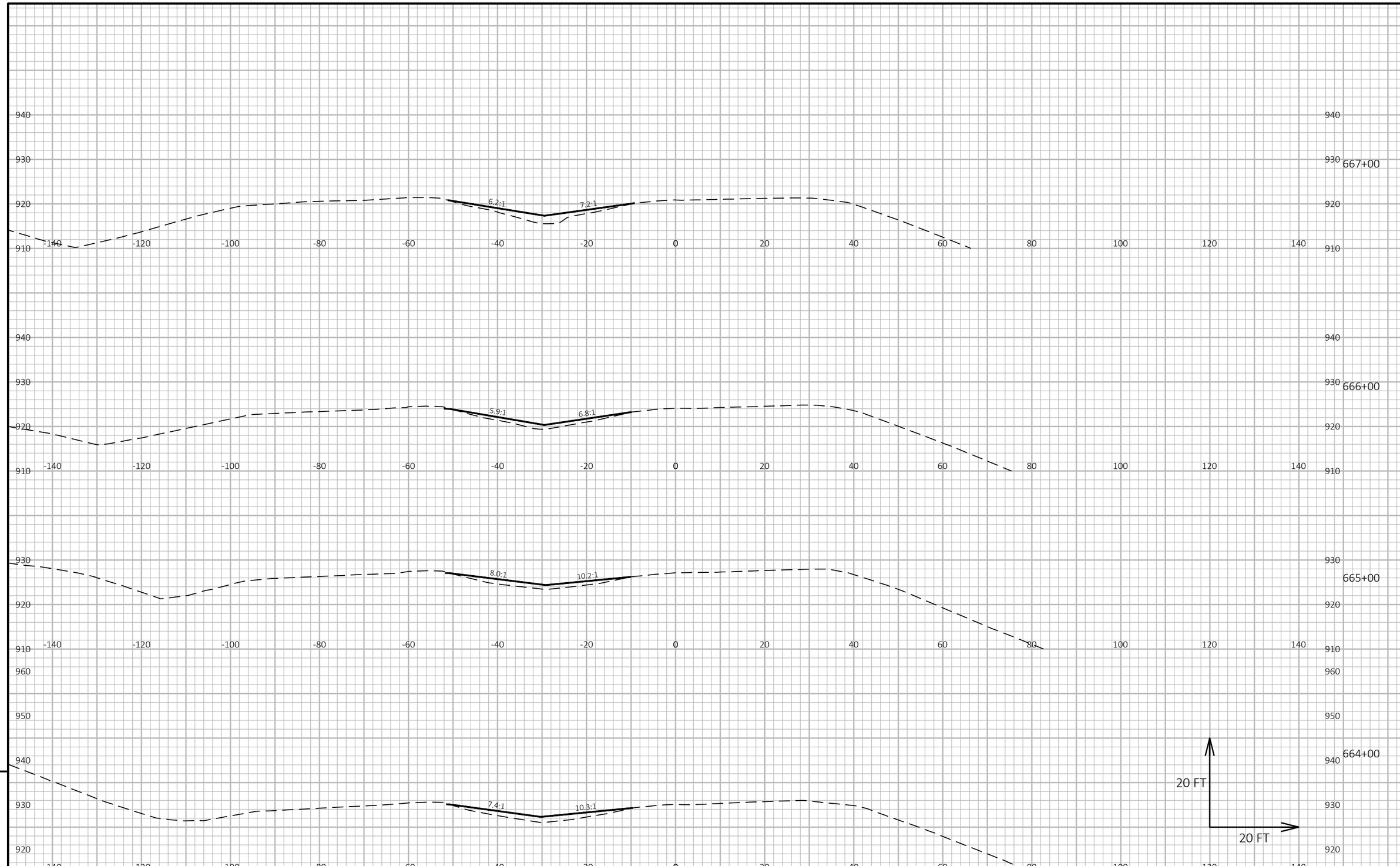

9

9

PROJECT NO: 1080-05-70	HWY: USH 12	COUNTY: WALWORTH	CROSS SECTIONS: USH 12	SHEET 114	E

FILE NAME : N:\PDS\C3D\10800500\DSGN\CRDR\EXISTING CONDITIONS\090201_XS.DWG
LAYOUT NAME - 090208_XS
PLOT DATE : 7/31/2025 12:40 PM
PLOT BY : MANYEN, WAYNE
PLOT NAME :
PLOT SCALE : 1 IN:20 FT HORZ. / 1 IN:20 FT VERT.
WISDOT/CADDS SHEET 49

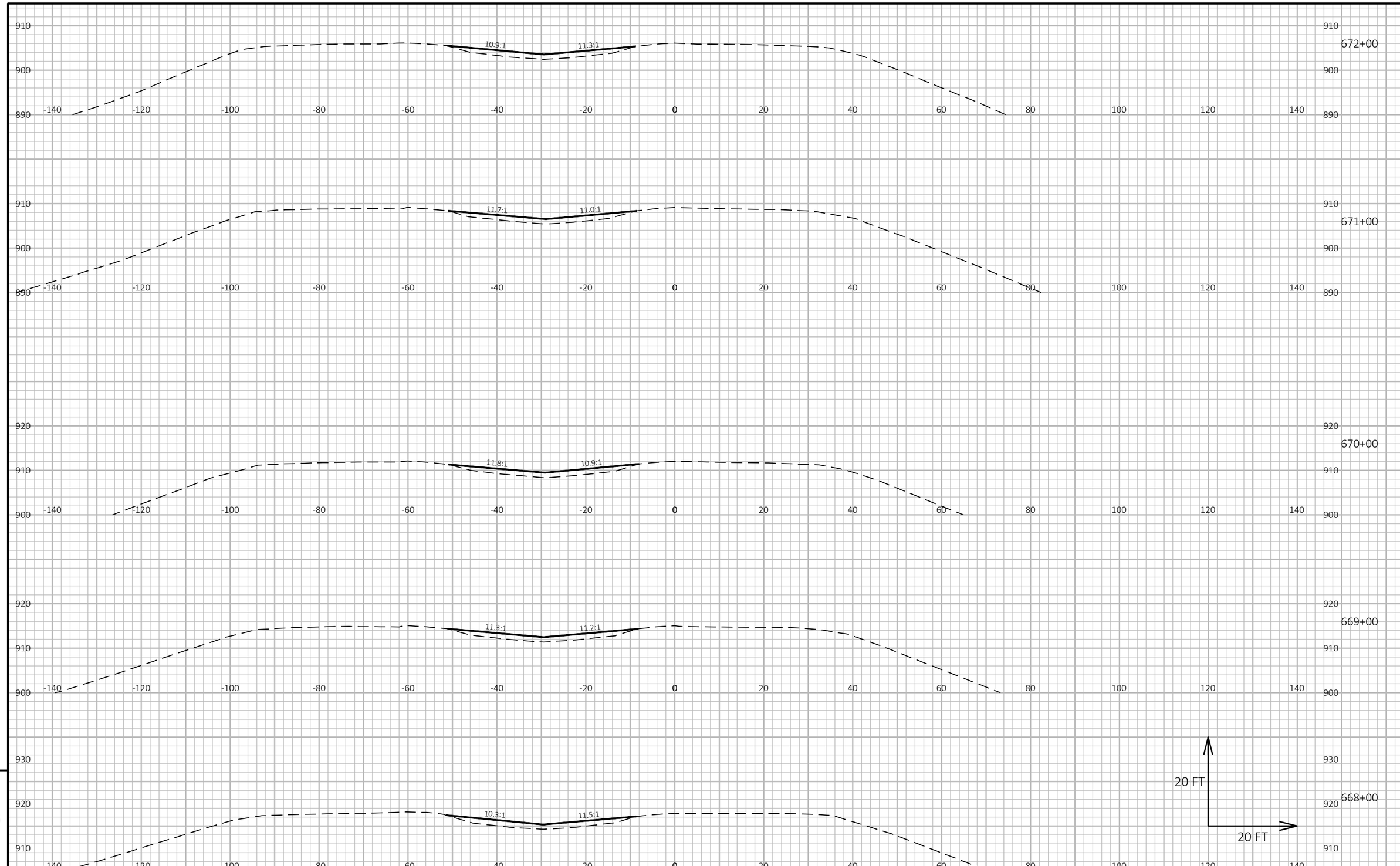

9

9

PROJECT NO: 1080-05-70	HWY: USH 12	COUNTY: WALWORTH	CROSS SECTIONS: USH 12	SHEET 115	E

FILE NAME : N:\PDS\C3D\10800500\DSGN\CRDR\EXISTING CONDITIONS\090201_XS.DWG
LAYOUT NAME - 090209_XS
PLOT DATE : 7/31/2025 12:40 PM
PLOT BY : MANYEN, WAYNE
PLOT NAME :
PLOT SCALE : 1 IN:20 FT HORZ. / 1 IN:20 FT VERT.
WISDOT/CADDS SHEET 49

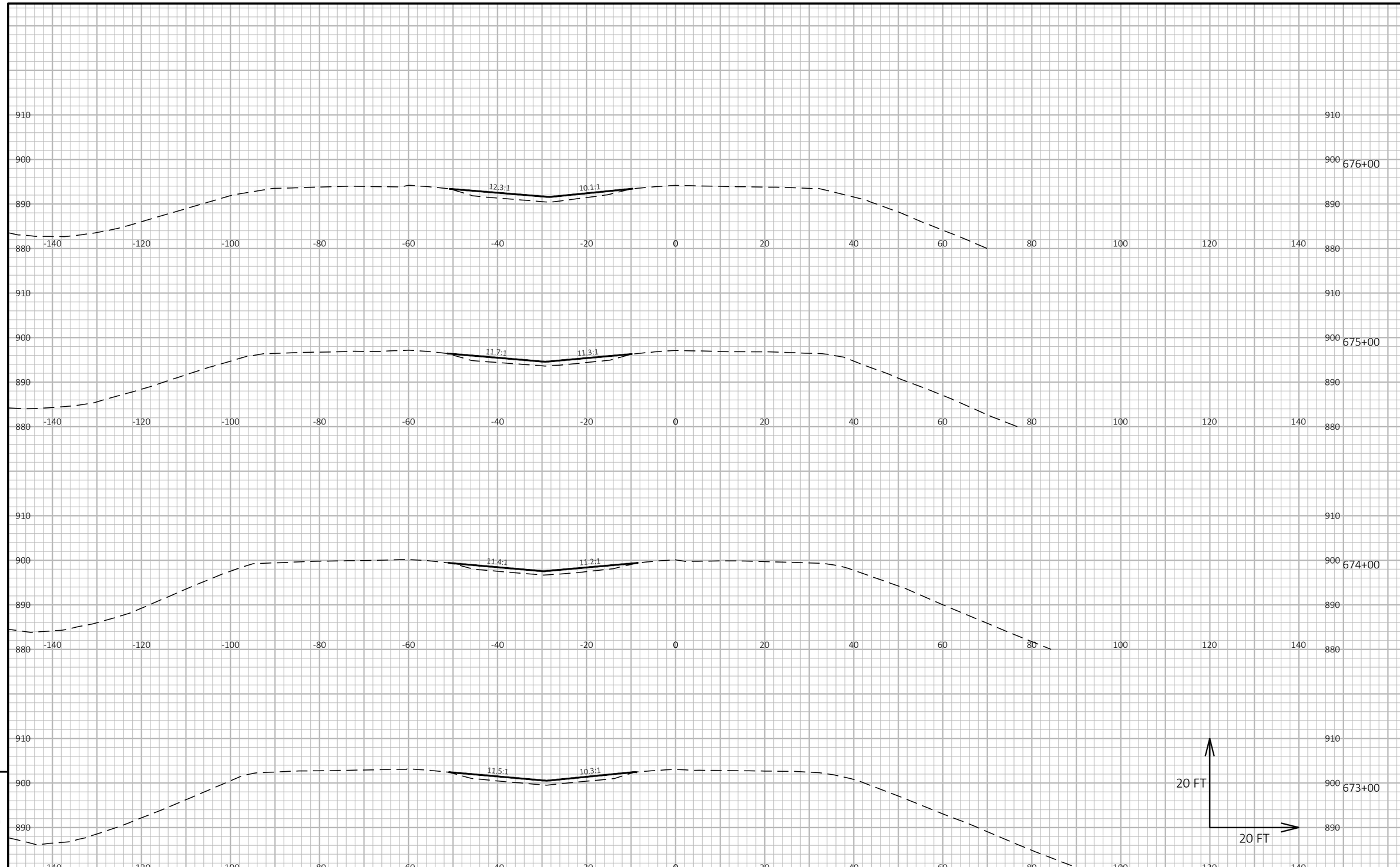

PROJECT NO: 1080-05-70	HWY: USH 12	COUNTY: WALWORTH	CROSS SECTIONS: USH 12	SHEET 116	E

FILE NAME : N:\PDS\C3D\10800500\DSGN\CRDR\EXISTING CONDITIONS\090201_XS.DWG
LAYOUT NAME - 090210_XS
PLOT DATE : 7/31/2025 12:40 PM
PLOT BY : MANYEN, WAYNE
PLOT NAME :
PLOT SCALE : 1 IN:20 FT HORZ. / 1 IN:20 FT VERT.
WISDOT/CADDS SHEET 49

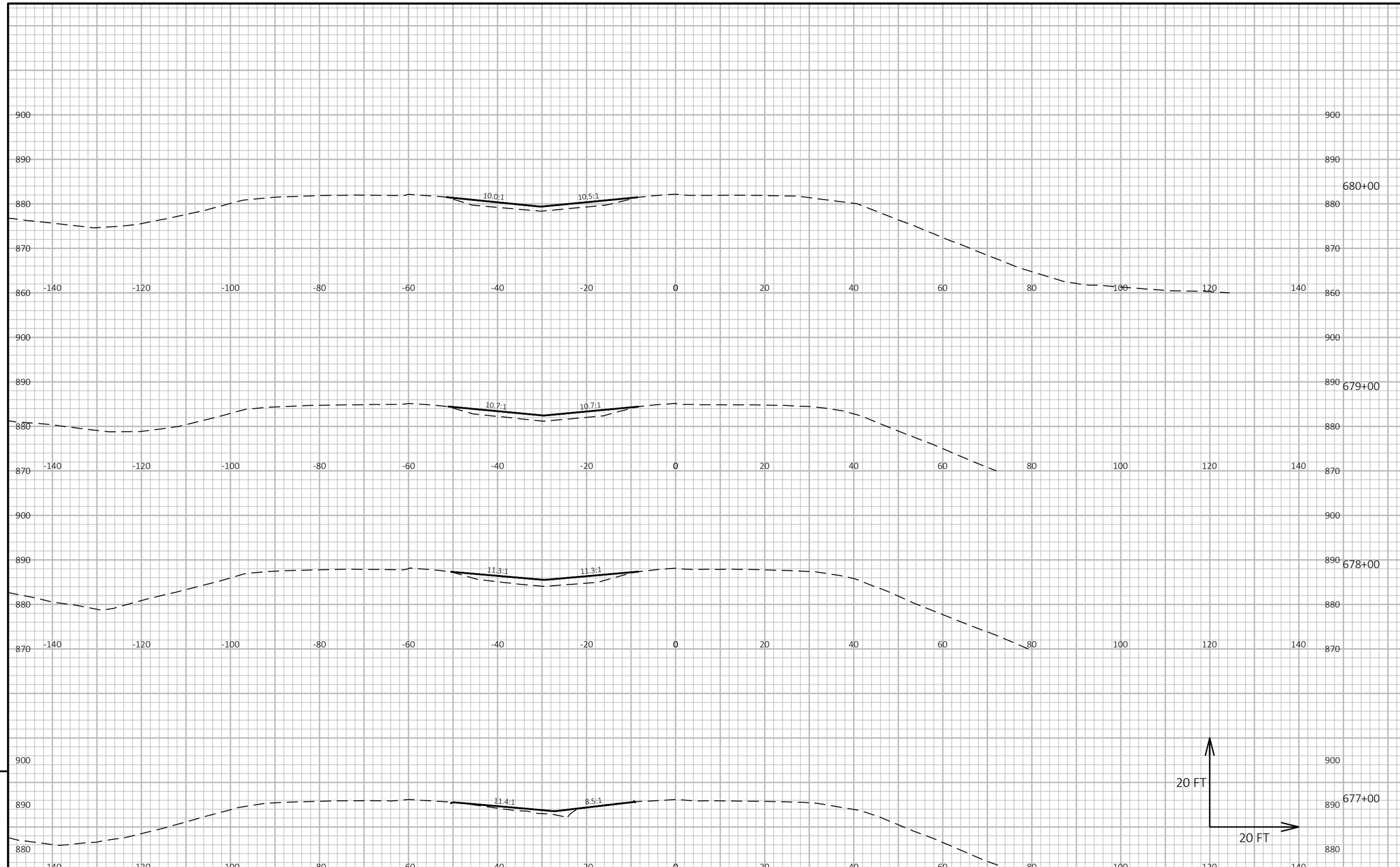

9

9

PROJECT NO: 1080-05-70	HWY: USH 12	COUNTY: WALWORTH	CROSS SECTIONS: USH 12	SHEET 117	E

FILE NAME : N:\PDS\C3D\10800500\DSGN\CRDR\EXISTING CONDITIONS\090201_XS.DWG
LAYOUT NAME - 090211_XS
PLOT DATE : 7/31/2025 12:40 PM
PLOT BY : MANYEN, WAYNE
PLOT NAME :
PLOT SCALE : 1 IN:20 FT HORZ. / 1 IN:20 FT VERT.
WISDOT/CADDS SHEET 49

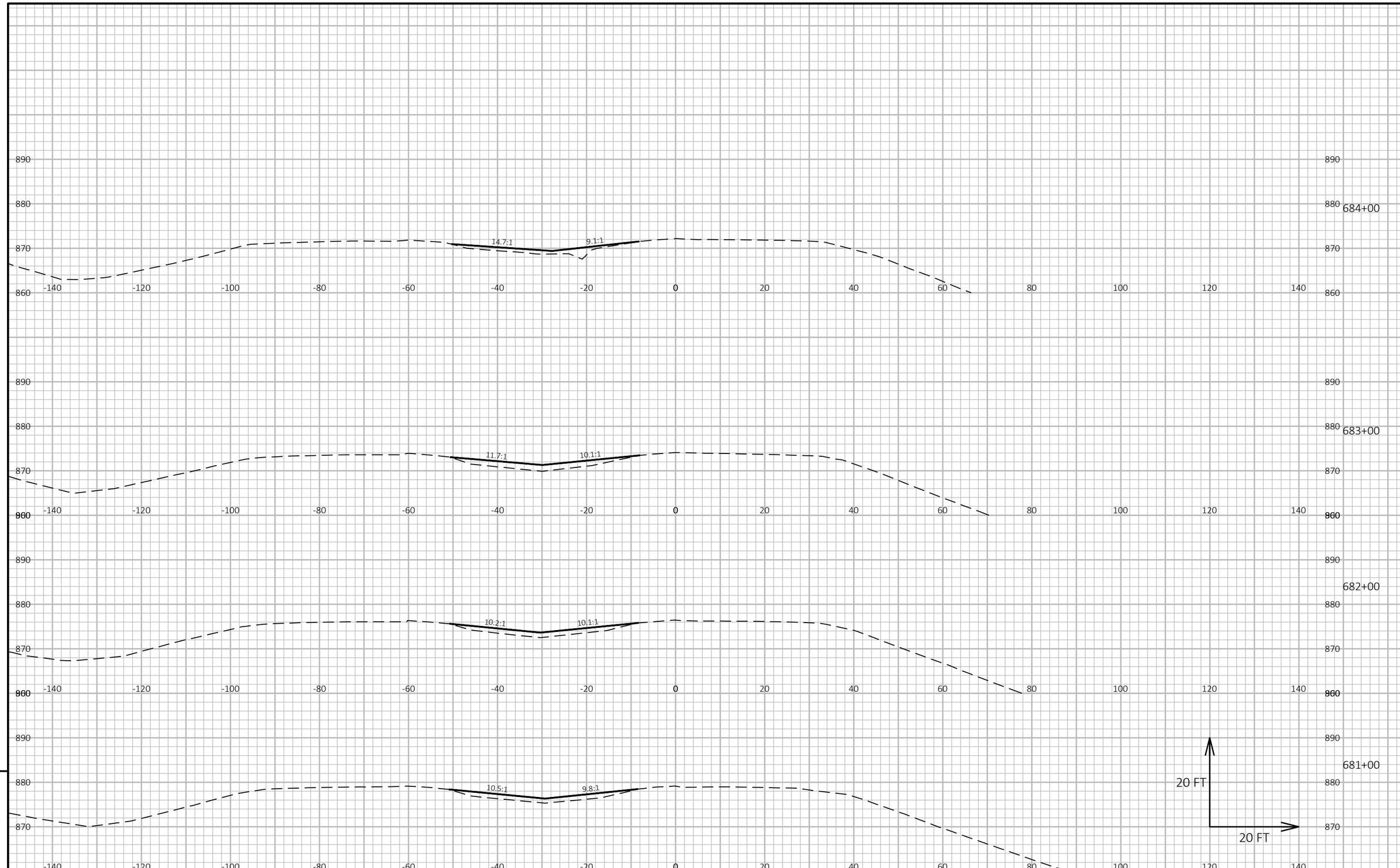

PROJECT NO: 1080-05-70	HWY: USH 12	COUNTY: WALWORTH	CROSS SECTIONS: USH 12	SHEET 118	E

FILE NAME : N:\PDS\C3D\10800500\DSGN\CRDR\EXISTING CONDITIONS\090201_XS.DWG
LAYOUT NAME - 090212_XS
PLOT DATE : 7/31/2025 12:40 PM
PLOT BY : MANYEN, WAYNE
PLOT NAME :
PLOT SCALE : 1 IN:20 FT HORZ. / 1 IN:20 FT VERT.
WISDOT/CADDS SHEET 49

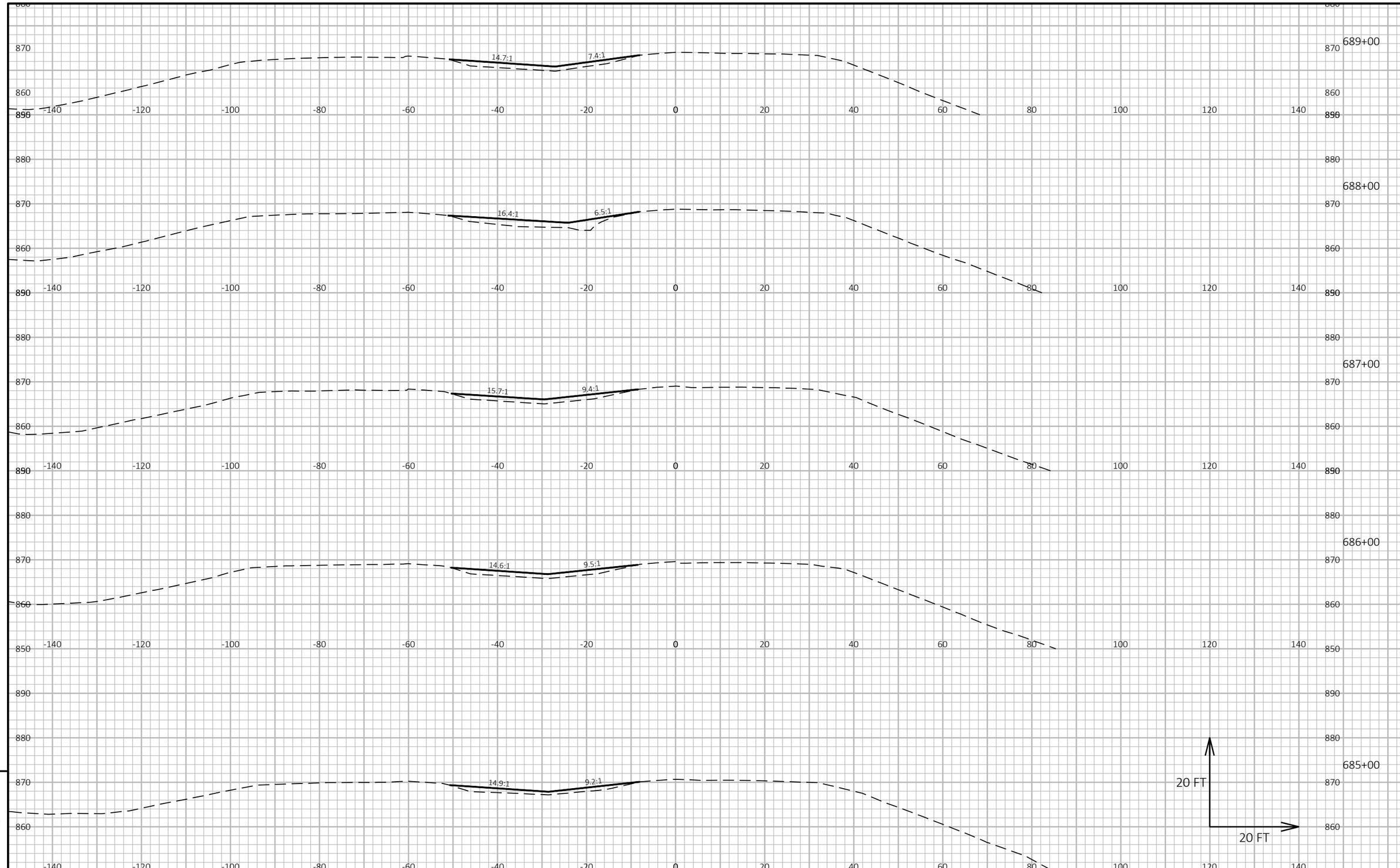

9

9

PROJECT NO: 1080-05-70	HWY: USH 12	COUNTY: WALWORTH	CROSS SECTIONS: USH 12	SHEET 119	E

FILE NAME : N:\PDS\C3D\10800500\DSGN\CRDR\EXISTING CONDITIONS\090201_XS.DWG
LAYOUT NAME - 090213_XS

PLOT DATE : 7/31/2025 12:40 PM PLOT BY : MANYEN, WAYNE PLOT NAME : PLOT SCALE : 1 IN:20 FT HORZ. / 1 IN:20 FT VERT.

WISDOT/CADDS SHEET 49

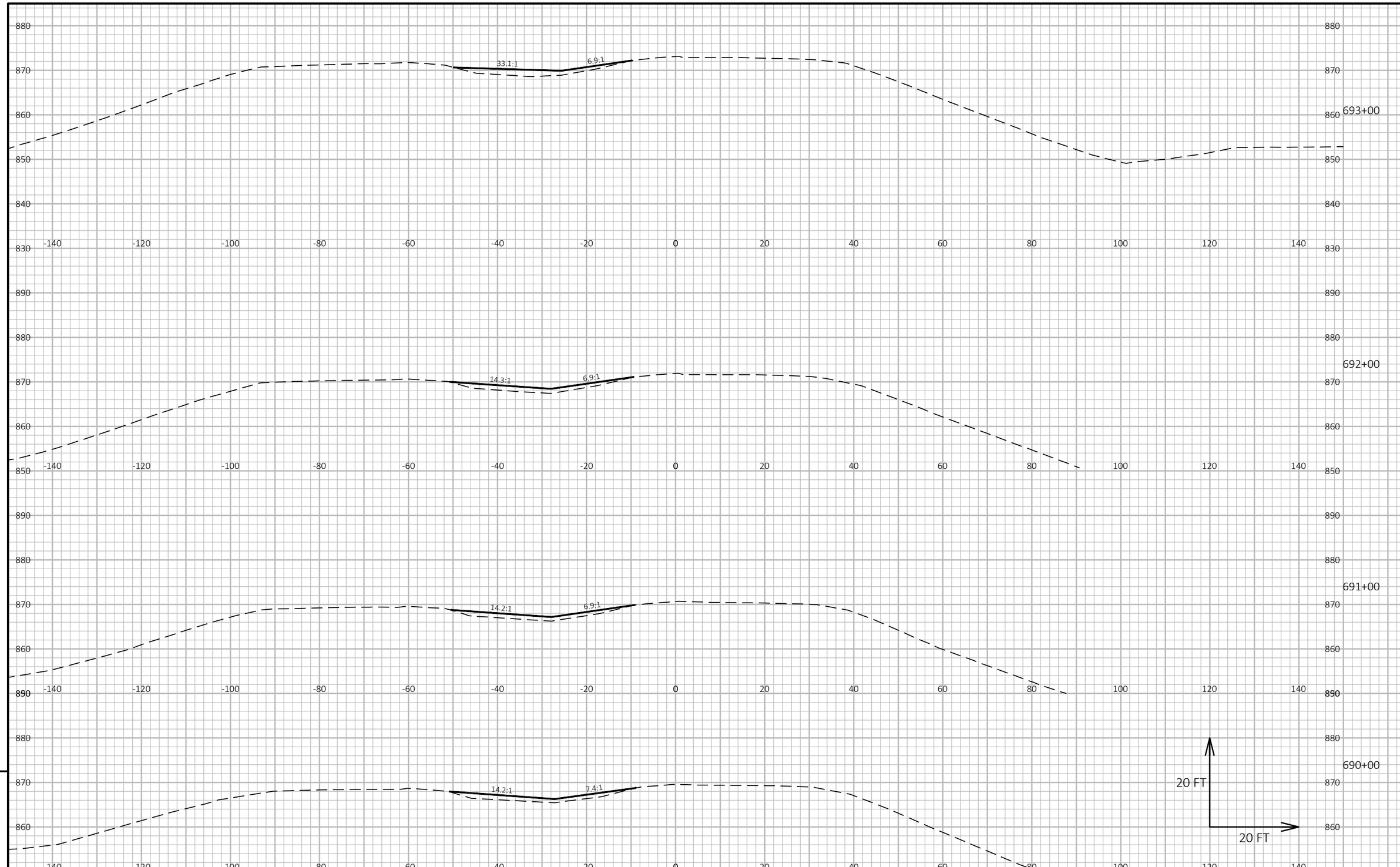

9

9

PROJECT NO: 1080-05-70	HWY: USH 12	COUNTY: WALWORTH	CROSS SECTIONS: USH 12	SHEET 120	E

FILE NAME : N:\PDS\C3D\10800500\DSGN\CRDR\EXISTING CONDITIONS\090201_XS.DWG
LAYOUT NAME - 090214_XS

PLOT DATE : 7/31/2025 12:40 PM PLOT BY : MANYEN, WAYNE PLOT NAME : PLOT SCALE : 1 IN:20 FT HORZ. / 1 IN:20 FT VERT.

WISDOT/CADDS SHEET 49

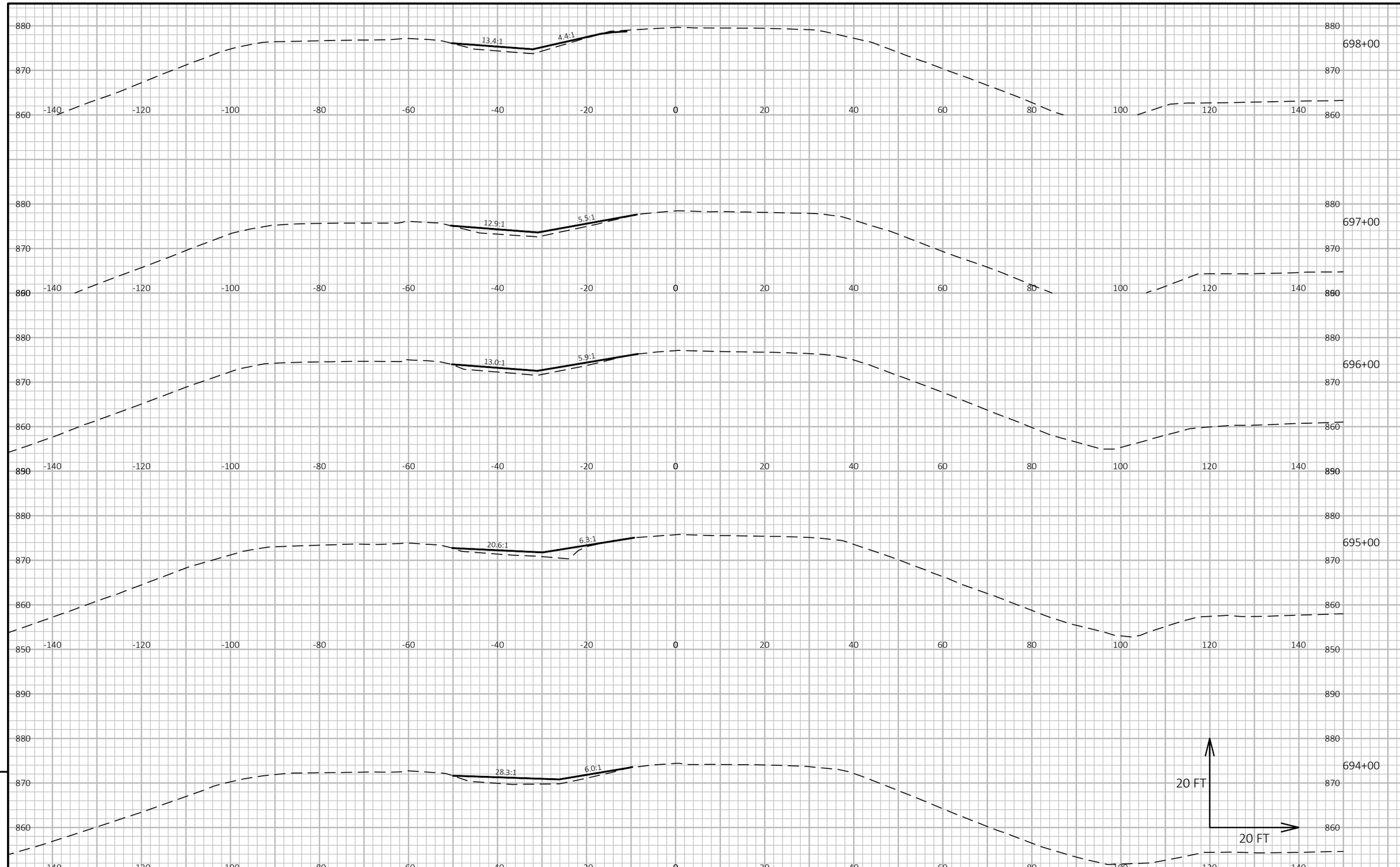

9

9

PROJECT NO: 1080-05-70	HWY: USH 12	COUNTY: WALWORTH	CROSS SECTIONS: USH 12	SHEET 121	E

FILE NAME : N:\PDS\C3D\10800500\DSGN\CRDR\EXISTING CONDITIONS\090201_XS.DWG
LAYOUT NAME - 090215_XS
PLOT DATE : 7/31/2025 12:40 PM
PLOT BY : MANYEN, WAYNE
PLOT NAME :
PLOT SCALE : 1 IN:20 FT HORZ. / 1 IN:20 FT VERT.
WISDOT/CADDS SHEET 49

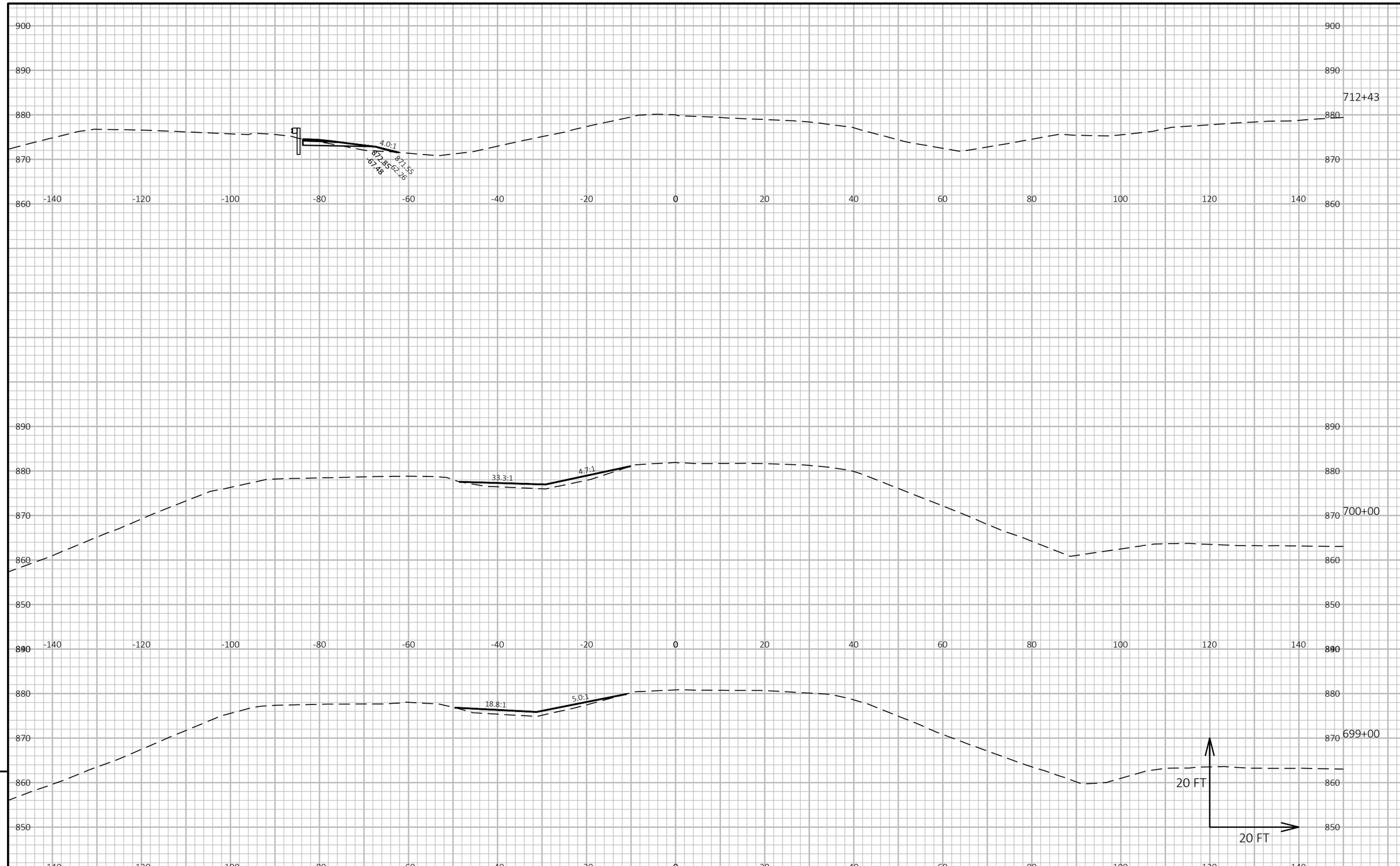

9

9

PROJECT NO: 1080-05-70	HWY: USH 12	COUNTY: WALWORTH	CROSS SECTIONS: USH 12	SHEET 122	E

FILE NAME : N:\PDS\C3D\10800500\DSGN\CRDR\EXISTING CONDITIONS\090201_XS.DWG
LAYOUT NAME - 090216_XS
PLOT DATE : 7/31/2025 12:40 PM
PLOT BY : MANYEN, WAYNE
PLOT NAME :
PLOT SCALE : 1 IN:20 FT HORZ. / 1 IN:20 FT VERT.
WISDOT/CADDS SHEET 49

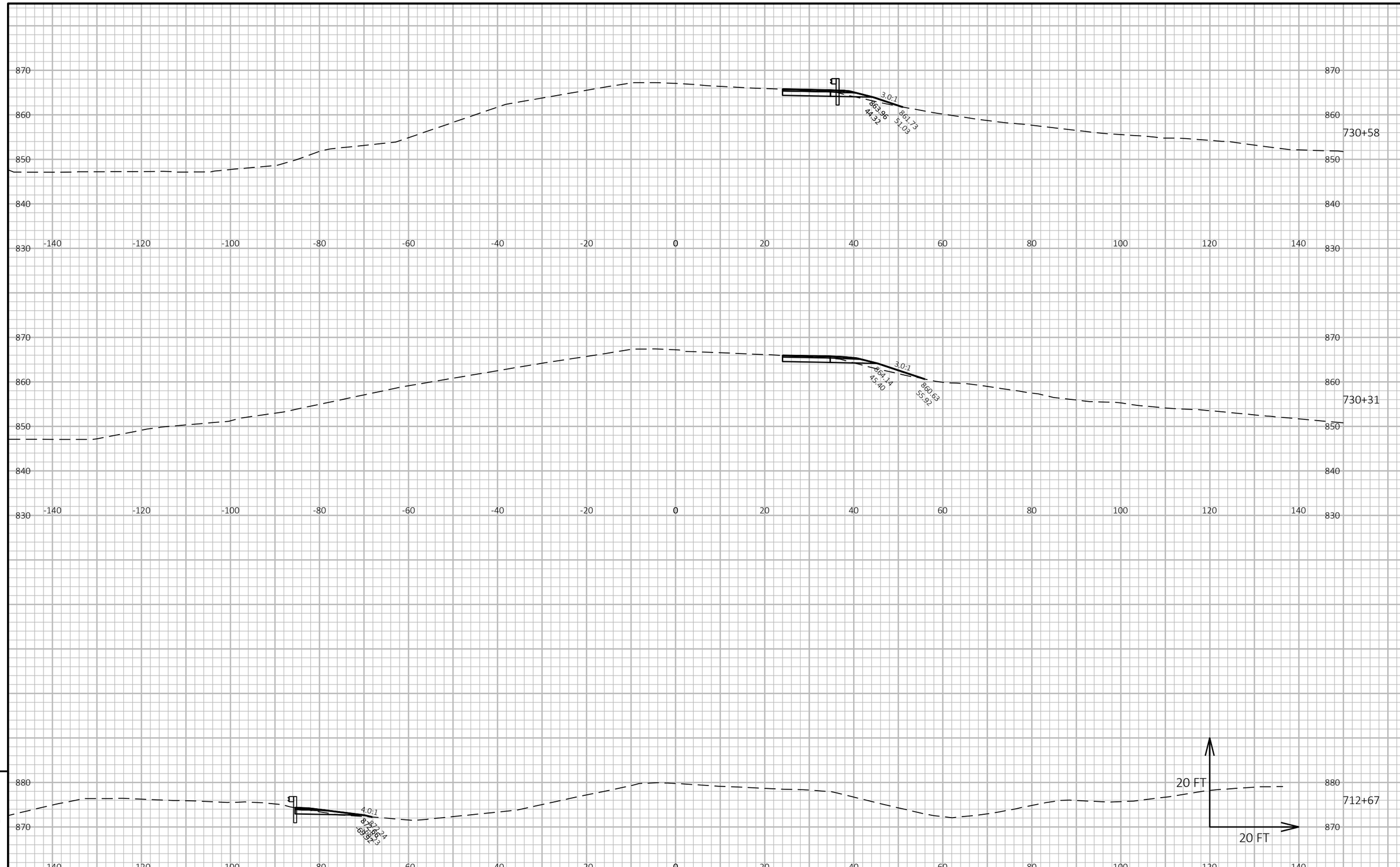

9

9

PROJECT NO: 1080-05-70	HWY: USH 12	COUNTY: WALWORTH	CROSS SECTIONS: USH 12	SHEET 123	E

FILE NAME : N:\PDS\C3D\10800500\DSGN\CRDR\EXISTING CONDITIONS\090201_XS.DWG
LAYOUT NAME - 090217_XS
PLOT DATE : 7/31/2025 12:40 PM
PLOT BY : MANYEN, WAYNE
PLOT NAME :
PLOT SCALE : 1 IN:20 FT HORZ. / 1 IN:20 FT VERT.
WISDOT/CADDS SHEET 49

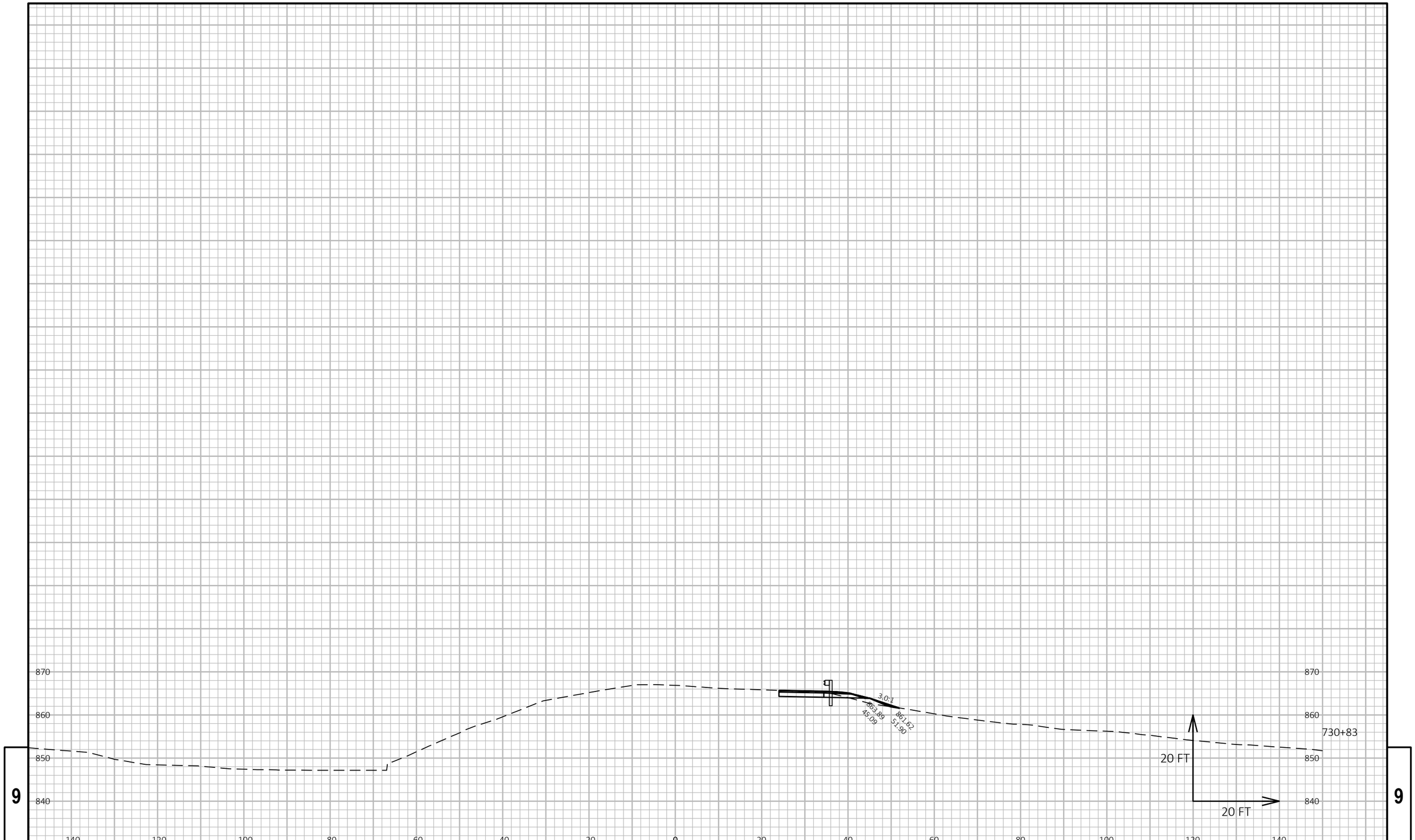

PROJECT NO: 1080-05-70	HWY: USH 12	COUNTY: WALWORTH	CROSS SECTIONS: USH 12	SHEET 124	E

FILE NAME : N:\PDS\C3D\10800500\DSGN\CRDR\EXISTING CONDITIONS\090201_XS.DWG
LAYOUT NAME - 090218_XS
PLOT DATE : 7/31/2025 12:40 PM
PLOT BY : MANYEN, WAYNE
PLOT NAME :
PLOT SCALE : 1 IN:20 FT HORZ. / 1 IN:20 FT VERT.
WISDOT/CADDS SHEET 49

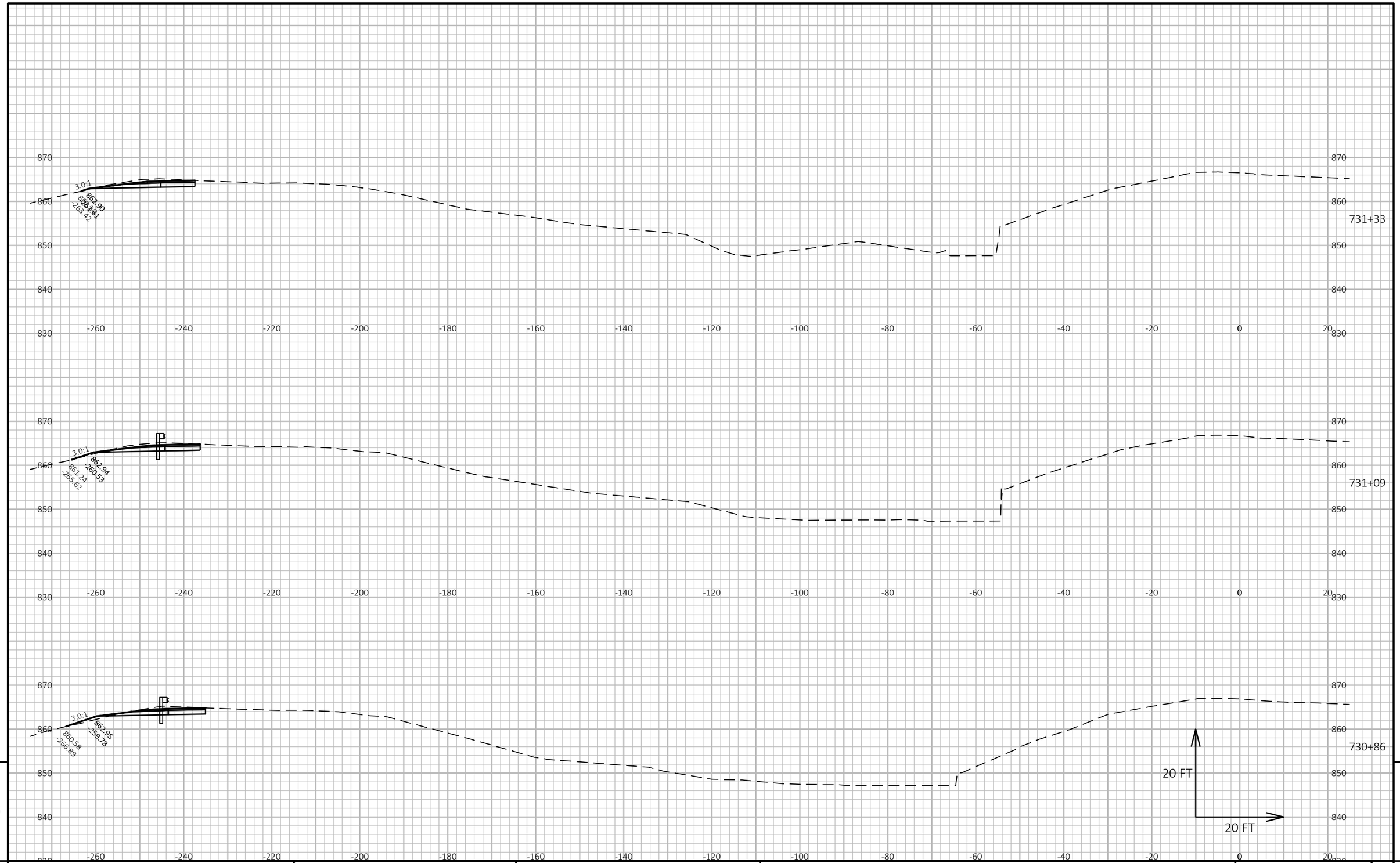

9

9

PROJECT NO: 1080-05-70	HWY: USH 12	COUNTY: WALWORTH	CROSS SECTIONS: USH 12	SHEET 125	E

FILE NAME : N:\PDS\C3D\10800500\DSGN\CRDR\EXISTING CONDITIONS\090201_XS.DWG
LAYOUT NAME - 090219_XS

PLOT DATE : 7/31/2025 12:40 PM PLOT BY : MANYEN, WAYNE PLOT NAME : PLOT SCALE : 1 IN:20 FT HORZ. / 1 IN:20 FT VERT.

WISDOT/CADDS SHEET 49

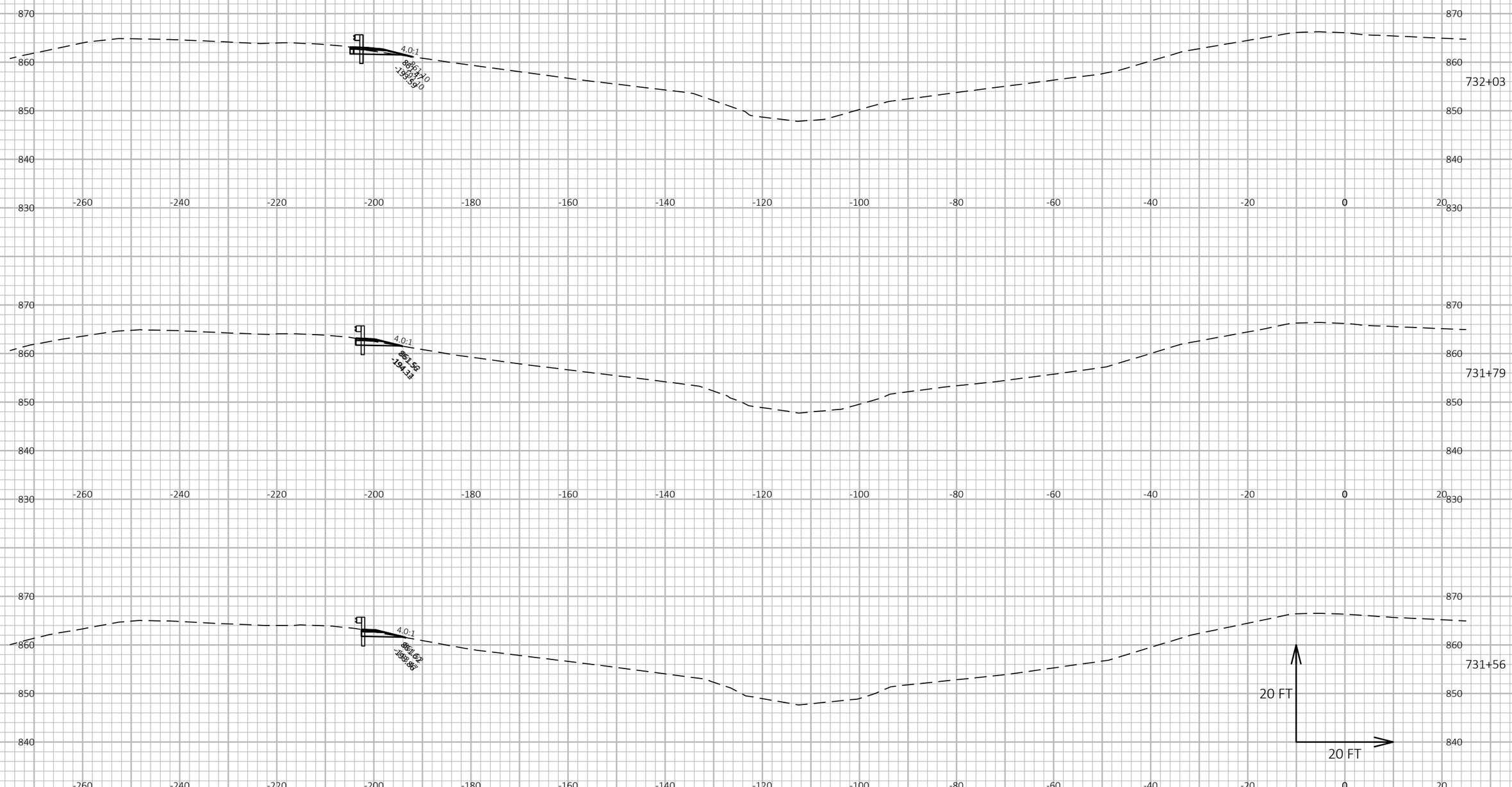

9

9

PROJECT NO: 1080-05-70	HWY: USH 12	COUNTY: WALWORTH	CROSS SECTIONS: USH 12	SHEET 126	E

FILE NAME : N:\PDS\C3D\10800500\DSGN\CRDR\EXISTING CONDITIONS\090201_XS.DWG
LAYOUT NAME - 090220_XS

PLOT DATE : 7/31/2025 12:40 PM PLOT BY : MANYEN, WAYNE PLOT NAME : PLOT SCALE : 1 IN:20 FT HORZ. / 1 IN:20 FT VERT.

WISDOT/CADDS SHEET 49

Notes

Wisconsin Department of Transportation

Dedicated people creating transportation solutions through innovation and exceptional service.

http://www.dot.wisconsin.gov