MAD

JANUARY 2026

PROJECT ID: 3997-01-79, 3997-01-80

WITH: N/A

COUNTY: JEFFERSON

06

ORDER OF SHEETS

TOTAL SHEETS = 194

STATE OF WISCONSIN
DEPARTMENT OF TRANSPORTATION

PLAN OF PROPOSED IMPROVEMENT

STATE PROJECT	FEDERAL PROJECT	
	PROJECT	CONTRACT
3997-01-79	WISC 2026060	1
3997-01-80	—	—

CITY OF WATERTOWN, DEWEY AVE

E MAIN STREET TO E DIVISION STREET

LOCAL STREET

JEFFERSON COUNTY

STATE PROJECT NUMBER

3997-01-79

CITY OF WATERTOWN, DEWEY AVE

E MAIN STREET TO E DIVISION STREET

LOCAL STREET

JEFFERSON COUNTY

STATE PROJECT NUMBER

3997-01-80

N

DESIGN DESIGNATION

A.A.D.T.	2026	=	1,600 VPD
A.A.D.T.	2046	=	1,700 VPD
D.H.V.		=	210 VPH
D.D.		=	50/50
T.		=	9.4%
DESIGN SPEED		=	30 MPH
ESALS		=	660,000

CONVENTIONAL SYMBOLS

PLAN

CORPORATE LIMITS

PROPERTY LINE

LOT LINE

LIMITED HIGHWAY EASEMENT

EXISTING RIGHT OF WAY

PROPOSED OR NEW R/W LINE

SLOPE INTERCEPT

REFERENCE LINE

EXISTING CULVERT

PROPOSED CULVERT (Box or Pipe)

COMBUSTIBLE FLUIDS

MARSH AREA

WOODED OR SHRUB AREA

PROFILE

GRADE LINE

ORIGINAL GROUND

MARSH OR ROCK PROFILE (To be noted as such)

SPECIAL DITCH

GRADE ELEVATION

CULVERT (Profile View)

UTILITIES

ELECTRIC

FIBER OPTIC

GAS

SANITARY SEWER

STORM SEWER

TELEPHONE

WATER

UTILITY PEDESTAL

POWER POLE

TELEPHONE POLE

END PROJECT
STA 29+99.47

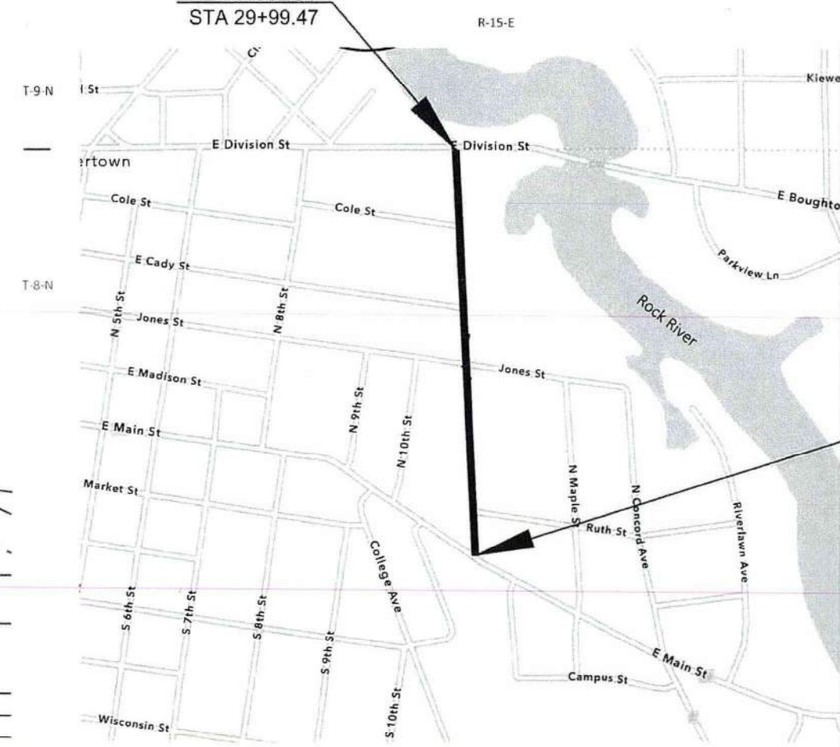

BEGIN PROJECT
STA 10+00.00
Y=437,102.365
X=2,311,557.406

LAYOUT

SCALE 0 # MI

TOTAL NET LENGTH OF CENTERLINE = 0.378 MI

HORIZONTAL POSITIONS SHOWN ON THIS PLAN ARE WISCONSIN STATE PLANE COORDINATE SYSTEM (SPCS), SOUTH ZONE, NAD83 (2011), IN U.S. SURVEY FEET. POSITIONS SHOWN ARE GRID COORDINATES, GRID BEARINGS, AND GRID DISTANCES. GRID DISTANCES ARE THE SAME AS GROUND DISTANCES.

ELEVATIONS ARE REFERENCED TO NAVD 88 (2018). GPS DERIVED ELEVATIONS ARE BASED ON GEOID 18.

ACCEPTED FOR

CITY OF WATERTOWN

DATE: 7/25/25 Director of Public Works/City Engineer (Signature and Title of Official)

ORIGINAL PLANS PREPARED BY

REL Robert E. Lee & Associates Inc

1250 Centennial Centre Blvd | Hobart, WI | 920.652.9641 | releeinc.com

WISCONSIN ERIC J. HANDLER E-43084-6 MENASHA WIS. PROFESSIONAL ENGINEER

DATE: 7/25/25 (Professional Engineer Signature)

STATE OF WISCONSIN
DEPARTMENT OF TRANSPORTATION

PREPARED BY

Surveyor	ROBERT E. LEE & ASSOCIATES, INC.
Designer	ROBERT E. LEE & ASSOCIATES, INC.
Project Manager	DELLA KOENIG
Regional Examiner	REGIONAL EXAMINER
Regional Supervisor	KYLE HEMP

APPROVED FOR THE DEPARTMENT

DATE: _____ Digitally signed by Della Koenig P.E. Date: 2025.07.28 13:21:44-05'00' (Signature)

E

FILE NAME : \\FS1\CADSURV\5300\5364\5364088\39970179\SHEETS\010101-TI.DWG PLOT DATE : 7/25/2025 10:28 AM PLOT BY : ERIC HANDLER PLOT NAME :

UTILITIES CONTACTS

AT&T DISTRIBUTION
TELECOMMUNICATIONS
TYLER FLECK
220 WISCONSIN AVE
WAUKESHA, WI 53816
PHONE: (414) 248-6803
EMAIL: TF8394@ATT.COM

SPECTRUM
FIBEROPTIC
EDWARD RIVERA
2701 DANIELS ST
MADISON, WI 53718
PHONE: (608) 516-8164
EMAIL: edward.rivera@charter.com

WE ENERGIES
GAS
SPENSER DOONER
700 S KANE ST
BURLINGTON, WI 53203
PHONE: (262) 763-1083
EMAIL: spenser.dooner@we-energies.com

CITY OF WATERTOWN
WATER/WASTE WATER DIVISION
PETER HARTZ
800 HOFFMANN DR
WATERTOWN, WI 53094
PHONE: (920) 262-4085
EMAIL: phartz@watertownwi.gov

WE ENERGIES
ELECTRIC
ERIC KICKHAVER
500 S 116TH STREET
WEST ALLIS, WI, 53214
PHONE: (262) 806-9197
EMAIL: eric.kickhaver1@we-energies.com

ORDER OF SECTION 2 DETAIL SHEETS

GENERAL NOTES
PROJECT OVERVIEW
TYPICAL SECTIONS
CONSTRUCTION DETAILS
REMOVAL PLANS
PLAN DETAILS
CURB RAMP DETAILS
JOINT DETAILS
EROSION CONTROL
STORM SEWER
WATERMAIN AND SANITARY SEWER PLAN
PERMANENT SIGNING & MARKING PLAN
DETOUR PLAN

CITY OF WATERTOWN CONTACT

ANDREW BEYER, P.E.
DPW/CITY ENGINEER
106 JONES STREET
WATERTOWN, WI 53094
PHONE: 920-262-4060
EMAIL: abeyer@watertownwi.gov

DESIGN PROJECT MANAGER

ASHLEY NELSON, P.E.
ROBERT E. LEE & ASSOCIATES, INC.
1250 CENTENNIAL CENTRE BOULEVARD
HOBART, WI 54155
PHONE: 920-554-4526
EMAIL: anelson@releeinc.com

CITY OF WATERTOWN CONTACT

RYAN THUROW
CITY FORESTER
106 JONES STREET
WATERTOWN, WI 53094
PHONE: 920-262-8080
EMAIL: rthurow@watertownwi.gov

SOIL BORING CONTACT

PATRICK BRAY
INTERTEK PSI
3009 VANDENBROEK RD
KAUKAUNA, WI 54130
PHONE: 920-735-1200
EMAIL: patrick.bray@intertek.com

CITY OF WATERTOWN CONTACT

PETER HARTZ
WATER SYSTEMS MANAGER
800 HOFFMANN DRIVE
WATERTOWN, WI 53094
PHONE: 920-262-4085
EMAIL: phartz@watertownwi.gov

WISDOT PROJECT MANAGER

DELLA KOENIG, P.E.
SOUTHWEST REGION
2101 WRIGHT ST
MADISION, WI 53704
PHONE: 608-246-7963
EMAIL: della.koenig@dot.wi.gov

CITY OF WATERTOWN CONTACT

MAUREEN MCBROOM
STREET DEPARTMENT
811 S FIRST ST
WATERTOWN, WI 53094
PHONE: 920-262-4047
EMAIL: swinkelman@watertownwi.gov

HISTORY SURVEYOR

GREG RAINKA
COMMONWEALTH HERITAGE GROUP
8669 N DEERWOOD DR
MILWAUKEE, WI 53209
PHONE: 414-446-4121
EMAIL: grainka@chg-inc.com

WISCONSIN DNR LIAISON

ERIC HEGGELUND
SOUTHWEST REGION
2101 WRIGHT ST
MADISON, WI 53704
PHONE: 608-228-7927
EMAIL: eric.heggelund@wisconsin.gov

REAL ESTATE SERVICES

HAAKON HAGEMEISTER
STEIGERWALDT
856 N 4TH ST.
TOMAHAWK, WI 54487
PHONE: 715-409-8536
EMAIL: haakon.h@steigerwaldt.com

CITY OF WATERTOWN CONTACT

MAUREEN MCBROOM
STORM WATER: ENGINEERING DIVISION
106 JONES ST
WATERTOWN, WI 53094
PHONE: 920-206-4264
EMAIL: MMcBroom@watertownwi.gov

GENERAL NOTES

THE LOCATIONS OF EXISTING AND PROPOSED UTILITY INSTALLATIONS AS SHOWN ON THE PLANS ARE APPROXIMATE. THERE MAY BE OTHER UTILITY INSTALLATIONS WITHIN THE PROJECT AREA THAT ARE NOT SHOWN.

CONTRACTOR WILL BE RESPONSIBLE FOR RESHAPING AND SEEDING ANY PREVIOUSLY GRASSED AREAS WHICH ARE DISTURBED BY OPERATIONS, OUTSIDE OF THE NORMAL CONSTRUCTION LIMITS.

HMA PAVEMENT WEIGHT CALCULATIONS ARE BASED ON 115 LBS/SY/IN.

NO TREES OR SHRUBS ARE TO BE REMOVED WITHOUT THE APPROVAL OF THE ENGINEER.

THE CONTRACTOR IS TO WORK WITH UTMOST CARE AND PROTECT ALL SURVEY MARKERS. REMOVAL OF ANY SURVEY MARKER IS TO BE WITH THE APPROVAL OF THE ENGINEER.

TOPSOIL SHALL BE PLACED 1-INCH BELOW THE TOP OF ADJACENT CONCRETE CURBS OR SIDEWALKS.

WHEN THE QUANTITY OF THE ITEMS OF BASE AGGREGATE, SUBBASE OR HMA PAVEMENT IS MEASURED FOR PAYMENT BY THE TON OR CUBIC YARD, THE DEPTH OR THICKNESS OF THE LAYERS SHOWN ON THE PLAN IS APPROXIMATE AND THE ACTUAL THICKNESS WILL DEPEND ON THE DISTRIBUTION OF THE MATERIAL AS DIRECTED BY THE ENGINEER.

EROSION CONTROL FEATURES AS SHOWN IN THE PLANS ARE AT APPROXIMATE LOCATIONS. EXACT LOCATIONS WILL BE DETERMINED BY THE CONTRACTOR'S EROSION CONTROL IMPLEMENTATION PLAN (ECIP) AND APPROVED BY THE ENGINEER. MAINTAIN EROSION CONTROL MEASURES UNTIL SUCH A TIME AS THE ENGINEER DETERMINES THE MEASURE IS NO LONGER NECESSARY.

RADIUS DIMENSIONS FOR THE CURB AND GUTTER ARE TO THE BACK OF CURB UNLESS OTHERWISE NOTED.

PAVEMENT REMOVAL WILL BE TO THE NEAREST JOINT OR A SAWED EDGE WILL BE REQUIRED AS DIRECTED BY THE ENGINEER.

PIPE AND INLET ELEVATIONS AS SHOWN ON THE PLANS MAY BE ADJUSTED BY THE ENGINEER TO FIT EXISTING FIELD CONDITIONS

CURB AND GUTTER PLAN GRADES ARE AT THE FLANGE LINE UNLESS OTHERWISE NOTED.

THE CONTRACTOR'S PAVING OPERATION SHALL BE CONSISTENT WITH THE TYPICAL SECTIONS AND CONSTRUCTED TO PREVENT LONGITUDINAL JOINTS FROM BEING LOCATED WITHIN A DRIVING OR PARKING LANE.

SAWCUTS, AS SHOWN ON THE PLANS, ARE SUGGESTED LOCATIONS AND MAY BE ADJUSTED AT THE DISCRETION OF THE ENGINEER TO BETTER SUIT FIELD CONDITIONS.

CONTRACTOR SHALL MAINTAIN ACCESS TO ALL DRIVEWAYS AT ALL TIMES EXCEPT WHEN PAVING OR PIPE LAYING OPERATIONS REQUIRE THE DRIVEWAY TO BE CLOSED. ACCESS TO DRIVEWAYS SHALL BE RE-ESTABLISHED IMMEDIATELY AFTER OPERATIONS ARE COMPLETED. ACCESS SHALL BE PROVIDED DURING ALL NON-WORKING HOURS.

TRAFFIC CONTROL DEVICES SHALL BE ADJUSTED TO FIT FIELD CONDITIONS AS DIRECTED BY THE ENGINEER.

PRIOR TO ORDERING DRAINAGE PIPES, THE CONTRACTOR SHALL FIELD VERIFY RELATED DRAINAGE INFORMATION IN THE PLAN WITH THE ENGINEER.

RUNOFF COEFFICIENT TABLE

	HYDROLOGIC SOIL GROUP											
	A			B			C			D		
	SLOPE RANGE (PERCENT)			SLOPE RANGE (PERCENT)			SLOPE RANGE (PERCENT)			SLOPE RANGE (PERCENT)		
LAND USE:	0-2	2-6	6 & OVER	0-2	2-6	6 & OVER	0-2	2-6	6 & OVER	0-2	2-6	6 & OVER
ROW CROPS:	.08 .22	.16 .30	.22 .38	.12 .26	.20 .34	.27 .44	.15 .30	.24 .37	.33 .50	.19 .34	.28 .41	.38 .56
MEDIAN STRIPTURF:	.19 .24	.20 .26	.24 .30	.19 .25	.22 .28	.26 .33	.20 .26	.23 .30	.30 .37	.20 .27	.25 .32	.30 .40
SIDE SLOPETURF:			.25 .32			.27 .34			.28 .36			.30 .38
PAVEMENT:												
ASPHALT:	.70 - .95											
CONCRETE:	.80 - .95											
BRICK:	.70 - .80											
DRIVES, WALKS:	.75 - .85											
ROOFS:	.75 - .95											
GRAVEL ROADS, SHOULDERS:	.40 - .60											

TOTAL PROJECT AREA = 3.13 ACRES
TOTAL AREA EXPECTED TO BE DISTURBED BY CONSTRUCTION ACTIVITIES = 3.13 ACRES

DIGGERS HOTLINE
Dial 811 or (800)242-8511
www.DiggersHotline.com

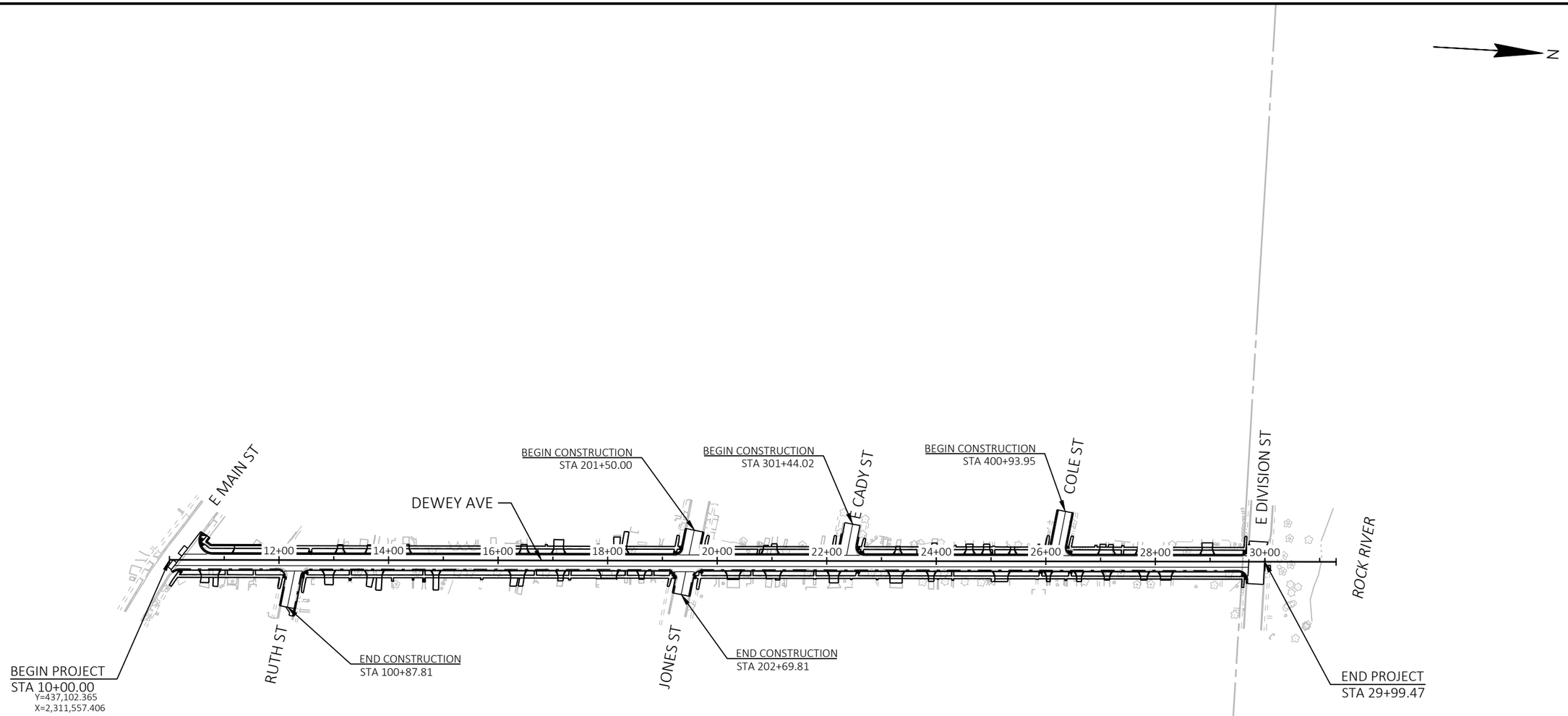

PROJECT NO: 3997-01-79/80	HWY: DEWEY AVE	COUNTY: JEFFERSON	PROJECT OVERVIEW	SHEET 3	E

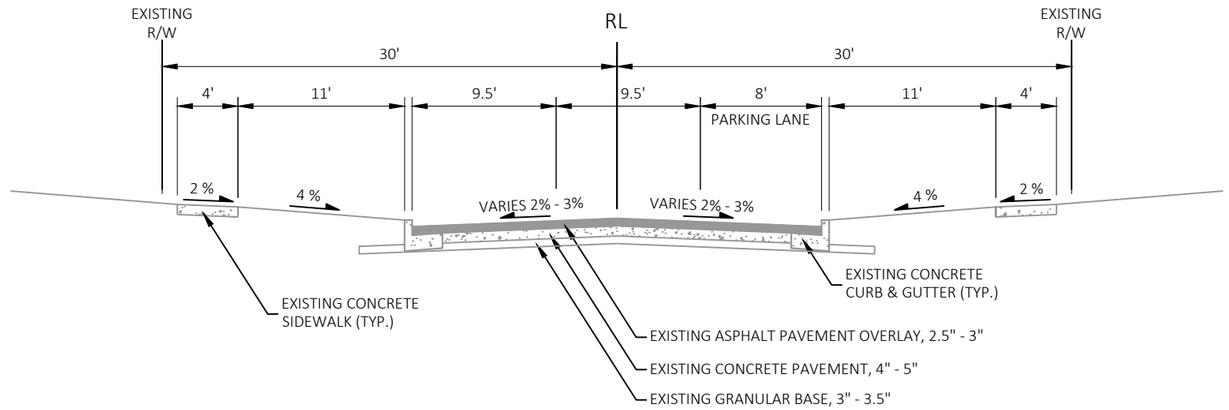

EXISTING TYPICAL SECTION - DEWEY AVE

STA 10+17 - 29+71

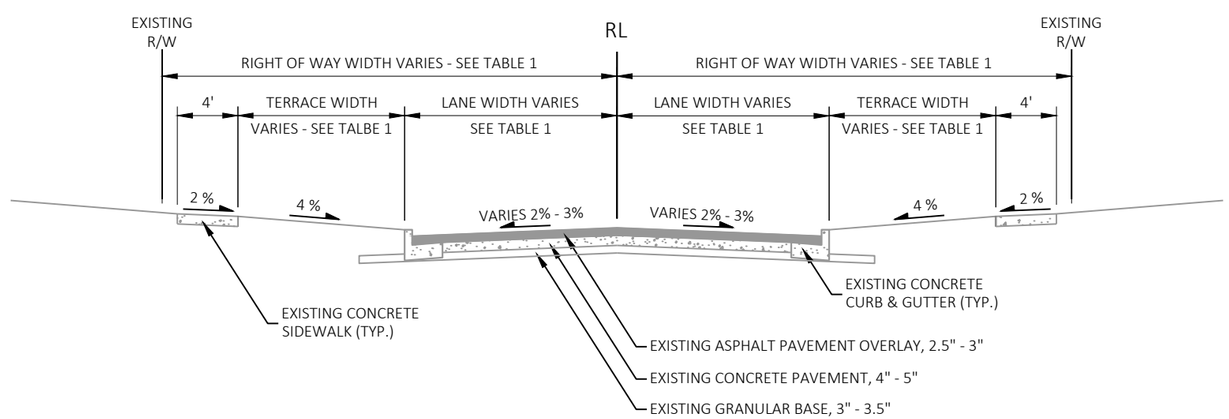

EXISTING TYPICAL SECTION - SIDE ROADS

RUTH ST
JONES ST
CADY ST
COLE ST

TABEL 1

SIDE ROAD	RIGHT OF WAY WIDTH (FT)	LANE WIDTH (FT)	TERRACE WIDTH (FT)
RUTH ST	25	15	5
JONES ST (WEST)	25	17.5	7
JONES ST (EAST)	30	16.5	8
CADY ST	30	16.5	8
COLE ST	25	15.25	4

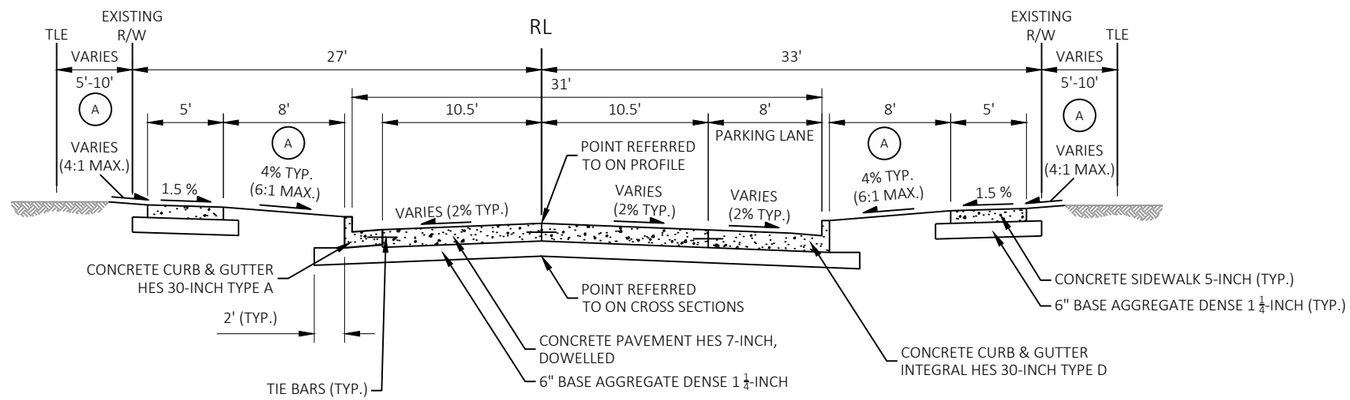

FINISHED TYPICAL SECTION - DEWEY AVE

STA 10+17 - 29+71

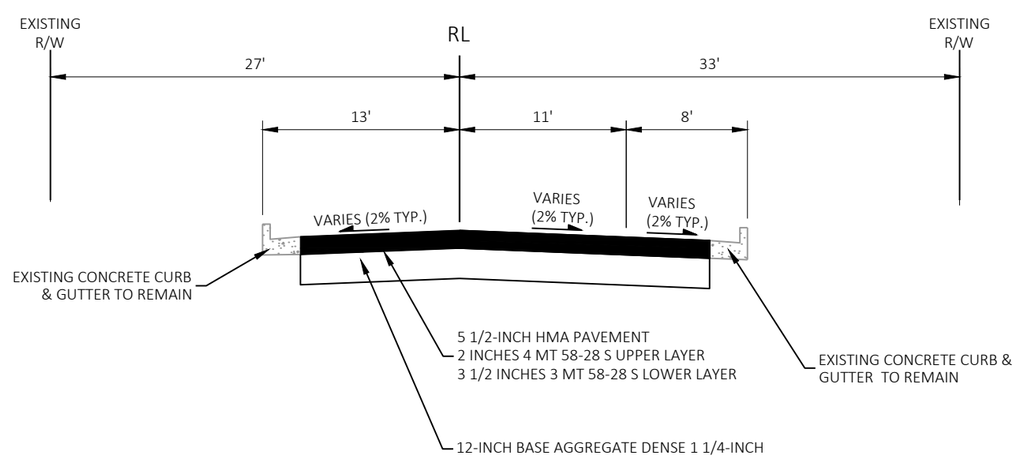

FINISHED TYPICAL SECTION - DIVISION ST

STA 500+74 - STA 501+52

(A) RESTORE ALL DISTURBED AREAS WITH SEED MIXTURE NO. 40, TEMPORARY SEED, FERTILIZER TYPE A, AND EROSION MAT URBAN CLASS I TYPE A

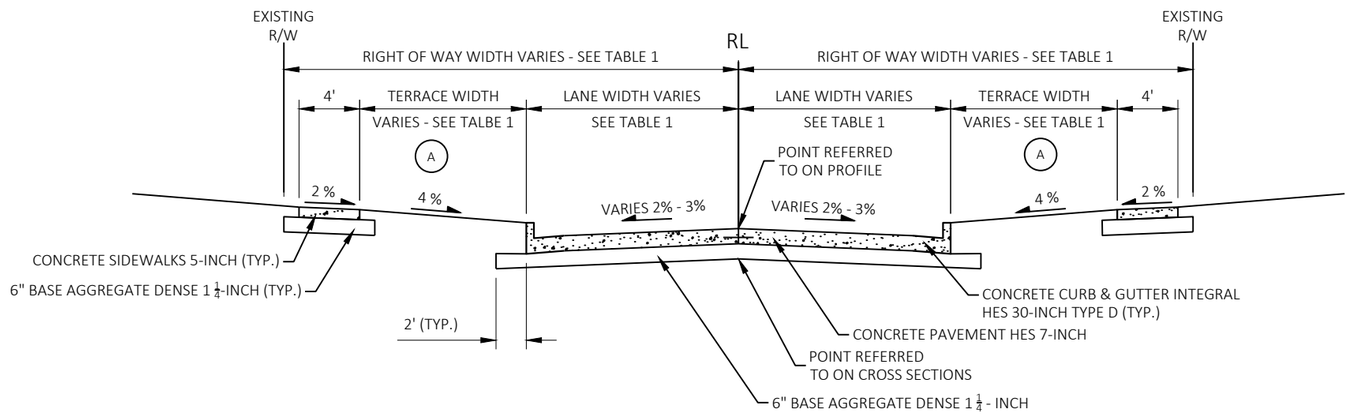

FINISHED TYPICAL SECTION - SIDE ROADS

RUTH ST
JONES ST
CADY ST
COLE ST

TABEL 1

SIDE ROAD	RIGHT OF WAY WIDTH (FT)	LANE WIDTH (FT)	TERRACE WIDTH (FT)
RUTH ST	25	15	5
JONES ST (WEST)	25	17.5	7
JONES ST (EAST)	30	16.5	8
CADY ST	30	16.5	8
COLE ST	25	15.25	4

(A) RESTORE ALL DISTURBED AREAS WITH SEED MIXTURE NO. 40, TEMPORARY SEED, FERTILIZER TYPE A, AND EROSION MAT URBAN CLASS I TYPE A

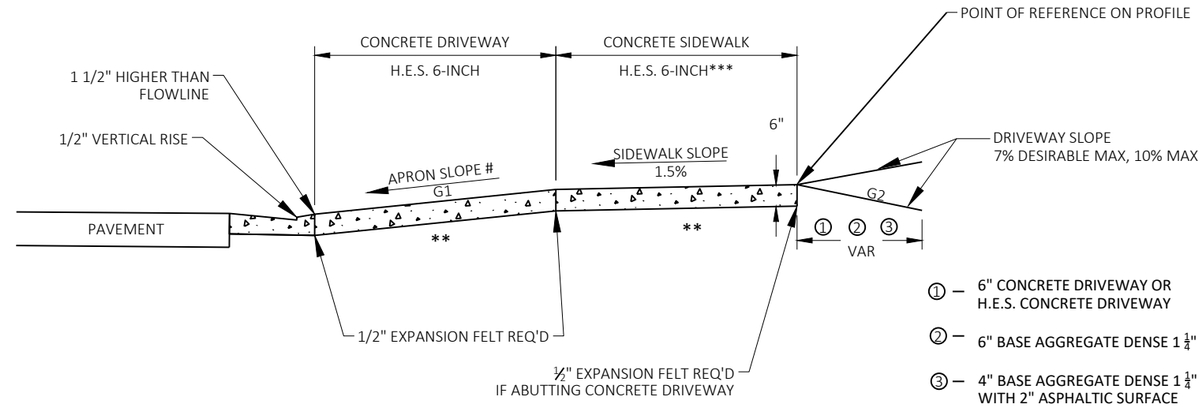

TYPICAL SIDEWALK SECTION

① – 6" CONCRETE DRIVEWAY OR H.E.S. CONCRETE DRIVEWAY

② – 6" BASE AGGREGATE DENSE 1 ¼"

③ – 4" BASE AGGREGATE DENSE 1 ¼" WITH 2" ASPHALTIC SURFACE

** 6" BASE AGGREGATE DENSE 1 ¼" REQ'D UNDER CONCRETE DRWY

*** CONCRETE SIDEWALK H.E.S. 6-INCH PAID FOR AS "CONCRETE DRIVEWAY H.E.S. 6-INCH"

#

TERRACE WIDTH	APRON SLOPE (G1)		
	MIN %	DESIRABLE %	MAX %
3 FT	7.0	8.5	9.0
4 FT	5.0	7.0	9.0
5 FT	4.0	7.0	9.0
6 FT	4.0	7.0	9.0
7 FT	3.5	7.0	9.0
8 FT	3.0	7.0	9.0

NOTE:
ALGEBRAIC DIFFERENCE BETWEEN TANGENT GRADES G1 & G2 TO NOT EXCEED 15%

DEPRESS SIDEWALK PROFILE IF DRIVEWAY APRON EXCEEDS MAX SLOPE

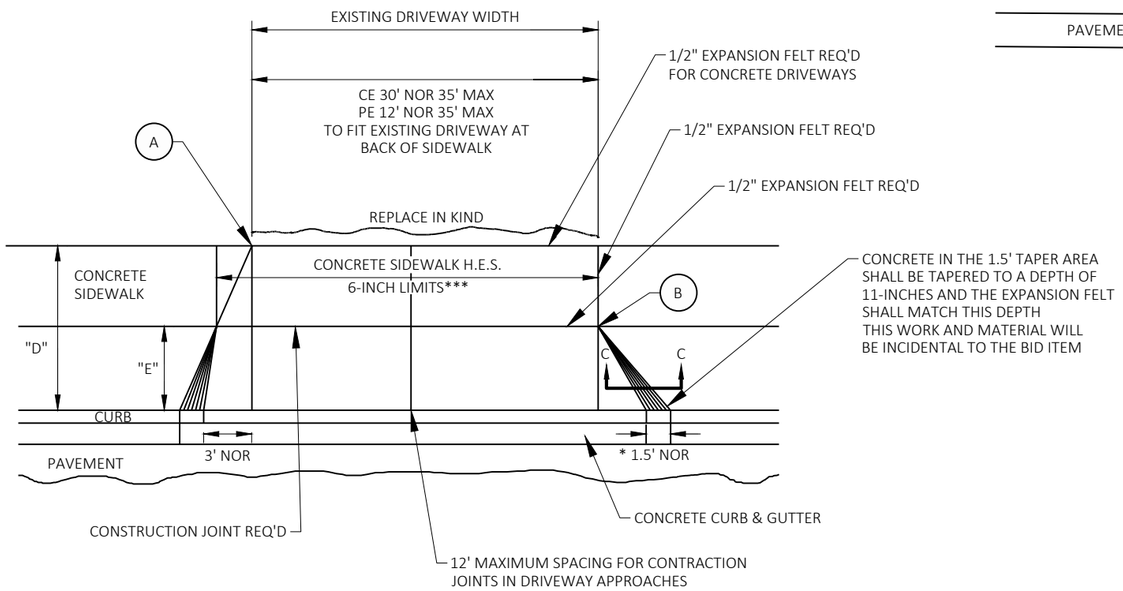

PLAN VIEW

Ⓐ WHEN "D" IS 13' OR LESS, ALIGN TAPER WITH BACK OF SIDEWALK

Ⓑ WHEN "D" IS GREATER THAN 13', ALIGN TAPER WITH FRONT OF SIDEWALK

* WHEN "E" =0
MAKE CURB TAPER 5'

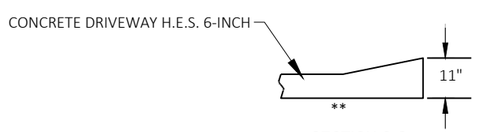

SECTION C-C

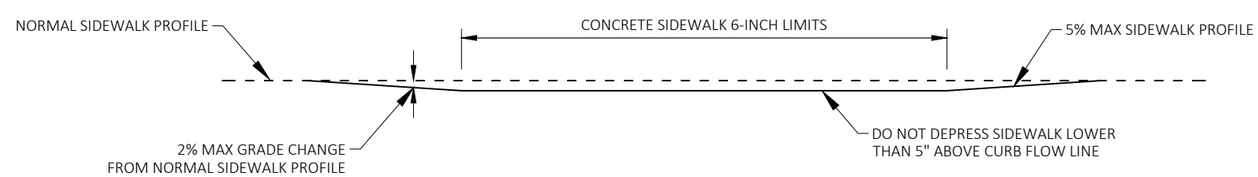

DEPRESSED SIDEWALK PROFILE DETAIL

DRIVEWAY ENTRANCE WITH SIDEWALK, CURB & GUTTER

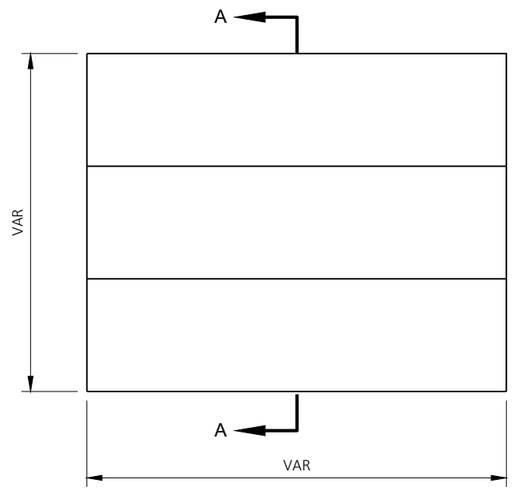

CONCRETE STEPS TO BE POURED MONOLITHICALLY

TOP VIEW

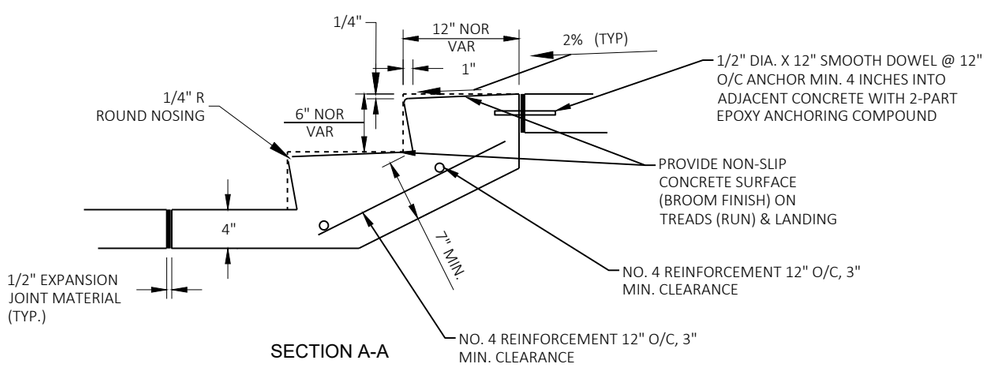

SECTION A-A

CONCRETE STEP

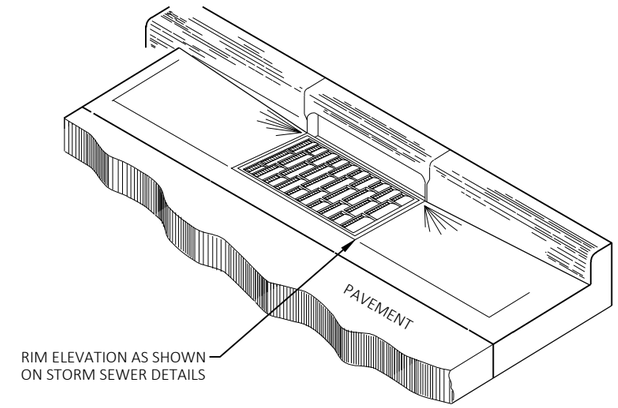

DETAIL OF CURB AND GUTTER AT INLETS

SEE SDD CONCRETE CURB, TIES AND CURB AND GUTTER APPLICATIONS FOR DETAILS NOT SHOWN

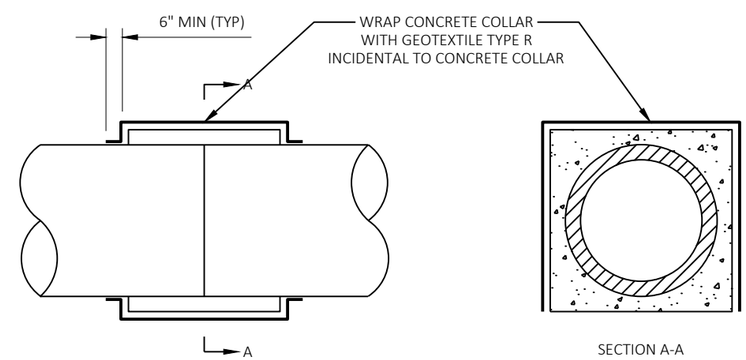

SECTION A-A

CONCRETE COLLAR

SEE SDD JOINT TIES FOR CONCRETE PIPE AND CONCRETE PIPE COLLARS FOR DETAILS NOT SHOWN

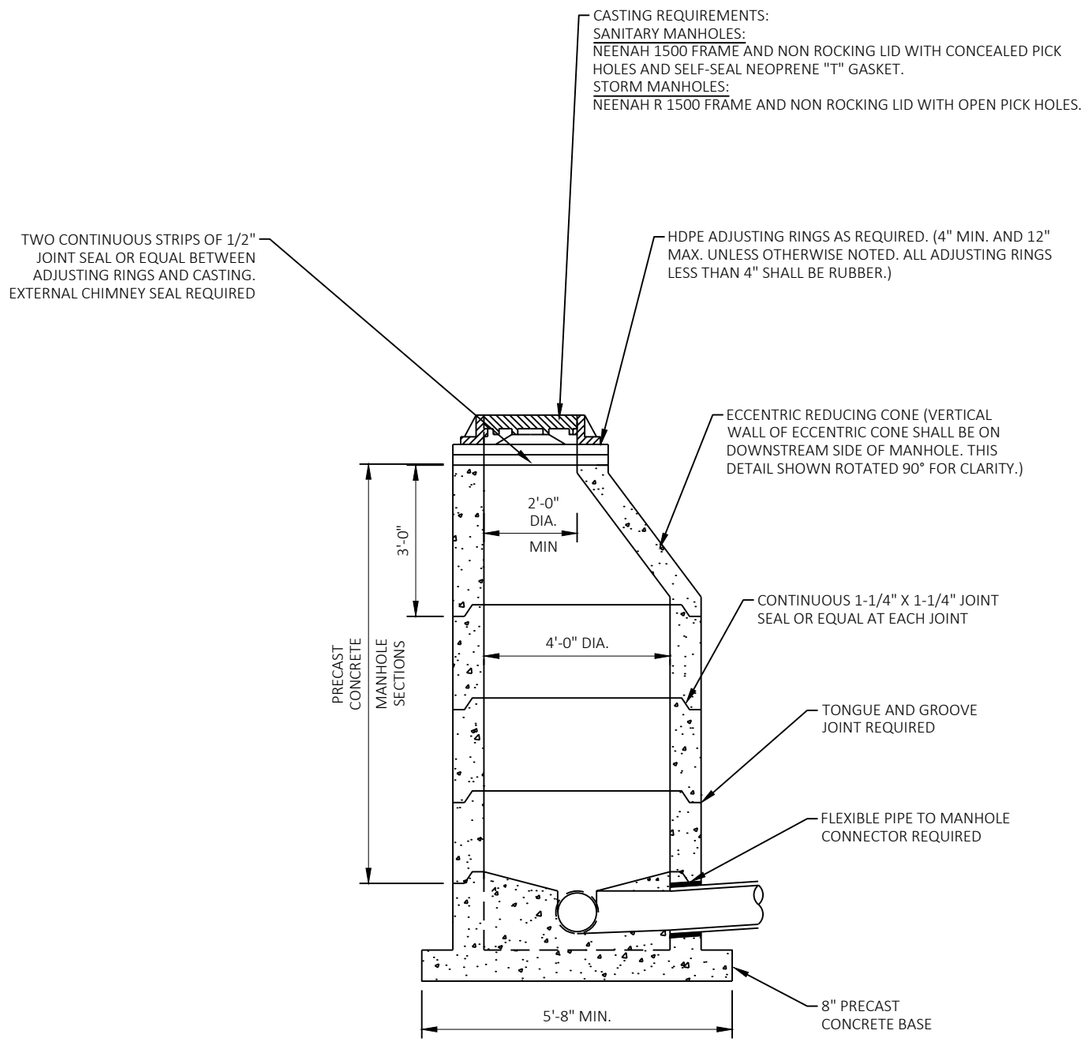

SANITARY AND STORM STANDARD MANHOLE 8"-24" (INCLUSIVE)

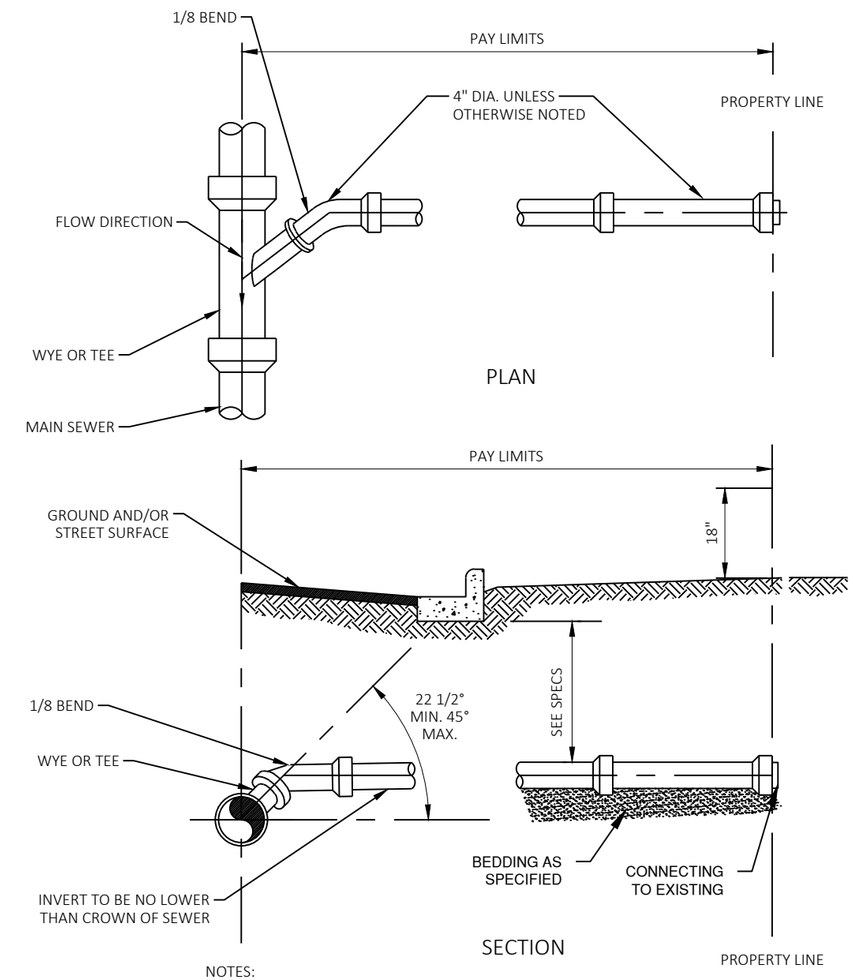

NOTES:
1. SADDLE CONNECTIONS NOT PERMITTED.
2. BACKFILL TO CONFORM TO MAIN SEWER.
3. MINIMUM SLOPE: 1/8 INCH PER FOOT.
4. MAXIMUM SLOPE: 1/2 INCH PER FOOT.

STANDARD SERVICE LATERAL

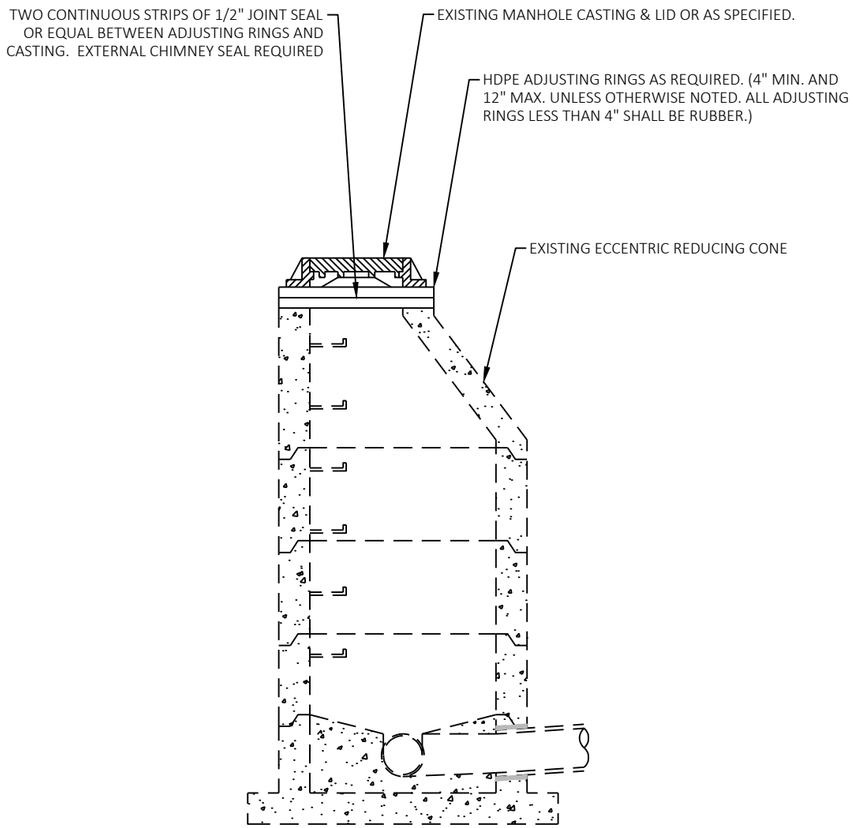

TYPICAL MANHOLE ADJUSTMENT DETAIL

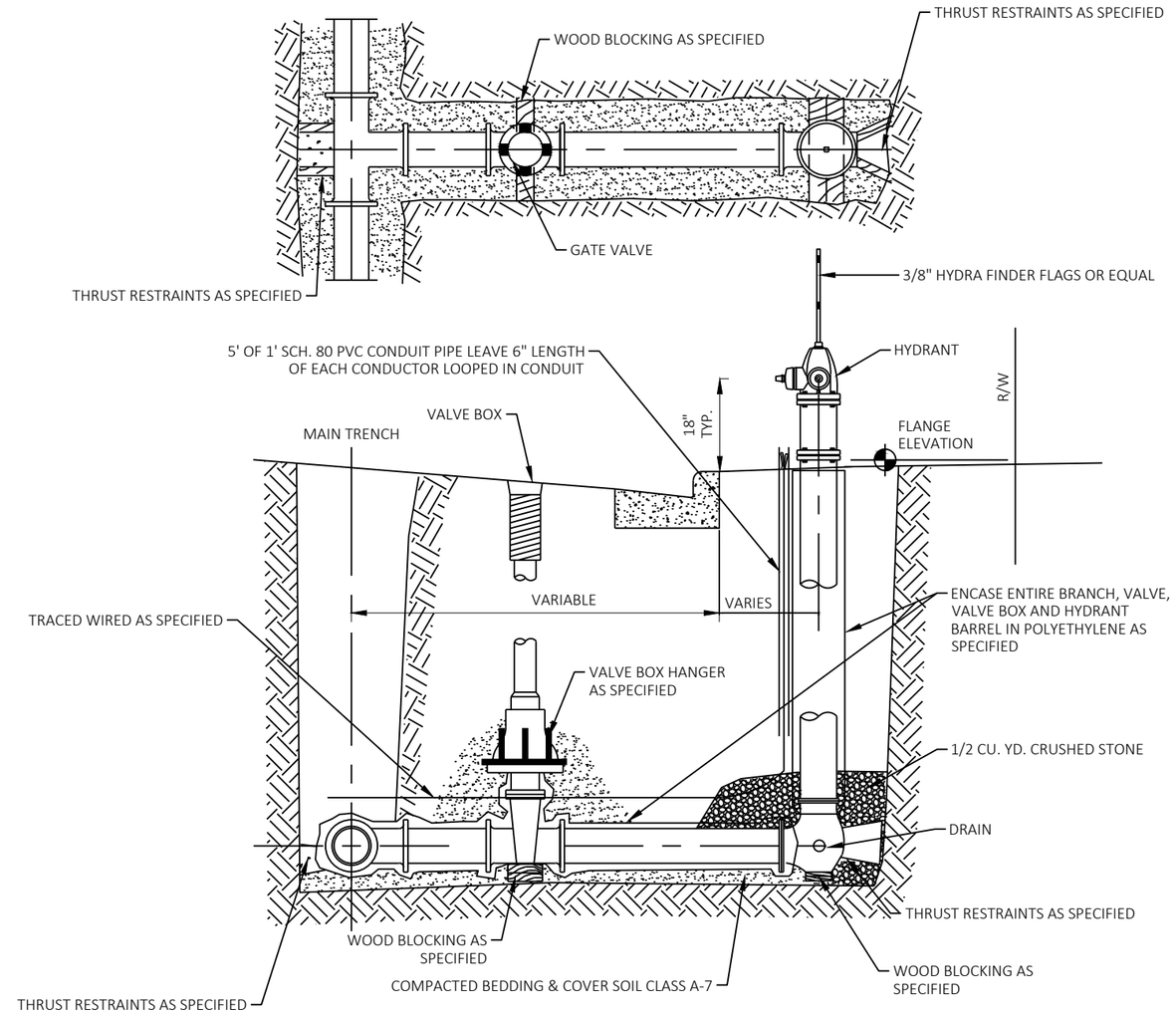

STANDARD HYDRANT SETTING CURB SECTION

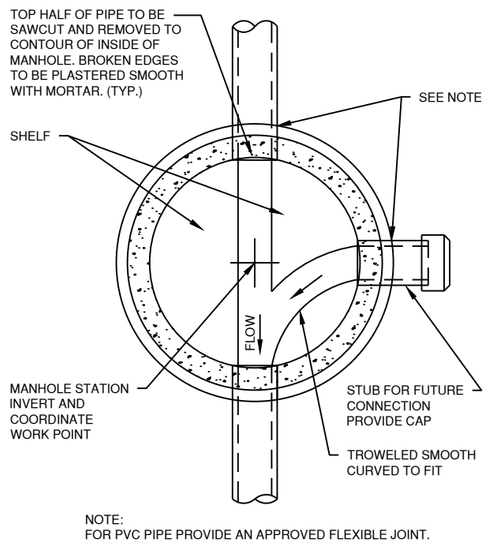

MANHOLE BASE PLAN 8" - 60" (INCLUSIVE)

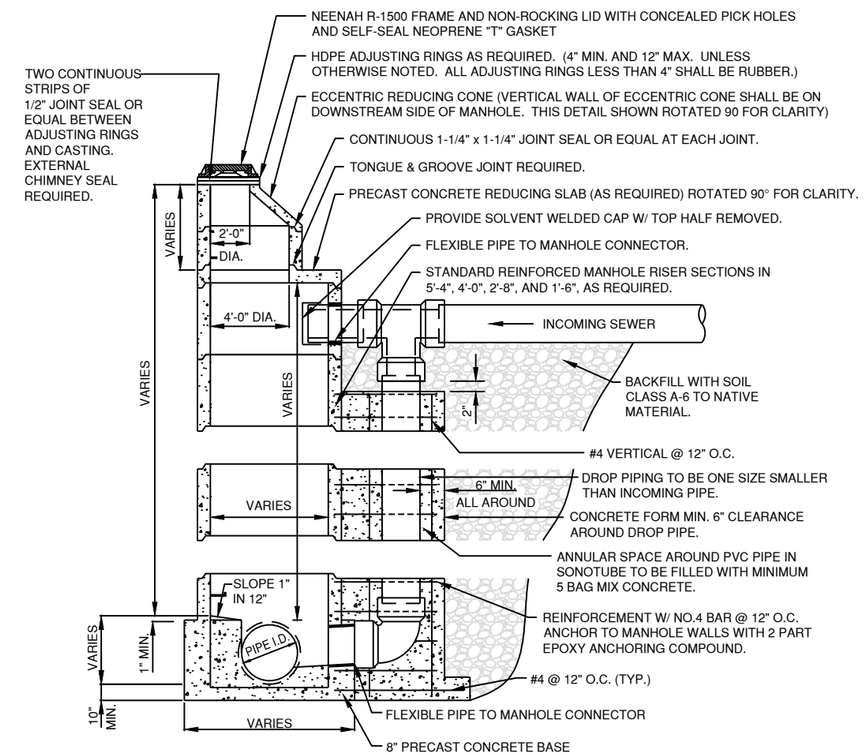

STANDARD PRECAST DROP MANHOLE

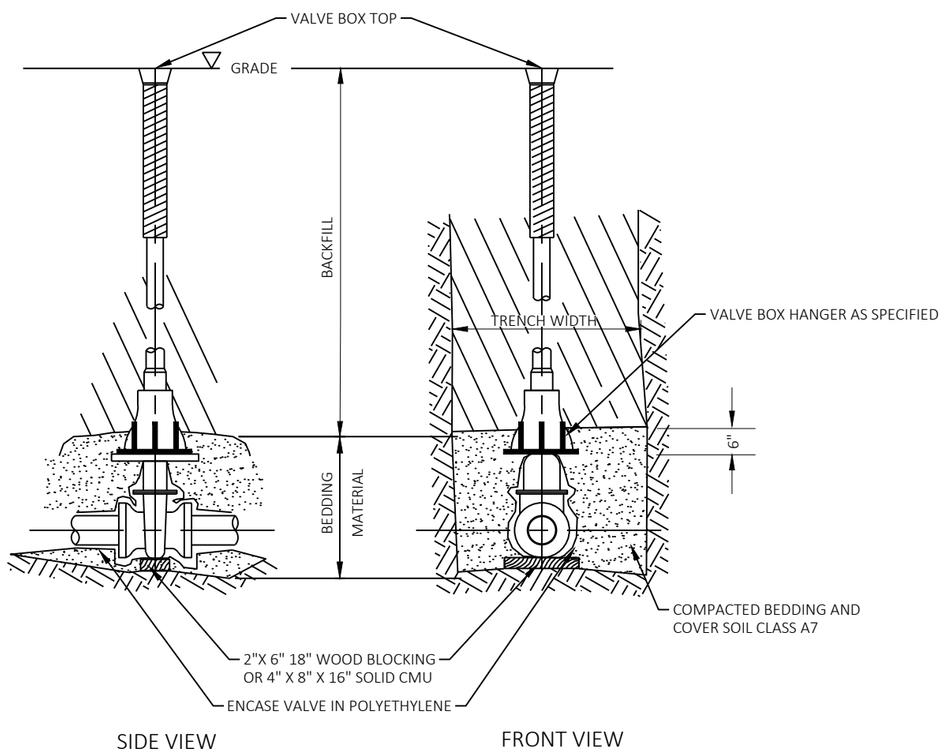

VALVE BOX SETTING

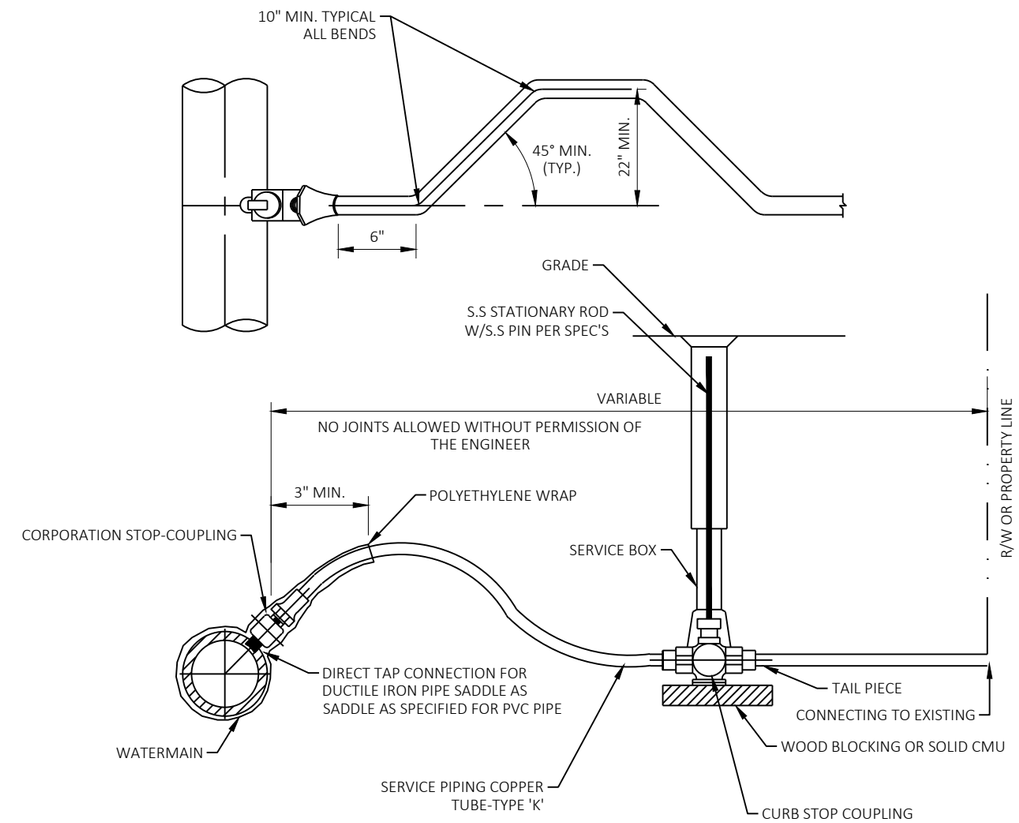

SERVICE PIPE	CORP. STOP	CURB STOP	SERVICE BOX
1"	1"	1"	2-1/2"
1-1/4"	1-1/4"	1-1/4"	3"
1-1/2"	1-1/2"	1-1/2"	3"
2"	2"	2"	3"

FOR A 2" SERVICE TAP ON 6" D.I.
WATERMAIN, A SADDLE IS REQUIRED.

TAP SERVICE PIPING
(COPPER)

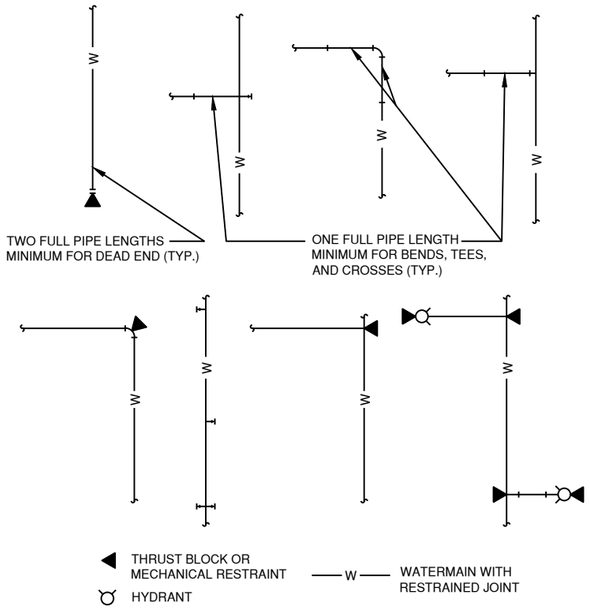

TYPICAL WATERMAIN RESTRAINT REQUIREMENTS

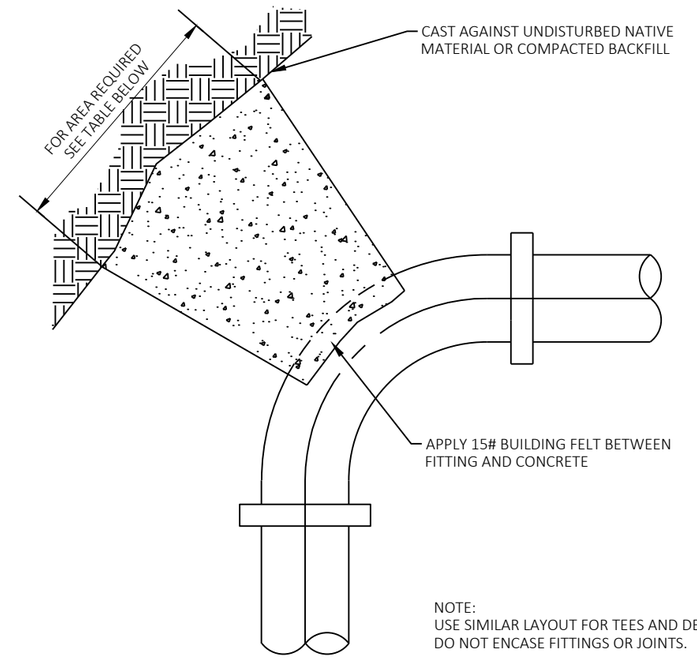

NOTE:
USE SIMILAR LAYOUT FOR TEES AND DEADENDS.
DO NOT ENCASE FITTINGS OR JOINTS.

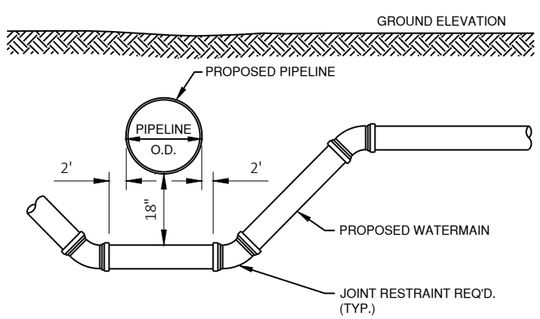

WATERMAIN OFFSET

THRUST BLOCK AREA REQUIREMENTS, S.F.					
DEGREE OF BEND	4" PIPE	6" PIPE	8" PIPE	10" PIPE	12" PIPE
5° TO 22.5°	1.0	1.0	2.0	3.0	4.0
23° TO 45°	1.0	2.0	4.0	6.0	8.0
46° TO 90°	2.0	4.0	7.0	11.0	15.0
TEE OR DEAD END	2.0	3.0	5.0	8.0	10.0

TYPICAL THRUST BLOCK

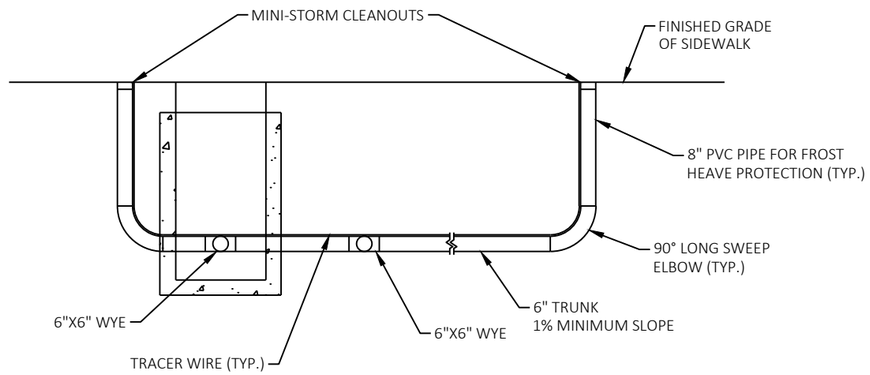

SECTIONA-A

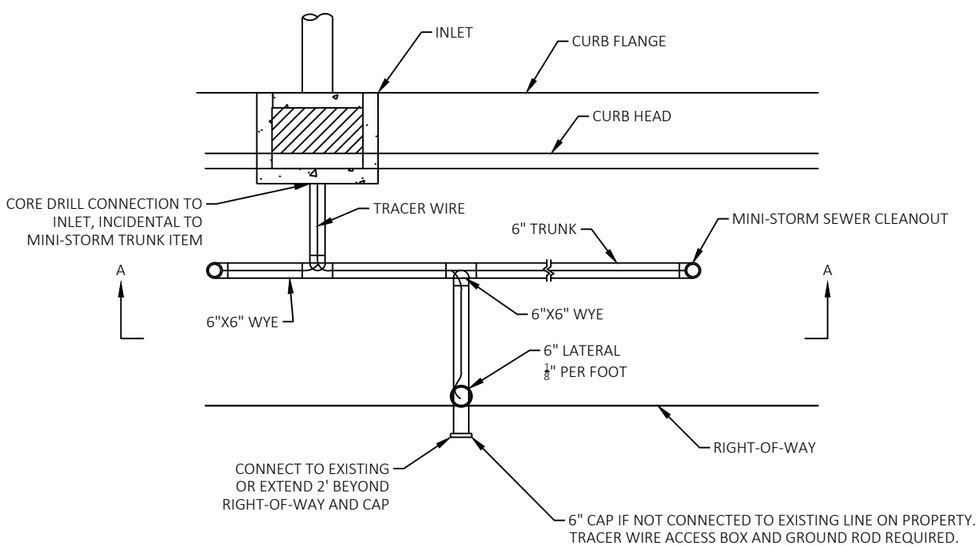

PLAN VIEW

MINI STORM TRUNK AND LATERAL DETAIL

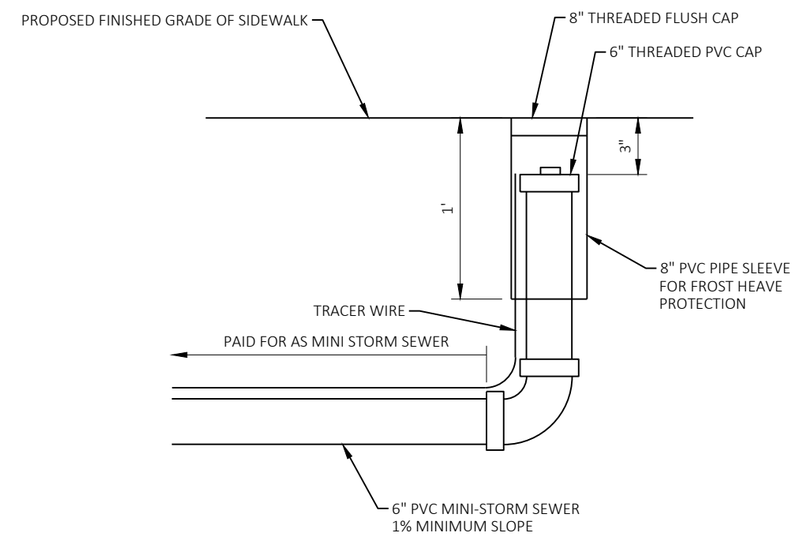

MINI STORM SEWER CLEANOUT

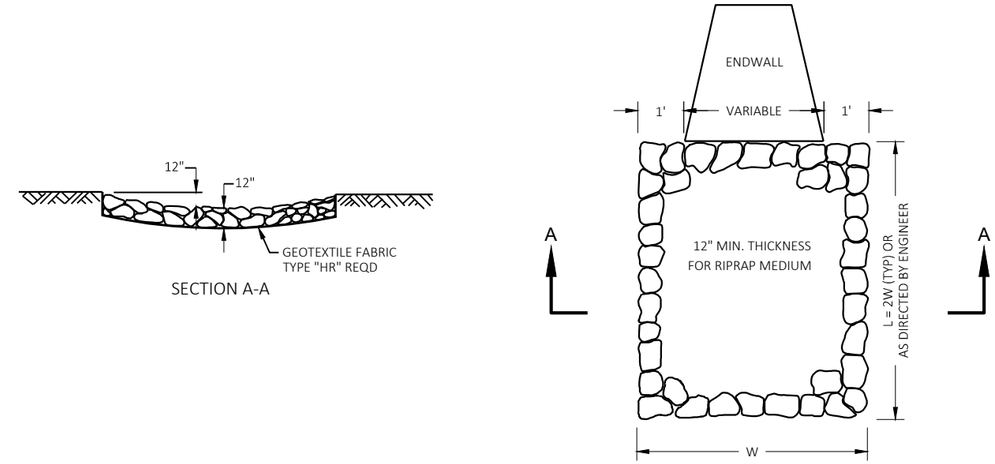

RIPRAP TREATMENT AT ENDWALLS

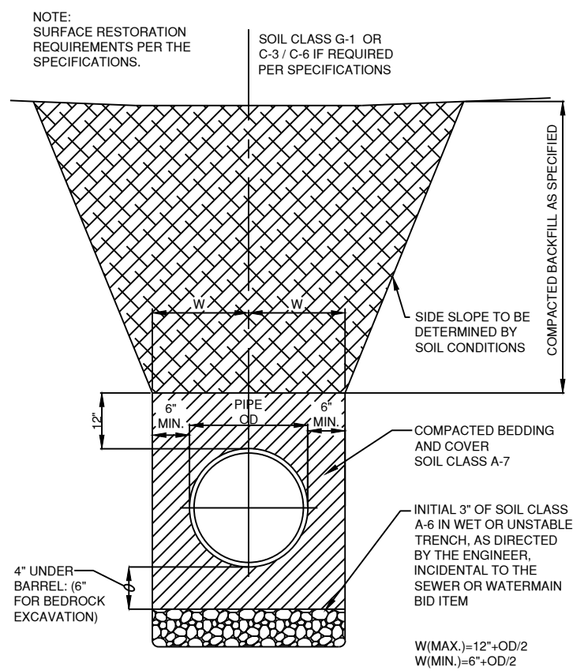

PVC SEWER AND WATERMAIN BEDDING AND TRENCH DETAIL

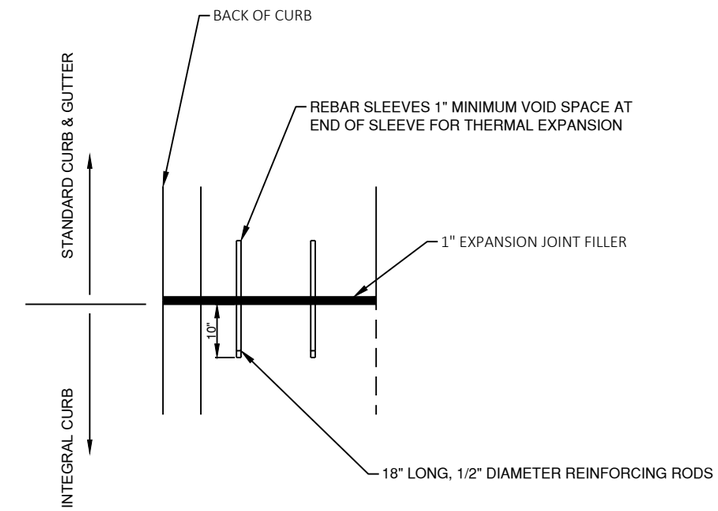

CURB TRANSITION DETAIL

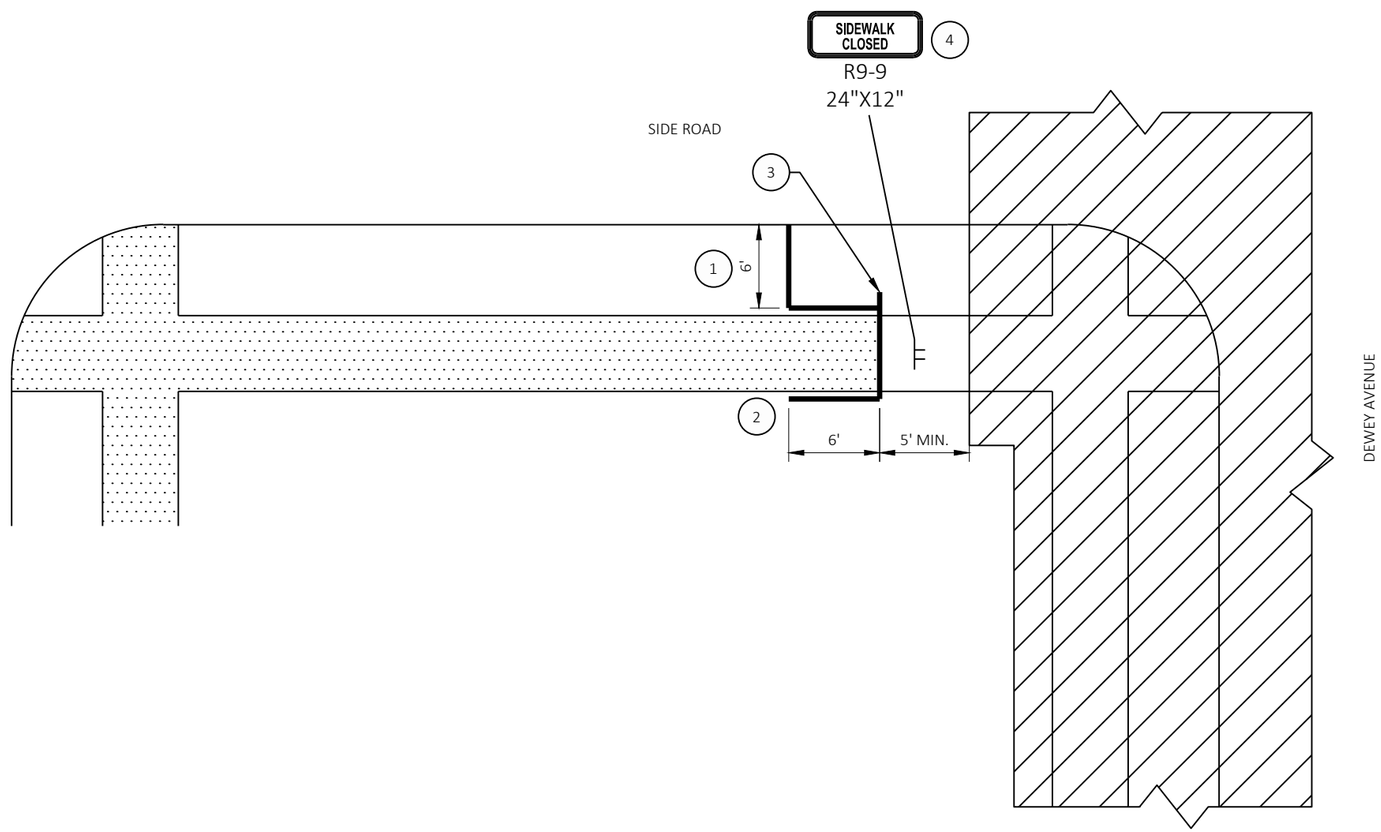

LEGEND

- WORK ZONE
- OPEN TO PEDESTRIAN TRAFFIC
- TEMPORARY PEDESTRIAN BARRICADE
- SIGN ON TEMPORARY SUPPORT
- SIGN ON PERMANENT SUPPORT

GENERAL NOTES

WHERE TEMPORARY BARRICADE RUNS PARALLEL ALONG SIDEWALK, PLACE THE FACE OF THE BARRICADE AT THE EDGE OF THE SIDEWALK.

SIGNS THAT REMAIN IN PLACE LESS THAN SEVEN CONTINUOUS DAYS AND NIGHTS MAY BE MOUNTED ON PORTABLE SUPPORTS.

PLACE TEMPORARY PEDESTRIAN BARRICADE TO FIT FIELD CONDITIONS, AVOIDING CONFLICT WITH DRIVEWAYS AND OTHER EXISTING FEATURES.

IF TERRACE IS LESS THAN 6 FEET WIDE, OMIT TEMPORARY PEDESTRIAN BARRICADE FROM THE SIDEWALK TO THE CURB.

PLACE BARRICADE CLOSURE SO THAT THE TEMPORARY PEDESTRIAN BARRICADE END IS AT THE LAST OPEN SIDEWALK ACCESS TO RESIDENCES OR BUSINESSES BEFORE THE SIDEWALK CLOSURE.

IF TEMPORARY PEDESTRIAN BARRICADE PANEL IS WIDER THAN THE SIDEWALK WIDTH, THE PORTION OF EXCESS PANEL SHOULD EXTEND INTO THE TERRACE.

MOUNTAIN HEIGHT OF 5 FEET FROM THE SURFACE TO THE BOTTOM OF THE SIGN.

SIDEWALK CLOSURE AT SIDEROAD INTERSECTION

E MAIN STREET
RUTH STREET
JONES STREET
CADY STREET
COLE STREET
E DIVISION ST

2

LEGEND

GR	CLEARING & GRUBBING
RCG	REMOVING CURB & GUTTER
RCP	REMOVING CONCRETE PAVEMENT
RAS	REMOVING ASPHALTIC SURFACE
RCS	REMOVING CONCRETE SIDEWALK
RSS	REMOVING SMALL SIGN SUPPORT & TYPE II SIGN
RSR	REMOVE, SALVAGE, AND REINSTALL SIGN
XXXX	ASPHALT SAWCUT
YYYY	CONCRETE SAWCUT

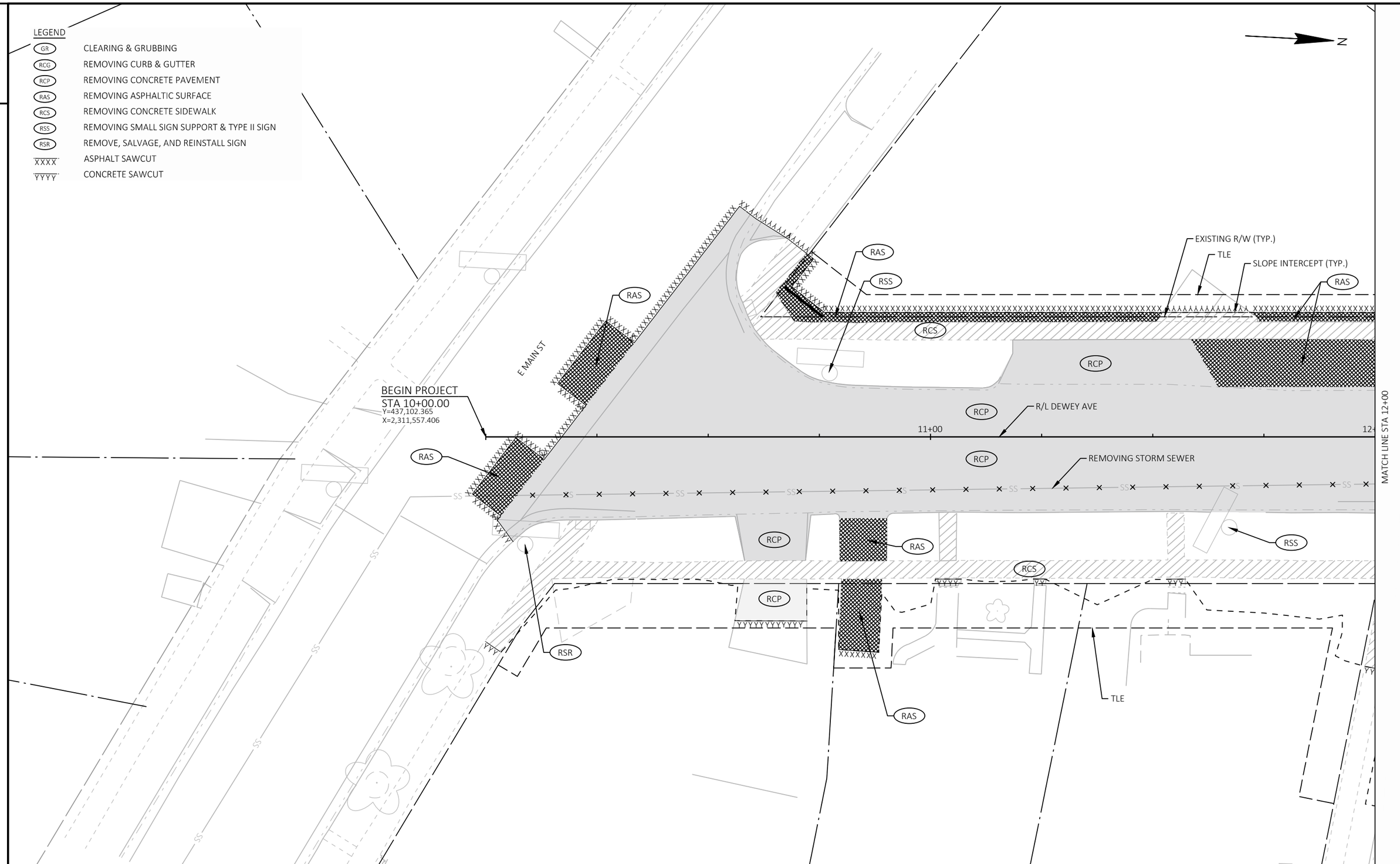

2

PROJECT NO: 3997-01-79/80	HWY: DEWEY AVE	COUNTY: JEFFERSON	REMOVAL DETAILS - DEWEY AVE	SHEET 17	E

FILE NAME : R:\5300\5364\5364088\39970179\SHEETS\021101-RM.DWG
LAYOUT NAME - 01
PLOT DATE : 9/12/2025 3:38 PM
PLOT BY : ERIC HANDLER
PLOT NAME :
PLOT SCALE : 1 IN:20 FT
WISDOT/CADDS SHEET 42

2

N

EXISTING TREE TO REMAIN. TREE PROTECTION PERMIT REQUIRED. SEE SPECIAL PROVISIONS.

SLOPE INTERCEPT (TYP.)

TLE

EXISTING R/W (TYP.)

EXISTING TREE TO REMAIN. TREE PROTECTION PERMIT REQUIRED. SEE SPECIAL PROVISIONS.

RAS

RSS

RCS

RSR

RCP

RAS

RCP

RCP

RCS

RCP

MATCH LINE STA 12+00

MATCH LINE STA 15+00

R/L DEWEY AVE

REMOVING MANHOLE

13+00

14+00

REMOVING INLET

REMOVING INLET

RCP

REMOVING STORM SEWER

REMOVING MANHOLE

REMOVING STORM SEWER

REMOVING STORM SEWER

RSR

RSS

RCP

RCP

RCP

RSS

RCS

RCS

RCP

RCP

REMOVING STORM SEWER

REMOVING MANHOLE

REMOVING STORM SEWER

TLE

EXISTING TREE TO REMAIN. TREE PROTECTION PERMIT REQUIRED. SEE SPECIAL PROVISIONS.

RAS

R/L RUTH ST

EXISTING TREE TO REMAIN. TREE PROTECTION PERMIT REQUIRED. SEE SPECIAL PROVISIONS.

101+00

END CONSTRUCTION STA 101+01.80

LEGEND

GR	CLEARING & GRUBBING
RCG	REMOVING CURB & GUTTER
RCP	REMOVING CONCRETE PAVEMENT
RAS	REMOVING ASPHALTIC SURFACE
RCS	REMOVING CONCRETE SIDEWALK
RSS	REMOVING SMALL SIGN SUPPORT & TYPE II SIGN
RSR	REMOVE, SALVAGE, AND REINSTALL SIGN
XXXX	ASPHALT SAWCUT
YYYY	CONCRETE SAWCUT

PROJECT NO: 3997-01-79/80	HWY: DEWEY AVE	COUNTY: JEFFERSON	REMOVAL DETAILS - DEWEY AVE	SHEET 18	E

FILE NAME : R:\5300\5364\5364088\39970179\SHEETS\021101-RM.DWG
LAYOUT NAME - 02

PLOT DATE : 9/12/2025 3:38 PM PLOT BY : ERIC HANDLER PLOT NAME : PLOT SCALE : 1 IN:20 FT

WISDOT/CADDS SHEET 42

2

LEGEND

GR	CLEARING & GRUBBING
RCG	REMOVING CURB & GUTTER
RCP	REMOVING CONCRETE PAVEMENT
RAS	REMOVING ASPHALTIC SURFACE
RCS	REMOVING CONCRETE SIDEWALK
RSS	REMOVING SMALL SIGN SUPPORT & TYPE II SIGN
RSR	REMOVE, SALVAGE, AND REINSTALL SIGN
XXXX	ASPHALT SAWCUT
YYYY	CONCRETE SAWCUT

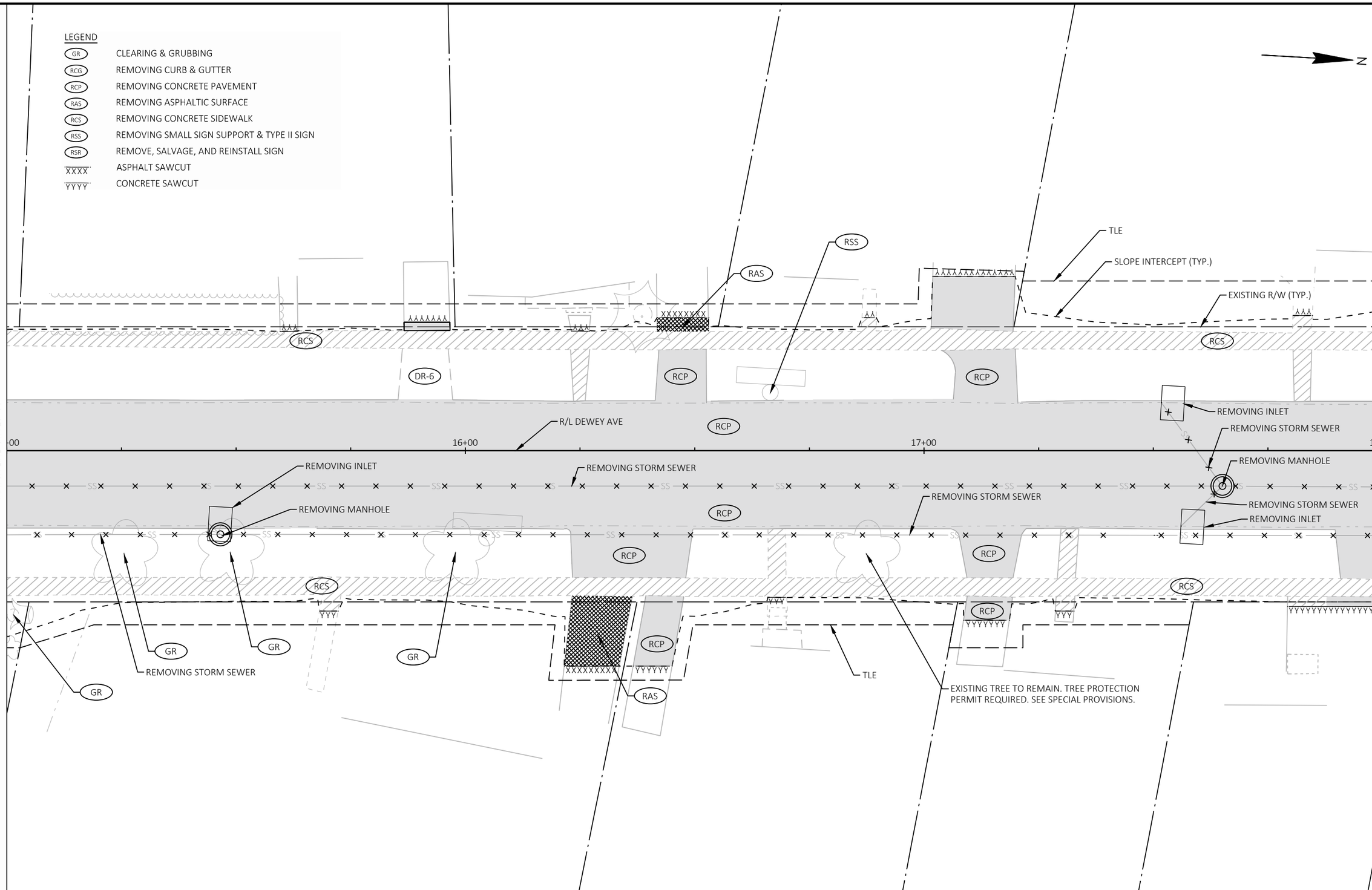

2

PROJECT NO: 3997-01-79/80	HWY: DEWEY AVE	COUNTY: JEFFERSON	REMOVAL DETAILS - DEWEY AVE	SHEET 19	E

FILE NAME : R:\5300\5364\5364088\39970179\SHEETS\021101-RM.DWG
LAYOUT NAME - 03
PLOT DATE : 9/12/2025 3:38 PM
PLOT BY : ERIC HANDLER
PLOT NAME :
PLOT SCALE : 1 IN:20 FT
WISDOT/CADDS SHEET 42

2

LEGEND

GR	CLEARING & GRUBBING
RCG	REMOVING CURB & GUTTER
RCP	REMOVING CONCRETE PAVEMENT
RAS	REMOVING ASPHALTIC SURFACE
RCS	REMOVING CONCRETE SIDEWALK
RSS	REMOVING SMALL SIGN SUPPORT & TYPE II SIGN
RSR	REMOVE, SALVAGE, AND REINSTALL SIGN
XXXX	ASPHALT SAWCUT
YYYY	CONCRETE SAWCUT

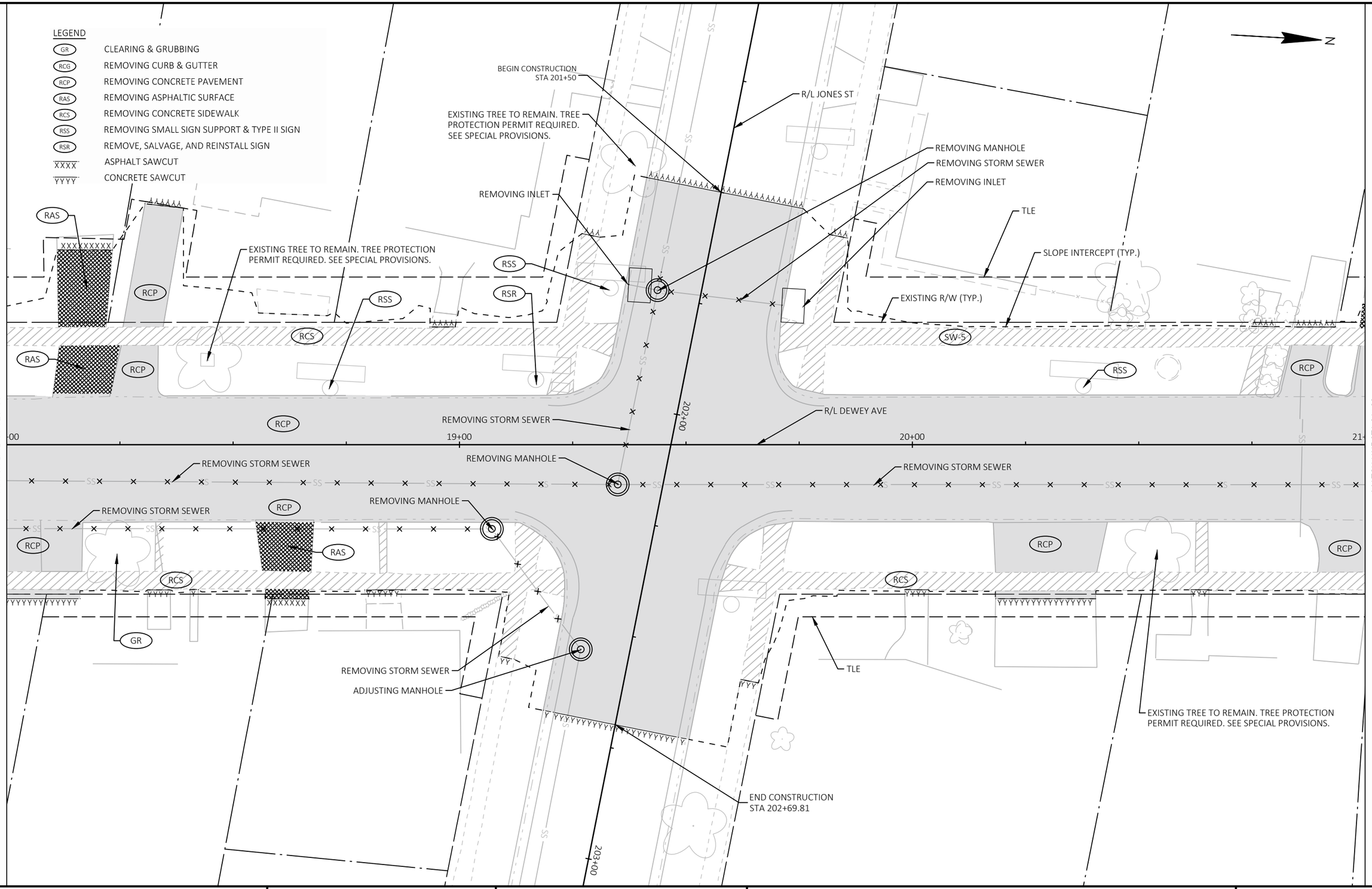

2

PROJECT NO: 3997-01-79/80	HWY: DEWEY AVE	COUNTY: JEFFERSON	REMOVAL DETAILS - DEWEY AVE	SHEET 20	E

FILE NAME : R:\5300\5364\5364088\39970179\SHEETS\021101-RM.DWG
LAYOUT NAME - 04
PLOT DATE : 10/29/2025 10:39 AM PLOT BY : ERIC HANDLER PLOT NAME : PLOT SCALE : 1 IN:20 FT
WISDOT/CADDS SHEET 42

2

LEGEND

GR	CLEARING & GRUBBING
RCG	REMOVING CURB & GUTTER
RCP	REMOVING CONCRETE PAVEMENT
RAS	REMOVING ASPHALTIC SURFACE
RCS	REMOVING CONCRETE SIDEWALK
RSS	REMOVING SMALL SIGN SUPPORT & TYPE II SIGN
RSR	REMOVE, SALVAGE, AND REINSTALL SIGN
XXXX	ASPHALT SAWCUT
YYYY	CONCRETE SAWCUT

N

R/L CADY ST

BEGIN CONSTRUCTION
STA 301+44.02

REMOVE STORM SEWER

REMOVE INLET

REMOVE MANHOLE

REMOVE INLET

EXISTING TREE TO REMAIN. TREE PROTECTION
PERMIT REQUIRED. SEE SPECIAL PROVISIONS.

EXISTING TREE TO REMAIN. TREE PROTECTION
PERMIT REQUIRED. SEE SPECIAL PROVISIONS.

EXISTING R/W (TYP.)

TLE

SLOPE INTERCEPT (TYP.)

RAS

RSS

RSR

RCS

RCP

RSS

RCP

REMOVE INLET

REMOVE STORM SEWER

R/L DEWEY AVE

MATCH LINE STA 21+00

-00

22+00

23+00

24-

MATCH LINE STA 24+00

REMOVE STORM SEWER

REMOVE MANHOLE

REMOVE STORM SEWER

REMOVE INLET

RCP

RCP

RCP

RSR

RCP

RCP

RCS

RCS

GR

RAS

TLE

EXISTING TREE TO REMAIN. TREE PROTECTION
PERMIT REQUIRED. SEE SPECIAL PROVISIONS.

2

PROJECT NO: 3997-01-79/80	HWY: DEWEY AVE	COUNTY: JEFFERSON	REMOVAL DETAILS - DEWEY AVE	SHEET 21	E

2

LEGEND

GR	CLEARING & GRUBBING
RCG	REMOVING CURB & GUTTER
RCP	REMOVING CONCRETE PAVEMENT
RAS	REMOVING ASPHALTIC SURFACE
RCS	REMOVING CONCRETE SIDEWALK
RSS	REMOVING SMALL SIGN SUPPORT & TYPE II SIGN
RSR	REMOVE, SALVAGE, AND REINSTALL SIGN
XXXX	ASPHALT SAWCUT
YYYY	CONCRETE SAWCUT

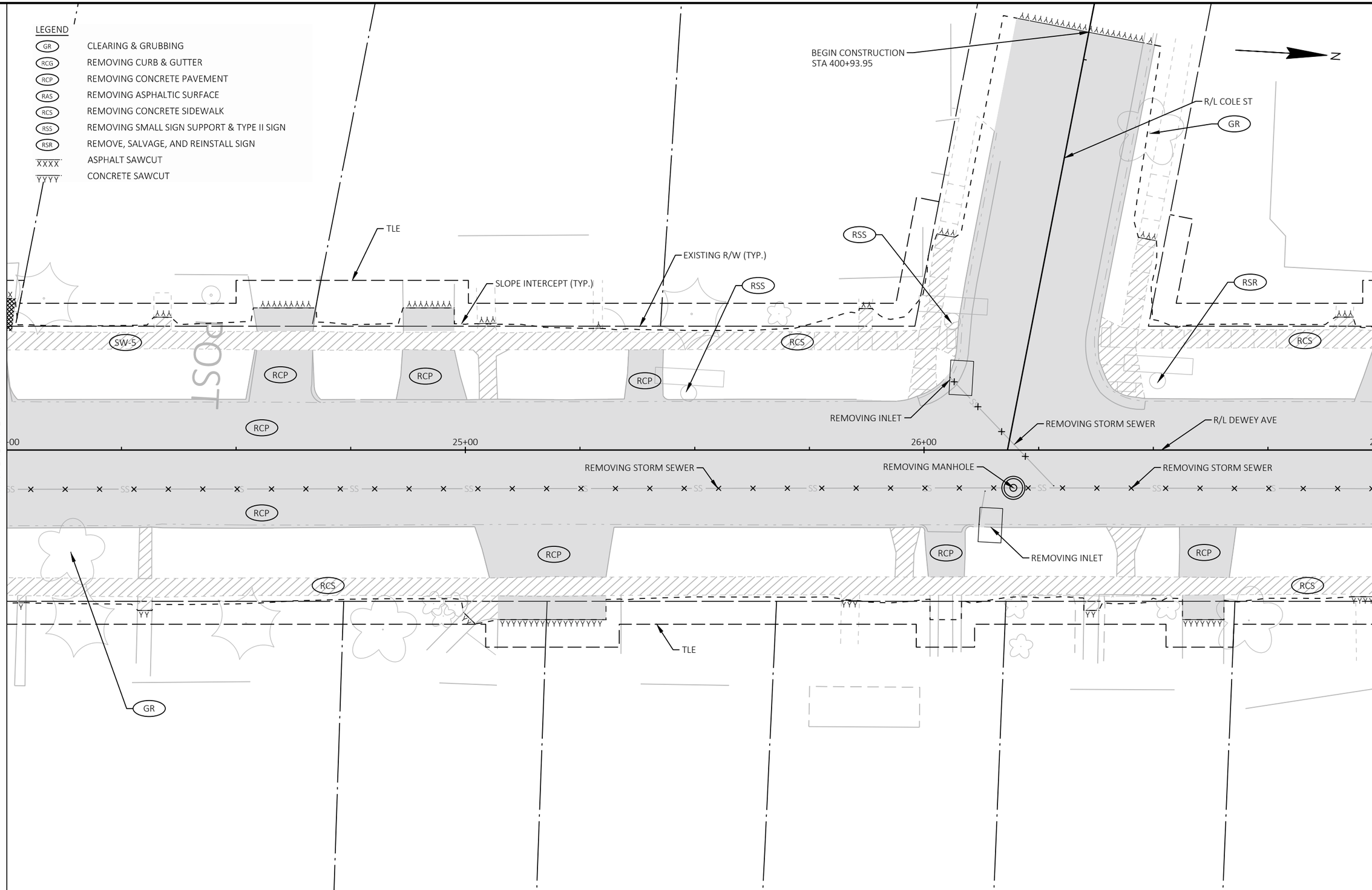

2

PROJECT NO: 3997-01-79/80	HWY: DEWEY AVE	COUNTY: JEFFERSON	REMOVAL DETAILS - DEWEY AVE	SHEET 22	E

FILE NAME : R:\5300\5364\5364088\39970179\SHEETS\021101-RM.DWG
LAYOUT NAME - 06
PLOT DATE : 9/12/2025 3:38 PM
PLOT BY : ERIC HANDLER
PLOT NAME :
PLOT SCALE : 1 IN:20 FT
WISDOT/CADDS SHEET 42

2

LEGEND

GR	CLEARING & GRUBBING
RCG	REMOVING CURB & GUTTER
RCP	REMOVING CONCRETE PAVEMENT
RAS	REMOVING ASPHALTIC SURFACE
RCS	REMOVING CONCRETE SIDEWALK
RSS	REMOVING SMALL SIGN SUPPORT & TYPE II SIGN
RSR	REMOVE, SALVAGE, AND REINSTALL SIGN
XXXX	ASPHALT SAWCUT
YYYY	CONCRETE SAWCUT

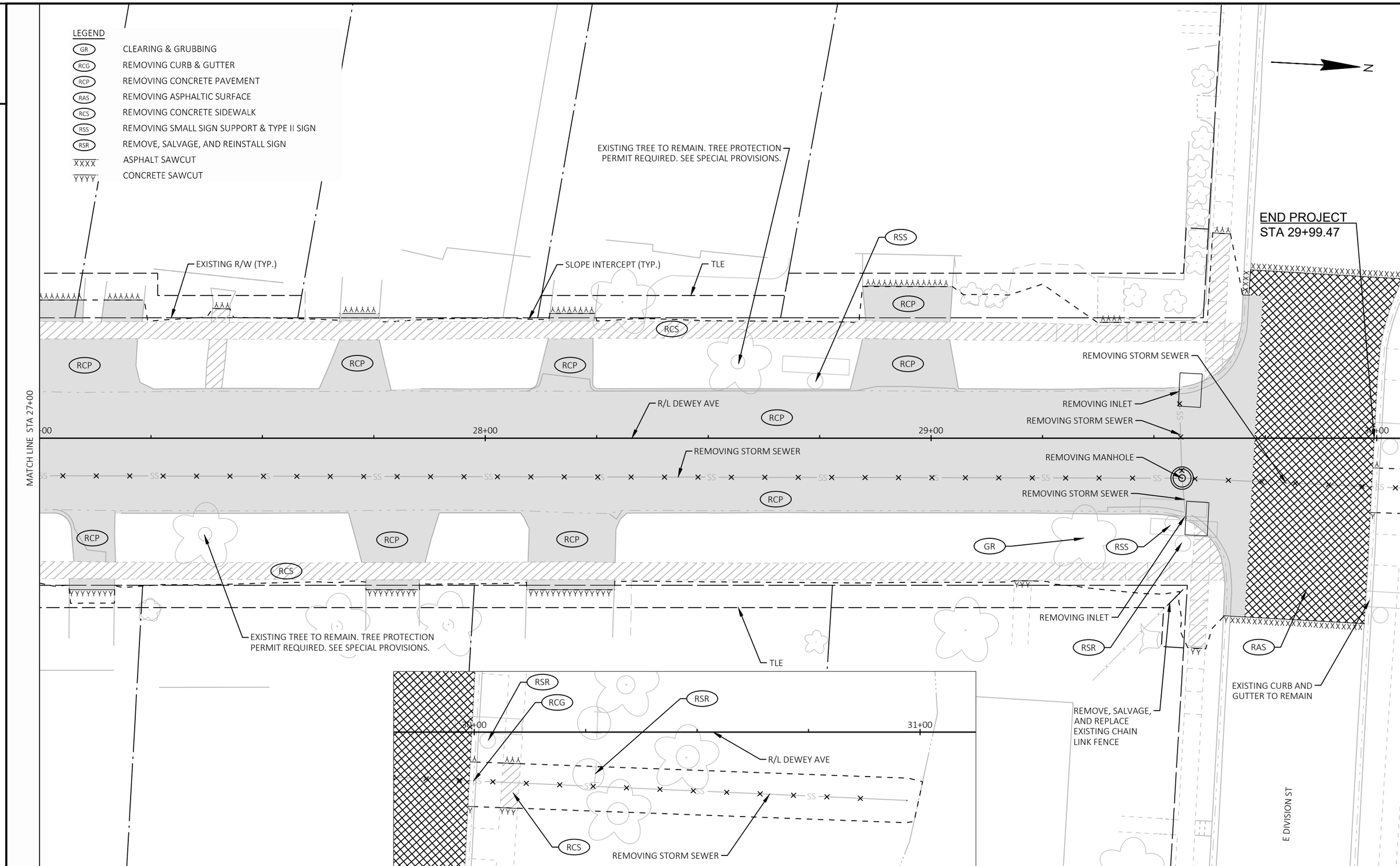

2

PROJECT NO: 3997-01-79/80	HWY: DEWEY AVE	COUNTY: JEFFERSON	REMOVAL DETAILS - DEWEY AVE	SHEET 23	E

FILE NAME : R:\5300\5364\5364088\39970179\SHEETS\021101-RM.DWG
LAYOUT NAME - 07
PLOT DATE : 9/12/2025 3:38 PM
PLOT BY : ERIC HANDLER
PLOT NAME :
PLOT SCALE : 1 IN:20 FT
WISDOT/CADDS SHEET 42

2

LEGEND

CP-7	CONCRETE PAVEMENT HES 7-INCH (DOWELED)
CG-1	CONCRETE CURB & GUTTER HES 30-INCH TYPE A
CG-2	CONCRETE CURB & GUTTER INTEGRAL HES 30-INCH TYPE D
CG-3	CONCRETE CURB & GUTTER 18-INCH TYPE D
CG-4	CONCRETE CURB & GUTTER 30-INCH TYPE D
DR-6	CONCRETE DRIVEWAY HES 6-INCH
SW-5	CONCRETE SIDEWALK 5-INCH
SW-6	CONCRETE SIDEWALK HES 6-INCH
HMA-1	5 1/2-INCH HMA PAVEMENT
ASPH	ASPHALTIC SURFACE DRIVEWAYS AND FIELD ENTRANCES
STEP	CONCRETE STEPS

NOTE: CONCRETE SIDEWALK HES 6-INCH PAID FOR AS CONCRETE DRIVEWAY HES 6-INCH

STATION & OFFSET TABLE

POINT	STATION	OFFSET	Y COORDS	X COORDS	RADIUS
1	10+78.55	35.50 LT	437178.813	2311517.573	22.5
2	10+19.15	41.50 RT	437123.800	2311597.771	22.5
3	11+98.33	31.50 RT	437302.146	2311577.777	12.5

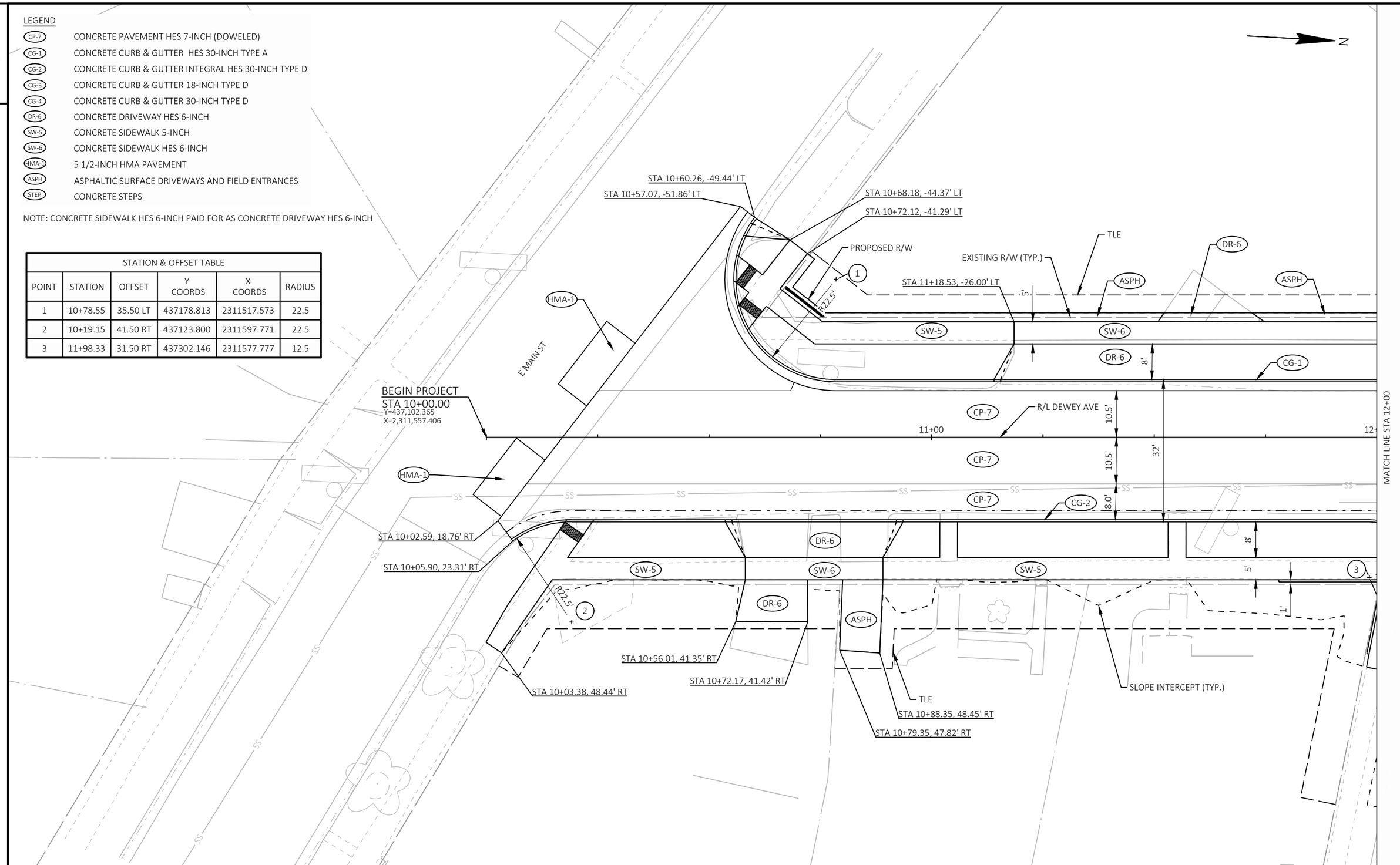

2

PROJECT NO: 3997-01-79/80	HWY: DEWEY AVE	COUNTY: JEFFERSON	PLAN DETAILS - DEWEY AVE	SHEET 24	E

FILE NAME : R:\5300\5364\5364088\39970179\SHEETS\021201-PD.DWG
LAYOUT NAME - 01
PLOT DATE : 9/30/2025 10:50 AM
PLOT BY : ERIC HANDLER
PLOT NAME :
PLOT SCALE : 1 IN:20 FT
WISDOT/CADDS SHEET 42

STATION & OFFSET TABLE					
POINT	STATION	OFFSET	Y COORDS	X COORDS	RADIUS
4	12+54.41	31.50 RT	437358.135	2311574.644	12.5
5	11+98.33	31.50 RT	437302.146	2311577.777	12.5

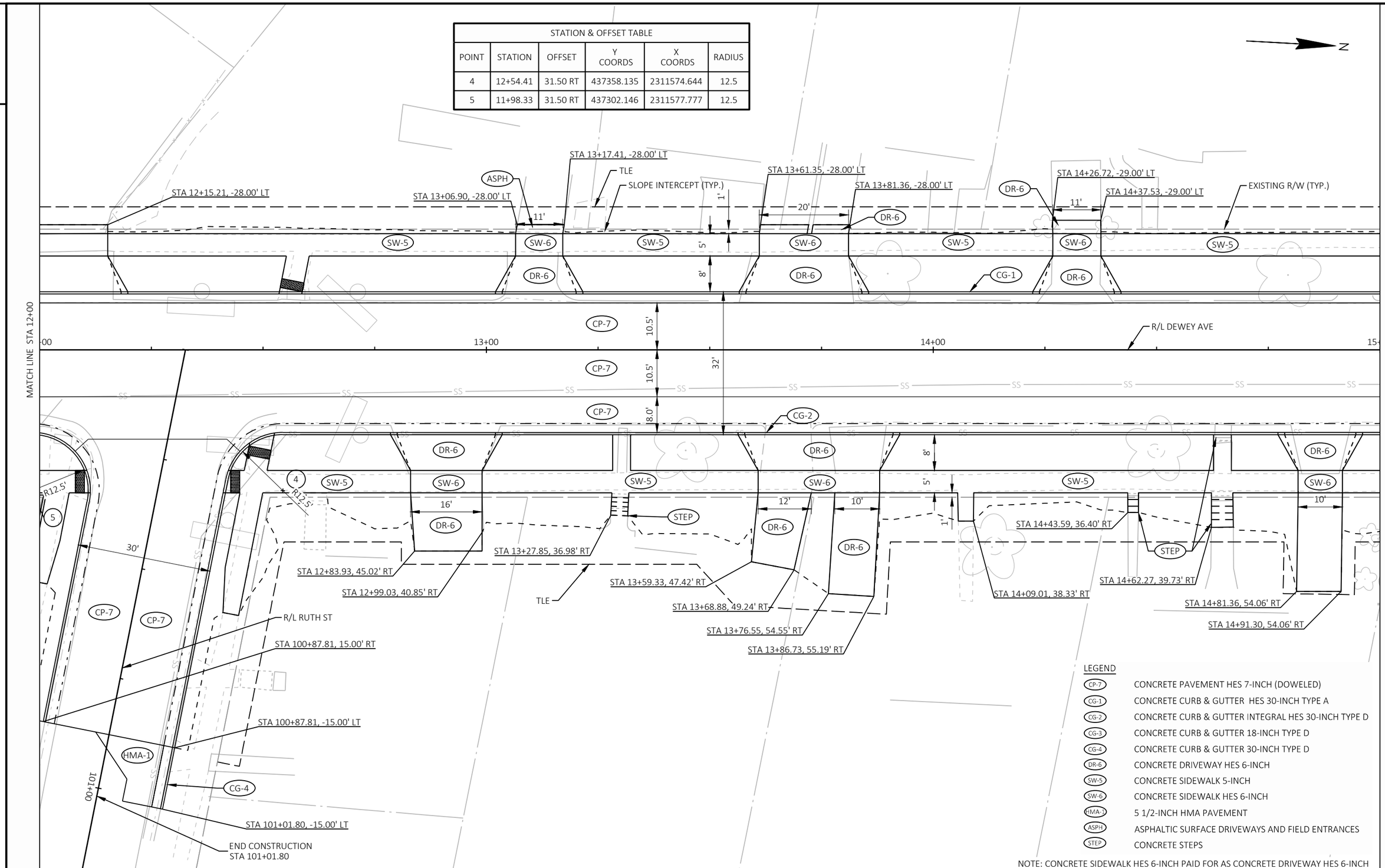

LEGEND

CP-7	CONCRETE PAVEMENT HES 7-INCH (DOWELED)
CG-1	CONCRETE CURB & GUTTER HES 30-INCH TYPE A
CG-2	CONCRETE CURB & GUTTER INTEGRAL HES 30-INCH TYPE D
CG-3	CONCRETE CURB & GUTTER 18-INCH TYPE D
CG-4	CONCRETE CURB & GUTTER 30-INCH TYPE D
DR-6	CONCRETE DRIVEWAY HES 6-INCH
SW-5	CONCRETE SIDEWALK 5-INCH
SW-6	CONCRETE SIDEWALK HES 6-INCH
HMA-1	5 1/2-INCH HMA PAVEMENT
ASPH	ASPHALTIC SURFACE DRIVEWAYS AND FIELD ENTRANCES
STEP	CONCRETE STEPS

NOTE: CONCRETE SIDEWALK HES 6-INCH PAID FOR AS CONCRETE DRIVEWAY HES 6-INCH

2

LEGEND

CP-7	CONCRETE PAVEMENT HES 7-INCH (DOWELED)
CG-1	CONCRETE CURB & GUTTER HES 30-INCH TYPE A
CG-2	CONCRETE CURB & GUTTER INTEGRAL HES 30-INCH TYPE D
CG-3	CONCRETE CURB & GUTTER 18-INCH TYPE D
CG-4	CONCRETE CURB & GUTTER 30-INCH TYPE D
DR-6	CONCRETE DRIVEWAY HES 6-INCH
SW-5	CONCRETE SIDEWALK 5-INCH
SW-6	CONCRETE SIDEWALK HES 6-INCH
HMA-1	5 1/2-INCH HMA PAVEMENT
ASPH	ASPHALTIC SURFACE DRIVEWAYS AND FIELD ENTRANCES
STEP	CONCRETE STEPS

NOTE: CONCRETE SIDEWALK HES 6-INCH PAID FOR AS CONCRETE DRIVEWAY HES 6-INCH

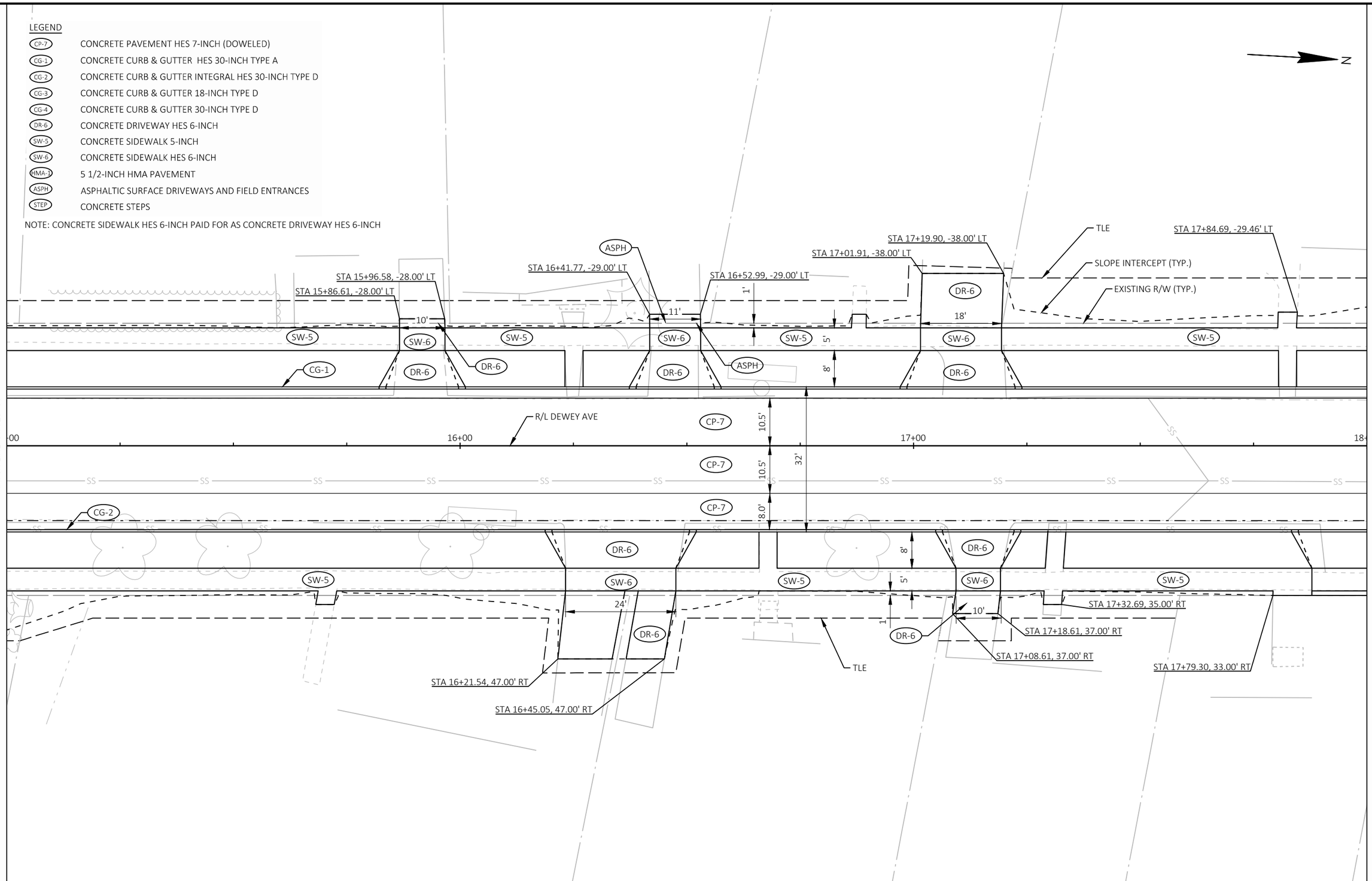

2

PROJECT NO: 3997-01-79/80	HWY: DEWEY AVE	COUNTY: JEFFERSON	PLAN DETAILS - DEWEY AVE	SHEET 26	E

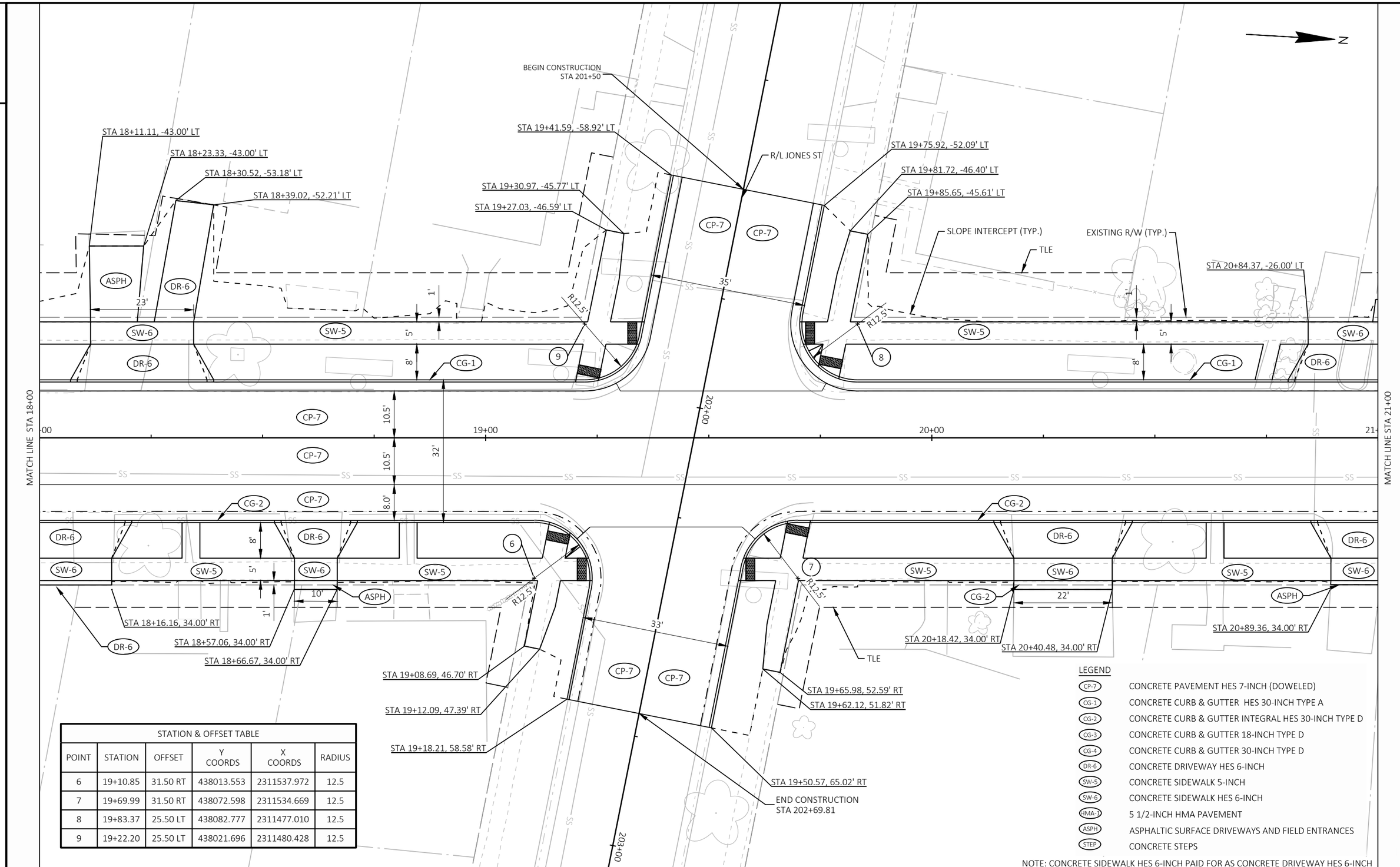

STATION & OFFSET TABLE					
POINT	STATION	OFFSET	Y COORDS	X COORDS	RADIUS
6	19+10.85	31.50 RT	438013.553	2311537.972	12.5
7	19+69.99	31.50 RT	438072.598	2311534.669	12.5
8	19+83.37	25.50 LT	438082.777	2311477.010	12.5
9	19+22.20	25.50 LT	438021.696	2311480.428	12.5

LEGEND

CP-7	CONCRETE PAVEMENT HES 7-INCH (DOWELED)
CG-1	CONCRETE CURB & GUTTER HES 30-INCH TYPE A
CG-2	CONCRETE CURB & GUTTER INTEGRAL HES 30-INCH TYPE D
CG-3	CONCRETE CURB & GUTTER 18-INCH TYPE D
CG-4	CONCRETE CURB & GUTTER 30-INCH TYPE D
DR-6	CONCRETE DRIVEWAY HES 6-INCH
SW-5	CONCRETE SIDEWALK 5-INCH
SW-6	CONCRETE SIDEWALK HES 6-INCH
HMA-1	5 1/2-INCH HMA PAVEMENT
ASPH	ASPHALTIC SURFACE DRIVEWAYS AND FIELD ENTRANCES
STEP	CONCRETE STEPS

NOTE: CONCRETE SIDEWALK HES 6-INCH PAID FOR AS CONCRETE DRIVEWAY HES 6-INCH

LEGEND

CP-7	CONCRETE PAVEMENT HES 7-INCH (DOWELED)
CG-1	CONCRETE CURB & GUTTER HES 30-INCH TYPE A
CG-2	CONCRETE CURB & GUTTER INTEGRAL HES 30-INCH TYPE D
CG-3	CONCRETE CURB & GUTTER 18-INCH TYPE D
CG-4	CONCRETE CURB & GUTTER 30-INCH TYPE D
DR-6	CONCRETE DRIVEWAY HES 6-INCH
SW-5	CONCRETE SIDEWALK 5-INCH
SW-6	CONCRETE SIDEWALK HES 6-INCH
HMA-1	5 1/2-INCH HMA PAVEMENT
ASPH	ASPHALTIC SURFACE DRIVEWAYS AND FIELD ENTRANCES
STEP	CONCRETE STEPS

NOTE: CONCRETE SIDEWALK HES 6-INCH PAID FOR AS CONCRETE DRIVEWAY HES 6-INCH

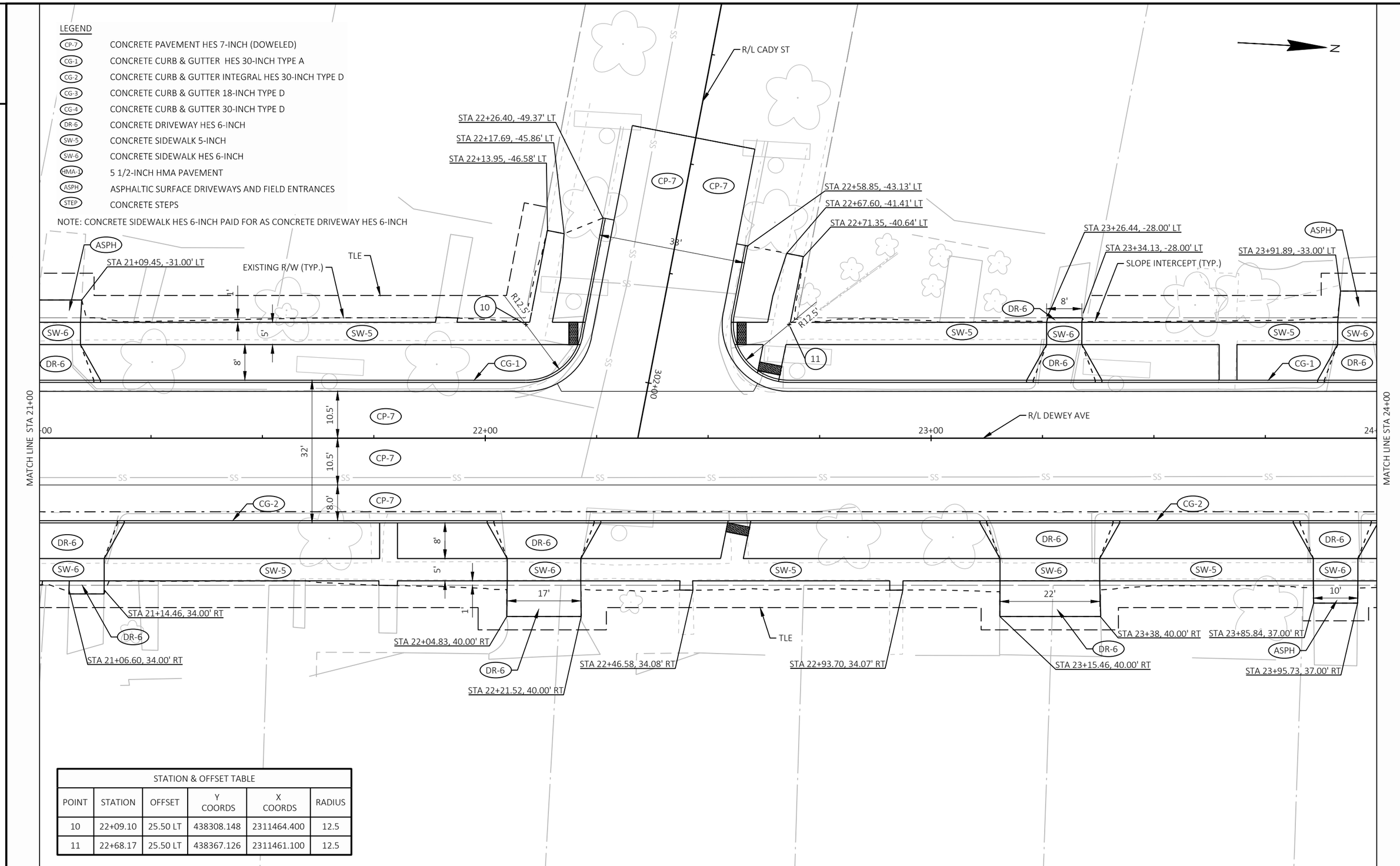

STATION & OFFSET TABLE					
POINT	STATION	OFFSET	Y COORDS	X COORDS	RADIUS
10	22+09.10	25.50 LT	438308.148	2311464.400	12.5
11	22+68.17	25.50 LT	438367.126	2311461.100	12.5

2

LEGEND

- CP-7 CONCRETE PAVEMENT HES 7-INCH (DOWELED)
- CG-1 CONCRETE CURB & GUTTER HES 30-INCH TYPE A
- CG-2 CONCRETE CURB & GUTTER INTEGRAL HES 30-INCH TYPE D
- CG-3 CONCRETE CURB & GUTTER 18-INCH TYPE D
- CG-4 CONCRETE CURB & GUTTER 30-INCH TYPE D
- DR-6 CONCRETE DRIVEWAY HES 6-INCH
- SW-5 CONCRETE SIDEWALK 5-INCH
- SW-6 CONCRETE SIDEWALK HES 6-INCH
- HMA-1 5 1/2-INCH HMA PAVEMENT
- ASPH ASPHALTIC SURFACE DRIVEWAYS AND FIELD ENTRANCES
- STEP CONCRETE STEPS

NOTE: CONCRETE SIDEWALK HES 6-INCH PAID FOR AS CONCRETE DRIVEWAY HES 6-INCH

STATION & OFFSET TABLE

POINT	STATION	OFFSET	Y COORDS	X COORDS	RADIUS
12	25+94.14	25.50 LT	438692.595	2311442.889	12.5
13	26+50.69	25.50 LT	438749.049	2311439.731	12.5

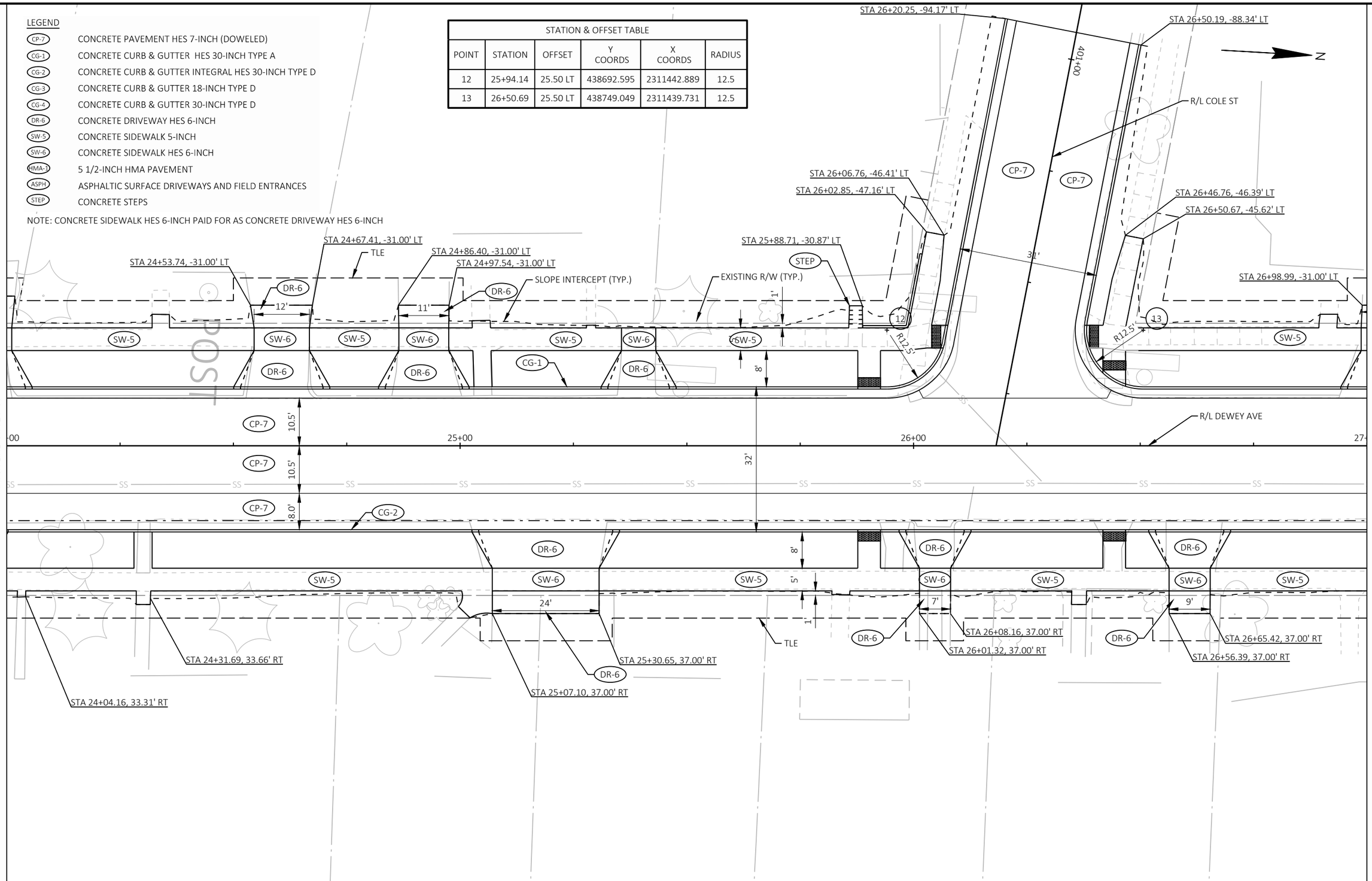

PROJECT NO: 3997-01-79/80	HWY: DEWEY AVE	COUNTY: JEFFERSON	PLAN DETAILS - DEWEY AVE	SHEET 29	E

FILE NAME : R:\5300\5364\5364088\39970179\SHEETS\021201-PD.DWG
LAYOUT NAME - 06
PLOT DATE : 9/30/2025 10:50 AM PLOT BY : ERIC HANDLER PLOT NAME : PLOT SCALE : 1 IN:20 FT

WISDOT/CADDS SHEET 42

2

LEGEND

- CP-7 CONCRETE PAVEMENT HES 7-INCH (DOWELED)
- CG-1 CONCRETE CURB & GUTTER HES 30-INCH TYPE A
- CG-2 CONCRETE CURB & GUTTER INTEGRAL HES 30-INCH TYPE D
- CG-3 CONCRETE CURB & GUTTER 18-INCH TYPE D
- CG-4 CONCRETE CURB & GUTTER 30-INCH TYPE D
- DR-6 CONCRETE DRIVEWAY HES 6-INCH
- SW-5 CONCRETE SIDEWALK 5-INCH
- SW-6 CONCRETE SIDEWALK HES 6-INCH
- HMA-1 5 1/2-INCH HMA PAVEMENT
- ASPH ASPHALTIC SURFACE DRIVEWAYS AND FIELD ENTRANCES
- STEP CONCRETE STEPS

NOTE: CONCRETE SIDEWALK HES 6-INCH PAID FOR AS CONCRETE DRIVEWAY HES 6-INCH

STATION & OFFSET TABLE

POINT	STATION	OFFSET	Y COORDS	X COORDS	RADIUS
14	29+51.16	34.00 RT	439052.374	2311482.352	15
15	29+54.66	28.00 LT	439052.413	2311420.253	15

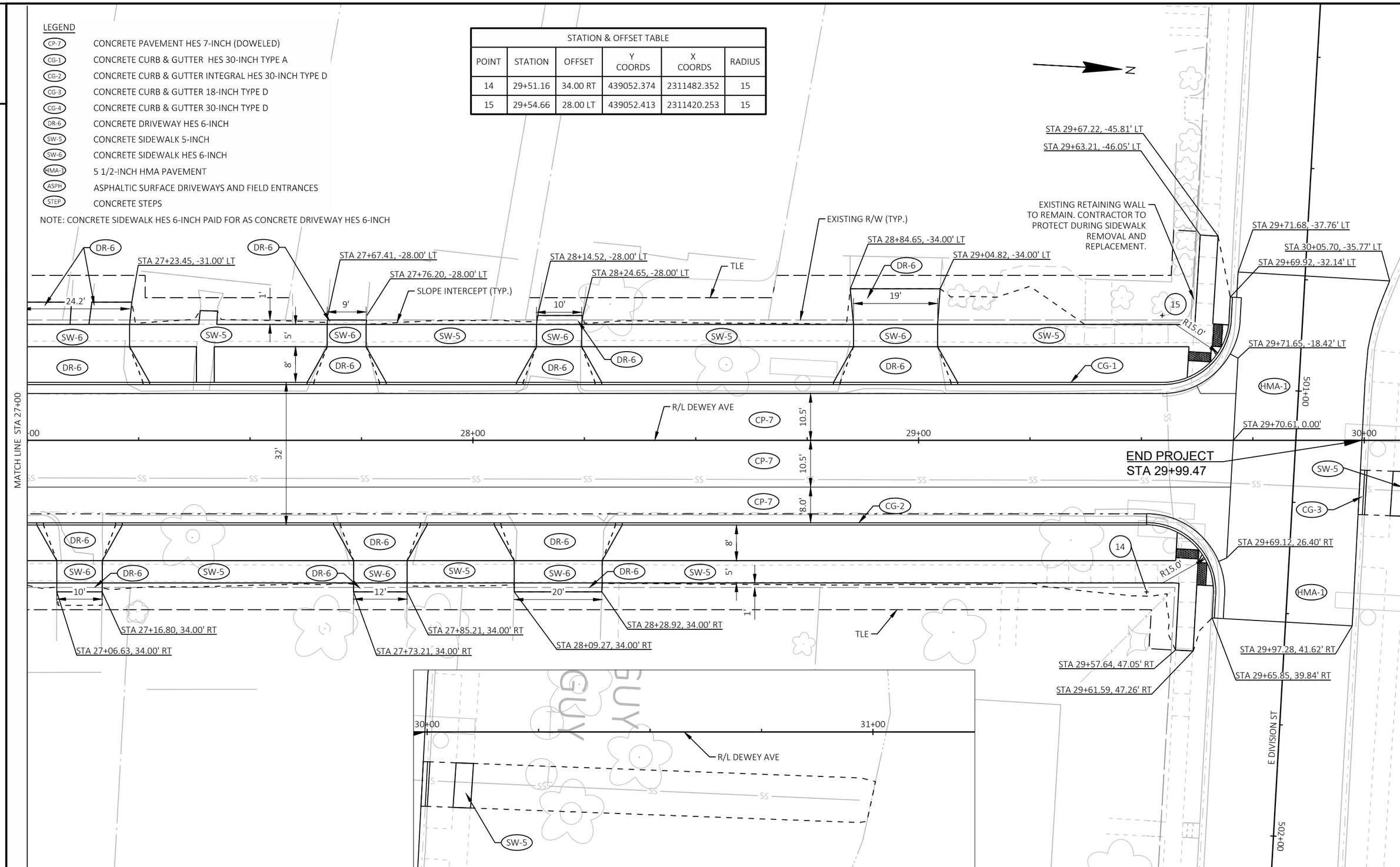

2

PROJECT NO: 3997-01-79/80	HWY: DEWEY AVE	COUNTY: JEFFERSON	PLAN DETAILS - DEWEY AVE	SHEET 30	E

2

LEGEND

CURB RAMP DETECTABLE WARNING FIELD NATURAL PATINA

ALL FLARES ARE GRADED 6:1 MAX. UNLESS OTHERWISE NOTED.

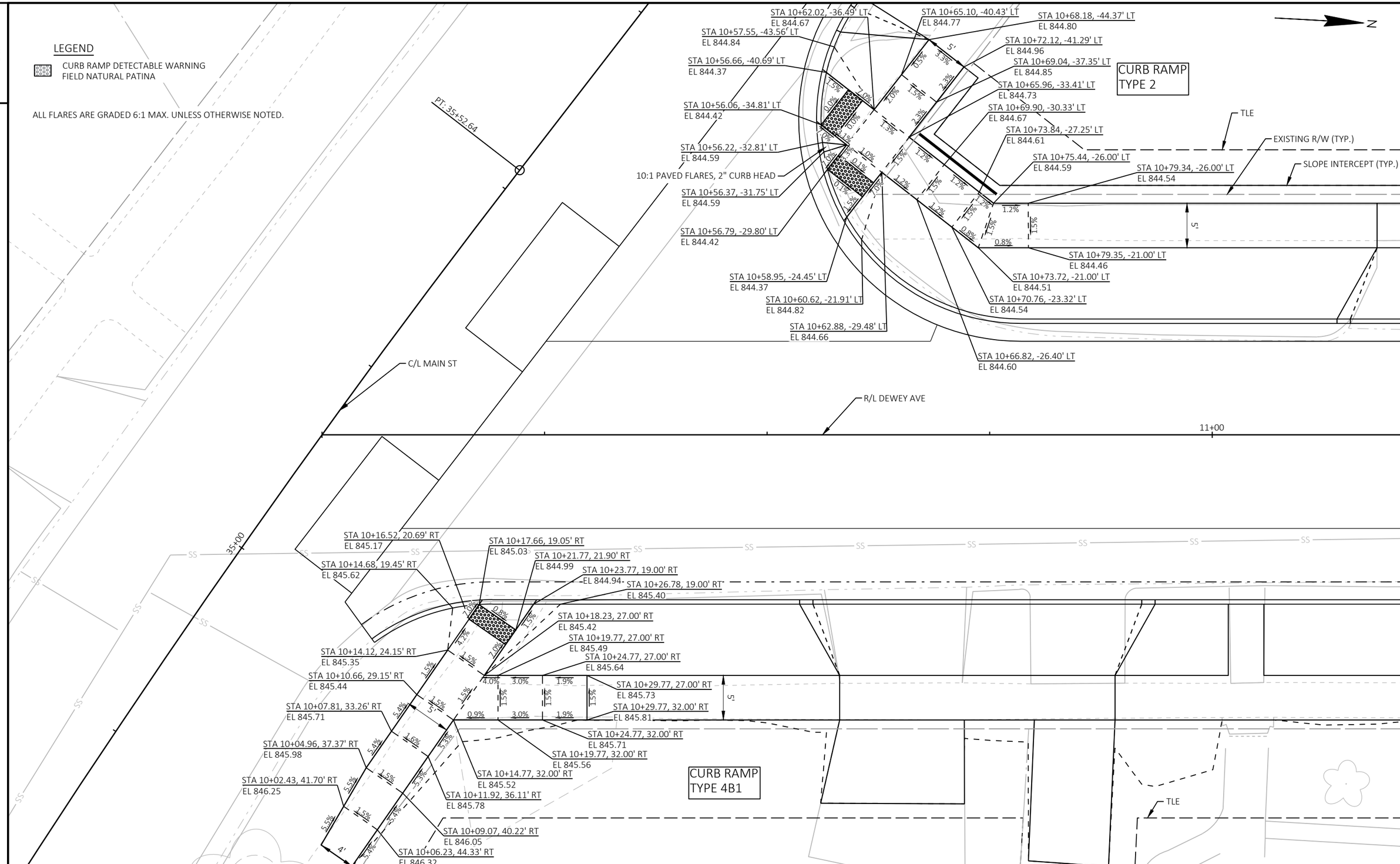

PROJECT NO: 3997-01-79/80	HWY: DEWEY AVE	COUNTY: JEFFERSON	CURB RAMPS	SHEET 31	E

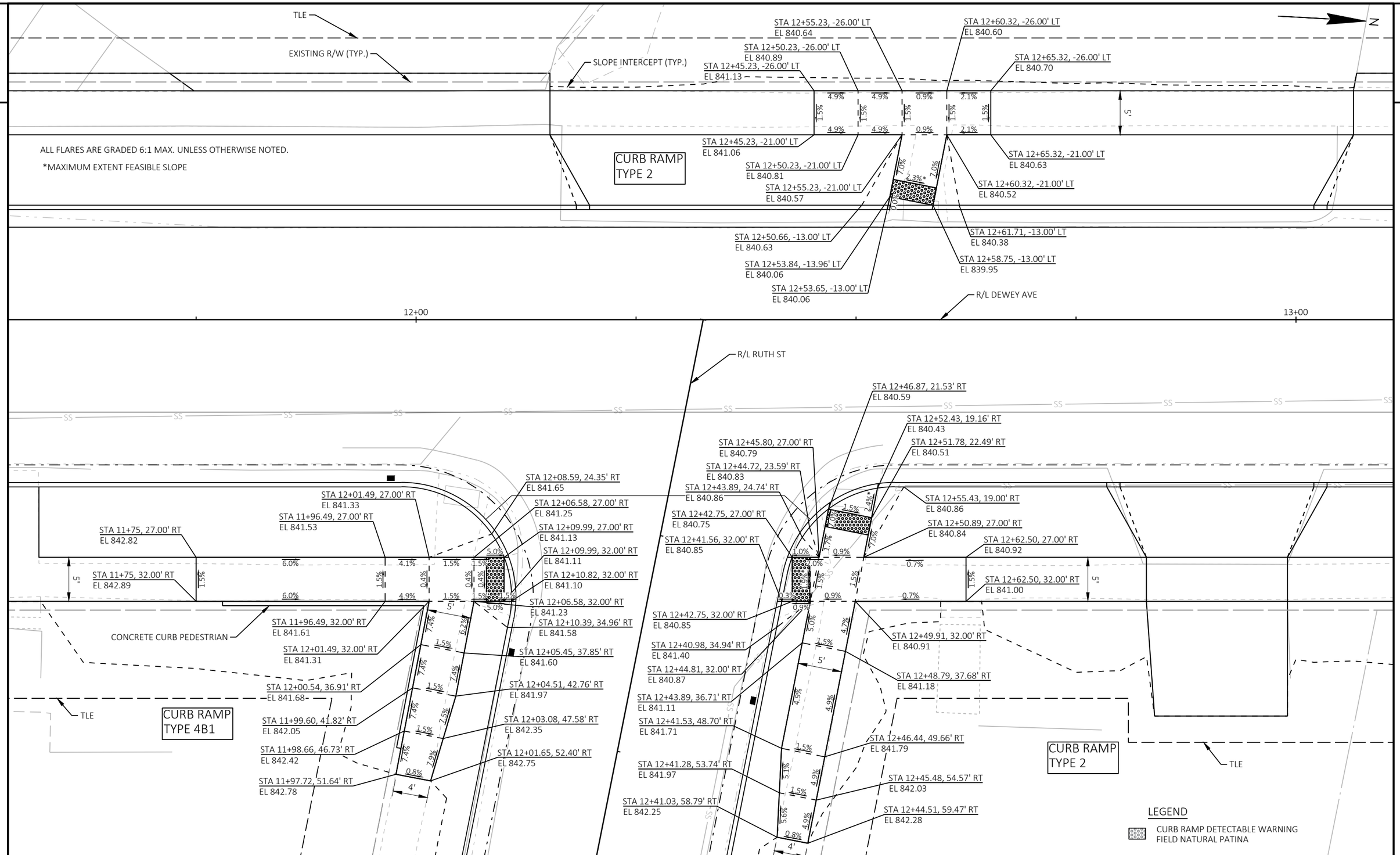

PROJECT NO: 3997-01-79/80	HWY: DEWEY AVE	COUNTY: JEFFERSON	CURB RAMPS	SHEET 32	E

FILE NAME : R:\5300\5364\5364088\39970179\SHEETS\021301-CR.DWG
LAYOUT NAME - RUTH
PLOT DATE : 9/12/2025 3:39 PM
PLOT BY : ERIC HANDLER
PLOT NAME :
PLOT SCALE : 1 IN:10 FT
WISDOT/CADDS SHEET 42

2

LEGEND

CURB RAMP DETECTABLE WARNING FIELD NATURAL PATINA

*MAXIMUM EXTENT FEASIBLE SLOPE
ALL FLARES ARE GRADED 6:1 MAX. UNLESS OTHERWISE NOTED.

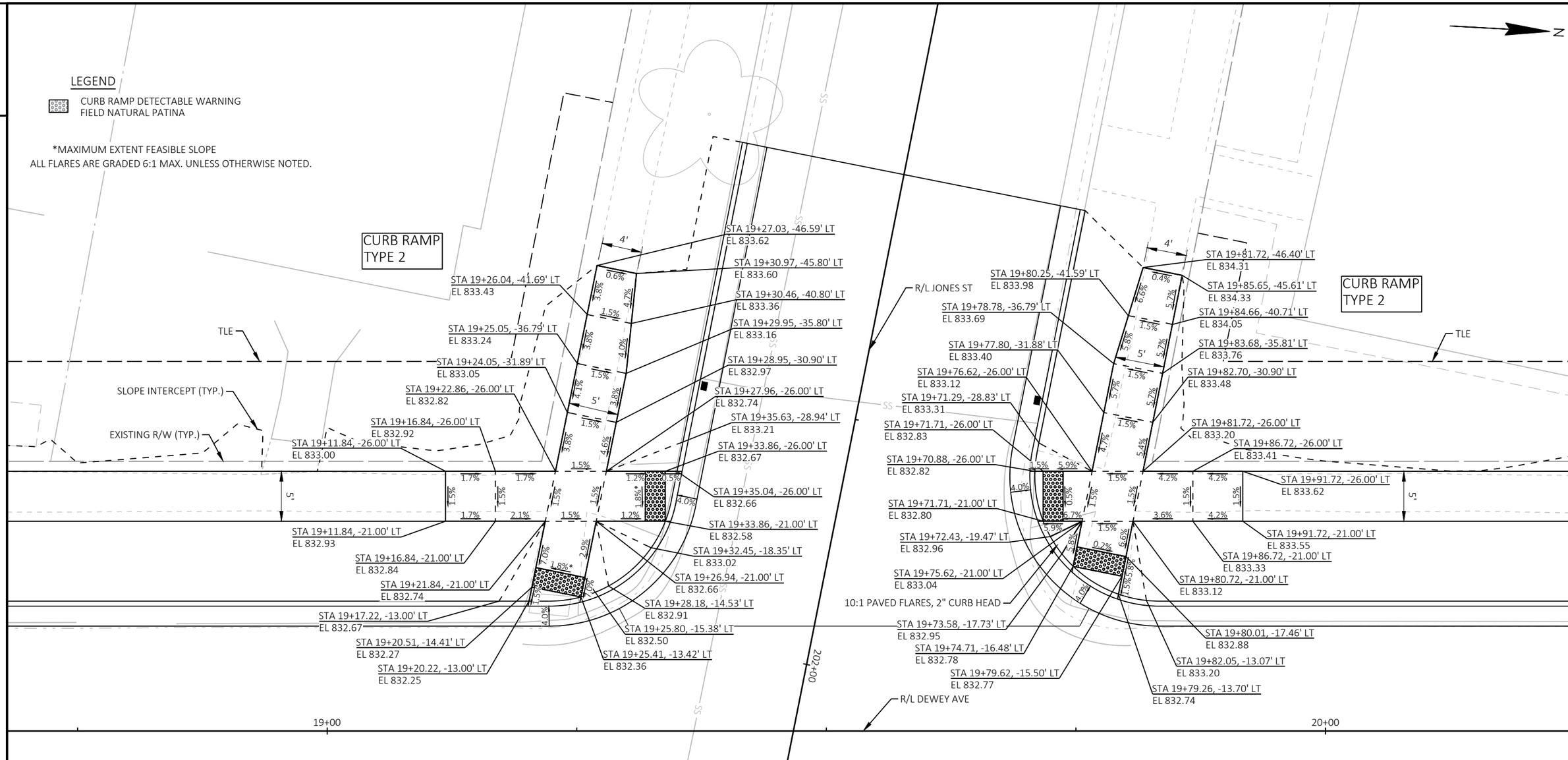

2

PROJECT NO: 3997-01-79/80	HWY: DEWEY AVE	COUNTY: JEFFERSON	CURB RAMPS	SHEET 33	E

FILE NAME : R:\5300\5364\5364088\39970179\SHEETS\021301-CR.DWG
LAYOUT NAME - JONES
PLOT DATE : 9/12/2025 3:39 PM
PLOT BY : ERIC HANDLER
PLOT NAME :
PLOT SCALE : 1 IN:10 FT
WISDOT/CADDS SHEET 42

2

2

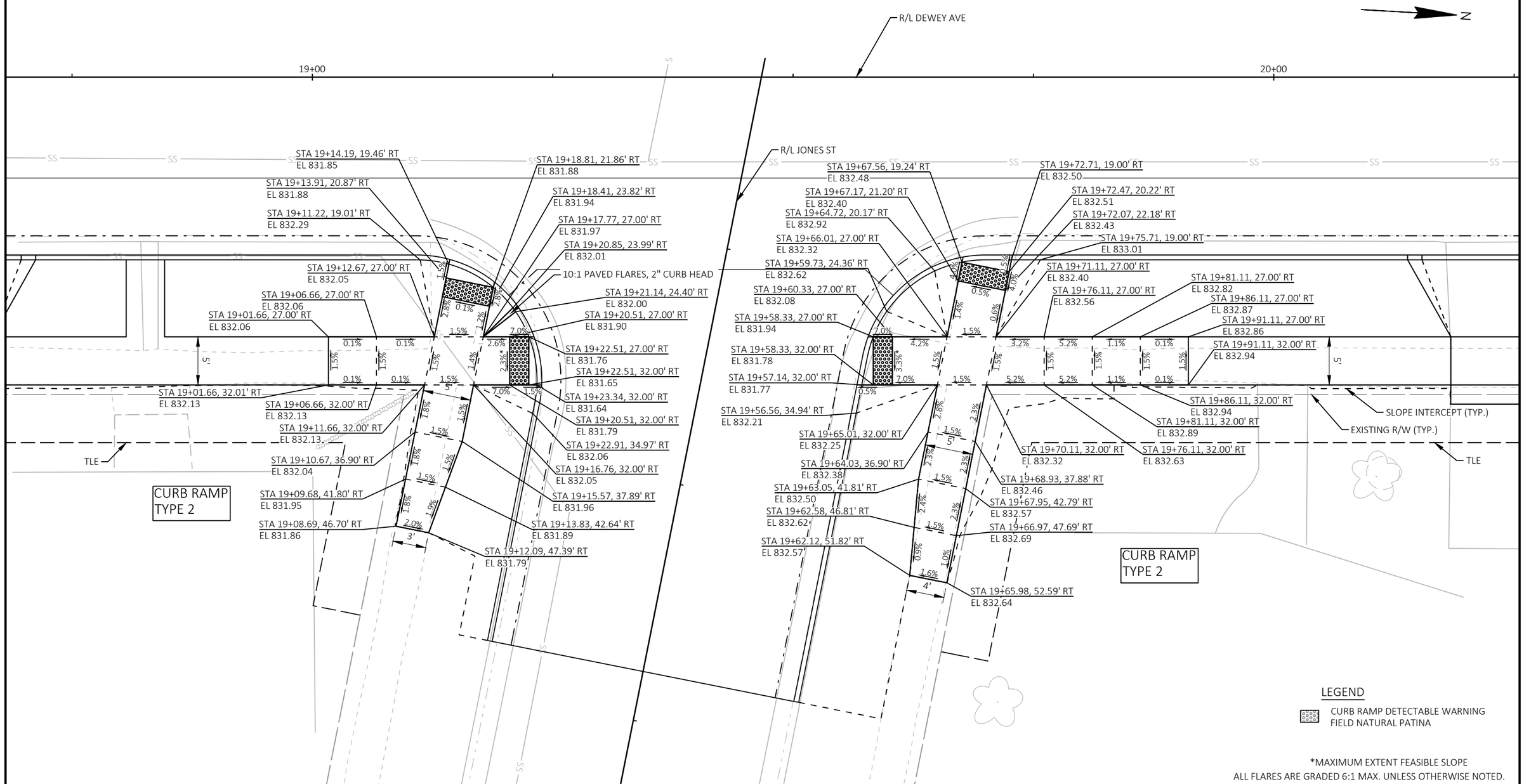

PROJECT NO: 3997-01-79/80	HWY: DEWEY AVE	COUNTY: JEFFERSON	CURB RAMPS	SHEET 34	E

FILE NAME : R:\5300\5364\5364088\39970179\SHEETS\021301-CR.DWG
LAYOUT NAME - JONES (2)
PLOT DATE : 9/15/2025 9:30 AM
PLOT BY : ERIC HANDLER
PLOT NAME :
PLOT SCALE : 1 IN:10 FT

2

LEGEND

CURB RAMP DETECTABLE WARNING FIELD NATURAL PATINA

*MAXIMUM EXTENT FEASIBLE SLOPE

ALL FLARES ARE GRADED 6:1 MAX. UNLESS OTHERWISE NOTED.

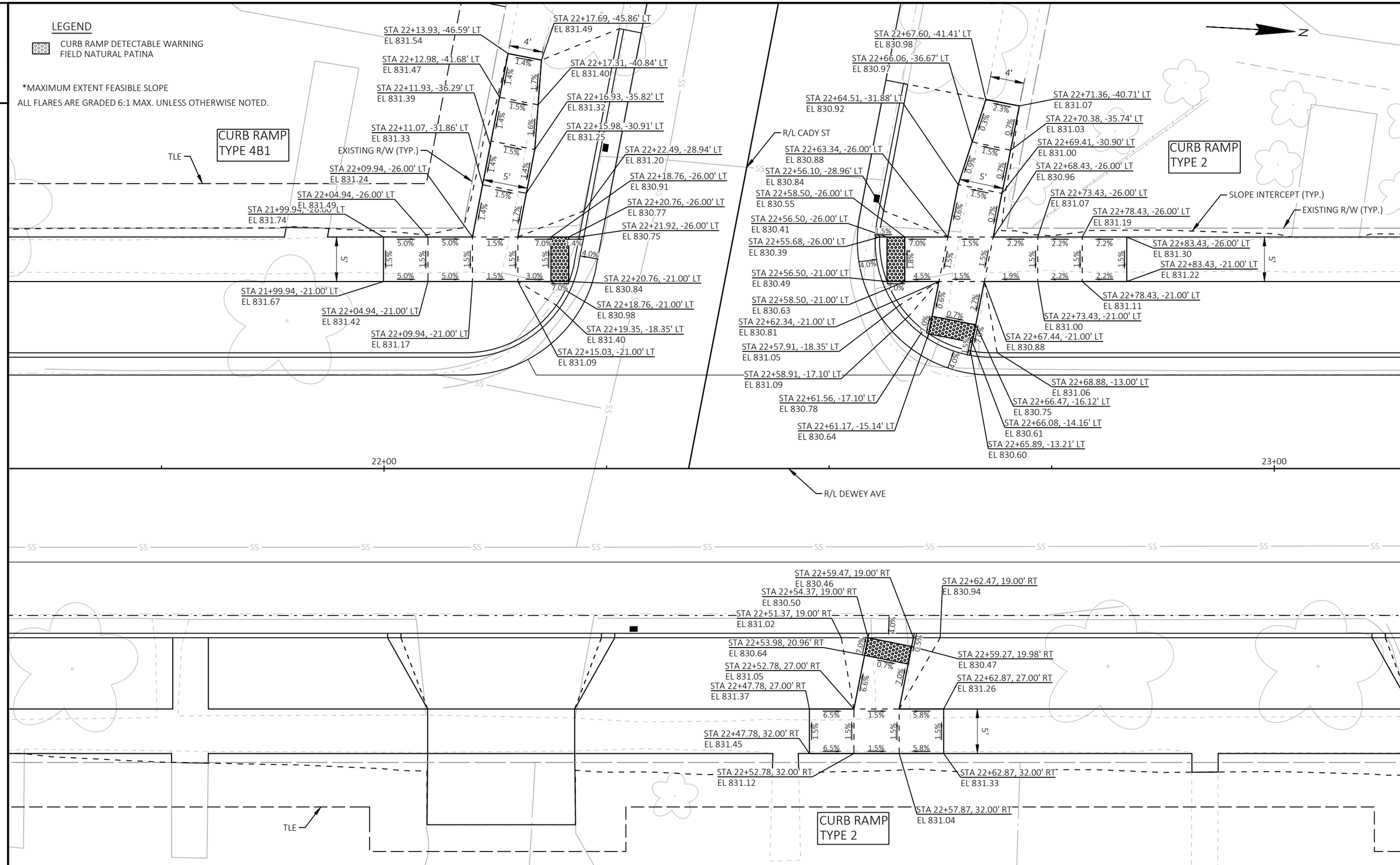

2

PROJECT NO: 3997-01-79/80	HWY: DEWEY AVE	COUNTY: JEFFERSON	CURB RAMPS	SHEET 35	E

FILE NAME : R:\5300\5364\5364088\39970179\SHEETS\021301-CR.DWG
LAYOUT NAME - CADY
PLOT DATE : 9/12/2025 3:39 PM
PLOT BY : ERIC HANDLER
PLOT NAME :
PLOT SCALE : 1 IN:10 FT
WISDOT/CADDS SHEET 42

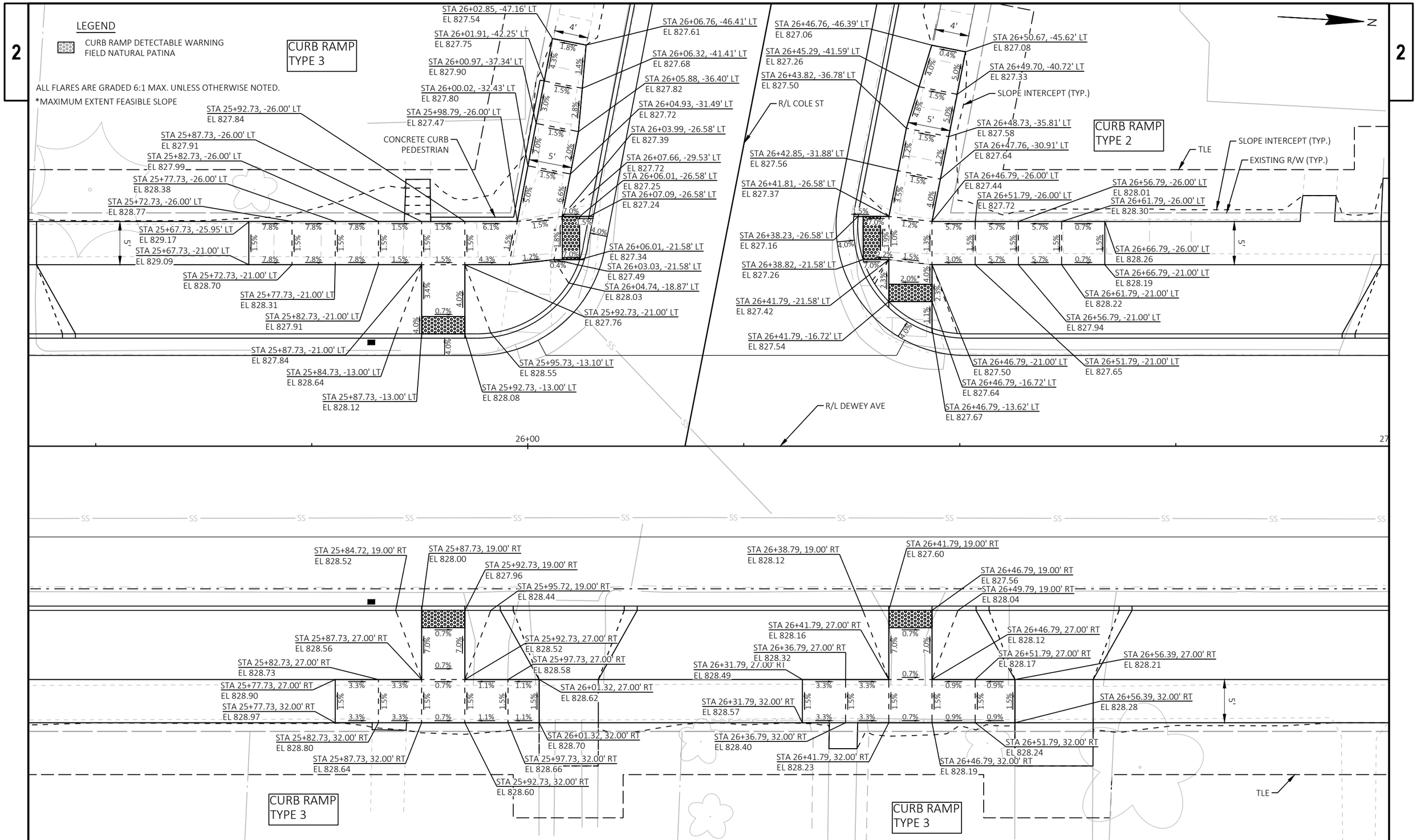

PROJECT NO: 3997-01-79/80	HWY: DEWEY AVE	COUNTY: JEFFERSON	CURB RAMPS	SHEET 36	E

FILE NAME : R:\5300\5364\5364088\39970179\SHEETS\021301-CR.DWG
LAYOUT NAME - COLE
PLOT DATE : 9/12/2025 3:40 PM
PLOT BY : ERIC HANDLER
PLOT NAME :
PLOT SCALE : 1 IN:10 FT
WISDOT/CADDS SHEET 42

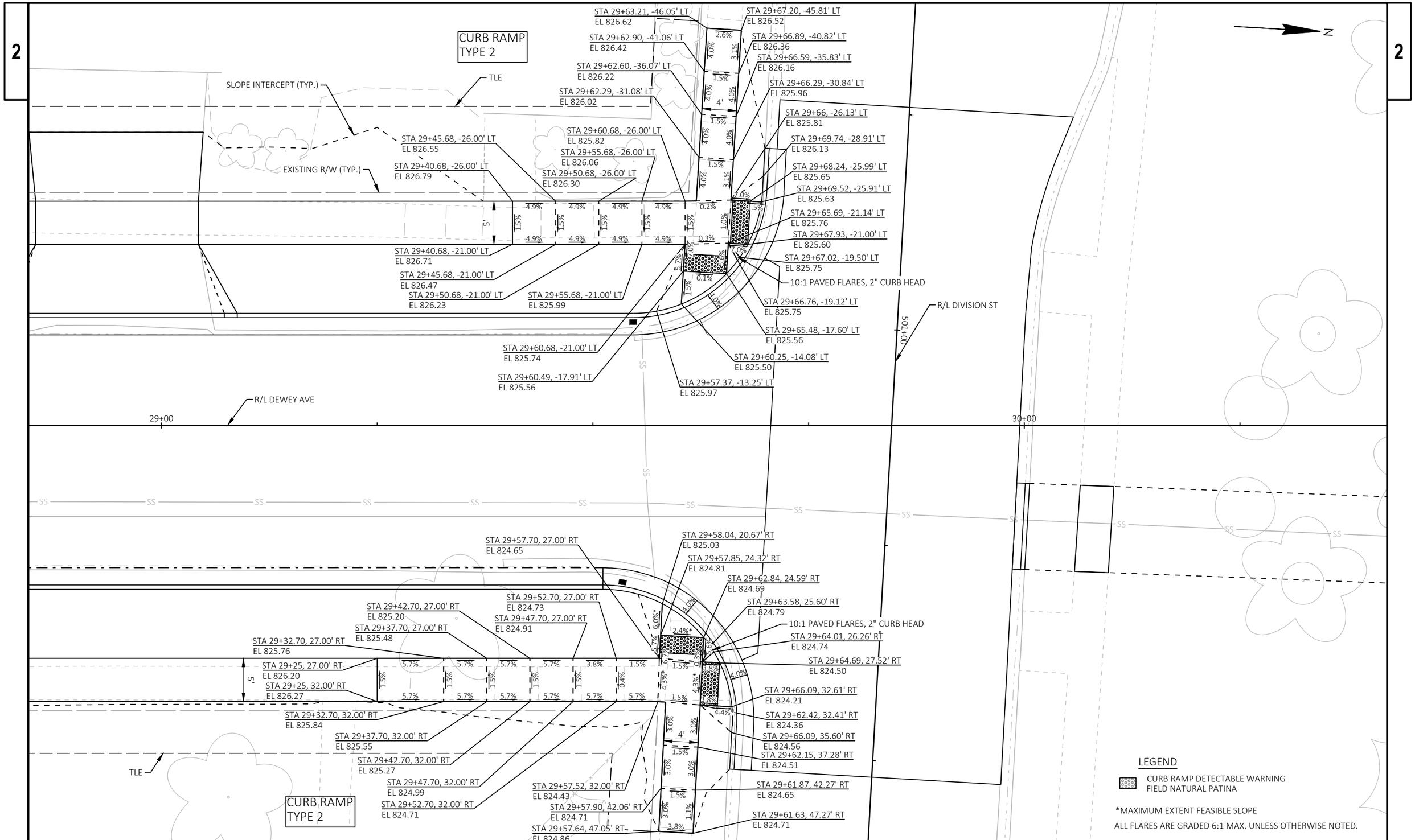

PROJECT NO: 3997-01-79/80	HWY: DEWEY AVE	COUNTY: JEFFERSON	CURB RAMPS	SHEET 37	E

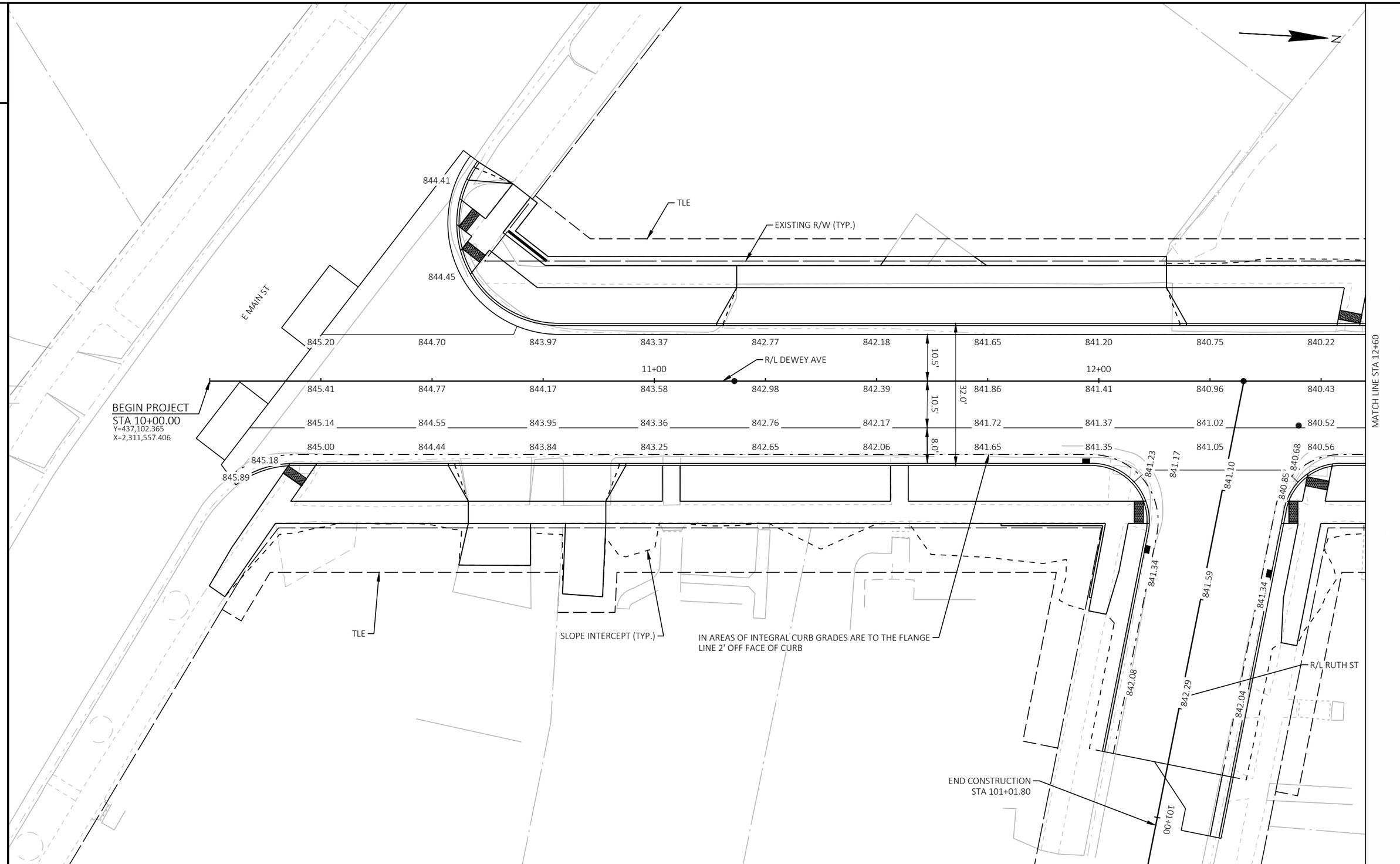

PROJECT NO: 3997-01-79/80	HWY: DEWEY AVE	COUNTY: JEFFERSON	JOINT DETAILS	SHEET 38	E

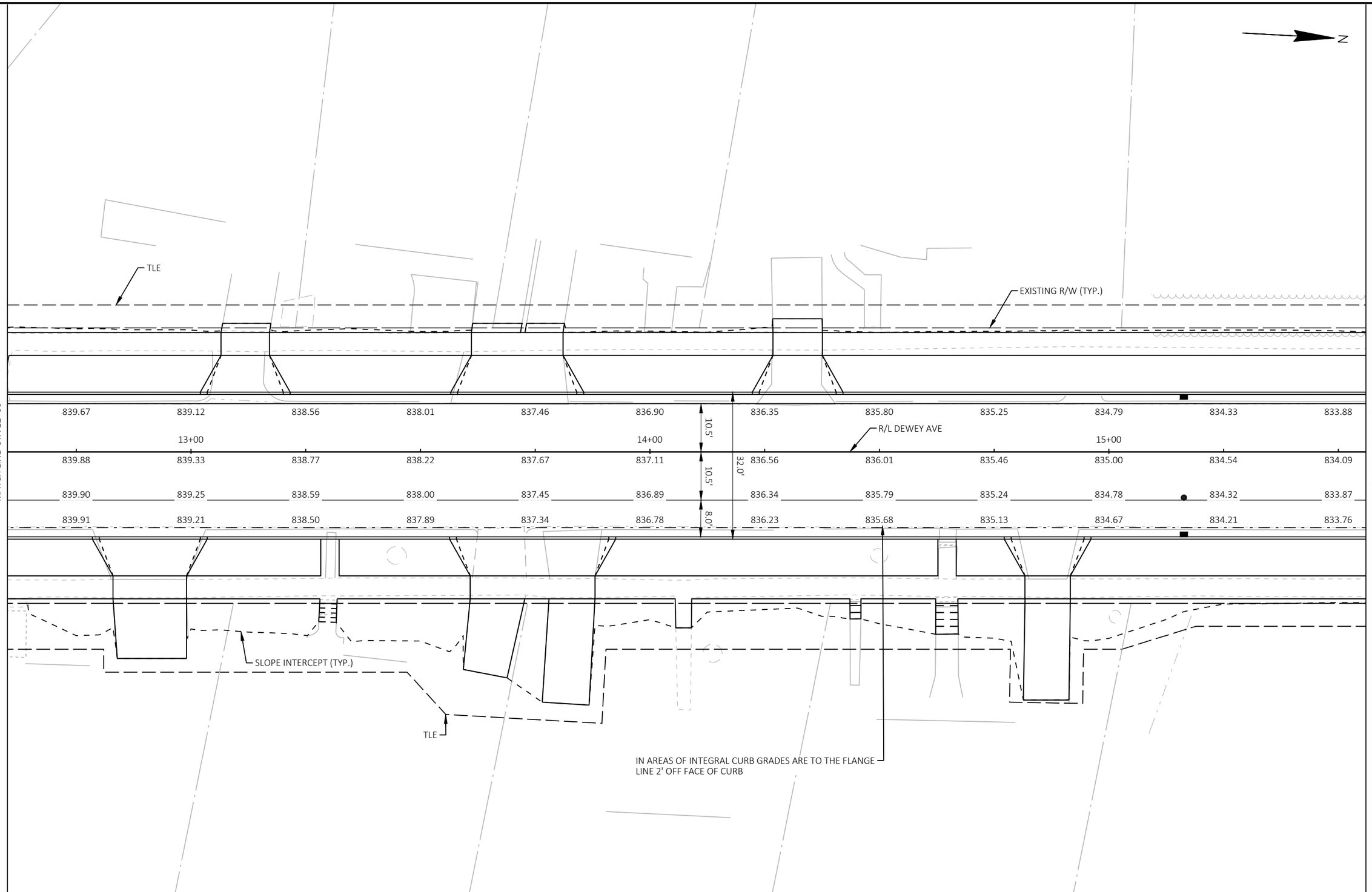

2

PROJECT NO: 3997-01-79/80	HWY: DEWEY AVE	COUNTY: JEFFERSON	JOINT DETAILS	SHEET 39	E

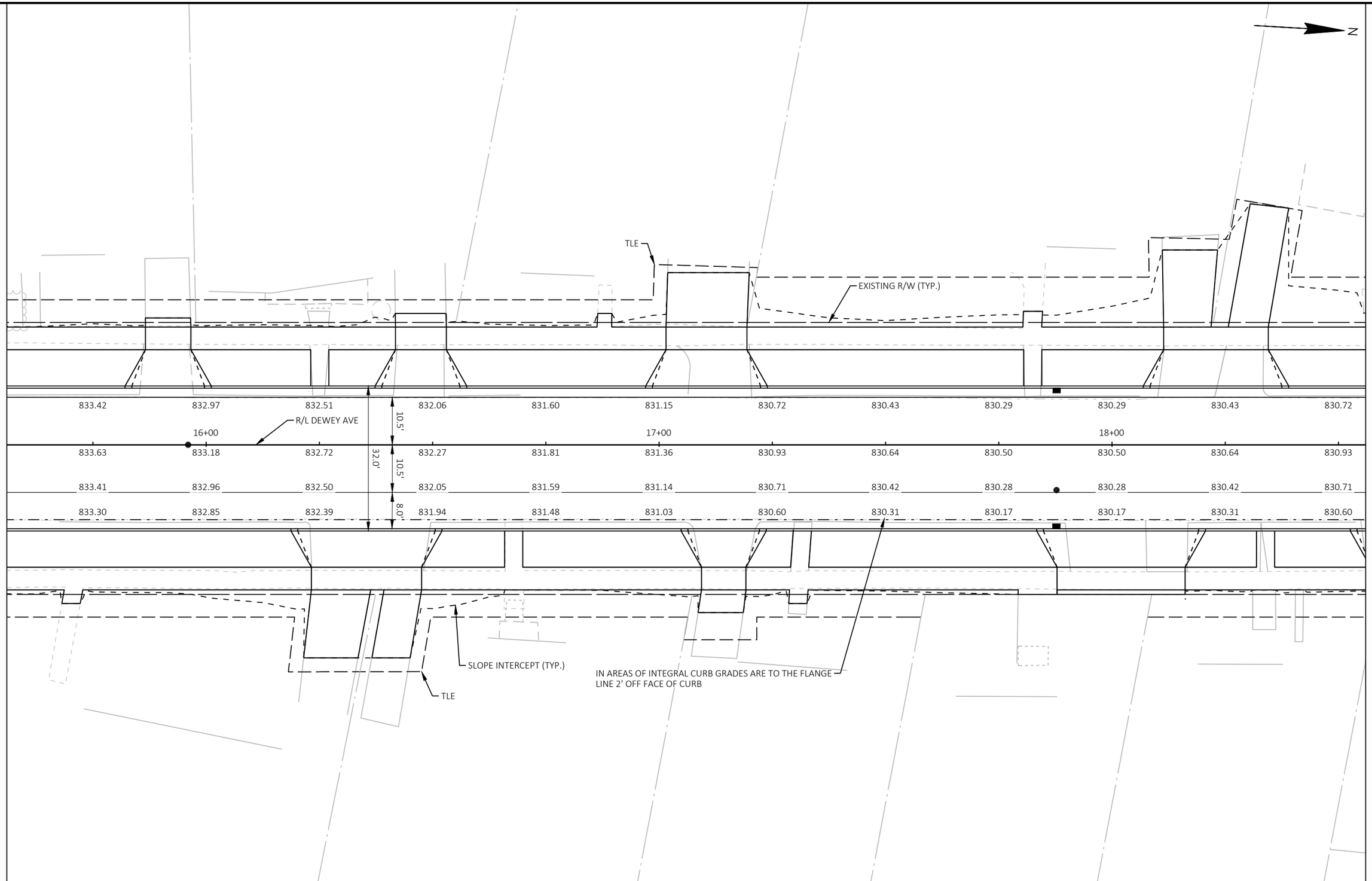
N
TLE
EXISTING R/W (TYP.)
MATCH LINE STA 15+56
MATCH LINE STA 18+56
833.42 832.97 832.51 832.06 831.60 831.15 830.72 830.43 830.29 830.29 830.43 830.72
R/L DEWEY AVE
16+00
17+00
18+00
10.5'
833.63 833.18 832.72 832.27 831.81 831.36 830.93 830.64 830.50 830.50 830.64 830.93
32.0'
10.5'
833.41 832.96 832.50 832.05 831.59 831.14 830.71 830.42 830.28 830.28 830.42 830.71
8.0'
833.30 832.85 832.39 831.94 831.48 831.03 830.60 830.31 830.17 830.17 830.31 830.60
SLOPE INTERCEPT (TYP.)
TLE
IN AREAS OF INTEGRAL CURB GRADES ARE TO THE FLANGE
LINE 2' OFF FACE OF CURB

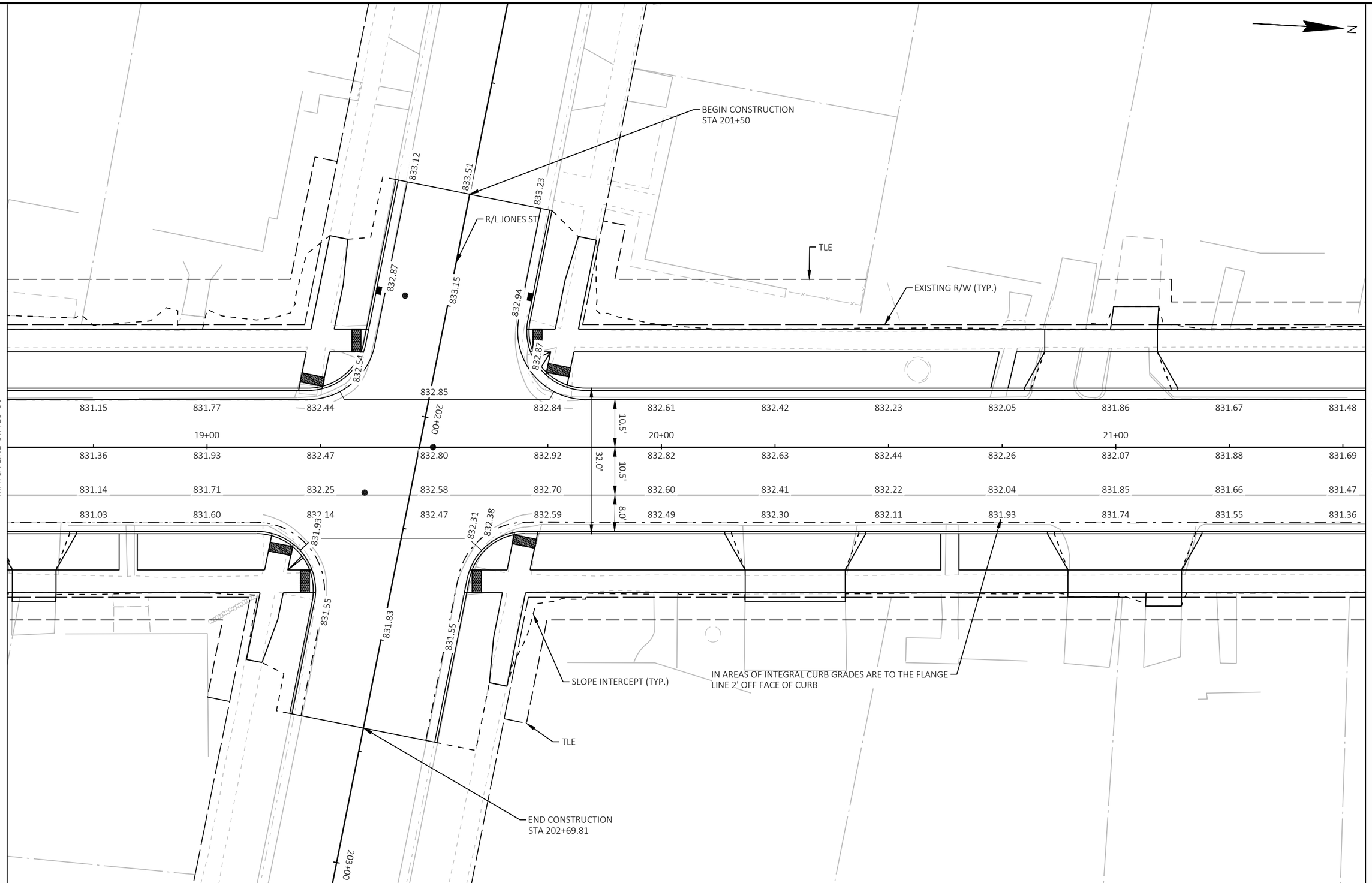

PROJECT NO: 3997-01-79/80	HWY: DEWEY AVE	COUNTY: JEFFERSON	JOINT DETAILS	SHEET 41	E

2

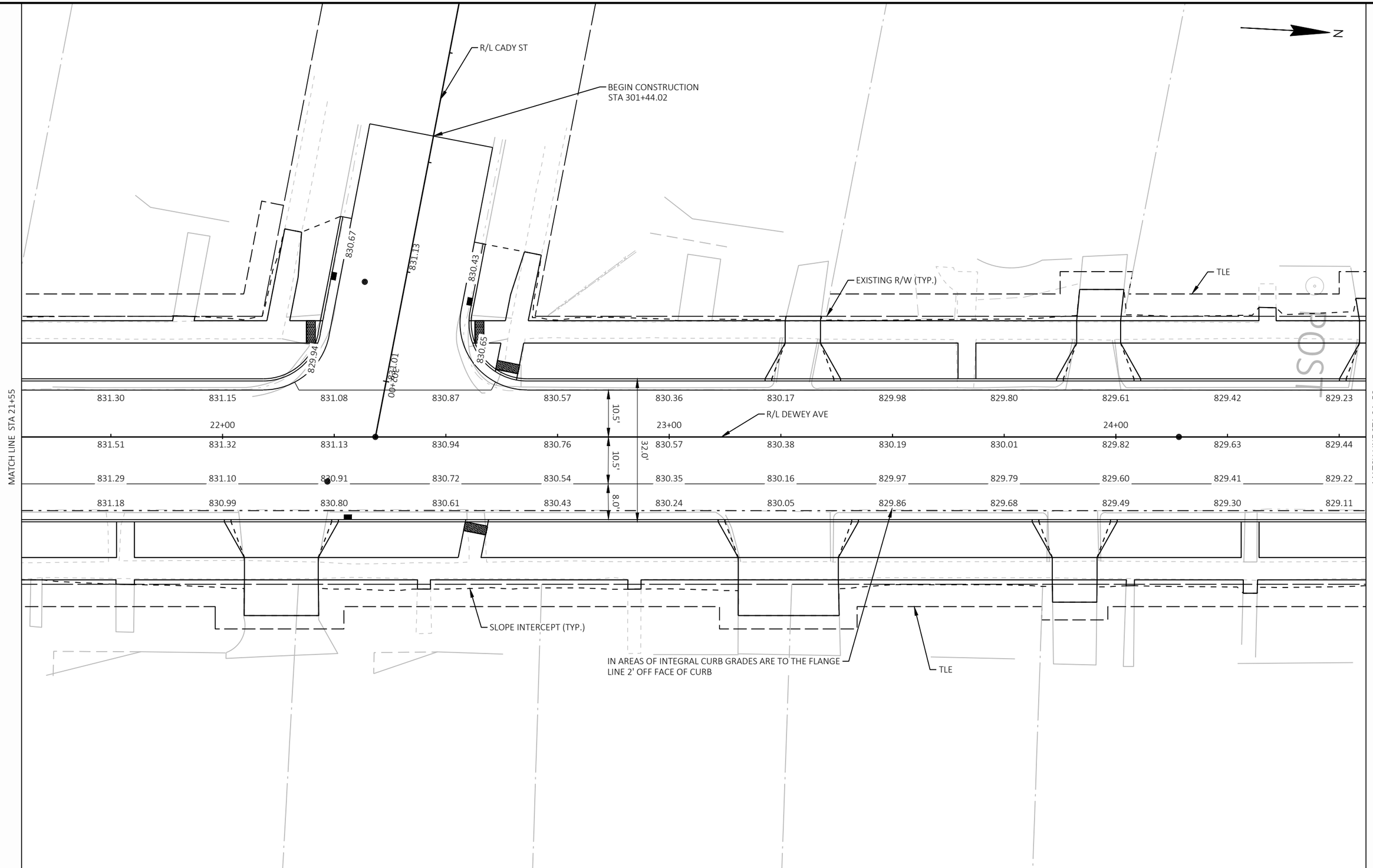

2

PROJECT NO: 3997-01-79/80	HWY: DEWEY AVE	COUNTY: JEFFERSON	JOINT DETAILS	SHEET 42	E

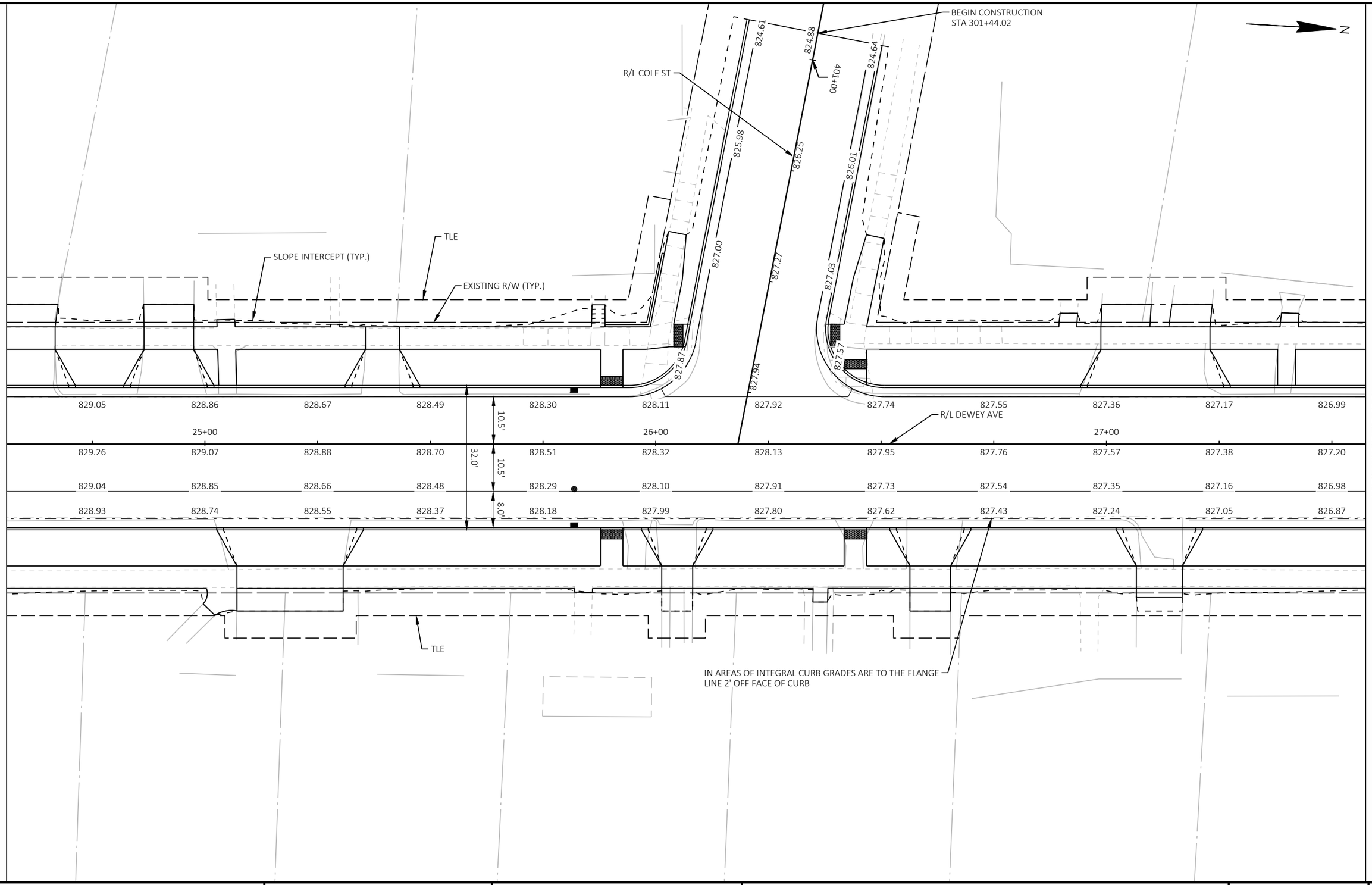
BEGIN CONSTRUCTION
STA 301+44.02
N
R/L COLE ST
401+00
824.61
824.88
824.64
825.98
826.25
826.01
827.00
827.27
827.03
827.87
827.57
827.94
TLE
SLOPE INTERCEPT (TYP.)
EXISTING R/W (TYP.)
829.05 828.86 828.67 828.49 828.30 828.11 827.92 827.74 827.55 827.36 827.17 826.99
25+00
26+00
27+00
R/L DEWEY AVE
10.5'
829.26 829.07 828.88 828.70 828.51 828.32 828.13 827.95 827.76 827.57 827.38 827.20
32.0'
10.5'
829.04 828.85 828.66 828.48 828.29 828.10 827.91 827.73 827.54 827.35 827.16 826.98
828.93 828.74 828.55 828.37 828.18 827.99 827.80 827.62 827.43 827.24 827.05 826.87
8.0'
MATCH LINE STA 24+56
MATCH LINE STA 27+57.50
TLE
IN AREAS OF INTEGRAL CURB GRADES ARE TO THE FLANGE
LINE 2' OFF FACE OF CURB

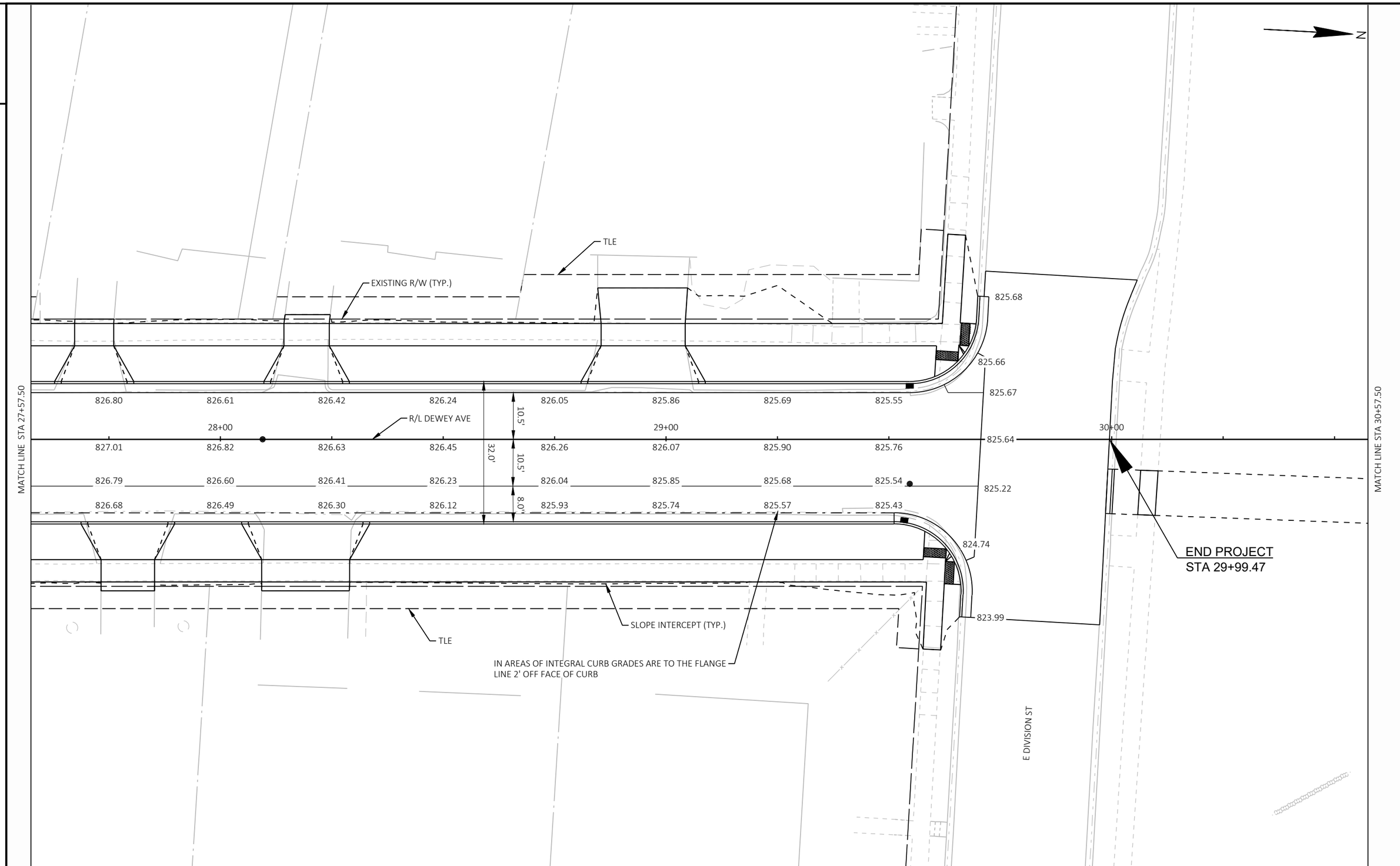

PROJECT NO: 3997-01-79/80	HWY: DEWEY AVE	COUNTY: JEFFERSON	JOINT DETAILS	SHEET 44	E

2

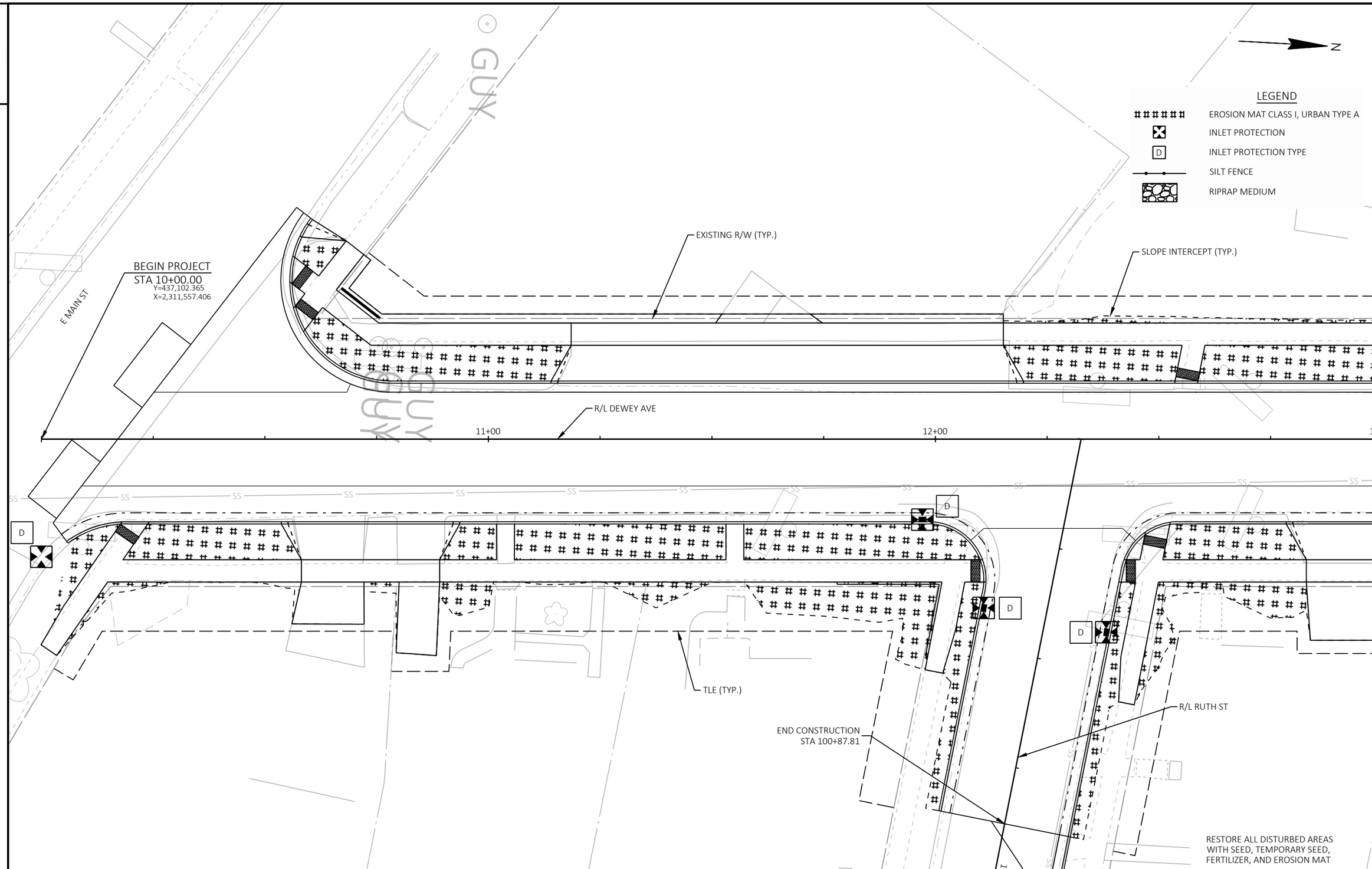

2

PROJECT NO: 3997-01-79/80	HWY: DEWEY AVE	COUNTY: JEFFERSON	EROSION CONTROL PLANS	SHEET 45	E

FILE NAME : R:\5300\5364\5364088\39970179\SHEETS\022001-EC.DWG
LAYOUT NAME - 01
PLOT DATE : 9/12/2025 3:41 PM
PLOT BY : ERIC HANDLER
PLOT NAME :
PLOT SCALE : 1 IN:20 FT
WISDOT/CADDS SHEET 42

2

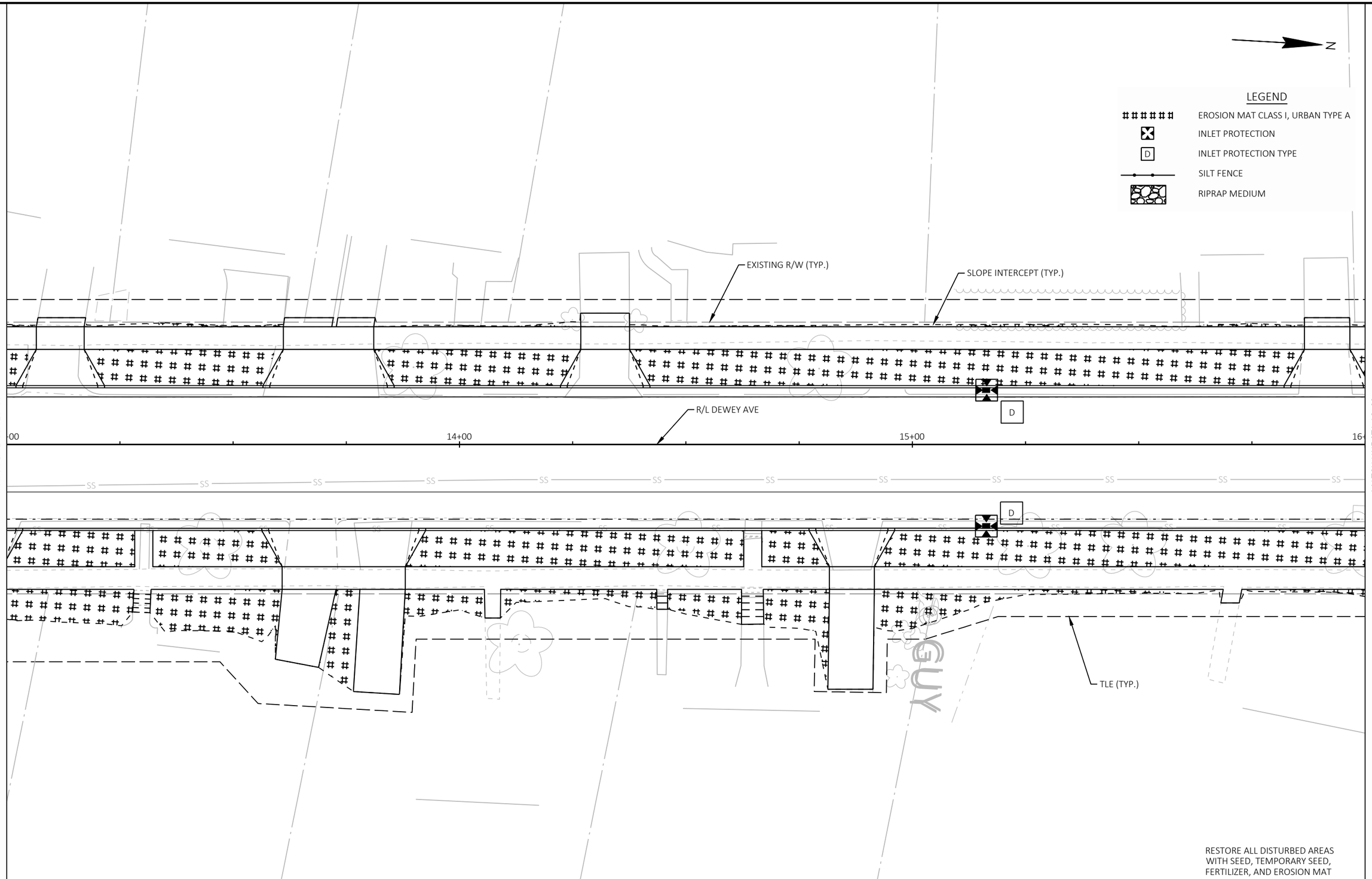

2

PROJECT NO: 3997-01-79/80	HWY: DEWEY AVE	COUNTY: JEFFERSON	EROSION CONTROL PLANS	SHEET 46	E

2

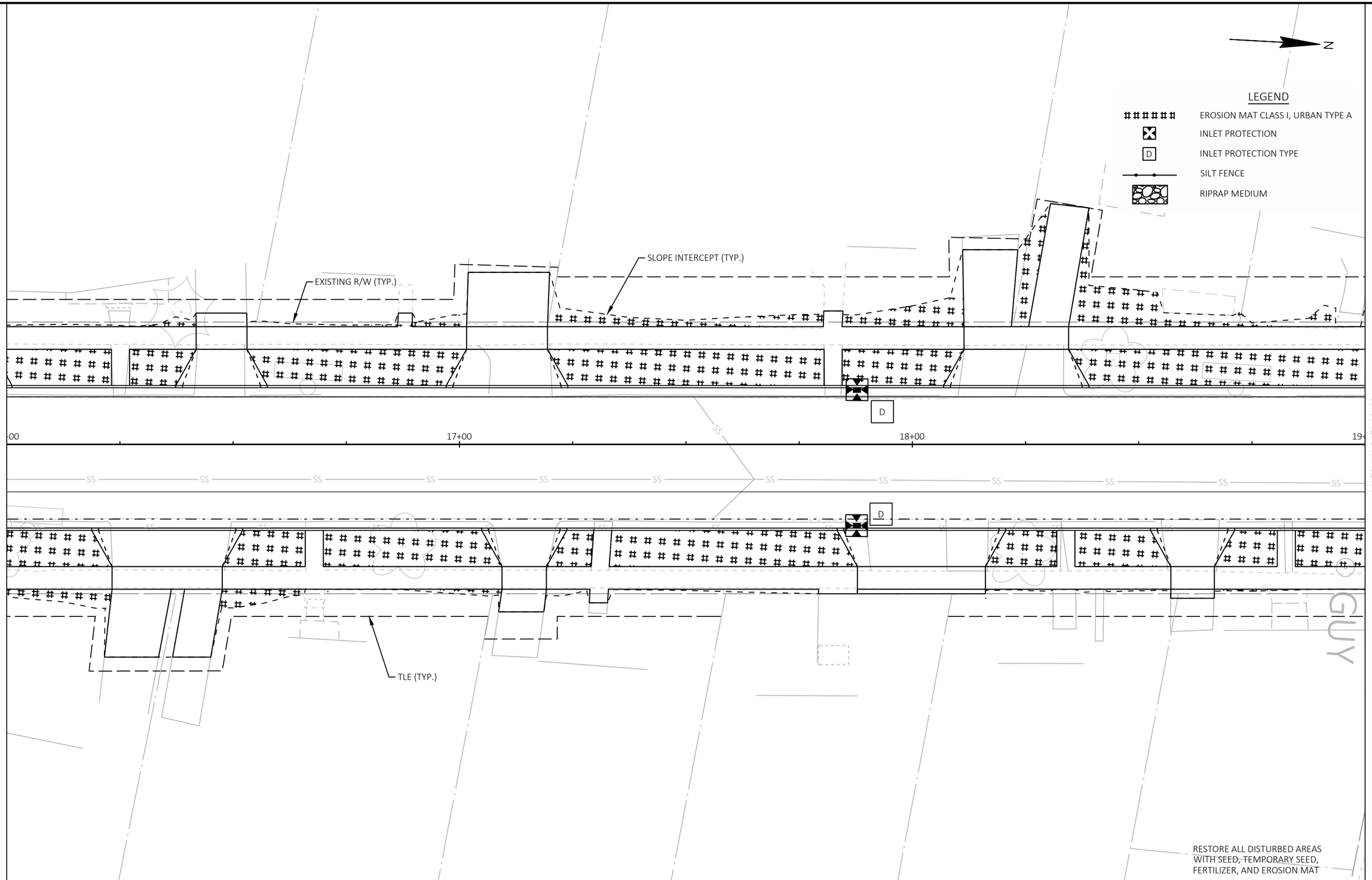

2

PROJECT NO: 3997-01-79/80	HWY: DEWEY AVE	COUNTY: JEFFERSON	EROSION CONTROL PLANS	SHEET 47	E

FILE NAME : R:\5300\5364\5364088\39970179\SHEETS\022001-EC.DWG
LAYOUT NAME - 03
PLOT DATE : 9/12/2025 3:41 PM
PLOT BY : ERIC HANDLER
PLOT NAME :
PLOT SCALE : 1 IN:20 FT
WISDOT/CADDS SHEET 42

2

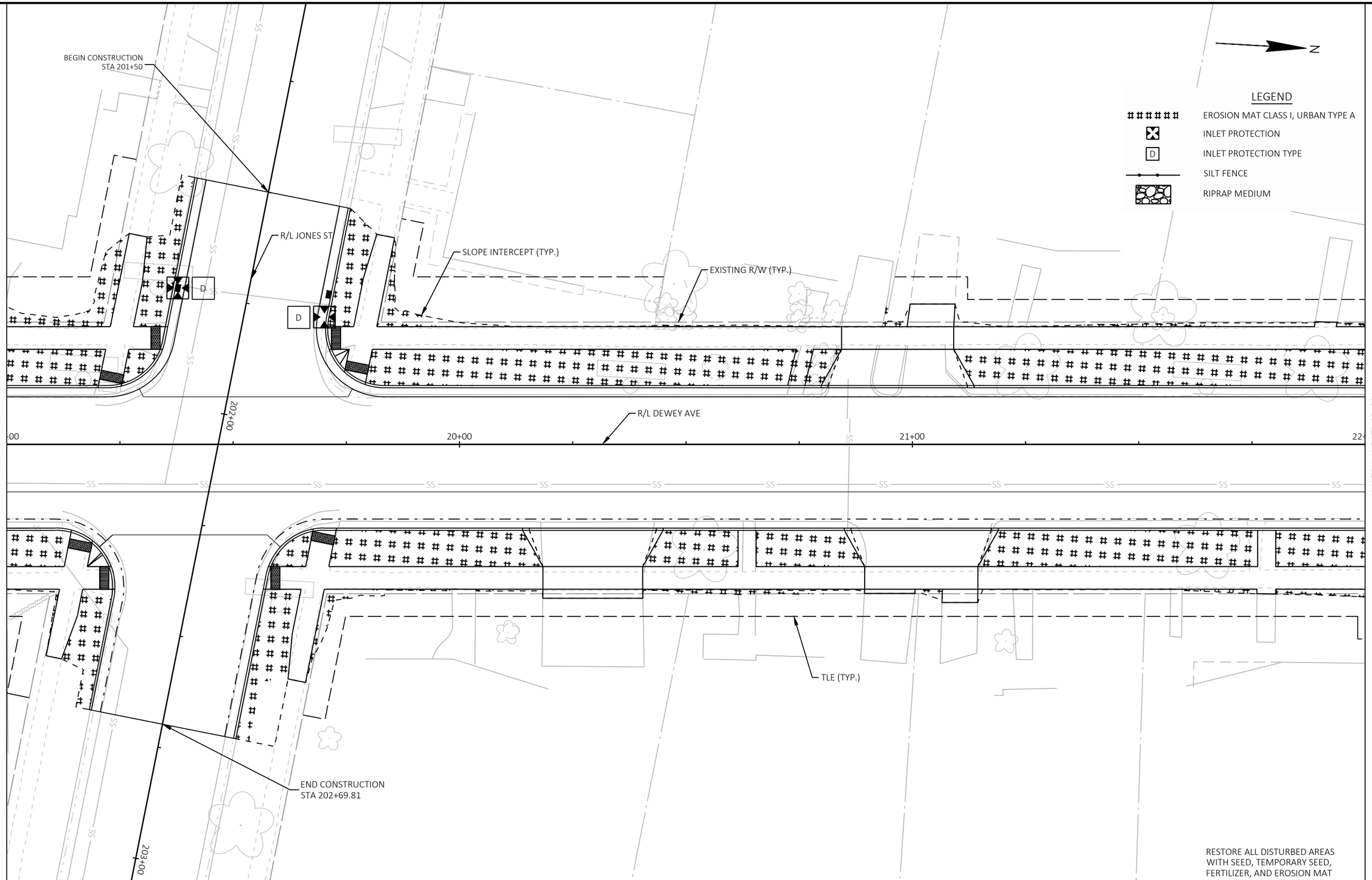

2

PROJECT NO: 3997-01-79/80	HWY: DEWEY AVE	COUNTY: JEFFERSON	EROSION CONTROL PLANS	SHEET 48	E

2

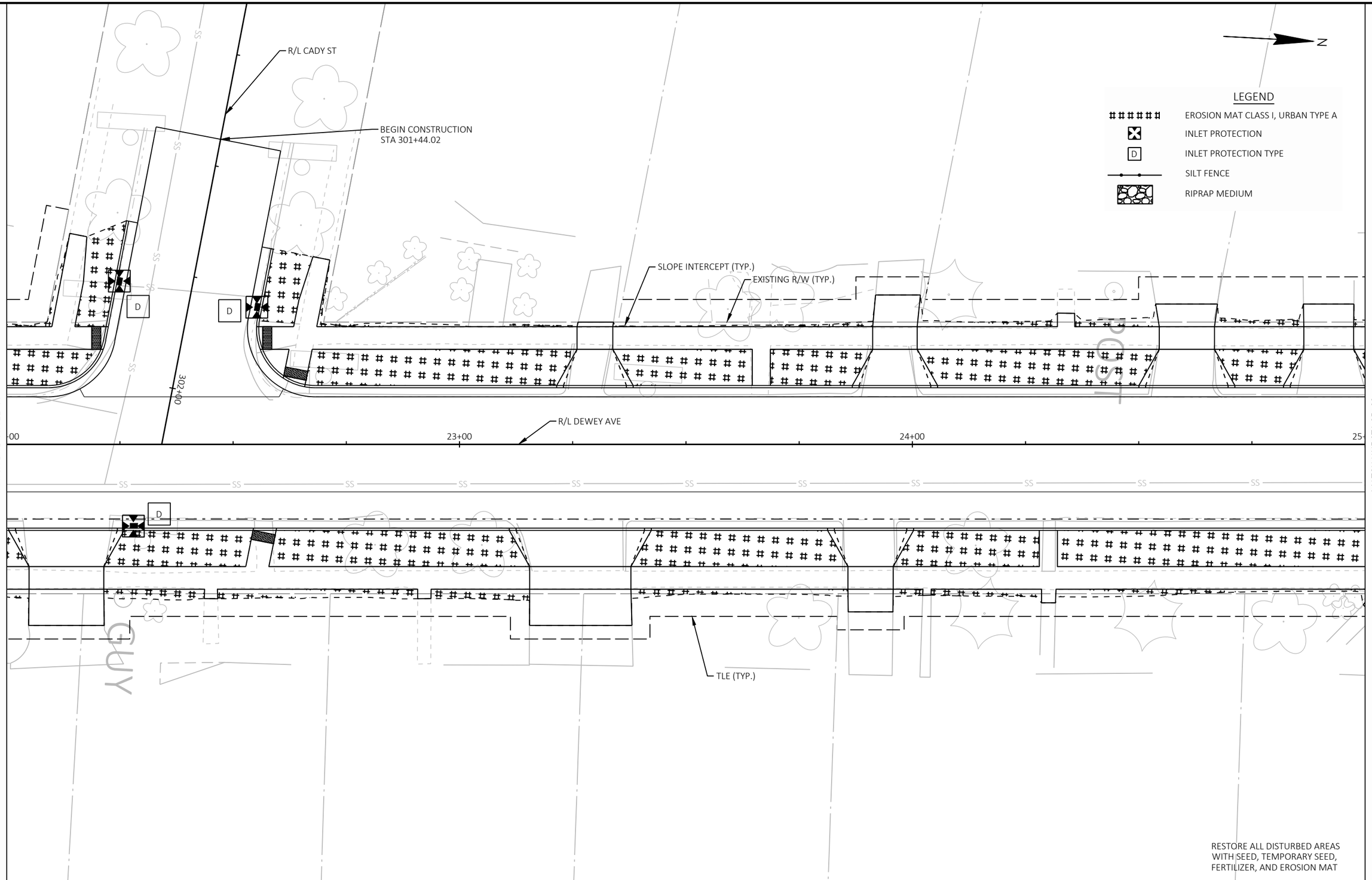

2

PROJECT NO: 3997-01-79/80	HWY: DEWEY AVE	COUNTY: JEFFERSON	EROSION CONTROL PLANS	SHEET 49	E

FILE NAME : R:\5300\5364\5364088\39970179\SHEETS\022001-EC.DWG
LAYOUT NAME - 05
PLOT DATE : 9/12/2025 3:41 PM
PLOT BY : ERIC HANDLER
PLOT NAME :
PLOT SCALE : 1 IN:20 FT

2

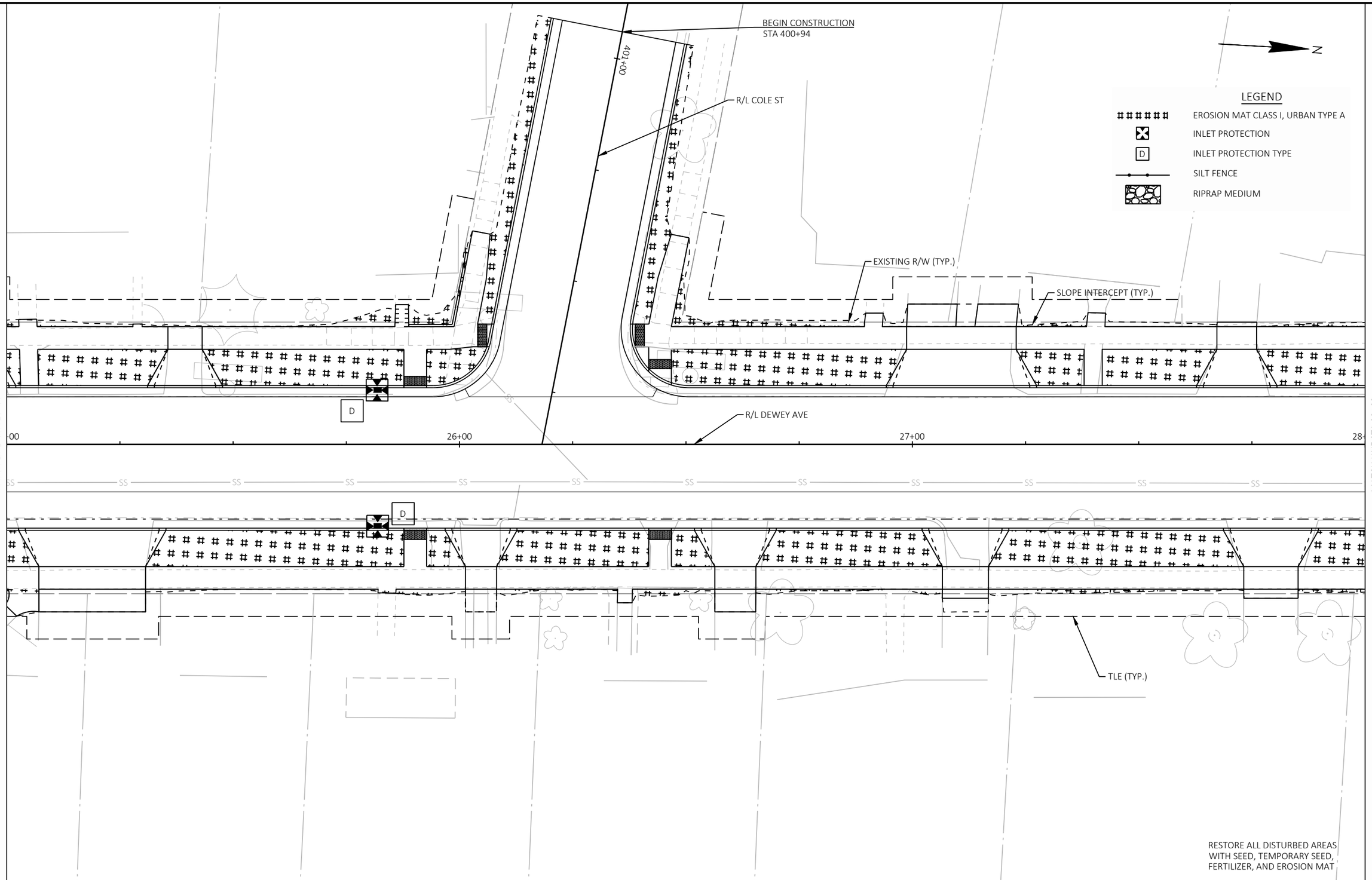

2

PROJECT NO: 3997-01-79/80	HWY: DEWEY AVE	COUNTY: JEFFERSON	EROSION CONTROL PLANS	SHEET 50	E

2

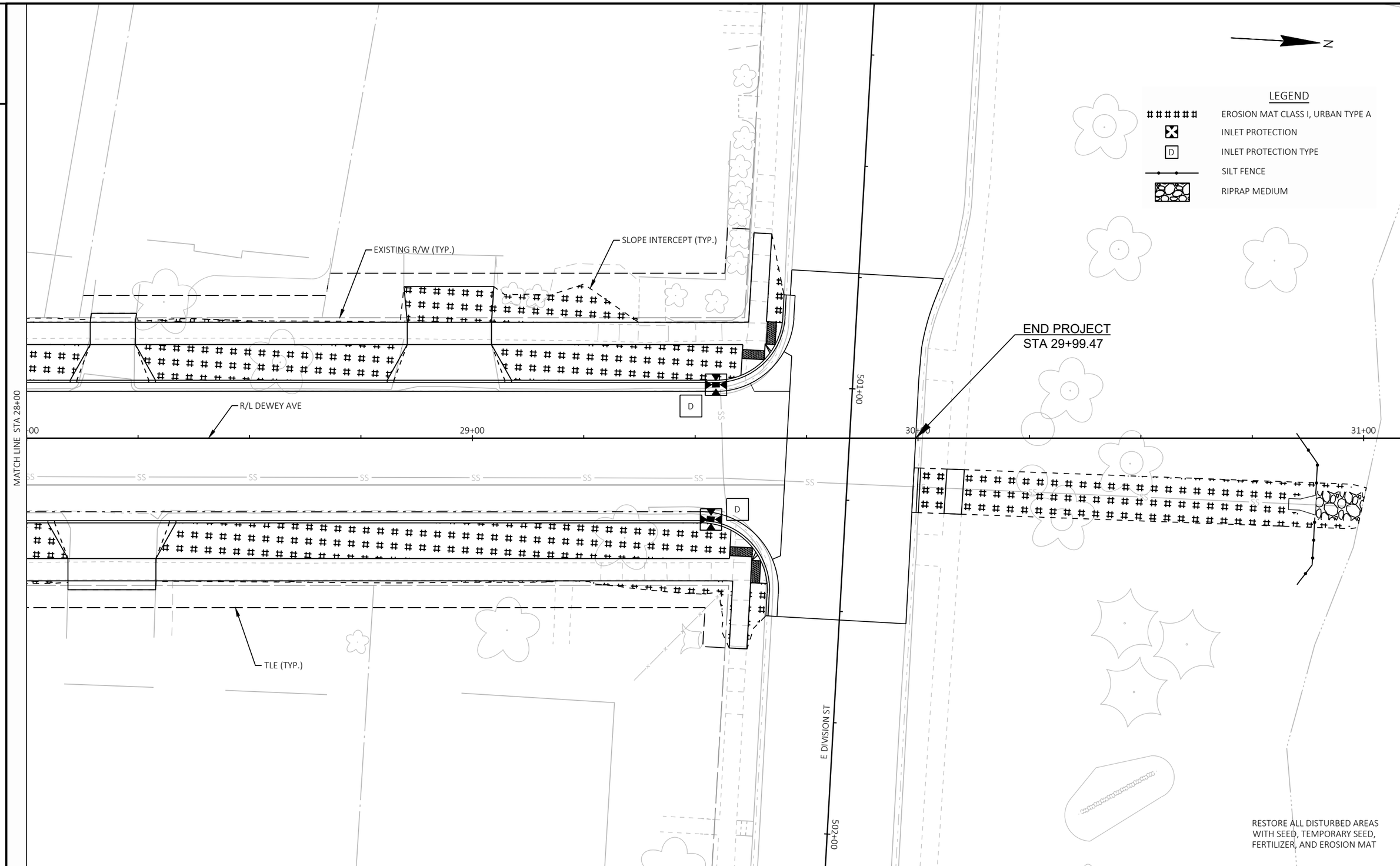

2

PROJECT NO: 3997-01-79/80	HWY: DEWEY AVE	COUNTY: JEFFERSON	EROSION CONTROL PLANS	SHEET 51	E

2

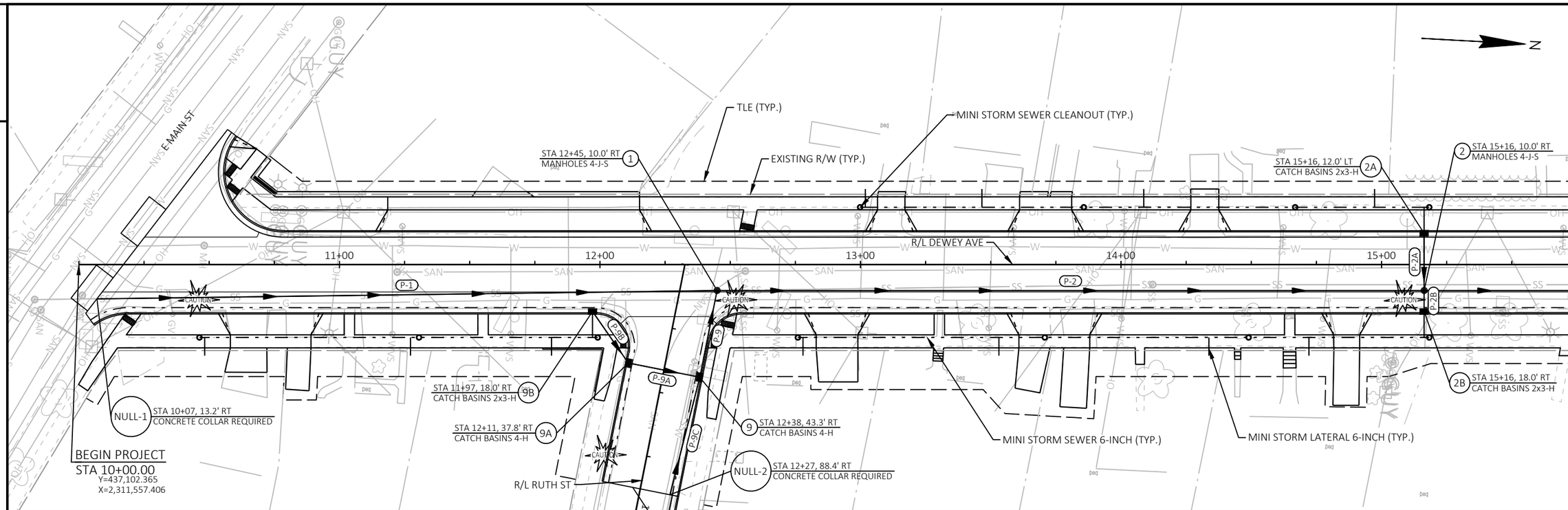

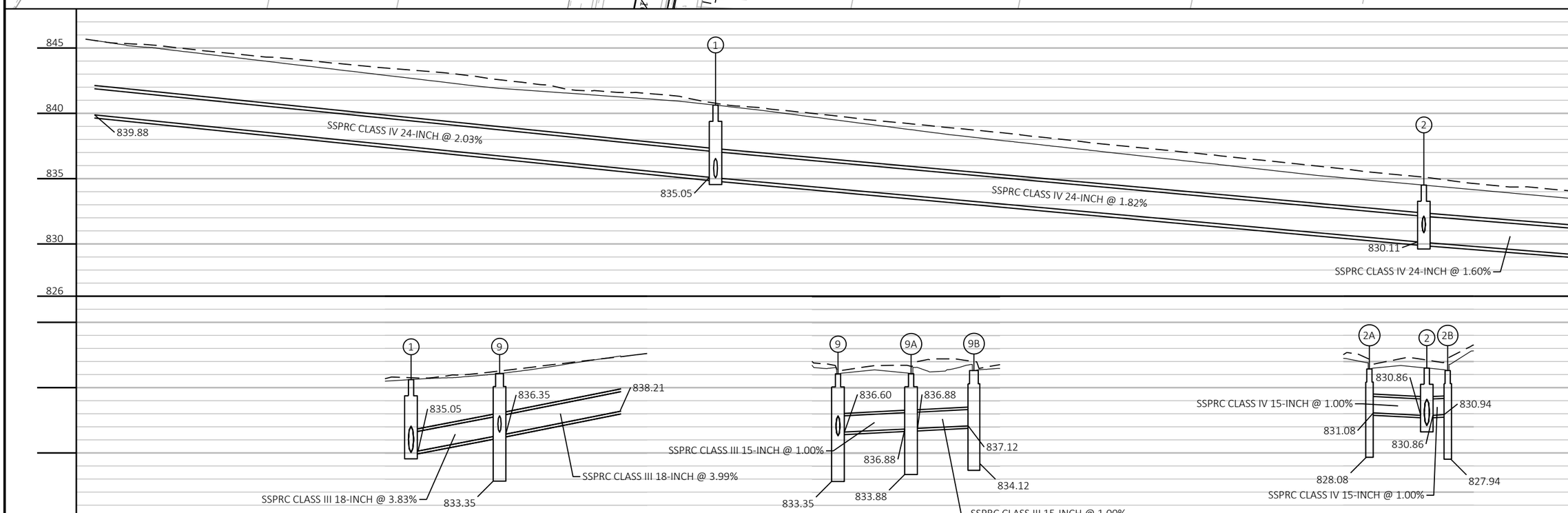

PROJECT NO: 3997-01-79/80	HWY: DEWEY AVE	COUNTY: JEFFERSON	STORM SEWER	SHEET 52	E

FILE NAME : R:\5300\5364\5364088\39970179\SHEETS\022501-SS.DWG
LAYOUT NAME - 01
PLOT DATE : 9/12/2025 3:41 PM
PLOT BY : ERIC HANDLER
PLOT NAME :
PLOT SCALE : 1 IN:40 FT
WISDOT/CADDS SHEET 41

2

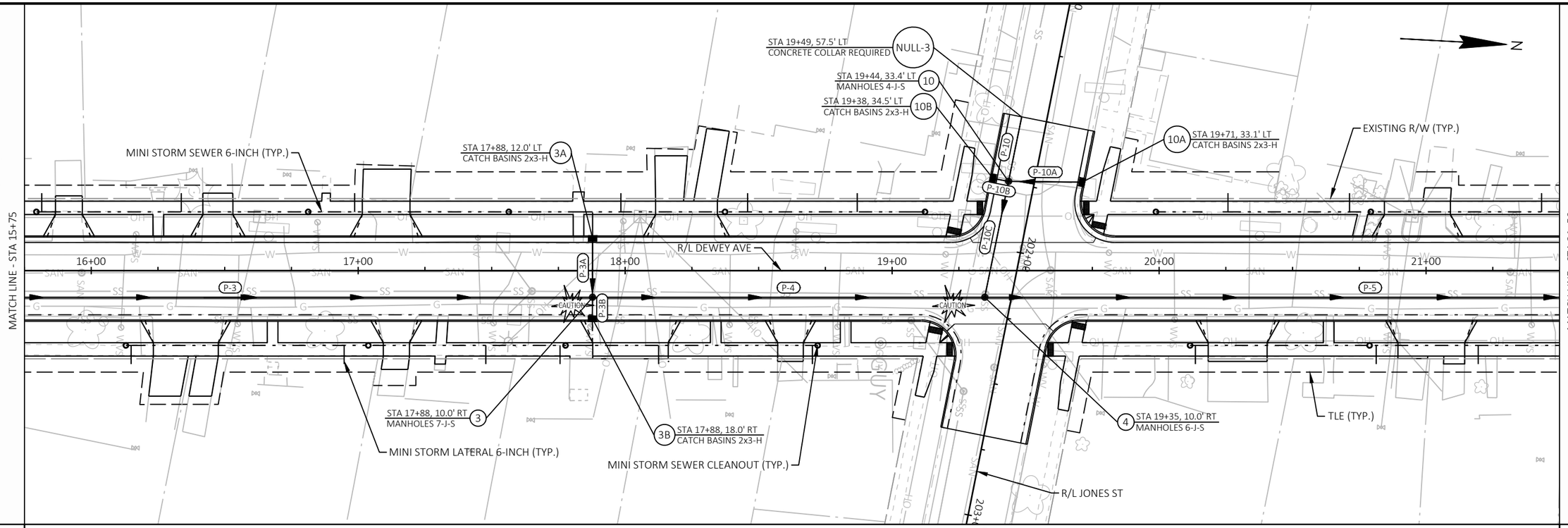

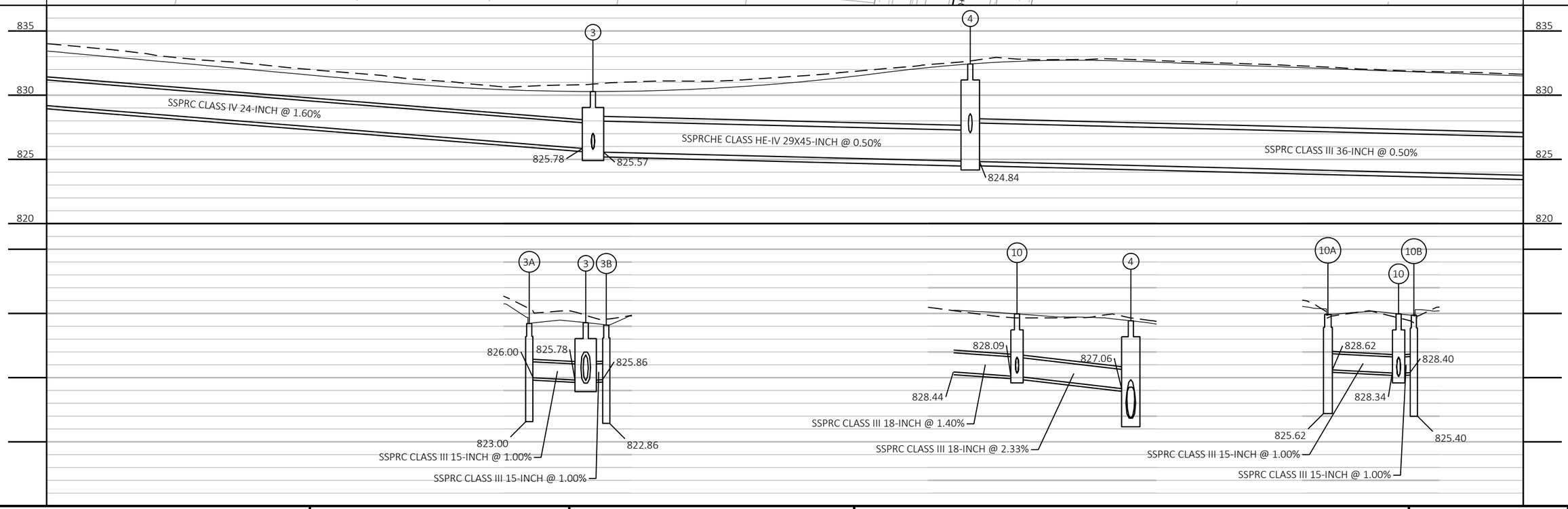

2

PROJECT NO: 3997-01-79/80	HWY: DEWEY AVE	COUNTY: JEFFERSON	STORM SEWER	SHEET 53	E

FILE NAME : R:\5300\5364\5364088\39970179\SHEETS\022501-SS.DWG
LAYOUT NAME - 02
PLOT DATE : 10/29/2025 10:41 AM
PLOT BY : ERIC HANDLER
PLOT NAME :
PLOT SCALE : 1 IN:40 FT
WISDOT/CADDS SHEET 41

2

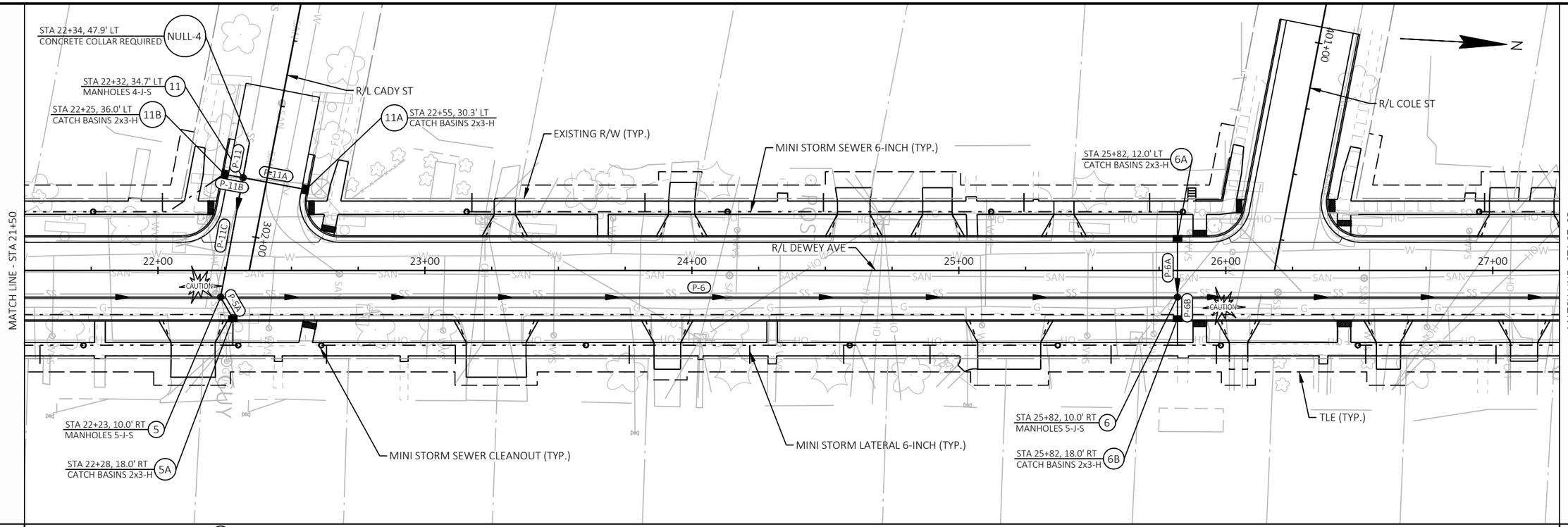

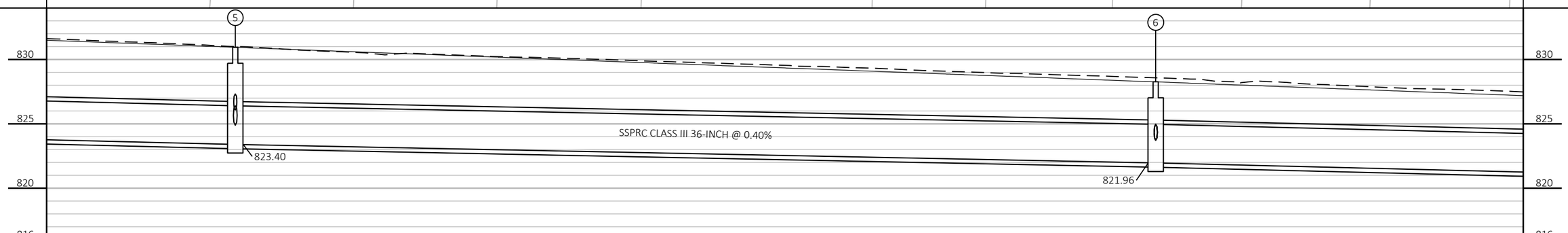

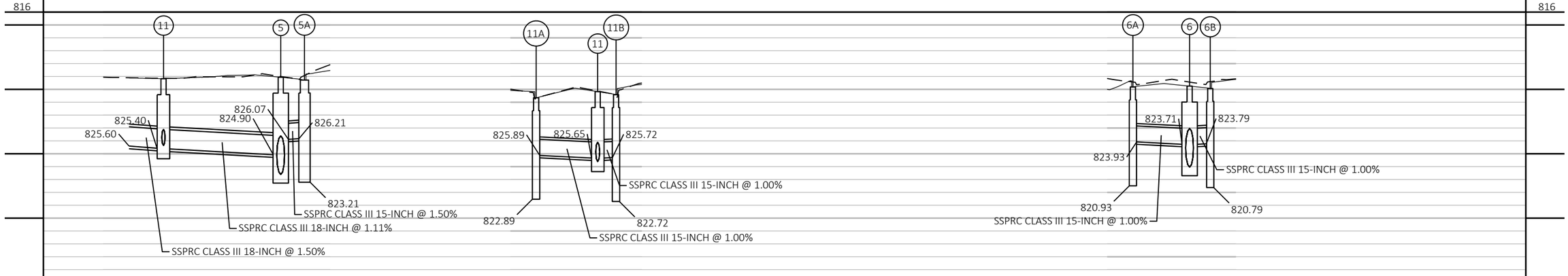

PROJECT NO: 3997-01-79/80	HWY: DEWEY AVE	COUNTY: JEFFERSON	STORM SEWER	SHEET 54	E

FILE NAME : R:\5300\5364\5364088\39970179\SHEETS\022501-SS.DWG
LAYOUT NAME - 03
PLOT DATE : 9/12/2025 3:41 PM
PLOT BY : ERIC HANDLER
PLOT NAME :
PLOT SCALE : 1 IN:40 FT
WISDOT/CADDS SHEET 41

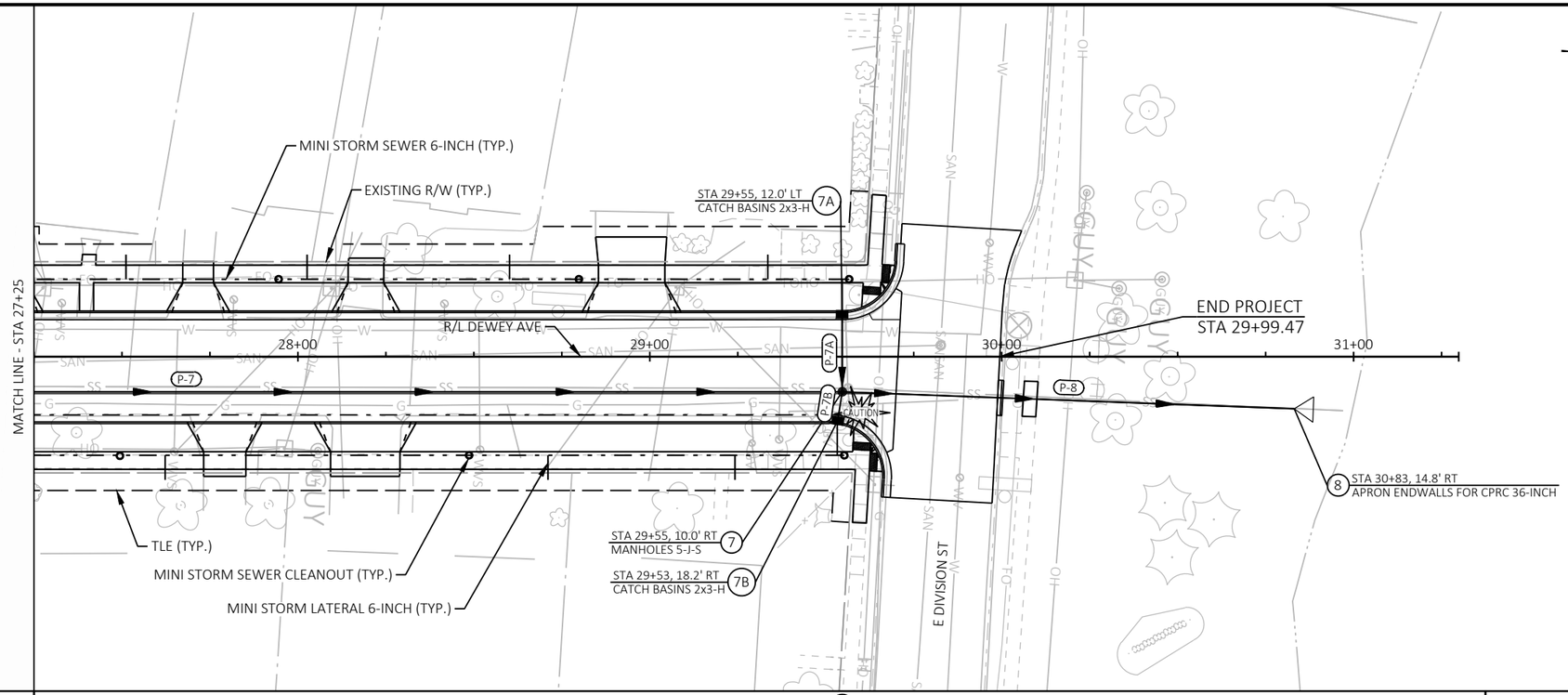
MINI STORM SEWER 6-INCH (TYP.)
EXISTING R/W (TYP.)
STA 29+55, 12.0' LT
CATCH BASINS 2x3-H
7A
MATCH LINE - STA 27+25
R/L DEWEY AVE
28+00
29+00
30+00
31+00
END PROJECT
STA 29+99.47
P-7
P-7A
P-7B
P-8
CAUTION
STA 30+83, 14.8' RT
APRON ENDWALLS FOR CPRC 36-INCH
8
TLE (TYP.)
MINI STORM SEWER CLEANOUT (TYP.)
MINI STORM LATERAL 6-INCH (TYP.)
STA 29+55, 10.0' RT
MANHOLES 5-J-S
7
STA 29+53, 18.2' RT
CATCH BASINS 2x3-H
7B
E DIVISION ST
N

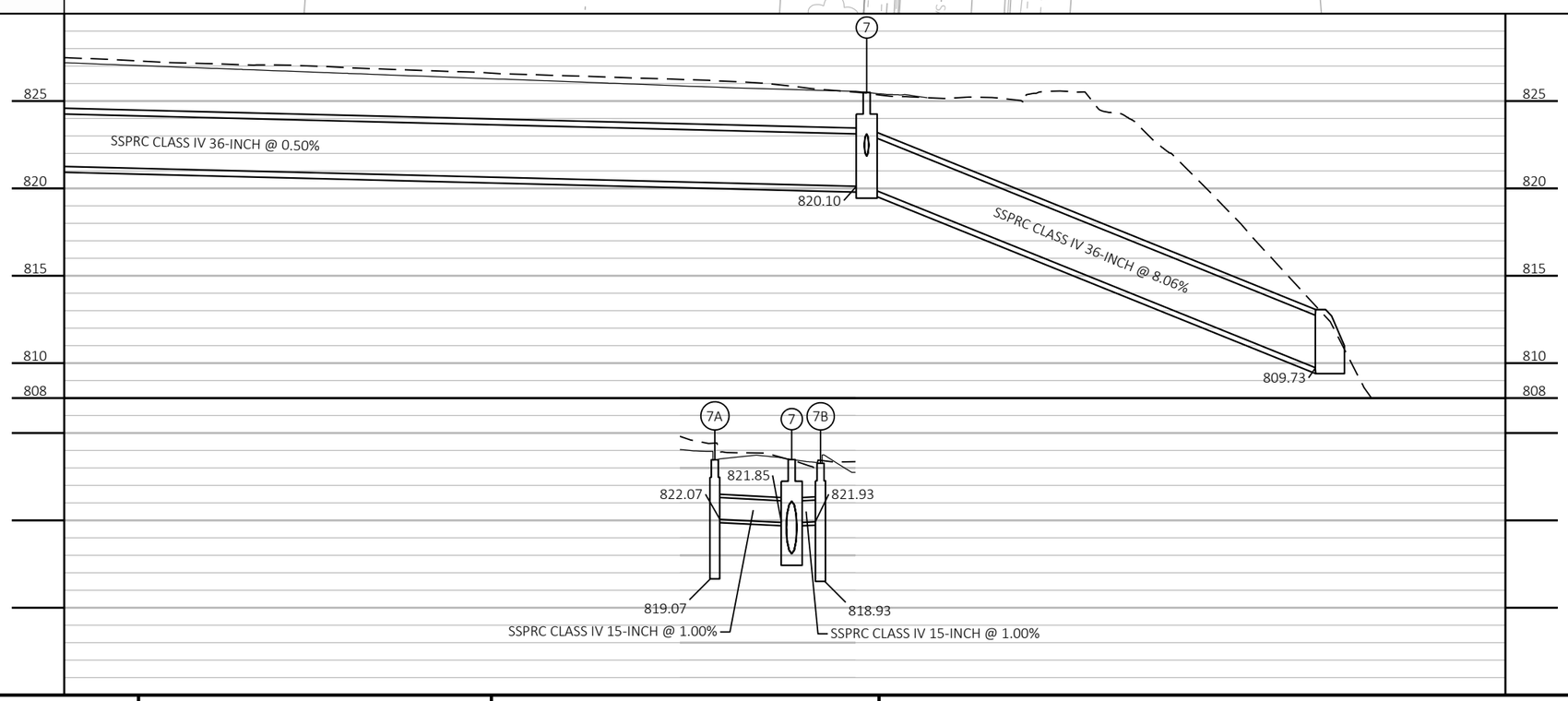
7
825
820
815
810
808
SSPRC CLASS IV 36-INCH @ 0.50%
820.10
SSPRC CLASS IV 36-INCH @ 8.06%
809.73
7A
7
7B
821.85
822.07
821.93
819.07
818.93
SSPRC CLASS IV 15-INCH @ 1.00%
SSPRC CLASS IV 15-INCH @ 1.00%

2

NOTE: SEE SPECIAL PROVISIONS FOR COORDINATION REQUIREMENTS AND LIST OF LEAD WATER SERVICE LATERALS TO BE REPLACED BY OTHERS.

BEGIN PROJECT
STA 10+00.00

8" TEE, (3) 8" VALVES, & CONNECT TO EX. 6" WATERMAIN WITH 8"X6" REDUCER & SOLID BODY SLEEVE

1-INCH CURB STOP & BOX (TYP.)

45° BEND REQ'D

PR SAN MH 14-034

REMOVE: EX SAN 14-034

P115'-8" PVC SAN. SEWER @ 2.36%

8" TEE

PR SAN MH 14-033

REMOVE: EX SAN 14-033

674'-8" WATERMAIN

TLE

P363'-8" PVC SAN. SEWER @ 1.73%

R/L DEWEY AVE

8" VALVE

STA 15+07
7" BURY, 6" VALVE, 9'-6" HYDRANT LEAD & HYDRANT FLANGE ELEV 835.49'

REMOVE: EX SAN 14-032

1-INCH CORPORATION (TYP.)

PR SAN MH 14-032

REMOVE SAN. SEWER SWEEP

LEAD WATER SERVICE LATERAL TO BE REPLACED BY OTHERS (TYP.)

SLOPE INTERCEPT (TYP.)

EXISTING R/W (TYP.)

1-INCH COPPER WATER SERVICE (TYP.)

CONNECT PR WATER SERVICE TO EXISTING SERVICE AT RIGHT OF WAY (TYP.)

PR 6" PVC SAN. LATERAL (TYP.)

TLE

R/L RUTH ST

8'

MATCH LINE - STA 17+00

E MAIN ST

1020 E MAIN ST

1106 E MAIN ST

115 DEWEY AVE

117 DEWEY AVE

119 DEWEY AVE

120 DEWEY AVE

121 DEWEY AVE

122 DEWEY AVE

123 DEWEY AVE

124 DEWEY AVE

125 DEWEY AVE

131 DEWEY AVE

132 DEWEY AVE

134 DEWEY AVE

137 DEWEY AVE

138 DEWEY AVE

11+00 12+00 13+00 14+00 15+00 16+00 17

NOTES:
1. MAINTAIN A MINIMUM DEPTH OF 6.5' OVER WATER MAIN.
2. FIELD VERIFY LOCATIONS OF SANITARY LATERALS AND ADJUST WATER MAIN AS NEEDED.
3. REMOVE OR ABANDON EXISTING WATER MAIN IN PLACE BY GROUTING (TYP.).
4. REPLACE WATER LATERALS FROM NEW WATER MAIN TO EXISTING RIGHT OF WAY, INSTALL NEW CURB BOX.
5. REPLACE SANITARY LATERALS FROM NEW SANITARY MAIN TO EXISTING RIGHT OF WAY.

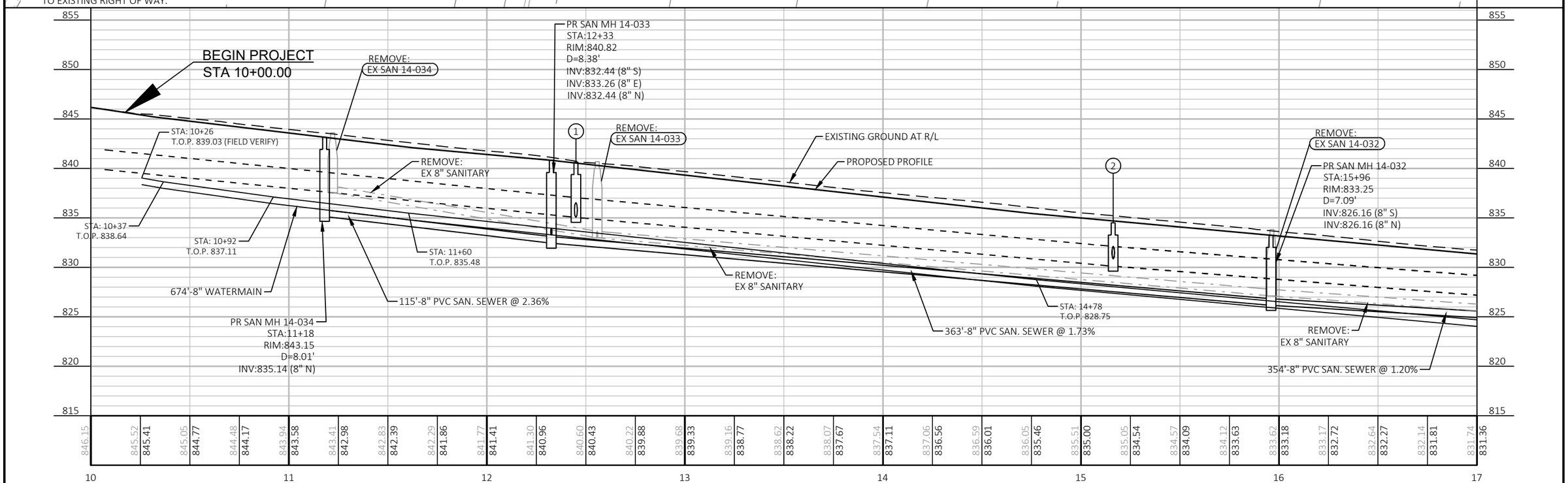

PROJECT NO: 3997-01-79/80	HWY: DEWEY AVE	COUNTY: JEFFERSON	DEWEY AVE WATERMAIN & SANITARY SEWER PLAN	SHEET 56	E

2

NOTE: SEE SPECIAL PROVISIONS FOR COORDINATION REQUIREMENTS AND LIST OF LEAD WATER SERVICE LATERALS TO BE REPLACED BY OTHERS.

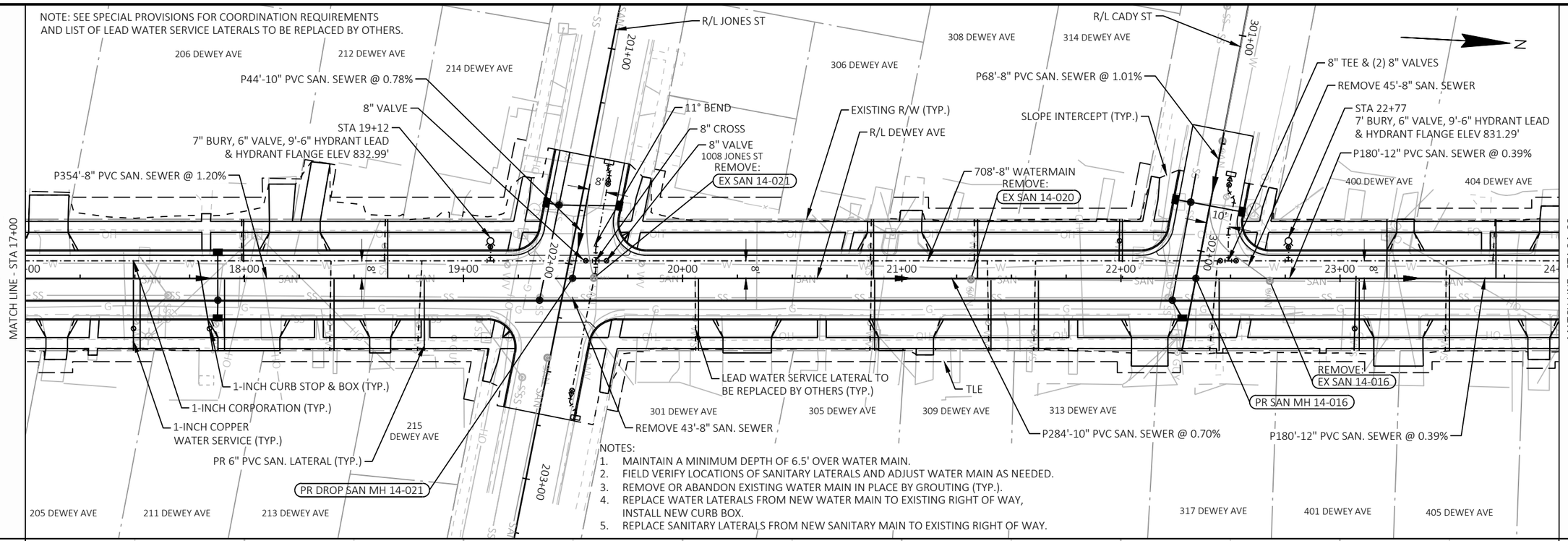

NOTES:

1. MAINTAIN A MINIMUM DEPTH OF 6.5' OVER WATER MAIN.
2. FIELD VERIFY LOCATIONS OF SANITARY LATERALS AND ADJUST WATER MAIN AS NEEDED.
3. REMOVE OR ABANDON EXISTING WATER MAIN IN PLACE BY GROUTING (TYP.).
4. REPLACE WATER LATERALS FROM NEW WATER MAIN TO EXISTING RIGHT OF WAY, INSTALL NEW CURB BOX.
5. REPLACE SANITARY LATERALS FROM NEW SANITARY MAIN TO EXISTING RIGHT OF WAY.

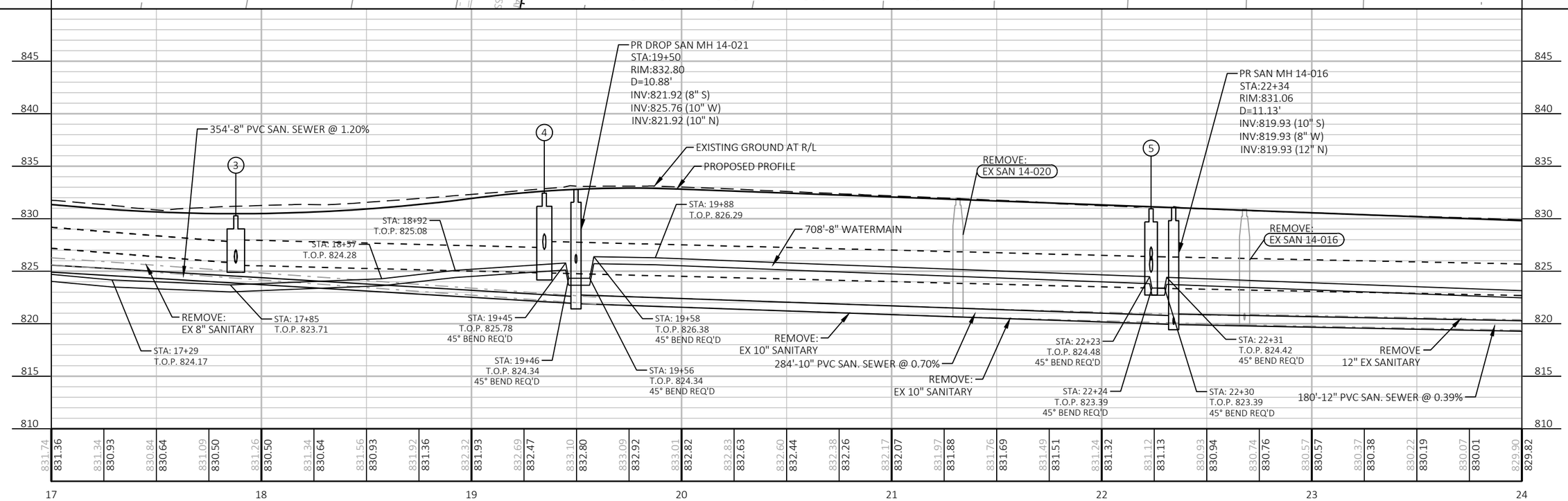

2

PROJECT NO: 3997-01-79/80	HWY: DEWEY AVE	COUNTY: JEFFERSON	DEWEY AVE WATERMAIN & SANITARY SEWER PLAN	SHEET 57	E

FILE NAME : R:\5300\5364\5364088\39970179\SHEETS\023001-UP.DWG
LAYOUT NAME - 02
PLOT DATE : 10/29/2025 10:41 AM
PLOT BY : ERIC HANDLER
PLOT NAME :
PLOT SCALE : 1 IN:50 FT

WISDOT/CADDS SHEET 41

2

NOTE: SEE SPECIAL PROVISIONS FOR COORDINATION REQUIREMENTS AND LIST OF LEAD WATER SERVICE LATERALS TO BE REPLACED BY OTHERS.

408 DEWEY AVE | 412 DEWEY AVE | 414 DEWEY AVE | 500 DEWEY AVE | 504 DEWEY AVE | 506 DEWEY AVE | 508 DEWEY AVE | 512 DEWEY AVE

R/L COLE ST

8" VALVE

STA 25+96

7' BURY, 6" VALVE, 9'-6" HYDRANT LEAD & HYDRANT FLANGE ELEV 828.28'

PR SAN MH 14-015

401+00

402+00

11° BEND

8" TEE

8" VALVE

REMOVE: EX SAN 14-014

TLE

1-INCH CORPORATION (TYP.)

SLOPE INTERCEPT (TYP.)

EXISTING R/W (TYP.)

589'-8" WATERMAIN

STA 29+43

7" BURY, 6" VALVE, 6.5'-6" HYDRANT LEAD & HYDRANT FLANGE ELEV 826.34'

EX 18" SAN. SEWER @ 0.63%

EX 12" SAN. SEWER @ 0.36%

EX SAN 14-011

R/L DEWEY AVE

MATCH LINE - STA 24+00

25+00 | 26+00 | 27+00 | 28+00 | 29+00 | 30+00 | 31+00

REMOVE: EX SAN 14-015

LEAD WATER SERVICE LATERAL TO BE REPLACED BY OTHERS (TYP.)

TLE

1-INCH COPPER WATER SERVICE (TYP.)

1-INCH CURB STOP & BOX (TYP.)

PR 6" PVC SAN. LATERAL (TYP.)

P109'-12" PVC SAN. SEWER @ 0.36%

CONNECT PROPOSED 12" PVC SAN. SEWER TO EXISTING 12" PVC SAN. SEWER AT BELL CONNECTION 64 FEET SOUTH OF SAN. MANHOLE 14-011

END PROJECT
STA 29+99.47

ROCK RIVER

E DIVISION ST

EX 8" SAN. SEWER @ 0.75%

409 1 DEWEY AVE | 415 DEWEY AVE | 417 DEWEY AVE | 419 DEWEY AVE | 421 DEWEY AVE | 501 DEWEY AVE | 503 DEWEY AVE | 505 DEWEY AVE | 901 E DIVISION ST

NOTES:
1. MAINTAIN A MINIMUM DEPTH OF 6.5' OVER WATER MAIN.
2. FIELD VERIFY LOCATIONS OF SANITARY LATERALS AND ADJUST WATER MAIN AS NEEDED.
3. REMOVE OR ABANDON EXISTING WATER MAIN IN PLACE BY GROUTING (TYP.).
4. REPLACE WATER LATERALS FROM NEW WATER MAIN TO EXISTING RIGHT OF WAY, INSTALL NEW CURB BOX.
5. REPLACE SANITARY LATERALS FROM NEW SANITARY MAIN TO EXISTING RIGHT OF WAY.

835 | 830 | 825 | 820 | 815 | 810 | 805 | 800

REMOVE: EX SAN 14-015

6

REMOVE: EX SAN 14-014

EXISTING GROUND AT R/L

PROPOSED PROFILE

PR SAN MH 14-014
STA:28+09
RIM:826.75
D=8.67'
INV:818.08 (12" S)
INV:818.08 (12" N)

7

STA: 29+65
T.O.P. 819.10
45° BEND REQ'D

END PROJECT
STA 29+99.47

109'-12" PVC SAN. SEWER @ 0.36%

EX SAN 14-011

EX 12" SANITARY

STA: 29+17
T.O.P. 819.24

STA: 29+77
T.O.P. 819.12
45° BEND REQ'D

STA: 29+90
T.O.P. 819.03

589'-8" WATERMAIN

CONNECT PROPOSED 12" PVC SAN. SEWER TO EXISTING 12" PVC SAN. SEWER AT BELL CONNECTION 64 FEET SOUTH OF SAN. MANHOLE 14-011

STA: 29+45
T.O.P. 819.08
45° BEND REQ'D

STA: 29+89
T.O.P. 819.03
45° BEND REQ'D

PR SAN MH 14-015
STA:24+14
RIM:829.71
D=10.48'
INV:819.23 (12" S)
INV:819.23 (12" N)

395'-12" PVC SAN. SEWER @ 0.29%

REMOVE: 12" EX SANITARY

REMOVE: 12" EX SANITARY

STA: 29+47
T.O.P. 816.65
45° BEND REQ'D

STA: 29+86
T.O.P. 815.85
45° BEND REQ'D

STA: 29+62
T.O.P. 816.65
45° BEND REQ'D

STA: 29+80
T.O.P. 815.85
45° BEND REQ'D

829.90 829.82 | 829.75 829.63 | 829.60 829.44 | 829.43 829.26 | 829.25 829.07 | 829.09 828.88 | 828.92 828.70 | 828.74 828.51 | 828.54 828.32 | 828.39 828.13 | 828.17 827.95 | 827.96 827.76 | 827.78 827.57 | 827.60 827.38 | 827.43 827.20 | 827.28 827.01 | 827.12 826.82 | 826.94 826.63 | 826.76 826.45 | 826.59 826.26 | 826.43 826.07 | 826.27 825.90 | 825.93 825.76 | 825.60 825.60 | 825.16 | 824.81 | 820.81 | 815.44 | 808.96

24 | 25 | 26 | 27 | 28 | 29 | 30 | 31

PROJECT NO: 3997-01-79/80	HWY: DEWEY AVE	COUNTY: JEFFERSON	DEWEY AVE WATERMAIN & SANITARY SEWER PLAN	SHEET 58	E

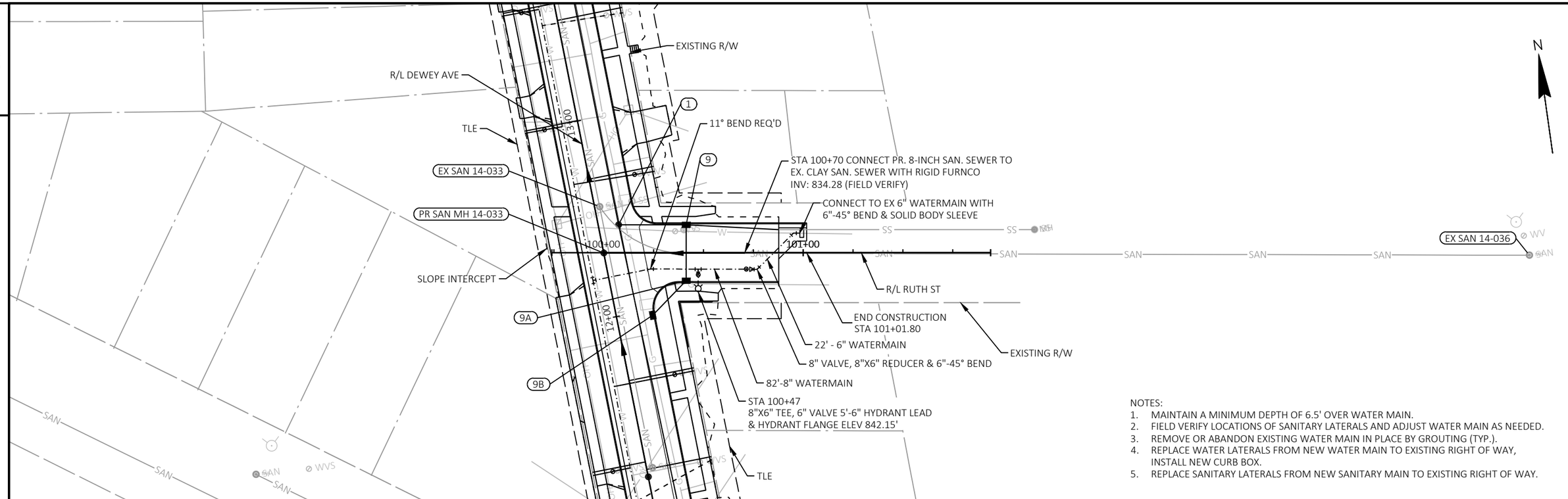

NOTES:
1. MAINTAIN A MINIMUM DEPTH OF 6.5' OVER WATER MAIN.
2. FIELD VERIFY LOCATIONS OF SANITARY LATERALS AND ADJUST WATER MAIN AS NEEDED.
3. REMOVE OR ABANDON EXISTING WATER MAIN IN PLACE BY GROUTING (TYP.).
4. REPLACE WATER LATERALS FROM NEW WATER MAIN TO EXISTING RIGHT OF WAY, INSTALL NEW CURB BOX.
5. REPLACE SANITARY LATERALS FROM NEW SANITARY MAIN TO EXISTING RIGHT OF WAY.

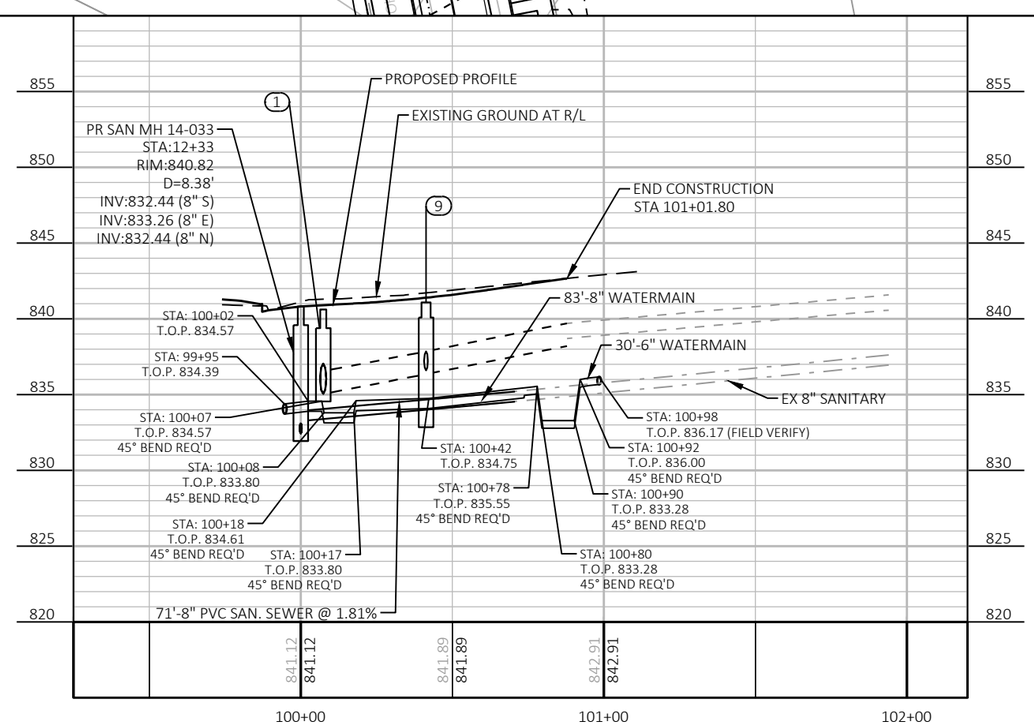

PROJECT NO: 3997-01-79/80	HWY: DEWEY AVE	COUNTY: JEFFERSON	RUTH ST WATERMAIN & SANITARY SEWER PLAN	SHEET 59	E

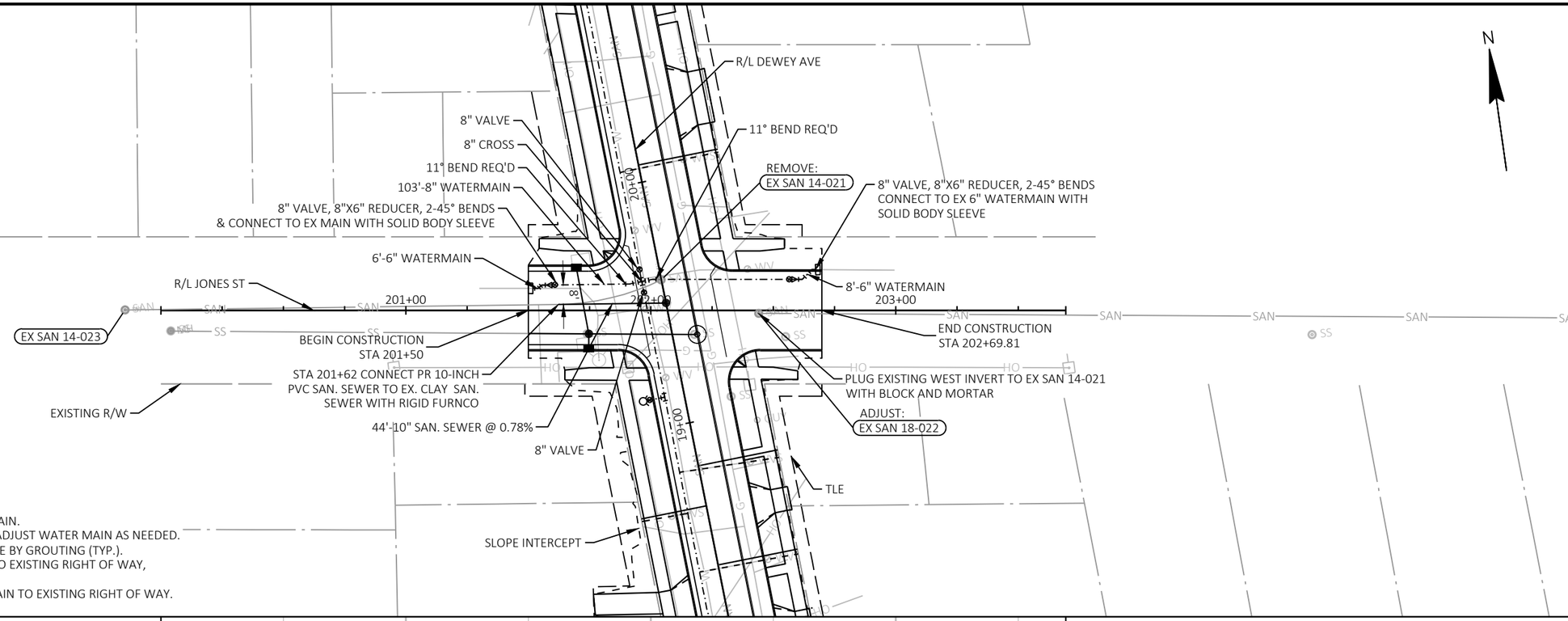

NOTES:
1. MAINTAIN A MINIMUM DEPTH OF 6.5' OVER WATER MAIN.
2. FIELD VERIFY LOCATIONS OF SANITARY LATERALS AND ADJUST WATER MAIN AS NEEDED.
3. REMOVE OR ABANDON EXISTING WATER MAIN IN PLACE BY GROUTING (TYP.).
4. REPLACE WATER LATERALS FROM NEW WATER MAIN TO EXISTING RIGHT OF WAY, INSTALL NEW CURB BOX.
5. REPLACE SANITARY LATERALS FROM NEW SANITARY MAIN TO EXISTING RIGHT OF WAY.

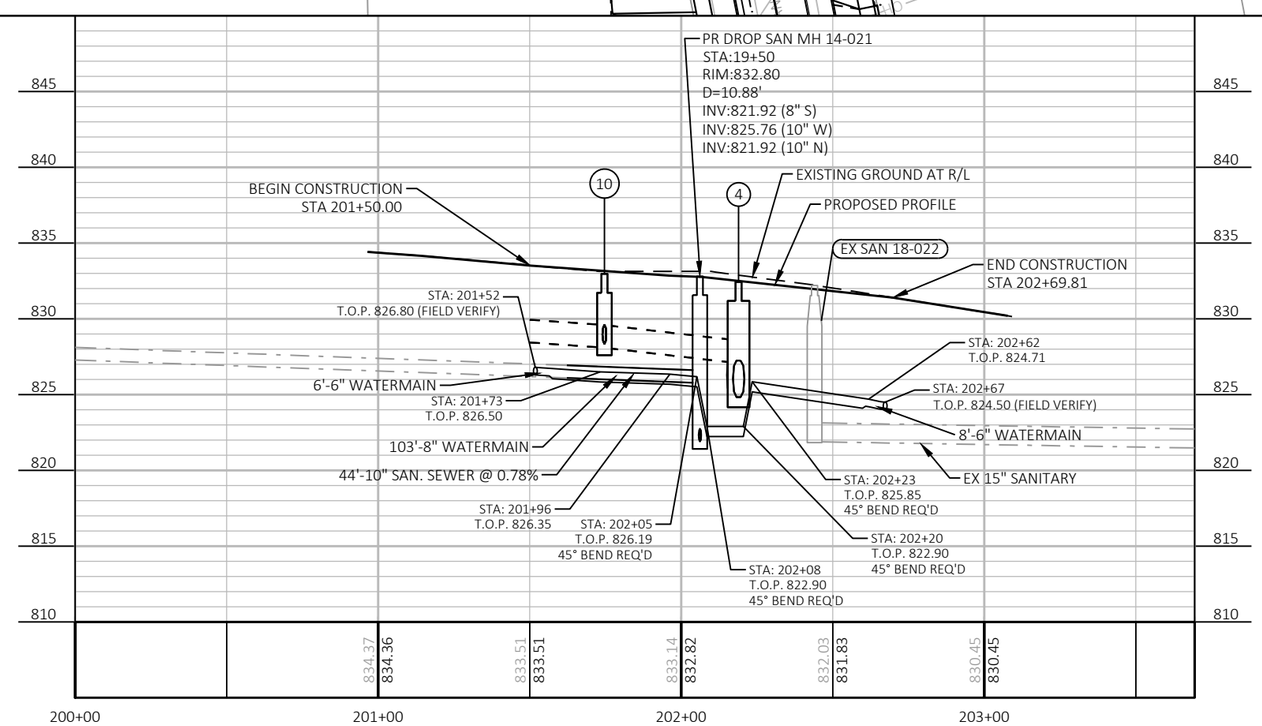

PROJECT NO: 3997-01-79/80	HWY: DEWEY AVE	COUNTY: JEFFERSON	JONES ST WATERMAIN & SANITARY SEWER PLAN	SHEET 60	E

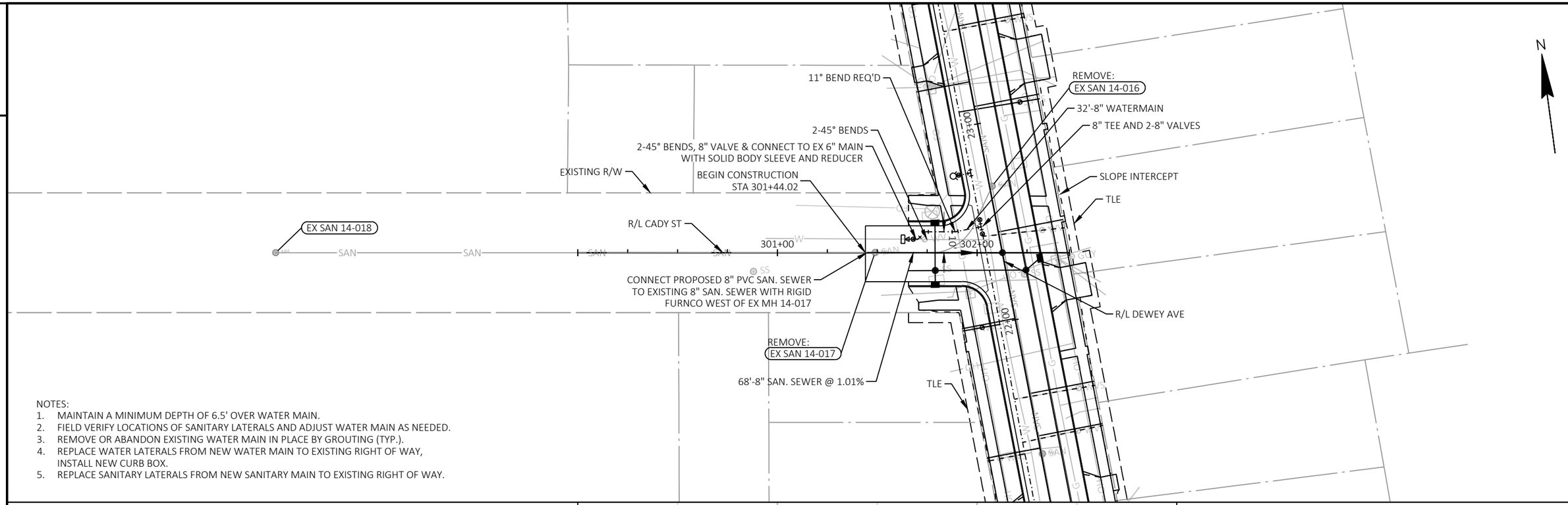

NOTES:
1. MAINTAIN A MINIMUM DEPTH OF 6.5' OVER WATER MAIN.
2. FIELD VERIFY LOCATIONS OF SANITARY LATERALS AND ADJUST WATER MAIN AS NEEDED.
3. REMOVE OR ABANDON EXISTING WATER MAIN IN PLACE BY GROUTING (TYP.).
4. REPLACE WATER LATERALS FROM NEW WATER MAIN TO EXISTING RIGHT OF WAY, INSTALL NEW CURB BOX.
5. REPLACE SANITARY LATERALS FROM NEW SANITARY MAIN TO EXISTING RIGHT OF WAY.

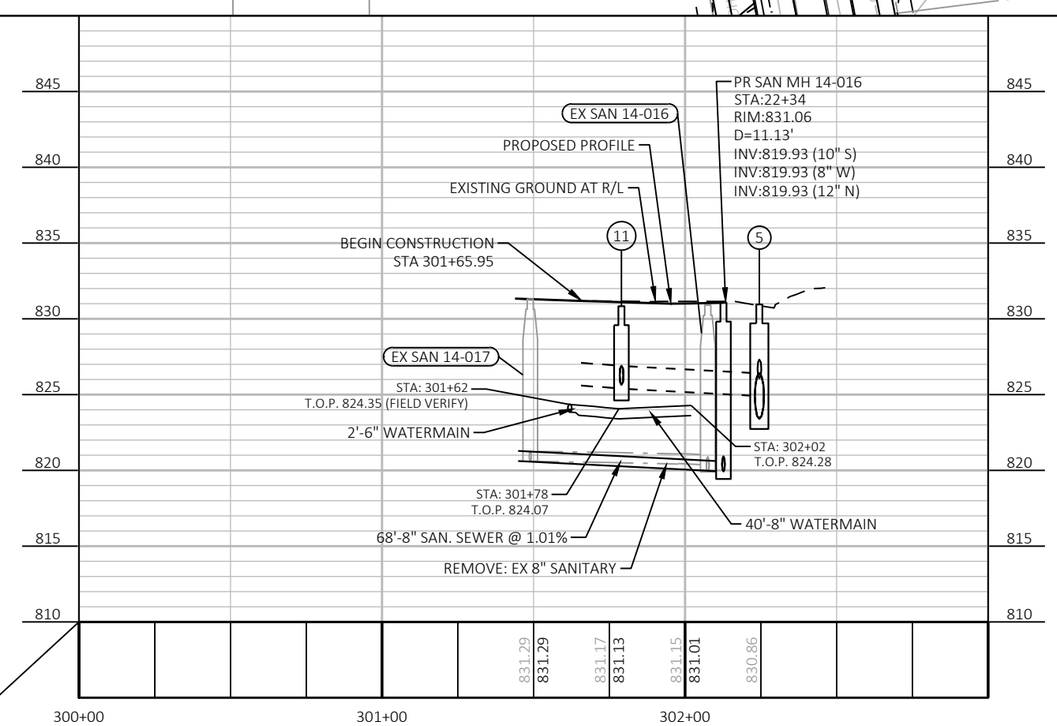

PROJECT NO: 3997-01-79/80	HWY: DEWEY AVE	COUNTY: JEFFERSON	CADY ST WATERMAIN & SANITARY SEWER PLAN	SHEET 61	E

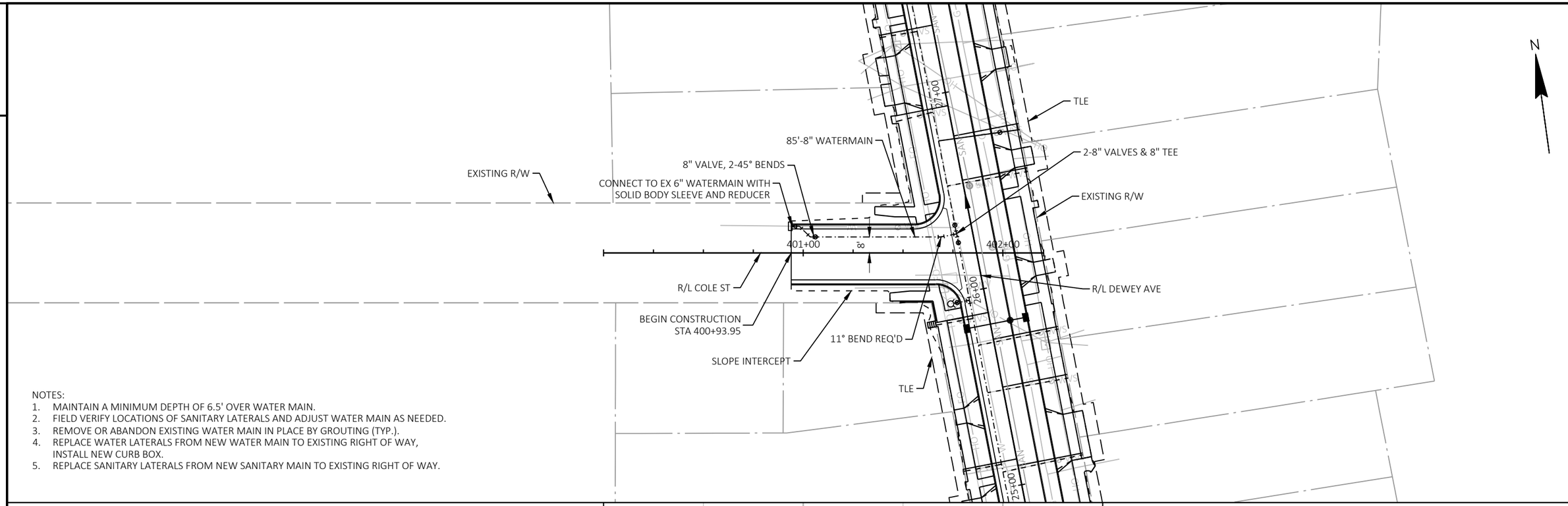

NOTES:
1. MAINTAIN A MINIMUM DEPTH OF 6.5' OVER WATER MAIN.
2. FIELD VERIFY LOCATIONS OF SANITARY LATERALS AND ADJUST WATER MAIN AS NEEDED.
3. REMOVE OR ABANDON EXISTING WATER MAIN IN PLACE BY GROUTING (TYP.).
4. REPLACE WATER LATERALS FROM NEW WATER MAIN TO EXISTING RIGHT OF WAY, INSTALL NEW CURB BOX.
5. REPLACE SANITARY LATERALS FROM NEW SANITARY MAIN TO EXISTING RIGHT OF WAY.

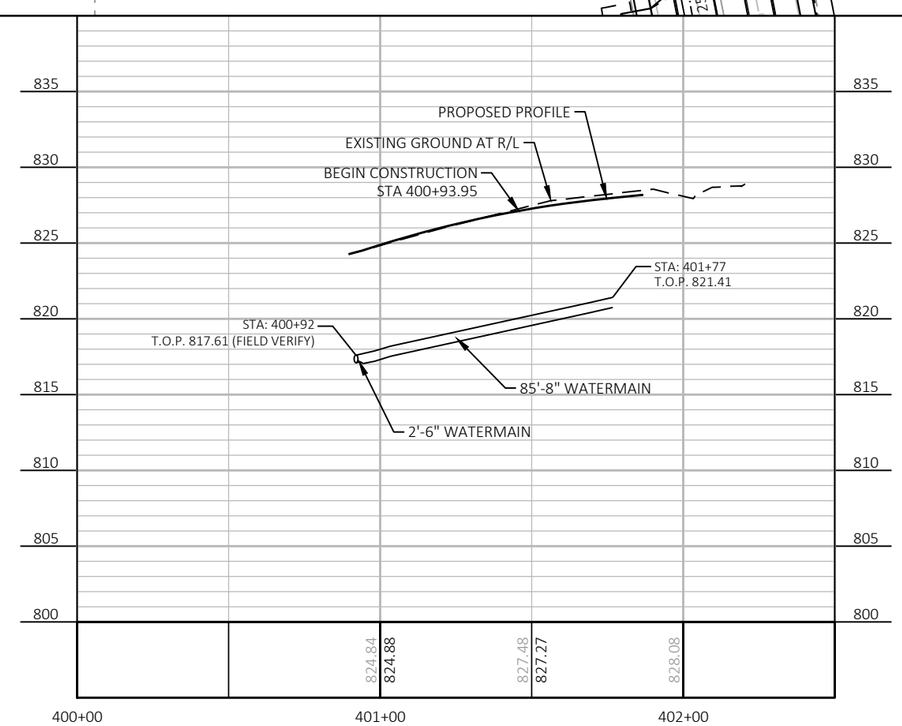

PROJECT NO: 3997-01-79/80	HWY: DEWEY AVE	COUNTY: JEFFERSON	COLE ST WATERMAIN & SANITARY SEWER PLAN	SHEET 62	E

2

NOTES:
1. MAINTAIN A MINIMUM DEPTH OF 6.5' OVER WATER MAIN.
2. FIELD VERIFY LOCATIONS OF SANITARY LATERALS AND ADJUST WATER MAIN AS NEEDED.
3. REMOVE OR ABANDON EXISTING WATER MAIN IN PLACE BY GROUTING (TYP.).
4. REPLACE WATER LATERALS FROM NEW WATER MAIN TO EXISTING RIGHT OF WAY, INSTALL NEW CURB BOX.
5. REPLACE SANITARY LATERALS FROM NEW SANITARY MAIN TO EXISTING RIGHT OF WAY.

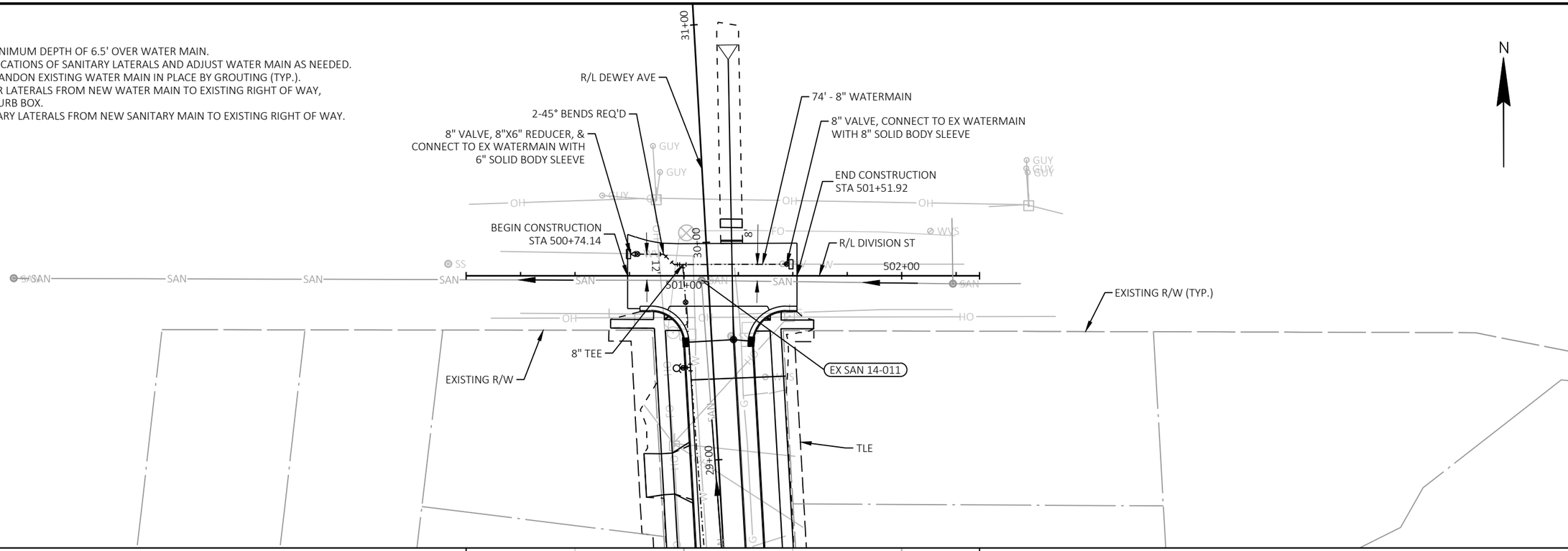

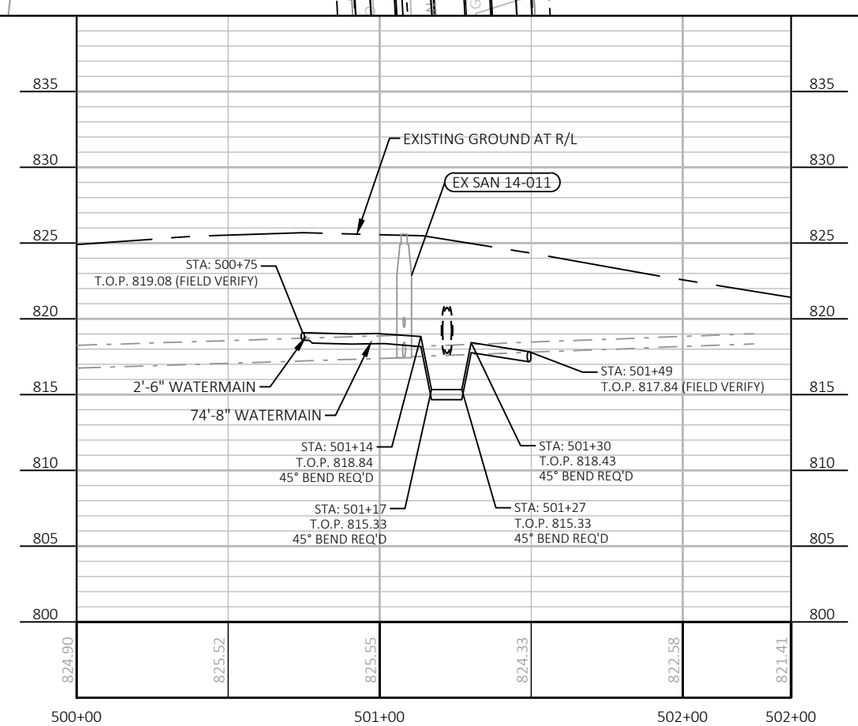

PROJECT NO: 3997-01-79/80	HWY: DEWEY AVE	COUNTY: JEFFERSON	DIVISION ST WATERMAIN & SANITARY SEWER PLAN	SHEET 63	E

2

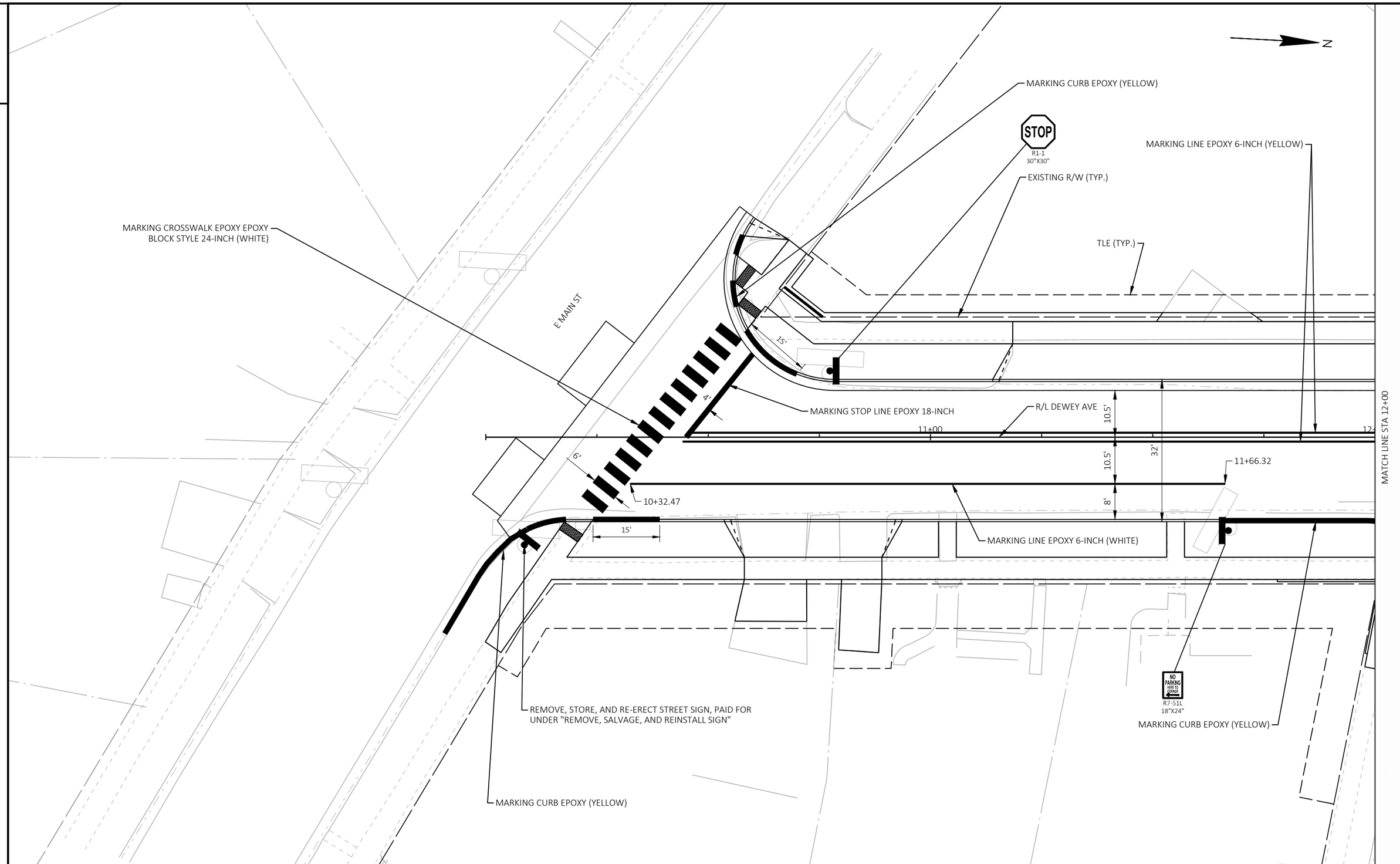

2

PROJECT NO: 3997-01-79/80	HWY: DEWEY AVE	COUNTY: JEFFERSON	PERMANENT SIGNING & MARKING PLANS	SHEET 64	E

FILE NAME : R:\5300\5364\5364088\39970179\SHEETS\023201-PS.DWG
LAYOUT NAME - 01
PLOT DATE : 9/12/2025 3:43 PM
PLOT BY : ERIC HANDLER
PLOT NAME :
PLOT SCALE : 1 IN:20 FT
WISDOT/CADDS SHEET 42

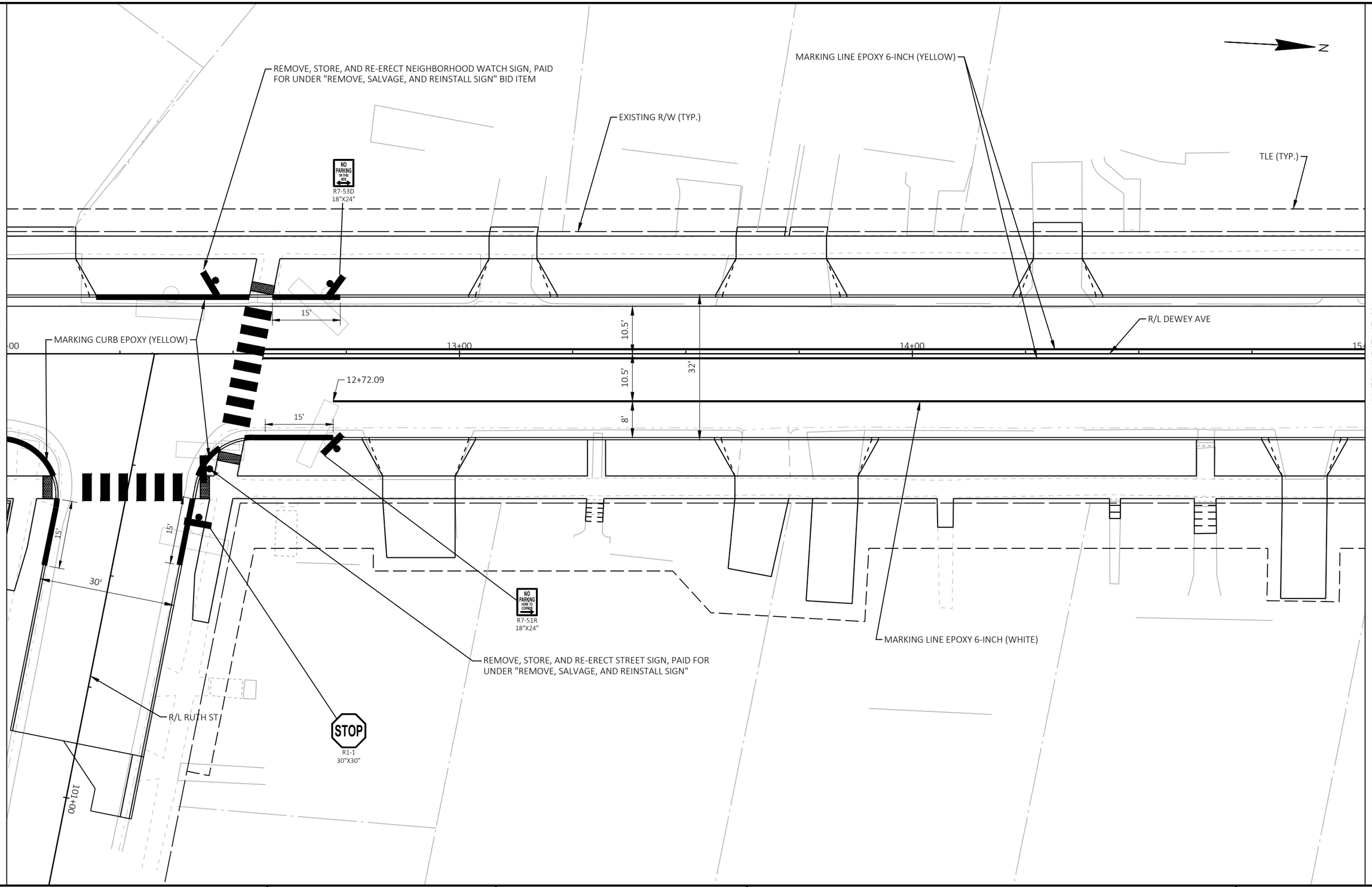
REMOVE, STORE, AND RE-ERECT NEIGHBORHOOD WATCH SIGN, PAID FOR UNDER "REMOVE, SALVAGE, AND REINSTALL SIGN" BID ITEM
MARKING LINE EPOXY 6-INCH (YELLOW)
EXISTING R/W (TYP.)
TLE (TYP.)
NO PARKING ON THIS SIDE
R7-53D
18"X24"
15'
10.5'
10.5'
8'
32'
R/L DEWEY AVE
MATCH LINE STA 12+00
MATCH LINE STA 15+00
MARKING CURB EPOXY (YELLOW)
13+00
14+00
12+72.09
15'
15'
15'
30'
NO PARKING HERE TO CORNER
R7-51R
18"X24"
MARKING LINE EPOXY 6-INCH (WHITE)
REMOVE, STORE, AND RE-ERECT STREET SIGN, PAID FOR UNDER "REMOVE, SALVAGE, AND REINSTALL SIGN"
R/L RUTH ST
STOP
R1-1
30"X30"
101+00

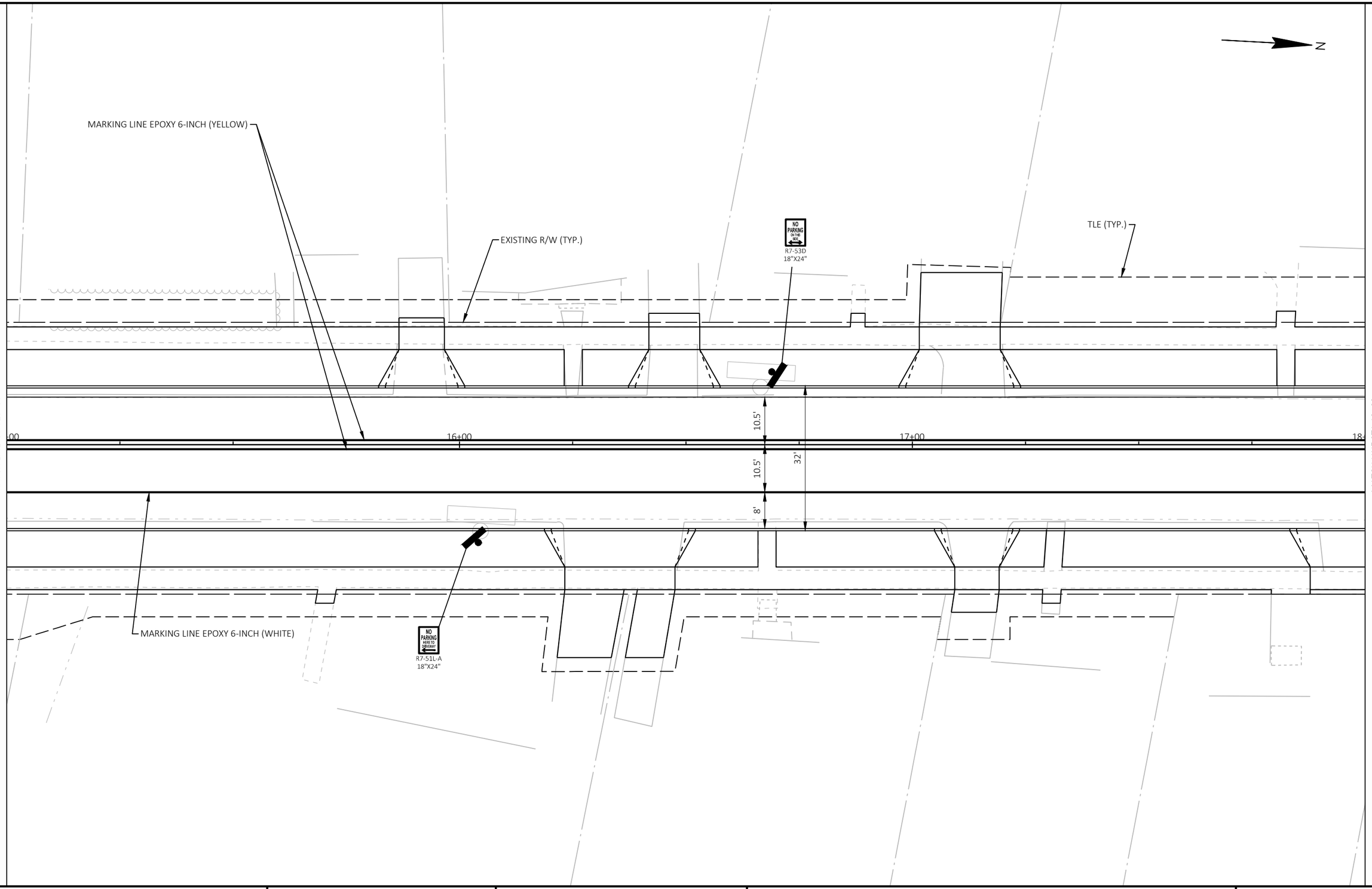

2

PROJECT NO: 3997-01-79/80	HWY: DEWEY AVE	COUNTY: JEFFERSON	PERMANENT SIGNING & MARKING PLANS	SHEET 66	E

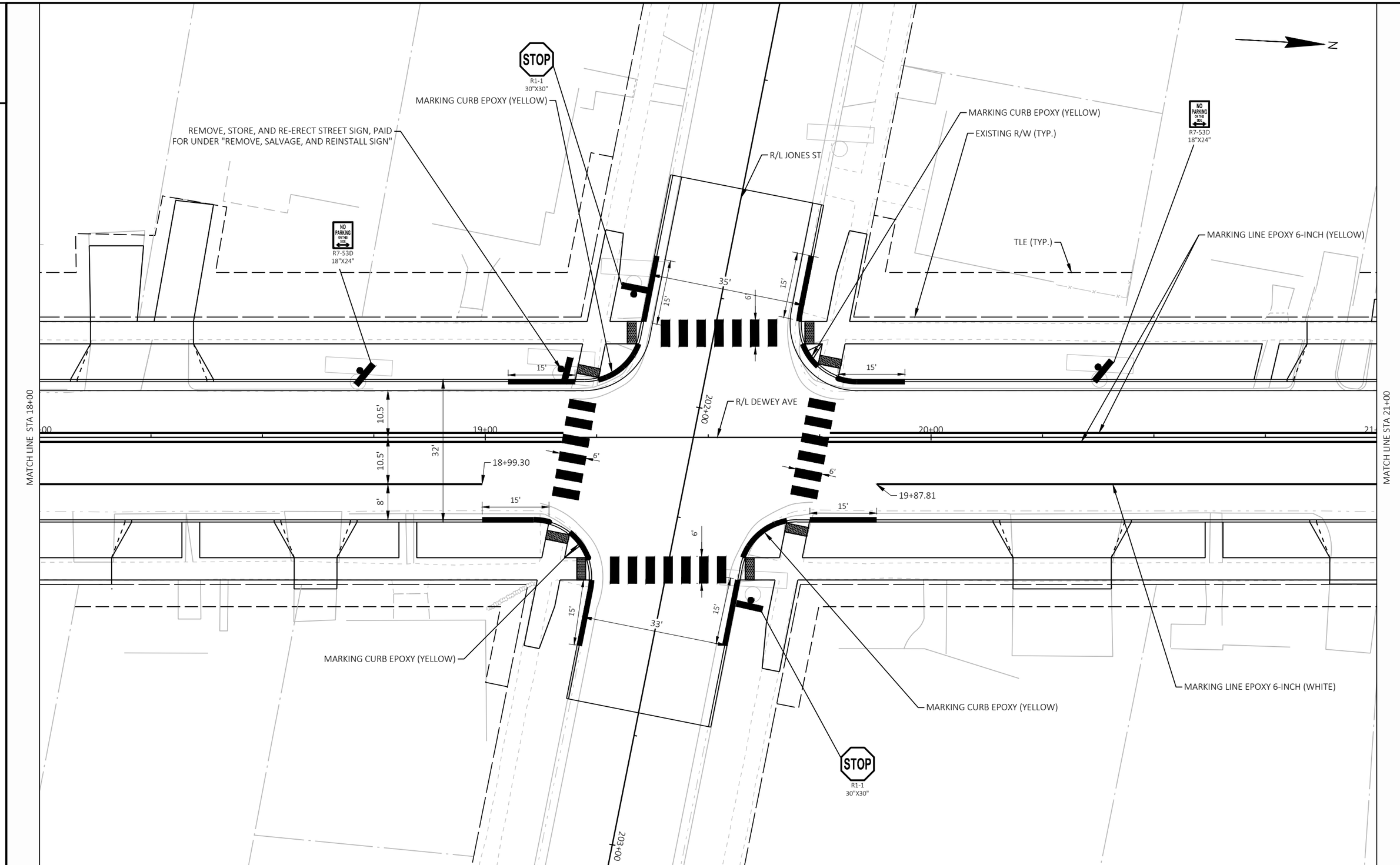

PROJECT NO: 3997-01-79/80	HWY: DEWEY AVE	COUNTY: JEFFERSON	PERMANENT SIGNING & MARKING PLANS	SHEET 67	E

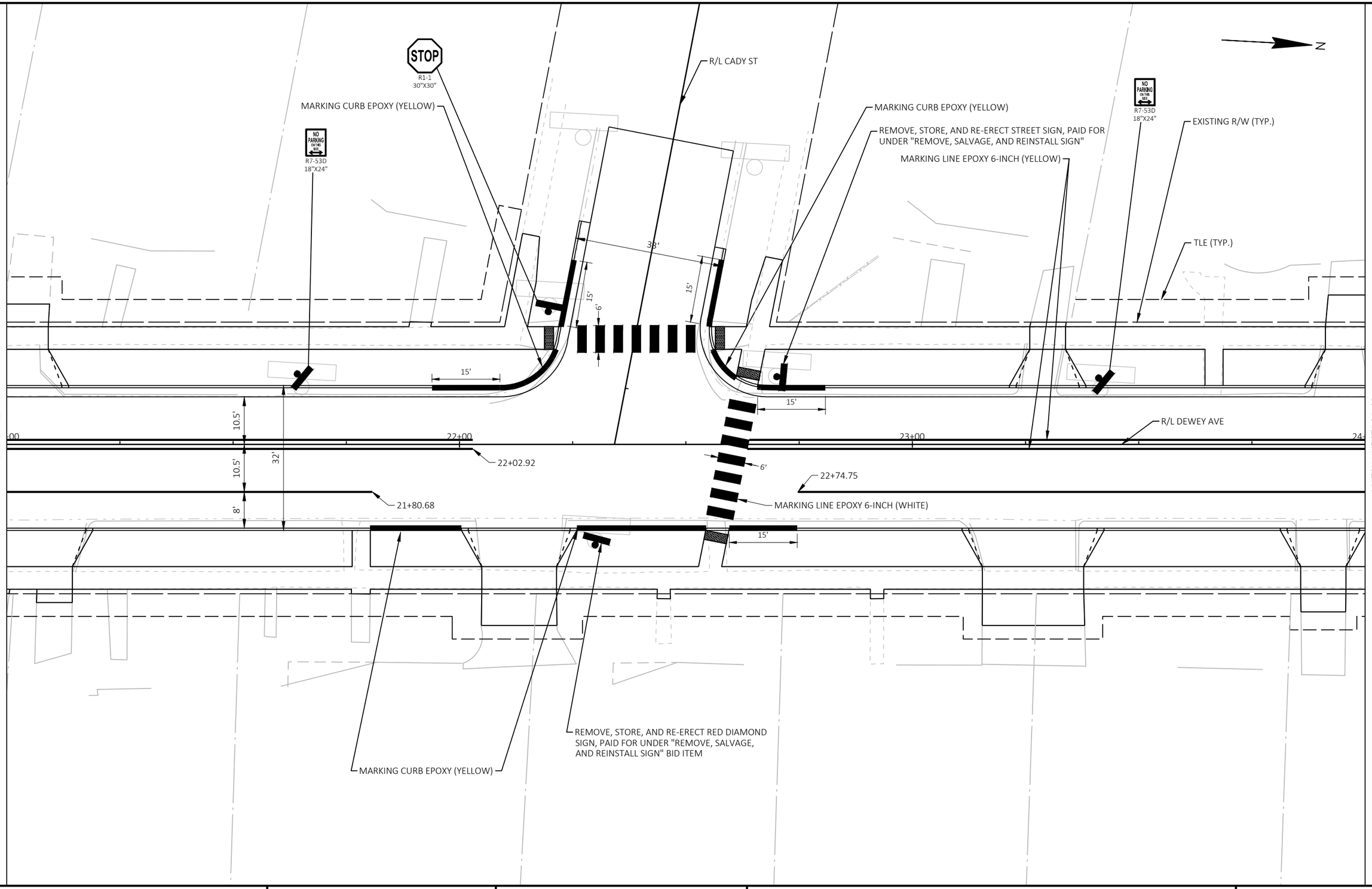
STOP
R1-1
30"X30"
MARKING CURB EPOXY (YELLOW)
NO PARKING ON THIS SIDE
R7-53D
18"X24"
R/L CADY ST
MARKING CURB EPOXY (YELLOW)
REMOVE, STORE, AND RE-ERECT STREET SIGN, PAID FOR UNDER "REMOVE, SALVAGE, AND REINSTALL SIGN"
MARKING LINE EPOXY 6-INCH (YELLOW)
NO PARKING ON THIS SIDE
R7-53D
18"X24"
EXISTING R/W (TYP.)
TLE (TYP.)
N
38'
15'
6'
15'
15'
15'
10.5'
10.5'
32'
8'
MATCH LINE STA 21+00
22+00
23+00
24+
MATCH LINE STA 24+00
R/L DEWEY AVE
22+02.92
6'
22+74.75
21+80.68
MARKING LINE EPOXY 6-INCH (WHITE)
15'
REMOVE, STORE, AND RE-ERECT RED DIAMOND SIGN, PAID FOR UNDER "REMOVE, SALVAGE, AND REINSTALL SIGN" BID ITEM
MARKING CURB EPOXY (YELLOW)

2

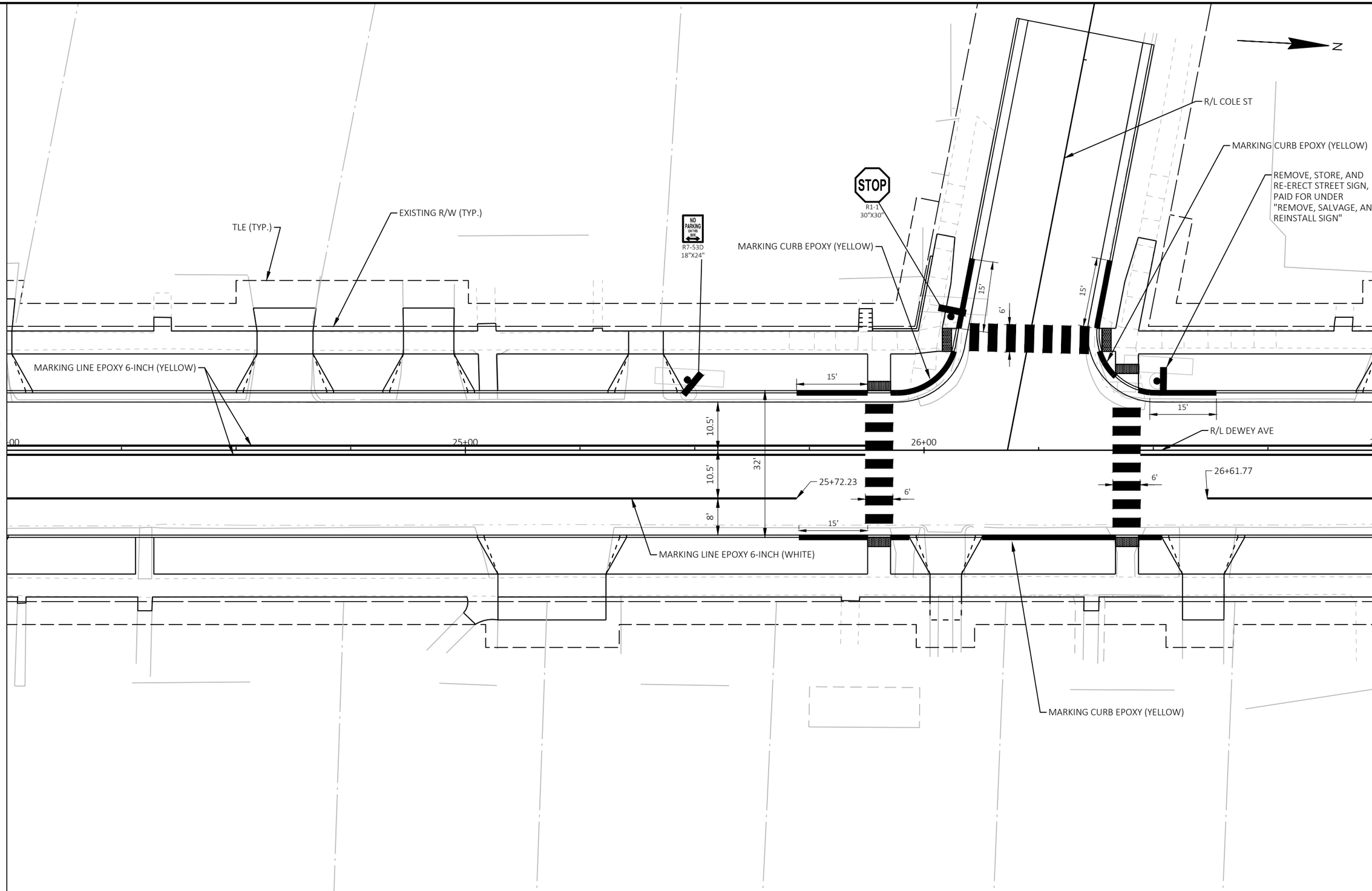

2

PROJECT NO: 3997-01-79/80	HWY: DEWEY AVE	COUNTY: JEFFERSON	PERMANENT SIGNING & MARKING PLANS	SHEET 69	E

FILE NAME : R:\5300\5364\5364088\39970179\SHEETS\023201-PS.DWG
LAYOUT NAME - 06
PLOT DATE : 9/12/2025 3:43 PM
PLOT BY : ERIC HANDLER
PLOT NAME :
PLOT SCALE : 1 IN:20 FT
WISDOT/CADDS SHEET 42

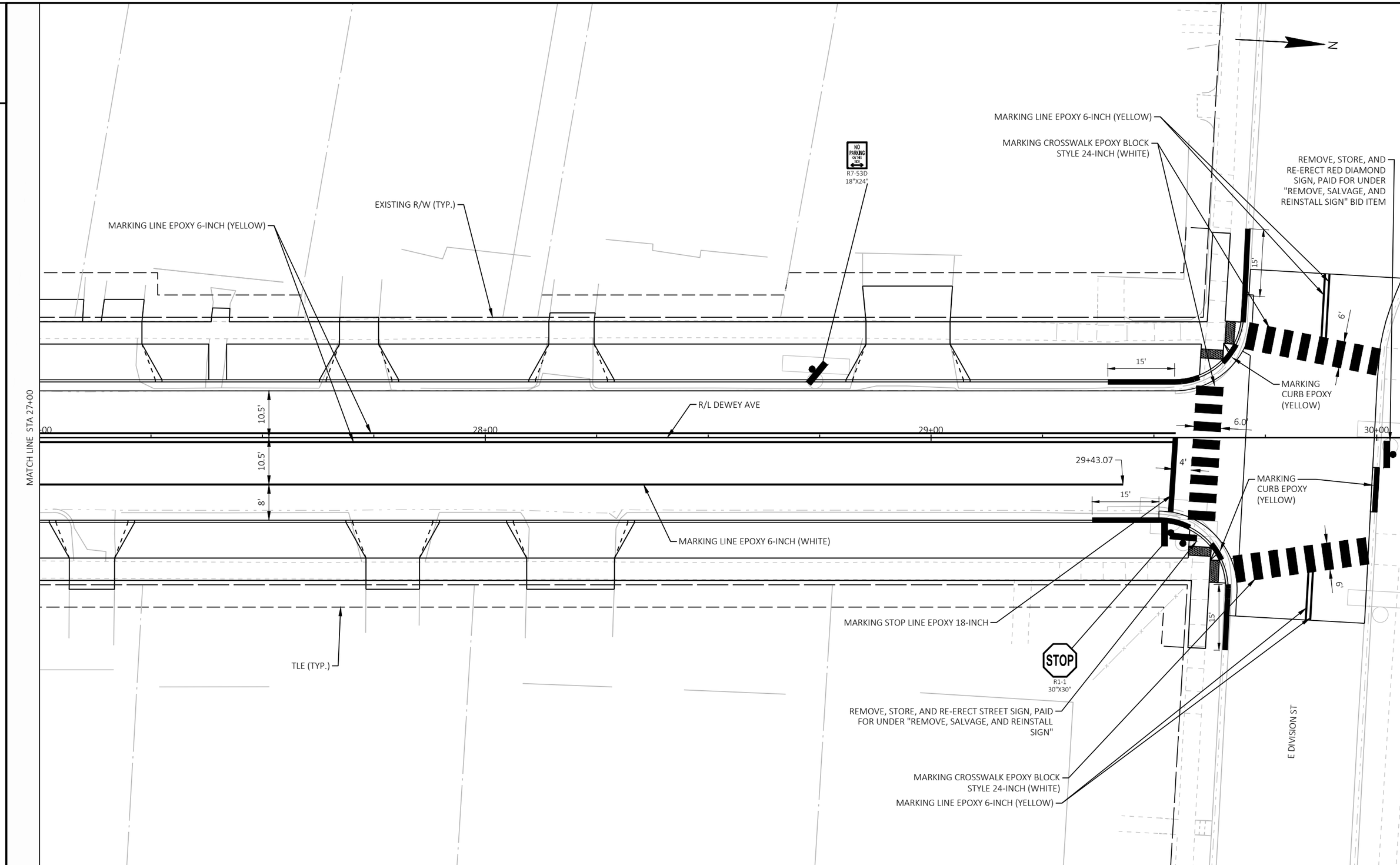
N
MARKING LINE EPOXY 6-INCH (YELLOW)
MARKING CROSSWALK EPOXY BLOCK STYLE 24-INCH (WHITE)
REMOVE, STORE, AND RE-ERECT RED DIAMOND SIGN, PAID FOR UNDER "REMOVE, SALVAGE, AND REINSTALL SIGN" BID ITEM
NO PARKING ON THIS SIDE
R7-53D 18"X24"
EXISTING R/W (TYP.)
MARKING LINE EPOXY 6-INCH (YELLOW)
15'
6'
15'
MARKING CURB EPOXY (YELLOW)
R/L DEWEY AVE
10.5'
6.0'
MATCH LINE STA 27+00
28+00
29+00
30+00
10.5'
29+43.07
4'
MARKING CURB EPOXY (YELLOW)
8'
15'
MARKING LINE EPOXY 6-INCH (WHITE)
6'
MARKING STOP LINE EPOXY 18-INCH
15'
STOP
R1-1 30"X30"
TLE (TYP.)
REMOVE, STORE, AND RE-ERECT STREET SIGN, PAID FOR UNDER "REMOVE, SALVAGE, AND REINSTALL SIGN"
E DIVISION ST
MARKING CROSSWALK EPOXY BLOCK STYLE 24-INCH (WHITE)
MARKING LINE EPOXY 6-INCH (YELLOW)

2

GENERAL NOTES FOR TRAFFIC CONTROL

1) THE EXACT NUMBER, LOCATION, AND SPACING OF ALL SIGN DEVICES SHALL BE ADJUSTED TO FIT FIELD CONDITIONS AS DIRECTED BY THE ENGINEER.
2) CONFLICTING TRAFFIC SIGNS SHALL BE COVERED OR REMOVED AS DIRECTED BY THE ENGINEER.
3) ALL TYPE III BARRICADES SHALL BE 8' WIDE, UNLESS OTHERWISE NOTED, AND EQUIPPED WITH TWO TYPE A (LOW INTENSITY FLASHING) LIGHTS.

GENERAL NOTES FOR STAGING

DEWEY AVENUE
- DEWEY AVENUE TO BE CLOSED TO THRU TRAFFIC FOR DURATION OF CONSTRUCTION.
- MAINTAIN ACCESS TO RESIDENCES AND BUSINESSES AT ALL TIMES. TEMPORARY DISRUPTIONS TO ACCESS MUST BE COORDINATED WITH THE PROPERTY/BUSINESS OWNER 7 DAYS IN ADVANCE.
- MAINTAIN EXISTING OR FINISHED SIDEWALK FOR PEDESTRIAN ACCESS ON AT LEAST ONE SIDE OF THE ROAD AT ALL TIMES.

E DIVISION ST INTERSECTION
- CLOSE THE INTERSECTION OF DEWEY AVE/E DIVISION ST FOR STORM SEWER AND WATERMAIN CONSTRUCTION.
- SEE "DETOUR PLAN - E DIVISION ST CLOSURE" FOR DETOUR ROUTE AND SIGNING DETAILS.
- LIMIT CLOSURE OF THE INTERSECTION TO MAXIMUM OF 5 DAYS BEFORE RESTORING PAVEMENT AND OPENING TO TWO-WAY THRU TRAFFIC.

LEGEND

TYPE III BARRICADE WITH TYPE A WARNING LIGHT

TYPE III BARRICADE WITH ATTACHED SIGN AND TYPE A WARNING LIGHT

SIGN ON PERMANENT SUPPORT

WORK AREA

1 SEE SDD "BARRICADES AND SIGNS FOR SIDEROAD CLOSURES", DETAIL 4

2 SEE SDD "BARRICADES AND SIGNS FOR MAINLINE CLOSURE", DETAIL B

3 SEE SDD "TRAFFIC CONTROL, WORK ON SHOULDER OR PARKING LANE, UNDIVIDED ROADWAY" FOR WATERMAIN AND STORM SEWER TIE-IN WORK ON E MAIN ST

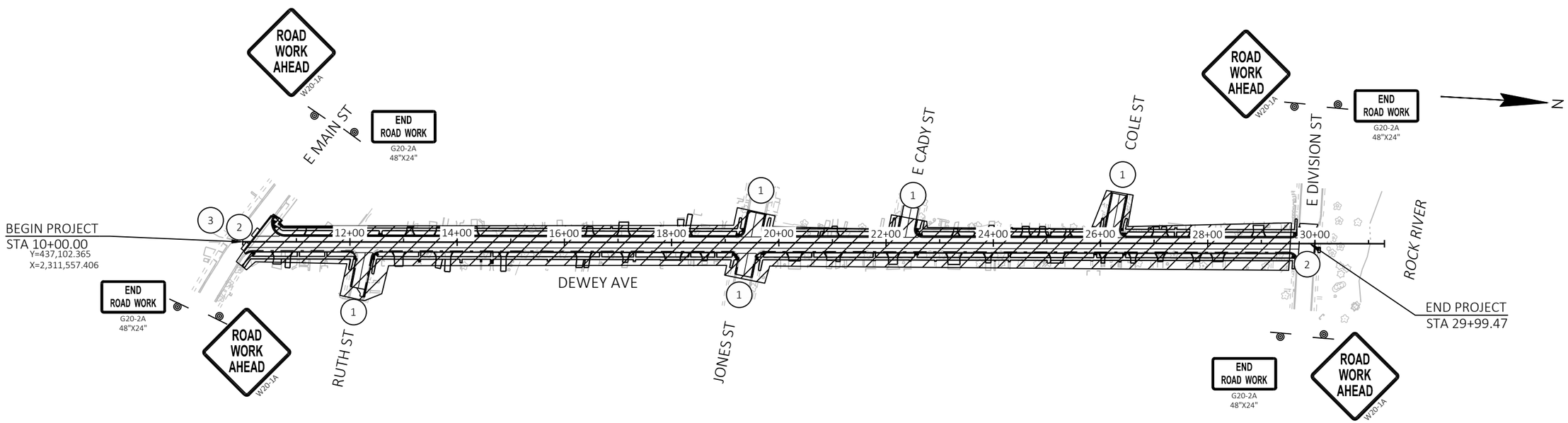

PROJECT NO: 3997-01-79/80	HWY: DEWEY AVE	COUNTY: JEFFERSON	TRAFFIC CONTROL GENERAL NOTES & ADVANCED WARNING PLAN	SHEET 71	E

FILE NAME : R:\5300\5364\5364088\39970179\SHEETS\025101-TC.DWG
LAYOUT NAME - 01
PLOT DATE : 9/12/2025 3:43 PM
PLOT BY : ERIC HANDLER
PLOT NAME :
PLOT SCALE : 1 IN:200 FT
WISDOT/CADDS SHEET 42

2

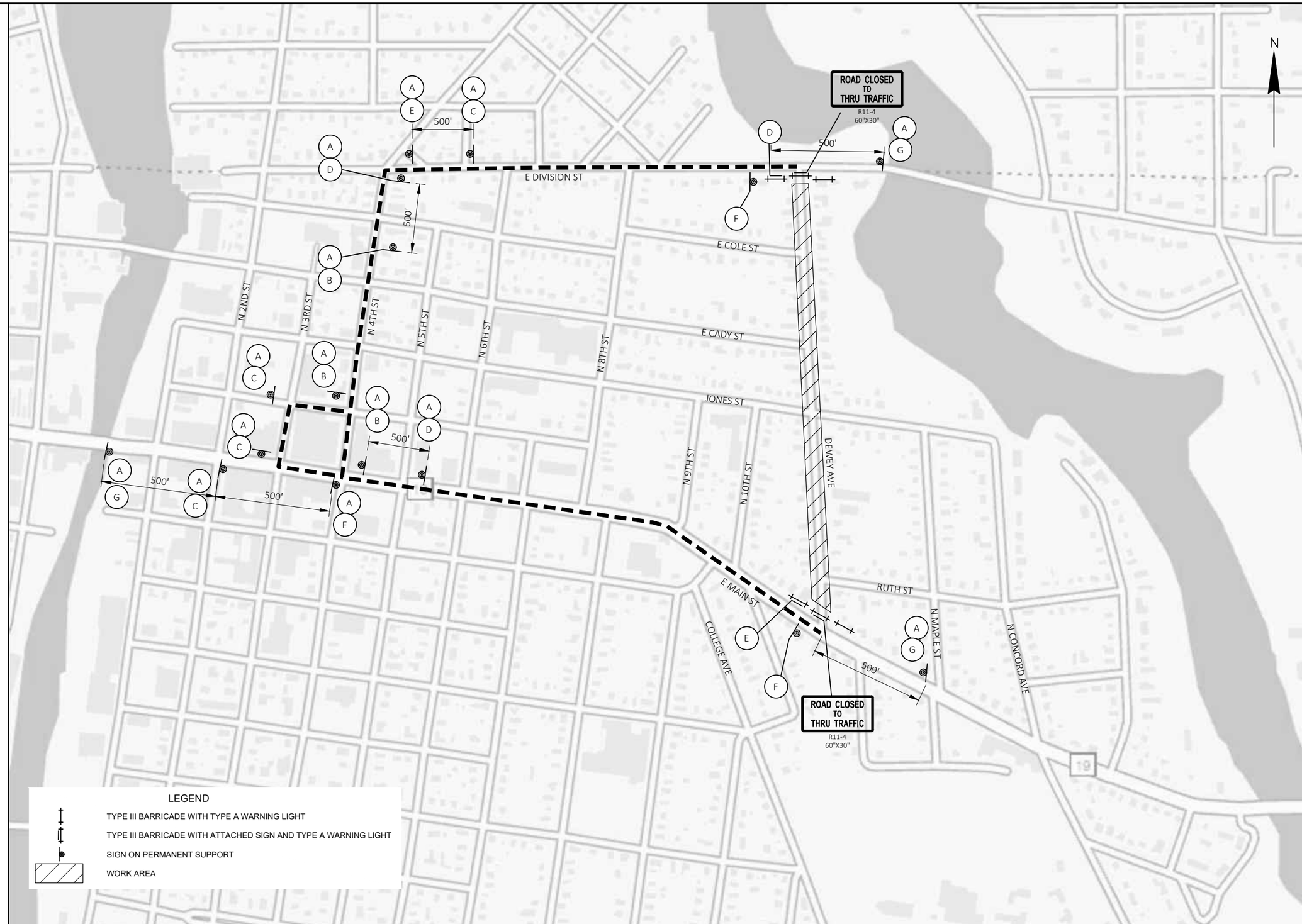

A	DEWEY AVE — M1-94 18"X15"
B	DETOUR — M4-59R 30"X30"
C	DETOUR — M4-59L 30"X30"
D	DETOUR — M4-9R 30"X24"
E	DETOUR — M4-9L 30"X24"
F	END DETOUR — M4-8A 24"X18"
G	DETOUR AHEAD — M4-59A 30"X18"

2

PROJECT NO: 3997-01-79/80	HWY: DEWEY AVE	COUNTY: JEFFERSON	DETOUR PLAN - DEWEY AVE CLOSURE	SHEET 72	E

FILE NAME : R:\5300\5364\5364088\39970179\SHEETS\027001-DT.DWG
LAYOUT NAME - 01
PLOT DATE : 9/12/2025 3:44 PM
PLOT BY : ERIC HANDLER
PLOT NAME :
PLOT SCALE : 1 IN:400 FT
WISDOT/CADDS SHEET 42

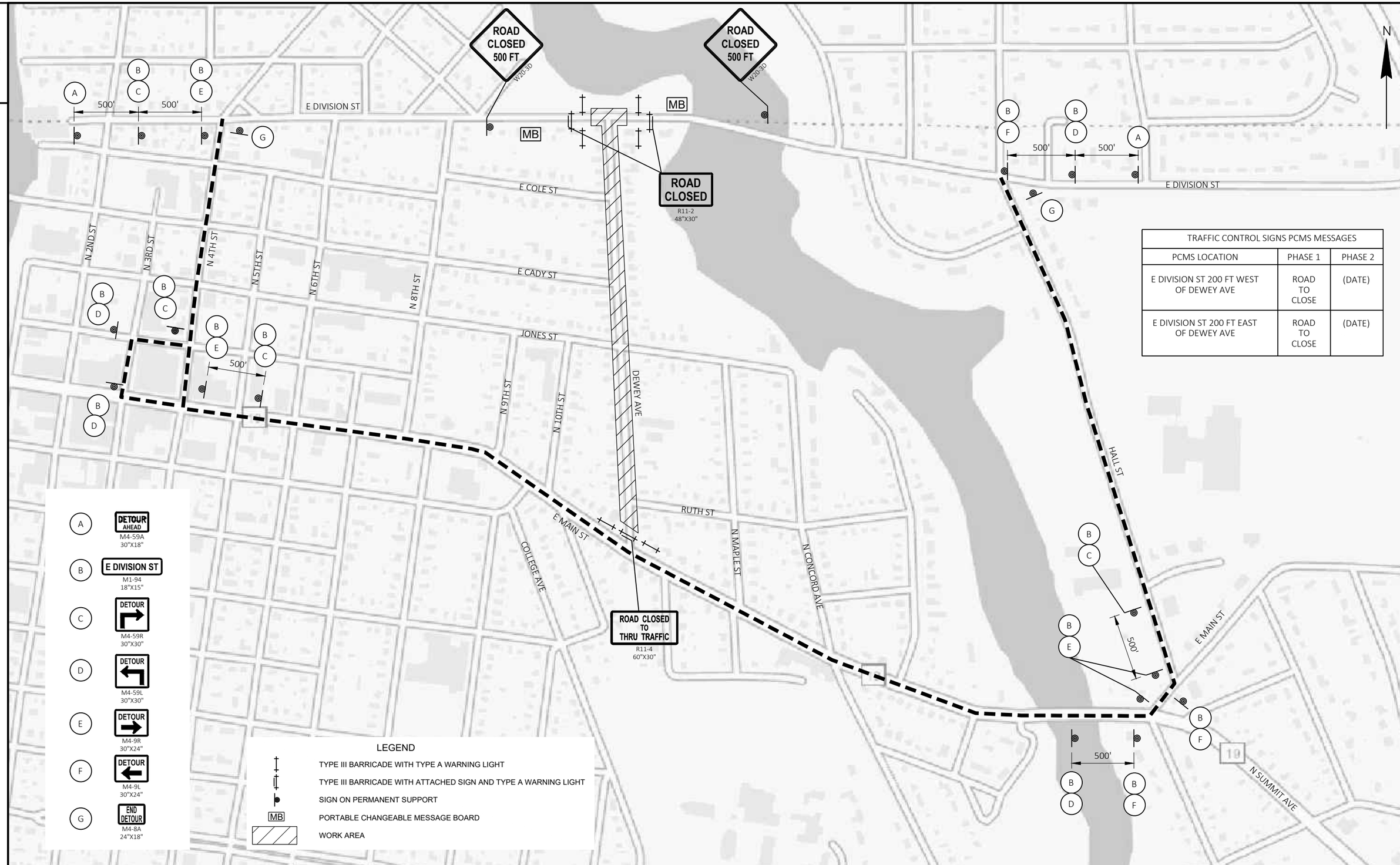

TRAFFIC CONTROL SIGNS PCMS MESSAGES		
PCMS LOCATION	PHASE 1	PHASE 2
E DIVISION ST 200 FT WEST OF DEWEY AVE	ROAD TO CLOSE	(DATE)
E DIVISION ST 200 FT EAST OF DEWEY AVE	ROAD TO CLOSE	(DATE)

PROJECT NO: 3997-01-79/80	HWY: DEWEY AVE	COUNTY: JEFFERSON	DETOUR PLAN - E DIVISION ST CLOSURE	SHEET 73	E

FILE NAME : R:\5300\5364\5364088\39970179\SHEETS\027002-DT.DWG
LAYOUT NAME - 01
PLOT DATE : 9/12/2025 3:44 PM
PLOT BY : ERIC HANDLER
PLOT NAME :
PLOT SCALE : 1 IN:400 FT
WISDOT/CADDS SHEET 42

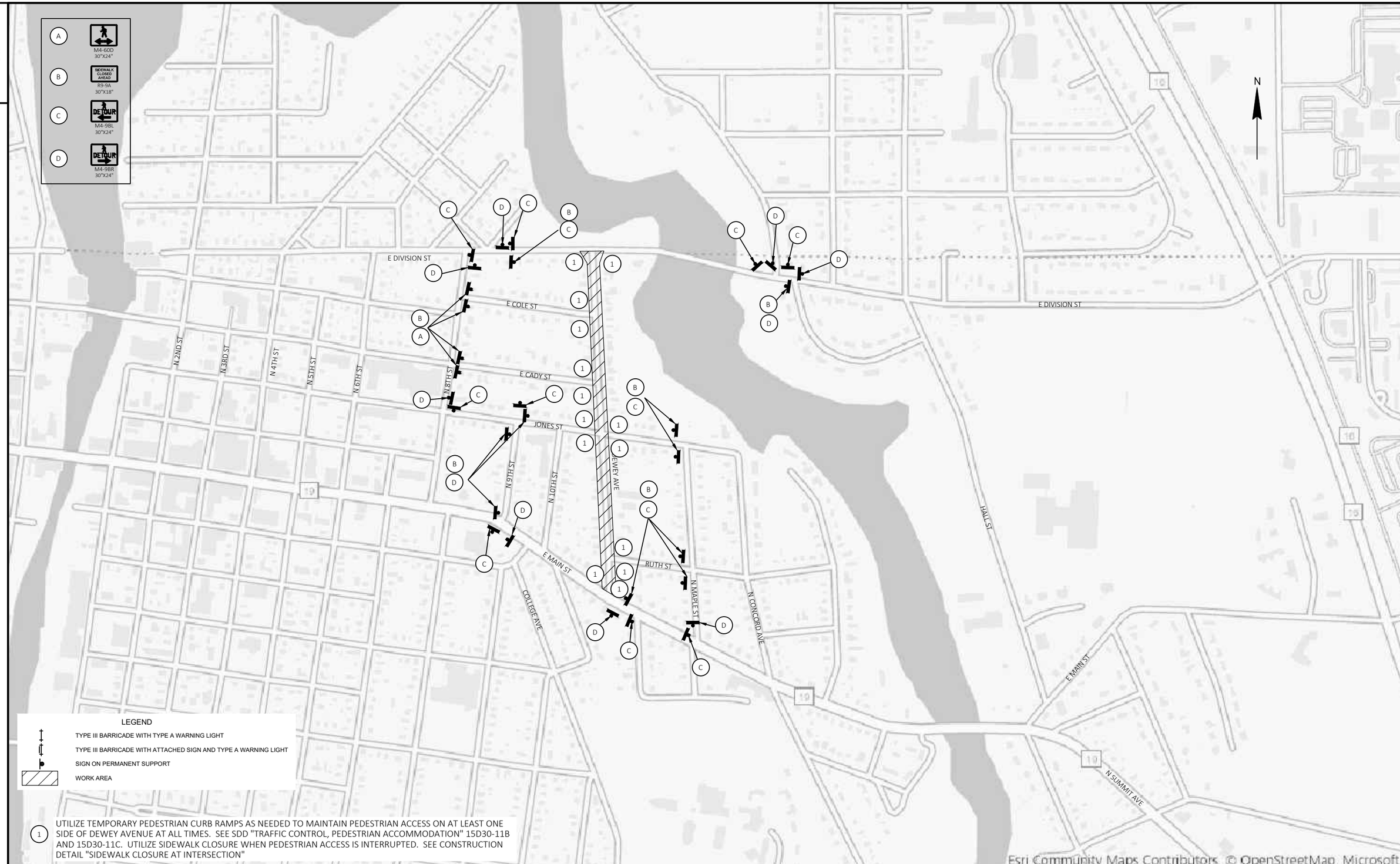

PROJECT NO: 3997-01-79/80	HWY: DEWEY AVE	COUNTY: JEFFERSON	DETOUR PLAN - PEDESTRIAN DETOUR	SHEET 74	E

FILE NAME : R:\5300\5364\5364088\39970179\SHEETS\027003-DT.DWG
LAYOUT NAME - 01
PLOT DATE : 9/12/2025 3:44 PM
PLOT BY : ERIC HANDLER
PLOT NAME :
PLOT SCALE : 1 IN:500 FT

Estimate Of Quantities

Line	Item	Item Description	Unit	Total	3997-01-79 Qty	3997-01-80 Qty
0002	201.0110	Clearing	SY	64.000	64.000	
0004	201.0210	Grubbing	SY	64.000	64.000	
0006	204.0100	Removing Concrete Pavement	SY	8,331.000	8,331.000	
0008	204.0110	Removing Asphaltic Surface	SY	516.000	516.000	
0010	204.0150	Removing Curb & Gutter	LF	10.000	10.000	
0012	204.0155	Removing Concrete Sidewalk	SY	1,937.000	1,937.000	
0014	204.0210	Removing Manholes	EACH	13.000	13.000	
0016	204.0220	Removing Inlets	EACH	15.000	15.000	
0018	204.0245	Removing Storm Sewer (size) 01. 10-Inch	LF	116.000	116.000	
0020	204.0245	Removing Storm Sewer (size) 02. 12-Inch	LF	1,523.000	1,523.000	
0022	204.0245	Removing Storm Sewer (size) 03. 15-Inch	LF	1,404.000	1,404.000	
0024	204.0245	Removing Storm Sewer (size) 04. 18-Inch	LF	735.000	735.000	
0026	204.0245	Removing Storm Sewer (size) 05. 24-Inch	LF	141.000	141.000	
0028	205.0100	Excavation Common	CY	5,173.000	5,173.000	
0030	213.0100	Finishing Roadway (project) 01. 3997-01-79	EACH	1.000	1.000	
0032	305.0120	Base Aggregate Dense 1 1/4-Inch	TON	4,500.000	4,500.000	
0034	455.0605	Tack Coat	GAL	40.000	40.000	
0036	460.2000	Incentive Density HMA Pavement	DOL	70.000	70.000	
0038	460.6223	HMA Pavement 3 MT 58-28 S	TON	60.000	60.000	
0040	460.6224	HMA Pavement 4 MT 58-28 S	TON	40.000	40.000	
0042	465.0120	Asphaltic Surface Driveways and Field Entrances	TON	30.000	30.000	
0044	520.8000	Concrete Collars for Pipe	EACH	4.000	4.000	
0046	522.1036	Apron Endwalls for Culvert Pipe Reinforced Concrete 36-Inch	EACH	1.000	1.000	
0048	601.0407	Concrete Curb & Gutter 18-Inch Type D	LF	10.000	10.000	
0050	601.0411	Concrete Curb & Gutter 30-Inch Type D	LF	14.000	14.000	
0052	601.0600	Concrete Curb Pedestrian	LF	66.000	66.000	
0054	602.0410	Concrete Sidewalk 5-Inch	SF	17,950.000	17,950.000	
0056	602.0515	Curb Ramp Detectable Warning Field Natural Patina	SF	290.000	290.000	
0058	602.0860	Concrete Driveway HES 6-Inch	SY	1,360.000	1,360.000	
0060	602.1500	Concrete Steps	SF	200.000	200.000	
0062	606.0200	Riprap Medium	CY	3.000	3.000	
0064	608.0315	Storm Sewer Pipe Reinforced Concrete Class III 15-Inch	LF	186.000	186.000	
0066	608.0318	Storm Sewer Pipe Reinforced Concrete Class III 18-Inch	LF	208.000	208.000	
0068	608.0336	Storm Sewer Pipe Reinforced Concrete Class III 36-Inch	LF	647.000	647.000	
0070	608.0415	Storm Sewer Pipe Reinforced Concrete Class IV 15-Inch	LF	60.000	60.000	
0072	608.0424	Storm Sewer Pipe Reinforced Concrete Class IV 24-Inch	LF	780.000	780.000	
0074	608.0436	Storm Sewer Pipe Reinforced Concrete Class IV 36-Inch	LF	502.000	502.000	
0076	608.2429	Storm Sewer Pipe Reinforced Concrete Horizontal Elliptical Class HE-IV 29x45-Inch	LF	147.000	147.000	
0078	611.0535	Manhole Covers Type J-Special	EACH	9.000	9.000	
0080	611.0624	Inlet Covers Type H	EACH	16.000	16.000	
0082	611.1004	Catch Basins 4-FT Diameter	EACH	2.000	2.000	
0084	611.1230	Catch Basins 2x3-FT	EACH	14.000	14.000	
0086	611.2004	Manholes 4-FT Diameter	EACH	4.000	4.000	
0088	611.2005	Manholes 5-FT Diameter	EACH	3.000	3.000	
0090	611.2006	Manholes 6-FT Diameter	EACH	1.000	1.000	
0092	611.2007	Manholes 7-FT Diameter	EACH	1.000	1.000	
0094	611.8110	Adjusting Manhole Covers	EACH	2.000	2.000	
0096	616.0404	Fence Chain Link Salvaged 4-FT	LF	10.000	10.000	
0098	618.0100	Maintenance and Repair of Haul Roads (project) 01. 3997-01-80	EACH	1.000		1.000

Estimate Of Quantities

Line	Item	Item Description	Unit	Total	3997-01-79 Qty	3997-01-80 Qty
0100	619.1000	Mobilization	EACH	1.000	0.700	0.300
0102	624.0100	Water	MGAL	45.000	45.000	
0104	625.0500	Salvaged Topsoil	SY	3,300.000	3,300.000	
0106	628.1504	Silt Fence	LF	50.000	50.000	
0108	628.1520	Silt Fence Maintenance	LF	50.000	50.000	
0110	628.1905	Mobilizations Erosion Control	EACH	3.000	3.000	
0112	628.1910	Mobilizations Emergency Erosion Control	EACH	3.000	3.000	
0114	628.2006	Erosion Mat Urban Class I Type A	SY	3,300.000	3,300.000	
0116	628.7020	Inlet Protection Type D	EACH	37.000	37.000	
0118	629.0205	Fertilizer Type A	CWT	210.000	210.000	
0120	630.0140	Seeding Mixture No. 40	LB	60.000	60.000	
0122	630.0200	Seeding Temporary	LB	90.000	90.000	
0124	630.0500	Seed Water	MGAL	19.000	19.000	
0126	634.0812	Posts Tubular Steel 2x2-Inch X 12-FT	EACH	17.000	17.000	
0128	637.2230	Signs Type II Reflective F	SF	66.260	66.260	
0130	638.2602	Removing Signs Type II	EACH	17.000	17.000	
0132	638.3000	Removing Small Sign Supports	EACH	17.000	17.000	
0134	642.5001	Field Office Type B	EACH	1.000	1.000	
0136	643.0300	Traffic Control Drums	DAY	1,175.000	1,175.000	
0138	643.0420	Traffic Control Barricades Type III	DAY	1,880.000	1,880.000	
0140	643.0705	Traffic Control Warning Lights Type A	DAY	5,085.000	5,085.000	
0142	643.0900	Traffic Control Signs	DAY	8,590.000	8,590.000	
0144	643.1050	Traffic Control Signs PCMS	DAY	14.000	14.000	
0146	643.5000	Traffic Control	EACH	1.000	1.000	
0148	644.1410	Temporary Pedestrian Surface Asphalt	SF	3,200.000	3,200.000	
0150	644.1601	Temporary Pedestrian Curb Ramp	DAY	3,000.000	3,000.000	
0152	644.1810	Temporary Pedestrian Barricade	LF	396.000	396.000	
0154	645.0120	Geotextile Type HR	SY	12.000	12.000	
0156	646.2020	Marking Line Epoxy 6-Inch	LF	4,890.000	4,890.000	
0158	646.6120	Marking Stop Line Epoxy 18-Inch	LF	41.000	41.000	
0160	646.7520	Marking Crosswalk Epoxy Block Style 24-Inch	LF	666.000	666.000	
0162	646.8120	Marking Curb Epoxy	LF	781.000	781.000	
0164	650.4000	Construction Staking Storm Sewer	EACH	26.000	26.000	
0166	650.4500	Construction Staking Subgrade	LF	1,997.000	1,997.000	
0168	650.5000	Construction Staking Base	LF	1,997.000	1,997.000	
0170	650.5500	Construction Staking Curb Gutter and Curb & Gutter	LF	4,274.000	4,274.000	
0172	650.7000	Construction Staking Concrete Pavement	LF	1,997.000	1,997.000	
0174	650.9000	Construction Staking Curb Ramps	EACH	18.000	18.000	
0176	650.9500	Construction Staking Sidewalk (project) 01. 3997-01-79	EACH	1.000	1.000	
0178	650.9911	Construction Staking Supplemental Control (project) 01. 3997-01-79	EACH	1.000	1.000	
0180	690.0150	Sawing Asphalt	LF	451.000	451.000	
0182	690.0250	Sawing Concrete	LF	916.000	916.000	
0184	ASP.1T0A	On-the-Job Training Apprentice at $5.00/HR	HRS	2,000.000	2,000.000	
0186	ASP.1T0G	On-the-Job Training Graduate at $5.00/HR	HRS	1,320.000	1,320.000	
0188	SPV.0060	Special 01. 8-Inch Gate Valve & Box	EACH	18.000		18.000
0190	SPV.0060	Special 02. 6-Inch Gate Valve & Box	EACH	6.000		6.000
0192	SPV.0060	Special 03. Fire Hyrdrant	EACH	6.000		6.000
0194	SPV.0060	Special 04. Temporary Water Service, Project	EACH	1.000		1.000
0196	SPV.0060	Special 05. Watermain Offset	EACH	8.000		8.000

Line	Item	Item Description	Unit	Total	3997-01-79 Qty	3997-01-80 Qty
0198	SPV.0060	Special 06. 6-Inch Watermain Tie In, Station 10+26	EACH	1.000		1.000
0200	SPV.0060	Special 07. 6-Inch Watermain Tie In, Station 100+98	EACH	1.000		1.000
0202	SPV.0060	Special 08. 6-Inch Watermain Tie In, Station 201+52	EACH	1.000		1.000
0204	SPV.0060	Special 09. 6-Inch Watermain Tie In, Station 202+67	EACH	1.000		1.000
0206	SPV.0060	Special 10. 6-Inch Watermain Tie In, Station 301+64	EACH	1.000		1.000
0208	SPV.0060	Special 11. 6-Inch Watermain Tie In, Station 400+94	EACH	1.000		1.000
0210	SPV.0060	Special 12. 6-Inch Watermain Tie In, Station 500+75	EACH	1.000		1.000
0212	SPV.0060	Special 13. 8-Inch Watermain Tie In, Station 501+48	EACH	1.000		1.000
0214	SPV.0060	Special 14. Mini Storm Cleanout	EACH	44.000		44.000
0216	SPV.0060	Special 15. Remove, Salvage, and Reinstall Sign	EACH	12.000	12.000	
0218	SPV.0090	Special 01. 6-Inch Watermain	LF	50.000		50.000
0220	SPV.0090	Special 02. 8-Inch Watermain	LF	2,350.000		2,350.000
0222	SPV.0090	Special 03. 6-Inch Watermain, Hydrant Lead	LF	42.000		42.000
0224	SPV.0090	Special 04. Copper Water Service 1-Inch	LF	588.000		588.000
0226	SPV.0090	Special 05. Mini Storm Sewer 6-Inch	LF	2,920.000		2,920.000
0228	SPV.0090	Special 06. Mini Storm Sewer Lateral, 6-Inch	LF	380.000		380.000
0230	SPV.0090	Special 07. Sanitary Sewer 8-Inch PVC	LF	971.000		971.000
0232	SPV.0090	Special 08. Sanitary Sewer 10-Inch PVC	LF	284.000		284.000
0234	SPV.0090	Special 09. Sanitary Sewer 12-Inch PVC	LF	684.000		684.000
0236	SPV.0090	Special 10. Sanitary Sewer 6-Inch Lateral	LF	1,520.000		1,520.000
0238	SPV.0090	Special 11. Concrete Curb & Gutter HES 30-Inch Type A	LF	2,133.000	2,133.000	
0240	SPV.0090	Special 12. Concrete Curb & Gutter Integral HES 30-Inch Type D	LF	2,117.000	2,117.000	
0242	SPV.0180	Special 01. Concrete Pavement HES 7-Inch	SY	6,860.000	6,860.000	
0244	SPV.0200	Special 01. Sanitary Manhole 48-Inch	VF	54.000		54.000
0246	SPV.0200	Special 02. Sanitary Manhole 48-Inch Outside Drop	VF	11.000		11.000

3

GRUBBING

CATEGORY	STA	TO	STA	201.0110 CLEARING SY	201.0210 GRUBBING SY
0010	10+00	-	31+00	64	64
			TOTAL	**64**	**64**

REMOVING PAVEMENT

CATEGORY	STA	TO	STA	LOCATION	204.0100 REMOVING CONCRETE PAVEMENT SY	204.0110 REMOVING ASPHALTIC SURFACE SY	204.0155 REMOVING CONCRETE SIDEWALK SY
0010	10+00	-	31+00	MAINLINE	8,331	516	1,937
				TOTALS	**8,331**	**516**	**1,937**

DIVISION	FROM/TO STATION	LOCATION	205.0100 COMMON EXCAVATION (1) CUT (2)	SALVAGED/UNUSABLE PAVEMENT MATERIAL (4)	AVAILABLE MATERIAL (5)	UNEXPANDED FILL	EXPANDED FILL (13) FACTOR 1.25	MASS ORDINATE +/- (14)	WASTE	208.0100 BORROW	COMMENT
DIVISION 1											
DEWEY AVE	10+21.17/29+75.00		5,173	2,464	2,709	23	29	5,144	5,144	0	
DIVISION 1 SUBTOTAL			5,173	2,464	2,709	23	29	5,144	5,144	0	
GRAND TOTAL			5,173	2,464	2,709	23	29	5,144	5,144	0	
TOTAL COMMON EXC			5,173								

NOTES:
(1) COMMON EXCAVATION IS THE SUM OF THE CUT AND EBS EXCAVATION COLUMNS. ITEM NUMBER 205.0100
(2) SALVAGED/UNSUABLE PAVEMENT MATERIAL IS INCLUDED IN CUT.
(3) EBS EXCAVATION TO BE BACKFILLED WITH SELECT BORROW MATERIAL. NOTE: THIS IS DESIGNERS CHOICE, CAN BE BACKFILLED WITH BORROW, OR CUT AS WELL.
(4) SALVAGED/UNUSABLE PAVEMENT MATERIAL
(5) AVAILABLE MATERIAL = CUT - SALVAGED/UNUSABLE PAVEMENT MATERIAL

(13) EXPANDING FILL FACTOR = 1.25

DEPENDING ON SELECTIONS: EXPANDED FILL = UNEXPANDED FILL * FILL FACTOR
(14) THE MASS ORDINATE + OR - QTY CALCULATED FOR THE DIVISION. PLUS QUANTITY INDICATES AN EXCESS OF MATERIAL WITHIN THE DIVISION. MINUS INDICATES A SHORTAGE OF MATERIAL WITHIN THE DIVISION.
(15) FACTORS USED TO COMPUTE ANTICIPATED WASTE AND THE COMPUTED WASTE VOLUME IDENTIFIED ARE FOR GENERAL INFORMATION ONLY.

REMOVING STORM SEWER

CATEGORY	STA	TO	STA	LOCATION	204.0210 REMOVING MANHOLES EACH	204.0220 REMOVING INLETS EACH	204.0245.01 REMOVING STORM SEWER 10-INCH LF	204.0245.02 REMOVING STORM SEWER 12-INCH LF	204.0245.03 REMOVING STORM SEWER 15-INCH LF	204.0245.04 REMOVING STORM SEWER 18-INCH LF	204.0245.05 REMOVING STORM SEWER 24-INCH LF
0010	10+00	-	30+00	MAINLINE	13	15	116	1,523	1,404	735	141
				TOTALS	**13**	**15**	**116**	**1,523**	**1,404**	**735**	**141**

BASE AGGREGATE

CATEGORY	STA	TO	STA	305.0120 BASE AGGREGATE DENSE 1 1/4-INCH TON	624.0100 WATER MGAL
0010	10+00	-	30+00	4500	45
			TOTALS	**4500**	**45**

HMA PAVEMENT

CATEGORY	LOCATION	455.0605 TACK COAT GAL	460.6223 HMA PAVEMENT 3 MT 58-28 S TON	460.6224 HMA PAVEMENT 4 MT 58-28 S TON	465.0120 ASPHALTIC SURFACE DRIVEWAYS AND FIELD ENTRANCES TON
0010	DEWEY AVE				30
	E MAIN ST	4	6	4	
	RUTH ST	2	3	2	
	E DIVISION ST	34	51	34	
	TOTALS	**40**	**60**	**40**	**30**

3

3

CONCRETE CURB & GUTTER

CATEGORY	STA	TO	STA	LOCATION	204.0150 REMOVING CURB & GUTTER LF	601.0407 CONCRETE CURB & GUTTER 18-INCH TYPE D LF	601.0411 CONCRETE CURB & GUTTER 30-INCH TYPE D LF	601.0600 CONCRETE CURB PEDESTRIAN LF	SPV.0090.11 CONCRETE CURB & GUTTER HES 30-INCH TYPE A LF	SPV.0090.12 CONCRETE CURB & GUTTER INTEGRAL HES 30-INCH TYPE D LF
0010	10+02	-	12+10	RT	--	--	--	40	--	267
0010	10+86	-	19+40	LT	--	--	--	--	944	--
0010	12+39	-	19+25	RT	--	--	--	--	--	784
0010	19+55	-	29+69	RT	--	--	--	--	--	1066
0010	19+73	-	22+29	LT	--	--	--	--	318	--
0010	22+60	-	26+13	LT	--	--	--	26	454	--
0010	26+42	-	29+72	LT	--	--	--	--	417	--
0010	100+88		101+02	LT	--	--	14	--	--	--
0010	501+17		501+27	LT	10	10	--	--	--	--
				TOTALS	**10**	**10**	**14**	**66**	**2133**	**2117**

CONCRETE PAVEMENT ITEMS

CATEGORY	STA	TO	STA	LOCATION	602.0410 CONCRETE SIDEWALK 5-INCH SF	602.0515 CURB RAMP DETECTABLE WARNING FIELD NATURAL PATINA SF	602.0860 CONCRETE DRIVEWAY HES 6-INCH SY	602.1500 CONCRETE STEPS SF	SPV.0180.01 CONCRETE PAVEMENT HES 7-INCH SY
0010	10+00	-	30+00	MAINLINE	17,950	290	1,360	200	6,860
				TOTALS	**17,950**	**290**	**1,360**	**200**	**6,860**

RIPRAP

CATEGORY	LOCATION	606.0200 RIPRAP MEDIUM CY	645.0130 GEOTEXTILE FABRIC TYPE HR SY
0010	31+00, RT	3	12
	TOTALS	**3**	**12**

ADJUSTING MANHOLE COVERS

CATEGORY	LOCATION	611.8110 ADJUSTING MANHOLE COVERS EACH
0010	202+44, RT	1
0010	202+55, RT	1
	TOTALS	**2**

SALVAGE CHAIN LINK FENCE

CATEGORY	LOCATION	616.0404 FENCE CHAIN LINK SALVAGED 4-FT LF
0010	29+50, RT	10
	TOTALS	**10**

EROSION CONTROL

CATEGORY	PROJECT	625.0500 SALVAGED TOPSOIL SY	628.1504 SILT FENCE LF	628.1520 SILT FENCE MAINTENANCE LF	628.1905 MOBILIZATIONS EROSION CONTROL EA	628.1910 MOBILIZATIONS EMERGENCY EROSION CONTROL EA	628.2006 EROSION MAT URBAN CLASS I TYPE A SY	628.7020 INLET PROTECTION TYPE D EA	629.0205 FERTILIZER TYPE A CWT	630.0140 SEEDING MIXTURE NO. 40 LB	630.0200 SEEDING TEMPORARY LB	630.0500 SEED WATER MGAL
0010	3997-01-79	3300	50	50	3	3	3300	37	210	60	90	19
	TOTALS	**3300**	**50**	**50**	**3**	**3**	**3300**	**37**	**210**	**60**	**90**	**19**

3

STORM SEWER PIPES

CATEGORY	FROM	-	TO	LOCATION	520.8000 CONCRETE COLLARS FOR PIPE EACH	608.0315 STORM SEWER PIPE REINFORCED CONCRETE CLASS III 15-INCH LF	608.0318 STORM SEWER PIPE REINFORCED CONCRETE CLASS III 18-INCH LF	608.0336 STORM SEWER PIPE REINFORCED CONCRETE CLASS III 36-INCH LF	608.0415 STORM SEWER PIPE REINFORCED CONCRETE CLASS IV 15-INCH LF	608.0424 STORM SEWER PIPE REINFORCED CONCRETE CLASS IV 24-INCH LF	608.0436 STORM SEWER PIPE REINFORCED CONCRETE CLASS IV 36-INCH LF	608.2429 STORM SEWER PIPE REINFORCED CONCRETE HORIZONTAL ELLIPTICAL CLASS HE-IV 29X45-INCH LF	JOINT TIES* EACH	INLET ELEVATION	DISCHARGE ELEVATION	SLOPE FT/FT
0010	2	-	1	DEWEY AVENUE	-	-	-	-	-	271	-	-	-	835.05	830.11	0.0182
	3	-	2	DEWEY AVENUE	-	-	-	-	-	271	-	-	-	830.11	825.78	0.0160
	2A	-	2	DEWEY AVENUE	-	-	-	-	22	-	-	-	-	831.08	830.86	0.0100
	2B	-	2	DEWEY AVENUE	-	-	-	-	8	-	-	-	-	830.94	830.86	0.0100
	4	-	3	DEWEY AVENUE	-	-	-	-	-	-	-	147	-	825.57	824.84	0.0050
	3A	-	3	DEWEY AVENUE	-	22	-	-	-	-	-	-	-	826.00	825.78	0.0100
	3B	-	3	DEWEY AVENUE	-	8	-	-	-	-	-	-	-	825.86	825.78	0.0100
	5	-	4	DEWEY AVENUE	-	-	-	289	-	-	-	-	-	824.84	823.40	0.0050
	6	-	5	DEWEY AVENUE	-	-	-	358	-	-	-	-	-	823.40	821.96	0.0040
	5A	-	5	DEWEY AVENUE	-	9	-	-	-	-	-	-	-	826.21	826.07	0.0150
	7	-	6	DEWEY AVENUE	-	-	-	-	-	-	373	-	-	821.96	820.10	0.0050
	6A	-	6	DEWEY AVENUE	-	22	-	-	-	-	-	-	-	823.93	823.71	0.0100
	6B	-	6	DEWEY AVENUE	-	8	-	-	-	-	-	-	-	823.79	823.71	0.0100
	8	-	7	DEWEY AVENUE	-	-	-	-	-	-	129	-	3	820.10	809.16	0.0851
	7A	-	7	DEWEY AVENUE	-	-	-	-	22	-	-	-	-	822.07	821.85	0.0100
	7B	-	7	DEWEY AVENUE	-	-	-	-	8	-	-	-	-	821.93	821.85	0.0100
	9	-	1	DEWEY AVENUE	-	-	34	-	-	-	-	-	-	836.35	835.05	0.0383
	9A	-	9	DEWEY AVENUE	-	28	-	-	-	-	-	-	-	836.88	836.60	0.0100
	9B	-	9A	DEWEY AVENUE	-	24	-	-	-	-	-	-	-	838.14	837.90	0.0100
	10	-	4	DEWEY AVENUE	-	-	44	-	-	-	-	-	-	828.09	827.06	0.0233
	10A	-	10	DEWEY AVENUE	-	28	-	-	-	-	-	-	-	828.62	828.34	0.0100
	10B	-	10	DEWEY AVENUE	-	6	-	-	-	-	-	-	-	828.40	828.34	0.0100
	11	-	5	DEWEY AVENUE	-	-	45	-	-	-	-	-	-	825.40	824.90	0.0111
	11A	-	11	DEWEY AVENUE	-	24	-	-	-	-	-	-	-	825.89	825.65	0.0100
	11B	-	11	DEWEY AVENUE	-	7	-	-	-	-	-	-	-	825.72	825.65	0.0100
	1	-	NULL-1	DEWEY AVENUE	1	-	-	-	-	238	-	-	-	839.88	835.05	0.0203
	NULL-2	-	9	DEWEY AVENUE	1	-	47	-	-	-	-	-	-	838.21	836.35	0.0399
	NULL-3	-	10	DEWEY AVENUE	1	-	25	-	-	-	-	-	-	828.44	828.09	0.0140
	NULL-4	-	11	DEWEY AVENUE	1	-	13	-	-	-	-	-	-	825.60	825.40	0.0150
				TOTALS	4	186	208	647	60	780	502	147	3			

*NON-BID ITEM: FOR INFORMATION ONLY

3

3

STORM SEWER STRUCTURES

STRUCTURE	STATION	OFFSET*	LOCATION	522.1036 APRON ENDWALLS FOR CULVERT PIPE REINFORCED CONCRETE 36-INCH EACH	611.0535 MANHOLE COVERS TYPE J-SPECIAL EACH	611.0624 INLET COVERS TYPE H EACH	611.1004 CATCH BASINS 4-FT DIAMETER EACH	611.1230 CATCH BASINS 2X3-FT EACH	611.2004 MANHOLES 4-FT DIAMETER EACH	611.2005 MANHOLES 5-FT DIAMETER EACH	611.2006 MANHOLES 6-FT DIAMETER EACH	611.2007 MANHOLES 7-FT DIAMETER EACH	650.4000 CONSTRUCTION STAKING STORM SEWER EACH	RIM** ELEVATION	INVERT*** ELEVATION	DEPTH**** FT
1	12+44.92	9.99' RT	DEWEY AVENUE	-	1	-	-	-	1	-	-	-	1	840.62	835.05	4.58
2	15+16.32	9.99' RT	DEWEY AVENUE	-	1	-	-	-	1	-	-	-	1	834.50	830.11	3.40
2A	15+16.32	12.00' LT	DEWEY AVENUE	-	-	1	-	1	-	-	-	-	1	834.43	828.08	5.35
2B	15+16.32	18.00' RT	DEWEY AVENUE	-	-	1	-	1	-	-	-	-	1	834.31	827.94	5.37
3	17+87.76	10.00' RT	DEWEY AVENUE	-	1	-	-	-	-	-	-	1	1	830.28	825.57	3.84
3A	17+87.79	12.00' LT	DEWEY AVENUE	-	-	1	-	1	-	-	-	-	1	830.21	823.00	6.21
3B	17+87.73	18.00' RT	DEWEY AVENUE	-	-	1	-	1	-	-	-	-	1	830.09	822.86	6.23
4	19+34.66	10.00' RT	DEWEY AVENUE	-	1	-	-	-	-	-	1	-	1	832.42	824.84	6.72
5	22+23.47	10.00' RT	DEWEY AVENUE	-	1	-	-	-	-	1	-	-	1	830.94	823.40	6.64
5A	22+28.04	18.00' RT	DEWEY AVENUE	-	-	1	-	1	-	-	-	-	1	830.72	823.21	6.51
6	25+81.90	10.00' RT	DEWEY AVENUE	-	1	-	-	-	-	1	-	-	1	828.26	821.96	5.39
6A	25+81.90	12.00' LT	DEWEY AVENUE	-	-	1	-	1	-	-	-	-	1	828.19	820.93	6.25
6B	25+81.90	18.00' RT	DEWEY AVENUE	-	-	1	-	1	-	-	-	-	1	828.07	820.79	6.27
7	29+54.66	10.00' RT	DEWEY AVENUE	-	1	-	-	-	-	1	-	-	1	825.48	820.10	4.48
7A	29+54.66	12.00' LT	DEWEY AVENUE	-	-	1	-	1	-	-	-	-	1	825.46	819.07	5.39
7B	29+53.44	18.16' RT	DEWEY AVENUE	-	-	1	-	1	-	-	-	-	1	825.27	818.93	5.34
8	30+83.16	14.79' RT	DEWEY AVENUE	1	-	-	-	-	-	-	-	-	1	-	809.73	-
9	12+38.30	43.27' RT	DEWEY AVENUE	-	-	1	1	-	-	-	-	-	1	841.08	833.35	6.73
9A	12+10.84	37.81' RT	DEWEY AVENUE	-	-	1	1	-	-	-	-	-	1	841.09	833.88	6.21
9B	11+97.13	18.00' RT	DEWEY AVENUE	-	-	1	-	1	-	-	-	-	1	841.33	834.12	6.21
10	19+43.57	33.38' LT	DEWEY AVENUE	-	1	-	-	-	1	-	-	-	1	832.96	828.09	3.84
10A	19+71.12	33.09' LT	DEWEY AVENUE	-	-	1	-	1	-	-	-	-	1	832.92	825.62	6.31
10B	19+37.76	34.53' LT	DEWEY AVENUE	-	-	1	-	1	-	-	-	-	1	832.87	825.40	6.47
11	22+31.84	34.72' LT	DEWEY AVENUE	-	1	-	-	-	1	-	-	-	1	830.83	825.11	4.47
11A	22+55.35	30.32' LT	DEWEY AVENUE	-	-	1	-	1	-	-	-	-	1	830.35	822.89	6.46
11B	22+24.87	36.02' LT	DEWEY AVENUE	-	-	1	-	1	-	-	-	-	1	830.59	822.72	6.87
			TOTALS	1	9	16	2	14	4	3	1	1	26			

REMARKS:
*STATIONS AND OFFSETS ARE TO CENTER OF STRUCTURE

**RIM ELEV IS AT THE INLET COVER FLANGE LOCATION

***FOR STRUCTURES WITH SUMPS, THE INVERT ELEVATION IS THE ELEVATION OF THE SUMP. FOR STRUCTURES WITHOUT SUMPS, THE INVERT ELEVATION IS THE ELEVATION OF THE LOWEST PIPE FLOW LINE

****DEPTH = RIM ELEV - TOP OF STRUCTURE BASE ELEV - COVER HEIGHT - 6-INCH ADJUSTMENT RING HEIGHT

3

PERMANENT SIGNING

CATEGORY	STA	LOCATION	SIGN CODE	DESCRIPTION	SIZE INCH	X	INCH	634.0812 POSTS TUBULAR STEEL 2X2-INCH X 12-FT EACH	637.2230 SIGNS TYPE II REFLECTIVE F SF	638.2602 REMOVING SIGNS TYPE II EACH	638.3000 REMOVING SMALL SIGN SUPPORTS EACH	SPV.0060.15 REMOVE, SALVAGE, AND REINSTALL SIGN EACH
0010	10+08	RT	--	STREET SIGNS (DEWEY AVE & MAIN ST)	--	X	--	--	--	--	--	1
0010	10+77	LT	R1-1	STOP	30	X	30	1	5.18	1	1	--
0010	11+67	RT	R7-51L	NO PARKING HERE TO CORNER (LEFT)	18	X	24	1	3.00	1	1	--
0010	134+85	LT	--	NEIGHBORHOOD CRIME WATCH	--	X	--	--	--	--	--	1
0010	12+45	RT	--	STREET SIGNS (DEWEY AVE & RUTH ST)	--	X	--	--	--	--	--	1
0010	12+42	RT	R1-1	STOP	30	X	30	1	5.18	1	1	--
0010	12+71	LT	R7-53D	NO PARKING ON THIS SIDE	18	X	24	1	3.00	1	1	--
0010	12+72	RT	R7-51R	NO PARKING HERE TO CORNER (RIGHT)	18	X	24	1	3.00	1	1	--
0010	16+61	LT	R7-53D	NO PARKING ON THIS SIDE	18	X	24	1	3.00	1	1	--
0010	18+71	LT	R7-53D	NO PARKING ON THIS SIDE	18	X	24	1	3.00	1	1	--
0010	19+17	LT	--	STREET SIGNS (DEWEY AVE & JONES ST)	--	X	--	--	--	--	--	1
0010	19+33	LT	R1-1	STOP	30	X	30	1	5.18	1	1	--
0010	19+60	RT	R1-1	STOP	30	X	30	1	5.18	1	1	--
0010	20+38	LT	R7-53D	NO PARKING ON THIS SIDE	18	X	24	1	3.00	1	1	--
0010	21+65	LT	R7-53D	NO PARKING ON THIS SIDE	18	X	24	1	3.00	1	1	--
0010	22+20	LT	R1-1	STOP	30	X	30	1	5.18	1	1	--
0010	22+30	RT	--	DIAMOND SIGNS	--	X	--	--	--	--	--	1
0010	22+70	LT	--	STREET SIGNS (DEWEY AVE & CADY ST)	--	X	--	--	--	--	--	1
0010	23+41	LT	R7-53D	NO PARKING ON THIS SIDE	18	X	24	1	3.00	1	1	1
0010	25+49	LT	R7-53D	NO PARKING ON THIS SIDE	18	X	24	1	3.00	1	1	1
0010	26+06	LT	R1-1	STOP	30	X	30	1	5.18	1	1	--
0010	26+51	LT	--	STREET SIGNS (DEWEY AVE & COLE ST)	--	X	--	--	--	--	--	1
0010	28+74	LT	R7-53D	NO PARKING ON THIS SIDE	18	X	24	1	3.00	1	1	--
0010	29+54	RT	R1-1	STOP	30	X	30	1	5.18	1	1	--
0010	29+57	RT	--	STREET SIGNS (DEWEY AVE & DIVISION ST)	--	X	--	--	--	--	--	1
0010	30+05	RT	--	DIAMOND SIGNS	--	X	--	--	--	--	--	1
0010	30+27	RT	--	PARK INFORMATION SIGN	--	X	--	--	--	--	--	1
		TOTALS						**17**	**66.26**	**17**	**17**	**12**

TRAFFIC CONTROL ITEMS

CATEGORY	LOCATION/OPERATION	PROJECT DURACTION DAYS	643.0300 TRAFFIC CONTROL DRUMS EACH	DAYS	643.0420 TRAFFIC CONTROL BARRICADES TYPE III EACH	DAYS	643.0705 TRAFFIC CONTROL WARNING LIGHTS TYPE A EACH	DAYS	643.0900 TRAFFIC CONTROL SIGNS EACH	DAYS	643.1050 TRAFFIC CONTROL SIGNS PCMS EACH	DAYS	644.1601 TEMPORARY PEDESTRIAN CURB RAMP EACH	DAYS	644.1810 TEMPORARY PEDESTRIAN BARRICADE LF
0010	DEWEY AVE CLOSURE	100	10	1,000	17	1,700	34	3,400	0	0	0	0	0	0	0
0010	DEWEY AVE DETOUR	100	0	0	0	0	12	1,200	34	3,400	0	0	0	0	0
0010	E DIVISION ST DETOUR ADVANCE NOTICE	7	0	0	0	0	0	0	0	0	2	14	0	0	0
0010	E DIVISION ST DETOUR	5	0	0	6	30	12	60	37	185	0	0	0	0	0
0010	TEMPORARY PEDESTRIAN AT INTERSECTIONS	100	0	0	0	0	0	0	14	1,400	0	0	28	2,800	336
0010	PEDESTRIAN DETOUR	100	0	0	0	0	0	0	31	3,100	0	0	0	0	0
0010	W MAIN ST SHOULDER CLOSURE	5	15	75	0	0	5	25	1	5	0	0	0	0	0
0010	UNDISTRIBUTED	-	0	100	0	150	0	400	0	500	0	0	0	200	60
		TOTALS		**1,175**		**1,880**		**5,085**		**8,590**		**14**		**3,000**	**396**

TEMPORARY PEDESTRIAN SURFACE

CATEGORY	LOCATION	644.1410 TEMPORARY PEDESTRIAN SURFACE ASPHALT SF	REMARKS
0010	DEWEY AVE	1,600	WATER LATERAL REPLACEMENT
0010	DEWEY AVE	1,600	SANITARY SEWER LATERAL REPLACEMENT
	TOTALS	**3,200**	

PAVEMENT MARKINGS

CATEGORY	STA	TO	STA	646.2020 MARKING LINE EPOXY 6-INCH WHITE LF	YELLOW LF	646.6120 MARKING STOP LINE EPOXY 18-INCH WHITE LF	646.7520 MARKING CROSSWALK EPOXY BLOCK STYLE 24-INCH WHITE LF	646.8120 MARKING CURB EPOXY YELLOW LF
0010	10+00	-	30+00	1,540	3,350	41	666	781
			TOTALS	**4,890**		**41**	**666**	**781**

3

CONSTRUCTION STAKING

CATEGORY	LOCATION	STA	TO	STA	650.4500 CONSTRUCTION STAKING SUBGRADE LF	650.5000 CONSTRUCTION STAKING BASE LF	650.5500 CONSTRUCTION STAKING CURB GUTTER AND CURB & GUTTER LF	650.7000 CONSTRUCTION STAKING CONCRETE PAVEMENT LF	650.9000 CONSTRUCTION STAKING CURB RAMPS EACH	650.9500 CONSTRUCTION STAKING SIDEWALK (01. 3997-01-79) EACH	650.9911 CONSTRUCTION STAKING SUPPLEMENTAL CONTROL (01. 3997-01-79) EA
0010	DEWEY AVE	10+00	-	30+00	1,997	1,997	4,274	1,997	18	1	1
				TOTALS	**1,997**	**1,997**	**4,274**	**1,997**	**18**	**1**	**1**

SAWING PAVEMENT

CATEGORY	STA	TO	STA	LOCATION	690.0150 SAWING ASPHALT LF	690.0250 SAWING CONCRETE LF
0010	10+00	-	30+00	DEWEY AVE	451	916
				TOTALS	**451**	**916**

WATER UTILITY TIE INS

CATEGORY	LOCATION	SPV.0060.06 6-INCH WATERMAIN TIE IN, STATION 10+26 EACH	SPV.0060.07 6-INCH WATERMAIN TIE IN, STATION 100+98 EACH	SPV.0060.08 6-INCH WATERMAIN TIE IN, STATION 201+52 EACH	SPV.0060.09 6-INCH WATERMAIN TIE IN, STATION 202+67 EACH	SPV.0060.10 6-INCH WATERMAIN TIE IN, STATION 301+64 EACH	SPV.0060.11 6-INCH WATERMAIN TIE IN, STATION 400+94 EACH	SPV.0060.12 6-INCH WATERMAIN TIE IN, STATION 500+75 EACH	SPV.0060.13 8-INCH WATERMAIN TIE IN, STATION 501+48 EACH
0020	PROJECT	1	1	1	1	1	1	1	1
		1	**1**	**1**	**1**	**1**	**1**	**1**	**1**

WATER UTILITY

CATEGORY	LOCATION	STA	TO	STA	SPV.0060.01 8-INCH GATE VALVE & BOX EACH	SPV.0060.02 6-INCH GATE VALVE & BOX EACH	SPV.0060.03 FIRE HYDRANT EACH	SPV.0060.04 TEMPORARY WATER SERVICE EACH	SPV.0060.05 WATERMAIN OFFSET EACH	SPV.0090.01 6-INCH WATERMAIN LF	SPV.0090.02 8-INCH WATERMAIN LF	SPV.0090.03 6-INCH WATERMAIN, HYDRANT LEAD LF	SPV.0090.04 COPPER WATER SERVICE 1-INCH LF
0020	DEWEY AVE	10+00	-	31+00	18	6	6	1	8	50	2,350	42	588
				TOTALS	**18**	**6**	**6**	**1**	**8**	**50**	**2,350**	**42**	**588**

MINI STORM SEWER

CATEGORY	LOCATION	STA	TO	STA	SPV.0060.14 MINI STORM CLEANOUT EACH	SPV.0090.05 MINI STORM SEWER, 6-INCH LF	SPV.0090.06 MINI STORM SEWER LATERAL, 6-INCH LF
0020	DEWEY AVE	10+00	-	31+00	44	2,920	380
				TOTALS	**44**	**2,920**	**380**

SANITARY SEWER

CATEGORY	LOCATION	STA	TO	STA	SPV.0090.07 SANITARY SEWER 8-INCH PVC LF	SPV.0090.08 SANITARY SEWER 10-INCH PVC LF	SPV.0090.09 SANITARY SEWER 12-INCH PVC LF	SPV.0090.10 SANITARY SEWER 6-INCH LATERAL LF	SPV.0200.01 SANITARY MANHOLE 48-INCH VF	SPV.0200.02 SANITARY MANHOLE 48-INCH OUTSIDE DROP VF
0020	DEWEY AVE	10+00	-	31+00	971	284	684	1,520	54	11
				TOTALS	**971**	**284**	**684**	**1,520**	**54**	**11**

R/W PROJECT NUMBER 3997-01-09	SHEET NUMBER	TOTAL SHEETS
FEDERAL PROJECT NUMBER N/A	4.01	4

PLAT OF RIGHT OF WAY REQUIRED FOR

CITY OF WATERTOWN, DEWEY AVENUE E MAIN STREET TO E DIVISION STREET

DEWEY AVENUE	JEFFERSON COUNTY

CONSTRUCTION PROJECT NUMBER 3997-01-79

CONVENTIONAL SYMBOLS

SECTION LINE
QUARTER LINE
SIXTEENTH LINE
NEW REFERENCE LINE
NEW R/W LINE
EXISTING R/W OR HE LINE
PROPERTY LINE
LOT, TIE & OTHER MINOR LINES
SLOPE INTERCEPT
CORPORATE LIMITS
UNDERGROUND FACILITY (COMMUNICATIONS, ELECTRIC, ETC) — W (TYPE)
NEW R/W (FEE OR HE) (HATCHING VARIES BY OWNER)
TEMPORARY LIMITED EASEMENT AREA
EASEMENT AREA (PERMANENT LIMITED OR RESTRICTED DEVELOPMENT)
TRANSMISSION STRUCTURES
BUILDING — TO BE REMOVED
BRIDGE — CULVERT

SECTION CORNER SYMBOL
SECTION CORNER MONUMENT
GEODETIC SURVEY MONUMENT
SIXTEENTH CORNER MONUMENT
SIGN
OFF-PREMISE SIGN

R/W MONUMENT (TO BE SET)
NON-MONUMENTED R/W POINT
FOUND IRON PIN (1-INCH UNLESS NOTED)

	COMPENSABLE	NON-COMPENSABLE
ELECTRIC POLE		
TELEPHONE POLE		
PEDESTAL (LABEL TYPE) (TV, TEL, ELEC, ETC.)		

ACCESS RESTRICTED BY ACQUISITION
NO ACCESS (BY STATUTORY AUTHORITY)
ACCESS RESTRICTED (BY PREVIOUS PROJECT OR CONTROL)
NO ACCESS (NEW HIGHWAY)
PARCEL NUMBER 25 — UTILITY NUMBER 40
PARALLEL OFFSETS

CONVENTIONAL UTILITY SYMBOLS

WATER — W
GAS — G
TELEPHONE — T
OVERHEAD TRANSMISSION LINES — OH
ELECTRIC — E
CABLE TELEVISION — TV
FIBER OPTIC — FO
SANITARY SEWER — SAN
STORM SEWER — SS
ELECTRIC TOWER

CONVENTIONAL ABBREVIATIONS

ACCESS RIGHTS	AR	POINT OF COMPOUND CURVE	PCC
ACRES	AC	POINT OF INTERSECTION	PI
AHEAD	AH	PROPERTY LINE	PL
ALUMINUM	ALUM	RECORDED AS	(100')
AND OTHERS	ET AL	REEL / IMAGE	R/I
BACK	BK	REFERENCE LINE	R/L
BLOCK	BLK	REMAINING	REM
CENTERLINE	C/L	RESTRICTIVE DEVELOPMENT EASEMENT	RDE
CERTIFIED SURVEY MAP	CSM	RIGHT	RT
CONCRETE	CONC	RIGHT OF WAY	R/W
COUNTY	CO	SECTION	SEC
COUNTY TRUNK HIGHWAY	CTH	SEPTIC VENT	SEPV
DISTANCE	DIST	SQUARE FEET	SF
CORNER	COR	STATE TRUNK HIGHWAY	STH
DOCUMENT NUMBER	DOC	STATION	STA
EASEMENT	EASE	TELEPHONE PEDESTAL	TP
EXISTING	EX	TEMPORARY LIMITED EASEMENT	TLE
GAS VALVE	GV	TRANSPORTATION PROJECT PLAT	TPP
GRID NORTH	GN	UNITED STATES HIGHWAY	USH
HIGHWAY EASEMENT	HE	VOLUME	V
IDENTIFICATION	ID		
LAND CONTRACT	LC		
LEFT	LT		
MONUMENT	MON		
NATIONAL GEODETIC SURVEY	NGS		
NUMBER	NO		
OUTLOT	OL		
PAGE	P		
POINT OF TANGENCY	PT		
PERMANENT LIMITED EASEMENT	PLE		
POINT OF BEGINNING	POB		
POINT OF CURVATURE	PC		

CURVE DATA ABBREVIATIONS

LONG CHORD	LCH
LONG CHORD BEARING	LCB
RADIUS	R
DEGREE OF CURVE	D
CENTRAL ANGLE	Δ /DELTA
LENGTH OF CURVE	L
TANGENT	T
DIRECTION AHEAD	DA
DIRECTION BACK	DB

END RELOCATION ORDER
40.18 FT NORTH AND 8.04 FT WEST OF THE NORTHEAST CORNER OF SEC. 4, T8N, R15E
STA 30+00
Y=439,099.242
X=2,311,445.677

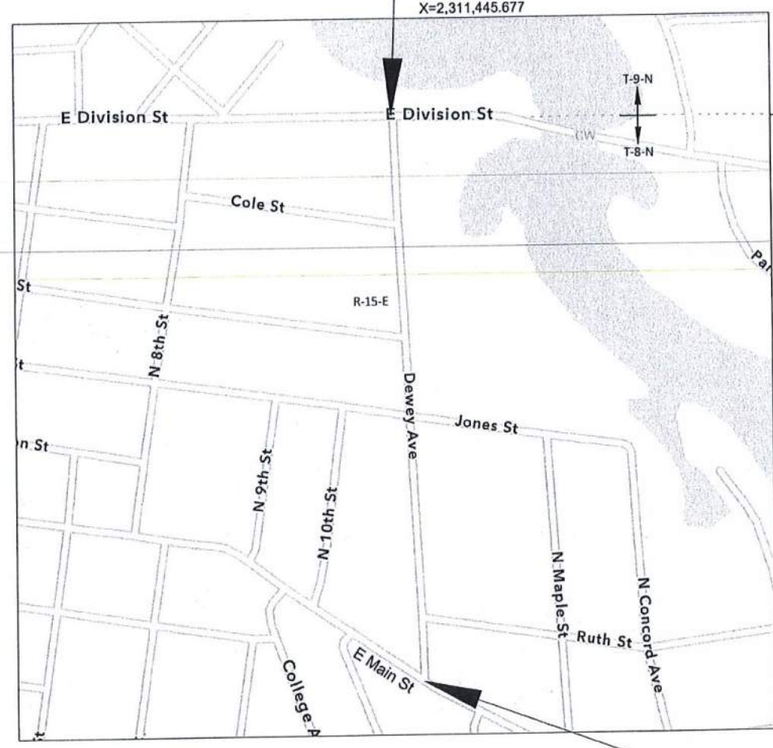

BEGIN RELOCATION ORDER
1344.88 FT NORTH AND 71.26 FT WEST OF THE EAST 1/4 CORNER OF SEC. 4, T8N, R15E
STA 10+00.00
Y=437,102.365
X=2,311,557.402

A TEMPORARY LIMITED EASEMENT (TLE) IS A RIGHT FOR CONSTRUCTION PURPOSES, AS DEFINED HEREIN, INCLUDING THE RIGHT TO OPERATE NECESSARY EQUIPMENT THEREON, THE RIGHT OF INGRESS AND EGRESS, AS LONG AS REQUIRED FOR SUCH PUBLIC PURPOSE, INCLUDING THE RIGHT TO PRESERVE, PROTECT, REMOVE, OR PLANT THEREON ANY VEGETATION THAT THE HIGHWAY AUTHORITIES MAY DEEM DESIRABLE. ALL (TLEs) ON THIS PLAT EXPIRE AT THE COMPLETION OF THE CONSTRUCTION PROJECT FOR WHICH THIS INSTRUMENT IS GIVEN.

A PERMANENT LIMITED EASEMENT (PLE) IS A RIGHT FOR CONSTRUCTION AND MAINTENANCE PURPOSES, AS DEFINED HEREIN, INCLUDING THE RIGHT TO OPERATE NECESSARY EQUIPMENT THEREON AND THE RIGHT OF INGRESS AND EGRESS, AS LONG AS REQUIRED FOR SUCH PUBLIC PURPOSE, INCLUDING THE RIGHT TO PRESERVE, PROTECT, REMOVE, OR PLANT THEREON ANY VEGETATION THAT THE HIGHWAY AUTHORITIES MAY DEEM DESIRABLE, BUT WITHOUT PREJUDICE TO THE OWNER'S RIGHTS TO MAKE OR CONSTRUCT IMPROVEMENTS ON SAID LANDS OR TO FLATTEN THE SLOPES, PROVIDING SAID ACTIVITIES WILL NOT IMPAIR OR OTHERWISE ADVERSELY AFFECT THE HIGHWAY FACILITIES.

PROPERTY LINES SHOWN ON THIS PLAT FOR PROPERTIES BEING IMPACTED ARE DRAWN FROM DATA DERIVED FROM FILED/RECORDED MAPS AND DOCUMENTS OF PUBLIC RECORD. THIS PLAT MAY NOT BE A TRUE REPRESENTATION OF EXISTING PROPERTY LINES, EXCLUDING RIGHT-OF-WAY, AND SHOULD NOT BE USED AS A SUBSTITUTE FOR AN ACCURATE FIELD SURVEY.

NOTES:

POSITIONS SHOWN ON THIS PLAT ARE WISCONSIN STATE PLANE COORDINATE (SPC) SYSTEM, SOUTH ZONE, NAD83 (2011)IN US SURVEY FEET. VALUES SHOWN ARE GRID COORDINATES, GRID BEARINGS, AND GRID DISTANCES. GRID DISTANCES MAY BE USED AS GROUND DISTANCES.

ALL NEW RIGHT-OF-WAY MONUMENTS WILL BE TYPE 2 (TYPICALLY ¾" X 24" IRON REBARS), UNLESS OTHERWISE NOTED, AND WILL BE PLACED PRIOR TO THE COMPLETION OF THE PROJECT.

DIMENSIONING FOR THE NEW RIGHT-OF-WAY IS MEASURED ALONG AND PERPENDICULAR TO THE NEW REFERENCE LINES.

RIGHT-OF-WAY BOUNDARIES ARE DEFINED WITH COURSES OF THE PERIMETER OF THE HIGHWAY LANDS REFERENCED TO THE U.S. PUBLIC LAND SURVEY SYSTEM OR OTHER "SURVEYS" OF PUBLIC RECORD.

FOR THE CURRENT ACCESS/DRIVEWAY INFORMATION, CONTACT THE PLANNING UNIT OF THE WISCONSIN DEPARTMENT OF TRANSPORTATION OFFICE IN MADISON/SOUTHWEST REGION.

PARCEL AND UTILITY IDENTIFICATION NUMBERS MAY NOT POINT TO ALL AREAS OF ACQUISITION, AS NOTED ON THE DETAIL PAGES.

INFORMATION FOR THE BASIS OF EXISTING HIGHWAY RIGHT-OF-WAY POINTS OF REFERENCE AND ACCESS CONTROL ARE LISTED ON THE DETAIL PAGES.

LAYOUT
SCALE 0 — 500

TOTAL NET LENGTH OF CENTERLINE = 1,957.54 FEET

THIS PLAT IS A GRAPHIC REPRESENTATION AND IS FOR REFERENCE PURPOSES ONLY. DEEDS MUST BE CHECKED TO DETERMINE PROPERTY BOUNDARIES AND ACCESS RIGHTS.

RECEIVED
JUL 17 2025
Jefferson County Clerk WI

REVISION DATE
5/29/2025

ACCEPTED FOR
CITY OF WATERTOWN
DATE: 6/24/25 DPW/CE
(Signature and Title of Official)

ORIGINAL PLANS PREPARED BY
REL Robert E. Lee & Associates, Inc.
1250 Centennial Centre Blvd | Hobart, WI | 920-662-9641 | relsurvey.com

WISCONSIN SCOTT M. DE BAKER S-2403 GREEN BAY WI LAND SURVEYOR

DATE: 5/29/2025
(Professional Land Surveyor Signature)

FILE NAME : R:\5300\5364\5364088\39970179\SHEETS\040100-TI.DWG
PLOT DATE : 5/29/2025 3:10 PM
PLOT BY : SCOTT M. DEBAKER
PLOT NAME :

NOTE: OWNER'S NAMES ARE SHOWN FOR REFERENCE PURPOSES ONLY AND ARE SUBJECT TO CHANGE PRIOR TO THE TRANSFER OF LAND INTERESTS TO THE CITY OF WATERTOWN

4

SCHEDULE OF LANDS & INTERESTS REQUIRED

PARCEL NUMBER	OWNER(S)	INTEREST REQUIRED	R/W NEW SF	TLE SF
1	1020 East Main, LLC	FEE & TLE	45	812
2	Kenneth W. Matson and Penelope R. Matson	TLE		534
3	Patricia A. Caldwell	TLE		216
4	Jason Castillo	TLE		225
5	Orlando Nevarez and Carrie Buller	TLE		458
6	Matthew D. Allickson	TLE		474
7	Ryan Gutzdorf and Angellica Gutzdorf	TLE		290
8	J. Jesus Aranda Gomez & Aidhe Aranda	TLE		489
9	Franklin & Edris A. Hrasky, Christopher & Kaye Pitrowski	TLE		1170
10	Anthony F. Scola and Margaret M. Scola Joint Revocable Living Trust	TLE		744
11	Tory J. Schlender, a single person	TLE		627
12	SLR Investments LLC	TLE		343
13	Richard C. Ebert, Jr. and Patrice M. Ebert	TLE		250
15	Benjamin L. Peterson and Janet K. Peterson	TLE		336
16	Michael L Herro	TLE		511
17	Sandy Creek LLC	TLE		898
18	Justin W. Helser and Jamie L. Helser	TLE		841
19	William R. Snodie and Pamela J. Snodie	TLE		975
20	Dalia Villarreal	TLE		1133
21	Vince Wayda a/k/a Vincent Wayda and Joleen Wayda	TLE		982
22	Victor K. Herschi and Antonette Herschi	TLE		949
23	Allies Properties Corporation	TLE		667
24	Aaron J. Borchardt a/k/a Aaron John Borchardt	TLE		731

SCHEDULE OF LANDS & INTERESTS REQUIRED

PARCEL NUMBER	OWNER(S)	INTEREST REQUIRED	R/W NEW SF	TLE SF
25	Michael S. Rogars and Theresa K. Rogars	TLE		665
26	Sandra L. Wakeman and Robert W. Amis, III, as joint tenants	TLE		251
27	Robert Wolfgram	TLE		373
28	Jacob Luebke	TLE		380
30	FJ Winter Enterprises, LLC	TLE		413
31	Mark D. Moretti, Jr.	TLE		414
32	Bryan R. Paulsen	TLE		542
33	Ericka M. Niemann	TLE		394
34	Christi M. Schroeder	TLE		458
35	John P. Richter	TLE		337
37	Christopher S. Bahn and Tami S. Bahn	TLE		273
38	Joseph L. Rivera	TLE		996
39	John W. Freepartner and Kay M. Freepartner	TLE		521
41	Dehnert & Company Contractors LLC, Edward Breunig	TLE		254
42	Matthew Kayser	TLE		422
43	Jordan Davids and Jennifer L. Davids	TLE		328
44	Becky Iadicicco and Steve Iadicicco	TLE		362
45	Michael R. Friedl and Laurel L. Friedl Revocable Trust	TLE		358
46	Allies Properties Corporation	TLE		496
47	LuAnn M.H. Weihert	TLE		289
48	Laurette E. Knope	TLE		332
49	Barbara Ann Agasie	TLE		315
50	Thomas Lulewicz and Bernadette Lulewicz	TLE		325
51	Joseph M. Dietrich (husband) and Debra K. Rothe	TLE		277
52	James N. Mork	TLE		373
53	Faustino Herrera	TLE		402
54	D & J Venture Rentals, LLC	TLE		474

4

NOTE: OWNER'S NAMES ARE SHOWN FOR REFERENCE PURPOSES ONLY AND ARE SUBJECT TO CHANGE PRIOR TO THE TRANSFER OF LAND INTERESTS TO THE CITY OF WATERTOWN

STATION & OFFSET TABLE				
POINT	STATION	OFFSET	Y COORDS	X COORDS
100	10+61.82	27.00 LT	437162.579	2311526.994
101	10+67.09	33.82 LT	437167.463	2311519.887
102	10+75.79	27.00 LT	437176.527	2311526.214

RW COURSE TABLE PARCEL 1		
PRW100 - PRW 101	N55°30'06"W	8.62'
PRW101 - PRW 102	S51°52'58"W	11.05'
PRW102 - PRW 100	S03°19'09"E	13.97'

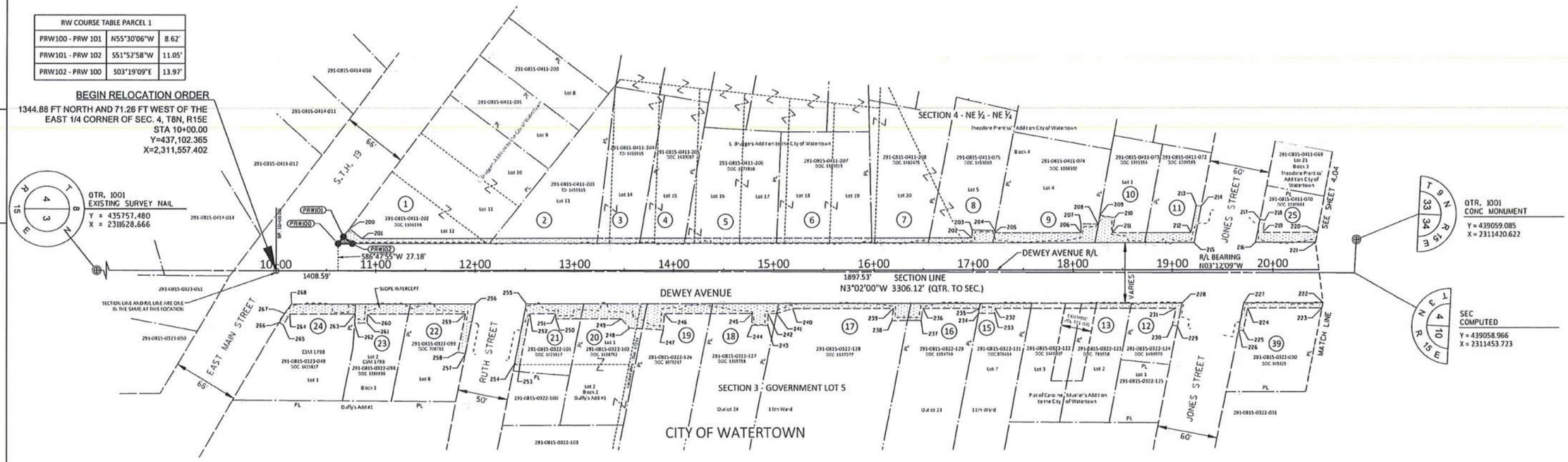

TLE POINTS STATION OFFSET TABLE				
POINT	STATION	OFFSET	Y COORDS	X COORDS
200	10+73.24'	41.69'LT	437173.164	2311511.693
201	10+85.63'	32.00 LT	437186.072	2311520.672
202	16+98.73	32.00 LT	437798.217	2311486.421
203	16+98.97	39.80 LT	437798.017	2311478.624
204	17+21.89	39.10 LT	437820.944	2311478.035
205	17+21.49	37.00 LT	437820.664	2311480.158
206	18+08.21	37.00 LT	437907.248	2311475.313
207	18+08.06	45.75 LT	437906.606	2311466.582
208	18+25.59	45.34 LT	437924.129	2311466.013
209	18+27.14	54.28 LT	437925.179	2311457.004
210	18+41.98	51.70 LT	437940.140	2311458.749
211	18+39.45	37.00 LT	437938.442	2311473.568
212	19+18.37	37.00 LT	438017.231	2311469.159
213	19+23.72	63.88 LT	438021.071	2311442.019
214	19+28.62	62.91 LT	438026.022	2311442.719
215	19+21.47	27.00 LT	438020.892	2311478.970
216	19+82.65	27.07 LT	438081.968	2311475.482
217	19+87.18	49.85 LT	438085.223	2311452.484

TLE POINTS STATION OFFSET TABLE				
POINT	STATION	OFFSET	Y COORDS	X COORDS
218	19+92.10	48.87 LT	438090.188	2311453.187
219	19+89.74	37.00 LT	438088.492	2311465.172
220	20+45.20	37.00 LT	438143.861	2311462.074
221	20+43.32	27.07 LT	438142.540	2311472.097
222	20+50.61	32.93 RT	438153.176	2311531.597
223	20+49.60	38.00 RT	438152.453	2311536.711
224	19+74.81	38.00 RT	438077.778	2311540.889
225	19+70.29	60.73 RT	438074.530	2311563.838
226	19+65.31	59.74 RT	438069.502	2311563.126
227	19+70.62	32.93 RT	438073.314	2311536.059
228	19+09.53	33.00 RT	438012.320	2311539.544
229	19+04.97	55.94 RT	438009.042	2311562.708
230	19+00.06	54.97 RT	438004.092	2311562.007
231	19+03.44	38.00 RT	438006.516	2311544.876
232	17+21.57	38.00 RT	437824.930	2311555.036
233	17+21.57	43.00 RT	437825.209	2311560.028
234	17+05.44	43.00 RT	437809.101	2311560.930
235	17+06.39	38.00 RT	437809.771	2311555.884

TLE POINTS STATION OFFSET TABLE				
POINT	STATION	OFFSET	Y COORDS	X COORDS
236	16+49.61	38.00 RT	437753.084	2311559.056
237	16+47.58	50.03 RT	437751.730	2311571.184
238	16+18.17	50.09 RT	437722.367	2311572.883
239	16+19.54	38.00 RT	437723.057	2311560.736
240	15+18.96	38.00 RT	437622.640	2311566.355
241	15+02.84	43.00 RT	437606.820	2311572.248
242	14+94.45	43.00 RT	437598.448	2311572.716
243	14+94.29	54.80 RT	437598.949	2311584.511
244	14+78.35	54.55 RT	437583.013	2311585.149
245	14+78.53	43.00 RT	437582.551	2311573.606
246	13+90.41	43.00 RT	437494.567	2311578.529
247	13+89.51	59.16 RT	437494.571	2311594.713
248	13+55.50	57.21 RT	437460.505	2311594.663
249	13+47.07	48.00 RT	437451.573	2311585.942
250	12+80.95	48.00 RT	437385.557	2311589.636
251	12+80.95	43.00 RT	437385.278	2311584.643
252	12+54.67	43.00 RT	437359.039	2311586.112
253	12+44.69	93.20 RT	437351.878	2311636.794

TLE POINTS STATION OFFSET TABLE				
POINT	STATION	OFFSET	Y COORDS	X COORDS
254	12+39.36	92.14 RT	437346.494	2311636.034
255	12+51.23	33.00 RT	437355.045	2311576.319
256	12+00.23	33.00 RT	437304.127	2311579.168
257	11+90.31	82.39 RT	437296.986	2311629.038
258	11+82.90	80.92 RT	437289.497	2311627.980
259	11+90.44	43.00 RT	437294.906	2311589.700
260	10+91.59	43.00 RT	437196.218	2311595.222
261	10+91.16	52.00 RT	437196.288	2311604.227
262	10+78.22	52.00 RT	437183.371	2311604.950
263	10+78.78	43.00 RT	437183.421	2311595.938
264	10+13.60	43.00 RT	437118.345	2311599.579
265	10+07.08	53.89 RT	437112.443	2311610.814
266	10+02.79	51.32 RT	437108.016	2311608.489
267	10+08.13	42.40 RT	437112.852	2311599.284
268	10+15.57	33.00 RT	437119.754	2311589.484

EXISTING MONUMENT STATION & OFFSET TABLE					
POINT	STATION	OFFSET	Y COORDS	X COORDS	MON. TYPE
10733	0+00.00	0.00	437029.157	2311617.707	IP /0.25
10732	0+00.00	0.00	437066.335	2311687.999	IP
10731	10+14.69	34.09 RT	437118.940	2311590.625	IP
10730	10+79.24	33.62 RT	437183.363	2311586.551	IP
10729	11+35.05	32.79 RT	437239.033	2311582.596	IP/IRON ROD
1554	11+45.74	136.52 LT	437240.252	2311412.959	IP / 1.25
10728	11+80.71	130.22 RT	437290.070	2311677.328	IP
10735	13+22.77	27.37 LT	437423.107	2311512.049	IP
10726	14+39.15	32.04 RT	437542.618	2311564.863	IP /0.25
10725	15+04.83	32.97 RT	437608.251	2311562.121	IP

EXISTING MONUMENT STATION & OFFSET TABLE					
POINT	STATION	OFFSET	Y COORDS	X COORDS	MON. TYPE
10736	15+97.68	26.95 LT	437697.607	2311497.110	IP/IRON ROD
10724	16+37.34	32.86 RT	437740.544	2311554.613	IP
10737	16+54.88	26.81 LT	437754.722	2311494.052	IP/IRON ROD
4374	16+54.88	26.81 LT	437754.722	2311494.058	IP/IRON ROD
10738	17+19.47	26.04 LT	437819.252	2311491.211	IP/IRON ROD
10723	17+59.12	32.88 RT	437862.136	2311547.827	IP
10739	18+22.25	26.17 LT	437921.874	2311485.345	IP/IRON ROD
10740	18+72.09	26.01 LT	437971.642	2311482.720	IP /0.25
8154	18+97.92	93.89 RT	438004.127	2311600.989	IP
10741	19+39.96	115.95 LT	438034.377	2311389.131	IP

EXISTING RIGHT-OF-WAY FOR DEWEY AVENUE IS BASED UPON COUNTY RECORDS AND ASSOCIATED FOUND SURVEY MONUMENTATION

REVISION DATE 5/29/2025	DATE 10/7/2024	SCALE, FEET 0 50 100	HWY: DEWEY AVE	STATE R/W PROJECT NUMBER N/A	PLAT SHEET 4.03
			COUNTY: JEFFERSON	CONSTRUCTION PROJECT NUMBER 3997-01-79	PS&E SHEET E

FILE NAME : 040101-RP.DWG
LAYOUT NAME - 04-03
PLOT DATE : 5/29/2025 2:53 PM PLOT BY : SCOTT M. DEBAKER PLOT NAME : PLOT SCALE :
WISDOT/CADDS SHEET 75

NOTE: OWNER'S NAMES ARE SHOWN FOR REFERENCE PURPOSES ONLY AND ARE SUBJECT TO CHANGE PRIOR TO THE TRANSFER OF LAND INTERESTS TO THE CITY OF WATERTOWN

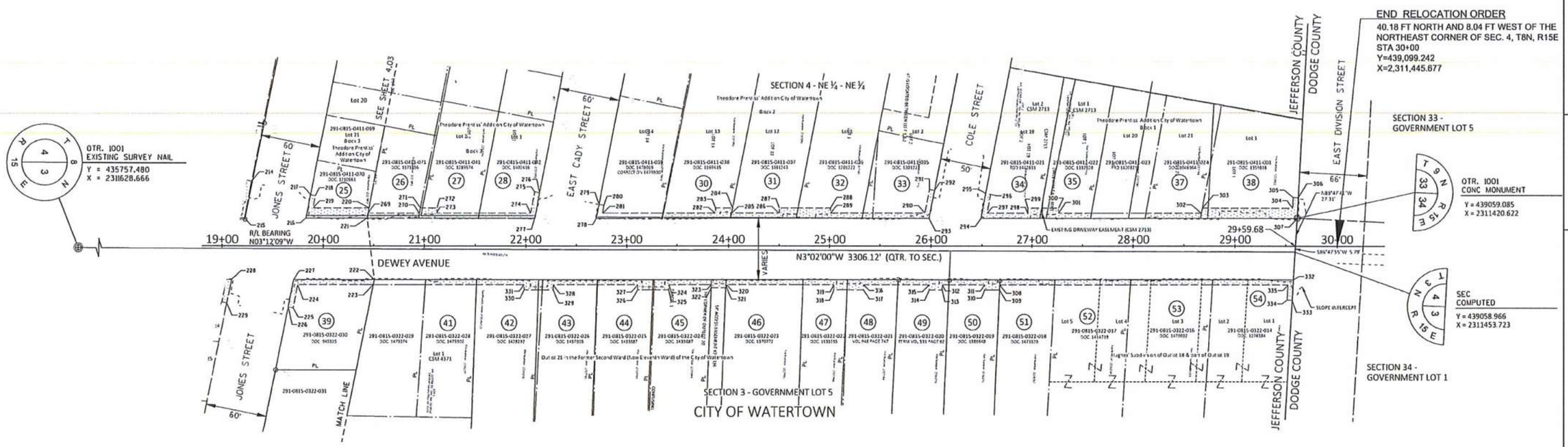

STATION & OFFSET TABLE				
POINT	STATION	OFFSET	Y COORDS	X COORDS
214	19+28.62	62.91 LT	438026.022	2311442.719
215	19+21.47	27.00 LT	438020.892	2311478.970
216	19+82.65	27.07 LT	438081.958	2311475.482
217	19+87.18	49.85 LT	438085.223	2311452.484
218	19+92.10	48.87 LT	438090.188	2311453.187
219	19+89.74	37.00 LT	438088.492	2311465.172
220	20+45.20	37.00 LT	438143.861	2311462.074
221	20+43.32	27.07 LT	438142.540	2311472.097
222	20+50.61	32.93 RT	438153.176	2311531.597
223	20+49.60	38.00 RT	438152.453	2311536.711
224	19+74.81	38.00 RT	438077.778	2311540.889
225	19+70.29	60.73 RT	438074.530	2311563.838
226	19+65.31	59.74 RT	438069.502	2311563.126
227	19+70.62	32.93 RT	438073.314	2311536.059
228	19+09.53	33.00 RT	438012.320	2311539.544
229	19+04.97	55.94 RT	438009.042	2311562.708
269	20+44.25	32.00 LT	438143.196	2311467.119
270	20+95.13	32.00 LT	438193.998	2311464.277
271	20+96.11	37.00 LT	438194.692	2311459.230
272	21+12.22	37.00 LT	438210.786	2311458.330
273	21+12.22	32.86 LT	438211.017	2311462.463

STATION & OFFSET TABLE				
POINT	STATION	OFFSET	Y COORDS	X COORDS
274	22+04.75	32.00 LT	438303.445	2311458.153
275	22+08.76	52.79 LT	438306.289	2311437.167
276	22+13.67	51.85 LT	438311.243	2311437.839
277	22+08.89	27.05 LT	438307.852	2311462.860
278	22+69.98	27.00 LT	438368.856	2311459.501
279	22+72.59	40.51 LT	438370.704	2311445.867
280	22+77.50	39.56 LT	438375.658	2311446.539
281	22+76.04	32.00 LT	438374.624	2311454.170
282	23+87.54	32.00 LT	438485.955	2311447.941
283	23+87.54	37.00 LT	438485.676	2311442.949
284	24+03.79	37.00 LT	438501.895	2311442.042
285	24+02.82	32.00 LT	438501.202	2311447.088
286	24+49.99	32.00 LT	438548.298	2311444.453
287	24+49.99	37.00 LT	438548.019	2311439.461
288	25+00.64	37.00 LT	438598.597	2311436.631
289	25+00.64	32.00 LT	438598.876	2311441.623
290	25+93.88	32.00 LT	438691.970	2311436.414
291	25+98.38	55.12 LT	438695.173	2311413.084
292	26+03.29	54.16 LT	438700.126	2311413.764
293	25+98.00	27.00 LT	438696.363	2311441.176
294	26+48.94	27.00 LT	438747.223	2311438.331

STATION & OFFSET TABLE				
POINT	STATION	OFFSET	Y COORDS	X COORDS
295	26+53.68	51.32 LT	438750.593	2311413.781
296	26+58.59	50.37 LT	438755.547	2311414.461
297	26+55.01	32.00 LT	438753.002	2311432.999
298	26+95.68	32.00 LT	438793.605	2311430.728
299	26+95.68	37.00 LT	438793.325	2311425.735
300	27+26.48	37.00 LT	438824.078	2311424.015
301	27+26.48	32.00 LT	438824.357	2311429.007
302	28+67.15	32.00 LT	438964.814	2311421.148
303	28+68.06	37.00 LT	438965.441	2311416.105
304	29+56.81	37.00 LT	439054.057	2311411.147
305	29+57.37	47.50 LT	439054.026	2311400.636
306	29+62.36	47.23 LT	439059.026	2311400.622
307	29+61.29	27.00 LT	439059.085	2311420.881
308	26+67.61	38.00 RT	438769.493	2311502.186
309	26+67.40	43.00 RT	438769.565	2311507.190
310	26+52.77	43.00 RT	438754.955	2311508.007
311	26+52.77	38.00 RT	438754.676	2311503.015
312	26+11.03	38.00 RT	438713.007	2311505.347
313	26+11.03	43.00 RT	438713.286	2311510.339
314	25+98.32	43.00 RT	438700.587	2311511.049
315	25+98.32	38.00 RT	438700.308	2311506.057

STATION & OFFSET TABLE				
POINT	STATION	OFFSET	Y COORDS	X COORDS
316	25+33.55	38.00 RT	438635.646	2311509.675
317	25+33.55	43.00 RT	438635.925	2311514.667
318	25+04.43	43.00 RT	438606.845	2311516.294
319	25+04.43	38.00 RT	438606.566	2311511.302
320	23+98.20	38.00 RT	438500.499	2311517.237
321	23+98.20	40.98 RT	438500.666	2311520.208
322	23+83.36	40.98 RT	438485.851	2311521.037
323	23+83.46	38.00 RT	438485.789	2311518.060
324	23+42.06	38.00 RT	438444.452	2311520.373
325	23+42.06	43.00 RT	438444.731	2311525.365
326	23+11.25	43.00 RT	438413.972	2311527.086
327	23+11.25	38.00 RT	438413.693	2311522.094
328	22+27.16	38.00 RT	438329.732	2311526.792
329	22+27.16	43.00 RT	438330.011	2311531.784
330	21+98.38	43.00 RT	438301.277	2311533.392
331	21+98.38	38.00 RT	438300.997	2311528.399
332	29+57.72	33.00 RT	439058.868	2311480.987
333	29+56.53	52.96 RT	439058.796	2311500.987
334	29+51.54	52.67 RT	439053.796	2311500.969
335	29+52.41	38.00 RT	439053.849	2311486.276

EXISTING MONUMENT STATION & OFFSET TABLE					
POINT	STATION	OFFSET	Y COORDS	X COORDS	MON. TYPE
8155	19+53.05	121.41 RT	438060.709	2311625.381	IP
10743	19+94.21	83.30 LT	438090.370	2311418.698	IP
10742	20+02.39	127.65 LT	438096.062	2311373.955	IP/IRON ROD
10745	20+43.85	29.87 LT	438142.913	2311469.268	IP/IRON ROD
10746	20+94.67	29.63 LT	438193.669	2311466.665	IP/IRON ROD
10771	21+01.34	32.83 RT	438203.824	2311528.660	IP
10770	21+51.39	32.79 RT	438253.792	2311525.827	IP
10747	21+51.42	26.90 LT	438250.481	2311466.229	IP /0.25
10748	22+09.10	28.44 LT	438307.986	2311461.464	IP
10749	22+27.15	120.79 LT	438320.846	2311368.249	IP
10750	22+35.36	164.90 LT	438326.588	2311323.749	IP /BENT S
10752	22+69.45	28.22 LT	438368.253	2311458.311	IP/IRON ROD
10751	22+92.75	146.41 LT	438384.922	2311339.010	IP /0.25
10755	23+35.30	27.93 LT	438434.015	2311454.927	IP/IRON ROD
10769	23+83.44	32.95 RT	438485.488	2311513.017	IP

EXISTING MONUMENT STATION & OFFSET TABLE					
POINT	STATION	OFFSET	Y COORDS	X COORDS	MON. TYPE
10768	24+73.28	32.66 RT	438575.172	2311507.712	IP
10756	25+42.56	26.66 LT	438641.027	2311444.608	IP
10767	25+67.67	32.88 RT	438669.423	2311502.660	IP /0.25
10757	25+98.33	26.82 LT	438696.698	2311441.336	IP
10766	26+17.68	32.88 RT	438719.353	2311499.862	IP
10758	26+27.90	182.25 LT	438717.546	2311284.495	IP
10765	26+67.68	33.06 RT	438769.291	2311497.251	IP
10759	26+77.59	174.12 LT	438767.609	2311289.836	IP/IRON ROD
10764	27+23.10	33.02 RT	438824.623	2311494.118	IP/IRON ROD
10760	27+57.95	27.28 LT	438856.050	2311431.957	IP/IRON ROD
10761	28+66.28	27.23 LT	438964.214	2311425.964	IP/IRON ROD
10763	28+77.88	32.63 RT	438979.138	2311485.075	IP
2001	29+61.25	27.16 LT	439059.033	2311420.725	SEC
1003	29+61.33	27.19 LT	439059.114	2311420.694	SEC / 6 DIA CONC CAPPED

EXISTING RIGHT-OF-WAY FOR DEWEY AVENUE IS BASED UPON COUNTY RECORDS AND ASSOCIATED FOUND SURVEY MONUMENTATION

REVISION DATE 5/29/25	DATE 10/7/2024	SCALE, FEET 0 50 100	HWY: DEWEY AVE	STATE R/W PROJECT NUMBER N/A	PLAT SHEET 4.04
			COUNTY: JEFFERSON	CONSTRUCTION PROJECT NUMBER 3997-01-79	PS&E SHEET E

FILE NAME : 040101-RP.DWG
LAYOUT NAME - 04-04
PLOT DATE : 5/29/2025 3:06 PM PLOT BY : SCOTT M. DEBAKER PLOT NAME : PLOT SCALE :
WISDOT/CADDS SHEET 75

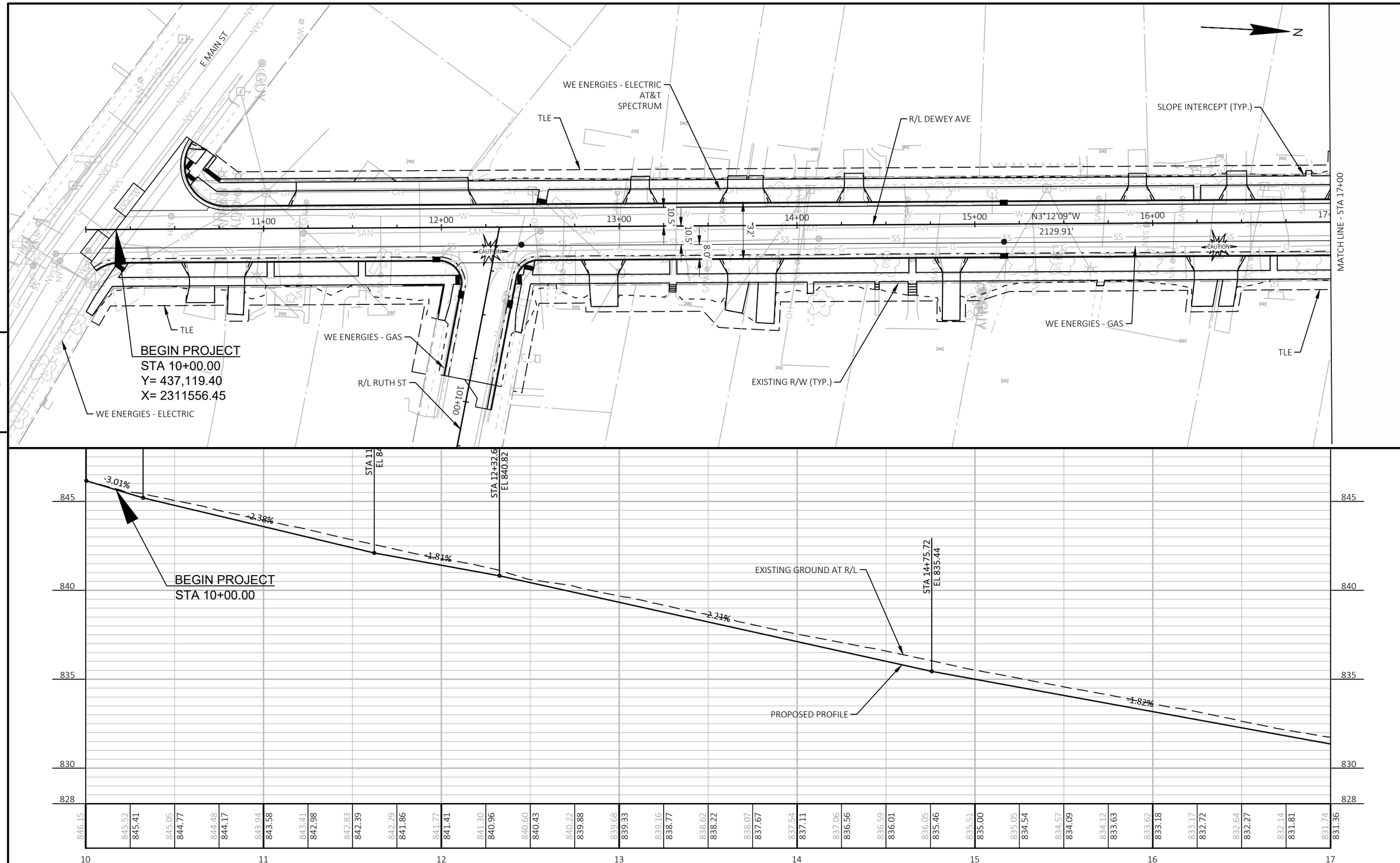

PROJECT NO: 3997-01-79/80	HWY: DEWEY AVE	COUNTY: JEFFERSON	PLAN AND PROFILE: DEWEY AVE	SHEET 88	E

FILE NAME : R:\5300\5364\5364088\39970179\SHEETS\050101-PP.DWG
LAYOUT NAME - 01
PLOT DATE : 9/12/2025 3:45 PM
PLOT BY : ERIC HANDLER
PLOT NAME :
PLOT SCALE : 1 IN:50 FT
WISDOT/CADDS SHEET 44

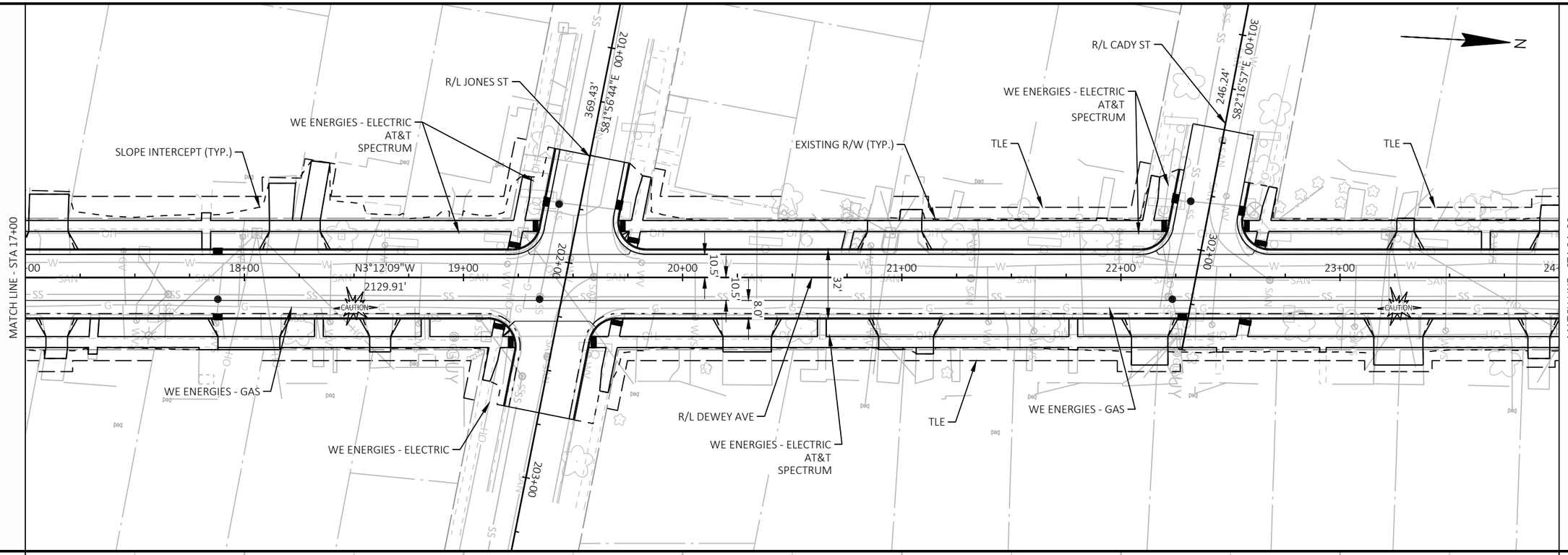

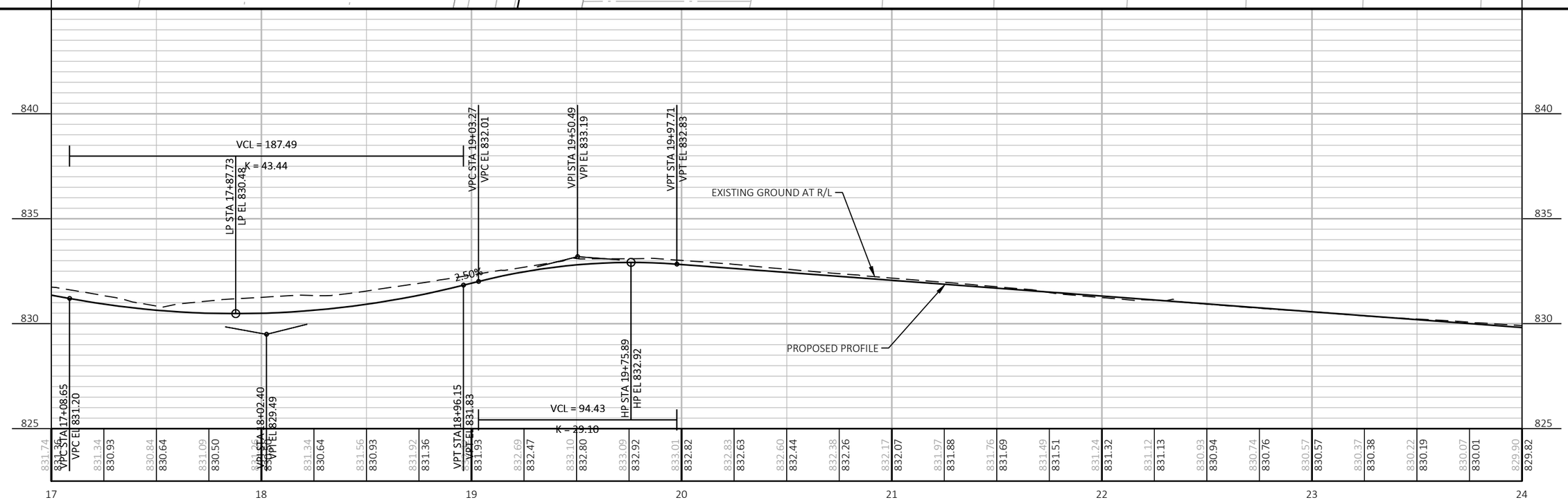

PROJECT NO: 3997-01-79/80	HWY: DEWEY AVE	COUNTY: JEFFERSON	PLAN AND PROFILE: DEWEY AVE	SHEET 89	E

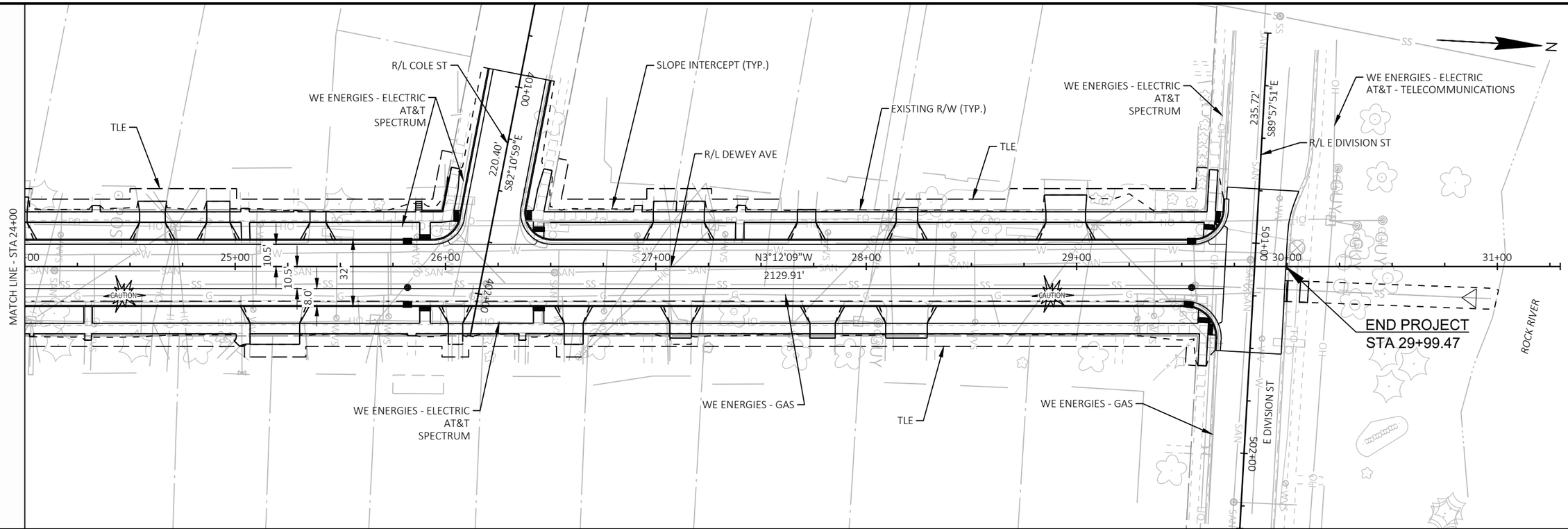

5

5

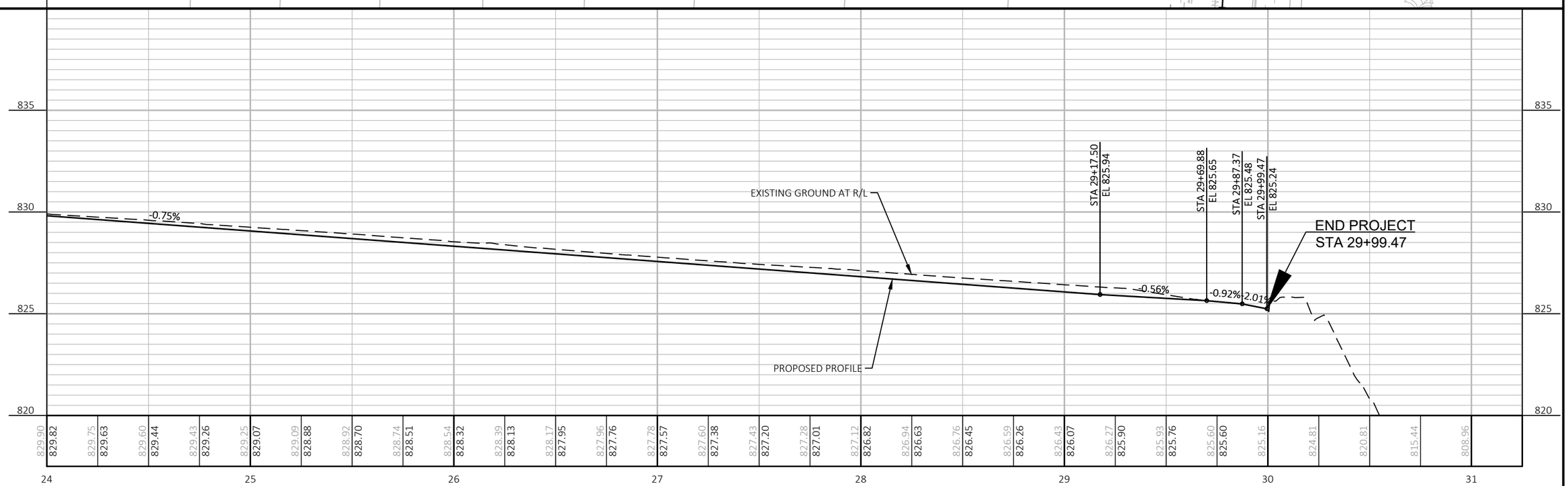

PROJECT NO: 3997-01-79/80	HWY: DEWEY AVE	COUNTY: JEFFERSON	PLAN AND PROFILE: DEWEY AVE	SHEET 90	E

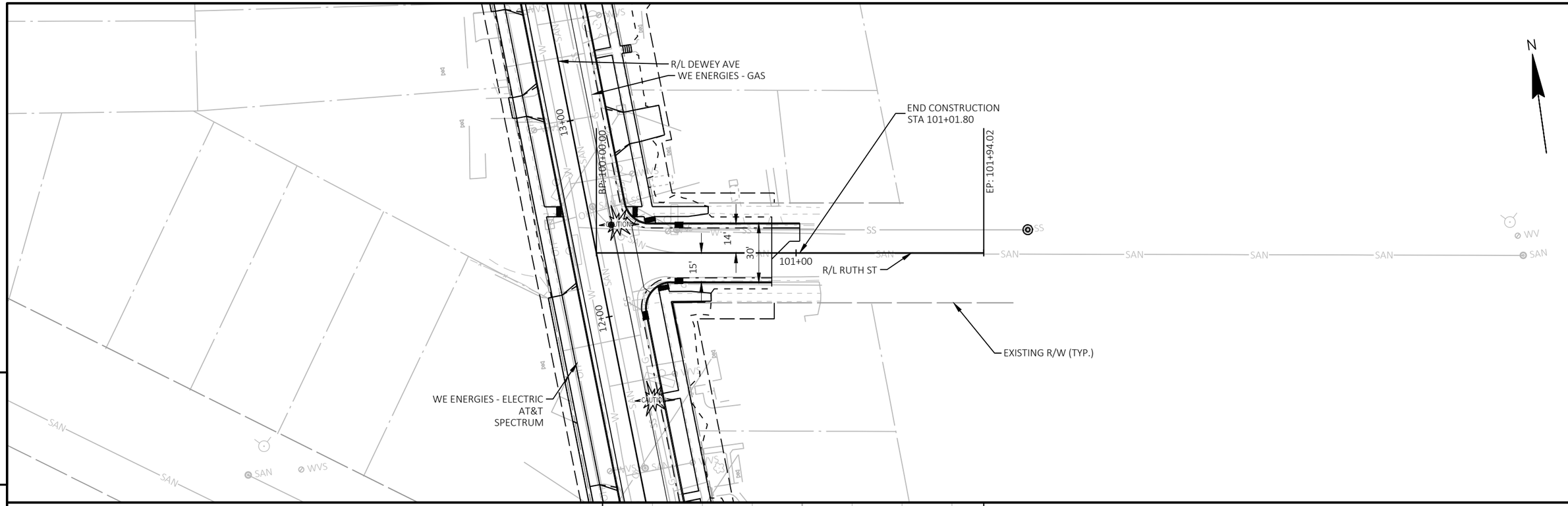

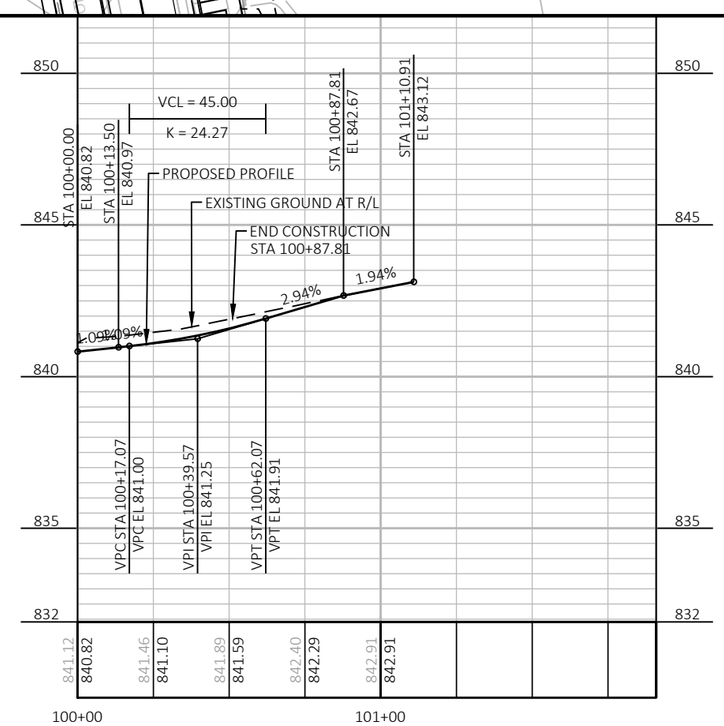

PROJECT NO: 3997-01-79/80	HWY: DEWEY AVE	COUNTY: JEFFERSON	PLAN AND PROFILE: RUTH ST	SHEET 91	E

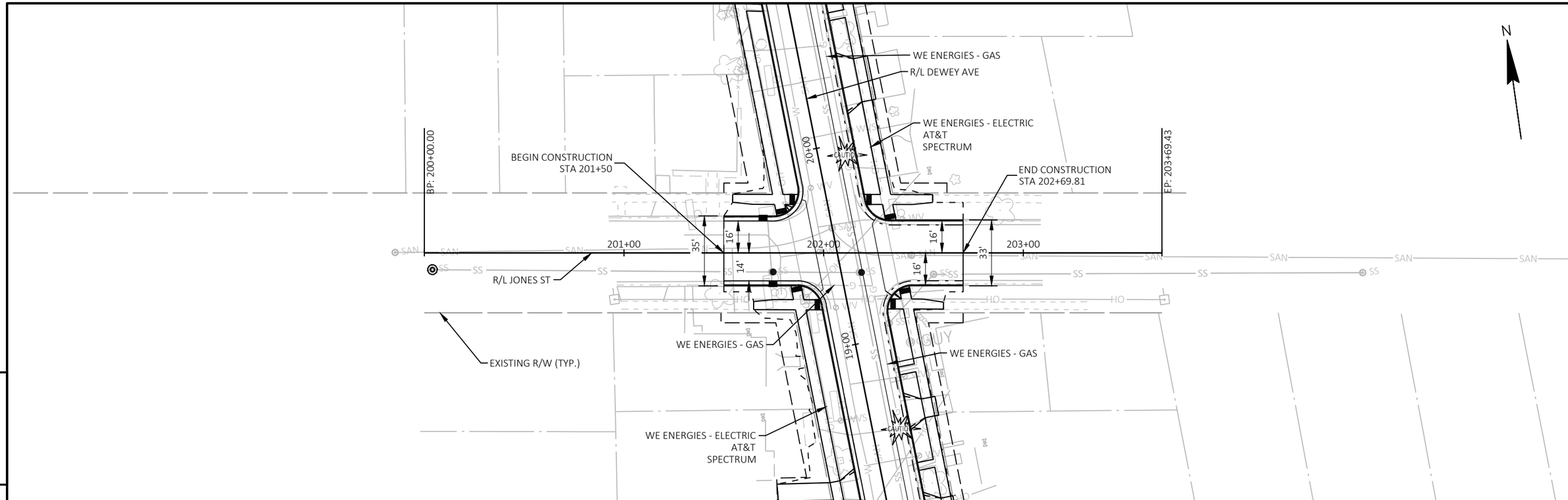

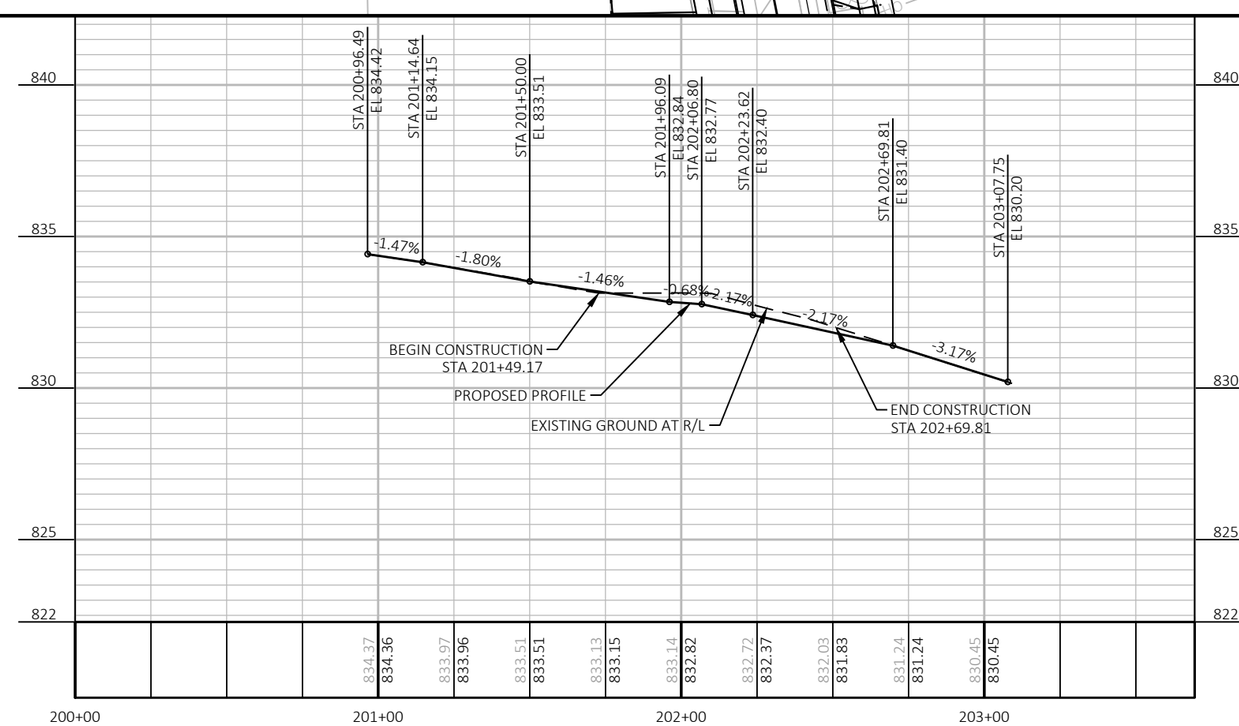

PROJECT NO: 3997-01-79/80	HWY: DEWEY AVE	COUNTY: JEFFERSON	PLAN AND PROFILE: JONES ST	SHEET 92	E

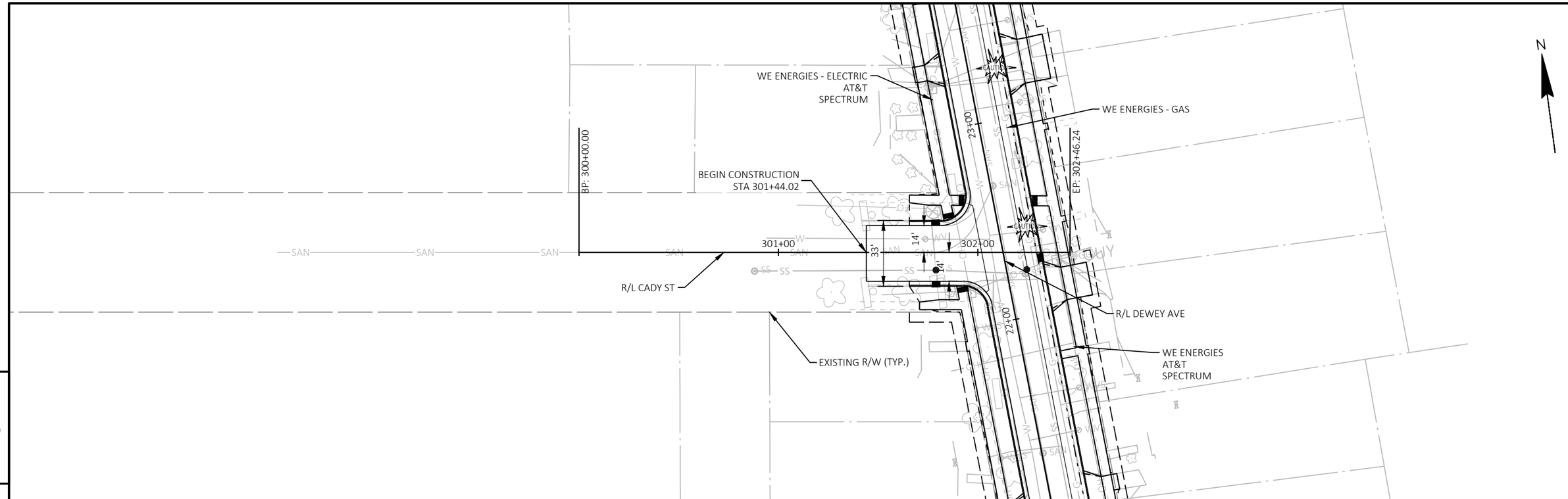

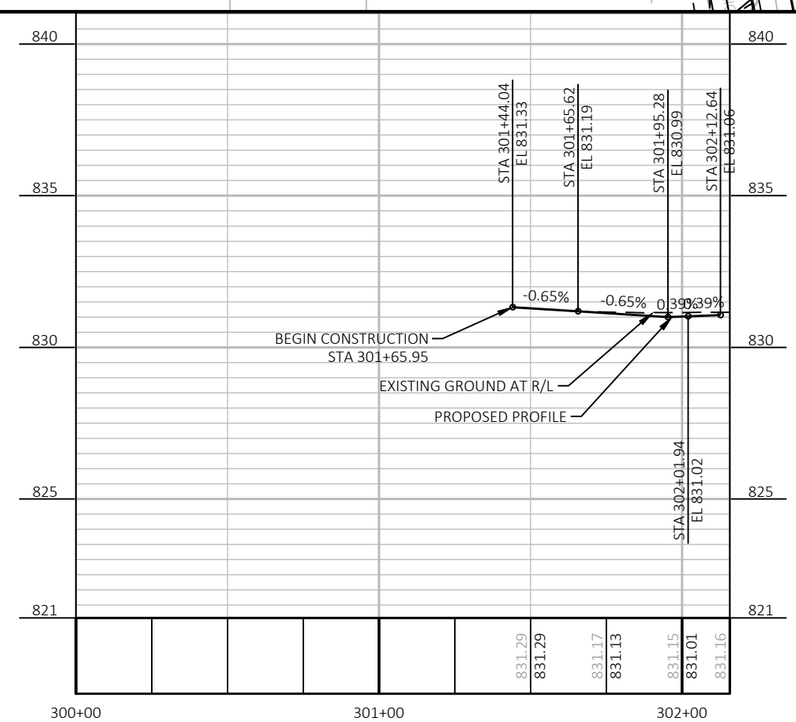

PROJECT NO: 3997-01-79/80	HWY: DEWEY AVE	COUNTY: JEFFERSON	PLAN AND PROFILE: CADY ST	SHEET 93	E

FILE NAME : R:\5300\5364\5364088\39970179\SHEETS\050102-PP.DWG
LAYOUT NAME - 01
PLOT DATE : 9/12/2025 3:45 PM
PLOT BY : ERIC HANDLER
PLOT NAME :
PLOT SCALE : 1 IN:50 FT
WISDOT/CADDS SHEET 44

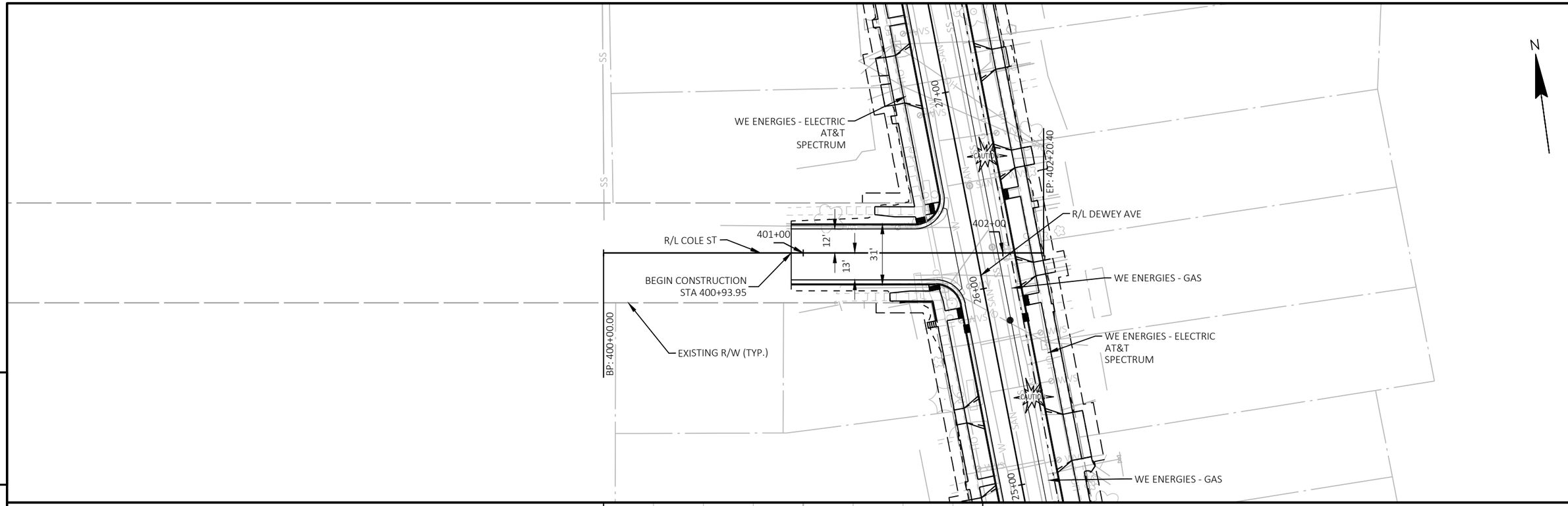

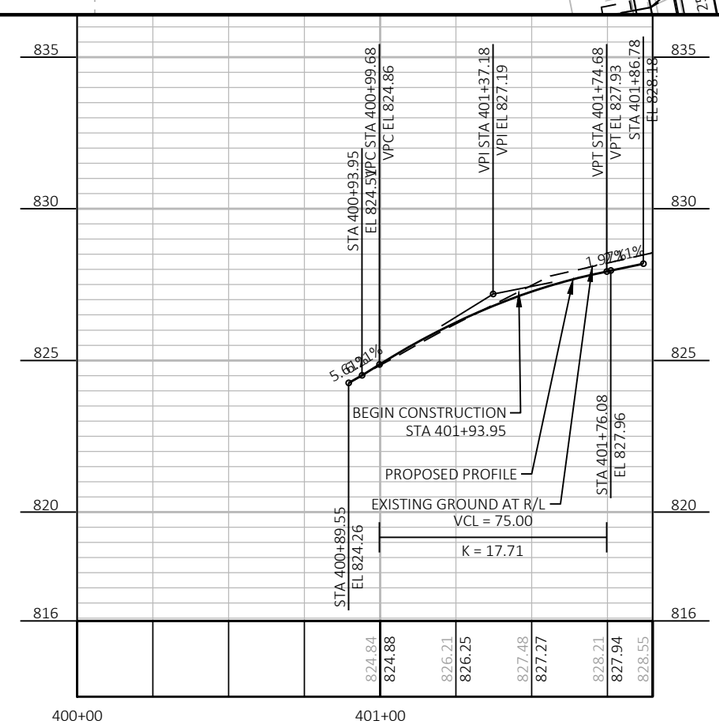

PROJECT NO: 3997-01-79/80	HWY: DEWEY AVE	COUNTY: JEFFERSON	PLAN AND PROFILE: COLE ST	SHEET 94	E

FILE NAME : R:\5300\5364\5364088\39970179\SHEETS\050102-PP.DWG
LAYOUT NAME - 02
PLOT DATE : 9/12/2025 3:45 PM
PLOT BY : ERIC HANDLER
PLOT NAME :
PLOT SCALE : 1 IN:50 FT
WISDOT/CADDS SHEET 44

Standard Detail Drawing List

08A05-22A	INLET COVERS TYPE A, H, A-S, H-S & Z
08A05-22E	INLET COVER TYPE BW, MANHOLE COVERS, TYPE K, J, J-S, L & M
08A08-03	CATCH BASINS 3-FT, 4-FT, 5-FT AND 6-FT DIAMETER
08A09-03	CATCH BASINS 2X3-FT AND 2.5X3-FT
08B09-04	MANHOLES 3-FT, 4-FT, 5-FT, 6-FT, 7-FT, 8-FT, 9-FT, 10-FT DIAMETER
08D01-24A	CONCRETE CURB & GUTTER
08D01-24B	CONCRETE CURB, TIES AND CURB AND GUTTER APPLICATIONS
08D05-21A	CURB RAMPS TYPES 1 AND 1-A
08D05-21B	CURB RAMPS TYPES 2 AND 3
08D05-21C	CURB RAMPS TYPES 4A AND 4A1
08D05-21D	CURB RAMPS TYPE 4B AND 4B1
08D05-21E	CURB RAMPS TYPES 5, 6, 7A, 7B & 8
08D05-21F	CURB RAMPS RADIAL DETECTABLE WARNING FIELD APPLICATIONS
08D05-21G	CURB RAMPS RECTANGULAR AND RADIAL DETECTABLE WARNING PLATES
08E09-06	SILT FENCE
08E10-02	INLET PROTECTION TYPE A, B, C AND D
08F01-11	APRON ENDWALLS FOR CULVERT PIPE
08F04-08	JOINT TIES FOR CONCRETE PIPE AND CONCRETE COLLAR DETAIL
13C01-19	CONCRETE PAVEMENT LONGITUDINAL JOINTS AND TIES
13C13-11	URBAN DOWELED CONCRETE PAVEMENT
13C18-08A	CONCRETE PAVEMENT JOINTING
13C18-08B	CONCRETE PAVEMENT STEEL REINFORCEMENT
13C18-08C	CONCRETE PAVEMENT JOINT TYPES
13C18-08D	CONCRETE PAVEMENT JOINTING AT UTILITY FIXTURES
13C18-08F	CONCRETE PAVEMENT INTERSECTION BOXOUT FOR INTEGRAL CURB AND GUTTER
13C19-03	HMA LONGITUDINAL JOINTS
15C02-09A	BARRICADES AND SIGNS FOR MAINLINE CLOSURES
15C02-09B	BARRICADES AND SIGNS FOR VARIOUS CLOSURES
15C03-05	BARRICADES AND SIGNS FOR SIDEROAD CLOSURES
15C05-05	TRAFFIC CONTROL, ADVANCE WARNING SIGNS 40 M.P.H. OR LESS
15C08-23A	PERMANENT LONGITUDINAL PAVEMENT MARKINGS
15C11-10A	CHANNELIZING DEVICES FLEXIBLE TUBULAR MARKER POST
15C11-10B	CHANNELIZING DEVICES DRUMS, CONES, BARRICADES AND VERTICAL PANELS
15C33-05	STOP LINE AND CROSSWALK PAVEMENT MARKING
15D28-04	TRAFFIC CONTROL, WORK ON SHOULDER OR PARKING LANE, UNDIVIDED ROADWAY
15D30-10A	TRAFFIC CONTROL, PEDESTRIAN ACCOMMODATION
15D30-10B	TRAFFIC CONTROL, PEDESTRIAN ACCOMMODATION
15D30-10C	TRAFFIC CONTROL, PEDESTRIAN ACCOMMODATION

6

6

GENERAL NOTES

DETAILS OF CONSTRUCTION, MATERIALS AND WORKMANSHIP NOT SHOWN ON THIS DRAWING SHALL CONFORM TO THE PERTINENT REQUIREMENTS OF THE STANDARD SPECIFICATIONS AND THE APPLICABLE SPECIAL PROVISIONS.

DETAIL DRAWINGS FOR PROPOSED ALTERNATE DESIGNS FOR CATCH BASIN, MANHOLE AND INLET COVERS SHALL BE SUBMITTED TO THE ENGINEER FOR APPROVAL PROVIDING THAT SUCH ALTERNATE DESIGNS MAKE PROVISION FOR EQUIVALENT CAPACITY AND STRENGTH.

ROUND FRAMES AND COVERS SHALL HAVE CONTINUOUSLY MACHINED BEARING SURFACES TO PREVENT ROCKING AND RATTLING.

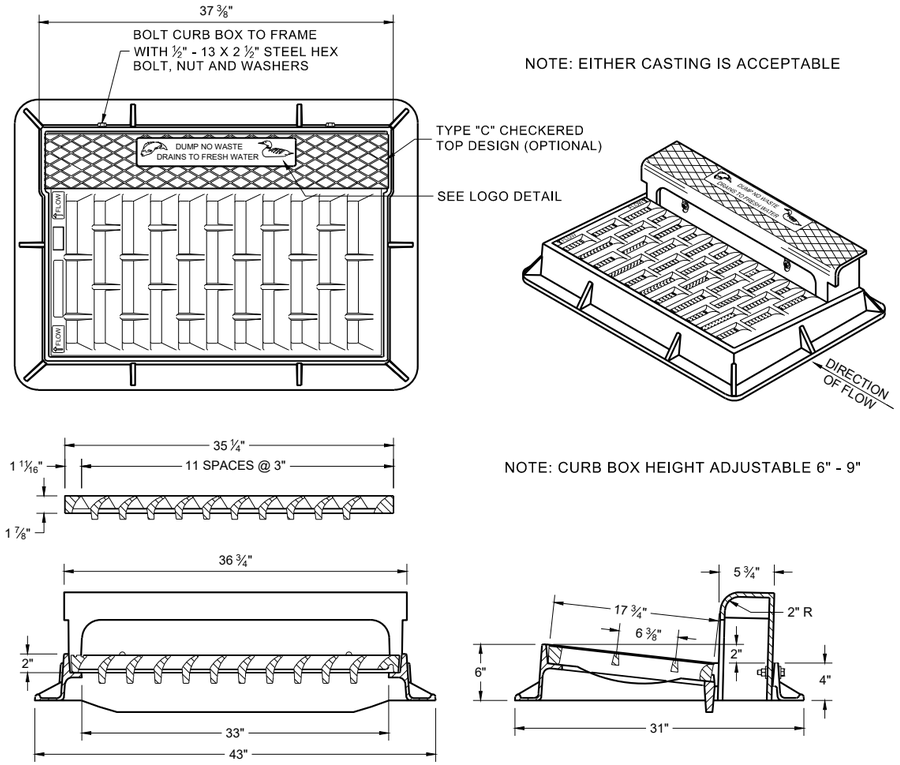

NOTE: EITHER CASTING IS ACCEPTABLE

NOTE: CURB BOX HEIGHT ADJUSTABLE 6" - 9"

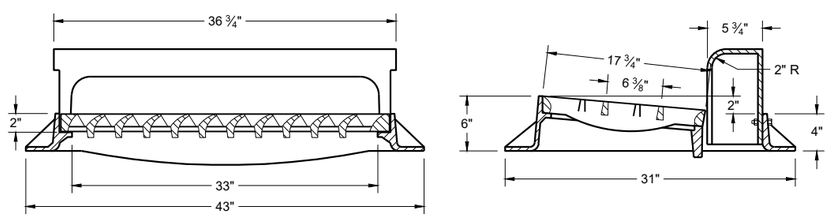

TYPE "H"

NOTE: EITHER CASTING IS ACCEPTABLE

1 ⅛" DIAGONAL BARS WITH 1 ⅝" OPENINGS

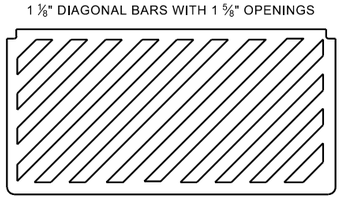

SPECIAL GRATE FOR TYPE "H" COVER

(MEASURES 35" X 17 ¾" X 2")

(NOTED AS TYPE H-S ON DRAINAGE TABLE)

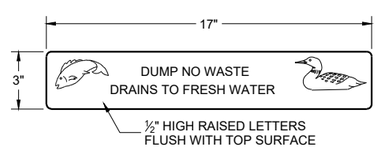

LOGO DETAIL

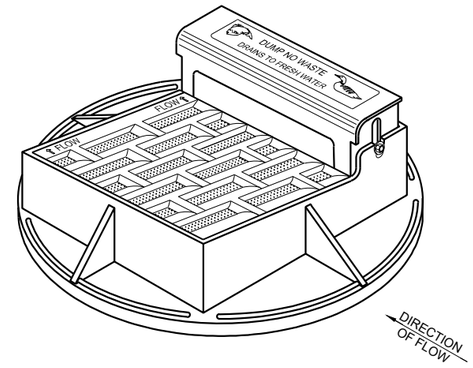

NOTE: CURB BOX HEIGHT ADJUSTABLE 6" - 9"

NOTE: EITHER CASTING IS ACCEPTABLE

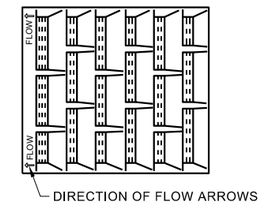

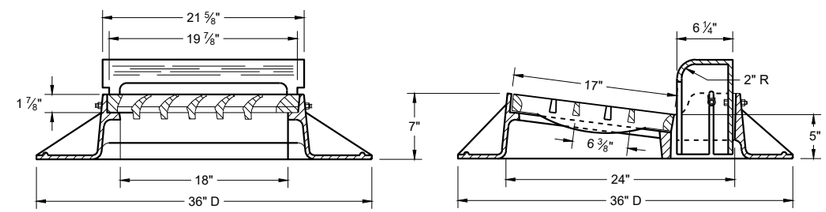

TYPE "A"

1" DIAGONAL BARS WITH 1 ½" OPENINGS

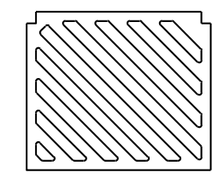

SPECIAL GRATE FOR TYPE "A" COVER

(MEASURES 19 ¾" X 17" X 1 ⅞")

(NOTED AS TYPE A-S ON DRAINAGE TABLE)

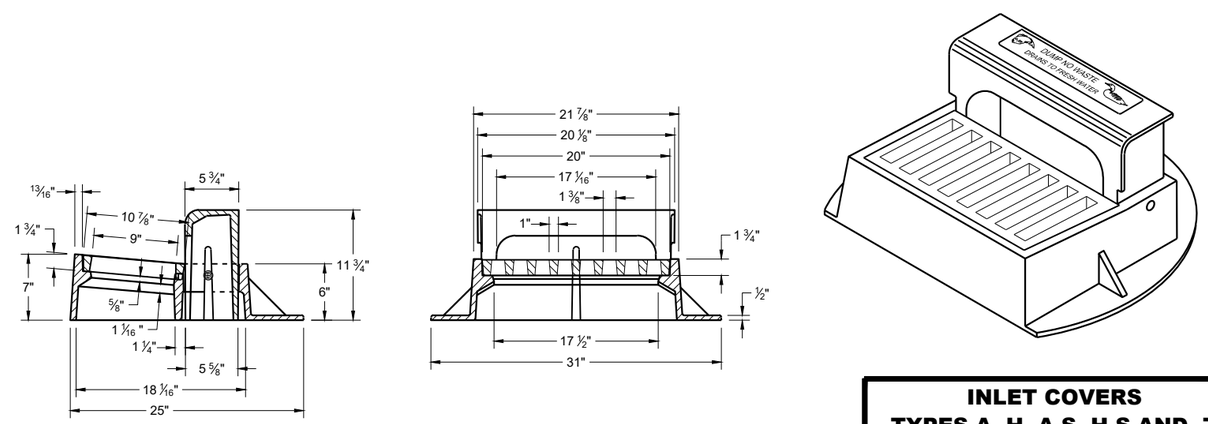

TYPE "Z"

INLET COVERS
TYPES A, H, A-S, H-S AND Z

STATE OF WISCONSIN
DEPARTMENT OF TRANSPORTATION

APPROVED
February 2025 — DATE
/S/ Rodney Taylor — ROADWAY STANDARDS DEVELOPMENT UNIT SUPERVISOR

FHWA

GENERAL NOTES

DETAILS OF CONSTRUCTION, MATERIALS AND WORKMANSHIP NOT SHOWN ON THIS DRAWING SHALL CONFORM TO THE PERTINENT REQUIREMENTS OF THE STANDARD SPECIFICATIONS AND THE APPLICABLE SPECIAL PROVISIONS.

DETAIL DRAWINGS FOR PROPOSED ALTERNATE DESIGNS FOR MANHOLE COVERS SHALL BE SUBMITTED TO THE ENGINEER FOR APPROVAL PROVIDING THAT SUCH ALTERNATE DESIGNS MAKE PROVISION FOR EQUIVALENT CAPACITY AND STRENGTH.

ROUND FRAMES AND COVERS SHALL HAVE CONTINUOUSLY MACHINED BEARING SURFACES TO PREVENT ROCKING AND RATTLING.

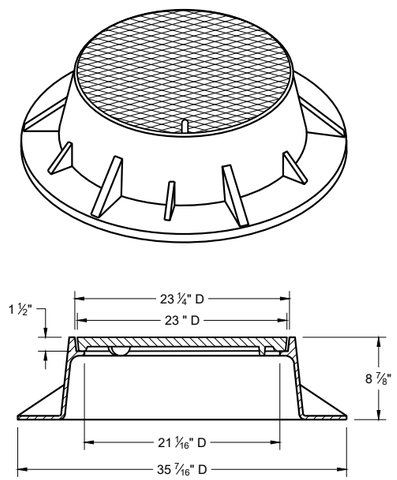

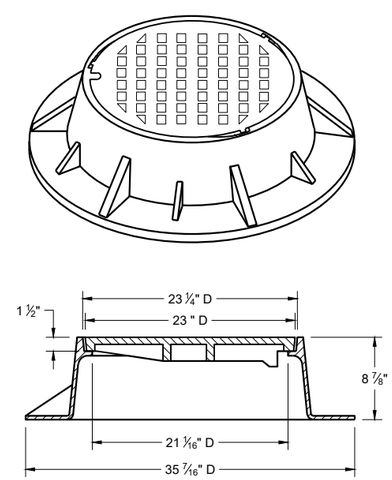

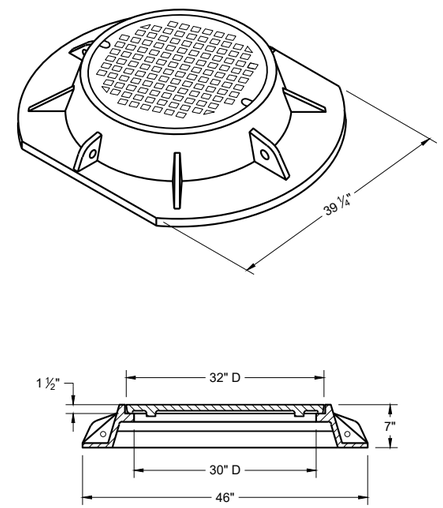

TYPE "K"

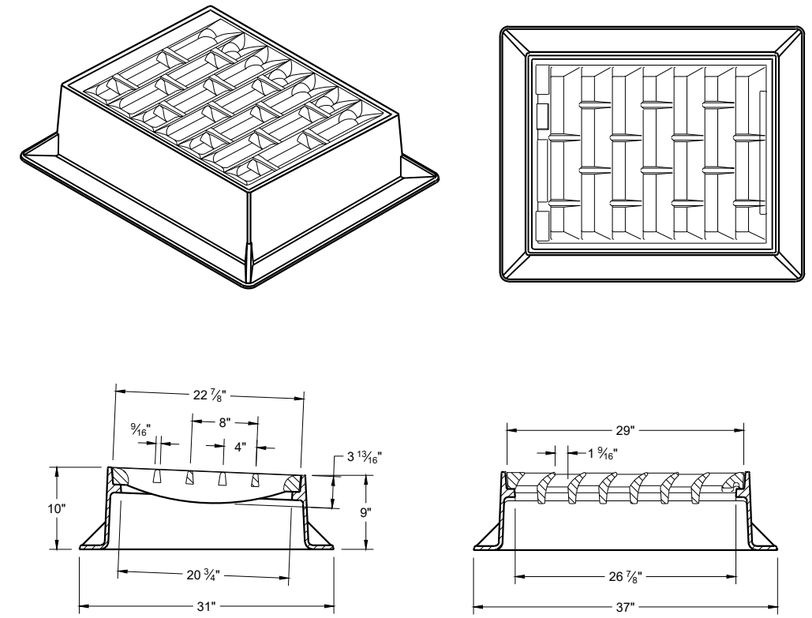

INLET COVER TYPE "BW"

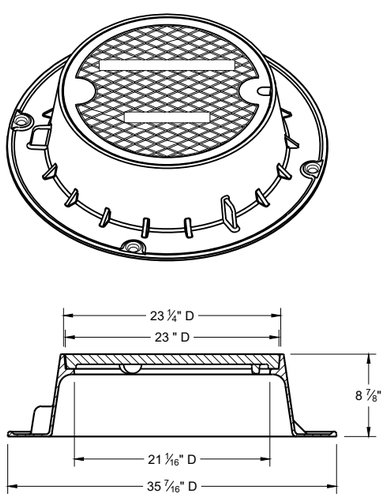

TYPE "J"

NOTE: EITHER CASTING IS ACCEPTABLE

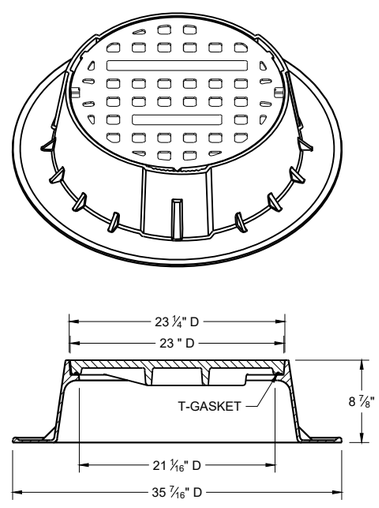

TYPE "J" SPECIAL

TYPE "B" NON-ROCKING SELF-SEAL LID
(NOTED AS TYPE J-S ON THE DRAINAGE TABLE)

NOTE: EITHER CASTING IS ACCEPTABLE

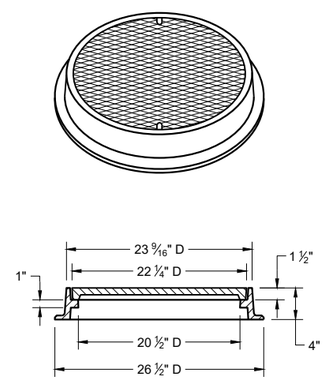

TYPE "L"

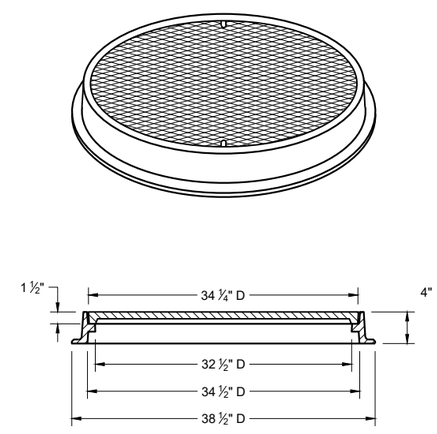

TYPE "M"

INLET COVERS TYPES BW
MANHOLE COVERS TYPES K, J, J-S, L, AND M

STATE OF WISCONSIN
DEPARTMENT OF TRANSPORTATION

APPROVED
February 2025 — DATE
/S/ Rodney Taylor — ROADWAY STANDARDS DEVELOPMENT UNIT SUPERVISOR

FHWA

6

SDD 08A05-22e

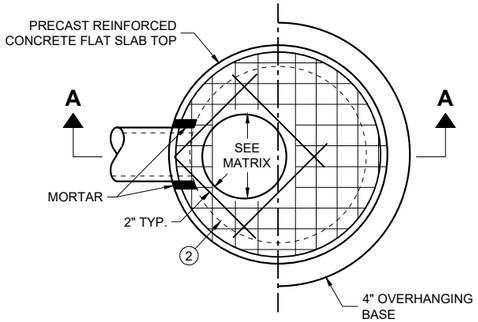

PLAN VIEW CIRCULAR OPENING

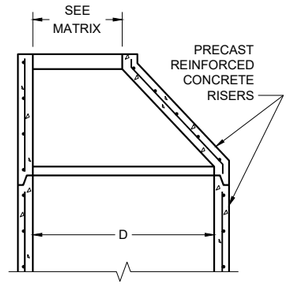

OPTIONAL PRECAST REINFORCED CONCRETE ECCENTRIC TOP

COVER MATRIX

CATCH BASIN SIZE	INLET COVER TYPE	ALL A'S	ALL B'S	BW	C	F	ALL H'S	S	T	V V-B	VV-B	WM	Z
	OPENING SIZE (FT.)												
3-FT	2 X 2	X	X					X		X			
	2 DIA.				X								X
4-FT TO 6-FT	2 X 2	X	X					X		X			
	2 X 2.5			X				X	X	X		X	
	2 DIA.				X								X
	2 X 3						X						
	2.5 X 3					X							
	2 X 3.5*										X*		

* REQUIRES 5-FT DIAMETER OR LARGER STRUCTURE

GENERAL NOTES

DETAILS OF CONSTRUCTION, MATERIALS AND WORKMANSHIP NOT SHOWN ON THIS DRAWING SHALL CONFORM TO THE PERTINENT REQUIREMENTS OF THE STANDARD SPECIFICATIONS AND THE APPLICABLE SPECIAL PROVISIONS.

UNLESS OTHERWISE AUTHORIZED IN WRITING BY THE ENGINEER, THE CONTRACTOR SHALL NOT ORDER AND DELIVER PRECAST CATCH BASIN UNITS REQUIRED FOR THE PROJECT UNTIL A LIST OF SIZES IS FURNISHED BY THE ENGINEER.

DETAILED DRAWINGS FOR PROPOSED ALTERNATE DESIGNS FOR UNDERGROUND DRAINAGE STRUCTURES SHALL BE SUBMITTED TO THE ENGINEER FOR APPROVAL PROVIDING THAT SUCH ALTERNATE DESIGNS MAKE PROVISION FOR EQUIVALENT CAPACITY AND STRENGTH.

ALL DRAINAGE STRUCTURES ARE DESIGNATED ON THE PLANS AS "MANHOLES 3X3-L", "CATCH BASINS 4-B", "INLETS 2X3-H", ETC. THE FIRST NUMBERS DESIGNATE THE SIZE OF THE STRUCTURE, AND THE FOLLOWING LETTER DESIGNATES THE TYPE OF COVER TO BE USED TO COMPRISE THE COMPLETE UNIT.

BASES SHALL BE PLACED ON A BED OF MATERIAL AT LEAST 6 INCHES IN DEPTH, WHICH MEETS THE REQUIREMENTS OF FOUNDATION BACKFILL. THIS BEDDING SHALL BE COMPACTED AND PROVIDE UNIFORM SUPPORT FOR THE ENTIRE AREA OF THE BASE.

PRECAST REINFORCED CONCRETE CONE TOPS (ECCENTRIC OR CONCENTRIC) OR PRECAST REINFORCED CONCRETE FLAT SLAB TOPS MAY BE USED ON CONCRETE BLOCK STRUCTURES.

ECCENTRIC CONE TOPS MAY BE USED ON ALL STRUCTURES. CONCENTRIC CONE TOPS SHALL BE USE ONLY ON STRUCTURES 5 FEET OR LESS IN DEPTH UNLESS OTHERWISE DIRECTED BY THE ENGINEER.

STEPS MEETING AASHTO M199 AND THE FOLLOWING REQUIREMENTS SHALL BE INSTALLED IN ALL STRUCTURES OVER 5 FEET IN DEPTH: 16 INCH C-C MAXIMUM SPACING; PROJECT A MINIMUM CLEAR DISTANCE OF 4 INCHES FROM THE WALL AT THE POINT OF EMBEDMENT; MINIMUM LENGTH OF 10 INCHES; MINIMUM WALL EMBEDMENT OF 3 INCHES. FERROUS METAL STEPS NOT PAINTED OR TREATED TO RESIST CORROSION SHALL HAVE A MINIMUM CROSS SECTIONAL DIMENSION OF 1 INCH.

STEPS OF APPROVED POLYPROPYLENE PLASTIC COATED REINFORCEMENT BAR ARE ACCEPTABLE. REINFORCING BAR MUST BE A MINIMUM OF ½ INCH AND MEET THE REQUIREMENTS OF ASTM A615.

CERTIFICATION SHALL BE PROVIDED THAT INSTALLED STEPS WHEN TESTED IN ACCORDANCE WITH SECTION 10 OF AASHTO T280 CAN WITHSTAND A VERTICAL LOAD OF 800 LBS. AND A HORIZONTAL LOAD OF 400 LBS.

ALL BAR STEEL REINFORCEMENT SHALL BE EMBEDDED 2 INCHES CLEAR UNLESS OTHERWISE SHOWN OR NOTED.

ALL PRECAST INLET UNITS SHALL CONFORM TO THE PERTINENT REQUIREMENTS OF AASHTO DESIGNATION M199.

PRECAST REINFORCED RISERS SHALL HAVE A TONGUE AND GROOVE JOINT WITH TONGUE UP OR DOWN.

CONCRETE BLOCK WILL NOT BE PERMITTED FOR STRUCTURES GREATER THAN 4 FEET IN DIAMETER.

4" OVERHANGING BASES ARE REQUIRED FOR ALL CONCRETE BLOCK INSTALLATIONS. 4" OVERHANG IS REQUIRED WHEN SEPARATE PRECAST BASE IS PROVIDED. OVERHANG IS NOT REQUIRED ON PRECAST STRUCTURES WITH AN INTEGRAL OR MONOLITHIC BASE.

FOR ADDITIONAL CONFIGURATIONS, MAINTAIN A MINIMUM OF 12 INCHES AS MEASURED FROM THE INSIDE OF THE STRUCTURE WALL BETWEEN THE OUTSIDE PIPE WALLS OF ADJACENT PIPES. SEE DETAIL "D".

1. MINIMUM WALL THICKNESS SHALL BE 4 INCHES FOR 3-FT, 5 INCHES FOR 4-FT, 6 INCHES FOR 5-FT AND 7 INCHES FOR 6-FT DIAMETER PRECAST CATCH BASINS.
2. FOR PRECAST CATCH BASINS AND REINFORCED CONCRETE BASES PROVIDE REINFORCING STEEL IN ACCORDANCE TO AASHTO M199.
3. PRECAST FLAT SLAB TOPS AND BASES WITH A DIAMETER OF 48" AND LESS SHALL HAVE A MINIMUM THICKNESS OF 6". PRECAST FLAT SLAB TOPS AND BASES WITH A DIAMETER LARGER THAN 48" SHALL HAVE A MINIMUM THICKNESS OF 8".
4. 1" CONCRETE KEY POURED AFTER INSTALLATION. 2' SUMP MEASURED FROM TOP OF KEY.
5. JOINTS TO BE SEALED WITH A BUTYL RUBBER SEAL PER SEALANT MANUFACTURERS RECOMMENDATIONS CONFORMING TO ASTM C 990 OR RUBBER GASKETS CONFROMING TO ASTM C443.

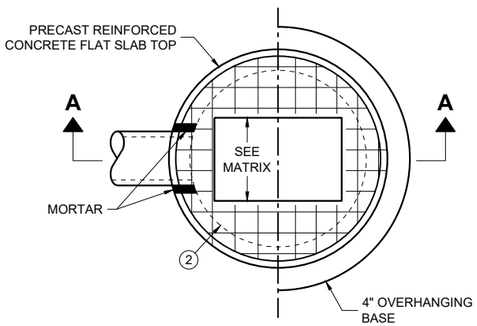

PLAN VIEW RECTANGULAR OPENING

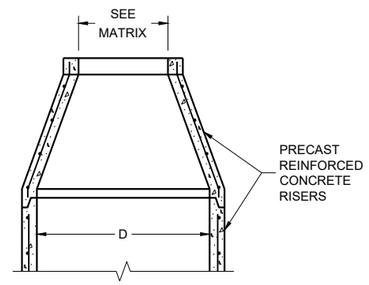

OPTIONAL PRECAST REINFORCED CONCRETE CONCENTRIC TOP

PIPE MATRIX

CATCH BASIN SIZE	MAXIMUM INSIDE PIPE DIAMETER FOR TWO PIPES	
	180° SEPARATION (IN)	90° SEPARATION (IN)
3-FT	15	12
4-FT	24	18
5-FT	36	24
6-FT	42	30

CATCH BASINS
3-FT, 4-FT, 5-FT AND 6-FT DIAMETER

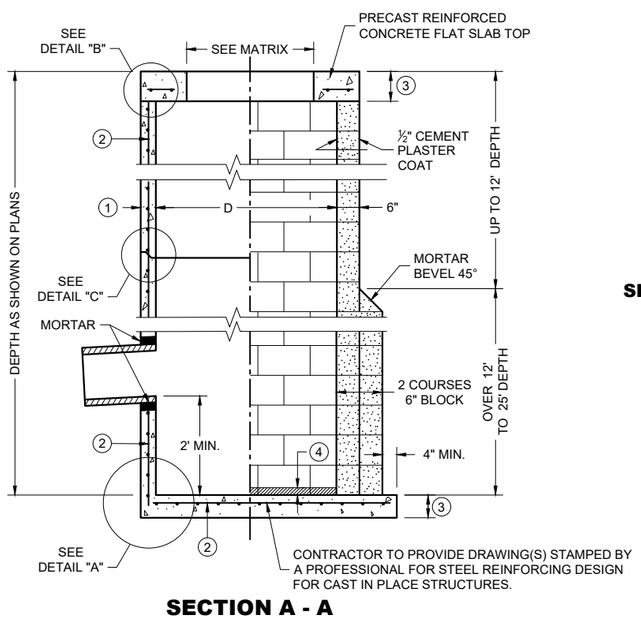

SECTION A - A

PRECAST REINFORCED CONCRETE WITH MONOLITHIC BASE

CONCRETE BLOCK WITH CAST IN PLACE OR PRECAST REINFORCED CONCRETE BASE 2

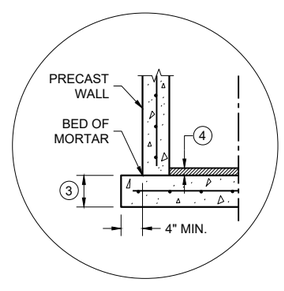

SEPARATE PRECAST REINFORCED CONCRETE BASE OPTION

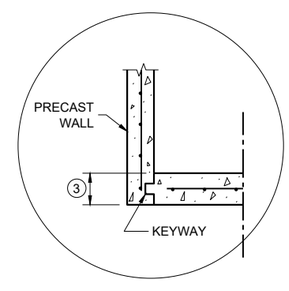

PRECAST REINFORCED CONCRETE WITH INTEGRAL BASE OPTION

DETAIL "A"

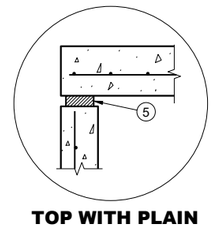

TOP WITH PLAIN END JOINT

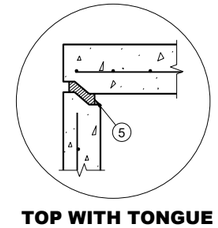

TOP WITH TONGUE AND GROOVE JOINT

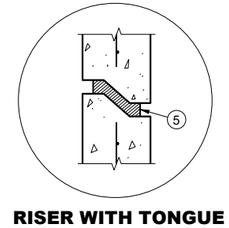

RISER WITH TONGUE AND GROOVE JOINT

DETAIL "B"

DETAIL "C"

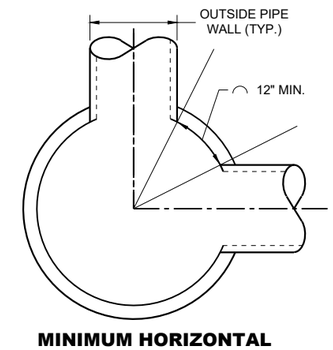

MINIMUM HORIZONTAL PIPE SEPARATION

DETAIL "D"

CATCH BASINS, 3-FT. 4-FT., 5 FT., AND 6-FT. DIAMETER

STATE OF WISCONSIN
DEPARTMENT OF TRANSPORTATION

APPROVED
December 2023 — /S/ Rodney Taylor
DATE — ROADWAY STANDARDS DEVELOPMENT UNIT SUPERVISOR

FHWA

6

SDD 08A08-03

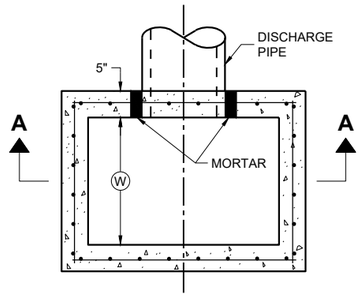

PLAN VIEW

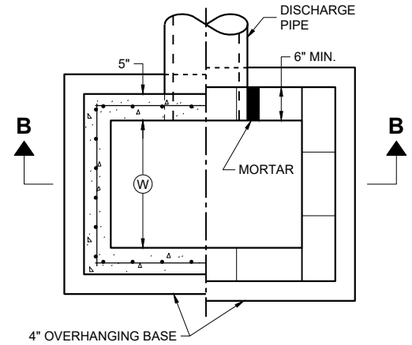

PLAN VIEW

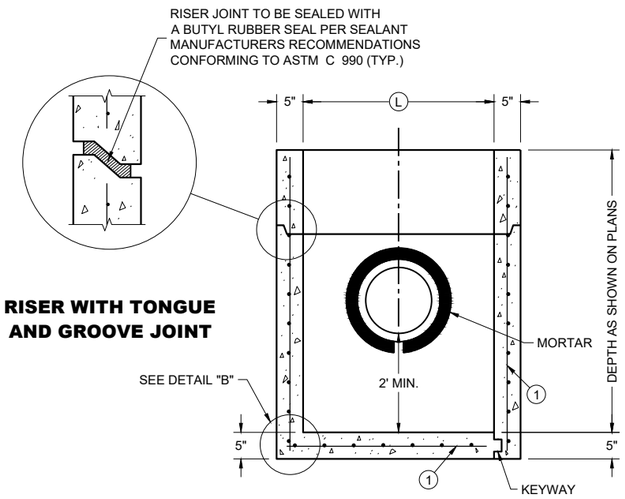

RISER WITH TONGUE AND GROOVE JOINT

PRECAST REINFORCED CONCRETE WITH MONOLITHIC BASE

PRECAST REINFORCED CONCRETE WITH INTEGRAL BASE

SECTION A - A

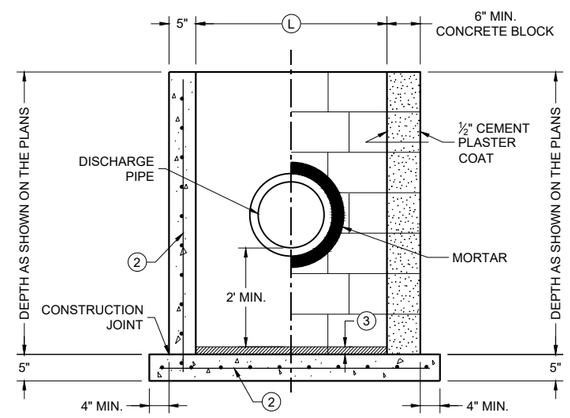

CAST IN PLACE REINFORCED CONCRETE

CONCRETE BLOCK ON CAST IN PLACE OR PRECAST REINFORCED CONCRETE BASE 1

SECTION B - B

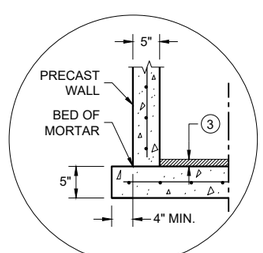

SEPARATE PRECAST REINFORCED CONCRETE BASE OPTION

DETAIL "B"

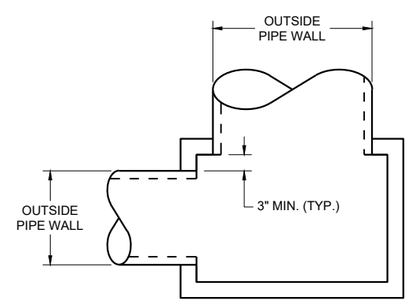

DETAIL "A"

CATCH BASINS 2X3-FT AND 2.5X3-FT

GENERAL NOTES

DETAILS OF CONSTRUCTION, MATERIALS AND WORKMANSHIP N0T SHOWN ON THIS DRAWING SHALL CONFORM TO THE PERTINENT REQUIREMENTS OF THE STANDARD SPECIFICATIONS AND THE APPLICABLE SPECIAL PROVISIONS.

UNLESS OTHERWISE AUTHORIZED IN WRITING BY THE ENGINEER, THE CONTRACTOR SHALL NOT ORDER AND DELIVER PRECAST CATCH BASIN UNITS REQUIRED FOR THE PROJECT UNTIL A LIST OF SIZES IS FURNISHED BY THE ENGINEER.

DETAILED DRAWINGS FOR PROPOSED ALTERNATE DESIGNS FOR UNDERGROUND DRAINAGE STRUCTURES SHALL BE SUBMITTED TO THE ENGINEER FOR APPROVAL PROVIDING THAT SUCH ALTERNATE DESIGNS MAKE PROVISION FOR EQUIVALENT CAPACITY AND STRENGTH.

ALL PRECAST CATCH BASIN UNITS SHALL CONFORM TO THE PERTINENT REQUIREMENTS OF ASTM C 913.

ALL DRAINAGE STRUCTURES ARE DESIGNATED ON THE PLANS AS "MANHOLES 3X3-L", "CATCH BASINS 4-B", "INLETS 2X3-H", ETC. THE FIRST NUMBERS DESIGNATES THE SIZE OF THE STRUCTURE, AND THE FOLLOWING LETTER DESIGNATES THE TYPE OF COVER TO BE USED TO COMPRISE THE COMPLETE UNIT.

BASES SHALL BE PLACED ON A BED OF MATERIAL AT LEAST 6 INCHES IN DEPTH, WHICH MEETS THE REQUIREMENTS OF FOUNDATION BACKFILL. THIS BEDDING SHALL BE COMPACTED AND PROVIDE UNIFORM SUPPORT FOR THE ENTIRE AREA OF THE BASE.

ALL BAR STEEL REINFORCEMENT SHALL BE EMBEDDED 2 INCHES CLEAR UNLESS OTHERWISE SHOWN OR NOTED.

PRECAST REINFORCED RISERS SHALL HAVE A TONGUE AND GROOVE JOINT WITH TONGUE UP OR DOWN.

4" OVERHANGING BASES ARE REQUIRED FOR CAST-IN-PLACE REINFORCED CONCRETE AND CONCRETE BLOCK INSTALLATIONS. 4" OVERHANG IS REQUIRED WHEN SEPARATE PRECAST BASE IS PROVIDED. OVERHANG IS NOT REQUIRED ON PRECAST STRUCTURES WITH AN INTEGRAL OR MONOLITHIC BASE.

MAXIMUM INSIDE PIPE DIAMETER DETERMINED BY 3" CLEARANCE ON EACH SIDE OF THE OUTSIDE WALL OF THE PIPE. SEE DETAIL "A". ASSUMES PIPE ENTERS PERPENDICULAR TO THE STRUCTURE.

1. FOR PRECAST CATCH BASINS AND REINFORCED CONCRETE BASES PROVIDE REINFORCING STEEL IN ACCORDANCE TO ASTM C 913.
2. CONTRACTOR TO PROVIDE DRAWING(S) STAMPED BY A PROFESSIONAL ENGINEER FOR STEEL REINFORCING DESIGN FOR CAST-IN-PLACE STRUCTURES.
3. 1" CONCRETE KEY POURED AFTER INSTALLATION. 2' SUMP MEASURED FROM TOP OF KEY.

CATCH BASIN COVER MATRIX

CATCH BASIN SIZE	WIDTH (W) (FT.)	LENGTH (L) (FT.)	INLET COVER TYPE	
			F	ALL H'S
2 X 3-FT	2	3		X
2.5 X 3-FT	2.5	3	X	

PIPE MATRIX

CATCH BASIN SIZE	MAXIMUM INSIDE PIPE DIAMETER (IN)	
	WIDTH (W)(IN)	LENGTH (L)(IN)
2 X 3-FT	12	24
2.5 X 3-FT	18	24

CATCH BASINS 2 X 3-FT AND 2.5 X 3-FT

STATE OF WISCONSIN
DEPARTMENT OF TRANSPORTATION

APPROVED
December 2023 /S/ RODNEY TAYLOR
DATE ROADWAY STANDARDS DEVELOPMENT UNIT SUPERVIS
FHWA

6

SDD 08A09-03

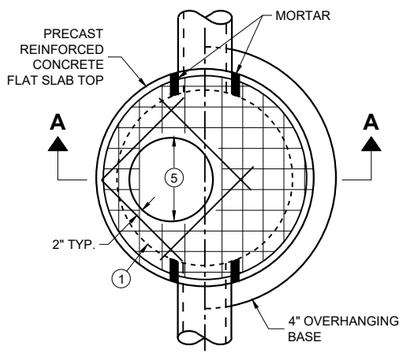

PLAN VIEW
CIRCULAR OPENING

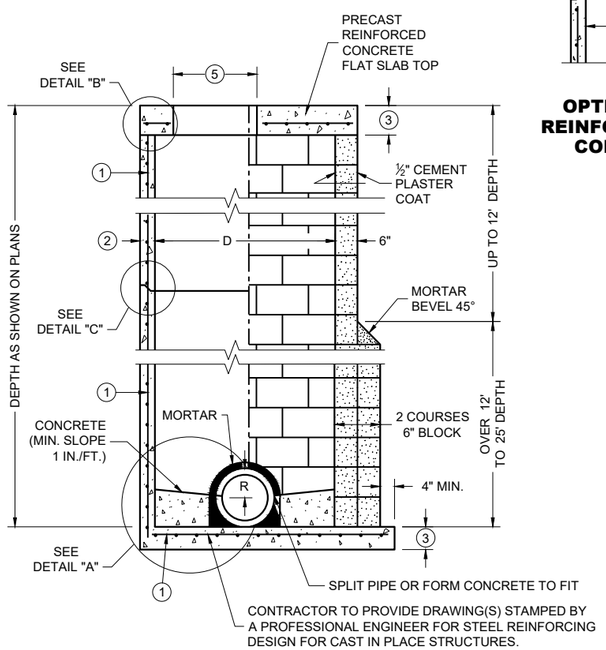

SECTION A - A

PRECAST REINFORCED CONCRETE WITH MONOLITHIC BASE

CONCRETE BLOCK WITH CAST IN PLACE OR PRECAST REINFORCED CONCRETE BASE (1)

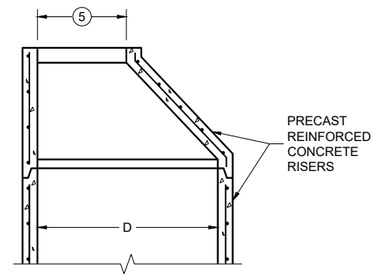

OPTIONAL PRECAST REINFORCED CONCRETE ECCENTRIC TOP

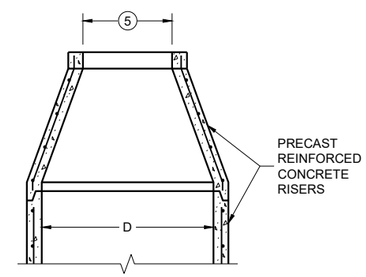

OPTIONAL PRECAST REINFORCED CONCRETE CONCENTRIC TOP

MANHOLE COVER OPENING MATRIX

OPENING SIZE (FT.) (5) \ MANHOLE COVER TYPE	C	ALL J'S	K	L	M
2 DIA.	X	X		X	
3 DIA.			X		X

PIPE MATRIX

MANHOLE SIZE (DIA.)	MAXIMUM INSIDE PIPE DIAMETER FOR TWO PIPES		MINIMUM WALL THICKNESS (IN)	MINIMUM PRECAST FLAT SLAB TOP AND BASE THICKNESS
	180° SEPARATION (IN)	90° SEPARATION (IN)		
3-FT	15	12	4	6
4-FT	24	18	4	6
5-FT	36	24	5	8
6-FT	42	36	6	8
7-FT	48	36/42*	7	8
8-FT	60	42	8	8
9-FT	66	54	9	10
10-FT	72	60	10	10

*A 36" PIPE AND A 42" PIPE CAN BE PLACED WITHIN 90 DEGREES. SEE MINIMUM HORIZONTAL PIPE SEPARATION DETAIL.

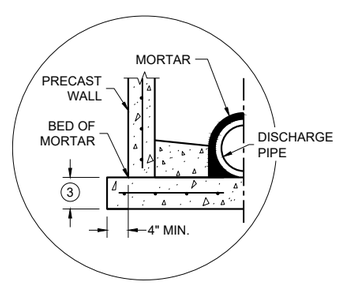

SEPARATE PRECAST REINFORCED CONCRETE BASE OPTION

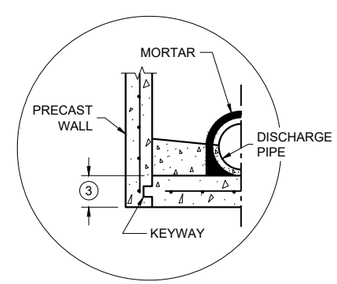

PRECAST REINFORCED CONCRETE WITH INTEGRAL BASE OPTION

DETAIL "A"

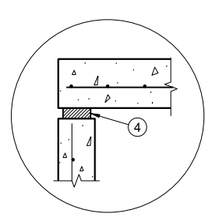

TOP WITH PLAIN END JOINT

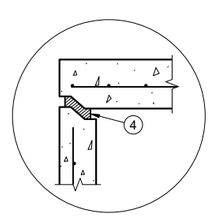

TOP WITH TONGUE AND GROOVE JOINT

DETAIL "B"

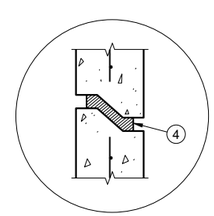

RISER WITH TONGUE AND GROOVE JOINT

DETAIL "C"

GENERAL NOTES

DETAILS OF CONSTRUCTION, MATERIALS AND WORKMANSHIP NOT SHOWN ON THIS DRAWING SHALL CONFORM TO THE PERTINENT REQUIREMENTS OF THE STANDARD SPECIFICATIONS AND THE APPLICABLE SPECIAL PROVISIONS.

UNLESS OTHERWISE AUTHORIZED IN WRITING BY THE ENGINEER, THE CONTRACTOR SHALL NOT ORDER AND DELIVER PRECAST MANHOLE UNITS REQUIRED FOR THE PROJECT UNTIL A LIST OF SIZES IS FURNISHED BY THE ENGINEER.

DETAILED DRAWINGS FOR PROPOSED ALTERNATE DESIGNS FOR UNDERGROUND DRAINAGE STRUCTURES SHALL BE SUBMITTED TO THE ENGINEER FOR APPROVAL PROVIDING THAT SUCH ALTERNATE DESIGNS MAKE PROVISION FOR EQUIVALENT CAPACITY AND STRENGTH.

ALL DRAINAGE STRUCTURES ARE DESIGNATED ON THE PLANS AS "MANHOLES 3X3-L", "CATCH BASINS 4-B", "INLETS 2X3-H", ETC. THE FIRST NUMBERS DESIGNATE THE SIZE OF THE STRUCTURE, AND THE FOLLOWING LETTER DESIGNATES THE TYPE OF COVER TO BE USED TO COMPRISE THE COMPLETE UNIT.

BASES SHALL BE PLACED ON A BED OF MATERIAL AT LEAST 6 INCHES IN DEPTH, WHICH MEETS THE REQUIREMENTS OF FOUNDATION BACKFILL. THIS BEDDING SHALL BE COMPACTED AND PROVIDE UNIFORM SUPPORT FOR THE ENTIRE AREA OF THE BASE.

PRECAST REINFORCED CONCRETE CONE TOPS (ECCENTRIC OR CONCENTRIC) OR PRECAST REINFORCED CONCRETE FLAT SLAB TOPS MAY BE USED ON CONCRETE BLOCK STRUCTURES.

ECCENTRIC CONE TOPS MAY BE USED ON ALL STRUCTURES. CONCENTRIC CONE TOPS SHALL BE USED ONLY ON STRUCTURES 5 FEET OR LESS IN DEPTH UNLESS OTHERWISE DIRECTED BY THE ENGINEER.

STEPS MEETING AASHTO M199 AND THE FOLLOWING REQUIREMENTS SHALL BE INSTALLED IN ALL STRUCTURES OVER 5 FEET IN DEPTH: 16 INCH C-C MAXIMUM SPACING; PROJECT A MINIMUM CLEAR DISTANCE OF 4 INCHES FROM THE WALL AT THE POINT OF EMBEDMENT; MINIMUM LENGTH OF 10 INCHES; MINIMUM WALL EMBEDMENT OF 3 INCHES. FERROUS METAL STEPS NOT PAINTED OR TREATED TO RESIST CORROSION SHALL HAVE A MINIMUM CROSS SECTIONAL IMENSION OF 1 INCH.

STEPS OF APPROVED POLYPROPYLENE PLASTIC COATED REINFORCEMENT BAR ARE ACCEPTABLE. REINFORCING BAR MUST BE A MINIMUM OF ⅝ INCH AND MEET THE REQUIREMENTS OF ASTM A615.

CERTIFICATION SHALL BE PROVIDED THAT INSTALLED STEPS WHEN TESTED IN ACCORDANCE WITH SECTION 10 OF AASHTO T280 CAN WITHSTAND A VERTICAL LOAD OF 800 LBS. AND A HORIZONTAL LOAD OF 400 LBS.

ALL BAR STEEL REINFORCEMENT SHALL BE EMBEDDED 2 INCHES CLEAR UNLESS OTHERWISE SHOWN OR NOTED.

ALL PRECAST MANHOLE UNITS SHALL CONFORM TO THE PERTINENT REQUIREMENTS OF AASHTO DESIGNATION M199.

PRECAST REINFORCED RISERS SHALL HAVE A TONGUE AND GROOVE JOINT WITH TONGUE UP OR DOWN.

CONCRETE BLOCK WILL NOT BE PERMITTED FOR STRUCTURES GREATER THAN 4 FEET IN DIAMETER.

4" OVERHANGING BASES ARE REQUIRED FOR ALL CONCRETE BLOCK INSTALLATIONS. 4" OVERHANG IS REQUIRED WHEN SEPARATE PRECAST BASE IS PROVIDED. OVERHANG IS NOT REQUIRED ON PRECAST STRUCTURES WITH AN INTEGRAL OR MONOLITHIC BASE.

FOR ADDITIONAL CONFIGURATIONS, MAINTAIN A MINIMUM OF 12 INCHES AS MEASURED FROM THE INSIDE OF THE STRUCTURE WALL BETWEEN THE OUTSIDE PIPE WALLS OF ADJACENT PIPES. SEE DETAIL "D".

(1) FOR PRECAST MANHOLES AND REINFORCED CONCRETE BASES PROVIDE REINFORCING STEEL IN ACCORDANCE TO AASHTO M199.

(2) SEE PIPE MATRIX TABLE FOR MINIMUM WALL THICKNESS FOR PRECAST MANHOLES

(3) SEE PIPE MATRIX TABLE FOR MINIMUM THICKNESS OF PRECAST FLAT SLAB TOPS AND BASES.

(4) JOINTS TO BE SEALED WITH A BUTYL RUBBER SEAL PER SEALANT MANUFACTURERS RECOMMENDATIONS CONFORMING TO ASTM C 990 OR RUBBER GASKETS CONFORMING TO ASTM C443.

(5) SEE MANHOLE COVER OPENING MATRIX.

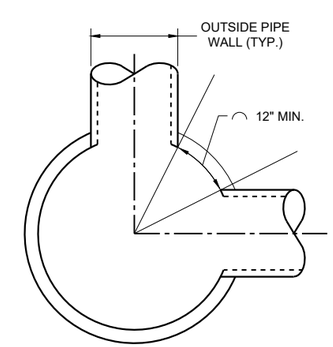

MINIMUM HORIZONTAL PIPE SEPARATION

DETAIL "D"

MANHOLES 3-FT, 4-FT, 5-FT, 6-FT, 7-FT, 8-FT, 9-FT AND 10-FT DIAMETER

MANHOLES, 3-FT, 4-FT 5-FT, 6-FT, 7-FT, 8-FT, 9-FT AND 10-FT DIAMETER

STATE OF WISCONSIN
DEPARTMENT OF TRANSPORTATION

APPROVED
December 2023 /S/ Rodney Taylor
DATE ROADWAY STANDARDS DEVELOPMENT UNIT SUPERVISOR
FHWA

6

SDD 08B09-04

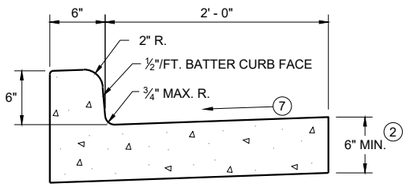

TYPES A (1) & D

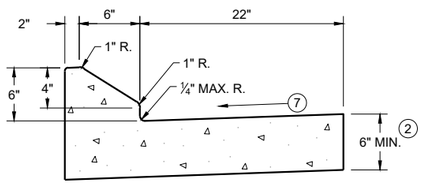

6" SLOPED CURB TYPES G (1) & J

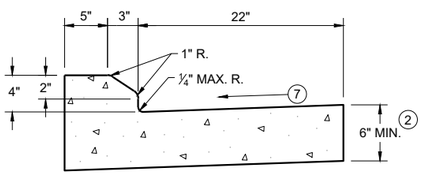

4" SLOPED CURB TYPES G (1) & J

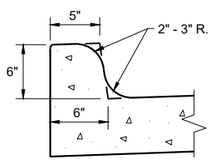

TYPES K (1) & L
(OPTIONAL CURB SHAPE)

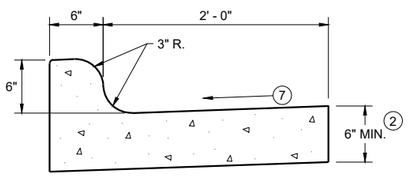

TYPES K (1) & L

CONCRETE CURB AND GUTTER 30"

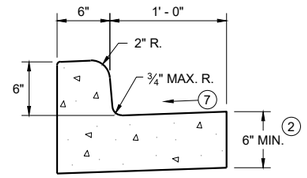

TYPES A (1) & D

CONCRETE CURB AND GUTTER 18"

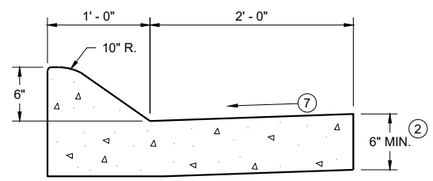

6" SLOPED CURB TYPES A (1) & D

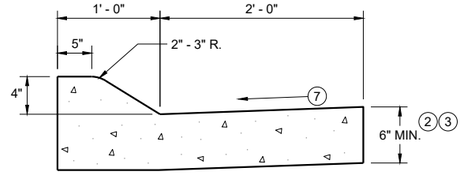

4" SLOPED CURB TYPES A (1) & D

CONCRETE CURB AND GUTTER 36"

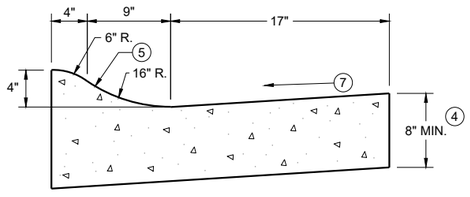

4" SLOPED CURB TYPES R (1) & T
CONCRETE CURB AND GUTTER 30"

TBT & TBTT	X
30"	22"
36"	28"

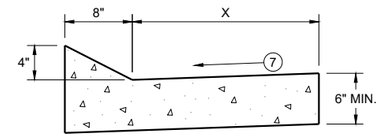

TYPES TBT & TBTT (1)

CONCRETE CURB AND GUTTER

PAVEMENT THICKNESS AND MAXIMUM CONCRETE PANEL WIDTH TABLE

PAVEMENT THICKNESS	MAXIMUM PANEL WIDTH
LESS THAN 10"	12'
10" & ABOVE	15'

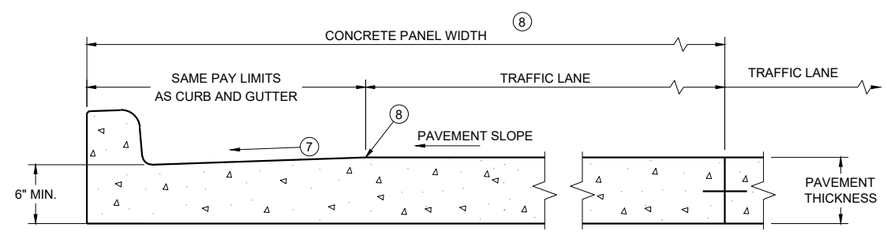

PARTIAL SECTION OF PAVEMENT WITH INTEGRAL CURB AND GUTTER *

* BIKE LANE IS NOT SHOWN

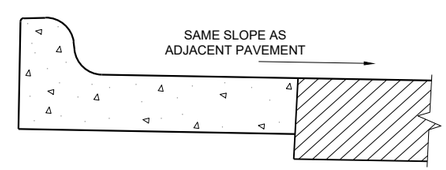

REVERSE SLOPE GUTTER (6)
(TYPICAL FOR ALL CURB & GUTTER TYPES)

GENERAL NOTES

DETAILS OF CONSTRUCTION AND WORKMANSHIP NOT SHOWN ON THIS DRAWING SHALL CONFORM TO THE PERTINENT REQUIREMENTS OF THE CONTRACT.

PAVEMENT TIES AND TIE BARS SHALL BE EPOXY COATED IN CONFORMANCE WITH SUBSECTION 505.2.6.2 OF THE STANDARD SPECIFICATIONS.

INTEGRAL CURB AND GUTTER SHALL CONFORM TO THE DETAILS SHOWN FOR CONCRETE CURB AND GUTTER INCLUDING THE TRANSVERSE GUTTER SLOPE.

UNLESS OTHERWISE SHOWN ON THE TYPICAL CROSS SECTIONS, THE BASE AGGREGATE AND COMMON EXCAVATION LIMITS ARE 2' - 0" BEHIND THE BACK OF CURBS.

(1) TIE BARS ARE REQUIRED FOR CURB AND GUTTERS TYPES A, G, K, R, AND TBTT.

(2) THE BOTTOM OF CURB AND GUTTER MAY BE CONSTRUCTED EITHER LEVEL OR PARALLEL TO THE SLOPE OF THE SUBGRADE OR BASE AGGREGATE PROVIDED A 6" MINIMUM GUTTER THICKNESS IS MAINTAINED.

(3) USE 8" MINIMUM GUTTER THICKNESS WHEN USED WITH AN ADJACENT CONCRETE TRUCK APRON PLACED BEHIND BACK OF CURB.

(4) THE BOTTOM OF CURB AND GUTTER MAY BE CONSTRUCTED EITHER LEVEL OR PARALLEL TO THE SLOPE OF THE SUBGRADE OR BASE AGGREGATE PROVIDED A 8" MINIMUM GUTTER THICKNESS IS MAINTAINED.

(5) UNLESS OTHERWISE NOTED, FOR STAKING PURPOSES THE FACE OF CURB IS 6" FROM THE BACK OF CURB.

(6) WHEN REVERSE SLOPE GUTTER IS REQUIRED, THE LOCATION(S) WILL BE SHOWN ELSEWHERE IN THE PLAN.

(7) USE 4% GUTTER CROSS SLOPE UNLESS OTHERWISE NOTED IN THE PLANS.

(8) INCLUDE LONGITUDINAL JOINT AND TIE BARS ALONG LANE EDGE WHEN CONCRETE PANEL WIDTH EXCEEDS THE MAXIMUM WIDTH PER TABLE BELOW. LONGITUDINAL JOINT(S) ARE NOT ALLOWED WITHIN TRAFFIC LANES AND BIKE LANES. LONGITUDINAL JOINT MAY BE SAWED.

(9) SLOPE TO BE REVERSE SLOPE MATCHING THE SLOPE OF THE PAVEMENT AND THE CIRCULATORY ROADWAY

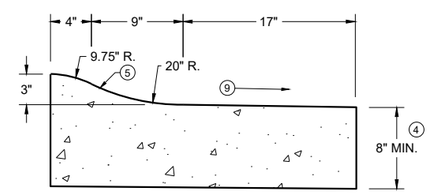

3" SLOPED CURB TYPES R (1) & T

CONCRETE CURB AND GUTTER

STATE OF WISCONSIN
DEPARTMENT OF TRANSPORTATION

6

SDD 08D01-24a

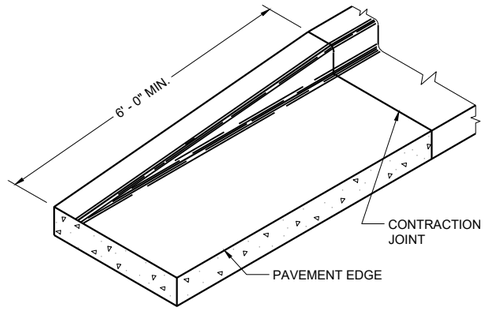

END SECTION CURB AND GUTTER

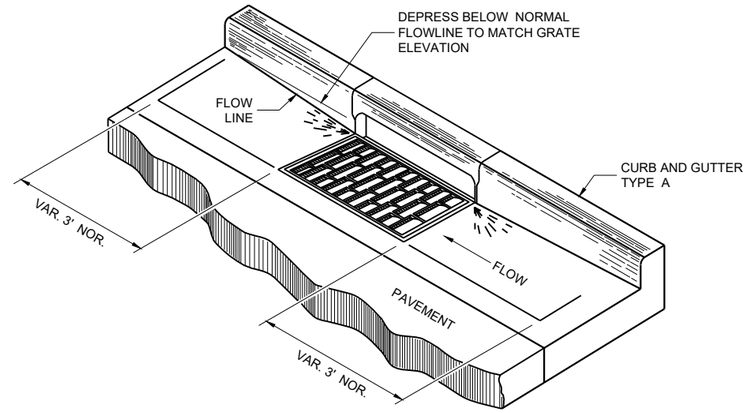

DETAIL OF CURB AND GUTTER AT INLETS

(TYPICAL H INLET COVER SHOWN)

GENERAL NOTES

DETAILS OF CONSTRUCTION AND WORKMANSHIP NOT SHOWN ON THIS DRAWING SHALL CONFORM TO THE PERTINENT REQUIREMENTS OF THE CONTRACT.

PAVEMENT TIES AND TIE BARS SHALL BE EPOXY COATED IN CONFORMANCE WITH SUBSECTION 505.2.6.2 OF THE STANDARD SPECIFICATIONS.

UNLESS OTHERWISE SHOWN ON THE TYPICAL CROSS SECTIONS, THE BASE AGGREGATE AND COMMON EXCAVATION LIMITS ARE 2' - 0" BEHIND THE BACK OF CURBS.

(1) TIE BARS ARE REQUIRED FOR CURB AND GUTTERS TYPES A, G, K, R, AND TBTT.

(2) THE BOTTOM OF CURB AND GUTTER MAY BE CONSTRUCTED EITHER LEVEL OR PARALLEL TO THE SLOPE OF THE SUBGRADE OR BASE AGGREGATE PROVIDED A 6" MINIMUM GUTTER THICKNESS IS MAINTAINED.

(10) REFER TO SDD 08D18 AND 08D19 FOR ADDITIONAL DRIVEWAY ENTRANCE CURB DETAILS.

(11) PLACE 1" THICK EXPANSION JOINT MATERIAL BETWEEN VERTICAL FACE CURB TYPES EXTENDING FROM THE TOP OF CURB TO 1 INCH BELOW THE ADJOINING CONCRETE SURFACE. RIGID CONCRETE STRUCTURES INCLUDE RAISED CONCRETE MEDIANS, CONCRETE SAFETY ISLANDS, SPLITTER ISLANDS, OR LOCATIONS IDENTIFIED ON THE PLANS.

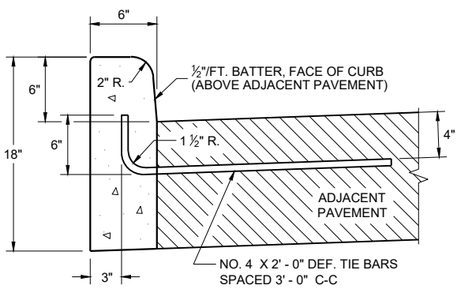

TYPES A (1) & D

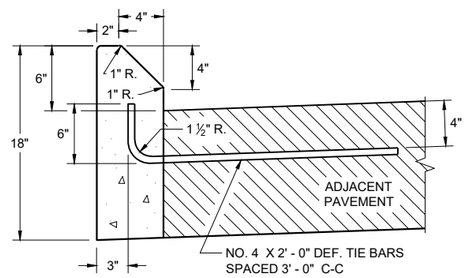

TYPES G (1) & J

CONCRETE CURB

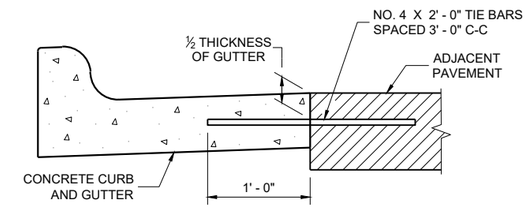

TYPICAL TIE BAR LOCATION (1)

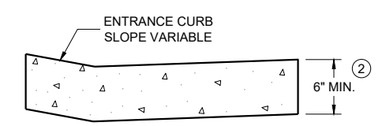

DRIVEWAY ENTRANCE CURB (10)

(WHEN DIRECTED BY THE ENGINEER)

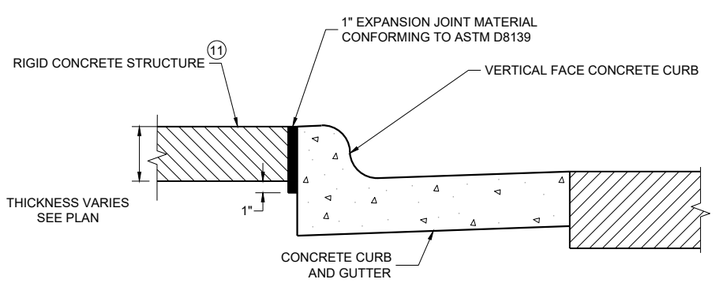

EXPANSION JOINT DETAIL FOR VERTICAL CURB ABUTTING A RIGID STRUCTURE (11)

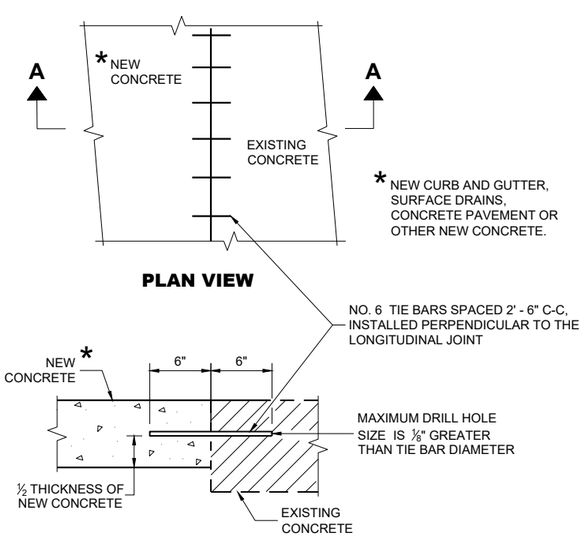

PLAN VIEW

SECTION A - A

TIE BARS DRILLED INTO EXISTING PAVEMENT

CONCRETE CURB, TIES AND CURB AND GUTTER APPLICATIONS

STATE OF WISCONSIN
DEPARTMENT OF TRANSPORTATION

APPROVED
February 2025 — DATE
/S/ Rodnery Taylor — ROADWAY STANDARDS DEVELOPMENT UNIT SUPERVISOR

FHWA

6
SDD 08D01-24b

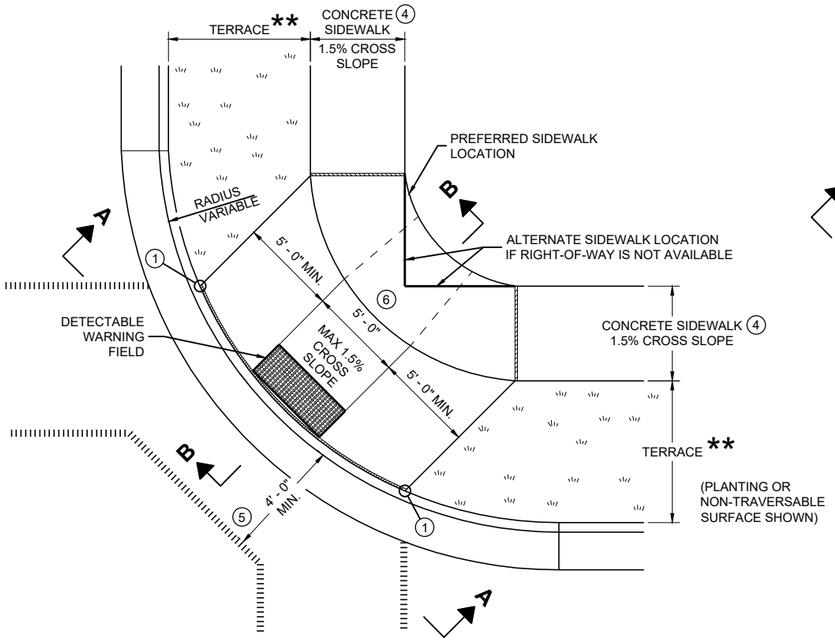

PLAN VIEW

CURB RAMP TYPE 1

(CENTER OF CORNER RADIUS)

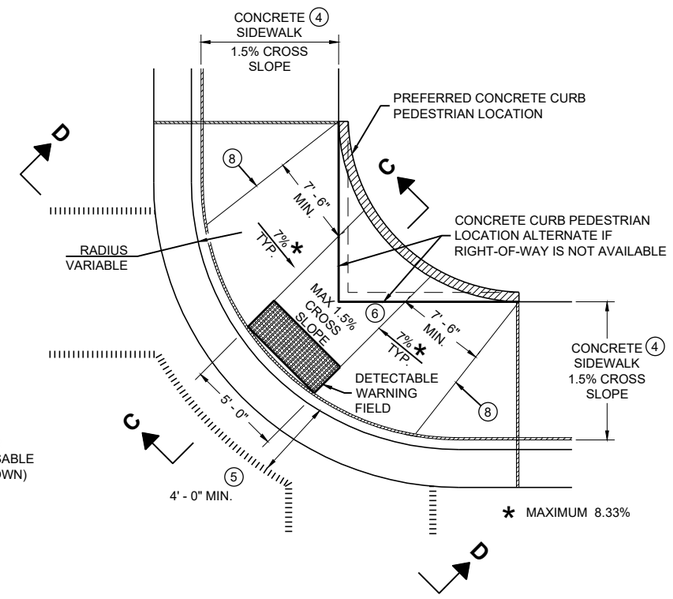

PLAN VIEW

CURB RAMP TYPE 1 - A

(NO TERRACE)

GENERAL NOTES

AVOID PLACING DRAINAGE STRUCTURES, JUNCTION BOXES OR OTHER OBSTRUCTIONS IN FRONT OF RAMP ACCESS AREAS.

DETAILS OF CONSTRUCTION, MATERIALS AND WORKMANSHIP NOT SHOWN ON THIS DRAWING SHALL CONFORM TO THE PERTINENT REQUIREMENTS OF THE STANDARD SPECIFICATIONS AND THE APPLICABLE SPECIAL PROVISIONS.

WHEN NECESSARY, THE SIDEWALK ELEVATION MAY BE LOWERED TO MEET THE HIGH POINT ON THE RAMP.

TYPE 1 CURB RAMPS SHALL HAVE A NORMAL SIDEWALK APRON AND CURB ON BOTH SIDES OF RAMP.

DETECTABLE WARNING FILED SHALL BE MEASURED AND PAID BY THE SQUARE FOOT AS "CURB RAMP DETECTABLE WARNING FIELD". THE CONCRETE PEDESTRIAN CURB, IF NEEDED, SHALL BE MEASURED AND PAID BY THE LINEAR FOOT AS "CONCRETE CURB PEDESTRIAN". CONCRETE SIDEWALK IN THE CURB RAMP AREA SHALL BE MEASURED AND PAID BY THE SQUARE FOOT AS CONCRETE SIDEWALK, INCLUDING THE AREA UNDER THE DETECTABLE WARNING FIELD.

SELECT CURB RAMP DETECTABLE WARNING FIELD MATERIALS AND DEVICES FROM THE DEPARTMENT'S APPROVED MATERIALS LIST. THE COLOR OF THE DETECTABLE WARNING FIELD IS SPECIFIED ELSEWHERE AND IS INCIDENTAL TO THE BID ITEM OF "CURB RAMP DETECTABLE WARNING FIELD"

DETECTABLE WARNING FIELDS THAT ARE INSTALLED AS A GROUP OR SIDE BY SIDE, SHALL BE FROM THE SAME MANUFACTURER.

SURFACE TEXTURE OF THE RAMP SHALL BE OBTAINED BY COARSE BROOMING TRANSVERSE TO THE SLOPE OF THE RAMP.

1. THIS POINT IS AN EXTENSION OF OUTSIDE EDGE OF APPROACHING SIDEWALK WHERE IT MEETS THE BACK OF CONCRETE CURB. POINT LOCATION MAY BE ADJUSTED TO ALIGN WITH BEGINNING OF FULL-HEIGHT CURB IF THIS DISTANCE IS SHORT.
2. GRADE CHANGE BETWEEN GUTTER FLAG SLOPE AND THE CURB RAMP SLOPE SHALL NOT EXCEED 11%. MAXIMUM GUTTER FLAG SLOPE IS 4%. PROVIDE LONGITUDINAL DRAINAGE AROUND CURB AND AWAY FROM CURB RAMP. NO VERTICAL LIPS OR DISCONTINUITIES GREATER THAN ¼ - INCH ARE ALLOWED. SLOPE OF CURB HEAD OPENING SHALL MATCH THE RAMP SLOPE, MINIMALLY 1.5% AND NOT TO EXCEED 7%. WHEN ADJACENT TO 1.5% LANDING, CONSTRUCT CURB HEAD OPENING AT 1.5% IN THE DIRECTION OF PEDESTRIAN TRAVEL.
3. MAXIMUM 8.33% CURB RAMP SLOPE IS ALLOWABLE WITH FLATTENED GUTTER FLAG SLOPE AND NOT TO EXCEED 11% GRADE CHANGE.
4. ±0.5% CONSTRUCTION TOLERANCE IN SIDEWALK CROSS SLOPE. THE SIDEWALK CROSS SLOPE SHALL NOT EXCEED 2% WITHOUT PRIOR APPROVAL FROM THE ENGINEER.
5. PROVIDE A LEVEL LANDING IN THE STREET AND GUTTER AREA (2% MAXIMUM SLOPE IN ANY DIRECTION). WHEN THE GUTTER SLOPE EXCEEDS 2%, CONSTRUCT THE LEVEL LANDING IN THE STREET AREA. 4 FOOT WIDTH IS MEASURED FROM THE FLANGE LINE
6. PROVIDE A LEVEL LANDING (MAXIMUM 2% SLOPE) IN ANY DIRECTION OF PEDESTRIAN TRAVEL. STANDARD LEVEL LANDING SIZE IS 5 FEET BY 5 FEET.
8. PROVIDE GRADE BREAK PERPENDICULAR TO DIRECTION OF WHEELCHAIR TRAVEL.

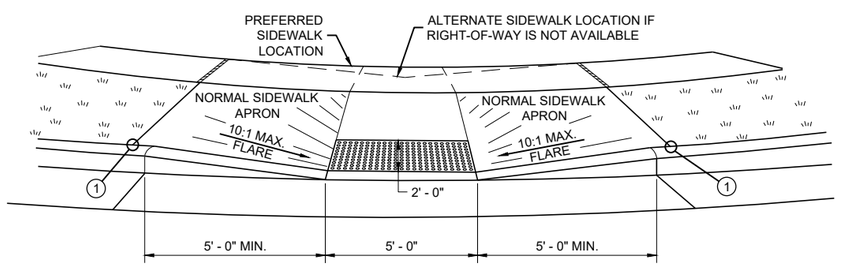

VIEW A - A FOR TYPE 1

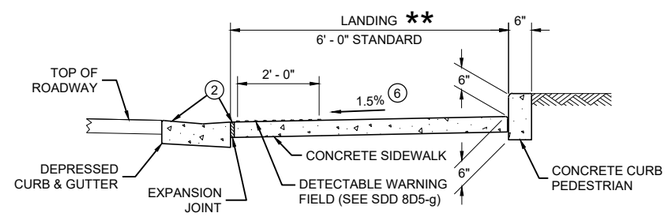

SECTION C - C FOR TYPE 1 - A

LEGEND

- ½" EXPANSION JOINT SIDEWALK
- CONTRACTION JOINT FIELD LOCATED
- PAVEMENT MARKING CROSSWALK (WHITE)

** WIDTH SHOWN ELSEWHERE IN THE PLANS

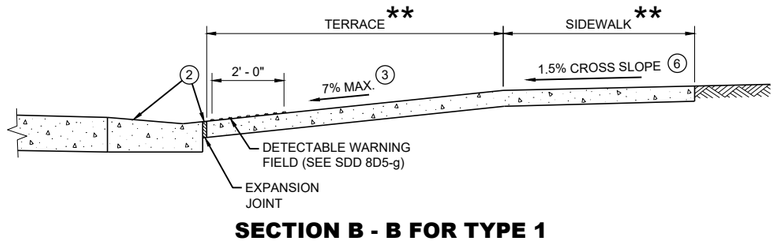

SECTION B - B FOR TYPE 1

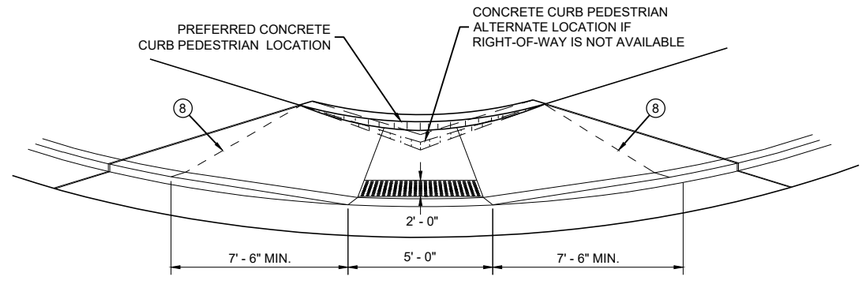

VIEW D - D FOR TYPE 1 - A

CURB RAMPS TYPE 1 AND 1-A

STATE OF WISCONSIN
DEPARTMENT OF TRANSPORTATION

6

SDD 08D05-21a

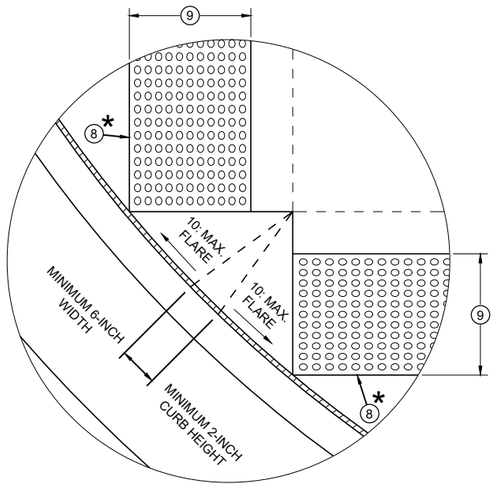

DETAIL A

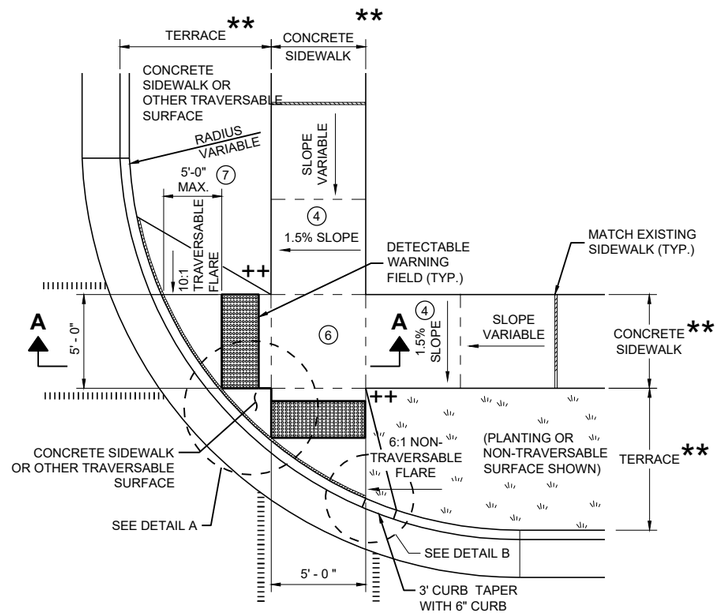

PLAN VIEW

CURB RAMP TYPE 2

(CENTER OF CORNER RADIUS)

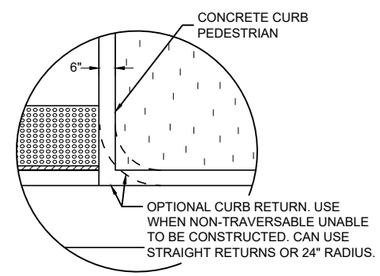

DETAIL B

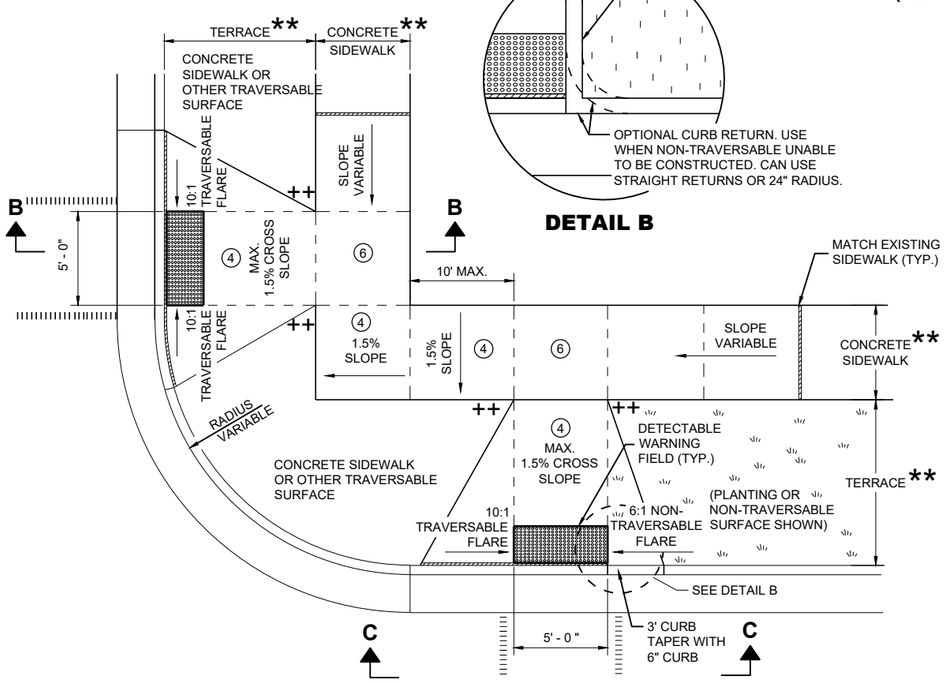

PLAN VIEW

CURB RAMP TYPE 3

(OUTSIDE OF CROSSWALK AREA)

GENERAL NOTES

AVOID PLACING DRAINAGE STRUCTURES, JUNCTION BOXES OR OTHER OBSTRUCTIONS IN FRONT OF RAMP ACCESS AREAS.

DETAILS OF CONSTRUCTION, MATERIALS AND WORKMANSHIP NOT SHOWN ON THIS DRAWING SHALL CONFORM TO THE PERTINENT REQUIREMENTS OF THE STANDARD SPECIFICATIONS AND THE APPLICABLE SPECIAL PROVISIONS.

DETECTABLE WARNING FIELDS THAT ARE INSTALLED AS A GROUP OR SIDE BY SIDE SHALL BE FROM THE SAME MANUFACTURER.

(2) GRADE CHANGE BETWEEN GUTTER FLAG SLOPE AND THE CURB RAMP SLOPE SHALL NOT EXCEED 11%. MAXIMUM GUTTER FLAG SLOPE IS 4%. PROVIDE LONGITUDINAL DRAINAGE AROUND CURB AND AWAY FROM CURB RAMP. NO VERTICAL LIPS OR DISCONTINUITIES GREATER THAN ¼ - INCH ARE ALLOWED. SLOPE OF CURB HEAD OPENING SHALL MATCH THE RAMP SLOPE, MINIMALLY 1.5% AND NOT TO EXCEED 7%. WHEN ADJACENT TO 1.5% LANDING, CONSTRUCT CURB HEAD OPENING AT 1.5% IN THE DIRECTION OF PEDESTRIAN TRAVEL.

(3) AN 8.33% CURB RAMP SLOPE IS ALLOWABLE WITH FLATTENED GUTTER FLAG SLOPE (2.67% OR LESS) AND NOT TO EXCEED 11% GRADE CHANGE.

(4) ±0.5% CONSTRUCTION TOLERANCE IN SIDEWALK CROSS SLOPE. THE SIDEWALK CROSS SLOPE SHALL NOT EXCEED 2% WITHOUT PRIOR APPROVAL FROM THE ENGINEER.

(6) PROVIDE A LEVEL LANDING (MAXIMUM 2% SLOPE) IN ANY DIRECTION OF PEDESTRIAN TRAVEL. STANDARD LEVEL LANDING SIZE IS 5 FEET X 5 FEET.

(7) WHEN GRADE BREAK DISTANCE EXCEEDS 5 FEET, USE RADIAL DETECTABLE WARNING FIELD PER SDD 8D5-f.

(8) PROVIDE GRADE BREAK PERPENDICULAR TO DIRECTION OF WHEELCHAIR TRAVEL.

(9) WHEN DISTANCE IS LESS THAN 6' - 0", IT MAY BE DIFFICULT TO ACHIEVE A 7% SLOPE OR FLATTER ALONG THE RAMP. REDUCE CURB HEIGHT IN TRIANGLE AREA TO ACHIEVE 7% SLOPE OR FLATTER ON RAMP. CONSTRUCT 2-INCH MINIMUM CURB HEIGHT BETWEEN 10:1 FLARES.

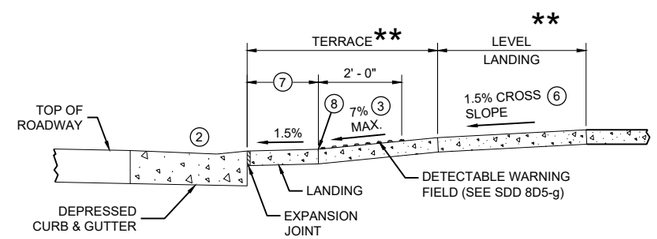

SECTION A - A FOR TYPE 2

* MAXIMUM 2.0% SLOPE IN ALL DIRECTIONS IN FRONT OF GRADE BREAK

** WIDTH SHOWN ELSEWHERE IN THE PLANS

++ CONSTRUCT 6" WEDGE TO AVOID CONCRETE BREAKAGE

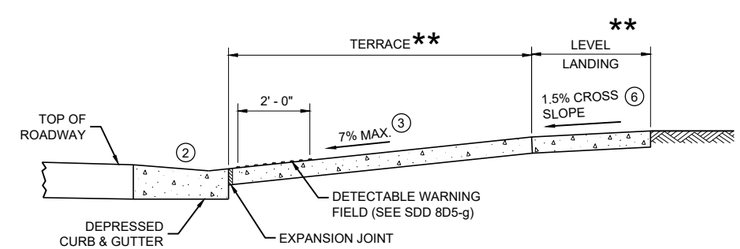

SECTION B - B FOR TYPE 3

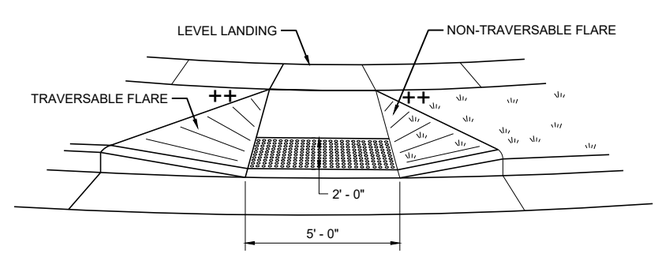

VIEW C - C FOR TYPE 3

LEGEND

- ½" EXPANSION JOINT SIDEWALK
- CONTRACTION JOINT SIDEWALK
- PAVEMENT MARKING CROSSWALK (WHITE)

CURB RAMPS TYPE 2 AND 3

STATE OF WISCONSIN
DEPARTMENT OF TRANSPORTATION

6

6

SDD 08D05-21b

SDD 08D05-21b

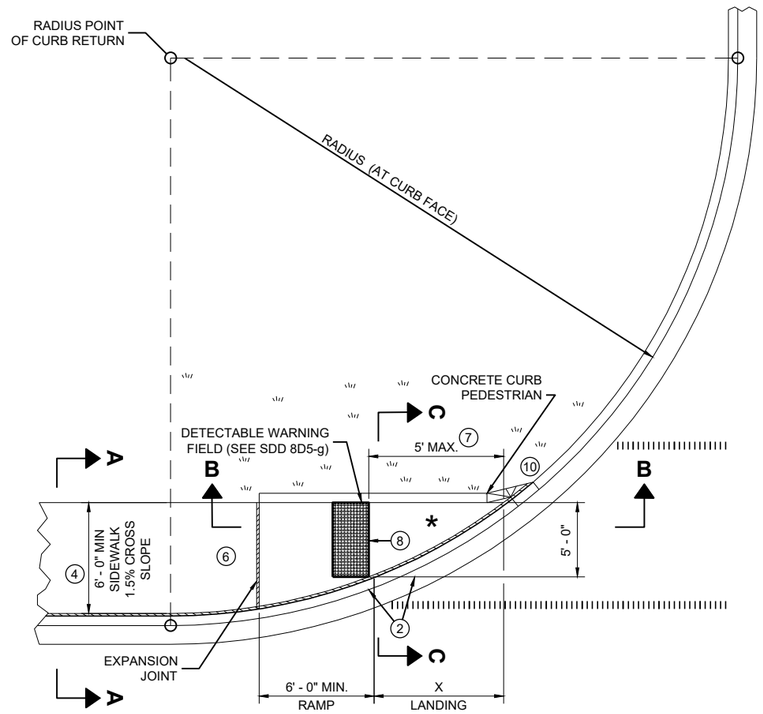

PLAN VIEW

CURB RAMP TYPE 4A

RADIUS (AT CURB FACE)	X
10 FEET	4' - 7"

INTERMEDIATE RADII CAN BE INTERPOLATED

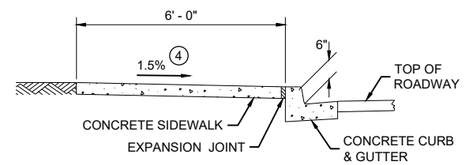

SECTION A - A FOR TYPE 4A

GENERAL NOTES

AVOID PLACING DRAINAGE STRUCTURES, JUNCTION BOXES OR OTHER OBSTRUCTIONS IN FRONT OF RAMP ACCESS AREAS.

DETAILS OF CONSTRUCTION, MATERIALS AND WORKMANSHIP NOT SHOWN ON THIS DRAWING SHALL CONFORM TO THE PERTINENT REQUIREMENTS OF THE STANDARD SPECIFICATIONS AND THE APPLICABLE SPECIAL PROVISIONS.

DETECTABLE WARNING FIELDS THAT ARE INSTALLED AS A GROUP OR SIDE BY SIDE, SHALL BE FROM THE SAME MANUFACTURER.

(2) GRADE CHANGE BETWEEN GUTTER FLAG SLOPE AND THE CURB RAMP SLOPE SHALL NOT EXCEED 11%. MAXIMUM GUTTER FLAG SLOPE IS 4%. PROVIDE LONGITUDINAL DRAINAGE AROUND CURB AND AWAY FROM CURB RAMP. NO VERTICAL LIPS OR DISCONTINUITIES GREATER THAN ¼ - INCH ARE ALLOWED. SLOPE OF CURB HEAD OPENING SHALL MATCH THE RAMP SLOPE, MINIMALLY 1.5% AND NOT TO EXCEED 7%. WHEN ADJACENT TO 1.5% LANDING, CONSTRUCT CURB HEAD OPENING AT 1.5% IN THE DIRECTION OF PEDESTRIAN TRAVEL.

(3) AN 8.33% CURB RAMP SLOPE IS ALLOWABLE WITH FLATTENED GUTTER FLAG SLOPE AND NOT TO EXCEED 11% GRADE CHANGE.

(4) ±0.5% CONSTRUCTION TOLERANCE IN SIDEWALK CROSS SLOPE. THE SIDEWALK CROSS SLOPE SHALL NOT EXCEED 2% WITHOUT PRIOR APPROVAL FROM THE ENGINEER.

(6) PROVIDE A LEVEL LANDING (MAXIMUM 2% SLOPE) IN ANY DIRECTION OF PEDESTRIAN TRAVEL. STANDARD LEVEL LANDING SIZE IS 5 FEET BY 5 FEET.

(7) WHEN THIS GRADE BREAK DISTANCE EXCEEDS 5 FEET, USE RADIAL DETECTABLE WARNING FIELD PER SDD 8D5-f.

(8) PROVIDE GRADE BREAK PERPENDICULAR TO DIRECTION OF WHEELCHAIR TRAVEL.

(10) INSTALL TRANSITION NOSE (INCIDENTAL TO OTHER PAY ITEMS). DO NOT MARK TRANSITION NOSE.

LEGEND

½" EXPANSION JOINT SIDEWALK

CONTRACTION JOINT SIDEWALK

PAVEMENT MARKING CROSSWALK (WHITE)

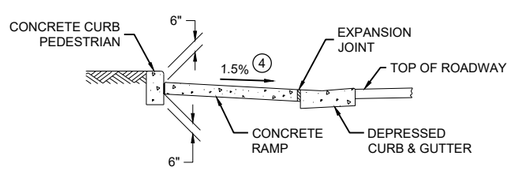

SECTION C - C FOR TYPE 4A

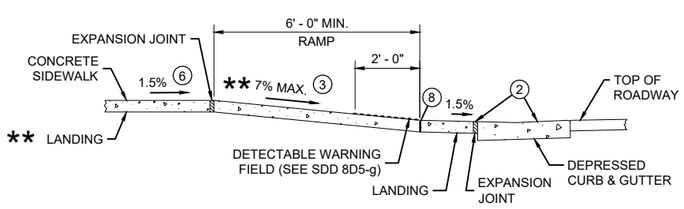

** IF RAMP SLOPE IS LESS THAN 5.0%, THEN NO ADJACENT UPHILL LANDING IS REQUIRED

SECTION B - B FOR TYPE 4A AND TYPE 4A1

* MAXIMUM 2.0% SLOPE IN ALL DIRECTIONS IF FRONT OF GRADE BREAK

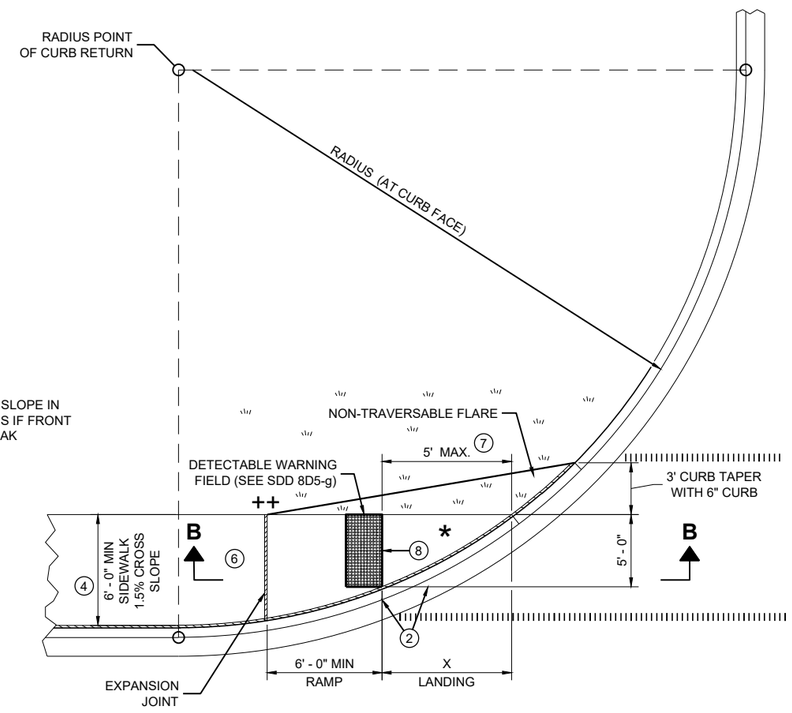

PLAN VIEW

CURB RAMP TYPE 4A1

++ CONSTRUCT 6" WEDGE TO AVOID CONCRETE BREAKAGE

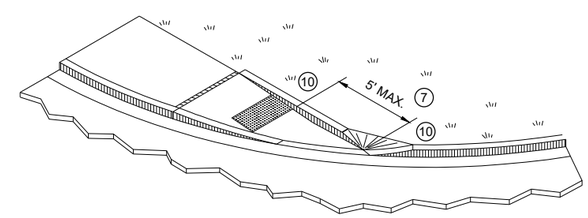

ISOMETRIC VIEW FOR TYPE 4A

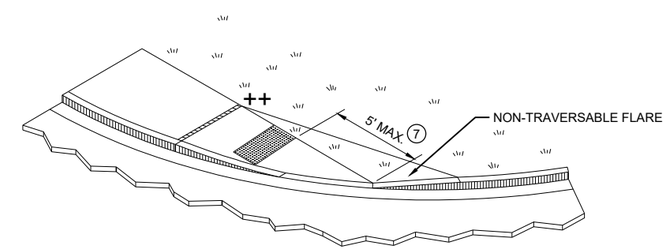

ISOMETRIC VIEW FOR TYPE 4A1

CURB RAMPS TYPE 4A AND 4A1

STATE OF WISCONSIN
DEPARTMENT OF TRANSPORTATION

6

6

SDD 08D05-21c

SDD 08D05-21c

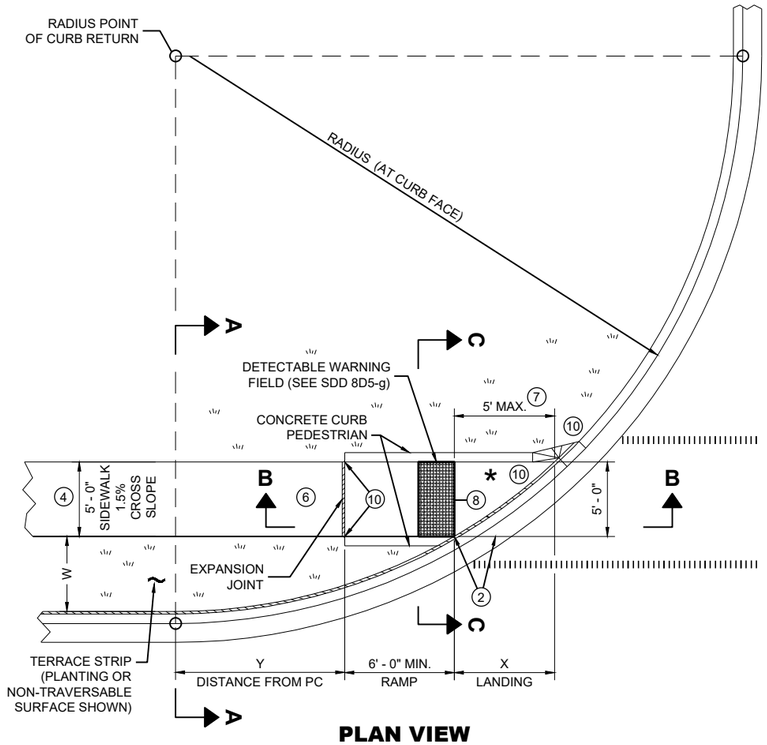

PLAN VIEW
CURB RAMP TYPE 4B

RADIUS (AT CURB FACE)	W = 3' - 0"		W = 4' - 0"		W = 5' - 0"		W = 6' - 0"		W = 7' - 0"		W = 8' - 0"		W = 9' - 0"		W = 10' - 0"	
	X	Y	X	Y	X	Y	X	Y	X	Y	X	Y	X	Y	X	Y
10 FEET	2' - 10 ¼"	0' - 5"	2' - 1"	1' - 4 ½"	1' - 5"	2' - 1"	0' - 10"	2' - 7 ½"	0' - 3 ¼"	3' - 0 ¼"						
15 FEET	4' - 6 ¾"	2' - 1 ¾"	3' - 9"	3' - 5 ¾"	3' - 1 ¼"	4' - 6"	2' - 6 ¾"	5' - 4 ½"	2' - 1"	6' - 1"	1' - 8"	6' - 8 ½"	1' - 3 ¼"	7' - 2 ½"	0' - 10 ¾"	7' - 7 ¼"
20 FEET			4' - 11 ½"	5' - 1 ¾"	4' - 3 ¼"	6' - 5 ½"	3' - 8 ¾"	7' - 7"	3' - 3"	8' - 6 ½"	2' - 10"	9' - 4 ½"	2' - 5 ½"	10' - 1 ¼"	2' - 1 ¼"	10' - 9"
30 FEET									4' - 10 ¾"	12' - 5 ¾"	4' - 5 ½"	13' - 7 ¾"	4' - 0 ¾"	14' - 8 ½"	3' - 8 ½"	15' - 8 ¼"
40 FEET															4' - 10 ¾"	19' - 8 ¼"

INTERMEDIATE RADII CAN BE INTERPOLATED
DIMENSION "Y" IS CALCULATED BASED ON 6'-0" RAMP LENGTH
DIMENSION "X" IS CALCULATED BASED ON 5'-0" SIDEWALK WIDTH

LEGEND

- ½" EXPANSION JOINT SIDEWALK
- CONTRACTION JOINT SIDEWALK
- PAVEMENT MARKING CROSSWALK (WHITE)

GENERAL NOTES

AVOID PLACING DRAINAGE STRUCTURES, JUNCTION BOXES OR OTHER OBSTRUCTIONS IN FRONT OF RAMP ACCESS AREAS.

DETAILS OF CONSTRUCTION, MATERIALS AND WORKMANSHIP NOT SHOWN ON THIS DRAWING SHALL CONFORM TO THE PERTINENT REQUIREMENTS OF THE STANDARD SPECIFICATIONS AND THE APPLICABLE SPECIAL PROVISIONS.

DETECTABLE WARNING FIELDS THAT ARE INSTALLED AS A GROUP OR SIDE BY SIDE, SHALL BE FROM THE SAME MANUFACTURER.

(2) GRADE CHANGE BETWEEN GUTTER FLAG SLOPE AND THE CURB RAMP SLOPE SHALL NOT EXCEED 11%. MAXIMUM GUTTER FLAG SLOPE IS 4%. PROVIDE LONGITUDINAL DRAINAGE AROUND CURB AND AWAY FROM CURB RAMP. NO VERTICAL LIPS OR DISCONTINUITIES GREATER THAN ¼ - INCH ARE ALLOWED. SLOPE OF CURB HEAD OPENING SHALL MATCH THE RAMP SLOPE, MINIMALLY 1.5% AND NOT TO EXCEED 7%. WHEN ADJACENT TO 1.5% LANDING, CONSTRUCT CURB HEAD OPENING AT 1.5% IN THE DIRECTION OF PEDESTRIAN TRAVEL.

(3) AN 8.33% CURB RAMP SLOPE IS ALLOWABLE WITH FLATTENED GUTTER FLAG SLOPE AND NOT TO EXCEED 11% GRADE CHANGE.

(4) ±0.5% CONSTRUCTION TOLERANCE IN SIDEWALK CROSS SLOPE. THE SIDEWALK CROSS SLOPE SHALL NOT EXCEED 2% WITHOUT PRIOR APPROVAL FROM THE ENGINEER.

(6) PROVIDE A LEVEL LANDING (MAXIMUM 2% SLOPE) IN ANY DIRECTION OF PEDESTRIAN TRAVEL. STANDARD LEVEL LANDING SIZE IS 5 FEET BY 5 FEET.

(7) WHEN THIS GRADE BREAK DISTANCE EXCEEDS 5 FEET, USE RADIAL DETECTABLE WARNING FIELD PER SDD 8D5-f.

(8) PROVIDE GRADE BREAK PERPENDICULAR TO DIRECTION OF WHEELCHAIR TRAVEL.

(10) INSTALL TRANSITION NOSE (INCIDENTAL TO OTHER PAY ITEMS). DO NOT MARK TRANSITION NOSE.

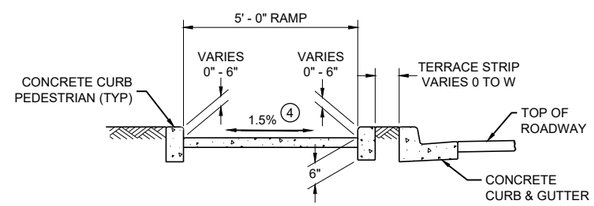

SECTION C - C FOR TYPE 4B

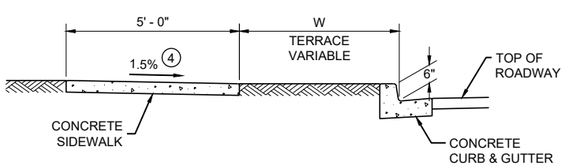

SECTION A - A FOR TYPE 4B

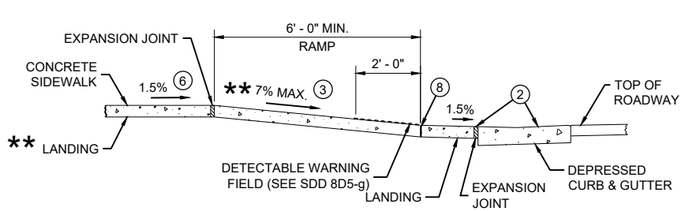

** IF RAMP SLOPE IS LESS THAN 5.0%, THEN NO ADJACENT UPHILL LANDING IS REQUIRED

SECTION B - B FOR TYPE 4B AND TYPE 4B1

* MAXIMUM 2.0% SLOPE IN ALL DIRECTIONS IF FRONT OF GRADE BREAK

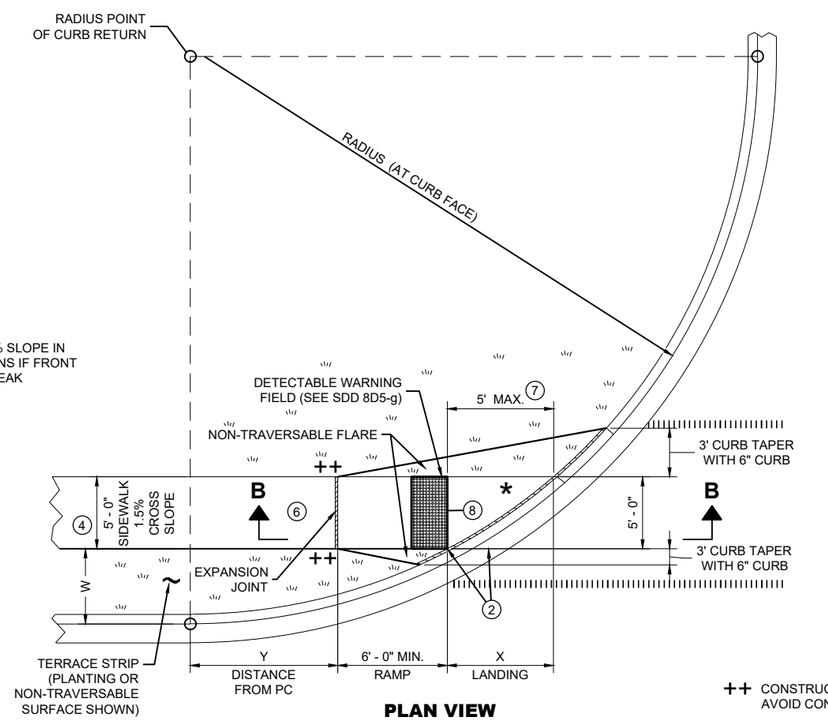

PLAN VIEW
CURB RAMP TYPE 4B1

++ CONSTRUCT 6" WEDGE TO AVOID CONCRETE BREAKAGE

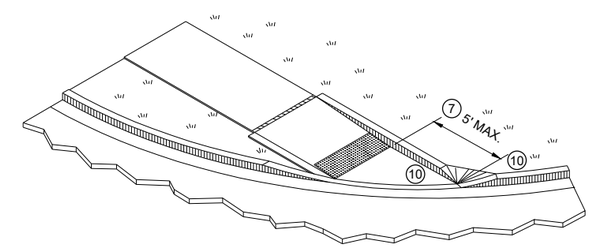

ISOMETRIC VIEW FOR TYPE 4B

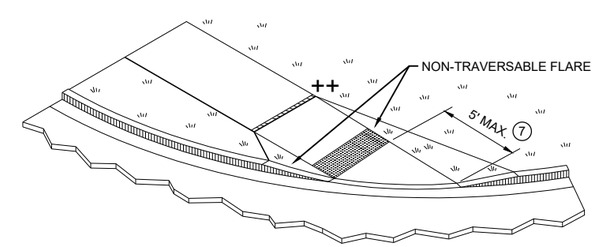

ISOMETRIC VIEW FOR TYPE 4B1

CURB RAMPS TYPE 4B AND 4B1

STATE OF WISCONSIN
DEPARTMENT OF TRANSPORTATION

6

SDD 08D05-21d

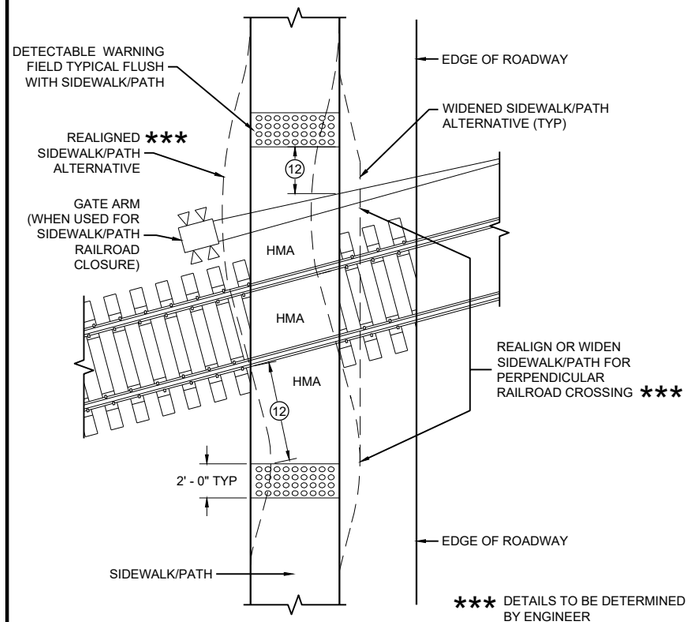

CURB RAMP TYPE 8

DETECTABLE WARNINGS FOR SIDEWALKS OR SHARED USE PATHS AT RAILROAD CROSSINGS

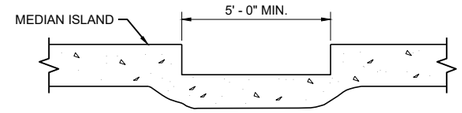

SECTION A - A FOR TYPE 5

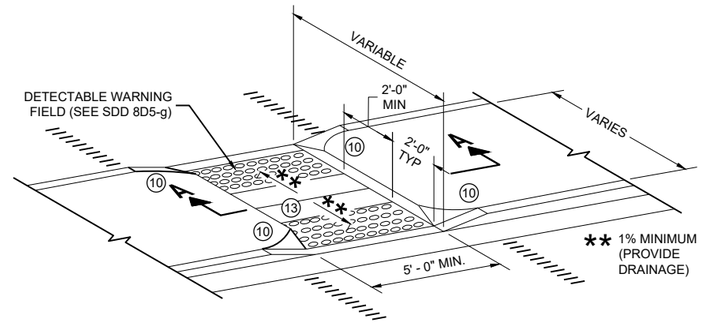

CURB RAMP TYPE 5

MEDIAN ISLAND NON-ELEVATED PEDESTRIAN CROSSING

GENERAL NOTES

AVOID PLACING DRAINAGE STRUCTURES, JUNCTION BOXES OR OTHER OBSTRUCTIONS IN FRONT OF RAMP ACCESS AREAS.

DETAILS OF CONSTRUCTION, MATERIALS AND WORKMANSHIP NOT SHOWN ON THIS DRAWING SHALL CONFORM TO THE PERTINENT REQUIREMENTS OF THE STANDARD SPECIFICATIONS AND THE APPLICABLE SPECIAL PROVISIONS.

SIDEWALK CROSS SLOPE SHALL NOT EXCEED 2%.

DETECTABLE WARNING FIELDS THAT ARE INSTALLED AS A GROUP OR SIDE BY SIDE, SHALL BE FROM THE SAME MANUFACTURER.

(2) GRADE CHANGE BETWEEN GUTTER FLAG SLOPE AND THE CURB RAMP SLOPE SHALL NOT EXCEED 11%. MAXIMUM GUTTER FLAG SLOPE IS 4%. PROVIDE LONGITUDINAL DRAINAGE AROUND CURB AND AWAY FROM CURB RAMP. NO VERTICAL LIPS OR DISCONTINUITIES GREATER THAN ¼ - INCH ARE ALLOWED. SLOPE OF CURB HEAD OPENING SHALL MATCH THE RAMP SLOPE, MINIMALLY 1.5% AND NOT TO EXCEED 7%. WHEN ADJACENT TO 1.5% LANDING, CONSTRUCT CURB HEAD OPENING AT 1.5% IN THE DIRECTION OF PEDESTRIAN TRAVEL.

(3) AN 8.33% CURB RAMP SLOPE IS ALLOWABLE WITH FLATTENED GUTTER FLAG SLOPE AND NOT TO EXCEED 11% GRADE CHANGE.

(4) ±0.5% CONSTRUCTION TOLERANCE IN SIDEWALK CROSS SLOPE. THE SIDEWALK CROSS SLOPE SHALL NOT EXCEED 2% WITHOUT PRIOR APPROVAL FROM THE ENGINEER.

(6) PROVIDE A LEVEL LANDING (MAXIMUM 2% SLOPE) IN ANY DIRECTION OF PEDESTRIAN TRAVEL. STANDARD LEVEL LANDING SIZE IS 5 FEET BY 5 FEET.

(10) INSTALL TRANSITION NOSE (INCIDENTAL TO OTHER PAY ITEMS). DO NOT MARK TRANSITION NOSE.

(11) SLOPE SIDEWALK TOWARD LANDING AS SHOWN WHERE THERE IS NO TERRACE OR WHERE THE TERRACE WIDTH IS LESS THAN 6 FEET WIDE.

(12) THE EDGE OF THE DETECTABLE WARNING FIELD NEAREST TO A RAILROAD CROSSING SHALL BE 1.5 FEET ±0.1' FROM THE FACE OF THE GATE ARM IF THE GATE ARM EXTENDS ACROSS THE SIDEWALK/PATH. WHERE THERE IS NO PEDESTRIAN GATE, THE EDGE OF THE DETECTABLE WARNING FIELD NEAREST TO THE RAILROAD TRACK IS 15 FEET MAXIMUM AND 12 FEET MINIMUM, 15 FEET TYPICAL FROM THE NEAREST RAIL.

(13) DO NOT INSTALL DETECTABLE WARNING FIELDS AT THE EDGES OF STEET-LEVEL PEDESTRIAN REFUGE ISLANDS IF A MINIMUM 2 FOOT CONCRETE SURFACE WITHOUT DETECTABLE WARNINGS (MEASURED IN THE DIRECTION OF PEDESTRIAN TRAVEL) CANNOT BE ACHIEVED.

LEGEND

- ½" EXPANSION JOINT SIDEWALK
- CONTRACTION JOINT FIELD LOCATED
- PAVEMENT MARKING CROSSWALK (WHITE)

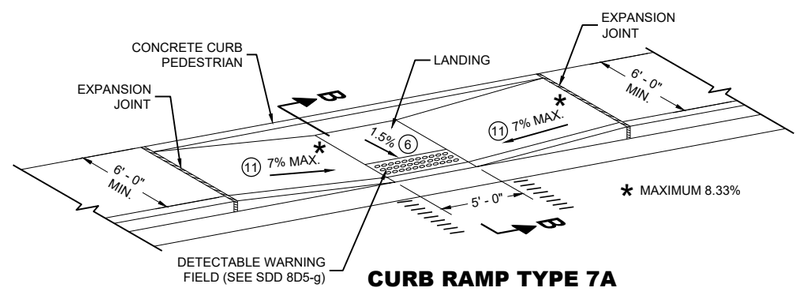

CURB RAMP TYPE 7A

FOR INTERSECTIONS AND MID BLOCK CROSSINGS

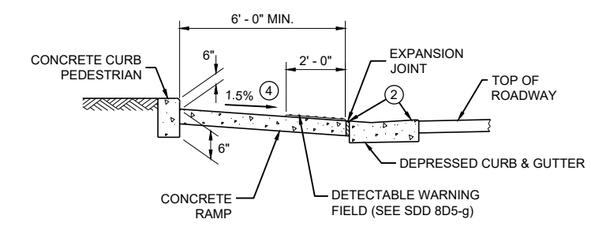

SECTION B - B FOR TYPE 7A

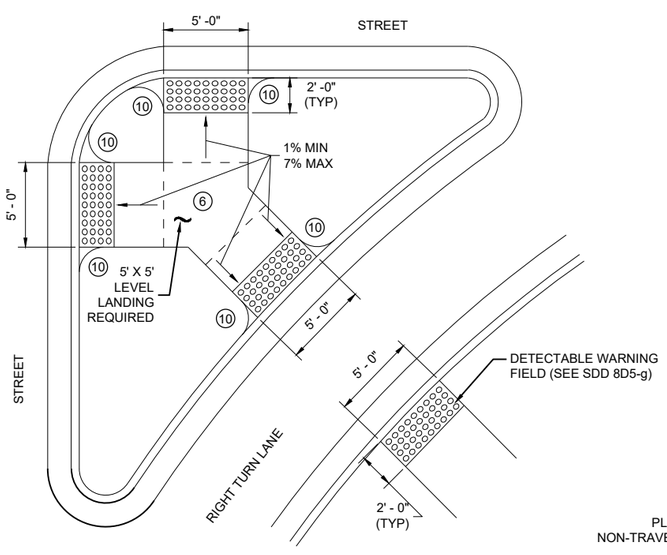

CURB RAMP TYPE 6

DETECTABLE WARNING AT ISLANDS

REFER TO GENERAL NOTES (2) AND (3) FOR ALL ISLAND CURB RAMPS

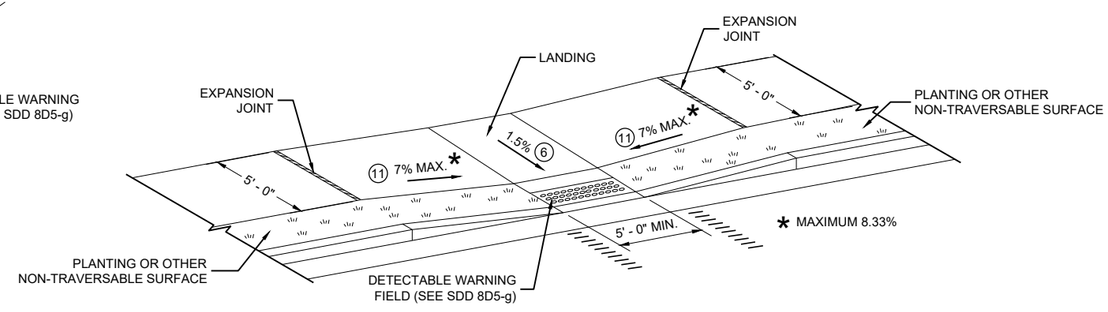

CURB RAMP TYPE 7B

FOR INTERSECTIONS AND MID BLOCK CROSSINGS

CURB RAMPS TYPE 5, 6, 7A, 7B & 8

STATE OF WISCONSIN
DEPARTMENT OF TRANSPORTATION

6

6

SDD 08D05-21e

SDD 08D05-21e

RADIAL DETECTABLE WARNING FIELD PLACEMENT WHEN 5 FOOT GRADE BREAK DISTANCE PER SDD 8D5-c IS EXCEEDED

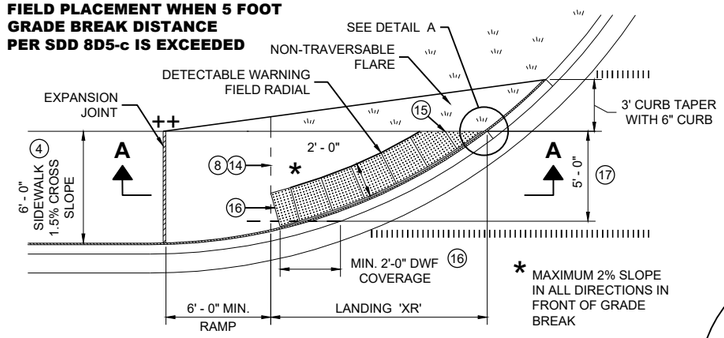

PLAN VIEW

CURB RAMP TYPE 4A1

(GRADE BREAK DISTANCE GREATER THAN 5 FEET)

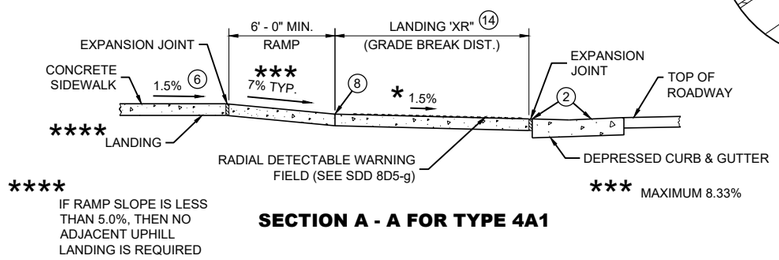

SECTION A - A FOR TYPE 4A1

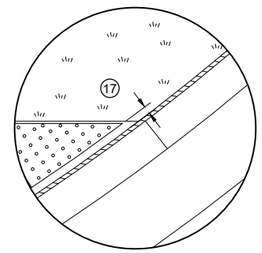

DETAIL A

LEGEND

- ½" EXPANSION JOINT SIDEWALK
- CONTRACTION JOINT SIDEWALK
- PAVEMENT MARKING CROSSWALK (WHITE)

GENERAL NOTES

AVOID PLACING DRAINAGE STRUCTURES, JUNCTION BOXES OR OTHER OBSTRUCTIONS IN FRONT OF RAMP ACCESS AREAS.

DETAILS OF CONSTRUCTION, MATERIALS AND WORKMANSHIP NOT SHOWN ON THIS DRAWING SHALL CONFORM TO THE PERTINENT REQUIREMENTS OF THE STANDARD SPECIFICATIONS AND THE APPLICABLE SPECIAL PROVISIONS.

DETECTABLE WARNING FIELDS THAT ARE INSTALLED AS A GROUP OR SIDE BY SIDE, SHALL BE FROM THE SAME MANUFACTURER.

APPLY RADIAL DETECTABLE WARNING PLACEMENT SIMILARLY FOR TYPE 4A AND 4A1 CURB RAMPS AND SIMILARLY FOR TYPE 4B AND 4B1 CURB RAMPS. TYPE 4A AND 4B CURB RAMPS ARE NOT SHOWN.

REFER TO SDD 8D5-g FOR ADDITIONAL RADIAL PLATE REQUIREMENTS.

FIELD CUTS AT INTERMEDIATE JOINTS WITHIN THE RADIAL DETECTABLE WARNING FILED ARE PROHIBITED.

DETERMINE FINAL RADIAL WARNING FIELD CONFIGURATION AD ITS INDIVIDUAL PLATE LOCATIONS. PERFORM PRE-LAYOUT PRIOR TO PLACEMENT IN PLASTIC CONCRETE. FOLLOW MANUFACTURER'S PRODUCT LIST AND INSTALLATION RECOMMENDATIONS.

(2) GRADE CHANGE BETWEEN GUTTER FLAG SLOPE AND THE CURB RAMP SLOPE SHALL NOT EXCEED 11%. MAXIMUM GUTTER FLAG SLOPE IS 4%. PROVIDE LONGITUDINAL DRAINAGE AROUND CURB AND AWAY FROM CURB RAMP. NO VERTICAL LIPS OR DISCONTINUITIES GREATER THAN ¼ - INCH ARE ALLOWED. SLOPE OF CURB HEAD OPENING SHALL MATCH THE RAMP SLOPE, MINIMALLY 1.5% AND NOT TO EXCEED 7%. WHEN ADJACENT TO 1.5% LANDING, CONSTRUCT CURB HEAD OPENING AT 1.5% IN THE DIRECTION OF PEDESTRIAN TRAVEL.

(3) AN 8.33% CURB RAMP SLOPE IS ALLOWABLE WITH FLATTENED GUTTER FLAG SLOPE AND NOT TO EXCEED 11% GRADE CHANGE.

(4) ±0.5% CONSTRUCTION TOLERANCE IN SIDEWALK CROSS SLOPE. THE SIDEWALK CROSS SLOPE SHALL NOT EXCEED 2% WITHOUT PRIOR APPROVAL FROM THE ENGINEER.

(6) PROVIDE A LEVEL LANDING (MAXIMUM 2% SLOPE) IN ANY DIRECTION OF PEDESTRIAN TRAVEL. STANDARD LANDING SIZE IS 5 FEET BY 5 FEET.

(8) PROVIDE GRADE BREAK PERPENDICULAR TO DIRECTION OF WHEELCHAIR TRAVEL.

(14) CONSULT ENGINEER IF GRADE BREAK LOCATION (END OF LANDING DIMENSION "XR") REQUIRES FIELD ADJUSTMENT WHEN ESTABLISHING FINAL RADIAL DETECTABLE WARNING FIELD LOCATION.

(15) FIELD SAW CUTS ALONG RADIAL DETECTABLE WARNING PLATES WILL BE NECESSARY TO MATCH EACH CURB RAMP EDGE. AVOID CUTTING THROUGH DOMES WHENEVER POSSIBLE. MAKE FIELD CUTS TRUE TO LINE AND WITHIN ⅛" DEVIATION. SMOOTH EDGES OF FIELD CUT PLATES.

(16) USE 1' X 2" RECTANGULAR END PLATE AT END OF TYPE 4A1 RAMP AND PROVIDE MINIMUM 2' - 0" DETECTABLE WARNING FIELD COVERAGE (IN DIRECTION OF PEDESTRIAN TRAVEL) ALONG THE ENTIRE CURB RAMP WIDTH.

(17) A MAXIMUM 3 INCH CONCRETE BORDER WIDTH IS ALLOWABLE IN FRONT OF RADIAL DETECTABLE WARNING FIELD FOR CONSTRUCTABILITY PURPOSES. CONCRETE BORDER WIDTH MAY VARY UP TO 1 INCH.

RADIAL DETECTABLE WARNING FIELD PLACEMENT WHEN 5 FOOT GRADE BREAK DISTANCE PER SDD 8D5-d IS EXCEEDED

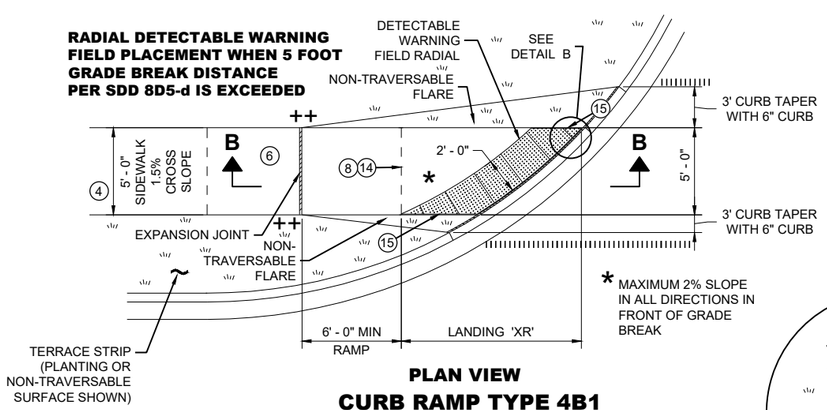

PLAN VIEW

CURB RAMP TYPE 4B1

(GRADE BREAK DISTANCE GREATER THAN 5 FEET)

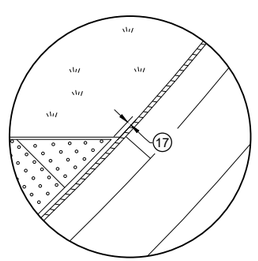

DETAIL B

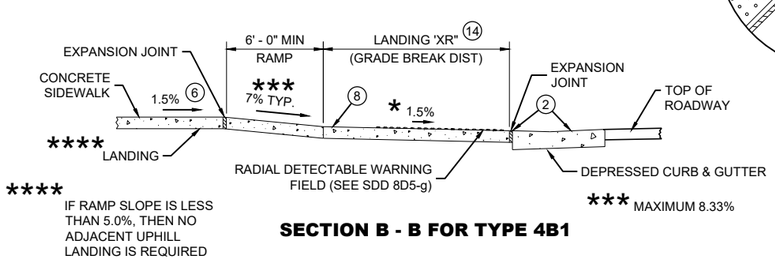

SECTION B - B FOR TYPE 4B1

RADIAL DETECTABLE WARNING FIELD PLACEMENT WHEN 5 FOOT GRADE BREAK DISTANCE PER SDD 8D5-b IS EXCEEDED

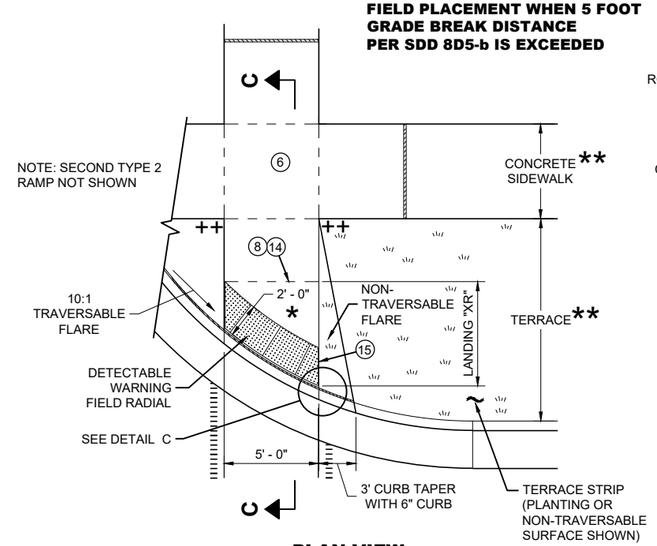

PLAN VIEW

CURB RAMP TYPE 2

(GRADE BREAK DISTANCE GREATER THAN 5 FEET)

(ON LINE WITH SIDEWALK)

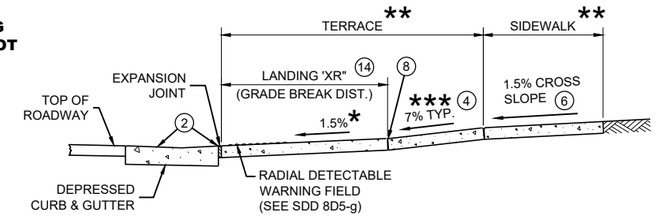

SECTION C - C FOR TYPE 2

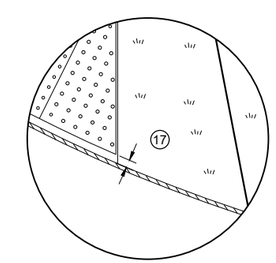

DETAIL C

* MAXIMUM 2% SLOPE IN ALL DIRECTIONS IN FRONT OF GRADE BREAK

** WIDTH SHOWN ELSEWHERE IN THE PLANS

*** MAXIMUM 8.33%

++ CONSTRUCT 6" WEDGE TO AVOID CONCRETE BREAKAGE

CURB RAMPS
RADIAL DETECTABLE WARNING

STATE OF WISCONSIN
DEPARTMENT OF TRANSPORTATION

6

SDD 08D05-21f

	MIN.	MAX.
A	1.6"	2.4"
B	0.65"	1.5"
C	*	*
D	0.9"	1.4"

* THE C DIMENSION IS 50% TO 65% OF THE D DIMENSION.

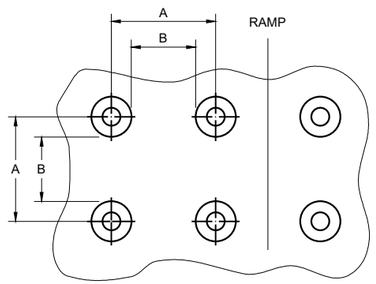

PLAN VIEW

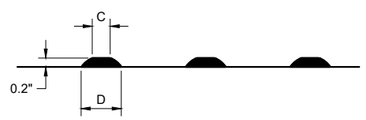

ELEVATION VIEW

TRUNCATED DOMES
DETECTABLE WARNING PATTERN DETAIL

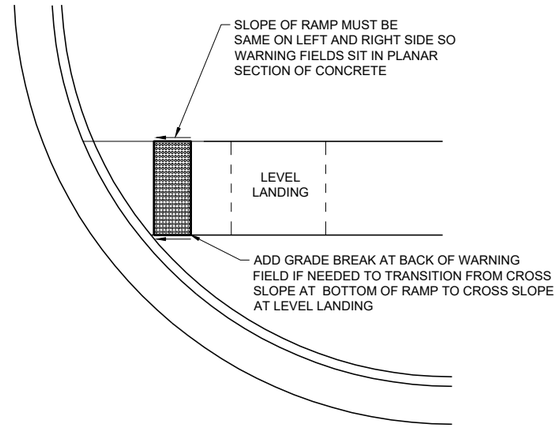

DETECTABLE WARNING FIELD
PLANAR INSTALLATION

GENERAL NOTES

DETECTABLE WARNING FIELDS THAT ARE INSTALLED AT A CURB RAMP SHALL BE FROM THE SAME MANUFACTURER.

PLACE ALL DETECTABLE WARNING FIELD SYSTEMS IN ACCORDANCE TO THE MANUFACTURER'S RECOMMENDATION.

FIELD CUTS AT INTERMEDIATE JOINTS WITHIN THE RADIAL DETECTABLE WARNING FILED ARE PROHIBITED.

DETERMINE FINAL RADIAL WARNING FIELD CONFIGURATION AND ITS INDIVIDUAL PLATE LOCATIONS. PERFORM PRE-LAYOUT PRIOR TO PLACEMENT IN PLASTIC CONCRETE. FOLLOW MANUFACTURER'S PRODUCT LIST AND INSTALLATION RECOMMENDATIONS.

FOR RADIAL DETECTABLE WARNING FIELD APPLICATIONS WHERE STANDARD RADIAL PLATES ARE NOT AVAILABLE AT AN INTERSECTION CURB RADIUS, A COMBINATION OF SQUARE OR RECTANGULAR PLATES AND RADIAL PLATES MAY BE USED TO FORM RADIAL CONFIGURATION. RADIAL WEDGE PLATES IN COMBINATION WITH SQUARE PLATES ARE ALSO ACCEPTABLE. FOLLOW MANUFACTURER'S RECOMMENDATIONS.

REFER TO CONTRACT AND STANDARD SPECIFICATIONS FOR FIELD CUTTING REQUIREMENTS.

DO NOT EMBED IN CONCRETE ANY FIELD-CUT PLATES WITH CUT EDGES SHORTER THAN 6 INCHES. CONSULT WITH MANUFACTURER FOR RE-DRILLING AND ANCHORING REQUIREMENTS OF FIELD-CUT PLATES.

(15) FIELD SAW CUTS ALONG RADIAL DETECTABLE WARNING PLATES WILL BE NECESSARY TO MATCH EACH CURB RAMP EDGE. AVOID CUTTING THROUGH DOMES WHENEVER POSSIBLE. MAKE FIELD CUTS TRUE TO LINE AND WITHIN ⅛" DEVIATION. SMOOTH EDGES OF FIELD CUT PLATES.

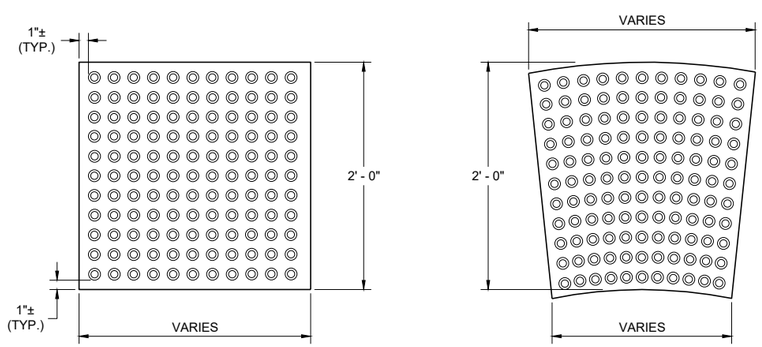

RECTANGULAR PLATES **RADIAL PLATES**

PLAN VIEW
DETECTABLE WARNING FIELDS (TYPICAL)

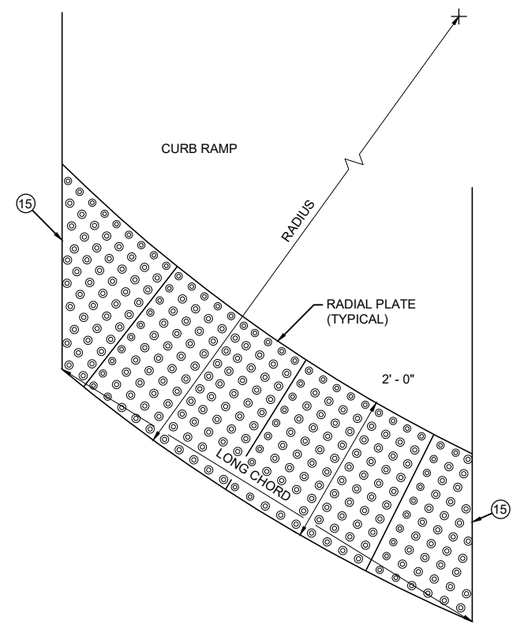

PLAN VIEW
RADIAL DETECTABLE WARNING FIELD ATTRIBUTES

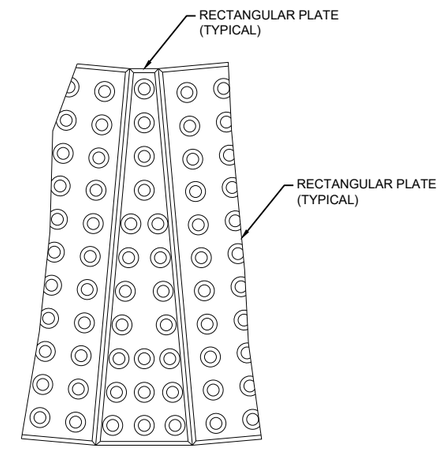

PLAN VIEW
RADIAL WEDGE PLATE CONNECTION DETAIL

6

6

SDD 08D05-21g

SDD 08D05-21g

CURB RAMPS
RECTANGULAR AND RADIAL DETECTABLE WARNING PLATES

STATE OF WISCONSIN
DEPARTMENT OF TRANSPORTATION

APPROVED
July 2023 — DATE
/S/ Rodney Taylor — ROADWAY STANDARDS DEVELOPMENT UNIT SUPERVISOR
FHWA

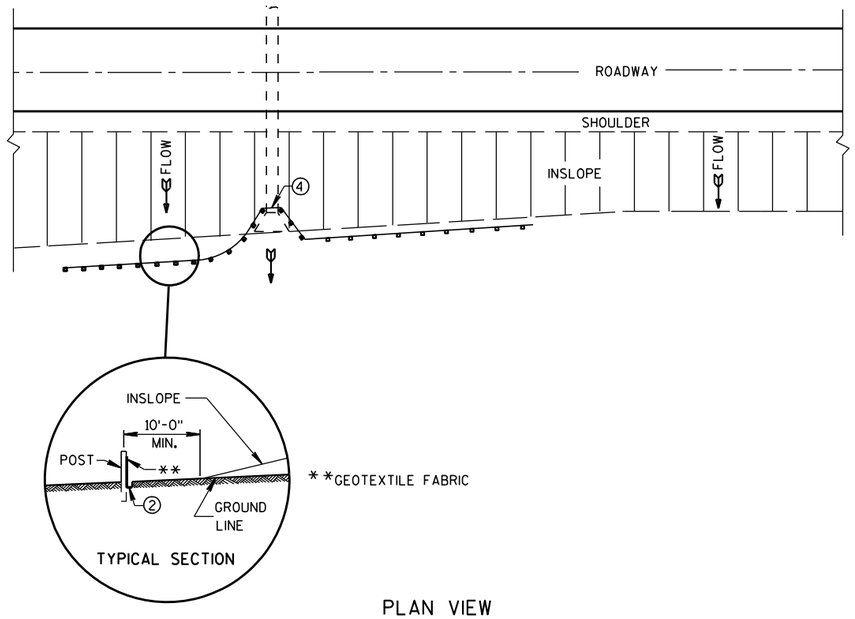

PLAN VIEW

TYPICAL APPLICATION OF SILT FENCE

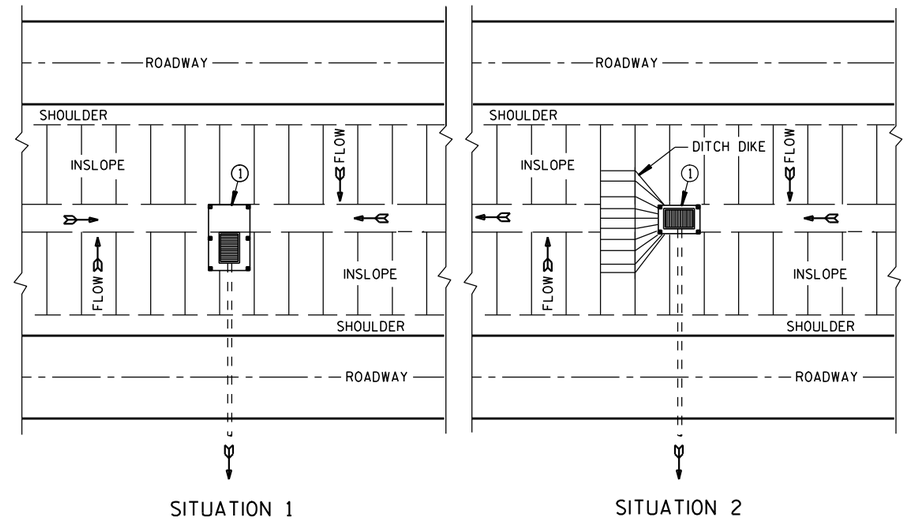

PLAN VIEW

SILT FENCE AT MEDIAN SURFACE DRAINS

GENERAL NOTES

DETAILS OF CONSTRUCTION NOT SHOWN ON THIS DRAWING SHALL CONFORM TO THE PERTINENT REQUIREMENTS OF THE STANDARD SPECIFICATIONS AND APPLICABLE SPECIAL PROVISIONS.

① HORIZONTAL BRACE REQUIRED WITH 2" X 4" WOODEN FRAME OR EQUIVALENT AT TOP OF POSTS.

② FOR MANUAL INSTALLATIONS THE TRENCH SHALL BE A MINIMUM OF 4" WIDE & 6" DEEP TO BURY AND ANCHOR THE GEOTEXTILE FABRIC. FOLD MATERIAL TO FIT TRENCH AND BACKFILL & COMPACT TRENCH WITH EXCAVATED SOIL.

③ WOOD POSTS SHALL BE A MINIMUM SIZE OF 1⅛" X 1⅛" OF OAK OR HICKORY.

④ SILT FENCE TO EXTEND ACROSS THE TOP OF THE PIPE.

⑤ CONSTRUCT SILT FENCE FROM A CONTINUOUS ROLL IF POSSIBLE BY CUTTING LENGTHS TO AVOID JOINTS. IF A JOINT IS NECESSARY USE ONE OF THE FOLLOWING TWO METHODS; A) OVERLAP THE END POSTS AND TWIST, OR ROTATE, AT LEAST 180 DEGREES. B) HOOK THE END OF EACH SILT FENCE LENGTH.

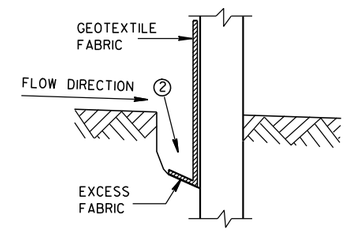

TRENCH DETAIL

NOTE: ADDITIONAL POST DEPTH OR TIE BACKS MAY BE REQUIRED IN UNSTABLE SOILS

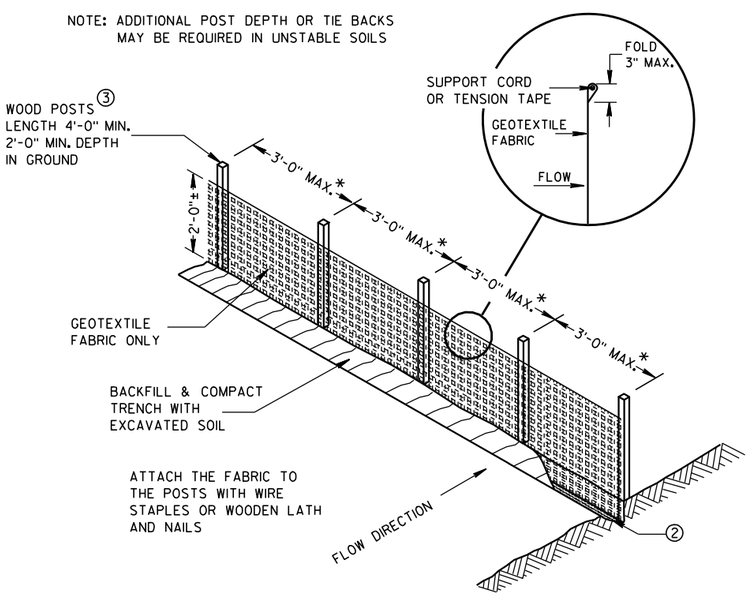

*NOTE: 8'-0" POST SPACING ALLOWED IF A WOVEN GEOTEXTILE FABRIC IS USED.

SILT FENCE

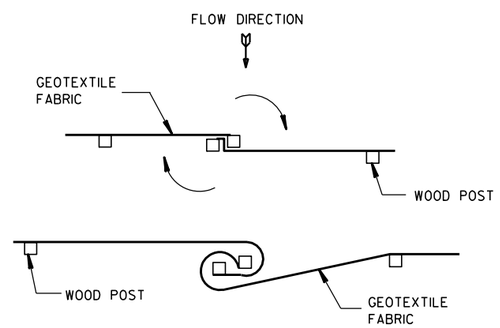

TWIST METHOD

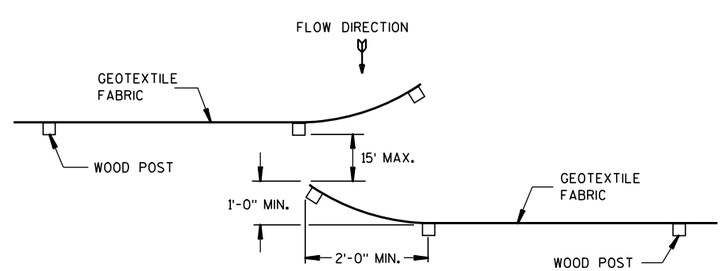

HOOK METHOD

JOINING TWO LENGTHS OF SILT FENCE ⑤

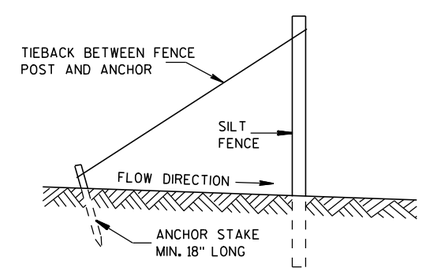

SILT FENCE TIE BACK

(WHEN REQUIRED BY THE ENGINEER)

SILT FENCE
STATE OF WISCONSIN DEPARTMENT OF TRANSPORTATION
APPROVED 4-29-05 DATE — /S/ Beth Cann-- CHIEF ROADWAY DEVELOP ENGINEER FHWA

6

6

S.D.D. 8 E 9-6

S.D.D. 8 E 9-6

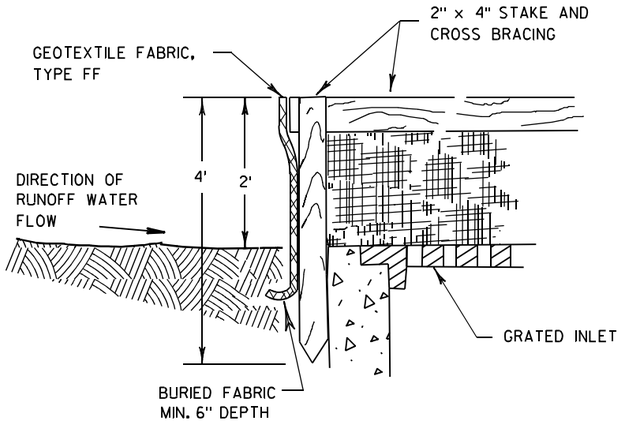

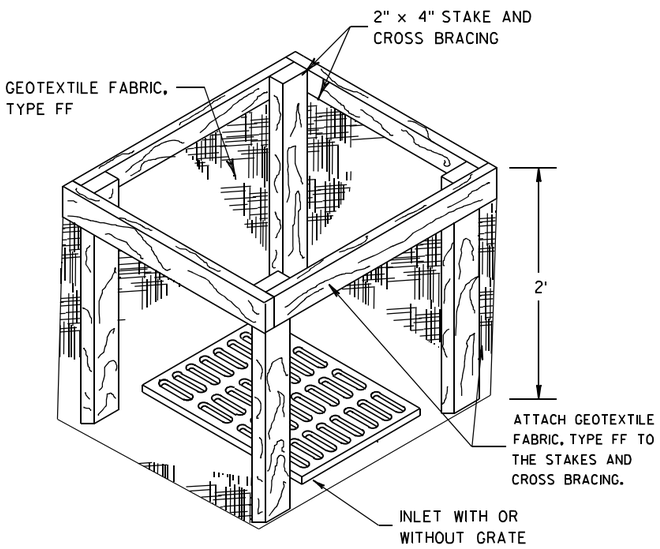

INLET PROTECTION, TYPE A

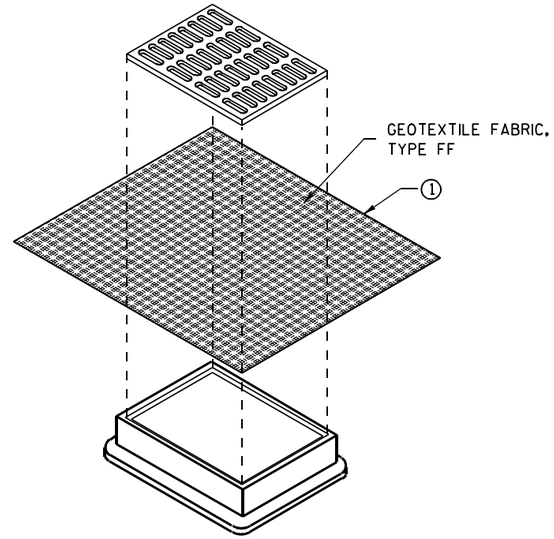

INLET PROTECTION, TYPE B
(WITHOUT CURB BOX)

(CAN BE INSTALLED IN ANY INLET WITHOUT A CURB BOX)

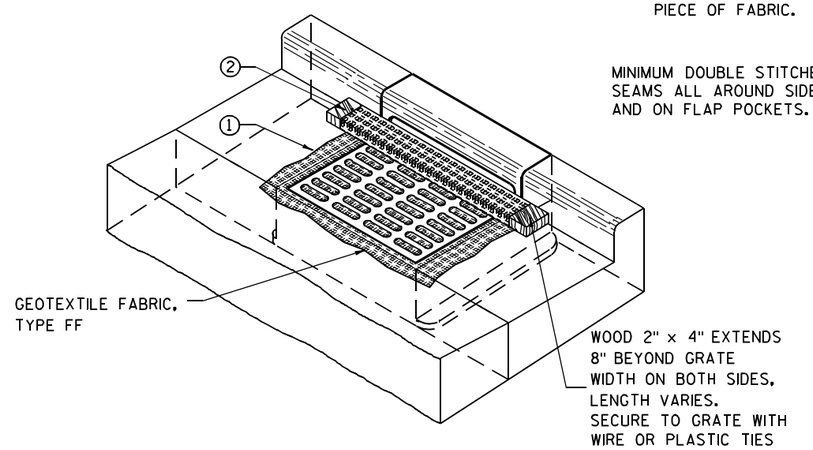

INLET PROTECTION, TYPE C (WITH CURB BOX)

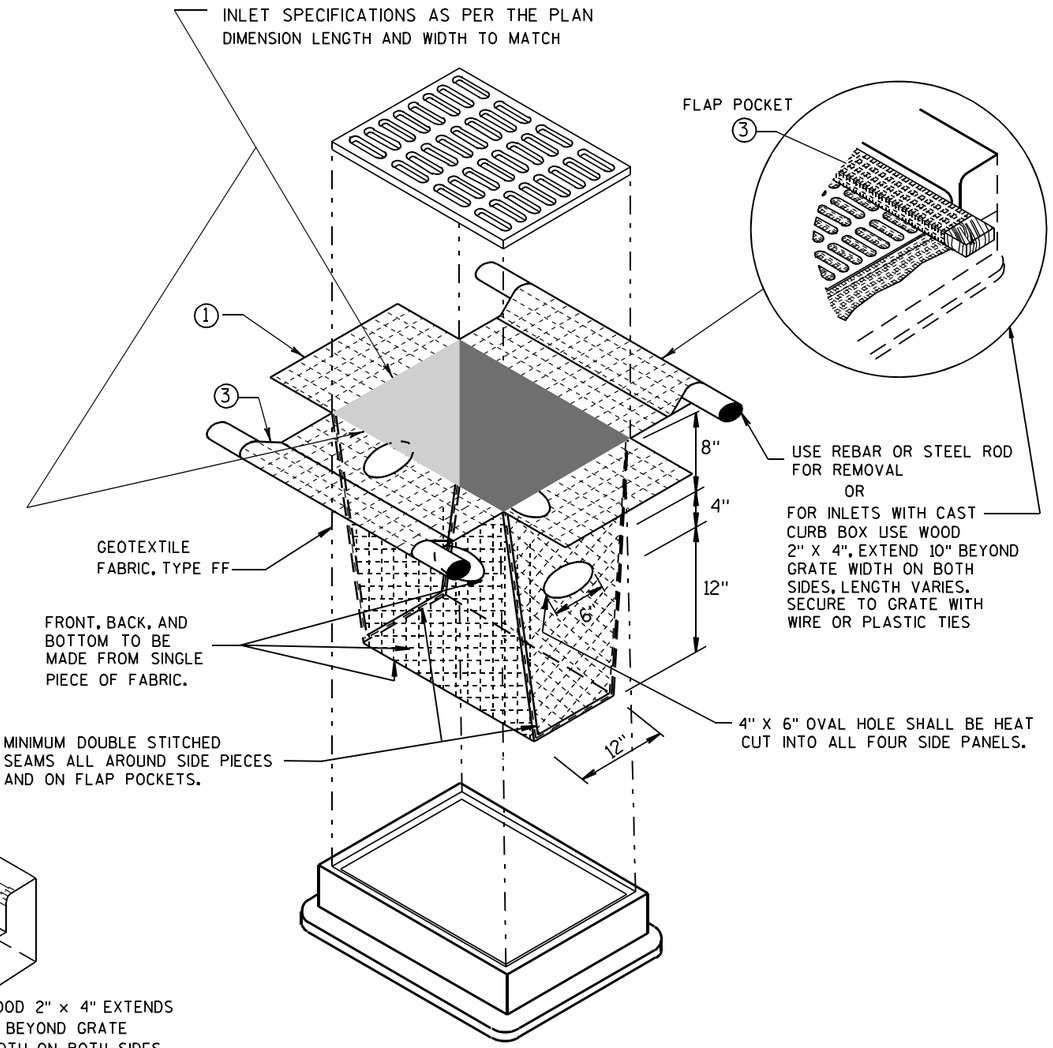

INLET PROTECTION, TYPE D

(CAN BE INSTALLED IN ANY INLET TYPE WITH
OR WITHOUT A CURB BOX AS PER NOTE ②)

GENERAL NOTES

INLET PROTECTION DEVICES SHALL BE MAINTAINED OR REPLACED AT THE DIRECTION OF THE ENGINEER.

MANUFACTURED ALTERNATIVES APPROVED AND LISTED ON THE DEPARTMENT'S EROSION CONTROL PRODUCT ACCEPTABILITY LIST MAY BE SUBSTITUTED.

WHEN REMOVING OR MAINTAINING INLET PROTECTION, CARE SHALL BE TAKEN SO THAT THE SEDIMENT TRAPPED ON THE GEOTEXTILE FABRIC DOES NOT FALL INTO THE INLET. ANY MATERIAL FALLING INTO THE INLET SHALL BE REMOVED IMMEDIATELY.

① FINISHED SIZE, INCLUDING FLAP POCKETS WHERE REQUIRED, SHALL EXTEND A MINIMUM OF 10" AROUND THE PERIMETER TO FACILITATE MAINTENANCE OR REMOVAL.

② FOR INLET PROTECTION, TYPE C (WITH CURB BOX), AN ADDITIONAL 18" OF FABRIC IS WRAPPED AROUND THE WOOD AND SECURED WITH STAPLES. THE WOOD SHALL NOT BLOCK THE ENTIRE HEIGHT OF THE CURB BOX OPENING.

③ FLAP POCKETS SHALL BE LARGE ENOUGH TO ACCEPT WOOD 2X4.

INSTALLATION NOTES

TYPE B & C

TRIM EXCESS FABRIC IN THE FLOW LINE TO WITHIN 3" OF THE GRATE.

THE CONTRACTOR SHALL DEMONSTRATE A METHOD OF MAINTENANCE, USING A SEWN FLAP, HAND HOLDS OR OTHER METHOD TO PREVENT ACCUMULATED SEDIMENT FROM ENTERING THE INLET.

TYPE D

DO NOT INSTALL INLET PROTECTION TYPE D IN INLETS SHALLOWER THAN 30", MEASURED FROM THE BOTTOM OF THE INLET TO THE TOP OF THE GRATE.

TRIM EXCESS FABRIC IN THE FLOW LINE TO WITHIN 3" OF THE GRATE.

THE INSTALLED BAG SHALL HAVE A MINIMUM SIDE CLEARANCE, BETWEEN THE INLET WALLS AND THE BAG, MEASURED AT THE BOTTOM OF THE OVERFLOW HOLES, OF 3". WHERE NECESSARY THE CONTRACTOR SHALL CINCH THE BAG, USING PLASTIC ZIP TIES, TO ACHIEVE THE 3" CLEARANCE. THE TIES SHALL BE PLACED AT A MAXIMUM OF 4" FROM THE BOTTOM OF THE BAG.

INLET PROTECTION
TYPE A, B, C, AND D

STATE OF WISCONSIN
DEPARTMENT OF TRANSPORTATION

APPROVED
10/16/02 — DATE
/S/ Beth Cannon
CHIEF ROADWAY DEVELOPMENT ENGINEER
FHWA

6

S.D.D. 8 E 10-2

METAL APRON ENDWALLS

PIPE DIA. (IN.)	MIN. THICK. (Inches) STEEL	MIN. THICK. (Inches) ALUM.	DIMENSIONS (Inches) A (±1")	B (MAX.)	H (±1")	L (±1 1/2")	L1 ①	L2 ①	W (±2")	APPROX. SLOPE	BODY
12	.064	.060	6	6	6	21	12	17 1/2	24	2 1/2 to 1	1 Pc.
15	.064	.060	7	8	6	26	14	21 3/4	30	2 1/2 to 1	1 Pc.
18	.064	.060	8	10	6	31	15	28 1/4	36	2 1/2 to 1	1 Pc.
21	.064	.060	9	12	6	36	18	29 5/8	42	2 1/2 to 1	1 Pc.
24	.064	.075	10	13	6	41	18	37 1/4	48	2 1/2 to 1	1 Pc.
30	.079	.075	12	16	8	51	18	52 1/4	60	2 1/2 to 1	1 Pc.
36	.079	.105	14	19	9	60	24	59 3/4	72	2 1/2 to 1	2 Pc.
42	.109	.105	16	22	11	69	24	75 5/8	84	2 1/2 to 1	2 Pc.
48	.109	.105	18	27	12	78	24	81	90	2 1/4 to 1	3 Pc.
54	.109	.105	18	30	12	84	30	85 1/2	102	2 1/4 to 1	3 Pc.
60	.109×	.105×	18	33	12	87	—	—	114	2 to 1	3 Pc.
66	.109×	.105×	18	36	12	87	—	—	120	2 to 1	3 Pc.
72	.109×	.105×	18	39	12	87	—	—	126	2 to 1	3 Pc.
78	.109×	.105×	18	42	12	87	—	—	132	1 1/2 to 1	3 Pc.
84	.109×	.105×	18	45	12	87	—	—	138	1 1/2 to 1	3 Pc.
90	.109×	.105×	18	37	12	87	—	—	144	1 1/2 to 1	3 Pc.
96	.109×	.105×	18	35	12	87	—	—	150	1 1/2 to 1	3 Pc.

× EXCEPT CENTER PANEL
SEE GENERAL NOTES

REINFORCED CONCRETE APRON ENDWALLS

PIPE DIA. (IN.)	DIMENSIONS (Inches) T	A	B	C	D	E	G	APPROX. SLOPE
12	2	4	24	48 7/8	72 7/8	24	2	3 to 1
15	2 1/4	6	27	46	73	30	2 1/4	3 to 1
18	2 1/2	9	27	46	73	36	2 1/2	3 to 1
21	2 3/4	9	36	37 1/2	73 1/2	42	2 3/4	3 to 1
24	3	9 1/2	43 1/2	30	73 1/2	48	3	3 to 1
27	3 1/4	10 1/2	49 1/2	24	73 1/2	54	3 1/4	3 to 1
30	3 1/2	12	54	19 3/4	73 1/2	60	3 1/2	3 to 1
36	4	15	63	34 3/4	97 3/4	72	4	3 to 1
42	4 1/2	21	63	35	98	78	4 1/2	3 to 1
48	5	24	72	26	98	84	5	3 to 1
54	5 1/2	27	65	*33 1/4-**35	*98 1/4-**100	90	5 1/2	2 2/5 to 1
60	6	*30-**35	60	39	99	96	5	2 to 1
66	6 1/2	*24-**30	*72-**78	*21-**27	99	102	5 1/2	2 to 1
72	7	*24-**36	78	21	99	108	6	2 to 1
78	7 1/2	*24-**36	78	21	99	114	6 1/2	2 to 1
84	8	36	90 1/2	21	111 1/2	120	6 1/2	1 1/2 to 1
90	8 1/2	41	87 1/2	24	111 1/2	132	6 1/2	1 1/2 to 1

*MINIMUM
**MAXIMUM

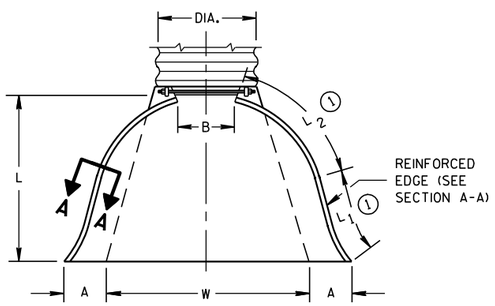

PLAN VIEW

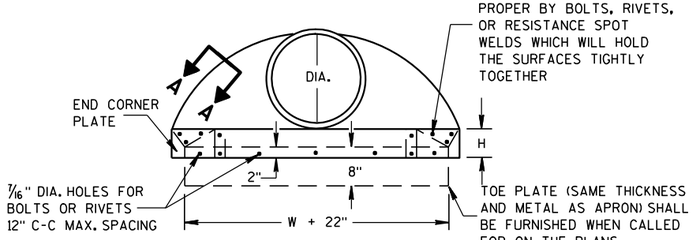

END VIEW

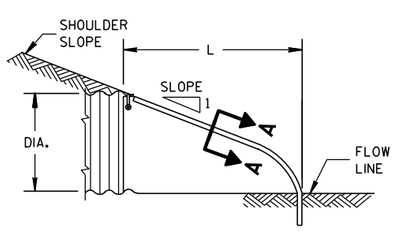

SIDE ELEVATION

METAL ENDWALLS

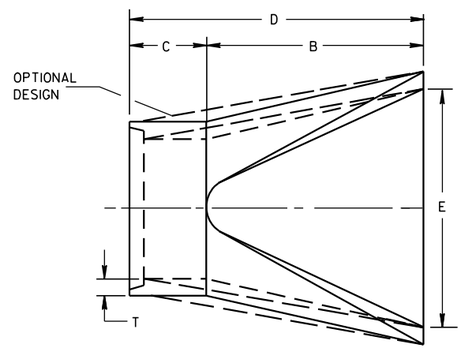

PLAN

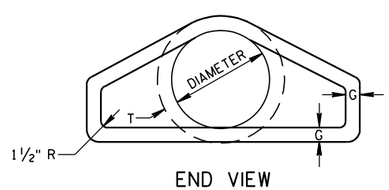

END VIEW

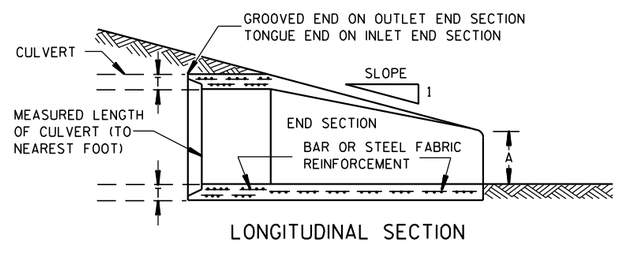

LONGITUDINAL SECTION

CONCRETE ENDWALLS

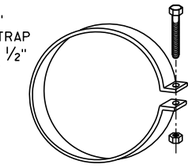

ALTERNATE FOR TYPE 1 CONNECTION

END SECTION CONNECTOR STRAP

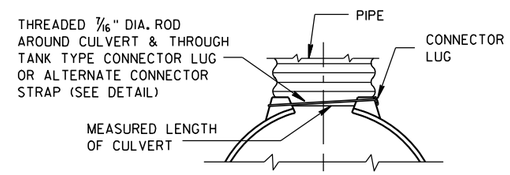

TYPE 1
FOR 12" THRU 24" CORR. PIPE

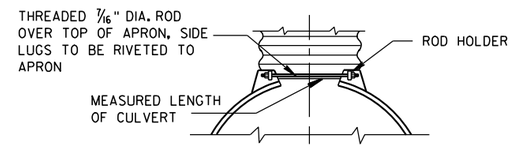

TYPE 2
FOR 30" THRU 96" CORR. PIPE

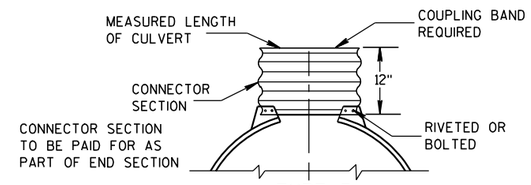

TYPE 3
FOR 42" THRU 96" CORR. PIPE

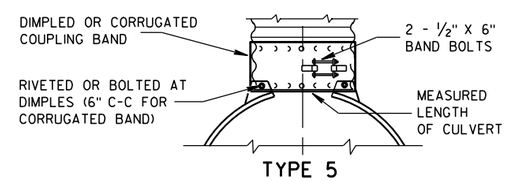

TYPE 5
ALTERNATE FOR:
ALL SIZES CORRUGATED CIRCULAR PIPE

NOTE: DIMPLED BAND FITS OVER OUTSIDE OF ENDWALL, AND CORRUGATED BAND FITS INSIDE ENDWALL. DIMPLED BAND MAY BE USED WITH HELICALLY CORRUGATED PIPE.

FOR CIRCUMFERENTIALLY CORRUGATED PIPE USE ENDWALL CONNECTION DETAILS 1, 2, 3 OR 5 AS APPLICABLE.

FOR HELICALLY CORRUGATED PIPE USE ENDWALL CONNECTION DETAILS 1, 2 OR 5.

FOR HELICALLY CORRUGATED PIPES WITH TWO CIRCUMFERENTIAL CORRUGATIONS AT EACH END USE ENDWALL CONNECTION DETAILS 1, 2 OR 3.

CONNECTION DETAILS

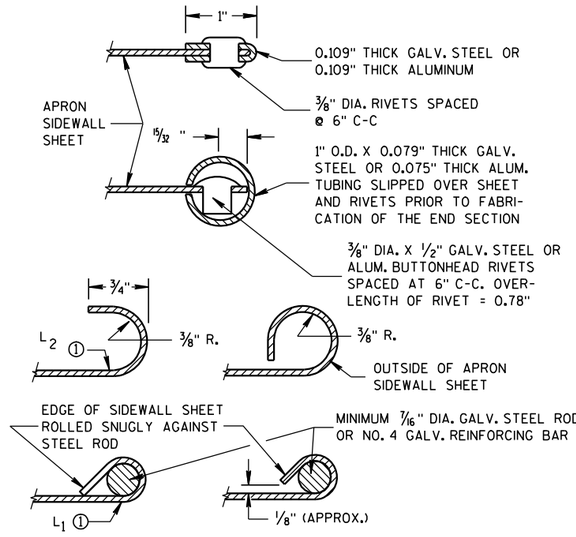

SECTION A-A

GENERAL NOTES

DETAILS OF CONSTRUCTION, MATERIALS AND WORKMANSHIP NOT SHOWN ON THIS DRAWING SHALL CONFORM TO THE PERTINENT REQUIREMENTS OF THE STANDARD SPECIFICATIONS AND THE APPLICABLE SPECIAL PROVISIONS.

CONCRETE CULVERT ENDWALLS MAY NOT BE USED WITH GALVANIZED STEEL OR ALUMINUM CULVERT PIPE OR VISE VERSA. GALVANIZED STEEL OR ALUMINUM ENDWALLS SHALL NORMALLY BE INSTALLED ON CULVERT PIPE OF THE SAME METAL.

ALL THREE PIECE STEEL APRON ENDWALLS FOR 60" DIAMETER PIPE AND LARGER SHALL HAVE 0.109" SIDES AND 0.138" CENTER PANELS. ALL THREE PIECE ALUMINUM APRON ENDWALLS FOR 60" DIAMETER PIPE AND LARGER SHALL HAVE 0.105" SIDES AND 0.134" CENTER PANELS. THE WIDTH OF CENTER PANELS SHALL BE GREATER THAN 20 PERCENT OF THE PIPE PERIMETER.

LAP SEAMS SHALL BE TIGHTLY JOINED BY GALVANIZED RIVETS OR BOLTS FOR STEEL UNITS AND ALUMINUM RIVETS AND BOLTS FOR ALUMINUM UNITS. FOR THE 60" THROUGH 96" DIAMETER APRON ENDWALL SIZES, THE REINFORCED EDGES AND CENTER PANEL SEAMS SHALL BE FURTHER REINFORCED WITH GALVANIZED STEEL OR ALUMINUM STIFFENER ANGLES. THE ANGLES SHALL BE ATTACHED BY GALVANIZED NUTS AND BOLTS FOR STEEL UNITS AND ALUMINUM NUTS AND BOLTS FOR ALUMINUM UNITS.

WHERE TWO OR MORE PIPES WITH APRON ENDWALLS ARE LAID ADJACENT TO EACH OTHER, THEY SHALL BE SEPARATED BY A DISTANCE SUFFICIENT TO PROVIDE A MINIMUM CLEARANCE OF 6 INCHES BETWEEN APRON ENDWALLS.

① FOR PIPE SIZES UP TO 60" DIAMETER, A 180° ROLLED EDGE MAY BE USED INSTEAD OF STEEL ROD REINFORCEMENT. SEE SECTION A-A.

APRON ENDWALLS FOR CULVERT PIPE

STATE OF WISCONSIN
DEPARTMENT OF TRANSPORTATION

APPROVED
11/30/94 — DATE
/S/ Rory L. Rhinesmith — CHIEF ROADWAY DEVELOPMENT ENGINEER
FHWA

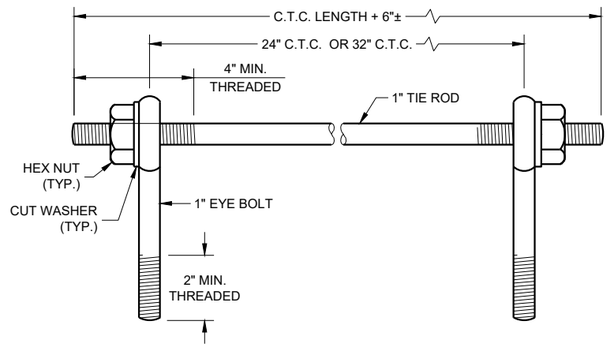

EYE BOLTS AND TIE ROD

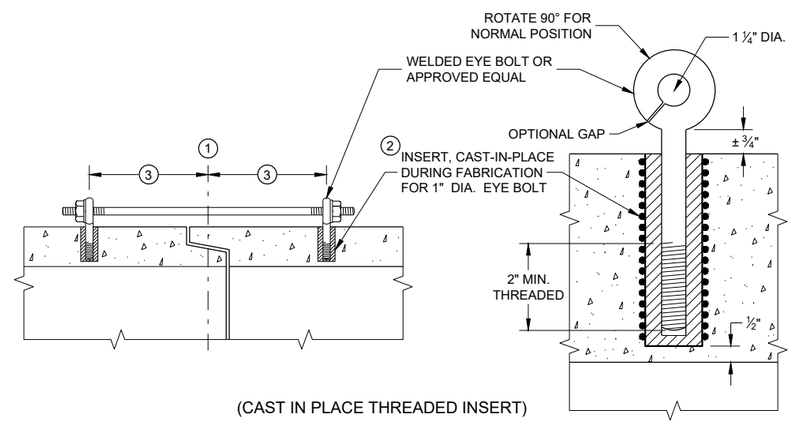

(CAST IN PLACE THREADED INSERT)

LONGITUDINAL SECTIONS

EYE BOLT AND TIE ROD ASSEMBLY (ALTERNATE NO. 1)

GENERAL NOTES

DETAILS OF CONSTRUCTION, MATERIALS, AND WORKMANSHIP NOT SHOWN ON THIS DRAWING SHALL CONFORM TO THE PERTINENT REQUIREMENTS OF THE STANDARD SPECIFICATIONS AND APPLICABLE SPECIAL PROVISIONS.

CONCRETE CULVERT AND STORM SEWER PIPE SHALL BE TIED TOGETHER IN THE MANNER ILLUSTRATED BY THIS DETAIL AT LOCATIONS DESIGNATED IN THE STANDARD SPECIFICATIONS AND THE PLAN. THE CONTRACTOR MAY USE EITHER ALTERNATE 1, 2 OR 3 FOR DRAINAGE STRUCTURES. ONLY ALTERNATE 1 AND 3 MAY BE USED FOR CATTLE PASSES, UNLESS OTHERWISE STATED IN THE CONTRACT. THE MATERIALS, FABRICATION AND WORK NECESSARY TO TIE THE PIPE BY THIS DETAIL WILL BE CONSIDERED INCIDENTAL TO THE PIPE AND APRON ENDWALLS IF REQUIRED.

DETAILED DRAWINGS FOR PROPOSED ALTERNATE DESIGNS FOR JOINT TIES SHALL BE SUBMITTED TO THE ENGINEER FOR APPROVAL.

JOINT TIES TO BE HOT-DIP GALVANIZED PER ASTM A 153.

1. CENTER LINE OF TONGUE AND GROOVE OR BELL AND SPIGOT JOINTS.
2. THE INSIDE OF THE THREADED INSERTS SHALL BE CLEAN TO ALLOW THE INSERTION OF THREADED EYE BOLTS.
3. HOLES SHALL BE CAST-IN-PLACE OR DRILLED PER THE APPLICABLE DETAIL, AND EQUAL DISTANCE FROM THE CENTERLINE OF THE JOINT.
4. BOLT PROJECTION INSIDE OF PIPE SHALL NOT EXCEED 2 INCHES.
5. OPENING TO BE ROD DIAMETER PLUS 1 INCH.
6. LENGTH ADEQUATE TO EXTEND TO WITHIN ½ INCH OF THE INNER SURFACE OF THE PIPE.
7. EYE BOLT LENGTH DETERMINED BY WALL THICKNESS, BELL THICKNESS AND BOLT PROJECTION INSIDE PIPE.

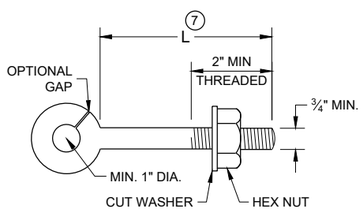

EYE BOLT 7

NOTE: TWO EYE BOLTS MAY BE USED WITH A 30" OR 38" LONG THREADED ROD IN LIEU OF THE 90° BENT TIE ROD.

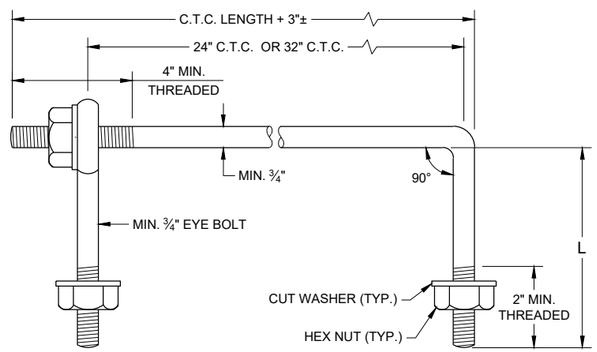

EYE BOLT AND TIE ROD

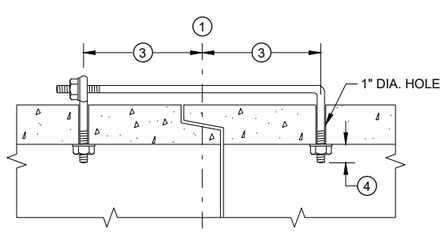

(TONGUE AND GROOVE PIPE)

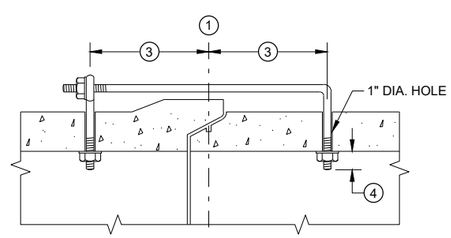

(MODIFIED BELL PIPE)

LONGITUDINAL SECTION

(JOINT TIES FOR 18" TO 66" DIA. CONCRETE PIPE)

EYE BOLT AND TIE ROD ASSEMBLY (ALTERNATE NO. 2)

ADJUSTABLE TIE ROD TABLE

PIPE DIAMETER	TIE ROD DIAMETER	D	L_1	N
12 - 60	⅝	⅝	5	½
66 - 84	¾	¾	5	½
90 - 144	1	1	7	1 7/16

DIMENSIONS SHOWN ARE IN INCHES

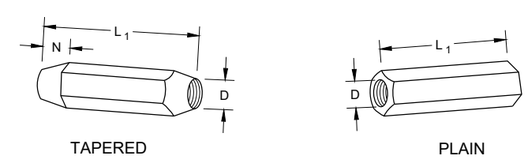

RIGHT AND LEFT THREADS

SLEEVE NUTS

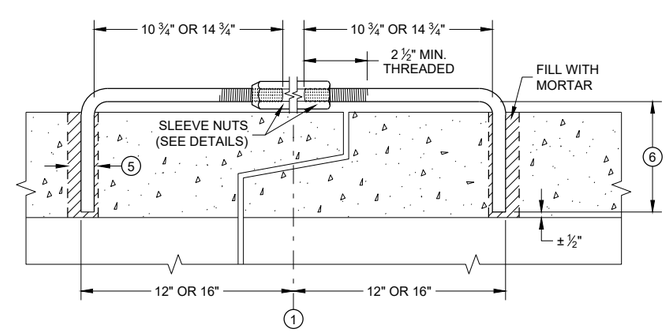

LONGITUDINAL SECTION

ADJUSTABLE TIE ROD (ALTERNATE NO. 3)

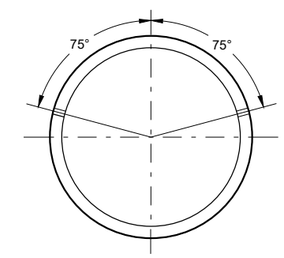

PLACEMENT OF (2) CAST-IN-PLACE INSERTS OR HOLES DURING FABRICATION FOR PIPE SECTIONS REQUIRING TIE RODS

TRANSVERSE SECTION

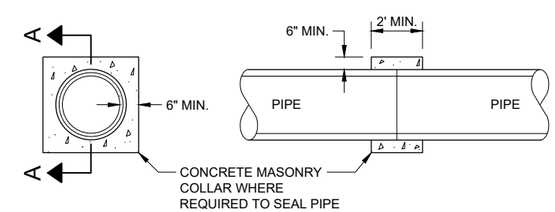

SECTION A - A

CONCRETE COLLAR DETAIL

JOINT TIES FOR CONCRETE PIPE AND CONCRETE COLLAR DETAIL

STATE OF WISCONSIN
DEPARTMENT OF TRANSPORTATION

APPROVED
November 2021 — DATE
/S/ Rodney Taylor — ROADWAY STANDARDS DEVE ENGINEER
FHWA

6

SDD 08F04 - 08

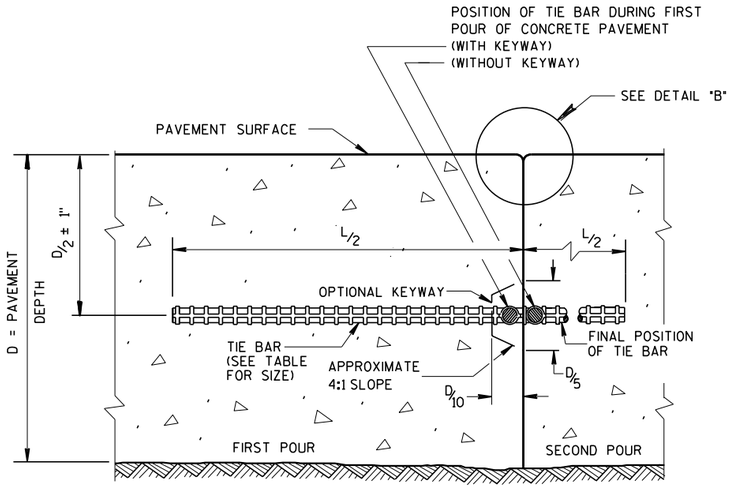

CONSTRUCTION JOINT

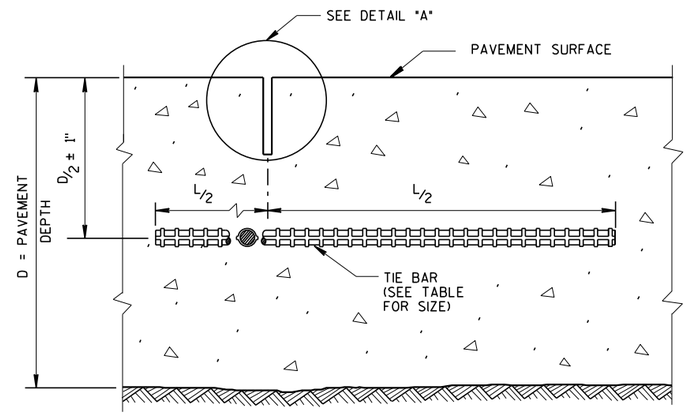

SAWED JOINT

GENERAL NOTES

CREATE A LONGITUDINAL JOINT FOR PAVEMENT WIDTHS GREATER THAN 15 FEET.

CORRELATE LONGITUDINAL JOINTS WITH LANE LINES WHEN POSSIBLE.

1. ANCHOR TIE BARS INTO DRILLED HOLES WITH AN EPOXY.
2. PAVEMENT THAT WAS IN PLACE PRIOR TO THE CONTRACT.

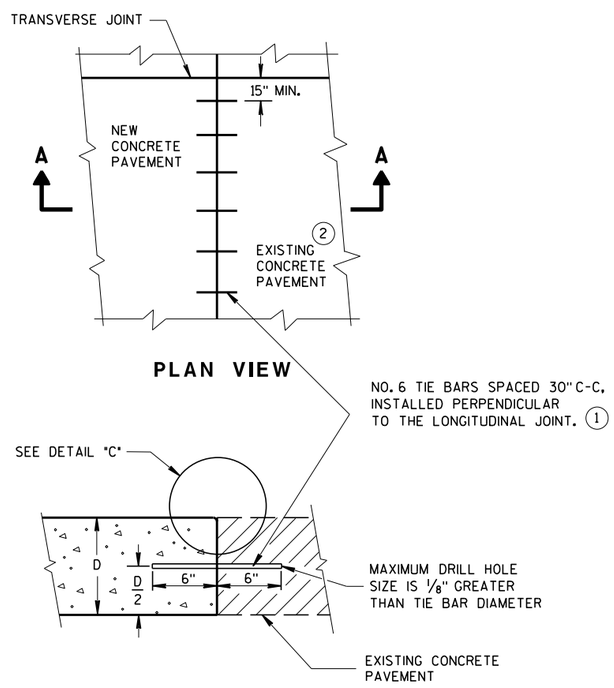

PLAN VIEW

SECTION A-A

LONGITUDINAL CONSTRUCTION JOINT TIE BARS ANCHORED INTO EXISTING PAVEMENT

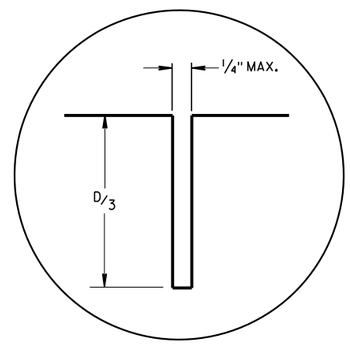

DETAIL "A"

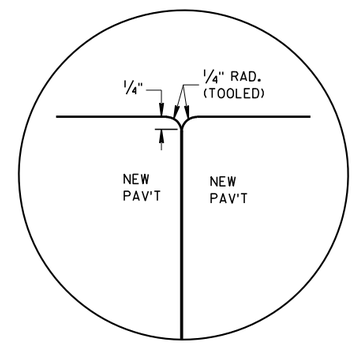

DETAIL "B"

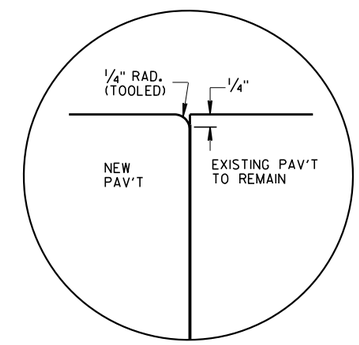

DETAIL "C"

TIE BAR TABLE

PAVEMENT DEPTH (D)	TIE BAR SIZE	TIE BAR LENGTH (L)	MAX. TIE BAR SPACING
< 10 1/2"	NO. 4	30"	36"
≥ 10 1/2"	NO. 5	36"	36"
	NO. 4 *	30"	24" **

* SUBSTITUTE BENT BARS AT LONGITUDINAL JOINTS WHEN EQUIPMENT LIMITATIONS DURING CONSTRUCTION WARRANT (e.g. AUXILIARY LANES OR TURN LANES)

** CONFORM TO 15" MINUMUM SPACING FROM TRANSVERSE JOINTS; SPACING BETWEEN TIE BARS WILL BE 30" AT TRANSVERSE JOINTS.

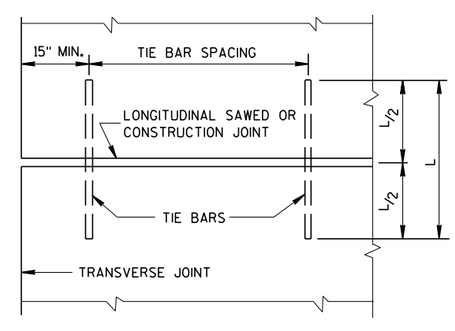

PLAN VIEW

SHOWING LOCATION OF TIE BARS

CONCRETE PAVEMENT LONGITUDINAL JOINTS AND TIES

STATE OF WISCONSIN
DEPARTMENT OF TRANSPORTATION

APPROVED
March 2018 — DATE
/S/ Peter Kerr — PAVEMENT SUPE
FHWA

6

S.D.D. 13 C 1-19

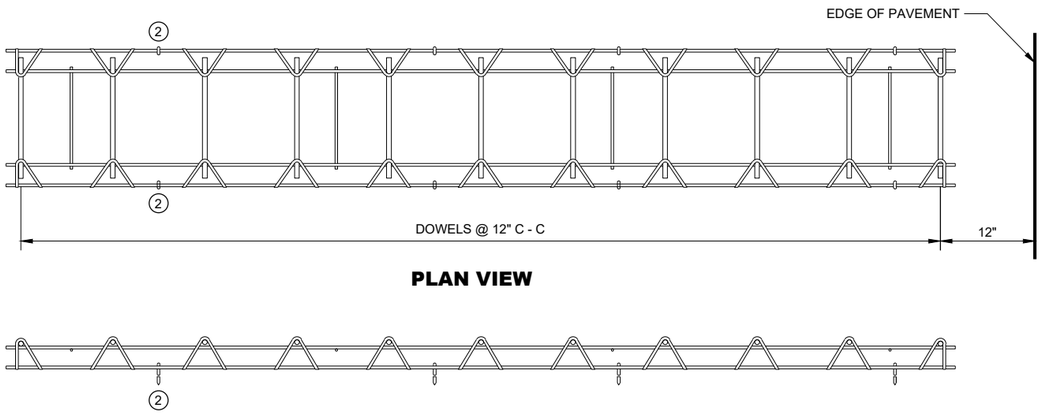

PLAN VIEW

SIDE VIEW

CONTRACTION JOINT DOWEL ASSEMBLY (1)

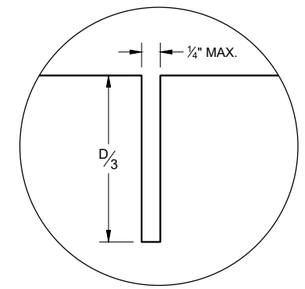

JOINT DETAIL

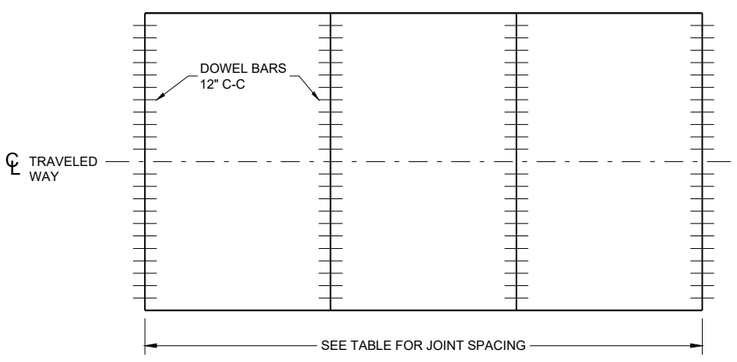

CONTRACTION JOINT LOCATIONS

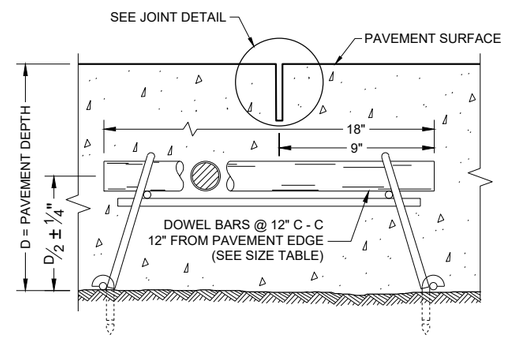

DOWELED CONTRACTION JOINT

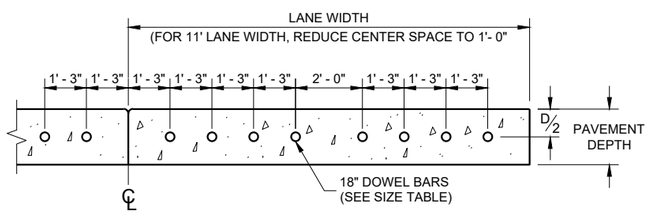

DRILLED DOWEL BAR CONSTRUCTION JOINT (7)

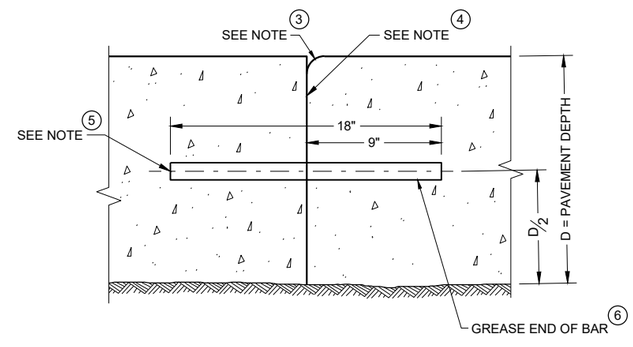

TRANSVERSE CONSTRUCTION JOINT

GENERAL NOTES

CONTRACTION JOINTS

CONSTRUCT TRANSVERSE CONTRACTION JOINTS NORMAL TO THE CENTERLINE. SHOW THE LOCATION OF CONTRACTION JOINTS THROUGH INTERSECTIONS ON THE PLANS OR AS DIRECTED BY THE ENGINEER.

INSTALL DOWEL BARS PARALLEL TO THE PAVEMENT CENTERLINE AND PAVEMENT SURFACE.

FOR PAVEMENT SLABS OF VARYING WIDTHS, LOCATE THE OUTER MOST DOWEL BAR SO THAT THE CENTER OF THE BAR IS A MINIMUM OF 6 INCHES FROM AND A MAXIMUM OF 18 INCHES FROM THE FREE EDGE OF PAVEMENT.

CONSTRUCTION JOINTS

LOCATE CONSTRUCTION JOINTS A MINIMUM OF 6 FEET FROM THE NEAREST CONTRACTION JOINT AND ALIGN PARALLEL TO THE CONTRACTION JOINTS.

1. OBTAIN THE ENGINEER'S APPROVAL FOR THE USE OF ALTERNATIVE DESIGNS OF THE DOWEL ASSEMBLY. USE MECHANICAL DOWEL BAR INSERTERS OR DOWEL ASSEMBLIES WHEN CONSTRUCTION CONTRACTION JOINTS.
2. SECURE BASKETS WITH ANCHORS TO HOLD DOWEL BARS IN THE CORRECT POSITION AND ALIGNMENT. TYPE, LOCATION, NUMBER AND LENGTH OF ANCHORS ARE DEPENDENT UPON FIELD CONDITIONS.
3. FORM OR SAW CONSTRUCTION JOINTS. PROVIDE A ¼" RADIUS AT FORMED JOINTS.
4. PROVIDE A SMOOTH VERTICAL FACE FOR THE ENTIRE DEPTH OF THE PAVEMENT WHEN FORMING CONSTRUCTION JOINTS.
5. INSTALL DOWEL BARS AT CONSTRUCTION JOINTS BY FORMING OR DRILLING. INSTALL FORMED DOWEL BARS 12 INCHES C - C AND 12 INCHES FROM PAVEMENT EDGE. REMOVE EXCESS CONCRETE FROM THE FREE END OF THE DOWEL BAR IF DOWEL BARS ARE FORMED THROUGH A HEADER BOARD. INSTALL DRILLED DOWEL BARS ACCORDING TO THE "DRILLED DOWEL BAR CONSTRUCTION JOINT" DETAIL.
6. APPLY A THIN UNIFORM COATING OF SURFACE TREATMENT TO THE FREE END OF DOWEL BARS TO PREVENT BONDING.
7. ANCHOR DOWEL BARS AND TIE BARS INTO DRILLED HOLES WITH AN EPOXY. MAXIMUM DRILLED HOLE SIZE IS ⅛" GREATER THAN DOWEL BAR DIAMETER, 9 INCHES IN LENGTH.

PAVEMENT DEPTH, DOWEL BAR SIZE AND JOINT SPACING TABLE

PAVEMENT DEPTH (D)	DOWEL BAR DIAMETER	CONTRACTION JOINT SPACING
6", 6 ½"	NONE	12'
7", 7 ½"	1"	14'
8" & ABOVE	1 ¼"	15'

URBAN DOWELED CONCRETE PAVEMENT

STATE OF WISCONSIN
DEPARTMENT OF TRANSPORTATION

APPROVED
November 2022 /S/ Peter Kemp P.E.
DATE PAVEMENT SUPERVIS
FHWA

6

SDD 13C13 - 11

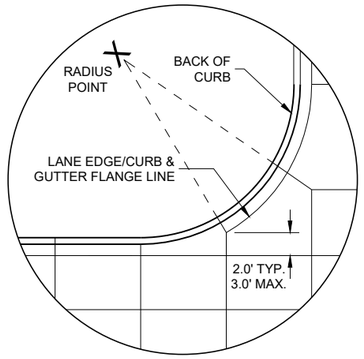

DETAIL "A"

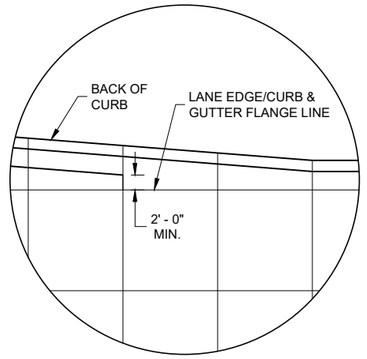

DETAIL "B"

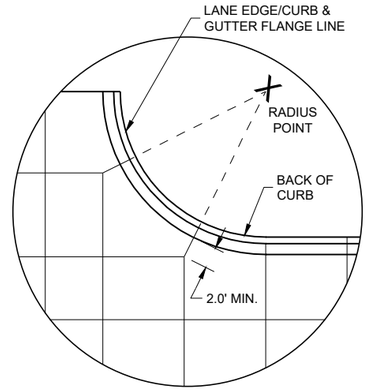

DETAIL "C"

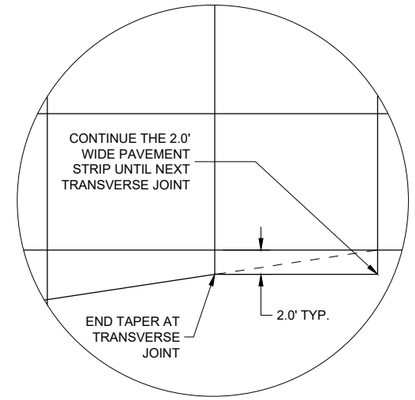

DETAIL "D"

GENERAL NOTES

THE PRIMARY ROADWAY CONTROLS THE TRANSVERSE JOINT PATTERN.

ALIGN NEW JOINTS WITH EXISTING JOINTS OR CRACKS.

CONSTRUCT TRANSVERSE JOINTS PERPENDICULAR TO THE ROADWAY.

ADJUST TRANSVERSE JOINTS TO ALIGN WITH UTILITY FIXTURES (E.G MANHOLES AND INLETS) IN THE PAVEMENT STRUCTURE WHEN POSSIBLE. WATER VALVES DO NOT REQUIRE JOINT ADJUSTMENT.

AVOID SLABS LESS THAN 2 FEET WIDE OR GREATER THAN 15 FEET WIDE.

SEE TABLE FOR TRANSVERSE JOINT SPACING. JOINT SPACING SPECIFIED IS MAXIMUM AND ACTUAL SPACING CAN BE ADJUSTED TO ACCOMMODATE INTERSECTIONS.

AVOID ANGLES LESS THAN 60° BY DOGLEGGING JOINTS THROUGH CURVE RADIUS POINTS. USE 90° ANGLES WHEN POSSIBLE.

CORRELATE LONGITUDINAL JOINTS WITH LANE LINES WHEN POSSIBLE.

1. PROVIDE TRANSVERSE JOINTS AT ALL PAVEMENT WIDTH CHANGES.
2. CONSTRUCT DOWELED EXPANSION JOINT ON THE SIDE ROAD OF AN INTERSECTION IF THE SIDE ROAD IS CONCRETE PAVEMENT AND GREATER THAN 300 FEET IN LENGTH. ALIGN EXPANSION JOINT WITH EDGE OF RADIUS.
3. THE ENGINEER MAY APPROVE SLIGHT VARIATIONS FROM THESE JOINTING DETAILS.

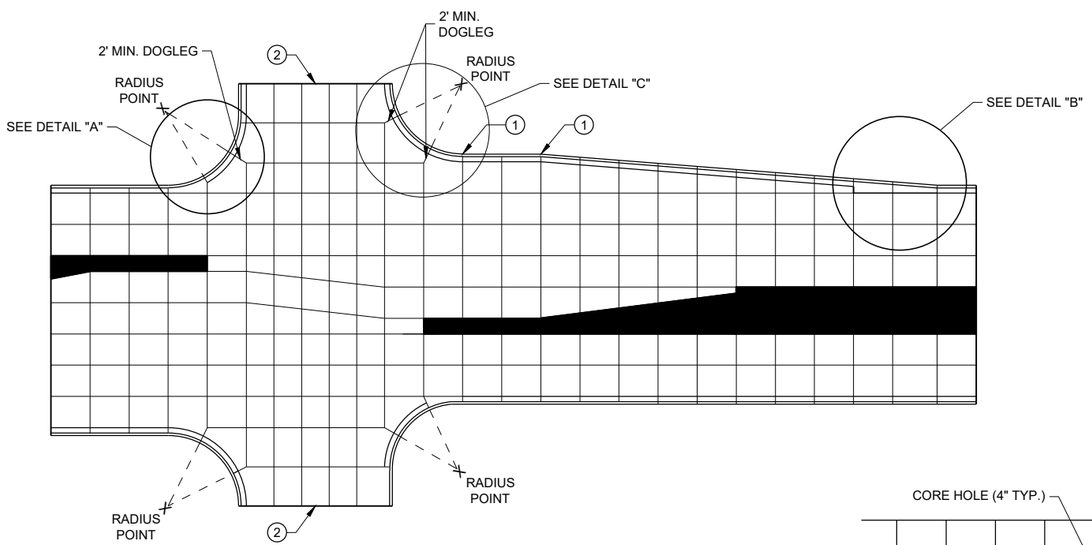

STANDARD INTERSECTION

PAVEMENT DEPTH AND JOINT SPACING TABLE

PAVEMENT DEPTH (D)	CONTRACTION JOINT SPACING
6", 6 ½"	12'
7", 7 ½"	14'
8" & ABOVE	15'

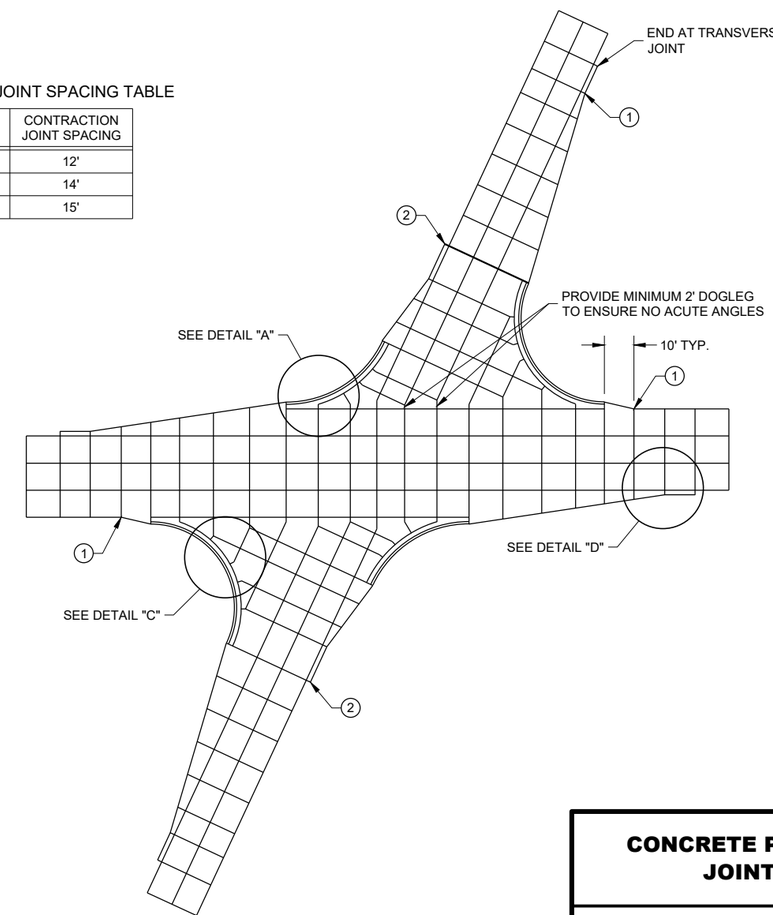

SKEWED INTERSECTION

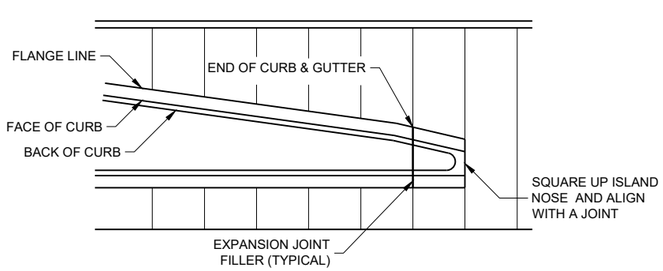

APPROACH TO MEDIAN

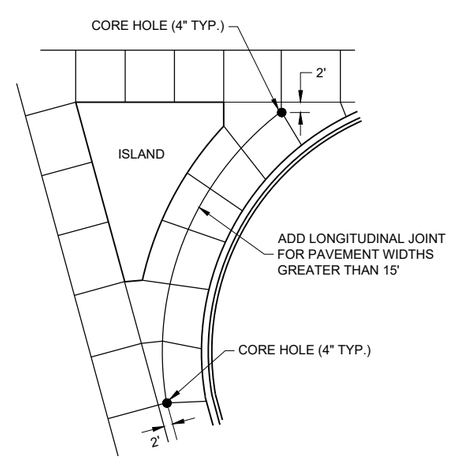

LARGE RIGHT TURN

CONCRETE PAVEMENT JOINTING

STATE OF WISCONSIN
DEPARTMENT OF TRANSPORTA

6

SDD 13C18 - 08a

LEGEND

POTENTIAL DOWELED EXPANSION JOINT

DOWELED JOINT

TIED JOINT

GENERAL NOTES

USE AN EXPANSION JOINT FILLER MEETING THE REQUIREMENTS OF STANDARD SPECIFICATION 415.

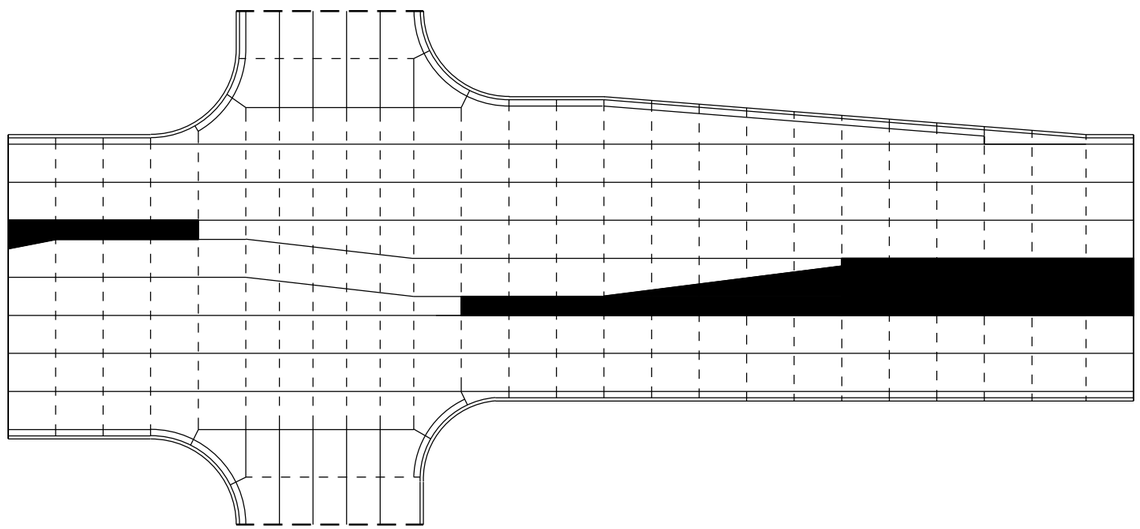

STANDARD INTERSECTION

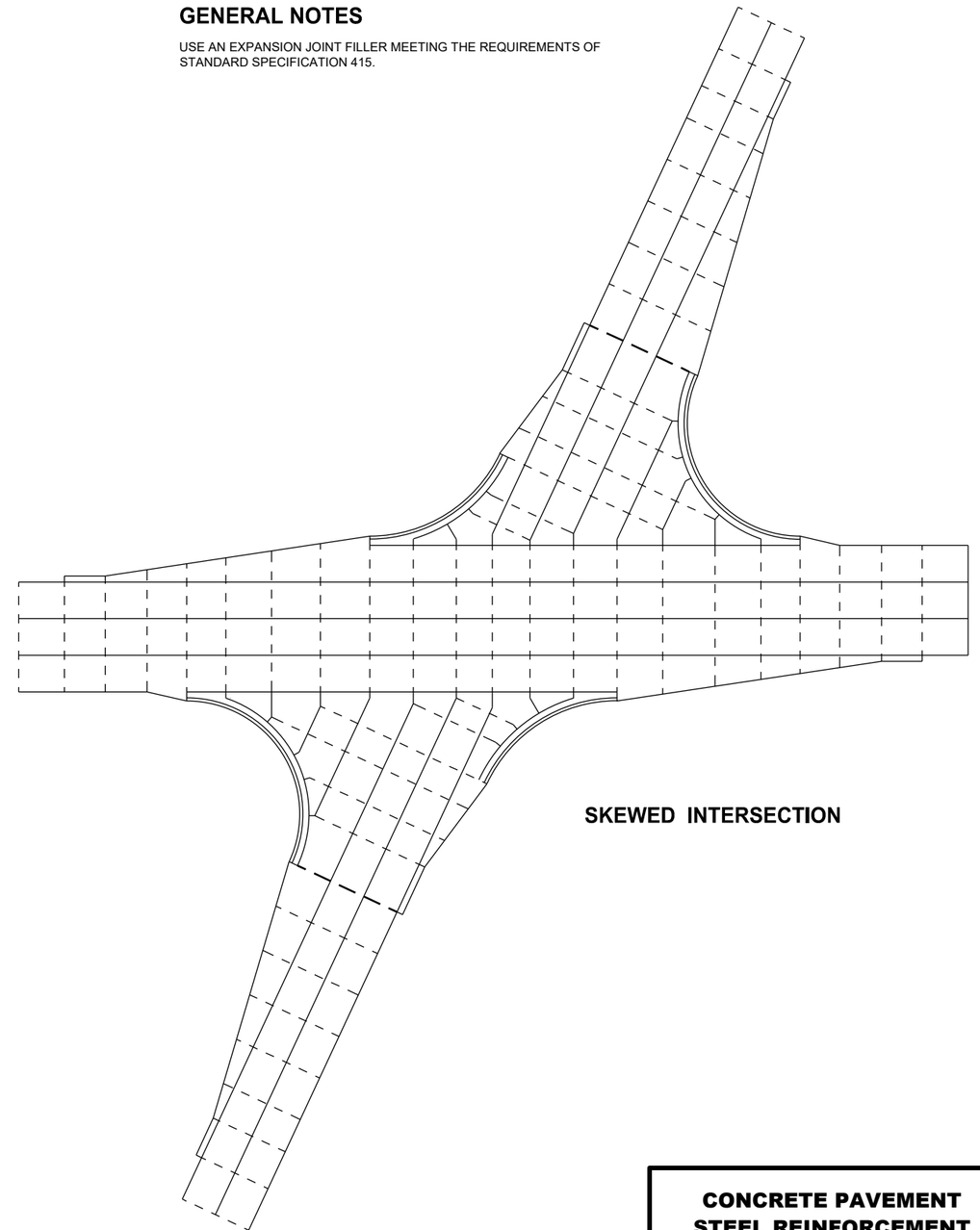

SKEWED INTERSECTION

CONCRETE PAVEMENT STEEL REINFORCEMENT

STATE OF WISCONSIN
DEPARTMENT OF TRANSPORTA

6

SDD 13C18 - 08b

6

SDD 13C18 - 08b

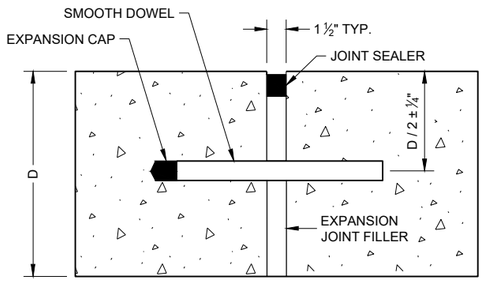

DOWELED TRANSVERSE (1)

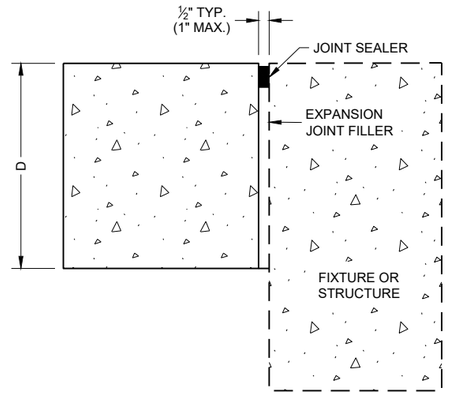

UNTIED - LONGITUDINAL

EXPANSION JOINTS

TIE BAR TABLE

PAVEMENT DEPTH (D)	TIE BAR SIZE	TIE BAR LENGTH (L)	MAX. TIE BAR SPACING
< 10 ½"	NO. 4	30"	36"
≥ 10 ½"	NO. 5	36"	36"
	NO. 4 *	30"	24" **

* SUBSTITUTE BENT BARS AT LONGITUDINAL JOINTS WHEN EQUIPMENT LIMITATIONS DURING CONSTRUCTION WARRANT (e.g. AUXILIARY LANES OR TURN LANES)

** CONFORM TO 15" MINIMUM SPACING FROM TRANSVERSE JOINTS; SPACING BETWEEN TIE BARS WILL BE 30" AT TRANSVERSE JOINTS.

GENERAL NOTES

1. USE DOWELED EXPANSION JOINTS ON SIDE ROADS AT INTERSECTIONS (TO ISOLATETHE SIDE ROAD FROM THE THROUGH STREET) IF THE SIDE ROAD IS CONCRETE PAVEMENT AND GREATER THAN 300 FEET IN LENGTH.
2. SPACE CONTRACTION JOINTS IN ACCORDANCE WITH SDD 13C4, 13C11 OR 13C13.
3. LOCATE CONSTRUCTION JOINTS A MINIMUM OF 6 FEET FROM THE NEAREST CONTRACTION JOINT AND ALIGN PARALLEL TO CONTRACTION JOINTS.
4. CONSTRUCTION JOINTS CAN BE FORMED OR SAWED.
5. IF JOINT IS FORMED, PROVIDE A ¼" RADIUS.
6. ANCHOR TIE BARS INTO DRILLED HOLES WITH AN EPOXY.

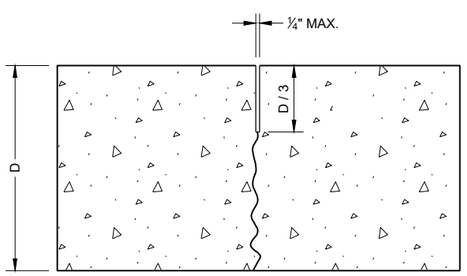

UNDOWELED TRANSVERSE

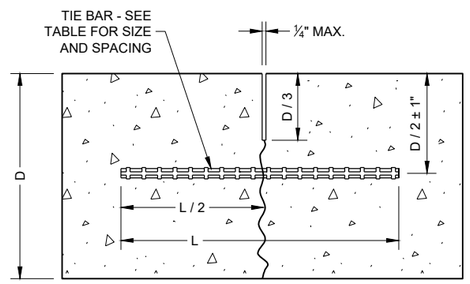

TIED LONGITUDINAL

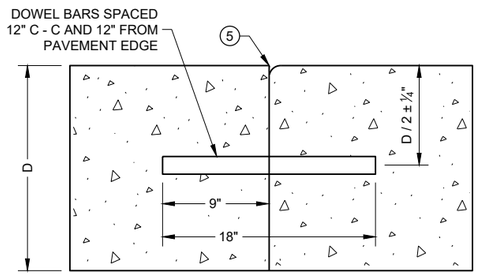

DOWELED TRANSVERSE (3)

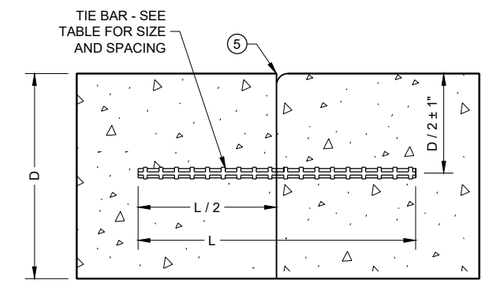

TIED LONGITUDINAL

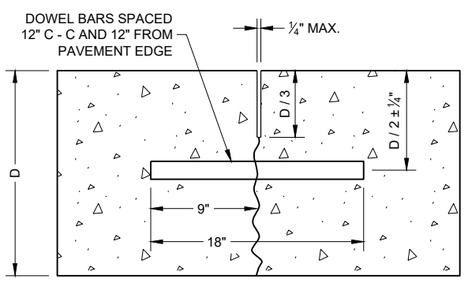

DOWELED TRANSVERSE

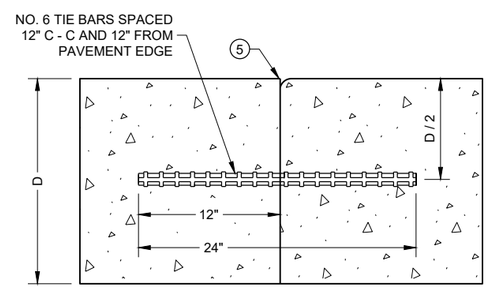

TIED TRANSVERSE (3)
(FOR USE ON NON-DOWELED PAVEMENTS ONLY)

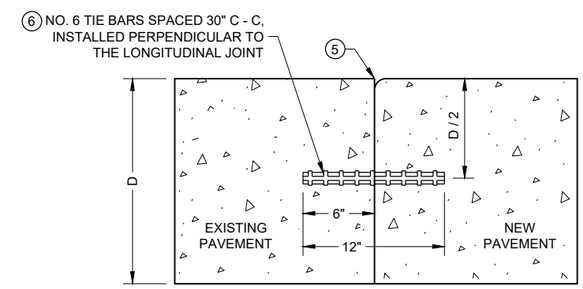

TIED LONGITUDINAL TO EXISTING

CONTRACTION JOINTS (2)

CONSTRUCTION JOINTS (4)

CONCRETE PAVEMENT JOINT TYPES

STATE OF WISCONSIN
DEPARTMENT OF TRANSPORTAT

6

SDD 13C18 - 08c

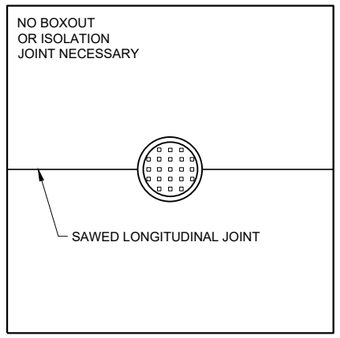

MANHOLE WITH LONGITUDINAL JOINT

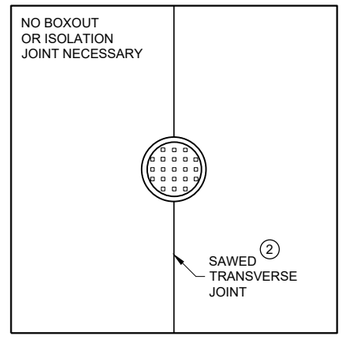

MANHOLE WITH TRANSVERSE JOINT

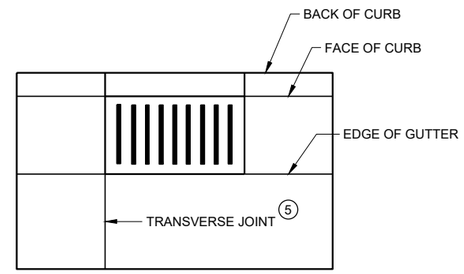

INLET WITH TRANSVERSE JOINT

GENERAL NOTES

1. USE BOXOUTS WHEN UTILITY STRUCTURE IS IN THE PATH OF CONSTRUCTION JOINTS. PROVIDE A 1 FOOT MINIMUM CLEARANCE BETWEEN THE EXTERIOR LIMIT OF THE STRUCTURE TO THE DIAMOND BOXOUT.
2. ADJUST TRANSVERSE JOINT TO INTERSECT MANHOLE IF POSSIBLE.
3. IF DISTANCE BETWEEN THE LONGITUDINAL JOINT AND THE EDGE OF MANHOLE IS 2 FEET OR LESS, DIVERT THE LONGITUDINAL JOINT AT A 2:1 TAPER RATE TO THE CENTER OF THE MANHOLE. IF THE DISTANCE IS GREATER THAN 2 FEET, DO NOT DIVERT THE JOINT AND SAW AS NORMAL. PLACE REINFORCEMENT REBAR AROUND THE MANHOLE.
4. IF THE DISTANCE FROM THE EDGE OF THE MANHOLE TO THE NEAREST TRANSVERSE JOINT IS LESS 4 FEET OR LESS, REDIRECT JOINT TO INTERSECT THE CENTER OF THE MANHOLE. IF DISTANCE IS GREATER THAN 4 FEET, DO NOT DIVERT THE JOINT AND SAW AS NORMAL. PLACE REINFORCEMENT REBAR AROUND THE MANHOLE.
5. ALIGN TRANSVERSE JOINT WITH ONE EDGE OF INLET WHEN PRACTICAL.

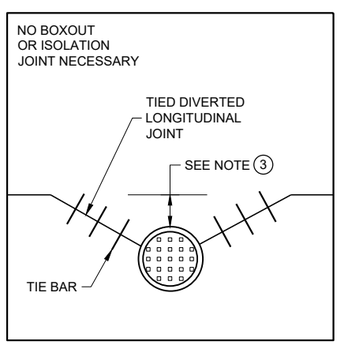

MANHOLE WITH DIVERTED LONGITUDINAL CONTRACTION JOINT

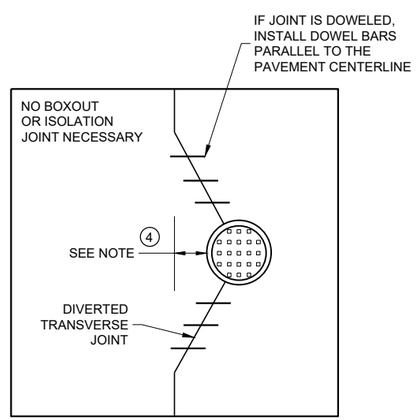

MANHOLE WITH DIVERTED TRANSVERSE CONTRACTION JOINT

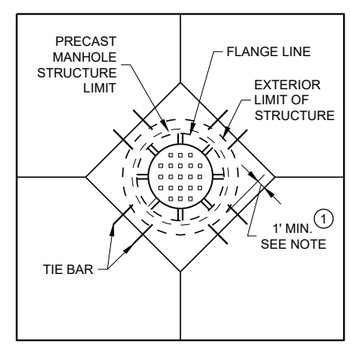

DIAGONAL MANHOLE BOXOUT FOR CONSTRUCTION JOINTS

CONCRETE PAVEMENT JOINTING AT UTILITY FIXTURES

STATE OF WISCONSIN
DEPARTMENT OF TRANSPORTATION

APPROVED
May 2023 — DATE
/S/ Peter Kemp P.E. — PAVEMENT SUPERVISO
FHWA

6

SDD 13C18 - 08d

LEGEND

- - - - - - DOWELED JOINT
——— TIED JOINT
EXPANSION JOINT
— — POTENTIAL DOWELED EXPANSION JOINT (1)
DIRECTION OF TRAFFIC

GENERAL NOTES

(1) CONSTRUCT DOWELED EXPANSION JOINT ON THE SIDE ROAD OF AN INTERSECTION IF THE SIDE ROAD IS CONCRETE PAVEMENT AND GREATER THAN 300 FEET IN LENGTH. ALIGN EXPANSION JOINT WITH THE EDGE OF RADIUS.

(2) PROVIDE TIED JOINT AT THE FLANGE OF SCAB ON CURB IF SCAB ON CURB AND GUTTER IS USE.

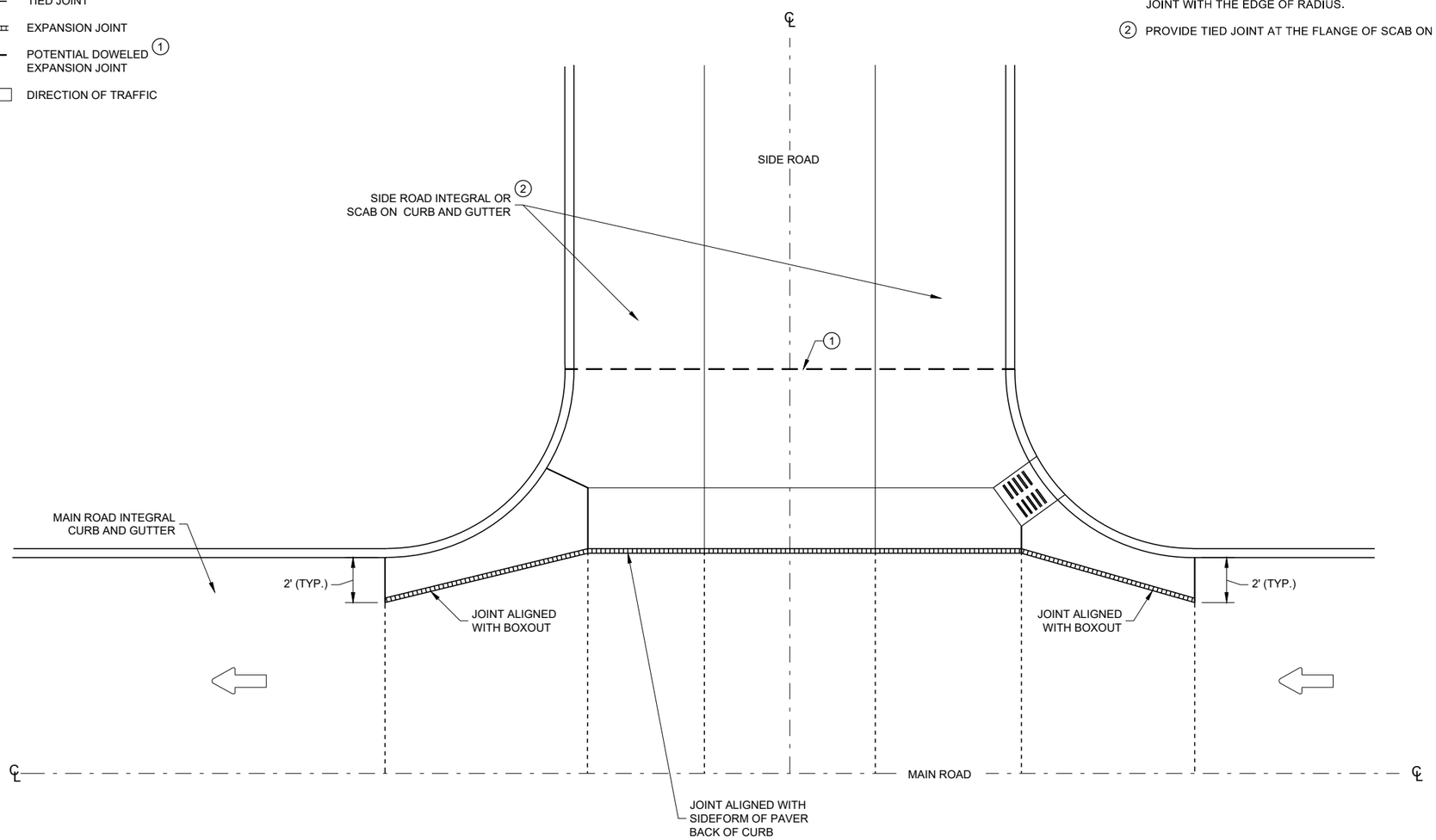

INTERSECTION BOXOUT FOR INTEGRAL CURB AND GUTTER

CONCRETE PAVEMENT INTERSECTION BOXOUT FOR INTEGRAL CURB AND GUTTER

STATE OF WISCONSIN
DEPARTMENT OF TRANSPORTATION

APPROVED
May 2023 — DATE
/S/ Peter Kemp P.E. — PAVEMENT SUPERVISOR
FHWA

6
SDD 13C18 - 08f

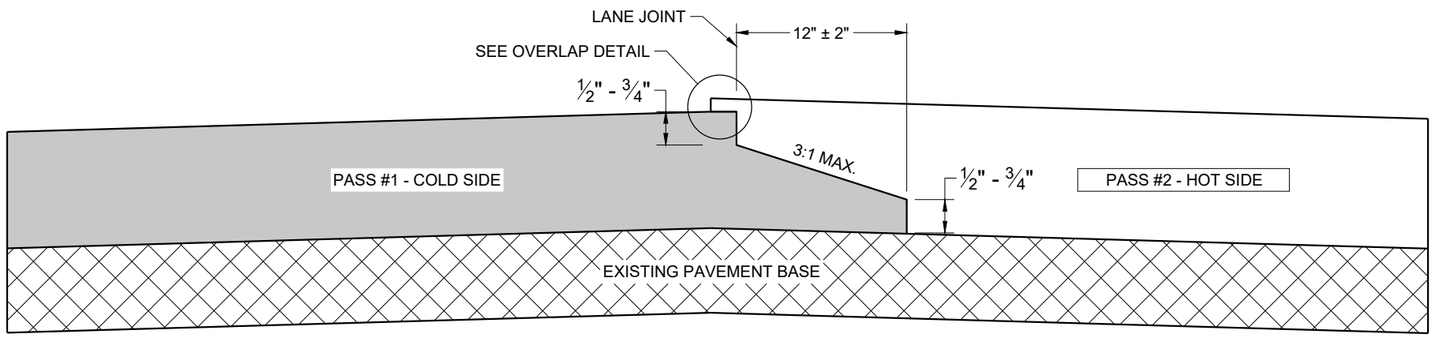

TYPICAL PAVEMENT CROSS SECTION
NOTCHED WEDGE JOINT

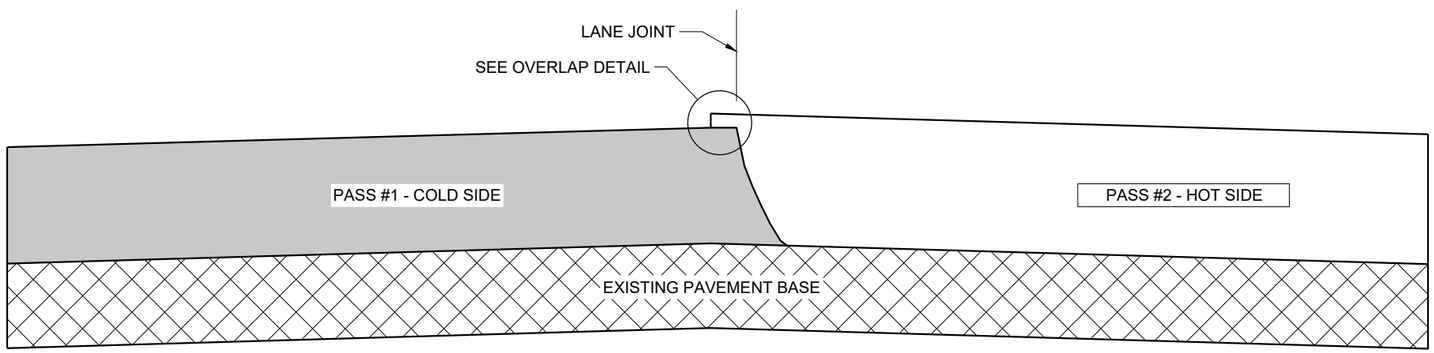

TYPICAL PAVEMENT CROSS SECTION
VERTICAL JOINT

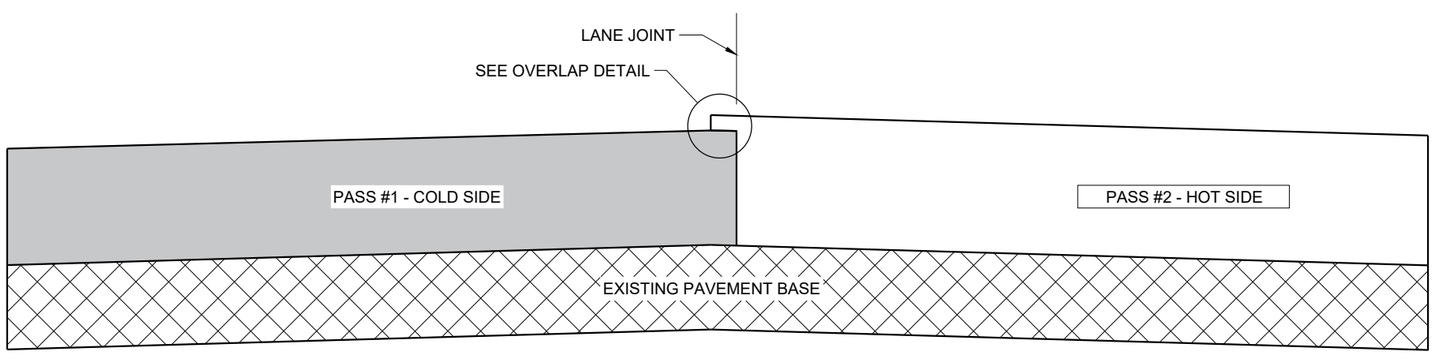

TYPICAL PAVEMENT CROSS SECTION
VERTICAL JOINT (MILLED)

GENERAL NOTES

IN ADDITION TO THE DETAILS PROVIDED IN THIS DRAWING, CONFORM TO STANDARD SPECIFICATION 450.3.2.8 FOR WHEN A NOTCHED WEDGE JOINT IS REQUIRED AND FOR GENERAL JOINT CONSTRUCTION REQUIREMENTS.

FOR ALL LONGITUDINAL JOINTS, ENSURE THE PAVER SCREED OVERLAPS THE PREVIOUSLY PLACED PAVEMENT BY 1" ± 0.5" AND THE HOT SIDE OF THE JOINT REMAINS HIGHER THAN THE COLD SIDE BY APPROXIMATELY 0.1" AFTER FINAL COMPACTION. (IT WILL BE FLUSH WHEN PAVING IN ECHELON.)

ONLY REMOVE THE LONGITUDINAL NOTCHED WEDGE JOINT FOR SMA PAVEMENT OR AS DIRECTED BY THE ENGINEER TO ADDRESS SPECIFIC LENGTHS OF JOINT DAMAGED BY TRAFFIC.

WHEN MILLING BACK OR REMOVING ANY LONGITUDINAL JOINT, LIMIT THE MATERIAL REMOVED TO 2" FROM THE TOP NOTCH OR FROM THE VERTICAL JOINT EDGE ON THE COLD SIDE OF THE JOINT.

USE LONGITUDINAL MILLED JOINT AS PLANS SHOW OR THE AS THE ENGINEER DIRECTS.

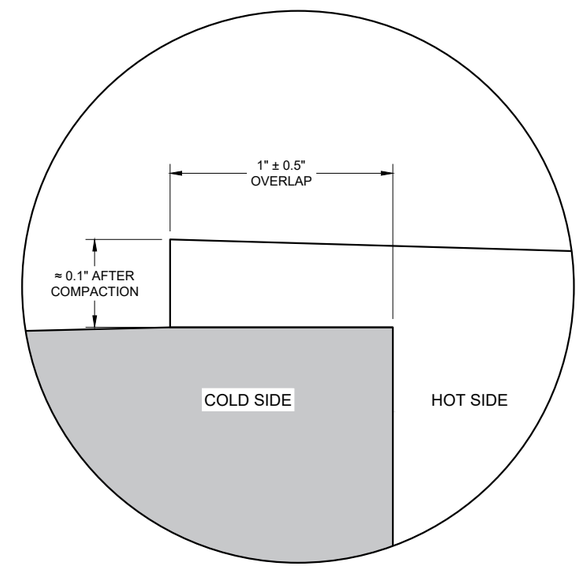

OVERLAP DETAIL (TYPICAL)

6

6

SDD 13C19 - 03

SDD 13C19 - 03

HMA LONGITUDINAL JOINTS

STATE OF WISCONSIN
DEPARTMENT OF TRANSPORTATION

APPROVED
November 2020 /S/ Steven Hefel
DATE HMA PAVEMENT ENGIN
FHWA

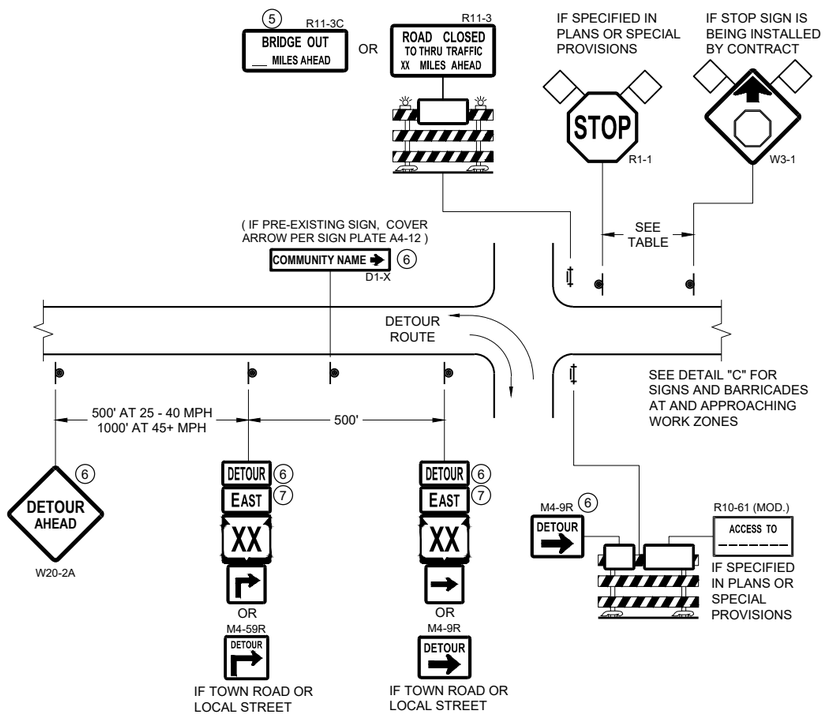

DETAIL A
MAINLINE CLOSURE WITH POSTED DETOUR

WORK ZONE GREATER THAN OR EQUAL TO ½ MILE FROM DETOUR ROUTE (1000 FEET IF URBAN)

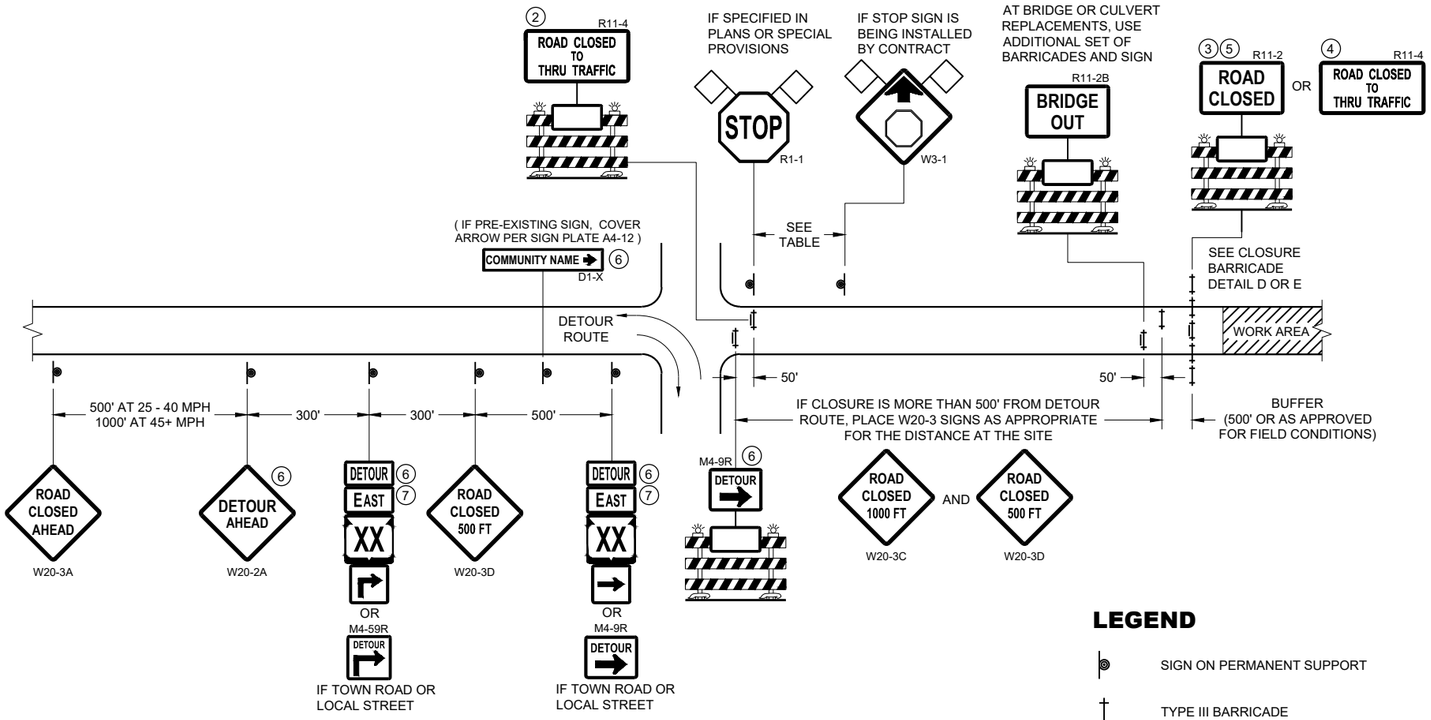

DETAIL B
MAINLINE CLOSURE WITH POSTED DETOUR

WORK ZONE LESS THAN ½ MILE FROM DETOUR ROUTE (1000 FEET IF URBAN)

LEGEND

- SIGN ON PERMANENT SUPPORT
- TYPE III BARRICADE
- TYPE III BARRICADE WITH ATTACHED SIGN
- TYPE "A" WARNING LIGHT (FLASHING)
- WORK AREA
- FLAGS, 16" X 16" MIN. (ORANGE)
- DETOUR M4 - 8
- EAST M3 - X
- XX M1 - 4 OR XX M1 - 6 OR COUNTY X M1 - 5A
- M05 - 1 OR M06 - 1

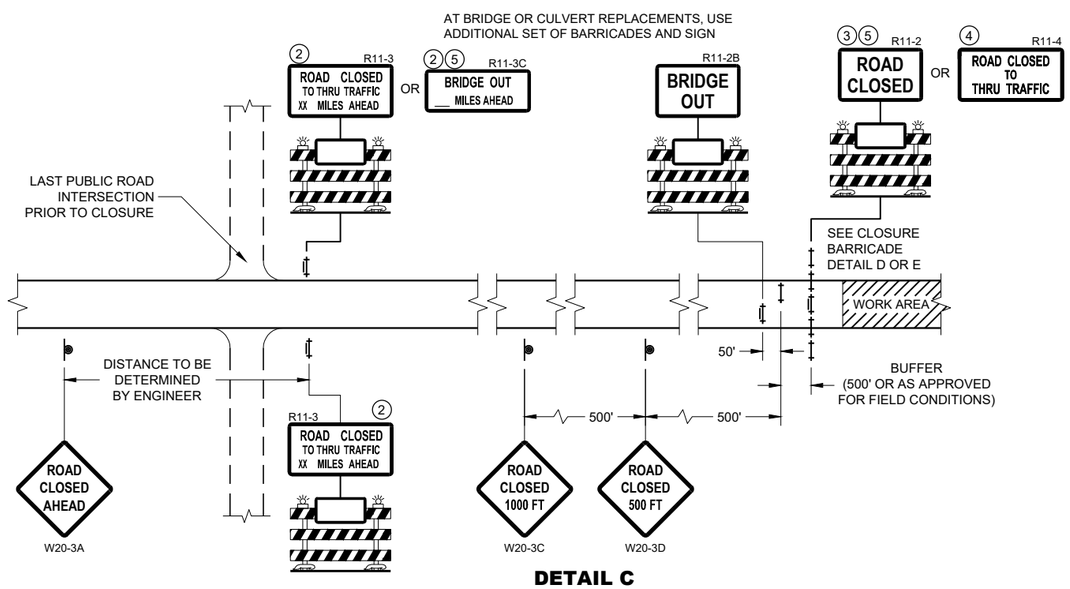

DETAIL C
MAINLINE CLOSURE, NO POSTED DETOUR

SPEED LIMIT (MPH)	"STOP AHEAD" ADVANCE WARNING DISTANCE (FT)
25	200
30	200
35	350
40	350
45	500
50	550
55	750

SEE SDD 15C2-SHEET "b" FOR GENERAL NOTES AND FOOTNOTES 1 THROUGH 7

BARRICADES AND SIGNS FOR MAINLINE CLOSURES

STATE OF WISCONSIN
DEPARTMENT OF TRANSPORTATION

APPROVED
May 2023 — DATE
/S/ Andrew Heidtke — WORK ZONE ENGINEER

FHWA

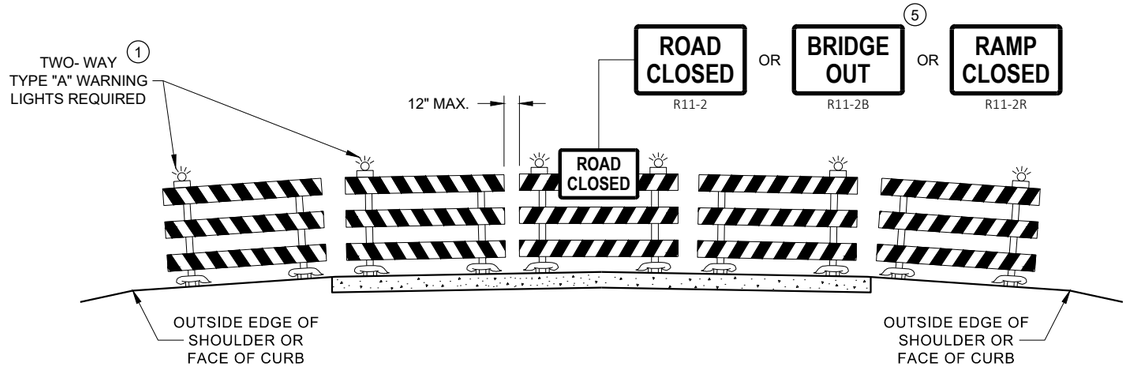

DETAIL D
ROAD CLOSURE BARRICADE DETAIL
APPROACH VIEW

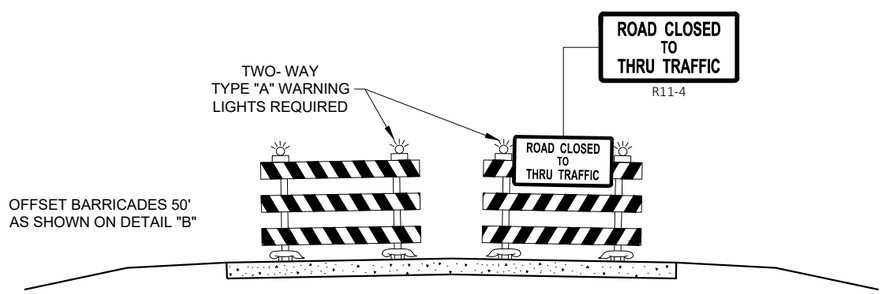

DETAIL E
LANE CLOSURE BARRICADE DETAIL
APPROACH VIEW

SEE SDD 15C2 - SHEET "a" FOR LEGEND

GENERAL NOTES

THE EXACT NUMBER, LOCATION, AND SPACING OF ALL SIGNS AND BARRICADES SHALL BE ADJUSTED TO FIT FIELD CONDITIONS AS APPROVED BY THE ENGINEER.

ANY SIGNS TEMPORARY OR EXISTING, WHICH CONFLICT WITH TRAFFIC CONTROL "IN USE", SHALL BE REMOVED OR COVERED AS NEEDED AND AS APPROVED BY THE ENGINEER.

THE SPACING BETWEEN TRAFFIC CONTROL SIGNS SHOULD BE ADJUSTED TO NOT CONFLICT WITH AND SHOULD PROVIDE A DESIRABLE MINIMUM OF 200 FEET CLEARANCE TO EXISTING SIGNS THAT WILL REMAIN IN PLACE.

BARRICADES THAT MUST BE MOVED FOR A WORK OPERATION SHALL BE IMMEDIATELY RE-ESTABLISHED UPON COMPLETION OF THE OPERATION, OR FOR CONTINUING OPERATIONS, AT THE END OF EACH WORKING DAY.

SIGNS THAT WILL BE IN PLACE LESS THAN 7 CONTINUOUS DAYS AND NIGHTS MAY BE MOUNTED ON PORTABLE SUPPORTS.

ALL TYPE III BARRICADES SHALL HAVE RAILS REFLECTORIZED ON BOTH FACES. STRIPES SHALL BE PROPERLY SLOPED DOWN TOWARD THE TRAFFIC SIDE OR AS SHOWN IN THE ROAD CLOSURE BARRICADE DETAIL "D" FOR FULL ROAD CLOSURES.

TYPE "A" LOW - INTENSITY FLASHING WARNING LIGHTS SHALL BE VISIBLE ON BOTH SIDES OF THE BARRICADE.

THE R11 - 2, R11 - 3, M4 - 9, R11 - 4, AND R10 - 61 SIGNS PLACED ON THE BARRICADES SHALL COVER NO MORE THAN THE TOP RAIL. THE SIGNS SHALL NOT COVER ANY PORTION OF THE MIDDLE RAIL OR BOTTOM RAILS.

"WO" AND "MO" SIGNS ARE THE SAME AS "W" AND "M" SIGNS EXCEPT THE BACKGROUND IS ORANGE.

ALL SIGNS SHALL BE 48" X 48" UNLESS OTHERWISE NOTED BELOW:
- R11 - 2 SHALL BE 48" X 30"
- R11 - 3 SHALL, R11 - 4 AND R10 - 61 SHALL BE 60 " X 30"
- M4 - 9 SHALL BE 30" X 24"
- M3 - X SHALL BE 24" X 12" (36" X 18" IF NEEDED TO MATCH EXISTING SIGNS)
- M4 - 8 SHALL BE 24" X 12" (36" X 18" IF NEEDED TO MATCH EXISTING SIGNS)
- M1 - 4, M1 - 5A AND M1 - 6 SHALL BE 24" X 24" (36" X 36" IF NEEDED TO MATCH EXISTING SIGNS)
- MO5 - 1 AND MO6 - 1 SHALL BE 21" X 21" (30" X 30" IF NEEDED TO MATCH EXISTING SIGNS)
- D1 - X SHALL BE AS SHOWN ON SPECIFIC PROJECT SIGNING DETAIL SHEETS.
- R1 - 1 SHALL BE 36" X 36"

1. TWO WARNING LIGHTS SHALL BE PROVIDED ON THE CENTER BARRICADE AND A MINIMUM OF ONE WARNING LIGHT SHALL BE PROVIDED ON EACH OF THE OTHER BARRICADES WITHIN THE ROADWAY LIMITS. SPACING OF THE WARNING LIGHTS SHALL BE UNIFORM TO THE EDGE OF ROADWAY AS SHOWN (APPROX. 8 FOOT LIGHT SPACING.
2. THESE SIGNS AND BARRICADES ARE NOT REQUIRED IF ROAD CLOSURE BEGINS AT AN INTERSECTION.
3. FOR ROAD CLOSURE WITHOUT LOCAL ACCESS TO PROJECT, SEE ROAD CLOSURE BARRICADE DETAIL "D".
4. FOR ROAD CLOSURE WITH LOCAL ACCESS TO PROJECT, SEE ROAD CLOSURE BARRICADE DETAIL "E".
5. FOR BRIDGE OR CULVERT REPLACEMENTS, SUBSTITUTE "BRIDGE OUT" INSTEAD OF "ROAD CLOSED" ON R11 - 2 AND R11 - 3 SIGNS.
6. INSTALL DETOUR AND COMMUNITY GUIDE SIGNS AND ARROWS ONLY IF SPECIFIED IN THE CONTRACT. IF THERE ARE EXISTING ROUTE MARKER ASSEMBLIES THAT WILL REMAIN IN PLACE, ADJUST THE LOCATION OF THE DETOUR ROUTE SIGNS TO CORRESPOND WITH THE EXISTING ASSEMBLIES. MODIFY EXISTING SIGNS WHERE POSSIBLE. SEE SPECIFIC PROJECT DETOUR SIGNING DETAIL SHEETS. IF DETOUR SIGNS ARE BEING INSTALLED BY OTHERS, PLACE THE CONTRACTED TRAFFIC CONTROL SIGNS TO ALLOW FOR PLACEMENT OF ALL WARNING, DETOUR AND GUIDE SIGNS AS SHOWN.
7. "EAST" CARDINAL DIRECTION MARKERS AND RIGHT TURN ARROWS ARE SHOWN. USE OTHER CARDINAL DIRECTIONS AND ARROWS AS APPROPRIATE.

BARRICADES AND SIGNS FOR VARIOUS CLOSURES

STATE OF WISCONSIN
DEPARTMENT OF TRANSPORTATION

APPROVED
May 2023 — DATE
/S/ Andrew Heidtke — WORK ZONE ENGINEE
FHWA

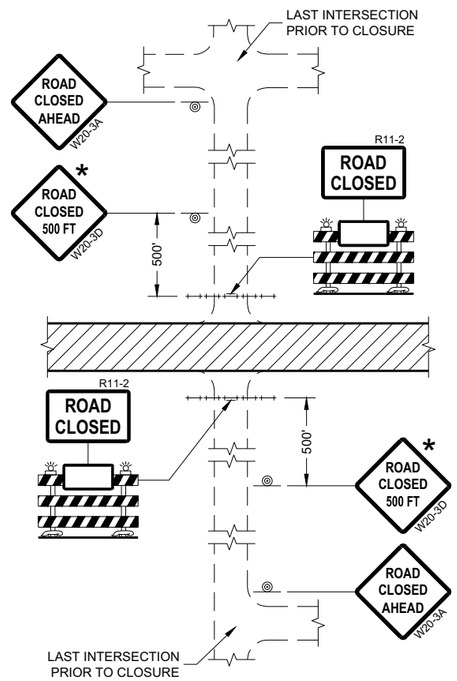

DETAIL 1
(NO ACCESS TO PROJECT)

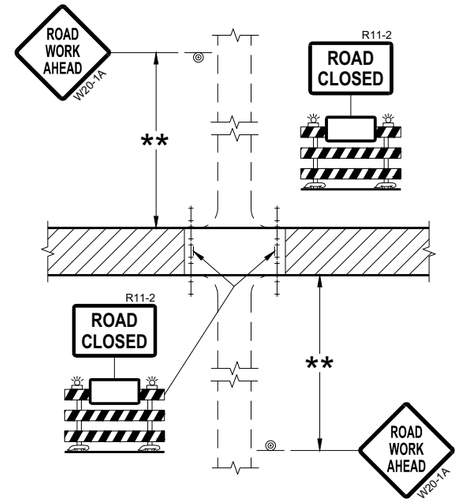

DETAIL 2
(PUBLIC CROSS-TRAFFIC MAINTAINED.
NO ACCESS TO PROJECT)

GENERAL NOTES

THE EXACT NUMBER, LOCATION, AND SPACING OF ALL SIGNS AND BARRICADES SHALL BE ADJUSTED TO FIT FIELD CONDITIONS AS APPROVED BY THE ENGINEER.

ANY SIGNS TEMPORARY OR EXISTING, WHICH CONFLICT WITH TRAFFIC CONTROL "IN USE" SHALL BE REMOVED OR COVERED AS NEEDED AND AS APPROVED BY THE ENGINEER.

THE SPACING BETWEEN TRAFFIC CONTROL SIGNS SHOULD BE ADJUSTED TO NOT CONFLICT WITH AND SHOULD PROVIDE A DESIRABLE MINIMUM OF 200 FEET CLEARANCE (500 FEET DESIRABLE) TO EXISTING SIGNS THAT WILL REMAIN IN PLACE.

IF A "STOP" SIGN MUST BE REMOVED FOR A WORK OPERATION, A TEMPORARY "STOP" SIGN SHALL BE PLACED PRIOR TO THE SIGN REMOVAL, OR A FLAGGER SHALL BE PROVIDED UNTIL THE SIGN IS REESTABLISHED.

BARRICADES THAT MUST BE MOVED FOR A WORK OPERATION SHALL BE IMMEDIATELY REESTABLISHED UPON COMPLETION OF THE OPERATION OR FOR CONTINUING OPERATIONS, AT THE END OF EACH WORKING DAY.

SIGNS THAT WILL BE IN PLACE LESS THAN SEVEN CONTINUOUS DAYS AND NIGHTS MAY BE MOUNTED ON PORTABLE SUPPORTS.

ALL TYPE III BARRICADES SHALL HAVE RAILS REFLECTORIZED ON BOTH FACES. STRIPES SHALL BE PROPERLY SLOPED DOWN TOWARD THE TRAFFIC SIDE OR AS SHOWN IN THE ROAD CLOSURE BARRICADE DETAIL "D" FOR FULL ROAD CLOSURES.

TYPE "A" LOW-INTENSITY FLASHING WARNING LIGHTS SHALL BE VISIBLE ON BOTH SIDES OF THE BARRICADE.

THE R11-2, R11-3, AND R11-4 SIGNS PLACED ON BARRICADES SHALL COVER NO MORE THAN THE TOP RAIL. THE SIGNS SHALL NOT COVER ANY PORTION OF THE MIDDLE OR BOTTOM RAILS.

ALL SIGNS SHALL BE 48" X 48" UNLESS OTHERWISE NOTED BELOW:
R11-2 SHALL BE 48" X 30".
R11-4 AND R11-3 SHALL BE 60" X 30".

* OMIT THE "ROAD CLOSED 500 FT." SIGN IF THE LAST INTERSECTION IS 500 FEET OR LESS FROM THE WORK ZONE.

** 500' MAX. OR AT LAST INTERSECTION, WHICHEVER IS CLOSEST.

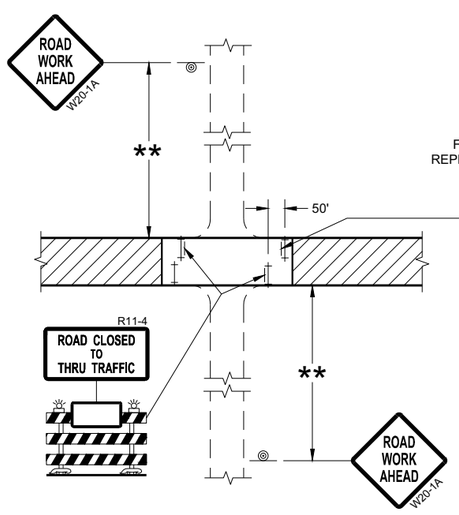

DETAIL 3
(PUBLIC CROSS-TRAFFIC MAINTAINED.
CONTRACTOR, LOCAL BUSINESS AND
RESIDENT ACCESS TO PROJECT)

FOR BRIDGE OR CULVERT
REPLACEMENT, USE ADDITIONAL
SIGN ON BARRICADE

BRIDGE OUT
XX MILES AHEAD
R11-3C

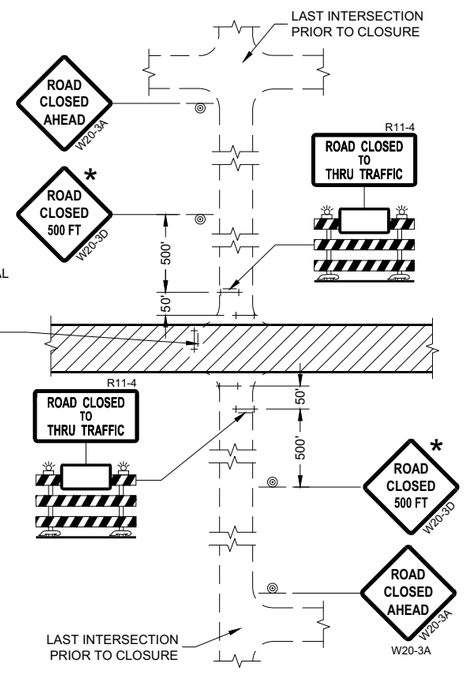

DETAIL 4
(CONTRACTOR, LOCAL BUSINESS AND
RESIDENT ACCESS TO PROJECT)

LEGEND

- SIGN ON PERMANENT SUPPORT
- TYPE III BARRICADE
- TYPE III BARRICADE WITH ATTACHED SIGN
- TYPE "A" WARNING LIGHT (FLASHING)
- WORK AREA

BARRICADES AND SIGNS FOR SIDEROAD CLOSURES

STATE OF WISCONSIN
DEPARTMENT OF TRANSPORTATION

APPROVED
July 2018 — DATE
/S/ Andrew Heidtke — WORK ZONE ENGINEE
FHWA

6

SDD 15C03 - 05

GENERAL NOTES

THE EXACT NUMBER, LOCATION, AND SPACING OF ALL SIGNS AND DEVICES SHALL BE ADJUSTED TO FIT FIELD CONDITIONS.

THE SPACING BETWEEN TRAFFIC CONTROL SIGNS SHOULD BE ADJUSTED TO NOT CONFLICT WITH AND SHOULD PROVIDE A MINIMUM OF 200 FEET (500 FEET DESIRABLE) CLEARANCE TO EXISTING SIGNS THAT WILL REMAIN IN PLACE.

ALL SIGNS ARE 48" X 48" UNLESS OTHERWISE NOTED. IF NECESSARY DUE TO SPACE CONSTRAINTS, 36"X36" SIGNS MAY BE USED INSTEAD OF 48" X 48" SIGNS.

SIGNS THAT WILL BE IN PLACE LESS THAN SEVEN CONTINUOUS DAYS AND NIGHTS MAY BE MOUNTED ON PORTABLE SUPPORTS.

IF A "STOP" SIGN MUST BE REMOVED FOR A WORK OPERATION, A TEMPORARY "STOP" SIGN SHALL BE PLACED PRIOR TO THE SIGN REMOVAL, OR A FLAGGER SHALL BE PROVIDED UNTIL THE SIGN IS REESTABLISHED.

* THE THIRD W20-1 SIGN IS REQUIRED ONLY IF THERE IS AN INTERSECTION BETWEEN THE "ROAD WORK 500 FEET" SIGN AND THE WORK ZONE. ADJUST THE PLACEMENT OF THIS SIGN BASED ON INTERSECTION LOCATION AND OTHER FIELD CONDITIONS.

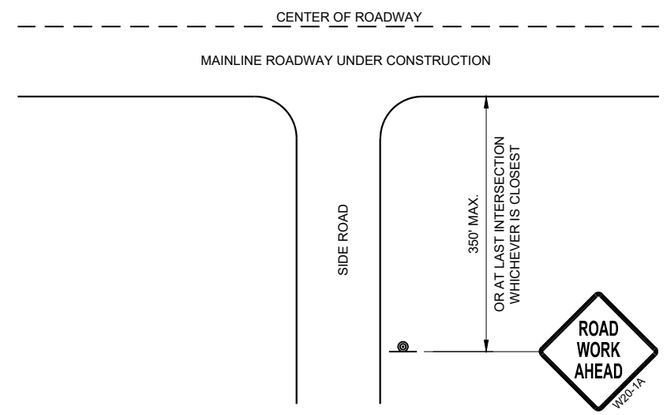

TYPICAL SIDE ROAD APPROACH WARNING SIGN DETAIL

LEGEND

- SIGN ON PERMANENT SUPPORT
- DIRECTION OF TRAFFIC
- WORK AREA

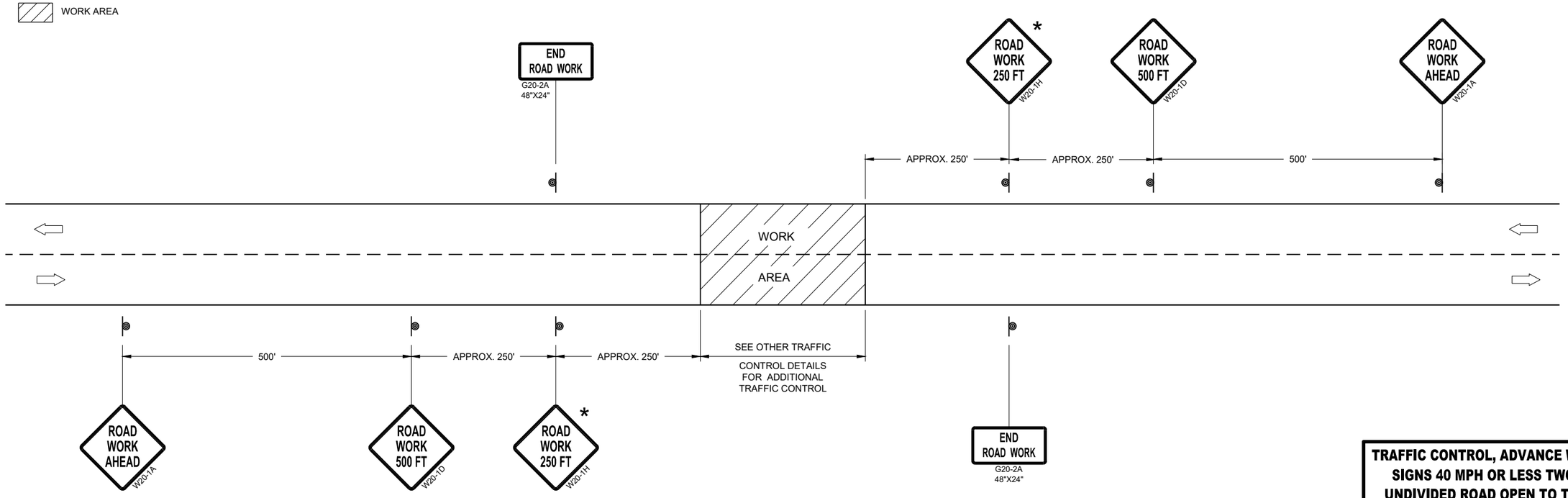

TRAFFIC CONTROL, ADVANCE WARNING SIGNS 40MPH OR LESS

TRAFFIC CONTROL, ADVANCE WARNING SIGNS 40 MPH OR LESS TWO-WAY UNDIVIDED ROAD OPEN TO TRAFFIC

STATE OF WISCONSIN
DEPARTMENT OF TRANSPORTATION

APPROVED
July 2018 — DATE
/S/ Andrew Heidtke — WORK ZONE ENGINEE
FHWA

6
SDD 15C05 - 05

*CONFIRM MARKING LINE WIDTH WITH THE MISCELLANEOUS QUANTITIES

GENERAL NOTES

DETAILS OF CONSTRUCTION NOT SHOWN ON THIS DRAWING SHALL CONFORM TO STANDARD SPECIFICATIONS AND SPECIAL PROVISIONS.

1. LOCATE THE NO PASSING ZONE W14-3 SIGN WITHIN 50 FEET OF THE "T" MARKING
2. MEASURE FROM EDGE OF MARKING TO JOINT LINE. THIS DOES NOT INCLUDE SPACE NEEDED FOR GROOVING OPERATIONS.

LEGEND

"T" MARKING

SIGN ON PERMANENT SUPPORT

DIRECTION OF TRAFFIC

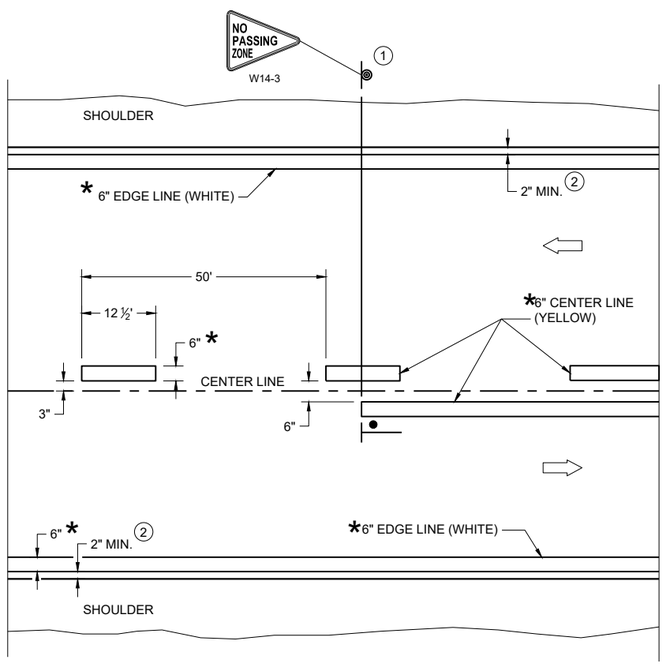

TWO WAY TRAFFIC

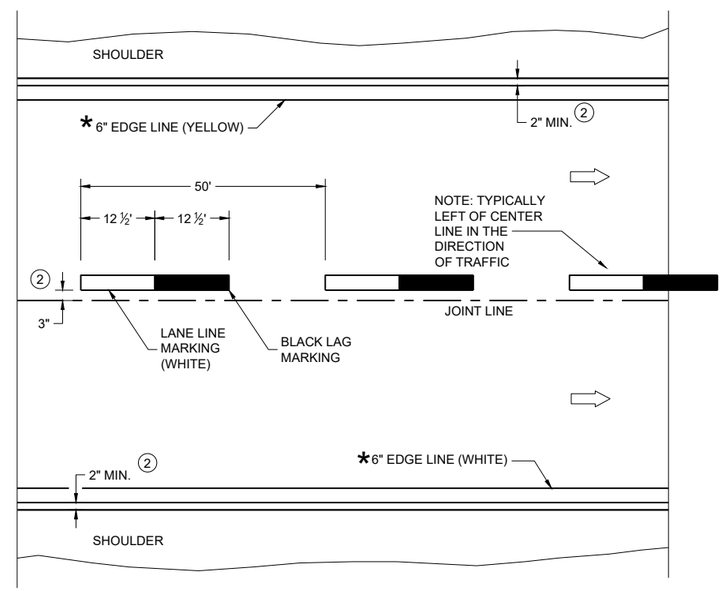

ONE WAY TRAFFIC

PERMANENT PAVEMENT MARKING

6

SDD 15C08-23a

PERMANENT LONGITUDINAL PAVEMENT MARKINGS

STATE OF WISCONSIN
DEPARTMENT OF TRANSPORTATION

APPROVED

May 2023 — DATE

/S/ Jeannie Silver — Statewide Pavement Marking Engineer

FHWA

6

SDD 15C08-23a

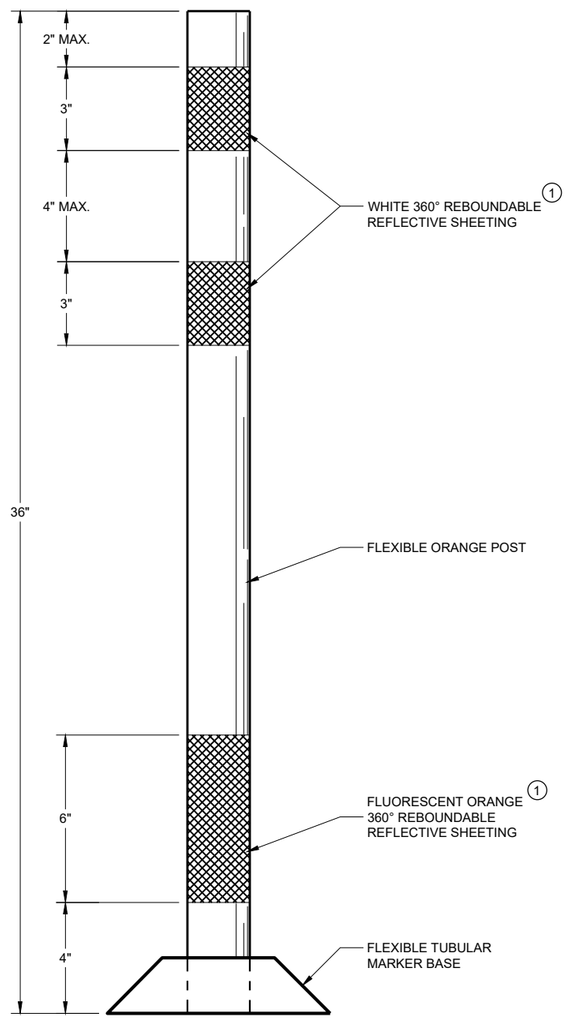

FLEXIBLE TUBULAR MARKER POST WORK ZONE

GENERAL NOTES

DETAILS OF CONSTRUCTION NOT SHOWN ON THIS DRAWING SHALL CONFORM TO THE PERTINENT REQUIREMENTS OF THE STANDARD SPECIFICATIONS AND THE APPLICABLE SPECIAL PROVISIONS.

SURFACE MOUNTED BASES SHALL BE FURNISHED IN ACCORDANCE WITH MANUFACTURERS RECOMMENDATIONS TO BE COMPATIBLE WITH FLEXIBLE TUBULAR MARKER POSTS TO A SIZE AND SHAPE THAT WILL PROVIDE A STABLE POST FOUNDATION WHEN SECURED TO THE PAVEMENT.

THE ASPHALTIC ADHESIVE OR BUTYL PAD FURNISHED SHALL BE IN ACCORDANCE WITH MANUFACTURERS RECOMMENDATIONS, UNLESS DIRECTED BY THE ENGINEER TO USE BOLTS.

(1) REFLECTIVE SHEETING SHALL FOLLOW THE REQUIREMENTS IN THE APPROVED PRODUCTS LISTING FOR SIGN SHEETING.

6

SDD 15C11 - 10a

CHANNELIZING DEVICES FLEXIBLE TUBULAR MARKER POST

STATE OF WISCONSIN
DEPARTMENT OF TRANSPORTATION

APPROVED
November 2022 — DATE
/S/ Andrew Heidtke — WORK ZONE ENGINEE
FHWA

6

SDD 15C11 - 10a

GENERAL NOTES

1. REFLECTIVE SHEETING SHALL FOLLOW THE REQUIREMENTS IN THE APPROVED PRODUCTS LISTING FOR SIGN SHEETING.
2. LOCATION OF WARNING LIGHTS WHEN SHOWN ON THE PLAN.

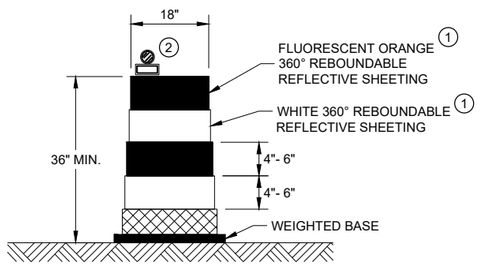

DRUM

BALLAST WIDTHS
RANGE FROM 24"-36"

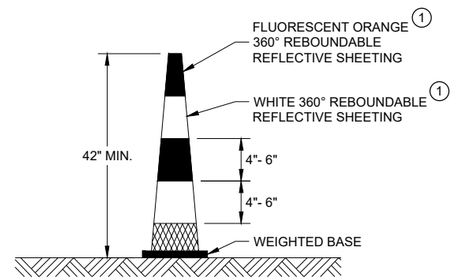

42" CONE

DO NOT USE IN TAPERS
½ SPACING OF DRUMS

BALLAST WIDTHS
RANGE FROM 14"-20"

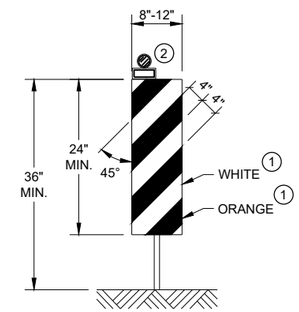

VERTICAL PANEL

THE STRIPES SHALL SLOPE DOWNWARD TO
THE TRAFFIC SIDE FOR CHANNELIZATION.

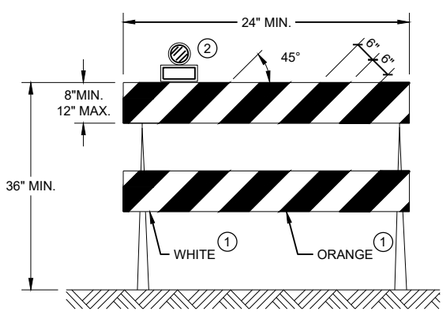

TYPE II BARRICADE

FOR RAILS LESS THAN 36" LONG, 4" WIDE STRIPES
MAY BE USED. ALL STRIPES SHALL SLOPE DOWNWARD
TO THE TRAFFIC SIDE FOR CHANNELIZATION.

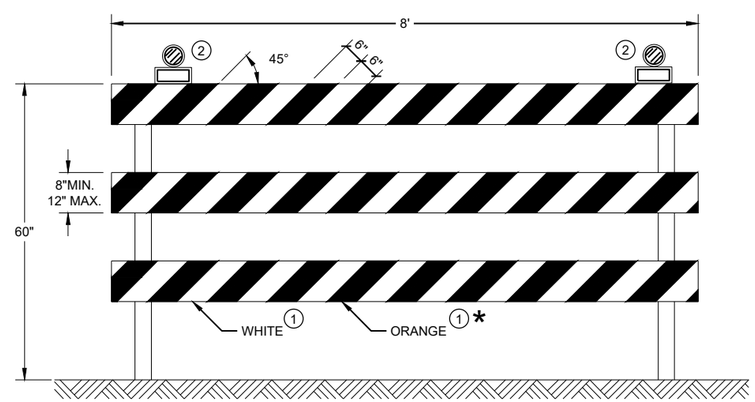

TYPE III BARRICADE

IF SIGN MOUNTED, DO NOT COVER MORE THAN 50% OF THE TOP
TWO RAILS OR 33% OF THE TOTAL AREA OF THE THREE RAILS.

* IF USED FOR A PERMANENT APPLICATION USE RED SHEETING.

CHANNELIZING DEVICES
DRUMS, CONES, BARRICADES
AND VERTICAL PANELS

STATE OF WISCONSIN
DEPARTMENT OF TRANSPORTATION

APPROVED
November 2022 — /S/ Andrew Heidtke
DATE — WORK ZONE ENGINEE
FHWA

6

6

SDD 15C11 - 10b

SDD 15C11 - 10b

GENERAL NOTES

STOP SIGN SHALL BE PLACED A MINIMUM OF 6 FEET TO A MAXIMUM OF 50 FEET FROM THE EDGELINE LOCATION.

1. 18-INCH STOP LINES MAY BE DELETED OR ADDED BY THE REGION MARKING ENGINEER BASED ON VISIBILITY AND SIGHT LINES.
2. NO STOP LINE IS REQUIRED IF STOP SIGN IS LESS THAN OR EQUAL TO 40 FEET FROM THE EDGELINE.
3. NO STOP LINE IS REQUIRED IF STOP SIGN IS LESS THAN OR EQUAL TO 30 FEET FROM THE FLANGE LINE EXTENSION.
4. MOVE CLOSER TO THE EDGE OF TRAVEL LINE AS NEEDED FOR VISIBILITY AND SIGHT LINES (NO CLOSER THAN 4 FEET).
5. LADDER BAR CROSSWALKS SHOULD ONLY BE USED FOR MID BLOCK CROSSINGS. USE 2 - 6" TRANSVERSE LINES.
6. POSTED SPEED LIMITS OF 40 MPH OR GREATER USE A MINIMUM WIDTH OF 8' FOR MIDBLOCK CROSSWALKS

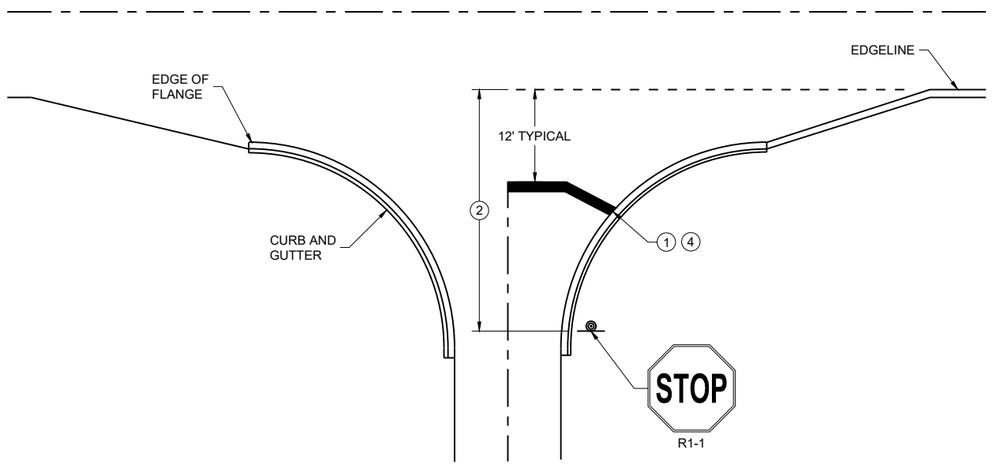

TYPICAL STOP LINE PAVEMENT MARKING WITH CURB AND GUTTER

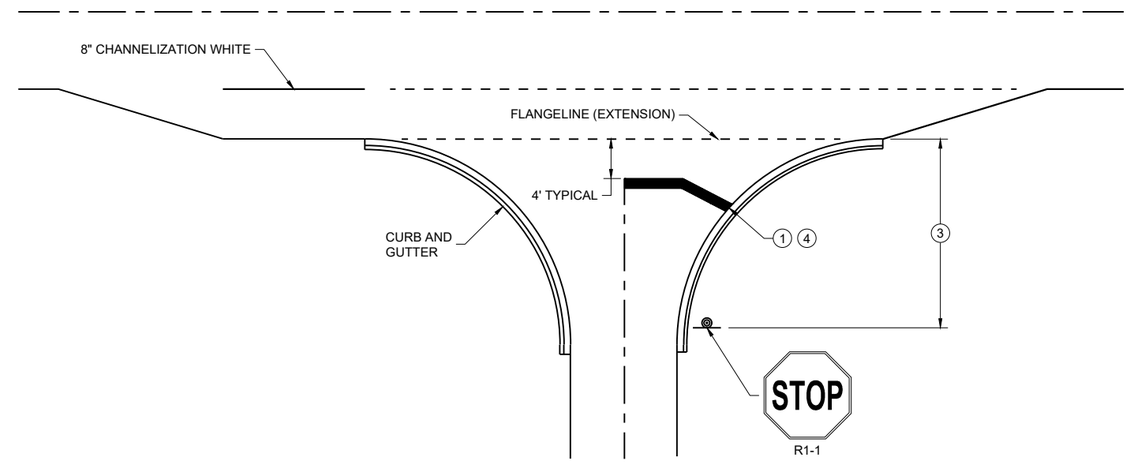

TYPICAL STOP LINE PAVEMENT MARKING FOR SIDE ROADS WITH RIGHT TURN LANE

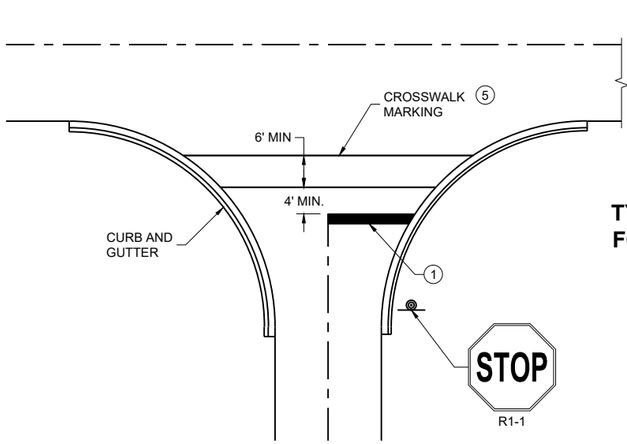

TYPICAL STOP LINE PAVEMENT MARKING FOR SIDE ROADS WITH CROSSWALK MARKING

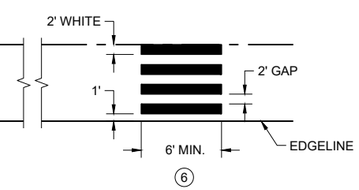

TYPICAL PAVEMENT MARKING FOR MID-BLOCK CROSSWALK 5

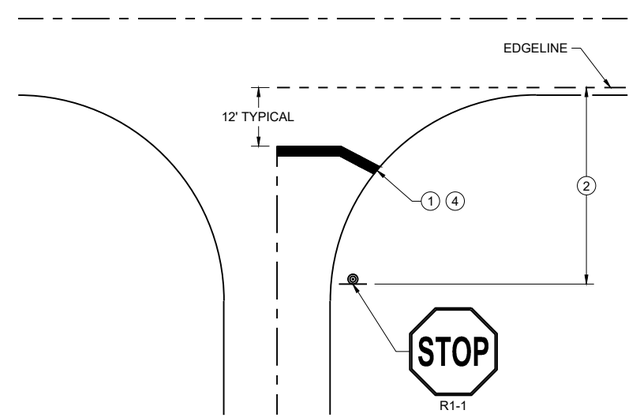

TYPICAL STOP LINE PAVEMENT MARKING WITHOUT CURB AND GUTTER

STOP LINE AND CROSSWALK PAVEMENT MARKING

STATE OF WISCONSIN
DEPARTMENT OF TRANSPORTATION

APPROVED
March 2024 — DATE
/S/ Matthew Rauch — STATE SIGNING AND MARKING ENGINEER

FHWA

LEGEND

SIGN ON PERMANENT SUPPORT

TRAFFIC CONTROL DRUM

DIRECTION OF TRAFFIC

WORK ZONE

GENERAL NOTES

ALL SIGNS ARE 48"X48" UNLESS OTHERWISE NOTED. IF NECESSARY DUE TO SPACE CONSTRAINTS IN URBAN AREAS, 36" X 36" SIGNS MAY BE USED IF APPROVED BY THE REGIONAL TRAFFIC UNIT.

"WO" SIGN IS THE SAME AS "W" SIGN EXCEPT THE BACKGROUND IS ORANGE.

ANY SIGNS TEMPORARY OR EXISTING, WHICH CONFLICT WITH THE TRAFFIC CONTROL "IN USE" SHALL BE REMOVED OR COVERED AS NEEDED AND AS APPROVED BY THE ENGINEER.

THE EXACT NUMBER, LOCATION, AND SPACING OF ALL SIGNS AND DEVICES SHALL BE ADJUSTED TO FIT FIELD CONDITIONS AS APPROVED BY THE ENGINEER.

CHANNELIZING DEVICES PLACED ADJACENT TO WORK AREA SHALL BE PULLED BACK FROM THE TRAVEL LANE WHEN WORK IS NOT IN PROGRESS.

SIGNS THAT WILL BE IN PLACE LESS THAN 7 CONTINUOUS DAYS AND NIGHTS MAY BE MOUNTED ON PORTABLE SUPPORTS.

W20-1A AND G20-2A SIGNS ARE NOT REQUIRED IF THE WORK AREA IS WITHIN A LARGER WORK ZONE WHERE THESE SIGNS ARE ALREADY PRESENT. G20-2A SIGNS MAY ALSO BE OMITTED IF DURATION OF WORK IS LESS THAN 7 CONTINUOUS DAYS AND NIGHTS.

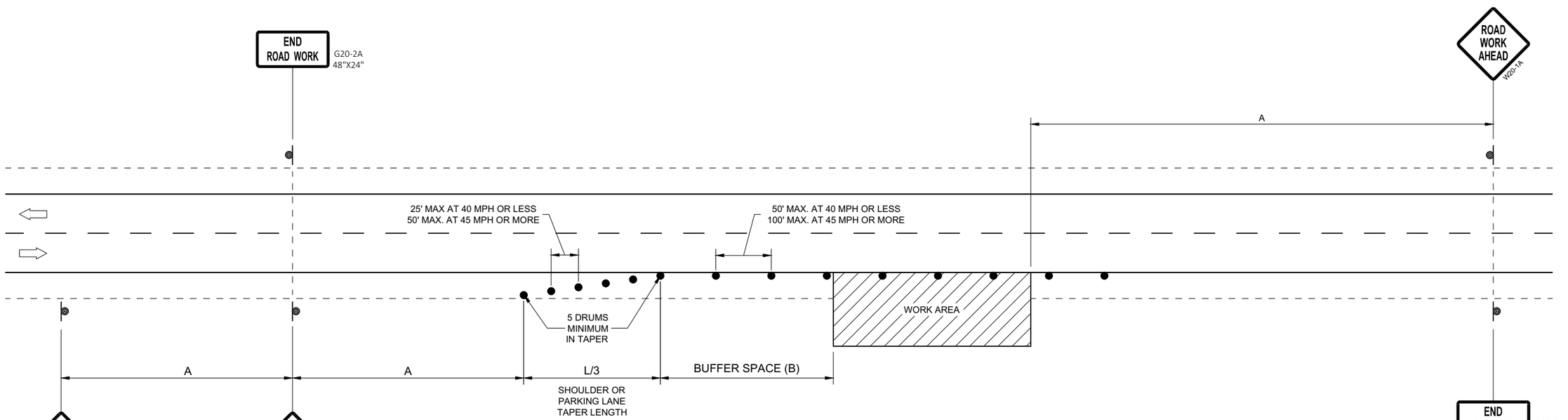

OR
IF TRAFFIC CONTROL DEVICES
ENCROACH ONTO TRAVELED WAY, USE

POSTED SPEED LIMIT PRIOR TO WORK STARTING (MPH)	ADVANCE WARNING SIGN SPACING (A) FEET	SHOULDER TAPER L / 3 W, LATERAL OFFSET (FT)						BUFFER SPACE (B) FEET
		3	4	5	6	7	8	
25	200'	10	14	17	21	24	28	55
30	200'	15	20	25	30	35	40	85
35	350'	20	27	34	40	47	54	120
40	350'	26	35	44	53	62	70	170
45	500'	45	59	74	89	104	119	220
50	500'	50	66	83	99	116	132	280
55	500'	54	73	91	109	127	145	335'

TRAFFIC CONTROL, WORK ON SHOULDER OR PARKING LANE, UNDIVIDED ROADWAY

STATE OF WISCONSIN
DEPARTMENT OF TRANSPORTATION

APPROVED
May 2020 — DATE
/S/ Andrew Heidtke — STATEWIDE WORK ZONE T SAFETY ENGINEER
FHWA

6

SDD 15D28 - 04

GENERAL NOTES

BARRICADE DEVICE SELECTED FROM APPROVED PRODUCT LIST

1. REFLECTIVE SHEETING SHALL FOLLOW THE REQUIREMENTS IN THE APPROVED PRODUCTS LISTING FOR SIGN SHEETING.
2. SHEETING REQUIRED ON MORE THAN 50% OF BARRICADE WIDTH.
3. PLACE SHEETING ON BOTH SIDES OF THE BARRICADE.

* USE THIS DETAIL FOR SHEETING PLACEMENT REFERENCE.

4. WHEN THE TEMPORARY PEDESTRIAN ACCESS ROUTE RUNS PARALLEL ON THE ROADWAY SURFACE, THE MAXIMUM CROSS SLOPE WILL MATCH THE EXISTING ROADWAY CROSS SLOPE.

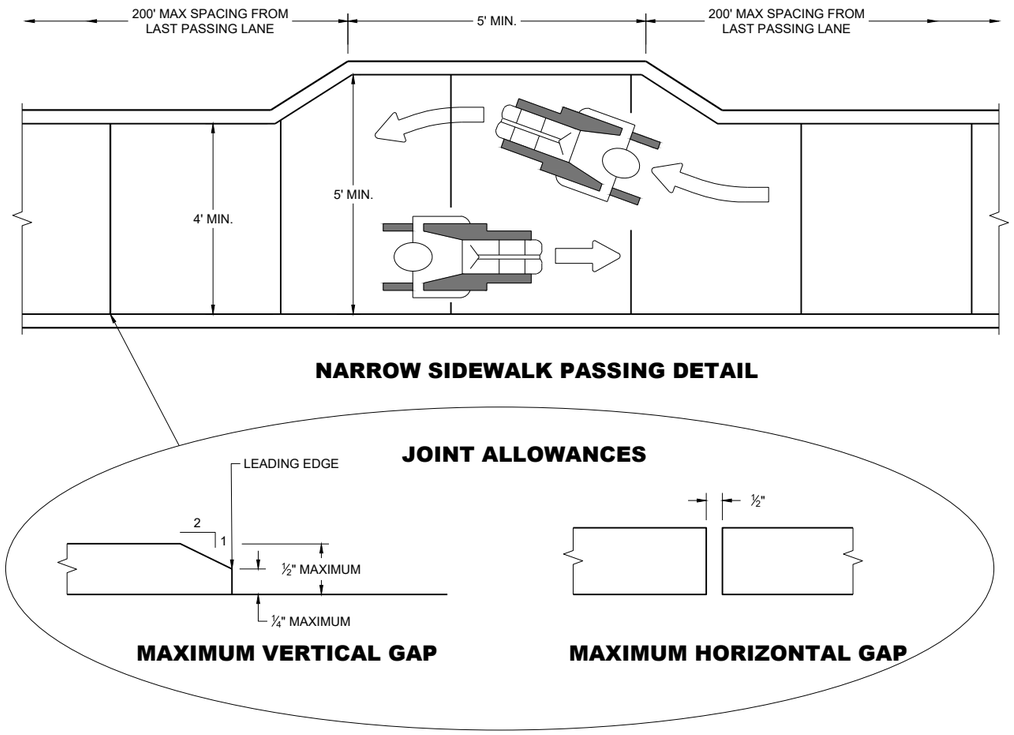

NARROW SIDEWALK PASSING DETAIL

MAXIMUM VERTICAL GAP

MAXIMUM HORIZONTAL GAP

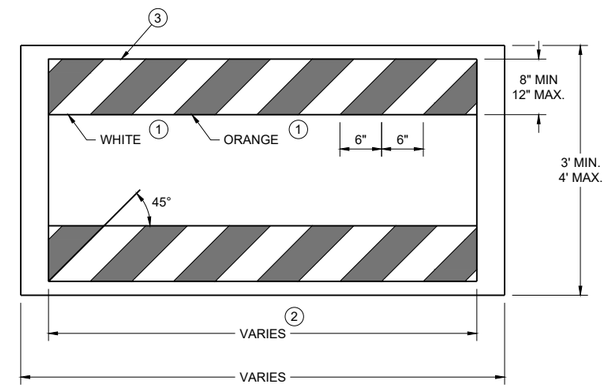

TEMPORARY PEDESTRIAN BARRICADE *

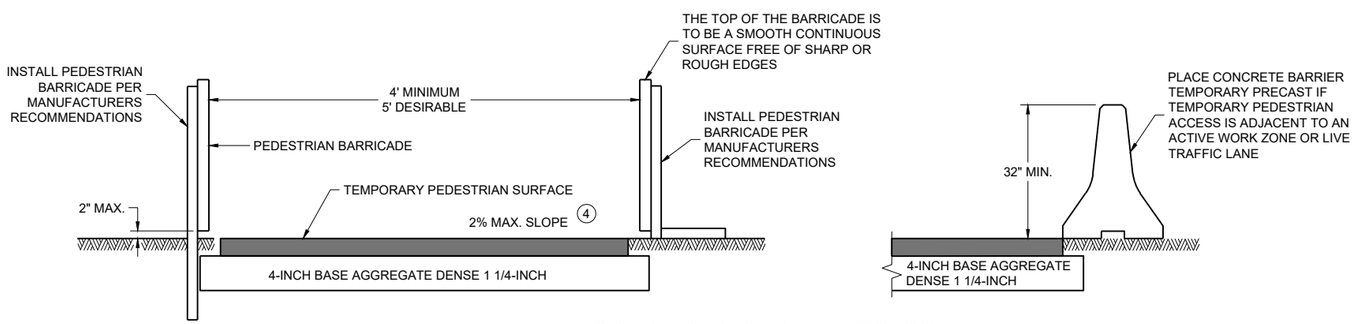

TEMPORARY PEDESTRIAN ACCESS

6

SDD 15D30-10a

TRAFFIC CONTROL, PEDESTRIAN ACCOMMODATION

STATE OF WISCONSIN
DEPARTMENT OF TRANSPORTATION

GENERAL NOTES

CURB RAMPS SHALL BE 48" MIN. WIDTH WITH A FIRM, STABLE AND SLIP RESISTANT SURFACE.

CURB RAMPS AND LANDINGS SHALL HAVE A 1:50 (2%) MAX. CROSS-SLOPE.

CLEAR SPACE OF 48" X 48" SHALL BE PROVIDED ABOVE AND BELOW THE CURB RAMP.
LATERAL JOINTS OR GAPS BETWEEN SURFACES SHALL BE LESS THAN ½" WIDTH.

CHANGES BETWEEN SURFACE HEIGHTS SHALL NOT EXCEED ½". LATERAL EDGES MAY BE VERTICAL UP TO ¼" HIGH AND SHALL BE BEVELED AT 1:2 BETWEEN ¼" AND ½".

1. INSTALL CONTRASTING TEMPORARY DETECTABLE WARNING FIELD AT PEDESTRIAN STREET CROSSINGS, AS SHOWN IN THE PLANS.
2. PROTECTIVE EDGING WITH A 2" MIN. HEIGHT SHALL BE INSTALLED WHEN A CURB RAMP OR LANDING PLATFORM HAS A VERTICAL DROP OF 6" OR GREATER OR HAS A SIDE APRON SLOPE STEEPER THAN 1:3 (33%). PROTECTIVE EDGING SHOULD BE CONSIDERED WHEN CURB RAMPS OR LANDING PLATFORMS HAVE A VERTICAL DROP OF 3" OR MORE.
3. DETECTABLE EDGING WITH 6" MIN. HEIGHT AND CONTRASTING COLOR SHALL BE INSTALLED ON ALL CURB RAMP LANDINGS WHERE THE WALKWAY CHANGES DIRECTION (TURNS).
4. DO NOT RESTRICT WATER FLOW IN THE GUTTER SYSTEM.
5. ENSURE CURB RAMP IS OUT OF THE GUTTER PAN.
6. IF ONLY PART OF THE END PANEL OF TEMPORARY PEDESTRIAN BARRICADE PANEL IS NEEDED, EXTEND EXCESS PORTION OF TEMPORARY PEDESTRIAN BARRICADE PANEL HERE.

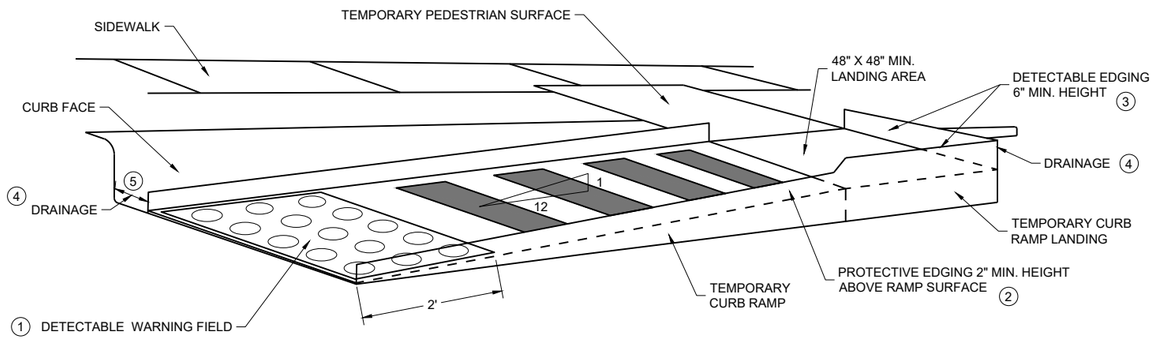

PERSPECTIVE VIEW

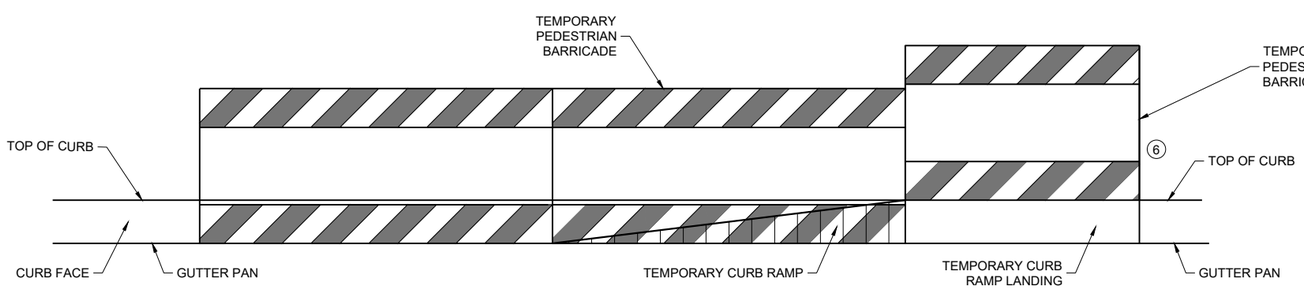

FRONT VIEW

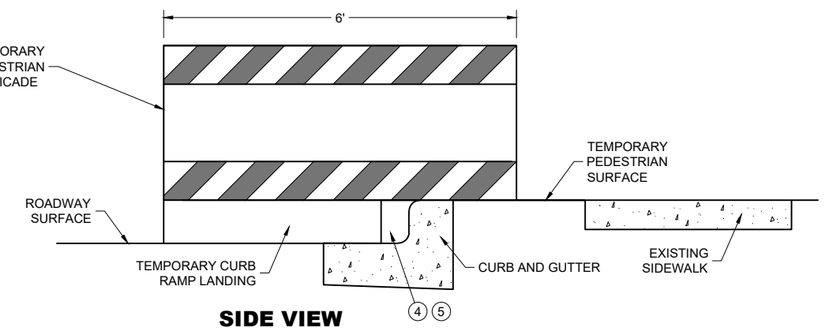

SIDE VIEW

TEMPORARY CURB RAMP PARALLEL TO CURB

6

6

SDD 15D30-10b

SDD 15D30-10b

TRAFFIC CONTROL, PEDESTRIAN ACCOMMODATION

STATE OF WISCONSIN
DEPARTMENT OF TRANSPORTATION

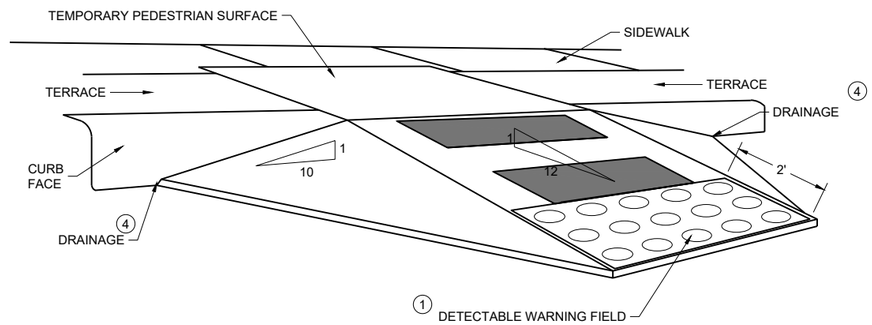

WITH SIDE APRON 5

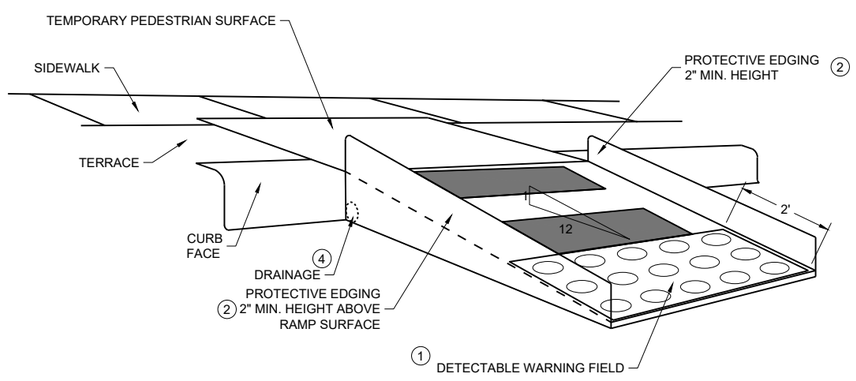

WITH PROTECTIVE EDGE

TEMPORARY CURB RAMP PERPENDICULAR TO CURB

GENERAL NOTES

CURB RAMPS SHALL BE 48" MINIMUM WIDTH WITH A FIRM, STABLE AND SLIP RESISTANT SURFACE.

ALTERNATE SIDEWALK WORK BETWEEN LEFT AND RIGHT SIDE OF ROADWAY TO MAINTAIN PEDESTRIAN ACCESS.

CURB RAMPS AND LANDINGS SHALL HAVE A 1:50 (2%) MAX. CROSS-SLOPE.

CLEAR SPACE OF 48" X 48" SHALL BE PROVIDED ABOVE AND BELOW THE CURB RAMP.

LATERAL JOINTS OR GAPS BETWEEN SURFACES SHALL BE LESS THAN ½" WIDTH.

CHANGES BETWEEN SURFACE HEIGHTS SHALL NOT EXCEED ½". LATERAL EDGES MAY BE VERTICAL UP TO ¼" HIGH AND SHALL BE BEVELED AT 1:2 BETWEEN ¼" AND ½".

1. INSTALL CONTRASTING TEMPORARY DETECTABLE WARNING FIELD AT PEDESTRIAN STREET CROSSINGS, AS SHOWN IN THE PLANS
2. PROTECTIVE EDGING WITH A 2" MIN. HEIGHT SHALL BE INSTALLED WHEN A CURB RAMP OR LANDING PLATFORM HAS A VERTICAL DROP OF 6" OR GREATER OR HAS A SIDE APRON SLOPE STEEPER THAN 1:3 (33%). PROTECTIVE EDGING SHOULD BE CONSIDERED WHEN CURB RAMPS OR LANDING PLATFORMS HAVE A VERTICAL DROP OF 3" OR MORE.
3. DETECTABLE EDGING WITH 6" MIN. HEIGHT AND CONTRASTING COLOR SHALL BE INSTALLED ON ALL CURB RAMP LANDINGS WHERE THE WALKWAY CHANGES DIRECTION (TURNS).
4. DO NOT RESTRICT WATER FLOW IN THE GUTTER SYSTEM.
5. CAN ONLY BE USED FOR RAMPS WITH 6" OR LESS OF VERTICAL CHANGE.

6

SDD 15D30-10c

TRAFFIC CONTROL, PEDESTRIAN ACCOMMODATION

STATE OF WISCONSIN
DEPARTMENT OF TRANSPORTATION

URBAN AREA

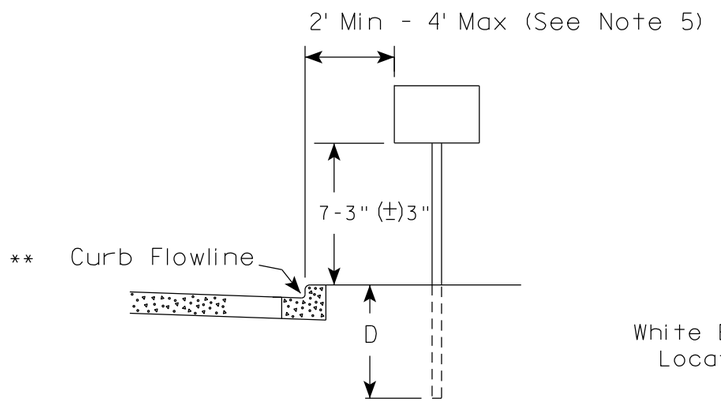

RURAL AREA (See Note 2)

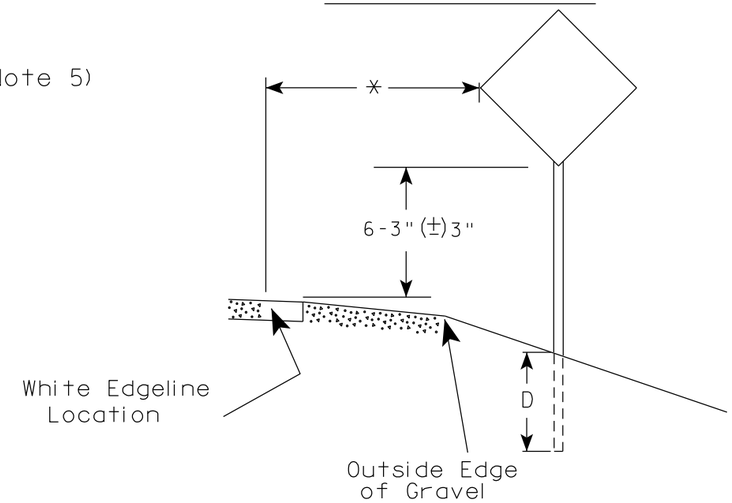

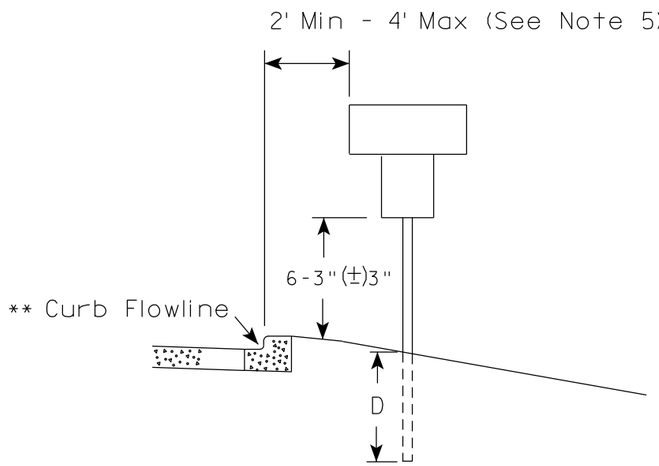

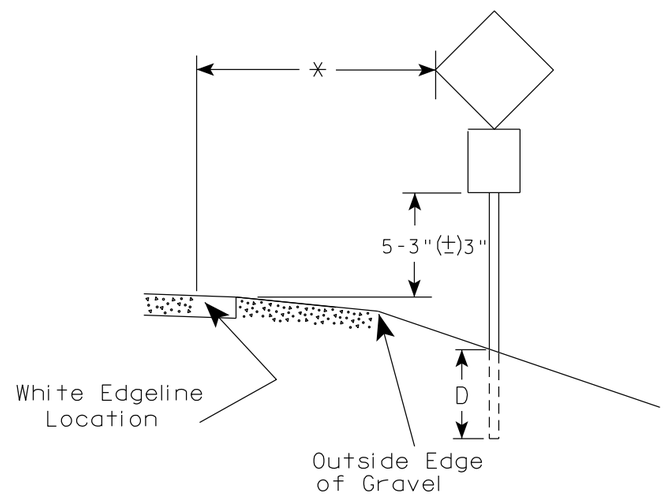

** The existence of curb and gutter does not in itself mandate the vertical clearance illustrated. That height is typically measured where there is sidewalk adjacent to the roadway or parking is permitted. In the absence of sidewalk vertical clearance is measured from the top of the curb. Offset of signs is measured from the flow line.

* 6 feet from edge of a paved shoulder or 12 feet from the edge of pavement (edge line location) or 2 feet from outside edge of gravel, whichever is greater unless directed by project engineer.

POST EMBEDMENT DEPTH

Area of Sign Installation (Sq. Ft.)	D (Min)
20 or Less	4'
Greater than 20	5'

GENERAL NOTES

1. Signs wider than 4 feet or 20 sq.ft or larger, shall be mounted on multiple posts. Refer to plate A4-4.
2. If signs are mounted on or behind barrier wall, see A4-10 sign plate.
   The Double Arrow sign (W12-1D) shall be mounted at a height of 2'-3" (±) 3". The Chevron sign (W1-8), Roundabout Chevron panel (R6-4B), Enhanced Reference Markers, Clearance Markers (W5-52), Mile Markers (D10 series), In Road Object Markers (W5-54) & End of Road Markers (W5-56) shall be mounted at a height of 4'-3" (±) 3".
3. For expressways and freeways, mounting height is 7'- 3" (±) 3" or 6'-3" (±) 3" depending upon existence of a sub-sign.
4. Minimum mounting height for signs mounted on traffic signal poles is 5'- 3" (±) 3".
5. Offset distance shall be consistent with existing signs or consistent throughout length of project.
6. Folding signs shall be mounted at a height of 5'-3" (±) 3" or as directd by the Engineer.

TYPICAL INSTALLATION OF PERMANENT TYPE II SIGNS ON SINGLE POSTS

WISCONSIN DEPT OF TRANSPORTATION

APPROVED Matthew R Rauch
for State Traffic Engineer

DATE 12/6/23 PLATE NO. A4-3.23

PROJECT NO:	HWY:	COUNTY:		SHEET NO: 134	E

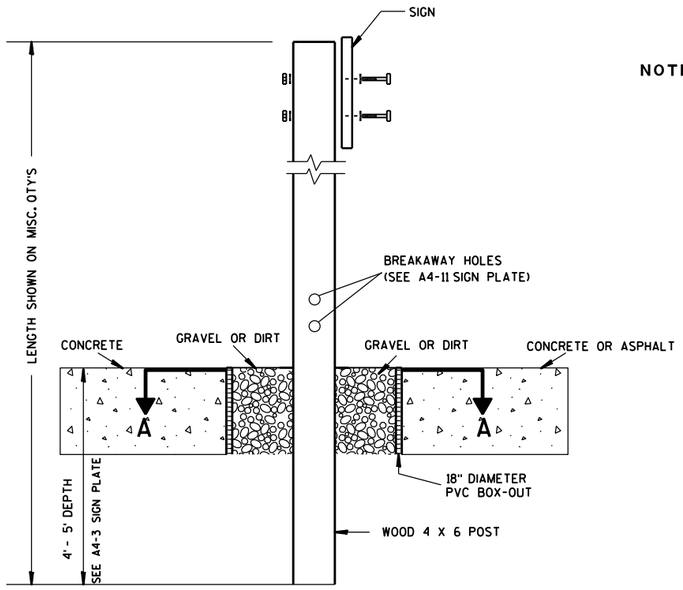

ELEVATION VIEW

DETAIL OF WOOD 4 X 6 SIGN POST IN BOX-OUT

NOTES:
1. ALL MATERIAL TO BE APPROVED BY ENGINEER PRIOR TO INSTALLATION
2. SEE SIGN PLATE A4-8 FOR SIGN HARDWARE REQUIREMENTS
3. 18 INCH X 18 INCH SQUARE BOX-OUTS MAY BE USED FOR INSTALLATIONS IN EXISTING CONCRETE OR ASPHALT LOCATIONS.

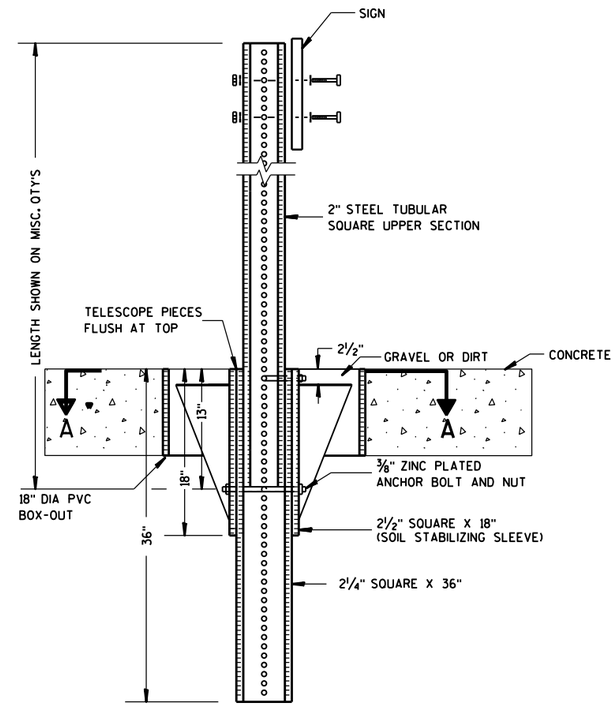

ELEVATION VIEW

DETAIL OF STEEL 2 X 2 SIGN POST IN BOX-OUT

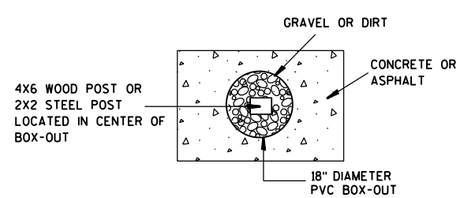

PLAN VIEW

FOR NEW CONCRETE/ASPHALT INSTALLATIONS

SIGN POST
BOX-OUTS
A4-3B

WISCONSIN DEPT OF TRANSPORTATION

APPROVED Matthew R Rauch
for State Traffic Engineer

DATE 1/27/14 PLATE NO. A4-3B.1

PROJECT NO:	HWY:	COUNTY:		SHEET NO:	E

URBAN AREA

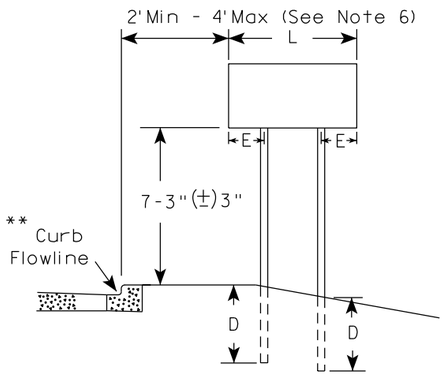

RURAL AREA (See Note 3)

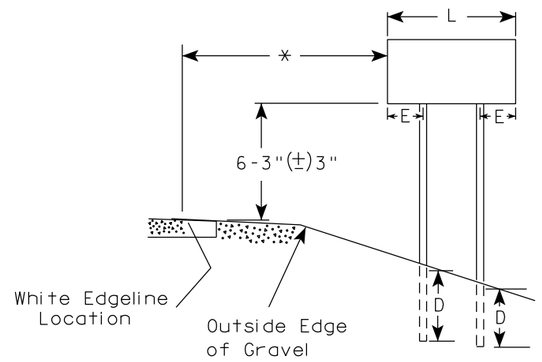

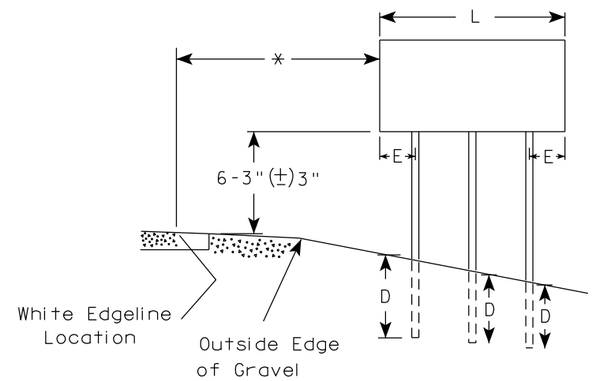

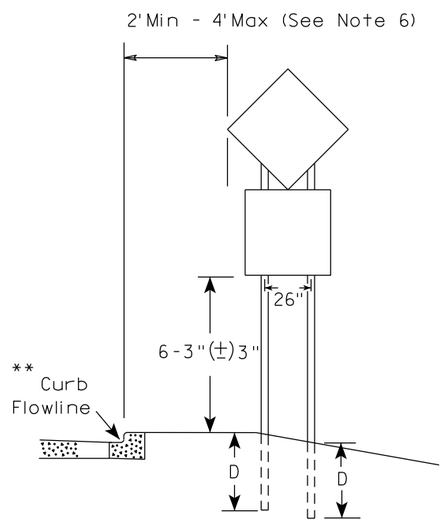

48" DIAMOND WARNING SIGN

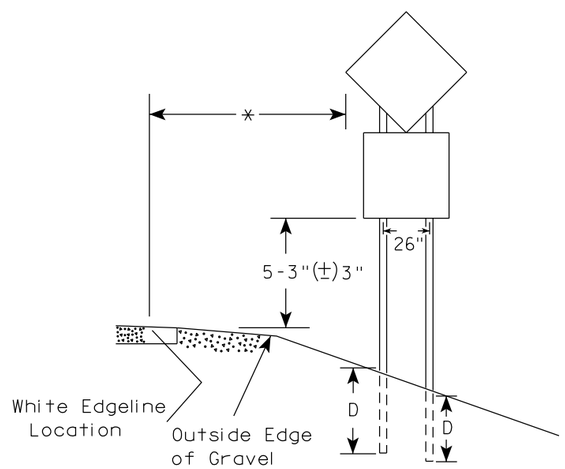

48" DIAMOND WARNING SIGN

GENERAL NOTES

1. For 3 or 4 post installations, individual post spacing shall be greater than 3'-6".
2. See tables below for required number of posts.
3. For expressways and freeways, mounting height is 7'-3" (±) 3" or 6'-3" (±) 3" depending upon existence of sub-sign.
4. The (±) tolerance for mounting height is 3 inches.
5. J-Assemblies are considered to be one sign for mounting height.
6. Offset distance shall be consistent with existing signs or consistent throughout length of project.
7. Folding signs shall be mounted at a height of 5'-3" (±) 3" or as directed by the engineer.
8. The Double Arrow sign (W12-1) shall be mounted at a height of 2'-3" (±) 3". The Chevron sign (W1-8), Roundabout Chevron panel (R6-4B), Clearance Markers (W5-52), Mile Markers (D10 series), In Road Object Markers (W5-54) & End of Road Markers (W5-56) shall be mounted at a height of 4"-3" (±) 3".

* 6 feet from edge of a paved shoulder or 12 feet from the edge of pavement (edge line location) or 2 feet from outside edge of gravel, whichever is greater unless directed by project engineer.

** The existence of curb and gutter does not in itself mandate the vertical clearance illustrated. That height is typically measured where there is sidewalk adjacent to the roadway or parking is permitted. In the absence of sidewalk vertical clearance is measured from the top of the curb. Offset of signs is measured from the flow line.

*** See A4-3 sign plate for signs 4' or less in width and less than 20 S.F. in area.

SIGN SHAPE OTHER THAN DIAMOND (TWO POSTS REQUIRED)	
L	E
*** Greater than 48" Less than 60"	12"
60" to 108"	L/5

SIGN SHAPE OTHER THAN DIAMOND (THREE POSTS REQUIRED)	
L	E
Greater than 108" to 144"	12"

POST EMBEDMENT DEPTH

Area of Sign Installation (Sq. Ft.)	D (Min)
20 or Less	4'
Greater than 20	5'

TYPICAL INSTALLATION OF TYPE II SIGNS ON MULTIPLE POSTS

WISCONSIN DEPT OF TRANSPORTATION

APPROVED Matthew R Rauch
for State Traffic Engineer

DATE 12/6/23 PLATE NO. A4-4.16

PROJECT NO:	HWY:	COUNTY:		SHEET NO: 136	E

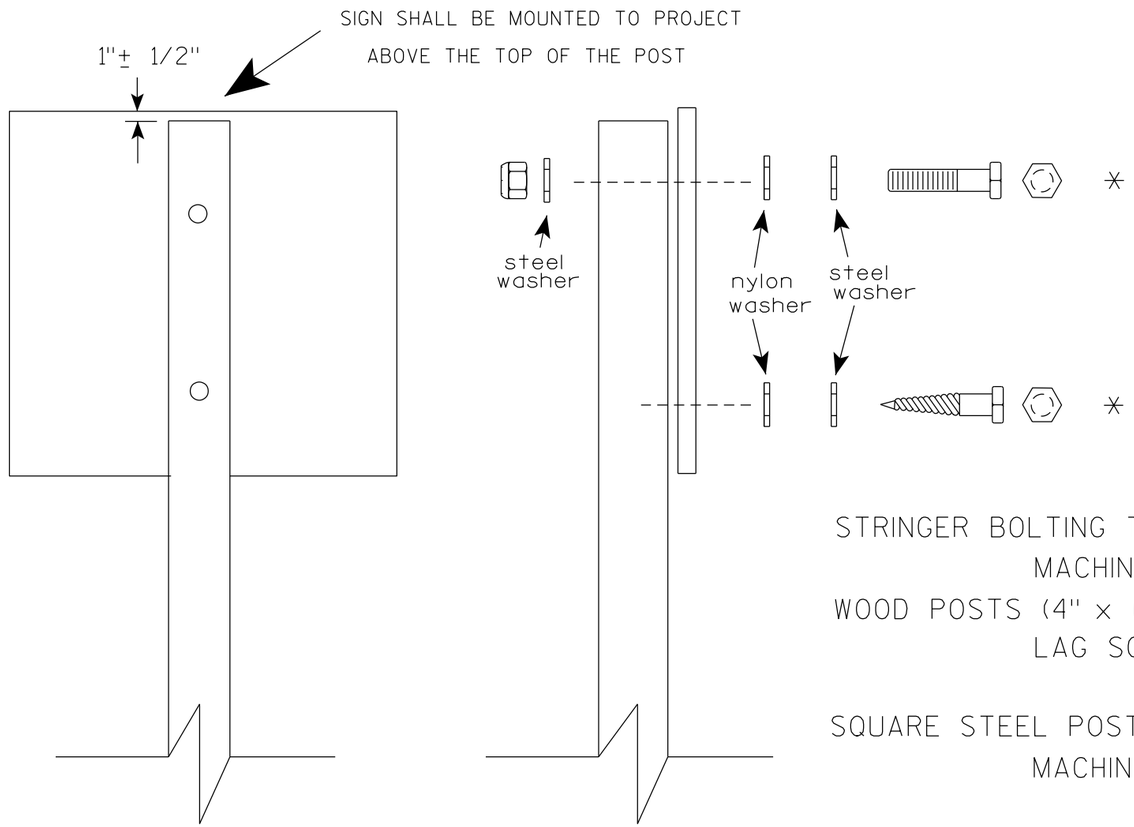

Nuts, bolts and lags used for mounting signs shall have hexagonal heads and shall be either :

a. Hot dip galvanized in accordance with ASTM Designation: A 153, Class D, or SC 3

b. Electro-galvanized in accordance with ASTM Designation : B 633, TYPE III, SC 3.

Threads on bolts and nuts shall be manufactured with sufficient allowance for the cadmium plate or galvanized coating to permit the nuts to run freely on the bolts.

STRINGER BOLTING TO ALUMINUM SIGNS (SEE SIGN PLATE A4-18)

MACHINE BOLTS - 5/16" X 1-3/4" Length w/ lock nuts

WOOD POSTS (4" x 6")

LAG SCREWS - 3/8" X 3" (NO STRINGERS ON BACK OF SIGN)
3/8" X 4" (STRINGERS ON BACK OF SIGN)

SQUARE STEEL POSTS (2" x 2")

MACHINE BOLTS - 3/8" X 3-1/4" Length w/ nuts (NO STRINGER ON BACK OF SIGN)
3/8" X 5" Length w/ nuts (STRINGERS ON BACK OF SIGN)

RIVETS - 9/32 " (6605-9-6) BULB-TITE, TRI-FOLD, ALUMINUM BODY/MANDREL
O.D. FLANGE .720-.765 INCH, GRIP RANGE .042-.375 INCH

WASHERS (ALL POSTS) -

1-1/4" O.D. X 3/8" I.D. X 1/16" STEEL
1-1/4" O.D. X 3/8" I.D. X .080 NYLON

* Two different fastening systems are shown for illustration purposes. On any individual sign, either one or the other system shall be used. Actual number of fasteners per sign varies with the sign area, but normally there are two. For a single post installation, all signs greater than 9 sq. ft. require the use of 3 fasteners.

ATTACHMENT OF SIGNS TO POSTS

WISCONSIN DEPT OF TRANSPORTATION

APPROVED Matthew R Rauch
for State Traffic Engineer

DATE 4/1/2020 PLATE NO. A4-8.9

TELESCOPIC TUBING ANCHORS
TWO PIECE SYSTEM

2 1/4 " SQUARE
12 GAUGE
PERFORATED
GALVANIZED FINISH

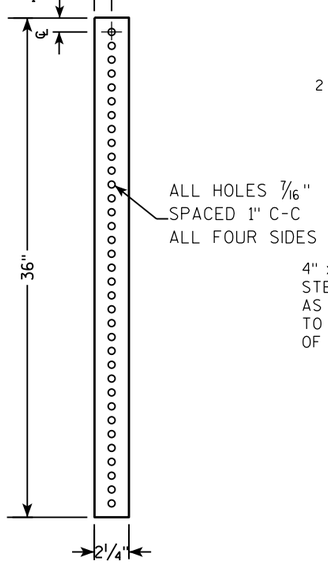

2 1/2 " SQUARE
12 GAUGE
OMNI-DIRECTIONAL
PERFORATED
SOIL STABILIZING SLEEVE
GALVANIZED FINISH

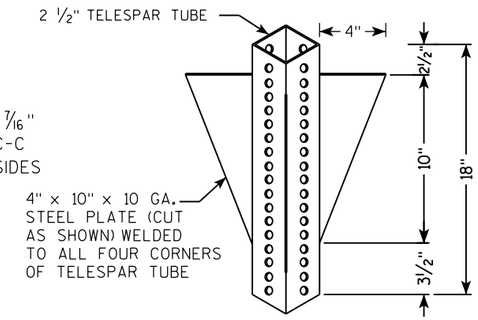

DETAIL OF TUBULAR STEEL SIGN POST
(IN POURED CONCRETE OR ASPHALT)

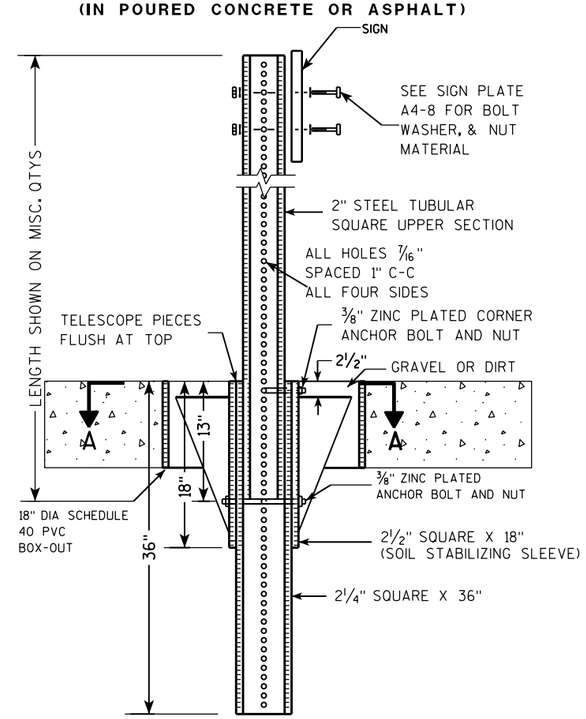

DETAIL OF TUBULAR STEEL SIGN POST
(IN LOCATIONS OTHER THAN POURED CONCRETE OR ASPHALT)

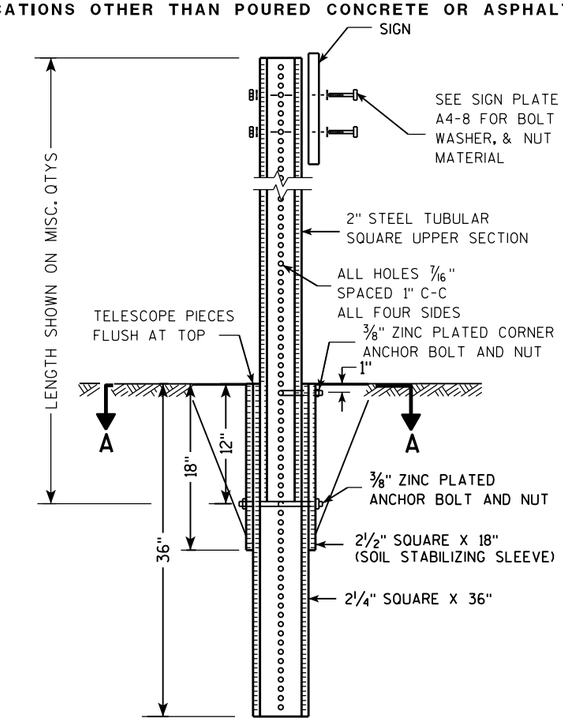

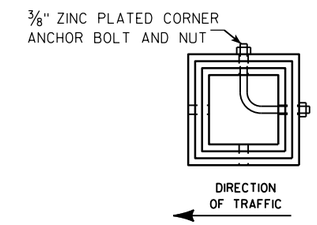

SECTION A-A

Area of Sign Installation (Sq. Ft.)	Number of Required Posts
9 or less	1
Greater than 9 less than or equal to 18	2
Greater than 18 less than or equal to 27	3

Signs wider than 3 feet or larger than 9 sq. ft shall be mounted on multiple posts (see above table).

TUBULAR STEEL
SIGN POST
A4-9

WISCONSIN DEPT OF TRANSPORTATION

APPROVED Matthew R Rauch
for State Traffic Engineer

DATE 2/05/15 PLATE A4-9.9

7 7

PROJECT NO:	HWY:	COUNTY:		SHEET NO:	E

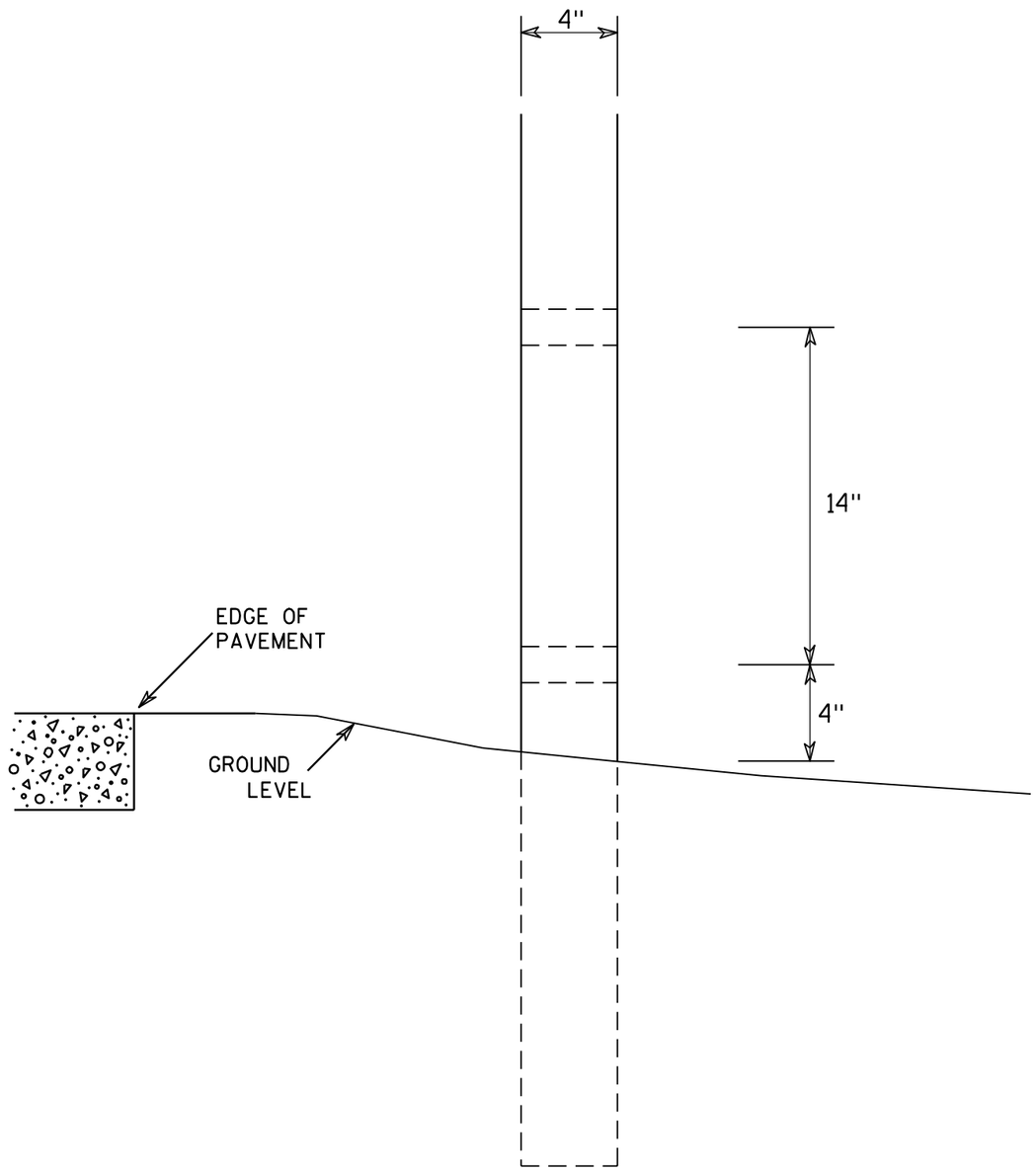

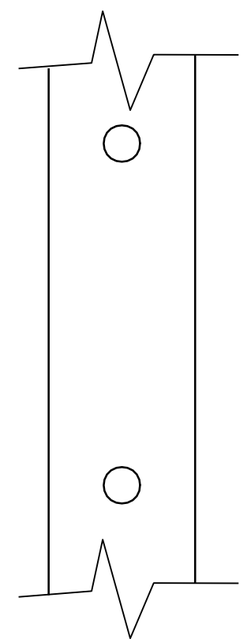

SIDE VIEW

GENERAL NOTES

1. All 4 x 6 Wood Posts shall be modified by having two 1½" diameter holes drilled perpendicular to the roadway centerline.

7

7

4 X 6 WOOD POST MODIFICATIONS

WISCONSIN DEPT OF TRANSPORTATION

APPROVED Chester J Spang for State Traffic Engineer

DATE 3/27/97 PLATE NO. A4-11.2

PROJECT NO:	HWY:	COUNTY:		SHEET NO: 139	E

BANDING

SINGLE SIGN

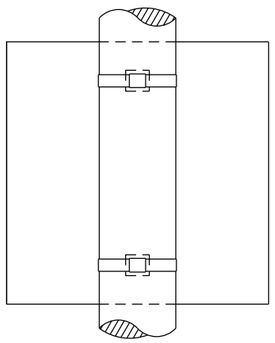

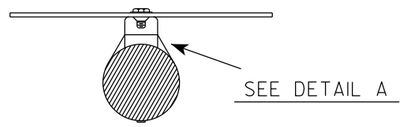

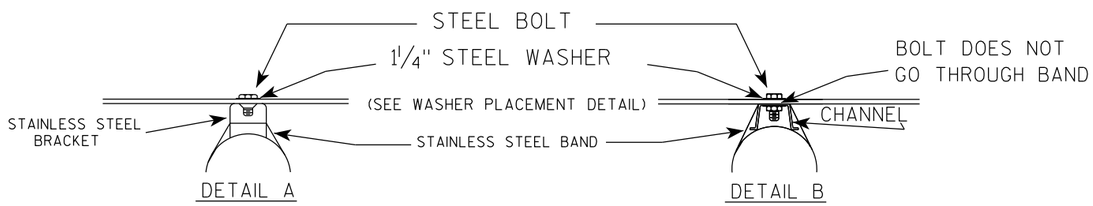

WASHER PLACEMENT

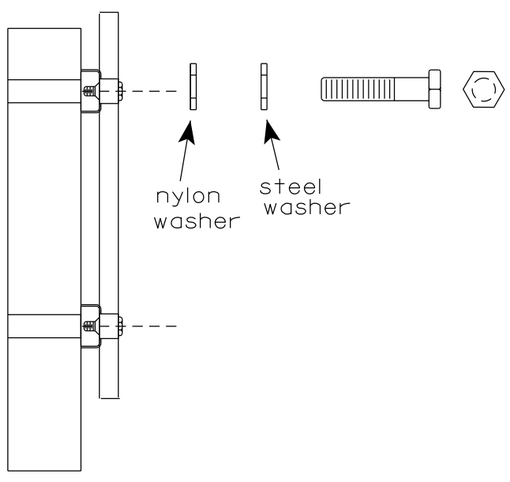

WASHERS (ALL POSTS) -
1-1/4" O.D. X 3/8" I.D. X 1/16" STEEL
1-1/4" O.D. X 3/8" I.D. X .080 NYLON
FOR ALL TYPE H SIGNS

GENERAL NOTES

1. Any sign over 3 feet in width shall use the V-Block banding method. See A5-10 standard plate.
2. Signs 3 feet or greater in height shall have three bracket bands installed. Signs less than 3 feet in height shall have two bracket bands installed.
3. Banding and assembly bracket shall be stainless steel. All bands shall be 3/4" in width and 0.025" thickness.
4. ALL SIGN MOUNTING BOLTS AND WASHERS SHALL BE EITHER:
   a. Hot dip or mechanically galvanized in accordance with ASTM Designation: A 153, Class D
   b. Electro-galvanized in accordance with ASTM designation: B 633, Type III, SC 3

"J" ASSEMBLY

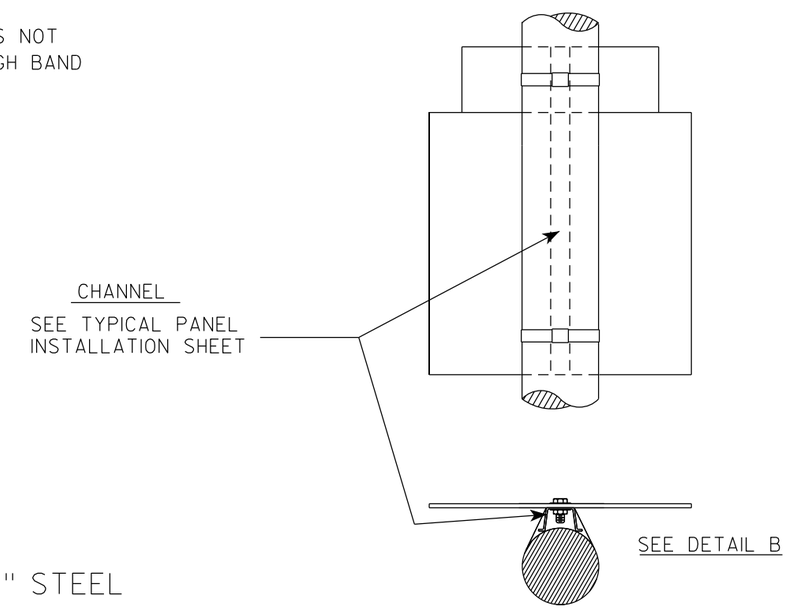

STANDARD SIGN
SIGN BANDING DETAILS

WISCONSIN DEPT OF TRANSPORTATION

APPROVED Matthew R Rauch for State Traffic Engineer

DATE 6/10/19 PLATE NO. A5-9.4

PROJECT NO:	HWY:	COUNTY:		SHEET NO: 140	E

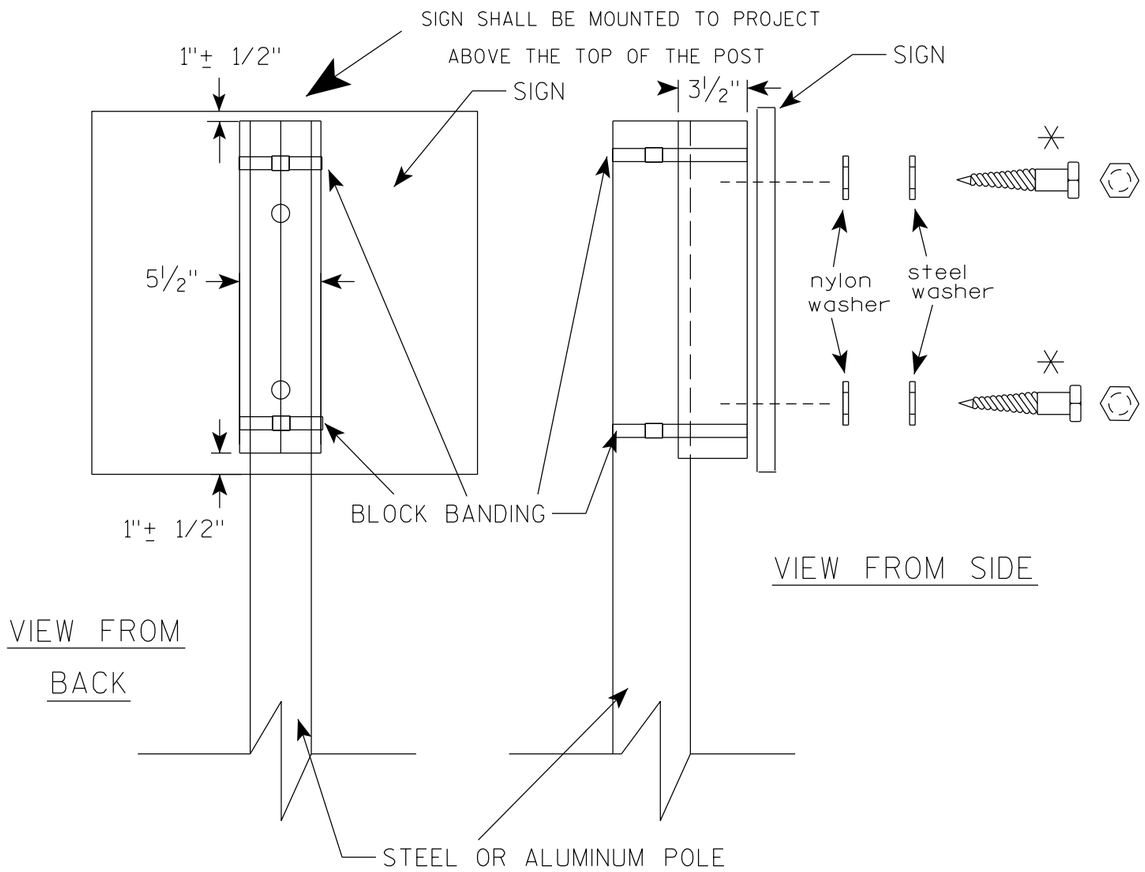

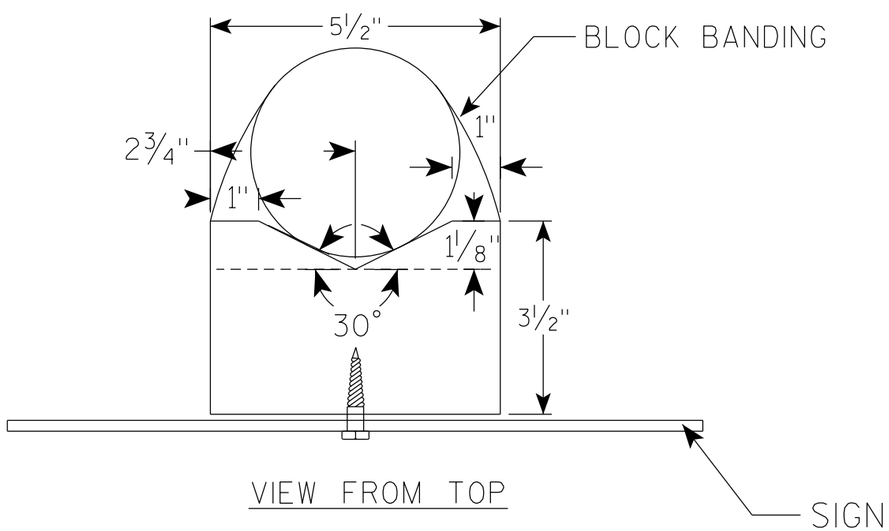

GENERAL NOTES

1. WOOD 4"X6" POST MATERIAL SHALL CONFORM TO 507.2.2 OF THE WisDOT STANDARD SPECIFICATIONS
2. BLOCK BANDING AND CLIPS SHALL BE STAINLESS STEEL, 3/4" WIDTH AND 0.025" THICKNESS
3. SIGNS 3' OR GREATER IN HEIGHT SHALL UTILIZE 3 BLOCK BANDS. SIGNS UNDER 3' IN HEIGHT SHALL UTILIZE 2 BLOCK BANDS
4. ACTUAL NUMBER OF FASTENERS PER SIGN VARIES WITH THE SIGN AREA, BUT NORNALLY THERE ARE TWO. FOR SIGNS GREATER THAN 9 S.F. 3 FASTENERS SHALL BE USED.
5. ALL SIGN MOUNTING BOLTS AND WASHERS SHALL BE EITHER:
   a. Hot dip or mechanically galvanized in accordance with ASTM Designation: A 153, Class D
   b. Electro-galvanized in accordance with ASTM Designation : B 633, TYPE III, SC 3
6. ALL BOLTS SHALL HAVE HEXAGONAL HEADS.
7. STEEL WASHERS SHALL BE 1 1/4" O.D. X 3/8" I.D. X 1/16"
8. NYLON WASHERS SHALL BE 1 1/4" O.D. X 3/8" I.D. X .080 FOR TYPE H OR TYPE F FACE SIGN

✳ LAG BOLTS SHALL BE 3/8" X 2 1/2"

7

7

BLOCK BANDING DETAIL
(V-BLOCK OPTION)

WISCONSIN DEPT OF TRANSPORTATION

APPROVED Matthew R Rauch
for State Traffic Engineer

DATE 4/19/2022 PLATE NO. A5-10.3

PROJECT NO:				SHEET NO: 141	E

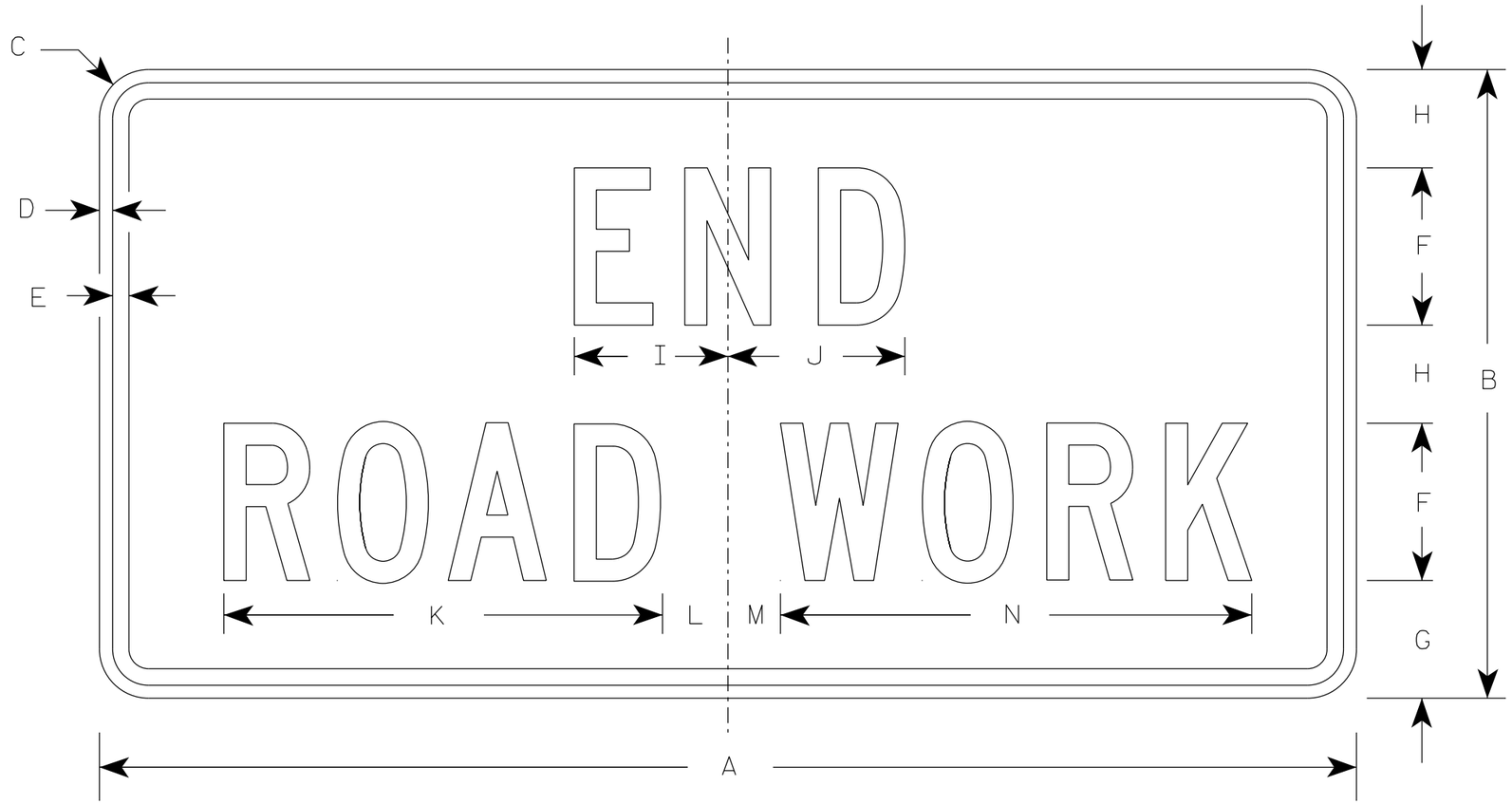

G20-2A

NOTES

1. Sign is Type II - Type F Reflective
2. Color:
   Background - Orange
   Message - Black
3. Message Series - C
4. Corners may be square or rounded when base material is plywood but borders shall be rounded as shown. When base material is metal, the corners and borders shall be rounded.

SIZE	A	B	C	D	E	F	G	H	I	J	K	L	M	N	O	P	Q	R	S	T	U	V	W	X	Y	Z	Area sq. ft.
1	36	18	1 1/2	3/8	1/2	4	3 3/4	2 1/2	4 1/8	4 1/8	11 1/8	2	1	12 1/8													4.5
2	48	24	1 7/8	1/2	5/8	6	4 1/2	3 3/4	5 7/8	6 3/4	16 3/4	2 1/2	1 3/4	18 1/2													8.0
2M	48	24	1 7/8	1/2	5/8	6	4 1/2	3 3/4	5 7/8	6 3/4	16 3/4	2 1/2	1 3/4	18 1/2													8.0
3	48	24	1 7/8	1/2	5/8	6	4 1/2	3 3/4	5 7/8	6 3/4	16 3/4	2 1/2	1 3/4	18 1/2													8.0
4	48	24	1 7/8	1/2	5/8	6	4 1/2	3 3/4	5 7/8	6 3/4	16 3/4	2 1/2	1 3/4	18 1/2													8.0
5	48	24	1 7/8	1/2	5/8	6	4 1/2	3 3/4	5 7/8	6 3/4	16 3/4	2 1/2	1 3/4	18 1/2													8.0

STANDARD SIGN
G20-2A

WISCONSIN DEPT OF TRANSPORTATION

APPROVED Matthew R Rauch
for State Traffic Engineer

DATE 1/26/2023 PLATE NO. G20-2A.10

PROJECT NO: | HWY: | COUNTY: | SHEET NO: 142 | E

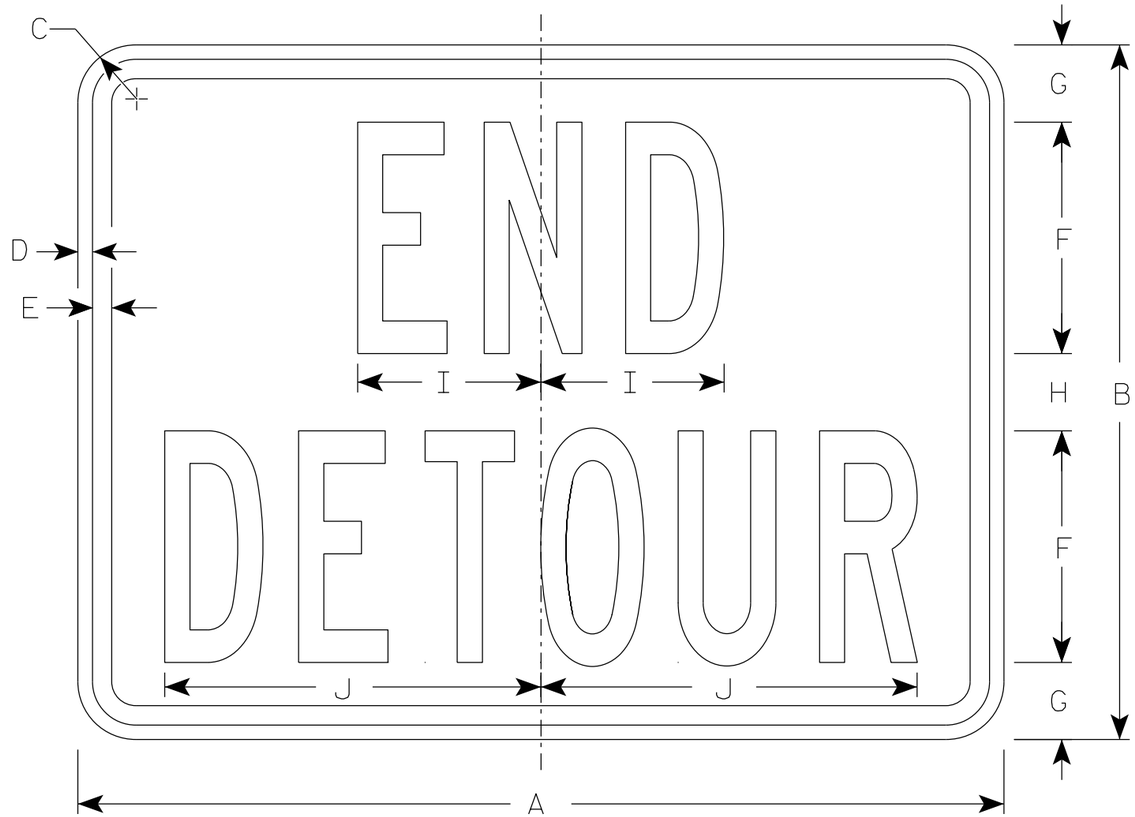

M4-8A

NOTES

1. Sign is Type II - Type F Reflective
2. Color:
   Background - Orange
   Message - Black
3. Message Series - B
4. Corners may be square or rounded when base material is plywood but borders shall be rounded as shown. When base material is metal, the corners and borders shall be rounded.

SIZE	A	B	C	D	E	F	G	H	I	J	K	L	M	N	O	P	Q	R	S	T	U	V	W	X	Y	Z	Area sq. ft.
1																											
2	24	18	1 1/2	3/8	1/2	6	2	2	4 3/4	9 3/4																	3.0
2M	24	18	1 1/2	3/8	1/2	6	2	2	4 3/4	9 3/4																	3.0
3	30	24	1 1/2	3/8	1/2	8	2 1/2	3	6 3/4	13																	5.0
4	30	24	1 1/2	3/8	1/2	8	2 1/2	3	6 3/4	13																	5.0
5	30	24	1 1/2	3/8	1/2	8	2 1/2	3	6 3/4	13																	5.0

STANDARD SIGN
M4-8A

WISCONSIN DEPT OF TRANSPORTATION

APPROVED Matthew R Rauch
for State Traffic Engineer

DATE 2/9/2023 PLATE NO. M4-8A.4

PROJECT NO: | HWY: | COUNTY: | SHEET NO: 143 | E

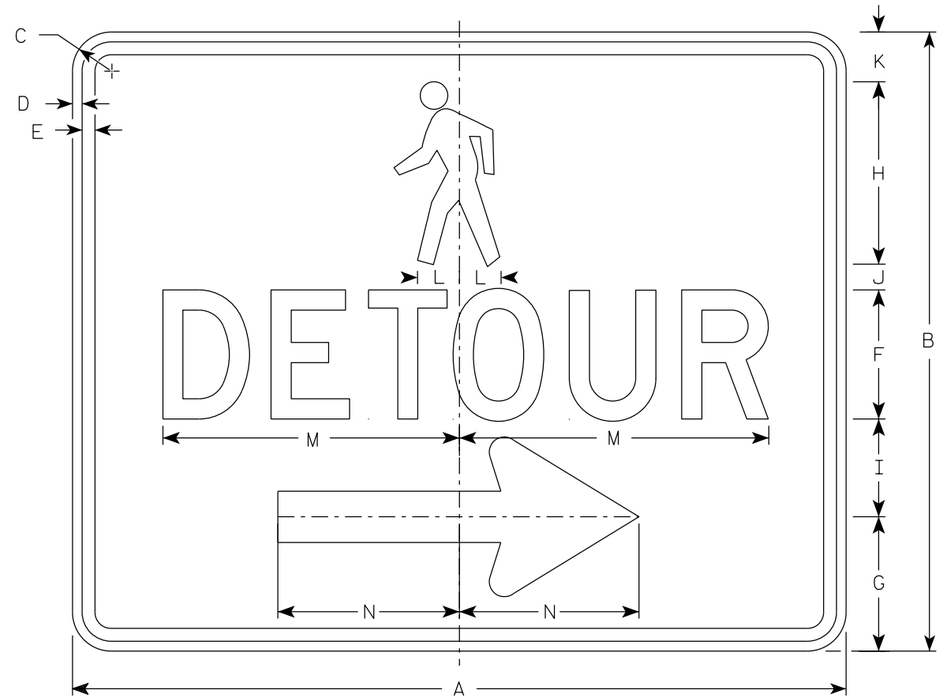

M4-9BR

NOTES

1. Sign is Type II-Type F Reflective
2. Color:
   Background - Orange
   Message - Black
3. Message Series - D
4. Corners may be square or rounded when base material is plywood but borders shall be rounded as shown. When base material is metal, the corners and borders shall be rounded.
5. M4-9BL is the same as M4-9BR except the arrow is reversed.

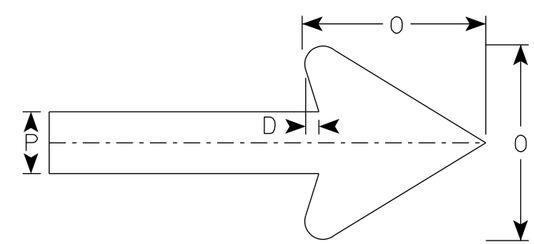

Arrow Detail

SIZE	A	B	C	D	E	F	G	H	I	J	K	L	M	N	O	P	Q	R	S	T	U	V	W	X	Y	Z	Area sq. ft.
1																											
2S	30	24	1 1/2	3/8	1/2	5	5 1/4	7 1/8	3 3/4	1	1 1/8	1 5/8	11 3/4	7	6	2											5.0
2M	30	24	1 1/2	3/8	1/2	5	5 1/4	7 1/8	3 3/4	1	1 1/8	1 5/8	11 3/4	7	6	2											5.0
3																											
4																											
5																											

STANDARD SIGN
M4-9B L&R

WISCONSIN DEPT OF TRANSPORTATION

APPROVED Matthew R Rauch
for State Traffic Engineer

DATE 2/9/2023 PLATE NO. M4-9B.4

PROJECT NO: | HWY: | COUNTY: | SHEET NO: 144 | E

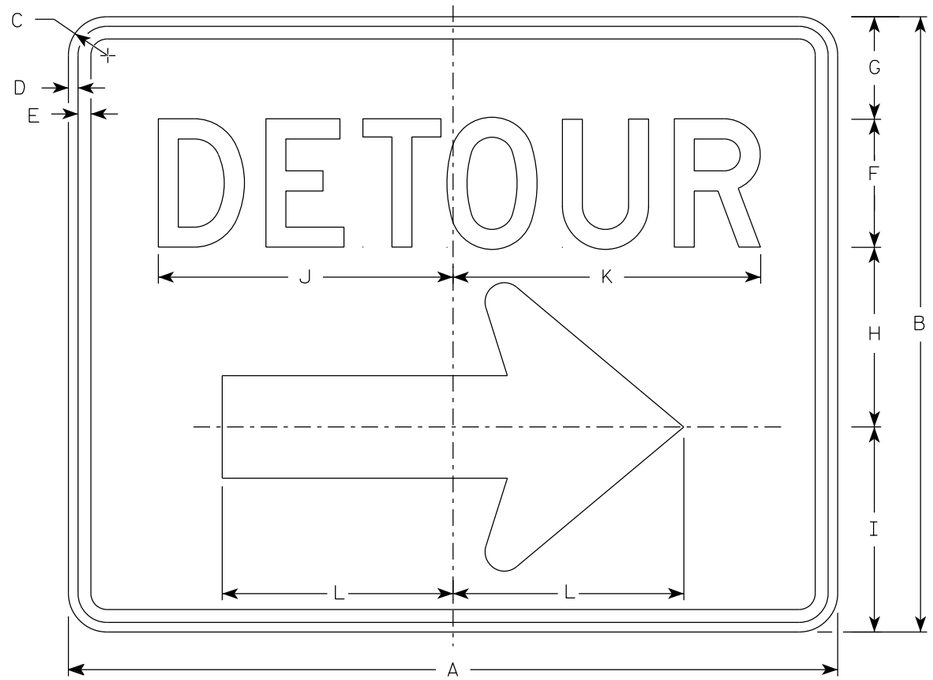

M4-9R

NOTES

1. Sign is Type II - Type F Reflective
2. Color:
   Background - Orange
   Message - Black
3. Message Series - D
4. Corners may be square or rounded when base material is plywood but borders shall be rounded as shown. When base material is metal, the corners and borders shall be rounded.
4. M4-9L is the same as M4-9R except the arrow is reversed.

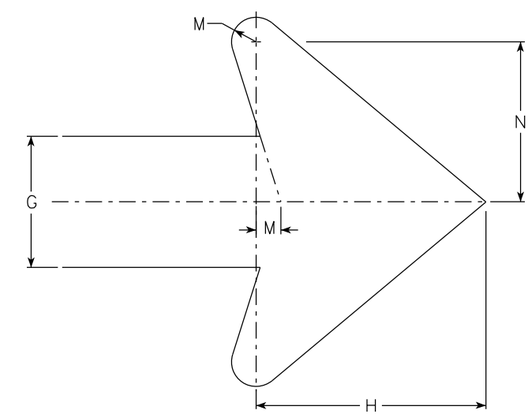

Arrow Detail

SIZE	A	B	C	D	E	F	G	H	I	J	K	L	M	N	O	P	Q	R	S	T	U	V	W	X	Y	Z	Area sq. ft.
1																											
2	30	24	1 1/2	3/8	1/2	5	4	7	8	11 1/2	12	9	3/4	4 7/8													5.00
2M	30	24	1 1/2	3/8	1/2	5	4	7	8	11 1/2	12	9	3/4	4 7/8													5.00
3	30	24	1 1/2	3/8	1/2	5	4	7	8	11 1/2	12	9	3/4	4 7/8													5.00
4	48	36	1 7/8	1/2	5/8	8	6	10 1/2	11 5/8	20 5/8	20 1/2	13 1/4	1 1/8	6 7/8													12.0
5	48	36	1 7/8	1/2	5/8	8	6	10 1/2	11 5/8	20 5/8	20 1/2	13 1/4	1 1/8	6 7/8													12.0

STANDARD SIGN
M4-9 R & L

WISCONSIN DEPT OF TRANSPORTATION

APPROVED Matthew R Rauch
For State Traffic Engineer

DATE 2/9/2023 PLATE NO. M4-9R.6

PROJECT NO: | HWY: | COUNTY: | SHEET NO: E

FILE NAME : C:\CAEfiles\Projects\tr_stdplate\M49R.dgn PLOT DATE : 21-MARCH 2023 1:40 PLOT BY : dotc4c PLOT NAME : PLOT SCALE : $$.....plotscale.....$$ WISDOT/CADDS SHEET 42

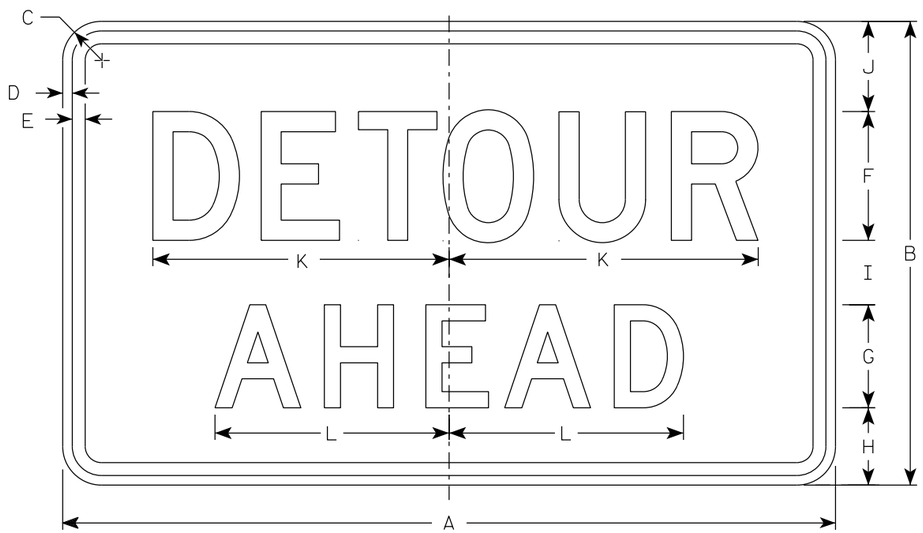

M4-59A

NOTES

1. Sign is Type II - Type F Reflective
2. Color:
   Background - Orange
   Message - Black
3. Message Series - D
4. Corners may be square or rounded when base material is plywood but borders shall be rounded as shown. When base material is metal, the corners and borders shall be rounded.

SIZE	A	B	C	D	E	F	G	H	I	J	K	L	M	N	O	P	Q	R	S	T	U	V	W	X	Y	Z	Area sq. ft.
1																											
2S	30	18	1 1/2	3/8	1/2	5	4	3	2 1/2	3 1/2	11 3/4	9 1/8															3.75
2M	30	18	1 1/2	3/8	1/2	5	4	3	2 1/2	3 1/2	11 3/4	9 1/8															3.75
3																											
4																											
5																											

STANDARD SIGN
M4-59A

WISCONSIN DEPT OF TRANSPORTATION

APPROVED Matthew R Rauch
For State Traffic Engineer

DATE 2/13/2023 PLATE NO. M4-59A.2

PROJECT NO: | HWY: | COUNTY: | SHEET NO: 146 | E

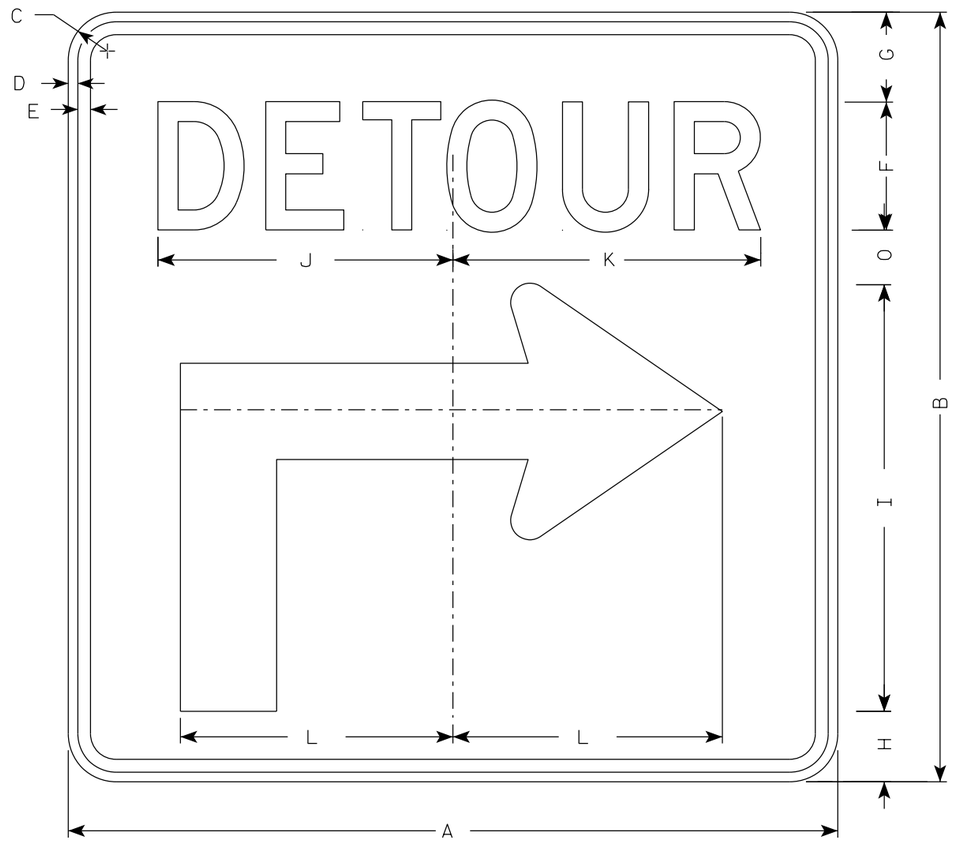

M4-59R

NOTES

1. Sign is Type II - Type F Reflective
2. Color:
   Background - Orange
   Message - Black
3. Message Series - D
4. Corners may be square or rounded when base material is plywood but borders shall be rounded as shown when base material is metal.
5. M4-59L is the same as M4-59R except the arrow is reversed.

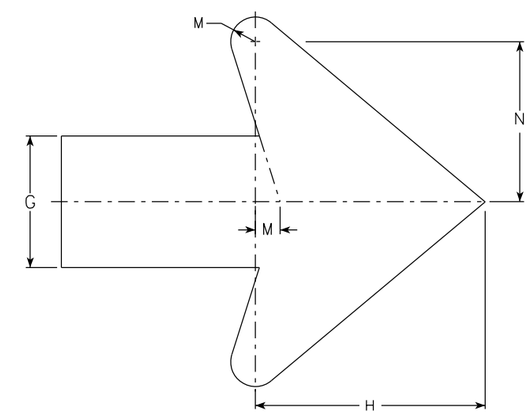

Arrow Detail

SIZE	A	B	C	D	E	F	G	H	I	J	K	L	M	N	O	P	Q	R	S	T	U	V	W	X	Y	Z	Area sq. ft.
1																											
2S	30	30	1 7/8	3/8	1/2	5	3 1/2	2 3/4	16 5/8	11 1/2	12	10 1/2	3/4	4 7/8	2 1/8												6.25
2M	30	30	1 7/8	3/8	1/2	5	3 1/2	2 3/4	16 5/8	11 1/2	12	10 1/2	3/4	4 7/8	2 1/8												6.25
3	30	30	1 7/8	3/8	1/2	5	3 1/2	2 3/4	16 5/8	11 1/2	12	10 1/2	3/4	4 7/8	2 1/8												6.25
4	48	48	2 1/4	1/2	5/8	8	5 5/8	4 3/8	26 5/8	20 5/8	20 1/2	17	1 1/8	6 7/8	3 3/8												16.0
5	48	48	2 1/4	1/2	5/8	8	5 5/8	4 3/8	26 5/8	20 5/8	20 1/2	17	1 1/8	6 7/8	3 3/8												16.0

STANDARD SIGN
M4-59 L&R

WISCONSIN DEPT OF TRANSPORTATION

APPROVED Matthew R Rauch
for State Traffic Engineer

DATE 2/13/2023 PLATE NO. M4-59.2

PROJECT NO: | HWY: | COUNTY: | SHEET NO: | E

NOTES

1. Sign is Type II- Type F Reflective
2. Color:
   Background - Orange
   Message - Black
3. Corners may be square or rounded when base material is plywood but borders shall be rounded as shown. When base material is metal, the corners and borders shall be rounded.

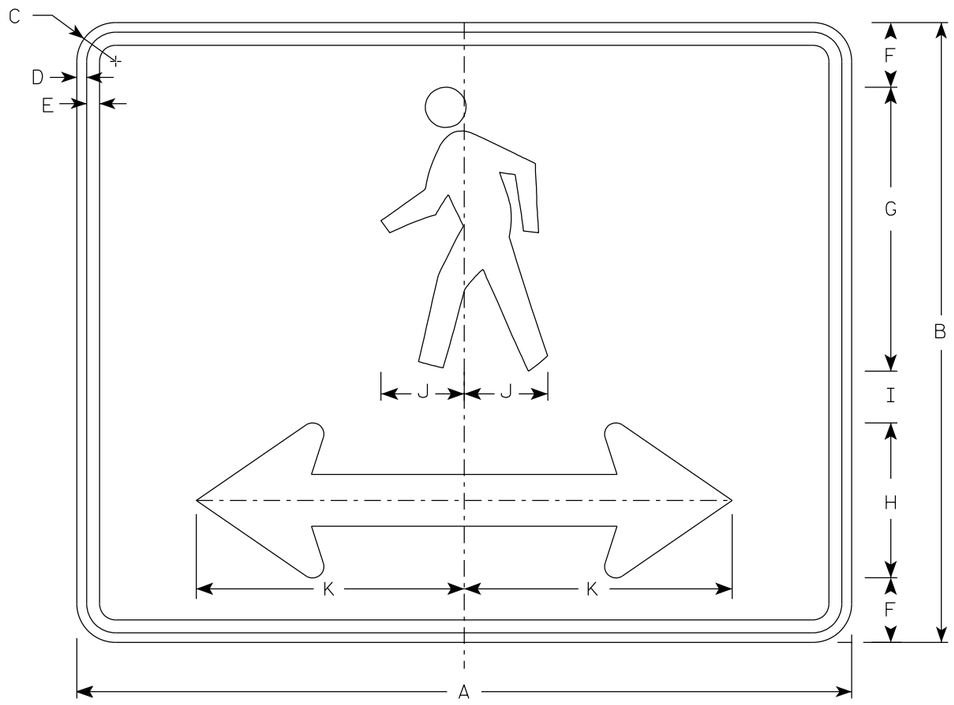

M4-60D

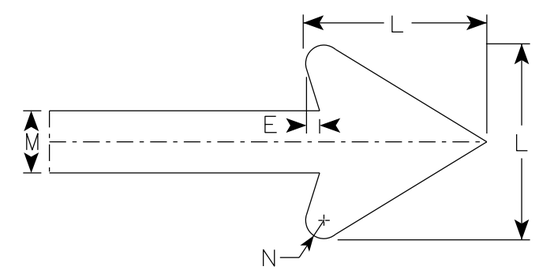

Arrow Detail

SIZE	A	B	C	D	E	F	G	H	I	J	K	L	M	N	O	P	Q	R	S	T	U	V	W	X	Y	Z	Area sq. ft.
1																											
2S	30	24	1 1/2	3/8	1/2	2 1/2	11	6	2	3 1/4	10 3/8	6	2	3/8													5.00
2M	30	24	1 1/2	3/8	1/2	2 1/2	11	6	2	3 1/4	10 3/8	6	2	3/8													5.00
3																											
4																											
5																											

STANDARD SIGN
M4-60D

WISCONSIN DEPT OF TRANSPORTATION

APPROVED Matthew R Rauch
for State Traffic Engineer

DATE 2/14/2023 PLATE NO. M4-60D.2

PROJECT NO: | HWY: | COUNTY: | SHEET NO: 148 | E

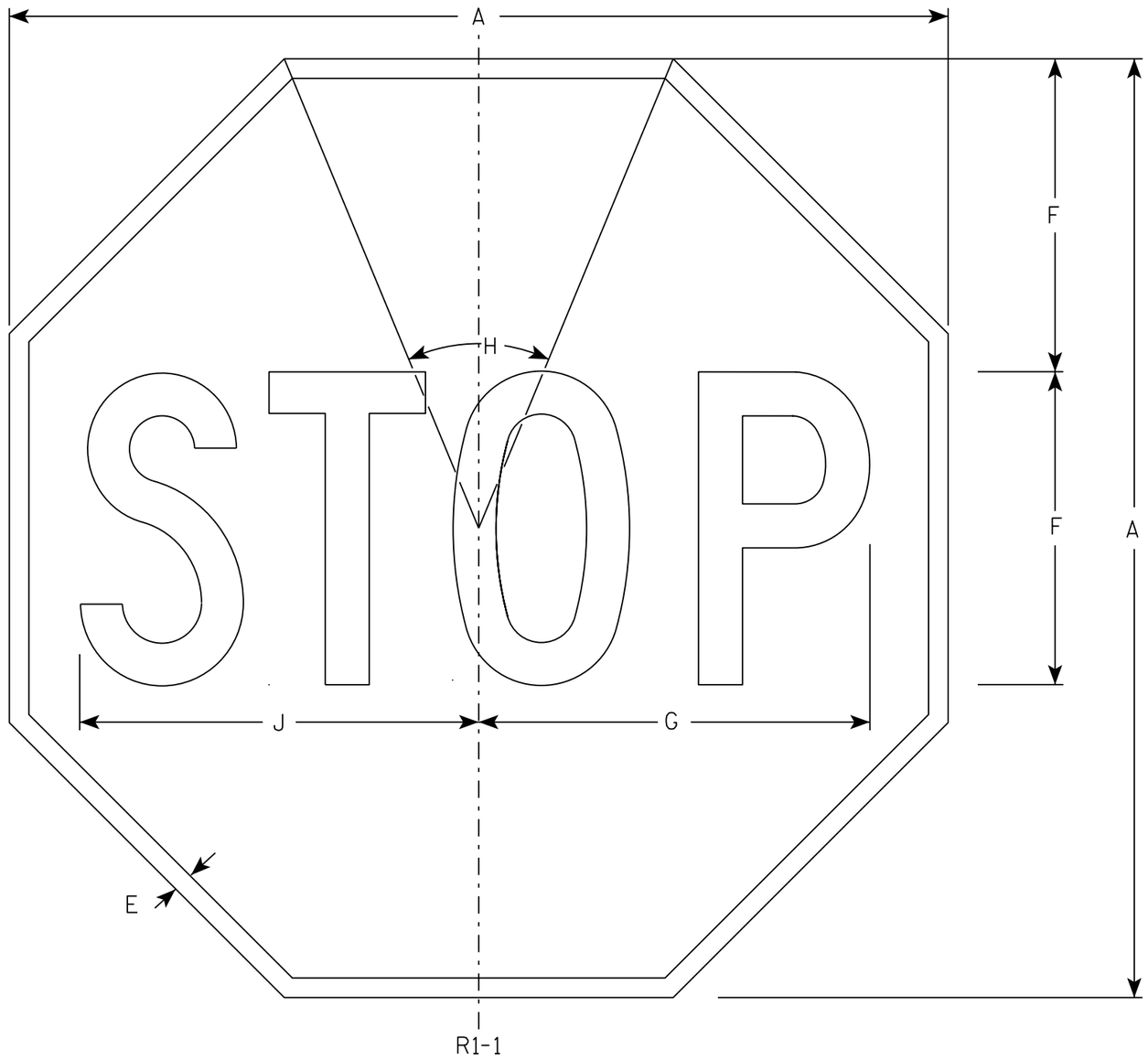

NOTES

1. Sign is Type II - Type H Reflective - reference WIS DOT Standard Specification for HIGHWAY and STRUCTURE CONSTRUCTION latest edition.
2. Color:
   Background - Red
   Message - White
3. Message Series - C

SIZE	A	B	C	D	E	F	G	H	I	J	K	L	M	N	O	P	Q	R	S	T	U	V	W	X	Y	Z	Area sq. ft.
1	30				5/8	10	12 1/2	45°		12 3/4																	5.18
2S	30				5/8	10	12 1/2	45°		12 3/4																	5.18
2M	36				3/4	12	15	45°		15 3/8																	7.46
3	36				3/4	12	15	45°		15 3/8																	7.46
4	48				1	16	20	45°		20 1/2																	13.25
5	48				1	16	20	45°		20 1/2																	13.25
6	18				3/8	6	7 3/4	45°		7 3/4																	1.86
7	12				1/4	4	5	45°		5 1/8																	0.78

STANDARD SIGN
R1-1

WISCONSIN DEPT OF TRANSPORTATION

APPROVED Matthew R Rauch
for State Traffic Engineer

DATE 11/12/15 PLATE NO. R1-1.13

PROJECT NO: | HWY: | COUNTY: | SHEET NO: 149 | E

R7-51

NOTES

1. Sign is Type II - Type H Reflective
2. Color:
   Background - White
   Message - Red
3. Message Series - Lines 1, 3 and 4 are Series C.
   Line 2 is Series B.
4. R7-51D (double arrow)
   R7-51R (right arrow)
   R7-51L (left arrow)

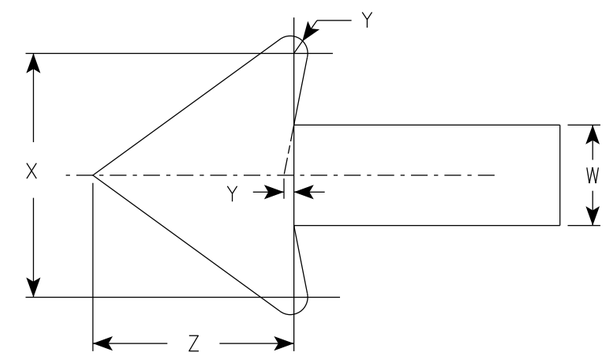

ARROW DETAIL

SIZE	A	B	C	D	E	F	G	H	I	J	K	L	M	N	O	P	Q	R	S	T	U	V	W	X	Y	Z	Area sq. ft.
1	12	18	1 1/2	3/8	3/8	3	1 7/8	2	7/8	5/8	1 1/2	2 1/2	2	2	4 7/8	4 7/8	4 7/8	5/8	1 3/4	2 1/2	4 3/8	3 7/8	3/4	1 3/4	1/8	1 1/2	1.5
2S	18	24	1 1/2	3/8	1/2	4	2 1/2	2 1/2	1 1/4	1	2	3 1/4	2 3/4	2 5/8	7 1/8	7	5 3/4	1 1/8	1 1/2	3 1/8	5 1/2	5 7/8	1 1/8	2 5/8	1/4	2 1/4	3.0
2M	24	30	1 1/2	3/8	1/2	5	3	3	2	1 1/4	2 1/2	4	3 1/4	3 3/8	9 1/4	9 1/4	7 1/8	1 1/4	2	3 3/4	6 1/2	7 3/4	1 1/2	3 1/2	1/4	3	5.0
3	24	30	1 1/2	3/8	1/2	5	3	3	2	1 1/4	2 1/2	4	3 1/4	3 3/8	9 1/4	9 1/4	7 1/8	1 1/4	2	3 3/4	6 1/2	7 3/4	1 1/2	3 1/2	1/4	3	5.0
4																											
5																											

STANDARD SIGN
R7-51

WISCONSIN DEPT OF TRANSPORTATION

APPROVED Matthew R Rauch
for State Traffic Engineer

DATE 11/9/23 PLATE NO. R7-51.7

PROJECT NO:	HWY:	COUNTY:			SHEET NO: 150	E

R7-53

NOTES

1. Sign is Type II - Type H Reflective
2. Color:
   Background - White
   Message - Red
3. Message Series - See Note 4
4. Lines 1, 3 and 4 are series C, line 2 is series B.
5. R7-53D (double arrow)
   R7-53L (left arrow)
   R7-53R (right arrow)

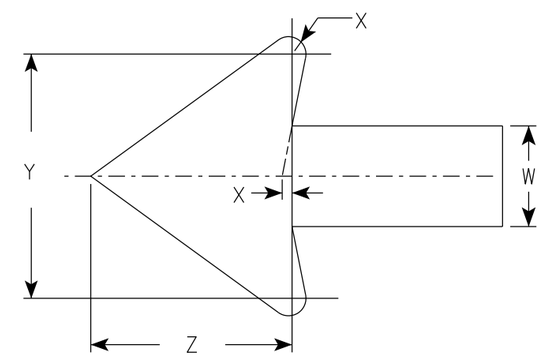

ARROW DETAIL

SIZE	A	B	C	D	E	F	G	H	I	J	K	L	M	N	O	P	Q	R	S	T	U	V	W	X	Y	Z	Area sq. ft.
1	12	18	1 1/2	3/8	3/8	3	1 7/8	2	7/8	5/8	1 1/2	2 1/2	2	2	4 7/8	4 7/8	2 5/8	1 3/4	1/4	4 1/2	2 3/8	3 7/8	3/4	1/8	1 3/4	1 1/2	1.5
2S	18	24	1 1/2	3/8	1/2	4	2 1/2	2 1/2	1 1/4	1	2	3 1/4	2 3/4	2 5/8	7 1/8	7	3 3/8	1 1/2	5/8	5 3/8	3	5 7/8	1 1/8	1/4	2 5/8	2 1/4	3.0
2M	24	30	1 1/2	3/8	1/2	5	3	3	2	1 1/4	2 1/2	4	3 1/4	3 3/8	9 1/4	9 1/4	4	2	5/8	6 5/8	3 5/8	7 3/4	1 1/2	1/4	3 1/2	3	5.0
3	24	30	1 1/2	3/8	1/2	5	3	3	2	1 1/4	2 1/2	4	3 1/4	3 3/8	9 1/4	9 1/4	4	2	5/8	6 5/8	3 5/8	7 3/4	1 1/2	1/4	3 1/2	3	5.0
4																											
5																											

STANDARD SIGN
R7-53

WISCONSIN DEPT OF TRANSPORTATION

APPROVED Matthew R Rauch
for State Traffic Engineer

DATE 11/9/23 PLATE NO. R7-53.7

PROJECT NO:	HWY:	COUNTY:		SHEET NO: 151	E

NOTES

1. Sign is Type II - Type H Reflective
2. Color:
   Background - White
   Message - Black
3. Message Series - D

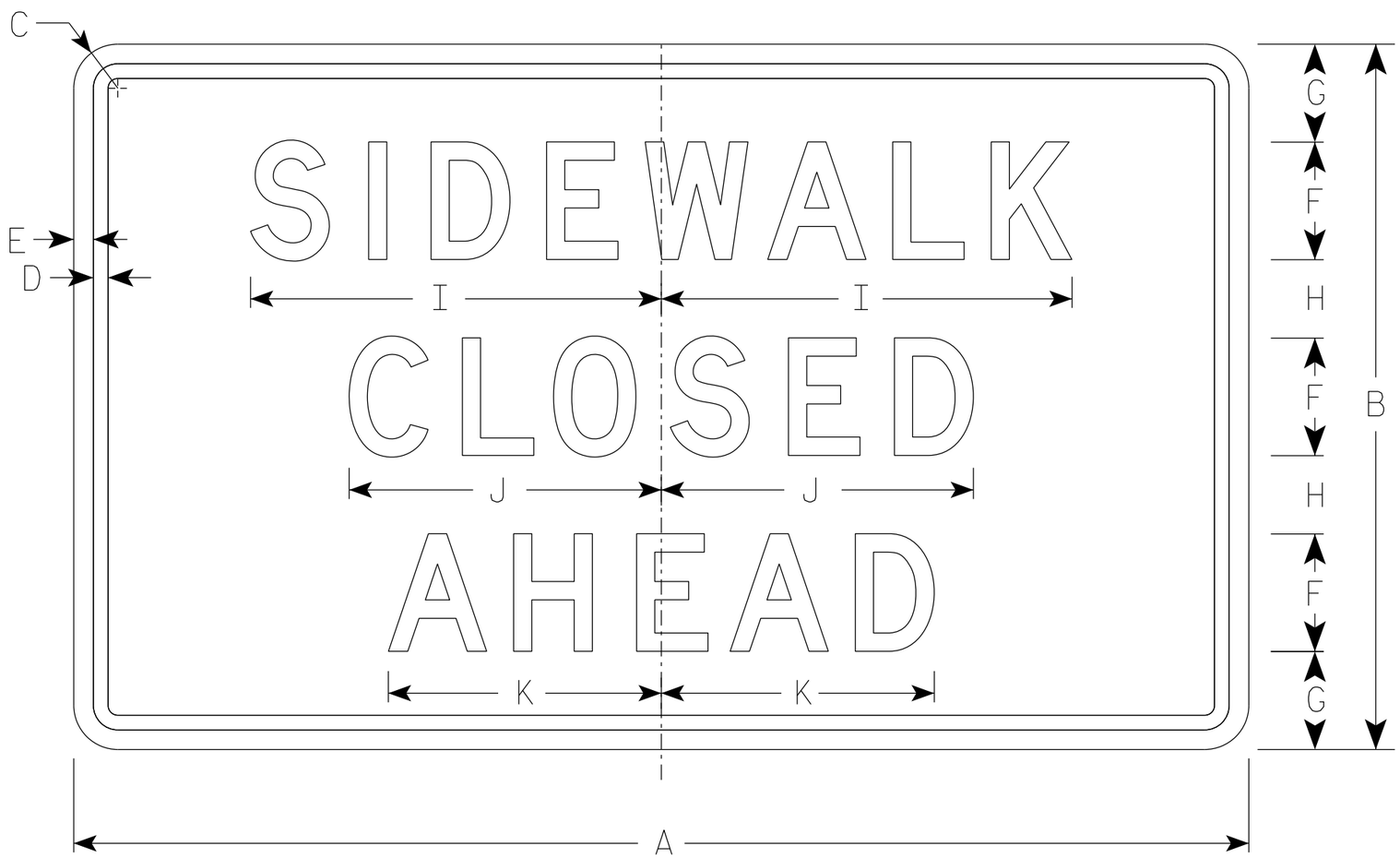

R9-9A

SIZE	A	B	C	D	E	F	G	H	I	J	K	L	M	N	O	P	Q	R	S	T	U	V	W	X	Y	Z	Area sq. ft.
1																											
2S	30	18	1 ½	⅜	½	3	2 ½	2	10 ½	8	7																3.75
2M	30	18	1 ½	⅜	½	3	2 ½	2	10 ½	8	7																3.75
3																											
4																											
5																											

STANDARD SIGN
R9-9A

WISCONSIN DEPT OF TRANSPORTATION

APPROVED Matthew R Rauch
for State Traffic Engineer

DATE 1/24/24 PLATE NO. R9-9A.2

PROJECT NO: | HWY: | COUNTY: | SHEET NO: 152 | E

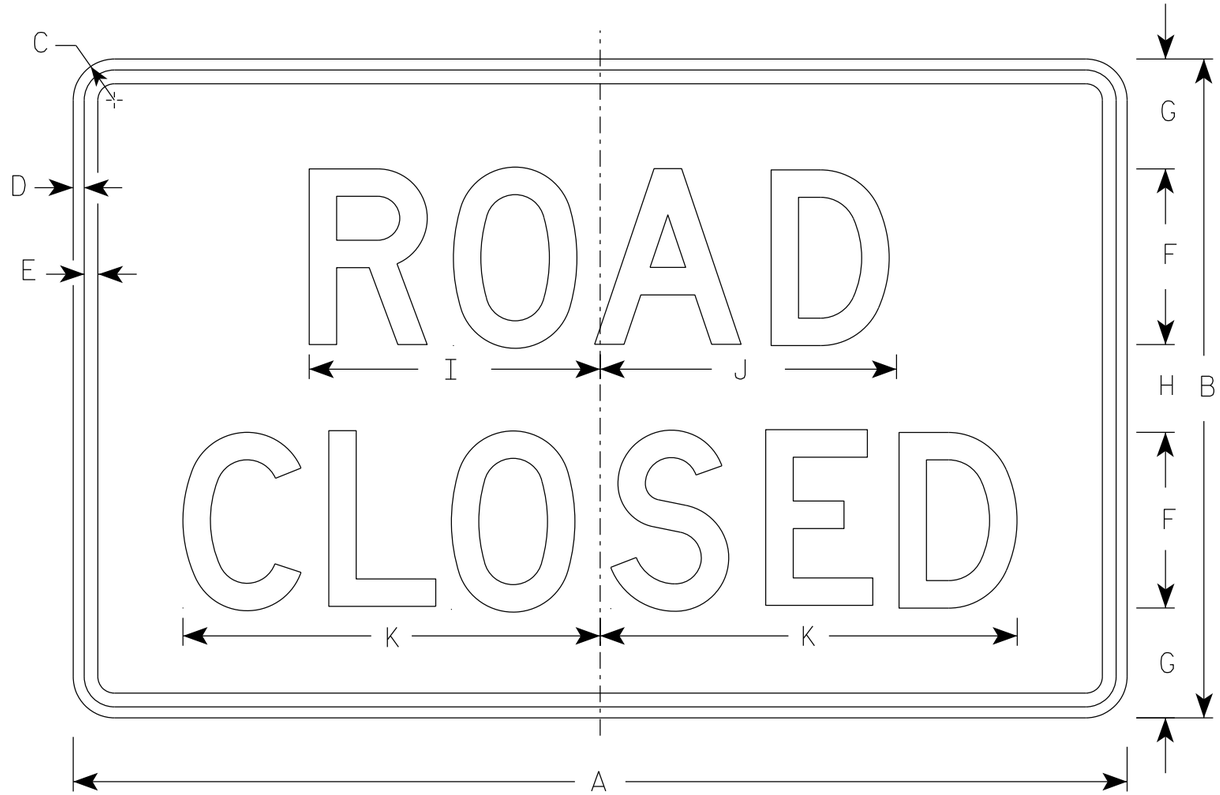

R11-2

NOTES

1. Sign is Type II - Type H Reflective
2. Color:
   Background - White
   Message - Black
3. Message Series - D
4. Corners may be square or rounded when base material is plywood but borders shall be rounded as shown. When base material is metal, the corners and borders shall be rounded.
5. Modify the message as required.

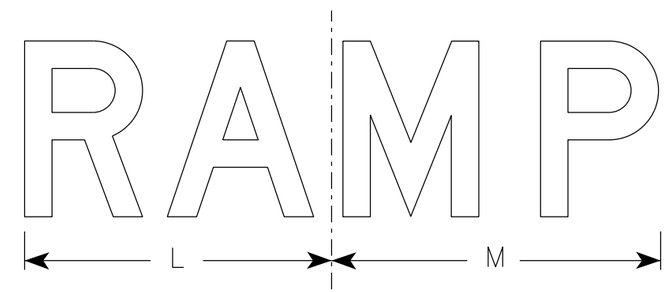

R11-2R

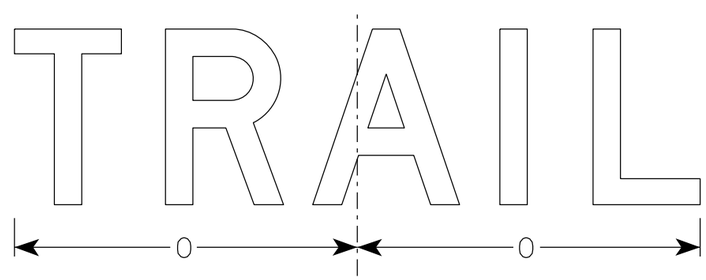

R11-2T

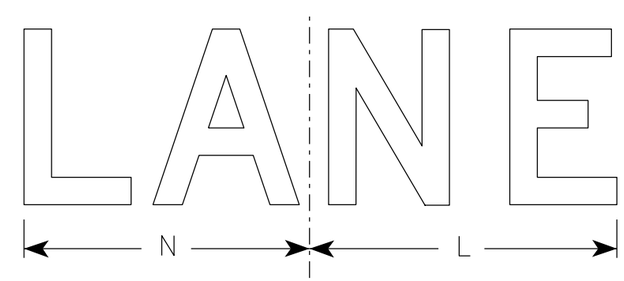

R11-2L

SIZE	A	B	C	D	E	F	G	H	I	J	K	L	M	N	O	P	Q	R	S	T	U	V	W	X	Y	Z	Area sq. ft.
1																											
2S	48	30	1 7/8	1/2	5/8	8	5	4	13 1/4	13 1/2	19	14	15	13	15 5/8												10.0
2M	48	30	1 7/8	1/2	5/8	8	5	4	13 1/4	13 1/2	19	14	15	13	15 5/8												10.0
3	48	30	1 7/8	1/2	5/8	8	5	4	13 1/4	13 1/2	19	14	15	13	15 5/8												10.0
4	48	30	1 7/8	1/2	5/8	8	5	4	13 1/4	13 1/2	19	14	15	13	15 5/8												10.0
5	48	30	1 7/8	1/2	5/8	8	5	4	13 1/4	13 1/2	19	14	15	13	15 5/8												10.0

STANDARD SIGN
R11-2

WISCONSIN DEPT OF TRANSPORTATION

APPROVED Matthew R Rauch
for State Traffic Engineer

DATE 2/5/24 PLATE NO. R11-2.12

PROJECT NO: | HWY: | COUNTY: | SHEET NO: | E

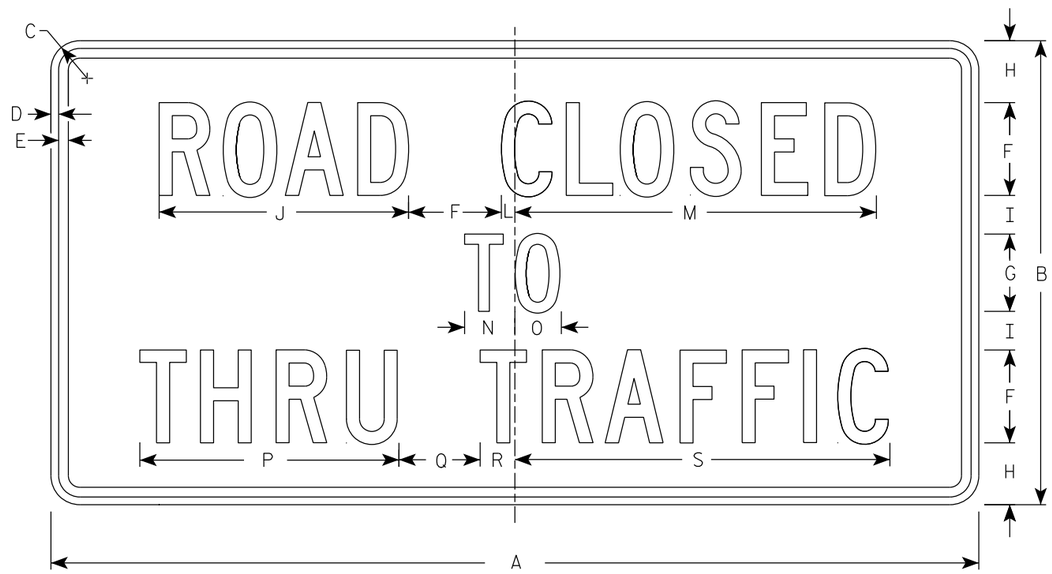

R11-4

NOTES

1. Sign is Type II - Type H Reflective
2. Color:
   Background - White
   Message - Black
3. Message Series - C
4. Corners may be square or rounded when base material is plywood but borders shall be rounded as shown. When base material is metal, the corners and borders shall be rounded.

SIZE	A	B	C	D	E	F	G	H	I	J	K	L	M	N	O	P	Q	R	S	T	U	V	W	X	Y	Z	Area sq. ft.
1																											
2S	60	30	1 7/8	1/2	5/8	6	5	4	2 1/2	16 1/8		7/8	23 3/8	3 1/4	3	16 3/4	5 1/4	2 1/4	24 1/4								12.5
2M	60	30	1 7/8	1/2	5/8	6	5	4	2 1/2	16 1/8		7/8	23 3/8	3 1/4	3	16 3/4	5 1/4	2 1/4	24 1/4								12.5
3																											
4																											
5																											

STANDARD SIGN
R11 - 4

WISCONSIN DEPT OF TRANSPORTATION

APPROVED Matthew R Rauch
for State Traffic Engineer

DATE 2/5/24 PLATE NO. R11-4.4

PROJECT NO: | HWY: | COUNTY: | SHEET NO: 154 | E

NOTES

1. Sign is Type II - Type F Reflective
2. Color:
   Background - Orange
   Message - Black
3. Message Series - C
4. Corners may be square or rounded when base material is plywood but borders shall be rounded as shown. When base material is metal, the corners and borders shall be rounded.

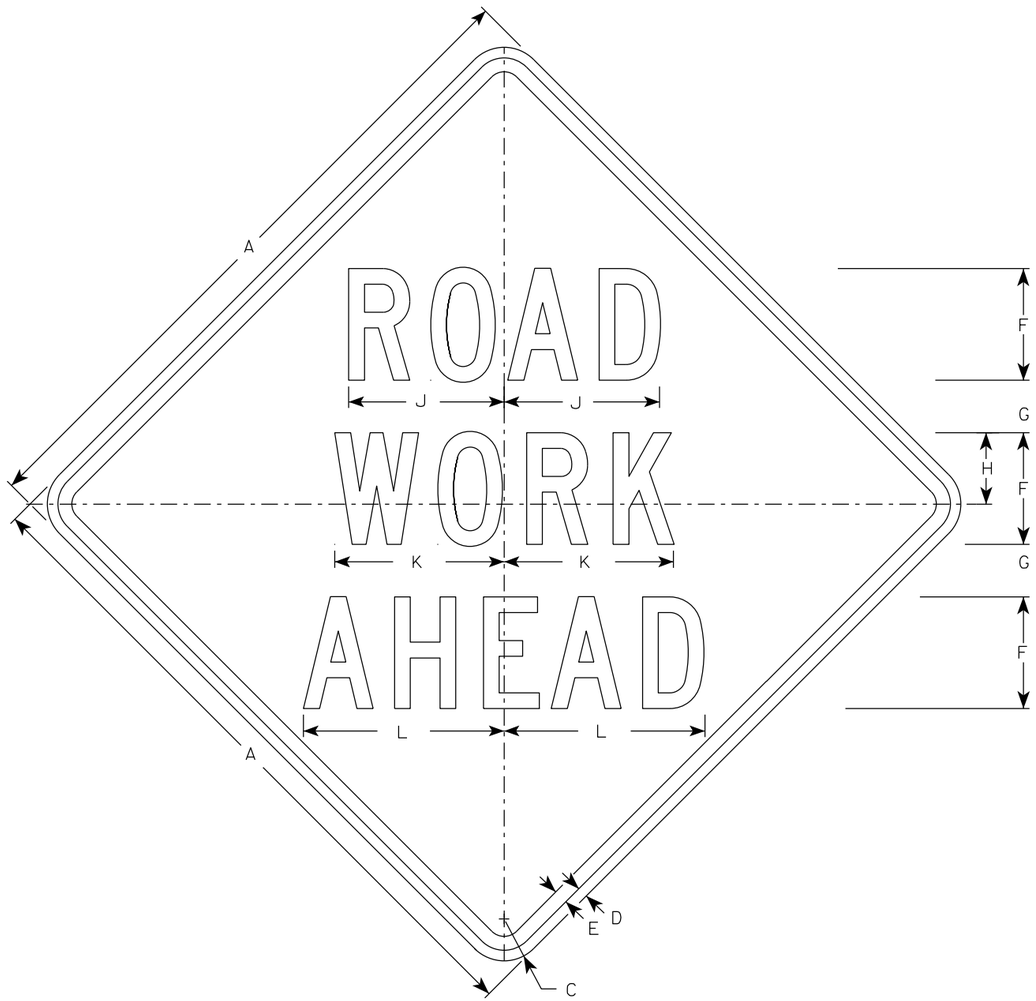

W20-1A

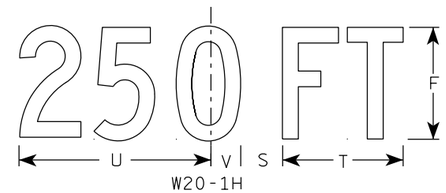

W20-1H

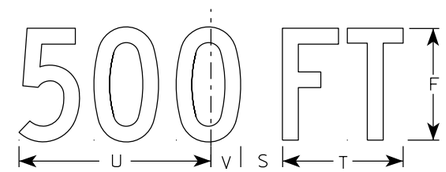

W20-1D

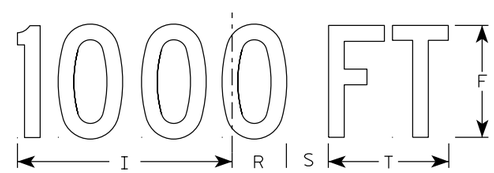

W20-1C

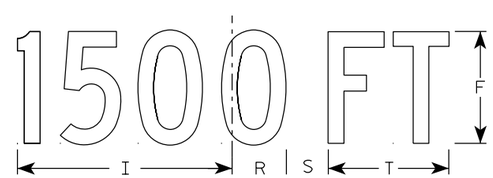

W20-1B

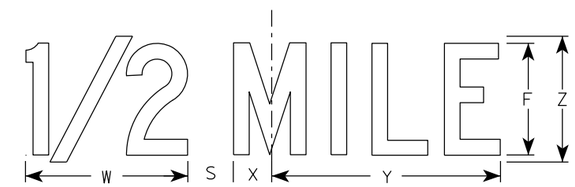

W20-1G

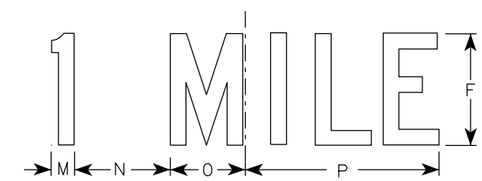

W20-1F

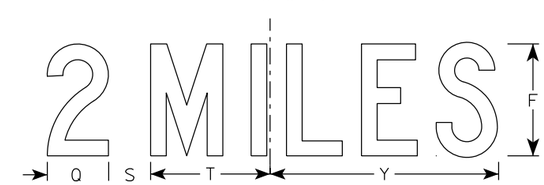

W20-1E

SIZE	A	B	C	D	E	F	G	H	I	J	K	L	M	N	O	P	Q	R	S	T	U	V	W	X	Y	Z	Area sq. ft.
1	36		2 1/4	5/8	3/4	5	2 5/8	3 1/4	10 1/8	7	7 5/8	8 7/8	1 1/8	4 1/2	3 1/2	9	3 1/4	2 1/2	2 1/4	5 5/8	9	1 3/8	8	1 3/4	10 3/4	6	9.0
2S	48		3	3/4	1	8	3 3/4	5 1/8	15 3/8	11 1/8	12 1/8	14 3/8	1 5/8	6 7/8	5 3/8	13 7/8	4 3/8	3 7/8	3	8 5/8	13 3/4	2 1/8	11 7/8	2 3/4	16 3/8	9	16.0
2M	48		3	3/4	1	8	3 3/4	5 1/8	15 3/8	11 1/8	12 1/8	14 3/8	1 5/8	6 7/8	5 3/8	13 7/8	4 3/8	3 7/8	3	8 5/8	13 3/4	2 1/8	11 7/8	2 3/4	16 3/8	9	16.0
3	48		3	3/4	1	8	3 3/4	5 1/8	15 3/8	11 1/8	12 1/8	14 3/8	1 5/8	6 7/8	5 3/8	13 7/8	4 3/8	3 7/8	3	8 5/8	13 3/4	2 1/8	11 7/8	2 3/4	16 3/8	9	16.0
4	48		3	3/4	1	8	3 3/4	5 1/8	15 3/8	11 1/8	12 1/8	14 3/8	1 5/8	6 7/8	5 3/8	13 7/8	4 3/8	3 7/8	3	8 5/8	13 3/4	2 1/8	11 7/8	2 3/4	16 3/8	9	16.0
5	48		3	3/4	1	8	3 3/4	5 1/8	15 3/8	11 1/8	12 1/8	14 3/8	1 5/8	6 7/8	5 3/8	13 7/8	4 3/8	3 7/8	3	8 5/8	13 3/4	2 1/8	11 7/8	2 3/4	16 3/8	9	16.0

STANDARD SIGN
W20-1A, B, C, D, E, F, G & H

WISCONSIN DEPT OF TRANSPORTATION

APPROVED Matthew R Rauch
For State Traffic Engineer

DATE 1/10/2024 PLATE NO. W20-1.12

PROJECT NO:

SHEET NO: 155 E

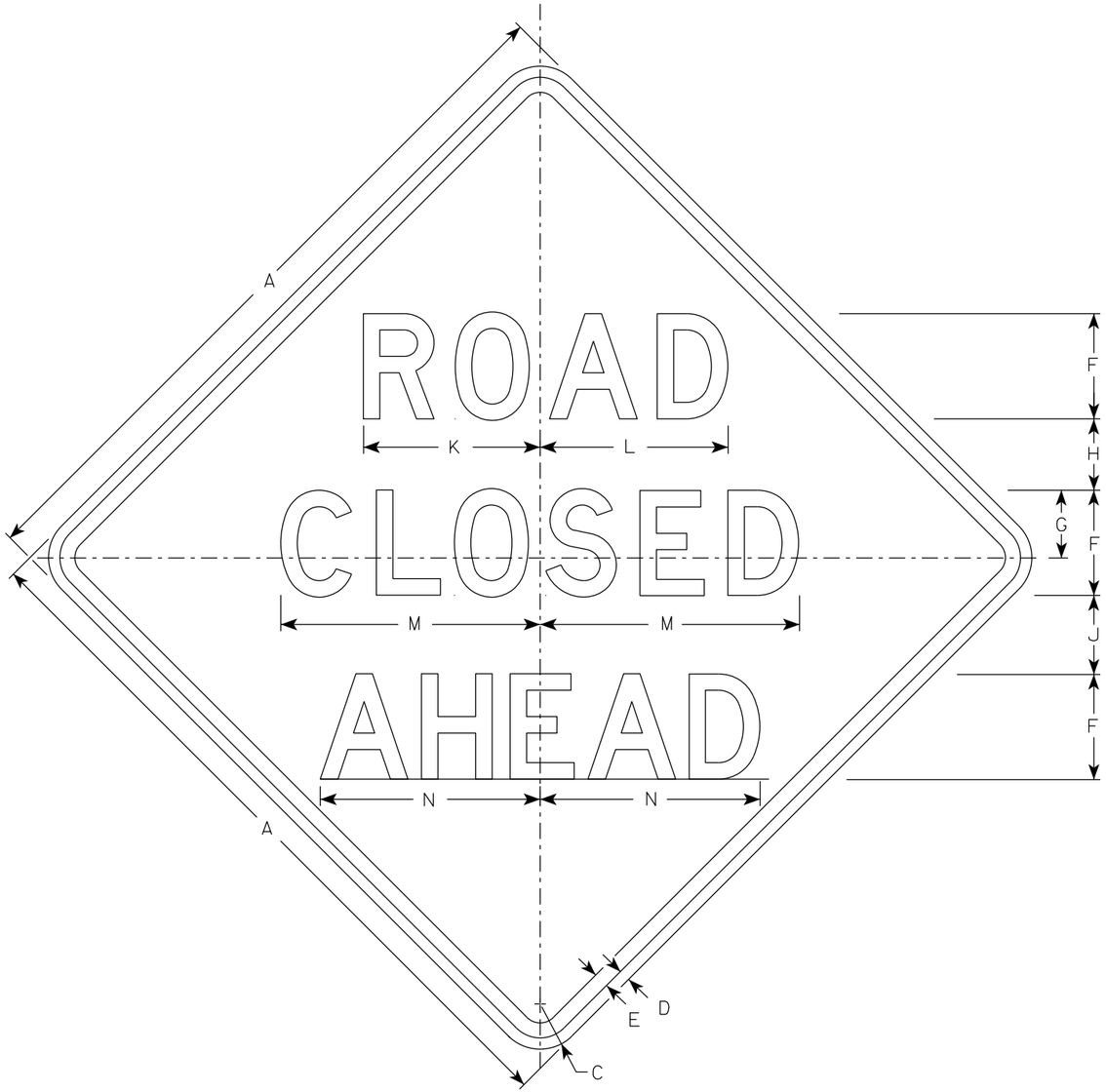

W20-3A

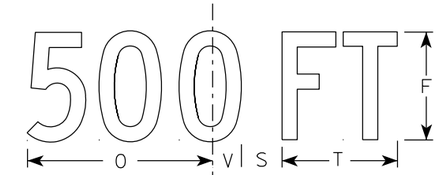

W20-3D

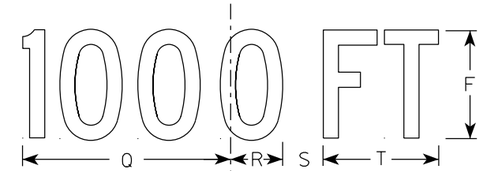

W20-3C

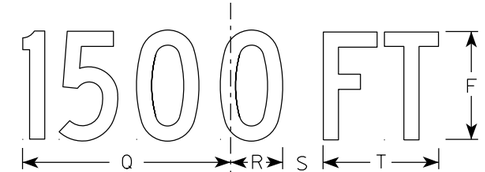

W20-3B

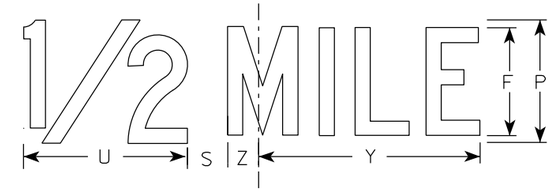

W20-3G

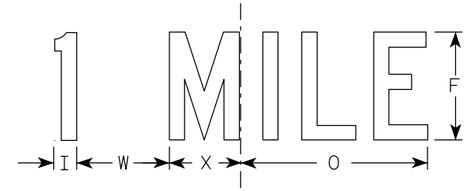

W20-3F

NOTES

1. Sign is Type II - Type F Reflective
2. Color:
   Background - Orange
   Message - Black
3. Message Series - see note 5
4. Corners may be square or rounded when base material is plywood but borders shall be rounded as shown. When base material is metal, the corners and borders shall be rounded.
5. Lines 1 and 2 are Series D.
   Line 3 is Series D for AHEAD and Series C for all other distances.

SIZE	A	B	C	D	E	F	G	H	I	J	K	L	M	N	O	P	Q	R	S	T	U	V	W	X	Y	Z	Area sq. ft.
1	36		2 1/4	5/8	3/4	5	3 3/8	3 1/2	1 1/8	4	8 3/8	8 7/8	12 1/2	11	9	6	10 1/8	2 1/2	1 7/8	5 5/8	8	1 3/8	4 1/2	3 1/2	10 3/4	1 3/4	9.0
2S	48		3	3/4	1	7	4 1/2	4 3/4	1 1/2	5 1/4	11 3/4	12 1/2	17 1/4	14 5/8	12	8	13 1/2	3 3/8	2 5/8	7 1/2	10 5/8	1 7/8	6	4 5/8	14 3/8	2 3/8	16.0
2M	48		3	3/4	1	7	4 1/2	4 3/4	1 1/2	5 1/4	11 3/4	12 1/2	17 1/4	14 5/8	12	8	13 1/2	3 3/8	2 5/8	7 1/2	10 5/8	1 7/8	6	4 5/8	14 3/8	2 3/8	16.0
3	48		3	3/4	1	7	4 1/2	4 3/4	1 1/2	5 1/4	11 3/4	12 1/2	17 1/4	14 5/8	12	8	13 1/2	3 3/8	2 5/8	7 1/2	10 5/8	1 7/8	6	4 5/8	14 3/8	2 3/8	16.0
4	48		3	3/4	1	7	4 1/2	4 3/4	1 1/2	5 1/4	11 3/4	12 1/2	17 1/4	14 5/8	12	8	13 1/2	3 3/8	2 5/8	7 1/2	10 5/8	1 7/8	6	4 5/8	14 3/8	2 3/8	16.0
5	48		3	3/4	1	7	4 1/2	4 3/4	1 1/2	5 1/4	11 3/4	12 1/2	17 1/4	14 5/8	12	8	13 1/2	3 3/8	2 5/8	7 1/2	10 5/8	1 7/8	6	4 5/8	14 3/8	2 3/8	16.0

STANDARD SIGN
W20-3A, B, C, D, F & G

WISCONSIN DEPT OF TRANSPORTATION

APPROVED Matthew R Rauch
for State Traffic Engineer

DATE 1/10/2024 PLATE NO. W20-3.8

PROJECT NO: | HWY: | COUNTY: | SHEET NO: E

DIVISION 1 - DEWEY AVENUE

STATION	REAL STATION	DISTANCE	AREA (SF)		INCREMENTAL VOL (CY) (UNADJUSTED)		CUMULATIVE VOL (CY)		
			CUT	FILL	CUT	FILL	CUT	EXPANDED FILL	MASS ORDINATE
							1.00	1.25	
					NOTE 1	NOTE 3	NOTE 1		NOTE 8
10+21.17	1021.17	0.00	29.28	0.00	0	0	0	0	0
10+50.00	1050.00	28.83	86.43	0.00	62	0	62	0	62
11+00.00	1100.00	50.00	69.30	0.57	144	1	206	1	205
11+50.00	1150.00	50.00	70.31	0.17	129	1	335	3	333
12+00.00	1200.00	50.00	64.09	0.13	124	0	459	3	457
12+25.00	1225.00	25.00	141.86	0.74	95	0	554	3	552
12+50.00	1250.00	25.00	45.84	1.75	87	1	641	4	637
13+00.00	1300.00	50.00	69.40	1.13	107	3	748	8	741
13+50.00	1350.00	50.00	87.40	0.30	145	1	893	9	884
14+00.00	1400.00	50.00	78.21	0.01	153	0	1,046	9	1,037
14+50.00	1450.00	50.00	84.26	0.00	150	0	1,196	9	1,187
15+00.00	1500.00	50.00	90.56	0.02	162	0	1,358	9	1,349
15+50.00	1550.00	50.00	70.88	0.07	149	0	1,507	9	1,498
16+00.00	1600.00	50.00	71.86	0.02	132	0	1,639	9	1,630
16+50.00	1650.00	50.00	80.46	0.00	141	0	1,780	9	1,771
17+00.00	1700.00	50.00	78.13	0.00	147	0	1,927	9	1,918
17+50.00	1750.00	50.00	63.43	0.01	131	0	2,058	9	2,049
18+00.00	1800.00	50.00	93.08	0.00	145	0	2,203	9	2,194
18+50.00	1850.00	50.00	86.05	0.02	166	0	2,369	9	2,360
19+00.00	1900.00	50.00	64.00	0.08	139	0	2,508	9	2,499
19+50.00	1950.00	50.00	151.81	0.00	200	0	2,708	9	2,699
20+00.00	2000.00	50.00	57.81	0.84	194	1	2,902	10	2,892
20+50.00	2050.00	50.00	54.92	1.84	104	2	3,006	13	2,994
21+00.00	2100.00	50.00	54.34	0.10	101	2	3,107	15	3,092
21+50.00	2150.00	50.00	54.64	0.90	101	1	3,208	16	3,192
22+00.00	2200.00	50.00	53.11	1.42	100	2	3,308	19	3,289
22+25.00	2225.00	25.00	78.53	0.00	61	1	3,369	20	3,349
22+50.00	2250.00	25.00	83.83	0.00	75	0	3,444	20	3,424
23+00.00	2300.00	50.00	54.54	1.40	128	1	3,572	21	3,551
23+50.00	2350.00	50.00	55.05	0.40	101	2	3,673	24	3,649
24+00.00	2400.00	50.00	60.28	0.00	107	0	3,780	24	3,756
24+50.00	2450.00	50.00	63.48	0.00	115	0	3,895	24	3,871
25+00.00	2500.00	50.00	63.44	0.00	118	0	4,013	24	3,989
25+50.00	2550.00	50.00	61.29	0.03	115	0	4,128	24	4,104
26+00.00	2600.00	50.00	55.08	0.00	108	0	4,236	24	4,212
26+25.00	2625.00	25.00	143.52	0.00	92	0	4,328	24	4,304
26+50.00	2650.00	25.00	69.01	1.28	98	1	4,426	25	4,401
27+00.00	2700.00	50.00	60.22	0.60	120	2	4,546	28	4,519
27+50.00	2750.00	50.00	62.92	0.17	114	1	4,660	29	4,631
28+00.00	2800.00	50.00	67.43	0.10	121	0	4,781	29	4,752
28+50.00	2850.00	50.00	63.61	0.04	121	0	4,902	29	4,873
29+00.00	2900.00	50.00	67.06	0.03	121	0	5,023	29	4,994
29+50.00	2950.00	50.00	63.29	0.04	121	0	5,144	29	5,115
29+75.00	2975.00	25.00	0.00	0.00	29	0	5,173	29	5,144

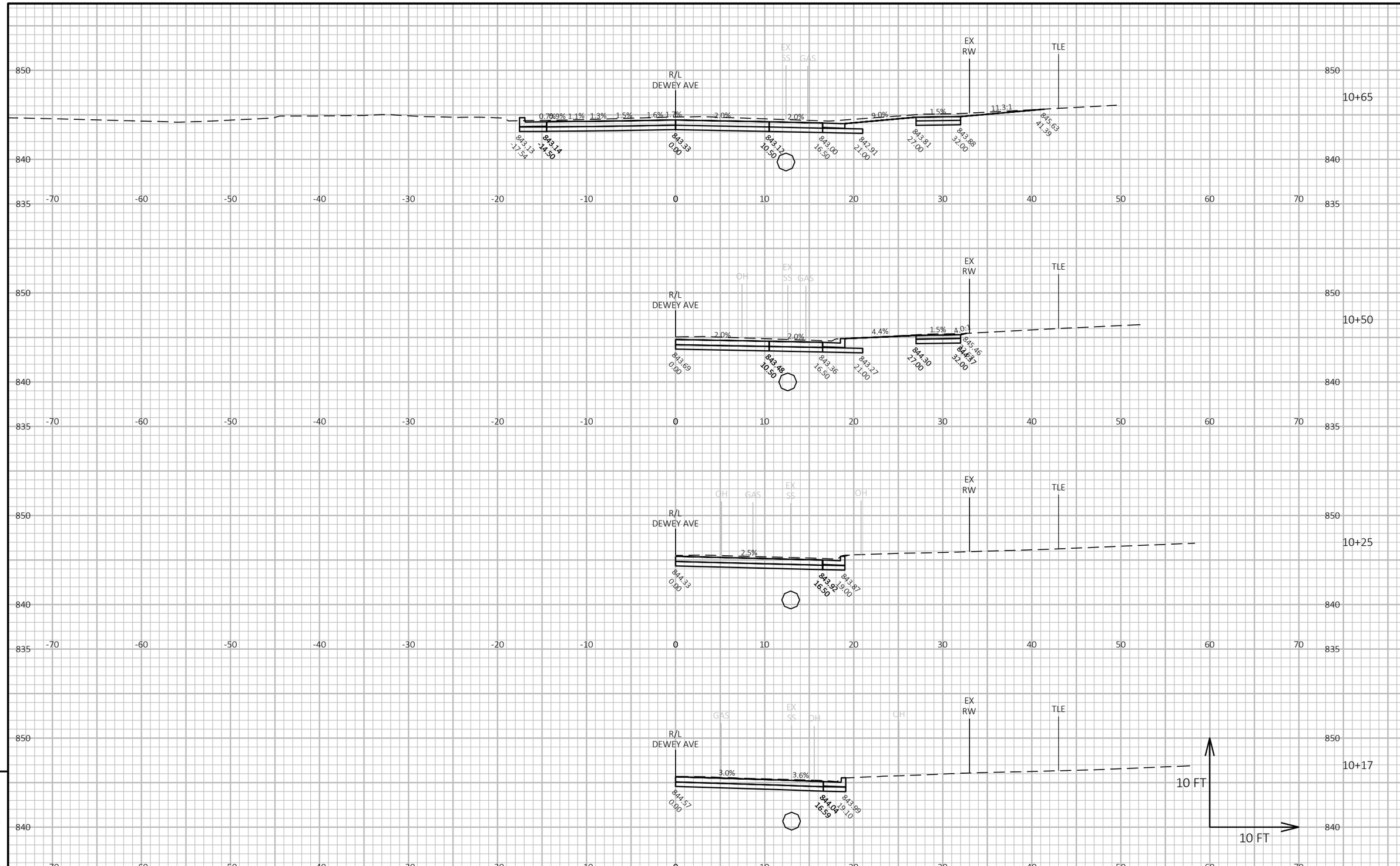

9

9

PROJECT NO: 3997-01-79/80	HWY: DEWEY AVE	COUNTY: JEFFERSON	CROSS SECTIONS: DEWEY AVE	SHEET 158	E

FILE NAME : R:\5300\5364\5364088\39970179\SHEETS\090201-XS.DWG
LAYOUT NAME - 090201_1xs

PLOT DATE : 9/12/2025 3:46 PM

PLOT BY : ERIC HANDLER

PLOT NAME :

PLOT SCALE : 1 IN:10 FT HORZ. / 1 IN:10 FT VERT.

WISDOT/CADDS SHEET 49

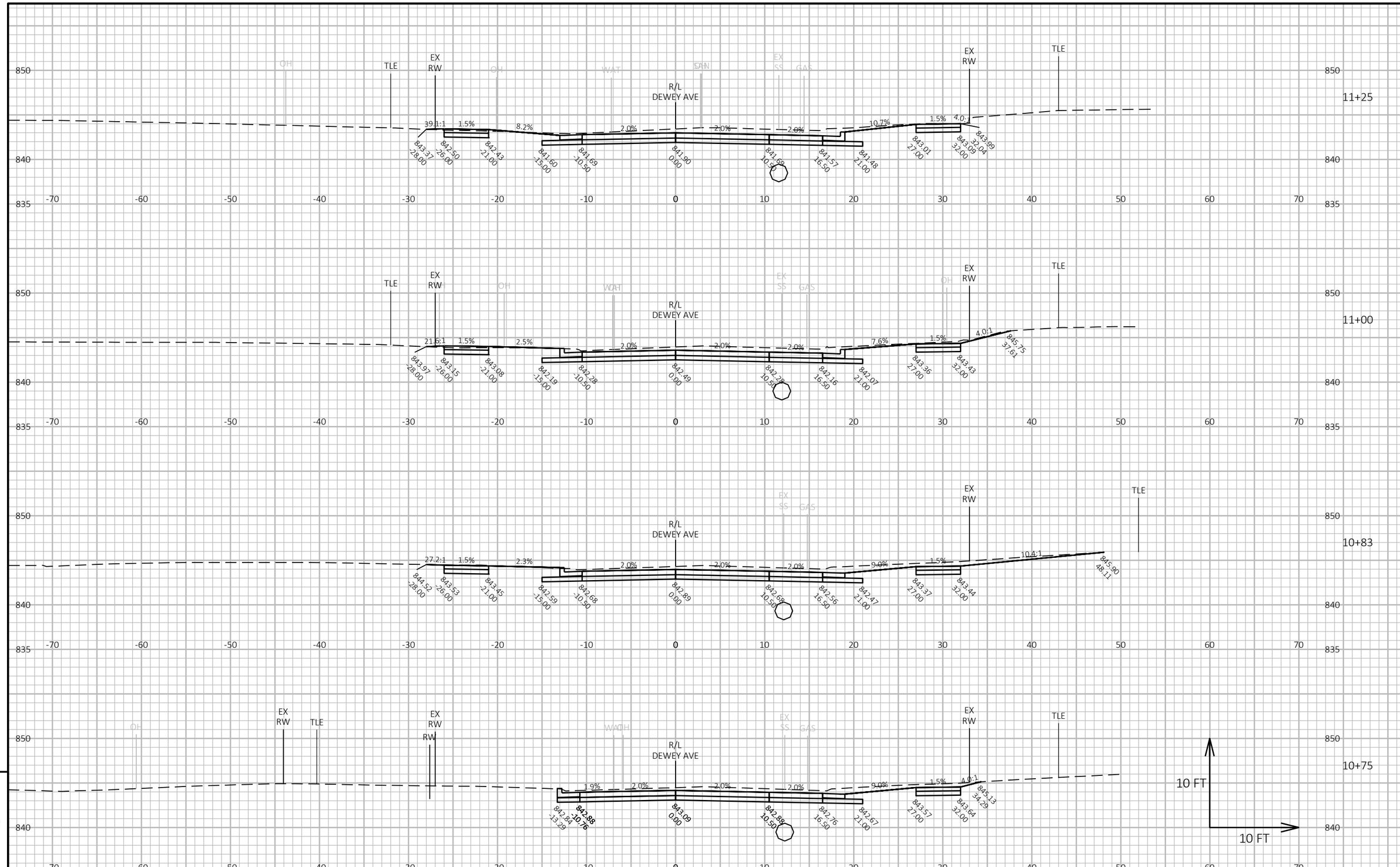

9

9

PROJECT NO: 3997-01-79/80	HWY: DEWEY AVE	COUNTY: JEFFERSON	CROSS SECTIONS: DEWEY AVE	SHEET 159	E

FILE NAME : R:\5300\5364\5364088\39970179\SHEETS\090201-XS.DWG
LAYOUT NAME - 090201_2xs

PLOT DATE : 9/12/2025 3:46 PM

PLOT BY : ERIC HANDLER

PLOT NAME :

PLOT SCALE : 1 IN:10 FT HORZ. / 1 IN:10 FT VERT.

WISDOT/CADDS SHEET 49

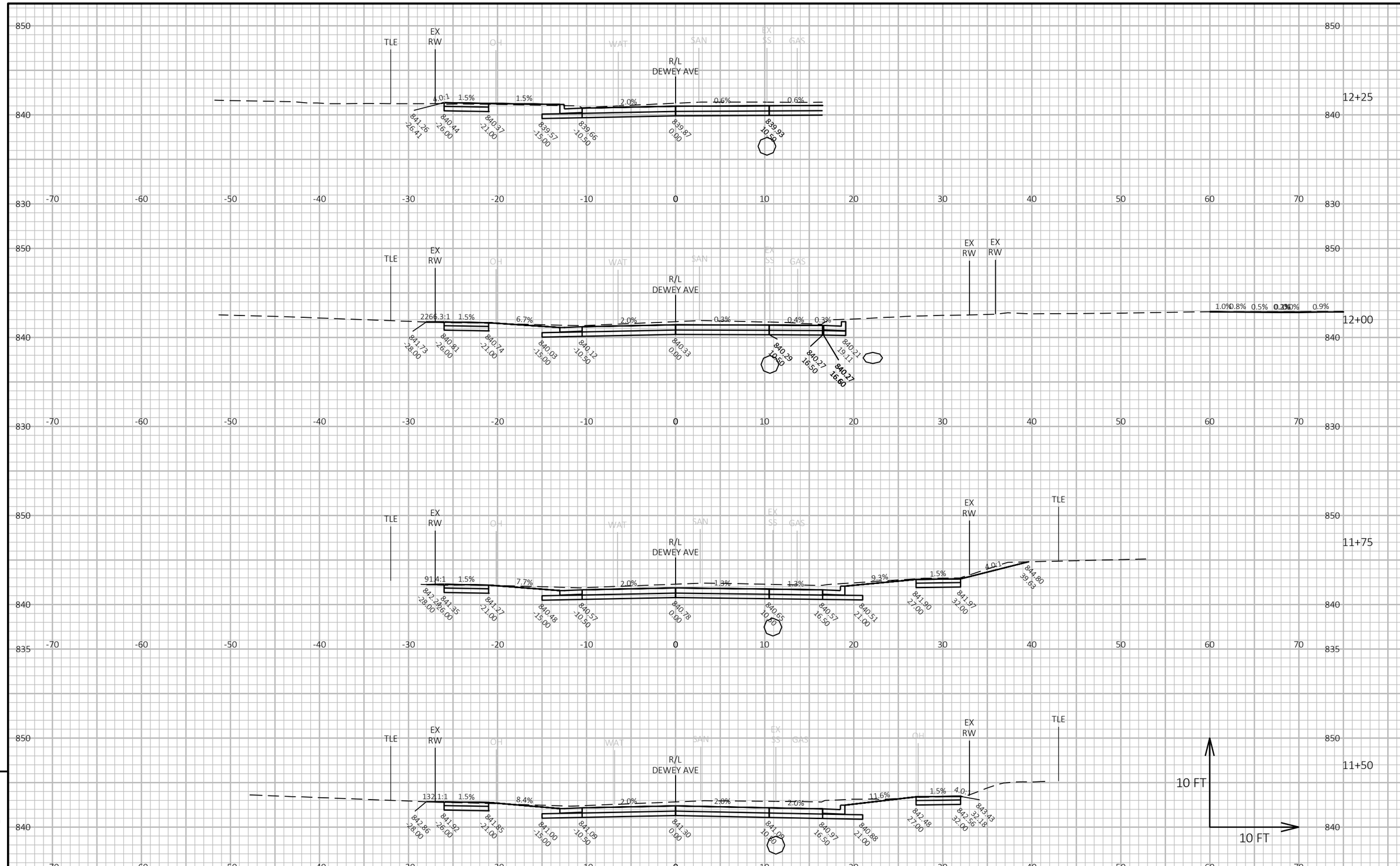

PROJECT NO: 3997-01-79/80	HWY: DEWEY AVE	COUNTY: JEFFERSON	CROSS SECTIONS: DEWEY AVE	SHEET 160	E

FILE NAME : R:\5300\5364\5364088\39970179\SHEETS\090201-XS.DWG
LAYOUT NAME - 090201_3xs
PLOT DATE : 9/12/2025 3:46 PM
PLOT BY : ERIC HANDLER
PLOT NAME :
PLOT SCALE : 1 IN:10 FT HORZ. / 1 IN:10 FT VERT.
WISDOT/CADDS SHEET 49

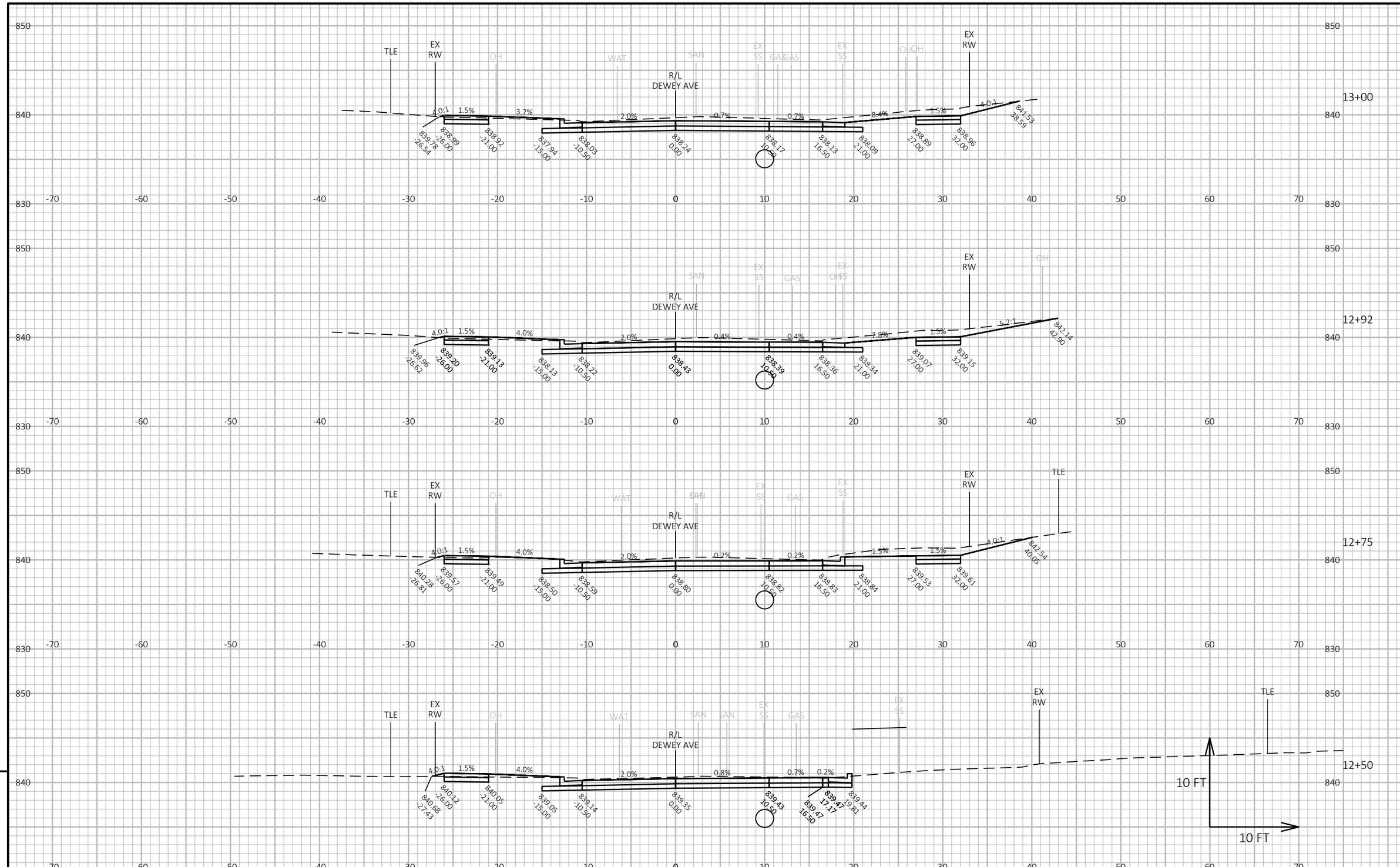

PROJECT NO: 3997-01-79/80	HWY: DEWEY AVE	COUNTY: JEFFERSON	CROSS SECTIONS: DEWEY AVE	SHEET 161	E

FILE NAME : R:\5300\5364\5364088\39970179\SHEETS\090201-XS.DWG
LAYOUT NAME - 090201_4xs
PLOT DATE : 9/12/2025 3:46 PM
PLOT BY : ERIC HANDLER
PLOT NAME :
PLOT SCALE : 1 IN:10 FT HORZ. / 1 IN:10 FT VERT.
WISDOT/CADDS SHEET 49

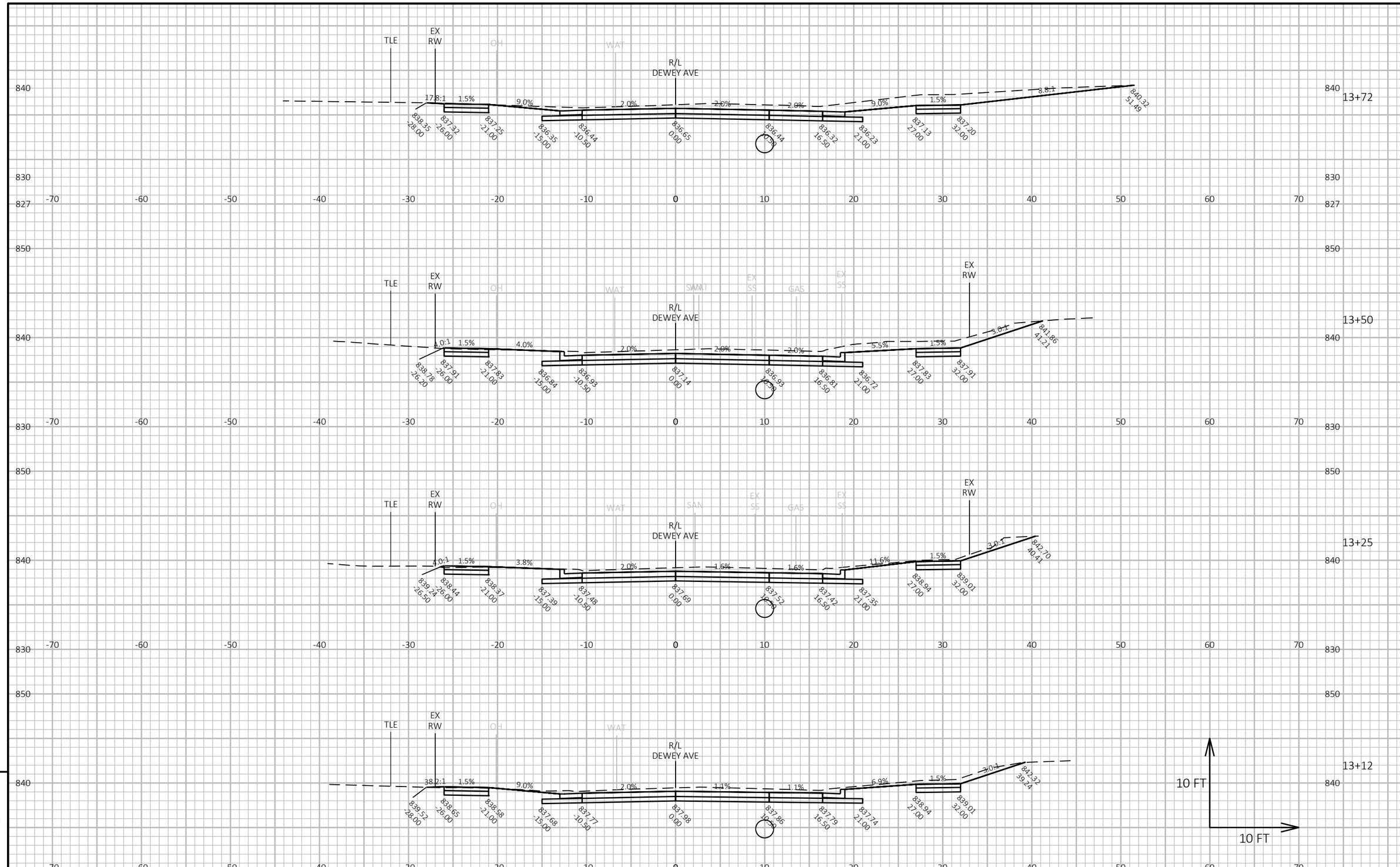

PROJECT NO: 3997-01-79/80	HWY: DEWEY AVE	COUNTY: JEFFERSON	CROSS SECTIONS: DEWEY AVE	SHEET 162	E

FILE NAME : R:\5300\5364\5364088\39970179\SHEETS\090201-XS.DWG
LAYOUT NAME - 090201_5xs
PLOT DATE : 9/12/2025 3:46 PM
PLOT BY : ERIC HANDLER
PLOT NAME :
PLOT SCALE : 1 IN:10 FT HORZ. / 1 IN:10 FT VERT.
WISDOT/CADDS SHEET 49

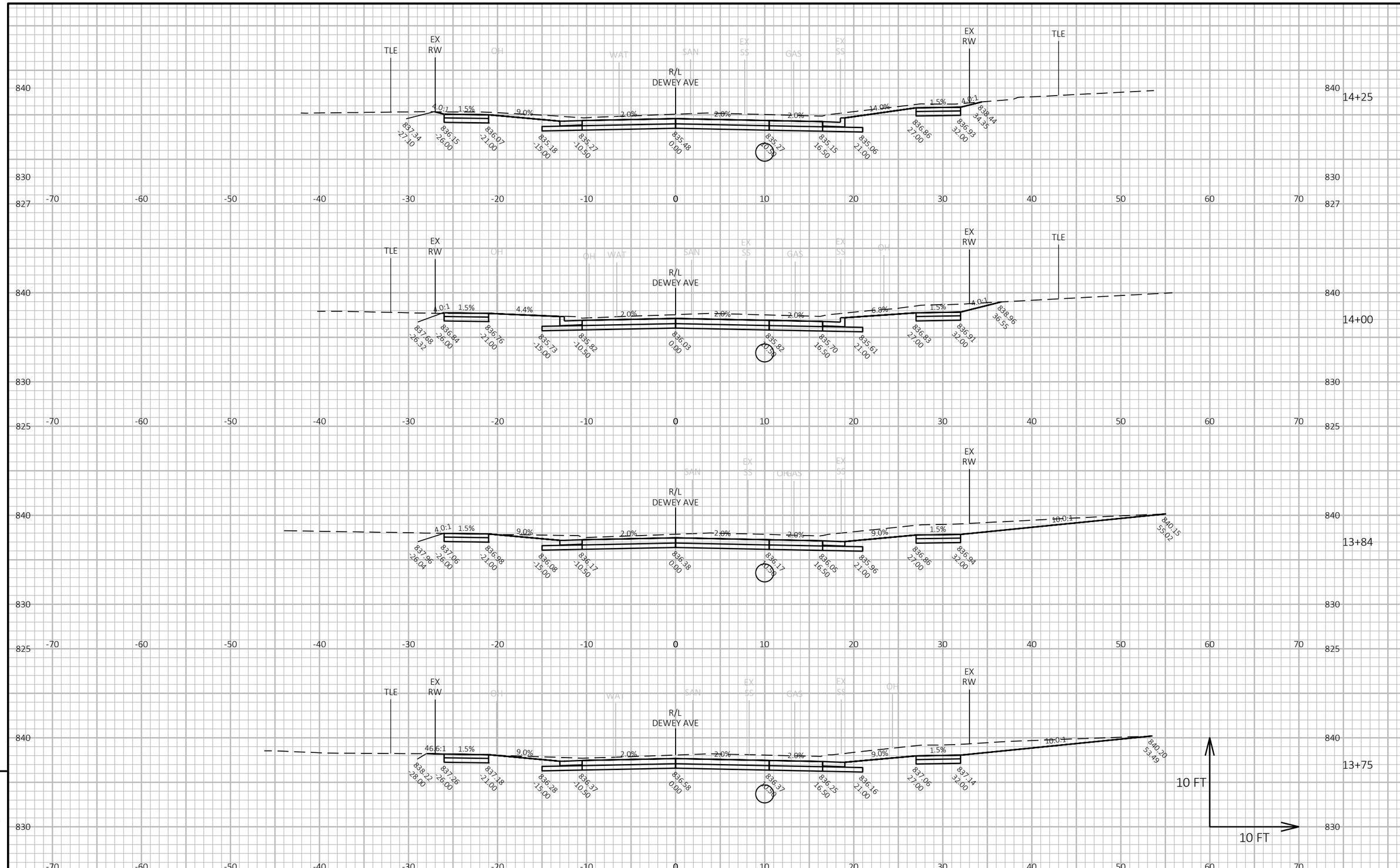

PROJECT NO: 3997-01-79/80	HWY: DEWEY AVE	COUNTY: JEFFERSON	CROSS SECTIONS: DEWEY AVE	SHEET 163	E

FILE NAME : R:\5300\5364\5364088\39970179\SHEETS\090201-XS.DWG
LAYOUT NAME - 090201_6xs
PLOT DATE : 9/12/2025 3:46 PM
PLOT BY : ERIC HANDLER
PLOT NAME :
PLOT SCALE : 1 IN:10 FT HORZ. / 1 IN:10 FT VERT.
WISDOT/CADDS SHEET 49

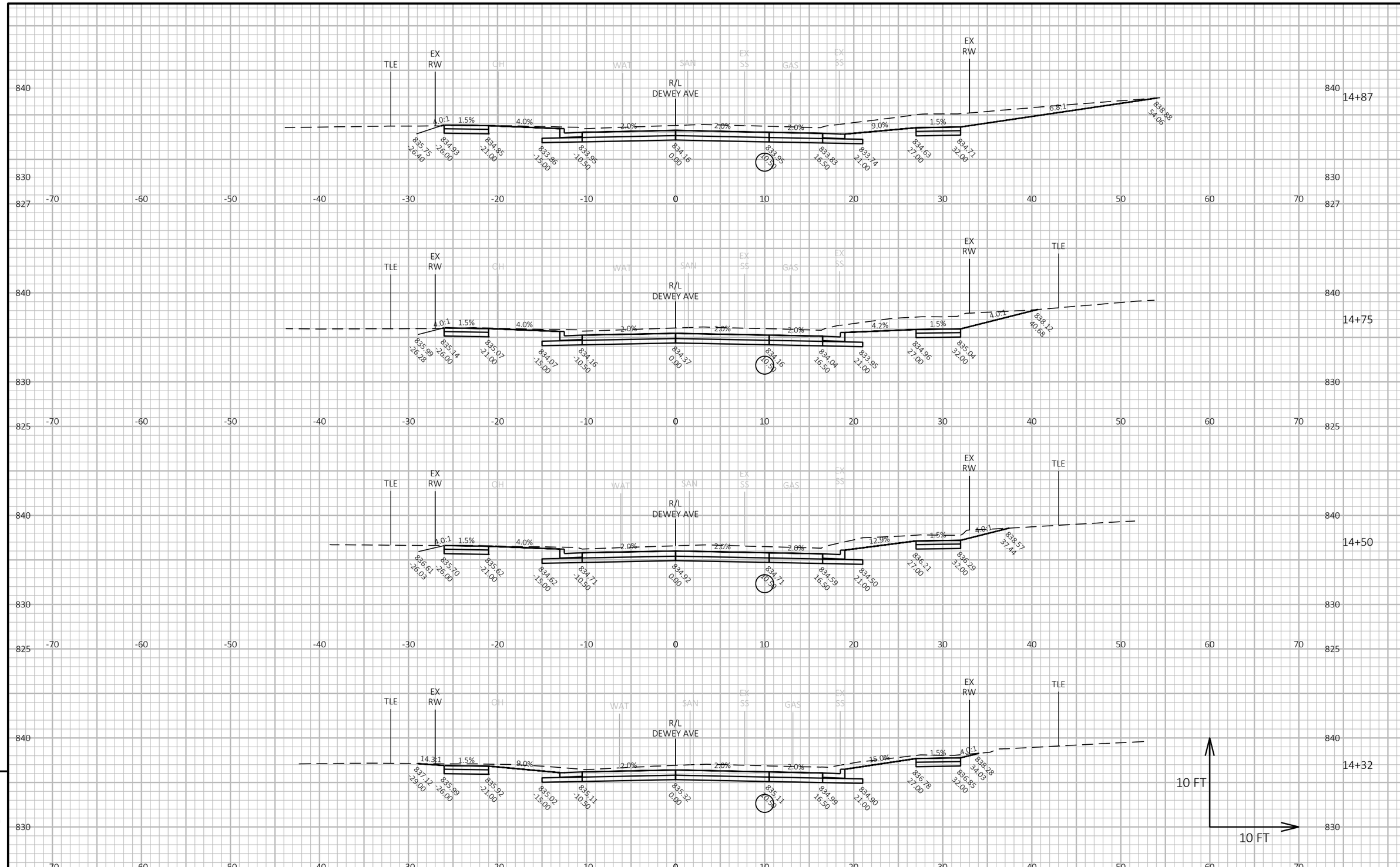

9

9

PROJECT NO: 3997-01-79/80	HWY: DEWEY AVE	COUNTY: JEFFERSON	CROSS SECTIONS: DEWEY AVE	SHEET 164	E

FILE NAME : R:\5300\5364\5364088\39970179\SHEETS\090201-XS.DWG
LAYOUT NAME - 090201_7xs

PLOT DATE : 9/12/2025 3:46 PM

PLOT BY : ERIC HANDLER

PLOT NAME :

PLOT SCALE : 1 IN:10 FT HORZ. / 1 IN:10 FT VERT.

WISDOT/CADDS SHEET 49

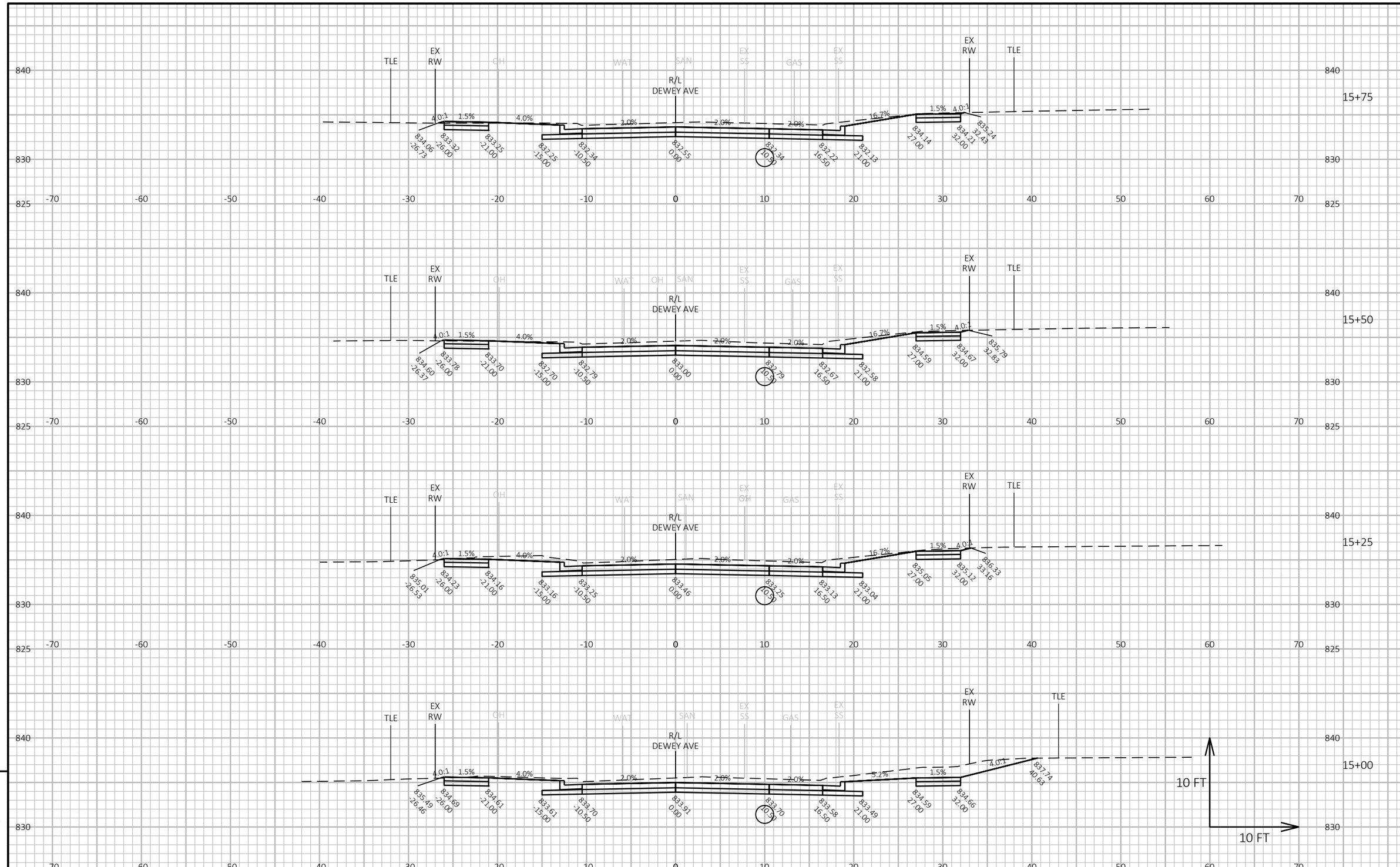

9

9

PROJECT NO: 3997-01-79/80	HWY: DEWEY AVE	COUNTY: JEFFERSON	CROSS SECTIONS: DEWEY AVE	SHEET 165	E

FILE NAME : R:\5300\5364\5364088\39970179\SHEETS\090201-XS.DWG
LAYOUT NAME - 090201_8xs

PLOT DATE : 9/12/2025 3:46 PM

PLOT BY : ERIC HANDLER

PLOT NAME :

PLOT SCALE : 1 IN:10 FT HORZ. / 1 IN:10 FT VERT.

WISDOT/CADDS SHEET 49

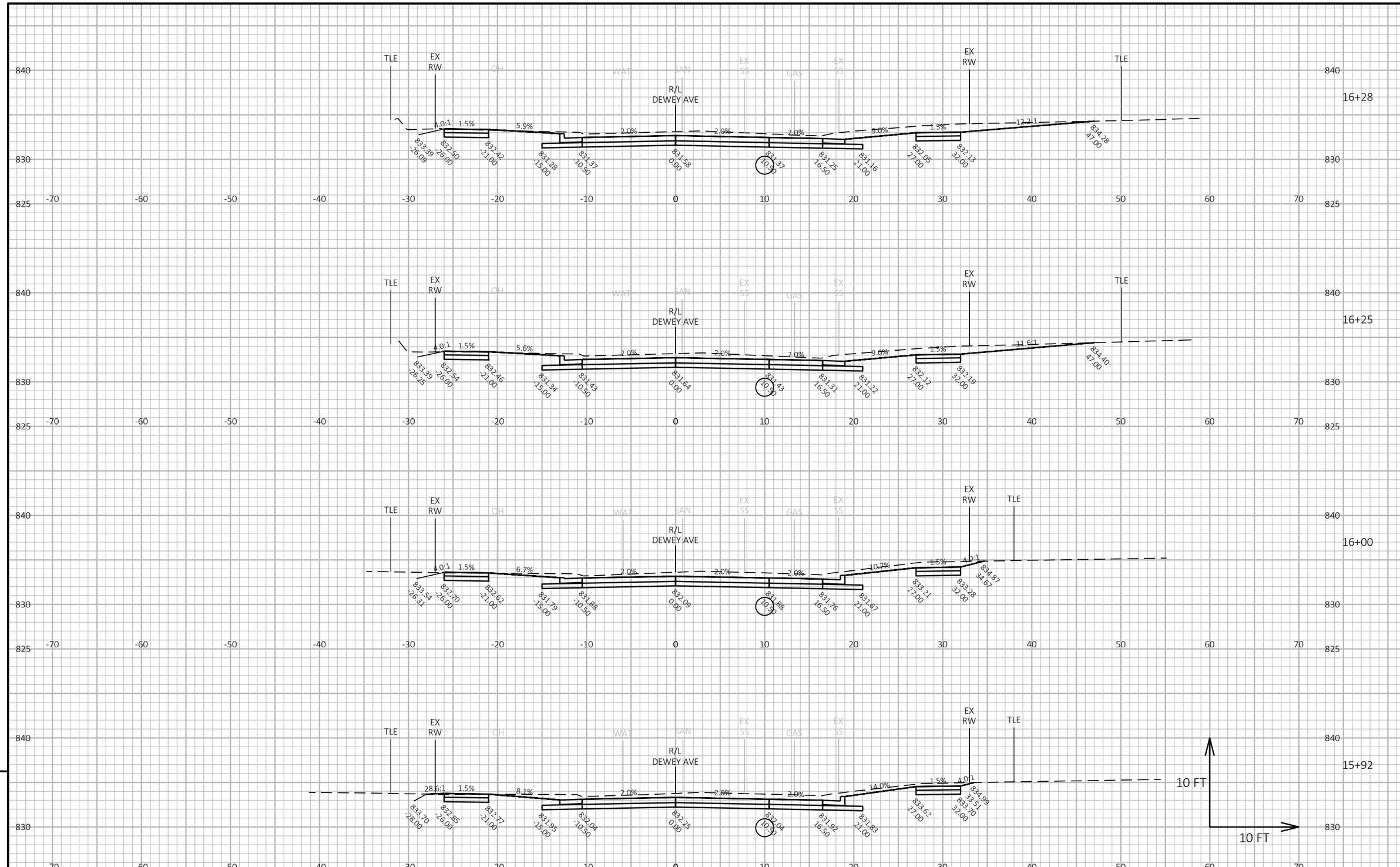

9

9

PROJECT NO: 3997-01-79/80	HWY: DEWEY AVE	COUNTY: JEFFERSON	CROSS SECTIONS: DEWEY AVE	SHEET 166	E

FILE NAME : R:\5300\5364\5364088\39970179\SHEETS\090201-XS.DWG
LAYOUT NAME - 090201_9xs

PLOT DATE : 9/12/2025 3:46 PM

PLOT BY : ERIC HANDLER

PLOT NAME :

PLOT SCALE : 1 IN:10 FT HORZ. / 1 IN:10 FT VERT.

WISDOT/CADDS SHEET 49

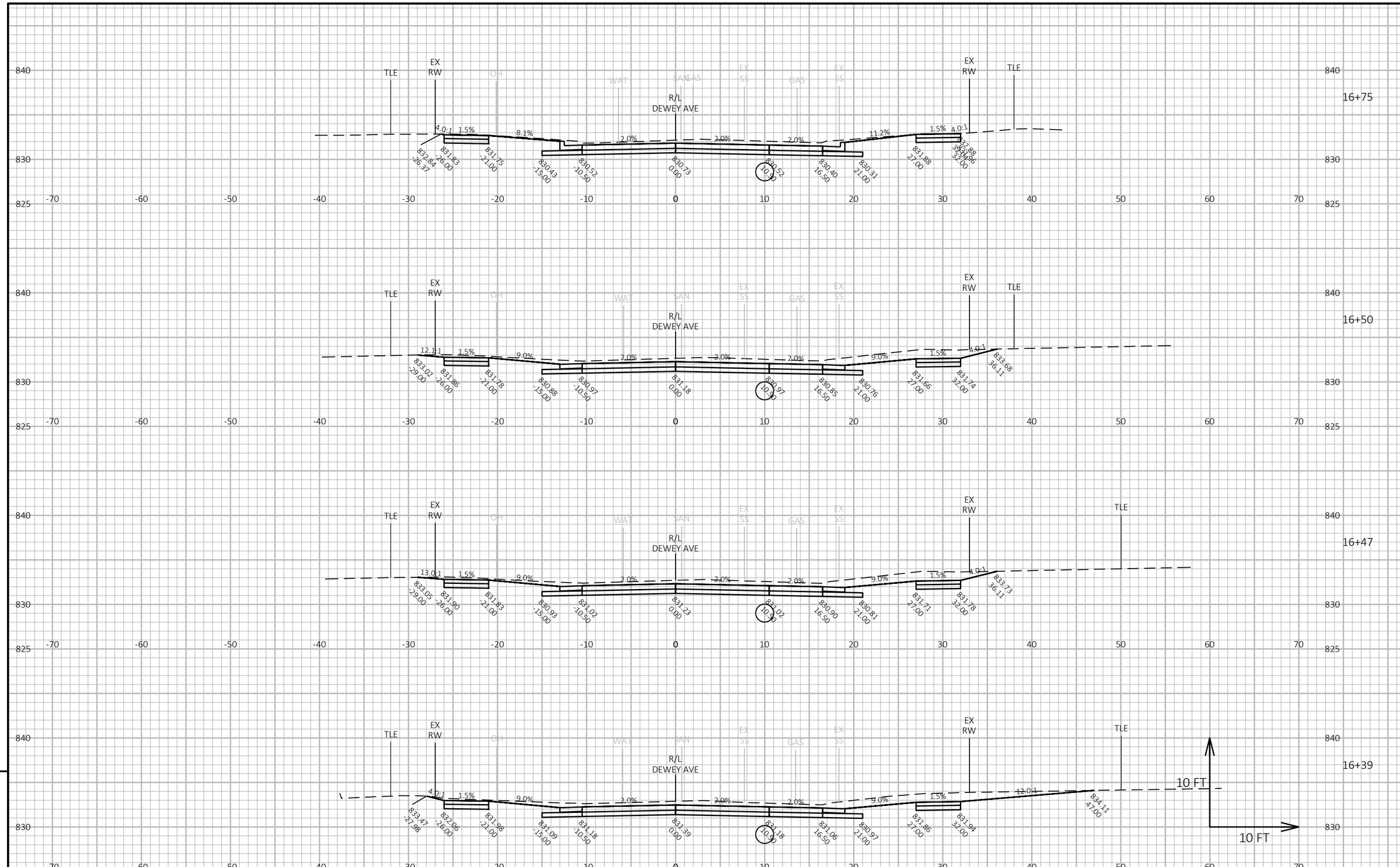

9

9

PROJECT NO: 3997-01-79/80	HWY: DEWEY AVE	COUNTY: JEFFERSON	CROSS SECTIONS: DEWEY AVE	SHEET 167	E

FILE NAME : R:\5300\5364\5364088\39970179\SHEETS\090201-XS.DWG
LAYOUT NAME - 090201_10xs

PLOT DATE : 9/12/2025 3:46 PM

PLOT BY : ERIC HANDLER

PLOT NAME :

PLOT SCALE : 1 IN:10 FT HORZ. / 1 IN:10 FT VERT.

WISDOT/CADDS SHEET 49

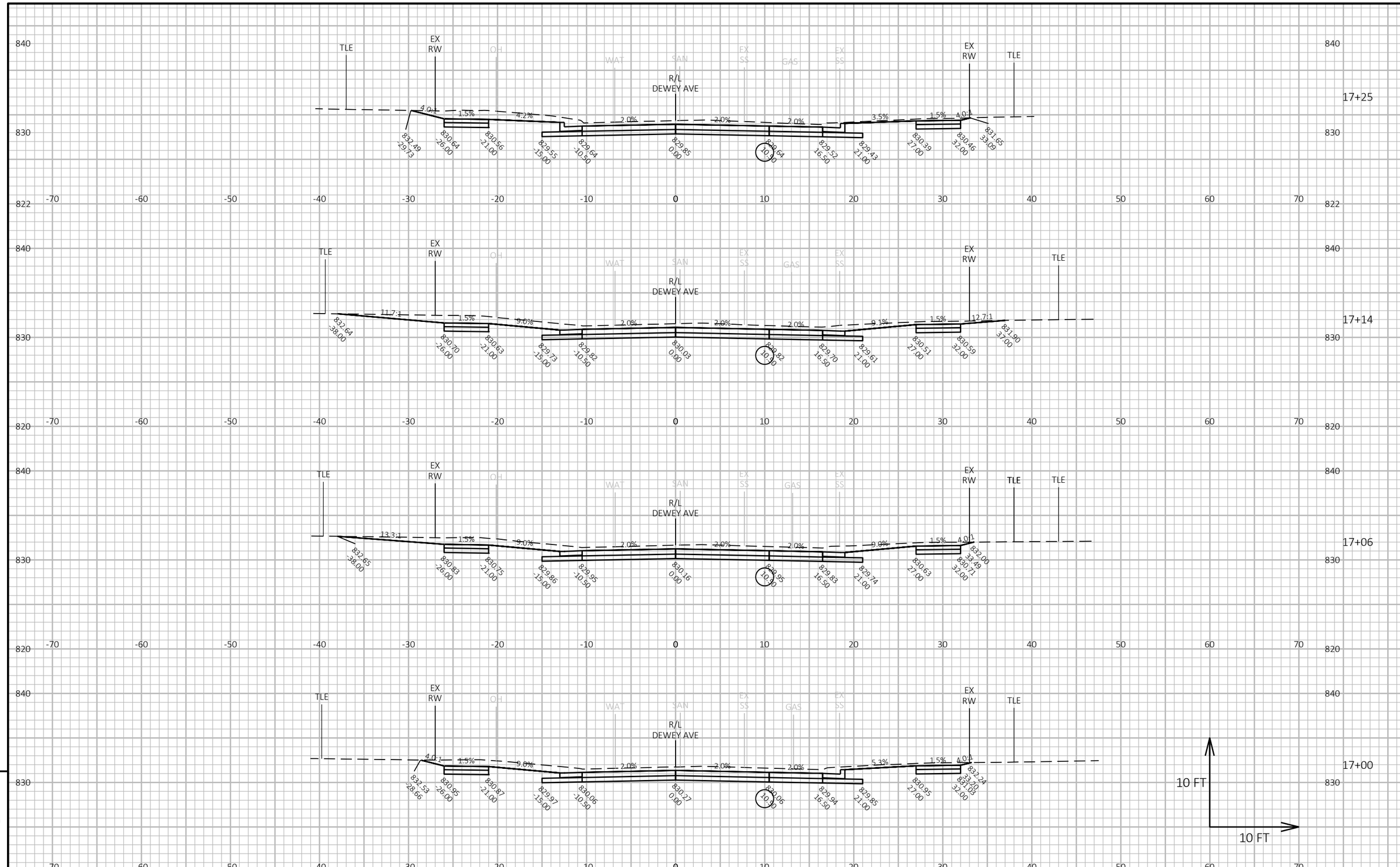

9

9

PROJECT NO: 3997-01-79/80	HWY: DEWEY AVE	COUNTY: JEFFERSON	CROSS SECTIONS: DEWEY AVE	SHEET 168	E

FILE NAME : R:\5300\5364\5364088\39970179\SHEETS\090201-XS.DWG
LAYOUT NAME - 090201_11xs

PLOT DATE : 9/12/2025 3:47 PM

PLOT BY : ERIC HANDLER

PLOT NAME :

PLOT SCALE : 1 IN:10 FT HORZ. / 1 IN:10 FT VERT.

WISDOT/CADDS SHEET 49

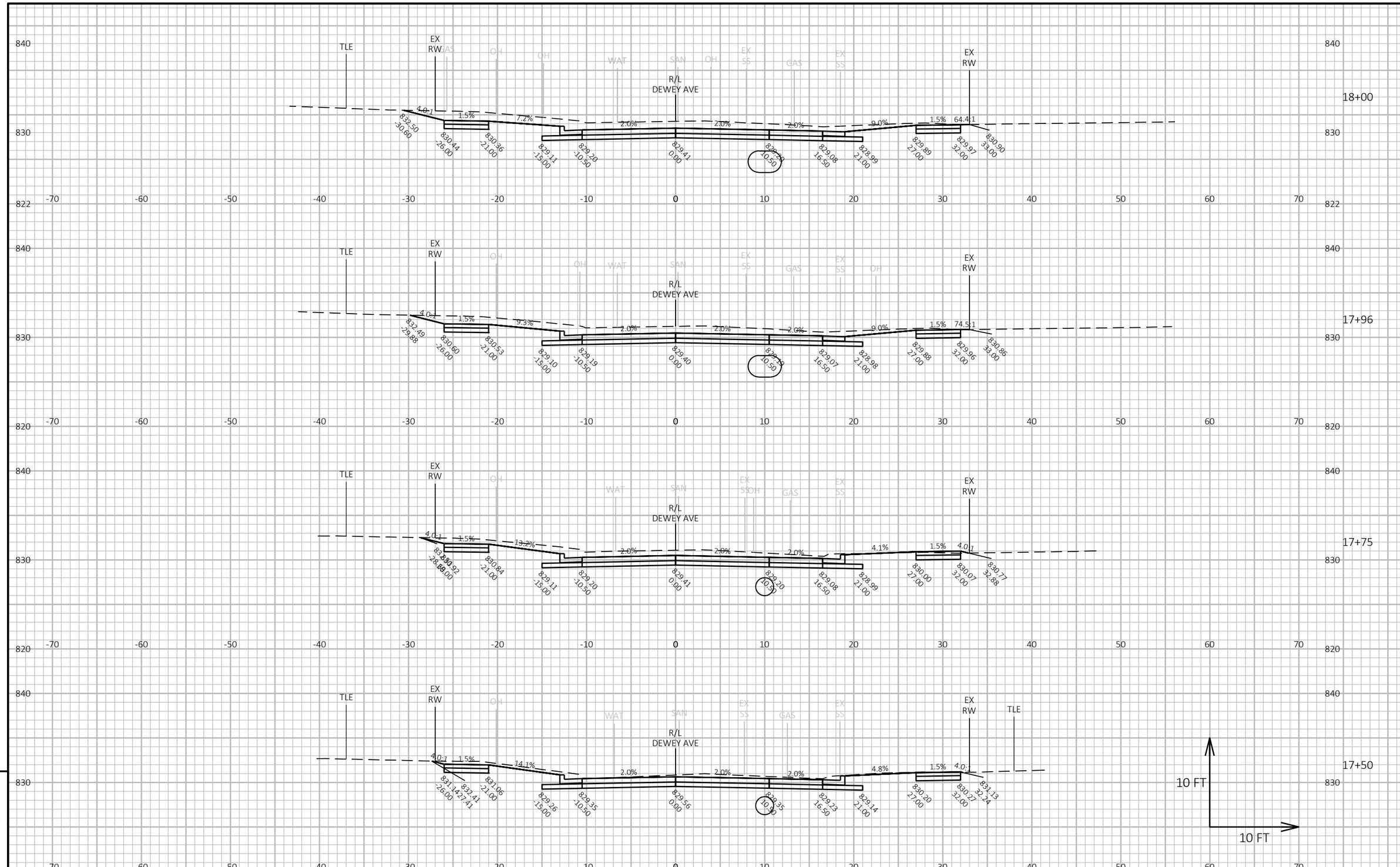

PROJECT NO: 3997-01-79/80	HWY: DEWEY AVE	COUNTY: JEFFERSON	CROSS SECTIONS: DEWEY AVE	SHEET 169	E

FILE NAME : R:\5300\5364\5364088\39970179\SHEETS\090201-XS.DWG
LAYOUT NAME - 090201_12xs
PLOT DATE : 9/12/2025 3:47 PM
PLOT BY : ERIC HANDLER
PLOT NAME :
PLOT SCALE : 1 IN:10 FT HORZ. / 1 IN:10 FT VERT.
WISDOT/CADDS SHEET 49

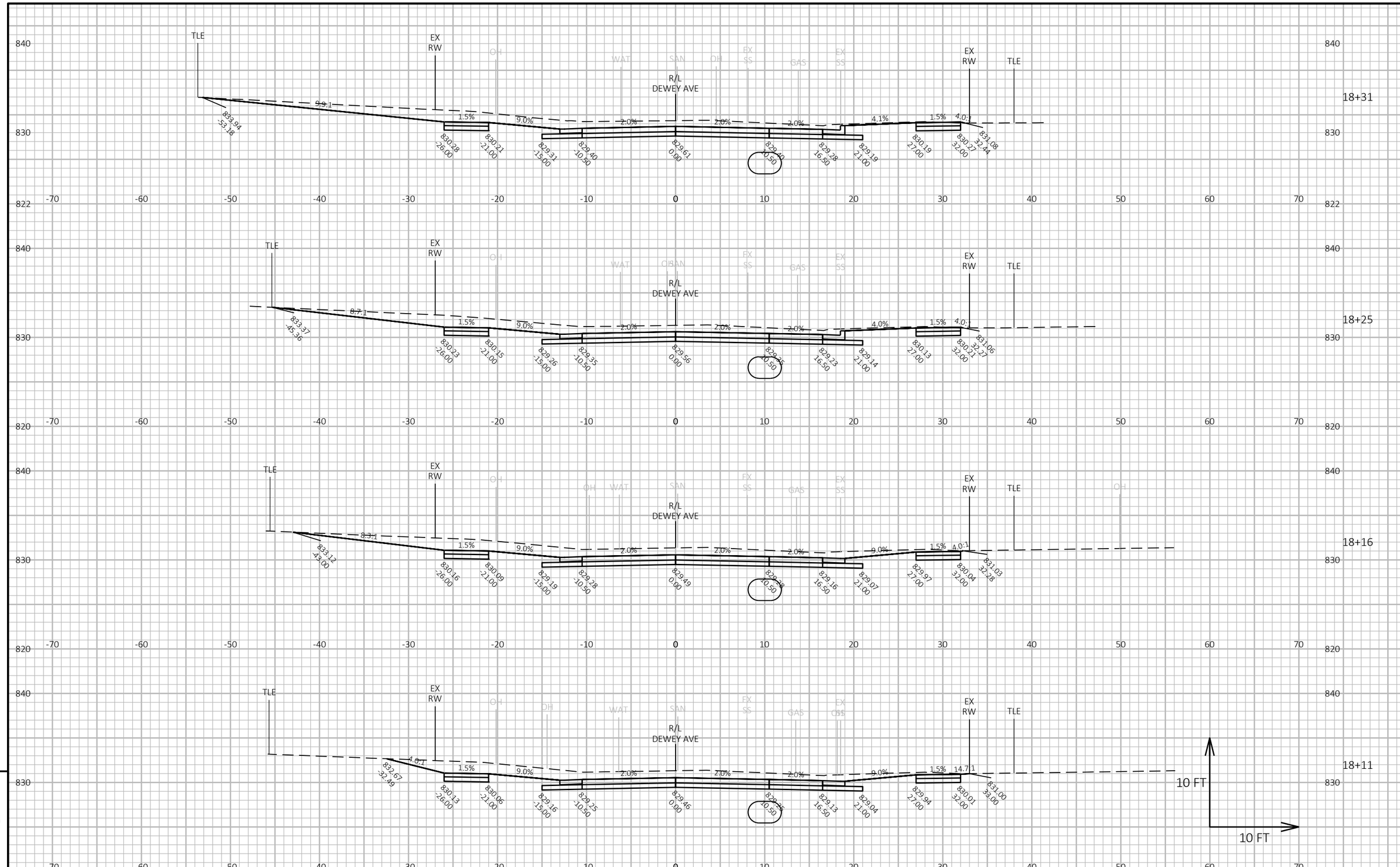

9

9

PROJECT NO: 3997-01-79/80	HWY: DEWEY AVE	COUNTY: JEFFERSON	CROSS SECTIONS: DEWEY AVE	SHEET 170	E

FILE NAME : R:\5300\5364\5364088\39970179\SHEETS\090201-XS.DWG
LAYOUT NAME - 090201_13xs
PLOT DATE : 9/12/2025 3:47 PM
PLOT BY : ERIC HANDLER
PLOT NAME :
PLOT SCALE : 1 IN:10 FT HORZ. / 1 IN:10 FT VERT.

WISDOT/CADDS SHEET 49

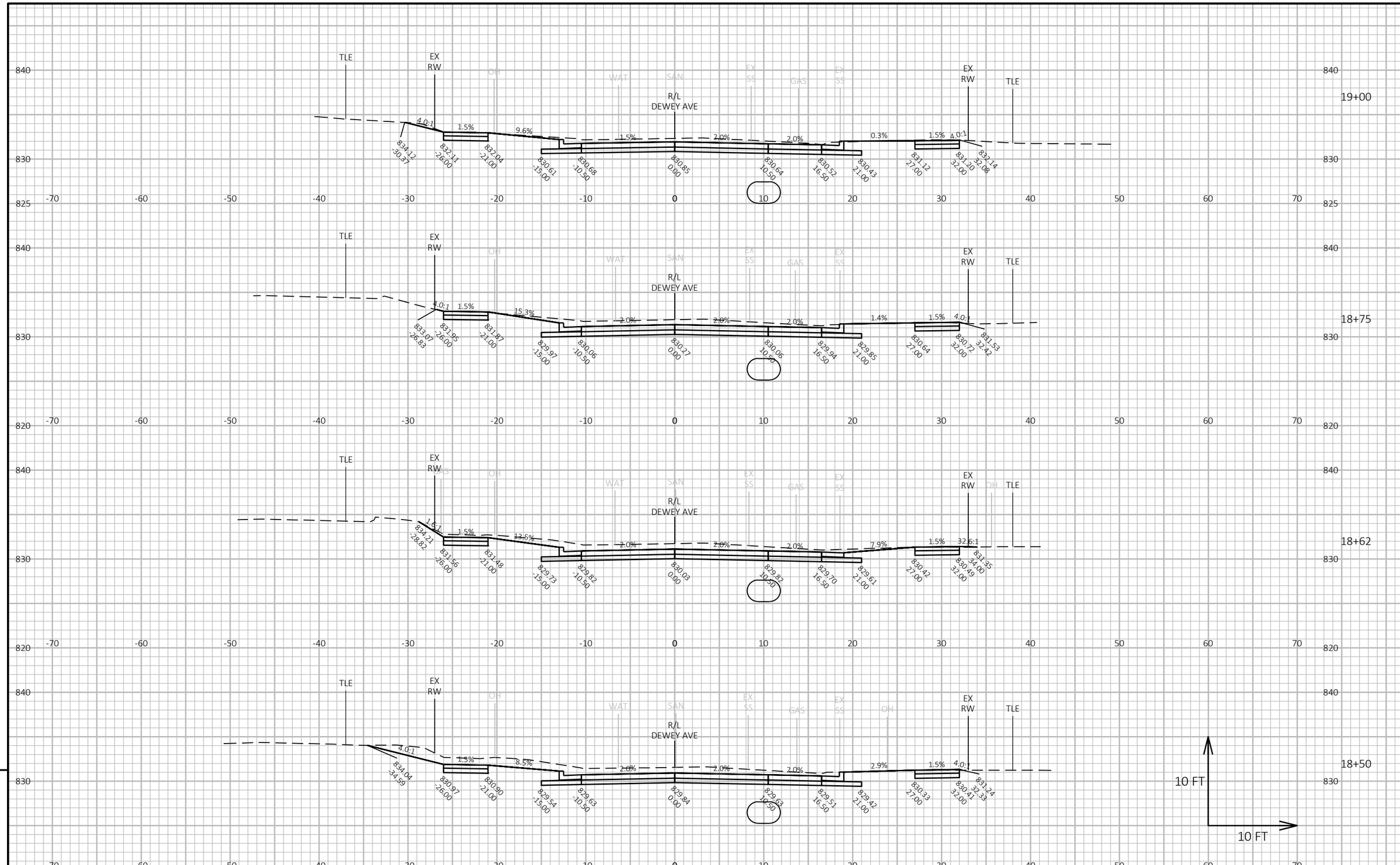

9

9

PROJECT NO: 3997-01-79/80	HWY: DEWEY AVE	COUNTY: JEFFERSON	CROSS SECTIONS: DEWEY AVE	SHEET 171	E

FILE NAME : R:\5300\5364\5364088\39970179\SHEETS\090201-XS.DWG
LAYOUT NAME - 090201_14xs
PLOT DATE : 9/12/2025 3:47 PM
PLOT BY : ERIC HANDLER
PLOT NAME :
PLOT SCALE : 1 IN:10 FT HORZ. / 1 IN:10 FT VERT.

WISDOT/CADDS SHEET 49

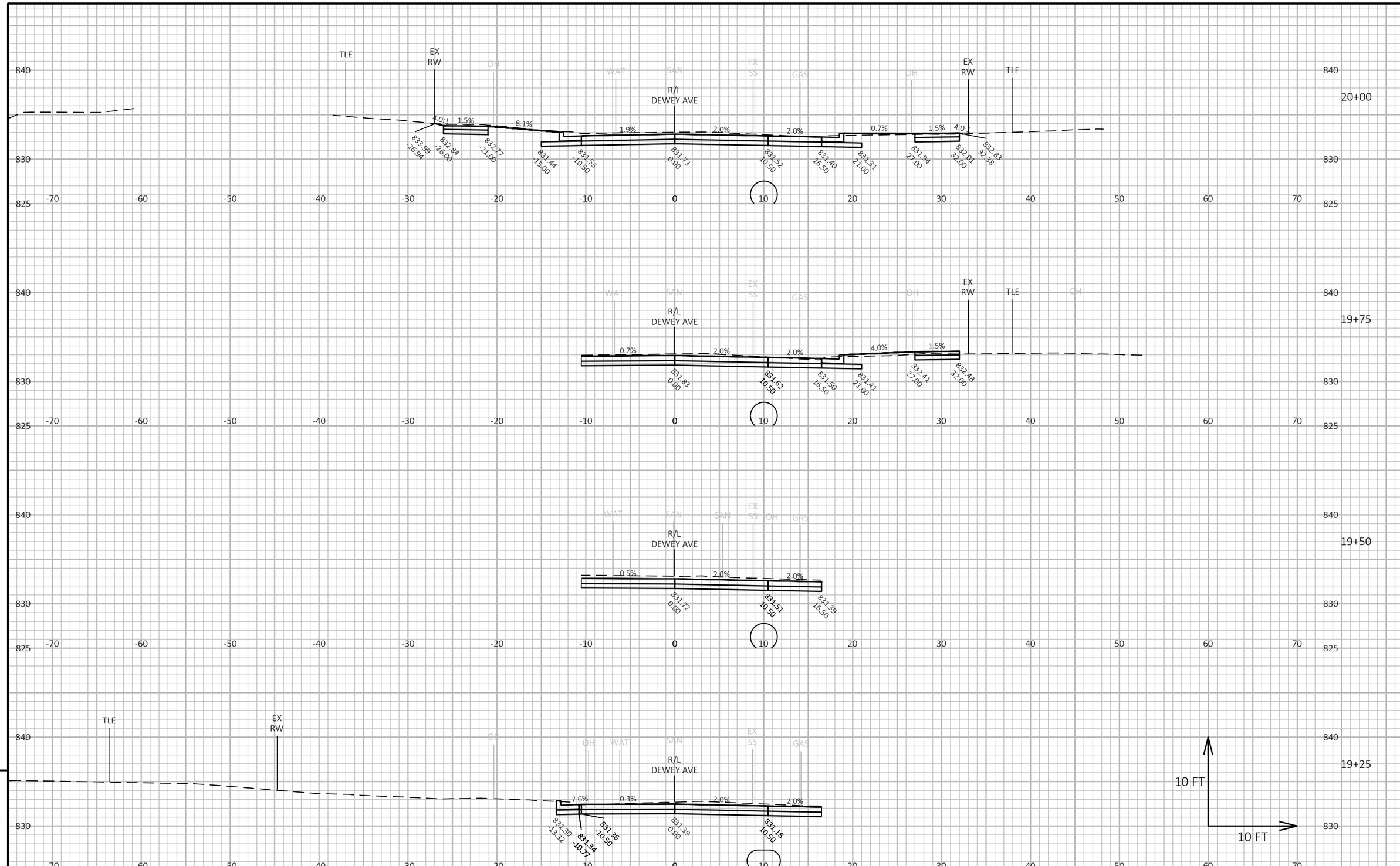

9

9

PROJECT NO: 3997-01-79/80	HWY: DEWEY AVE	COUNTY: JEFFERSON	CROSS SECTIONS: DEWEY AVE	SHEET 172	E

FILE NAME : R:\5300\5364\5364088\39970179\SHEETS\090201-XS.DWG
LAYOUT NAME - 090201_15xs

PLOT DATE : 9/12/2025 3:47 PM

PLOT BY : ERIC HANDLER

PLOT NAME :

PLOT SCALE : 1 IN:10 FT HORZ. / 1 IN:10 FT VERT.

WISDOT/CADDS SHEET 49

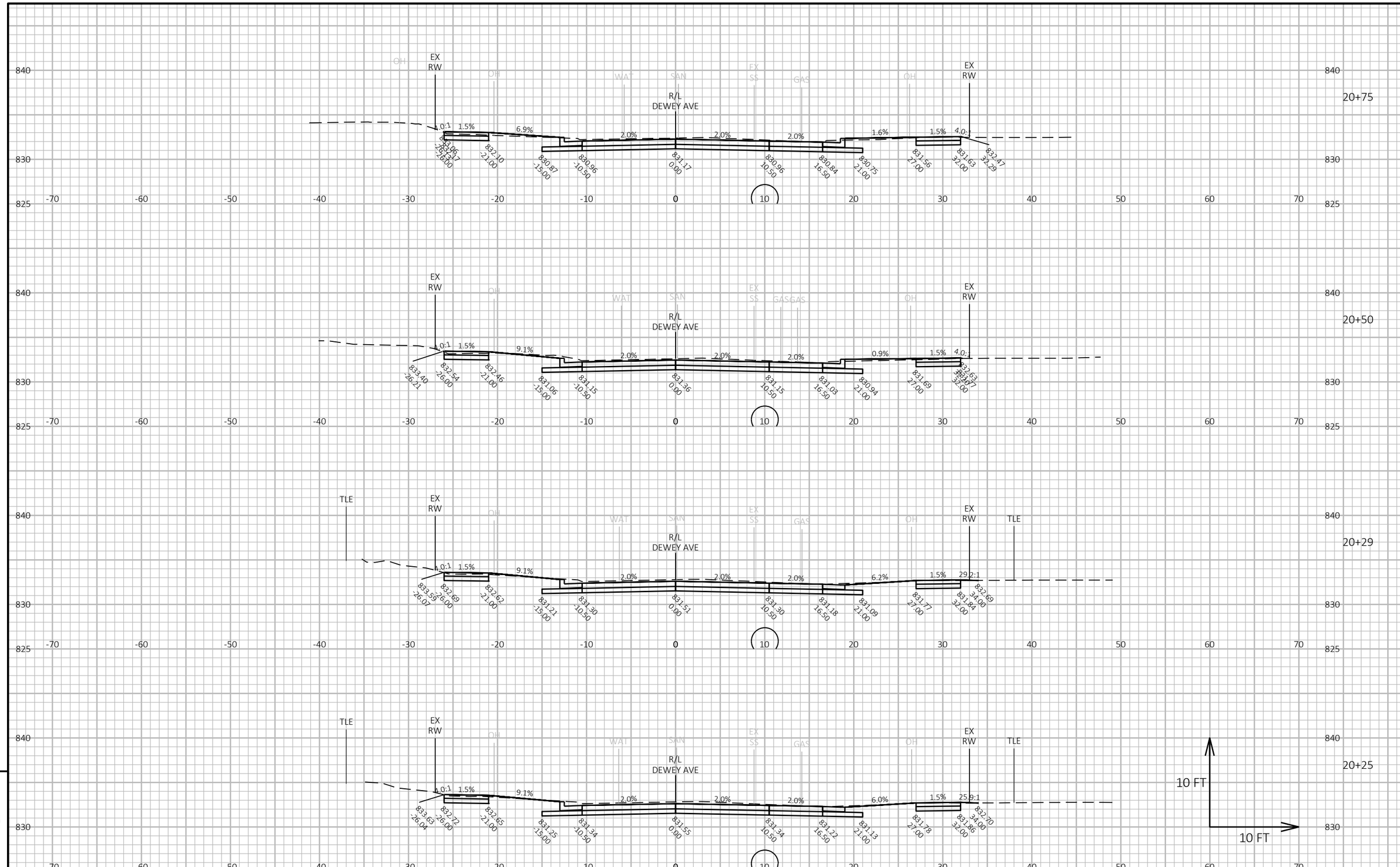

9

9

PROJECT NO: 3997-01-79/80	HWY: DEWEY AVE	COUNTY: JEFFERSON	CROSS SECTIONS: DEWEY AVE	SHEET 173	E

FILE NAME : R:\5300\5364\5364088\39970179\SHEETS\090201-XS.DWG
LAYOUT NAME - 090201_16xs
PLOT DATE : 10/29/2025 11:13 AM
PLOT BY : ERIC HANDLER
PLOT NAME :
PLOT SCALE : 1 IN:10 FT HORZ. / 1 IN:10 FT VERT.
WISDOT/CADDS SHEET 49

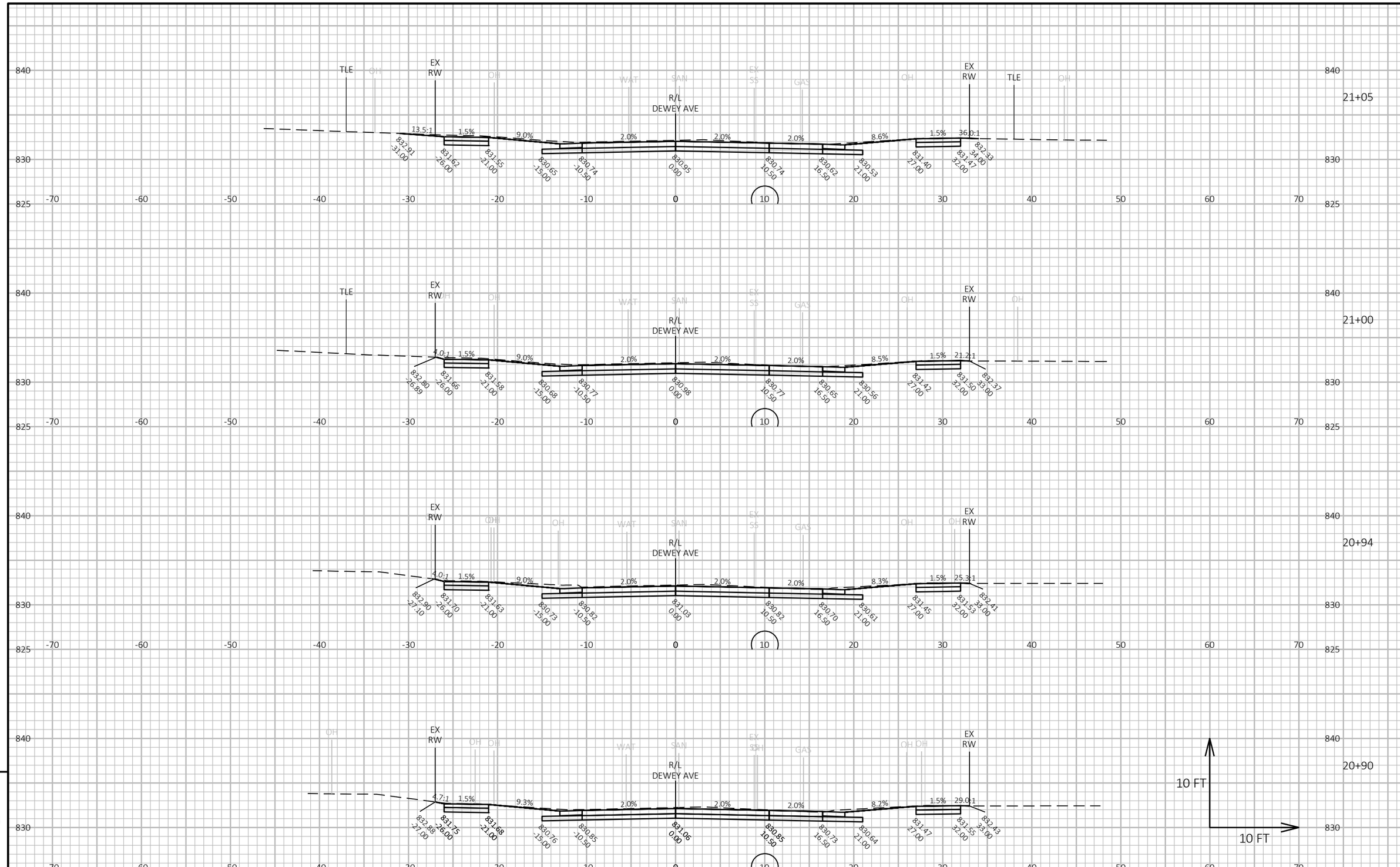

9

9

PROJECT NO: 3997-01-79/80	HWY: DEWEY AVE	COUNTY: JEFFERSON	CROSS SECTIONS: DEWEY AVE	SHEET 174	E

FILE NAME : R:\5300\5364\5364088\39970179\SHEETS\090201-XS.DWG
LAYOUT NAME - 090201_17xs

PLOT DATE : 10/29/2025 11:13 AM PLOT BY : ERIC HANDLER PLOT NAME : **PLOT SCALE :** 1 IN:10 FT HORZ. / 1 IN:10 FT VERT.

WISDOT/CADDS SHEET 49

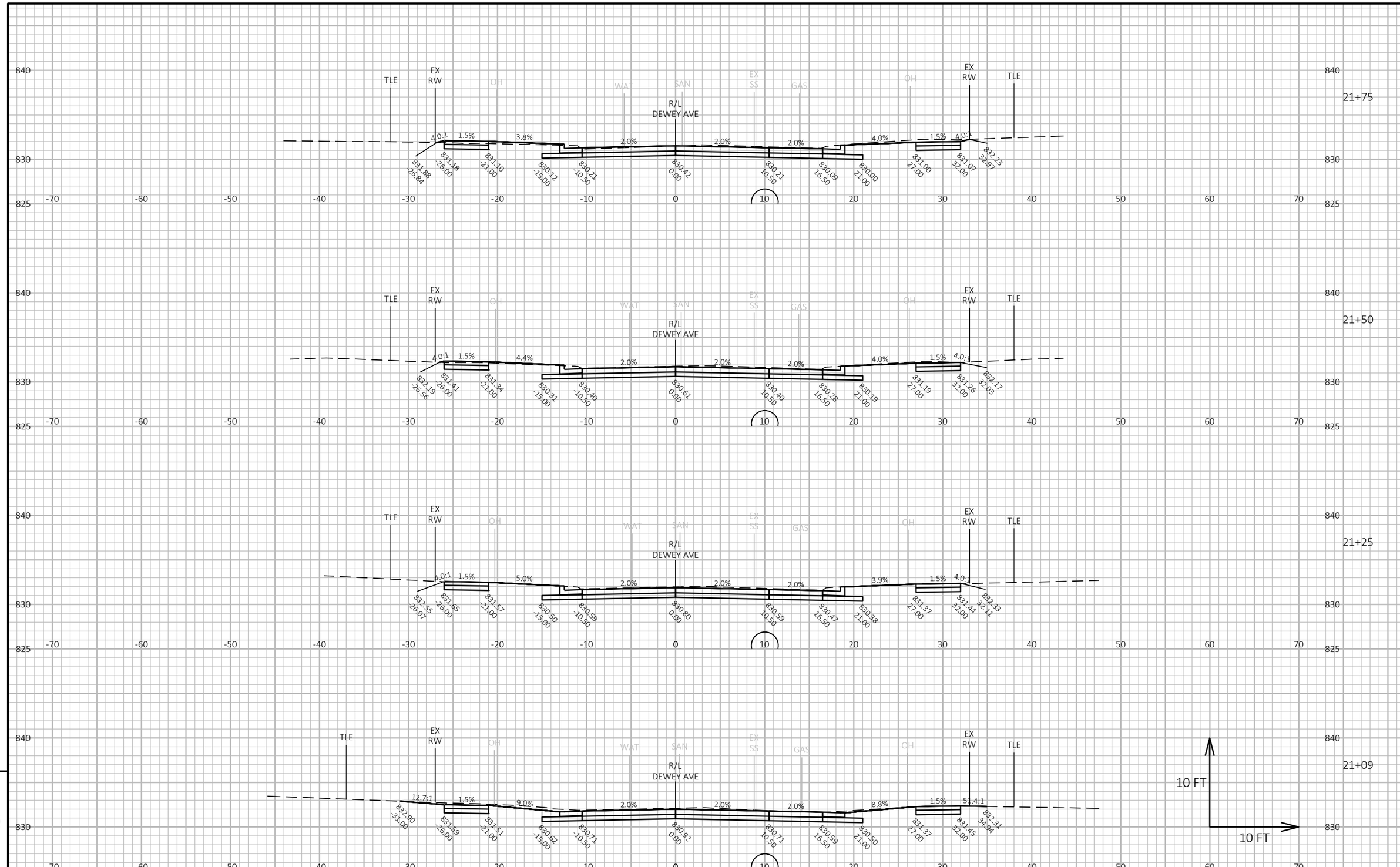

PROJECT NO: 3997-01-79/80	HWY: DEWEY AVE	COUNTY: JEFFERSON	CROSS SECTIONS: DEWEY AVE	SHEET 175	E

FILE NAME : R:\5300\5364\5364088\39970179\SHEETS\090201-XS.DWG
LAYOUT NAME - 090201_18xs
PLOT DATE : 9/12/2025 3:47 PM
PLOT BY : ERIC HANDLER
PLOT NAME :
PLOT SCALE : 1 IN:10 FT HORZ. / 1 IN:10 FT VERT.
WISDOT/CADDS SHEET 49

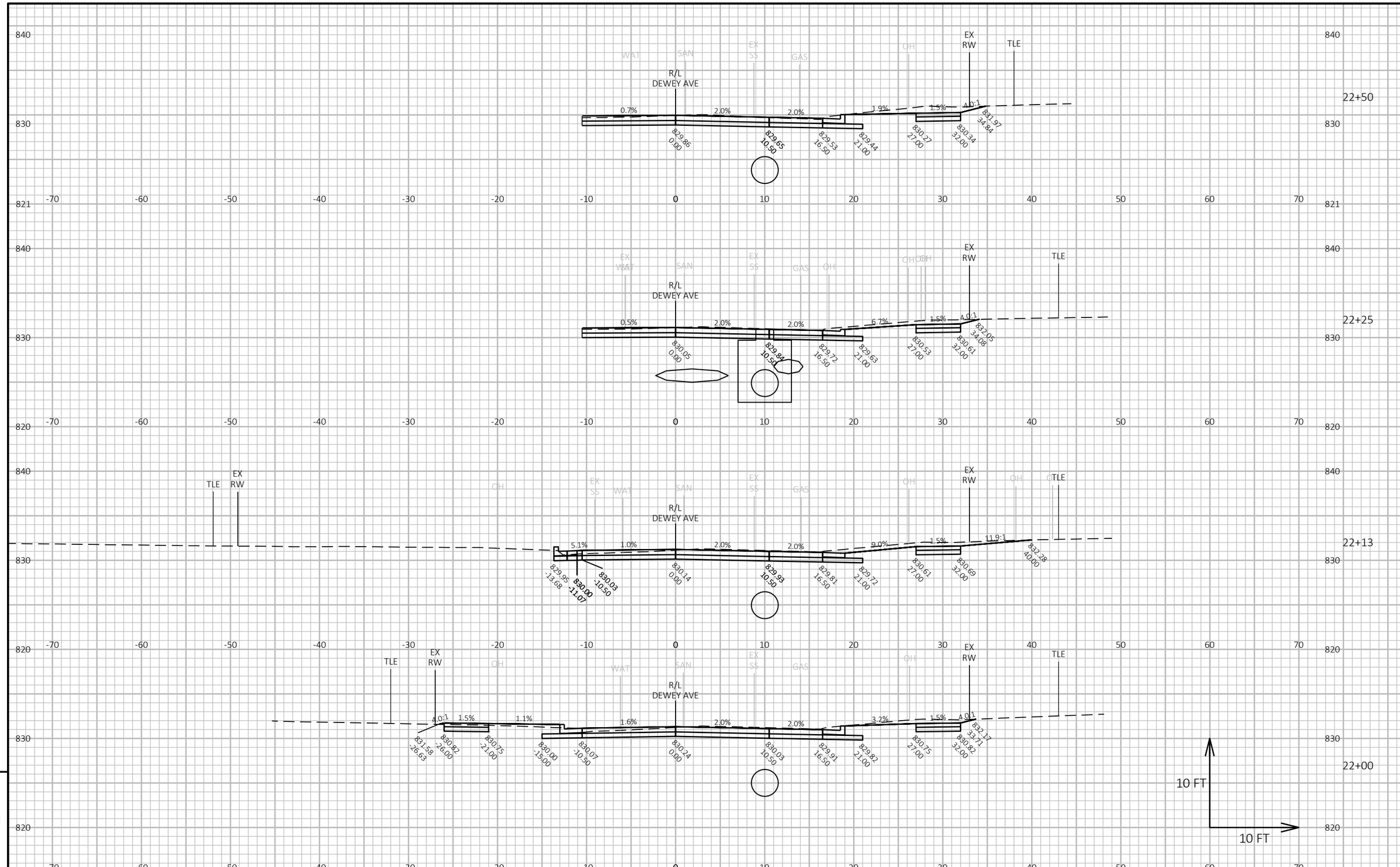

PROJECT NO: 3997-01-79/80	HWY: DEWEY AVE	COUNTY: JEFFERSON	CROSS SECTIONS: DEWEY AVE	SHEET 176	E

FILE NAME : R:\5300\5364\5364088\39970179\SHEETS\090201-XS.DWG
LAYOUT NAME - 090201_19xs
PLOT DATE : 9/12/2025 3:47 PM
PLOT BY : ERIC HANDLER
PLOT NAME :
PLOT SCALE : 1 IN:10 FT HORZ. / 1 IN:10 FT VERT.
WISDOT/CADDS SHEET 49

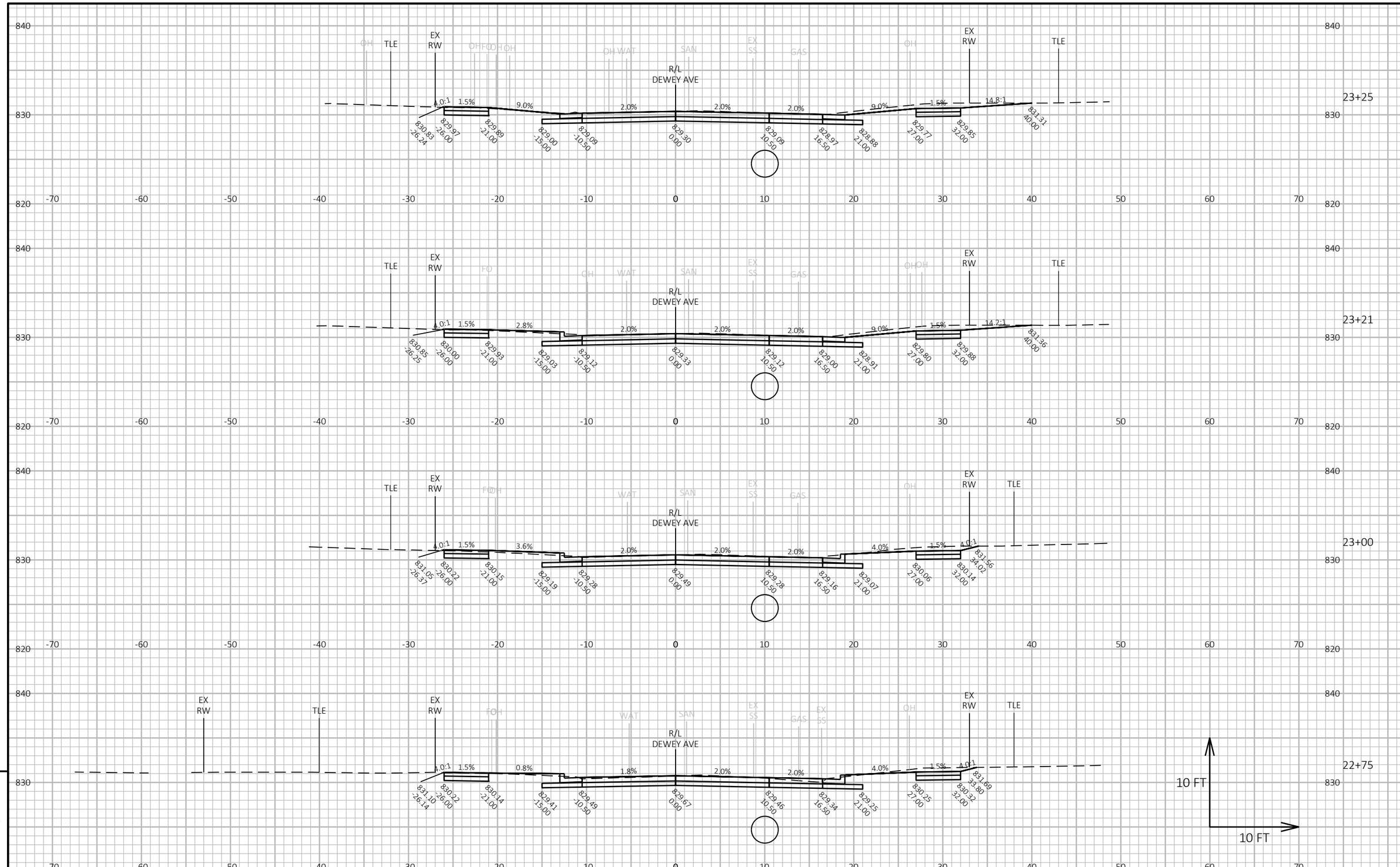

9

9

PROJECT NO: 3997-01-79/80	HWY: DEWEY AVE	COUNTY: JEFFERSON	CROSS SECTIONS: DEWEY AVE	SHEET 177	E

FILE NAME : R:\5300\5364\5364088\39970179\SHEETS\090201-XS.DWG
LAYOUT NAME - 090201_20xs

PLOT DATE : 9/12/2025 3:47 PM

PLOT BY : ERIC HANDLER

PLOT NAME :

PLOT SCALE : 1 IN:10 FT HORZ. / 1 IN:10 FT VERT.

WISDOT/CADDS SHEET 49

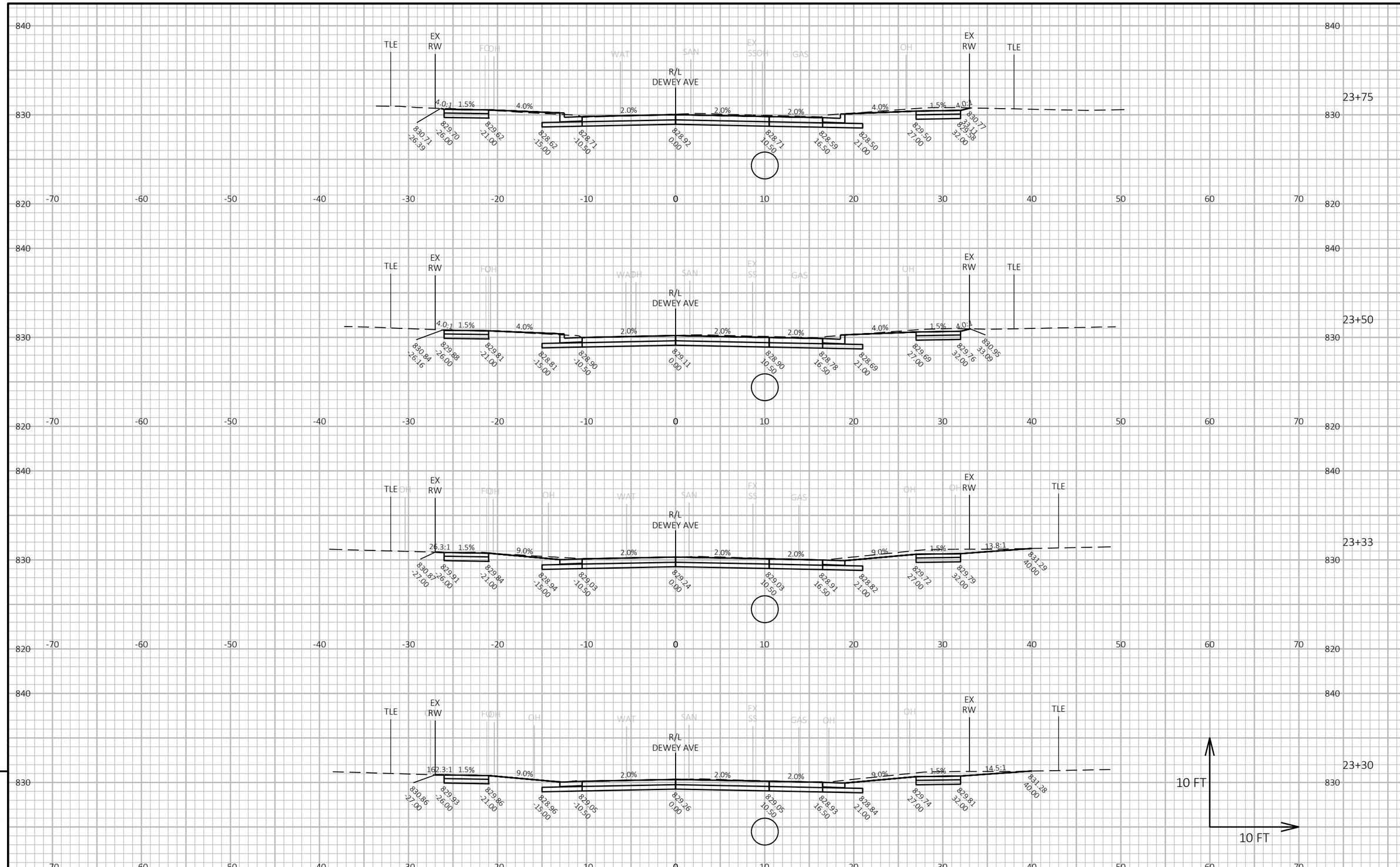

9

9

PROJECT NO: 3997-01-79/80	HWY: DEWEY AVE	COUNTY: JEFFERSON	CROSS SECTIONS: DEWEY AVE	SHEET 178	E

FILE NAME : R:\5300\5364\5364088\39970179\SHEETS\090201-XS.DWG
LAYOUT NAME - 090201_21xs

PLOT DATE : 9/12/2025 3:47 PM

PLOT BY : ERIC HANDLER

PLOT NAME :

PLOT SCALE : 1 IN:10 FT HORZ. / 1 IN:10 FT VERT.

WISDOT/CADDS SHEET 49

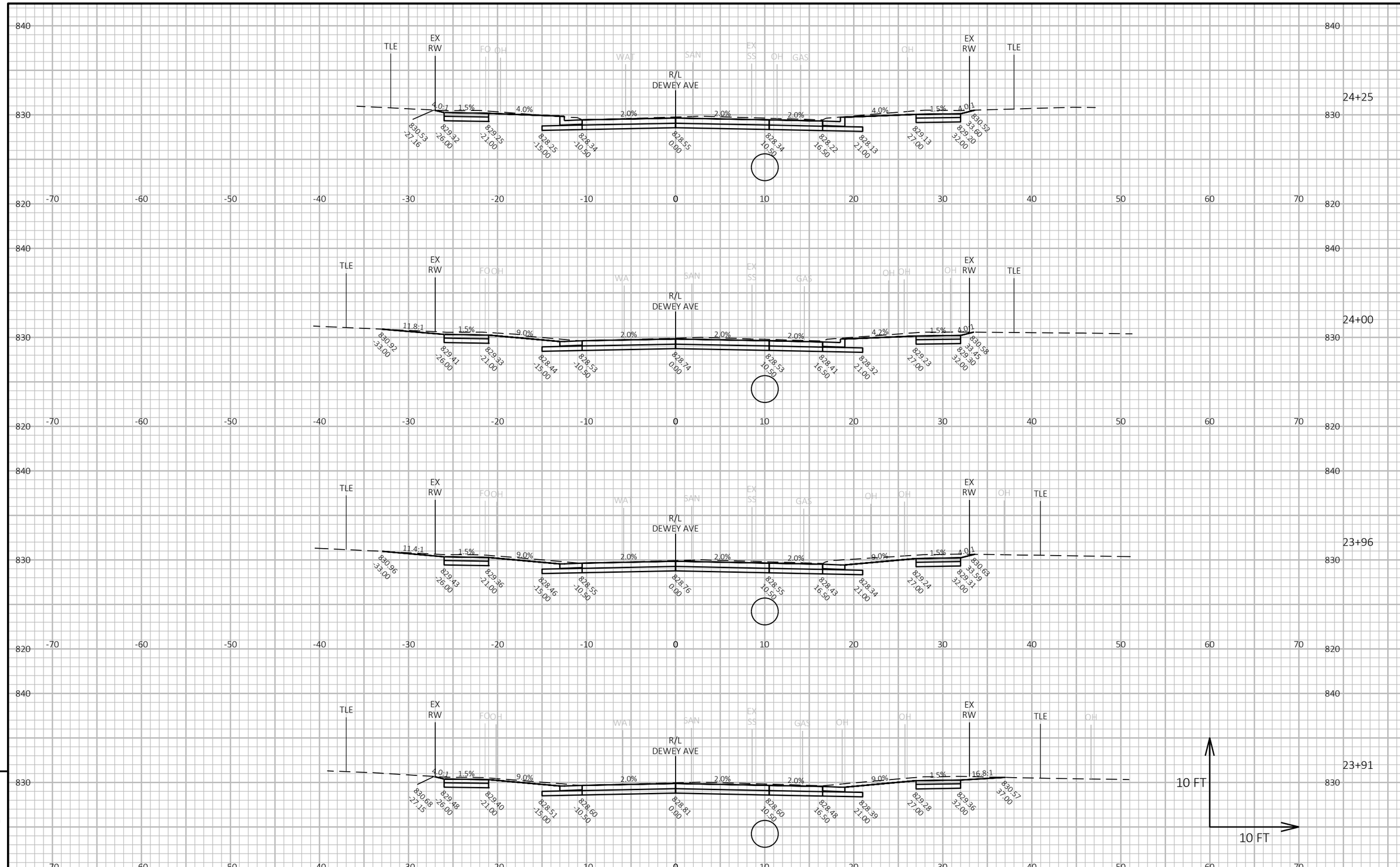

9

9

PROJECT NO: 3997-01-79/80	HWY: DEWEY AVE	COUNTY: JEFFERSON	CROSS SECTIONS: DEWEY AVE	SHEET 179	E

FILE NAME : R:\5300\5364\5364088\39970179\SHEETS\090201-XS.DWG
LAYOUT NAME - 090201_22xs

PLOT DATE : 9/12/2025 3:47 PM

PLOT BY : ERIC HANDLER

PLOT NAME :

PLOT SCALE : 1 IN:10 FT HORZ. / 1 IN:10 FT VERT.

WISDOT/CADDS SHEET 49

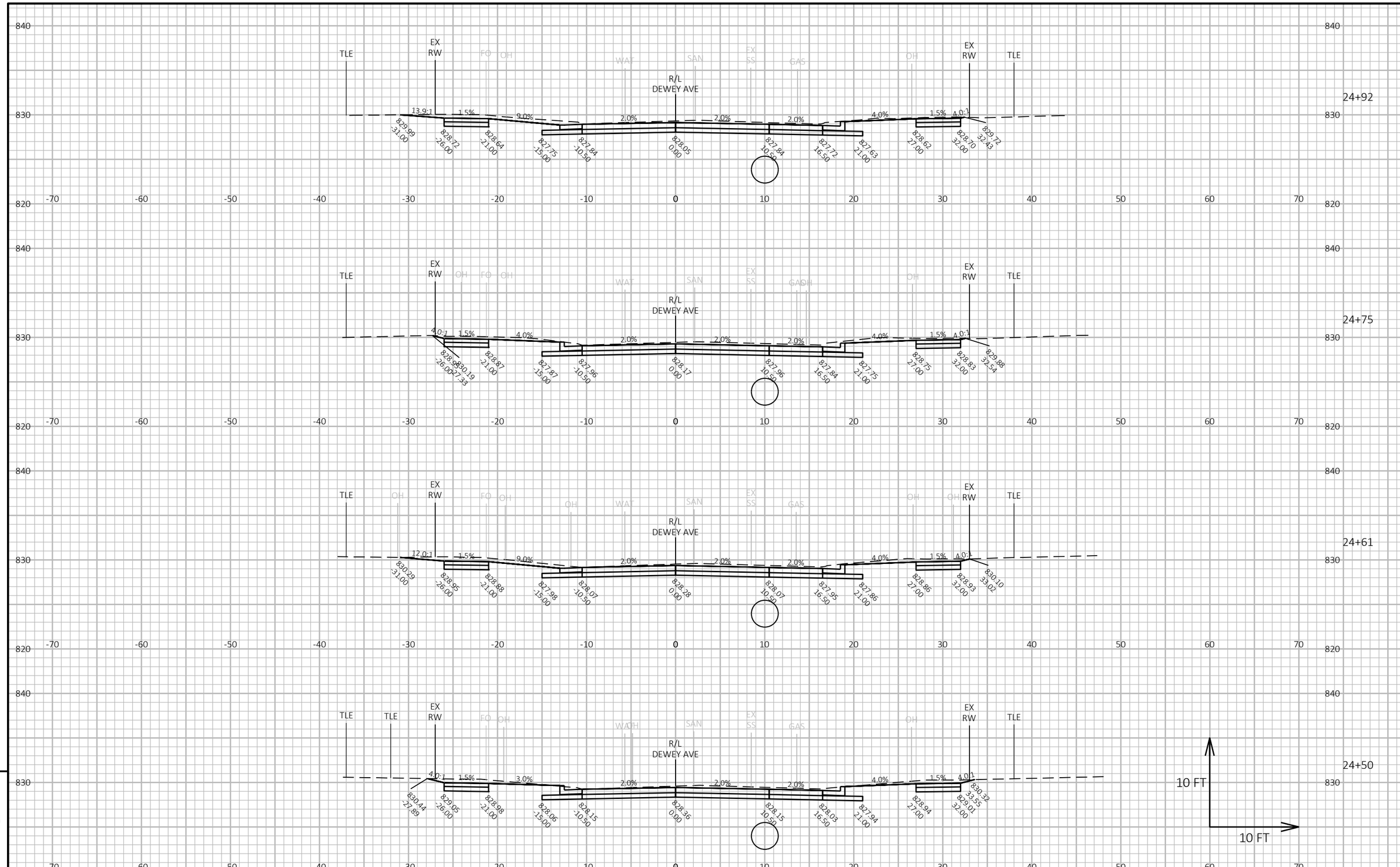

PROJECT NO: 3997-01-79/80	HWY: DEWEY AVE	COUNTY: JEFFERSON	CROSS SECTIONS: DEWEY AVE	SHEET 180	E

FILE NAME : R:\5300\5364\5364088\39970179\SHEETS\090201-XS.DWG
LAYOUT NAME - 090201_23xs
PLOT DATE : 9/12/2025 3:48 PM
PLOT BY : ERIC HANDLER
PLOT NAME :
PLOT SCALE : 1 IN:10 FT HORZ. / 1 IN:10 FT VERT.
WISDOT/CADDS SHEET 49

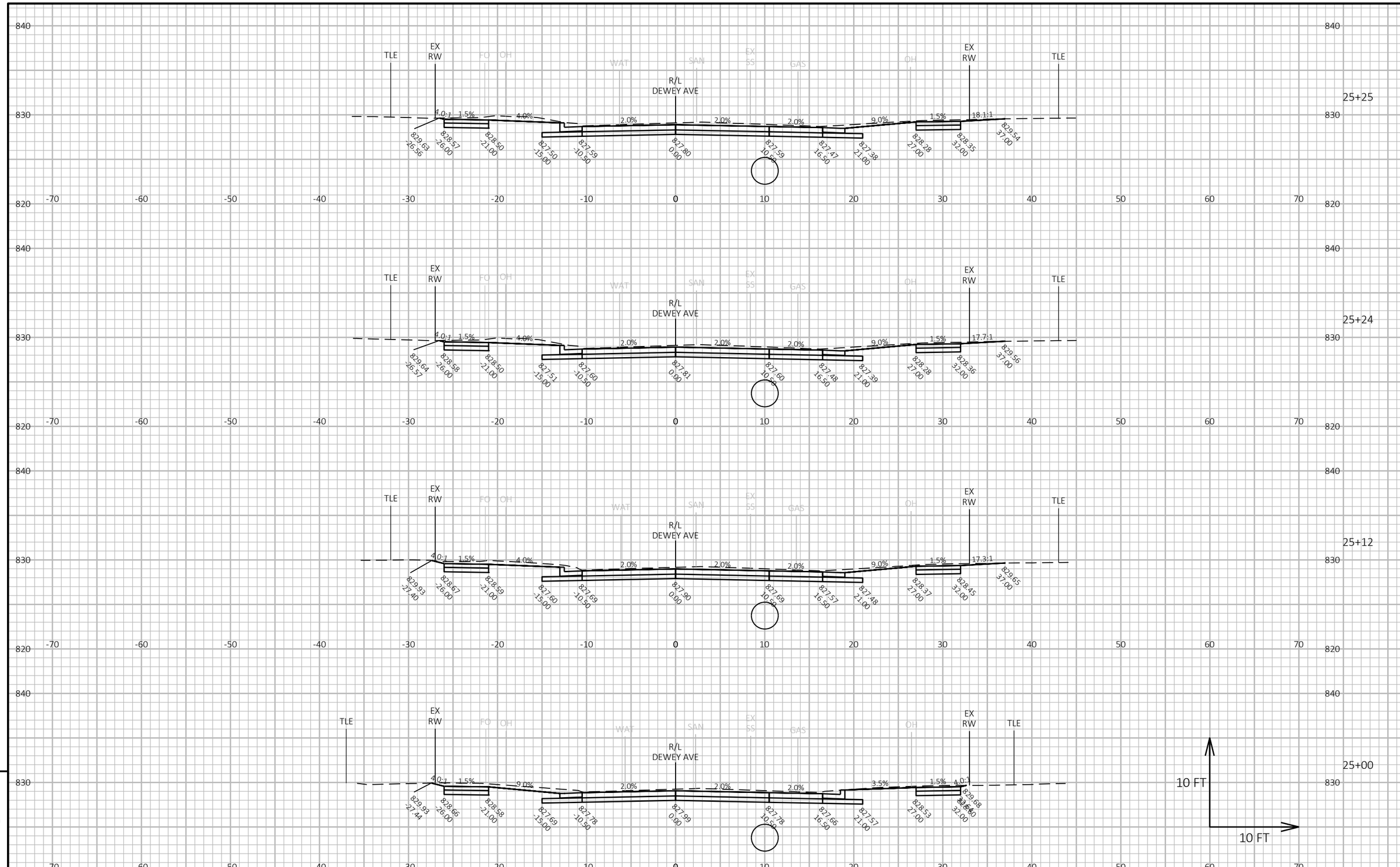

9

9

PROJECT NO: 3997-01-79/80	HWY: DEWEY AVE	COUNTY: JEFFERSON	CROSS SECTIONS: DEWEY AVE	SHEET 181	E

FILE NAME : R:\5300\5364\5364088\39970179\SHEETS\090201-XS.DWG
LAYOUT NAME - 090201_24xs

PLOT DATE : 9/12/2025 3:48 PM

PLOT BY : ERIC HANDLER

PLOT NAME :

PLOT SCALE : 1 IN:10 FT HORZ. / 1 IN:10 FT VERT.

WISDOT/CADDS SHEET 49

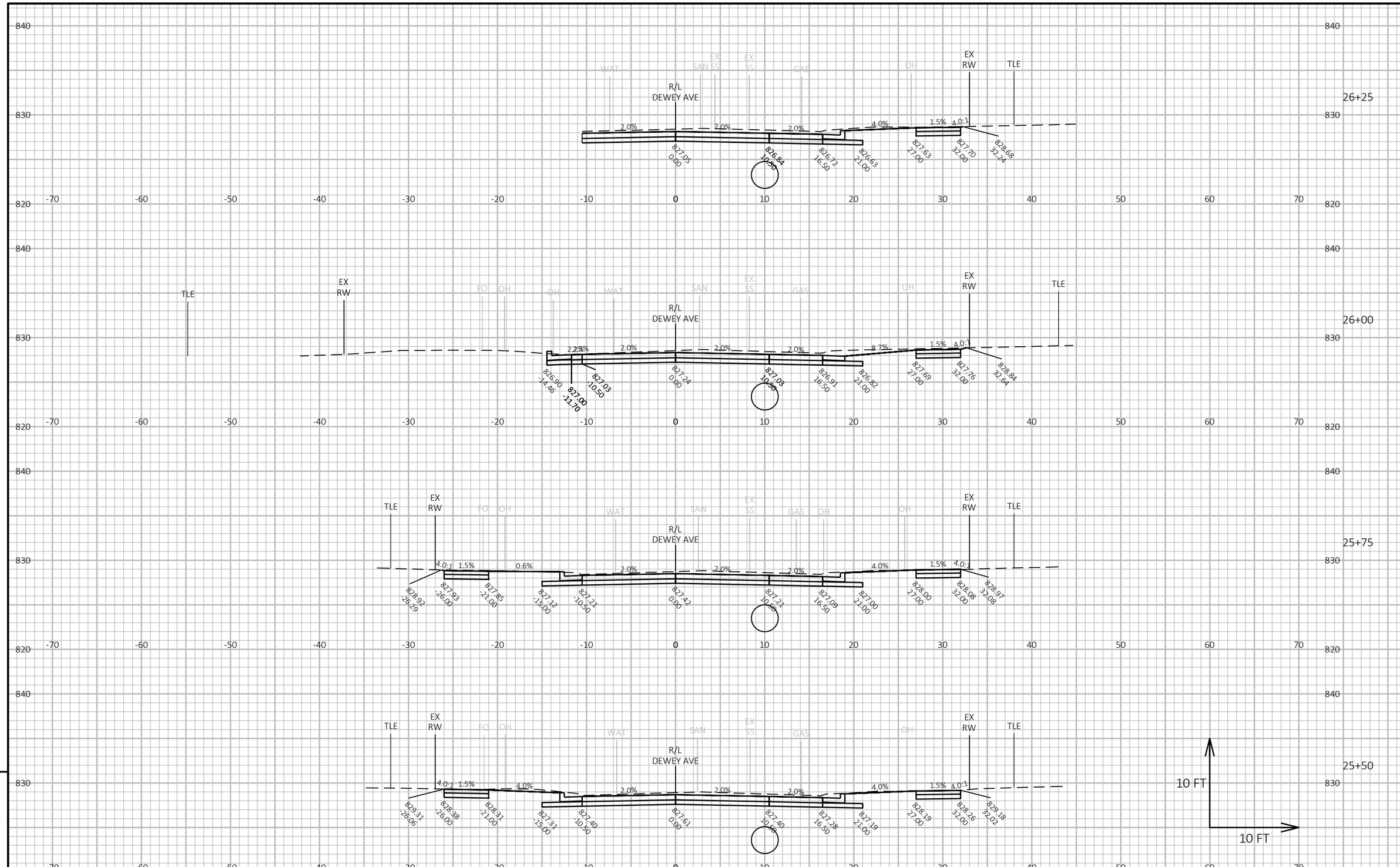

9

9

PROJECT NO: 3997-01-79/80	HWY: DEWEY AVE	COUNTY: JEFFERSON	CROSS SECTIONS: DEWEY AVE	SHEET 182	E

FILE NAME : R:\5300\5364\5364088\39970179\SHEETS\090201-XS.DWG
LAYOUT NAME - 090201_25xs

PLOT DATE : 9/12/2025 3:48 PM

PLOT BY : ERIC HANDLER

PLOT NAME :

PLOT SCALE : 1 IN:10 FT HORZ. / 1 IN:10 FT VERT.

WISDOT/CADDS SHEET 49

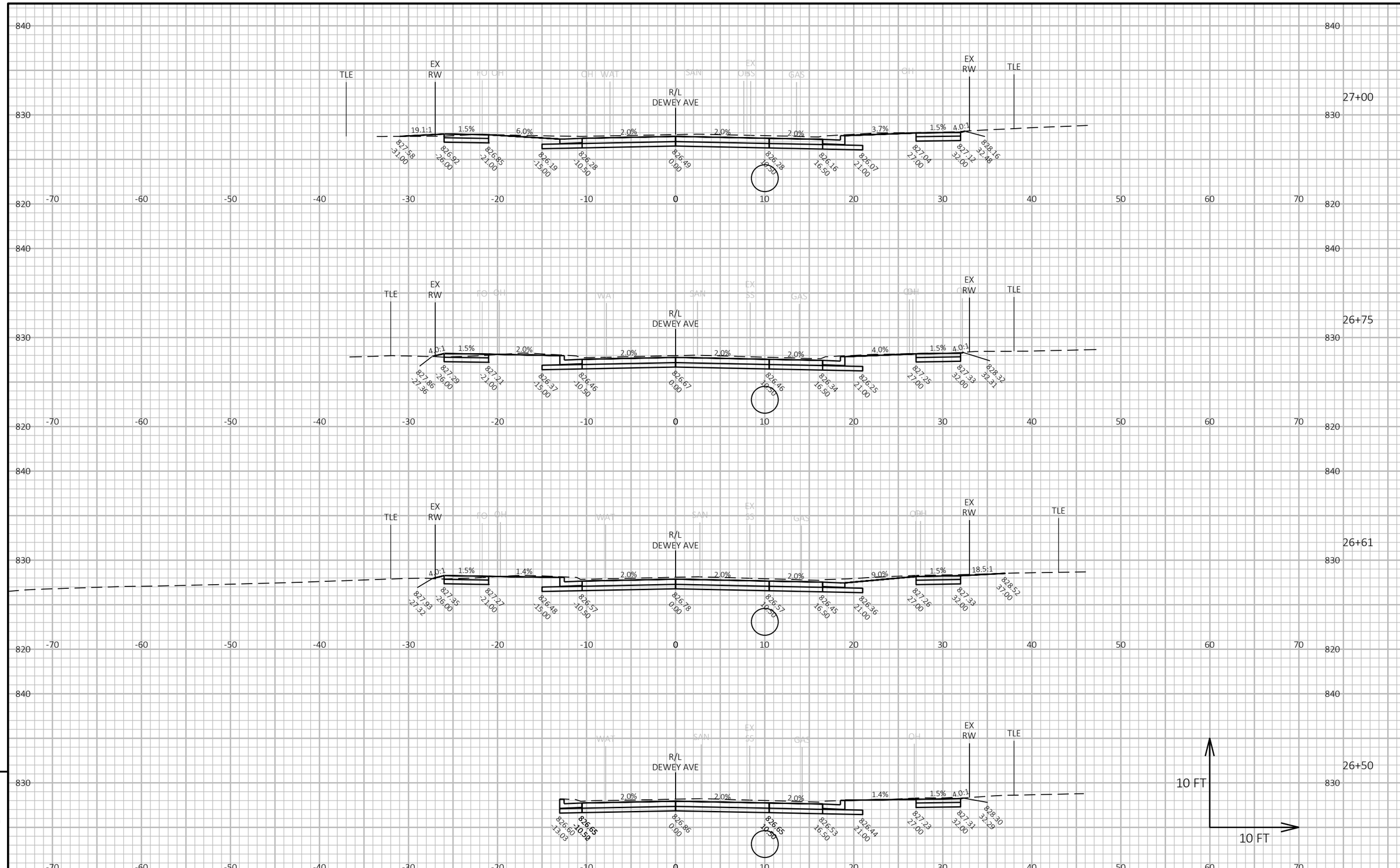

9

9

PROJECT NO: 3997-01-79/80	HWY: DEWEY AVE	COUNTY: JEFFERSON	CROSS SECTIONS: DEWEY AVE	SHEET 183	E

FILE NAME : R:\5300\5364\5364088\39970179\SHEETS\090201-XS.DWG
LAYOUT NAME - 090201_26xs
PLOT DATE : 9/12/2025 3:48 PM
PLOT BY : ERIC HANDLER
PLOT NAME :
PLOT SCALE : 1 IN:10 FT HORZ. / 1 IN:10 FT VERT.
WISDOT/CADDS SHEET 49

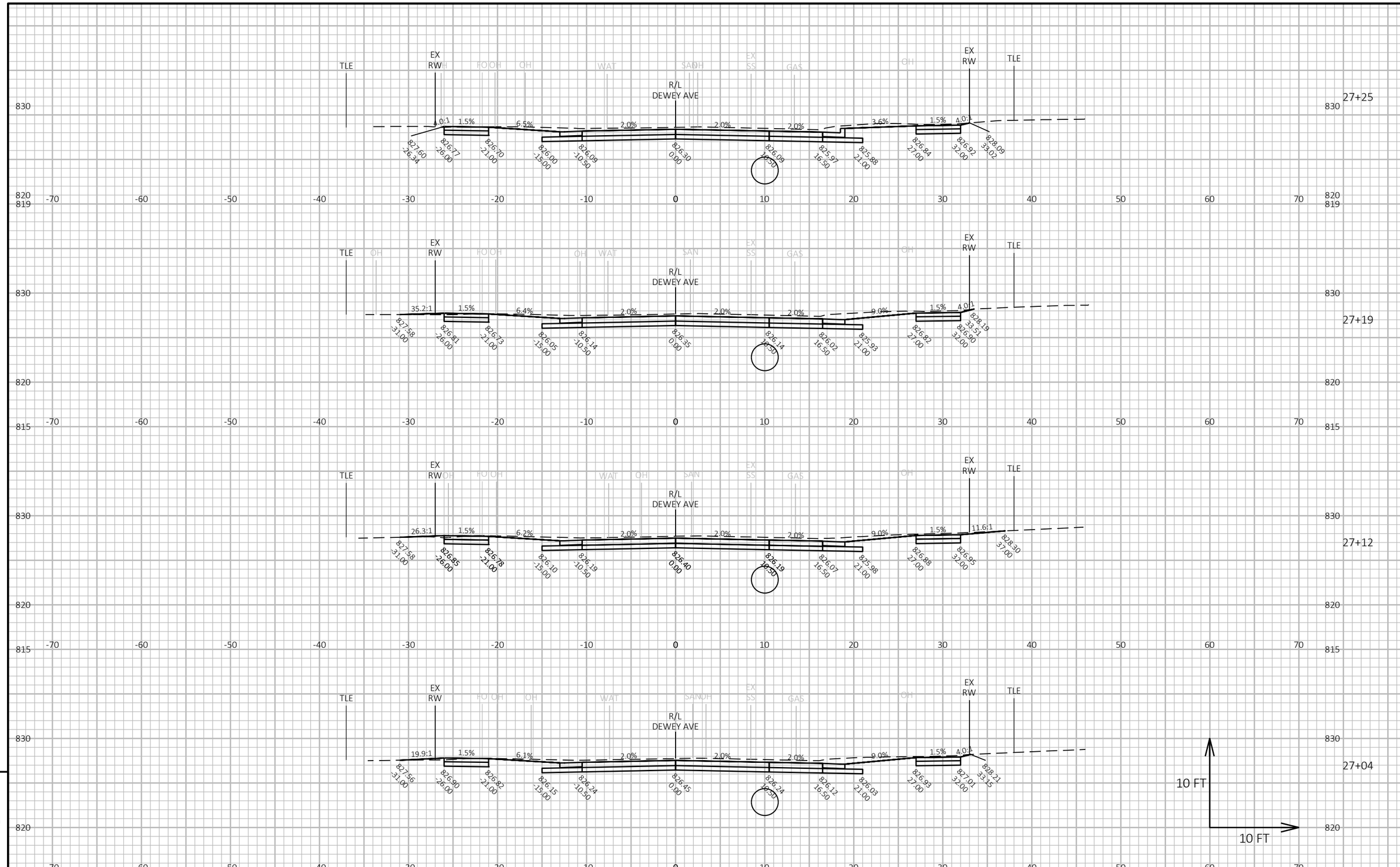

PROJECT NO: 3997-01-79/80	HWY: DEWEY AVE	COUNTY: JEFFERSON	CROSS SECTIONS: DEWEY AVE	SHEET 184	E

FILE NAME : R:\5300\5364\5364088\39970179\SHEETS\090201-XS.DWG
LAYOUT NAME - 090201_27xs
PLOT DATE : 9/12/2025 3:48 PM
PLOT BY : ERIC HANDLER
PLOT NAME :
PLOT SCALE : 1 IN:10 FT HORZ. / 1 IN:10 FT VERT.

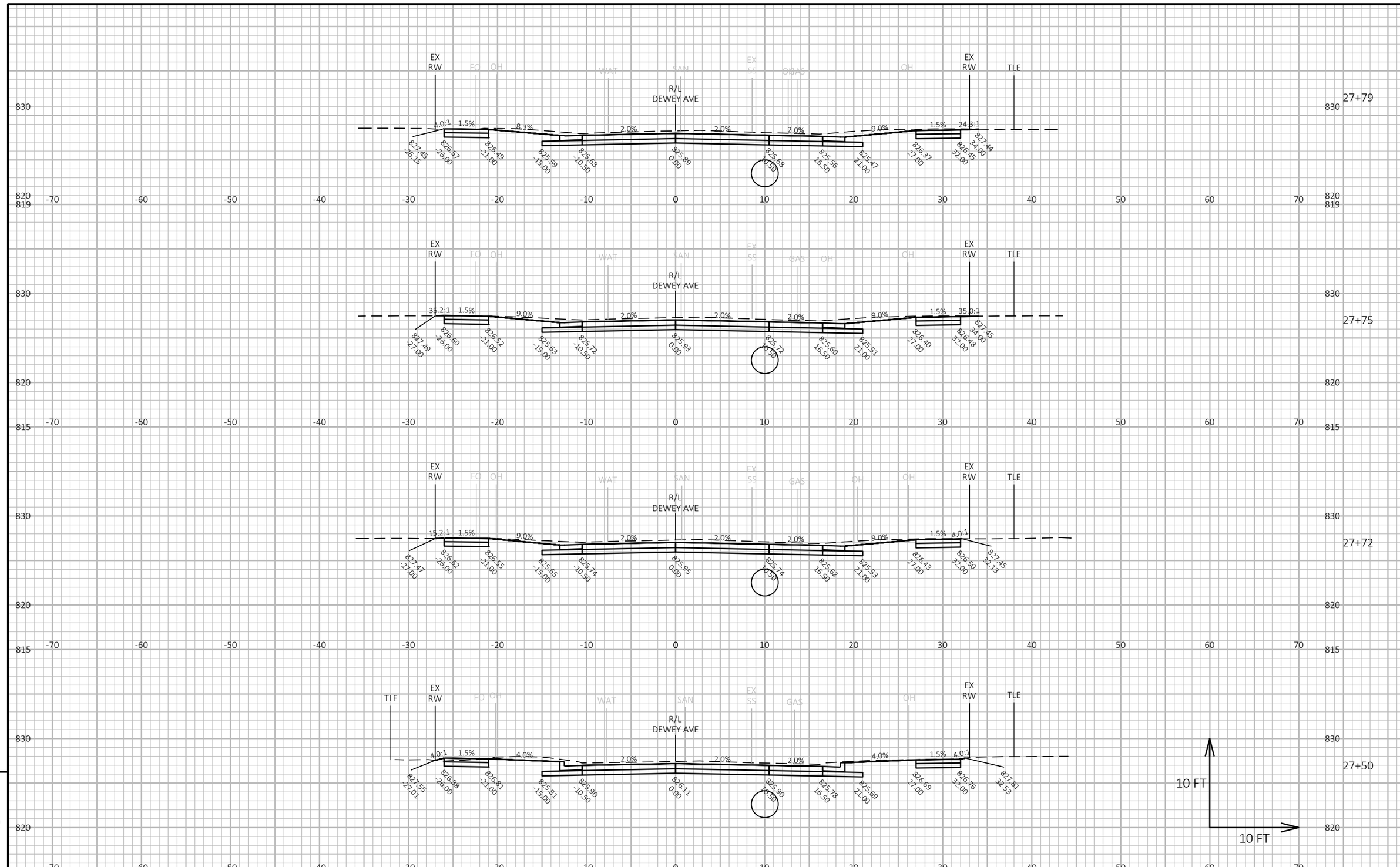

PROJECT NO: 3997-01-79/80	HWY: DEWEY AVE	COUNTY: JEFFERSON	CROSS SECTIONS: DEWEY AVE	SHEET 185	E

FILE NAME : R:\5300\5364\5364088\39970179\SHEETS\090201-XS.DWG
LAYOUT NAME - 090201_28xs
PLOT DATE : 9/12/2025 3:48 PM
PLOT BY : ERIC HANDLER
PLOT NAME :
PLOT SCALE : 1 IN:10 FT HORZ. / 1 IN:10 FT VERT.
WISDOT/CADDS SHEET 49

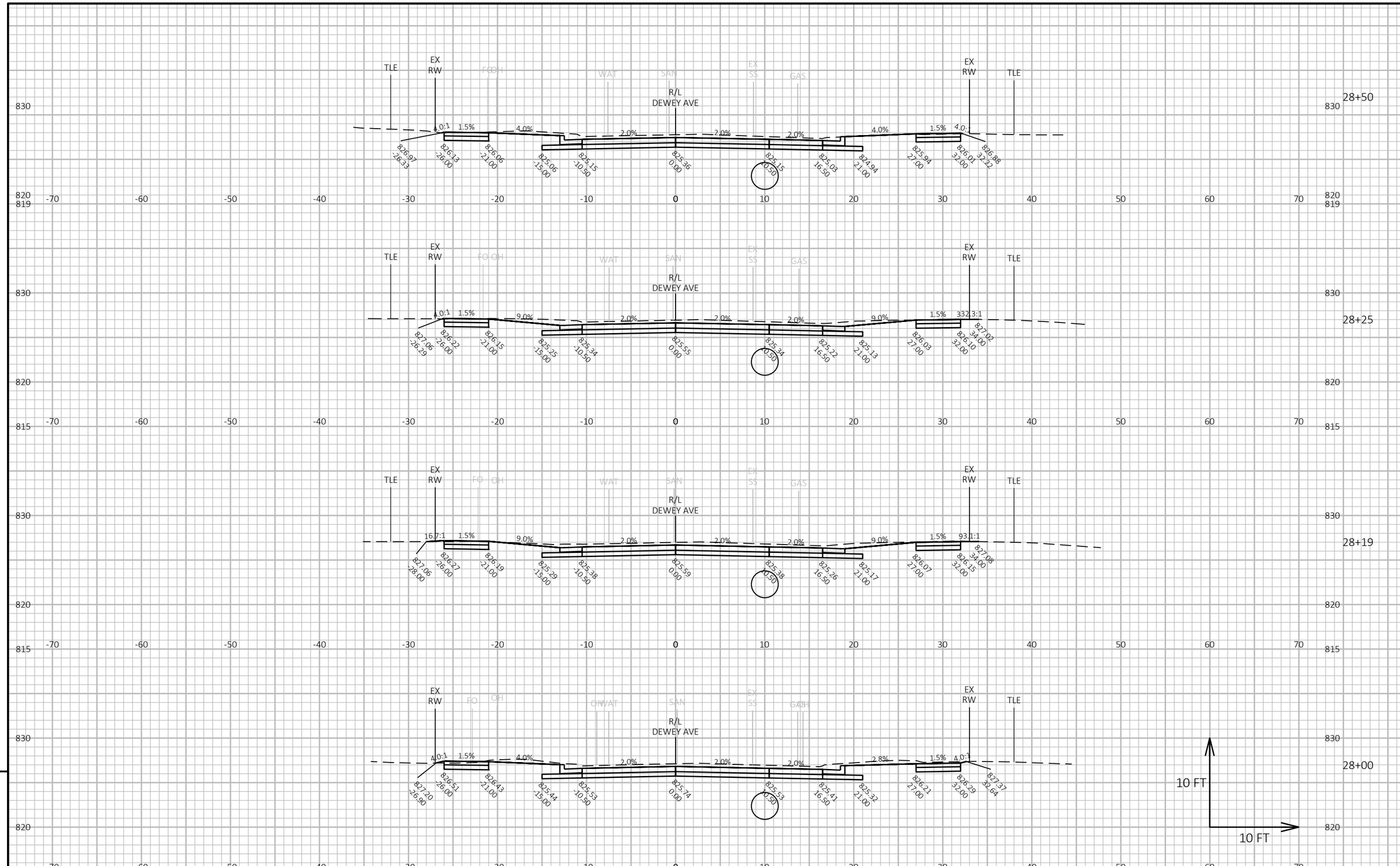

PROJECT NO: 3997-01-79/80	HWY: DEWEY AVE	COUNTY: JEFFERSON	CROSS SECTIONS: DEWEY AVE	SHEET 186	E

FILE NAME : R:\5300\5364\5364088\39970179\SHEETS\090201-XS.DWG
LAYOUT NAME - 090201_29xs

PLOT DATE : 9/12/2025 3:48 PM PLOT BY : ERIC HANDLER PLOT NAME : **PLOT SCALE :** 1 IN:10 FT HORZ. / 1 IN:10 FT VERT.

WISDOT/CADDS SHEET 49

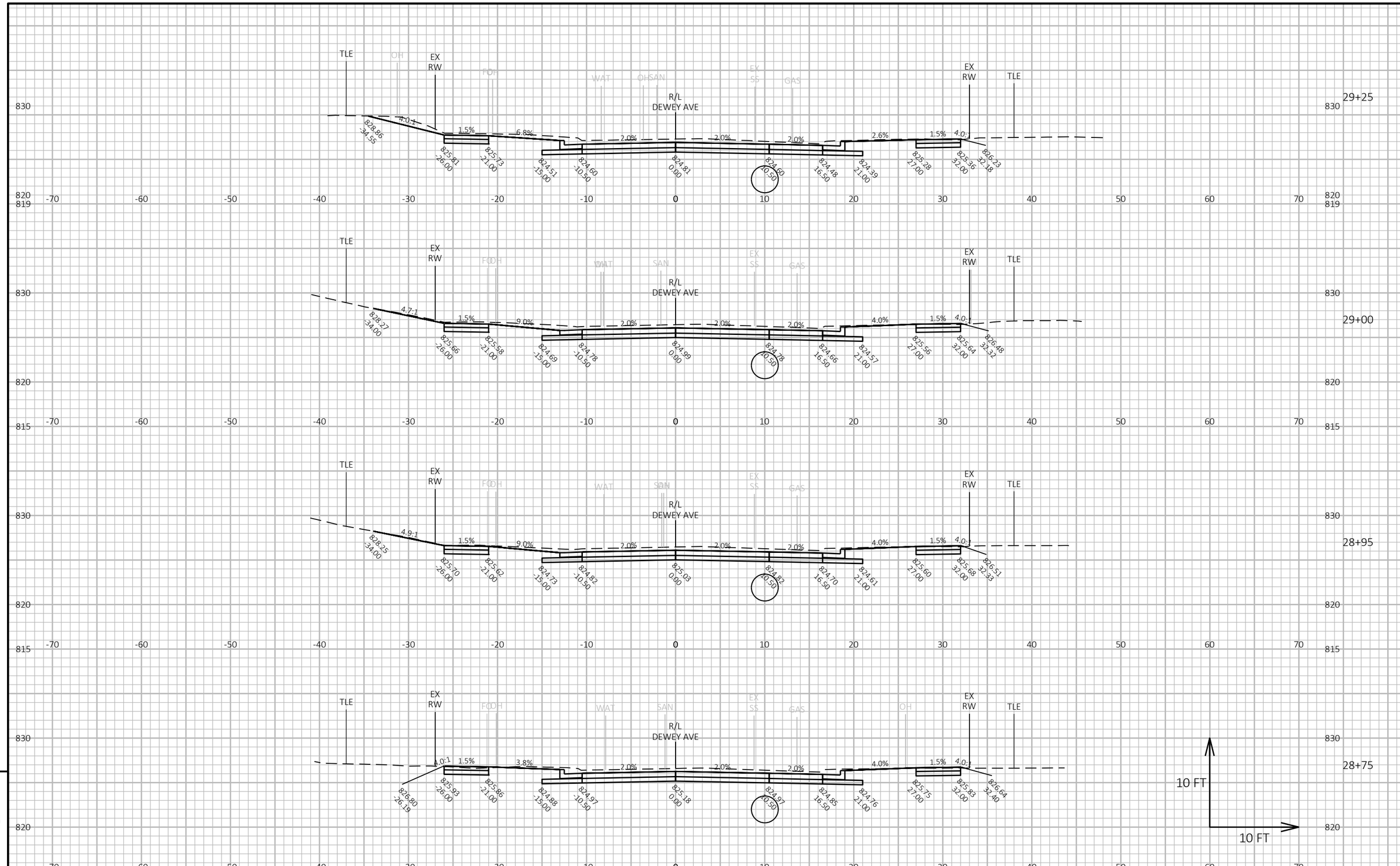

9

9

PROJECT NO: 3997-01-79/80	HWY: DEWEY AVE	COUNTY: JEFFERSON	CROSS SECTIONS: DEWEY AVE	SHEET 187	E

FILE NAME : R:\5300\5364\5364088\39970179\SHEETS\090201-XS.DWG
LAYOUT NAME - 090201_30xs

PLOT DATE : 9/12/2025 3:48 PM

PLOT BY : ERIC HANDLER

PLOT NAME :

PLOT SCALE : 1 IN:10 FT HORZ. / 1 IN:10 FT VERT.

WISDOT/CADDS SHEET 49

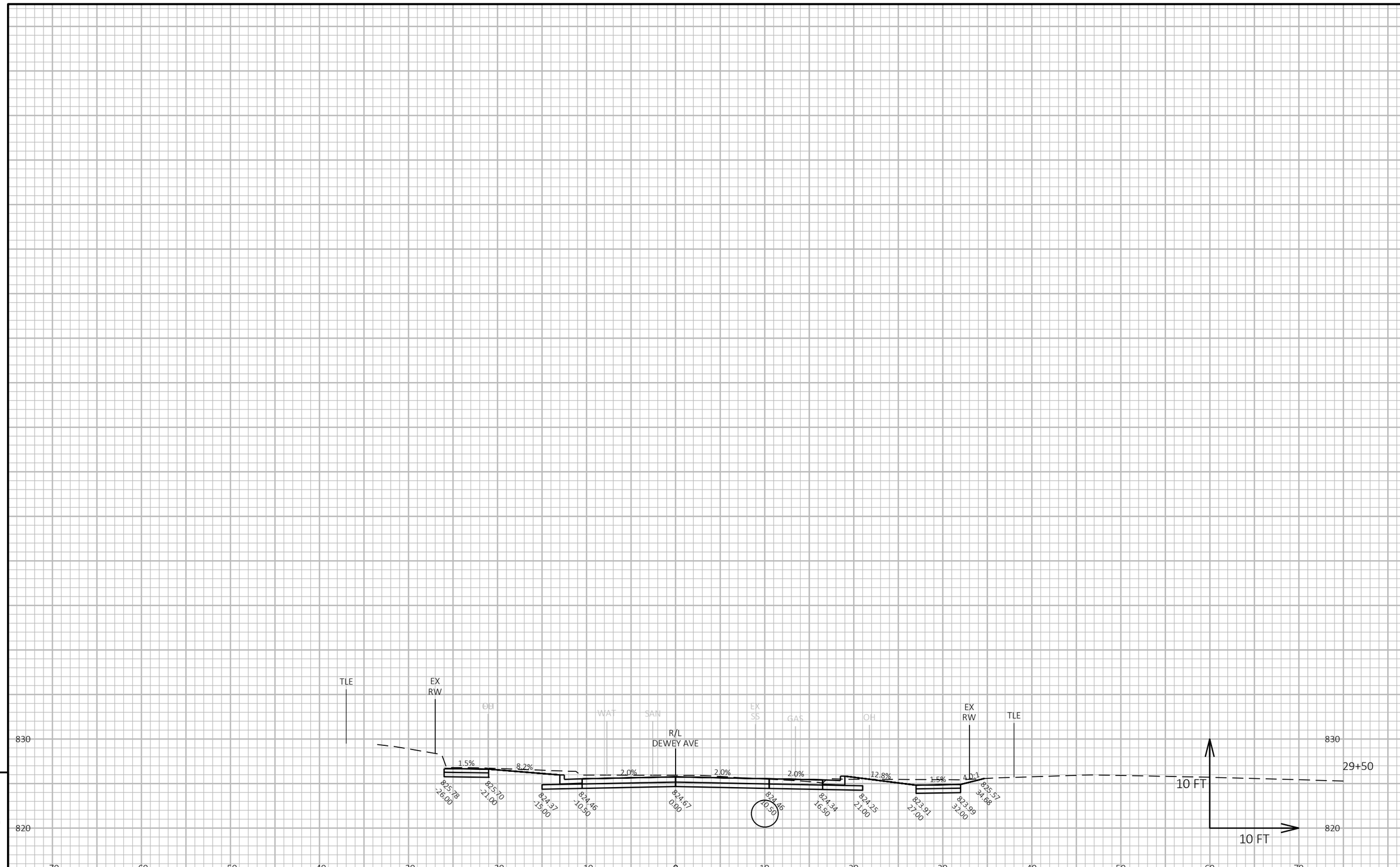

9

9

PROJECT NO: 3997-01-79/80	HWY: DEWEY AVE	COUNTY: JEFFERSON	CROSS SECTIONS: DEWEY AVE	SHEET 188	E

FILE NAME : R:\5300\5364\5364088\39970179\SHEETS\090201-XS.DWG
LAYOUT NAME - 090201_31xs

PLOT DATE : 9/12/2025 3:48 PM

PLOT BY : ERIC HANDLER

PLOT NAME :

PLOT SCALE : 1 IN:10 FT HORZ. / 1 IN:10 FT VERT.

WISDOT/CADDS SHEET 49

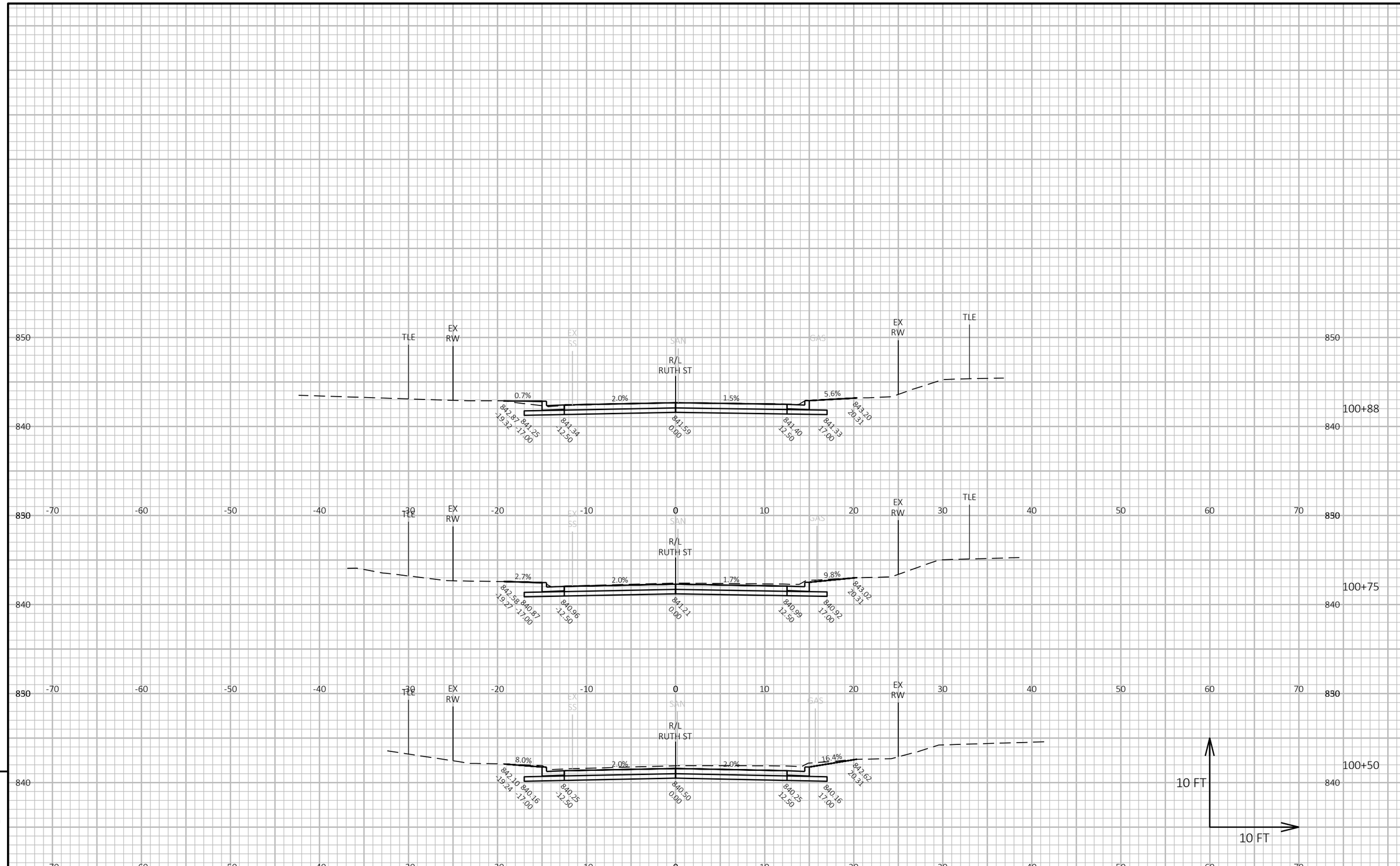

9

9

PROJECT NO: 3997-01-79/80	HWY: DEWEY AVE	COUNTY: JEFFERSON	CROSS SECTIONS: RUTH ST	SHEET 189	E

FILE NAME : R:\5300\5364\5364088\39970179\SHEETS\090202-XS.DWG
LAYOUT NAME - 090202_Ruth1xs

PLOT DATE : 9/12/2025 3:48 PM

PLOT BY : ERIC HANDLER

PLOT NAME :

PLOT SCALE : 1 IN:10 FT HORZ. / 1 IN:10 FT VERT.

WISDOT/CADDS SHEET 49

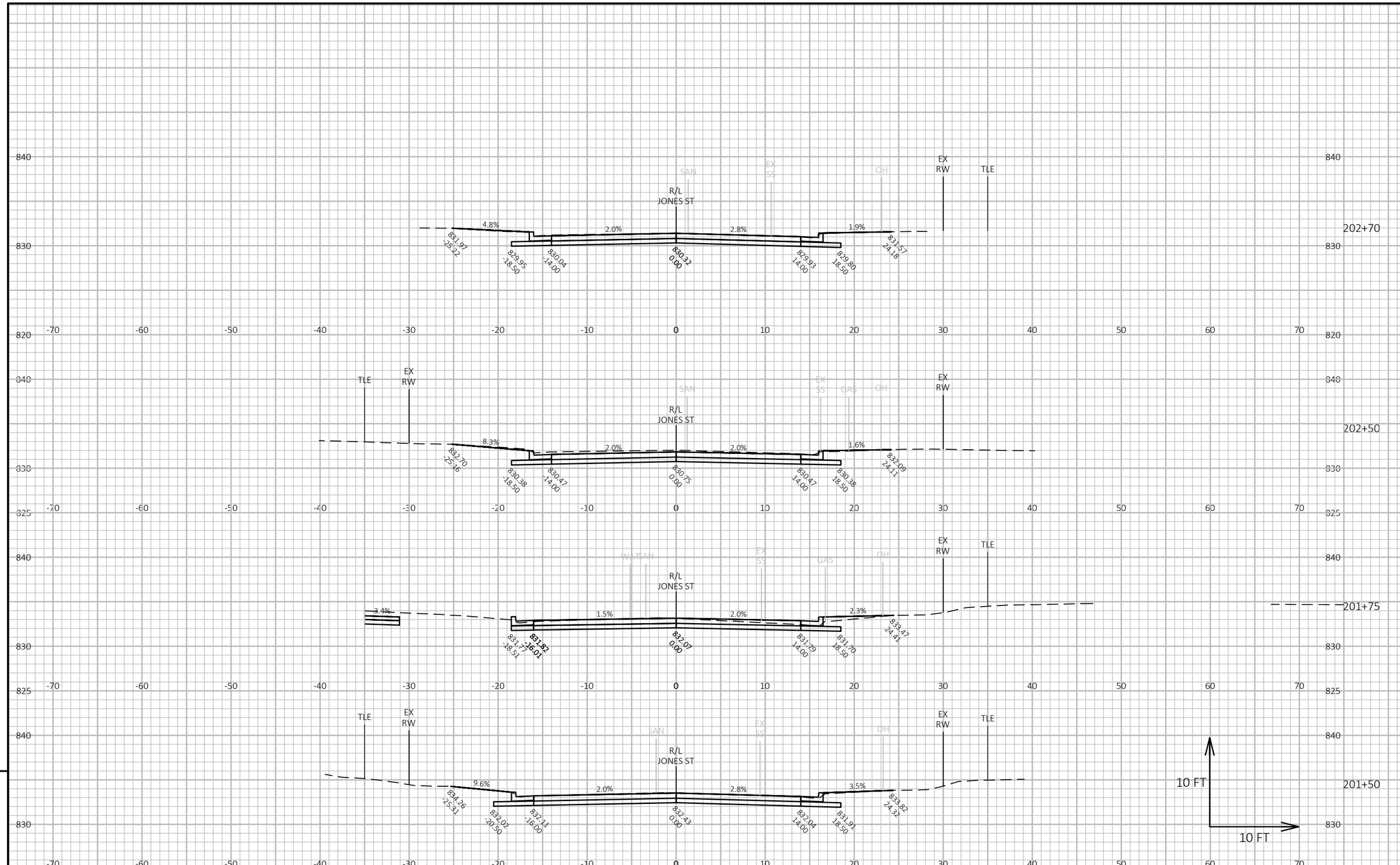

PROJECT NO: 3997-01-79/80	HWY: DEWEY AVE	COUNTY: JEFFERSON	CROSS SECTIONS: JONES ST	SHEET 190	E

FILE NAME : R:\5300\5364\5364088\39970179\SHEETS\090202-XS.DWG
LAYOUT NAME - 090202_Jones1xs

PLOT DATE : 9/12/2025 3:48 PM PLOT BY : ERIC HANDLER PLOT NAME : **PLOT SCALE :** 1 IN:10 FT HORZ. / 1 IN:10 FT VERT.

WISDOT/CADDS SHEET 49

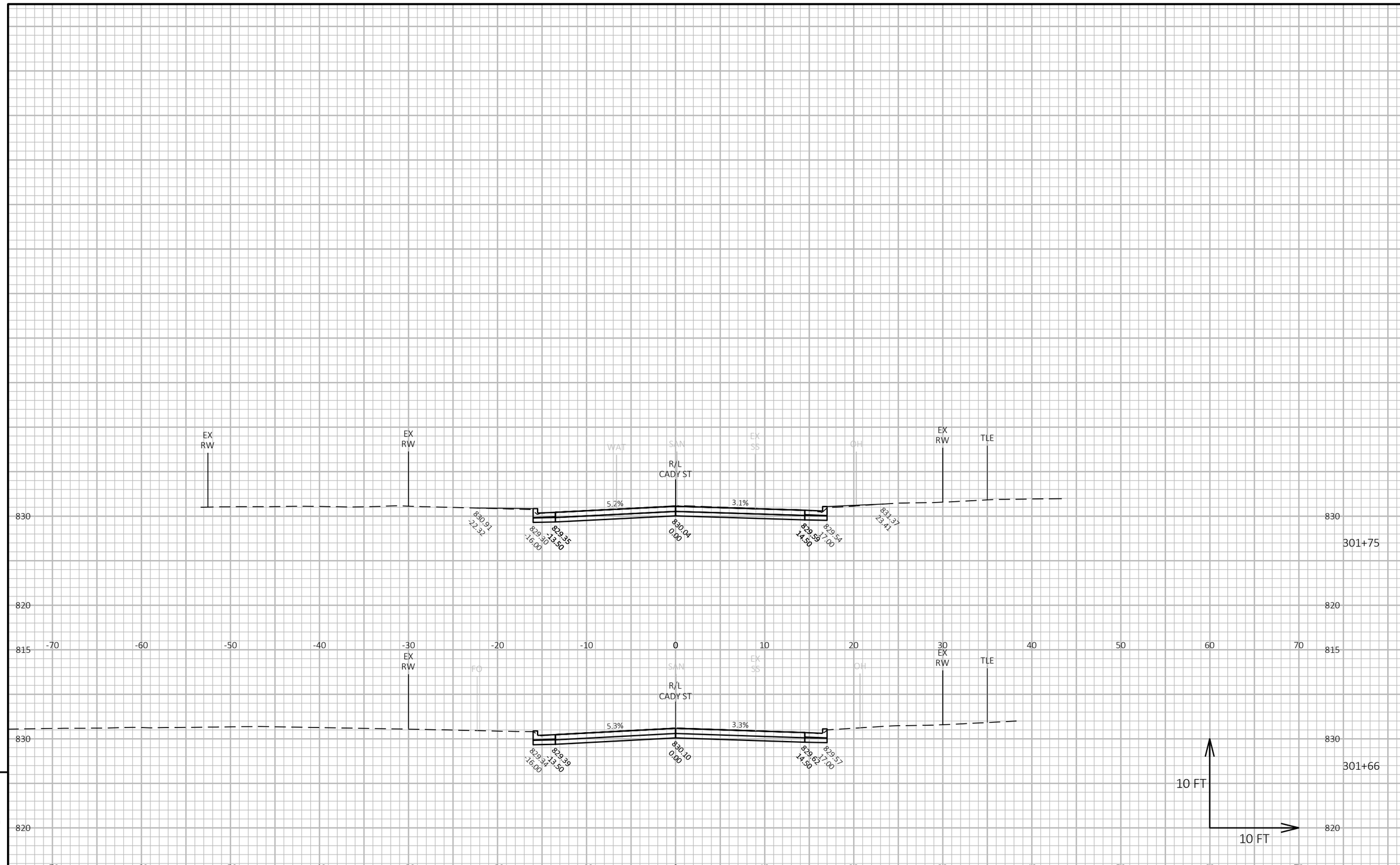

9

9

PROJECT NO: 3997-01-79/80	HWY: DEWEY AVE	COUNTY: JEFFERSON	CROSS SECTIONS: CADY ST	SHEET 191	E

FILE NAME : R:\5300\5364\5364088\39970179\SHEETS\090202-XS.DWG
LAYOUT NAME - 090202_Cady1xs

PLOT DATE : 9/12/2025 3:49 PM PLOT BY : ERIC HANDLER PLOT NAME : **PLOT SCALE :** 1 IN:10 FT HORZ. / 1 IN:10 FT VERT.

WISDOT/CADDS SHEET 49

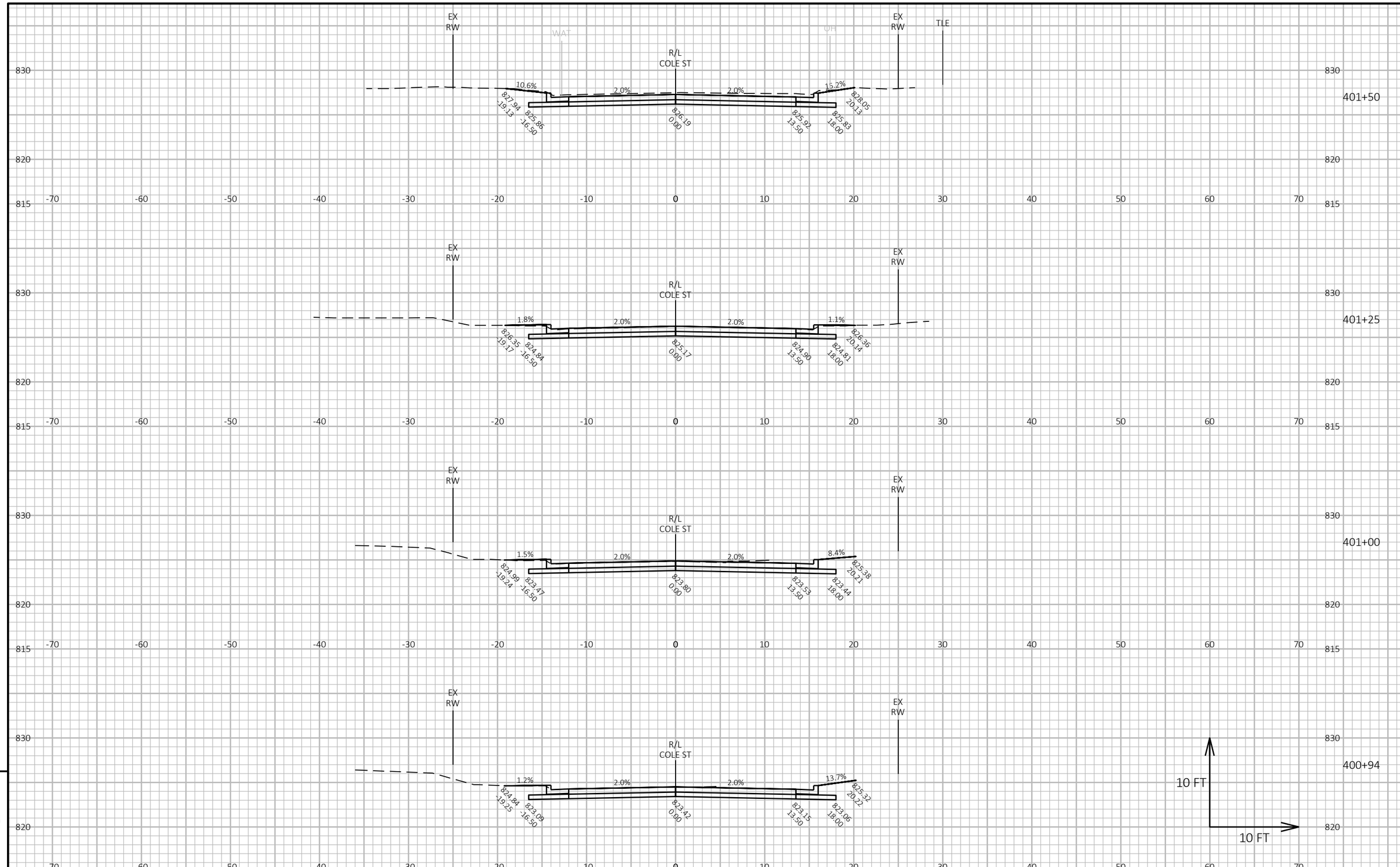

9

9

PROJECT NO: 3997-01-79/80	HWY: DEWEY AVE	COUNTY: JEFFERSON	CROSS SECTIONS: COLE ST	SHEET 192	E

FILE NAME : R:\5300\5364\5364088\39970179\SHEETS\090202-XS.DWG
LAYOUT NAME - 090202_Cole1xs

PLOT DATE : 9/12/2025 3:49 PM PLOT BY : ERIC HANDLER PLOT NAME : **PLOT SCALE :** 1 IN:10 FT HORZ. / 1 IN:10 FT VERT.

WISDOT/CADDS SHEET 49

Notes

Wisconsin Department of Transportation

Dedicated people creating transportation solutions through innovation and exceptional service.

http://www.dot.wisconsin.gov