Wisconsin Department of Transportation

Division of Transportation Systems Development
Bureau of Project Development
4822 Madison Yards Way, 4th Floor South
Madison, WI 53705

Telephone: (608) 266-1631
Facsimile (FAX): (608) 266-8459

January 7, 2026

NOTICE TO ALL CONTRACTORS:

Proposal #37: 9854-00-70, WISC 2026156
T Harrison, Woodford Road
Noisy Creek Bridge, B-35-0161
LOC STR
Lincoln County

Letting of January 13, 2026

This is Addendum No. 01, which provides for the following:

Special Provisions:

Added Special Provisions	
Article No.	Description
22	Infill Riprap – B-35-161, Item SPV.0195.01 Infill Riprap – STA 10+26 to STA 10+68, Item SPV.0195.02

Deleted Special Provisions	
Article No.	Description
21	Infill Riprap – B-35-0161, Item SPV.0180.01 Infill Riprap – STA 10+26 to STA 10+68, Item SPV.0180.02

Schedule of Items:

Added Bid Item Quantities					
Bid Item	Item Description	Unit	Proposal Total Prior to Addendum	Quantity Added	Proposal Total After Addendum
SPV.0195.01	Infill Riprap - B-35-161	TON	0	32	32
SPV.0195.02	Infill Riprap – STA 10+26 to STA 10+68	TON	0	16	16

Deleted Bid Item Quantities					
Bid Item	Item Description	Unit	Proposal Total Prior to Addendum	Proposal Quantity Change (-)	Proposal Total After Addendum
SPV.0180.01	Infill Riprap – B-35-161	SY	100	-100	0
SPV.0180.02	Infill Riprap – STA 10+26 to STA 10+68	SY	44	-44	0

Plan Sheets:

Revised Plan Sheets	
Plan Sheet	Plan Sheet Title (brief description of changes to sheet)
7	Miscellaneous Quantities
32	Structure Plan (Infill Riprap – B-35-0161 unit changed from SY to TON)

The responsibility for notifying potential subcontractors and suppliers of these changes remains with the prime contractor.

Sincerely,

Mike Coleman

Proposal Development Specialist
Proposal Management Section

ADDENDUM NO. 01

9854-00-70

January 7, 2026

Special Provisions

21. Deleted.

22. Infill Riprap – B-35-0161, Item SPV.0195.01; Infill Riprap – STA 10+26 to STA 10+68, Item SPV.0195.02.

A Description
This special provision describes infilling riprap voids.
B Materials
Furnish clean, coarse aggregate that has 0 to 10 percent passing through a No. 10 sieve and remaining voids are no larger than 1.5-Inches. Do not use crushed concrete or reclaimed asphalt.
C Construction
Place after riprap has been completed. Fill in voids of riprap with materials as specified in Section B so that no void larger than 1.5-Inches remains. Fill to the top of riprap. At abutments, fill riprap voids above the waterline.
D Measurement
The department will measure Infill Riprap – "Location" by the TON acceptably completed, measured as the area of the heavy riprap being infilled as the contract designates or the engineer establishes.
E Payment
The department will pay for measured quantities at the contract unit price under the following bid item:

ITEM NUMBER	DESCRIPTION	UNIT
SPV.0195.01	Infill Riprap – B-35-0161	TON
SPV.0195.02	Infill Riprap – STA 10+26 to STA 10+68	TON

Payment for Infill Riprap – "Location" is full compensation for providing, placing, and shaping the material.
ncr-606-005 (20251121)

Schedule of Items
Attached, dated January 7, 2026, are the revised Schedule of Items Pages 4 and 5.

Plan Sheets
The following 8½ x 11-inch sheets are attached and made part of the plans for this proposal:
Revised: 7, 32

END OF ADDENDUM

3

CATEGORY	STATION	TO	STATION	LOCATION	201.0105 CLEARING STA	201.0205 GRUBBING STA
0010	9+00	-	10+70	RT & LT	2	2
				TOTAL 0010	2	2

CATEGORY	STATION	TO	STATION	LOCATION	205.0100 EXCAVATION COMMON CY	SALVAGED / UNUSABLE MATERIAL (2) CY	AVAILABLE MATERIAL (3) CY	UNEXPANDED FILL CY	EXPANDED FILL (4) CY	* MASS ORDINATE +/- (6) CY
0010	9+00	-	9+78.75	MAINLINE	84	12	72	36	45	27
0010	10+21.25	-	10+70	MAINLINE	52	8	44	30	38	6
				TOTAL 0010	136					33

(1) COMMON EXCAVATION = SALVAGED/UNUSEABLE PAVEMENT MATERIAL
(2) SALVAGED/UNUSEABLE PAVEMENT MATERIAL
(3) AVAILABLE MATERIAL = CUT - SALVAGED/UNUSEABLE PAVEMENT MATERIAL
(4) EXPANDED FILL FACTOR = 1.25
(5) EXPANDED FILL FACTOR = 1.00
(6) THE MASS ORDINATE + OR - QUANTITY CALCULATED FOR THE DIVISION. PLUS QUANTITY INDICATES AN EXCESS OF MATERIAL WITHIN THE DIVISION. MINUS QUANTITY INDICATES A SHORTAGE OF MATERIAL WITHIN THE DIVISION.
*FOR INFORMATION PURPOSES ONLY

CATEGORY	STATION	TO	STATION	LOCATION	305.0110 BASE AGGREGATE DENSE 3/4-INCH TON	305.0120 BASE AGGREGATE DENSE 1 1/4-INCH TON	624.0100 WATER MGAL
0010	9+00	-	9+78.75	LT & RT	15	140	3.1
0010	10+21.25	-	10+70	LT & RT	10	90	2.0
0010	9+00		10+70	LT & RT	2	--	0.1
				TOTAL 0010	27	230	5.2

CATEGORY	STATION	TO	STATION	LOCATION	455.0605 TACK COAT GAL	465.0105 ASPHALTIC SURFACE TON	REMARKS
0010	9+00	-	9+78.75	MAINLINE	15	50	
0010	10+21.25	-	10+70	MAINLINE	10	30	
0010	9+00.00		10+70	RT & LT	--	2	BETWEEN WING & FLUME
				TOTAL 0010	25	82	

CATEGORY	STATION	LOCATION	465.0315 ASPHALTIC FLUMES SY
0010	10+27	RT	10
0010	10+27	LT	11
		TOTAL 0010	21

CATEGORY	STATION	TO	STATION	LOCATION	* 606.0300 RIPRAP HEAVY CY	* 645.0120 GEOTEXTILE TYPE HR SY	SPV.0195.02 INFILL RIPRAP - STA 10+26 TO STA 10+68 TON
0010	10+26	-	10+68	LT	30	65	16
				TOTAL 0010	30	65	16

*ADDITIONAL QUANTITIES SHOWN IN STRUCTURE PLAN

Addendum No. 01
ID 9854-00-70
Revised Sheet 7
January 7, 2026

3

PROJECT NO: 9854-00-70	HWY: LOC STR	COUNTY: LINCOLN	MISCELLANEOUS QUANTITIES	SHEET: 7	E

WISCONSIN
NATHAN J KINDT
E-48663
SUAMICO
WIS.
PROFESSIONAL ENGINEER
Nathan J Kindt
12-22-2025

JLR
01/05/2026

Addendum No. 01
ID 9854-00-70
Revised Sheet 32
January 7, 2026

STATE PROJECT NUMBER
9854-00-70

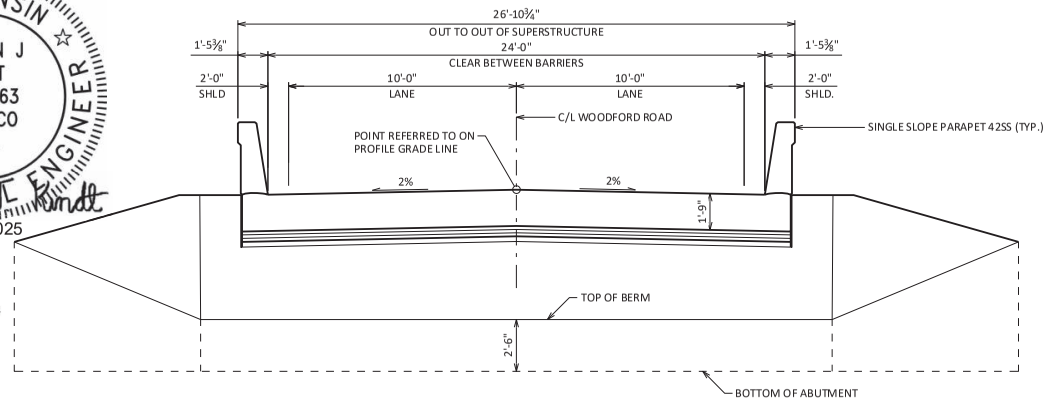

CROSS SECTION THRU ROADWAY

LOOKING UPSTATION
(PILING NOT SHOWN FOR CLARITY)

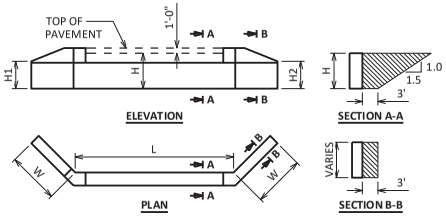

ABUTMENT BACKFILL DIAGRAM

L = ABUTMENT BODY LENGTH AT BACKFACE (FT)
H = AVERAGE ABUTMENT FILL HEIGHT (FT)
H1 = WING 1 HEIGHT AT TIP (FT)
H2 = WING 2 HEIGHT AT TIP (FT)
W = WING LENGTH (FT)
EF = EXPANSION FACTOR (1.20 FOR CY BID ITEMS AND 1.00 FOR TON BID ITEMS)
V_{CF} = (L)(3.0')(H) + (L)(0.5)(1.5H)(H) + (3')(0.5)(H1+H2+H+H)(W)
V_{CY} = V_{CF}(EF)/27
V_{TON} = V_{CY}(2.0)

BENCH MARK

NO.	STATION	DESCRIPTION	ELEV.
6	9+32.79	SPIKE IN TREE, 24.67' RT	1548.93
5	10+13.94	CHISELED X IN CONCRETE, 14.95' LT	1552.74

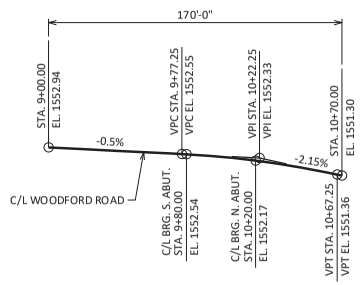

PROFILE GRADE LINE

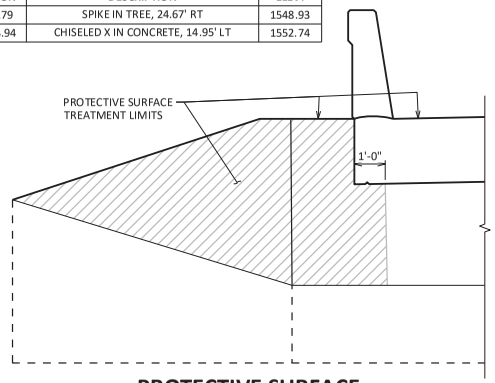

PROTECTIVE SURFACE TREATMENT DETAILS

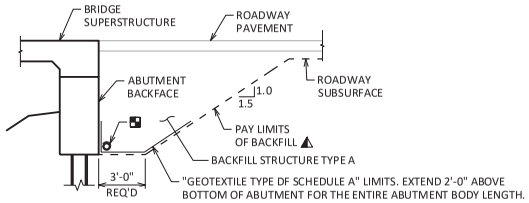

TYPICAL SECTION THRU ABUTMENT

⚠ BACKFILL PAY LIMITS. BACKFILL BEYOND PAY LIMITS SHALL BE INCIDENTAL TO EXCAVATION FOR STRUCTURES. LIMITS OF EXCAVATION SHALL BE DETERMINED BY THE CONTRACTOR.

PIPE UNDERDRAIN WRAPPED (6-INCH). SLOPE 0.5% MIN. TO SUITABLE DRAINAGE. ATTACH RODENT SHIELD AT ENDS OF PIPE UNDERDRAIN.

GENERAL NOTES

DRAWINGS SHALL NOT BE SCALED.

BAR STEEL REINFORCEMENT SHALL BE EMBEDDED 2" CLEAR UNLESS OTHERWISE SHOWN OR NOTED.

THE FIRST OR FIRST TWO DIGITS OF THE BAR MARK SIGNIFIES THE BAR SIZE.

BEVEL EXPOSED EDGES OF CONCRETE ¾" UNLESS OTHERWISE NOTED.

THE UPPER LIMITS OF "EXCAVATION FOR STRUCTURES B-35-161" SHALL BE THE EXISTING GROUNDLINE.

AT THE BACK FACE OF ABUTMENT ALL VOLUME WHICH CANNOT BE PLACED BEFORE ABUTMENT CONSTRUCTION AND IS NOT OCCUPIED BY THE NEW STRUCTURE SHALL BE BACKFILLED WITH STRUCTURE BACKFILL TYPE A.

EXCAVATION BELOW THE ABUTMENT AND ABUTMENT BEDDING MATERIALS REQUIRES ENGINEER APPROVAL. GEOTEXTILE SHALL BE SET AT THE BOTTOM OF EXCAVATION AND EXTEND 2'-0" ABOVE BOTTOM OF ABUTMENT.

THE QUANTITY FOR BACKFILL STRUCTURE IS CALCULATED BASED ON THE DETAIL SHOWN IN THE PLANS.

THE SLOPE OF THE FILL IN FRONT OF THE ABUTMENTS SHALL BE COVERED WITH HEAVY RIPRAP, INFILL RIPRAP - B-35-0161, AND GEOTEXTILE TYPE HR TO THE EXTENT SHOWN ON SHEET 1 AND THE ABUTMENT DETAILS.

AT ABUTMENTS, CONCRETE POURED UNDER WATER WILL BE ALLOWED AND SHALL BE DONE IN ACCORDANCE WITH SECTION 502.3.5.3 OF THE STANDARD SPECIFICATIONS.

SLAB FALSEWORK SHALL BE SUPPORTED ON PILES OR THE SUBSTRUCTURE, UNLESS AN ALTERNATE METHOD IS APPROVED BY THE ENGINEER.

PROTECTIVE SURFACE TREATMENT TO BE APPLIED TO ENTIRE EXPOSED TOP OF SLAB, THE TOP AND EXTERIOR EXPOSED FACE OF WINGS AND FRONT FACE OF ABUTMENT TO 1'-0" PAST THE EDGE OF SLAB.

ELEVATIONS SHOWN ON THIS PLAN ARE REFERENCED TO USGS NAVD 88 (2012). BENCHMARK REFERENCES AT THE PROJECT SITE WERE SET BY THE CONSULTANT USING GPS TECHNOLOGY.

PIGMENTED SURFACE SEALER TO BE APPLIED TO THE FRONT FACE AND TOP OF PARAPET.

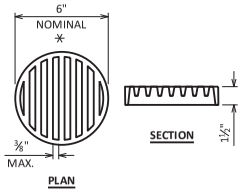

RODENT SHIELD DETAIL

✳ DIMENSIONS ARE APPROXIMATE. THE GRATE IS SIZED TO FIT INTO A PIPE COUPLING. ORIENT SO SLOTS ARE VERTICAL.

THE RODENT SHIELD, PIPE COUPLING AND SCREWS SHALL BE CONSIDERED INCIDENTAL TO THE BID ITEM "PIPE UNDERDRAIN WRAPPED 6-INCH".

THE RODENT SHIELD SHALL BE A PVC GRATE SIMILAR TO THIS DETAIL. THE GRATE IS COMMERCIALLY AVAILABLE AS A FLOOR STRAINER. A PIPE COUPLING IS REQUIRED FOR THE ATTACHMENT OF THIS SHIELD TO THE EXPOSED END OF THE PIPE UNDERDRAIN. THE SHIELD SHALL BE FASTENED TO THE PIPE COUPLING WITH TWO OR MORE NO. 10 X 1-INCH STAINLESS STEEL SHEET METAL SCREWS.

TOTAL ESTIMATED QUANTITIES

ITEM NUMBER	BID ITEM	UNIT	SUPER	SOUTH ABUT.	NORTH ABUT.	TOTAL
203.0250	REMOVING STRUCTURES OVER WATERWAY REMOVE DEBRIS P-35-23	EACH	-	-	-	1
206.1001	EXCAVATION FOR STRUCTURES BRIDGES B-35-161	EACH	-	-	-	1
210.1500	BACKFILL STRUCTURE TYPE A	TON	-	179	179	358
502.0100	CONCRETE MASONRY BRIDGES	CY	88	30	30	148
502.3200	PROTECTIVE SURFACE TREATMENT	SY	113	17	17	147
502.3210	PIGMENTED SURFACE SEALER	SY	42	-	-	42
505.0400	BAR STEEL REINFORCEMENT HS STRUCTURES	LB	-	2,040	2,040	4,080
505.0600	BAR STEEL REINFORCEMENT HS COATED STRUCTURES	LB	19,300	1,530	1,530	22,360
516.0500	RUBBERIZED MEMBRANE WATERPROOFING	SY	-	5	5	10
550.1100	PILING STEEL HP 10-INCH x 42 LB	LF	-	410	470	880
606.0300	RIPRAP HEAVY	CY	-	36	36	72
612.0406	PIPE UNDERDRAIN WRAPPED 6-INCH	LF	-	69	69	138
614.0150	ANCHOR ASSEMBLIES FOR STEEL PLATE BEAM GUARD	EACH	4	-	-	4
645.0111	GEOTEXTILE TYPE DF SCHEDULE A	SY	-	42	42	84
645.0120	GEOTEXTILE TYPE HR	SY	-	73	73	146
SPV.0195.01	INFILL RIPRAP - B-35-161	TON	-	16	16	32 ⚠
	NON-BID ITEMS					
	PREFORMED FILLER	SIZE				½" & ¾"

THIS SHEET WAS CREATED BY THE WISDOT BUREAU OF STRUCTURES STANDARD BRIDGE DESIGN TOOL VERSION 1.1.0.0

8

8

NO.	DATE	REVISION	BY
⚠	12/22/2025	INFILL RIPRAP QUANTITIES	NJK

STATE OF WISCONSIN
DEPARTMENT OF TRANSPORTATION

STRUCTURE B-35-161

DRAWN BY EKK | PLANS CK'D NJK

CROSS SECTION & QUANTITIES

SHEET 2

32

SCALE = 6.0

Proposal ID: 20260113037 **Project(s):** 9854-00-70

Federal ID(s): WISC 2026156

SECTION: 0001 Contract Items

Alt Set ID: **Alt Mbr ID:**

Proposal Line Number	Item ID Description	Approximate Quantity and Units	Unit Price	Bid Amount
0094	645.0111 Geotextile Type DF Schedule A	84.000 SY	_____._____	_____._____
0096	645.0120 Geotextile Type HR	211.000 SY	_____._____	_____._____
0098	650.4500 Construction Staking Subgrade	128.000 LF	_____._____	_____._____
0100	650.5000 Construction Staking Base	128.000 LF	_____._____	_____._____
0102	650.6501 Construction Staking Structure Layout (structure) 01. B-35-0161	1.000 EACH	_____._____	_____._____
0104	650.9911 Construction Staking Supplemental Control (project) 01. 9854-00-70	1.000 EACH	_____._____	_____._____
0106	650.9920 Construction Staking Slope Stakes	128.000 LF	_____._____	_____._____
0108	690.0150 Sawing Asphalt	40.000 LF	_____._____	_____._____
0110	715.0502 Incentive Strength Concrete Structures	890.000 DOL	1.00000	890.00
0112	999.2000.S Installing and Maintaining Bird Deterrent System (station) 01. Station 10+00	1.000 EACH	_____._____	_____._____
0114	999.2200.S Installing and Maintaining Turtle Exclusion Covering	102.000 SY	_____._____	_____._____
0116	ASP.1T0A On-the-Job Training Apprentice at $5.00/HR	300.000 HRS	5.00000	1,500.00
0118	ASP.1T0G On-the-Job Training Graduate at $5.00/HR	600.000 HRS	5.00000	3,000.00
0124	SPV.0195 Special 01. Infill Riprap - B-13-161	32.000 TON	_____._____	_____._____

Proposal ID: 20260113037 **Project(s):** 9854-00-70

Federal ID(s): WISC 2026156

SECTION: 0001 Contract Items

Alt Set ID: **Alt Mbr ID:**

Proposal Line Number	Item ID Description	Approximate Quantity and Units	Unit Price	Bid Amount
0126	SPV.0195 Special 02. Infill Riprap - STA 10+26 to STA 10+68	16.000 TON	_____._____	_____._____

Section: 0001 **Total:** _____._____

Total Bid: _____._____