EAU | NOVEMBER 2025

PROJECT ID: 7229-00-70
WITH: N/A

COUNTY: BUFFALO

ORDER OF SHEETS

Section No.	1	Title
Section No.	2	Typical Sections and Details
Section No.	3	Estimate of Quantities
Section No.	3	Miscellaneous Quantities
~~Section No.~~	~~4~~	~~Right of Way Plat~~
Section No.	5	Plan and Profile
Section No.	6	Standard Detail Drawings
Section No.	7	Sign Plates
~~Section No.~~	~~8~~	~~Structure Plans~~
Section No.	9	Computer Earthwork Data
Section No.	9	Cross Sections

TOTAL SHEETS = 122

STATE OF WISCONSIN
DEPARTMENT OF TRANSPORTATION

PLAN OF PROPOSED IMPROVEMENT

STH 37 - GILMANTON

STH 37 TO STH 88

CTH B
BUFFALO COUNTY

STATE PROJECT	FEDERAL PROJECT	
	PROJECT	CONTRACT
7229-00-70	WISC 2026045	1

STATE PROJECT NUMBER
7229-00-70

N

DESIGN DESIGNATION

A.A.D.T.	(2025)	=	590
A.A.D.T.	(2045)	=	602
D.H.V.		=	--
D.D.		=	50/50
T.		=	6.0%
DESIGN SPEED		=	50 MPH
ESALS		=	73,000

NET EXCEPTION TO CL LENGTH
STA 106+76.99 - STA 109+45.76

BEGIN PROJECT
STA 100+00.00
Y=360804.124
X=592993.157

NET EXCEPTION TO CL LENGTH
STA 208+63.50 - STA 208+96.25

END PROJECT
STA 238+20.00

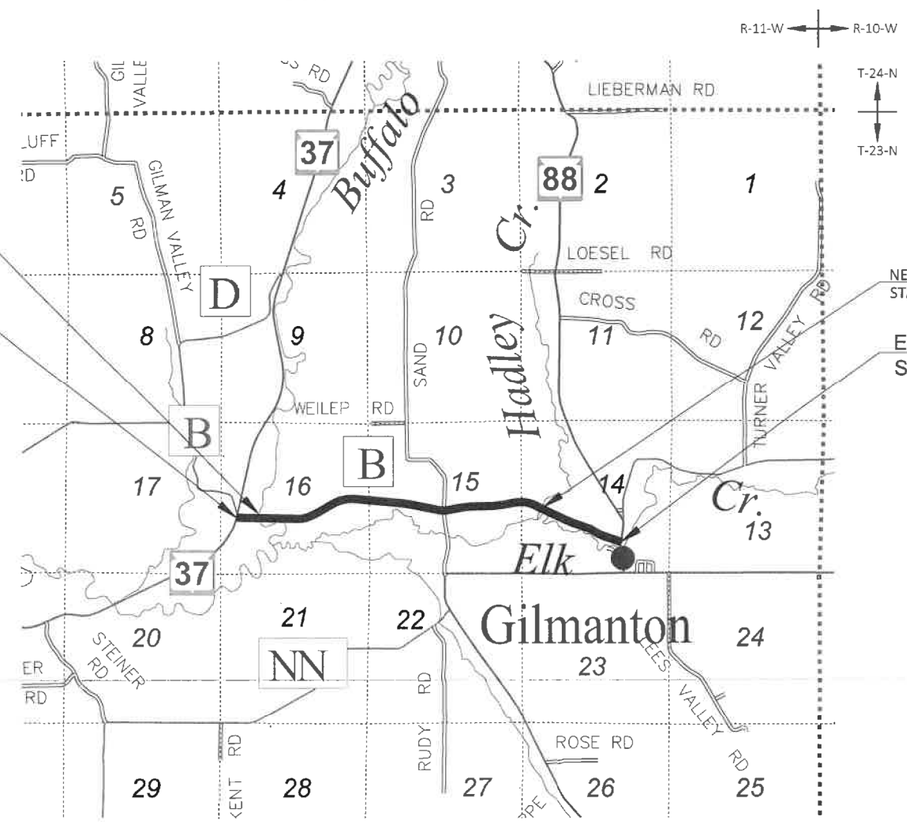

CONVENTIONAL SYMBOLS

PLAN
- CORPORATE LIMITS
- PROPERTY LINE
- LOT LINE
- LIMITED HIGHWAY EASEMENT
- EXISTING RIGHT OF WAY
- PROPOSED OR NEW R/W LINE
- SLOPE INTERCEPT
- REFERENCE LINE (300'EB')
- EXISTING CULVERT
- PROPOSED CULVERT (Box or Pipe)
- COMBUSTIBLE FLUIDS (CAUTION)
- MARSH AREA
- WOODED OR SHRUB AREA

PROFILE
- GRADE LINE
- ORIGINAL GROUND
- MARSH OR ROCK PROFILE (To be noted as such) (ROCK)
- SPECIAL DITCH (LABEL)
- GRADE ELEVATION (95.36)
- CULVERT (Profile View)

UTILITIES
- ELECTRIC (E)
- FIBER OPTIC (FO)
- GAS (G)
- OVERHEAD (OH)
- SANITARY SEWER (SAN)
- STORM SEWER (SS)
- TELEPHONE (T)
- WATER (W)
- UTILITY PEDESTAL
- POWER POLE
- TELEPHONE POLE

LAYOUT
SCALE 0 — 1 MI

TOTAL NET LENGTH OF CENTERLINE = 2.559 MI

HORIZONTAL POSITIONS SHOWN ON THIS PLAN ARE WISCONSIN COORDINATE REFERENCE SYSTEM (WISCRS), BUFFALO COUNTY, NAD83 (2011), IN U.S. SURVEY FEET. POSITIONS SHOWN ARE GRID COORDINATES, GRID BEARINGS, AND GRID DISTANCES. GRID DISTANCES ARE THE SAME AS GROUND DISTANCES.

ELEVATIONS ARE REFERENCED TO NAVD 88 (2012). GPS DERIVED ELEVATIONS ARE BASED ON GEOID 18.

ACCEPTED FOR
BUFFALO COUNTY
Date 6/5/25 (Signature and Title of Official)
HIGHWAY Commissioner

ORIGINAL PLANS PREPARED BY
CORRE ENGINEERING
MADISON | EAU CLAIRE | WAUKESHA | APPLETON | TOMAH | WAUSAU

WISCONSIN PROFESSIONAL ENGINEER
KEVIN L. MEYER
E-38309-006
ELK MOUND WI

DATE: 7/10/25 (Professional Engineer Signature)

STATE OF WISCONSIN
DEPARTMENT OF TRANSPORTATION

PREPARED BY

Surveyor	CORRE, INC
Designer	CORRE, INC
Project Manager	TOU YANG, PE
Regional Examiner	TOU YANG, PE
Regional Supervisor	TOU YANG, PE

APPROVED FOR THE DEPARTMENT
DATE: 7/16/2025 (Signature)

E

GENERAL NOTES

THE LOCATIONS OF EXISTING AND PROPOSED UTILITY INSTALLATIONS AS SHOWN ON THE PLANS ARE APPROXIMATE. THERE MAY BE OTHER UTILITY INSTALLATIONS WITHIN THE PROJECT AREA THAT ARE NOT SHOWN.

CONTRACTOR WILL BE RESPONSIBLE FOR RESHAPING AND SEEDING ANY PREVIOUSLY GRASSED AREAS WHICH ARE DISTURBED BY OPERATIONS, OUTSIDE OF THE NORMAL CONSTRUCTION LIMITS.

HMA PAVEMENT WEIGHT CALCULATIONS ARE BASED ON 112 LBS/SY/IN.

NO TREES OR SHRUBS ARE TO BE REMOVED WITHOUT THE APPROVAL OF THE ENGINEER.

RIGHT OF WAY INFORMATION SHOWN ON THE PLANS IS APPROXIMATE.

WHEN THE QUANTITY OF THE ITEMS OF BASE AGGREGATE, SUBBASE OR HMA PAVEMENT IS MEASURED FOR PAYMENT BY THE TON OR CUBIC YARD, THE DEPTH OR THICKNESS OF THE LAYERS SHOWN ON THE PLAN IS APPROXIMATE AND THE ACTUAL THICKNESS WILL DEPEND ON THE DISTRIBUTION OF THE MATERIAL AS DIRECTED BY THE ENGINEER.

FOR PULVERIZE AND RELAY TYPICAL SECTIONS, THE PROPOSED SHOULDER WIDTH SHOWN IN THE TYPICAL SECTIONS ARE MINIMUM WIDTH. PERPETUATE EXISTING SHOULDERS THAT ARE WIDER THAN WHAT IS SHOWN IN THE TYPICAL SECTIONS.

EROSION CONTROL FEATURES AS SHOWN IN THE PLANS ARE AT APPROXIMATE LOCATIONS. EXACT LOCATIONS WILL BE DETERMINED BY THE CONTRACTOR'S EROSION CONTROL IMPLEMENTATION PLAN (ECIP) AND APPROVED BY THE ENGINEER. MAINTAIN EROSION CONTROL MEASURES UNTIL SUCH A TIME AS THE ENGINEER DETERMINES THE MEASURE IS NO LONGER NECESSARY.

RADIUS DIMENSIONS FOR THE CURB AND GUTTER ARE TO THE FLANGE LINE UNLESS OTHERWISE NOTED.

MATCH EXISTING PAVEMENT RADII AT SAND RD AND BRIXEN RD INTERSECTION.

PIPE ELEVATIONS, LENGTHS AND LOCATIONS AS SHOWN ON THE PLANS, MAY BE ADJUSTED TO FIT EXISTING FIELD CONDITIONS AS DIRECTED BY THE ENGINEER.

CONTRACTOR SHALL MAINTAIN ACCESS TO ALL DRIVEWAYS AT ALL TIMES EXCEPT WHEN PAVING OR PIPE LAYING OPERATIONS REQUIRE THE DRIVEWAY TO BE CLOSED. ACCESS TO DRIVEWAYS SHALL BE RE-ESTABLISHED IMMEDIATELY AFTER OPERATIONS ARE COMPLETED. ACCESS SHALL BE PROVIDED DURING ALL NON-WORKING HOURS.

SAWCUTS MAY BE ADJUSTED AT THE DISCRETION OF THE ENGINEER TO BETTER SUIT FIELD CONDITIONS.

TRAFFIC CONTROL DEVICES SHALL BE ADJUSTED TO FIT FIELD CONDITIONS AS DIRECTED BY THE ENGINEER.

PRIOR TO ORDERING DRAINAGE PIPES, THE CONTRACTOR SHALL FIELD VERIFY RELATED DRAINAGE INFORMATION IN THE PLAN WITH THE ENGINEER.

BEARINGS SHOWN ON THE PLAN ARE GROUND BEARINGS TO THE NEAREST SECOND.

DO NOT DRIVE OR STORE EQUIPMENT, OR STORE CONSTRUCTION MATERIALS IN ENVIRONMENTALLY SENSITIVE AREAS, WETLANDS OR WATERWAYS.

MATCH EXISTING SUPERELEVATIONS IN PULVERIZE AND RELAY SECTIONS.

ORDER OF SECTION 2 DETAIL SHEETS

GENERAL NOTES
PROJECT OVERVIEW
TYPICAL SECTIONS
CONSTRUCTION DETAILS
STORM SEWER PLAN

RUNOFF COEFFICIENT TABLE

LAND USE:	HYDROLOGIC SOIL GROUP											
	A			B			C			D		
	SLOPE RANGE (PERCENT)			SLOPE RANGE (PERCENT)			SLOPE RANGE (PERCENT)			SLOPE RANGE (PERCENT)		
	0-2	2-6	6 & OVER	0-2	2-6	6 & OVER	0-2	2-6	6 & OVER	0-2	2-6	6 & OVER
ROW CROPS:	.08 .22	.16 .30	.22 .38	.12 .26	.20 .34	.27 .44	.15 .30	.24 .37	.33 .50	.19 .34	.28 .41	.38 .56
MEDIAN STRIPTURF:	.19 .24	.20 .26	.24 .30	.19 .25	.22 .28	.26 .33	.20 .26	.23 .30	.30 .37	.20 .27	.25 .32	.30 .40
SIDE SLOPETURF:			.25 .32			.27 .34			.28 .36			.30 .38
PAVEMENT:												
ASPHALT:	.70 - .95											
CONCRETE:	.80 - .95											
BRICK:	.70 - .80											
DRIVES, WALKS:	.75 - .85											
ROOFS:	.75 - .95											
GRAVEL ROADS, SHOULDERS:	.40 - .60											

TOTAL PROJECT AREA = 26.3 ACRES
TOTAL AREA EXPECTED TO BE DISTURBED BY CONSTRUCTION ACTIVITIES = 6.5 ACRES

WISCONSIN DNR LIAISON

AMY LESIK
DNR WEST CENTRAL REGION HQ
1300 WEST CLAIREMONT AVENUE
EAU CLAIRE, WI 54701
PHONE: (715) 495-1903
EMAIL: AMYL.LESIK@WISCONSIN.GOV

DESIGN CONSULTANT

KEVIN MEYER
CORRE INC
1802 WARDEN STREET
EAU CLAIRE, WI 54703
PHONE: (715) 299-1894
EMAIL: KMEYER@CORREINC.COM

COUNTY HIGHWAY COMMISSIONER

KARL NOELDNER
BUFFALO COUNTY
S1672 STATE ROAD 37
ALMA, WI 54610
PHONE: (608) 685-6226
EMAIL: KARL.NOELDNER@BUFFALOCOUNTYWI.GOV

BORING LOG TABLE

BORING NO.	STATION	OFFSET	ASPHALT DEPTH (INCH)	SAND BASE DEPTH (INCH)
B-1	103+21.8	10.3' RT	3	7
B-2	110+19.0	8.0' LT	2	4.5
B-3	116+25.3	7.8' RT	4	8
B-4	127+06.4	10.6' LT	2	6
B-5	154+46.2	7.2' RT	3	9
B-6	173+18.6	9.2' LT	4	9
B-7	184+45.4	6.9' RT	3.5	7
B-8	207+31.3	7.7' LT	2.5	9
B-9	221+25.5	5.9' RT	3	8
B-10	234+23.0	9.5' LT	3	6

UTILITIES CONTACTS

NELSON TELEPHONE CO-OP
COMMUNICATION
MATT HOYT
318 3RD AVE W
DURAND, WI 54736
PHONE: (715) 672-4204
EMAIL: MATT@NTEC.NET

RIVERLAND ENERGY COOPERATIVE
ELECTRICITY
TIM HOLTAN
N28988 STATE ROAD 93, PO BOX 277
ARCADIA, WI 54612
PHONE: (608) 323-3381
EMAIL: THOLTAN@RIVERLANDENERGY.COM

DIGGERS HOTLINE
Dial 811 or (800)242-8511
www.DiggersHotline.com

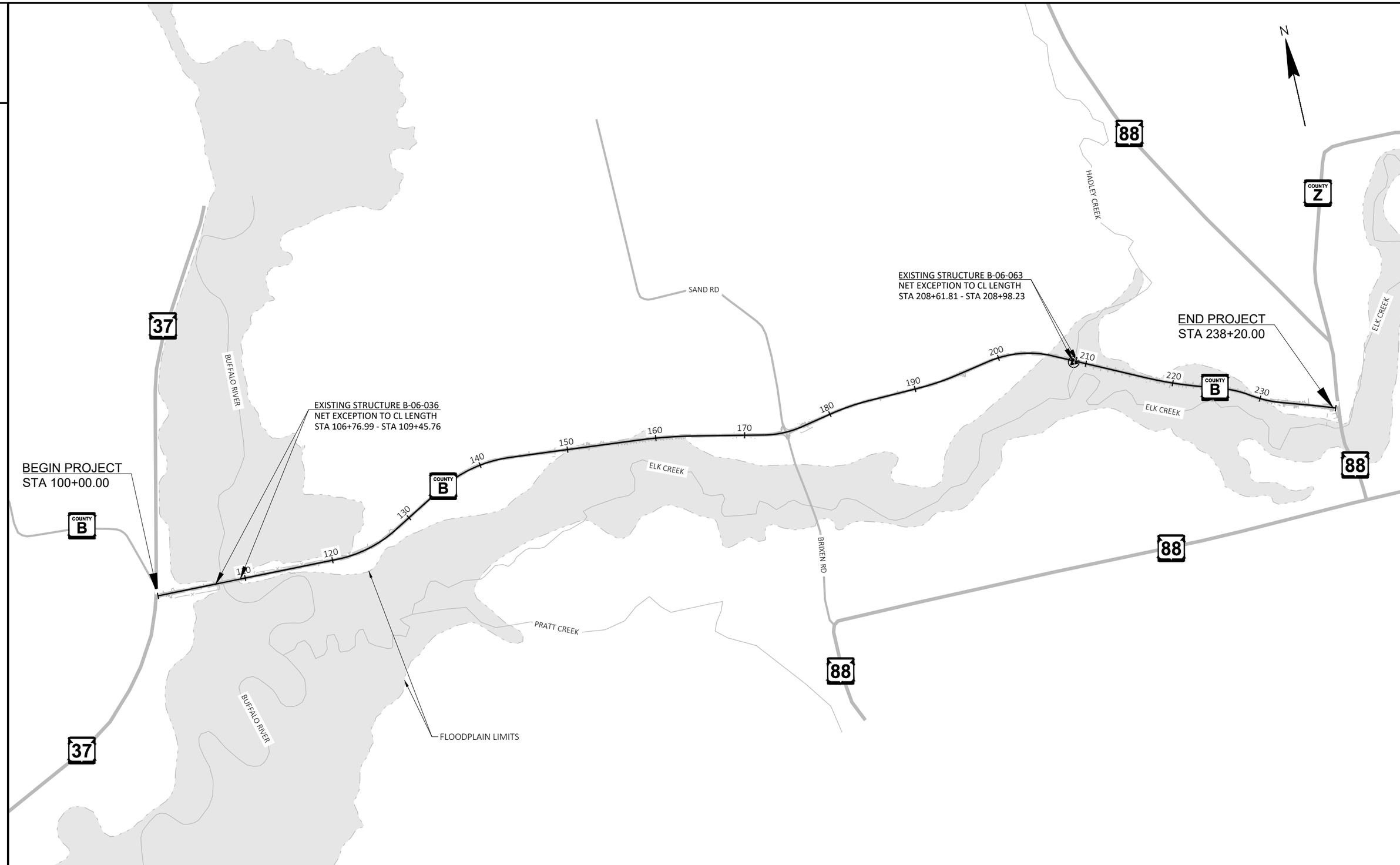

PROJECT NO: 7229-00-70	HWY: CTH B	COUNTY: BUFFALO	PROJECT OVERVIEW	SHEET 3	E

FILE NAME : C:\OD\ONEDRIVE - CORRE, INC\PROJECTS NW REGION\PROJECTS - 7229-00-00_BUFFALO CO_CTH B\500_CADD\501_C3D_2022\72290000\SHEETS\020201-PO.DWG
LAYOUT NAME - 01
PLOT DATE : 6/2/2025 3:02 PM
PLOT BY : NICHOLAS WATHKE, PE
PLOT NAME :
PLOT SCALE : 1 IN:1000 FT
WISDOT/CADDS SHEET 42

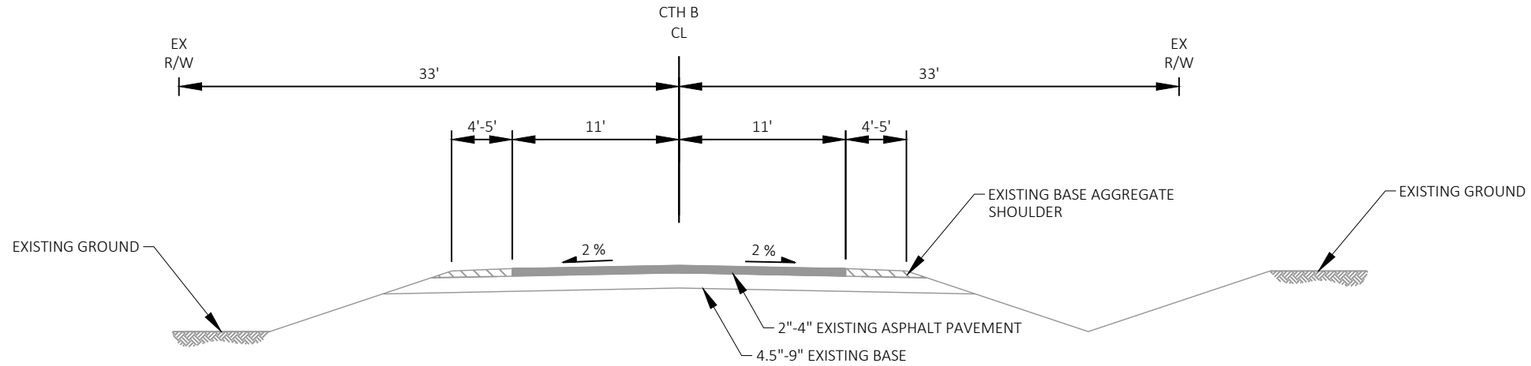

EXISTING TYPICAL SECTION

STA 100+00 - 106+77
STA 109+45 - 208+59
STA 208+99 - 235+50

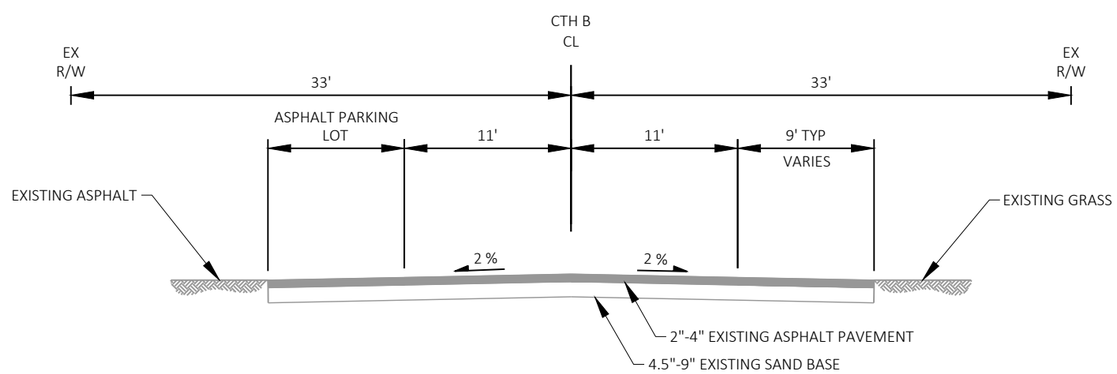

EXISTING TYPICAL SECTION

STA 235+50 - 238+20

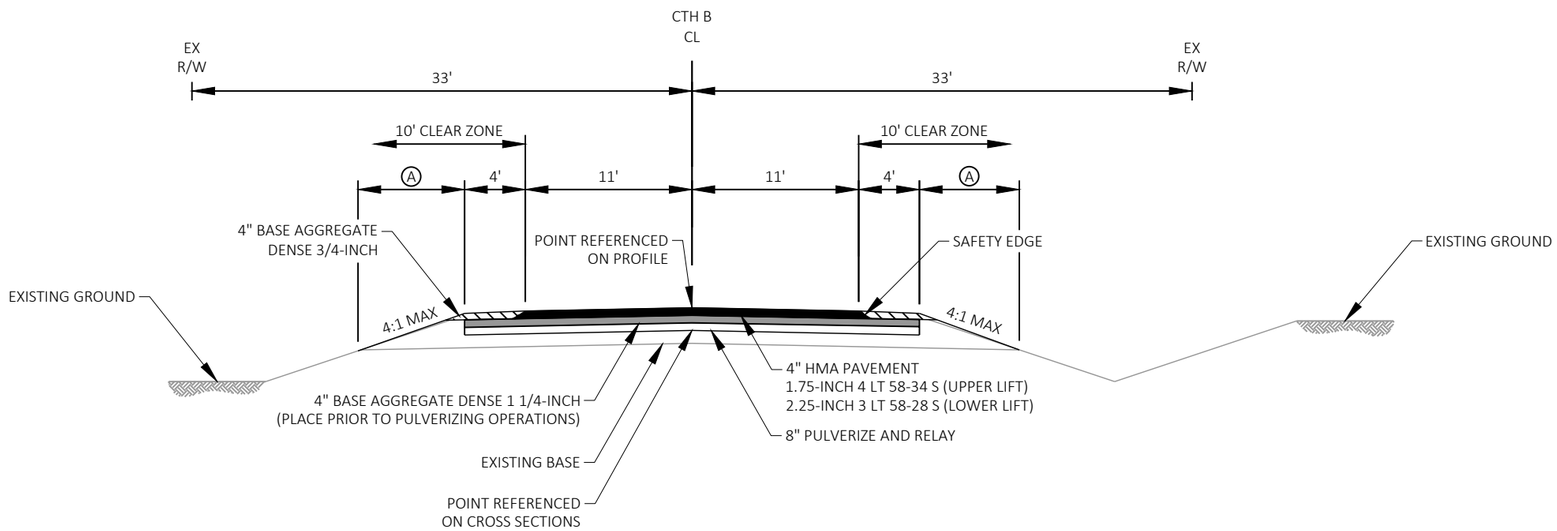

FINISHED TYPICAL SECTION - PULVERIZE AND RELAY

STA 100+00 - 106+77
STA 109+45 - 148+00
STA 164+00 - 205+00
STA 232+00 - 235+50

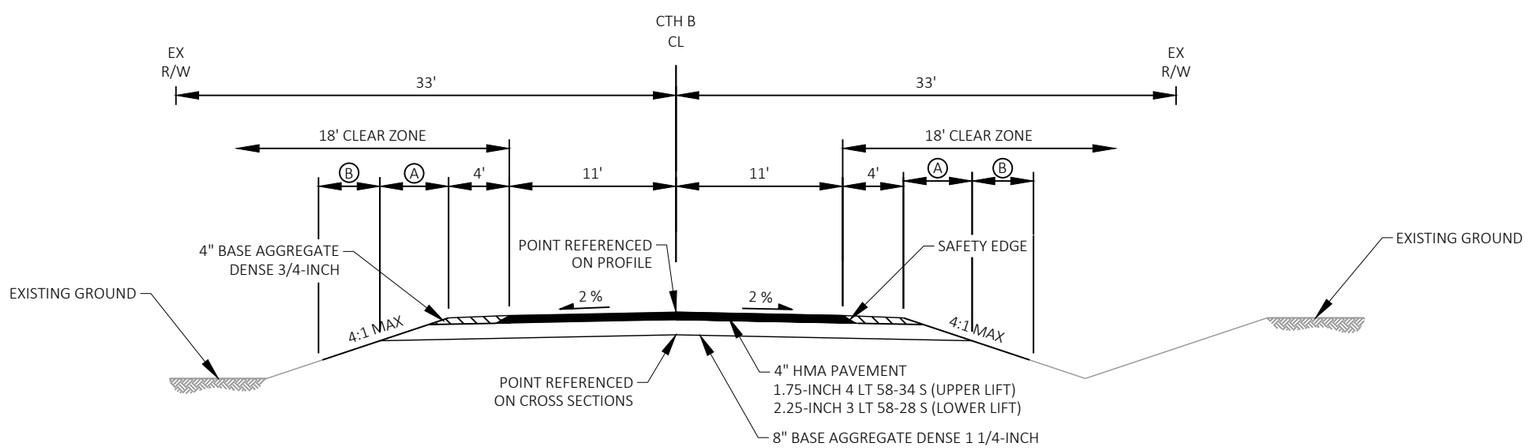

FINISHED TYPICAL SECTION - FULL DEPTH PAVEMENT REPLACEMENT

STA 148+00 - 164+00
STA 205+00 - 208+64
STA 208+96 - 232+00

LEGEND

A FERTILIZER TYPE B; SEEDING MIXTURE NO. 20

B SALVAGED TOPSOIL, MULCHING, EROSION MAT URBAN CLASS I TYPE B, FERTILIZER TYPE B, SEEDING MIXTURE NO. 20

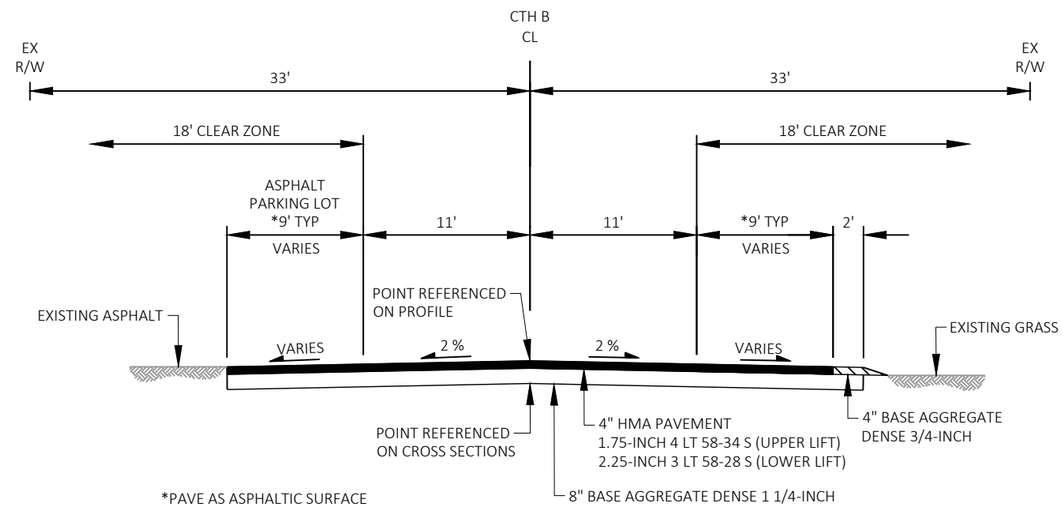

FINISHED TYPICAL SECTION - FULL DEPTH PAVEMENT REPLACEMENT

STA 235+50 - 238+20

2

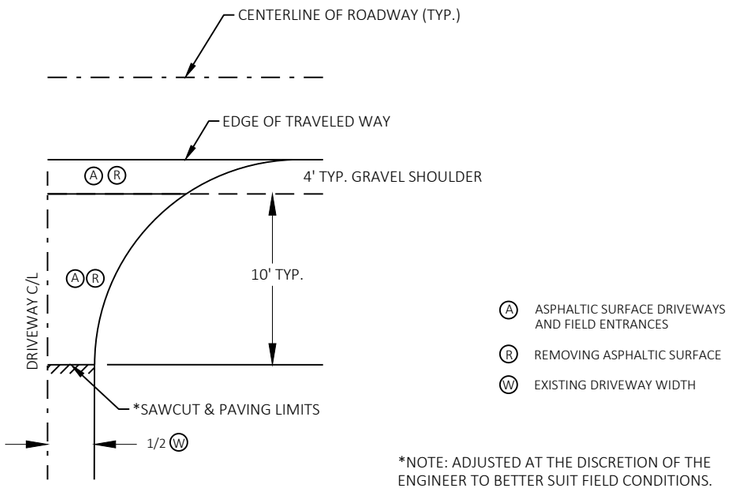

RURAL ENTRANCE WITH ASPHALTIC SURFACE
HALF SECTION

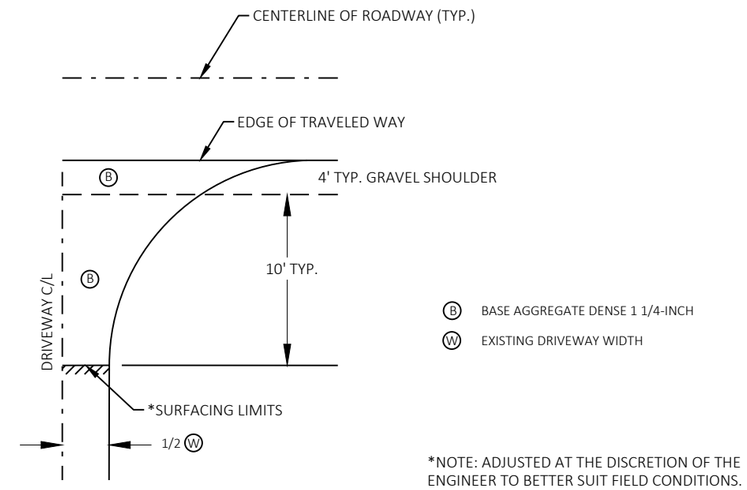

RURAL ENTRANCE WITH AGGREGATE SURFACE
HALF SECTION

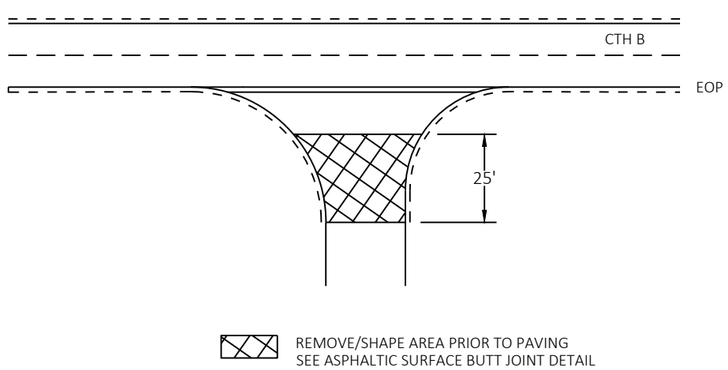

SIDE ROADS
WITHOUT CURB AND GUTTER

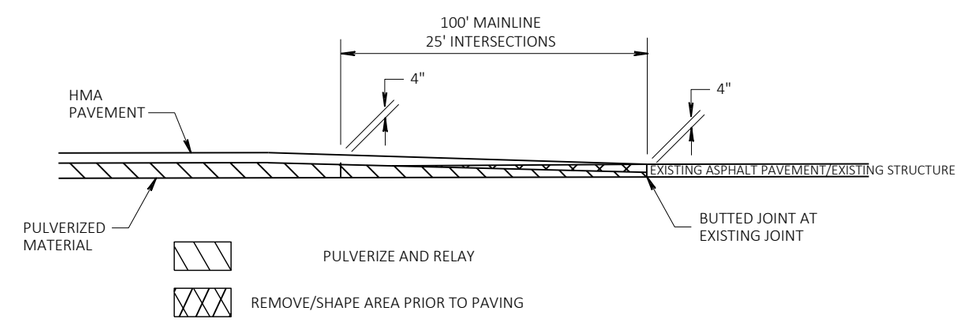

DETAIL OF ASPHALTIC SURFACE BUTT JOINT
PULVERIZE AND RELAY
STA 100+00 - 101+00
STA 105+77 - 106+77
STA 109+45 - 110+45
STA 147+00 - 148+00

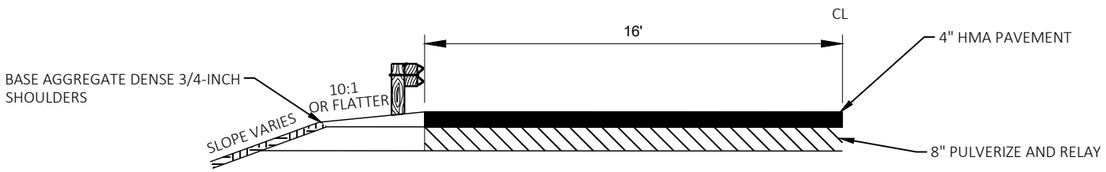

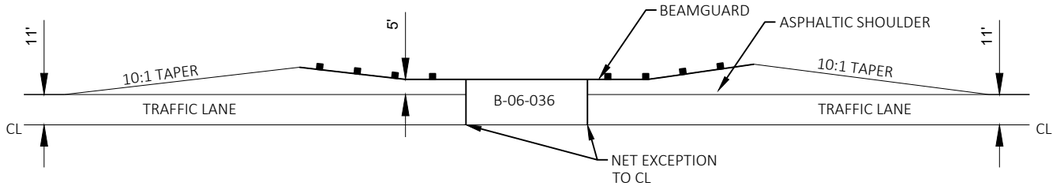

DETAIL FOR ASPHALTIC SHOULDER AT B-06-036

STA 105+49 - 110+74

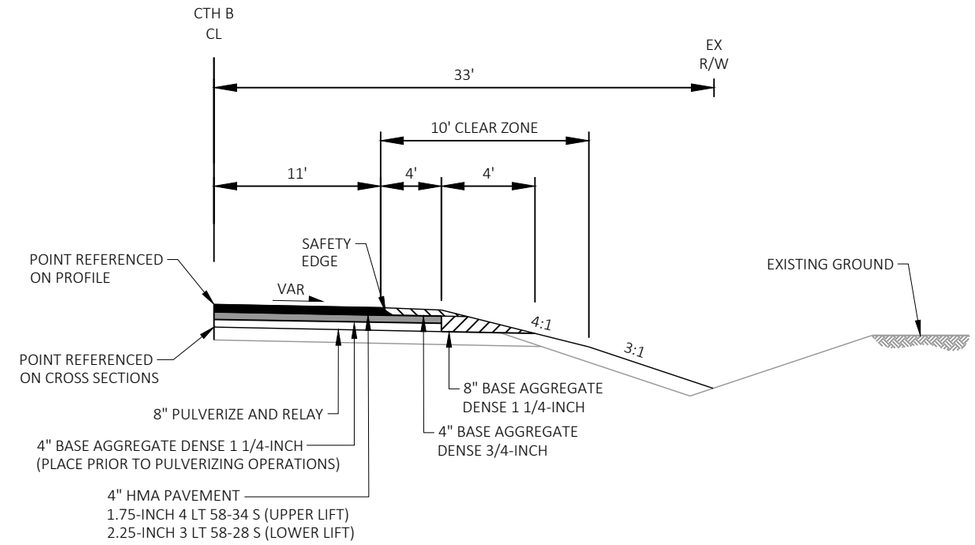

SHOULDER WIDENING DETAIL

STA 164+00 - 165+00 LT	STA 125+00 - 130+00 RT
STA 180+00 - 185+00 LT	STA 136+00 - 139+00 RT
STA 193+00 - 199+00 LT	STA 164+00 - 174+00 RT
STA 232+00 - 233+00 LT	STA 178+00 - 184+00 RT
	STA 189+00 - 196+00 RT
	STA 199+00 - 203+00 RT
	STA 232+00 - 234+00 RT

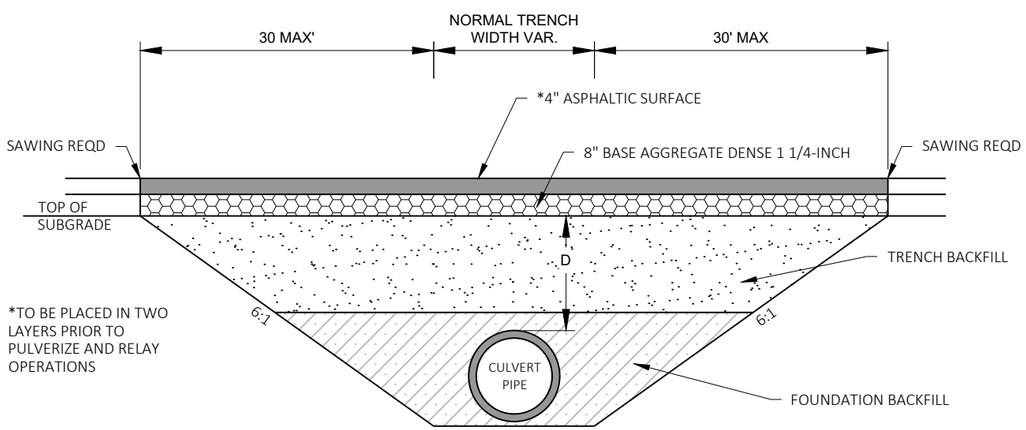

CROSS DRAIN INSTALLATION DETAIL

PULVERIZE AND RELAY

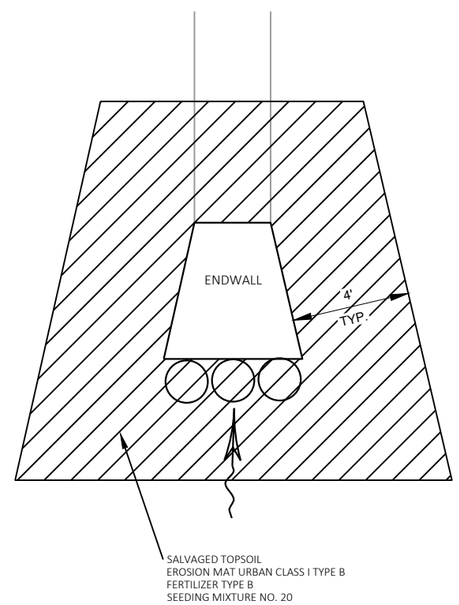

RESTORATION AT STORM SEWER APRON ENDWALL

STA 237+77 RT

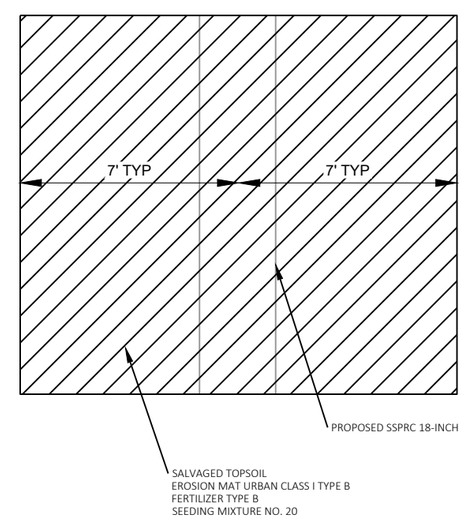

RESTORATION AT STORM SEWER PIPE

STA 237+77 RT

2

STH 88 INTERSECTION POINTS					
POINT NUMBER	STATION	OFFSET	ELEVATION	NORTHING	EASTING
100	237+85.95	30.27' LT	772.55	360011.88	606304.28
101	238+01.51	18.39' LT	773.78	359995.54	606315.06
102	238+20.00	14.85' LT	774.94	359986.11	606331.35
103	237+60.00	19.00' RT	772.18	359973.88	606263.56
104	237+67.51	19.26' RT	772.46	359971.17	606270.57
105	237+89.91	17.26' RT	773.38	359965.69	606292.38
106	238+12.26	15.27' RT	774.31	359960.22	606314.14
107	238+20.00	15.17' RT	774.63	359957.76	606321.48

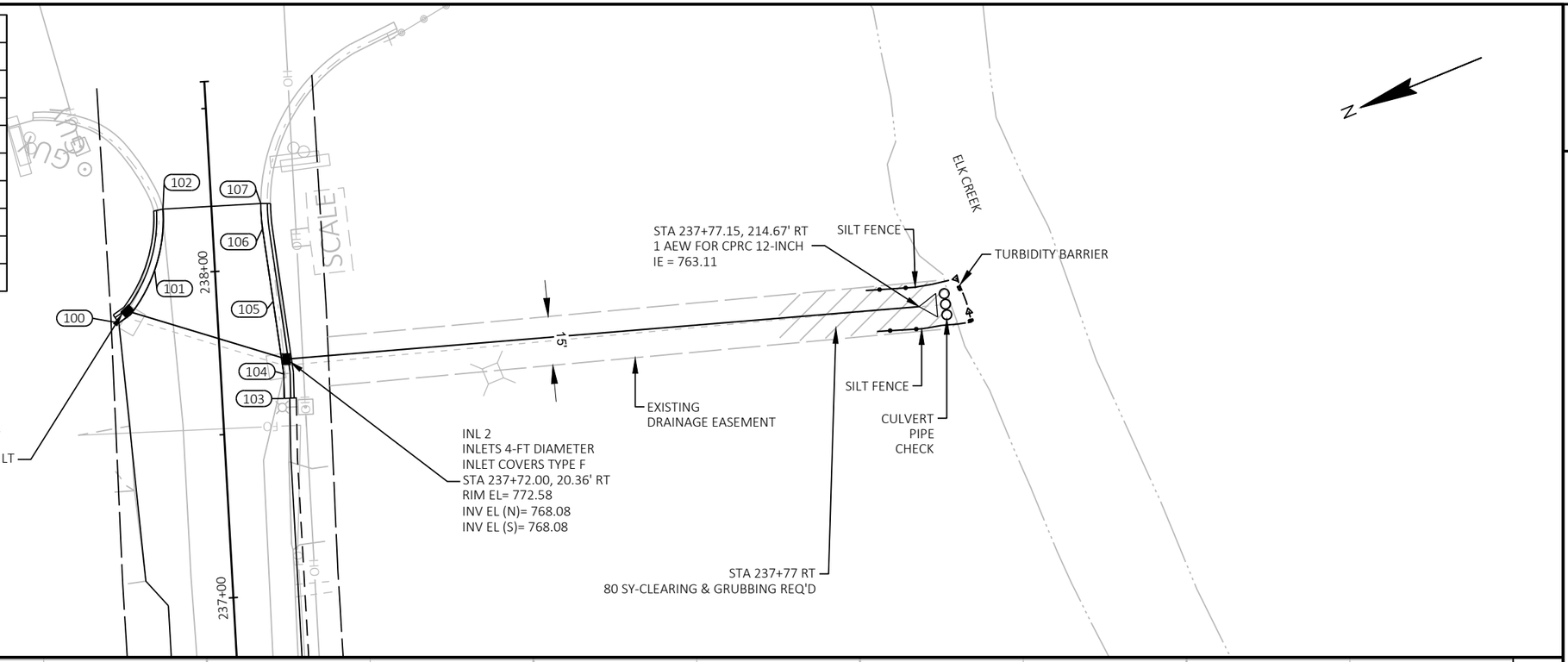

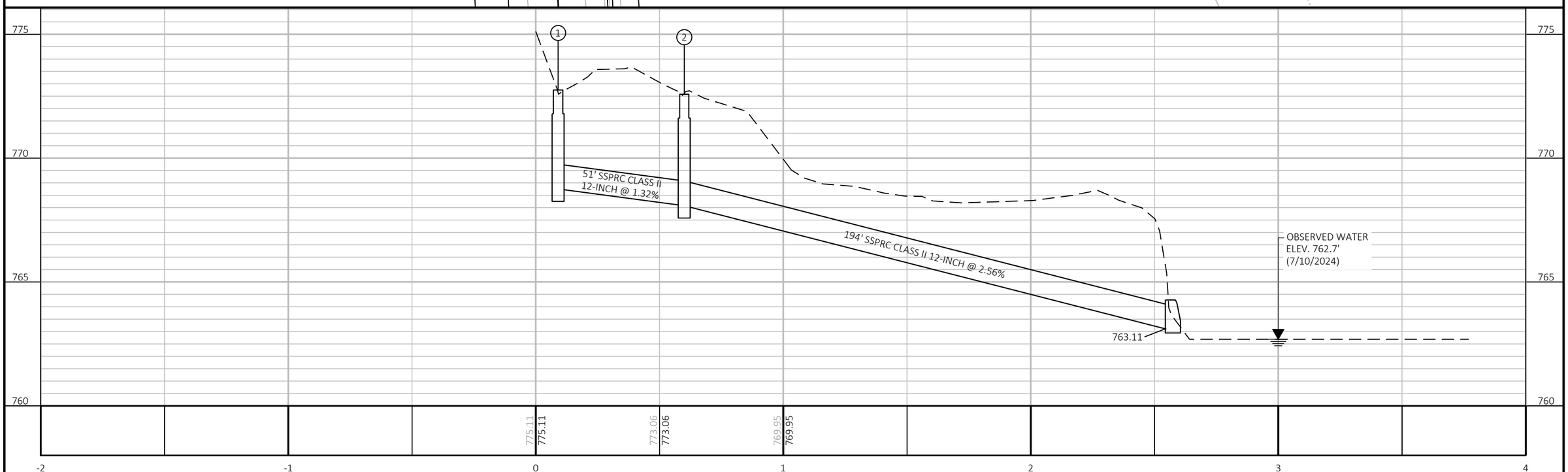

PROJECT NO: 7229-00-70	HWY: CTH B	COUNTY: BUFFALO	STORM SEWER PLAN	SHEET 9	E

Estimate Of Quantities

7229-00-70

Line	Item	Item Description	Unit	Total	Qty
0002	201.0110	Clearing	SY	80.000	80.000
0004	201.0210	Grubbing	SY	80.000	80.000
0006	203.0100	Removing Small Pipe Culverts	EACH	7.000	7.000
0008	204.0100	Removing Concrete Pavement	SY	50.000	50.000
0010	204.0110	Removing Asphaltic Surface	SY	610.000	610.000
0012	204.0115	Removing Asphaltic Surface Butt Joints	SY	2,480.000	2,480.000
0014	204.0150	Removing Curb & Gutter	LF	194.000	194.000
0016	204.0165	Removing Guardrail	LF	288.000	288.000
0018	204.0220	Removing Inlets	EACH	2.000	2.000
0020	204.0245	Removing Storm Sewer (size) 01. 18-Inch	LF	252.000	252.000
0022	205.0100	Excavation Common	CY	6,476.000	6,476.000
0024	213.0100	Finishing Roadway (project) 01. 7229-00-70	EACH	1.000	1.000
0026	305.0110	Base Aggregate Dense 3/4-Inch	TON	3,020.000	3,020.000
0028	305.0120	Base Aggregate Dense 1 1/4-Inch	TON	16,140.000	16,140.000
0030	325.0100	Pulverize and Relay	SY	22,770.000	22,770.000
0032	455.0605	Tack Coat	GAL	2,430.000	2,430.000
0034	460.2000	Incentive Density HMA Pavement	DOL	4,960.000	4,960.000
0036	460.5223	HMA Pavement 3 LT 58-28 S	TON	4,360.000	4,360.000
0038	460.5244	HMA Pavement 4 LT 58-34 S	TON	3,390.000	3,390.000
0040	465.0105	Asphaltic Surface	TON	150.000	150.000
0042	465.0120	Asphaltic Surface Driveways and Field Entrances	TON	65.000	65.000
0044	521.1024	Apron Endwalls for Culvert Pipe Steel 24-Inch	EACH	2.000	2.000
0046	521.1036	Apron Endwalls for Culvert Pipe Steel 36-Inch	EACH	12.000	12.000
0048	521.3124	Culvert Pipe Corrugated Steel 24-Inch	LF	60.000	60.000
0050	521.3136	Culvert Pipe Corrugated Steel 36-Inch	LF	305.000	305.000
0052	522.1012	Apron Endwalls for Culvert Pipe Reinforced Concrete 12-Inch	EACH	1.000	1.000
0054	601.0557	Concrete Curb & Gutter 6-Inch Sloped 36-Inch Type D	LF	97.000	97.000
0056	602.0810	Concrete Driveway 6-Inch	SY	50.000	50.000
0058	608.0212	Storm Sewer Pipe Reinforced Concrete Class II 12-Inch	LF	245.000	245.000
0060	611.0615	Inlet Covers Type F	EACH	2.000	2.000
0062	611.3004	Inlets 4-FT Diameter	EACH	2.000	2.000
0064	614.2300	MGS Guardrail 3	LF	225.000	225.000
0066	614.2500	MGS Thrie Beam Transition	LF	315.200	315.200
0068	614.2610	MGS Guardrail Terminal EAT	EACH	8.000	8.000
0070	618.0100	Maintenance and Repair of Haul Roads (project) 01. 7229-00-70	EACH	1.000	1.000
0072	619.1000	Mobilization	EACH	1.000	1.000
0074	624.0100	Water	MGAL	292.000	292.000
0076	625.0500	Salvaged Topsoil	SY	16,510.000	16,510.000
0078	627.0200	Mulching	SY	15,330.000	15,330.000
0080	628.1504	Silt Fence	LF	15,620.000	15,620.000
0082	628.1520	Silt Fence Maintenance	LF	15,620.000	15,620.000
0084	628.1905	Mobilizations Erosion Control	EACH	5.000	5.000
0086	628.1910	Mobilizations Emergency Erosion Control	EACH	3.000	3.000
0088	628.2008	Erosion Mat Urban Class I Type B	SY	1,180.000	1,180.000
0090	628.6005	Turbidity Barriers	SY	30.000	30.000
0092	628.7555	Culvert Pipe Checks	EACH	46.000	46.000
0094	629.0210	Fertilizer Type B	CWT	10.460	10.460
0096	630.0120	Seeding Mixture No. 20	LB	749.000	749.000
0098	630.0200	Seeding Temporary	LB	452.000	452.000

Estimate Of Quantities

7229-00-70

Line	Item	Item Description	Unit	Total	Qty
0100	630.0500	Seed Water	MGAL	371.000	371.000
0102	638.2102	Moving Signs Type II	EACH	28.000	28.000
0104	638.3000	Removing Small Sign Supports	EACH	2.000	2.000
0106	638.4000	Moving Small Sign Supports	EACH	23.000	23.000
0108	642.5001	Field Office Type B	EACH	1.000	1.000
0110	643.0300	Traffic Control Drums	DAY	2,260.000	2,260.000
0112	643.0420	Traffic Control Barricades Type III	DAY	1,582.000	1,582.000
0114	643.0705	Traffic Control Warning Lights Type A	DAY	904.000	904.000
0116	643.0900	Traffic Control Signs	DAY	4,746.000	4,746.000
0118	643.0920	Traffic Control Covering Signs Type II	EACH	10.000	10.000
0120	646.1020	Marking Line Epoxy 4-Inch	LF	48,105.000	48,105.000
0122	646.6120	Marking Stop Line Epoxy 18-Inch	LF	38.000	38.000
0124	648.0100	Locating No-Passing Zones	MI	2.620	2.620
0126	650.4000	Construction Staking Storm Sewer	EACH	3.000	3.000
0128	650.5000	Construction Staking Base	LF	4,570.000	4,570.000
0130	650.5500	Construction Staking Curb Gutter and Curb & Gutter	LF	97.000	97.000
0132	650.6000	Construction Staking Pipe Culverts	EACH	7.000	7.000
0134	650.8000	Construction Staking Resurfacing Reference	LF	9,250.000	9,250.000
0136	650.9911	Construction Staking Supplemental Control (project) 01. 7229-00-70	EACH	1.000	1.000
0138	650.9920	Construction Staking Slope Stakes	LF	4,534.000	4,534.000
0140	690.0150	Sawing Asphalt	LF	474.000	474.000
0142	690.0250	Sawing Concrete	LF	40.000	40.000
0144	740.0440	Incentive IRI Ride	DOL	10,239.000	10,239.000
0146	ASP.1T0A	On-the-Job Training Apprentice at $5.00/HR	HRS	300.000	300.000
0148	ASP.1T0G	On-the-Job Training Graduate at $5.00/HR	HRS	300.000	300.000

3

STATION	LOCATION	201.0110 CLEARING SY	201.0210 GRUBBING SY	REMARKS
237+77	RT	80	80	STORM SEWER REPLACEMENT
	TOTAL 0010	80	80	

STATION	LOCATION	203.0100 REMOVING SMALL PIPE CULVERTS EACH	REMARKS
148+55	CTH B	1	68 LF - 24" CMCP
151+32	CTH B	1	54 LF - 36" CMCP
152+79	CTH B	1	48 LF - 36" CMCP
159+33	CTH B	1	46 LF - 36" CMCP
170+00	CTH B	1	50 LF - 36" CMCP
202+61	CTH B	1	58 LF - 36" CMCP
219+75	CTH B	1	50 LF - 36" CMCP
TOTAL 0010		7	

STATION	LOCATION	204.0110 REMOVING ASPHALTIC SURFACE SY
100+47	ASPH PE LT	30
127+49	ASPH PE LT	65
152+28	ASPH PE LT	40
235+05	ASPH PE LT	25
236+34	ASPH PARKING LOT LT	295
236+63	ASPH PARKING LOT RT	155
TOTAL 0010		610

STATION	TO	STATION	LOCATION	204.0115 REMOVING ASPHALTIC SURFACE BUTT JOINTS SY
100+00	-	101+00	BEGIN PROJECT	360
105+77	-	106+77	B-06-036	360
109+45	-	110+45	B-06-036	360
147+00	-	148+00	RECONSTRUCT TRANSITION	250
164+00	-	165+00	RECONSTRUCT TRANSITION	250
174+32	-	174+67	SAND RD	80
174+60	-	174+84	BRIXEN RD	70
204+00	-	205+00	RECONSTRUCT TRANSITION	250
232+00	-	233+00	RECONSTRUCT TRANSITION	250
234+50	-	235+50	END PROJECT	250
			TOTAL 0010	2,480

STATION	TO	STATION	LOCATION	204.0165 REMOVING GUARDRAIL LF
207+88	-	208+64	B-06-063 SW QUADRANT	76
207+92	-	208+64	B-06-063 NW QUADRANT	72
208+96	-	209+69	B-06-063 SE QUADRANT	73
208+96	-	209+63	B-06-063 NE QUADRANT	67
			TOTAL 0010	288

STATION	LOCATION	204.0220 REMOVING INLETS EACH
237+72	CTH B RT	1
237+89	CTH B LT	1
	TOTAL 0010	2

3

STATION	TO	STATION	LOCATION	305.0110 BASE AGGREGATE DENSE 3/4-INCH TON	REMARKS
100+00	-	106+77	BEGIN PROJECT TO B-06-036	155	SHOULDER
109+45	-	174+00	B-06-036 TO SAND RD/BRIXEN RD	1,465	SHOULDER
174+00	-	208+59	SAND RD/BRIXEN RD TO B-06-063	785	SHOULDER
208+99	-	236+00	B-06-063 TO END PROJECT	615	SHOULDER
			TOTAL 0010	3,020	

STATION	TO	STATION	LOCATION	325.0100 PULVERIZE AND RELAY SY
100+00	-	106+77	CTH B	1,780
109+45	-	148+00	CTH B	9,420
164+00	-	205+00	CTH B	10,710
232+00	-	235+50	CTH B	860
			TOTAL 0010	22,770

STATION	TO	STATION	LOCATION	305.0120 BASE AGGREGATE DENSE 1 1/4-INCH TON	REMARKS
100+00	-	106+77	PULVERIZE AND OVERLAY	620	PRIOR TO P&R OPERATIONS
109+45	-	148+00	PULVERIZE AND OVERLAY	2,990	PRIOR TO P&R OPERATIONS
148+00	-	164+00	RECONSTRUCTION	2,690	ROADWAY BASE
164+00	-	205+00	PULVERIZE AND OVERLAY	3,245	PRIOR TO P&R OPERATIONS
205+00	-	208+59	RECONSTRUCTION	710	ROADWAY BASE
208+99	-	232+00	RECONSTRUCTION	3,970	ROADWAY BASE
232+00	-	235+50	PULVERIZE AND OVERLAY	260	PRIOR TO P&R OPERATIONS
235+50	-	238+20	RECONSTRUCTION	580	ROADWAY BASE
			SHOULDER WIDENING AREAS	880	
			DRIVEWAYS	195	
			TOTAL 0010	16,140	

STATION	LOCATION	204.0245.01 REMOVING STORM SEWER (SIZE) (01. 18-INCH) LF
237+72	GILMANTON	252
	TOTAL 0010	252

DIVISION	FROM/TO STATION	LOCATION	205.0100 COMMON EXCAVATION (1) CUT (2)	EBS EXCAVATION	SALVAGED/UNUSABLE PAVEMENT MATERIAL (3)	AVAILABLE MATERIAL (4)	UNEXPANDED FILL	EXPANDED FILL (5) FACTOR 1.25	MASS ORDINATE +/- (6)	WASTE
DIVISION 1	104+99 TO 208+20	CTH B	6,476		1,315	5,161	789	986	4,175	4,175
DIVISION 1 SUBTOTAL			6,476	0	1,315	5,161	789	986	4,175	
GRAND TOTAL			6,476	0	1,315	5,161	789	986	4,175	4,175
TOTAL COMMON EXC			6,476							

NOTES:

(1) COMMON EXCAVATION IS THE SUM OF THE CUT AND EBS EXCAVATION COLUMNS. ITEM NUMBER 205.0100

(2) SALVAGED/UNSUABLE PAVEMENT MATERIAL IS INCLUDED IN CUT.

(3) SALVAGED/UNUSABLE PAVEMENT MATERIAL

(4) AVAILABLE MATERIAL = CUT - SALVAGED/UNUSUABLE PAVEMENT MATERIAL

(5) EXPANDED FILL FACTOR = 1.25

(6) THE MASS ORDINATE + OR - QTY CALCULATED FOR THE DIVISION. PLUS QUANTITY INDICATES AN EXCESS OF MATERIAL WITHIN THE DIVISION. MINUS INDICATES A SHORTAGE OF MATERIAL WITHIN THE DIVISION.

(7) FACTORS USED TO COMPUTE ANTICIPATED WASTE AND THE COMPUTED WASTE VOLUME IDENTIFIED ARE FOR GENERAL INFORMATION ONLY.

3

STATION	TO	STATION	LOCATION	455.0605 TACK COAT GAL	460.5223 HMA PAVEMENT 3 LT 58-28 S TON	460.5244 HMA PAVEMENT 4 LT 58-34 S TON
100+00	-	106+77	BEGIN PROJECT TO B-06-036	140	250	190
109+45	-	174+00	B-06-036 TO SAND RD/BRIXEN RD	1,120	2,010	1,570
174+00	-	208+59	SAND RD/BRIXEN RD TO B-06-063	650	1,170	910
208+99	-	238+20	B-06-063 TO END PROJECT	520	930	720
			TOTAL 0010	2,430	4,360	3,390

STATION	LOCATION	465.0105 ASPHALTIC SURFACE TON
170+00	CULVERT REPLACEMENT	20
202+61	CULVERT REPLACEMENT	20
236+34	ASPH PARKING LOT LT	70
236+63	ASPH PARKING LOT RT	40
	TOTAL 0010	150

STATION	LOCATION	465.0120 ASPHALTIC SURFACE DRIVEWAYS AND FIELD ENTRANCES TON
100+47	ASPH PE LT	30
127+48	ASPH PE LT	20
152+30	ASPH PE LT	10
233+05	ASPH PE LT	5
	TOTAL 0010	65

3

STATION	LOCATION	521.1024 APRON ENDWALLS FOR CULVERT PIPE STEEL 24-INCH EACH	521.1036 APRON ENDWALLS FOR CULVERT PIPE STEEL 36-INCH EACH	521.3124 CULVERT PIPE CORRUGATED STEEL 24-INCH LF	521.3136 CULVERT PIPE CORRUGATED STEEL 36-INCH LF	650.6000 CONSTRUCTION STAKING PIPE CULVERTS EACH	MINIMUM WALL THICKNESS (INCH)
148+55	CTH B	2	--	60	--	1	0.064
151+32	CTH B	--	2	--	50	1	0.079
152+79	CTH B	--	2	--	48	1	0.079
159+33	CTH B	--	2	--	46	1	0.079
170+00	CTH B	--	2	--	53	1	0.079
202+61	CTH B	--	2	--	58	1	0.079
219+75	CTH B	--	2	--	50	1	0.079
	TOTAL 0010	2	12	60	305	7	

STATION	TO	STATION	LOCATION	204.0150 REMOVING CURB & GUTTER LF	601.0557 CONCRETE CURB & GUTTER 6-INCH SLOPED 36-INCH TYPE D LF	650.5500 CONSTRUCTION STAKING CURB GUTTER AND CURB & GUTTER LF
237+60	-	238+20	STH 88 INTERSECTION RT	120	60	60
237+86	-	238+20	STH 88 INTERSECTION LT	74	37	37
			TOTAL 0010	194	97	97

STATION	LOCATION	204.0100 REMOVING CONCRETE PAVEMENT SY	602.0810 CONCRETE DRIVEWAY 6-INCH SY	REMARKS
197+70	CONC PE LT	50	50	UNDISTRIBUTED
	TOTAL 0010	50	50	

STATION	LOCATION	522.1012 APRON ENDWALLS FOR CULVERT PIPE REINFORCED CONCRETE 12-INCH EACH	608.0212 STORM SEWER PIPE REINFORCED CONCRETE CLASS II 12-INCH LF	611.0615 INLET COVERS TYPE F EACH	611.3004 INLETS 4-FT DIAMETER EACH	650.4000 CONSTRUCTION STAKING STORM SEWER EACH
237+72	CTH B RT	--	--	1	1	1
237+72 - 237+77	CTH B RT	1	194	--	--	1
237+89	CTH B LT	--	51	1	1	1
	TOTAL 0010	1	245	2	2	3

STATION	TO	STATION	LOCATION	614.2300 MGS GUARDRAIL 3 LF	614.2500 MGS THRIE BEAM TRANSITION LF	614.2610 MGS GUARDRAIL TERMINAL EAT EACH
105+49	-	106+79	B-06-036 SW QUADRANT	37.5	39.4	1
105+74	-	106+79	B-06-036 NW QUADRANT	12.5	39.4	1
109+44	-	110+49	B-06-036 SE QUADRANT	12.5	39.4	1
109+44	-	110+74	B-06-036 NE QUADRANT	37.5	39.4	1
207+08	-	208+64	B-06-063 SW QUADRANT	62.5	39.4	1
207+71	-	208+64	B-06-063 NW QUADRANT	--	39.4	1
208+96	-	209+89	B-06-063 SE QUADRANT	--	39.4	1
208+96	-	210+51	B-06-063 NE QUADRANT	62.5	39.4	1
			TOTAL 0010	225	315.2	8

3

STATION	TO	STATION	LOCATION	624.0100 WATER MGAL	REMARKS
100+00	-	106+77	PULVERIZE AND OVERLAY	12	PRIOR TO P&R OPERATIONS
109+45	-	148+00	PULVERIZE AND OVERLAY	58	PRIOR TO P&R OPERATIONS
148+00	-	164+00	RECONSTRUCTION	46	ROADWAY BASE
164+00	-	205+00	PULVERIZE AND OVERLAY	63	PRIOR TO P&R OPERATIONS
205+00	-	208+64	RECONSTRUCTION	12	ROADWAY BASE
208+96	-	232+00	RECONSTRUCTION	68	ROADWAY BASE
232+00	-	235+50	PULVERIZE AND OVERLAY	6	PRIOR TO P&R OPERATIONS
235+50	-	238+20	RECONSTRUCTION	10	ROADWAY BASE
			SHOULDER WIDENING AREAS	14	
			DRIVEWAYS	3	
			TOTAL 0010	292	

STATION	TO	STATION	LOCATION	625.0500 SALVAGED TOPSOIL SY	627.0200 MULCHING SY	628.2008 EROSION MAT URBAN CLASS I TYPE B SY	629.0210 FERTILIZER TYPE B CWT	630.0120 SEEDING MIXTURE NO. 20 LB	630.0200 SEEDING TEMPORARY LB	630.0500 SEED WATER MGAL
105+49	-	106+79	B-06-036 WEST APPROACH	190	--	190	0.12	9	6	4
109+44	-	110+74	B-06-036 EAST APPROACH	340	--	340	0.22	16	10	8
125+00	-	130+00	CTH B RT	410	410	--	0.26	19	12	9
136+00	-	139+00	CTH B RT	310	310	--	0.20	14	9	7
148+55	-	219+75	CULVERT REPLACEMENTS	135	--	135	0.09	7	4	3
149+00	-	174+00	PAVEMENT REPLACEMENT	4,530	4,530	--	2.86	204	123	102
178+00	-	184+00	CTH B LT & RT	1,070	1,070	--	0.68	49	29	24
189+00	-	203+00	CTH B LT & RT	1,735	1,735	--	1.10	79	47	39
205+00	-	208+59	PAVEMENT REPLACEMENT	835	835	--	0.53	38	23	19
208+99	-	234+00	PAVEMENT REPLACEMENT	5,660	5,660	--	3.57	255	153	127
237+72		237+95	STORM SEWER	325	--	325	0.21	15	9	7
100+00	-	238+20	UNDISTRIBUTED	970	780	190	0.62	44	27	22
			TOTAL 0010	16,510	15,330	1,180	10.46	749	452	371

STATION	TO	STATION	LOCATION	628.1504 SILT FENCE LF	628.1520 SILT FENCE MAINTENANCE LF	628.6005 TURBIDITY BARRIERS SY
105+00	-	112+00	B-06-036 GUARDRAIL GRADING	890	890	--
124+95	-	130+05	CTH B RT	540	540	--
135+95	-	139+06	CTH B RT	330	330	--
148+55	-	219+75	CTH B	4,250	4,250	--
148+92	-	174+15	CULVERT REPLACEMENTS	420	420	--
177+92	-	185+05	CTH B	1,160	1,160	--
188+95	-	203+07	CTH B	1,730	1,730	--
204+91	-	233+95	CTH B	5,730	5,730	--
			STORM SEWER OUTFALL	40	40	30
			UNDISTRIBUTED	530	530	--
			TOTAL 0010	15,620	15,620	30

LOCATION	628.1905 MOBILIZATIONS EROSION CONTROL EACH	628.1910 MOBILIZATIONS EMERGENCY EROSION CONTROL EACH
PROJECT	5	3
TOTAL 0010	5	3

STATION	LOCATION	638.2102 MOVING SIGNS TYPE II EACH	638.3000 REMOVING SMALL SIGN SUPPORTS EACH	638.4000 MOVING SMALL SIGN SUPPORTS EACH	REMARKS
106+69	CTH B LT	--	1	--	WOOD POST
106+71	CTH B LT	1	--	1	BRIDGE HASH MARK
106+75	CTH B RT	1	--	1	BRIDGE HASH MARK
106+75	CTH B RT	1	--	1	BUFFALO RIVER
109+48	CTH B RT	1	--	1	BRIDGE HASH MARK
109+49	CTH B LT	1	--	1	BRIDGE HASH MARK
109+49	CTH B LT	1	--	1	BUFFALO RIVER
109+52	CTH B LT	--	1	--	WOOD POST
110+24	CTH B LT	1	--	1	STOP AHEAD
163+18	CTH B RT	1	--	1	ROAD CURVES AHEAD
208+58	CTH B LT	1	--	1	BRIDGE HASH MARK
208+58	CTH B RT	1	--	1	BRIDGE HASH MARK
209+01	CTH B LT	1	--	1	BRIDGE HASH MARK
209+01	CTH B RT	1	--	1	BRIDGE HASH MARK
212+40	CTH B LT	2	--	1	NO PASSING ZONE/ROAD CURVES AHEAD
215+50	CTH B RT	1	--	1	NO PASSING ZONE
218+54	CTH B RT	2	--	1	REDUCE SPEED/40 MPH
219+90	CTH B RT	1	--	1	GILMANTON
221+17	CTH B RT	1	--	1	ROAD CURVES AHEAD
223+22	CTH B RT	1	--	1	SPEED LIMIT 40
223+34	CTH B LT	1	--	1	SPEED LIMIT 55
226+05	CTH B RT	4	--	1	JCT STH 88/END CTH B
231+39	CTH B RT	2	--	2	SPEED LIMIT 30/STOP AHEAD
231+40	CTH B LT	1	--	1	SPEED LIMIT 40
	TOTAL 0010	28	2	23	

STATION	TO	STATION	LOCATION	DAYS	DEVICES	643.0300 TRAFFIC CONTROL DRUMS DAY	DAYS	DEVICES	643.0420 TRAFFIC CONTROL BARRICADES TYPE III DAY	DAYS	DEVICES	643.0705 TRAFFIC CONTROL WARNING LIGHTS TYPE A DAY	DAYS	DEVICES	643.0900 TRAFFIC CONTROL SIGNS DAY	643.0920 TRAFFIC CONTROL COVERING SIGNS TYPE II EACH
100+00	-	238+20	PROJECT	113	20	2,260	113	14	1,582	113	8	904	113	42	4,746	10
			TOTAL 0010			2,260			1,582			904			4,746	10

STATION	LOCATION	628.7555 CULVERT PIPE CHECKS EACH
148+55	CULVERT PIPE REPLACEMENT	3
151+32	CULVERT PIPE REPLACEMENT	7
152+79	CULVERT PIPE REPLACEMENT	7
159+33	CULVERT PIPE REPLACEMENT	7
170+00	CULVERT PIPE REPLACEMENT	7
202+61	CULVERT PIPE REPLACEMENT	7
219+75	CULVERT PIPE REPLACEMENT	7
237+77	STORM SEWER REPLACEMENT	1
	TOTAL 0010	46

STATION	TO	STATION	LOCATION	646.1020 MARKING LINE EPOXY 4-INCH LF	TYPE/COLOR
100+00	-	238+20	CTH B	20,465	CENTERLINE/YELLOW
100+00	-	238+20	CTH B	27,640	EDGELINE/WHITE
			TOTAL 0010	48,105	

3

PROJECT NO: 7229-00-70 | HWY: CTH B | COUNTY: BUFFALO | MISCELLANEOUS QUANTITIES | SHEET 14 | E

3

STATION	LOCATION	646.6120 MARKING STOP LINE EPOXY 18-INCH LF
100+00	STH 37	22
238+20	STH 88	16
	TOTAL 0010	38

STATION	TO	STATION	LOCATION	648.0100 LOCATING NO-PASSING ZONES MI
100+00	-	238+20	CTH B	2.62
			TOTAL 0010	2.62

STATION	TO	STATION	LOCATION	650.5000 CONSTRUCTION STAKING BASE LF	650.8000 CONSTRUCTION STAKING RESURFACING REFERENCE LF	650.9911.01 CONSTRUCTION STAKING SUPPLEMENTAL CONTROL (PROJECT) (01. 7229-00-70) EACH	650.9920 CONSTRUCTION STAKING SLOPE STAKES LF
100+00	-	148+00	PULVERIZE AND RELAY	--	4,800	--	--
148+00	-	164+00	RECONSTRUCTION	1,600	--	--	1,600
164+00	-	205+00	PULVERIZE AND RELAY	--	4,100	--	--
205+00	-	232+00	RECONSTRUCTION	2,700	--	--	2,664
232+00	-	235+50	PULVERIZE AND RELAY	--	350	--	--
235+50	-	238+20	RECONSTRUCTION	270	--	--	270
			PROJECT	--	--	1	--
			TOTAL 0010	4,570	9,250	1	4,534

STATION	LOCATION	690.0150 SAWING ASPHALT LF	690.0250 SAWING CONCRETE LF	REMARKS
100+47	ASPH PE LT	46	-	
127+48	ASPH PE LT	40	-	
152+30	ASPH PE LT	21	-	
170+00	CULVERT REPLACEMENT	44	-	
197+70	CONC PE LT	-	34	UNDSITRIBUTED
202+61	CULVERT REPLACEMENT	44	-	
236+34	GILMANTON PARKING	202	-	
236+45	ASPH PE RT	21	-	
237+28	ASPH PE RT	26	-	
238+20	END PROJECT	30	6	
	TOTAL 0010	474	40	

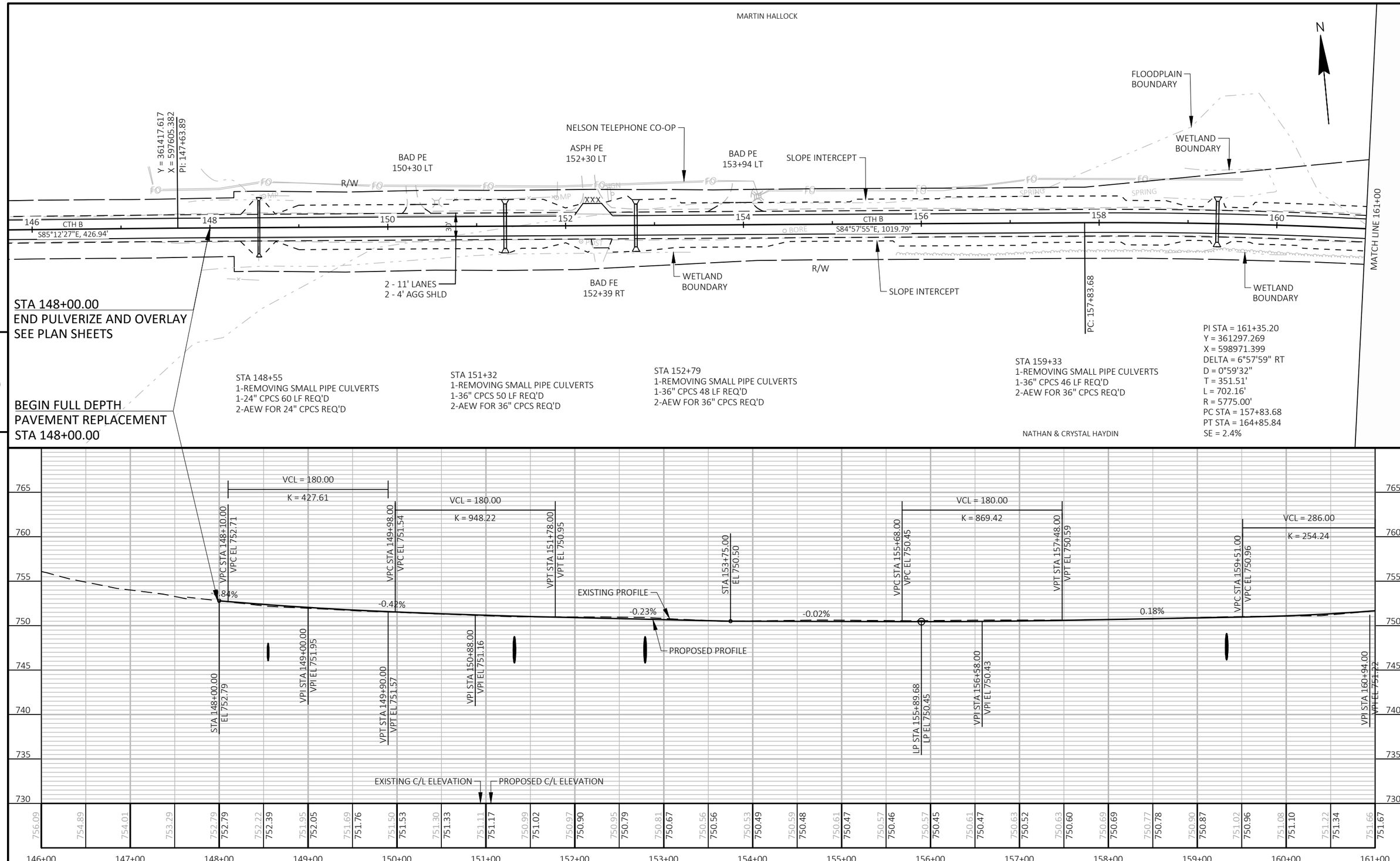

PROJECT NO: 7229-00-70	HWY: CTH B	COUNTY: BUFFALO	PLAN AND PROFILE: CTH B	SHEET 16	E

FILE NAME : C:\OD\ONEDRIVE - CORRE, INC\PROJECTS NW REGION\PROJECTS - 7229-00-00_BUFFALO CO_CTH B\500_CADD\501_C3D_2022\72290000\SHEETS\050101-PP.DWG
LAYOUT NAME - 01
PLOT DATE : 6/3/2025 8:41 AM
PLOT BY : NICHOLAS WATHKE, PE
PLOT NAME :
PLOT SCALE : 1 IN:100 FT

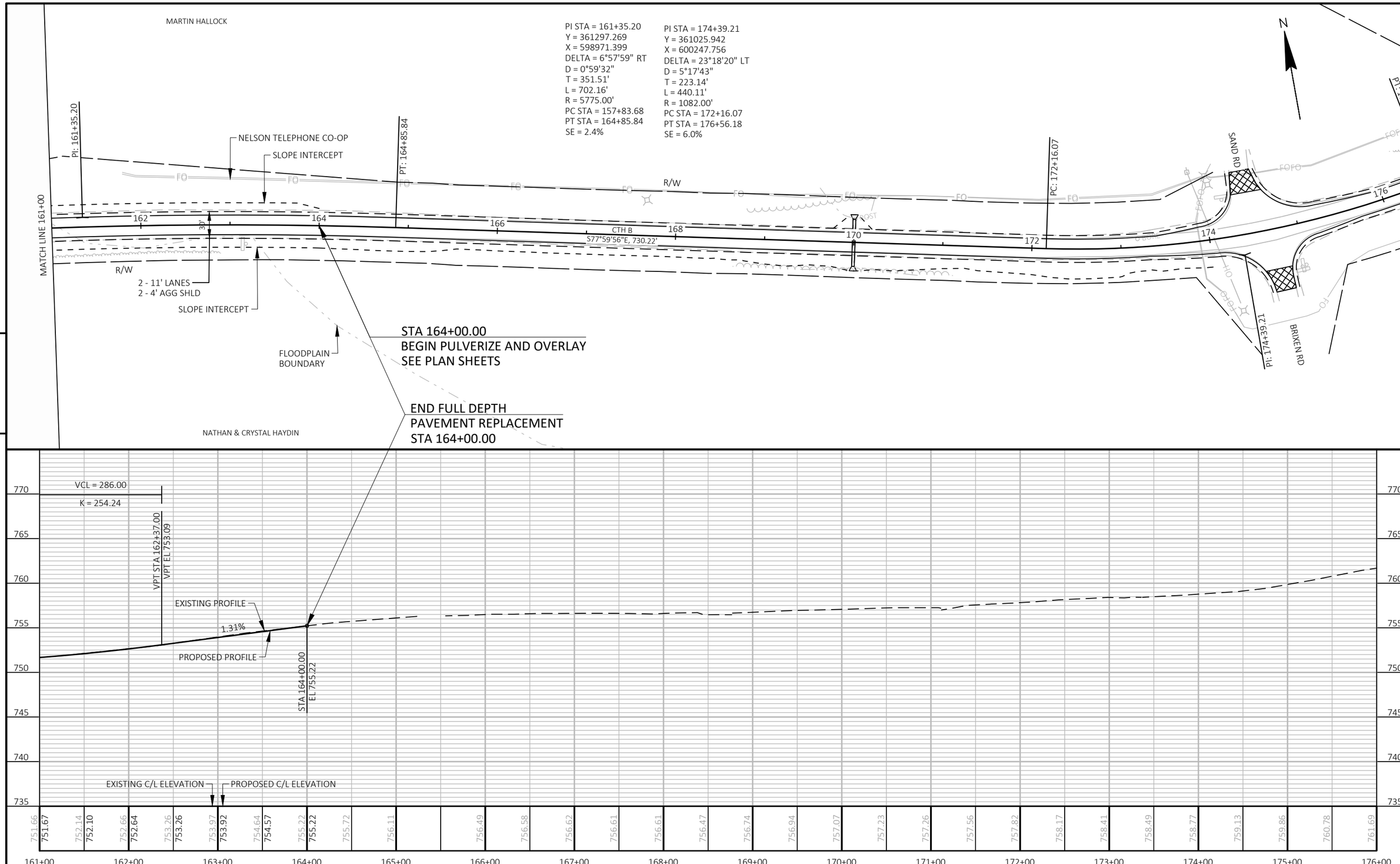

PROJECT NO: 7229-00-70	HWY: CTH B	COUNTY: BUFFALO	PLAN AND PROFILE: CTH B	SHEET 17	E

FILE NAME : C:\OD\ONEDRIVE - CORRE, INC\PROJECTS NW REGION\PROJECTS - 7229-00-00_BUFFALO CO_CTH B\500_CADD\501_C3D_2022\72290000\SHEETS\050101-PP.DWG
LAYOUT NAME - 02
PLOT DATE : 6/3/2025 8:41 AM
PLOT BY : NICHOLAS WATHKE, PE
PLOT NAME :
PLOT SCALE : 1 IN:100 FT

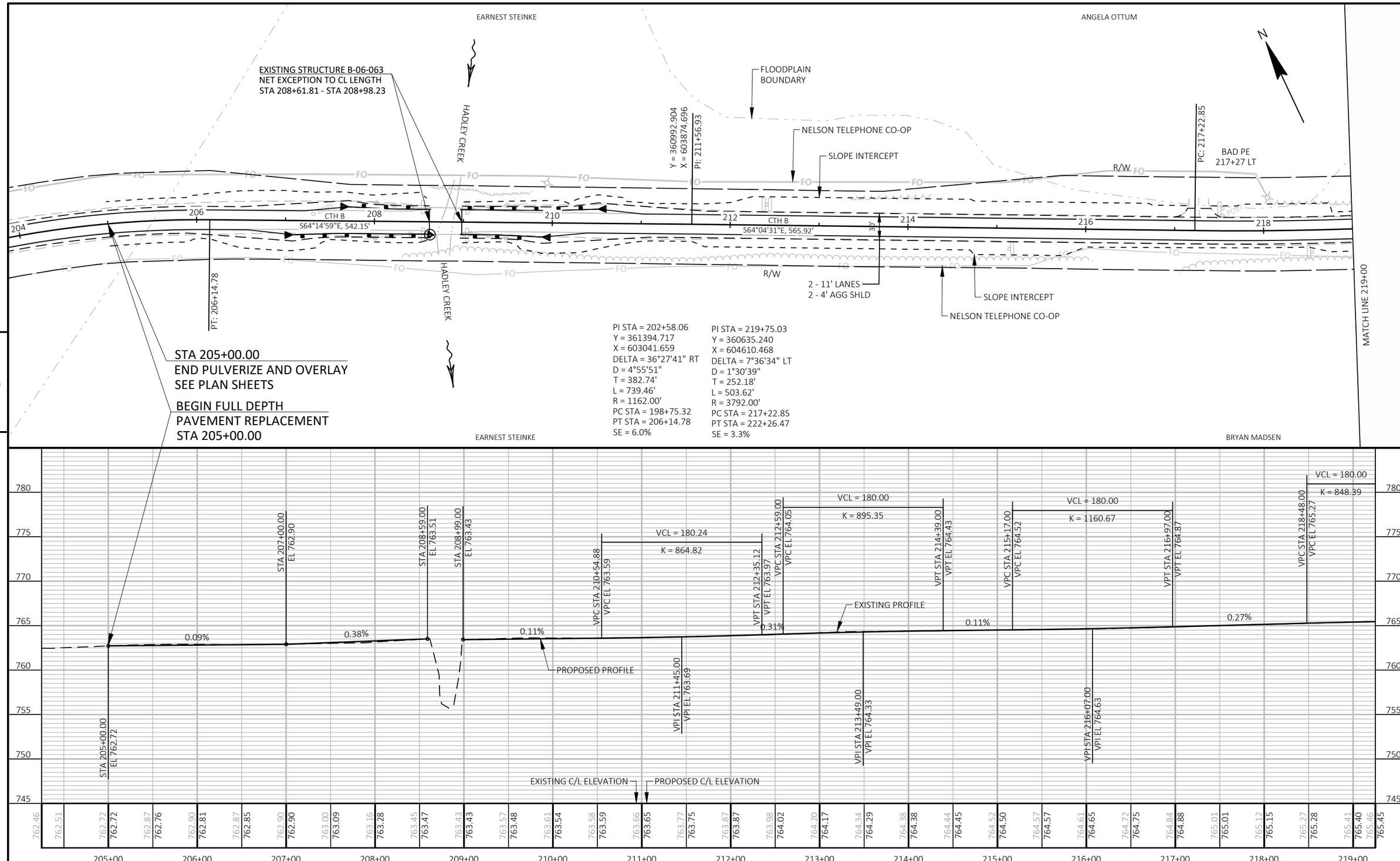

PROJECT NO: 7229-00-70	HWY: CTH B	COUNTY: BUFFALO	PLAN AND PROFILE: CTH B	SHEET 18	E

FILE NAME : C:\OD\ONEDRIVE - CORRE, INC\PROJECTS NW REGION\PROJECTS - 7229-00-00_BUFFALO CO_CTH B\500_CADD\501_C3D_2022\72290000\SHEETS\050101-PP.DWG
LAYOUT NAME - 03
PLOT DATE : 6/3/2025 8:41 AM
PLOT BY : NICHOLAS WATHKE, PE
PLOT NAME :
PLOT SCALE : 1 IN:100 FT

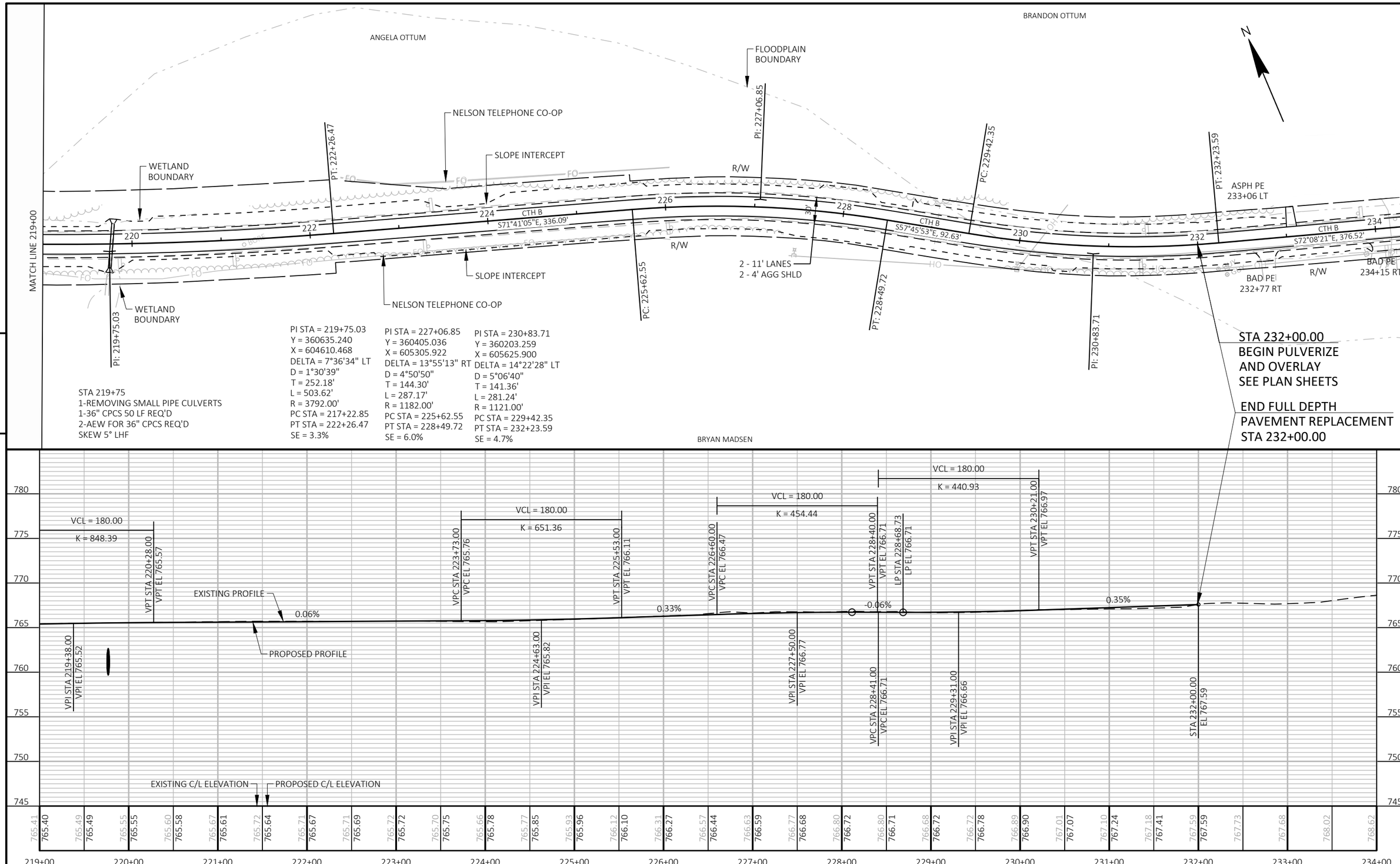

PROJECT NO: 7229-00-70	HWY: CTH B	COUNTY: BUFFALO	PLAN AND PROFILE: CTH B	SHEET 19	E

FILE NAME : C:\OD\ONEDRIVE - CORRE, INC\PROJECTS NW REGION\PROJECTS - 7229-00-00_BUFFALO CO_CTH B\500_CADD\501_C3D_2022\72290000\SHEETS\050101-PP.DWG
LAYOUT NAME - 04
PLOT DATE : 6/3/2025 8:41 AM
PLOT BY : NICHOLAS WATHKE, PE
PLOT NAME :
PLOT SCALE : 1 IN:100 FT

STH 88 INTERSECTION (RADIUS POINT)				
POINT NUMBER	STATION	OFFSET	NORTHING	EASTING
1	238+19.56	62.46' LT	360031.22	606346.60

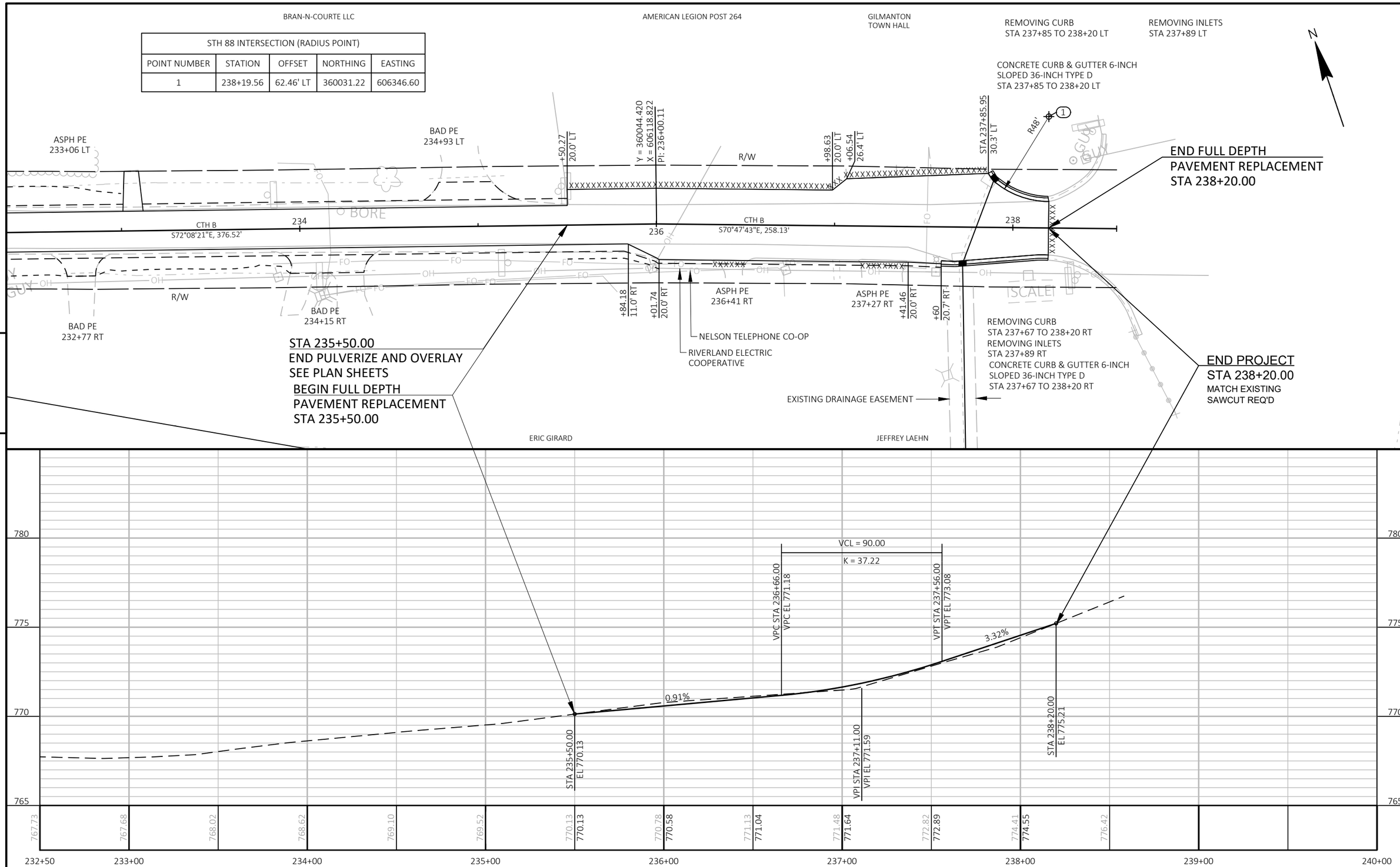

PROJECT NO: 7229-00-70	HWY: CTH B	COUNTY: BUFFALO	PLAN AND PROFILE: CTH B	SHEET 20	E

CONTROL POINT TABLE						
POINT	STATION	OFFSET	Y	X	ELEV	DESCRIPTION
CP 953	101+86.88	25.86 LT	360826.150	593180.523	743.09	3/4" REBAR
CP 954	114+02.13	20.00 RT	360755.423	594394.582	737.63	3/4" REBAR

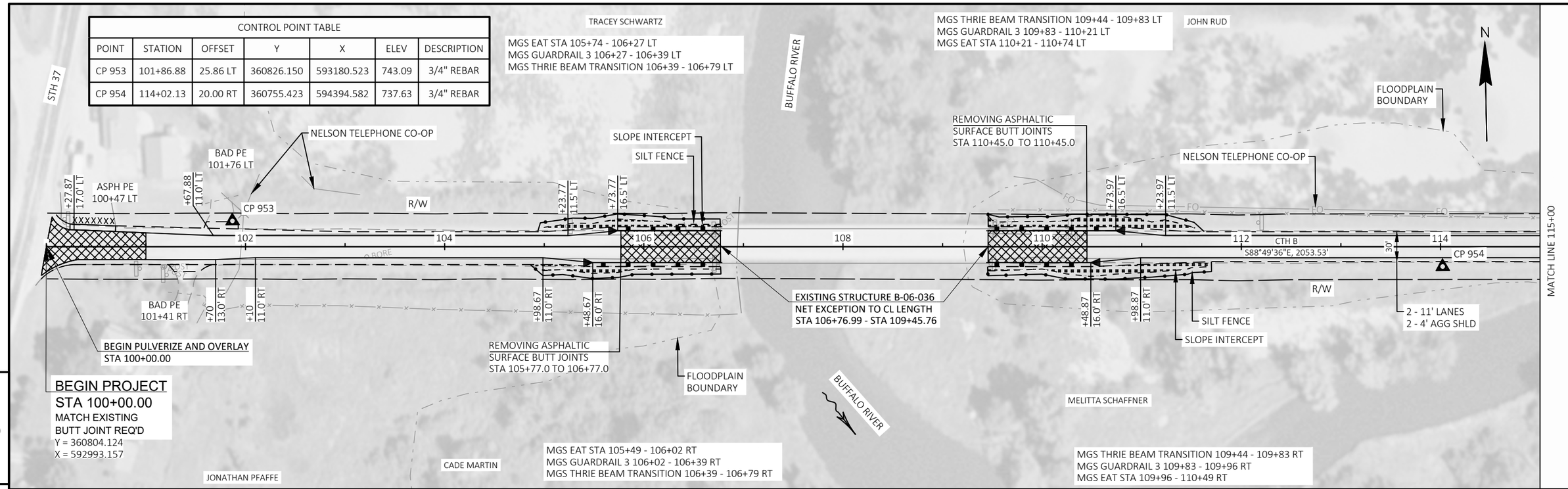

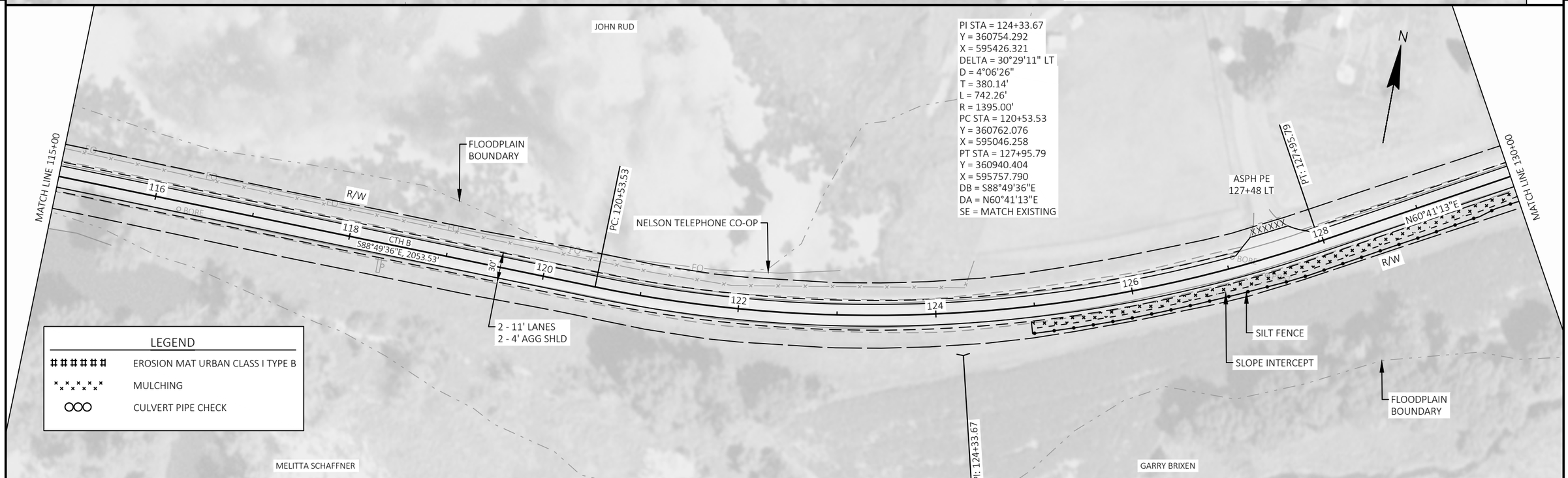

PROJECT NO: 7229-00-70	HWY: CTH B	COUNTY: BUFFALO	PLAN SHEETS	SHEET 21	E

FILE NAME : C:\OD\ONEDRIVE - CORRE, INC\PROJECTS NW REGION\PROJECTS - 7229-00-00_BUFFALO CO_CTH B\500_CADD\501_C3D_2022\72290000\SHEETS\050201-PN.DWG
LAYOUT NAME - 01
PLOT DATE : 9/17/2025 9:51 AM
PLOT BY : NICHOLAS WATHKE, PE
PLOT NAME :
PLOT SCALE : 1 IN:100 FT
WISDOT/CADDS SHEET 44

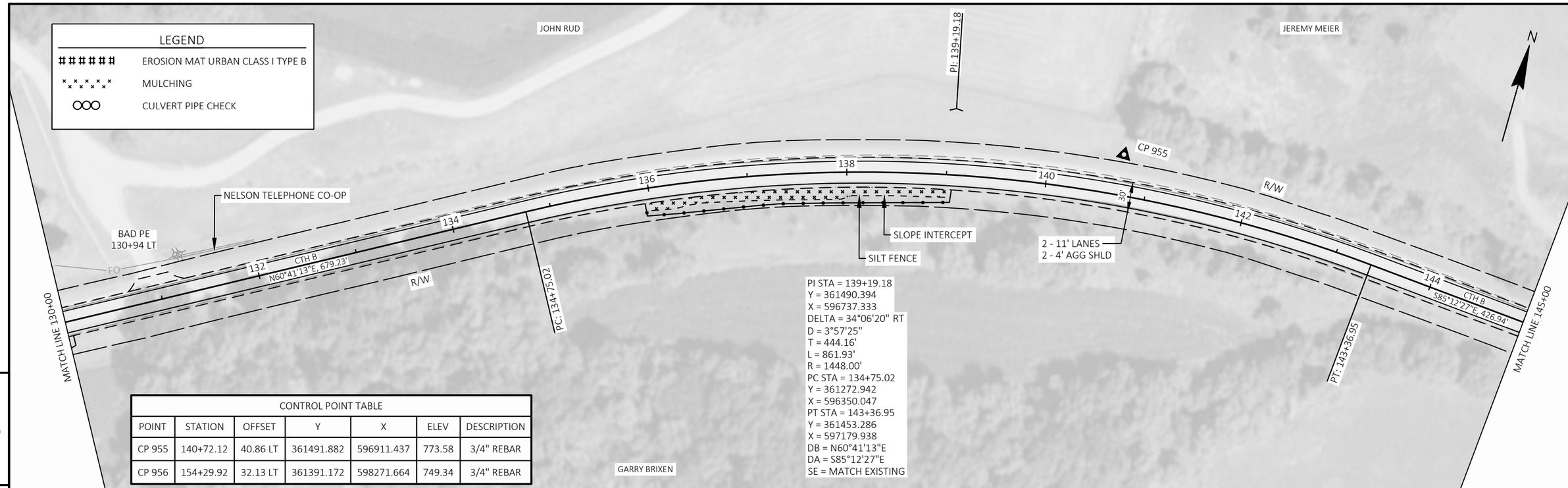

CONTROL POINT TABLE						
POINT	STATION	OFFSET	Y	X	ELEV	DESCRIPTION
CP 955	140+72.12	40.86 LT	361491.882	596911.437	773.58	3/4" REBAR
CP 956	154+29.92	32.13 LT	361391.172	598271.664	749.34	3/4" REBAR

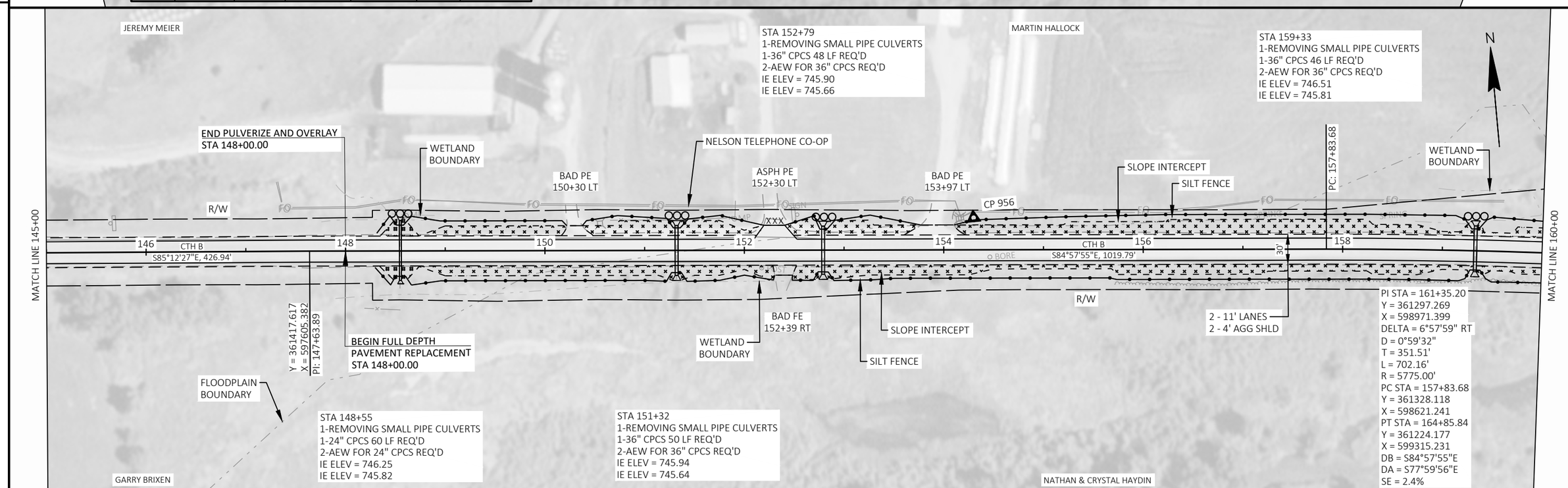

PROJECT NO: 7229-00-70	HWY: CTH B	COUNTY: BUFFALO	PLAN SHEETS	SHEET 22	E

FILE NAME : C:\OD\ONEDRIVE - CORRE, INC\PROJECTS NW REGION\PROJECTS - 7229-00-00_BUFFALO CO_CTH B\500_CADD\501_C3D_2022\72290000\SHEETS\050201-PN.DWG
LAYOUT NAME - 02
PLOT DATE : 9/17/2025 9:52 AM PLOT BY : NICHOLAS WATHKE, PE PLOT NAME : PLOT SCALE : 1 IN:100 FT

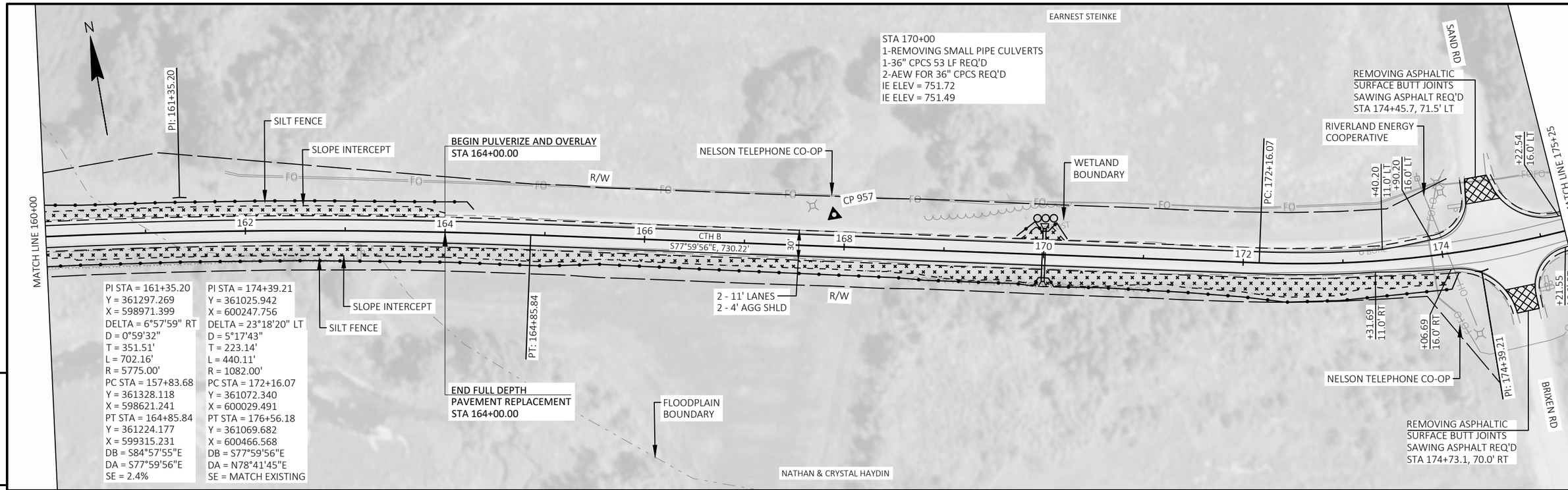

PROJECT NO: 7229-00-70	HWY: CTH B	COUNTY: BUFFALO	PLAN SHEETS	SHEET 23	E

FILE NAME : C:\OD\ONEDRIVE - CORRE, INC\PROJECTS NW REGION\PROJECTS - 7229-00-00_BUFFALO CO_CTH B\500_CADD\501_C3D_2022\72290000\SHEETS\050201-PN.DWG
LAYOUT NAME - 03
PLOT DATE : 9/17/2025 9:52 AM
PLOT BY : NICHOLAS WATHKE, PE
PLOT NAME :
PLOT SCALE : 1 IN:100 FT
WISDOT/CADDS SHEET 44

CONTROL POINT TABLE						
POINT	STATION	OFFSET	Y	X	ELEV	DESCRIPTION
CP 959	195+60.48	25.28 RT	361240.226	602360.939	769.76	3/4" REBAR

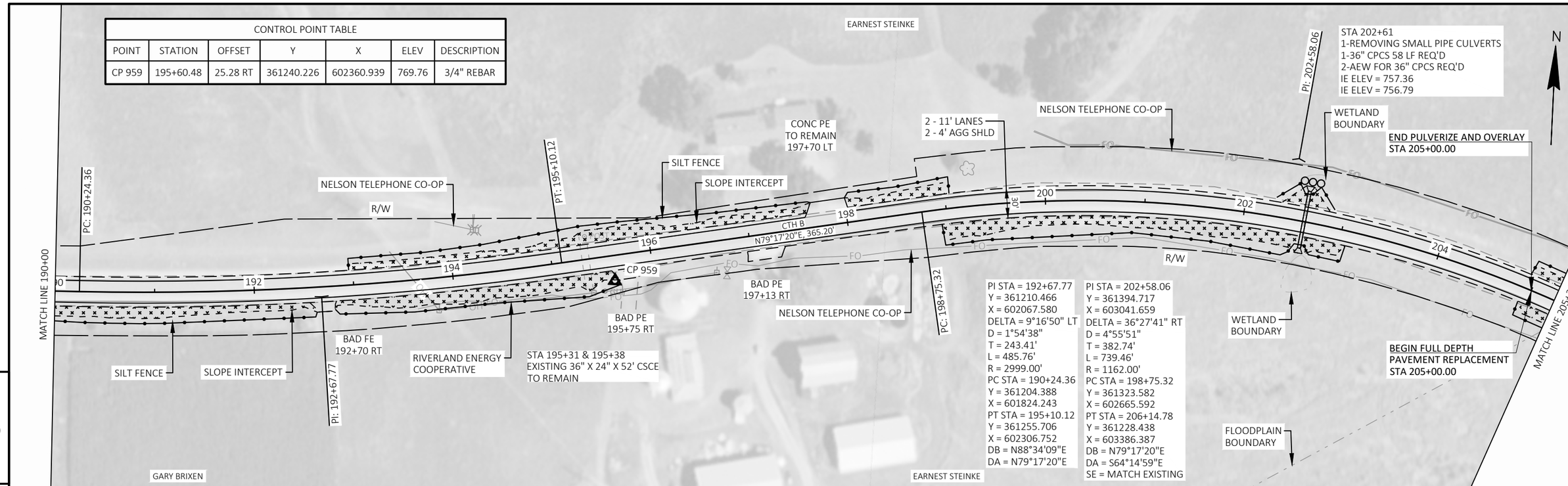

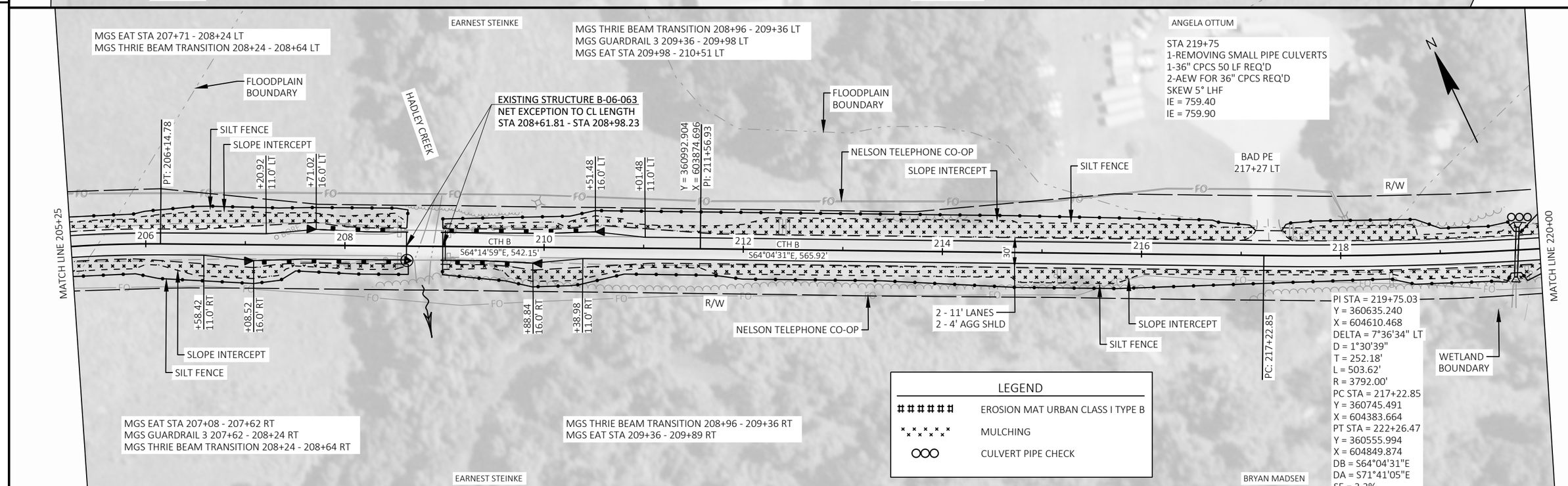

PROJECT NO: 7229-00-70	HWY: CTH B	COUNTY: BUFFALO	PLAN SHEETS	SHEET 24	E

FILE NAME : C:\OD\ONEDRIVE - CORRE, INC\PROJECTS NW REGION\PROJECTS - 7229-00-00_BUFFALO CO_CTH B\500_CADD\501_C3D_2022\72290000\SHEETS\050201-PN.DWG
LAYOUT NAME - 04
PLOT DATE : 9/17/2025 9:52 AM PLOT BY : NICHOLAS WATHKE, PE PLOT NAME : PLOT SCALE : 1 IN:100 FT

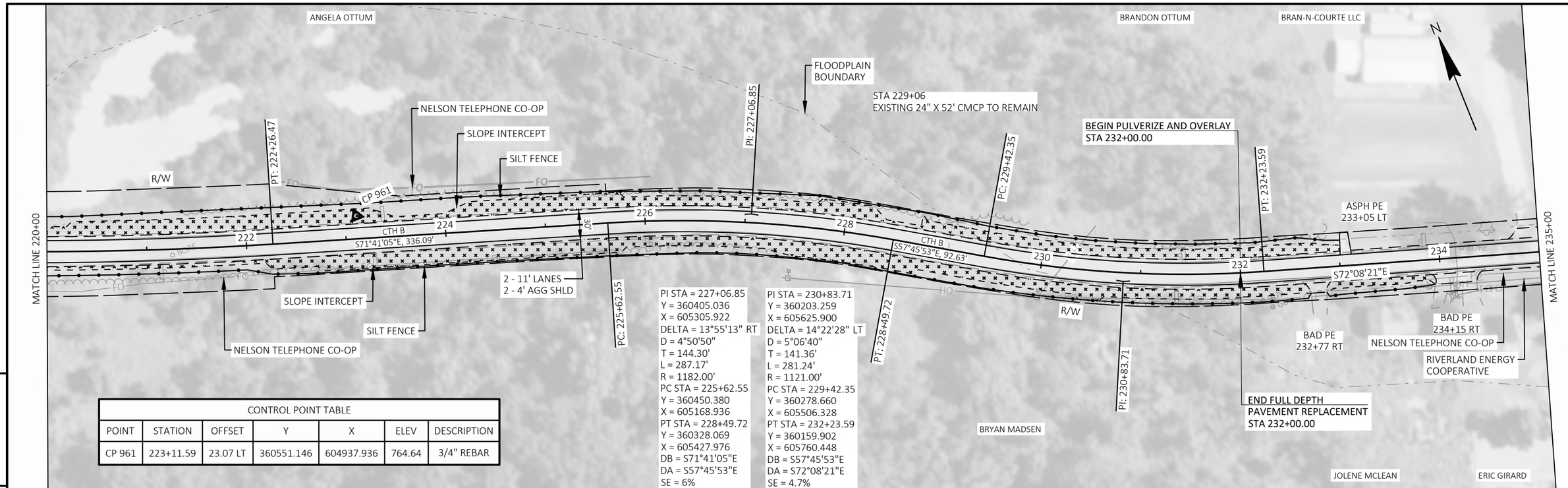

CONTROL POINT TABLE						
POINT	STATION	OFFSET	Y	X	ELEV	DESCRIPTION
CP 961	223+11.59	23.07 LT	360551.146	604937.936	764.64	3/4" REBAR

5

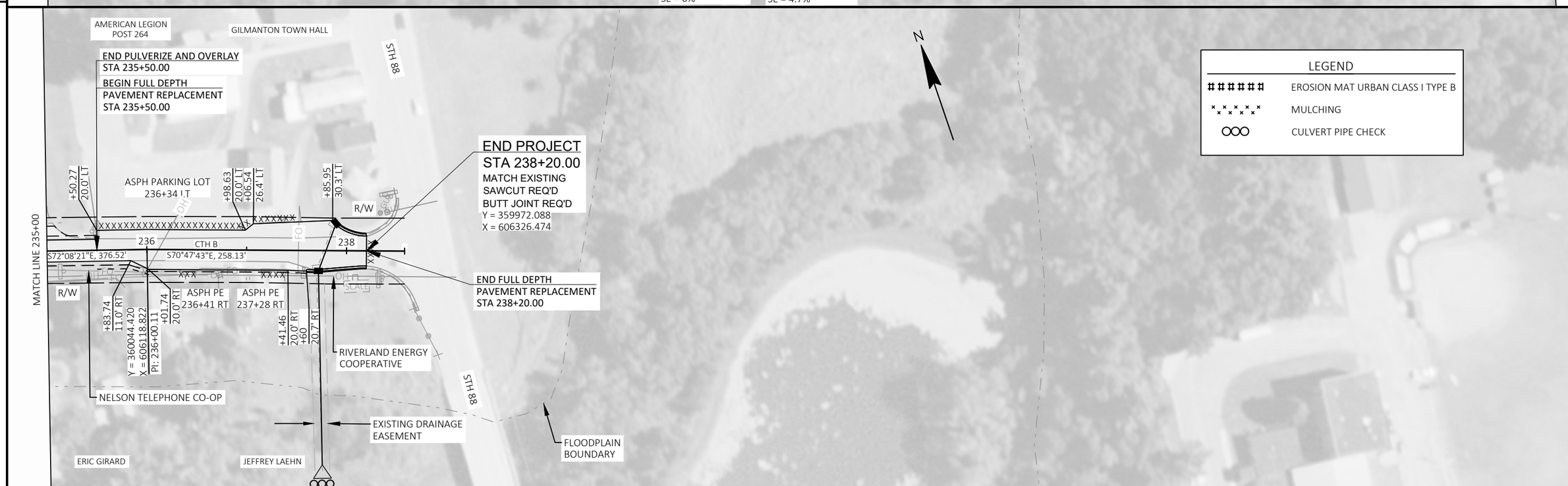

5

PROJECT NO: 7229-00-70	HWY: CTH B	COUNTY: BUFFALO	PLAN SHEETS	SHEET 25	E

Standard Detail Drawing List

08A05-22C	INLET COVERS TYPE F, HM, HM-S, S, T, HM-GJ & HM-GJ-S
08C06-03	INLETS 3-FT AND 4-FT DIAMETER
08D01-23A	CONCRETE CURB & GUTTER
08D01-23B	CONCRETE CURB, TIES AND CURB AND GUTTER APPLICATIONS
08D21-01	DRIVEWAYS WITHOUT CURB & GUTTER
08E09-06	SILT FENCE
08E11-02	TURBIDITY BARRIER
08E15-01	CULVERT PIPE CHECK
08F01-11	APRON ENDWALLS FOR CULVERT PIPE
08F04-08	JOINT TIES FOR CONCRETE PIPE AND CONCRETE COLLAR DETAIL
14B29-01	SAFETY EDGE
14B42-07A	MIDWEST GUARDRAIL SYSTEM (MGS) GUARDRAIL
14B42-07B	MIDWEST GUARDRAIL SYSTEM (MGS) GUARDRAIL
14B42-07C	MIDWEST GUARDRAIL SYSTEM (MGS) GUARDRAIL
14B42-07D	MIDWEST GUARDRAIL SYSTEM (MGS) GUARDRAIL
14B44-04A	MIDWEST GUARDRAIL SYSTEM ENERGY ABSORBING TERMINAL (MGS)
14B44-04B	MIDWEST GUARDRAIL SYSTEM ENERGY ABSORBING TERMINAL (MGS)
14B44-04C	MIDWEST GUARDRAIL SYSTEM ENERGY ABSORBING TERMINAL (MGS)
14B45-05A	MIDWEST GUARDRAIL SYSTEM THRIE BEAM TRANSITION (MGS)
14B45-05B	MIDWEST GUARDRAIL SYSTEM THRIE BEAM TRANSITION (MGS)
14B45-05C	MIDWEST GUARDRAIL SYSTEM THRIE BEAM TRANSITION (MGS)
14B45-05D	MIDWEST GUARDRAIL SYSTEM THRIE BEAM TRANSITION (MGS)
14B45-05E	MIDWEST GUARDRAIL SYSTEM THRIE BEAM TRANSITION (MGS)
14B45-05F	MIDWEST GUARDRAIL SYSTEM THRIE BEAM TRANSITION (MGS)
14B45-05G	MIDWEST GUARDRAIL SYSTEM THRIE BEAM TRANSITION (MGS)
14B45-05H	MIDWEST GUARDRAIL SYSTEM THRIE BEAM TRANSITION (MGS)
14B45-05I	MIDWEST GUARDRAIL SYSTEM THRIE BEAM TRANSITION (MGS)
14B45-05J	MIDWEST GUARDRAIL SYSTEM THRIE BEAM TRANSITION (MGS)
14B45-05K	MIDWEST GUARDRAIL SYSTEM THRIE BEAM TRANSITION (MGS)
14B45-05L	MIDWEST GUARDRAIL SYSTEM THRIE BEAM TRANSITION (MGS)
15C02-09A	BARRICADES AND SIGNS FOR MAINLINE CLOSURES
15C02-09B	BARRICADES AND SIGNS FOR VARIOUS CLOSURES
15C04-05	TRAFFIC CONTROL, ADVANCE WARNING SIGNS 45 M.P.H. OR GREATER TWO-WAY UNDIVIDED ROAD OPEN TO TRAFFIC
15C05-05	TRAFFIC CONTROL, ADVANCE WARNING SIGNS 40 M.P.H. OR LESS
15C08-24A	PERMANENT LONGITUDINAL PAVEMENT MARKINGS
15C11-10B	CHANNELIZING DEVICES DRUMS, CONES, BARRICADES AND VERTICAL PANELS
15C33-05	STOP LINE AND CROSSWALK PAVEMENT MARKING

6

6

GENERAL NOTES

DETAILS OF CONSTRUCTION, MATERIALS AND WORKMANSHIP NOT SHOWN ON THIS DRAWING SHALL CONFORM TO THE PERTINENT REQUIREMENTS OF THE STANDARD SPECIFICATIONS AND THE APPLICABLE SPECIAL PROVISIONS.

DETAIL DRAWINGS FOR PROPOSED ALTERNATE DESIGNS FOR INLET COVERS SHALL BE SUBMITTED TO THE ENGINEER FOR APPROVAL PROVIDING THAT SUCH ALTERNATE DESIGNS MAKE PROVISION FOR EQUIVALENT CAPACITY AND STRENGTH.

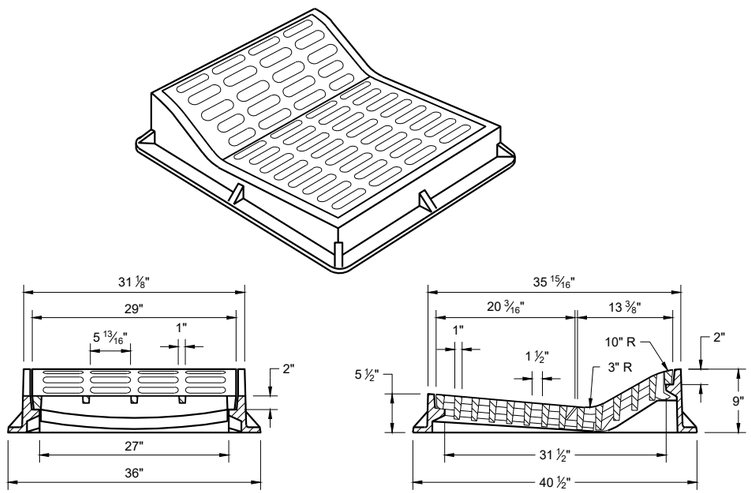

TYPE "F"

USE WITH TYPES "A" AND "D" CONCRETE CURB AND GUTTER, 36"

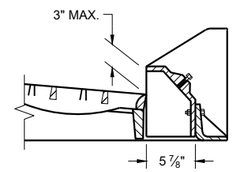

ALTERNATIVE CURB BOX FOR TYPE "HM" COVER

USE WITH TYPES "G" AND "J" CONCRETE CURB AND GUTTER, 30 INCH
NOTED AS TYP "HM-GJ" ON DRAINAGE TABLE

NOTE:
SPECIAL GRATE FOR THE TYPE "H" COVER MAY ALSO BE USED FOR THE TYPE "HM-GJ" COVER.

NOTED AS TYPE HM-GJ-S ON THE DRAINAGE TABLE.

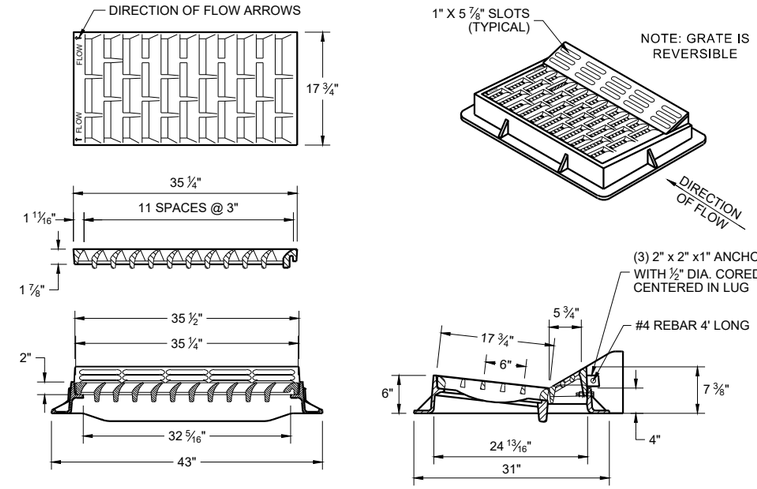

TYPE "HM"

USE WITH TYPES "A" AND "D" CONCRETE CURB AND GUTTER, 36"

NOTE:
SPECIAL GRATE FOR THE TYPE "H" COVER MAY ALSO BE USED FOR THE TYPE "HM-GJ" COVER.

NOTED AS TYPE HM-GJ-S ON THE DRAINAGE TABLE.

6

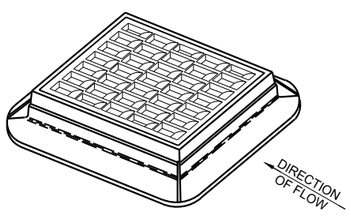

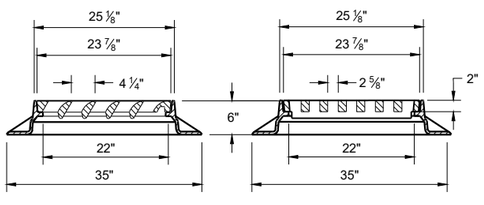

TYPE "S"

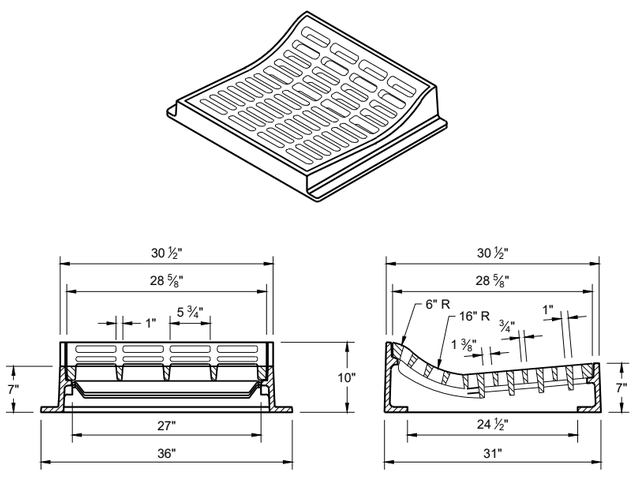

TYPE "T"

USE WITH TYPES "R" AND "T" CONCRETE CURB AND GUTTER, 36"

INLET COVERS
TYPES F, HM, HM-S, S, T, HM-GJ AND HM-GJ-S

STATE OF WISCONSIN
DEPARTMENT OF TRANSPORTATION

APPROVED
February 2025 — DATE
/S/ Rodney Taylor — ROADWAY STANDARDS DEVELOPMENT UNIT SUPERVISOR

FHWA

SDD 08A05-22c

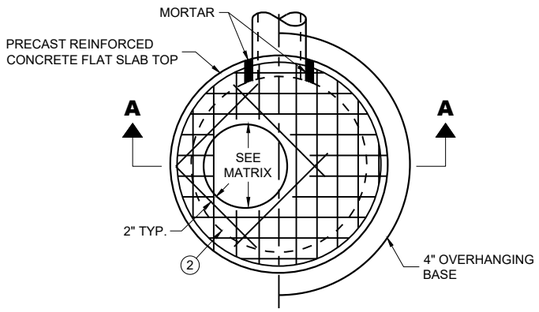

PLAN VIEW CIRCULAR OPENING

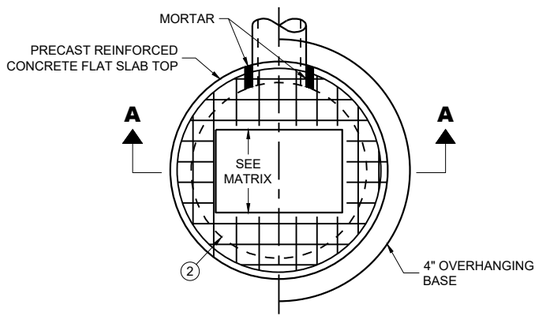

PLAN VIEW RECTANGULAR OPENING

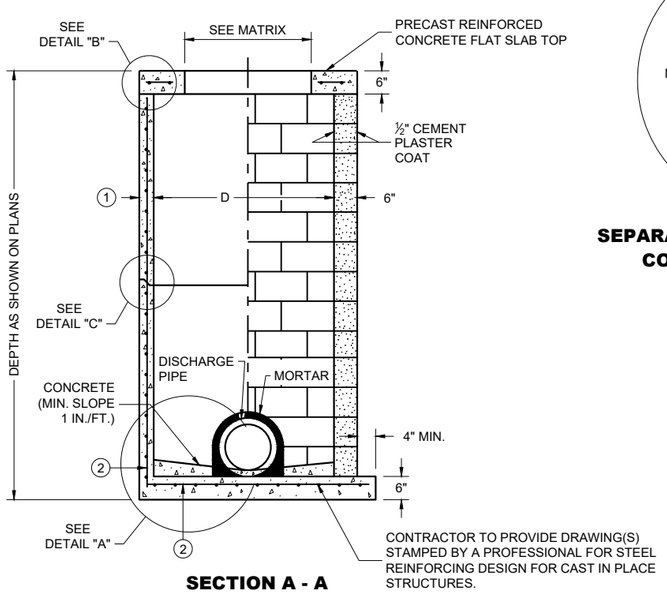

SECTION A - A

PRECAST REINFORCED CONCRETE WITH MONOLITHIC BASE

CONCRETE BLOCK WITH CAST IN PLACE OR PRECAST REINFORCED CONCRETE BASE (2)

CIRCULAR INLETS WITH FLAT TOP

CATCH BASIN COVER OPENING MATRIX

INLET SIZE	INLET COVER TYPE	ALL A'S	ALL B'S	BW	C	F	ALL H'S	S	T	V	WM	Z
	OPENING SIZE (FT.)											
3-FT	2 DIA.				X							X
	2 X 2	X	X					X		X		
4-FT	2 DIA.				X							X
	2 X 2	X	X					X		X		
	2 X 2.5			X				X	X	X	X	
	2 X 3						X					
	2.5 X 3					X						

PIPE MATRIX

INLET SIZE	MAXIMUM INSIDE PIPE DIAMETER FOR TWO PIPES	
	180° SEPARATION (IN)	90° SEPARATION (IN)
3-FT	15	12
4-FT	24	18

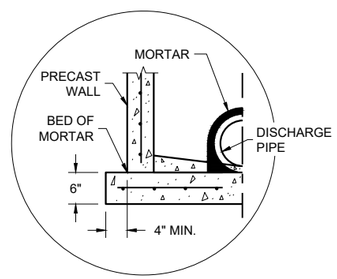

SEPARATE PRECAST REINFORCED CONCRETE BASE OPTION

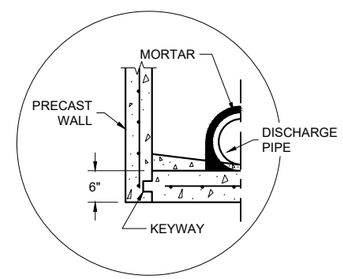

PRECAST REINFORCED CONCRETE WITH INTEGRAL BASE OPTION

DETAIL "A"

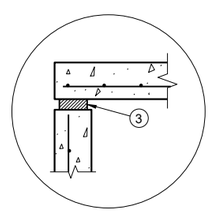

TOP WITH PLAIN END JOINT

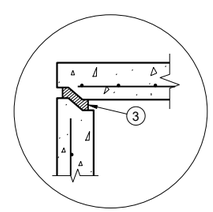

TOP WITH TONGUE AND GROOVE JOINT

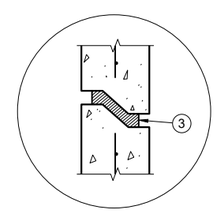

RISER WITH TONGUE AND GROOVE JOINT

DETAIL "B"

DETAIL "C"

INLETS 3-FT AND 4-FT DIAMETER

GENERAL NOTES

DETAILS OF CONSTRUCTION, MATERIALS AND WORKMANSHIP NOT SHOWN ON THIS DRAWING SHALL CONFORM TO THE PERTINENT REQUIREMENTS OF THE STANDARD SPECIFICATIONS AND THE APPLICABLE SPECIAL PROVISIONS.

UNLESS OTHERWISE AUTHORIZED IN WRITING BY THE ENGINEER, THE CONTRACTOR SHALL NOT ORDER AND DELIVER PRECAST INLET UNITS REQUIRED FOR THE PROJECT UNTIL A LIST OF SIZES IS FURNISHED BY THE ENGINEER.

DETAILED DRAWINGS FOR PROPOSED ALTERNATE DESIGNS FOR UNDERGROUND DRAINAGE STRUCTURES SHALL BE SUBMITTED TO THE ENGINEER FOR APPROVAL PROVIDING THAT SUCH ALTERNATE DESIGNS MAKE PROVISION FOR EQUIVALENT CAPACITY AND STRENGTH.

ALL DRAINAGE STRUCTURES ARE DESIGNATED ON THE PLANS AS "MANHOLES 3X3-L", "CATCH BASINS 4-B", "INLETS 2X3-H", ETC. THE FIRST NUMBERS DESIGNATE THE SIZE OF THE STRUCTURE, AND THE FOLLOWING LETTER DESIGNATES THE TYPE OF COVER TO BE USED TO COMPRISE THE COMPLETE UNIT.

BASES SHALL BE PLACED ON A BED OF MATERIAL AT LEAST 6 INCHES IN DEPTH, WHICH MEETS THE REQUIREMENTS OF FOUNDATION BACKFILL. THIS BEDDING SHALL BE COMPACTED AND PROVIDE UNIFORM SUPPORT FOR THE ENTIRE AREA OF THE BASE.

ALL BAR STEEL REINFORCEMENT SHALL BE EMBEDDED 2 INCHES CLEAR UNLESS OTHERWISE SHOWN OR NOTED.

ALL PRECAST INLET UNITS SHALL CONFORM TO THE PERTINENT REQUIREMENTS OF AASHTO DESIGNATION M199.

PRECAST REINFORCED RISERS SHALL HAVE A TONGUE AND GROOVE JOINT WITH TONGUE UP OR DOWN.

4" OVERHANGING BASES ARE REQUIRED FOR ALL CONCRETE BLOCK INSTALLATIONS. 4" OVERHANG IS REQUIRED WHEN SEPARATE PRECAST BASE IS PROVIDED. OVERHANG IS NOT REQUIRED ON PRECAST STRUCTURES WITH AN INTEGRAL OR MONOLITHIC BASE.

FOR ADDITIONAL CONFIGURATIONS, MAINTAIN A MINIMUM OF 12 INCHES AS MEASURED FROM THE INSIDE OF THE STRUCTURE WALL BETWEEN THE OUTSIDE PIPE WALLS OF ADJACENT PIPES. SEE DETAIL "D".

(1) MINIMUM WALL THICKNESS SHALL BE 4 INCHES FOR 3-FT DIAMETER AND 5 INCHES FOR 4-FT DIAMTER PRECAST INLETS.

(2) FOR PRECAST INLETS AND REINFORCED CONCRETE BASES PROVIDE REINFORCING STEEL IN ACCORDANCE TO AASHTO M199.

(3) JOINTS TO BE SEALED WITH A BUTYL RUBBER SEAL PER SEALANT MANUFACTURERS RECOMMENDATIONS CONFORMING TO ASTM C 990 OR RUBBER GASKETS CONFORMING TO ASTM C443.

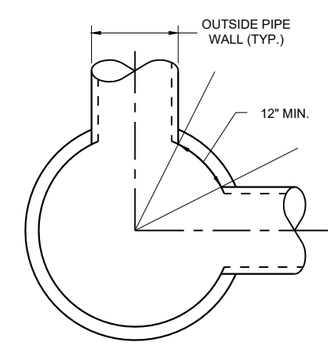

MINIMUM HORIZONTAL PIPE SEPARATION

DETAIL "D"

INLETS 3-FT AND 4-FT DIAMETER

STATE OF WISCONSIN
DEPARTMENT OF TRANSPORTATION

APPROVED
December 2023 — DATE
/S/ Rodney Taylor — ROADWAY STANDARDS DEVELOPMENT UNIT SUPERVISOR
FHWA

6

SDD 08C06-03

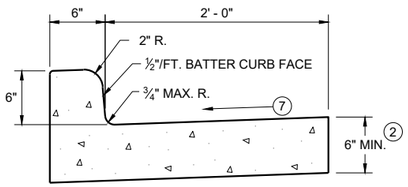

TYPES A (1) & D

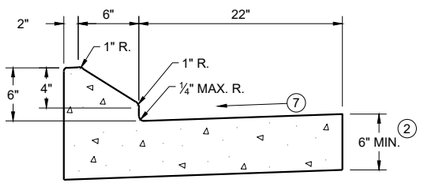

6" SLOPED CURB TYPES G (1) & J

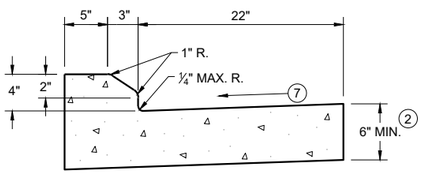

4" SLOPED CURB TYPES G (1) & J

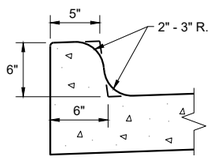

TYPES K (1) & L
(OPTIONAL CURB SHAPE)

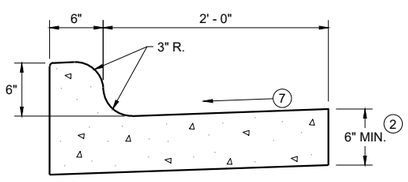

TYPES K (1) & L

CONCRETE CURB AND GUTTER 30"

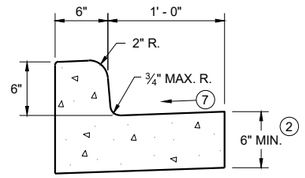

TYPES A (1) & D

CONCRETE CURB AND GUTTER 18"

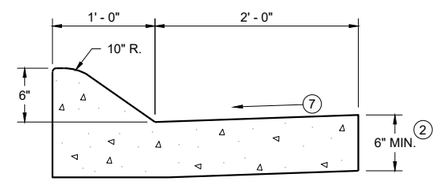

6" SLOPED CURB TYPES A (1) & D

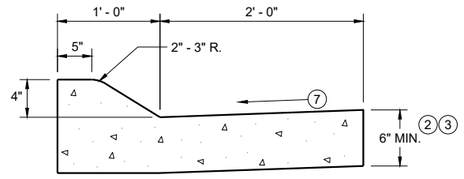

4" SLOPED CURB TYPES A (1) & D

CONCRETE CURB AND GUTTER 36"

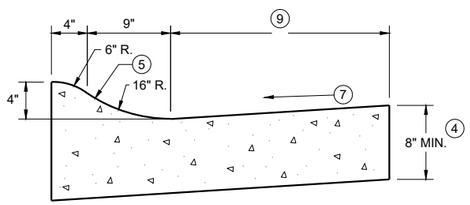

4" SLOPED CURB TYPES R (1) & T

TBT & TBTT	X
30"	22"
36"	28"

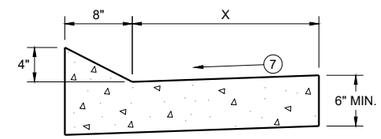

TYPES TBT & TBTT (1)

CONCRETE CURB AND GUTTER

PAVEMENT THICKNESS AND MAXIMUM CONCRETE PANEL WIDTH TABLE

PAVEMENT THICKNESS	MAXIMUM PANEL WIDTH
LESS THAN 10"	12'
10" & ABOVE	15'

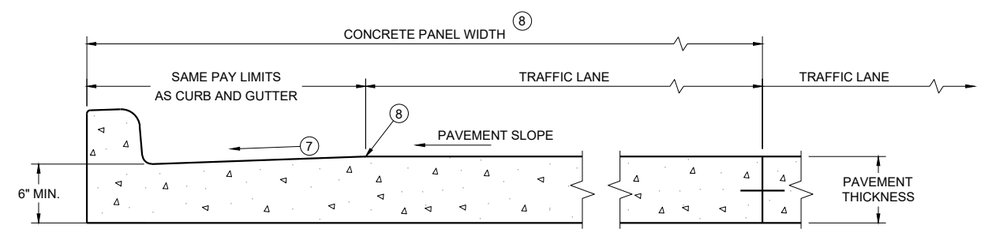

PARTIAL SECTION OF PAVEMENT WITH INTEGRAL CURB AND GUTTER *

* BIKE LANE IS NOT SHOWN

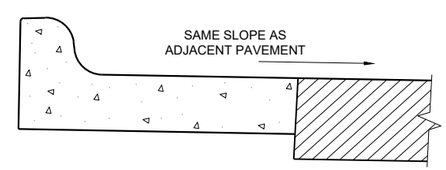

REVERSE SLOPE GUTTER (6)
(TYPICAL FOR ALL CURB & GUTTER TYPES)

GENERAL NOTES

DETAILS OF CONSTRUCTION AND WORKMANSHIP NOT SHOWN ON THIS DRAWING SHALL CONFORM TO THE PERTINENT REQUIREMENTS OF THE CONTRACT.

PAVEMENT TIES AND TIE BARS SHALL BE EPOXY COATED IN CONFORMANCE WITH SUBSECTION 505.2.6.2 OF THE STANDARD SPECIFICATIONS.

INTEGRAL CURB AND GUTTER SHALL CONFORM TO THE DETAILS SHOWN FOR CONCRETE CURB AND GUTTER INCLUDING THE TRANSVERSE GUTTER SLOPE.

UNLESS OTHERWISE SHOWN ON THE TYPICAL CROSS SECTIONS, THE BASE AGGREGATE AND COMMON EXCAVATION LIMITS ARE 2' - 0" BEHIND THE BACK OF CURBS.

(1) TIE BARS ARE REQUIRED FOR CURB AND GUTTERS TYPES A, G, K, R, AND TBTT.

(2) THE BOTTOM OF CURB AND GUTTER MAY BE CONSTRUCTED EITHER LEVEL OR PARALLEL TO THE SLOPE OF THE SUBGRADE OR BASE AGGREGATE PROVIDED A 6" MINIMUM GUTTER THICKNESS IS MAINTAINED.

(3) USE 8" MINIMUM GUTTER THICKNESS WHEN USED WITH AN ADJACENT CONCRETE TRUCK APRON PLACED BEHIND BACK OF CURB.

(4) THE BOTTOM OF CURB AND GUTTER MAY BE CONSTRUCTED EITHER LEVEL OR PARALLEL TO THE SLOPE OF THE SUBGRADE OR BASE AGGREGATE PROVIDED A 8" MINIMUM GUTTER THICKNESS IS MAINTAINED.

(5) UNLESS OTHERWISE NOTED, FOR STAKING PURPOSES THE FACE OF CURB IS 6" FROM THE BACK OF CURB.

(6) WHEN REVERSE SLOPE GUTTER IS REQUIRED, THE LOCATION(S) WILL BE SHOWN ELSEWHERE IN THE PLAN.

(7) USE 4% GUTTER CROSS SLOPE UNLESS OTHERWISE NOTED IN THE PLANS.

(8) INCLUDE LONGITUDINAL JOINT AND TIE BARS ALONG LANE EDGE WHEN CONCRETE PANEL WIDTH EXCEEDS THE MAXIMUM WIDTH PER TABLE BELOW. LONGITUDINAL JOINT(S) ARE NOT ALLOWED WITHIN TRAFFIC LANES AND BIKE LANES. LONGITUDINAL JOINT MAY BE SAWED.

(9) CONCRETE CURB AND GUTTER 4-INCH SLOPED 30-INCH TYPE "R" AND "T" = 17 INCHES
CONCRETE CURB AND GUTTER 4-INCH SLOPED 36-INCH TYPE "R" AND "T" = 23 INCHES

CONCRETE CURB AND GUTTER

STATE OF WISCONSIN
DEPARTMENT OF TRANSPORTATION

6
SDD 08D01-23a

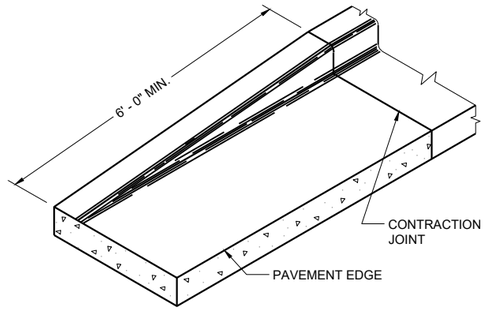

END SECTION CURB AND GUTTER

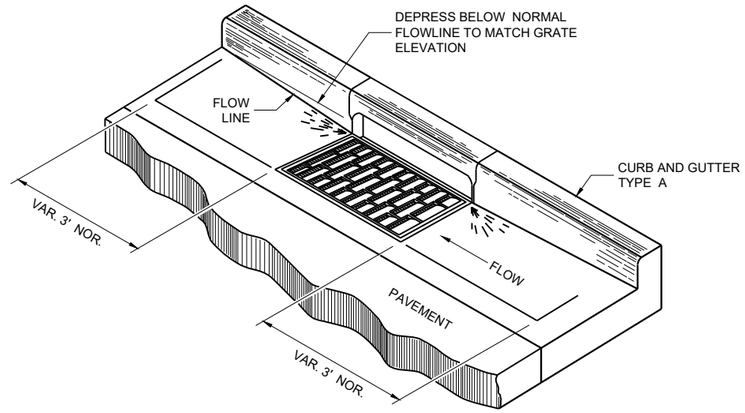

DETAIL OF CURB AND GUTTER AT INLETS

(TYPICAL H INLET COVER SHOWN)

GENERAL NOTES

DETAILS OF CONSTRUCTION AND WORKMANSHIP NOT SHOWN ON THIS DRAWING SHALL CONFORM TO THE PERTINENT REQUIREMENTS OF THE CONTRACT.

PAVEMENT TIES AND TIE BARS SHALL BE EPOXY COATED IN CONFORMANCE WITH SUBSECTION 505.2.6.2 OF THE STANDARD SPECIFICATIONS.

UNLESS OTHERWISE SHOWN ON THE TYPICAL CROSS SECTIONS, THE BASE AGGREGATE AND COMMON EXCAVATION LIMITS ARE 2' - 0" BEHIND THE BACK OF CURBS.

(1) TIE BARS ARE REQUIRED FOR CURB AND GUTTERS TYPES A, G, K, R, AND TBTT.

(2) THE BOTTOM OF CURB AND GUTTER MAY BE CONSTRUCTED EITHER LEVEL OR PARALLEL TO THE SLOPE OF THE SUBGRADE OR BASE AGGREGATE PROVIDED A 6" MINIMUM GUTTER THICKNESS IS MAINTAINED.

(10) REFER TO SDD 08D18 AND 08D19 FOR ADDITIONAL DRIVEWAY ENTRANCE CURB DETAILS.

(11) PLACE 1" THICK EXPANSION JOINT MATERIAL BETWEEN VERTICAL FACE CURB TYPES EXTENDING FROM THE TOP OF CURB TO 1 INCH BELOW THE ADJOINING CONCRETE SURFACE. RIGID CONCRETE STRUCTURES INCLUDE RAISED CONCRETE MEDIANS, CONCRETE SAFETY ISLANDS, SPLITTER ISLANDS, OR LOCATIONS IDENTIFIED ON THE PLANS.

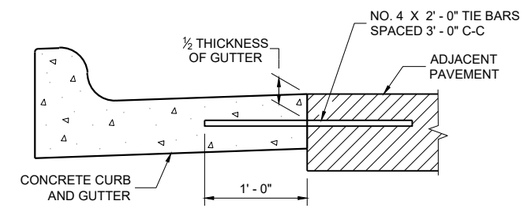

TYPICAL TIE BAR LOCATION (1)

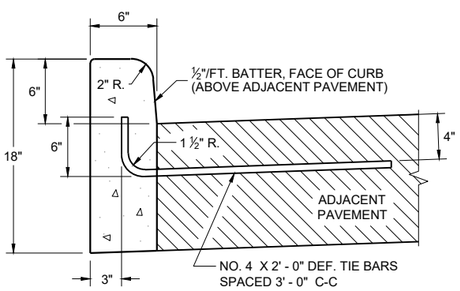

TYPES A (1) & D

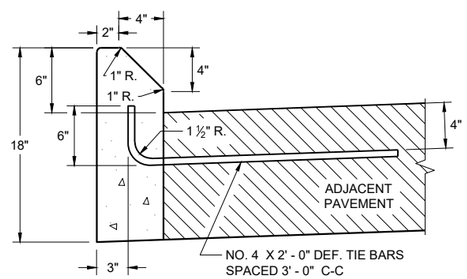

TYPES G (1) & J

CONCRETE CURB

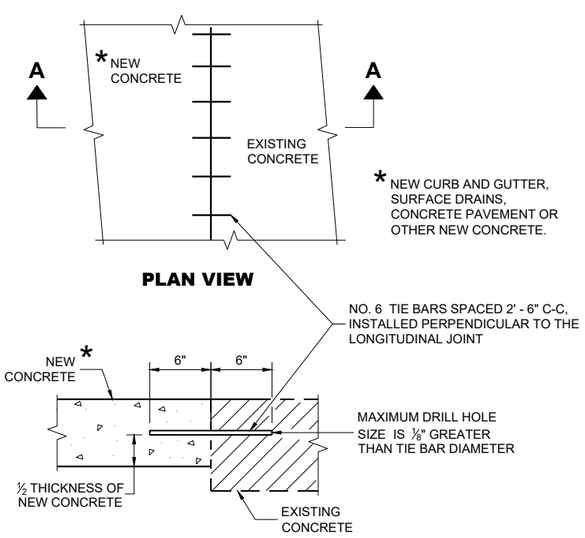

PLAN VIEW

SECTION A - A

TIE BARS DRILLED INTO EXISTING PAVEMENT

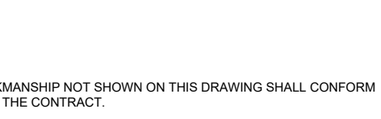

DRIVEWAY ENTRANCE CURB (10)

(WHEN DIRECTED BY THE ENGINEER)

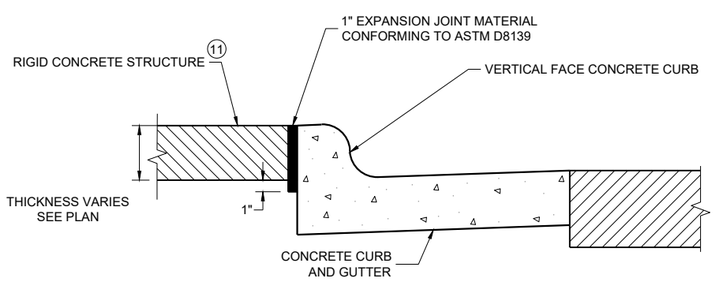

EXPANSION JOINT DETAIL FOR VERTICAL CURB ABUTTING A RIGID STRUCTURE (11)

CONCRETE CURB, TIES AND CURB AND GUTTER APPLICATIONS

STATE OF WISCONSIN
DEPARTMENT OF TRANSPORTATION

APPROVED
May 2023 — DATE
/S/ Rodnery Taylor — ROADWAY STANDARDS DEVELOPMENT UNIT SUPERVISOR

FHWA

6
SDD 08D01-23b

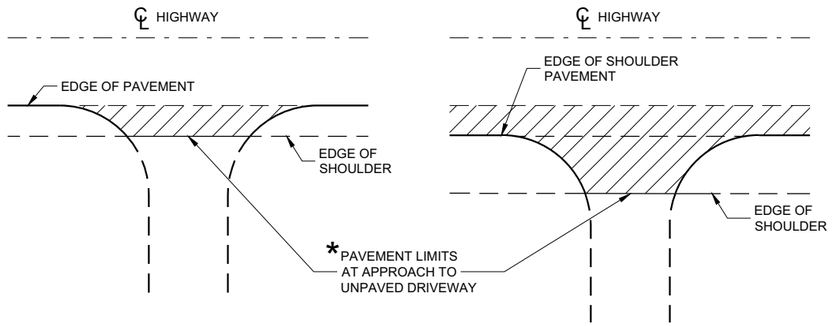

* WHERE DRIVEWAY IS PAVED, APPROACH PAVEMENT SHOULD BE EXTENDED TO MATCH DRIVEWAY PAVEMENT.

PLAN VIEW
(UNPAVED SHOULDER ON HIGHWAY)

PLAN VIEW
(PAVED SHOULDER ON HIGHWAY)

RURAL DRIVEWAY INTERSECTION DETAIL
(NO CURB AND GUTTER OR SIDEWALK)

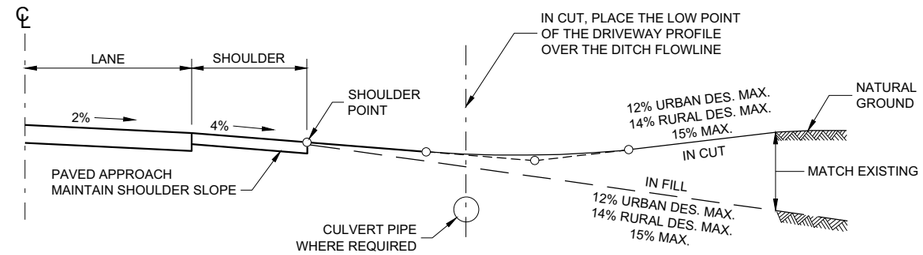

TYPICAL DRIVEWAY PROFILES

6

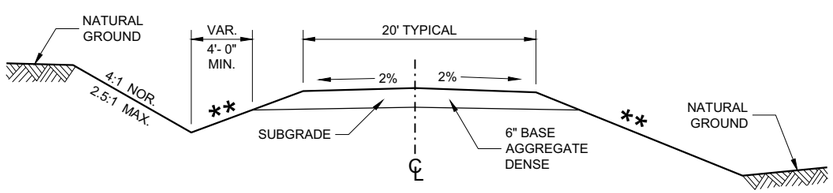

IN CUT **IN FILL**

TYPICAL CROSS SECTION FOR PRIVATE DRIVE OR FIELD ENTRANCE AGGREGATE SURFACE

** SLOPE CAN VARY WITH SPEED. SEE 11-45-30.6.2

POSTED SPEED MPH	MAX. SLOPE
<35	4:1
≥ 35 TO < 60	6:1
≥60	10:1

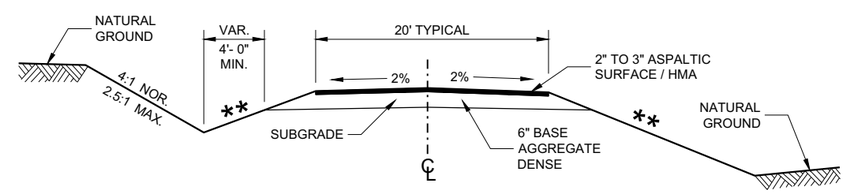

IN CUT **IN FILL**

TYPICAL CROSS SECTION FOR PRIVATE DRIVE OR FIELD ENTRANCE ASPHALTIC SURFACE

DRIVEWAYS WITHOUT CURB AND GUTTER

STATE OF WISCONSIN
DEPARTMENT OF TRANSPORTATION

APPROVED
December 2017 — DATE
/S/ Rodney Taylor — ROADWAY STANDARDS DEVE UNIT SUPERVISOR
FHWA

SDD 08D21 - 01

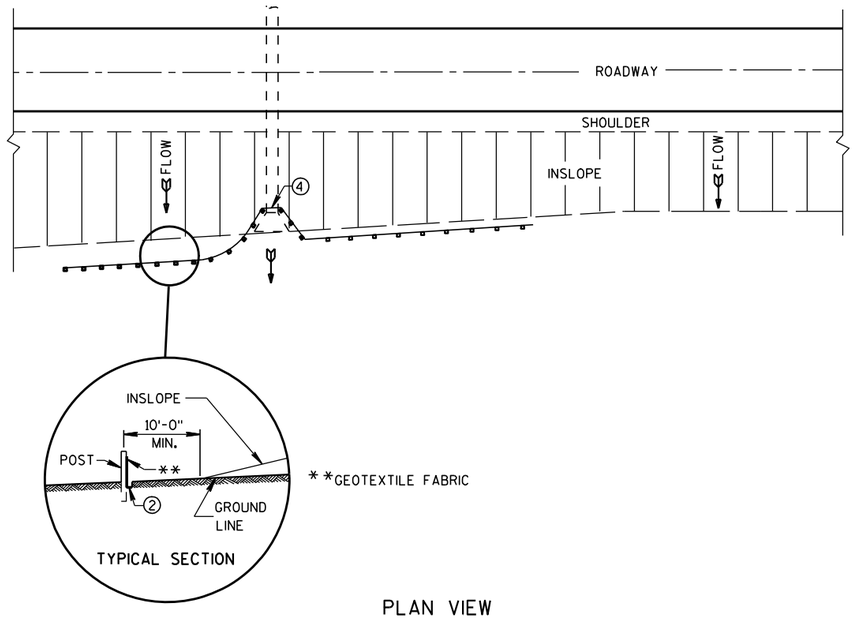

PLAN VIEW

TYPICAL APPLICATION OF SILT FENCE

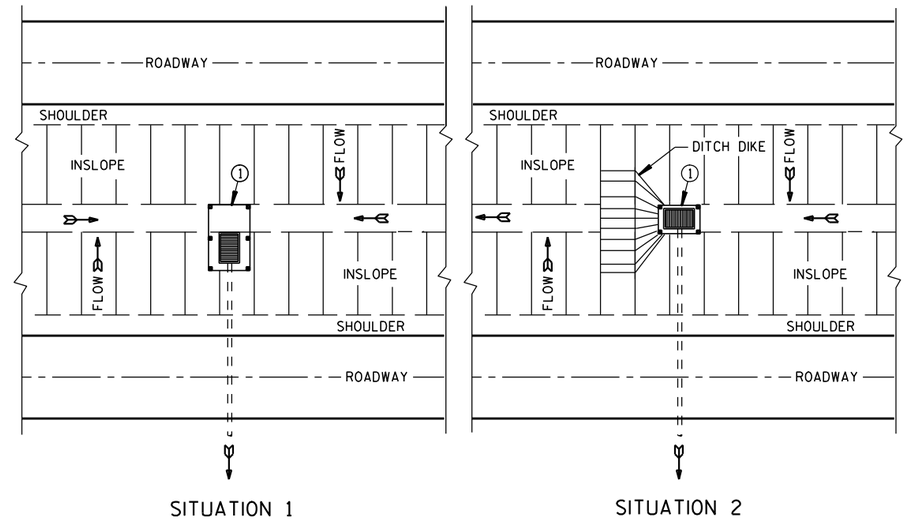

PLAN VIEW

SILT FENCE AT MEDIAN SURFACE DRAINS

GENERAL NOTES

DETAILS OF CONSTRUCTION NOT SHOWN ON THIS DRAWING SHALL CONFORM TO THE PERTINENT REQUIREMENTS OF THE STANDARD SPECIFICATIONS AND APPLICABLE SPECIAL PROVISIONS.

① HORIZONTAL BRACE REQUIRED WITH 2" X 4" WOODEN FRAME OR EQUIVALENT AT TOP OF POSTS.

② FOR MANUAL INSTALLATIONS THE TRENCH SHALL BE A MINIMUM OF 4" WIDE & 6" DEEP TO BURY AND ANCHOR THE GEOTEXTILE FABRIC. FOLD MATERIAL TO FIT TRENCH AND BACKFILL & COMPACT TRENCH WITH EXCAVATED SOIL.

③ WOOD POSTS SHALL BE A MINIMUM SIZE OF 1⅛" X 1⅛" OF OAK OR HICKORY.

④ SILT FENCE TO EXTEND ACROSS THE TOP OF THE PIPE.

⑤ CONSTRUCT SILT FENCE FROM A CONTINUOUS ROLL IF POSSIBLE BY CUTTING LENGTHS TO AVOID JOINTS. IF A JOINT IS NECESSARY USE ONE OF THE FOLLOWING TWO METHODS; A) OVERLAP THE END POSTS AND TWIST, OR ROTATE, AT LEAST 180 DEGREES. B) HOOK THE END OF EACH SILT FENCE LENGTH.

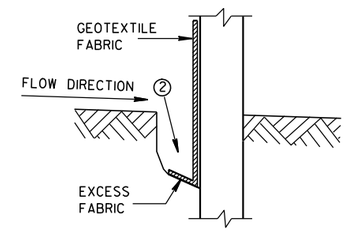

TRENCH DETAIL

NOTE: ADDITIONAL POST DEPTH OR TIE BACKS MAY BE REQUIRED IN UNSTABLE SOILS

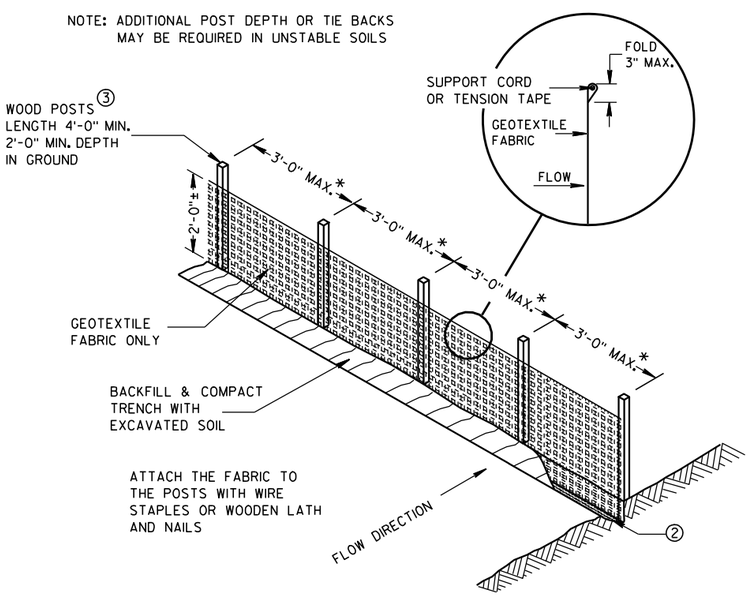

*NOTE: 8'-0" POST SPACING ALLOWED IF A WOVEN GEOTEXTILE FABRIC IS USED.

SILT FENCE

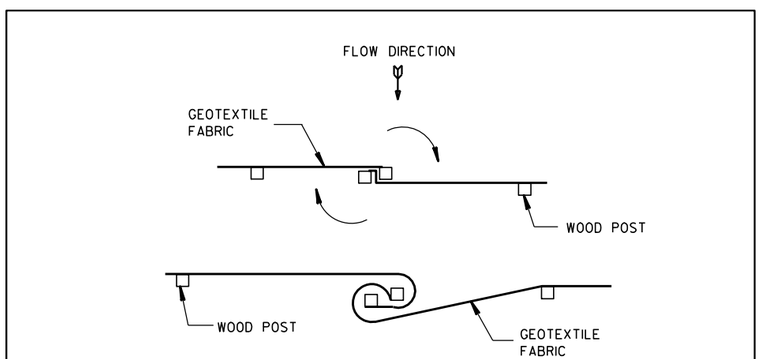

TWIST METHOD

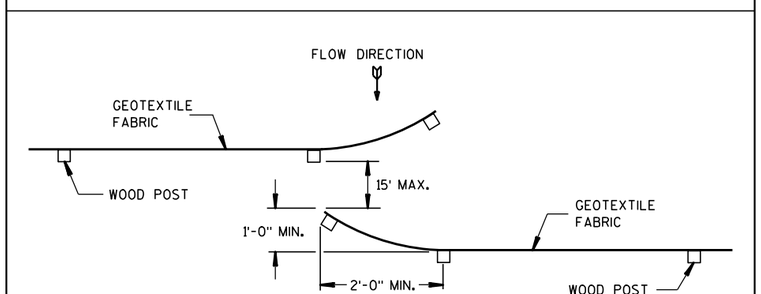

HOOK METHOD

JOINING TWO LENGTHS OF SILT FENCE ⑤

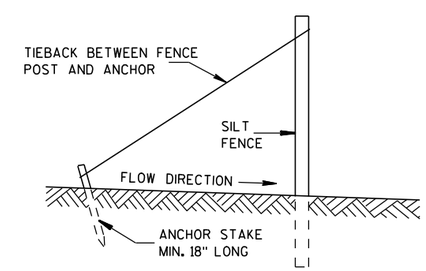

SILT FENCE TIE BACK

(WHEN REQUIRED BY THE ENGINEER)

SILT FENCE
STATE OF WISCONSIN DEPARTMENT OF TRANSPORTATION
APPROVED 4-29-05 /S/ Beth Cann----- DATE CHIEF ROADWAY DEVELOP ENGINEER FHWA

6

6

S.D.D. 8 E 9-6

S.D.D. 8 E 9-6

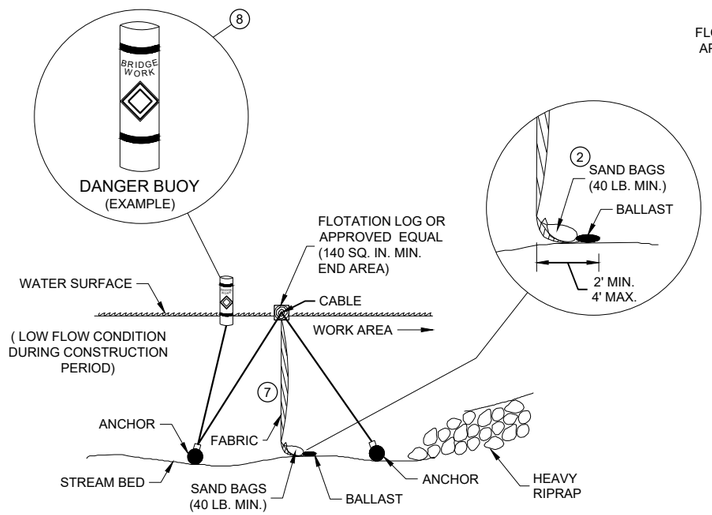

SECTION B - B

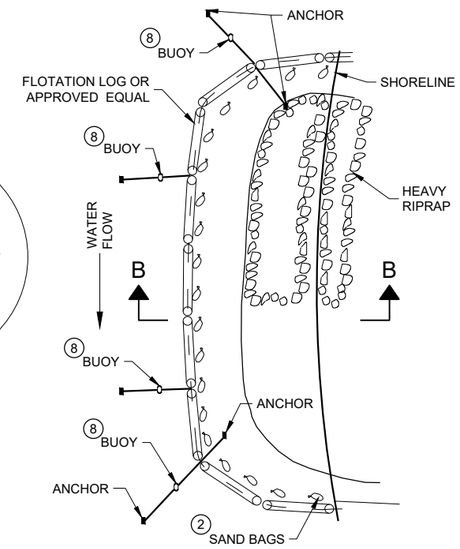

PLAN VIEW

TURBIDITY BARRIER - FLOAT ALTERNATIVE
CAUTION - SEE NOTE 6

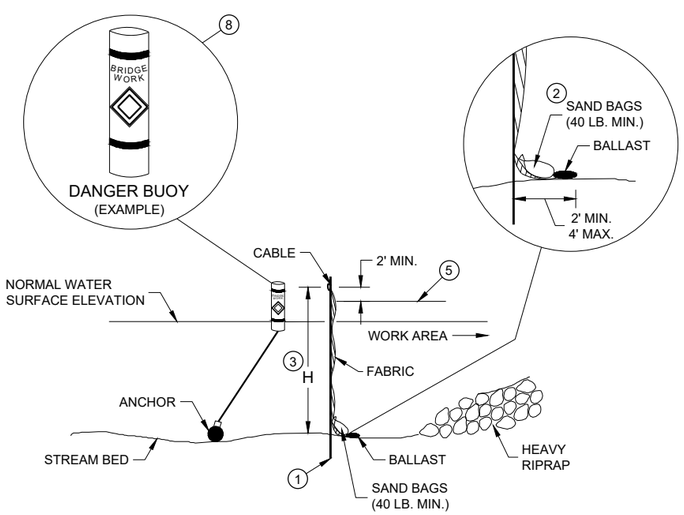

SECTION A - A

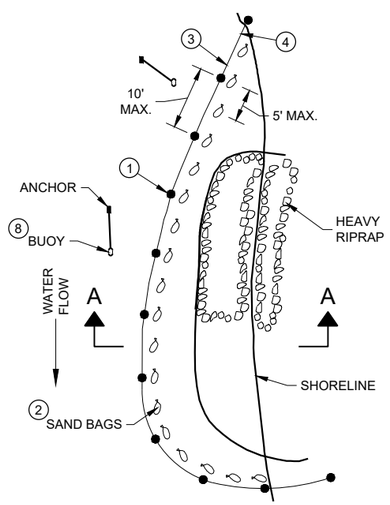

PLAN VIEW

TURBIDITY BARRIER - STANDARD POST INSTALLATION

TURBIDITY BARRIER PLACEMENT DETAILS

GENERAL NOTES

DETAILS OF CONSTRUCTION, MATERIALS AND WORKMANSHIP NOT SHOWN ON THIS DRAWING SHALL CONFORM TO THE PERTINENT REQUIREMENTS OF THE STANDARD SPECIFICATIONS AND THE APPLICABLE SPECIAL PROVISIONS.

TURBIDITY BARRIER MAY BE REMOVED AT THE ENGINEERS DISCRETION, WHEN PERMANENT EROSION CONTROL MEASURES HAVE BEEN ESTABLISHED.

1. DRIVEN STEEL POSTS, PIPES, OR CHANNELS. LENGTH SHALL BE SUFFICIENT TO SECURELY SUPPORT BARRIER AT HIGH WATER ELEVATIONS.
2. SAND BAGS TO BE USED AS ADDITIONAL BALLAST WHEN ORDERED BY THE ENGINEER TO MEET ADVERSE FIELD CONDITIONS. SPACE AS APPROPRIATE FOR SITE CONDITIONS.
3. WHEN BARRIER HEIGHT "H" EXCEEDS 8 FEET, POST SPACING MAY NEED TO BE DECREASED.
4. IN WATERWAYS SUBJECT TO FLUCTUATING WATER ELEVATIONS, PROVISIONS SHOULD BE MADE TO ALLOW THE WATER TO EQUALIZE ON EACH SIDE OF THE BARRIER. THIS MAY BE ACCOMPLISHED BY LEAVING A PORTION OF THE BARRIER OPEN ON THE UPSTREAM END.
5. ESTIMATED HIGH WATER ELEVATION DURING CONSTRUCTION PERIOD. MINIMUM BARRIER HEIGHT SHALL BE 2' GREATER THAN EITHER THE Q2 ELEVATION OR THE ESTIMATED HIGH WATER ELEVATION DURING CONSTRUCTION, WHICHEVER IS GREATER.
6. FLOAT ALTERNATIVE WILL ONLY BE ALLOWED WITH WRITTEN APPROVAL OF THE ENGINEER, AND IS MEANT FOR LOCATIONS WHERE BEDROCK PREVENTS THE INSTALLATION OF POSTS.
7. ALLOW SUFFICIENT SLACK VERTICALLY AND HORIZONTALLY SO THAT SEDIMENT BUILD UP WILL NOT SEPARATE OR LOWER THE TURBIDITY BARRIER.
8. USE AS DIRECTED BY COAST GUARD OR DNR PERMIT WHEN WORKING IN NAVIGABLE WATERWAYS.

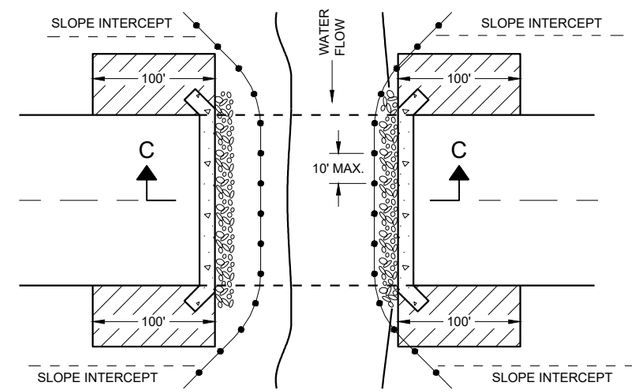

PLAN VIEW

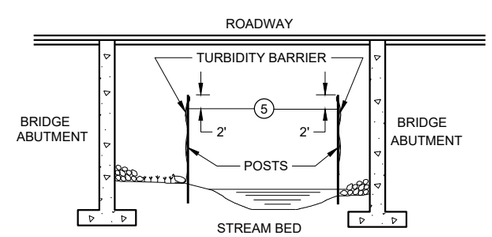

SECTION C - C

TURBIDITY BARRIER DETAIL SHOWING TYPICAL PLACEMENT AT STRUCTURES

TURBIDITY BARRIER

STATE OF WISCONSIN
DEPARTMENT OF TRANSPORTATION

APPROVED
6/4/02 — DATE
/S/ Beth Cannestra — CHIEF ROADWAY DEVELOPMENT ENGINEER
FHWA

6

6

SDD 08E11 - 02

SDD 08E11 - 02

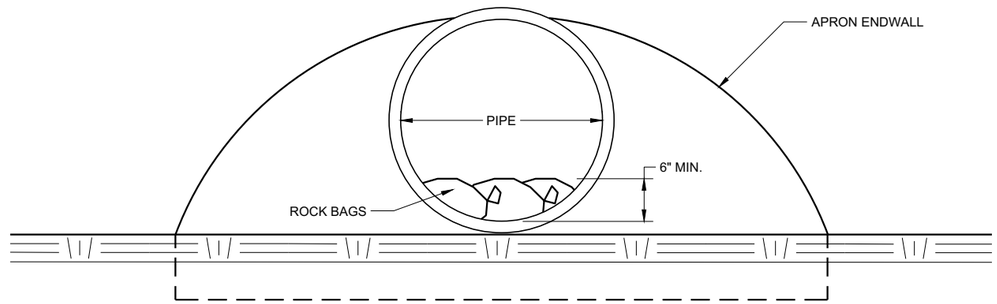

END VIEW

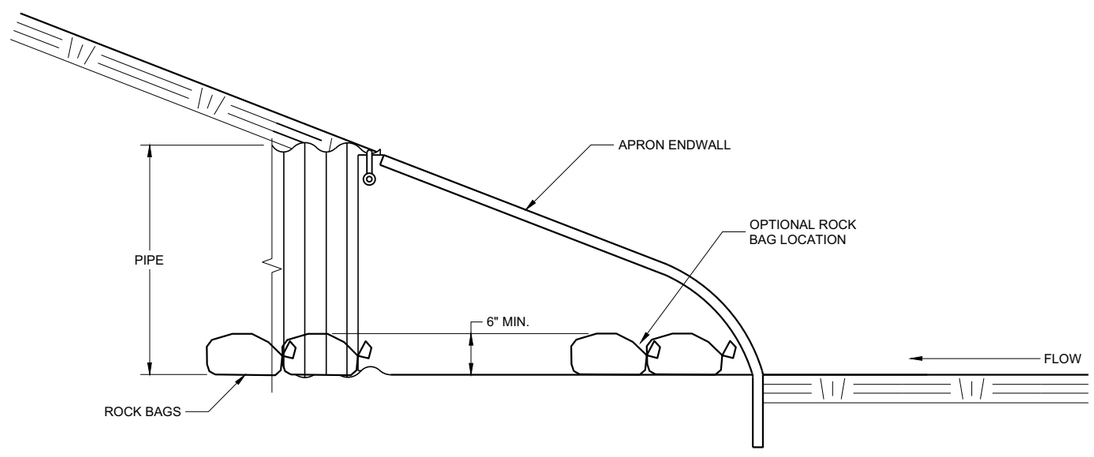

SIDE VIEW

CULVERT PIPE CHECK

(INSTALL ON INLET END ONLY)

CULVERT PIPE CHECK

STATE OF WISCONSIN
DEPARTMENT OF TRANSPORTATION

APPROVED
May 2019 — DATE
/S/ Daniel Schave — EROSION CONTROL ENGI
FHWA

6

6

SDD 08E15 - 01

SDD 08E15 - 01

METAL APRON ENDWALLS

PIPE DIA. (IN.)	MIN. THICK. (Inches) STEEL	MIN. THICK. (Inches) ALUM.	DIMENSIONS (Inches) A (±1")	B (MAX.)	H (±1")	L (±1 1/2")	L1 ①	L2 ①	W (±2")	APPROX. SLOPE	BODY
12	.064	.060	6	6	6	21	12	17 1/2	24	2 1/2 to 1	1 Pc.
15	.064	.060	7	8	6	26	14	21 3/4	30	2 1/2 to 1	1 Pc.
18	.064	.060	8	10	6	31	15	28 1/4	36	2 1/2 to 1	1 Pc.
21	.064	.060	9	12	6	36	18	29 5/8	42	2 1/2 to 1	1 Pc.
24	.064	.075	10	13	6	41	18	37 1/4	48	2 1/2 to 1	1 Pc.
30	.079	.075	12	16	8	51	18	52 1/4	60	2 1/2 to 1	1 Pc.
36	.079	.105	14	19	9	60	24	59 3/4	72	2 1/2 to 1	2 Pc.
42	.109	.105	16	22	11	69	24	75 5/8	84	2 1/2 to 1	2 Pc.
48	.109	.105	18	27	12	78	24	81	90	2 1/4 to 1	3 Pc.
54	.109	.105	18	30	12	84	30	85 1/2	102	2 1/4 to 1	3 Pc.
60	.109×	.105×	18	33	12	87	—	—	114	2 to 1	3 Pc.
66	.109×	.105×	18	36	12	87	—	—	120	2 to 1	3 Pc.
72	.109×	.105×	18	39	12	87	—	—	126	2 to 1	3 Pc.
78	.109×	.105×	18	42	12	87	—	—	132	1 1/2 to 1	3 Pc.
84	.109×	.105×	18	45	12	87	—	—	138	1 1/2 to 1	3 Pc.
90	.109×	.105×	18	37	12	87	—	—	144	1 1/2 to 1	3 Pc.
96	.109×	.105×	18	35	12	87	—	—	150	1 1/2 to 1	3 Pc.

× EXCEPT CENTER PANEL
SEE GENERAL NOTES

REINFORCED CONCRETE APRON ENDWALLS

PIPE DIA. (IN.)	DIMENSIONS (Inches) T	A	B	C	D	E	G	APPROX. SLOPE
12	2	4	24	48 7/8	72 7/8	24	2	3 to 1
15	2 1/4	6	27	46	73	30	2 1/4	3 to 1
18	2 1/2	9	27	46	73	36	2 1/2	3 to 1
21	2 3/4	9	36	37 1/2	73 1/2	42	2 3/4	3 to 1
24	3	9 1/2	43 1/2	30	73 1/2	48	3	3 to 1
27	3 1/4	10 1/2	49 1/2	24	73 1/2	54	3 1/4	3 to 1
30	3 1/2	12	54	19 3/4	73 1/2	60	3 1/2	3 to 1
36	4	15	63	34 3/4	97 3/4	72	4	3 to 1
42	4 1/2	21	63	35	98	78	4 1/2	3 to 1
48	5	24	72	26	98	84	5	3 to 1
54	5 1/2	27	65	*33 1/4-**35	*98 1/4-**100	90	5 1/2	2 2/5 to 1
60	6	*30-**35	60	39	99	96	5	2 to 1
66	6 1/2	*24-**30	*72-**78	*21-**27	99	102	5 1/2	2 to 1
72	7	*24-**36	78	21	99	108	6	2 to 1
78	7 1/2	*24-**36	78	21	99	114	6 1/2	2 to 1
84	8	36	90 1/2	21	111 1/2	120	6 1/2	1 1/2 to 1
90	8 1/2	41	87 1/2	24	111 1/2	132	6 1/2	1 1/2 to 1

*MINIMUM
**MAXIMUM

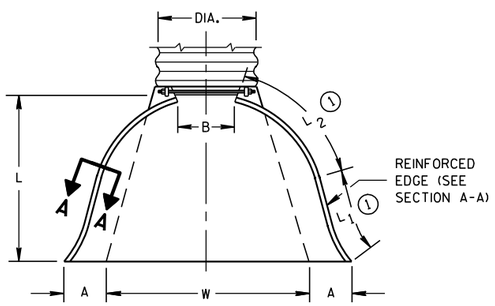

PLAN VIEW

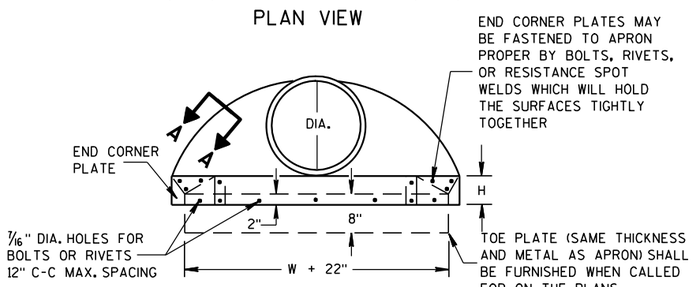

END VIEW

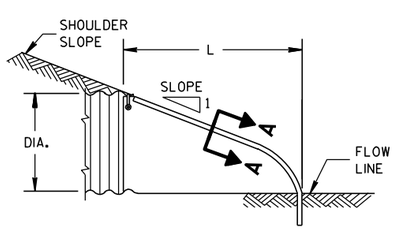

SIDE ELEVATION

METAL ENDWALLS

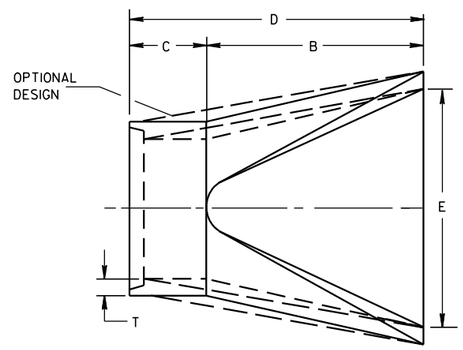

PLAN

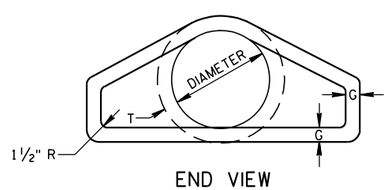

END VIEW

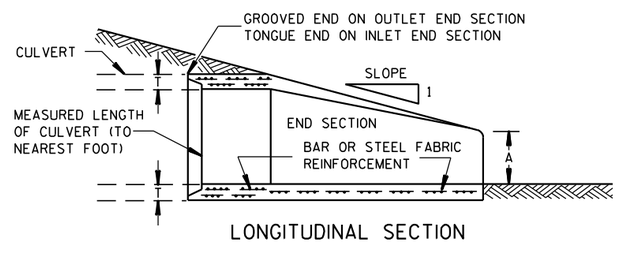

LONGITUDINAL SECTION

CONCRETE ENDWALLS

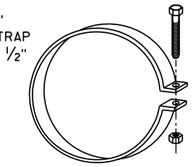

ALTERNATE FOR TYPE 1 CONNECTION

END SECTION CONNECTOR STRAP

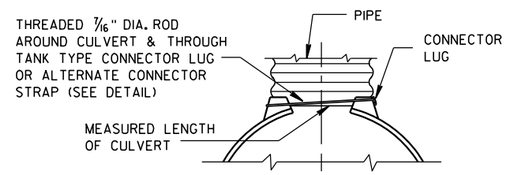

TYPE 1
FOR 12" THRU 24" CORR. PIPE

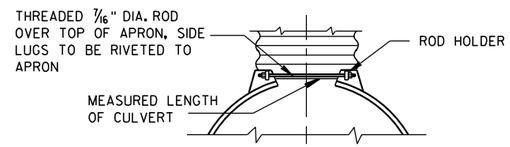

TYPE 2
FOR 30" THRU 96" CORR. PIPE

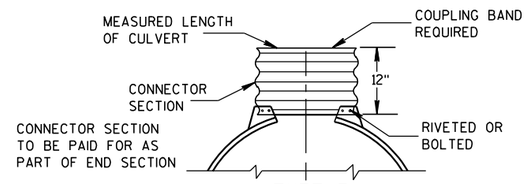

TYPE 3
FOR 42" THRU 96" CORR. PIPE

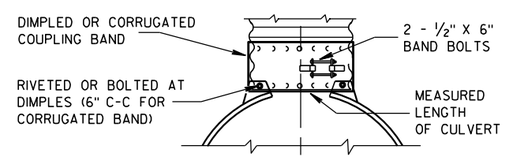

TYPE 5
ALTERNATE FOR:
ALL SIZES CORRUGATED CIRCULAR PIPE

NOTE: DIMPLED BAND FITS OVER OUTSIDE OF ENDWALL, AND CORRUGATED BAND FITS INSIDE ENDWALL. DIMPLED BAND MAY BE USED WITH HELICALLY CORRUGATED PIPE.

FOR CIRCUMFERENTIALLY CORRUGATED PIPE USE ENDWALL CONNECTION DETAILS 1, 2, 3 OR 5 AS APPLICABLE.

FOR HELICALLY CORRUGATED PIPE USE ENDWALL CONNECTION DETAILS 1, 2 OR 5.

FOR HELICALLY CORRUGATED PIPES WITH TWO CIRCUMFERENTIAL CORRUGATIONS AT EACH END USE ENDWALL CONNECTION DETAILS 1, 2 OR 3.

CONNECTION DETAILS

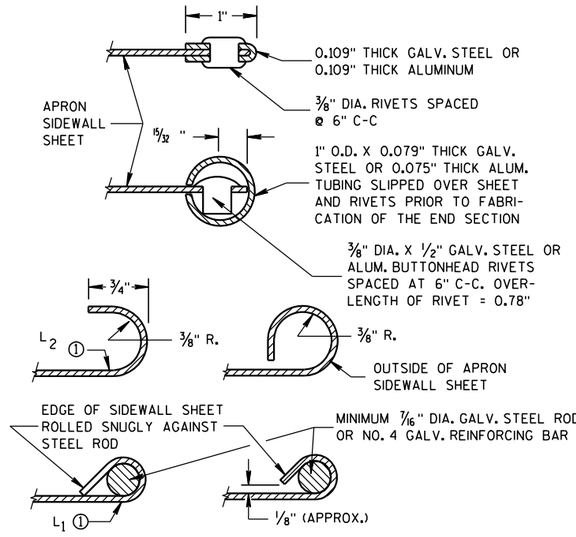

SECTION A-A

GENERAL NOTES

DETAILS OF CONSTRUCTION, MATERIALS AND WORKMANSHIP NOT SHOWN ON THIS DRAWING SHALL CONFORM TO THE PERTINENT REQUIREMENTS OF THE STANDARD SPECIFICATIONS AND THE APPLICABLE SPECIAL PROVISIONS.

CONCRETE CULVERT ENDWALLS MAY NOT BE USED WITH GALVANIZED STEEL OR ALUMINUM CULVERT PIPE OR VISE VERSA. GALVANIZED STEEL OR ALUMINUM ENDWALLS SHALL NORMALLY BE INSTALLED ON CULVERT PIPE OF THE SAME METAL.

ALL THREE PIECE STEEL APRON ENDWALLS FOR 60" DIAMETER PIPE AND LARGER SHALL HAVE 0.109" SIDES AND 0.138" CENTER PANELS. ALL THREE PIECE ALUMINUM APRON ENDWALLS FOR 60" DIAMETER PIPE AND LARGER SHALL HAVE 0.105" SIDES AND 0.134" CENTER PANELS. THE WIDTH OF CENTER PANELS SHALL BE GREATER THAN 20 PERCENT OF THE PIPE PERIMETER.

LAP SEAMS SHALL BE TIGHTLY JOINED BY GALVANIZED RIVETS OR BOLTS FOR STEEL UNITS AND ALUMINUM RIVETS AND BOLTS FOR ALUMINUM UNITS. FOR THE 60" THROUGH 96" DIAMETER APRON ENDWALL SIZES, THE REINFORCED EDGES AND CENTER PANEL SEAMS SHALL BE FURTHER REINFORCED WITH GALVANIZED STEEL OR ALUMINUM STIFFENER ANGLES. THE ANGLES SHALL BE ATTACHED BY GALVANIZED NUTS AND BOLTS FOR STEEL UNITS AND ALUMINUM NUTS AND BOLTS FOR ALUMINUM UNITS.

WHERE TWO OR MORE PIPES WITH APRON ENDWALLS ARE LAID ADJACENT TO EACH OTHER, THEY SHALL BE SEPARATED BY A DISTANCE SUFFICIENT TO PROVIDE A MINIMUM CLEARANCE OF 6 INCHES BETWEEN APRON ENDWALLS.

① FOR PIPE SIZES UP TO 60" DIAMETER, A 180° ROLLED EDGE MAY BE USED INSTEAD OF STEEL ROD REINFORCEMENT. SEE SECTION A-A.

APRON ENDWALLS FOR CULVERT PIPE

STATE OF WISCONSIN
DEPARTMENT OF TRANSPORTATION

APPROVED
11/30/94 — DATE
/S/ Rory L. Rhinesmith — CHIEF ROADWAY DEVELOPMENT ENGINEER
FHWA

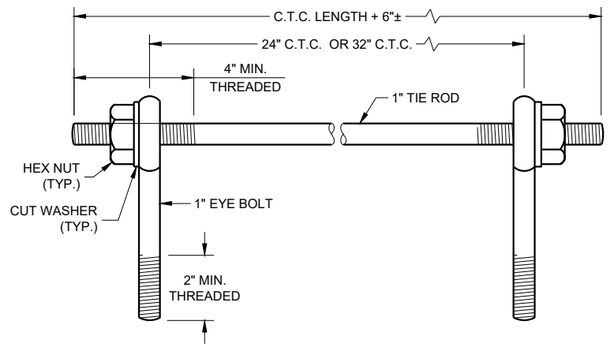

EYE BOLTS AND TIE ROD

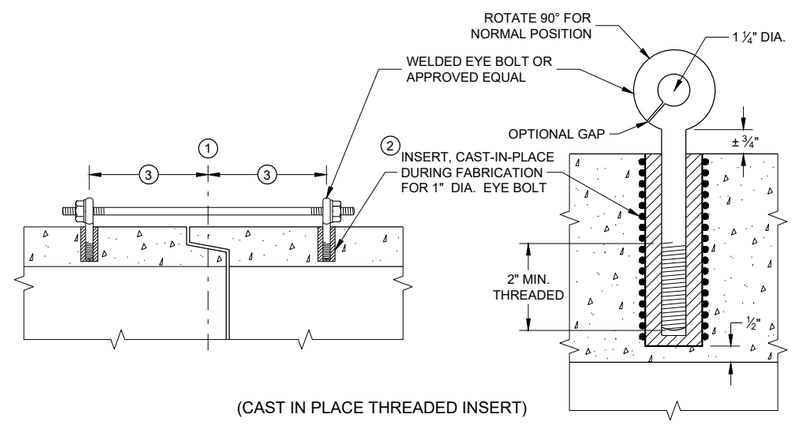

(CAST IN PLACE THREADED INSERT)

LONGITUDINAL SECTIONS

EYE BOLT AND TIE ROD ASSEMBLY (ALTERNATE NO. 1)

GENERAL NOTES

DETAILS OF CONSTRUCTION, MATERIALS, AND WORKMANSHIP NOT SHOWN ON THIS DRAWING SHALL CONFORM TO THE PERTINENT REQUIREMENTS OF THE STANDARD SPECIFICATIONS AND APPLICABLE SPECIAL PROVISIONS.

CONCRETE CULVERT AND STORM SEWER PIPE SHALL BE TIED TOGETHER IN THE MANNER ILLUSTRATED BY THIS DETAIL AT LOCATIONS DESIGNATED IN THE STANDARD SPECIFICATIONS AND THE PLAN. THE CONTRACTOR MAY USE EITHER ALTERNATE 1, 2 OR 3 FOR DRAINAGE STRUCTURES. ONLY ALTERNATE 1 AND 3 MAY BE USED FOR CATTLE PASSES, UNLESS OTHERWISE STATED IN THE CONTRACT. THE MATERIALS, FABRICATION AND WORK NECESSARY TO TIE THE PIPE BY THIS DETAIL WILL BE CONSIDERED INCIDENTAL TO THE PIPE AND APRON ENDWALLS IF REQUIRED.

DETAILED DRAWINGS FOR PROPOSED ALTERNATE DESIGNS FOR JOINT TIES SHALL BE SUBMITTED TO THE ENGINEER FOR APPROVAL.

JOINT TIES TO BE HOT-DIP GALVANIZED PER ASTM A 153.

1. CENTER LINE OF TONGUE AND GROOVE OR BELL AND SPIGOT JOINTS.
2. THE INSIDE OF THE THREADED INSERTS SHALL BE CLEAN TO ALLOW THE INSERTION OF THREADED EYE BOLTS.
3. HOLES SHALL BE CAST-IN-PLACE OR DRILLED PER THE APPLICABLE DETAIL, AND EQUAL DISTANCE FROM THE CENTERLINE OF THE JOINT.
4. BOLT PROJECTION INSIDE OF PIPE SHALL NOT EXCEED 2 INCHES.
5. OPENING TO BE ROD DIAMETER PLUS 1 INCH.
6. LENGTH ADEQUATE TO EXTEND TO WITHIN ½ INCH OF THE INNER SURFACE OF THE PIPE.
7. EYE BOLT LENGTH DETERMINED BY WALL THICKNESS, BELL THICKNESS AND BOLT PROJECTION INSIDE PIPE.

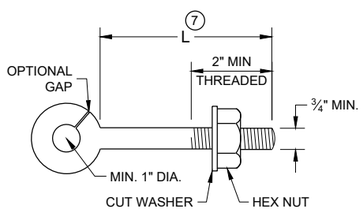

EYE BOLT 7

NOTE: TWO EYE BOLTS MAY BE USED WITH A 30" OR 38" LONG THREADED ROD IN LIEU OF THE 90° BENT TIE ROD.

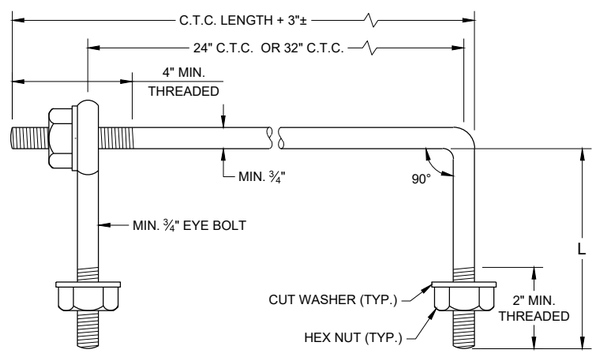

EYE BOLT AND TIE ROD

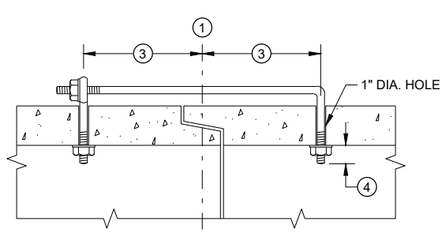

(TONGUE AND GROOVE PIPE)

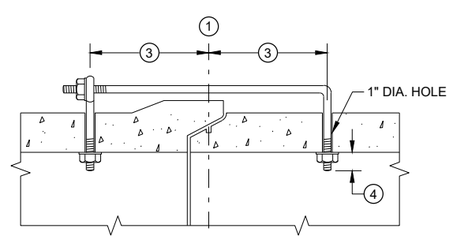

(MODIFIED BELL PIPE)

LONGITUDINAL SECTION

(JOINT TIES FOR 18" TO 66" DIA. CONCRETE PIPE)

EYE BOLT AND TIE ROD ASSEMBLY (ALTERNATE NO. 2)

ADJUSTABLE TIE ROD TABLE

PIPE DIAMETER	TIE ROD DIAMETER	D	L_1	N
12 - 60	⅝	⅝	5	½
66 - 84	¾	¾	5	½
90 - 144	1	1	7	1 7/16

DIMENSIONS SHOWN ARE IN INCHES

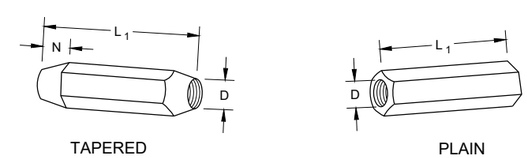

RIGHT AND LEFT THREADS

SLEEVE NUTS

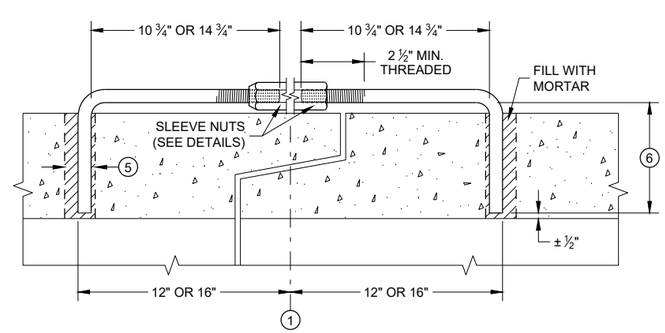

LONGITUDINAL SECTION

ADJUSTABLE TIE ROD (ALTERNATE NO. 3)

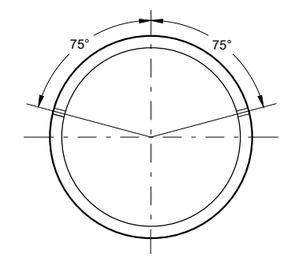

PLACEMENT OF (2) CAST-IN-PLACE INSERTS OR HOLES DURING FABRICATION FOR PIPE SECTIONS REQUIRING TIE RODS

TRANSVERSE SECTION

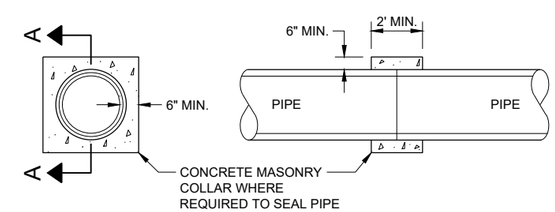

SECTION A - A

CONCRETE COLLAR DETAIL

JOINT TIES FOR CONCRETE PIPE AND CONCRETE COLLAR DETAIL

STATE OF WISCONSIN
DEPARTMENT OF TRANSPORTATION

APPROVED
November 2021 — DATE
/S/ Rodney Taylor — ROADWAY STANDARDS DEVE ENGINEER
FHWA

6

SDD 08F04 - 08

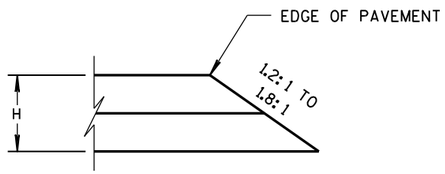

CONSTRUCTED WITH FINAL TWO LAYERS

FOR H 5" OR LESS

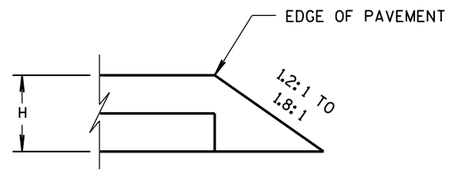

CONSTRUCTED WITH FINAL LAYER

FOR H 5" OR LESS

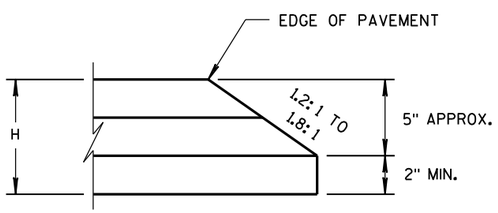

CONSTRUCTED WITH FINAL TWO LAYERS

FOR H GREATER THAN 5"

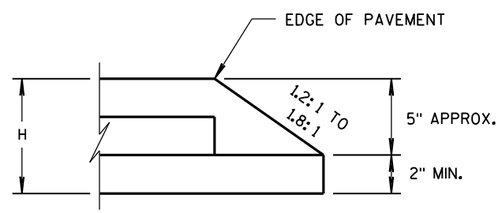

CONSTRUCTED WITH FINAL LAYER

FOR H GREATER THAN 5"

HMA PAVEMENT AND HMA OVERLAYS

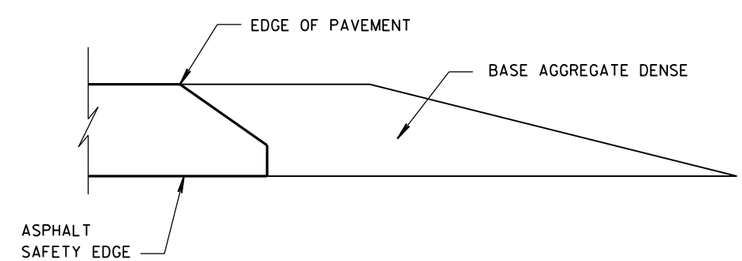

FINISHED SHOULDER AGGREGATE PLACEMENT

6

6

SAFETY EDGE SM

STATE OF WISCONSIN
DEPARTMENT OF TRANSPORTATION

APPROVED

11/30/2012
DATE

/S/ Jerry H. Zogg
ROADWAY STANDARDS DEVELOPMENT ENGINEER

FHWA

S.D.D. 14 B 29-1

1. WOOD OR STEEL POSTS (w6X9 OR w6X8.5) MAY BE USED. DO NOT INTERMIX WOOD AND STEEL POSTS. INSTALL STEEL POSTS WITH HOLES ON APPROACHING TRAFFIC SIDE.
2. USE WOOD OR APPROVED PLASTIC BLOCKOUTS. WOOD BLOCKOUTS MAY BE CONSTRUCTED OUT OF TWO OR MORE WOOD BLOCKOUTS. SEE ALTERNATE WOOD BLOCKOUT DETAIL. DIMENSIONS OF APPROVED PLASTIC BLOCKOUTS MAY VARY.
3. IF ROCK IS ENCOUNTERED DURING EXCAVATION, PROVIDE A HOLE 12 INCHES IN DIAMETER EXTENDING 20 INCHES DEEP INTO THE ROCK. PLACE APPROXIMATELY 2 1/2" INCHES OF GRANULAR MATERIAL IN THE BOTTOM OF THE HOLE. CUT THE POSTS THE TO LENGTH AMD INSTALL. BACKFILL WITH EXCAVATED MATERIAL AND COMPACT. BACKFILL IS TO BE FREE OF LARGE ROCKS.
4. WHEN THE DISTANCE FROM BACK OF POST TO SHOULDER HINGE POINT IS LESS THAN 2 FEET INSTALL LONGER POST AT HALF POST SPACING (K).
5. FOR NEW MGS INSTALLATION TOP OF W-BEAM RAIL TOLERANCE IS ±1". FOR EXISTING MGS INSTALLATION TOP OF W-BEAM IS BETWEEN 27 ¾" TO 32".
6. WHEN USING STEEL POST AND WOOD BLOCKOUTS INSTALL FOUR 16D GALVANIZED NAILS. INSTALL NAILS AT THE BACK CORNERS OF THE BLOCK AND BEND THE NAILS OVER THE FLANGE OF THE STEEL POST.
7. TOTAL POST LENGTH FOR TYPE K IS 7' - 0". TOTAL POST LENGTH FOR OTHER MGS TYPES IS 6' - 0".

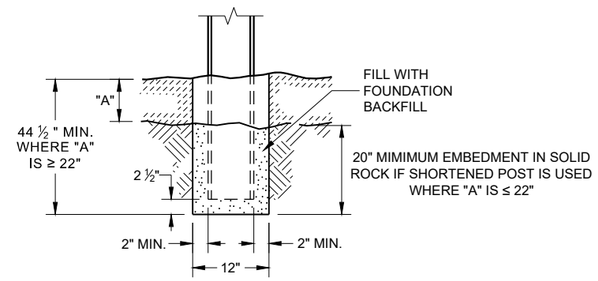

END VIEW
SETTING STEEL OR WOOD POST IN ROCK (3)

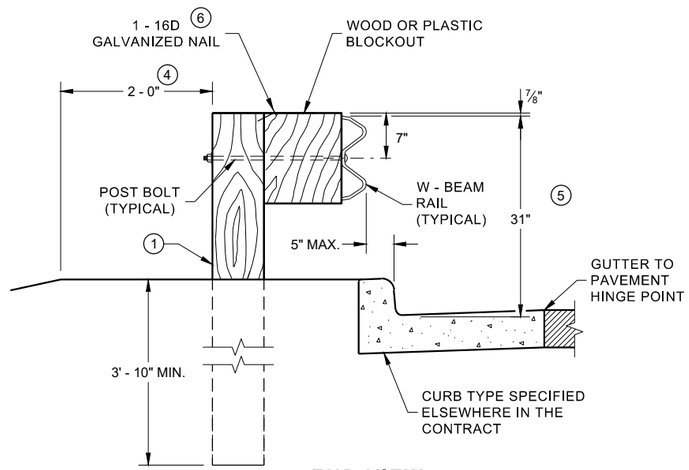

END VIEW
LOCATED ALONG A CURBED ROADWAY

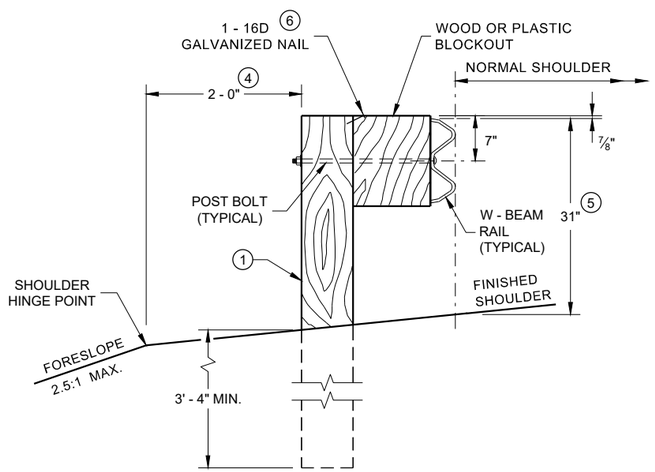

END VIEW
LOCATED ALONG A ROADWAY SHOULDER STANDARD INSTALLATION

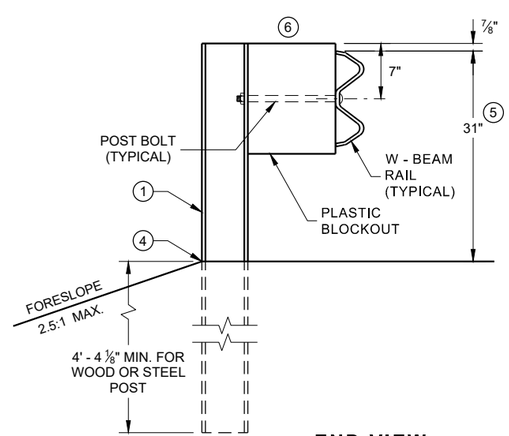

END VIEW
MGS LONGER POST AT HALFPOST SPACING W BEAM (K)

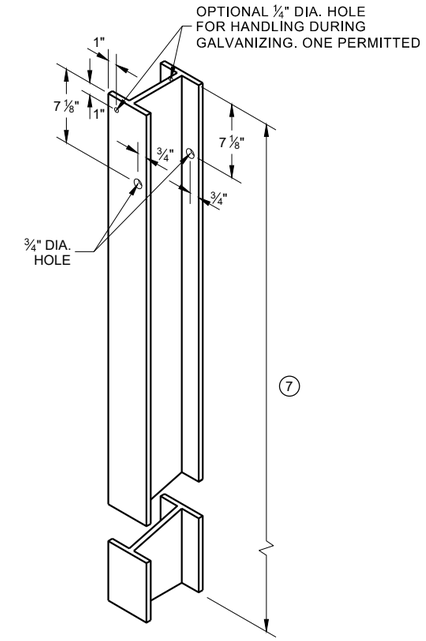

STEEL POST & HOLE PUNCHING DETAIL (W 6 X 9) (1)

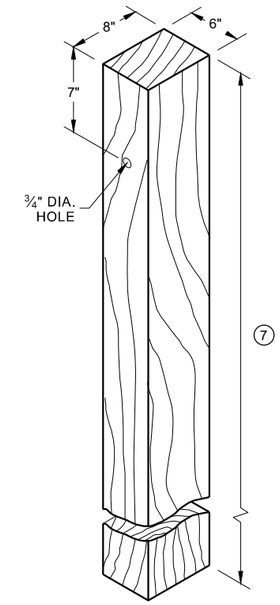

WOOD POST (6" X 8") NOMINAL (1)

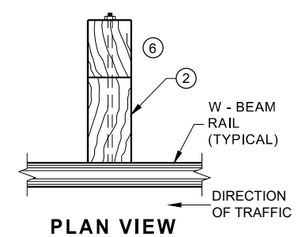

PLAN VIEW WOOD POST, BLOCKOUT & BEAM

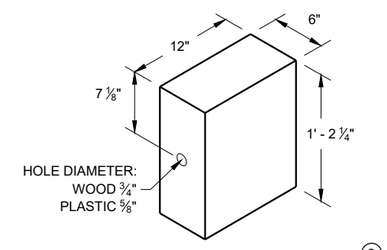

WOOD OR PLASTIC BLOCKOUT (2)

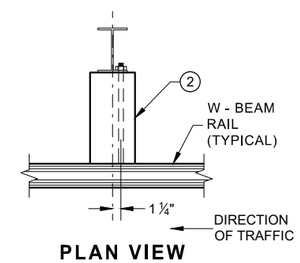

PLAN VIEW STEEL POST, PLASTIC BLOCKOUT & BEAM

MIDWEST GUARDRAIL SYSTEM (MGS) GUARDRAIL

STATE OF WISCONSIN
DEPARTMENT OF TRANSPORTA

6

SDD 14B42 - 07a

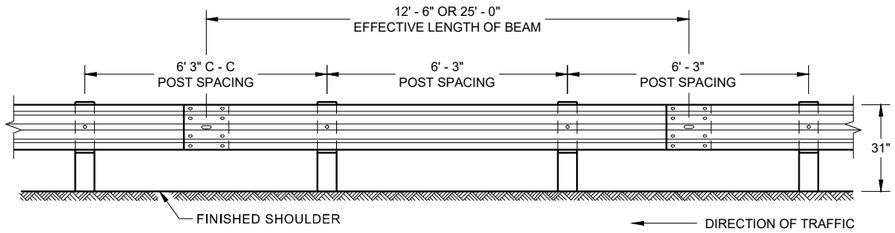

FRONT VIEW
POST SPACING STANDARD INSTALLATION

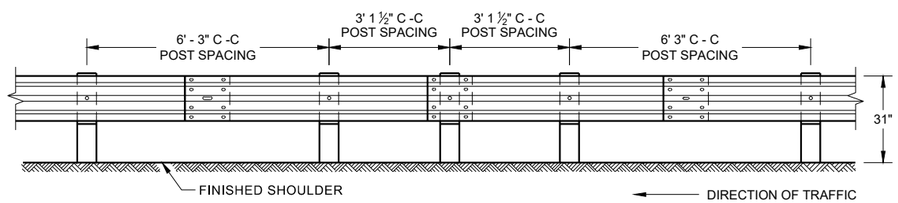

FRONT VIEW
HALF POST SPACING (HS) AND HALF POST SPACING WITH LONGER POSTS (K)

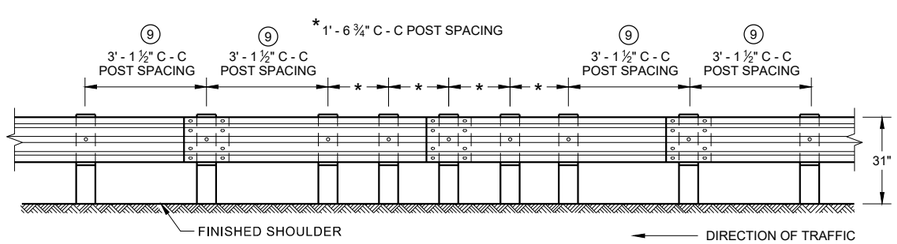

FRONT VIEW
QUARTER POST SPACING (QS)

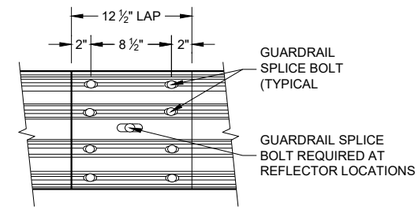

FRONT VIEW
MID-SPAN BEAM SPLICE

GENERAL NOTES

8 DO NOT INSTALL REFLECTORS ON THE FIRST 50 FEET OF THE APPROACH END OF THE ENERGY ABSORBING TERMINAL.

9 25 FEET OF HALF POST SPACING IS REQUIRED ON APPROACH AND DEPARTURE ENDS OF QUARTER POST SPACING.

POST BOLTS ARE A ⅝" DIAMETER ASTM A307 GUARDRAIL BOLT. A POST BOLT REQUIRES ⅝" DIAMETER A563A DOUBLE RECESSED (DR) HEAVY HEX NUT AND ⅝" DIAMETER F844 FLAT WASHER. POST BOLTS MAY BE LONGER IF MULTIPLE BLOCKOUTS ARE BEING USED.

GUARD RAIL SPLICE BOLTS ARE A ⅝" DIAMETER ASTM A307 GUARDRAIL HEAD BOLT. A GUARDRAIL SPLICE BOLT REQUIRES ⅝" DIAMETER A563A DOUBLE RECESSED (DR) HEAVY HEX NUT.

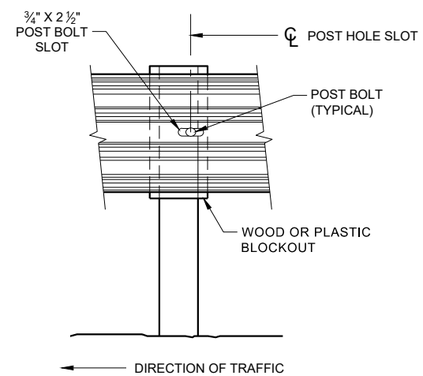

FRONT VIEW AT STEEL POST

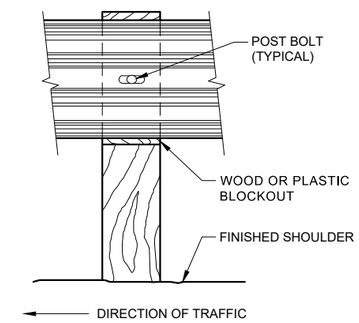

FRONT VIEW AT WOOD POST

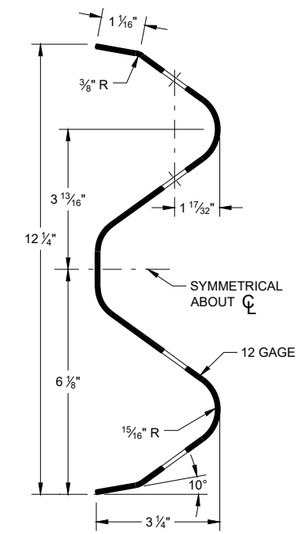

SECTION THRU W-BEAM RAIL

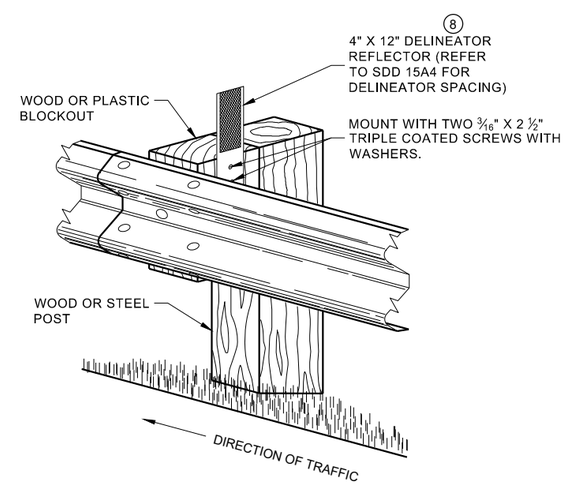

ONE SIDED REFLECTOR DETAIL AND TYPICAL INSTALLATION

MIDWEST GUARDRAIL SYSTEM (MGS) GUARDRAIL

STATE OF WISCONSIN
DEPARTMENT OF TRANSPORTAT

6

SDD 14B42 - 07b

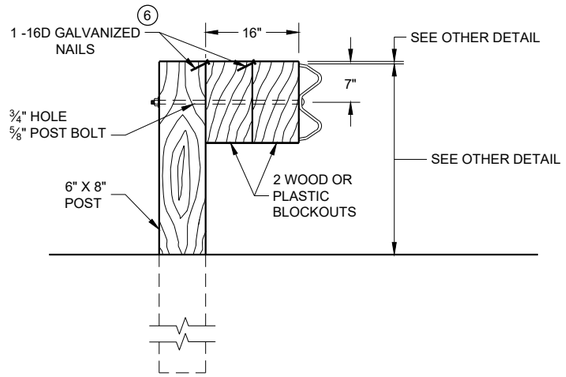

DETAIL FOR 16" BLOCKOUT DEPTH

IT IS ACCEPTABLE TO USE BLOCKOUTS UP TO 16" DEEP TO INCREASE THE POST OFFSET TO AVOID UNDERGROUND OBSTACLES. THERE IS NO LIMIT TO THE NUMBER OF POSTS THAT CAN HAVE ADDITIONAL BLOCKOUTS UP TO 16" DEEP.

NOTE:

1. ALL FILLETS SHALL HAVE A MINIMUM RADIUS OF 3/16".
2. IF THE BOLT EXTENDS MORE THAN ¼" FROM THE NUT THE BOLT SHOULD BE TRIMMED BACK.

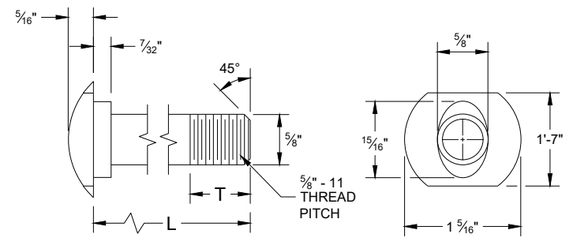

POST BOLT TABLE

L	T (MIN.)
1 ¼"	1 ⅛"
2"	1 ¾"
10"	4"
14"	4 1/16"
18"	4"
21"	4 1/16"
25"	4"

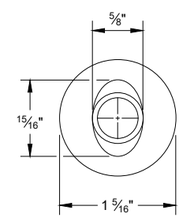

ALTERNATE BOLT HEAD

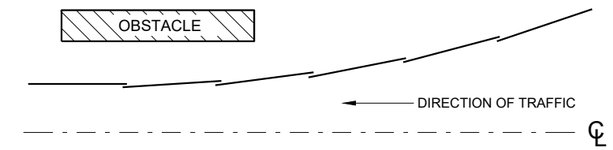

PLAN VIEW
BEAM LAPPING DETAIL

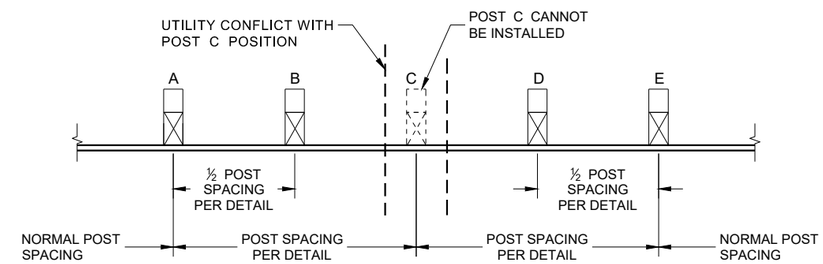

POST DRIVING FOR CONTINUOUS UNDERGROUND OBSTRUCTION

6

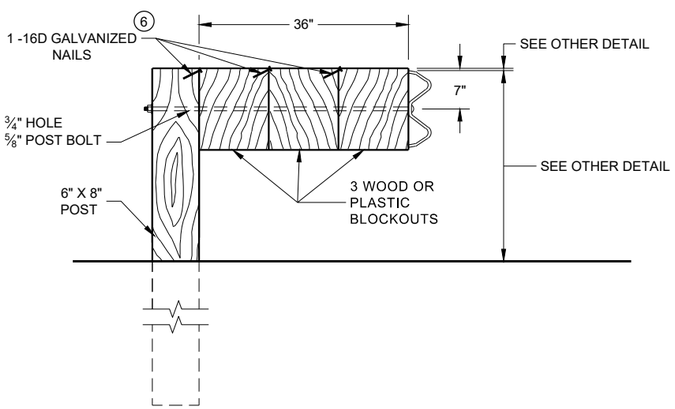

DETAIL FOR 36" BLOCKOUT DEPTH

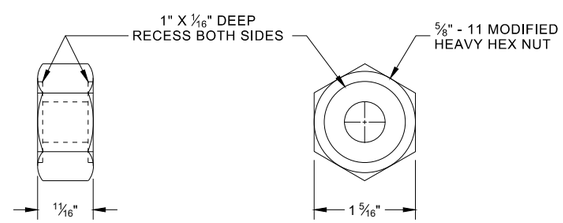

POST BOLT, SPLICE BOLT AND RECESS NUT

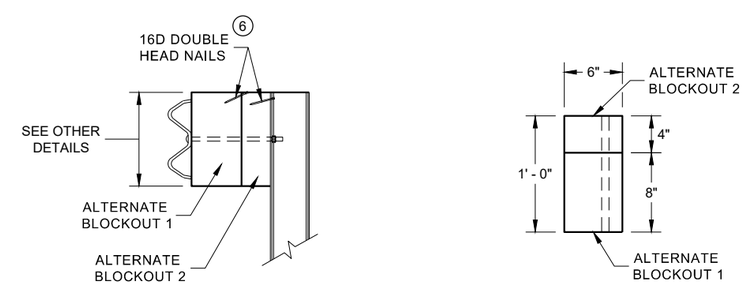

SIDE VIEW

PLAN VIEW

ALTERNATE WOOD BLOCKOUT DETAIL

NOTES: UNDER SPECIAL CIRCUMSTANCES, SUCH AS AVOIDING OBSTACLES THAT ARE NOT RELOCATED, IT IS ACCEPTABLE TO INSTALL ADDITIONAL BLOCKOUTS TO OBTAIN UP TO 36" DEPTH FOR ONE OR TWO POSTS IN A SECTION OF GUARDRAIL.

DO NOT USE 16" OR 36" BLOCKOUTS IF IT CAUSES THE POST TO BE DRIVEN BEYOND SHOULDER HINGE POINT OR CAUSES A FIXED OBJECT TO BE WITHIN THE DEFLECTION DISTANCE OF THE BARRIER.

(6) WHEN USING STEEL POST AD WOOD BLOCKOUTS, INSTALL FOUR 16D GALVANIZED NAILS. INSTALL NAILS AT THE BACK CORNERS OF THE BLOCK AND BEND THE NAILS OVER THE FLANGE OF THE STEEL POST.

MIDWEST GUARDRAIL SYSTEM (MGS) GUARDRAIL

STATE OF WISCONSIN
DEPARTMENT OF TRANSPORTA

SDD 14B42 - 07c

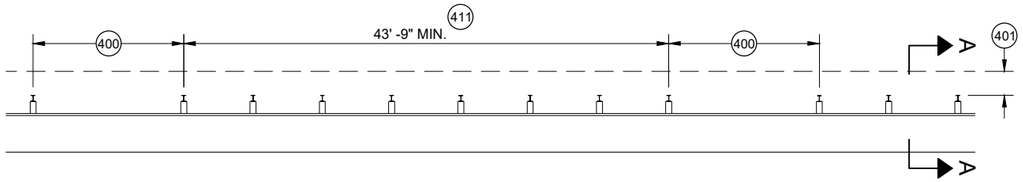

MISSING POST IN MGS GUARDRAIL

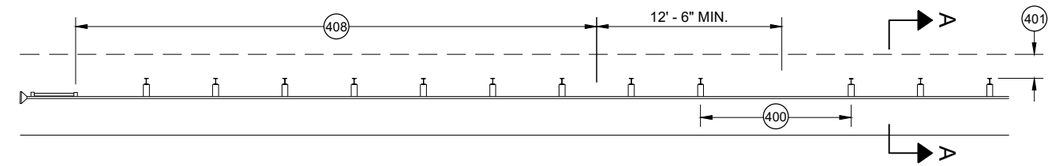

MISSING POST IN MGS GUARDRAIL NEAR EAT

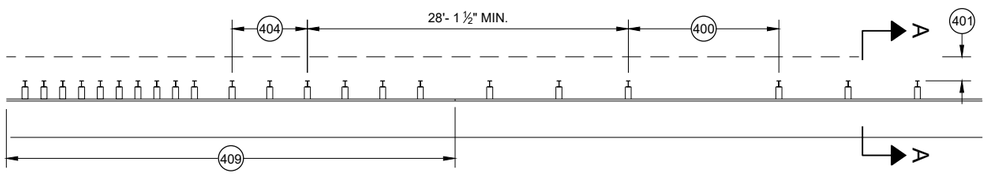

MISSING POST IN MGS GUARDRAIL NEAR AN APPROACH TRANSITION

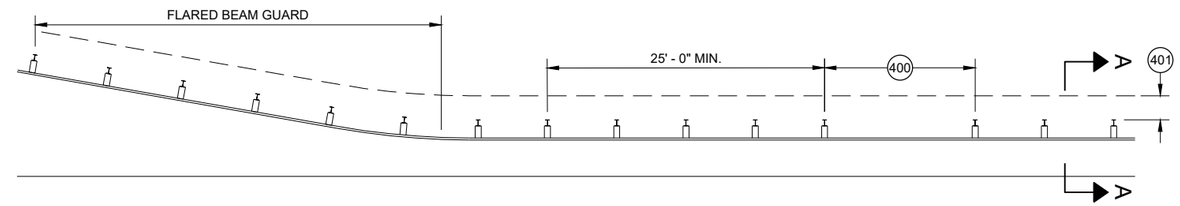

MISSING POST IN MGS GUARDRAIL NEAR FLARED BEAM GUARD

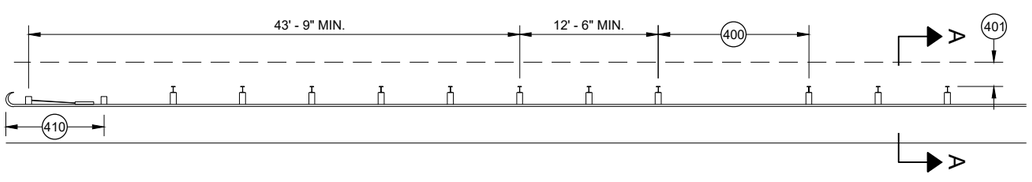

MISSING POST IN MGS GUARDRAIL NEAR A TYPE 2 END TERMINAL

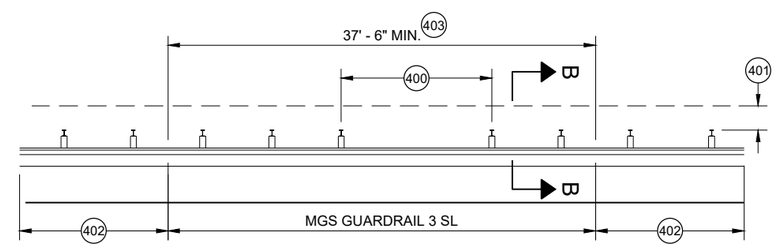

MISSING POST IN SHORT SPAN MGS GUARDRAIL NEAR CURB (SL) 407

400 MAX SPAN 12' - 6"
401 2' MIN.
402 MGS GUARDRAIL 3
403 NESTING BEAM GUARD
404 ASYMMETRIC TRANSITION
405 SOIL WELL DRAINED AND COMPACTED
406 SEE OTHER DRAWINGS IN THIS SDD
407 SEE OTHER DRAWINGS FOR MIN. SPACING BETWEEN SPANS
408 SEE SDD 14B44
409 SEE SDD 14B45
410 SEE SDD 14B47
411 MINIMUM DISTANCE BETWEEN MISSING POST SPANS.

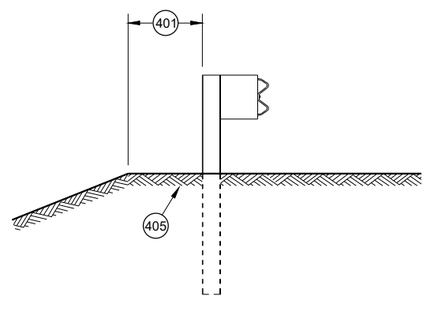

SECTION A - A 406

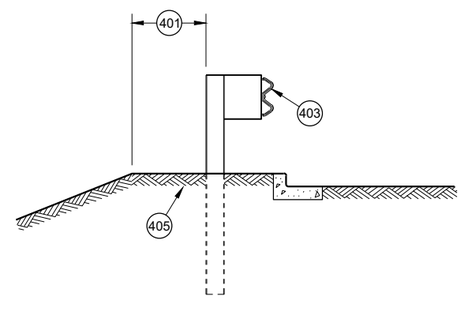

SECTION B - B 406

MIDWEST GUARDRAIL SYSTEM (MGS) GUARDRAIL

STATE OF WISCONSIN
DEPARTMENT OF TRANSPORTATION

APPROVED
May 2021 — DATE
/S/ Rodney Taylor — ROADWAY STANDARDS DEVE UNIT SUPERVISOR
FHWA

6

SDD 14B42 - 07d

GENERAL NOTES

(A) THE SLOPE IN THE AREA BOUNDED BY THE GRADELINE, THE HINGE POINT LINE (HPL) AND THE CLEAR ZONE LIMITS (CZL) SHALL BE 4:1 OR FLATTER.

(B) AFTER FINAL ASSEMBLY, RECHECK CABLE TO BE SURE IT IS TAUT AND HAS NOT RELAXED

(C) DIFFERENT MANUFACTURERS REQUIRE DIFFERENT PERFORATED W - BEAM RAIL END PANELS. SEE MANUFACTURER'S INFORMATION.

(D) ATTACH ALUMINUM SHEET TO E.A.T. HEAD USING 4 STAINLESS STEEL SELF - TAPPING SCREWS. ONE SCREW PER CORNER.

(E) HARDWARE MAY VARY BETWEEN MANUFACTURER. SEE MANUFACTURER'S DRAWING FOR INFORMATION.

DIMENSIONS MAY VARY, MANUFACTURER'S INFORMATION.

SEE SDD 14B42 FOR MORE INFORMATION.

* DO NOT ATTACH BLOCKOUTS TO POST 1 AND 2.

DO NOT INSTALL REFLECTORS ON THE FIRST 50 FEET OF THE APPROACH END OF THE ENERGY ABSORBING TERMINAL.

SEE MANUFACTURER'S DRAWING FOR SPLICE LOCATION, HARDWARE DIMENSIONS AND INSTALLATION INSTRUCTIONS.

THE CENTER OF THE UPPER 3 ½" DIAMETER HOLE ON POST NUMBER 3 THROUGH POST 9 IS TO BE FLUSH WITH THE GROUND LINE UP TO A MAXIMUM OF 2" ABOVE GROUND LINE. WOOD BLOCKS ON POSTS NUMBERED 3 THROUGH 9 MAY BE ADJUSTED UP TO 3" ABOVE THE TOP OF POST.

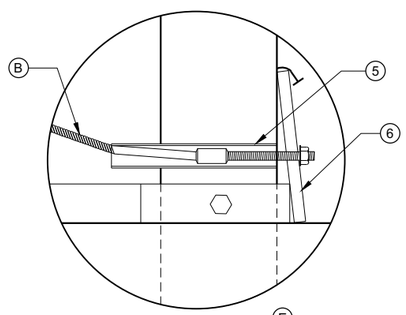

DETAIL "A" (E)

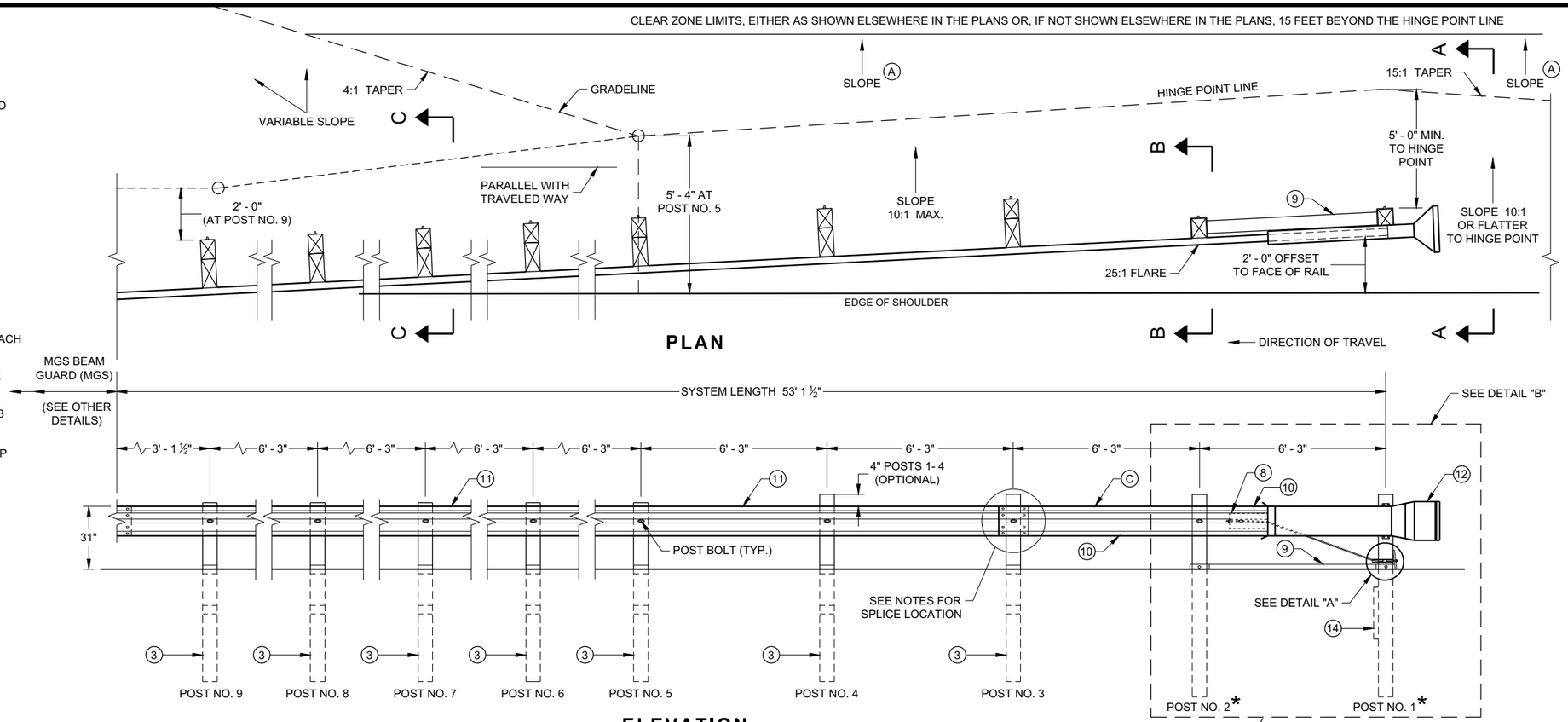

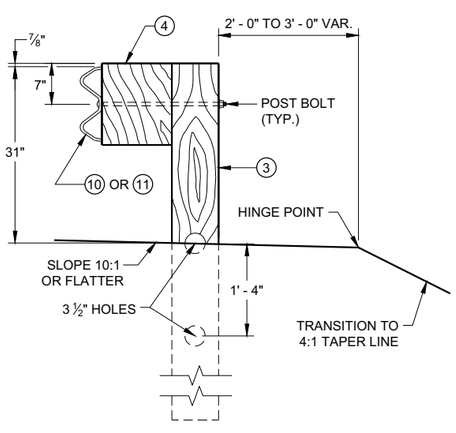

SECTION C - C
TYPICAL AT POST NOS. 3 - 9

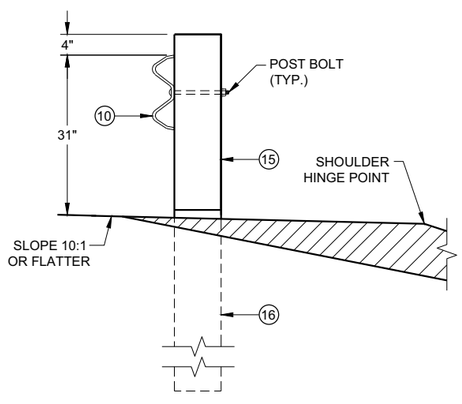

SECTION B - B
TYPICAL AT POST NO. 2*

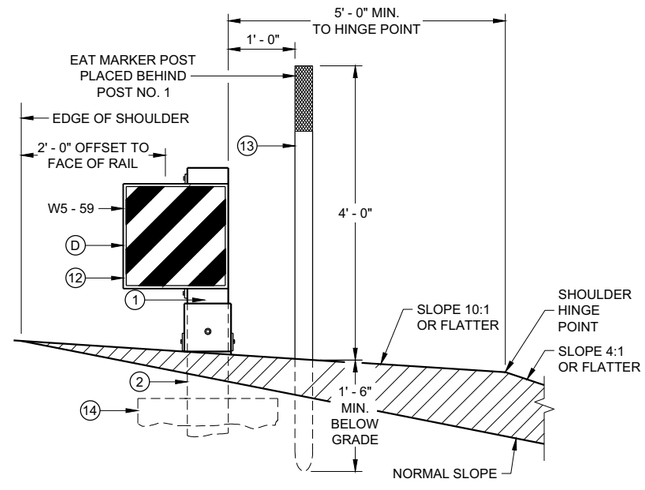

SECTION A - A
TYPICAL AT POST NO. 1*

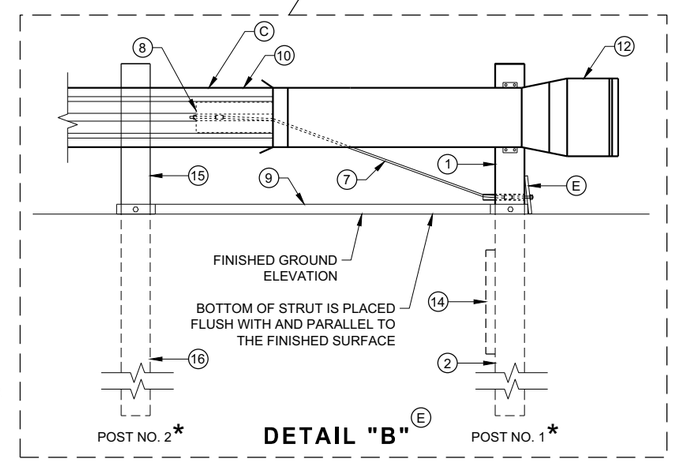

DETAIL "B" (E)

MIDWEST GUARDRAIL SYSTEM ENERGY ABSORBING TERMINAL (MGS)

STATE OF WISCONSIN
DEPARTMENT OF TRANSPORTATION

6

SDD 14B44 - 04a

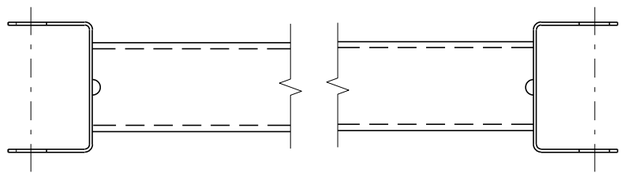

GENERIC GROUND STRUT 9 E

BILL OF MATERIALS

PART NO.	DESCRIPTION MATERIALS PROVIDED BY MGS EAT MANUFACTURER. SEE MANUGACTURER'S DETAILS FOR MORE INFORMATION.
1	UPPER POST NO. 1 6" X 6" TUBE
2	LOWER POST NO. 1
3	WOOD CRT
4	WOOD BLOCKOUT
5	PIPE SLEEVE
6	BEARING PLATE
7	BCT CABLE ASSEMBLY
8	ANCHOR CABLE BOX
9	GROUND STRUT
10	PERFORATED W-BEAM RAIL END PANEL, 12'-6" LONG.
11	STANDARD W-BEAM RAIL. MULTIPLE SECTIONS REQUIRED. SECTIONS VARY IN LENGTH.
12	IMPACT HEAD
13	EAT MARKER POST - YELLOW (SEE APPROVED PRODUCTS LIST)
14	SOIL PLATE
15	UPPER POST NO. 2
16	LOWER POST NO. 2

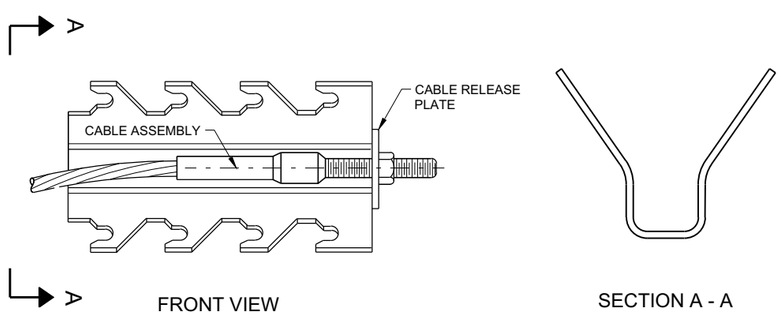

GENERIC ANCHOR CABLE BOX 9 E

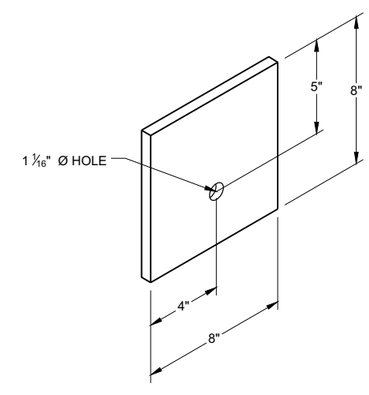

BEARING PLATE 6 E

6

6

SDD 14B44 - 04b

SDD 14B44 - 04b

MIDWEST GUARDRAIL SYSTEM ENERGY ABSORBING TERMINAL (MGS)

STATE OF WISCONSIN
DEPARTMENT OF TRANSPORTAT

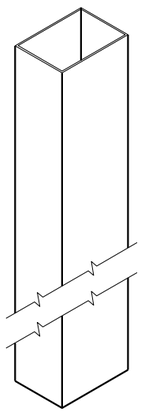

UPPER POST NO. 1 (1) (E)

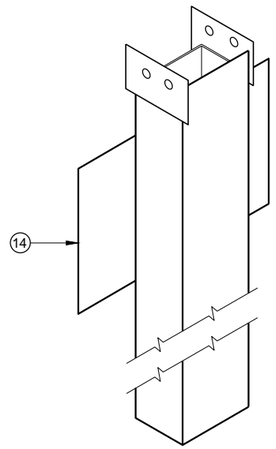

LOWER POST NO. 1 (2) (E)

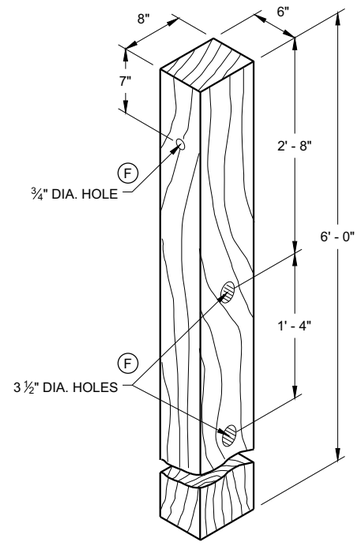

WOOD CRT POST (3) (E)

POSTS NUMBER 3-9

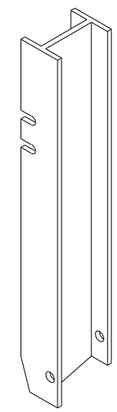

UPPER POST NO. 2 (15) (E)

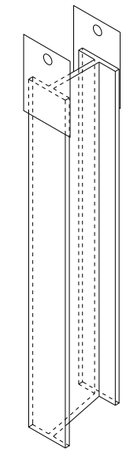

LOWER POST NO. 2 (16) (E)

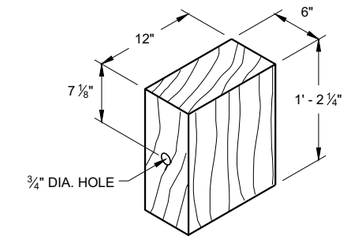

WOOD BLOCKOUT (4)

REQ'D. AT ALL POSTS EXCEPT POST NO'S 1 & 2

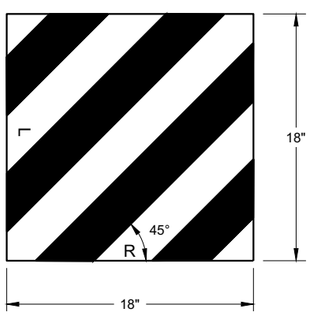

W5 - 59

REFLECTIVE SHEETING DETAIL (E)

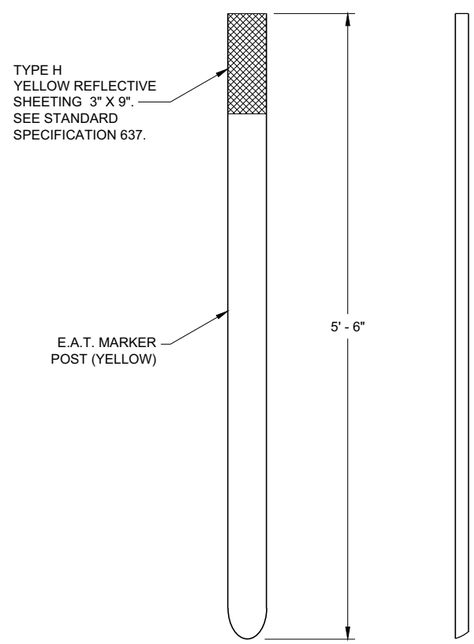

FRONT VIEW SIDE VIEW

E.A.T. MARKER POST (13)

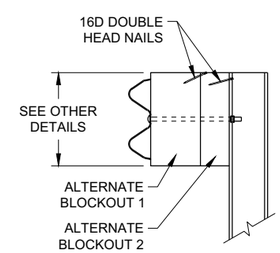

SIDE VIEW

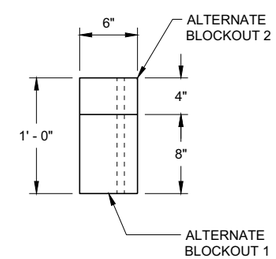

TOP VIEW

ALTERNATE WOOD BLOCKOUT DETAIL

MIDWEST GUARDRAIL SYSTEM ENERGY ABSORBING TERMINAL (MGS)

STATE OF WISCONSIN
DEPARTMENT OF TRANSPORTATION

APPROVED
7/2018 — DATE
/S/ Rodney Taylor — ROADWAY STANDARDS DEVE UNIT SUPERVISOR
FHWA

6

SDD 14B44 - 04c

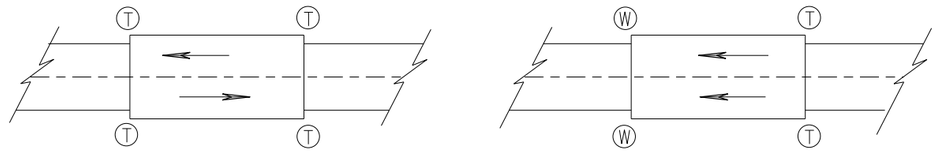

TWO WAY TRAFFIC **ONE WAY TRAFFIC**

(T) THRIE BEAM CONNECTION

(W) W-BEAM CONNECTION WHEN REQUIRED

TYPICAL LOCATIONS OF THRIE BEAM AND W-BEAM CONNECTIONS TO BRIDGE

GENERAL NOTES

IF ROCK IS ENCOUNTERED, REMOVE ROCK TO FULL DEPTH OF POST PLUS 2½", AND 12" DIAMETER AROUND POST. SEE 14B42 FOR MORE DETAILS.

TRANSITION USES STEEL POSTS ONLY.

SEE STANDARD DETAIL DRAWING 14 B 42 FOR MORE INFORMATION.

POST 2 THROUGH 17 USES STEEL POST ONLY

(1) BRIDGE RAILING TYPE "W" DOES NOT REQUIRE A TERMINAL CONNECTOR.

(2) OPTIONAL CURB AND GUTTER OR DRAINAGE FEATURE SEE PLAN FOR INFORMATION.

(13) STEEL OR WOOD POST IS ACCEPTABLE AT POST 1. SEE SDD14B42

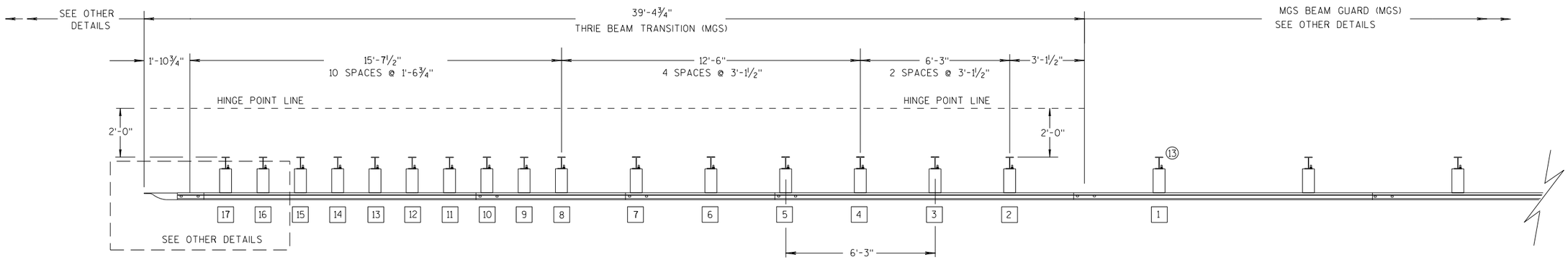

PLAN VIEW

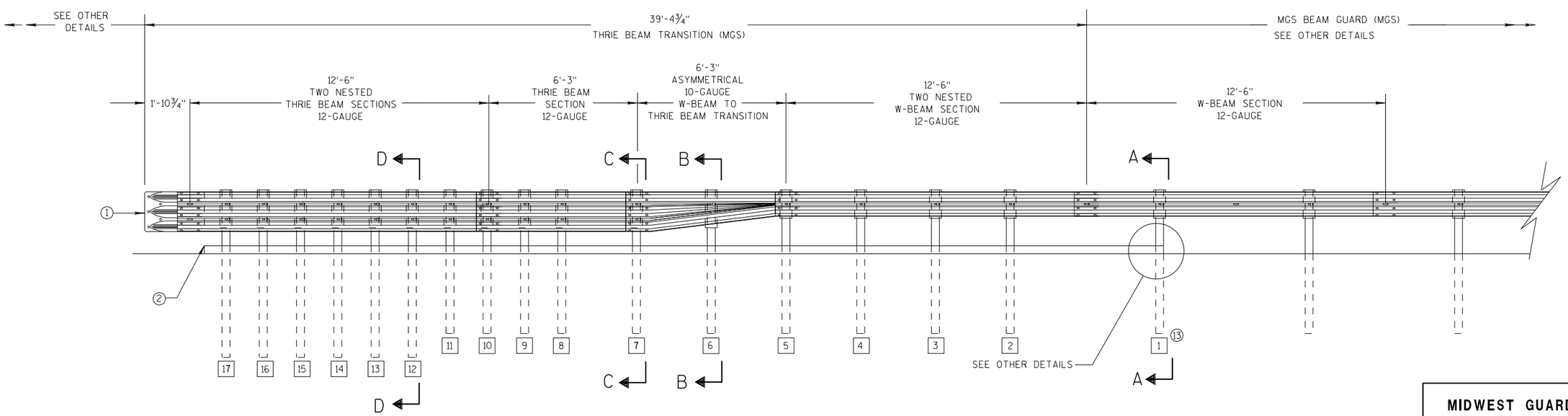

ELEVATION VIEW

MIDWEST GUARDRAIL SYSTEM THRIE BEAM TRANSITION

MIDWEST GUARDRAIL SYSTEM THRIE BEAM TRANSITION (MGS)

STATE OF WISCONSIN
DEPARTMENT OF TRANSPOR

6

S.D.D. 14 B 45-5a

GENERAL NOTES

(2) OPTIONAL CURB AND GUTTER OR DRAINAGE FEATURE SEE PLAN FOR INFORMATION.

(3) WHEN USING STEEL POSTS AND WOOD BLOCKOUTS INSTALL FOUR 10D GALVANIZED NAILS. INSTALL NAILS AT THE BACK CORNERS OF THE BLOCK AND BEND THE NAILS OVER THE FLANGE OF THE STEEL POST.

(4) TOLERANCE FOR TOP OF W-BEAM RAIL IS ± 1".

(13) STEEL OR WOOD POST IS ACCEPTABLE AT POST 1. SEE SDD 14B42

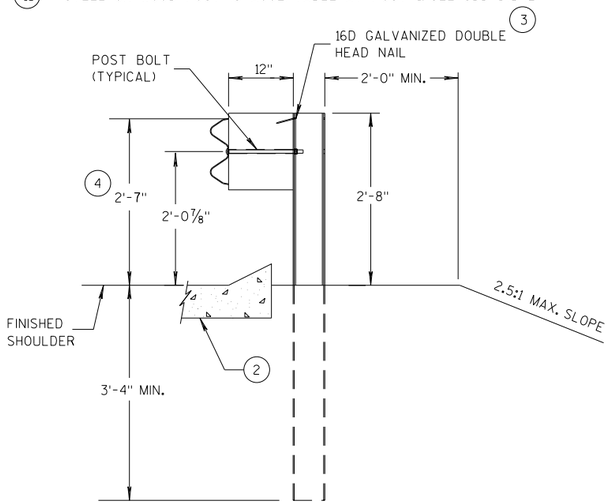

SECTION A-A (13)

POSTS 1-5

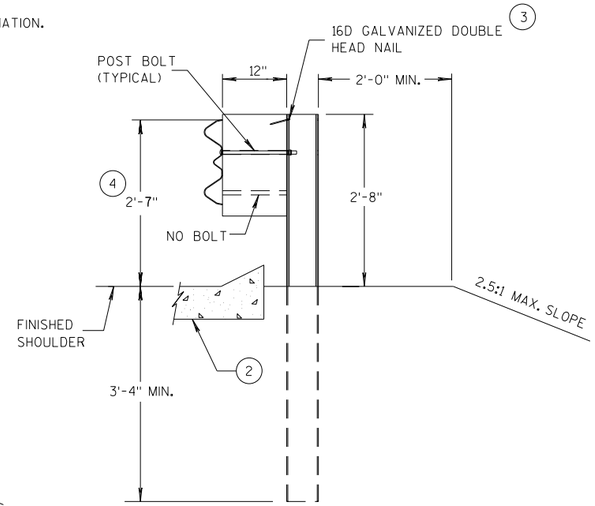

SECTION B-B

POST 6

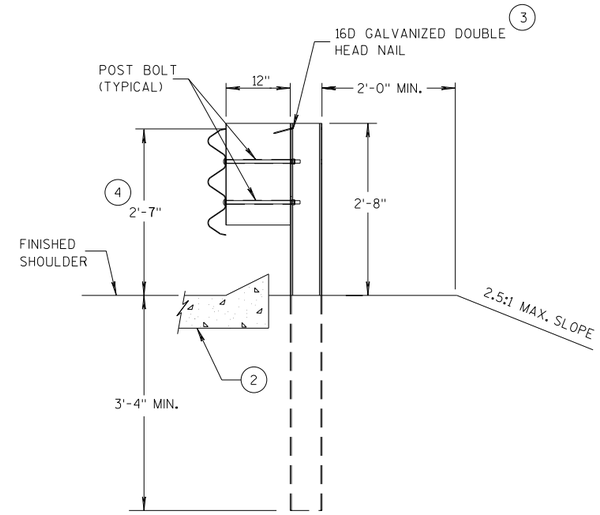

SECTION C-C

POSTS 7-11

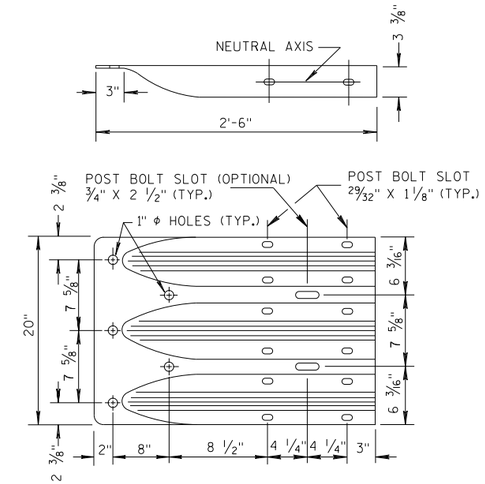

THRIE BEAM TERMINAL CONNECTOR

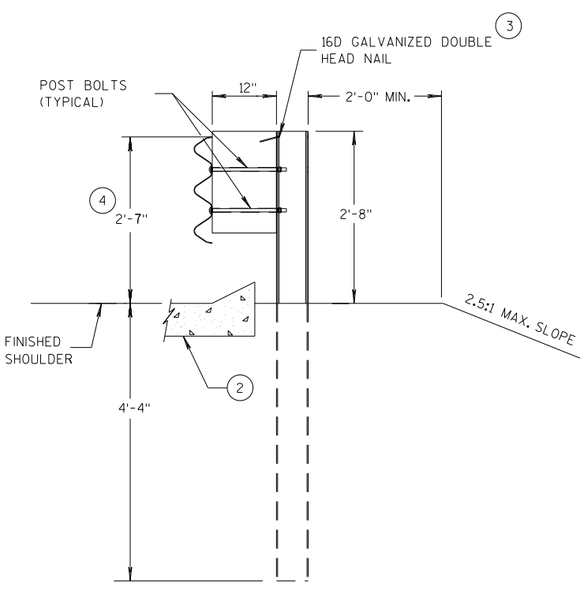

SECTION D-D

POSTS 12-17

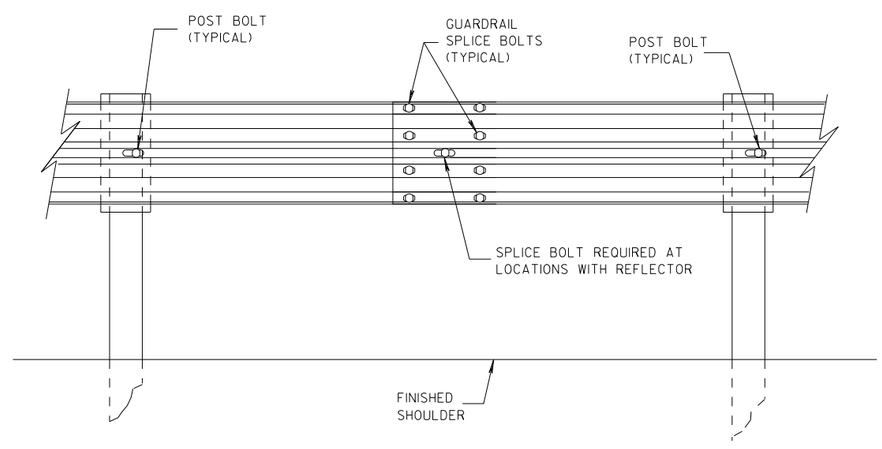

SPLICE DETAIL

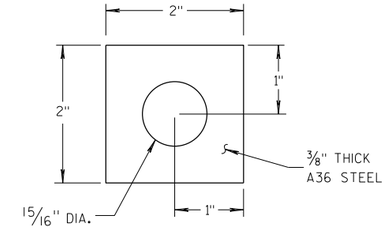

PLATE WASHER DETAIL

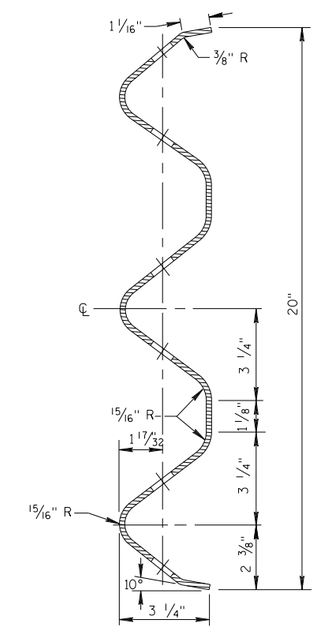

SECTION THRU THRIE BEAM RAIL ELEMENT

MIDWEST GUARDRAIL SYSTEM
THRIE BEAM TRANSITION (MGS)

STATE OF WISCONSIN
DEPARTMENT OF TRANSPORTATION

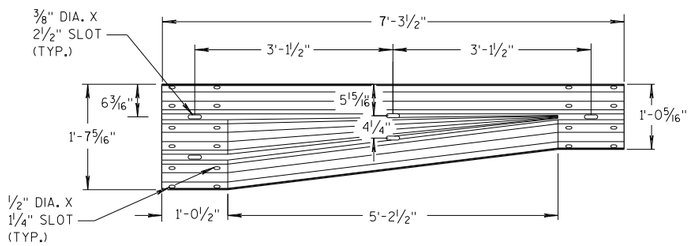

W-BEAM TO THRIE BEAM TRANSITION SECTION

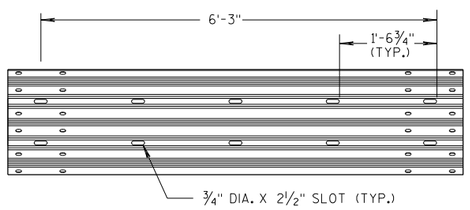

6'-3" THRIE BEAM SECTION

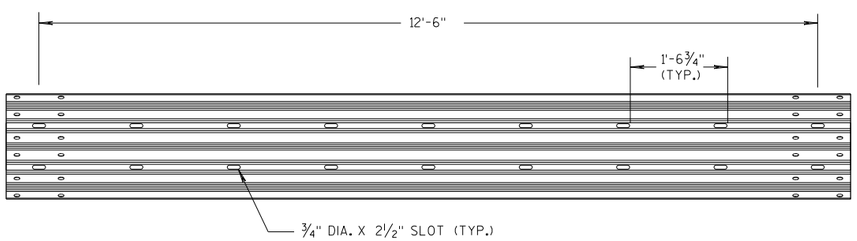

12'-6" THRIE BEAM SECTION

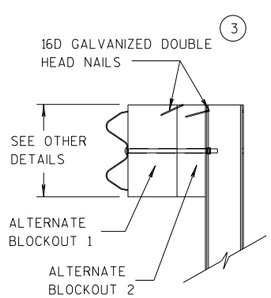

SIDE VIEW

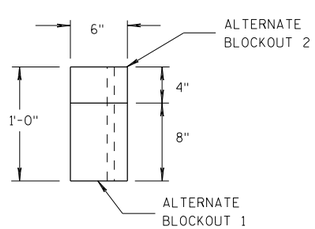

TOP VIEW

ALTERNATE WOOD BLOCKOUT DETAIL

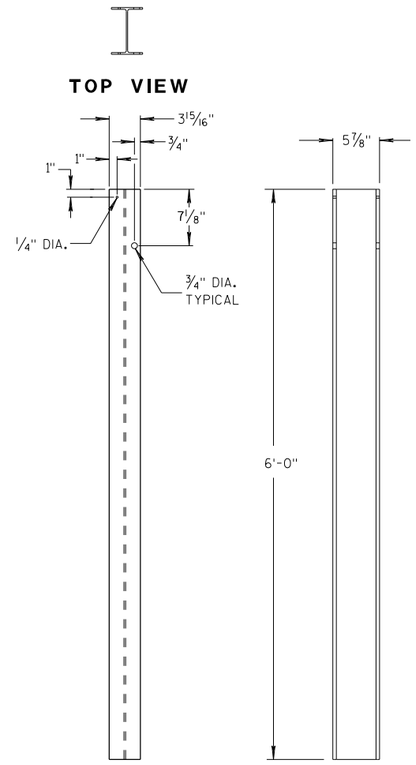

STEEL POSTS 1-5 (13)

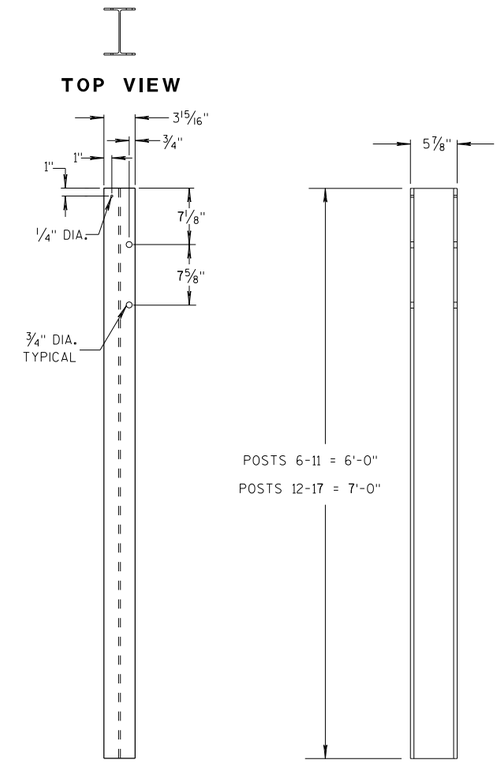

STEEL POSTS 6-17

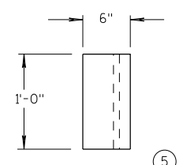

TOP VIEW (5)

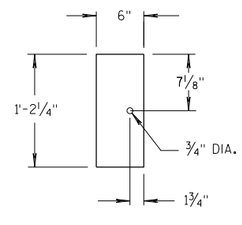

FRONT VIEW

BLOCKOUT POSTS 1-5

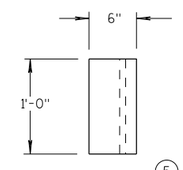

TOP VIEW (5)

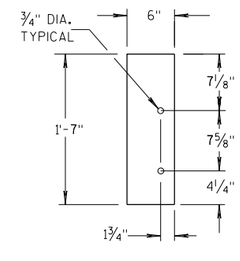

FRONT VIEW

BLOCKOUT POSTS 6-17

GENERAL NOTES

STEEL POSTS ARE W6X9 OR W6X8.5.

BOLT HOLES FOR POST ARE ON FRONT AND OF SIDE OF POST.

(3) WHEN USING STEEL POSTS AND WOOD BLOCKOUTS INSTALL FOUR 16D GALVANIZED NAILS. INSTALL NAILS AT THE BACK CORNERS OF THE BLOCK AND BEND THE NAILS OVER THE FLANGE OF THE STEEL POST.

(5) WOOD BLOCKS MAY BE CONSTRUCTED OUT OF 2 WOOD BLOCKS. SEE ALTERNATE WOOD BLOCK DETAIL.

(13) STEEL OR WOOD POST IS ACCEPTABLE AT POST 1. SEE SDD 14B42.

MIDWEST GUARDRAIL SYSTEM THRIE BEAM TRANSITION (MGS)

STATE OF WISCONSIN
DEPARTMENT OF TRANSPOR

6

S.D.D. 14 B 45-5c

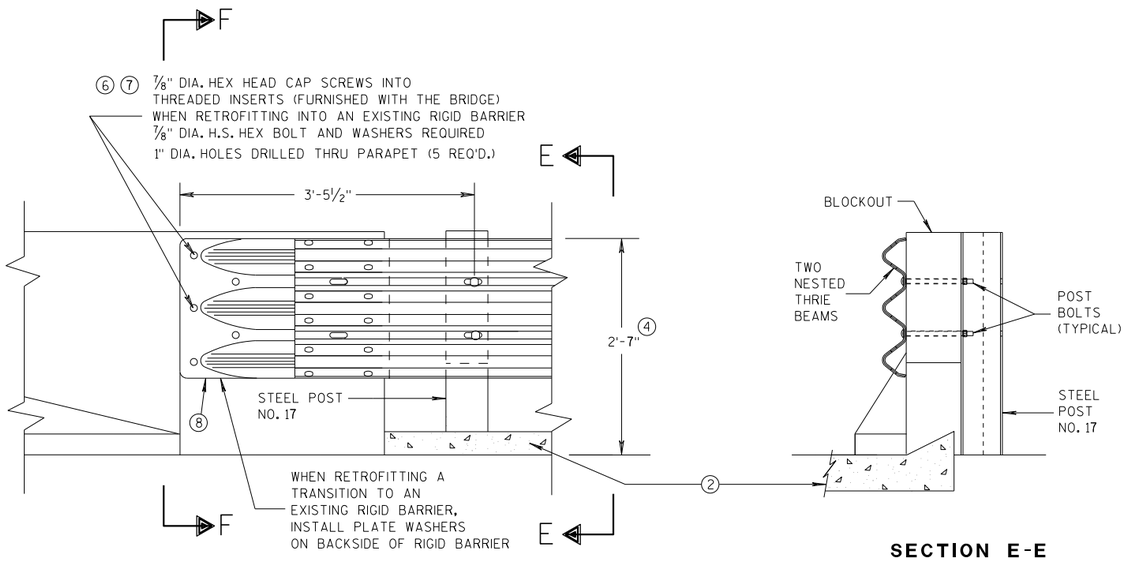

FRONT VIEW

SECTION E-E

THRIE BEAM CONNECTION TO BRIDGE PARAPET WITH SQUARE ENDS

GENERAL NOTES

THESE ARE TYPICAL CONNECTION DETAILS. ADJUST THE POSTION OF CONNECTIONS TO EXISTING BRIDGES TO FIT THE ACTUAL BRIDGE AND SITE DIMENSIONS.

② OPTIONAL CURB AND GUTTER OR DRAINAGE FEATURE SEE PLAN FOR INFORMATION.

④ TOLERANCE FOR TOP OF BEAM IS ± 1".

⑥ DRILLING BOLT HOLES THROUGH THE PARAPET, BOLTS, NUTS, WASHERS AND REPAIRING DAMAGED CONCRETE ARE INCIDENTAL TO THE CONTRACT.

⑦ BOLTS MAY BE A325 BOLTS OR A449 BOLTS. BOLT LENGTH AND THREADING LENGTH ARE TO ALLOW FOR A TIGHT CONNECTION BETWEEN RIGID BARRIER AND THRIE BEAM CONNECTION PLATE. CONTRACTOR IS TO FIELD VERIFY BOLT LENGTH AND THREAD LENGTH. ONE ROUND WASHER REQUIRED BETWEEN BOLT HEAD AND THRIE BEAM CONNECTOR PLATE. BOLTS THAT EXTEND THROUGH THE PARAPET AND OUT THE BACK FACE REQUIRE A HARDENED ROUND STEEL WASHER THAT IS 2" O.D. X 5/32" THICK AND ONE PLATE WASHER. REPAIR ANY DAMAGED CONCRETE FROM BOLT INSTALLATION.

⑧ THE RECESS FOR A W-BEAM CONNECTION, WHICH EXISTS ON SOME PARAPETS OF THIS TYPE, SHALL BE FILLED WITH A TREATED TIMBER BLOCKOUT. BLOCKOUT SIZE IS 1'-6" X 2'-0" X 3 1/2".

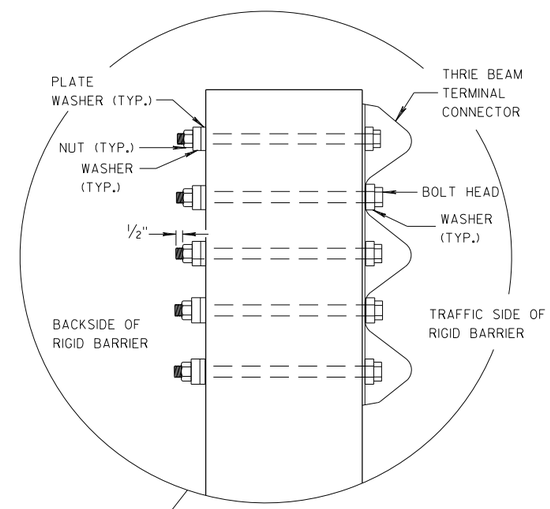

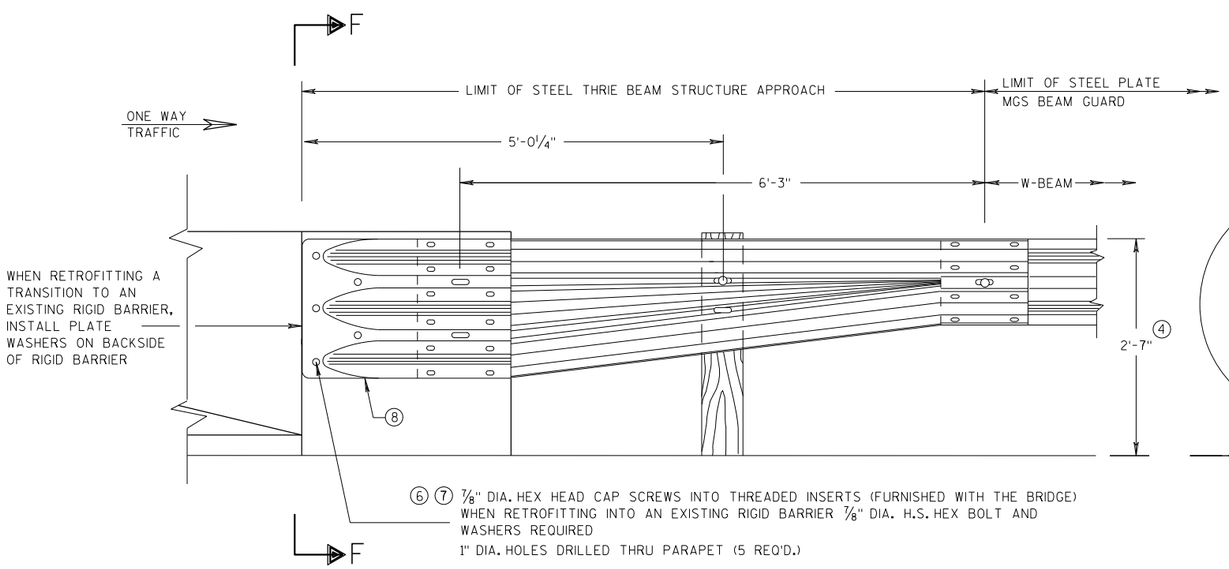

FRONT VIEW

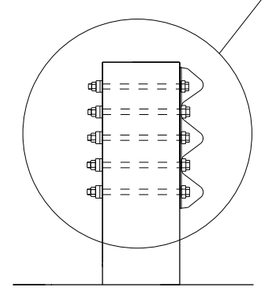

SECTION F-F

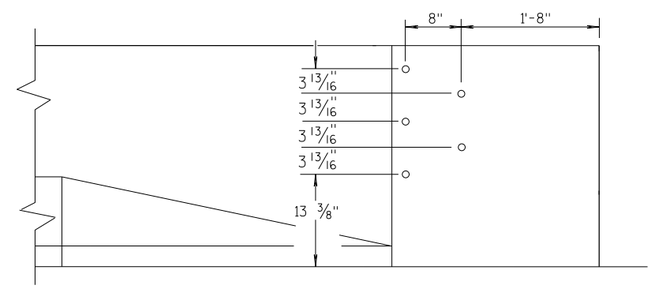

DRILL HOLE LOCATION

W BEAM TRANSITION AND CONNECTION TO BRIDGE PARAPETS WITH SQUARE ENDS

(USE ONLY ON THE TRAFFIC EXIT END OF ONE WAY BRIDGES)

MIDWEST GUARDRAIL SYSTEM THRIE BEAM TRANSITION (MGS)

STATE OF WISCONSIN
DEPARTMENT OF TRANSPORTATION

APPROVED
07/2018 — DATE
/S/ Rodney Taylor — ROADWAY STANDARDS D[illegible] UNIT SUPERVI[illegible]
FHWA

GENERAL NOTES

THESE ARE TYPICAL CONNECTION DETAILS. ADJUST THE POSTION OF CONNECTIONS TO EXISTING BRIDGES TO FIT THE ACTUAL BRIDGE AND SITE DIMENSIONS.

(2) OPTIONAL CURB AND GUTTER OR DRAINAGE FEATURE SEE PLAN FOR INFORMATION.

(4) TOLERANCE FOR TOP OF BEAM IS ± 1".

(6) DRILLING BOLT HOLES THROUGH THE PARAPET, BOLTS, NUTS, WASHERS AND REPAIRING DAMAGED CONCRETE ARE INCIDENTAL TO THE CONTRACT.

(7) BOLTS MAY BE A325 BOLTS OR A449 BOLTS. BOLT LENGTH AND THREADING LENGTH ARE TO ALLOW FOR A TIGHT CONNECTION BETWEEN RIGID BARRIER AND THRIE BEAM CONNECTION PLATE. CONTRACTOR IS TO FIELD VERIFY BOLT LENGTH AND THREAD LENGTH. ONE ROUND WASHER REQUIRED BETWEEN BOLT HEAD AND THRIE BEAM CONNECTOR PLATE. BOLTS THAT EXTEND THROUGH THE PARAPET AND OUT THE BACK FACE REQUIRE A HARDENED ROUND STEEL WASHER THAT IS 2" O.D. X 5/32" THICK AND ONE PLATE WASHER. REPAIR ANY DAMAGED CONCRETE FROM BOLT INSTALLATION.

(8) THE RECESS FOR A W-BEAM CONNECTION, WHICH EXISTS ON SOME PARAPETS OF THIS TYPE, SHALL BE FILLED WITH A TREATED TIMBER BLOCKOUT. BLOCKOUT SIZE IS 1'-6" X 2'-0" X 3 1/2".

(9) BOLT, NUT AND WASHERS NOT REQUIRED FOR THIS LOCATION WHEN RETROFITTING AN EXISTING PAPAPET AND THE HOLE IS EITHER ABOVE PARAPET OR WITHIN 4 INCHES OF THE EDGE OF PARAPET.

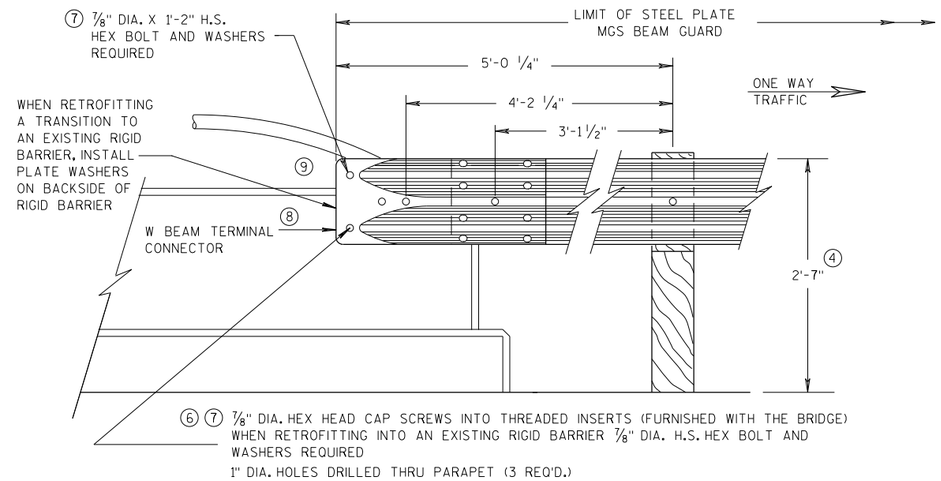

FRONT VIEW

W BEAM CONNECTION TO VERTICAL FACE PARAPET

(USE ONLY ON THE TRAFFIC EXIT END OF ONE WAY BRIDGES)

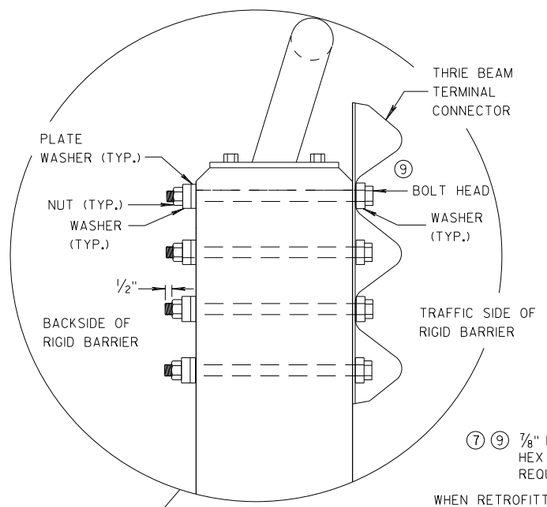

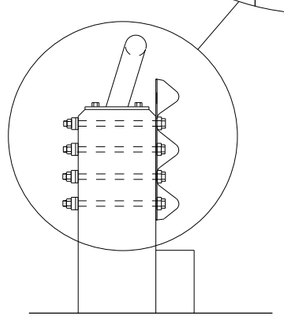

SECTION G-G

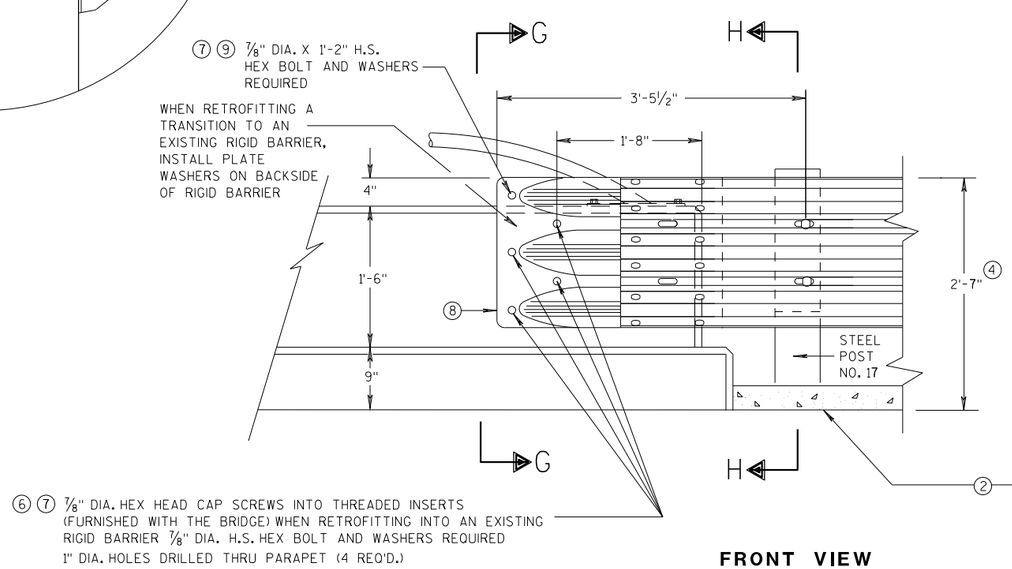

FRONT VIEW

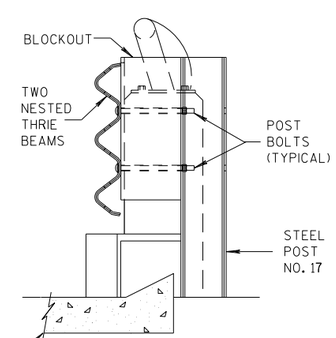

SECTION H-H

THRIE BEAM CONNECTION TO VERTICAL FACED PARAPETS

MIDWEST GUARDRAIL SYSTEM
THRIE BEAM TRANSITION (MGS)

STATE OF WISCONSIN
DEPARTMENT OF TRANSPORTATION

APPROVED
07/2018 — DATE
/S/ Rodney Taylor
ROADWAY STANDARDS D[illegible] UNIT SUPERVI[illegible]
FHWA

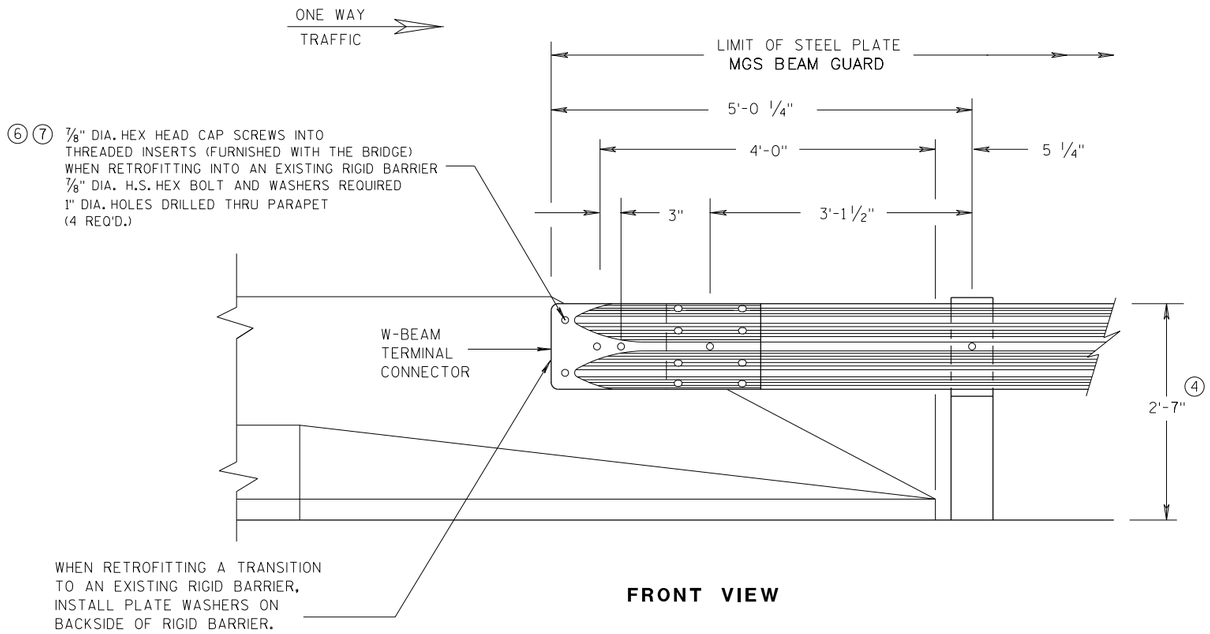

FRONT VIEW

W BEAM CONNECTION TO PARAPETS WITH SLOPED ENDS

(USE ONLY AT TRAFFIC EXIT END OF ONE WAY BRIDGE)

GENERAL NOTES

② OPTIONAL CURB AND GUTTER OR DRAINAGE FEATURE SEE PLAN FOR INFORMATION.

④ TOLERANCE FOR TOP OF BEAM IS ± 1".

⑥ DRILLING BOLT HOLES THROUGH THE PARAPET, BOLTS, NUTS, WASHERS AND REPAIRING DAMAGED CONCRETE ARE INCIDENTAL TO THE CONTRACT.

⑦ BOLTS MAY BE A325 BOLTS OR A449 BOLTS. BOLT LENGTH AND THREADING LENGTH ARE TO ALLOW FOR A TIGHT CONNECTION BETWEEN RIGID BARRIER AND THRIE BEAM CONNECTION PLATE. CONTRACTOR IS TO FIELD VERIFY BOLT LENGTH AND THREAD LENGTH. ONE ROUND WASHER REQUIRED BETWEEN BOLT HEAD AND THRIE BEAM CONNECTOR PLATE. BOLTS THAT EXTEND THROUGH THE PARAPET AND OUT THE BACK FACE REQUIRE A HARDENED ROUND STEEL WASHER THAT IS 2" O.D. X 5/32" THICK AND ONE PLATE WASHER. REPAIR ANY DAMAGED CONCRETE FROM BOLT INSTALLATION.

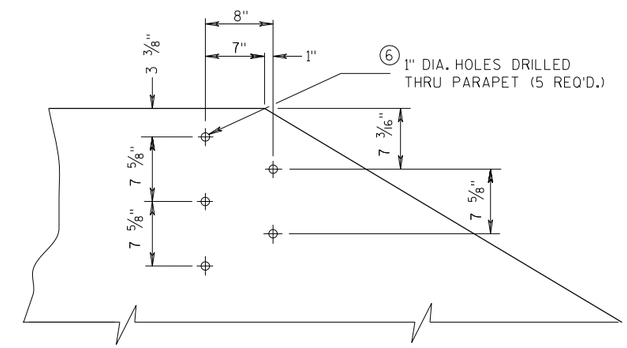

DRILL HOLE LOCATION AND PATTERN FOR THRIE BEAM CONNECTION

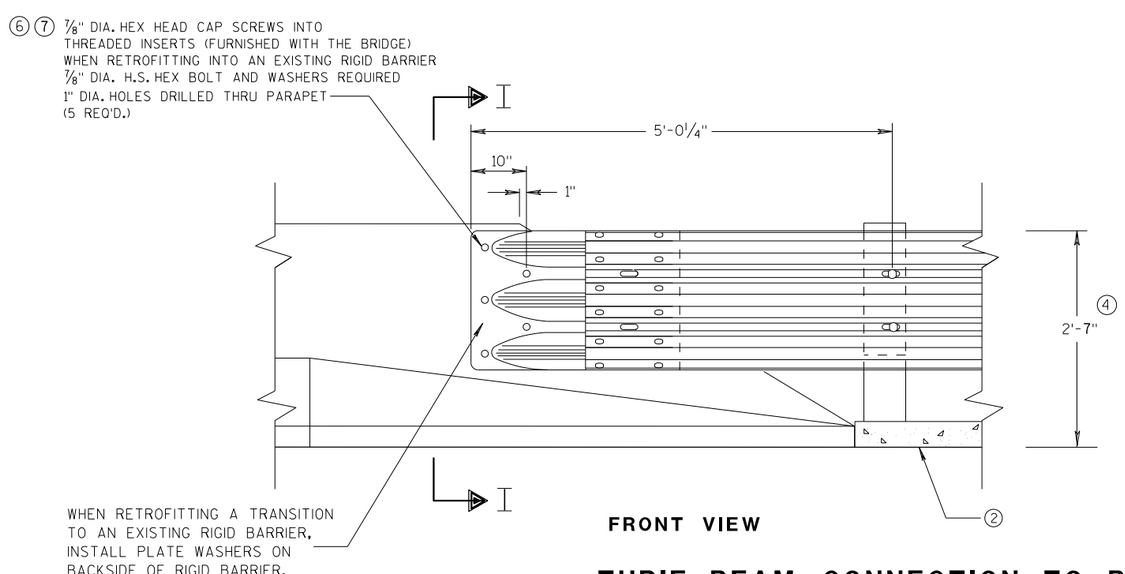

FRONT VIEW

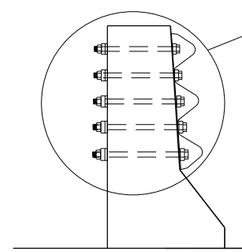

SECTION I-I

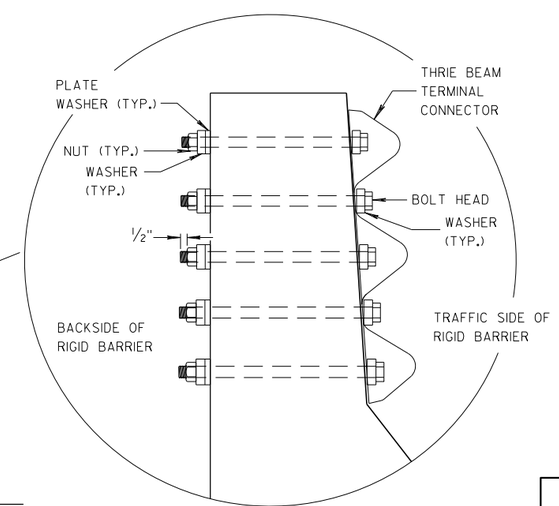

THRIE BEAM CONNECTION TO BRIDGE PARAPETS WITH SLOPED ENDS

MIDWEST GUARDRAIL SYSTEM THRIE BEAM TRANSITION (MGS)

STATE OF WISCONSIN
DEPARTMENT OF TRANSPORTATION

APPROVED
07/2018 — DATE
/S/ Rodney Taylor — ROADWAY STANDARDS DEVELOPMENT UNIT SUPERVISOR
FHWA

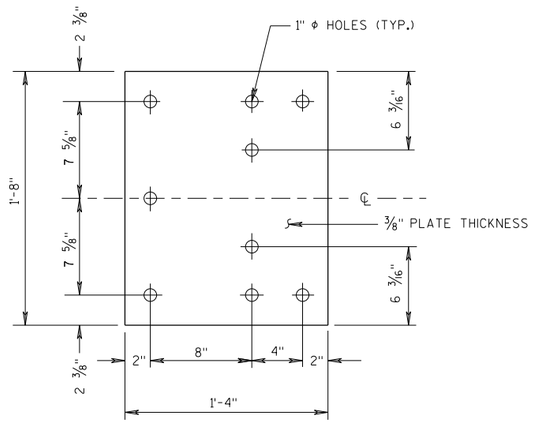

BACK-UP PLATE DETAIL

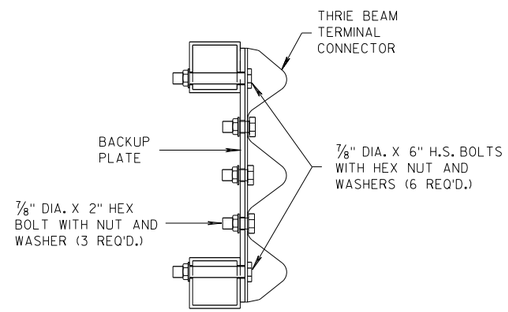

SECTION J-J

GENERAL NOTES

(4) TOLERANCE FOR TOP OF BEAM IS ± 1".

(6) DRILLING HOLES THROUGH THE PAPRPET, BOLTS, NUTS, WASHERS AND REPAIRING DAMAGED CONCRETE ARE INCIDENTAL TO THE CONTRACT.

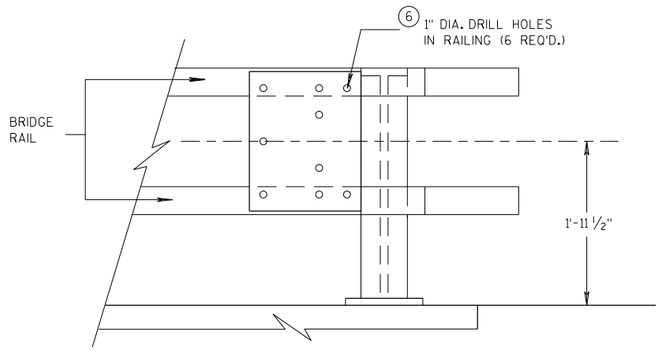

BACK-UP PLATE MOUNTING ONTO BRIDGE RAILING

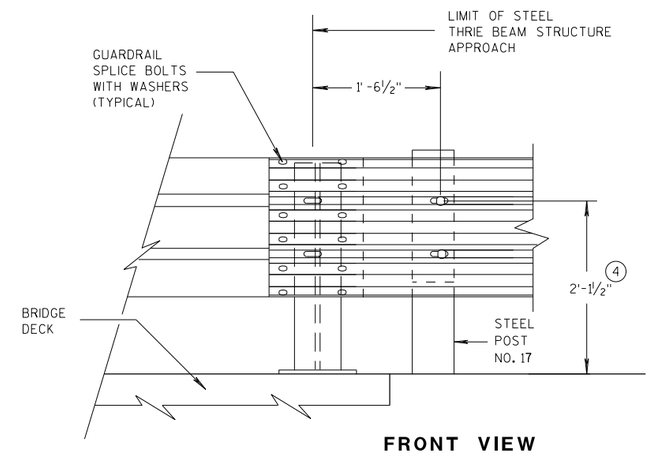

FRONT VIEW

THRIE BEAM CONNECTION TO STEEL RAILING TYPE "W"

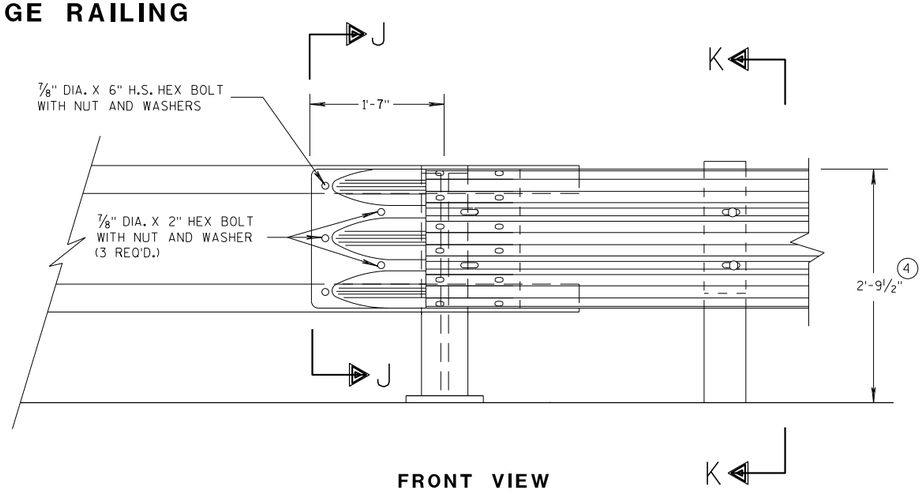

FRONT VIEW

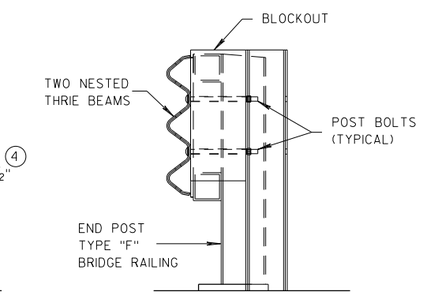

SECTION K-K

THRIE BEAM CONNECTION TO TUBULAR RAILING TYPE "F"

MIDWEST GUARDRAIL SYSTEM THRIE BEAM TRANSITION (MGS)

STATE OF WISCONSIN
DEPARTMENT OF TRANSPORTATION

APPROVED 07/2018 — DATE — FHWA

/S/ Rodney Taylor — ROADWAY STANDARDS DEVELOPMENT UNIT SUPERVISOR

S.D.D. 14 B 45-5g

GENERAL NOTES

(4) TOLERANCE FOR TOP OF W-BEAM RAIL IS ± 1".

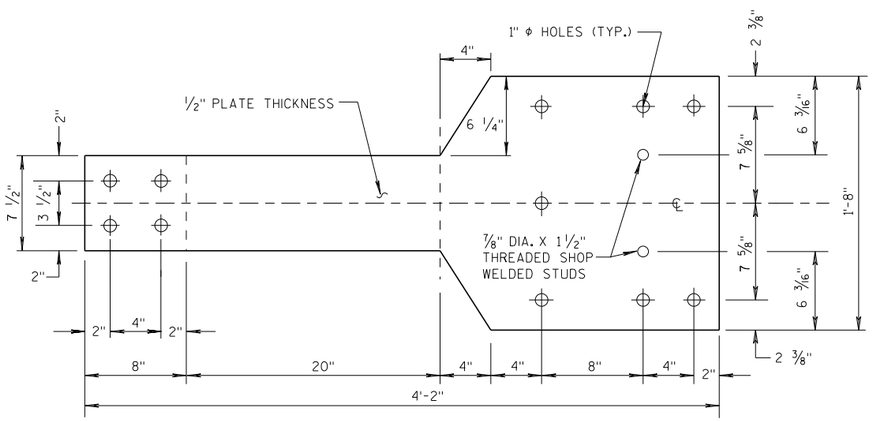

FRONT VIEW

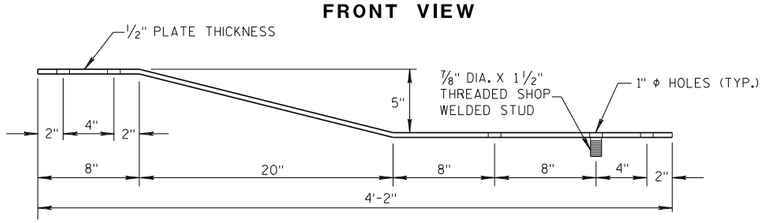

PLAN VIEW

BACK-UP PLATE DETAIL, TYPE "M"

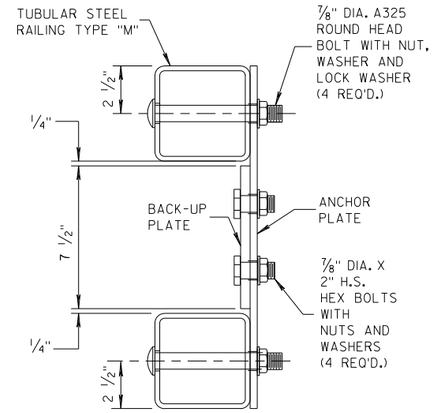

SECTION L-L

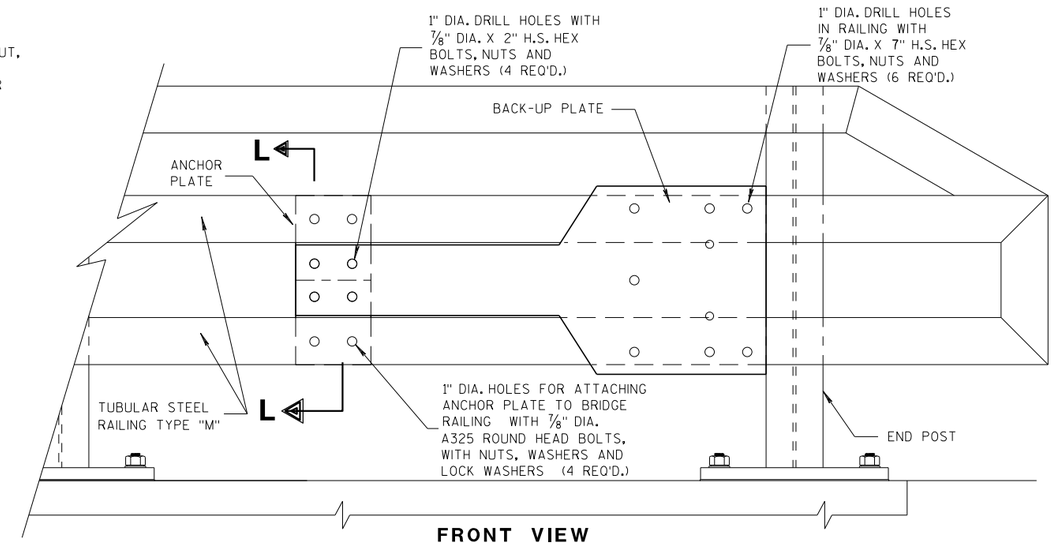

FRONT VIEW

ANCHOR AND BACK-UP PLATE MOUNTING TO BRIDGE RAILING, TYPE "M"

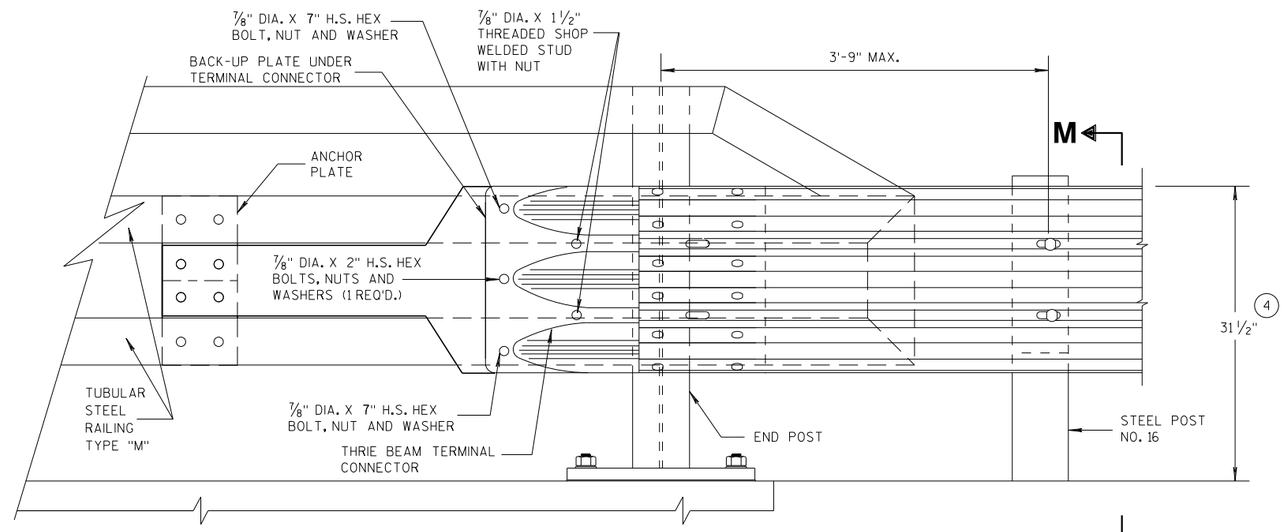

FRONT VIEW

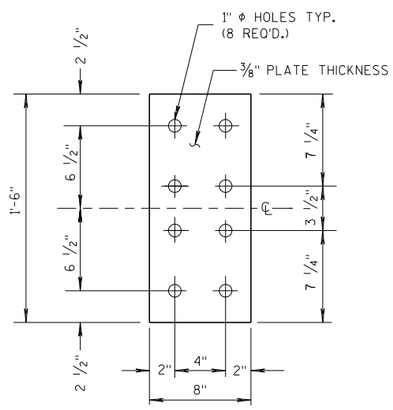

FRONT VIEW

ANCHOR PLATE DETAIL, TYPE "M"

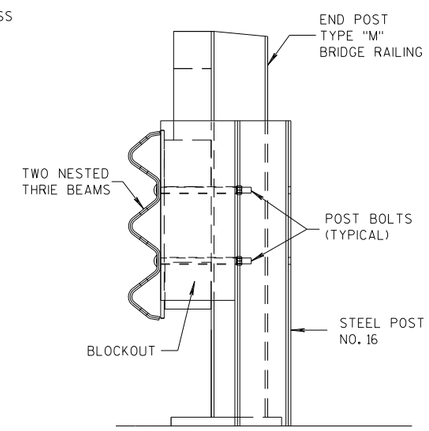

SECTION M-M

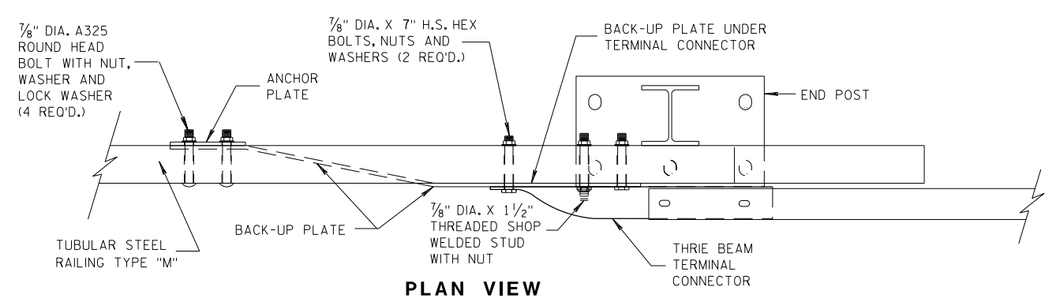

PLAN VIEW

THRIE BEAM CONNECTION TO TUBULAR RAILING, TYPE "M"

MIDWEST GUARDRAIL SYSTEM THRIE BEAM TRANSITION (MGS)

STATE OF WISCONSIN
DEPARTMENT OF TRANSPORTATION

APPROVED
07/2018 — DATE
/S/ Rodney Taylor — ROADWAY STANDARDS DEVELOPMENT UNIT SUPERVISOR
FHWA

6

S.D.D. 14 B 45-5h

GENERAL NOTES

COVER PLATE PANELS ARE 3/16" THICK.

ALL STIFFENERS ARE 1/4" THICK.

CONNECTOR PLATE SHALL BE FABRICATED FROM ASTM GRADE A36 STEEL AND GALVANIZED.

FOR GALVANIZED REQUIREMENTS, SEE SECTION 614 OF THE STANDARD SPECIFICATIONS.

ALL HOLE DIAMETERS SHALL BE 1".

FOR OPPOSITE SIDE INSTALLATION MIRROR DRAWINGS.

(10) STIFFENERS LOCATED AT THE OUTSIDE EDGES OF THE COVER PLATES SHALL BE WELDED AS FOLLOWS:
SINGLE BEVEL GROOVE WELD ON EXTERNAL SIDES AND 3/16" FILLET WELD BY 1" LONG SPACED AT 2" ON INTERNAL SIDES.

(11) STIFFENERS LOCATED ON THE INSIDE OF THE COVER PLATE SHALL BE WELDED AS FOLLOWS:
3/16" FILLET WELD BY 1" LONG SPACED AT 2".

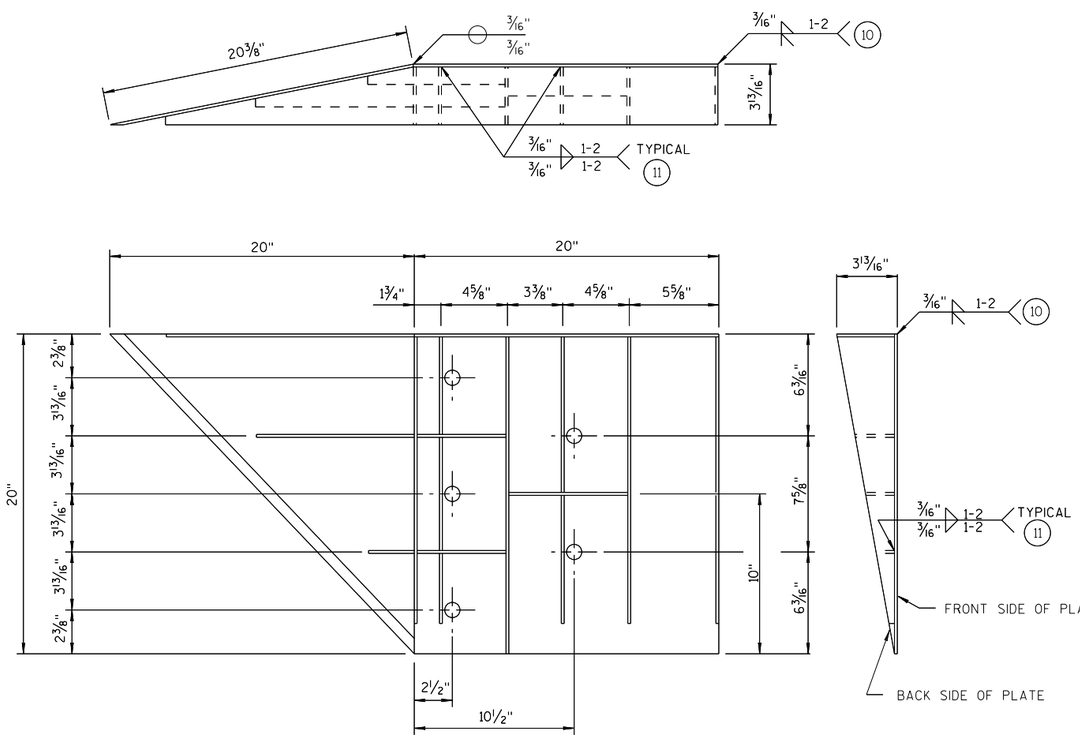

WELDING INSTRUCTION

(VIEWED FROM BACK SIDE OF PLATE)

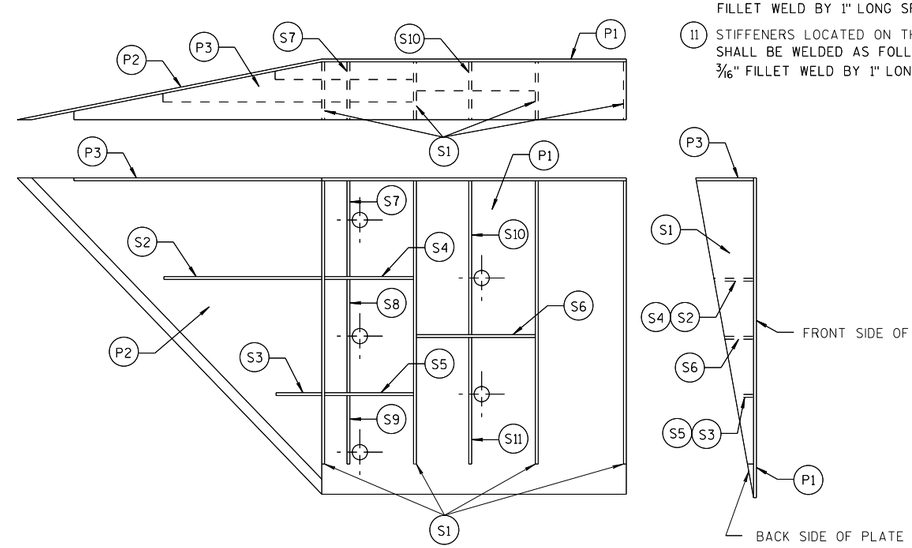

PLATE AND STIFFENER IDENTIFICATION

(VIEWED FROM BACK SIDE OF PLATE)

CONNECTOR PLATE DIMENSION (PER ASSEMBLY)				
PLATE	QUANTITY	SHAPE	SIZE (A x B x C x D)	THICKNESS
P1	1		20" x 20"	3/16"
P2	1		20" x 20" x 28 9/16"	3/16"
P3	1		39" x 3 5/8" x 20" x 19 5/16"	3/16"
S1	4		18 7/16" x 3 5/8" x 18 3/4"	1/4"
S2	1		10 1/4" x 2 7/16" x 10 3/8" x 1/2"	1/4"
S3	1		3" x 1 1/16" x 3 1/8" x 1/2"	1/4"
S4	1		6 1/8" x 2 7/16"	1/4"
S5	1		6 1/8" x 1 1/16"	1/4"
S6	1		7 3/4" x 1 3/4"	1/4"
S7	1		2 9/16" x 6" x 3 5/8" x 5 7/8"	1/4"
S8	1		1 5/32" x 7 1/2" x 2 1/2" x 7 3/8"	1/4"
S9	1		6 1/16" x 6 3/16" x 1 3/32"	1/4"
S10	1		1 7/8" x 9 7/8" x 3 5/8" x 9 11/16"	1/4"
S11	1		8 1/2" x 8 3/4" x 1 13/16"	1/4"

SINGLE SLOPE CONNECTION PLATE

MIDWEST GUARDRAIL SYSTEM THRIE BEAM TRANSITION (MGS)

STATE OF WISCONSIN
DEPARTMENT OF TRANSPORTATION

APPROVED
7/2018 /S/ Rodney Taylor
DATE ROADWAY STANDARDS DEVELOPMENT UNIT SUPERVISOR
FHWA

6

S.D.D. 14 B 45-5i

GENERAL NOTES

CONNECTOR PLATE, DRILLING BOLT HOLES THROUGH THE PARAPET, BOLTS, NUTS, WASHERS AND REPAIRING DAMAGED CONCRETE ARE INCIDENTAL TO THE CONTRACT.

(2) OPTIONAL CURB AND GUTTER OR DRAINAGE FEATURE SEE PLAN FOR INFORMATION.

(7) BOLTS MAY BE A325 BOLTS OR A449 BOLTS. BOLT LENGTH AND THREADING LENGTH ARE TO ALLOW FOR A TIGHT CONNECTION BETWEEN RIGID BARRIER AND THRIE BEAM CONNECTION PLATE. CONTRACTOR IS TO FIELD VERIFY BOLT LENGTH AND THREAD LENGTH. ONE ROUND WASHER REQUIRED BETWEEN BOLT HEAD AND THRIE BEAM CONNECTOR PLATE. BOLTS THAT EXTEND THROUGH THE PARAPET AND OUT THE BACK FACE REQUIRE A HARDENED ROUND STEEL WASHER THAT IS 2" O.D. X 5/32" THICK AND ONE PLATE WASHER. REPAIR ANY DAMAGED CONCRETE FROM BOLT INSTALLATION.

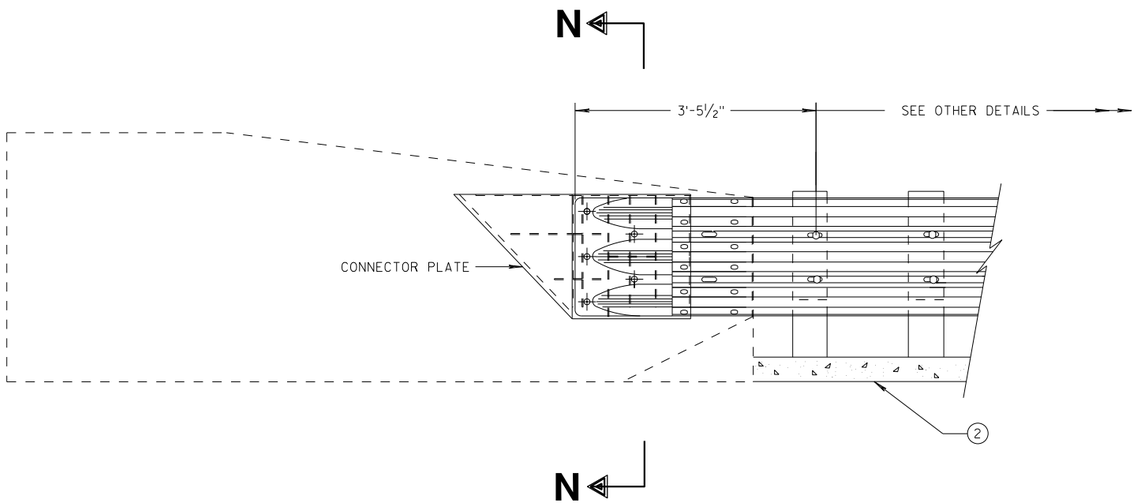

THRIE BEAM CONNECTION TO SINGLE SLOPE BARRIER

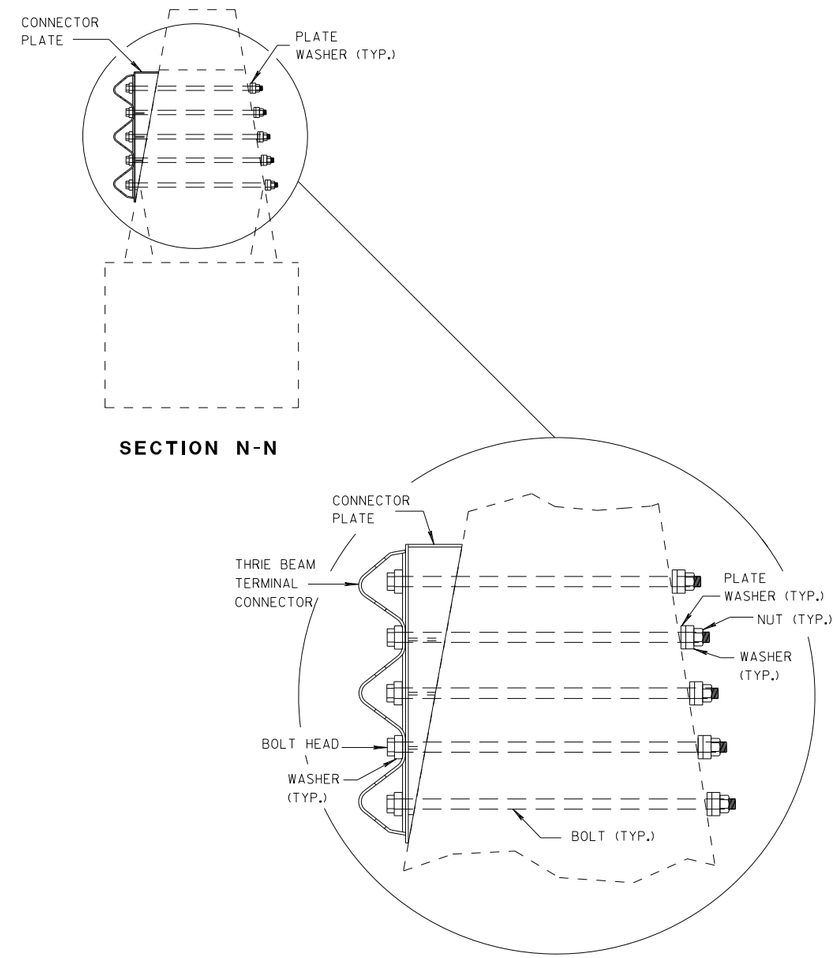

SECTION N-N

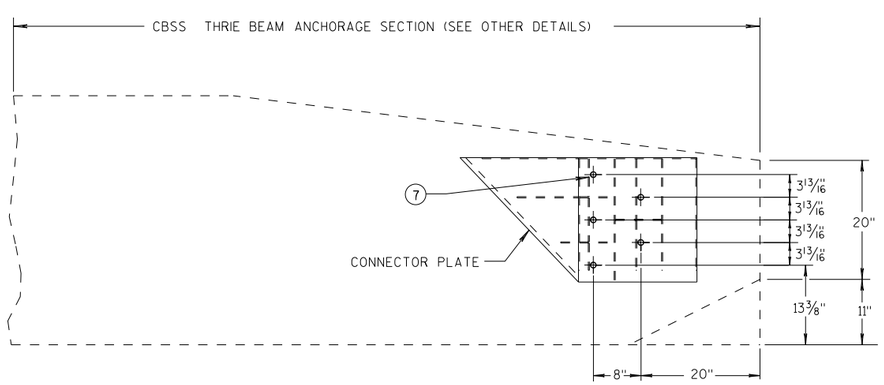

SINGLE SLOPE CONNECTION PLATE PLACEMENT

MIDWEST GUARDRAIL SYSTEM THRIE BEAM TRANSITION (MGS)

STATE OF WISCONSIN
DEPARTMENT OF TRANSPORTATION

APPROVED
7/2018 — DATE
/S/ Rodney Taylor — ROADWAY STANDARDS DI... UNIT SUPERVIS...
FHWA

6

S.D.D. 14 B 45-5j

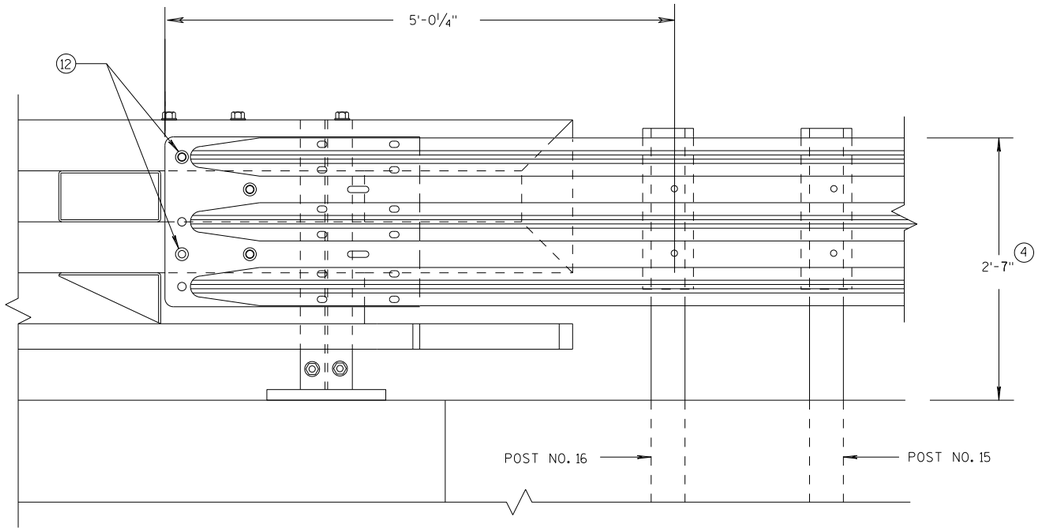

ELEVATION OF DETAIL AT NY3 END POST

THRIE BEAM RAIL ATTACHMENT

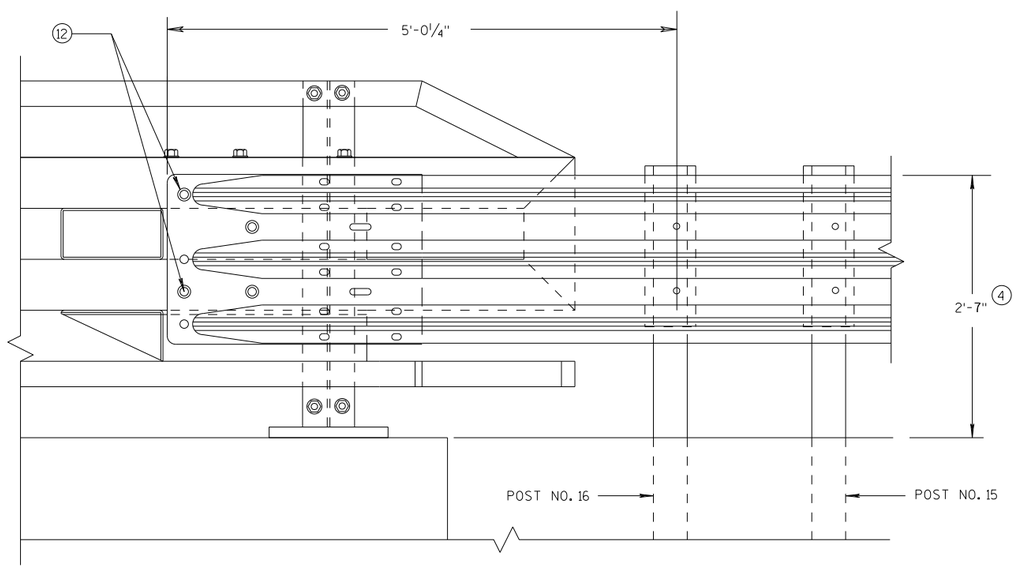

ELEVATION OF DETAIL AT NY4 END POST

THRIE BEAM RAIL ATTACHMENT

GENERAL NOTES

(4) TOLERANCE FOR TOP OF BEAM IS ± 1".

(12) BOLTS MAY BE A325 BOLTS OR A449 BOLTS. BOLT LENGTH AND THREADING LENGTH ARE TO ALLOW FOR A TIGHT CONNECTION BETWEEN RIGID BARRIER AND THRIE BEAM CONNECTION PLATE. CONTRACTOR IS TO FIELD VERIFY BOLT LENGTH AND THREAD LENGTH. ONE ROUND WASHER REQUIRED BETWEEN BOLT HEAD AND THRIE BEAM CONNECTOR PLATE. ON BACKSIDE OF PARAPET ONE ROUND WASHER, AND NUT REQUIRED. BOLT THREAD IS TO EXTEND ½-INCH BEYOND NUT.

MIDWEST GUARDRAIL SYSTEM
THRIE BEAM TRANSITION (MGS)

STATE OF WISCONSIN
DEPARTMENT OF TRANSPORTATION

APPROVED
7/2018
DATE
/S/ Rodney Taylor
ROADWAY STANDARDS D
UNIT SUPERVIS
NT
FHWA

6
S.D.D. 14 B 45-5k

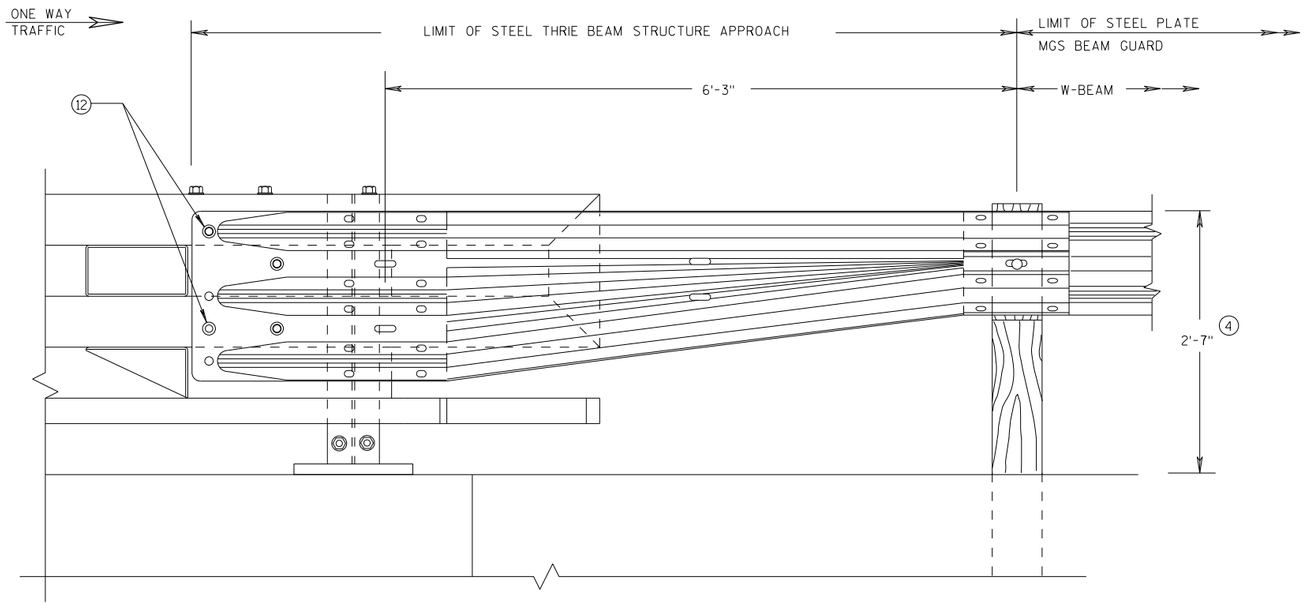

FRONT VIEW

W BEAM TRANSITION AND CONNECTION TO BRIDGE RAILING TYPE "NY3"

(USE ONLY ON THE TRAFFIC EXIT END OF ONE WAY BRIDGES)

GENERAL NOTES

(4) TOLERANCE FOR TOP OF BEAM IS ± 1".

(12) BOLTS MAY BE A325 BOLTS OR A449 BOLTS. BOLT LENGTH AND THREADING LENGTH ARE TO ALLOW FOR A TIGHT CONNECTION BETWEEN RIGID BARRIER AND THRIE BEAM CONNECTION PLATE. CONTRACTOR IS TO FIELD VERIFY BOLT LENGTH AND THREAD LENGTH. ONE ROUND WASHER REQUIRED BETWEEN BOLT HEAD AND THRIE BEAM CONNECTOR PLATE. ON BACKSIDE OF PARAPET ONE ROUND WASHER, AND NUT REQUIRED. BOLT THREAD IS TO EXTEND ½-INCH BEYOND NUT.

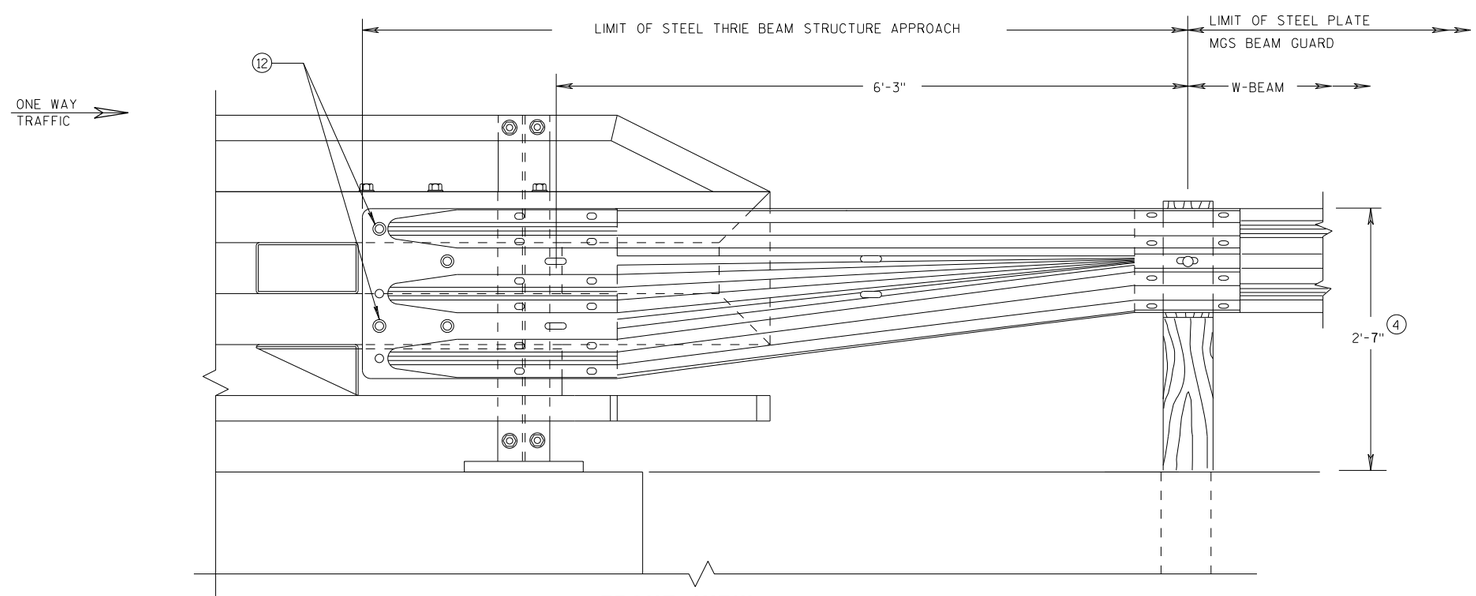

FRONT VIEW

W BEAM TRANSITION AND CONNECTION TO BRIDGE RAILING TYPE "NY4"

(USE ONLY ON THE TRAFFIC EXIT END OF ONE WAY BRIDGES)

MIDWEST GUARDRAIL SYSTEM THRIE BEAM TRANSITION (MGS)

STATE OF WISCONSIN
DEPARTMENT OF TRANSPORTATION

APPROVED
7/2018 — DATE
/S/ Rodney Taylor — ROADWAY STANDARDS DEVELOPMENT UNIT SUPERVISOR
NT
FHWA

6

S.D.D. 14 B 45-5L

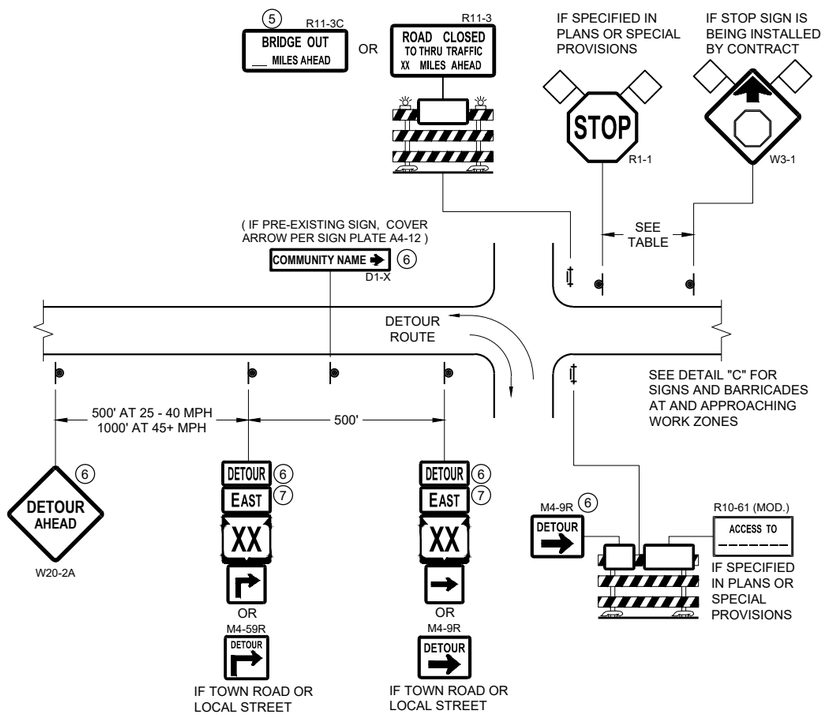

DETAIL A
MAINLINE CLOSURE WITH POSTED DETOUR

WORK ZONE GREATER THAN OR EQUAL TO ½ MILE FROM DETOUR ROUTE (1000 FEET IF URBAN)

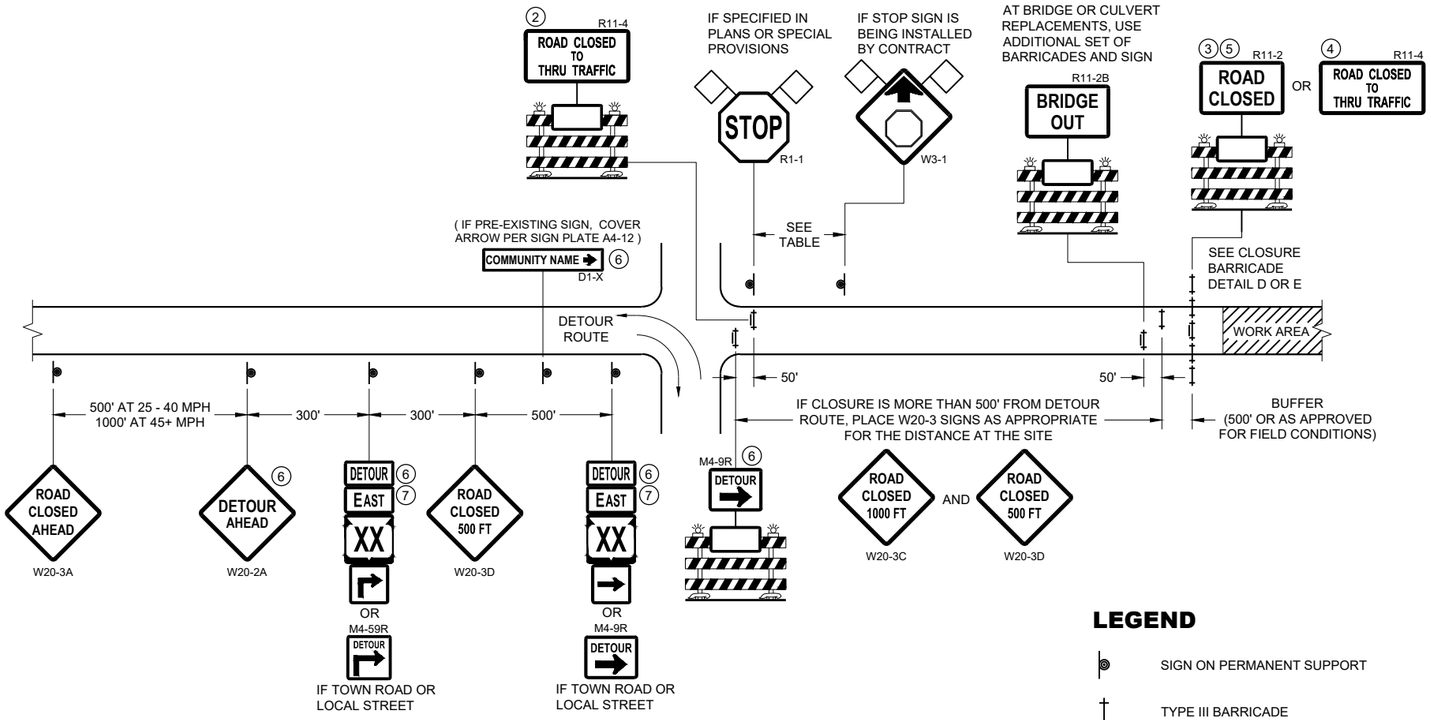

DETAIL B
MAINLINE CLOSURE WITH POSTED DETOUR

WORK ZONE LESS THAN ½ MILE FROM DETOUR ROUTE (1000 FEET IF URBAN)

LEGEND

- SIGN ON PERMANENT SUPPORT
- TYPE III BARRICADE
- TYPE III BARRICADE WITH ATTACHED SIGN
- TYPE "A" WARNING LIGHT (FLASHING)
- WORK AREA
- FLAGS, 16" X 16" MIN. (ORANGE)
- DETOUR — M4 - 8
- EAST — M3 - X
- XX (M1 - 4) OR XX (M1 - 6) OR COUNTY X (M1 - 5A)
- (M05 - 1) OR (M06 - 1)

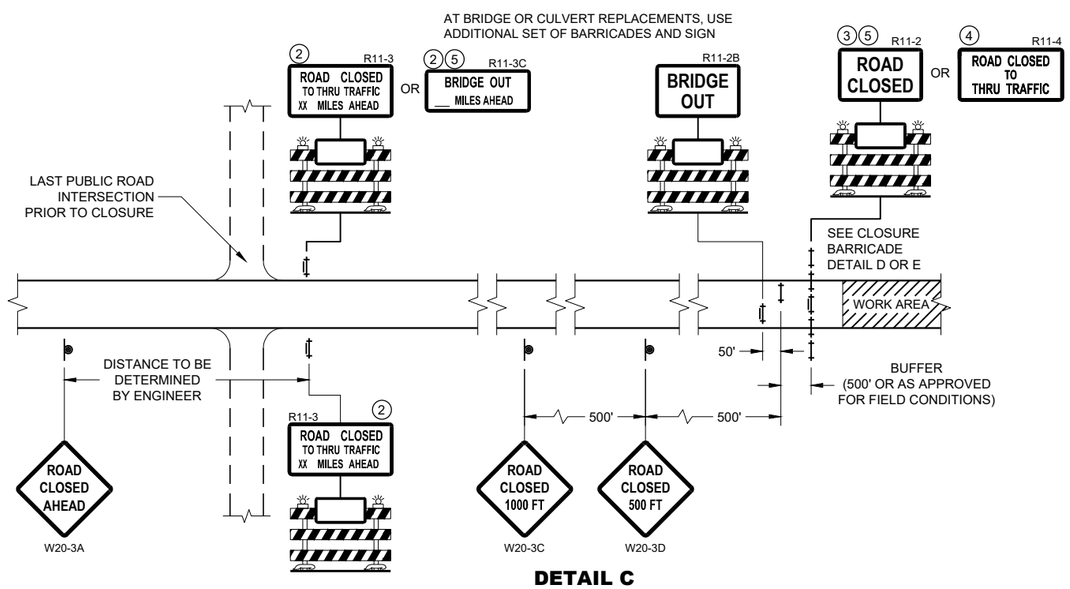

DETAIL C
MAINLINE CLOSURE, NO POSTED DETOUR

SPEED LIMIT (MPH)	"STOP AHEAD" ADVANCE WARNING DISTANCE (FT)
25	200
30	200
35	350
40	350
45	500
50	550
55	750

SEE SDD 15C2-SHEET "b" FOR GENERAL NOTES AND FOOTNOTES 1 THROUGH 7

BARRICADES AND SIGNS FOR MAINLINE CLOSURES

STATE OF WISCONSIN
DEPARTMENT OF TRANSPORTATION

APPROVED
May 2023 — DATE
/S/ Andrew Heidtke — WORK ZONE ENGINEER

FHWA

6

SDD 15C02 - 09a

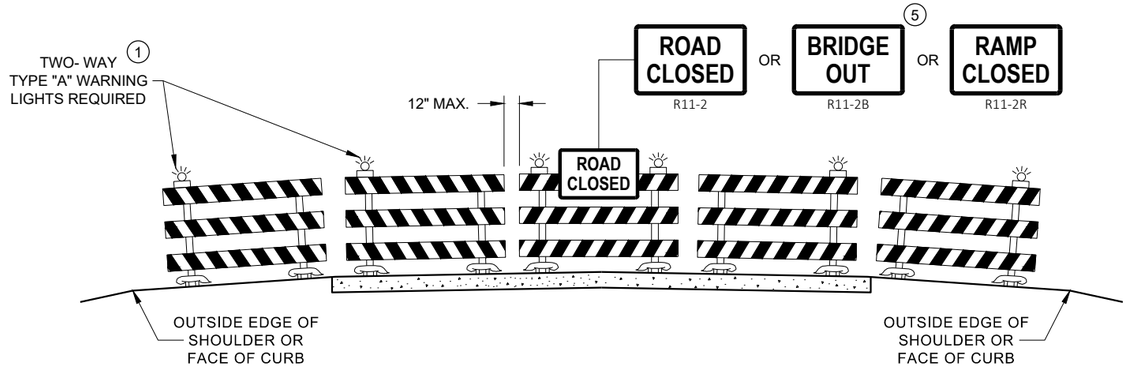

DETAIL D
ROAD CLOSURE BARRICADE DETAIL
APPROACH VIEW

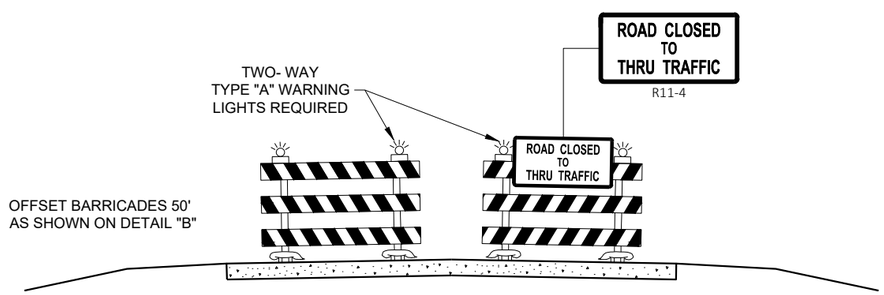

DETAIL E
LANE CLOSURE BARRICADE DETAIL
APPROACH VIEW

SEE SDD 15C2 - SHEET "a" FOR LEGEND

GENERAL NOTES

THE EXACT NUMBER, LOCATION, AND SPACING OF ALL SIGNS AND BARRICADES SHALL BE ADJUSTED TO FIT FIELD CONDITIONS AS APPROVED BY THE ENGINEER.

ANY SIGNS TEMPORARY OR EXISTING, WHICH CONFLICT WITH TRAFFIC CONTROL "IN USE", SHALL BE REMOVED OR COVERED AS NEEDED AND AS APPROVED BY THE ENGINEER.

THE SPACING BETWEEN TRAFFIC CONTROL SIGNS SHOULD BE ADJUSTED TO NOT CONFLICT WITH AND SHOULD PROVIDE A DESIRABLE MINIMUM OF 200 FEET CLEARANCE TO EXISTING SIGNS THAT WILL REMAIN IN PLACE.

BARRICADES THAT MUST BE MOVED FOR A WORK OPERATION SHALL BE IMMEDIATELY RE-ESTABLISHED UPON COMPLETION OF THE OPERATION, OR FOR CONTINUING OPERATIONS, AT THE END OF EACH WORKING DAY.

SIGNS THAT WILL BE IN PLACE LESS THAN 7 CONTINUOUS DAYS AND NIGHTS MAY BE MOUNTED ON PORTABLE SUPPORTS.

ALL TYPE III BARRICADES SHALL HAVE RAILS REFLECTORIZED ON BOTH FACES. STRIPES SHALL BE PROPERLY SLOPED DOWN TOWARD THE TRAFFIC SIDE OR AS SHOWN IN THE ROAD CLOSURE BARRICADE DETAIL "D" FOR FULL ROAD CLOSURES.

TYPE "A" LOW - INTENSITY FLASHING WARNING LIGHTS SHALL BE VISIBLE ON BOTH SIDES OF THE BARRICADE.

THE R11 - 2, R11 - 3, M4 - 9, R11 - 4, AND R10 - 61 SIGNS PLACED ON THE BARRICADES SHALL COVER NO MORE THAN THE TOP RAIL. THE SIGNS SHALL NOT COVER ANY PORTION OF THE MIDDLE RAIL OR BOTTOM RAILS.

"WO" AND "MO" SIGNS ARE THE SAME AS "W" AND "M" SIGNS EXCEPT THE BACKGROUND IS ORANGE.

ALL SIGNS SHALL BE 48" X 48" UNLESS OTHERWISE NOTED BELOW:
- R11 - 2 SHALL BE 48" X 30"
- R11 - 3 SHALL, R11 - 4 AND R10 - 61 SHALL BE 60 " X 30"
- M4 - 9 SHALL BE 30" X 24"
- M3 - X SHALL BE 24" X 12" (36" X 18" IF NEEDED TO MATCH EXISTING SIGNS)
- M4 - 8 SHALL BE 24" X 12" (36" X 18" IF NEEDED TO MATCH EXISTING SIGNS)
- M1 - 4, M1 - 5A AND M1 - 6 SHALL BE 24" X 24" (36" X 36" IF NEEDED TO MATCH EXISTING SIGNS)
- MO5 - 1 AND MO6 - 1 SHALL BE 21" X 21" (30" X 30" IF NEEDED TO MATCH EXISTING SIGNS)
- D1 - X SHALL BE AS SHOWN ON SPECIFIC PROJECT SIGNING DETAIL SHEETS.
- R1 - 1 SHALL BE 36" X 36"

1. TWO WARNING LIGHTS SHALL BE PROVIDED ON THE CENTER BARRICADE AND A MINIMUM OF ONE WARNING LIGHT SHALL BE PROVIDED ON EACH OF THE OTHER BARRICADES WITHIN THE ROADWAY LIMITS. SPACING OF THE WARNING LIGHTS SHALL BE UNIFORM TO THE EDGE OF ROADWAY AS SHOWN (APPROX. 8 FOOT LIGHT SPACING.
2. THESE SIGNS AND BARRICADES ARE NOT REQUIRED IF ROAD CLOSURE BEGINS AT AN INTERSECTION.
3. FOR ROAD CLOSURE WITHOUT LOCAL ACCESS TO PROJECT, SEE ROAD CLOSURE BARRICADE DETAIL "D".
4. FOR ROAD CLOSURE WITH LOCAL ACCESS TO PROJECT, SEE ROAD CLOSURE BARRICADE DETAIL "E".
5. FOR BRIDGE OR CULVERT REPLACEMENTS, SUBSTITUTE "BRIDGE OUT" INSTEAD OF "ROAD CLOSED" ON R11 - 2 AND R11 - 3 SIGNS.
6. INSTALL DETOUR AND COMMUNITY GUIDE SIGNS AND ARROWS ONLY IF SPECIFIED IN THE CONTRACT. IF THERE ARE EXISTING ROUTE MARKER ASSEMBLIES THAT WILL REMAIN IN PLACE, ADJUST THE LOCATION OF THE DETOUR ROUTE SIGNS TO CORRESPOND WITH THE EXISTING ASSEMBLIES. MODIFY EXISTING SIGNS WHERE POSSIBLE. SEE SPECIFIC PROJECT DETOUR SIGNING DETAIL SHEETS. IF DETOUR SIGNS ARE BEING INSTALLED BY OTHERS, PLACE THE CONTRACTED TRAFFIC CONTROL SIGNS TO ALLOW FOR PLACEMENT OF ALL WARNING, DETOUR AND GUIDE SIGNS AS SHOWN.
7. "EAST" CARDINAL DIRECTION MARKERS AND RIGHT TURN ARROWS ARE SHOWN. USE OTHER CARDINAL DIRECTIONS AND ARROWS AS APPROPRIATE.

BARRICADES AND SIGNS FOR VARIOUS CLOSURES

STATE OF WISCONSIN
DEPARTMENT OF TRANSPORTATION

APPROVED
May 2023 — DATE
/S/ Andrew Heidtke — WORK ZONE ENGINEE
FHWA

6
SDD 15C02 - 09b

GENERAL NOTES

THE EXACT NUMBER, LOCATION, AND SPACING OF ALL SIGNS AND DEVICES SHALL BE ADJUSTED TO FIT FIELD CONDITIONS.

THE SPACING BETWEEN TRAFFIC CONTROL SIGNS SHOULD BE ADJUSTED TO NOT CONFLICT WITH AND SHOULD PROVIDE A MINIMUM OF 200 FEET (500 FEET DESIRABLE) CLEARANCE TO EXISTING SIGNS THAT WILL REMAIN IN PLACE.

ALL SIGNS ARE 48" X 48" UNLESS OTHERWISE NOTED.

SIGNS THAT WILL BE IN PLACE LESS THAN SEVEN CONTINUOUS DAYS AND NIGHTS MAY BE MOUNTED ON PORTABLE SUPPORTS.

IF A "STOP" SIGN MUST BE REMOVED FOR A WORK OPERATION, A TEMPORARY "STOP" SIGN SHALL BE PLACED PRIOR TO THE SIGN REMOVAL, OR A FLAGGER SHALL BE PROVIDED UNTIL THE SIGN IS REESTABLISHED.

* OMIT G20-1 SIGNS IF LENGTH OF WORK AREA IS 2 MILES OR LESS

** PLACE AN ADDITIONAL W20-1A "ROAD WORK AHEAD" SIGN IF WORK AREA WITHIN THE PROJECT IS SEPARATED BY MORE THAN 2 MILES FROM PREVIOUS WORK AREA.

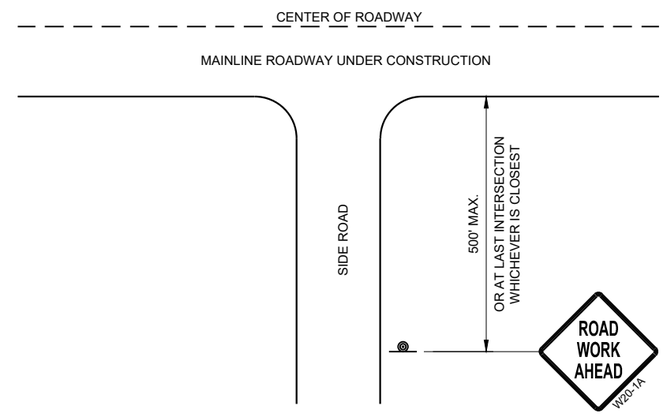

TYPICAL SIDE ROAD APPROACH WARNING SIGN DETAIL

LEGEND

- SIGN ON PERMANENT SUPPORT
- DIRECTION OF TRAFFIC
- WORK AREA

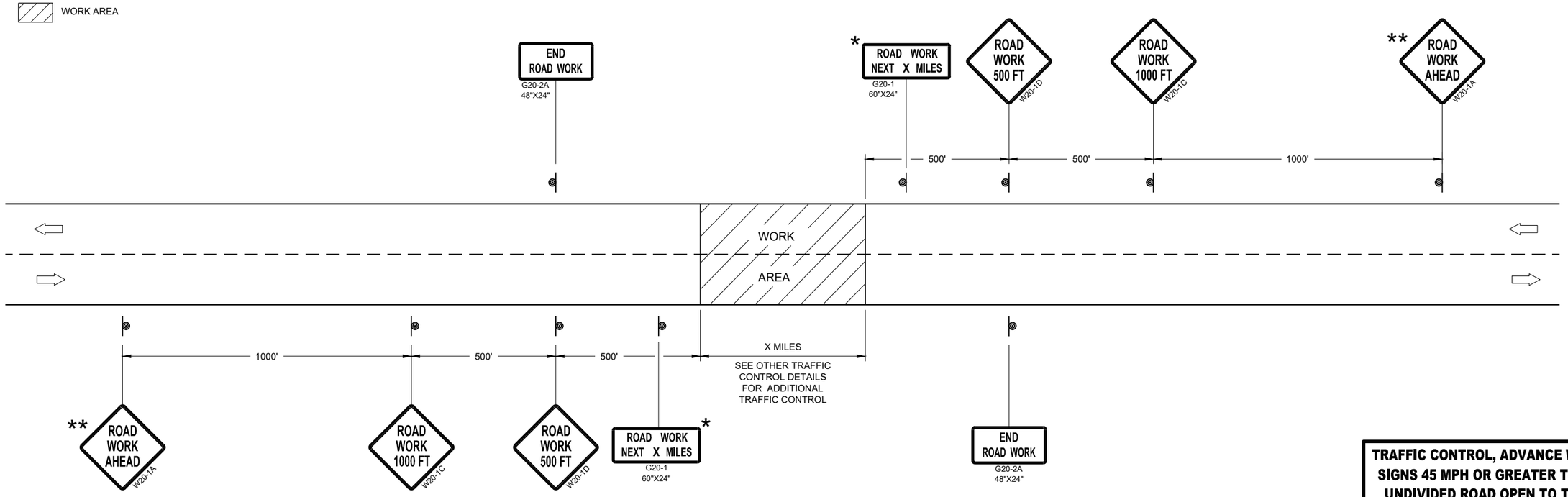

TRAFFIC CONTROL, ADVANCE WARNING SIGNS 45MPH OR GREATER

TRAFFIC CONTROL, ADVANCE WARNING SIGNS 45 MPH OR GREATER TWO-WAY UNDIVIDED ROAD OPEN TO TRAFFIC

STATE OF WISCONSIN
DEPARTMENT OF TRANSPORTATION

APPROVED
July 2018 — DATE
/S/ Andrew Heidtke — WORK ZONE ENGINEE
FHWA

6
SDD 15C04 - 05

GENERAL NOTES

THE EXACT NUMBER, LOCATION, AND SPACING OF ALL SIGNS AND DEVICES SHALL BE ADJUSTED TO FIT FIELD CONDITIONS.

THE SPACING BETWEEN TRAFFIC CONTROL SIGNS SHOULD BE ADJUSTED TO NOT CONFLICT WITH AND SHOULD PROVIDE A MINIMUM OF 200 FEET (500 FEET DESIRABLE) CLEARANCE TO EXISTING SIGNS THAT WILL REMAIN IN PLACE.

ALL SIGNS ARE 48" X 48" UNLESS OTHERWISE NOTED. IF NECESSARY DUE TO SPACE CONSTRAINTS, 36"X36" SIGNS MAY BE USED INSTEAD OF 48" X 48" SIGNS.

SIGNS THAT WILL BE IN PLACE LESS THAN SEVEN CONTINUOUS DAYS AND NIGHTS MAY BE MOUNTED ON PORTABLE SUPPORTS.

IF A "STOP" SIGN MUST BE REMOVED FOR A WORK OPERATION, A TEMPORARY "STOP" SIGN SHALL BE PLACED PRIOR TO THE SIGN REMOVAL, OR A FLAGGER SHALL BE PROVIDED UNTIL THE SIGN IS REESTABLISHED.

* THE THIRD W20-1 SIGN IS REQUIRED ONLY IF THERE IS AN INTERSECTION BETWEEN THE "ROAD WORK 500 FEET" SIGN AND THE WORK ZONE. ADJUST THE PLACEMENT OF THIS SIGN BASED ON INTERSECTION LOCATION AND OTHER FIELD CONDITIONS.

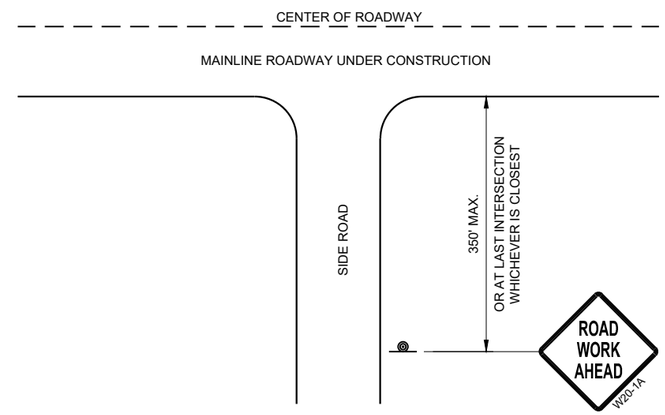

TYPICAL SIDE ROAD APPROACH WARNING SIGN DETAIL

LEGEND

- SIGN ON PERMANENT SUPPORT
- DIRECTION OF TRAFFIC
- WORK AREA

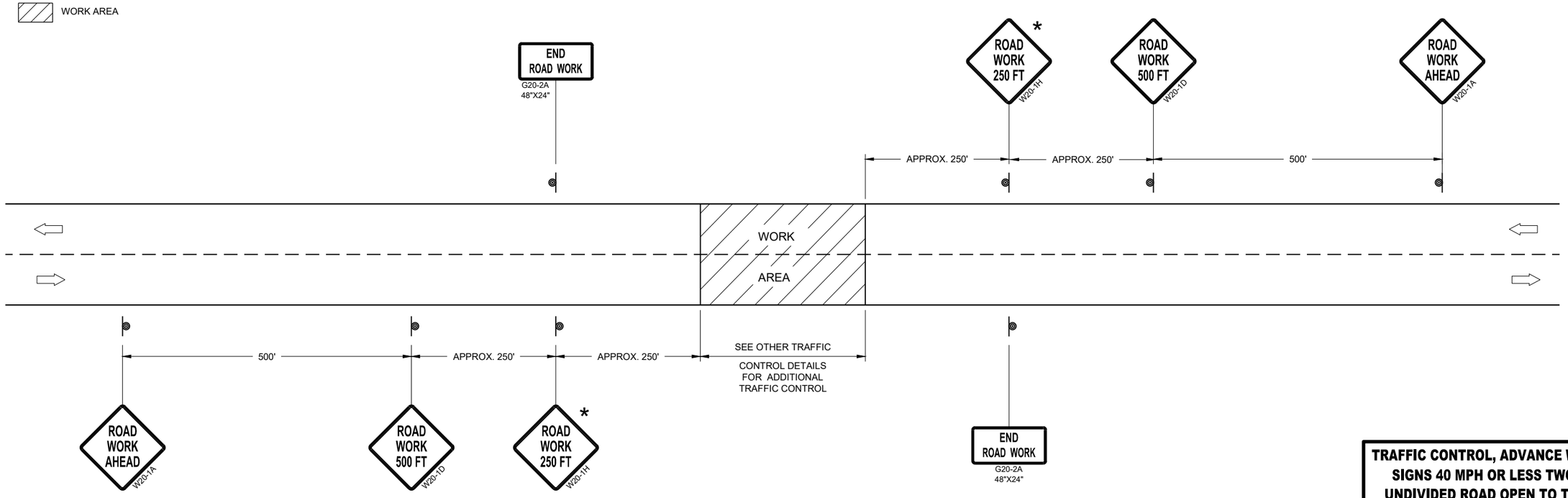

TRAFFIC CONTROL, ADVANCE WARNING SIGNS 40MPH OR LESS

TRAFFIC CONTROL, ADVANCE WARNING SIGNS 40 MPH OR LESS TWO-WAY UNDIVIDED ROAD OPEN TO TRAFFIC

STATE OF WISCONSIN
DEPARTMENT OF TRANSPORTATION

APPROVED
July 2018 — DATE
/S/ Andrew Heidtke — WORK ZONE ENGINEE
FHWA

6
SDD 15C05 - 05

*CONFIRM MARKING LINE WIDTH WITH THE MISCELLANEOUS QUANTITIES

GENERAL NOTES

DETAILS OF CONSTRUCTION NOT SHOWN ON THIS DRAWING SHALL CONFORM TO STANDARD SPECIFICATIONS AND SPECIAL PROVISIONS.

1. LOCATE THE NO PASSING ZONE W14-3 SIGN WITHIN 50 FEET OF THE "T" MARKING
2. MEASURE FROM EDGE OF MARKING TO JOINT LINE. THIS DOES NOT INCLUDE SPACE NEEDED FOR GROOVING OPERATIONS.

LEGEND

"T" MARKING

SIGN ON PERMANENT SUPPORT

DIRECTION OF TRAFFIC

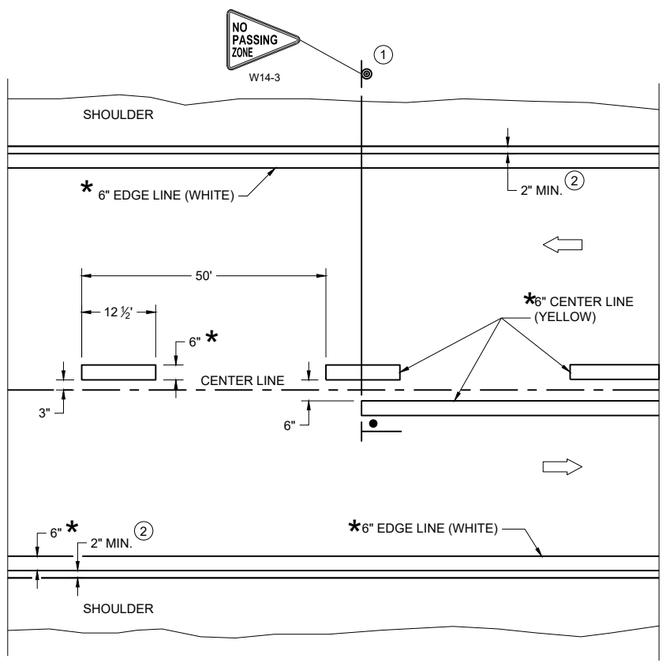

TWO WAY TRAFFIC

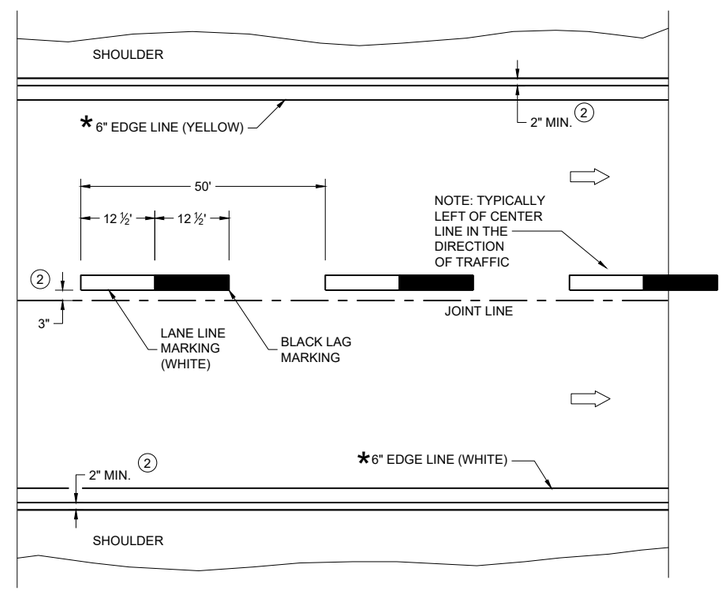

ONE WAY TRAFFIC

PERMANENT PAVEMENT MARKING

6

SDD 15C08-24a

PERMANENT LONGITUDINAL PAVEMENT MARKINGS

STATE OF WISCONSIN
DEPARTMENT OF TRANSPORTATION

APPROVED
December 2024 — DATE
/S/ Jeannie Silver — Statewide Pavement Marking Engineer
FHWA

GENERAL NOTES

1. REFLECTIVE SHEETING SHALL FOLLOW THE REQUIREMENTS IN THE APPROVED PRODUCTS LISTING FOR SIGN SHEETING.
2. LOCATION OF WARNING LIGHTS WHEN SHOWN ON THE PLAN.

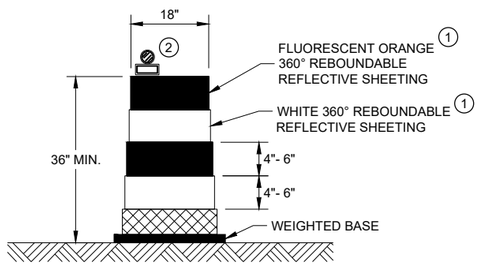

DRUM

BALLAST WIDTHS
RANGE FROM 24"-36"

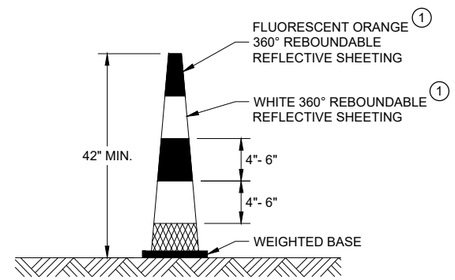

42" CONE

DO NOT USE IN TAPERS
½ SPACING OF DRUMS

BALLAST WIDTHS
RANGE FROM 14"-20"

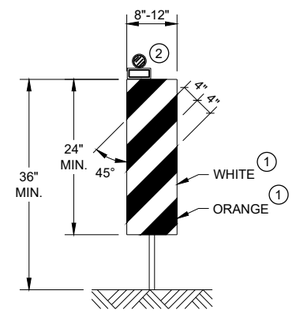

VERTICAL PANEL

THE STRIPES SHALL SLOPE DOWNWARD TO
THE TRAFFIC SIDE FOR CHANNELIZATION.

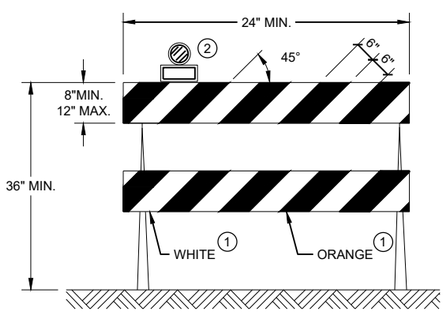

TYPE II BARRICADE

FOR RAILS LESS THAN 36" LONG, 4" WIDE STRIPES
MAY BE USED. ALL STRIPES SHALL SLOPE DOWNWARD
TO THE TRAFFIC SIDE FOR CHANNELIZATION.

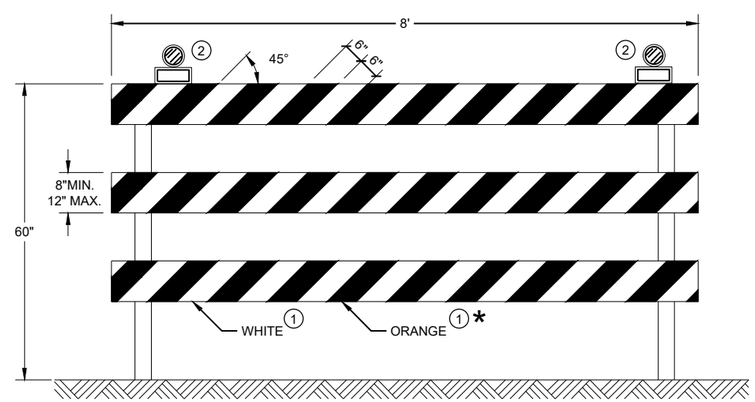

TYPE III BARRICADE

IF SIGN MOUNTED, DO NOT COVER MORE THAN 50% OF THE TOP
TWO RAILS OR 33% OF THE TOTAL AREA OF THE THREE RAILS.

* IF USED FOR A PERMANENT APPLICATION USE RED SHEETING.

CHANNELIZING DEVICES
DRUMS, CONES, BARRICADES
AND VERTICAL PANELS

STATE OF WISCONSIN
DEPARTMENT OF TRANSPORTATION

APPROVED
November 2022 — /S/ Andrew Heidtke
DATE — WORK ZONE ENGINEE
FHWA

6

6

SDD 15C11 - 10b

SDD 15C11 - 10b

GENERAL NOTES

STOP SIGN SHALL BE PLACED A MINIMUM OF 6 FEET TO A MAXIMUM OF 50 FEET FROM THE EDGELINE LOCATION.

1. 18-INCH STOP LINES MAY BE DELETED OR ADDED BY THE REGION MARKING ENGINEER BASED ON VISIBILITY AND SIGHT LINES.
2. NO STOP LINE IS REQUIRED IF STOP SIGN IS LESS THAN OR EQUAL TO 40 FEET FROM THE EDGELINE.
3. NO STOP LINE IS REQUIRED IF STOP SIGN IS LESS THAN OR EQUAL TO 30 FEET FROM THE FLANGE LINE EXTENSION.
4. MOVE CLOSER TO THE EDGE OF TRAVEL LINE AS NEEDED FOR VISIBILITY AND SIGHT LINES (NO CLOSER THAN 4 FEET).
5. LADDER BAR CROSSWALKS SHOULD ONLY BE USED FOR MID BLOCK CROSSINGS. USE 2 - 6" TRANSVERSE LINES.
6. POSTED SPEED LIMITS OF 40 MPH OR GREATER USE A MINIMUM WIDTH OF 8' FOR MIDBLOCK CROSSWALKS

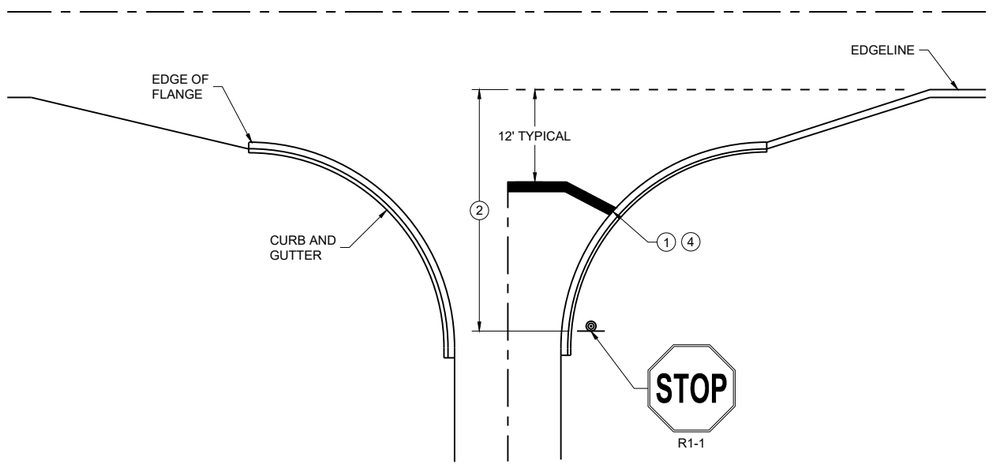

TYPICAL STOP LINE PAVEMENT MARKING WITH CURB AND GUTTER

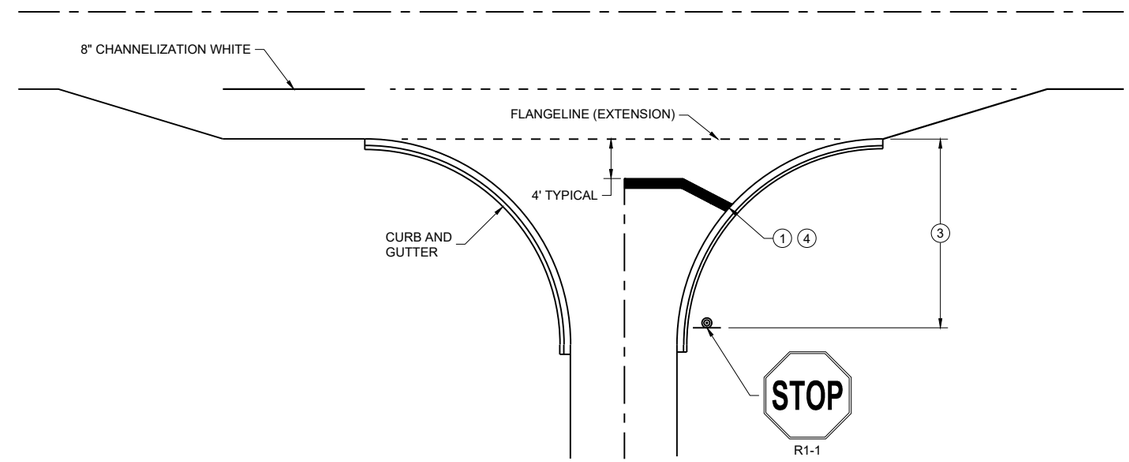

TYPICAL STOP LINE PAVEMENT MARKING FOR SIDE ROADS WITH RIGHT TURN LANE

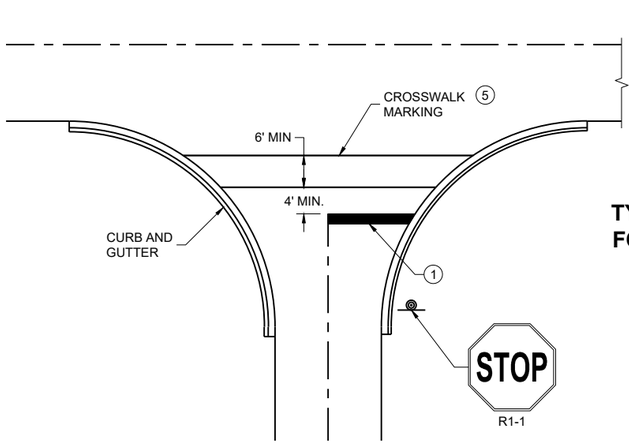

TYPICAL STOP LINE PAVEMENT MARKING FOR SIDE ROADS WITH CROSSWALK MARKING

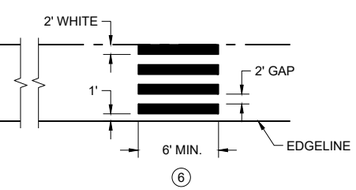

TYPICAL PAVEMENT MARKING FOR MID-BLOCK CROSSWALK 5

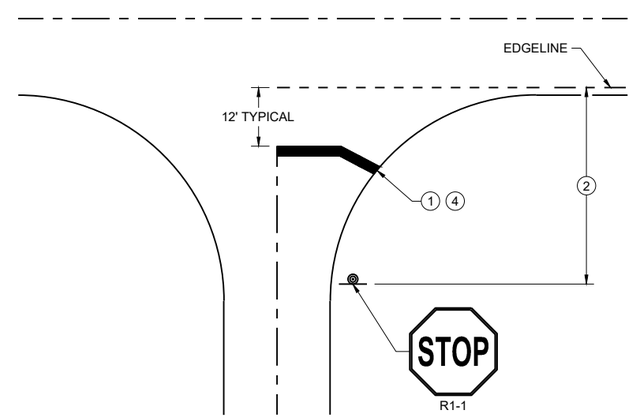

TYPICAL STOP LINE PAVEMENT MARKING WITHOUT CURB AND GUTTER

STOP LINE AND CROSSWALK PAVEMENT MARKING

STATE OF WISCONSIN
DEPARTMENT OF TRANSPORTATION

APPROVED
March 2024 — DATE
/S/ Matthew Rauch — STATE SIGNING AND MARKING ENGINEER

FHWA

6
SDD 15C33-05

URBAN AREA

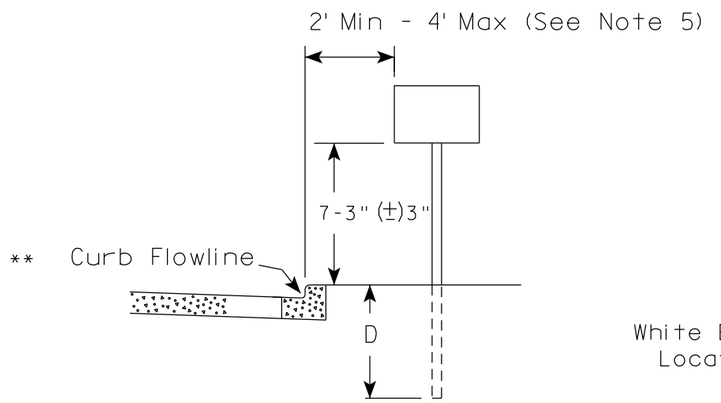

RURAL AREA (See Note 2)

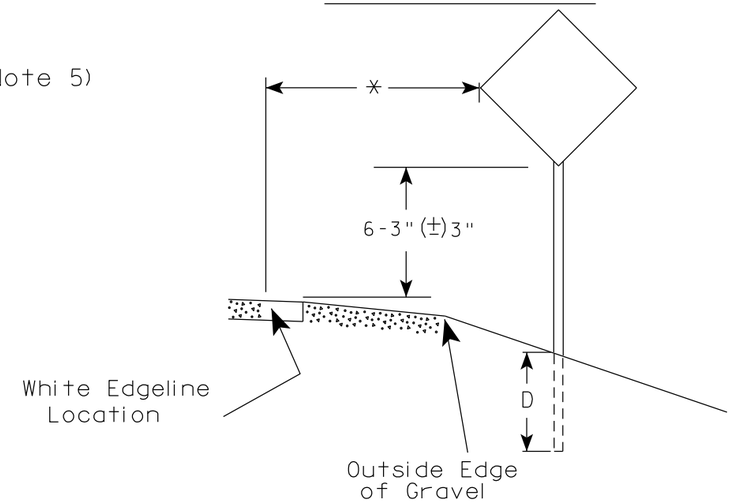

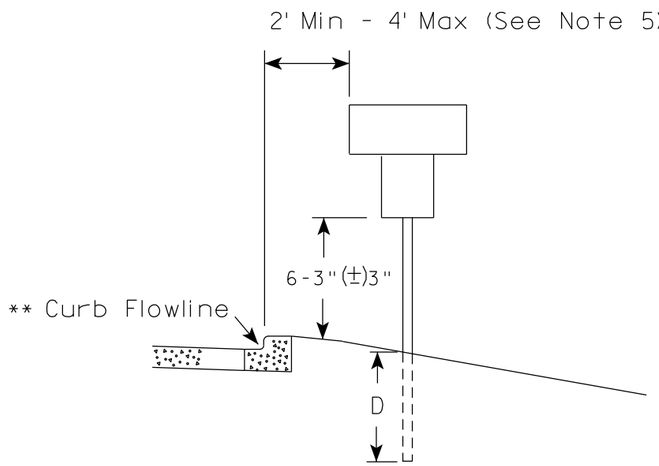

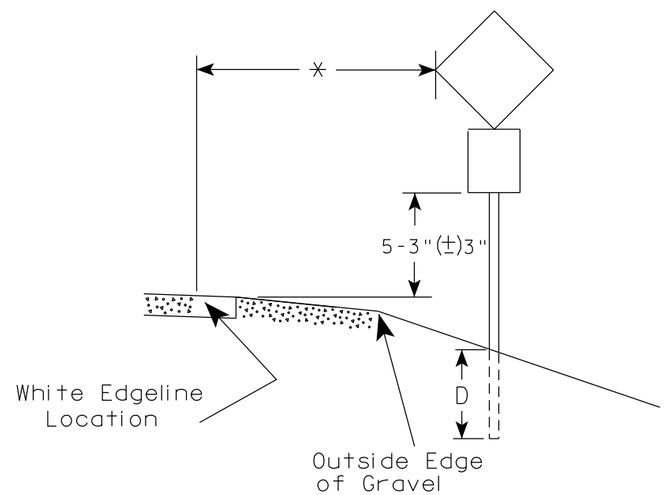

** The existence of curb and gutter does not in itself mandate the vertical clearance illustrated. That height is typically measured where there is sidewalk adjacent to the roadway or parking is permitted. In the absence of sidewalk vertical clearance is measured from the top of the curb. Offset of signs is measured from the flow line.

* 6 feet from edge of a paved shoulder or 12 feet from the edge of pavement (edge line location) or 2 feet from outside edge of gravel, whichever is greater unless directed by project engineer.

GENERAL NOTES

1. Signs wider than 4 feet or 20 sq.ft or larger, shall be mounted on multiple posts. Refer to plate A4-4.
2. If signs are mounted on or behind barrier wall, see A4-10 sign plate.
   The Double Arrow sign (W12-1D) shall be mounted at a height of 2'-3" (±) 3". The Chevron sign (W1-8), Roundabout Chevron panel (R6-4B), Enhanced Reference Markers, Clearance Markers (W5-52), Mile Markers (D10 series), In Road Object Markers (W5-54) & End of Road Markers (W5-56) shall be mounted at a height of 4'-3" (±) 3".
3. For expressways and freeways, mounting height is 7'- 3" (±) 3" or 6'-3" (±) 3" depending upon existence of a sub-sign.
4. Minimum mounting height for signs mounted on traffic signal poles is 5'- 3" (±) 3".
5. Offset distance shall be consistent with existing signs or consistent throughout length of project.
6. Folding signs shall be mounted at a height of 5'-3" (±) 3" or as directd by the Engineer.

POST EMBEDMENT DEPTH

Area of Sign Installation (Sq. Ft.)	D (Min)
20 or Less	4'
Greater than 20	5'

TYPICAL INSTALLATION OF PERMANENT TYPE II SIGNS ON SINGLE POSTS

WISCONSIN DEPT OF TRANSPORTATION

APPROVED Matthew R Rauch
for State Traffic Engineer

DATE 12/6/23 PLATE NO. A4-3.23

7 7

PROJECT NO:	HWY:	COUNTY:		SHEET NO: 64	E

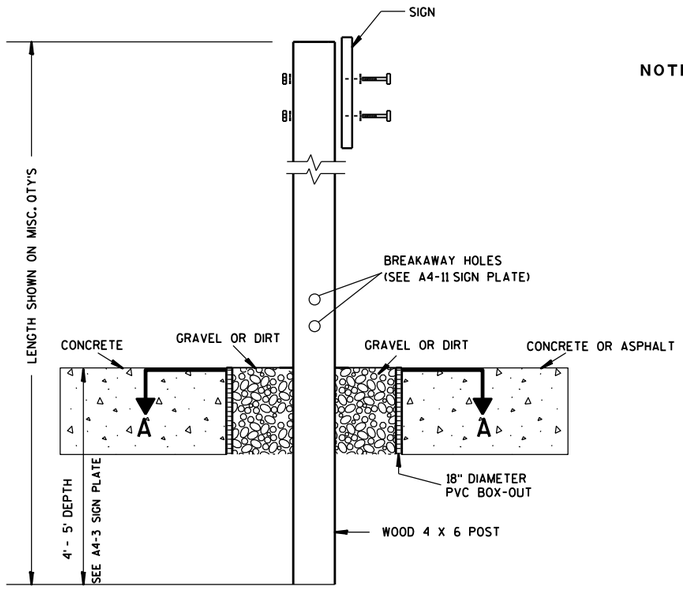

ELEVATION VIEW

DETAIL OF WOOD 4 X 6 SIGN POST IN BOX-OUT

NOTES:
1. ALL MATERIAL TO BE APPROVED BY ENGINEER PRIOR TO INSTALLATION
2. SEE SIGN PLATE A4-8 FOR SIGN HARDWARE REQUIREMENTS
3. 18 INCH X 18 INCH SQUARE BOX-OUTS MAY BE USED FOR INSTALLATIONS IN EXISTING CONCRETE OR ASPHALT LOCATIONS.

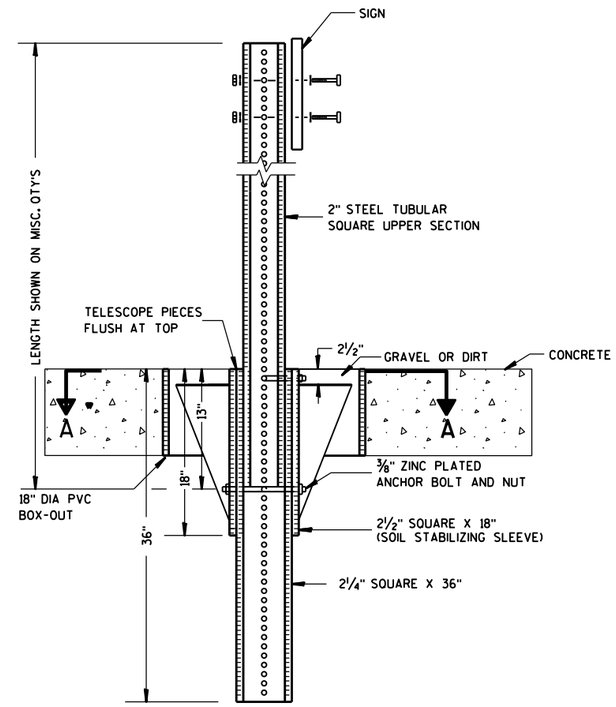

ELEVATION VIEW

DETAIL OF STEEL 2 X 2 SIGN POST IN BOX-OUT

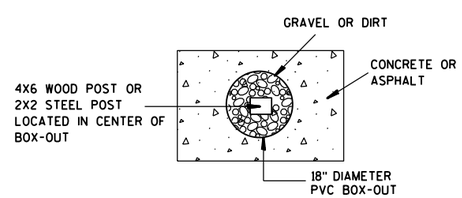

PLAN VIEW

FOR NEW CONCRETE/ASPHALT INSTALLATIONS

SIGN POST
BOX-OUTS
A4-3B

WISCONSIN DEPT OF TRANSPORTATION

APPROVED Matthew R Rauch
for State Traffic Engineer

DATE 1/27/14 PLATE NO. A4-3B.1

PROJECT NO:	HWY:	COUNTY:		SHEET NO:	E

URBAN AREA

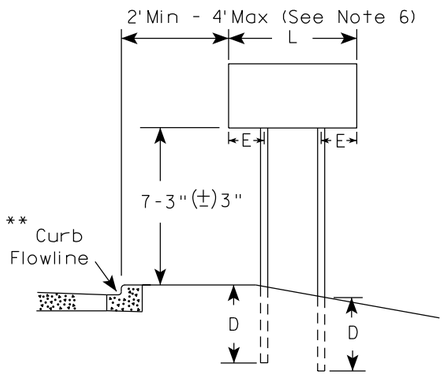

RURAL AREA (See Note 3)

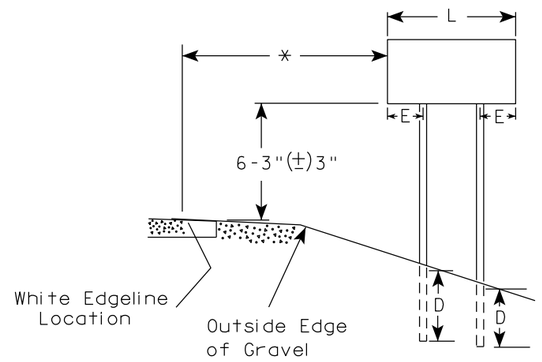

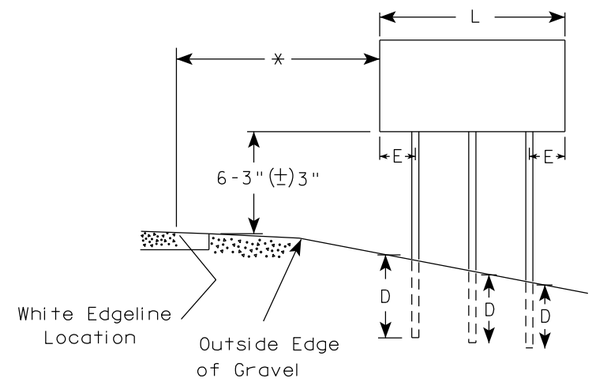

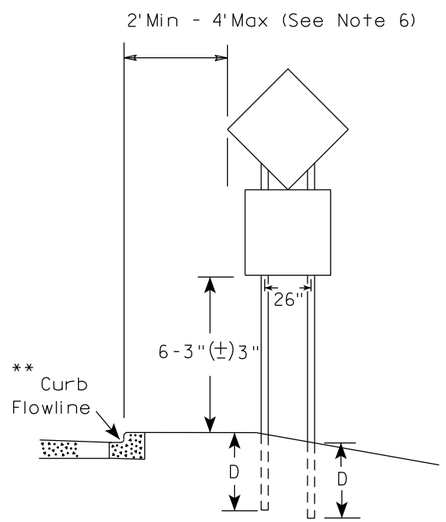

48" DIAMOND WARNING SIGN

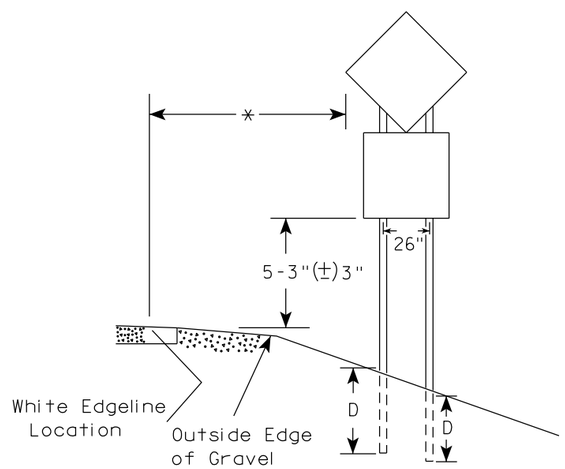

48" DIAMOND WARNING SIGN

GENERAL NOTES

1. For 3 or 4 post installations, individual post spacing shall be greater than 3'-6".
2. See tables below for required number of posts.
3. For expressways and freeways, mounting height is 7'-3" (±) 3" or 6'-3" (±) 3" depending upon existence of sub-sign.
4. The (±) tolerance for mounting height is 3 inches.
5. J-Assemblies are considered to be one sign for mounting height.
6. Offset distance shall be consistent with existing signs or consistent throughout length of project.
7. Folding signs shall be mounted at a height of 5'-3" (±) 3" or as directed by the engineer.
8. The Double Arrow sign (W12-1) shall be mounted at a height of 2'-3" (±) 3". The Chevron sign (W1-8), Roundabout Chevron panel (R6-4B), Clearance Markers (W5-52), Mile Markers (D10 series), In Road Object Markers (W5-54) & End of Road Markers (W5-56) shall be mounted at a height of 4"-3" (±) 3".

* 6 feet from edge of a paved shoulder or 12 feet from the edge of pavement (edge line location) or 2 feet from outside edge of gravel, whichever is greater unless directed by project engineer.

** The existence of curb and gutter does not in itself mandate the vertical clearance illustrated. That height is typically measured where there is sidewalk adjacent to the roadway or parking is permitted. In the absence of sidewalk vertical clearance is measured from the top of the curb. Offset of signs is measured from the flow line.

*** See A4-3 sign plate for signs 4' or less in width and less than 20 S.F. in area.

SIGN SHAPE OTHER THAN DIAMOND (TWO POSTS REQUIRED)	
L	E
*** Greater than 48" Less than 60"	12"
60" to 108"	L/5

SIGN SHAPE OTHER THAN DIAMOND (THREE POSTS REQUIRED)	
L	E
Greater than 108" to 144"	12"

POST EMBEDMENT DEPTH

Area of Sign Installation (Sq. Ft.)	D (Min)
20 or Less	4'
Greater than 20	5'

TYPICAL INSTALLATION OF TYPE II SIGNS ON MULTIPLE POSTS

WISCONSIN DEPT OF TRANSPORTATION

APPROVED Matthew R Rauch
for State Traffic Engineer

DATE 12/6/23 PLATE NO. A4-4.16

PROJECT NO:	HWY:	COUNTY:		SHEET NO: 66	E

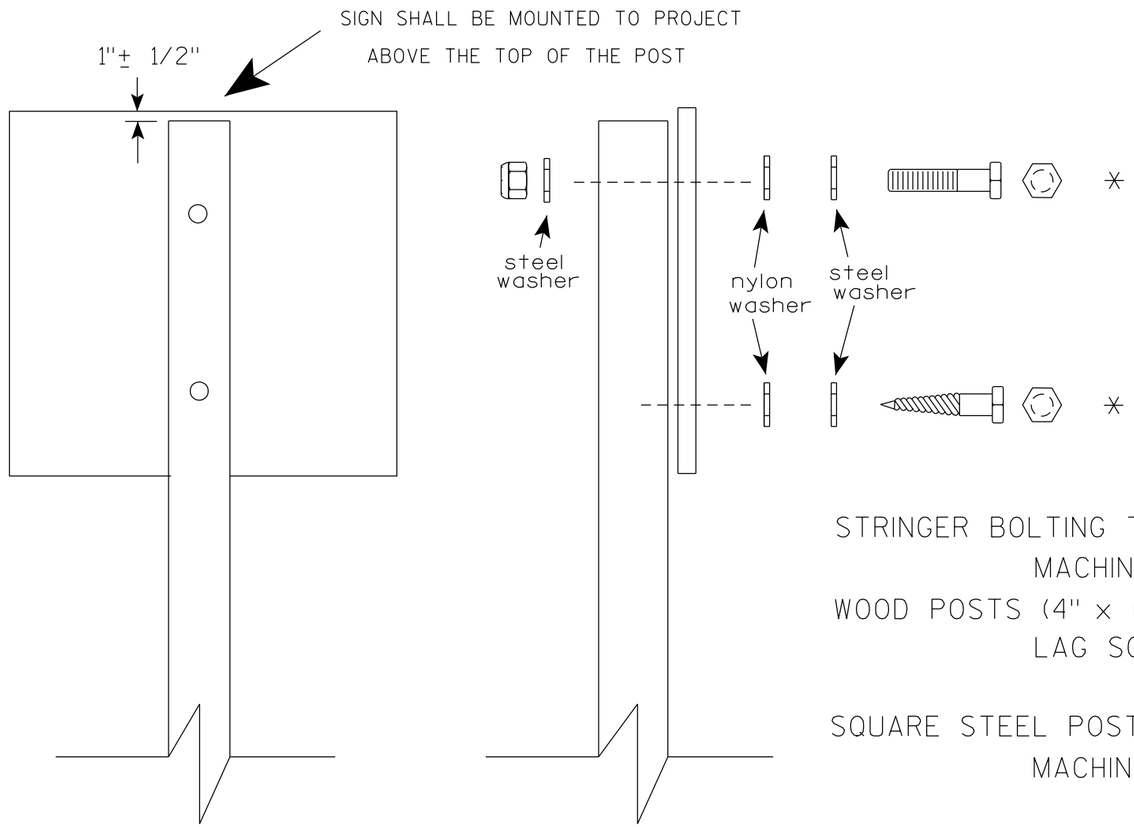

Nuts, bolts and lags used for mounting signs shall have hexagonal heads and shall be either :

a. Hot dip galvanized in accordance with ASTM Designation: A 153, Class D, or SC 3

b. Electro-galvanized in accordance with ASTM Designation : B 633, TYPE III, SC 3.

Threads on bolts and nuts shall be manufactured with sufficient allowance for the cadmium plate or galvanized coating to permit the nuts to run freely on the bolts.

STRINGER BOLTING TO ALUMINUM SIGNS (SEE SIGN PLATE A4-18)

MACHINE BOLTS - 5/16" X 1-3/4" Length w/ lock nuts

WOOD POSTS (4" x 6")

LAG SCREWS - 3/8" X 3" (NO STRINGERS ON BACK OF SIGN)
3/8" X 4" (STRINGERS ON BACK OF SIGN)

SQUARE STEEL POSTS (2" x 2")

MACHINE BOLTS - 3/8" X 3-1/4" Length w/ nuts (NO STRINGER ON BACK OF SIGN)
3/8" X 5" Length w/ nuts (STRINGERS ON BACK OF SIGN)

RIVETS - 9/32 " (6605-9-6) BULB-TITE, TRI-FOLD, ALUMINUM BODY/MANDREL
O.D. FLANGE .720-.765 INCH, GRIP RANGE .042-.375 INCH

WASHERS (ALL POSTS) -

1-1/4" O.D. X 3/8" I.D. X 1/16" STEEL
1-1/4" O.D. X 3/8" I.D. X .080 NYLON

* Two different fastening systems are shown for illustration purposes. On any individual sign, either one or the other system shall be used. Actual number of fasteners per sign varies with the sign area, but normally there are two. For a single post installation, all signs greater than 9 sq. ft. require the use of 3 fasteners.

ATTACHMENT OF SIGNS TO POSTS

WISCONSIN DEPT OF TRANSPORTATION

APPROVED Matthew R Rauch
for State Traffic Engineer

DATE 4/1/2020 PLATE NO. A4-8.9

TELESCOPIC TUBING ANCHORS
TWO PIECE SYSTEM

2 1/4 " SQUARE
12 GAUGE
PERFORATED
GALVANIZED FINISH

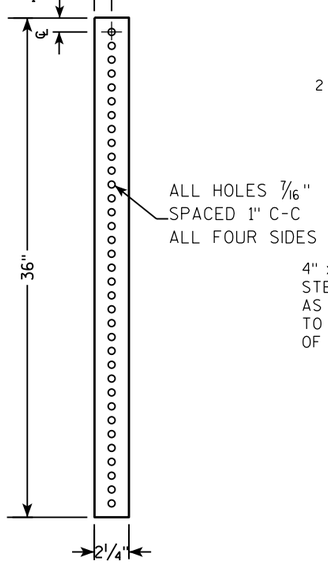

2 1/2 " SQUARE
12 GAUGE
OMNI-DIRECTIONAL
PERFORATED
SOIL STABILIZING SLEEVE
GALVANIZED FINISH

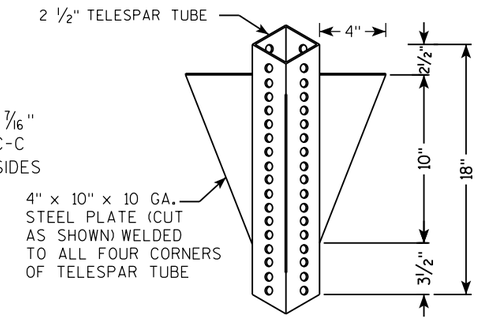

DETAIL OF TUBULAR STEEL SIGN POST
(IN POURED CONCRETE OR ASPHALT)

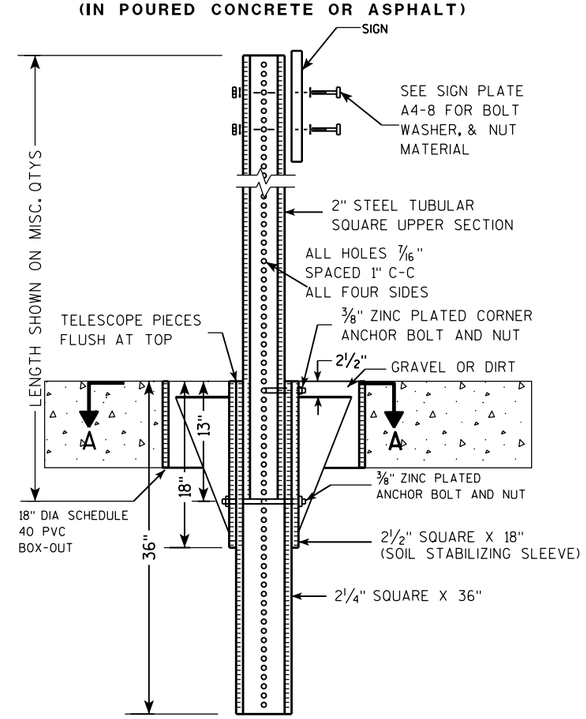

DETAIL OF TUBULAR STEEL SIGN POST
(IN LOCATIONS OTHER THAN POURED CONCRETE OR ASPHALT)

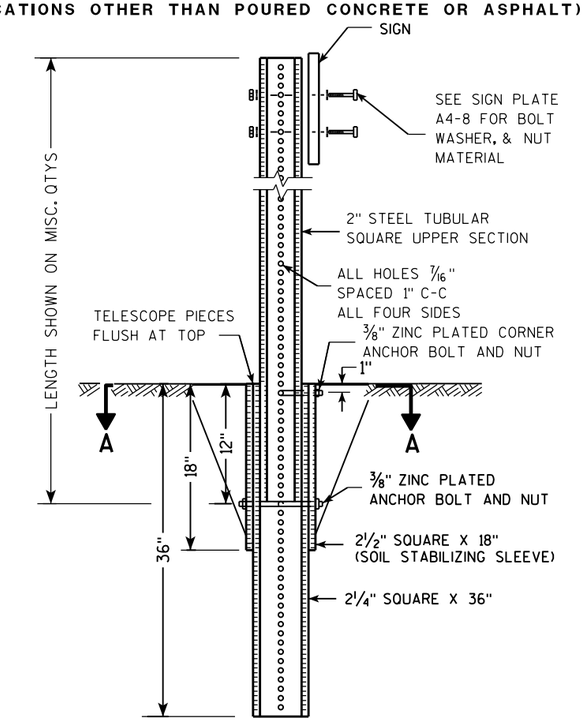

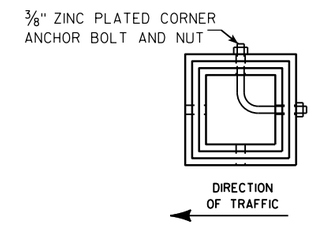

SECTION A-A

Area of Sign Installation (Sq. Ft.)	Number of Required Posts
9 or less	1
Greater than 9 less than or equal to 18	2
Greater than 18 less than or equal to 27	3

Signs wider than 3 feet or larger than 9 sq. ft shall be mounted on multiple posts (see above table).

TUBULAR STEEL
SIGN POST
A4-9

WISCONSIN DEPT OF TRANSPORTATION

APPROVED Matthew R Rauch
for State Traffic Engineer

DATE 2/05/15 PLATE A4-9.9

7 7

PROJECT NO:	HWY:	COUNTY:		SHEET NO:	E

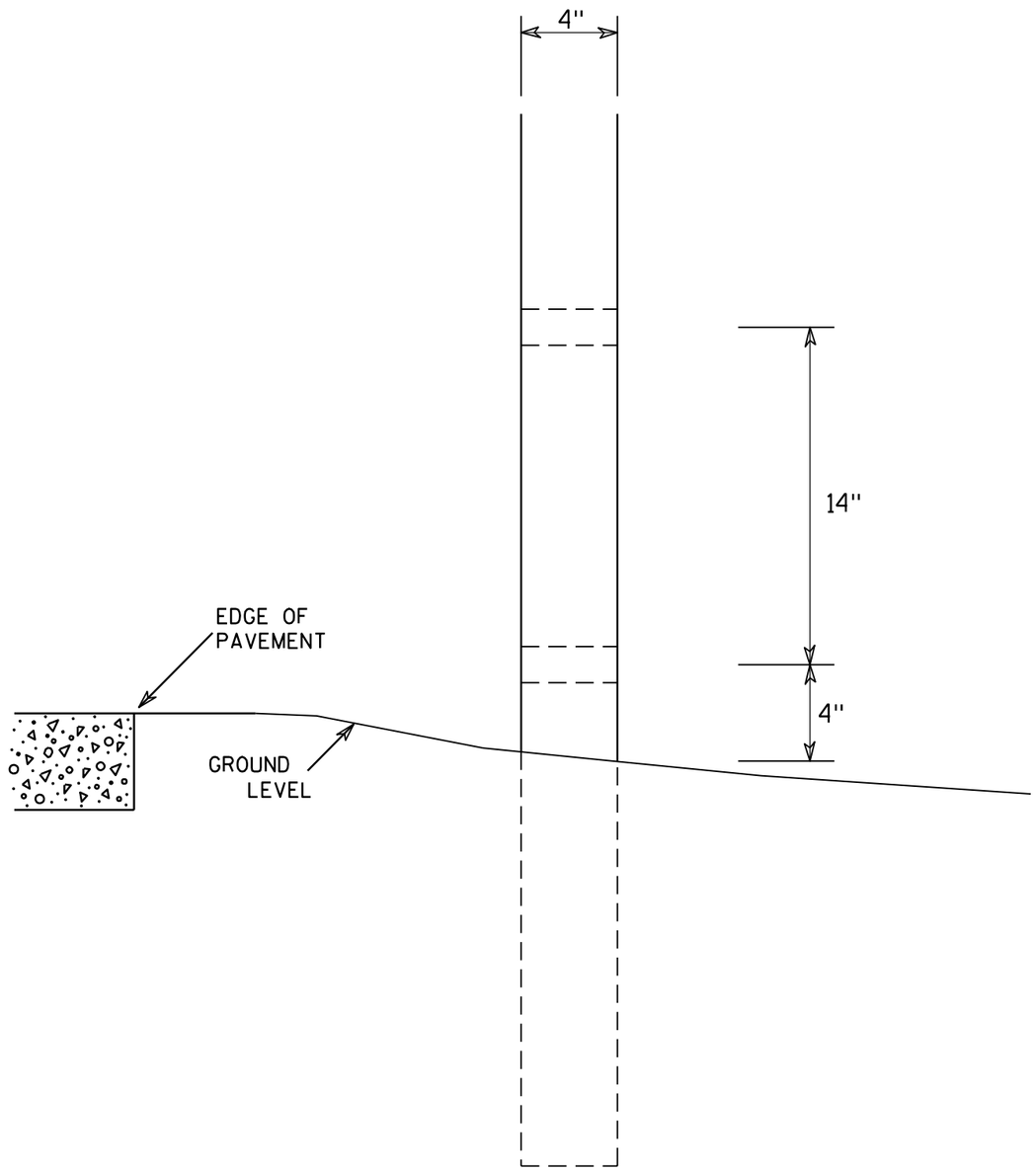

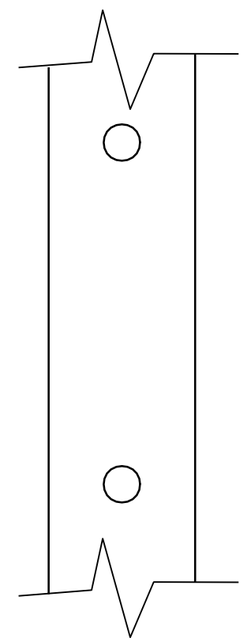

SIDE VIEW

GENERAL NOTES

1. All 4 x 6 Wood Posts shall be modified by having two 1½" diameter holes drilled perpendicular to the roadway centerline.

7

7

4 X 6 WOOD POST MODIFICATIONS

WISCONSIN DEPT OF TRANSPORTATION

APPROVED Chester J Spang for State Traffic Engineer

DATE 3/27/97 PLATE NO. A4-11.2

PROJECT NO:	HWY:	COUNTY:		SHEET NO: 69	E

BANDING

SINGLE SIGN

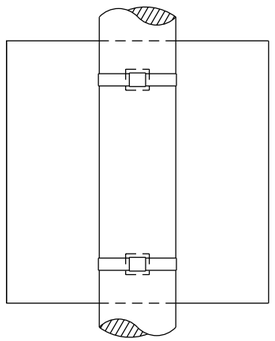

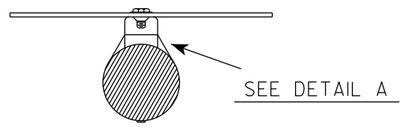

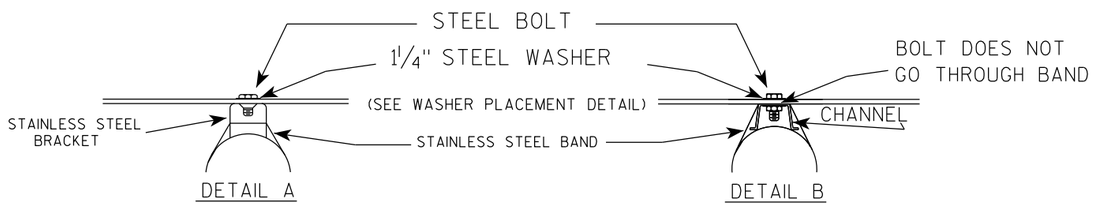

WASHER PLACEMENT

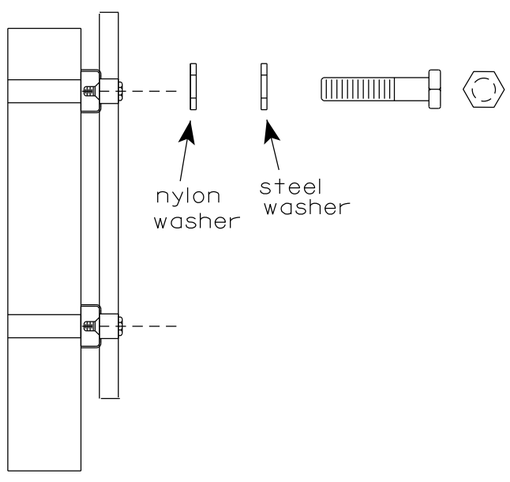

WASHERS (ALL POSTS) -
1-1/4" O.D. X 3/8" I.D. X 1/16" STEEL
1-1/4" O.D. X 3/8" I.D. X .080 NYLON
FOR ALL TYPE H SIGNS

GENERAL NOTES

1. Any sign over 3 feet in width shall use the V-Block banding method. See A5-10 standard plate.
2. Signs 3 feet or greater in height shall have three bracket bands installed. Signs less than 3 feet in height shall have two bracket bands installed.
3. Banding and assembly bracket shall be stainless steel. All bands shall be ¾" in width and 0.025" thickness.
4. ALL SIGN MOUNTING BOLTS AND WASHERS SHALL BE EITHER:
   a. Hot dip or mechanically galvanized in accordance with ASTM Designation: A 153, Class D
   b. Electro-galvanized in accordance with ASTM designation: B 633, Type III, SC 3

"J" ASSEMBLY

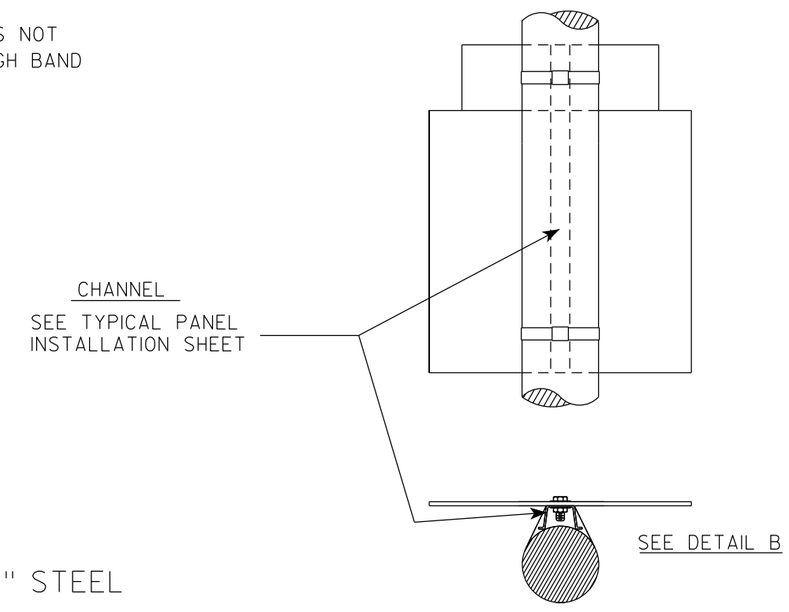

STANDARD SIGN
SIGN BANDING DETAILS

WISCONSIN DEPT OF TRANSPORTATION

APPROVED Matthew R Rauch for State Traffic Engineer

DATE 6/10/19 PLATE NO. A5-9.4

PROJECT NO:	HWY:	COUNTY:		SHEET NO: 70	E

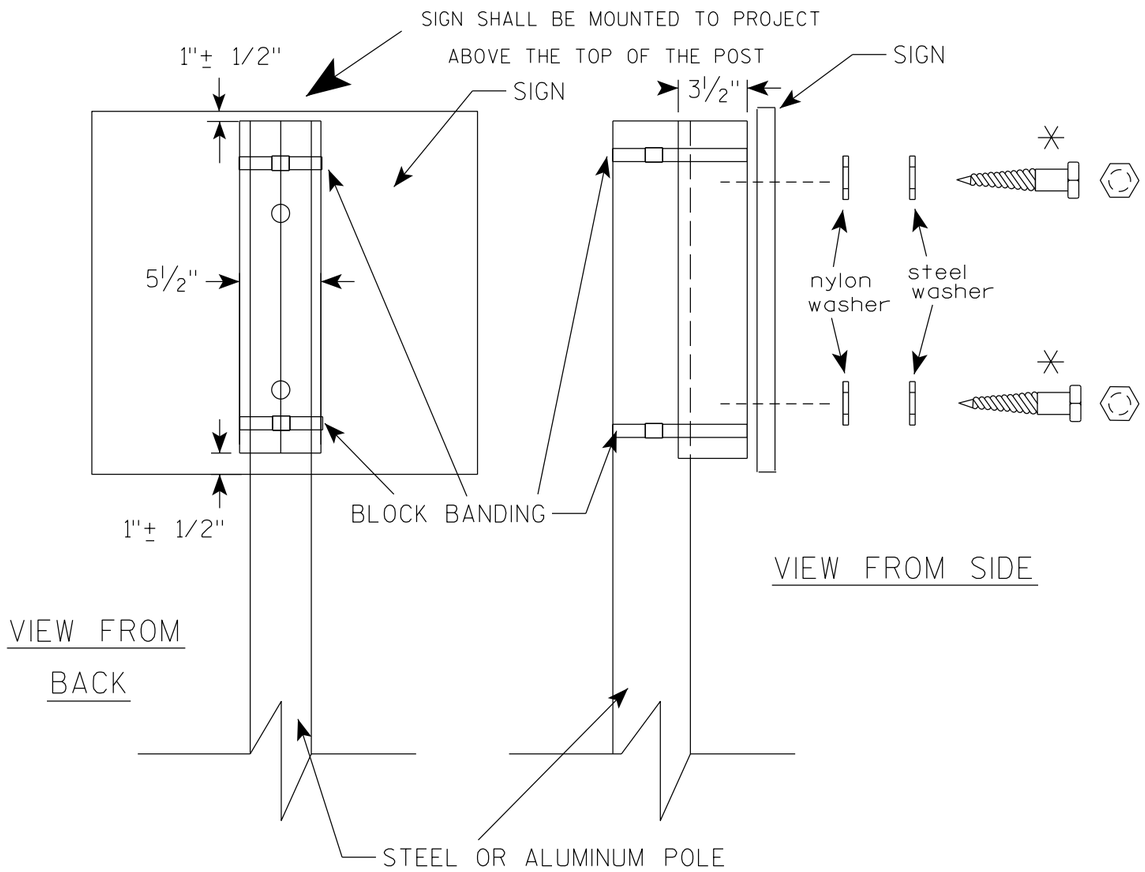

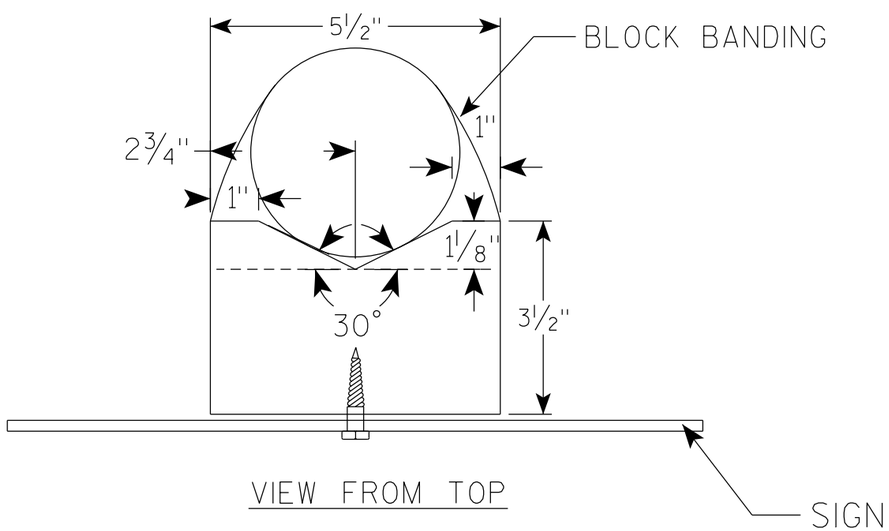

GENERAL NOTES

1. WOOD 4"X6" POST MATERIAL SHALL CONFORM TO 507.2.2 OF THE WisDOT STANDARD SPECIFICATIONS
2. BLOCK BANDING AND CLIPS SHALL BE STAINLESS STEEL, 3/4" WIDTH AND 0.025" THICKNESS
3. SIGNS 3' OR GREATER IN HEIGHT SHALL UTILIZE 3 BLOCK BANDS. SIGNS UNDER 3' IN HEIGHT SHALL UTILIZE 2 BLOCK BANDS
4. ACTUAL NUMBER OF FASTENERS PER SIGN VARIES WITH THE SIGN AREA, BUT NORNALLY THERE ARE TWO. FOR SIGNS GREATER THAN 9 S.F. 3 FASTENERS SHALL BE USED.
5. ALL SIGN MOUNTING BOLTS AND WASHERS SHALL BE EITHER:
   a. Hot dip or mechanically galvanized in accordance with ASTM Designation: A 153, Class D
   b. Electro-galvanized in accordance with ASTM Designation : B 633, TYPE III, SC 3
6. ALL BOLTS SHALL HAVE HEXAGONAL HEADS.
7. STEEL WASHERS SHALL BE 1 1/4" O.D. X 3/8" I.D. X 1/16"
8. NYLON WASHERS SHALL BE 1 1/4" O.D. X 3/8" I.D. X .080 FOR TYPE H OR TYPE F FACE SIGN

✳ LAG BOLTS SHALL BE 3/8" X 2 1/2"

7

7

BLOCK BANDING DETAIL
(V-BLOCK OPTION)

WISCONSIN DEPT OF TRANSPORTATION

APPROVED Matthew R Rauch
for State Traffic Engineer

DATE 4/19/2022 PLATE NO. A5-10.3

PROJECT NO:				SHEET NO: 71	E

DIVISION -- CTH B

STATION	DISTANCE	AREA (SF)			INCREMENTAL VOL (CY) (UNADJUSTED)			CUMULATIVE VOL (CY)		
		CUT	SALVAGED/UNUSABLE PAVEMENT MATERIAL	FILL	CUT	SALVAGED/UNUSABLE PAVEMENT MATERIAL	FILL	CUT	EXPANDED FILL	MASS ORDINATE
								1.00	1.25	
					NOTE 1	NOTE 2	NOTE 3	NOTE 1		NOTE 4
104+99	0.00	0.00	0.00	0.75	0	0	0	0	0	0
105+24	25.00	0.00	0.00	0.97	0	0	1	0	1	-1
105+49	25.00	0.00	0.00	1.82	0	0	1	0	3	-3
105+74	25.00	0.00	0.00	2.67	0	0	2	0	5	-5
105+99	24.96	0.00	0.00	0.91	0	0	2	0	8	-8
106+24	25.00	0.00	0.00	0.00	0	0	0	0	8	-8
106+50	26.37	0.00	0.00	0.00	0	0	0	0	8	-8
106+75	25.00	0.00	0.00	0.00	0	0	0	0	8	-8
					B-06-036					
109+50	0.00	0.00	0.00	1.14	0	0	0	0	8	-8
109+99	48.91	0.00	0.00	0.86	0	0	2	0	10	-10
110+24	25.00	0.00	0.00	1.90	0	0	1	0	11	-11
110+49	24.96	0.00	0.00	5.40	0	0	3	0	15	-15
110+74	25.00	0.00	0.00	3.81	0	0	4	0	20	-20
110+99	25.00	0.00	0.00	1.84	0	0	3	0	24	-24
111+24	25.00	0.00	0.00	2.22	0	0	2	0	26	-26
125+00	0.00	0.00	0.00	1.84	0	0	0	0	26	-26
126+00	100.00	0.00	0.00	1.83	0	0	7	0	35	-35
127+00	100.00	0.00	0.00	2.46	0	0	8	0	45	-45
128+00	100.00	0.00	0.00	5.28	0	0	14	0	63	-63
129+00	100.00	0.00	0.00	1.63	0	0	13	0	79	-79
130+00	100.00	0.00	0.00	0.45	0	0	4	0	84	-84
136+00	0.00	0.00	0.00	0.68	0	0	0	0	84	-84
137+00	100.00	0.00	0.00	1.66	0	0	4	0	89	-89
138+00	100.00	0.00	0.00	2.36	0	0	7	0	98	-98
139+00	100.00	0.00	0.00	1.47	0	0	7	0	106	-106

NOTES:	
1 - CUT	CUT INCLUDES SALVAGED/UNUSABLE PAVEMENT MATERIAL
2 - SALVAGED/UNUSABLE PAVEMENT MATERIAL	THIS DOES NOT SHOW UP IN CROSS SECTIONS
3 - FILL	DOES NOT INCLUDE UNUSABLE PAVEMENT EXC VOLUME
4 - MASS ORDINATE	(CUT - SALVAGED PAVT) - (FILL * FILL FACTOR)

DIVISION -- CTH B

STATION	DISTANCE	AREA (SF)			INCREMENTAL VOL (CY) (UNADJUSTED)			CUMULATIVE VOL (CY)		
		CUT	SALVAGED/UNUSABLE PAVEMENT MATERIAL	FILL	CUT	SALVAGED/UNUSABLE PAVEMENT MATERIAL	FILL	CUT	EXPANDED FILL	MASS ORDINATE
								1.00	1.25	
					NOTE 1	NOTE 2	NOTE 3	NOTE 1		NOTE 4
148+00	0.00	36.27	7.33	0.00	0	0	0	0	106	-106
149+00	100.00	33.65	7.33	0.00	129	27	0	129	106	-4
150+00	100.00	35.65	7.33	0.00	128	27	0	257	106	97
151+00	100.00	38.28	7.33	0.00	137	27	0	394	106	207
152+00	100.00	37.45	7.33	0.00	140	27	0	534	106	320
153+00	100.00	46.25	7.33	0.09	155	27	0	689	106	448
154+00	100.00	43.55	7.33	0.00	166	27	0	855	106	587
155+00	100.00	46.74	7.33	0.00	167	27	0	1,022	106	727
156+00	100.00	47.63	7.33	0.00	175	27	0	1,197	106	875
157+00	100.00	46.37	7.33	0.00	174	27	0	1,371	106	1,022
158+00	100.00	37.26	7.33	0.01	155	27	0	1,526	106	1,150
159+00	100.00	34.39	7.33	0.00	133	27	0	1,659	106	1,256
160+00	100.00	34.47	7.33	0.01	128	27	0	1,787	106	1,357
161+00	100.00	35.16	7.33	0.00	129	27	0	1,916	106	1,459
162+00	100.00	34.40	7.33	0.18	129	27	0	2,045	106	1,561
163+00	100.00	33.67	7.33	1.45	126	27	3	2,171	110	1,656
164+00	100.00	28.20	7.33	2.95	115	27	8	2,286	120	1,734
165+00	100.00	0.00	0.00	6.88	52	14	18	2,338	143	1,750
166+00	100.00	0.00	0.00	2.20	0	0	17	2,338	164	1,728
167+00	100.00	0.00	0.00	1.46	0	0	7	2,338	173	1,720
168+00	100.00	0.00	0.00	3.57	0	0	9	2,338	184	1,708
169+00	100.00	0.00	0.00	5.04	0	0	16	2,338	204	1,688
170+00	100.00	0.00	0.00	33.51	0	0	71	2,338	293	1,600
171+00	100.00	0.00	0.00	5.27	0	0	72	2,338	383	1,510
172+00	100.00	0.00	0.00	10.17	0	0	29	2,338	419	1,473
173+00	100.00	0.00	0.00	13.62	0	0	44	2,338	474	1,418
174+00	100.00	0.00	0.00	17.24	0	0	57	2,338	545	1,347
178+00	0.00	0.00	0.00	0.06	0	0	0	2,338	545	1,347
179+00	100.00	0.00	0.00	1.79	0	0	3	2,338	549	1,343
180+00	100.00	0.00	0.00	4.46	0	0	12	2,338	564	1,328
181+00	100.00	0.00	0.00	1.71	0	0	11	2,338	578	1,315
182+00	100.00	0.00	0.00	1.62	0	0	6	2,338	585	1,307
183+00	100.00	0.00	0.00	1.91	0	0	7	2,338	594	1,298
184+00	100.00	0.00	0.00	6.78	0	0	16	2,338	614	1,278
185+00	100.00	0.00	0.00	1.54	0	0	15	2,338	633	1,260

NOTES:	
1 - CUT	CUT INCLUDES SALVAGED/UNUSABLE PAVEMENT MATERIAL
2 - SALVAGED/UNUSABLE PAVEMENT MATERIAL	THIS DOES NOT SHOW UP IN CROSS SECTIONS
3 - FILL	DOES NOT INCLUDE UNUSABLE PAVEMENT EXC VOLUME
4 - MASS ORDINATE	(CUT - SALVAGED PAVT) - (FILL * FILL FACTOR)

DIVISION – CTH B

STATION	DISTANCE	AREA (SF)			INCREMENTAL VOL (CY) (UNADJUSTED)			CUMULATIVE VOL (CY)		
		CUT	SALVAGED/UNUSABLE PAVEMENT MATERIAL	FILL	CUT	SALVAGED/UNUSABLE PAVEMENT MATERIAL	FILL	CUT	EXPANDED FILL	MASS ORDINATE
								1.00	1.25	
					NOTE 1	NOTE 2	NOTE 3	NOTE 1		NOTE 4
189+00	0.00	0.00	0.00	0.07	0	0	0	2,338	633	1,260
190+00	100.00	0.00	0.00	2.01	0	0	4	2,338	638	1,255
191+00	100.00	0.00	0.00	6.04	0	0	15	2,338	656	1,236
192+00	100.00	0.00	0.00	1.46	0	0	14	2,338	674	1,218
193+00	100.00	0.00	0.00	1.34	0	0	5	2,338	680	1,212
194+00	100.00	0.00	0.00	5.98	0	0	14	2,338	698	1,195
195+00	100.00	0.00	0.00	6.82	0	0	24	2,338	728	1,165
196+00	100.00	0.00	0.00	2.04	0	0	16	2,338	748	1,145
197+00	100.00	0.00	0.00	2.65	0	0	9	2,338	759	1,133
198+00	100.00	0.00	0.00	0.00	0	0	5	2,338	765	1,127
199+00	100.00	0.00	0.00	5.85	0	0	11	2,338	779	1,113
200+00	100.00	0.00	0.00	1.73	0	0	14	2,338	796	1,096
201+00	100.00	0.00	0.00	2.87	0	0	9	2,338	808	1,085
202+00	100.00	0.00	0.00	3.97	0	0	13	2,338	824	1,068
203+00	100.00	0.00	0.00	3.38	0	0	14	2,338	841	1,051
205+00	0.00	39.53	7.33	0.00	0	0	0	2,338	841	1,051
206+00	100.00	41.90	7.33	0.00	151	27	0	2,489	841	1,175
206+15	14.78	41.44	7.33	0.15	23	4	0	2,512	841	1,194
206+51	36.14	41.85	7.33	7.26	56	10	5	2,568	848	1,234
207+00	49.08	40.83	7.33	13.34	75	13	19	2,643	871	1,272
207+08	8.42	40.56	7.33	13.35	13	2	4	2,656	876	1,278
207+34	25.10	40.59	7.33	4.73	38	7	8	2,694	886	1,299
207+58	24.83	41.58	7.33	0.00	38	7	2	2,732	889	1,327
207+71	12.57	41.83	7.33	0.00	19	3	0	2,751	889	1,343
207+96	25.00	41.49	7.33	0.00	39	7	0	2,790	889	1,375
208+21	24.96	42.85	7.33	0.00	39	7	0	2,829	889	1,407
208+59	38.12	37.85	7.33	0.00	57	10	0	2,886	889	1,454

B-06-063

NOTES:	
1 - CUT	CUT INCLUDES SALVAGED/UNUSABLE PAVEMENT MATERIAL
2 - SALVAGED/UNUSABLE PAVEMENT MATERIAL	THIS DOES NOT SHOW UP IN CROSS SECTIONS
3 - FILL	DOES NOT INCLUDE UNUSABLE PAVEMENT EXC VOLUME
4 - MASS ORDINATE	(CUT - SALVAGED PAVT) - (FILL * FILL FACTOR)

DIVISION -- CTH B

STATION	DISTANCE	AREA (SF)			INCREMENTAL VOL (CY) (UNADJUSTED)			CUMULATIVE VOL (CY)		
		CUT	SALVAGED/UNUSABLE PAVEMENT MATERIAL	FILL	CUT	SALVAGED/UNUSABLE PAVEMENT MATERIAL	FILL	CUT	EXPANDED FILL	MASS ORDINATE
					NOTE 1	NOTE 2	NOTE 3	1.00 NOTE 1	1.25	NOTE 4
					B-06-063					
209+00	0.00	35.90	7.33	2.87	0	0	0	2,886	889	1,454
209+39	38.88	41.22	7.33	0.00	56	11	2	2,942	891	1,497
209+64	25.10	43.30	7.33	1.41	39	7	1	2,981	893	1,528
209+89	24.86	43.83	7.33	7.63	40	7	4	3,021	898	1,556
210+01	12.54	43.82	7.33	6.29	20	3	3	3,041	901	1,569
210+26	25.00	43.59	7.33	4.16	40	7	5	3,081	908	1,596
210+51	24.96	43.26	7.33	3.17	40	7	3	3,121	911	1,625
211+09	57.64	41.09	7.33	0.00	90	16	3	3,211	915	1,695
211+71	62.50	38.59	7.33	0.19	92	17	0	3,303	915	1,770
212+00	28.52	37.80	7.33	0.00	40	8	0	3,343	915	1,802
214+00	200.00	42.85	7.33	0.00	299	54	0	3,642	915	2,047
215+00	100.00	41.93	7.33	0.07	157	27	0	3,799	915	2,177
216+00	100.00	31.75	7.33	0.04	136	27	0	3,935	915	2,286
217+00	100.00	24.00	7.33	0.00	103	27	0	4,038	915	2,362
218+00	100.00	22.71	7.33	0.25	87	27	0	4,125	915	2,422
219+00	100.00	23.27	7.33	0.50	85	27	1	4,210	916	2,479
220+00	100.00	20.84	7.33	3.11	82	27	7	4,292	925	2,525
221+00	100.00	36.79	7.33	0.03	107	27	6	4,399	933	2,598
222+00	100.00	42.28	7.33	0.00	146	27	0	4,545	933	2,717
223+00	100.00	44.32	7.33	0.00	160	27	0	4,705	933	2,850
224+00	100.00	35.34	7.33	0.00	148	27	0	4,853	933	2,971
225+00	100.00	42.49	7.33	0.00	144	27	0	4,997	933	3,088
226+00	100.00	40.04	7.33	0.00	153	27	0	5,150	933	3,214
227+00	100.00	40.77	7.33	0.00	150	27	0	5,300	933	3,337
228+00	100.00	47.13	7.33	0.02	163	27	0	5,463	933	3,473
229+00	100.00	38.16	7.33	0.00	158	27	0	5,621	933	3,604
230+00	100.00	32.93	7.33	0.56	132	27	1	5,753	934	3,707
231+00	100.00	25.19	7.33	2.49	108	27	6	5,861	941	3,781
232+00	100.00	21.74	7.33	5.83	87	27	15	5,948	960	3,822
233+00	100.00	11.60	0.00	2.71	62	14	16	6,010	980	3,850
234+00	100.00	23.29	0.00	0.00	65	0	5	6,075	986	3,909
235+50	0.00	38.76	13.33	0.00	0	0	0	6,075	986	3,909
236+00	50.00	38.57	13.33	0.00	72	25	0	6,147	986	3,956
236+50	50.00	40.41	13.33	0.00	73	25	0	6,220	986	4,004
237+00	50.00	45.25	13.33	0.00	79	25	0	6,299	986	4,058
237+50	50.00	43.62	13.33	0.00	82	25	0	6,381	986	4,115
238+00	50.00	34.52	13.33	0.00	72	25	0	6,453	986	4,162
238+20	20.00	28.52	13.33	0.00	23	10	0	6,476	986	4,175

NOTES:	
1 - CUT	CUT INCLUDES SALVAGED/UNUSABLE PAVEMENT MATERIAL
2 - SALVAGED/UNUSABLE PAVEMENT MATERIAL	THIS DOES NOT SHOW UP IN CROSS SECTIONS
3 - FILL	DOES NOT INCLUDE UNUSABLE PAVEMENT EXC VOLUME
4 - MASS ORDINATE	(CUT - SALVAGED PAVT) - (FILL * FILL FACTOR)

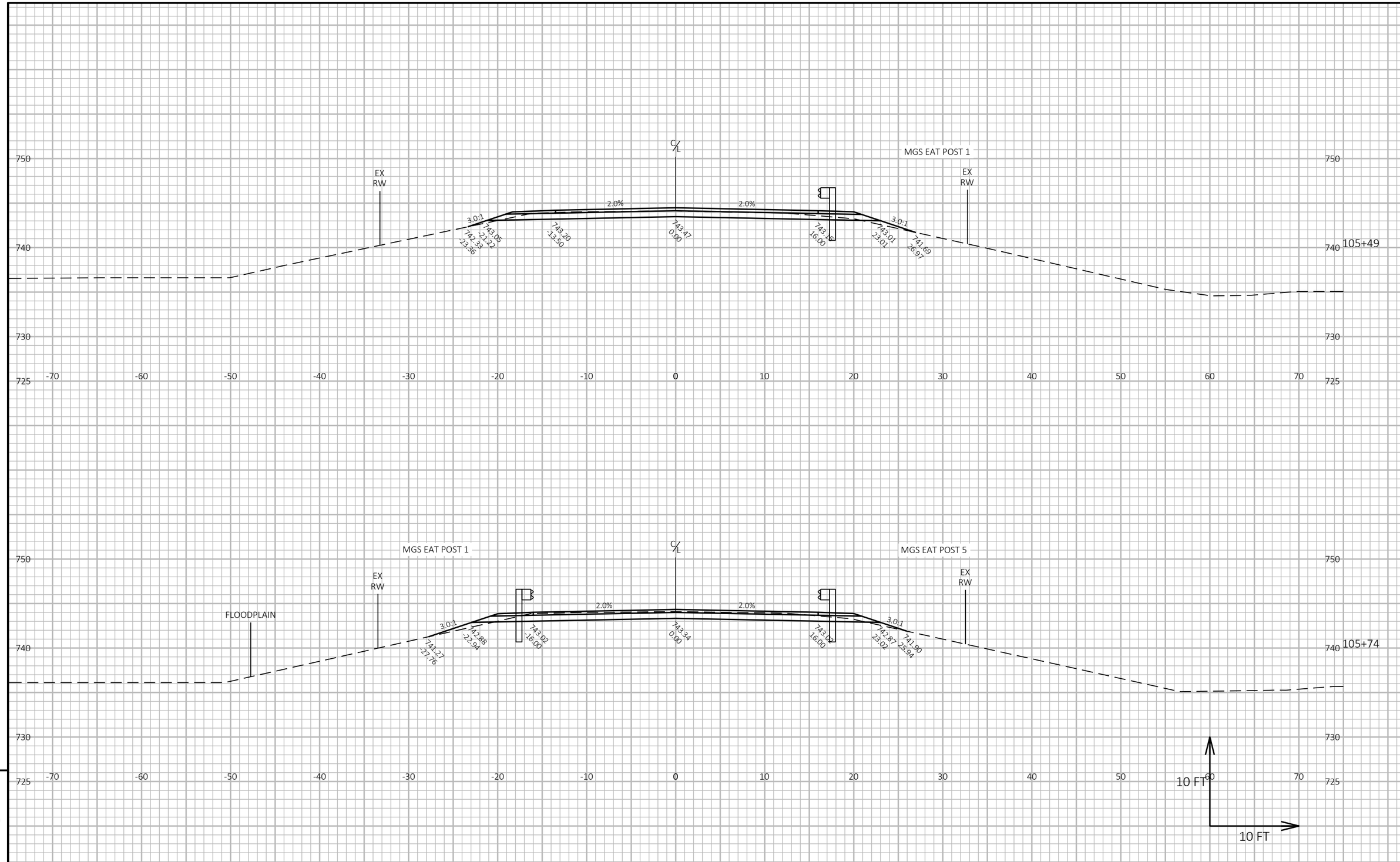

PROJECT NO: 7229-00-70	HWY: CTH B	COUNTY: BUFFALO	CROSS SECTIONS: PULVERIZE AND OVERLAY	SHEET 76	E

FILE NAME : C:\OD\CORRE, INC\PROJECTS - WI-NW REGION\7229-00-00_BUFFALO CO_CTH B\500_CADD\501_C3D_2022\72290000\SHEETS\090201-XS - CLEANUP.DWG
LAYOUT NAME - 01
PLOT DATE : 7/11/2024 1:09 PM
PLOT BY : NICHOLAS WATHKE, PE
PLOT NAME :
PLOT SCALE : 1 IN:10 FT HORZ. / 1 IN:10 FT VERT.

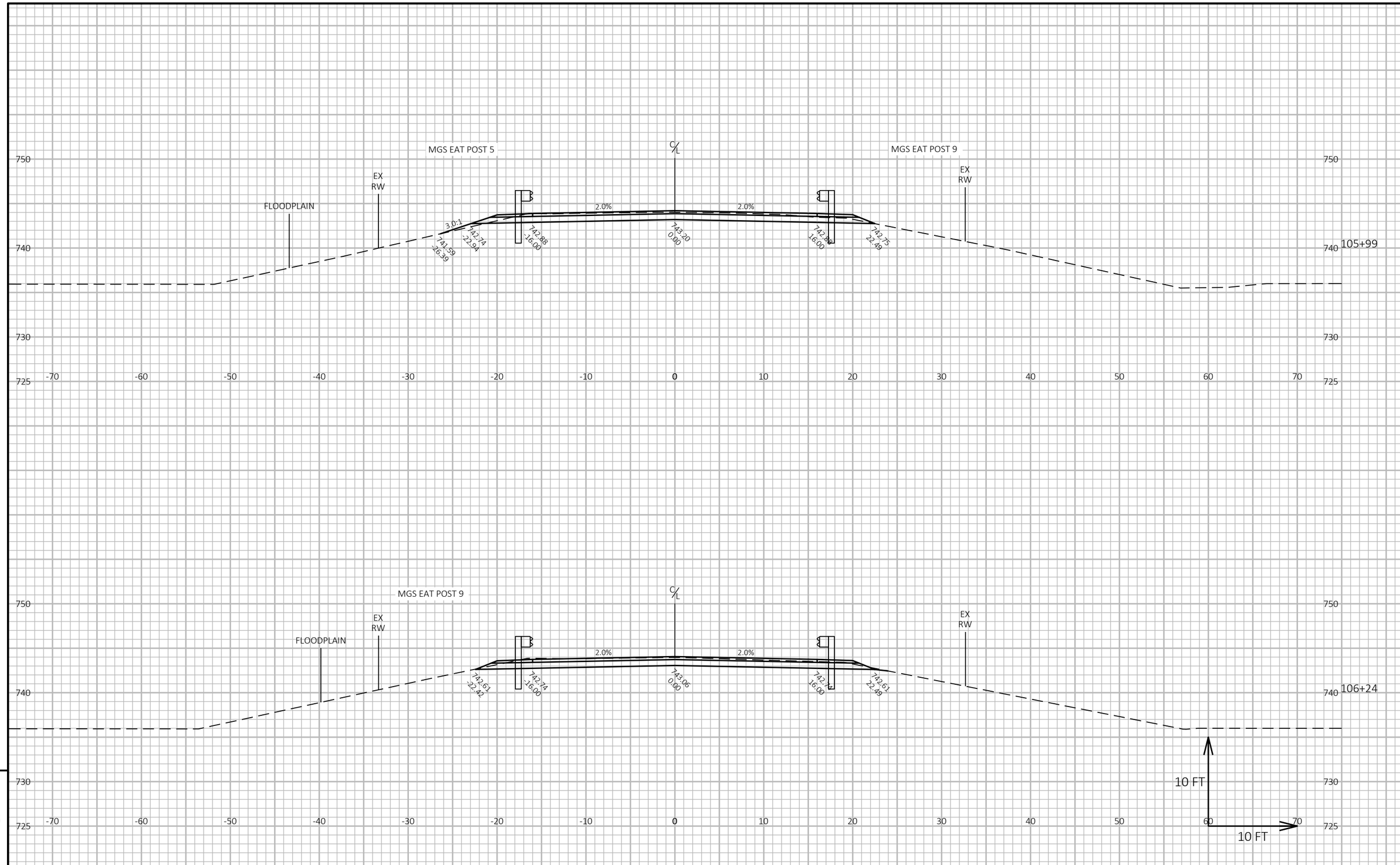

PROJECT NO: 7229-00-70	HWY: CTH B	COUNTY: BUFFALO	CROSS SECTIONS: PULVERIZE AND OVERLAY	SHEET 77	E

FILE NAME : C:\OD\CORRE, INC\PROJECTS - WI-NW REGION\7229-00-00_BUFFALO CO_CTH B\500_CADD\501_C3D_2022\72290000\SHEETS\090201-XS - CLEANUP.DWG
LAYOUT NAME - 02
PLOT DATE : 7/11/2024 1:09 PM
PLOT BY : NICHOLAS WATHKE, PE
PLOT NAME :
PLOT SCALE : 1 IN:10 FT HORZ. / 1 IN:10 FT VERT.
WISDOT/CADDS SHEET 49

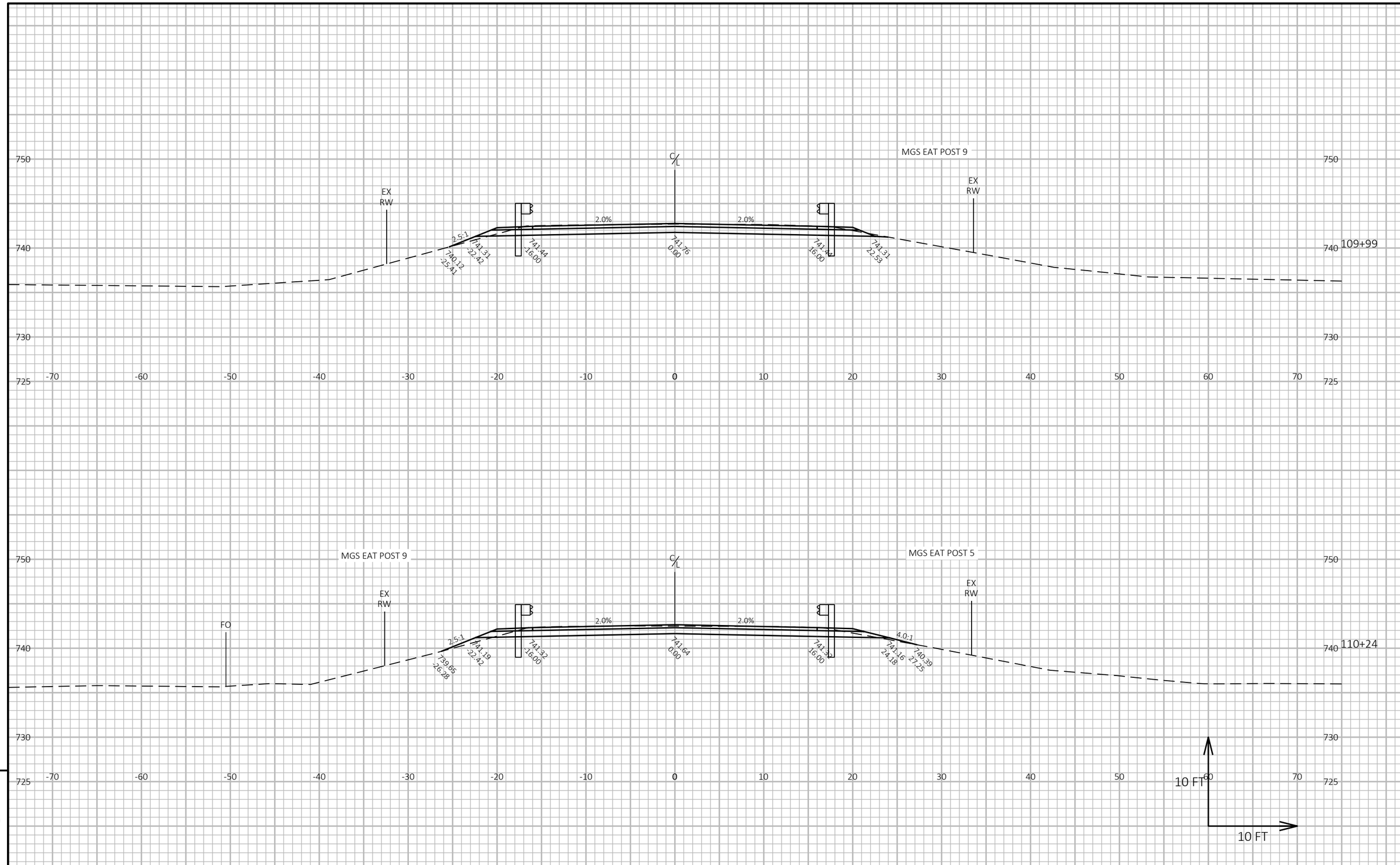

9

9

PROJECT NO: 7229-00-70	HWY: CTH B	COUNTY: BUFFALO	CROSS SECTIONS: PULVERIZE AND OVERLAY	SHEET 78	E

FILE NAME : C:\OD\CORRE, INC\PROJECTS - WI-NW REGION\7229-00-00_BUFFALO CO_CTH B\500_CADD\501_C3D_2022\72290000\SHEETS\090201-XS - CLEANUP.DWG
LAYOUT NAME - 03
PLOT DATE : 7/11/2024 1:09 PM
PLOT BY : NICHOLAS WATHKE, PE
PLOT NAME :
PLOT SCALE : 1 IN:10 FT HORZ. / 1 IN:10 FT VERT.

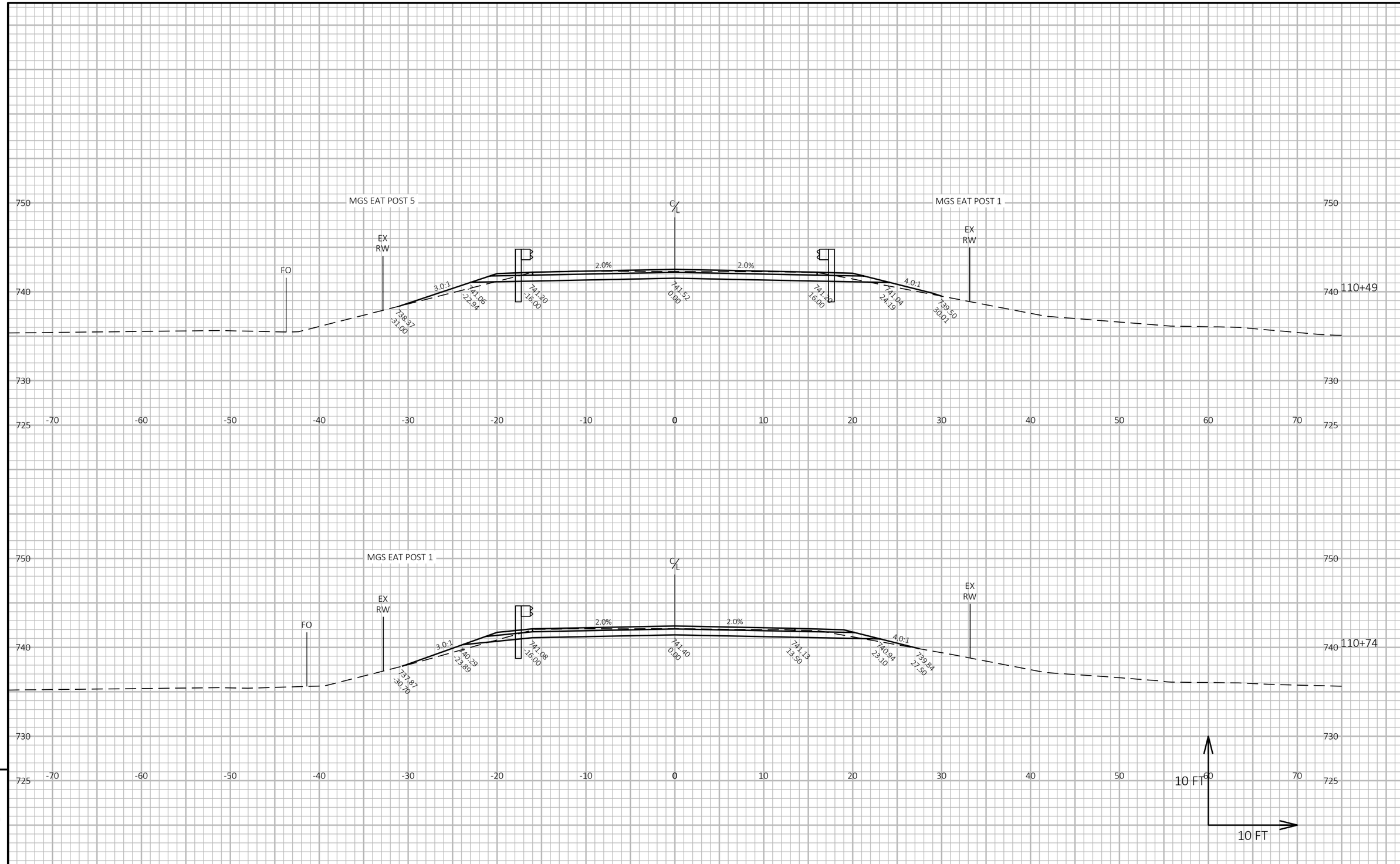

9

9

PROJECT NO: 7229-00-70	HWY: CTH B	COUNTY: BUFFALO	CROSS SECTIONS: PULVERIZE AND OVERLAY	SHEET 79	E

FILE NAME : C:\OD\CORRE, INC\PROJECTS - WI-NW REGION\7229-00-00_BUFFALO CO_CTH B\500_CADD\501_C3D_2022\72290000\SHEETS\090201-XS - CLEANUP.DWG
LAYOUT NAME - 04
PLOT DATE : 7/11/2024 1:09 PM
PLOT BY : NICHOLAS WATHKE, PE
PLOT NAME :
PLOT SCALE : 1 IN:10 FT HORZ. / 1 IN:10 FT VERT.

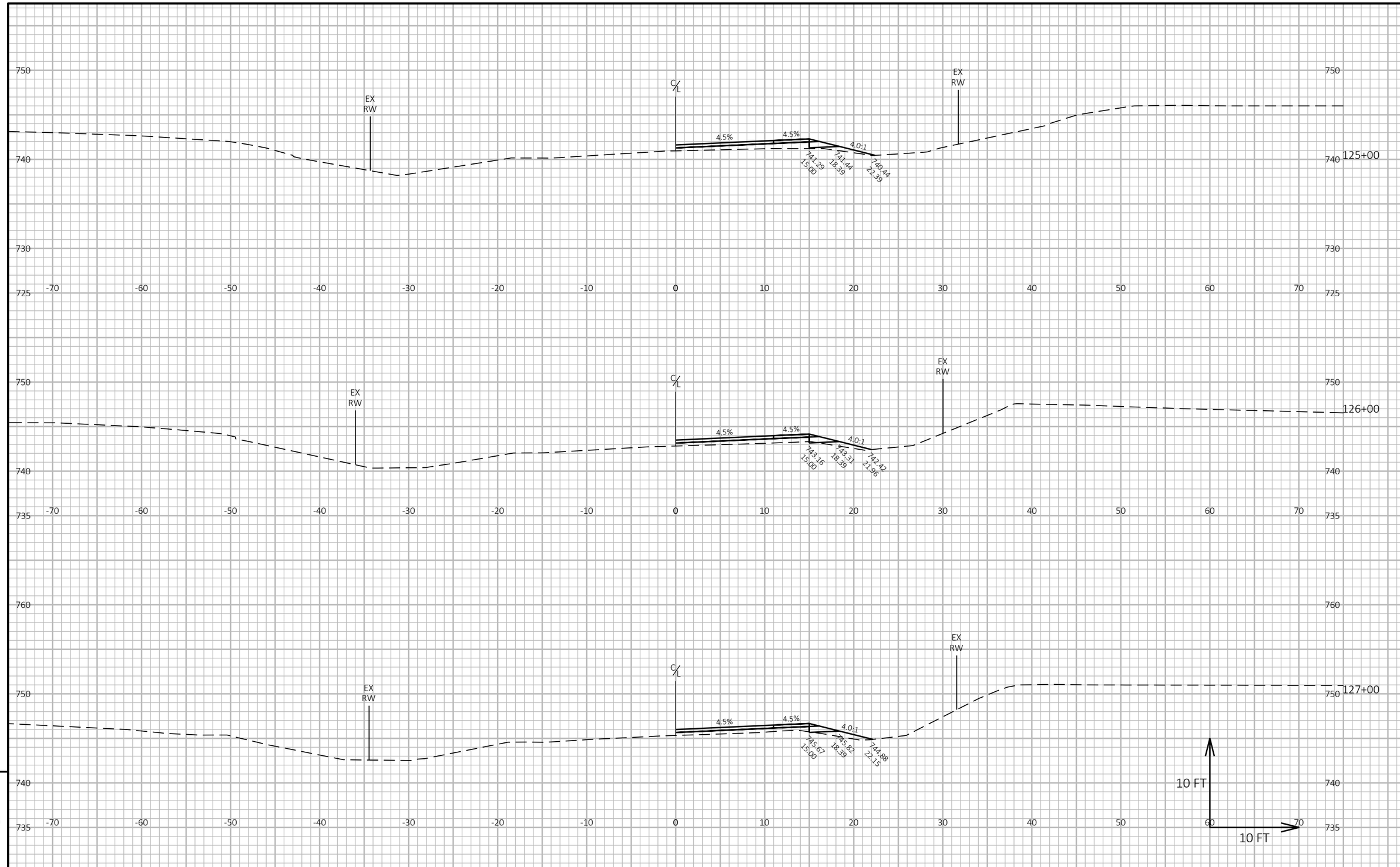

9

9

PROJECT NO: 7229-00-70	HWY: CTH B	COUNTY: BUFFALO	CROSS SECTIONS: PULVERIZE AND OVERLAY	SHEET 80	E

FILE NAME : C:\OD\CORRE, INC\PROJECTS - WI-NW REGION\7229-00-00_BUFFALO CO_CTH B\500_CADD\501_C3D_2022\72290000\SHEETS\090201-XS - CLEANUP.DWG
LAYOUT NAME - 05
PLOT DATE : 7/11/2024 1:10 PM
PLOT BY : NICHOLAS WATHKE, PE
PLOT NAME :
PLOT SCALE : 1 IN:10 FT HORZ. / 1 IN:10 FT VERT.
WISDOT/CADDS SHEET 49

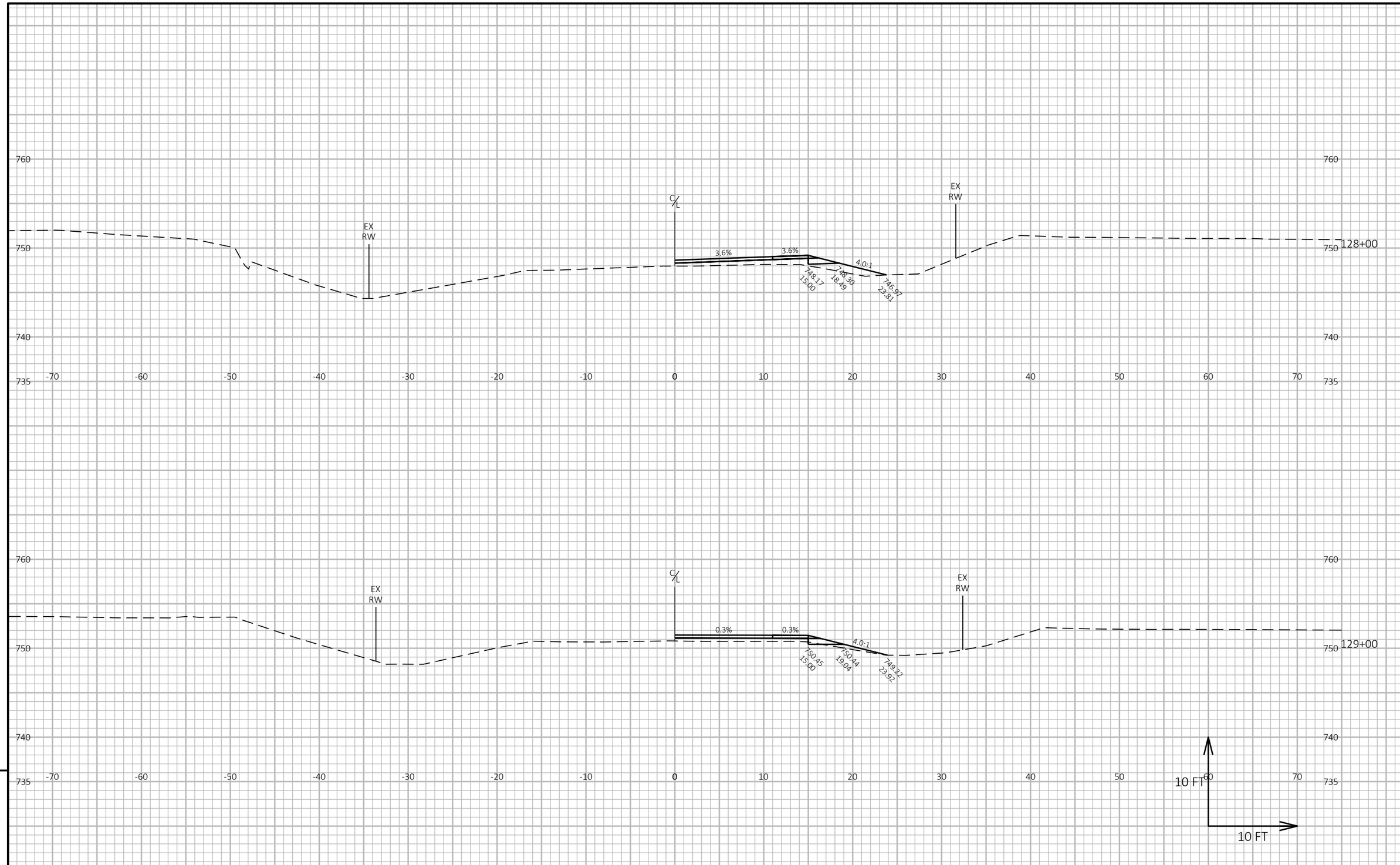

PROJECT NO: 7229-00-70	HWY: CTH B	COUNTY: BUFFALO	CROSS SECTIONS: PULVERIZE AND OVERLAY	SHEET 81	E

FILE NAME : C:\OD\CORRE, INC\PROJECTS - WI-NW REGION\7229-00-00_BUFFALO CO_CTH B\500_CADD\501_C3D_2022\72290000\SHEETS\090201-XS - CLEANUP.DWG
LAYOUT NAME - 06
PLOT DATE : 7/11/2024 1:10 PM
PLOT BY : NICHOLAS WATHKE, PE
PLOT NAME :
PLOT SCALE : 1 IN:10 FT HORZ. / 1 IN:10 FT VERT.
WISDOT/CADDS SHEET 49

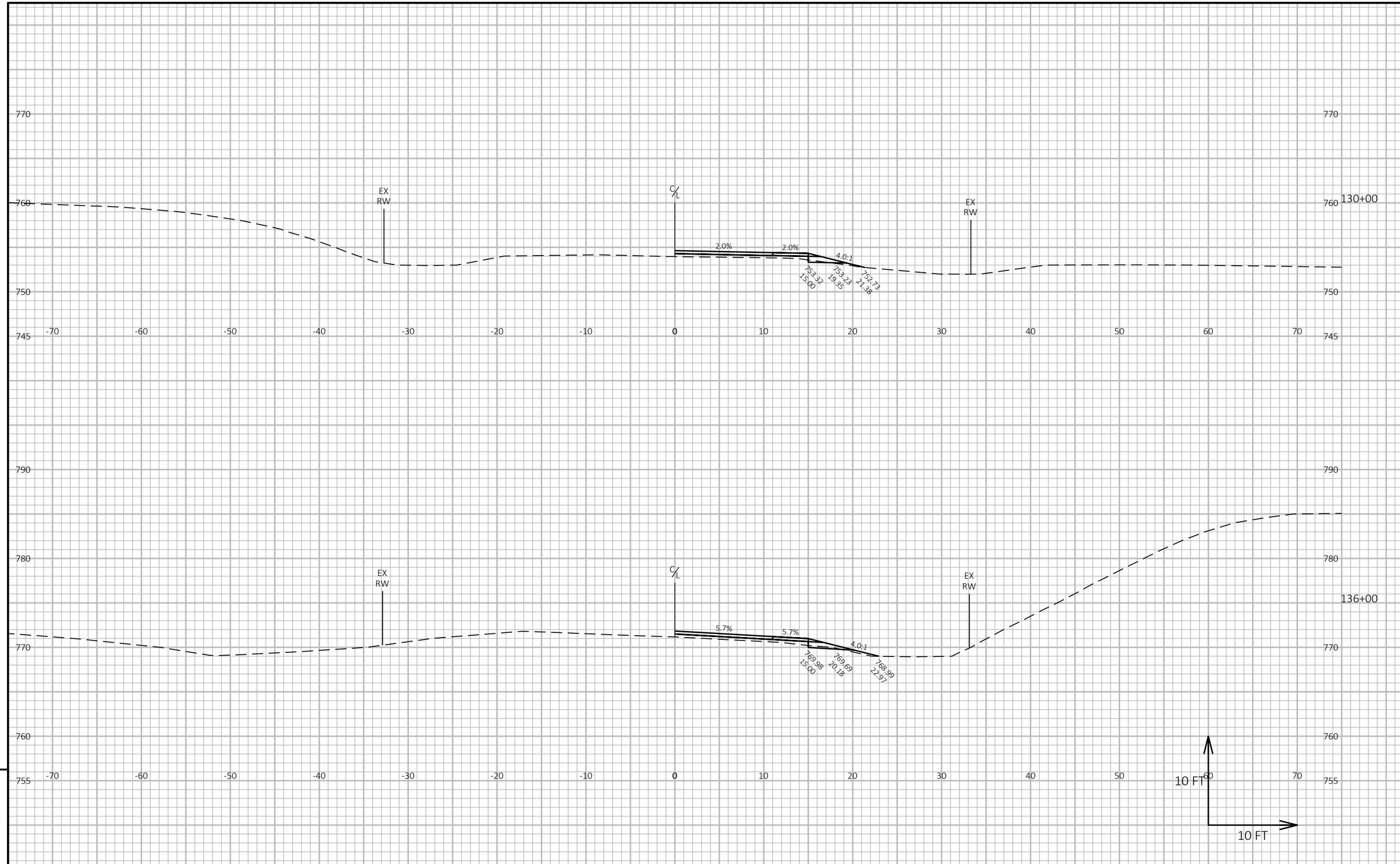

9

9

PROJECT NO: 7229-00-70	HWY: CTH B	COUNTY: BUFFALO	CROSS SECTIONS: PULVERIZE AND OVERLAY	SHEET 82	E

FILE NAME : C:\OD\CORRE, INC\PROJECTS - WI-NW REGION\7229-00-00_BUFFALO CO_CTH B\500_CADD\501_C3D_2022\72290000\SHEETS\090201-XS - CLEANUP.DWG
LAYOUT NAME - 07
PLOT DATE : 7/11/2024 1:10 PM
PLOT BY : NICHOLAS WATHKE, PE
PLOT NAME :
PLOT SCALE : 1 IN:10 FT HORZ. / 1 IN:10 FT VERT.
WISDOT/CADDS SHEET 49

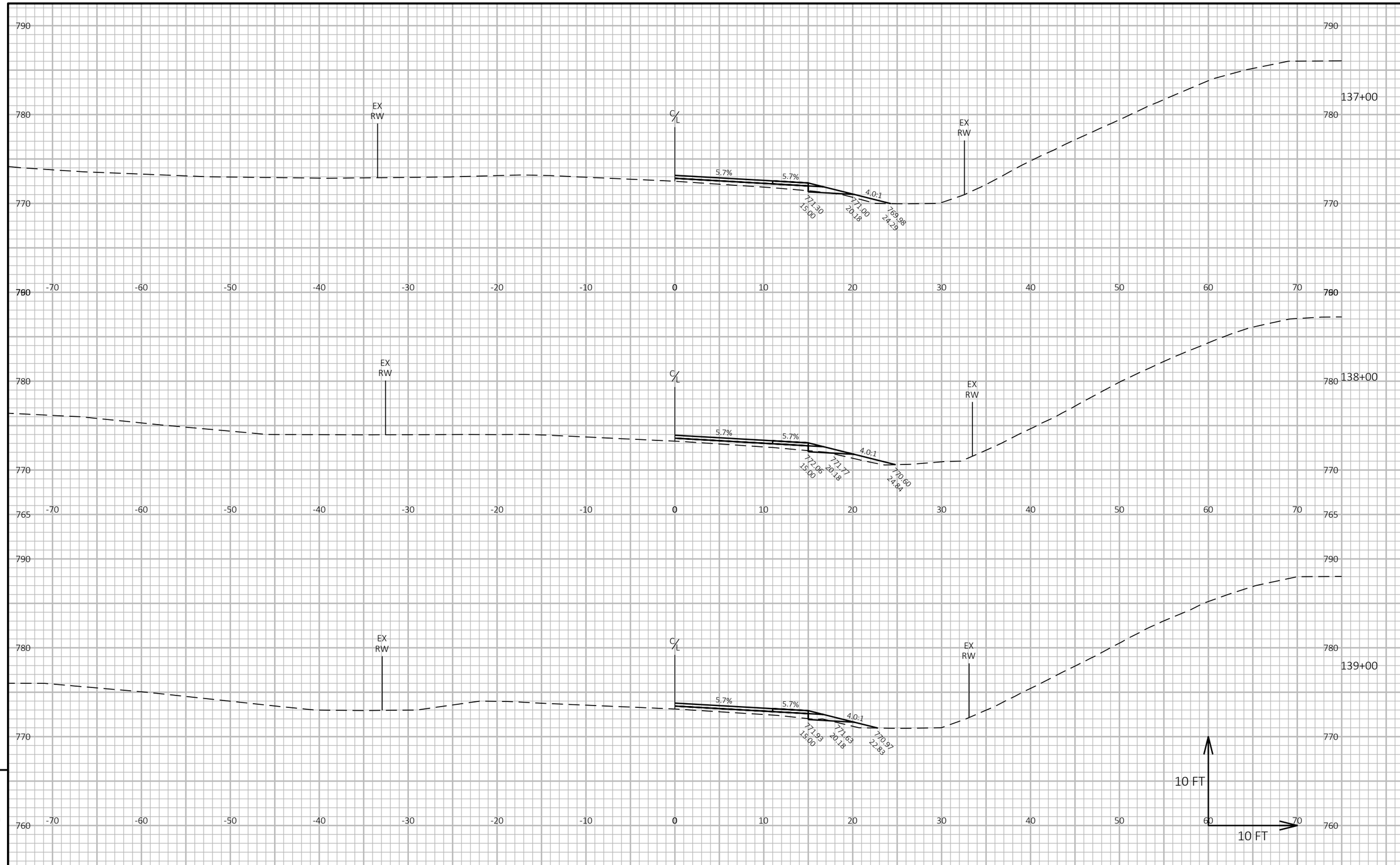

PROJECT NO: 7229-00-70	HWY: CTH B	COUNTY: BUFFALO	CROSS SECTIONS: PULVERIZE AND OVERLAY	SHEET 83	E

FILE NAME : C:\OD\CORRE, INC\PROJECTS - WI-NW REGION\7229-00-00_BUFFALO CO_CTH B\500_CADD\501_C3D_2022\72290000\SHEETS\090201-XS - CLEANUP.DWG
LAYOUT NAME - 08
PLOT DATE : 7/11/2024 1:10 PM PLOT BY : NICHOLAS WATHKE, PE PLOT NAME : **PLOT SCALE :** 1 IN:10 FT HORZ. / 1 IN:10 FT VERT.
WISDOT/CADDS SHEET 49

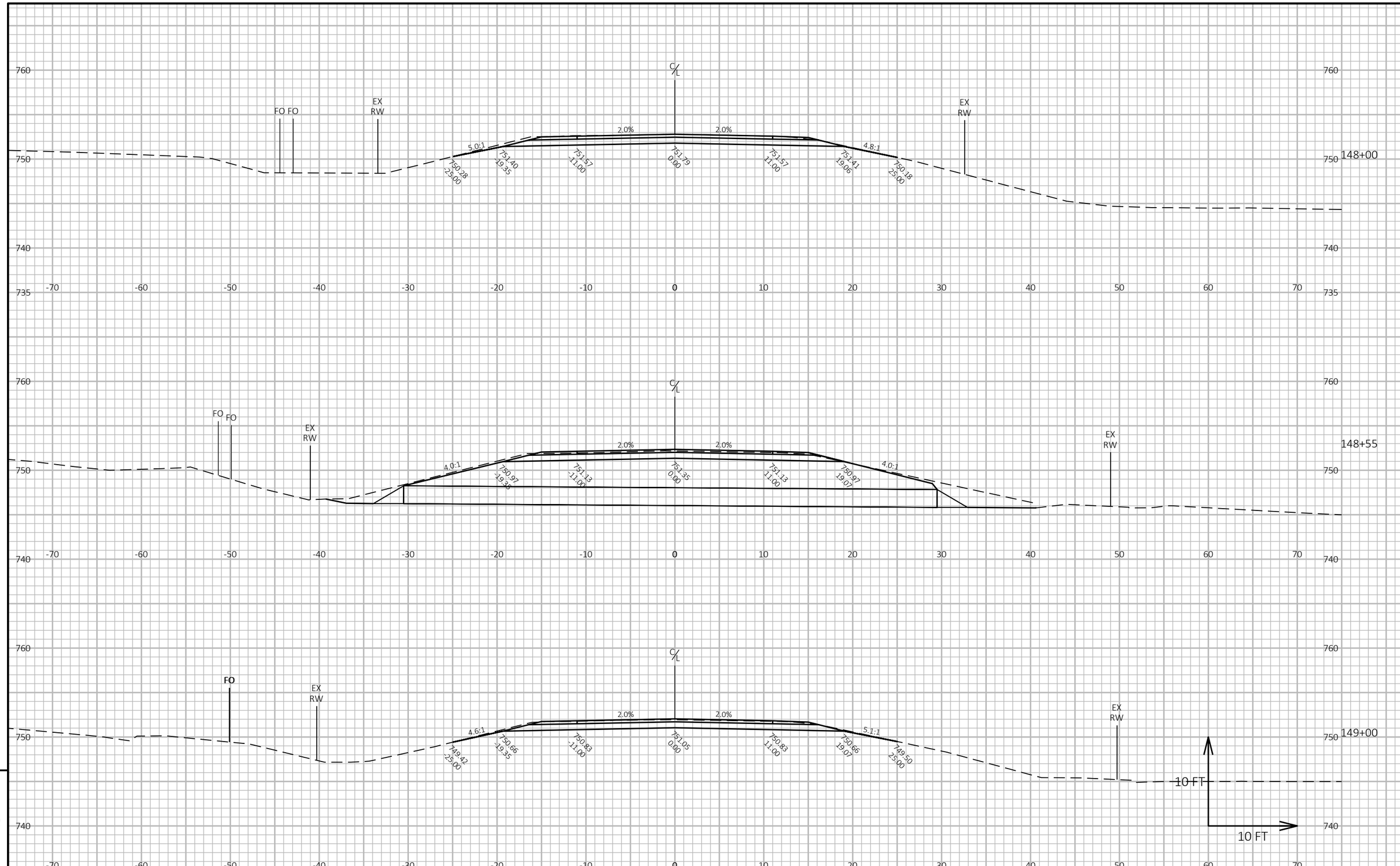

PROJECT NO: 7229-00-70	HWY: CTH B	COUNTY: BUFFALO	CROSS SECTIONS: FULL DEPTH PAVEMENT REPLACEMENT	SHEET 84	E

FILE NAME : C:\OD\CORRE, INC\PROJECTS - WI-NW REGION\7229-00-00_BUFFALO CO_CTH B\500_CADD\501_C3D_2022\72290000\SHEETS\090201-XS - CLEANUP.DWG
LAYOUT NAME - 09
PLOT DATE : 7/11/2024 1:10 PM
PLOT BY : NICHOLAS WATHKE, PE
PLOT NAME :
PLOT SCALE : 1 IN:10 FT HORZ. / 1 IN:10 FT VERT.
WISDOT/CADDS SHEET 49

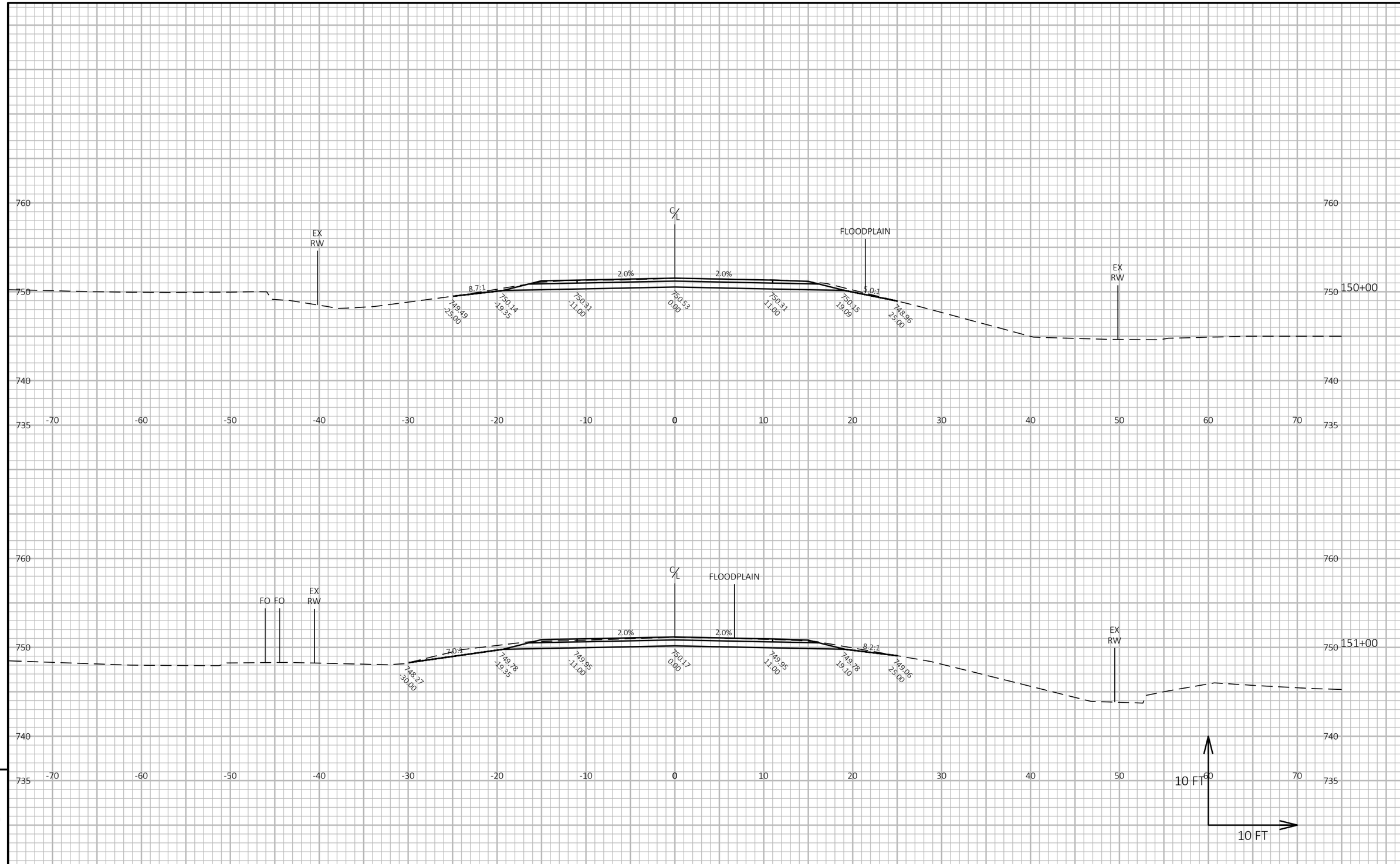

9

9

PROJECT NO: 7229-00-70	HWY: CTH B	COUNTY: BUFFALO	CROSS SECTIONS: FULL DEPTH PAVEMENT REPLACEMENT	SHEET 85	E

FILE NAME : C:\OD\CORRE, INC\PROJECTS - WI-NW REGION\7229-00-00_BUFFALO CO_CTH B\500_CADD\501_C3D_2022\72290000\SHEETS\090201-XS - CLEANUP.DWG
LAYOUT NAME - 10
PLOT DATE : 7/11/2024 1:11 PM
PLOT BY : NICHOLAS WATHKE, PE
PLOT NAME :
PLOT SCALE : 1 IN:10 FT HORZ. / 1 IN:10 FT VERT.

WISDOT/CADDS SHEET 49

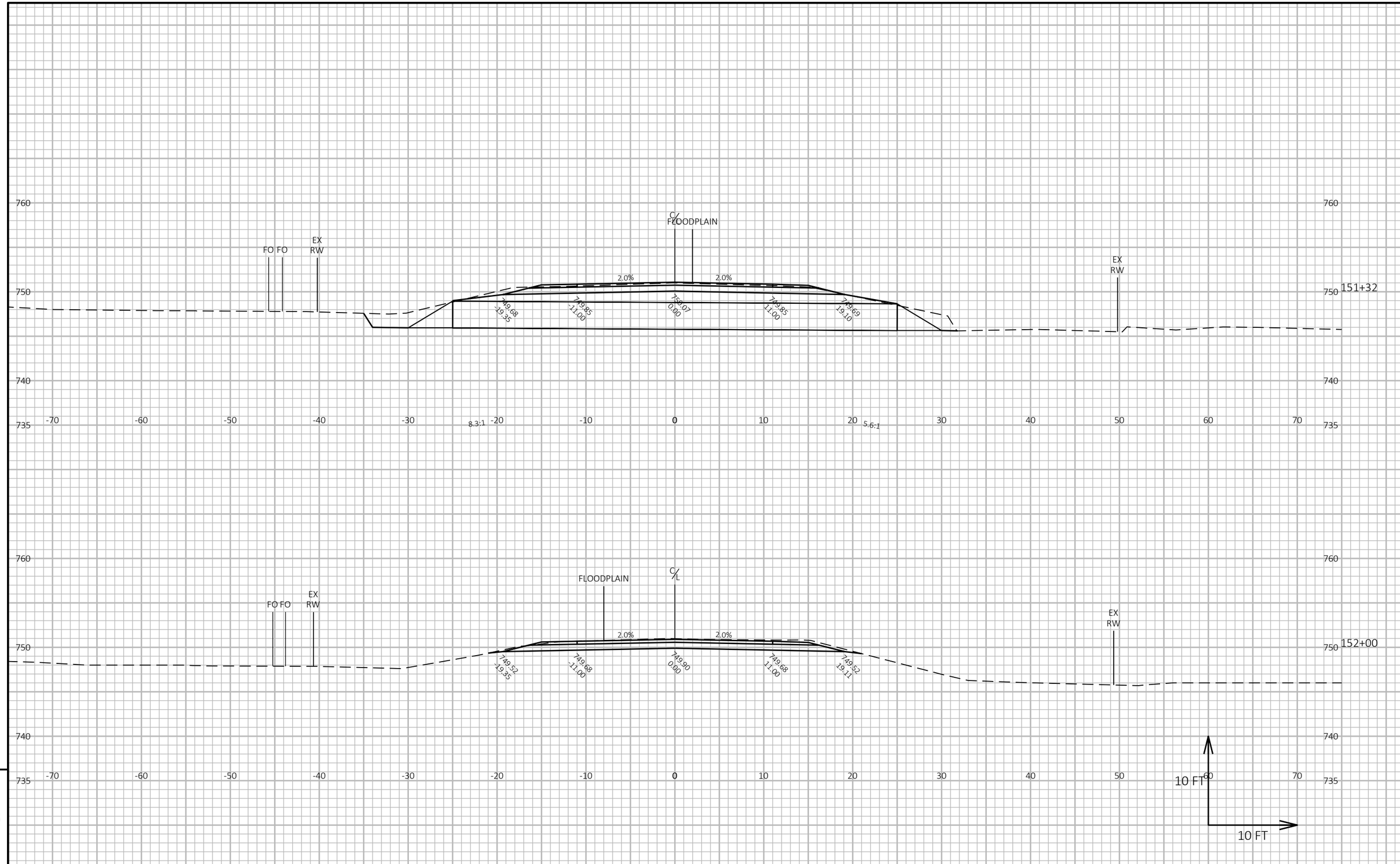

9

9

PROJECT NO: 7229-00-70	HWY: CTH B	COUNTY: BUFFALO	CROSS SECTIONS: FULL DEPTH PAVEMENT REPLACEMENT	SHEET 86	E

FILE NAME : C:\OD\CORRE, INC\PROJECTS - WI-NW REGION\7229-00-00_BUFFALO CO_CTH B\500_CADD\501_C3D_2022\72290000\SHEETS\090201-XS - CLEANUP.DWG
LAYOUT NAME - 11
PLOT DATE : 7/11/2024 1:11 PM
PLOT BY : NICHOLAS WATHKE, PE
PLOT NAME :
PLOT SCALE : 1 IN:10 FT HORZ. / 1 IN:10 FT VERT.

WISDOT/CADDS SHEET 49

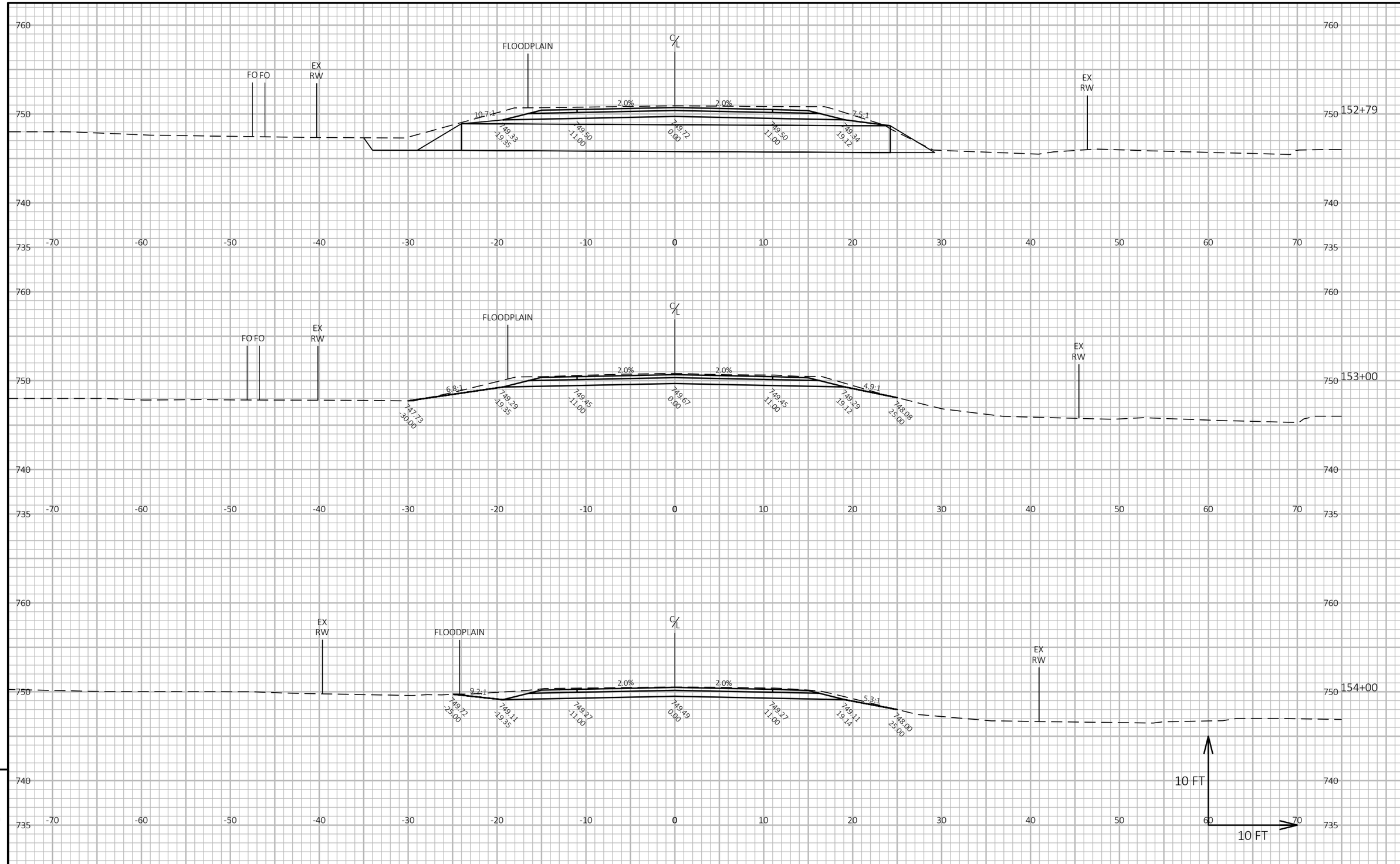

9

9

PROJECT NO: 7229-00-70	HWY: CTH B	COUNTY: BUFFALO	CROSS SECTIONS: FULL DEPTH PAVEMENT REPLACEMENT	SHEET 87	E

FILE NAME : C:\OD\CORRE, INC\PROJECTS - WI-NW REGION\7229-00-00_BUFFALO CO_CTH B\500_CADD\501_C3D_2022\72290000\SHEETS\090201-XS - CLEANUP.DWG
LAYOUT NAME - 13
PLOT DATE : 7/11/2024 1:11 PM PLOT BY : NICHOLAS WATHKE, PE PLOT NAME : **PLOT SCALE :** 1 IN:10 FT HORZ. / 1 IN:10 FT VERT.

WISDOT/CADDS SHEET 49

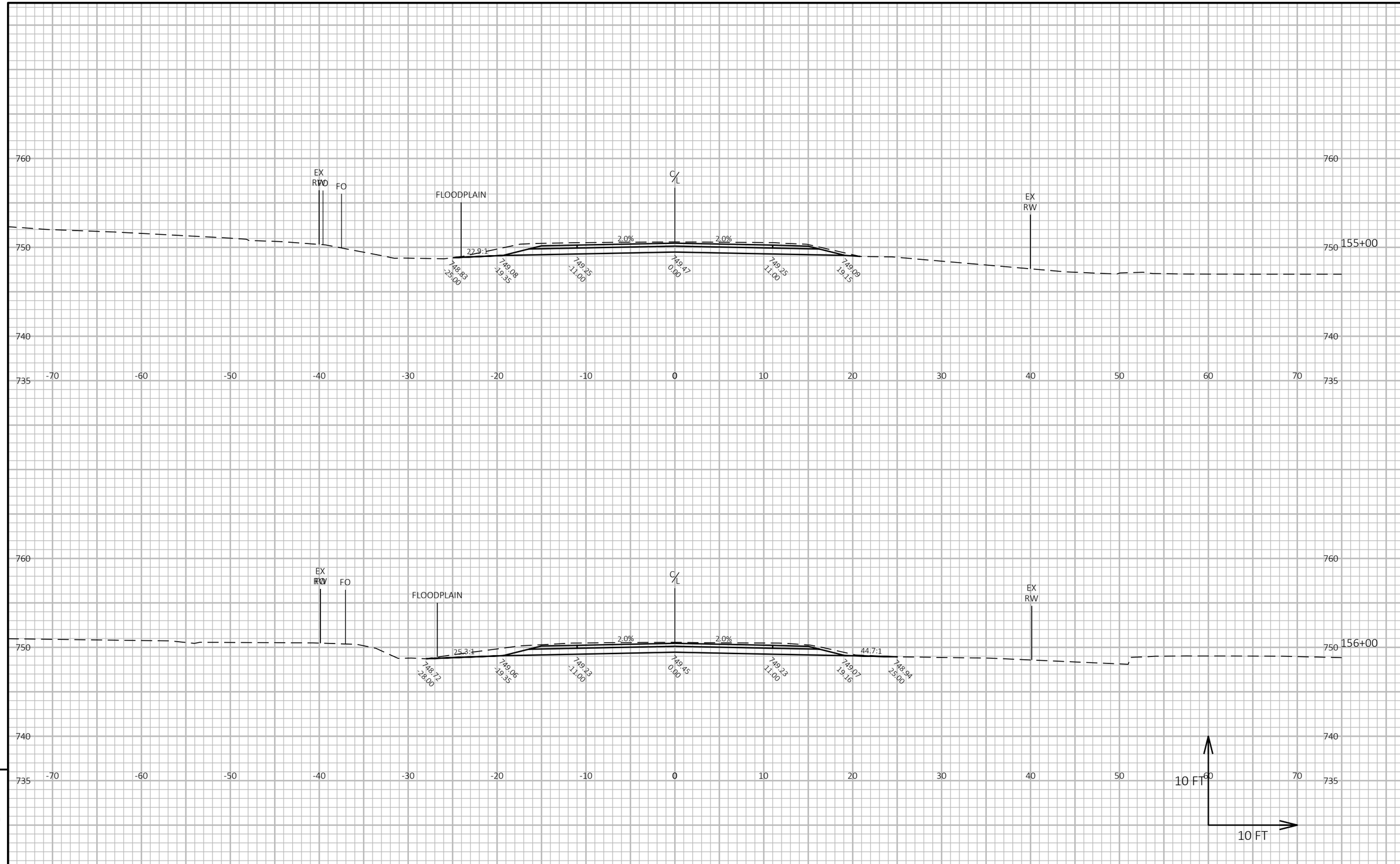

9

9

PROJECT NO: 7229-00-70	HWY: CTH B	COUNTY: BUFFALO	CROSS SECTIONS: FULL DEPTH PAVEMENT REPLACEMENT	SHEET 88	E

FILE NAME : C:\OD\CORRE, INC\PROJECTS - WI-NW REGION\7229-00-00_BUFFALO CO_CTH B\500_CADD\501_C3D_2022\72290000\SHEETS\090201-XS - CLEANUP.DWG
LAYOUT NAME - 14
PLOT DATE : 7/11/2024 1:11 PM
PLOT BY : NICHOLAS WATHKE, PE
PLOT NAME :
PLOT SCALE : 1 IN:10 FT HORZ. / 1 IN:10 FT VERT.

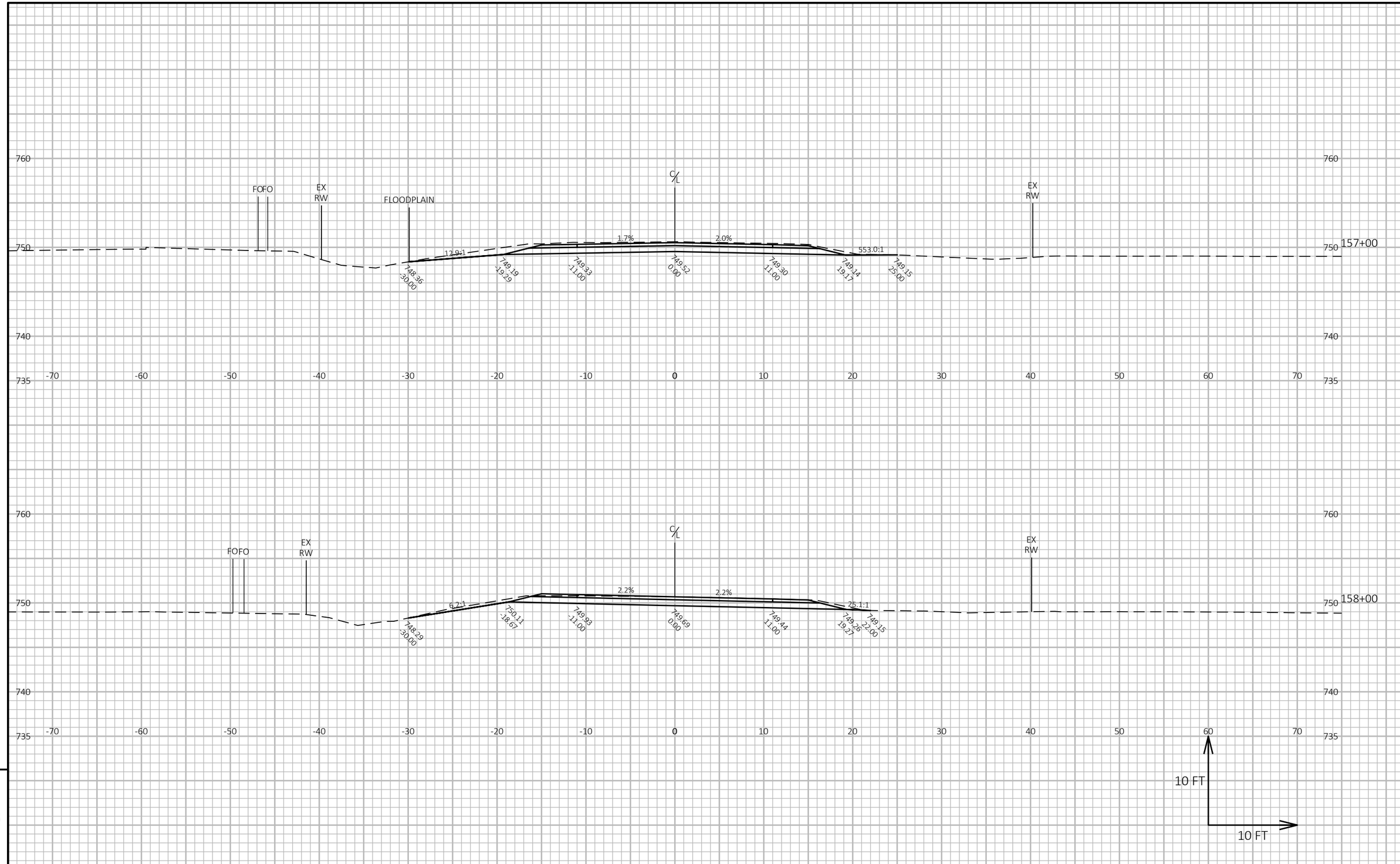

9

9

PROJECT NO: 7229-00-70	HWY: CTH B	COUNTY: BUFFALO	CROSS SECTIONS: FULL DEPTH PAVEMENT REPLACEMENT	SHEET 89	E

FILE NAME : C:\OD\CORRE, INC\PROJECTS - WI-NW REGION\7229-00-00_BUFFALO CO_CTH B\500_CADD\501_C3D_2022\72290000\SHEETS\090201-XS - CLEANUP.DWG
LAYOUT NAME - 15
PLOT DATE : 7/11/2024 1:11 PM
PLOT BY : NICHOLAS WATHKE, PE
PLOT NAME :
PLOT SCALE : 1 IN:10 FT HORZ. / 1 IN:10 FT VERT.

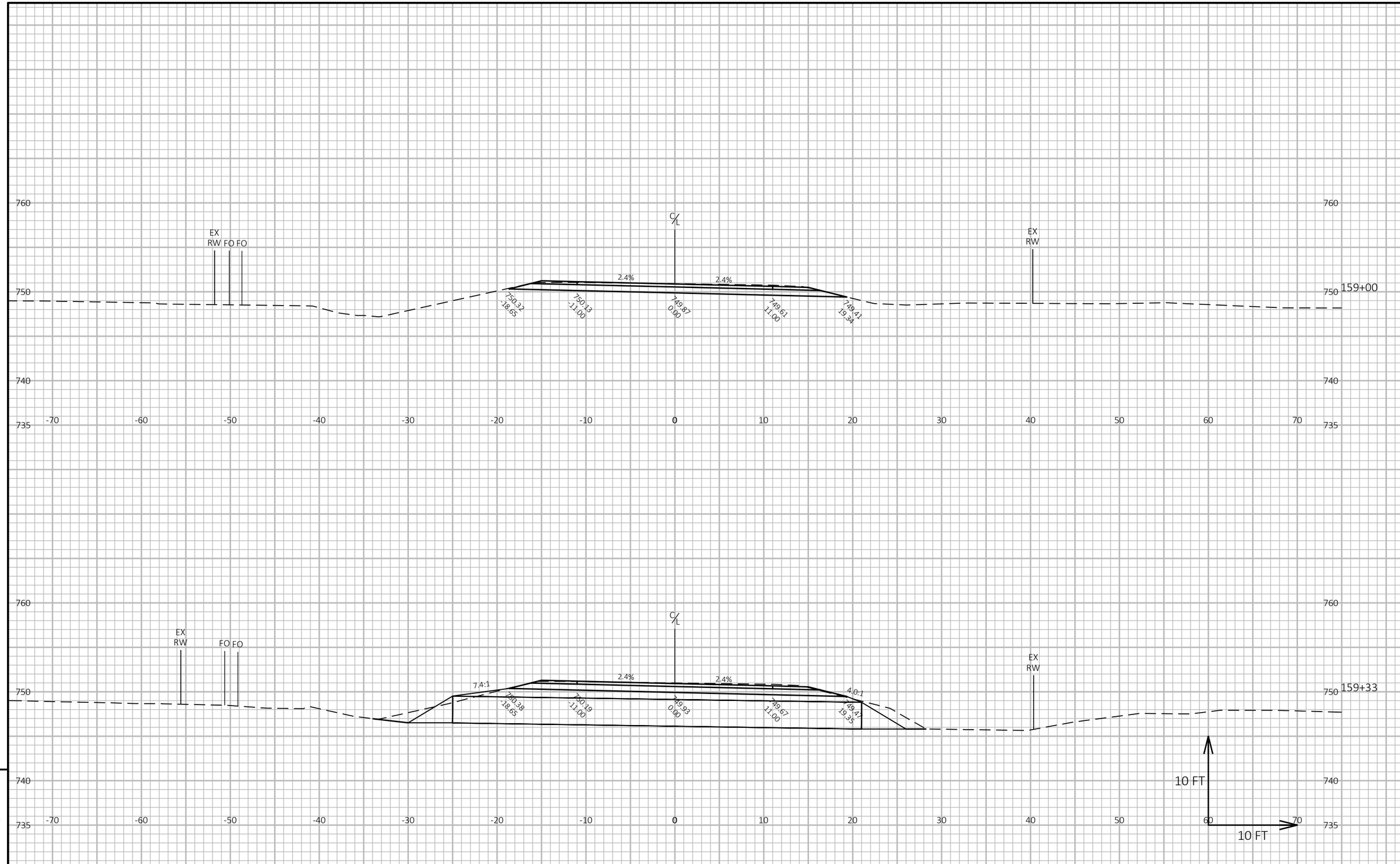

9

9

PROJECT NO: 7229-00-70	HWY: CTH B	COUNTY: BUFFALO	CROSS SECTIONS: FULL DEPTH PAVEMENT REPLACEMENT	SHEET 90	E

FILE NAME : C:\OD\CORRE, INC\PROJECTS - WI-NW REGION\7229-00-00_BUFFALO CO_CTH B\500_CADD\501_C3D_2022\72290000\SHEETS\090201-XS - CLEANUP.DWG
LAYOUT NAME - 16
PLOT DATE : 7/11/2024 1:12 PM
PLOT BY : NICHOLAS WATHKE, PE
PLOT NAME :
PLOT SCALE : 1 IN:10 FT HORZ. / 1 IN:10 FT VERT.

WISDOT/CADDS SHEET 49

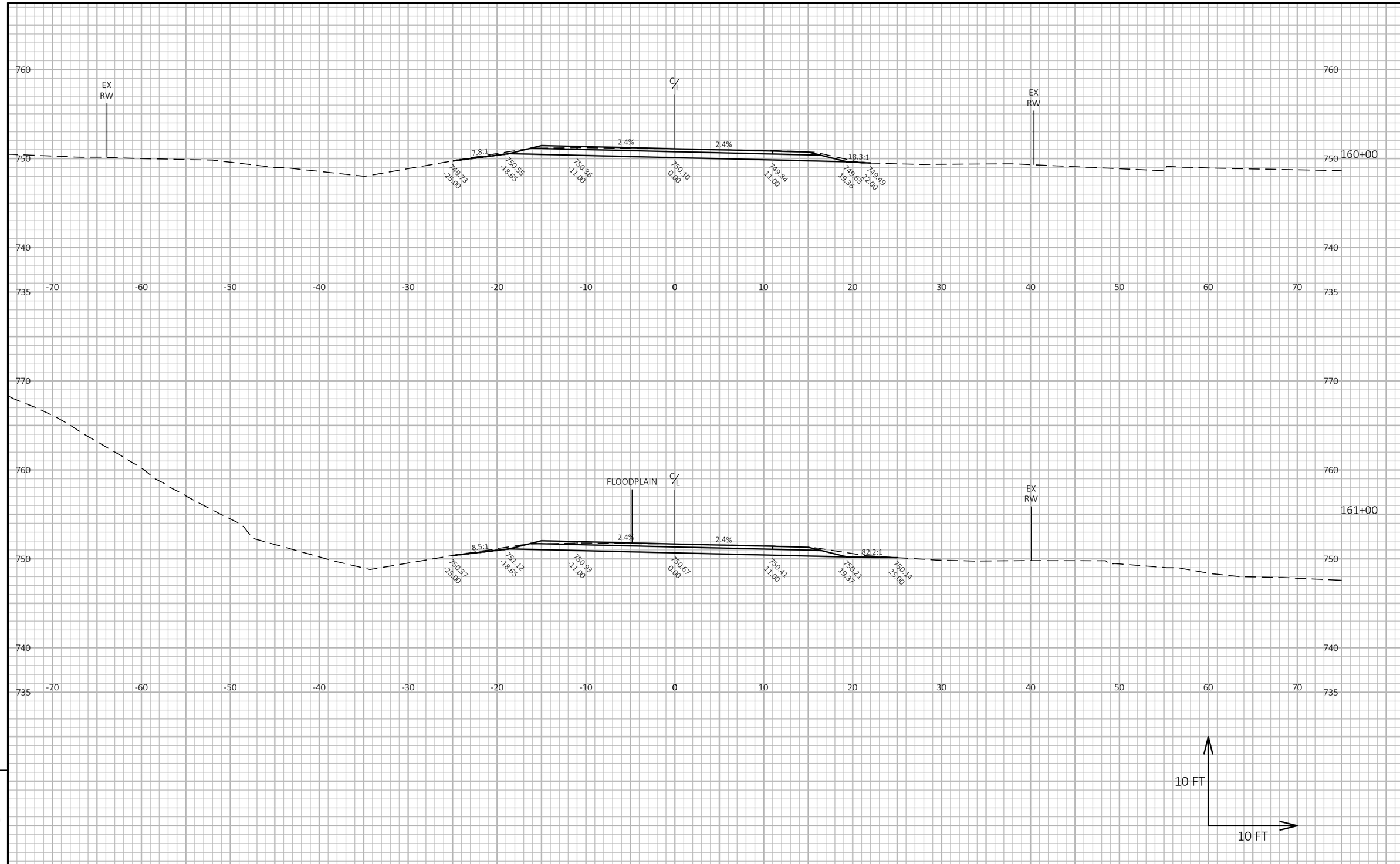

9

9

PROJECT NO: 7229-00-70	HWY: CTH B	COUNTY: BUFFALO	CROSS SECTIONS: FULL DEPTH PAVEMENT REPLACEMENT	SHEET 91	E

FILE NAME : C:\OD\CORRE, INC\PROJECTS - WI-NW REGION\7229-00-00_BUFFALO CO_CTH B\500_CADD\501_C3D_2022\72290000\SHEETS\090201-XS - CLEANUP.DWG
LAYOUT NAME - 17
PLOT DATE : 7/11/2024 1:12 PM
PLOT BY : NICHOLAS WATHKE, PE
PLOT NAME :
PLOT SCALE : 1 IN:10 FT HORZ. / 1 IN:10 FT VERT.
WISDOT/CADDS SHEET 49

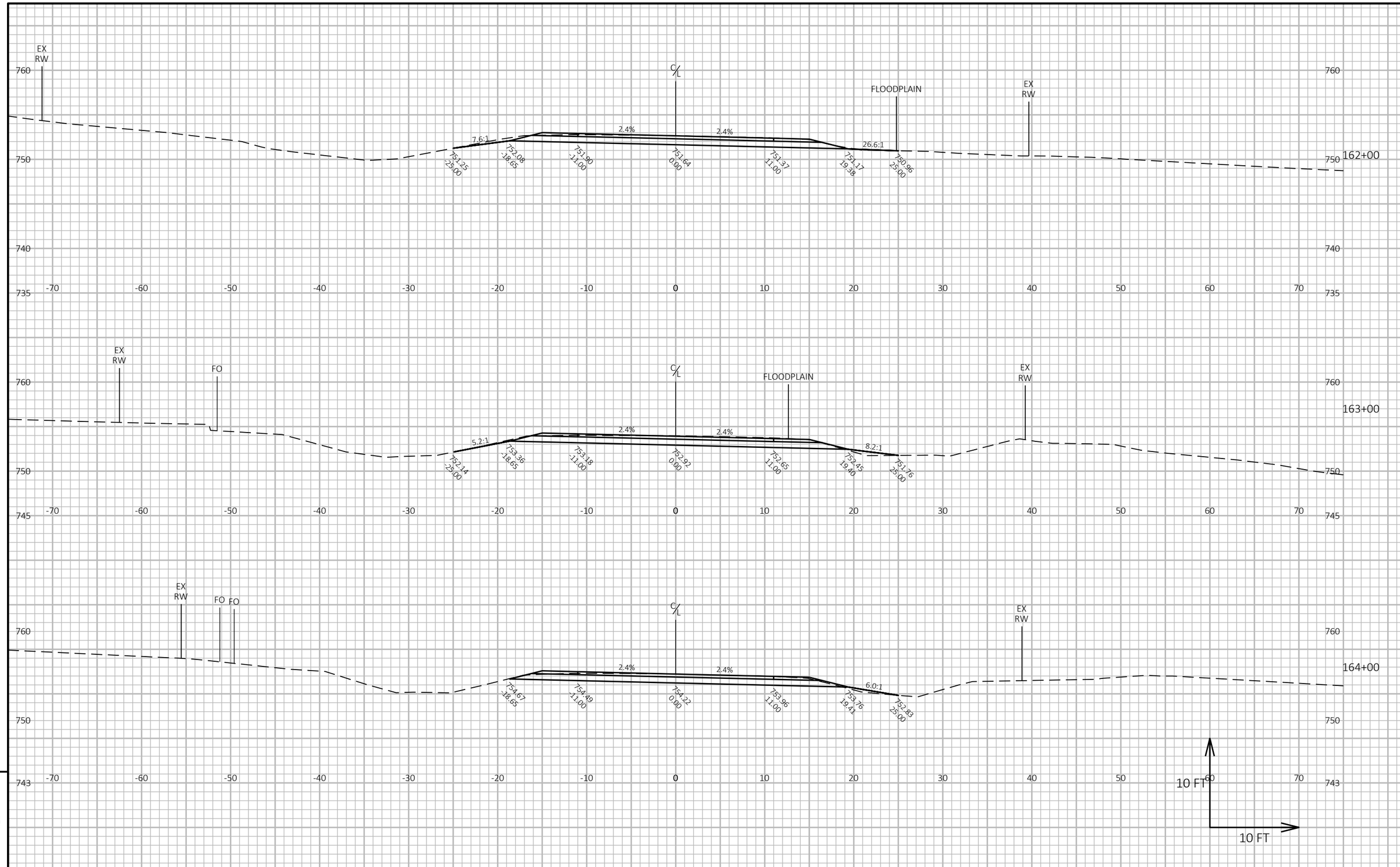

PROJECT NO: 7229-00-70	HWY: CTH B	COUNTY: BUFFALO	CROSS SECTIONS: FULL DEPTH PAVEMENT REPLACEMENT	SHEET 92	E

FILE NAME : C:\OD\CORRE, INC\PROJECTS - WI-NW REGION\7229-00-00_BUFFALO CO_CTH B\500_CADD\501_C3D_2022\72290000\SHEETS\090201-XS - CLEANUP.DWG
LAYOUT NAME - 18
PLOT DATE : 7/11/2024 1:12 PM PLOT BY : NICHOLAS WATHKE, PE PLOT NAME : **PLOT SCALE :** 1 IN:10 FT HORZ. / 1 IN:10 FT VERT.
WISDOT/CADDS SHEET 49

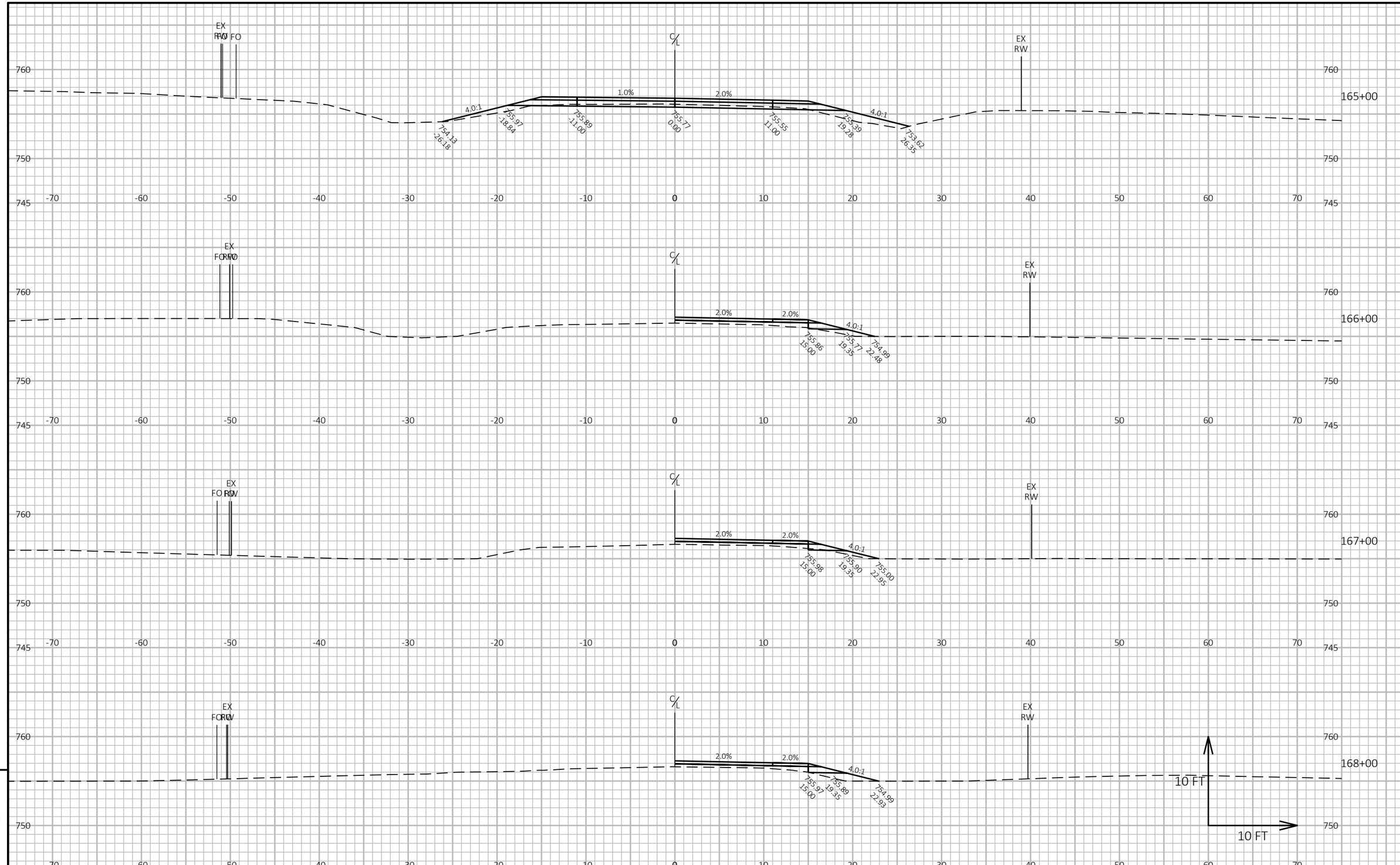

9

9

PROJECT NO: 7229-00-70	HWY: CTH B	COUNTY: BUFFALO	CROSS SECTIONS: PULVERIZE AND OVERLAY	SHEET 93	E

FILE NAME : C:\OD\CORRE, INC\PROJECTS - WI-NW REGION\7229-00-00_BUFFALO CO_CTH B\500_CADD\501_C3D_2022\72290000\SHEETS\090201-XS - CLEANUP.DWG
LAYOUT NAME - 19
PLOT DATE : 7/11/2024 1:12 PM
PLOT BY : NICHOLAS WATHKE, PE
PLOT NAME :
PLOT SCALE : 1 IN:10 FT HORZ. / 1 IN:10 FT VERT.

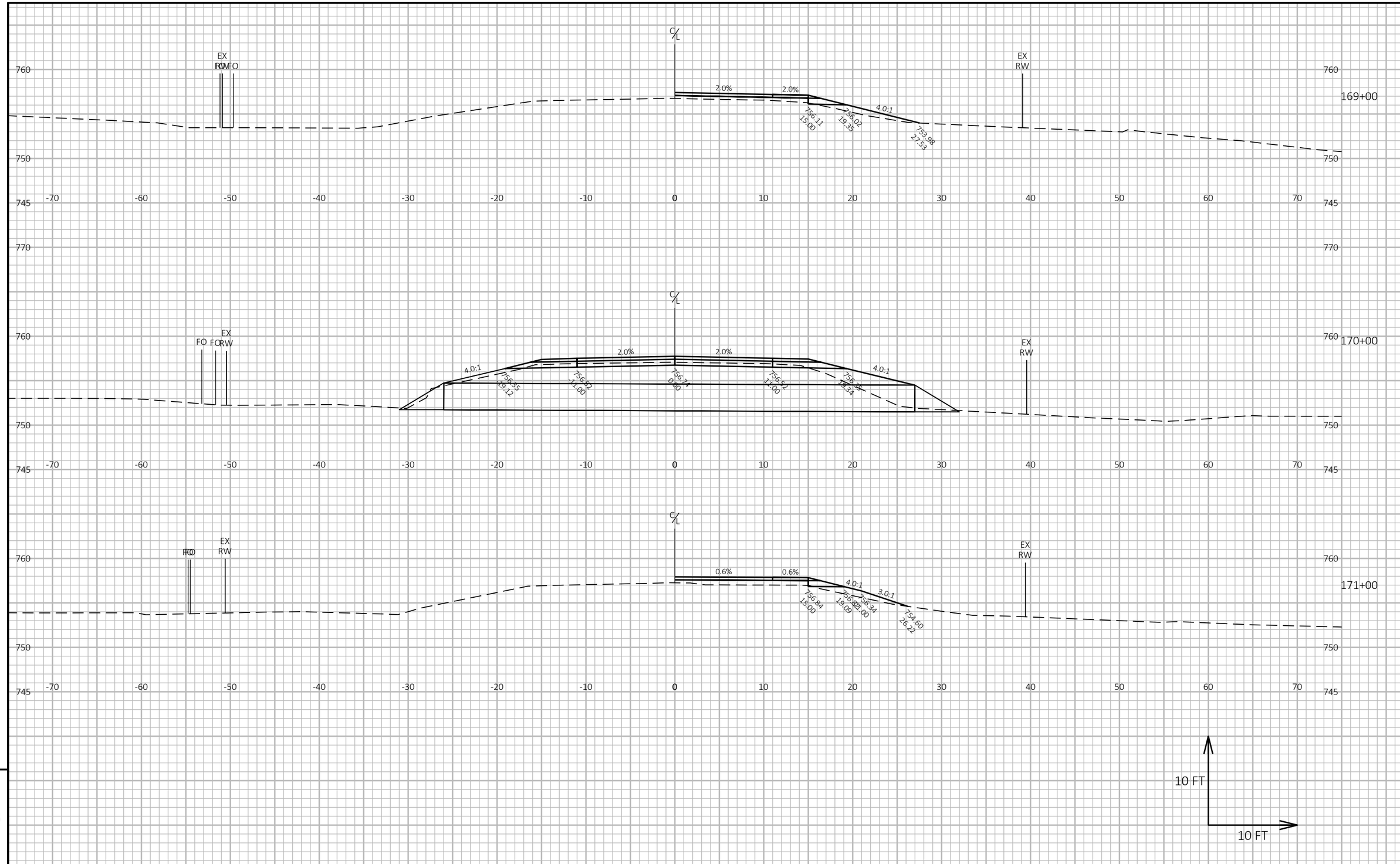

PROJECT NO: 7229-00-70	HWY: CTH B	COUNTY: BUFFALO	CROSS SECTIONS: PULVERIZE AND OVERLAY	SHEET 94	E

FILE NAME : C:\OD\CORRE, INC\PROJECTS - WI-NW REGION\7229-00-00_BUFFALO CO_CTH B\500_CADD\501_C3D_2022\72290000\SHEETS\090201-XS - CLEANUP.DWG
LAYOUT NAME - 20
PLOT DATE : 7/11/2024 1:12 PM
PLOT BY : NICHOLAS WATHKE, PE
PLOT NAME :
PLOT SCALE : 1 IN:10 FT HORZ. / 1 IN:10 FT VERT.
WISDOT/CADDS SHEET 49

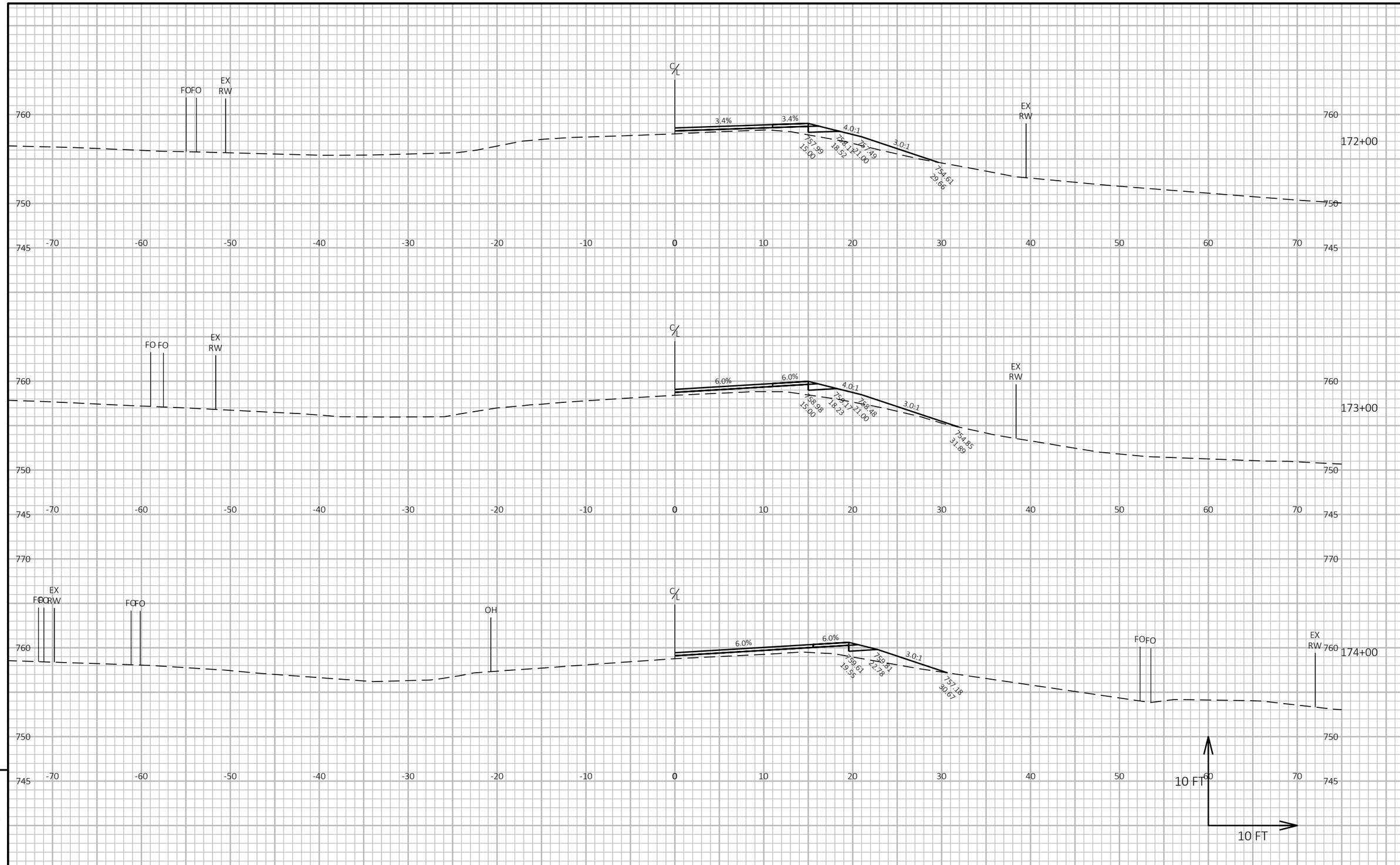

9

9

PROJECT NO: 7229-00-70	HWY: CTH B	COUNTY: BUFFALO	CROSS SECTIONS: PULVERIZE AND OVERLAY	SHEET 95	E

FILE NAME : C:\OD\CORRE, INC\PROJECTS - WI-NW REGION\7229-00-00_BUFFALO CO_CTH B\500_CADD\501_C3D_2022\72290000\SHEETS\090201-XS - CLEANUP.DWG
LAYOUT NAME - 21
PLOT DATE : 7/11/2024 1:12 PM
PLOT BY : NICHOLAS WATHKE, PE
PLOT NAME :
PLOT SCALE : 1 IN:10 FT HORZ. / 1 IN:10 FT VERT.
WISDOT/CADDS SHEET 49

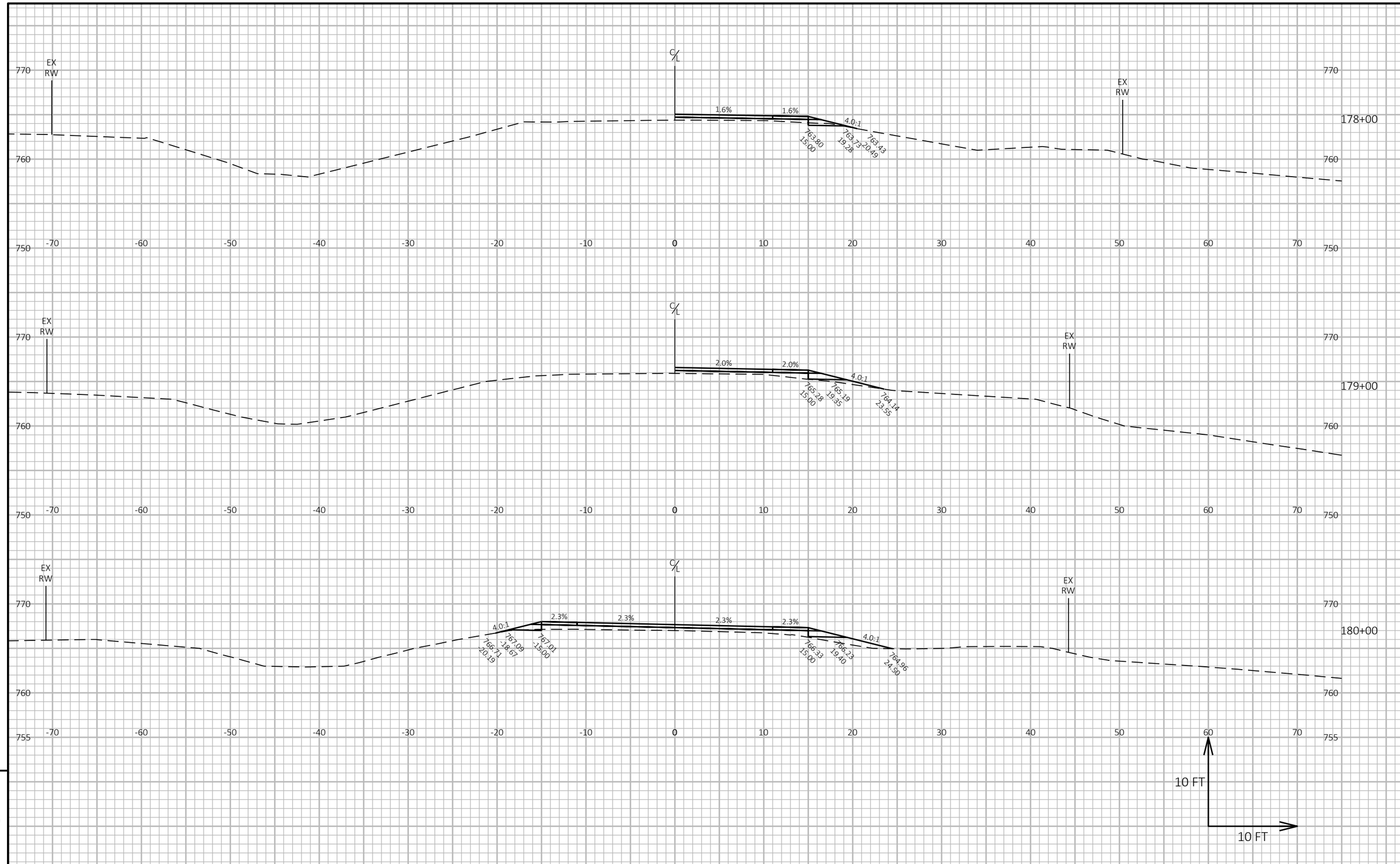

9

9

PROJECT NO: 7229-00-70	HWY: CTH B	COUNTY: BUFFALO	CROSS SECTIONS: PULVERIZE AND OVERLAY	SHEET 96	E

FILE NAME : C:\OD\CORRE, INC\PROJECTS - WI-NW REGION\7229-00-00_BUFFALO CO_CTH B\500_CADD\501_C3D_2022\72290000\SHEETS\090201-XS - CLEANUP.DWG
LAYOUT NAME - 22
PLOT DATE : 7/11/2024 1:13 PM PLOT BY : NICHOLAS WATHKE, PE PLOT NAME : **PLOT SCALE :** 1 IN:10 FT HORZ. / 1 IN:10 FT VERT.

9

9

PROJECT NO: 7229-00-70	HWY: CTH B	COUNTY: BUFFALO	CROSS SECTIONS: PULVERIZE AND OVERLAY	SHEET 97	E

FILE NAME : C:\OD\CORRE, INC\PROJECTS - WI-NW REGION\7229-00-00_BUFFALO CO_CTH B\500_CADD\501_C3D_2022\72290000\SHEETS\090201-XS - CLEANUP.DWG
LAYOUT NAME - 23
PLOT DATE : 7/11/2024 1:13 PM
PLOT BY : NICHOLAS WATHKE, PE
PLOT NAME :
PLOT SCALE : 1 IN:10 FT HORZ. / 1 IN:10 FT VERT.

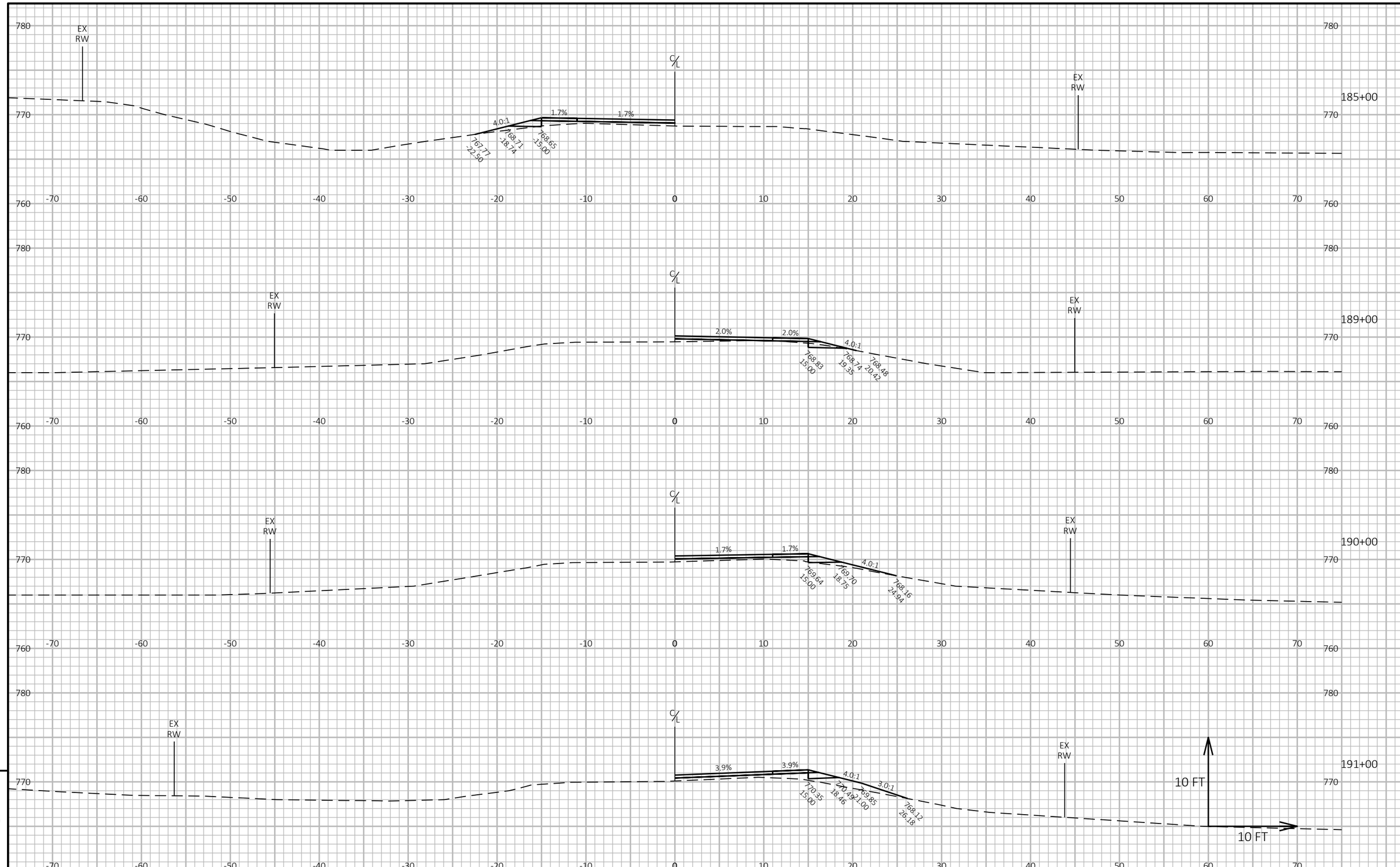

9

9

PROJECT NO: 7229-00-70	HWY: CTH B	COUNTY: BUFFALO	CROSS SECTIONS: PULVERIZE AND OVERLAY	SHEET 98	E

FILE NAME : C:\OD\CORRE, INC\PROJECTS - WI-NW REGION\7229-00-00_BUFFALO CO_CTH B\500_CADD\501_C3D_2022\72290000\SHEETS\090201-XS - CLEANUP.DWG
LAYOUT NAME - 24
PLOT DATE : 7/11/2024 1:13 PM
PLOT BY : NICHOLAS WATHKE, PE
PLOT NAME :
PLOT SCALE : 1 IN:10 FT HORZ. / 1 IN:10 FT VERT.

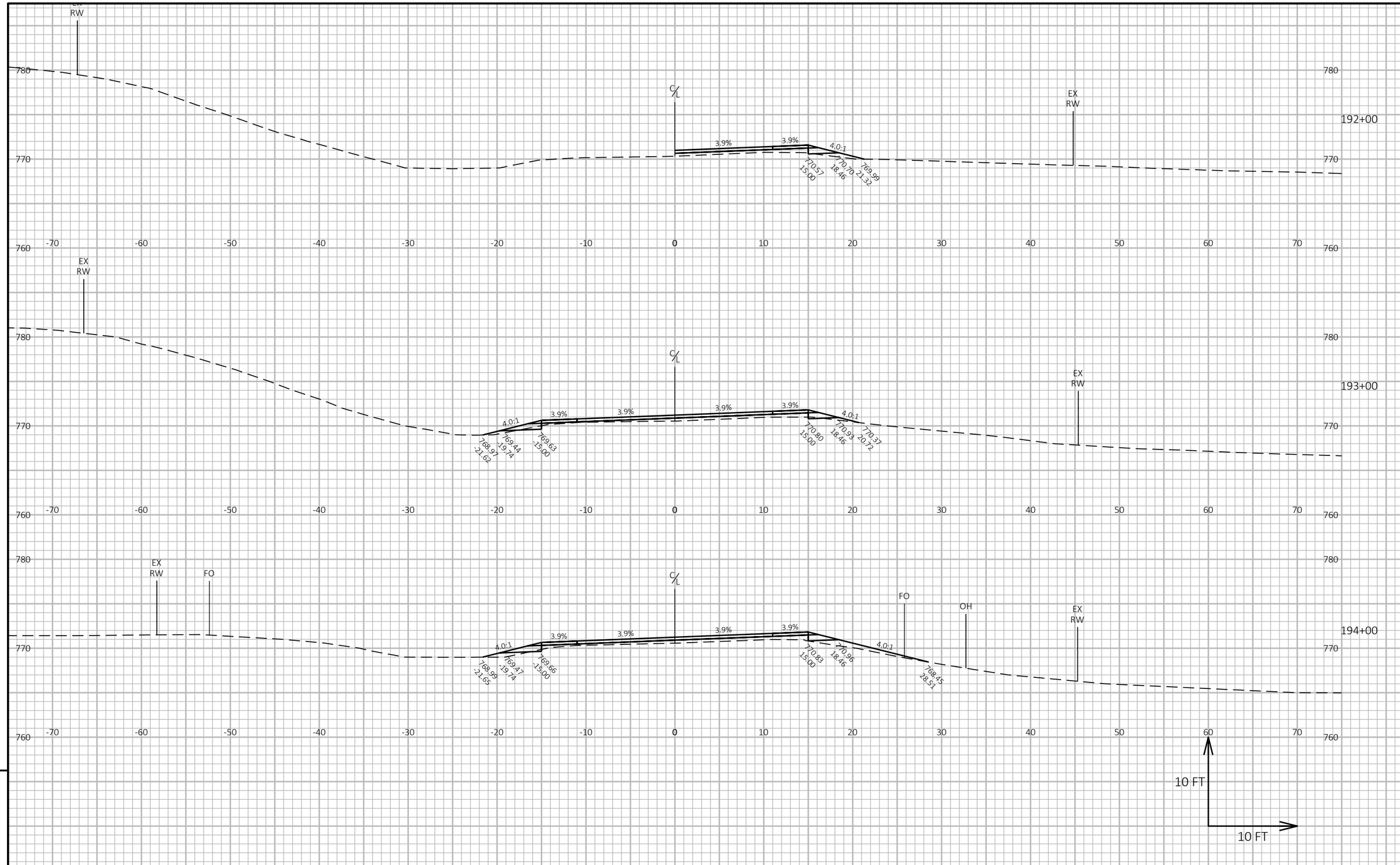

PROJECT NO: 7229-00-70	HWY: CTH B	COUNTY: BUFFALO	CROSS SECTIONS: PULVERIZE AND OVERLAY	SHEET 99	E

FILE NAME : C:\OD\CORRE, INC\PROJECTS - WI-NW REGION\7229-00-00_BUFFALO CO_CTH B\500_CADD\501_C3D_2022\72290000\SHEETS\090201-XS - CLEANUP.DWG
LAYOUT NAME - 25
PLOT DATE : 7/11/2024 1:13 PM PLOT BY : NICHOLAS WATHKE, PE PLOT NAME : **PLOT SCALE :** 1 IN:10 FT HORZ. / 1 IN:10 FT VERT.

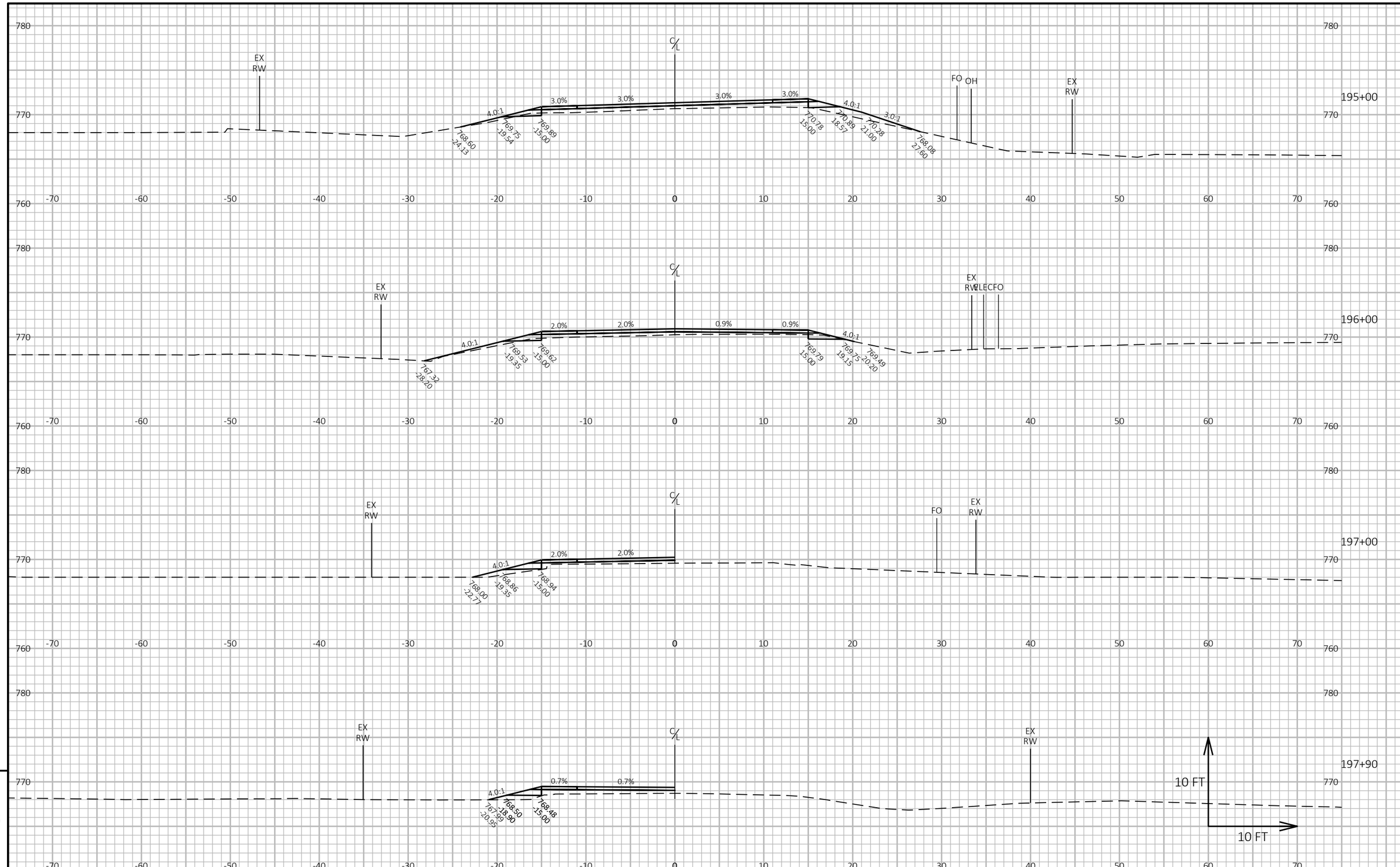

9

9

PROJECT NO: 7229-00-70	HWY: CTH B	COUNTY: BUFFALO	CROSS SECTIONS: PULVERIZE AND OVERLAY	SHEET 100	E

FILE NAME : C:\OD\CORRE, INC\PROJECTS - WI-NW REGION\7229-00-00_BUFFALO CO_CTH B\500_CADD\501_C3D_2022\72290000\SHEETS\090201-XS - CLEANUP.DWG
LAYOUT NAME - 26
PLOT DATE : 7/11/2024 1:13 PM
PLOT BY : NICHOLAS WATHKE, PE
PLOT NAME :
PLOT SCALE : 1 IN:10 FT HORZ. / 1 IN:10 FT VERT.

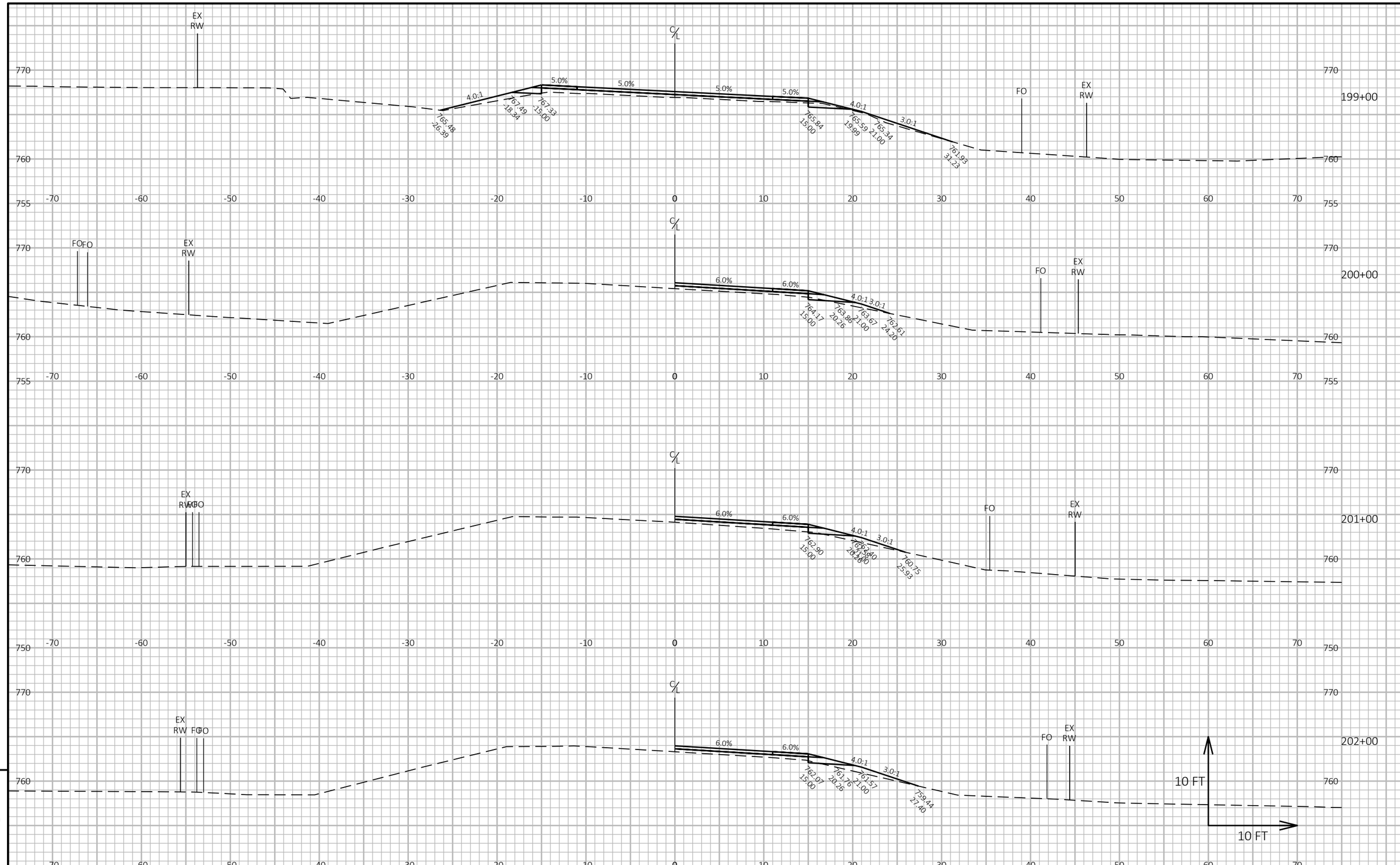

9

9

PROJECT NO: 7229-00-70	HWY: CTH B	COUNTY: BUFFALO	CROSS SECTIONS: PULVERIZE AND OVERLAY	SHEET 101	E

FILE NAME : C:\OD\CORRE, INC\PROJECTS - WI-NW REGION\7229-00-00_BUFFALO CO_CTH B\500_CADD\501_C3D_2022\72290000\SHEETS\090201-XS - CLEANUP.DWG
LAYOUT NAME - 27

PLOT DATE : 7/11/2024 1:13 PM PLOT BY : NICHOLAS WATHKE, PE PLOT NAME : **PLOT SCALE :** 1 IN:10 FT HORZ. / 1 IN:10 FT VERT.

WISDOT/CADDS SHEET 49

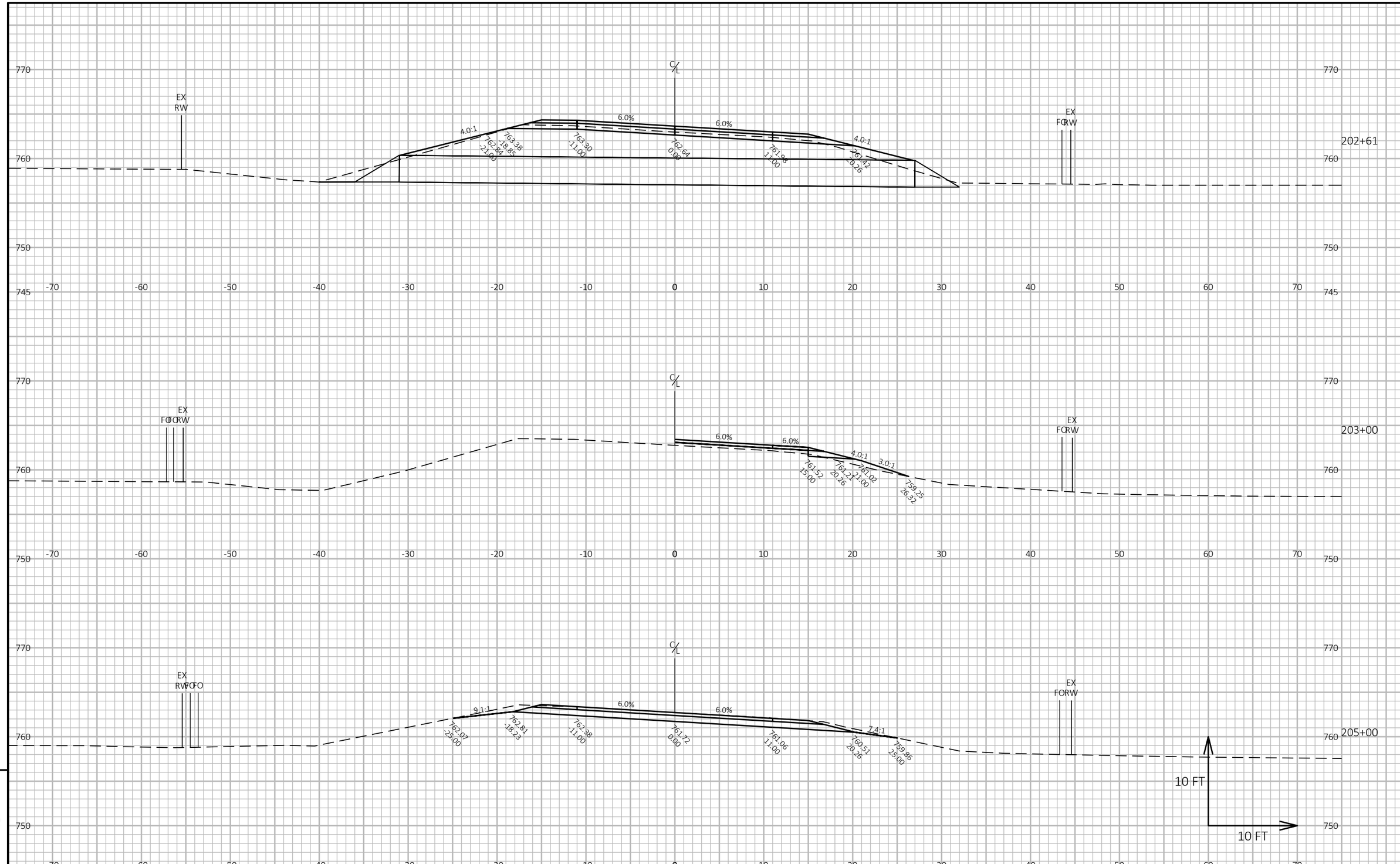

PROJECT NO: 7229-00-70	HWY: CTH B	COUNTY: BUFFALO	CROSS SECTIONS: PULVERIZE AND OVERLAY	SHEET 102	E

FILE NAME : C:\OD\CORRE, INC\PROJECTS - WI-NW REGION\7229-00-00_BUFFALO CO_CTH B\500_CADD\501_C3D_2022\72290000\SHEETS\090201-XS - CLEANUP.DWG
LAYOUT NAME - 28
PLOT DATE : 7/11/2024 1:14 PM
PLOT BY : NICHOLAS WATHKE, PE
PLOT NAME :
PLOT SCALE : 1 IN:10 FT HORZ. / 1 IN:10 FT VERT.
WISDOT/CADDS SHEET 49

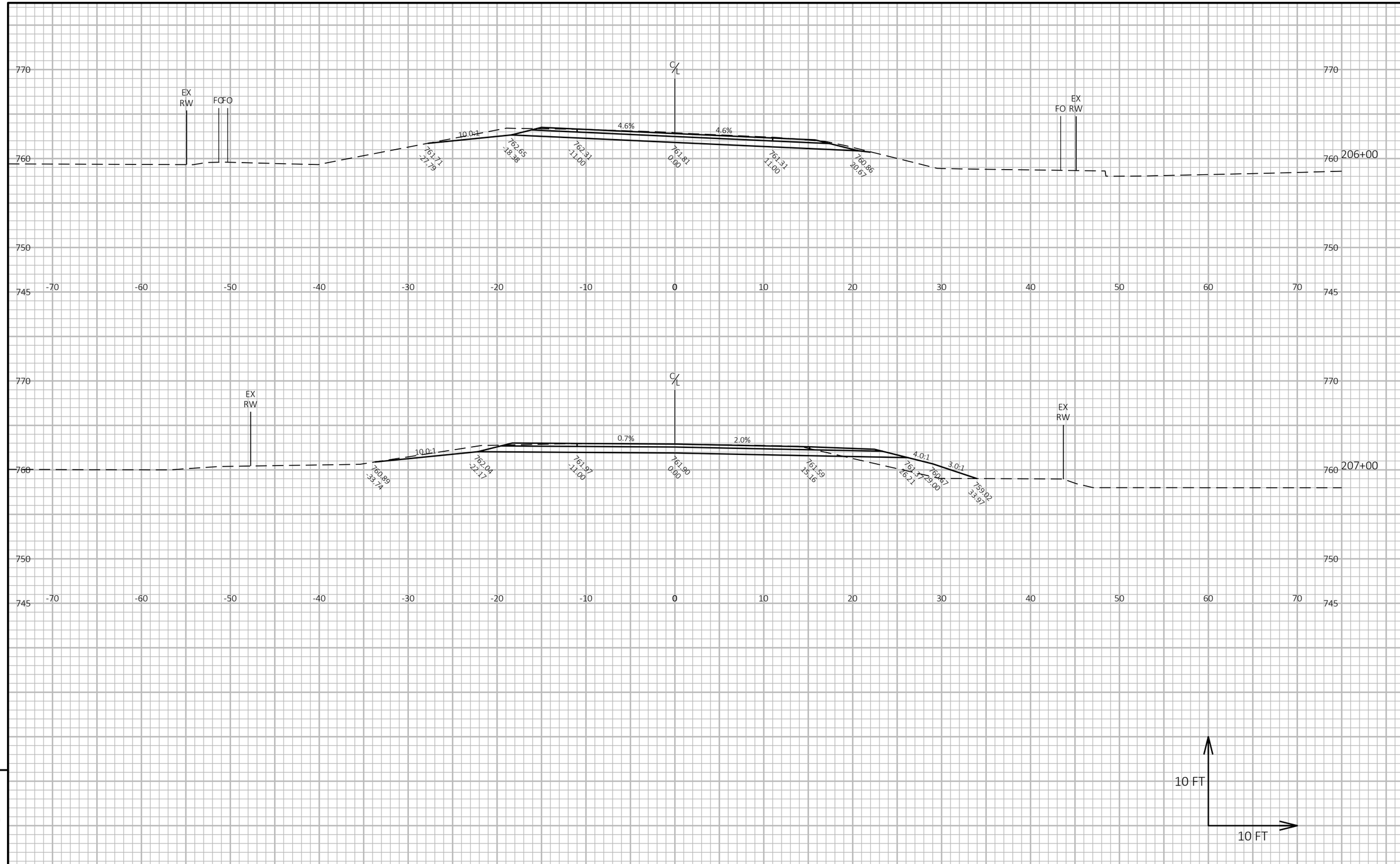

9

9

PROJECT NO: 7229-00-70	HWY: CTH B	COUNTY: BUFFALO	CROSS SECTIONS: FULL DEPTH PAVEMENT REPLACEMENT	SHEET 103	E

FILE NAME : C:\OD\CORRE, INC\PROJECTS - WI-NW REGION\7229-00-00_BUFFALO CO_CTH B\500_CADD\501_C3D_2022\72290000\SHEETS\090201-XS - CLEANUP.DWG
LAYOUT NAME - 29

PLOT DATE : 7/11/2024 1:14 PM PLOT BY : NICHOLAS WATHKE, PE PLOT NAME : **PLOT SCALE :** 1 IN:10 FT HORZ. / 1 IN:10 FT VERT.

WISDOT/CADDS SHEET 49

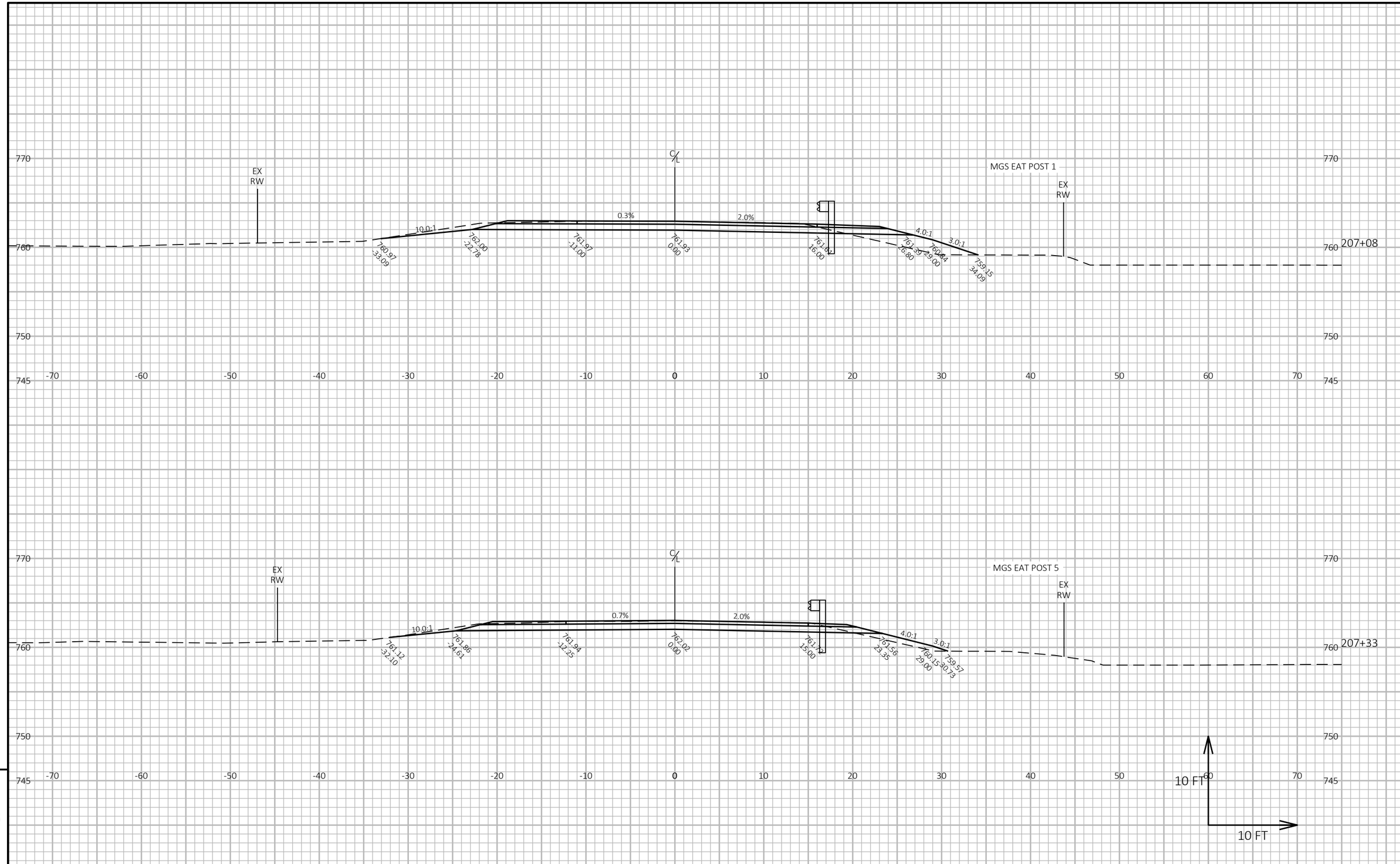

9

9

PROJECT NO: 7229-00-70	HWY: CTH B	COUNTY: BUFFALO	CROSS SECTIONS: FULL DEPTH PAVEMENT REPLACEMENT	SHEET 104	E

FILE NAME : C:\OD\CORRE, INC\PROJECTS - WI-NW REGION\7229-00-00_BUFFALO CO_CTH B\500_CADD\501_C3D_2022\72290000\SHEETS\090201-XS - CLEANUP.DWG
LAYOUT NAME - 30
PLOT DATE : 7/11/2024 1:14 PM
PLOT BY : NICHOLAS WATHKE, PE
PLOT NAME :
PLOT SCALE : 1 IN:10 FT HORZ. / 1 IN:10 FT VERT.
WISDOT/CADDS SHEET 49

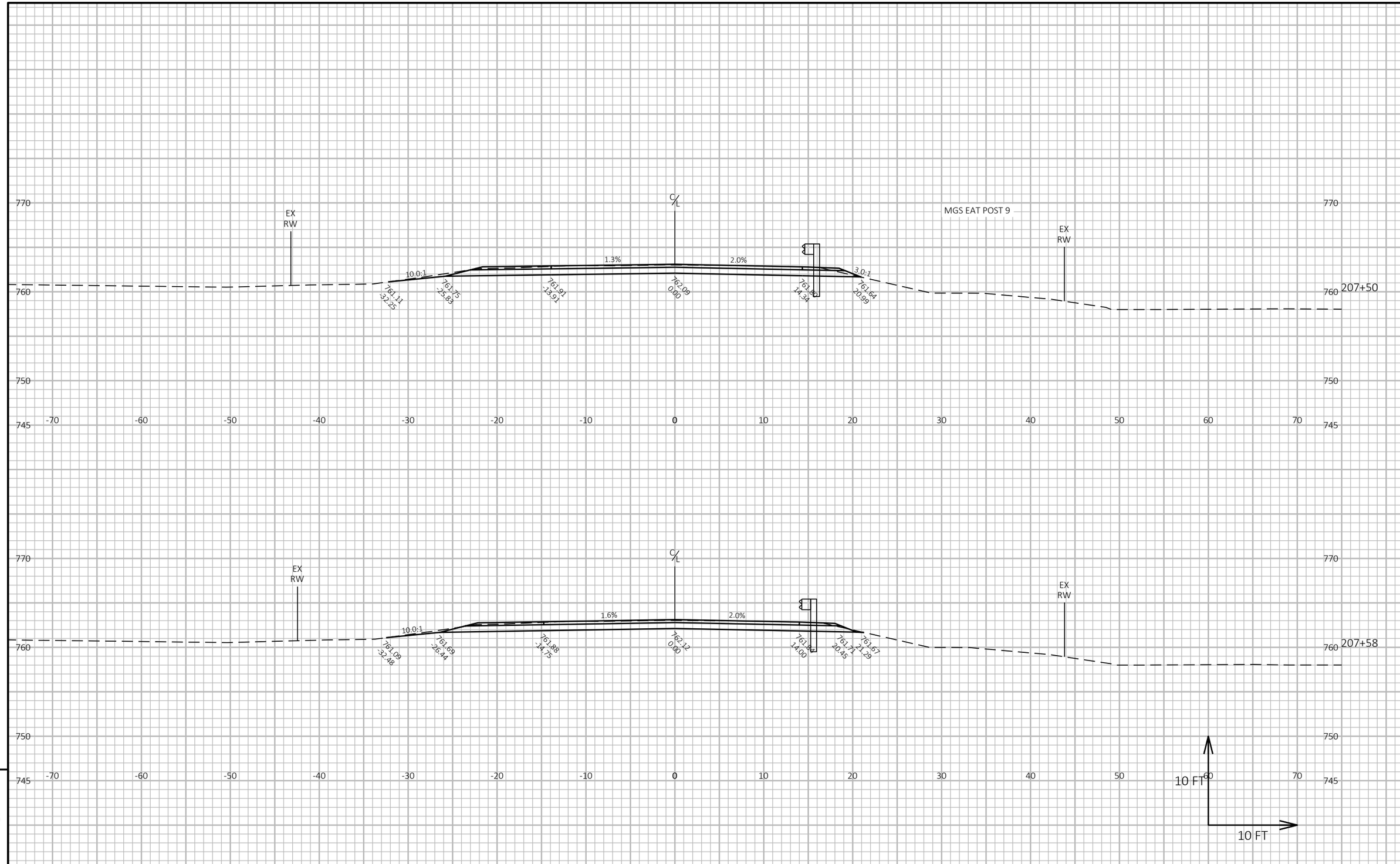

9

9

PROJECT NO: 7229-00-70	HWY: CTH B	COUNTY: BUFFALO	CROSS SECTIONS: FULL DEPTH PAVEMENT REPLACEMENT	SHEET 105	E

FILE NAME : C:\OD\CORRE, INC\PROJECTS - WI-NW REGION\7229-00-00_BUFFALO CO_CTH B\500_CADD\501_C3D_2022\72290000\SHEETS\090201-XS - CLEANUP.DWG
LAYOUT NAME - 31
PLOT DATE : 7/11/2024 1:14 PM
PLOT BY : NICHOLAS WATHKE, PE
PLOT NAME :
PLOT SCALE : 1 IN:10 FT HORZ. / 1 IN:10 FT VERT.
WISDOT/CADDS SHEET 49

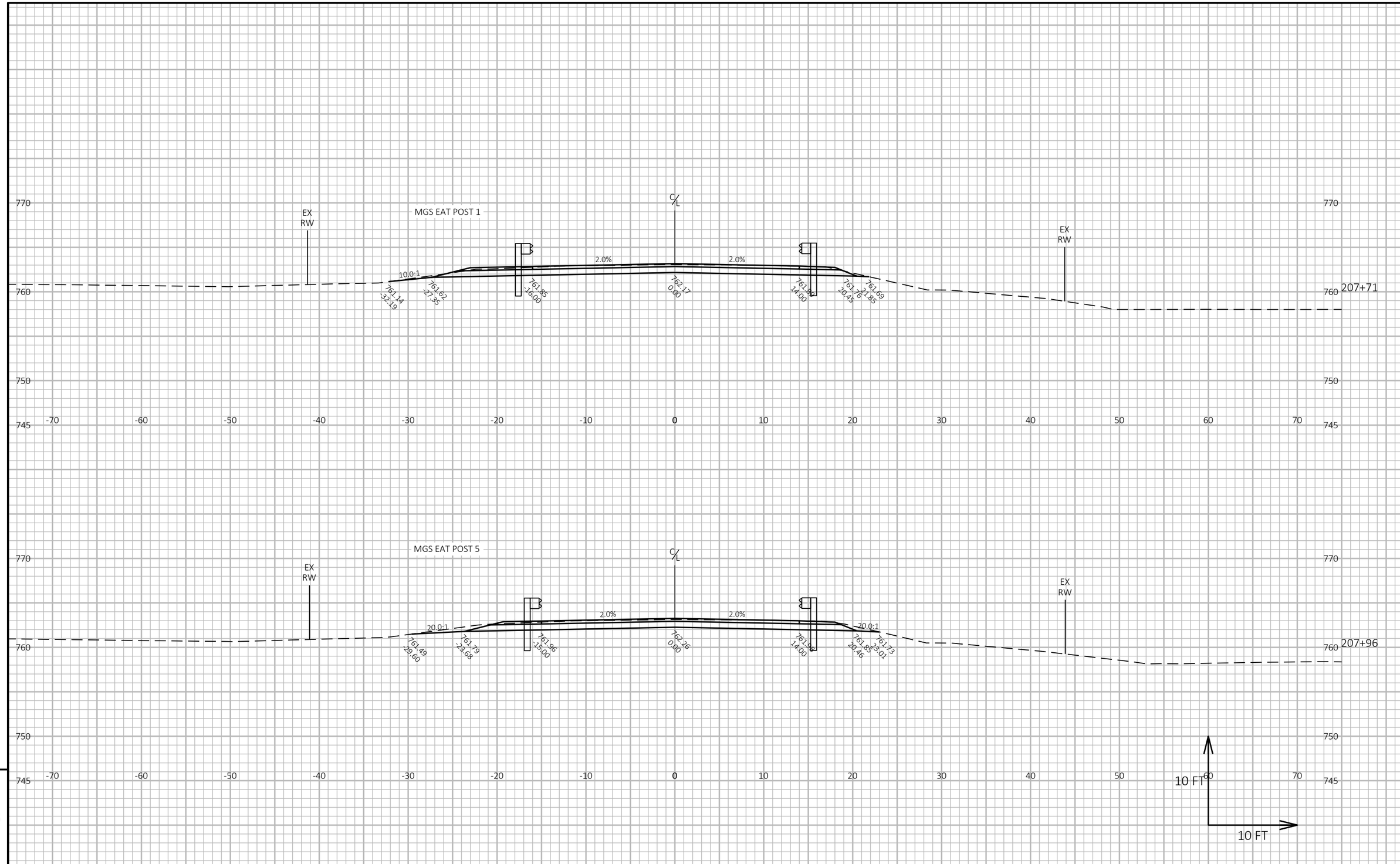

9

9

PROJECT NO: 7229-00-70	HWY: CTH B	COUNTY: BUFFALO	CROSS SECTIONS: FULL DEPTH PAVEMENT REPLACEMENT	SHEET 106	E

FILE NAME : C:\OD\CORRE, INC\PROJECTS - WI-NW REGION\7229-00-00_BUFFALO CO_CTH B\500_CADD\501_C3D_2022\72290000\SHEETS\090201-XS - CLEANUP.DWG
LAYOUT NAME - 32
PLOT DATE : 7/11/2024 1:14 PM
PLOT BY : NICHOLAS WATHKE, PE
PLOT NAME :
PLOT SCALE : 1 IN:10 FT HORZ. / 1 IN:10 FT VERT.
WISDOT/CADDS SHEET 49

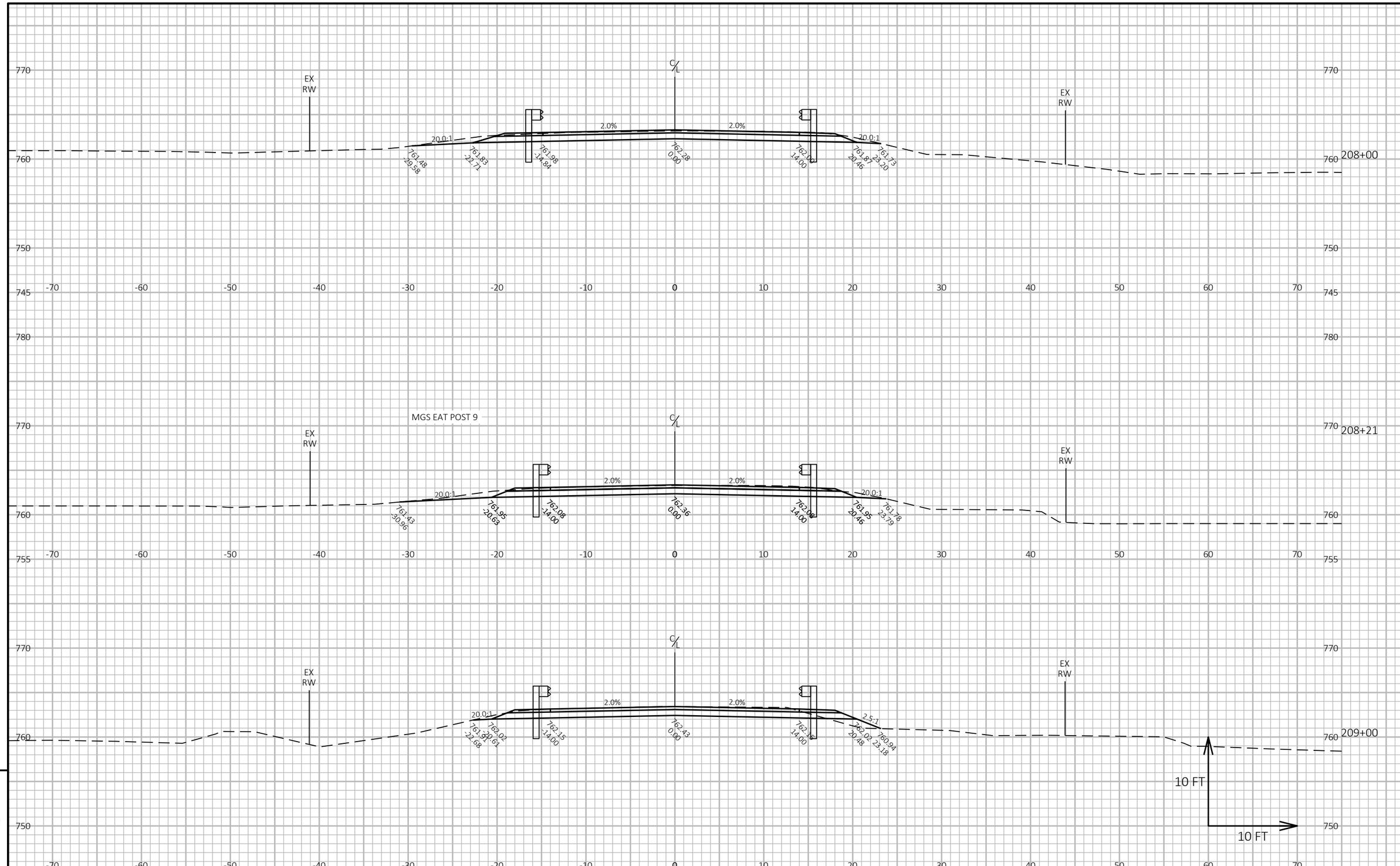

9

9

PROJECT NO: 7229-00-70	HWY: CTH B	COUNTY: BUFFALO	CROSS SECTIONS: FULL DEPTH PAVEMENT REPLACEMENT	SHEET 107	E

FILE NAME : C:\OD\CORRE, INC\PROJECTS - WI-NW REGION\7229-00-00_BUFFALO CO_CTH B\500_CADD\501_C3D_2022\72290000\SHEETS\090201-XS - CLEANUP.DWG
LAYOUT NAME - 33
PLOT DATE : 7/11/2024 1:14 PM
PLOT BY : NICHOLAS WATHKE, PE
PLOT NAME :
PLOT SCALE : 1 IN:10 FT HORZ. / 1 IN:10 FT VERT.
WISDOT/CADDS SHEET 49

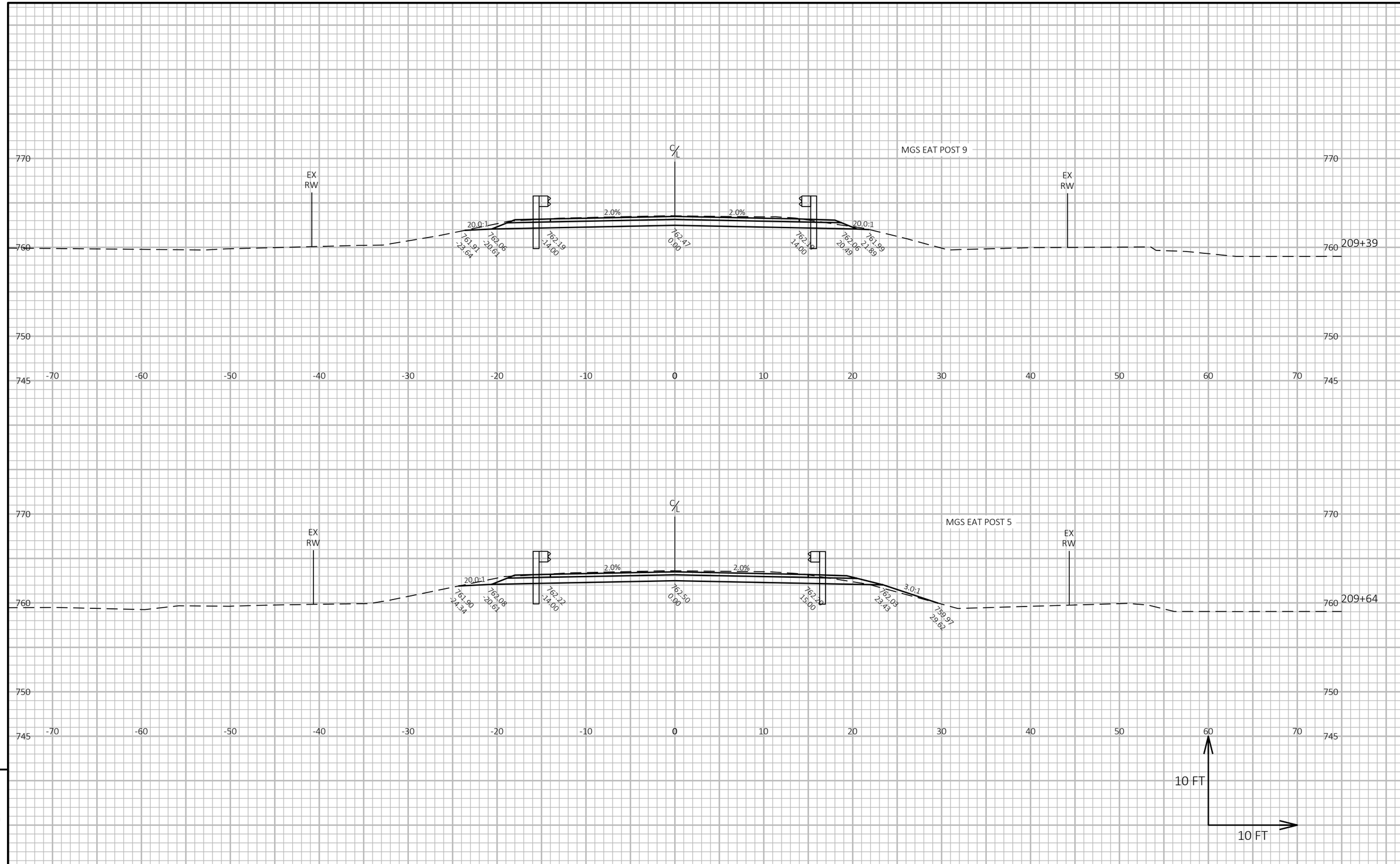

PROJECT NO: 7229-00-70	HWY: CTH B	COUNTY: BUFFALO	CROSS SECTIONS: FULL DEPTH PAVEMENT REPLACEMENT	SHEET 108	E

FILE NAME : C:\OD\CORRE, INC\PROJECTS - WI-NW REGION\7229-00-00_BUFFALO CO_CTH B\500_CADD\501_C3D_2022\72290000\SHEETS\090201-XS - CLEANUP.DWG
LAYOUT NAME - 34
PLOT DATE : 7/11/2024 1:15 PM
PLOT BY : NICHOLAS WATHKE, PE
PLOT NAME :
PLOT SCALE : 1 IN:10 FT HORZ. / 1 IN:10 FT VERT.
WISDOT/CADDS SHEET 49

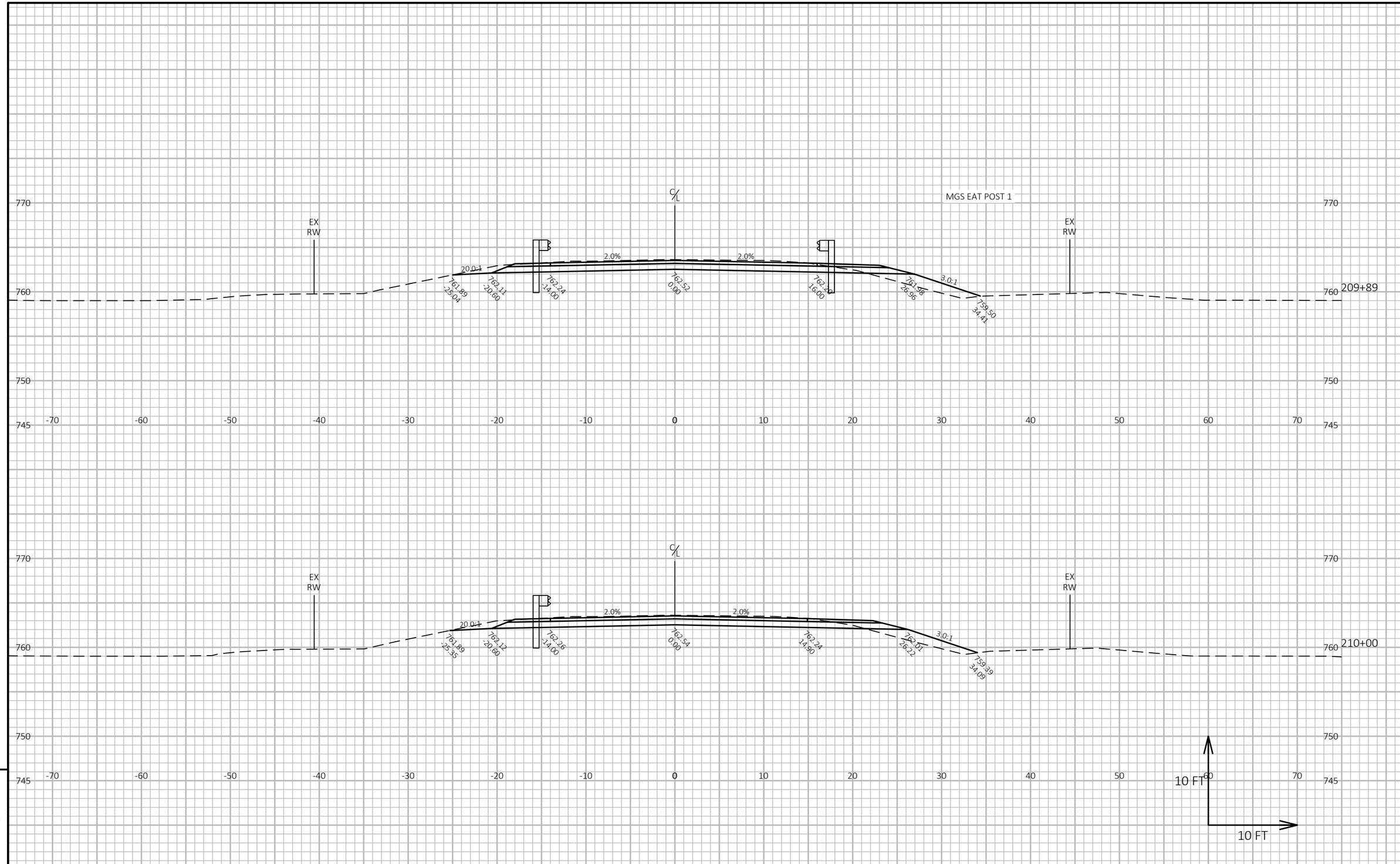

PROJECT NO: 7229-00-70	HWY: CTH B	COUNTY: BUFFALO	CROSS SECTIONS: FULL DEPTH PAVEMENT REPLACEMENT	SHEET 109	E

FILE NAME : C:\OD\CORRE, INC\PROJECTS - WI-NW REGION\7229-00-00_BUFFALO CO_CTH B\500_CADD\501_C3D_2022\72290000\SHEETS\090201-XS - CLEANUP.DWG
LAYOUT NAME - 35
PLOT DATE : 7/11/2024 1:15 PM
PLOT BY : NICHOLAS WATHKE, PE
PLOT NAME :
PLOT SCALE : 1 IN:10 FT HORZ. / 1 IN:10 FT VERT.
WISDOT/CADDS SHEET 49

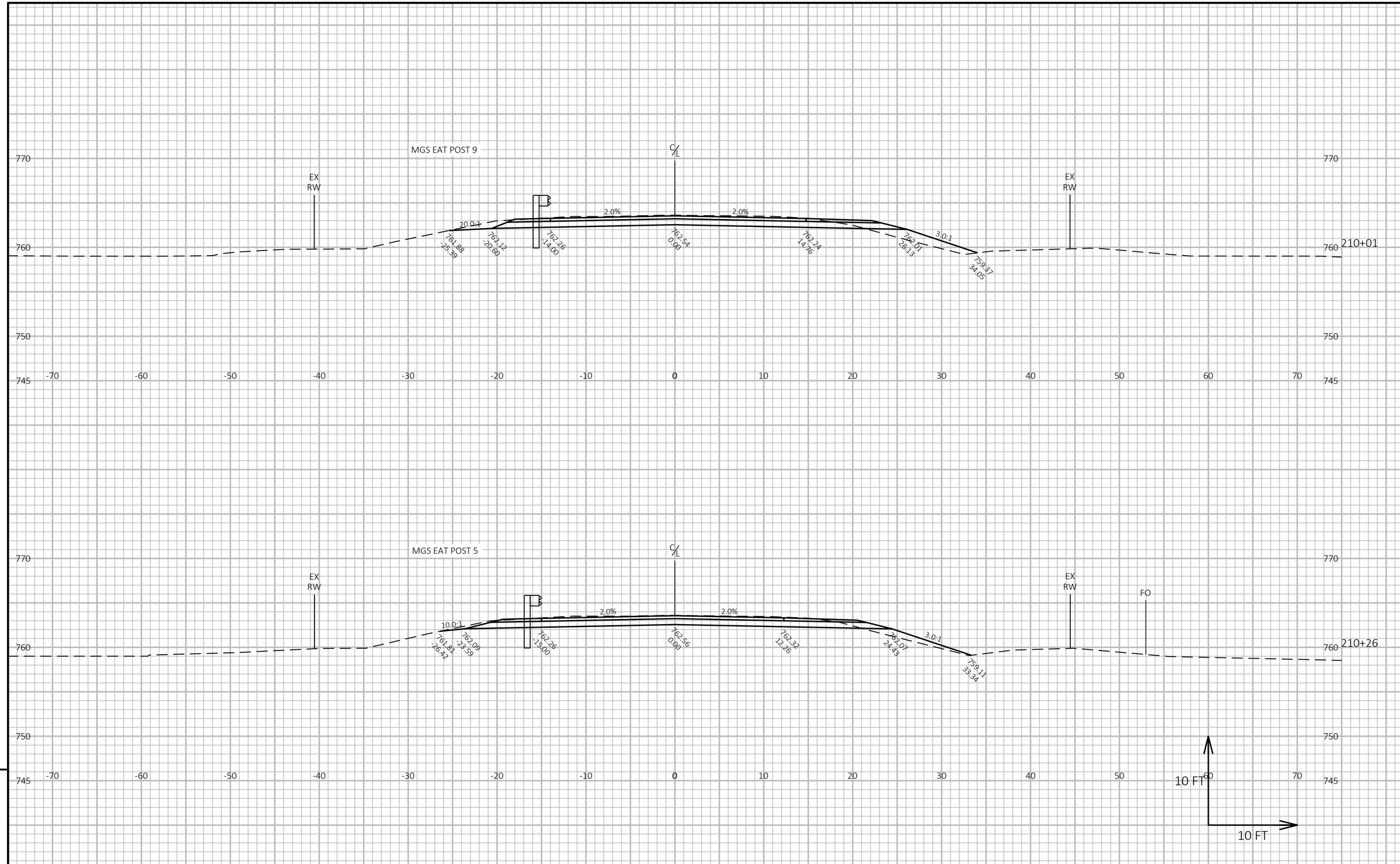

PROJECT NO: 7229-00-70	HWY: CTH B	COUNTY: BUFFALO	CROSS SECTIONS: FULL DEPTH PAVEMENT REPLACEMENT	SHEET 110	E

FILE NAME : C:\OD\CORRE, INC\PROJECTS - WI-NW REGION\7229-00-00_BUFFALO CO_CTH B\500_CADD\501_C3D_2022\72290000\SHEETS\090201-XS - CLEANUP.DWG
LAYOUT NAME - 36
PLOT DATE : 7/11/2024 1:15 PM
PLOT BY : NICHOLAS WATHKE, PE
PLOT NAME :
PLOT SCALE : 1 IN:10 FT HORZ. / 1 IN:10 FT VERT.
WISDOT/CADDS SHEET 49

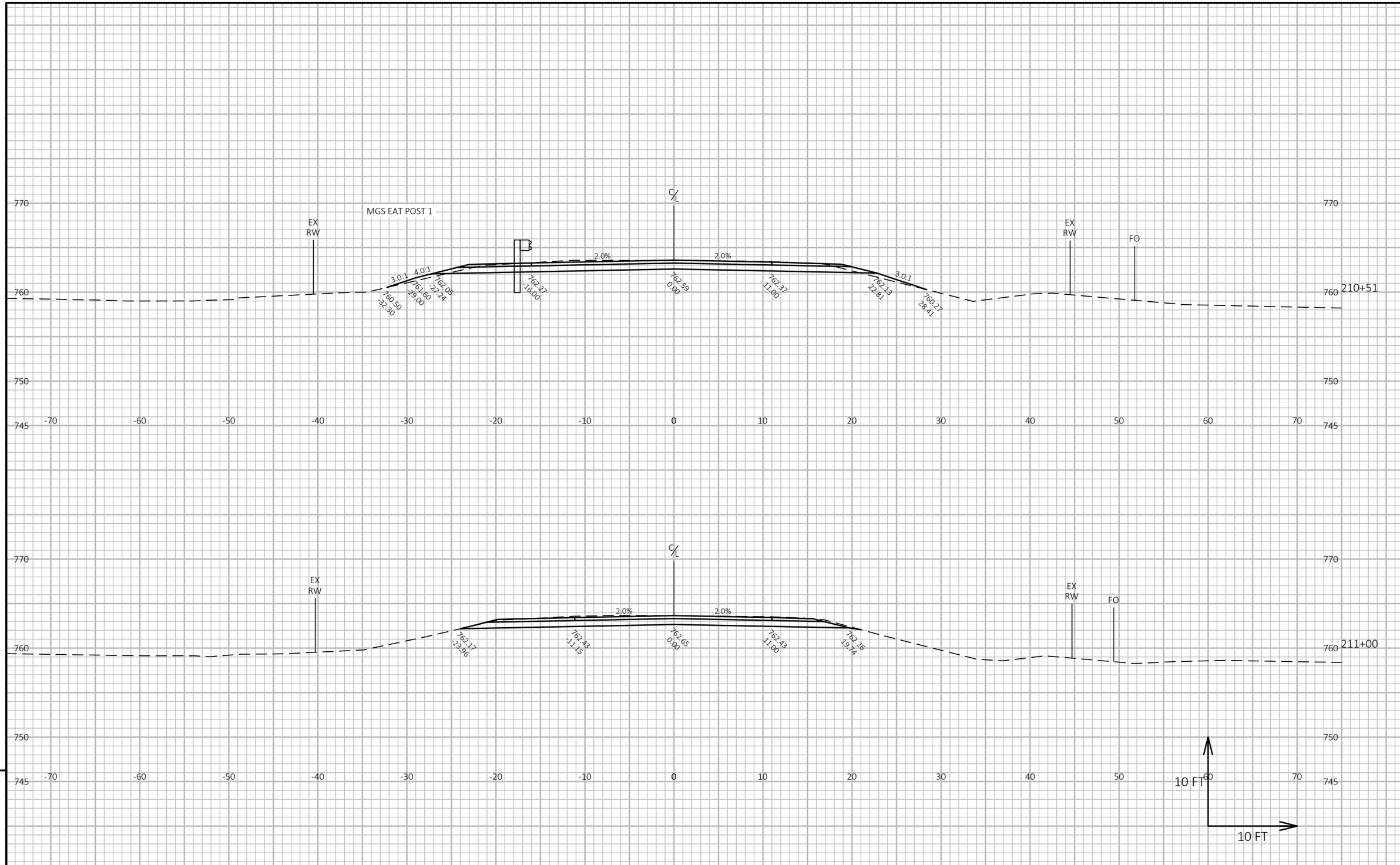

PROJECT NO: 7229-00-70	HWY: CTH B	COUNTY: BUFFALO	CROSS SECTIONS: FULL DEPTH PAVEMENT REPLACEMENT	SHEET 111	E

FILE NAME : C:\OD\CORRE, INC\PROJECTS - WI-NW REGION\7229-00-00_BUFFALO CO_CTH B\500_CADD\501_C3D_2022\72290000\SHEETS\090201-XS - CLEANUP.DWG
LAYOUT NAME - 37
PLOT DATE : 7/11/2024 1:15 PM
PLOT BY : NICHOLAS WATHKE, PE
PLOT NAME :
PLOT SCALE : 1 IN:10 FT HORZ. / 1 IN:10 FT VERT.
WISDOT/CADDS SHEET 49

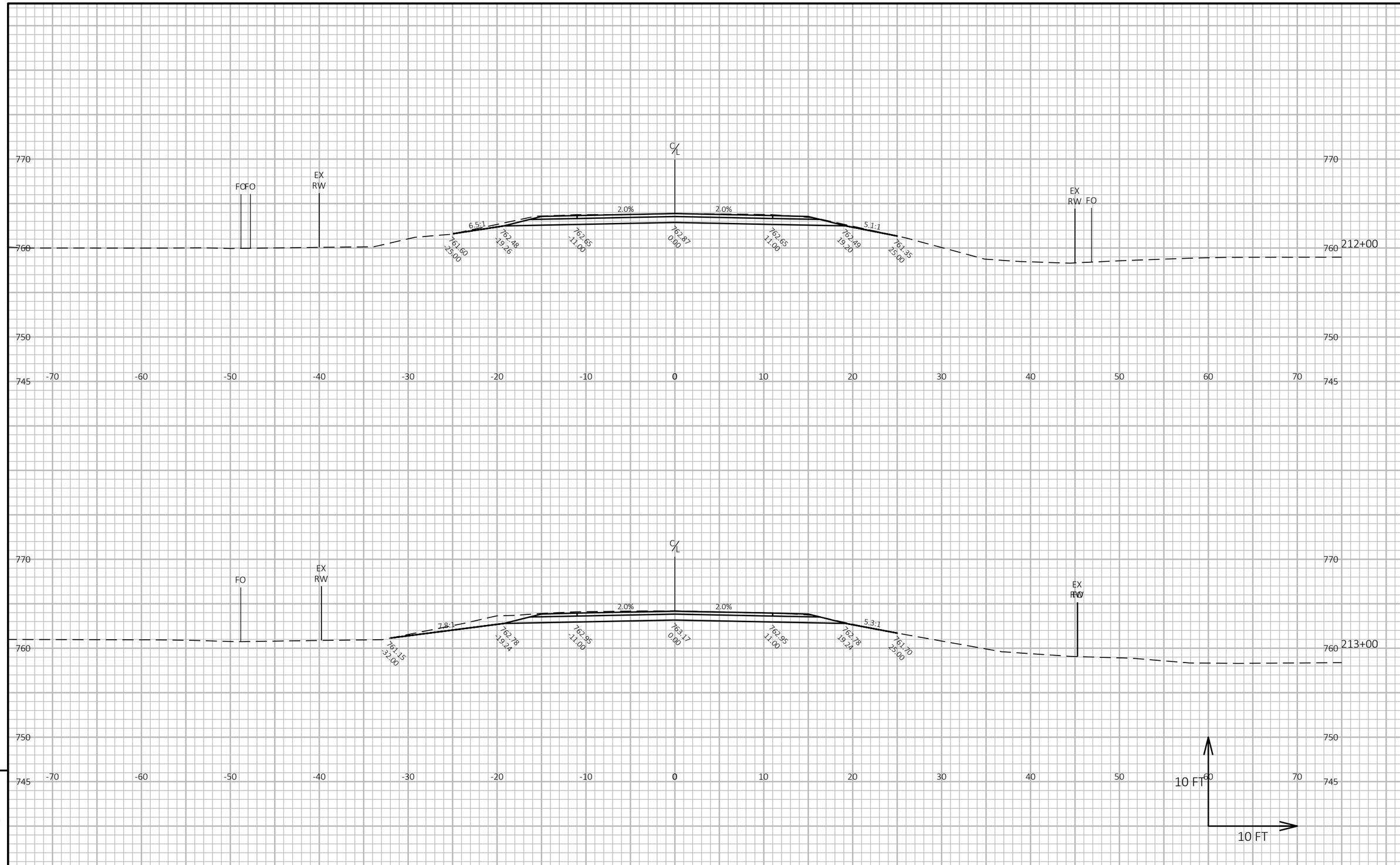

9

9

PROJECT NO: 7229-00-70	HWY: CTH B	COUNTY: BUFFALO	CROSS SECTIONS: FULL DEPTH PAVEMENT REPLACEMENT	SHEET 112	E

FILE NAME : C:\OD\CORRE, INC\PROJECTS - WI-NW REGION\7229-00-00_BUFFALO CO_CTH B\500_CADD\501_C3D_2022\72290000\SHEETS\090201-XS - CLEANUP.DWG
LAYOUT NAME - 38
PLOT DATE : 7/11/2024 1:15 PM PLOT BY : NICHOLAS WATHKE, PE PLOT NAME : **PLOT SCALE :** 1 IN:10 FT HORZ. / 1 IN:10 FT VERT.

WISDOT/CADDS SHEET 49

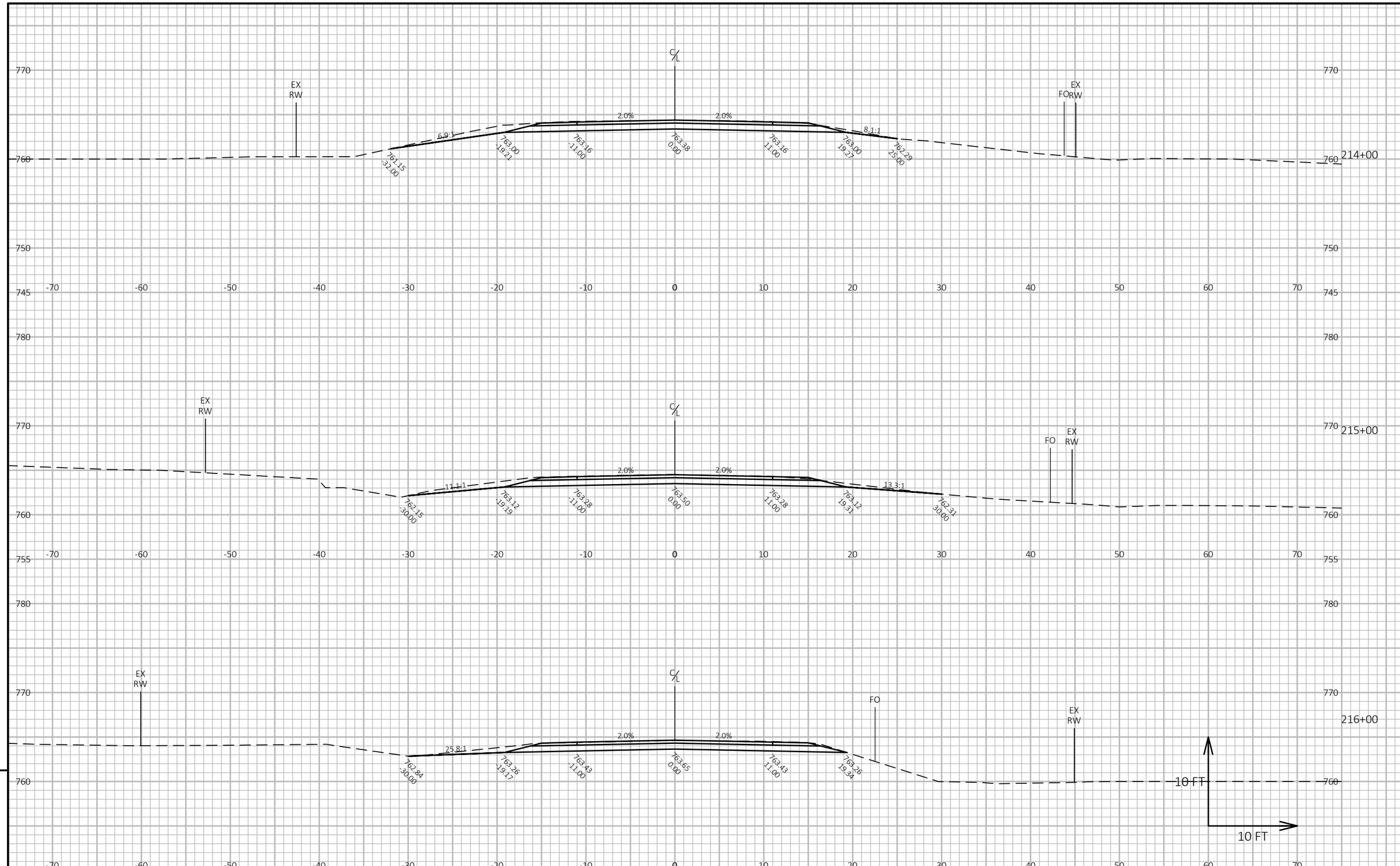

PROJECT NO: 7229-00-70	HWY: CTH B	COUNTY: BUFFALO	CROSS SECTIONS: FULL DEPTH PAVEMENT REPLACEMENT	SHEET 113	E

FILE NAME : C:\OD\CORRE, INC\PROJECTS - WI-NW REGION\7229-00-00_BUFFALO CO_CTH B\500_CADD\501_C3D_2022\72290000\SHEETS\090201-XS - CLEANUP.DWG
LAYOUT NAME - 39
PLOT DATE : 7/11/2024 1:15 PM PLOT BY : NICHOLAS WATHKE, PE PLOT NAME : PLOT SCALE : 1 IN:10 FT HORZ. / 1 IN:10 FT VERT.

WISDOT/CADDS SHEET 49

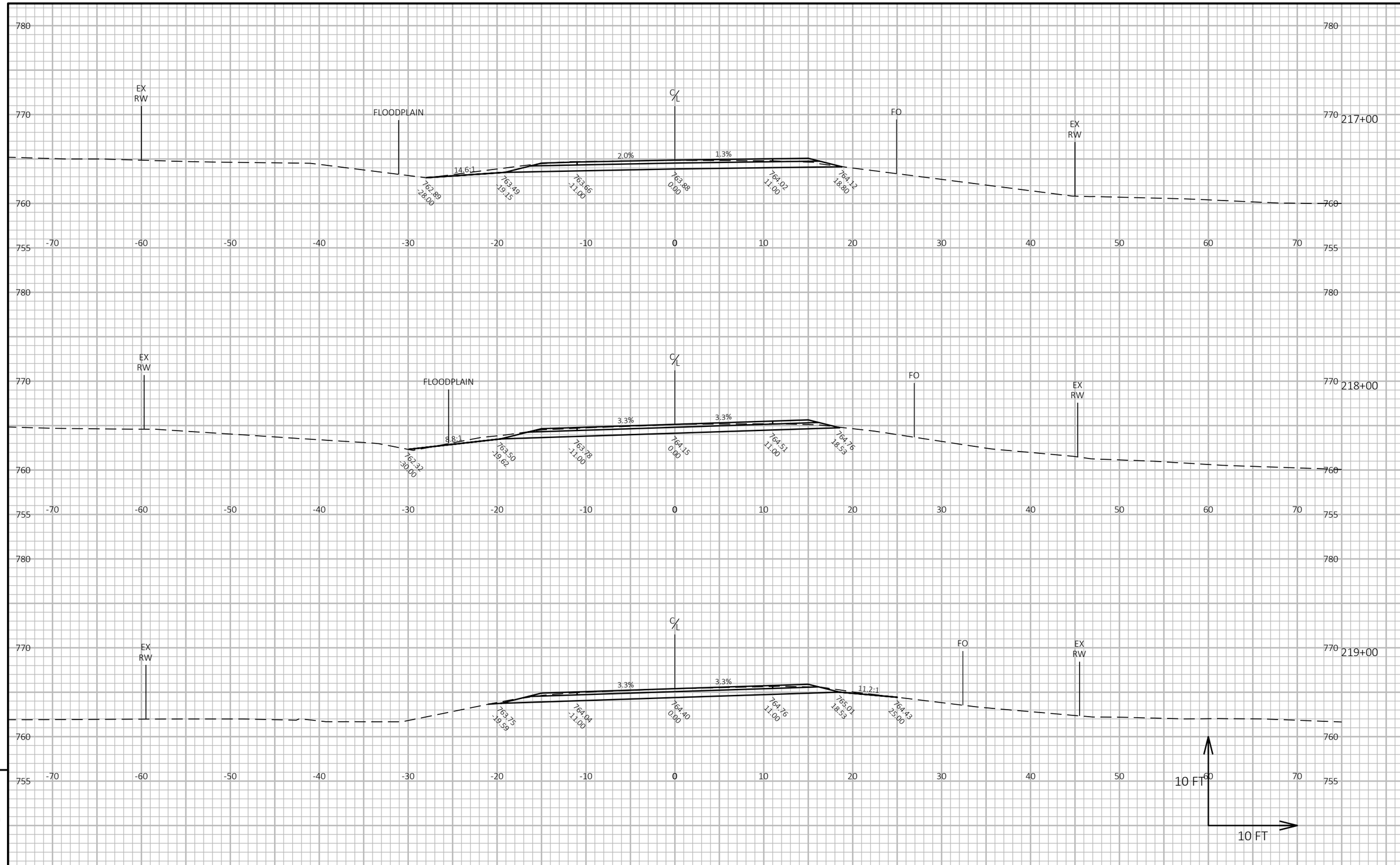

9

9

PROJECT NO: 7229-00-70	HWY: CTH B	COUNTY: BUFFALO	CROSS SECTIONS: FULL DEPTH PAVEMENT REPLACEMENT	SHEET 114	E

FILE NAME : C:\OD\CORRE, INC\PROJECTS - WI-NW REGION\7229-00-00_BUFFALO CO_CTH B\500_CADD\501_C3D_2022\72290000\SHEETS\090201-XS - CLEANUP.DWG
LAYOUT NAME - 40
PLOT DATE : 7/11/2024 1:16 PM
PLOT BY : NICHOLAS WATHKE, PE
PLOT NAME :
PLOT SCALE : 1 IN:10 FT HORZ. / 1 IN:10 FT VERT.
WISDOT/CADDS SHEET 49

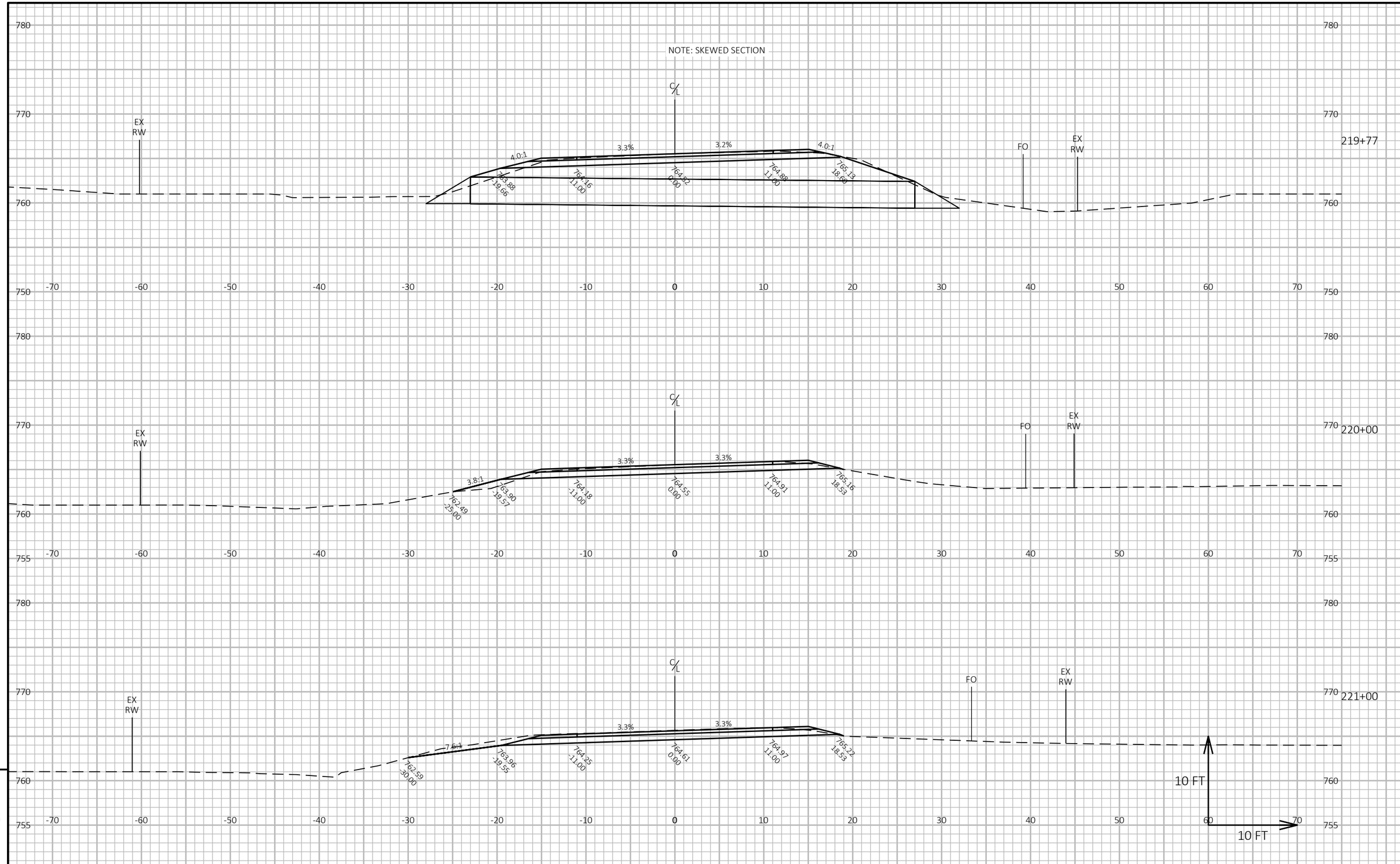

PROJECT NO: 7229-00-70	HWY: CTH B	COUNTY: BUFFALO	CROSS SECTIONS: FULL DEPTH PAVEMENT REPLACEMENT	SHEET 115	E

FILE NAME : C:\OD\CORRE, INC\PROJECTS - WI-NW REGION\7229-00-00_BUFFALO CO_CTH B\500_CADD\501_C3D_2022\72290000\SHEETS\090201-XS - CLEANUP.DWG
LAYOUT NAME - 41
PLOT DATE : 7/11/2024 1:16 PM PLOT BY : NICHOLAS WATHKE, PE PLOT NAME : **PLOT SCALE :** 1 IN:10 FT HORZ. / 1 IN:10 FT VERT.

WISDOT/CADDS SHEET 49

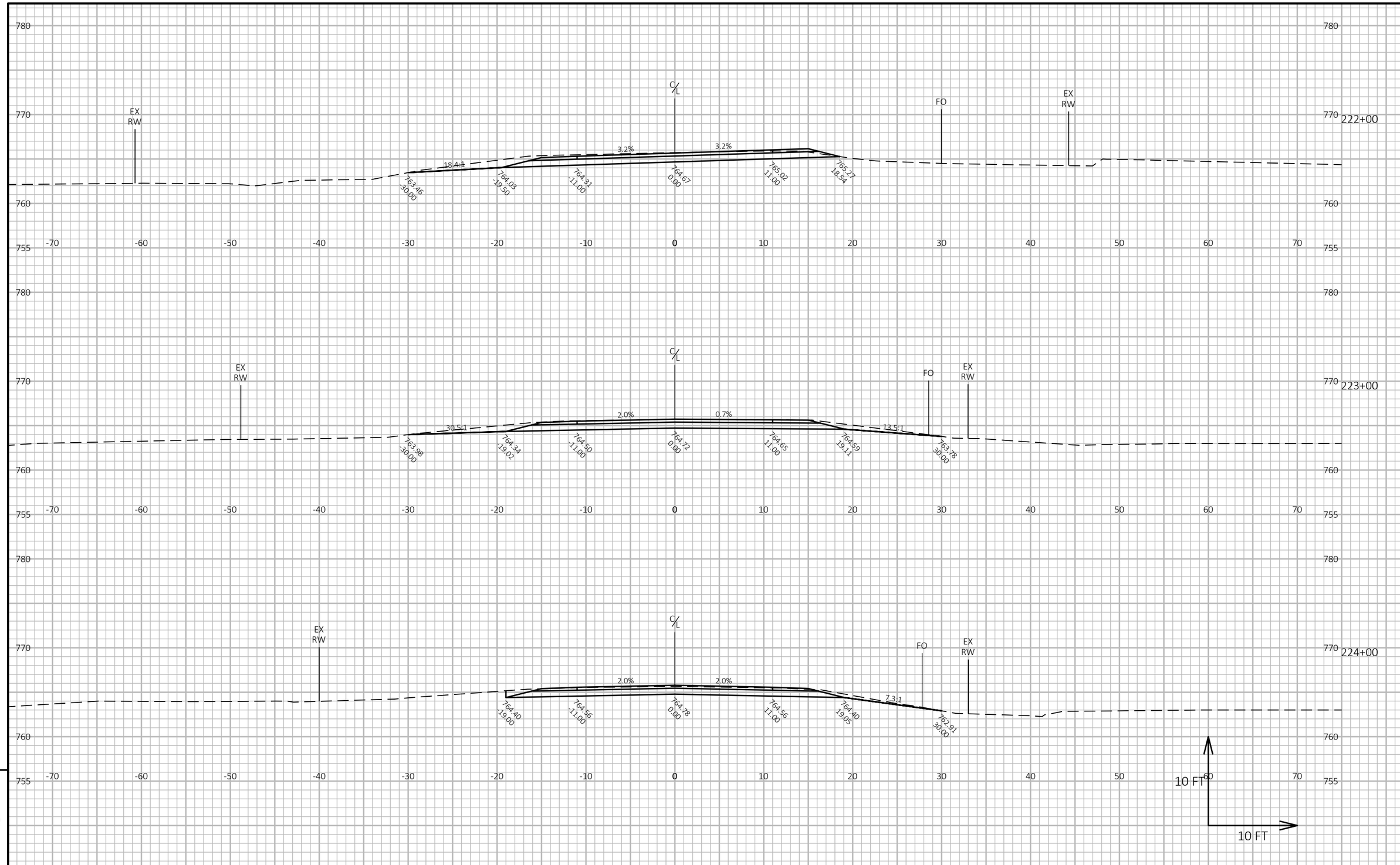

PROJECT NO: 7229-00-70	HWY: CTH B	COUNTY: BUFFALO	CROSS SECTIONS: FULL DEPTH PAVEMENT REPLACEMENT	SHEET 116	E

FILE NAME : C:\OD\CORRE, INC\PROJECTS - WI-NW REGION\7229-00-00_BUFFALO CO_CTH B\500_CADD\501_C3D_2022\72290000\SHEETS\090201-XS - CLEANUP.DWG
LAYOUT NAME - 42
PLOT DATE : 7/11/2024 1:16 PM
PLOT BY : NICHOLAS WATHKE, PE
PLOT NAME :
PLOT SCALE : 1 IN:10 FT HORZ. / 1 IN:10 FT VERT.
WISDOT/CADDS SHEET 49

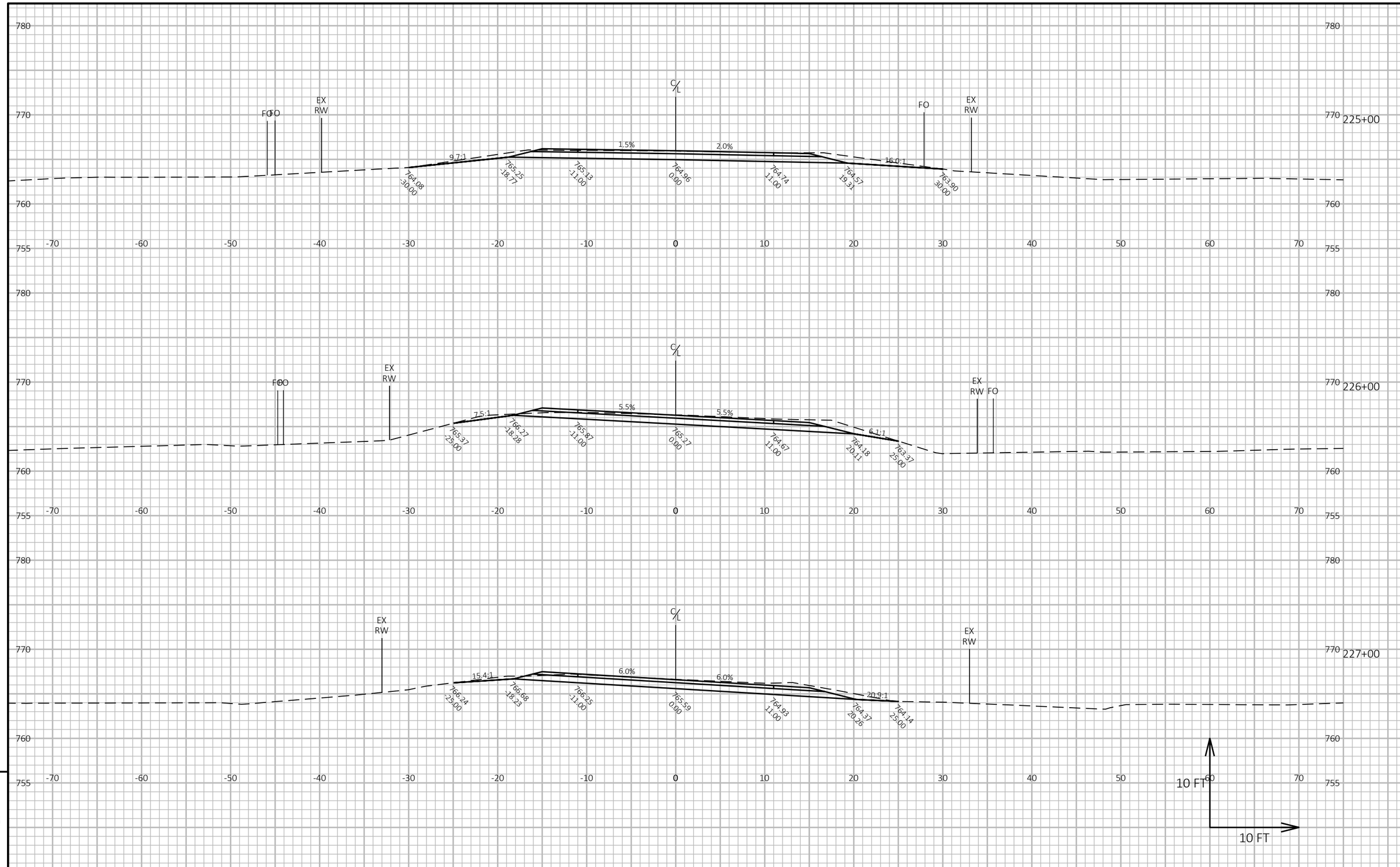

9

9

PROJECT NO: 7229-00-70	HWY: CTH B	COUNTY: BUFFALO	CROSS SECTIONS: FULL DEPTH PAVEMENT REPLACEMENT	SHEET 117	E

FILE NAME : C:\OD\CORRE, INC\PROJECTS - WI-NW REGION\7229-00-00_BUFFALO CO_CTH B\500_CADD\501_C3D_2022\72290000\SHEETS\090201-XS - CLEANUP.DWG
LAYOUT NAME - 43
PLOT DATE : 7/11/2024 1:16 PM
PLOT BY : NICHOLAS WATHKE, PE
PLOT NAME :
PLOT SCALE : 1 IN:10 FT HORZ. / 1 IN:10 FT VERT.
WISDOT/CADDS SHEET 49

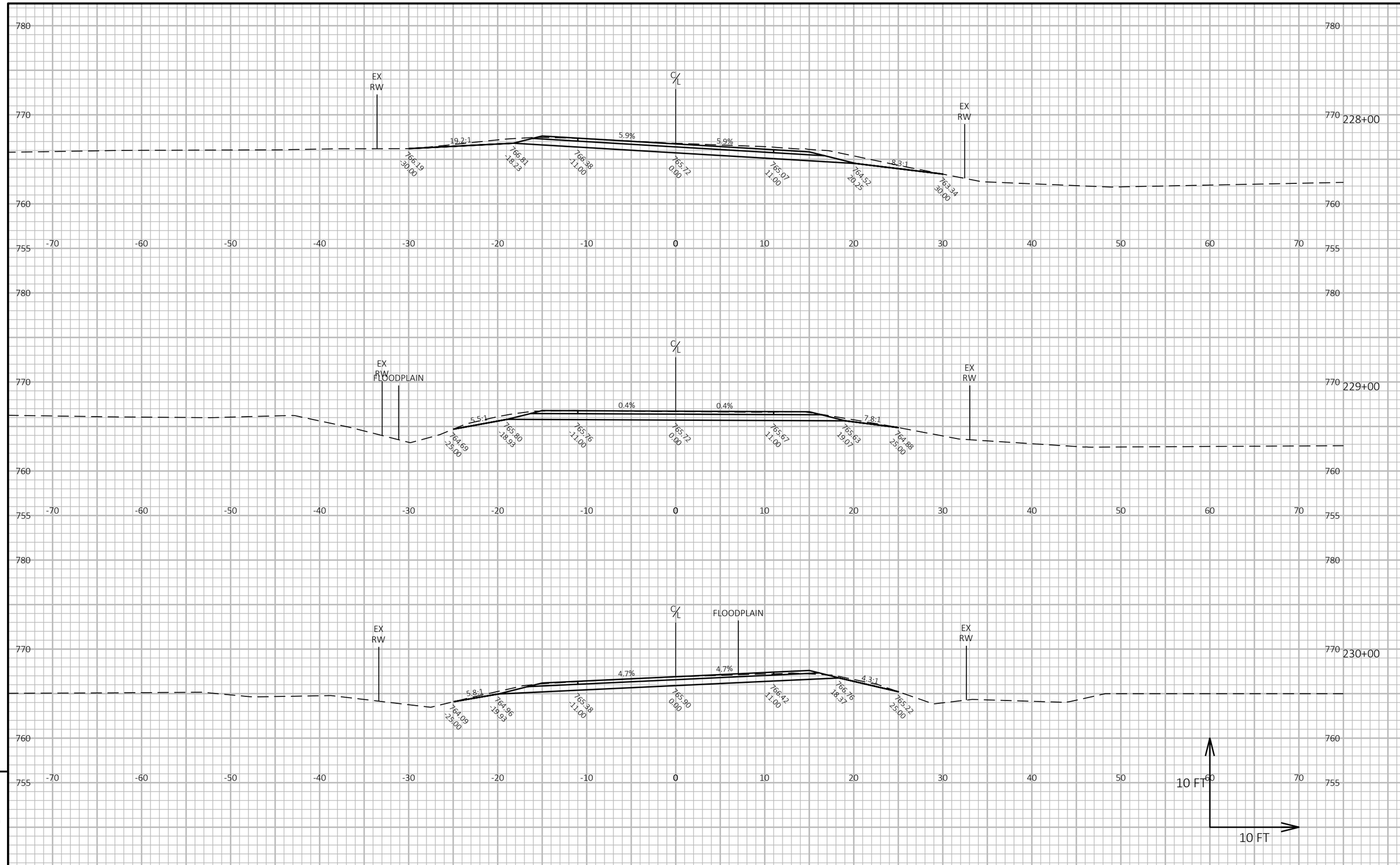

9

9

PROJECT NO: 7229-00-70	HWY: CTH B	COUNTY: BUFFALO	CROSS SECTIONS: FULL DEPTH PAVEMENT REPLACEMENT	SHEET 118	E

FILE NAME : C:\OD\CORRE, INC\PROJECTS - WI-NW REGION\7229-00-00_BUFFALO CO_CTH B\500_CADD\501_C3D_2022\72290000\SHEETS\090201-XS - CLEANUP.DWG
LAYOUT NAME - 44
PLOT DATE : 7/11/2024 1:16 PM PLOT BY : NICHOLAS WATHKE, PE PLOT NAME : **PLOT SCALE :** 1 IN:10 FT HORZ. / 1 IN:10 FT VERT.

WISDOT/CADDS SHEET 49

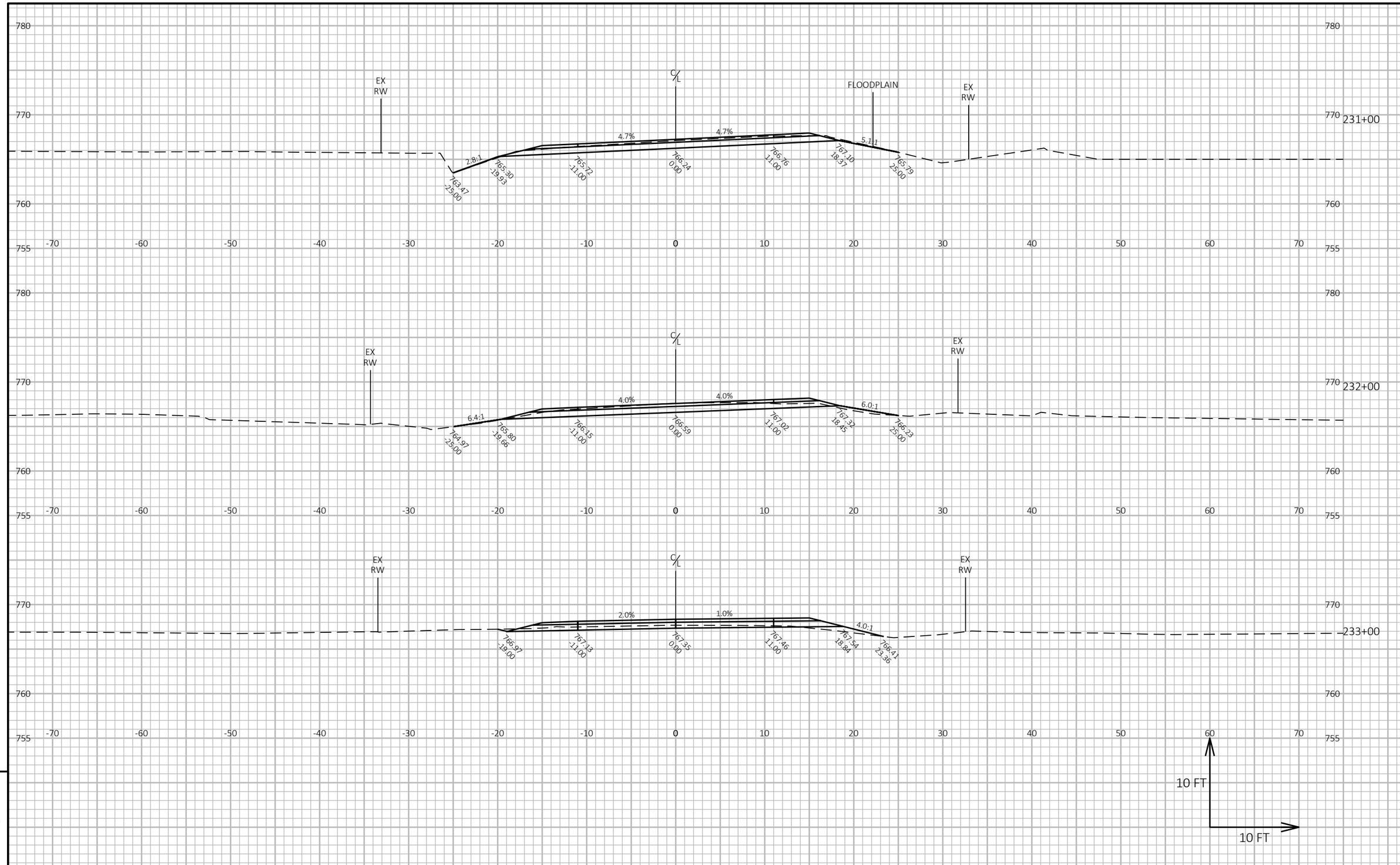

9

9

PROJECT NO: 7229-00-70	HWY: CTH B	COUNTY: BUFFALO	CROSS SECTIONS: FULL DEPTH PAVEMENT REPLACEMENT	SHEET 119	E

FILE NAME : C:\OD\CORRE, INC\PROJECTS - WI-NW REGION\7229-00-00_BUFFALO CO_CTH B\500_CADD\501_C3D_2022\72290000\SHEETS\090201-XS - CLEANUP.DWG
LAYOUT NAME - 45
PLOT DATE : 7/11/2024 1:16 PM PLOT BY : NICHOLAS WATHKE, PE PLOT NAME : **PLOT SCALE :** 1 IN:10 FT HORZ. / 1 IN:10 FT VERT.

WISDOT/CADDS SHEET 49

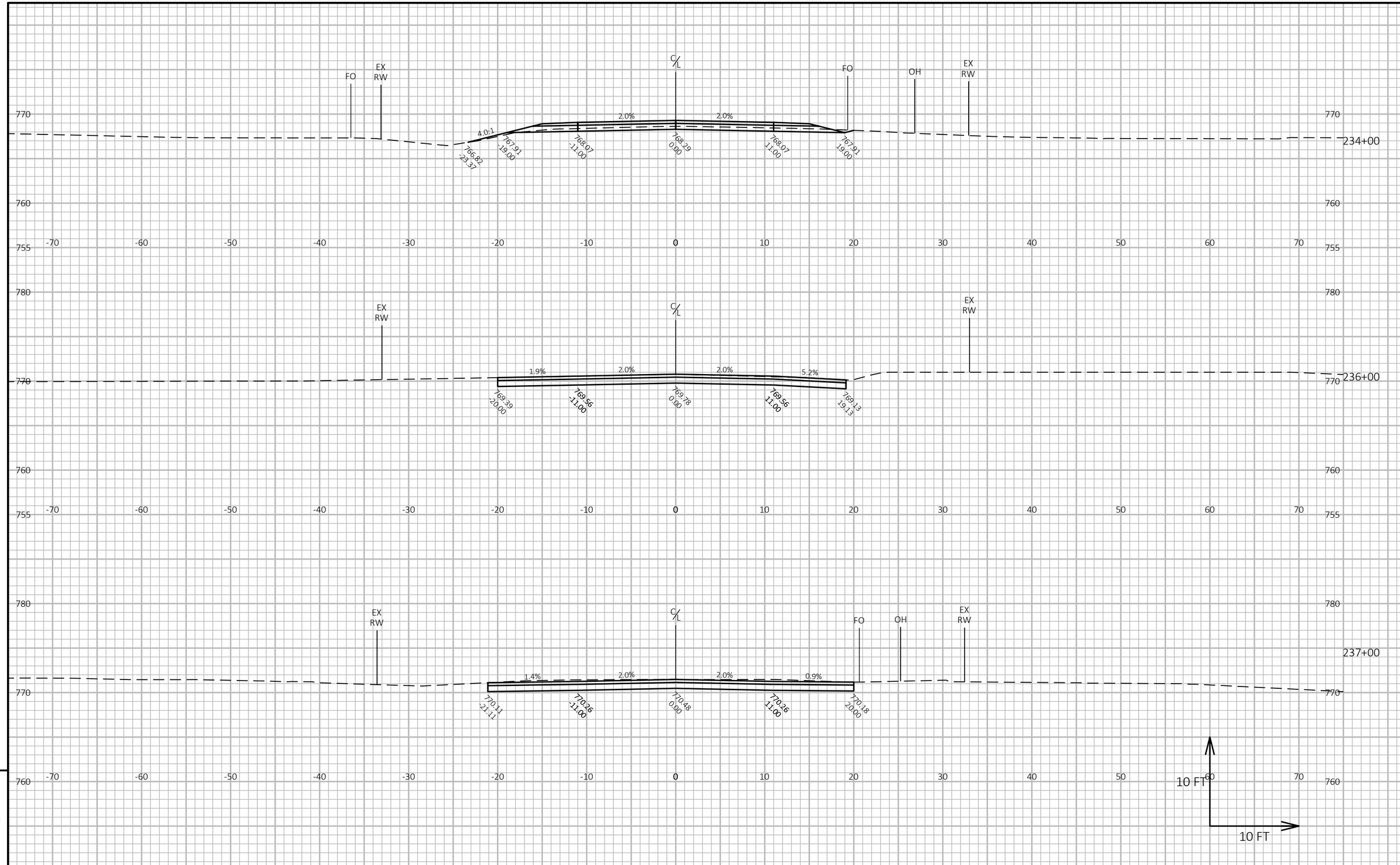

9

9

PROJECT NO: 7229-00-70	HWY: CTH B	COUNTY: BUFFALO	CROSS SECTIONS: FULL DEPTH PAVEMENT REPLACEMENT	SHEET 120	E

FILE NAME : C:\OD\CORRE, INC\PROJECTS - WI-NW REGION\7229-00-00_BUFFALO CO_CTH B\500_CADD\501_C3D_2022\72290000\SHEETS\090201-XS - CLEANUP.DWG
LAYOUT NAME - 46
PLOT DATE : 7/11/2024 1:17 PM
PLOT BY : NICHOLAS WATHKE, PE
PLOT NAME :
PLOT SCALE : 1 IN:10 FT HORZ. / 1 IN:10 FT VERT.
WISDOT/CADDS SHEET 49

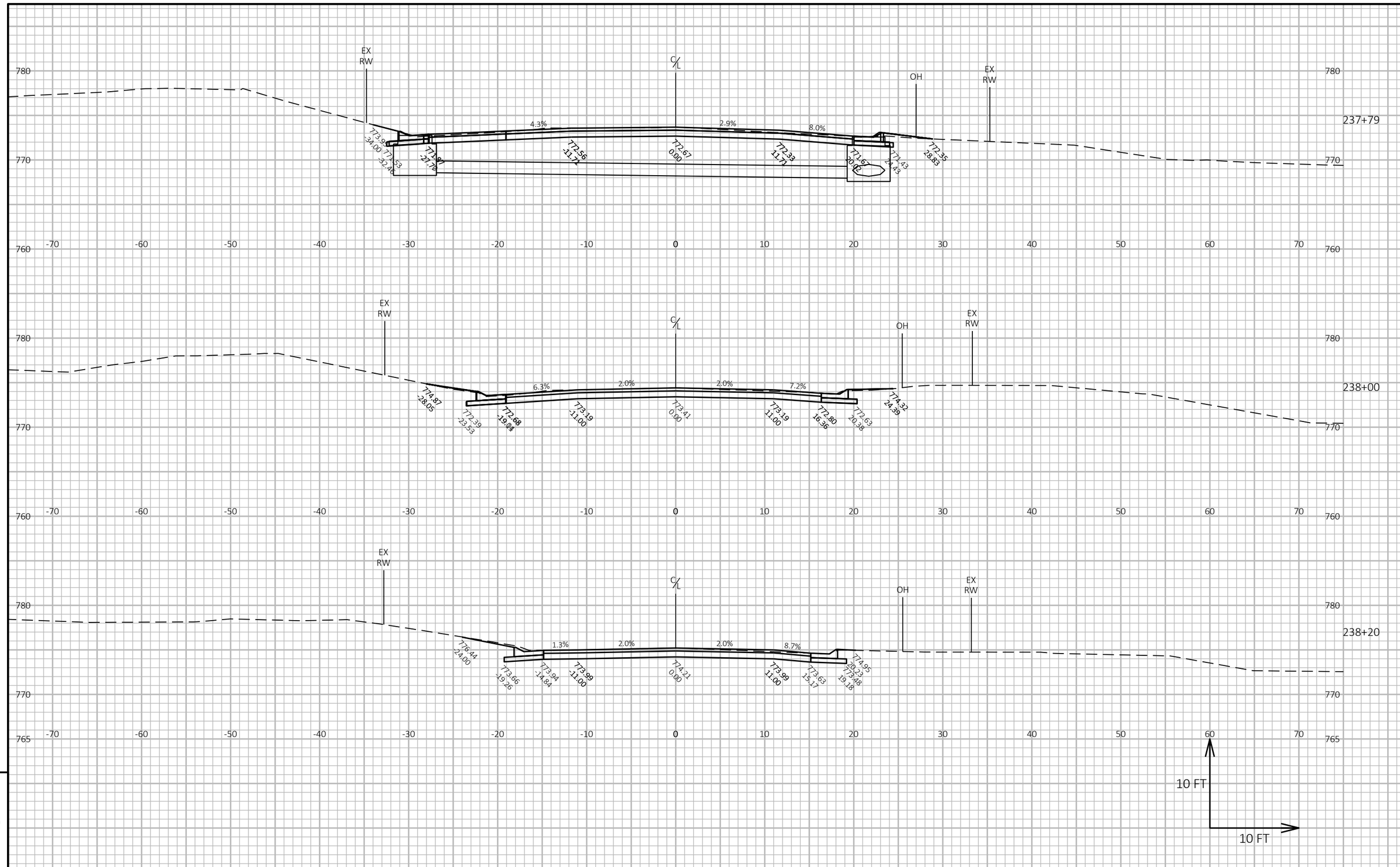

PROJECT NO: 7229-00-70	HWY: CTH B	COUNTY: BUFFALO	CROSS SECTIONS: FULL DEPTH PAVEMENT REPLACEMENT	SHEET 121	E

FILE NAME : C:\OD\CORRE, INC\PROJECTS - WI-NW REGION\7229-00-00_BUFFALO CO_CTH B\500_CADD\501_C3D_2022\72290000\SHEETS\090201-XS - CLEANUP.DWG
LAYOUT NAME - 47
PLOT DATE : 7/11/2024 1:17 PM PLOT BY : NICHOLAS WATHKE, PE PLOT NAME : **PLOT SCALE :** 1 IN:10 FT HORZ. / 1 IN:10 FT VERT.

WISDOT/CADDS SHEET 49

Wisconsin Department of Transportation

Dedicated people creating transportation solutions through innovation and exceptional service.

http://www.dot.wisconsin.gov