WIS

PROJECT ID: 1053-07-60

WITH:

COUNTY: MARATHON

AUGUST 2025

ORDER OF SHEETS

Section No.	1	Title
Section No.	2	Typical Sections and Details
Section No.	3	Estimated Quantites
Section No.	3	Miscellaneous Quantities
~~Section No.~~	~~4~~	~~Right of Way Plat~~
Section No.	5	Plan and Profile
Section No.	6	Standard Detail Drawings
Section No.	7	Sign Plates
Section No.	8	Structure Plans
~~Section No.~~	~~9~~	~~Computer Earthwork Data~~
Section No.	9	Cross Sections

TOTAL SHEETS: 228

STATE PROJECT	FEDERAL PROJECT	
	PROJECT	CONTRACT
1053-07-60	WISC 2025576	1

STATE OF WISCONSIN
DEPARTMENT OF TRANSPORTATION

PLAN OF PROPOSED IMPROVEMENT

WAUSAU - WITTENBERG

CTH D TO CTH OO

STH 29

MARATHON COUNTY AND SHAWANO COUNTY

STATE PROJECT NUMBER

1053-07-60

14

N

DESIGN DESIGNATION

A.A.D.T.	2026	=	10,685
A.A.D.T.	2046	=	11,560
D.H.V.	2046	=	1,156
D.D.		=	60/40
T.		=	24.6%
DESIGN SPEED		=	70 MPH
ESALS		=	8,550,000

BEGIN PROJECT
STA 1065'EB'+45.35
Y=163,539.358
X=374,514.234
STA 1054'WB'+94.88
Y=164,330.338
X=373,821.299

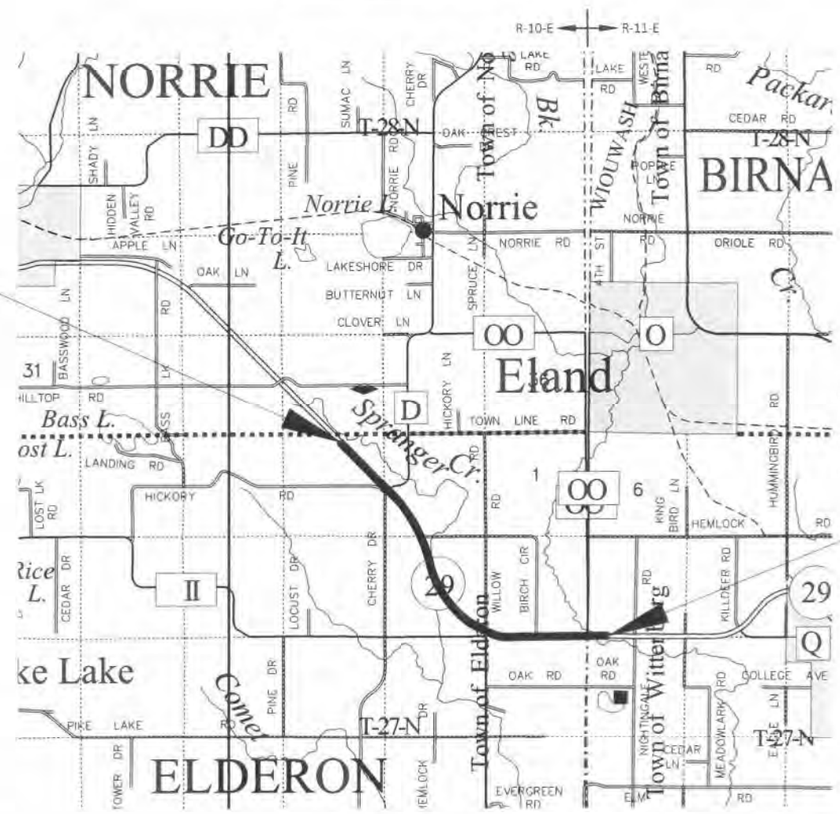

CONVENTIONAL SYMBOLS

PLAN
- CORPORATE LIMITS
- PROPERTY LINE
- LOT LINE
- LIMITED HIGHWAY EASEMENT
- EXISTING RIGHT OF WAY
- PROPOSED OR NEW R/W LINE
- SLOPE INTERCEPT
- REFERENCE LINE
- EXISTING CULVERT
- PROPOSED CULVERT (Box or Pipe)
- COMBUSTIBLE FLUIDS (CAUTION)
- MARSH AREA
- WOODED OR SHRUB AREA

PROFILE
- GRADE LINE
- ORIGINAL GROUND
- MARSH OR ROCK PROFILE (To be noted as such) (ROCK)
- SPECIAL DITCH (LABEL)
- GRADE ELEVATION (95.36)
- CULVERT (Profile View)

UTILITIES
- ELECTRIC — E —
- FIBER OPTIC — FO —
- GAS — G —
- SANITARY SEWER — SAN —
- STORM SEWER — SS —
- TELEPHONE — T —
- WATER — W —
- UTILITY PEDESTAL
- POWER POLE
- TELEPHONE POLE

LAYOUT

SCALE 0 — 1.5 MI

TOTAL NET LENGTH OF CENTERLINE = 3.616 MI

HORIZONTAL POSITIONS SHOWN ON THIS PLAN ARE WISCONSIN COORDINATE REFERENCE SYSTEM (WISCRS), MARATHON COUNTY, NAD83 (2011), IN U.S. SURVEY FEET. POSITIONS SHOWN ARE GRID COORDINATES, GRID BEARINGS, AND GRID DISTANCES. GRID DISTANCES ARE THE SAME AS GROUND DISTANCES.

ELEVATIONS ARE REFERENCED TO NAVD 88 (2012). GPS DERIVED ELEVATIONS ARE BASED ON GEOID 18

ORIGINAL PLANS PREPARED BY

ISG

WISCONSIN
WILLIAM A. KRATT
E-40457
LA CROSSE, WISC.
PROFESSIONAL ENGINEER

DATE: 4/21/25 William A. Kratt (Professional Engineer Signature)

STATE OF WISCONSIN
DEPARTMENT OF TRANSPORTATION

PREPARED BY

Surveyor	J&S GROUP, INC.
Designer	J&S GROUP, INC.
Project Manager	PRESTON BOHN, PE
Regional Examiner	FRED SCHUNKE, PE
Regional Supervisor	KEVIN KUJAWA, PE

APPROVED FOR THE DEPARTMENT

DATE: 4/28/2025 Preston Bohn (Signature)

E

GENERAL NOTES

THE LOCATIONS OF EXISTING AND PROPOSED UTILITY INSTALLATIONS AS SHOWN ON THE PLANS ARE APPROXIMATE. THERE MAY BE OTHER UTILITY INSTALLATIONS WITHIN THE PROJECT AREA THAT ARE NOT SHOWN.

HMA PAVEMENT WEIGHT CALCULATIONS ARE BASED ON 112 LBS/SY/IN.

RIGHT OF WAY INFORMATION SHOWN ON THE PLANS IS APPROXIMATE.

ORDER OF SECTION 2 DETAIL SHEETS

GENERAL NOTES
PROJECT OVERVIEW
TYPICAL SECTIONS
CONSTRUCTION DETAILS
PLAN DETAILS
ADVANCE WARNING DETAILS
TRAFFIC CONTROL DETAILS
STAGING PLANS

WISCONSIN DNR LIAISON

(MARATHON)
JEREMIAH SCHIEFELBEIN
WISCONSIN DNR - DNR TL
2984 SHAWANO AVE.
GREEN BAY, WI 54313
PHONE: 920-360-3784
EMAIL: JEREMIAH.SCHIEFELBEIN@WISCONSIN.GOV

WISCONSIN DNR LIAISON

(SHAWANO)
JIM DOPERALSKI, JR
WISCONSIN DNR - DNR TL
2984 SHAWANO AVE.
GREEN BAY, WI 54313
PHONE: 920-412-0165
EMAIL: JAMES.DOPERALSKI@WISCONSIN.GOV

UTILITIES CONTACTS

ALLIANT ENERGY
ELECTRICITY
STEVEN CYCHOSZ
708 NE 7TH STREET
MARION, WI 54950
PHONE: (920)-290-4102
EMAIL: STEVENCYCHOSZ@ALLIANTENERGY.COM

CENTURYLINK COMMUNICATIONS, LLC
COMMUNICATION LINE
RYAN BIRDSALL
3235 INTERTECH DR SUITE 600
BROOKFIELD, WI 53045
PHONE: (608)-658-2899
EMAIL: RYAN.BIRDSALL@LUMEN.COM

SPECTRUM
COMMUNICATION LINE
BILL PARMENTER
853 MCINTOSCH STREET
WAUSAU, WI 54401
PHONE: (608) 301-6189
EMAIL: BILL.PARMENTER@CHARTER.COM

WISCONSIN PUBLIC SERVICE CORPORATION
GAS/PETROLEUM
TYLER DAHLSTROM
1700 SHERMAN STREET
WAUSAU, WI 54402
PHONE: (715) 432-9212
EMAIL: TYLERDAHLSTROM@WISCONSINPUBLICSERVICE.COM

WITTENBERG CABLE TV INC
COMMUNICATION LINE
MARCUS DAVIDSON
WEST WALKER STREET
WITTENBERG, WI 54499
PHONE: (715) 881-1360
EMAIL: MARCUS@CIRRINITY.NET

WITTENBERG TELEPHONE COMPANY
COMMUNICATION LINE
MARCUS DAVIDSON
WEST WALK STREET
WITTENBERG, WI 54499
PHONE: (715) 881-1360
EMAIL: MARCUS@CIRRINITY.COM

RUNOFF COEFFICIENT TABLE

	HYDROLOGIC SOIL GROUP											
	A			B			C			D		
	SLOPE RANGE (PERCENT)			SLOPE RANGE (PERCENT)			SLOPE RANGE (PERCENT)			SLOPE RANGE (PERCENT)		
LAND USE:	0-2	2-6	6 & OVER	0-2	2-6	6 & OVER	0-2	2-6	6 & OVER	0-2	2-6	6 & OVER
ROW CROPS:	.08	.16	.22	.12	.20	.27	.15	.24	.33	.19	.28	.38
	.22	.30	.38	.26	.34	.44	.30	.37	.50	.34	.41	.56
MEDIAN STRIPTURF:	.19	.20	.24	.19	.22	.26	.20	.23	.30	.20	.25	.30
	.24	.26	.30	.25	.28	.33	.26	.30	.37	.27	.32	.40
SIDE SLOPETURF:			.25			.27			.28			.30
			.32			.34			.36			.38
PAVEMENT:												
ASPHALT:	.70 - .95											
CONCRETE:	.80 - .95											
BRICK:	.70 - .80											
DRIVES, WALKS:	.75 - .85											
ROOFS:	.75 - .95											
GRAVEL ROADS, SHOULDERS:	.40 - .60											

TOTAL PROJECT AREA = 121.3 ACRES
TOTAL AREA EXPECTED TO BE DISTURBED BY CONSTRUCTION ACTIVITIES = 0.4 ACRES

STANDARD ABBREVIATIONS

ABUT	ABUTMENT	LT	LEFT
AC	ACRE	LHF	LEFT HAND FORWARD
AGG	AGGREGATE	L	LENGTH OF CURVE
AH	AHEAD	LF	LINEAR FOOT
∠	ANGLE	LC	LONG CHORD OF CURVE
AADT	ANNUAL AVERAGE DAILY TRAFFIC	LS	LUMP SUM
AEW	APRON ENDWALL	MGAL	ONE THOUSAND GALLONS
ASPH	ASPHALTIC	MH	MANHOLE
BK	BACK	ML OR M/L	MATCH LINE
BC	BACK OF CURB	NOM	NOMINAL
BAD	BASE AGGREGATE DENSE	NC	NORMAL CROWN
BL OR B/L	BASE LINE	NB	NORTHBOUND
BM	BENCH MARK	NO	NUMBER
CB	CATCH BASIN	OD	OUTSIDE DIAMETER
CL OR C/L	CENTER LINE	PAVT	PAVEMENT
Δ	CENTRAL ANGLE OR DELTA	PLE	PERMANENT LIMITED EASEMENT
CE	COMMERCIAL ENTRANCE	PC	POINT OF CURVATURE
CONC	CONCRETE	PI	POINT OF INTERSECTION
CSW	CONCRETE SIDEWALK	PT	POINT OF TANGENCY
CONST	CONSTRUCTION	PCC	PORTLAND CEMENT CONCRETE
CP	CONTROL POINT	LB	POUND
CO	COUNTY	PSI	POUNDS PER SQUARE INCH
CTH	COUNTY TRUCK HIGHWAY	PE	PRIVATE ENTRANCE
CY	CUBIC YARD	PROJ	PROJECT
CP	CULVERT PIPE	PL	PROPERTY LINE
CPCA	CULVERT PIPE CORRUGATED ALUMINUM	PRW	PROPOSED RIGHT OF WAY
CPCPE	CULVERT PIPE CORRUGATED POLYETHYLENE	R	RADIUS
CPCPP	CULVERT PIPE CORRUGATED POLYPROPYLENE	RL OR R/L	REFERENCE LINE
CPCS	CULVERT PIPE CORRUGATED STEEL	REQD	REQUIRED
CPCSAC	CULVERT PIPE CORRUGATED STEEL ALUMINUM COATED	RT	RIGHT
CPCSPC	CULVERT PIPE CORRUGATED STEEL POLYMER COATED	RHF	RIGHT HAND FORWARD
CPRC	CULVERT PIPE REINFORCED CONCRETE	R/W	RIGHT OF WAY
CPRCHE	CULVERT PIPE REINFORCED CONCRETE HORIZONTAL ELLIPTICAL	RD	ROAD
CPS	CULVERT PIPE SALVAGED	RDWY	ROADWAY
CPT	CULVERT PIPE TEMPORARY	SHLDR	SHOULDER
C & G	CURB AND GUTTER	SW	SIDEWALK
D	DEGREE OF CURVE	SB	SOUTHBOUND
DHV	DESIGN HOUR VOLUME	SPECS	SPECIFICATIONS
DIA	DIAMETER	SF	SQUARE FEET
DD	DIRECTIONAL DISTRIBUTION	SY	SQUARE YARD
DE	DRAINAGE EASEMENT	SDD	STANDARD DETAIL DRAWINGS
DWY	DRIVEWAY	STH	STATE TRUNK HIGHWAY
EA	EACH	STA	STATION
EB	EASTBOUND	SSPC	STORM SEWER PIPE COMPOSITE
EL OR ELEV	ELEVATION	SSCPE	STORM SEWER PIPE CORRUGATED POLYETHYLENE
EMB	EMBANKMENT	SSCPP	STORM SEWER PIPE CORRUGATED POLYPROPYLENE
EW	ENDWALL	SSPNRC	STORM SEWER PIPE NON-REINFORCED CONCRETE
EAT	ENERGY ABSORBING TERMINAL	SSPRC	STORM SEWER PIPE REINFORCED CONCRETE
ESALS	EQUIVALENT SINGLE AXLE LOADS	SSPRC	STORM SEWER PIPE REINFORCED CONCRETE
EXC	EXCAVATION	SSPRCHE	STORM SEWER PIPE REINFORCED CONCRETE HORIZONTAL ELLIPTICAL
EBS	EXCAVATION BELOW SUBGRADE	SE	SUPERELEVATION
EXIST	EXISTING	SL OR S/L	SURVEY LINE
FERT	FERTILIZER	TEMP	TEMPORARY
FE	FIELD ENTRANCE	TI	TEMPORARY INTEREST
FL OR F/L	FLOW LINE	TLE	TEMPORARY LIMITED EASEMENT
FT	FOOT	TC	TOP OF CURB
FTMS	FREE TRAFFIC MANAGEMENT SYSTEM	TL OR T/L	TRANSIT LINE
HES	HIGH EARLY STRENGTH	T	TRUCKS (PERCENT OF)
HE	HIGHWAY EASEMENT	TYP	TYPICAL
CWT	HUNDRED WEIGHT	USH	UNITED STATES HIGHWAY
IN DIA	INCH DIAMETER	VAR	VARIABLE
INL	INLET	VC	VERTICAL CURVE
ID	INSIDE DIAMETER	VPC	VERTICAL POINT OF CURVATURE
INTERS	INTERSECTION	VPI	VERTICAL POINT OF INTERSECTION
IH	INTERSTATE HIGHWAY	VPT	VERTICAL POINT OF TANGENCY
INV	INVERT	W	WEST
JT	JOINT	WB	WESTBOUND

DIGGERS HOTLINE
Dial 811 or (800)242-8511
www.DiggersHotline.com

2

CONTROL POINT TABLE

POINT	STATION (29EB-ETW)	OFFSET (29EB-ETW)	STATION (29WB-ETW)	OFFSET (29WB-ETW)	Y COORDS	X COORDS	ELEVATION
9	1131+40.98 'EB'	115.49 LT	1131+40.98 'WB'	55.49 LT	158360.600	378517.215	1219.44
10	1236+88.63 'EB'	4143.40 LT	1236+88.54 'WB'	4083.40 LT	158252.880	386713.001	1222.35
516	1063+10.30 'EB'	31.59 LT	1063+10.38 'WB'	25.83 RT	163730.487	374374.369	1264.32
517	1080+78.58 'EB'	68.00 RT	1080+78.59 'WB'	128.00 RT	162397.949	375540.203	1255.37
518	1090+64.98 'EB'	178.64 RT	1090+64.98 'WB'	238.64 RT	161616.753	376152.531	1251.99
519	1119+94.49 'EB'	31.72 LT	1120+15.15 'WB'	28.28 RT	159415.850	378041.377	1248.34
520	1148+22.71 'EB'	48.16 RT	1148+15.78 'WB'	108.16 RT	156708.293	378878.392	1224.10
521	1169+92.41 'EB'	18.42 LT	1169+57.09 'WB'	41.58 RT	155025.190	380228.119	1222.32
522	1184+76.21 'EB'	52.39 RT	1184+18.79 'WB'	112.39 RT	154226.060	381480.054	1220.98
523	1209+90.36 'EB'	31.36 LT	1209+90.27 'WB'	28.64 RT	154153.687	383995.248	1217.88
524	1236+05.85 'EB'	42.26 RT	1236+05.75 'WB'	102.26 RT	154067.657	386610.355	1204.36
525	1244+30.81 'EB'	17.75 LT	1244+30.84 'WB'	42.25 RT	154122.521	387435.623	1203.84
527	1237+49.11 'EB'	116.67 LT	1237+49.01 'WB'	56.67 LT	154225.907	386754.367	1203.00
528	1183+79.38 'EB'	119.07 LT	1183+23.99 'WB'	59.07 LT	154419.497	381446.406	1216.27
529	1090+92.95 'EB'	127.84 LT	1090+92.95 'WB'	67.84 LT	161811.577	376390.762	1251.61

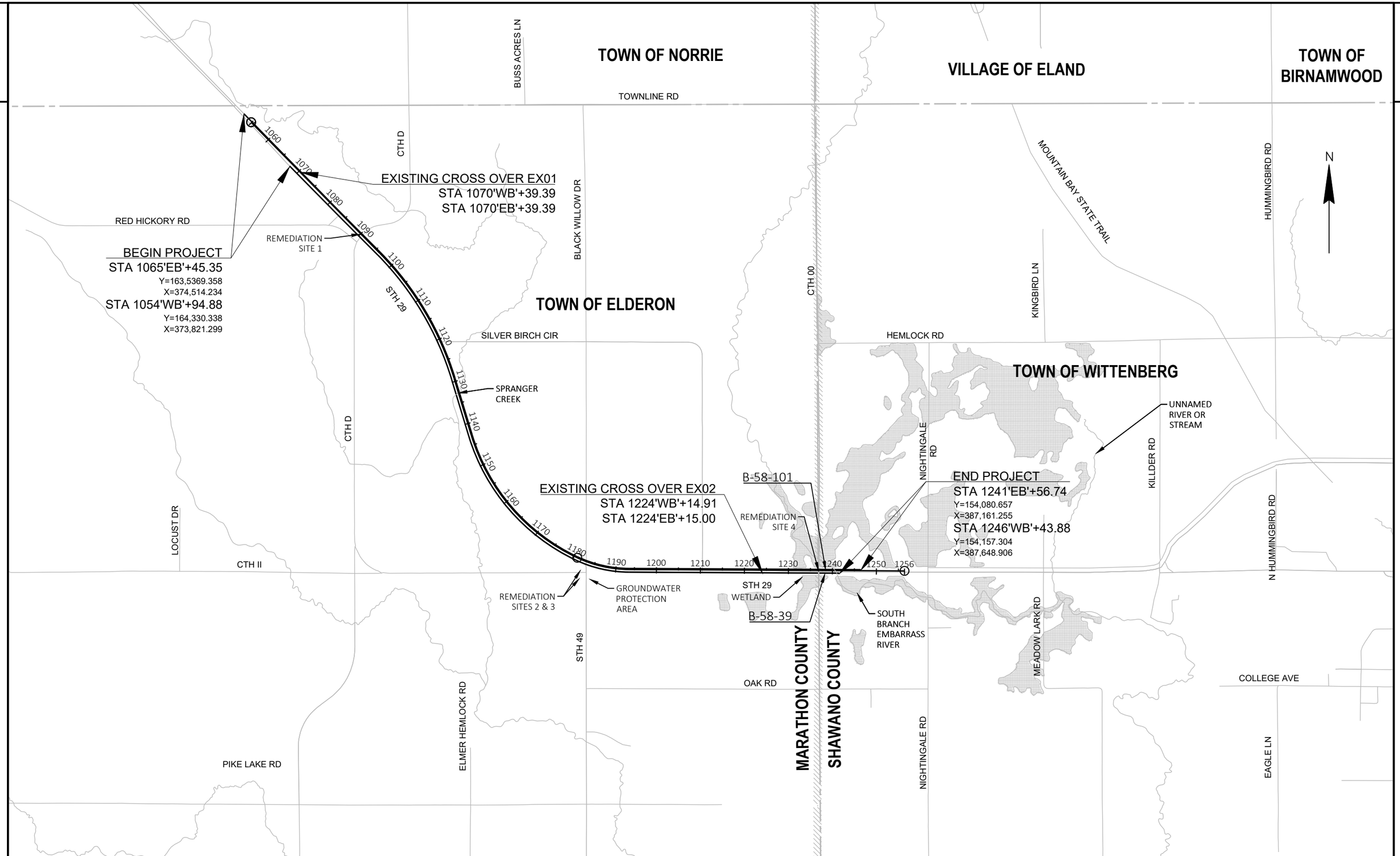

PROJECT NO: 1053-07-60	HWY: STH 29	COUNTY: MARATHON	PROJECT OVERVIEW	SHEET 4	E

FILE NAME : W:\10530730\SHEETS\020201-PO.DWG
LAYOUT NAME - 020201-po
PLOT DATE : 6/17/2025 1:48 PM
PLOT BY : RYAN BOOTH
PLOT NAME :
PLOT SCALE : 1 IN:2000 FT
WISDOT/CADDS SHEET 42

2

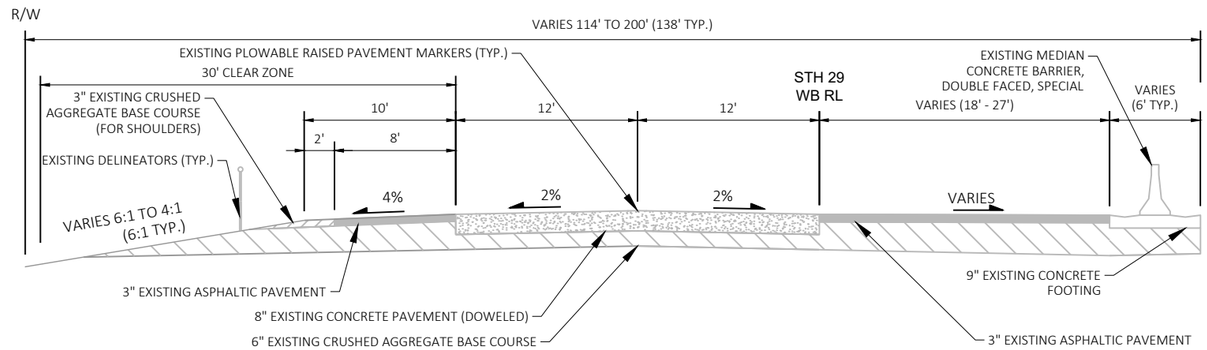

EXISTING TYPICAL SECTION

STA 1054'WB'+95 - STA 1057'WB'+65

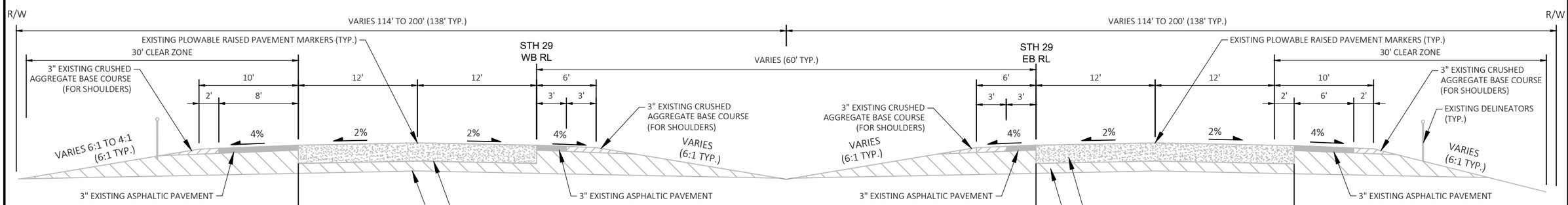

EXISTING TYPICAL SECTION

STA 1057'WB'+65 - STA 1080'WB'+30
STA 1086'WB'+33 - STA 1122'WB'+83
STA 1065'EB'+45 - STA 1084'EB'+05
STA 1091'EB'+50 - STA 1142'EB'+94
STA 1196'EB'+29 - STA 1241'EB'+57

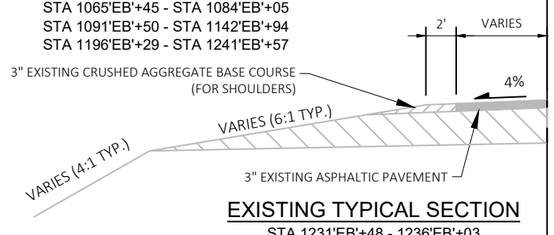

EXISTING TYPICAL SECTION

STA 1231'EB'+48 - 1236'EB'+03

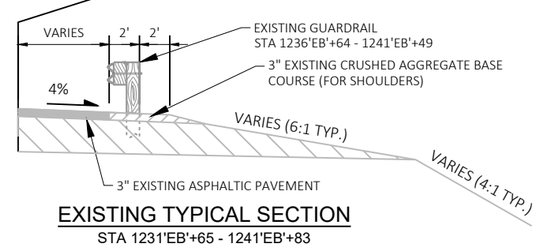

EXISTING TYPICAL SECTION

STA 1231'EB'+65 - 1241'EB'+83

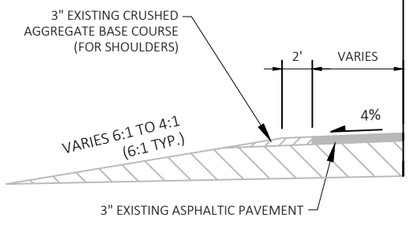

EXISTING TYPICAL SECTION

STA 1089'WB'+50 - 1095'WB'+24
STA 1120'WB'+00 - 1122'WB'+83

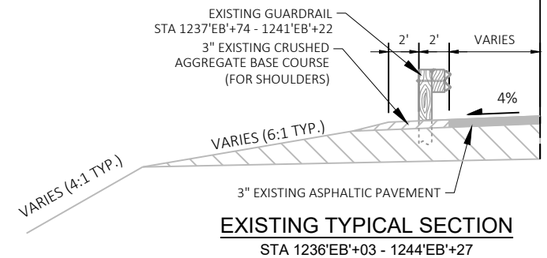

EXISTING TYPICAL SECTION

STA 1236'EB'+03 - 1244'EB'+27

PROJECT NO: 1053-07-60	HWY: STH 29	COUNTY: MARATHON	TYPICAL SECTION	SHEET 5	E

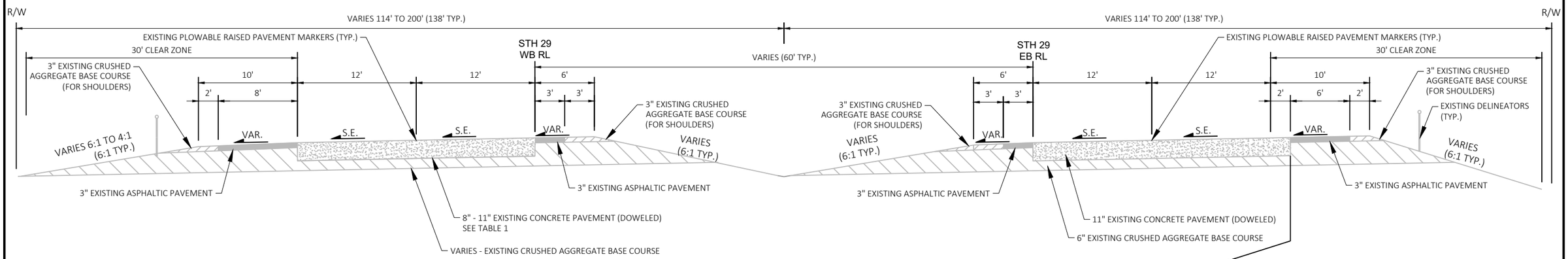

EXISTING TYPICAL SECTION

STA 1142'WB'+94 - STA 1196'WB'+29
STA 1142'EB'+94 - STA 1196'EB'+29

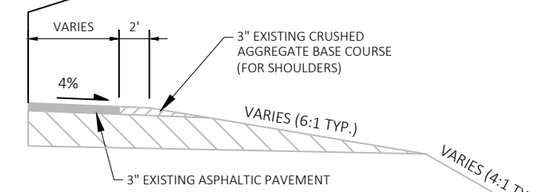

EXISTING TYPICAL SECTION

STA 1179'EB'+80 - 1185'EB'+35

TABLE 1: EXISTING CONCRETE PAVEMENT THICKNESS					
STA	TO	STA	CONCRETE PAVEMENT THICKNESS (INCHES)	LOCATION	REMARKS
1055+00	-	1070+10	8	WB DRIVING LANES	
1070+10	-	1071+30	8-11	WB DRIVING LANES	LONG. TRANSITION
1071+30	-	1097+10	11	WB DRIVING LANES	
1097+10	-	1098+00	11-8	WB DRIVING LANES	LONG. TRANSITION
1098+00	-	1110+90	8	WB DRIVING LANES	
1110+90	-	1111+80	8-11	WB DRIVING LANES	LONG. TRANSITION
1111+80	-	1128+60	11	WB DRIVING LANES	
1128+60	-	1144+80	11-8	WB DRIVING LANES	LONG. TRANSITION
1144+80	-	1172+40	8	WB DRIVING LANES	
1172+40	-	1173+90	8-11	WB DRIVING LANES	LONG. TRANSITION
1173+90	-	1187+70	11	WB DRIVING LANES	
1187+70	-	1193+70	11-->8	WB DRIVING LANES	TRANSVERSE TRANSITION 11" OUTSIDE TO 8" INSIDE
1194+60	-	1201+80	11	WB DRIVING LANES	
1201+80	-	1207+80	11	WB DRIVING LANES	ALTERNATIVE DOWEL BAR PLACEMENT
1207+80	-	1236+30	11	WB DRIVING LANES	
1239+81	-	1241+14	7	WB SHOULDERS	BRIDGE APPROACH SHOULDERS
1240+50	-	1241+57	7	EB SHOULDERS	BRIDGE APPROACH SHOULDERS

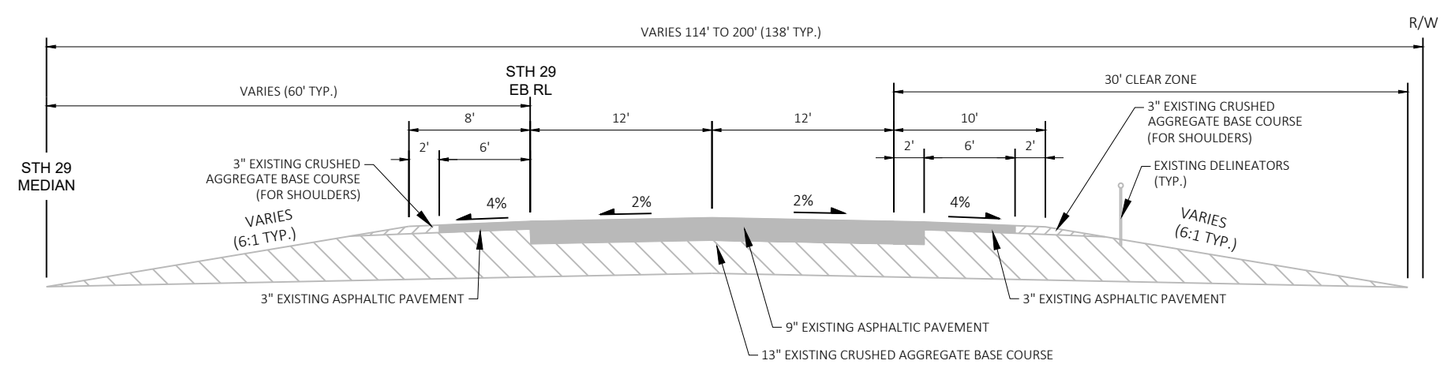

EXISTING TYPICAL SECTION

STA 1084'EB'+05 - STA 1091'EB'+50

2

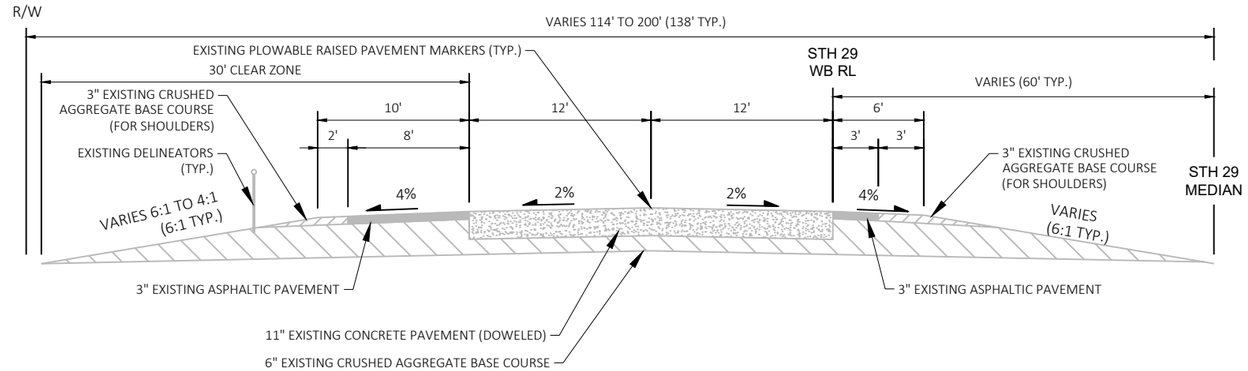

EXISTING TYPICAL SECTION

STA 1080'WB'+30 - STA 1086'WB'+33

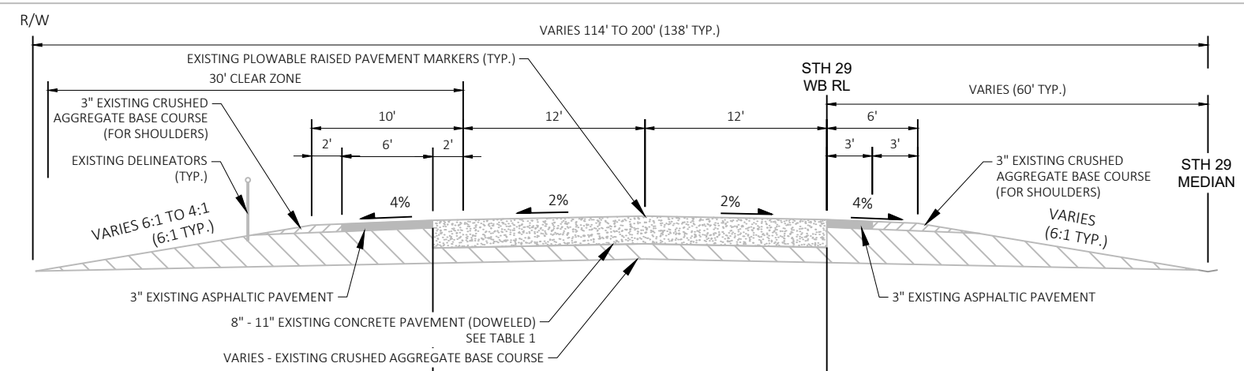

EXISTING TYPICAL SECTION

STA 1122'WB'+83 - STA 1142'WB'+94
STA 1196'WB'+29 - STA 1265'WB'+05

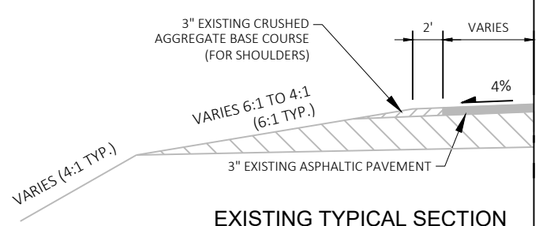

EXISTING TYPICAL SECTION

STA 1122'WB'+83 - 1126'WB'+05
STA 1181'WB'+78 - 1186'WB'+24
STA 1209'WB'+45 - 1213'WB'+83

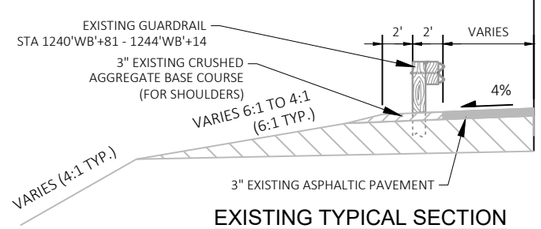

EXISTING TYPICAL SECTION

STA 1235'WB'+63 - 1244'WB'+38

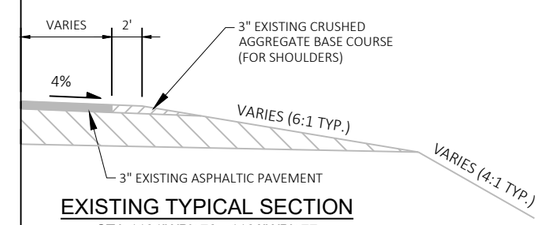

EXISTING TYPICAL SECTION

STA 1181'WB'+78 - 1186'WB'+77

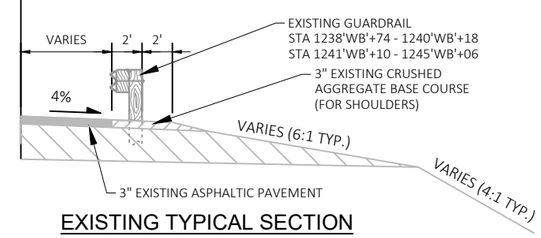

EXISTING TYPICAL SECTION

STA 1238'WB'+28 - 1246'WB'+44

2

PROJECT NO: 1053-07-60	HWY: STH 29	COUNTY: MARATHON	TYPICAL SECTION	SHEET 7	E

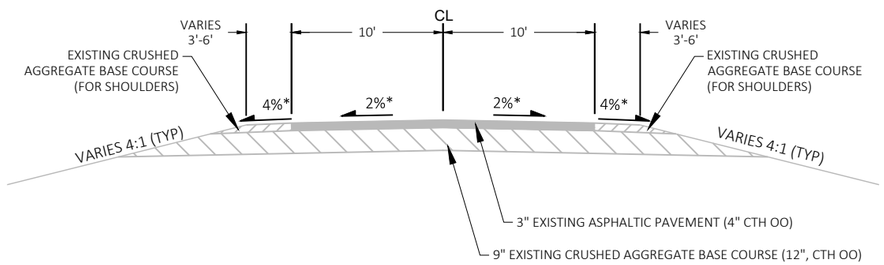

* CROSS SLOPE VARIES DUE TO SUPERELEVATION

EXISTING SIDEROAD TYPICAL SECTION

CTH D
BLACK CHERRY DR
SILVER BIRCH CIR (WEST)
BLACK WILLOW DR
CTH II
SILVER BIRCH CIR (EAST)
CTH OO

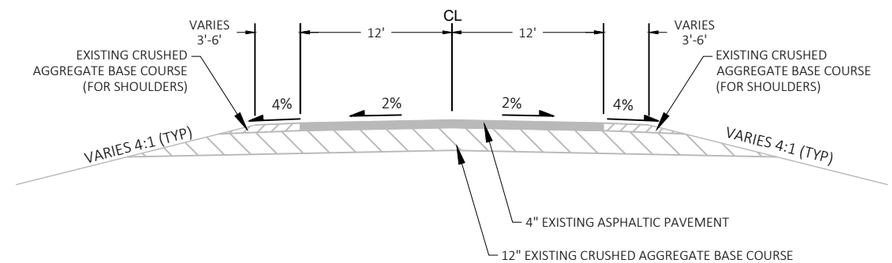

EXISTING SIDEROAD TYPICAL SECTION

STH 49

2

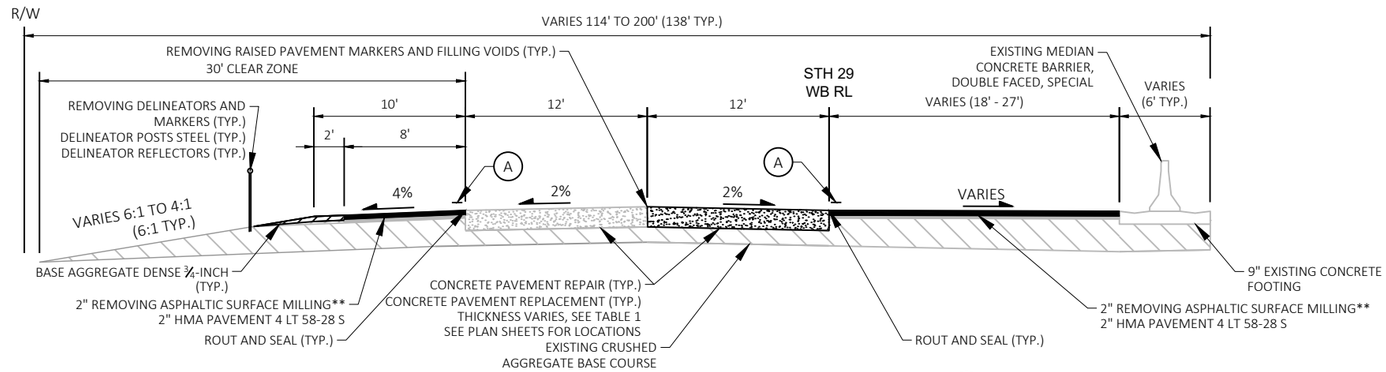

** EXISTING ASPHALTIC SHOULDERS HAVE SETTLED LOWER THAN EXISTING CONCRETE PAVEMENT IN VARIOUS LOCATIONS. MILLING DEPTH TO BE SET OFF OF THE EXISTING CONCRETE PAVEMENT EDGE.

FINISHED TYPICAL SECTION

STA 1054'WB'+95 - STA 1057'WB'+65

(A) = ASPHALTIC SHOULDER RUMBLE STRIPS, DIVIDED ROADWAY

NOTE:
DIAMOND GRIND CONCRETE PAVEMENT REPAIR AND REPLACEMENT PATCHES EXTENDING 5-FT FROM OUTER PATCH LIMITS (SEE DETAIL).

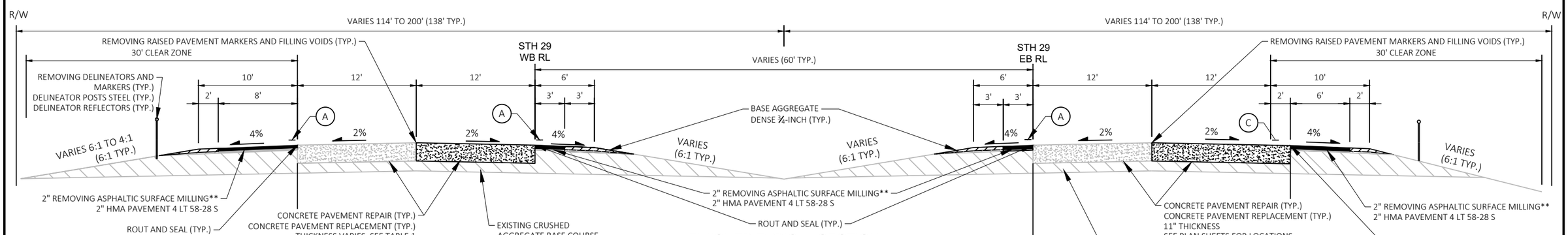

FINISHED TYPICAL SECTION

STA 1057'WB'+65 - STA 1080'WB'+30
STA 1086'WB'+33 - STA 1122'WB'+83
STA 1065'EB'+49 - STA 1084'EB'+05
STA 1091'EB'+50 - STA 1142'EB'+94
STA 1223'EB'+54 - STA 1241'EB'+57

** EXISTING ASPHALTIC SHOULDERS HAVE SETTLED LOWER THAN EXISTING CONCRETE PAVEMENT IN VARIOUS LOCATIONS. MILLING DEPTH TO BE SET OFF OF THE EXISTING CONCRETE PAVEMENT EDGE.

(C) = CONCRETE SHOULDER RUMBLE STRIPS, DIVIDED ROADWAY

(A) = ASPHALTIC SHOULDER RUMBLE STRIPS, DIVIDED ROADWAY

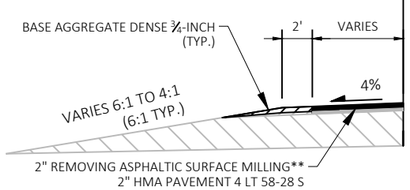

FINISHED TYPICAL SECTION

STA 1089'WB'+50 - 1095'WB'+24
STA 1120'WB'+00 - 1122'WB'+83

NOTE:
DIAMOND GRIND CONCRETE PAVEMENT REPAIR AND REPLACEMENT PATCHES EXTENDING 5-FT FROM OUTER PATCH LIMITS (SEE DETAIL).

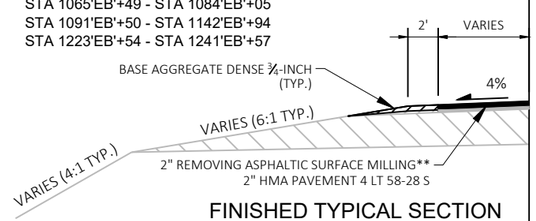

FINISHED TYPICAL SECTION

STA 1231'EB'+48 - 1236'EB'+03

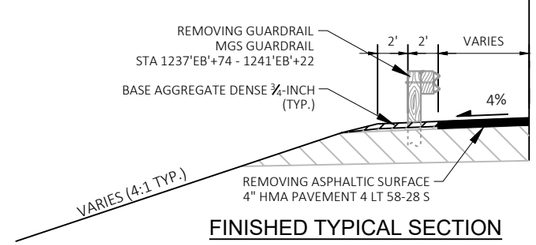

FINISHED TYPICAL SECTION

STA 1237'EB'+66 - 1240'EB'+50

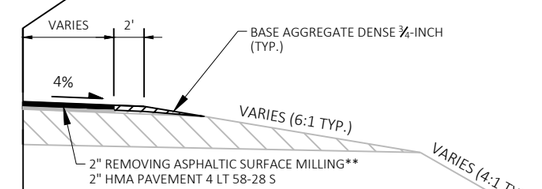

FINISHED TYPICAL SECTION

STA 1179'EB'+80 - 1185'EB'+35

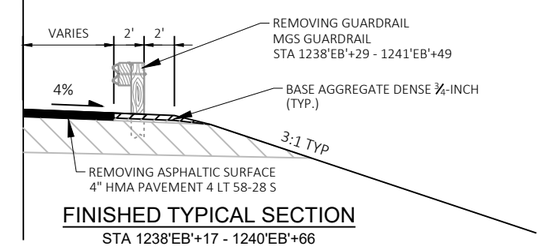

FINISHED TYPICAL SECTION

STA 1238'EB'+17 - 1240'EB'+66

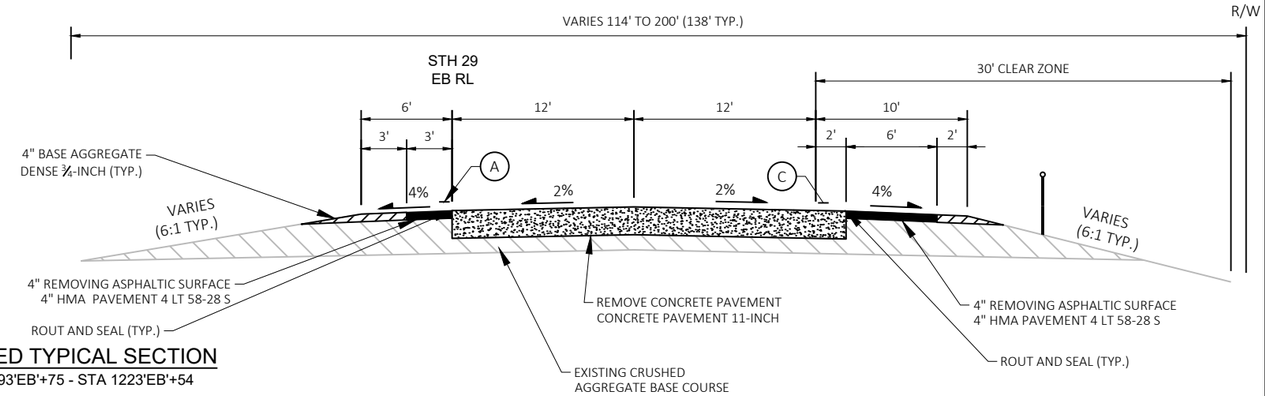

FINISHED TYPICAL SECTION

STA 1193'EB'+75 - STA 1223'EB'+54

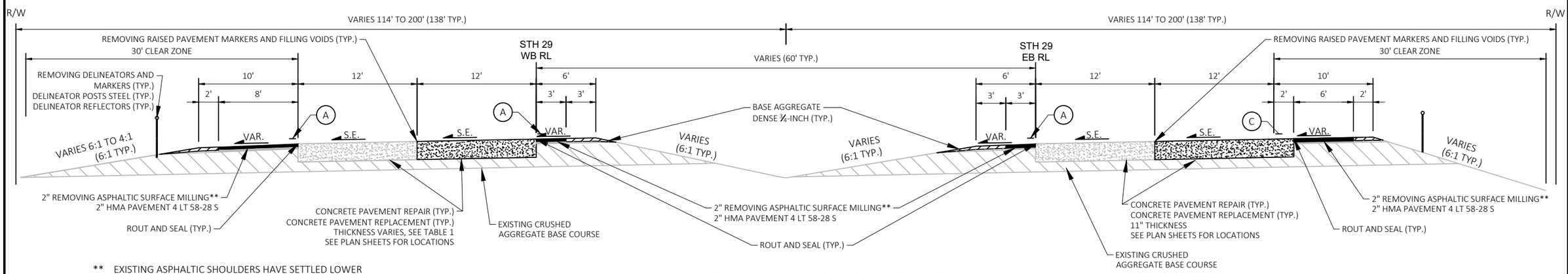

FINISHED SUPERELEVATED TYPICAL SECTION

STA 1142'WB'+94 - STA 1196'WB'+29
STA 1142'EB'+94 - STA 1173'EB'+13

** EXISTING ASPHALTIC SHOULDERS HAVE SETTLED LOWER THAN EXISTING CONCRETE PAVEMENT IN VARIOUS LOCATIONS. MILLING DEPTH TO BE SET OFF OF THE EXISTING CONCRETE PAVEMENT EDGE.

(C) = CONCRETE SHOULDER RUMBLE STRIPS, DIVIDED ROADWAY

(A) = ASPHALTIC SHOULDER RUMBLE STRIPS, DIVIDED ROADWAY

NOTE:
DIAMOND GRIND CONCRETE PAVEMENT REPAIR AND REPLACEMENT PATCHES EXTENDING 5-FT FROM OUTER PATCH LIMITS (SEE DETAIL).

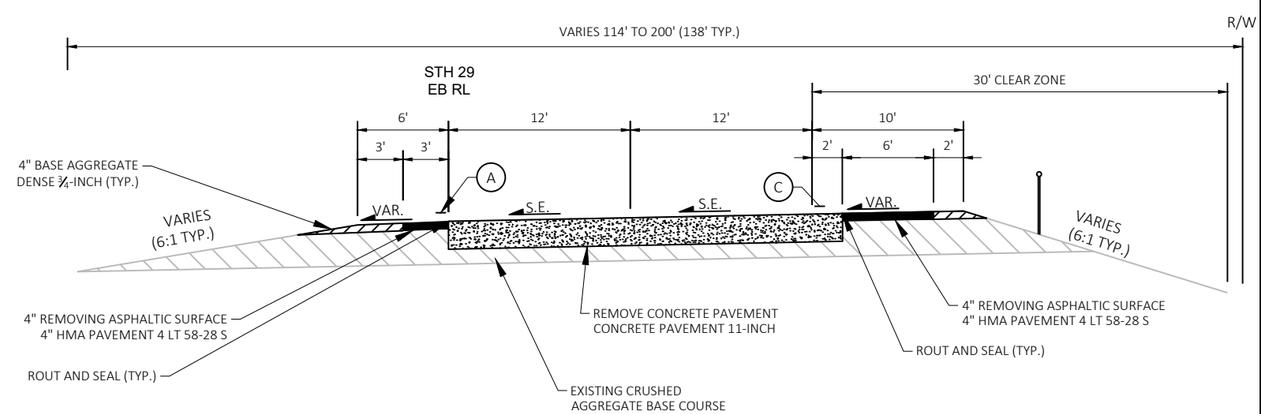

FINISHED SUPERELEVATED TYPICAL SECTION

STA 1173'EB'+13 - STA 1193EB'+75

PROJECT NO: 1053-07-60	HWY: STH 29	COUNTY: MARATHON	TYPICAL SECTION	SHEET 10	E

2

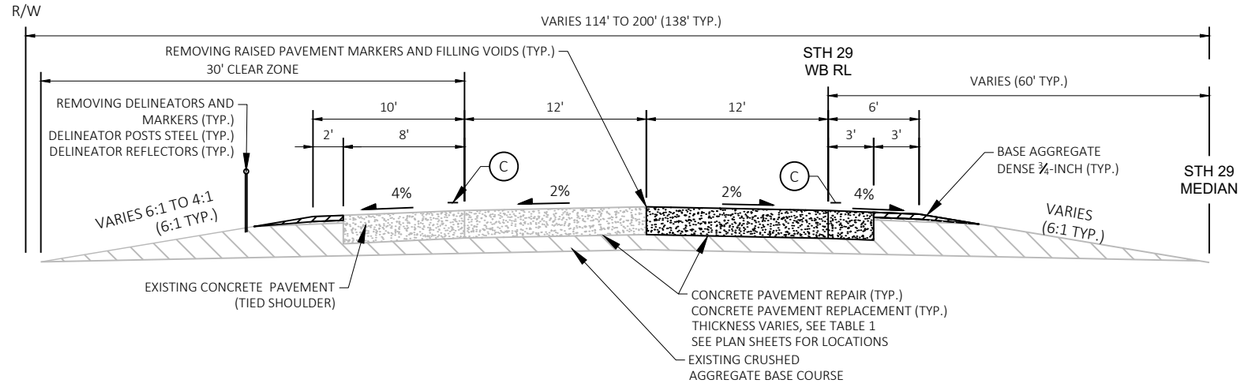

FINISHED TYPICAL SECTION

STA 1080'WB'+30 - STA 1086'WB'+33

(C) = CONCRETE SHOULDER RUMBLE STRIPS, DIVIDED ROADWAY

(A) = ASPHALTIC SHOULDER RUMBLE STRIPS, DIVIDED ROADWAY

NOTE:
DIAMOND GRIND CONCRETE PAVEMENT REPAIR AND REPLACEMENT PATCHES EXTENDING 5-FT FROM OUTER PATCH LIMITS (SEE DETAIL).

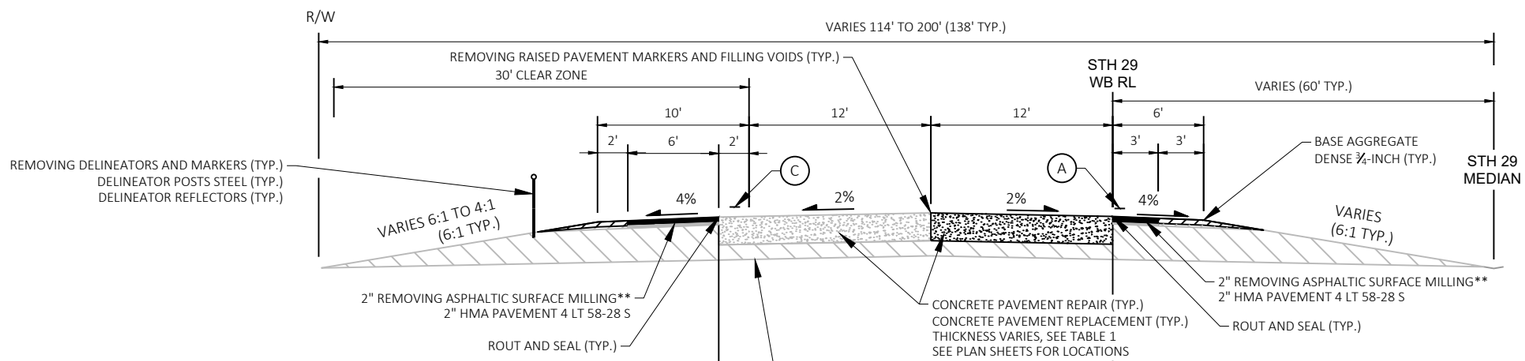

FINISHED TYPICAL SECTION

STA 1122'WB'+83 - STA 1246'WB'+44

(C) = CONCRETE SHOULDER RUMBLE STRIPS, DIVIDED ROADWAY

(A) = ASPHALTIC SHOULDER RUMBLE STRIPS, DIVIDED ROADWAY

** EXISTING ASPHALTIC SHOULDERS HAVE SETTLED LOWER THAN EXISTING CONCRETE PAVEMENT IN VARIOUS LOCATIONS. MILLING DEPTH TO BE SET OFF OF THE EXISTING CONCRETE PAVEMENT EDGE.

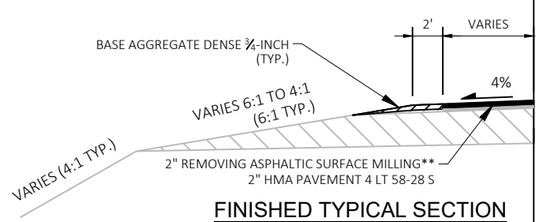

FINISHED TYPICAL SECTION

STA 1122'WB'+83 - 1126'WB'+05
STA 1181'WB'+78 - 1186'WB'+24
STA 1209'WB'+45 - 1213'WB'+83

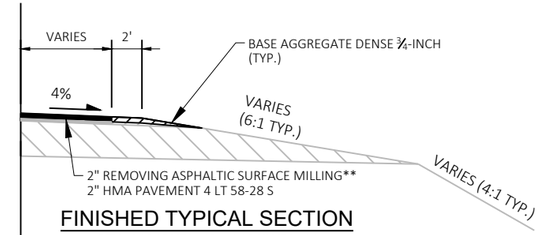

FINISHED TYPICAL SECTION

STA 1181'WB'+78 - 1186'WB'+77

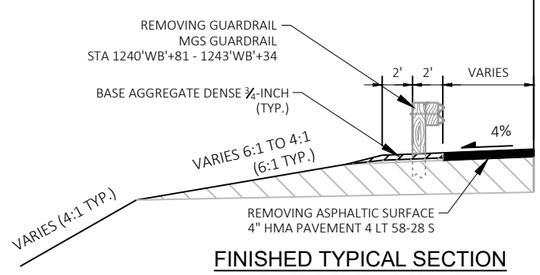

FINISHED TYPICAL SECTION

STA 1238'WB'+88 - 1239'WB'+81
STA 1240'WB'+91 - 1244'WB'+38

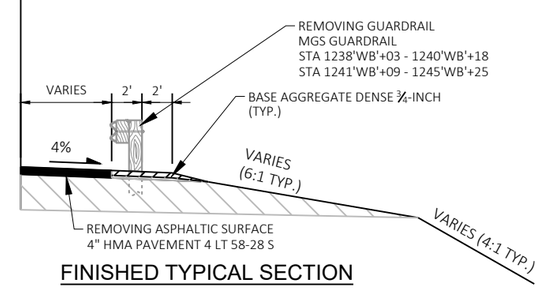

FINISHED TYPICAL SECTION

STA 1237'WB'+89 - 1239'WB'+99
STA 1241'WB'+14 - 1246'WB'+44

NOTE:
DIAMOND GRIND CONCRETE PAVEMENT REPAIR AND REPLACEMENT PATCHES EXTENDING 5-FT FROM OUTER PATCH LIMITS (SEE DETAIL).

2

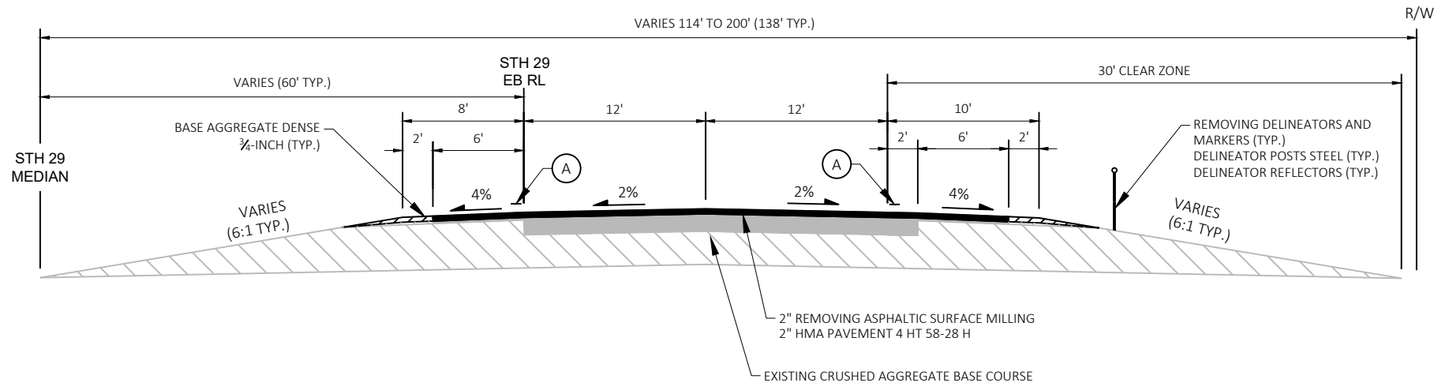

FINISHED TYPICAL SECTION

STA 1084'EB'+05 - STA 1091'EB'+50

(A) = ASPHALTIC SHOULDER RUMBLE STRIPS, DIVIDED ROADWAY

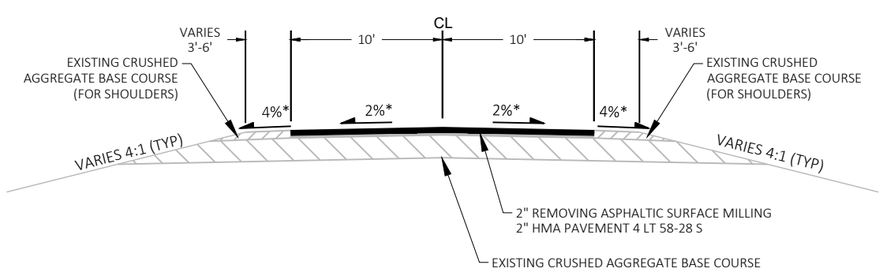

* CROSS SLOPE VARIES DUE TO SUPERELEVATION, MATCH EXISTING

FINISHED SIDEROAD TYPICAL SECTION

CTH D
BLACK CHERRY DR
SILVER BIRCH CIR (WEST)
BLACK WILLOW DR
CTH II
SILVER BIRCH CIR (EAST)
CTH OO

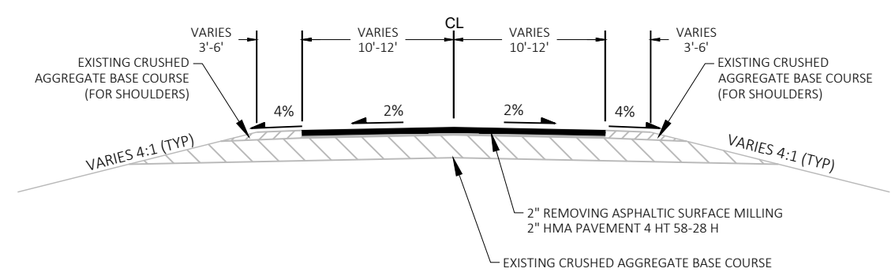

FINISHED SIDEROAD TYPICAL SECTION

STH 49

2

2" REMOVING ASPHALTIC SURFACE MILLING
2" HMA PAVEMENT 4 LT 58-28 S (UPPER)

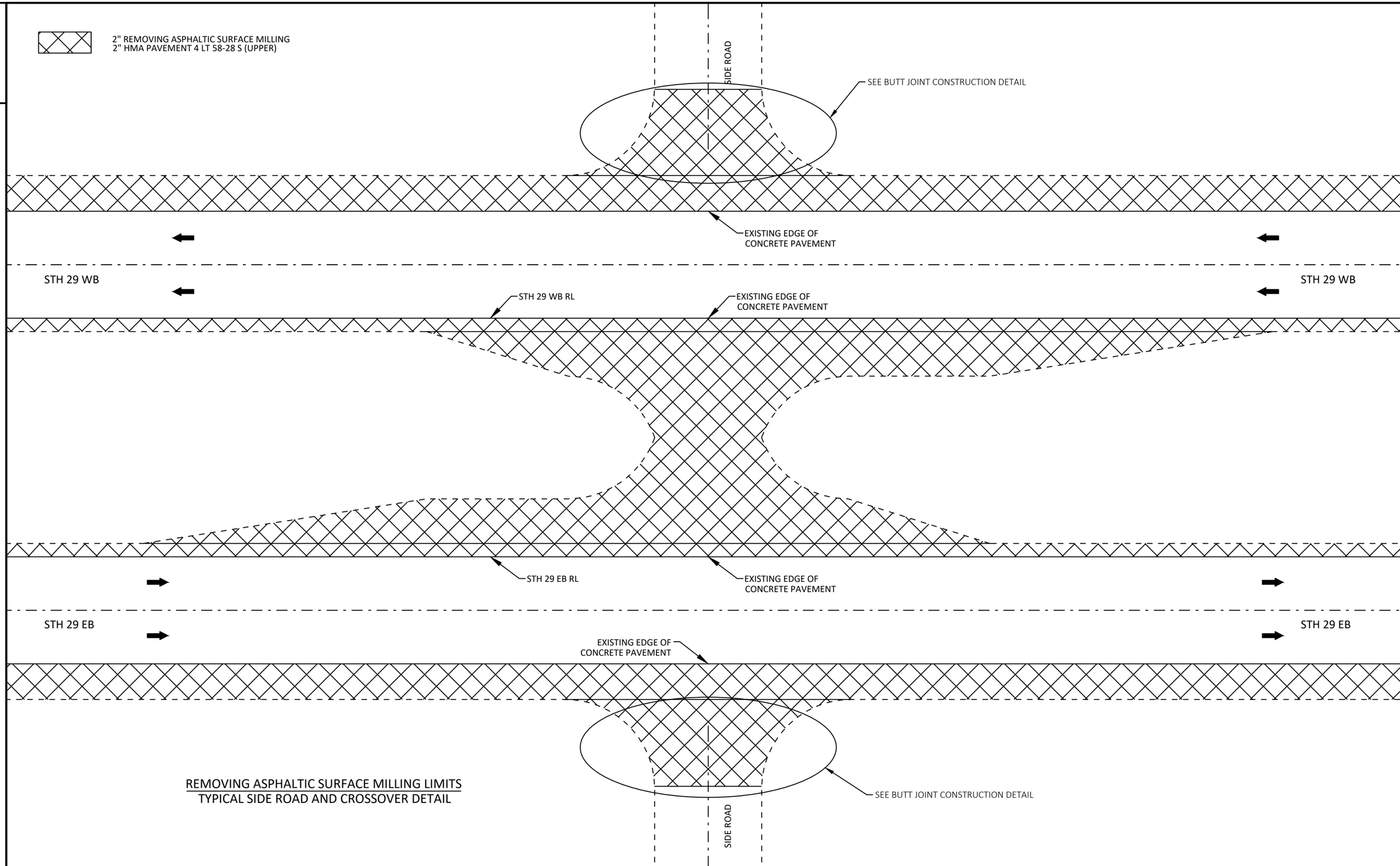

REMOVING ASPHALTIC SURFACE MILLING LIMITS
TYPICAL SIDE ROAD AND CROSSOVER DETAIL

2

PROJECT NO: 1053-07-60	HWY: STH 29	COUNTY: MARATHON	CONSTRUCTION DETAILS	SHEET 13	E

FILE NAME : W:\10530730\SHEETS\021001-CD.DWG
LAYOUT NAME - 021001-cd
PLOT DATE : 6/17/2025 1:56 PM
PLOT BY : RYAN BOOTH
PLOT NAME :
PLOT SCALE : 1:10
WISDOT/CADDS SHEET 42

2

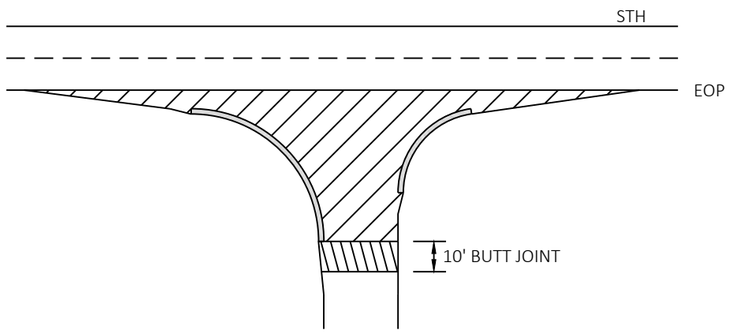

REMOVING ASPHALTIC SURFACE MILLING

REMOVING ASPHALTIC SURFACE BUTT JOINTS
SEE BUTT JOINT DETAIL

NOTE: WHEN MATCHING TO AN UNPAVED SURFACE BUTT JOINT IS NOT REQUIRED

SIDE ROADS

WITH CURB AND GUTTER

CTH D
STH 49
SILVER BIRCH CIR

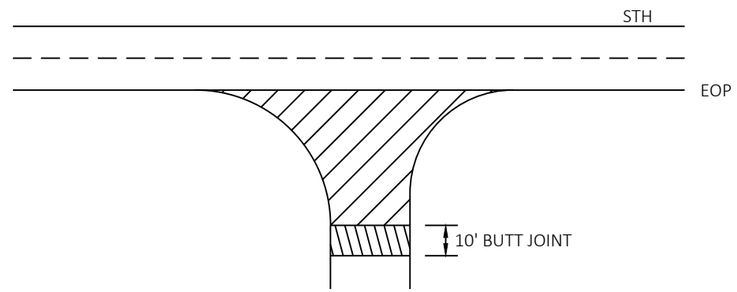

REMOVING ASPHALTIC SURFACE MILLING

REMOVING ASPHALTIC SURFACE BUTT JOINTS
SEE BUTT JOINT DETAIL

NOTE: WHEN MATCHING TO AN UNPAVED SURFACE BUTT JOINT IS NOT REQUIRED

SIDE ROADS

WITHOUT CURB AND GUTTER

BLACK CHERRY DR
SILVER BIRCH CIR
BLACK WILLOW DR
CTH OO

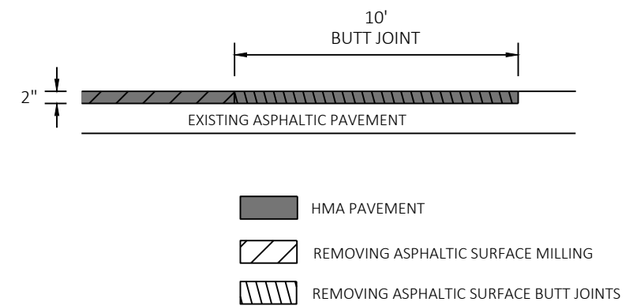

BUTT JOINT - ADJACENT TO ASPHALT

MAINLINE AND SIDE ROADS

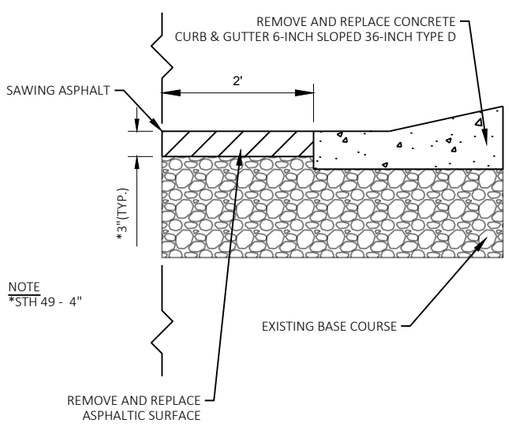

CURB & GUTTER REPLACEMENT
SIDEROADS

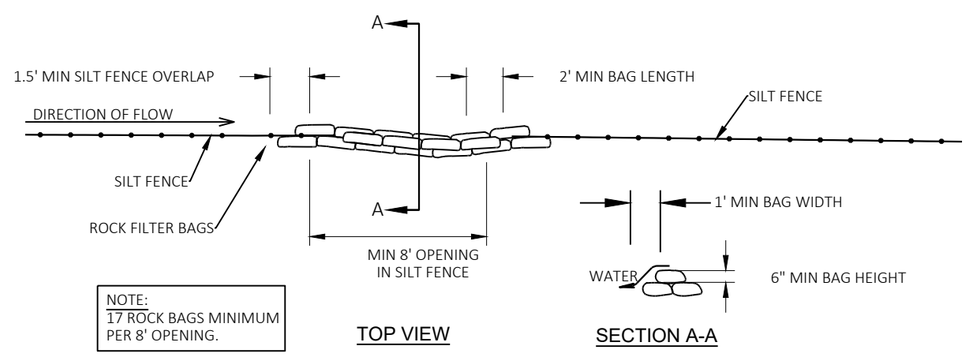

ROCK BAGS USED FOR SILT FENCE RELIEF

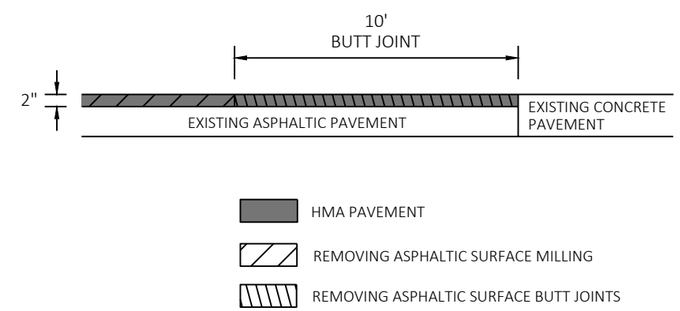

BUTT JOINT - ADJACENT TO CONCRETE

MAINLINE

PROJECT NO: 1053-07-60	HWY: STH 29	COUNTY: MARATHON	CONSTRUCTION DETAILS	SHEET 14	E

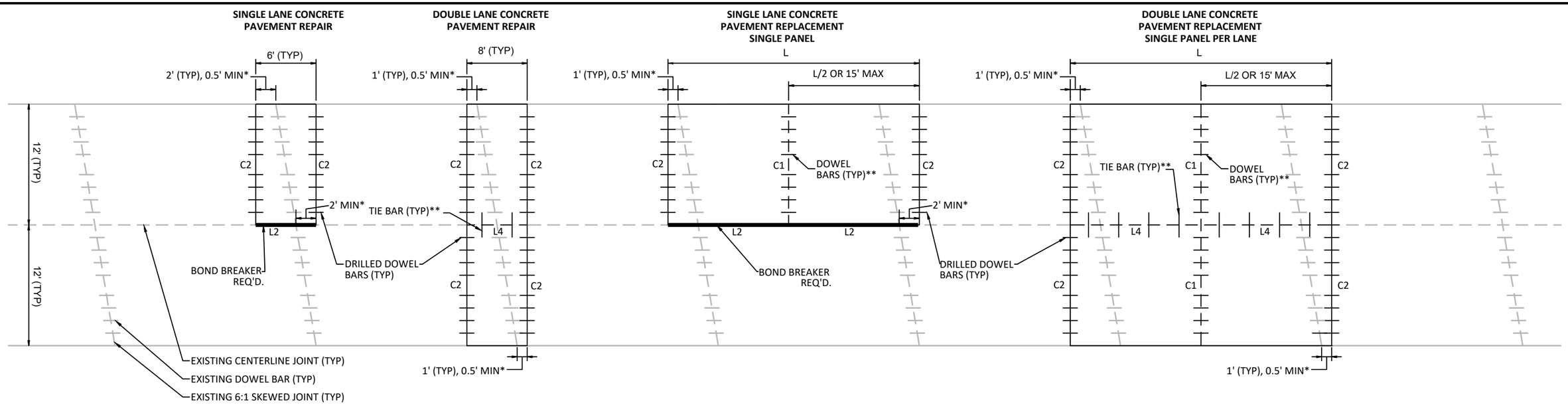

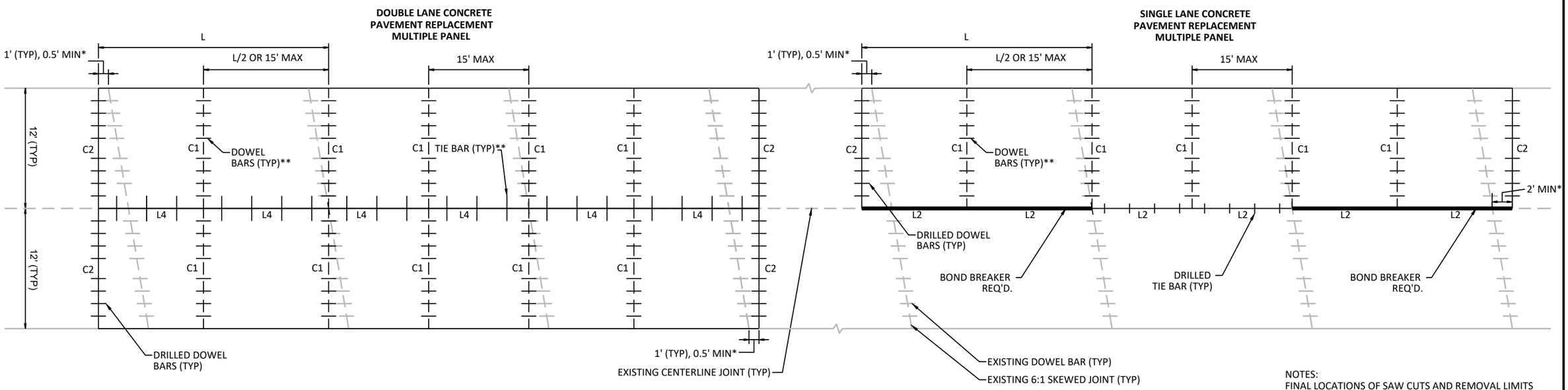

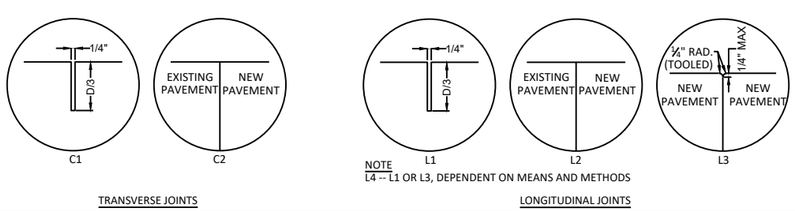

NOTE
L4 -- L1 OR L3, DEPENDENT ON MEANS AND METHODS

CONCRETE PAVEMENT REPAIR / REPLACEMENT DETAILS FOR SKEWED JOINTS

NOTES:
FINAL LOCATIONS OF SAW CUTS AND REMOVAL LIMITS ARE TO BE DETERMINED BY THE ENGINEER IN THE FIELD.

REFER TO SDD CONCRETE PAVEMENT REPAIR AND REPLACEMENT FOR ADDITIONAL DETAILS.

* ENSURE FULL REMOVAL OF EXISTING DOWEL BAR AT CONCRETE REPAIR/REPLACEMENT LOCATIONS.

**INCIDENTAL WHEN NOT ABUTTING EXISTING PAVEMENT.

2

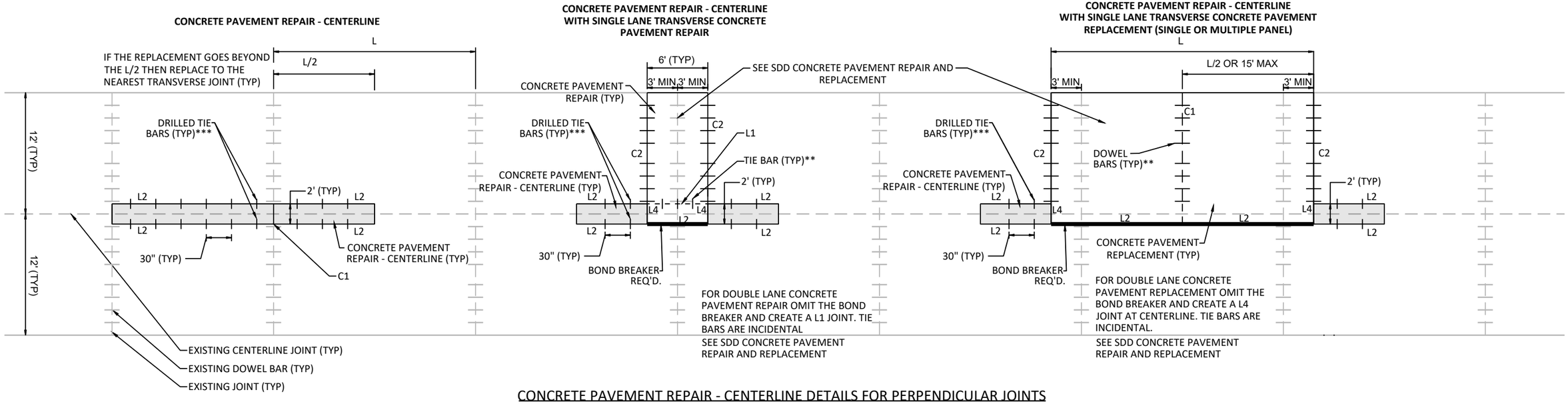

CONCRETE PAVEMENT REPAIR - CENTERLINE DETAILS FOR PERPENDICULAR JOINTS

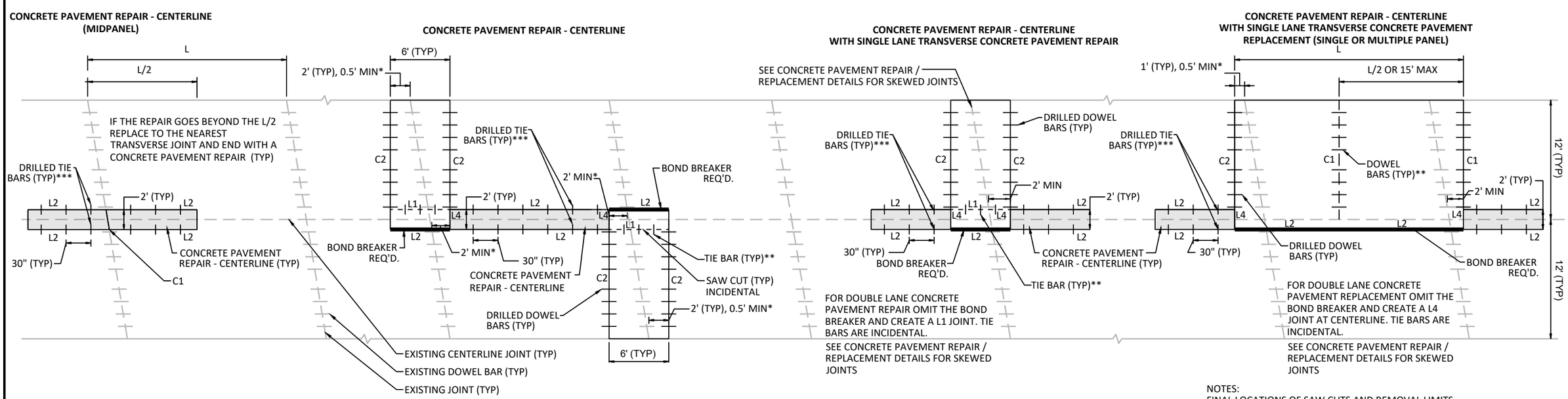

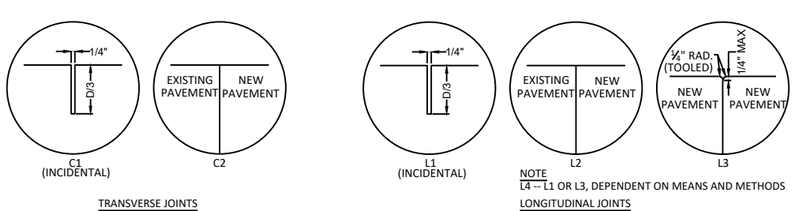

CONCRETE PAVEMENT REPAIR - CENTERLINE DETAILS FOR SKEWED JOINTS

NOTES:
FINAL LOCATIONS OF SAW CUTS AND REMOVAL LIMITS ARE TO BE DETERMINED BY THE ENGINEER IN THE FIELD.

REFER TO S.D.D. CONCRETE PAVEMENT REPAIR AND REPLACEMENT FOR ADDITIONAL DETAILS.

* ENSURE FULL REMOVAL OF EXISTING DOWEL BAR AT CONCRETE REPAIR/REPLACEMENT LOCATIONS.

**INCIDENTAL WHEN NOT ABUTTING EXISTING PAVEMENT.

***TIE BAR MAY BE DRILLED AT AN ANGLE, THEN BENT PERPENDICULAR TO JOINT AFTER INSTALLATION.

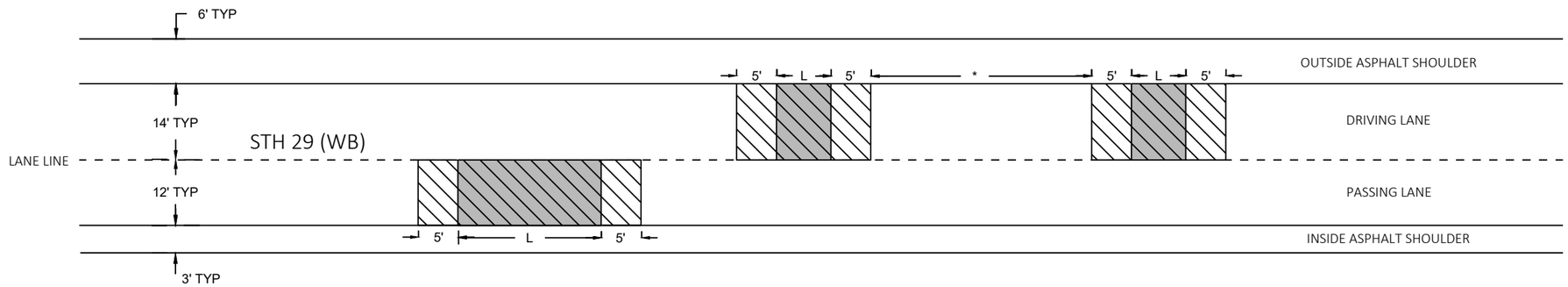

CONCRETE PAVEMENT REPAIR OR REPLACEMENT AREA

CONTINUOUS DIAMOND GRINDING CONCRETE PAVEMENT AREA

* NOTE: CONNECT DIAMOND GRINDING OPERATIONS AT LOCATIONS WHERE CONSECUTIVE JOINTS ARE BEING REPAIRED AND THE GAP DISTANCE IS LESS THAN OR EQUAL TO 10 FEET. CENTERLINE CONCRETE PAVEMENT REPAIR AREAS WILL NOT REQUIRE DIAMOND GRINDING OPERATIONS. DO NOT DIAMOND GRIND ON APPROACH SLABS.

L = LENGTH OF REPAIR OR REPLACEMENT SHOWN ELSEWHERE IN PLANS OR DETERMINED BY THE ENGINEER IN THE FIELD

DETAIL FOR LIMITS OF DIAMOND GRINDING

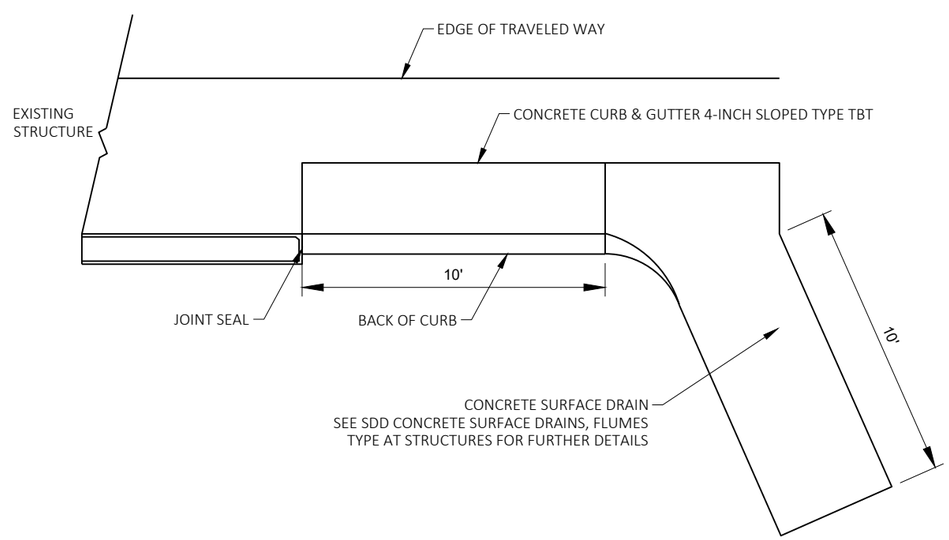

CONCRETE SURFACE DRAIN AT STRUCTURES WITHOUT BEAMGUARD

NOTES:

PERFORM REMOVING ASPHALTIC SURFACE MILLING PRIOR TO REMOVING DISTRESSED ASPHALTIC SURFACE MILLING

1. MILLED VERTICAL EDGES ARE ACCEPTABLE, SAW CUTS ARE NOT REQUIRED.
2. THE SMALLEST DIMENSION OF REMOVING DISTRESSED ASPHALTIC SURFACE MILLING IS 4 FEET IN ANY DIRECTION.
3. WHEN THE DISTANCE FROM THE EDGE OF PAVEMENT TO EDGE OF REMOVING DISTRESSED ASPHALTIC SURFACE MILLING IS LESS THAN 1-FOOT, EXTEND THE REMOVING DISTRESSED ASPHALTIC SURFACE MILLING TO THE EDGE OF PAVEMENT.

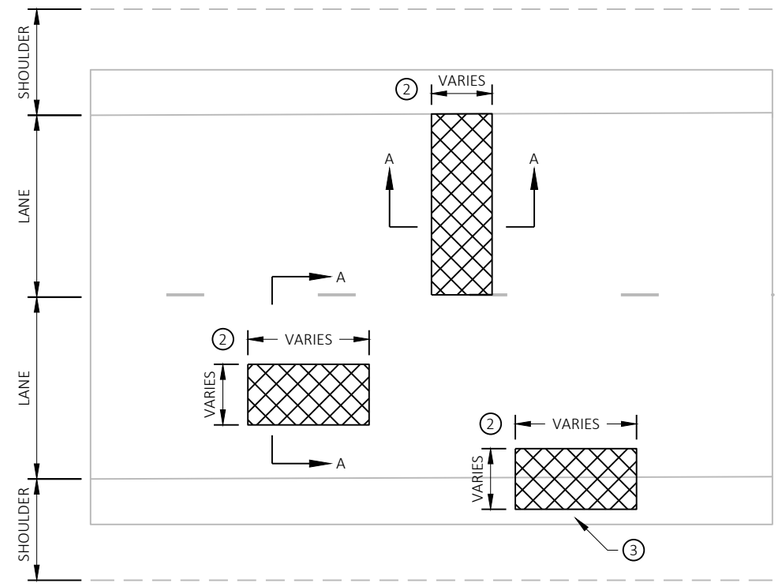

PLAN VIEW

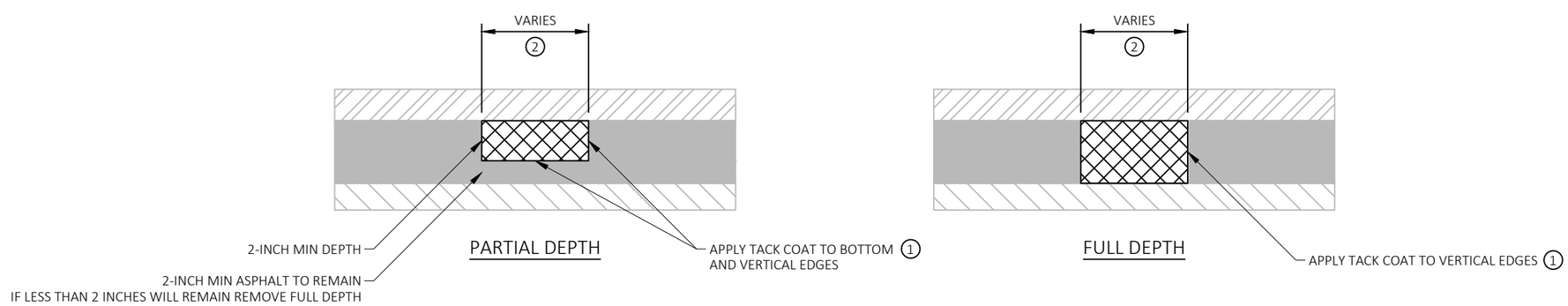

SECTION A-A

REMOVING ASPHALTIC SURFACE MILLING

REMOVING DISTRESSED ASPHALTIC SURFACE MILLING
ASPHALTIC SURFACE PATCHING

EXISTING ASPHALT

EXISTING BASE COURSE

REMOVING DISTRESSED ASPHALTIC SURFACE MILLING

LOCATIONS AND LIMITS DETERMINED BY THE ENGINEER IN THE FIELD

2

NOTES:

1. REMOVE LOOSE OR SPALLED CONCRETE AND ASPHALT PATCHING
2. EXISTING CONCRETE SHOULDER 6-FOOT OR LESS INCLUDED IN REPAIR AREA OF ADJACENT LANE

ASPHALTIC SURFACE
EXISTING CONCRETE PAVEMENT
EXISTING BASE COURSE

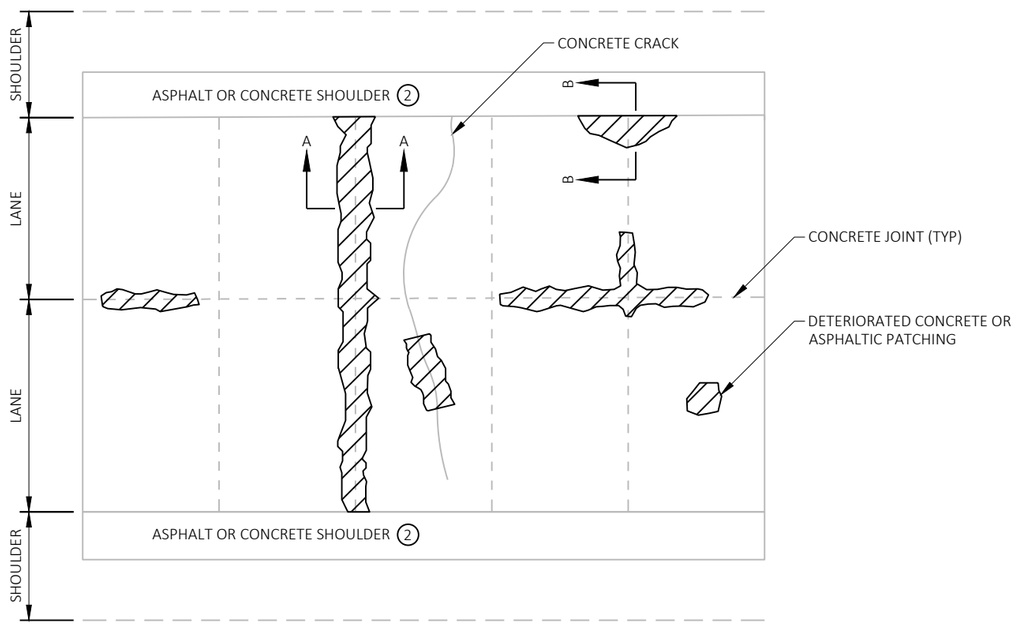

PLAN VIEW

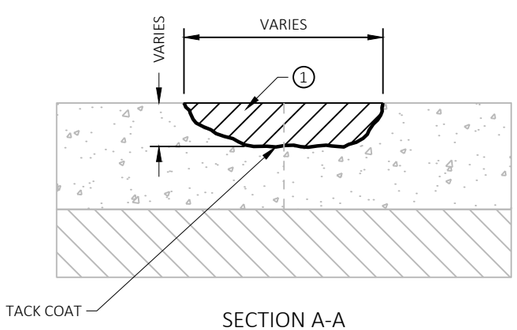

SECTION A-A

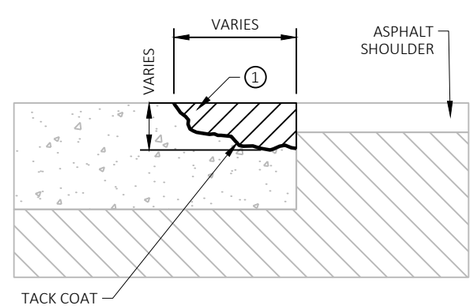

SECTION B-B

CONCRETE JOINT AND CRACK CLEANING AND REPAIR

SEE MISCELLANEOUS QUANTITIES FOR LOCATION

2

ASPHALTIC SURFACE
EXISTING CONCRETE PAVEMENT
EXISTING BASE COURSE

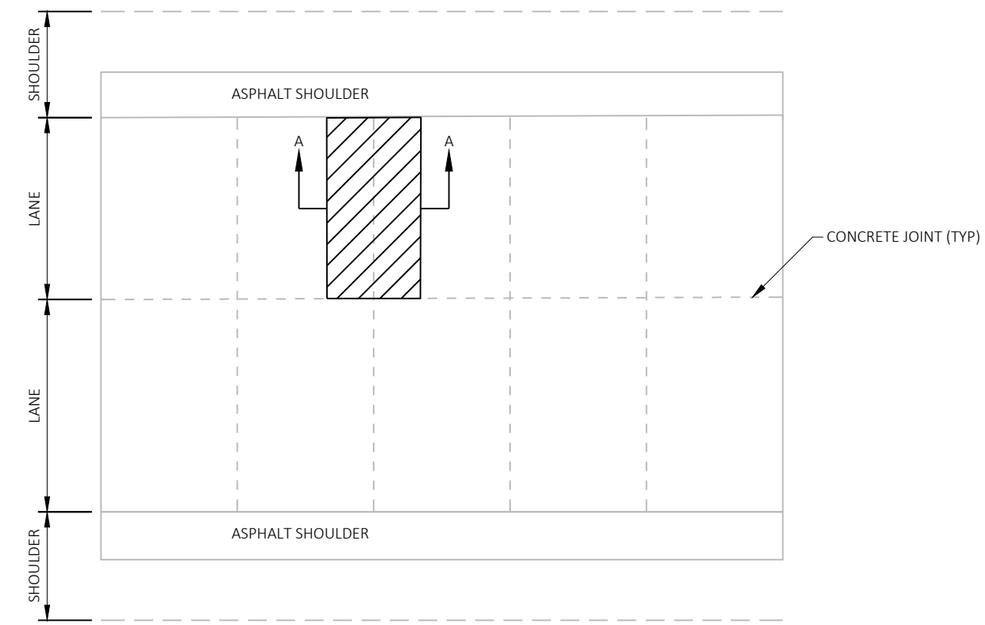

PLAN VIEW

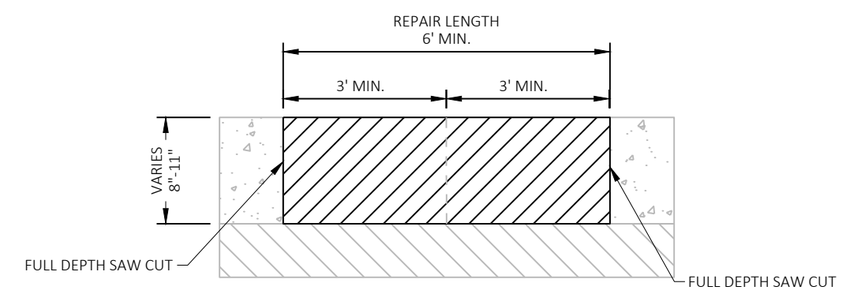

SECTION A-A

FULL DEPTH ASPHALT PATCH

PROJECT NO: 1053-07-60	HWY: STH 29	COUNTY: MARATHON	CONSTRUCTION DETAILS	SHEET 19	E

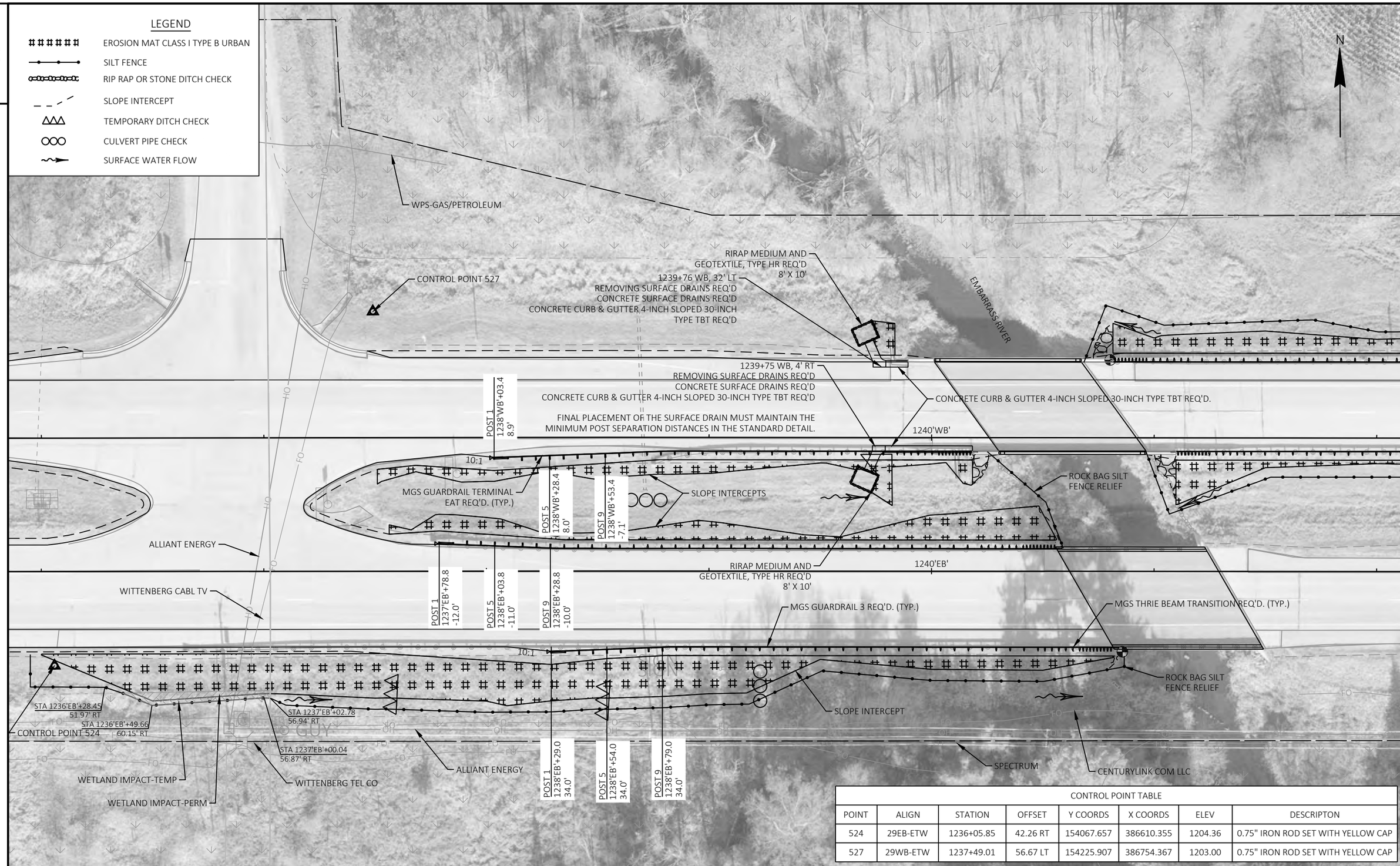

CONTROL POINT TABLE

POINT	ALIGN	STATION	OFFSET	Y COORDS	X COORDS	ELEV	DESCRIPTON
524	29EB-ETW	1236+05.85	42.26 RT	154067.657	386610.355	1204.36	0.75" IRON ROD SET WITH YELLOW CAP
527	29WB-ETW	1237+49.01	56.67 LT	154225.907	386754.367	1203.00	0.75" IRON ROD SET WITH YELLOW CAP

PROJECT NO: 1053-07-60	HWY: STH 29	COUNTY: MARATHON	PLAN DETAILS - GUARDRAIL AND EROSION CONTROL	SHEET 20	E

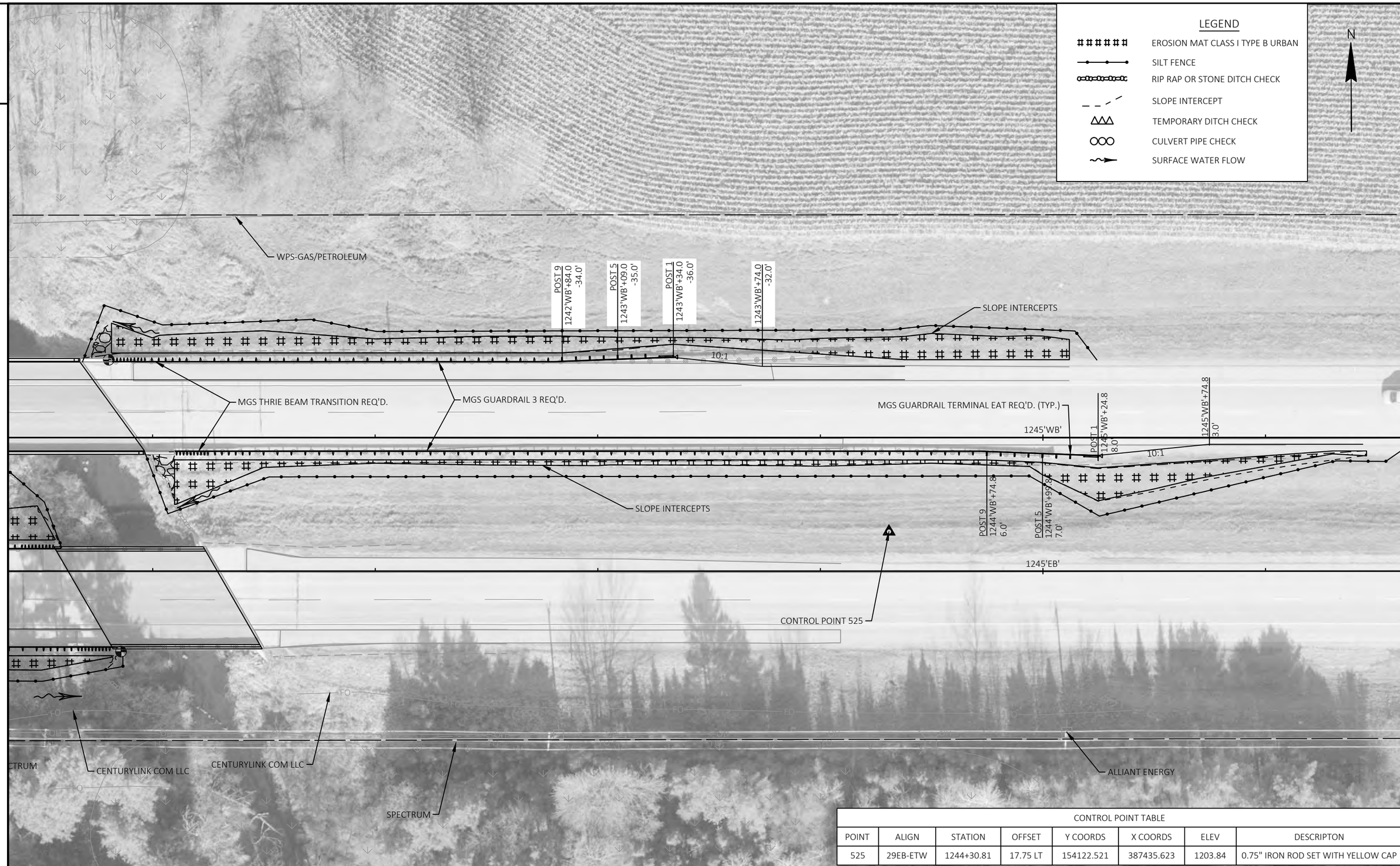

CONTROL POINT TABLE

POINT	ALIGN	STATION	OFFSET	Y COORDS	X COORDS	ELEV	DESCRIPTON
525	29EB-ETW	1244+30.81	17.75 LT	154122.521	387435.623	1203.84	0.75" IRON ROD SET WITH YELLOW CAP

2

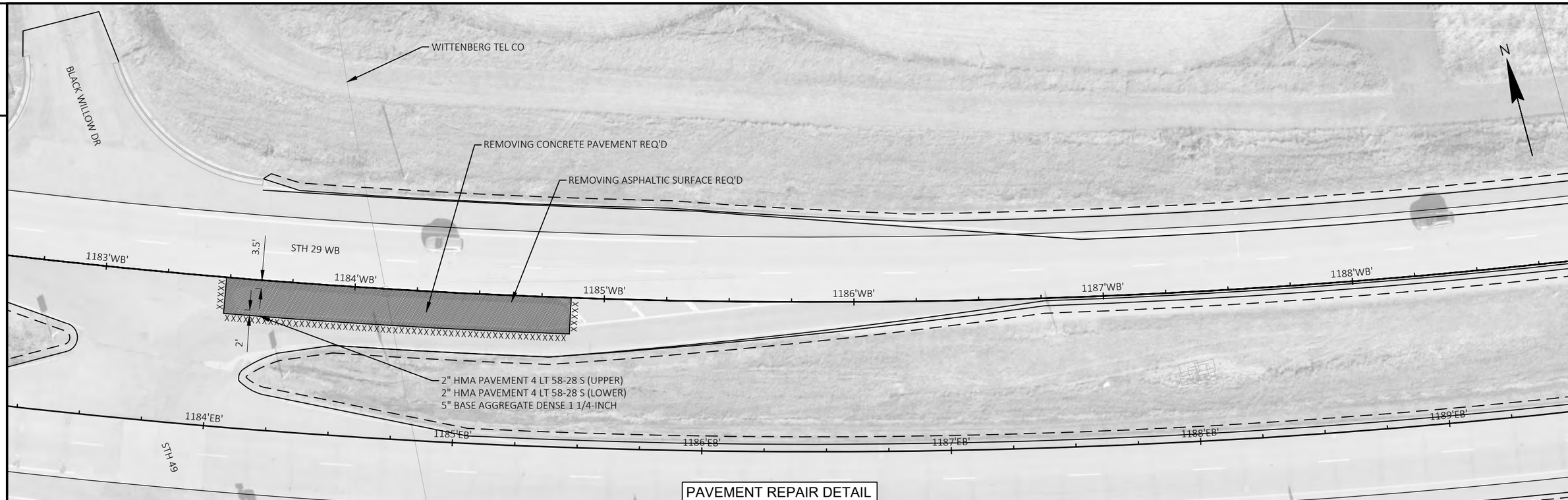

PAVEMENT REPAIR DETAIL

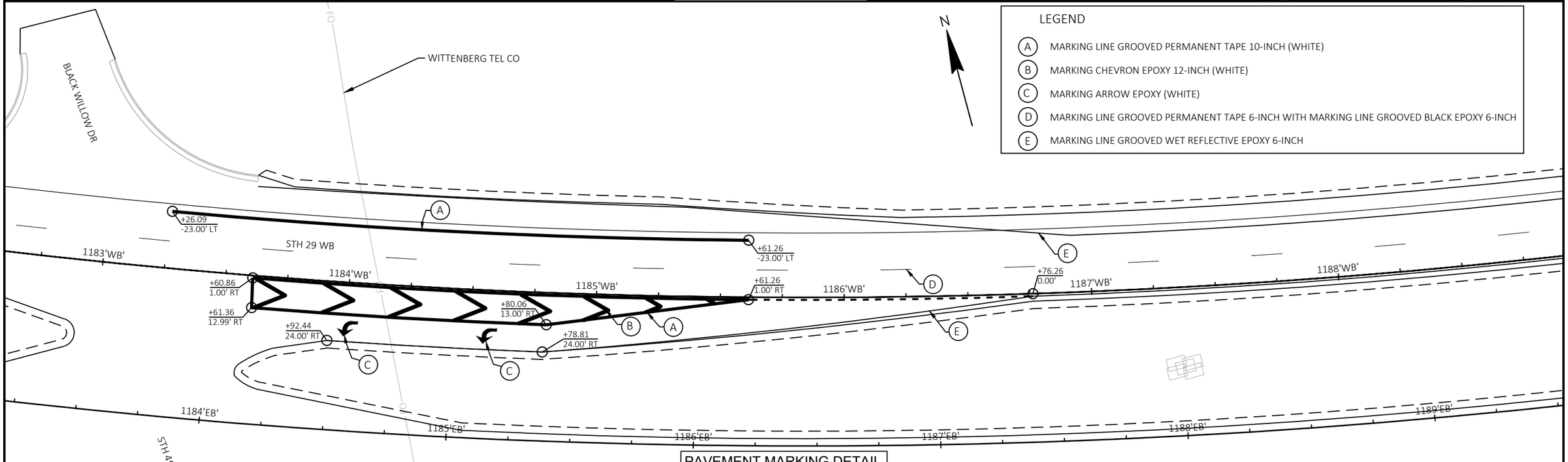

PAVEMENT MARKING DETAIL

PROJECT NO: 1053-07-60	HWY: STH 29	COUNTY: MARATHON	PLAN DETAIL - STH 29 WB TURN LANE AT STH 49	SHEET 22	E

2

CP01	CONCRETE PAVEMENT 11-INCH
HMA01	4" HMA PAVEMENT 4 LT 58-28 S

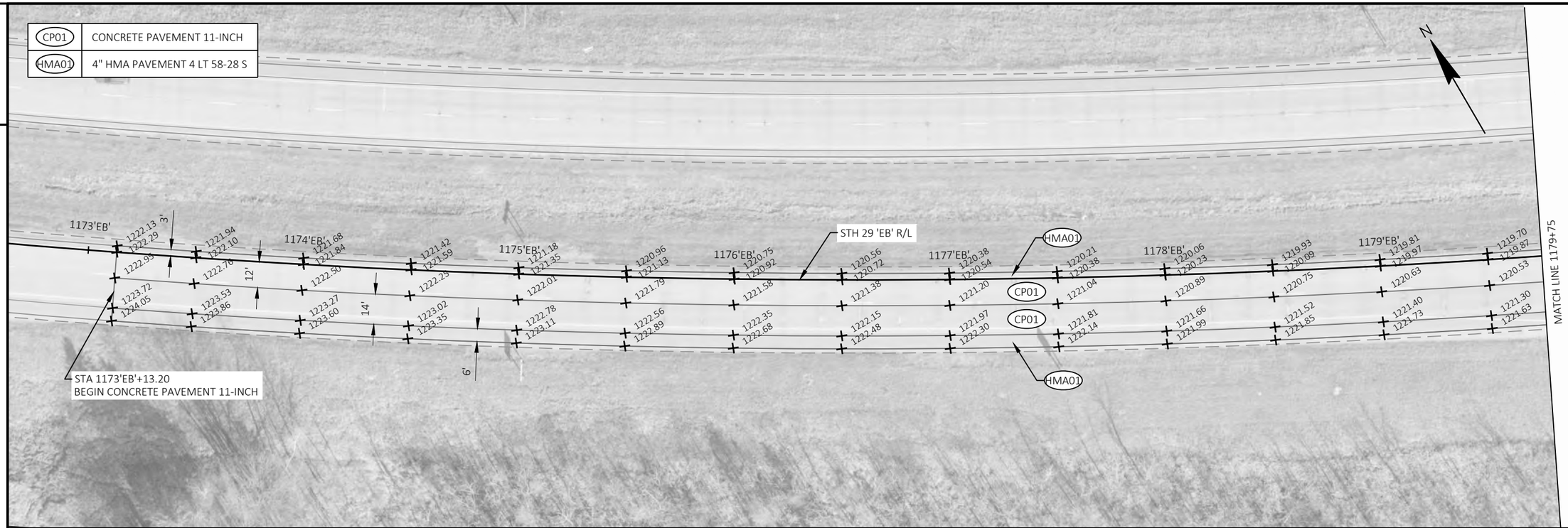

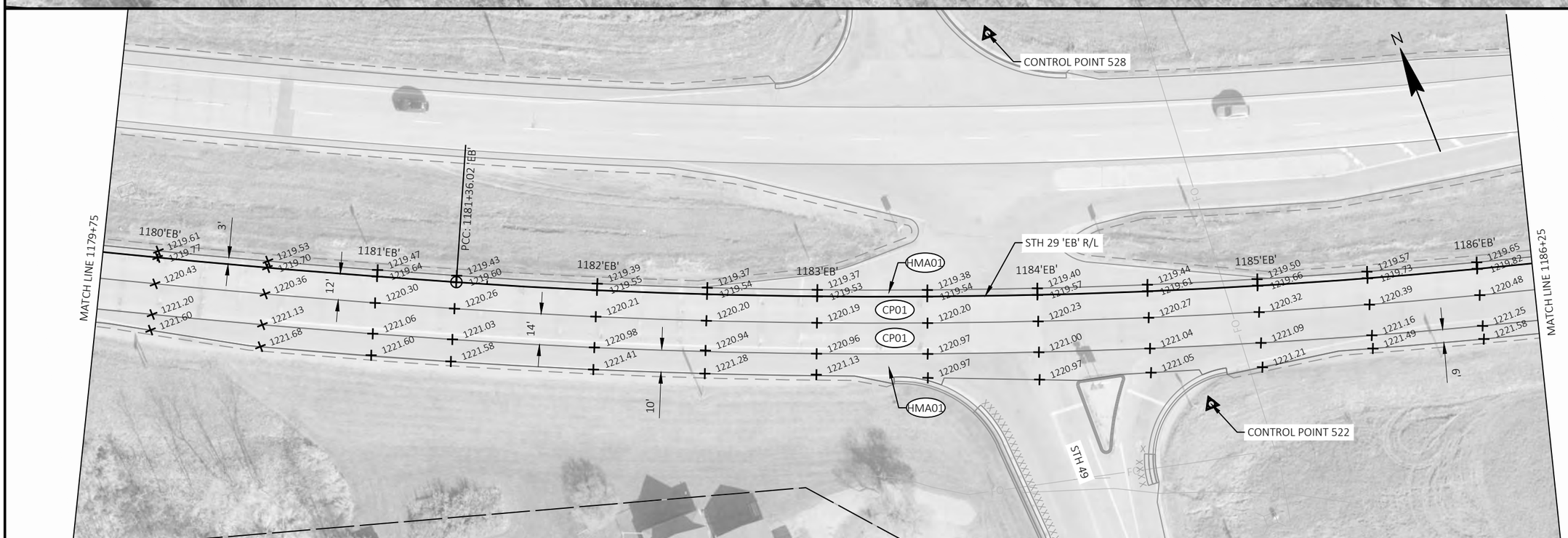

PROJECT NO: 1053-07-60	HWY: STH 29	COUNTY: MARATHON	PLAN DETAILS - STA 1173'EB'+13 - STA 1223'EB'+54	SHEET 23	E

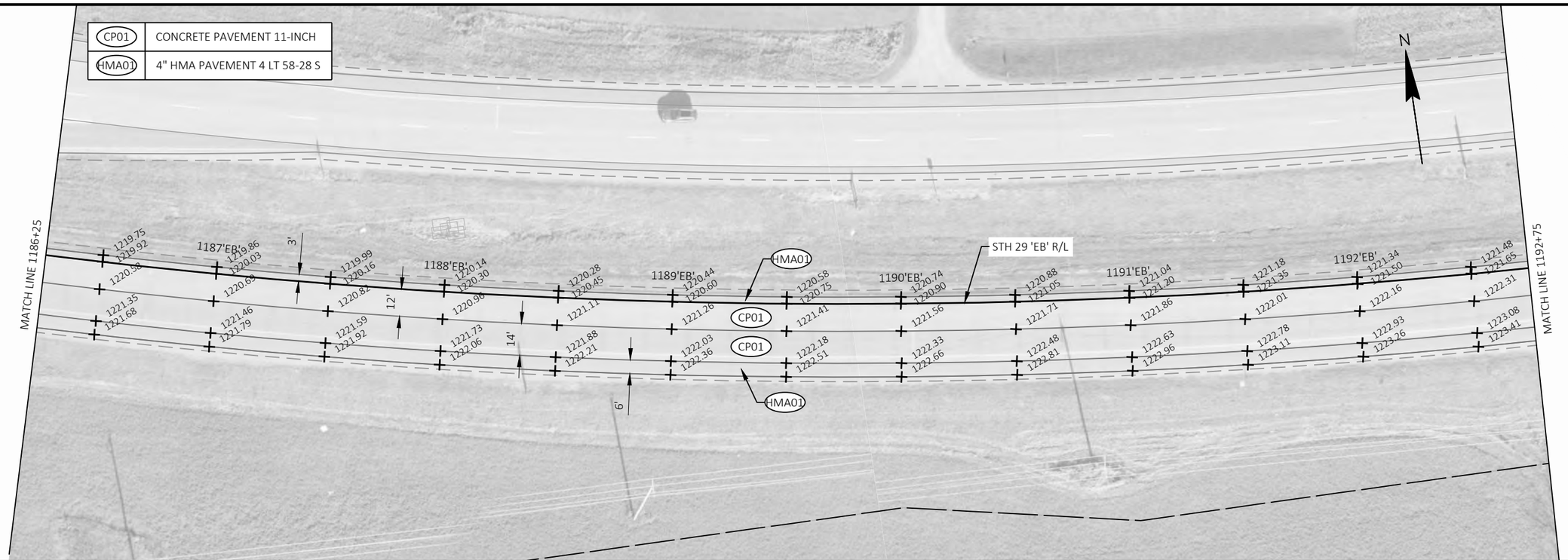

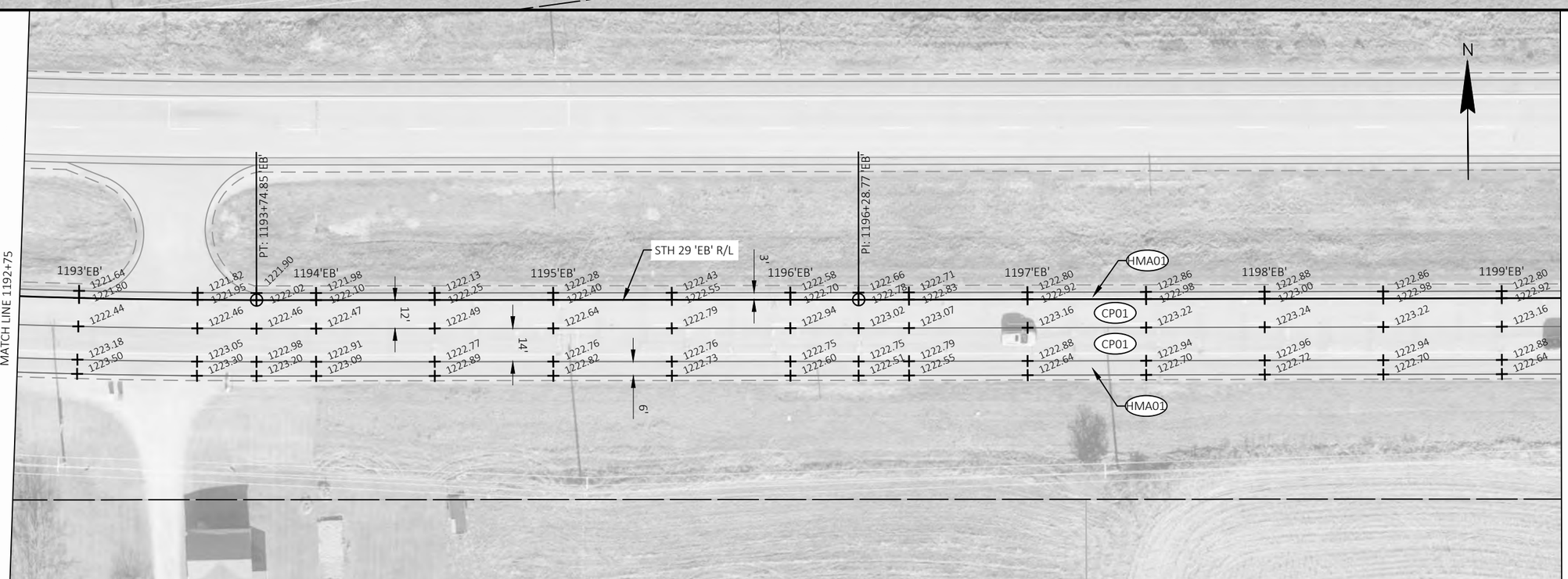

PROJECT NO: 1053-07-60	HWY: STH 29	COUNTY: MARATHON	PLAN DETAILS - STA 1173'EB'+13 - STA 1223'EB'+54	SHEET 24	E

2

CP01	CONCRETE PAVEMENT 11-INCH
HMA01	4" HMA PAVEMENT 4 LT 58-28 S

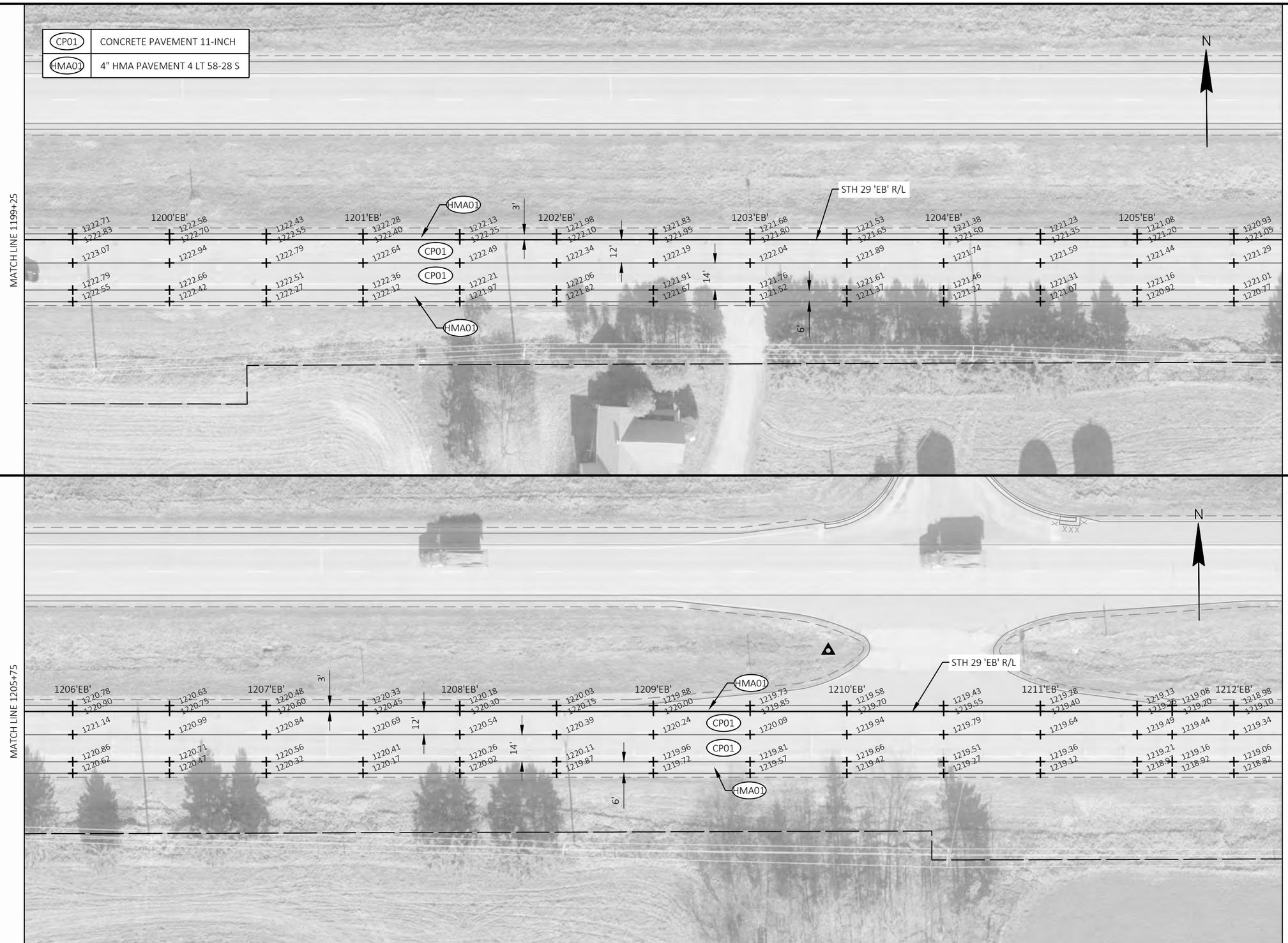

2

PROJECT NO: 1053-07-60	HWY: STH 29	COUNTY: MARATHON	PLAN DETAILS - STA 1173'EB'+13 - STA 1223'EB'+54	SHEET 25	E

2

CP01	CONCRETE PAVEMENT 11-INCH
HMA01	4" HMA PAVEMENT 4 LT 58-28 S

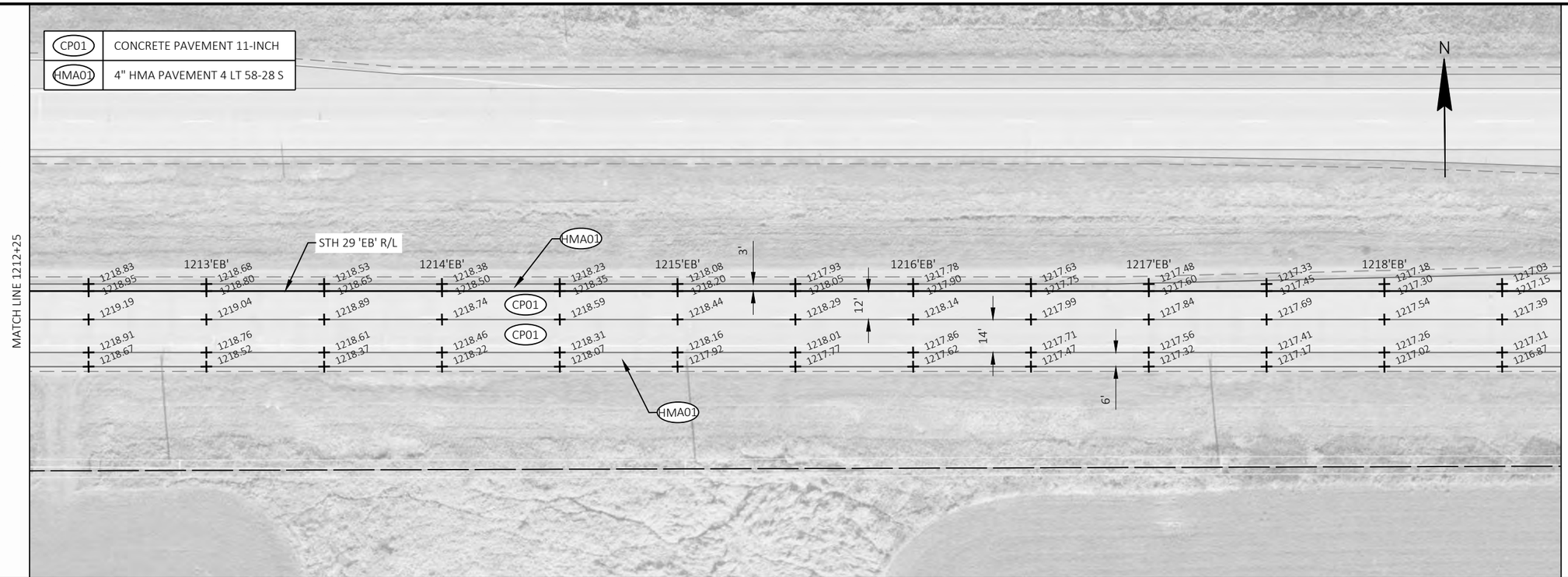

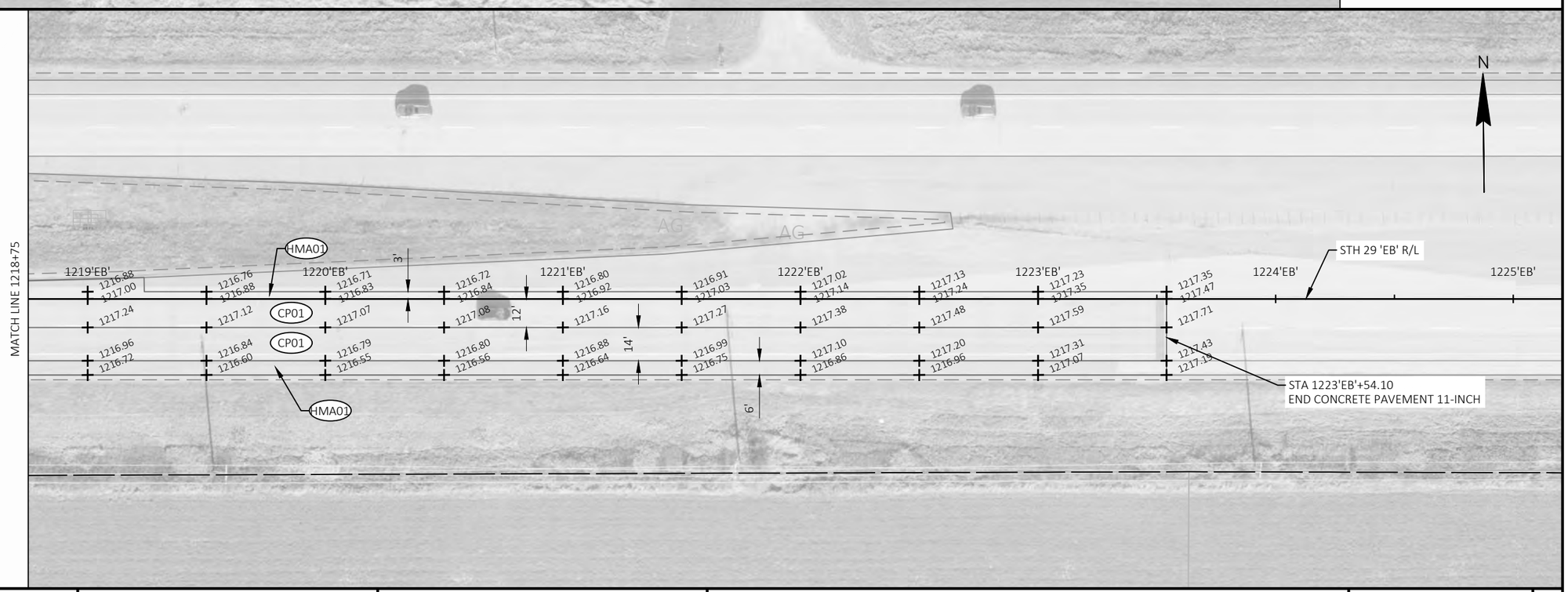

2

PROJECT NO: 1053-07-60	HWY: STH 29	COUNTY: MARATHON	PLAN DETAILS - STA 1173'EB'+13 - STA 1223'EB'+54	SHEET 26	E

ADVANCED WIDTH RESTRICTION
SIGNING AT CTH X, CTH J, CTH Q (MARATHON COUNTY), CTH Y, AND USH 51
STAGES 2A, 3A, AND 3B.
SEE ADVANCED WARNING DETAILS AND STANDARD DETAIL DRAWING "ADVANCED WIDTH RESTRICTION SIGNING".

STAGING
STAGES 1, 2A, 2B, 3A, 3B, AND 4.
SEE TRAFFIC CONTROL - STAGING TYPICAL SECTIONS AND STAGING PLAN DETAILS

SPEED REDUCTION
STAGES 1, 2A, 2B, 3A, 3B, AND 4.
SEE STANDARD DETAIL DRAWING "TRAFFIC CONTROL, LANE CLOSURE, SPEED REDUCTION".

SINGLE LANE CLOSURES | BI-DIRECTIONAL TRAFFIC

HILLY ACRES RD

PLACE SEVEN DAYS PRIOR TO CONSTRUCTION AND REMOVE WHEN CONSTRUCTION BEGINS

HWY 29
ROAD WORK
BEGINS XXX-XX

G20-57
96"X48"

TOWN OF NORRIE

VILLAGE OF ELAND

BUSS ACRES LN

TOWNLINE RD

EXISTING CROSSOVER EX01
STA 1070'WB'+39.39
STA 1070'EB'+39.39

BEGIN PROJECT
STA 1065'EB'+45.35
STA 1054'WB'+94.88

CTH D

BLACK WILLOW DR

MARATHON COUNTY

SHAWANO COUNTY

MOUNTAIN BAY STATE TRAIL

RED HICKORY RD

ADVANCED WIDTH RESTRICTION SIGNING AT CTH D
STAGES 2A, 2B, 3A, AND 3B
SEE ADVANCE WARNING DETAILS

TOWN OF ELDERON

KINGBIRD LN

TOWNLINE RD

HEMLOCK RD

TOWN OF WITTENBERG

STAGING
STAGES 1, 2A, 2B, 3A, 3B, AND 4.
SEE TRAFFIC CONTROL - STAGING TYPICAL SECTIONS AND STAGING PLAN DETAILS

ADVANCED WIDTH RESTRICTION
SIGNING AT CTH Q (SHAWANO COUNTY), USH 45 N, AND USH 45 S.
STAGES 2B, 3A, AND 3B.
SEE ADVANCED WARNING DETAILS AND STANDARD DETAIL DRAWING "ADVANCED WIDTH RESTRICTION SIGNING".

SPEED REDUCTION
STAGES 1, 2A, 2B, 3A, 3B, AND 4.
SEE STANDARD DETAIL DRAWING "TRAFFIC CONTROL, LANE CLOSURE, SPEED REDUCTION".

BI-DIRECTIONAL TRAFFIC | SINGLE LANE CLOSURES

PLACE SEVEN DAYS PRIOR TO CONSTRUCTION AND REMOVE WHEN CONSTRUCTION BEGINS

HWY 29
ROAD WORK
BEGINS XXX-XX

G20-57
96"X48"

KILLDER RD

B-58-101

SILVER BIRCH CIR

CTH OO

LOCUST DR

CTH II

ADVANCED WIDTH RESTRICTION SIGNING AT STH 49
STAGES 2A, 2B, 3A, AND 3B
SEE ADVANCE WARNING DETAILS

EXISTING CROSSOVER EX02
STA 1224'WB'+14.91
STA 1224'EB'+15.00

END PROJECT
STA 1241'EB'+56.74
STA 1246'WB'+43.88

B-58-39
TRAFFIC CONTROL, FULL LANE SHIFT, MULTI-LANE DIVIDED 50 MPH AND OVER
STAGES 3A AND 3B

MEADOW LARK RD

STH 49

OAK RD

ADVANCED WIDTH RESTRICTION SIGNING AT CTH OO
STAGES 2A, 2B, 3A, AND 3B
SEE ADVANCE WARNING DETAILS

NIGHTINGALE RD

1060 1070 1080 1090 1100 1110 1120 1130 1140 1150 1160 1170 1180 1190 1200 1210 1220 1230 1240 1250 1256

N

WIDTH RESTRICTION SIGNING

STAGE 2A: EB ONLY (14-FT)
STAGE 2B: WB ONLY (14-FT)
STAGE 3A: BOTH DIRECTIONS (12-FT)
STAGE 3B: BOTH DIRECTIONS (14-FT)

GENERAL NOTES

DRAWING SHOWS TRAFFIC CONTROL FOR A TYPICAL SITUATION. ADDITIONAL TRAFFIC CONTROL DEVICES MAY BE REQUIRED AND/OR LAYOUT DETAILS MODIFIED DEPENDING ON CONTRACTOR METHODS OR SEQUENCE OF OPERATION.

THE EXACT NUMBER, LOCATION, AND SPACING OF ALL SIGNS AND DEVICES SHALL BE ADJUSTED TO FIT FIELD CONDITIONS AS APPROVED BY THE ENGINEER.

THE SPACING BETWEEN SIGNS SHOULD BE ADJUSTED TO NOT CONFLICT WITH AND TO PROVIDE A MINIMUM OF 200 FEET (500 FEET DESIRABLE) DISTANCE TO EXISTING SIGNS.

ALL SIGNS ARE 48"x48" UNLESS OTHERWISE NOTED. "WO" IS THE SAME AS "W" EXCEPT THE BACKGROUND IS ORANGE.

ANY SIGNS, TEMPORARY OR EXISTING, WHICH CONFLICT WITH TRAFFIC CONTROL, "IN USE" SHALL BE REMOVED OR COVERED AS NEEDED AND APPROVED BY THE ENGINEER. NO WARNING LIGHTS SHALL BE WORKING ON "COVERED" OR "DOWNED" SIGNS.

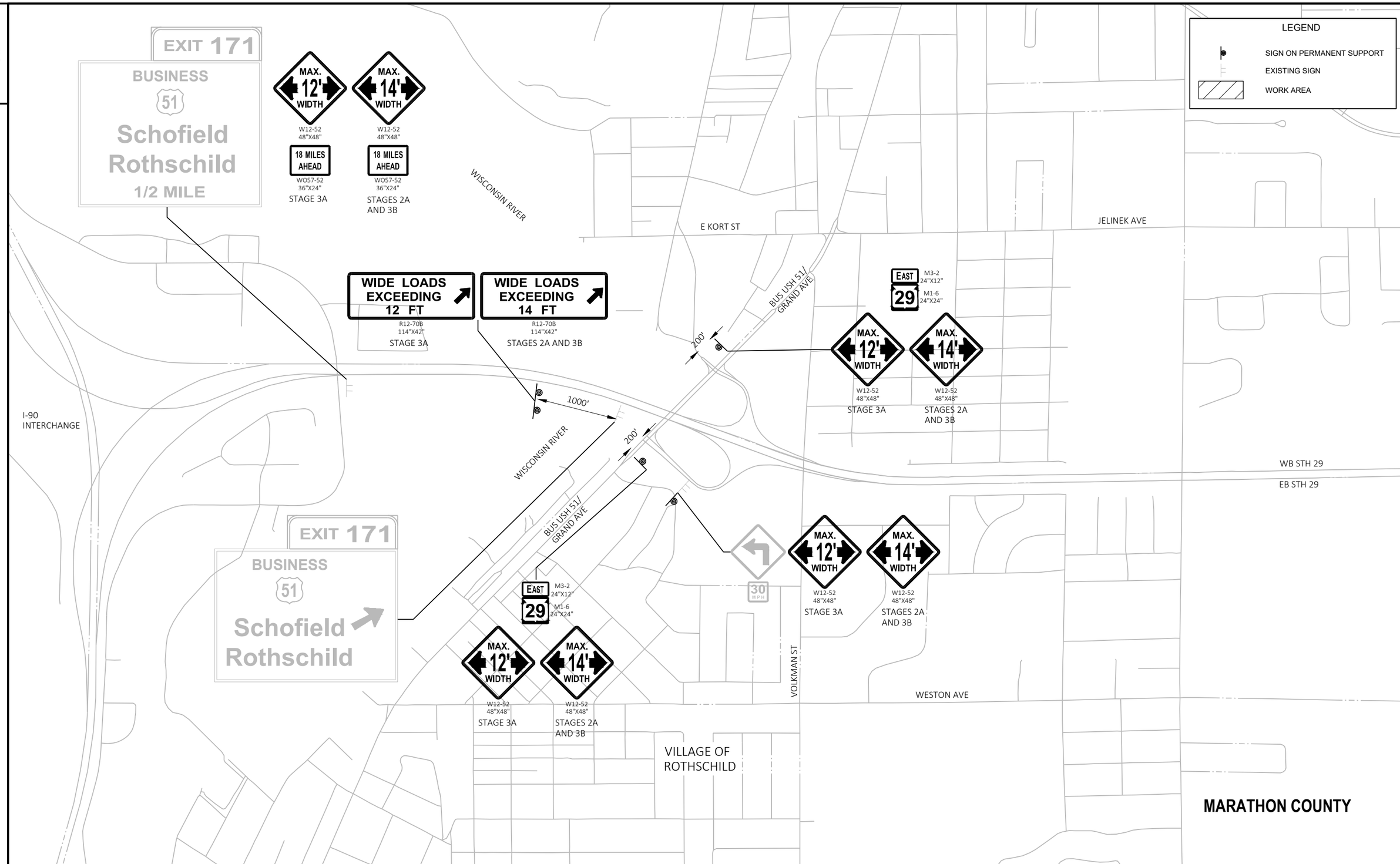

PROJECT NO: 1053-07-60	HWY: STH 29	COUNTY: MARATHON	ADVANCED WARNING - STAGE 2A, 3A, AND 3B AT USH 51	SHEET 28	E

FILE NAME : W:\10530730\SHEETS\025000-AW.DWG
LAYOUT NAME - 025002-aw
PLOT DATE : 6/17/2025 2:05 PM
PLOT BY : RYAN BOOTH
PLOT NAME :
PLOT SCALE : 1 IN:1000 FT
WISDOT/CADDS SHEET 42

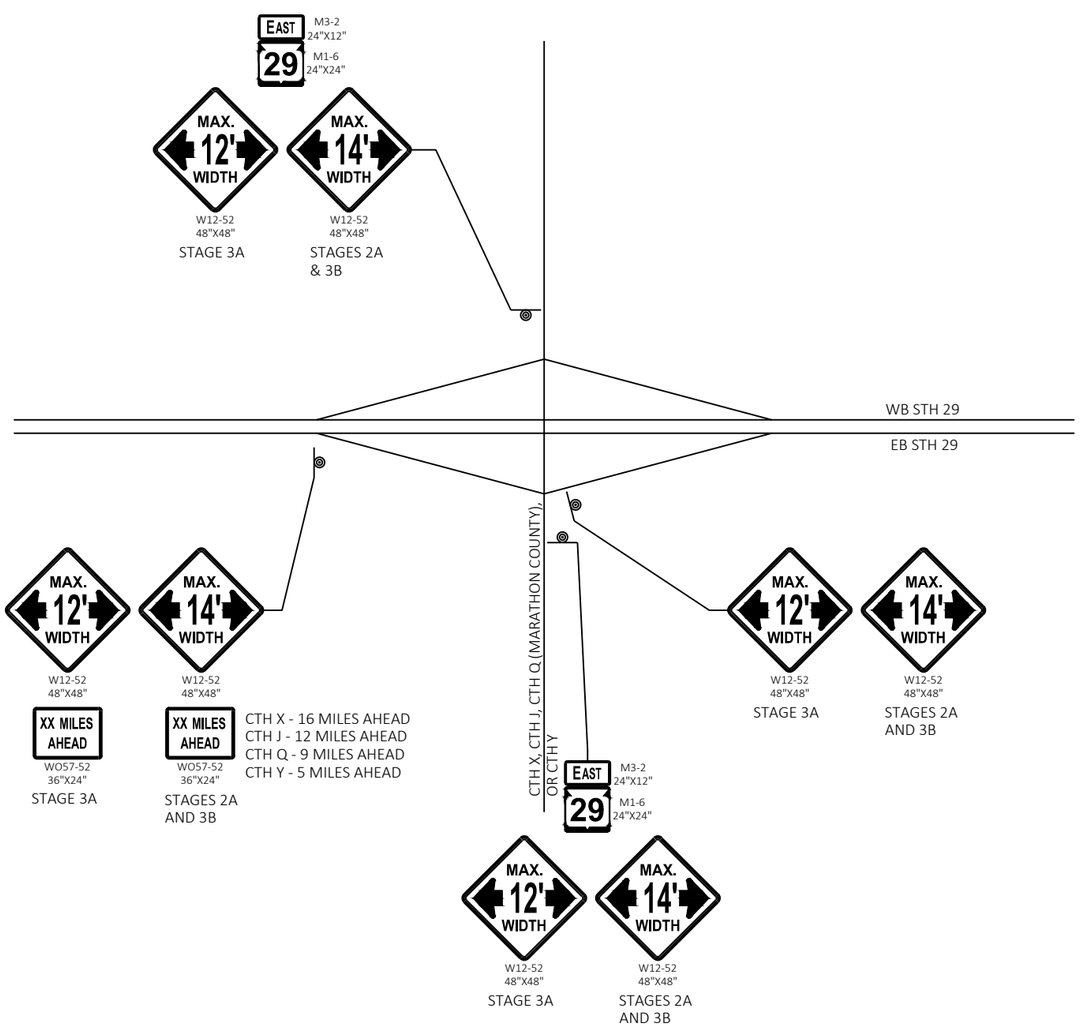
EAST
M3-2
24"X12"
29
M1-6
24"X24"
MAX. 12' WIDTH
W12-52
48"X48"
STAGE 3A
MAX. 14' WIDTH
W12-52
48"X48"
STAGES 2A & 3B
WB STH 29
EB STH 29
CTH X, CTH J, CTH Q (MARATHON COUNTY), OR CTH Y
XX MILES AHEAD
WO57-52
36"X24"
STAGE 3A
STAGES 2A AND 3B
CTH X - 16 MILES AHEAD
CTH J - 12 MILES AHEAD
CTH Q - 9 MILES AHEAD
CTH Y - 5 MILES AHEAD
STAGE 3A
STAGES 2A AND 3B

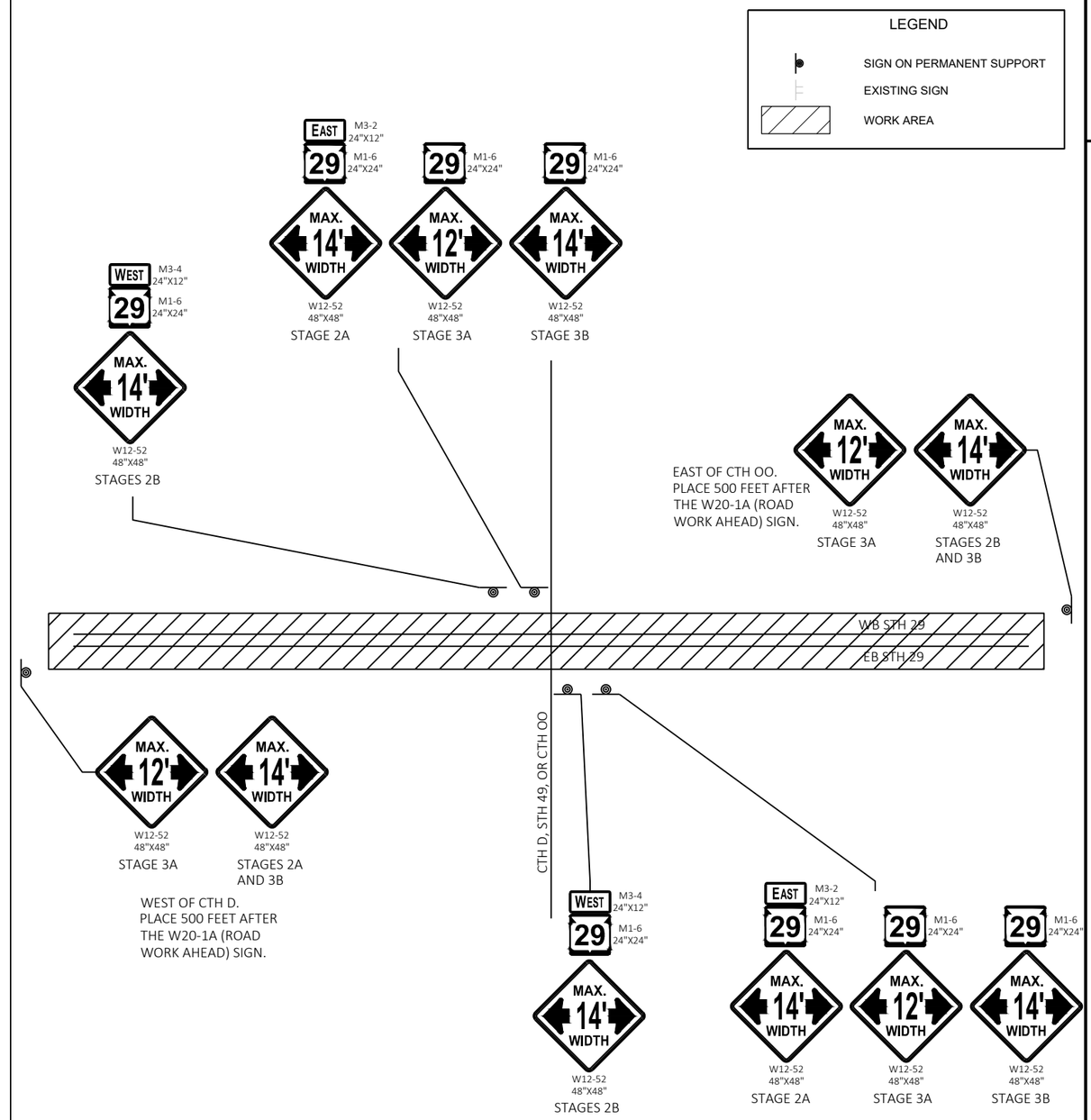
LEGEND
SIGN ON PERMANENT SUPPORT
EXISTING SIGN
WORK AREA
WEST
M3-4
24"X12"
29
M1-6
24"X24"
MAX. 14' WIDTH
W12-52
48"X48"
STAGES 2B
STAGE 2A
STAGE 3A
STAGE 3B
EAST OF CTH OO. PLACE 500 FEET AFTER THE W20-1A (ROAD WORK AHEAD) SIGN.
STAGE 3A
STAGES 2B AND 3B
WB STH 29
EB STH 29
CTH D, STH 49, OR CTH OO
WEST OF CTH D. PLACE 500 FEET AFTER THE W20-1A (ROAD WORK AHEAD) SIGN.
STAGE 3A
STAGES 2A AND 3B
STAGES 2B
STAGE 2A
STAGE 3A
STAGE 3B

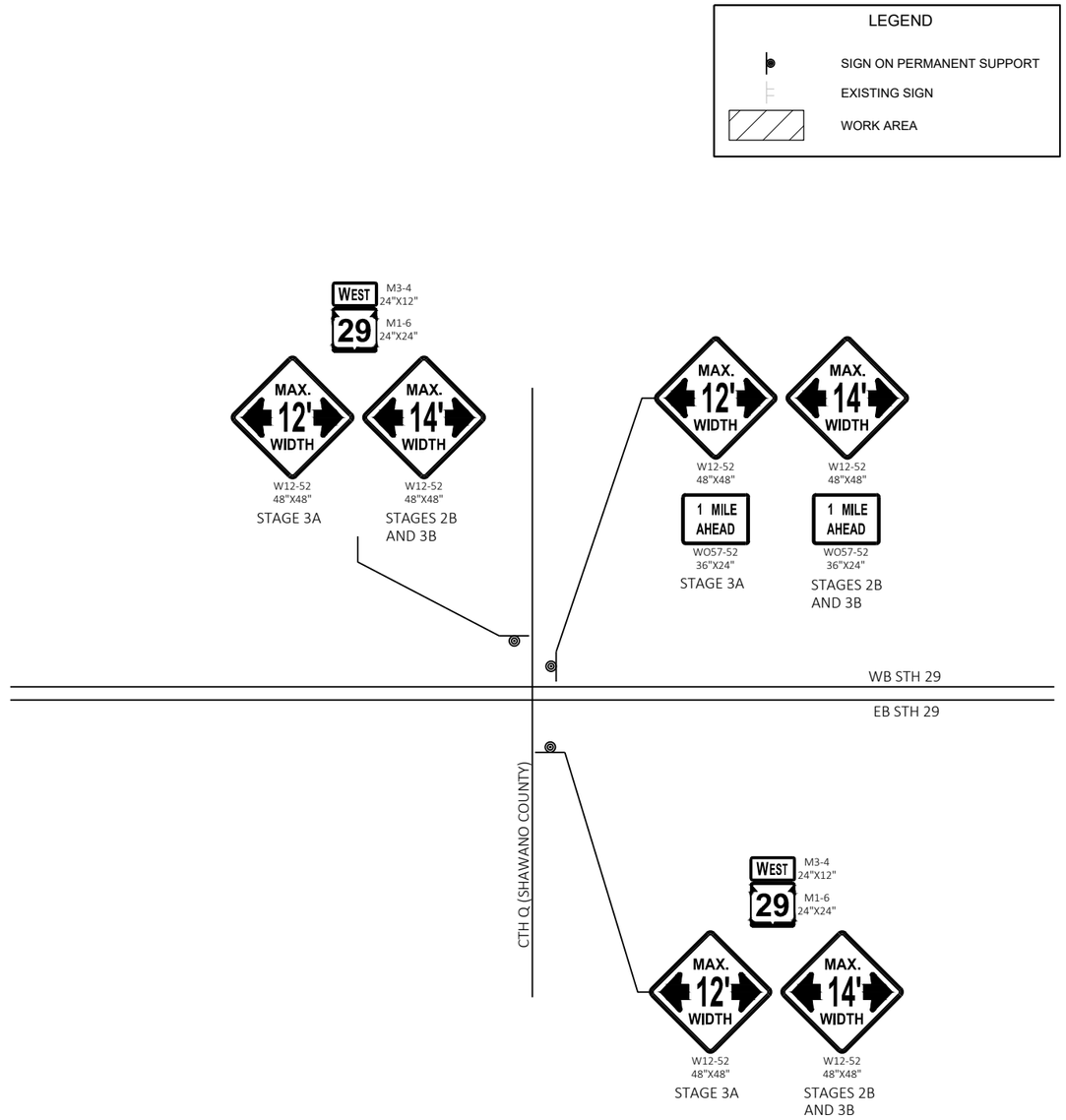

2

PROJECT NO: 1053-07-60	HWY: STH 29	COUNTY: MARATHON	ADVANCED WARNING - STAGE 2B, 3A, AND 3B AT CTH Q (SHAWANO COUNTY)	SHEET 30	E

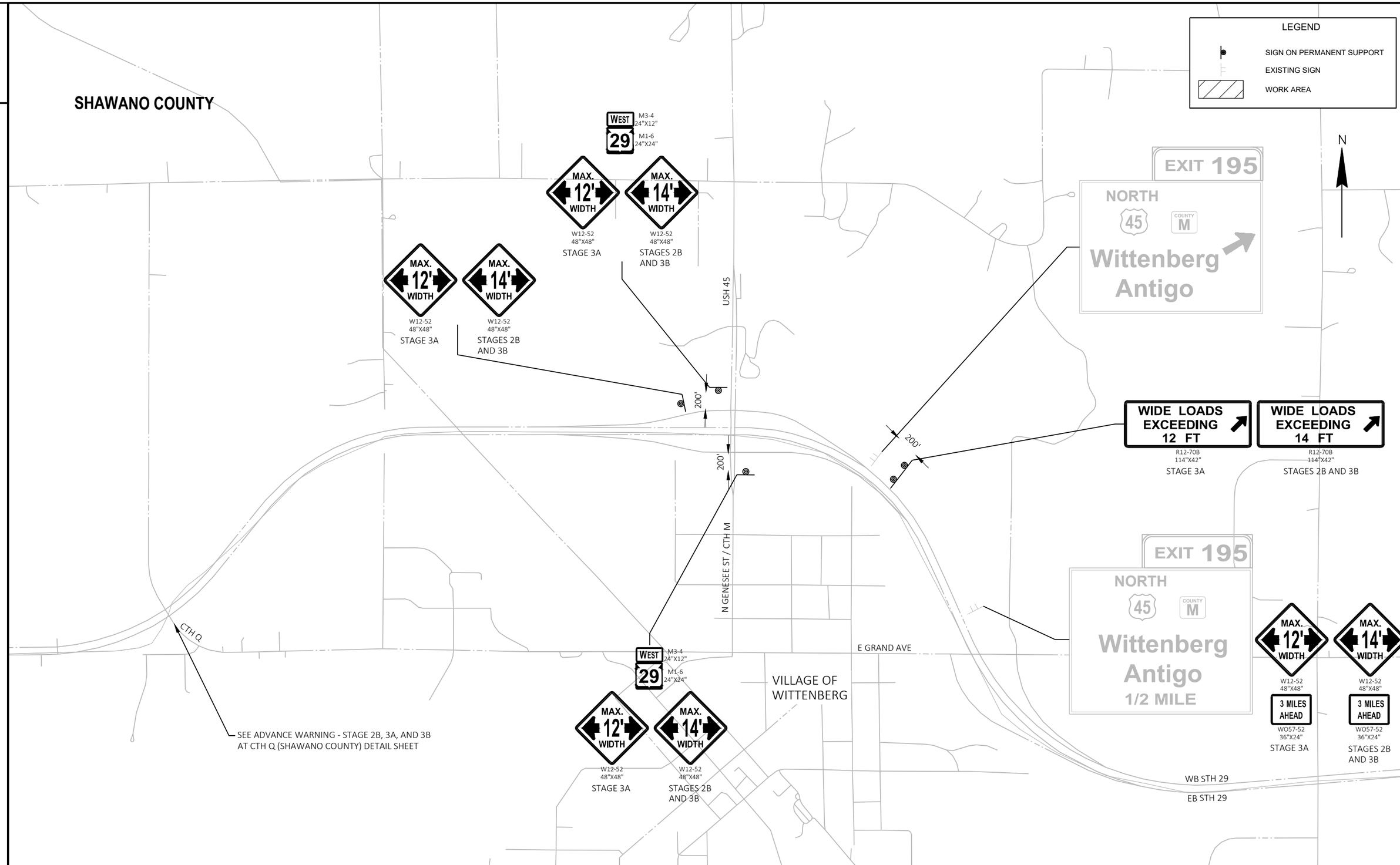

PROJECT NO: 1053-07-60	HWY: STH 29	COUNTY: MARATHON	ADVANCED WARNING - STAGE 2B, 3A, AND 3B AT USH 45	SHEET 31	E

2

GENERAL NOTES

DRAWING SHOWS TRAFFIC CONTROL FOR A TYPICAL SITUATION. ADDITIONAL TRAFFIC CONTROL DEVICES MAY BE REQUIRED AND/OR LAYOUT DETAILS MODIFIED DEPENDING ON CONTRACTOR METHODS OR SEQUENCE OF OPERATION.

THE EXACT NUMBER, LOCATION, AND SPACING OF ALL SIGNS AND DEVICES SHALL BE ADJUSTED TO FIT FIELD CONDITIONS AS APPROVED BY THE ENGINEER.

THE SPACING BETWEEN SIGNS SHOULD BE ADJUSTED TO NOT CONFLICT WITH AND TO PROVIDE A MINIMUM OF 200 FEET (500 FEET DESIRABLE) DISTANCE TO EXISTING SIGNS.

ALL SIGNS ARE 48"x48" UNLESS OTHERWISE NOTED. "WO" IS THE SAME AS "W" EXCEPT THE BACKGROUND IS ORANGE.

ANY SIGNS, TEMPORARY OR EXISTING, WHICH CONFLICT WITH TRAFFIC CONTROL, "IN USE" SHALL BE REMOVED OR COVERED AS NEEDED AND APPROVED BY THE ENGINEER. NO WARNING LIGHTS SHALL BE WORKING ON "COVERED" OR "DOWNED" SIGNS.

CONTRACTOR SHALL MAINTAIN ACCESS TO ALL DRIVEWAYS AT ALL TIMES EXCEPT WHEN PAVING OR PIPE LAYING OPERATIONS REQUIRE THE DRIVEWAY TO BE CLOSED. ACCESS TO DRIVEWAYS SHALL BE RE-ESTABLISHED IMMEDIATELY AFTER OPERATIONS ARE COMPLETED. ACCESS SHALL BE PROVIDED DURING ALL NON-WORKING HOURS.

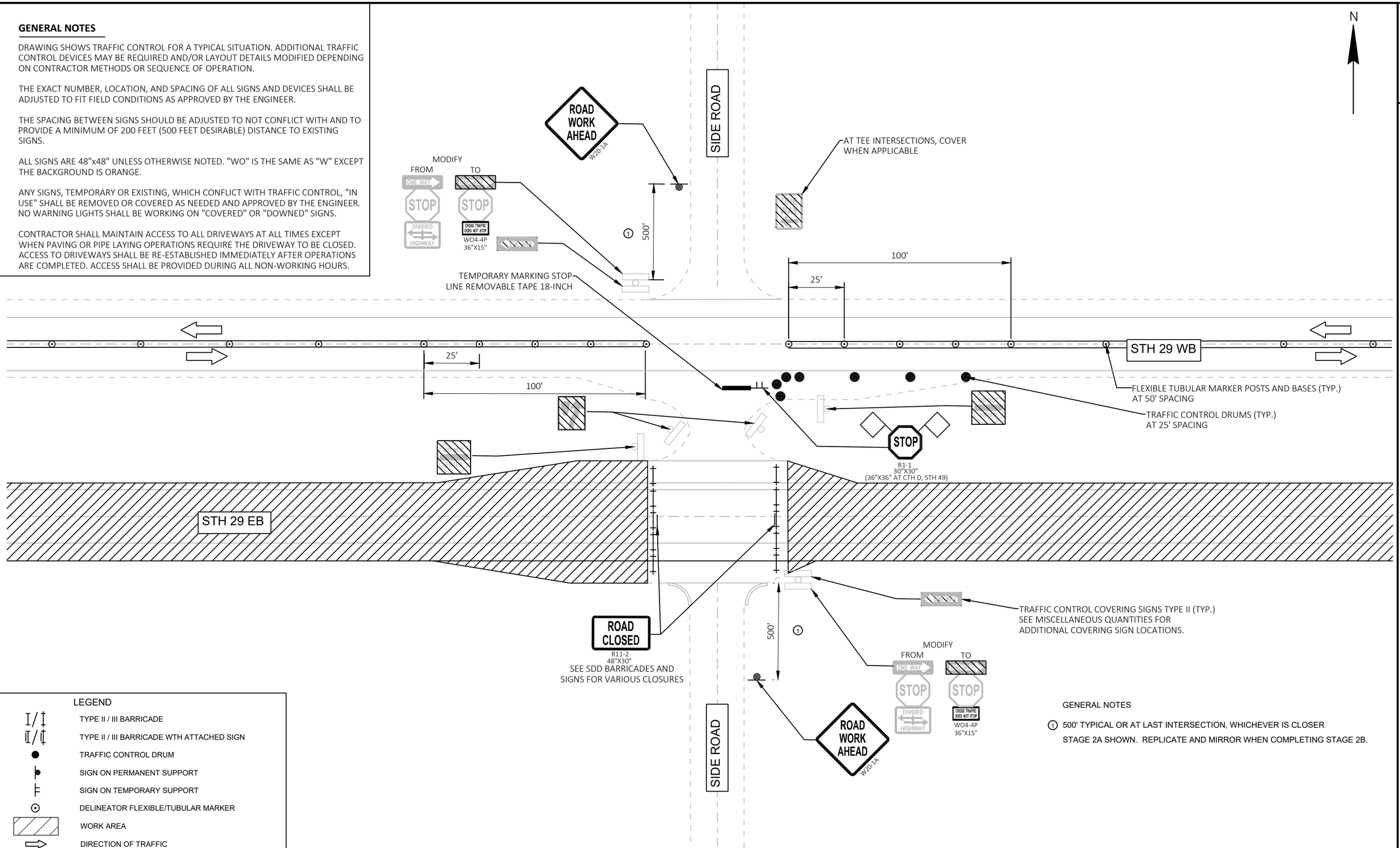

LEGEND

- TYPE II / III BARRICADE
- TYPE II / III BARRICADE WTH ATTACHED SIGN
- TRAFFIC CONTROL DRUM
- SIGN ON PERMANENT SUPPORT
- SIGN ON TEMPORARY SUPPORT
- DELINEATOR FLEXIBLE/TUBULAR MARKER
- WORK AREA
- DIRECTION OF TRAFFIC

GENERAL NOTES

① 500' TYPICAL OR AT LAST INTERSECTION, WHICHEVER IS CLOSER

STAGE 2A SHOWN. REPLICATE AND MIRROR WHEN COMPLETING STAGE 2B.

PROJECT NO: 1053-07-60	HWY: STH 29	COUNTY: MARATHON	TRAFFIC CONTROL - INTERSECTION WITHIN BIDIRECTIONAL TRAFFIC - DETAIL A	SHEET 32	E

2

GENERAL NOTES

DRAWING SHOWS TRAFFIC CONTROL FOR A TYPICAL SITUATION. ADDITIONAL TRAFFIC CONTROL DEVICES MAY BE REQUIRED AND/OR LAYOUT DETAILS MODIFIED DEPENDING ON CONTRACTOR METHODS OR SEQUENCE OF OPERATION.

THE EXACT NUMBER, LOCATION, AND SPACING OF ALL SIGNS AND DEVICES SHALL BE ADJUSTED TO FIT FIELD CONDITIONS AS APPROVED BY THE ENGINEER.

THE SPACING BETWEEN SIGNS SHOULD BE ADJUSTED TO NOT CONFLICT WITH AND TO PROVIDE A MINIMUM OF 200 FEET (500 FEET DESIRABLE) DISTANCE TO EXISTING SIGNS.

ALL SIGNS ARE 48"x48" UNLESS OTHERWISE NOTED. "WO" IS THE SAME AS "W" EXCEPT THE BACKGROUND IS ORANGE.

ANY SIGNS, TEMPORARY OR EXISTING, WHICH CONFLICT WITH TRAFFIC CONTROL, "IN USE" SHALL BE REMOVED OR COVERED AS NEEDED AND APPROVED BY THE ENGINEER. NO WARNING LIGHTS SHALL BE WORKING ON "COVERED" OR "DOWNED" SIGNS.

CONTRACTOR SHALL MAINTAIN ACCESS TO ALL DRIVEWAYS AT ALL TIMES EXCEPT WHEN PAVING OR PIPE LAYING OPERATIONS REQUIRE THE DRIVEWAY TO BE CLOSED. ACCESS TO DRIVEWAYS SHALL BE RE-ESTABLISHED IMMEDIATELY AFTER OPERATIONS ARE COMPLETED. ACCESS SHALL BE PROVIDED DURING ALL NON-WORKING HOURS.

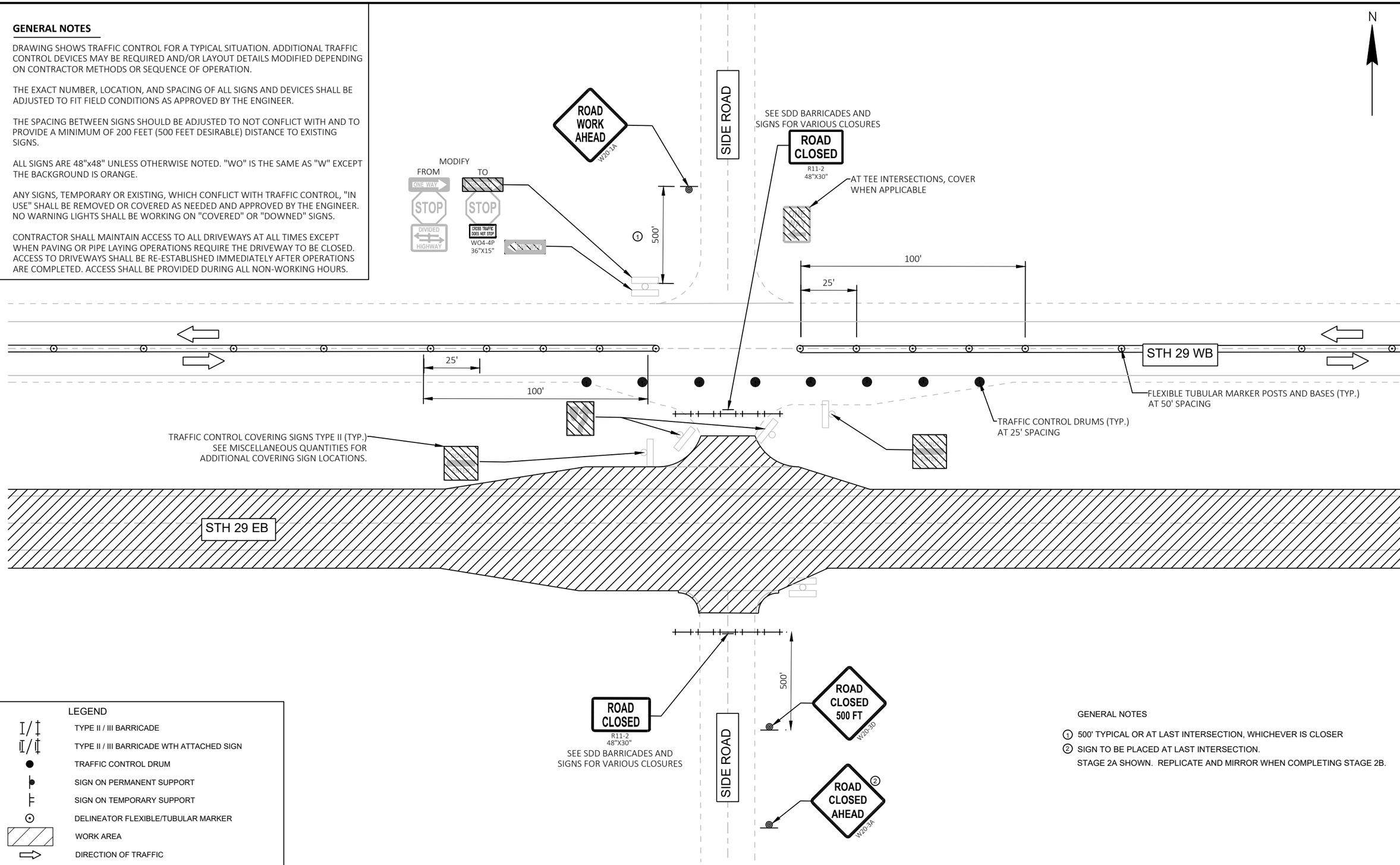

LEGEND

- TYPE II / III BARRICADE
- TYPE II / III BARRICADE WTH ATTACHED SIGN
- TRAFFIC CONTROL DRUM
- SIGN ON PERMANENT SUPPORT
- SIGN ON TEMPORARY SUPPORT
- DELINEATOR FLEXIBLE/TUBULAR MARKER
- WORK AREA
- DIRECTION OF TRAFFIC

GENERAL NOTES

1. 500' TYPICAL OR AT LAST INTERSECTION, WHICHEVER IS CLOSER
2. SIGN TO BE PLACED AT LAST INTERSECTION.

STAGE 2A SHOWN. REPLICATE AND MIRROR WHEN COMPLETING STAGE 2B.

PROJECT NO: 1053-07-60	HWY: STH 29	COUNTY: MARATHON	TRAFFIC CONTROL - INTERSECTION WITHIN BIDIRECTIONAL TRAFFIC - DETAIL B	SHEET 33	E

2

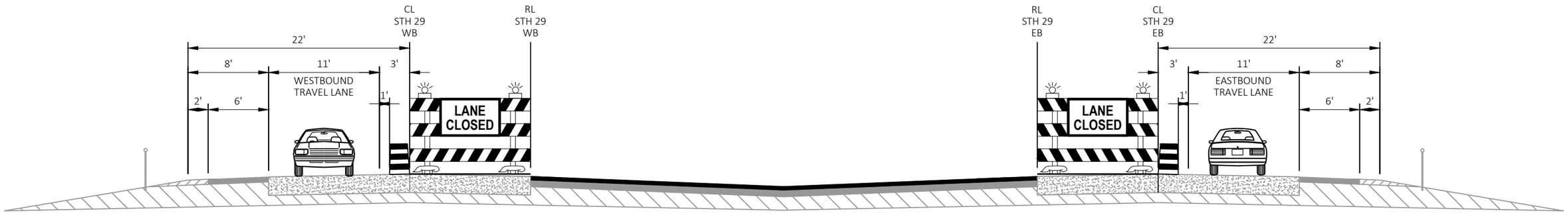

WESTBOUND STH 29

EASTBOUND STH 29

SINGLE LANE CLOSURE (INSIDE LANE)
STAGE 1

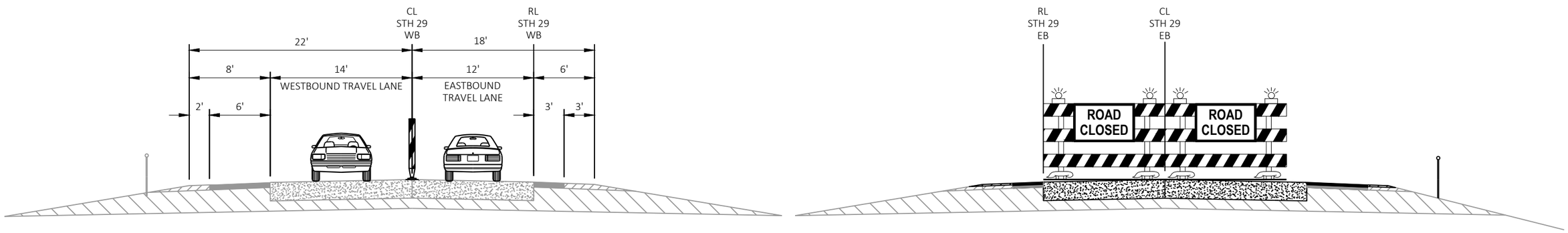

WESTBOUND STH 29

BI-DIRECTIONAL (EASTBOUND CLOSED)
STAGE 2A

EASTBOUND STH 29

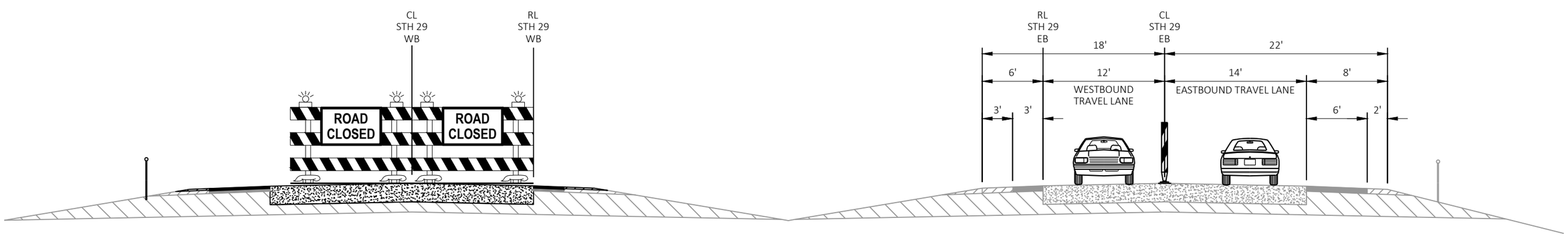

WESTBOUND STH 29

BI-DIRECTIONAL (WESTBOUND CLOSED)
STAGE 2B

EASTBOUND STH 29

PROJECT NO: 1053-07-60	HWY: STH 29	COUNTY: MARATHON	TRAFFIC CONTROL - STAGING TYPICAL SECTIONS	SHEET 34	E

2

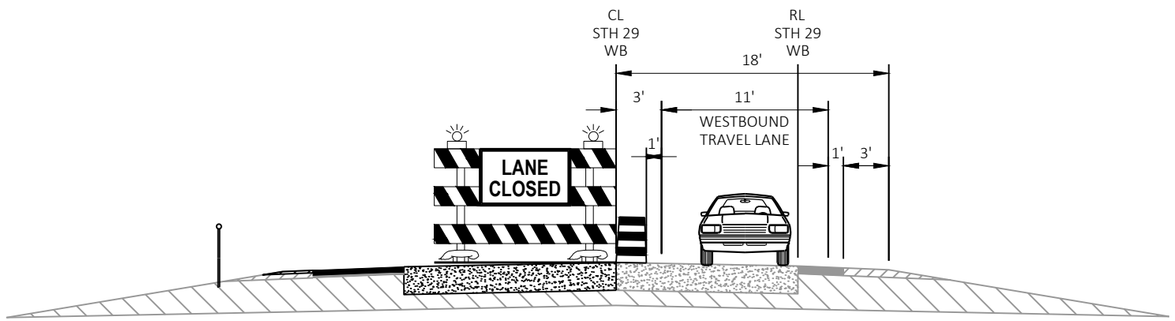

WESTBOUND STH 29

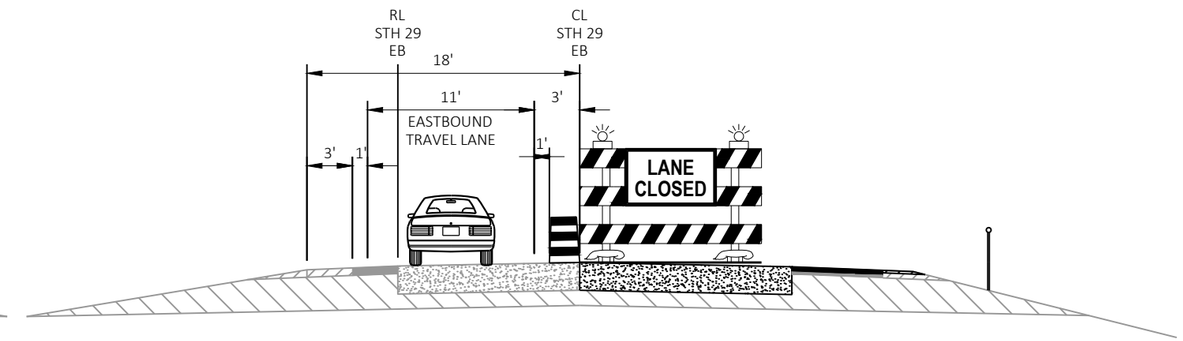

EASTBOUND STH 29

SINGLE LANE CLOSURE (OUTSIDE LANE)
STAGE 3A + STAGE 4

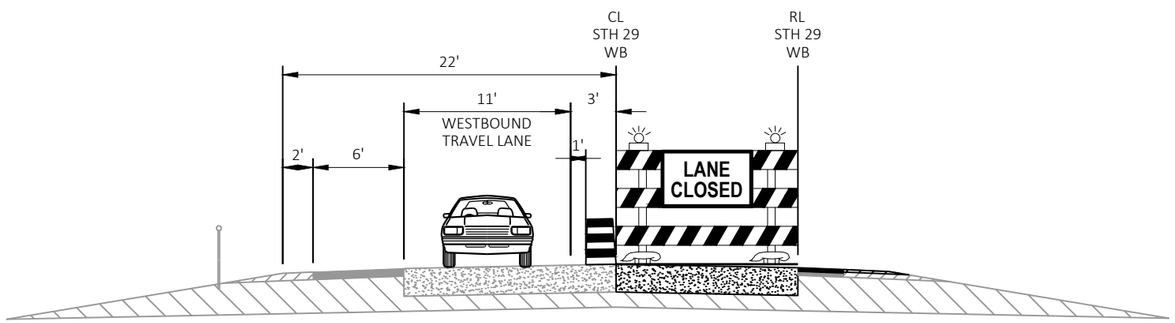

WESTBOUND STH 29

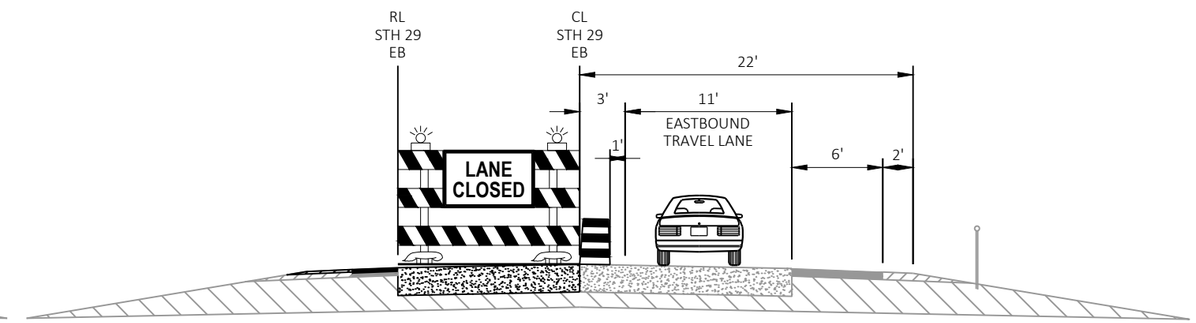

EASTBOUND STH 29

SINGLE LANE CLOSURE (INSIDE LANE)
STAGE 3B

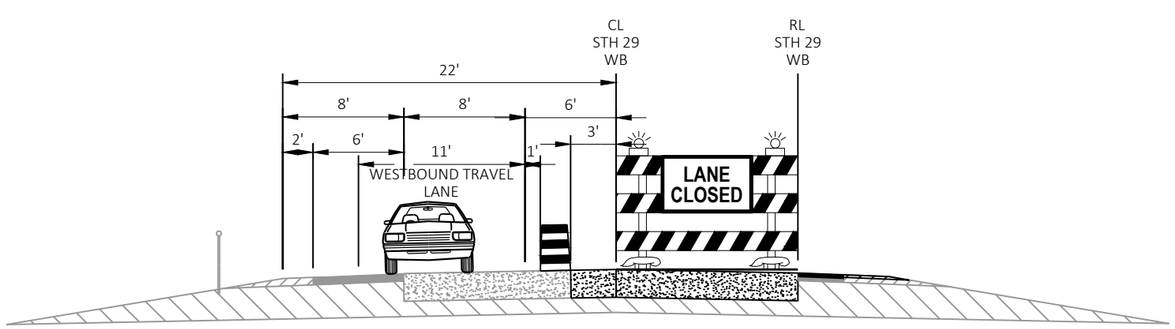

WESTBOUND STH 29

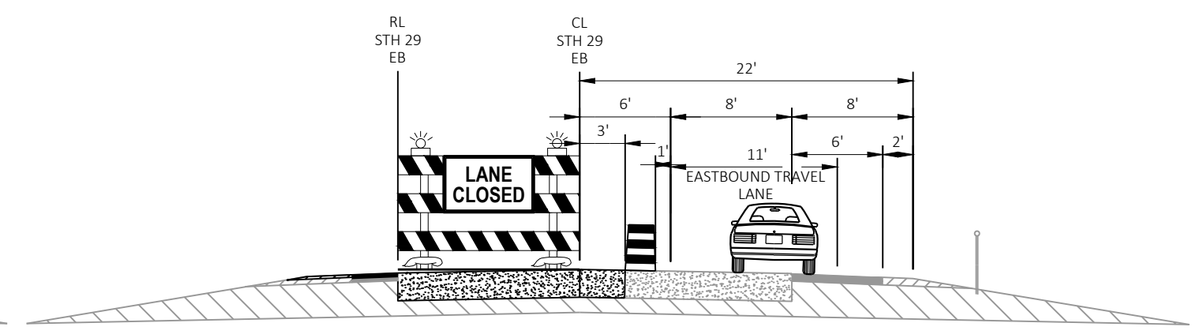

EASTBOUND STH 29

SINGLE LANE CLOSURE (INSIDE LANE-CENTERLINE PATCH)
STAGE 3B

PROJECT NO: 1053-07-60	HWY: STH 29	COUNTY: MARATHON	TRAFFIC CONTROL - STAGING TYPICAL SECTIONS	SHEET 35	E

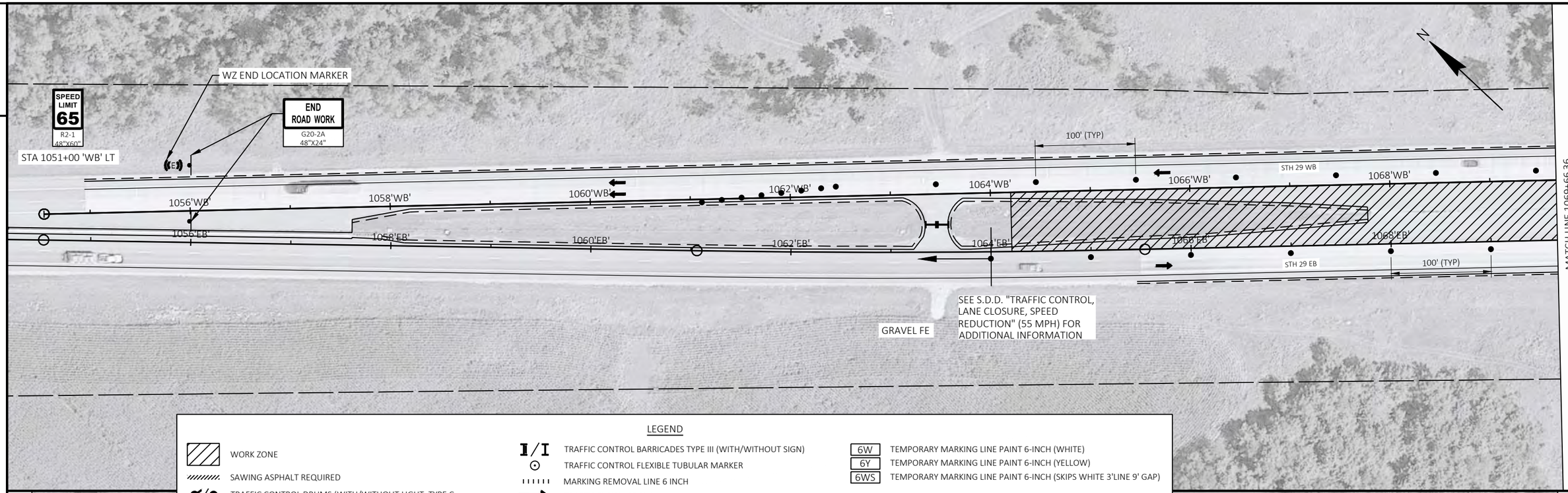

LEGEND

- WORK ZONE
- SAWING ASPHALT REQUIRED
- TRAFFIC CONTROL DRUMS (WITH/WITHOUT LIGHT, TYPE C
- TRAFFIC CONTROL SIGNS (MOUNTED ON PERMANENT SUPPORTS)
- TRAFFIC CONTROL SIGNS (MOUNTED ON TEMPORARY SUPPORTS)
- TRAFFIC CONTROL BARRICADES TYPE III (WITH/WITHOUT SIGN)
- TRAFFIC CONTROL FLEXIBLE TUBULAR MARKER
- MARKING REMOVAL LINE 6 INCH
- TRAFFIC FLOW ARROW
- DELINEATORS TEMPORARY (STEEL POST WITH SINGLE DELINEATOR COLOR OF DELINEATOR SHALL MATCH THE COLOR OF THE EDGE LINE)
- 6DY TEMPORARY MARKING LINE PAINT 6-INCH (DOUBLE YELLOW)
- 6W TEMPORARY MARKING LINE PAINT 6-INCH (WHITE)
- 6Y TEMPORARY MARKING LINE PAINT 6-INCH (YELLOW)
- 6WS TEMPORARY MARKING LINE PAINT 6-INCH (SKIPS WHITE 3'LINE 9' GAP)

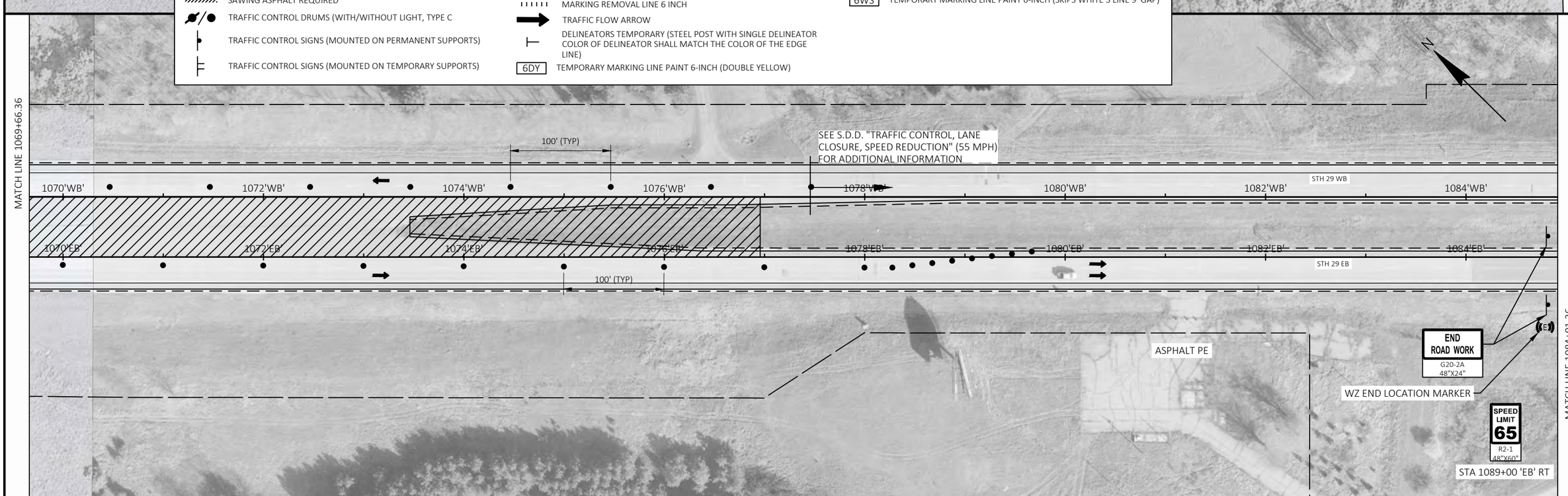

PROJECT NO: 1053-07-60	HWY: STH 29	COUNTY: MARATHON	STAGING PLANS - STAGE 1	SHEET 36	E

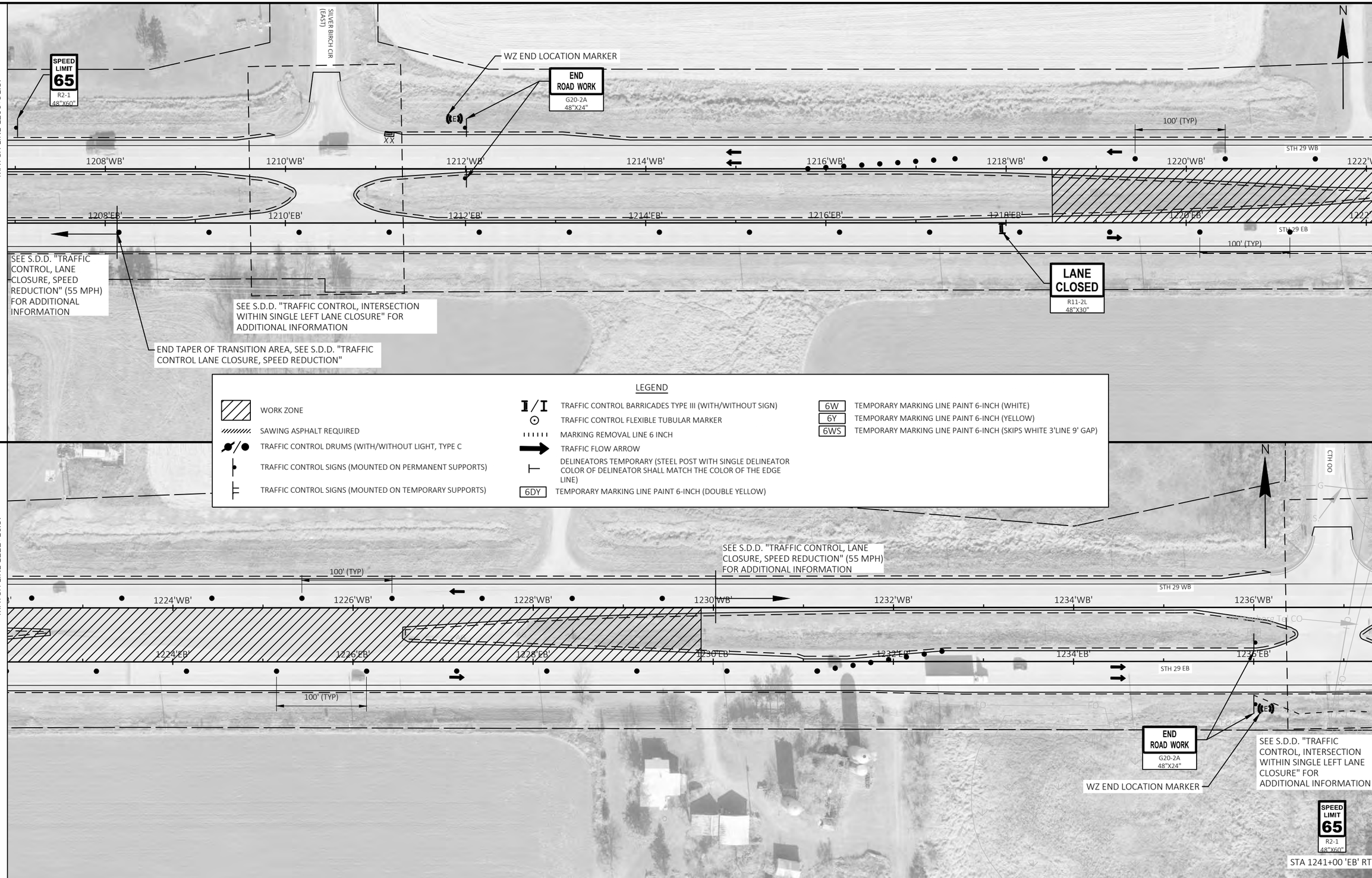

PROJECT NO: 1053-07-60	HWY: STH 29	COUNTY: MARATHON	STAGING PLANS - STAGE 1	SHEET 37	E

FILE NAME : W:\10530730\SHEETS\026001-S1.DWG
LAYOUT NAME - 026002-s1
PLOT DATE : 6/17/2025 2:07 PM
PLOT BY : RYAN BOOTH
PLOT NAME :
PLOT SCALE : 1 IN:100 FT

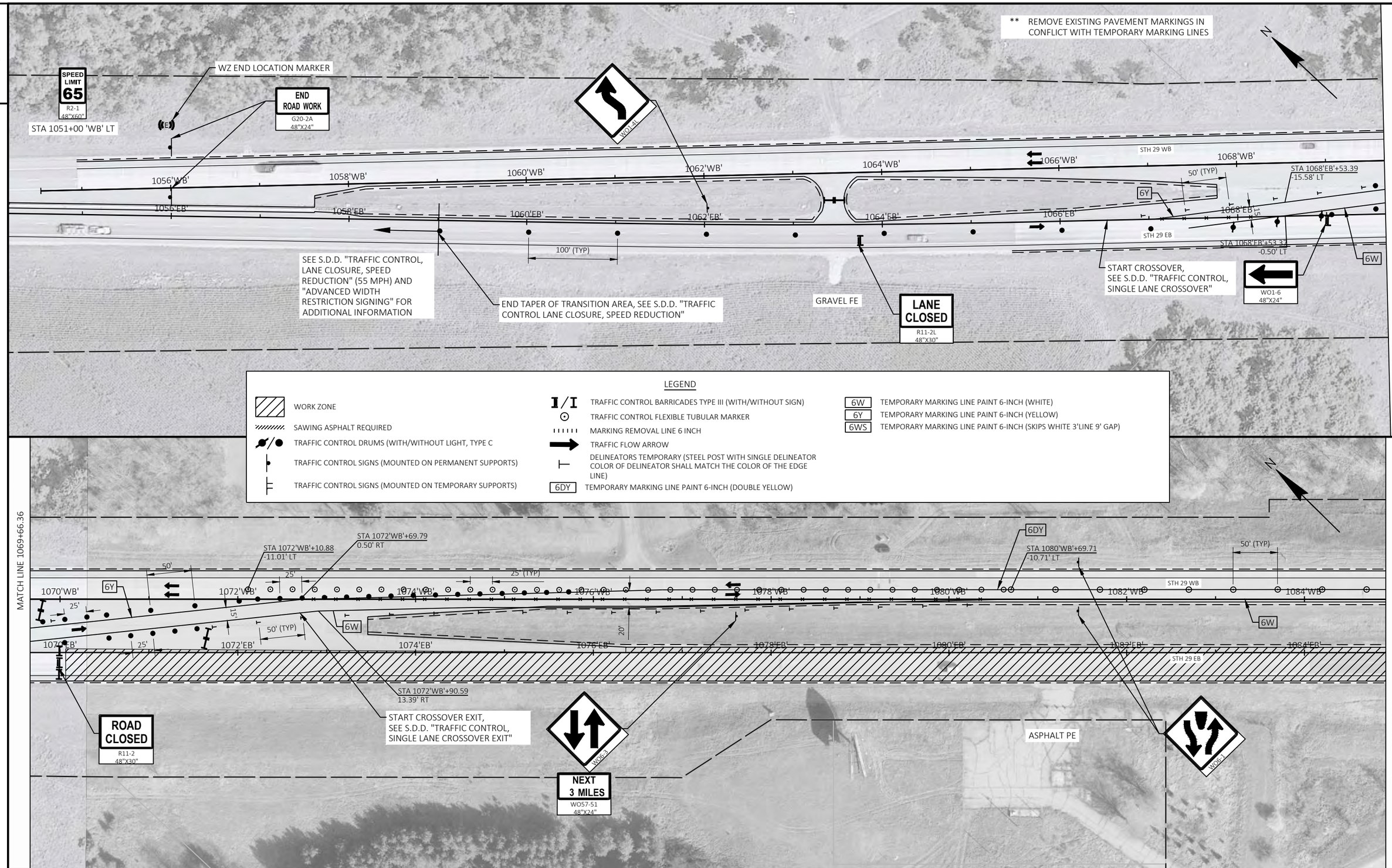
** REMOVE EXISTING PAVEMENT MARKINGS IN CONFLICT WITH TEMPORARY MARKING LINES
SPEED LIMIT 65
R2-1
48"X60"
STA 1051+00 'WB' LT
WZ END LOCATION MARKER
END ROAD WORK
G20-2A
48"X24"
WO1-H
1056'WB'
1058'WB'
1060'WB'
1062'WB'
1064'WB'
1066'WB'
1068'WB'
STH 29 WB
50' (TYP)
STA 1068'EB'+53.39
-15.58' LT
6Y
1056'EB'
1058'EB'
1060'EB'
1062'EB'
1064'EB'
1066'EB'
1068'EB'
STH 29 EB
STA 1068'EB'+53.32
-0.50' LT
6W
100' (TYP)
SEE S.D.D. "TRAFFIC CONTROL, LANE CLOSURE, SPEED REDUCTION" (55 MPH) AND "ADVANCED WIDTH RESTRICTION SIGNING" FOR ADDITIONAL INFORMATION
END TAPER OF TRANSITION AREA, SEE S.D.D. "TRAFFIC CONTROL LANE CLOSURE, SPEED REDUCTION"
GRAVEL FE
LANE CLOSED
R11-2L
48"X30"
START CROSSOVER, SEE S.D.D. "TRAFFIC CONTROL, SINGLE LANE CROSSOVER"
WO1-6
48"X24"
MATCH LINE 1069+66.36
LEGEND
WORK ZONE
SAWING ASPHALT REQUIRED
TRAFFIC CONTROL DRUMS (WITH/WITHOUT LIGHT, TYPE C
TRAFFIC CONTROL SIGNS (MOUNTED ON PERMANENT SUPPORTS)
TRAFFIC CONTROL SIGNS (MOUNTED ON TEMPORARY SUPPORTS)
TRAFFIC CONTROL BARRICADES TYPE III (WITH/WITHOUT SIGN)
TRAFFIC CONTROL FLEXIBLE TUBULAR MARKER
MARKING REMOVAL LINE 6 INCH
TRAFFIC FLOW ARROW
DELINEATORS TEMPORARY (STEEL POST WITH SINGLE DELINEATOR COLOR OF DELINEATOR SHALL MATCH THE COLOR OF THE EDGE LINE)
6DY TEMPORARY MARKING LINE PAINT 6-INCH (DOUBLE YELLOW)
6W TEMPORARY MARKING LINE PAINT 6-INCH (WHITE)
6Y TEMPORARY MARKING LINE PAINT 6-INCH (YELLOW)
6WS TEMPORARY MARKING LINE PAINT 6-INCH (SKIPS WHITE 3'LINE 9' GAP)
MATCH LINE 1069+66.36
STA 1072'WB'+10.88
-11.01' LT
STA 1072'WB'+69.79
0.50' RT
6DY
STA 1080'WB'+69.71
-10.71' LT
50' (TYP)
50'
25'
25' (TYP)
1070'WB'
6Y
1072'WB'
1074'WB'
1076'WB'
1078'WB'
1080'WB'
1082'WB'
STH 29 WB
1084'WB'
6W
15'
50' (TYP)
20'
1074'EB'
1072'EB'
1074'EB'
1076'EB'
1078'EB'
1080'EB'
1082'EB'
1084'EB'
STH 29 EB
STA 1072'WB'+90.59
13.39' RT
START CROSSOVER EXIT, SEE S.D.D. "TRAFFIC CONTROL, SINGLE LANE CROSSOVER EXIT"
ROAD CLOSED
R11-2
48"X30"
WO6-3
NEXT 3 MILES
WO57-51
48"X24"
ASPHALT PE
WO6-1
MATCH LINE 1084+91.36

2

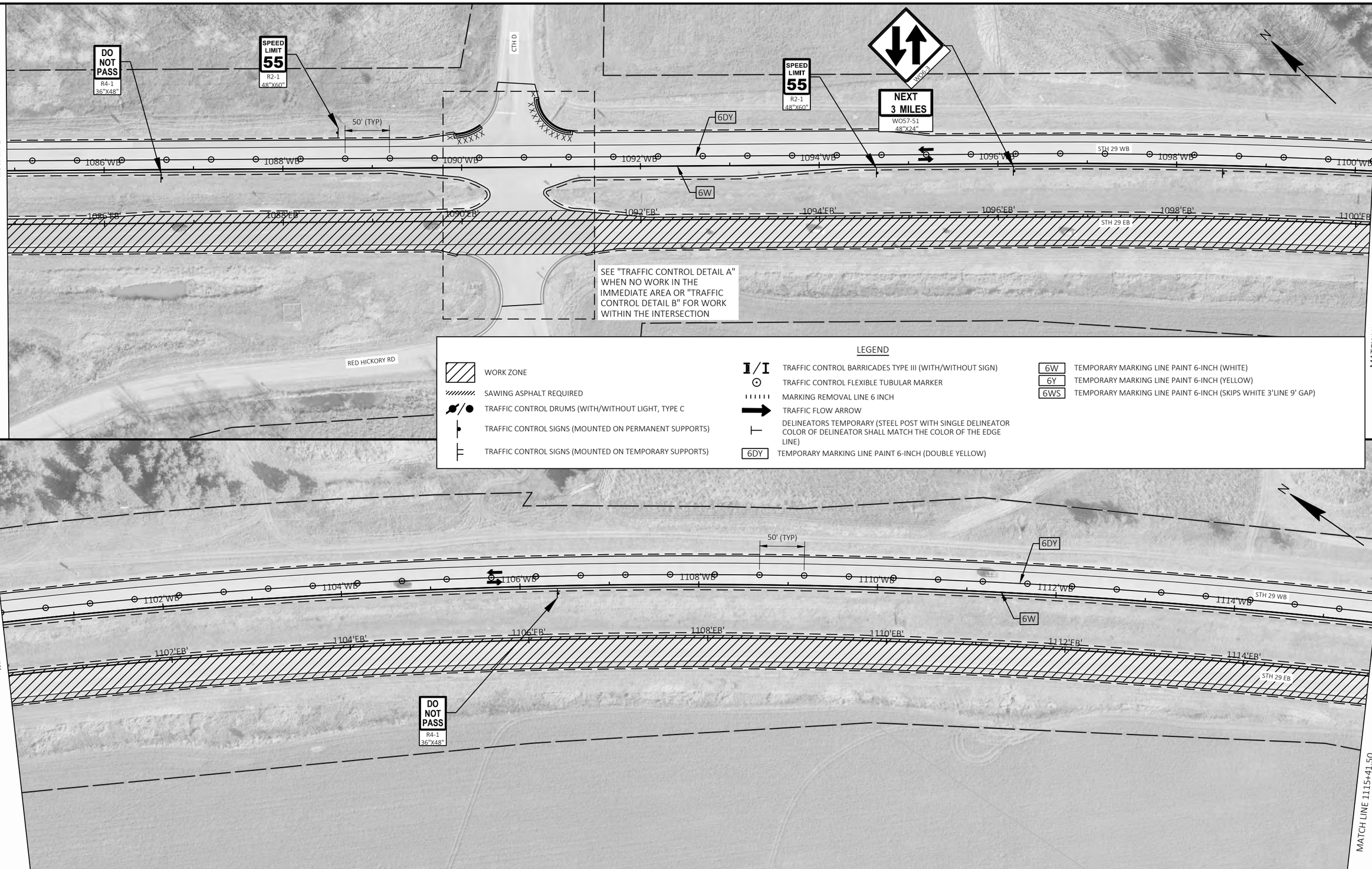

2

PROJECT NO: 1053-07-60	HWY: STH 29	COUNTY: MARATHON	STAGING PLANS - STAGE 2A	SHEET 39	E

FILE NAME : W:\10530730\SHEETS\026002-S2A.DWG
LAYOUT NAME - 026002-s2a
PLOT DATE : 6/17/2025 2:08 PM
PLOT BY : RYAN BOOTH
PLOT NAME :
PLOT SCALE : 1 IN:100 FT
WISDOT/CADDS SHEET 44

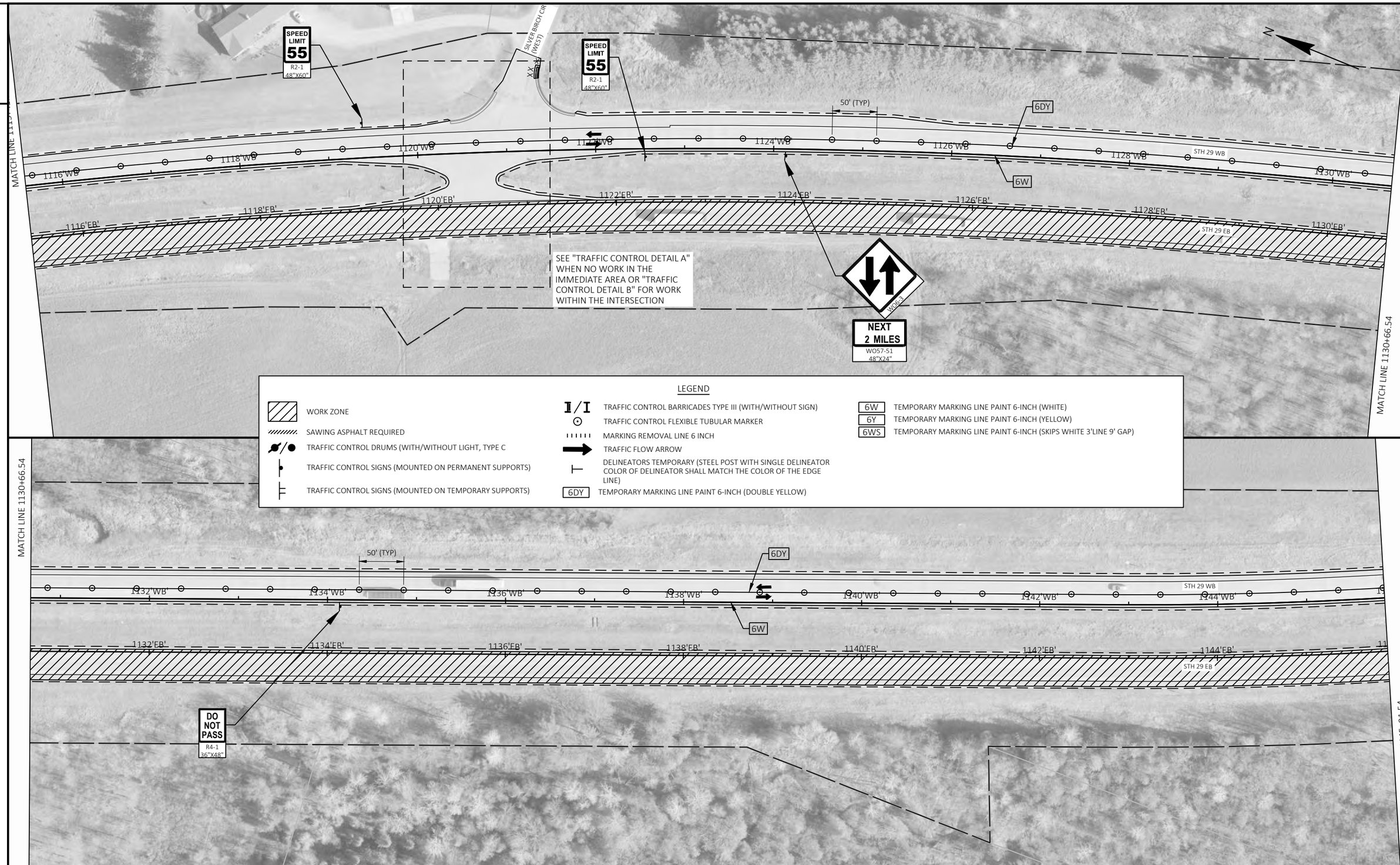

PROJECT NO: 1053-07-60	HWY: STH 29	COUNTY: MARATHON	STAGING PLANS - STAGE 2A	SHEET 40	E

PROJECT NO: 1053-07-60	HWY: STH 29	COUNTY: MARATHON	STAGING PLANS - STAGE 2A	SHEET 41	E

FILE NAME : W:\10530730\SHEETS\026002-S2A.DWG
LAYOUT NAME - 026004-s2a
PLOT DATE : 6/17/2025 2:09 PM
PLOT BY : RYAN BOOTH
PLOT NAME :
PLOT SCALE : 1 IN:100 FT

2

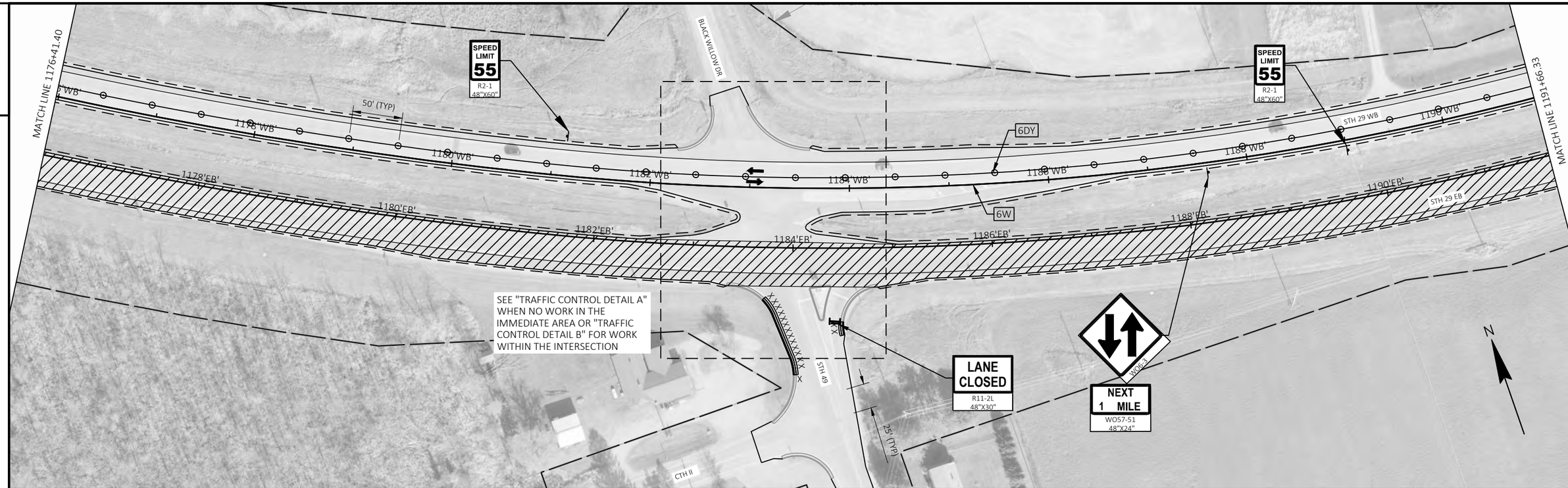

2

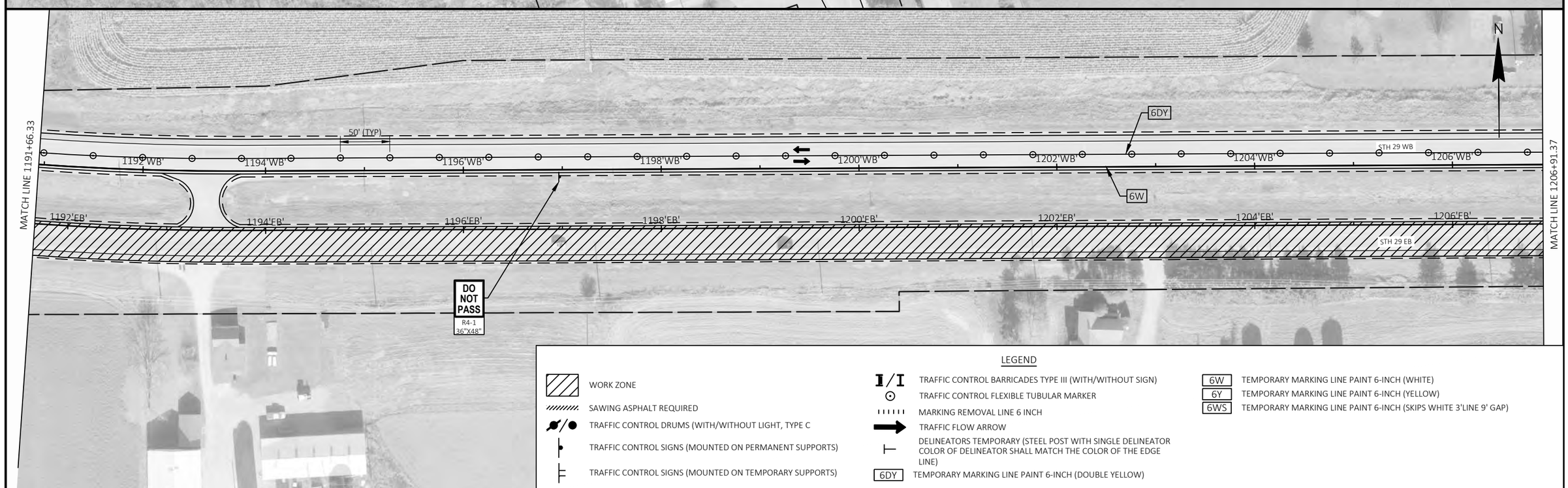

LEGEND

- WORK ZONE
- SAWING ASPHALT REQUIRED
- TRAFFIC CONTROL DRUMS (WITH/WITHOUT LIGHT, TYPE C
- TRAFFIC CONTROL SIGNS (MOUNTED ON PERMANENT SUPPORTS)
- TRAFFIC CONTROL SIGNS (MOUNTED ON TEMPORARY SUPPORTS)
- TRAFFIC CONTROL BARRICADES TYPE III (WITH/WITHOUT SIGN)
- TRAFFIC CONTROL FLEXIBLE TUBULAR MARKER
- MARKING REMOVAL LINE 6 INCH
- TRAFFIC FLOW ARROW
- DELINEATORS TEMPORARY (STEEL POST WITH SINGLE DELINEATOR COLOR OF DELINEATOR SHALL MATCH THE COLOR OF THE EDGE LINE)
- 6DY TEMPORARY MARKING LINE PAINT 6-INCH (DOUBLE YELLOW)
- 6W TEMPORARY MARKING LINE PAINT 6-INCH (WHITE)
- 6Y TEMPORARY MARKING LINE PAINT 6-INCH (YELLOW)
- 6WS TEMPORARY MARKING LINE PAINT 6-INCH (SKIPS WHITE 3'LINE 9' GAP)

PROJECT NO: 1053-07-60	HWY: STH 29	COUNTY: MARATHON	STAGING PLANS - STAGE 2A	SHEET 42	E

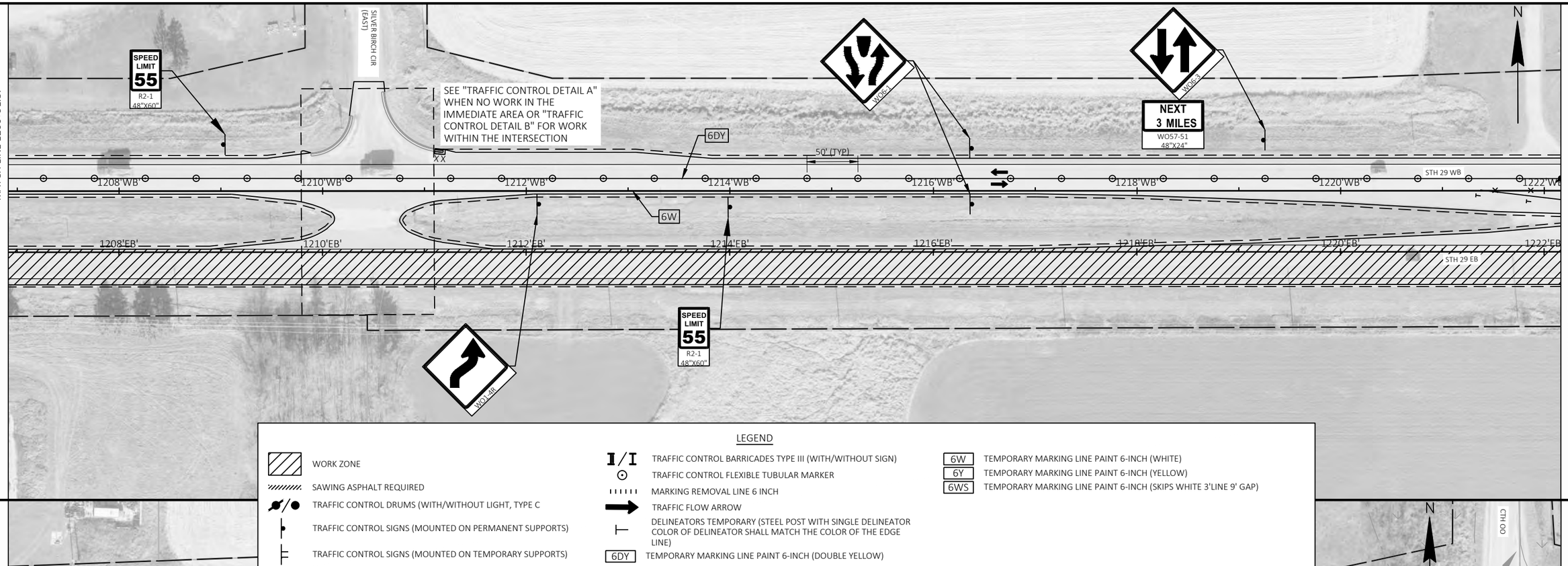

LEGEND

- WORK ZONE
- SAWING ASPHALT REQUIRED
- TRAFFIC CONTROL DRUMS (WITH/WITHOUT LIGHT, TYPE C
- TRAFFIC CONTROL SIGNS (MOUNTED ON PERMANENT SUPPORTS)
- TRAFFIC CONTROL SIGNS (MOUNTED ON TEMPORARY SUPPORTS)
- TRAFFIC CONTROL BARRICADES TYPE III (WITH/WITHOUT SIGN)
- TRAFFIC CONTROL FLEXIBLE TUBULAR MARKER
- MARKING REMOVAL LINE 6 INCH
- TRAFFIC FLOW ARROW
- DELINEATORS TEMPORARY (STEEL POST WITH SINGLE DELINEATOR COLOR OF DELINEATOR SHALL MATCH THE COLOR OF THE EDGE LINE)
- 6DY TEMPORARY MARKING LINE PAINT 6-INCH (DOUBLE YELLOW)
- 6W TEMPORARY MARKING LINE PAINT 6-INCH (WHITE)
- 6Y TEMPORARY MARKING LINE PAINT 6-INCH (YELLOW)
- 6WS TEMPORARY MARKING LINE PAINT 6-INCH (SKIPS WHITE 3'LINE 9' GAP)

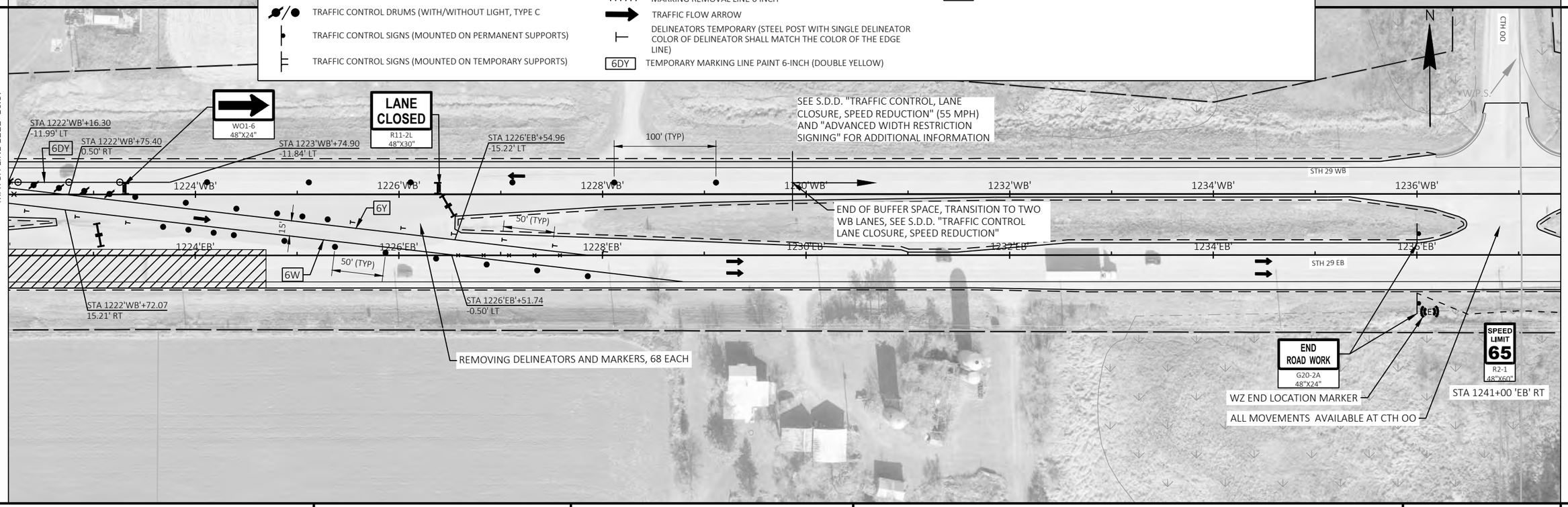

PROJECT NO: 1053-07-60	HWY: STH 29	COUNTY: MARATHON	STAGING PLANS - STAGE 2A	SHEET 43	E

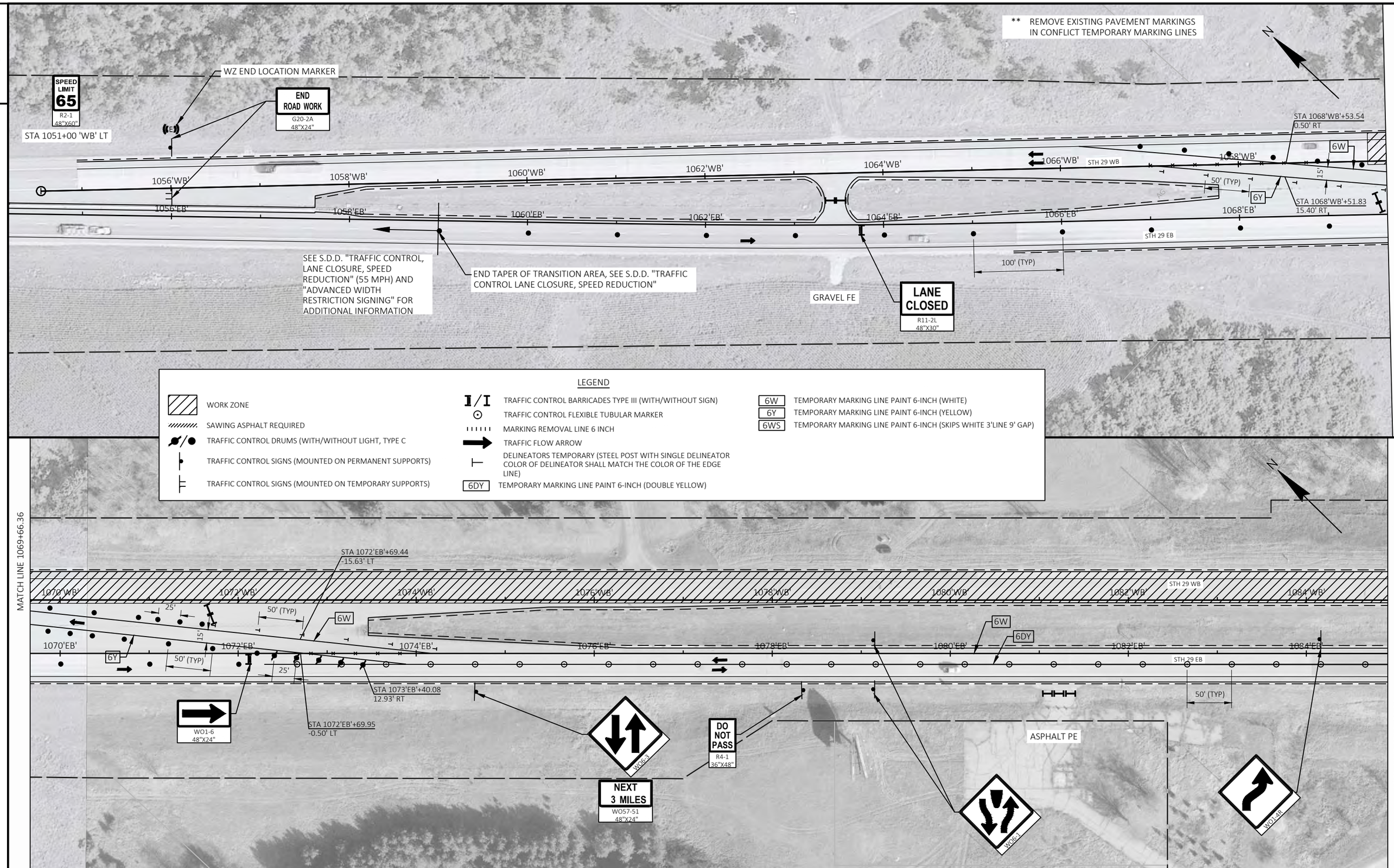

PROJECT NO: 1053-07-60	HWY: STH 29	COUNTY: MARATHON	STAGING PLANS - STAGE 2B	SHEET 44	E

FILE NAME : W:\10530730\SHEETS\026003-S2B.DWG
LAYOUT NAME - 026001-s2b
PLOT DATE : 6/17/2025 2:10 PM
PLOT BY : RYAN BOOTH
PLOT NAME :
PLOT SCALE : 1 IN:100 FT

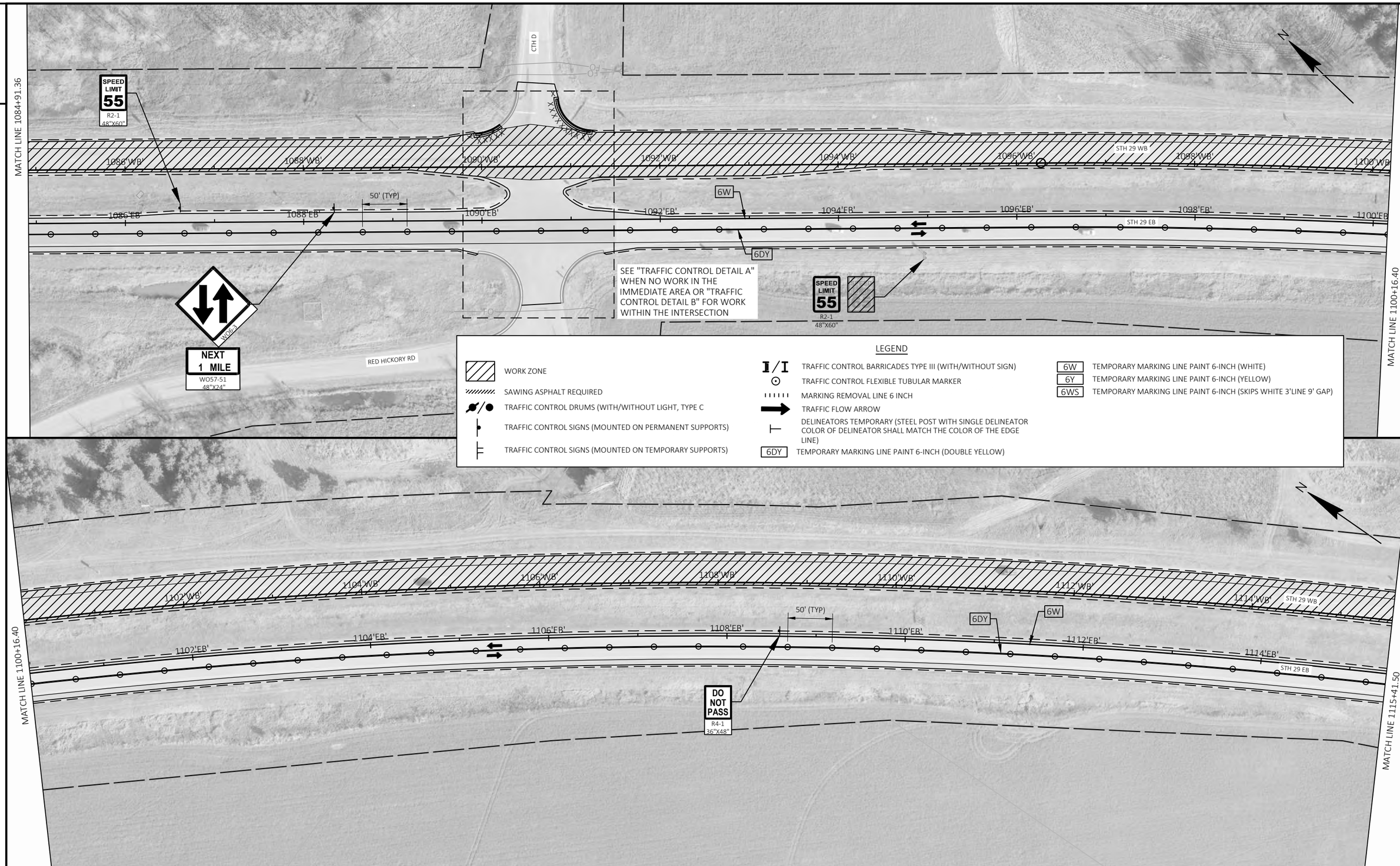
MATCH LINE 1084+91.36
SPEED LIMIT 55
R2-1
48"X60"
CTH D
1086'WB'
1088'WB'
1090'WB'
1092'WB'
1094'WB'
1096'WB'
STH 29 WB
1098'WB'
1100'WB'
50' (TYP)
6W
1086'EB'
1088'EB'
1090'EB'
1092'EB'
1094'EB'
1096'EB'
1098'EB'
1100'EB'
STH 29 EB
6DY
SEE "TRAFFIC CONTROL DETAIL A" WHEN NO WORK IN THE IMMEDIATE AREA OR "TRAFFIC CONTROL DETAIL B" FOR WORK WITHIN THE INTERSECTION
SPEED LIMIT 55
R2-1
48"X60"
WO8-3
NEXT 1 MILE
WO57-51
48"X24"
RED HICKORY RD
MATCH LINE 1100+16.40
LEGEND
WORK ZONE
SAWING ASPHALT REQUIRED
TRAFFIC CONTROL DRUMS (WITH/WITHOUT LIGHT, TYPE C
TRAFFIC CONTROL SIGNS (MOUNTED ON PERMANENT SUPPORTS)
TRAFFIC CONTROL SIGNS (MOUNTED ON TEMPORARY SUPPORTS)
TRAFFIC CONTROL BARRICADES TYPE III (WITH/WITHOUT SIGN)
TRAFFIC CONTROL FLEXIBLE TUBULAR MARKER
MARKING REMOVAL LINE 6 INCH
TRAFFIC FLOW ARROW
DELINEATORS TEMPORARY (STEEL POST WITH SINGLE DELINEATOR COLOR OF DELINEATOR SHALL MATCH THE COLOR OF THE EDGE LINE)
6DY TEMPORARY MARKING LINE PAINT 6-INCH (DOUBLE YELLOW)
6W TEMPORARY MARKING LINE PAINT 6-INCH (WHITE)
6Y TEMPORARY MARKING LINE PAINT 6-INCH (YELLOW)
6WS TEMPORARY MARKING LINE PAINT 6-INCH (SKIPS WHITE 3'LINE 9' GAP)
1102'WB'
1104'WB'
1106'WB'
1108'WB'
1110'WB'
1112'WB'
1114'WB'
STH 29 WB
50' (TYP)
6DY
6W
1102'EB'
1104'EB'
1106'EB'
1108'EB'
1110'EB'
1112'EB'
1114'EB'
STH 29 EB
DO NOT PASS
R4-1
36"X48"
MATCH LINE 1100+16.40
MATCH LINE 1115+41.50

PROJECT NO: 1053-07-60	HWY: STH 29	COUNTY: MARATHON	STAGING PLANS - STAGE 2B	SHEET 46	E

2

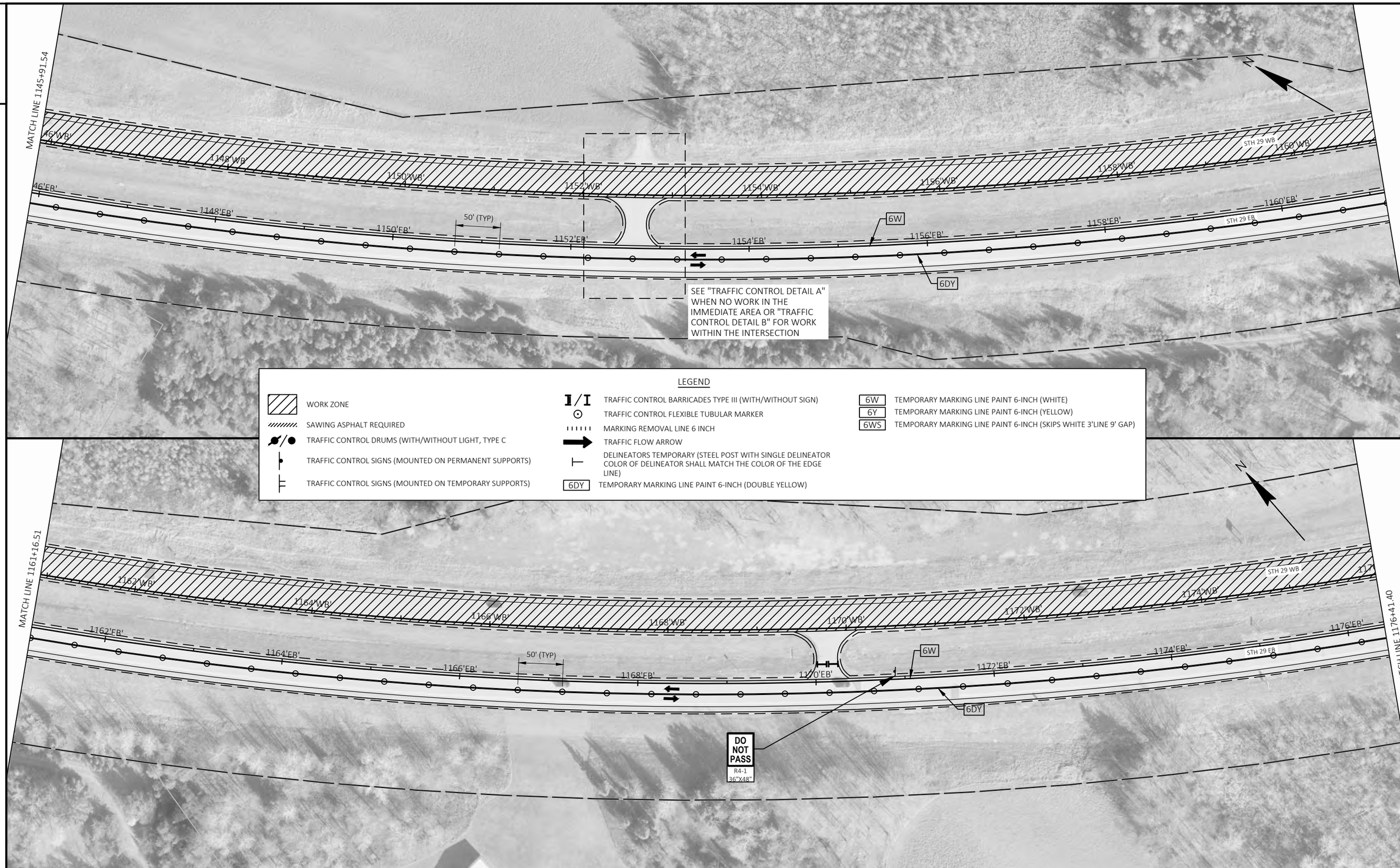

LEGEND

- WORK ZONE
- SAWING ASPHALT REQUIRED
- TRAFFIC CONTROL DRUMS (WITH/WITHOUT LIGHT, TYPE C
- TRAFFIC CONTROL SIGNS (MOUNTED ON PERMANENT SUPPORTS)
- TRAFFIC CONTROL SIGNS (MOUNTED ON TEMPORARY SUPPORTS)
- TRAFFIC CONTROL BARRICADES TYPE III (WITH/WITHOUT SIGN)
- TRAFFIC CONTROL FLEXIBLE TUBULAR MARKER
- MARKING REMOVAL LINE 6 INCH
- TRAFFIC FLOW ARROW
- DELINEATORS TEMPORARY (STEEL POST WITH SINGLE DELINEATOR COLOR OF DELINEATOR SHALL MATCH THE COLOR OF THE EDGE LINE)
- 6DY TEMPORARY MARKING LINE PAINT 6-INCH (DOUBLE YELLOW)
- 6W TEMPORARY MARKING LINE PAINT 6-INCH (WHITE)
- 6Y TEMPORARY MARKING LINE PAINT 6-INCH (YELLOW)
- 6WS TEMPORARY MARKING LINE PAINT 6-INCH (SKIPS WHITE 3'LINE 9' GAP)

2

PROJECT NO: 1053-07-60	HWY: STH 29	COUNTY: MARATHON	STAGING PLANS - STAGE 2B	SHEET 47	E

FILE NAME : W:\10530730\SHEETS\026003-S2B.DWG
LAYOUT NAME - 026004-s2b
PLOT DATE : 6/17/2025 2:11 PM
PLOT BY : RYAN BOOTH
PLOT NAME :
PLOT SCALE : 1 IN:100 FT

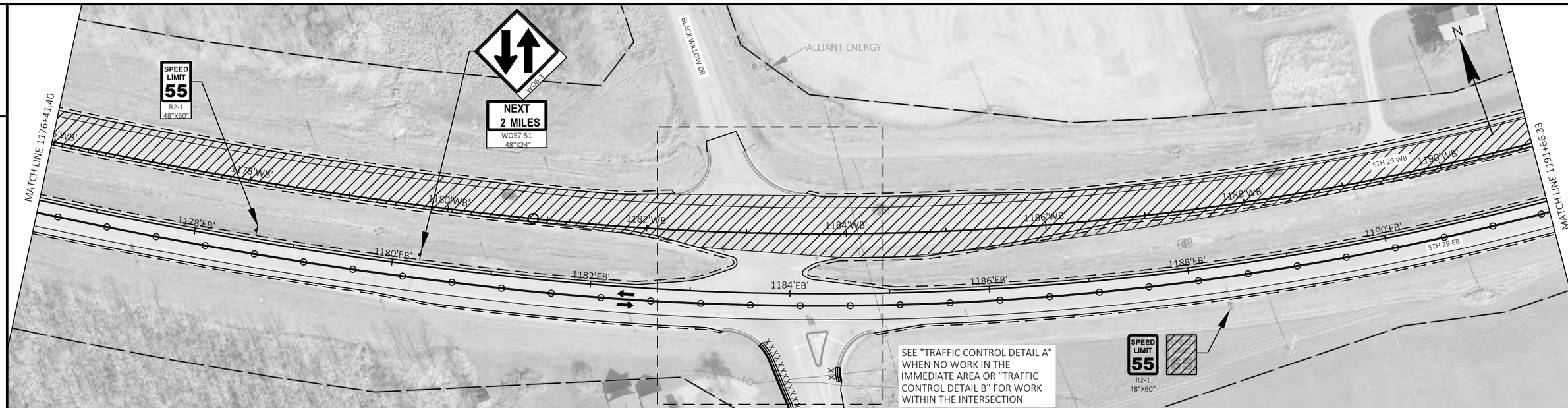

LEGEND

- WORK ZONE
- SAWING ASPHALT REQUIRED
- TRAFFIC CONTROL DRUMS (WITH/WITHOUT LIGHT, TYPE C
- TRAFFIC CONTROL SIGNS (MOUNTED ON PERMANENT SUPPORTS)
- TRAFFIC CONTROL SIGNS (MOUNTED ON TEMPORARY SUPPORTS)
- TRAFFIC CONTROL BARRICADES TYPE III (WITH/WITHOUT SIGN)
- TRAFFIC CONTROL FLEXIBLE TUBULAR MARKER
- MARKING REMOVAL LINE 6 INCH
- TRAFFIC FLOW ARROW
- DELINEATORS TEMPORARY (STEEL POST WITH SINGLE DELINEATOR COLOR OF DELINEATOR SHALL MATCH THE COLOR OF THE EDGE LINE)
- 6DY TEMPORARY MARKING LINE PAINT 6-INCH (DOUBLE YELLOW)
- 6W TEMPORARY MARKING LINE PAINT 6-INCH (WHITE)
- 6Y TEMPORARY MARKING LINE PAINT 6-INCH (YELLOW)
- 6WS TEMPORARY MARKING LINE PAINT 6-INCH (SKIPS WHITE 3'LINE 9' GAP)

2

MATCH LINE 1206+91.37

SILVER BIRCH CIR (EAST)

SEE "TRAFFIC CONTROL DETAIL A" WHEN NO WORK IN THE IMMEDIATE AREA OR "TRAFFIC CONTROL DETAIL B" FOR WORK WITHIN THE INTERSECTION

SPEED LIMIT 55 R2-1 48"X60"

1208'WB' 1210'WB' 1212'WB' 1214'WB' 1216'WB' 1218'WB' 1220'WB' 1222'WB'

STH 29 WB

6W

STA 1218'EB'+07.90 -12.68' LT

50' (TYP) 20'

STA 1221'EB'+92.63 -7.41' LT

1208'EB' 1210'EB' 1212'EB' 1214'EB' 1216'EB' 1218'EB' 1220'EB' 1222'EB'

STH 29 EB

50' (TYP)

STA 1214'EB'+06.69 11.55' RT

6DY

25' (TYP)

SPEED LIMIT 55 R2-1 48"X60"

DO NOT PASS R4-1 36"X48"

W10G-3

NEXT 3 MILES WO57-51 48"X24"

W10G-3

NEXT 3 MILES WO57-51 48"X24"

MATCH LINE 1222+16.37

2

N

LEGEND

- WORK ZONE
- SAWING ASPHALT REQUIRED
- TRAFFIC CONTROL DRUMS (WITH/WITHOUT LIGHT, TYPE C
- TRAFFIC CONTROL SIGNS (MOUNTED ON PERMANENT SUPPORTS)
- TRAFFIC CONTROL SIGNS (MOUNTED ON TEMPORARY SUPPORTS)
- TRAFFIC CONTROL BARRICADES TYPE III (WITH/WITHOUT SIGN)
- TRAFFIC CONTROL FLEXIBLE TUBULAR MARKER
- MARKING REMOVAL LINE 6 INCH
- TRAFFIC FLOW ARROW
- DELINEATORS TEMPORARY (STEEL POST WITH SINGLE DELINEATOR COLOR OF DELINEATOR SHALL MATCH THE COLOR OF THE EDGE LINE)
- 6DY TEMPORARY MARKING LINE PAINT 6-INCH (DOUBLE YELLOW)
- 6W TEMPORARY MARKING LINE PAINT 6-INCH (WHITE)
- 6Y TEMPORARY MARKING LINE PAINT 6-INCH (YELLOW)
- 6WS TEMPORARY MARKING LINE PAINT 6-INCH (SKIPS WHITE 3'LINE 9' GAP)

MATCH LINE 1222+16.37

N

CTH OO

G

W.P.S

ROAD CLOSED R11-2 48"X30"

WO1-6 48"X24"

END CROSSOVER, SEE S.D.D. "TRAFFIC CONTROL, SINGLE LANE CROSSOVER"

LANE CLOSED R11-2L 48"X30"

SEE S.D.D. "TRAFFIC CONTROL, LANE CLOSURE, SPEED REDUCTION" (55 MPH) AND "ADVANCED WIDTH RESTRICTION SIGNING" FOR ADDITIONAL INFORMATION

STA 1222'EB'+65.02 -15.86' LT

STA 1226'WB'+43.20 0.00'

50' (TYP) 50' (TYP) 100' (TYP)

STH 29 WB

1224'WB' 1226'WB' 1228'WB' 1230'WB' 1232'WB' 1234'WB' 1236'WB'

6W

25' (TYP)

6Y

LIMIT OF BUFFER SPACE, SEE S.D.D. "TRAFFIC CONTROL LANE CLOSURE, SPEED REDUCTION"

50' (TYP)

STA 1226'WB'+43.39 16.09' RT

1224'EB' 1226'EB' 1228'EB' 1230'EB' 1232'EB' 1234'EB' 1236'EB'

25' (TYP)

STH 29 EB

6DY

STA 1223'EB'+11.02 12.17' RT

END CROSSOVER EXIT, SEE S.D.D. "TRAFFIC CONTROL, SINGLE LANE CROSSOVER EXIT"

STA 1222'EB'+68.17 -0.12' LT

WO1-4L

END ROAD WORK G20-2A 48"X24"

WZ END LOCATION MARKER

ALL MOVEMENTS AVAILABLE AT CTH OO

SPEED LIMIT 65 R2-1 48"X60"

STA 1241+00 'EB' RT

MATCH LINE 1237+41.37

PROJECT NO: 1053-07-60	HWY: STH 29	COUNTY: MARATHON	STAGING PLANS - STAGE 2B	SHEET 49	E

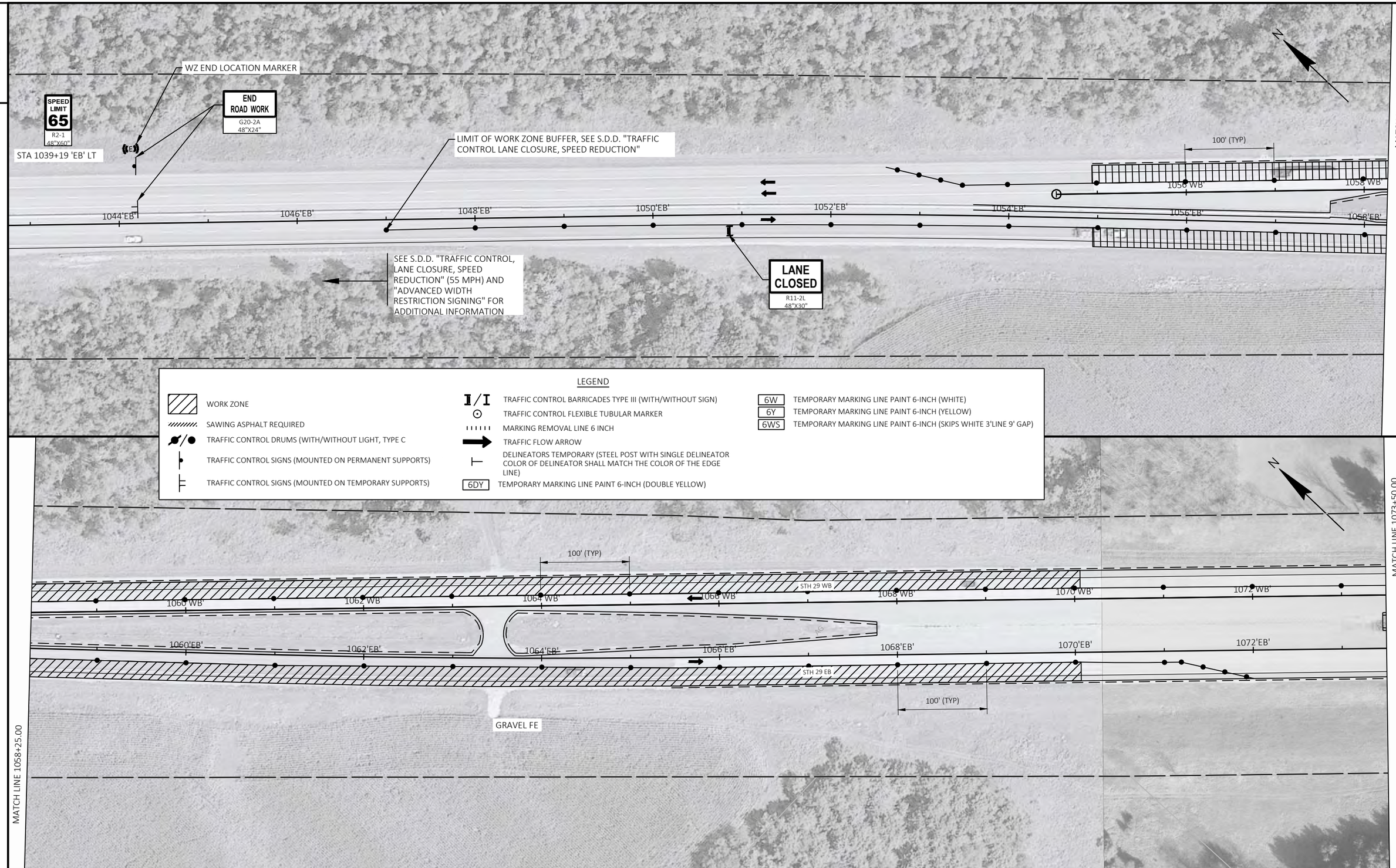

PROJECT NO: 1053-07-60	HWY: STH 29	COUNTY: MARATHON	STAGING PLANS - STAGE 3A	SHEET 50	E

FILE NAME : W:\10530730\SHEETS\026004-S3A.DWG
LAYOUT NAME - 01-s3a
PLOT DATE : 6/17/2025 2:13 PM
PLOT BY : RYAN BOOTH
PLOT NAME :
PLOT SCALE : 1 IN:100 FT

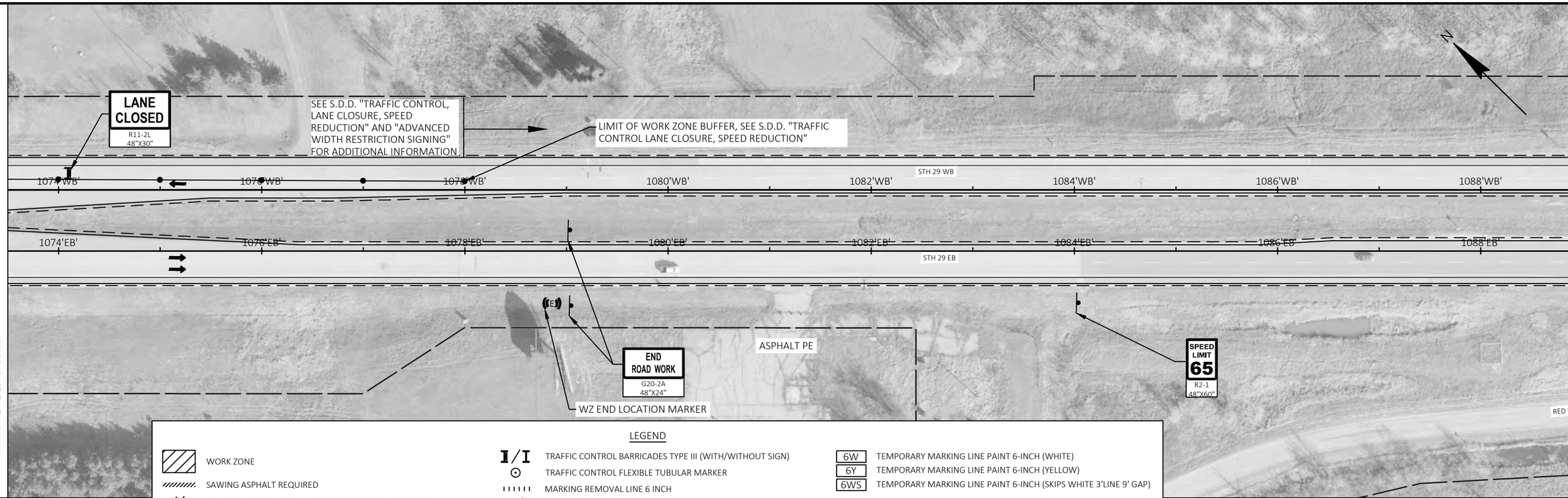

MATCH LINE 1073+50.00

LEGEND

- WORK ZONE
- SAWING ASPHALT REQUIRED
- TRAFFIC CONTROL DRUMS (WITH/WITHOUT LIGHT, TYPE C
- TRAFFIC CONTROL SIGNS (MOUNTED ON PERMANENT SUPPORTS)
- TRAFFIC CONTROL SIGNS (MOUNTED ON TEMPORARY SUPPORTS)
- TRAFFIC CONTROL BARRICADES TYPE III (WITH/WITHOUT SIGN)
- TRAFFIC CONTROL FLEXIBLE TUBULAR MARKER
- MARKING REMOVAL LINE 6 INCH
- TRAFFIC FLOW ARROW
- DELINEATORS TEMPORARY (STEEL POST WITH SINGLE DELINEATOR COLOR OF DELINEATOR SHALL MATCH THE COLOR OF THE EDGE LINE)
- 6DY TEMPORARY MARKING LINE PAINT 6-INCH (DOUBLE YELLOW)
- 6W TEMPORARY MARKING LINE PAINT 6-INCH (WHITE)
- 6Y TEMPORARY MARKING LINE PAINT 6-INCH (YELLOW)
- 6WS TEMPORARY MARKING LINE PAINT 6-INCH (SKIPS WHITE 3'LINE 9' GAP)

2

SPEED LIMIT 65
R2-1
48"X60"

STA 1209+68 'WB' LT

WZ END LOCATION MARKER

END ROAD WORK
G20-2A
48"X24"

N

100' (TYP)

STH 29 WB

1214'WB' 1216'WB' 1218'WB' 1220'WB' 1222'WB' 1224'WB' 1226'WB' 1228'WB'

LIMIT OF WORK ZONE BUFFER, SEE S.D.D. "TRAFFIC CONTROL LANE CLOSURE, SPEED REDUCTION"

1214'EB' 1216'EB' 1218'EB' 1220'EB' 1222'EB' 1224'EB' 1226'EB' 1228'EB'

STH 29 EB

SEE S.D.D. "TRAFFIC CONTROL, LANE CLOSURE, SPEED REDUCTION" AND "ADVANCED WIDTH RESTRICTION SIGNING" FOR ADDITIONAL INFORMATION

LANE CLOSED
R11-2L
48"X30"

100' (TYP)

MATCH LINE 1228+25.00

2

LEGEND

- WORK ZONE
- SAWING ASPHALT REQUIRED
- TRAFFIC CONTROL DRUMS (WITH/WITHOUT LIGHT, TYPE C
- TRAFFIC CONTROL SIGNS (MOUNTED ON PERMANENT SUPPORTS)
- TRAFFIC CONTROL SIGNS (MOUNTED ON TEMPORARY SUPPORTS)
- TRAFFIC CONTROL BARRICADES TYPE III (WITH/WITHOUT SIGN)
- TRAFFIC CONTROL FLEXIBLE TUBULAR MARKER
- MARKING REMOVAL LINE 6 INCH
- TRAFFIC FLOW ARROW
- DELINEATORS TEMPORARY (STEEL POST WITH SINGLE DELINEATOR COLOR OF DELINEATOR SHALL MATCH THE COLOR OF THE EDGE LINE)
- 6DY TEMPORARY MARKING LINE PAINT 6-INCH (DOUBLE YELLOW)
- 6W TEMPORARY MARKING LINE PAINT 6-INCH (WHITE)
- 6Y TEMPORARY MARKING LINE PAINT 6-INCH (YELLOW)
- 6WS TEMPORARY MARKING LINE PAINT 6-INCH (SKIPS WHITE 3'LINE 9' GAP)

N

STRUCTURE B-58-101
BEAM GUARD REPLACEMENT

SEE S.D.D. "TRAFFIC CONTROL INTERSECTION WITHIN SINGLE RIGHT LANE CLOSURE"

100' (TYP)

STH 29 WB

1230'WB' 1232'WB' 1234'WB' 1236'WB' 1238'WB' 1240'WB' 1242'WB'

1230'EB' 1232'EB' 1234'EB' 1236'EB' 1238'EB' 1240'EB' 1242'EB'

STH 29 EB

100' (TYP)

SEE S.D.D. "TRAFFIC CONTROL, FULL LANE SHIFT, MULTI-LANE DIVIDED 50 MPH AND OVER" FOR ADDITIONAL INFORMATION

STRUCTURE B-58-39
STRUCTURE REHABILITATION
BEAM GUARD REPLACEMENT

MATCH LINE 1243+50.00

MATCH LINE 1228+25.00

PROJECT NO: 1053-07-60	HWY: STH 29	COUNTY: MARATHON	STAGING PLANS - STAGE 3A	SHEET 52	E

FILE NAME : W:\10530730\SHEETS\026004-S3A.DWG
LAYOUT NAME - 03-s3a
PLOT DATE : 6/17/2025 2:13 PM
PLOT BY : RYAN BOOTH
PLOT NAME :
PLOT SCALE : 1 IN:100 FT

WISDOT/CADDS SHEET 44

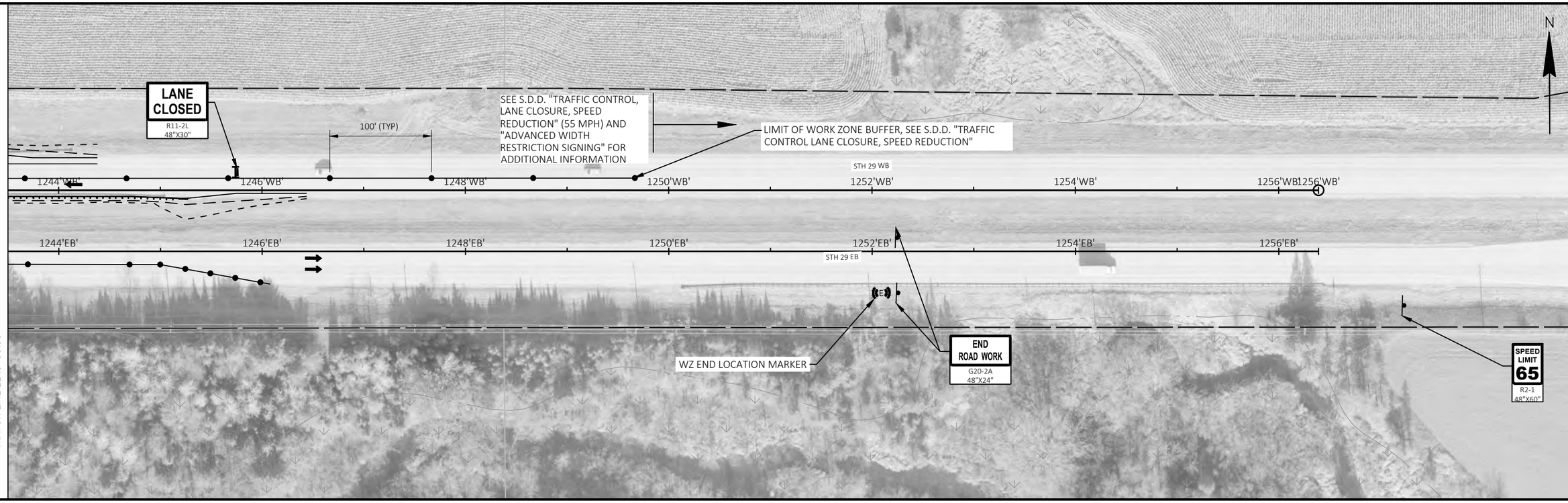

2

LEGEND

- WORK ZONE
- SAWING ASPHALT REQUIRED
- TRAFFIC CONTROL DRUMS (WITH/WITHOUT LIGHT, TYPE C
- TRAFFIC CONTROL SIGNS (MOUNTED ON PERMANENT SUPPORTS)
- TRAFFIC CONTROL SIGNS (MOUNTED ON TEMPORARY SUPPORTS)
- TRAFFIC CONTROL BARRICADES TYPE III (WITH/WITHOUT SIGN)
- TRAFFIC CONTROL FLEXIBLE TUBULAR MARKER
- MARKING REMOVAL LINE 6 INCH
- TRAFFIC FLOW ARROW
- DELINEATORS TEMPORARY (STEEL POST WITH SINGLE DELINEATOR COLOR OF DELINEATOR SHALL MATCH THE COLOR OF THE EDGE LINE)
- 6DY TEMPORARY MARKING LINE PAINT 6-INCH (DOUBLE YELLOW)
- 6W TEMPORARY MARKING LINE PAINT 6-INCH (WHITE)
- 6Y TEMPORARY MARKING LINE PAINT 6-INCH (YELLOW)
- 6WS TEMPORARY MARKING LINE PAINT 6-INCH (SKIPS WHITE 3'LINE 9' GAP)

2

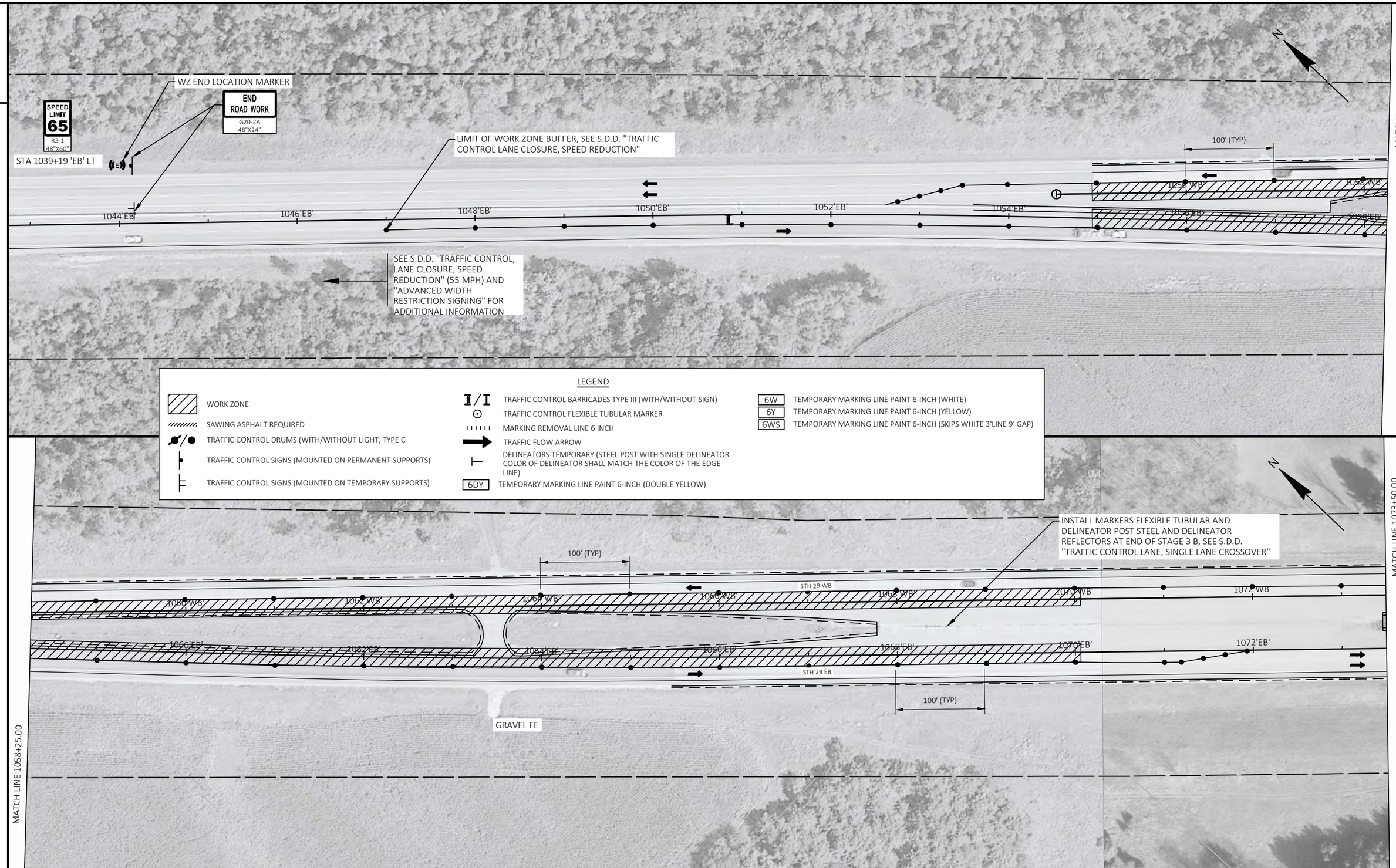

2

PROJECT NO: 1053-07-60	HWY: STH 29	COUNTY: MARATHON	STAGING PLANS - STAGE 3B	SHEET 54	E

FILE NAME : W:\10530730\SHEETS\026005-S3B.DWG
LAYOUT NAME - 01-s3b
PLOT DATE : 6/17/2025 2:14 PM
PLOT BY : RYAN BOOTH
PLOT NAME :
PLOT SCALE : 1 IN:100 FT

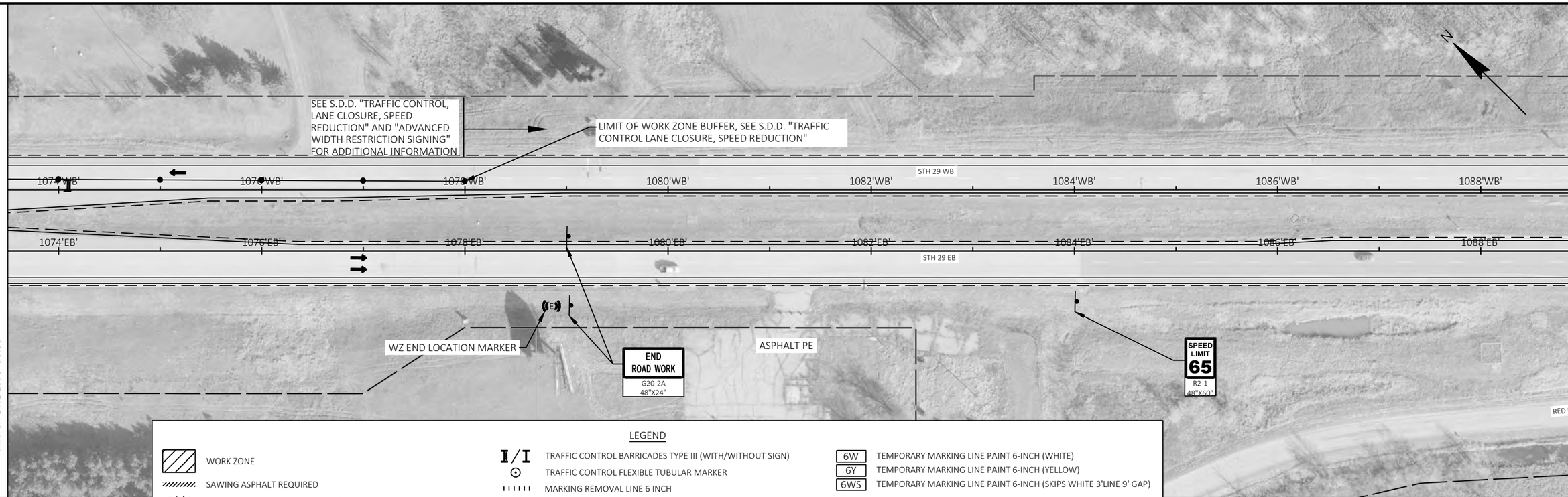

MATCH LINE 1073+50.00

LEGEND

- WORK ZONE
- SAWING ASPHALT REQUIRED
- TRAFFIC CONTROL DRUMS (WITH/WITHOUT LIGHT, TYPE C
- TRAFFIC CONTROL SIGNS (MOUNTED ON PERMANENT SUPPORTS)
- TRAFFIC CONTROL SIGNS (MOUNTED ON TEMPORARY SUPPORTS)
- TRAFFIC CONTROL BARRICADES TYPE III (WITH/WITHOUT SIGN)
- TRAFFIC CONTROL FLEXIBLE TUBULAR MARKER
- MARKING REMOVAL LINE 6 INCH
- TRAFFIC FLOW ARROW
- DELINEATORS TEMPORARY (STEEL POST WITH SINGLE DELINEATOR COLOR OF DELINEATOR SHALL MATCH THE COLOR OF THE EDGE LINE)
- 6DY TEMPORARY MARKING LINE PAINT 6-INCH (DOUBLE YELLOW)
- 6W TEMPORARY MARKING LINE PAINT 6-INCH (WHITE)
- 6Y TEMPORARY MARKING LINE PAINT 6-INCH (YELLOW)
- 6WS TEMPORARY MARKING LINE PAINT 6-INCH (SKIPS WHITE 3'LINE 9' GAP)

2

SPEED LIMIT 65
R2-1
48"X60"

STA 1209+69 'WB' LT

WZ END LOCATION MARKER

END ROAD WORK
G20-2A
48"X24"

INSTALL MARKERS FLEXIBLE TUBULAR AND DELINEATOR POST STEEL AND DELINEATOR REFLECTORS AT END OF STAGE 3 B, SEE S.D.D. "TRAFFIC CONTROL LANE, SINGLE LANE CROSSOVER"

N

100' (TYP)

STH 29 WB

1214'WB' 1216'WB' 1218'WB' 1220'WB' 1222'WB' 1224'WB' 1226'WB' 1228'WB'

LIMIT OF WORK ZONE BUFFER, SEE S.D.D. "TRAFFIC CONTROL LANE CLOSURE, SPEED REDUCTION"

1214'EB' 1216'EB' 1218'EB' 1220'EB' 1222'EB' 1224'EB' 1226'EB' 1228'EB'

STH 29 EB

SEE S.D.D. "TRAFFIC CONTROL, LANE CLOSURE, SPEED REDUCTION" AND "ADVANCED WIDTH RESTRICTION SIGNING" FOR ADDITIONAL INFORMATION

100' (TYP)

MATCH LINE 1228+25.00

2

LEGEND

- WORK ZONE
- SAWING ASPHALT REQUIRED
- TRAFFIC CONTROL DRUMS (WITH/WITHOUT LIGHT, TYPE C
- TRAFFIC CONTROL SIGNS (MOUNTED ON PERMANENT SUPPORTS)
- TRAFFIC CONTROL SIGNS (MOUNTED ON TEMPORARY SUPPORTS)
- TRAFFIC CONTROL BARRICADES TYPE III (WITH/WITHOUT SIGN)
- TRAFFIC CONTROL FLEXIBLE TUBULAR MARKER
- MARKING REMOVAL LINE 6 INCH
- TRAFFIC FLOW ARROW
- DELINEATORS TEMPORARY (STEEL POST WITH SINGLE DELINEATOR COLOR OF DELINEATOR SHALL MATCH THE COLOR OF THE EDGE LINE)
- 6DY TEMPORARY MARKING LINE PAINT 6-INCH (DOUBLE YELLOW)
- 6W TEMPORARY MARKING LINE PAINT 6-INCH (WHITE)
- 6Y TEMPORARY MARKING LINE PAINT 6-INCH (YELLOW)
- 6WS TEMPORARY MARKING LINE PAINT 6-INCH (SKIPS WHITE 3'LINE 9' GAP)

CTH OO

SOUTH BRANCH EMBARRASS RIVER

WITTENBERG TEL. & CABLE

N

STRUCTURE B-58-101
BEAM GUARD REPLACEMENT

SEE S.D.D. "TRAFFIC CONTROL INTERSECTION WITHIN SINGLE RIGHT LANE CLOSURE"

100' (TYP)

SEE S.D.D. "TRAFFIC CONTROL, FULL LANE SHIFT, MULTI-LANE DIVIDED 50 MPH AND OVER" FOR ADDITIONAL INFORMATION

STH 29 WB

1230'WB' 1232'WB' 1234'WB' 1236'WB' 1238'WB' 1240'WB' 1242'WB'

1230'EB' 1232'EB' 1234'EB' 1236'EB' 1238'EB' 1240'EB' 1242'EB'

STH 29 EB

100' (TYP)

SEE S.D.D. "TRAFFIC CONTROL INTERSECTION WITHIN SINGLE LEFT LANE CLOSURE"

SEE S.D.D. "TRAFFIC CONTROL, FULL LANE SHIFT, MULTI-LANE DIVIDED 50 MPH AND OVER" FOR ADDITIONAL INFORMATION

STRUCTURE B-58-39
STRUCTURE REHABILITATION
BEAM GUARD REPLACEMENT

MATCH LINE 1243+50.00

MATCH LINE 1228+25.00

PROJECT NO: 1053-07-60	HWY: STH 29	COUNTY: MARATHON	STAGING PLANS - STAGE 3B	SHEET 56	E

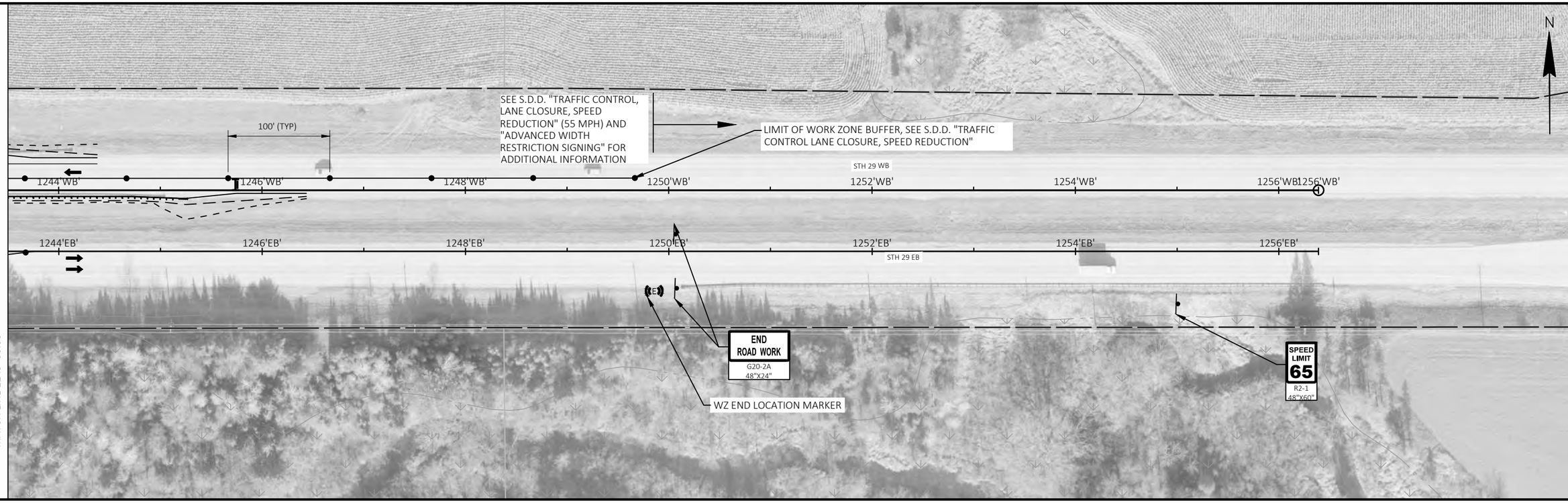

LEGEND

- WORK ZONE
- SAWING ASPHALT REQUIRED
- TRAFFIC CONTROL DRUMS (WITH/WITHOUT LIGHT, TYPE C
- TRAFFIC CONTROL SIGNS (MOUNTED ON PERMANENT SUPPORTS)
- TRAFFIC CONTROL SIGNS (MOUNTED ON TEMPORARY SUPPORTS)
- TRAFFIC CONTROL BARRICADES TYPE III (WITH/WITHOUT SIGN)
- TRAFFIC CONTROL FLEXIBLE TUBULAR MARKER
- MARKING REMOVAL LINE 6 INCH
- TRAFFIC FLOW ARROW
- DELINEATORS TEMPORARY (STEEL POST WITH SINGLE DELINEATOR COLOR OF DELINEATOR SHALL MATCH THE COLOR OF THE EDGE LINE)
- 6DY TEMPORARY MARKING LINE PAINT 6-INCH (DOUBLE YELLOW)
- 6W TEMPORARY MARKING LINE PAINT 6-INCH (WHITE)
- 6Y TEMPORARY MARKING LINE PAINT 6-INCH (YELLOW)
- 6WS TEMPORARY MARKING LINE PAINT 6-INCH (SKIPS WHITE 3'LINE 9' GAP)

Estimate Of Quantities

1053-07-60

Line	Item	Item Description	Unit	Total	Qty
0002	203.0335	Debris Containment Over Waterway (structure) 01. B-58-0039	EACH	1.000	1.000
0004	204.0100	Removing Concrete Pavement	SY	14,700.000	14,700.000
0006	204.0110	Removing Asphaltic Surface	SY	6,860.000	6,860.000
0008	204.0115	Removing Asphaltic Surface Butt Joints	SY	500.000	500.000
0010	204.0120	Removing Asphaltic Surface Milling	SY	54,100.000	54,100.000
0012	204.0150	Removing Curb & Gutter	LF	210.000	210.000
0014	204.0165	Removing Guardrail	LF	1,570.000	1,570.000
0016	204.0180	Removing Delineators and Markers	EACH	250.000	250.000
0018	204.0190	Removing Surface Drains	EACH	2.000	2.000
0020	211.0201	Prepare Foundation for Concrete Pavement (project) 01. 1053-07-60	EACH	1.000	1.000
0022	211.0400	Prepare Foundation for Asphaltic Shoulders	STA	122.000	122.000
0024	213.0100	Finishing Roadway (project) 01. 1053-07-60	EACH	1.000	1.000
0026	305.0110	Base Aggregate Dense 3/4-Inch	TON	5,420.000	5,420.000
0028	305.0120	Base Aggregate Dense 1 1/4-Inch	TON	930.000	930.000
0030	305.0500	Shaping Shoulders	STA	122.000	122.000
0032	390.0100	Removing Pavement for Base Patching	CY	68.000	68.000
0034	415.0110	Concrete Pavement 11-Inch	SY	14,560.000	14,560.000
0036	415.0210	Concrete Pavement Gaps	EACH	3.000	3.000
0038	415.6000.S	Rout and Seal	LF	69,300.000	69,300.000
0040	416.0610	Drilled Tie Bars	EACH	3,731.000	3,731.000
0042	416.0620	Drilled Dowel Bars	EACH	4,488.000	4,488.000
0044	416.1710	Concrete Pavement Repair	SY	2,020.000	2,020.000
0046	416.1720	Concrete Pavement Replacement	SY	3,340.000	3,340.000
0048	420.1000	Continuous Diamond Grinding Concrete Pavement	SY	9,360.000	9,360.000
0050	450.4000	HMA Cold Weather Paving	TON	1,930.000	1,930.000
0052	455.0605	Tack Coat	GAL	4,340.000	4,340.000
0054	460.2000	Incentive Density HMA Pavement	DOL	4,950.000	4,950.000
0056	460.5224	HMA Pavement 4 LT 58-28 S	TON	7,280.000	7,280.000
0058	460.7424	HMA Pavement 4 HT 58-28 H	TON	430.000	430.000
0060	465.0105	Asphaltic Surface	TON	12.000	12.000
0062	465.0110	Asphaltic Surface Patching	TON	173.000	173.000
0064	465.0510	Asphaltic Rumble Strips, Shoulder Divided Roadway	LF	31,600.000	31,600.000
0066	502.3200	Protective Surface Treatment	SY	22.000	22.000
0068	505.0600	Bar Steel Reinforcement HS Coated Structures	LB	83.000	83.000
0070	509.1500	Concrete Surface Repair	SF	235.000	235.000
0072	509.5100.S	Polymer Overlay	SY	2.000	2.000
0074	509.9015.S	Removing Polymer Overlay (structure) 01. B-58-0039	SY	2.000	2.000
0076	601.0557	Concrete Curb & Gutter 6-Inch Sloped 36-Inch Type D	LF	210.000	210.000
0078	601.0588	Concrete Curb & Gutter 4-Inch Sloped 36-Inch Type TBT	LF	30.000	30.000
0080	601.0590	Concrete Curb & Gutter 4-Inch Sloped 36-Inch Type TBTT	LF	29.000	29.000
0082	602.3010	Concrete Surface Drains	CY	2.200	2.200
0084	602.3210	Concrete Rumble Strips, Shoulder Divided Roadway	LF	26,900.000	26,900.000
0086	603.8000	Concrete Barrier Temporary Precast Delivered	LF	235.000	235.000
0088	603.8125	Concrete Barrier Temporary Precast Installed	LF	470.000	470.000
0090	606.0200	Riprap Medium	CY	10.000	10.000
0092	614.0010	Barrier System Grading Shaping Finishing	EACH	5.000	5.000
0094	614.2300	MGS Guardrail 3	LF	962.500	962.500
0096	614.2500	MGS Thrie Beam Transition	LF	197.000	197.000
0098	614.2610	MGS Guardrail Terminal EAT	EACH	5.000	5.000

Estimate Of Quantities

1053-07-60

Line	Item	Item Description	Unit	Total	Qty
0100	618.0100	Maintenance and Repair of Haul Roads (project) 01. 1053-07-60	EACH	1.000	1.000
0102	619.1000	Mobilization	EACH	1.000	1.000
0104	624.0100	Water	MGAL	87.000	87.000
0106	625.0100	Topsoil	SY	400.000	400.000
0108	628.1504	Silt Fence	LF	2,070.000	2,070.000
0110	628.1520	Silt Fence Maintenance	LF	2,070.000	2,070.000
0112	628.1905	Mobilizations Erosion Control	EACH	4.000	4.000
0114	628.1910	Mobilizations Emergency Erosion Control	EACH	2.000	2.000
0116	628.2008	Erosion Mat Urban Class I Type B	SY	2,170.000	2,170.000
0118	628.7504	Temporary Ditch Checks	LF	40.000	40.000
0120	628.7555	Culvert Pipe Checks	EACH	2.000	2.000
0122	628.7570	Rock Bags	EACH	40.000	40.000
0124	629.0210	Fertilizer Type B	CWT	3.000	3.000
0126	630.0130	Seeding Mixture No. 30	LB	110.000	110.000
0128	630.0200	Seeding Temporary	LB	20.000	20.000
0130	630.0500	Seed Water	MGAL	60.000	60.000
0132	633.0100	Delineator Posts Steel	EACH	107.000	107.000
0134	633.0500	Delineator Reflectors	EACH	123.000	123.000
0136	633.1100	Delineators Temporary	EACH	76.000	76.000
0138	633.5350	Markers Permanent Flexible	EACH	194.000	194.000
0140	642.5001	Field Office Type B	EACH	1.000	1.000
0142	643.0300	Traffic Control Drums	DAY	25,700.000	25,700.000
0144	643.0420	Traffic Control Barricades Type III	DAY	10,900.000	10,900.000
0146	643.0500	Traffic Control Flexible Tubular Marker Posts	EACH	846.000	846.000
0148	643.0600	Traffic Control Flexible Tubular Marker Bases	EACH	736.000	736.000
0150	643.0705	Traffic Control Warning Lights Type A	DAY	6,880.000	6,880.000
0152	643.0715	Traffic Control Warning Lights Type C	DAY	6,910.000	6,910.000
0154	643.0810.S	Connected Arrow Board	DAY	310.000	310.000
0156	643.0900	Traffic Control Signs	DAY	16,000.000	16,000.000
0158	643.0920	Traffic Control Covering Signs Type II	EACH	177.000	177.000
0160	643.1000	Traffic Control Signs Fixed Message	SF	64.000	64.000
0162	643.1220.S	Connected Work Zone Start and End Location Markers	DAY	310.000	310.000
0164	643.3165	Temporary Marking Line Paint 6-Inch	LF	115,000.000	115,000.000
0166	643.3850	Temporary Marking Stop Line Removable Tape 18-Inch	LF	189.000	189.000
0168	643.5000	Traffic Control	EACH	1.000	1.000
0170	645.0120	Geotextile Type HR	SY	32.000	32.000
0172	646.2020	Marking Line Epoxy 6-Inch	LF	572.000	572.000
0174	646.2025	Marking Line Grooved Black Epoxy 6-Inch	LF	9,150.000	9,150.000
0176	646.2040	Marking Line Grooved Wet Ref Epoxy 6-Inch	LF	72,400.000	72,400.000
0178	646.2050	Marking Line Grooved Permanent Tape 6-Inch	LF	9,150.000	9,150.000
0180	646.4040	Marking Line Grooved Wet Ref Epoxy 10-Inch	LF	163.000	163.000
0182	646.4050	Marking Line Grooved Permanent Tape 10-Inch	LF	2,240.000	2,240.000
0184	646.5020	Marking Arrow Epoxy	EACH	2.000	2.000
0186	646.6120	Marking Stop Line Epoxy 18-Inch	LF	85.000	85.000
0188	646.6466	Cold Weather Marking Epoxy 6-Inch	LF	82,000.000	82,000.000
0190	646.6470	Cold Weather Marking Epoxy 10-Inch	LF	163.000	163.000
0192	646.7320	Marking Chevron Epoxy 12-Inch	LF	177.000	177.000
0194	646.8120	Marking Curb Epoxy	LF	38.000	38.000
0196	646.8220	Marking Island Nose Epoxy	EACH	3.000	3.000

1053-07-60

Line	Item	Item Description	Unit	Total	Qty
0198	646.9002	Marking Removal Line 6-Inch	LF	43,200.000	43,200.000
0200	650.7000	Construction Staking Concrete Pavement	LF	5,041.000	5,041.000
0202	650.8000	Construction Staking Resurfacing Reference	LF	36,761.000	36,761.000
0204	650.9911	Construction Staking Supplemental Control (project) 01. 1053-07-60	EACH	1.000	1.000
0206	690.0150	Sawing Asphalt	LF	1,620.000	1,620.000
0208	690.0250	Sawing Concrete	LF	18,750.000	18,750.000
0210	715.0720	Incentive Compressive Strength Concrete Pavement	DOL	4,370.000	4,370.000
0212	ASP.1T0A	On-the-Job Training Apprentice at $5.00/HR	HRS	2,000.000	2,000.000
0214	ASP.1T0G	On-the-Job Training Graduate at $5.00/HR	HRS	1,260.000	1,260.000
0216	SPV.0060	Special 01. Reseal Railing Post Connection	EACH	22.000	22.000
0218	SPV.0060	Special 02. Removing Raised Pavement Markers and Filling Voids	EACH	297.000	297.000
0220	SPV.0060	Special 03. Embedded Galvanic Anodes	EACH	130.000	130.000
0222	SPV.0060	Special 04. Coring of Existing Concrete Pavement	EACH	4.000	4.000
0224	SPV.0090	Special 01. Flashing Stainless Steel	LF	121.000	121.000
0226	SPV.0170	Special 01. Concrete Joint and Crack Cleaning and Repair	STA	28.000	28.000
0228	SPV.0180	Special 01. Removing Distressed Asphaltic Surface Milling	SY	3,040.000	3,040.000
0230	SPV.0180	Special 02. Concrete Pavement Repair - Centerline	SY	908.000	908.000
0232	SPV.0195	Special 01. Full Depth Asphalt Patch	TON	35.000	35.000

3

CATEGORY	STATION	TO	STATION	LOCATION	* 204.0110 REMOVING ASPHALTIC SURFACE SY	204.0120 REMOVING ASPHALTIC SURFACE MILLING SY	SPV.0180.01 SPECIAL (01. REMOVING DISTRESSED ASPHALTIC SURFACE MILLING) SY	REMARKS
0010	1063+72	-	1077+00	STH 29 WB RT	-	5,615	-	STAGE 1 A MEDIAN CROSSOVER
0010	1219+00	-	1230+00	STH 29 WB RT	-	4,865	-	STAGE 1 A MEDIAN CROSSOVER
0010	1065+55	-	1089+95	STH 29 EB RT	-	1,635	-	STAGE 2A
0010	1084+15	-	1091+40	STH 29 RT	-	2,095	-	STAGE 2 A MAINLINE
0010	1091+36	-	1173+13	STH 29 EB RT	-	5,470	-	STAGE 2A
0010	1173+13	-	1223+54	STH 29 EB RT	3,629	-	-	STAGE 2A
0010	1223+54	-	1225+00	STH 29 EB RT	-	100	-	STAGE 2A
0010	1077+00	-	1090+08	STH 29 EB LT	-	1,050	-	STAGE 2A
0010	1091+32	-	1119+54	STH 29 EB LT	-	985	-	STAGE 2A
0010	1121+78	-	1152+49	STH 29 EB LT	-	1,025	-	STAGE 2A
0010	1152+97	-	1169+89	STH 29 EB LT	-	565	-	STAGE 2A
0011	1170+37	-	1173+13	STH 29 EB LT	-	95	-	STAGE 2A
0012	1173+13	-	1223+54	STH 29 EB LT	1,757	-	-	STAGE 2A
0010	BLACK CHERRY DR	-	-	EB	-	490	-	STAGE 2A
0010	1069+50	-	1080+20	STH 29 WB LT	-	955	-	STAGE 2B
0010	1086+43	-	1089+94	STH 29 WB LT	-	330	-	STAGE 2B
0010	CTH D	-	-	WB	-	500	-	STAGE 2B
0010	1091+22	-	1120+38	STH 29 WB LT	-	2,865	-	STAGE 2B
0010	SILVER BIRCH CIR W	-	-	WB	-	570	-	STAGE 2B
0010	1121+78	-	1182+26	STH 29 WB LT	-	4,330	-	STAGE 2B
0010	BLACK WILLOW DR	-	-	WB	-	455	-	STAGE 2B
0010	1183+60	-	1209+88	STH 29 WB LT	-	1,830	-	STAGE 2B
0010	SILVER BIRCH CIR	-	-	WB	-	495	-	STAGE 2B
0010	1211+18	-	1224+00	STH 29 WB LT	-	1,010	-	STAGE 2B
0010	1077+00	-	1080+20	STH 29 WB RT	-	155	-	STAGE 2B
0010	1086+43	-	1089+95	STH 29 WB RT	-	145	-	STAGE 2B
0010	1089+95	-	1091+36	STH 29 WB RT	-	675	-	STAGE 2B MEDIAN CROSSOVER
0010	1091+36	-	1119+16	STH 29 WB RT	-	1,165	-	STAGE 2B
0010	1119+16	-	1122+50	STH 29 WB RT	-	895	-	STAGE 2B MEDIAN CROSSOVER
0010	1122+50	-	1152+22	STH 29 WB RT	-	1,005	-	STAGE 2B
0010	1152+22	-	1152+95	STH 29 WB RT	-	245	-	STAGE 2B MEDIAN CROSSOVER
0010	1152+95	-	1169+41	STH 29 WB RT	-	550	-	STAGE 2B
0010	1169+41	-	1170+13	STH 29 WB RT	-	245	-	STAGE 2B MEDIAN CROSSOVER
0010	1170+13	-	1181+78	STH 29 WB RT	-	390	-	STAGE 2B
0010	1181+78	-	1186+76	STH 29 WB RT	-	1,165	-	STAGE 2B MEDIAN CROSSOVER
0010	1186+76	-	1192+19	STH 29 WB RT	-	185	-	STAGE 2B
0010	1192+19	-	1192+98	STH 29 WB RT		255	-	STAGE 2B MEDIAN CROSSOVER
0010	1193+75	-	1209+11	STH 29 WB RT	-	515	-	STAGE 2B
0010	1209+11	-	1212+07	STH 29 WB RT	-	825	-	STAGE 2B MEDIAN CROSSOVER
0010	1212+07	-	1219+00	STH 29 WB RT	-	280	-	STAGE 2B
0010	1055+05	-	1069+50	STH 29 WB LT	-	1,285	-	STAGE 3A
0010	1224+00	-	1236+19	STH 29 WB LT	-	835	-	STAGE 3A
0010	CTH OO	-	-	WB	-	435	-	STAGE 3A
0010	1237+46	-	1238+87	STH 29 WB LT	-	160	-	STAGE 3A
0010	1225+00	-	1238+17	STH 29 EB RT	-	1,010	-	STAGE 3A
0010	1055+05	-	1058+20	STH 29 WB RT	-	630	-	STAGE 3B
0010	1058+20	-	1063+12	STH 29 WB RT	-	165	-	STAGE 3B
0010	1063+12	-	1063+72	STH 29 WB RT	-	165	-	STAGE 3B MEDIAN CROSSOVER
0010	1230+00	-	1235+34	STH 29 WB RT	-	205	-	STAGE 3B
0010	1235+34	-	1237+87	STH 29 WB RT	-	905	-	STAGE 3B MEDIAN CROSSOVER
0010	1230+00	-	1236+03	STH 29 EB LT	-	650	-	
0010			PROJECT		-	-	2,630	
				TOTAL 0010	5,386	52,470	2,630	
0030	STH 49	-	-	STH 49	-	1,630	410	
				TOTAL 0030	0	1,630	410	
				PROJECT TOTAL	5,386	54,100	3,040	

* ADDITIONAL QUANTITIES SHOWN ELSE WHERE

3

3

204 REMOVALS

CATEGORY	STATION	TO	STATION	LOCATION	* 204.0100 REMOVING CONCRETE PAVEMENT SY	* 204.0110 REMOVING ASPHALTIC SURFACE SY	204.0165 REMOVING GUARDRAIL LF	204.0180 REMOVING DELINEATORS AND MARKERS EACH	211.0400 PREPARE FOUNDATION FOR ASPHALTIC SHOULDERS STA	305.0500 SHAPING SHOULDERS STA	SPV.0060.04 SPECIAL (04. CORING OF EXISTING CONCRETE PAVEMENT) EACH	REMARKS
0010	1237+77	-	1240+58	STH 29 EB LT	-	-	279	-	-	-	-	
0010	1238+75	-	1240+20	STH 29 WB RT	-	-	146	-	-	-	-	
0010	1236+67	-	1240+85	STH 29 EB RT	-	-	416	-	-	-	-	
0010	1240+80	-	1244+12	STH 29 WB LT	-	-	333	-	-	-	-	
0010	1241+08	-	1245+03	STH 29 WB RT	-	-	396	-	-	-	-	
0010	1054+95	-	1239+90	STH 29 WB	-	-	-	135	-	-	-	
0010	1065+45	-	1236+70	STH 29 EB	-	-	-	115	-	-	-	
0010	1173+13	-	1223+54	STH 29 EB LT & RT	14,555	-	-	-	102	102	4	
0010	1183+51	-	1184+84	STH 29 WB	139	-	-	-	-	-	-	
0010	1237+66	-	1240+50	STH 29 EB LT	-	325	-	-	3	3	-	NW BEAMGUARD
0010	1237+89	-	1240+00	STH 29 WB RT	-	151	-	-	3	3	-	SW BEAMGUARD
0010	1238+17	-	1240+66	STH 29 EB RT	-	222	-	-	3	3	-	SW BEAMGUARD
0010	1238+87	-	1239+81	STH 29 WB LT	-	84	-	-	1	1	-	NW BEAMGUARD
0010	1240+91	-	1244+38	STH 29 WB LT	-	302	-	-	4	4	-	NE BEAMGUARD
0010	1241+14	-	1246+44	STH 29 WB RT	-	334	-	-	6	6	-	SE BEAMGUARD
				TOTAL 0010	14,694	1,418	1,570	250	122	122	4	

* ADDITIONAL QUANTITIES SHOWN ELSE WHERE

CATEGORY	STATION	TO	STATION	LOCATION	204.0115 REMOVING ASPHALTIC SURFACE BUTT JOINTS SY	REMARKS
0010	1054+95	-	1055+05	STH 29 WB RT/LT	27	
0010	1063+23	-	1063+70	STH 29 EB LT	43	
0010	1065+45	-	1065+55	STH 29 EB RT/LT	18	
0010	1080+20	-	1080+30	STH 29 WB RT/LT	14	
0010	1084+05		1084+15	STH 29 EB	29	
0010	1086+33	-	1086+43	STH 29 WB RT/LT	14	
0010	1090+41	-	1090+83	STH 29 WB LT	50	
0010	1090+44	-	1090+88	STH 29 EB RT	48	
0010	1091+39		1091+49	STH 29 EB	29	
0010	1121+15	-	1121+41	STH 29 WB LT	36	
0010	1182+57	-	1182+91	STH 29 WB LT	38	
0010	1210+29	-	1210+58	STH 29 WB LT	35	
0010	1236+67	-	1237+10	STH 29 WB LT	50	
				TOTAL 0010	431	
0030	STH 49	-	-	STH 49	31	
0030	CTH II	-	-	CTH II	38	
				TOTAL 0030	69	
				PROJECT TOTAL	500	

CATEGORY	STATION	TO	STATION	LOCATION	305.0110 BASE AGGREGATE DENSE 3/4-INCH TON	624.0100 WATER MGAL	REMARKS
0010	1065+55	-	1089+95	STH 29 EB RT	241	4	STAGE 2A
0010	1091+36	-	1183+35	STH 29 EB RT	909	14	STAGE 2A
0010	1184+84	-	1225+00	STH 29 EB RT	397	6	STAGE 2A
0010	1077+00	-	1090+08	STH 29 EB LT	97	1	STAGE 2A
0010	1091+32	-	1119+54	STH 29 EB LT	210	3	STAGE 2A
0010	1121+78	-	1152+49	STH 29 EB LT	228	3	STAGE 2A
0010	1152+97	-	1169+89	STH 29 EB LT	126	2	STAGE 2A
0010	1170+37	-	1182+46	STH 29 EB LT	90	1	STAGE 2A
0010	1185+06	-	1193+11	STH 29 EB LT	60	1	STAGE 2A
0010	1193+74	-	1208+90	STH 29 EB LT	113	2	STAGE 2A
0010	1211+68	-	1219+00	STH 29 EB LT	55	1	STAGE 2A
0010	1069+50	-	1080+20	STH 29 WB LT	106	2	STAGE 2B
0010	1086+43	-	1089+94	STH 29 WB LT	35	1	STAGE 2B
0010	1091+22	-	1120+38	STH 29 WB LT	288	4	STAGE 2B
0010	1121+78	-	1182+26	STH 29 WB LT	599	9	STAGE 2B
0010	1183+60	-	1209+88	STH 29 WB LT	260	4	STAGE 2B
0010	1211+18	-	1224+00	STH 29 WB LT	127	2	STAGE 2B
0010	1077+00	-	1080+20	STH 29 WB RT	24	1	STAGE 2B
0010	1086+43	-	1089+95	STH 29 WB RT	27	1	STAGE 2B
0010	1091+36	-	1119+16	STH 29 WB RT	206	3	STAGE 2B
0010	1122+50	-	1152+22	STH 29 WB RT	221	3	STAGE 2B
0010	1152+95	-	1169+41	STH 29 WB RT	122	2	STAGE 2B
0010	1170+13	-	1181+78	STH 29 WB RT	87	1	STAGE 2B
0010	1186+76	-	1192+19	STH 29 WB RT	41	1	STAGE 2B
0010	1193+75	-	1209+11	STH 29 WB RT	114	2	STAGE 2B
0010	1212+07	-	1219+00	STH 29 WB RT	52	1	STAGE 2B
0010	1055+05	-	1069+50	STH 29 WB LT	143	2	STAGE 3A
0010	1224+00	-	1236+19	STH 29 WB LT	121	2	STAGE 3A
0010	1237+46	-	1238+87	STH 29 WB LT	14	1	STAGE 3A
0010	1225+00	-	1238+17	STH 29 EB RT	131	2	STAGE 3A
0010	1055+05	-	1058+20	STH 29 WB RT	24	1	STAGE 3B
0010	1058+20	-	1063+12	STH 29 WB RT	37	1	STAGE 3B
0010	1230+00	-	1235+34	STH 29 WB RT	40	1	STAGE 3B
0010	1230+00	-	1236+03	STH 29 EB LT	45	1	STAGE 3B
				TOTAL 0010	5,390	86	
0030		-		STH 49	30	1	SHOULDER
				TOTAL 0030	30	1	
				PROJECT TOTAL	5,420	87	

3

420 CONCRETE PAVEMENT SUMMARY

CATEGORY	STATION	TO	STATION	LOCATION	305.0120 BASE AGGREGATE DENSE 1 1/4-INCH TON	390.0100 REMOVING PAVEMENT FOR BASE PATCHING CY	415.0110 CONCRETE PAVEMENT 11-INCH SY	415.0210 CONCRETE PAVEMENT GAPS EACH	415.6000.S ROUT AND SEAL LF	416.0610 DRILLED TIE BARS EACH	416.0620 DRILLED DOWEL BARS EACH	416.1710 CONCRETE PAVEMENT REPAIR SY	416.1720 CONCRETE PAVEMENT REPLACEMENT SY	420.1000 CONTINUOUS DIAMOND GRINDING CONCRETE PAVEMENT SY	* 690.0250 SAWING CONCRETE LF	SPV.0060.02 SPECIAL (02. REMOVING RAISED PAVEMENT MARKERS AND FILLING VOIDS) EACH	SPV.0170.01 SPECIAL (01. CONCRETE JOINT AND CRACK CLEANING AND REPAIR) STA	SPV.0180.02 SPECIAL (02. CONCRETE PAVEMENT REPAIR - CENTERLINE) SY	SPV.0195.01 SPECIAL (01. FULL DEPTH ASPHALT PATCH) TON	REMARKS
0010	1054+95	-	1241+14	STH 29 WB	-	-	-	-	35,752	-	-	-	-	-	-	181	-	-	-	PROJECT WIDE
0010	1065+45	-	1241+65	STH 29 EB	-	-	-	-	33,548	-	-	-	-	-	-	116	-	-	-	PROJECT WIDE
0010	1054+95	-	1241+14	STH 29 WB	-	61	-	-	-	-	-	-	-	-	750	-	25	-	31	STAGE 1, STH 29 WB INSIDE LANE
0010	1054+95	-	1070+00	STH 29 WB	-	-	-	-	-	817	160	60	82	263	2,350	-	-	224	-	STAGE 3A/3B
0010	1070+00	-	1121+00	STH 29 EB	-	-	-	-	-	83	432	133	750	1,286	1,034	-	-	-	-	STAGE 2A
0010	1121+00	-	1225+00	STH 29 EB	810	-	14,560	2	-	103	1,200	555	830	2,466	2,422	-	-	-	-	STAGE 2A
0010	1070+00	-	1121+00	STH 29 WB	-	-	-	-	-	792	432	101	590	1,036	2,778	-	-	181	-	STAGE 2B
0010	1121+00	-	1186+00	STH 29 WB	-	-	-	-	-	1,478	1,344	691	663	2,622	6,571	-	-	397	-	STAGE 2B
0010	1186+00	-	1225+00	STH 29 WB	-	-	-	-	-	5	256	124	83	442	485	-	-	3	-	STAGE 2B
0010	1225+00	-	1246+00	STH 29 WB	-	-	-	-	-	10	80	68	-	118	187	-	-	0	-	STAGE 3A/3B
0010	1054+95	-	1070+00	STH 29 EB	-	-	-	-	-	92	48	25	-	68	269	-	-	20	-	STAGE 3A/3B
0010	1225+00	-	1241+57	STH 29 EB	-	-	-	-	-	11	128	77	31	209	277	-	-	-	-	STAGE 3A/3B
				UNDISTRIBUTED	120	7	-	1	-	340	408	186	311	850	1,609	-	3	83	4	PROJECT WIDE, 10%
				TOTAL 0010	930	68	14,560	3	69,300	3,731	4,488	2,020	3,340	9,360	18,732	297	28	908	35	

NOTE: START OF PROJECT TO STATION 1224+00 EB AND STATION 1236+00 WB HAVE PERPENDICULAR JOINTS.
NOTE: STATION 1224+00 EB AND STATION 1236+00 WB TO END OF PROJECT HAVE SKEWED JOINTS.

CATEGORY	STATION	TO	STATION	LOCATION	* 204.0100 REMOVING CONCRETE PAVEMENT SY	204.0190 REMOVING SURFACE DRAINS EACH	601.0588 CONCRETE CURB & GUTTER 4-INCH SLOPED 36-INCH TYPE TBT LF	601.0590 CONCRETE CURB & GUTTER 4-INCH SLOPED 36-INCH TYPE TBTT LF	602.3010 CONCRETE SURFACE DRAINS CY	606.0200 RIPRAP MEDIUM CY	645.0120 GEOTEXTILE TYPE HR SY	REMARKS
0010	1239+76	-	-	STH 29 WB LT	6	1	-	-	1.1	5	16	
0010	1239+74	-	1239+89	STH 29 WB LT	-	-	10	10	-	-	-	
0010	1239+75	-	-	STH 29 WB RT	-	1	-	-	1.1	5	16	
0010	1239+78	-	1240+18	STH 29 WB RT	-	-	20	19	-	-	-	
				TOTAL 0010	6	2	30	29	2.2	10	32	

* ADDITIONAL QUANTITIES SHOWN ELSE WHERE

601 CURB AND GUTTER SUMMARY

CATEGORY	LOCATION	* 204.0110 REMOVING ASPHALTIC SURFACE SY	204.0150 REMOVING CURB & GUTTER LF	465.0105 ASPHALTIC SURFACE TON	601.0557 CONCRETE CURB & GUTTER 6-INCH SLOPED 36-INCH TYPE D LF	* 690.0150 SAWING ASPHALT LF	* 690.0250 SAWING CONCRETE LF	REMARKS
0010	N. CTH D	9	31	2	31	41	3	NW RETURN
0010	N. CTH D	16	58	3	58	75	-	NE RETURN
0010	N SILVER BIRCH CIR	5	15	1	15	16	3	SE RETURN
0010	S SILVER BIRCH CIR	3	10	1	10	12	3	NE RETURN
	TOTAL 0010	33	114	7	114	144	9	
0030	STH49 RT/LT	23	96	5	96	109	9	
	TOTAL 0030	23	96	5	96	109	9	
	PROJECT TOTAL	56	210	12	210	253	18	

* ADDITIONAL QUANTITIES SHOWN ELSE WHERE

CATEGORY	STATION	TO	STATION	LOCATION	603.8000 CONCRETE BARRIER TEMPORARY PRECAST DELIVERED LF	603.8125 CONCRETE BARRIER TEMPORARY PRECAST INSTALLED LF	REMARKS
0010	1239+15	-	1241+41	EB	235	235	STAGE 3A
0010	1239+15	-	1241+41	EB	-	235	STAGE 3B
				TOTAL 0010	235	470	

3

460 HMA SUMMARY

CATEGORY	STATION	TO	STATION	LOCATION	450.4000 HMA COLD WEATHER PAVING TON	455.0605 TACK COAT GAL	460.5224 HMA PAVEMENT 4 LT 58-28 S TON	460.7424 HMA PAVEMENT 4 HT 58-28 H TON	465.0110 ASPHALTIC SURFACE PATCHING TON	REMARKS
0010	1063+72	-	1077+00	STH 29 WB RT	-	396	630	-	-	STAGE 1 A MEDIAN CROSSOVER
0010	1219+00	-	1230+00	STH 29 WB RT	-	343	545	-	-	STAGE 1 A MEDIAN CROSSOVER
0010	1065+45	-	1089+95	STH 29 EB RT	-	115	184	-	-	STAGE 2A
0010	1084+05	-	1091+50	STH 29 RT	-	151	-	240	-	STAGE 2 A MAINLINE
0010	1091+36	-	1173+13	STH 29 EB RT	-	384	615	-	-	STAGE 2A
0010	1173+13	-	1223+54	STH 29 EB RT		255	815			STAGE 2A
0010	1223+54	-	1225+00	STH 29 EB RT	-	7	11	-	-	STAGE 2A
0010	1077+00	-	1090+08	STH 29 EB LT	-	74	118	-	-	STAGE 2A
0010	1091+32	-	1119+54	STH 29 EB LT	-	69	111	-	-	STAGE 2A
0010	1121+78	-	1152+49	STH 29 EB LT	-	72	115	-	-	STAGE 2A
0010	1152+97	-	1169+89	STH 29 EB LT	-	40	64	-	-	STAGE 2A
0010	1170+37	-	1173+13	STH 29 EB LT	-	7	11	-	-	STAGE 2A
0010	1173+13	-	1223+54	STH 29 EB LT	-	123	395	-	-	STAGE 2A
0010	BLACK CHERRY DR	-	-	EB	-	38	61	-	-	STAGE 2A
0010	1069+50	-	1080+20	STH 29 WB LT	-	67	107	-	-	STAGE 2B
0010	1086+43	-	1089+94	STH 29 WB LT	-	23	37	-	-	STAGE 2B
0010	CTH D	-	-	WB	-	39	62	-	-	STAGE 2B
0010	1091+22	-	1120+38	STH 29 WB LT	-	201	321	-	-	STAGE 2B
0010	SILVER BIRCH CIR W	-	-	WB	-	43	68	-	-	STAGE 2B
0010	1121+78	-	1182+26	STH 29 WB LT	-	304	486	-	-	STAGE 2B
0010	BLACK WILLOW DR	-	-	WB	-	35	56	-	-	STAGE 2B
0010	1183+60	-	1209+88	STH 29 WB LT	-	129	205	-	-	STAGE 2B
0010	SILVER BIRCH CIR	-	-	WB	-	37	59	-	-	STAGE 2B
0010	1211+18	-	1224+00	STH 29 WB LT	-	71	113	-	-	STAGE 2B
0010	1077+00	-	1080+20	STH 29 WB RT	-	11	17	-	-	STAGE 2B
0010	1086+43	-	1089+95	STH 29 WB RT	-	11	17	-	-	STAGE 2B
0010	1089+95	-	1091+36	STH 29 WB RT	-	48	76	-	-	STAGE 2B MEDIAN CROSSOVER
0010	1091+36	-	1119+16	STH 29 WB RT	-	82	131	-	-	STAGE 2B
0010	1119+16	-	1122+50	STH 29 WB RT	-	63	100	-	-	STAGE 2B MEDIAN CROSSOVER
0010	1122+50	-	1152+22	STH 29 WB RT	-	71	113	-	-	STAGE 2B
0010	1152+22	-	1152+95	STH 29 WB RT	-	17	27	-	-	STAGE 2B MEDIAN CROSSOVER
0010	1152+95	-	1169+41	STH 29 WB RT	-	39	62	-	-	STAGE 2B
0010	1169+41	-	1170+13	STH 29 WB RT	-	18	28	-	-	STAGE 2B MEDIAN CROSSOVER
0010	1170+13	-	1181+78	STH 29 WB RT	-	28	44	-	-	STAGE 2B
0010	1181+78	-	1186+76	STH 29 WB RT	-	82	132	-	-	STAGE 2B MEDIAN CROSSOVER
0010	1186+76	-	1192+19	STH 29 WB RT	-	13	21	-	-	STAGE 2B
0010	1192+19	-	1192+98	STH 29 WB RT	-	18	29	-	-	STAGE 2B MEDIAN CROSSOVER
0010	1193+75	-	1209+11	STH 29 WB RT	-	36	58	-	-	STAGE 2B
0010	1209+11	-	1212+07	STH 29 WB RT	-	58	93	-	-	STAGE 2B MEDIAN CROSSOVER
0010	1212+07	-	1219+00	STH 29 WB RT	-	20	32	-	-	STAGE 2B
0010	1054+95	-	1069+50	STH 29 WB LT	-	91	145	-	-	STAGE 3A
0010	1224+00	-	1236+19	STH 29 WB LT	-	59	94	-	-	STAGE 3A
0010	CTH OO	-	-	WB	-	34	54	-	-	STAGE 3A
0010	1237+46	-	1238+87	STH 29 WB LT	-	12	18	-	-	STAGE 3A
0010	1225+00	-	1238+17	STH 29 EB RT	-	71	115	-	-	STAGE 3A
0010	1054+95	-	1058+20	STH 29 WB RT	-	46	73	-	-	STAGE 3B
0010	1058+20	-	1063+12	STH 29 WB RT	-	12	19	-	-	STAGE 3B
0010	1063+12	-	1063+72	STH 29 WB RT	-	15	24	-	-	STAGE 3B MEDIAN CROSSOVER
0010	1230+00	-	1235+34	STH 29 WB RT	-	15	24	-	-	STAGE 3B
0010	1235+34	-	1237+87	STH 29 WB RT	-	64	102	-	-	STAGE 3B MEDIAN CROSSOVER
0010	1230+00	-	1236+03	STH 29 EB LT	-	46	73	-	-	STAGE 3B
0010	1237+66	-	1240+50	STH 29 EB LT	-	23	73	-	-	NW BEAMGUARD
0010	1237+89	-	1240+00	STH 29 WB RT	-	11	34	-	-	SW BEAMGUARD
0010	1238+17	-	1240+66	STH 29 EB RT	-	16	50	-	-	SW BEAMGUARD
0010	1238+87	-	1239+81	STH 29 WB LT	-	6	19	-	-	NW BEAMGUARD
0010	1240+91	-	1244+38	STH 29 WB LT	-	22	68	-	-	NE BEAMGUARD
0010	1241+14	-	1246+44	STH 29 WB RT	-	24	75	-	-	SE BEAMGUARD
0010	1183+48	-	1184+87	STH 29 WB	-	16	51	-	-	TURN LANE
0010	-	-	-	UNDISTRIBUTED	1,882	-	-	-	150	PROJECT
				TOTAL 0010	1,882	4,221	7,280	240	150	
0030	1183+00	-	1185+00	STH 49	48	119	-	190	23	
				TOTAL 0030	48	119	0	190	23	
				PROJECT TOTAL	1,930	4,340	7,280	430	173	

3

3

RUMBLE STRIP SUMMARY

CATEGORY	STATION	TO	STATION	LOCATION	465.0510 ASPHALTIC RUMBLE STRIPS, SHOULDER DIVIDED ROADWAY LF	602.3210 CONCRETE RUMBLE STRIPS, SHOULDER DIVIDED ROADWAY LF	REMARKS
0010	1054+54	-	1076+06	WB	2,150	-	OUTSIDE
0010	1076+88	-	1080+30	WB	345	-	OUTSIDE
-0010	1080+30	-	1086+33	WB	-	605	OUTSIDE
0010	1086+33	-	1089+51	WB	320	-	OUTSIDE
0010	1095+23	-	1120+00	WB	2,490	-	OUTSIDE
0010	1126+05	-	1181+79	WB	-	5,585	OUTSIDE
0010	1186+23	-	1189+06	WB	-	280	OUTSIDE
0010	1189+91	-	1208+95	WB	-	1,830	OUTSIDE
0010	1213+83	-	1221+54	WB	-	780	OUTSIDE
0010	1222+50	-	1227+76	WB	-	530	OUTSIDE
0010	1228+85	-	1235+14	WB	-	630	OUTSIDE
0010	1240+98	-	1244+38	WB	-	340	OUTSIDE
0010	1054+54	-	1063+12	WB	860	-	INSIDE
0010	1075+48	-	1080+30	WB	485	-	INSIDE
0010	1080+30	-	1086+33	WB	-	605	INSIDE
0010	1086+33	-	1088+71	WB	238	-	INSIDE
0010	1094+37	-	1118+66	WB	2430	-	INSIDE
0010	1122+50	-	1181+28	WB	5910	-	INSIDE
0010	1186+76	-	1208+61	WB	2110	-	INSIDE
0010	1212+07	-	1217+01	WB	495	-	INSIDE
0010	1231+85	-	1234+84	WB	300	-	INSIDE
0010	1237+51	-	1240+17	WB	270	-	INSIDE
0010	1065+54	-	1080+85	EB	-	1,540	OUTSIDE
0010	1081+61	-	1084+05	EB	-	245	OUTSIDE
0010	1084+05	-	1089+73	EB	570	-	OUTSIDE
0010	1092+24	-	1179+81	EB	-	8,780	OUTSIDE
0010	1185+84	-	1192+70	EB	-	695	OUTSIDE
0010	1193+79	-	1202+51	EB	-	875	OUTSIDE
0010	1203+43	-	1229+53	EB	-	2,620	OUTSIDE
0010	1230+30	-	1231+59	EB	-	130	OUTSIDE
0010	1232+38	-	1240+60	EB	-	830	OUTSIDE
0010	1076+36	-	1085+81	EB	945	-	OUTSIDE
0010	1092+60	-	1119+02	EB	2,645	-	INSIDE
0010	1122+28	-	1182+46	EB	6,015	-	INSIDE
0010	1185+56	-	1208+90	EB	2,335	-	INSIDE
0010	1212+18	-	1216+86	EB	465	-	INSIDE
0010	1238+28	-	1240+47	EB	222	-	INSIDE
				TOTAL 0010	31,600	26,900	

614 BEAM GUARD SUMMARY

CATEGORY	STATION	TO	STATION	LOCATION	614.2300 MGS GUARDRAIL 3 LF	614.2500 MGS THRIE BEAM TRANSITION LF	614.2610 MGS GUARDRAIL TERMINAL EAT EACH	REMARKS
0010	1237+78	-	1238+32	STH 29 EB LT	-	-	1	B-58-39 NW QUADRANT
0010	1238+02	-	1238+57	STH 29 WB RT	-	-	1	B-58-101 SW QUADRANT
0010	1238+28	-	1238+82	STH 29 EB RT	-	-	1	B-58-39 SW QUADRANT
0010	1238+32	-	1240+19	STH 29 EB LT	187.5	-	-	B-58-39 NW QUADRANT
0010	1238+57	-	1239+82	STH 29 WB RT	125.0	-	-	B-58-101 SE QUADRANT
0010	1238+82	-	1240+45	STH 29 EB RT	162.5	-	-	B-58-39 SW QUADRANT
0010	1239+82	-	1239+99	STH 29 WB RT	-	39.4	-	B-58-101 SW QUADRANT
0010	1240+19	-	1240+59	STH 29 EB LT	-	39.4	-	B-58-39 NW QUADRANT
0010	1240+45	-	1240+65	STH 29 EB RT	-	39.4	-	B-58-39 SW QUADRANT
0010	1240+81	-	1241+18	STH 29 WB LT	-	39.4	-	B-58-101 NE QUADRANT
0010	1241+09	-	1241+47	STH 29 WB RT	-	39.4	-	B-58-101 SE QUADRANT
0010	1241+18	-	1242+81	STH 29 WB LT	162.5	-	-	B-58-101 NE QUADRANT
0010	1241+47	-	1244+72	STH 29 WB RT	325.0	-	-	B-58-101 SE QUADRANT
0010	1242+81	-	1243+35	STH 29 WB LT	-	-	1	B-58-101 NE QUADRANT
0010	1244+72	-	1245+27	STH 29 WB RT	-	-	1	B-58-101 SE QUADRANT
				TOTAL 0010	962.5	197.0	5	

3

CATEGORY	STATION	TO	STATION	LOCATION	614.0010 BARRIER SYSTEM GRADING SHAPING FINISHING EACH	EXCAVATION COMMON** CY	BORROW** CY	TOPSOIL** SY	EROSION MAT URBAN CLASS I TYPE B** SY	FERTILIZER TYPE B** CWT	SEEDING MIXTURE NO. 30** LB	SEED WATER** MGAL	REMARKS
0010	1236+00	-	1240+82	STH 29 EB RT	1	91	101	712	712	0.4	32	16	
0010	1237+51	-	1240+18	STH 29 WB RT	1	15	25	150	150	0.1	7	3.4	
0010	1237+56	-	1240+56	STH 29 EB LT	1	30	16	219	219	0.1	10	5.0	
0010	1240+81	-	1245+12	STH 29 WB LT	1	110	-	371	371	0.2	17	8.4	
0010	1241+10	-	1246+45	STH 29 WB RT	1	16	26	263	263	0.2	12	6.0	
				TOTAL 0010	5	262	168	1,715	1,715	1.1	77	39	

** QUANTITIES SHOWN ABOVE ARE FOR INFORMATION ONLY AND ARE INCIDENTAL TO ITEM 614.0010

628 EC AND RESTORATION SUMMARY

CATEGORY	STATION	TO	STATION	LOCATION	625.0100 TOPSOIL SY	628.1504 SILT FENCE LF	628.1520 SILT FENCE MAINTENANCE LF	628.1905 MOBILIZATIONS EROSION CONTROL EACH	628.1910 MOBILIZATIONS EMERGENCY EROSION CONTROL EACH	628.2008 EROSION MAT URBAN CLASS I TYPE B SY	628.7504 TEMPORARY DITCH CHECKS LF	628.7555 CULVERT PIPE CHECKS EACH	628.7570 ROCK BAGS EACH	629.0210 FERTILIZER TYPE B CWT	630.0130 SEEDING MIXTURE NO. 30 LB	630.0200 SEEDING TEMPORARY LB	630.0500 SEED WATER MGAL	REMARKS
0010	1235+90	-	1240+87	29EB	-	520	520	-	-	935	20	2	-	1.0	50	-	30	
0010	1237+51	-	1246+61	29WB	-	1135	1135	-	-	800	-	-	-	1.0	40	-	20	
0010	-	-	-	UNDISTRIBUTED	400	415	415	-	-	435	20	-	40	1.0	20	20	10	
0010	-	-	-	PROJECT	-	-	-	4	2	-	-	-	-	-	-	-	-	
				TOTAL 0010	400	2,070	2,070	4	2	2,170	40	2	40	3.0	110	20	60	

NOTE: WATERING IS ASSUMED FOR 4 WEEKS

3

643 TRAFFIC CONTROL SUMMARY

CATEGORY	LOCATION	DAYS OF WORK	633.1100 DELINEATORS TEMPORARY EACH	EACH	643.0300 TRAFFIC CONTROL DRUMS DAY	EACH	643.0420 TRAFFIC CONTROL BARRICADES TYPE III DAY	643.0500 TRAFFIC CONTROL FLEXIBLE TUBULAR MARKER POSTS EACH	643.0600 TRAFFIC CONTROL FLEXIBLE TUBULAR MARKER BASES EACH	EACH	643.0705 TRAFFIC CONTROL WARNING LIGHTS TYPE A DAY	EACH	643.0715 TRAFFIC CONTROL WARNING LIGHTS TYPE C DAY	EACH	643.0900 TRAFFIC CONTROL SIGNS DAY	643.0920 TRAFFIC CONTROL COVERING SIGNS TYPE II EACH	643.1000 TRAFFIC CONTROL SIGNS FIXED MESSAGE SF	643.3165 TEMPORARY MARKING LINE PAINT 6-INCH LF	643.3850 TEMPORARY MARKING STOP LINE REMOVABLE TAPE 18-INCH LF	646.9002 MARKING REMOVAL LINE 6-INCH LF	EACH	643.1220.S CONNECTED WORK ZONE START AND END LOCATION MARKERS DAY	EACH	643.0810.S CONNECTED ARROW BOARD DAY	REMARKS
0010	START OF PROJECT	-	-	-	-	-	-	-	-	-	-	-	-	-	-	-	32	-	-	-	-	-	-	-	
0010	END OF PROJECT	-	-	-	-	-	-	-	-	-	-	-	-	-	-	-	32	-	-	-	-	-	-	-	
0010	STAGE 1	11	-	178	1,958	8	88	-	-	16	176	20	220	56	616	-	-	3,120	-	780	2	22	2	22	STAGE 1, EB + WB, STH 29
0010	STAGE 2A	55	36	110	6,050	30	1,650	320	320	32	1,760	51	2,805	65	3,575	-	-	50,667	-	19,215	2	110	2	110	STAGE 2A, EB + WB, STH 29
0010	STAGE 2A DETAIL A	48	-	42	2,016	60	2,880	24	24	24	1,152	-	-	42	2,016	48	-	-	90	-	-	-	-	-	6 INTERSECTIONS
0010	STAGE 2A DETAIL B	7	-	48	336	60	420	24	24	24	168	-	-	36	252	36	-	-	-	-	-	-	-	-	6 INTERSECTIONS
0010	STAGE 2B	55	36	101	5,555	23	1,265	320	320	26	1,430	38	2,090	88	4,840	-	-	48,945	-	19,503	2	110	2	110	STAGE 2B, EB + WB, STH 29
0010	STAGE 2B DETAIL A	48	-	42	2,016	60	2,880	24	24	24	1,152	-	-	42	2,016	48	-	-	90	-	-	-	-	-	6 INTERSECTIONS
0010	STAGE 2B DETAIL B	7	-	48	336	60	420	24	24	24	168	-	-	36	252	36	-	-	-	-	-	-	-	-	6 INTERSECTIONS
0010	STAGE 3A	17	-	204	3,468	8	136	-	-	16	272	56	952	68	1,156	-	-	3,120	-	780	2	34	2	34	STAGE 3A, EB + WB, STH 29
0010	STAGE 3B	17	-	96	1,632	8	136	-	-	16	272	30	510	29	493	-	-	3,120	-	780	2	34	2	34	STAGE 3B, EB + WB, STH 29
0010	PROJECT		4	-	2,333	-	1,025	110	-	-	330	-	333	-	761	9	-	6,028	9	2,142	-	-	-	-	UNDISTRIBUTED
	TOTAL 0010		76		25,700		10,900	846	736		6,880		6,910		16,000	177	64	115,000	189	43,200		310		310	

633 DELINEATORS SUMMARY

CATEGORY	STATION	TO	STATION	LOCATION	633.0100 DELINEATOR POSTS STEEL EACH	633.0500 DELINEATOR REFLECTORS EACH	633.5350 MARKERS PERMANENT FLEXIBLE EACH	REMARKS
0010	1054+95	-	1240+00	STH 29 WB	47	47	-	PROJECT
0010	1065+45	-	1238+00	STH 29 EB	44	44	-	PROJECT
0010	1067+75	-	1073+50	MEDIAN	8	16	115	NORTH CROSSOVER (EX-01)
0010	1222+64	-	1226+55	MEDIAN	8	16	79	SOUTH CROSSOVER (EX-02)
				TOTAL 0010	107	123	194	

CATEGORY	STATION	TO	STATION	LOCATION	650.7000 CONSTRUCTION STAKING CONCRETE PAVEMENT LF	650.8000 CONSTRUCTION STAKING RESURFACING REFERENCE LF	REMARKS
0010	1054+95	-	1246+44	STH 29 WB	-	19,149	
0010	1065+45	-	1241+57	STH 29 EB	-	17,612	
0010	1173+13	-	1223+54	STH 29 EB	5,041	-	
				TOTAL 0010	5,041	36,761	

CATEGORY	STATION	TO	STATION	LOCATION	* 690.0150 SAWING ASPHALT LF	REMARKS
0010	1183+48	-	1184+87	STH 29 WB RT	168	
0010	1237+88	-	-	STH 29 WB RT	7	
0010	1238+87	-	-	STH 29 WB LT	10	
0010	1244+38	-	-	STH 29 WB LT	6	
0010	1246+44	-	-	STH 29 WB RT	3	
0010	1173+13	-	-	STH 29 EB LT & RT	9	
0010	1182+46	-	1185+05	STH 29 EB LT	259	
0010	1183+57	-	1184+73	STH 29 EB RT	104	
0010	1193+11	-	1193+74	STH 29 EB LT	63	
0010	1208+90	-	1211+68	STH 29 EB LT	279	
0010	1219+24		1223+54	STH 29 EB LT	439	
0010	1237+66	-	-	STH 29 EB LT	12	
0010	1238+17	-	-	STH 29 EB RT	8	
				TOTAL 0010	1,367	

* ADDITIONAL QUANTITIES SHOWN ELSEWHERE

3

3

646 MARKING LINE SUMMARY

CATEGORY	STATION	TO	STATION	LOCATION	646.2020 MARKING LINE EPOXY 6-INCH LF	646.2025 MARKING LINE GROOVED BLACK EPOXY 6-INCH LF	646.2040 MARKING LINE GROOVED WET REF EPOXY 6-INCH LF	646.2050 MARKING LINE GROOVED PERMANENT TAPE 6-INCH LF	646.4040 MARKING LINE GROOVED WET REF EPOXY 10-INCH LF	646.4050 MARKING LINE GROOVED PERMANENT TAPE 10-INCH LF	646.5020 MARKING ARROW EPOXY EACH	646.6120 MARKING STOP LINE EPOXY 18-INCH LF	646.6466 COLD WEATHER MARKING EPOXY 6-INCH LF	646.6470 COLD WEATHER MARKING EPOXY 10-INCH LF	646.7320 MARKING CHEVRON EPOXY 12-INCH LF	646.8120 MARKING CURB EPOXY LF	646.8220 MARKING ISLAND NOSE EPOXY EACH	REMARKS
0010	1065+45	-	1240+68	EB	-	4,382	-	4,382	-	-	-	-	4,382	-	-	-	-	LANE LINE
0010	1240+68	-	1241+36	EB	17	-	-	-	-	-	-	-	17	-	-	-	-	BRIDGES LANE LINE
0010	1065+45	-	1089+96	EB	-	-	2,451	-	-	-	-	-	2,451	-	-	-	-	WHITE EDGELINE
0010	1091+36	-	1183+35	EB	-	-	9,200	-	-	-	-	-	9,200	-	-	-	-	WHITE EDGELINE
0010	1184+84	-	1240+77	EB	-	-	5,595	-	-	-	-	-	5,595	-	-	-	-	WHITE EDGELINE
0010	1240+77	-	1241+44	EB	67	-	-	-	-	-	-	-	67	-	-	-	-	WHITE EDGELINE BRIDGE
0010	1241+44	-	1241+57	EB	-	-	13	-	-	-	-	-	13	-	-	-	-	WHITE EDGELINE
0010	1065+45	-	1090+31	EB	-	-	2,486	-	-	-	-	-	2,486	-	-	-	-	YELLOW EDGELINE
0010	1090+92	-	1120+13	EB	-	-	2,925	-	-	-	-	-	2,925	-	-	-	-	YELLOW EDGELINE
0010	1120+66	-	1183+46	EB	-	-	6,280	-	-	-	-	-	6,280	-	-	-	-	YELLOW EDGELINE
0010	1184+12	-	1210+12	EB	-	-	2,600	-	-	-	-	-	2,600	-	-	-	-	YELLOW EDGELINE
0010	1210+76	-	1236+49	EB	-	-	2,575	-	-	-	-	-	2,575	-	-	-	-	YELLOW EDGELINE
0010	1237+18	-	1240+62	EB	-	-	345	-	-	-	-	-	345	-	-	-	-	YELLOW EDGELINE
0010	1240+62	-	1241+29	EB	67	-	-	-	-	-	-	-	67	-	-	-	-	YELLOW EDGELINE BRIDGE
0010	1241+29	-	1241+42	EB	-	-	13	-	-	-	-	-	13	-	-	-	-	YELLOW EDGELINE
0010	1054+95	-	1129+75	WB	-	1,870	-	1,870	-	-	-	-	1,870	-	-	-	-	LANE LINE
0010	1129+46	-	1192+99	WB	-	1,589	-	1,589	-	-	-	-	1,589	-	-	-	-	LANE LINE
0010	1193+45	-	1240+16	WB	-	1,168	-	1,168	-	-	-	-	1,168	-	-	-	-	LANE LINE
0010	1240+16	-	1240+82	WB	17	-	-	-	-	-	-	-	17	-	-	-	-	LANE LINE BRIDGE
0010	1240+82	-	1246+44	WB	-	141	-	141	-	-	-	-	141	-	-	-	-	LANE LINE
0010	1054+95	-	1090+32	WB	-	-	3,540	-	-	-	-	-	3,540	-	-	-	-	YELLOW EDGELINE
0010	1090+91	-	1120+34	WB	-	-	2,945	-	-	-	-	-	2,945	-	-	-	-	YELLOW EDGELINE
0010	1120+86	-	1129+75	WB	-	-	890	-	-	-	-	-	890	-	-	-	-	YELLOW EDGELINE
0010	1129+46	-	1182+91	WB	-	-	5,345	-	-	-	-	-	5,340	-	-	-	-	YELLOW EDGELINE
0010	1183+56	-	1192+98	WB	-	-	945	-	-	-	-	-	945	-	-	-	-	YELLOW EDGELINE
0010	1193+75	-	1210+12	WB	-	-	1,640	-	-	-	-	-	1,640	-	-	-	-	YELLOW EDGELINE
0010	1210+75	-	1236+49	WB	-	-	2,575	-	-	-	-	-	2,575	-	-	-	-	YELLOW EDGELINE
0010	1237+18	-	1240+26	WB	-	-	310	-	-	-	-	-	310	-	-	-	-	YELLOW EDGELINE
0010	1240+26	-	1240+92	WB	66	-	-	-	-	-	-	-	66	-	-	-	-	YELLOW EDGELINE BRIDGE
0010	1240+92	-	1246+44	WB	-	-	555	-	-	-	-	-	555	-	-	-	-	YELLOW EDGELINE
0010	1054+95	-	1089+94	WB	-	-	3,500	-	-	-	-	-	3,500	-	-	-	-	WHITE EDGELINE
0010	1091+22	-	1120+38	WB	-	-	2,920	-	-	-	-	-	2,920	-	-	-	-	WHITE EDGELINE
0010	1121+77	-	1129+75	WB	-	-	800	-	-	-	-	-	800	-	-	-	-	WHITE EDGELINE
0010	1129+46	-	1182+26	WB	-	-	5,280	-	-	-	-	-	5,272	-	-	-	-	WHITE EDGELINE
0010	1183+60	-	1192+99	WB	-	-	940	-	-	-	-	-	940	-	-	-	-	WHITE EDGELINE
0010	1193+75	-	1209+88	WB	-	-	1,615	-	-	-	-	-	1,615	-	-	-	-	WHITE EDGELINE
0010	1211+18	-	1236+19	WB	-	-	2,500	-	-	-	-	-	2,500	-	-	-	-	WHITE EDGELINE
0010	1237+46	-	1240+07	WB	-	-	260	-	-	-	-	-	260	-	-	-	-	WHITE EDGELINE
0010	1240+07	-	1240+73	WB	66	-	-	-	-	-	-	-	66	-	-	-	-	WHITE EDGELINE BRIDGE
0010	1240+73	-	1246+44	WB	-	-	570	-	-	-	-	-	570	-	-	-	-	WHITE EDGELINE
0010	1090+42		1094+77	WB	98	-	-	-	-	375	-	25	98	-	-	-	-	CTH D AND TURN LANE
0010	1121+49		1125+37	WB	-	-	-	-	-	388	-	-	-	-	-	-	-	SILVER BIRCH CIR (EAST) TURN LANE
0010	1183+61	-	1185+62	WB	-	-	-	-	-	636	2	-	-	-	177	-	-	TURN LANE
0010	1236+65		1238+58	WB	65	-	-	-	-	114	-	20	65	-	-	-	-	CTH OO AND TURN LANE
0010	1086+55		1090+24	EB	-	-	-	-	-	370	-	-	-	-	-	-	-	CTH D TURN LANE
0010	1232+56		1236+13	EB	-	-	-	-	-	357	-	-	-	-	-	-	-	CTH OO TURN LANE
				TOTAL 0010	463	9,150	71,613	9,150	0	2,240	2	45	81,213	0	177	0	0	
0030	-	-	-	STH 49	-	-	787	-	163	-	-	40	787	163	-	38	3	STH 49
0030	-	-	-	CTH II	109	-	-	-	-	-	-	-	-	-	-	-	-	CTH II
				TOTAL 0030	109	0	787	0	163	0	0	40	787	163	0	38	3	
				PROJECT TOTAL	572	9,150	72,400	9,150	163	2,240	2	85	82,000	163	177	38	3	

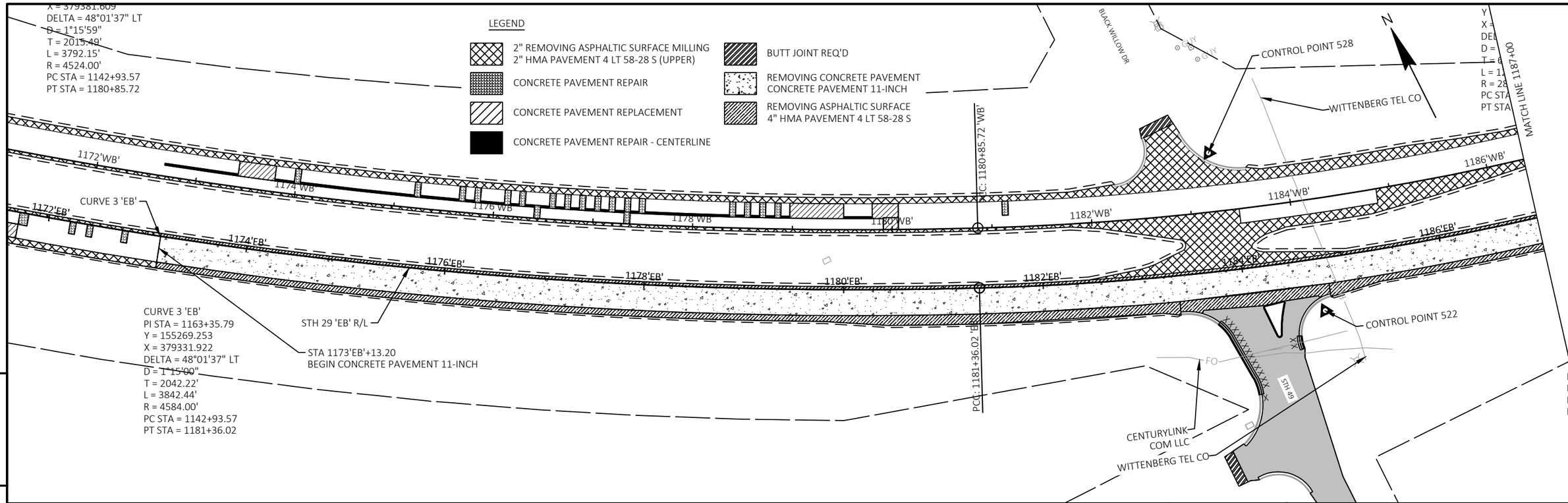

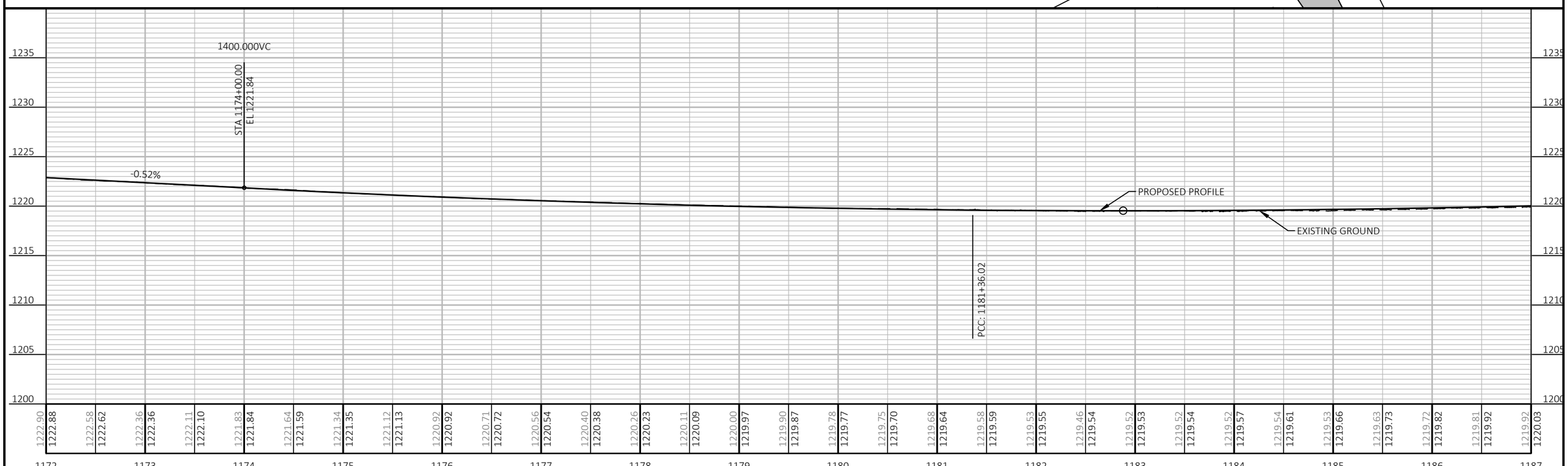

PROJECT NO: 1053-07-60	HWY: STH 29	COUNTY: MARATHON	PLAN AND PROFILE: STA 1173'EB'+13 - STA 1223'EB'+54	SHEET 68	E

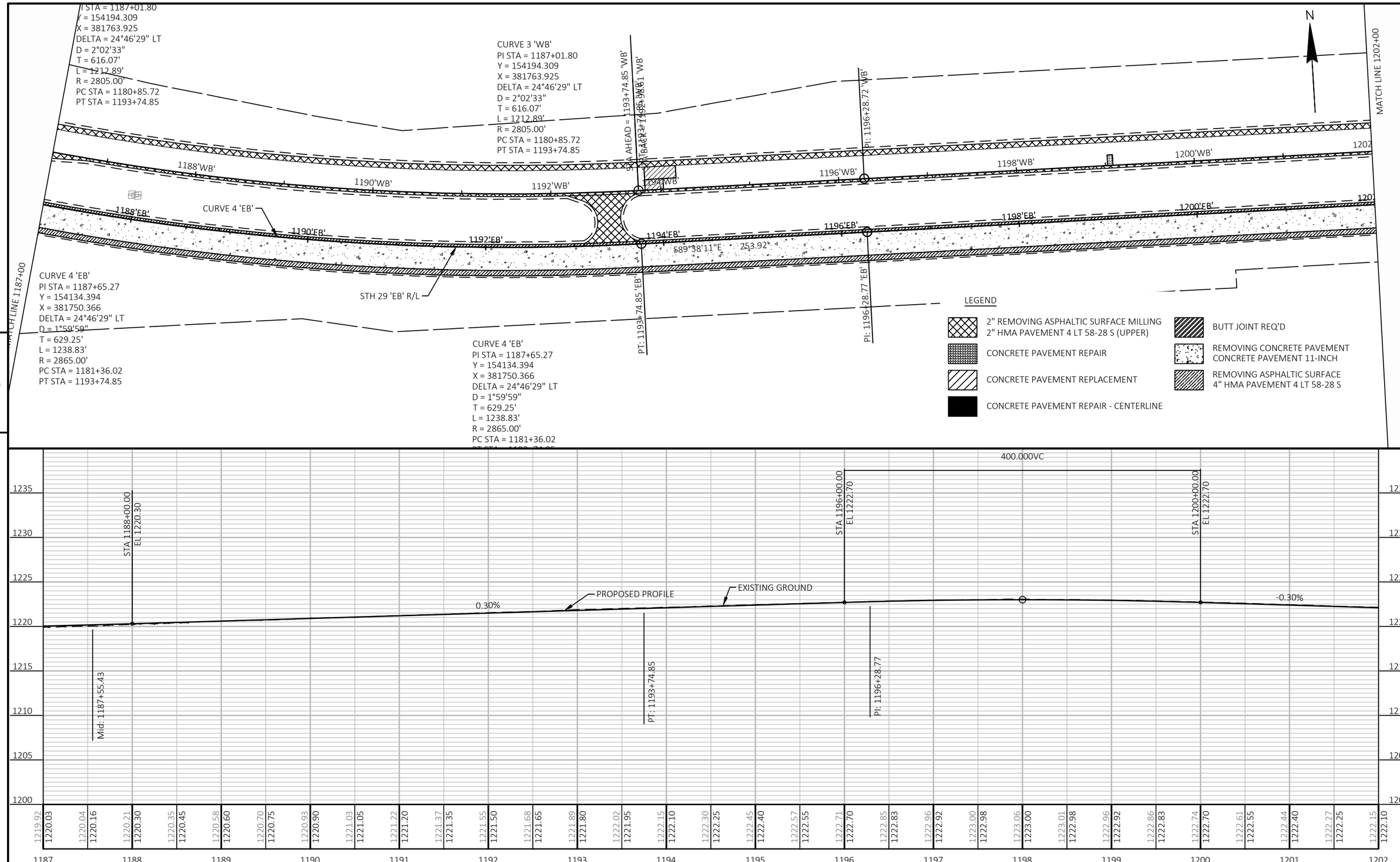

5

5

PROJECT NO: 1053-07-60	HWY: STH 29	COUNTY: MARATHON	PLAN AND PROFILE: STA 1173'EB'+13 - STA 1223'EB'+54	SHEET 69	E

FILE NAME : W:\10530730\SHEETS\050101-PP.DWG
LAYOUT NAME - 02
PLOT DATE : 6/17/2025 2:16 PM
PLOT BY : RYAN BOOTH
PLOT NAME :
PLOT SCALE : 1 IN:100 FT

WISDOT/CADDS SHEET 44

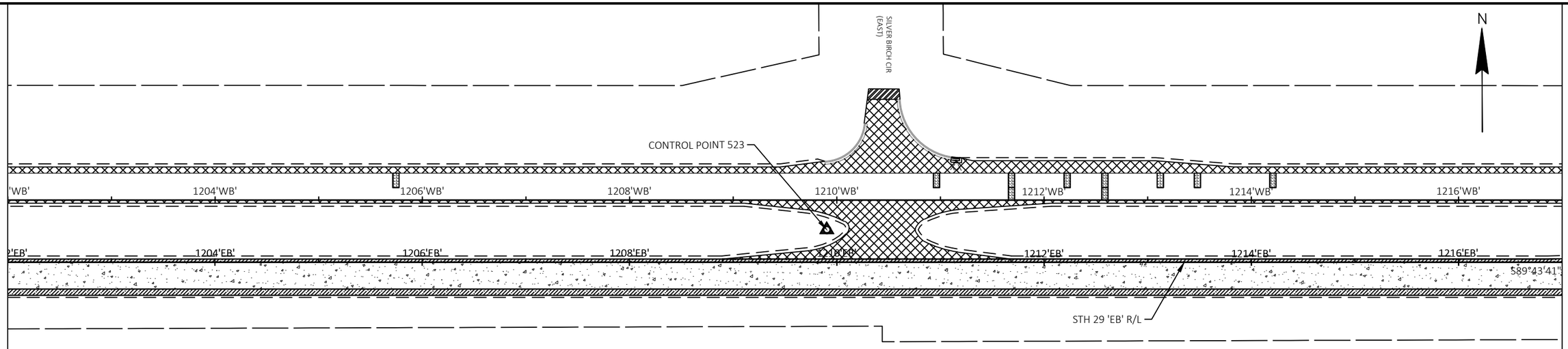

LEGEND

- 2" REMOVING ASPHALTIC SURFACE MILLING
  2" HMA PAVEMENT 4 LT 58-28 S (UPPER)
- CONCRETE PAVEMENT REPAIR
- CONCRETE PAVEMENT REPLACEMENT
- CONCRETE PAVEMENT REPAIR - CENTERLINE
- BUTT JOINT REQ'D
- REMOVING CONCRETE PAVEMENT
  CONCRETE PAVEMENT 11-INCH
- REMOVING ASPHALTIC SURFACE
  4" HMA PAVEMENT 4 LT 58-28 S

5

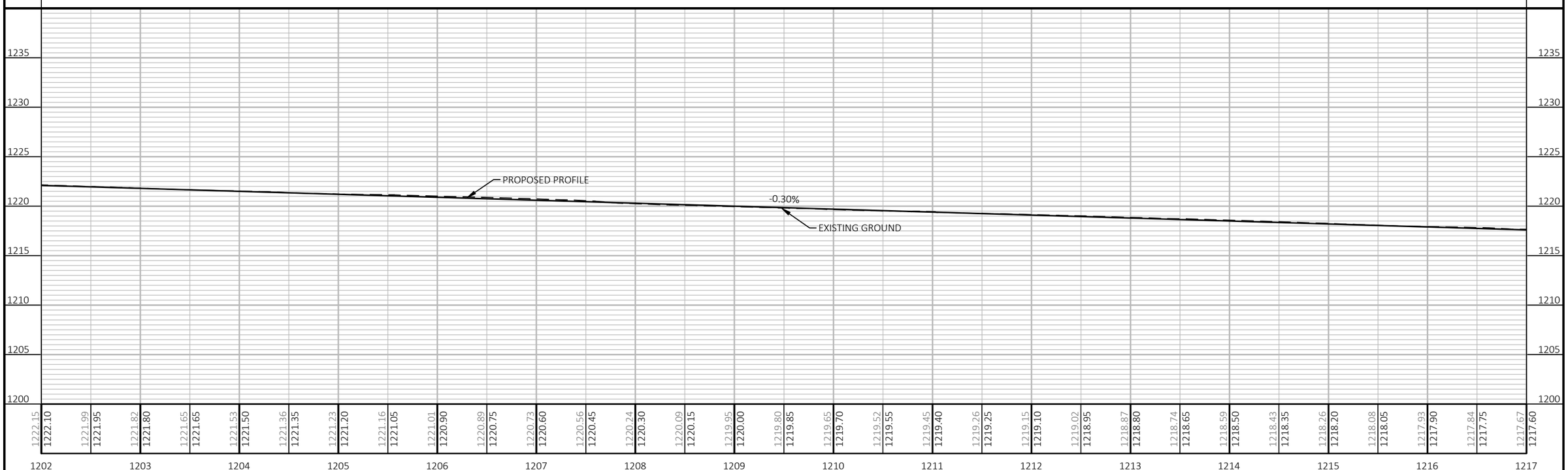

PROJECT NO: 1053-07-60	HWY: STH 29	COUNTY: MARATHON	PLAN AND PROFILE: STA 1173'EB'+13 - STA 1223'EB'+54	SHEET 70	E

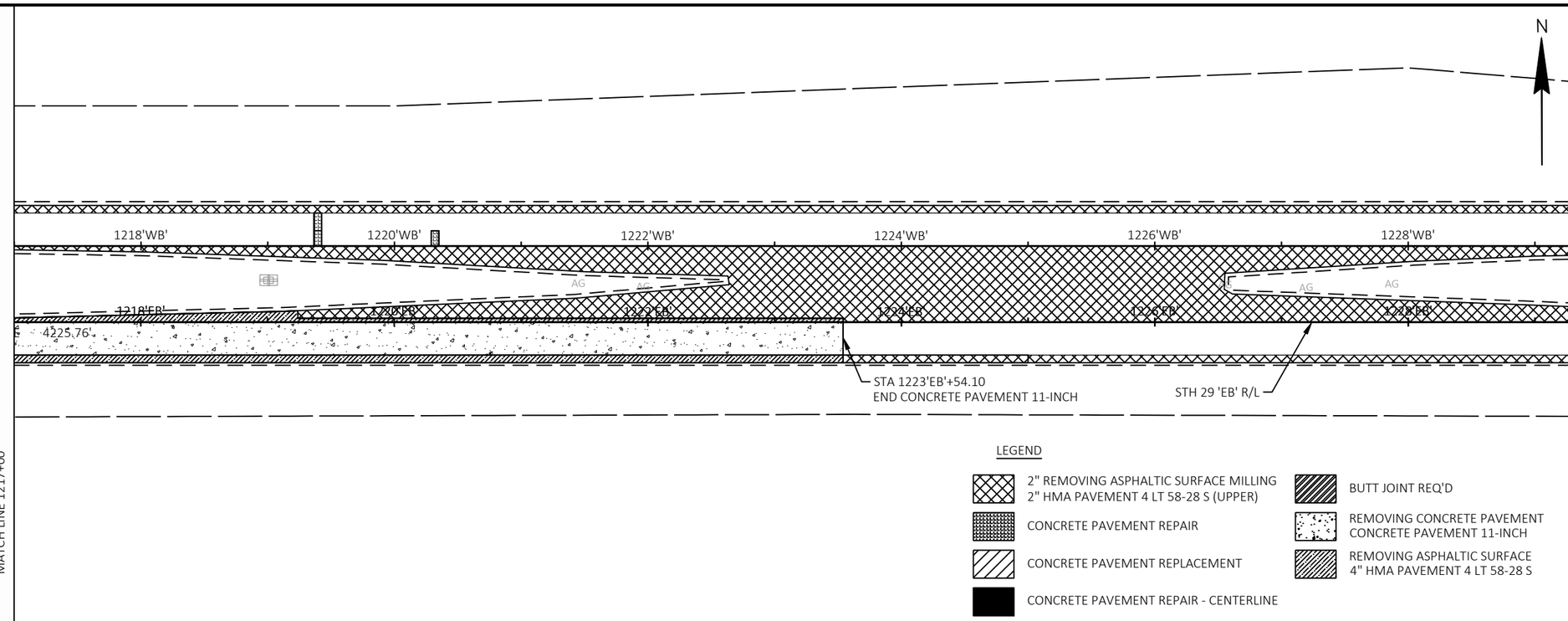

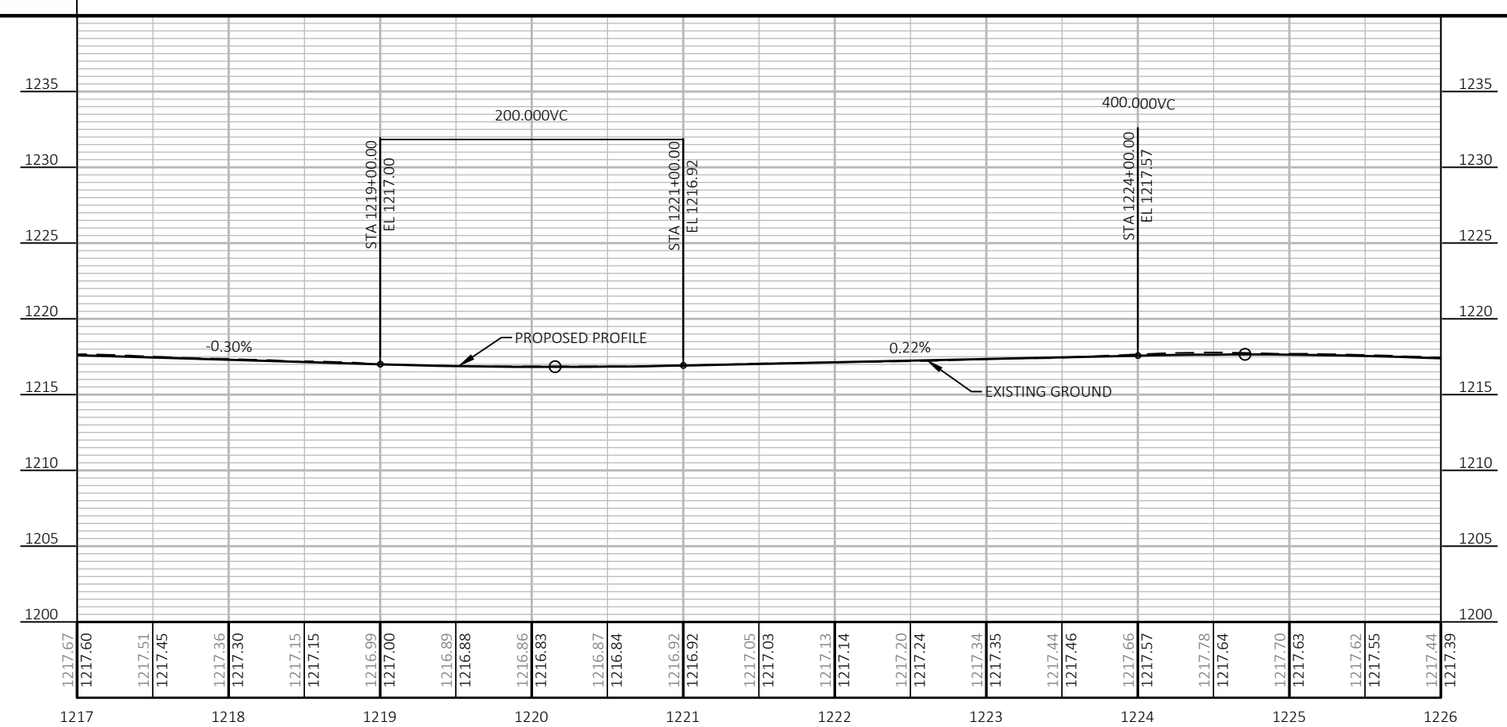

PROJECT NO: 1053-07-60	HWY: STH 29	COUNTY: MARATHON	PLAN AND PROFILE: STA 1173'EB'+13 - STA 1223'EB'+54	SHEET 71	E

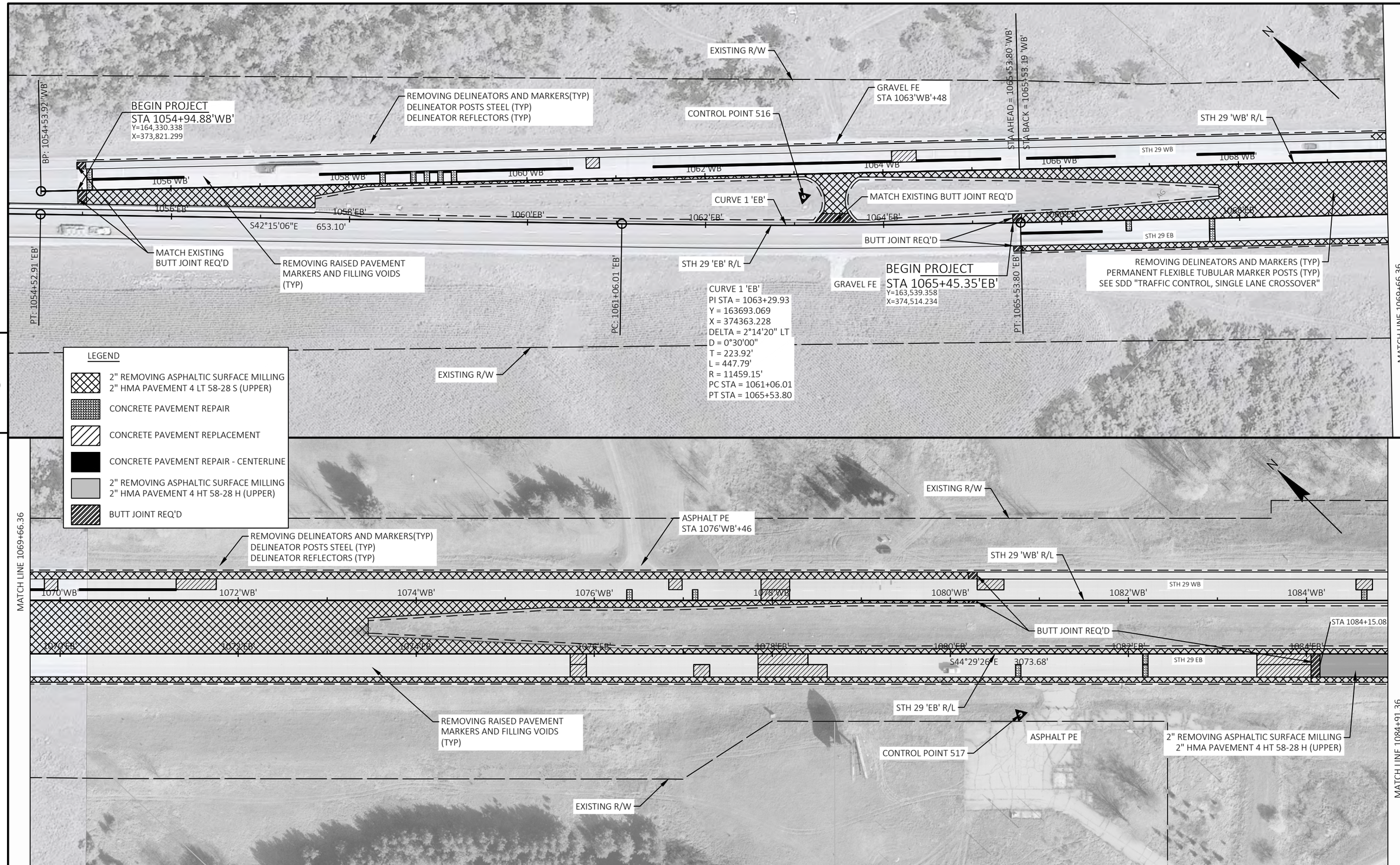

PROJECT NO: 1053-07-60	HWY: STH 29	COUNTY: MARATHON	PLAN SHEETS	SHEET 72	E

FILE NAME : W:\10530730\SHEETS\050201-PN.DWG
LAYOUT NAME - 050201-pn
PLOT DATE : 6/17/2025 2:18 PM
PLOT BY : RYAN BOOTH
PLOT NAME :
PLOT SCALE : 1 IN:100 FT
WISDOT/CADDS SHEET 44

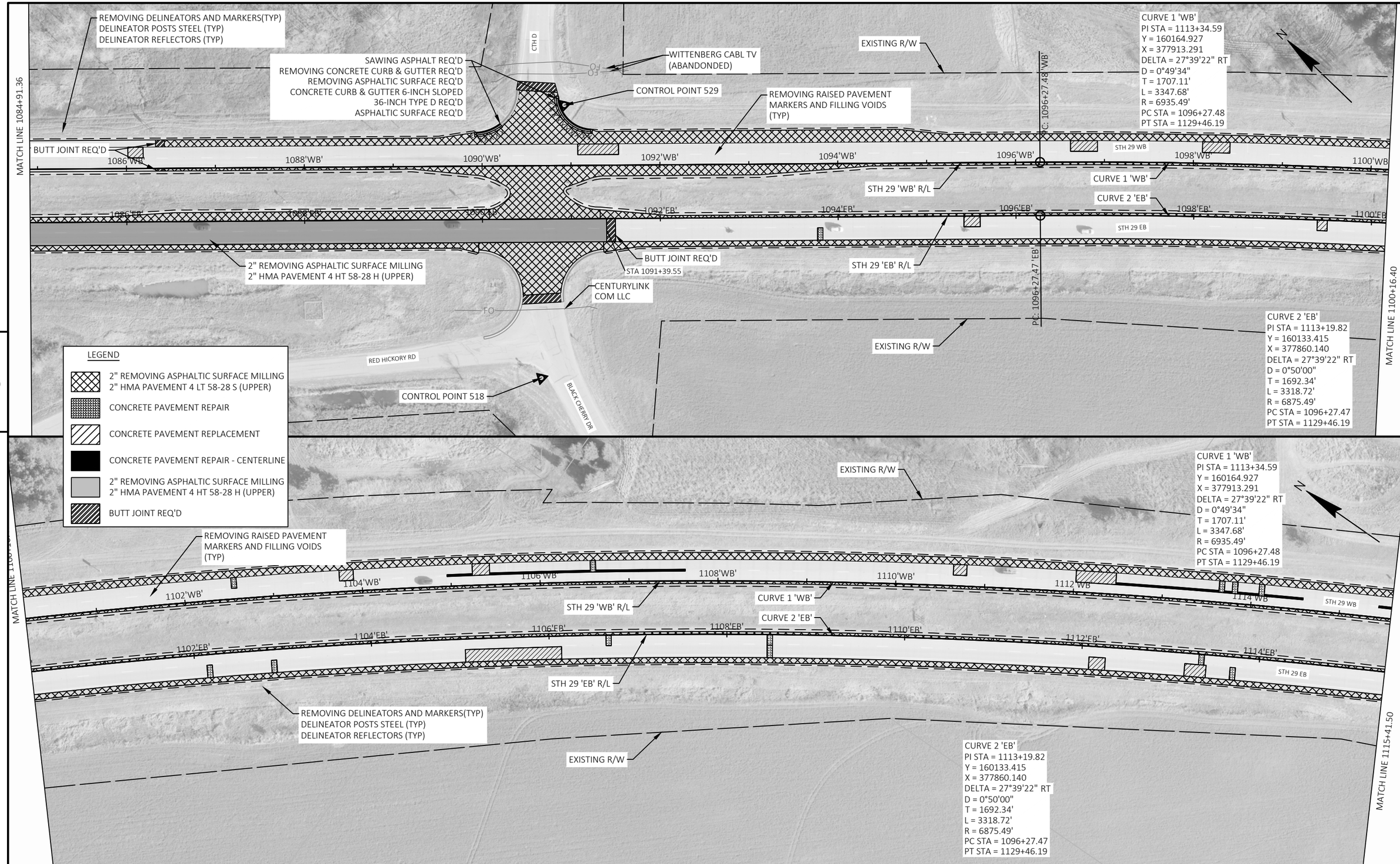

PROJECT NO: 1053-07-60	HWY: STH 29	COUNTY: MARATHON	PLAN SHEETS	SHEET 73	E

FILE NAME : W:\10530730\SHEETS\050201-PN.DWG
LAYOUT NAME - 050202-pn
PLOT DATE : 6/17/2025 2:18 PM
PLOT BY : RYAN BOOTH
PLOT NAME :
PLOT SCALE : 1 IN:100 FT
WISDOT/CADDS SHEET 44

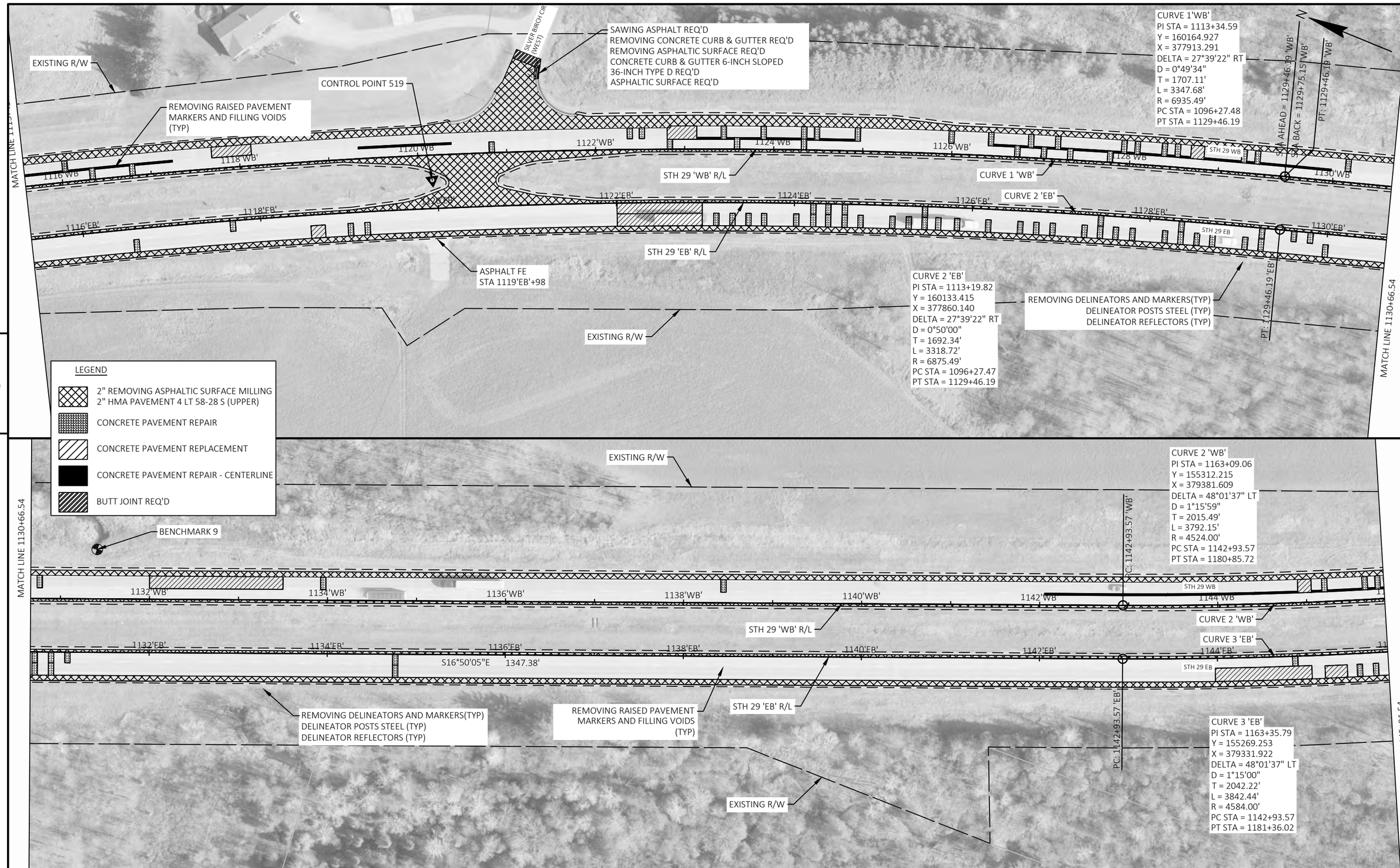

PROJECT NO: 1053-07-60	HWY: STH 29	COUNTY: MARATHON	PLAN SHEETS	SHEET 74	E

FILE NAME : W:\10530730\SHEETS\050201-PN.DWG
LAYOUT NAME - 050203-pn
PLOT DATE : 6/17/2025 2:18 PM
PLOT BY : RYAN BOOTH
PLOT NAME :
PLOT SCALE : 1 IN:100 FT

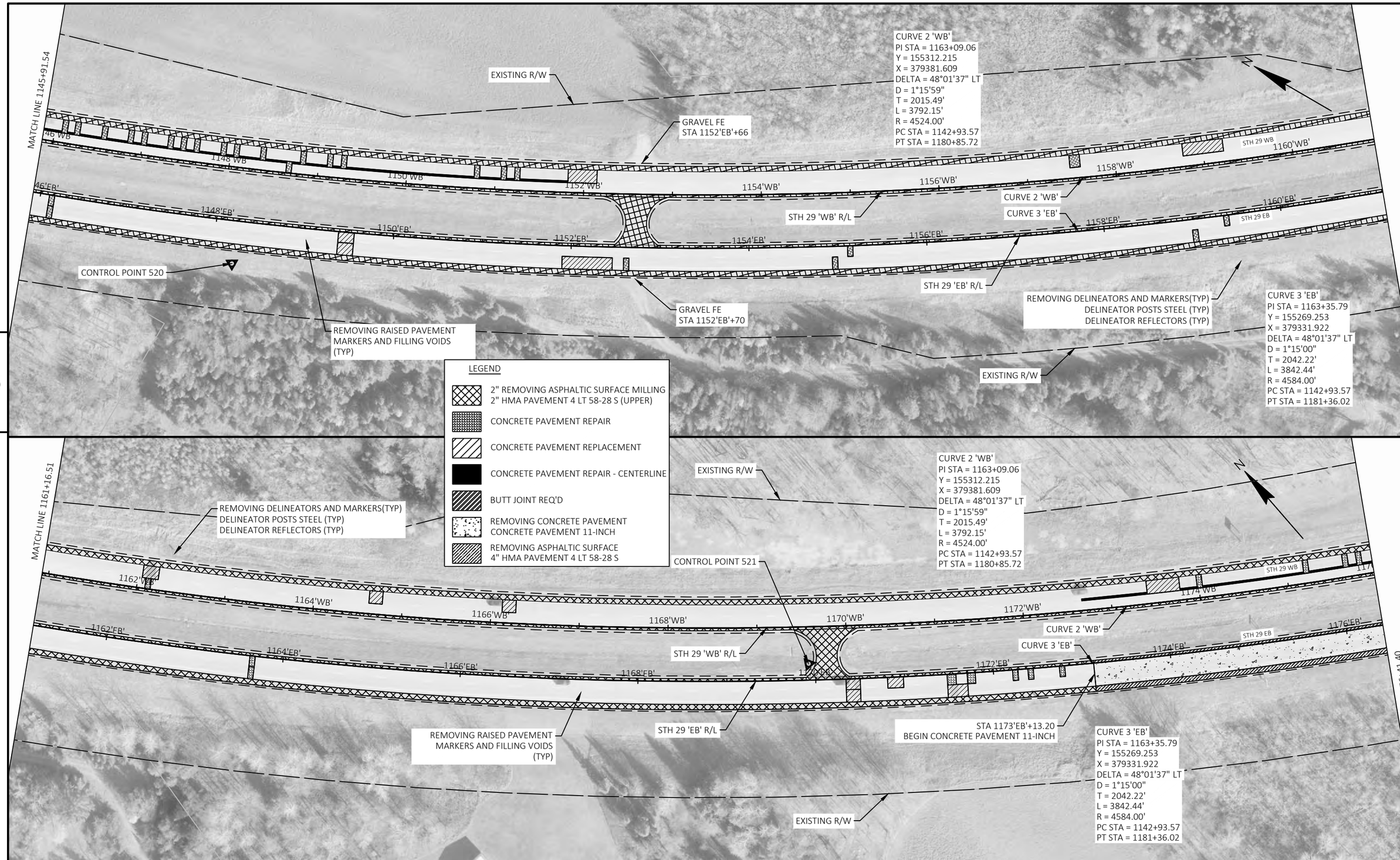

5

5

PROJECT NO: 1053-07-60	HWY: STH 29	COUNTY: MARATHON	PLAN SHEETS	SHEET 75	E

FILE NAME : W:\10530730\SHEETS\050201-PN.DWG
LAYOUT NAME - 050204-pn
PLOT DATE : 6/17/2025 2:18 PM
PLOT BY : RYAN BOOTH
PLOT NAME :
PLOT SCALE : 1 IN:100 FT
WISDOT/CADDS SHEET 44

5

5

PROJECT NO: 1053-07-60	HWY: STH 29	COUNTY: MARATHON	PLAN SHEETS	SHEET 76	E

FILE NAME : W:\10530730\SHEETS\050201-PN.DWG
LAYOUT NAME - 050205-pn
PLOT DATE : 6/17/2025 2:19 PM
PLOT BY : RYAN BOOTH
PLOT NAME :
PLOT SCALE : 1 IN:100 FT
WISDOT/CADDS SHEET 44

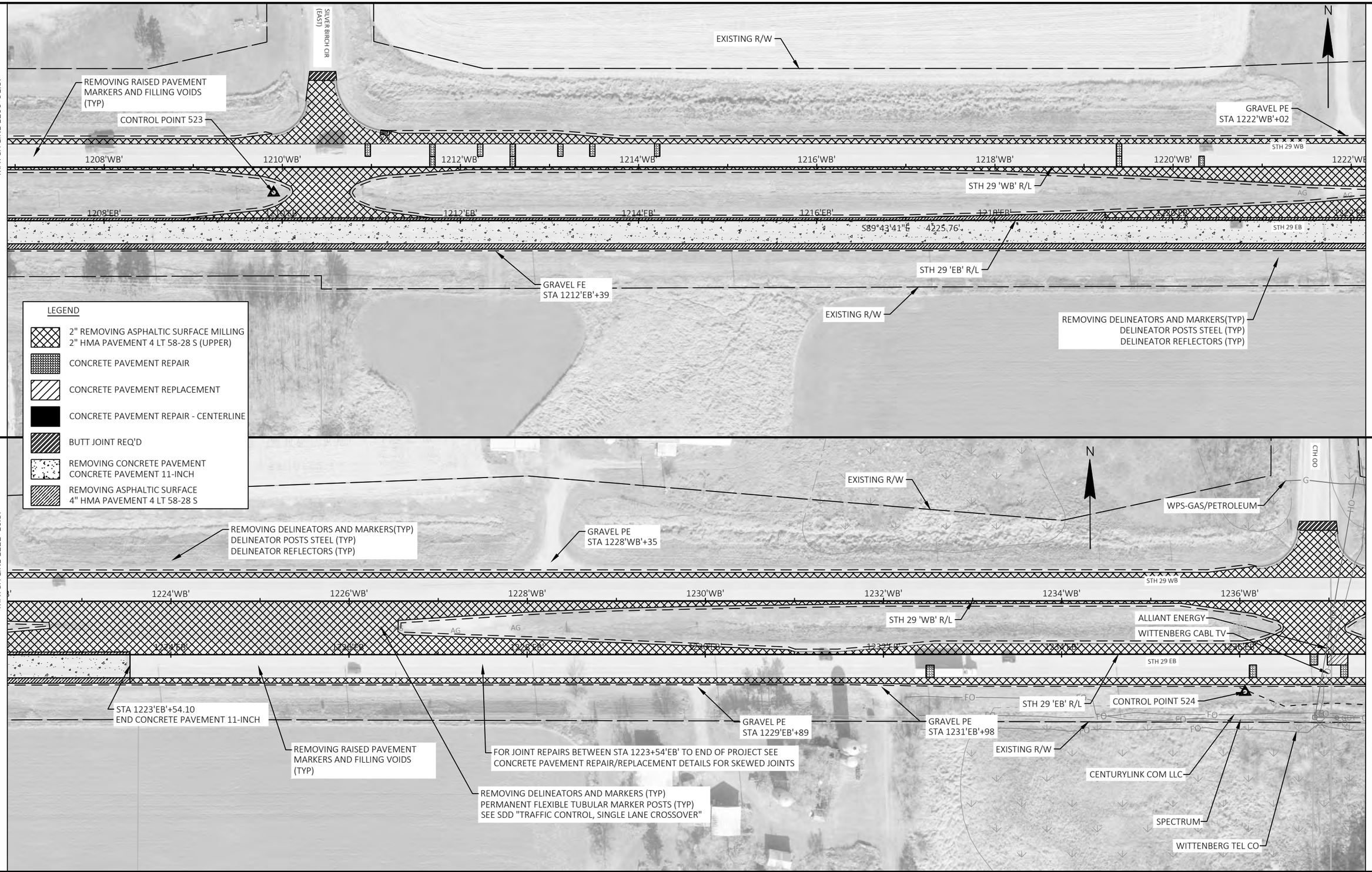

PROJECT NO: 1053-07-60	HWY: STH 29	COUNTY: MARATHON	PLAN SHEETS	SHEET 77	E

FILE NAME : W:\10530730\SHEETS\050201-PN.DWG
LAYOUT NAME - 050206-pn
PLOT DATE : 6/17/2025 2:19 PM
PLOT BY : RYAN BOOTH
PLOT NAME :
PLOT SCALE : 1 IN:100 FT

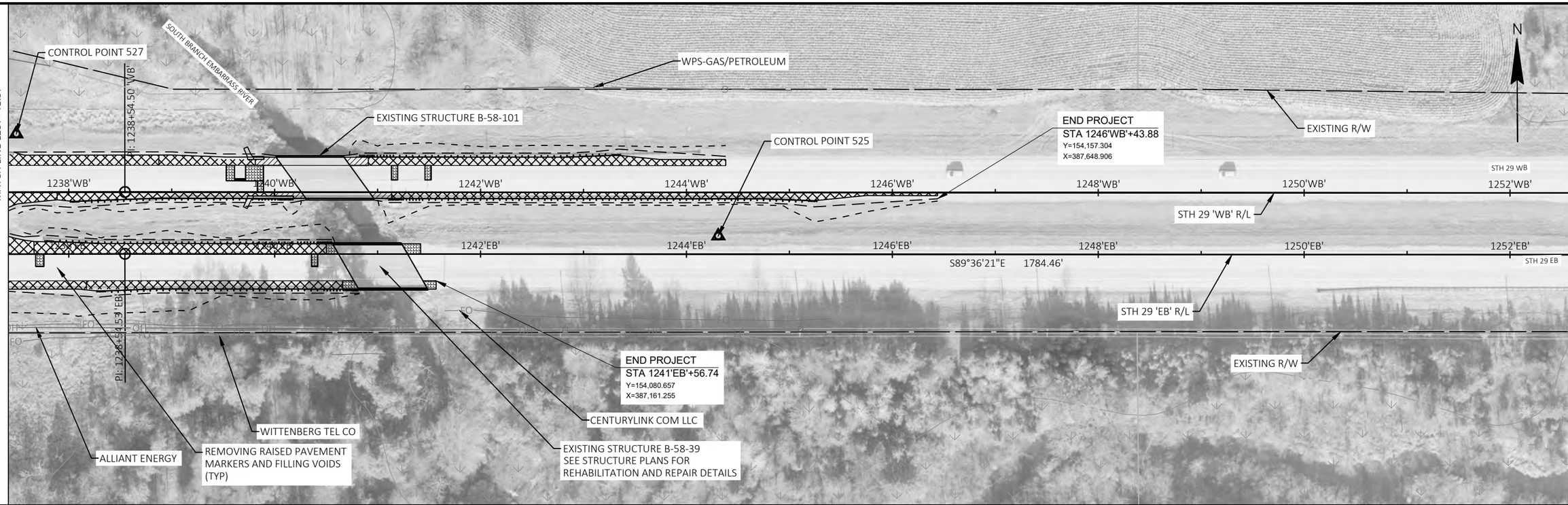

5

5

LEGEND

- 2" REMOVING ASPHALTIC SURFACE MILLING
  2" HMA PAVEMENT 4 LT 58-28 S (UPPER)
- CONCRETE PAVEMENT REPAIR
- CONCRETE PAVEMENT REPLACEMENT
- CONCRETE PAVEMENT REPAIR - CENTERLINE
- BUTT JOINT REQ'D

Standard Detail Drawing List

08D01-23A	CONCRETE CURB & GUTTER
08D01-23B	CONCRETE CURB, TIES AND CURB AND GUTTER APPLICATIONS
08D02-08A	CONCRETE SURFACE DRAINS FLUME TYPE AT STRUCTURES
08D02-08B	CONCRETE SURFACE DRAINS FLUME TYPE AT STRUCTURES
08D02-08C	CONCRETE SURFACE DRAINS FLUME TYPE AT STRUCTURES
08D04-07	CONCRETE SURFACE DRAINS & ASPHALTIC FLUMES
08E08-03	TYPICAL INSTALLATIONS OF EROSION BALES / TEMPORARY DITCH CHECKS
08E09-06	SILT FENCE
08E15-01	CULVERT PIPE CHECK
11A01-06	MAINTENANCE CROSSOVER FOR FREEWAYS
13A05-06A	SHOULDER RUMBLE STRIPS, DIVIDED ROADWAY
13A05-06B	SHOULDER RUMBLE STRIPS, DIVIDED ROADWAY
13A10-03G	SHOULDER AND EDGE LINE RUMBLE STRIPS - CROSSINGS, INTERSECTIONS, BRIDGES, DRIVEWAYS
13C01-19	CONCRETE PAVEMENT LONGITUDINAL JOINTS AND TIES
13C09-17A	CONCRETE PAVEMENT REPAIR AND REPLACEMENT
13C09-17B	CONCRETE PAVEMENT REPAIR AND REPLACEMENT
13C09-17C	CONCRETE PAVEMENT REPAIR AND REPLACEMENT
13C11-14A	RURAL DOWELED CONCRETE PAVEMENT
13C11-14B	RURAL DOWELED CONCRETE PAVEMENT
13C18-08A	CONCRETE PAVEMENT JOINTING
13C18-08B	CONCRETE PAVEMENT STEEL REINFORCEMENT
13C18-08C	CONCRETE PAVEMENT JOINT TYPES
13C18-08D	CONCRETE PAVEMENT JOINTING AT UTILITY FIXTURES
13C18-08F	CONCRETE PAVEMENT INTERSECTION BOXOUT FOR INTEGRAL CURB AND GUTTER
13C19-03	HMA LONGITUDINAL JOINTS
14B07-16A	CONCRETE BARRIER TEMPORARY PRECAST, 12'-6"
14B07-16B	CONCRETE BARRIER TEMPORARY PRECAST, 12'-6"
14B07-16C	CONCRETE BARRIER TEMPORARY PRECAST, 12'-6"
14B07-16D	CONCRETE BARRIER TEMPORARY PRECAST, 12'-6"
14B07-16E	CONCRETE BARRIER TEMPORARY PRECAST, 12'-6"
14B07-16F	CONCRETE BARRIER TEMPORARY PRECAST, 12'-6"
14B07-16G	CONCRETE BARRIER TEMPORARY PRECAST, 12'-6"
14B07-16H	CONCRETE BARRIER TEMPORARY PRECAST, 12'-6"
14B07-16I	CONCRETE BARRIER TEMPORARY PRECAST, 12'-6"
14B07-16J	CONCRETE BARRIER TEMPORARY PRECAST, 12'-6"
14B07-16K	CONCRETE BARRIER TEMPORARY PRECAST, 12'-6"
14B07-16L	CONCRETE BARRIER TEMPORARY PRECAST, 12'-6"
14B07-16M	CONCRETE BARRIER TEMPORARY PRECAST, 12'-6"
14B07-16N	CONCRETE BARRIER TEMPORARY PRECAST, 12'-6"
14B08-02A	CRASH CUSHION/SAND BARREL ARRAY AND OTHER TEMPORARY BARRIER LAYOUT DETAILS
14B08-02B	CRASH CUSHION/SAND BARREL ARRAY AND OTHER TEMPORARY BARRIER LAYOUT DETAILS
14B42-07A	MIDWEST GUARDRAIL SYSTEM (MGS) GUARDRAIL
14B42-07B	MIDWEST GUARDRAIL SYSTEM (MGS) GUARDRAIL
14B42-07C	MIDWEST GUARDRAIL SYSTEM (MGS) GUARDRAIL
14B42-07D	MIDWEST GUARDRAIL SYSTEM (MGS) GUARDRAIL
14B44-04A	MIDWEST GUARDRAIL SYSTEM ENERGY ABSORBING TERMINAL (MGS)
14B44-04B	MIDWEST GUARDRAIL SYSTEM ENERGY ABSORBING TERMINAL (MGS)
14B44-04C	MIDWEST GUARDRAIL SYSTEM ENERGY ABSORBING TERMINAL (MGS)
14B45-05A	MIDWEST GUARDRAIL SYSTEM THRIE BEAM TRANSITION (MGS)
14B45-05B	MIDWEST GUARDRAIL SYSTEM THRIE BEAM TRANSITION (MGS)
14B45-05C	MIDWEST GUARDRAIL SYSTEM THRIE BEAM TRANSITION (MGS)
14B45-05D	MIDWEST GUARDRAIL SYSTEM THRIE BEAM TRANSITION (MGS)
14B45-05E	MIDWEST GUARDRAIL SYSTEM THRIE BEAM TRANSITION (MGS)
14B45-05F	MIDWEST GUARDRAIL SYSTEM THRIE BEAM TRANSITION (MGS)
14B45-05G	MIDWEST GUARDRAIL SYSTEM THRIE BEAM TRANSITION (MGS)
14B45-05H	MIDWEST GUARDRAIL SYSTEM THRIE BEAM TRANSITION (MGS)
14B45-05I	MIDWEST GUARDRAIL SYSTEM THRIE BEAM TRANSITION (MGS)
14B45-05J	MIDWEST GUARDRAIL SYSTEM THRIE BEAM TRANSITION (MGS)
14B45-05K	MIDWEST GUARDRAIL SYSTEM THRIE BEAM TRANSITION (MGS)
14B45-05L	MIDWEST GUARDRAIL SYSTEM THRIE BEAM TRANSITION (MGS)
15A04-08A	FLEXIBLE DELINEATOR POST
15A04-08C	DELINEATOR POST WITH REFLECTIVE SHEETING
15A04-08D	CHANNELIZING DEVICES, PERMANENT FLEXIBLE TUBULAR MARKER POST
15A04-08E	DELINEATOR POST WITH REFLECTIVE SHEETING
15C02-09A	BARRICADES AND SIGNS FOR MAINLINE CLOSURES
15C02-09B	BARRICADES AND SIGNS FOR VARIOUS CLOSURES
15C02-09F	ADVANCED WIDTH RESTRICTION SIGNING

6

Standard Detail Drawing List

15C03-05	BARRICADES AND SIGNS FOR SIDEROAD CLOSURES
15C06-12	SIGNING & MARKING FOR TWO LANE BRIDGES
15C07-16C	PAVEMENT MARKING ARROWS
15C08-23A	PERMANENT LONGITUDINAL PAVEMENT MARKINGS
15C08-23B	TEMPORARY LONGITUDINAL PAVEMENT MARKING
15C08-23D	PAVEMENT MARKING (TURN LANES)
15C11-10A	CHANNELIZING DEVICES FLEXIBLE TUBULAR MARKER POST
15C11-10B	CHANNELIZING DEVICES DRUMS, CONES, BARRICADES AND VERTICAL PANELS
15C18-09B	PAVEMENT MARKINGS, MEDIAN ISLAND NOSE
15C18-09C	MEDIAN PAVEMENT MARKINGS DOUBLE ARROW WARNING SIGN PLACEMENT
15C19-09C	MOVING PAVEMENT MARKING OPERATION MULTI-LANE DIVIDED ROADWAY
15C33-05	STOP LINE AND CROSSWALK PAVEMENT MARKING
15C35-06A	PAVEMENT MARKING (INTERSECTIONS)
15D05-06	TRAFFIC CONTROL, SINGLE LANE CROSSOVER ENTRANCE WITH BARRIER
15D06-06	TRAFFIC CONTROL, TWO LANE TWO WAY OPERATION
15D09-07	TRAFFIC CONTROL, SINGLE LANE CROSSOVER EXIT
15D11-09	TRAFFIC CONTROL, SINGLE LANE CROSSOVER
15D12-14B	TRAFFIC CONTROL, INTERSECTION WITHIN SINGLE LANE CLOSURE
15D21-07A	TRAFFIC CONTROL, INTERSECTION WITHIN SINGLE LANE CLOSURE
15D21-07B	TRAFFIC CONTROL, INTERSECTION WITHIN SINGLE LANE CLOSURE
15D27-03	TRAFFIC CONTROL, SHOULDER CLOSURE ON DIVIDED ROADWAY, SPEEDS GREATER THAN 40 MPH
15D39-02	TRAFFIC CONTROL, DROP-OFF SIGNING
15D40-05B	TRAFFIC CONTROL, FULL LANE SHIFT MULTILANE DIVIDED 50 MPH AND OVER
15D40-05D	TRAFFIC CONTROL, PARTIAL LANE SHIFT MULTILANE DIVIDED 50 MPH AND GREATER
15D43-02	TRAFFIC CONTROL, SHORT DURATION MOBILE OPERATIONS

6

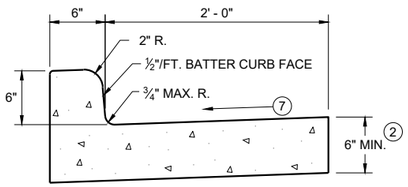

TYPES A (1) & D

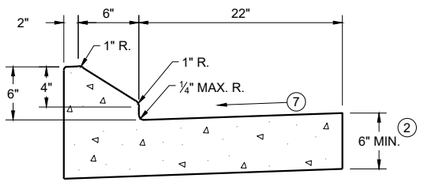

6" SLOPED CURB TYPES G (1) & J

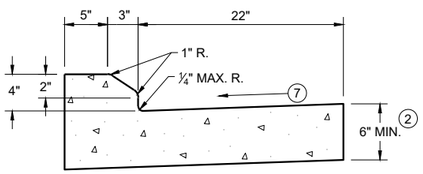

4" SLOPED CURB TYPES G (1) & J

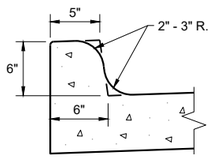

TYPES K (1) & L
(OPTIONAL CURB SHAPE)

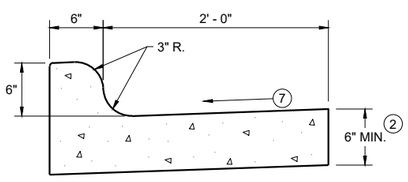

TYPES K (1) & L

CONCRETE CURB AND GUTTER 30"

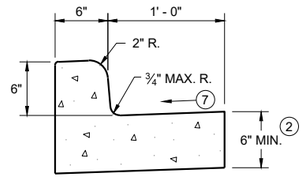

TYPES A (1) & D

CONCRETE CURB AND GUTTER 18"

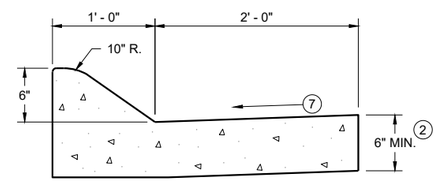

6" SLOPED CURB TYPES A (1) & D

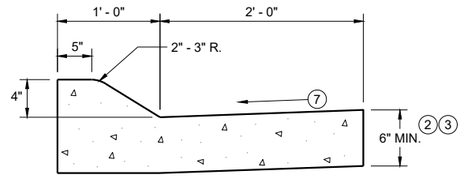

4" SLOPED CURB TYPES A (1) & D

CONCRETE CURB AND GUTTER 36"

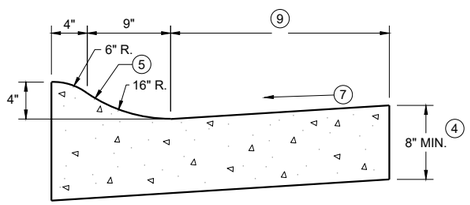

4" SLOPED CURB TYPES R (1) & T

TBT & TBTT	X
30"	22"
36"	28"

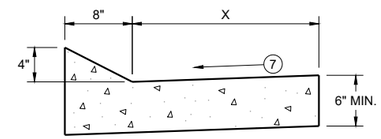

TYPES TBT & TBTT (1)

CONCRETE CURB AND GUTTER

PAVEMENT THICKNESS AND MAXIMUM CONCRETE PANEL WIDTH TABLE

PAVEMENT THICKNESS	MAXIMUM PANEL WIDTH
LESS THAN 10"	12'
10" & ABOVE	15'

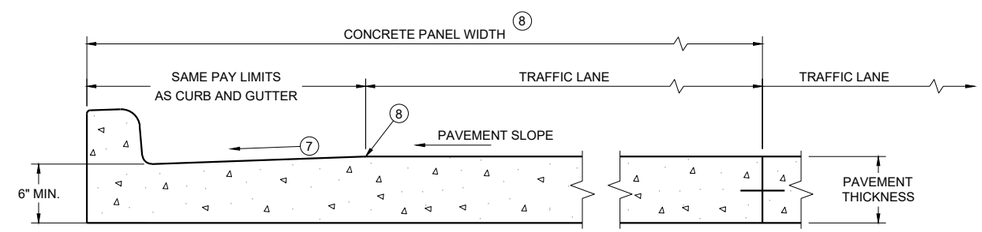

PARTIAL SECTION OF PAVEMENT * WITH INTEGRAL CURB AND GUTTER

* BIKE LANE IS NOT SHOWN

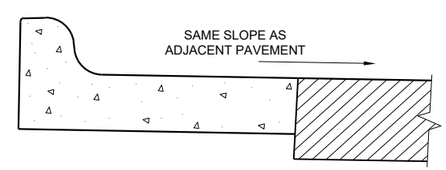

REVERSE SLOPE GUTTER (6)
(TYPICAL FOR ALL CURB & GUTTER TYPES)

GENERAL NOTES

DETAILS OF CONSTRUCTION AND WORKMANSHIP NOT SHOWN ON THIS DRAWING SHALL CONFORM TO THE PERTINENT REQUIREMENTS OF THE CONTRACT.

PAVEMENT TIES AND TIE BARS SHALL BE EPOXY COATED IN CONFORMANCE WITH SUBSECTION 505.2.6.2 OF THE STANDARD SPECIFICATIONS.

INTEGRAL CURB AND GUTTER SHALL CONFORM TO THE DETAILS SHOWN FOR CONCRETE CURB AND GUTTER INCLUDING THE TRANSVERSE GUTTER SLOPE.

UNLESS OTHERWISE SHOWN ON THE TYPICAL CROSS SECTIONS, THE BASE AGGREGATE AND COMMON EXCAVATION LIMITS ARE 2' - 0" BEHIND THE BACK OF CURBS.

(1) TIE BARS ARE REQUIRED FOR CURB AND GUTTERS TYPES A, G, K, R, AND TBTT.

(2) THE BOTTOM OF CURB AND GUTTER MAY BE CONSTRUCTED EITHER LEVEL OR PARALLEL TO THE SLOPE OF THE SUBGRADE OR BASE AGGREGATE PROVIDED A 6" MINIMUM GUTTER THICKNESS IS MAINTAINED.

(3) USE 8" MINIMUM GUTTER THICKNESS WHEN USED WITH AN ADJACENT CONCRETE TRUCK APRON PLACED BEHIND BACK OF CURB.

(4) THE BOTTOM OF CURB AND GUTTER MAY BE CONSTRUCTED EITHER LEVEL OR PARALLEL TO THE SLOPE OF THE SUBGRADE OR BASE AGGREGATE PROVIDED A 8" MINIMUM GUTTER THICKNESS IS MAINTAINED.

(5) UNLESS OTHERWISE NOTED, FOR STAKING PURPOSES THE FACE OF CURB IS 6" FROM THE BACK OF CURB.

(6) WHEN REVERSE SLOPE GUTTER IS REQUIRED, THE LOCATION(S) WILL BE SHOWN ELSEWHERE IN THE PLAN.

(7) USE 4% GUTTER CROSS SLOPE UNLESS OTHERWISE NOTED IN THE PLANS.

(8) INCLUDE LONGITUDINAL JOINT AND TIE BARS ALONG LANE EDGE WHEN CONCRETE PANEL WIDTH EXCEEDS THE MAXIMUM WIDTH PER TABLE BELOW. LONGITUDINAL JOINT(S) ARE NOT ALLOWED WITHIN TRAFFIC LANES AND BIKE LANES. LONGITUDINAL JOINT MAY BE SAWED.

(9) CONCRETE CURB AND GUTTER 4-INCH SLOPED 30-INCH TYPE "R" AND "T" = 17 INCHES
CONCRETE CURB AND GUTTER 4-INCH SLOPED 36-INCH TYPE "R" AND "T" = 23 INCHES

CONCRETE CURB AND GUTTER

STATE OF WISCONSIN
DEPARTMENT OF TRANSPORTATION

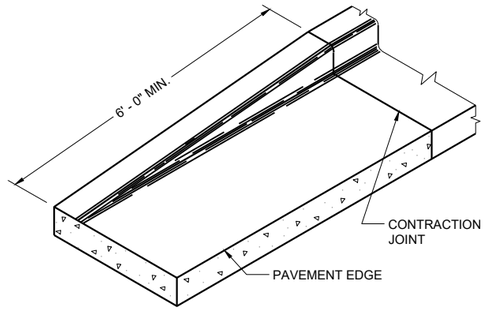

END SECTION CURB AND GUTTER

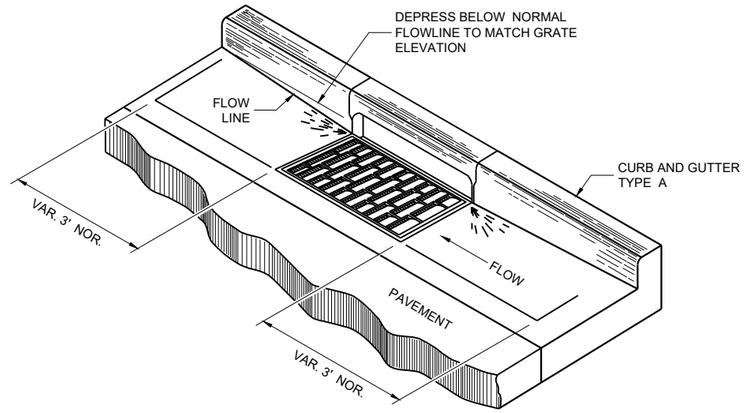

DETAIL OF CURB AND GUTTER AT INLETS

(TYPICAL H INLET COVER SHOWN)

GENERAL NOTES

DETAILS OF CONSTRUCTION AND WORKMANSHIP NOT SHOWN ON THIS DRAWING SHALL CONFORM TO THE PERTINENT REQUIREMENTS OF THE CONTRACT.

PAVEMENT TIES AND TIE BARS SHALL BE EPOXY COATED IN CONFORMANCE WITH SUBSECTION 505.2.6.2 OF THE STANDARD SPECIFICATIONS.

UNLESS OTHERWISE SHOWN ON THE TYPICAL CROSS SECTIONS, THE BASE AGGREGATE AND COMMON EXCAVATION LIMITS ARE 2' - 0" BEHIND THE BACK OF CURBS.

(1) TIE BARS ARE REQUIRED FOR CURB AND GUTTERS TYPES A, G, K, R, AND TBTT.

(2) THE BOTTOM OF CURB AND GUTTER MAY BE CONSTRUCTED EITHER LEVEL OR PARALLEL TO THE SLOPE OF THE SUBGRADE OR BASE AGGREGATE PROVIDED A 6" MINIMUM GUTTER THICKNESS IS MAINTAINED.

(10) REFER TO SDD 08D18 AND 08D19 FOR ADDITIONAL DRIVEWAY ENTRANCE CURB DETAILS.

(11) PLACE 1" THICK EXPANSION JOINT MATERIAL BETWEEN VERTICAL FACE CURB TYPES EXTENDING FROM THE TOP OF CURB TO 1 INCH BELOW THE ADJOINING CONCRETE SURFACE. RIGID CONCRETE STRUCTURES INCLUDE RAISED CONCRETE MEDIANS, CONCRETE SAFETY ISLANDS, SPLITTER ISLANDS, OR LOCATIONS IDENTIFIED ON THE PLANS.

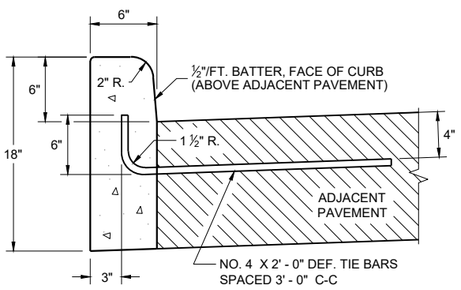

TYPES A (1) & D

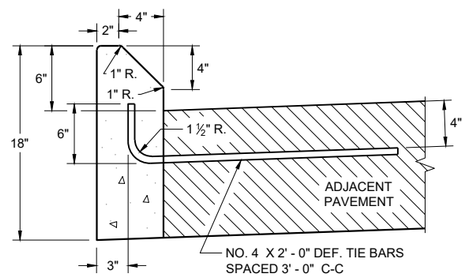

TYPES G (1) & J

CONCRETE CURB

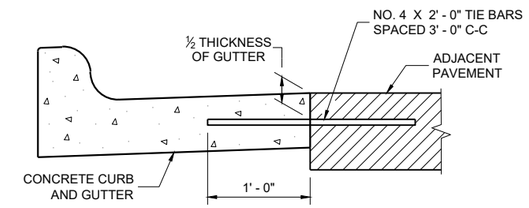

TYPICAL TIE BAR LOCATION (1)

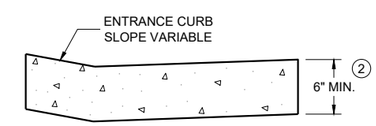

DRIVEWAY ENTRANCE CURB (10)

(WHEN DIRECTED BY THE ENGINEER)

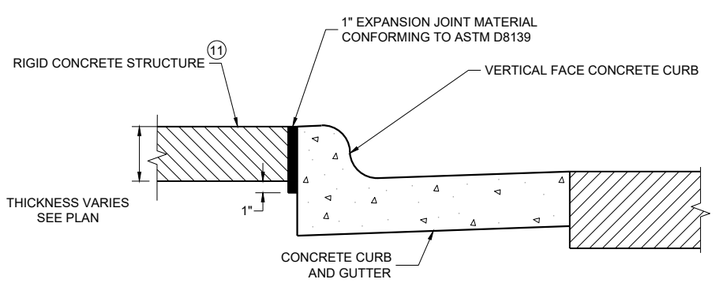

EXPANSION JOINT DETAIL FOR VERTICAL CURB ABUTTING A RIGID STRUCTURE (11)

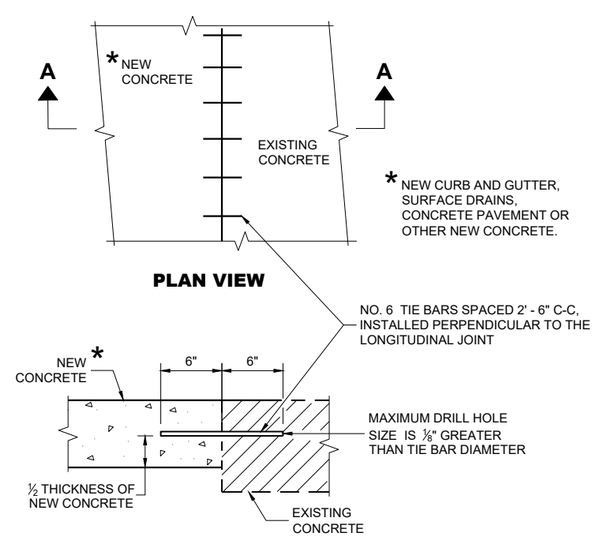

PLAN VIEW

SECTION A - A

TIE BARS DRILLED INTO EXISTING PAVEMENT

CONCRETE CURB, TIES AND CURB AND GUTTER APPLICATIONS

STATE OF WISCONSIN
DEPARTMENT OF TRANSPORTATION

APPROVED
May 2023 — DATE
/S/ Rodnery Taylor — ROADWAY STANDARDS DEVELOPMENT UNIT SUPERVISOR

FHWA

GENERAL NOTES

DETAILS OF CONSTRUCTION, MATERIALS AND WORKMANSHIP NOT SHOWN ON THIS DRAWING SHALL CONFORM TO THE PERTINENT REQUIREMENTS OF THE STANDARD SPECIFICATIONS AND THE APPLICABLE SPECIAL PROVISIONS.

ALL STEEL REINFORCEMENT SHALL BE EMBEDDED 2 INCHES CLEAR UNLESS OTHERWISE SHOWN OR NOTED.

1. USE A JOINT SEALANT CONFORMING TO STANDARD SPECIFICATION 415.2.6.
2. NO. 4 X 2' - 0" TIE BARS SPACED AT 12" C-C TO BE PLACED BY BRIDGE CONTRACTOR OR DRILLED TIE BARS PLACED AS DIRECTED BY THE ENGINEER.
3. PAVED CONCRETE SHOULDER (SDD 13A03) OR CONCRETE DRAINAGE SLAB.
4. CONCRETE PAVEMENT APPROACH SLAB (SHOWN) OR STRUCTURE APPROACH SLAB AND CONCRETE PAVEMENT APPROACH SLAB. SEE SDD 13B02.
5. PAVED CONCRETE SHOULDER (SDD 13A03) OR ASPHALT SHOULDER.
6. CONCRETE CURB AND GUTTER 4-INCH SLOPED 36-INCH TYPE TBT OR TBTT. USE TYPE TBTT CURB WITH NO. 4 X 2' -0" TIE BARS SPACED AT 3' - 0" C-C ONLY WHEN ADJACENT TO CONCRETE PAVEMENTS.
7. PLACE FLUME BEFORE MSG THRIE BEAM TRANSITION POST 1 (SEE SDD 14B45)
8. CENTER FLUME BETWEEN POSTS. 6-INCH MINIMUM SEPARATION FROM OUTSIDE EDGE OF FLUME TO POSTS.
9. MINIMUM REINFORCEMENT SHALL BE 4" X 4" - W3.0 X W3.0 OR NO. 3 BARS LONGITUDINAL AND TRANSVERSE SPACING 12" C -C.
10. SEE ROADWAY PLANS FOR FLUME LOCATION.
11. START CURB AND GUTTER TRANSITION OR END SECTION.
12. DEPRESS FLOW LINE (SEE DETAIL)

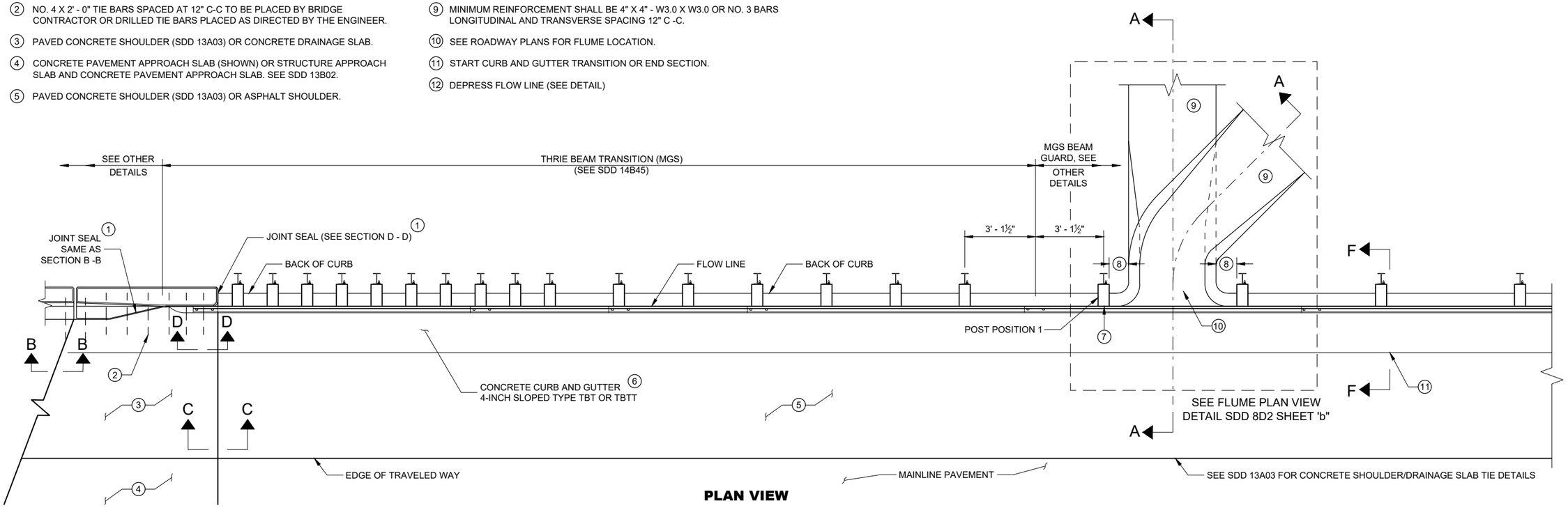

PLAN VIEW

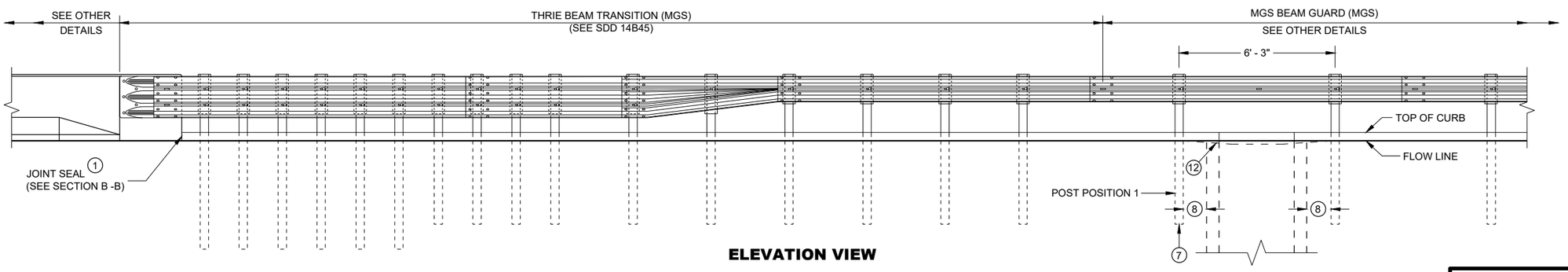

ELEVATION VIEW

CONCRETE SURFACE DRAINS FLUME TYPE AT STRUCTURES

STATE OF WISCONSIN
DEPARTMENT OF TRANSPORTAT

6

SDD 08D02 - 08a

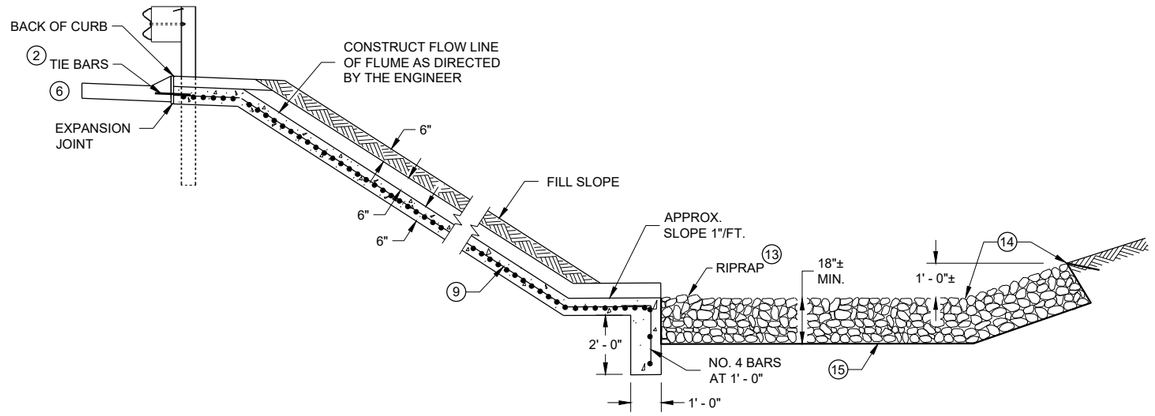

SECTION A - A

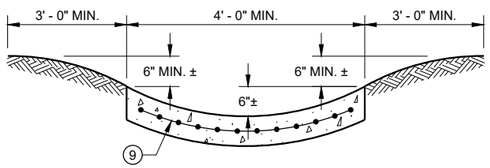

SECTION G - G

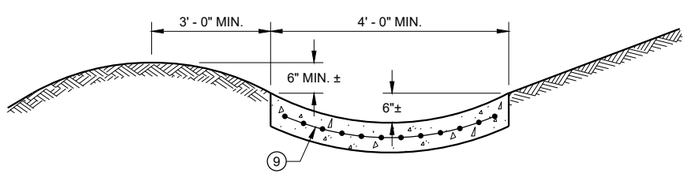

SECTION H - H

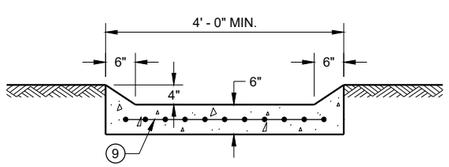

SECTION I - I

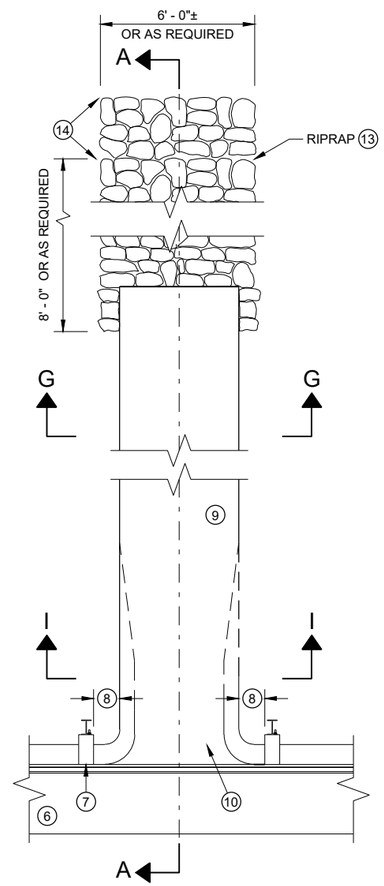

PLAN VIEW PERPENDICULAR FLUME

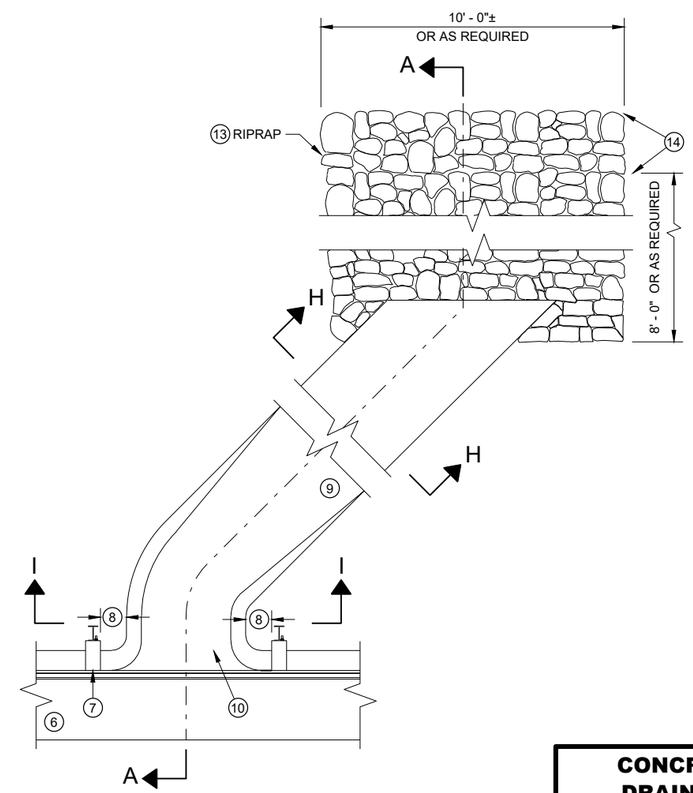

PLAN VIEW SKEWED FLUME

GENERAL NOTES

DETAILS OF CONSTRUCTION, MATERIALS AND WORKMANSHIP NOT SHOWN ON THIS DRAWING SHALL CONFORM TO THE PERTINENT REQUIREMENTS OF THE STANDARD SPECIFICATIONS AND THE APPLICABLE SPECIAL PROVISIONS.

ALL STEEL REINFORCEMENT SHALL BE EMBEDDED 2 INCHES CLEAR UNLESS OTHERWISE SHOWN OR NOTED.

1. USE A JOINT SEALANT CONFORMING TO STANDARD SPECIFICATION 415.2.6.
2. NO. 4 X 2' - 0" TIE BARS SPACED AT 12" C-C TO BE PLACED BY BRIDGE CONTRACTOR OR DRILLED TIE BARS PLACED AS DIRECTED BY THE ENGINEER.
3. PAVED CONCRETE SHOULDER (SDD 13A03) OR CONCRETE DRAINAGE SLAB.
4. CONCRETE PAVEMENT APPROACH SLAB (SHOWN) OR STRUCTURE APPROACH SLAB AND CONCRETE PAVEMENT APPROACH SLAB. SEE SDD 13B02 AND STRUCTURE PLANS.
5. PAVED CONCRETE SHOULDER (SDD 13A03) OR ASPHALT SHOULDER.
6. CONCRETE CURB AND GUTTER 4-INCH SLOPED 36-INCH TYPE TBT OR TBTT. USE TYPE TBTT CURB WITH NO. 4 X 2' -0" TIE BARS SPACED AT 3' - 0" C-C ONLY WHEN ADJACENT TO CONCRETE PAVEMENTS.
7. PLACE FLUME BEFORE MSG THRIE BEAM TRANSITION POST 1 (SEE SDD 14B45)
8. CENTER FLUME BETWEEN POSTS. 6-INCH MINIMUM SEPARATION FROM OUTSIDE EDGE OF FLUME TO POSTS.
9. MINIMUM REINFORCEMENT SHALL BE 4" X 4" - W3.0 X W3.0 OR NO. 3 BARS LONGITUDINAL AND TRANSVERSE SPACING 12" C -C.
10. SEE ROADWAY PLANS FOR FLUME LOCATION.
11. START CURB AND GUTTER TRANSITION OR END SECTION.
12. DEPRESS FLOW LINE (SEE DETAIL)
13. MEDIUM RIPRAP UNLESS OTHERWISE SPECIFIED.
14. LIMITS OF ADDITIONAL RIPRAP WHEN SPECIAL DITCH AS REQUIRED.
15. GEOTEXTILE TYPE HR.

CONCRETE SURFACE DRAINS FLUME TYPE AT STRUCTURES

STATE OF WISCONSIN
DEPARTMENT OF TRANSPORTAT

6

SDD 08D02 - 08b

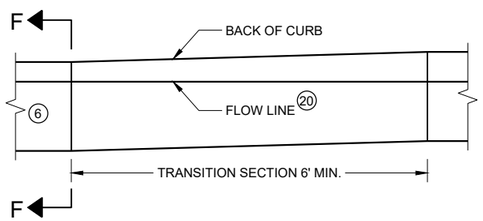

CURB AND GUTTER TRANSITION SECTION
CONCRETE CURB AND GUTTER 4-INCH SLOPED
36 INCH TYPE TBT OR TBTT

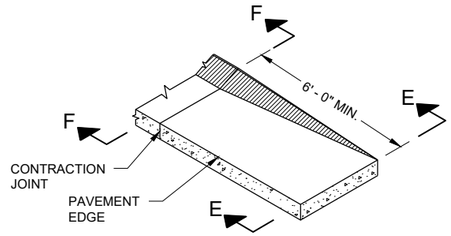

CURB AND GUTTER END SECTION
CONCRETE CURB AND GUTTER 4-INCH SLOPED
36 INCH TYPE TBT OR TBTT

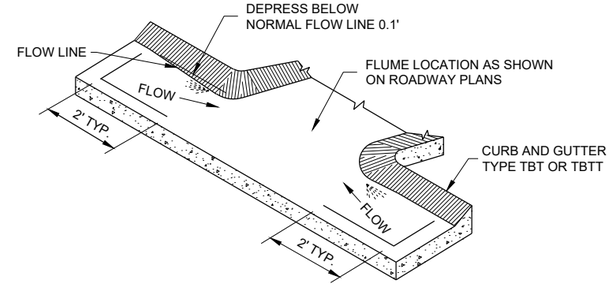

CURB AND GUTTER FLOW LINE DEPRESSION
AT FLUMES CONCRETE CURB AND GUTTER
4-INCH SLOPED 36 INCH TYPE TBT OR TBTT

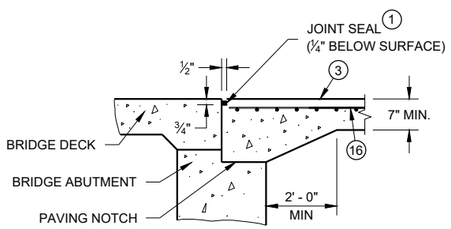

SECTION B-B 4

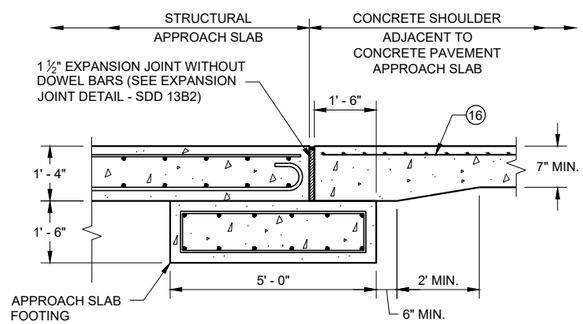

SECTION C - C
JOINT DETAIL FOR BRIDGE WITH STRUCTURAL
APPROACH SLAB AND CONCRETE APPROACH SLAB

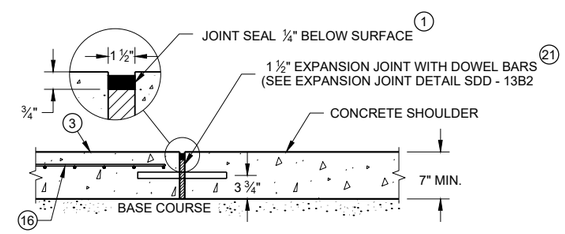

SECTION C - C
JOINT DETAIL FOR BRIDGE APPROACH
WITH CONCRETE SHOULDERS

GENERAL NOTES

DETAILS OF CONSTRUCTION, MATERIALS AND WORKMANSHIP NOT SHOWN ON THIS DRAWING SHALL CONFORM TO THE PERTINENT REQUIREMENTS OF THE STANDARD SPECIFICATIONS AND THE APPLICABLE SPECIAL PROVISIONS.

ALL STEEL REINFORCEMENT SHALL BE EMBEDDED 2 INCHES CLEAR UNLESS OTHERWISE SHOWN OR NOTED.

1. USE A JOINT SEALANT CONFORMING TO STANDARD SPECIFICATION 415.2.6.
2. NO. 4 X 2' - 0" TIE BARS SPACED AT 12" C-C TO BE PLACED BY BRIDGE CONTRACTOR OR DRILLED TIE BARS PLACED AS DIRECTED BY THE ENGINEER.
3. PAVED CONCRETE SHOULDER (SDD 13A03) OR CONCRETE DRAINAGE SLAB.
4. CONCRETE PAVEMENT APPROACH SLAB (SHOWN) OR STRUCTURE APPROACH SLAB AND CONCRETE PAVEMENT APPROACH SLAB. SEE SDD 13B02 AND STRUCTURE PLANS.
5. PAVED CONCRETE SHOULDER (SDD 13A03) OR ASPHALT SHOULDER.
6. CONCRETE CURB AND GUTTER 4-INCH SLOPED 36-INCH TYPE TBT OR TBTT. USE TYPE TBTT CURB WITH NO. 4 X 2' -0" TIE BARS SPACED AT 3' - 0" C-C ONLY WHEN ADJACENT TO CONCRETE PAVEMENTS.
7. PLACE FLUME BEFORE MSG THRIE BEAM TRANSITION POST 1 (SEE SDD 14B45)
8. CENTER FLUME BETWEEN POSTS. 6-INCH MINIMUM SEPARATION FROM OUTSIDE EDGE OF FLUME TO POSTS.
9. MINIMUM REINFORCEMENT SHALL BE 4" X 4" - W3.0 X W3.0 OR NO. 3 BARS LONGITUDINAL AND TRANSVERSE SPACING 12" C -C.
10. SEE ROADWAY PLANS FOR FLUME LOCATION.
11. START CURB AND GUTTER TRANSITION OR END SECTION.
12. DEPRESS FLOW LINE (SEE DETAIL)
13. MEDIUM RIPRAP UNLESS OTHERWISE SPECIFIED.
14. LIMITS OF ADDITIONAL RIPRAP WHEN SPECIAL DITCH IS REQUIRED.
15. GEOTEXTILE TYPE HR.
16. MINIMUM REINFORCEMENT SHALL BE 6" X 6" - W4.0 X W4.0 OR NO. 3 BARS LONGITUDINAL AND TRANSVERSE SPACING 12" C - C.
17. MSG THRIE BEAM TRANSITION POST 1. SEE SDD 14B45 FOR ADDITIONAL CONSTRUCTION DETAILS AND ACCEPTABLE MATERIALS.
18. MAINTAIN WIDTH, THICKNESS AND CROSS SLOPE OF ADJACENT TYPE TBT OR TBTT CURB. SEE NOTE 6 FOR TIE BAR SPACING.
19. ALIGN FACE OF POST BLOCK WITH FLOW LINE.
20. MAINTAIN FLOW LINE AT EDGE OF PAVEMENT/FACE OF BEAM GUARD AS APPLICABLE.
21. DO NOT CONSTRUCT AN EXPANSION JOINT OR INSTALL DOWEL BARS WHEN ABUTTING HMA PAVEMENTS.

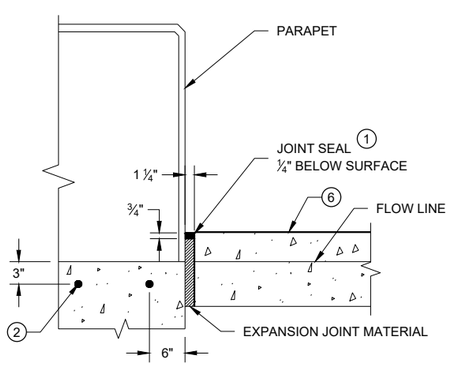

SECTION D - D

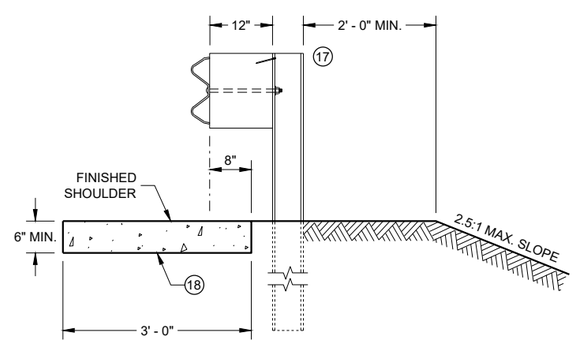

SECTION E - E

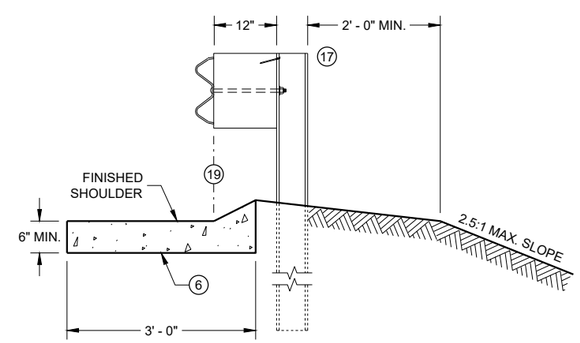

SECTION F - F

CONCRETE SURFACE DRAINS FLUME TYPE AT STRUCTURES

STATE OF WISCONSIN
DEPARTMENT OF TRANSPORTATION

APPROVED
May 2023 — DATE
/S/ Rodney Taylor — ROADWAY STANDARDS DEVE ENGINEER

FHWA

6

SDD 08D02 - 08c

NOTE: TAPER CURB ENDS TO GUTTER IN 1' - 0"

ASPHALTIC FLUME

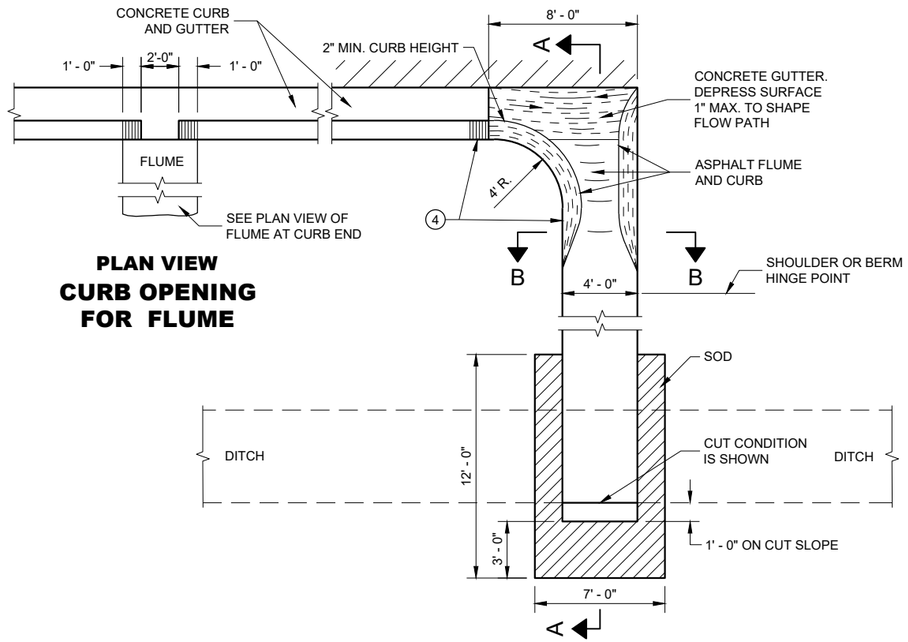

PLAN VIEW
CURB OPENING FOR FLUME

PLAN VIEW
FLUME AT CURB END

GENERAL NOTES

DETAILS OF CONSTRUCTION, MATERIALS AND WORKMANSHIP NOT SHOWN ON THIS DRAWING SHALL CONFORM TO PERTINENT REQUIREMENTS OF THE STANDARD SPECIFICATIONS AND APPLICABLE SPECIAL PROVISIONS.

4" X 4" - W3.0 X W3.0 CONCRETE REINFORCEMENT SHALL BE IN ACCORDANCE WITH AASHTO SPECIFICATION M55.

1. JOINTS SHALL BE ⅛" TO ¼" WIDE BY 1½" DEEP AND SPACED AT UNIFORM INTERVALS OF APPROXIMATELY 4 FEET.
2. GEOTEXTILE TYPE "R" SHALL UNDERLAY THE FULL LENGTH AND WIDTH OF THE CONCRETE SURFACE DRAIN AND RIPRAP.
3. CONCRETE SURFACE DRAIN WITHOUT CURB AND GUTTER MAY BE USED ON BACKSLOPES WHEN SPECIFIED.
4. ANGLE OF FLUME IN RELATION TO BACK OF CURB TO BE CONSTRUCTED PER THE PLAN DETAILS OR AS DIRECTED BY THE ENGINEER. ANGLE OF FLUME MAY BE OTHER THAN 90 DEGREES AS SHOWN.

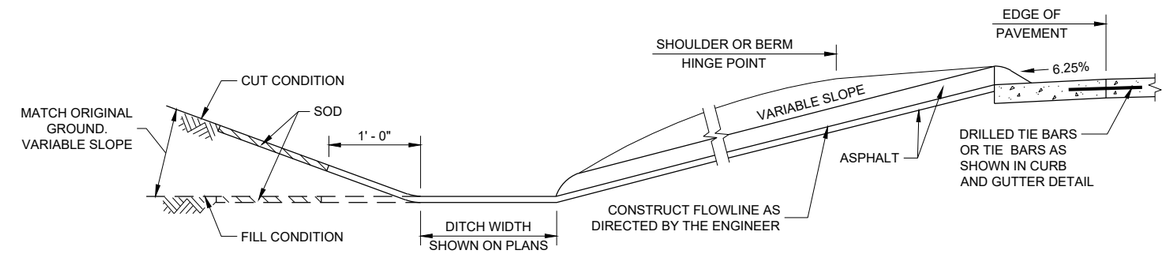

SECTION A - A

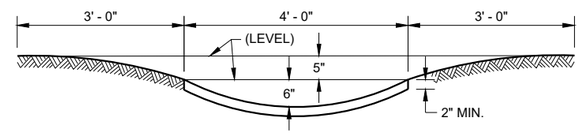

SECTION B - B

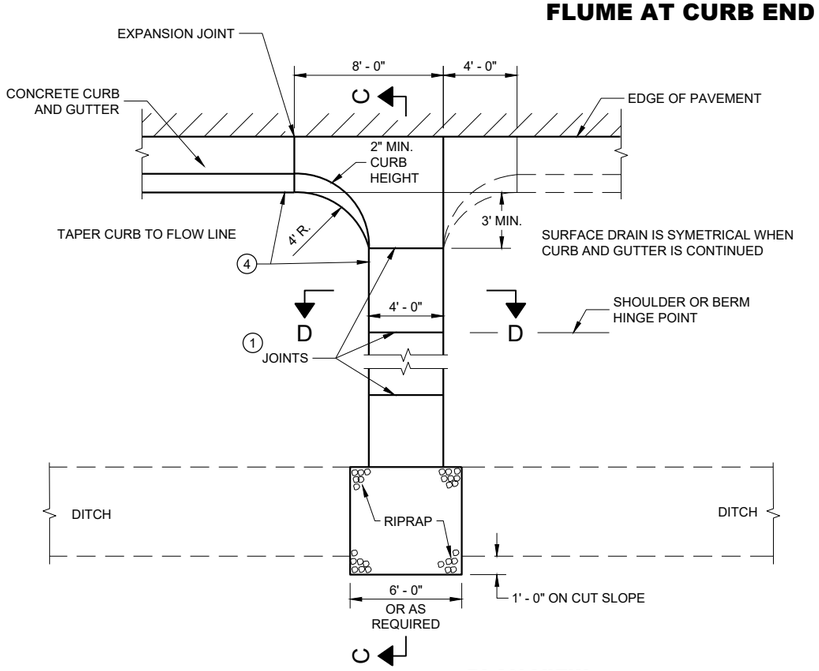

PLAN VIEW
CONCRETE SURFACE DRAIN

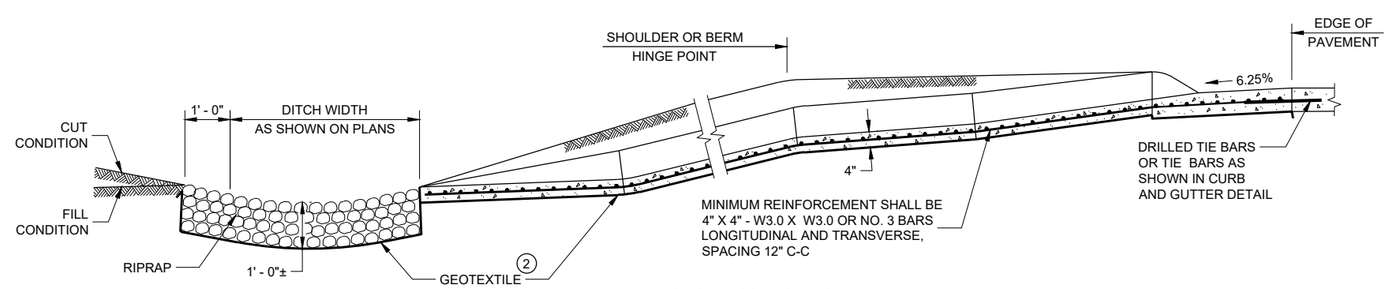

SECTION C - C

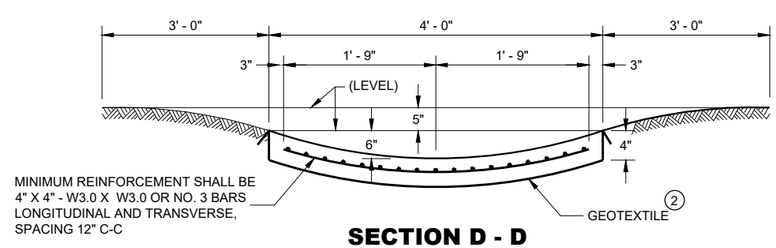

SECTION D - D

CONCRETE SURFACE DRAINS AND ASPHALTIC FLUMES

STATE OF WISCONSIN
DEPARTMENT OF TRANSPORTATION

APPROVED
May 2023 — DATE
/S/ Rodney Taylor — ROADWAY STANDARDS DEVE ENGINEER

FHWA

6

SDD 08D04 - 07

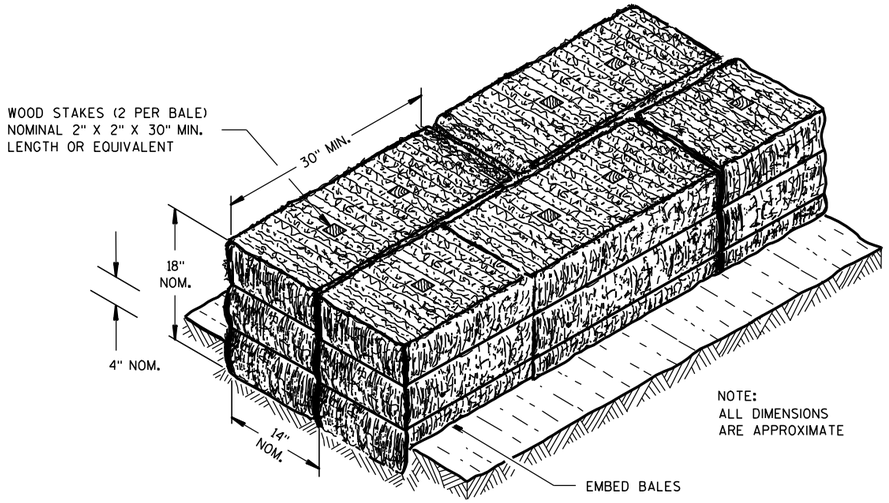

SECTION A-A

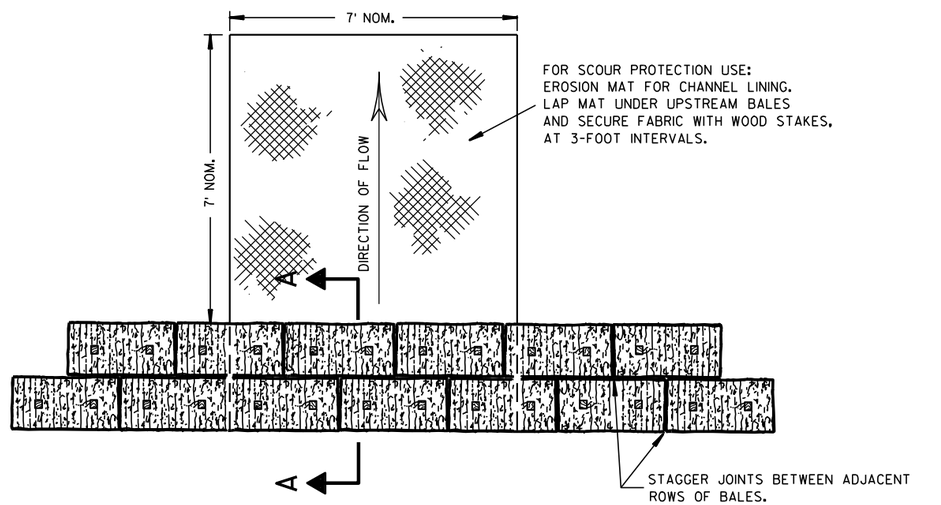

PLAN VIEW

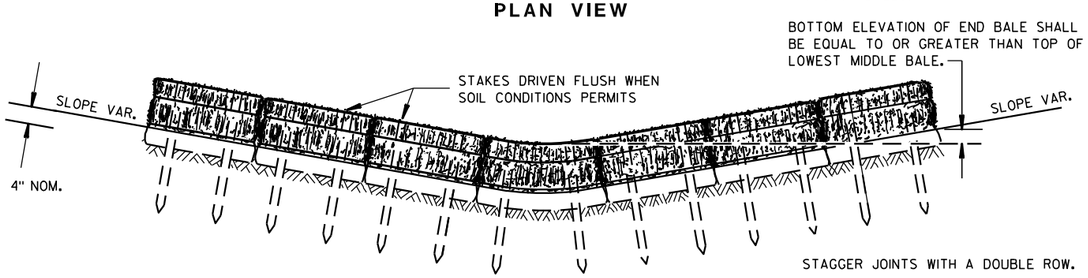

FRONT ELEVATION

TEMPORARY DITCH CHECK USING EROSION BALES ①

GENERAL NOTES

DETAILS OF CONSTRUCTION, MATERIALS AND WORKMANSHIP NOT SHOWN ON THIS DRAWING SHALL CONFORM TO THE PERTINENT REQUIREMENTS OF THE STANDARD SPECIFICATIONS AND THE APPLICABLE SPECIAL PROVISIONS.

① TEMPORARY DITCH CHECKS EITHER EROSION BALES OR MANUFACTURED SHALL BE PAID FOR UNDER THE BID ITEM OF TEMPORARY DITCH CHECK. THE DEPARTMENT WILL NOT PAY FOR TEMPORARY DITCH CHECKS CONSTRUCTED OF A SINGLE ROW OF EROSION BALES.

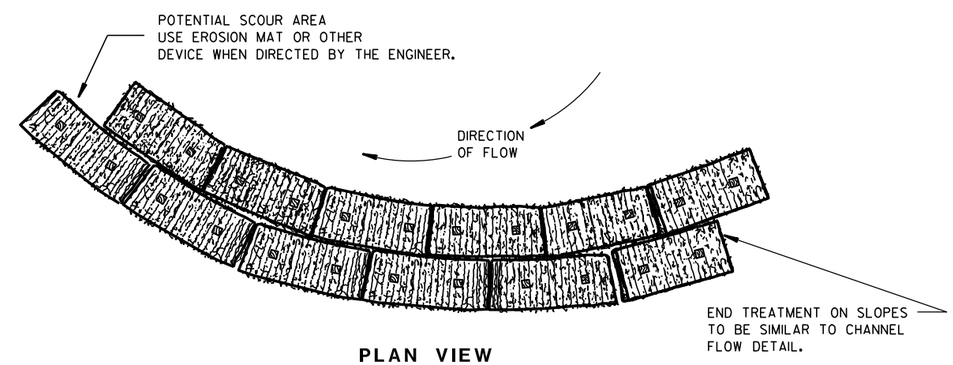

PLAN VIEW

WHEN ALTERING THE DIRECTION OF FLOW

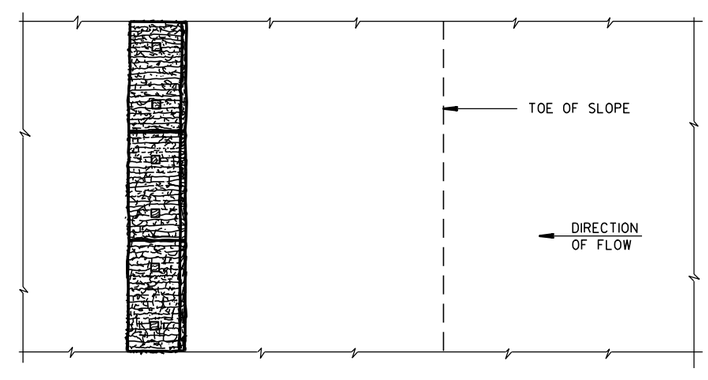

PLAN VIEW

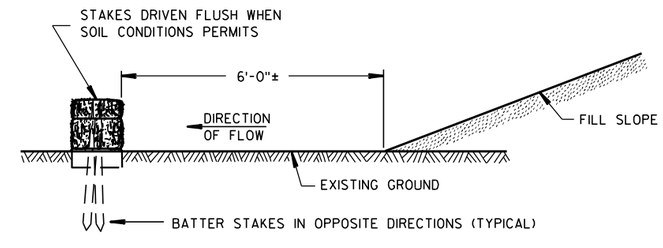

FRONT ELEVATION

WHEN EXISTING GROUND SLOPES AWAY FROM FILL SLOPE

EROSION BALES FOR SHEET FLOW

TYPICAL INSTALLATIONS OF EROSION BALES / TEMPORARY DITCH CHECKS

STATE OF WISCONSIN
DEPARTMENT OF TRANSPORTATION

APPROVED

6/04/02 — DATE

/S/ Beth Cann — CHIEF ROADWAY DEVELOPMENT ENGINEER

FHWA

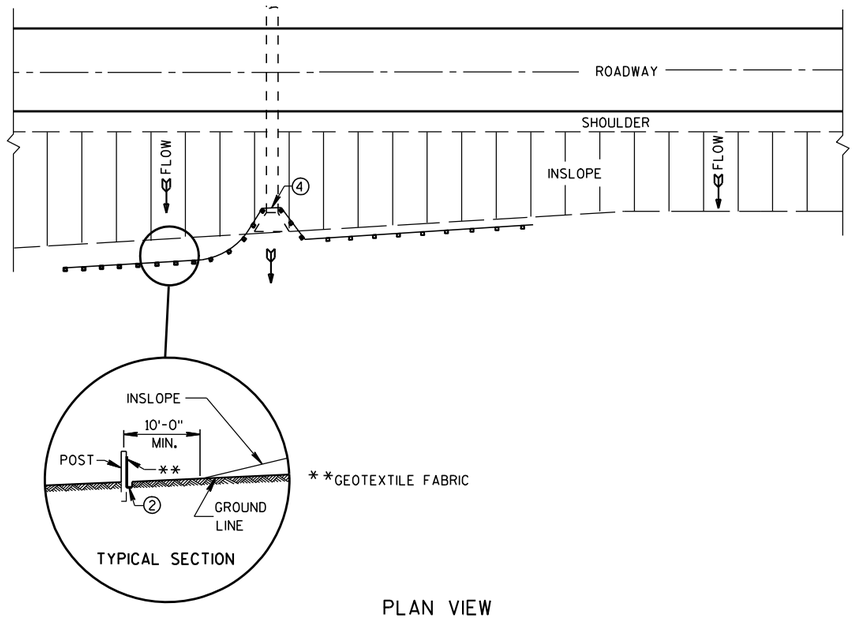

PLAN VIEW

TYPICAL APPLICATION OF SILT FENCE

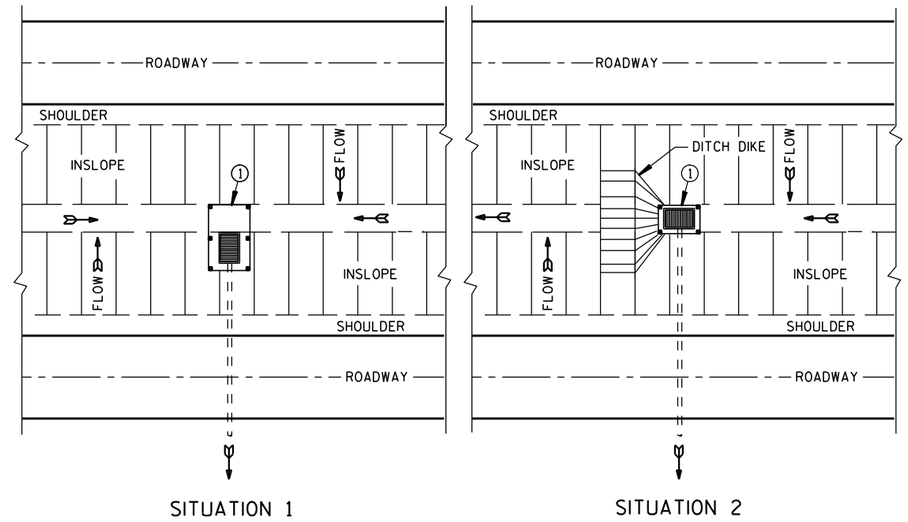

PLAN VIEW

SILT FENCE AT MEDIAN SURFACE DRAINS

GENERAL NOTES

DETAILS OF CONSTRUCTION NOT SHOWN ON THIS DRAWING SHALL CONFORM TO THE PERTINENT REQUIREMENTS OF THE STANDARD SPECIFICATIONS AND APPLICABLE SPECIAL PROVISIONS.

① HORIZONTAL BRACE REQUIRED WITH 2" X 4" WOODEN FRAME OR EQUIVALENT AT TOP OF POSTS.

② FOR MANUAL INSTALLATIONS THE TRENCH SHALL BE A MINIMUM OF 4" WIDE & 6" DEEP TO BURY AND ANCHOR THE GEOTEXTILE FABRIC. FOLD MATERIAL TO FIT TRENCH AND BACKFILL & COMPACT TRENCH WITH EXCAVATED SOIL.

③ WOOD POSTS SHALL BE A MINIMUM SIZE OF 1⅛" X 1⅛" OF OAK OR HICKORY.

④ SILT FENCE TO EXTEND ACROSS THE TOP OF THE PIPE.

⑤ CONSTRUCT SILT FENCE FROM A CONTINUOUS ROLL IF POSSIBLE BY CUTTING LENGTHS TO AVOID JOINTS. IF A JOINT IS NECESSARY USE ONE OF THE FOLLOWING TWO METHODS; A) OVERLAP THE END POSTS AND TWIST, OR ROTATE, AT LEAST 180 DEGREES. B) HOOK THE END OF EACH SILT FENCE LENGTH.

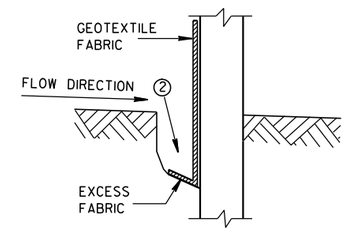

TRENCH DETAIL

NOTE: ADDITIONAL POST DEPTH OR TIE BACKS MAY BE REQUIRED IN UNSTABLE SOILS

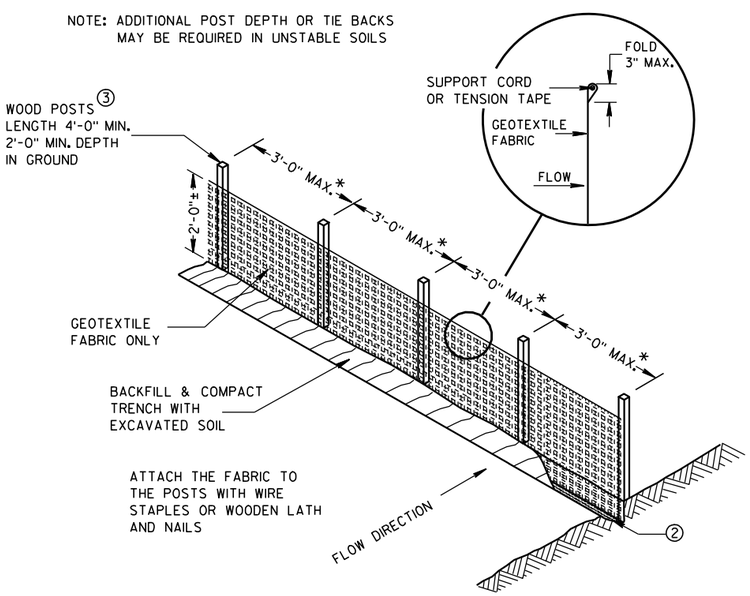

*NOTE: 8'-0" POST SPACING ALLOWED IF A WOVEN GEOTEXTILE FABRIC IS USED.

SILT FENCE

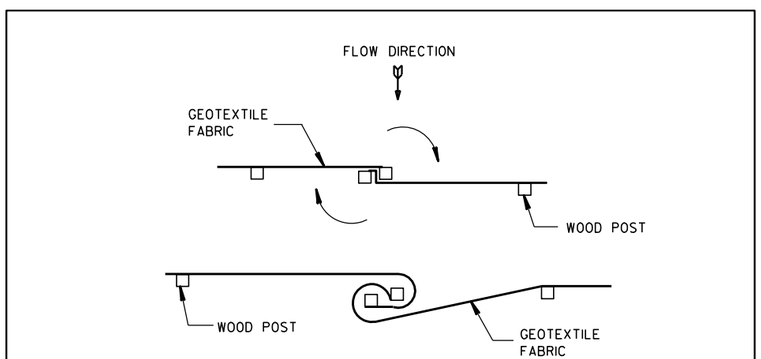

TWIST METHOD

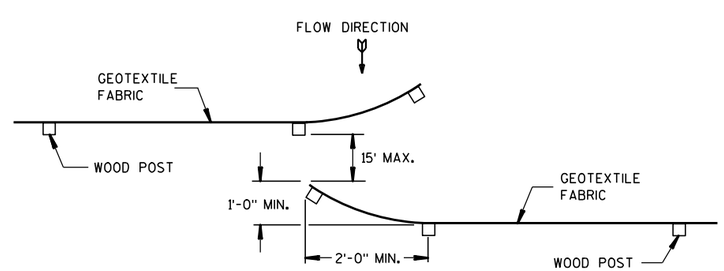

HOOK METHOD

JOINING TWO LENGTHS OF SILT FENCE ⑤

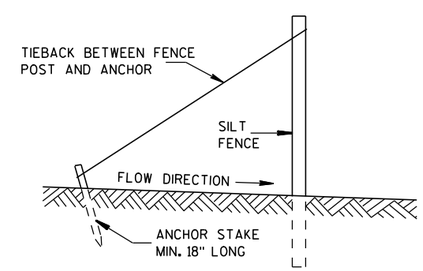

SILT FENCE TIE BACK

(WHEN REQUIRED BY THE ENGINEER)

SILT FENCE
STATE OF WISCONSIN DEPARTMENT OF TRANSPORTATION
APPROVED 4-29-05 DATE — /S/ Beth Cann-- CHIEF ROADWAY DEVELOP ENGINEER FHWA

6

6

S.D.D. 8 E 9-6

S.D.D. 8 E 9-6

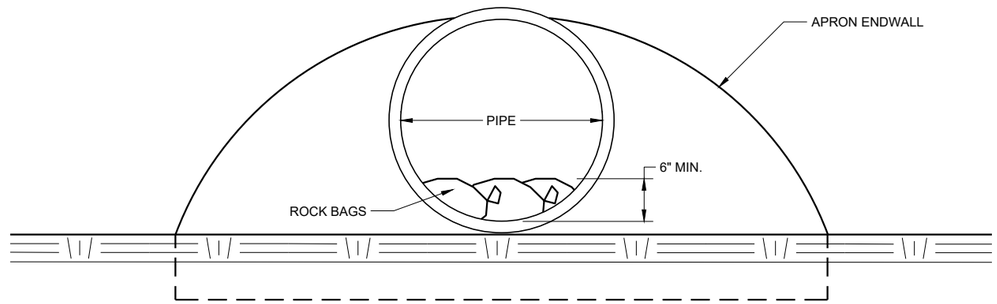

END VIEW

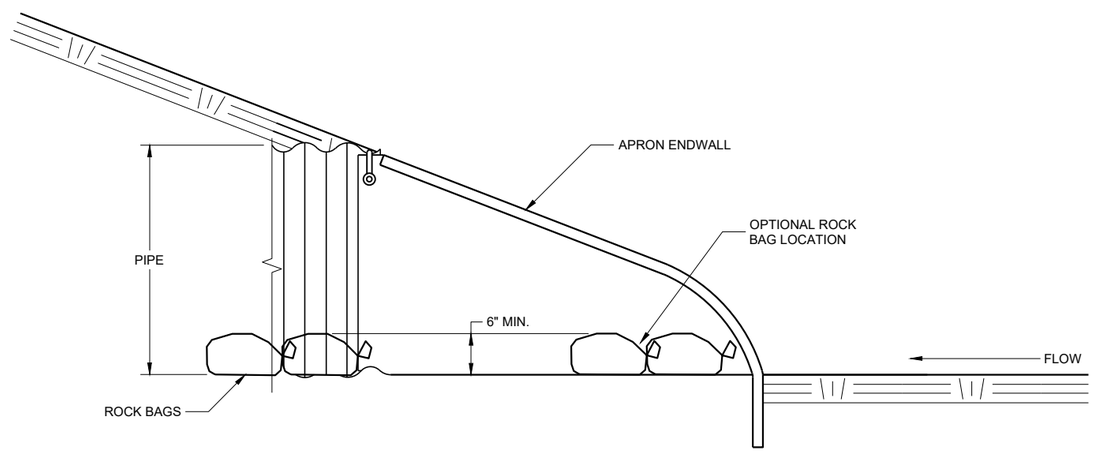

SIDE VIEW

CULVERT PIPE CHECK

(INSTALL ON INLET END ONLY)

CULVERT PIPE CHECK

STATE OF WISCONSIN
DEPARTMENT OF TRANSPORTATION

APPROVED
May 2019 — DATE
/S/ Daniel Schave — EROSION CONTROL ENGI
FHWA

6

6

SDD 08E15 - 01

SDD 08E15 - 01

GENERAL NOTES

1. ADJUST VERTICAL CURVE LOCATION LATERALLY TO MAINTAIN 20:1 MAX.
2. SIGNING DETAILS AND SPECIFICATIONS ARE PROVIDED ELSEWHERE IN THE CONTRACT.
3. INSTALL DELINEATOR. SEE STANDARD DETAIL DRAWING 15A4.

LEGEND

- SIGN ON PERMANENT SUPPORT
- DELINEATOR
- DIRECTION OF TRAFFIC

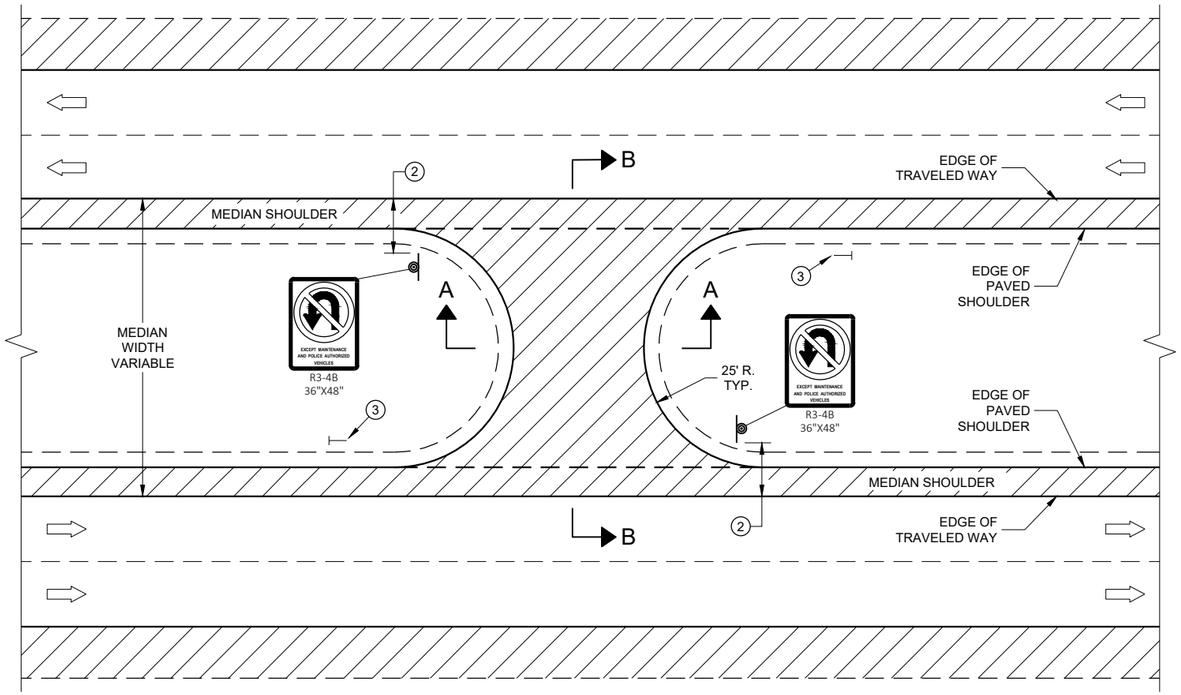

PLAN VIEW

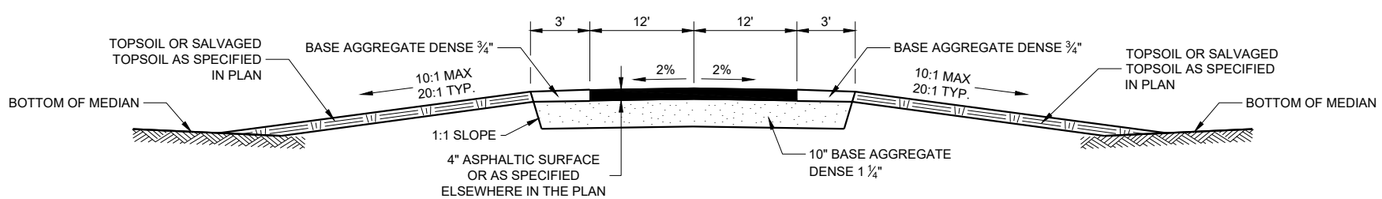

SECTION A-A

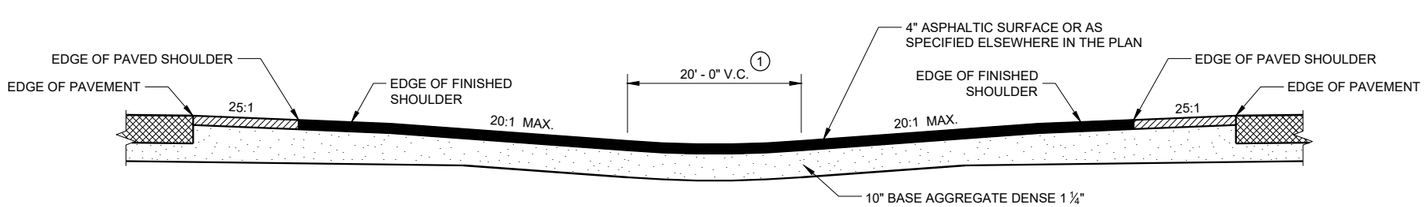

SECTION B-B

MAINTENANCE CROSSOVER FOR FREEWAYS

STATE OF WISCONSIN
DEPARTMENT OF TRANSPORTATION

APPROVED
November 2019 — DATE
/S/ Rodney Taylor — ROADWAY STANDARDS DEVE ENGINEER
FHWA

6

SDD 11A01 - 06

GENERAL NOTES

SDD 13A5, SHEET "b" SHOWS THE LOCATION OF THE RUMBLE STRIPS AT RAMP AND GORE LOCATIONS.

RUMBLE STRIPS ON EXPRESSWAYS:
DO NOT INSTALL SHOULDER RUMBLE STRIPS ACROSS SIDE ROAD INTERSECTIONS, COMMERCIAL AND PRIVATE DRIVEWAYS, ADJACENT TO RIGHT TURN LANES, LEFT TURN LANES, TURN LANE TAPERS, 25' IN ADVANCE OF BRIDGE DECKS, 25' IN ADVANCE OF BRIDGE APPROACHES, OR 100 FEET IN ADVANCE OF RAILROAD CROSSINGS.

(1) CONCRETE PAVEMENT - RUMBLE STRIPS SHALL BE A MINIMUM OF 6 INCHES AWAY FROM TRANSVERSE JOINTS.

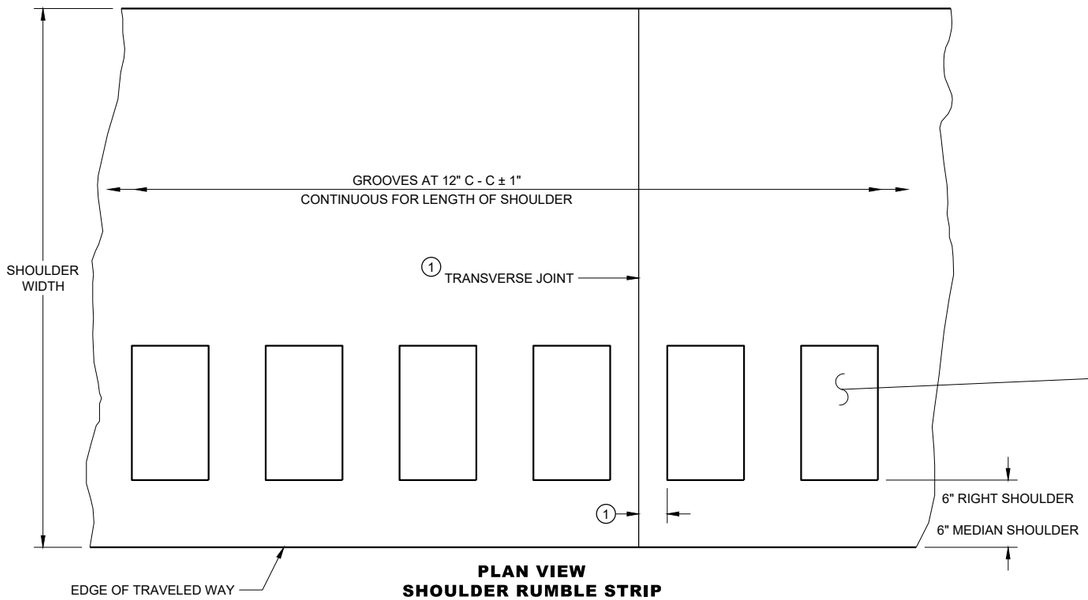

PLAN VIEW
SHOULDER RUMBLE STRIP

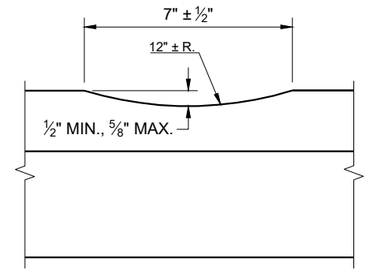

SECTION A - A

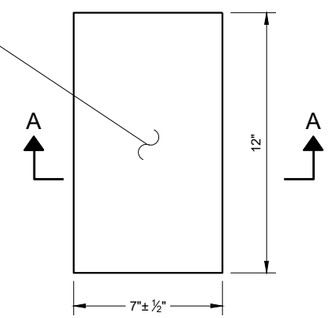

PLAN VIEW
(SINGLE GROOVE)

PLACEMENT DETAIL FOR RUMBLE STRIP

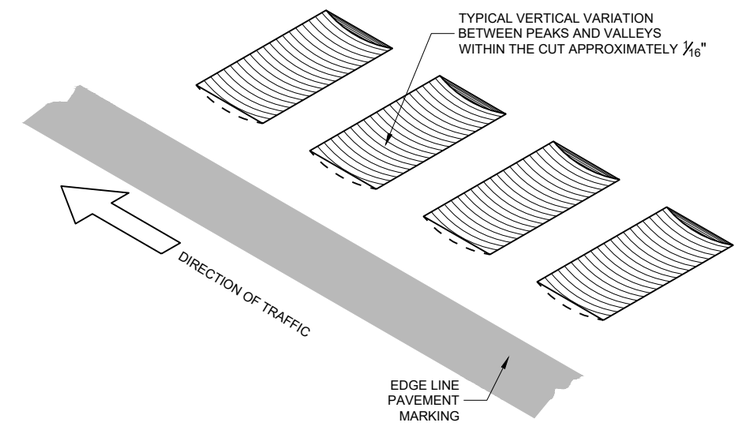

ISOMETRIC

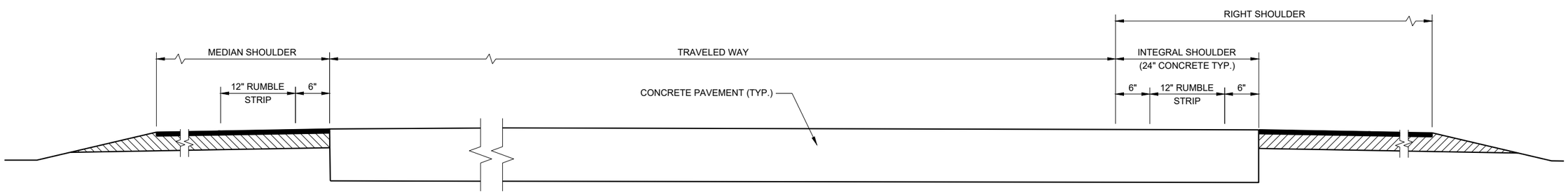

SECTION VIEW

TYPICAL SHOULDER RUMBLE STRIPS
(ONE ROADWAY IS SHOWN)

SHOULDER RUMBLE STRIPS, DIVIDED ROADWAY

STATE OF WISCONSIN
DEPARTMENT OF TRANSPORTATION

6
SDD 13A05-06a

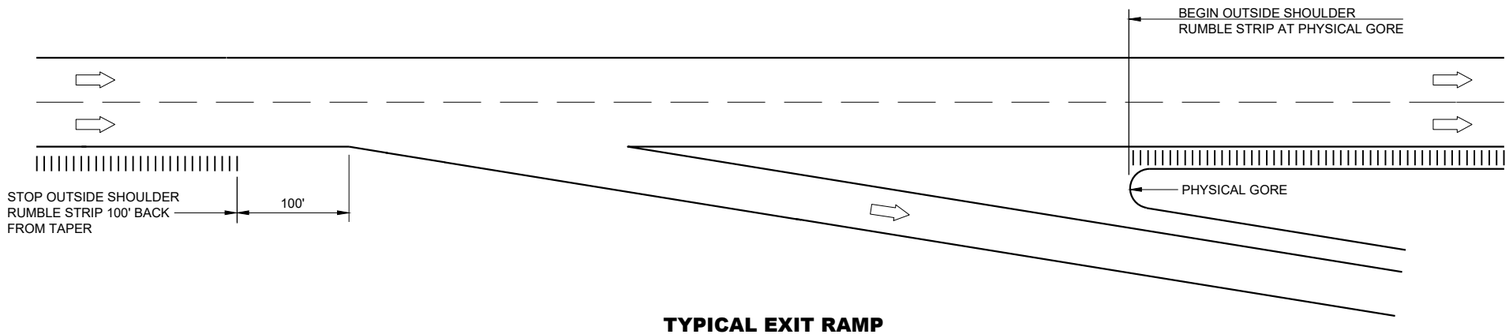

TYPICAL EXIT RAMP

GENERAL NOTES

NO RUMBLE STRIP ON EXIT, DIRECTIONAL OR ENTRANCE RAMPS, EXCEPT NEAR THE ENTRANCE TAPER END AND ALONG THE PARALLEL RAMP AREA AS SHOWN.

RUMBLE STRIPS ON EXPRESSWAYS:
DO NOT INSTALL SHOULDER RUMBLE STRIPS ACROSS SIDE ROAD INTERSECTIONS, COMMERCIALAND PRIVATE DRIVEWAYS, ADJACENT TO RIGHT TURN LANES, LEFT TURN LANES, TURN LANE TAPERS, 25' IN ADVANCE OF BRIDGE DECKS, 25' IN ADVANCE OF BRIDGE APPROACHES, OR 100 FEET IN ADVANCE OF RAILROAD CROSSINGS.

LEGEND

DIRECTION OF TRAFFIC

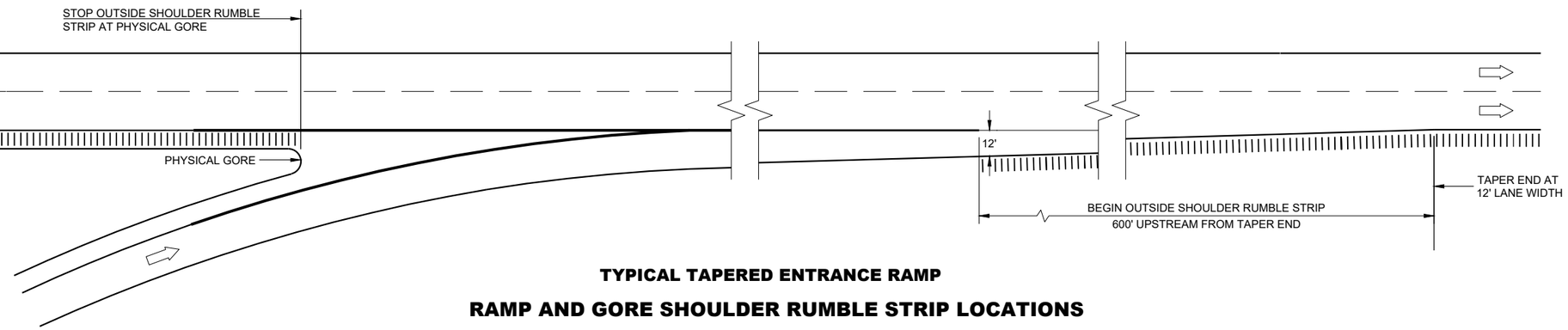

TYPICAL TAPERED ENTRANCE RAMP

RAMP AND GORE SHOULDER RUMBLE STRIP LOCATIONS

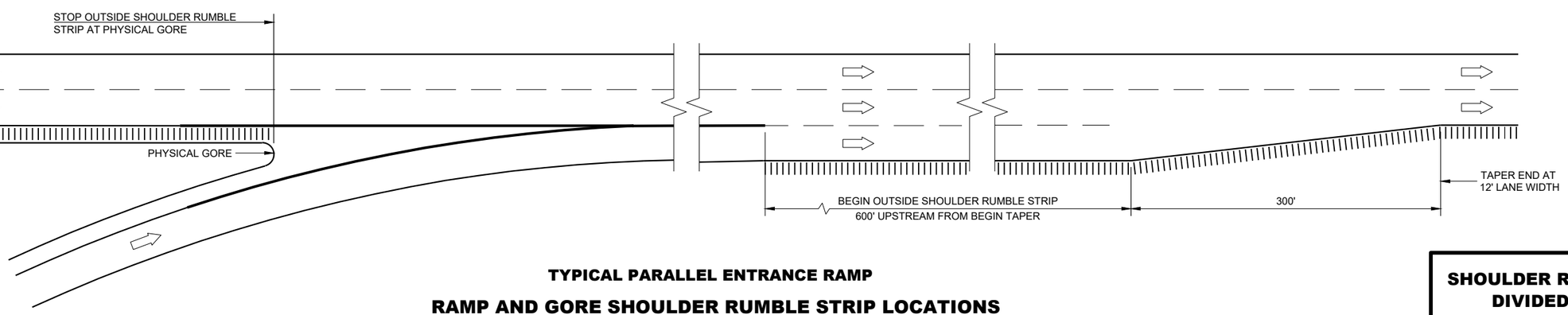

TYPICAL PARALLEL ENTRANCE RAMP

RAMP AND GORE SHOULDER RUMBLE STRIP LOCATIONS

SHOULDER RUMBLE STRIPS, DIVIDED ROADWAY

STATE OF WISCONSIN
DEPARTMENT OF TRANSPORTATION

APPROVED
May 2023 — DATE
/S/ Rodney Taylor — ROADWAY DESIGN STANDARDS UNIT SUPERVISOR
FHWA

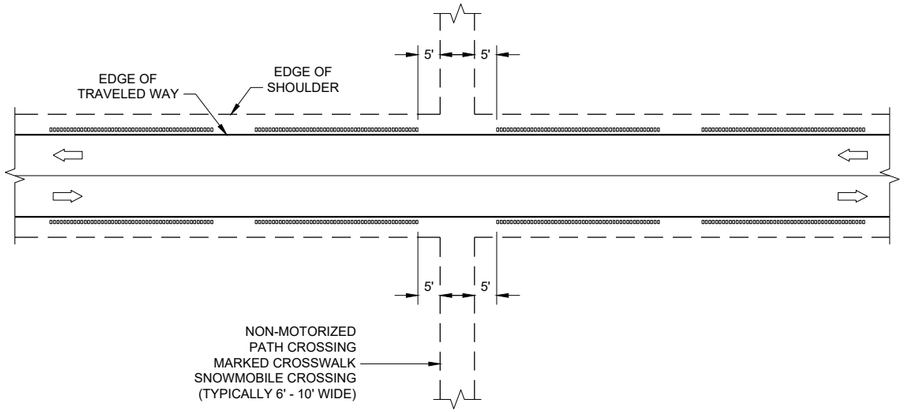

GROOVES AT MISCELLANEOUS CROSSINGS

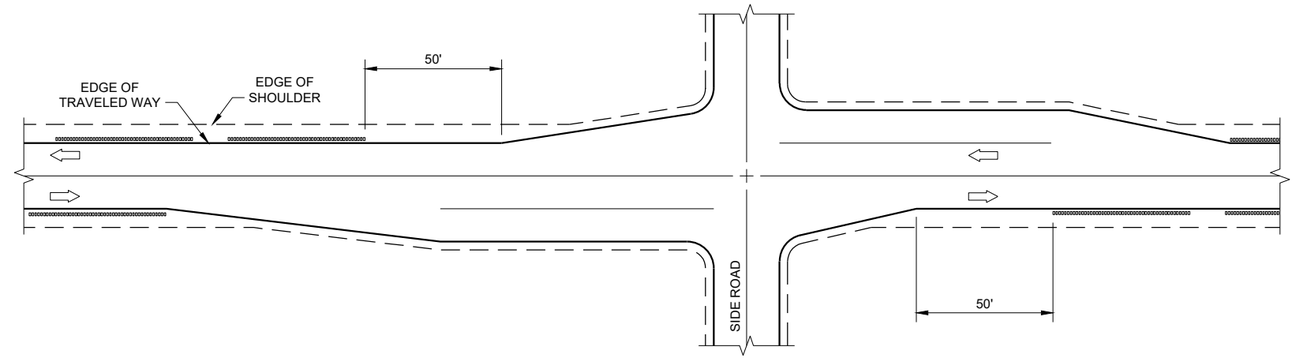

GROOVES AT RIGHT TURN LANE

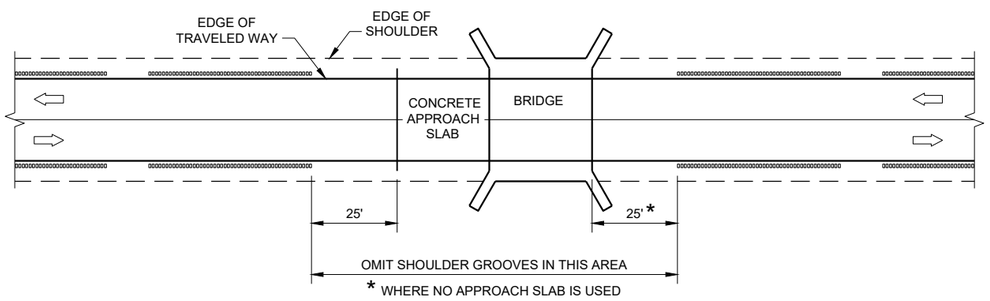

GROOVES AT BRIDGES

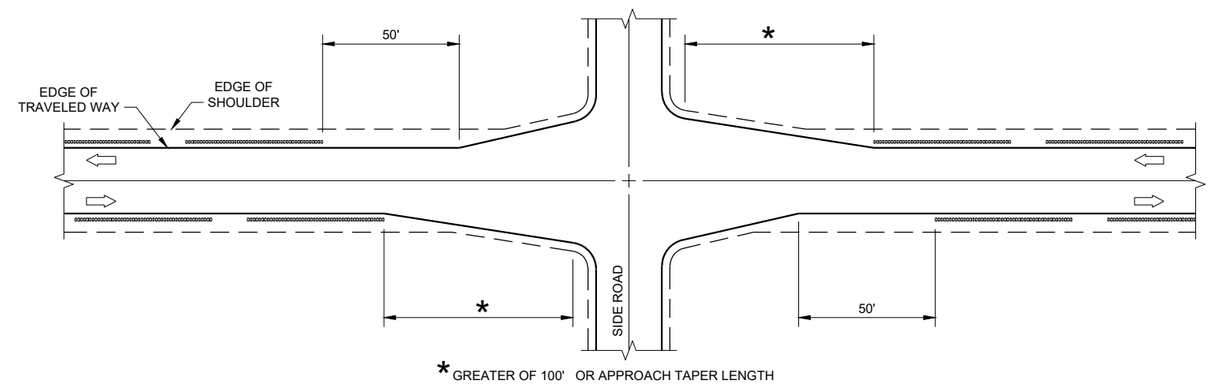

GROOVES AT INTERSECTIONS WITH APPROACH TAPER

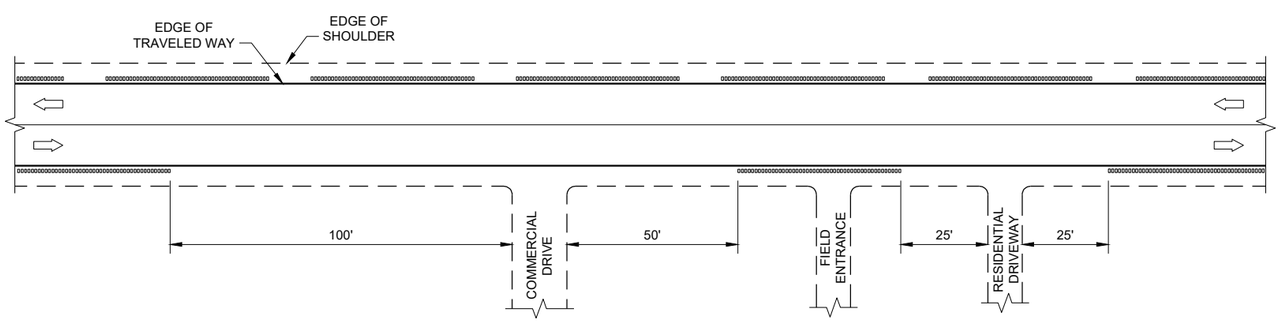

GROOVES AT DRIVEWAYS (1)

GENERAL NOTES

(1) SHOULDER GROOVES MAY BE OMITTED IN AREAS WITH HIGH CONCENTRATIONS OF DRIVEWAYS. WHEN DIRECTED BY THE ENGINEER.

SHOULDER AND EDGE LINE RUMBLE STRIPS CROSSINGS, INTERSECTIONS, BRIDGES, DRIVEWAYS

STATE OF WISCONSIN
DEPARTMENT OF TRANSPORTAT

6

SDD 13A10 - 03g

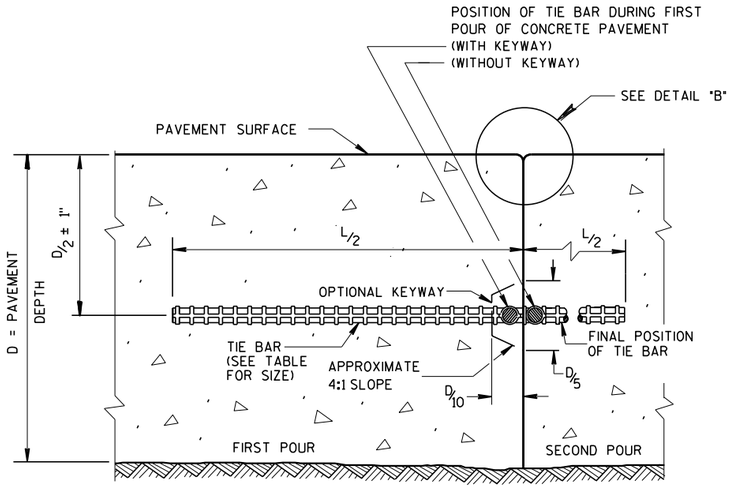

CONSTRUCTION JOINT

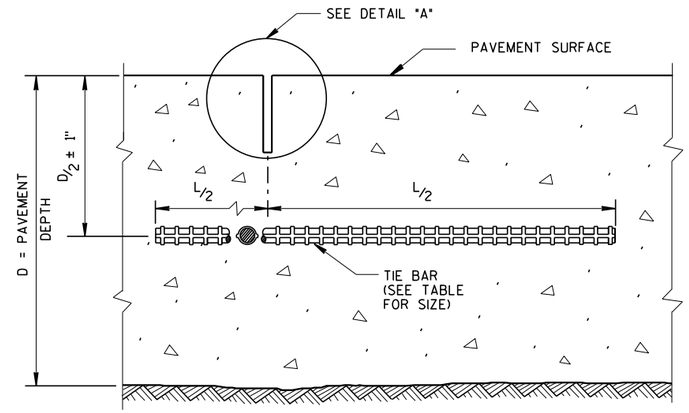

SAWED JOINT

GENERAL NOTES

CREATE A LONGITUDINAL JOINT FOR PAVEMENT WIDTHS GREATER THAN 15 FEET.

CORRELATE LONGITUDINAL JOINTS WITH LANE LINES WHEN POSSIBLE.

1. ANCHOR TIE BARS INTO DRILLED HOLES WITH AN EPOXY.
2. PAVEMENT THAT WAS IN PLACE PRIOR TO THE CONTRACT.

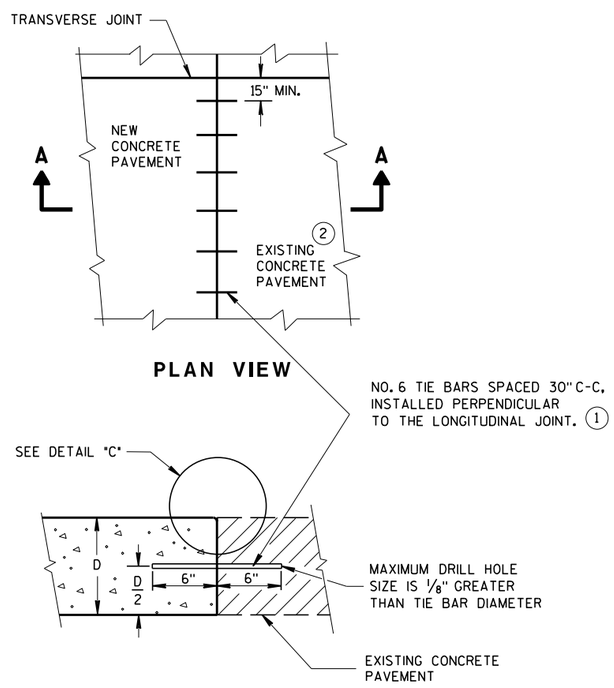

PLAN VIEW

SECTION A-A

LONGITUDINAL CONSTRUCTION JOINT TIE BARS ANCHORED INTO EXISTING PAVEMENT

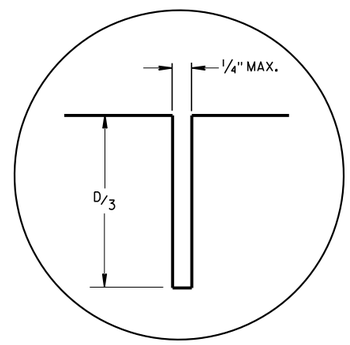

DETAIL "A"

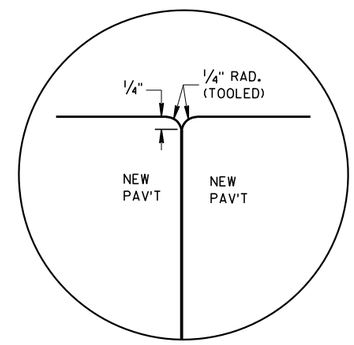

DETAIL "B"

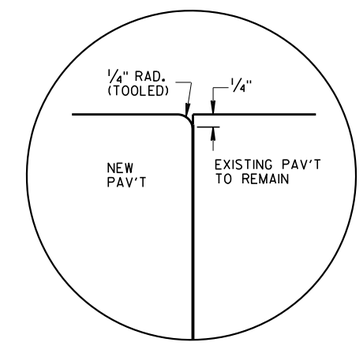

DETAIL "C"

TIE BAR TABLE

PAVEMENT DEPTH (D)	TIE BAR SIZE	TIE BAR LENGTH (L)	MAX. TIE BAR SPACING
< 10 1/2"	NO. 4	30"	36"
≥ 10 1/2"	NO. 5	36"	36"
	NO. 4 *	30"	24" **

* SUBSTITUTE BENT BARS AT LONGITUDINAL JOINTS WHEN EQUIPMENT LIMITATIONS DURING CONSTRUCTION WARRANT (e.g. AUXILIARY LANES OR TURN LANES)

** CONFORM TO 15" MINUMUM SPACING FROM TRANSVERSE JOINTS; SPACING BETWEEN TIE BARS WILL BE 30" AT TRANSVERSE JOINTS.

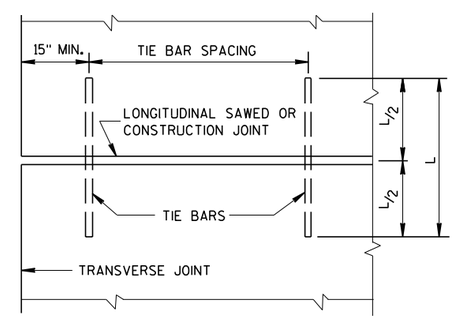

PLAN VIEW

SHOWING LOCATION OF TIE BARS

CONCRETE PAVEMENT LONGITUDINAL JOINTS AND TIES

STATE OF WISCONSIN
DEPARTMENT OF TRANSPORTATION

APPROVED

March 2018 — DATE

/S/ Peter Kerr — PAVEMENT SUPE

FHWA

GENERAL NOTES

SAW CUT, DRILL, AND LIFT OUT EXISTING CONCRETE PAVEMENT WITHIN THE BOUNDARIES OF CONCRETE REPAIR AREAS. THE CONTRACTOR MAY MAKE ADDITIONAL SAW CUTS INSIDE THE REPAIR LIMITS TO REDUCE WEIGHT AND SIZE OF CONCRETE PIECES.

PROVIDE A 6 FOOT MINIMUM DISTANCE FROM BOUNDARIES OF CONCRETE REPAIR AREA TO ADJACENT TRANSVERSE JOINT OR CRACK.

THE LENGTH OF THE REPAIRS MAY VARY FROM THE DIMENSIONS SHOWN IF THE EXISTING CONCRETE PAVEMENT IS NON-DOWELED AND THE PAVEMENT IS TO BE OVERLAID AFTER REPAIRING.

(1) DOWEL BARS MAY NOT BE PRESENT.

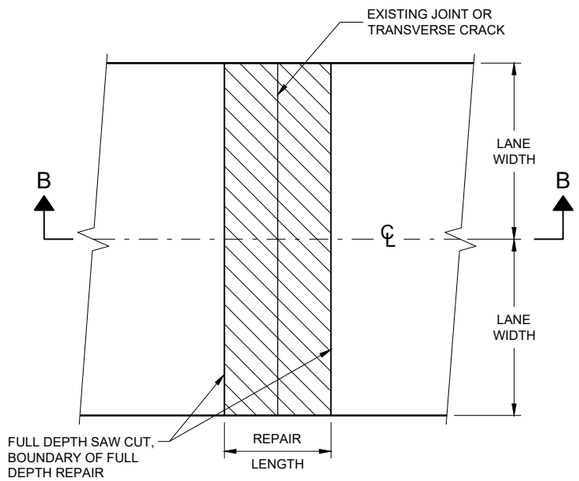

PLAN VIEW (DOUBLE LANE REPAIR)

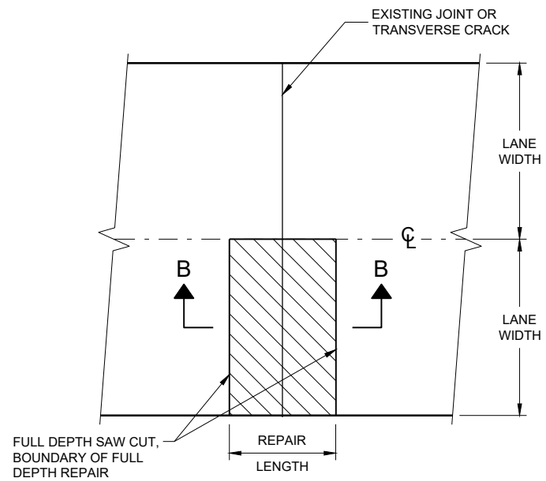

PLAN VIEW (SINGLE LANE REPAIR)

FULL DEPTH CONCRETE PAVEMENT REMOVAL

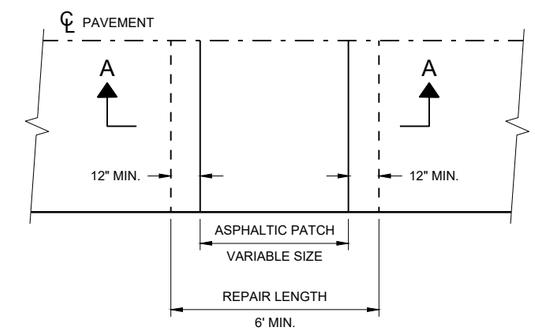

PLAN VIEW

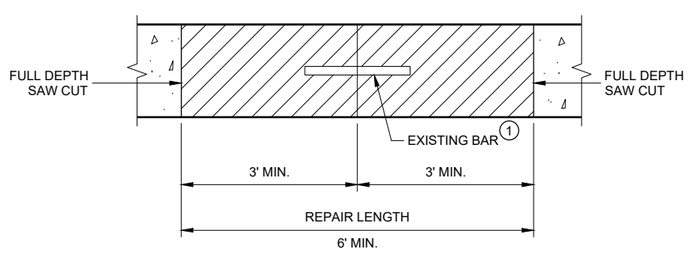

SECTION B - B

CONCRETE REMOVAL

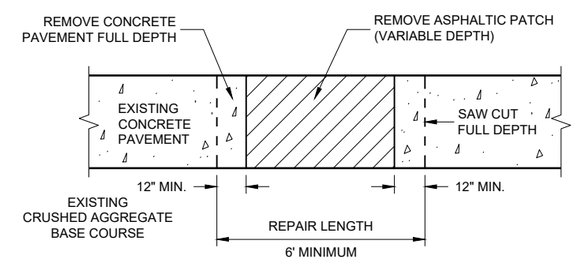

SECTION A - A

HMA PATCH REMOVAL

CONCRETE PAVEMENT REPAIR AND REPLACEMENT

STATE OF WISCONSIN
DEPARTMENT OF TRANSPORTAT

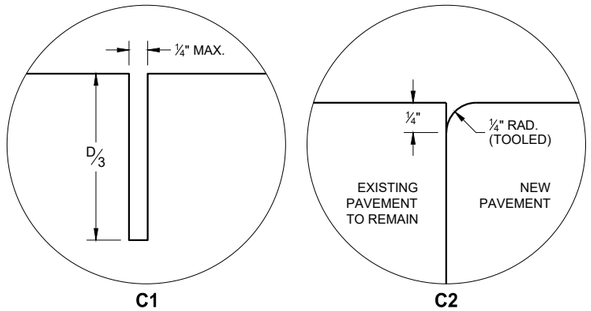

TRANSVERSE JOINTS

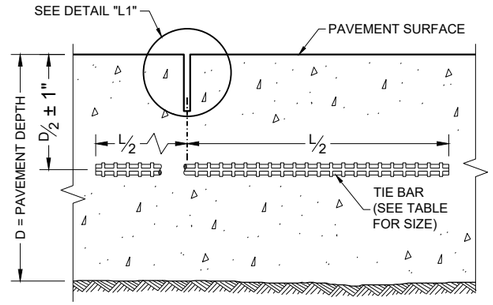

SECTION C - C
SAWED LONGITUDINAL JOINT

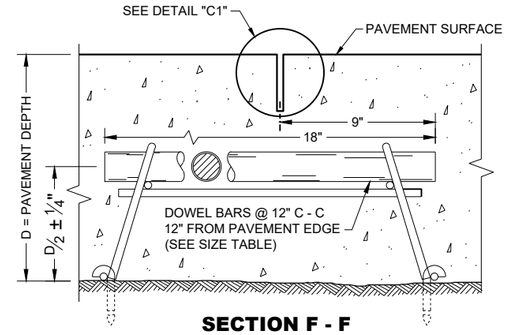

SECTION F - F
DOWELED CONTRACTION JOINT

GENERAL NOTES

INSTALL DOWEL BARS PARALLEL TO THE PAVEMENT CENTERLINE AND PAVEMENT SURFACE.

CONCRETE PAVEMENT REPAIRS OF EXISTING NON-DOWELED CONCRETE PAVEMENTS DO NOT NEED TO BE DOWELED.

ANCHOR DOWEL BARS AND TIE BARS INTO DRILLED HOLES WITH AN EPOXY.

FOR MULTI-LANE CONCRETE PAVEMENT REPLACEMENTS, PROVIDE A MINIMUM DISTANCE OF 15 INCHES FROM ALL TRANSVERSE JOINTS OR EDGES OF REPLACEMENT TO THE CENTER OF THE TIE BAR NEAREST THAT JOINT OR EDGE.

(1) APPLY A THIN UNIFORM COATING OF SURFACE TREATMENT TO THE FREE END OF DOWEL BARS TO PREVENT BONDING.

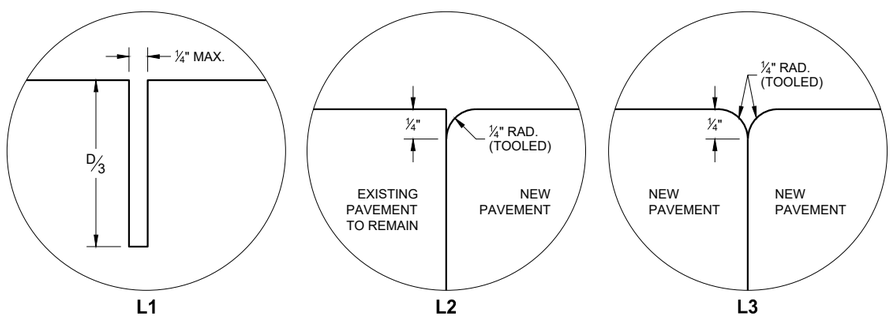

LONGITUDINAL JOINTS

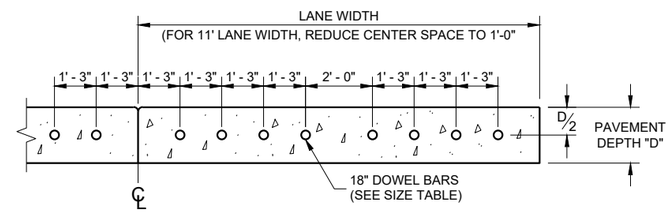

SECTION E - E
DRILLED DOWEL BAR CONSTRUCTION JOINT

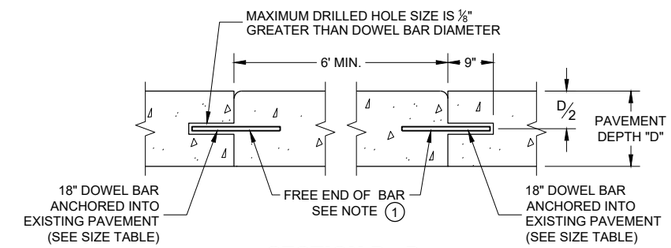

SECTION D - D

TIE BAR TABLE

PAVEMENT DEPTH (D)	TIE BAR SIZE	TIE BAR LENGTH (L)	MAX. TIE BAR SPACING
< 10½"	NO. 4	30"	36"
≥ 10½"	NO. 5	36"	36"
	NO. 4 *	30"	24" **

* SUBSTITUTE BENT BARS AT LONGITUDINAL JOINTS WHEN EQUIPMENT LIMITATIONS DURING CONSTRUCTION WARRANT (e.g. AUXILIARY LANES OR TURN LANES)

** CONFORM TO 15" MINIMUM SPACING FROM TRANSVERSE JOINTS; SPACING BETWEEN TIE BARS WILL BE 30" AT TRANSVERSE JOINTS.

PAVEMENT DEPTH, DOWEL BAR SIZE AND JOINT SPACING TABLE

PAVEMENT DEPTH (D)	DOWEL BAR DIAMETER	DRILLED DOWEL BAR DIAMETER	CONTRACTION JOINT SPACING
6", 6½"	NONE	NONE	12'
7", 7½"	1"	1"	14'
8" & ABOVE	1¼"	1¼"	15'

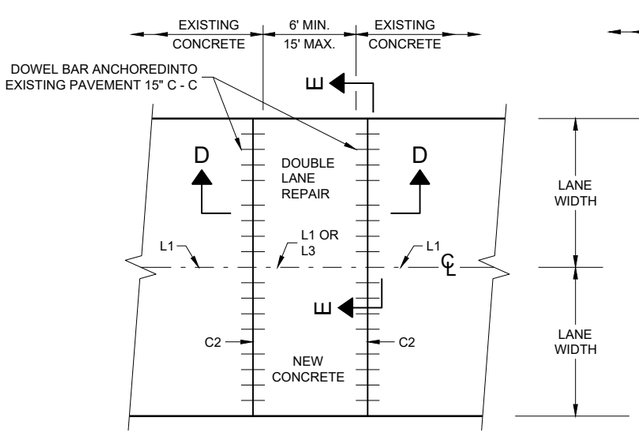

PLAN VIEW
MULTILANE CONCRETE PAVEMENT REPAIR

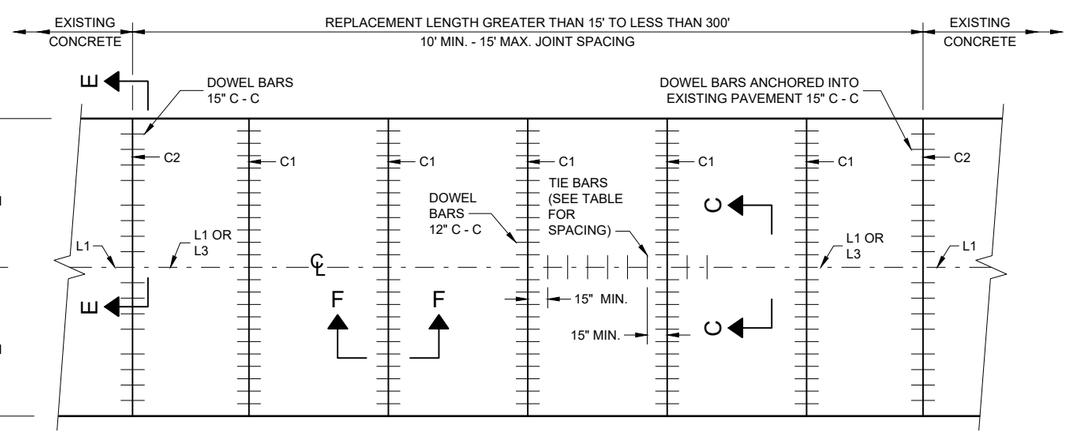

PLAN VIEW
MULTILANE CONCRETE PAVEMENT REPLACEMENT

CONCRETE PAVEMENT REPAIR AND REPLACEMENT

STATE OF WISCONSIN
DEPARTMENT OF TRANSPORTATION

6

SDD 13C09 - 17b

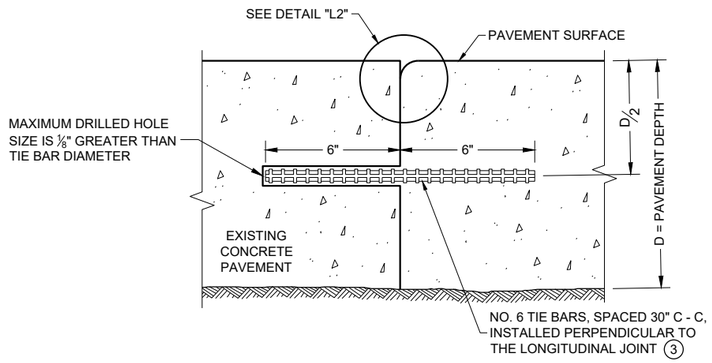

SECTION G - G

TIE BARS ANCHORED INTO EXISTING PAVEMENT

GENERAL NOTES

1. WITH THE APPROVAL OF THE ENGINEER, FOR SINGLE LANE PAVEMENT REPLACEMENTS LESS THAN 30 FEET IN LENGTH, THE CONTRACTOR MAY INSTALL DRILLED TIE BARS ON 6:1 SKEW HORIZONTALLY, DIRECTION OF SKEW ALTERNATING WITH EACH SUCCESSIVE BAR. DRIVE SKEWED TIE BARS TO A DEPTH OF 6 INCHES IN A HOLE OF SUCH A DIAMETER AS TO PROVIDE A TIGHT DRIVEN FIT.
2. USE AN ENGINEER APPROVED BOND BREAKER (E.G. RELEASE AGENT, CURING COMPOUND) FOR SINGLE LANE REPAIRS UP TO 15 FEET IN LENGTH.
3. ANCHOR TIE BARS INTO DRILLED HOLES WITH AN EPOXY.

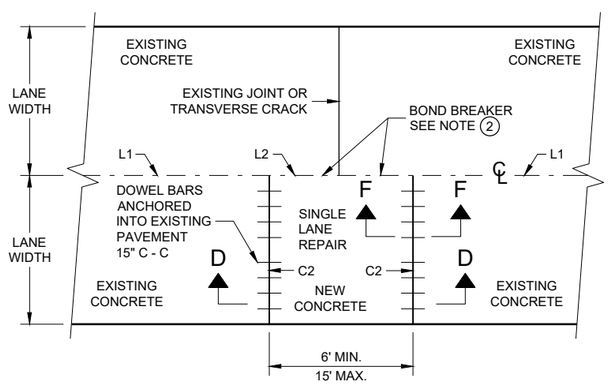

PLAN VIEW

SINGLE LANE CONCRETE PAVEMENT REPAIR

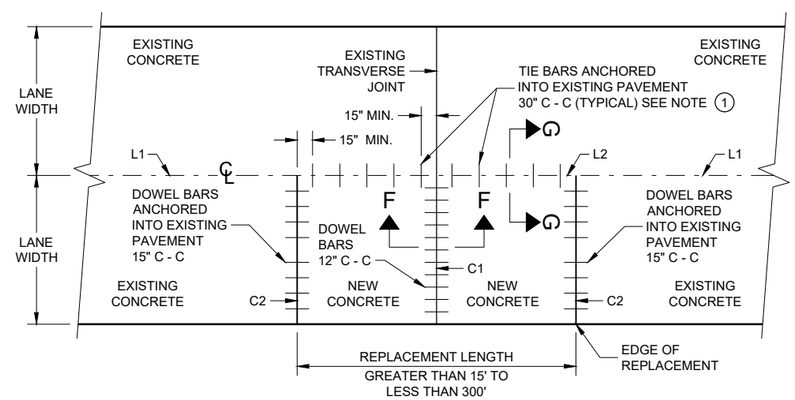

PLAN VIEW

SINGLE LANE CONCRETE PAVEMENT REPLACEMENT

CONCRETE REPAIR AND REPLACEMENT

STATE OF WISCONSIN
DEPARTMENT OF TRANSPORTATION

APPROVED
November 2022 /S/ Peter Kemp P.E.
DATE PAVEMENT SUPERVISOR
FHWA

6

SDD 13C09 - 17c

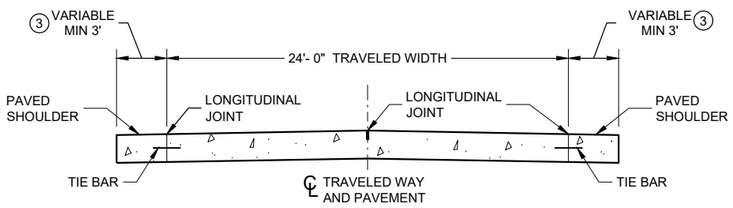

SECTION A - A

TWO-LANE TWO-WAY HIGHWAY 1

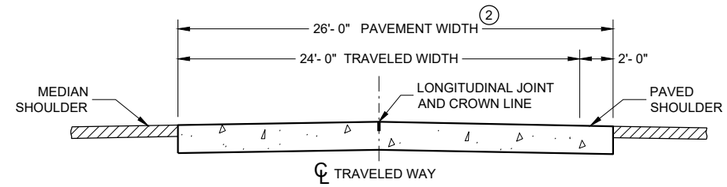

SECTION B - B

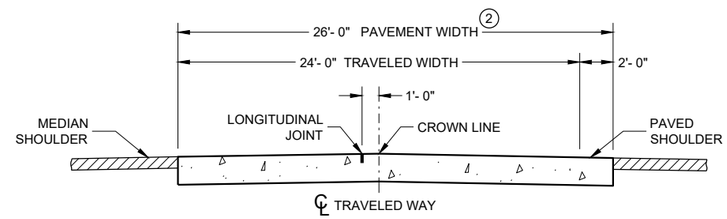

ALTERNATIVE SECTION B - B

DIVIDED HIGHWAY 1

GENERAL NOTES

CONTRACTION JOINTS

CONSTRUCT TRANSVERSE CONTRACTION JOINTS NORMAL TO THE CENTERLINE. SHOW THE LOCATION OF CONTRACTION JOINTS THROUGH INTERSECTIONS ON THE PLANS OR AS DIRECTED BY THE ENGINEER.

INSTALL DOWEL BARS PARALLEL TO THE PAVEMENT CENTERLINE AND PAVEMENT SURFACE.

FOR PAVEMENT SLABS OF VARYING WIDTHS, LOCATE THE OUTER MOST DOWEL BAR SO THAT THE CENTER OF THE BAR IS A MINIMUM OF 6 INCHES FROM AND A MAXIMUM OF 18 INCHES FROM THE FREE EDGE OF PAVEMENT.

CONSTRUCTION JOINTS

LOCATE CONSTRUCTION JOINTS A MINIMUM OF 6 FEET FROM THE NEAREST CONTRACTION JOINT AND ALIGN PARALLEL TO THE CONTRACTION JOINTS.

1. REFER TO TYPICAL CROSS SECTIONS FOR ADDITIONAL DETAILS.
2. MEASURE THE ENTIRE PAVED WIDTH INCLUDING THE PORTION(S) LABELED "PAVED SHOULDER" AS CONCRETE PAVEMENT.
3. SHOULDER WIDTHS LESS THAN 3 FEET SHALL BE PAVED INTEGRAL TO THE MAINLINE CONCRETE PAVEMENT, SEE SECTION B-B.

PAVEMENT DEPTH, DOWEL BAR SIZE AND JOINT SPACING TABLE

PAVEMENT DEPTH (D)	DOWEL BAR DIAMETER	CONTRACTION JOINT SPACING
6", 6 ½"	NONE	12'
7", 7 ½"	1"	14'
8" & ABOVE	1 ¼"	15'

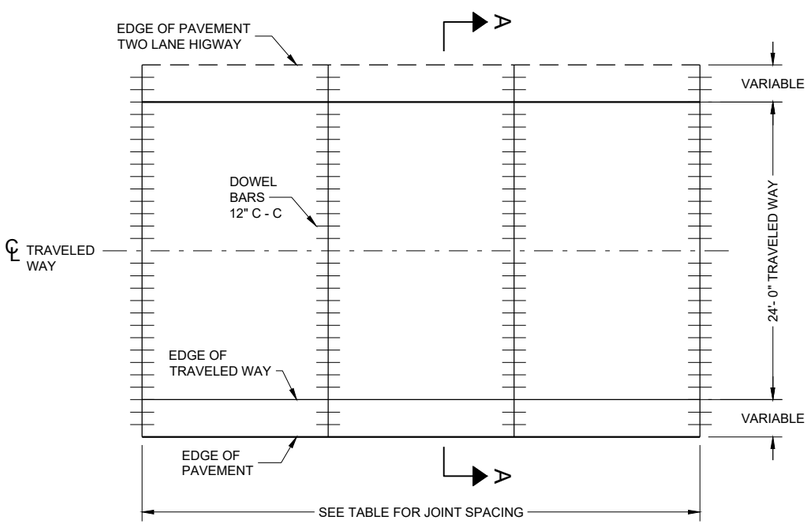

CONTRACTION JOINT LAYOUT FOR TWO-LANE TWO-WAY HIGHWAY

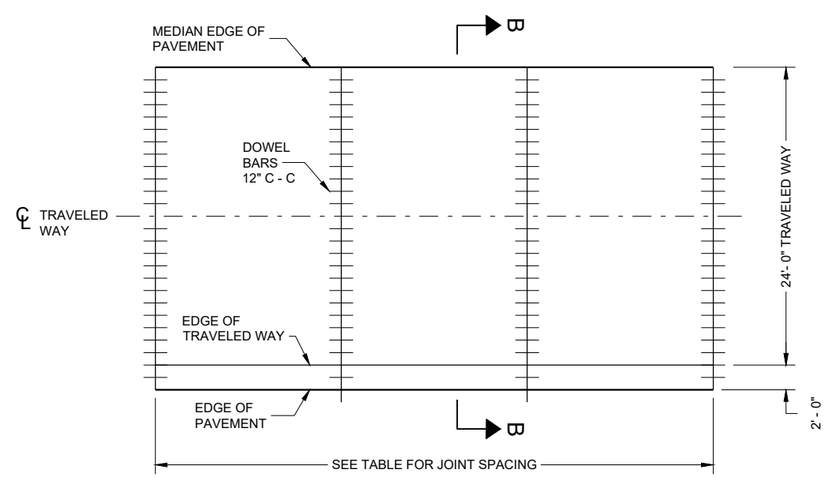

CONTRACTION JOINT LAYOUT FOR DIVIDED HIGHWAY

RURAL DOWELED CONCRETE PAVEMENT

STATE OF WISCONSIN
DEPARTMENT OF TRANSPORTAT

6

SDD 13C11 - 14a

GENERAL NOTES

1. OBTAIN THE ENGINEER'S APPROVAL FOR THE USE OF ALTERNATIVE DESIGNS OF THE DOWEL ASSEMBLY. USE MECHANICAL DOWEL BAR INSERTERS OR DOWEL ASSEMBLIES WHEN CONSTRUCTION CONTRACTION JOINTS.
2. SECURE BASKETS WITH ANCHORS TO HOLD DOWEL BARS IN THE CORRECT POSITION AND ALIGNMENT. TYPE, LOCATION, NUMBER AND LENGTH OF ANCHORS ARE DEPENDENT UPON FIELD CONDITIONS.
3. FORM OR SAW CONSTRUCTION JOINTS. PROVIDE A ¼" RADIUS AT FORMED JOINTS.
4. PROVIDE A SMOOTH VERTICAL FACE FOR THE ENTIRE DEPTH OF THE PAVEMENT WHEN FORMING CONSTRUCTION JOINTS.
5. INSTALL DOWEL BARS AT CONSTRUCTION JOINTS BY FORMING OR DRILLING. INSTALL FORMED DOWEL BARS 12 INCHES C - C AND 12 INCHES FROM PAVEMENT EDGE. REMOVE EXCESS CONCRETE FROM THE FREE END OF THE DOWEL BAR IF DOWEL BARS ARE FORMED THROUGH A HEADER BOARD. INSTALL DRILLED DOWEL BARS ACCORDING TO THE "DRILLED DOWEL BAR CONSTRUCTION JOINT" DETAIL.
6. APPLY A THIN UNIFORM COATING OF SURFACE TREATMENT TO THE FREE END OF DOWEL BARS TO PREVENT BONDING.
7. ANCHOR DOWEL BARS AND TIE BARS INTO DRILLED HOLES WITH AN EPOXY. MAXIMUM DRILLED HOLE SIZE IS ⅛" GREATER THAN DOWEL BAR DIAMETER, 9 INCHES IN LENGTH.

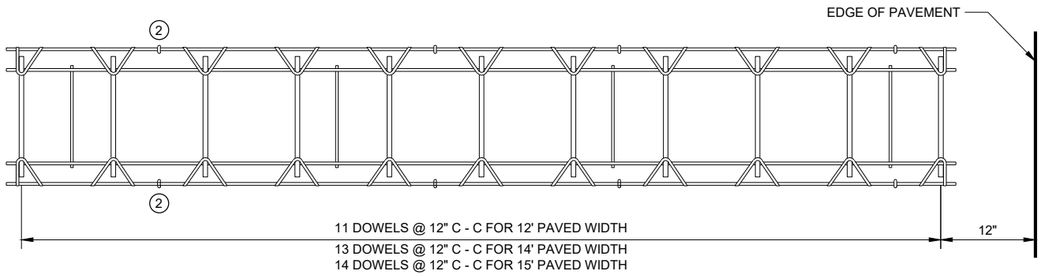

PLAN VIEW

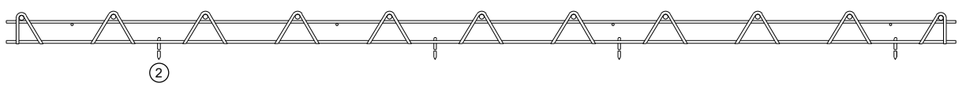

SIDE VIEW

(NORMAL TO CENTERLINE)

CONTRACTION JOINT DOWEL ASSEMBLY (1)

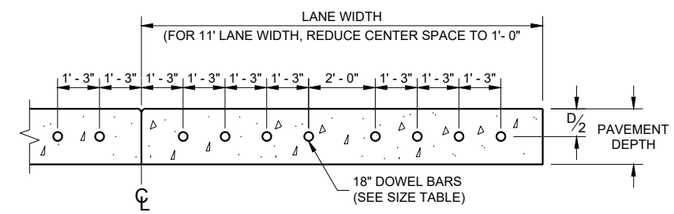

DRILLED DOWEL BAR CONSTRUCTION JOINT (7)

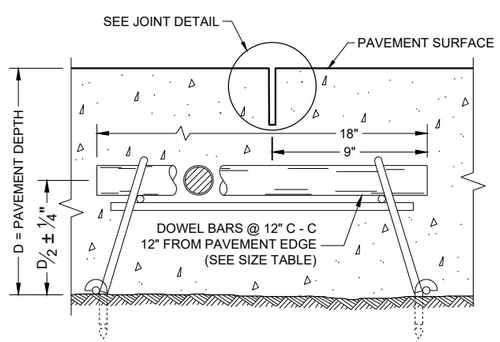

DOWELED CONTRACTION JOINT

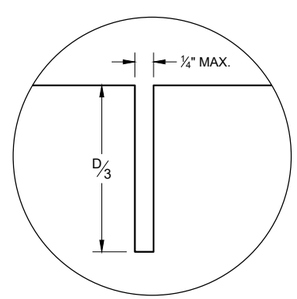

JOINT DETAIL

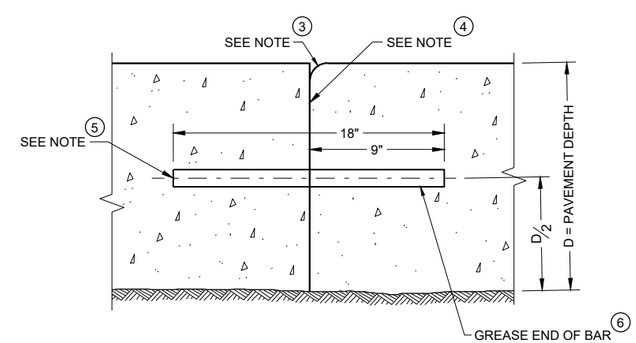

TRANSVERSE CONSTRUCTION JOINT

RURAL DOWELED CONCRETE PAVEMENT

STATE OF WISCONSIN
DEPARTMENT OF TRANSPORTATION

APPROVED
November 2022 — DATE
/S/ Peter Kemp P.E. — PAVEMENT SUPERVISOR
FHWA

6
SDD 13C11 - 14b

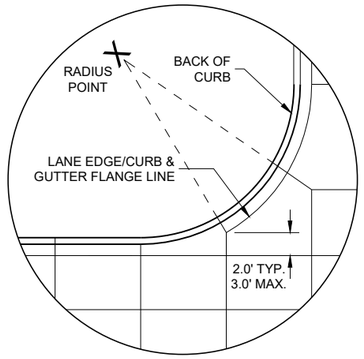

DETAIL "A"

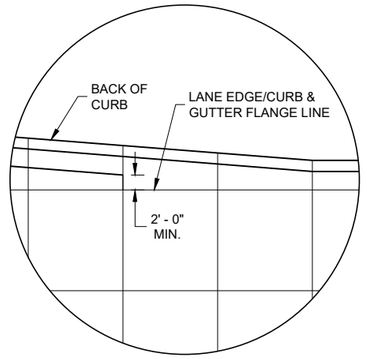

DETAIL "B"

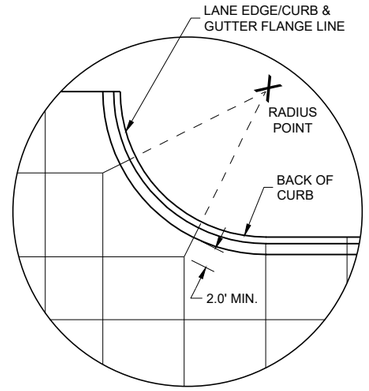

DETAIL "C"

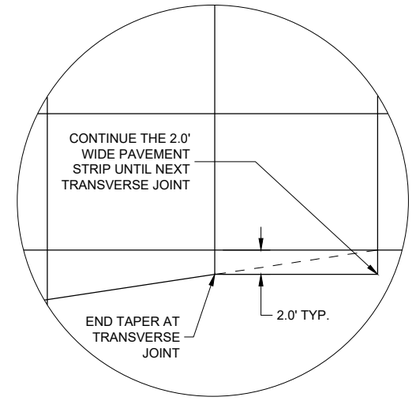

DETAIL "D"

GENERAL NOTES

THE PRIMARY ROADWAY CONTROLS THE TRANSVERSE JOINT PATTERN.

ALIGN NEW JOINTS WITH EXISTING JOINTS OR CRACKS.

CONSTRUCT TRANSVERSE JOINTS PERPENDICULAR TO THE ROADWAY.

ADJUST TRANSVERSE JOINTS TO ALIGN WITH UTILITY FIXTURES (E.G MANHOLES AND INLETS) IN THE PAVEMENT STRUCTURE WHEN POSSIBLE. WATER VALVES DO NOT REQUIRE JOINT ADJUSTMENT.

AVOID SLABS LESS THAN 2 FEET WIDE OR GREATER THAN 15 FEET WIDE.

SEE TABLE FOR TRANSVERSE JOINT SPACING. JOINT SPACING SPECIFIED IS MAXIMUM AND ACTUAL SPACING CAN BE ADJUSTED TO ACCOMMODATE INTERSECTIONS.

AVOID ANGLES LESS THAN 60° BY DOGLEGGING JOINTS THROUGH CURVE RADIUS POINTS. USE 90° ANGLES WHEN POSSIBLE.

CORRELATE LONGITUDINAL JOINTS WITH LANE LINES WHEN POSSIBLE.

1. PROVIDE TRANSVERSE JOINTS AT ALL PAVEMENT WIDTH CHANGES.
2. CONSTRUCT DOWELED EXPANSION JOINT ON THE SIDE ROAD OF AN INTERSECTION IF THE SIDE ROAD IS CONCRETE PAVEMENT AND GREATER THAN 300 FEET IN LENGTH. ALIGN EXPANSION JOINT WITH EDGE OF RADIUS.
3. THE ENGINEER MAY APPROVE SLIGHT VARIATIONS FROM THESE JOINTING DETAILS.

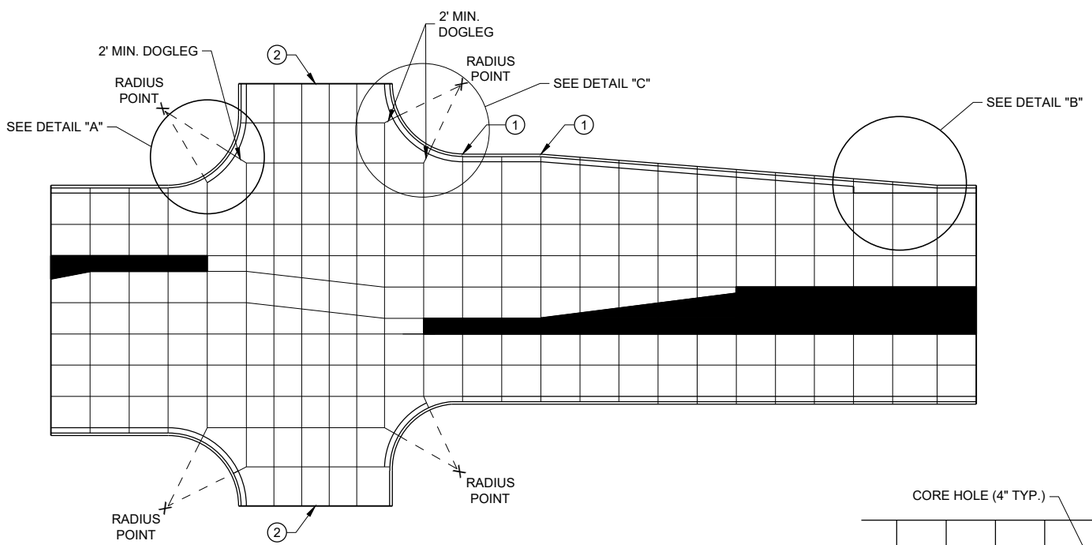

STANDARD INTERSECTION

PAVEMENT DEPTH AND JOINT SPACING TABLE

PAVEMENT DEPTH (D)	CONTRACTION JOINT SPACING
6", 6 ½"	12'
7", 7 ½"	14'
8" & ABOVE	15'

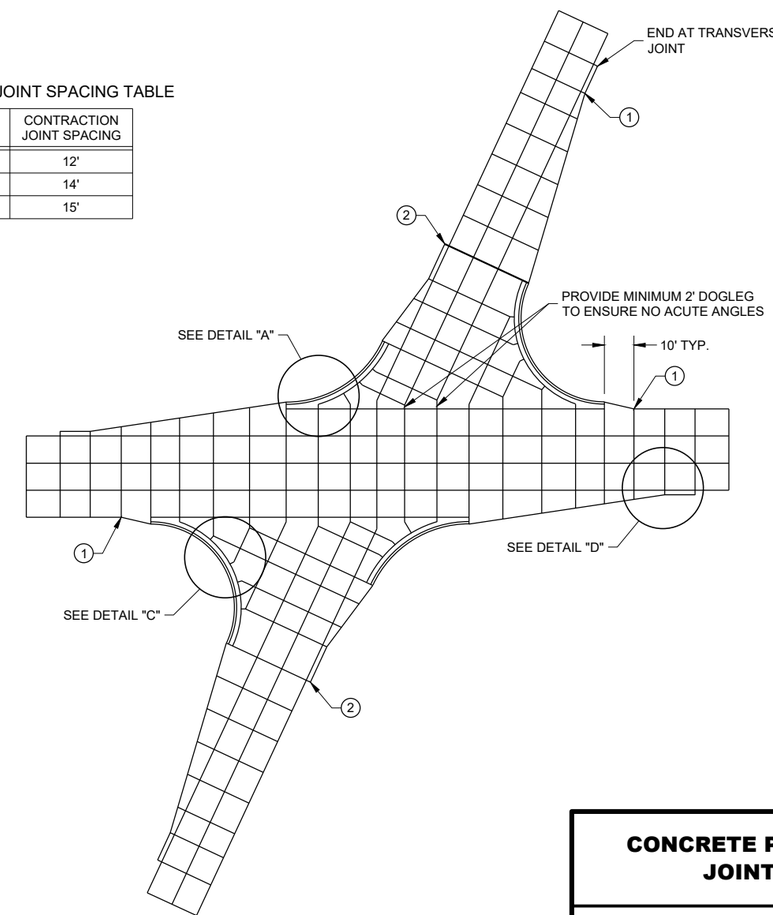

SKEWED INTERSECTION

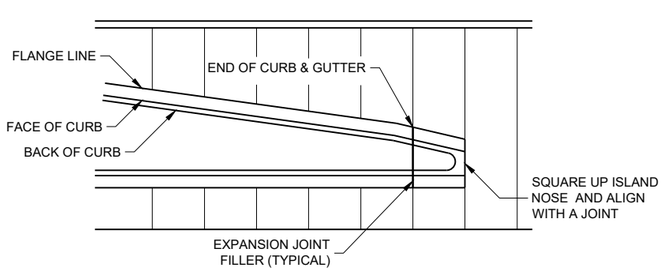

APPROACH TO MEDIAN

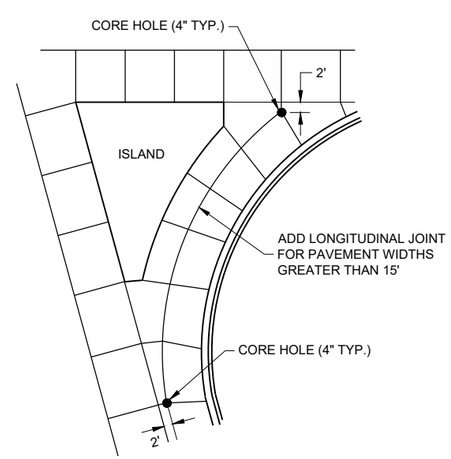

LARGE RIGHT TURN

CONCRETE PAVEMENT JOINTING

STATE OF WISCONSIN
DEPARTMENT OF TRANSPORTA

6

SDD 13C18 - 08a

LEGEND

POTENTIAL DOWELED EXPANSION JOINT

DOWELED JOINT

TIED JOINT

GENERAL NOTES

USE AN EXPANSION JOINT FILLER MEETING THE REQUIREMENTS OF STANDARD SPECIFICATION 415.

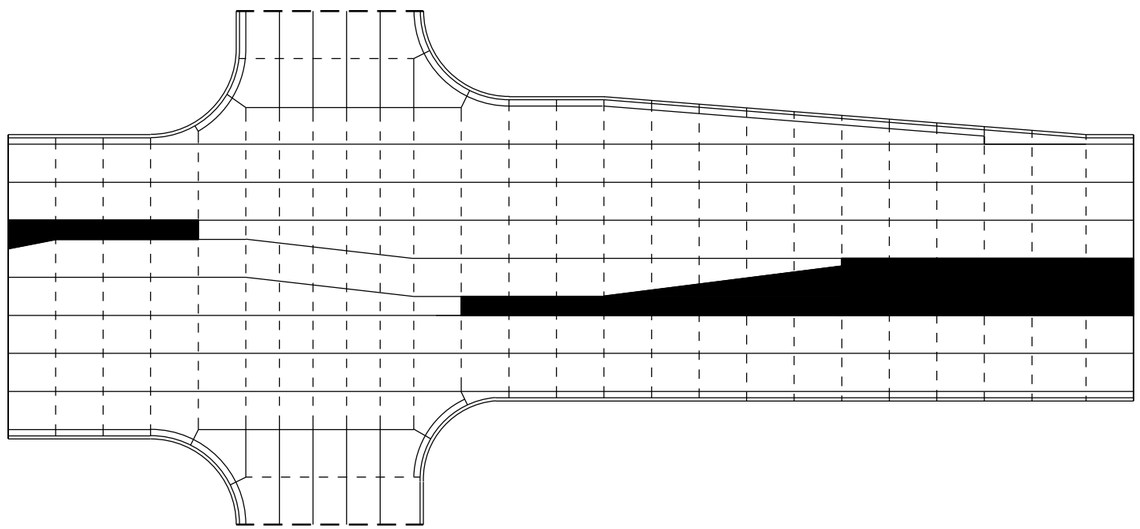

STANDARD INTERSECTION

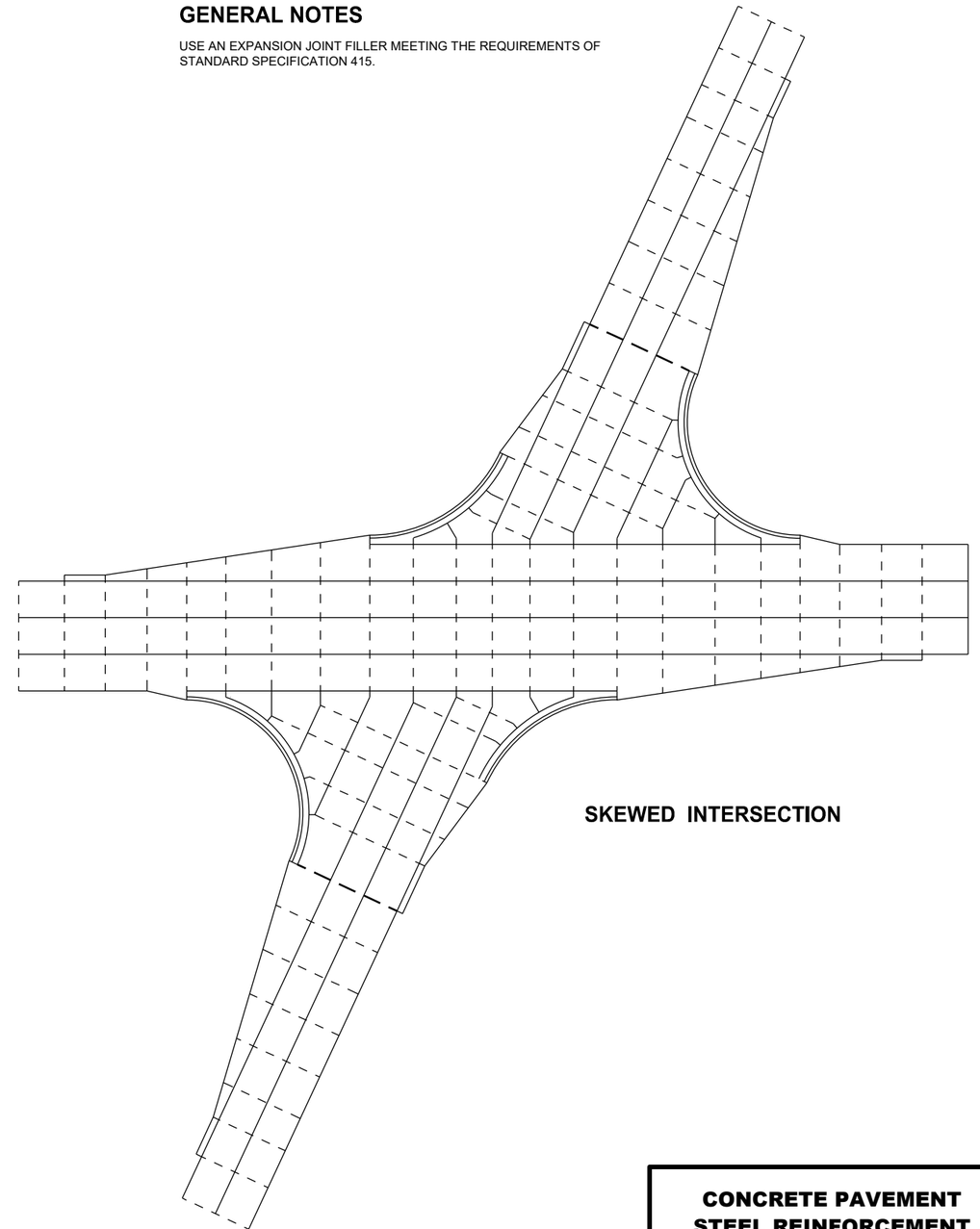

SKEWED INTERSECTION

CONCRETE PAVEMENT STEEL REINFORCEMENT

STATE OF WISCONSIN
DEPARTMENT OF TRANSPORTA

6

SDD 13C18 - 08b

6

SDD 13C18 - 08b

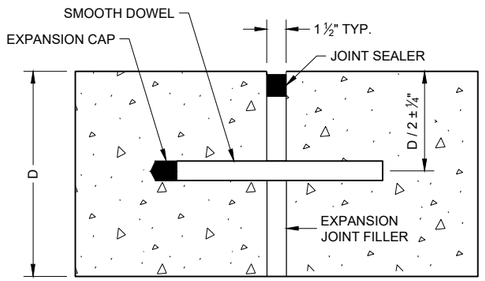

DOWELED TRANSVERSE (1)

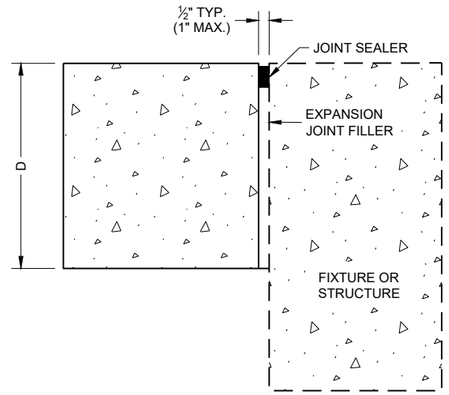

UNTIED - LONGITUDINAL

EXPANSION JOINTS

TIE BAR TABLE

PAVEMENT DEPTH (D)	TIE BAR SIZE	TIE BAR LENGTH (L)	MAX. TIE BAR SPACING
< 10 ½"	NO. 4	30"	36"
≥ 10 ½"	NO. 5	36"	36"
	NO. 4 *	30"	24" **

* SUBSTITUTE BENT BARS AT LONGITUDINAL JOINTS WHEN EQUIPMENT LIMITATIONS DURING CONSTRUCTION WARRANT (e.g. AUXILIARY LANES OR TURN LANES)

** CONFORM TO 15" MINIMUM SPACING FROM TRANSVERSE JOINTS; SPACING BETWEEN TIE BARS WILL BE 30" AT TRANSVERSE JOINTS.

GENERAL NOTES

1. USE DOWELED EXPANSION JOINTS ON SIDE ROADS AT INTERSECTIONS (TO ISOLATETHE SIDE ROAD FROM THE THROUGH STREET) IF THE SIDE ROAD IS CONCRETE PAVEMENT AND GREATER THAN 300 FEET IN LENGTH.
2. SPACE CONTRACTION JOINTS IN ACCORDANCE WITH SDD 13C4, 13C11 OR 13C13.
3. LOCATE CONSTRUCTION JOINTS A MINIMUM OF 6 FEET FROM THE NEAREST CONTRACTION JOINT AND ALIGN PARALLEL TO CONTRACTION JOINTS.
4. CONSTRUCTION JOINTS CAN BE FORMED OR SAWED.
5. IF JOINT IS FORMED, PROVIDE A ¼" RADIUS.
6. ANCHOR TIE BARS INTO DRILLED HOLES WITH AN EPOXY.

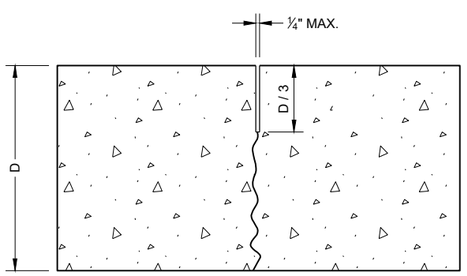

UNDOWELED TRANSVERSE

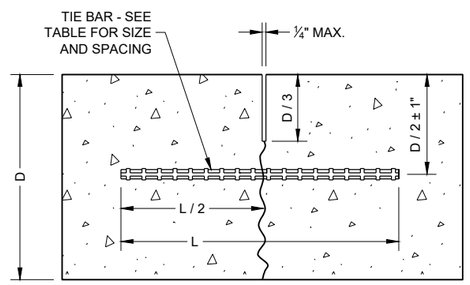

TIED LONGITUDINAL

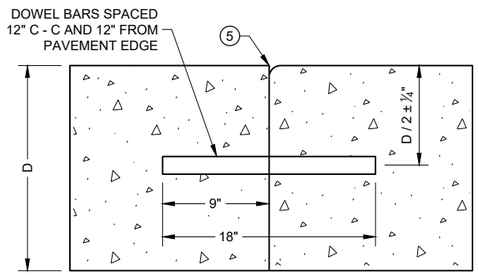

DOWELED TRANSVERSE (3)

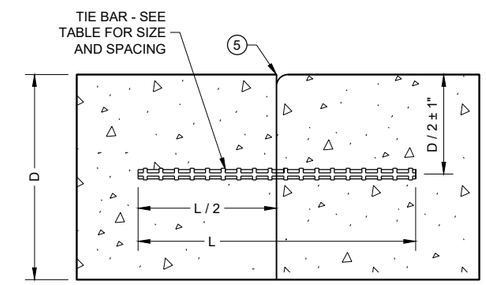

TIED LONGITUDINAL

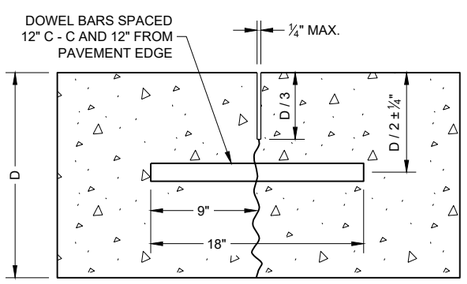

DOWELED TRANSVERSE

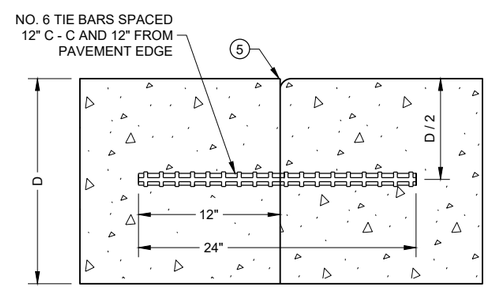

TIED TRANSVERSE (3)
(FOR USE ON NON-DOWELED PAVEMENTS ONLY)

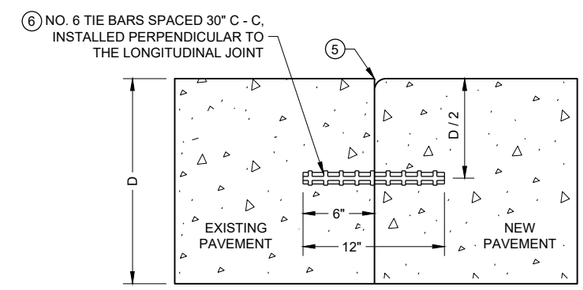

TIED LONGITUDINAL TO EXISTING

CONTRACTION JOINTS (2)

CONSTRUCTION JOINTS (4)

CONCRETE PAVEMENT JOINT TYPES

STATE OF WISCONSIN
DEPARTMENT OF TRANSPORTAT

6
SDD 13C18 - 08c

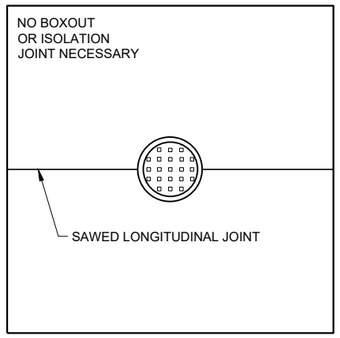

MANHOLE WITH LONGITUDINAL JOINT

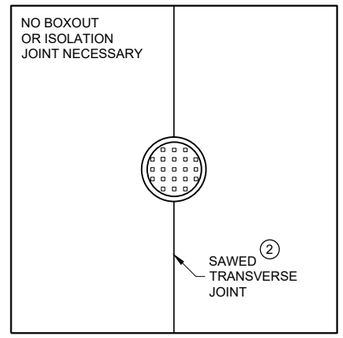

MANHOLE WITH TRANSVERSE JOINT

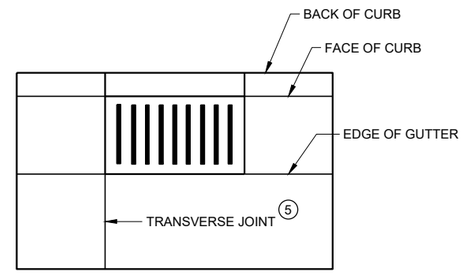

INLET WITH TRANSVERSE JOINT

GENERAL NOTES

1. USE BOXOUTS WHEN UTILITY STRUCTURE IS IN THE PATH OF CONSTRUCTION JOINTS. PROVIDE A 1 FOOT MINIMUM CLEARANCE BETWEEN THE EXTERIOR LIMIT OF THE STRUCTURE TO THE DIAMOND BOXOUT.
2. ADJUST TRANSVERSE JOINT TO INTERSECT MANHOLE IF POSSIBLE.
3. IF DISTANCE BETWEEN THE LONGITUDINAL JOINT AND THE EDGE OF MANHOLE IS 2 FEET OR LESS, DIVERT THE LONGITUDINAL JOINT AT A 2:1 TAPER RATE TO THE CENTER OF THE MANHOLE. IF THE DISTANCE IS GREATER THAN 2 FEET, DO NOT DIVERT THE JOINT AND SAW AS NORMAL. PLACE REINFORCEMENT REBAR AROUND THE MANHOLE.
4. IF THE DISTANCE FROM THE EDGE OF THE MANHOLE TO THE NEAREST TRANSVERSE JOINT IS LESS 4 FEET OR LESS, REDIRECT JOINT TO INTERSECT THE CENTER OF THE MANHOLE. IF DISTANCE IS GREATER THAN 4 FEET, DO NOT DIVERT THE JOINT AND SAW AS NORMAL. PLACE REINFORCEMENT REBAR AROUND THE MANHOLE.
5. ALIGN TRANSVERSE JOINT WITH ONE EDGE OF INLET WHEN PRACTICAL.

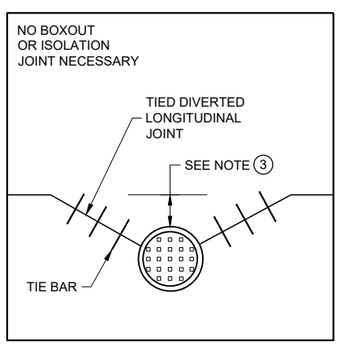

MANHOLE WITH DIVERTED LONGITUDINAL CONTRACTION JOINT

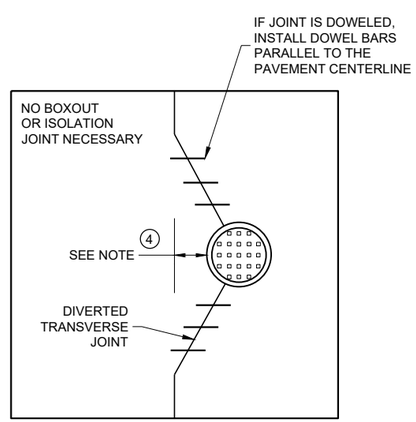

MANHOLE WITH DIVERTED TRANSVERSE CONTRACTION JOINT

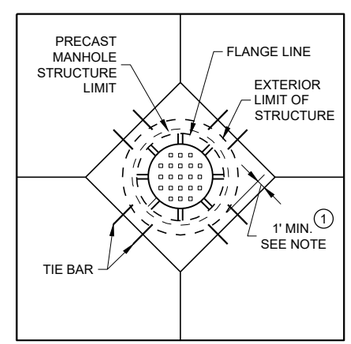

DIAGONAL MANHOLE BOXOUT FOR CONSTRUCTION JOINTS

CONCRETE PAVEMENT JOINTING AT UTILITY FIXTURES

STATE OF WISCONSIN
DEPARTMENT OF TRANSPORTATION

APPROVED
May 2023 — DATE
/S/ Peter Kemp P.E. — PAVEMENT SUPERVISO
FHWA

6

SDD 13C18 - 08d

LEGEND

- - - - - - DOWELED JOINT
——— TIED JOINT
EXPANSION JOINT
— — POTENTIAL DOWELED EXPANSION JOINT (1)
DIRECTION OF TRAFFIC

GENERAL NOTES

(1) CONSTRUCT DOWELED EXPANSION JOINT ON THE SIDE ROAD OF AN INTERSECTION IF THE SIDE ROAD IS CONCRETE PAVEMENT AND GREATER THAN 300 FEET IN LENGTH. ALIGN EXPANSION JOINT WITH THE EDGE OF RADIUS.

(2) PROVIDE TIED JOINT AT THE FLANGE OF SCAB ON CURB IF SCAB ON CURB AND GUTTER IS USE.

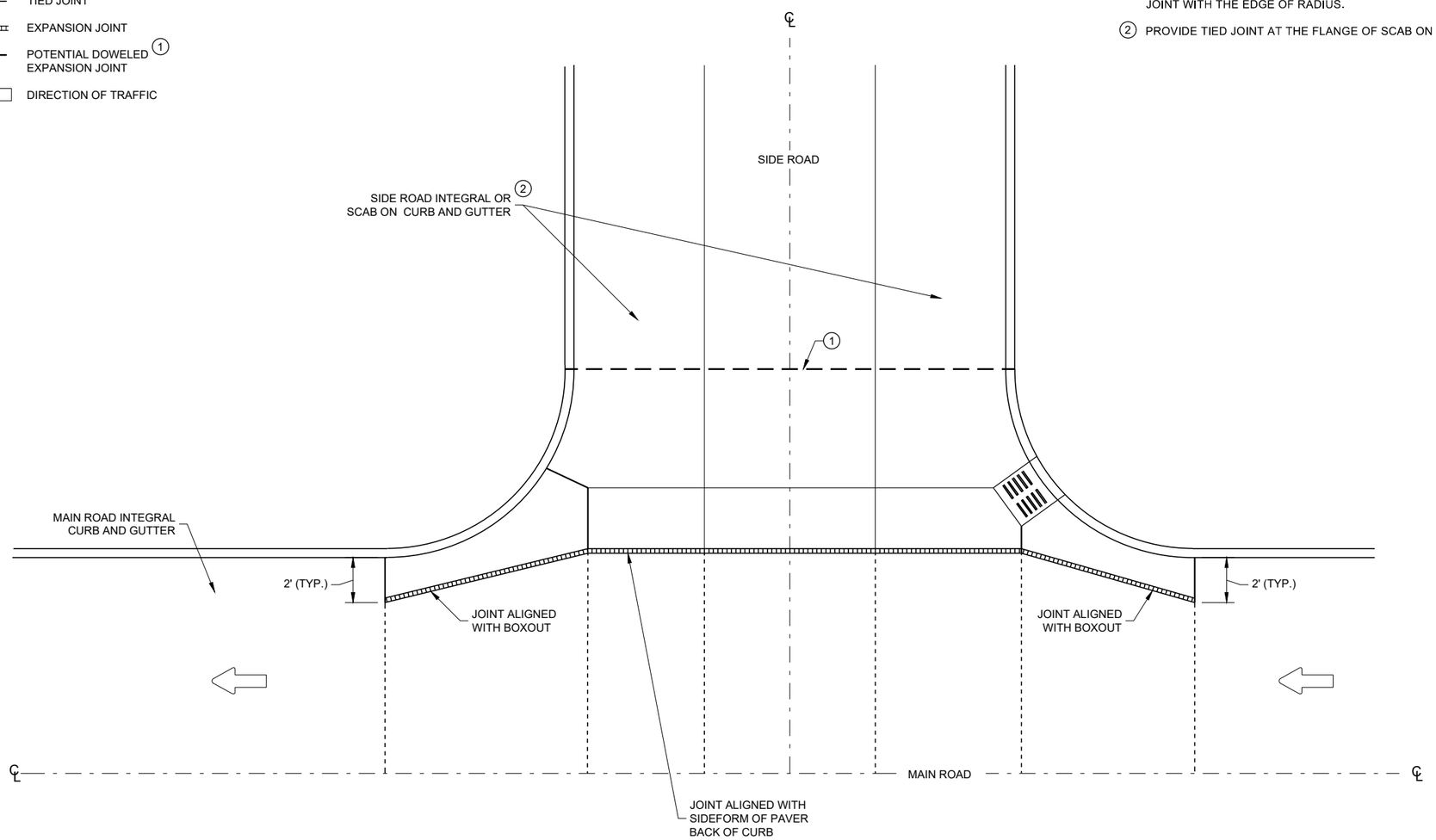

INTERSECTION BOXOUT FOR INTEGRAL CURB AND GUTTER

CONCRETE PAVEMENT INTERSECTION BOXOUT FOR INTEGRAL CURB AND GUTTER

STATE OF WISCONSIN
DEPARTMENT OF TRANSPORTATION

APPROVED
May 2023 — DATE
/S/ Peter Kemp P.E. — PAVEMENT SUPERVISOR
FHWA

6

SDD 13C18 - 08f

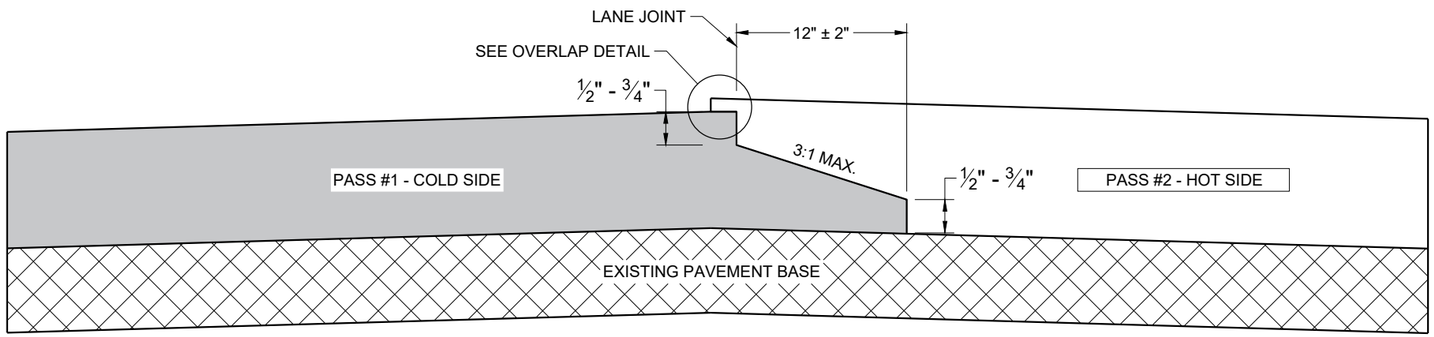

TYPICAL PAVEMENT CROSS SECTION
NOTCHED WEDGE JOINT

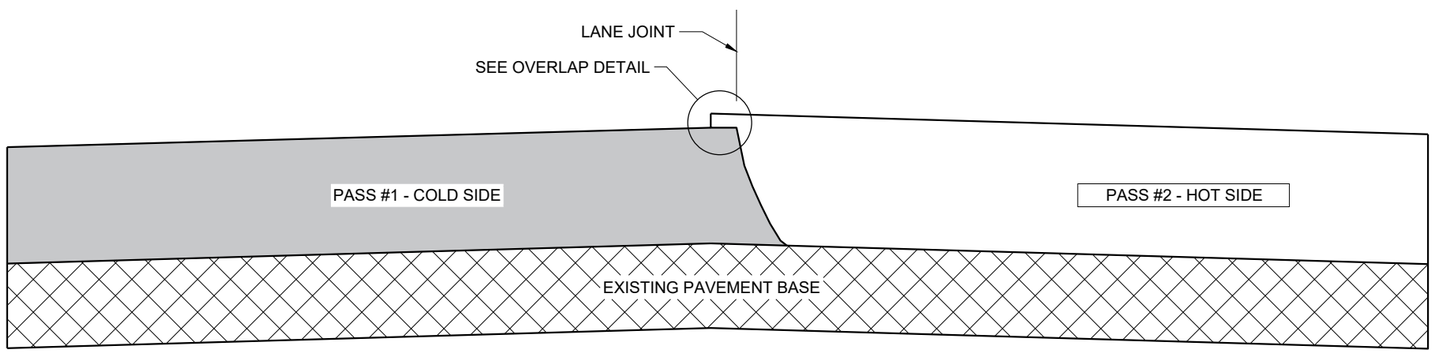

TYPICAL PAVEMENT CROSS SECTION
VERTICAL JOINT

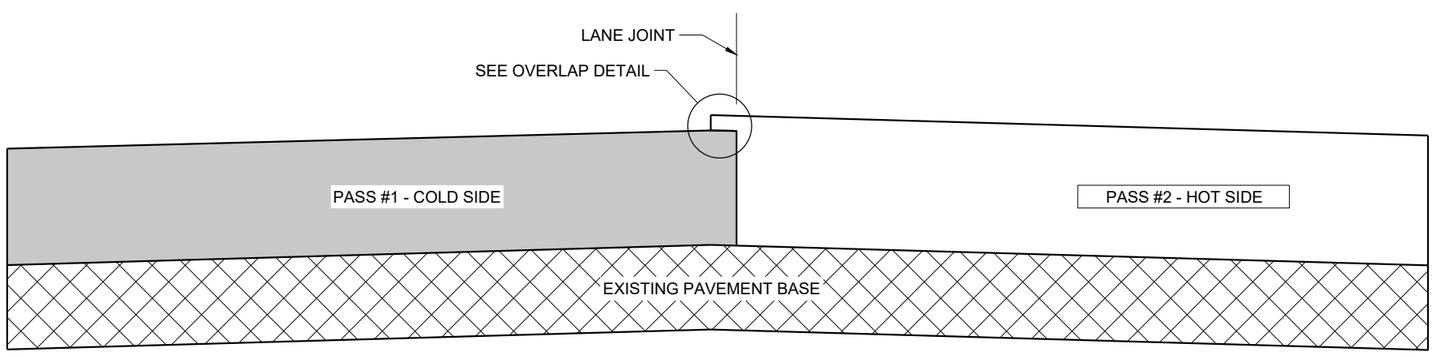

TYPICAL PAVEMENT CROSS SECTION
VERTICAL JOINT (MILLED)

GENERAL NOTES

IN ADDITION TO THE DETAILS PROVIDED IN THIS DRAWING, CONFORM TO STANDARD SPECIFICATION 450.3.2.8 FOR WHEN A NOTCHED WEDGE JOINT IS REQUIRED AND FOR GENERAL JOINT CONSTRUCTION REQUIREMENTS.

FOR ALL LONGITUDINAL JOINTS, ENSURE THE PAVER SCREED OVERLAPS THE PREVIOUSLY PLACED PAVEMENT BY 1" ± 0.5" AND THE HOT SIDE OF THE JOINT REMAINS HIGHER THAN THE COLD SIDE BY APPROXIMATELY 0.1" AFTER FINAL COMPACTION. (IT WILL BE FLUSH WHEN PAVING IN ECHELON.)

ONLY REMOVE THE LONGITUDINAL NOTCHED WEDGE JOINT FOR SMA PAVEMENT OR AS DIRECTED BY THE ENGINEER TO ADDRESS SPECIFIC LENGTHS OF JOINT DAMAGED BY TRAFFIC.

WHEN MILLING BACK OR REMOVING ANY LONGITUDINAL JOINT, LIMIT THE MATERIAL REMOVED TO 2" FROM THE TOP NOTCH OR FROM THE VERTICAL JOINT EDGE ON THE COLD SIDE OF THE JOINT.

USE LONGITUDINAL MILLED JOINT AS PLANS SHOW OR THE AS THE ENGINEER DIRECTS.

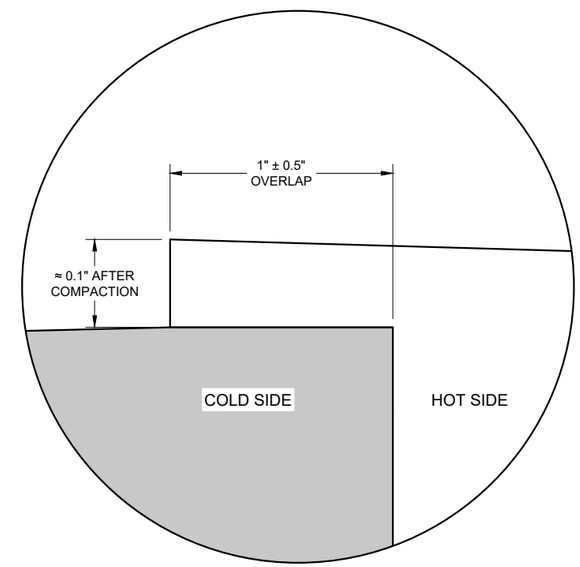

OVERLAP DETAIL (TYPICAL)

6

6

SDD 13C19 - 03

SDD 13C19 - 03

HMA LONGITUDINAL JOINTS

STATE OF WISCONSIN
DEPARTMENT OF TRANSPORTATION

APPROVED
November 2020 /S/ Steven Hefel
DATE HMA PAVEMENT ENGIN

FHWA

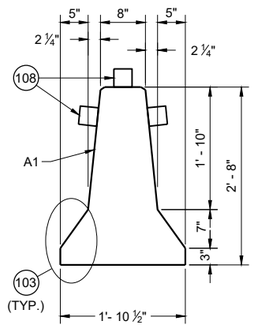

CROSS SECTION

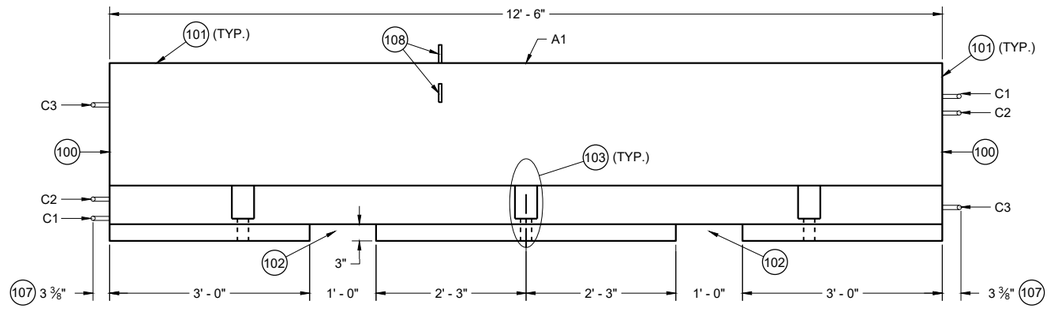

PROFILE VIEW

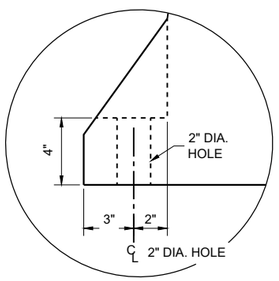

ANCHOR BLOCK DETAIL

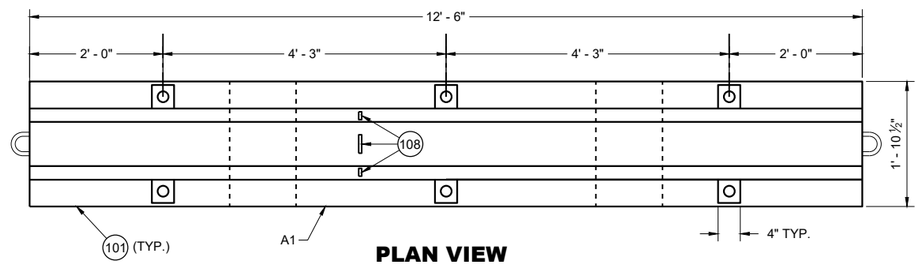

PLAN VIEW

TEMPORARY BARRIER

GENERAL NOTES

PLACE BARRIER ON PAVED SURFACE. BEFORE PLACEMENT OF TEMPORARY BARRIER, REMOVE ALL LOOSE MATERIAL FROM PAVED SURFACE.

LOOP BARS C1, C2 AND C3 ARE NOT FOR PLACEMENT OR MOVEMENT OF BARRIER.

100 PERMANENTLY FORM INTO ONE END OF BARRIER THE FOLLOWING INFORMATION:
- A. TYPE OF BARRIER: WI-CBTP
- B. MANUFACTURER
- C. DATE OF MANUFACTURE (MONTH AND YEAR)

101 1" OPTIONAL CHAMFER

102 SEE LIFTING SLOT DETAIL

103 SEE ANCHOR BLOCK DETAIL

104 1 ¾" MIN. CLEAR COVER

105 2" MIN. CLEAR COVER

106 1" MIN. CLEAR COVER

107 ± ⅛" MEASURED FROM FACE OF CONCRETE BARRIER TO OUTSIDE OF LOOP BAR (TYP.)

108 USE DELINEATORS CONFORMING TO SECTION 633 OF THE STANDARD SPECIFICATIONS. CONTRACTOR MY USE ALTERNATE SHAPES AND HOUSING. INSTALL DELINEATORS ACCORDING TO MANUFACTURERS INSTRUCTION. INSTALL YELLOW REFLECTORS WHEN BARRIER IS LOCATED LEFT OF TRAFFIC AND WHITE WHEN BARRIER IS LOCATED RIGHT OF TRAFFIC. SPACE DELINEATORS A MAXIMUM OF 25 FEET APART, PROVIDE TOP MOUNTED DELINEATORS IN ADDITION TO SIDE MOUNTED DELINEATORS ON BARRIER INSTALLATIONS LOCATED ON A CURVED ALIGNMENT LONGER THAT 200 FEET AND ON BARRIERS USED TO SEPARATE OPPOSING TRAFFIC.

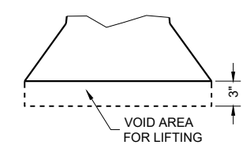

LIFTING SLOT DETAIL (TYP.)

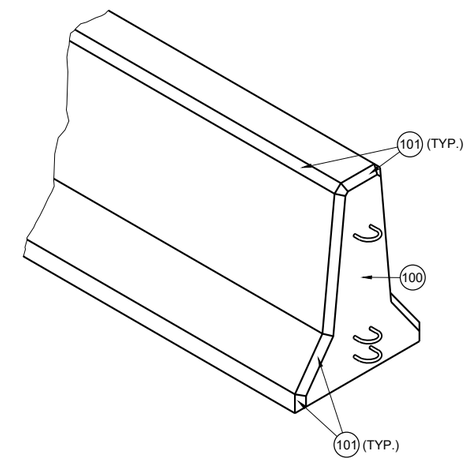

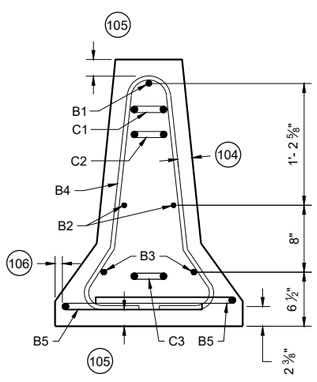

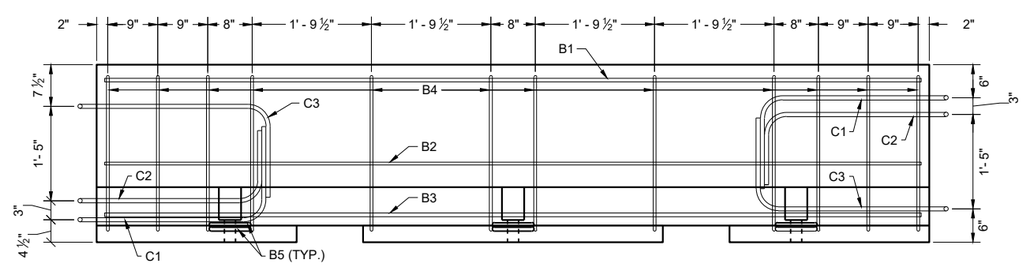

PROFILE VIEW

TEMPORARY BARRIER REINFORCEMENT

CONCRETE BARRIER TEMPORARY PRECAST, 12' - 6"

STATE OF WISCONSIN
DEPARTMENT OF TRANSPORTATION

6

6

SDD 14B07-16a

SDD 14B07-16a

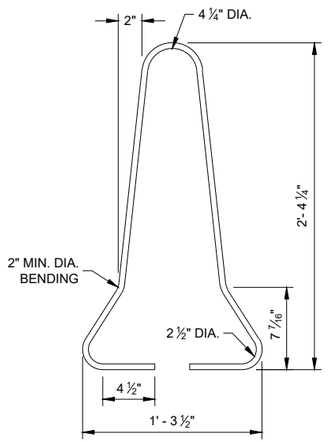

B4 BAR DETAIL

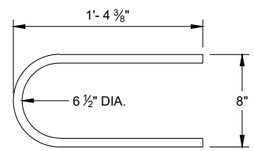

B5 BAR DETAIL

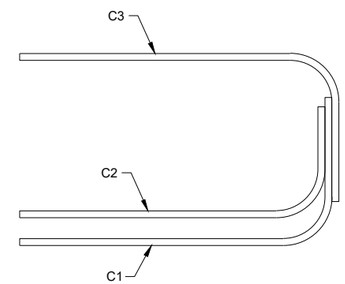

PROFILE VIEW

LOOP BAR ASSEMBLY

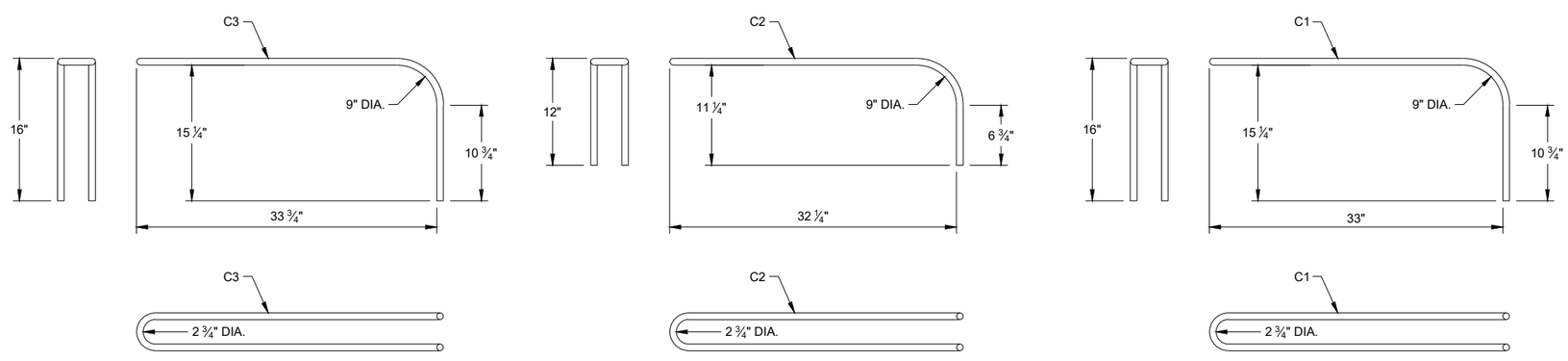

C BAR DETAILS

CONCRETE BARRIER TEMPORARY PRECAST, 12' - 6"

STATE OF WISCONSIN
DEPARTMENT OF TRANSPORTAT

6

SDD 14B07-16b

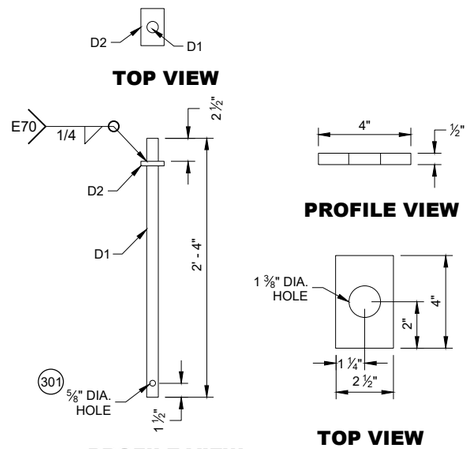

CONNECTOR PIN ASSEMBLY

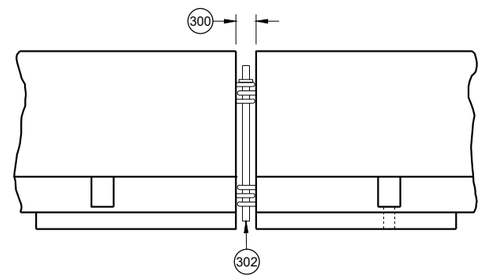

CONNECTING TEMPORARY BARRIER SECTIONS

GENERAL NOTES

300 SET WITH 3 ⅝" WOOD BLOCK.

301 HOLE IS OPTIONAL.

302 CONNECTOR PIN ASSEMBLY.

303 CONCRETE PAVEMENT, APPROACH SLAB, OR DECK.

304 CONCRETE DECK.

305 DO NOT USE ON CONCRETE BRIDGE DECK WITH ASPHALT OVERLAY OR CONCRETE PAVEMENT WITH ASPHALT OVERLAY.

306 MINIMUM OF 2" OF ASPHALT.

307 ASPHALT ANCHOR PIN ASSEMBLY

308 IF DRILLING A PILOT HOLE, THE MAX, DIA. OF THE HOLE IS 3/4"

309 WHEN THERE IS ASPHALT OVERLAYING CONCRETE PAVEMENT, A 1 5/8" DIA. PILOT HOLE CAN BE DRILLED INTO THE OVERLAY AND CONCRETE. IF NEEDED DRILL A 3/4" PILOT HOLE IN BASE COURSE.

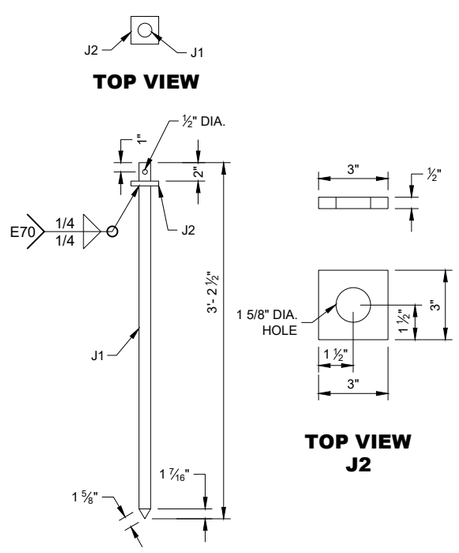

PROFILE VIEW

ASPHALT ANCHOR PIN ASSEMBLY

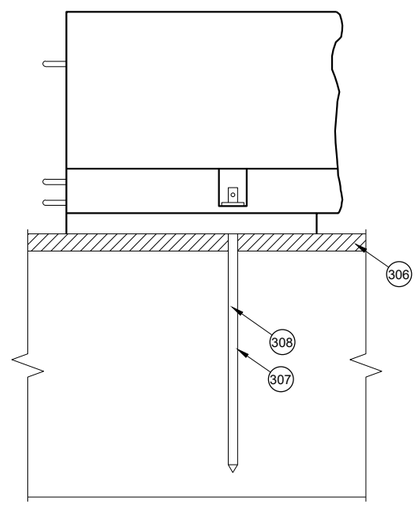

SIDE VIEW

ASPHALT ANCHOR INSTALLATION THROUGH ASPHALT PAVEMENT

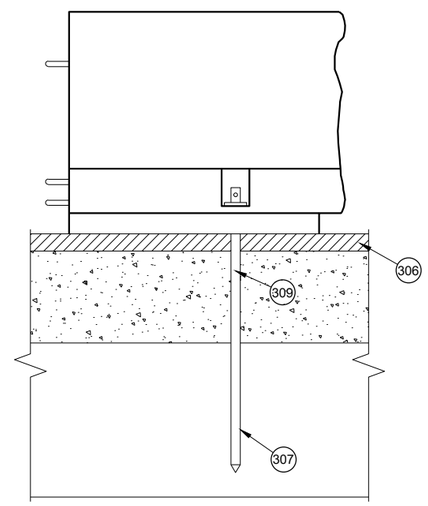

SIDE VIEW

ASPHALT ANCHOR INSTALLATION THROUGH ASPHALT OVERLAY ON TOP OF CONCRETE PAVEMENT

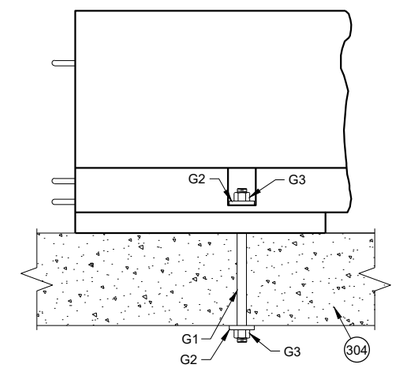

SIDE VIEW

THROUGH BOLT ANCHOR INSTALLATION 305

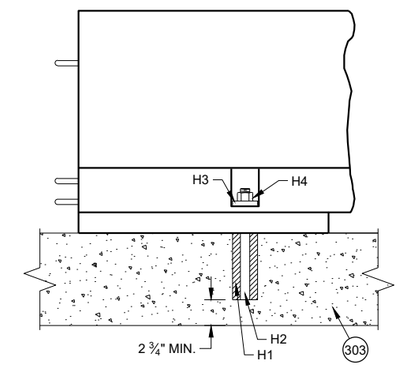

SIDE VIEW

ADHESIVE ANCHOR INSTALLATION 305

CONCRETE BARRIER TEMPORARY PRECAST, 12' - 6"

STATE OF WISCONSIN
DEPARTMENT OF TRANSPORTAT

6

SDD 14B07-16c

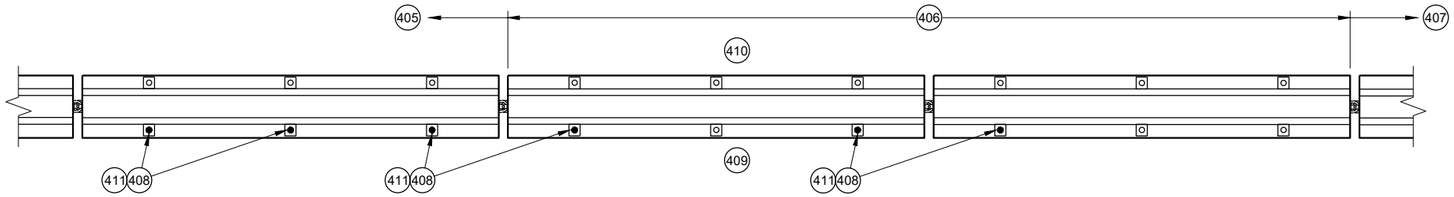

PLAN VIEW

TRANSITION FROM FREE STANDING TO ANCHORED BARRIER

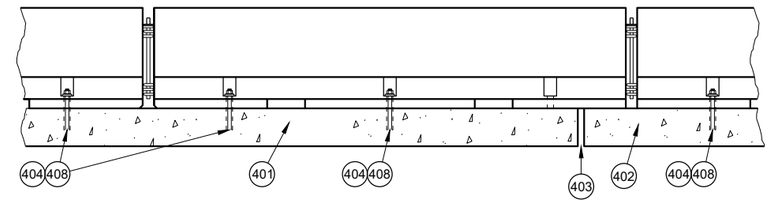

PROFILE VIEW

ANCHORED BARRIER NEAR EXPANSION JOINT (400)

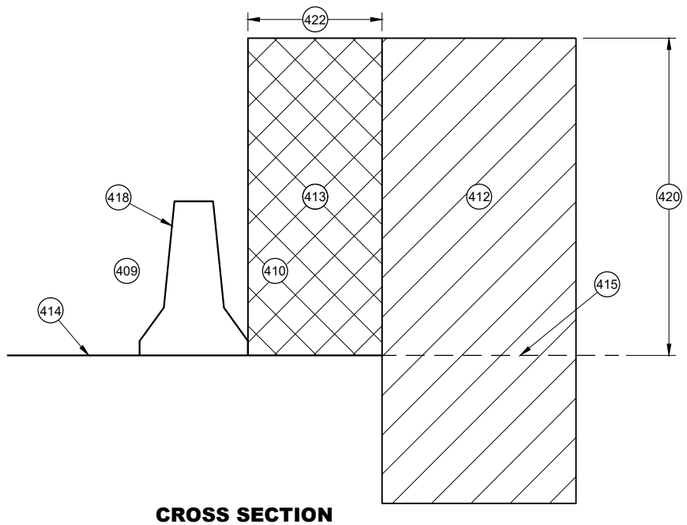

CROSS SECTION

FREE STANDING BARRIER

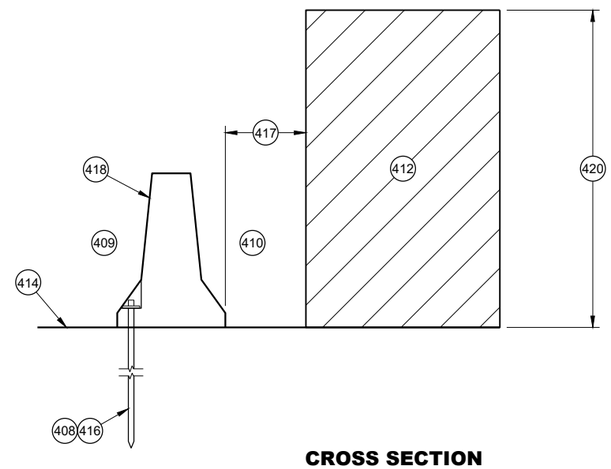

CROSS SECTION

ANCHORED BARRIER FOR OBJECTS ABOVE THE GRADE LINE AND NEAR THE BARRIER

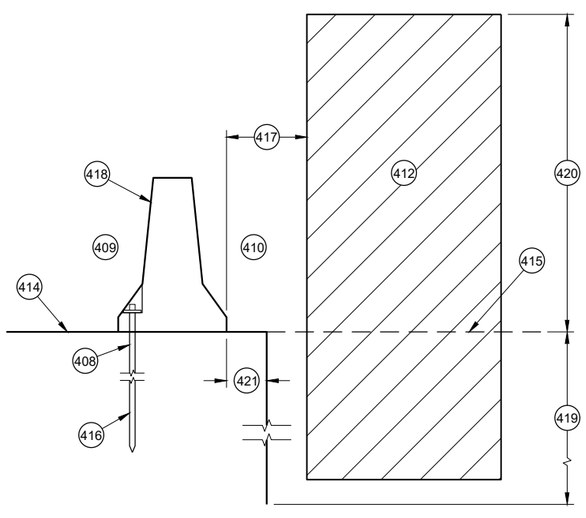

CROSS SECTION

ANCHORED BARRIER NEAR VERTICAL DROP OFF

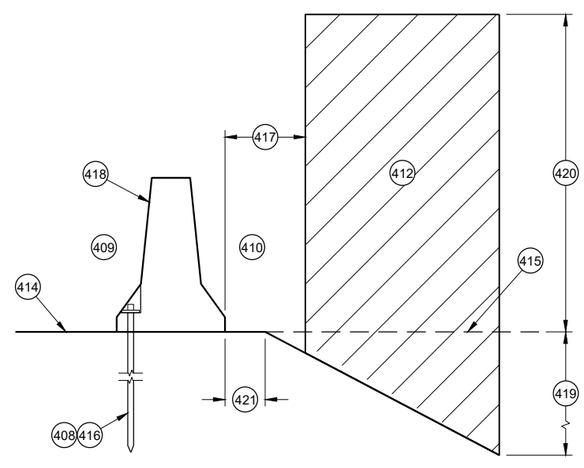

CROSS SECTION

ANCHORED BARRIER NEAR A SLOPE

GENERAL NOTES

(400) NO SINGLE CONCRETE BARRIER SECTION SHALL BE ANCHORED TO BOTH THE BRIDGE DECK AND THE APPROACH SLAB. ALL ANCHOR BOLT LOCATIONS SHALL BE ANCHORED TO THE DECK IN ACCORDANCE WITH THE DETAIL. NO MORE THAN ONE ANCHOR BOLT SHALL BE ELIMINATED FROM A BARRIER SECTION WHEN SPANNING AN EXPANSION JOINT.

(401) CONCRETE DECK

(402) CONCRETE DECK OR APPROACH SLAB.

(403) EXPANSION JOINT

(404) ADHESIVE ANCHOR SHOWN. SEE ANCHOR DETAILS.

(405) ANCHORED TEMPORARY BARRIER

(406) TRANSITION FROM ANCHORED TEMPORARY BARRIER TO FREE STANDING

(407) FREE STANDING BARRIER

(408) REMOVE ALL ANCHORS WHEN NO LONGER NEEDED. FILL CONCRETE PAVEMENTS, DECKS AND APPROACH SLABS WITH NON-SHRINK COMMERCIAL GROUT FROM THE APPROVED PRODUCT LIST. FILL ASPHALT PAVEMENTS WITH ASTM D6690 TYPE II RUBBERIZED CRACK FILLER.

(409) TRAFFIC SIDE

(410) NON-TRAFFIC SIDE

(411) ANCHOR LOCATION. SEE ANCHORING DETAILS.

(412) WORK AREA

(413) AREA FREE OF OBJECTS AND WORKERS

(414) GRADE LINE

(415) EXTENDED GRADE LINE

(416) ANCHORED TEMPORARY BARRIER. SEE BOLT THROUGH DECK, REMOVABLE ADHESIVE ANCHOR, OR AN ASPHALT ANCHOR ROD DETAILS FOR MORE INFORMATION. ASPHALT ANCHOR ROD SHOWN.

(417) WHEN OBJECTS EXTEND ABOVE THE GRADE. A MINIMUM OF 1 FOOT IS REQUIRED FROM BACK OF BARRIER TO OBJECT.

(418) OBJECTS ARE NOT TO BE PLACED ON, MOUNTED TO, OR ALLOWED TO LEAN AGAINST THE BARRIER WITHOUT WRITTEN PERMISSION OF THE PROJECT ENGINEER.

(419) DEPTHS OF 3 FEET OR MORE.

(420) Y = 6.5'

(421) OFFSET FROM BACK OF BARRIER EDGE:

CONCRETE PAVEMENT	0.5'
ASPHALT	0.5'

(422) POSTED SPEED (MPH):

45 OR GREATER	4.0'
40 OR LOWER	2.0'

CONCRETE BARRIER TEMPORARY PRECAST, 12' - 6"

STATE OF WISCONSIN
DEPARTMENT OF TRANSPORTAT

6

SDD 14B07-16d

GENERAL NOTES

500 EXISTING RIGID BARRIERS (VARIES)

501 TEMPORARY BARRIER

502 SEE OTHER DETAIL ON HOW TO ANCHOR TEMPORARY BARRIER (BARRIER ASPHALT ANCHOR SHOWN).

503 ANCHORS ARE REQUIRED ON BOTH SIDE OF THE TEMPORARY BARRIER.

504 NESTED RAILS ARE REQUIRED ON BOTH SIDES OF THE TEMPORARY BARRIER FOR ALL INSTALLATIONS.

505 TRAFFIC TRAVELS FROM PERMANENT BARRIER TO TEMPORARY BARRIER.

506 TRAFFIC TRAVELS FROM TEMPORARY BARRIER TO PERMANENT BARRIER.

507 VERTICAL BARRIER

508 SAFETY SHAPE BARRIER

509 SINGLE SLOPE BARRIER

510 CAP END PLATE PLACED FLUSH WITH UPSTREAM END OF RIGID BARRIER.

511 BENT THRIE BEAM TO FIT.

512 THRIE BEAM PIECES ARE OFFSET 15 ¼" TO PREVENT INTERFERENCE FROM THE ANCHORS ON OPPOSING SIDES.

513 TWO (2) P1, P2 AND P3 ARE REQUIRED

514 FIVE (5) N1, N2 AND N3 ARE REQUIRED

515 TWO (2) R1, R2 AND R3 ARE REQUIRED

516 CUT WOOD BLOCK TO FIT.

517 SEE THRIE BEAM RAIL TERMINAL CONNECTOR DETAIL ASSEMBLY.

518 CAP ASSEMBLY

519 4" MAX. GAP BETWEEN TEMPORARY BARRIER AND RIGID BARRIER.

520 ALL TWELVE SPLICE HOLES REQUIRE M1 AND M2

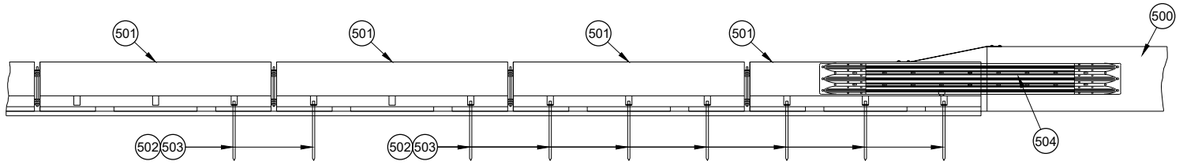

PROFILE VIEW

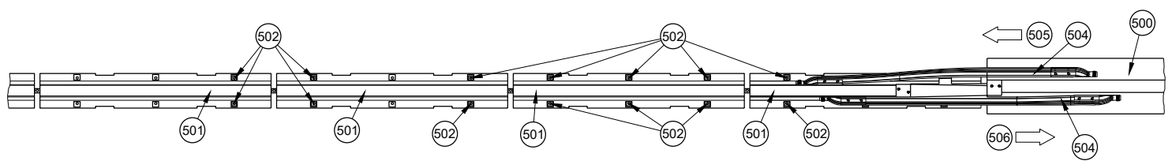

PLAN VIEW
TRANSITION TO RIGID BARRIER

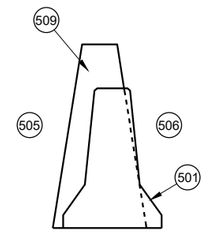

CROSS SECTION TEMPORARY BARRIER PLACEMENT SINGLE SLOPE

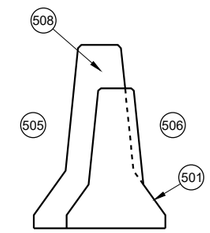

CROSS SECTION TEMPORARY BARRIER PLACEMENT SAFETY SHAPE

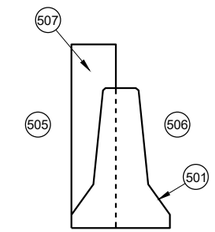

CROSS SECTION TEMPORARY BARRIER PLACEMENT VERTICAL

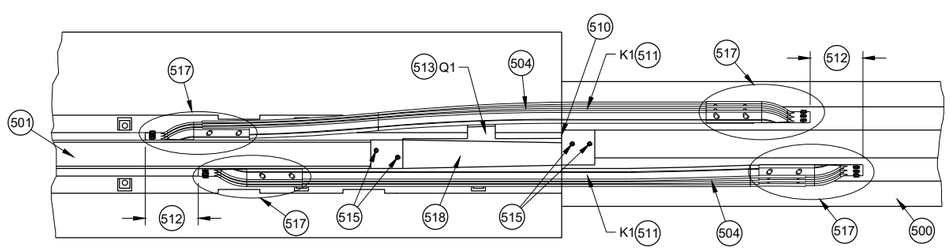

PLAN DETAIL VIEW
TRANSITION TO RIGID BARRIER

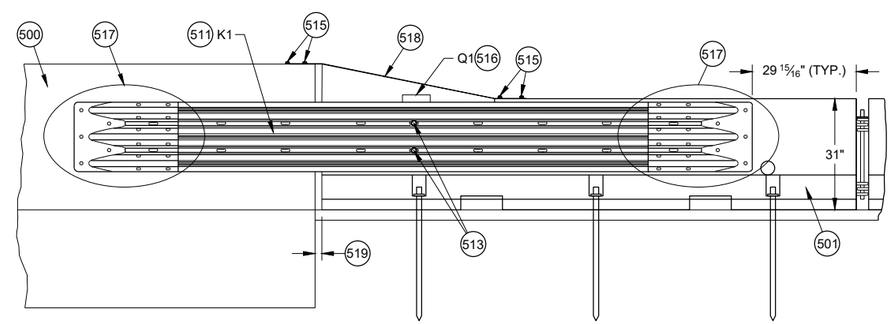

BACK DETAIL VIEW
TRANSITION TO RIGID BARRIER

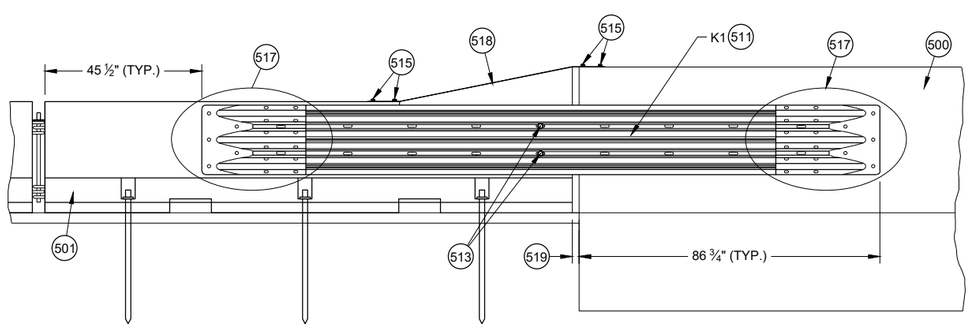

FRONT DETAIL VIEW
TRANSITION TO RIGID BARRIER

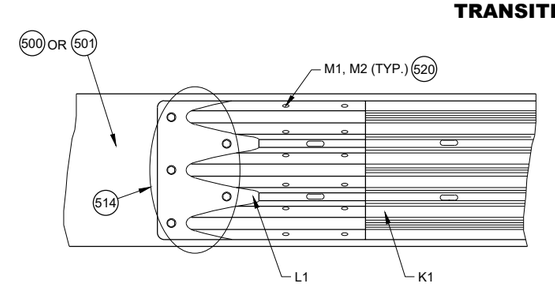

517 DETAIL PLAN VIEW
THRIE BEAM RAIL TERMINAL CONNECTOR ASSEMBLY

CONCRETE BARRIER TEMPORARY PRECAST, 12' - 6"

STATE OF WISCONSIN
DEPARTMENT OF TRANSPORTAT

6

SDD 14B07-16e

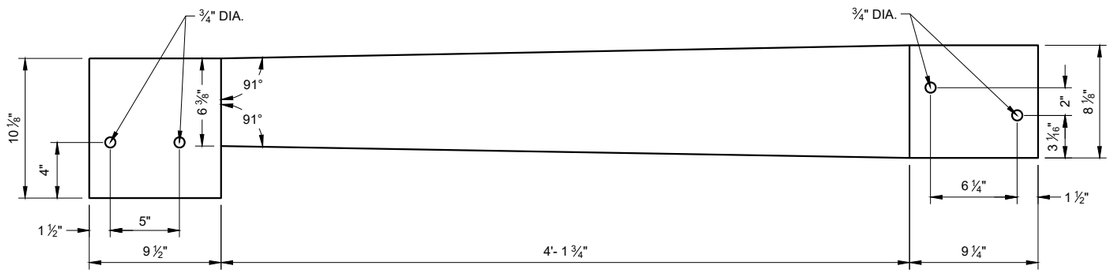

TOP VIEW
S1

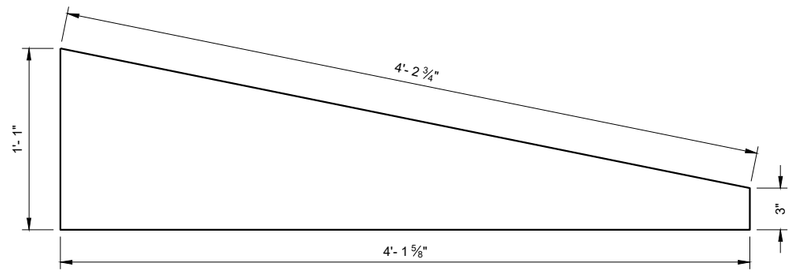

SIDE VIEW
S3

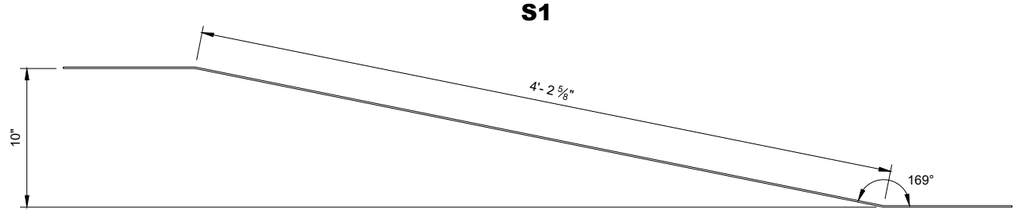

ELEVATION VIEW
S1

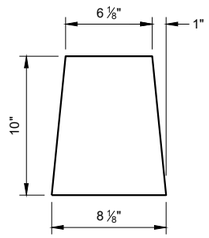

S2

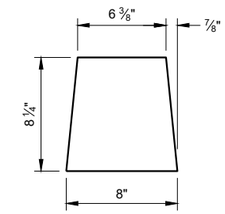

S4

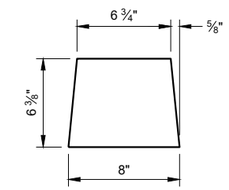

S5

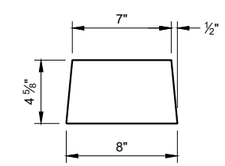

S6

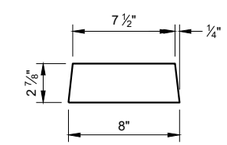

S7

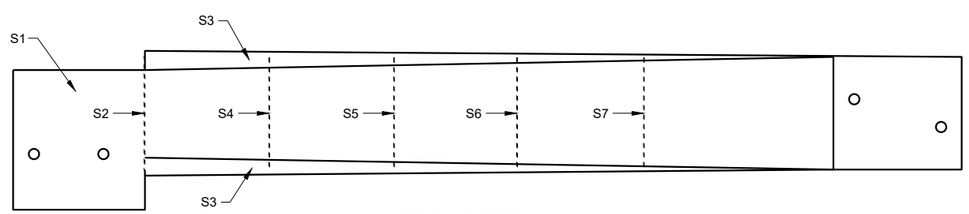

PLAN VIEW

GENERAL NOTES

STITCH WELD GUSSET PLATES AND END PLATES ON THREE SIDES

STITCH WELD TWO SIDE PLATES TO TOP PLATE, END PLATE AND GUSSETS.

600 SIDE PLATES (S3) NOT SHOWN FOR CLARITY.

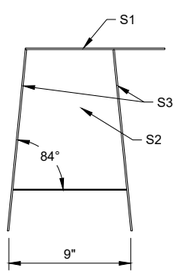

BACK VIEW

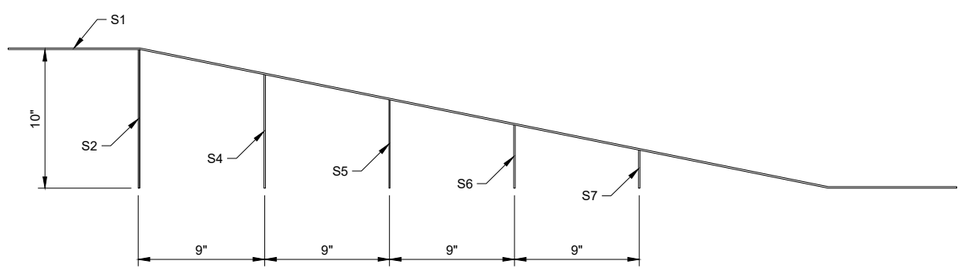

SIDE VIEW 600

42" TOP CAP ASSEMBLY

CONCRETE BARRIER TEMPORARY PRECAST, 12' - 6"

STATE OF WISCONSIN
DEPARTMENT OF TRANSPORTA

6

SDD 14B07-16f

6

SDD 14B07-16f

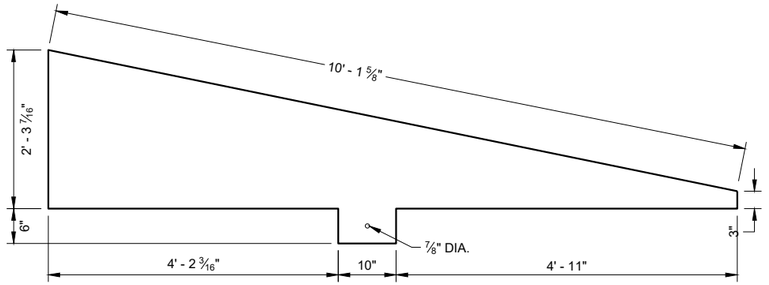

SIDE VIEW
T4

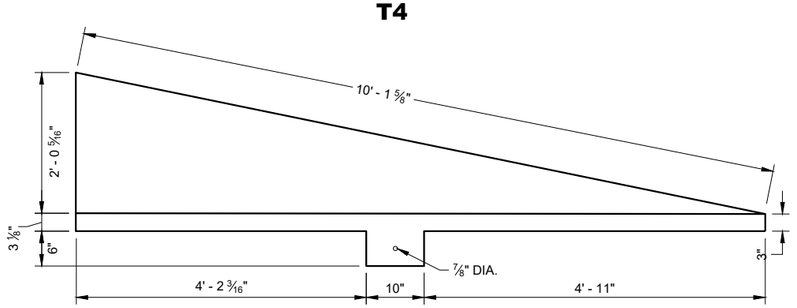

SIDE VIEW
T3

END VIEW

GENERAL NOTES

STITCH WELD GUSSET PLATES AND END PLATES ON THRIE SIDES

STITCH WELD TWO SIDE PLATES TO TOP PLATE, END PLATE AND GUSSETS.

SIDE PLATES, TOP PLATE, END PLATE AND GUSSETS ARE 12 GAUGE ASTM A36 GALVANIZED STEEL.

700 SIDE PLATES (T3 AND T4) NOT SHOWN FOR CLARITY.

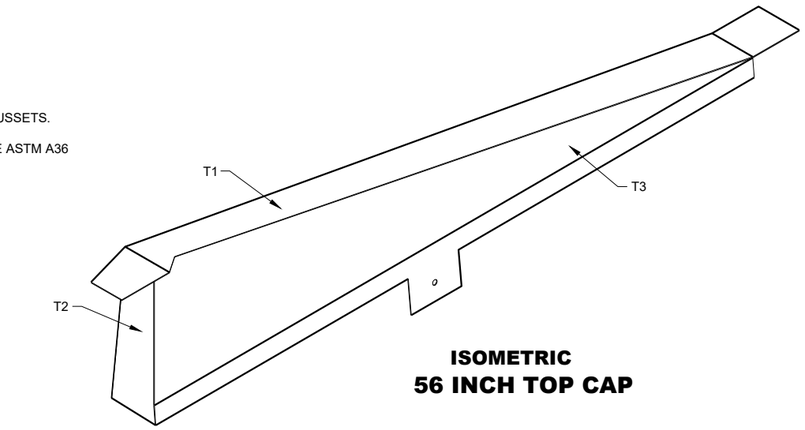

ISOMETRIC
56 INCH TOP CAP

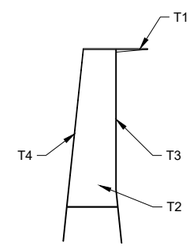

END VIEW
56 INCH TOP CAP

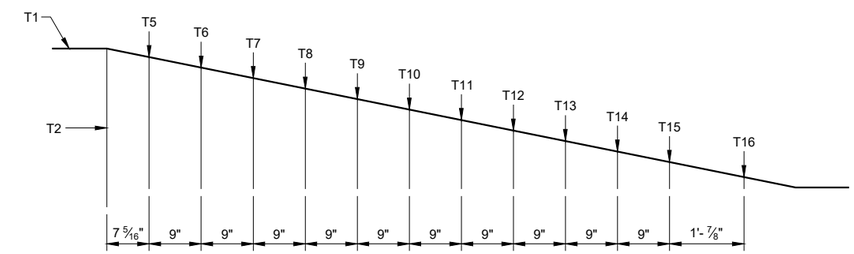

SIDE VIEW
56 INCH TOP CAP 700

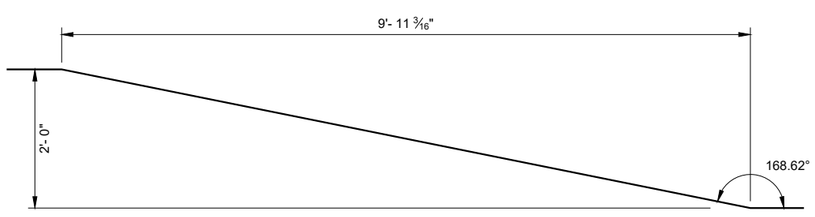

SIDE VIEW
TOP PLATE T1

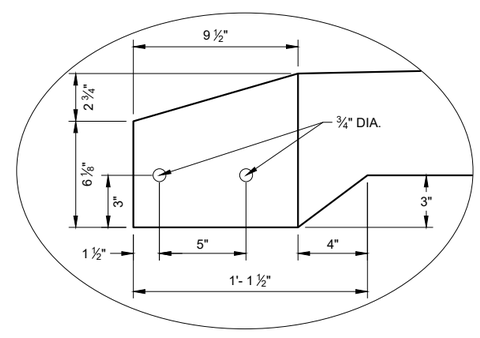

DETAIL "A"

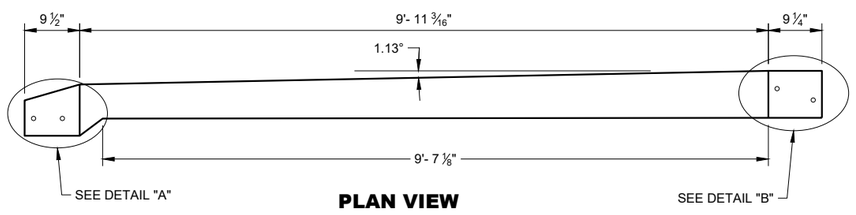

PLAN VIEW
TOP PLATE T1

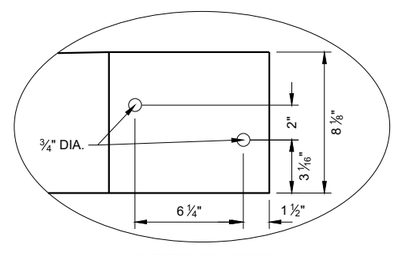

DETAIL "B"

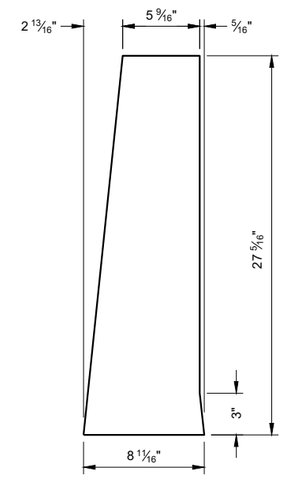

END PLATE T2

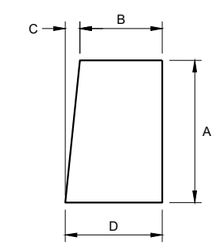

GUSSET PLATES
T5 - T16

GUSSET DIMENSIONS				
GUSSET NO.	A	B	C	D
T5	22 13/16"	5 11/16"	2 5/16"	8 1/16"
T6	21"	5 7/8"	2 3/16"	8 1/16"
T7	19 3/16"	6 1/16"	1 15/16"	8 1/16"
T8	17 3/8"	6 1/4"	1 13/16"	8 1/16"
T9	15 5/16"	6 7/16"	1 9/16"	8 1/16"
T10	13 3/4"	6 5/8"	1 7/16"	8 1/16"
T11	11 15/16"	6 13/16"	1 1/4"	8 1/16"
T12	10 1/8"	7"	1 1/16"	8 1/16"
T13	8 5/16"	7 3/16"	7/8"	8 1/16"
T14	6 1/2"	7 3/8"	11/16"	8 1/16"
T15	4 11/16"	7 9/16"	1/2"	8"
T16	2 7/8"	7 3/4"	1/4"	8"

CONCRETE BARRIER TEMPORARY PRECAST, 12' - 6"

STATE OF WISCONSIN
DEPARTMENT OF TRANSPORTATION

6

6

SDD 14B07-16g

SDD 14B07-16g

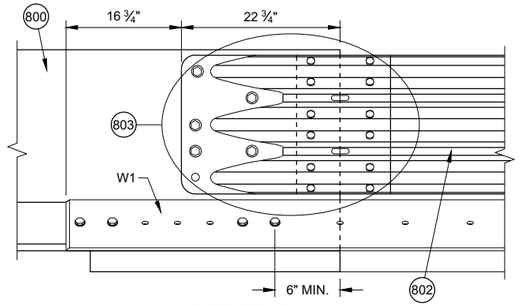

DETAIL D

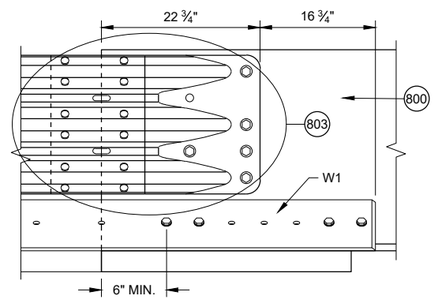

DETAIL E

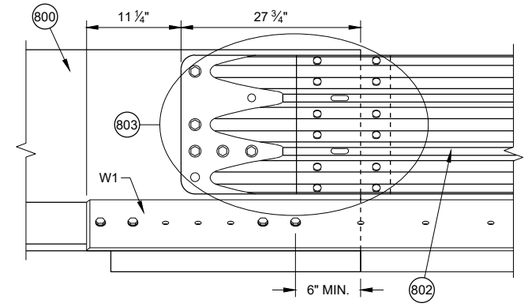

DETAIL F

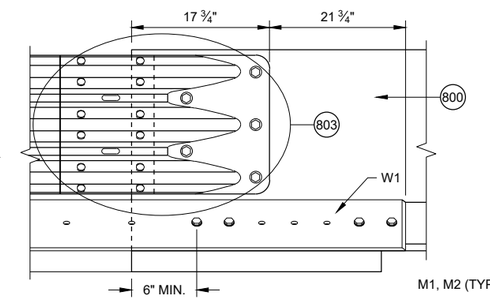

DETAIL G

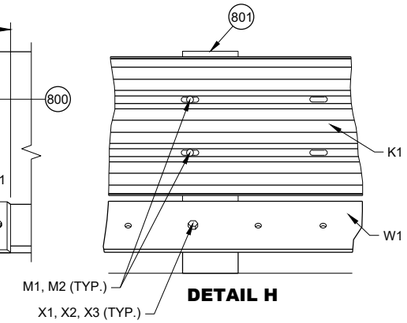

DETAIL H

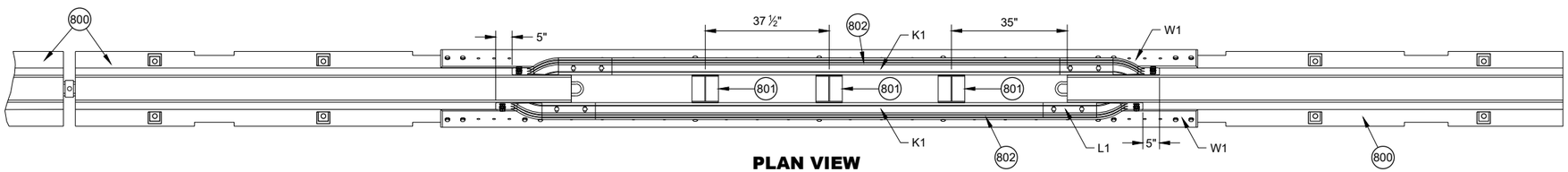

PLAN VIEW

GENERAL NOTES

(800) FREE STANDING TEMPORARY BARRIER

(801) GAP STIFFENER ASSEMBLY

(802) THRIE BEAMS ARE NESTED ON BOTH SIDES OF THE TEMPORARY BARRIER.

(803) SEE THRIE BEAM RAIL TERMINAL CONNECTOR DETAIL

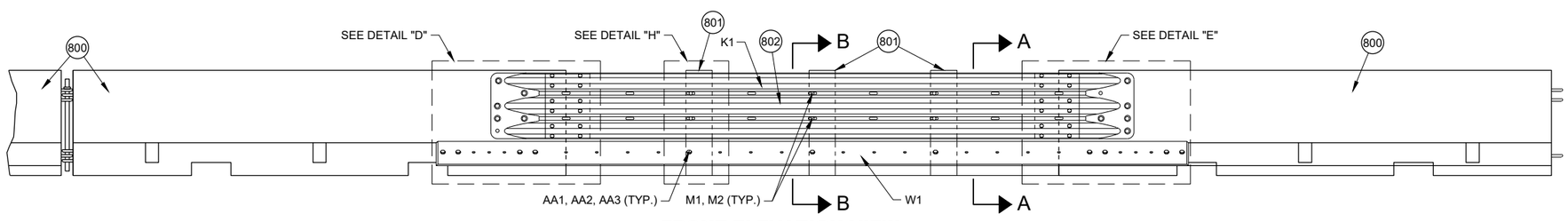

FRONT ELEVATION VIEW

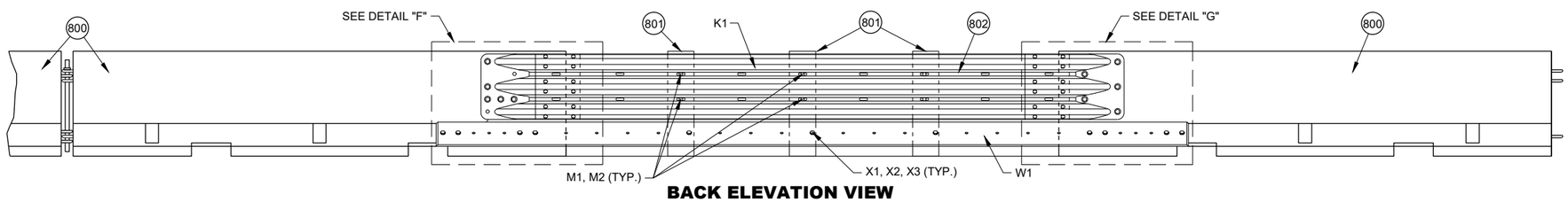

BACK ELEVATION VIEW

PORTABLE CONCRETE BARRIER GAP THRIE BEAM COVER

CONCRETE BARRIER TEMPORARY PRECAST, 12' - 6"

STATE OF WISCONSIN
DEPARTMENT OF TRANSPORTA

6

SDD 14B07-16h

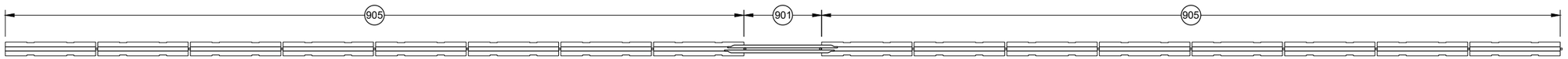

PLAN VIEW
GAP WITHIN SPACING

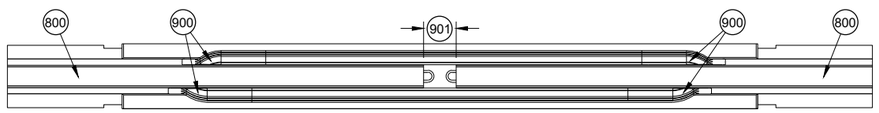

PLAN VIEW
TEMPORARY BARRIER GAP OVER 4" TO 1' MAX. (904)

GENERAL NOTES

(900) SEE OTHER DETAILS FOR TEMPORARY GAP HARDWARE (TYP.)

(901) TEMPORARY BARRIER GAP

(902) GAP STIFFENER ASSEMBLY CENTERED IN THE GAP.

(903) GAP STIFFENER ASSEMBLY IS OFFSET 18 ¾" FROM CENTER

(904) MINIMUM NUMBER OF GAP STIFFENERS SHOWN FOR THE GAP RANGE SHOWN.

(905) MINIMUM OF 8 CONTINUOUS FREE STANDING TEMPORARY BARRIERS

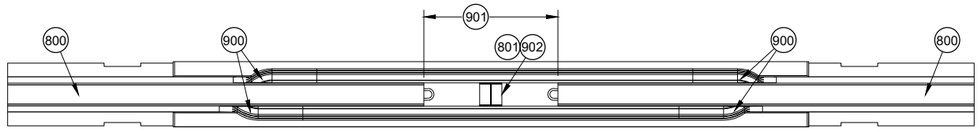

PLAN VIEW
TEMPORARY BARRIER GAP OVER 1' TO 4' MAX. (904)

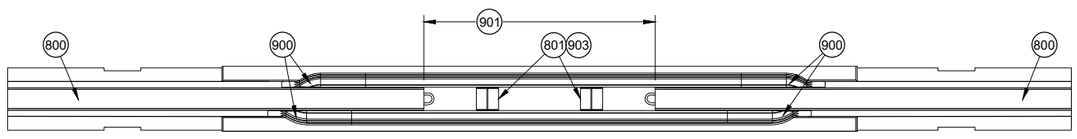

PLAN VIEW
TEMPORARY BARRIER GAP OVER 4' TO 7' MAX. (904)

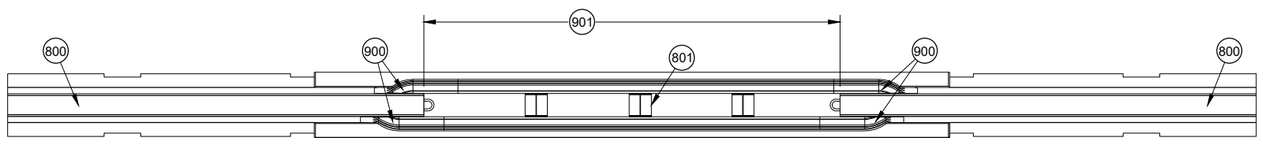

PLAN VIEW
TEMPORARY BARRIER GAP OVER 7' TO 12.5' MAX. (904)

CONCRETE BARRIER TEMPORARY PRECAST, 12' - 6"

STATE OF WISCONSIN
DEPARTMENT OF TRANSPORTAT

6

SDD 14B07-16i

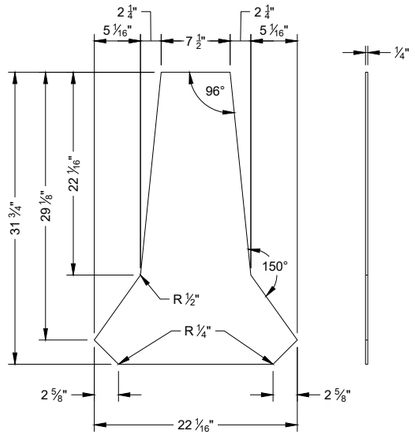

PROFILE VIEW

SIDE VIEW

STIFFENER ASSEMBLY CENTER PANEL U1

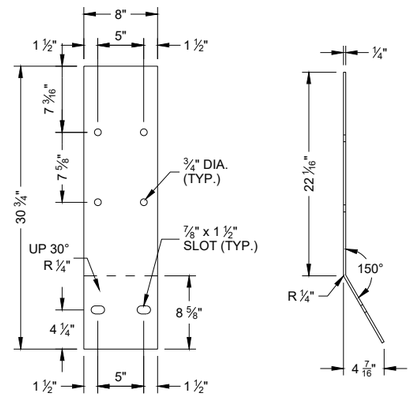

FLAT PATTERN

SIDE VIEW

STIFFENER ASSEMBLY SIDE PANEL U2

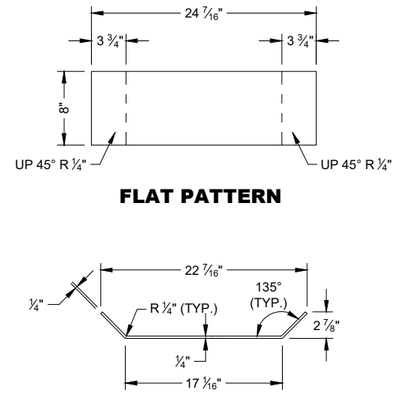

FLAT PATTERN

PROFILE VIEW

STIFFENER ASSEMBLY BOTTOM PANEL U3

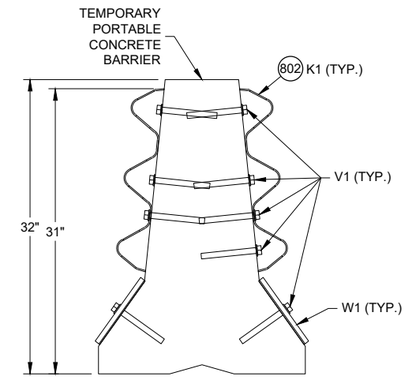

SECTION A - A

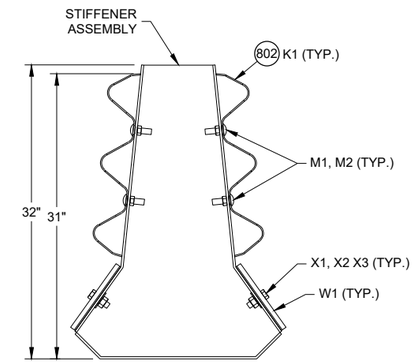

SECTION B - B

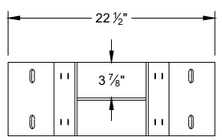

PLAN VIEW

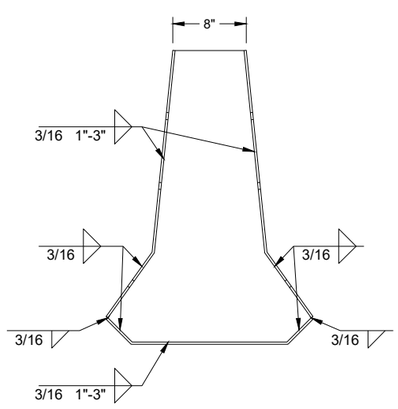

PROFILE VIEW

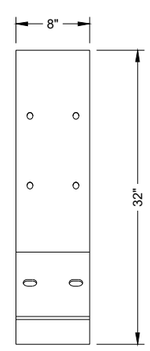

SIDE VIEW

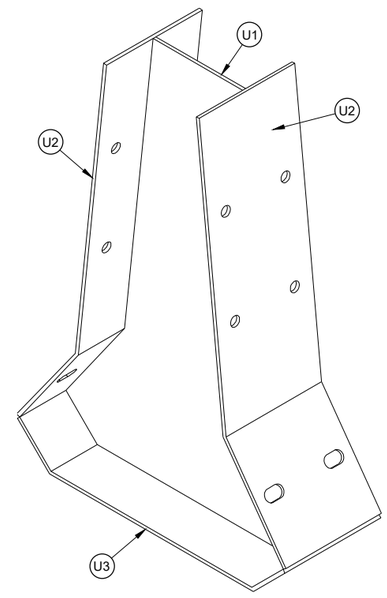

ISOMETRIC

GAP STIFFENER ASSEMBLY

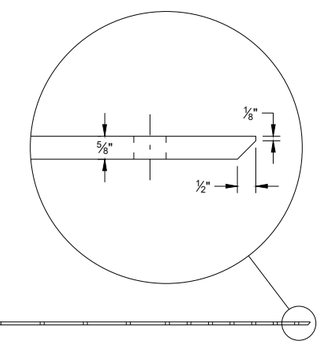

PLAN VIEW

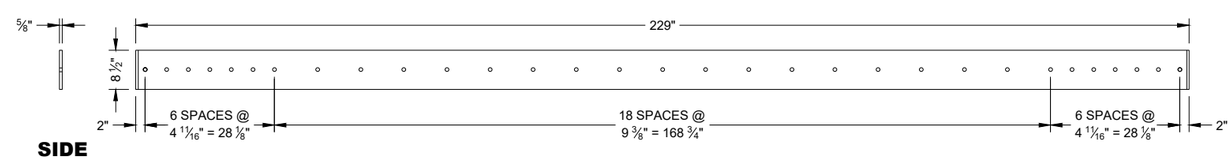

SIDE VIEW

ELEVATION VIEW

W1 TOE PLATE

CONCRETE BARRIER TEMPORARY PRECAST, 12' - 6"

STATE OF WISCONSIN
DEPARTMENT OF TRANSPORTATION

6

SDD 14B07-16j

GENERAL NOTES

(1100) 1" DIA. HOLE

(1101) ¾" DIA. HOLE

(1102) PROVIDE HOLES IN THRIE BEAM TERMINAL CONNECTOR TO LIMIT STEEL REINFORCEMENT OR LOOP BAR CONFLICT. CONTRACTOR MAY FIELD DRILL ADDITIONAL HOLE OR PROVIDE THRIE BEAM TERMINAL CONNECTOR WITH ADDITIONAL HOLES FROM SUPPLIER.

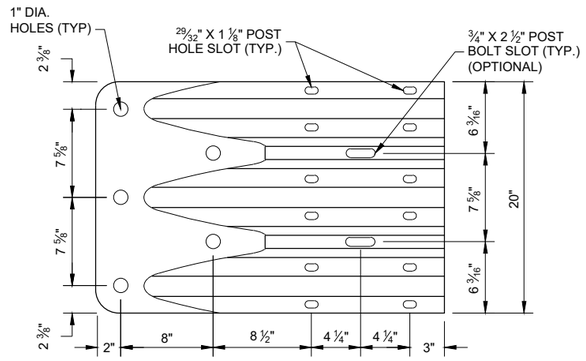

ELEVATION VIEW

THRIE BEAM TERMINAL CONNECTOR

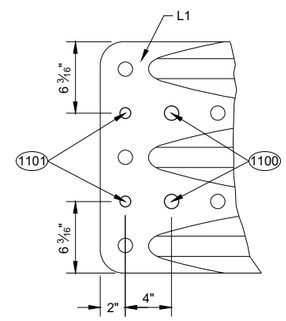

ELEVATION VIEW

ADDITIONAL THRIE BEAM (1102) TERMINAL CONNECTOR HOLE DETAIL

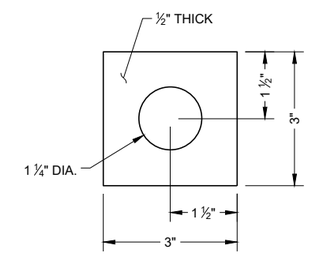

PLATE WASHER DETAIL G2, H3

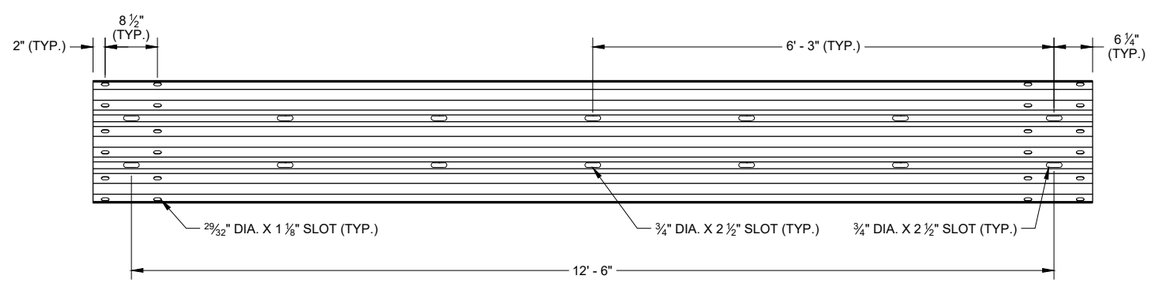

SLOTTED THRIE BEAM RAIL K1

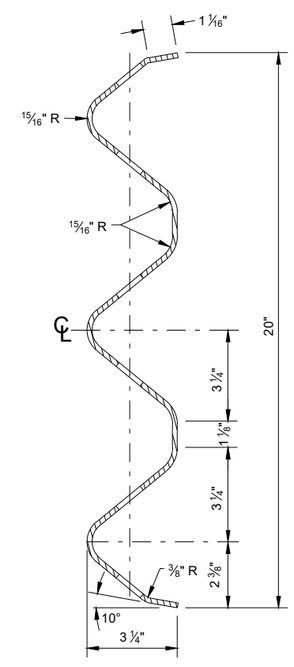

SECTION THROUGH BEAM K1

CONCRETE BARRIER TEMPORARY PRECAST, 12' - 6"

STATE OF WISCONSIN
DEPARTMENT OF TRANSPORTAT

6

SDD 14B07-16k

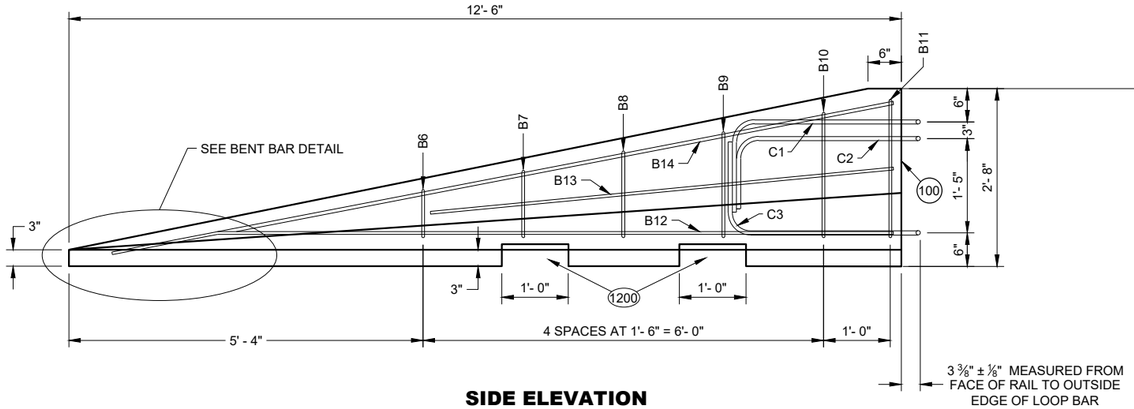

SIDE ELEVATION
(FOR CONNECTION TO LEFT END OF BARRIER)

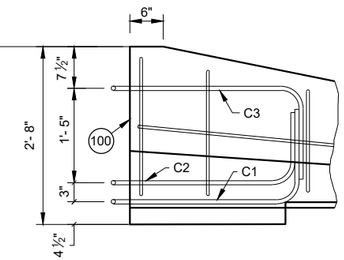

SIDE ELEVATION
LOOP BAR ASSEMBLY INVERTED FOR OPPOSITE END
(FOR CONNECTION TO RIGHT END OF BARRIER)

GENERAL NOTES

1200 SEE LIFTING SLOT DETAIL. LOCATION OF LIFTING SLOTS DETERMINED BY CONTRACTOR.

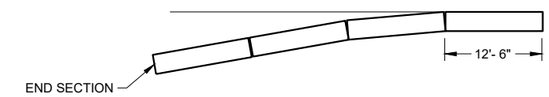

FLARE AT BARRIER END

POSTED SPEED, (MPH)	FLARE RATE
40 OR LESS	6:1
45 OR GREATER	8:1

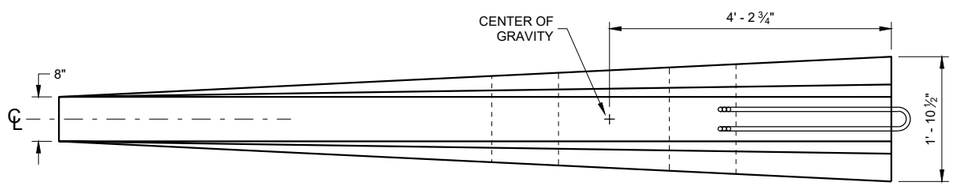

PLAN VIEW

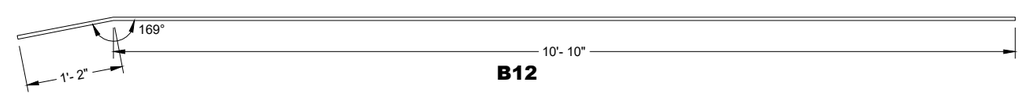

B12

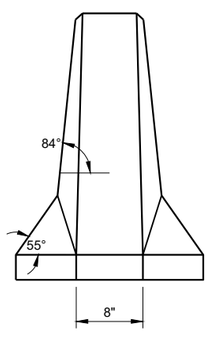

FRONT ELEVATION

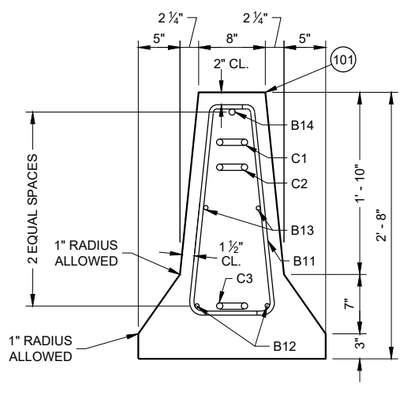

END SECTION

DETAILS OF BARRIER TAPER SECTION

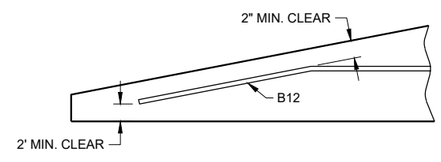

BENT BAR DETAIL

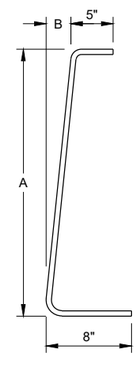

BAR	A	B
B6	10"	1"
B7	1'- 1"	1 ¼"
B8	1'- 5"	1 ⅝"
B9	1'- 8"	1 ⅞"
B10	2'- 0 ½"	2 ⅜"
B11	2'- 3"	2 ¾"

B BARS
2 OF EACH SIZE REQUIRED FOR STIRRUP ASSEMBLY

CONCRETE BARRIER TEMPORARY PRECAST, 12' - 6"

STATE OF WISCONSIN
DEPARTMENT OF TRANSPORTAT

6

SDD 14B07-16I

BILL OF MATERIALS - CONCRETE BARRIER PRECAST

PART	DESCRIPTION	MATERIALS SPECIFICATIONS	NOTES
A1	PRECAST TEMPORARY BARRIER - CONCRETE	MIN. = f'c 5000 PSI	
B1	REBAR	STANDARD SPEC. 505.2 GRADE 60 UNCOATED REBAR	#5 REBAR, LENGTH 12'-2"
B2	REBAR	STANDARD SPEC. 505.2 GRADE 60 UNCOATED REBAR	#4 REBAR, LENGTH 12'-2"
B3	REBAR	STANDARD SPEC. 505.2 GRADE 60 UNCOATED REBAR	#5 REBAR, LENGTH 12'-2"
B4	REBAR	STANDARD SPEC. 505.2 GRADE 60 UNCOATED REBAR	#4 REBAR, LENGTH 6'-0"
B5	REBAR	STANDARD SPEC. 505.2 GRADE 60 UNCOATED REBAR	#6 REBAR, LENGTH 2'-11"
B6	REBAR	STANDARD SPEC. 505.2 GRADE 60 UNCOATED REBAR	#4 REBAR, LENGTH 1'-11"
B7	REBAR	STANDARD SPEC. 505.2 GRADE 60 UNCOATED REBAR	#4 REBAR, LENGTH 2'-2"
B8	REBAR	STANDARD SPEC. 505.2 GRADE 60 UNCOATED REBAR	#4 REBAR, LENGTH 2'-6"
B9	REBAR	STANDARD SPEC. 505.2 GRADE 60 UNCOATED REBAR	#4 REBAR, LENGTH 2'-9"
B10	REBAR	STANDARD SPEC. 505.2 GRADE 60 UNCOATED REBAR	#4 REBAR, LENGTH 3'-2"
B11	REBAR	STANDARD SPEC. 505.2 GRADE 60 UNCOATED REBAR	#4 REBAR, LENGTH 3'-4"
B12	REBAR	STANDARD SPEC. 505.2 GRADE 60 UNCOATED REBAR	#4 REBAR, LENGTH 12'-0"
B13	REBAR	STANDARD SPEC. 505.2 GRADE 60 UNCOATED REBAR	#4 REBAR, LENGTH 7'-9"
B14	REBAR	STANDARD SPEC. 505.2 GRADE 60 UNCOATED REBAR	#5 REBAR, LENGTH 11'-9"
C1	LOOP BAR	ASTM A709 GRADE 70 SMOOTH BAR OR ASTM A706 GRADE 60 REBAR UNCOATED	¾" DIA.
C2	LOOP BAR	ASTM A709 GRADE 70 SMOOTH BAR OR ASTM A706 GRADE 60 REBAR UNCOATED	¾" DIA.
C3	LOOP BAR	ASTM A709 GRADE 70 SMOOTH BAR OR ASTM A706 GRADE 60 REBAR UNCOATED	¾" DIA.
D1	CONNECTION PIN - ROD	ASTM A36 MIN. STRENGTH 36 KSI / ASTM A529 MAX. STRENGTH 50 KSI / ASTM A572 MAX STRENGTH 50 KSI / ASTM A709 MAX STRENGTH 50 KSI / ASTM A992 MAX STRENGTH 50 KSI	1 ¼" DIA.
D2	CONNECTION PIN - TOP PLATE	ASTM A36 MIN. STRENGTH 36 KSI / ASTM A529 MAX. STRENGTH 50 KSI / ASTM A572 MAX STRENGTH 50 KSI / ASTM A709 MAX STRENGTH 50 KSI / ASTM A992 MAX STRENGTH 50 KSI	
G1	BOLT THROUGH ANCHOR - THREADED ROD	HOT DIP AASHTO M232 CLASS / ASTM A153 CLASS C / ASTM F2329 C OR MECHANICAL GALVANIZE TO AASHTO M298 CLASS 55 TYPE 2 / ASTM B695 CLASS 55 TYPE 2 A307 GRADE A OR SAE J429 GRADE 2 UNC	1 ⅛" DIA.
G2	BOLT THROUGH ANCHOR - WASHER, SQUARE	ASTM A36 MIN. STRENGTH 36 KSI / ASTM A529 MAX. STRENGTH 50 KSI / ASTM A572 MAX STRENGTH 50 KSI / ASTM A709 MAX STRENGTH 50 KSI / ASTM A992 MAX STRENGTH 50 KSI	
G3	BOLT THROUGH ANCHOR - NUT	HOT DIP AASHTO M232 CLASS / ASTM A153 CLASS C / ASTM F2329 C OR MECHANICAL GALVANIZE TO AASHTO M298 CLASS 55 TYPE 2 / ASTM B695 CLASS 55 UNC OVER TAP NUTS AS SPECIFIED IN AASHTO 291 / ASTM A 563 HEAVY HEX HEAD ASTM A563DH OR SAE J995 GRADE 5	
H1	ADHESIVE ANCHOR - ADHESIVE	ICC-ES-AC308 5 ¼" EMBEDMENT WITH A MIN. BOND STRENGTH OF 1,650 PSI. SEE 603.2 AND 603.3.1.2 OF THE WISCONSIN STANDARD SPECIFICATIONS FOR MORE INFORMATION ON ADHESIVE ANCHORS.	
H2	ADHESIVE ANCHOR - THREADED ROD	HOT DIP AASHTO M232 CLASS / ASTM A153 CLASS C / ASTM F2329 C OR MECHANICAL GALVANIZE TO AASHTO M298 CLASS 55 TYPE 2 / ASTM B695 CLASS 55 TYPE 2 A307 GRADE A / SAE J429 GRADE 2 UNC	1 ⅛" DIA.
H3	ADHESIVE ANCHOR - WASHER, SQUARE	ASTM A36 MIN. STRENGTH 36 KSI / ASTM A529 MAX. STRENGTH 50 KSI / ASTM A572 MAX STRENGTH 50 KSI / ASTM A709 MAX STRENGTH 50 KSI / ASTM A992 MAX STRENGTH 50 KSI	
H4	ADHESIVE ANCHOR - NUT	HOT DIP AASHTO M232 CLASS / ASTM A153 CLASS C / ASTM F2329 C OR MECHANICAL GALVANIZE TO AASHTO M298 CLASS 55 TYPE 2 / ASTM B695 CLASS 55 UNC OVER TAP NUTS AS SPECIFIED IN AASHTO 291 / ASTM A 563 HEAVY HEX HEAD ASTM A563DH OR SAE J995 GRADE 5	
J1	ASPHALT ANCHOR PIN - ROD	ASTM A36 MIN. STRENGTH 36 KSI / ASTM A529 MAX. STRENGTH 50 KSI / ASTM A572 MAX STRENGTH 50 KSI / ASTM A709 MAX STRENGTH 50 KSI / ASTM A992 MAX STRENGTH 50 KSI	1 ½" DIA.
J2	ASPHALT ANCHOR PIN - STOP PLATE	ASTM A36 MIN. STRENGTH 36 KSI / ASTM A529 MAX. STRENGTH 50 KSI / ASTM A572 MAX STRENGTH 50 KSI / ASTM A709 MAX STRENGTH 50 KSI / ASTM A992 MAX STRENGTH 50 KSI	
K1	THRIE BEAM RAIL	AASHTO M180 CLASS A TYPE 2 APPROVED PRODUCER	12 GAUGE
L1	THRIE BEAM RAIL - TERMINAL	AASHTO M180 CLASS A TYPE 2 APPROVED PRODUCER	12 GAUGE

PART	DESCRIPTION	MATERIALS SPECIFICATIONS	NOTES
M1	SPLICE BOLT	HOT DIP AASHTO M232 CLASS / ASTM A153 CLASS C / ASTM F2329 C OR MECHANICAL GAL. TO AASHTO M298 CLASS 55 TYPE 2 / ASTM B695 CLASS 55 TYPE 2 UNC AASHTO M180 HEAD ASTM A307 GRADE B OR SAE J429 GRADE 2 OR ASTM F1554 GRADE 36	⅝" DIA.
M2	SPLICE BOLT - NUT	HOT DIP AASHTO M232 CLASS / ASTM A153 CLASS C / ASTM F2329 C OR MECHANICAL GALVANIZE TO AASHTO M298 CLASS 55 TYPE 2 / ASTM B695 CLASS 55 UNC OVER TAP NUTS AS SPECIFIED IN AASHTO 291 / ASTM A 563 AASHTO M180 RECESSED HEAVY HEX HEAD ASTM A563DH OR SAE J995 GRADE 5	
N1	THRIE BEAM RAIL TERMINAL - MECHANICAL ANCHOR	HOT DIP AASHTO M232 CLASS / ASTM A153 CLASS C / ASTM F2329 C OR MECHANICAL GALVANIZE TO AASHTO M298 CLASS 55 TYPE 2 / ASTM B695 CLASS 55 UNC OVER TAP NUTS AS SPECIFIED IN AASHTO 291 / ASTM A 563 AASHTO M180 RECESSED HEAVY HEX HEAD ASTM A563DH OR SAE J995 GRADE 5	¾" DIA. LENGTH 6"
N2	THRIE BEAM RAIL TERMINAL - WASHER	HOT DIP AASHTO M232 CLASS / ASTM A153 CLASS C / ASTM F2329 C OR MECHANICAL GALVANIZE TO AASHTO M298 CLASS 55 TYPE 2 / ASTM B695 CLASS 55 TYPE 2 F436 TYPE 1	
N3	THRIE BEAM RAIL TERMINAL MECHANICAL OR ADHESIVE ANCHOR	MINIMUM MECHANICAL OR ADHESIVE ANCHOR STRENGTH REQUIREMENTS: ULTIMATE TENSILE LOAD 17.9 KIPS AND ULTIMATE SHEAR LOAD 21.96 KIPS. SEE 603.2 AND 603.3.1.2 OF THE WISCONSIN STANDARD SPECIFICATIONS FOR MORE INFORMATION ON ADHESIVE ANCHORS.	
P1	THRIE BEAM RAIL CONNECTION 1-BOLT	HOT DIP AASHTO M232 CLASS / ASTM A153 CLASS C / ASTM F2329 C OR MECHANICAL GALVANIZE TO AASHTO M298 CLASS 55 TYPE 2 / ASTM B695 CLASS 55 UNC OVER TAP NUTS AS SPECIFIED IN AASHTO 291 / ASTM A 563 AASHTO M180 RECESSED HEAVY HEX HEAD ASTM A563DH OR SAE J995 GRADE 5	¾" DIA.
P2	THRIE BEAM RAIL CONNECTION 1-WASHER	HOT DIP AASHTO M232 CLASS / ASTM A153 CLASS C / ASTM F2329 C OR MECHANICAL GAL. TO AASHTO M298 CLASS 55 TYPE 2 / ASTM B695 CLASS 55 TYPE 2 F436 TYPE 1	
P3	THRIE BEAM RAIL CONNETION 1- MECHANICAL OR ADHESIVE ANCHOR	MINIMUM MECHANICAL OR ADHESIVE ANCHOR STRENGTH REQUIREMENTS: ULTIMATE TENSILE LOAD 9.48 KIPS AND ULTIMATE SHEAR LOAD 10.48 KIPS. SEE 603.2 AND 603.3.1.2 OF THE WISCONSIN STANDARD SPECIFICATIONS FOR MORE INFORMATION ON ADHESIVE ANCHORS.	
Q1	BLOCK WOOD	SEE STANDARD SPEC. 614	
R1	CAP - BOLT	HOT DIP AASHTO M232 CLASS / ASTM A153 CLASS C / ASTM F2329 C OR MECHANICAL GALVANIZE TO AASHTO M298 CLASS 55 TYPE 2 / ASTM B695 CLASS 55 UNC OVER TAP NUTS AS SPECIFIED IN AASHTO 291 / ASTM A 563 AASHTO M180 RECESSED HEAVY HEX HEAD ASTM A563DH OR SAE J995 GRADE 5	⅝" DIA.
R2	CAP- BOLT - WASHER	HOT DIP AASHTO M232 CLASS / ASTM A153 CLASS C / ASTM F2329 C OR MECHANICAL GAL. TO AASHTO M298 CLASS 55 TYPE 2 / ASTM B695 CLASS 55 TYPE 2 F436 TYPE 1	
R3	CAP - BOLT - MECHANICAL ANCHOR	MINIMUM MECHANICAL OR ADHESIVE ANCHOR STRENGTH REQUIREMENTS ULTIMATE TENSILE LOAD 12.14 KIPS AND ULTIMATE SHEAR LOAD 17.5 KIPS.SEE 603.2 AND 603.3.1.2 OF THE WISCONSIN STANDARD SPECIFICATIONS FOR MORE INFORMATION ON ADHESIVE ANCHORS.	12 GAUGE
S1	CAP 42-INCH TOP PLATE	AASHTO M111 / ASTM A123 ASTM A36 MIN. STRENGTH 36 KSI, OR ASTM A529 MAX. STRENGTH 50 KSI, OR ASTM A572 MAX. STRENGTH 50 KSI, OR ASTM A709 MAX. STRENGTH 50 KSI, OR ASTM A992 MAX. STRENGTH 50 KSI	12 GAUGE
S2	CAP 42-INCH END PLATE	AASHTO M111 / ASTM A123 ASTM A36 MIN. STRENGTH 36 KSI, OR ASTM A529 MAX. STRENGTH 50 KSI, OR ASTM A572 MAX. STRENGTH 50 KSI, OR ASTM A709 MAX. STRENGTH 50 KSI, OR ASTM A992 MAX. STRENGTH 50 KSI	12 GAUGE
S3	CAP 42-INCH SIDE PLATE	AASHTO M111 / ASTM A123 ASTM A36 MIN. STRENGTH 36 KSI, OR ASTM A529 MAX. STRENGTH 50 KSI, OR ASTM A572 MAX. STRENGTH 50 KSI, OR ASTM A709 MAX. STRENGTH 50 KSI, OR ASTM A992 MAX. STRENGTH 50 KSI	12 GAUGE
S4	CAP 42-INCH GUSSET 1	AASHTO M111 / ASTM A123 ASTM A36 MIN. STRENGTH 36 KSI, OR ASTM A529 MAX. STRENGTH 50 KSI, OR ASTM A572 MAX. STRENGTH 50 KSI, OR ASTM A709 MAX. STRENGTH 50 KSI, OR ASTM A992 MAX. STRENGTH 50 KSI	12 GAUGE
S5	CAP 42-INCH GUSSET 2	AASHTO M111 / ASTM A123 ASTM A36 MIN. STRENGTH 36 KSI, OR ASTM A529 MAX. STRENGTH 50 KSI, OR ASTM A572 MAX. STRENGTH 50 KSI, OR ASTM A709 MAX. STRENGTH 50 KSI, OR ASTM A992 MAX. STRENGTH 50 KSI	12 GAUGE
S6	CAP 42-INCH GUSSET 3	AASHTO M111 / ASTM A123 ASTM A36 MIN. STRENGTH 36 KSI, OR ASTM A529 MAX. STRENGTH 50 KSI, OR ASTM A572 MAX. STRENGTH 50 KSI, OR ASTM A709 MAX. STRENGTH 50 KSI, OR ASTM A992 MAX. STRENGTH 50 KSI	12 GAUGE
S7	CAP 42-INCH GUSSET 4	AASHTO M111 / ASTM A123 ASTM A36 MIN. STRENGTH 36 KSI, OR ASTM A529 MAX. STRENGTH 50 KSI, OR ASTM A572 MAX. STRENGTH 50 KSI, OR ASTM A709 MAX. STRENGTH 50 KSI, OR ASTM A992 MAX. STRENGTH 50 KSI	12 GAUGE

CONCRETE BARRIER TEMPORARY PRECAST, 12' - 6"

STATE OF WISCONSIN
DEPARTMENT OF TRANSPORTAT

6

SDD 14B07-16m

BILL OF MATERIALS - CONCRETE BARRIER PRECAST

PART	DESCRIPTION	MATERIALS SPECIFICATIONS	NOTES
T1	CAP 56-INCH TOP PLATE	AASHTO M111 / ASTM A123 ASTM A36 MIN. STRENGTH 36 KSI, OR ASTM A529 MAX. STRENGTH 50 KSI, OR ASTM A572 MAX. STRENGTH 50 KSI, OR ASTM A709 MAX. STRENGTH 50 KSI, OR ASTM A992 MAX. STRENGTH 50 KSI	12 GAUGE
T2	CAP 56-INCH END PLATE	AASHTO M111 / ASTM A123 ASTM A36 MIN. STRENGTH 36 KSI, OR ASTM A529 MAX. STRENGTH 50 KSI, OR ASTM A572 MAX. STRENGTH 50 KSI, OR ASTM A709 MAX. STRENGTH 50 KSI, OR ASTM A992 MAX. STRENGTH 50 KSI	12 GAUGE
T3	CAP 56-INCH SIDE PLATE 1	AASHTO M111 / ASTM A123 ASTM A36 MIN. STRENGTH 36 KSI, OR ASTM A529 MAX. STRENGTH 50 KSI, OR ASTM A572 MAX. STRENGTH 50 KSI, OR ASTM A709 MAX. STRENGTH 50 KSI, OR ASTM A992 MAX. STRENGTH 50 KSI	12 GAUGE
T4	CAP 56-INCH SIDE PLATE 2	AASHTO M111 / ASTM A123 ASTM A36 MIN. STRENGTH 36 KSI, OR ASTM A529 MAX. STRENGTH 50 KSI, OR ASTM A572 MAX. STRENGTH 50 KSI, OR ASTM A709 MAX. STRENGTH 50 KSI, OR ASTM A992 MAX. STRENGTH 50 KSI	12 GAUGE
T5	CAP 56-INCH GUSSET 1	AASHTO M111 / ASTM A123 ASTM A36 MIN. STRENGTH 36 KSI, OR ASTM A529 MAX. STRENGTH 50 KSI, OR ASTM A572 MAX. STRENGTH 50 KSI, OR ASTM A709 MAX. STRENGTH 50 KSI, OR ASTM A992 MAX. STRENGTH 50 KSI	12 GAUGE
T6	CAP 56-INCH GUSSET 2	AASHTO M111 / ASTM A123 ASTM A36 MIN. STRENGTH 36 KSI, OR ASTM A529 MAX. STRENGTH 50 KSI, OR ASTM A572 MAX. STRENGTH 50 KSI, OR ASTM A709 MAX. STRENGTH 50 KSI, OR ASTM A992 MAX. STRENGTH 50 KSI	12 GAUGE
T7	CAP 56-INCH GUSSET 3	AASHTO M111 / ASTM A123 ASTM A36 MIN. STRENGTH 36 KSI, OR ASTM A529 MAX. STRENGTH 50 KSI, OR ASTM A572 MAX. STRENGTH 50 KSI, OR ASTM A709 MAX. STRENGTH 50 KSI, OR ASTM A992 MAX. STRENGTH 50 KSI	12 GAUGE
T8	CAP 42-INCH GUSSET 4	AASHTO M111 / ASTM A123 ASTM A36 MIN. STRENGTH 36 KSI, OR ASTM A529 MAX. STRENGTH 50 KSI, OR ASTM A572 MAX. STRENGTH 50 KSI, OR ASTM A709 MAX. STRENGTH 50 KSI, OR ASTM A992 MAX. STRENGTH 50 KSI	12 GAUGE
T9	CAP 42-INCH GUSSET 5	AASHTO M111 / ASTM A123 ASTM A36 MIN. STRENGTH 36 KSI, OR ASTM A529 MAX. STRENGTH 50 KSI, OR ASTM A572 MAX. STRENGTH 50 KSI, OR ASTM A709 MAX. STRENGTH 50 KSI, OR ASTM A992 MAX. STRENGTH 50 KSI	12 GAUGE
T10	CAP 42-INCH GUSSET 6	AASHTO M111 / ASTM A123 ASTM A36 MIN. STRENGTH 36 KSI, OR ASTM A529 MAX. STRENGTH 50 KSI, OR ASTM A572 MAX. STRENGTH 50 KSI, OR ASTM A709 MAX. STRENGTH 50 KSI, OR ASTM A992 MAX. STRENGTH 50 KSI	12 GAUGE
T11	CAP 42-INCH GUSSET 7	AASHTO M111 / ASTM A123 ASTM A36 MIN. STRENGTH 36 KSI, OR ASTM A529 MAX. STRENGTH 50 KSI, OR ASTM A572 MAX. STRENGTH 50 KSI, OR ASTM A709 MAX. STRENGTH 50 KSI, OR ASTM A992 MAX. STRENGTH 50 KSI	12 GAUGE
T12	CAP 42-INCH GUSSET 8	AASHTO M111 / ASTM A123 ASTM A36 MIN. STRENGTH 36 KSI, OR ASTM A529 MAX. STRENGTH 50 KSI, OR ASTM A572 MAX. STRENGTH 50 KSI, OR ASTM A709 MAX. STRENGTH 50 KSI, OR ASTM A992 MAX. STRENGTH 50 KSI	12 GAUGE
T13	CAP 42-INCH GUSSET 9	AASHTO M111 / ASTM A123 ASTM A36 MIN. STRENGTH 36 KSI, OR ASTM A529 MAX. STRENGTH 50 KSI, OR ASTM A572 MAX. STRENGTH 50 KSI, OR ASTM A709 MAX. STRENGTH 50 KSI, OR ASTM A992 MAX. STRENGTH 50 KSI	12 GAUGE
T14	CAP 42-INCH GUSSET 10	AASHTO M111 / ASTM A123 ASTM A36 MIN. STRENGTH 36 KSI, OR ASTM A529 MAX. STRENGTH 50 KSI, OR ASTM A572 MAX. STRENGTH 50 KSI, OR ASTM A709 MAX. STRENGTH 50 KSI, OR ASTM A992 MAX. STRENGTH 50 KSI	12 GAUGE
T15	CAP 42-INCH GUSSET 11	AASHTO M111 / ASTM A123 ASTM A36 MIN. STRENGTH 36 KSI, OR ASTM A529 MAX. STRENGTH 50 KSI, OR ASTM A572 MAX. STRENGTH 50 KSI, OR ASTM A709 MAX. STRENGTH 50 KSI, OR ASTM A992 MAX. STRENGTH 50 KSI	12 GAUGE
T16	CAP 42-INCH GUSSET 12	AASHTO M111 / ASTM A123 ASTM A36 MIN. STRENGTH 36 KSI, OR ASTM A529 MAX. STRENGTH 50 KSI, OR ASTM A572 MAX. STRENGTH 50 KSI, OR ASTM A709 MAX. STRENGTH 50 KSI, OR ASTM A992 MAX. STRENGTH 50 KSI	12 GAUGE
U1	GAP STIFFENER	AASHTO M111 / ASTM A123 ASTM A36 MIN. STRENGTH 36 KSI, OR ASTM A529 MAX. STRENGTH 50 KSI, OR ASTM A572 MAX. STRENGTH 50 KSI, OR ASTM A709 MAX. STRENGTH 50 KSI, OR ASTM A992 MAX. STRENGTH 50 KSI	
U2	GAP STIFFENER - CONNECTOR PLATE 1	AASHTO M111 / ASTM A123 ASTM A36 MIN. STRENGTH 36 KSI, OR ASTM A529 MAX. STRENGTH 50 KSI, OR ASTM A572 MAX. STRENGTH 50 KSI, OR ASTM A709 MAX. STRENGTH 50 KSI, OR ASTM A992 MAX. STRENGTH 50 KSI	
U3	GAP STIFFENER - CONNECTOR PLATE 2	AASHTO M111 / ASTM A123 ASTM A36 MIN. STRENGTH 36 KSI, OR ASTM A529 MAX. STRENGTH 50 KSI, OR ASTM A572 MAX. STRENGTH 50 KSI, OR ASTM A709 MAX. STRENGTH 50 KSI, OR ASTM A992 MAX. STRENGTH 50 KSI	

PART	DESCRIPTION	MATERIALS SPECIFICATIONS	NOTES
V1	THRIE BEAM RAIL TERMINAL MECHANICAL OR ADHESIVE ANCHOR	MINIMUM MECHANICAL OR ADHESIVE ANCHOR STRENGTH REQUIREMENTS ULTIMATE TENSILE LOAD 24.0 KIPS AND ULTIMATE SHEAR LOAD 21.5 KIPS. SEE 603.2 AND 603.3.1.2 OF THE WISCONSIN STANDARD SPECIFICATIONS FOR MORE INFORMATION ON ADHESIVE ANCHORS.	¾" DIA.
V2	GAP STIFFENER - BOLT - NUT	HOT DIP AASHTO M232 CLASS / ASTM A153 CLASS C / ASTM F2329 C O R MECHANICAL GALVANIZE TO AASHTO M298 CLASS 50 TYPE 1 / ASTM B695 CLASS 50 TYPE 1 UNC OVER TAP NUTS AS SPECIFIED IN AASHTO 291/ASTM A 563 HEAVY HEX HEAD ASTM A563DH OR SAE J995 GRADE 5	
W1	TOE PLATE	AASHTO M111/ASTM A123 ASTM A36 MIN STRENGTH 36 KSI, OR ASTM A529 MAX. STRENGTH 50 KSI, OR ASTM A572 MAX. STRENGTH 50 KSI, OR ASTM A709 MAX. STRENGTH 50 KSI, OR ASTM A992 MAX. STRENGTH 50 KSI	
X1	TOE PLATE - CONNECTION BOLT	HOT DIP AASHTO M232 CLASS / ASTM A153 CLASS C / ASTM F2329 C OR MECHANICAL GALVANIZE TO AASHTO M298 CLASS 55 TYPE 2 / ASTM B695 CLASS 55 TYPE 2 UNC HEAVY HEX HEAD OR AASTHO M180 HEAD, ASTM F3125 GRADE A325 TYPE 1 HEAVY HEX HEAD OR SAE J429 GRADE 5 HEAVY HEX HEAD / ASTM A449 TYPE 1 HEAVY HEX HEAD. BOLTS MAY BE FULLY THREADED. PROVIDE ENOUGH THREADING FOR PROPER TIGHTENING OF BOLT.	¾" DIA.
X2	TOE PLATE - CONNECTION BOLT - WASHER	HOT DIP AASHTO M232 CLASS / ASTM A153 CLASS C / ASTM F2329 C OR MECHANICAL GALVANIZE TO AASHTO M298 CLASS 55 TYPE 2 / ASTM B695 CLASS 55 TYPE 2 F436 TYPE 1 (HARDEN WASHER ONLY)	
X3	TOE PLATE - CONNECTION BOLT - NUT	HOT DIP AASHTO M232 CLASS / ASTM A153 CLASS C / ASTM F2329 C OR MECHANICAL GALVANIZE TO AASHTO M298 CLASS 55 TYPE 2 / ASTM B695 CLASS 55 UNC OVER TAP NUTS AS SPECIFIED IN AASHTO 291 / ASTM A 563 HEAVY HEX HEAD ASTM A563DH OR SAE J995 GRADE 5	

CONCRETE BARRIER TEMPORARY PRECAST, 12' - 6"

STATE OF WISCONSIN
DEPARTMENT OF TRANSPORTATION

APPROVED
February 2023 — DATE
/S/ Rodney Taylor — ROADWAY STANDARDS DEVE ENGINEER
FHWA

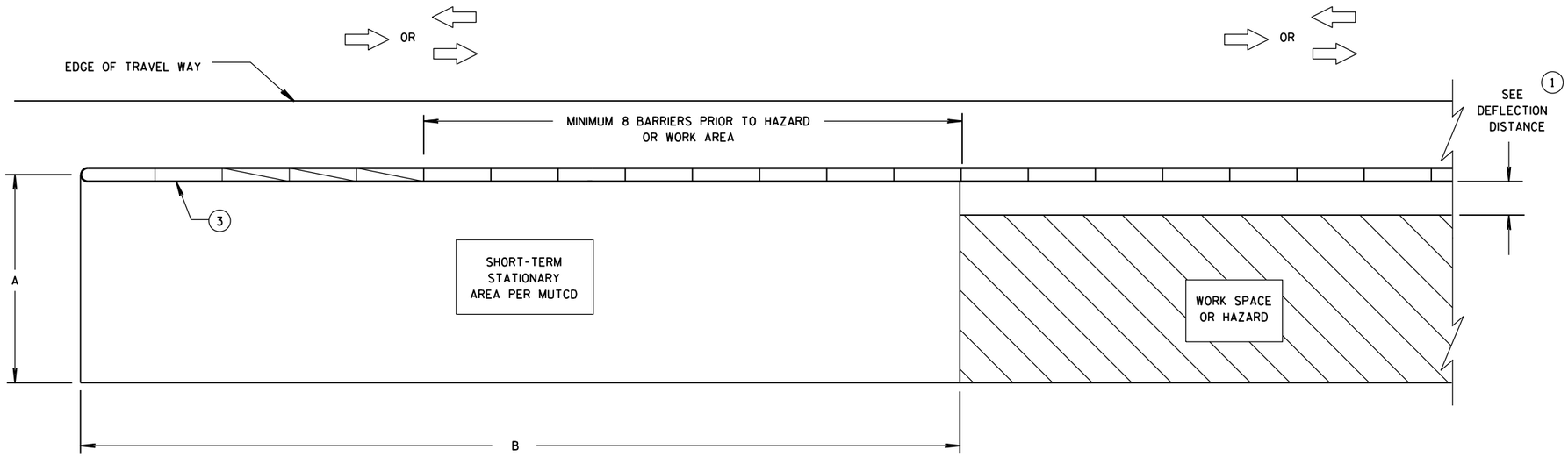

CRASH CUSHION/SAND BARREL ARRAY AND TEMPORARY BARRIER INSTALLATION FOR TRAFFIC ON ONE SIDE OF BARRIER

DIMENSION A TABLE (2)

FACILITY	POSTED SPEED MPH	DIMENSION A MIN. FT	DIMENSION A MAX. FT
FREEWAY/EXPRESSWAY	ALL	15	20
NON-FREEWAY/EXPRESSWAY	GREATER THAN OR EQUAL TO 45	10	15
NON-FREEWAY/EXPRESSWAY	LESS THAN 45	8	10
AADT LESS THAN 1,500	ALL	8	10

DIMENSION B TABLE (2)

POSTED SPEEDS MPH	DIMENSION B FT
20	115
25	155
30	200
35	250
40	305
45	360
50	425
55	495
60	570
65	645

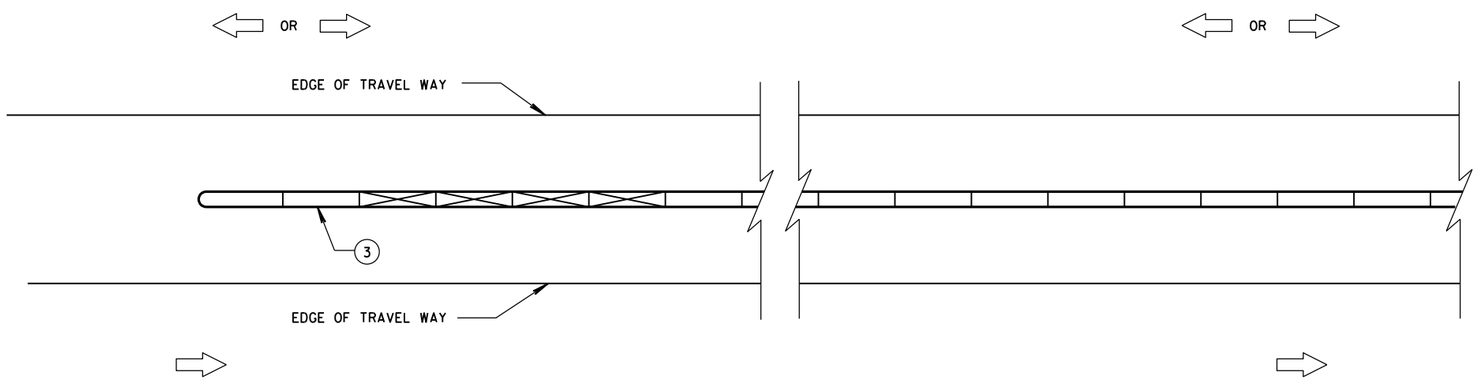

CRASH CUSHION/SAND BARREL ARRAY AND TEMPORARY BARRIER INSTALLATION FOR TRAFFIC ON BOTH SIDES OF BARRIER

LEGEND

- DIRECTION OF TRAVEL
- CRASH CUSHION OR SAND BARREL ARRAY
- SEE FREE STANDING TRANSITION TO TIED-DOWN SYSTEM DETAILS
- SEE BI-DIRECTIONAL TRANSITION TO TIED-DOWN SYSTEM DETAILS
- 3 PINS PLACED ON TRAFFIC SIDE OF BARRIER
- PERMANENT CONCRETE BARRIER OR CONCRETE PARAPET
- FREE STANDING TEMPORARY BARRIER

GENERAL NOTES

SEE STANDARD DETAIL DRAWING 14B7 FOR MORE INFORMATION.

DETAILS PROVIDE A GENERAL LAYOUT OF TEMPORARY CONCRETE BARRIER, CRASH CUSHIONS, SAND BARREL ARRAYS AND TIE DOWN TRANSITIONS. DETAILS PROVIDED MAY NOT FIT ALL POSSIBLE SITUATIONS OR SITE CONDITIONS. SEE OTHER SECTIONS OF THE CONTRACT OR PROJECT ENGINEER FOR MORE DETAILS.

ADDITIONAL TEMPORARY BARRIER MAY BE REQUIRED TO PROTECT TRAVELING PUBLIC FROM HAZARDS, CONTRACTOR'S OPERATIONS OR TO CONTROL TRAFFIC.

TEMPORARY BARRIER MAY BE REQUIRED TO BE ANCHORED TO PAVEMENT OR BRIDGE DECK.

FOR DETAILS ON CRASH CUSHION OR SAND BARREL ARRAYS SEE OTHER SECTIONS OF THE PLAN AND MANUFACTURE'S DETAILS.

SLOPES LEADING TO TEMPORARY BARRIER, CRASH CUSHION OR SAND BARREL ARRAY ARE 10:1 OR LESS.

(1) FOR DEFLECTION INFORMATION SEE STANDARD DETAIL DRAWING 14B7.

(2) VALUES PROVIDED MAY NOT FIT ALL POSSIBLE SITUATIONS OR SITE CONDITIONS. SEE OTHER SECTIONS OF THE CONTRACT OR PROJECT ENGINEER FOR MORE DETAILS.

(3) ANCHOR TEMPORARY BARRIER ACCORDING TO CRASH CUSHION OR SAND BARREL MANUFACTURER'S RECOMMENDATIONS. IF MANUFACTURER'S RECOMMENDATIONS ARE NOT PROVIDED, ANCHOR 3 PINS ON TRAFFIC SIDE.

CRASH CUSHION/SAND BARREL ARRAY AND OTHER TEMPORARY BARRIER LAYOUT DETAILS

STATE OF WISCONSIN
DEPARTMENT OF TRANSPOR

6

S.D.D. 14 B 8-2a

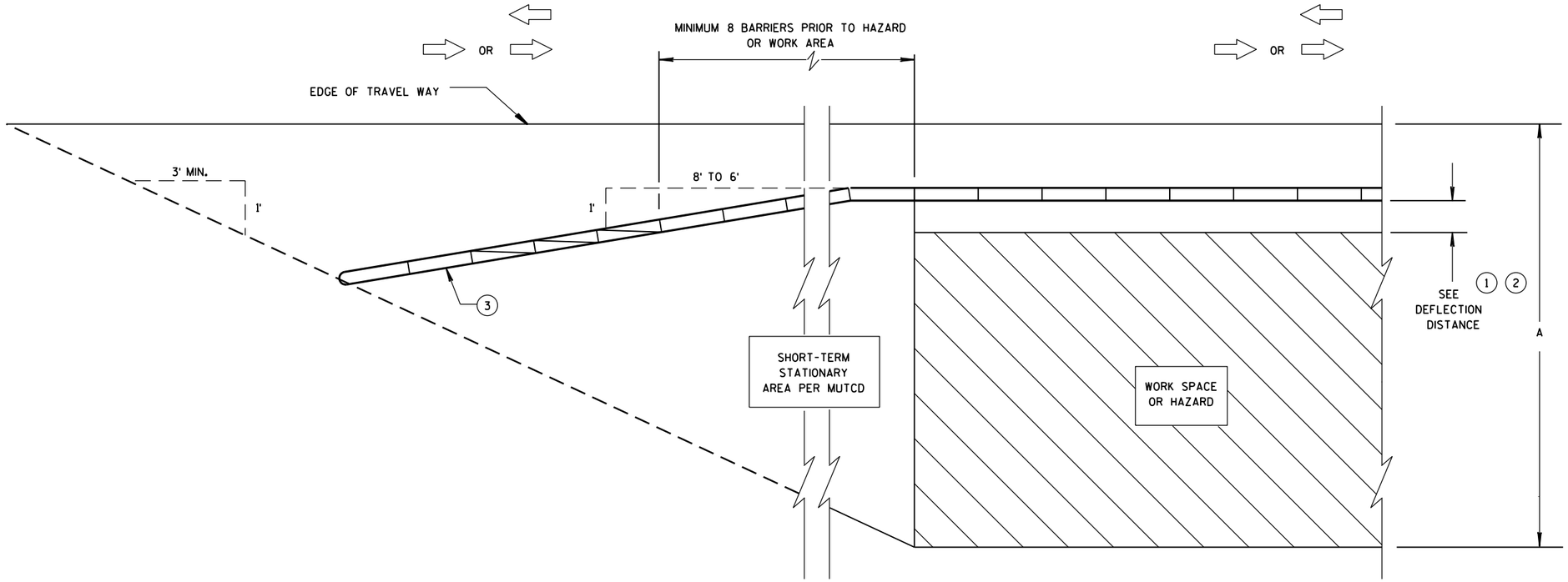

CRASH CUSHION/SAND BARREL ARRAY AND TEMPORARY BARRIER INSTALLATION FOR TRAFFIC ON ONE SIDE - FLARED INSTALLATION

6

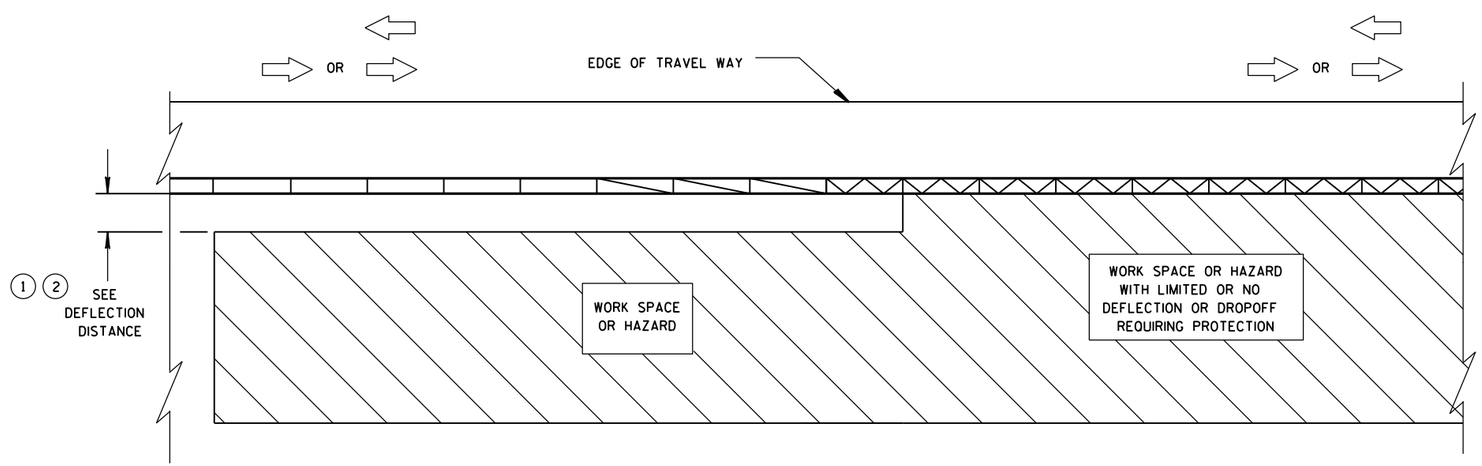

TRANSITION FROM FREE STANDING TEMPORARY BARRIER TO ANCHORED BARRIER

LEGEND

- DIRECTION OF TRAVEL
- CRASH CUSHION OR SAND BARREL ARRAY
- SEE FREE STANDING TRANSITION TO TIED-DOWN SYSTEM DETAILS
- SEE BI-DIRECTIONAL TRANSITION TO TIED-DOWN SYSTEM DETAILS
- 3 PINS PLACED ON TRAFFIC SIDE OF BARRIER
- PERMANENT CONCRETE BARRIER OR CONCRETE PARAPET
- FREE STANDING TEMPORARY BARRIER

CRASH CUSHION/SAND BARREL ARRAY AND OTHER TEMPORARY BARRIER LAYOUT DETAILS

STATE OF WISCONSIN
DEPARTMENT OF TRANSPOI

S.D.D. 14 B 8-2b

1. WOOD OR STEEL POSTS (w6X9 OR w6X8.5) MAY BE USED. DO NOT INTERMIX WOOD AND STEEL POSTS. INSTALL STEEL POSTS WITH HOLES ON APPROACHING TRAFFIC SIDE.
2. USE WOOD OR APPROVED PLASTIC BLOCKOUTS. WOOD BLOCKOUTS MAY BE CONSTRUCTED OUT OF TWO OR MORE WOOD BLOCKOUTS. SEE ALTERNATE WOOD BLOCKOUT DETAIL. DIMENSIONS OF APPROVED PLASTIC BLOCKOUTS MAY VARY.
3. IF ROCK IS ENCOUNTERED DURING EXCAVATION, PROVIDE A HOLE 12 INCHES IN DIAMETER EXTENDING 20 INCHES DEEP INTO THE ROCK. PLACE APPROXIMATELY 2 1/2" INCHES OF GRANULAR MATERIAL IN THE BOTTOM OF THE HOLE. CUT THE POSTS THE TO LENGTH AMD INSTALL. BACKFILL WITH EXCAVATED MATERIAL AND COMPACT. BACKFILL IS TO BE FREE OF LARGE ROCKS.
4. WHEN THE DISTANCE FROM BACK OF POST TO SHOULDER HINGE POINT IS LESS THAN 2 FEET INSTALL LONGER POST AT HALF POST SPACING (K).
5. FOR NEW MGS INSTALLATION TOP OF W-BEAM RAIL TOLERANCE IS ±1". FOR EXISTING MGS INSTALLATION TOP OF W-BEAM IS BETWEEN 27 ¾" TO 32".
6. WHEN USING STEEL POST AND WOOD BLOCKOUTS INSTALL FOUR 16D GALVANIZED NAILS. INSTALL NAILS AT THE BACK CORNERS OF THE BLOCK AND BEND THE NAILS OVER THE FLANGE OF THE STEEL POST.
7. TOTAL POST LENGTH FOR TYPE K IS 7' - 0". TOTAL POST LENGTH FOR OTHER MGS TYPES IS 6' - 0".

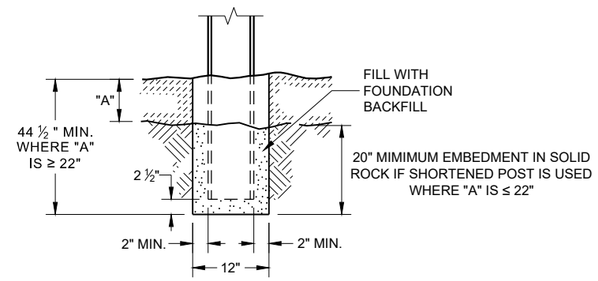

END VIEW
SETTING STEEL OR WOOD POST IN ROCK (3)

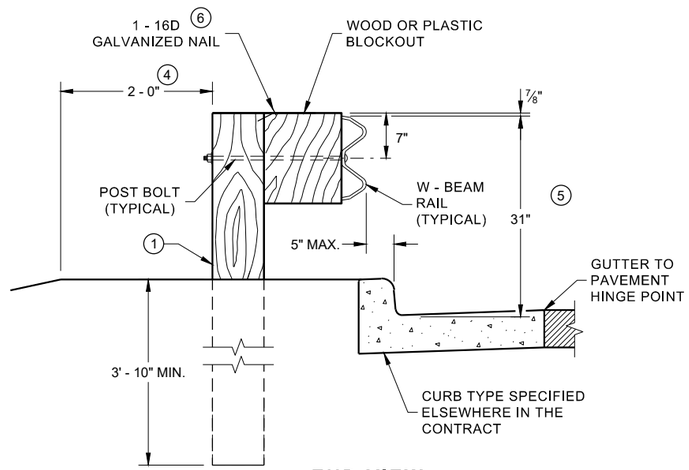

END VIEW
LOCATED ALONG A CURBED ROADWAY

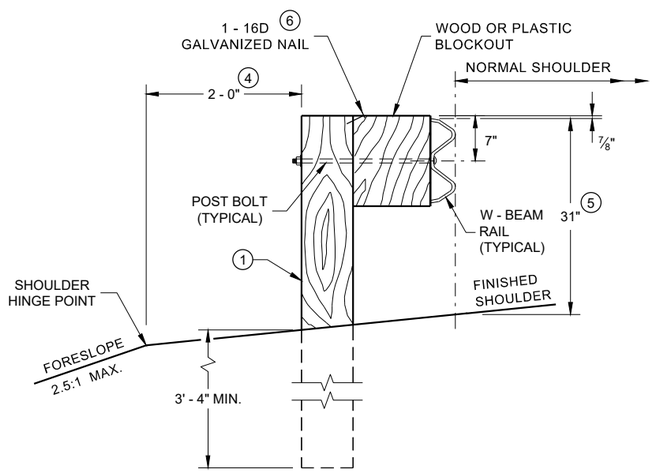

END VIEW
LOCATED ALONG A ROADWAY SHOULDER STANDARD INSTALLATION

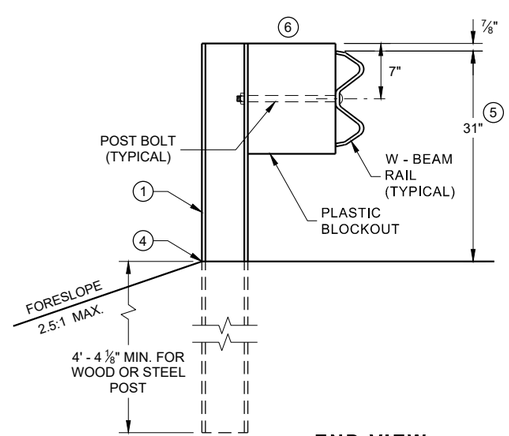

END VIEW
MGS LONGER POST AT HALFPOST SPACING W BEAM (K)

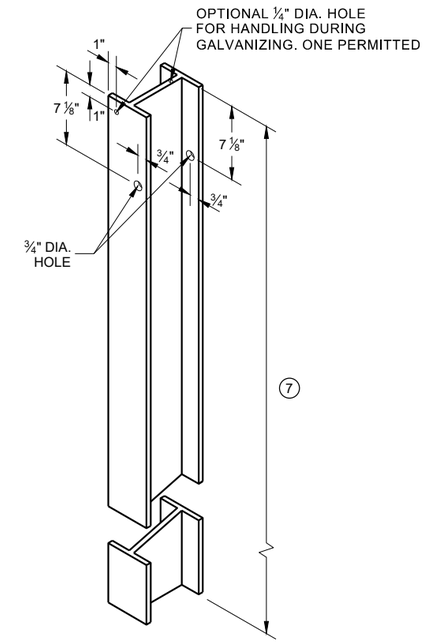

STEEL POST & HOLE PUNCHING DETAIL (W 6 X 9) (1)

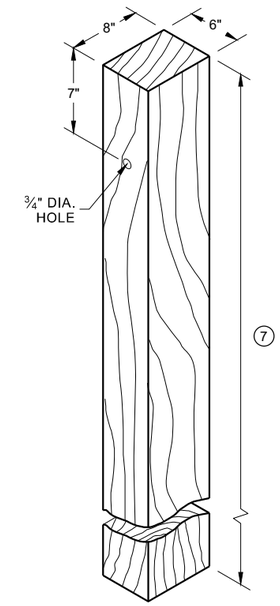

WOOD POST (6" X 8") NOMINAL (1)

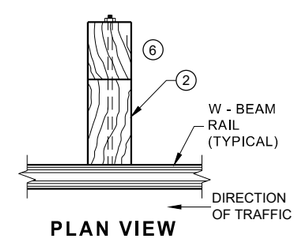

PLAN VIEW WOOD POST, BLOCKOUT & BEAM

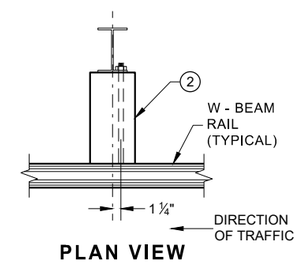

PLAN VIEW STEEL POST, PLASTIC BLOCKOUT & BEAM

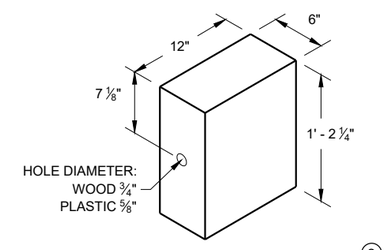

WOOD OR PLASTIC BLOCKOUT (2)

MIDWEST GUARDRAIL SYSTEM (MGS) GUARDRAIL

STATE OF WISCONSIN
DEPARTMENT OF TRANSPORTA

6

SDD 14B42 - 07a

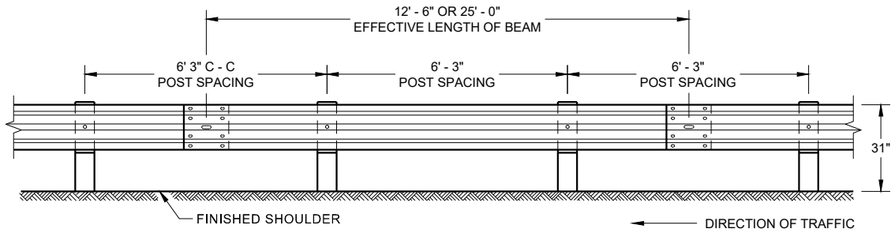

FRONT VIEW
POST SPACING STANDARD INSTALLATION

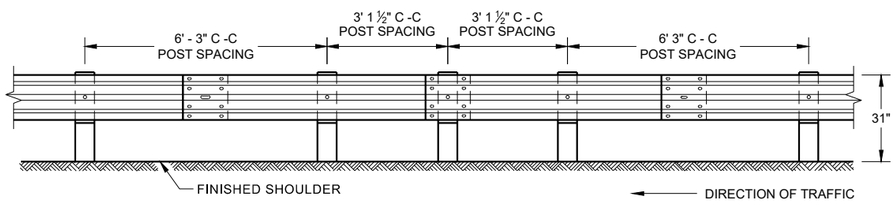

FRONT VIEW
HALF POST SPACING (HS) AND HALF POST SPACING WITH LONGER POSTS (K)

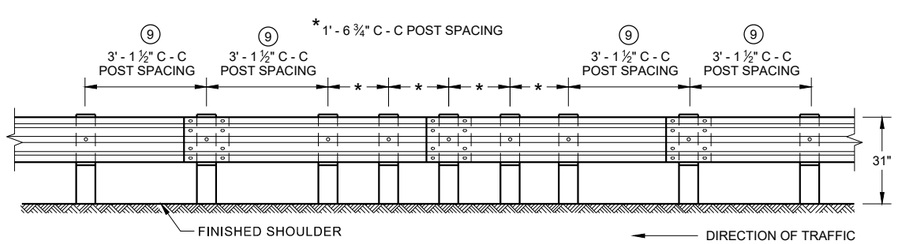

FRONT VIEW
QUARTER POST SPACING (QS)

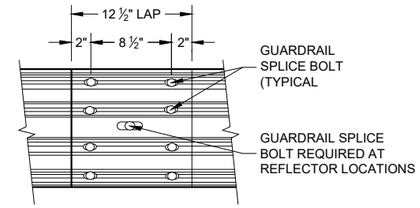

FRONT VIEW
MID-SPAN BEAM SPLICE

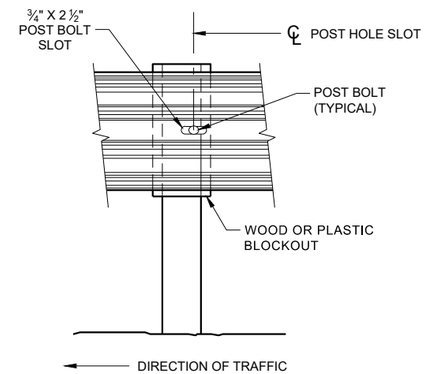

FRONT VIEW AT STEEL POST

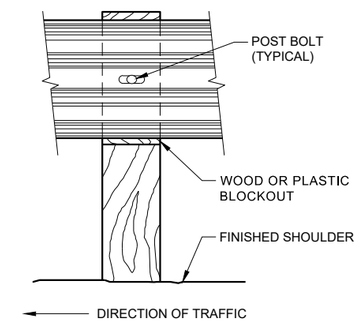

FRONT VIEW AT WOOD POST

GENERAL NOTES

8 DO NOT INSTALL REFLECTORS ON THE FIRST 50 FEET OF THE APPROACH END OF THE ENERGY ABSORBING TERMINAL.

9 25 FEET OF HALF POST SPACING IS REQUIRED ON APPROACH AND DEPARTURE ENDS OF QUARTER POST SPACING.

POST BOLTS ARE A ⅝" DIAMETER ASTM A307 GUARDRAIL BOLT. A POST BOLT REQUIRES ⅝" DIAMETER A563A DOUBLE RECESSED (DR) HEAVY HEX NUT AND ⅝" DIAMETER F844 FLAT WASHER. POST BOLTS MAY BE LONGER IF MULTIPLE BLOCKOUTS ARE BEING USED.

GUARD RAIL SPLICE BOLTS ARE A ⅝" DIAMETER ASTM A307 GUARDRAIL HEAD BOLT. A GUARDRAIL SPLICE BOLT REQUIRES ⅝" DIAMETER A563A DOUBLE RECESSED (DR) HEAVY HEX NUT.

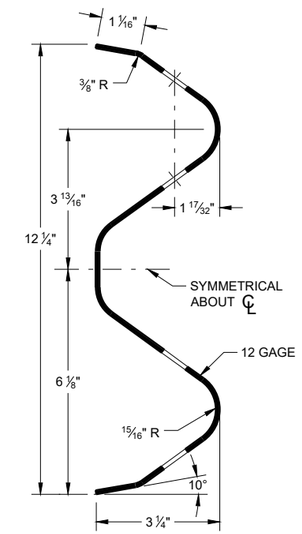

SECTION THRU W-BEAM RAIL

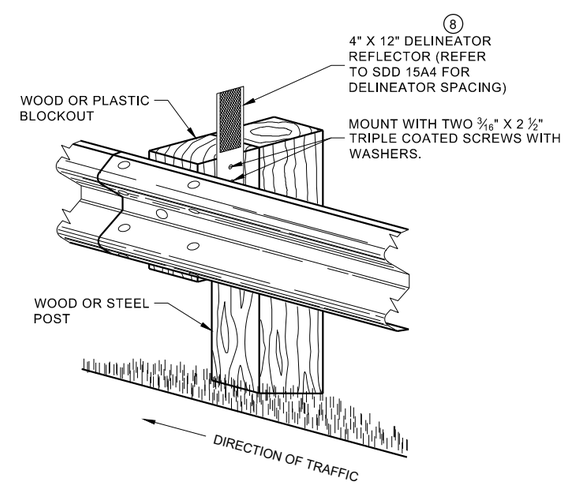

ONE SIDED REFLECTOR DETAIL AND TYPICAL INSTALLATION

MIDWEST GUARDRAIL SYSTEM (MGS) GUARDRAIL

STATE OF WISCONSIN
DEPARTMENT OF TRANSPORTAT

6

6

SDD 14B42 - 07b

SDD 14B42 - 07b

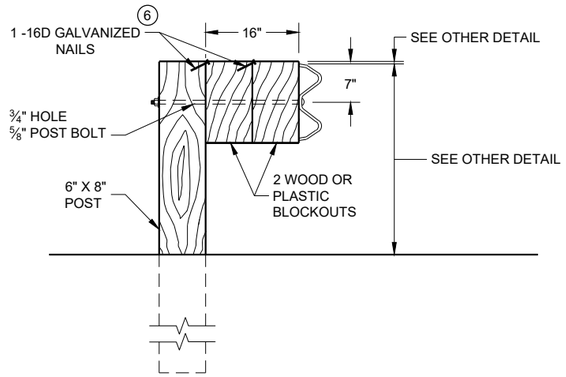

DETAIL FOR 16" BLOCKOUT DEPTH

IT IS ACCEPTABLE TO USE BLOCKOUTS UP TO 16" DEEP TO INCREASE THE POST OFFSET TO AVOID UNDERGROUND OBSTACLES. THERE IS NO LIMIT TO THE NUMBER OF POSTS THAT CAN HAVE ADDITIONAL BLOCKOUTS UP TO 16" DEEP.

NOTE:

1. ALL FILLETS SHALL HAVE A MINIMUM RADIUS OF 3/16".
2. IF THE BOLT EXTENDS MORE THAN ¼" FROM THE NUT THE BOLT SHOULD BE TRIMMED BACK.

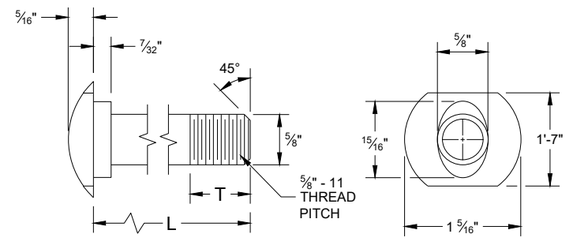

POST BOLT TABLE

L	T (MIN.)
1 ¼"	1 ⅛"
2"	1 ¾"
10"	4"
14"	4 1/16"
18"	4"
21"	4 1/16"
25"	4"

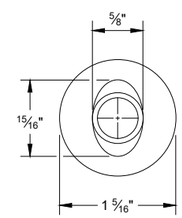

ALTERNATE BOLT HEAD

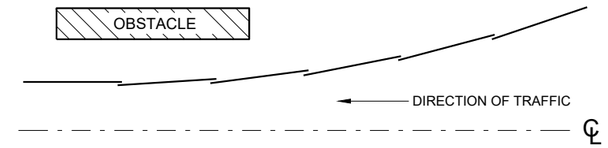

PLAN VIEW
BEAM LAPPING DETAIL

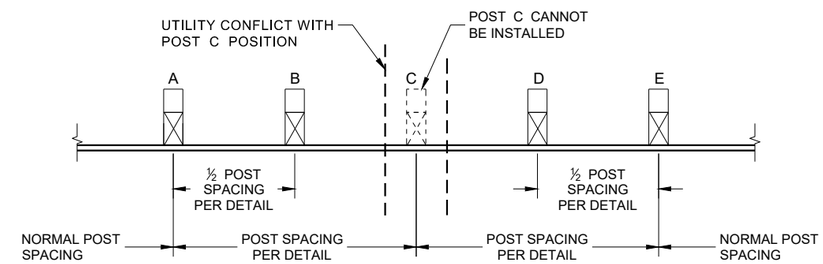

POST DRIVING FOR CONTINUOUS UNDERGROUND OBSTRUCTION

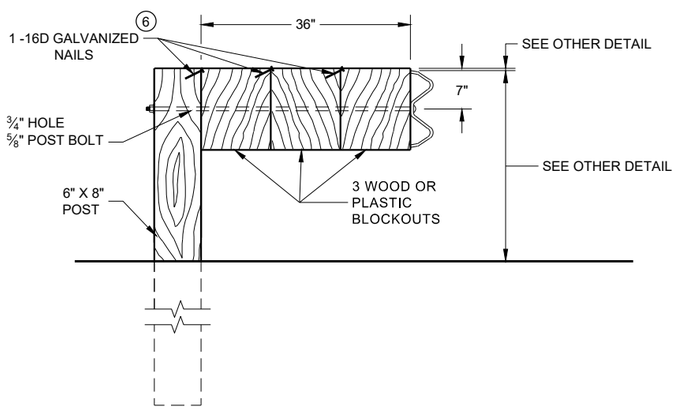

DETAIL FOR 36" BLOCKOUT DEPTH

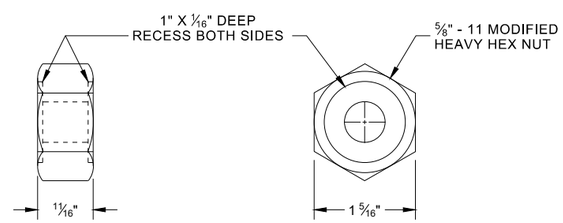

POST BOLT, SPLICE BOLT AND RECESS NUT

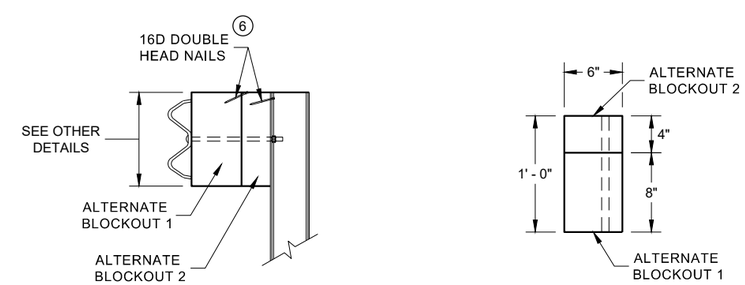

SIDE VIEW

PLAN VIEW

ALTERNATE WOOD BLOCKOUT DETAIL

NOTES: UNDER SPECIAL CIRCUMSTANCES, SUCH AS AVOIDING OBSTACLES THAT ARE NOT RELOCATED, IT IS ACCEPTABLE TO INSTALL ADDITIONAL BLOCKOUTS TO OBTAIN UP TO 36" DEPTH FOR ONE OR TWO POSTS IN A SECTION OF GUARDRAIL.

DO NOT USE 16" OR 36" BLOCKOUTS IF IT CAUSES THE POST TO BE DRIVEN BEYOND SHOULDER HINGE POINT OR CAUSES A FIXED OBJECT TO BE WITHIN THE DEFLECTION DISTANCE OF THE BARRIER.

(6) WHEN USING STEEL POST AD WOOD BLOCKOUTS, INSTALL FOUR 16D GALVANIZED NAILS. INSTALL NAILS AT THE BACK CORNERS OF THE BLOCK AND BEND THE NAILS OVER THE FLANGE OF THE STEEL POST.

MIDWEST GUARDRAIL SYSTEM (MGS) GUARDRAIL

STATE OF WISCONSIN
DEPARTMENT OF TRANSPORTA

6

SDD 14B42 - 07c

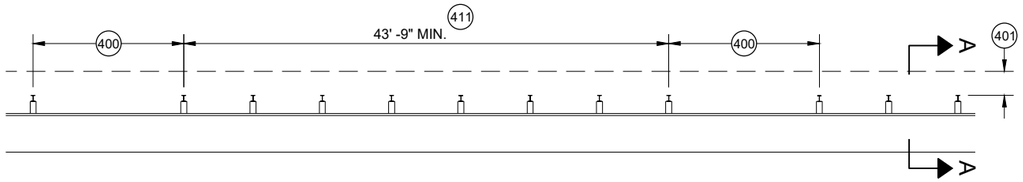

MISSING POST IN MGS GUARDRAIL

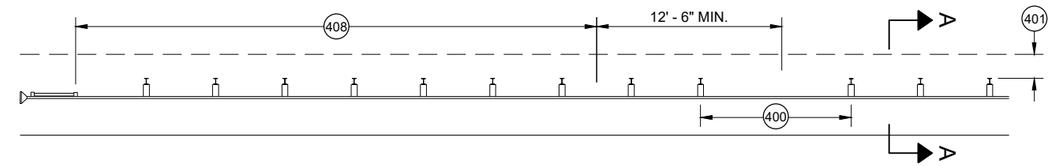

MISSING POST IN MGS GUARDRAIL NEAR EAT

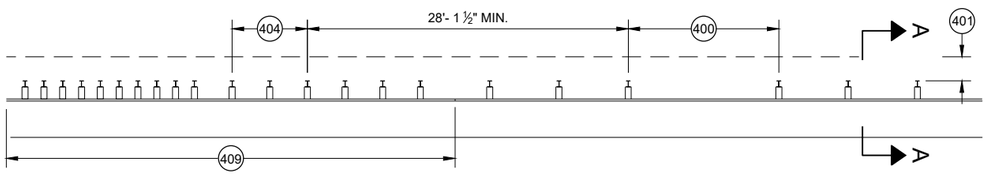

MISSING POST IN MGS GUARDRAIL NEAR AN APPROACH TRANSITION

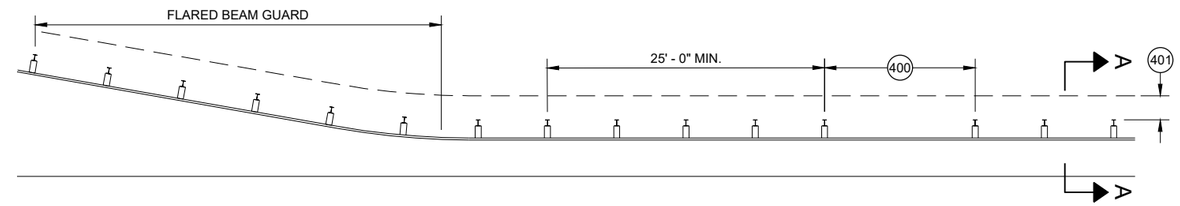

MISSING POST IN MGS GUARDRAIL NEAR FLARED BEAM GUARD

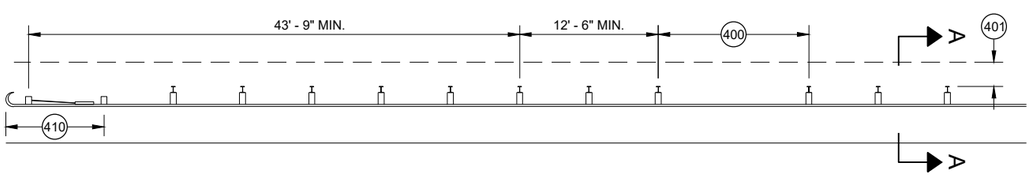

MISSING POST IN MGS GUARDRAIL NEAR A TYPE 2 END TERMINAL

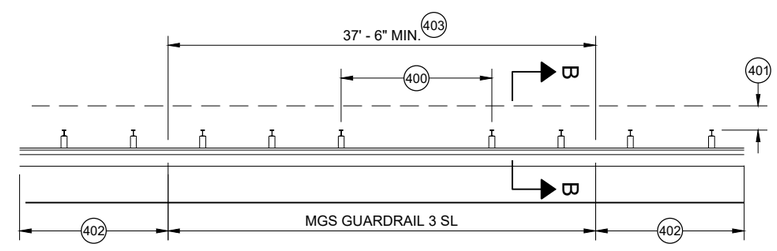

MISSING POST IN SHORT SPAN MGS GUARDRAIL NEAR CURB (SL) 407

400 MAX SPAN 12' - 6"
401 2' MIN.
402 MGS GUARDRAIL 3
403 NESTING BEAM GUARD
404 ASYMMETRIC TRANSITION
405 SOIL WELL DRAINED AND COMPACTED
406 SEE OTHER DRAWINGS IN THIS SDD
407 SEE OTHER DRAWINGS FOR MIN. SPACING BETWEEN SPANS
408 SEE SDD 14B44
409 SEE SDD 14B45
410 SEE SDD 14B47
411 MINIMUM DISTANCE BETWEEN MISSING POST SPANS.

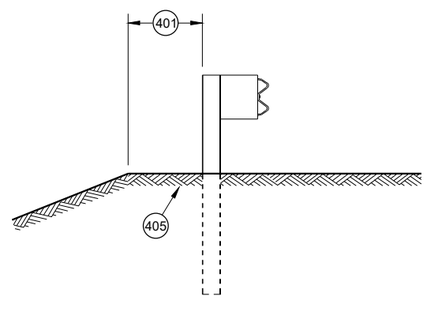

SECTION A - A 406

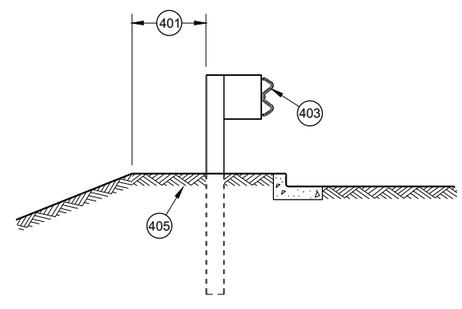

SECTION B - B 406

MIDWEST GUARDRAIL SYSTEM (MGS) GUARDRAIL

STATE OF WISCONSIN
DEPARTMENT OF TRANSPORTATION

APPROVED
May 2021 — DATE
/S/ Rodney Taylor — ROADWAY STANDARDS DEVE UNIT SUPERVISOR
FHWA

6

SDD 14B42 - 07d

GENERAL NOTES

(A) THE SLOPE IN THE AREA BOUNDED BY THE GRADELINE, THE HINGE POINT LINE (HPL) AND THE CLEAR ZONE LIMITS (CZL) SHALL BE 4:1 OR FLATTER.

(B) AFTER FINAL ASSEMBLY, RECHECK CABLE TO BE SURE IT IS TAUT AND HAS NOT RELAXED

(C) DIFFERENT MANUFACTURERS REQUIRE DIFFERENT PERFORATED W - BEAM RAIL END PANELS. SEE MANUFACTURER'S INFORMATION.

(D) ATTACH ALUMINUM SHEET TO E.A.T. HEAD USING 4 STAINLESS STEEL SELF - TAPPING SCREWS. ONE SCREW PER CORNER.

(E) HARDWARE MAY VARY BETWEEN MANUFACTURER. SEE MANUFACTURER'S DRAWING FOR INFORMATION.

DIMENSIONS MAY VARY, MANUFACTURER'S INFORMATION.

SEE SDD 14B42 FOR MORE INFORMATION.

* DO NOT ATTACH BLOCKOUTS TO POST 1 AND 2.

DO NOT INSTALL REFLECTORS ON THE FIRST 50 FEET OF THE APPROACH END OF THE ENERGY ABSORBING TERMINAL.

SEE MANUFACTURER'S DRAWING FOR SPLICE LOCATION, HARDWARE DIMENSIONS AND INSTALLATION INSTRUCTIONS.

THE CENTER OF THE UPPER 3 ½" DIAMETER HOLE ON POST NUMBER 3 THROUGH POST 9 IS TO BE FLUSH WITH THE GROUND LINE UP TO A MAXIMUM OF 2" ABOVE GROUND LINE. WOOD BLOCKS ON POSTS NUMBERED 3 THROUGH 9 MAY BE ADJUSTED UP TO 3" ABOVE THE TOP OF POST.

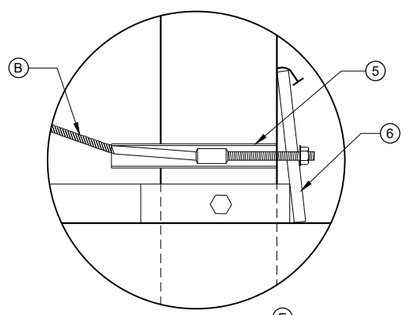

DETAIL "A" (E)

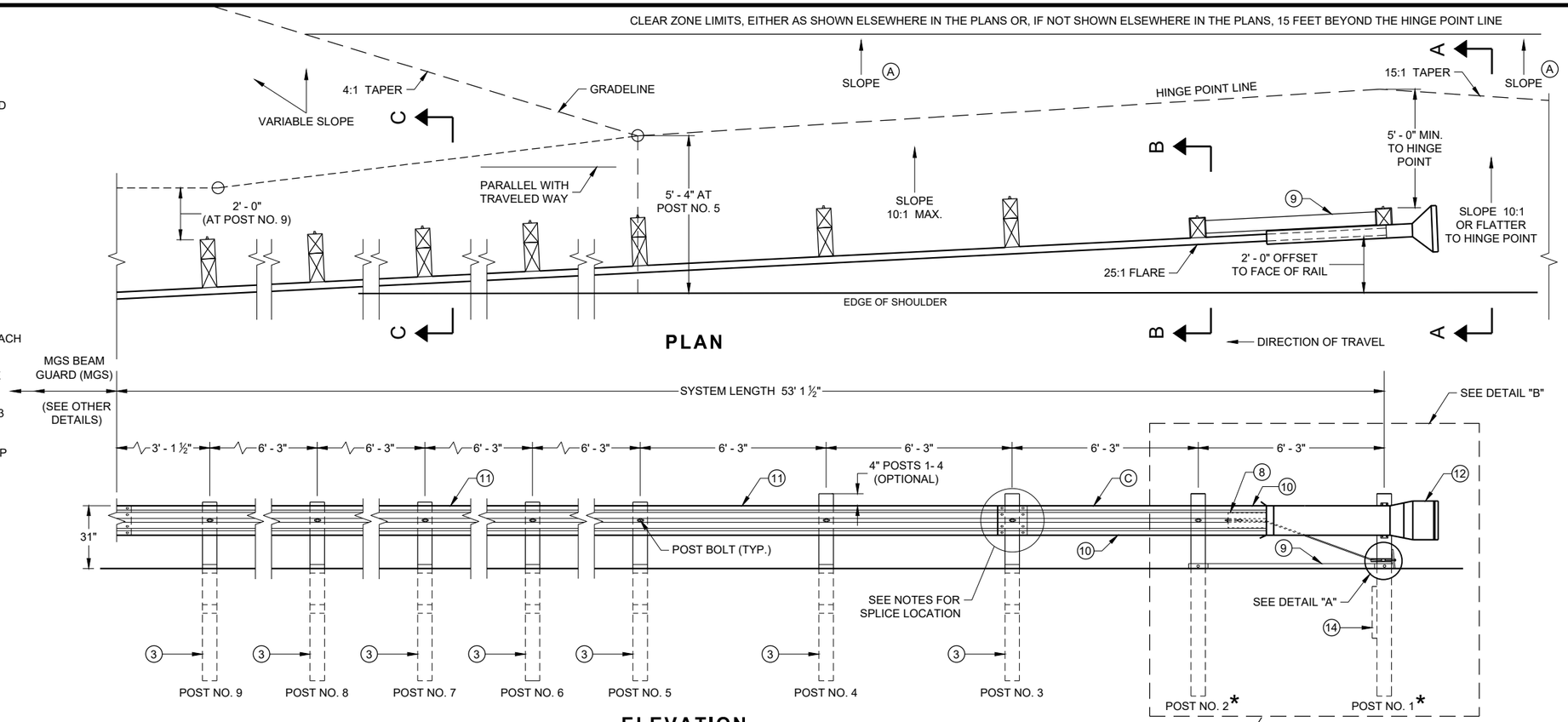

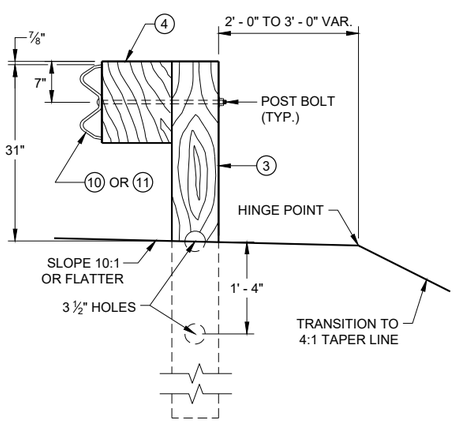

SECTION C - C
TYPICAL AT POST NOS. 3 - 9

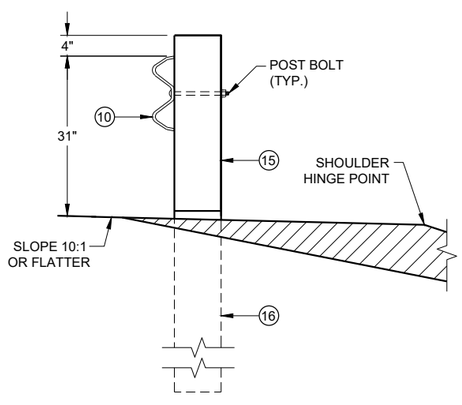

SECTION B - B
TYPICAL AT POST NO. 2*

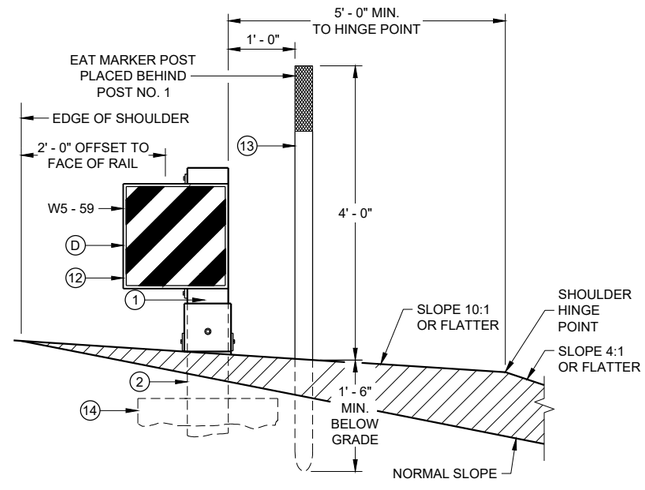

SECTION A - A
TYPICAL AT POST NO. 1*

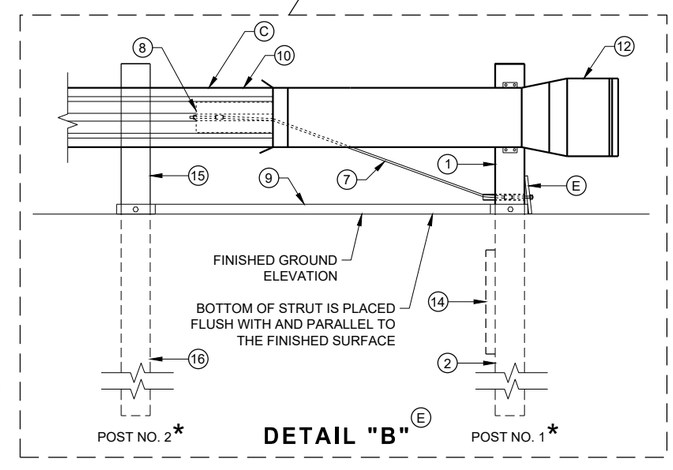

DETAIL "B" (E)

MIDWEST GUARDRAIL SYSTEM ENERGY ABSORBING TERMINAL (MGS)

STATE OF WISCONSIN
DEPARTMENT OF TRANSPORTATION

6

6

SDD 14B44 - 04a

SDD 14B44 - 04a

BILL OF MATERIALS

PART NO.	DESCRIPTION MATERIALS PROVIDED BY MGS EAT MANUFACTURER. SEE MANUGACTURER'S DETAILS FOR MORE INFORMATION.
1	UPPER POST NO. 1 6" X 6" TUBE
2	LOWER POST NO. 1
3	WOOD CRT
4	WOOD BLOCKOUT
5	PIPE SLEEVE
6	BEARING PLATE
7	BCT CABLE ASSEMBLY
8	ANCHOR CABLE BOX
9	GROUND STRUT
10	PERFORATED W-BEAM RAIL END PANEL, 12'-6" LONG.
11	STANDARD W-BEAM RAIL. MULTIPLE SECTIONS REQUIRED. SECTIONS VARY IN LENGTH.
12	IMPACT HEAD
13	EAT MARKER POST - YELLOW (SEE APPROVED PRODUCTS LIST)
14	SOIL PLATE
15	UPPER POST NO. 2
16	LOWER POST NO. 2

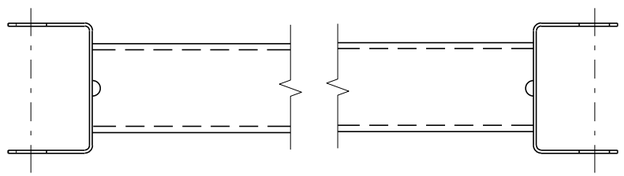

GENERIC GROUND STRUT 9 E

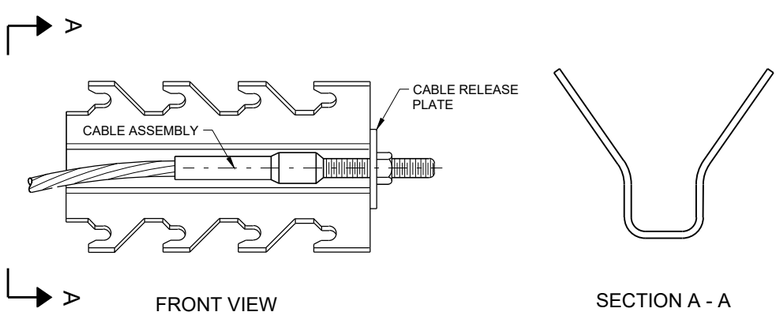

GENERIC ANCHOR CABLE BOX 9 E

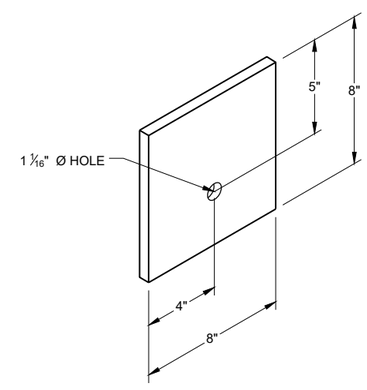

BEARING PLATE 6 E

6

6

SDD 14B44 - 04b

SDD 14B44 - 04b

MIDWEST GUARDRAIL SYSTEM ENERGY ABSORBING TERMINAL (MGS)

STATE OF WISCONSIN
DEPARTMENT OF TRANSPORTAT

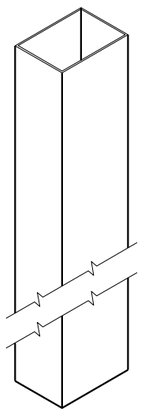

UPPER POST NO. 1 (1) (E)

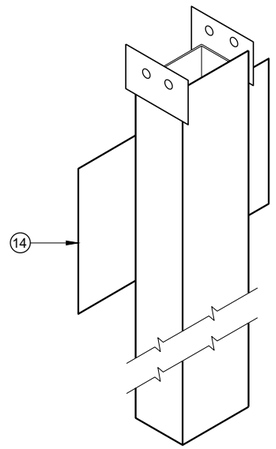

LOWER POST NO. 1 (2) (E)

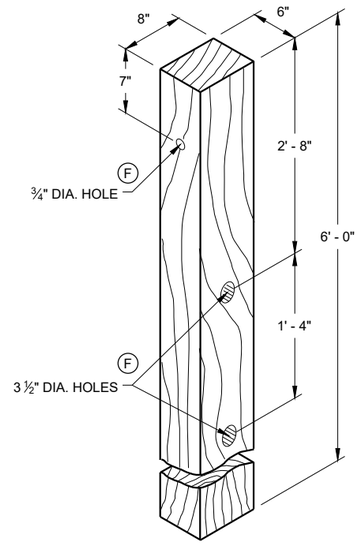

WOOD CRT POST (3) (E)

POSTS NUMBER 3-9

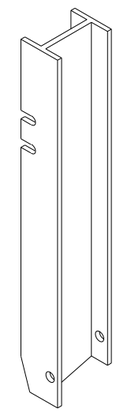

UPPER POST NO. 2 (15) (E)

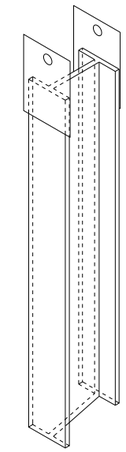

LOWER POST NO. 2 (16) (E)

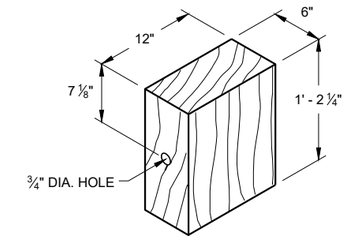

WOOD BLOCKOUT (4)

REQ'D. AT ALL POSTS EXCEPT POST NO'S 1 & 2

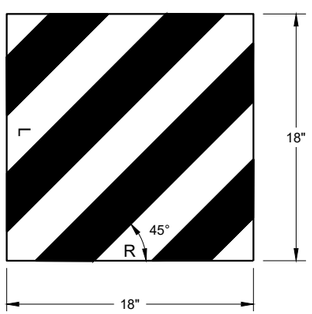

W5 - 59

REFLECTIVE SHEETING DETAIL (E)

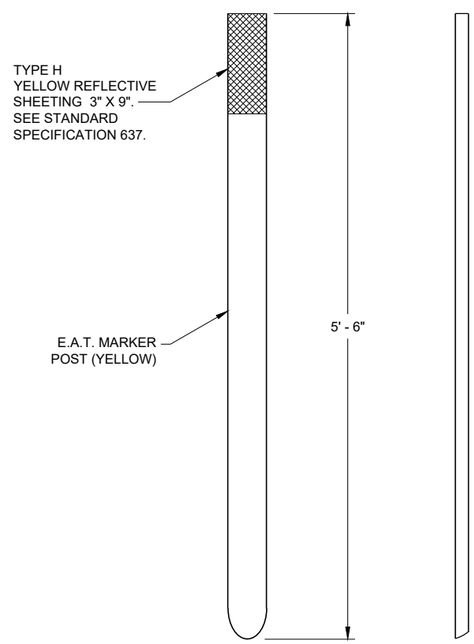

FRONT VIEW SIDE VIEW

E.A.T. MARKER POST (13)

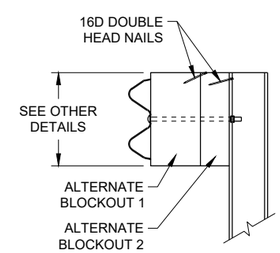

SIDE VIEW

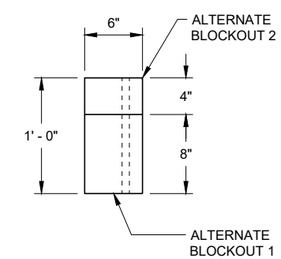

TOP VIEW

ALTERNATE WOOD BLOCKOUT DETAIL

MIDWEST GUARDRAIL SYSTEM ENERGY ABSORBING TERMINAL (MGS)

STATE OF WISCONSIN
DEPARTMENT OF TRANSPORTATION

APPROVED
7/2018 — DATE
/S/ Rodney Taylor — ROADWAY STANDARDS DEVE UNIT SUPERVISOR
FHWA

6

6

SDD 14B44 - 04c

SDD 14B44 - 04c

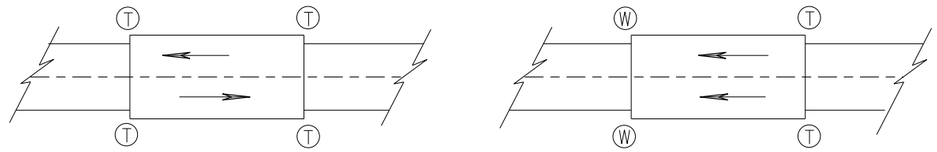

TWO WAY TRAFFIC **ONE WAY TRAFFIC**

(T) THRIE BEAM CONNECTION

(W) W-BEAM CONNECTION WHEN REQUIRED

TYPICAL LOCATIONS OF THRIE BEAM AND W-BEAM CONNECTIONS TO BRIDGE

GENERAL NOTES

IF ROCK IS ENCOUNTERED, REMOVE ROCK TO FULL DEPTH OF POST PLUS 2½", AND 12" DIAMETER AROUND POST. SEE 14B42 FOR MORE DETAILS.

TRANSITION USES STEEL POSTS ONLY.

SEE STANDARD DETAIL DRAWING 14 B 42 FOR MORE INFORMATION.

POST 2 THROUGH 17 USES STEEL POST ONLY

(1) BRIDGE RAILING TYPE "W" DOES NOT REQUIRE A TERMINAL CONNECTOR.

(2) OPTIONAL CURB AND GUTTER OR DRAINAGE FEATURE SEE PLAN FOR INFORMATION.

(13) STEEL OR WOOD POST IS ACCEPTABLE AT POST 1. SEE SDD14B42

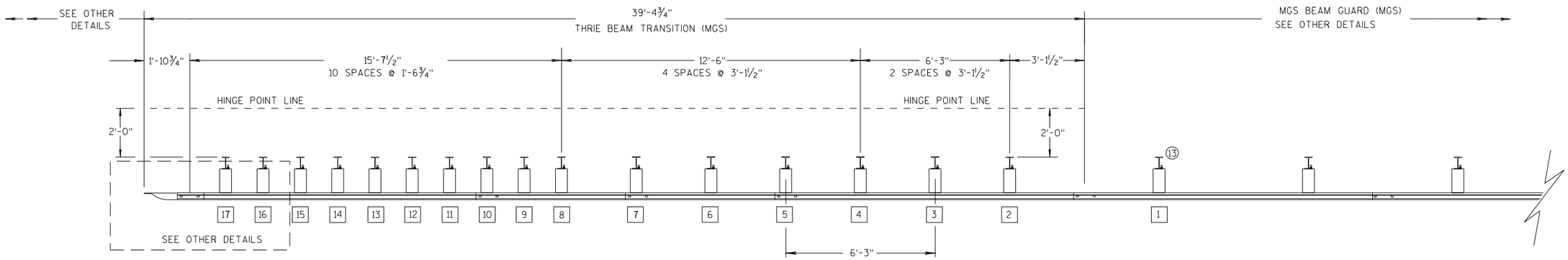

PLAN VIEW

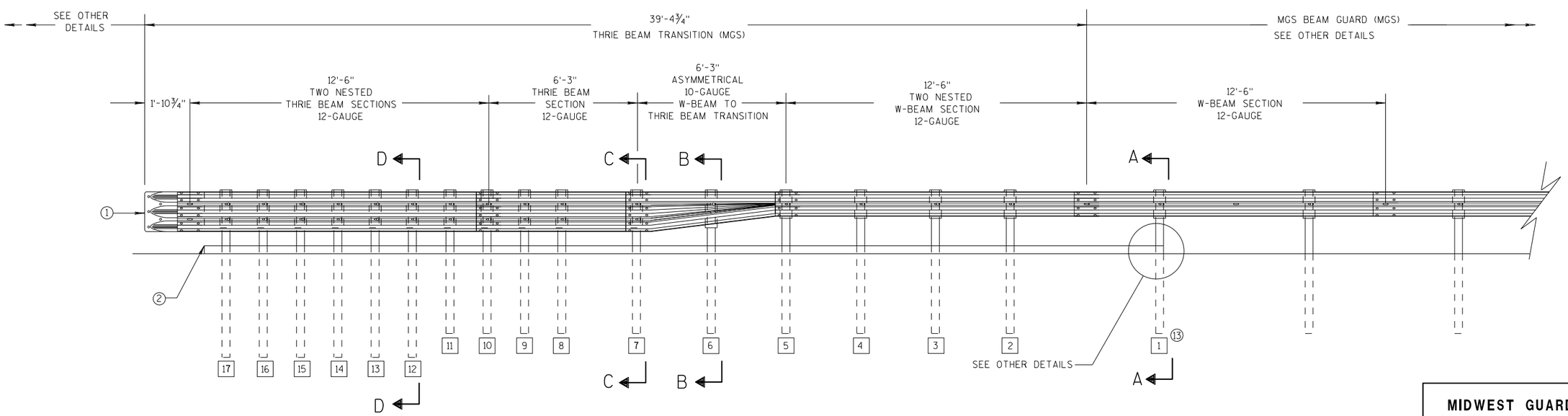

ELEVATION VIEW

MIDWEST GUARDRAIL SYSTEM THRIE BEAM TRANSITION

MIDWEST GUARDRAIL SYSTEM THRIE BEAM TRANSITION (MGS)

STATE OF WISCONSIN
DEPARTMENT OF TRANSPOR

6

S.D.D. 14 B 45-5a

GENERAL NOTES

(2) OPTIONAL CURB AND GUTTER OR DRAINAGE FEATURE SEE PLAN FOR INFORMATION.

(3) WHEN USING STEEL POSTS AND WOOD BLOCKOUTS INSTALL FOUR 10D GALVANIZED NAILS. INSTALL NAILS AT THE BACK CORNERS OF THE BLOCK AND BEND THE NAILS OVER THE FLANGE OF THE STEEL POST.

(4) TOLERANCE FOR TOP OF W-BEAM RAIL IS ± 1".

(13) STEEL OR WOOD POST IS ACCEPTABLE AT POST 1. SEE SDD 14B42

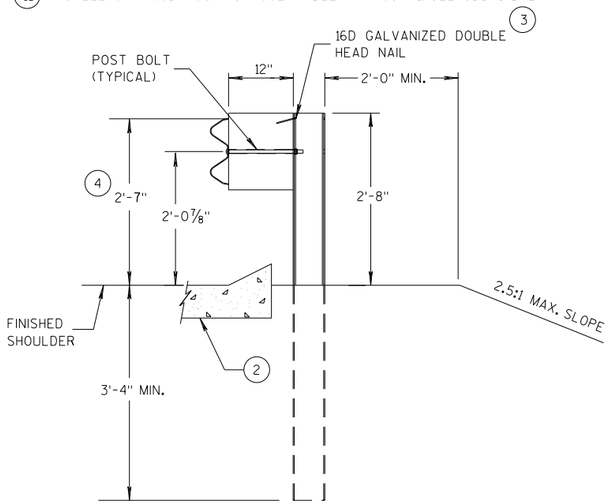

SECTION A-A (13)

POSTS 1-5

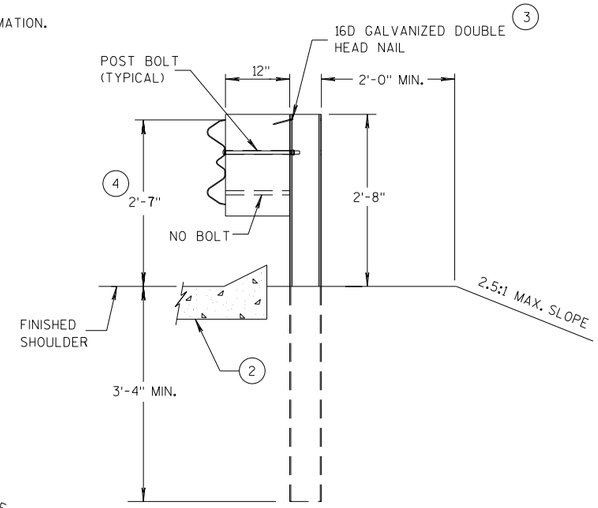

SECTION B-B

POST 6

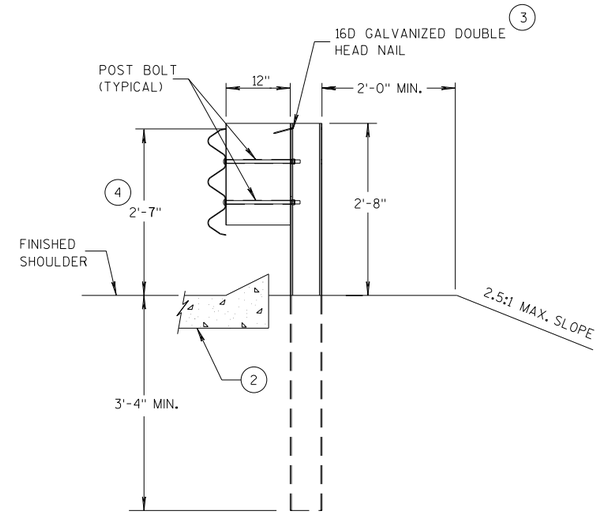

SECTION C-C

POSTS 7-11

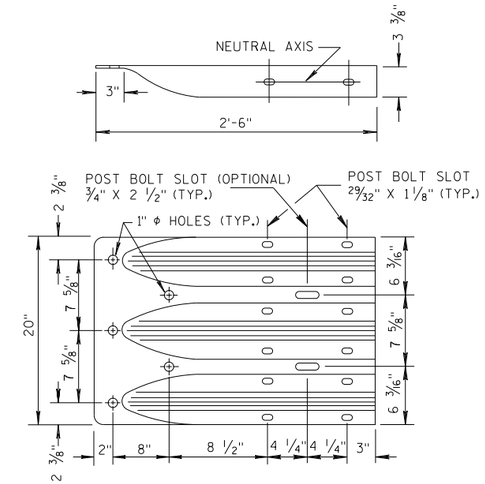

THRIE BEAM TERMINAL CONNECTOR

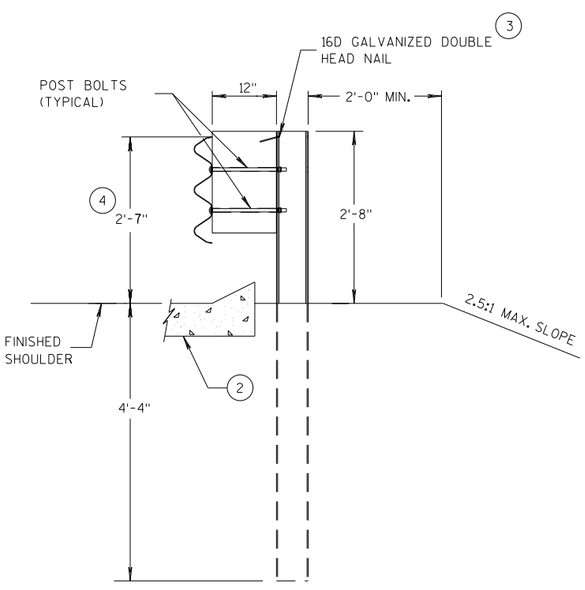

SECTION D-D

POSTS 12-17

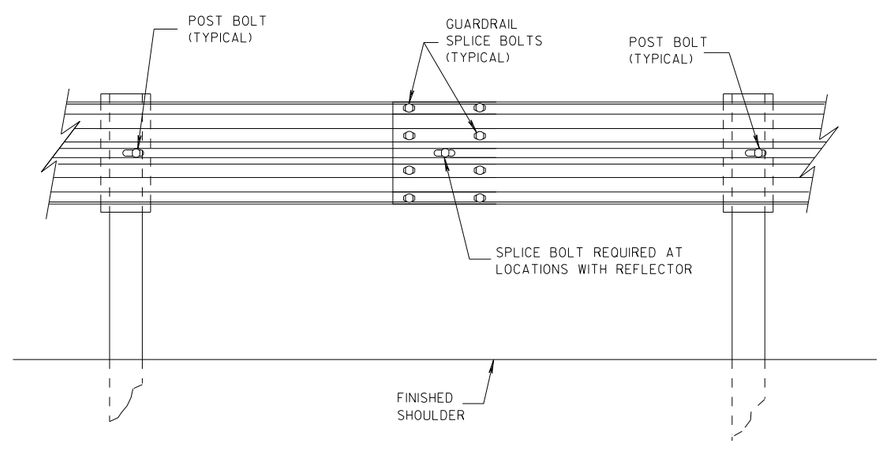

SPLICE DETAIL

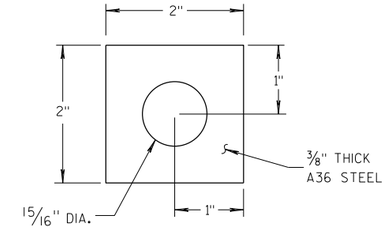

PLATE WASHER DETAIL

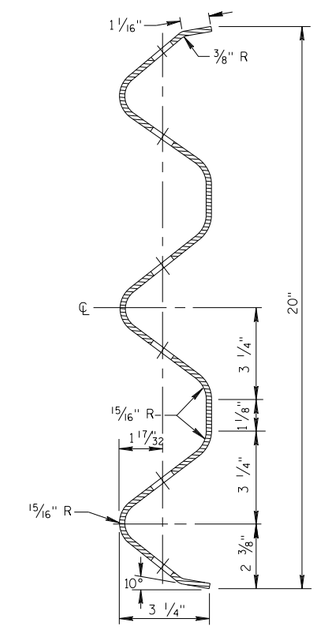

SECTION THRU THRIE BEAM RAIL ELEMENT

MIDWEST GUARDRAIL SYSTEM
THRIE BEAM TRANSITION (MGS)

STATE OF WISCONSIN
DEPARTMENT OF TRANSPOR

6

S.D.D. 14 B 45-5b

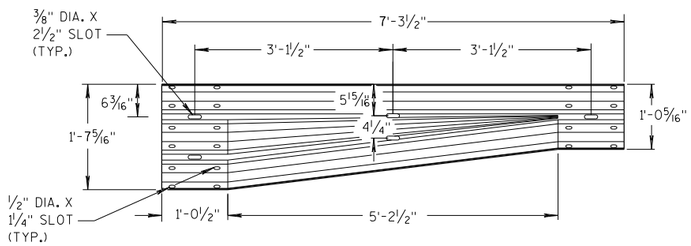

W-BEAM TO THRIE BEAM TRANSITION SECTION

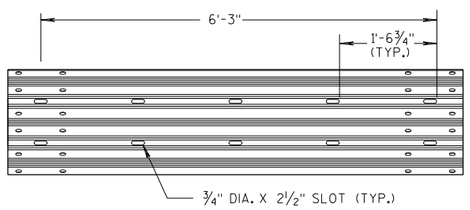

6'-3" THRIE BEAM SECTION

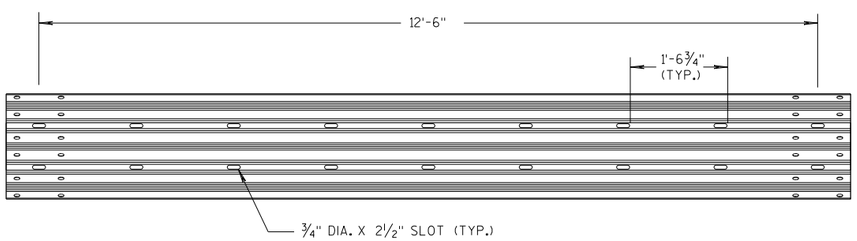

12'-6" THRIE BEAM SECTION

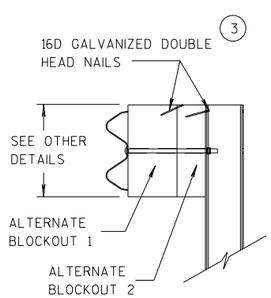

SIDE VIEW

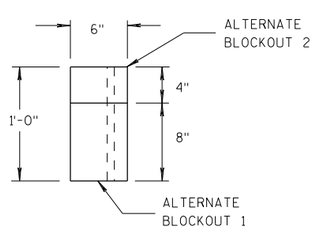

TOP VIEW

ALTERNATE WOOD BLOCKOUT DETAIL

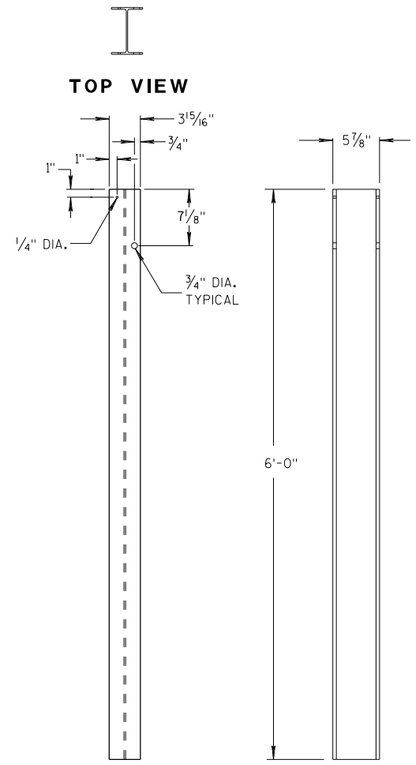

STEEL POSTS 1-5 (13)

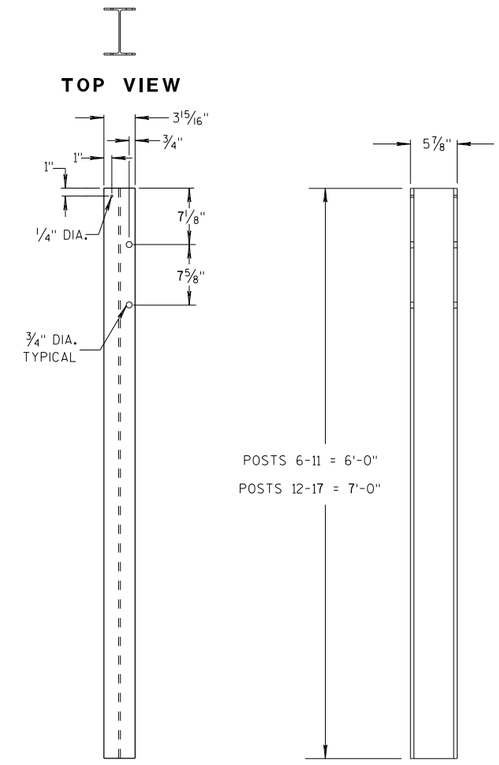

STEEL POSTS 6-17

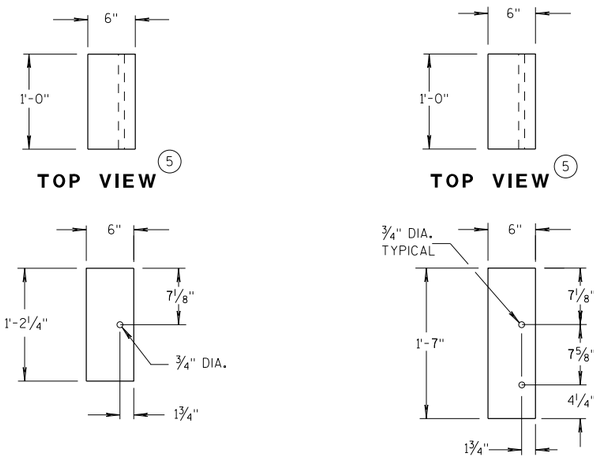

BLOCKOUT POSTS 1-5

BLOCKOUT POSTS 6-17

GENERAL NOTES

STEEL POSTS ARE W6X9 OR W6X8.5.

BOLT HOLES FOR POST ARE ON FRONT AND OF SIDE OF POST.

(3) WHEN USING STEEL POSTS AND WOOD BLOCKOUTS INSTALL FOUR 16D GALVANIZED NAILS. INSTALL NAILS AT THE BACK CORNERS OF THE BLOCK AND BEND THE NAILS OVER THE FLANGE OF THE STEEL POST.

(5) WOOD BLOCKS MAY BE CONSTRUCTED OUT OF 2 WOOD BLOCKS. SEE ALTERNATE WOOD BLOCK DETAIL.

(13) STEEL OR WOOD POST IS ACCEPTABLE AT POST 1. SEE SDD 14B42.

MIDWEST GUARDRAIL SYSTEM
THRIE BEAM TRANSITION (MGS)

STATE OF WISCONSIN
DEPARTMENT OF TRANSPOR

6

S.D.D. 14 B 45-5c

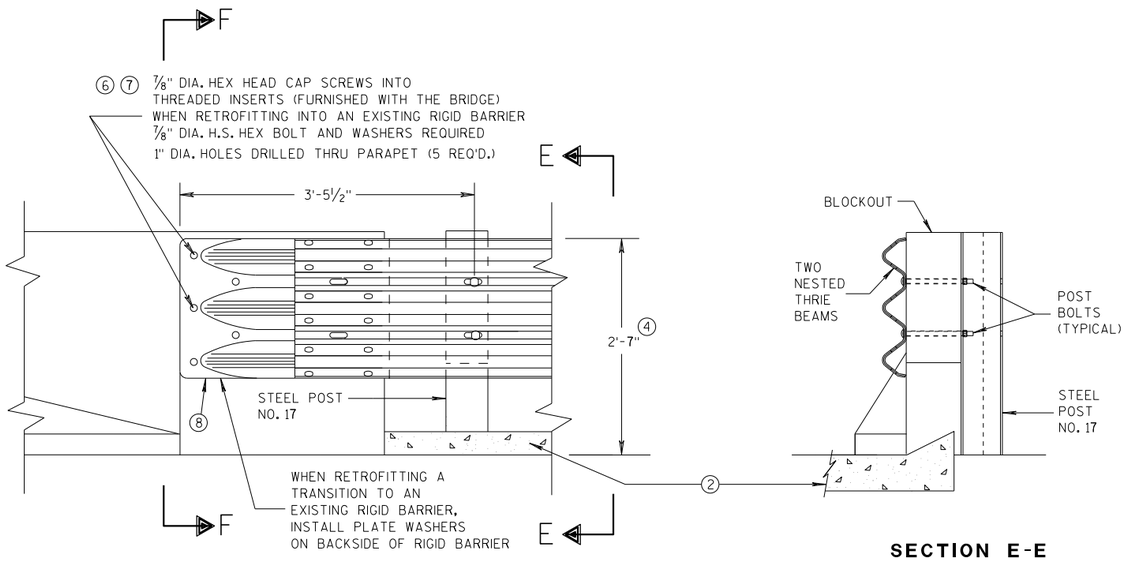

FRONT VIEW

SECTION E-E

THRIE BEAM CONNECTION TO BRIDGE PARAPET WITH SQUARE ENDS

GENERAL NOTES

THESE ARE TYPICAL CONNECTION DETAILS. ADJUST THE POSTION OF CONNECTIONS TO EXISTING BRIDGES TO FIT THE ACTUAL BRIDGE AND SITE DIMENSIONS.

② OPTIONAL CURB AND GUTTER OR DRAINAGE FEATURE SEE PLAN FOR INFORMATION.

④ TOLERANCE FOR TOP OF BEAM IS ± 1".

⑥ DRILLING BOLT HOLES THROUGH THE PARAPET, BOLTS, NUTS, WASHERS AND REPAIRING DAMAGED CONCRETE ARE INCIDENTAL TO THE CONTRACT.

⑦ BOLTS MAY BE A325 BOLTS OR A449 BOLTS. BOLT LENGTH AND THREADING LENGTH ARE TO ALLOW FOR A TIGHT CONNECTION BETWEEN RIGID BARRIER AND THRIE BEAM CONNECTION PLATE. CONTRACTOR IS TO FIELD VERIFY BOLT LENGTH AND THREAD LENGTH. ONE ROUND WASHER REQUIRED BETWEEN BOLT HEAD AND THRIE BEAM CONNECTOR PLATE. BOLTS THAT EXTEND THROUGH THE PARAPET AND OUT THE BACK FACE REQUIRE A HARDENED ROUND STEEL WASHER THAT IS 2" O.D. X 5/32" THICK AND ONE PLATE WASHER. REPAIR ANY DAMAGED CONCRETE FROM BOLT INSTALLATION.

⑧ THE RECESS FOR A W-BEAM CONNECTION, WHICH EXISTS ON SOME PARAPETS OF THIS TYPE, SHALL BE FILLED WITH A TREATED TIMBER BLOCKOUT. BLOCKOUT SIZE IS 1'-6" X 2'-0" X 3 1/2".

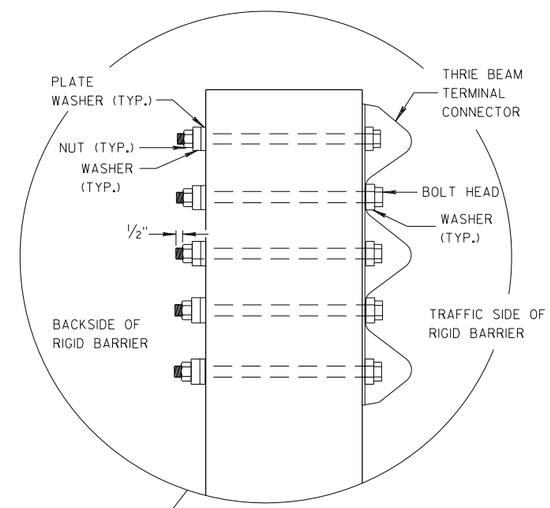

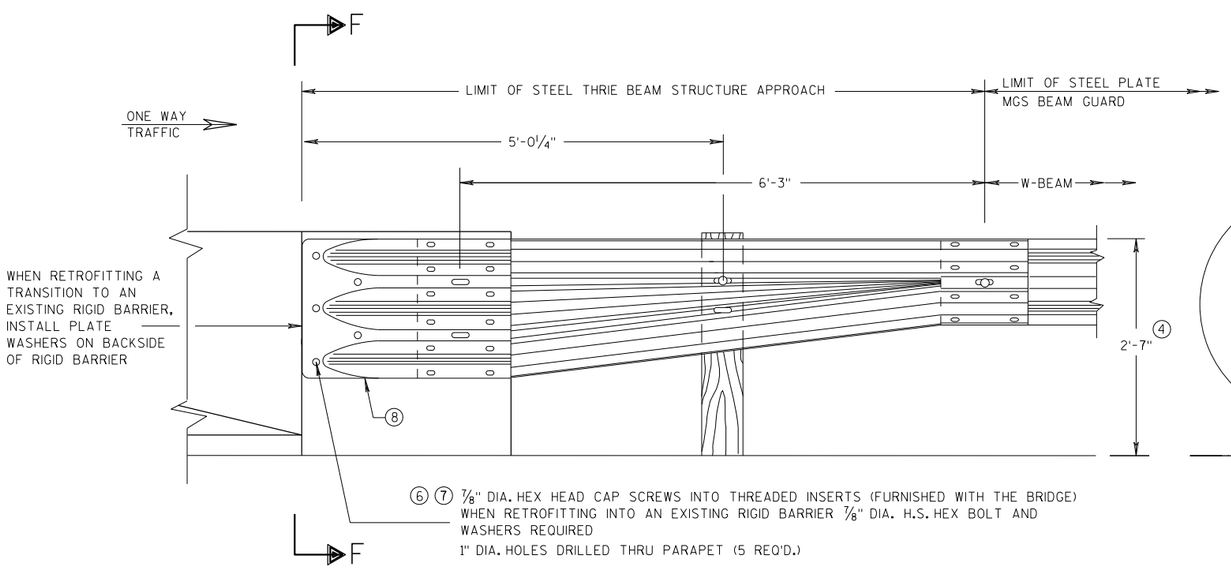

FRONT VIEW

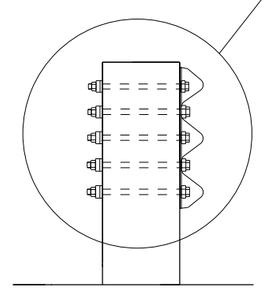

SECTION F-F

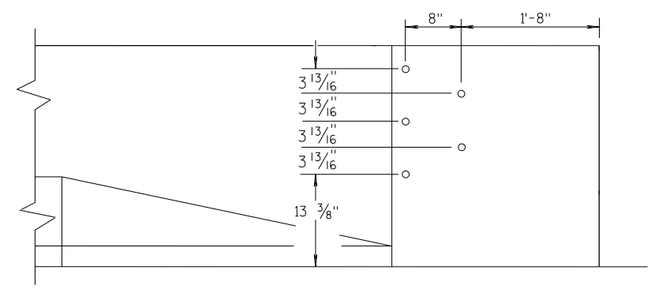

DRILL HOLE LOCATION

W BEAM TRANSITION AND CONNECTION TO BRIDGE PARAPETS WITH SQUARE ENDS

(USE ONLY ON THE TRAFFIC EXIT END OF ONE WAY BRIDGES)

MIDWEST GUARDRAIL SYSTEM THRIE BEAM TRANSITION (MGS)

STATE OF WISCONSIN
DEPARTMENT OF TRANSPORTATION

APPROVED
07/2018 — DATE
/S/ Rodney Taylor — ROADWAY STANDARDS D[illegible] UNIT SUPERVI[illegible]
FHWA

6

S.D.D. 14 B 45-5d

GENERAL NOTES

THESE ARE TYPICAL CONNECTION DETAILS. ADJUST THE POSTION OF CONNECTIONS TO EXISTING BRIDGES TO FIT THE ACTUAL BRIDGE AND SITE DIMENSIONS.

(2) OPTIONAL CURB AND GUTTER OR DRAINAGE FEATURE SEE PLAN FOR INFORMATION.

(4) TOLERANCE FOR TOP OF BEAM IS ± 1".

(6) DRILLING BOLT HOLES THROUGH THE PARAPET, BOLTS, NUTS, WASHERS AND REPAIRING DAMAGED CONCRETE ARE INCIDENTAL TO THE CONTRACT.

(7) BOLTS MAY BE A325 BOLTS OR A449 BOLTS. BOLT LENGTH AND THREADING LENGTH ARE TO ALLOW FOR A TIGHT CONNECTION BETWEEN RIGID BARRIER AND THRIE BEAM CONNECTION PLATE. CONTRACTOR IS TO FIELD VERIFY BOLT LENGTH AND THREAD LENGTH. ONE ROUND WASHER REQUIRED BETWEEN BOLT HEAD AND THRIE BEAM CONNECTOR PLATE. BOLTS THAT EXTEND THROUGH THE PARAPET AND OUT THE BACK FACE REQUIRE A HARDENED ROUND STEEL WASHER THAT IS 2" O.D. X 5/32" THICK AND ONE PLATE WASHER. REPAIR ANY DAMAGED CONCRETE FROM BOLT INSTALLATION.

(8) THE RECESS FOR A W-BEAM CONNECTION, WHICH EXISTS ON SOME PARAPETS OF THIS TYPE, SHALL BE FILLED WITH A TREATED TIMBER BLOCKOUT. BLOCKOUT SIZE IS 1'-6" X 2'-0" X 3 1/2".

(9) BOLT, NUT AND WASHERS NOT REQUIRED FOR THIS LOCATION WHEN RETROFITTING AN EXISTING PAPAPET AND THE HOLE IS EITHER ABOVE PARAPET OR WITHIN 4 INCHES OF THE EDGE OF PARAPET.

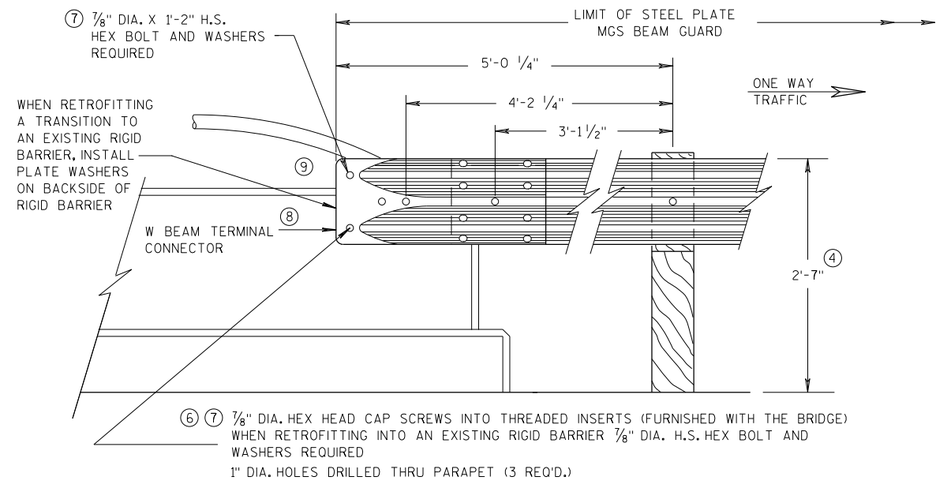

FRONT VIEW

W BEAM CONNECTION TO VERTICAL FACE PARAPET

(USE ONLY ON THE TRAFFIC EXIT END OF ONE WAY BRIDGES)

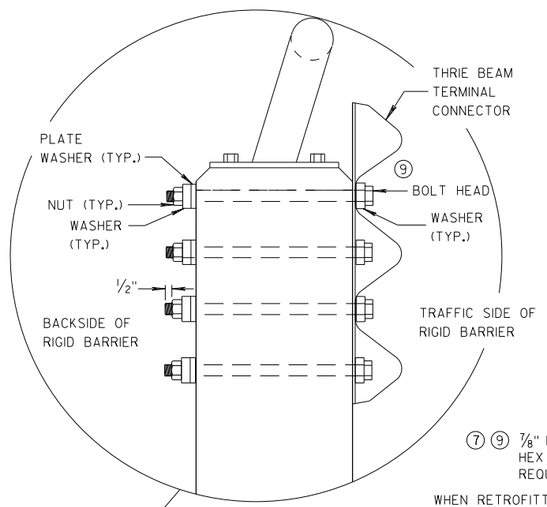

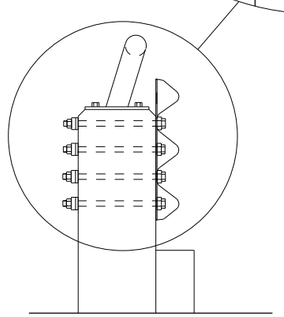

SECTION G-G

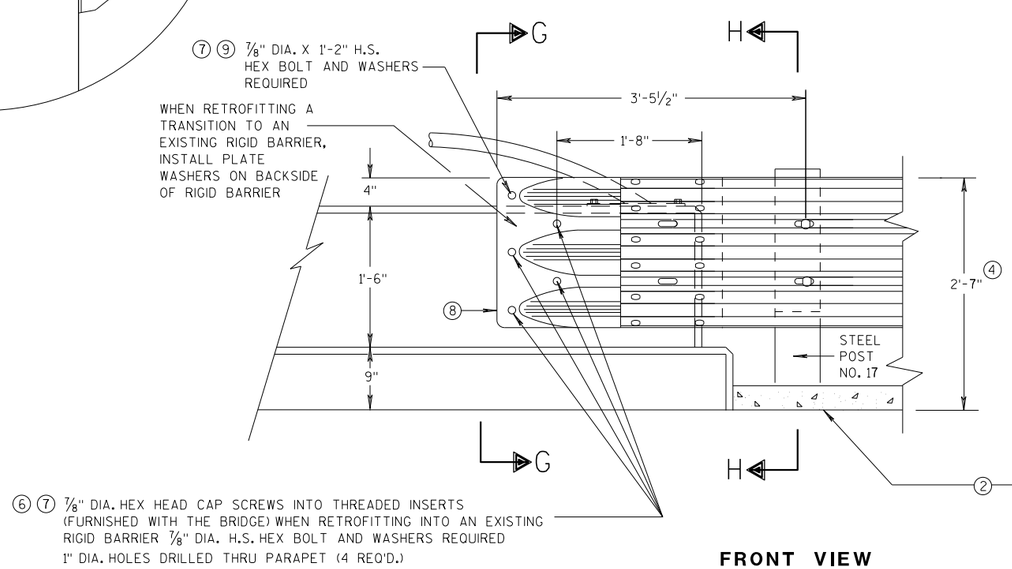

FRONT VIEW

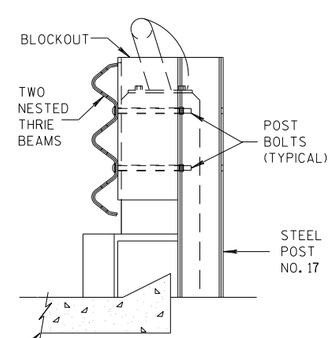

SECTION H-H

THRIE BEAM CONNECTION TO VERTICAL FACED PARAPETS

MIDWEST GUARDRAIL SYSTEM
THRIE BEAM TRANSITION (MGS)

STATE OF WISCONSIN
DEPARTMENT OF TRANSPORTATION

APPROVED
07/2018 — DATE
/S/ Rodney Taylor
ROADWAY STANDARDS D UNIT SUPERVIS
FHWA

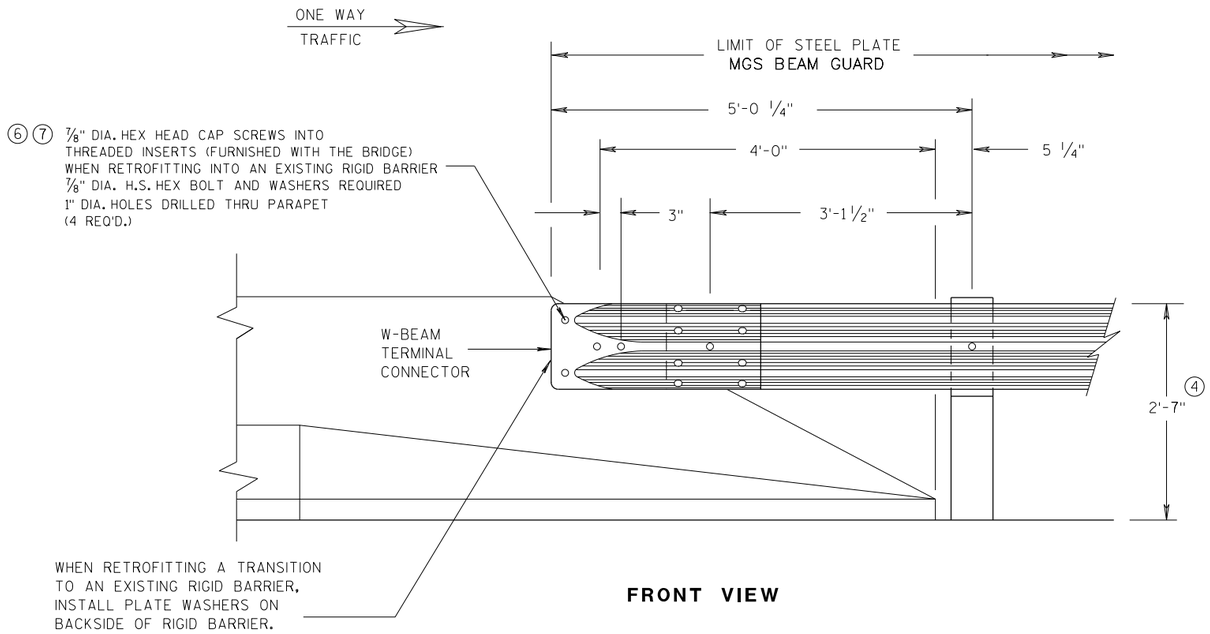

FRONT VIEW

W BEAM CONNECTION TO PARAPETS WITH SLOPED ENDS

(USE ONLY AT TRAFFIC EXIT END OF ONE WAY BRIDGE)

GENERAL NOTES

② OPTIONAL CURB AND GUTTER OR DRAINAGE FEATURE SEE PLAN FOR INFORMATION.

④ TOLERANCE FOR TOP OF BEAM IS ± 1".

⑥ DRILLING BOLT HOLES THROUGH THE PARAPET, BOLTS, NUTS, WASHERS AND REPAIRING DAMAGED CONCRETE ARE INCIDENTAL TO THE CONTRACT.

⑦ BOLTS MAY BE A325 BOLTS OR A449 BOLTS. BOLT LENGTH AND THREADING LENGTH ARE TO ALLOW FOR A TIGHT CONNECTION BETWEEN RIGID BARRIER AND THRIE BEAM CONNECTION PLATE. CONTRACTOR IS TO FIELD VERIFY BOLT LENGTH AND THREAD LENGTH. ONE ROUND WASHER REQUIRED BETWEEN BOLT HEAD AND THRIE BEAM CONNECTOR PLATE. BOLTS THAT EXTEND THROUGH THE PARAPET AND OUT THE BACK FACE REQUIRE A HARDENED ROUND STEEL WASHER THAT IS 2" O.D. X 5/32" THICK AND ONE PLATE WASHER. REPAIR ANY DAMAGED CONCRETE FROM BOLT INSTALLATION.

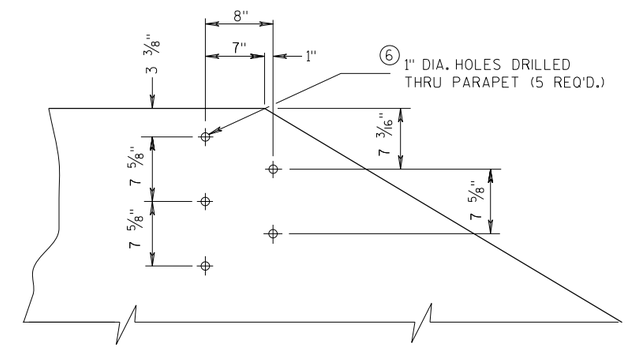

DRILL HOLE LOCATION AND PATTERN FOR THRIE BEAM CONNECTION

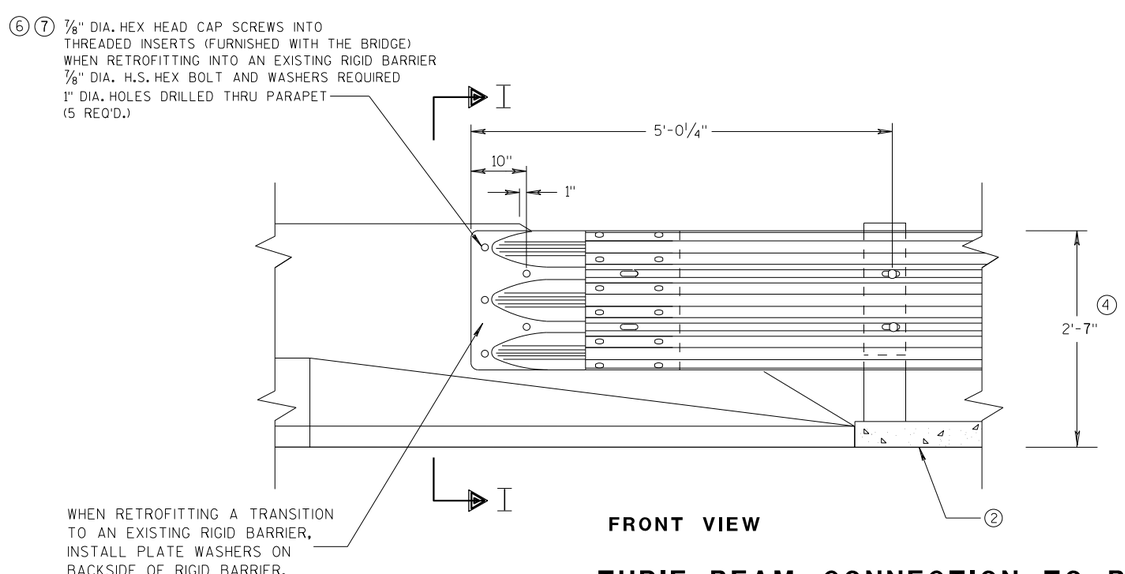

FRONT VIEW

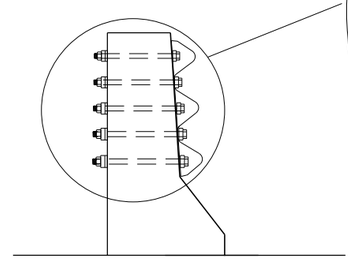

SECTION I-I

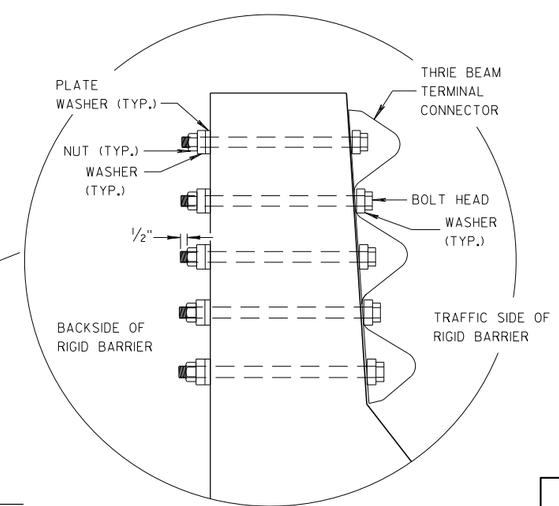

THRIE BEAM CONNECTION TO BRIDGE PARAPETS WITH SLOPED ENDS

MIDWEST GUARDRAIL SYSTEM THRIE BEAM TRANSITION (MGS)

STATE OF WISCONSIN
DEPARTMENT OF TRANSPORTATION

APPROVED
07/2018 — DATE
/S/ Rodney Taylor
ROADWAY STANDARDS DEVELOPMENT UNIT SUPERVISOR
FHWA

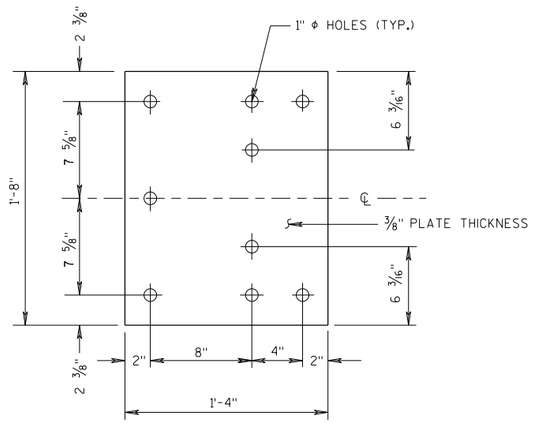

BACK-UP PLATE DETAIL

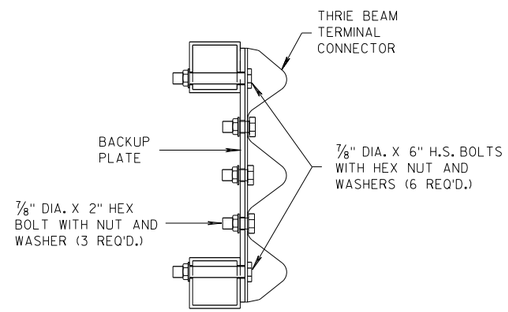

SECTION J-J

GENERAL NOTES

(4) TOLERANCE FOR TOP OF BEAM IS ± 1".

(6) DRILLING HOLES THROUGH THE PAPRPET, BOLTS, NUTS, WASHERS AND REPAIRING DAMAGED CONCRETE ARE INCIDENTAL TO THE CONTRACT.

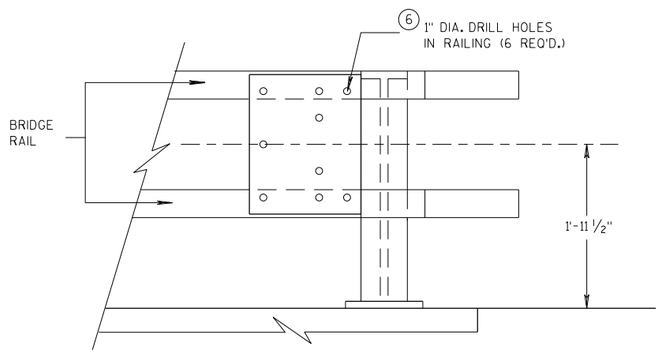

BACK-UP PLATE MOUNTING ONTO BRIDGE RAILING

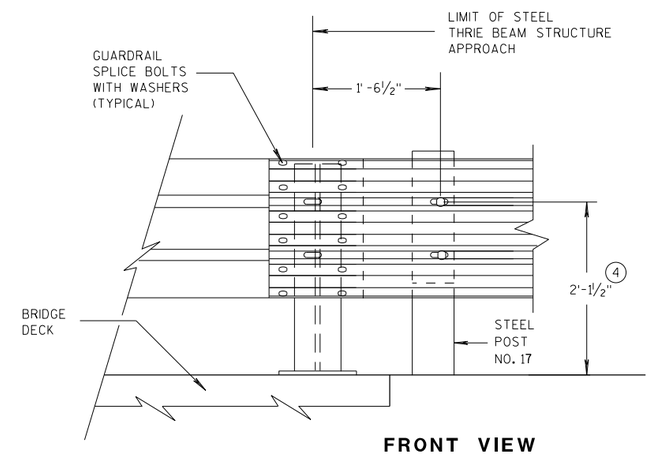

FRONT VIEW

THRIE BEAM CONNECTION TO STEEL RAILING TYPE "W"

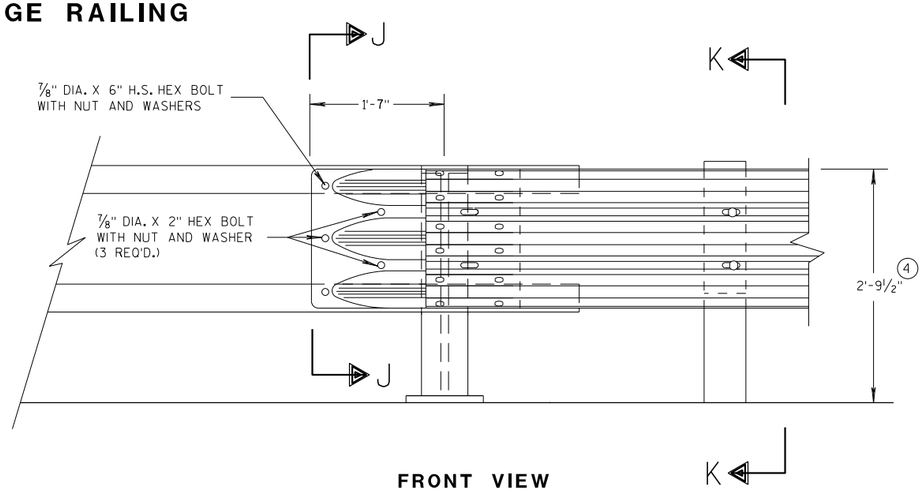

FRONT VIEW

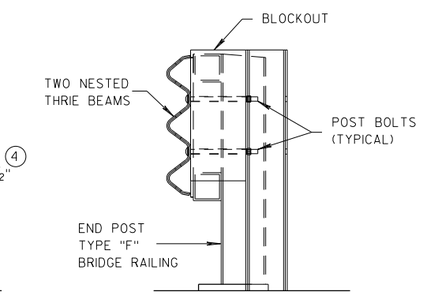

SECTION K-K

THRIE BEAM CONNECTION TO TUBULAR RAILING TYPE "F"

MIDWEST GUARDRAIL SYSTEM THRIE BEAM TRANSITION (MGS)

STATE OF WISCONSIN
DEPARTMENT OF TRANSPORTATION

APPROVED 07/2018 — DATE — FHWA

/S/ Rodney Taylor — ROADWAY STANDARDS DEVELOPMENT UNIT SUPERVISOR

GENERAL NOTES

(4) TOLERANCE FOR TOP OF W-BEAM RAIL IS ± 1".

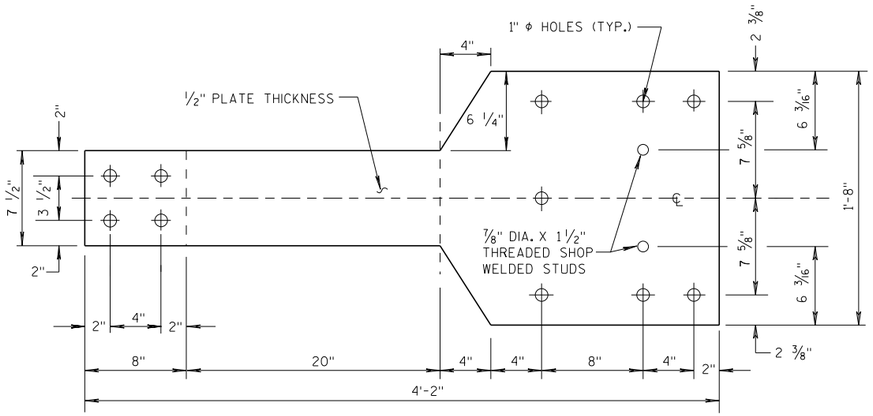

FRONT VIEW

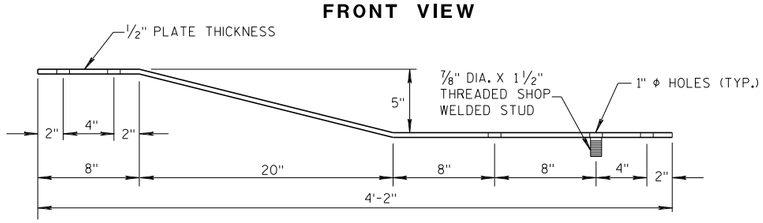

PLAN VIEW

BACK-UP PLATE DETAIL, TYPE "M"

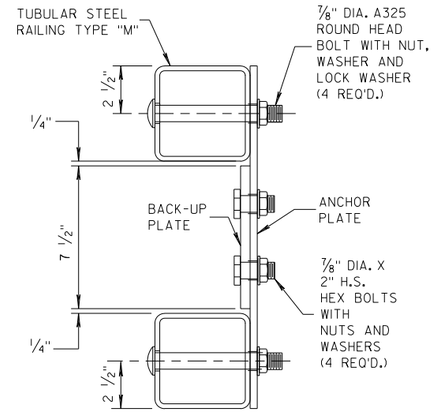

SECTION L-L

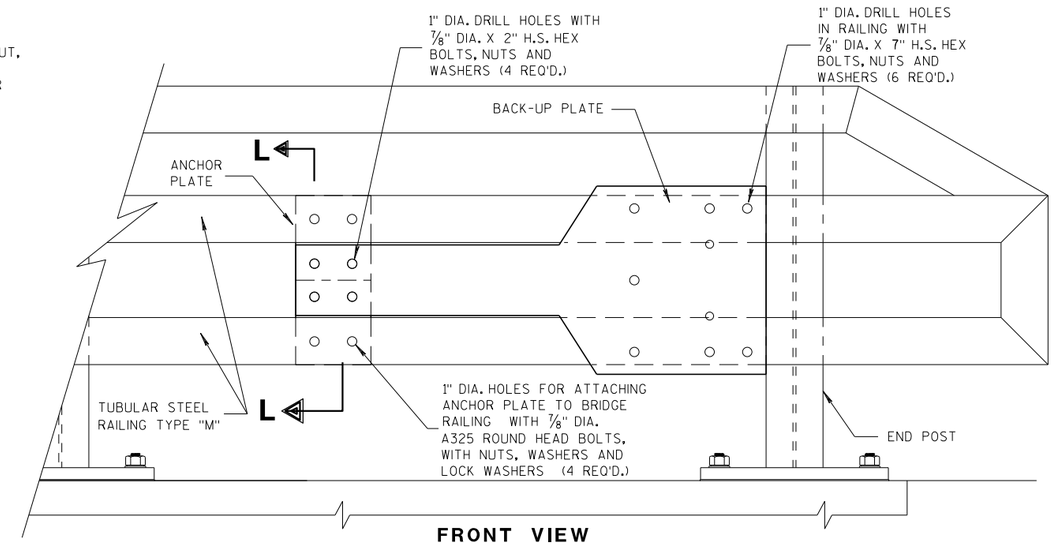

FRONT VIEW

ANCHOR AND BACK-UP PLATE MOUNTING TO BRIDGE RAILING, TYPE "M"

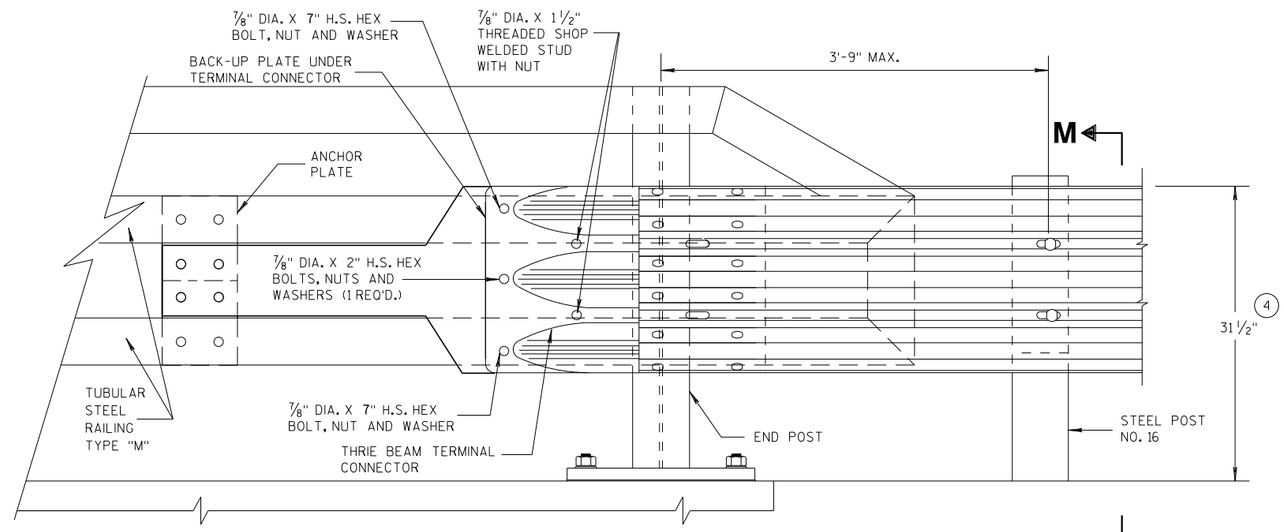

FRONT VIEW

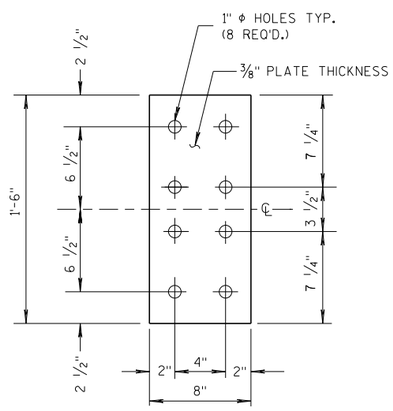

FRONT VIEW

ANCHOR PLATE DETAIL, TYPE "M"

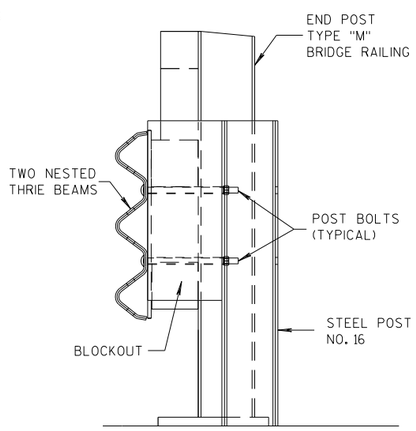

SECTION M-M

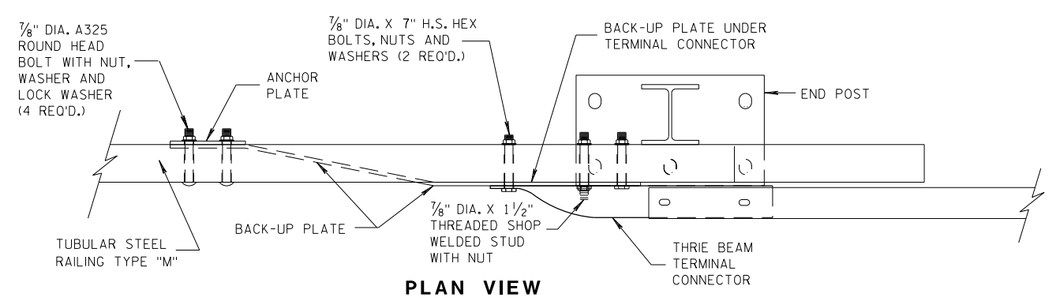

PLAN VIEW

THRIE BEAM CONNECTION TO TUBULAR RAILING, TYPE "M"

MIDWEST GUARDRAIL SYSTEM THRIE BEAM TRANSITION (MGS)

STATE OF WISCONSIN
DEPARTMENT OF TRANSPORTATION

APPROVED
07/2018 — DATE
/S/ Rodney Taylor — ROADWAY STANDARDS DEVELOPMENT UNIT SUPERVISOR
FHWA

GENERAL NOTES

COVER PLATE PANELS ARE 3/16" THICK.

ALL STIFFENERS ARE 1/4" THICK.

CONNECTOR PLATE SHALL BE FABRICATED FROM ASTM GRADE A36 STEEL AND GALVANIZED.

FOR GALVANIZED REQUIREMENTS, SEE SECTION 614 OF THE STANDARD SPECIFICATIONS.

ALL HOLE DIAMETERS SHALL BE 1".

FOR OPPOSITE SIDE INSTALLATION MIRROR DRAWINGS.

(10) STIFFENERS LOCATED AT THE OUTSIDE EDGES OF THE COVER PLATES SHALL BE WELDED AS FOLLOWS:
SINGLE BEVEL GROOVE WELD ON EXTERNAL SIDES AND 3/16" FILLET WELD BY 1" LONG SPACED AT 2" ON INTERNAL SIDES.

(11) STIFFENERS LOCATED ON THE INSIDE OF THE COVER PLATE SHALL BE WELDED AS FOLLOWS:
3/16" FILLET WELD BY 1" LONG SPACED AT 2".

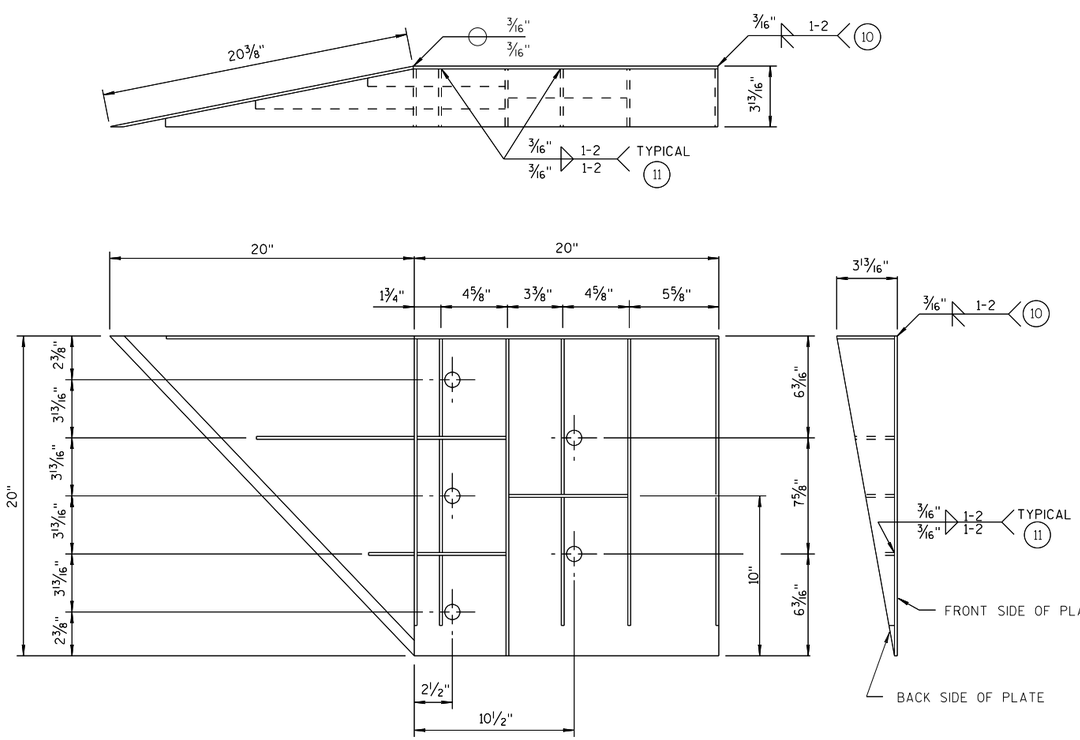

WELDING INSTRUCTION

(VIEWED FROM BACK SIDE OF PLATE)

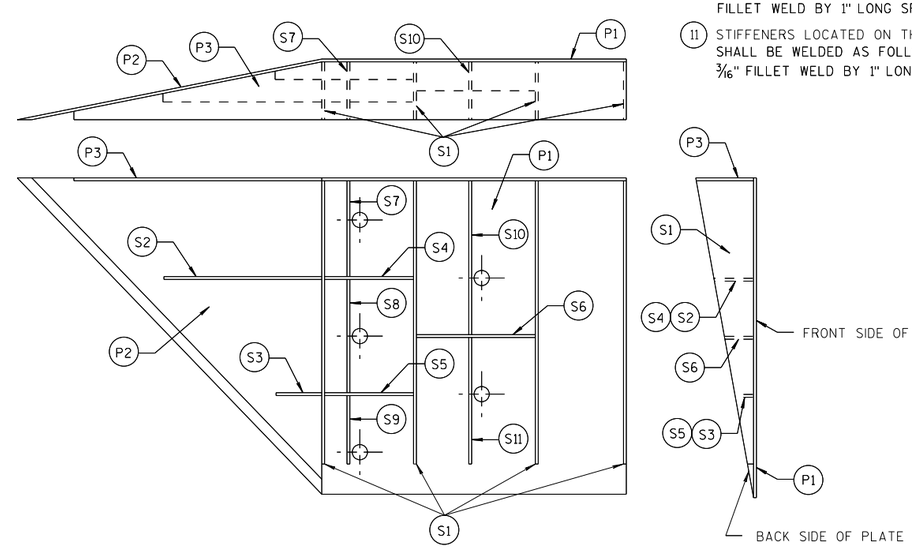

PLATE AND STIFFENER IDENTIFICATION

(VIEWED FROM BACK SIDE OF PLATE)

CONNECTOR PLATE DIMENSION (PER ASSEMBLY)				
PLATE	QUANTITY	SHAPE	SIZE (A x B x C x D)	THICKNESS
P1	1		20" x 20"	3/16"
P2	1		20" x 20" x 28 9/16"	3/16"
P3	1		39" x 3 5/8" x 20" x 19 5/16"	3/16"
S1	4		18 7/16" x 3 5/8" x 18 3/4"	1/4"
S2	1		10 1/4" x 2 7/16" x 10 3/8" x 1/2"	1/4"
S3	1		3" x 1 1/16" x 3 1/8" x 1/2"	1/4"
S4	1		6 1/8" x 2 7/16"	1/4"
S5	1		6 1/8" x 1 1/16"	1/4"
S6	1		7 3/4" x 1 3/4"	1/4"
S7	1		2 9/16" x 6" x 3 5/8" x 5 7/8"	1/4"
S8	1		1 5/32" x 7 1/2" x 2 1/2" x 7 3/8"	1/4"
S9	1		6 1/16" x 6 3/16" x 1 3/32"	1/4"
S10	1		1 7/8" x 9 7/8" x 3 5/8" x 9 11/16"	1/4"
S11	1		8 1/2" x 8 3/4" x 1 13/16"	1/4"

SINGLE SLOPE CONNECTION PLATE

MIDWEST GUARDRAIL SYSTEM THRIE BEAM TRANSITION (MGS)

STATE OF WISCONSIN
DEPARTMENT OF TRANSPORTATION

APPROVED
7/2018 /S/ Rodney Taylor
DATE ROADWAY STANDARDS DEVELOPMENT UNIT SUPERVISOR
FHWA

6
S.D.D. 14 B 45-5i

GENERAL NOTES

CONNECTOR PLATE, DRILLING BOLT HOLES THROUGH THE PARAPET, BOLTS, NUTS, WASHERS AND REPAIRING DAMAGED CONCRETE ARE INCIDENTAL TO THE CONTRACT.

(2) OPTIONAL CURB AND GUTTER OR DRAINAGE FEATURE SEE PLAN FOR INFORMATION.

(7) BOLTS MAY BE A325 BOLTS OR A449 BOLTS. BOLT LENGTH AND THREADING LENGTH ARE TO ALLOW FOR A TIGHT CONNECTION BETWEEN RIGID BARRIER AND THRIE BEAM CONNECTION PLATE. CONTRACTOR IS TO FIELD VERIFY BOLT LENGTH AND THREAD LENGTH. ONE ROUND WASHER REQUIRED BETWEEN BOLT HEAD AND THRIE BEAM CONNECTOR PLATE. BOLTS THAT EXTEND THROUGH THE PARAPET AND OUT THE BACK FACE REQUIRE A HARDENED ROUND STEEL WASHER THAT IS 2" O.D. X 5/32" THICK AND ONE PLATE WASHER. REPAIR ANY DAMAGED CONCRETE FROM BOLT INSTALLATION.

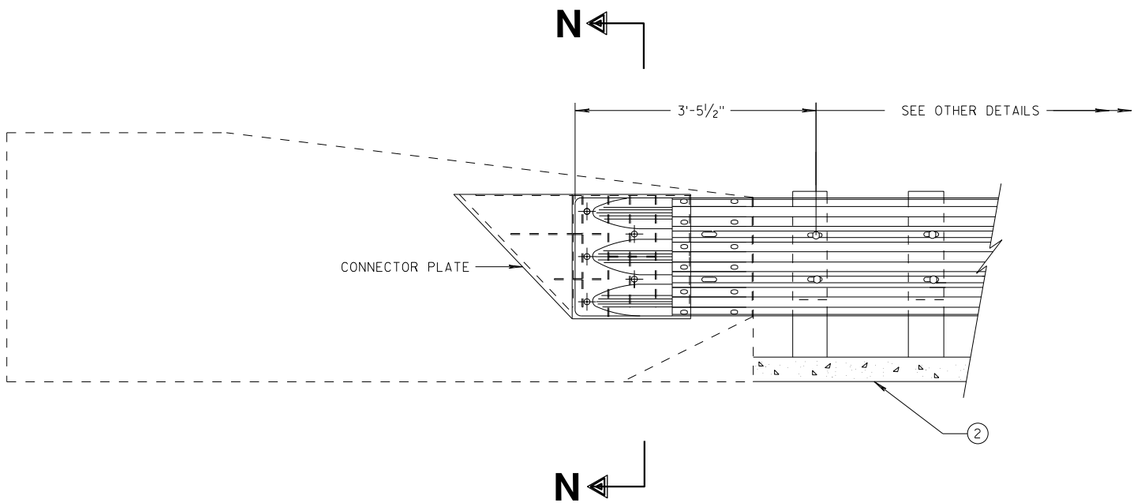

THRIE BEAM CONNECTION TO SINGLE SLOPE BARRIER

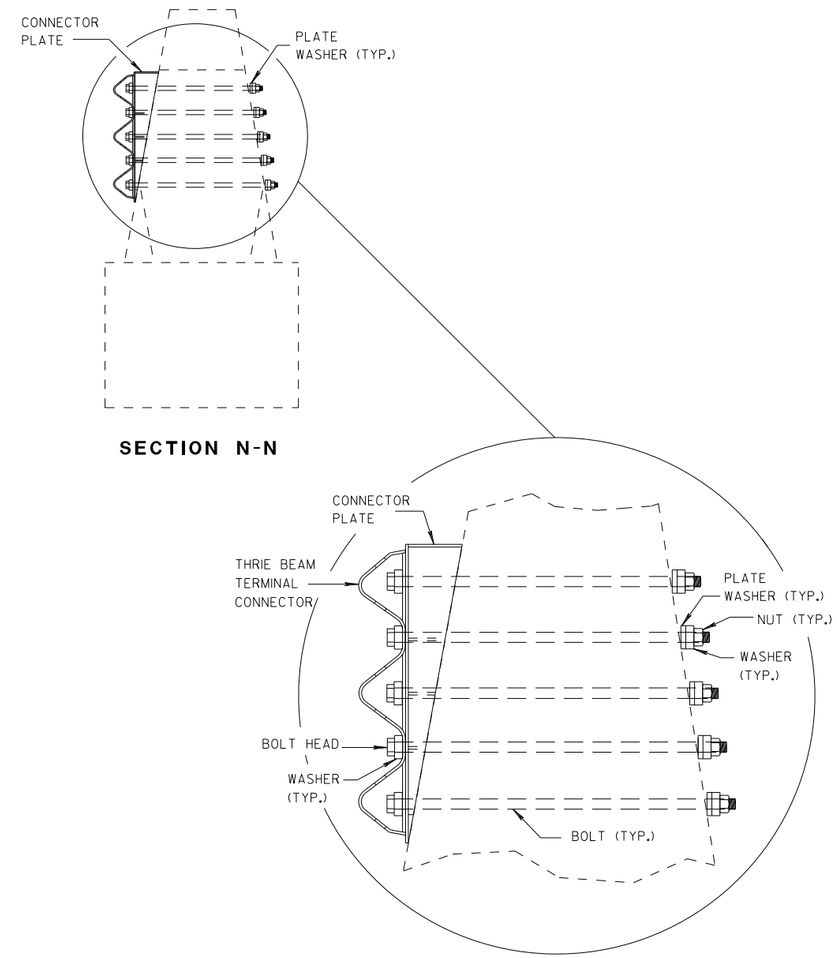

SECTION N-N

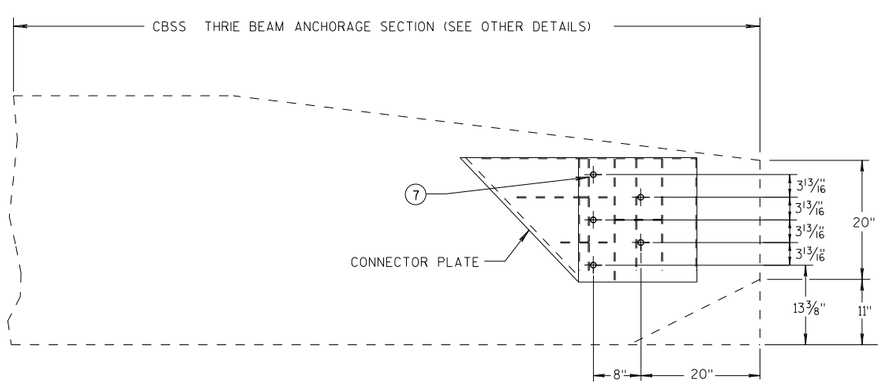

SINGLE SLOPE CONNECTION PLATE PLACEMENT

MIDWEST GUARDRAIL SYSTEM THRIE BEAM TRANSITION (MGS)

STATE OF WISCONSIN
DEPARTMENT OF TRANSPORTATION

APPROVED
7/2018 — DATE
/S/ Rodney Taylor — ROADWAY STANDARDS DI[illegible] UNIT SUPERVIS[illegible]
FHWA

6

S.D.D. 14 B 45-5j

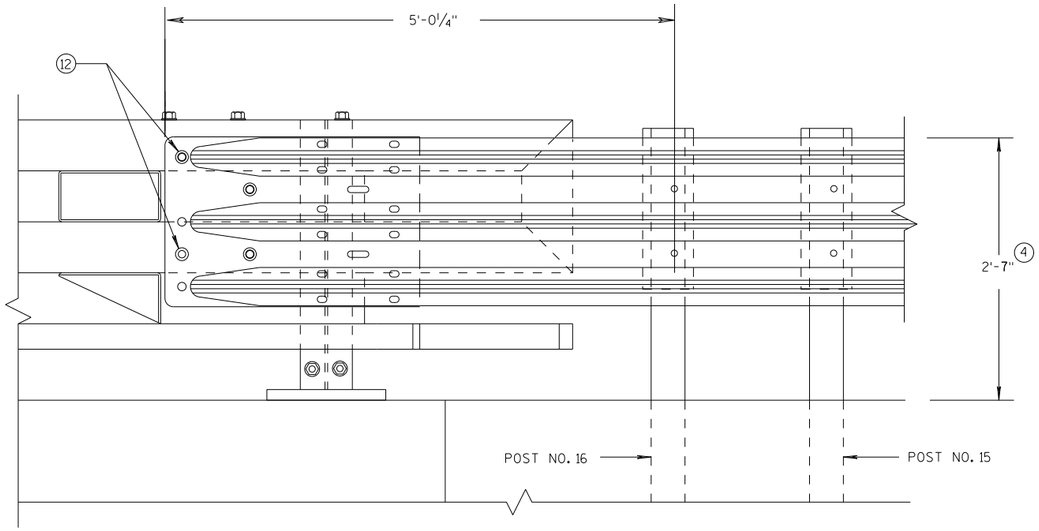

ELEVATION OF DETAIL AT NY3 END POST

THRIE BEAM RAIL ATTACHMENT

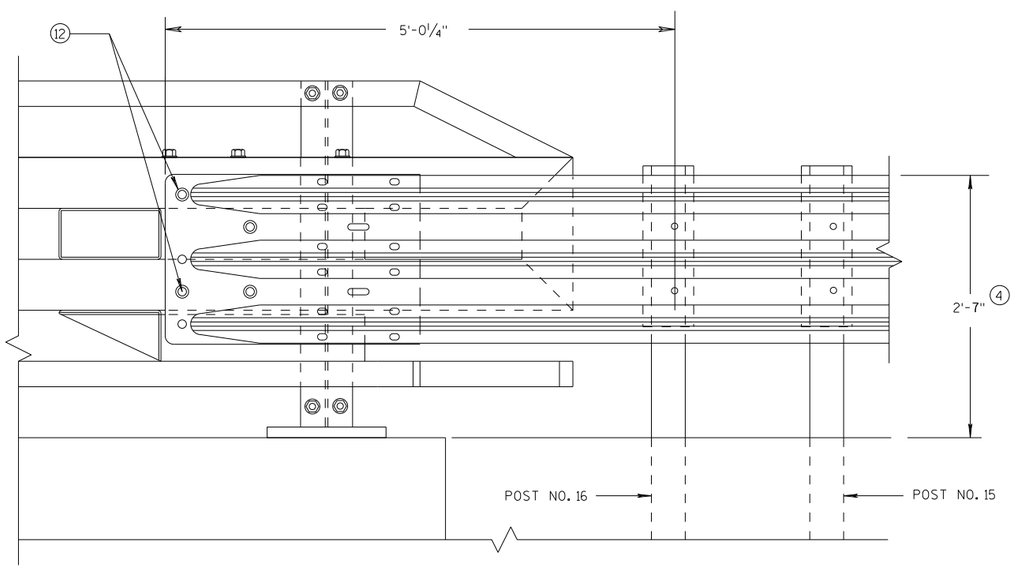

ELEVATION OF DETAIL AT NY4 END POST

THRIE BEAM RAIL ATTACHMENT

GENERAL NOTES

(4) TOLERANCE FOR TOP OF BEAM IS ± 1".

(12) BOLTS MAY BE A325 BOLTS OR A449 BOLTS. BOLT LENGTH AND THREADING LENGTH ARE TO ALLOW FOR A TIGHT CONNECTION BETWEEN RIGID BARRIER AND THRIE BEAM CONNECTION PLATE. CONTRACTOR IS TO FIELD VERIFY BOLT LENGTH AND THREAD LENGTH. ONE ROUND WASHER REQUIRED BETWEEN BOLT HEAD AND THRIE BEAM CONNECTOR PLATE. ON BACKSIDE OF PARAPET ONE ROUND WASHER, AND NUT REQUIRED. BOLT THREAD IS TO EXTEND ½-INCH BEYOND NUT.

MIDWEST GUARDRAIL SYSTEM
THRIE BEAM TRANSITION (MGS)

STATE OF WISCONSIN
DEPARTMENT OF TRANSPORTATION

APPROVED
7/2018
DATE
FHWA

/S/ Rodney Taylor
ROADWAY STANDARDS D
UNIT SUPERVIS

NT

6

S.D.D. 14 B 45-5k

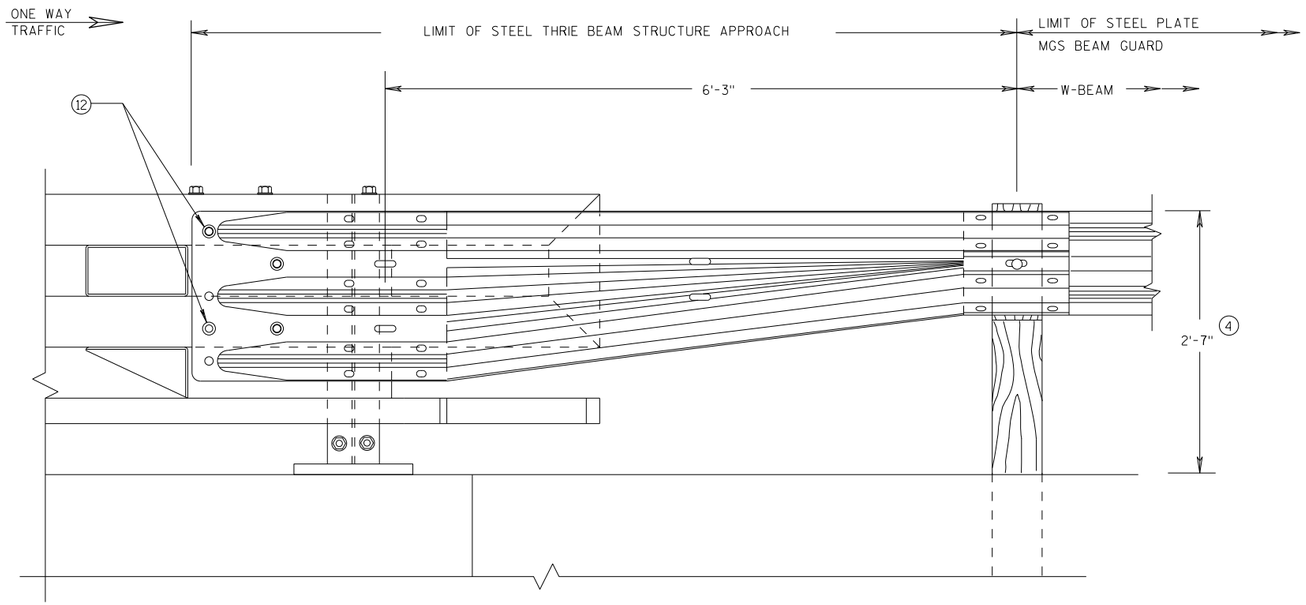

FRONT VIEW

W BEAM TRANSITION AND CONNECTION TO BRIDGE RAILING TYPE "NY3"

(USE ONLY ON THE TRAFFIC EXIT END OF ONE WAY BRIDGES)

GENERAL NOTES

(4) TOLERANCE FOR TOP OF BEAM IS ± 1".

(12) BOLTS MAY BE A325 BOLTS OR A449 BOLTS. BOLT LENGTH AND THREADING LENGTH ARE TO ALLOW FOR A TIGHT CONNECTION BETWEEN RIGID BARRIER AND THRIE BEAM CONNECTION PLATE. CONTRACTOR IS TO FIELD VERIFY BOLT LENGTH AND THREAD LENGTH. ONE ROUND WASHER REQUIRED BETWEEN BOLT HEAD AND THRIE BEAM CONNECTOR PLATE. ON BACKSIDE OF PARAPET ONE ROUND WASHER, AND NUT REQUIRED. BOLT THREAD IS TO EXTEND ½-INCH BEYOND NUT.

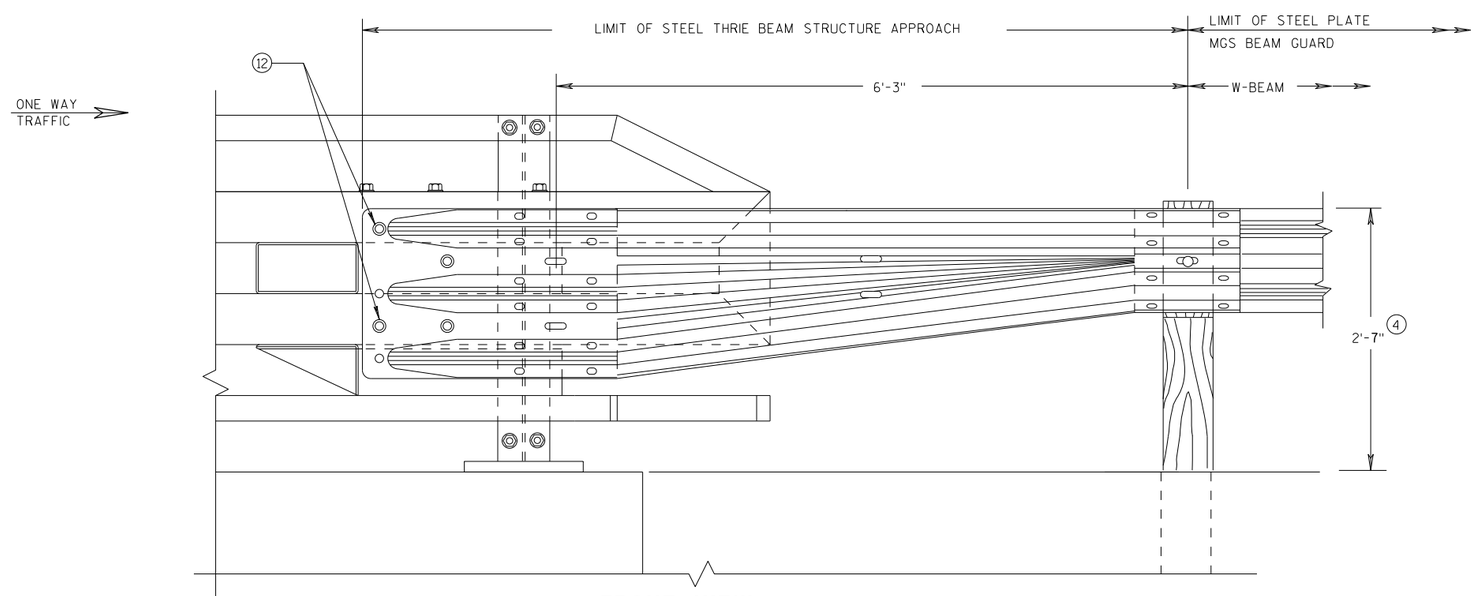

FRONT VIEW

W BEAM TRANSITION AND CONNECTION TO BRIDGE RAILING TYPE "NY4"

(USE ONLY ON THE TRAFFIC EXIT END OF ONE WAY BRIDGES)

MIDWEST GUARDRAIL SYSTEM THRIE BEAM TRANSITION (MGS)

STATE OF WISCONSIN
DEPARTMENT OF TRANSPORTATION

APPROVED
7/2018 — DATE
/S/ Rodney Taylor — ROADWAY STANDARDS DEVELOPMENT UNIT SUPERVISOR
NT
FHWA

6

S.D.D. 14 B 45-5L

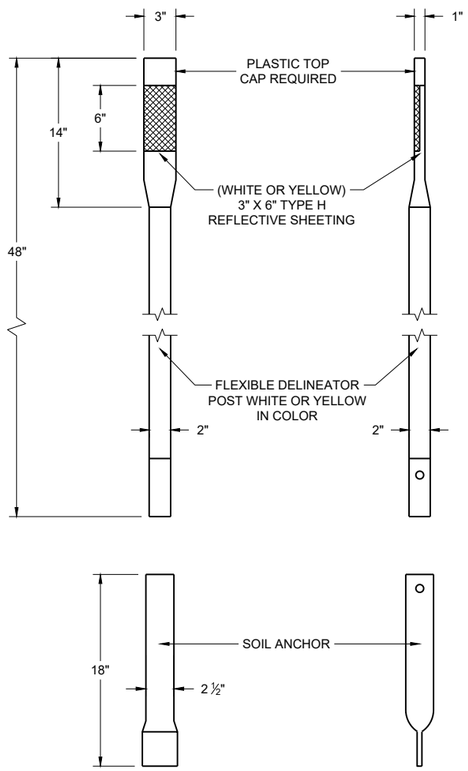

FRONT VIEW **SIDE VIEW**

ALTERNATE 1

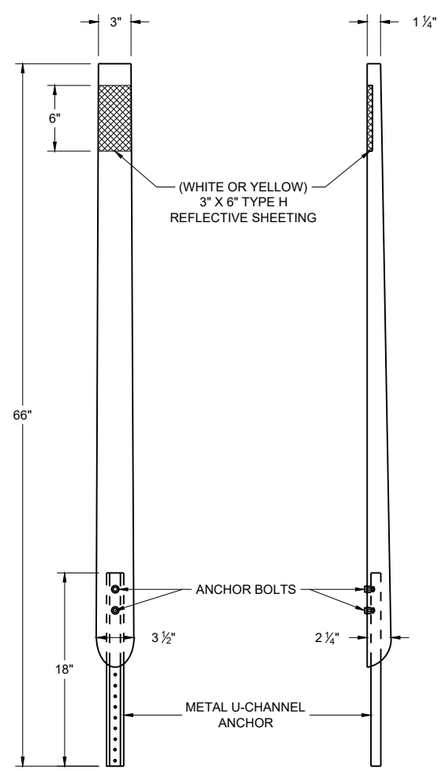

FRONT VIEW **SIDE VIEW**

ALTERNATE 2

FLEXIBLE DELINEATOR POSTS

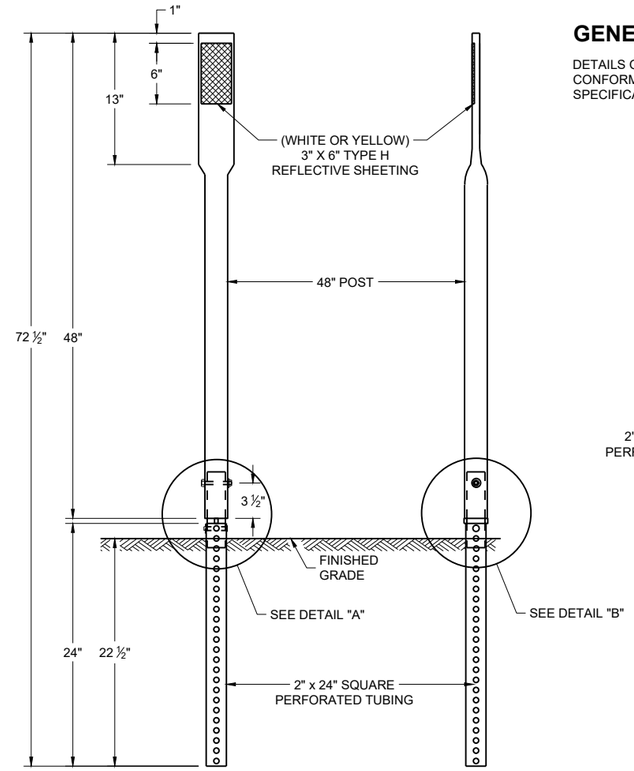

FRONT VIEW **SIDE VIEW**

ALTERNATE 3

GENERAL NOTES

DETAILS OF CONSTRUCTION NOT SHOWN ON THIS DRAWING SHALL CONFORM TO THE PERTINENT REQUIREMENTS OF THE STANDARD SPECIFICATIONS AND THE APPLICABLE SPECIAL PROVISIONS.

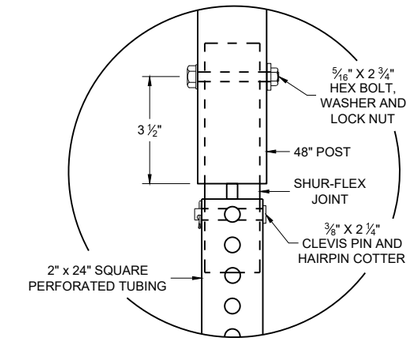

DETAIL A

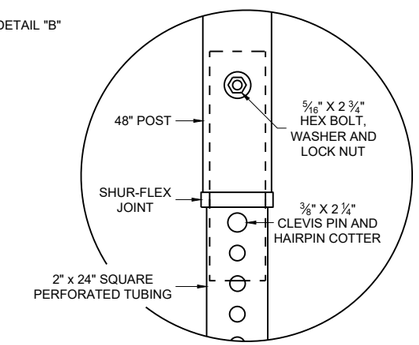

DETAIL B

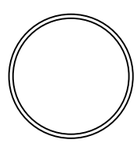

SECTION A - A

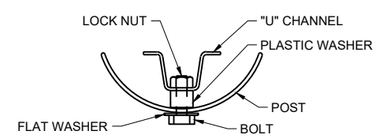

SECTION B - B

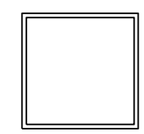

SECTION C - C

REFLECTOR SPACING TABLE

REFLECTOR SPACING	LOCATION
* 100' C-C	RAMPS
400' C-C	MAINLINE

* START AT BEGINNING OF RAMP TAPER AND END AT END OF RAMP TAPER

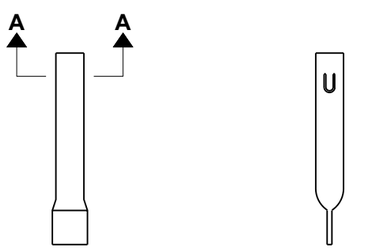

FRONT VIEW **SIDE VIEW**

ALTERNATE 1

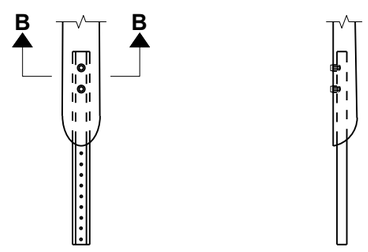

FRONT VIEW **SIDE VIEW**

ALTERNATE 2

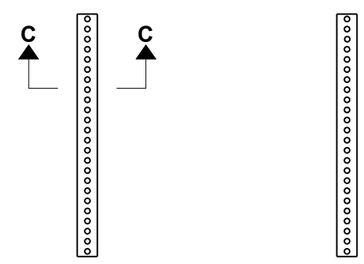

FRONT VIEW **SIDE VIEW**

ALTERNATE 3

FLEXIBLE MARKER POST ANCHORS

FLEXIBLE DELINEATOR POST

STATE OF WISCONSIN
DEPARTMENT OF TRANSPORTATION

APPROVED
March 2024 — DATE
/S/ Jeannie Silver — Statewide Pavement Marking Engineer
FHWA

6

SDD 15A04-08a

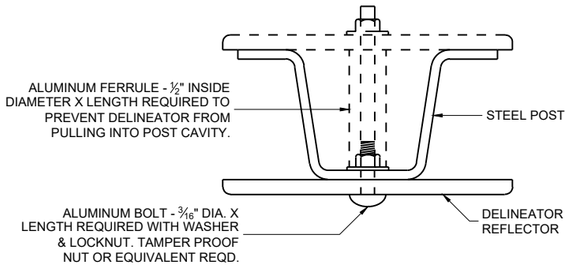

MOUNTING DETAIL FOR DELINEATOR REFLECTOR

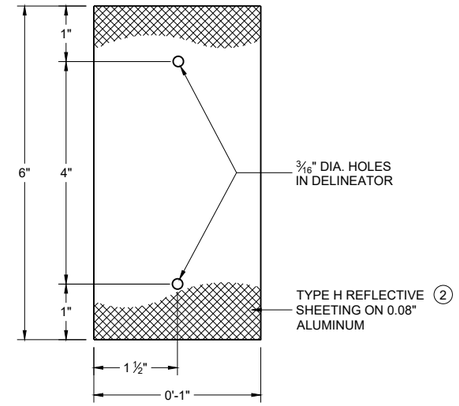

DETAIL "A" 3" X 6" DELINEATOR REFLECTOR

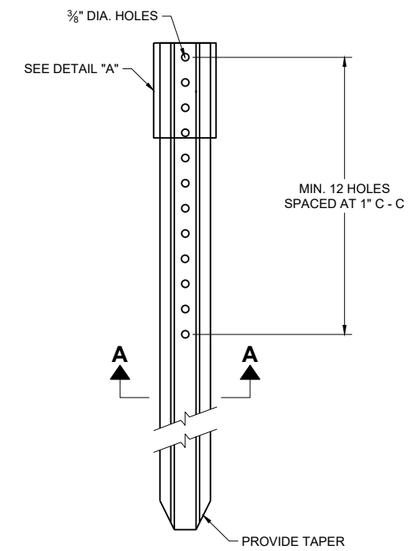

DELINEATOR POST

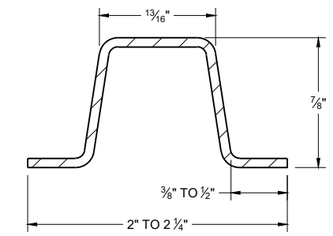

SECTION A - A

WEIGHT 1.12 LBS PER FT. \ 0.1 LB.

REFLECTOR SPACING TABLE

REFLECTOR SPACING	LOCATION
* 100' C-C	RAMPS
400' C-C	MAINLINE

* START AT BEGINNING OF RAMP TAPER AND END AT END OF RAMP TAPER

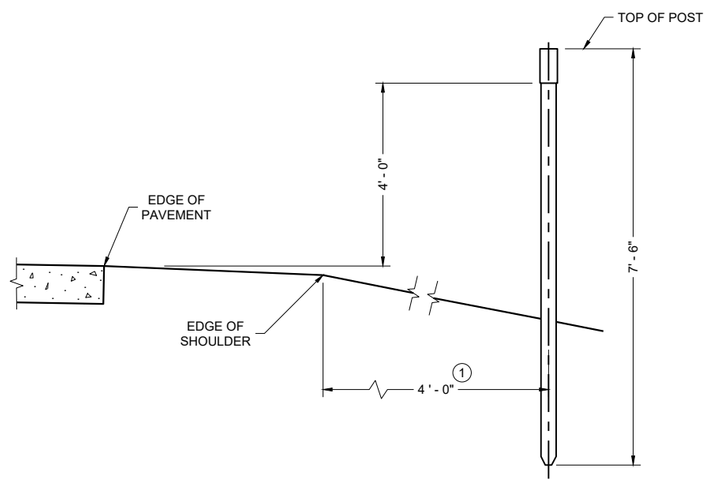

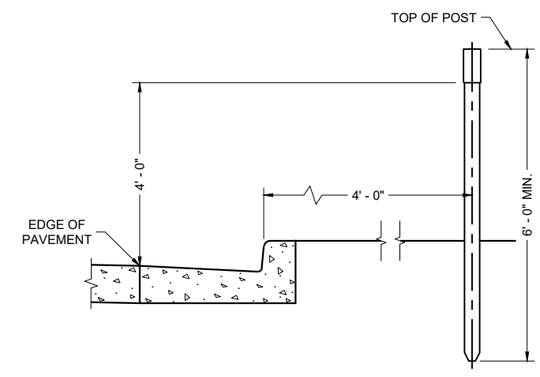

TYPICAL INSTALLATIONS OF DELINEATOR POSTS

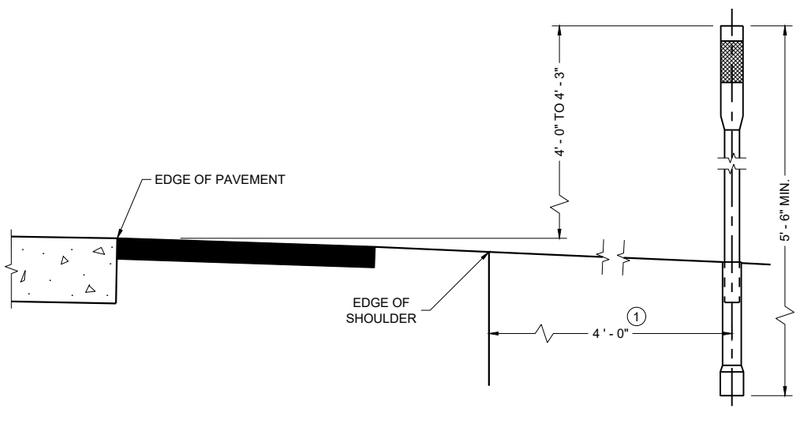

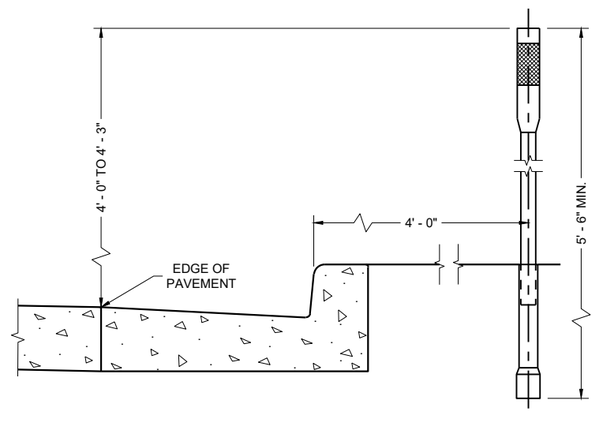

TYPICAL INSTALLATIONS OF FLEXIBLE DELINEATOR POSTS

GENERAL NOTES

DETAILS OF CONSTRUCTION NOT SHOWN ON THIS DRAWING SHALL CONFORM TO THE PERTINENT REQUIREMENTS OF TEH STANDARD SPECIFICATIONS AND THE APPLICABLE SPECIAL PROVISIONS.

1. DELINEATORS SHALL BE PLACED AT A CONSTANT DISTANCE FROM THE EDGE OF THE SHOULDER FOR THE LENGTH OF THE INSTALLATION.
2. FURNISH TYPE H SHEETING FROM THE APPROVED PRODUCTS LIST.

DELINEATOR POST WITH REFLECTIVE SHEETING

STATE OF WISCONSIN
DEPARTMENT OF TRANSPORTATION

APPROVED
March 2024 — DATE
/S/ Jeannie Silver — Statewide Pavement Marking Engineer

FHWA

6

SDD 15A04-08c

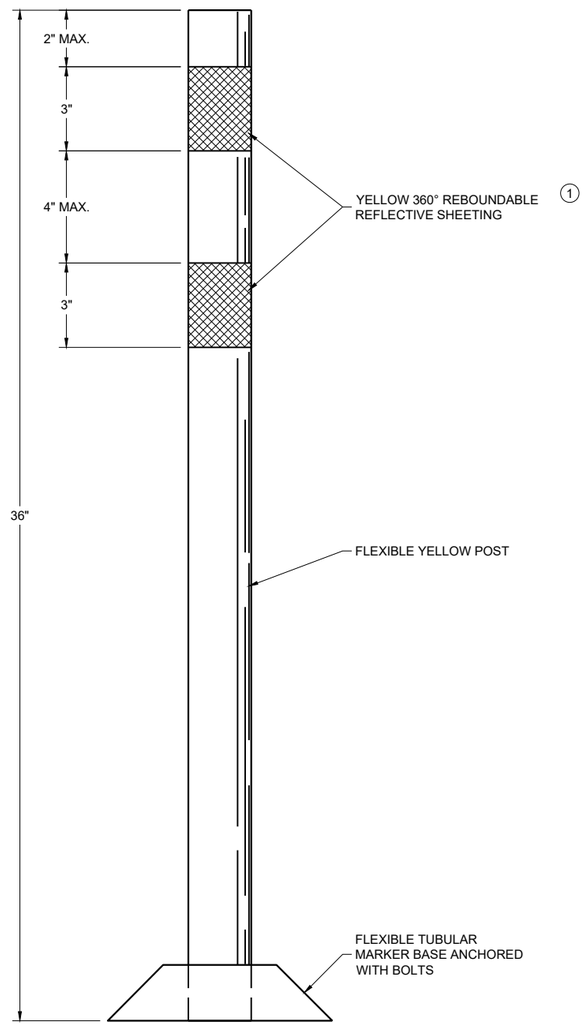

PERMANENT FLEXIBLE TUBULAR MARKER POST

GENERAL NOTES

DETAILS OF CONSTRUCTION NOT SHOWN ON THIS DRAWING SHALL CONFORM TO THE PERTINENT REQUIREMENTS OF THE STANDARD SPECIFICATIONS AND THE APPLICABLE SPECIAL PROVISIONS.

SURFACE MOUNTED BASES SHALL BE FURNISHED IN ACCORDANCE WITH MANUFACTURERS RECOMMENDATIONS TO BE COMPATIBLE WITH FLEXIBLE TUBULAR MARKER POSTS TO A SIZE AND SHAPE THAT WILL PROVIDE A STABLE POST FOUNDATION WHEN SECURED TO THE PAVEMENT.

THE ASPHALTIC ADHESIVE OR BUTYL PAD FURNISHED SHALL BE IN ACCORDANCE WITH MANUFACTURERS RECOMMENDATIONS, UNLESS DIRECTED BY THE ENGINEER TO USE BOLTS.

1 REFLECTIVE SHEETING SHALL FOLLOW THE REQUIREMENTS IN THE APPROVED PRODUCTS LISTING FOR SIGN SHEETING.

CHANNELIZING DEVICES PERMANENT FLEXIBLE TUBULAR MARKER POST

STATE OF WISCONSIN
DEPARTMENT OF TRANSPORTATION

APPROVED
March 2024 — DATE
/S/ Jeannie Silver — Statewide Pavement Marking Engineer
FHWA

6

SDD 15A04-08d

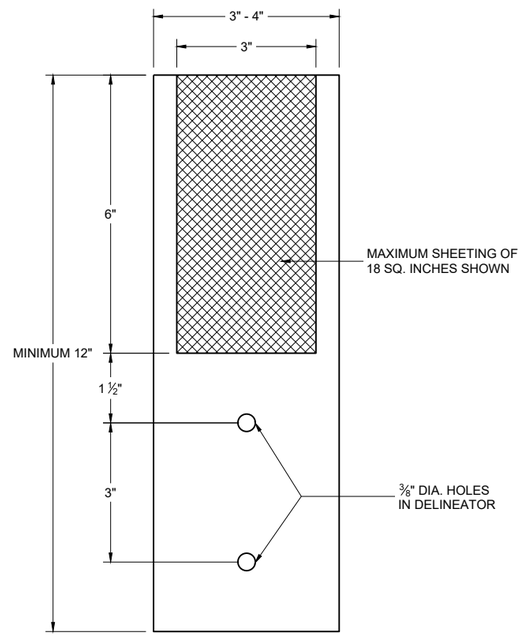

4" x 12" DELINEATOR WITH REFLECTIVE SHEETING

REFLECTOR SPACING TABLE

REFLECTOR SPACING	MINIMUM NUMBER OF REFLECTORS
100' C-C	3

DELINEATOR POST WITH REFLECTIVE SHEETING

STATE OF WISCONSIN
DEPARTMENT OF TRANSPORTATION

APPROVED
March 2024 — DATE
/S/ Jeannie Silver — Statewide Pavement Marking Engineer
FHWA

6

SDD 15A04-08e

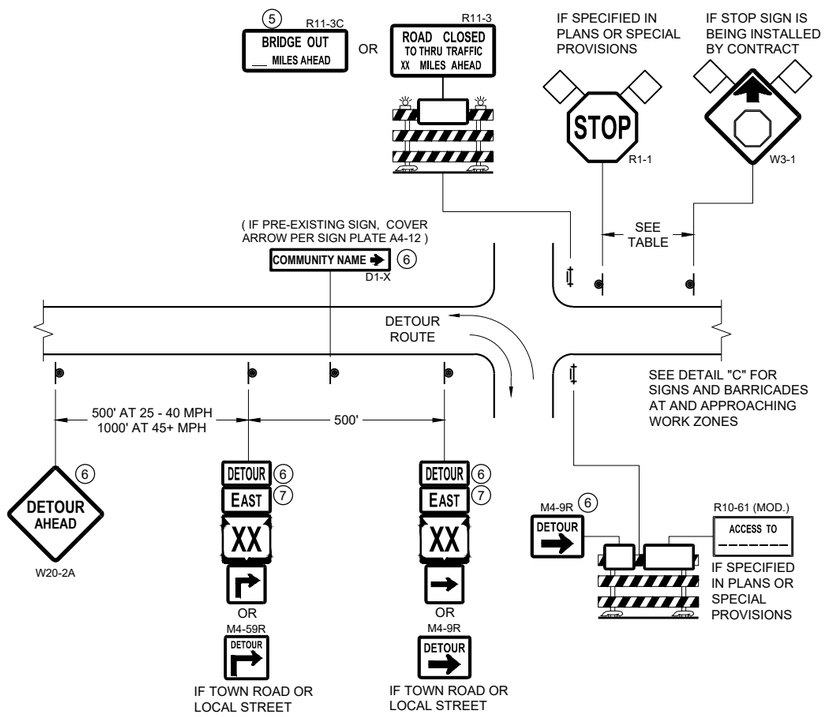

DETAIL A
MAINLINE CLOSURE WITH POSTED DETOUR

WORK ZONE GREATER THAN OR EQUAL TO ½ MILE FROM DETOUR ROUTE (1000 FEET IF URBAN)

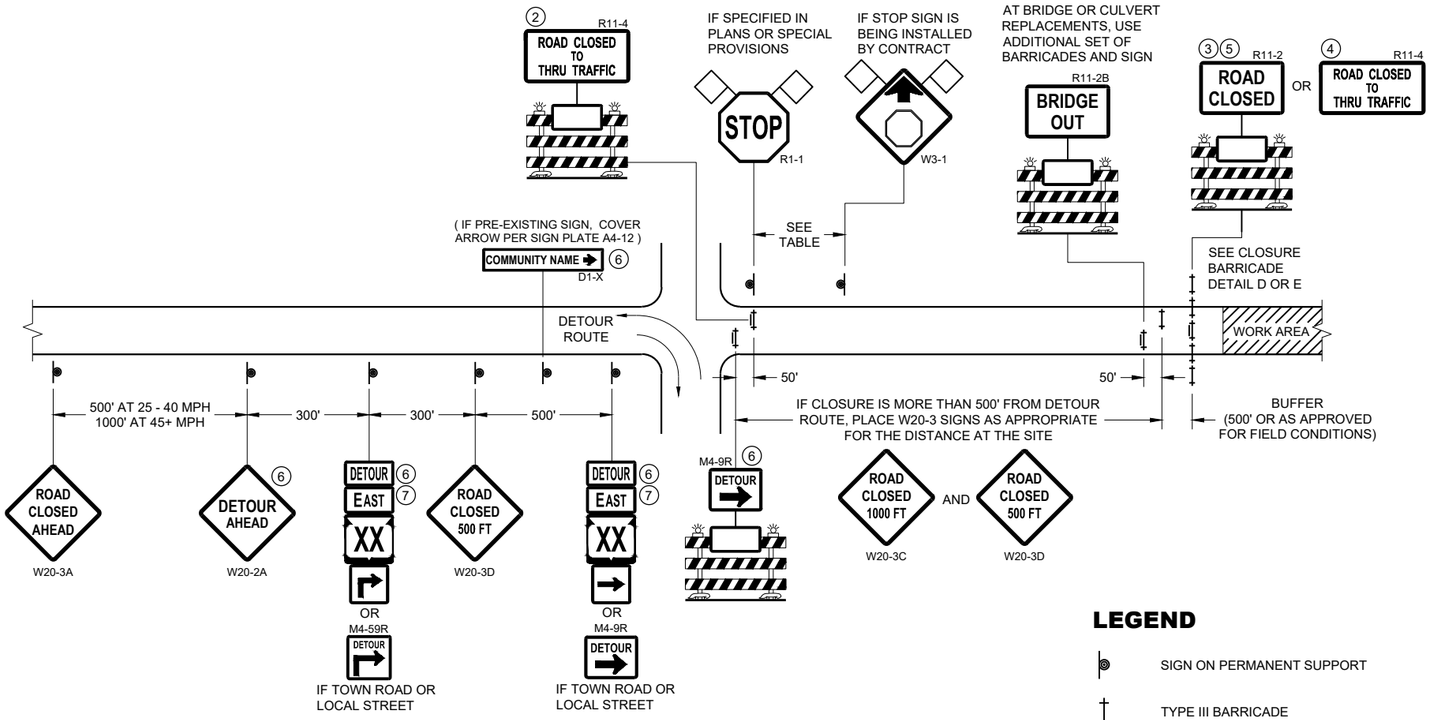

DETAIL B
MAINLINE CLOSURE WITH POSTED DETOUR

WORK ZONE LESS THAN ½ MILE FROM DETOUR ROUTE (1000 FEET IF URBAN)

LEGEND

- SIGN ON PERMANENT SUPPORT
- TYPE III BARRICADE
- TYPE III BARRICADE WITH ATTACHED SIGN
- TYPE "A" WARNING LIGHT (FLASHING)
- WORK AREA
- FLAGS, 16" X 16" MIN. (ORANGE)
- DETOUR — M4 - 8
- EAST — M3 - X
- XX (M1 - 4) OR XX (M1 - 6) OR COUNTY X (M1 - 5A)
- (M05 - 1) OR (M06 - 1)

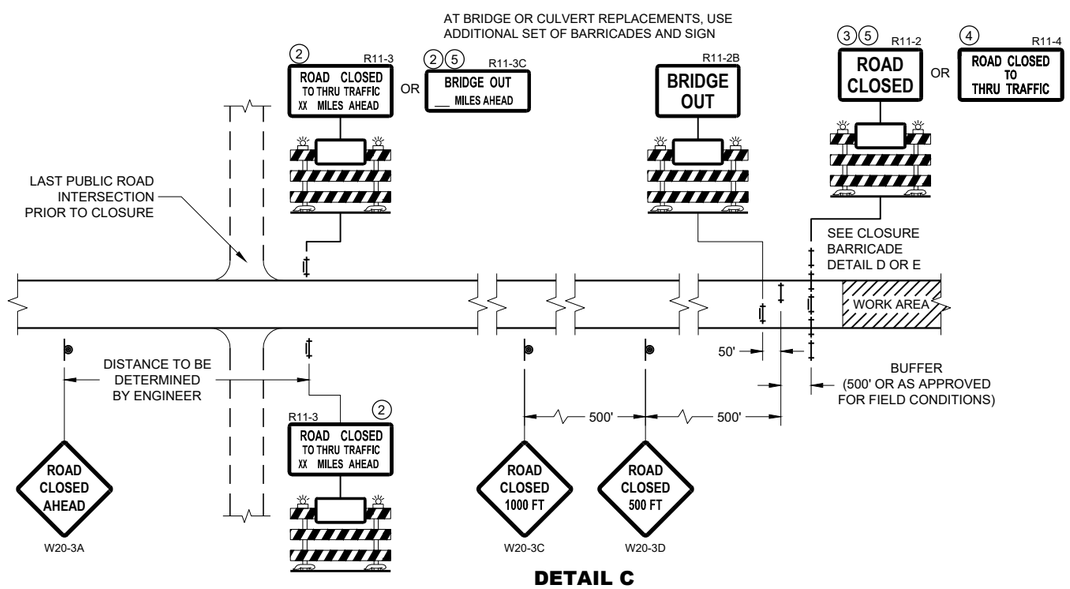

DETAIL C
MAINLINE CLOSURE, NO POSTED DETOUR

SPEED LIMIT (MPH)	"STOP AHEAD" ADVANCE WARNING DISTANCE (FT)
25	200
30	200
35	350
40	350
45	500
50	550
55	750

SEE SDD 15C2-SHEET "b" FOR GENERAL NOTES AND FOOTNOTES 1 THROUGH 7

BARRICADES AND SIGNS FOR MAINLINE CLOSURES

STATE OF WISCONSIN
DEPARTMENT OF TRANSPORTATION

APPROVED
May 2023 — DATE
/S/ Andrew Heidtke — WORK ZONE ENGINEER

FHWA

6

SDD 15C02 - 09a

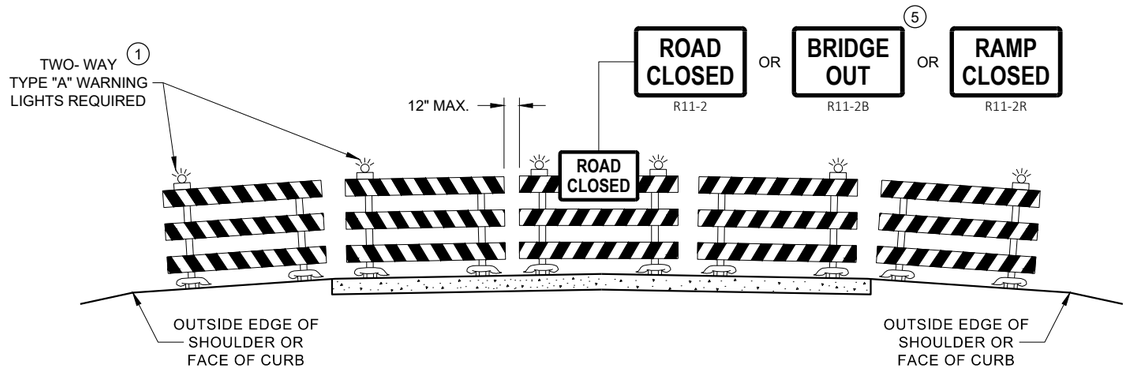

DETAIL D
ROAD CLOSURE BARRICADE DETAIL
APPROACH VIEW

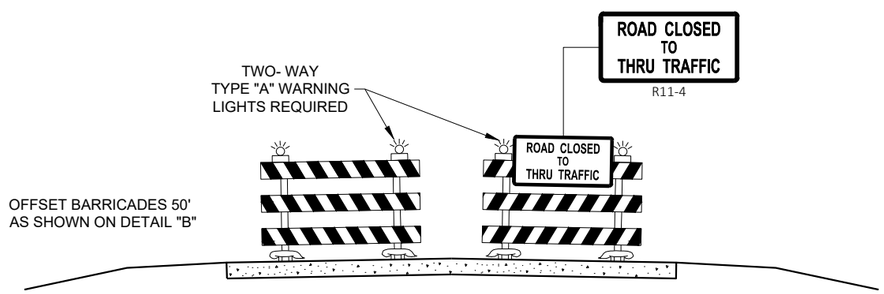

DETAIL E
LANE CLOSURE BARRICADE DETAIL
APPROACH VIEW

SEE SDD 15C2 - SHEET "a" FOR LEGEND

GENERAL NOTES

THE EXACT NUMBER, LOCATION, AND SPACING OF ALL SIGNS AND BARRICADES SHALL BE ADJUSTED TO FIT FIELD CONDITIONS AS APPROVED BY THE ENGINEER.

ANY SIGNS TEMPORARY OR EXISTING, WHICH CONFLICT WITH TRAFFIC CONTROL "IN USE", SHALL BE REMOVED OR COVERED AS NEEDED AND AS APPROVED BY THE ENGINEER.

THE SPACING BETWEEN TRAFFIC CONTROL SIGNS SHOULD BE ADJUSTED TO NOT CONFLICT WITH AND SHOULD PROVIDE A DESIRABLE MINIMUM OF 200 FEET CLEARANCE TO EXISTING SIGNS THAT WILL REMAIN IN PLACE.

BARRICADES THAT MUST BE MOVED FOR A WORK OPERATION SHALL BE IMMEDIATELY RE-ESTABLISHED UPON COMPLETION OF THE OPERATION, OR FOR CONTINUING OPERATIONS, AT THE END OF EACH WORKING DAY.

SIGNS THAT WILL BE IN PLACE LESS THAN 7 CONTINUOUS DAYS AND NIGHTS MAY BE MOUNTED ON PORTABLE SUPPORTS.

ALL TYPE III BARRICADES SHALL HAVE RAILS REFLECTORIZED ON BOTH FACES. STRIPES SHALL BE PROPERLY SLOPED DOWN TOWARD THE TRAFFIC SIDE OR AS SHOWN IN THE ROAD CLOSURE BARRICADE DETAIL "D" FOR FULL ROAD CLOSURES.

TYPE "A" LOW - INTENSITY FLASHING WARNING LIGHTS SHALL BE VISIBLE ON BOTH SIDES OF THE BARRICADE.

THE R11 - 2, R11 - 3, M4 - 9, R11 - 4, AND R10 - 61 SIGNS PLACED ON THE BARRICADES SHALL COVER NO MORE THAN THE TOP RAIL. THE SIGNS SHALL NOT COVER ANY PORTION OF THE MIDDLE RAIL OR BOTTOM RAILS.

"WO" AND "MO" SIGNS ARE THE SAME AS "W" AND "M" SIGNS EXCEPT THE BACKGROUND IS ORANGE.

ALL SIGNS SHALL BE 48" X 48" UNLESS OTHERWISE NOTED BELOW:
- R11 - 2 SHALL BE 48" X 30"
- R11 - 3 SHALL, R11 - 4 AND R10 - 61 SHALL BE 60 " X 30"
- M4 - 9 SHALL BE 30" X 24"
- M3 - X SHALL BE 24" X 12" (36" X 18" IF NEEDED TO MATCH EXISTING SIGNS)
- M4 - 8 SHALL BE 24" X 12" (36" X 18" IF NEEDED TO MATCH EXISTING SIGNS)
- M1 - 4, M1 - 5A AND M1 - 6 SHALL BE 24" X 24" (36" X 36" IF NEEDED TO MATCH EXISTING SIGNS)
- MO5 - 1 AND MO6 - 1 SHALL BE 21" X 21" (30" X 30" IF NEEDED TO MATCH EXISTING SIGNS)
- D1 - X SHALL BE AS SHOWN ON SPECIFIC PROJECT SIGNING DETAIL SHEETS.
- R1 - 1 SHALL BE 36" X 36"

1. TWO WARNING LIGHTS SHALL BE PROVIDED ON THE CENTER BARRICADE AND A MINIMUM OF ONE WARNING LIGHT SHALL BE PROVIDED ON EACH OF THE OTHER BARRICADES WITHIN THE ROADWAY LIMITS. SPACING OF THE WARNING LIGHTS SHALL BE UNIFORM TO THE EDGE OF ROADWAY AS SHOWN (APPROX. 8 FOOT LIGHT SPACING.
2. THESE SIGNS AND BARRICADES ARE NOT REQUIRED IF ROAD CLOSURE BEGINS AT AN INTERSECTION.
3. FOR ROAD CLOSURE WITHOUT LOCAL ACCESS TO PROJECT, SEE ROAD CLOSURE BARRICADE DETAIL "D".
4. FOR ROAD CLOSURE WITH LOCAL ACCESS TO PROJECT, SEE ROAD CLOSURE BARRICADE DETAIL "E".
5. FOR BRIDGE OR CULVERT REPLACEMENTS, SUBSTITUTE "BRIDGE OUT" INSTEAD OF "ROAD CLOSED" ON R11 - 2 AND R11 - 3 SIGNS.
6. INSTALL DETOUR AND COMMUNITY GUIDE SIGNS AND ARROWS ONLY IF SPECIFIED IN THE CONTRACT. IF THERE ARE EXISTING ROUTE MARKER ASSEMBLIES THAT WILL REMAIN IN PLACE, ADJUST THE LOCATION OF THE DETOUR ROUTE SIGNS TO CORRESPOND WITH THE EXISTING ASSEMBLIES. MODIFY EXISTING SIGNS WHERE POSSIBLE. SEE SPECIFIC PROJECT DETOUR SIGNING DETAIL SHEETS. IF DETOUR SIGNS ARE BEING INSTALLED BY OTHERS, PLACE THE CONTRACTED TRAFFIC CONTROL SIGNS TO ALLOW FOR PLACEMENT OF ALL WARNING, DETOUR AND GUIDE SIGNS AS SHOWN.
7. "EAST" CARDINAL DIRECTION MARKERS AND RIGHT TURN ARROWS ARE SHOWN. USE OTHER CARDINAL DIRECTIONS AND ARROWS AS APPROPRIATE.

BARRICADES AND SIGNS FOR VARIOUS CLOSURES

STATE OF WISCONSIN
DEPARTMENT OF TRANSPORTATION

APPROVED
May 2023 — DATE
/S/ Andrew Heidtke — WORK ZONE ENGINEE
FHWA

6

SDD 15C02 - 09b

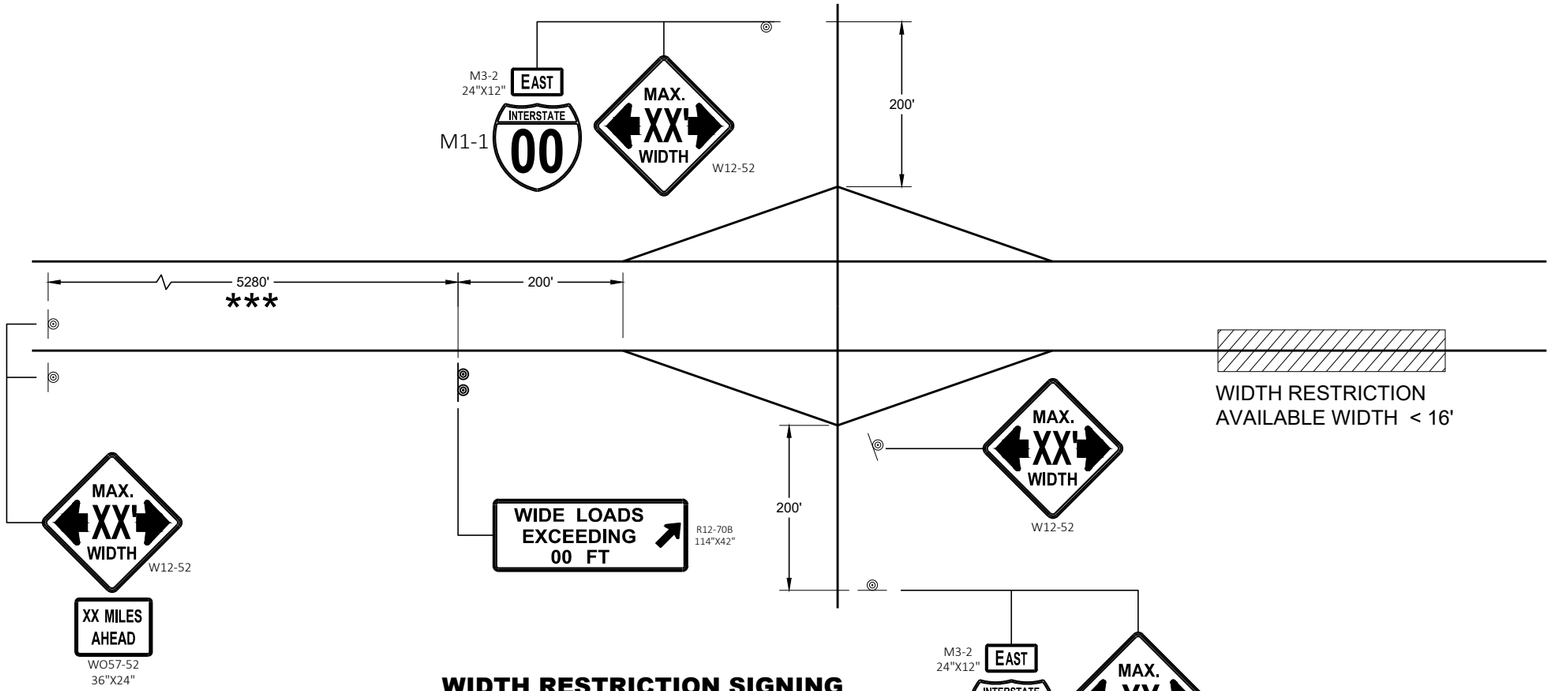

WIDTH RESTRICTION SIGNING

LEGEND

◎ SIGN ON PERMANENT SUPPORT

GENERAL NOTES

THE EXACT NUMBER, LOCATION AND SPACING OF ALL SIGNS SHALL BE ADJUSTED TO FIT FIELD CONDITIONS AS APPROVED BY THE ENGINEER.

THE SPACING BETWEEN SIGNS SHOULD BE ADJUSTED TO NOT CONFLICT WITH AND TO PROVIDE A DESIRABLE MINIMUM OF 200 FEET CLEARANCE TO EXISTING SIGNS THAT WILL REMAIN IN PLACE.

ANY SIGNS TEMPORARY OR EXISTING, WHICH CONFLICT WITH TRAFFIC CONTROL " IN USE" SHALL BE REMOVED OR COVERED AS NEEDED AND AS APPROVED BY THE ENGINEER.

ALL SIGNS ARE 48" X 48" UNLESS OTHERWISE NOTED.

"WO" SIGNS ARE THE SAME AS "W" SIGNS EXCEPT THE BACKGROUND IS ORANGE.

WIDTH ON SIGN TO BE APPROXIMATELY ONE FOOT LESS THAN AVAILABLE WIDTH.

* PLACE 500 FEET AFTER THE W20 - 1A AND 500 FEET BEFORE ADDITIONAL SIGNS FOR ROADWAYS WITH A PRE - CONSTRUCTION SPEED LIMIT OF 45 MPH OR MORE. FOR 35-40 MPH, USE 350 FOOT TYPICAL SPACING. FOR 25-30 MPH, USE 200 FOOT TYPICAL SPACING.

** SIGN SHALL BE VISIBLE FROM ROADWAY.

*** ADDITIONAL SIGNS NEEDED IF THERE IS AN ON RAMP BETWEEN SIGNS.

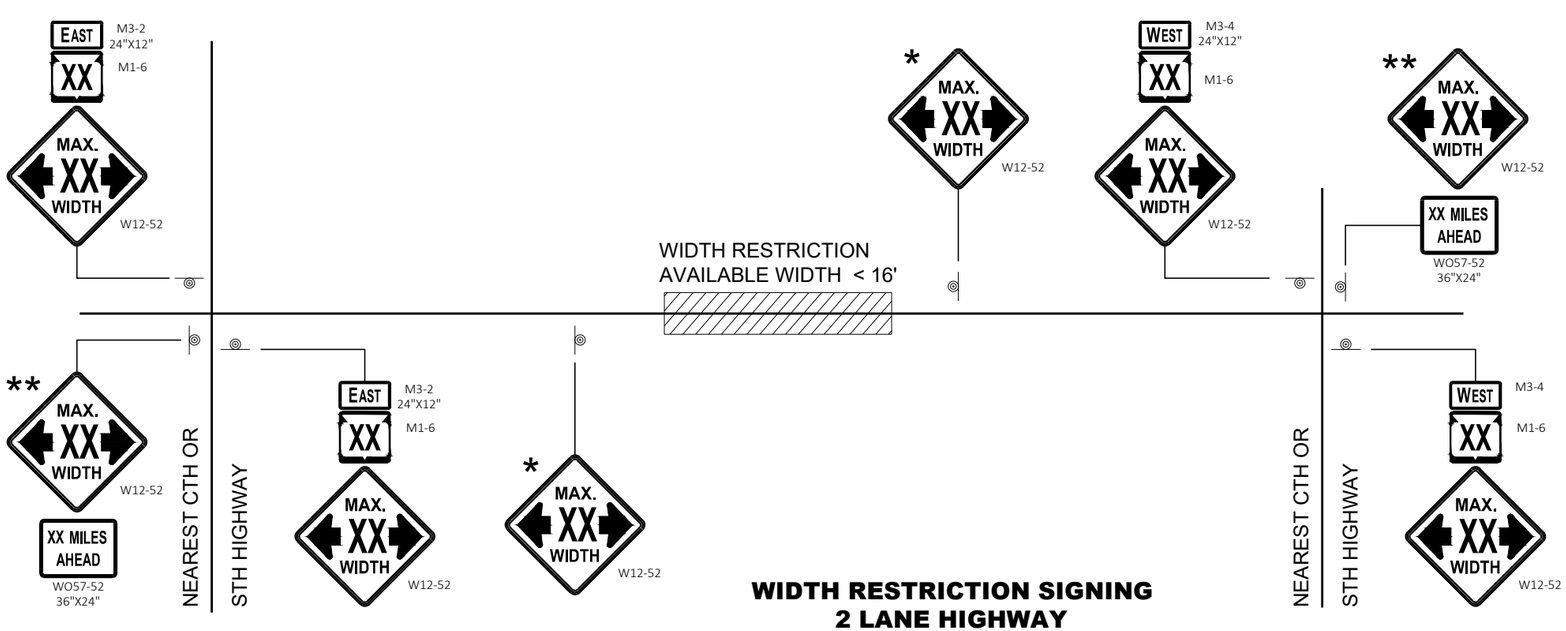

WIDTH RESTRICTION SIGNING
2 LANE HIGHWAY

WIDTH ON SIGN TO BE APPROX. 1 - FOOT LESS THAN AVAILABLE WIDTH

ADVANCED WIDTH RESTRICTION SIGNING

STATE OF WISCONSIN
DEPARTMENT OF TRANSPORTATION

APPROVED
May 2023 — DATE
/S/ Andrew Heidtke — WORK ZONE ENGINEER
FHWA

6

SDD 15C02 - 09f

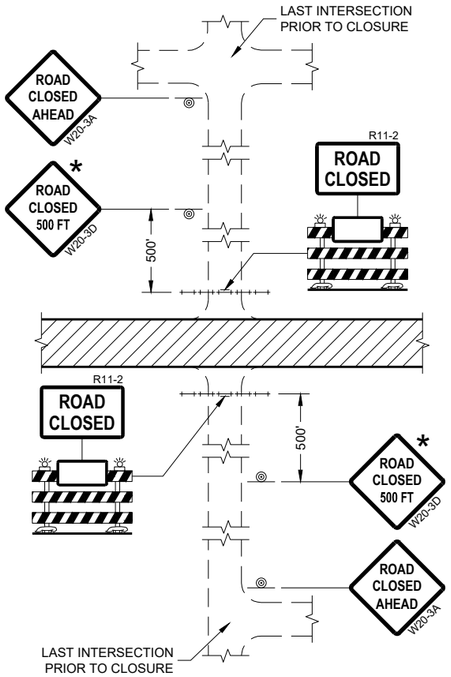

DETAIL 1
(NO ACCESS TO PROJECT)

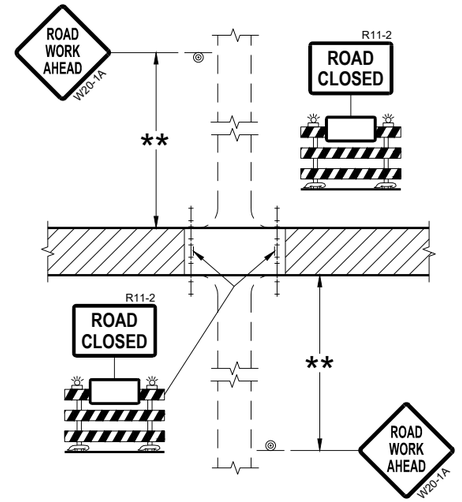

DETAIL 2
(PUBLIC CROSS-TRAFFIC MAINTAINED.
NO ACCESS TO PROJECT)

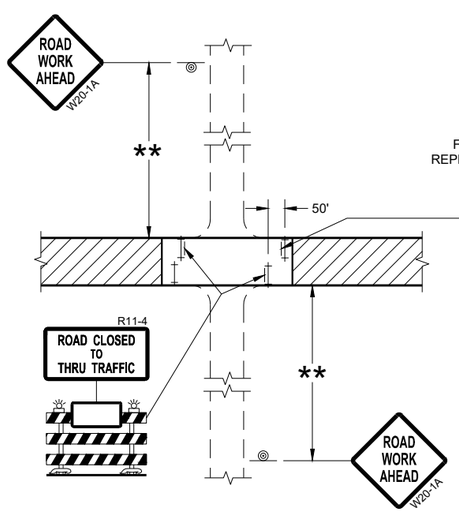

DETAIL 3
(PUBLIC CROSS-TRAFFIC MAINTAINED.
CONTRACTOR, LOCAL BUSINESS AND
RESIDENT ACCESS TO PROJECT)

FOR BRIDGE OR CULVERT
REPLACEMENT, USE ADDITIONAL
SIGN ON BARRICADE

BRIDGE OUT
XX MILES AHEAD
R11-3C

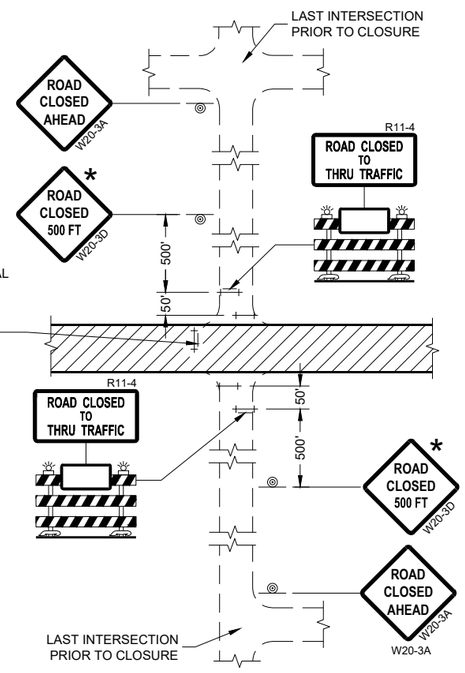

DETAIL 4
(CONTRACTOR, LOCAL BUSINESS AND
RESIDENT ACCESS TO PROJECT)

GENERAL NOTES

THE EXACT NUMBER, LOCATION, AND SPACING OF ALL SIGNS AND BARRICADES SHALL BE ADJUSTED TO FIT FIELD CONDITIONS AS APPROVED BY THE ENGINEER.

ANY SIGNS TEMPORARY OR EXISTING, WHICH CONFLICT WITH TRAFFIC CONTROL "IN USE" SHALL BE REMOVED OR COVERED AS NEEDED AND AS APPROVED BY THE ENGINEER.

THE SPACING BETWEEN TRAFFIC CONTROL SIGNS SHOULD BE ADJUSTED TO NOT CONFLICT WITH AND SHOULD PROVIDE A DESIRABLE MINIMUM OF 200 FEET CLEARANCE (500 FEET DESIRABLE) TO EXISTING SIGNS THAT WILL REMAIN IN PLACE.

IF A "STOP" SIGN MUST BE REMOVED FOR A WORK OPERATION, A TEMPORARY "STOP" SIGN SHALL BE PLACED PRIOR TO THE SIGN REMOVAL, OR A FLAGGER SHALL BE PROVIDED UNTIL THE SIGN IS REESTABLISHED.

BARRICADES THAT MUST BE MOVED FOR A WORK OPERATION SHALL BE IMMEDIATELY REESTABLISHED UPON COMPLETION OF THE OPERATION OR FOR CONTINUING OPERATIONS, AT THE END OF EACH WORKING DAY.

SIGNS THAT WILL BE IN PLACE LESS THAN SEVEN CONTINUOUS DAYS AND NIGHTS MAY BE MOUNTED ON PORTABLE SUPPORTS.

ALL TYPE III BARRICADES SHALL HAVE RAILS REFLECTORIZED ON BOTH FACES. STRIPES SHALL BE PROPERLY SLOPED DOWN TOWARD THE TRAFFIC SIDE OR AS SHOWN IN THE ROAD CLOSURE BARRICADE DETAIL "D" FOR FULL ROAD CLOSURES.

TYPE "A" LOW-INTENSITY FLASHING WARNING LIGHTS SHALL BE VISIBLE ON BOTH SIDES OF THE BARRICADE.

THE R11-2, R11-3, AND R11-4 SIGNS PLACED ON BARRICADES SHALL COVER NO MORE THAN THE TOP RAIL. THE SIGNS SHALL NOT COVER ANY PORTION OF THE MIDDLE OR BOTTOM RAILS.

ALL SIGNS SHALL BE 48" X 48" UNLESS OTHERWISE NOTED BELOW:
R11-2 SHALL BE 48" X 30".
R11-4 AND R11-3 SHALL BE 60" X 30".

* OMIT THE "ROAD CLOSED 500 FT." SIGN IF THE LAST INTERSECTION IS 500 FEET OR LESS FROM THE WORK ZONE.

** 500' MAX. OR AT LAST INTERSECTION, WHICHEVER IS CLOSEST.

LEGEND

- SIGN ON PERMANENT SUPPORT
- TYPE III BARRICADE
- TYPE III BARRICADE WITH ATTACHED SIGN
- TYPE "A" WARNING LIGHT (FLASHING)
- WORK AREA

BARRICADES AND SIGNS FOR SIDEROAD CLOSURES

STATE OF WISCONSIN
DEPARTMENT OF TRANSPORTATION

APPROVED
July 2018 — DATE
/S/ Andrew Heidtke — WORK ZONE ENGINEE
FHWA

6

SDD 15C03 - 05

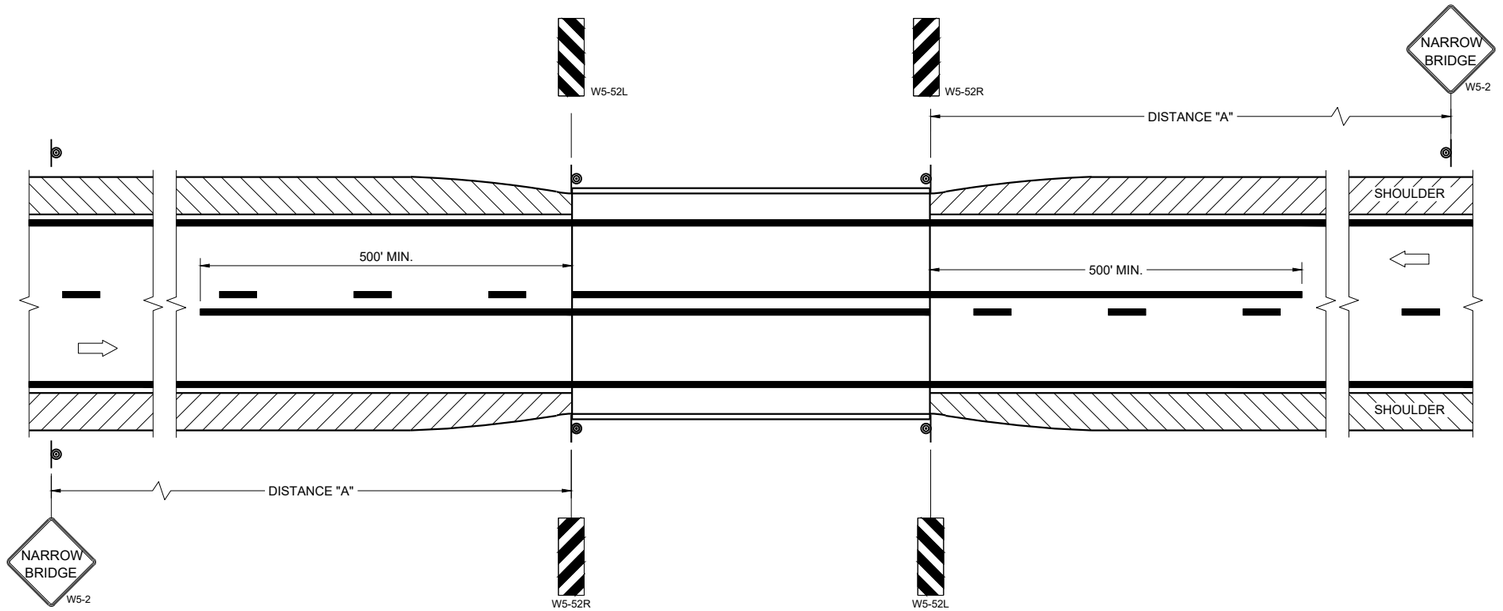

SITUATION 1

WARRANTING CRITERIA:
BRIDGE WIDTH IS AT LEAST 16 FEET BUT LESS THAN 24 FEET.

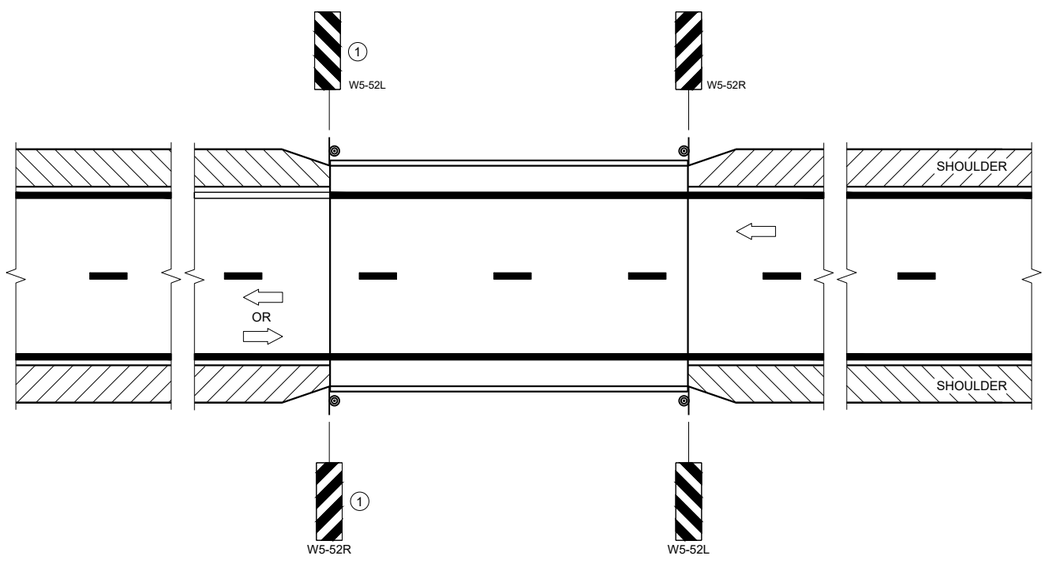

SITUATION 2

WARRANTING CRITERIA:
1. BRIDGE WIDTH IS AT LEAST 24 FEET AND
2. BRIDGE SHOULDER WIDTH IS LESS THAN 6 FEET

GENERAL NOTES

DETAILS OF TRAFFIC CONTROL DEVICES AND INSTALLATION NOT SHOWN ON THE DRAWING SHALL CONFORM TO THE PERTINENT REQUIREMENTS OF THE STANDARD SPECIFICATIONS, THE SPECIAL PROVISIONS, AND THE MANUAL ON UNIFORM TRAFFIC CONTROL DEVICES.

LOCATE W5-52 SIGN POST(S) BEHIND GUARDRAIL WHEN PRESENT.

PLACE THE EDGE OF THE W5-52 SIGN IN LINE WITH FACE OF CURB OR PARAPET.

ON BRIDGE ONLY PROJECTS, PLACE 300 FEET OF EDGELINE.

OMIT EDGELINES ON ROADWAYS WITHOUT EXISTING EDGELINES.

(1) OMIT ON ONE-WAY TRAVELED WAYS.

LEGEND

SIGN ON PERMANENT SUPPORT

DIRECTION OF TRAFFIC

DISTANCE TABLE

POSTED OR 85TH PERCENTILE SPEED	DISTANCE "A"
25	150'
30	200'
35	250'
40	300'
45	400'
50	550'
55	700'

SIGNING AND MARKING FOR TWO LANE BRIDGES

STATE OF WISCONSIN
DEPARTMENT OF TRANSPORTATION

APPROVED
May 2023 — DATE
/S/ Jeannie Silver — Statewide Pavement Marking Engineer
FHWA

6

SDD 15C06-12

GENERAL NOTES

DETAILS OF INSTALLATION, MATERIALS AND WORKMANSHIP NOT SHOWN ON THIS DRAWING SHALL CONFORM TO THE PERTINENT REQUIREMENTS OF THE STANDARD SPECIFICATIONS AND APPLICABLE SPECIAL PROVISIONS.

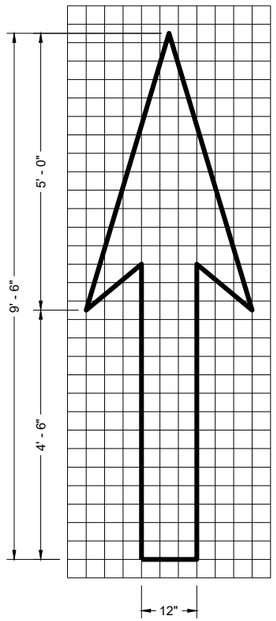

TYPE 1

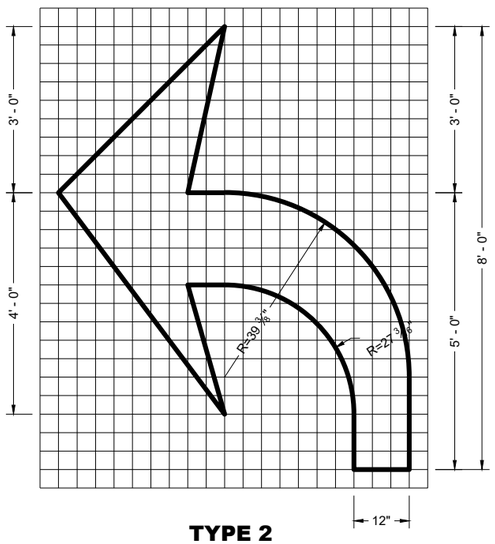

TYPE 2

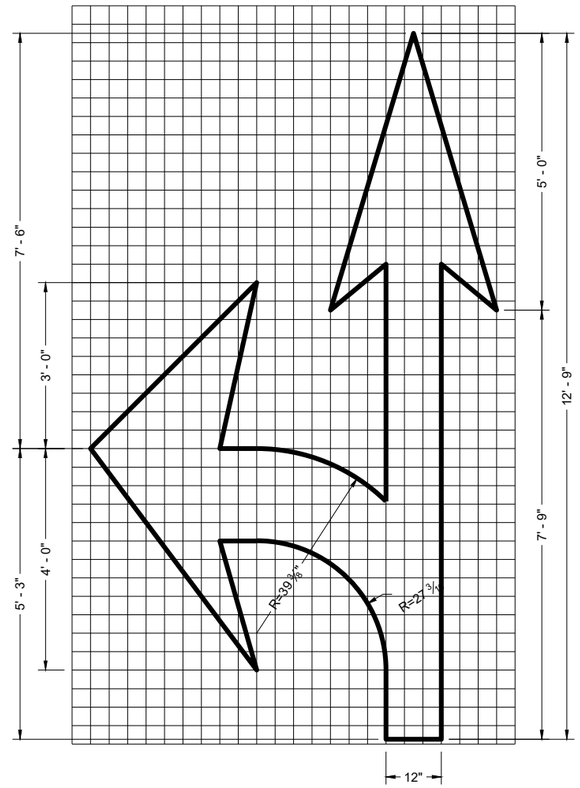

TYPE 3

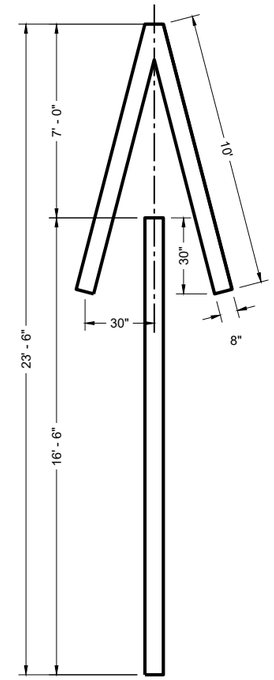

TYPE 4

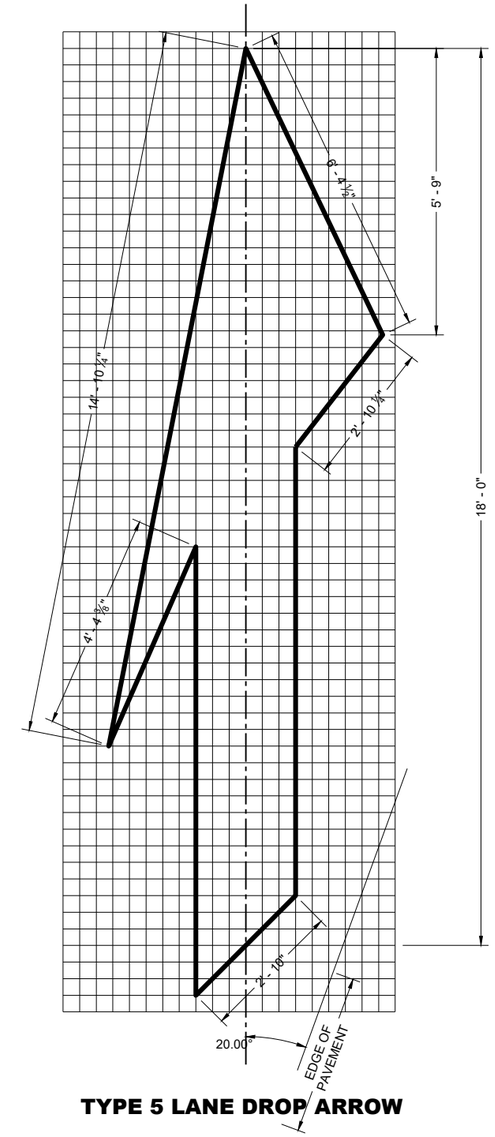

TYPE 5 LANE DROP ARROW

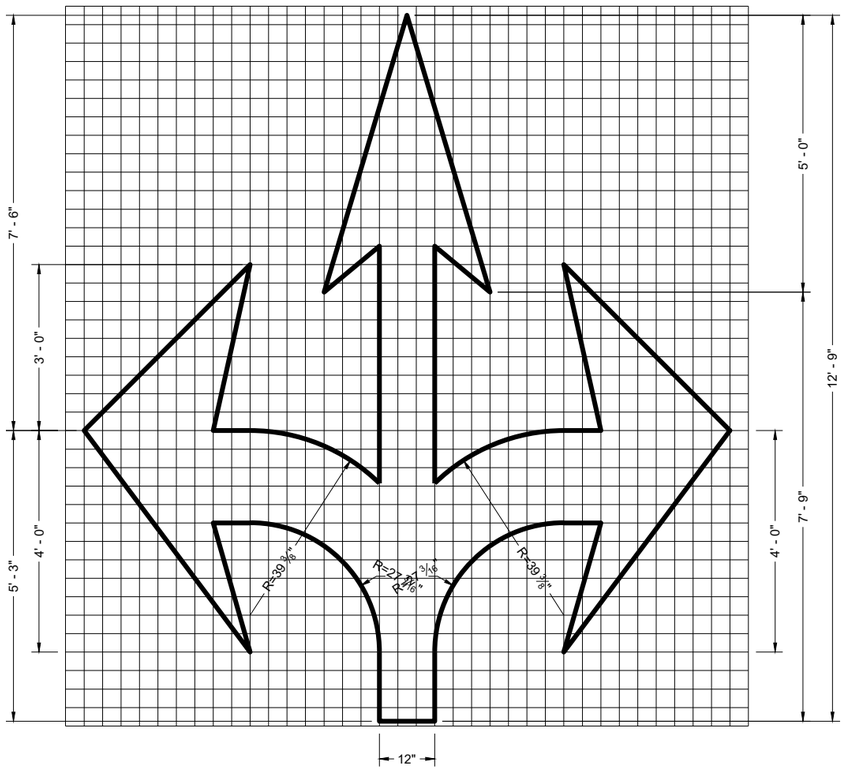

TYPE 6

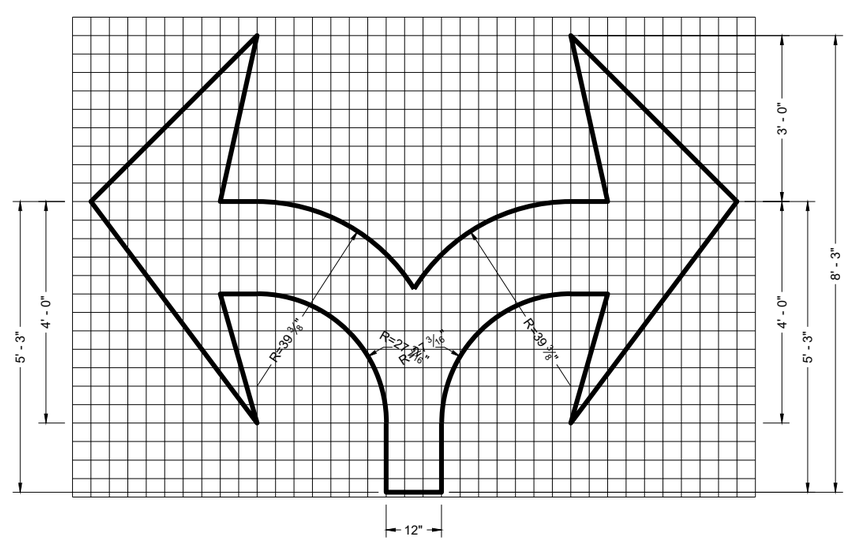

TYPE 7

6

SDD 15C07-16c

PAVEMENT MARKING ARROWS

STATE OF WISCONSIN
DEPARTMENT OF TRANSPORTATION

APPROVED
November 2024 — DATE
/S/ Matthew Rauch — STATE SIGNING AND MARKING ENGINEER

FHWA

6

SDD 15C07-16c

*CONFIRM MARKING LINE WIDTH WITH THE MISCELLANEOUS QUANTITIES

GENERAL NOTES

DETAILS OF CONSTRUCTION NOT SHOWN ON THIS DRAWING SHALL CONFORM TO STANDARD SPECIFICATIONS AND SPECIAL PROVISIONS.

1. LOCATE THE NO PASSING ZONE W14-3 SIGN WITHIN 50 FEET OF THE "T" MARKING
2. MEASURE FROM EDGE OF MARKING TO JOINT LINE. THIS DOES NOT INCLUDE SPACE NEEDED FOR GROOVING OPERATIONS.

LEGEND

"T" MARKING

SIGN ON PERMANENT SUPPORT

DIRECTION OF TRAFFIC

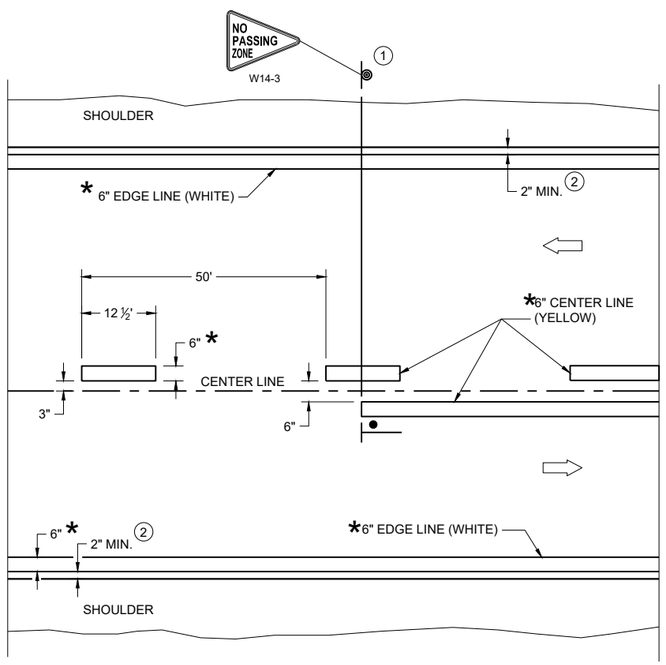

TWO WAY TRAFFIC

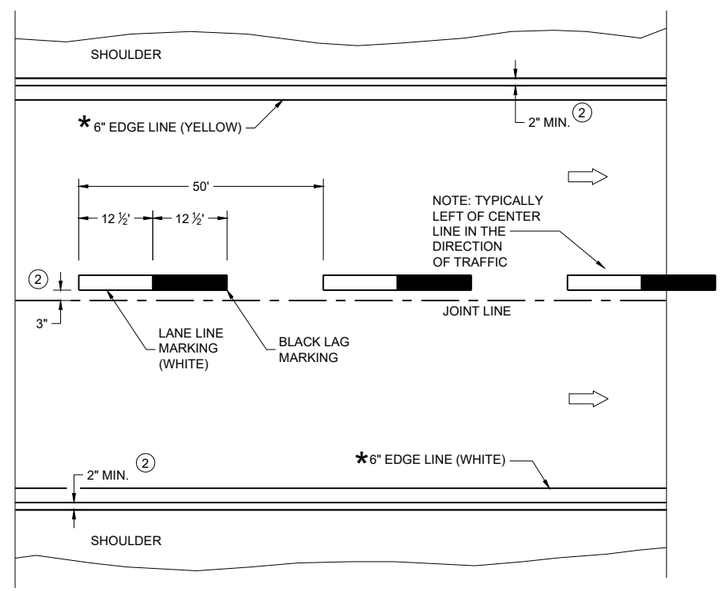

ONE WAY TRAFFIC

PERMANENT PAVEMENT MARKING

6

SDD 15C08-23a

PERMANENT LONGITUDINAL PAVEMENT MARKINGS

STATE OF WISCONSIN
DEPARTMENT OF TRANSPORTATION

APPROVED
May 2023 — DATE
/S/ Jeannie Silver — Statewide Pavement Marking Engineer
FHWA

6

SDD 15C08-23a

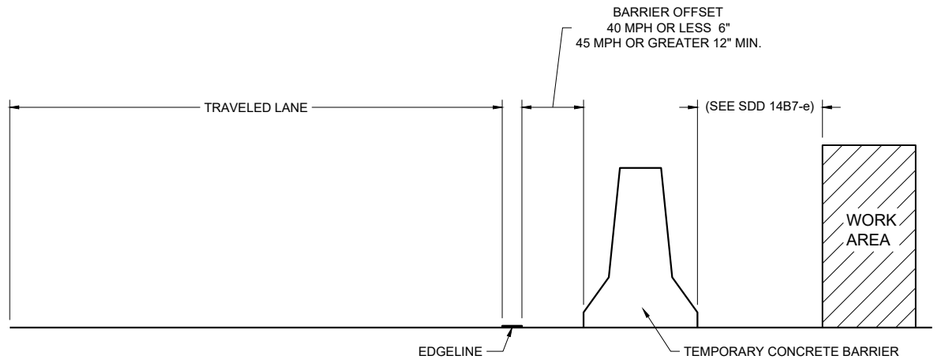

TEMPORARY BARRIER OFFSET FROM EDGELINE

GENERAL NOTES

DETAILS OF CONSTRUCTION NOT SHOWN ON THIS DRAWING SHALL CONFORM TO STANDARD SPECIFICATIONS AND SPECIAL PROVISIONS.

LEGEND

DIRECTION OF TRAFFIC

*CONFIRM MARKING LINE WIDTH WITH THE MISCELLANEOUS QUANTITIES

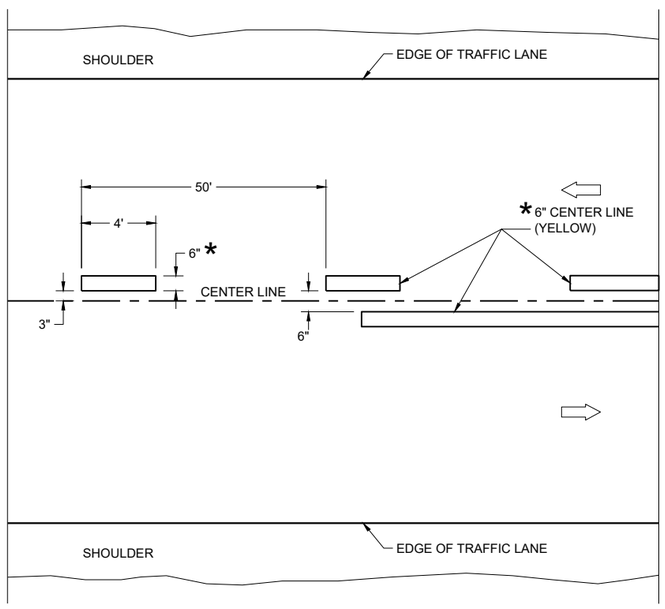

TWO WAY TRAFFIC

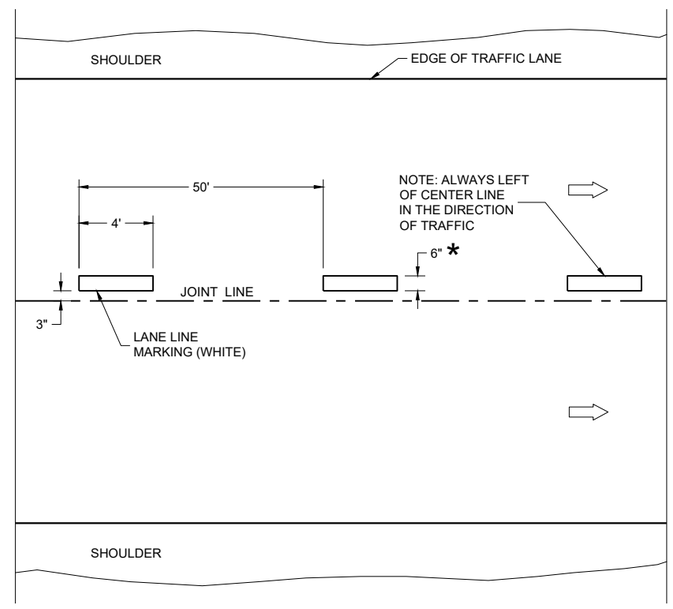

ONE WAY TRAFFIC

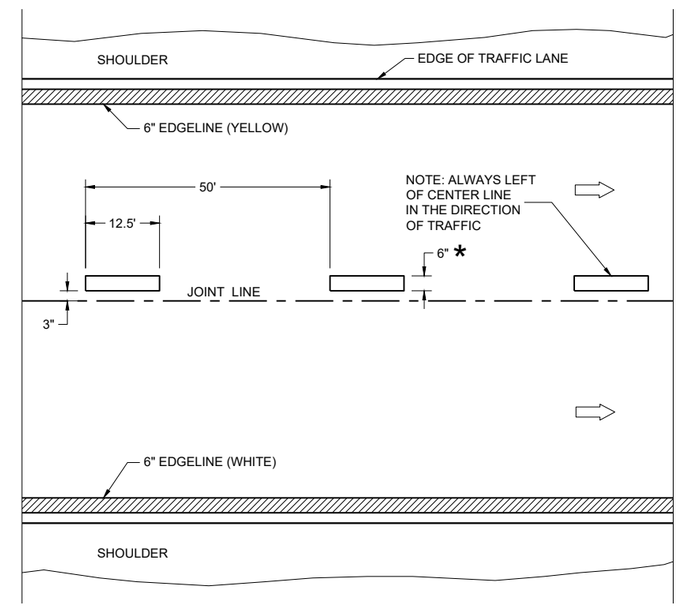

FREEWAYS AND EXPRESSWAYS

TEMPORARY PAVEMENT MARKING

TEMPORARY LONGITUDINAL PAVEMENT MARKING	
STATE OF WISCONSIN DEPARTMENT OF TRANSPORTATION	
APPROVED May 2023 DATE	/S/ Jeannie Silver Statewide Pavement Marking Engineer
FHWA	

6

SDD 15C08-23b

6

SDD 15C08-23b

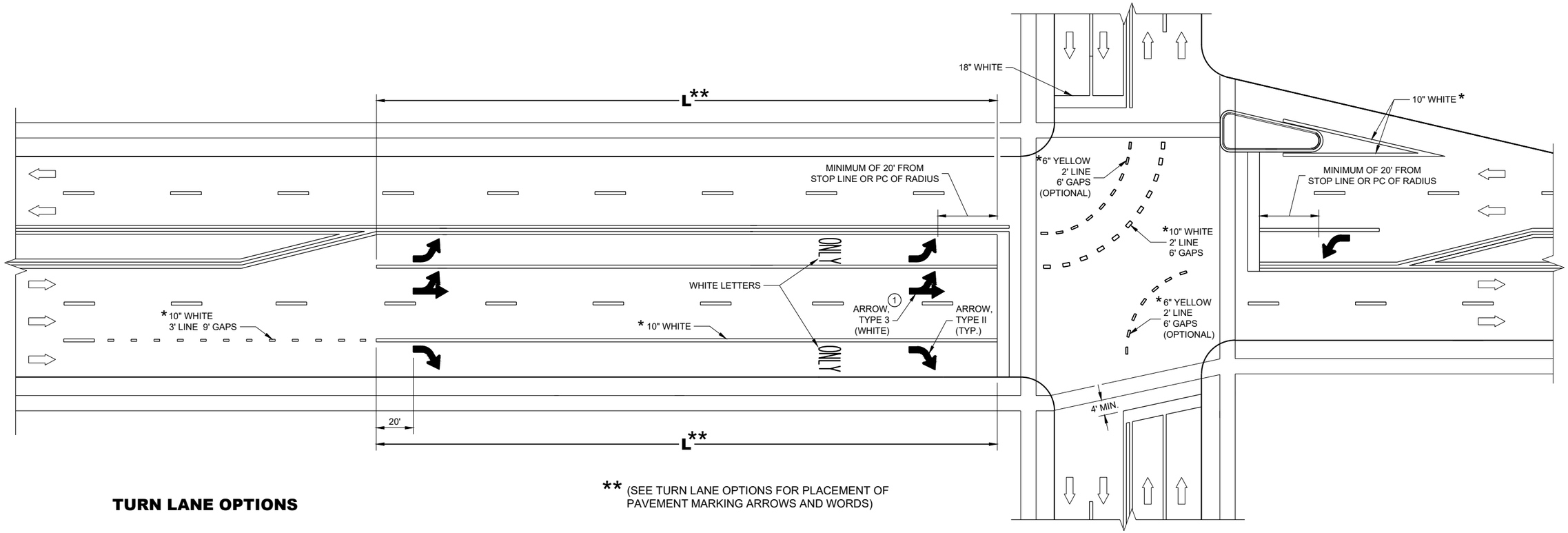

** (SEE TURN LANE OPTIONS FOR PLACEMENT OF PAVEMENT MARKING ARROWS AND WORDS)

TURN LANE OPTIONS

LENGTH OF TURN BAY (L) OF 0 - 47' DOES NOT REQUIRE PAVEMENT MARKING ARROWS OR WORDS

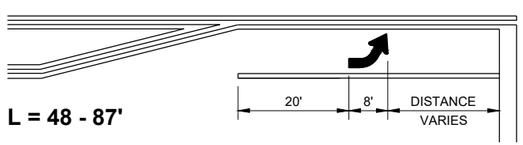

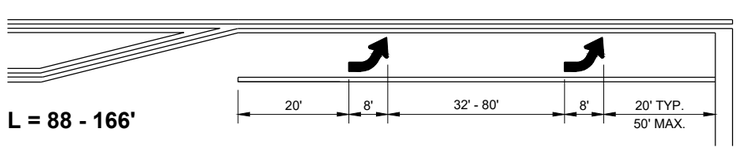

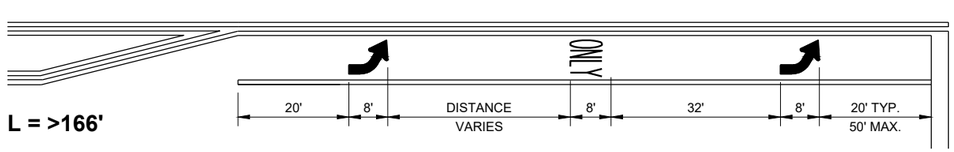

GENERAL NOTES

1. QUANTITY AND LOCATION OF TYPE 3 ARROWS ARE THE SAME AS THE TYPE II ARROWS IN THE ADJACENT TURN LANE. FOR TURN LANES WITH A PHYSICAL SEPARATION IN THE SAME DIRECTION OF TRAVEL, THE ARROWS AND "ONLY" MARKING MAY BE ELIMINATED.

⇨ DIRECTION OF TRAFFIC

L = LENGTH OF TURN BAY

* CONFIRM MARKING LINE WIDTH WITH THE MISCELLANEOUS QUANTITIES

PAVEMENT MARKING (TURN LANES)

STATE OF WISCONSIN
DEPARTMENT OF TRANSPORTAT

6

SDD 15C08-23d

6

SDD 15C08-23d

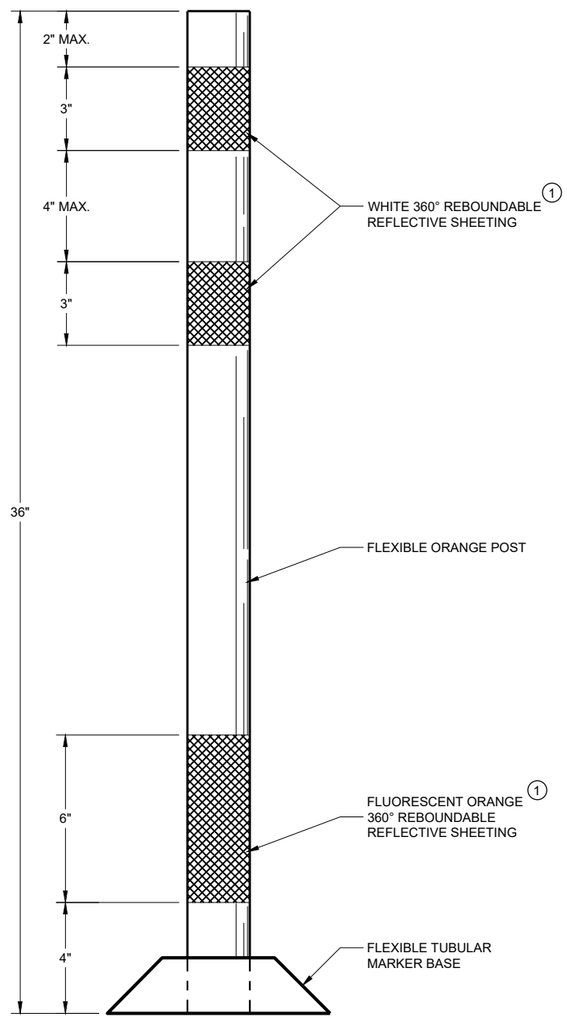

FLEXIBLE TUBULAR MARKER POST WORK ZONE

GENERAL NOTES

DETAILS OF CONSTRUCTION NOT SHOWN ON THIS DRAWING SHALL CONFORM TO THE PERTINENT REQUIREMENTS OF THE STANDARD SPECIFICATIONS AND THE APPLICABLE SPECIAL PROVISIONS.

SURFACE MOUNTED BASES SHALL BE FURNISHED IN ACCORDANCE WITH MANUFACTURERS RECOMMENDATIONS TO BE COMPATIBLE WITH FLEXIBLE TUBULAR MARKER POSTS TO A SIZE AND SHAPE THAT WILL PROVIDE A STABLE POST FOUNDATION WHEN SECURED TO THE PAVEMENT.

THE ASPHALTIC ADHESIVE OR BUTYL PAD FURNISHED SHALL BE IN ACCORDANCE WITH MANUFACTURERS RECOMMENDATIONS, UNLESS DIRECTED BY THE ENGINEER TO USE BOLTS.

(1) REFLECTIVE SHEETING SHALL FOLLOW THE REQUIREMENTS IN THE APPROVED PRODUCTS LISTING FOR SIGN SHEETING.

6

SDD 15C11 - 10a

CHANNELIZING DEVICES FLEXIBLE TUBULAR MARKER POST

STATE OF WISCONSIN
DEPARTMENT OF TRANSPORTATION

APPROVED
November 2022 — DATE
/S/ Andrew Heidtke — WORK ZONE ENGINEE
FHWA

6

SDD 15C11 - 10a

GENERAL NOTES

1. REFLECTIVE SHEETING SHALL FOLLOW THE REQUIREMENTS IN THE APPROVED PRODUCTS LISTING FOR SIGN SHEETING.
2. LOCATION OF WARNING LIGHTS WHEN SHOWN ON THE PLAN.

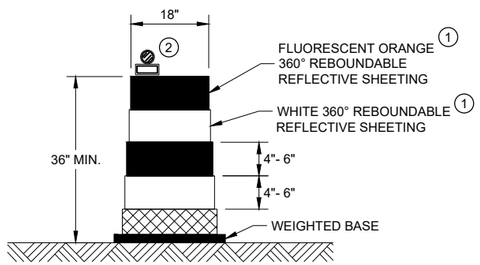

DRUM

BALLAST WIDTHS
RANGE FROM 24"-36"

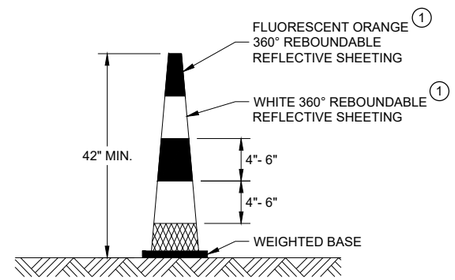

42" CONE

DO NOT USE IN TAPERS
½ SPACING OF DRUMS

BALLAST WIDTHS
RANGE FROM 14"-20"

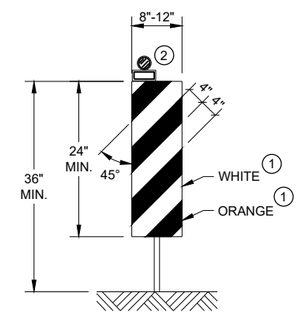

VERTICAL PANEL

THE STRIPES SHALL SLOPE DOWNWARD TO
THE TRAFFIC SIDE FOR CHANNELIZATION.

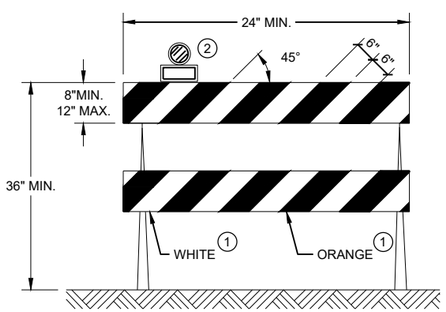

TYPE II BARRICADE

FOR RAILS LESS THAN 36" LONG, 4" WIDE STRIPES
MAY BE USED. ALL STRIPES SHALL SLOPE DOWNWARD
TO THE TRAFFIC SIDE FOR CHANNELIZATION.

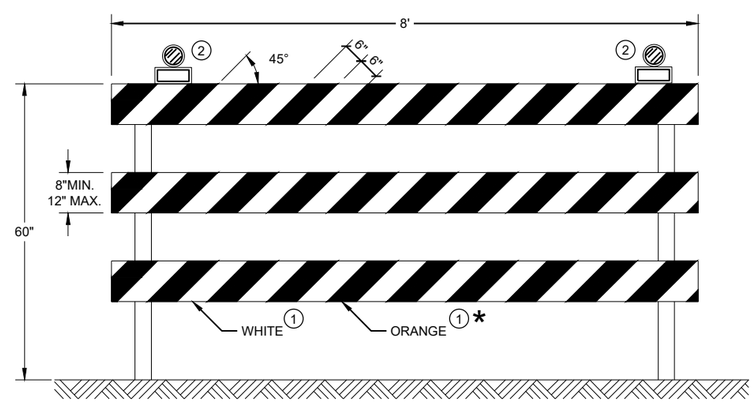

TYPE III BARRICADE

IF SIGN MOUNTED, DO NOT COVER MORE THAN 50% OF THE TOP
TWO RAILS OR 33% OF THE TOTAL AREA OF THE THREE RAILS.

* IF USED FOR A PERMANENT APPLICATION USE RED SHEETING.

CHANNELIZING DEVICES
DRUMS, CONES, BARRICADES
AND VERTICAL PANELS

STATE OF WISCONSIN
DEPARTMENT OF TRANSPORTATION

APPROVED
November 2022 — /S/ Andrew Heidtke
DATE — WORK ZONE ENGINEE
FHWA

6

6

SDD 15C11 - 10b

SDD 15C11 - 10b

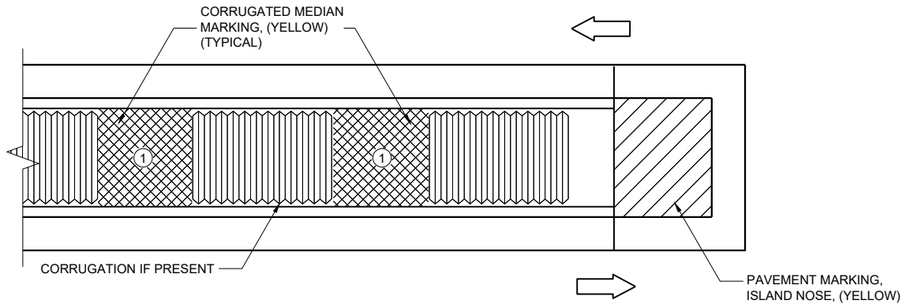

MEDIAN ISLAND WITH SQUARE BLUNT NOSE

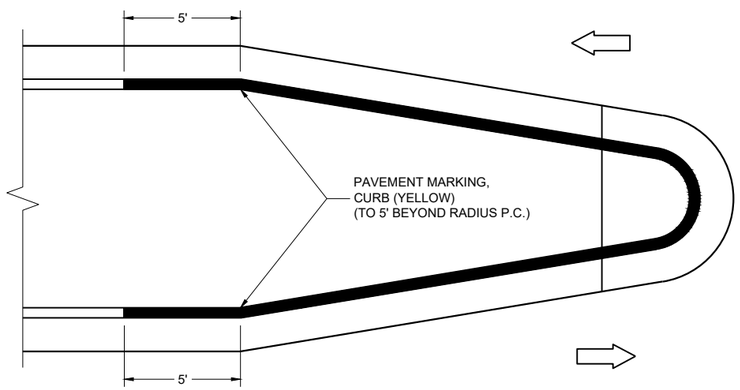

MEDIAN ISLAND WITH ROUND BLUNT NOSE

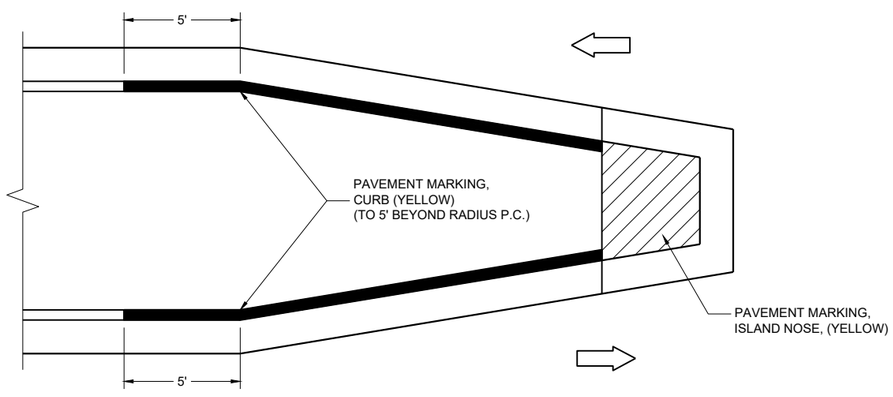

MEDIAN ISLAND WITH SLOPED NOSE

**TYPICAL PLACEMENT OF
PAVEMENT MARKING ON MEDIAN ISLANDS**

GENERAL NOTES

WHEN CONCRETE CORRUGATED MEDIAN IS CONSTRUCTED TO SEPARATE TRAFFIC OPERATING IN THE OPPOSING DIRECTION, YELLOW PAVEMENT MARKING SHALL BE APPLIED TO THE FLAT PORTION OF THE CONCRETE CORRUGATED MEDIAN. THE ITEM OF PAVEMENT MARKING, CONCRETE CORRUGATED MEDIAN, WILL BE MEASURED IN PLACE AND ACCEPTED IN ACCORDANCE WITH THE CONTRACT AND PAID FOR AT THE CONTRACT UNIT PRICE PER SQUARE FOOT.

(1) APPLY PAVEMENT MARKING TO THE FLAT PORTION OF CORRUGATED MEDIAN.

ISLAND NOSE MARKING

CURB MARKING

CORRUGATED MEDIAN MARKING

DIRECTION OF TRAVEL

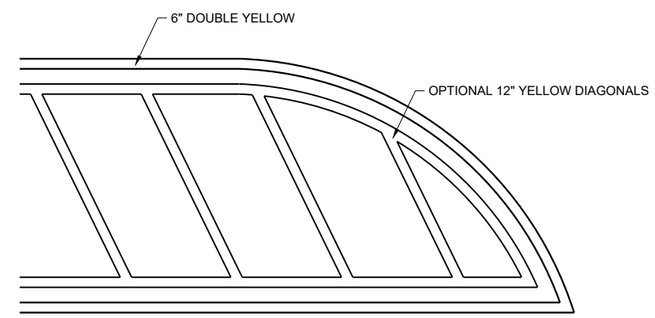

FLUSH MEDIAN ISLAND NOSE

**PAVEMENT MARKINGS,
MEDIAN ISLAND NOSE**

STATE OF WISCONSIN
DEPARTMENT OF TRANSPORTATION

APPROVED
August 2024 /S/ Jeannie Silver
DATE Statewide Pavement Marking Engineer
FHWA

REQUIREMENTS FOR EDGE LINES		
POSTED SPEED	IS THERE CONTINUOUS LIGHTING?	
	YES	NO
≤ 30 MPH	NO	OPTIONAL
35 OR 40 MPH	OPTIONAL	RECOMMENDED
≥ 45 MPH	RECOMMENDED	REQUIRED

GENERAL NOTES

APPLIES TO ISLANDS AT LEFT TURNS AT ONE WAY ROADWAYS AS WELL.

SEE MISCELLANEOUS QUANTITIES FOR SIGN SIZE.

1. MARK CURB NOSES YELLOW.
2. MARK ACCORDING TO TABLE.
3. CHEVRON MAY BE OMITTED IF LESS THAN 4" WIDE

⇨ DIRECTION OF TRAVEL

*CONFIRM MARKING LINE WIDTH WITH THE MISCELLANEOUS QUANTITIES

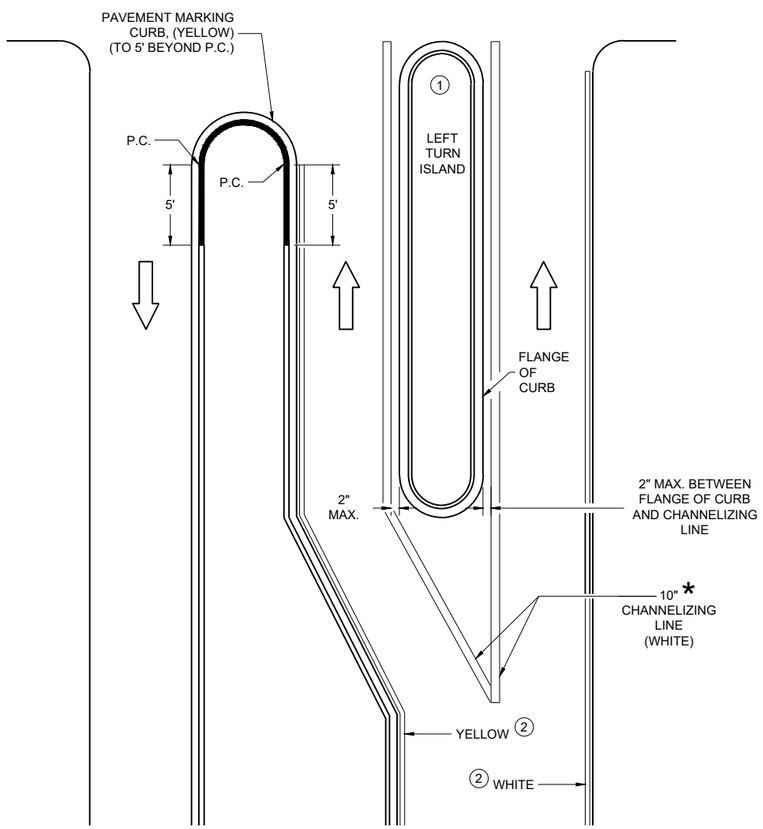

LEFT TURN & MEDIAN ISLAND

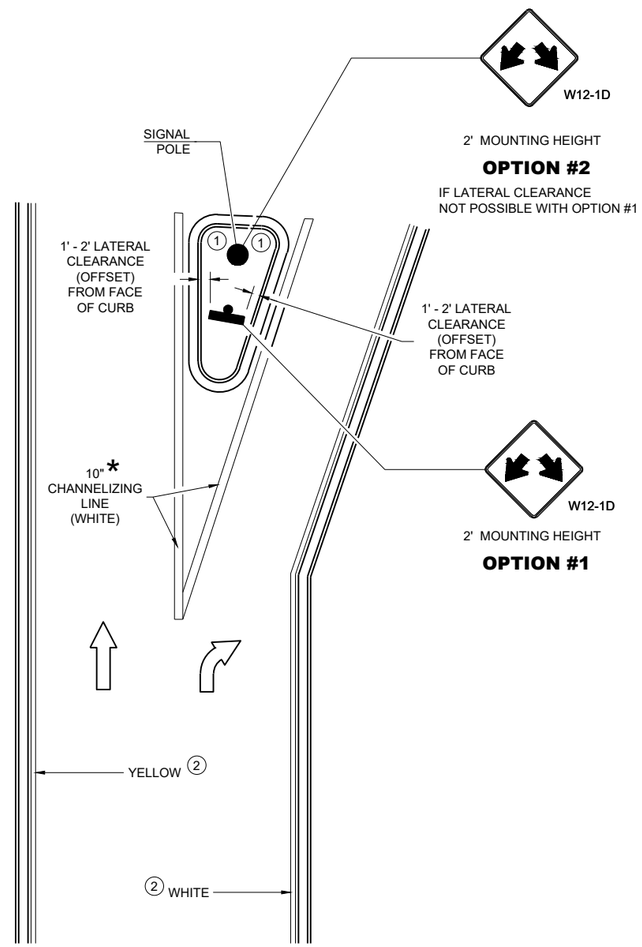

RIGHT TURN ISLAND

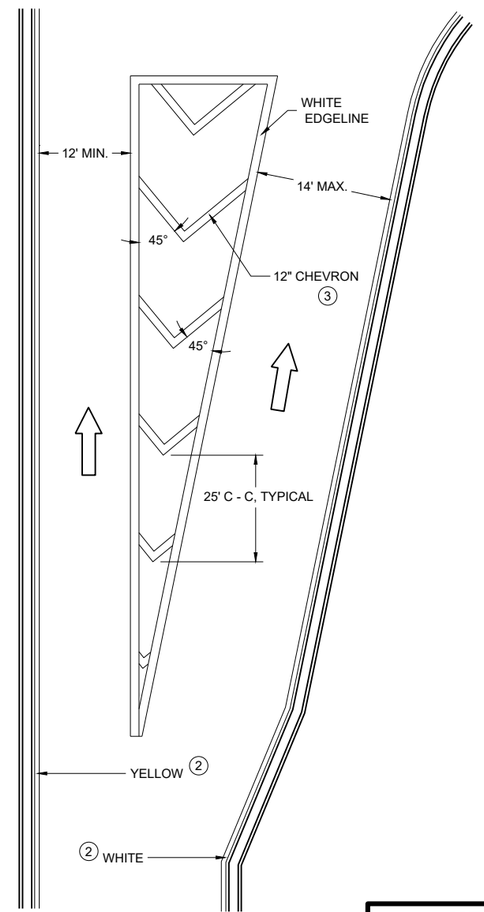

TURN LANE DETAIL

MEDIAN PAVEMENT MARKINGS, DOUBLE ARROW WARNING SIGN PLACEMENT

STATE OF WISCONSIN
DEPARTMENT OF TRANSPORTATION

APPROVED
August 2024 — DATE
/S/ Jeannie Silver — Statewide Pavement Marking Engineer
FHWA

6

SDD 15C18-09c

LEGEND

V1 MARKING VEHICLE

V2 SHADOW VEHICLE

V3 TRAIL VEHICLE

TRUCK MOUNTED ATTENUATOR (TMA)

SIGN ON TEMPORARY SUPPORT

DIRECTION OF TRAFFIC

FLASHING ARROW PANEL (MERGE)

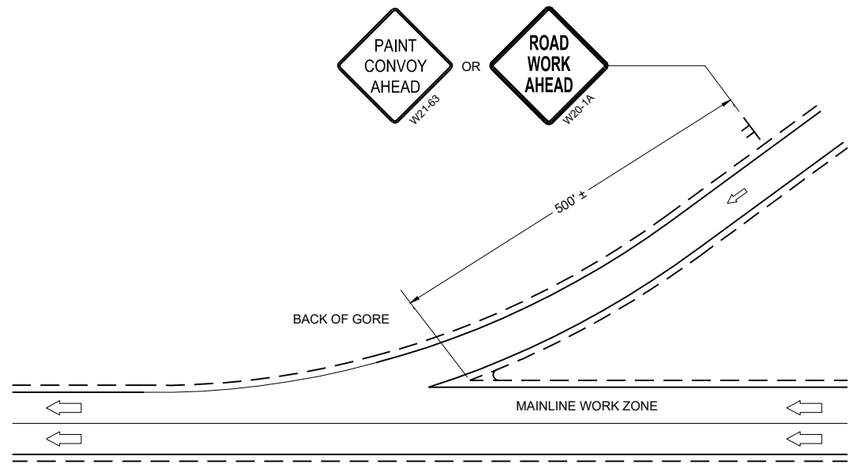

GENERAL NOTES

ALL VEHICLES SHALL BE EQUIPPED WITH TWO 360 DEGREE HIGH INTENSITY YELLOW FLASHING LIGHTS OR STROBE LIGHTS AND OPERATED WITH HEADLIGHTS TURNED ON.

ALL VEHICLES SHALL BE EQUIPPED WITH REAR FACING TYPE B OR C FLASHING ARROW PANEL. SIGNS PLACED ON VEHICLES MUST NOT OBSCURE THE ARROW PANEL.

ALL SIGNS ARE 48" X 48" UNLESS OTHERWISE SPECIFIED.

DISTANCE BETWEEN VEHICLES MAY VARY ACCORDING TO TERRAIN, SIGHT DISTANCE, PAINT DRYING TIME, AND OTHER FACTORS. WHENEVER ADEQUATE STOPPING SIGHT DISTANCE EXISTS TO THE REAR, SHADOW VEHICLES SHOULD MAINTAIN THE MINIMUM DISTANCE FROM THE WORK VEHICLE AND PROCEED AT THE SAME SPEED AS THE WORK VEHICLE. SHADOW VEHICLES SHOULD SLOW DOWN IN ADVANCE OF VERTICAL AND HORIZONTAL CURVES THAT RESTRICT SIGHT DISTANCE.

WHEN WORK ACTIVITY BLOCKS THE LEFT LANE, REVERSE TRAFFIC CONTROL.

WHEN A RAMP INTERSECTS THE FACILITY ON WHICH THE WORK IS BEING PERFORMED, PROVIDE ADDITIONAL TRAFFIC CONTROLS AS SPECIFIED IN THE CONTRACT OR AS APPROVED BY THE ENGINEER.

USE AN ATTENUATOR ON THE REARMOST VEHICLE THAT BLOCKS ALL OR PART OF THE TRAFFIC LANE.

IF THE SHOULDER IS TOO NARROW TO ACCOMMODATE THE LAST TRAILING VEHICLE, THE VEHICLE SHOULD STRADDLE THE EDGE LINE.

WHEN NO WORK ACTIVITY IS TAKING PLACE, REMOVE OR LAY STATIONARY SIGNS AND SUPPORTS FLAT ON THE GRADE WITH UPRIGHTS ORIENTED PARALLEL TO AND DOWNSTREAM FROM TRAFFIC

CONES SHOULD BE USED BETWEEN THE MARKING AND SHADOW VEHICLE AT 100 FOOT SPACING. CONES MAY BE OMITTED ON PAINTED LINE IF APPROVED BY THE ENGINEER. CONSIDER PAVEMENT MARKING DRY OR CURE TIMES AND TRAFFIC VOLUME.

CONES SHALL BE A MINIMUM HEIGHT OF 28" FOR WET PAVEMENT MARKINGS

(1) SIGNS SHALL BE REPEATED APPROXIMATELY EVERY THREE MILES AND AFTER EVERY ON RAMP.

(2) IF CONSTRUCTION WORK ZONE SIGNS ARE IN PLACE, W20-1A OR W21-63 ARE NOT REQUIRED.

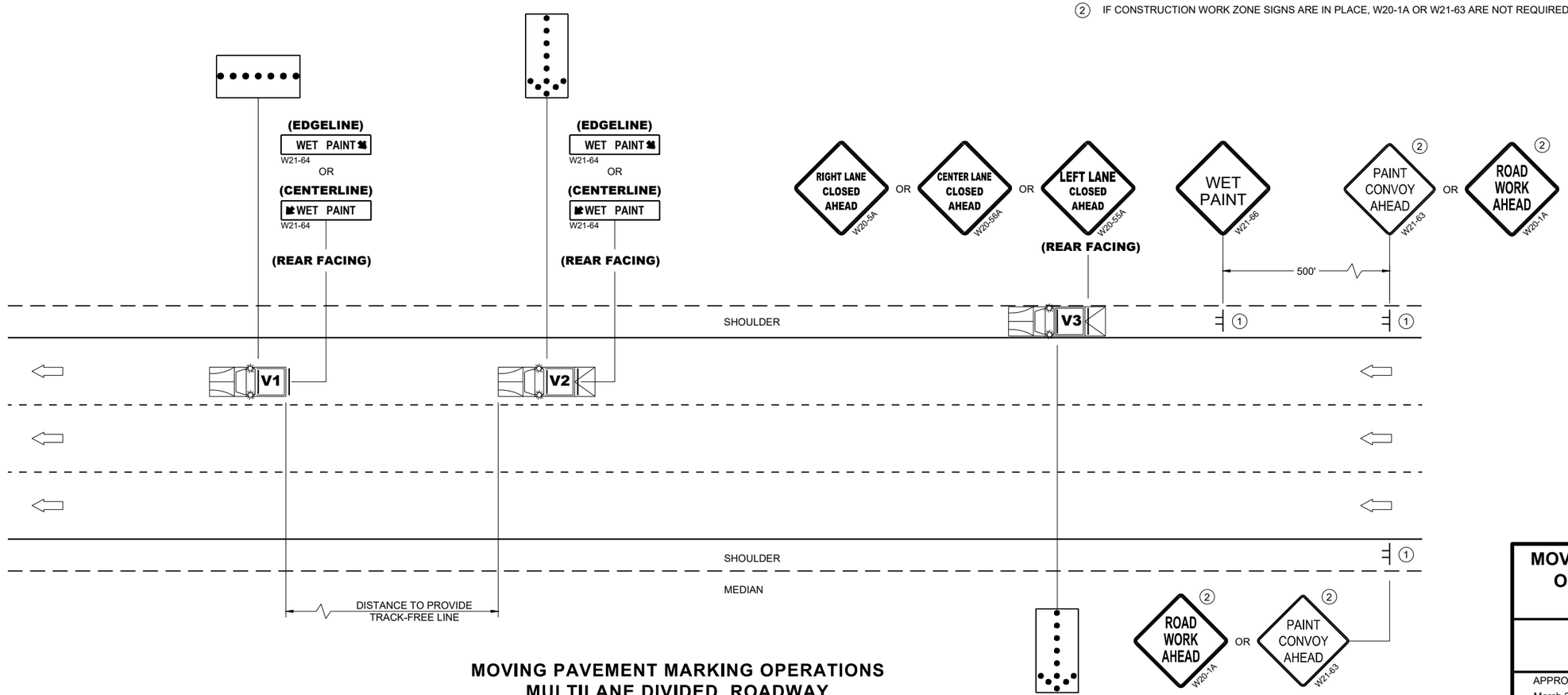

MOVING PAVEMENT MARKING OPERATIONS
MULTILANE DIVIDED ROADWAY

MOVING PAVEMENT MARKING OPERATION MULTI-LANE DIVIDED ROADWAY

STATE OF WISCONSIN
DEPARTMENT OF TRANSPORTATION

APPROVED
March 2024 — DATE
/S/ Andrew Heidtke — WORK ZONE ENGINEER
FHWA

6

SDD 15C19-9c

GENERAL NOTES

STOP SIGN SHALL BE PLACED A MINIMUM OF 6 FEET TO A MAXIMUM OF 50 FEET FROM THE EDGELINE LOCATION.

1. 18-INCH STOP LINES MAY BE DELETED OR ADDED BY THE REGION MARKING ENGINEER BASED ON VISIBILITY AND SIGHT LINES.
2. NO STOP LINE IS REQUIRED IF STOP SIGN IS LESS THAN OR EQUAL TO 40 FEET FROM THE EDGELINE.
3. NO STOP LINE IS REQUIRED IF STOP SIGN IS LESS THAN OR EQUAL TO 30 FEET FROM THE FLANGE LINE EXTENSION.
4. MOVE CLOSER TO THE EDGE OF TRAVEL LINE AS NEEDED FOR VISIBILITY AND SIGHT LINES (NO CLOSER THAN 4 FEET).
5. LADDER BAR CROSSWALKS SHOULD ONLY BE USED FOR MID BLOCK CROSSINGS. USE 2 - 6" TRANSVERSE LINES.
6. POSTED SPEED LIMITS OF 40 MPH OR GREATER USE A MINIMUM WIDTH OF 8' FOR MIDBLOCK CROSSWALKS

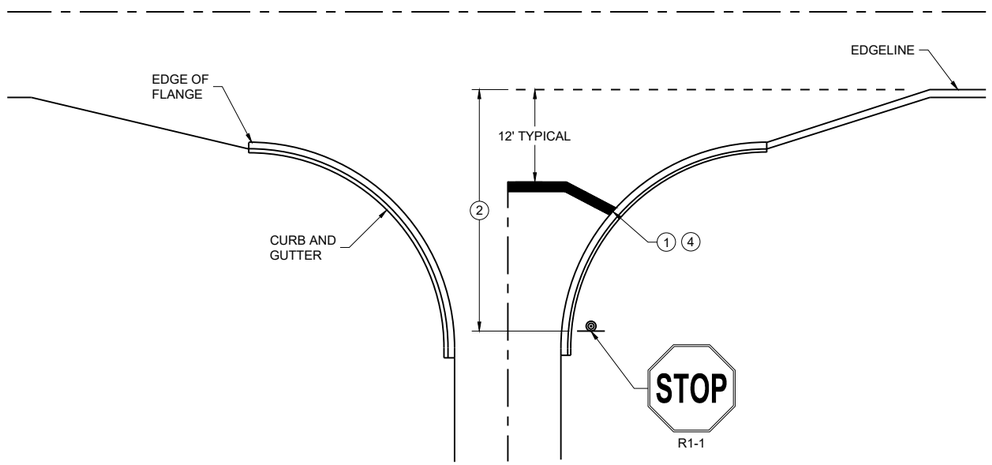

TYPICAL STOP LINE PAVEMENT MARKING WITH CURB AND GUTTER

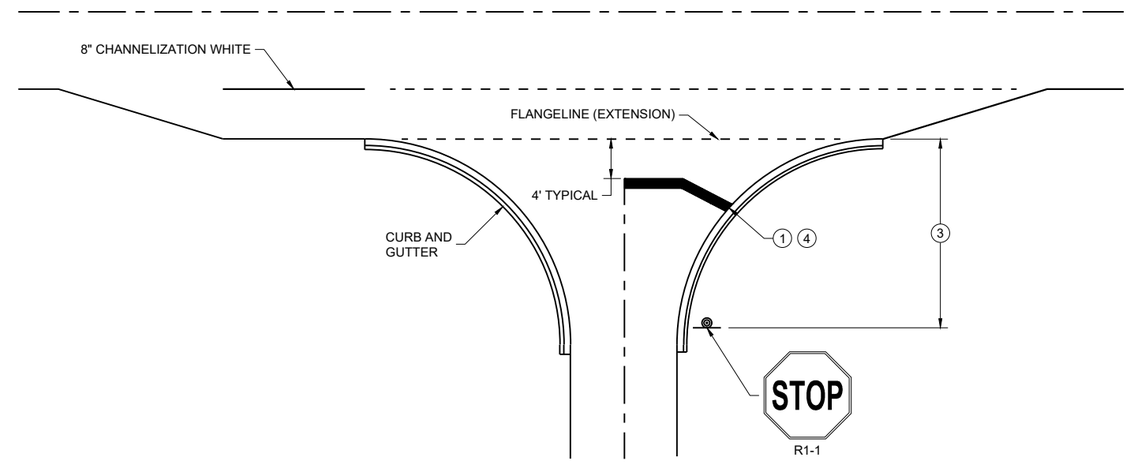

TYPICAL STOP LINE PAVEMENT MARKING FOR SIDE ROADS WITH RIGHT TURN LANE

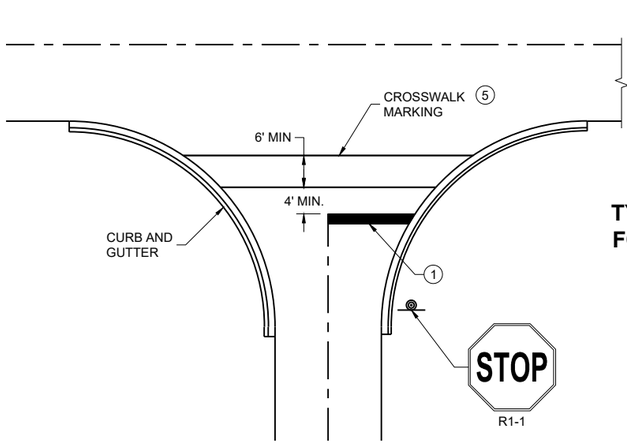

TYPICAL STOP LINE PAVEMENT MARKING FOR SIDE ROADS WITH CROSSWALK MARKING

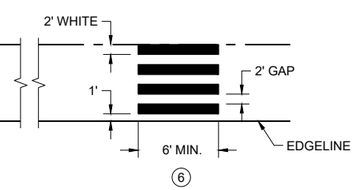

TYPICAL PAVEMENT MARKING FOR MID-BLOCK CROSSWALK 5

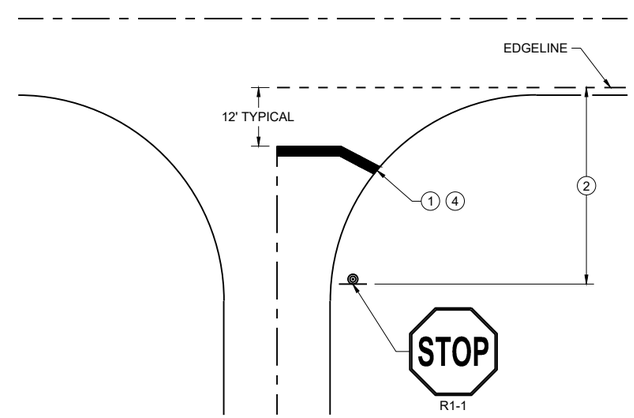

TYPICAL STOP LINE PAVEMENT MARKING WITHOUT CURB AND GUTTER

STOP LINE AND CROSSWALK PAVEMENT MARKING

STATE OF WISCONSIN
DEPARTMENT OF TRANSPORTATION

APPROVED
March 2024 — DATE
/S/ Matthew Rauch — STATE SIGNING AND MARKING ENGINEER

FHWA

6
SDD 15C33-05

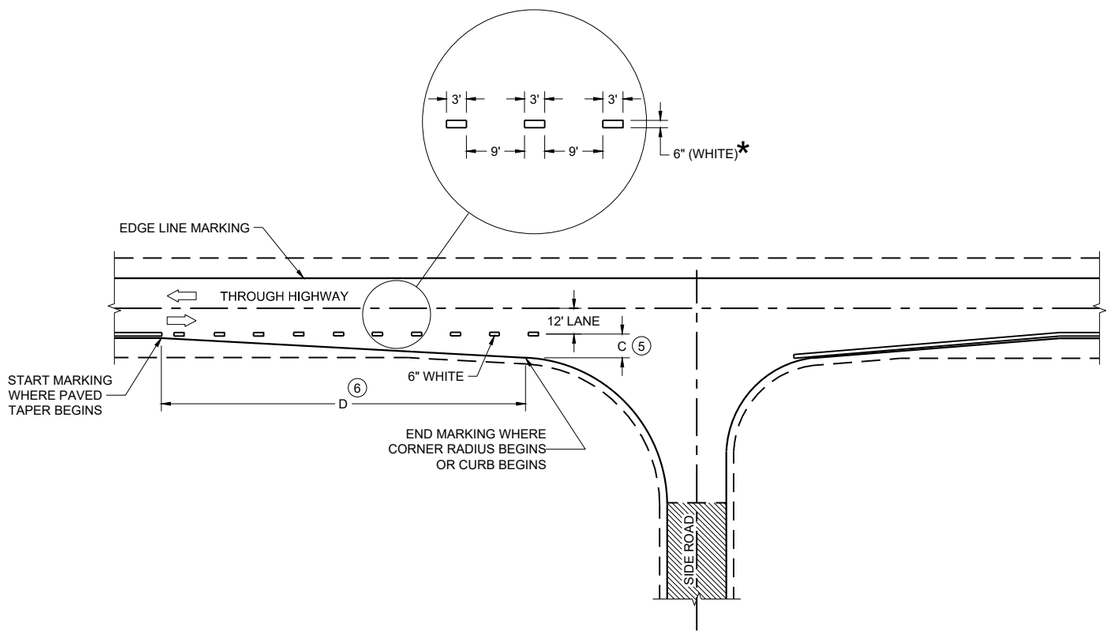

MINOR INTERSECTION

*CONFIRM MARKING LINE WIDTH WITH THE MISCELLANEOUS QUANTITIES

GENERAL NOTES

OMIT EDGE LINES THROUGH INTERSECTIONS. CONTINUE EDGE LINES THROUGH DRIVEWAYS.

1. WHEN DISTANCE "A" IS LESS THAN 250 FEET, OMIT LANE LINE.
2. WHEN DISTANCE "B" IS LESS THAN 100 FEET, OMIT CHANNELIZING LANE LINE.
3. BARRIER LINE ENDS AT SIDE ROAD PAVEMENT / SURFACE EDGE EXTENSION.
4. BARRIER LINE STARTS 500 FEET PRIOR TO THE BYPASS TAPER.
5. WHEN DISTANCE "C" IS LESS THAN 4 FEET, OMIT DOTTED EXTENSION.
6. WHEN DISTANCE "D" IS LESS THAN 50 FEET, OMIT DOTTED EXTENSION.

LEGEND

DIRECTION OF TRAVEL

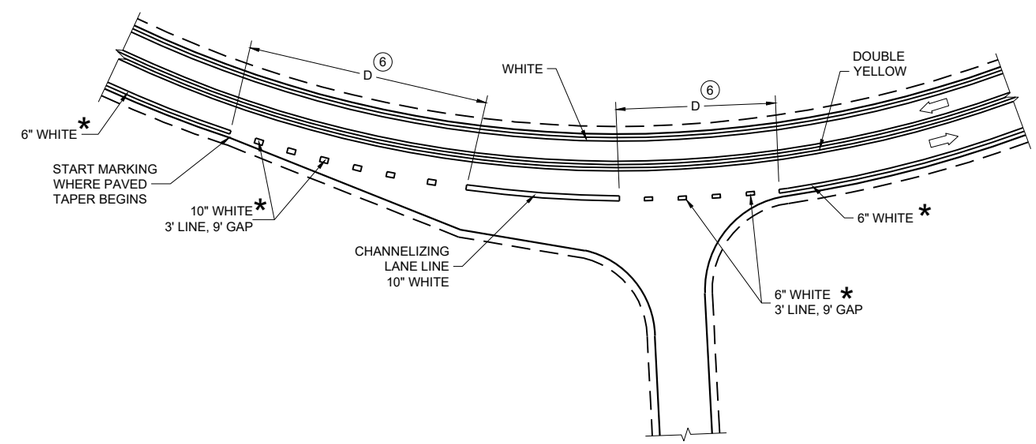

INTERSECTION ON OUTSIDE OF CURVE

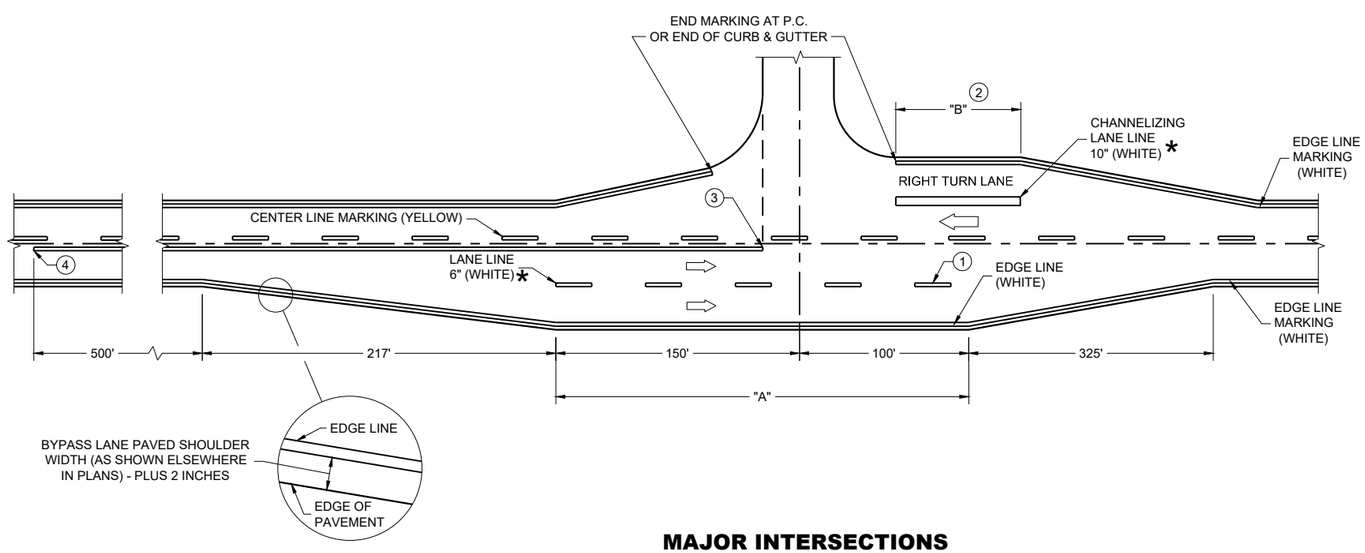

MAJOR INTERSECTIONS

(INTERSECTION WITH FULL RIGHT TURN LANE OR BYPASS LANE)

PAVEMENT MARKING (INTERSECTIONS)

STATE OF WISCONSIN
DEPARTMENT OF TRANSPORTATION

6
SDD 15C35-06a

LEGEND

- SIGN ON PERMANENT SUPPORT
- TRAFFIC CONTROL DRUM
- DELINEATOR, FLEXIBLE/TUBULAR MARKER
- TEMPORARY DELINEATOR (STEEL POST W/SINGLE DELINEATOR)
- PORTABLE CRASH CUSHION
- CONCRETE BARRIER TEMPORARY PRECAST
- REMOVE PAVEMENT MARKINGS
- DIRECTION OF TRAFFIC

GENERAL NOTES

ALL SIGNS ARE 48"X48" UNLESS OTHERWISE NOTED.

"WO" SIGN IS THE SAME AS "W" SIGN EXCEPT THE BACKGROUND IS ORANGE.

ANY SIGNS TEMPORARY OR EXISTING, WHICH CONFLICT WITH THE TRAFFIC CONTROL "IN USE" SHALL BE REMOVED OR COVERED AS NEEDED AND AS APPROVED BY THE ENGINEER. NO WARNING LIGHTS SHALL BE WORKING ON COVERED OR "DOWNED" SIGNS.

THE EXACT NUMBER, LOCATION, AND SPACING OF ALL SIGNS AND DEVICES SHALL BE ADJUSTED TO FIT FIELD CONDITIONS AS APPROVED BY THE ENGINEER.

THE SPACING BETWEEN SIGNS SHOULD BE ADJUSTED TO NOT CONFLICT WITH AND TO PROVIDE A MINIMUM OF 200 FEET (500' DESIRABLE) DISTANCE TO EXISTING SIGNS.

** SEE SDD 15D12 FOR LANE CLOSURE DETAILS.

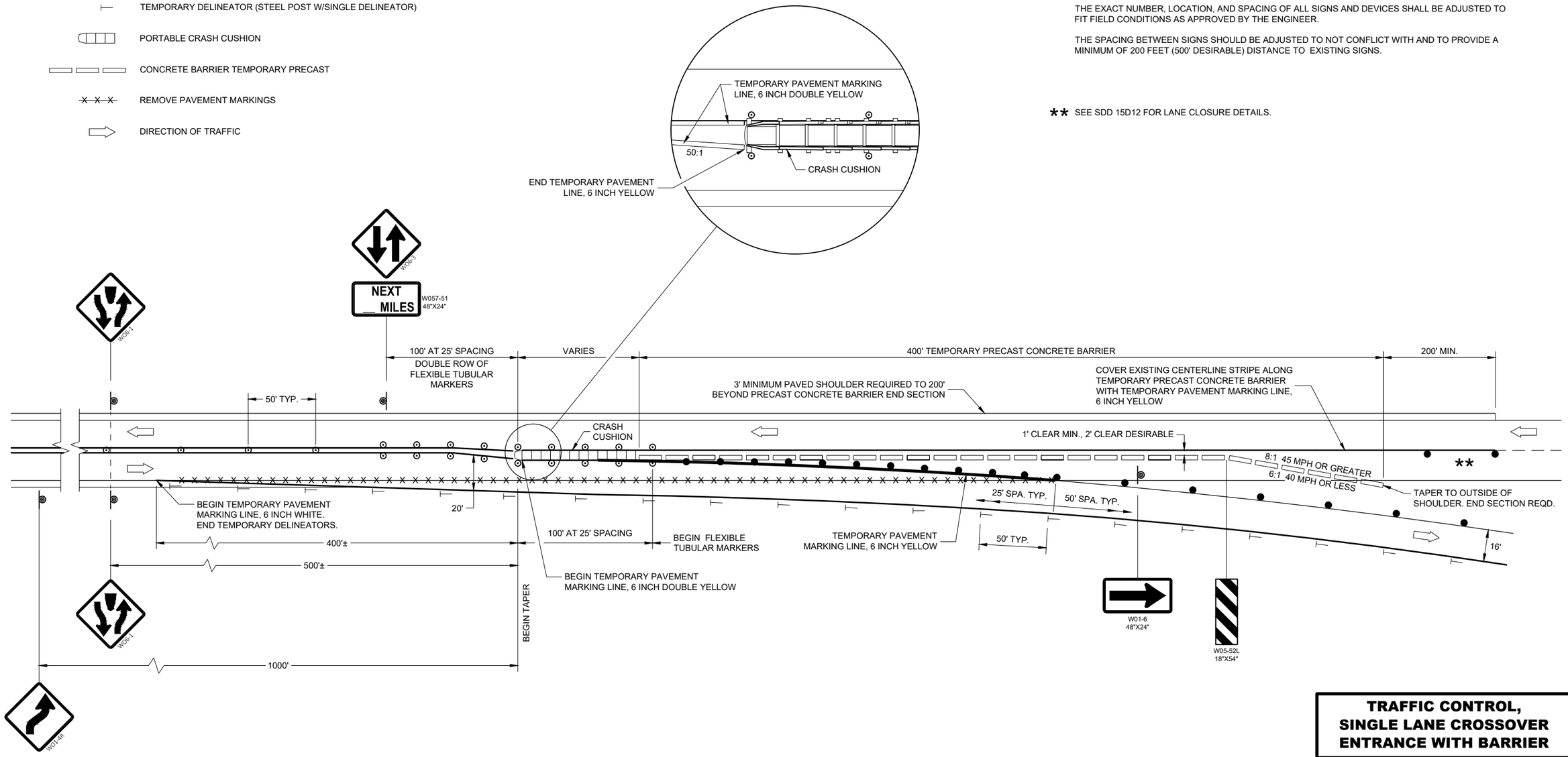

TRAFFIC CONTROL, SINGLE LANE CROSSOVER ENTRANCE WITH BARRIER

STATE OF WISCONSIN
DEPARTMENT OF TRANSPORTATION

APPROVED
May 2023 — DATE
/S/ Andrew Heidtke — WORK ZONE ENGINEE
FHWA

6 SDD 15D05-06

LEGEND

SIGN ON PERMANENT SUPPORT

DELINEATOR, FLEXIBLE/TUBULAR MARKER

DIRECTION OF TRAFFIC

GENERAL NOTES

ALL SIGNS ARE 48"X48" UNLESS OTHERWISE NOTED.

"WO" SIGN IS THE SAME AS "W" SIGN EXCEPT THE BACKGROUND IS ORANGE.

ANY SIGNS TEMPORARY OR EXISTING, WHICH CONFLICT WITH THE TRAFFIC CONTROL "IN USE" SHALL BE REMOVED OR COVERED AS NEEDED AND AS APPROVED BY THE ENGINEER. NO WARNING LIGHTS SHALL BE WORKING ON COVERED OR "DOWNED" SIGNS.

THE EXACT NUMBER, LOCATION, AND SPACING OF ALL SIGNS AND DEVICES SHALL BE ADJUSTED TO FIT FIELD CONDITIONS AS APPROVED BY THE ENGINEER.

THE SPACING BETWEEN SIGNS SHOULD BE ADJUSTED TO NOT CONFLICT WITH AND TO PROVIDE A MINIMUM OF 200 FEET (500' DESIRABLE) DISTANCE TO EXISTING SIGNS.

A SINGLE ROW OF FLEXIBLE TUBULAR MARKERS ON CENTERLINE EXTEND FOR THE ENTIRE LENGTH OF TWO-WAY TRAFFIC AT 50 FOOT SPACING.

COVER EXISTING CENTERLINE STRIPE WITH TEMPORARY PAVEMENT MARKING LINE, 6 INCH DOUBLE YELLOW.

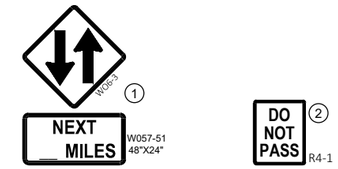

1. THE WO6-3 AND WO57-51 SHALL BE LOCATED 200 FEET BEYOND THE END OF THE ACCELERATION LANE OF EACH ENTRANCE RAMP AND / OR 500 FEET BEYOND ANY SIDE ROAD. THE R4-1 SHALL BE LOCATED 1000 FEET BEYOND THE WO6-3 AND THE WO57-51 AND THE SIGNS SHALL BE ALTERNATED WITH ONE MILE INTERVALS BETWEEN THE SIGNS.

2. CONVENTIONAL: 24" X 30"
   FREEWAY AND EXPRESSWAY: 36" X 48"

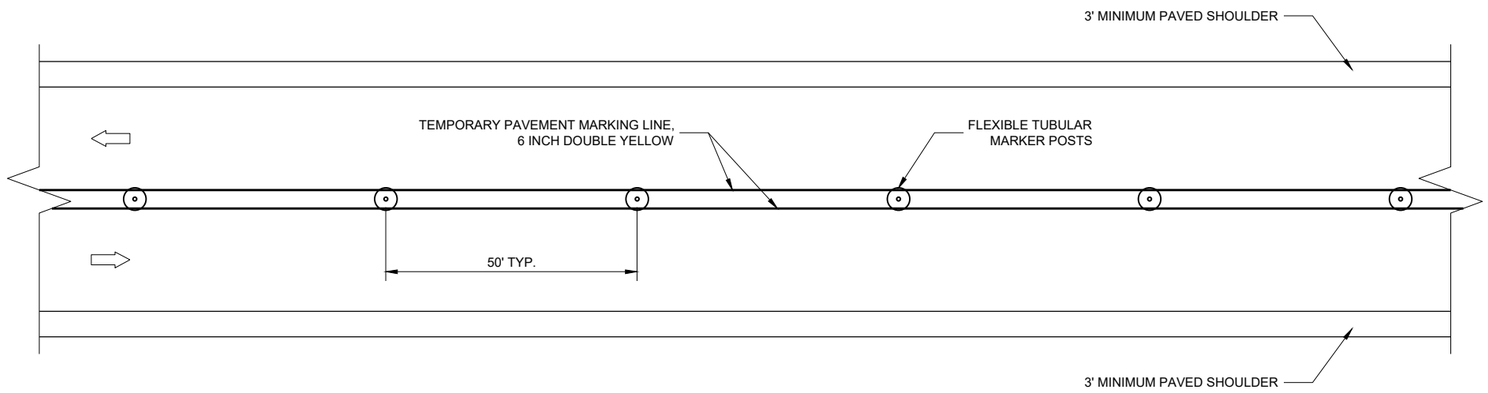

TWO LANE, TWO WAY OPERATION

6

SDD 15D06-06

TRAFFIC CONTROL
TWO LANE TWO WAY
OPERATION

STATE OF WISCONSIN
DEPARTMENT OF TRANSPORTATION

APPROVED
May 2023 — DATE
/S/ Andrew Heidtke — WORK ZONE ENGINEE
FHWA

LEGEND

- SIGN ON PERMANENT SUPPORT
- TRAFFIC CONTROL DRUM
- DELINEATOR FLEXIBLE / TUBULAR MARKER
- TEMPORARY DELINEATOR (STEEL POST DELINEATOR) COLOR OF DELINEATOR SHALL MATCH THE RESPECTIVE EDGE LINE MARKING
- DIRECTION OF TRAFFIC
- REMOVE PAVEMENT MARKINGS

DO NOT PASS (1) R4-1

INSTALL THE R4-1 SIGN 1000 FEET BEYOND THE WO6-3 SIGN WITH THE WO57-51 AND ALTERNATE THE SEQUENCE OF THESE SIGNS EVERY 1 MILE.

GENERAL NOTES

ALL SIGNS ARE 48"X48" UNLESS OTHERWISE NOTED.

"WO" SIGN IS THE SAME AS "W" SIGN EXCEPT THE BACKGROUND IS ORANGE.

ANY SIGNS TEMPORARY OR EXISTING, WHICH CONFLICT WITH THE TRAFFIC CONTROL "IN USE" SHALL BE REMOVED OR COVERED AS NEEDED AND AS APPROVED BY THE ENGINEER. NO WARNING LIGHTS SHALL BE WORKING ON COVERED OR "DOWNED" SIGNS.

THE EXACT NUMBER, LOCATION, AND SPACING OF ALL SIGNS AND DEVICES SHALL BE ADJUSTED TO FIT FIELD CONDITIONS AS APPROVED BY THE ENGINEER.

THE SPACING BETWEEN SIGNS SHOULD BE ADJUSTED TO NOT CONFLICT WITH AND TO PROVIDE A MINIMUM OF 200 FEET (500' DESIRABLE) DISTANCE TO EXISTING SIGNS.

(1) CONVENTIONAL: 24" X 30"
FREEWAY AND EXPRESSWAY: 36" X 48"

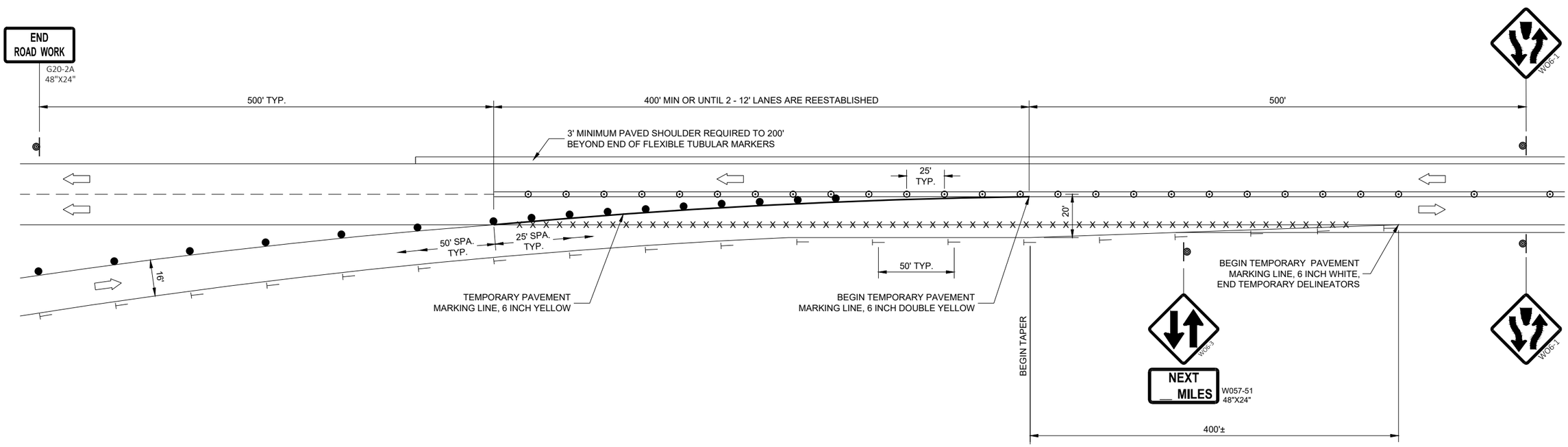

6

6

SDD 15D09-07

SDD 15D09-07

TRAFFIC CONTROL, SINGLE LANE CROSSOVER EXIT

STATE OF WISCONSIN
DEPARTMENT OF TRANSPORTATION

APPROVED
May 2023 — DATE
/S/ Andrew Heidtke — WORK ZONE ENGINEE
FHWA

LEGEND

- SIGN ON PERMANENT SUPPORT
- TRAFFIC CONTROL DRUM
- TRAFFIC CONTROL DRUM WITH TYPE "C" STEADY BURN LIGHT
- DELINEATOR FLEXIBLE / TUBULAR MARKER
- TEMPORARY DELINEATOR (STEEL POST WITH SINGLE DELINEATOR) COLOR OF DELINEATOR SHALL MATCH THE COLOR OF THE RESPECTIVE EDGELINE MARKING
- TEMPORARY DELINEATOR (DOUBLE SIDED)
- TYPE "A" WARNING LIGHT (FLASHING)
- TYPE III BARRICADE
- TYPE III BARRICADE WITH ATTACHED SIGN
- DIRECTION OF TRAFFIC
- REMOVE PAVEMENT MARKINGS
- WORK AREA

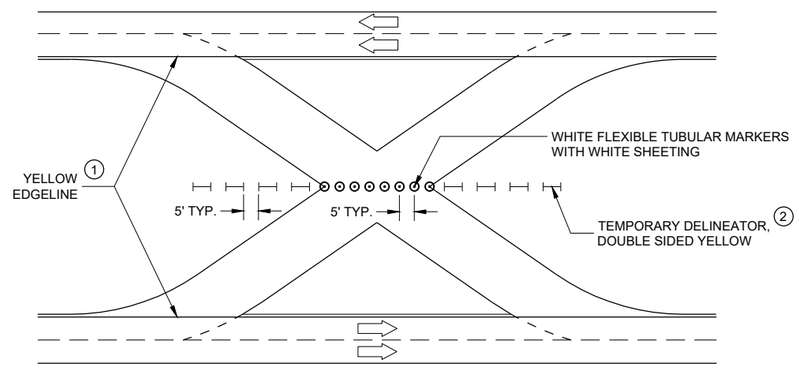

TRAFFIC CONTROL FOR CROSSOVER THAT IS NOT IN USE

GENERAL NOTES

ALL SIGNS ARE 48"X48" UNLESS OTHERWISE NOTED.

"WO" SIGN IS THE SAME AS "W" SIGN EXCEPT THE BACKGROUND IS ORANGE.

ANY SIGNS TEMPORARY OR EXISTING, WHICH CONFLICT WITH THE TRAFFIC CONTROL "IN USE" SHALL BE REMOVED OR COVERED AS NEEDED AND AS APPROVED BY THE ENGINEER. NO WARNING LIGHTS SHALL BE WORKING ON COVERED OR "DOWNED" SIGNS.

THE EXACT NUMBER, LOCATION, AND SPACING OF ALL SIGNS AND DEVICES SHALL BE ADJUSTED TO FIT FIELD CONDITIONS AS APPROVED BY THE ENGINEER.

THE SPACING BETWEEN PROPOSED SIGNS SHOULD BE ADJUSTED TO NOT CONFLICT WITH AND TO PROVIDE A MINIMUM OF 200 FEET (500' DESIRABLE) DISTANCE TO EXISTING SIGNS.

REVERSE DEVICES WHEN OTHER LEG OF CROSSOVER IS IN USE.

(1) FOR PERMANENT CROSSOVER, PAVEMENT MARKING SHOULD CONFORM TO SECTION 646 OF THE STANDARD SPECIFICATIONS.

(2) FOR PERMANENT CROSSOVER, INSTALL PERMANENT DELINEATORS ACCORDING TO SECTION 633 OF THE STANDARD SPECIFICATIONS.

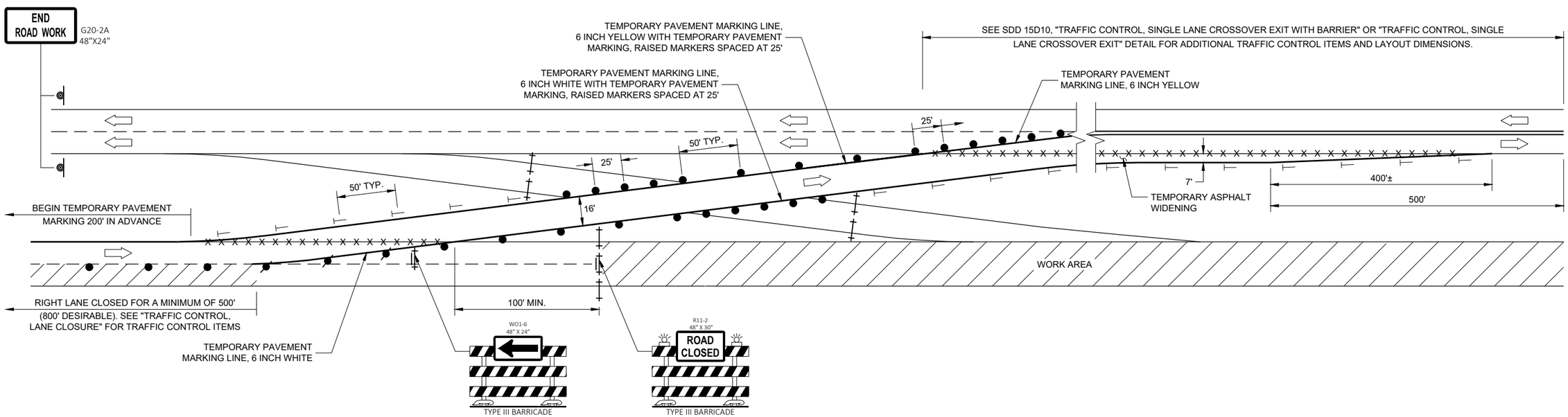

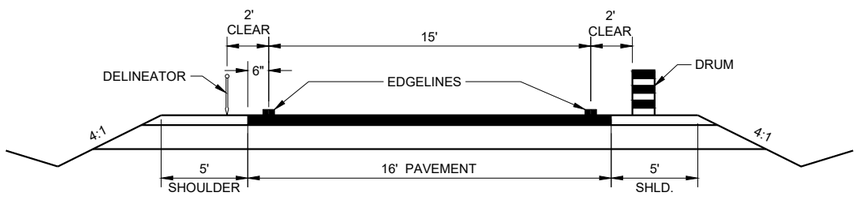

TYPICAL TEMPORARY CROSSOVER ROADWAY DIMENSIONS

(SEE PLAN FOR ROADWAY DESIGN ELEMENTS)

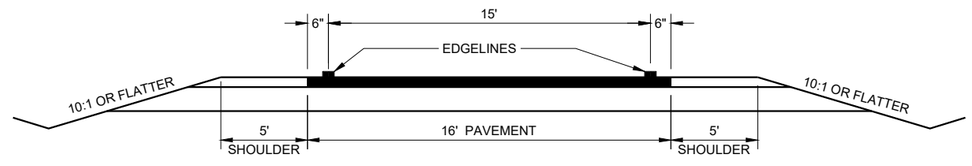

TYPICAL CROSSOVER TO REMAIN IN PLACE ROADWAY DIMENSIONS

(SEE PLAN FOR ROADWAY DESIGN ELEMENTS)

TRAFFIC CONTROL, SINGLE LANE CROSSOVER

STATE OF WISCONSIN
DEPARTMENT OF TRANSPORTATION

APPROVED
May 2023 — DATE
/S/ Andrew Heidtke — WORK ZONE ENGINEER
FHWA

6

SDD 15D11-09

GENERAL NOTES

THE EXACT NUMBER, LOCATION, AND SPACING OF ALL SIGNS AND DEVICES SHALL BE ADJUSTED TO FIT FIELD CONDITIONS AS APPROVED BY THE ENGINEER.

THE SPACING BETWEEN SIGNS SHOULD BE ADJUSTED TO NOT CONFLICT WITH AND TO PROVIDE A MINIMUM OF 200 FEET (500 FEET DESIRABLE) CLEARANCE TO EXISTING SIGNS.

THIS LANE CLOSURE IS TYPICAL FOR CLOSING RIGHT LANE - REVERSE FOR CLOSING LEFT LANE.

ALL SIGNS ARE 48" x 48" UNLESS OTHERWISE NOTED.

"WO" SIGNS ARE THE SAME AS "W" SIGNS EXCEPT THE BACKGROUND IS ORANGE.

ANY SIGNS TEMPORARY OR EXISTING, WHICH CONFLICT WITH TRAFFIC CONTROL "IN USE" SHALL BE REMOVED OR COVERED AS NEEDED OR AS APPROVED BY THE ENGINEER.

CONSIDER ROADWAY GEOMETRICS WHEN LOCATING SIGNS AND ARROW BOARD SO THE DRIVER HAS A CLEAR VIEW OF THE ARROW BOARD AND LANE CLOSURE DRUMS.

FOR A LANE CLOSURE THAT IS IN PLACE LESS THAN 7 CONTINUOUS DAYS AND NIGHTS, THE ADVANCED WARNING SIGNS MAY BE MOUNTED ON PORTABLE SUPPORTS.

REMOVE PAVEMENT MARKINGS AND PLACE TEMPORARY PAVEMENT MARKING LINE IF LANE CLOSURE IS TO BE IN PLACE 4 OR MORE CONTINUOUS DAYS AND NIGHTS.

WARNING LIGHTS ARE NOT REQUIRED IF THE LANE CLOSURE IS A DAYTIME ONLY OPERATION.

IF THE HORIZONTAL ALIGNMENT IS SUCH THAT A CURVE MAY REQUIRE ADDITIONAL DELINEATION, THE DEVICE SPACING MAY BE DECREASED TO 50 FEET.

ADJUSTMENTS IN BUFFER SPACE NEED TO BE INCORPORATED WHEN THE LANE CLOSURE OCCURS NEAR AN INTERCHANGE EXIT OR ENTRANCE RAMP OR INTERSECTION. THE LANE CLOSURE MUST TAKE PLACE FAR ENOUGH IN ADVANCE OF AN EXIT OR ENTRANCE RAMP TO STILL ALLOW FOR ADEQUATE BUFFER SPACE. THE MINIMUM LENGTH OF THE BUFFER SPACE BEFORE AN EXIT RAMP SHOULD BE ONE HALF THE LENGTH OF THE TRANSITION AREA. THE ENTRANCE RAMP SHOULD BE FOLLOWED BY THE ORIGINAL BUFFER SPACE LENGTH OF 800 FEET DESIRABLE PRIOR TO ANOTHER TRAFFIC CONTROL CHANGE SUCH AS A CROSSOVER MANEUVER.

(1) A SPEED LIMIT SIGN SHALL BE LOCATED 1500 FEET BEYOND THE END OF THE ACCELERATION LANE OF EACH ENTRANCE RAMP. PLACE A SPEED LIMIT SIGN A MINIMUM OF EVERY 3 MILES. INCLUDE A RESUME SPEED LIMIT SIGN 200 FEET MINIMUM (500 FEET DESIRABLE) BEYOND THE "END OF ROADWORK" SIGN.

LEGEND

- SIGN ON PERMANENT SUPPORT
- TRAFFIC CONTROL DRUM
- TRAFFIC CONTROL DRUM WITH TYPE "C" STEADY BURN LIGHT
- TYPE III BARRICADE WITH ATTACHED SIGN
- TYPE "A" WARNING LIGHT (FLASHING)
- REMOVING PAVEMENT MARKINGS
- DIRECTION OF TRAFFIC
- WORK AREA
- CONNECTED ARROW BOARD
- (S) WZ START LOCATION MARKER
- (E) WZ END LOCATION MARKER

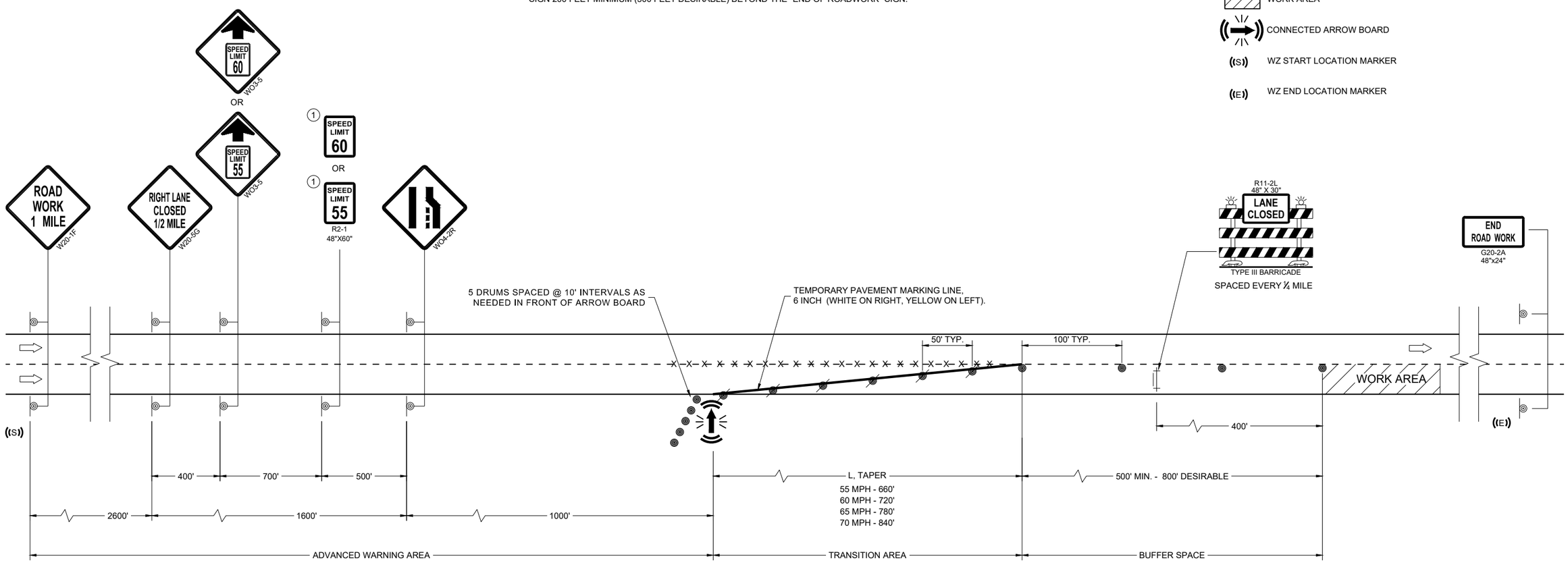

6

SDD 15D12-14b

TRAFFIC CONTROL, LANE CLOSURE, SPEED REDUCTION

STATE OF WISCONSIN
DEPARTMENT OF TRANSPORTATION

APPROVED
November 2024 — DATE
/S/ Andrew Heidtke — ROADWAY STANDARDS DEVELOPMENT UNIT SUPERVISOR

FHWA

6

SDD 15D12-14b

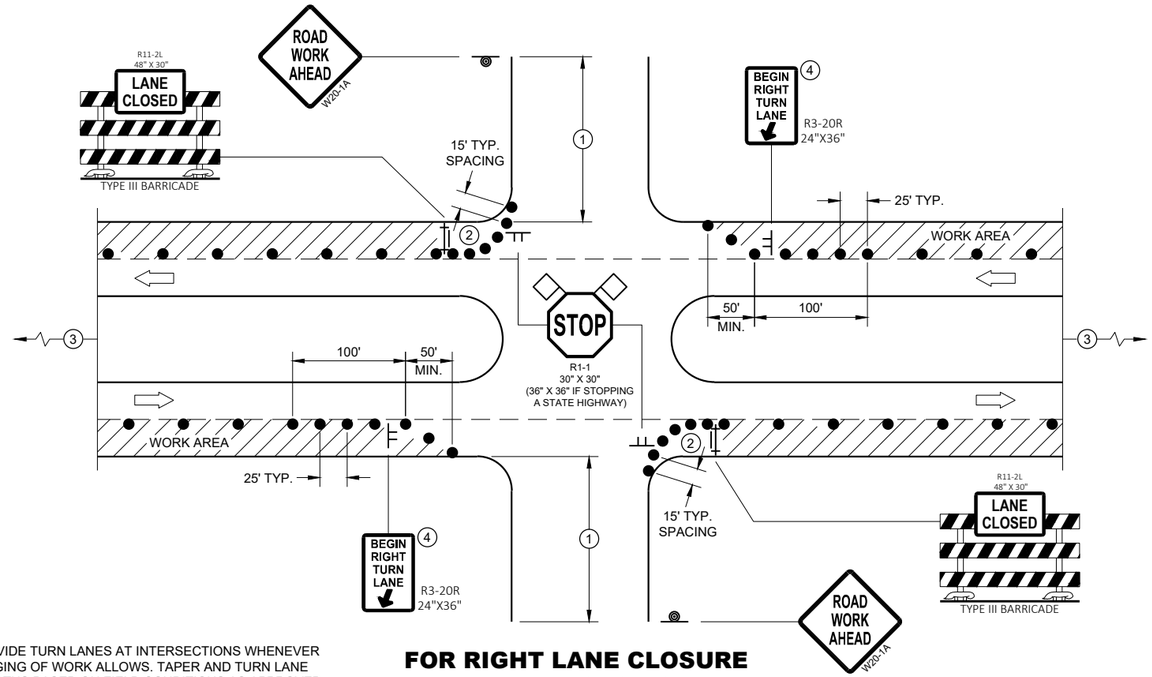

PROVIDE TURN LANES AT INTERSECTIONS WHENEVER STAGING OF WORK ALLOWS. TAPER AND TURN LANE LENGTHS BASED ON FIELD CONDITIONS AS APPROVED BY THE ENGINEER.

FOR RIGHT LANE CLOSURE AT INTERSECTION

GENERAL NOTES

ALL SIGNS ARE 48"X48" UNLESS OTHERWISE NOTED. IF NECESSARY DUE TO SPACE CONSTRAINTS IN URBAN AREAS, 36" X 36" MAY BE USED IF APPROVED BY THE DISTRICT TRAFFIC UNIT.

"WO" SIGN IS THE SAME AS "W" SIGN EXCEPT THE BACKGROUND IS ORANGE.

ANY SIGNS TEMPORARY OR EXISTING, WHICH CONFLICT WITH THE TRAFFIC CONTROL "IN USE" SHALL BE REMOVED OR COVERED AS NEEDED AND AS APPROVED BY THE ENGINEER. NO WARNING LIGHTS SHALL BE WORKING ON COVERED OR "DOWNED" SIGNS.

THE EXACT NUMBER, LOCATION, AND SPACING OF ALL SIGNS AND DEVICES SHALL BE ADJUSTED TO FIT FIELD CONDITIONS AS APPROVED BY THE ENGINEER.

THE SPACING BETWEEN TRAFFIC CONTROL SIGNS SHOULD BE ADJUSTED TO NOT CONFLICT WITH AND TO PROVIDE A MINIMUM OF 200 FEET (500' DESIRABLE) DISTANCE TO EXISTING SIGNS THAT WILL REMAIN IN PLACE

SIGN LAYOUTS SHALL BE IN ACCORDANCE WITH THE FHWA'S MANUAL OF STANDARD HIGHWAY SIGNS OR THE WISCONSIN STANDARD SIGN PLATES.

SIGNS THAT WILL REMAIN IN PLACE LESS THAN 7 CONTINUOUS DAYS AND NIGHTS OR THAT WILL BE PLACED IN A CLOSED LANE MAY BE MOUNTED ON PORTABLE SUPPORTS.

BARRICADES IN A CLOSED LANE THAT MUST BE MOVED FOR A WORK OPERATION SHALL BE IMMEDIATELY REESTABLISHED UPON COMPLETION OF THE OPERATION, OR FOR CONTINUING OPERATIONS, AT THE END OF EACH WORKING DAY.

CHANNELIZING DEVICES PLACED ADJACENT TO WORK AREA SHALL BE PULLED BACK FROM THE TRAVEL LANE WHEN WORK IS NOT IN PROGRESS.

1. 500' TYPICAL OR AT LAST INTERSECTION, WHICHEVER IS CLOSER.
   350' IF 35 - 40 MPH.
   200' IF 25 - 30 MPH.
2. ALSO USE BARRICADE AND 15 FOOT TYPICAL DRUM SPACING AT COMMERCIAL DRIVEWAYS
3. SEE SEPARATE LANE CLOSURE DETAIL FOR ADDITIONAL TRAFFIC CONTROL.
4. MINIMUM MOUNTING HEIGHT OF 5 FEET FROM EDGE OF PAVEMENT (AT EDGE LINE LOCATION) TO BOTTOM OF SIGN.

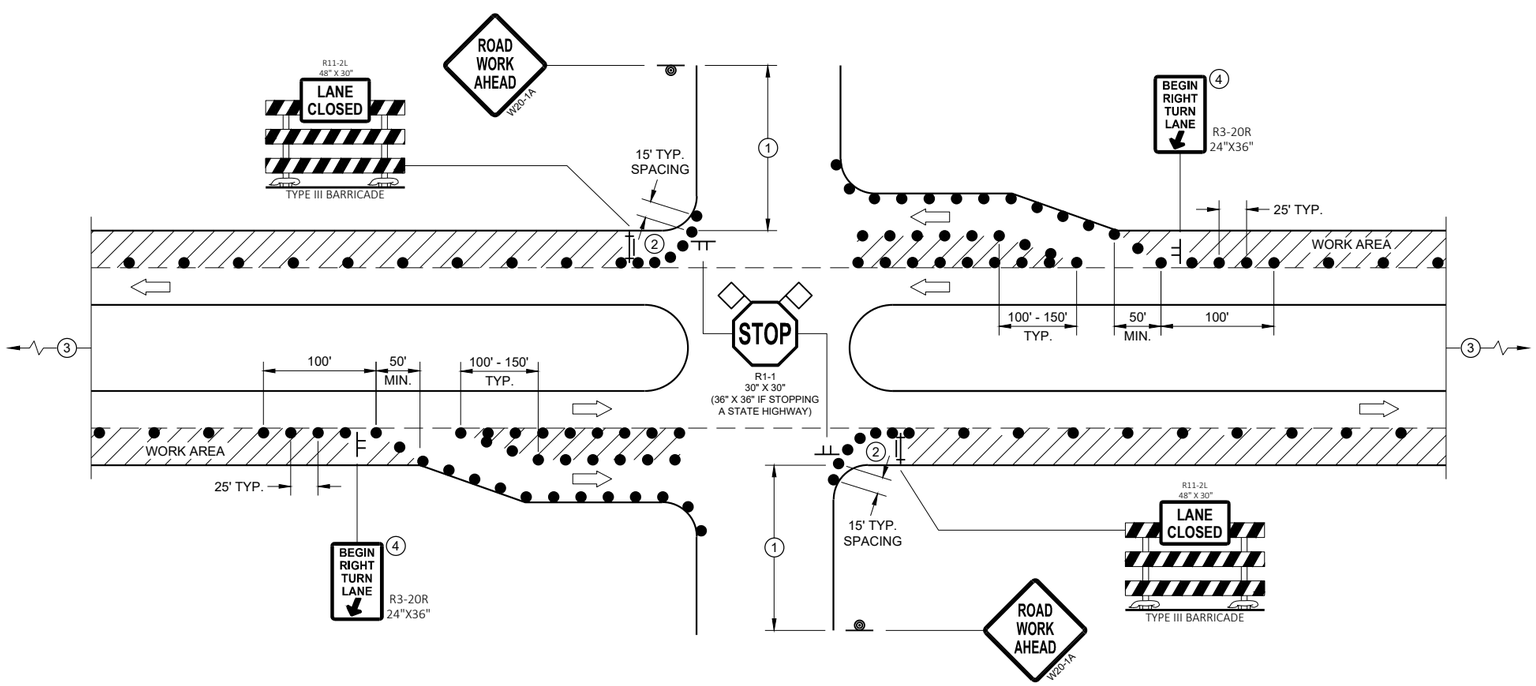

FOR RIGHT LANE CLOSURE AT INTERSECTION (WITH RIGHT TURN BAY OPEN)

LEGEND

- SIGN ON TEMPORARY SUPPORT
- SIGN ON PERMANENT SUPPORT
- TRAFFIC CONTROL DRUM
- TYPE III BARRICADE WITH ATTACHED SIGN
- DIRECTION OF TRAFFIC
- FLAGS, 16" X 16" MIN., ORANGE
- WORK AREA

TRAFFIC CONTROL, INTERSECTION WITHIN SINGLE RIGHT LANE CLOSURE

STATE OF WISCONSIN
DEPARTMENT OF TRANSPORTAT

6

SDD 15D21 - 07a

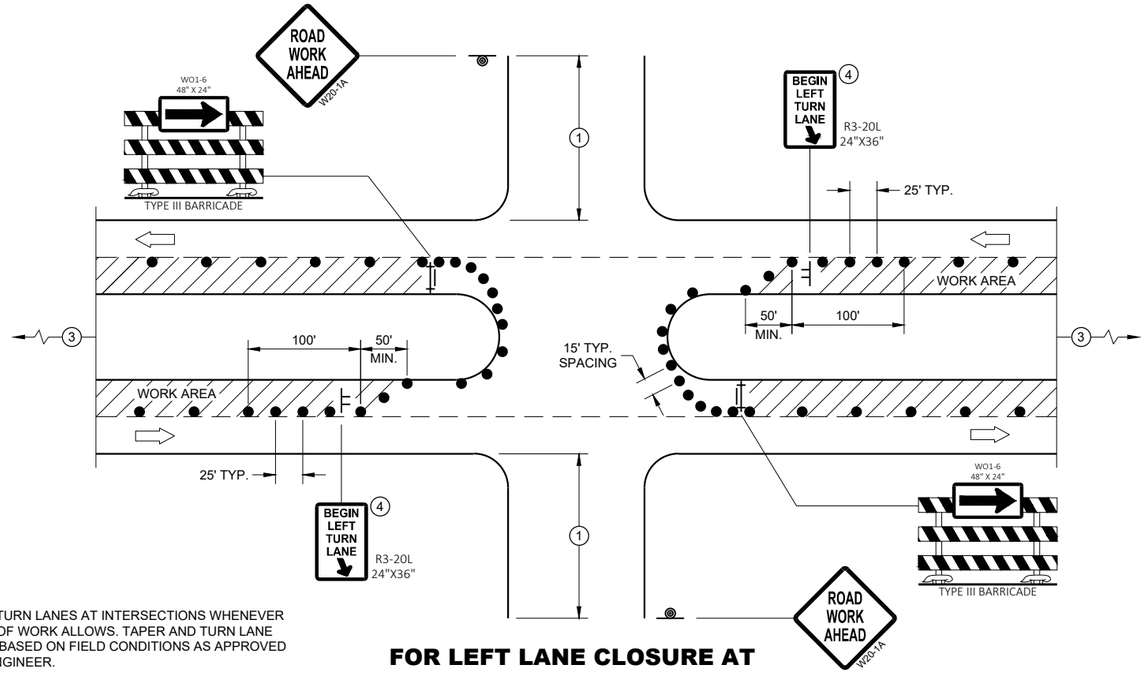

PROVIDE TURN LANES AT INTERSECTIONS WHENEVER STAGING OF WORK ALLOWS. TAPER AND TURN LANE LENGTHS BASED ON FIELD CONDITIONS AS APPROVED BY THE ENGINEER.

FOR LEFT LANE CLOSURE AT INTERSECTION OR MEDIAN OPENING

GENERAL NOTES

ALL SIGNS ARE 48"X48" UNLESS OTHERWISE NOTED. IF NECESSARY DUE TO SPACE CONSTRAINTS IN URBAN AREAS, 36" X 36" MAY BE USED IF APPROVED BY THE DISTRICT TRAFFIC UNIT.

"WO" SIGN IS THE SAME AS "W" SIGN EXCEPT THE BACKGROUND IS ORANGE.

ANY SIGNS TEMPORARY OR EXISTING, WHICH CONFLICT WITH THE TRAFFIC CONTROL "IN USE" SHALL BE REMOVED OR COVERED AS NEEDED AND AS APPROVED BY THE ENGINEER. NO WARNING LIGHTS SHALL BE WORKING ON COVERED OR "DOWNED" SIGNS.

THE EXACT NUMBER, LOCATION, AND SPACING OF ALL SIGNS AND DEVICES SHALL BE ADJUSTED TO FIT FIELD CONDITIONS AS APPROVED BY THE ENGINEER.

THE SPACING BETWEEN TRAFFIC CONTROL SIGNS SHOULD BE ADJUSTED TO NOT CONFLICT WITH AND TO PROVIDE A MINIMUM OF 200 FEET (500' DESIRABLE) DISTANCE TO EXISTING SIGNS THAT WILL REMAIN IN PLACE

SIGN LAYOUTS SHALL BE IN ACCORDANCE WITH THE FHWA'S MANUAL OF STANDARD HIGHWAY SIGNS OR THE WISCONSIN STANDARD SIGN PLATES.

SIGNS THAT WILL REMAIN IN PLACE LESS THAN 7 CONTINUOUS DAYS AND NIGHTS OR THAT WILL BE PLACED IN A CLOSED LANE MAY BE MOUNTED ON PORTABLE SUPPORTS.

BARRICADES IN A CLOSED LANE THAT MUST BE MOVED FOR A WORK OPERATION SHALL BE IMMEDIATELY REESTABLISHED UPON COMPLETION OF THE OPERATION, OR FOR CONTINUING OPERATIONS, AT THE END OF EACH WORKING DAY.

CHANNELIZING DEVICES PLACED ADJACENT TO WORK AREA SHALL BE PULLED BACK FROM THE TRAVEL LANE WHEN WORK IS NOT IN PROGRESS.

1. 500' TYPICAL OR AT LAST INTERSECTION, WHICHEVER IS CLOSER.
   350' IF 35 - 40 MPH.
   200' IF 25 - 30 MPH.
2. ALSO USE BARRICADE AND 15 FOOT TYPICAL DRUM SPACING AT COMMERCIAL DRIVEWAYS
3. SEE SEPARATE LANE CLOSURE DETAIL FOR ADDITIONAL TRAFFIC CONTROL.
4. MINIMUM MOUNTING HEIGHT OF 5 FEET FROM EDGE OF PAVEMENT (AT EDGE LINE LOCATION) TO BOTTOM OF SIGN.

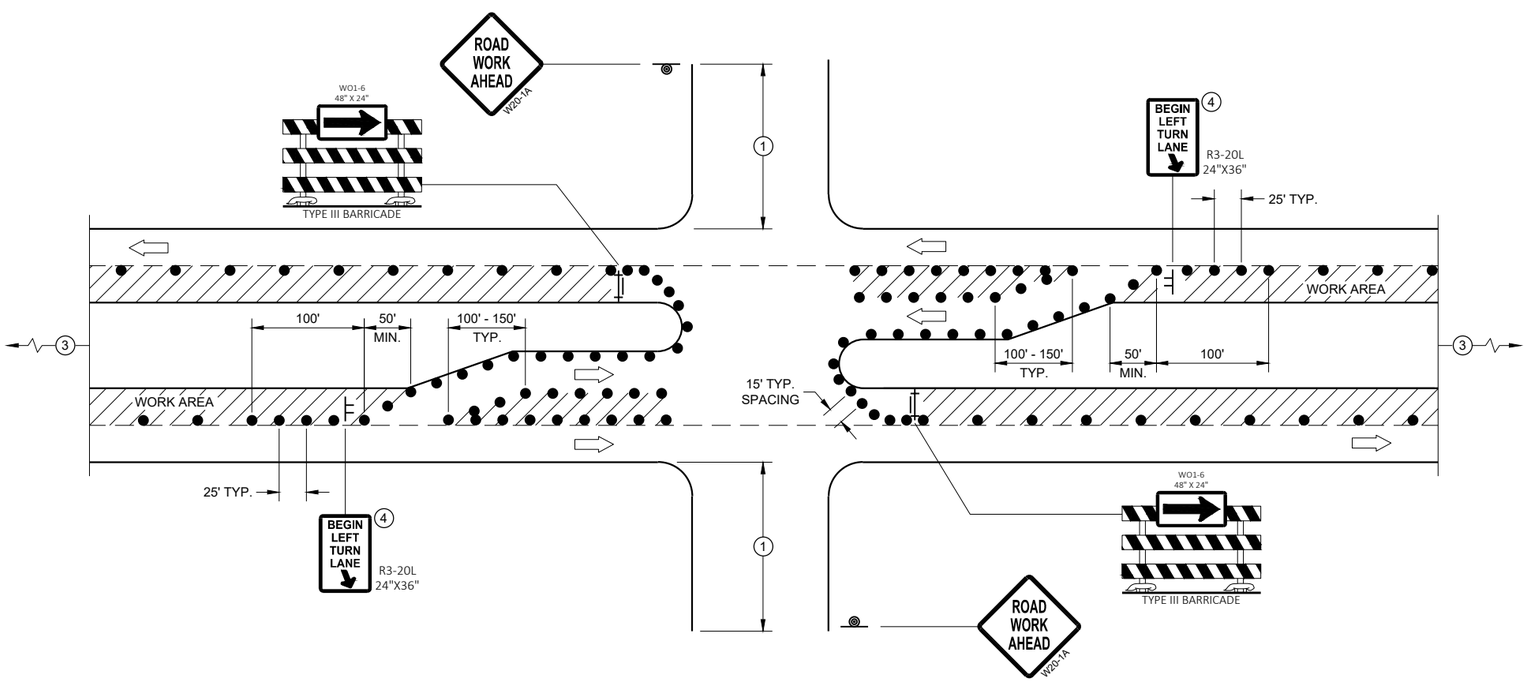

FOR LEFT LANE CLOSURE AT INTERSECTION OR MEDIAN OPENING (WITH LEFT TURN BAY OPEN)

LEGEND

- SIGN ON TEMPORARY SUPPORT
- SIGN ON PERMANENT SUPPORT
- TRAFFIC CONTROL DRUM
- TYPE III BARRICADE WITH ATTACHED SIGN
- DIRECTION OF TRAFFIC
- FLAGS, 16" X 16" MIN., ORANGE
- WORK AREA

TRAFFIC CONTROL, INTERSECTION WITHIN SINGLE LEFT LANE CLOSURE

STATE OF WISCONSIN
DEPARTMENT OF TRANSPORTATION

APPROVED
August 2020 — DATE
/S/ Andrew Heidtke — WORK ZONE ENGINEER
FHWA

LEGEND

- TRAFFIC CONTROL DRUM
- SIGN ON PERMANENT SUPPORT
- DIRECTION OF TRAFFIC
- FLASHING ARROW BOARD
- WORK AREA

GENERAL NOTES

THIS DETAIL IS TYPICAL FOR CLOSING THE RIGHT SHOULDER. FOR CLOSING THE LEFT SHOULDER, REVERSE THE TRAFFIC CONTROL.

THIS DETAIL MAY BE USED FOR DIVIDED ROADWAYS WITH ANY NUMBER OF TRAVEL LANES.

THE EXACT NUMBER, LOCATION AND SPACING OF ALL SIGNS AND DEVICES SHALL BE ADJUSTED TO FIT FIELD CONDITIONS AS APPROVED BY THE ENGINEER.

ALL SIGNS ARE 48" X 48" UNLESS OTHERWISE NOTED.

SIGN LAYOUTS SHALL BE IN ACCORDANCE WITH THE FHWA'S MANUAL OF STANDARD HIGHWAY SIGNS OR THE WISCONSIN STANDARD SIGN PLATES.

SIGNS THAT WILL BE IN PLACE LESS THAN 7 CONTINUOUS DAYS AND NIGHTS MAY BE MOUNTED ON PORTABLE SUPPORTS.

ANY SIGNS TEMPORARY OR EXISTING, WHICH CONFLICT WITH TRAFFIC CONTROL "IN USE" SHALL BE REMOVED OR COVERED AS NEEDED AND AS APPROVED BY THE ENGINEER.

CHANNELIZING DEVICES PLACED ADJACENT TO THE WORK AREA SHALL BE PULLED BACK FROM THE TRAVEL LANE WHEN WORK IS NOT IN PROGRESS.

WHEN A RAMP INTERSECTS THE FACILITY ON WHICH THE WORK IS BEING PERFORMED, ADDITIONAL TRAFFIC CONTROLS SHALL BE PROVIDED AS SPECIFIED IN THE PLANS AND/OR THE SPECIAL PROVISIONS OR AS APPROVED BY THE ENGINEER.

*FOR SHORT DURATION SHOULDER WORK OF LESS THAN ONE HOUR, THE W21-5a SIGN MAY BE OMITTED.

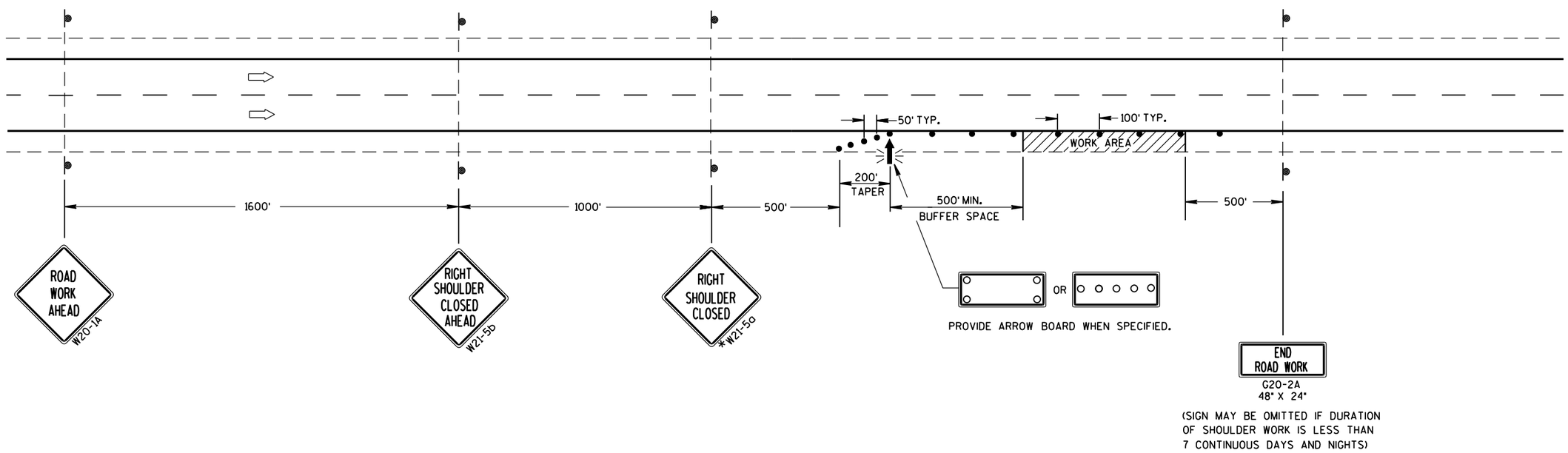

TRAFFIC CONTROL SHOULDER CLOSURE ON DIVIDED ROADWAY, SPEEDS GREATER THAN 40 MPH

STATE OF WISCONSIN
DEPARTMENT OF TRANSPORTATION

APPROVED

June 2016 — DATE

/S/ Peter Amakobe Atepe — STATEWIDE WORK ZONE TRAFFIC SAFETY ENGINEER

FHWA

6

S.D.D. 15 D 27-3

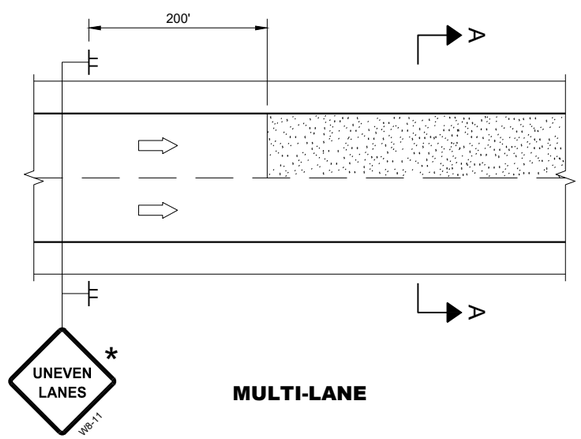

MULTI-LANE

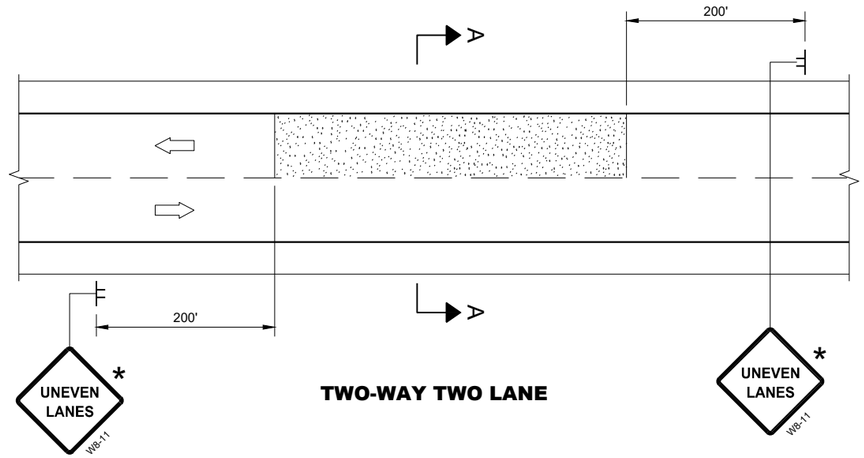

TWO-WAY TWO LANE

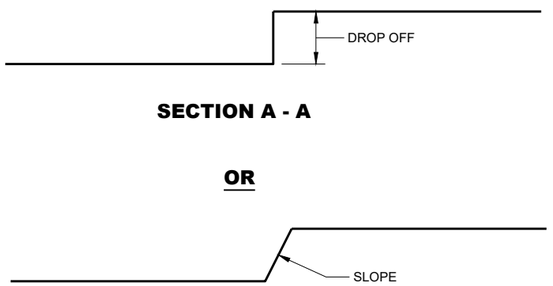

SECTION A - A

OR

SECTION A - A

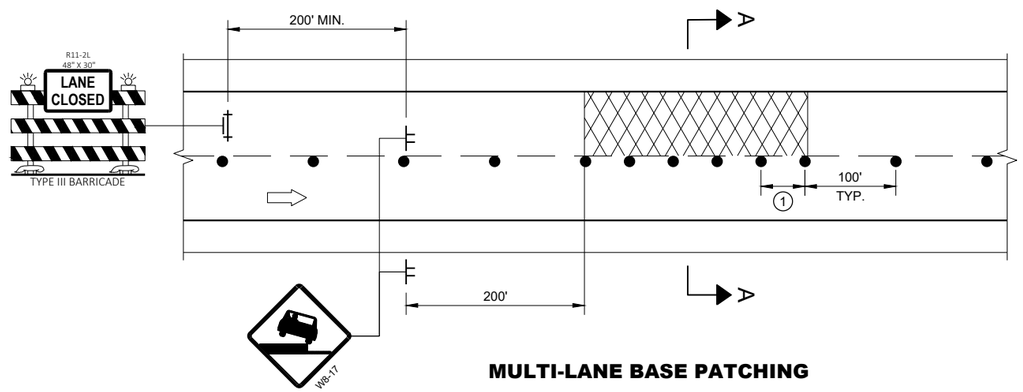

MULTI-LANE BASE PATCHING

ADJACENT LANE DROP-OFFS

GENERAL NOTES

FOR SPOT LOCATIONS USE ENGINEERING JUDGEMENT WHEN PLACING ADDITIONAL SIGNS.

ALL SIGNS ARE 48" X 48" UNLESS OTHERWISE NOTED.

"WO" SIGNS ARE THE SAME AS "W" SIGNS EXCEPT THE BACKGROUND IS ORANGE.

WARNING LIGHTS ARE NOT REQUIRED IF THE LANE CLOSURE IS A DAYTIME ONLY OPERATION.

* IF THE DROP-OFF IS CONTINUOUS ALONG THE PROJECT, PLACE ADDITIONAL SIGNS EVERY 1 MILE AND AFTER EVERY ENTRANCE RAMP.

(1) USE CLOSER SPACING WHEN DELINEATING DROP-OFF.

LEGEND

- SIGN ON TEMPORARY SUPPORT
- TRAFFIC CONTROL DRUM
- TYPE III BARRICADE WITH ATTACHED SIGN
- TYPE "A" WARNING LIGHT (FLASHING)
- DIRECTION OF TRAFFIC
- WORK AREA WITH DROP-OFF
- MILLED SURFACE

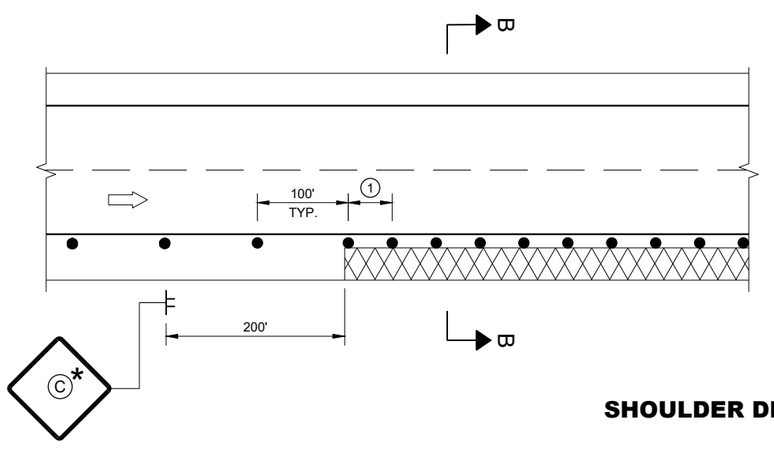

SHOULDER DROP-OFFS

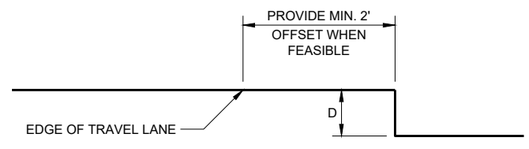

SECTION B - B

D	SIGN (C)
< 2" WITH A SLOPE STEEPER THAN 3:1	LOW SHOULDER WO8-9
2" < 6" WITH A SLOPE STEEPER THAN 3:1	SHOULDER DROP - OFF W8-9A PROVIDE A 3:1 OR FLATTER SLOPE OF MATERIAL ADJACENT TO THE PAVEMENT

TRAFFIC CONTROL, DROP-OFF SIGNING

STATE OF WISCONSIN
DEPARTMENT OF TRANSPORTATION

APPROVED
March 2018 — DATE
/S/ Andrew Heidtke — WORK ZONE ENGINEE
FHWA

6

SDD 15D39 - 02

LEGEND

- TYPE III BARRICADE WITH ATTACHED SIGN
- SIGN ON PERMANENT SUPPORT
- TRAFFIC CONTROL DRUM
- TRAFFIC CONTROL DRUM WITH TYPE "C" STEADY BURN LIGHT
- TYPE "A" WARNING LIGHT (FLASHING)
- DIRECTION OF TRAFFIC
- WORK AREA
- REMOVING PAVEMENT MARKING (SEE GENERAL NOTES)
- CONCRETE BARRIER TEMPORARY PRECAST

GENERAL NOTES

THE EXACT NUMBER, LOCATION, AND SPACING OF ALL SIGNS AND DEVICES SHALL BE ADJUSTED TO FIT FIELD CONDITIONS AS APPROVED BY THE ENGINEER.

THE SPACING BETWEEN SIGNS SHOULD BE ADJUSTED TO NOT CONFLICT WITH AND TO PROVIDE A MINIMUM OF 200 FEET, (500 FEET DESIRABLE) DISTANCE TO EXISTING SIGNS.

THIS LANE CLOSURE IS TYPICAL FOR LANE SHIFT RIGHT - REVERSE FOR SHIFTING LEFT.

ALL SIGNS ARE 48"x48" UNLESS OTHERWISE NOTED.

"WO" IS THE SAME AS "W" EXCEPT THE BACKGROUND IS ORANGE.

ANY SIGNS TEMPORARY OR EXISTING, WHICH CONFLICT WITH TRAFFIC CONTROL "IN USE" SHALL BE REMOVED OR COVERED AS NEEDED AND AS APPROVED BY THE ENGINEER. NO WARNING LIGHTS SHALL BE WORKING ON ANY "COVERED" OR "DOWNED" SIGNS.

CONSIDER GEOMETRICS WHEN LOCATING SIGNS AND ARROW BOARDS SO THE DRIVER HAS A CLEAR VIEW OF THE ARROW BOARD AND LANE CLOSURE DRUMS FOR A MINIMUM 1500 FEET IN FRONT OF DRUMS.

FOR A LANE CLOSURE THAT IS IN PLACE LESS THAN 7 CONTINUOUS DAYS AND NIGHTS, THE ADVANCED WARNING SIGNS MAY BE MOUNTED ON PORTABLE SUPPORTS.

REMOVE PAVEMENT MARKINGS AND PLACE TEMPORARY PAVEMENT MARKING LINES IF LANE CLOSURE IS TO BE IN PLACE FOR 4 OR MORE CONTINUOUS DAYS AND NIGHTS.

WARNING LIGHTS ARE NOT REQUIRED IF THE LANE CLOSURE IS A DAYTIME ONLY OPERATION.

IF THE HORIZONTAL ALIGNMENT IS SUCH THAT A CURVE MAY REQUIRE ADDITIONAL DELINEATION, THE DEVICE SPACING MAY BE DECREASED TO 50 FEET.

ADJUSTMENTS IN BUFFER SPACE NEED TO BE INCORPORATED WHEN THE LANE SHIFT OCCURS NEAR AN INTERCHANGE EXIT OR ENTRANCE RAMP. THE LANE SHIFT MUST TAKE PLACE FAR ENOUGH IN ADVANCE OF AN EXIT OR ENTRANCE RAMP TO STILL ALLOW FOR ADEQUATE BUFFER SPACE. THE MINIMUM LENGTH OF THE BUFFER SPACE BEFORE AN EXIT RAMP SHOULD BE ½ THE LENGTH OF THE TRANSITION AREA. THE ENTRANCE RAMP SHOULD BE FOLLOWED BY THE ORIGINAL BUFFER SPACE LENGTH OF 800 FEET DESIRABLE PRIOR TO ANOTHER TRAFFIC CONTROL CHANGE SUCH AS A CROSSOVER MANEUVER.

1. USE ONLY IF DESIGN SPEED IS 10 MPH BELOW POSTED SPEED.
2. IF BEGINNING OF LANE SHIFT IS 1200' OF LESS FROM THE END OF THE LANE CLOSURE TAPER, PLACE THE WO1-4L SIGN 200 FEET AFTER THE END OF THE LANE CLOSURE TAPER.

POSTED SPEED LIMIT PRIOR TO WORK STARTING (MPH)	SHIFTING TAPER L/2 W, LATERAL OFFSET (FT)				
	10	11	12	13	14
50	250	275	300	325	350
55	275	303	330	358	385
60	300	330	360	390	420
65	325	358	390	423	455
70	350	385	420	455	490

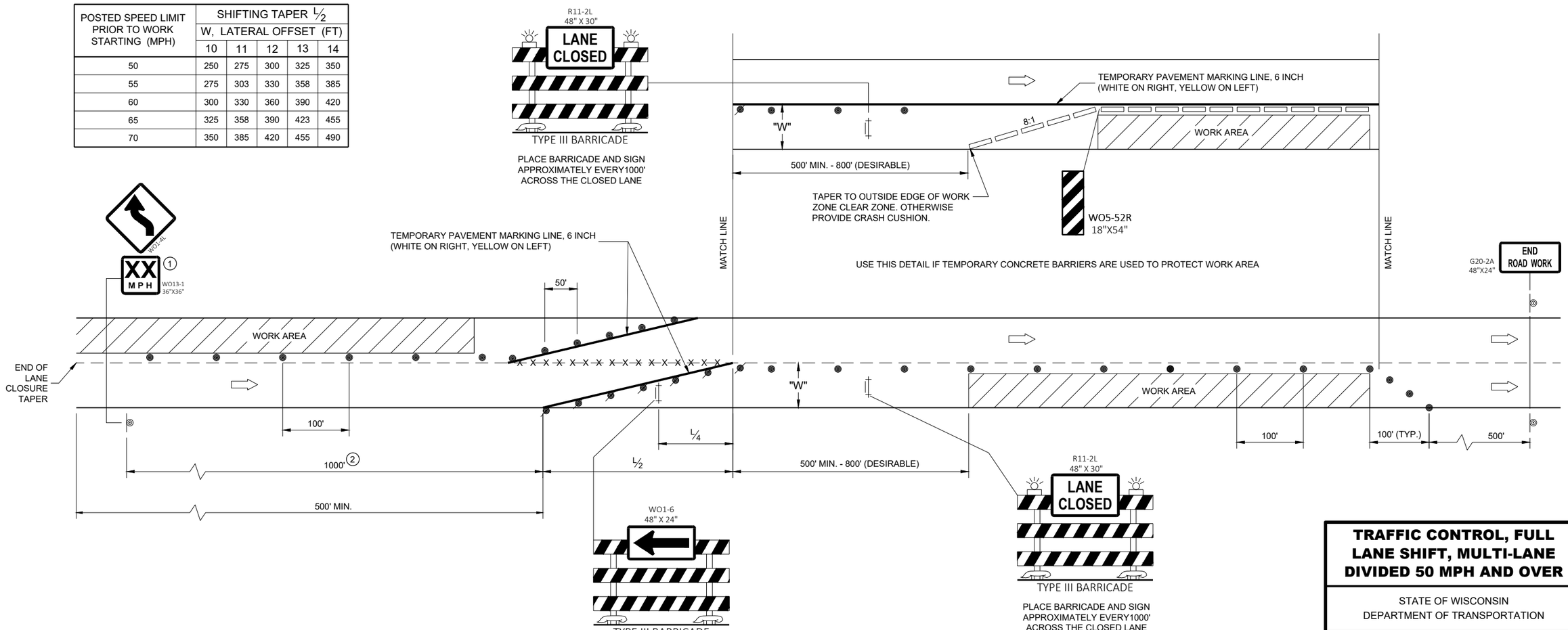

TRAFFIC CONTROL, FULL LANE SHIFT, MULTI-LANE DIVIDED 50 MPH AND OVER

STATE OF WISCONSIN
DEPARTMENT OF TRANSPORTATION

APPROVED
May 2023 — DATE
/S/ Andrew Heidtke — WORK ZONE ENGINEE
FHWA

6

SDD 15D40-05b

LEGEND

- TYPE III BARRICADE WITH ATTACHED SIGN
- SIGN ON PERMANENT SUPPORT
- TRAFFIC CONTROL DRUM
- TRAFFIC CONTROL DRUM WITH TYPE "C" STEADY BURN LIGHT
- TYPE "A" WARNING LIGHT (FLASHING)
- DIRECTION OF TRAFFIC
- WORK AREA
- REMOVING PAVEMENT MARKING (SEE GENERAL NOTES)
- CONCRETE BARRIER TEMPORARY PRECAST

POSTED SPEED LIMIT PRIOR TO WORK STARTING (MPH)	SHIFTING TAPER L/2 W, LATERAL OFFSET (FT)								
	1	2	3	4	5	6	7	8	9
50	25	50	75	100	125	150	175	200	225
55	28	55	83	110	138	165	193	220	248
60	30	60	90	120	150	180	210	240	270
65	33	65	98	130	163	195	228	260	293
70	35	70	105	140	175	210	245	280	315

GENERAL NOTES

THE EXACT NUMBER, LOCATION, AND SPACING OF ALL SIGNS AND DEVICES SHALL BE ADJUSTED TO FIT FIELD CONDITIONS AS APPROVED BY THE ENGINEER.

THE SPACING BETWEEN SIGNS SHOULD BE ADJUSTED TO NOT CONFLICT WITH AND TO PROVIDE A MINIMUM OF 200 FEET, (500 FEET DESIRABLE) DISTANCE TO EXISTING SIGNS.

THIS LANE CLOSURE IS TYPICAL FOR LANE SHIFT LEFT - REVERSE FOR SHIFTING RIGHT.

ALL SIGNS ARE 48"x48" UNLESS OTHERWISE NOTED.

"WO" IS THE SAME AS "W" EXCEPT THE BACKGROUND IS ORANGE.

ANY SIGNS TEMPORARY OR EXISTING, WHICH CONFLICT WITH TRAFFIC CONTROL "IN USE" SHALL BE REMOVED OR COVERED AS NEEDED AND AS APPROVED BY THE ENGINEER. NO WARNING LIGHTS SHALL BE WORKING ON ANY "COVERED" OR "DOWNED" SIGNS.

CONSIDER GEOMETRICS WHEN LOCATING SIGNS AND ARROW BOARDS SO THE DRIVER HAS A CLEAR VIEW OF THE ARROW BOARD AND LANE CLOSURE DRUMS FOR A MINIMUM 1500 FEET IN FRONT OF DRUMS.

FOR A LANE CLOSURE THAT IS IN PLACE LESS THAN 7 CONTINUOUS DAYS AND NIGHTS, THE ADVANCED WARNING SIGNS MAY BE MOUNTED ON PORTABLE SUPPORTS.

REMOVE PAVEMENT MARKINGS AND PLACE TEMPORARY PAVEMENT MARKING LINES IF LANE CLOSURE IS TO BE IN PLACE FOR 4 OR MORE CONTINUOUS DAYS AND NIGHTS.

WARNING LIGHTS ARE NOT REQUIRED IF THE LANE CLOSURE IS A DAYTIME ONLY OPERATION.

IF THE HORIZONTAL ALIGNMENT IS SUCH THAT A CURVE MAY REQUIRE ADDITIONAL DELINEATION, THE DEVICE SPACING MAY BE DECREASED TO 50 FEET.

ADJUSTMENTS IN BUFFER SPACE NEED TO BE INCORPORATED WHEN THE LANE SHIFT OCCURS NEAR AN INTERCHANGE EXIT OR ENTRANCE RAMP. THE LANE SHIFT MUST TAKE PLACE FAR ENOUGH IN ADVANCE OF AN EXIT OR ENTRANCE RAMP TO STILL ALLOW FOR ADEQUATE BUFFER SPACE. THE MINIMUM LENGTH OF THE BUFFER SPACE BEFORE AN EXIT RAMP SHOULD BE 1/2 THE LENGTH OF THE TRANSITION AREA. THE ENTRANCE RAMP SHOULD BE FOLLOWED BY THE ORIGINAL BUFFER SPACE LENGTH OF 800 FEET DESIRABLE PRIOR TO ANOTHER TRAFFIC CONTROL CHANGE SUCH AS A CROSSOVER MANEUVER.

1. USE ONLY WHEN T<600', OMIT WO1-4R.
2. IF NEEDED, USE ONLY IF DESIGN SPEED IS 10 MPH BELOW POSTED SPEED.
3. IF THE BEGINNING OF LANE SHIFT TAPER IS 1200 FEET OR LESS FROM END OF LANE CLOSURE TAPER, PLACE THE WO1-4L SIGN 200 FEET AFTER THE END OF THE LANE CLOSURE TAPER.
4. IF THE BEGINNING OF THE SECOND LANE SHIFT TAPER IS 1200 FEET OR LESS FROM END OF THE FIRST LANE CLOSURE TAPER, PLACE THE WO1-4L SIGN 200 FEET AFTER THE END OF THE FIRST LANE CLOSURE TAPER.

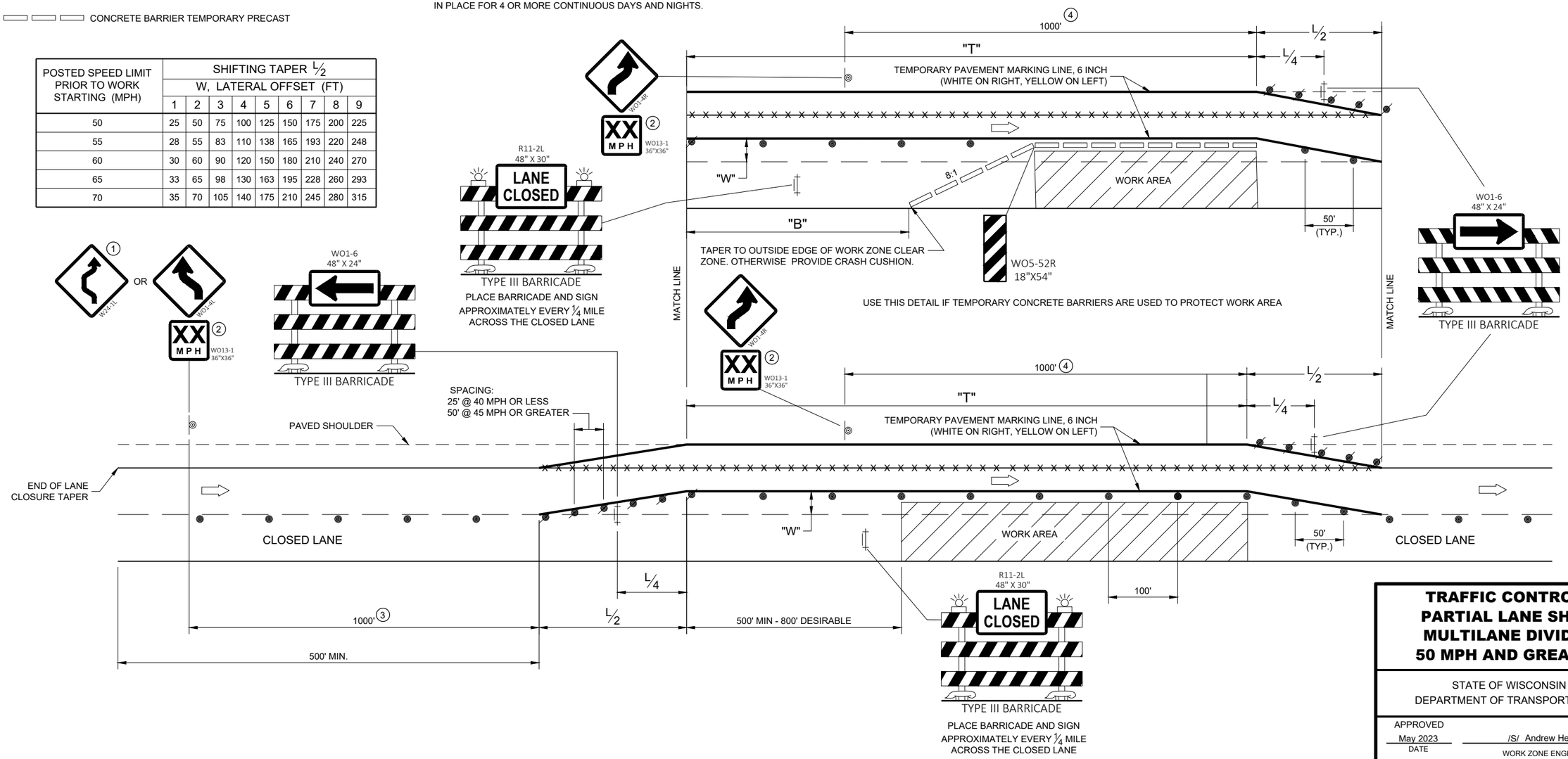

TRAFFIC CONTROL, PARTIAL LANE SHIFT MULTILANE DIVIDED 50 MPH AND GREATER

STATE OF WISCONSIN
DEPARTMENT OF TRANSPORTATION

APPROVED
May 2023 — DATE
/S/ Andrew Heidtke — WORK ZONE ENGINEER
FHWA

6

SDD 15D40-05d

LEGEND

- V1 SHADOW VEHICLE 1
- V2 SHADOW VEHICLE 2
- V3 ADVANCE WARNING TRUCK
- TRAFFIC CONTROL DRUM
- TRUCK MOUNTED ATTENUATOR (TMA)
- SIGN ON TEMPORARY SUPPORT
- DIRECTION OF TRAFFIC
- FLASHING ARROW PANEL (MERGE)
- FLASHING ARROW PANEL (CAUTION)
- PCMS PORTABLE CHANGEABLE MESSAGE SIGN
- WORK AREA

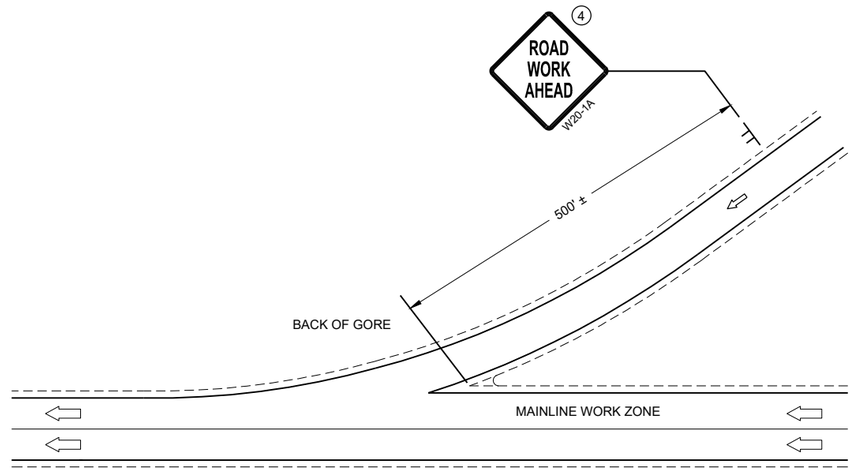

GENERAL NOTES

SHORT DURATION IS WORK THAT OCCUPIES A LOCATION UP TO 1 HOUR.

MOBILE IS WORK THAT MOVES INTERMITTENTLY OR CONTINUOUSLY.

ALL VEHICLES SHALL BE EQUIPPED WITH TWO 360 DEGREE HIGH INTENSITY YELLOW FLASHING LIGHTS OR STROBE LIGHTS AND OPERATED WITH HEADLIGHTS TURNED ON.

ALL VEHICLES SHALL BE EQUIPPED WITH REAR FACING TYPE B OR C FLASHING ARROW PANEL. SIGNS PLACED ON VEHICLES MUST NOT OBSCURE THE ARROW PANEL.

ALL SIGNS ARE 48" X 48" UNLESS OTHERWISE SPECIFIED.

WHEN WORK ACTIVITY BLOCKS THE RIGHT LANE, REVERSE TRAFFIC CONTROL.

WHEN A RAMP INTERSECTS THE FACILITY ON WHICH THE WORK IS BEING PERFORMED, PROVIDE ADDITIONAL TRAFFIC CONTROLS AS SPECIFIED IN THE CONTRACT OR AS APPROVED BY THE ENGINEER.

USE DOUBLE ARROWS WHEN CONVOY IS IN CENTER LANE ONLY.

WHEN NO WORK ACTIVITY IS TAKING PLACE, REMOVE OR LAY STATIONARY SIGNS AND SUPPORTS FLAT ON THE GRADE WITH UPRIGHTS ORIENTED PARALLEL TO AND DOWNSTREAM FROM TRAFFIC

1. DISTANCE BETWEEN VEHICLES MAY VARY ACCORDING TO TERRAIN, SIGHT DISTANCE AND OTHER FACTORS. WHENEVER ADEQUATE STOPPING SIGHT DISTANCE EXISTS TO THE REAR, SHADOW VEHICLES SHOULD MAINTAIN THE MINIMUM DISTANCE FROM THE WORK VEHICLE AND PROCEED AT THE SAME SPEED AS THE WORK VEHICLE. SHADOW VEHICLES SHOULD SLOW DOWN IN ADVANCE OF VERTICAL AND HORIZONTAL CURVES THAT RESTRICT SIGHT DISTANCE.
2. DRUMS ARE TO BE USED FOR BRIDGE DECK SEALING AND OTHER PROJECTS THAT REQUIRE DELINEATION.
3. WITHIN 5 MILES, RELOCATE SIGNS AS WORK PROGRESSES AND NECESSARY OR AS DIRECTED BY THE ENGINEER.
4. SIGN NOT REQUIRED IF MOVING OPERATION OCCURS WITHIN A SIGNED ROAD WORK ZONE AREA.
5. SHADOW VEHICLE 1 (V1) IS OPTIONAL

* PCMS OPTIONAL

PCMS MESSAGING

FRAME 1	FRAME 2
MOVING LANE CLOSURES	NEXT XX MILES

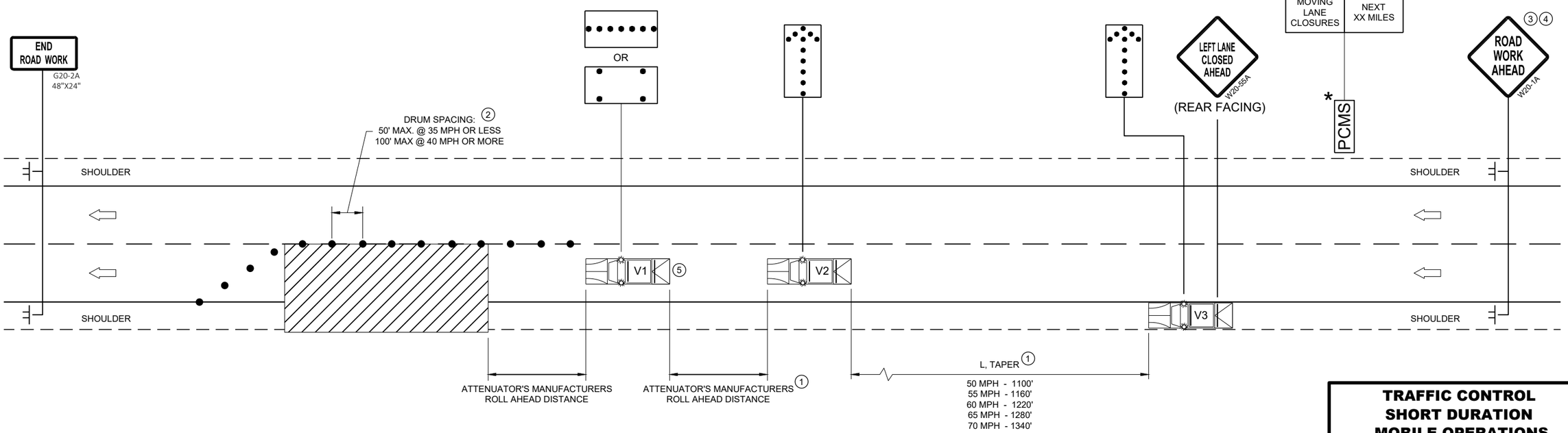

TRAFFIC CONTROL
SHORT DURATION
MOBILE OPERATIONS

STATE OF WISCONSIN
DEPARTMENT OF TRANSPORTATION

APPROVED
August 2021 — DATE
/S/ Andrew Heidtke — WORK ZONE ENGINEE
FHWA

6

SDD 15D43 - 02

6

SDD 15D43 - 02

URBAN AREA

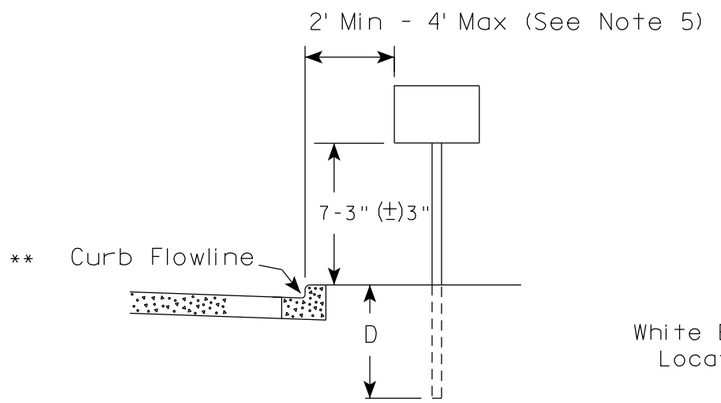

RURAL AREA (See Note 2)

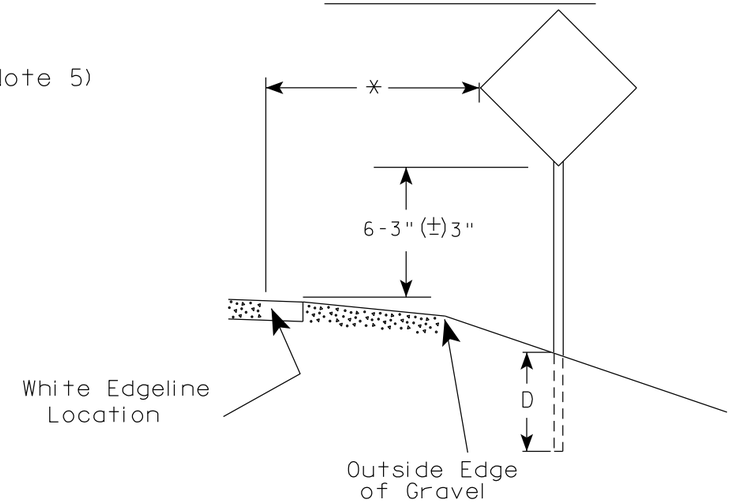

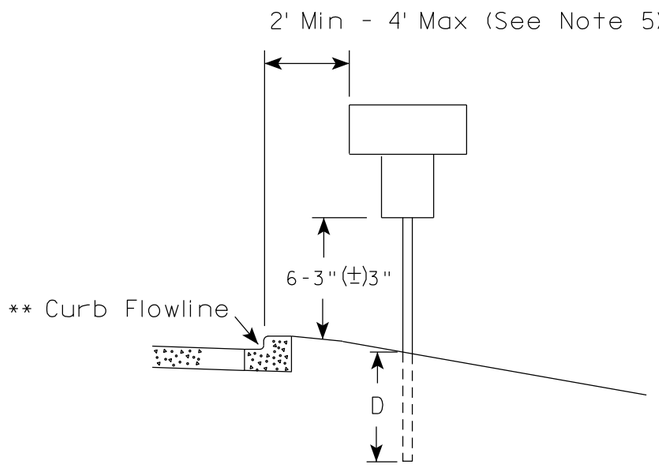

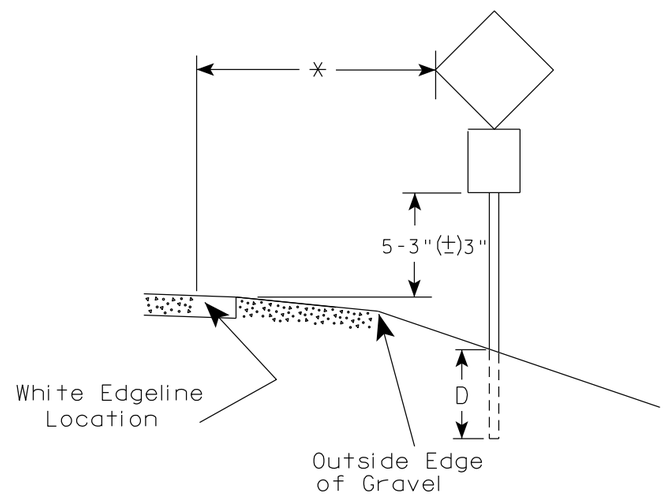

** The existence of curb and gutter does not in itself mandate the vertical clearance illustrated. That height is typically measured where there is sidewalk adjacent to the roadway or parking is permitted. In the absence of sidewalk vertical clearance is measured from the top of the curb. Offset of signs is measured from the flow line.

* 6 feet from edge of a paved shoulder or 12 feet from the edge of pavement (edge line location) or 2 feet from outside edge of gravel, whichever is greater unless directed by project engineer.

GENERAL NOTES

1. Signs wider than 4 feet or 20 sq.ft or larger, shall be mounted on multiple posts. Refer to plate A4-4.
2. If signs are mounted on or behind barrier wall, see A4-10 sign plate.
   The Double Arrow sign (W12-1D) shall be mounted at a height of 2'-3" (±) 3". The Chevron sign (W1-8), Roundabout Chevron panel (R6-4B), Enhanced Reference Markers, Clearance Markers (W5-52), Mile Markers (D10 series), In Road Object Markers (W5-54) & End of Road Markers (W5-56) shall be mounted at a height of 4'-3" (±) 3".
3. For expressways and freeways, mounting height is 7'- 3" (±) 3" or 6'-3" (±) 3" depending upon existence of a sub-sign.
4. Minimum mounting height for signs mounted on traffic signal poles is 5'- 3" (±) 3".
5. Offset distance shall be consistent with existing signs or consistent throughout length of project.
6. Folding signs shall be mounted at a height of 5'-3" (±) 3" or as directd by the Engineer.

POST EMBEDMENT DEPTH

Area of Sign Installation (Sq. Ft.)	D (Min)
20 or Less	4'
Greater than 20	5'

TYPICAL INSTALLATION OF PERMANENT TYPE II SIGNS ON SINGLE POSTS

WISCONSIN DEPT OF TRANSPORTATION

APPROVED Matthew R Rauch
for State Traffic Engineer

DATE 12/6/23 PLATE NO. A4-3.23

7 7

PROJECT NO:	HWY:	COUNTY:		SHEET NO: 173	E

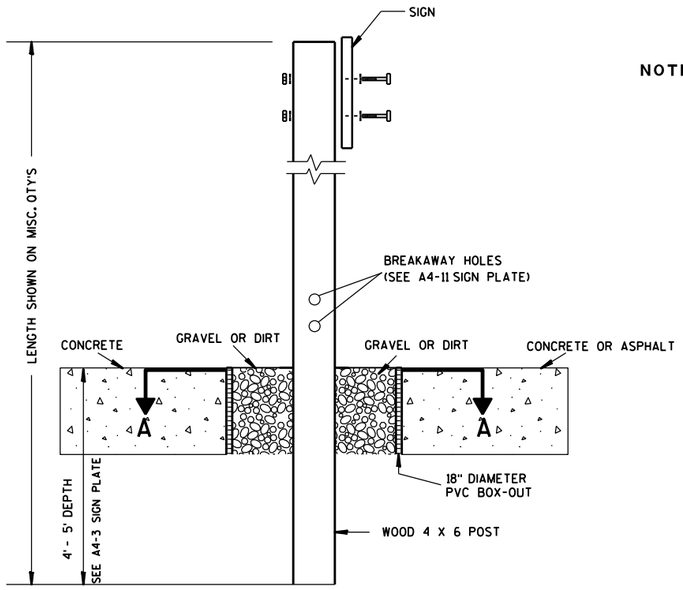

ELEVATION VIEW

DETAIL OF WOOD 4 X 6 SIGN POST IN BOX-OUT

NOTES:
1. ALL MATERIAL TO BE APPROVED BY ENGINEER PRIOR TO INSTALLATION
2. SEE SIGN PLATE A4-8 FOR SIGN HARDWARE REQUIREMENTS
3. 18 INCH X 18 INCH SQUARE BOX-OUTS MAY BE USED FOR INSTALLATIONS IN EXISTING CONCRETE OR ASPHALT LOCATIONS.

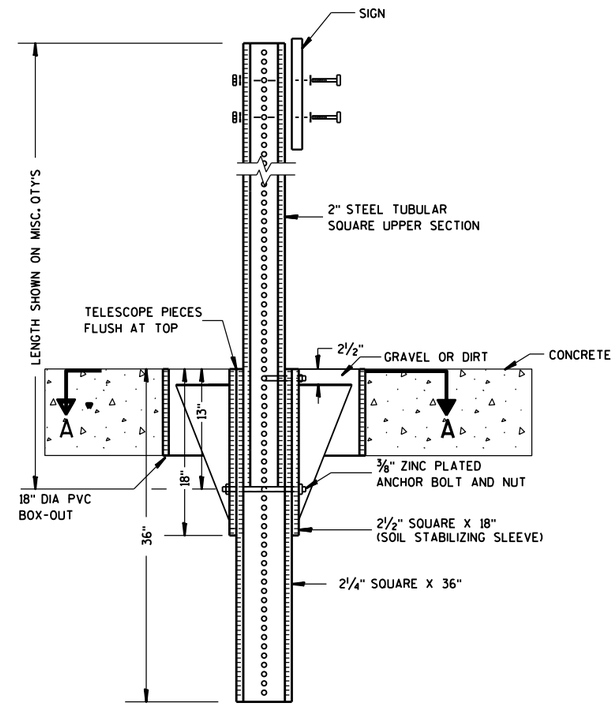

ELEVATION VIEW

DETAIL OF STEEL 2 X 2 SIGN POST IN BOX-OUT

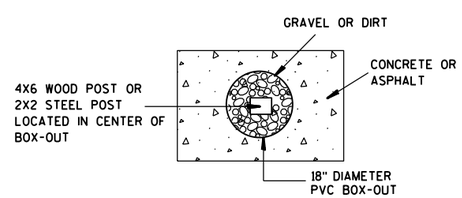

PLAN VIEW

FOR NEW CONCRETE/ASPHALT INSTALLATIONS

SIGN POST
BOX-OUTS
A4-3B

WISCONSIN DEPT OF TRANSPORTATION

APPROVED Matthew R Rauch
for State Traffic Engineer

DATE 1/27/14 PLATE NO. A4-3B.1

PROJECT NO:	HWY:	COUNTY:		SHEET NO:	E

URBAN AREA

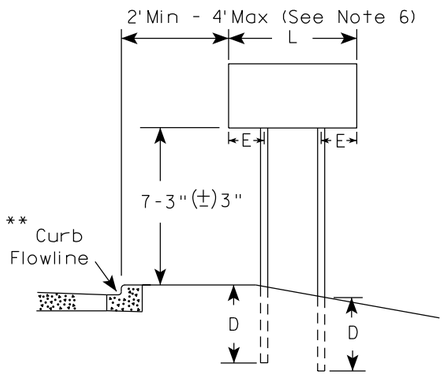

RURAL AREA (See Note 3)

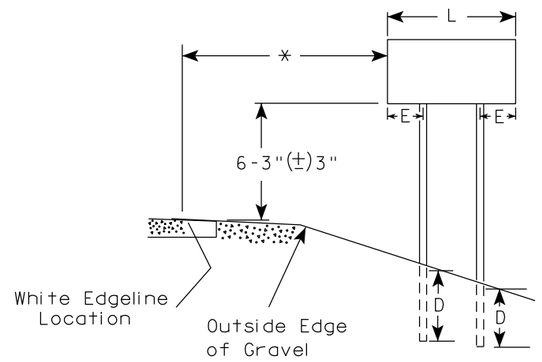

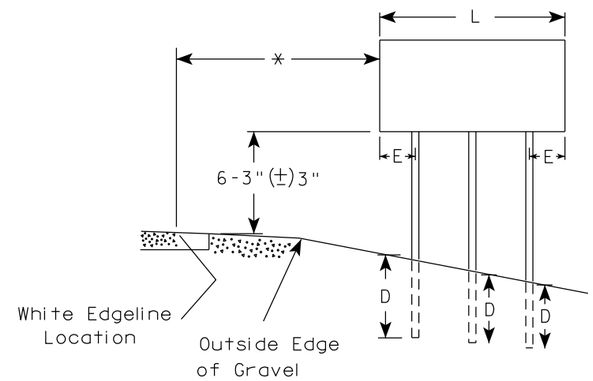

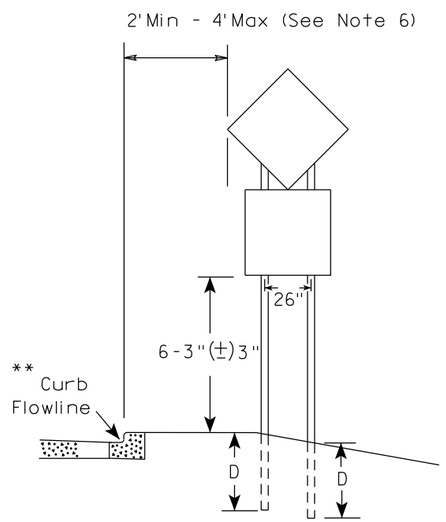

48" DIAMOND WARNING SIGN

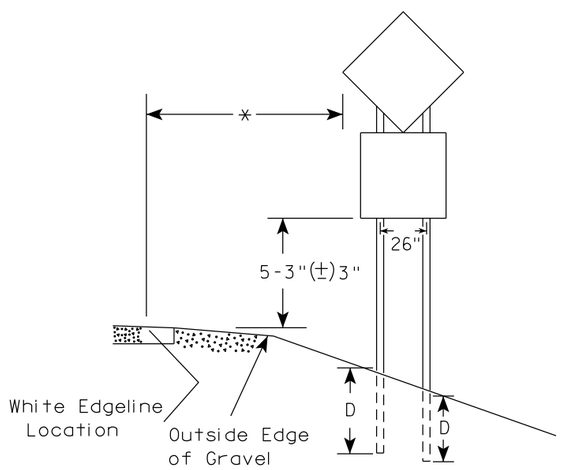

48" DIAMOND WARNING SIGN

GENERAL NOTES

1. For 3 or 4 post installations, individual post spacing shall be greater than 3'-6".
2. See tables below for required number of posts.
3. For expressways and freeways, mounting height is 7'-3" (±) 3" or 6'-3" (±) 3" depending upon existence of sub-sign.
4. The (±) tolerance for mounting height is 3 inches.
5. J-Assemblies are considered to be one sign for mounting height.
6. Offset distance shall be consistent with existing signs or consistent throughout length of project.
7. Folding signs shall be mounted at a height of 5'-3" (±) 3" or as directed by the engineer.
8. The Double Arrow sign (W12-1) shall be mounted at a height of 2'-3" (±) 3". The Chevron sign (W1-8), Roundabout Chevron panel (R6-4B), Clearance Markers (W5-52), Mile Markers (D10 series), In Road Object Markers (W5-54) & End of Road Markers (W5-56) shall be mounted at a height of 4"-3" (±) 3".

* 6 feet from edge of a paved shoulder or 12 feet from the edge of pavement (edge line location) or 2 feet from outside edge of gravel, whichever is greater unless directed by project engineer.

** The existence of curb and gutter does not in itself mandate the vertical clearance illustrated. That height is typically measured where there is sidewalk adjacent to the roadway or parking is permitted. In the absence of sidewalk vertical clearance is measured from the top of the curb. Offset of signs is measured from the flow line.

*** See A4-3 sign plate for signs 4' or less in width and less than 20 S.F. in area.

SIGN SHAPE OTHER THAN DIAMOND (TWO POSTS REQUIRED)	
L	E
*** Greater than 48" Less than 60"	12"
60" to 108"	L/5

SIGN SHAPE OTHER THAN DIAMOND (THREE POSTS REQUIRED)	
L	E
Greater than 108" to 144"	12"

POST EMBEDMENT DEPTH

Area of Sign Installation (Sq. Ft.)	D (Min)
20 or Less	4'
Greater than 20	5'

TYPICAL INSTALLATION OF TYPE II SIGNS ON MULTIPLE POSTS

WISCONSIN DEPT OF TRANSPORTATION

APPROVED Matthew R Rauch
for State Traffic Engineer

DATE 12/6/23 PLATE NO. A4-4.16

PROJECT NO:	HWY:	COUNTY:		SHEET NO: 175	E

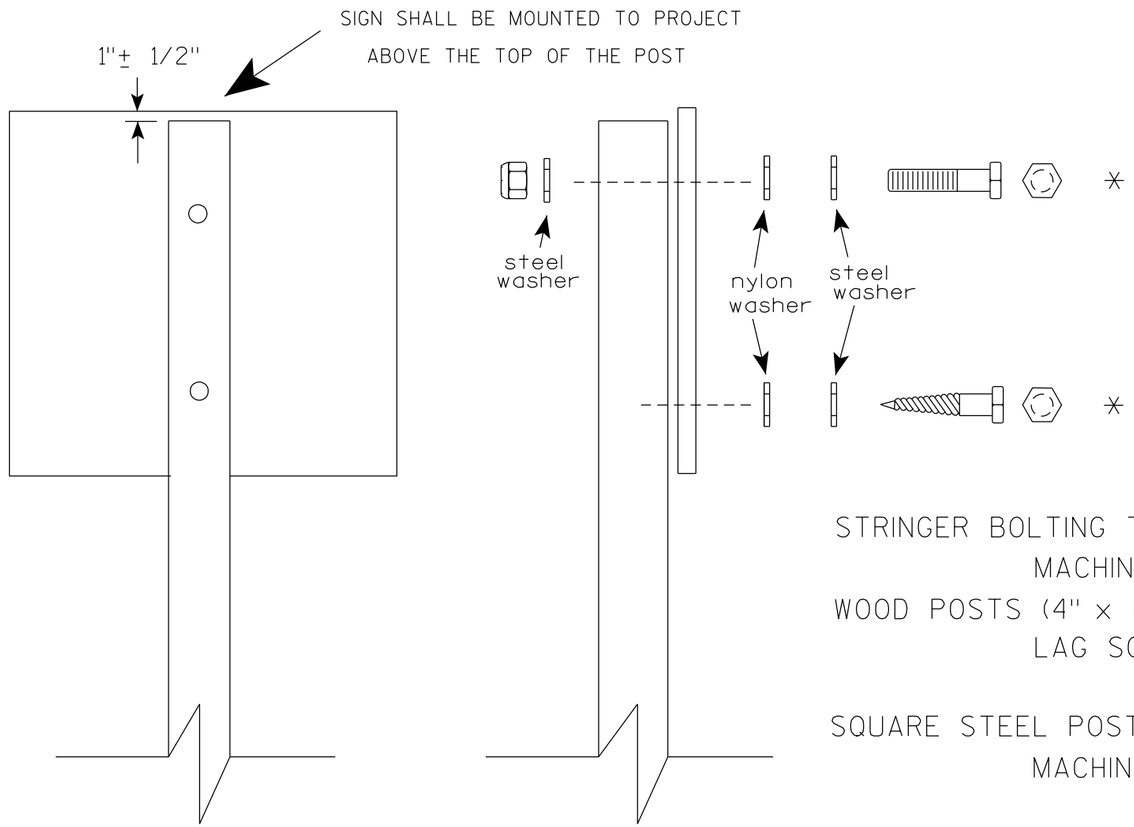

Nuts, bolts and lags used for mounting signs shall have hexagonal heads and shall be either :

a. Hot dip galvanized in accordance with ASTM Designation: A 153, Class D, or SC 3

b. Electro-galvanized in accordance with ASTM Designation : B 633, TYPE III, SC 3.

Threads on bolts and nuts shall be manufactured with sufficient allowance for the cadmium plate or galvanized coating to permit the nuts to run freely on the bolts.

STRINGER BOLTING TO ALUMINUM SIGNS (SEE SIGN PLATE A4-18)

MACHINE BOLTS - 5/16" X 1-3/4" Length w/ lock nuts

WOOD POSTS (4" x 6")

LAG SCREWS - 3/8" X 3" (NO STRINGERS ON BACK OF SIGN)
3/8" X 4" (STRINGERS ON BACK OF SIGN)

SQUARE STEEL POSTS (2" x 2")

MACHINE BOLTS - 3/8" X 3-1/4" Length w/ nuts (NO STRINGER ON BACK OF SIGN)
3/8" X 5" Length w/ nuts (STRINGERS ON BACK OF SIGN)

RIVETS - 9/32 " (6605-9-6) BULB-TITE, TRI-FOLD, ALUMINUM BODY/MANDREL
O.D. FLANGE .720-.765 INCH, GRIP RANGE .042-.375 INCH

WASHERS (ALL POSTS) -

1-1/4" O.D. X 3/8" I.D. X 1/16" STEEL
1-1/4" O.D. X 3/8" I.D. X .080 NYLON

* Two different fastening systems are shown for illustration purposes. On any individual sign, either one or the other system shall be used. Actual number of fasteners per sign varies with the sign area, but normally there are two. For a single post installation, all signs greater than 9 sq. ft. require the use of 3 fasteners.

ATTACHMENT OF SIGNS TO POSTS

WISCONSIN DEPT OF TRANSPORTATION

APPROVED Matthew R Rauch
for State Traffic Engineer

DATE 4/1/2020 PLATE NO. A4-8.9

TELESCOPIC TUBING ANCHORS
TWO PIECE SYSTEM

2 1/4" SQUARE
12 GAUGE
PERFORATED
GALVANIZED FINISH

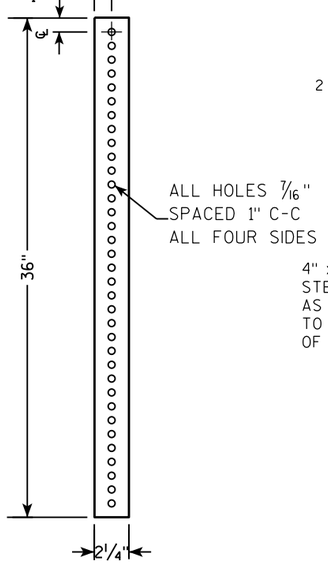

2 1/2" SQUARE
12 GAUGE
OMNI-DIRECTIONAL
PERFORATED
SOIL STABILIZING SLEEVE
GALVANIZED FINISH

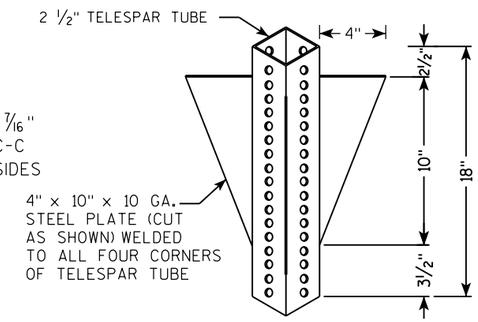

DETAIL OF TUBULAR STEEL SIGN POST
(IN POURED CONCRETE OR ASPHALT)

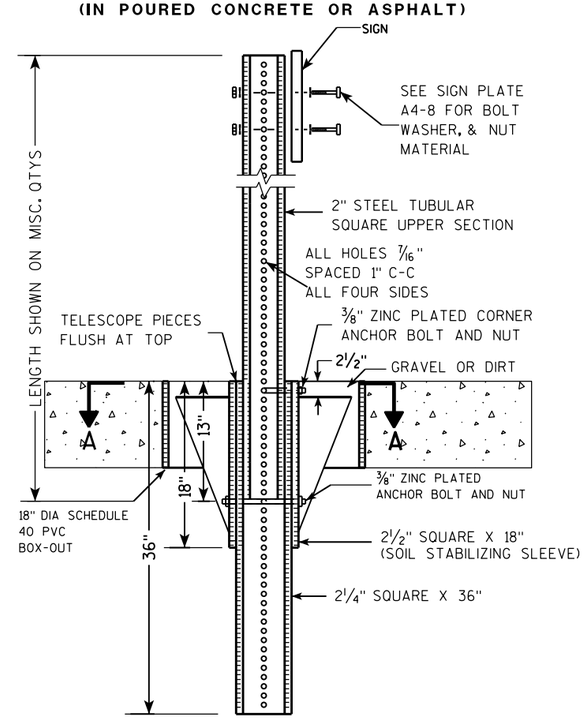

DETAIL OF TUBULAR STEEL SIGN POST
(IN LOCATIONS OTHER THAN POURED CONCRETE OR ASPHALT)

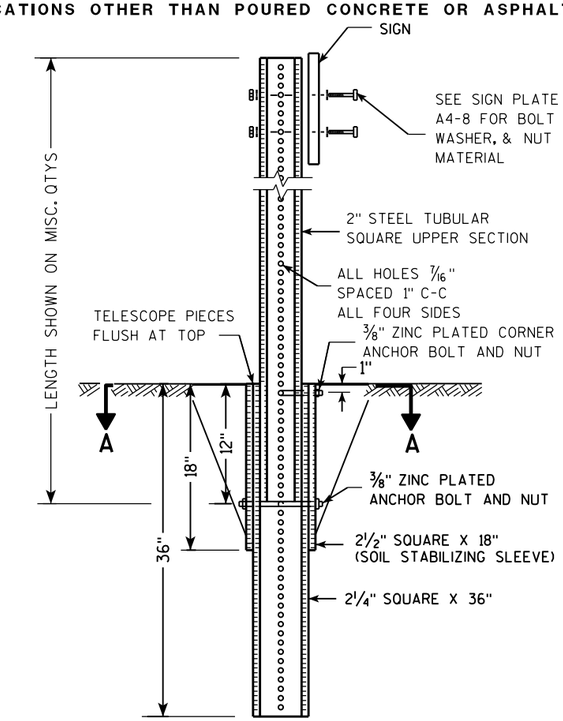

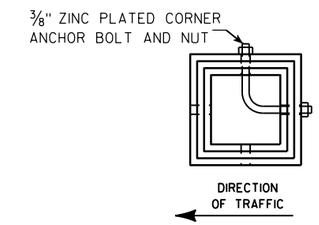

SECTION A-A

Area of Sign Installation (Sq. Ft.)	Number of Required Posts
9 or less	1
Greater than 9 less than or equal to 18	2
Greater than 18 less than or equal to 27	3

Signs wider than 3 feet or larger than 9 sq. ft shall be mounted on multiple posts (see above table).

TUBULAR STEEL
SIGN POST
A4-9

WISCONSIN DEPT OF TRANSPORTATION

APPROVED Matthew R Rauch
for State Traffic Engineer

DATE 2/05/15 PLATE A4-9.9

7 7

PROJECT NO:	HWY:	COUNTY:		SHEET NO:	E

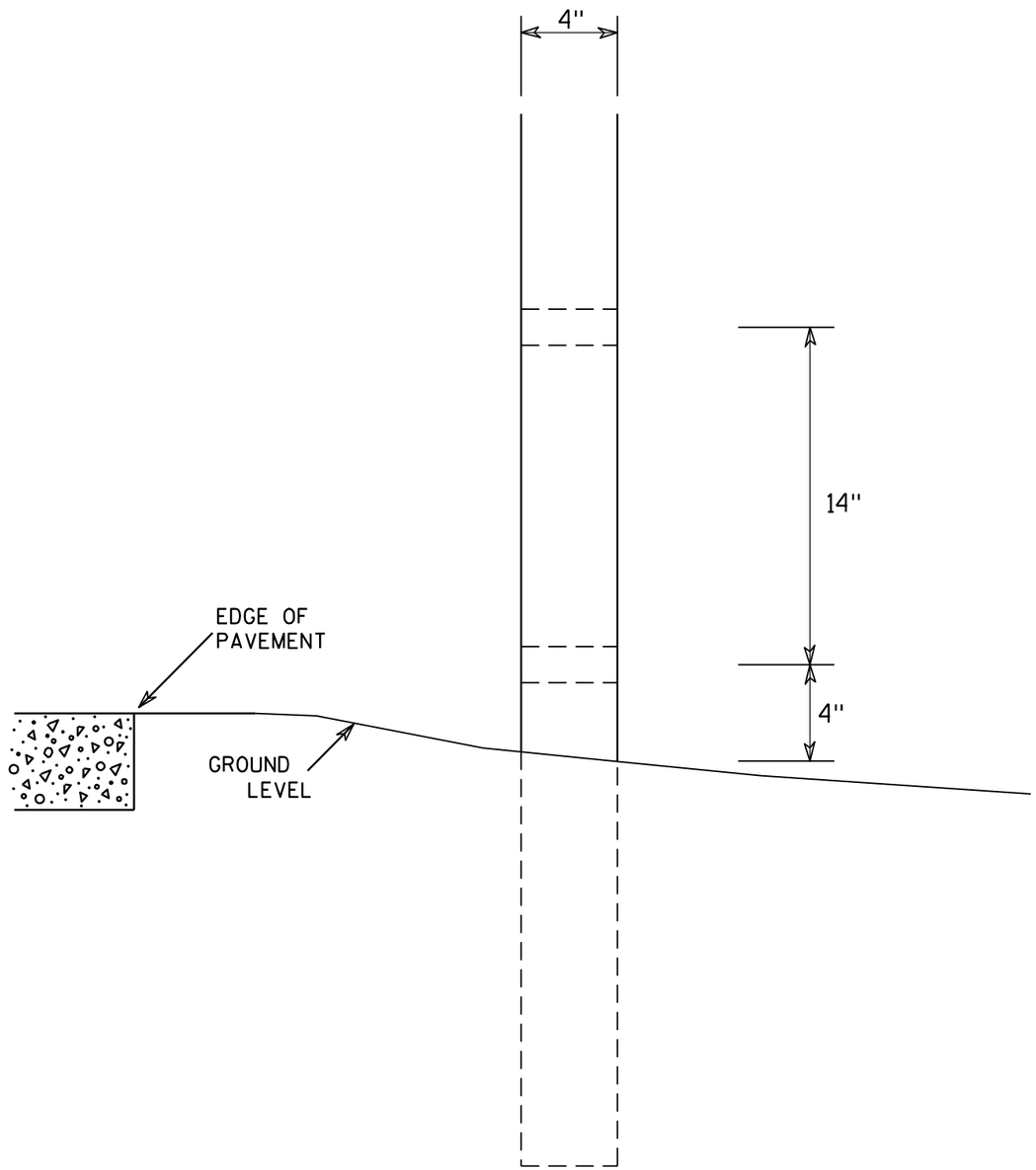

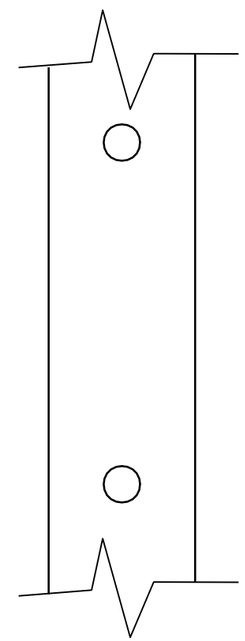

SIDE VIEW

GENERAL NOTES

1. All 4 x 6 Wood Posts shall be modified by having two 1½" diameter holes drilled perpendicular to the roadway centerline.

7

7

4 X 6 WOOD POST MODIFICATIONS

WISCONSIN DEPT OF TRANSPORTATION

APPROVED Chester J Spang for State Traffic Engineer

DATE 3/27/97 PLATE NO. A4-11.2

PROJECT NO:	HWY:	COUNTY:		SHEET NO: 178	E

BANDING

SINGLE SIGN

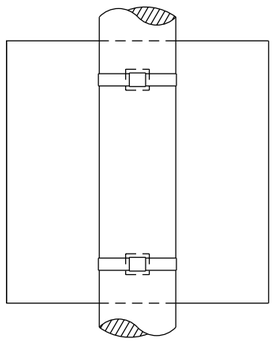

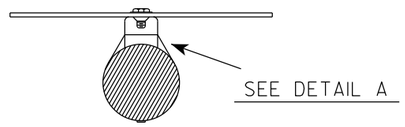

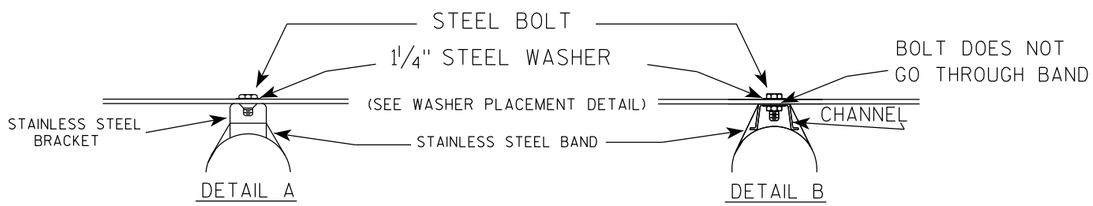

WASHER PLACEMENT

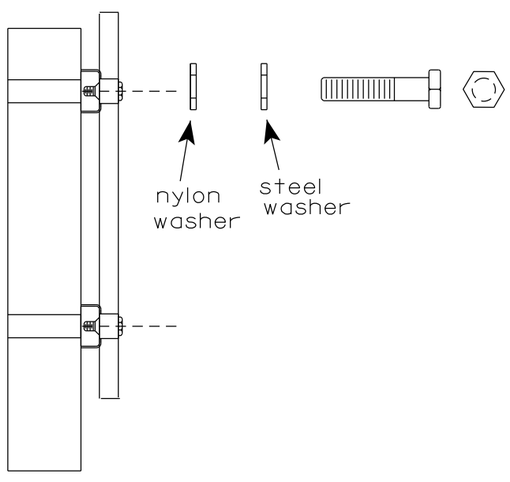

WASHERS (ALL POSTS) -
1-1/4" O.D. X 3/8" I.D. X 1/16" STEEL
1-1/4" O.D. X 3/8" I.D. X .080 NYLON
FOR ALL TYPE H SIGNS

GENERAL NOTES

1. Any sign over 3 feet in width shall use the V-Block banding method. See A5-10 standard plate.
2. Signs 3 feet or greater in height shall have three bracket bands installed. Signs less than 3 feet in height shall have two bracket bands installed.
3. Banding and assembly bracket shall be stainless steel. All bands shall be 3/4" in width and 0.025" thickness.
4. ALL SIGN MOUNTING BOLTS AND WASHERS SHALL BE EITHER:
   a. Hot dip or mechanically galvanized in accordance with ASTM Designation: A 153, Class D
   b. Electro-galvanized in accordance with ASTM designation: B 633, Type III, SC 3

"J" ASSEMBLY

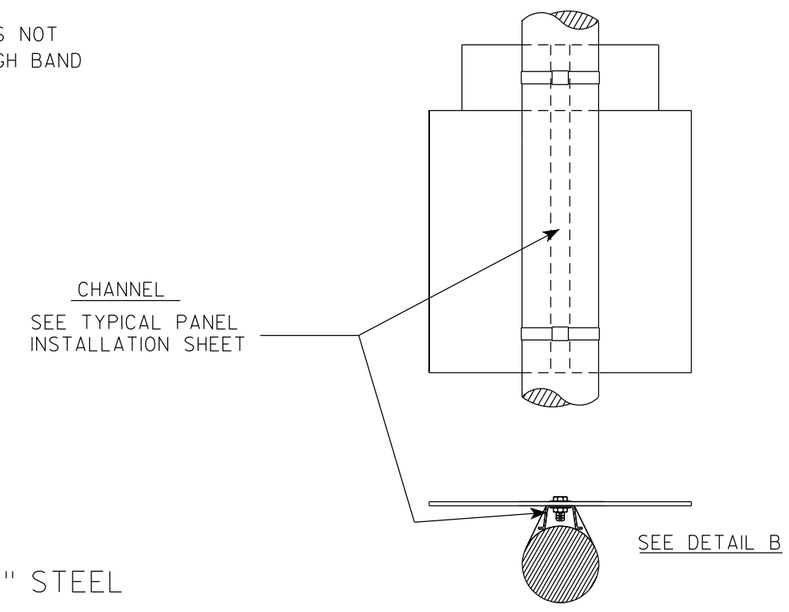

STANDARD SIGN
SIGN BANDING DETAILS

WISCONSIN DEPT OF TRANSPORTATION

APPROVED Matthew R Rauch for State Traffic Engineer

DATE 6/10/19 PLATE NO. A5-9.4

PROJECT NO:	HWY:	COUNTY:		SHEET NO: 179	E

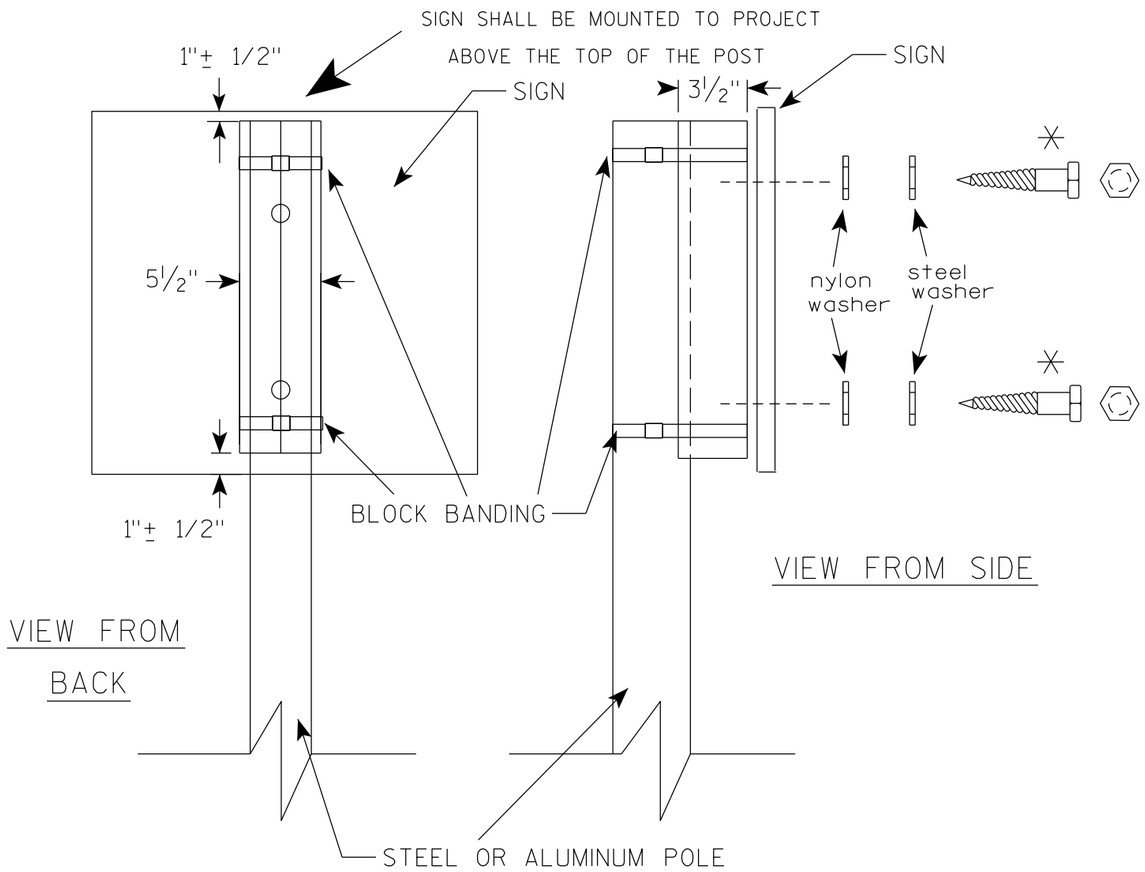

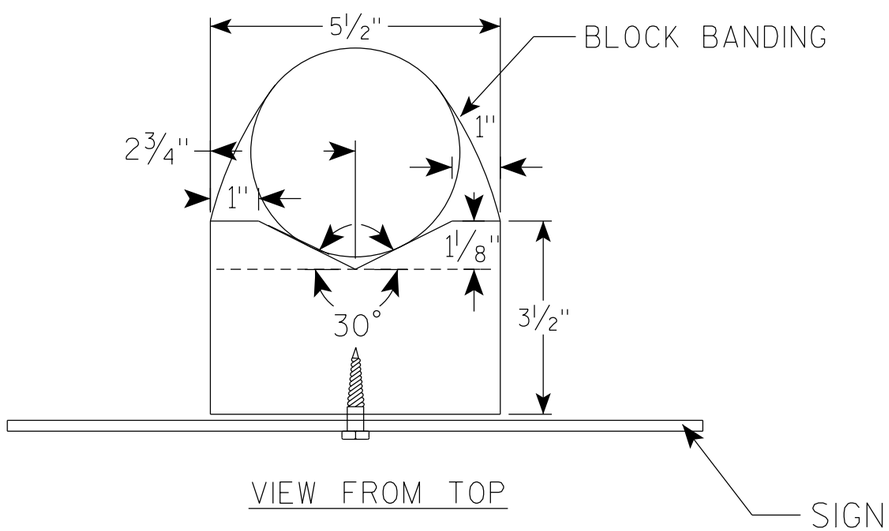

GENERAL NOTES

1. WOOD 4"X6" POST MATERIAL SHALL CONFORM TO 507.2.2 OF THE WisDOT STANDARD SPECIFICATIONS
2. BLOCK BANDING AND CLIPS SHALL BE STAINLESS STEEL, 3/4" WIDTH AND 0.025" THICKNESS
3. SIGNS 3' OR GREATER IN HEIGHT SHALL UTILIZE 3 BLOCK BANDS. SIGNS UNDER 3' IN HEIGHT SHALL UTILIZE 2 BLOCK BANDS
4. ACTUAL NUMBER OF FASTENERS PER SIGN VARIES WITH THE SIGN AREA, BUT NORNALLY THERE ARE TWO. FOR SIGNS GREATER THAN 9 S.F. 3 FASTENERS SHALL BE USED.
5. ALL SIGN MOUNTING BOLTS AND WASHERS SHALL BE EITHER:
   a. Hot dip or mechanically galvanized in accordance with ASTM Designation: A 153, Class D
   b. Electro-galvanized in accordance with ASTM Designation : B 633, TYPE III, SC 3
6. ALL BOLTS SHALL HAVE HEXAGONAL HEADS.
7. STEEL WASHERS SHALL BE 1 1/4" O.D. X 3/8" I.D. X 1/16"
8. NYLON WASHERS SHALL BE 1 1/4" O.D. X 3/8" I.D. X .080 FOR TYPE H OR TYPE F FACE SIGN

✳ LAG BOLTS SHALL BE 3/8" X 2 1/2"

7

7

BLOCK BANDING DETAIL
(V-BLOCK OPTION)

WISCONSIN DEPT OF TRANSPORTATION

APPROVED Matthew R Rauch
for State Traffic Engineer

DATE 4/19/2022 PLATE NO. A5-10.3

PROJECT NO:				SHEET NO: 180	E

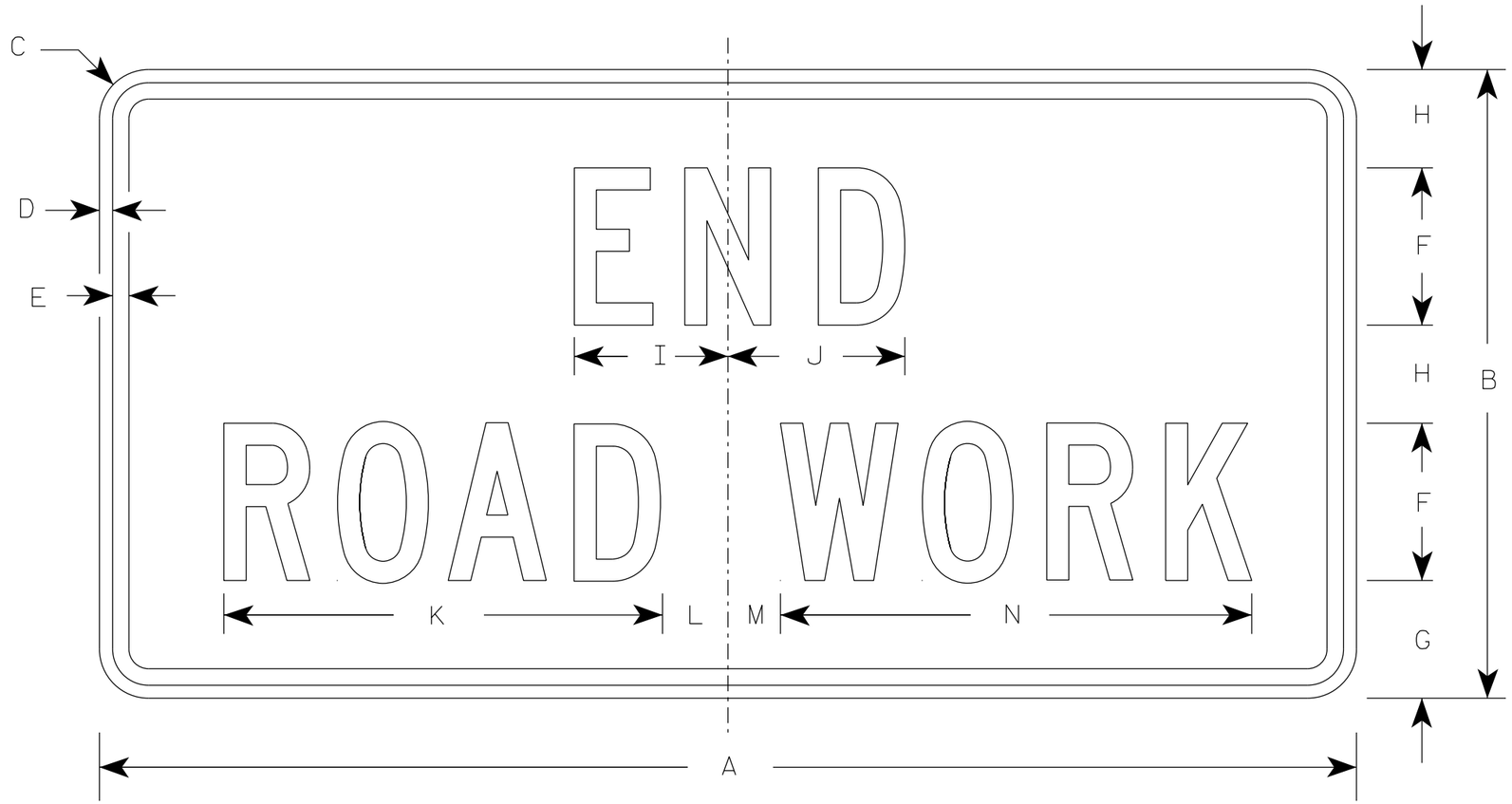

G20-2A

NOTES

1. Sign is Type II - Type F Reflective
2. Color:
   Background - Orange
   Message - Black
3. Message Series - C
4. Corners may be square or rounded when base material is plywood but borders shall be rounded as shown. When base material is metal, the corners and borders shall be rounded.

SIZE	A	B	C	D	E	F	G	H	I	J	K	L	M	N	O	P	Q	R	S	T	U	V	W	X	Y	Z	Area sq. ft.
1	36	18	1 1/2	3/8	1/2	4	3 3/4	2 1/2	4 1/8	4 1/8	11 1/8	2	1	12 1/8													4.5
2	48	24	1 7/8	1/2	5/8	6	4 1/2	3 3/4	5 7/8	6 3/4	16 3/4	2 1/2	1 3/4	18 1/2													8.0
2M	48	24	1 7/8	1/2	5/8	6	4 1/2	3 3/4	5 7/8	6 3/4	16 3/4	2 1/2	1 3/4	18 1/2													8.0
3	48	24	1 7/8	1/2	5/8	6	4 1/2	3 3/4	5 7/8	6 3/4	16 3/4	2 1/2	1 3/4	18 1/2													8.0
4	48	24	1 7/8	1/2	5/8	6	4 1/2	3 3/4	5 7/8	6 3/4	16 3/4	2 1/2	1 3/4	18 1/2													8.0
5	48	24	1 7/8	1/2	5/8	6	4 1/2	3 3/4	5 7/8	6 3/4	16 3/4	2 1/2	1 3/4	18 1/2													8.0

STANDARD SIGN

G20-2A

WISCONSIN DEPT OF TRANSPORTATION

APPROVED Matthew R Rauch
for State Traffic Engineer

DATE 1/26/2023 PLATE NO. G20-2A.10

PROJECT NO: HWY: COUNTY: SHEET NO: 181 E

NOTES

1. Sign is Type II - Type F Reflective
2. Color:
   Background - Orange
   Message - Black
3. Message Series - D
4. Substitute appropriate numeral and adjust spacing to achieve proper balance.

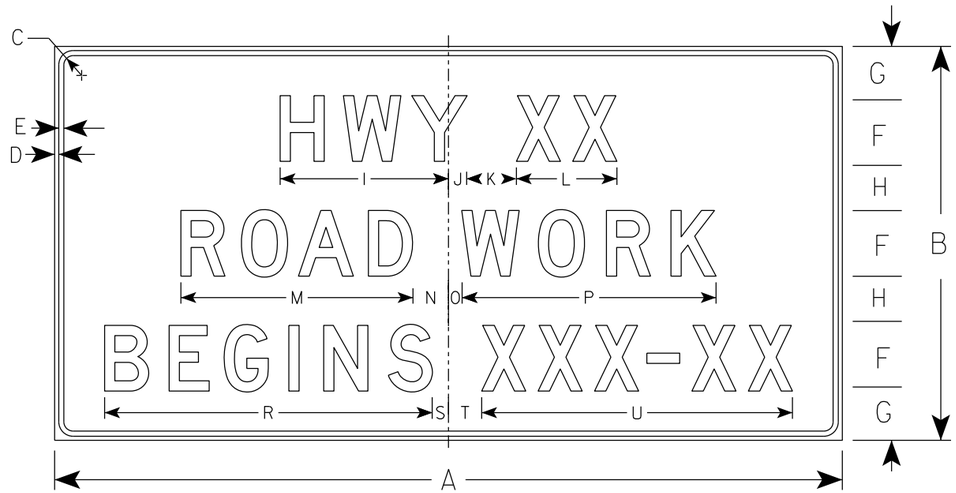

G20-57

SIZE	A	B	C	D	E	F	G	H	I	J	K	L	M	N	O	P	Q	R	S	T	U	V	W	X	Y	Z	Area sq. ft.
1																											
2																											
3	72	36	1 1/8	1/2	5/8	6	5	4	15 5/8	1 5/8	5	9 1/4	21 1/4	3 1/2	1 1/2	23 1/4		29 7/8	1 3/4	3 1/4	28 1/2						18.0
4	96	48	2 1/4	3/4	1	8	6 1/2	5 1/2	20 5/8	2 1/4	6	12 1/4	28 1/4	4 3/8	1 5/8	31		39 1/4	2	4	37 7/8						32.0
5																											

STANDARD SIGN
G20-57

WISCONSIN DEPT OF TRANSPORTATION

APPROVED Matthew R Rauch
For State Traffic Engineer

DATE 1/22/19 PLATE NO. G20-57.3

PROJECT NO: HWY: COUNTY: SHEET NO: 182 E

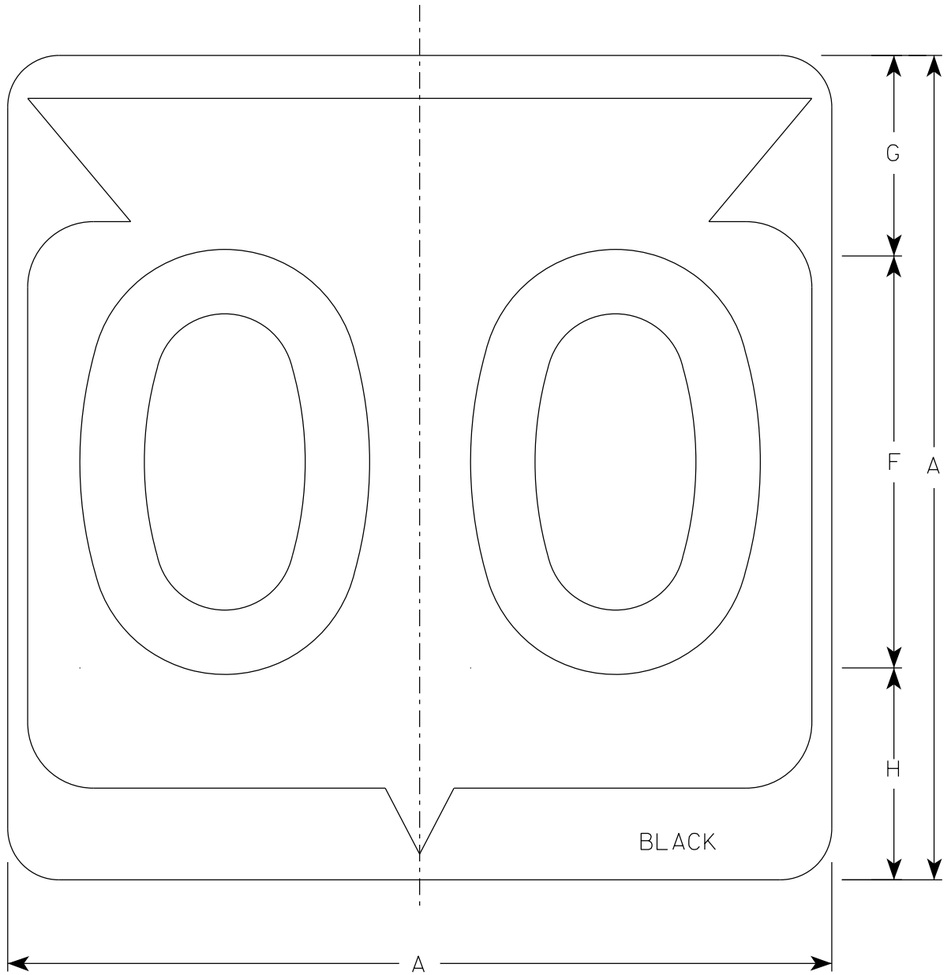

M1-6

NOTES

1. Sign is Type II - Type H Reflective
2. Color:
   Background - White
   Message - Black
3. Message Series - D except 3 number signs Series C

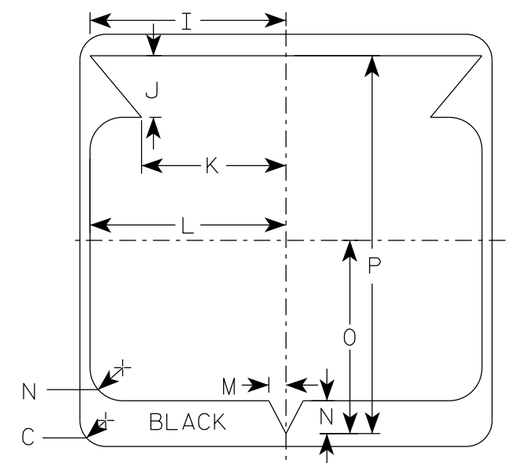

SIZE	A	B	C	D	E	F	G	H	I	J	K	L	M	N	O	P	Q	R	S	T	U	V	W	X	Y	Z	Area sq. ft.
1																											
2	24		1 1/2			12	5 1/2	6 1/2	10 1/4	2 1/2	8 7/8	11 1/2	1	1 7/8	11 1/4	21 7/8											4.0
2M	24		1 1/2			12	5 1/2	6 1/2	10 1/4	2 1/2	8 7/8	11 1/2	1	1 7/8	11 1/4	21 7/8											4.0
3	36		2 1/4			18	8 3/4	9 1/4	15 3/8	5 3/8	12 5/8	17 1/8	1 1/2	2 7/8	16 7/8	33											9.0
4	36		2 1/4			18	8 3/4	9 1/4	15 3/8	5 3/8	12 5/8	17 1/8	1 1/2	2 7/8	16 7/8	33											9.0
5	36		2 1/4			18	8 3/4	9 1/4	15 3/8	5 3/8	12 5/8	17 1/8	1 1/2	2 7/8	16 7/8	33											9.0

STATE ROUTE MARKER
M1-6 FOR ASSEMBLIES

WISCONSIN DEPT OF TRANSPORTATION

APPROVED Matthew R Rauch
for State Traffic Engineer

DATE 11/8/2022 PLATE NO. M1-6.11

PROJECT NO:	HWY:	COUNTY:		SHEET NO: 183	E

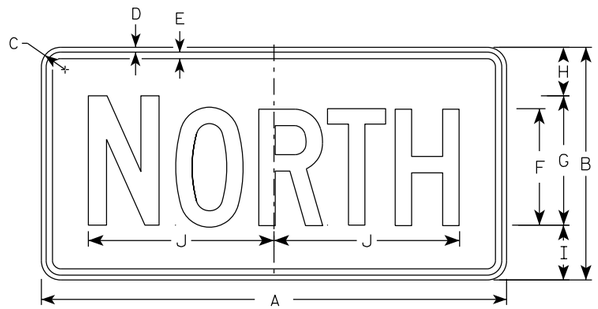

M3-1
MM3-1
MP3-1

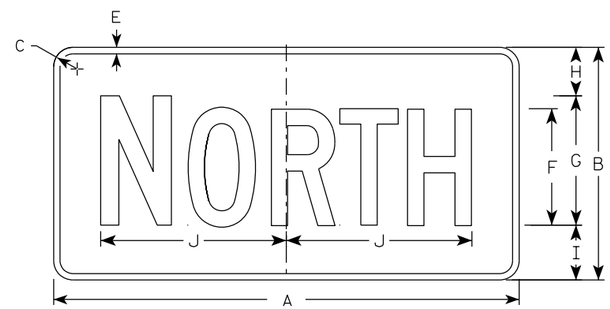

MB3-1
MK3-1
MN3-1

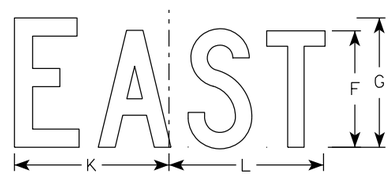

M3-2
MM3-2
MP3-2

MB3-2
MK3-2
MN3-2

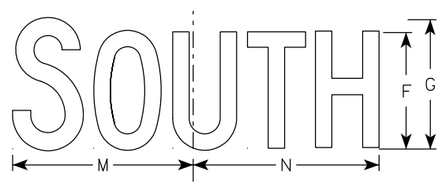

M3-3
MM3-3
MP3-3

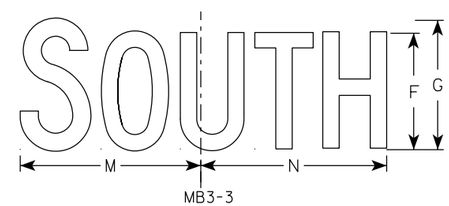

MB3-3
MK3-3
MN3-3

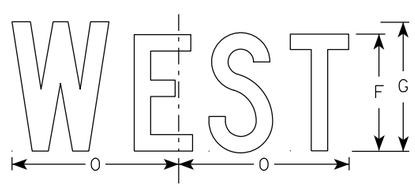

M3-4
MM3-4
MP3-4

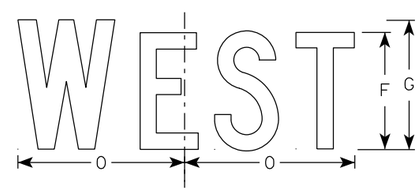

MB3-4
MK3-4
MN3-4

NOTES

1. All Signs Type II - Type H Reflective
2. Color:
   Background - See note 5
   Message - See note 5
3. Message Series - C
4. Corners may be square or rounded when base material is plywood but borders shall be rounded as shown. When base material is metal, the corners and borders shall be rounded.
5. M3-1 thru M3-4 Background - White
   Message - Black
   MB3-1 thru MB3-4 Background - Blue
   Message - White
   MK3-1 thru MK3-4 Background - Green
   Message - White
   MM3-1 thru MM3-4 Background - White
   Message - Green
   MN3-1 thru MN3-4 Background - Brown
   Message - White
   MP3-1 thru MP3-4 Background - White
   Message - Blue
6. Note the first letter of each direction is larger than the remainder of the message.

SIZE	A	B	C	D	E	F	G	H	I	J	K	L	M	N	O	P	Q	R	S	T	U	V	W	X	Y	Z	Area sq. ft.
1																											
2S	24	12	1 1/2	3/8	3/8	6	7	2 1/4	2 3/4	10 1/4	7 7/8	8 3/8	10 1/4	9 3/4	8 3/4												2.00
2M	24	12	1 1/2	3/8	3/8	6	7	2 1/4	2 3/4	10 1/4	7 7/8	8 3/8	10 1/4	9 3/4	8 3/4												2.00
3	36	18	1 1/2	3/8	1/2	9	10	3 3/4	4 1/4	14 3/8	12	12 1/8	14	14 1/8	13												4.5
4	36	18	1 1/2	3/8	1/2	9	10	3 3/4	4 1/4	14 3/8	12	12 1/8	14	14 1/8	13												4.5
5	36	18	1 1/2	3/8	1/2	9	10	3 3/4	4 1/4	14 3/8	12	12 1/8	14	14 1/8	13												4.5

STANDARD SIGNS
M3-1 THRU M3-4
SERIES

WISCONSIN DEPT OF TRANSPORTATION

APPROVED Matthew R Rauch
For State Traffic Engineer

DATE 2/8/2023 PLATE NO. M3-1.15

PROJECT NO: | HWY: | COUNTY: | SHEET NO: 184 | E

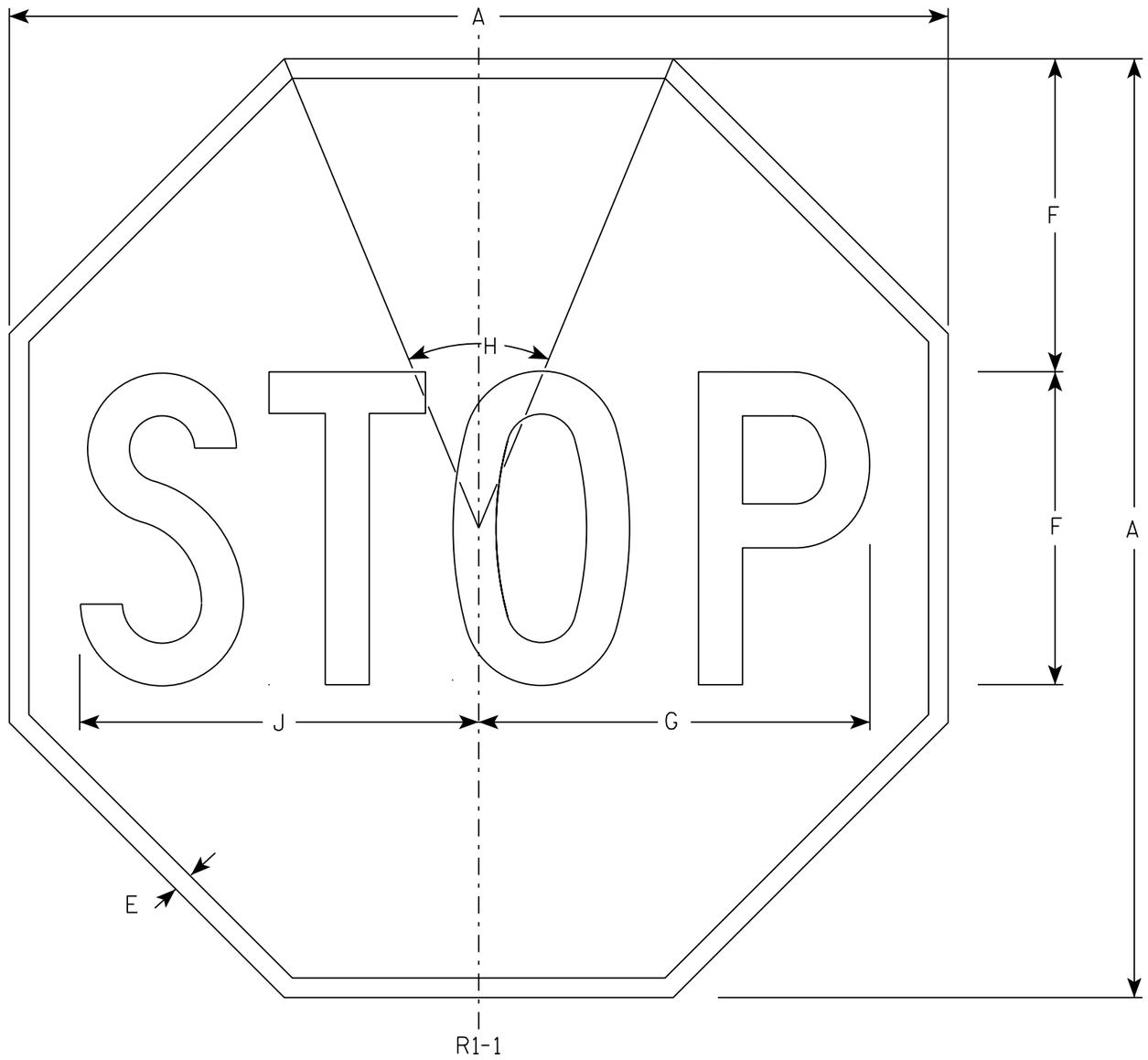

NOTES

1. Sign is Type II - Type H Reflective - reference WIS DOT Standard Specification for HIGHWAY and STRUCTURE CONSTRUCTION latest edition.
2. Color:
   Background - Red
   Message - White
3. Message Series - C

SIZE	A	B	C	D	E	F	G	H	I	J	K	L	M	N	O	P	Q	R	S	T	U	V	W	X	Y	Z	Area sq. ft.
1	30				5/8	10	12 1/2	45°		12 3/4																	5.18
2S	30				5/8	10	12 1/2	45°		12 3/4																	5.18
2M	36				3/4	12	15	45°		15 3/8																	7.46
3	36				3/4	12	15	45°		15 3/8																	7.46
4	48				1	16	20	45°		20 1/2																	13.25
5	48				1	16	20	45°		20 1/2																	13.25
6	18				3/8	6	7 3/4	45°		7 3/4																	1.86
7	12				1/4	4	5	45°		5 1/8																	0.78

STANDARD SIGN
R1-1

WISCONSIN DEPT OF TRANSPORTATION

APPROVED Matthew R Rauch
for State Traffic Engineer

DATE 11/12/15 PLATE NO. R1-1.13

PROJECT NO: | HWY: | COUNTY: | SHEET NO: 185 | E

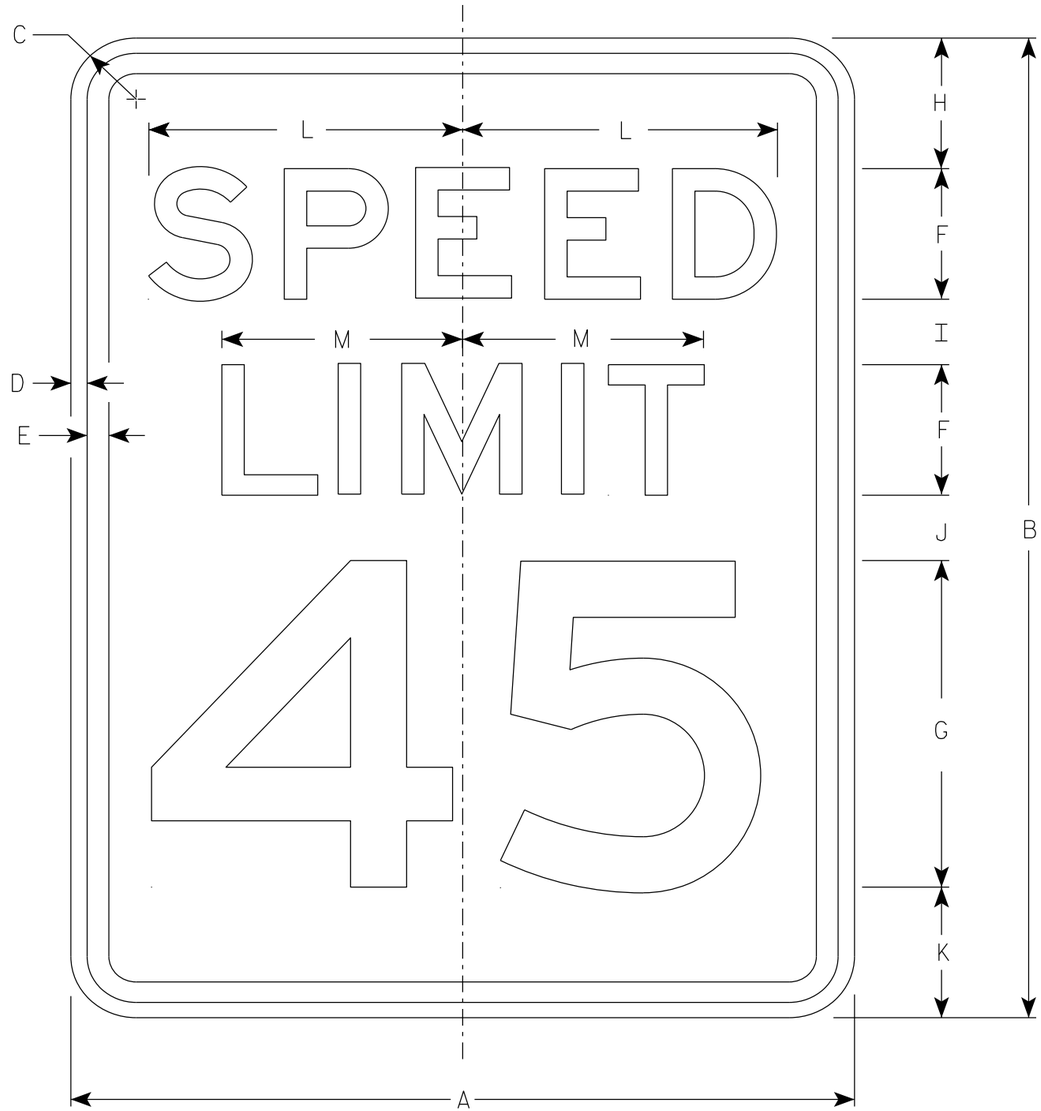

R2-1

NOTES

1. Sign is Type II - Type H Reflective
2. Color:
   Background - White
   Message - Black
3. Message Series - E
4. Substitute appropriate numerals and optically adjust spacing to achieve proper balance.

SIZE	A	B	C	D	E	F	G	H	I	J	K	L	M	N	O	P	Q	R	S	T	U	V	W	X	Y	Z	Area sq. ft.
1	18	24	1 1/2	3/8	1/2	3	8	3	2	2	3	7 1/4	5 1/2														3.0
2S	24	30	1 1/2	3/8	1/2	4	10	3	2 1/4	3 3/8	3 3/8	9 5/8	7 3/8														5.0
2M	30	36	1 7/8	1/2	5/8	5	12	5	2 1/2	2 1/2	4	12	9 1/4														7.5
3	36	48	1 7/8	1/2	5/8	6	14	6	5	5	6	14 3/8	11														12.0
4	36	48	1 7/8	1/2	5/8	6	14	6	5	5	6	14 3/8	11														12.0
5	48	60	3	3/4	1	8	20	6	4 1/2	6 3/4	6 3/4	19 1/4	14 5/8														20.0

STANDARD SIGN
R2-1

WISCONSIN DEPT OF TRANSPORTATION

APPROVED Matthew R Rauch
for State Traffic Engineer

DATE 2/1/23 PLATE NO. R2-1.14

PROJECT NO: | HWY: | COUNTY: | SHEET NO: 186 | E

NOTES

1. Sign is Type II - Type H Reflective
2. Color:
   Background - White
   Message - Black
3. Message Series - D

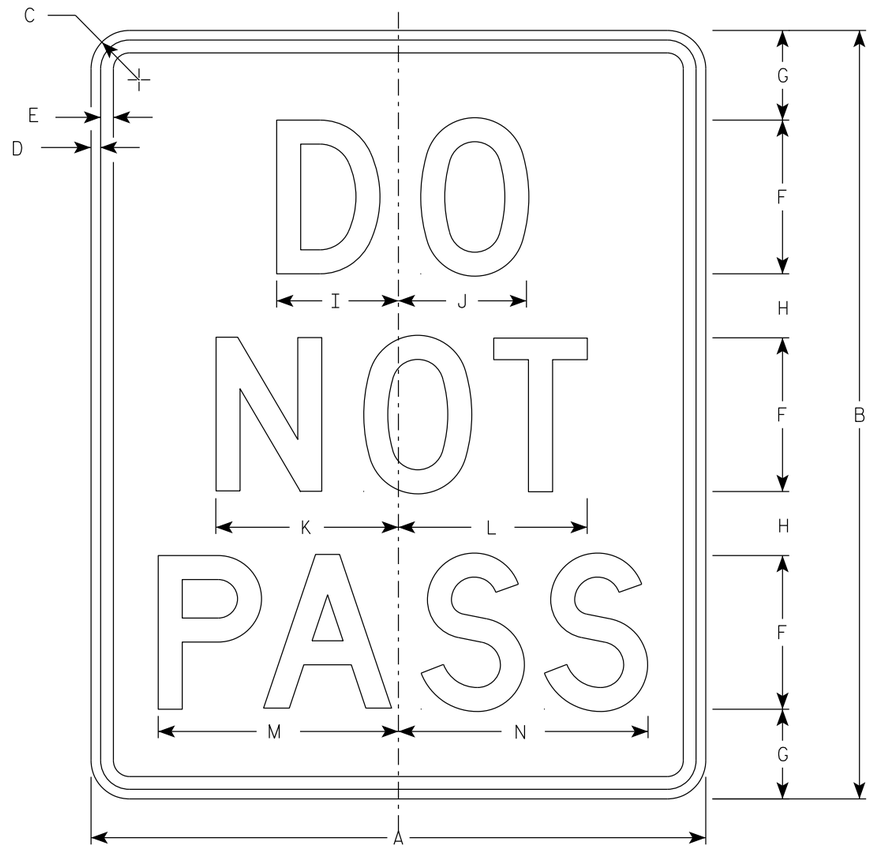

R4-1

SIZE	A	B	C	D	E	F	G	H	I	J	K	L	M	N	O	P	Q	R	S	T	U	V	W	X	Y	Z	Area sq. ft.
1	18	24	1 1/2	3/8	1/2	4	3 1/2	2 1/2	3 1/8	3 1/4	4 3/4	4 7/8	6 1/4	6 1/2													3.0
2S	24	30	1 1/2	3/8	1/2	6	3 1/2	2 1/2	4 3/4	5	7 1/8	7 3/8	9 3/8	9 3/4													5.0
2M	24	30	1 1/2	3/8	1/2	6	3 1/2	2 1/2	4 3/4	5	7 1/8	7 3/8	9 3/8	9 3/4													5.0
3	36	48	1 7/8	5/8	3/4	8	7	5	6 1/4	6 5/8	9 1/2	9 3/4	12 1/2	13													12.0
4	36	48	1 7/8	5/8	3/4	8	7	5	6 1/4	6 5/8	9 1/2	9 3/4	12 1/2	13													12.0
5	48	60	3	3/4	1	10	8	7	7 3/4	8 3/8	11 7/8	12 1/4	15 5/8	16 1/4													20.0

STANDARD SIGN
R4-1

WISCONSIN DEPT OF TRANSPORTATION

APPROVED Matthew R Rauch
for State Traffic Engineer

DATE 3/16/23 PLATE NO. R4-1.8

PROJECT NO: | HWY: | COUNTY: | SHEET NO: 187 | E

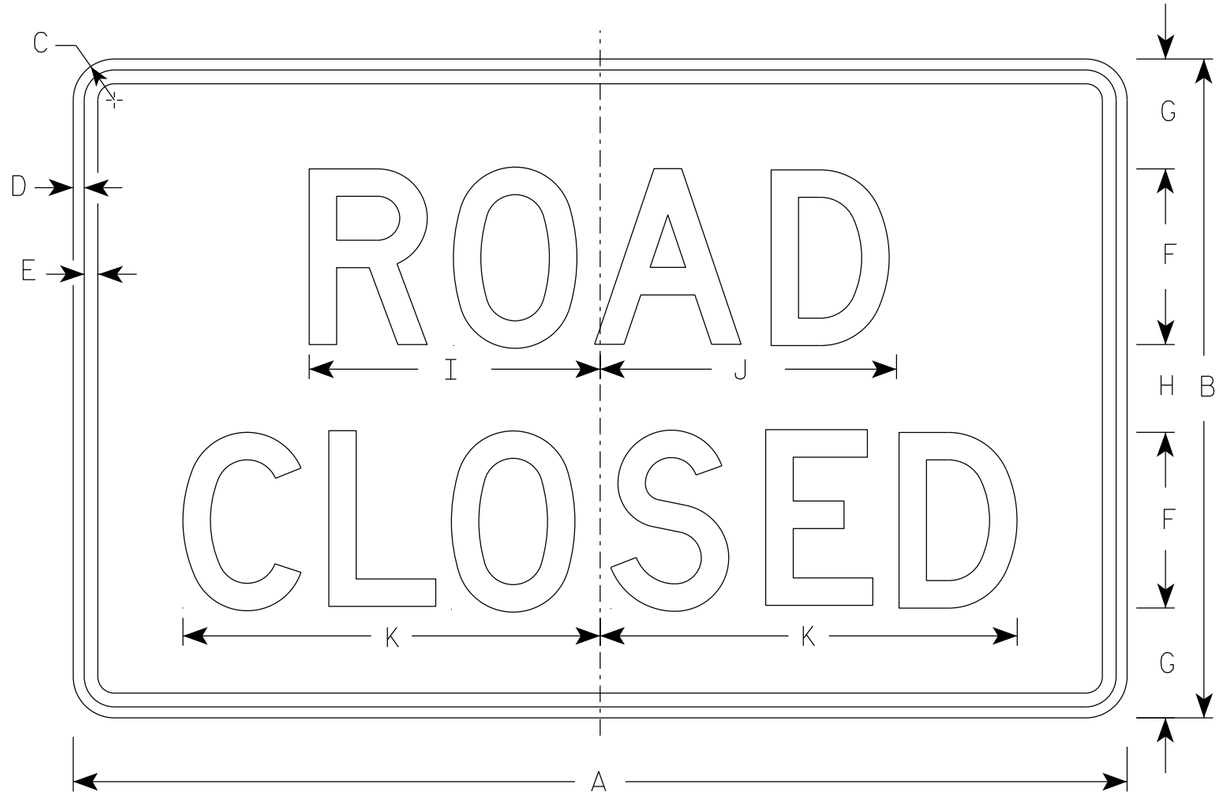

R11-2

NOTES

1. Sign is Type II - Type H Reflective
2. Color:
   Background - White
   Message - Black
3. Message Series - D
4. Corners may be square or rounded when base material is plywood but borders shall be rounded as shown. When base material is metal, the corners and borders shall be rounded.
5. Modify the message as required.

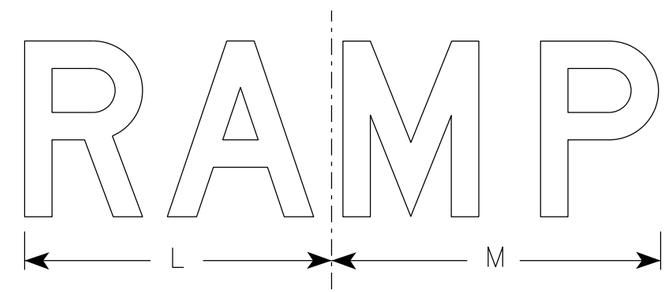

R11-2R

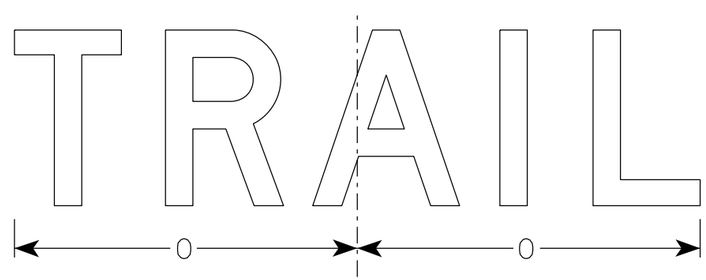

R11-2T

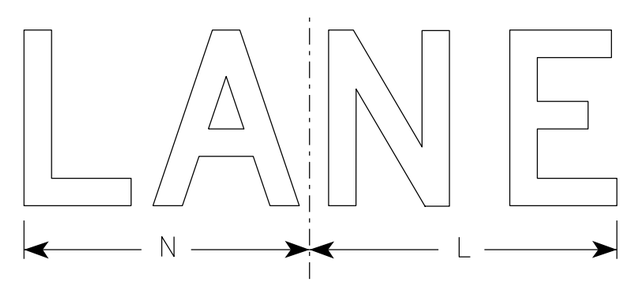

R11-2L

SIZE	A	B	C	D	E	F	G	H	I	J	K	L	M	N	O	P	Q	R	S	T	U	V	W	X	Y	Z	Area sq. ft.
1																											
2S	48	30	1 7/8	1/2	5/8	8	5	4	13 1/4	13 1/2	19	14	15	13	15 5/8												10.0
2M	48	30	1 7/8	1/2	5/8	8	5	4	13 1/4	13 1/2	19	14	15	13	15 5/8												10.0
3	48	30	1 7/8	1/2	5/8	8	5	4	13 1/4	13 1/2	19	14	15	13	15 5/8												10.0
4	48	30	1 7/8	1/2	5/8	8	5	4	13 1/4	13 1/2	19	14	15	13	15 5/8												10.0
5	48	30	1 7/8	1/2	5/8	8	5	4	13 1/4	13 1/2	19	14	15	13	15 5/8												10.0

STANDARD SIGN
R11-2

WISCONSIN DEPT OF TRANSPORTATION

APPROVED Matthew R Rauch
for State Traffic Engineer

DATE 2/5/24 PLATE NO. R11-2.12

PROJECT NO: | HWY: | COUNTY: | SHEET NO: | E

NOTES

1. Sign is Type II - Type H Reflective
2. Color:
   Background - White
   Message - Black
3. Message Series - E except as noted
4. Corners may be square or rounded when base material is plywood but borders shall be rounded as shown. When base material is metal, the corners and borders shall be rounded.

** Substitute appropriate message, optically center message

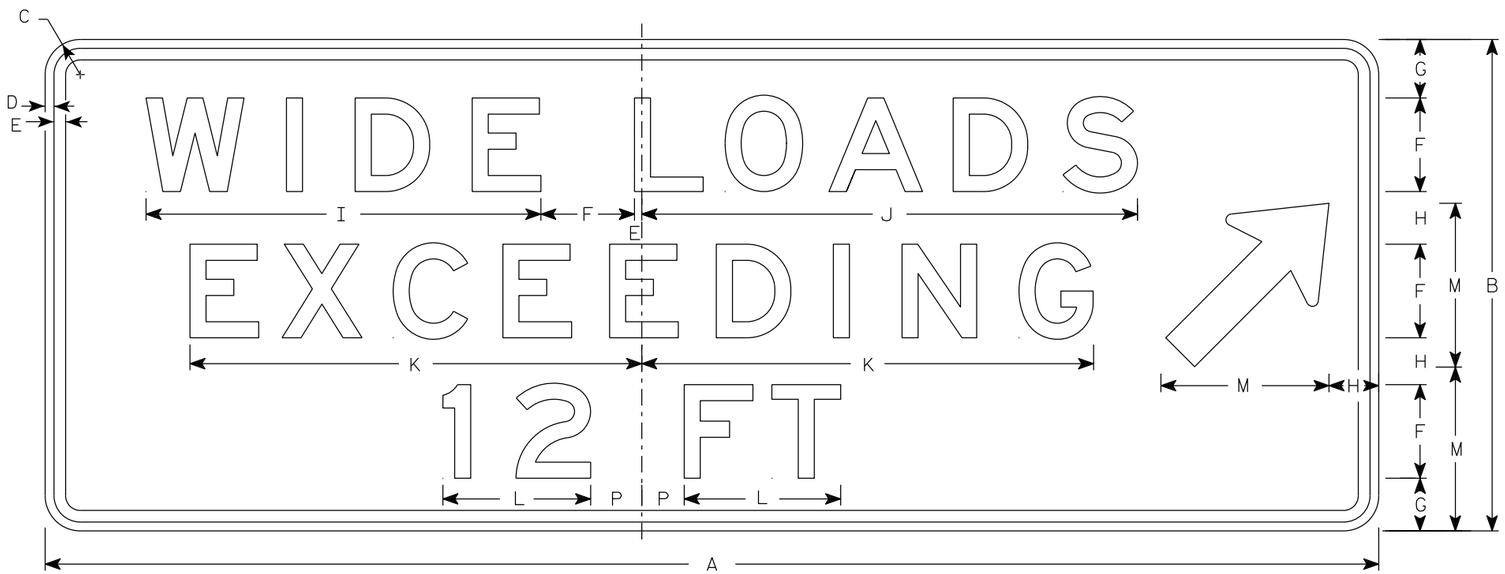

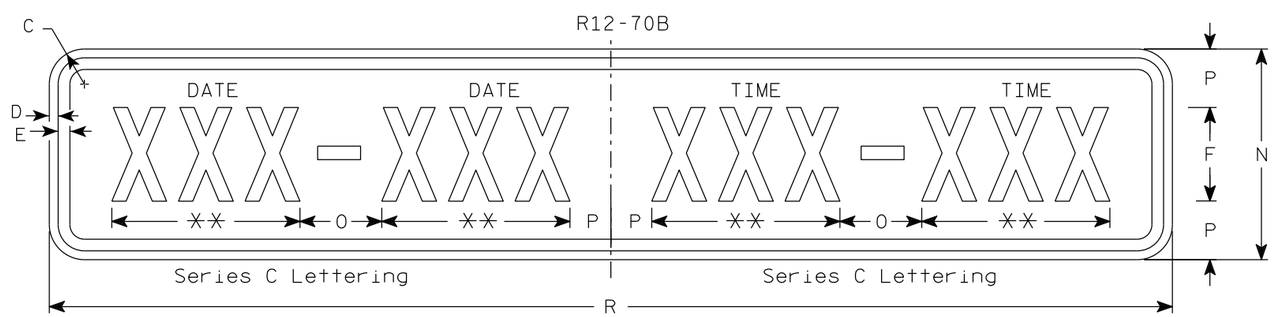

R12-70C

SIZE	A	B	C	D	E	F	G	H	I	J	K	L	M	N	O	P	Q	R	S	T	U	V	W	X	Y	Z	R12-70 Area sq. ft.	R12-70C Area sq. ft.
1																												
2S	90	36	3	1/2	5/8	6	4	5	20 7/8	28 3/8	24 5/8	8 1/8	12	12	6	3		66									22.5	5.5
2M	90	36	3	1/2	5/8	6	4	5	20 7/8	28 3/8	24 5/8	8 1/8	12	12	6	3		66									22.5	5.5
3	90	36	3	1/2	5/8	6	4	5	20 7/8	28 3/8	24 5/8	8 1/8	12	12	6	3		66									22.5	5.5
4	114	42	3	3/4	1	8	5	4	34	42	39	13	14	18	7	3 1/2		96									36.75	12.0
5	114	42	3	3/4	1	8	5	4	34	42	39	13	14	18	7	3 1/2		96									36.75	12.0

TYPICAL SIGN
R12-70B

WISCONSIN DEPT OF TRANSPORTATION

APPROVED Matthew R Rauch
for State Traffic Engineer

DATE 2/9/24 PLATE NO. R12-70B.4

PROJECT NO: | HWY: | COUNTY: | SHEET NO: 189 | E

NOTES

1. Sign is Type II - Type F Reflective
2. Color:
   Background - Yellow
   Message - Black
3. Message Series - B

W4-4P

SIZE	A	B	C	D	E	F	G	H	I	J	K	L	M	N	O	P	Q	R	S	T	U	V	W	X	Y	Z	Area sq. ft.
1																											
2S	24	12	1 1/2	3/8	3/8	3	2 1/4	1 1/2	8	1 1/2	3/8	10	6 1/4	2 1/4	2 1/4	6 1/4											2.0
2M	24	12	1 1/2	3/8	3/8	3	2 1/4	1 1/2	8	1 1/2	3/8	10	6 1/4	2 1/4	2 1/4	6 1/4											2.0
3	36	15	1 1/2	3/8	1/2	4	2 5/8	1 3/4	10 3/4	2 3/8	3/8	13 1/2	8 3/8	3	3 1/8	8 3/8											3.75
4	42	18	1 1/2	3/8	1/2	5	3	2	13 3/8	3 1/8	3/8	16 7/8	10 1/2	3 5/8	3 7/8	10 3/8											5.25
5																											

STANDARD SIGN

W4-4P

WISCONSIN DEPT OF TRANSPORTATION

APPROVED Matthew R Rauch
For State Traffic Engineer

DATE 9/5/2023 PLATE NO. W4-4P.3

PROJECT NO:	HWY:	COUNTY:		SHEET NO: 190	E

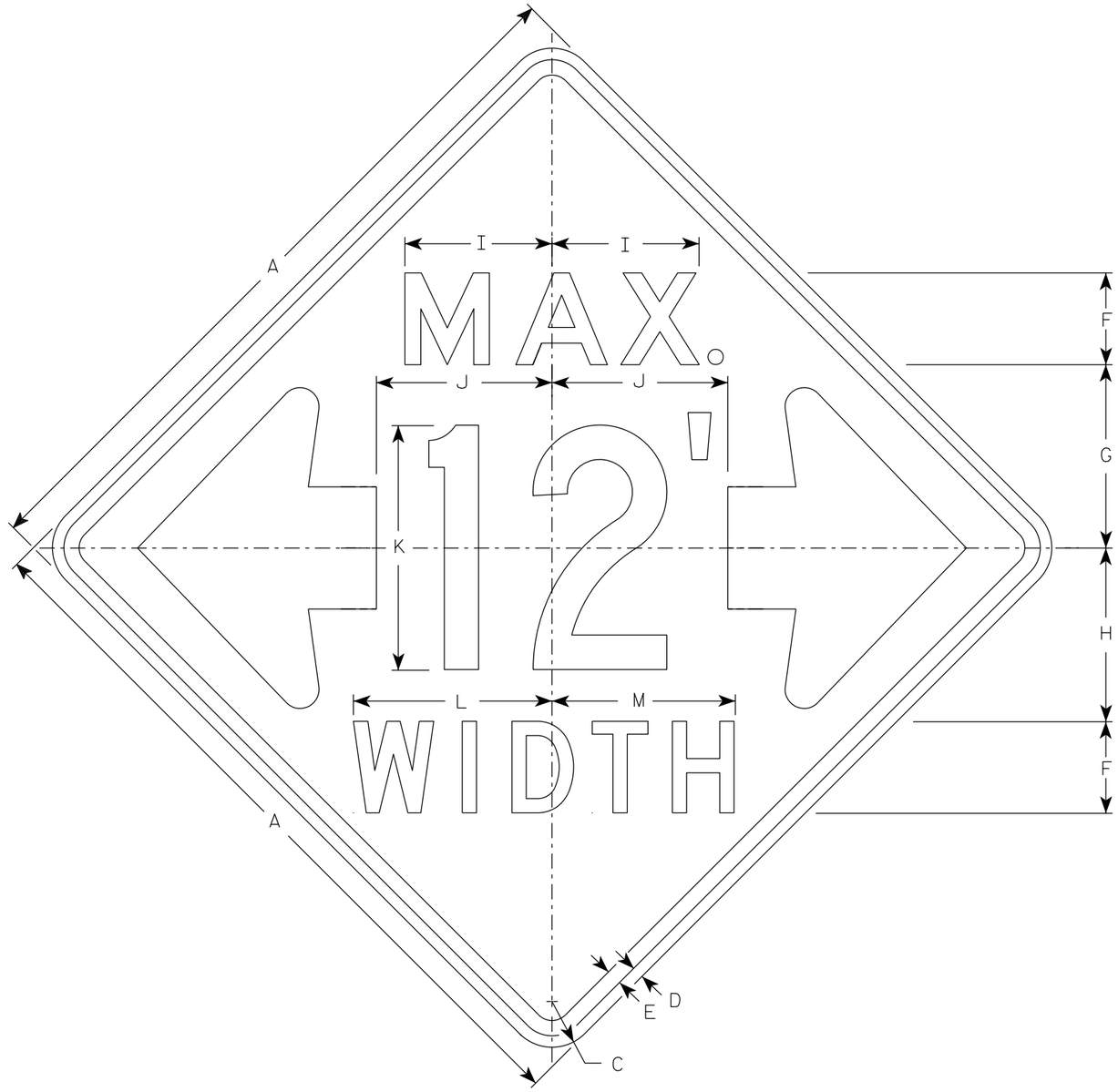

W12-52

NOTES

1. Sign is Type II - Type F Reflective
2. Color:
   Background - Orange
   Message - Black
3. Message Series - See note 5
4. The top line is series E, the numerals are series C, and the bottom line is series D.
5. Substitute appropriate numerals and adjust spacing as required.

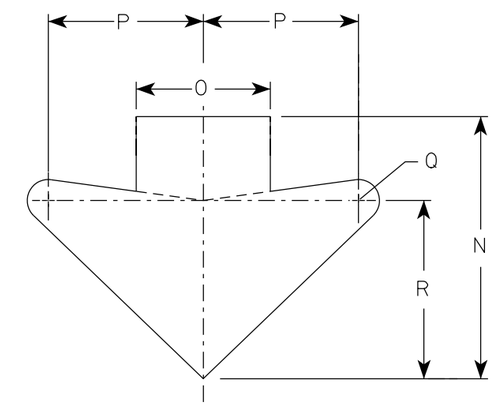

ARROW DETAIL

SIZE	A	B	C	D	E	F	G	H	I	J	K	L	M	N	O	P	Q	R	S	T	U	V	W	X	Y	Z	Area sq. ft.
1																											
2S	48		3	¾	1	6	12	11 ⅜	9 ⅝	11 ½	16	13	12	15 ⅝	8	9 ¼	1 ¼	10 ⅝									16.0
2M	48		3	¾	1	6	12	11 ⅜	9 ⅝	11 ½	16	13	12	15 ⅝	8	9 ¼	1 ¼	10 ⅝									16.0
3																											
4																											
5																											

STANDARD SIGN
W12-52

WISCONSIN DEPT OF TRANSPORTATION

APPROVED Matthew R Rauch
for State Traffic Engineer

DATE 3/10/2024 PLATE NO. W12-52.8

PROJECT NO: | HWY: | COUNTY: | SHEET NO: 191 | E

NOTES

1. Sign is Type II - Type F Reflective
2. Color:
   Background - Orange
   Message - Black
3. Message Series - C
4. Corners may be square or rounded when base material is plywood but borders shall be rounded as shown. When base material is metal, the corners and borders shall be rounded.

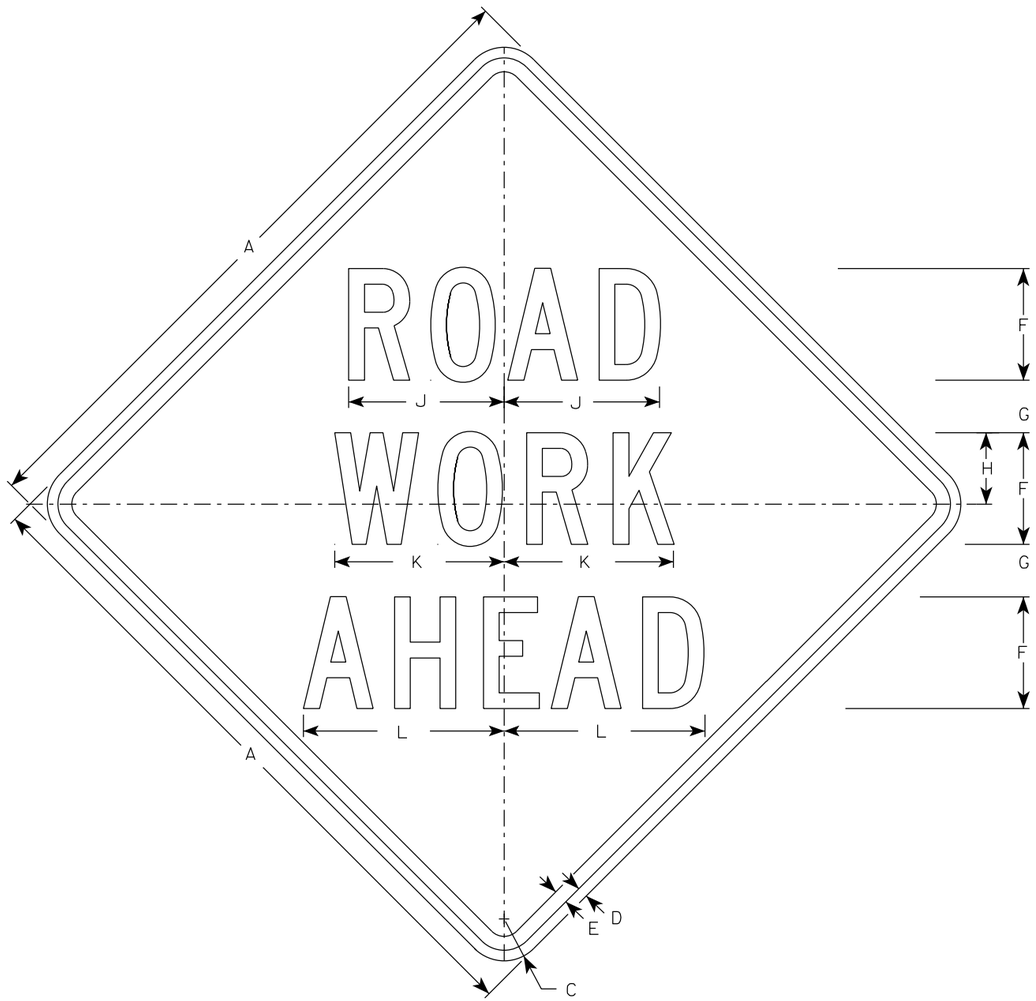

W20-1A

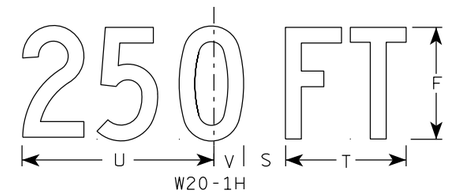

W20-1H

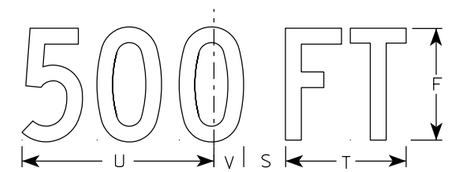

W20-1D

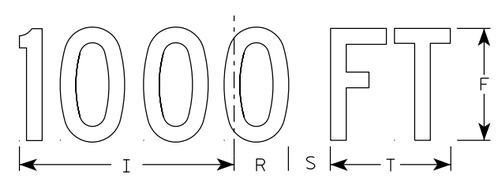

W20-1C

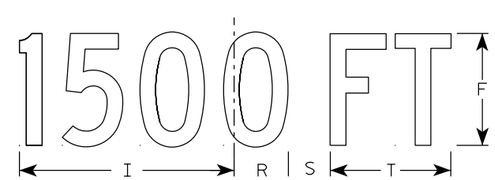

W20-1B

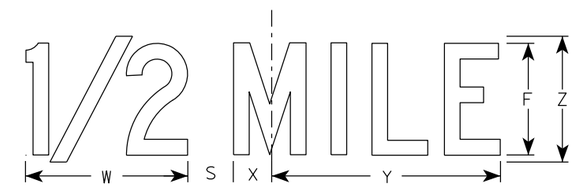

W20-1G

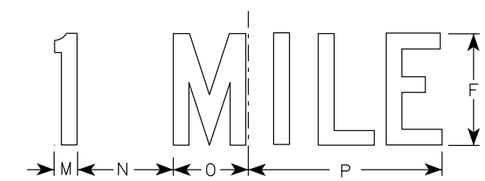

W20-1F

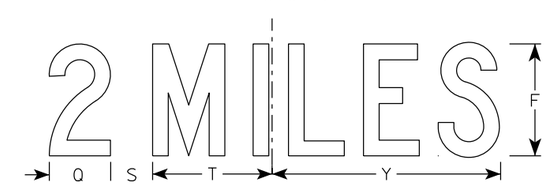

W20-1E

SIZE	A	B	C	D	E	F	G	H	I	J	K	L	M	N	O	P	Q	R	S	T	U	V	W	X	Y	Z	Area sq. ft.
1	36		2 1/4	5/8	3/4	5	2 5/8	3 1/4	10 1/8	7	7 5/8	8 7/8	1 1/8	4 1/2	3 1/2	9	3 1/4	2 1/2	2 1/4	5 5/8	9	1 3/8	8	1 3/4	10 3/4	6	9.0
2S	48		3	3/4	1	8	3 3/4	5 1/8	15 3/8	11 1/8	12 1/8	14 3/8	1 5/8	6 7/8	5 3/8	13 7/8	4 3/8	3 7/8	3	8 5/8	13 3/4	2 1/8	11 7/8	2 3/4	16 3/8	9	16.0
2M	48		3	3/4	1	8	3 3/4	5 1/8	15 3/8	11 1/8	12 1/8	14 3/8	1 5/8	6 7/8	5 3/8	13 7/8	4 3/8	3 7/8	3	8 5/8	13 3/4	2 1/8	11 7/8	2 3/4	16 3/8	9	16.0
3	48		3	3/4	1	8	3 3/4	5 1/8	15 3/8	11 1/8	12 1/8	14 3/8	1 5/8	6 7/8	5 3/8	13 7/8	4 3/8	3 7/8	3	8 5/8	13 3/4	2 1/8	11 7/8	2 3/4	16 3/8	9	16.0
4	48		3	3/4	1	8	3 3/4	5 1/8	15 3/8	11 1/8	12 1/8	14 3/8	1 5/8	6 7/8	5 3/8	13 7/8	4 3/8	3 7/8	3	8 5/8	13 3/4	2 1/8	11 7/8	2 3/4	16 3/8	9	16.0
5	48		3	3/4	1	8	3 3/4	5 1/8	15 3/8	11 1/8	12 1/8	14 3/8	1 5/8	6 7/8	5 3/8	13 7/8	4 3/8	3 7/8	3	8 5/8	13 3/4	2 1/8	11 7/8	2 3/4	16 3/8	9	16.0

STANDARD SIGN
W20-1A, B, C, D, E, F, G & H

WISCONSIN DEPT OF TRANSPORTATION

APPROVED Matthew R Rauch
For State Traffic Engineer

DATE 1/10/2024 PLATE NO. W20-1.12

PROJECT NO:

SHEET NO: E

FILE NAME : C:\CAEfiles\Projects\tr_stdplate\W201.DGN PLOT DATE : 10-JAN 2024 11:16 PLOT BY : dotc4c

WISDOT/CADDS SHEET 42

7

7

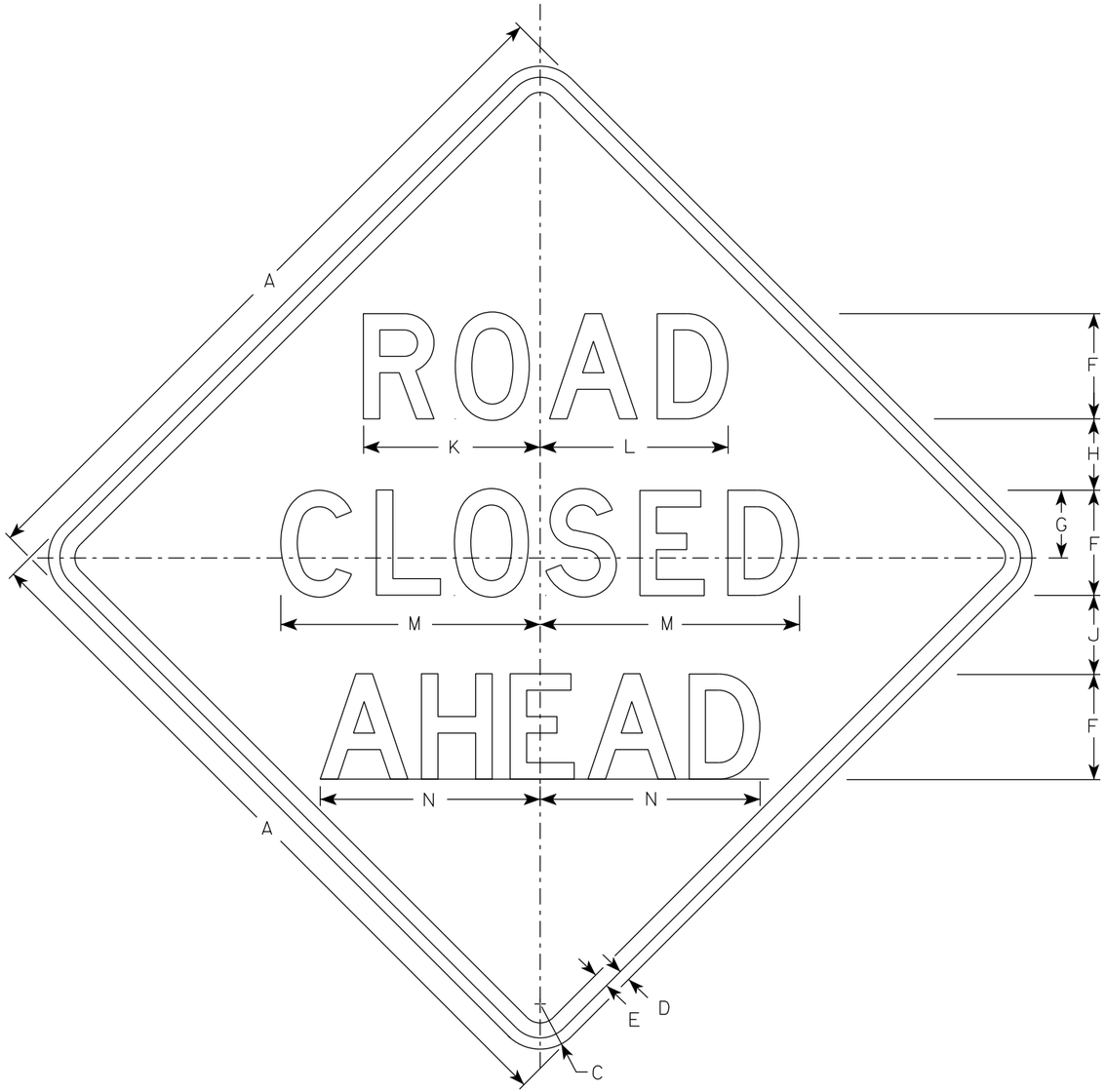

W20-3A

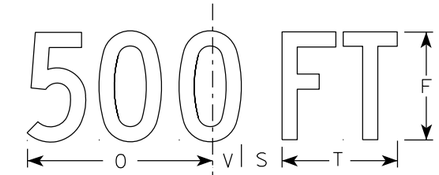

W20-3D

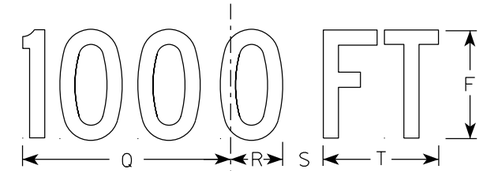

W20-3C

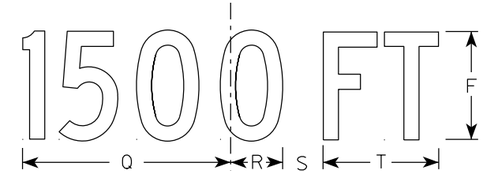

W20-3B

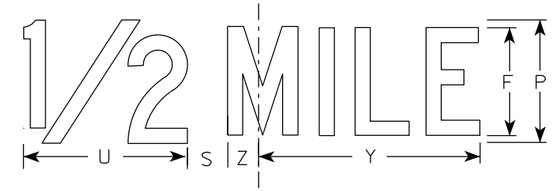

W20-3G

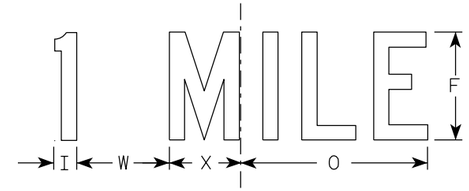

W20-3F

NOTES

1. Sign is Type II - Type F Reflective
2. Color:
   Background - Orange
   Message - Black
3. Message Series - see note 5
4. Corners may be square or rounded when base material is plywood but borders shall be rounded as shown. When base material is metal, the corners and borders shall be rounded.
5. Lines 1 and 2 are Series D.
   Line 3 is Series D for AHEAD and Series C for all other distances.

SIZE	A	B	C	D	E	F	G	H	I	J	K	L	M	N	O	P	Q	R	S	T	U	V	W	X	Y	Z	Area sq. ft.
1	36		2 1/4	5/8	3/4	5	3 3/8	3 1/2	1 1/8	4	8 3/8	8 7/8	12 1/2	11	9	6	10 1/8	2 1/2	1 7/8	5 5/8	8	1 3/8	4 1/2	3 1/2	10 3/4	1 3/4	9.0
2S	48		3	3/4	1	7	4 1/2	4 3/4	1 1/2	5 1/4	11 3/4	12 1/2	17 1/4	14 5/8	12	8	13 1/2	3 3/8	2 5/8	7 1/2	10 5/8	1 7/8	6	4 5/8	14 3/8	2 3/8	16.0
2M	48		3	3/4	1	7	4 1/2	4 3/4	1 1/2	5 1/4	11 3/4	12 1/2	17 1/4	14 5/8	12	8	13 1/2	3 3/8	2 5/8	7 1/2	10 5/8	1 7/8	6	4 5/8	14 3/8	2 3/8	16.0
3	48		3	3/4	1	7	4 1/2	4 3/4	1 1/2	5 1/4	11 3/4	12 1/2	17 1/4	14 5/8	12	8	13 1/2	3 3/8	2 5/8	7 1/2	10 5/8	1 7/8	6	4 5/8	14 3/8	2 3/8	16.0
4	48		3	3/4	1	7	4 1/2	4 3/4	1 1/2	5 1/4	11 3/4	12 1/2	17 1/4	14 5/8	12	8	13 1/2	3 3/8	2 5/8	7 1/2	10 5/8	1 7/8	6	4 5/8	14 3/8	2 3/8	16.0
5	48		3	3/4	1	7	4 1/2	4 3/4	1 1/2	5 1/4	11 3/4	12 1/2	17 1/4	14 5/8	12	8	13 1/2	3 3/8	2 5/8	7 1/2	10 5/8	1 7/8	6	4 5/8	14 3/8	2 3/8	16.0

STANDARD SIGN
W20-3A, B, C, D, F & G

WISCONSIN DEPT OF TRANSPORTATION

APPROVED Matthew R Rauch
for State Traffic Engineer

DATE 1/10/2024 PLATE NO. W20-3.8

PROJECT NO: | HWY: | COUNTY: | SHEET NO: E

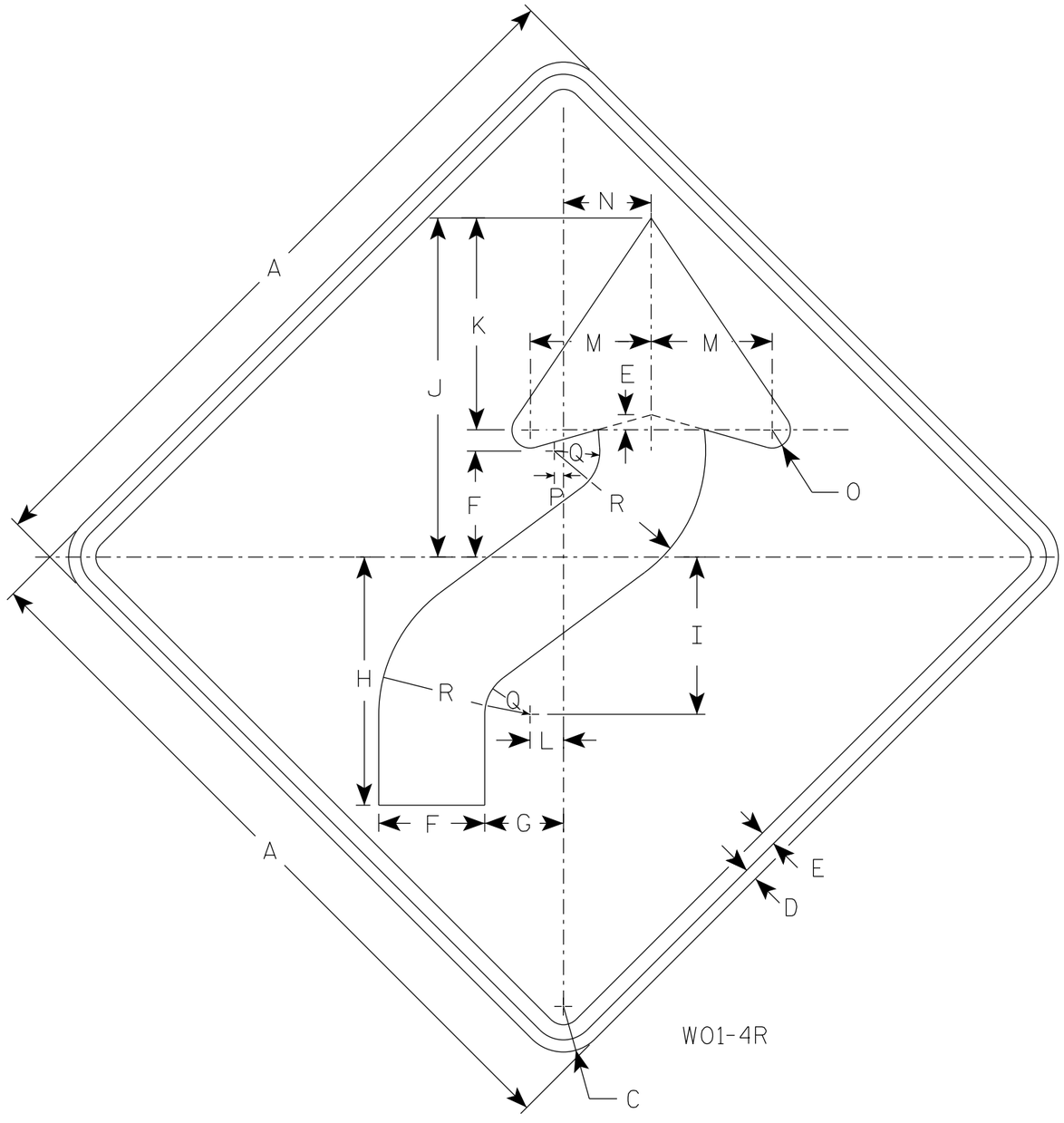

W01-4R

NOTES

1. Sign is Type II - Type F Reflective
2. Color:
   Background - Orange
   Message - Black
3. Corners may be square or rounded when base material is plywood but borders shall be rounded as shown. When base material is metal, the corners and borders shall be rounded.
4. W01-4L is the same as W01-4R except the arrow is reversed along the vertical centerline.

SIZE	A	B	C	D	E	F	G	H	I	J	K	L	M	N	O	P	Q	R	S	T	U	V	W	X	Y	Z	Area sq. ft.
1	36		2 1/4	5/8	3/4	5 1/4	4	12 3/8	7 7/8	16 7/8	10 1/2	1 5/8	6	4 1/2	1	1/2	2 1/4	7 1/2									9.0
2S	48		3	3/4	1	7	5 1/4	16 1/2	10 1/2	22 1/2	14	2 1/4	8	6	1 1/4	5/8	3	10									16.0
2M	48		3	3/4	1	7	5 1/4	16 1/2	10 1/2	22 1/2	14	2 1/4	8	6	1 1/4	5/8	3	10									16.0
3	48		3	3/4	1	7	5 1/4	16 1/2	10 1/2	22 1/2	14	2 1/4	8	6	1 1/4	5/8	3	10									16.0
4	48		3	3/4	1	7	5 1/4	16 1/2	10 1/2	22 1/2	14	2 1/4	8	6	1 1/4	5/8	3	10									16.0
5	48		3	3/4	1	7	5 1/4	16 1/2	10 1/2	22 1/2	14	2 1/4	8	6	1 1/4	5/8	3	10									16.0

STANDARD SIGN
W01-4

WISCONSIN DEPT OF TRANSPORTATION

APPROVED Matthew R Rauch
For State Traffic Engineer

DATE 1/24/2024 PLATE NO. W01-4.2

PROJECT NO: | HWY: | COUNTY: | SHEET NO: 194 | E

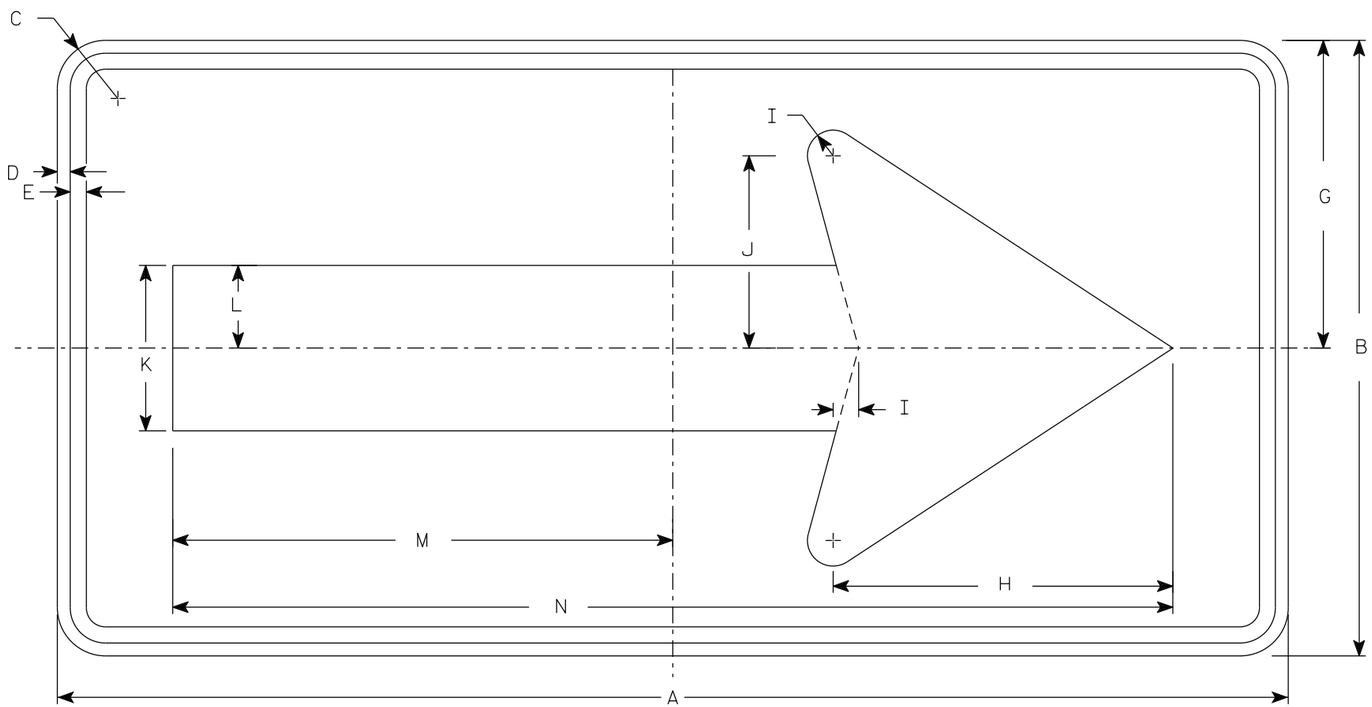

W01-6

NOTES

1. Sign is Type II - Type F Reflective
2. Color:
   Background - Orange
   Message - Black
3. Corners may be square or rounded when base material is plywood but borders shall be rounded as shown. When base material is metal, the corners and borders shall be rounded.

SIZE	A	B	C	D	E	F	G	H	I	J	K	L	M	N	O	P	Q	R	S	T	U	V	W	X	Y	Z	Area sq. ft.
1																											
2S	48	24	1 7/8	1/2	5/8		12	13 1/4	1	7 1/2	6 1/2	3 1/4	19 1/2	39													8.0
2M	48	24	1 7/8	1/2	5/8		12	13 1/4	1	7 1/2	6 1/2	3 1/4	19 1/2	39													8.0
3	60	30	1 7/8	1/2	5/8		15	16 1/4	1 1/4	9 1/4	8	4	24 3/8	48 3/4													12.5
4	60	30	1 7/8	1/2	5/8		15	16 1/4	1 1/4	9 1/4	8	4	24 3/8	48 3/4													12.5
5	60	30	1 7/8	1/2	5/8		15	16 1/4	1 1/4	9 1/4	8	4	24 3/8	48 3/4													12.5

STANDARD SIGN
W01-6

WISCONSIN DEPT OF TRANSPORTATION

APPROVED Matthew R Rauch
for State Traffic Engineer

DATE 1/24/2024 PLATE NO. W01-6.2

PROJECT NO: | HWY: | COUNTY: | SHEET NO: E

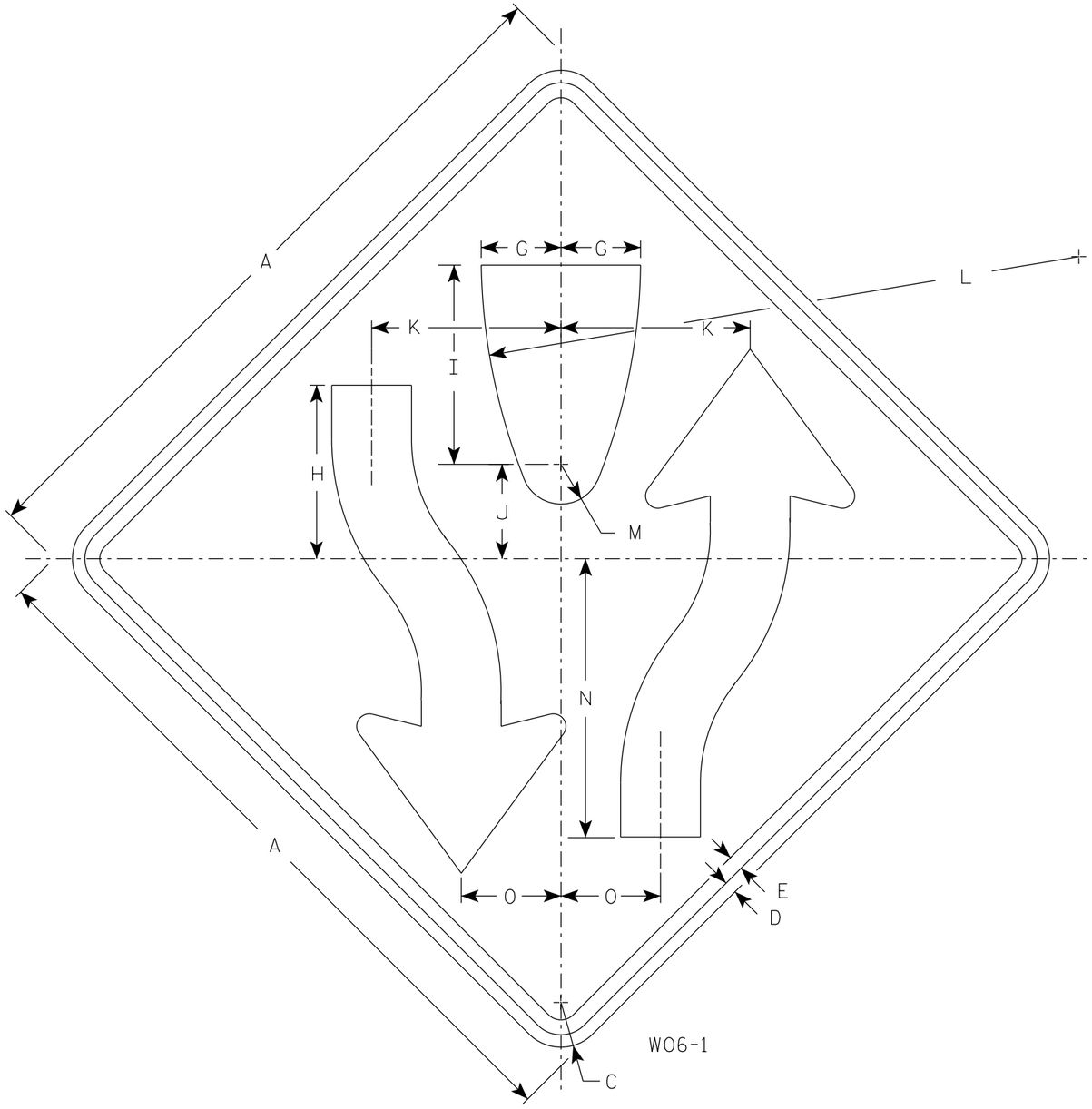

NOTES

1. Sign is Type II - Type F Reflective
2. Color:
   Background - Orange
   Message - Black
3. Corners may be square or rounded when base material is plywood but borders shall be rounded as shown. When base material is metal, the corners and borders shall be rounded.
4. W06-2 same as W06-1 but is rotated 180° when mounted.

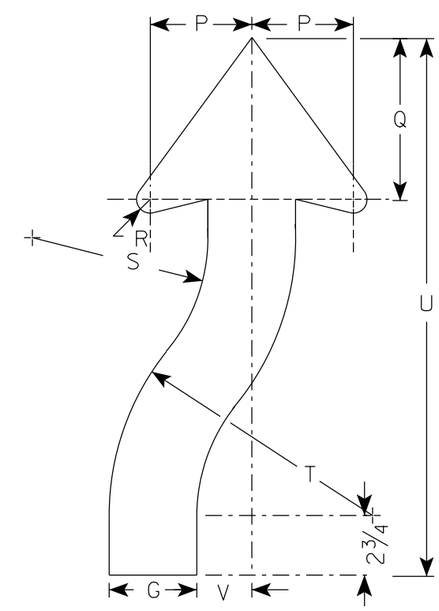

ARROW DETAIL

SIZE	A	B	C	D	E	F	G	H	I	J	K	L	M	N	O	P	Q	R	S	T	U	V	W	X	Y	Z	Area sq. ft.
1	36		2 1/4	5/8	3/4		4	8 3/4	10	4 3/4	9 1/2	30	2	14	5	4 5/8	7 3/8	7/8	8	12	24 1/2	2 1/2					9.0
2S	48		3	3/4	1		5 3/8	11 5/8	13 3/8	6 3/8	12 5/8	40	2 5/8	18 5/8	6 5/8	6 1/4	9 7/8	1 1/4	10 5/8	16	32 5/8	3 3/8					16.0
2M	48		3	3/4	1		5 3/8	11 5/8	13 3/8	6 3/8	12 5/8	40	2 5/8	18 5/8	6 5/8	6 1/4	9 7/8	1 1/4	10 5/8	16	32 5/8	3 3/8					16.0
3	48		3	3/4	1		5 3/8	11 5/8	13 3/8	6 3/8	12 5/8	40	2 5/8	18 5/8	6 5/8	6 1/4	9 7/8	1 1/4	10 5/8	16	32 5/8	3 3/8					16.0
4	48		3	3/4	1		5 3/8	11 5/8	13 3/8	6 3/8	12 5/8	40	2 5/8	18 5/8	6 5/8	6 1/4	9 7/8	1 1/4	10 5/8	16	32 5/8	3 3/8					16.0
5	48		3	3/4	1		5 3/8	11 5/8	13 3/8	6 3/8	12 5/8	40	2 5/8	18 5/8	6 5/8	6 1/4	9 7/8	1 1/4	10 5/8	16	32 5/8	3 3/8					16.0

STANDARD SIGN
W06-1 & W06-2

WISCONSIN DEPT OF TRANSPORTATION

APPROVED Matthew R Rauch
for State Traffic Engineer

DATE 1/30/2024 PLATE NO. W06-1.2

PROJECT NO:	HWY:	COUNTY:		SHEET NO:	E

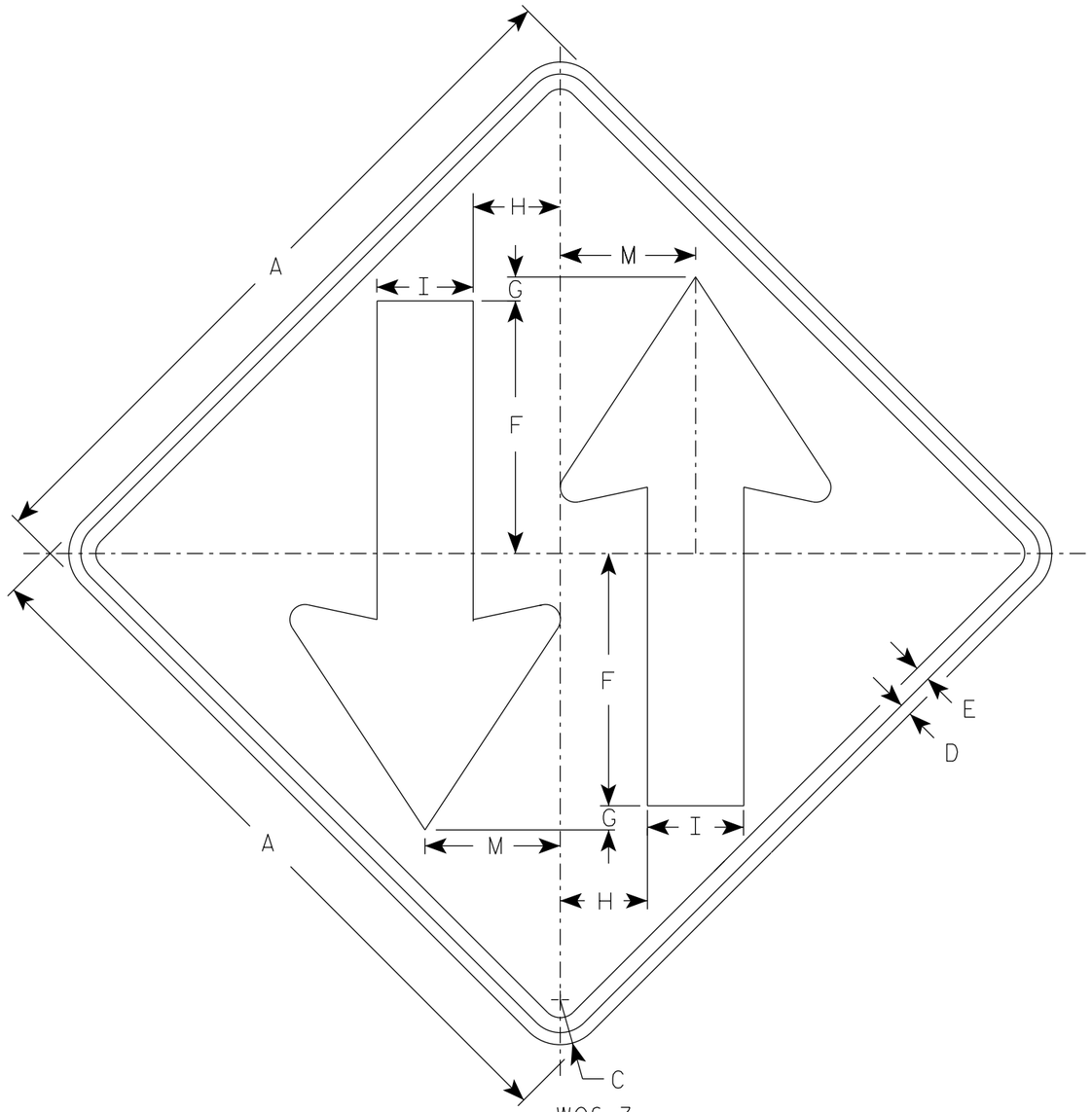

W06-3

NOTES

1. Sign is Type II - Type F Reflective
2. Color:
   Background - Orange
   Message - Black
3. Corners may be square or rounded when base material is plywood but borders shall be rounded as shown. When base material is metal, the corners and borders shall be rounded.

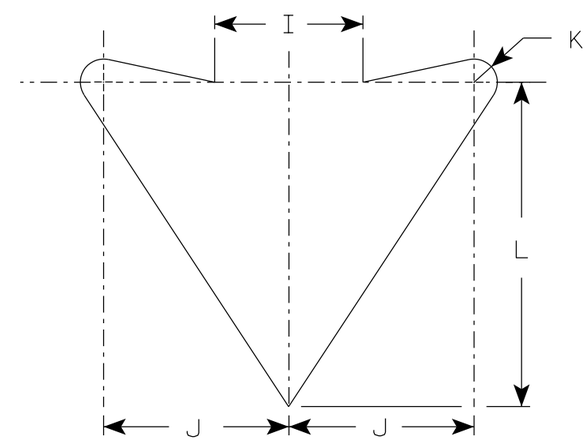

ARROW DETAIL

SIZE	A	B	C	D	E	F	G	H	I	J	K	L	M	N	O	P	Q	R	S	T	U	V	W	X	Y	Z	Area sq. ft.
1	36		2 1/4	5/8	3/4	12	1	4 1/4	5	6	3/4	10 1/2	6 3/4														9.0
2S	48		3	3/4	1	15 1/2	1	6	6	8	1	14	9														16.0
2M	48		3	3/4	1	15 1/2	1	6	6	8	1	14	9														16.0
3	48		3	3/4	1	15 1/2	1	6	6	8	1	14	9														16.0
4	48		3	3/4	1	15 1/2	1	6	6	8	1	14	9														16.0
5	48		3	3/4	1	15 1/2	1	6	6	8	1	14	9														16.0

STANDARD SIGN
W06-3

WISCONSIN DEPT OF TRANSPORTATION

APPROVED Matthew R Rauch
for State Traffic Engineer

DATE 1/30/2024 PLATE NO. W06-3.2

PROJECT NO:	HWY:	COUNTY:		SHEET NO: 197	E

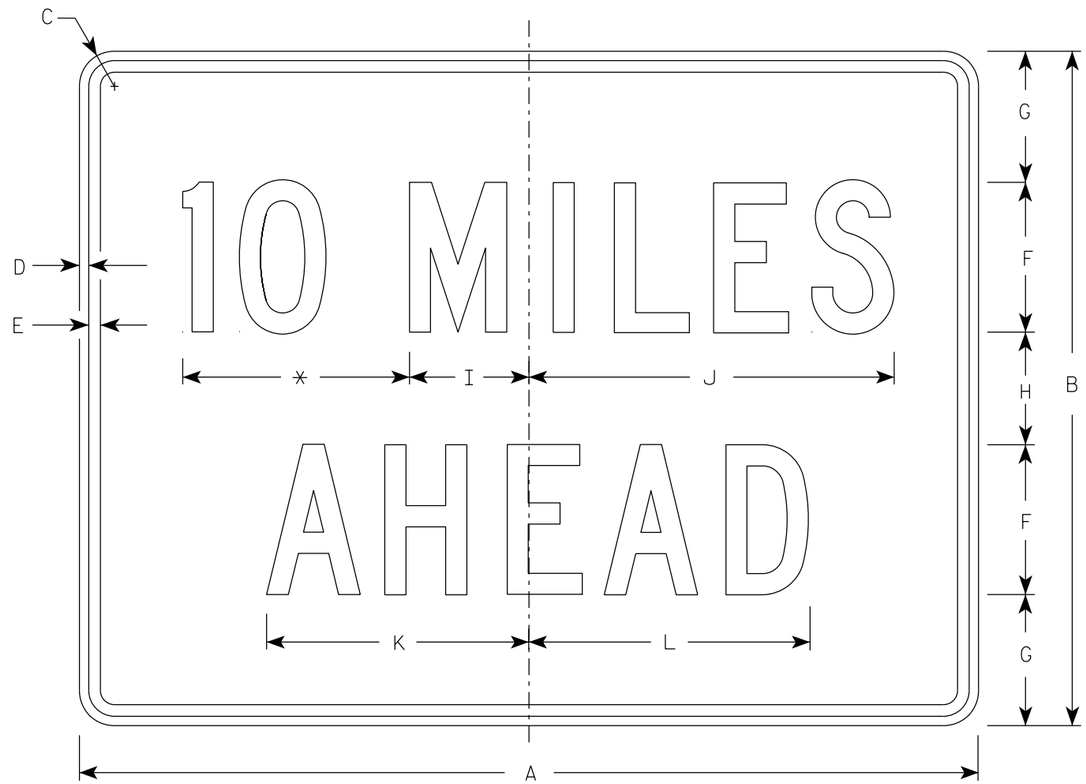

W057-52

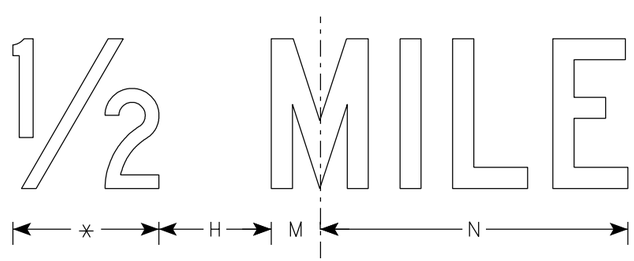

* See note 5

NOTES

1. Sign is Type II - Type F Reflective
2. Color:
   Background - Orange
   Message - Black
3. Message Series - C
4. Corners may be square or rounded when base material is plywood but borders shall be rounded as shown. When base material is metal, the corners and borders shall be rounded.
5. Substitute appropriate numerals to the nearest quarter mile and optically adjust spacing to achieve proper balance.

SIZE	A	B	C	D	E	F	G	H	I	J	K	L	M	N	O	P	Q	R	S	T	U	V	W	X	Y	Z	Area sq. ft.
1	36	24	1 1/2	3/8	1/2	6	4 1/2	3	4 3/4	14 5/8	10 5/8	11 3/8	2	12													6.0
2S	48	36	2 1/4	1/2	5/8	8	7	6	6 3/8	19 1/2	14	15	2 3/4	16 3/8													12.0
2M	48	36	2 1/4	1/2	5/8	8	7	6	6 3/8	19 1/2	14	15	2 3/4	16 3/8													12.0
3	48	36	2 1/4	1/2	5/8	8	7	6	6 3/8	19 1/2	14	15	2 3/4	16 3/8													12.0
4	48	36	2 1/4	1/2	5/8	8	7	6	6 3/8	19 1/2	14	15	2 3/4	16 3/8													12.0
5	48	36	2 1/4	1/2	5/8	8	7	6	6 3/8	19 1/2	14	15	2 3/4	16 3/8													12.0

STANDARD SIGN
W057-52

WISCONSIN DEPT OF TRANSPORTATION

APPROVED Matthew R Rauch
for State Traffic Engineer

DATE 2/1/2024 PLATE NO. W057-52.3

PROJECT NO: | HWY: | COUNTY: | SHEET NO: 198 | E

STATE PROJECT NUMBER

1053-07-60

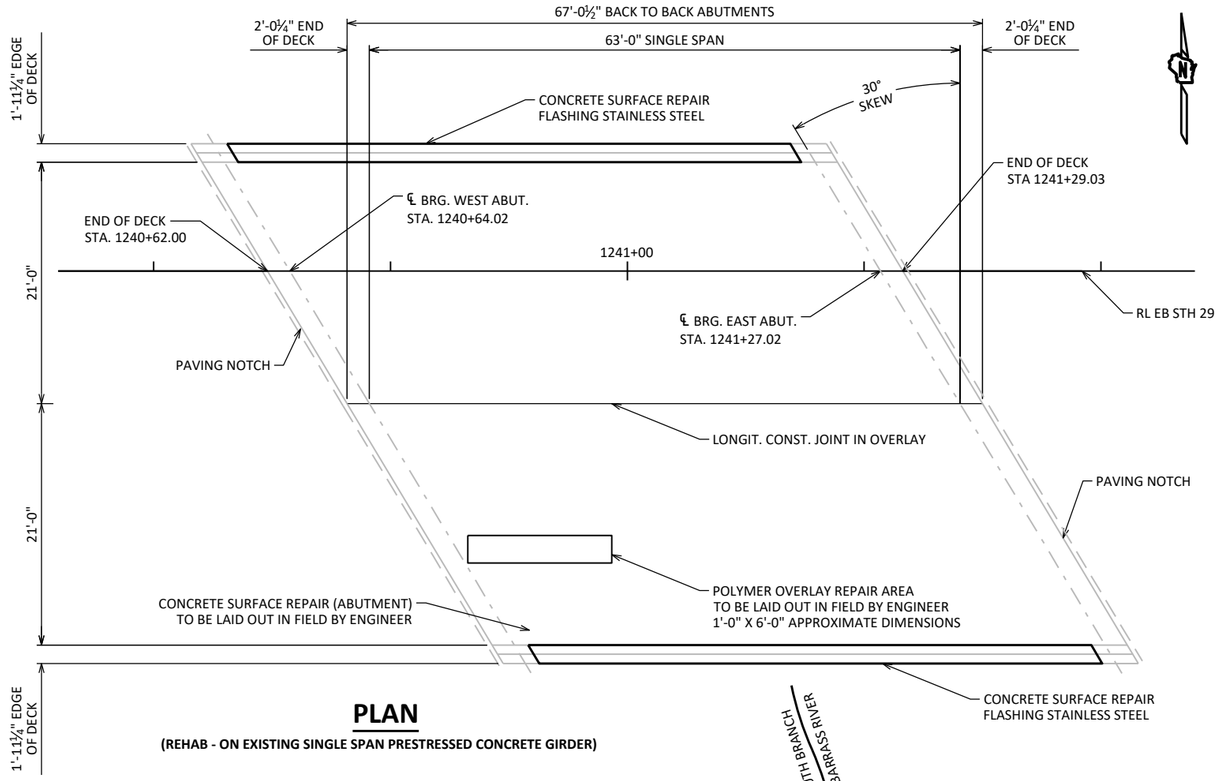

PLAN

(REHAB - ON EXISTING SINGLE SPAN PRESTRESSED CONCRETE GIRDER)

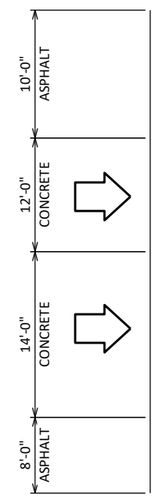

TRAFFIC DATA

FEATURE ON: STH 29 EB

ADT = 10,685 (2026)
ADT = 11,560 (2046)
R.D.S. = 70 MPH

DESIGN DATA

LIVE LOAD:

DESIGN LOADING: HS20
INVENTORY RATING: HS24
OPERATING RATING: HS45
WISCONSIN STANDARD PERMIT VEHICLE (WIS-SPV): 250 (KIPS)
RATINGS TAKEN FROM HSIS 03/08/2018

MATERIAL PROPERTIES:

CONCRETE MASONRY:
SUPERSTRUCTURE ——— f'_c = 4,000 PSI
ALL OTHER ——— f'_c = 3,500 PSI

BAR STEEL REINFORCEMENT
GRADE 60 ——— f_y = 60,000 PSI

REHABILITATION FLASHING NOTES

TYPICAL BOTH EDGES OF DECK.

EXTEND FLASHING TO F.F. OF ABUTMENT DIAPHRAGM.

THE BID ITEM "FLASHING STAINLESS STEEL" SHALL INCLUDE PROVIDING AND INSTALLING THE STAINLESS STEEL FLASHING, SILICONE CAULK, CONCRETE SCREWS, AND CLEANING THE EDGE OF THE DECK PRIOR TO ATTACHMENT OF THE FLASHING.

FLASHING TO BE INSTALLED AFTER PROTECTIVE SURFACE TREATMENT APPLICATION. PROTECTIVE SURFACE TREATMENT TO BE APPLIED TO EXTERIOR EDGE OF THE SLAB, AND THE FIRST 1'-0" OF THE UNDERSIDE OF THE SLAB.

CONCRETE SCREWS SHALL BE 410 STAINLESS STEEL.

CONCRETE SURFACE REPAIR ALONG BOTH EDGES OF DECK, ALONG BOTTOM OF DECK FACE.

TOP OF FLASHING TO BEGIN APPROX. 1-INCH BELOW TOP OF DECK/ SLAB SURFACE.

THE FLASHING IS TO BE A CONSTANT HEIGHT BASED ON THE THINNEST SLAB DEPTH OVER THE BRIDGE LENGTH.

PROVIDE 2" MINIMUM FLASHING OVERLAP, FASTEN WITH 3/16" X 2" (MIN.) CONCRETE SCREWS.

GENERAL NOTES

DRAWINGS SHALL NOT BE SCALED.

DIMENSIONS SHOWN ARE BASED ON THE ORIGINAL STRUCTURE PLANS.

SEE ROADWAY PLANS FOR TRAFFIC CONTROL INFORMATION.

CONCRETE SURFACE REPAIR LOCATIONS AS DIRECTED BY ENGINEER.

UTILIZE EXISTING BAR STEEL REINFORCEMENT WHERE SHOWN AND EXTEND 24 BAR DIAMETERS INTO NEW WORK, UNLESS SPECIFIED OTHERWISE.

RE-CAULK ALL RAILING BASE PLATES.

CAULK SHALL BE NON-STAINING, GRAY NON-BITUMINOUS JOINT SEALER.

SHOT BLASTING, DECK SURFACE PREPARATIONS, AND TRANSITIONAL AREAS ARE INCLUDED IN THE BID ITEM "POLYMER OVERLAY".

WISCONSIN
DYLAN C MUSGJERD
E-48208
MANTORVILLE, MINN.
PROFESSIONAL ENGINEER
05/01/2025

BILL OF BARS

NOTE: THE FIRST OR FIRST TWO DIGITS OF THE BAR MARK SIGNIFIES THE BAR SIZE.

BAR MARK	COAT	NO. REQ'D.	LENGTH	BENT	BAR SERIES	LOCATION
S401	X	4	30'-11"			DECK EDGE REPAIR LONGITUDINAL

LIST OF DRAWINGS:

1. GENERAL PLAN
2. QUANTITIES AND NOTES

STRUCTURE DESIGN CONTACTS:
DYLAN MUSGJERD, PE 608-789-2034
AARON BONK, PE 608-261-0261

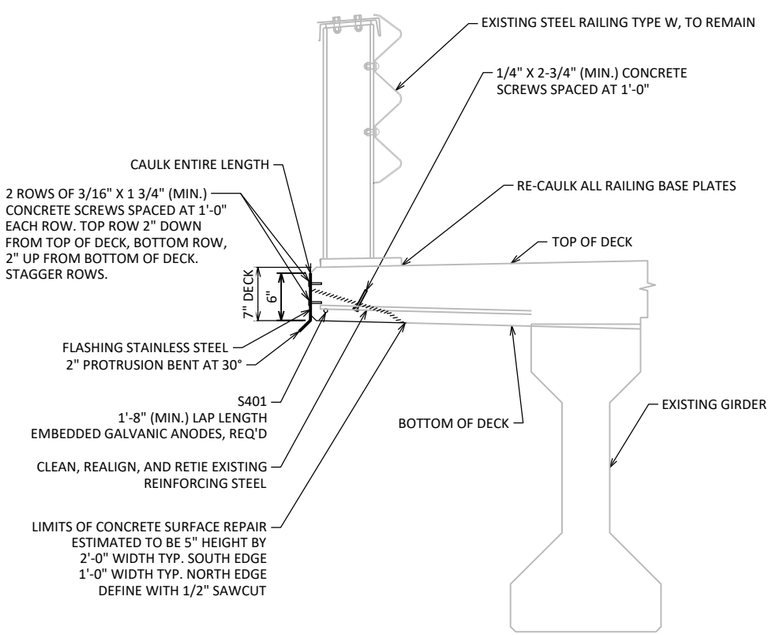

REHABILITATION FLASHING DETAIL

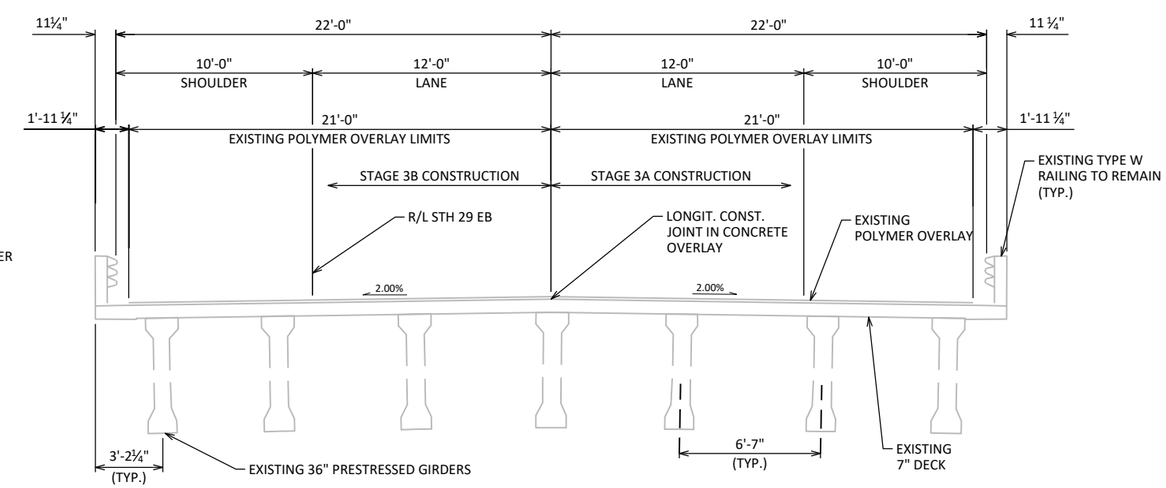

CROSS SECTION THRU ROADWAY

(LOOKING EAST)

NO.	DATE	REVISION	BY

ORIGINAL PLANS PREPARED BY
LA CROSSE OFFICE
201 MAIN STREET
SUITE 1020
LA CROSSE, WI 54601
ISG

STATE OF WISCONSIN
DEPARTMENT OF TRANSPORTATION

ACCEPTED ——— EMK 05/05/25
CHIEF STRUCTURES DESIGN ENGINEER — DATE

STRUCTURE B-58-39

STH 29 EAST BOUND OVER SOUTH BRANCH EMBARRASS RIVER

COUNTY	TOWN
SHAWANO	WITTENBERG

DESIGN SPEC.
REHABILITATION - N/A

DESIGNED BY	DCM	DESIGNED CK'D	JMB	DRAWN BY	JRM	PLANS CK'D	DCM

GENERAL PLAN

SHEET 1 OF 2
199

8

8

I.D. 1053-07-60 DATE: 01/06/2025

STATE PROJECT NUMBER

1053-07-60

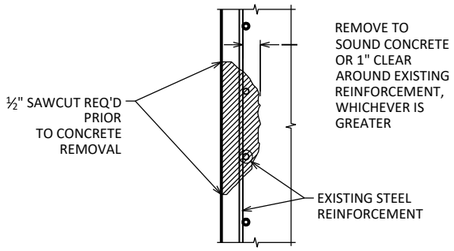

TYPICAL CONCRETE SURFACE REMOVAL DETAIL

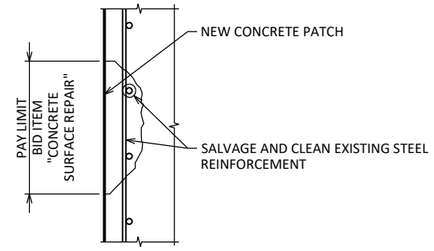

TYPICAL CONCRETE SURFACE REPAIR DETAIL

TOTAL ESTIMATED QUANTITIES

BID ITEM NUMBER		UNIT	SUPER	WEST ABUT.	EAST ABUT.	TOTALS
203.0335	DEBRIS CONTAINMENT OVER WATERWAY B-58-39	EACH	---	---	---	1
502.3200	PROTECTIVE SURFACE TREATMENT	SY	22	---	---	22
505.0600	BAR STEEL REINFORCEMENT HS COATED STRUCTURES	LB	83	---	---	83
509.1500	CONCRETE SURFACE REPAIR	SF	232	3	---	235
509.5100.S	POLYMER OVERLAY	SY	2	---	---	2
509.9015.S	REMOVING POLYMER OVERLAY STRUCTURE B-58-39	SY	2	---	---	2
SPV.0060.01	RESEAL RAILING POST CONNECTIONS	EACH	22	---	---	22
SPV.0060.03	EMBEDDED GALVANIC ANODES	EACH	128	2	---	130
SPV.0090.01	FLASHING STAINLESS STEEL	LF	121	---	---	121

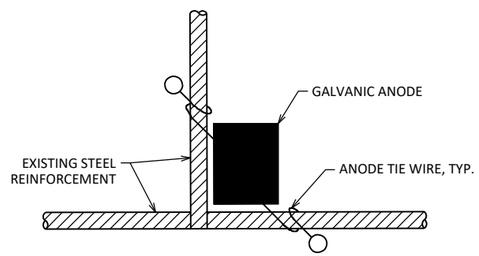

TYPICAL ANODE INSTALLATION AT BAR STEEL INTERSECTION

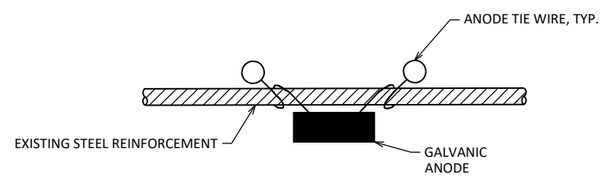

TYPICAL ANODE INSTALLATION FOR BAR STEEL

NOTES

AREAS AND LOCATIONS FOR "CONCRETE SURFACE REPAIR" ARE APPROXIMATE. PERFORM REPAIRS AS DIRECTED BY THE ENGINEER

THE FINISHED CONCRETE SURFACE SHALL MATCH THE SHAPE AND FINISH OF THE ORIGINAL CONCRETE SURFACE, UNLESS OTHERWISE DIRECTED BY THE ENGINEER TO PROVIDE ADDITIONAL CONCRETE.

SURFACE REPAIR AREAS WITH CATHODIC PROTECTION ARE BASED ON THE PLANS AND AS DETERMINED BY THE ENGINEER. THE PLAN QUANTITY FOR THE BID ITEM "EMBEDDED GALVANIC ANODES" IS BASED ON A MAXIMUM SPACING OF 24-INCHES AROUND THE SURFACE REPAIR PERIMETER. THE ACTUAL QUANTITY SHALL BE BASED ON THE FIELD CONDITIONS AND AS RECOMMENDED BY THE GALVANIC ANODE SUPPLIER.

SURFACE REPAIRS SHALL BE FILLED WITH REPAIR MATERIALS COMPATIBLE WITH CATHODIC PROTECTION, AS RECOMMENDED BY THE ANODE SUPPLIER.

EXISTING REINFORCING STEEL TO BE COMPLETELY CLEANED OF CORRODED MATERIAL AND CONCRETE TO PROVIDE SUFFICIENT ELECTRICAL CONNECTION AND BOND. CATHODIC PROTECTION PREPARATIONS ARE INCLUDED IN THE BID ITEM "EMBEDDED GALVANIC ANODES".

ANODES NEAREST TO EDGE OF REPAIR TO BE WITHIN 6" OF EDGE.

AFTER PLACEMENT, GALVANIC ANODES SHOULD MAINTAIN A MINIMUM TOP COVER OF 1 1/2" AND A MINIMUM BOTTOM COVER OF 3/4"

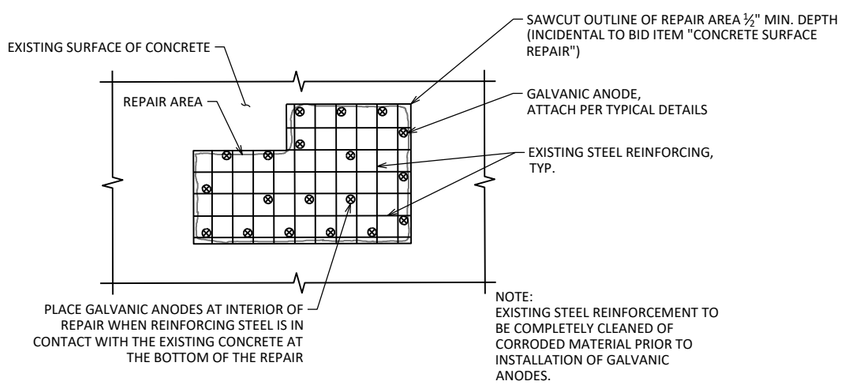

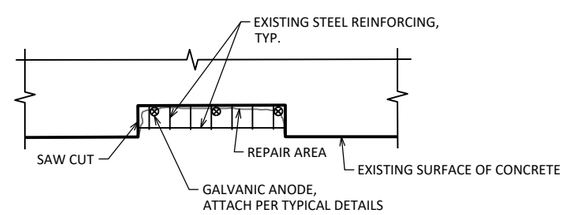

PART. PLAN TYPICAL REPAIR DETAIL

8

8

NO.	DATE	REVISION	BY

STATE OF WISCONSIN
DEPARTMENT OF TRANSPORTATION
STRUCTURES DESIGN SECTION

STRUCTURE B-58-39

DRAWN BY JRM PLANS CK'D DCM

QUANTITIES AND NOTES

SHEET 2 OF 2

200

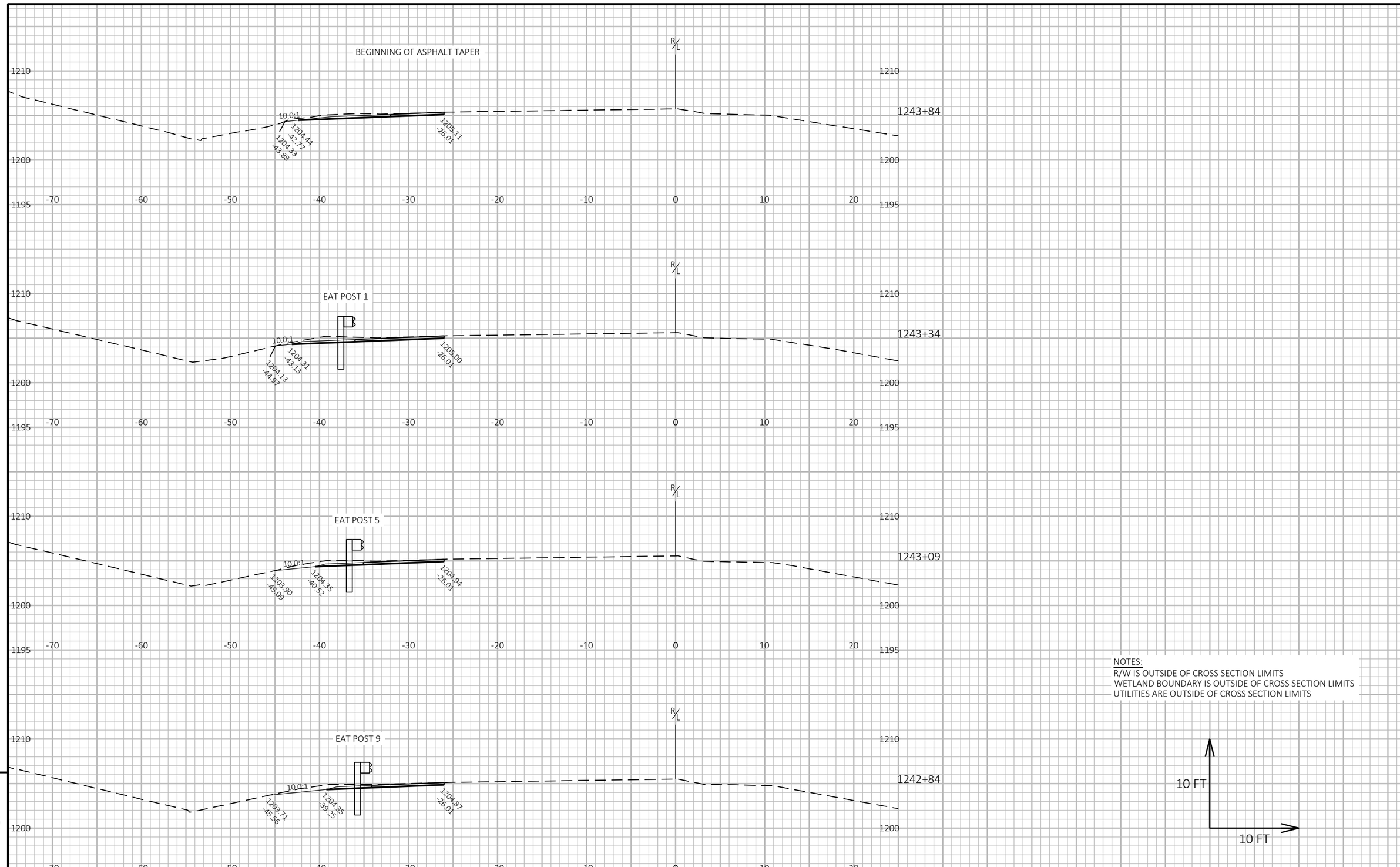

9

9

PROJECT NO: 1053-07-60	HWY: STH 29	COUNTY: MARATHON	CROSS SECTIONS: 29WB_BG_NE	SHEET 201	E

FILE NAME : W:\10530730\DSGN\CRDR\CRDR-29WB-BG.DWG
LAYOUT NAME - 090201-XS_01
PLOT DATE : 6/17/2025 2:20 PM
PLOT BY : RYAN BOOTH
PLOT NAME :
PLOT SCALE : 1 IN:10 FT HORZ. / 1 IN:10 FT VERT.
WISDOT/CADDS SHEET 49

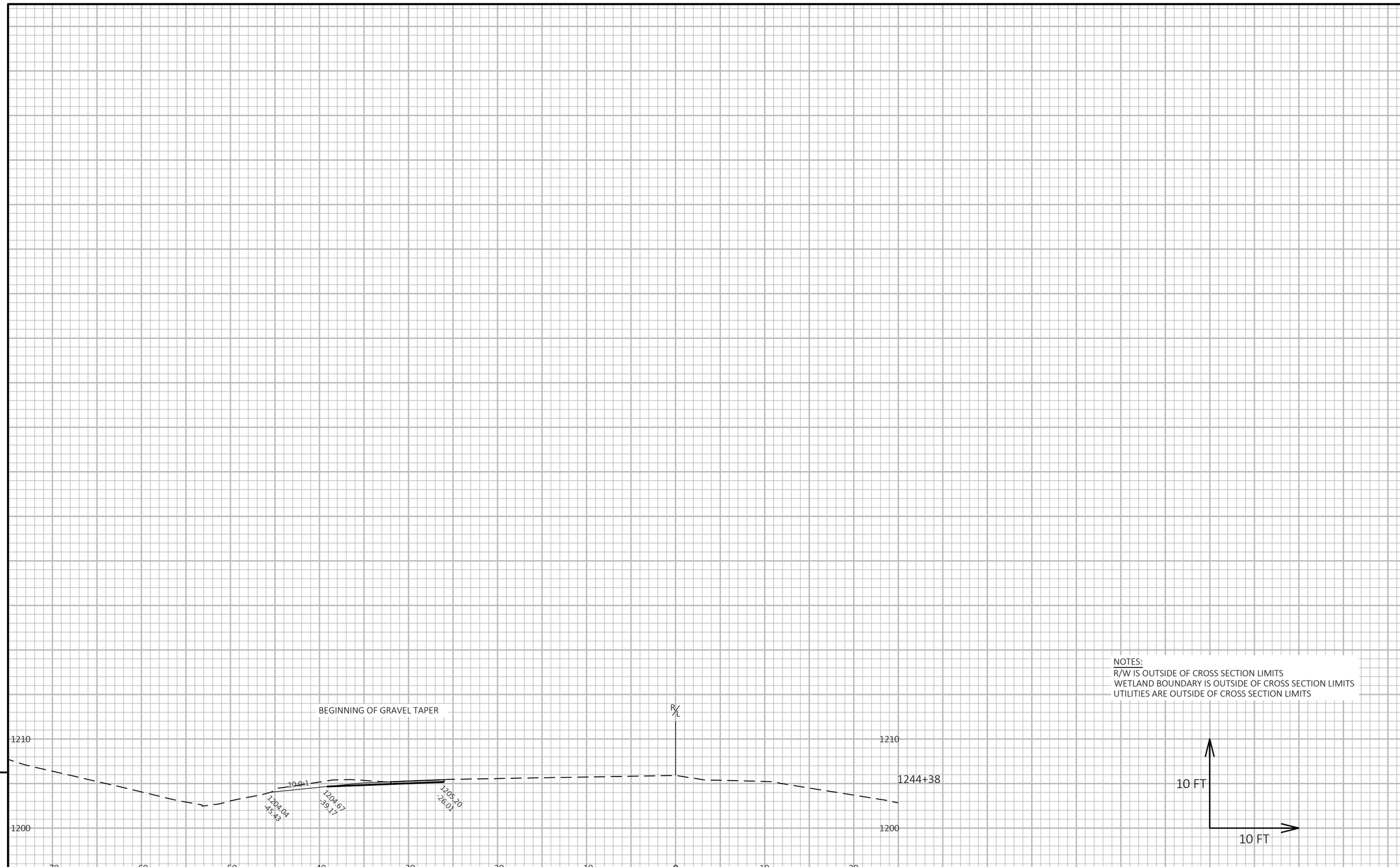

9

9

PROJECT NO: 1053-07-60	HWY: STH 29	COUNTY: MARATHON	CROSS SECTIONS: 29WB_BG_NE	SHEET 202	E

FILE NAME : W:\10530730\DSGN\CRDR\CRDR-29WB-BG.DWG
LAYOUT NAME - 090201-XS_02

PLOT DATE : 6/17/2025 2:20 PM PLOT BY : RYAN BOOTH PLOT NAME : PLOT SCALE : 1 IN:10 FT HORZ. / 1 IN:10 FT VERT.

WISDOT/CADDS SHEET 49

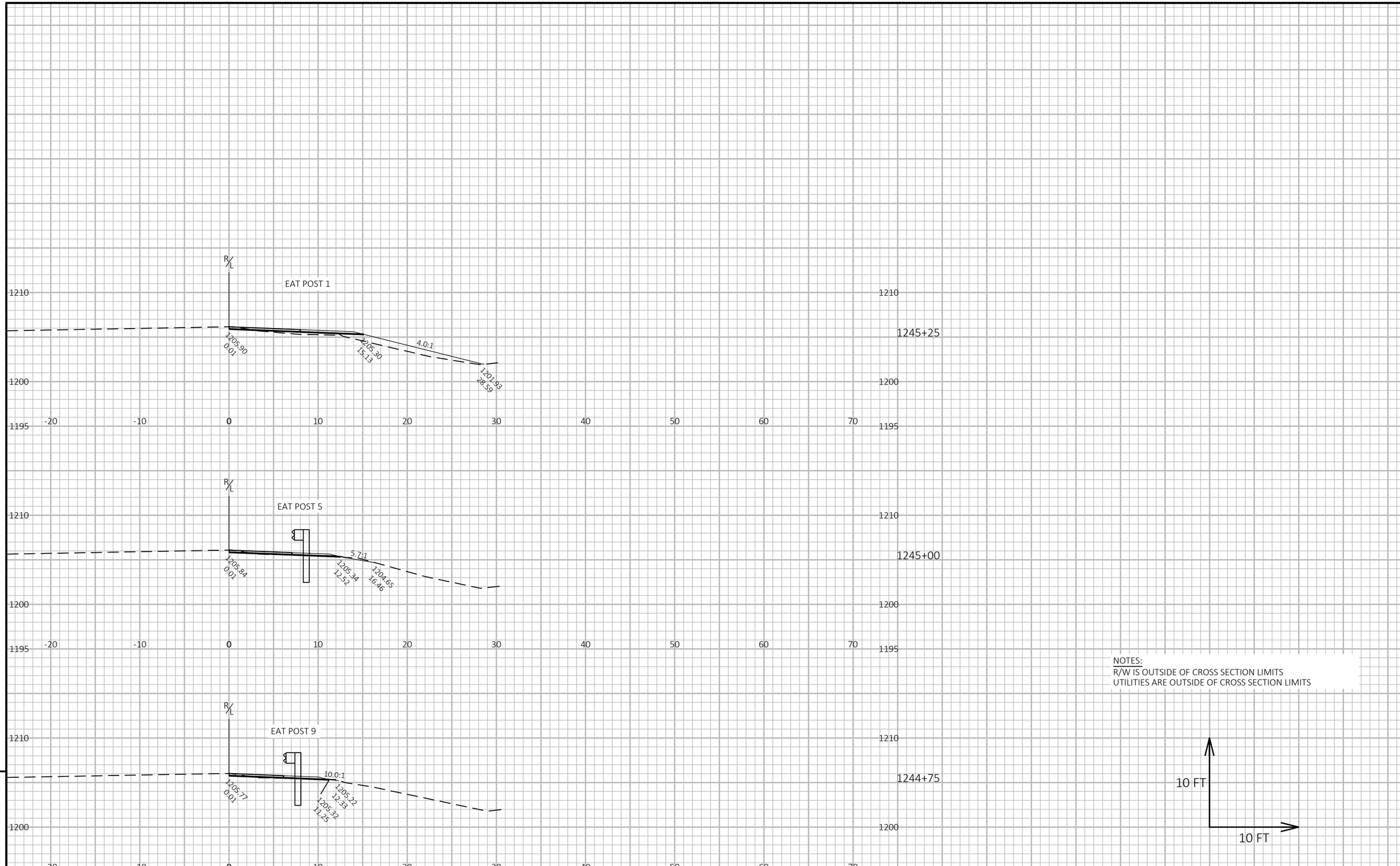

9

9

PROJECT NO: 1053-07-60	HWY: STH 29	COUNTY: MARATHON	CROSS SECTIONS: 29WB_BG_SE	SHEET 203	E

FILE NAME : W:\10530730\DSGN\CRDR\CRDR-29WB-BG.DWG
LAYOUT NAME - 090201-XS_05
PLOT DATE : 6/17/2025 2:20 PM
PLOT BY : RYAN BOOTH
PLOT NAME :
PLOT SCALE : 1 IN:10 FT HORZ. / 1 IN:10 FT VERT.
WISDOT/CADDS SHEET 49

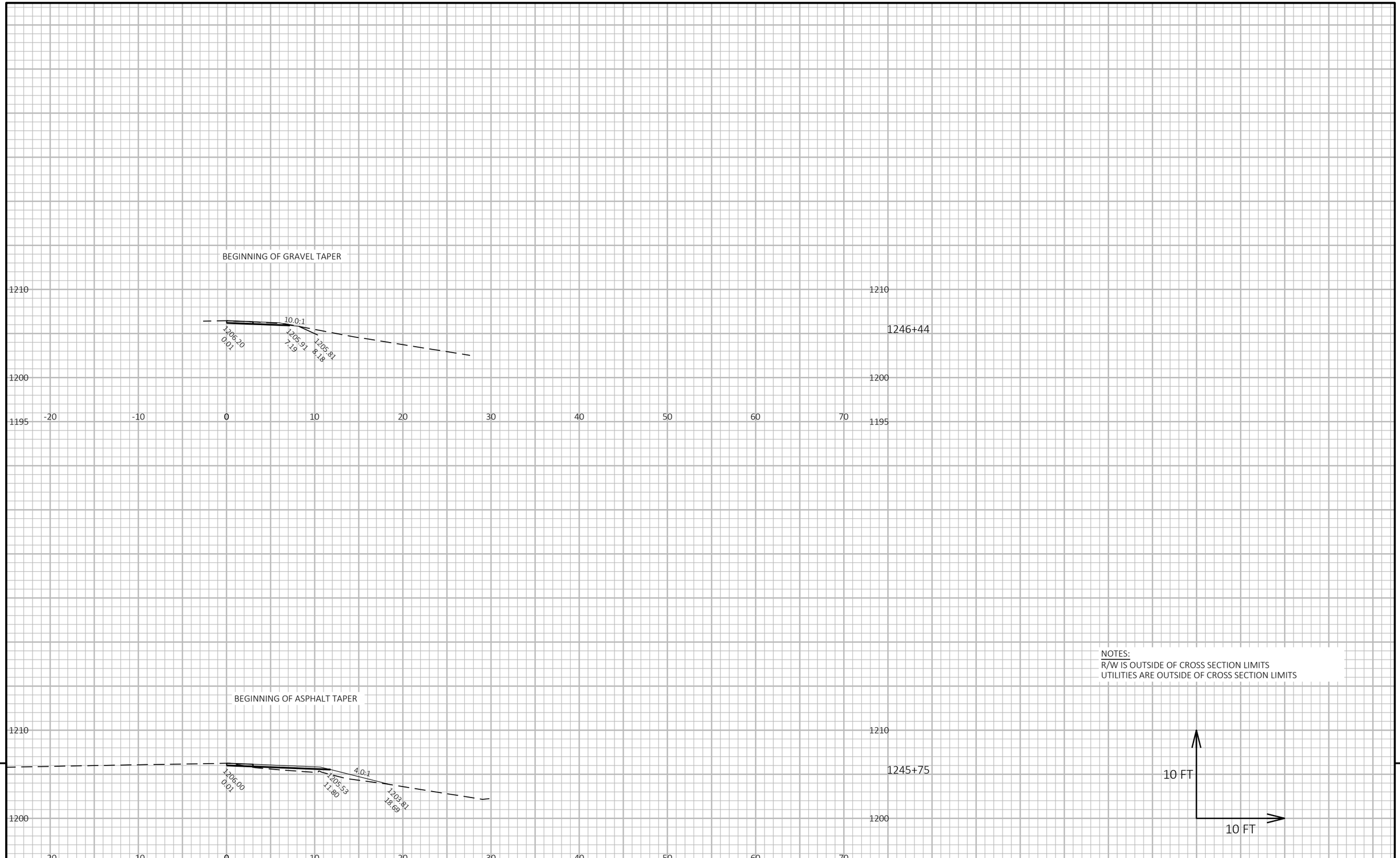

NOTES:
R/W IS OUTSIDE OF CROSS SECTION LIMITS
UTILITIES ARE OUTSIDE OF CROSS SECTION LIMITS

9

9

PROJECT NO: 1053-07-60	HWY: STH 29	COUNTY: MARATHON	CROSS SECTIONS: 29WB_BG_SE	SHEET 204	E

FILE NAME : W:\10530730\DSGN\CRDR\CRDR-29WB-BG.DWG
LAYOUT NAME - 090201-XS_06
PLOT DATE : 6/17/2025 2:20 PM
PLOT BY : RYAN BOOTH
PLOT NAME :
PLOT SCALE : 1 IN:10 FT HORZ. / 1 IN:10 FT VERT.
WISDOT/CADDS SHEET 49

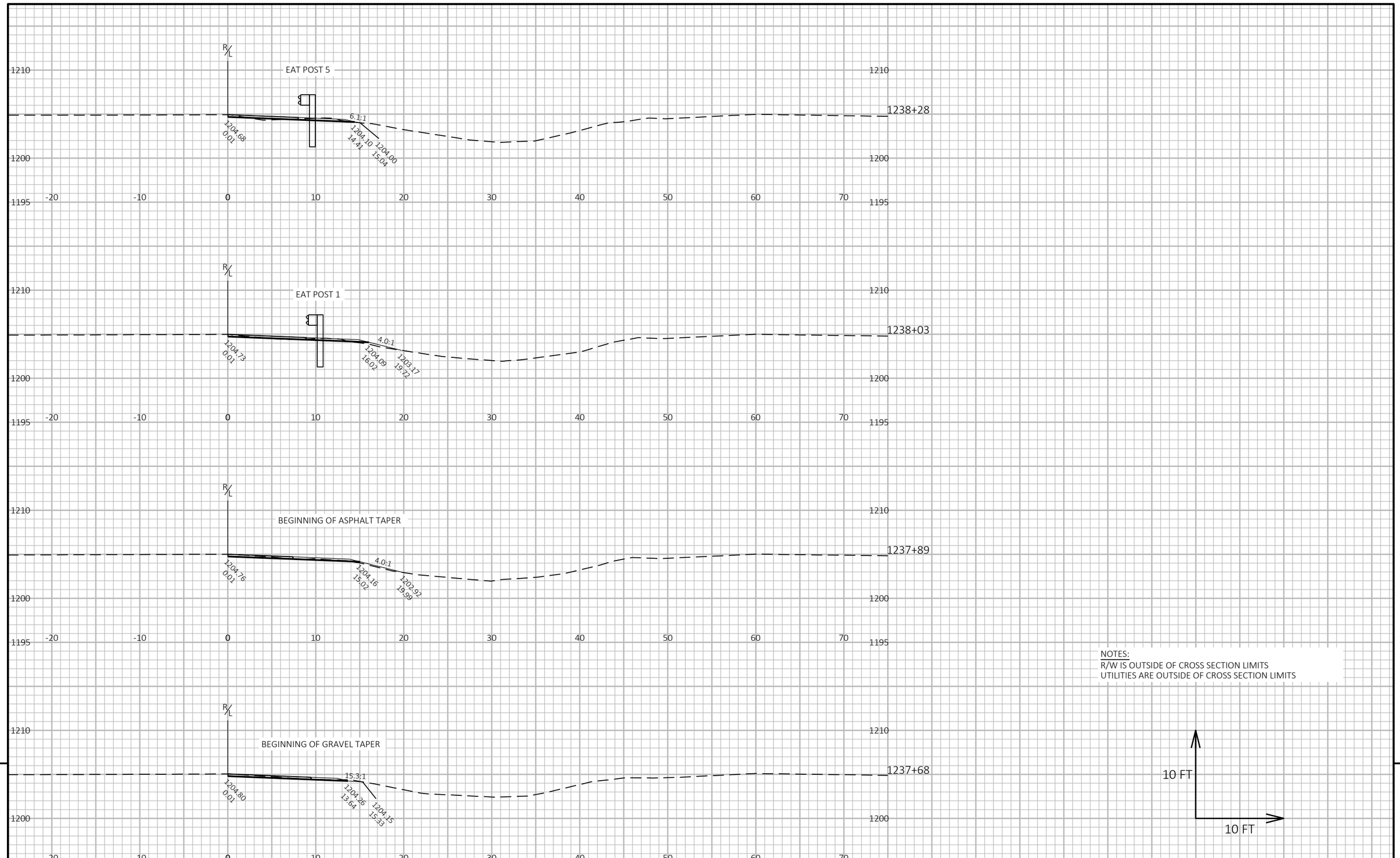

9

9

PROJECT NO: 1053-07-60	HWY: STH 29	COUNTY: MARATHON	CROSS SECTIONS: 29WB_BG_SW	SHEET 205	E

FILE NAME : W:\10530730\DSGN\CRDR\CRDR-29WB-BG.DWG
LAYOUT NAME - 090201-XS_07
PLOT DATE : 6/17/2025 2:21 PM
PLOT BY : RYAN BOOTH
PLOT NAME :
PLOT SCALE : 1 IN:10 FT HORZ. / 1 IN:10 FT VERT.
WISDOT/CADDS SHEET 49

NOTES:
R/W IS OUTSIDE OF CROSS SECTION LIMITS
WETLAND BOUNDARY IS OUTSIDE OF CROSS SECTION LIMITS
UTILITIES ARE OUTSIDE OF CROSS SECTION LIMITS

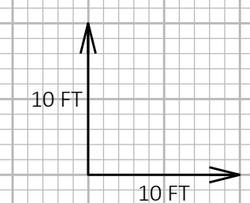

9

9

PROJECT NO: 1053-07-60	HWY: STH 29	COUNTY: MARATHON	CROSS SECTIONS: 29WB_BG_SW	SHEET 206	E

FILE NAME : W:\10530730\DSGN\CRDR\CRDR-29WB-BG.DWG
LAYOUT NAME - 090201-XS_08
PLOT DATE : 6/17/2025 2:21 PM
PLOT BY : RYAN BOOTH
PLOT NAME :
PLOT SCALE : 1 IN:10 FT HORZ. / 1 IN:10 FT VERT.
WISDOT/CADDS SHEET 49

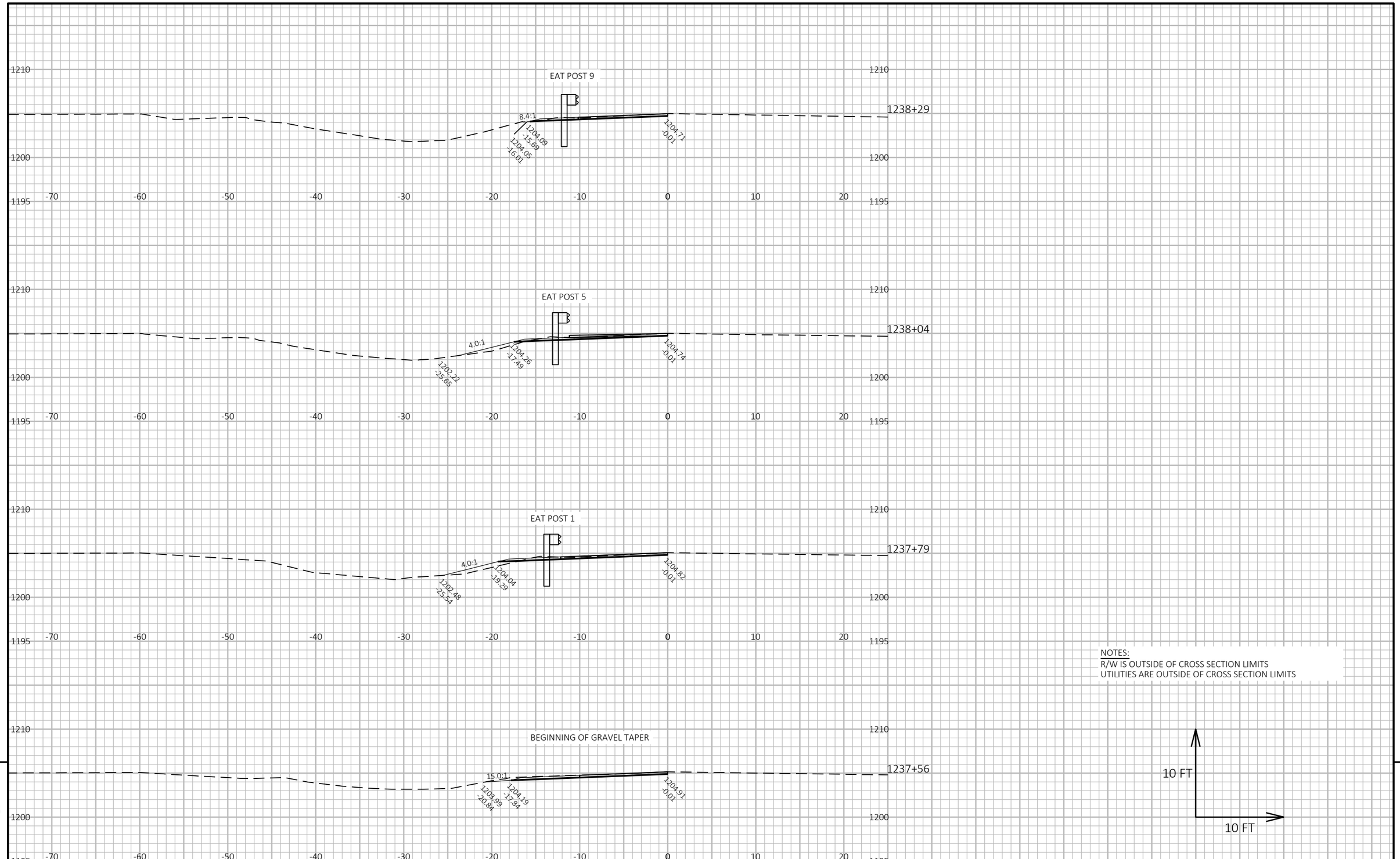

NOTES:
R/W IS OUTSIDE OF CROSS SECTION LIMITS
UTILITIES ARE OUTSIDE OF CROSS SECTION LIMITS

10 FT

10 FT

9

9

PROJECT NO: 1053-07-60	HWY: STH 29	COUNTY: MARATHON	CROSS SECTIONS: 29EB_BG_NW	SHEET 207	E

FILE NAME : W:\10530730\DSGN\CRDR\CRDR-29EB-BG.DWG
LAYOUT NAME - 090201-XS_09

PLOT DATE : 6/17/2025 2:21 PM PLOT BY : RYAN BOOTH PLOT NAME : **PLOT SCALE :** 1 IN:10 FT HORZ. / 1 IN:10 FT VERT.

WISDOT/CADDS SHEET 49

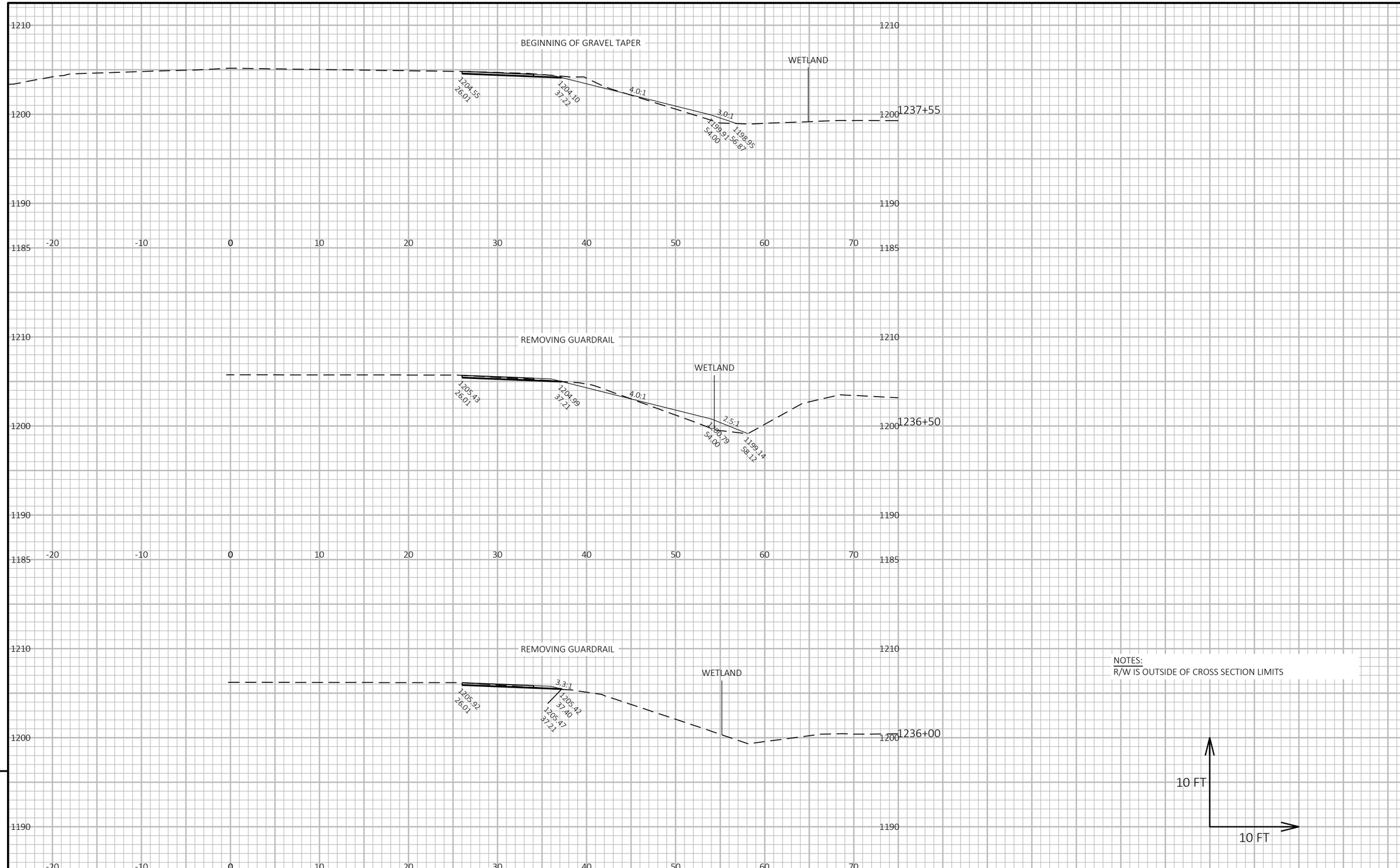

9

9

PROJECT NO: 1053-07-60	HWY: STH 29	COUNTY: MARATHON	CROSS SECTIONS: 29EB_BG_SW	SHEET 208	E

FILE NAME : W:\10530730\DSGN\CRDR\CRDR-29EB-BG.DWG
LAYOUT NAME - 090201-XS_10
PLOT DATE : 6/17/2025 2:21 PM
PLOT BY : RYAN BOOTH
PLOT NAME :
PLOT SCALE : 1 IN:10 FT HORZ. / 1 IN:10 FT VERT.
WISDOT/CADDS SHEET 49

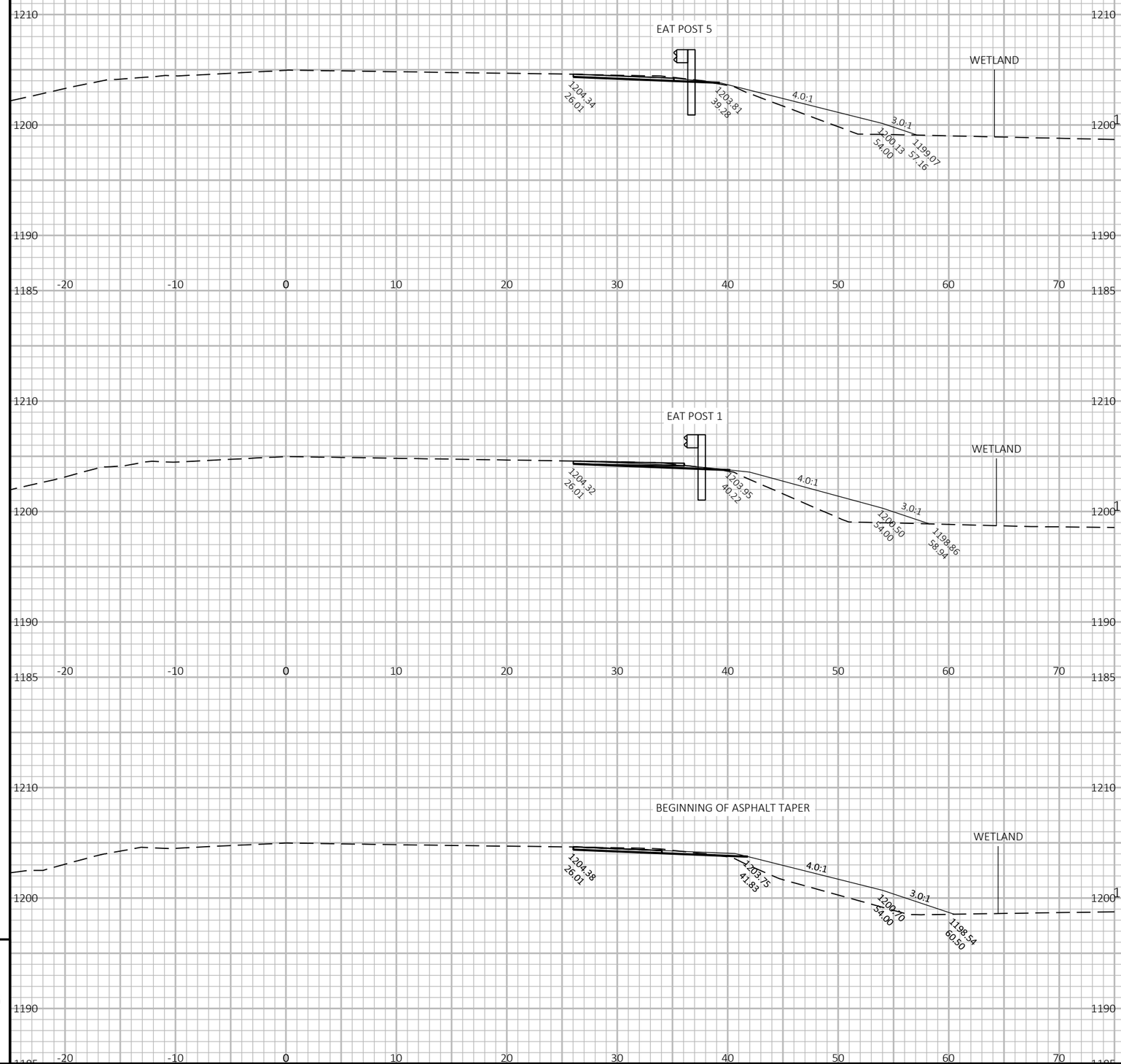

NOTES:
R/W IS OUTSIDE OF CROSS SECTION LIMITS

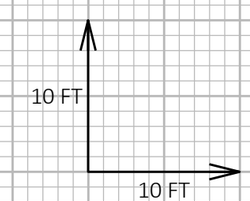

9

9

PROJECT NO: 1053-07-60	HWY: STH 29	COUNTY: MARATHON	CROSS SECTIONS: 29EB_BG_SW	SHEET 209	E

FILE NAME : W:\10530730\DSGN\CRDR\CRDR-29EB-BG.DWG
LAYOUT NAME - 090201-XS_11
PLOT DATE : 6/17/2025 2:22 PM
PLOT BY : RYAN BOOTH
PLOT NAME :
PLOT SCALE : 1 IN:10 FT HORZ. / 1 IN:10 FT VERT.
WISDOT/CADDS SHEET 49

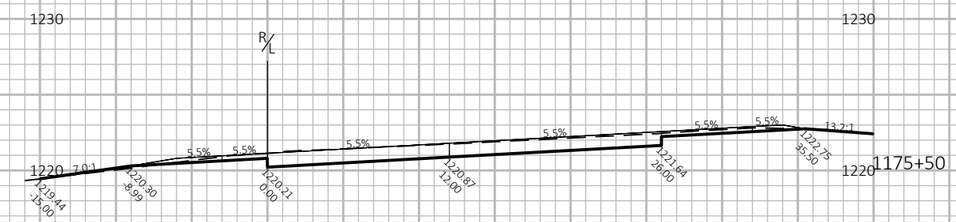

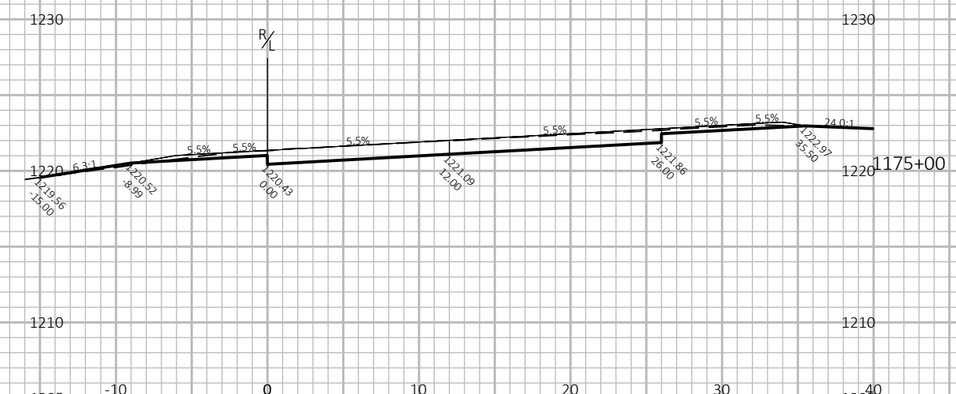

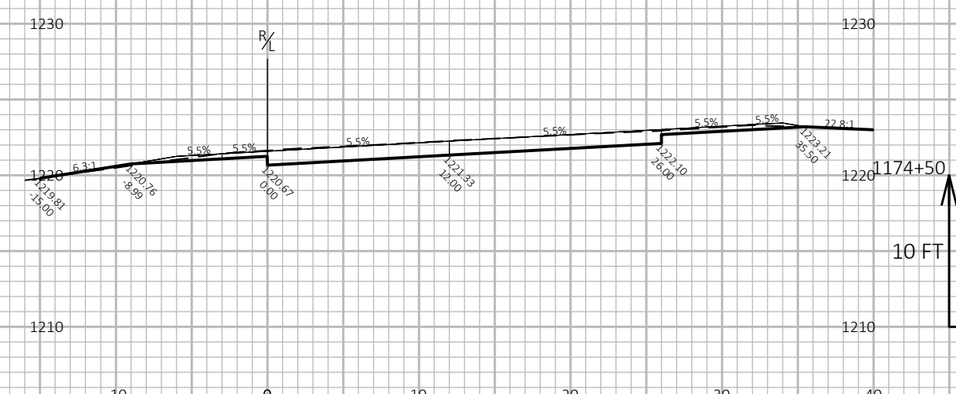

10 FT

10 FT

9

9

PROJECT NO: 1053-07-60	HWY: STH 29	COUNTY: MARATHON	CROSS SECTIONS: 29EB_PAVEMENT REPLACEMENT	SHEET 210	E

FILE NAME : W:\10530730\SHEETS\090201-XS.DWG
LAYOUT NAME - 01

PLOT DATE : 6/17/2025 2:22 PM PLOT BY : RYAN BOOTH PLOT NAME : **PLOT SCALE :** 1 IN:10 FT HORZ. / 1 IN:10 FT VERT.

WISDOT/CADDS SHEET 49

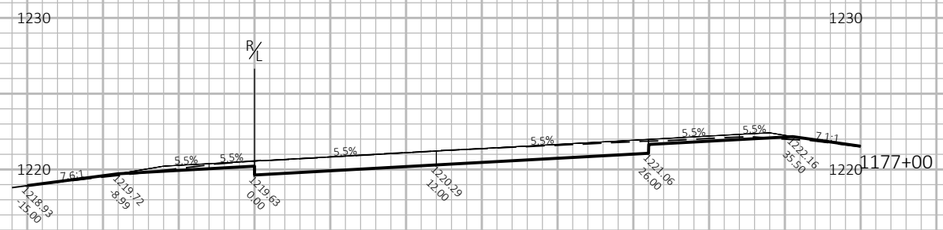

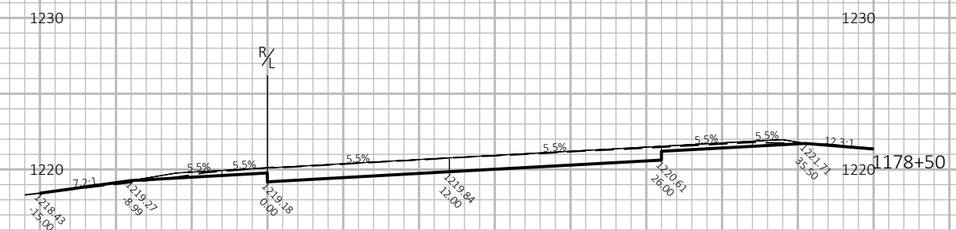

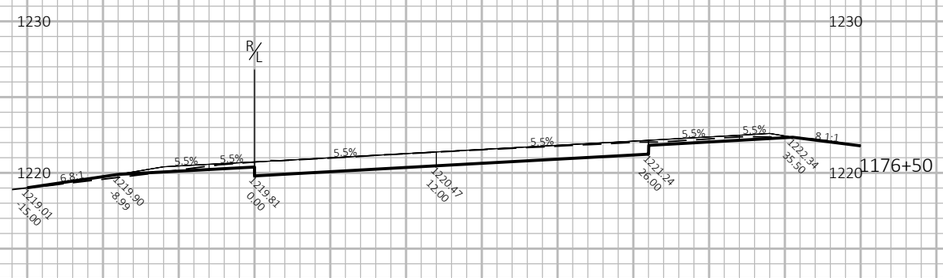

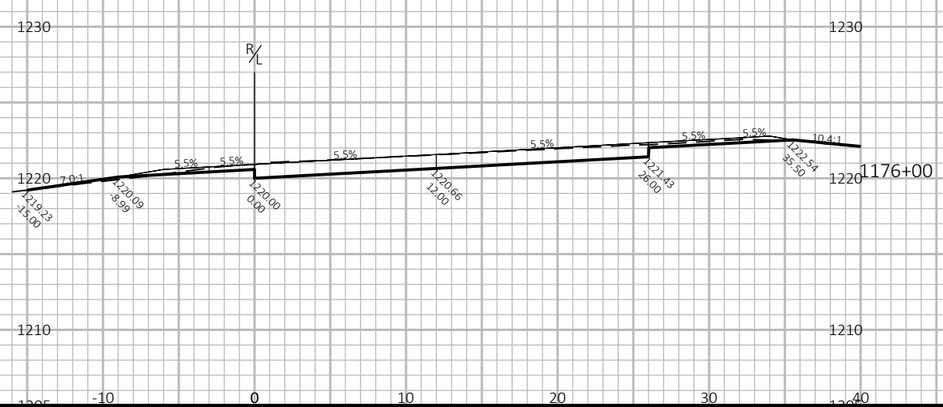

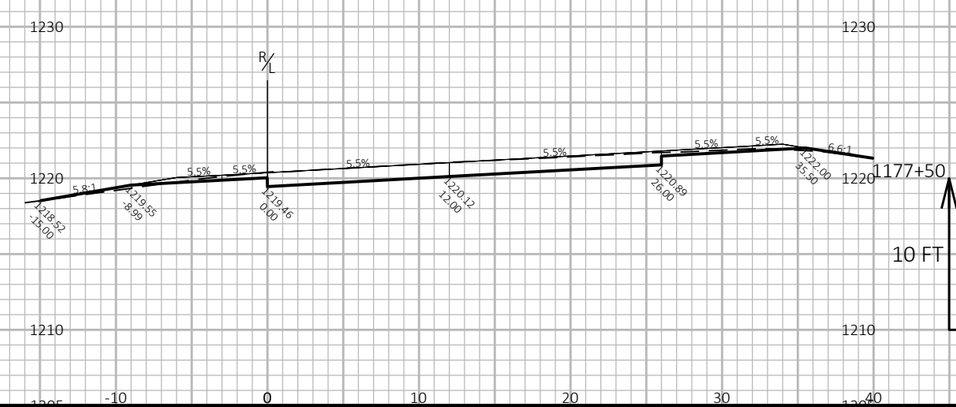

10 FT

10 FT

9

9

PROJECT NO: 1053-07-60	HWY: STH 29	COUNTY: MARATHON	CROSS SECTIONS: 29EB_PAVEMENT REPLACEMENT	SHEET 211	E

FILE NAME : W:\10530730\SHEETS\090201-XS.DWG
LAYOUT NAME - 02

PLOT DATE : 6/17/2025 2:22 PM PLOT BY : RYAN BOOTH PLOT NAME : PLOT SCALE : 1 IN:10 FT HORZ. / 1 IN:10 FT VERT.

WISDOT/CADDS SHEET 49

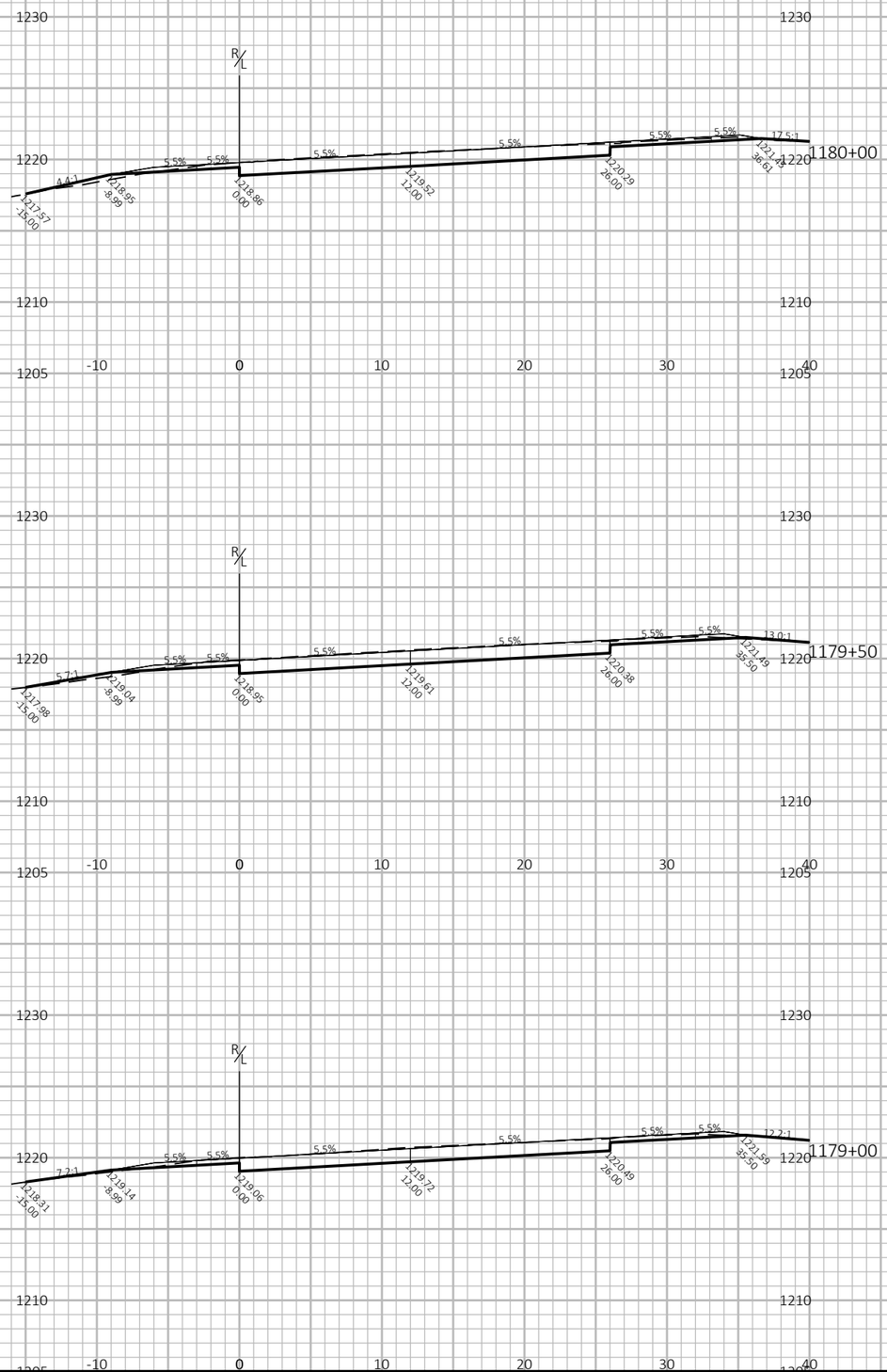

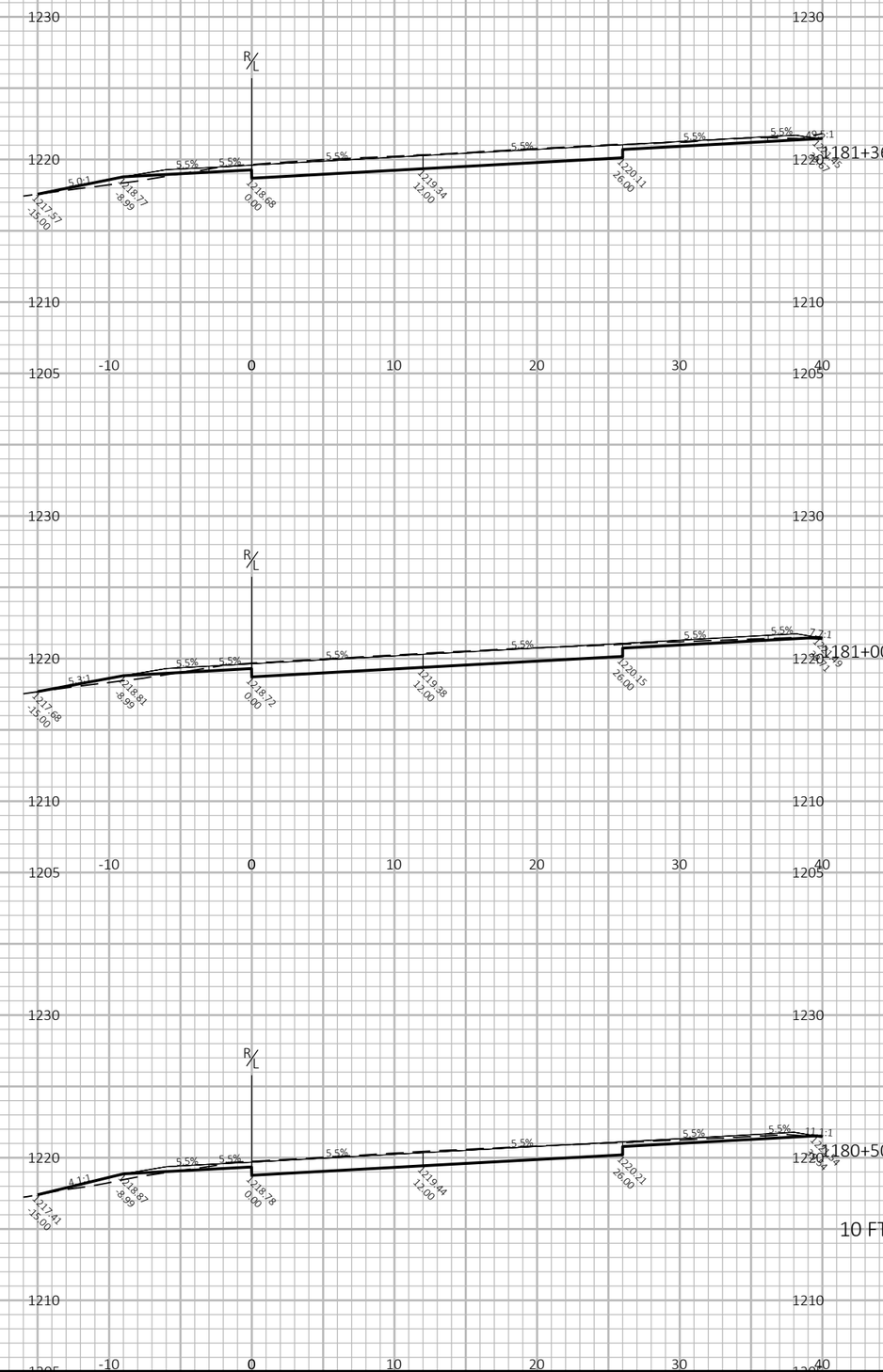

9

9

PROJECT NO: 1053-07-60	HWY: STH 29	COUNTY: MARATHON	CROSS SECTIONS: 29EB_PAVEMENT REPLACEMENT	SHEET 212	E

FILE NAME : W:\10530730\SHEETS\090201-XS.DWG
LAYOUT NAME - 03
PLOT DATE : 6/17/2025 2:23 PM
PLOT BY : RYAN BOOTH
PLOT NAME :
PLOT SCALE : 1 IN:10 FT HORZ. / 1 IN:10 FT VERT.
WISDOT/CADDS SHEET 49

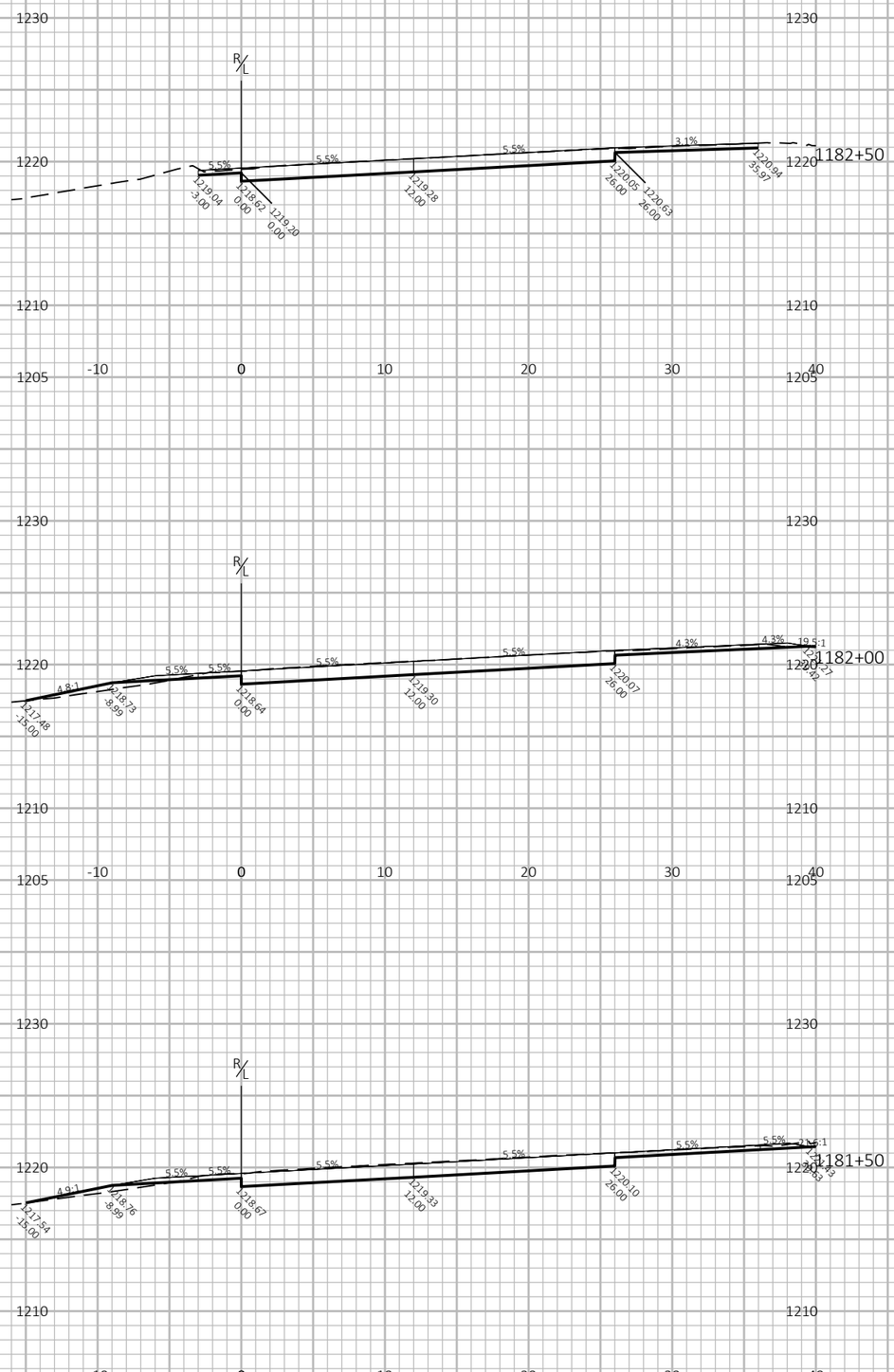

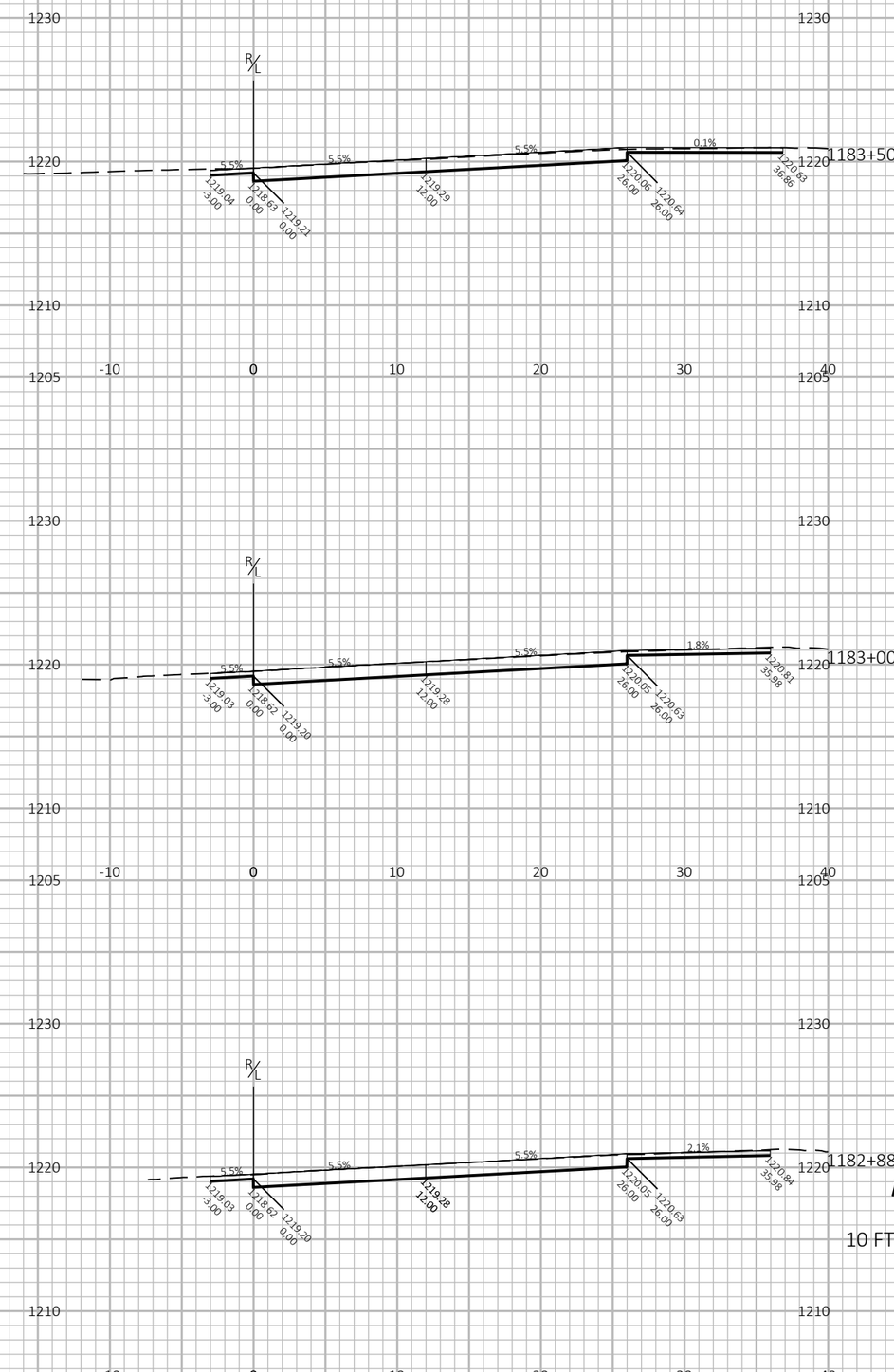

9

9

PROJECT NO: 1053-07-60	HWY: STH 29	COUNTY: MARATHON	CROSS SECTIONS: 29EB_PAVEMENT REPLACEMENT	SHEET 213	E

FILE NAME : W:\10530730\SHEETS\090201-XS.DWG
LAYOUT NAME - 04
PLOT DATE : 6/17/2025 2:23 PM
PLOT BY : RYAN BOOTH
PLOT NAME :
PLOT SCALE : 1 IN:10 FT HORZ. / 1 IN:10 FT VERT.
WISDOT/CADDS SHEET 49

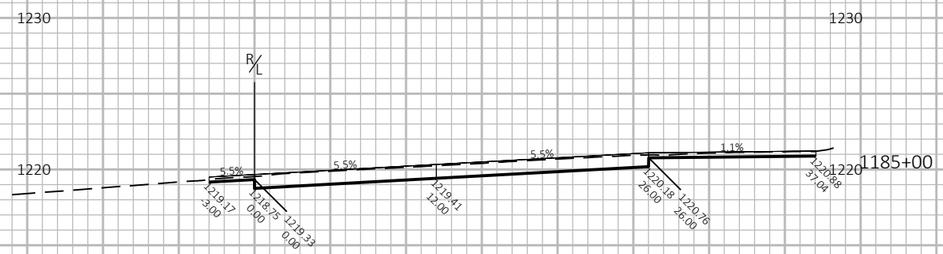

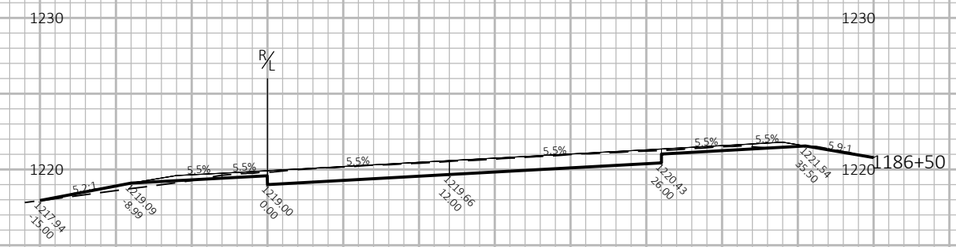

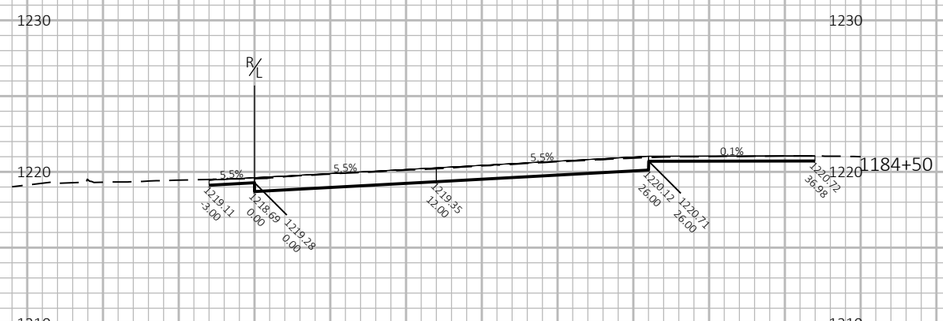

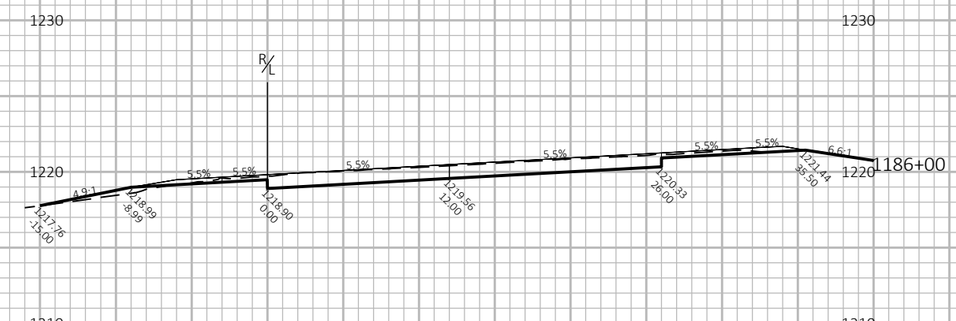

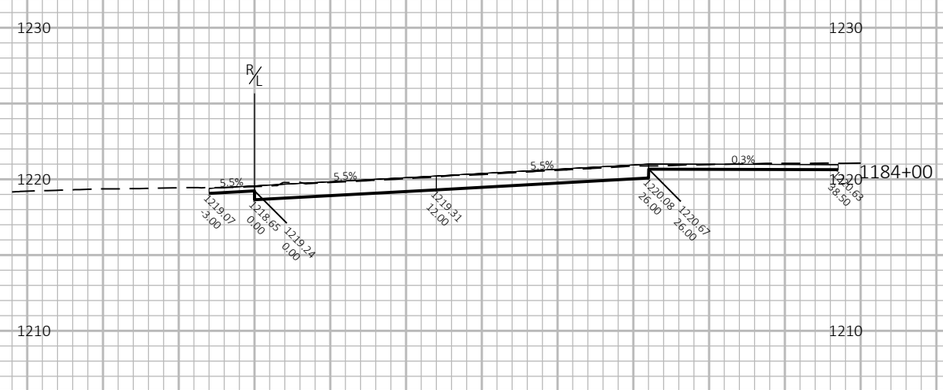

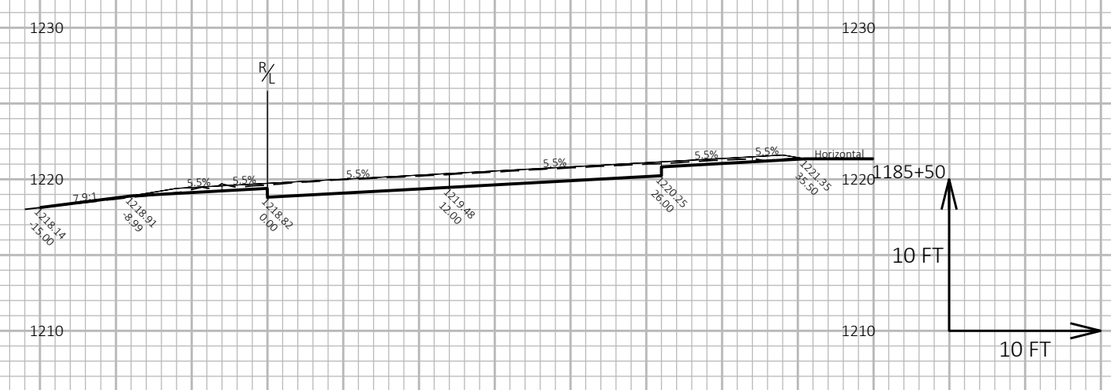

9

9

PROJECT NO: 1053-07-60	HWY: STH 29	COUNTY: MARATHON	CROSS SECTIONS: 29EB_PAVEMENT REPLACEMENT	SHEET 214	E

FILE NAME : W:\10530730\SHEETS\090201-XS.DWG
LAYOUT NAME - 05
PLOT DATE : 6/17/2025 2:23 PM
PLOT BY : RYAN BOOTH
PLOT NAME :
PLOT SCALE : 1 IN:10 FT HORZ. / 1 IN:10 FT VERT.
WISDOT/CADDS SHEET 49

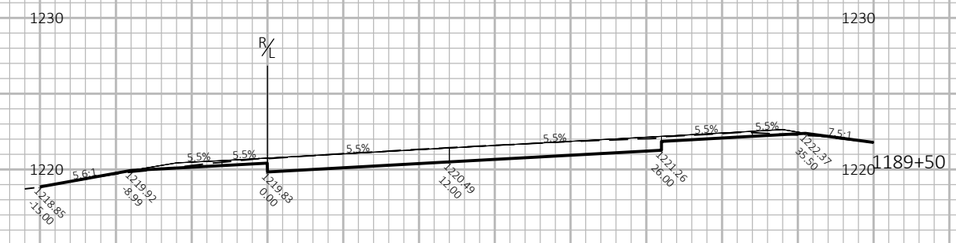

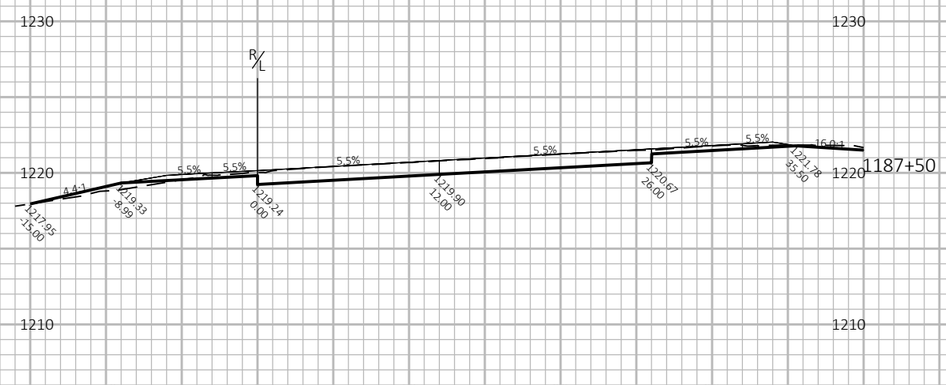

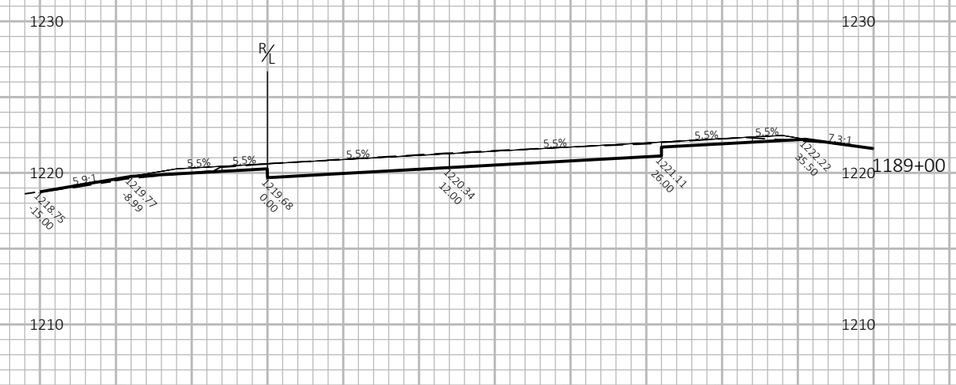

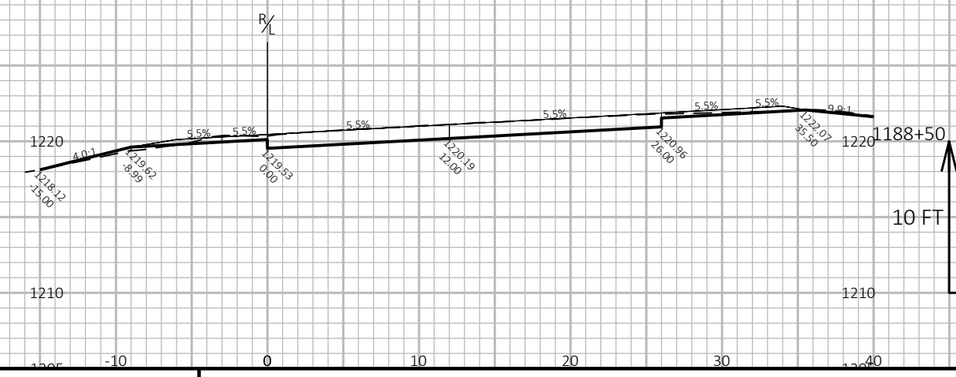

10 FT

10 FT

9

9

PROJECT NO: 1053-07-60	HWY: STH 29	COUNTY: MARATHON	CROSS SECTIONS: 29EB_PAVEMENT REPLACEMENT	SHEET 215	E

FILE NAME : W:\10530730\SHEETS\090201-XS.DWG
LAYOUT NAME - 06
PLOT DATE : 6/17/2025 2:23 PM
PLOT BY : RYAN BOOTH
PLOT NAME :
PLOT SCALE : 1 IN:10 FT HORZ. / 1 IN:10 FT VERT.
WISDOT/CADDS SHEET 49

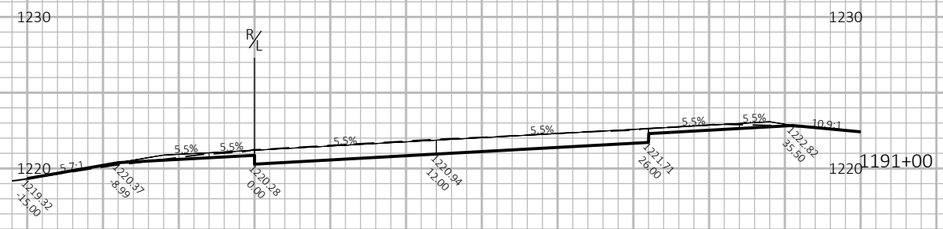

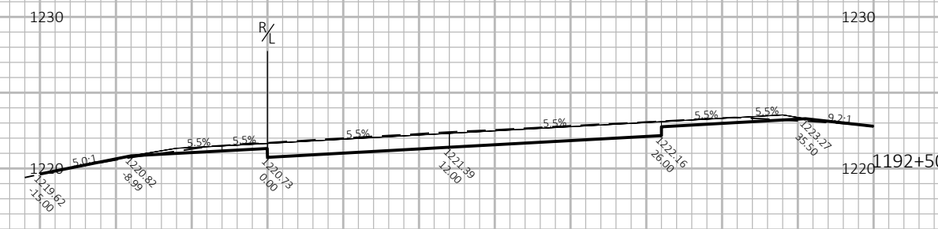

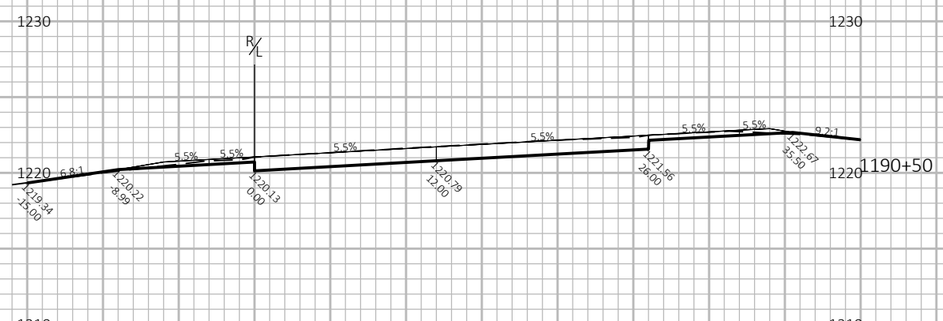

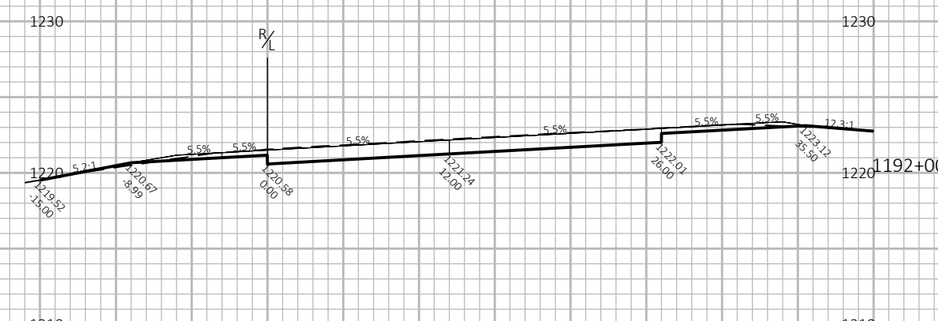

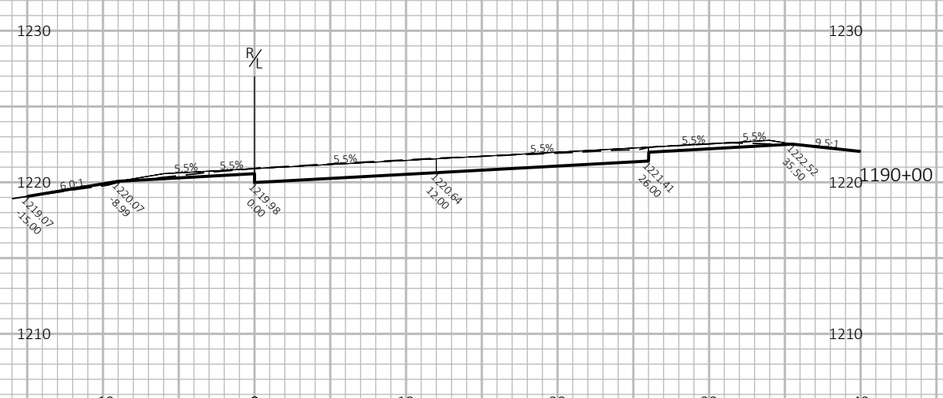

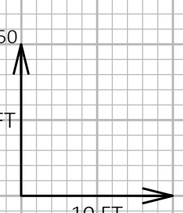

9

9

PROJECT NO: 1053-07-60	HWY: STH 29	COUNTY: MARATHON	CROSS SECTIONS: 29EB_PAVEMENT REPLACEMENT	SHEET 216	E

FILE NAME : W:\10530730\SHEETS\090201-XS.DWG
LAYOUT NAME - 07
PLOT DATE : 6/17/2025 2:23 PM
PLOT BY : RYAN BOOTH
PLOT NAME :
PLOT SCALE : 1 IN:10 FT HORZ. / 1 IN:10 FT VERT.
WISDOT/CADDS SHEET 49

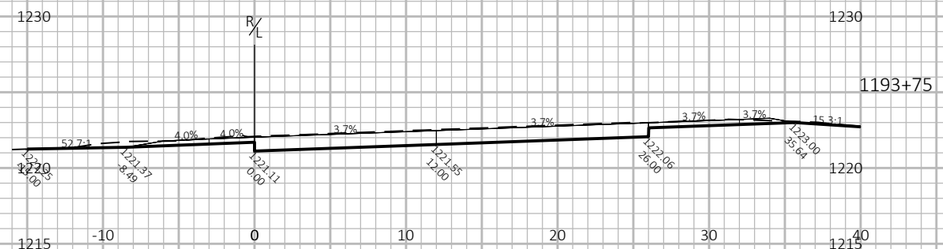

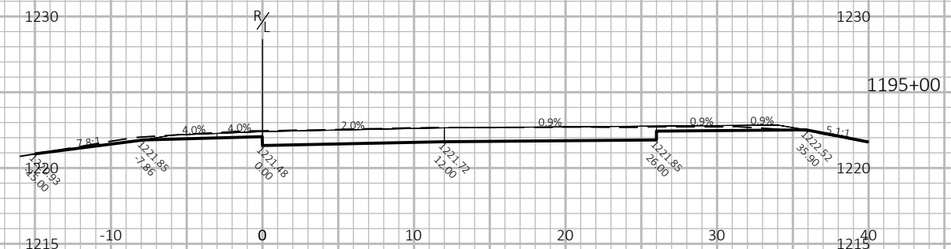

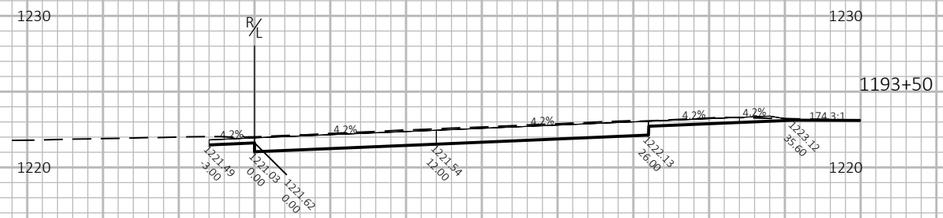

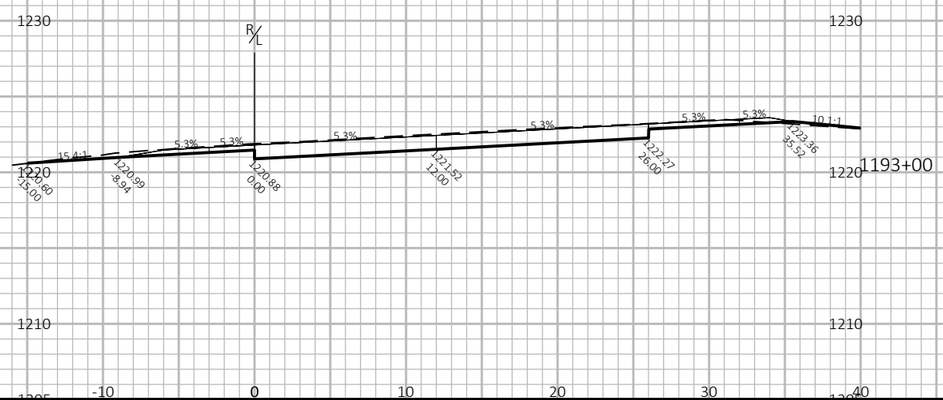

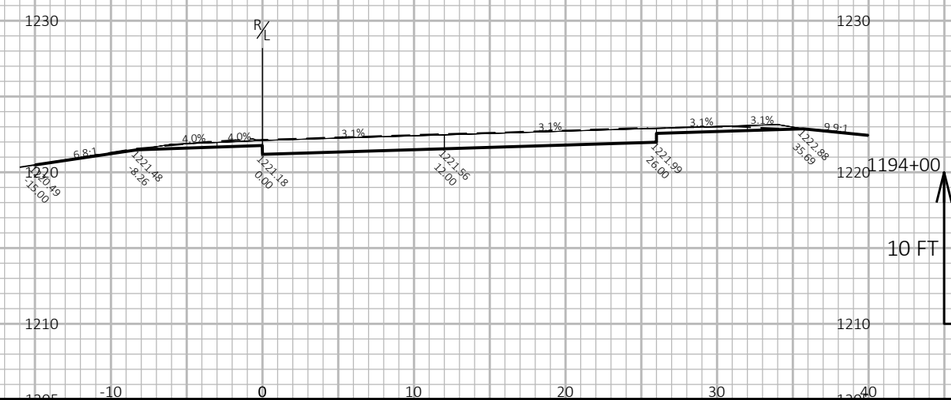

10 FT

10 FT

9

9

PROJECT NO: 1053-07-60	HWY: STH 29	COUNTY: MARATHON	CROSS SECTIONS: 29EB_PAVEMENT REPLACEMENT	SHEET 217	E

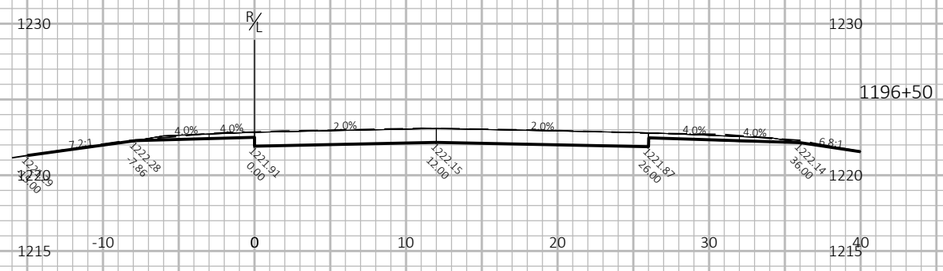

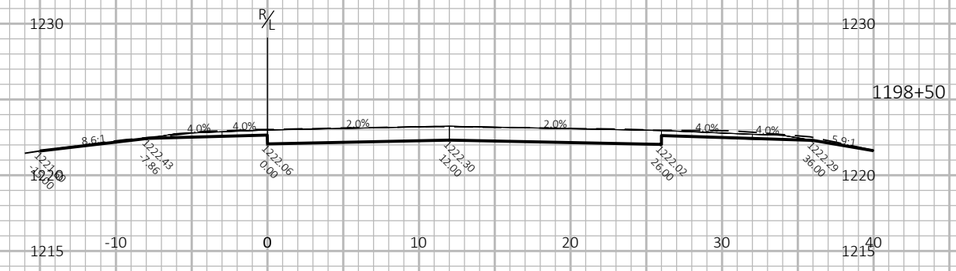

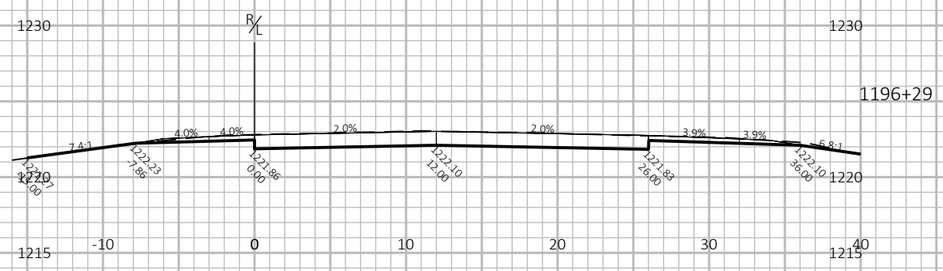

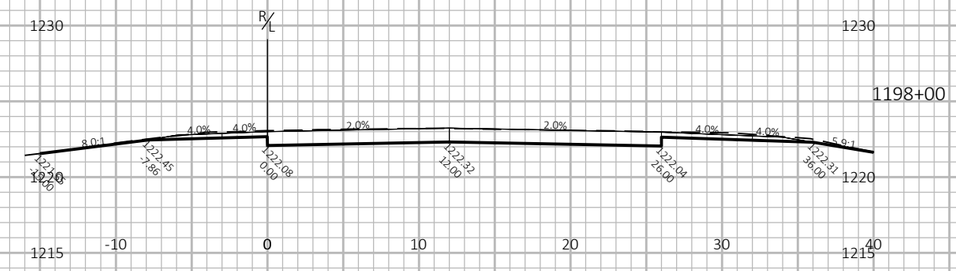

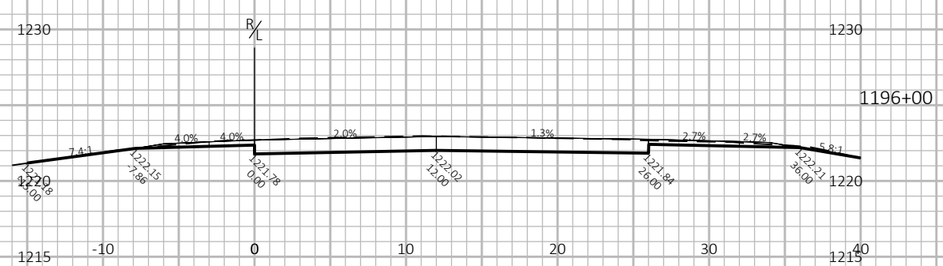

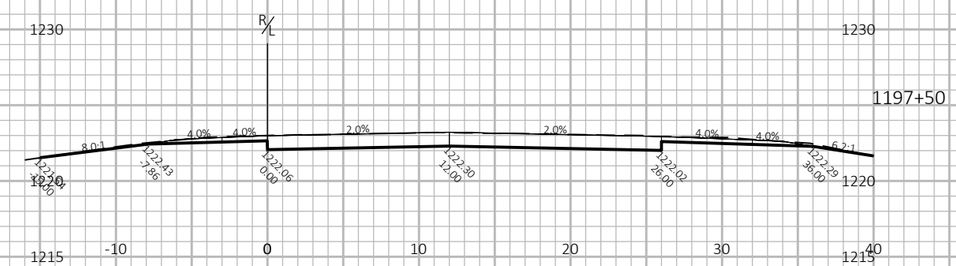

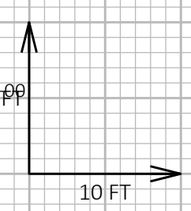

9

9

PROJECT NO: 1053-07-60	HWY: STH 29	COUNTY: MARATHON	CROSS SECTIONS: 29EB_PAVEMENT REPLACEMENT	SHEET 218	E

FILE NAME : W:\10530730\SHEETS\090201-XS.DWG
LAYOUT NAME - 09
PLOT DATE : 6/17/2025 2:24 PM
PLOT BY : RYAN BOOTH
PLOT NAME :
PLOT SCALE : 1 IN:10 FT HORZ. / 1 IN:10 FT VERT.
WISDOT/CADDS SHEET 49

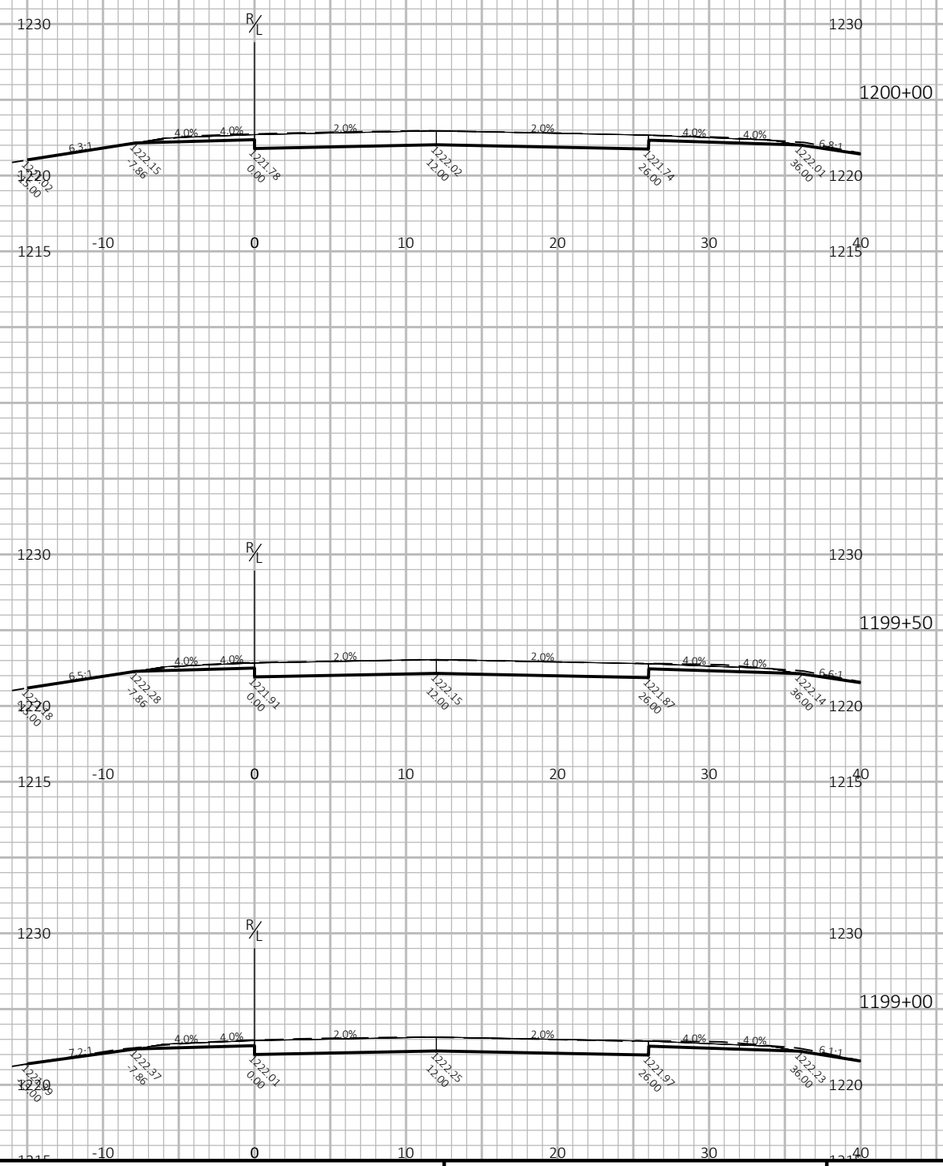

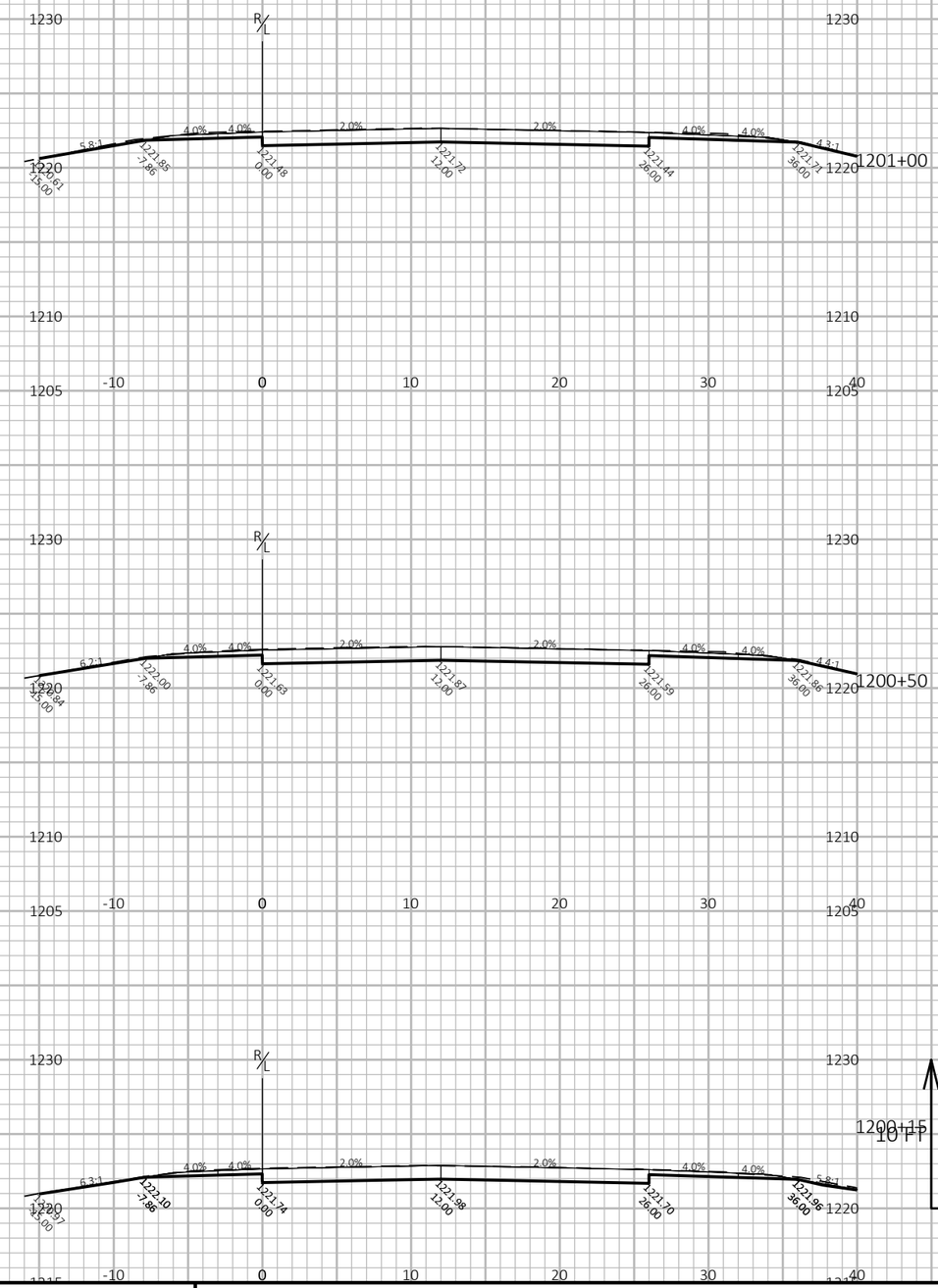

PROJECT NO: 1053-07-60	HWY: STH 29	COUNTY: MARATHON	CROSS SECTIONS: 29EB_PAVEMENT REPLACEMENT	SHEET 219	E

FILE NAME : W:\10530730\SHEETS\090201-XS.DWG
LAYOUT NAME - 10
PLOT DATE : 6/17/2025 2:24 PM
PLOT BY : RYAN BOOTH
PLOT NAME :
PLOT SCALE : 1 IN:10 FT HORZ. / 1 IN:10 FT VERT.
WISDOT/CADDS SHEET 49

9

9

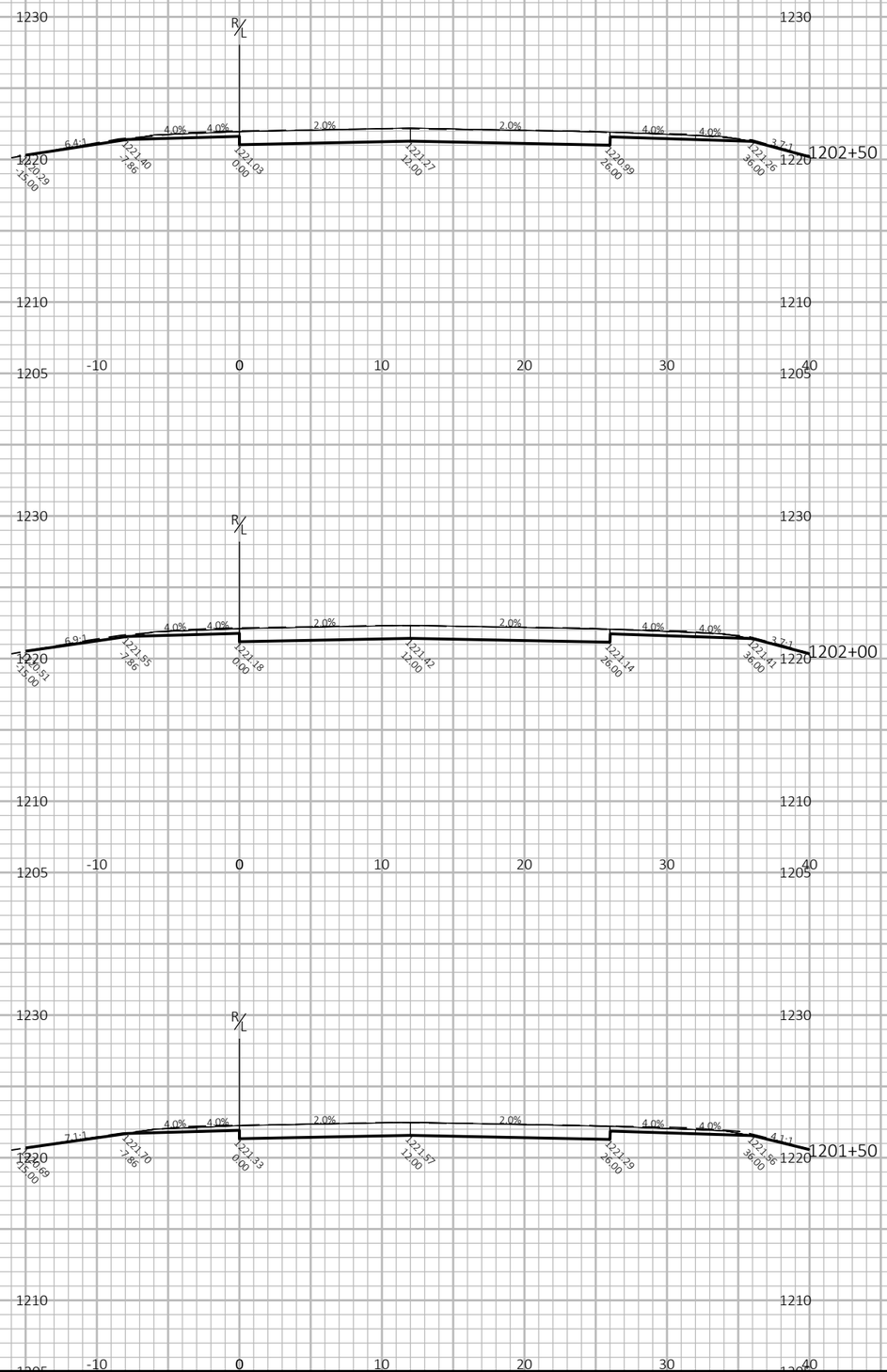

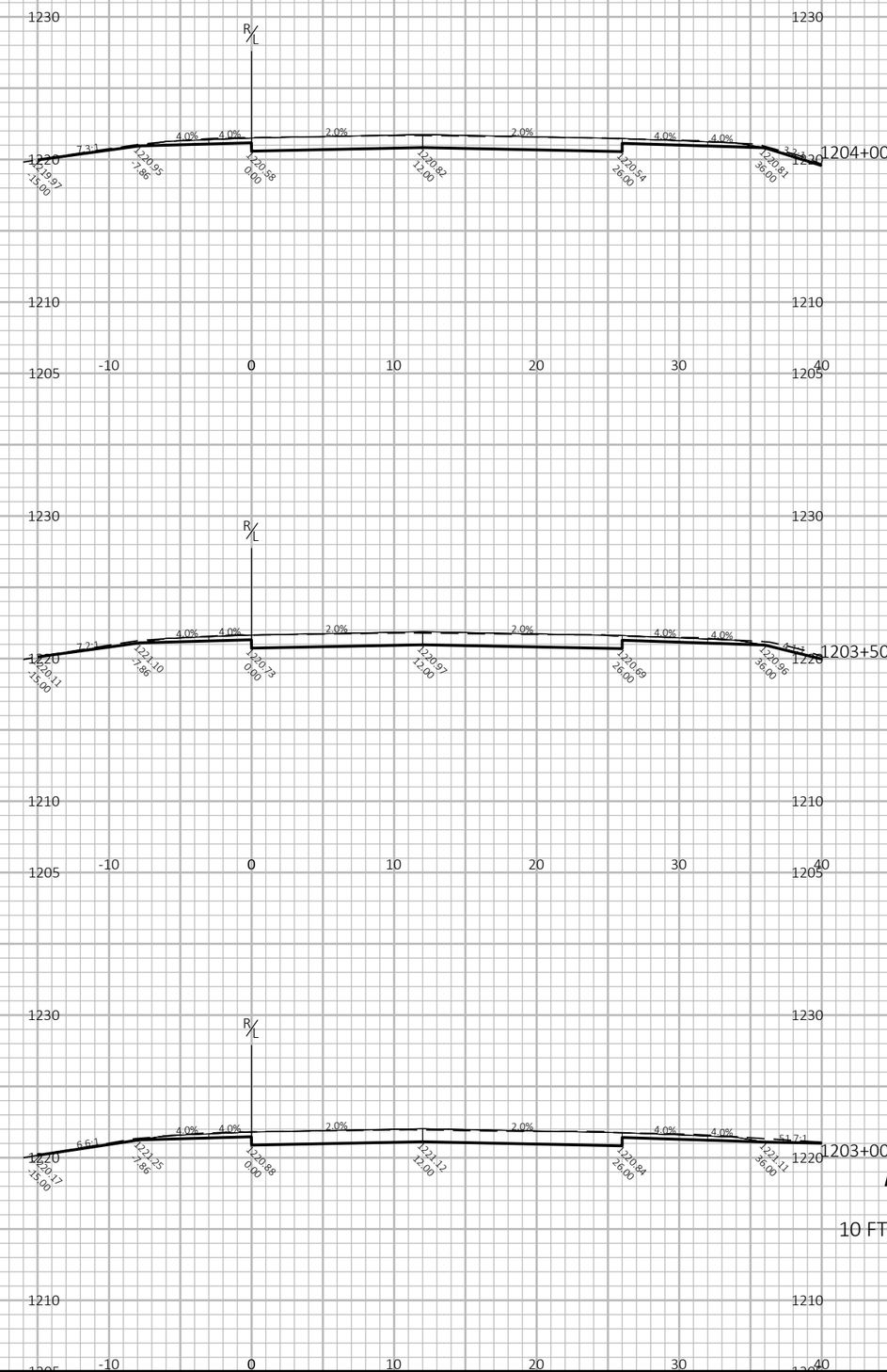

9

9

PROJECT NO: 1053-07-60	HWY: STH 29	COUNTY: MARATHON	CROSS SECTIONS: 29EB_PAVEMENT REPLACEMENT	SHEET 220	E

FILE NAME : W:\10530730\SHEETS\090201-XS.DWG
LAYOUT NAME - 11
PLOT DATE : 6/17/2025 2:24 PM
PLOT BY : RYAN BOOTH
PLOT NAME :
PLOT SCALE : 1 IN:10 FT HORZ. / 1 IN:10 FT VERT.
WISDOT/CADDS SHEET 49

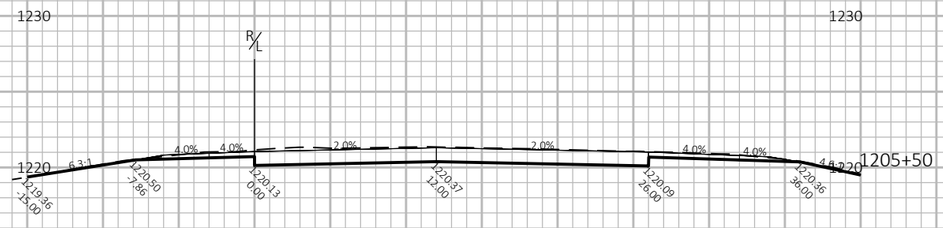

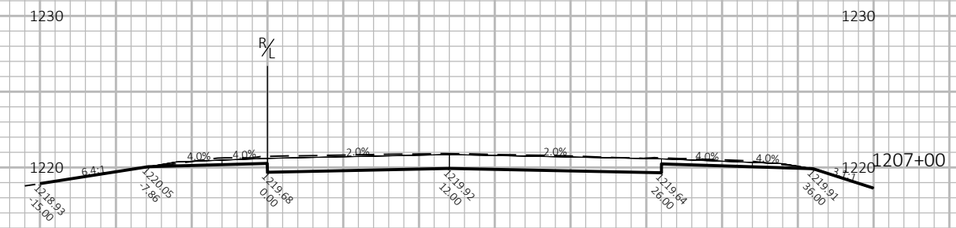

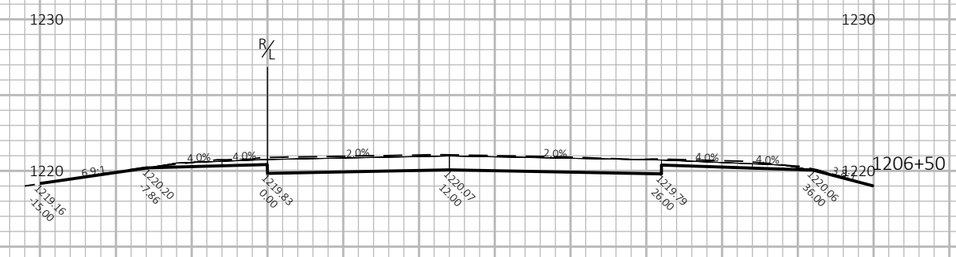

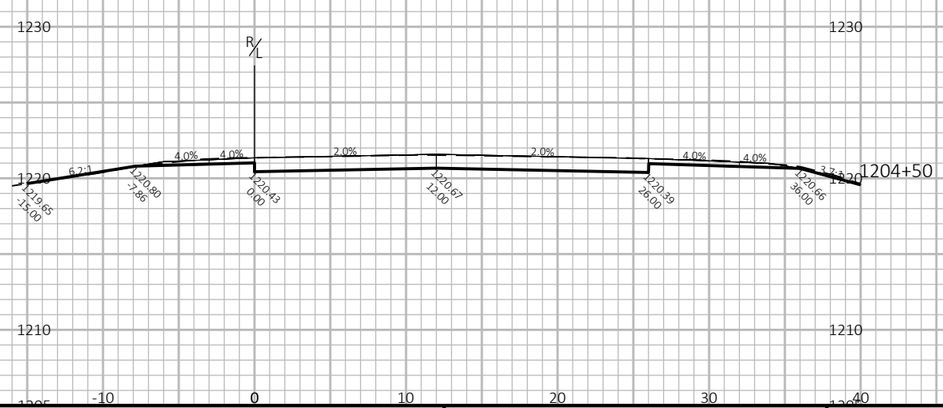

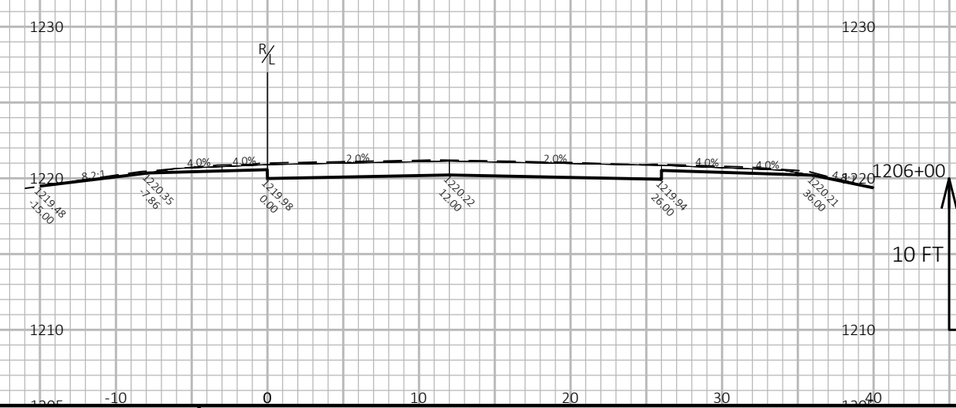

9

9

PROJECT NO: 1053-07-60	HWY: STH 29	COUNTY: MARATHON	CROSS SECTIONS: 29EB_PAVEMENT REPLACEMENT	SHEET 221	E

FILE NAME : W:\10530730\SHEETS\090201-XS.DWG
LAYOUT NAME - 12
PLOT DATE : 6/17/2025 2:24 PM
PLOT BY : RYAN BOOTH
PLOT NAME :
PLOT SCALE : 1 IN:10 FT HORZ. / 1 IN:10 FT VERT.
WISDOT/CADDS SHEET 49

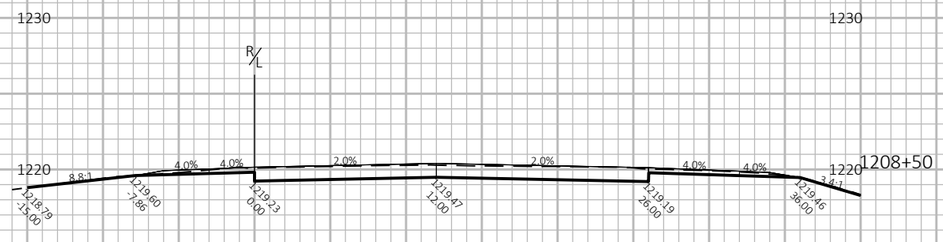

1208+50

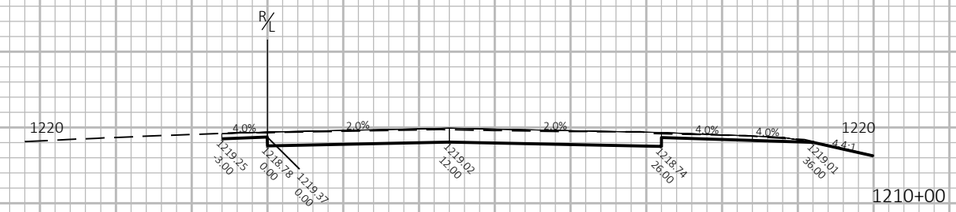

1210+00

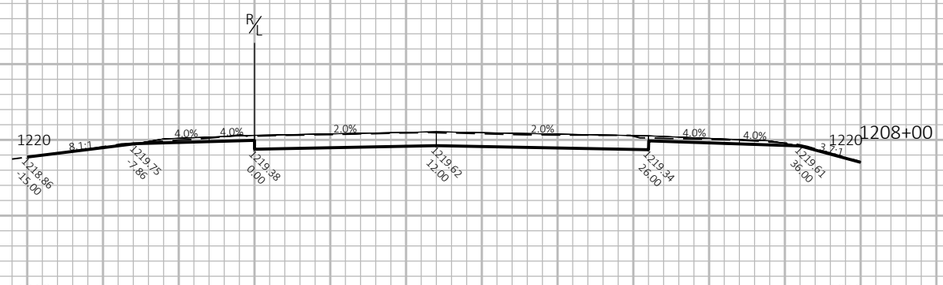

1208+00

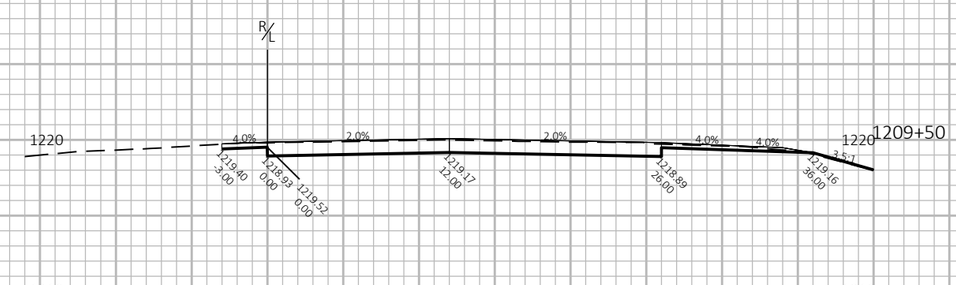

1209+50

1207+50

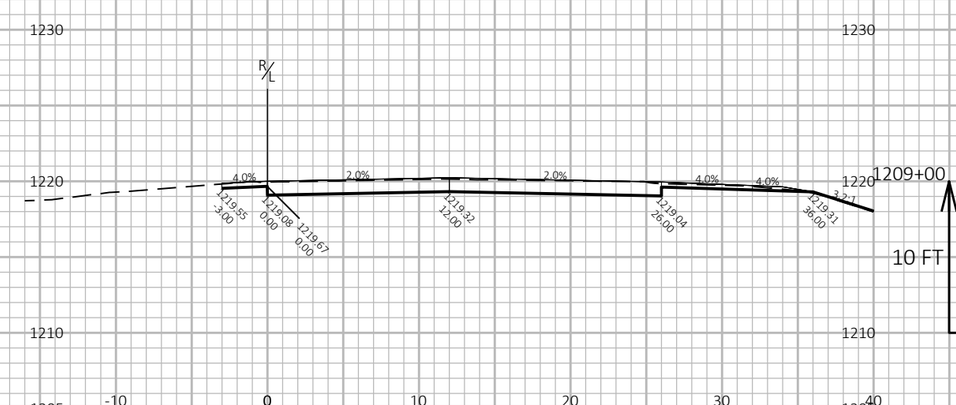

1209+00

10 FT

10 FT

9

9

PROJECT NO: 1053-07-60	HWY: STH 29	COUNTY: MARATHON	CROSS SECTIONS: 29EB_PAVEMENT REPLACEMENT	SHEET 222	E

FILE NAME : W:\10530730\SHEETS\090201-XS.DWG
LAYOUT NAME - 13
PLOT DATE : 6/17/2025 2:24 PM
PLOT BY : RYAN BOOTH
PLOT NAME :
PLOT SCALE : 1 IN:10 FT HORZ. / 1 IN:10 FT VERT.
WISDOT/CADDS SHEET 49

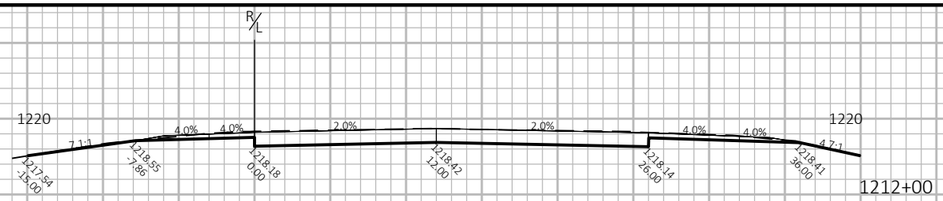

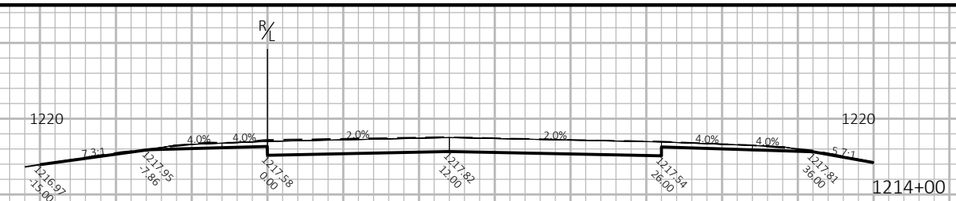

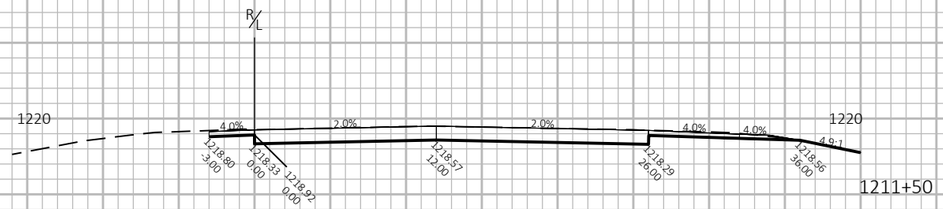

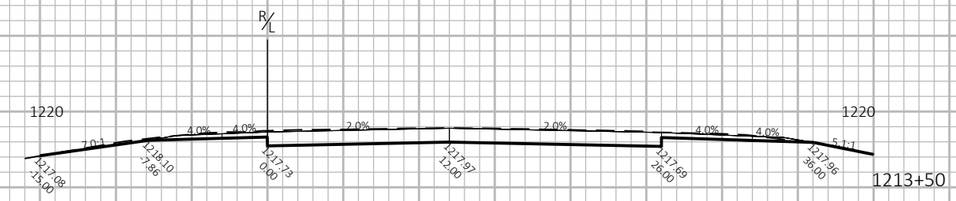

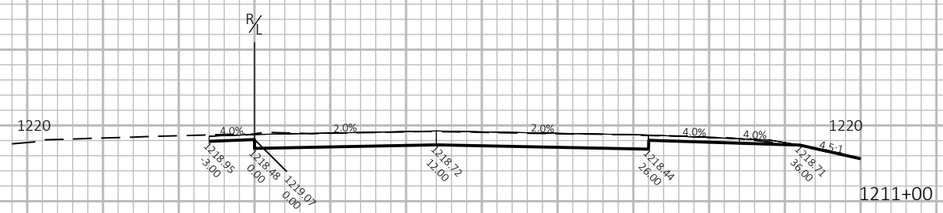

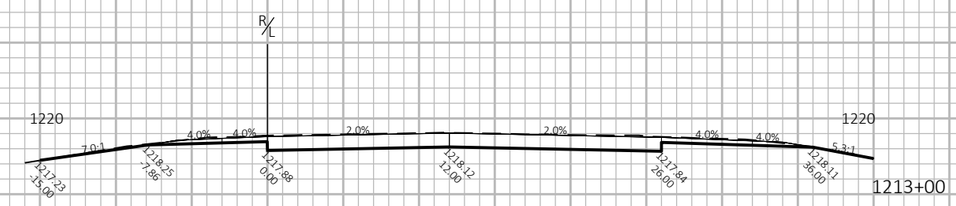

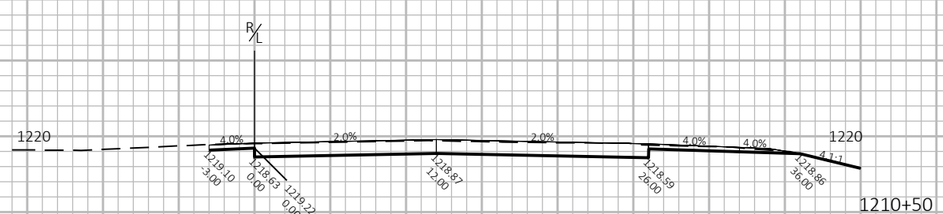

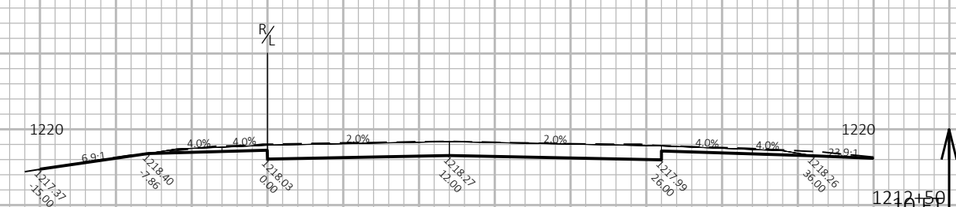

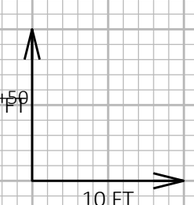

9

9

PROJECT NO: 1053-07-60	HWY: STH 29	COUNTY: MARATHON	CROSS SECTIONS: 29EB_PAVEMENT REPLACEMENT	SHEET 223	E

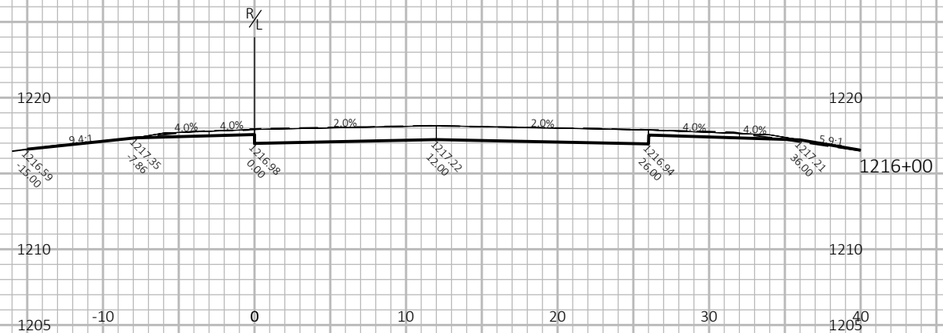

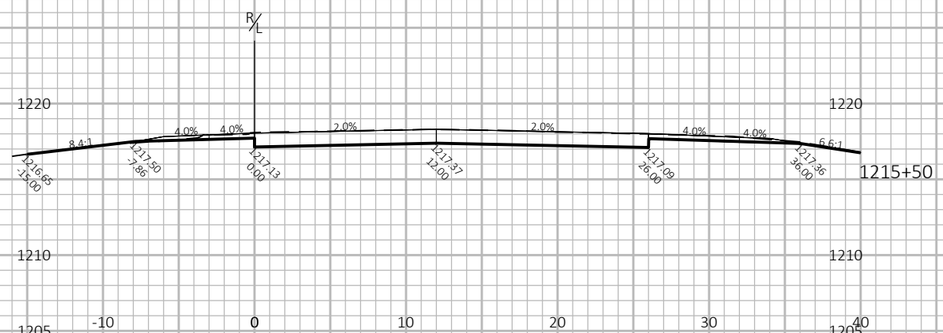

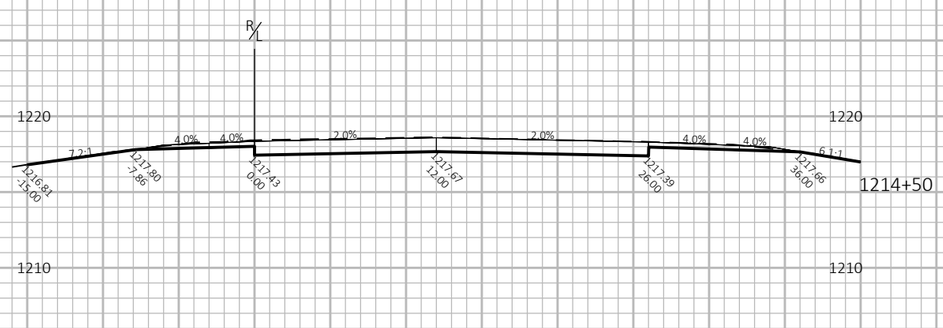

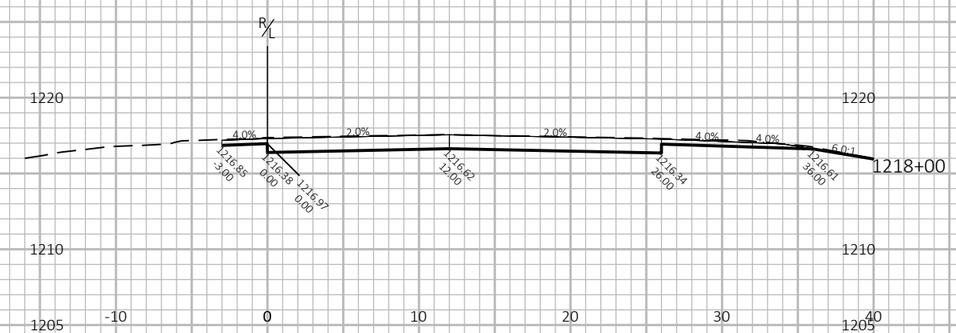

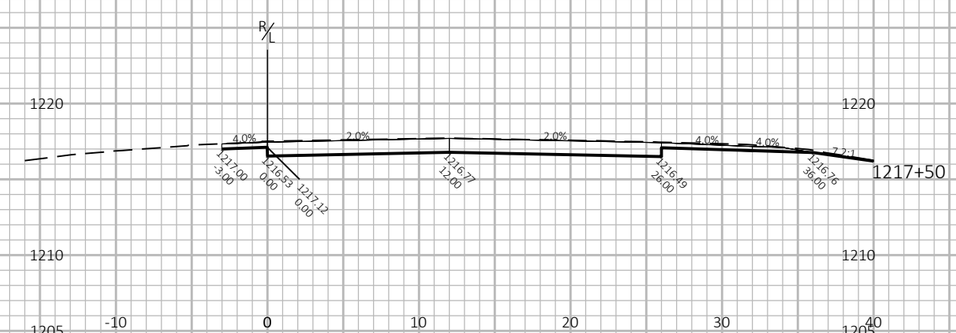

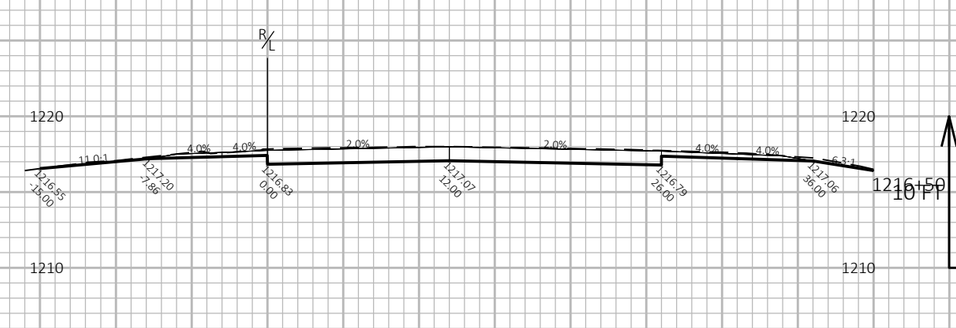

10 FT

10 FT

9

9

PROJECT NO: 1053-07-60	HWY: STH 29	COUNTY: MARATHON	CROSS SECTIONS: 29EB_PAVEMENT REPLACEMENT	SHEET 224	E

FILE NAME : W:\10530730\SHEETS\090201-XS.DWG
LAYOUT NAME - 15
PLOT DATE : 6/17/2025 2:25 PM
PLOT BY : RYAN BOOTH
PLOT NAME :
PLOT SCALE : 1 IN:10 FT HORZ. / 1 IN:10 FT VERT.

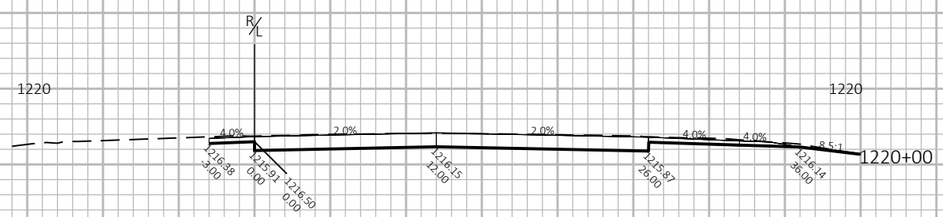

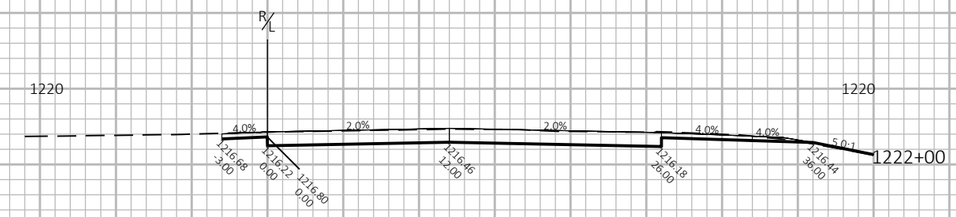

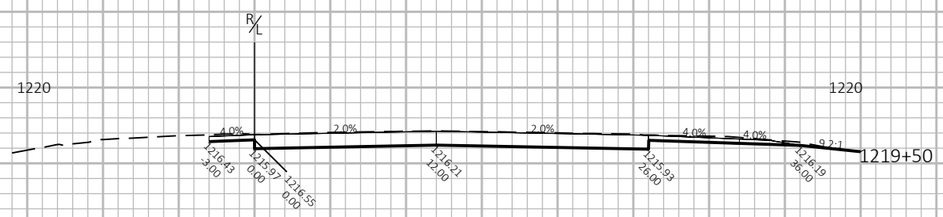

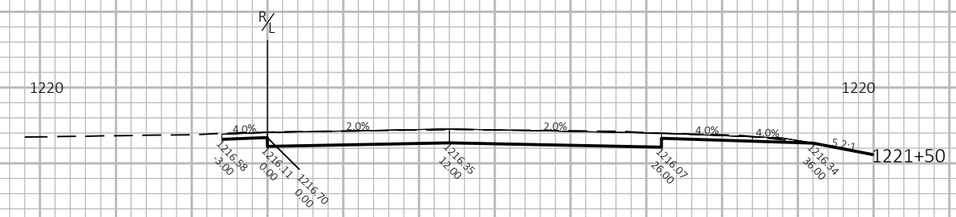

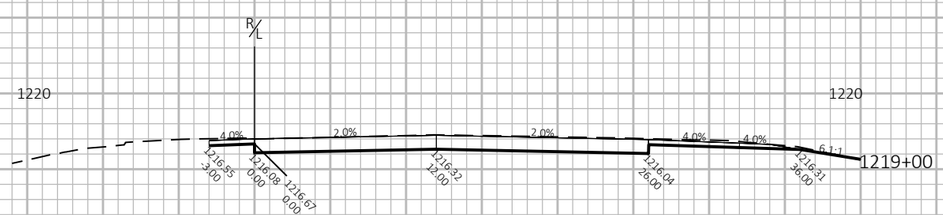

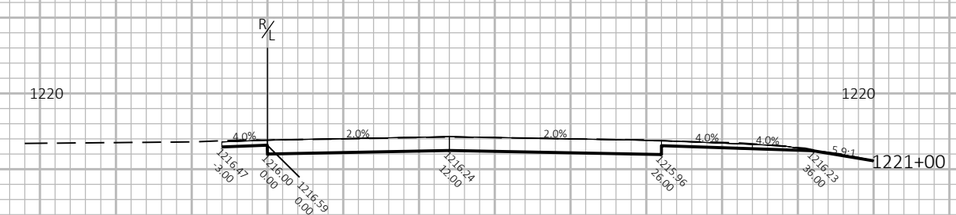

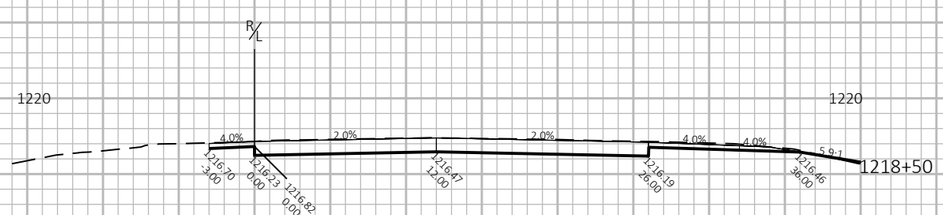

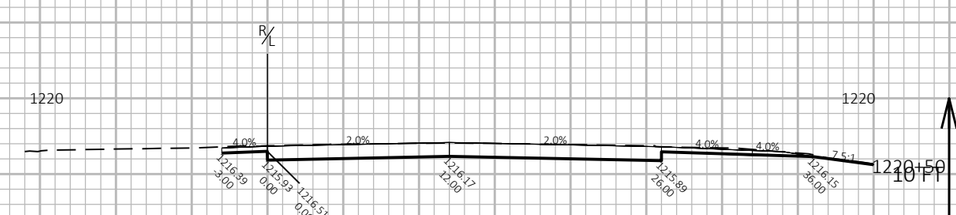

9

9

PROJECT NO: 1053-07-60	HWY: STH 29	COUNTY: MARATHON	CROSS SECTIONS: 29EB_PAVEMENT REPLACEMENT	SHEET 225	E

FILE NAME : W:\10530730\SHEETS\090201-XS.DWG
LAYOUT NAME - 16
PLOT DATE : 6/17/2025 2:25 PM
PLOT BY : RYAN BOOTH
PLOT NAME :
PLOT SCALE : 1 IN:10 FT HORZ. / 1 IN:10 FT VERT.
WISDOT/CADDS SHEET 49

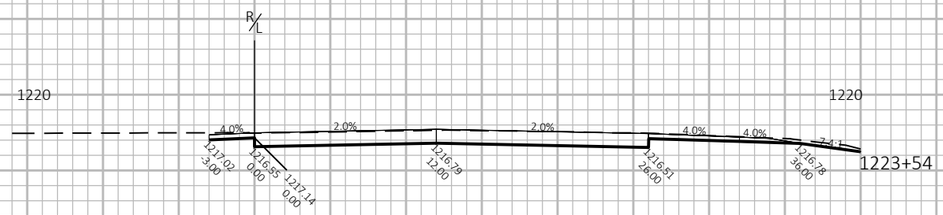

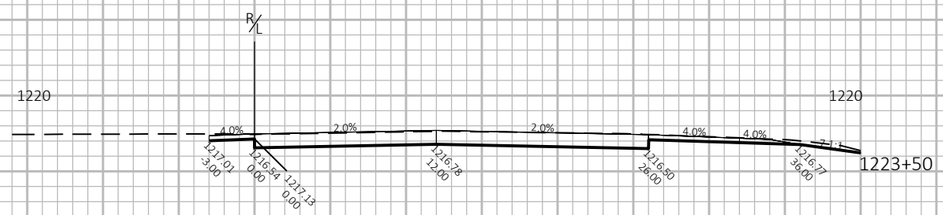

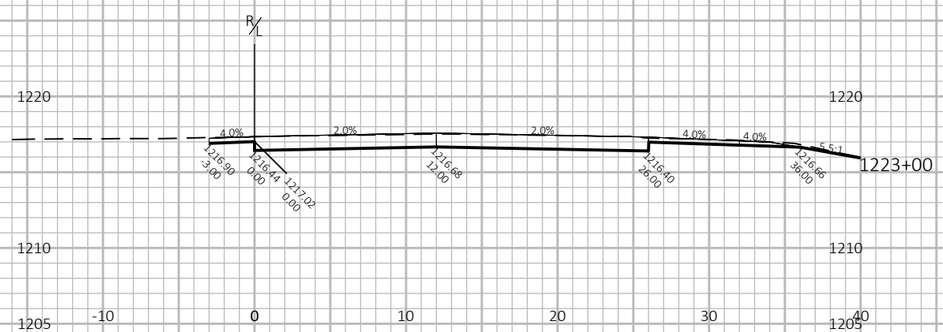

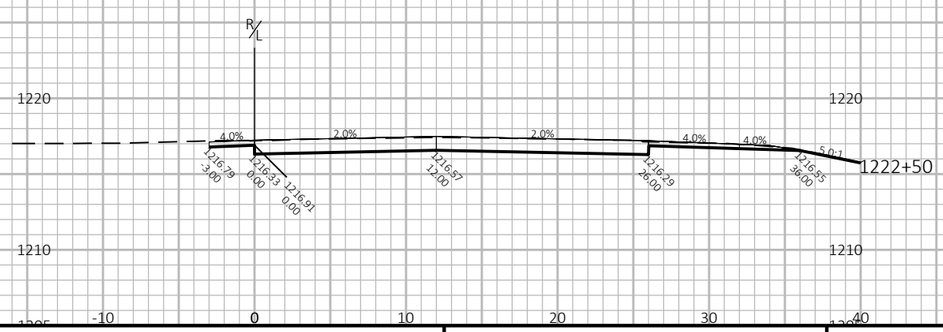

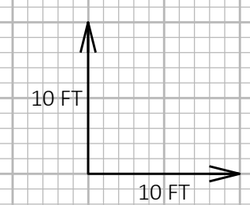

9

9

PROJECT NO: 1053-07-60	HWY: STH 29	COUNTY: MARATHON	CROSS SECTIONS: 29EB_PAVEMENT REPLACEMENT	SHEET 226	E

Notes

Wisconsin Department of Transportation

Dedicated people creating transportation solutions through innovation and exceptional service.

http://www.dot.wisconsin.gov