WKE

AUGUST 2025

PROJECT ID: 4010-18-70

COUNTY: WASHINGTON

ORDER OF SHEETS

Section No.	1	Title
Section No.	2	Typical Sections and Details
Section No.	3	Estimate of Quantities
Section No.	3	Miscellaneous Quantities
Section No.	4	Right of Way Plat
Section No.	5	Plan and Profile
Section No.	6	Standard Detail Drawings
Section No.	7	Sign Plates
~~Section No.~~	~~8~~	~~Structure Plans~~
Section No.	9	Computer Earthwork Data
Section No.	9	Cross Sections

TOTAL SHEETS = 296

N

DESIGN DESIGNATION

A.A.D.T.	2025	=	4,810
A.A.D.T.	2045	=	5,440
D.H.V.		=	555
D.D.		=	60 / 40
T.		=	22
DESIGN SPEED		=	60 MPH
ESALS		=	1,800,000

CONVENTIONAL SYMBOLS

PLAN

- CORPORATE LIMITS
- PROPERTY LINE
- LOT LINE
- LIMITED HIGHWAY EASEMENT
- EXISTING RIGHT OF WAY
- PROPOSED OR NEW R/W LINE
- SLOPE INTERCEPT
- REFERENCE LINE
- EXISTING CULVERT
- PROPOSED CULVERT (Box or Pipe)
- COMBUSTIBLE FLUIDS
- MARSH AREA
- WOODED OR SHRUB AREA

PROFILE

- GRADE LINE
- ORIGINAL GROUND
- MARSH OR ROCK PROFILE (To be noted as such)
- SPECIAL DITCH
- GRADE ELEVATION
- CULVERT (Profile View)

UTILITIES

- ELECTRIC
- FIBER OPTIC
- GAS
- SANITARY SEWER
- STORM SEWER
- TELEPHONE
- WATER
- UTILITY PEDESTAL
- POWER POLE
- TELEPHONE POLE

STATE OF WISCONSIN
DEPARTMENT OF TRANSPORTATION

PLAN OF PROPOSED IMPROVEMENT

WEST BEND - WALDO

SKYLINE DR TO NCL

STH 144

WASHINGTON COUNTY

STATE PROJECT	FEDERAL PROJECT	
	PROJECT	CONTRACT
4010-18-70	WISC 2025575	1

STATE PROJECT NUMBER
4010-18-70

R-19-E ◄► R-20-E

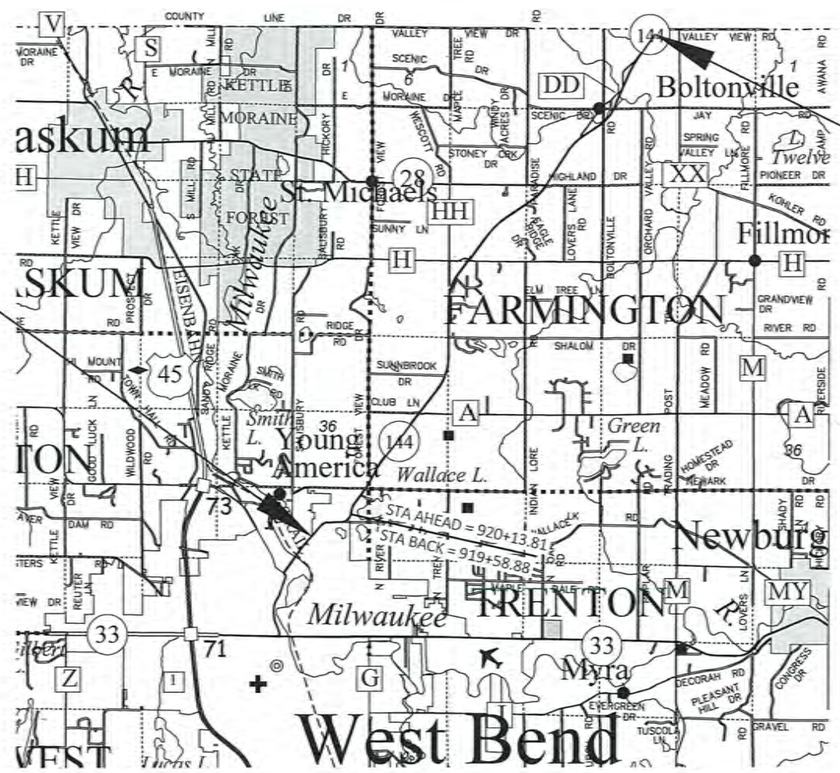

LAYOUT

SCALE 0 1 MI

TOTAL NET LENGTH OF CENTERLINE = 8.458 MI

HORIZONTAL POSITIONS SHOWN ON THIS PLAN ARE WISCONSIN COORDINATE REFERENCE SYSTEM (WISCRS), WASHINGTON COUNTY, NAD83 (2011), IN U.S. SURVEY FEET. POSITIONS SHOWN ARE GRID COORDINATES, GRID BEARINGS, AND GRID DISTANCES. GRID DISTANCES ARE THE SAME AS GROUND DISTANCES.

ELEVATIONS ARE REFERENCED TO NAVD 88 (2012). GPS DERIVED ELEVATIONS ARE BASED ON GEOID 12A.

STATE OF WISCONSIN
DEPARTMENT OF TRANSPORTATION

PREPARED BY

Surveyor	SURVEYOR
Designer	WISDOT
Project Manager	MARTIN VILLACA
Regional Examiner	
Regional Supervisor	JOSHUA LEVEQUE

APPROVED FOR THE DEPARTMENT

DATE: 5/1/2025 Martin E Villaca (Signature)

E

FILE NAME : N:\PDS\C3D\40101800\SHEETSPLAN\010101-TI.DWG PLOT DATE : 5/1/2025 8:32 AM PLOT BY : JONARDI, REBECCA PLOT NAME :

GENERAL NOTES

THE LOCATIONS OF EXISTING AND PROPOSED UTILITY INSTALLATIONS AS SHOWN ON THE PLANS ARE APPROXIMATE. THERE MAY BE OTHER UTILITY INSTALLATIONS WITHIN THE PROJECT AREA THAT ARE NOT SHOWN. COORDINATE CONSTRUCTION ACTIVITIES WITH A CALL TO DIGGERS HOTLINE AND/OR A DIRECT CALL TO THE UTILITIES THAT HAVE FACILITIES IN THE AREA. NOT ALL UTILITIES ARE MEMBERS OF DIGGERS HOTLINE.

THE CONTRACTOR WILL MAINTAIN ACCESS TO ALL DRIVEWAYS AND BUSINESSES AT ALL TIMES.

THE CONTRACTOR SHALL PLACE ALL TRAFFIC CONTROL DEVICES PRIOR TO BEGINNING ANY WORK ON THE ROADWAY.

PRIOR TO CONSTRUCTION THE CONTRACTOR SHALL CONTACT THE WASHINGTON COUNTY SURVEYOR CONCERNING MONUMENT AND PROPERTY CORNER PRESERVATION. LANDMARK REFERENCE MONUMENTS SHALL BE PERPETUATED BY THE WASHINGTON COUNTY SURVEYOR.

CONTACT THE PROJECT ENGINEER AND SCOTT SCHMIDT, WASHINGTON COUNTY SURVEYOR, AT LEAST TWO WEEKS PRIOR TO WORK NEAR ANY PUBLIC SURVEY MONUMENT.

SECTION CORNERS WITHIN THE ROADWAY WILL BE ADDRESSED WITH PAVING RINGS OR FULL DEPTH REPLACEMENT OF THE MONUMENT. THE WASHINGTON COUNTY SURVEYOR WILL MAKE THE DETERMINATION OF THE EXTENT OF THE WORK INVOLVED WITH PERPETUATING OR REPLACING THE SECTION CORNER MONUMENTS BASED ON INSPECTION DURING CONSTRUCTION. WASHINGTON COUNTY IS UNDER A SEPARATE CONTRACT WITH WISDOT SER TO PERPETUATE/REPLACE SECTION CORNER MONUMENTS. COORDINATE WITH WASHINGTON COUNTY HIGHWAY DEPARTMENT AT 262-335-4435.

CONSTRUCT PAVEMENT CONSISTENT WITH THE PLAN TYPICAL SECTIONS. LOCATE LONGITUDINAL JOINTS IN ASPHALT PAVEMENT OUTSIDE OF DRIVING, TURNING, BIKE, OR PARKING LANE UNLESS DIRECTED OTHERWISE BY THE ENGINEER PREVENT HMA LONGITUDINAL JOINTS FROM BEING LOCATED WITHIN A DRIVING, TURNING, BIKE, OR PARKING LANE. THE CONTRACTOR'S PAVING OPERATIONS SHALL BE CONSISTENT WITH THE PLAN TYPICAL SECTIONS AND CONSTRUCTED TO PREVENT HMA LONGITUDINAL JOINTS FROM BEING LOCATED WITHIN A DRIVING, TURNING, BIKE OR PARKING LANE.

RESHAPE, RESTORE AND FINISH ALL PREVIOUSLY GRASSED AREAS DISTURBED BY OPERATIONS OUTSIDE OF THE NORMAL CONSTRUCTION LIMITS AT NO EXPENSE TO THE DEPARTMENT DISTURBED AREAS WITHIN THE RIGHT OF WAY ARE TO BE TOPSOILED (SALVAGED), FERTILIZED, SEEDED, AND MULCHED OR SODDED AS DIRECTED BY THE ENGINEER.

PRIOR TO THE PLACEMENT OF STEEL PLATE BEAM GUARD OR MGS GUARDRAIL, THE SHOULDERS SHALL BE IN PLACE, SHAPED AND COMPACTED UNLESS SHOWN OTHERWISE.

BACKFILL ALL OPENINGS AND HOLES LOCATED WITHIN THE ROADWAY RESULTING FROM REMOVALS OR ABANDONMENTS WITH GRANULAR BACKFILL UNLESS THE PLANS PROVIDE FOR ALTERNATE BACKFILL.

DO NOT REMOVE ANY TREES OR SHRUBS WITHOUT APPROVAL OF THE ENGINEER.

ALL SIGN LOCATIONS SHALL BE REVIEWED BY THE ENGINEER PRIOR TO INSTALLATION.

EXISTING DRIVEWAYS AND FIELD ENTRANCES SHALL BE RESTORED IN KIND AS DIRECTED BY THE ENGINEER IN THE FIELD AND AT THE LOCATION DETERMINED BY THE ENGINEER.

THE EXACT LOCATION OF PRIVATE ENTRANCES IS TO BE DETERMINED IN THE FIELD BY THE ENGINEER.

CROSS SECTIONS SHOWN INCLUDE THE THICKNESS OF TOPSOIL WHERE REQUIRED. TOPSOIL SHALL BE REPLACED WITH 4-INCH TYPICAL DEPTH.

SQUEEGEE ALL SAWCUT SLUDGE TO AGGREGATE SHOULDER OR CURB PAN, REMOVE, AND DISPOSE OF AT AN ACCEPTABLE MATERIAL DISPOSAL SITE OR ON ENGINEER-APPROVED AREAS OF THE ROADWAY OR ROADSIDE.

HMA PAVING

LOCATION	THICKNESS	HMA PAVEMENT	LAYER LIFT	NOTES
STA 885+49 TO 1332+62	2-INCH	4MT 58-28 S	UPPER LAYER	
STORM SEWER PAVEMENT	2-INCH 2-INCH	3MT 58-34 S 4MT 58-28 S	LOWER LAYER UPPER LAYER	
CULVERT REMOVAL AREA	4-INCH 2-INCH	3MT 58-34 S 4MT 58-28 S	LOWER LAYER UPPER LAYER	17" BASE AGGREGATE DENSE 1 1/4-INCH

UTILITIES CONTACTS

ANR PIPELINE CO - GAS/PETROLEUM
DANIEL FLAHERTY
EDEN FIELD OFFICE, W3925 PIPELINE LANE
EDEN, WI 53019
920-447-2006
DAN-FLAHERTY@TCENERGRY.COM

AT&T WISCONSIN - COMMUNICATION LINE
DEAN HERRO
435 SOUTH 95TH STREET
MILWAUKEE, WI 53214-1226
262-226-9639
DH2572@ATT.COM

ATC MANAGEMENT, INC. - ELECTRICITY -TRANSMISSION
CHRIS DAILEY
P.O. BOX 47
WAUKESHA, WI 53187
262-506-6884
CDAILEY@ATCLLC.COM

CITY OF WEST BEND - WATER
TRAVIS THULL
251 MUNICIPAL DRIVE
WEST BEND, WI 53095
262-335-5040
THULLT@CI.WEST-BEND.WI.US

FRONTIER COMMUNICATIONS OF WI LLC - COMMUNICATION LINE
JEREMY ZEHM
1851 N. 14TH AVE
WAUSAU, WI 54401
715-243-9243
JEREMY.ZEHM@FTR.COM

SPECTRUM - COMMUNICATION LINE
NICK FRASE
1515 W WASHINGTON ST.
WEST BEND, WI 53095
920-831-9227
NICK.FRASE@CHARTER.COM

SPRINT COMMUNICATIONS CO LP - COMMUNICATION LINE
STEVEN HUGHES
1457 COUNTY ROAD 545 S
SKANDIA, MI 49885
513-462-7221
STEVEN..HUGHES1@T-MOBILE.COM

WALLACE LAKE SANITARY DISTRICT - SEWER
THOMAS GURECKI
PO BOX 434
P.O. BOX 31
BROWNSVILLE, WI 53002
262-689-5741
TGURECKI81951@GMAIL.COM

WE ENERGIES - ELECTRICITY
GREGORY BOERNER
500 S 116TH STREET
WEST ALLIS, WI 53214
618-409-5861
GREGORY.BOERNER@WE-ENERGIES.COM

WE ENERGIES - GAS/PETROLEUM
KELLY JAECK
500 S 116TH STREET
WEST ALLIS, WI 53214
414-994-5767
KELLY.JAECK@WE-ENERGIES.COM

WEST SHORE PIPE LINE COMPANY - GAS/PETROLEUM
CASEY SCHWANDT
11115 WEST COUNTY LINE RD
MILWAUKEE, WI 53224
414-354-9288
CSCHWANDT@BUCKEYE.COM

CITY OF WEST BEND - SEWER
STEVE RANDALL
512 MUNICIPAL DRIVE
WEST BEND, WI 53095
262-334-3925
RANDALLS@CI.WEST-BEND.WI.US

WDNR

RYAN PAPPAS
DNR SERVICE CENTER
2300 N MARTIN LUTHER KING JR DRIVE
MILWAUKEE, WI 53212
414-750-7495
RYAN.PAPPAS@WISCONSIN.GOV

OTHER CONTACTS

CITY OF WEST BEND - PUBLIC WORKS DIRECTOR
DOUG NEUMANN
251 MUNICIPAL DRIVE
WEST BEND, WI 53095
262-335-5079
NEUMANND@CI.WEST-BEND.WI.US

BARTON TOWN CLERK
SHERRY ECKERT
3482 TOWN HALL ROAD
KEWAUSKUM, WI 53040
262-334-2765
CLERK@BARTONTOWN.NET

FARMINGTON TOWN CLERK
PATTY HOERIG
1807 COUNTY ROAD A
WEST BEND, WI 53040
262-429-1087
CLKPATTY.HOERIG@CHARTER.NET

WASHINGTON COUNTY ENGINEER/ SURVEYOR
WASHINGTON COUNTY HIGHWAY COMMISSIONER
SCOTT SCHMIDT, PE, PLS
900 LANG STREET
WEST BEND, WI 53090
262-335-6881
SCOTT.SCHMIDT@CO.WASHINGTON.WI.US

DIGGERS HOTLINE
Dial 811 or (800)242-8511
www.DiggersHotline.com

PROJECT NO: 4010-18-70	HWY: STH 144	COUNTY: WASHINGTON	GENERAL NOTES AND UTILITY CONTACTS	SHEET 2	E

2

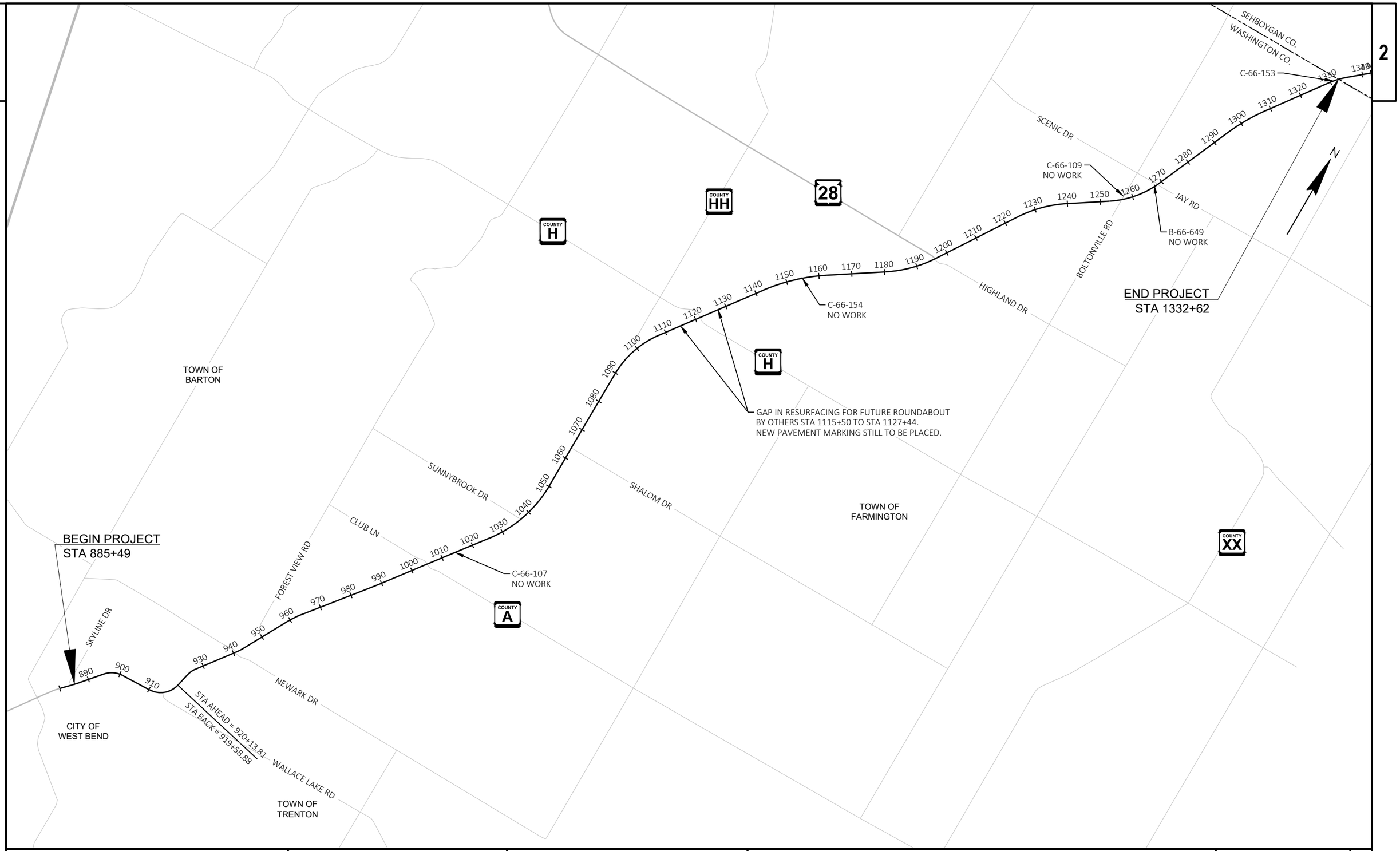

PROJECT NO: 4010-18-70	HWY: STH 144	COUNTY: WASHINGTON	PROJECT OVERVIEW	SHEET 3	E

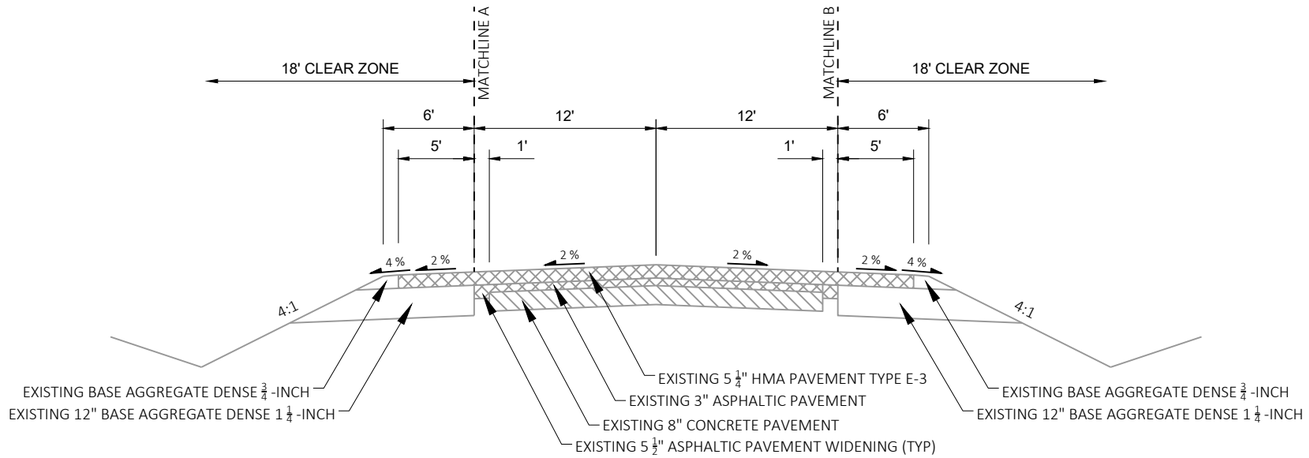

EXISTING TYPICAL SECTION - STH 144

STA 885+49 - 907+25
STA 921+00 - 977+55
STA 1004+00 - 1006+04

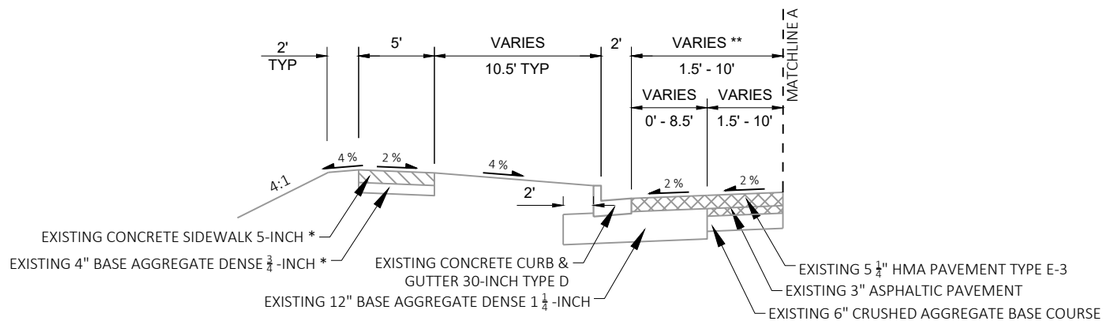

NOTES:

* SIDEWALK ON RIGHT ONLY

** 7'TYPICAL ON RIGHT, 10' TYPICAL ON LEFT

URBAN SECTION

(LEFT SHOWN, MIRROR IMAGE FOR RIGHT)
STA 885+49 - 888+01 RT
STA 885+49 - 887+00 LT

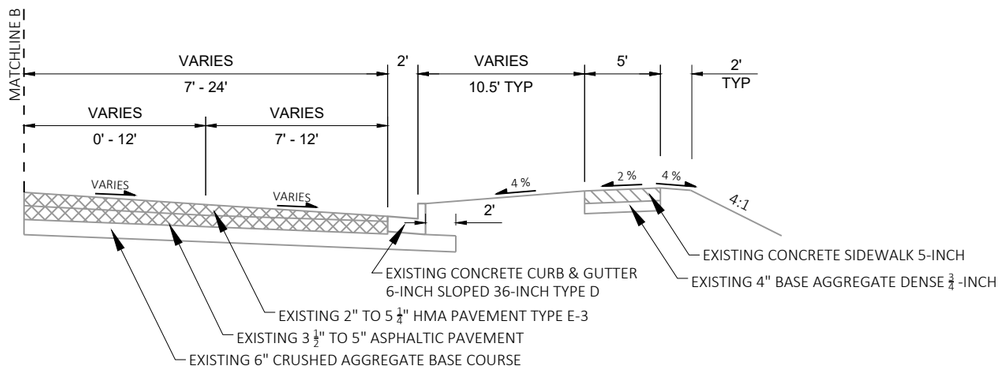

URBAN RIGHT TURN LANE

STA 888+01 - 891+75 RT

EXISTING TYPICAL HALF-SECTIONS - STH 144

PROJECT NO: 4010-18-70	HWY: STH 144	COUNTY: WASHINGTON	EXISTING TYPICAL SECTIONS	SHEET 4	E

FILE NAME : N:\PDS\C3D\40101800\SHEETSPLAN\020301-TS-EX.DWG
LAYOUT NAME - 020301-ts
PLOT DATE : 7/1/2025 11:09 AM
PLOT BY : SCHMIDT, JUDENE M
PLOT NAME :
PLOT SCALE : 1 IN:10 FT
WISDOT/CADDS SHEET 42

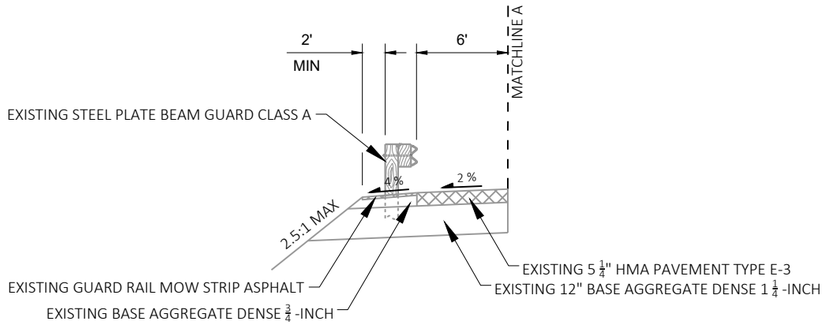

BEAM GUARD SECTION

(LEFT SHOWN, MIRROR IMAGE FOR RIGHT)
STA 893+12 - 897+43 RT
STA 893+42 - 897+36 LT

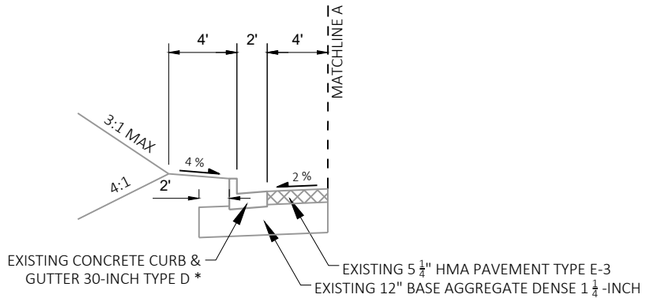

URBAN SECTION

(LEFT SHOWN, MIRROR IMAGE FOR RIGHT)
STA 898+00 - 903+00 RT
STA 935+00 - 935+61 RT
STA 935+50 - 940+40 LT
STA 945+36 - 949+43 LT
STA 953+85 - 956+00 RT

NOTES:

* CONCRETE CURB & GUTTER 6-INCH SLOPED
36-INCH TYPE D FOR STA 898+00 - 903+00 RT

CONCRETE CURB & GUTTER 4-INCH SLOPED
36-INCH TYPE D FOR STA 953+85 - 956+00 RT

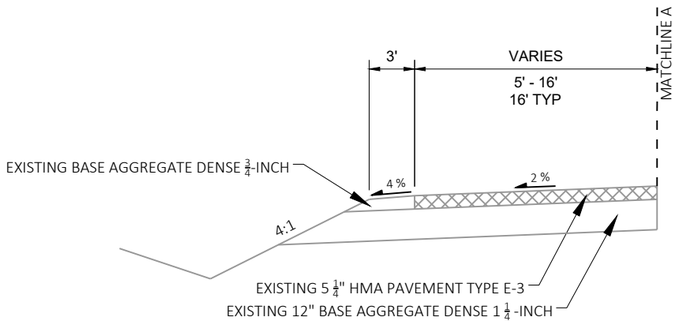

RIGHT TURN LANE

(LEFT SHOWN, MIRROR IMAGE FOR RIGHT)
STA 937+50 - 940+69 RT
STA 950+00 - 955+51 LT
STA 1004+00 - 1004+80 RT

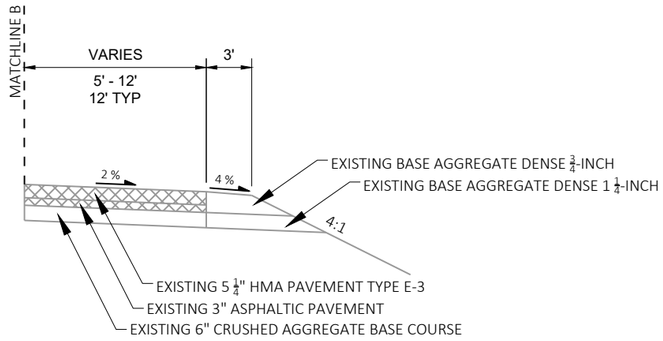

RIGHT TURN LANE

STA 903+24 - 906+00 RT

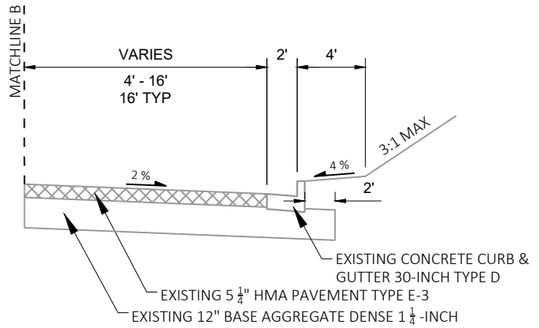

URBAN RIGHT TURN LANE

STA 903+24 - 906+00 RT

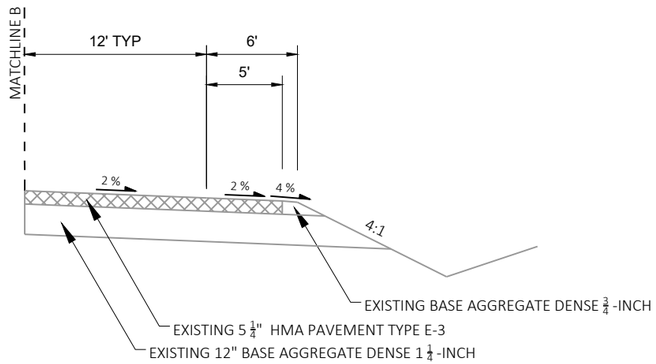

BYPASS LANE

STA 903+24 - 906+00 RT

EXISTING TYPICAL HALF-SECTIONS - STH 144

2

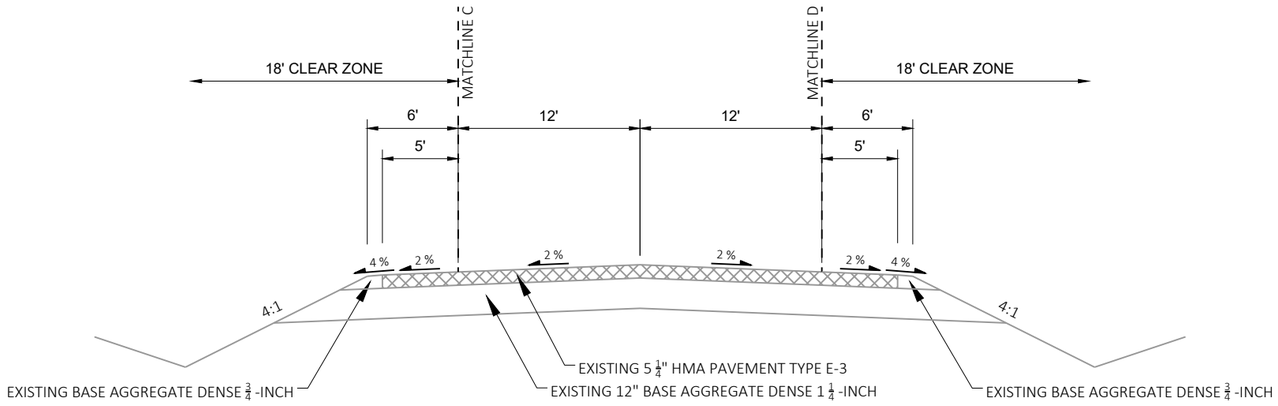

EXISTING TYPICAL SECTION - STH 144

STA 907+25 - 921+00
STA 977+55 - 1004+00

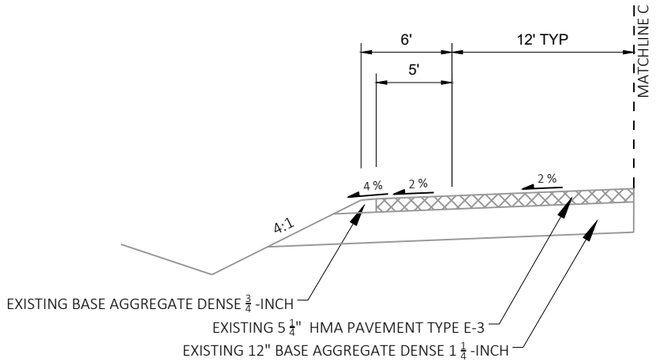

BYPASS LANE

STA 910+29 - 918+06 LT

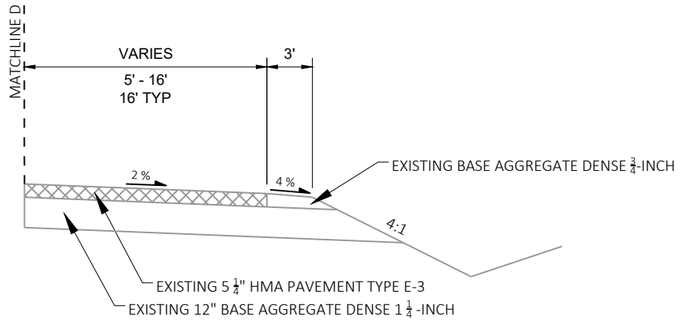

RIGHT TURN LANE

STA 908+90 - 914+33 RT
STA 998+89 - 1004+00 RT

TYPICAL EXISTING HALF-SECTIONS - STH 144

PROJECT NO: 4010-18-70	HWY: STH 144	COUNTY: WASHINGTON	EXISTING TYPICAL SECTIONS	SHEET 6	E

FILE NAME : N:\PDS\C3D\40101800\SHEETSPLAN\020301-TS-EX.DWG
LAYOUT NAME - 020303-ts
PLOT DATE : 7/1/2025 11:09 AM
PLOT BY : SCHMIDT, JUDENE M
PLOT NAME :
PLOT SCALE : 1 IN:10 FT
WISDOT/CADDS SHEET 42

2

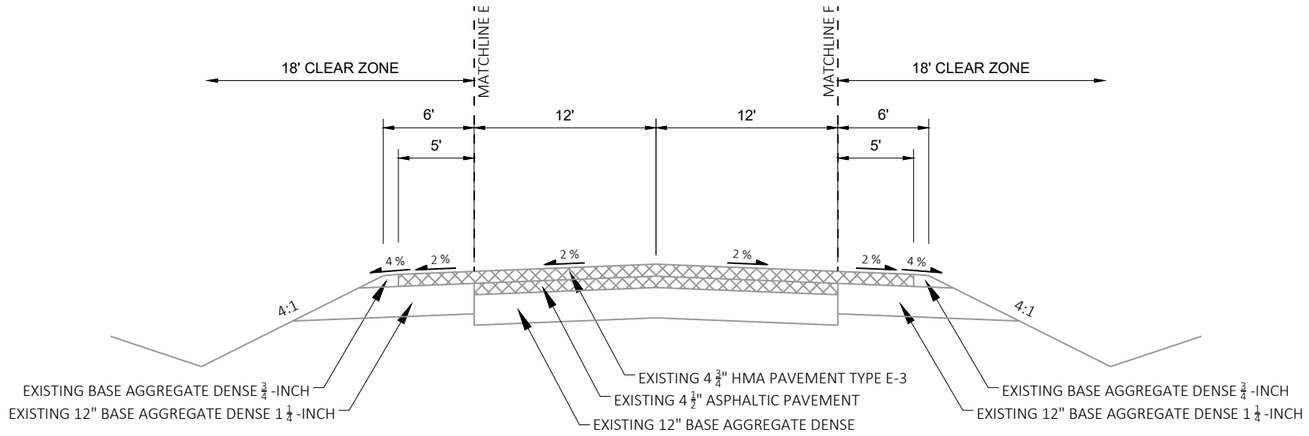

EXISTING TYPICAL SECTION - STH 144

STA 1006+04 - 1328+14

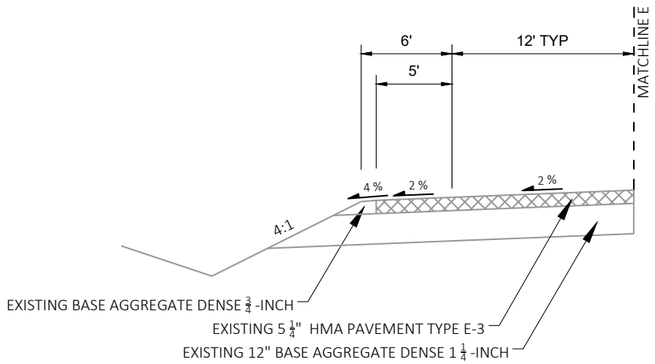

BYPASS LANE

STA 1059+44 - 1067+35 LT

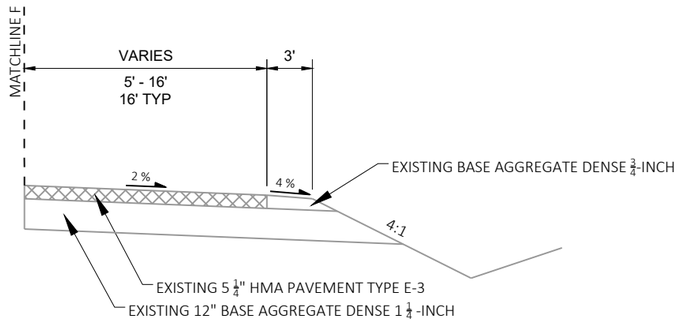

RIGHT TURN LANE

(RIGHT SHOWN, MIRROR IMAGE FOR LEFT)

STA 1005+05 - 1011+00 LT
STA 1057+92 - 1063+52 RT
STA 1115+24 - 1121+21 RT
STA 1121+78 - 1127+75 LT
STA 1190+30 - 1195+94 RT
STA 1198+75 - 1202+06 LT
STA 1262+53 - 1268+41 RT
STA 1268+60 - 1274+32 LT

EXISTING TYPICAL HALF-SECTIONS - STH 144

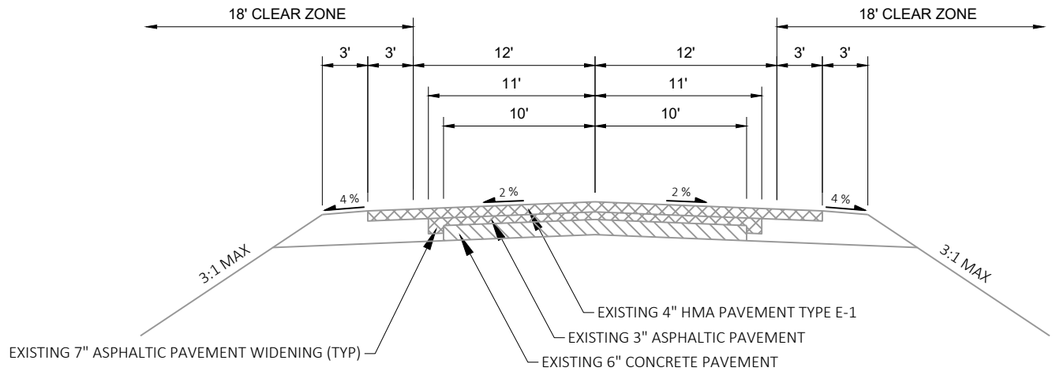

EXISTING TYPICAL SECTION - STH 144

STA 1328+14 - 1332+62

PROJECT NO: 4010-18-70	HWY: STH 144	COUNTY: WASHINGTON	EXISTING TYPICAL SECTIONS	SHEET 7	E

FILE NAME : N:\PDS\C3D\40101800\SHEETSPLAN\020301-TS-EX.DWG
LAYOUT NAME - 020304-ts
PLOT DATE : 7/1/2025 11:09 AM
PLOT BY : SCHMIDT, JUDENE M
PLOT NAME :
PLOT SCALE : 1 IN:10 FT
WISDOT/CADDS SHEET 42

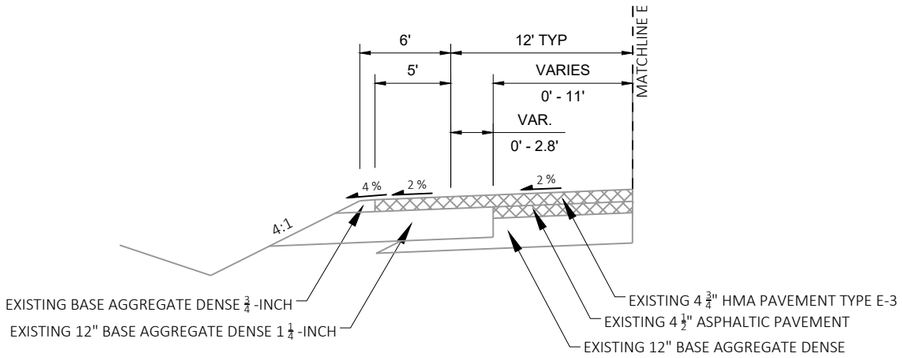

BYPASS LANE
STA 1072+68 - 1080+60 LT

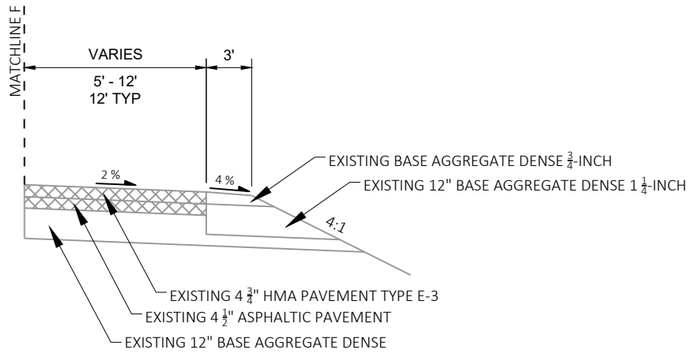

RIGHT TURN LANE
STA 1073+69 - 1076+80 RT
STA 1174+74 - 1177+15 RT

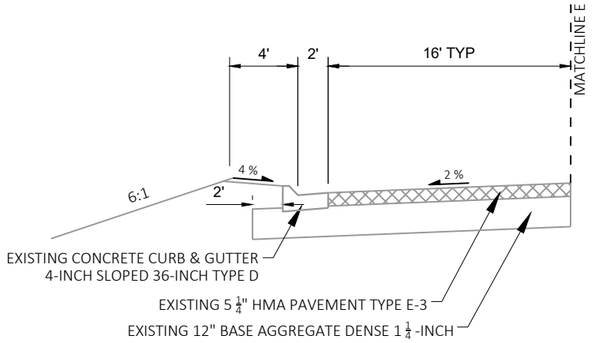

RIGHT TURN LANE
STA 1196+16 - 1198+75 LT

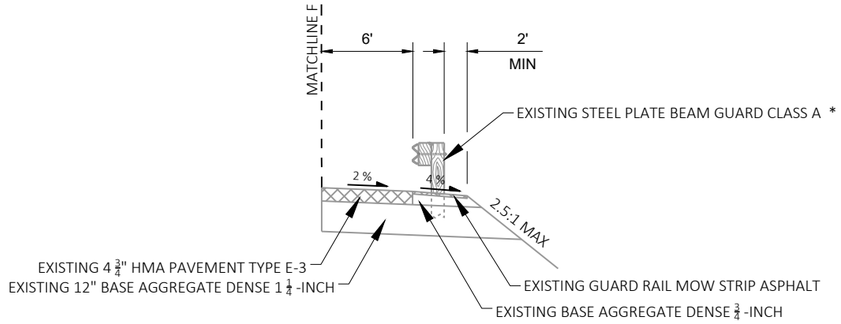

BEAM GUARD SECTION
(RIGHT SHOWN, MIRROR IMAGE FOR LEFT)
STA 1131+77 - 1137+90 RT
STA 1132+00 - 1138+13 LT
STA 1138+88 - 1146+00 RT
STA 1153+77 - 1155+90 RT *
STA 1154+02 - 1156+14 LT
STA 1249+11 - 1262+13 LT

NOTES:

* GUARDRAIL STIFFENED LHW WITH 2.5:1 MAX. SLOPE FROM BACK OF POST FOR STA 1153+77 - 1155+90 RT

TYPICAL EXISTING HALF-SECTIONS - STH 144

PROJECT NO: 4010-18-70	HWY: STH 144	COUNTY: WASHINGTON	EXISTING TYPICAL SECTIONS	SHEET 8	E

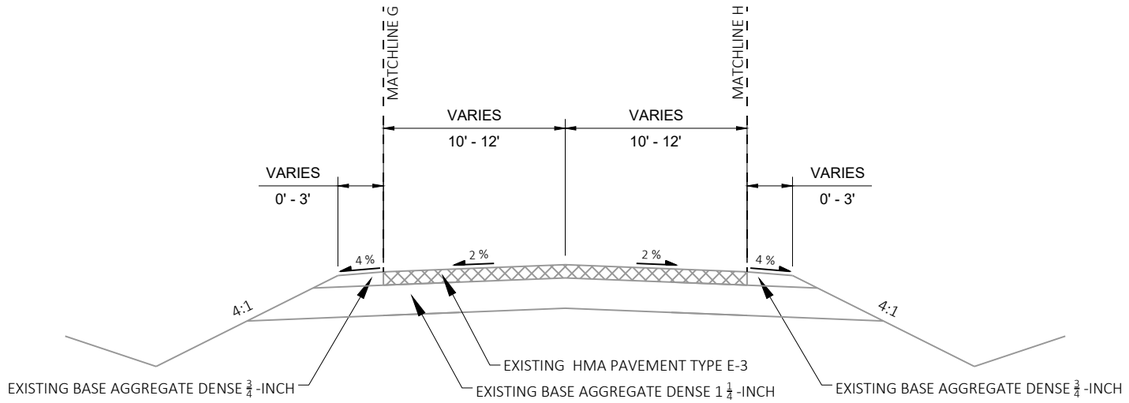

EXISTING TYPICAL SECTION - SIDEROADS

RAINBOW LAKE LANE	WHITEWOOD DRIVE
LAKERIDGE COURT	HIGH GROUND COURT
SUNNYBROOK DRIVE	CTH DD (BOLTON DRIVE)
ANN COURT	PINE LANE
ELM TREE DRIVE	CRANBERRY ROAD

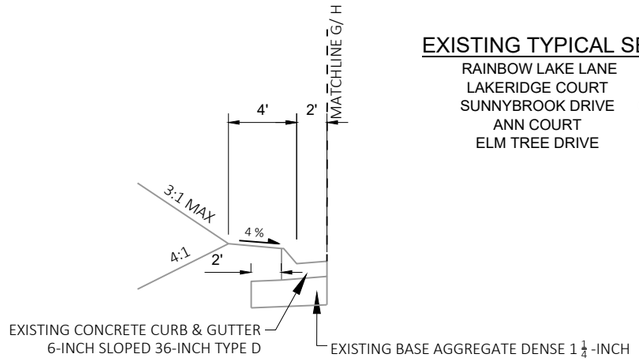

EXISTING TYPICAL HALF SECTION

(LEFT SHOWN, MIRROR IMAGE FOR RIGHT)
RAINBOW LAKE LANE

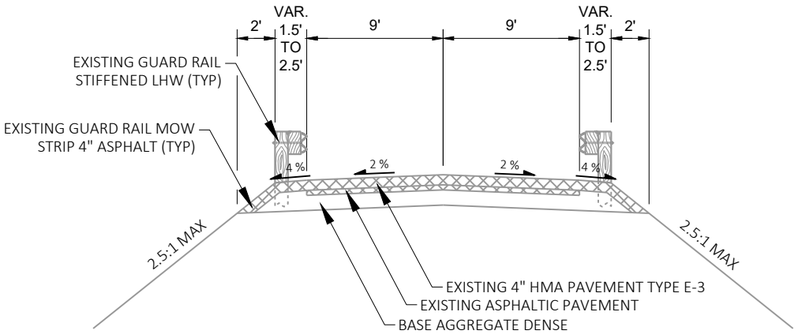

EXISTING TYPICAL SECTION - SIDEROADS

BOLTONVILLE ROAD

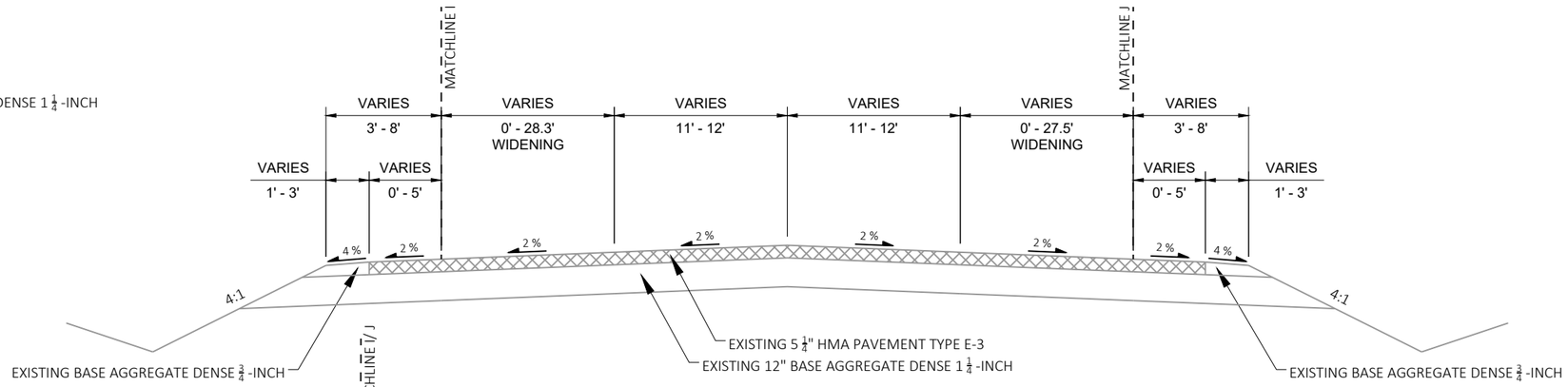

EXISTING TYPICAL SECTION - SIDEROADS

WALLACE LAKE ROAD	CTH A	HIGHLAND DRIVE
NEWARK DRIVE	SHALOM DRIVE	SCENIC DRIVE
FOREST VIEW ROAD	CTH HH	JAY ROAD
CLUB LANE	CTH H	
	STH 28	

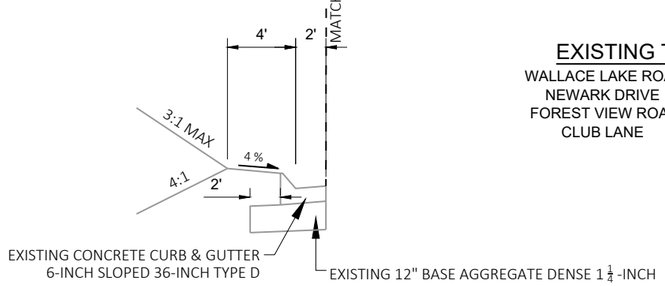

EXISTING TYPICAL HALF SECTION

(LEFT SHOWN, MIRROR IMAGE FOR RIGHT)
FOREST VIEW ROAD

2

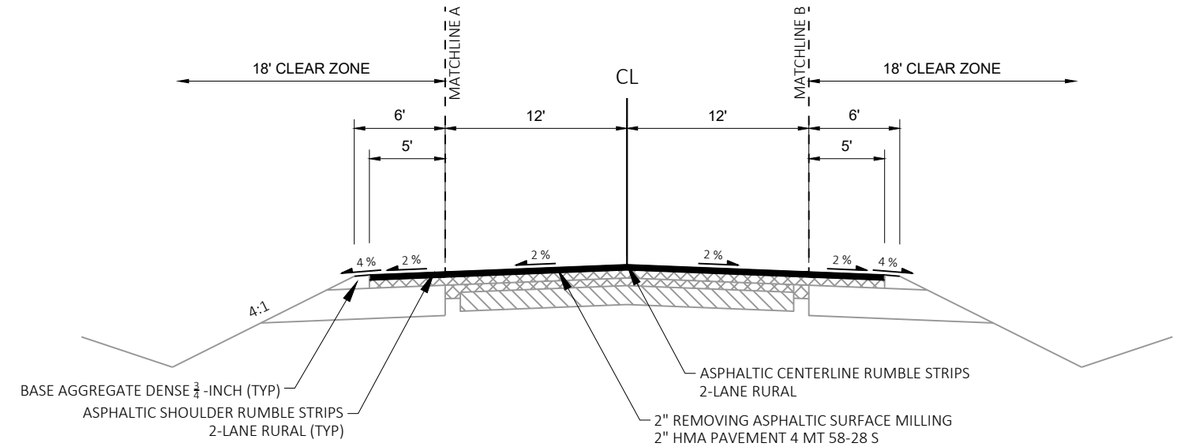

FINISHED TYPICAL SECTION - STH 144

STA 885+49 - 907+25
STA 921+00 - 977+55
STA 1004+00 - 1006+04

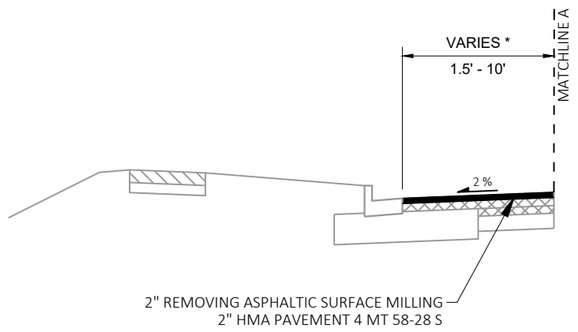

URBAN SECTION

(LEFT SHOWN, MIRROR IMAGE FOR RIGHT)
STA 885+49 - 888+01 RT
STA 885+49 - 887+00 LT

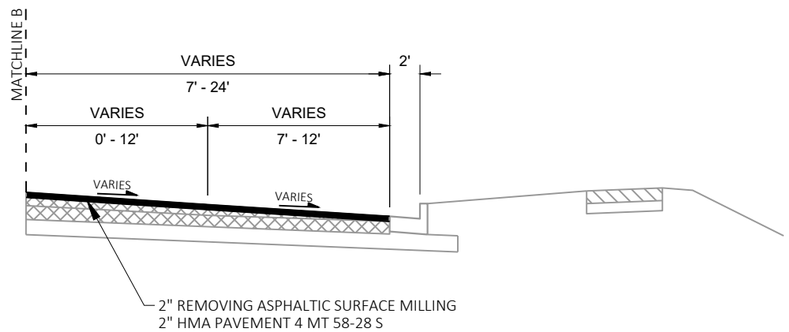

URBAN RIGHT TURN LANE

STA 888+01 - 891+75 RT

NOTE:

* 7'TYPICAL ON RIGHT, 10' TYPICAL ON LEFT

FINISHED TYPICAL HALF-SECTIONS - STH 144

PROJECT NO: 4010-18-70	HWY: STH 144	COUNTY: WASHINGTON	PROPOSED TYPICAL SECTIONS	SHEET 10	E

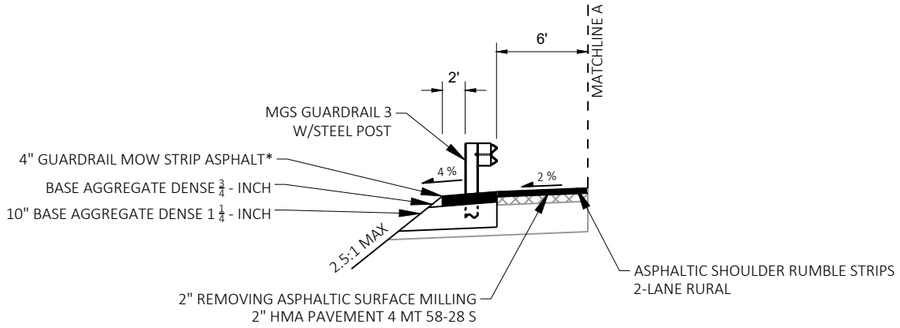

*GUARDRAIL MOW STRIP
EMULSIFIED ASPHALT AT EATS

BEAM GUARD SECTION

(LEFT SHOWN, MIRROR IMAGE FOR RIGHT)
STA 893+12 - 897+43 RT
STA 893+42 - 897+36 LT

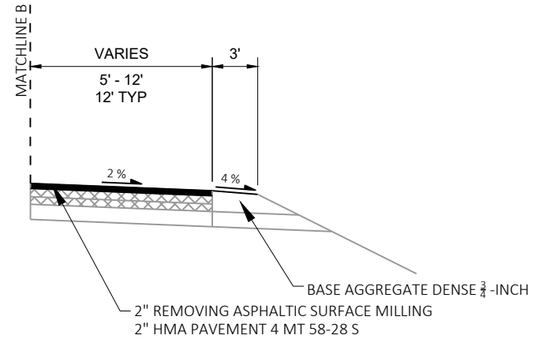

RIGHT TURN LANE

STA 903+24 - 906+00 RT

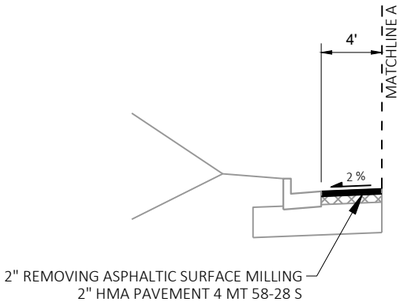

URBAN SECTION

(LEFT SHOWN, MIRROR IMAGE FOR RIGHT)
STA 898+00 - 903+00 RT
STA 935+00 - 935+61 RT
STA 935+50 - 940+40 LT
STA 945+36 - 949+43 LT
STA 953+85 - 956+00 RT

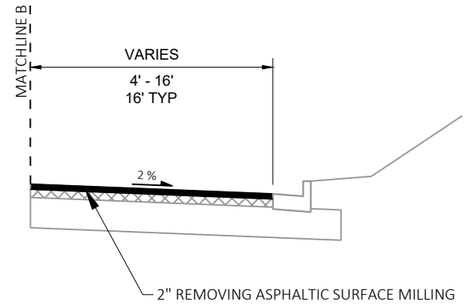

URBAN RIGHT TURN LANE

STA 903+24 - 906+00 RT

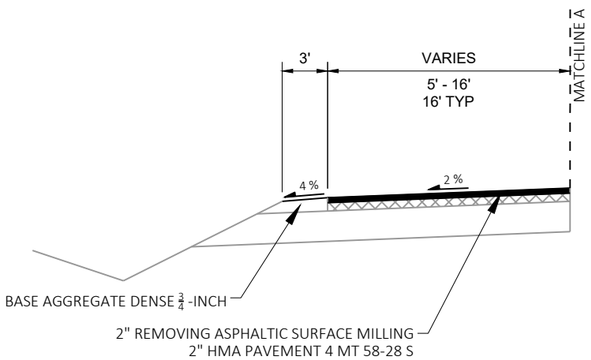

RIGHT TURN LANE

(LEFT SHOWN, MIRROR IMAGE FOR RIGHT)
STA 937+50 - 940+69 RT
STA 950+00 - 955+51 LT
STA 1004+00 - 1004+80 RT

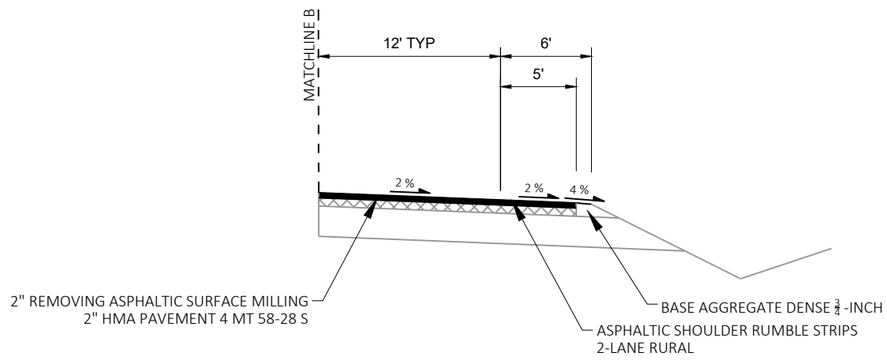

BYPASS LANE

STA 903+24 - 906+00 RT

FINISHED TYPICAL HALF-SECTIONS - STH 144

2

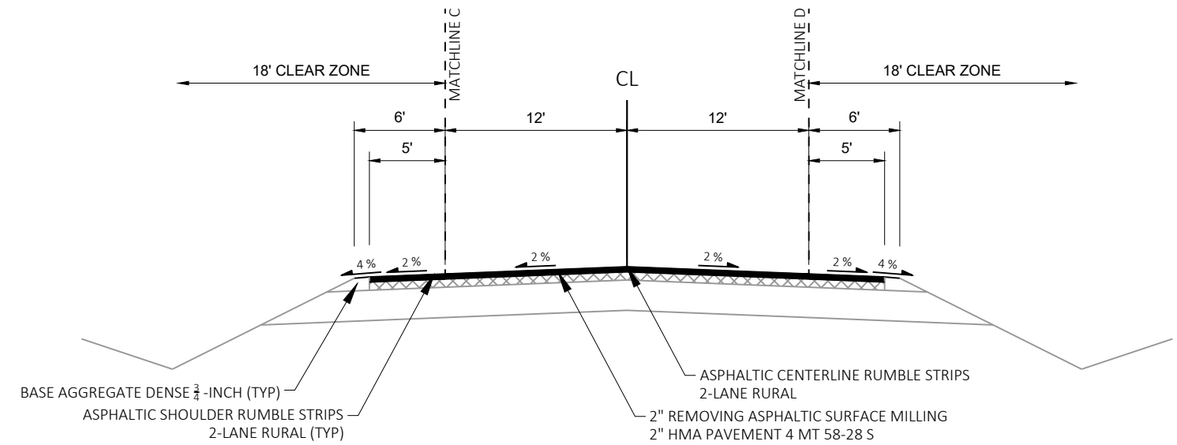

FINISHED TYPICAL SECTION - STH 144

STA 907+25 - 921+00
STA 977+55 - 1004+00

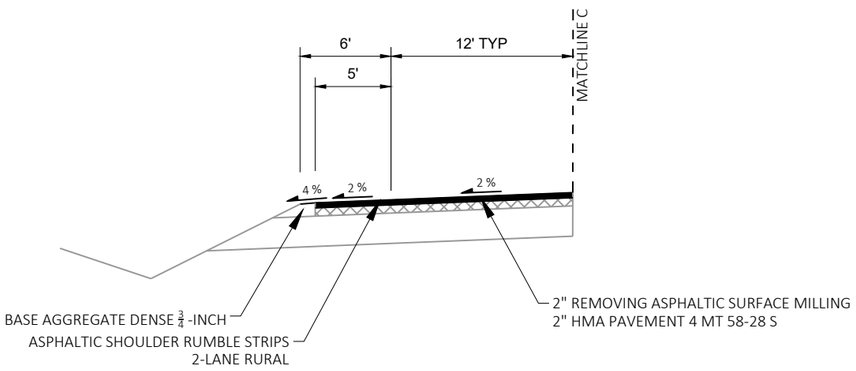

BYPASS LANE

STA 910+29 - 918+06 LT

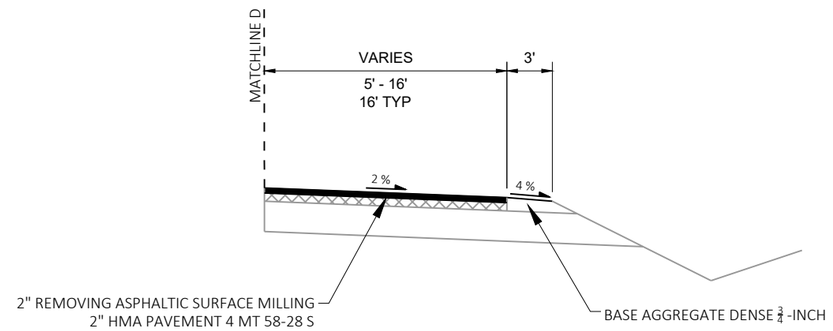

RIGHT TURN LANE

STA 908+90 - 914+33 RT
STA 998+89 - 1004+00 RT

FINISHED TYPICAL HALF-SECTIONS - STH 144

PROJECT NO: 4010-18-70	HWY: STH 144	COUNTY: WASHINGTON	PROPOSED TYPICAL SECTIONS	SHEET 12	E

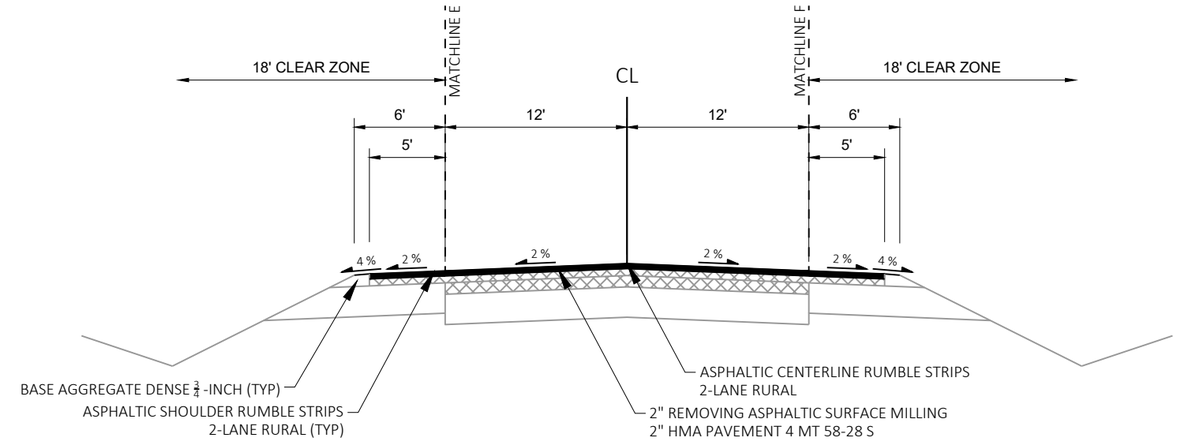

FINISHED TYPICAL SECTION - STH 144

STA 1006+04 - 1115+50
STA 1127+44 - 1328+14

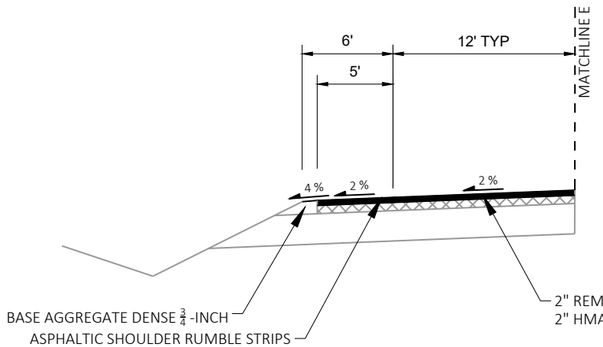

BYPASS LANE

STA 1059+44 - 1067+35 LT

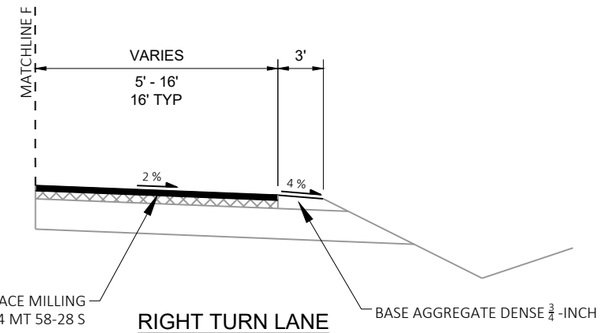

RIGHT TURN LANE

(RIGHT SHOWN, MIRROR IMAGE FOR LEFT)
STA 1005+05 - 1011+00 LT
STA 1057+92 - 1063+52 RT
STA 1190+30 - 1195+94 RT
STA 1198+75 - 1202+06 LT
STA 1262+53 - 1268+41 RT
STA 1268+60 - 1274+32 LT

FINISHED TYPICAL HALF-SECTIONS - STH 144

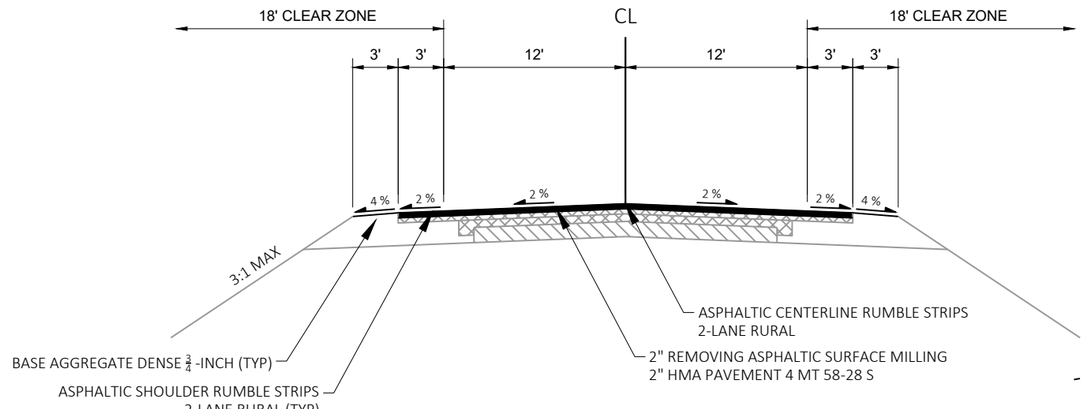

FINISHED TYPICAL SECTION - STH 144

STA 1328+14 - 1330+29
STA 1331+49 - 1332+62

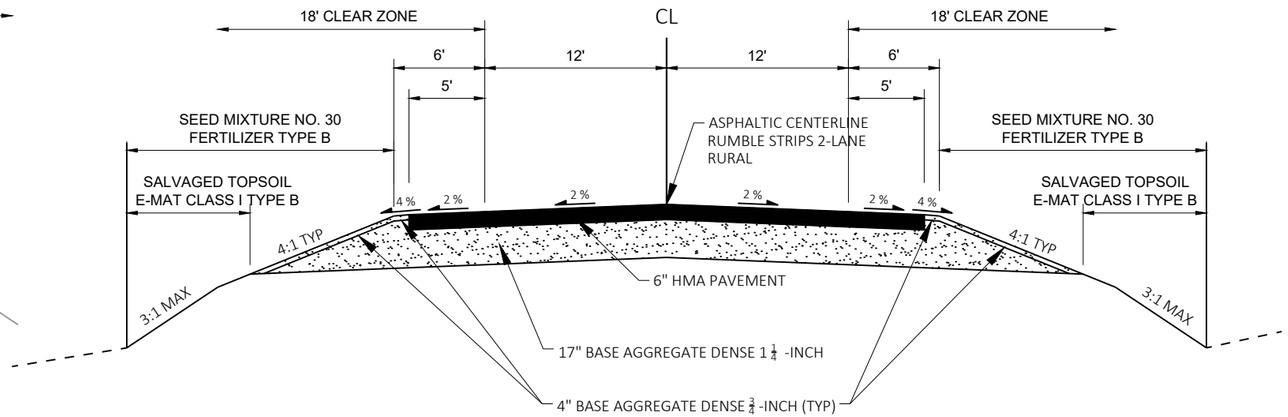

FINISHED TYPICAL SECTION - STH 144

STA 1330+29 - 1331+49

PROJECT NO: 4010-18-70	HWY: STH 144	COUNTY: WASHINGTON	PROPOSED TYPICAL SECTIONS	SHEET 13	E

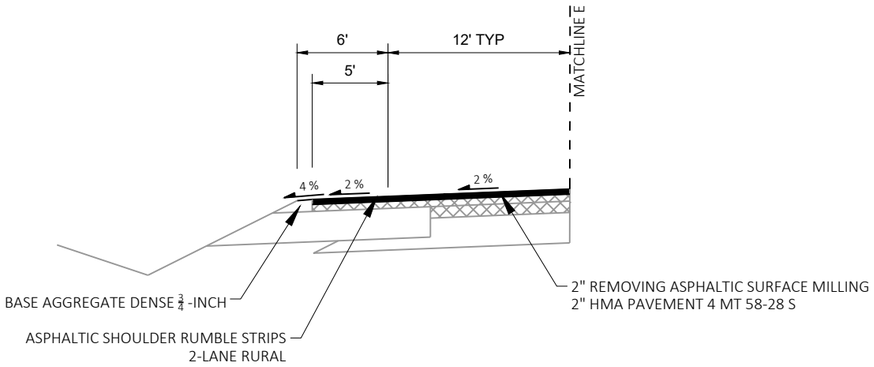

BYPASS LANE
STA 1072+68 - 1080+60 LT

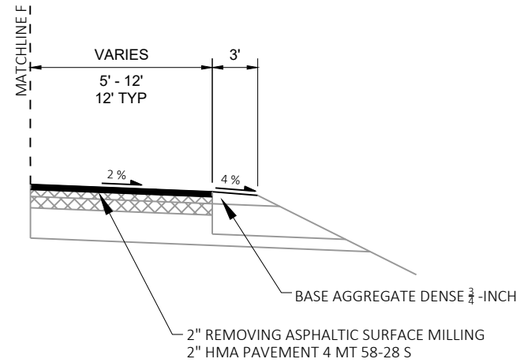

RIGHT TURN LANE
STA 1073+69 - 1076+80 RT
STA 1174+74 - 1177+15 RT

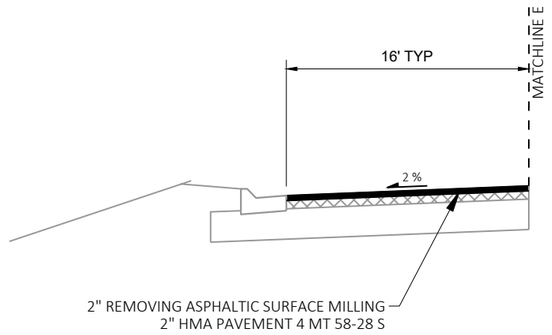

RIGHT TURN LANE
STA 1196+16 - 1198+75 LT

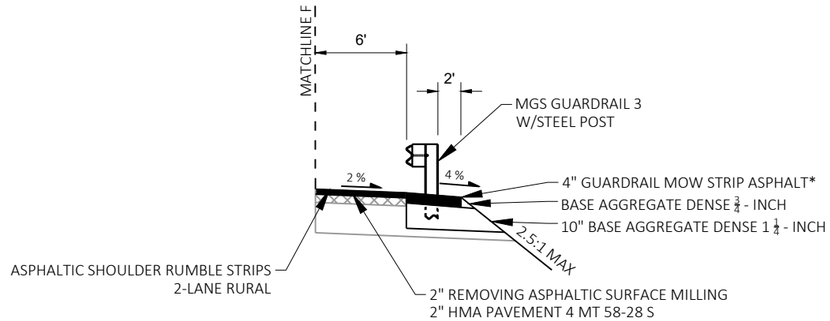

BEAM GUARD SECTION
(RIGHT SHOWN, MIRROR IMAGE FOR LEFT)
STA 1131+77 - 1137+90 RT
STA 1132+00 - 1138+13 LT
STA 1138+88 - 1146+00 RT
STA 1153+77 - 1155+90 RT *
STA 1154+02 - 1156+14 LT
STA 1249+11 - 1262+13 LT

*GUARDRAIL MOW STRIP
EMULSIFIED ASPHALT AT EATS

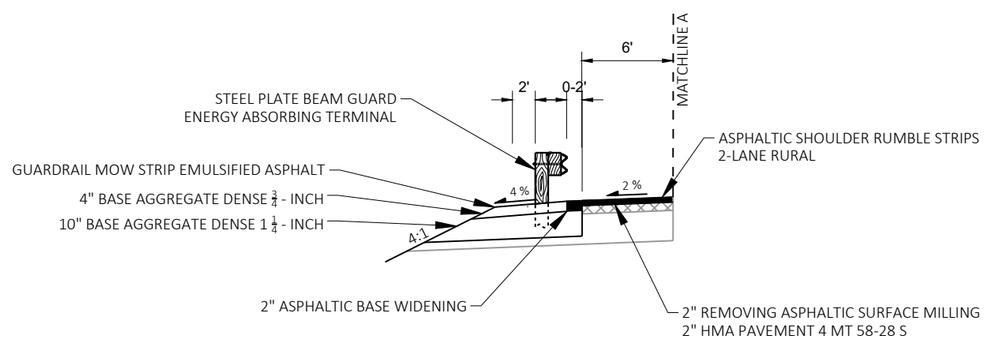

EAT REPLACEMENTS
STA 1249+11 - 1249+61 LT
STA 1262+64- 1262+14 LT

FINISHED TYPICAL HALF-SECTIONS - STH 144

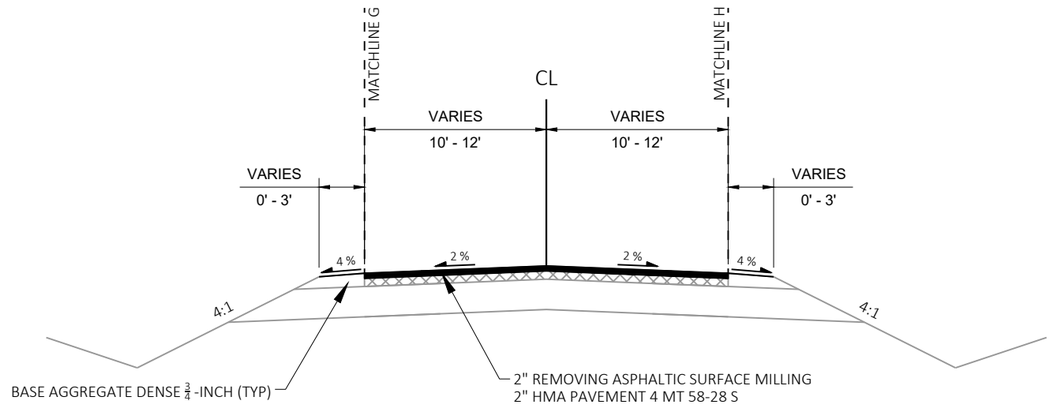

FINISHED TYPICAL SECTION - SIDEROADS

RAINBOW LAKE LANE	WHITEWOOD DRIVE
LAKERIDGE COURT	HIGH GROUND COURT
SUNNYBROOK DRIVE	CTH DD (BOLTON DRIVE)
ANN COURT	PINE LANE
ELM TREE DRIVE	CRANBERRY ROAD

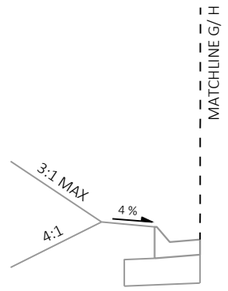

FINISHED TYPICAL HALF SECTION

(LEFT SHOWN, MIRROR IMAGE FOR RIGHT)
RAINBOW LAKE LANE

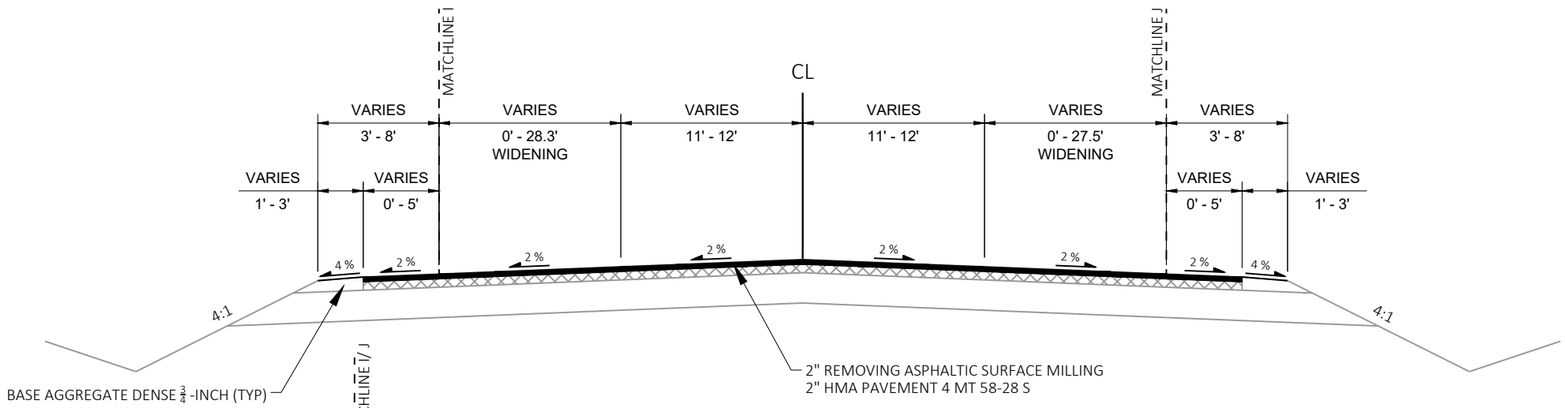

FINISHED TYPICAL SECTION - SIDEROADS

WALLACE LAKE ROAD	CTH A	HIGHLAND DRIVE
NEWARK DRIVE	SHALOM DRIVE	SCENIC DRIVE
FOREST VIEW ROAD		JAY ROAD
CLUB LANE		

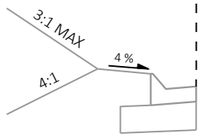

FINISHED TYPICAL HALF SECTION

(LEFT SHOWN, MIRROR IMAGE FOR RIGHT)
FOREST VIEW ROAD

2

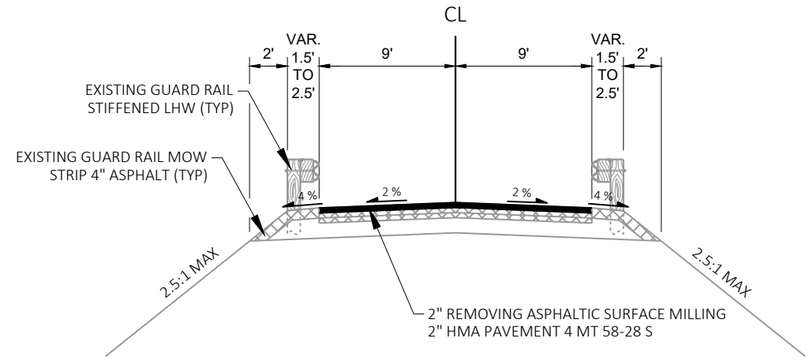

FINISHED TYPICAL SECTION - SIDEROADS

BOLTONVILLE ROAD

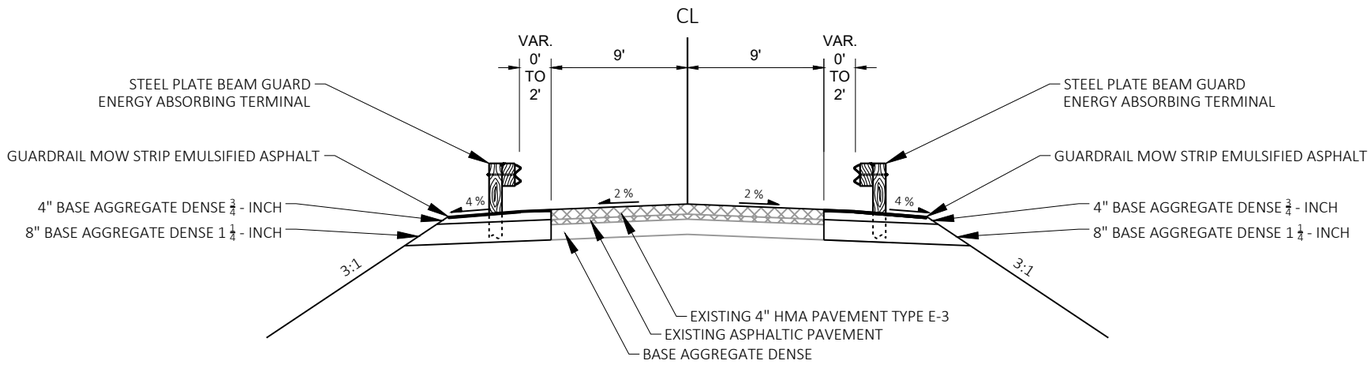

FINISHED TYPICAL SECTION - SIDEROADS

BOLTONVILLE ROAD EAT REPLACEMENT
STA 12+70 - 13+20

PROJECT NO: 4010-18-70	HWY: STH 144	COUNTY: WASHINGTON	PROPOSED TYPICAL SECTIONS	SHEET 16	E

FILE NAME : N:\PDS\C3D\40101800\SHEETSPLAN\020301-TS-PR.DWG
LAYOUT NAME - 020317-ts
PLOT DATE : 7/1/2025 11:07 AM
PLOT BY : SCHMIDT, JUDENE M
PLOT NAME :
PLOT SCALE : 1 IN:10 FT
WISDOT/CADDS SHEET 42

2

LEGEND

ASPHALTIC REPAIR (USE THE FOLLOWING ITEMS)

REMOVING ASPHALTIC SURFACE MILLING (SY)

ASPHALTIC SURFACE (TON)

SSSSSS VERTICAL MILLED EDGE
SAW CUTTING AT THE CONTRACTORS DISCRETION

TTTTTTT TACK COAT

GENERAL NOTES

1. EXACT LOCATION, DEPTH AND SIZE OF REPAIR TO BE DETERMINED BY THE ENGINEER IN THE FIELD.
2. MILL PAVEMENT PER PLAN PRIOR TO MAKING ASPHALTIC REPAIR.
3. LOCATE LONGITUDINAL REPAIR JOINTS OUTSIDE OF WHEEL PATH. 12-INCH MINIMUM (24-INCH RECOMMENDED) FROM THE CENTER OF THE WHEEL PATH.
4. ASPHALTIC REPAIR PAVING TO BE DONE ON THE SAME DAY AS REMOVAL.

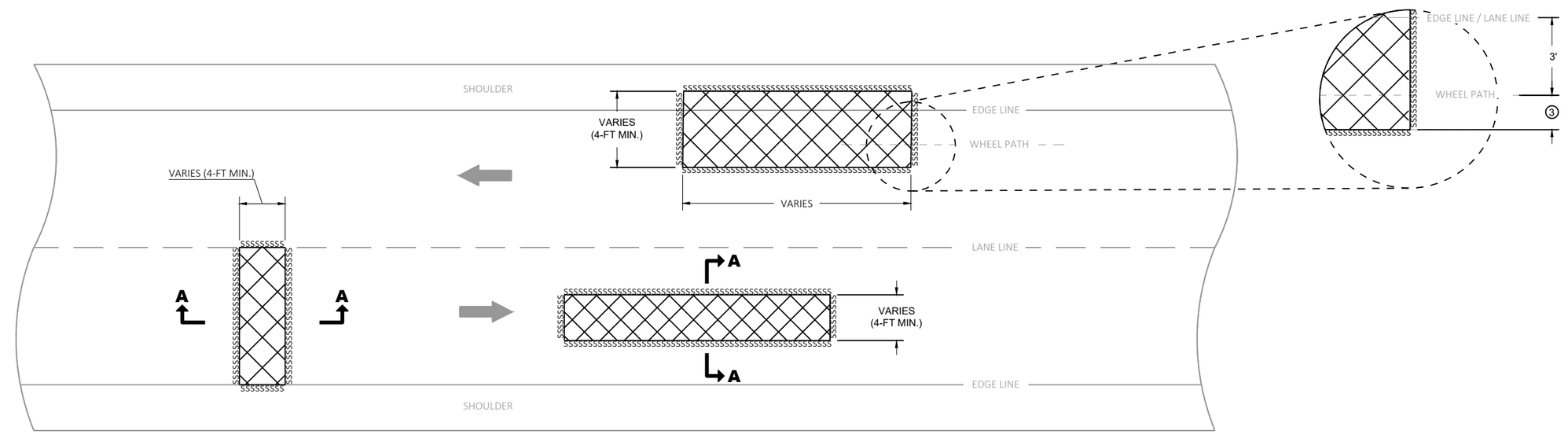

PLAN VIEW

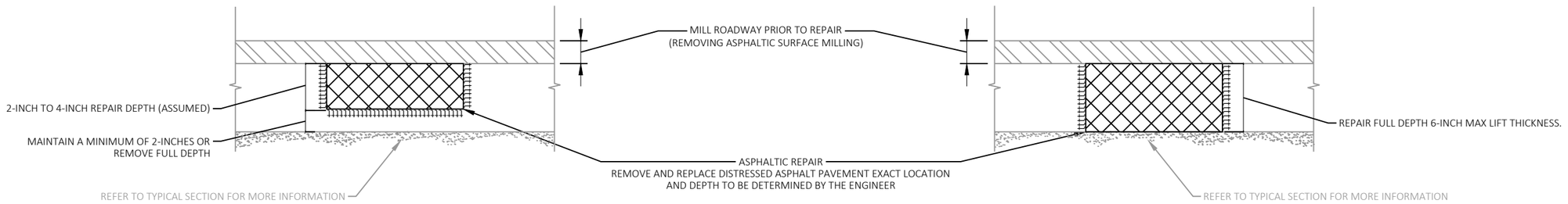

PARTIAL DEPTH **FULL DEPTH**

SECTION A-A

ASPHALTIC REPAIR

PROJECT NO: 4010-18-70	HWY: STH 144	COUNTY: WASHINGTON	CONSTRUCTION DETAILS	SHEET 17	E

FILE NAME : N:\PDS\C3D\40101800\SHEETSPLAN\021001-CD.DWG
LAYOUT NAME - 01

PLOT DATE : 7/1/2025 11:20 AM PLOT BY : SCHMIDT, JUDENE M PLOT NAME : PLOT SCALE : 1 IN:125 FT

WISDOT/CADDS SHEET 42

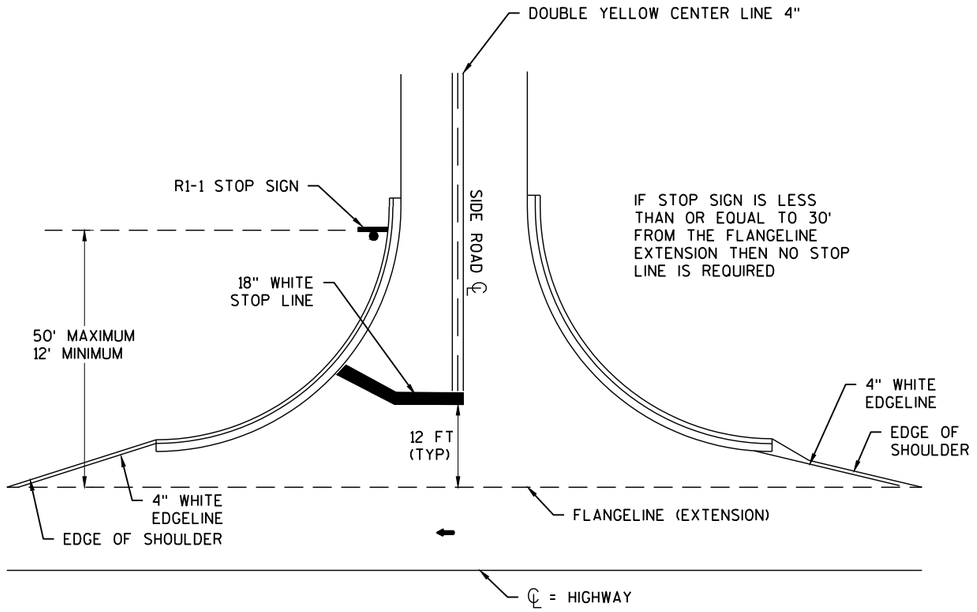

TYPICAL PAVEMENT MARKING FOR SIDEROADS

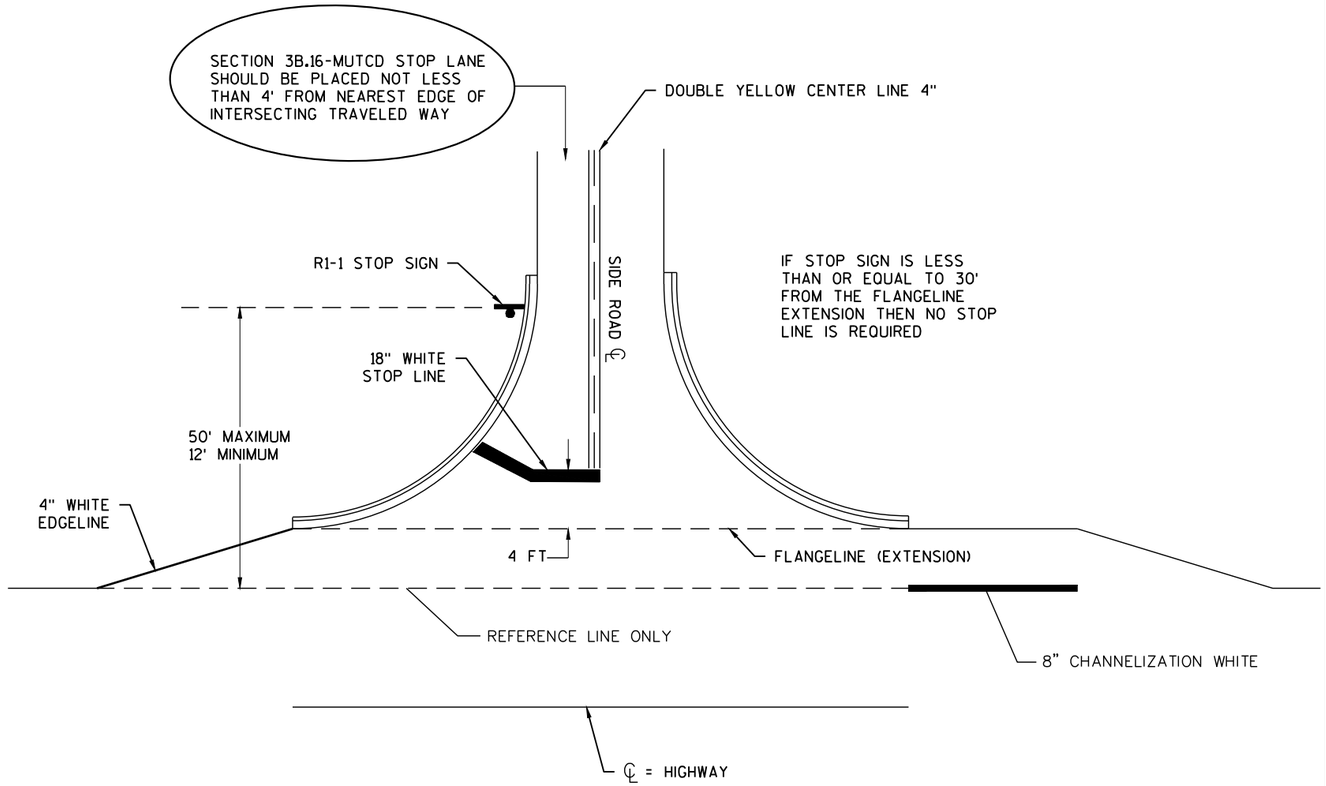

TYPICAL PAVEMENT MARKING FOR SIDEROADS WITH RIGHT TURN LANE

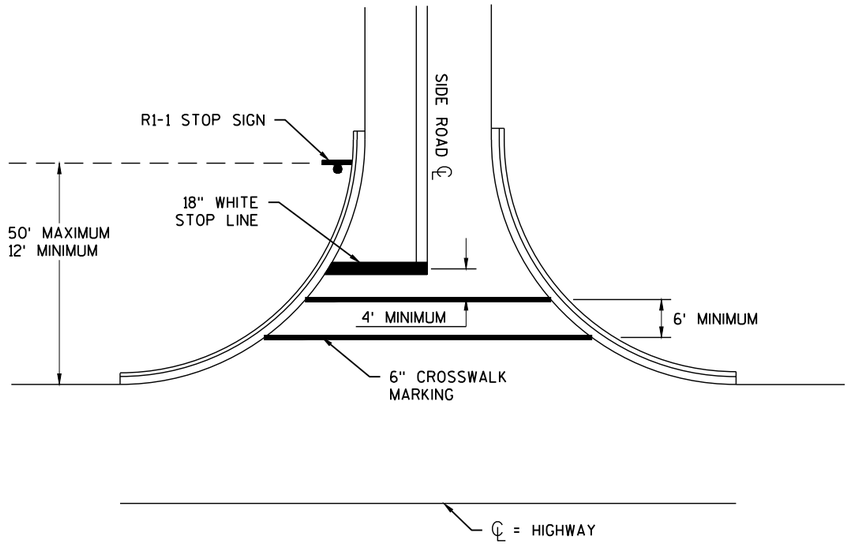

TYPICAL PAVEMENT MARKING FOR SIDEROADS WITH CROSSWALK MARKING

NOTES:
18-INCH STOP LINES MAY BE DELETED OR ADDED BY THE PROJECT ENGINEER BASED ON VISIBILITY AND SIGHT LINES.

STOP LINES REQUIRED WHERE:

- CROSSWALK MARKINGS EXIST OR BEING PROVIDED
- LARGE RADII
- OFFSET LEFT TURNS WHERE STOP BAR FOR LEFT TURN IS SET BACK FROM THRU MOVEMENT.

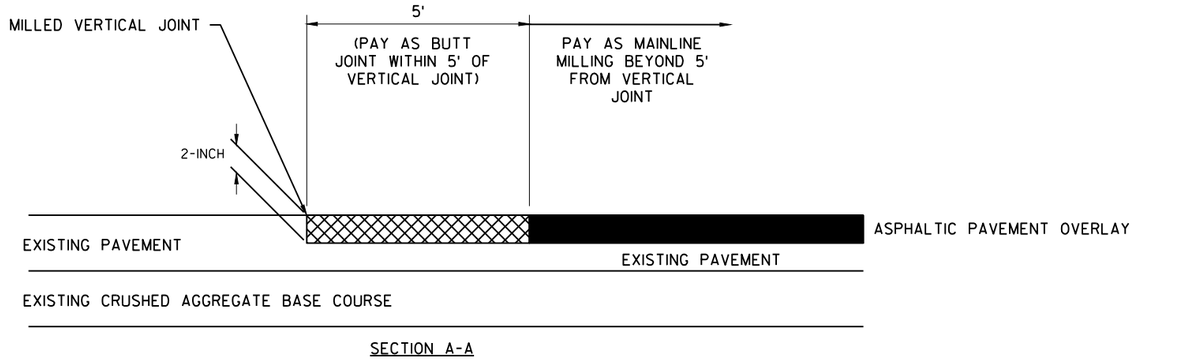

SECTION A-A

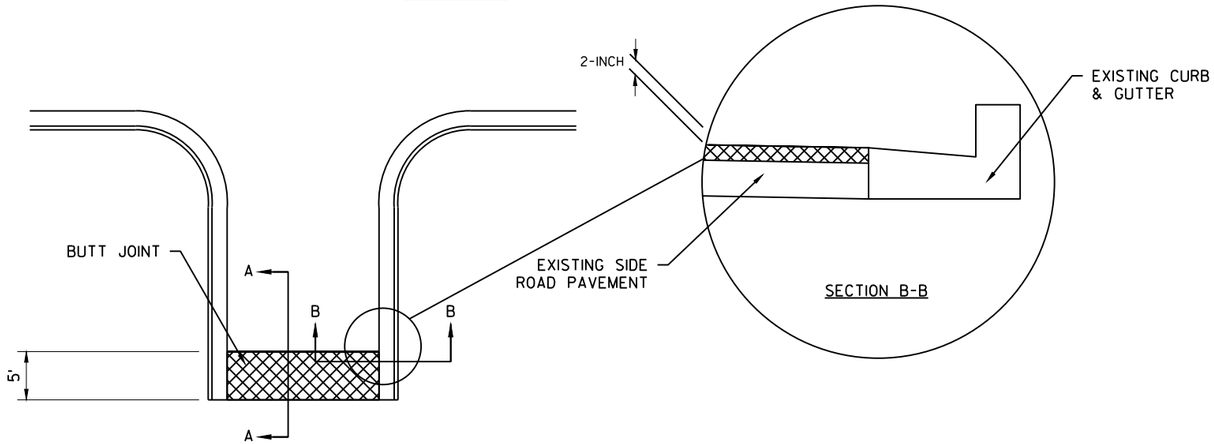

MAINLINE MILL & OVERLAY

REMOVING ASPHALT SURFACE BUTT JOINTS

REMOVING ASPHALTIC BUTT JOINTS DETAIL - TYPICAL

LOCATIONS

STH 144 885+49	CTH H
STH 144 1332+62	HIGH GROUND COURT
RAINBOW LAKE LANE	STH 28
LAKERIDGE COURT	HIGHLAND DRIVE
WALLACE LAKE ROAD	CTH DD (BOLTON DRIVE) (SOUTH)
NEWARK DRIVE	BOLTONVILLE ROAD
FOREST VIEW ROAD	SCENIC DRIVE
CLUB LANE	JAY ROAD
CTH A	CTH DD (BOLTON DRIVE) (NORTH)
SUNNYBROOK DRIVE	PINE LANE (SOUTH)
SHALOM DRIVE	PINE LANE (NORTH)
ANN COURT	CRANBERRY ROAD
ELM TREE DRIVE	
WHITEWOOD DRIVE	

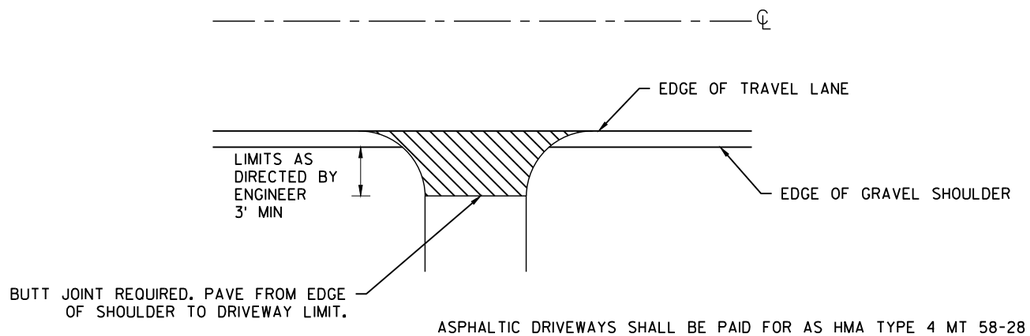

ASPHALTIC DRIVEWAYS SHALL BE PAID FOR AS HMA TYPE 4 MT 58-28 S. ANY ADDITIONAL BASE AGG. DENSE REQ'D. SHALL BE PAID UNDER ITEM - "BASE AGGREGATE DENSE 3/4-INCH"

RURAL DRIVEWAY DETAIL - ASPHALT

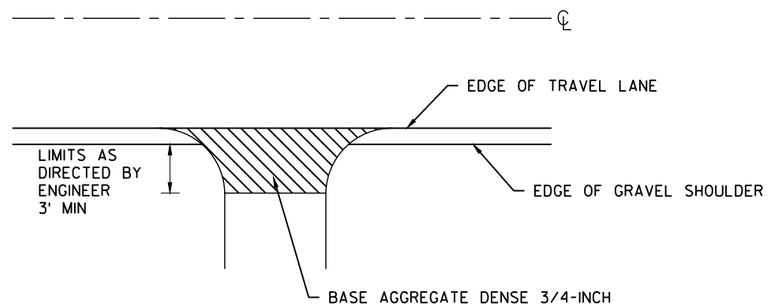

RURAL DRIVEWAY DETAIL - GRAVEL

2

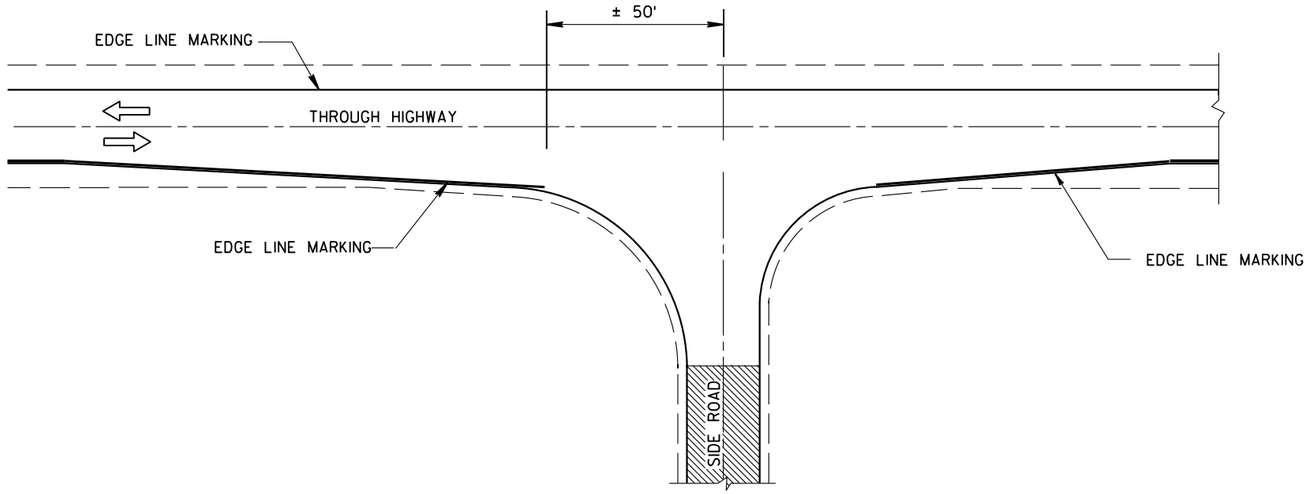

MINOR INTERSECTION WITHOUT CURBS
(TYPICAL MARKING)

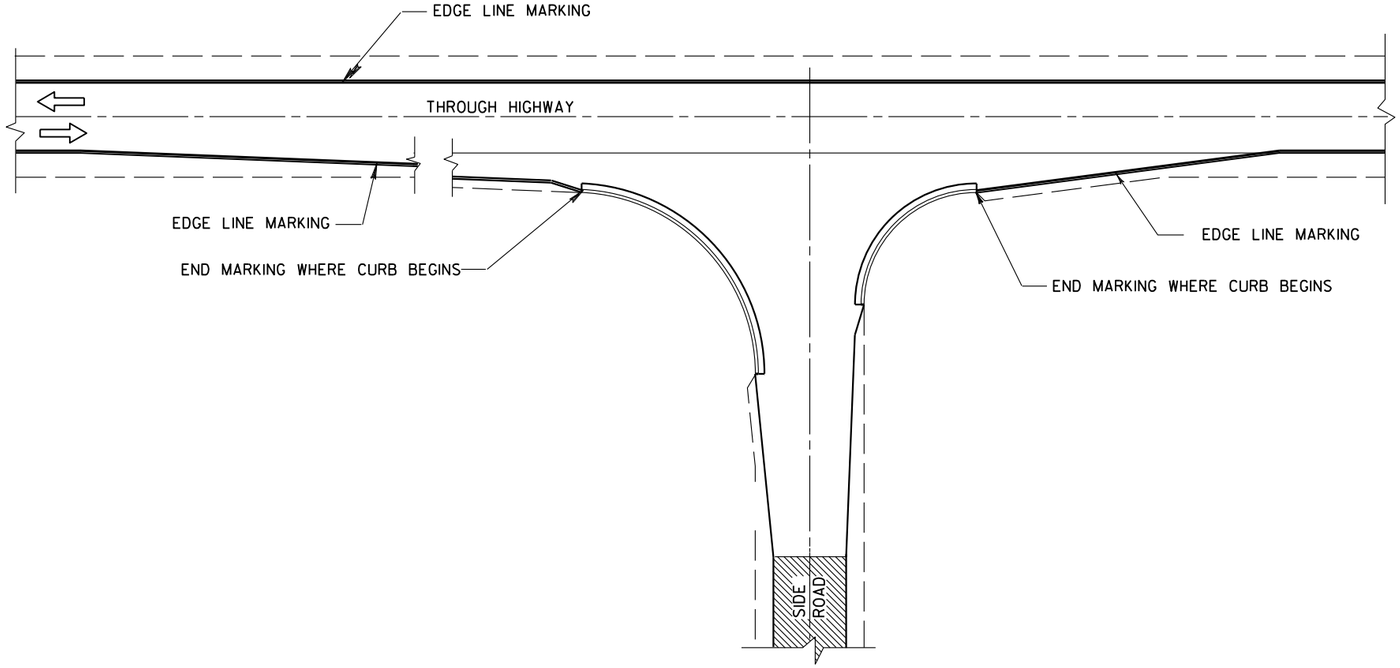

MINOR INTERSECTION WITH CURBS
(TYPICAL MARKING)

2

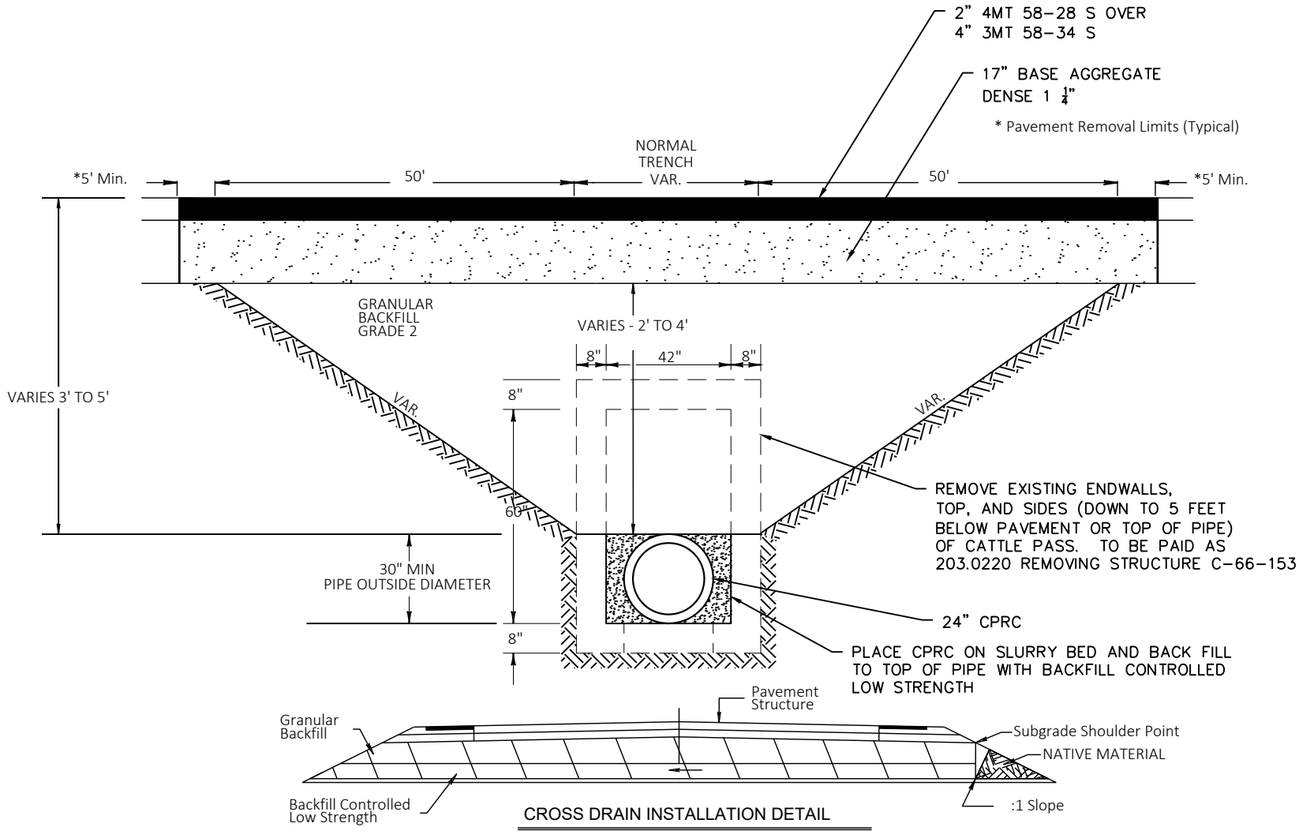

CROSS DRAIN INSTALLATION DETAIL

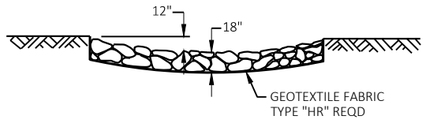

SECTION A-A

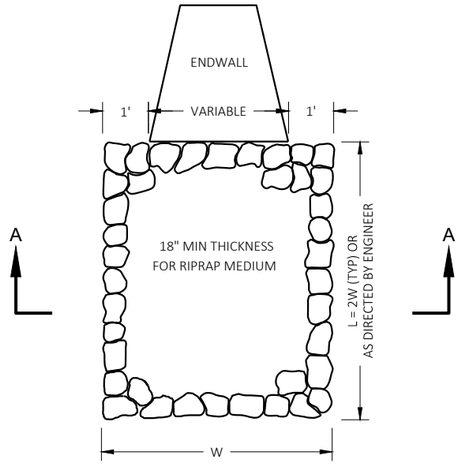

RIPRAP MEDIUM TREATMENT AT CULVERTS

2

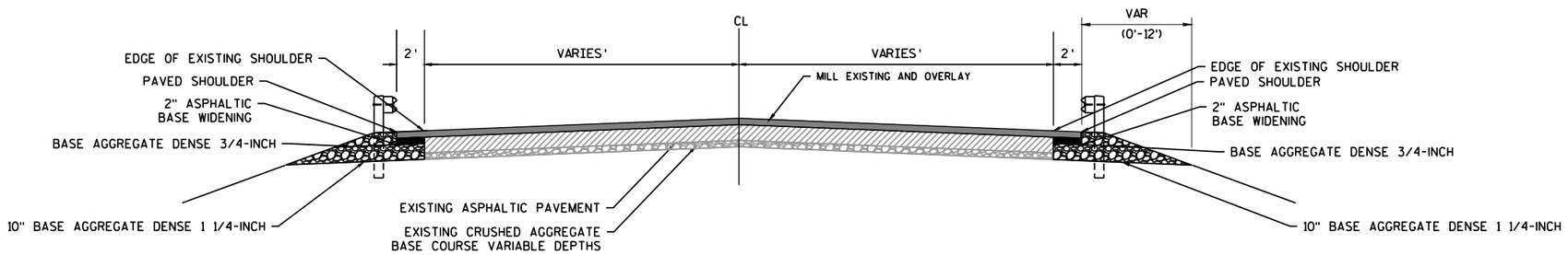

E.A.T. PAVING DETAIL

STH 144

2

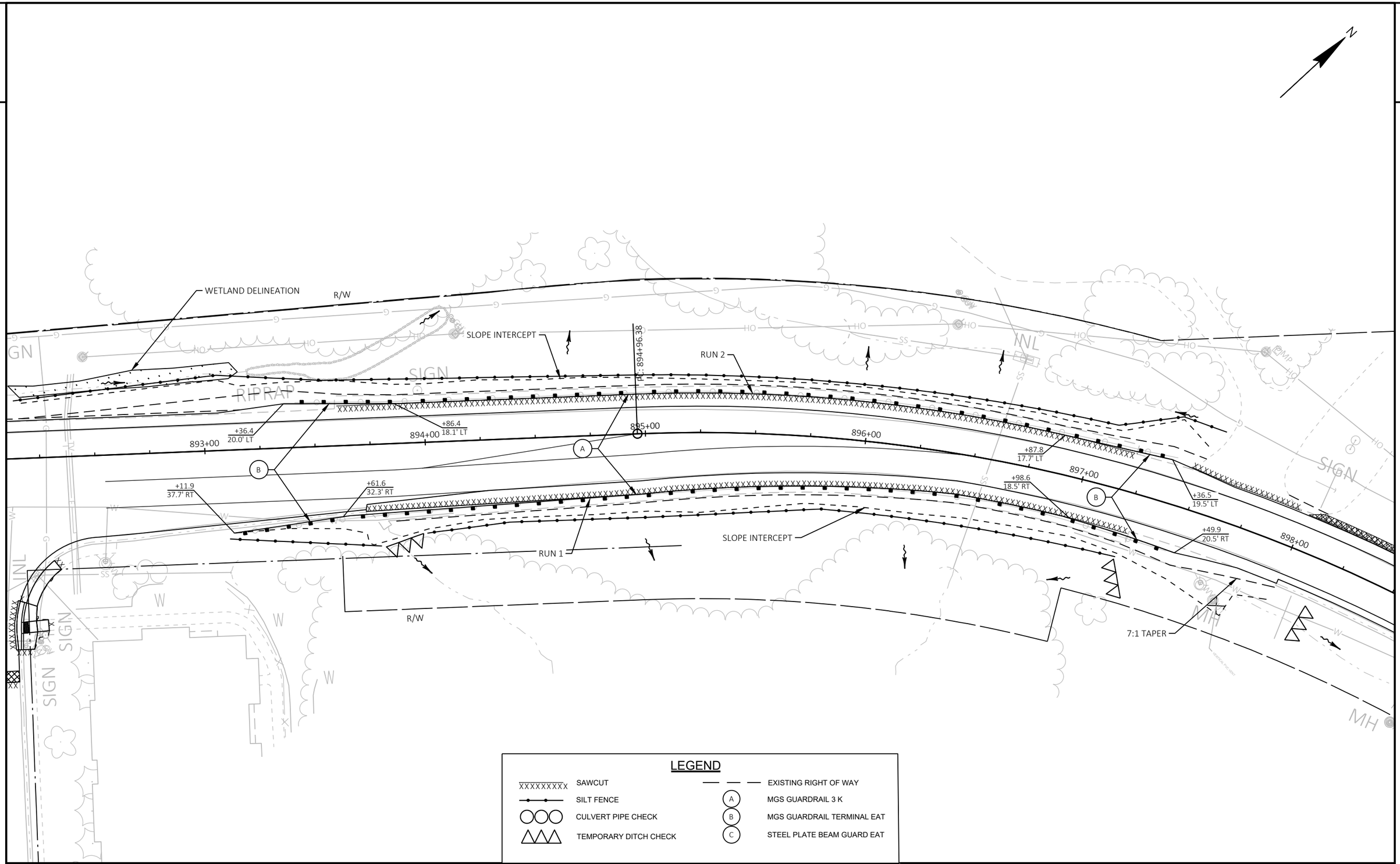

PROJECT NO: 4010-18-70	HWY: STH 144	COUNTY: WASHINGTON	BEAM GUARD AND EROSION CONTROL DETAIL - RUNS 1 AND 2	SHEET 23	E

2

2

MATCH LINE 1135+91.93

R/W

OH

GUY

RUN 4

SLOPE INTERCEPT

+12.4
19.8' LT

+62.4
17.9' LT

1130+00

1131+00

1132+00

1133+00

1134+00

1135+00

A

B

+09.9
20.3' RT

+59.9
18.3' RT

RIPRAP

SLOPE INTERCEPT

RUN 3

R/W

LEGEND

SAWCUT	EXISTING RIGHT OF WAY
SILT FENCE	A MGS GUARDRAIL 3 K
CULVERT PIPE CHECK	B MGS GUARDRAIL TERMINAL EAT
TEMPORARY DITCH CHECK	C STEEL PLATE BEAM GUARD EAT

PROJECT NO: 4010-18-70	HWY: STH 144	COUNTY: WASHINGTON	BEAM GUARD AND EROSION CONTROL DETAIL - RUNS 3 AND 4	SHEET 24	E

FILE NAME : \\WKERTOVFILPI01\N3PUBLIC\PDS\C3D\40101800\SHEETSPLAN\021051-BG.DWG
LAYOUT NAME - 02

PLOT DATE : 6/30/2025 2:44 PM PLOT BY : CAVERSON, DAVID J PLOT NAME : PLOT SCALE : 1 IN:40 FT

2

2

MATCH LINE 1141+71.93

MATCH LINE 1135+91.93

R/W

SLOPE INTERCEPT

RUN 4

OH

GN

SIGN

SIG

1136+00

1137+00

1138+00

1139+00

1140+00

1141+00

+18.6
16.3' LT

+68.6
18.0' LT

+89
22.1' RT

+39
20.3' RT

+41.1
19.7' RT

+91.1
21.8' RT

A

B

RUN 3

SLOPE INTERCEPT

4:1 TAPER

RIPRAP

RUN 5

SLOPE INTERCEPT

R/W

LEGEND

XXXXXXXXX SAWCUT	EXISTING RIGHT OF WAY
SILT FENCE	A MGS GUARDRAIL 3 K
CULVERT PIPE CHECK	B MGS GUARDRAIL TERMINAL EAT
TEMPORARY DITCH CHECK	C STEEL PLATE BEAM GUARD EAT

PROJECT NO: 4010-18-70	HWY: STH 144	COUNTY: WASHINGTON	BEAM GUARD AND EROSION CONTROL DETAIL - RUNS 3,4 AND 5	SHEET 25 E

2

2

N

R/W

PC: 1142+32.36

1142+00

1143+00

1144+00

1145+00

1146+00

1147+00

A

B

+46.4
20.9' RT

+96.6
22.8' RT

RUN 5

SLOPE INTERCEPT

RIPRAP

WETLAND DELINEATION

RIPRAP

R/W

MATCH LINE 1141+71.93

LEGEND

SAWCUT	EXISTING RIGHT OF WAY
SILT FENCE	A MGS GUARDRAIL 3 K
CULVERT PIPE CHECK	B MGS GUARDRAIL TERMINAL EAT
TEMPORARY DITCH CHECK	C STEEL PLATE BEAM GUARD EAT

PROJECT NO: 4010-18-70	HWY: STH 144	COUNTY: WASHINGTON	BEAM GUARD AND EROSION CONTROL DETAIL - RUN 5	SHEET 26 E

FILE NAME : \\WKERTOVFILPI01\N3PUBLIC\PDS\C3D\40101800\SHEETSPLAN\021051-BG.DWG
LAYOUT NAME - 04

PLOT DATE : 6/30/2025 2:44 PM PLOT BY : CAVERSON, DAVID J PLOT NAME : PLOT SCALE : 1 IN:40 FT

WISDOT/CADDS SHEET 42

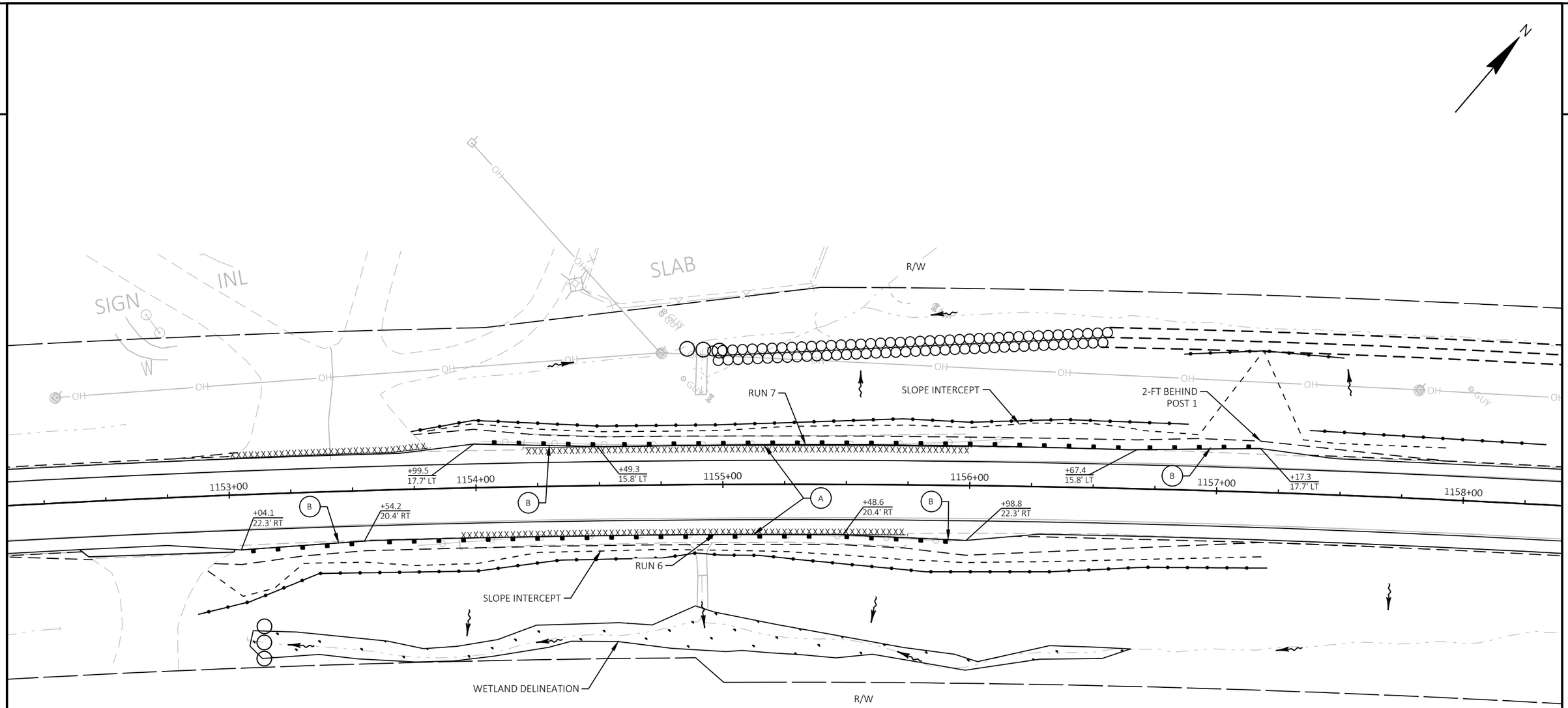

LEGEND

XXXXXXXXX	SAWCUT	— — —	EXISTING RIGHT OF WAY
—•—•—	SILT FENCE	A	MGS GUARDRAIL 3 K
○○○	CULVERT PIPE CHECK	B	MGS GUARDRAIL TERMINAL EAT
△△△	TEMPORARY DITCH CHECK	C	STEEL PLATE BEAM GUARD EAT

PROJECT NO: 4010-18-70	HWY: STH 144	COUNTY: WASHINGTON	BEAM GUARD AND EROSION CONTROL DETAIL - RUNS 6 AND 7	SHEET 27	E

2

2

EXISTING STEEL PLATE BEAMGUARD
HEIGHT EXCEEDS 29" MAXIMUM
(HEIGHTS VARY FROM 32" TO 36")

ADJUST BEAMGUARD HEIGHT ALONG
STH 144 & BOLTONVILLE ROAD BY
POUNDING IN POSTS TO ACHIEVE 29"
MAXIMUM RAIL HEIGHT

R/W

SLOPE INTERCEPT

RUN 8

XXXXXXXXXXXXX

+10.7
21.1' LT

+60.7
18.8' LT

1247+00 1248+00 1249+00 1250+00 1251+00 1252+00

C

XXXXXXXXXXXXXXX

SIGN

R/W

LEGEND

XXXXXXXXX	SAWCUT	— — —	EXISTING RIGHT OF WAY
	SILT FENCE	A	MGS GUARDRAIL 3 K
	CULVERT PIPE CHECK	B	MGS GUARDRAIL TERMINAL EAT
	TEMPORARY DITCH CHECK	C	STEEL PLATE BEAM GUARD EAT

PROJECT NO: 4010-18-70	HWY: STH 144	COUNTY: WASHINGTON	BEAM GUARD AND EROSION CONTROL DETAIL - RUN 8	SHEET 28	E

FILE NAME : \\WKERTOVFILPI01\N3PUBLIC\PDS\C3D\40101800\SHEETSPLAN\021051-BG.DWG
LAYOUT NAME - 06

PLOT DATE : 6/30/2025 2:45 PM PLOT BY : CAVERSON, DAVID J PLOT NAME : PLOT SCALE : 1 IN:40 FT

2

2

LEGEND

- SAWCUT
- SILT FENCE
- CULVERT PIPE CHECK
- TEMPORARY DITCH CHECK
- EXISTING RIGHT OF WAY
- (A) MGS GUARDRAIL 3 K
- (B) MGS GUARDRAIL TERMINAL EAT
- (C) STEEL PLATE BEAM GUARD EAT

N

4-FT BEHIND POST 1

+19.5 / 12.5' LT

SLOPE INTERCEPT

+19.8 / 12.4' RT

SLOPE INTERCEPT

13+00

+69.5 / 10.8' LT

C

R/W

+69.8 / 11.4' RT

R/W

12+00

RUN 8

EXISTING STEEL PLATE BEAMGUARD HEIGHT EXCEEDS 29" MAXIMUM (HEIGHTS VARY FROM 32" TO 36")

ADJUST BEAMGUARD HEIGHT ALONG STH 144 & BOLTONVILLE ROAD BY POUNDING IN POSTS TO ACHIEVE 29" MAXIMUM RAIL HEIGHT

11+00

SLOPE INTERCEPT

R/W

RUN 9

SIGN

XXXXXXXXXXXX

+63.6 / 20.3' LT

+14 / 22.0' LT

C

1257+00

1258+00

1259+00

1260+00

1261+00

1262+00

1263+00

SIGN

R/W

PROJECT NO: 4010-18-70	HWY: STH 144	COUNTY: WASHINGTON	BEAM GUARD AND EROSION CONTROL DETAIL - RUNS 8 AND 9	SHEET 29	E

2

2

SIGN

SIGN

SIGN

SIGN

SIGN

SIGN

SLOPE INTERCEPT

R/W

PI: 1328+13.85

PC: 1330+01.67

1328+00

1329+00

1330+00

1331+00

1332+00

1333+00

1334+00

R/W

SLOPE INTERCEPT

R/W

LEGEND

SAWCUT

SILT FENCE

CULVERT PIPE CHECK

TEMPORARY DITCH CHECK

EXISTING RIGHT OF WAY

PROJECT NO: 4010-18-70	HWY: STH 144	COUNTY: WASHINGTON	CATTLE PASS ABANDONMENT AND EROSION CONTROL DETAIL	SHEET 30	E

FILE NAME : N:\PDS\C3D\40101800\SHEETSPLAN\021100-CP.DWG
LAYOUT NAME - 01

PLOT DATE : 6/30/2025 4:36 PM PLOT BY : SCHMIDT, JUDENE M PLOT NAME : PLOT SCALE : 1 IN:40 FT

WISDOT/CADDS SHEET 42

2

LEGEND

- CG36D — CONCRETE CURB & GUTTER 6-INCH SLOPED 36-INCH TYPE D
- SA — SAWING ASPHALT
- SC — SAWING CONCRETE
- LR — LAWN RESTORATION (SEED AND MULCH)
- SW5 — CONCRETE SIDEWALK 5-INCH
- LL — LEVEL LANDING
- MEF — MAXIMUM EXTENTS FEASIBLE
- G — GRADED FLARE (6:1 MAX SLOPE)
- P — PAVED FLARE (10% MAX SLOPE)
- ASPHALTIC SURFACE (MATCH ADJACENT PAVEMENT DEPTH)
- CURB RAMP DETECTABLE WARNING FIELD YELLOW
- SLOPE INTERCEPT

N

RAINBOW LAKE LN

EXISTING R/W

R/W

TLE

TYPE 3 CURB RAMP

TYPE 7B CURB RAMP

PROJECT NO: 4010-18-70	HWY: STH 144	COUNTY: WASHINGTON	CURB RAMPS	SHEET 31	E

FILE NAME : N:\PDS\C3D\40101800\SHEETSPLAN\021301-CR.DWG
LAYOUT NAME - 021301-cr

PLOT DATE : 6/30/2025 3:49 PM PLOT BY : SCHMIDT, JUDENE M PLOT NAME : PLOT SCALE : 1 IN:5 FT

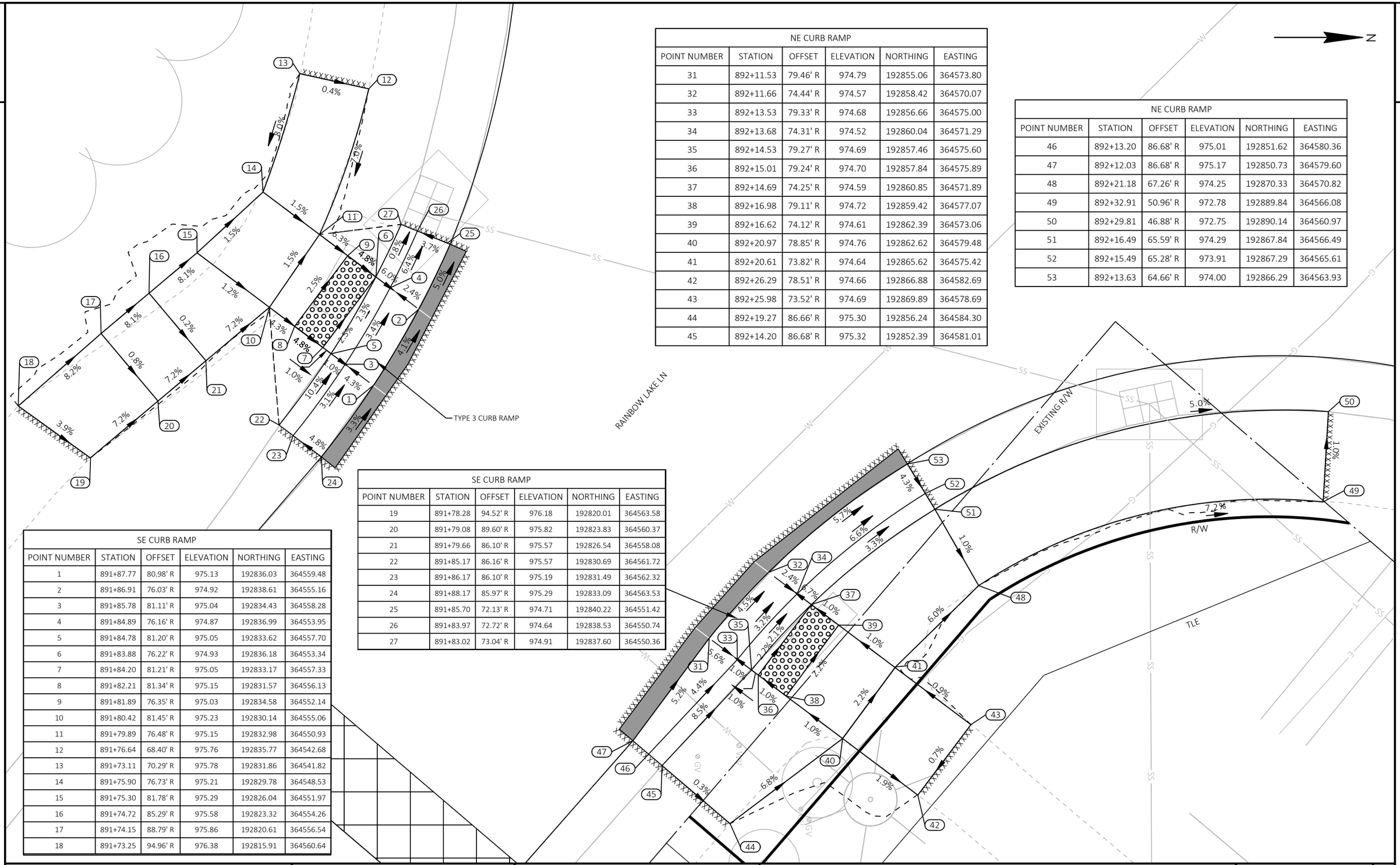

NE CURB RAMP					
POINT NUMBER	STATION	OFFSET	ELEVATION	NORTHING	EASTING
31	892+11.53	79.46' R	974.79	192855.06	364573.80
32	892+11.66	74.44' R	974.57	192858.42	364570.07
33	892+13.53	79.33' R	974.68	192856.66	364575.00
34	892+13.68	74.31' R	974.52	192860.04	364571.29
35	892+14.53	79.27' R	974.69	192857.46	364575.60
36	892+15.01	79.24' R	974.70	192857.84	364575.89
37	892+14.69	74.25' R	974.59	192860.85	364571.89
38	892+16.98	79.11' R	974.72	192859.42	364577.07
39	892+16.62	74.12' R	974.61	192862.39	364573.06
40	892+20.97	78.85' R	974.76	192862.62	364579.48
41	892+20.61	73.82' R	974.64	192865.62	364575.42
42	892+26.29	78.51' R	974.66	192866.88	364582.69
43	892+25.98	73.52' R	974.69	192869.89	364578.69
44	892+19.27	86.66' R	975.30	192856.24	364584.30
45	892+14.20	86.68' R	975.32	192852.39	364581.01

NE CURB RAMP					
POINT NUMBER	STATION	OFFSET	ELEVATION	NORTHING	EASTING
46	892+13.20	86.68' R	975.01	192851.62	364580.36
47	892+12.03	86.68' R	975.17	192850.73	364579.60
48	892+21.18	67.26' R	974.25	192870.33	364570.82
49	892+32.91	50.96' R	972.78	192889.84	364566.08
50	892+29.81	46.88' R	972.75	192890.14	364560.97
51	892+16.49	65.59' R	974.29	192867.84	364566.49
52	892+15.49	65.28' R	973.91	192867.29	364565.61
53	892+13.63	64.66' R	974.00	192866.29	364563.93

SE CURB RAMP					
POINT NUMBER	STATION	OFFSET	ELEVATION	NORTHING	EASTING
19	891+78.28	94.52' R	976.18	192820.01	364563.58
20	891+79.08	89.60' R	975.82	192823.83	364560.37
21	891+79.66	86.10' R	975.57	192826.54	364558.08
22	891+85.17	86.16' R	975.57	192830.69	364561.72
23	891+86.17	86.10' R	975.19	192831.49	364562.32
24	891+88.17	85.97' R	975.29	192833.09	364563.53
25	891+85.70	72.13' R	974.71	192840.22	364551.42
26	891+83.97	72.72' R	974.64	192838.53	364550.74
27	891+83.02	73.04' R	974.91	192837.60	364550.36

SE CURB RAMP					
POINT NUMBER	STATION	OFFSET	ELEVATION	NORTHING	EASTING
1	891+87.77	80.98' R	975.13	192836.03	364559.48
2	891+86.91	76.03' R	974.92	192838.61	364555.16
3	891+85.78	81.11' R	975.04	192834.43	364558.28
4	891+84.89	76.16' R	974.87	192836.99	364553.95
5	891+84.78	81.20' R	975.05	192833.62	364557.70
6	891+83.88	76.22' R	974.93	192836.18	364553.34
7	891+84.20	81.21' R	975.05	192833.17	364557.33
8	891+82.21	81.34' R	975.15	192831.57	364556.13
9	891+81.89	76.35' R	975.03	192834.58	364552.14
10	891+80.42	81.45' R	975.23	192830.14	364555.06
11	891+79.89	76.48' R	975.15	192832.98	364550.93
12	891+76.64	68.40' R	975.76	192835.77	364542.68
13	891+73.11	70.29' R	975.78	192831.86	364541.82
14	891+75.90	76.73' R	975.21	192829.78	364548.53
15	891+75.30	81.78' R	975.29	192826.04	364551.97
16	891+74.72	85.29' R	975.58	192823.32	364554.26
17	891+74.15	88.79' R	975.86	192820.61	364556.54
18	891+73.25	94.96' R	976.38	192815.91	364560.64

PROJECT NO: 4010-18-70	HWY: STH 144	COUNTY: WASHINGTON	CURB RAMPS - DETAILS	SHEET 32	E

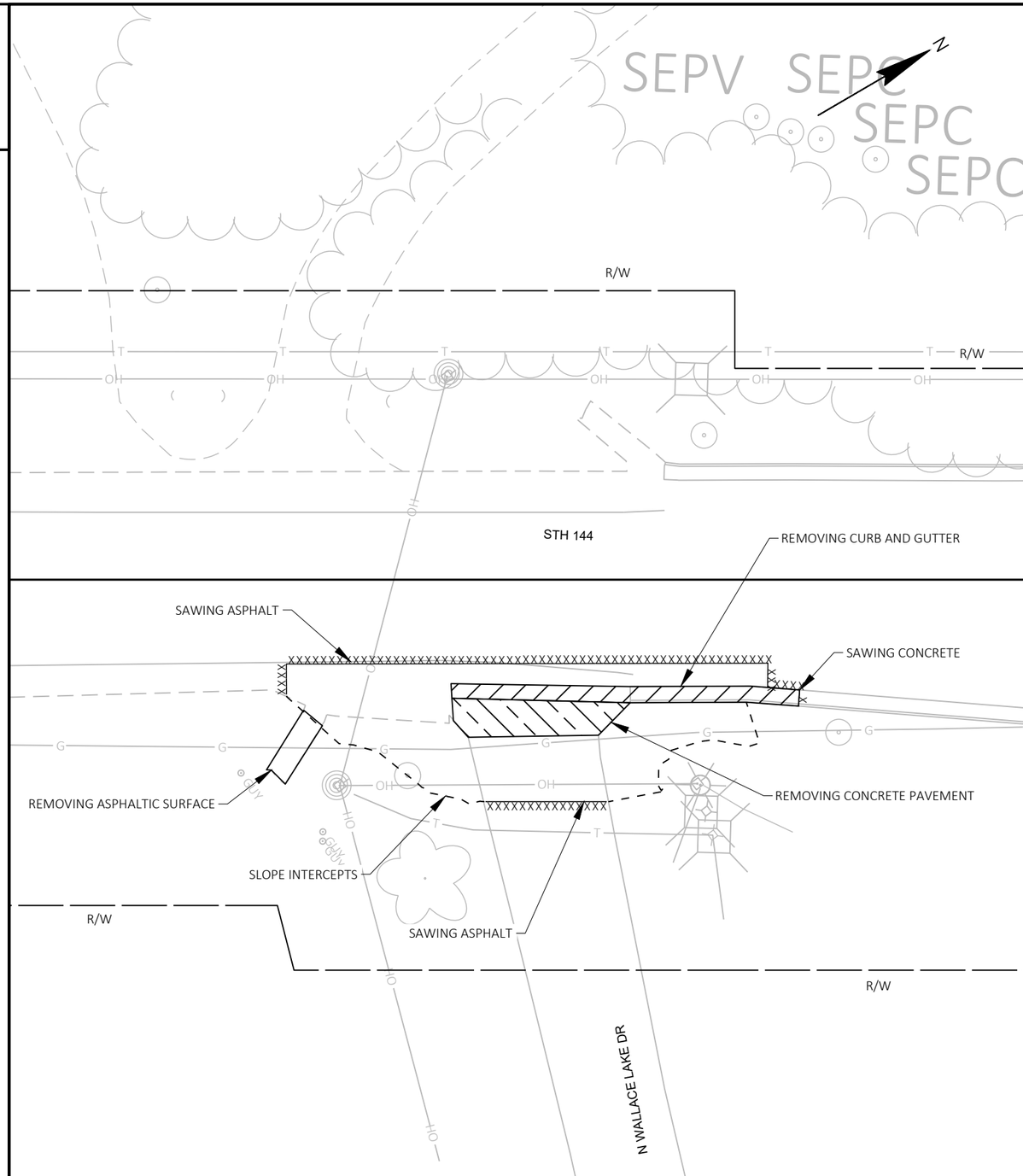

N WALLACE LAKE DR REMOVALS

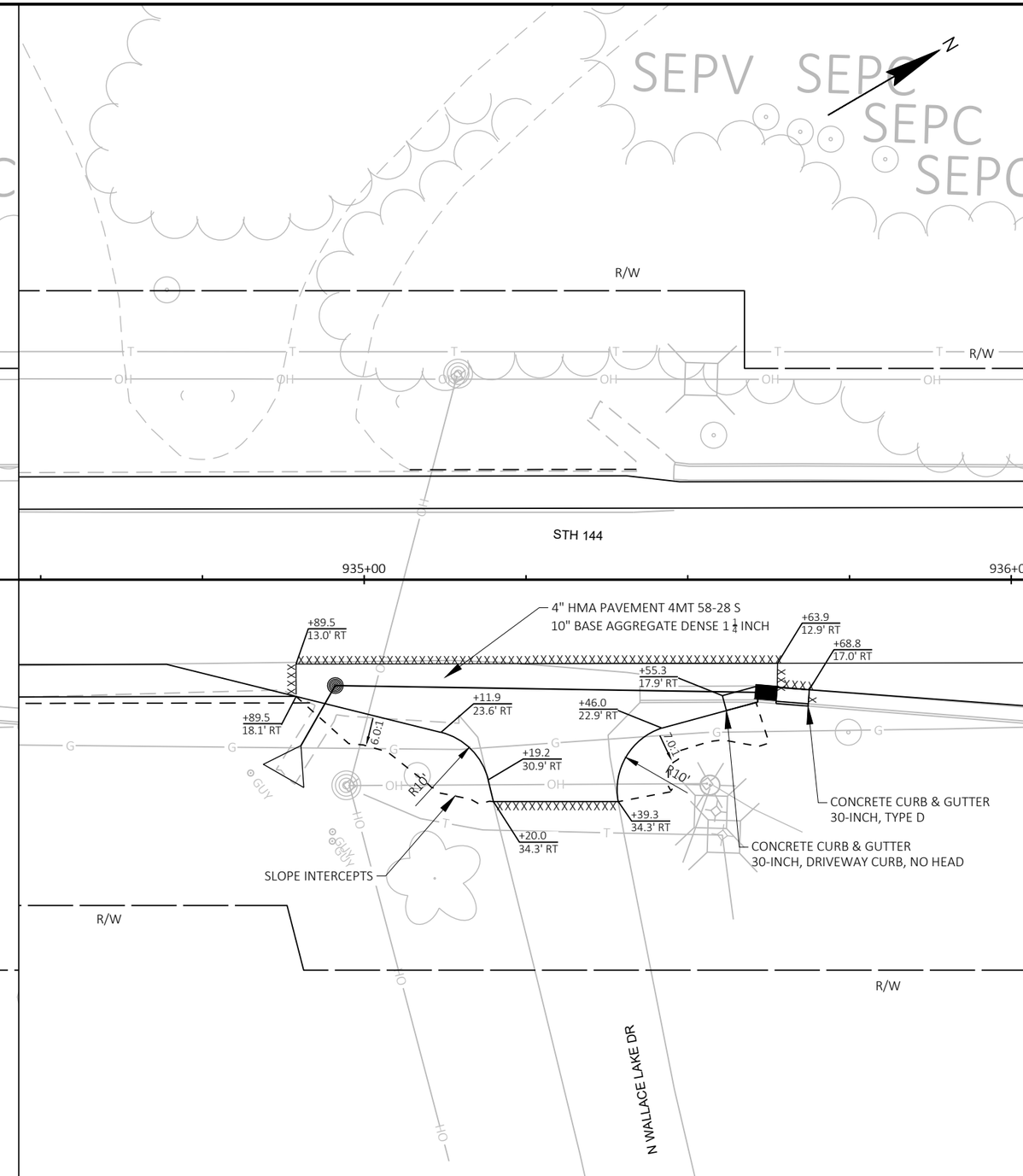

N WALLACE LAKE DR DETAILS

PROJECT NO: 4010-18-70	HWY: STH 144	COUNTY: WASHINGTON	N WALLACE LAKE DR	SHEET 33	E

2

934+00

935+00

936+00

STH 144

STA 934+96, 16.4' RT
MANHOLE COVER TYPE J- MANHOLES 4-J

STA 935+62, 17.4' RT
INLETS 4-WM -INLET COVER TYPE H

STA 934+90, 25.6' RT
APRON ENDWALLS FOR CPRC 15-INCH

P1

R2

WALLACE LAKE DRIVE

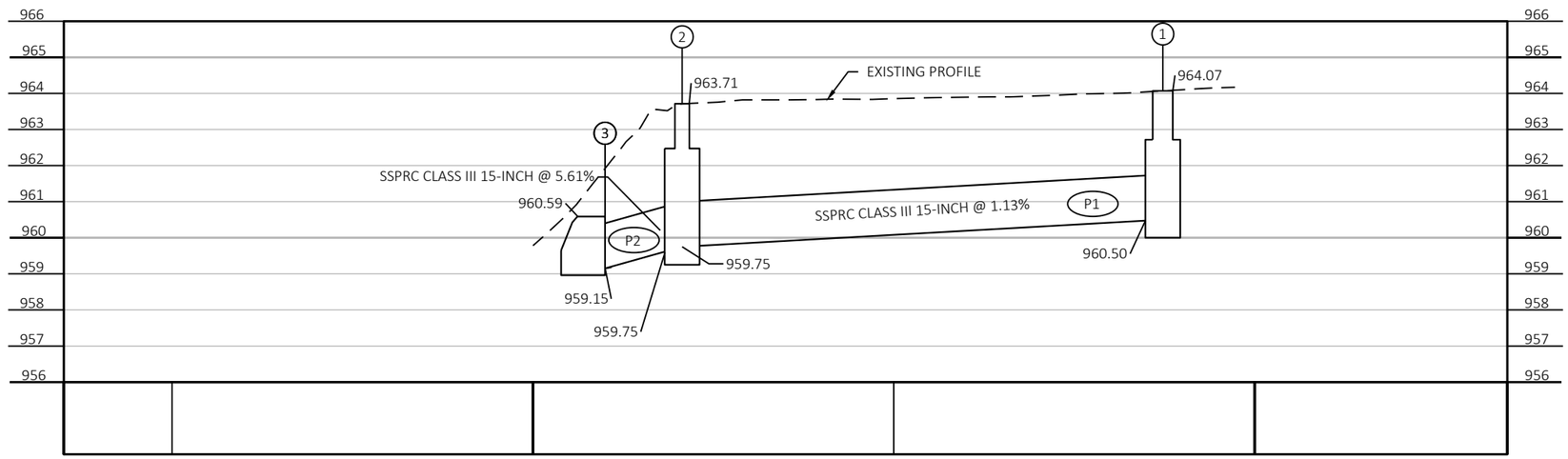

PROJECT NO: 4010-18-70	HWY: STH 144	COUNTY: WASHINGTON	STORM SEWER - WALLACE LAKE DRIVE	SHEET 34	E

2

LIVING SNOW FENCE LEGEND

2 ROWS - DECIDUOUS SHRUBS AND BED LIMITS

3 ROWS - DECIDUOUS SHRUBS AND BED LIMITS

SYMBOL LEGEND

P# — LIVING SNOW FENCE AREA IDENTIFICATION NUMBER

— PLANT QUANTITY

NOTES:
1. LAYOUT AND STAKING OF PLANT MATERIALS TO BE VERIFIED BY ENGINEER PRIOR TO INSTALLATION.
2. SEE PLANT BED DETAILS FOR SPACING OF DECIDUOUS SHRUBS.
3. A VARIETY OF NO LESS THAN 3 SPECIES SHALL BE CHOSEN FROM THE ABOVE LIST, WITH ANY CHOSEN SPECIES COMPRISING OF AT LEAST 20% OF THE TOTAL PLANT MATERIAL COUNT. ANY DEVIATIONS WILL BE SPELLED OUT IN THE PLAN SET OR MUST BE APPROVED BY THE PROJECT ENGINEER.
4. PLANTINGS TO BE PROTECTED BY WEED BARRIER FABRIC TO 1.5' AROUND EACH SHRUB.
5. THE FOLLOWING PLANT SPECIES ARE RECOMMENDED FOR WET AREAS: COMMON BUTTONBUSH, RED OSIER DOGWOOD AND SANDBAR WILLOW.

SNOWDRIFT CONTROL - DECIDUOUS SHRUBS

COMMON NAME	LATIN NAME	MATURE HEIGHT	SOIL MOISTURE TOLERANCE	WINTER HARDINESS
DOGWOOD, SILKY	CORNUS AMOMUM	10' (3m)	WET TO DRY MESIC	SOUTH HALF OF THE STATE
DOGWOOD, GREY	CORNUS RACEMOSA	10' (3m)	WET MESIC TO DRY	STATEWIDE
DOGWOOD, REDOSIER	CORNUS SERICEA	8' (2.5m)	WET TO DRY MESIC	STATEWIDE
FILBERT, AMERICAN	CORYLUS AMERICANA	8' (2.5m)	WET MESIC TO DRY	STATEWIDE
NINEBARK, COMMON	PHYSOCARPUS OPULIFOLIUS	10' (3m)	WET TO DRY	STATEWIDE
PLUM, AMERICAN	PRUNUS AMERICANA	15' (4.5m)	MESIC TO DRY	SOUTH HALF OF THE STATE
VIBURNUM, AMERICAN CRANBERRYBUSH	VIBURNUM TRILOBUM	12' (4m)	WET TO DRY MESIC	STATEWIDE
WILLOW, SANDBAR	SALIX EXIGUA	18' (5m)	WET TO DRY MESIC	STATEWIDE
BUTTONBUSH, COMMON	CEPHALANTHUS	18' (5m)	WET TO DRY MESIC	STATEWIDE

PLANT DATA CHART - EVERGREENS FOR SNOWDRIFT CONTROL

COMMON NAME	SCIENTIFIC NAME	TYPE	AVERAGE MATURE HEIGHT	TYPICAL MATURE SPREAD	SOIL MOISTURE TOLERANCE	SIZE WHEN PLANTED		ROOT ZONE MODE	MINIMUM SIZE				
									BALL / POT SIZE		ROOT SPREAD	PLANT HOLE	
						HEIGHT	SPREAD		DIAMETER	DEPTH		DIAMETER	DEPTH
JUNIPER, TRAUTMAN	JUNIPERUS CHINENSIS VAR. "TRAUTMAN"	2C	12'	4'	MESIC TO DRY	5'	2' TO 4'	BB	24"	12"	11"	36"	17"

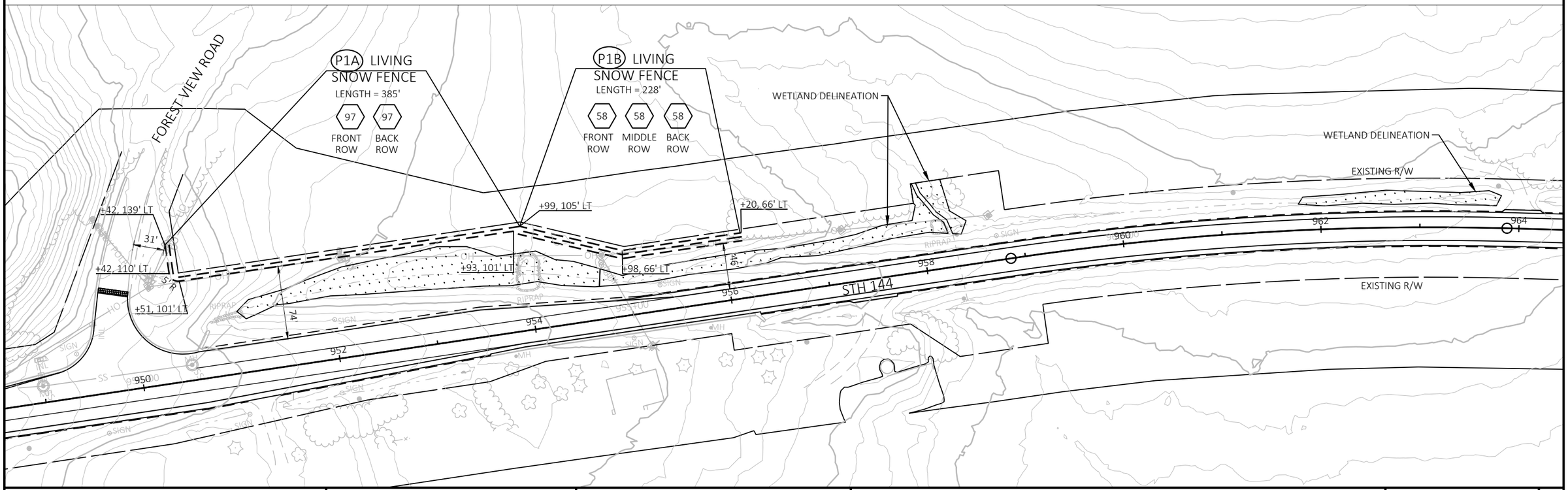

PROJECT NO: 4010-18-70	HWY: STH 144	COUNTY: WASHINGTON	LIVING SNOW FENCE/ PLANTING DETAILS	SHEET 35	E

FILE NAME : N:\PDS\C3D\40101800\SHEETSPLAN\023101-PL.DWG
LAYOUT NAME - 01-pl

PLOT DATE : 6/30/2025 3:33 PM PLOT BY : SCHMIDT, JUDENE M PLOT NAME : PLOT SCALE : ##########

WISDOT/CADDS SHEET 42

2

WETLAND LIMITS

P2 LIVING SNOW FENCE
LENGTH = 779'

195	195	195
FRONT ROW	MIDDLE ROW	BACK ROW

WETLAND DELINEATION

+68, 130' LT

CTH H

12'

12'

EXISTING R/W

50' FIELD ENTRANCE

+11, 90' LT

+10, 90' LT

78'

1110 1112 1114 1116 1118 1120 1122 1124

STH 144

EXISTING R/W

N

P3A LIVING SNOW FENCE- EVERGREENS
LENGTH = 160'

40	40
FRONT ROW	BACK ROW

P3B LIVING SNOW FENCE
LENGTH = 542'

137	137	137
FRONT ROW	MIDDLE ROW	BACK ROW

EXISTING R/W

+54, 61' LT

+97, 52' LT

47'

+96, 56' LT

EXISTING R/W

1152 1154 1156 1158 1160 1162 1164 1166

STH 144

WETLAND DELINEATION

LIVING SNOW FENCE LEGEND

2 ROWS - DECIDUOUS SHRUBS AND BED LIMITS

3 ROWS - DECIDUOUS SHRUBS AND BED LIMITS

SYMBOL LEGEND

P# LIVING SNOW FENCE AREA IDENTIFICATION NUMBER

PLANT QUANTITY

PROJECT NO: 4010-18-70	HWY: STH 144	COUNTY: WASHINGTON	LIVING SNOW FENCE/ PLANTING DETAILS	SHEET 36	E

FILE NAME : N:\PDS\C3D\40101800\SHEETSPLAN\023101-PL.DWG
LAYOUT NAME - 02-pl

PLOT DATE : 6/30/2025 3:33 PM PLOT BY : SCHMIDT, JUDENE M PLOT NAME : PLOT SCALE : ##########

2

2

P4A LIVING SNOW FENCE
LENGTH = 981'

246 246 246
FRONT ROW | MIDDLE ROW | BACK ROW

P4B LIVING SNOW FENCE
LENGTH = 276'

70 70 70
FRONT ROW | MIDDLE ROW | BACK ROW

+27, 40' LT
+96, 59' LT
+19, 60' LT
+70, 60' LT
+51, 58' LT
EXISTING R/W
28'
47'
47'
1178
1180
1182
1184
1186
1188
1190
1192
STH 144
50' FIELD ENTRANCE

LIVING SNOW FENCE LEGEND

2 ROWS - DECIDUOUS SHRUBS AND BED LIMITS

3 ROWS - DECIDUOUS SHRUBS AND BED LIMITS

SYMBOL LEGEND

P# LIVING SNOW FENCE AREA IDENTIFICATION NUMBER

PLANT QUANTITY

P5 LIVING SNOW FENCE
LENGTH = 534'

134 134 134
FRONT ROW | MIDDLE ROW | BACK ROW

EXISTING R/W
EXISTING R/W
+07, 61' LT
+41, 61' LT
50'
1208
1210
1212
1214
1216
1218
1220
1222
STH 144

PROJECT NO: 4010-18-70	HWY: STH 144	COUNTY: WASHINGTON	LIVING SNOW FENCE/ PLANTING DETAILS	SHEET 37	E

FILE NAME : N:\PDS\C3D\40101800\SHEETSPLAN\023101-PL.DWG
LAYOUT NAME - 03-pl
PLOT DATE : 6/30/2025 3:33 PM
PLOT BY : SCHMIDT, JUDENE M
PLOT NAME :
PLOT SCALE : ##########

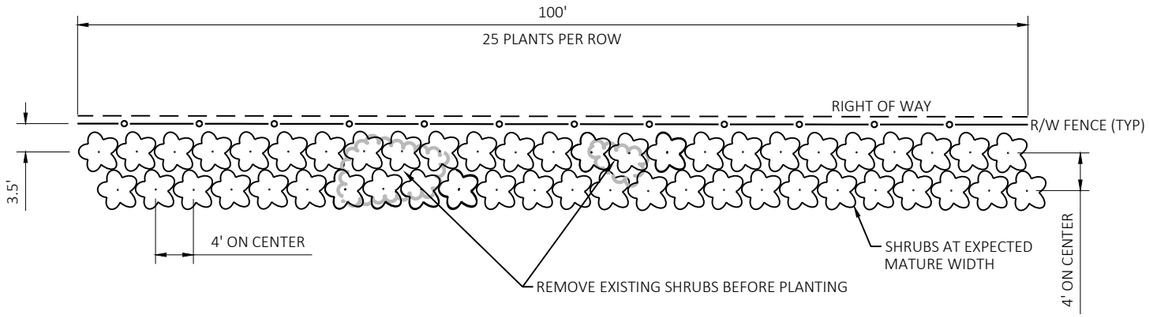

2 ROW SHRUB & EVERGREEN BED LAYOUT DETAIL

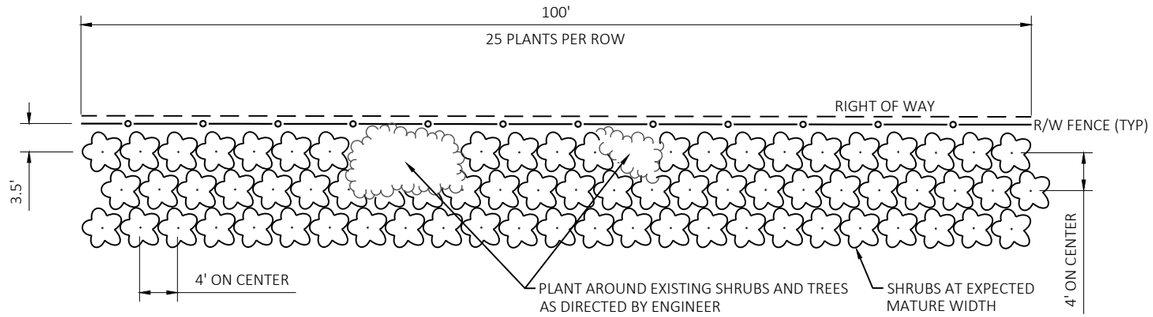

3 ROW SHRUB BED LAYOUT DETAIL

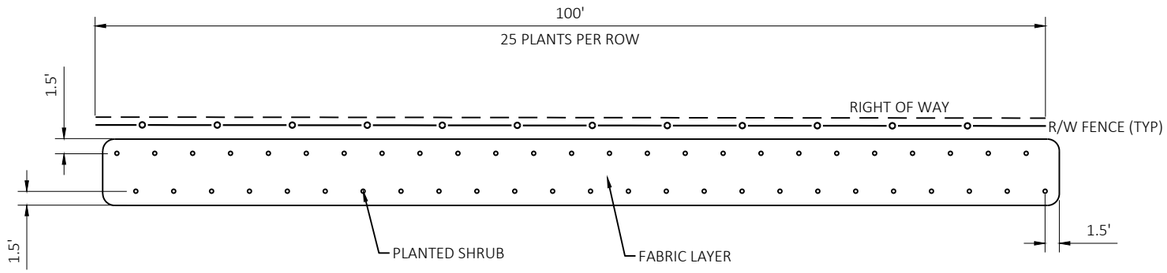

2 ROW WEED FABRIC DETAIL

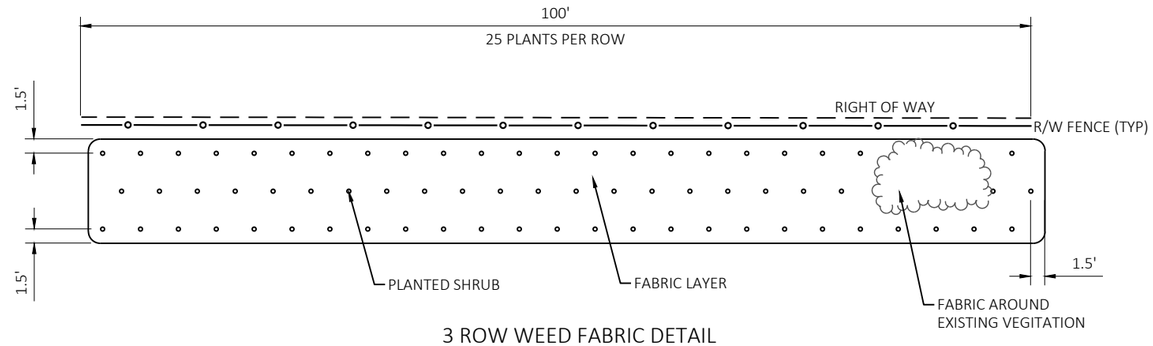

3 ROW WEED FABRIC DETAIL

NOTE: THIS DRAWING IS NOT TO SCALE AND IS INTENDED TO SHOW REQUIRED SETBACKS AND RELATIVE POSITIONS OF PLANTINGS ONLY.

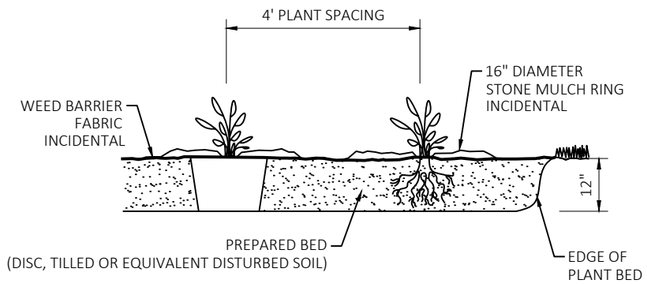

PLANTING BED DETAIL

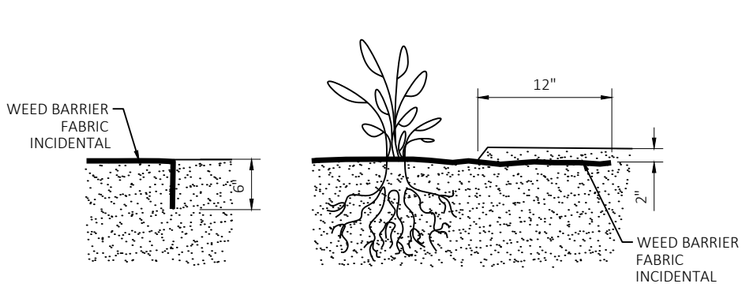

FABRIC EDGE DETAIL

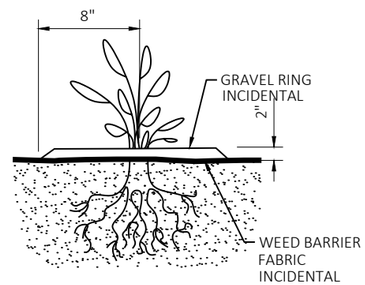

GRAVEL RING DETAIL

PROJECT NO: 4010-18-70	HWY: STH 144	COUNTY: WASHINGTON	PLANT BED DETAILS - LIVING SNOW FENCE (SHRUBS)	SHEET 38	E

PLANTING PROCESS EXPECTATIONS

ENDANGERED SPECIES EXPECTATIONS

- MOWING MUST BEGIN THE FIRST WEEK OF APRIL
- MOWING MUST BE MAINTAINED UP TO THE DATE OF INSTALL TO PREVENT NESTING OF ENDANGERED SPECIES.
- CONTRACTOR WILL TAKE GREAT CARE TO WATCH FOR, AND REMOVE, ANY TURTLES FOUND WITHIN THE LIMITS OF THE PROJECT SITE FOR THE DURATION OF THE PROJECT.

INITIAL PLANTING

1. IF REQUIRED PER THE PLAN SET, CLEAR AND GRUB WOODY VEGETATION.
2. APPLY HERBICIDE TO PLANTING SITE TO KILL EXISTING WEEDS.
    - APPLY MINIMUM DAYS PRIOR TO CULTIVATING SITE BASED ON MANUFACTURERS APPLICATION INSTRUCTIONS.
    - APPLICATOR MUST BE CERTIFIED AND LICENSED.
3. MOW AND MAINTAIN SITE TO A HEIGHT NO MORE THAN 6-INCHES.
4. WITHIN 7 DAYS OF SEEDLING STOCK INSTALLATION PREPARE PLANTING BED BY DISCING, TILLING OR EQUIVALENT PROCESS.
    - MINIMUM SOIL DISTURBANCE TO BE 12-INCHES DEPTH AND 12-INCHES WIDTH PER ROW. SEE DETAIL
5. SOAK SEEDLING STOCK ROOTS 1 TO 24 HOURS PRIOR TO PLANTING.
6. PLANT SEEDLING STOCK AND INSTALL SPECIFIED WEED BARRIER FABRIC OR EQUIVALENT. PICK FROM TWO OPTIONS.

HAND PLANTING OPTION	MACHINE PLANTING OPTION
A. PLACE SPECIFIED WEED BARRIER FABRIC OR EQUIVALENT. SEE STEP 7 FOR MORE DETAILS.	A. MACHINE PLANT SEEDLING STOCK WITH PULL BEHIND PLANTER.
B. HAND PLANT SEEDLING STOCK THROUGH THE FABRIC.	B. PLACE SPECIFIED WEED BARRIER FABRIC OR EQUIVALENT. SEE STEP 7 FOR MORE DETAILS.

7. FABRIC INSTALLATION SHALL FOLLOW THESE GUIDELINES
    - INSTALLATION SHALL BE THE WIDTH OF THE PLANTING BED, UNLESS APPROVED BY THE PROJECT ENGINEER.
    - ALL PLANTS SHOULD BE INSTALLED 1.5-FEET FROM ALL EDGES OF THE FABRIC.
    - WHEN CUTTING HOLES IN THE FABRIC, INDIVIDUAL SLITS SHALL BE LARGE ENOUGH TO PULL THE SHRUB THROUGH AND NO MORE. EXCESS SPACE LEADS TO WEED COMPETITION.
    - STAPLES SHALL BE PLACED ACCORDING TO MANUFACTURER'S RECOMMENDATION.
    - CONTRACTOR SHALL SECURE THE OUTSIDE EDGE OF FABRIC BY EITHER CREATING A 2-INCH SOIL BERM ON THE OUTSIDE ONE FOOT OF FABRIC OR DEPRESS 6-INCHES OF OUTSIDE EDGE BELOW THE NATURAL GRADE TO PREVENT LIFTING. SEE DETAIL.
8. APPLY PRE-EMERGENT HERBICIDE AROUND PLANT FABRIC OPENINGS AND OUTSIDE MOWED EDGE.
    - APPLICATION MUST OCCUR AFTER THE FIRST GOOD RAIN AND SOIL SURFACE HAS DRIED.
    - APPLICATOR MUST BE CERTIFIED AND LICENSED.
9. INSTALL PEA GRAVEL LANDSCAPE MULCH ON TOP OF FABRIC AROUND EACH PLANT HOLE. SEE DETAIL.
    - PEA GRAVEL MULCH SHALL BE USED TO PREVENT WEED GROWTH IN THE CUT SLITS MADE IN THE FABRIC.
    - SWEEP AND/OR BLOW ANY SOIL, STRAW MULCH, OR OTHER DEBRIS OFF THE TOP OF THE FABRIC PRIOR TO THR PLACEMENT OF THE PEA GRAVEL MULCH.
    - APPLY MULCH AT 2-INCH DEPTH AS PER THE LIVING SNOW FENCE LAYOUT DETAIL SHEET.
    - USE 1/4-INCH CRUSHED AND SCREENED STONE CHIPS IN PLACE OF THE PEA GRAVEL FOR STEEP SLOPES.

REPLACING DEAD SEEDLING STOCK (EACH SPRING FOLLOWING INITIAL PLANTING)

1. MOW OUTSIDE EDGES OF WEED FABRIC TO A HEIGHT NO MORE THAN 6-INCHES.
2. APPLY PRE-EMERGENT TO OUTSIDE EDGES AND EXPOSED SOIL IN FABRIC OPENING.
3. REMOVE ANY DEAD PLANT.
4. CREATE A DISTURBED SOIL STATE TO A DEPTH OF 12-INCHES.
5. INSTALL SEEDLING STOCK REPLACEMENTS.
6. BEGIN CARE CYCLE MAINTENANCE.

CARE CYCLE MAINTENANCE

1. TO BE PERFORMED AT MINIMUM OF EVERY TWO WEEKS, TO A MAXIMUM OF 13 TOTAL CARE CYCLES PER GROWING SEASON.
2. CONTROL WEEDS
    - HAND PULL WEEDS.
    - SELECTIVE HERBICIDE TREATMENT WITH CAUTION.
    - WEED EATERS/WHACKERS ARE NOT RECOMMENDED DUE TO HIGH POTENTIAL OF DAMAGE TO SEEDLINGS.
3. WATER AS NEEDED.
4. MOW SEVERAL TIMES IN THE SEASON TO CONTROL ENCROACHMENT OF UNWANTED VEGETATION.
    - OUTSIDE EDGES OF PLANTING AREA BY 3 TO 5-FEET.
5. SUBMIT CARE CYCLE REPORTS EVERY CARE EVENT.

2

LEGEND

- EXISTING SIGN MOUNTED ON POST(S)
- EXISTING SIGN MOUNTED ON BRIDGE OR SIGN BRIDGE
- PROPOSED SIGN MOUNTED ON POST(S)
- PROPOSED SIGN MOUNTED ON BRIDGE OR SIGN BRIDGE
- VMS — VARIABLE MESSAGE SIGN
- EXISTING LIGHT OR SIGNAL POLE
- SIGN BRIDGE
- CANTILEVER SIGN BRIDGE
- XXX — DENOTES SIGN NUMBER
- (X) — INDICATES SIGN SIZE
- (20XX) — YEAR OF SIGN

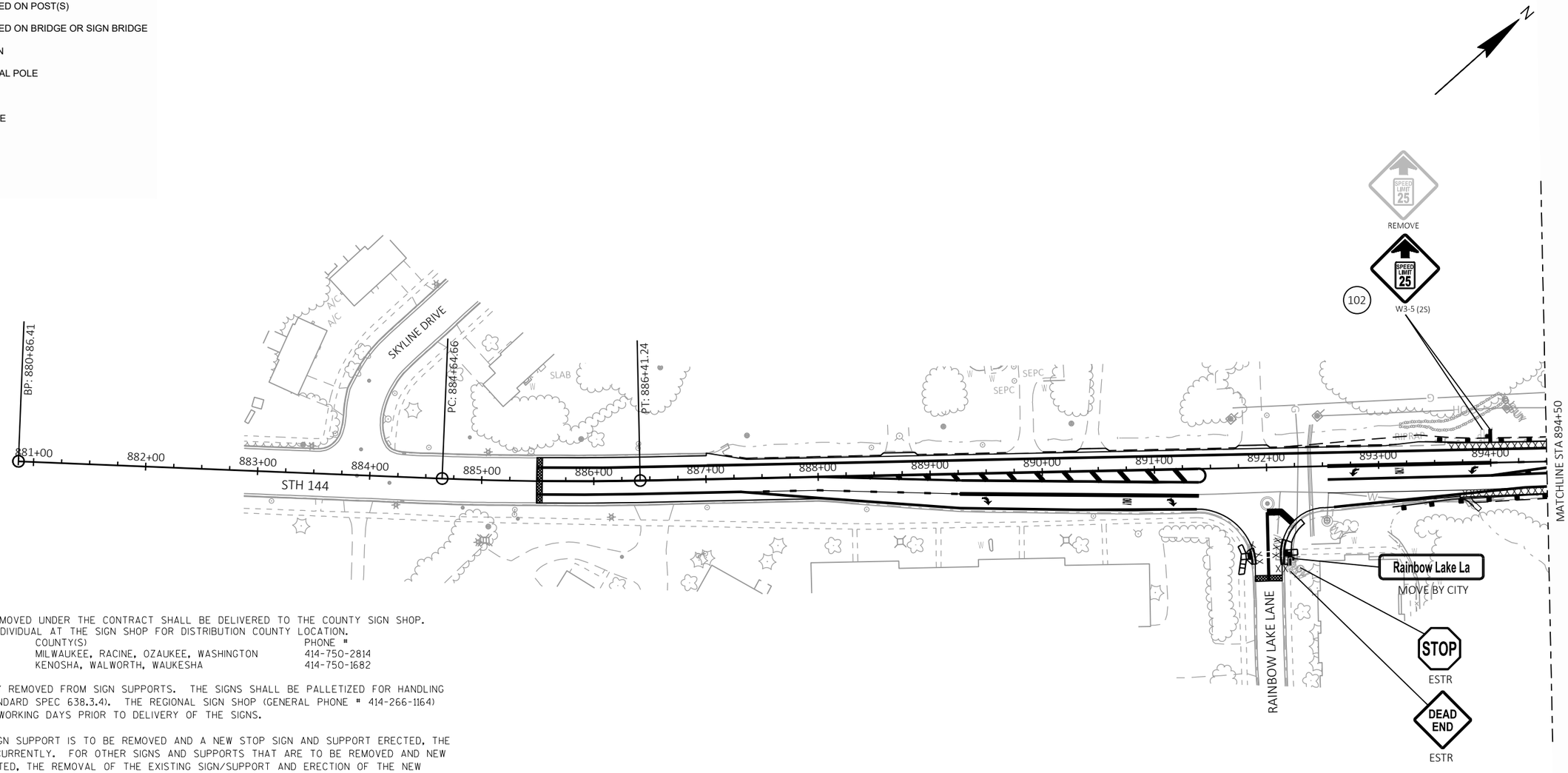

TYPE II ALUMINUM SIGNS REMOVED UNDER THE CONTRACT SHALL BE DELIVERED TO THE COUNTY SIGN SHOP. CONTACT THE FOLLOWING INDIVIDUAL AT THE SIGN SHOP FOR DISTRIBUTION COUNTY LOCATION.

SIGNING COORDINATOR	COUNTY(S)	PHONE #
• BREE JOHNS-KONKEL	MILWAUKEE, RACINE, OZAUKEE, WASHINGTON	414-750-2814
• CHUCK SALDIVAR	KENOSHA, WALWORTH, WAUKESHA	414-750-1682

SIGNS SHALL BE CAREFULLY REMOVED FROM SIGN SUPPORTS. THE SIGNS SHALL BE PALLETIZED FOR HANDLING WITH A FORKLIFT (SEE STANDARD SPEC 638.3.4). THE REGIONAL SIGN SHOP (GENERAL PHONE # 414-266-1164) SHALL BE NOTIFIED THREE WORKING DAYS PRIOR TO DELIVERY OF THE SIGNS.

WHEN AN EXISTING STOP SIGN SUPPORT IS TO BE REMOVED AND A NEW STOP SIGN AND SUPPORT ERECTED, THE WORK SHALL BE DONE CONCURRENTLY. FOR OTHER SIGNS AND SUPPORTS THAT ARE TO BE REMOVED AND NEW SIGNS AND SUPPORTS ERECTED, THE REMOVAL OF THE EXISTING SIGN/SUPPORT AND ERECTION OF THE NEW SIGN/SUPPORT SHOULD BE DONE AS CONCURRENTLY AS POSSIBLE. IN NO CASE SHALL A NEW SIGN/SUPPORT BE DOWN FOR MORE THAN 24 HOURS AND THERE SHALL NOT BE MORE THAN ONE SIGN OF THE SAME LEGEND MISSING IN A ROW.

WOOD POSTS SIZES, FOR TYPE II SIGNS ARE ESTIMATED LENGTHS AND THE ACTUAL LENGTH WILL BE DETERMINED IN THE FIELD.

STREET NAME SIGNS ARE PROPERTY OF THE MUNICIPALITY (CITY, VILLAGE OR TOWN). THE MUNICIPALITY SHALL BE CONTACTED TO REMOVE THEIR STREET NAME SIGNS PRIOR TO CONSTRUCTION AND IT IS THEIR RESPONSIBILITY TO REINSTALL THE OLD SIGNS OR REPLACE THEM FOLLOWING CONSTRUCTION. WISDOT DOES NOT FURNISH OR INSTALL STREET NAME SIGNS. THE STREET NAME SIGNS SHALL NOT BE PLACED ON TOP OF THE STOP SIGNS.

LOCATE NO PASSING PENNANTS BASED ON EXISTING NO PASSING ZONES. PLACE SIGNS BASED ON WHERE THE PAVEMENT MARKING FOR NO PASSING ZONES BEGIN.

BOX OUT OR CORING OF CONCRETE FOR SIGN POSTS IS INCIDENTAL TO THE POST.

SHEET 1 OF 32

2

LEGEND

- EXISTING SIGN MOUNTED ON POST(S)
- EXISTING SIGN MOUNTED ON BRIDGE OR SIGN BRIDGE
- PROPOSED SIGN MOUNTED ON POST(S)
- PROPOSED SIGN MOUNTED ON BRIDGE OR SIGN BRIDGE
- VMS — VARIABLE MESSAGE SIGN
- EXISTING LIGHT OR SIGNAL POLE
- SIGN BRIDGE
- CANTILEVER SIGN BRIDGE
- XXX — DENOTES SIGN NUMBER
- (X) — INDICATES SIGN SIZE
- (20XX) — YEAR OF SIGN

N
PC: 894+96.38
MATCHLINE STA 894+50
894+00
895+00
896+00
897+00
898+00
899+00
900+00
901+00
PI: 900+92.81
902+00
903+00
904+00
905+00
906+00
907+00
908+00
909+00
MATCHLINE STA 909+00
STH 144
MAILBOX
MAILBOX
RIPRAP
LAKERIDGE COURT
GUY
GUY
HO
HO
HO
GV
WV
WV
MH
MH
W
W
W

2

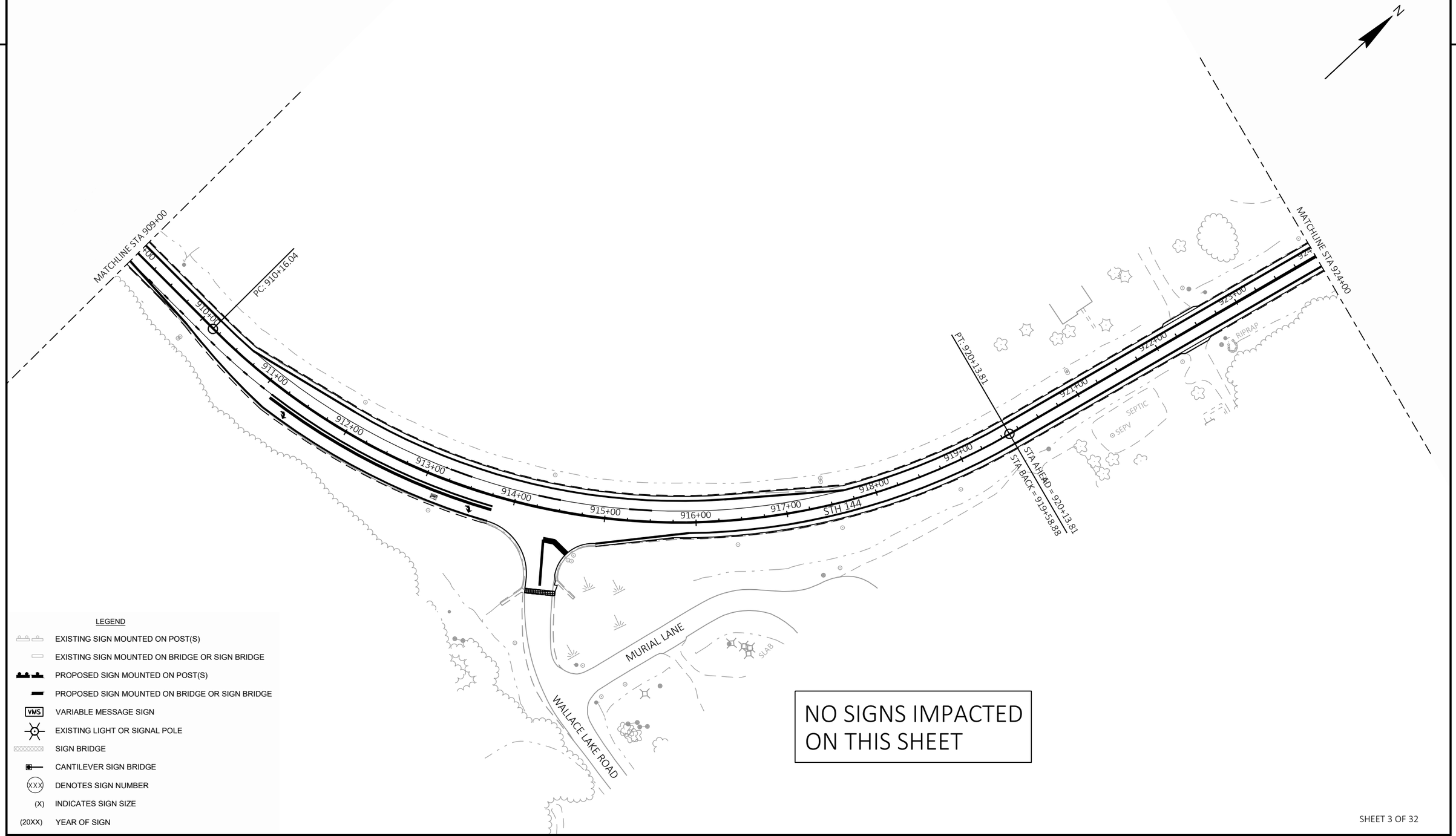

LEGEND

- EXISTING SIGN MOUNTED ON POST(S)
- EXISTING SIGN MOUNTED ON BRIDGE OR SIGN BRIDGE
- PROPOSED SIGN MOUNTED ON POST(S)
- PROPOSED SIGN MOUNTED ON BRIDGE OR SIGN BRIDGE
- VMS — VARIABLE MESSAGE SIGN
- EXISTING LIGHT OR SIGNAL POLE
- SIGN BRIDGE
- CANTILEVER SIGN BRIDGE
- XXX — DENOTES SIGN NUMBER
- (X) — INDICATES SIGN SIZE
- (20XX) — YEAR OF SIGN

NO SIGNS IMPACTED ON THIS SHEET

SHEET 3 OF 32

PROJECT NO: 4010-18-70	HWY: STH 144	COUNTY: WASHINGTON	PERMANENT SIGNING	SHEET 42	E

2

2

LEGEND

- EXISTING SIGN MOUNTED ON POST(S)
- EXISTING SIGN MOUNTED ON BRIDGE OR SIGN BRIDGE
- PROPOSED SIGN MOUNTED ON POST(S)
- PROPOSED SIGN MOUNTED ON BRIDGE OR SIGN BRIDGE
- VMS — VARIABLE MESSAGE SIGN
- EXISTING LIGHT OR SIGNAL POLE
- SIGN BRIDGE
- CANTILEVER SIGN BRIDGE
- XXX — DENOTES SIGN NUMBER
- (X) — INDICATES SIGN SIZE
- (20XX) — YEAR OF SIGN

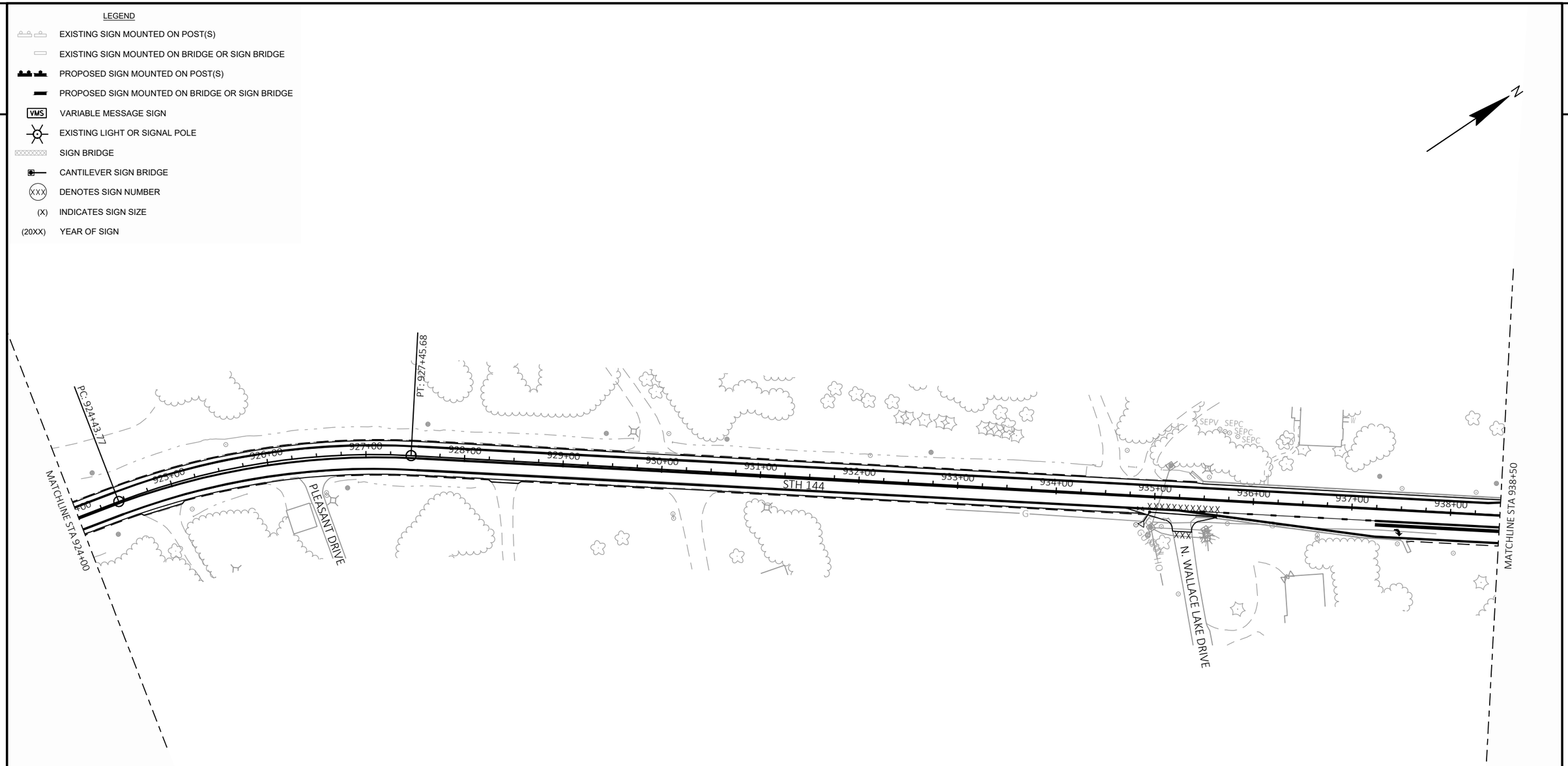

NO SIGNS IMPACTED ON THIS SHEET

SHEET 4 OF 32

PROJECT NO: 4010-18-70	HWY: STH 144	COUNTY: WASHINGTON	PERMANENT SIGNING	SHEET 43	E

FILE NAME : X:\ML\2022\20220357\2022-0357.02\DESIGN\TRANSPORTATION\SHEETSPLAN\023201-PS.DWG
LAYOUT NAME - 023204_ps

PLOT DATE : 10/5/2023 8:53 AM PLOT BY : ROGAHN, DOUG PLOT NAME : PLOT SCALE : 1 IN:100 FT

WISDOT/CADDS SHEET 42

2

LEGEND

- EXISTING SIGN MOUNTED ON POST(S)
- EXISTING SIGN MOUNTED ON BRIDGE OR SIGN BRIDGE
- PROPOSED SIGN MOUNTED ON POST(S)
- PROPOSED SIGN MOUNTED ON BRIDGE OR SIGN BRIDGE
- VMS — VARIABLE MESSAGE SIGN
- EXISTING LIGHT OR SIGNAL POLE
- SIGN BRIDGE
- CANTILEVER SIGN BRIDGE
- XXX — DENOTES SIGN NUMBER
- (X) — INDICATES SIGN SIZE
- (20XX) — YEAR OF SIGN

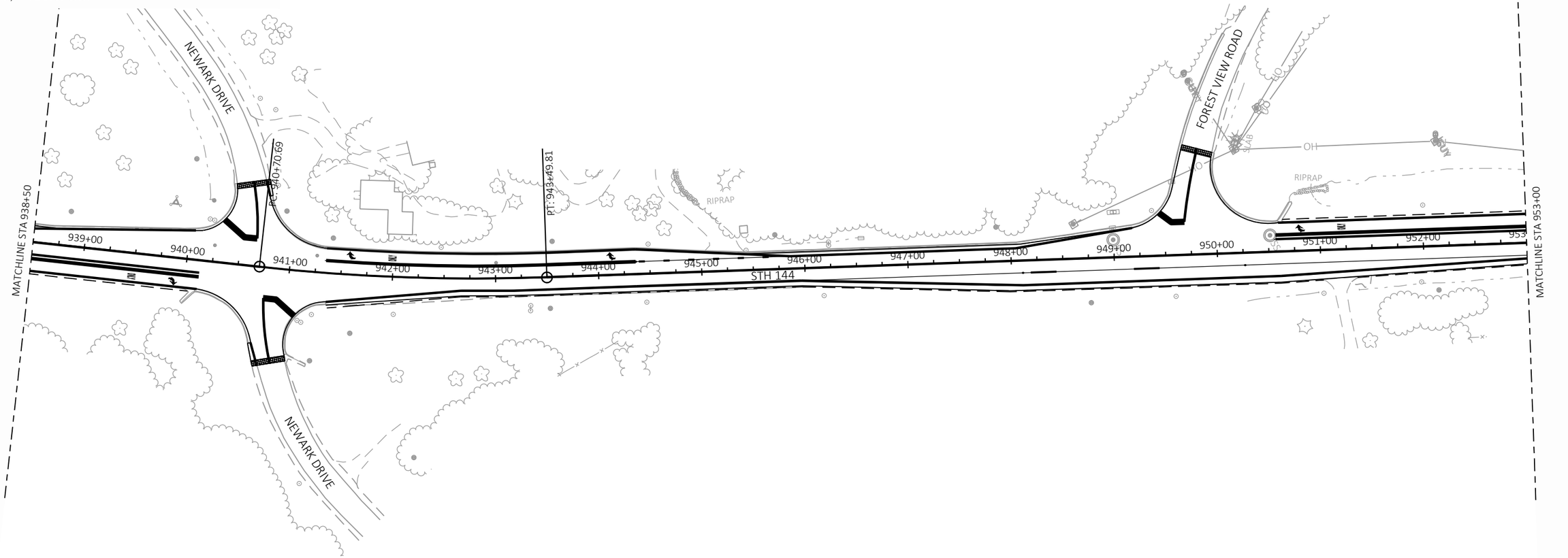

NO SIGNS IMPACTED ON THIS SHEET

2

LEGEND

- EXISTING SIGN MOUNTED ON POST(S)
- EXISTING SIGN MOUNTED ON BRIDGE OR SIGN BRIDGE
- PROPOSED SIGN MOUNTED ON POST(S)
- PROPOSED SIGN MOUNTED ON BRIDGE OR SIGN BRIDGE
- VMS — VARIABLE MESSAGE SIGN
- EXISTING LIGHT OR SIGNAL POLE
- SIGN BRIDGE
- CANTILEVER SIGN BRIDGE
- XXX — DENOTES SIGN NUMBER
- (X) — INDICATES SIGN SIZE
- (20XX) — YEAR OF SIGN

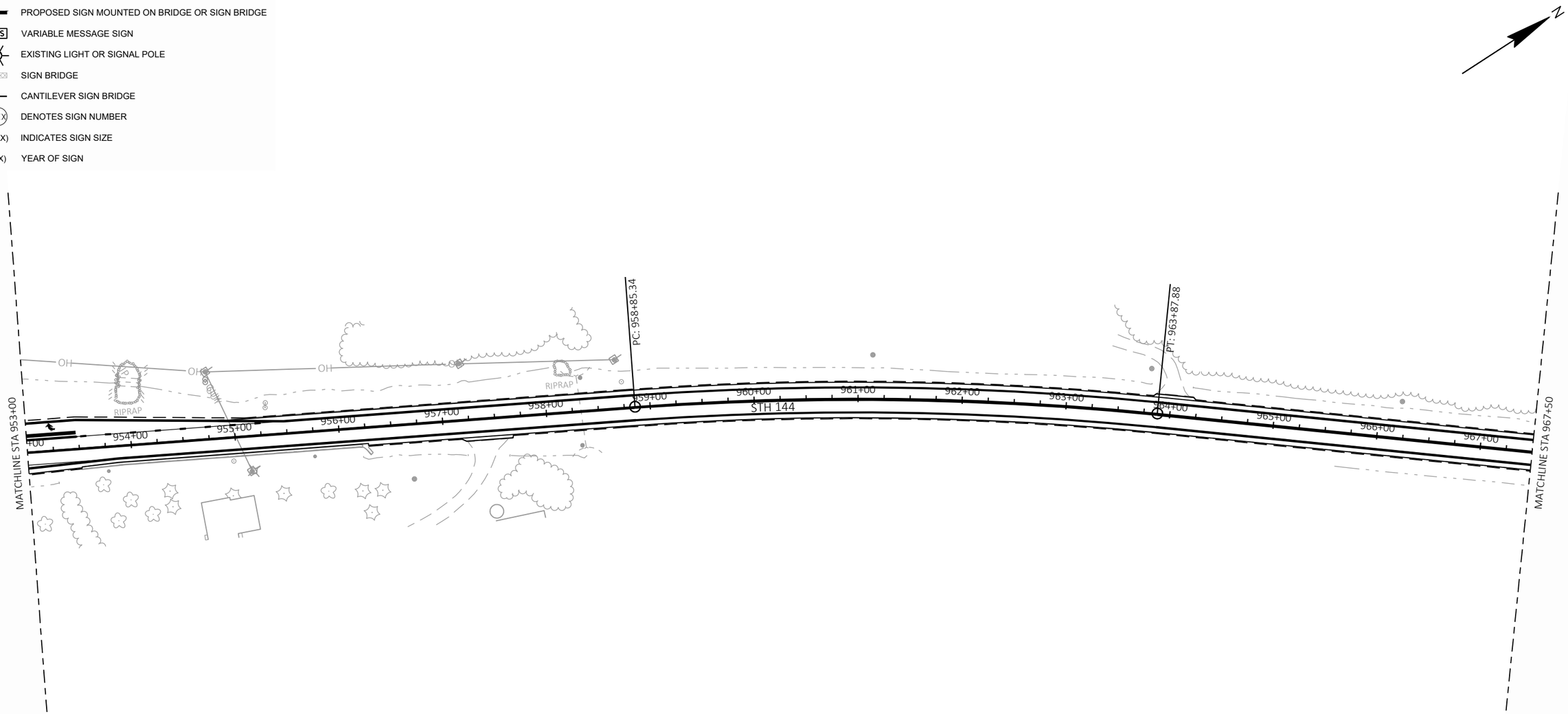

NO SIGNS IMPACTED ON THIS SHEET

SHEET 6 OF 32

PROJECT NO: 4010-18-70	HWY: STH 144	COUNTY: WASHINGTON	PERMANENT SIGNING	SHEET 45	E

FILE NAME : X:\ML\2022\20220357\2022-0357.02\DESIGN\TRANSPORTATION\SHEETSPLAN\023201-PS.DWG
LAYOUT NAME - 023206_ps

PLOT DATE : 10/5/2023 8:53 AM PLOT BY : ROGAHN, DOUG PLOT NAME : PLOT SCALE : 1 IN:100 FT

WISDOT/CADDS SHEET 42

2

LEGEND

- EXISTING SIGN MOUNTED ON POST(S)
- EXISTING SIGN MOUNTED ON BRIDGE OR SIGN BRIDGE
- PROPOSED SIGN MOUNTED ON POST(S)
- PROPOSED SIGN MOUNTED ON BRIDGE OR SIGN BRIDGE
- VMS — VARIABLE MESSAGE SIGN
- EXISTING LIGHT OR SIGNAL POLE
- SIGN BRIDGE
- CANTILEVER SIGN BRIDGE
- XXX — DENOTES SIGN NUMBER
- (X) — INDICATES SIGN SIZE
- (20XX) — YEAR OF SIGN

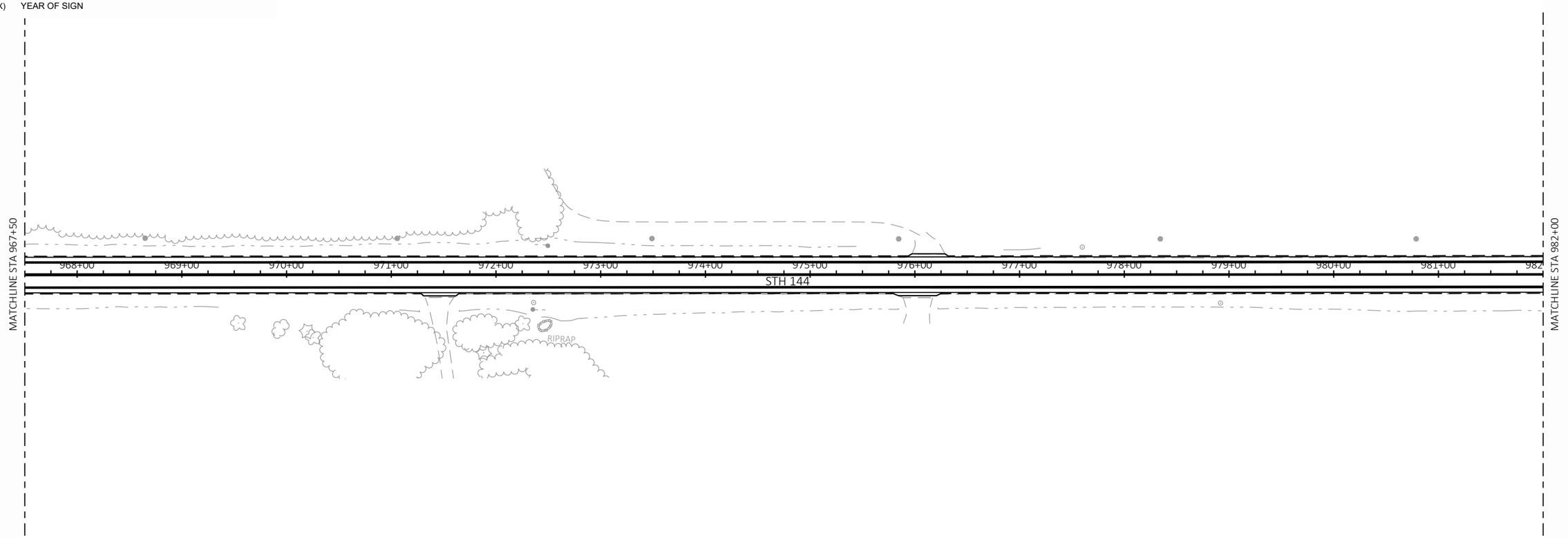

NO SIGNS IMPACTED
ON THIS SHEET

2

2

LEGEND

- EXISTING SIGN MOUNTED ON POST(S)
- EXISTING SIGN MOUNTED ON BRIDGE OR SIGN BRIDGE
- PROPOSED SIGN MOUNTED ON POST(S)
- PROPOSED SIGN MOUNTED ON BRIDGE OR SIGN BRIDGE
- VMS — VARIABLE MESSAGE SIGN
- EXISTING LIGHT OR SIGNAL POLE
- SIGN BRIDGE
- CANTILEVER SIGN BRIDGE
- XXX — DENOTES SIGN NUMBER
- (X) — INDICATES SIGN SIZE
- (20XX) — YEAR OF SIGN

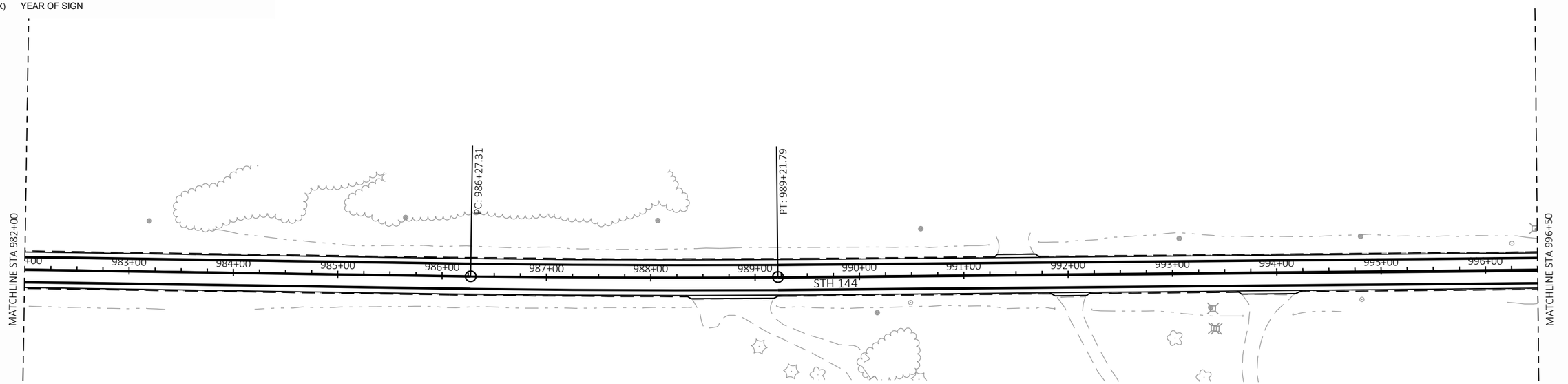

NO SIGNS IMPACTED ON THIS SHEET

SHEET 8 OF 32

PROJECT NO: 4010-18-70	HWY: STH 144	COUNTY: WASHINGTON	PERMANENT SIGNING	SHEET 47	E

FILE NAME : X:\ML\2022\20220357\2022-0357.02\DESIGN\TRANSPORTATION\SHEETSPLAN\023201-PS.DWG
LAYOUT NAME - 023208_ps

PLOT DATE : 10/5/2023 8:53 AM PLOT BY : ROGAHN, DOUG PLOT NAME : PLOT SCALE : 1 IN:100 FT

WISDOT/CADDS SHEET 42

2

2

LEGEND

- EXISTING SIGN MOUNTED ON POST(S)
- EXISTING SIGN MOUNTED ON BRIDGE OR SIGN BRIDGE
- PROPOSED SIGN MOUNTED ON POST(S)
- PROPOSED SIGN MOUNTED ON BRIDGE OR SIGN BRIDGE
- VMS — VARIABLE MESSAGE SIGN
- EXISTING LIGHT OR SIGNAL POLE
- SIGN BRIDGE
- CANTILEVER SIGN BRIDGE
- XXX — DENOTES SIGN NUMBER
- (X) — INDICATES SIGN SIZE
- (20XX) — YEAR OF SIGN

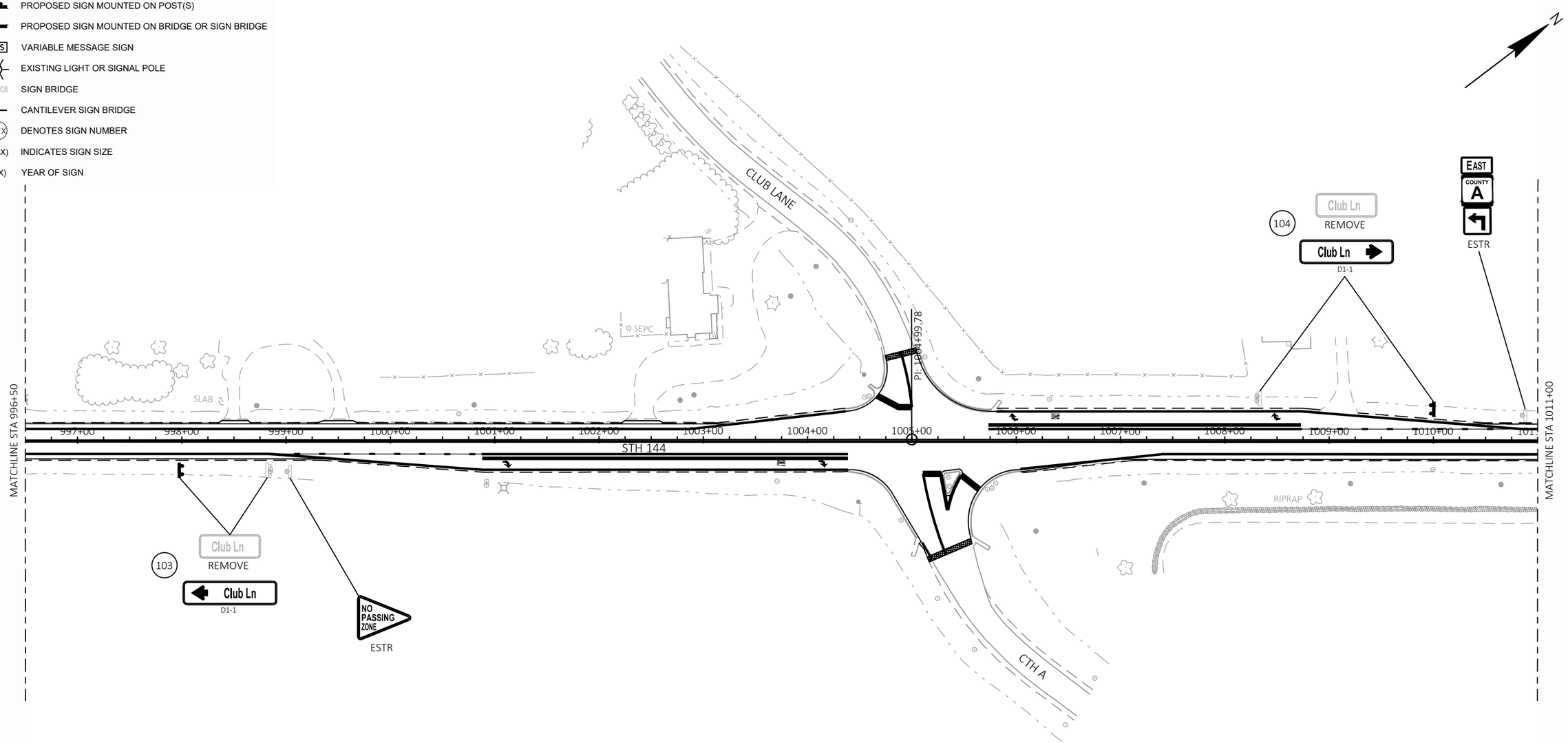

SHEET 9 OF 32

PROJECT NO: 4010-18-70	HWY: STH 144	COUNTY: WASHINGTON	PERMANENT SIGNING	SHEET 48	E

FILE NAME : X:\ML\2022\20220357\2022-0357.02\DESIGN\TRANSPORTATION\SHEETSPLAN\023201-PS.DWG
LAYOUT NAME - 023209_ps

PLOT DATE : 10/5/2023 8:54 AM PLOT BY : ROGAHN, DOUG PLOT NAME : PLOT SCALE : 1 IN:100 FT

WISDOT/CADDS SHEET 42

2

2

LEGEND

- EXISTING SIGN MOUNTED ON POST(S)
- EXISTING SIGN MOUNTED ON BRIDGE OR SIGN BRIDGE
- PROPOSED SIGN MOUNTED ON POST(S)
- PROPOSED SIGN MOUNTED ON BRIDGE OR SIGN BRIDGE
- VMS — VARIABLE MESSAGE SIGN
- EXISTING LIGHT OR SIGNAL POLE
- SIGN BRIDGE
- CANTILEVER SIGN BRIDGE
- XXX — DENOTES SIGN NUMBER
- (X) — INDICATES SIGN SIZE
- (20XX) — YEAR OF SIGN

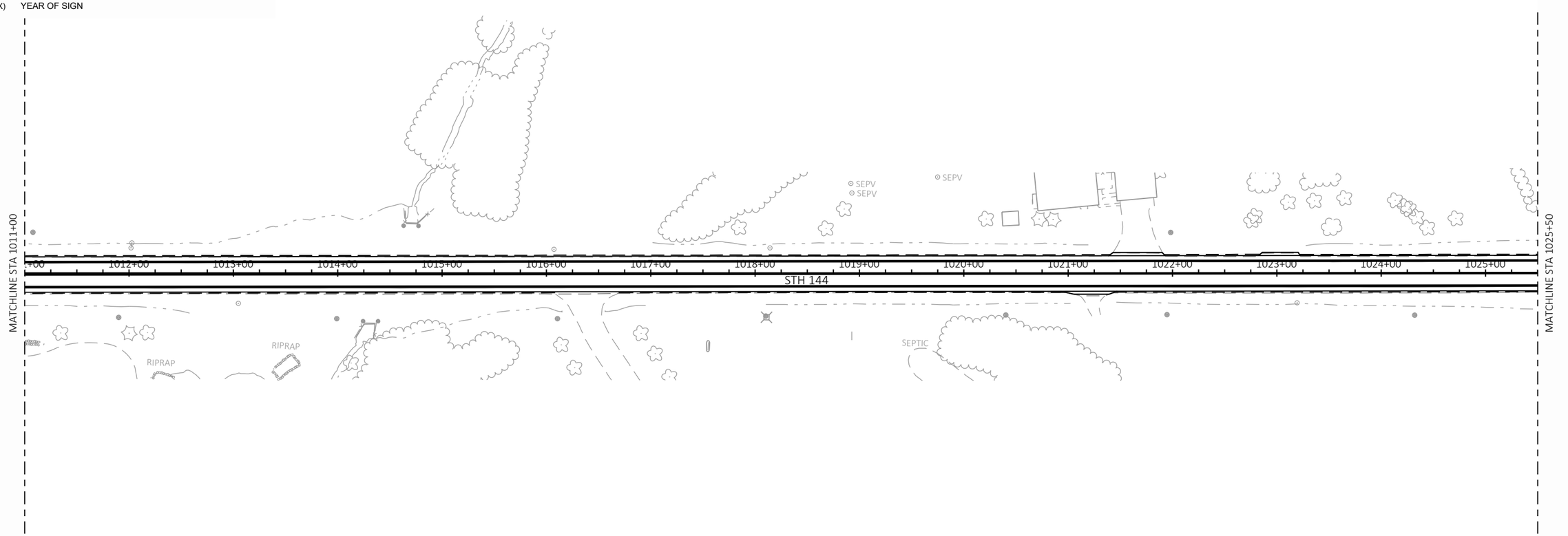

NO SIGNS IMPACTED
ON THIS SHEET

SHEET 10 OF 32

PROJECT NO: 4010-18-70	HWY: STH 144	COUNTY: WASHINGTON	PERMANENT SIGNING	SHEET 49	E

FILE NAME : X:\ML\2022\20220357\2022-0357.02\DESIGN\TRANSPORTATION\SHEETSPLAN\023201-PS.DWG
LAYOUT NAME - 023210_ps

PLOT DATE : 10/5/2023 8:54 AM PLOT BY : ROGAHN, DOUG PLOT NAME : PLOT SCALE : 1 IN:100 FT

WISDOT/CADDS SHEET 42

2

2

LEGEND

- EXISTING SIGN MOUNTED ON POST(S)
- EXISTING SIGN MOUNTED ON BRIDGE OR SIGN BRIDGE
- PROPOSED SIGN MOUNTED ON POST(S)
- PROPOSED SIGN MOUNTED ON BRIDGE OR SIGN BRIDGE
- VMS — VARIABLE MESSAGE SIGN
- EXISTING LIGHT OR SIGNAL POLE
- SIGN BRIDGE
- CANTILEVER SIGN BRIDGE
- XXX — DENOTES SIGN NUMBER
- (X) — INDICATES SIGN SIZE
- (20XX) — YEAR OF SIGN

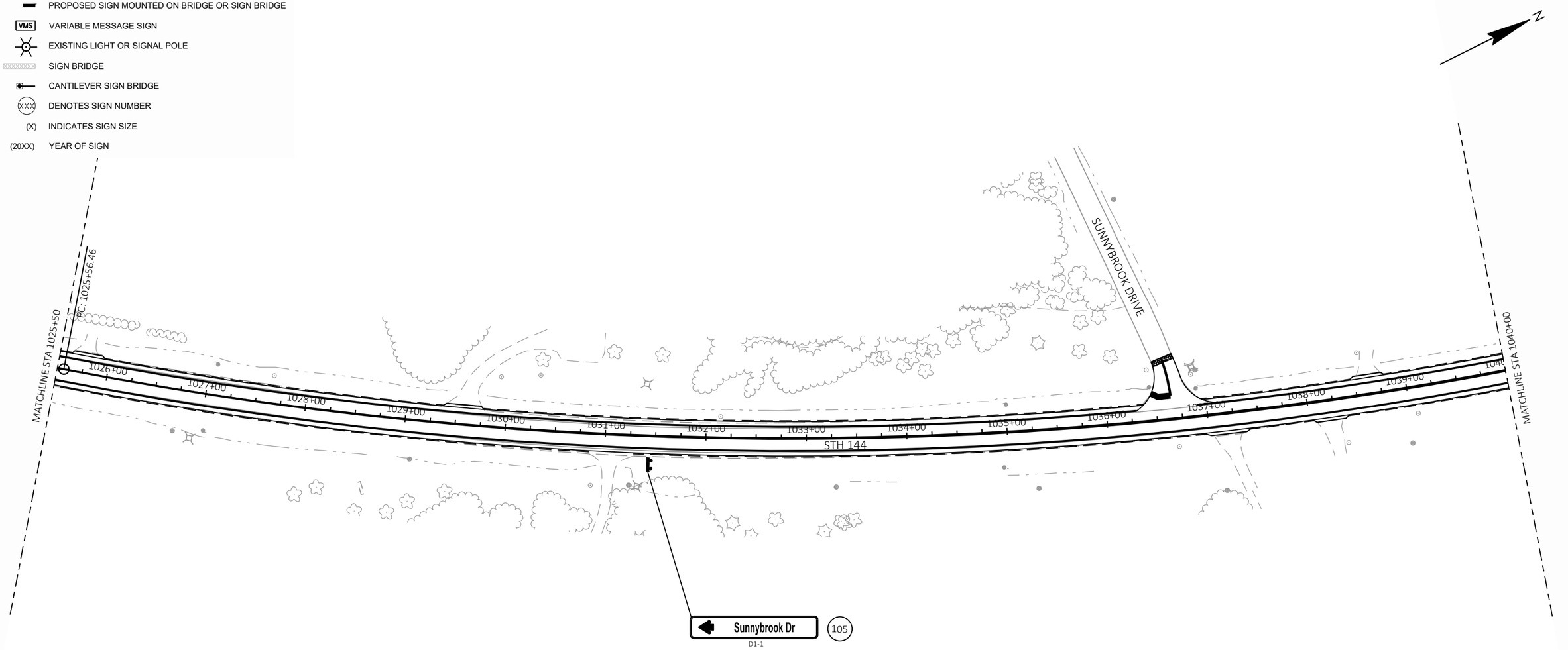

SHEET 11 OF 32

PROJECT NO: 4010-18-70	HWY: STH 144	COUNTY: WASHINGTON	PERMANENT SIGNING	SHEET 50	E

FILE NAME : X:\ML\2022\20220357\2022-0357.02\DESIGN\TRANSPORTATION\SHEETSPLAN\023201-PS.DWG
LAYOUT NAME - 023211_ps

PLOT DATE : 10/5/2023 8:54 AM PLOT BY : ROGAHN, DOUG PLOT NAME : PLOT SCALE : 1 IN:100 FT

WISDOT/CADDS SHEET 42

2

2

LEGEND

- EXISTING SIGN MOUNTED ON POST(S)
- EXISTING SIGN MOUNTED ON BRIDGE OR SIGN BRIDGE
- PROPOSED SIGN MOUNTED ON POST(S)
- PROPOSED SIGN MOUNTED ON BRIDGE OR SIGN BRIDGE
- VMS — VARIABLE MESSAGE SIGN
- EXISTING LIGHT OR SIGNAL POLE
- SIGN BRIDGE
- CANTILEVER SIGN BRIDGE
- XXX — DENOTES SIGN NUMBER
- (X) — INDICATES SIGN SIZE
- (20XX) — YEAR OF SIGN

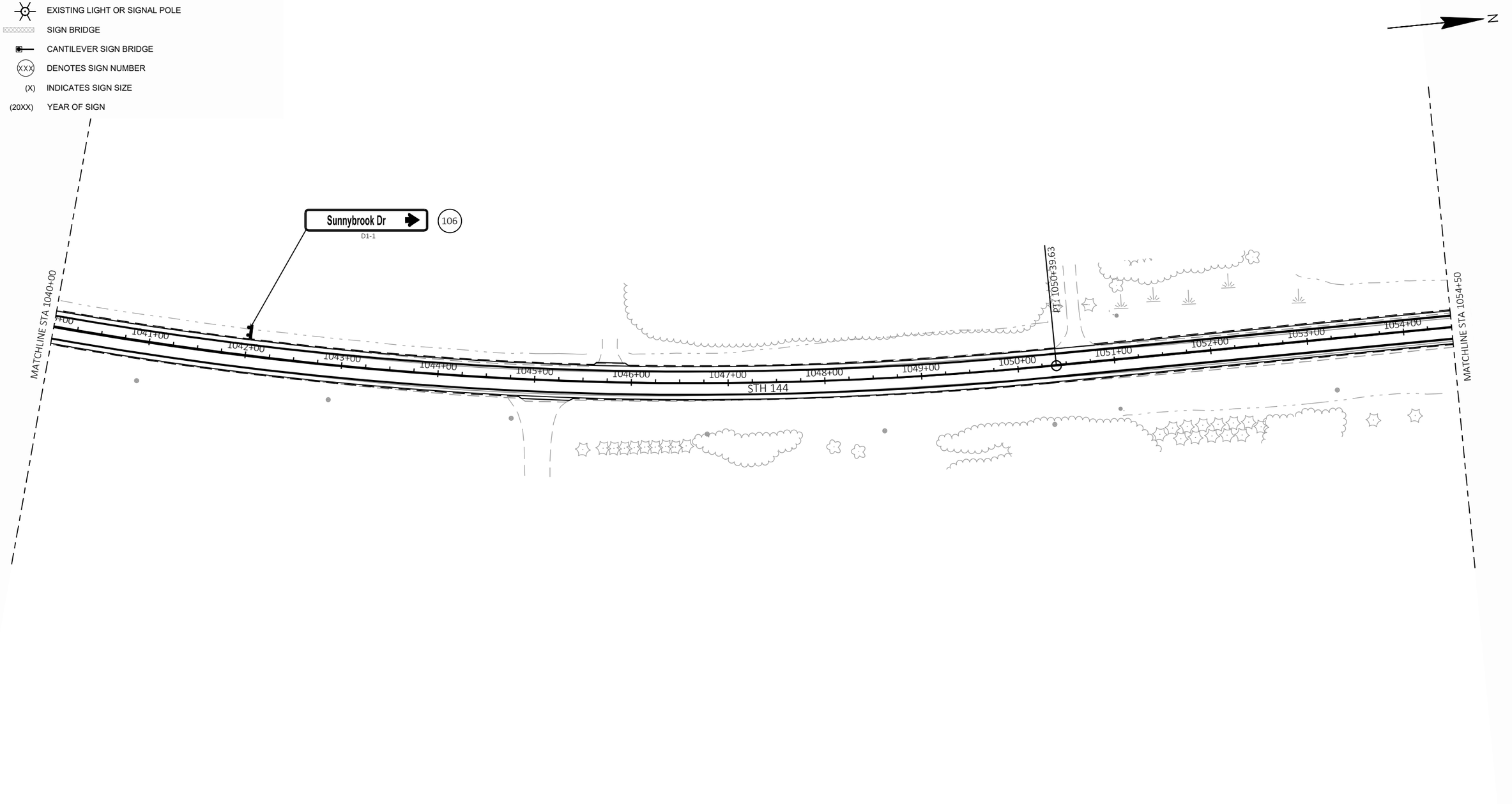

SHEET 12 OF 32

PROJECT NO: 4010-18-70	HWY: STH 144	COUNTY: WASHINGTON	PERMANENT SIGNING	SHEET 51	E

FILE NAME : X:\ML\2022\20220357\2022-0357.02\DESIGN\TRANSPORTATION\SHEETSPLAN\023201-PS.DWG
LAYOUT NAME - 023212_ps

PLOT DATE : 10/5/2023 8:54 AM PLOT BY : ROGAHN, DOUG PLOT NAME : PLOT SCALE : 1 IN:100 FT

WISDOT/CADDS SHEET 42

2

2

LEGEND

- EXISTING SIGN MOUNTED ON POST(S)
- EXISTING SIGN MOUNTED ON BRIDGE OR SIGN BRIDGE
- PROPOSED SIGN MOUNTED ON POST(S)
- PROPOSED SIGN MOUNTED ON BRIDGE OR SIGN BRIDGE
- VMS — VARIABLE MESSAGE SIGN
- EXISTING LIGHT OR SIGNAL POLE
- SIGN BRIDGE
- CANTILEVER SIGN BRIDGE
- XXX — DENOTES SIGN NUMBER
- (X) — INDICATES SIGN SIZE
- (20XX) — YEAR OF SIGN

N

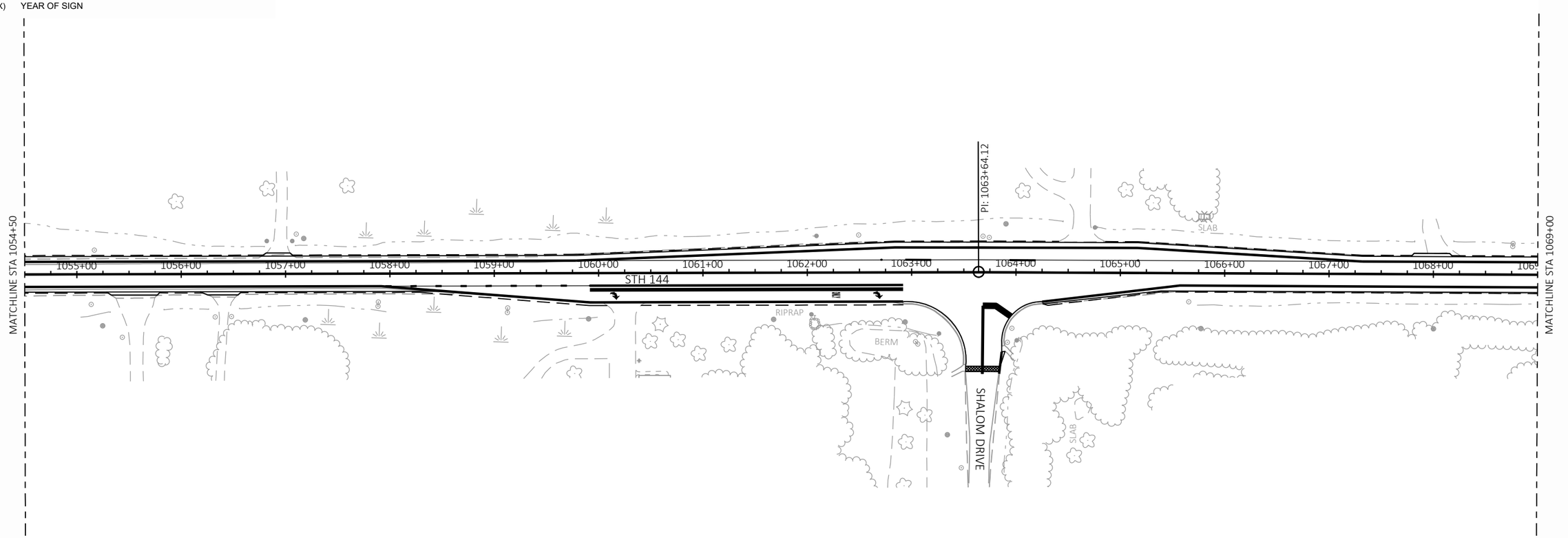

NO SIGNS IMPACTED ON THIS SHEET

SHEET 13 OF 32

PROJECT NO: 4010-18-70	HWY: STH 144	COUNTY: WASHINGTON	PERMANENT SIGNING	SHEET 52	E

FILE NAME : X:\ML\2022\20220357\2022-0357.02\DESIGN\TRANSPORTATION\SHEETSPLAN\023201-PS.DWG
LAYOUT NAME - 023213_ps

PLOT DATE : 10/5/2023 8:54 AM PLOT BY : ROGAHN, DOUG PLOT NAME : PLOT SCALE : 1 IN:100 FT

WISDOT/CADDS SHEET 42

2

2

LEGEND

- EXISTING SIGN MOUNTED ON POST(S)
- EXISTING SIGN MOUNTED ON BRIDGE OR SIGN BRIDGE
- PROPOSED SIGN MOUNTED ON POST(S)
- PROPOSED SIGN MOUNTED ON BRIDGE OR SIGN BRIDGE
- VMS — VARIABLE MESSAGE SIGN
- EXISTING LIGHT OR SIGNAL POLE
- SIGN BRIDGE
- CANTILEVER SIGN BRIDGE
- XXX — DENOTES SIGN NUMBER
- (X) — INDICATES SIGN SIZE
- (20XX) — YEAR OF SIGN

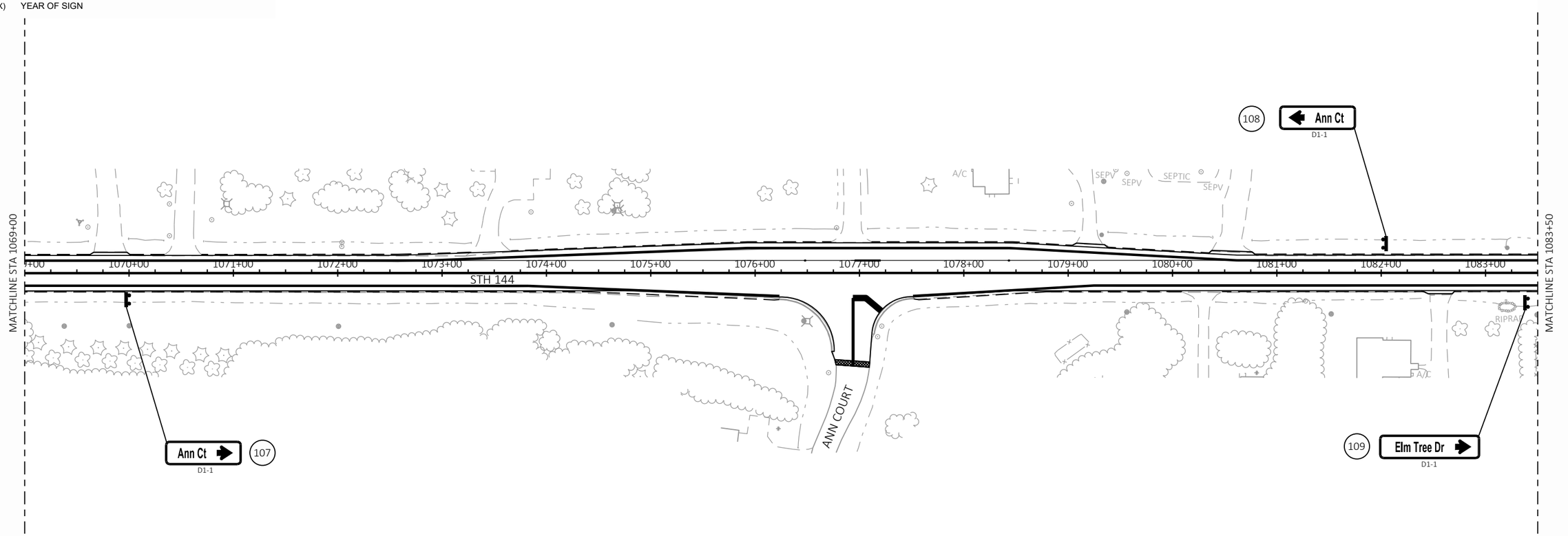

SHEET 14 OF 32

PROJECT NO: 4010-18-70	HWY: STH 144	COUNTY: WASHINGTON	PERMANENT SIGNING	SHEET 53	E

FILE NAME : X:\ML\2022\20220357\2022-0357.02\DESIGN\TRANSPORTATION\SHEETSPLAN\023201-PS.DWG
LAYOUT NAME - 023214_ps

PLOT DATE : 10/5/2023 8:54 AM PLOT BY : ROGAHN, DOUG PLOT NAME : PLOT SCALE : 1 IN:100 FT

WISDOT/CADDS SHEET 42

2

2

LEGEND

- EXISTING SIGN MOUNTED ON POST(S)
- EXISTING SIGN MOUNTED ON BRIDGE OR SIGN BRIDGE
- PROPOSED SIGN MOUNTED ON POST(S)
- PROPOSED SIGN MOUNTED ON BRIDGE OR SIGN BRIDGE
- VMS — VARIABLE MESSAGE SIGN
- EXISTING LIGHT OR SIGNAL POLE
- SIGN BRIDGE
- CANTILEVER SIGN BRIDGE
- XXX — DENOTES SIGN NUMBER
- (X) — INDICATES SIGN SIZE
- (20XX) — YEAR OF SIGN

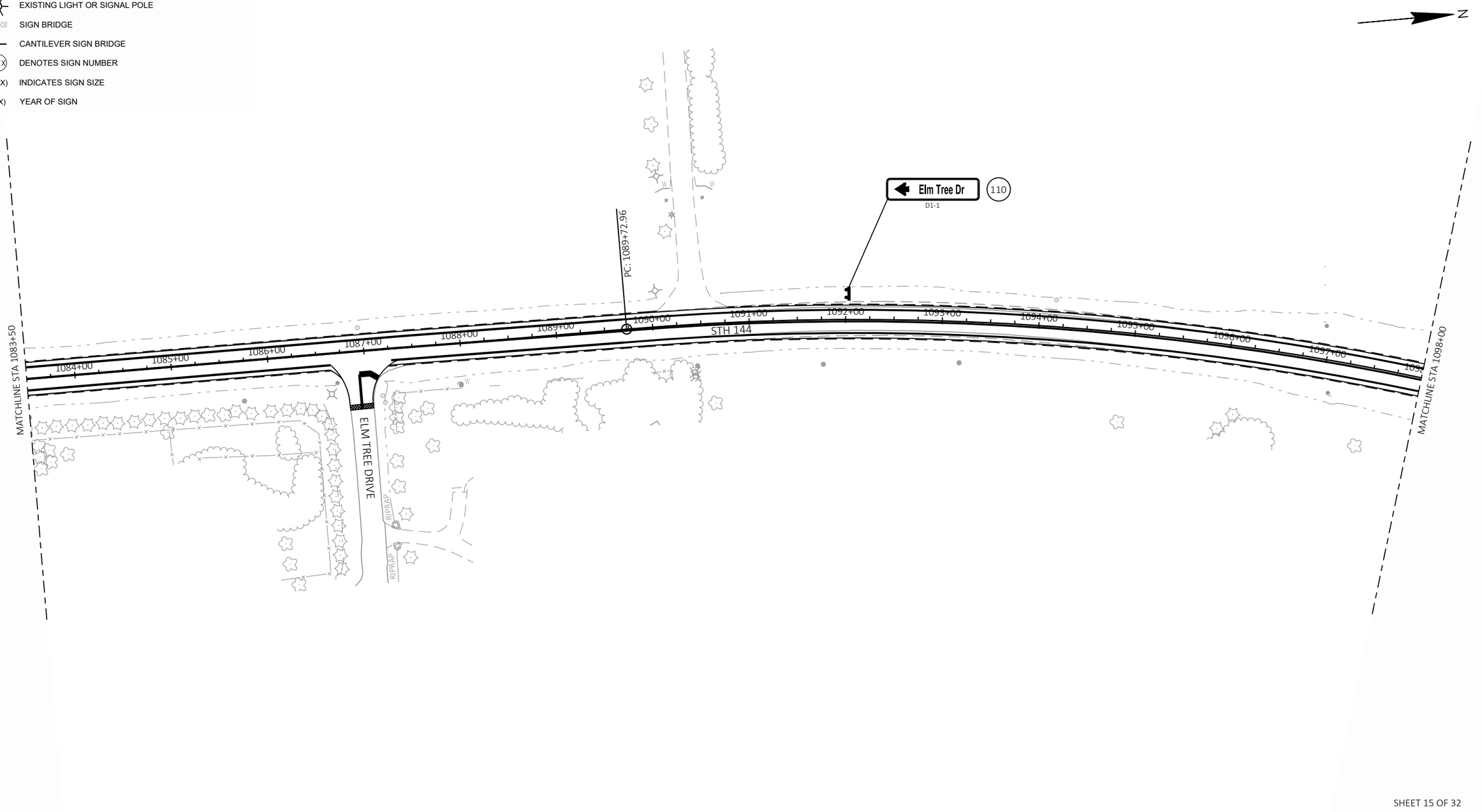

SHEET 15 OF 32

PROJECT NO: 4010-18-70	HWY: STH 144	COUNTY: WASHINGTON	PERMANENT SIGNING	SHEET 54	E

FILE NAME : X:\ML\2022\20220357\2022-0357.02\DESIGN\TRANSPORTATION\SHEETSPLAN\023201-PS.DWG
LAYOUT NAME - 023215_ps

PLOT DATE : 10/5/2023 8:54 AM PLOT BY : ROGAHN, DOUG PLOT NAME : PLOT SCALE : 1 IN:100 FT

WISDOT/CADDS SHEET 42

2

2

LEGEND

- EXISTING SIGN MOUNTED ON POST(S)
- EXISTING SIGN MOUNTED ON BRIDGE OR SIGN BRIDGE
- PROPOSED SIGN MOUNTED ON POST(S)
- PROPOSED SIGN MOUNTED ON BRIDGE OR SIGN BRIDGE
- VMS — VARIABLE MESSAGE SIGN
- EXISTING LIGHT OR SIGNAL POLE
- SIGN BRIDGE
- CANTILEVER SIGN BRIDGE
- XXX — DENOTES SIGN NUMBER
- (X) — INDICATES SIGN SIZE
- (20XX) — YEAR OF SIGN

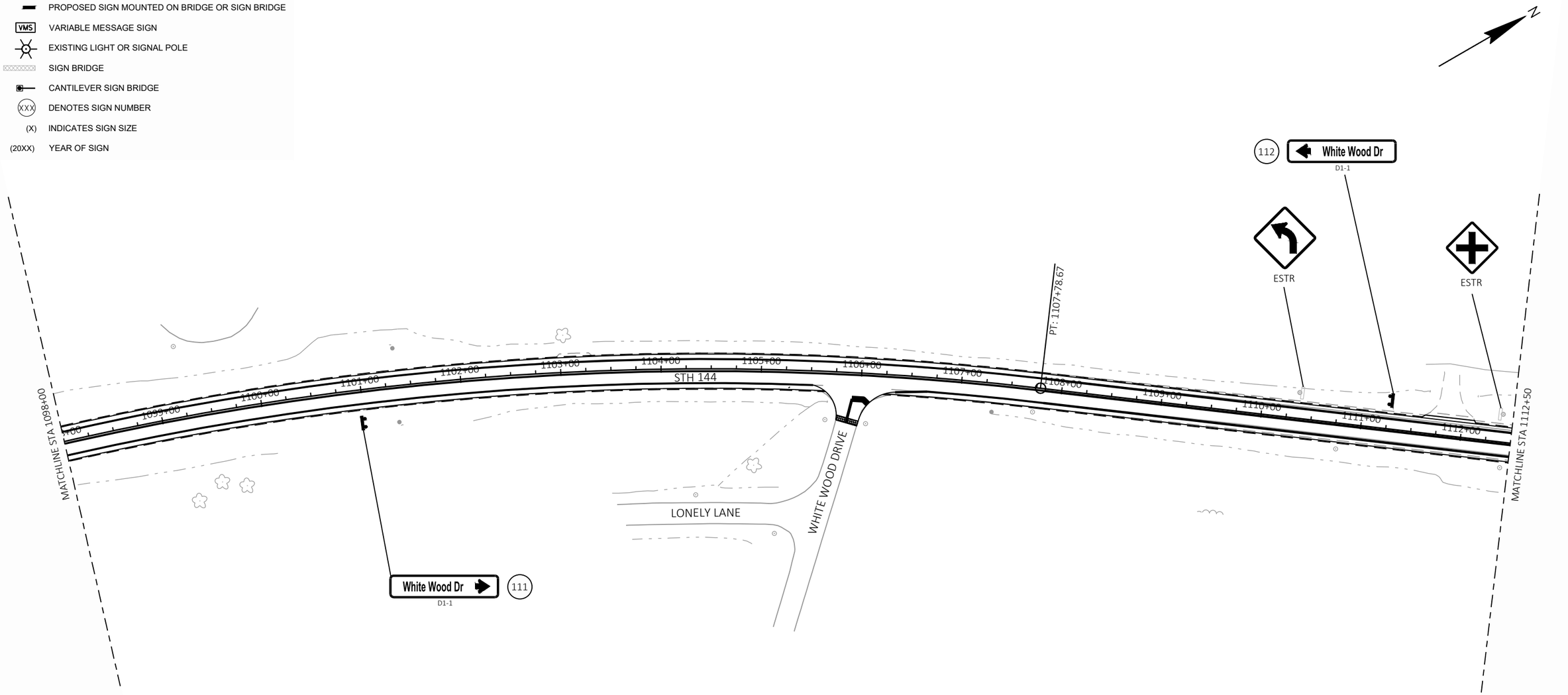

SHEET 16 OF 32

PROJECT NO: 4010-18-70	HWY: STH 144	COUNTY: WASHINGTON	PERMANENT SIGNING	SHEET 55	E

FILE NAME : X:\ML\2022\20220357\2022-0357.02\DESIGN\TRANSPORTATION\SHEETSPLAN\023201-PS.DWG
LAYOUT NAME - 023216_ps

PLOT DATE : 10/5/2023 8:54 AM PLOT BY : ROGAHN, DOUG PLOT NAME : PLOT SCALE : 1 IN:100 FT

WISDOT/CADDS SHEET 42

2

LEGEND

- EXISTING SIGN MOUNTED ON POST(S)
- EXISTING SIGN MOUNTED ON BRIDGE OR SIGN BRIDGE
- PROPOSED SIGN MOUNTED ON POST(S)
- PROPOSED SIGN MOUNTED ON BRIDGE OR SIGN BRIDGE
- VMS — VARIABLE MESSAGE SIGN
- EXISTING LIGHT OR SIGNAL POLE
- SIGN BRIDGE
- CANTILEVER SIGN BRIDGE
- XXX — DENOTES SIGN NUMBER
- (X) — INDICATES SIGN SIZE
- (20XX) — YEAR OF SIGN

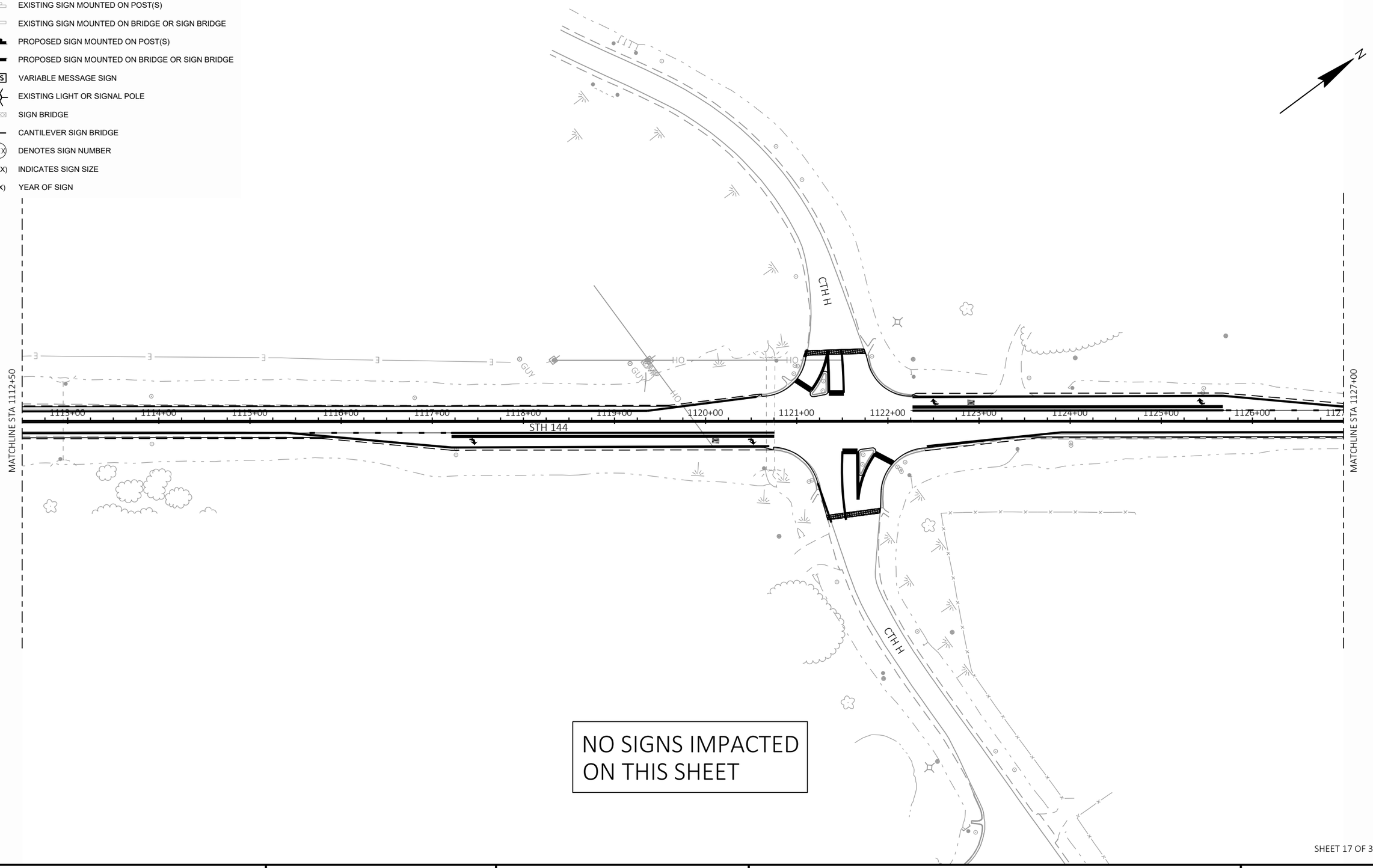

NO SIGNS IMPACTED ON THIS SHEET

SHEET 17 OF 32

PROJECT NO: 4010-18-70	HWY: STH 144	COUNTY: WASHINGTON	PERMANENT SIGNING	SHEET 56	E

FILE NAME : X:\ML\2022\20220357\2022-0357.02\DESIGN\TRANSPORTATION\SHEETSPLAN\023201-PS.DWG
LAYOUT NAME - 023217_ps

PLOT DATE : 10/5/2023 8:54 AM PLOT BY : ROGAHN, DOUG PLOT NAME : PLOT SCALE : 1 IN:100 FT

WISDOT/CADDS SHEET 42

2

LEGEND

- EXISTING SIGN MOUNTED ON POST(S)
- EXISTING SIGN MOUNTED ON BRIDGE OR SIGN BRIDGE
- PROPOSED SIGN MOUNTED ON POST(S)
- PROPOSED SIGN MOUNTED ON BRIDGE OR SIGN BRIDGE
- VMS — VARIABLE MESSAGE SIGN
- EXISTING LIGHT OR SIGNAL POLE
- SIGN BRIDGE
- CANTILEVER SIGN BRIDGE
- XXX — DENOTES SIGN NUMBER
- (X) — INDICATES SIGN SIZE
- (20XX) — YEAR OF SIGN

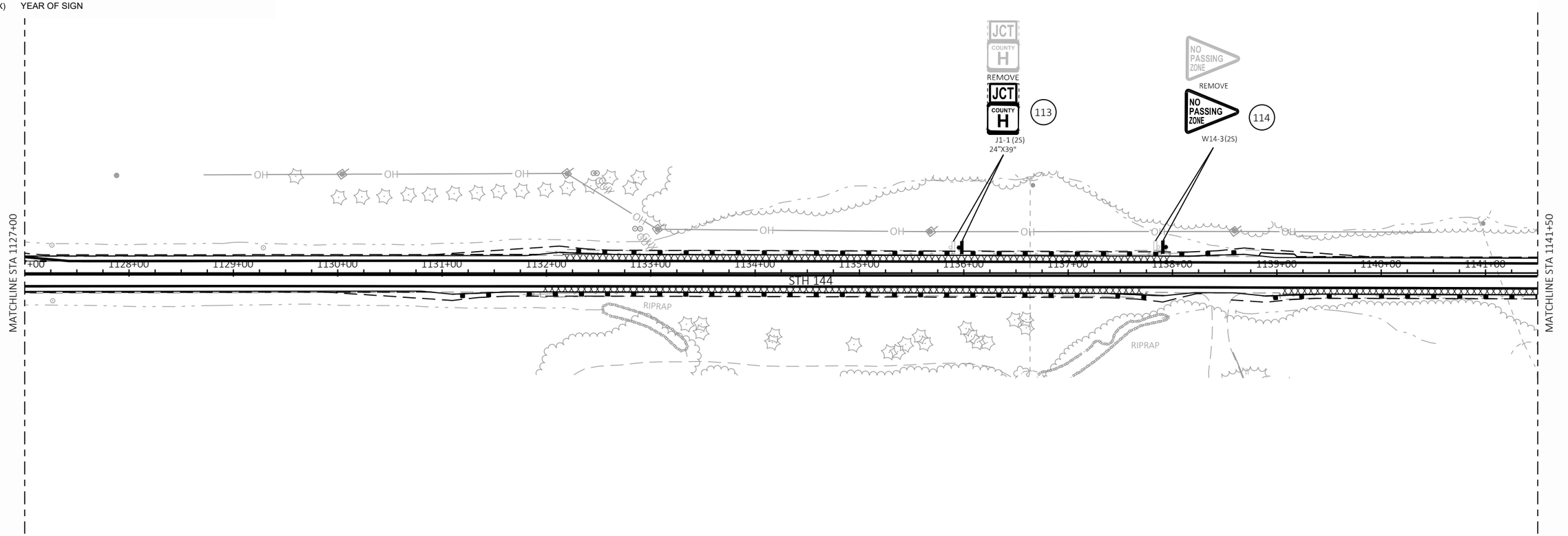

SHEET 18 OF 32

PROJECT NO: 4010-18-70	HWY: STH 144	COUNTY: WASHINGTON	PERMANENT SIGNING	SHEET 57	E

FILE NAME : X:\ML\2022\20220357\2022-0357.02\DESIGN\TRANSPORTATION\SHEETSPLAN\023201-PS.DWG
LAYOUT NAME - 023218_ps

PLOT DATE : 10/5/2023 8:54 AM PLOT BY : ROGAHN, DOUG PLOT NAME : PLOT SCALE : 1 IN:100 FT

WISDOT/CADDS SHEET 42

2

LEGEND

- EXISTING SIGN MOUNTED ON POST(S)
- EXISTING SIGN MOUNTED ON BRIDGE OR SIGN BRIDGE
- PROPOSED SIGN MOUNTED ON POST(S)
- PROPOSED SIGN MOUNTED ON BRIDGE OR SIGN BRIDGE
- VMS — VARIABLE MESSAGE SIGN
- EXISTING LIGHT OR SIGNAL POLE
- SIGN BRIDGE
- CANTILEVER SIGN BRIDGE
- XXX — DENOTES SIGN NUMBER
- (X) — INDICATES SIGN SIZE
- (20XX) — YEAR OF SIGN

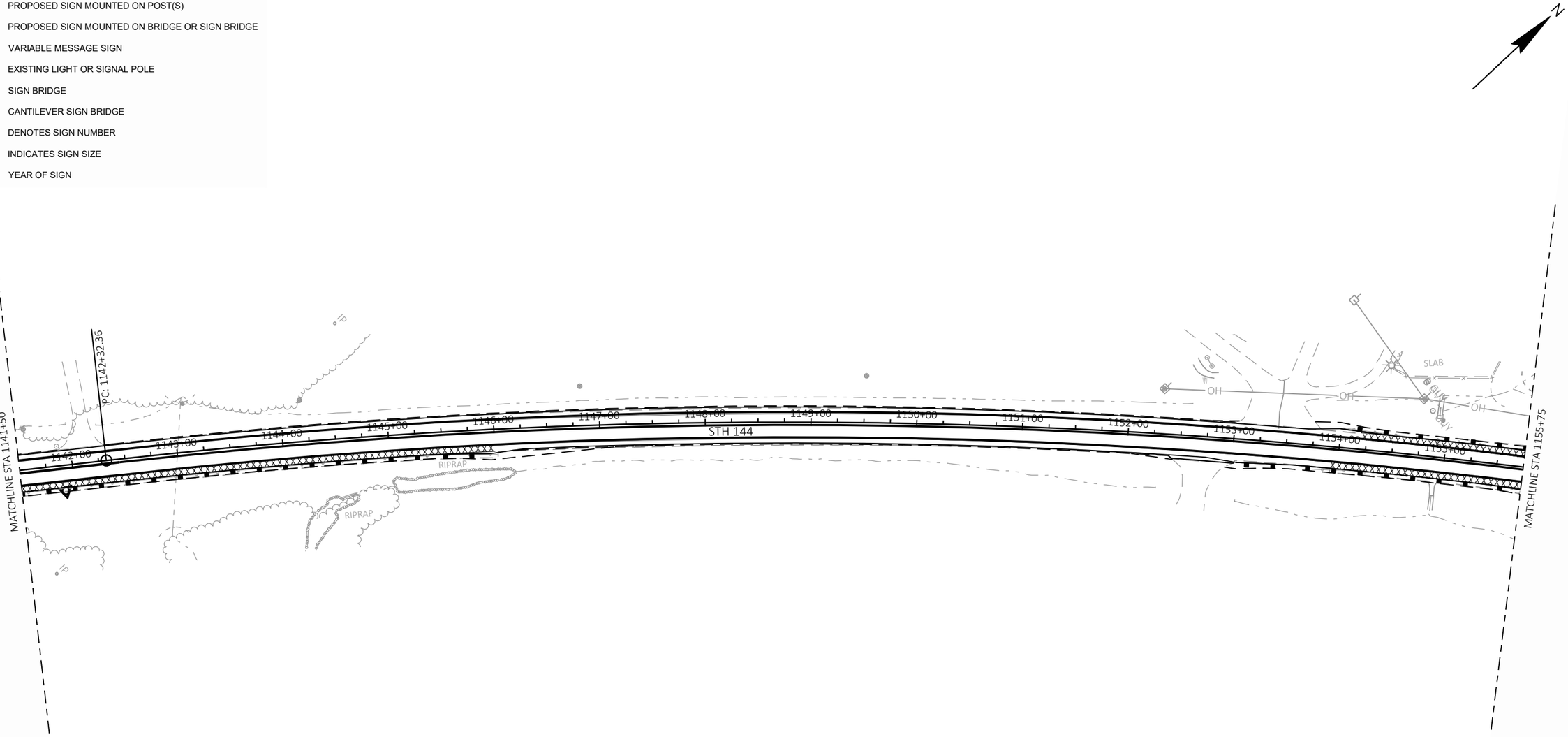

NO SIGNS IMPACTED ON THIS SHEET

SHEET 19 OF 32

PROJECT NO: 4010-18-70	HWY: STH 144	COUNTY: WASHINGTON	PERMANENT SIGNING	SHEET 58	E

FILE NAME : X:\ML\2022\20220357\2022-0357.02\DESIGN\TRANSPORTATION\SHEETSPLAN\023201-PS.DWG
LAYOUT NAME - 023219_ps

PLOT DATE : 10/5/2023 8:54 AM PLOT BY : ROGAHN, DOUG PLOT NAME : PLOT SCALE : 1 IN:100 FT

WISDOT/CADDS SHEET 42

2

LEGEND

- EXISTING SIGN MOUNTED ON POST(S)
- EXISTING SIGN MOUNTED ON BRIDGE OR SIGN BRIDGE
- PROPOSED SIGN MOUNTED ON POST(S)
- PROPOSED SIGN MOUNTED ON BRIDGE OR SIGN BRIDGE
- VMS — VARIABLE MESSAGE SIGN
- EXISTING LIGHT OR SIGNAL POLE
- SIGN BRIDGE
- CANTILEVER SIGN BRIDGE
- XXX — DENOTES SIGN NUMBER
- (X) — INDICATES SIGN SIZE
- (20XX) — YEAR OF SIGN

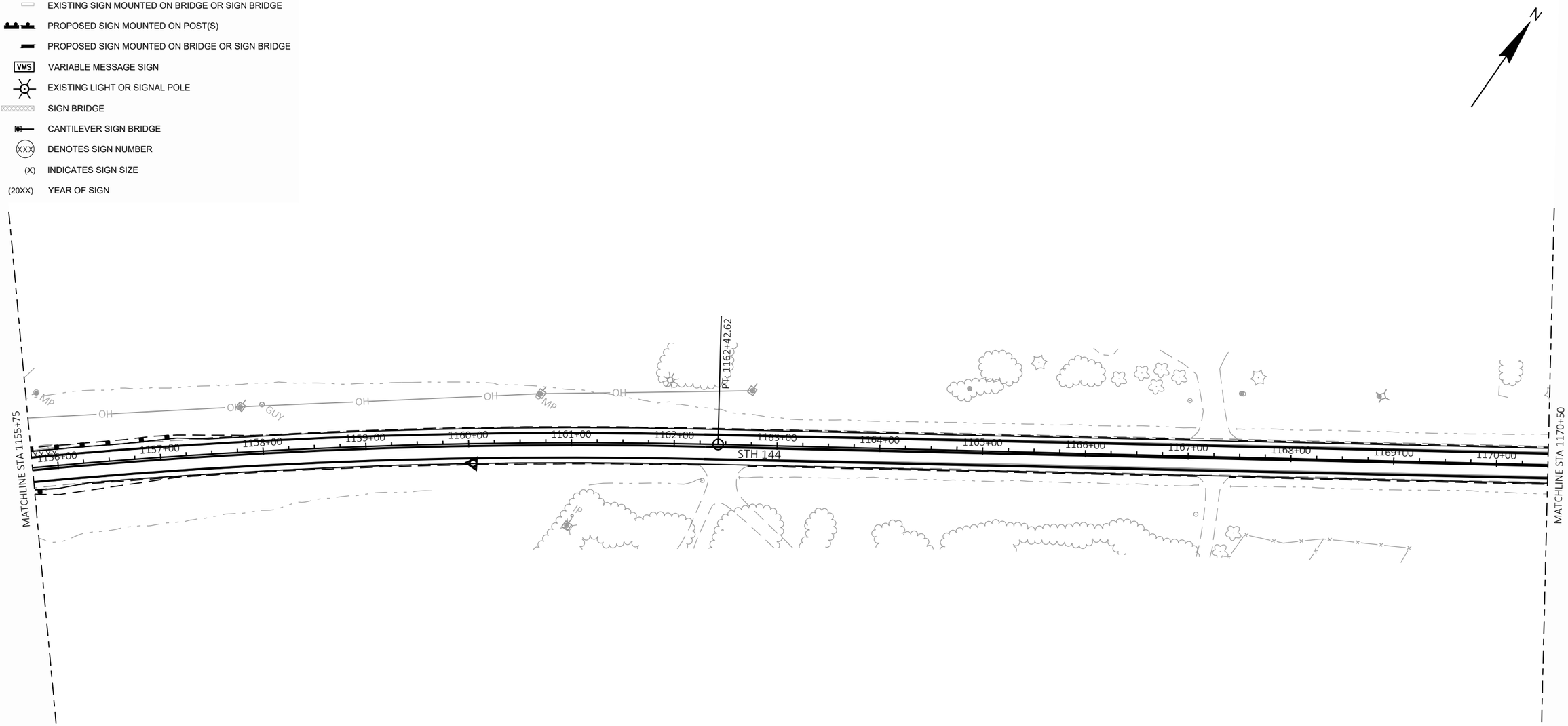

NO SIGNS IMPACTED ON THIS SHEET

SHEET 20 OF 32

PROJECT NO: 4010-18-70	HWY: STH 144	COUNTY: WASHINGTON	PERMANENT SIGNING	SHEET 59	E

FILE NAME : X:\ML\2022\20220357\2022-0357.02\DESIGN\TRANSPORTATION\SHEETSPLAN\023201-PS.DWG
LAYOUT NAME - 023220_ps
PLOT DATE : 10/5/2023 8:54 AM PLOT BY : ROGAHN, DOUG PLOT NAME : PLOT SCALE : 1 IN:100 FT

2

LEGEND

- EXISTING SIGN MOUNTED ON POST(S)
- EXISTING SIGN MOUNTED ON BRIDGE OR SIGN BRIDGE
- PROPOSED SIGN MOUNTED ON POST(S)
- PROPOSED SIGN MOUNTED ON BRIDGE OR SIGN BRIDGE
- VMS — VARIABLE MESSAGE SIGN
- EXISTING LIGHT OR SIGNAL POLE
- SIGN BRIDGE
- CANTILEVER SIGN BRIDGE
- XXX — DENOTES SIGN NUMBER
- (X) — INDICATES SIGN SIZE
- (20XX) — YEAR OF SIGN

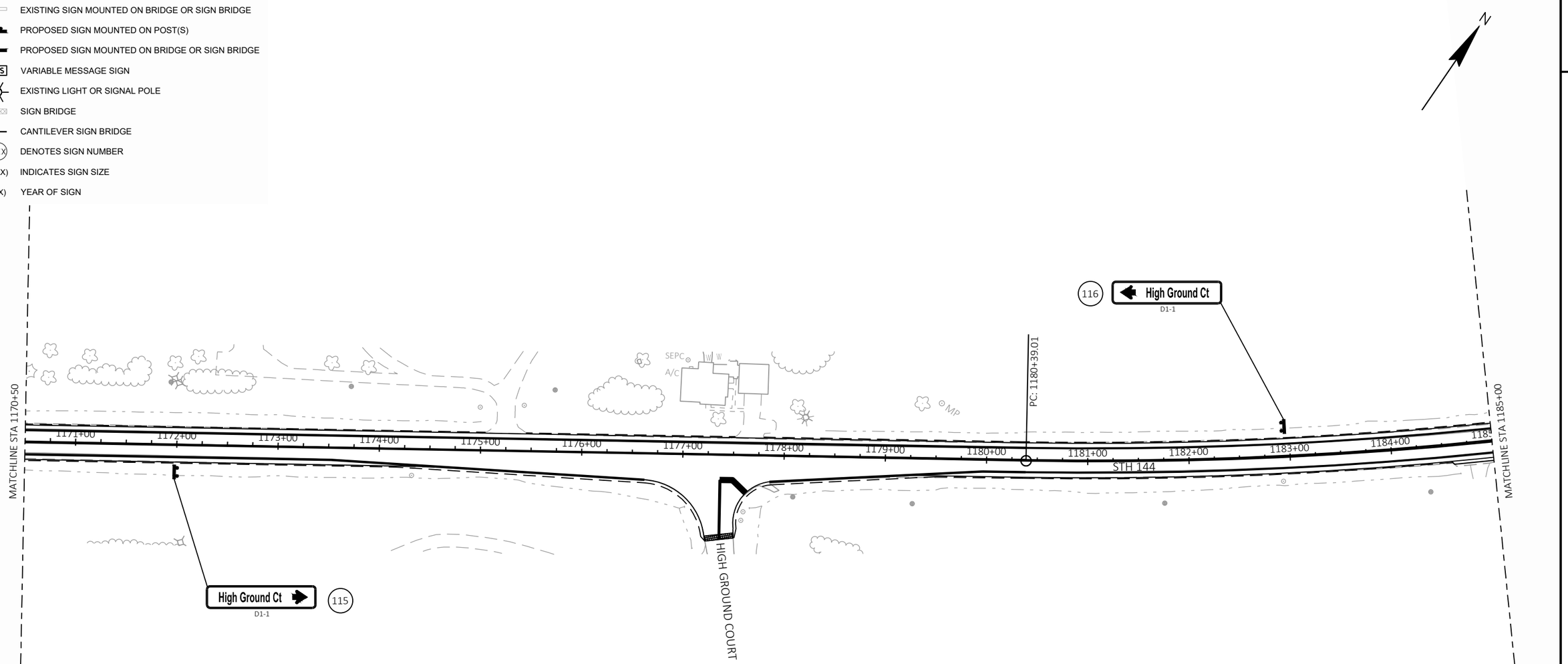

SHEET 21 OF 32

PROJECT NO: 4010-18-70	HWY: STH 144	COUNTY: WASHINGTON	PERMANENT SIGNING	SHEET 60	E

FILE NAME : X:\ML\2022\20220357\2022-0357.02\DESIGN\TRANSPORTATION\SHEETSPLAN\023201-PS.DWG
LAYOUT NAME - 023221_ps

PLOT DATE : 10/5/2023 8:55 AM PLOT BY : ROGAHN, DOUG PLOT NAME : PLOT SCALE : 1 IN:100 FT

WISDOT/CADDS SHEET 42

2

2

LEGEND

- EXISTING SIGN MOUNTED ON POST(S)
- EXISTING SIGN MOUNTED ON BRIDGE OR SIGN BRIDGE
- PROPOSED SIGN MOUNTED ON POST(S)
- PROPOSED SIGN MOUNTED ON BRIDGE OR SIGN BRIDGE
- VMS — VARIABLE MESSAGE SIGN
- EXISTING LIGHT OR SIGNAL POLE
- SIGN BRIDGE
- CANTILEVER SIGN BRIDGE
- XXX — DENOTES SIGN NUMBER
- (X) — INDICATES SIGN SIZE
- (20XX) — YEAR OF SIGN

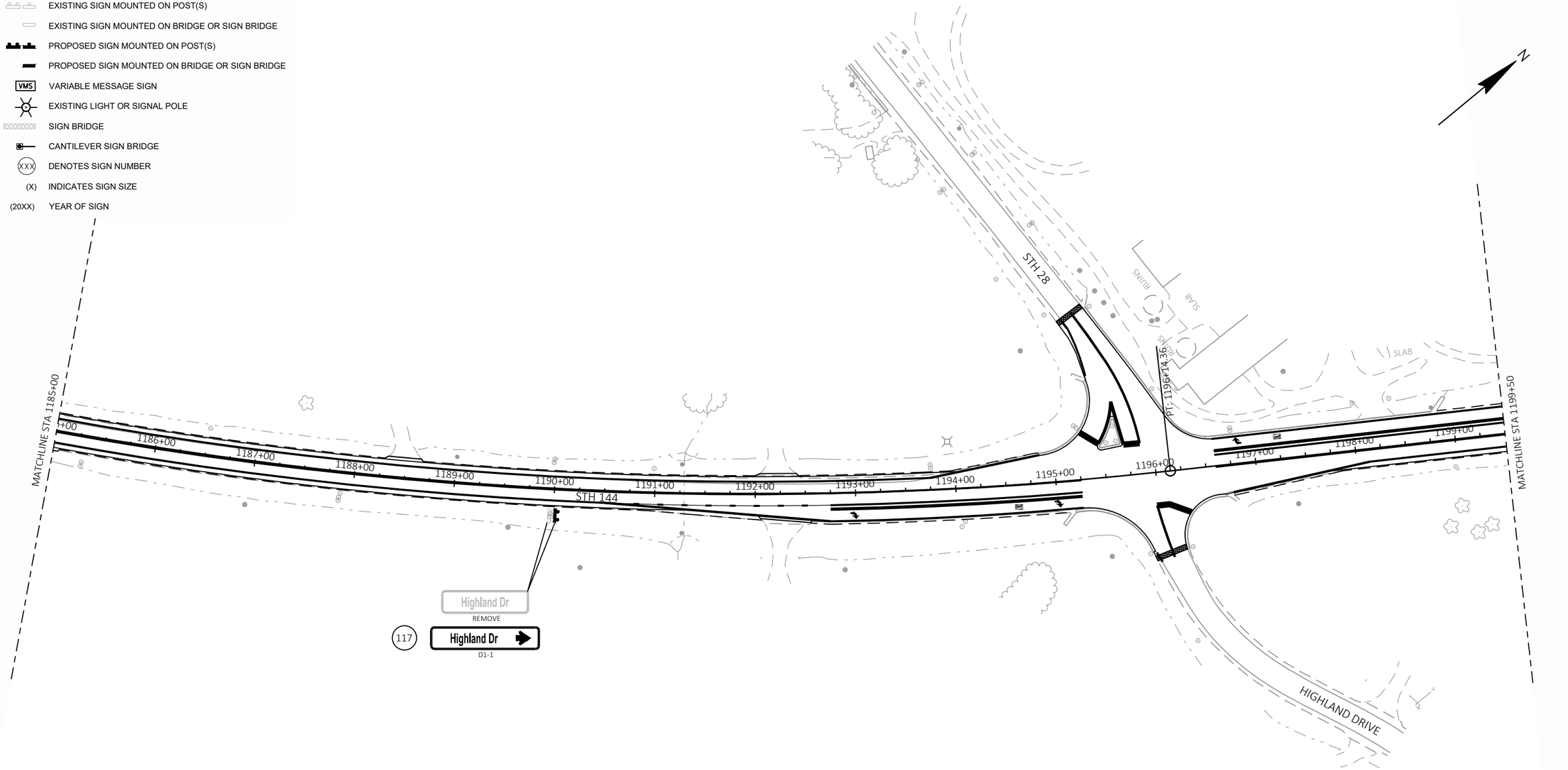

SHEET 22 OF 32

PROJECT NO: 4010-18-70	HWY: STH 144	COUNTY: WASHINGTON	PERMANENT SIGNING	SHEET 61	E

FILE NAME : X:\ML\2022\20220357\2022-0357.02\DESIGN\TRANSPORTATION\SHEETSPLAN\023201-PS.DWG
LAYOUT NAME - 023222_ps

PLOT DATE : 10/5/2023 8:55 AM PLOT BY : ROGAHN, DOUG PLOT NAME : PLOT SCALE : 1 IN:100 FT

WISDOT/CADDS SHEET 42

2

2

LEGEND

- EXISTING SIGN MOUNTED ON POST(S)
- EXISTING SIGN MOUNTED ON BRIDGE OR SIGN BRIDGE
- PROPOSED SIGN MOUNTED ON POST(S)
- PROPOSED SIGN MOUNTED ON BRIDGE OR SIGN BRIDGE
- VMS — VARIABLE MESSAGE SIGN
- EXISTING LIGHT OR SIGNAL POLE
- SIGN BRIDGE
- CANTILEVER SIGN BRIDGE
- XXX — DENOTES SIGN NUMBER
- (X) — INDICATES SIGN SIZE
- (20XX) — YEAR OF SIGN

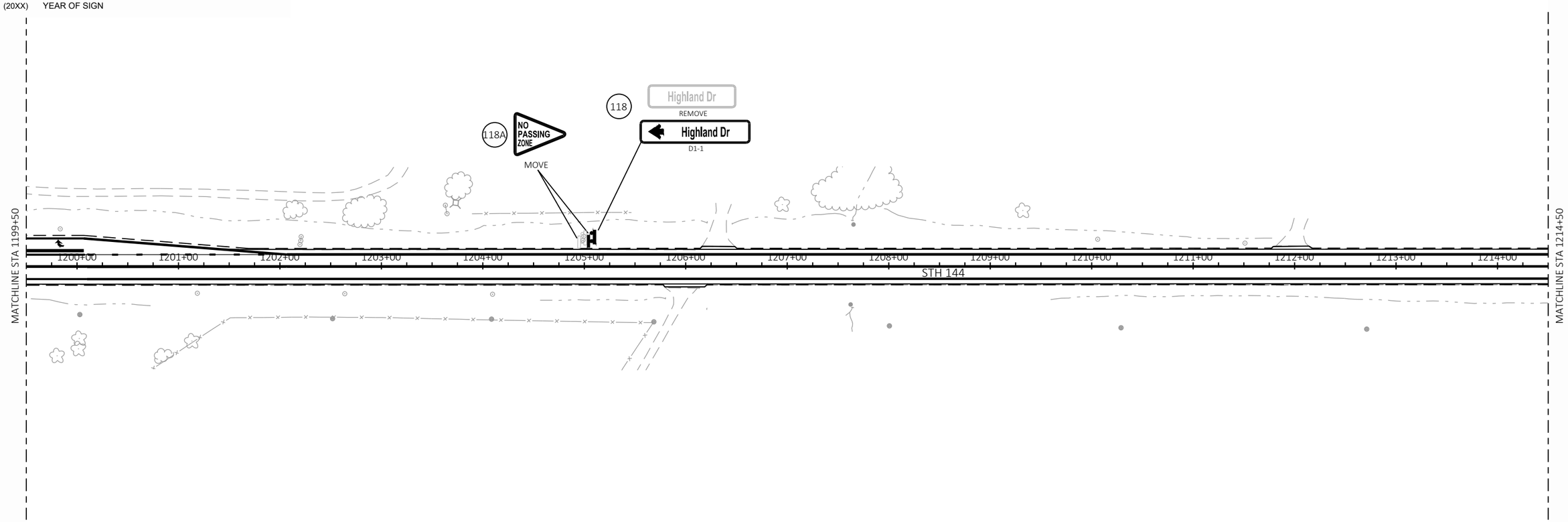

SHEET 23 OF 32

PROJECT NO: 4010-18-70	HWY: STH 144	COUNTY: WASHINGTON	PERMANENT SIGNING	SHEET 62	E

FILE NAME : X:\ML\2022\20220357\2022-0357.02\DESIGN\TRANSPORTATION\SHEETSPLAN\023201-PS.DWG
LAYOUT NAME - 023223_ps

PLOT DATE : 10/5/2023 8:55 AM PLOT BY : ROGAHN, DOUG PLOT NAME : PLOT SCALE : 1 IN:100 FT

WISDOT/CADDS SHEET 42

2

2

LEGEND

- EXISTING SIGN MOUNTED ON POST(S)
- EXISTING SIGN MOUNTED ON BRIDGE OR SIGN BRIDGE
- PROPOSED SIGN MOUNTED ON POST(S)
- PROPOSED SIGN MOUNTED ON BRIDGE OR SIGN BRIDGE
- VMS — VARIABLE MESSAGE SIGN
- EXISTING LIGHT OR SIGNAL POLE
- SIGN BRIDGE
- CANTILEVER SIGN BRIDGE
- XXX — DENOTES SIGN NUMBER
- (X) — INDICATES SIGN SIZE
- (20XX) — YEAR OF SIGN

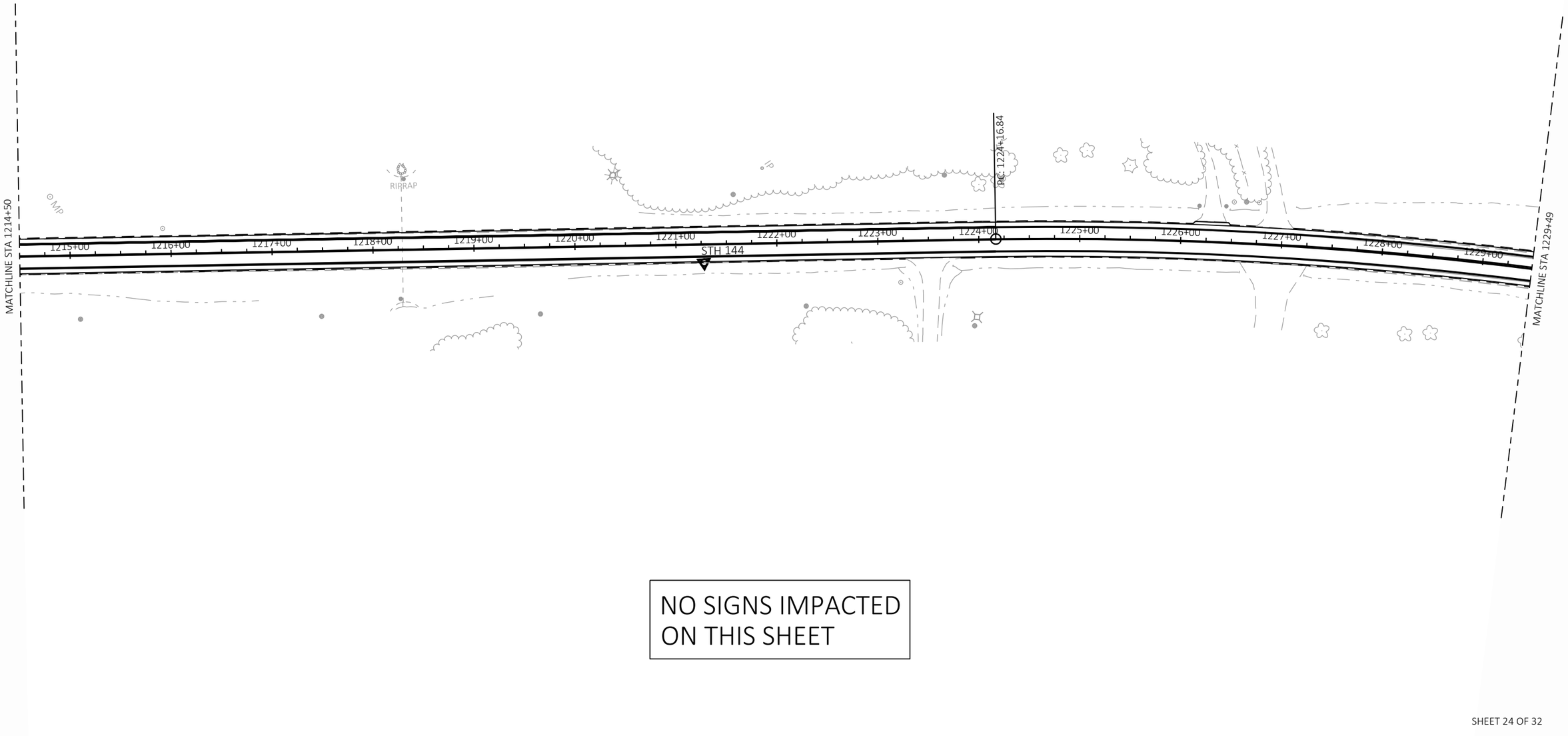

NO SIGNS IMPACTED ON THIS SHEET

SHEET 24 OF 32

PROJECT NO: 4010-18-70	HWY: STH 144	COUNTY: WASHINGTON	PERMANENT SIGNING	SHEET 63	E

FILE NAME : X:\ML\2022\20220357\2022-0357.02\DESIGN\TRANSPORTATION\SHEETSPLAN\023201-PS.DWG
LAYOUT NAME - 023224_ps

PLOT DATE : 10/5/2023 8:55 AM PLOT BY : ROGAHN, DOUG PLOT NAME : PLOT SCALE : 1 IN:100 FT

WISDOT/CADDS SHEET 42

2

2

LEGEND

- EXISTING SIGN MOUNTED ON POST(S)
- EXISTING SIGN MOUNTED ON BRIDGE OR SIGN BRIDGE
- PROPOSED SIGN MOUNTED ON POST(S)
- PROPOSED SIGN MOUNTED ON BRIDGE OR SIGN BRIDGE
- VMS — VARIABLE MESSAGE SIGN
- EXISTING LIGHT OR SIGNAL POLE
- SIGN BRIDGE
- CANTILEVER SIGN BRIDGE
- XXX — DENOTES SIGN NUMBER
- (X) — INDICATES SIGN SIZE
- (20XX) — YEAR OF SIGN

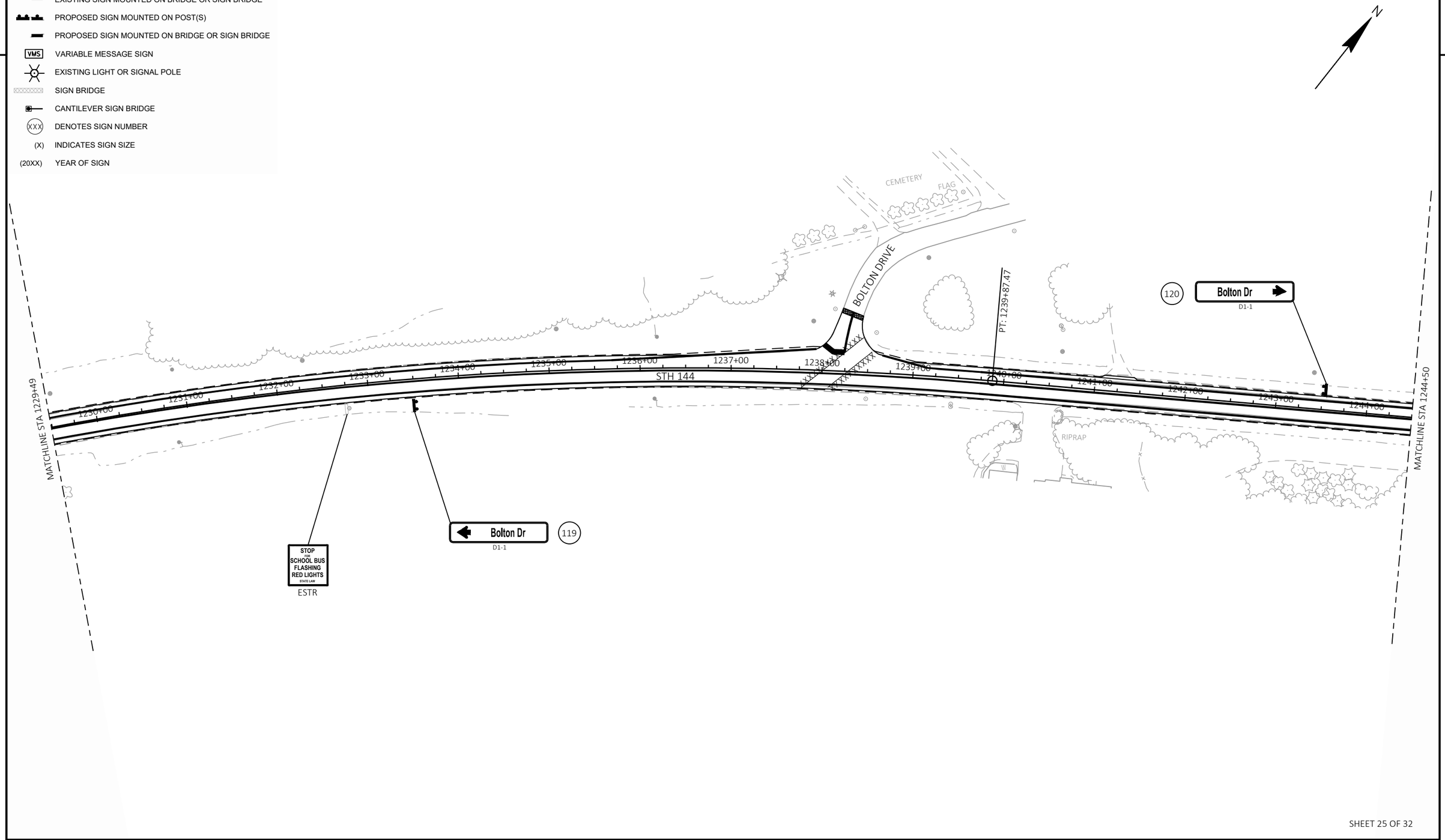

SHEET 25 OF 32

PROJECT NO: 4010-18-70	HWY: STH 144	COUNTY: WASHINGTON	PERMANENT SIGNING	SHEET 64	E

FILE NAME : X:\ML\2022\20220357\2022-0357.02\DESIGN\TRANSPORTATION\SHEETSPLAN\023201-PS.DWG
LAYOUT NAME - 023225_ps

PLOT DATE : 10/5/2023 8:55 AM PLOT BY : ROGAHN, DOUG PLOT NAME : PLOT SCALE : 1 IN:100 FT

WISDOT/CADDS SHEET 42

2

2

LEGEND

- EXISTING SIGN MOUNTED ON POST(S)
- EXISTING SIGN MOUNTED ON BRIDGE OR SIGN BRIDGE
- PROPOSED SIGN MOUNTED ON POST(S)
- PROPOSED SIGN MOUNTED ON BRIDGE OR SIGN BRIDGE
- VMS — VARIABLE MESSAGE SIGN
- EXISTING LIGHT OR SIGNAL POLE
- SIGN BRIDGE
- CANTILEVER SIGN BRIDGE
- XXX — DENOTES SIGN NUMBER
- (X) — INDICATES SIGN SIZE
- (20XX) — YEAR OF SIGN

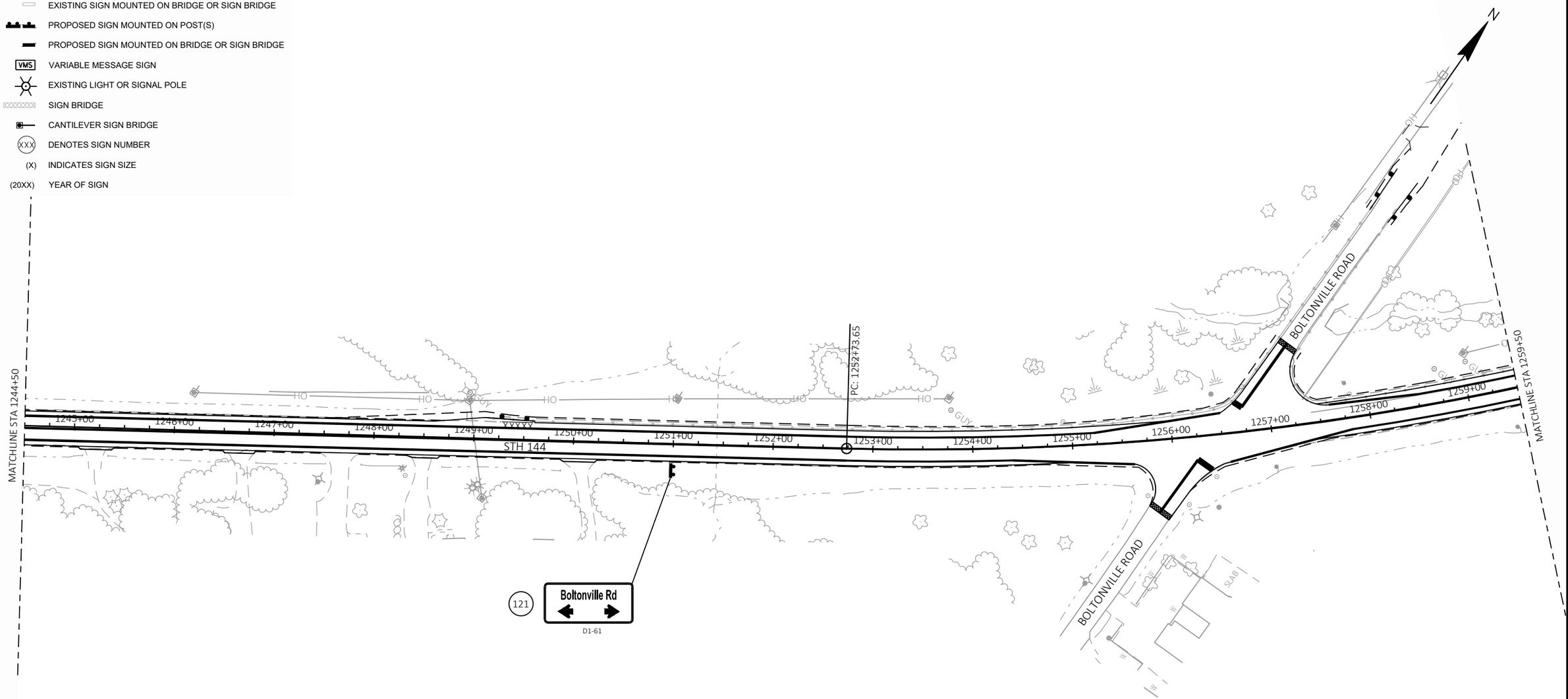

SHEET 26 OF 32

PROJECT NO: 4010-18-70	HWY: STH 144	COUNTY: WASHINGTON	PERMANENT SIGNING	SHEET 65	E

FILE NAME : X:\ML\2022\20220357\2022-0357.02\DESIGN\TRANSPORTATION\SHEETSPLAN\023201-PS.DWG
LAYOUT NAME - 023226_ps

PLOT DATE : 10/5/2023 8:55 AM PLOT BY : ROGAHN, DOUG PLOT NAME : PLOT SCALE : 1 IN:100 FT

WISDOT/CADDS SHEET 42

2

2

LEGEND

- EXISTING SIGN MOUNTED ON POST(S)
- EXISTING SIGN MOUNTED ON BRIDGE OR SIGN BRIDGE
- PROPOSED SIGN MOUNTED ON POST(S)
- PROPOSED SIGN MOUNTED ON BRIDGE OR SIGN BRIDGE
- VMS — VARIABLE MESSAGE SIGN
- EXISTING LIGHT OR SIGNAL POLE
- SIGN BRIDGE
- CANTILEVER SIGN BRIDGE
- XXX — DENOTES SIGN NUMBER
- (X) — INDICATES SIGN SIZE
- (20XX) — YEAR OF SIGN

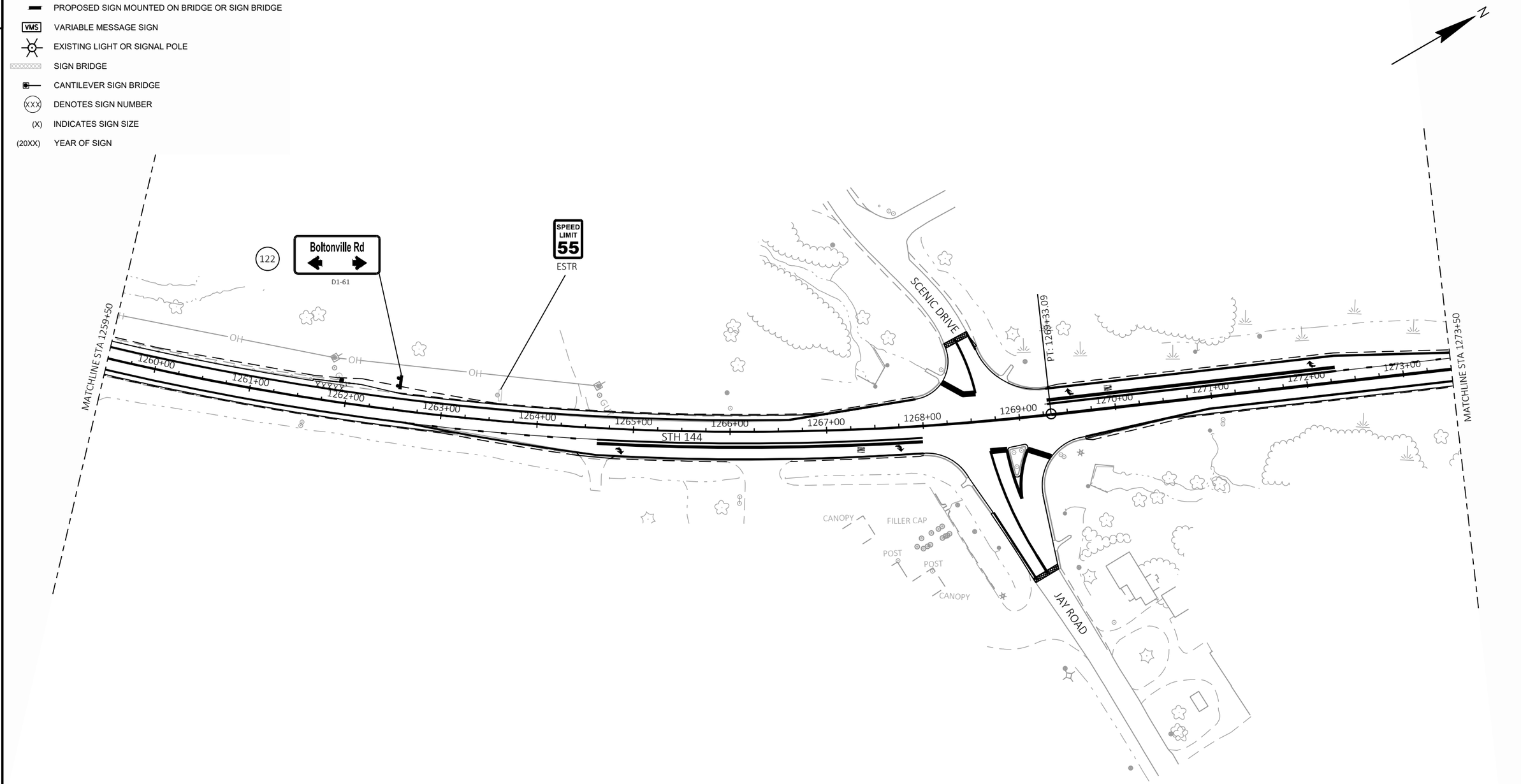

SHEET 27 OF 32

PROJECT NO: 4010-18-70	HWY: STH 144	COUNTY: WASHINGTON	PERMANENT SIGNING	SHEET 66	E

FILE NAME : X:\ML\2022\20220357\2022-0357.02\DESIGN\TRANSPORTATION\SHEETSPLAN\023201-PS.DWG
LAYOUT NAME - 023227_ps

PLOT DATE : 10/5/2023 8:55 AM PLOT BY : ROGAHN, DOUG PLOT NAME : PLOT SCALE : 1 IN:100 FT

WISDOT/CADDS SHEET 42

2

2

LEGEND

- EXISTING SIGN MOUNTED ON POST(S)
- EXISTING SIGN MOUNTED ON BRIDGE OR SIGN BRIDGE
- PROPOSED SIGN MOUNTED ON POST(S)
- PROPOSED SIGN MOUNTED ON BRIDGE OR SIGN BRIDGE
- VMS — VARIABLE MESSAGE SIGN
- EXISTING LIGHT OR SIGNAL POLE
- SIGN BRIDGE
- CANTILEVER SIGN BRIDGE
- XXX — DENOTES SIGN NUMBER
- (X) — INDICATES SIGN SIZE
- (20XX) — YEAR OF SIGN

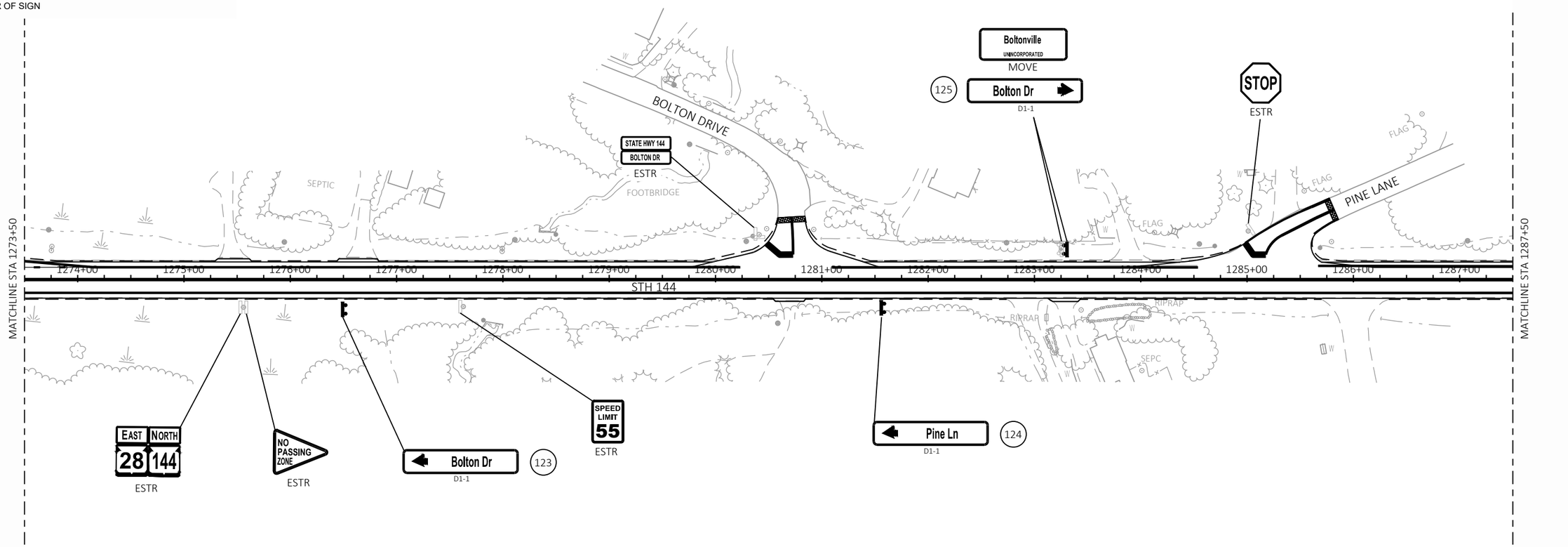

SHEET 28 OF 32

PROJECT NO: 4010-18-70	HWY: STH 144	COUNTY: WASHINGTON	PERMANENT SIGNING	SHEET 67	E

FILE NAME : X:\ML\2022\20220357\2022-0357.02\DESIGN\TRANSPORTATION\SHEETSPLAN\023201-PS.DWG
LAYOUT NAME - 023228_ps

PLOT DATE : 10/5/2023 9:25 AM PLOT BY : ROGAHN, DOUG PLOT NAME : PLOT SCALE : 1 IN:100 FT

WISDOT/CADDS SHEET 42

2

2

LEGEND

- EXISTING SIGN MOUNTED ON POST(S)
- EXISTING SIGN MOUNTED ON BRIDGE OR SIGN BRIDGE
- PROPOSED SIGN MOUNTED ON POST(S)
- PROPOSED SIGN MOUNTED ON BRIDGE OR SIGN BRIDGE
- VMS — VARIABLE MESSAGE SIGN
- EXISTING LIGHT OR SIGNAL POLE
- SIGN BRIDGE
- CANTILEVER SIGN BRIDGE
- XXX — DENOTES SIGN NUMBER
- (X) — INDICATES SIGN SIZE
- (20XX) — YEAR OF SIGN

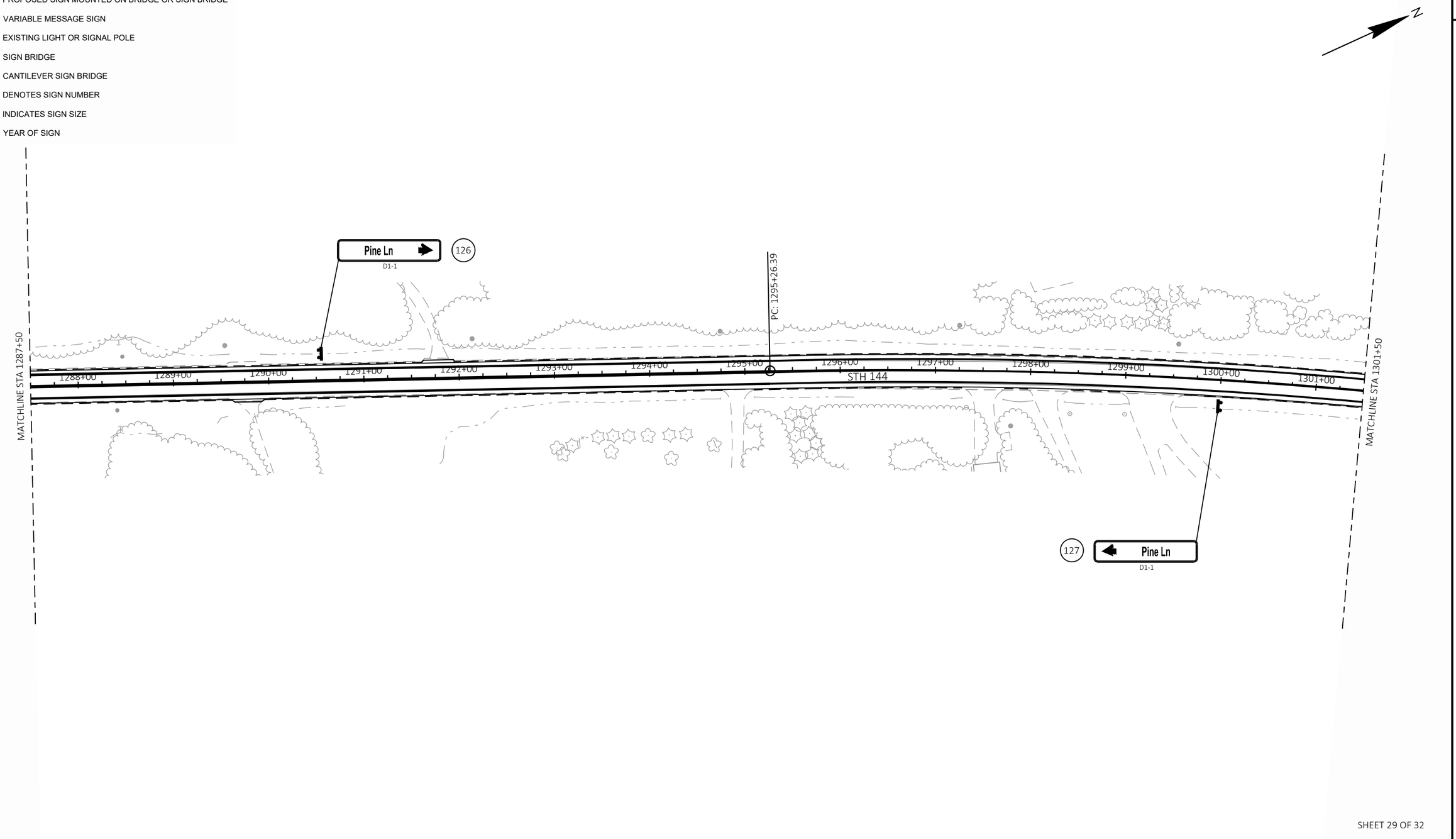

SHEET 29 OF 32

PROJECT NO: 4010-18-70	HWY: STH 144	COUNTY: WASHINGTON	PERMANENT SIGNING	SHEET 68	E

FILE NAME : X:\ML\2022\20220357\2022-0357.02\DESIGN\TRANSPORTATION\SHEETSPLAN\023201-PS.DWG
LAYOUT NAME - 023229_ps

PLOT DATE : 10/5/2023 8:55 AM PLOT BY : ROGAHN, DOUG PLOT NAME : PLOT SCALE : 1 IN:100 FT

WISDOT/CADDS SHEET 42

2

2

LEGEND

- EXISTING SIGN MOUNTED ON POST(S)
- EXISTING SIGN MOUNTED ON BRIDGE OR SIGN BRIDGE
- PROPOSED SIGN MOUNTED ON POST(S)
- PROPOSED SIGN MOUNTED ON BRIDGE OR SIGN BRIDGE
- VMS — VARIABLE MESSAGE SIGN
- EXISTING LIGHT OR SIGNAL POLE
- SIGN BRIDGE
- CANTILEVER SIGN BRIDGE
- XXX — DENOTES SIGN NUMBER
- (X) — INDICATES SIGN SIZE
- (20XX) — YEAR OF SIGN

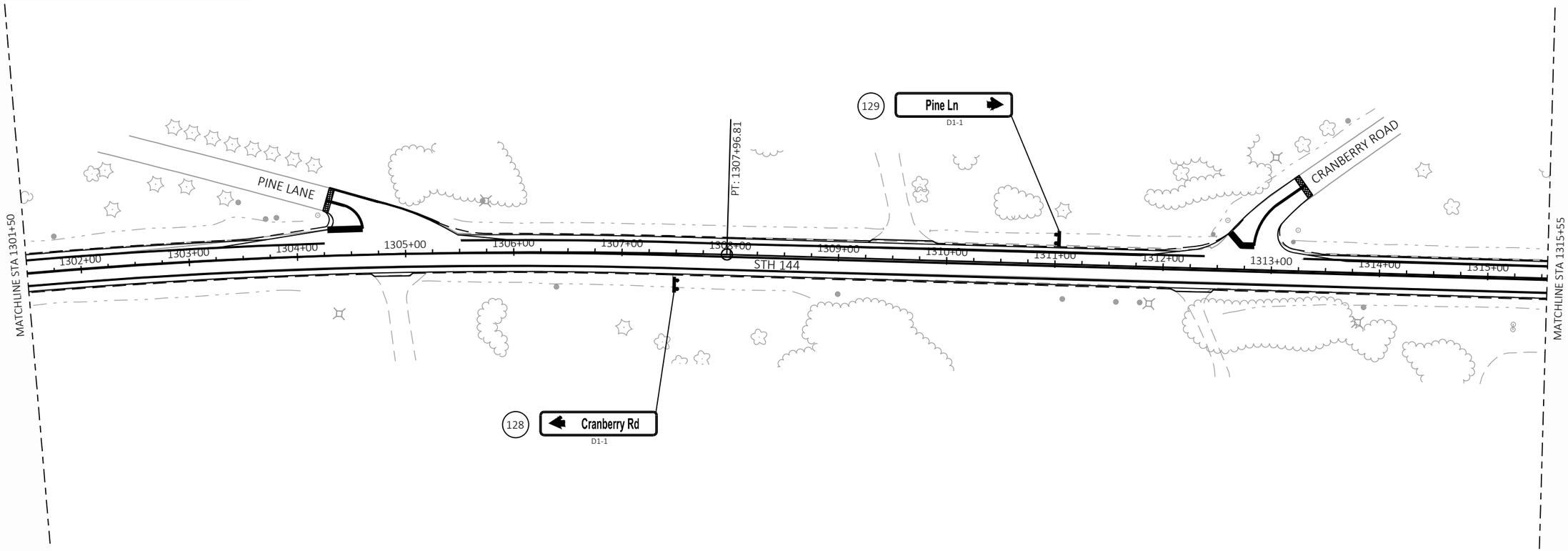

SHEET 30 OF 32

PROJECT NO: 4010-18-70	HWY: STH 144	COUNTY: WASHINGTON	PERMANENT SIGNING	SHEET 69	E

FILE NAME : X:\ML\2022\20220357\2022-0357.02\DESIGN\TRANSPORTATION\SHEETSPLAN\023201-PS.DWG
LAYOUT NAME - 023230_ps

PLOT DATE : 10/5/2023 8:55 AM PLOT BY : ROGAHN, DOUG PLOT NAME : PLOT SCALE : 1 IN:100 FT

WISDOT/CADDS SHEET 42

2

LEGEND

- EXISTING SIGN MOUNTED ON POST(S)
- EXISTING SIGN MOUNTED ON BRIDGE OR SIGN BRIDGE
- PROPOSED SIGN MOUNTED ON POST(S)
- PROPOSED SIGN MOUNTED ON BRIDGE OR SIGN BRIDGE
- VMS — VARIABLE MESSAGE SIGN
- EXISTING LIGHT OR SIGNAL POLE
- SIGN BRIDGE
- CANTILEVER SIGN BRIDGE
- XXX — DENOTES SIGN NUMBER
- (X) — INDICATES SIGN SIZE
- (20XX) — YEAR OF SIGN

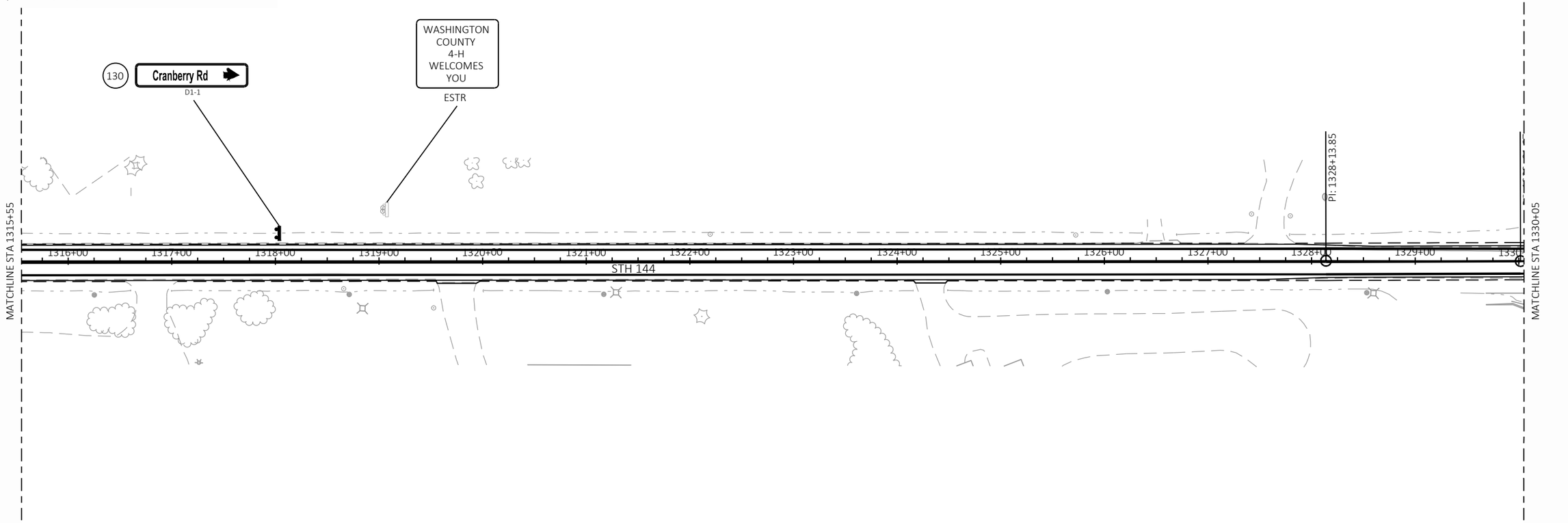

2

SHEET 31 OF 32

PROJECT NO: 4010-18-70	HWY: STH 144	COUNTY: WASHINGTON	PERMANENT SIGNING	SHEET 70	E

FILE NAME : X:\ML\2022\20220357\2022-0357.02\DESIGN\TRANSPORTATION\SHEETSPLAN\023201-PS.DWG
LAYOUT NAME - 023231_ps
PLOT DATE : 10/5/2023 8:55 AM PLOT BY : ROGAHN, DOUG PLOT NAME : PLOT SCALE : 1 IN:100 FT

2

LEGEND

- EXISTING SIGN MOUNTED ON POST(S)
- EXISTING SIGN MOUNTED ON BRIDGE OR SIGN BRIDGE
- PROPOSED SIGN MOUNTED ON POST(S)
- PROPOSED SIGN MOUNTED ON BRIDGE OR SIGN BRIDGE
- VMS — VARIABLE MESSAGE SIGN
- EXISTING LIGHT OR SIGNAL POLE
- SIGN BRIDGE
- CANTILEVER SIGN BRIDGE
- XXX — DENOTES SIGN NUMBER
- (X) — INDICATES SIGN SIZE
- (20XX) — YEAR OF SIGN

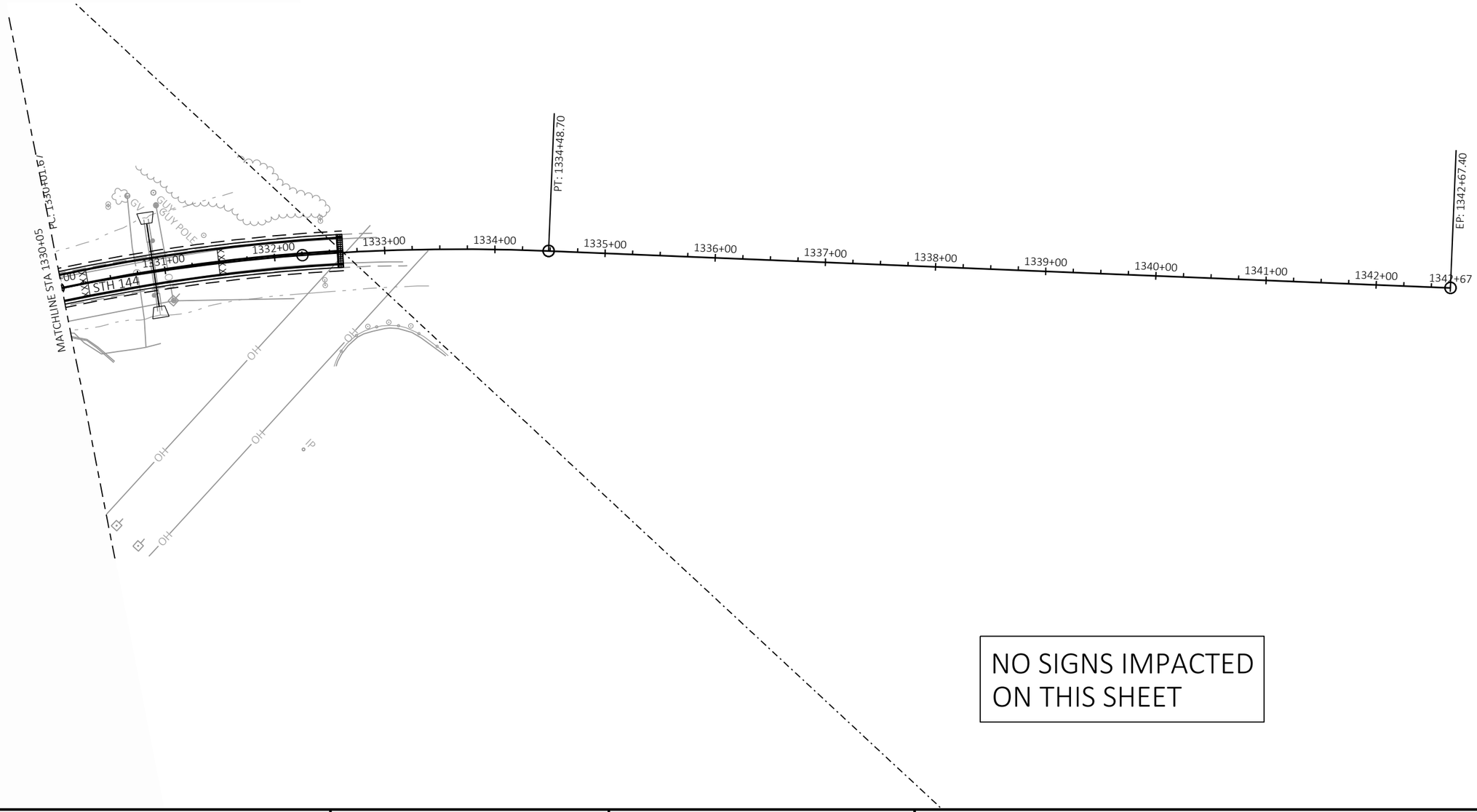

NO SIGNS IMPACTED ON THIS SHEET

SHEET 32 OF 32

PROJECT NO: 4010-18-70	HWY: STH 144	COUNTY: WASHINGTON	PERMANENT SIGNING	SHEET 71	E

FILE NAME : X:\ML\2022\20220357\2022-0357.02\DESIGN\TRANSPORTATION\SHEETSPLAN\023201-PS.DWG
LAYOUT NAME - 023232_ps

PLOT DATE : 10/5/2023 8:55 AM PLOT BY : ROGAHN, DOUG PLOT NAME : PLOT SCALE : 1 IN:100 FT

WISDOT/CADDS SHEET 42

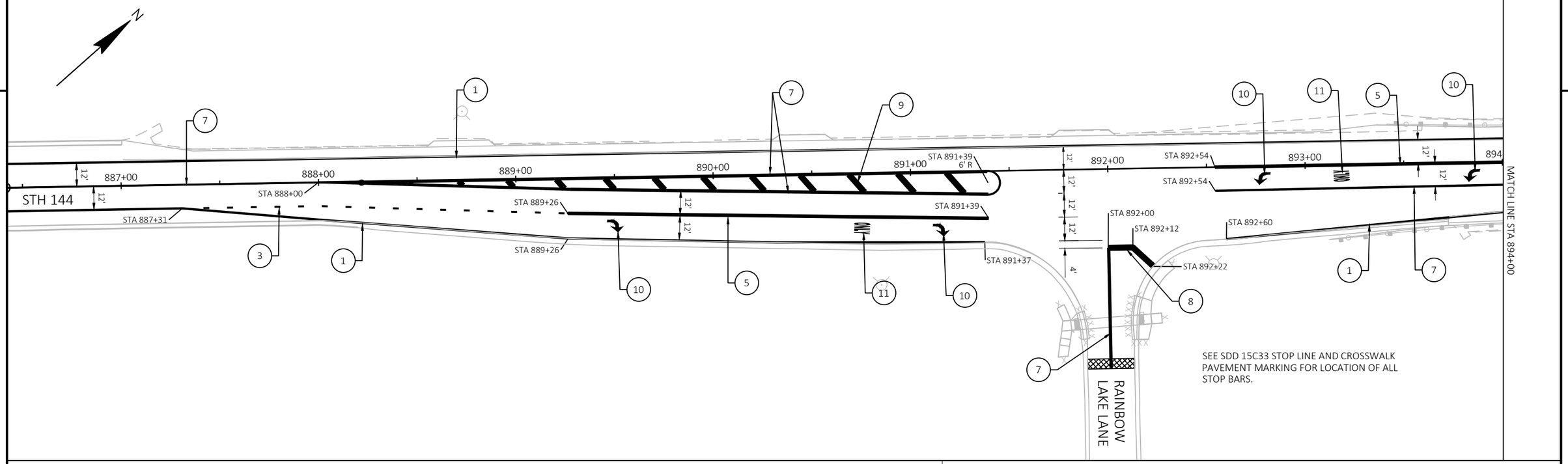

LEGEND

1	MARKING LINE GROOVED WET REFLECTIVE EPOXY 6-INCH (WHITE)
2	MARKING LINE EPOXY 6-INCH 3' LINE WITH 9' GAP (WHITE)
3	MARKING LINE EPOXY 10-INCH 3' LINE WITH 9' GAP (WHITE)
4	MARKING LINE EPOXY 6-INCH 12 1/2' LINE WITH 37 1/2' GAP (WHITE)
5	MARKING LINE EPOXY 10-INCH (WHITE)
6	MARKING LINE EPOXY 6-INCH (WHITE)
7	MARKING LINE GROOVED WET REF EPOXY 6-INCH (DOUBLE YELLOW)
8	MARKING STOP LINE EPOXY 18-INCH (WHITE)
9	MARKING DIAGONAL EPOXY 12-INCH (YELLOW)
10	MARKING ARROW EPOXY
11	MARKING WORD EPOXY

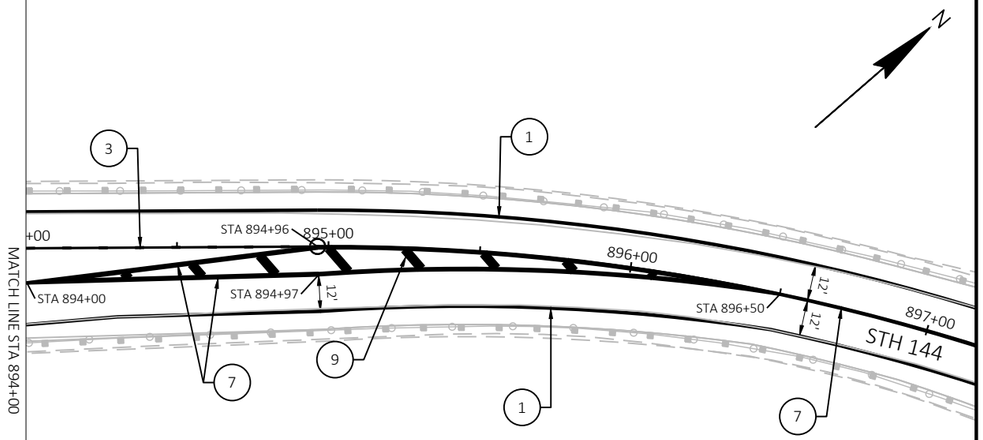

CONTRACTOR SHALL NOTE IN THE FIELD THE EXISTING STARTING AND ENDING POINT OF NO PASSING ZONES PRIOR TO MILLING. MARK NO PASSING ZONES TO MATCH EXISTING CONDITIONS.

PROJECT NO: 4010-18-70	HWY: STH 144	COUNTY: WASHINGTON	PAVEMENT MARKING - RAINBOW LAKE LANE	SHEET 72	E

2

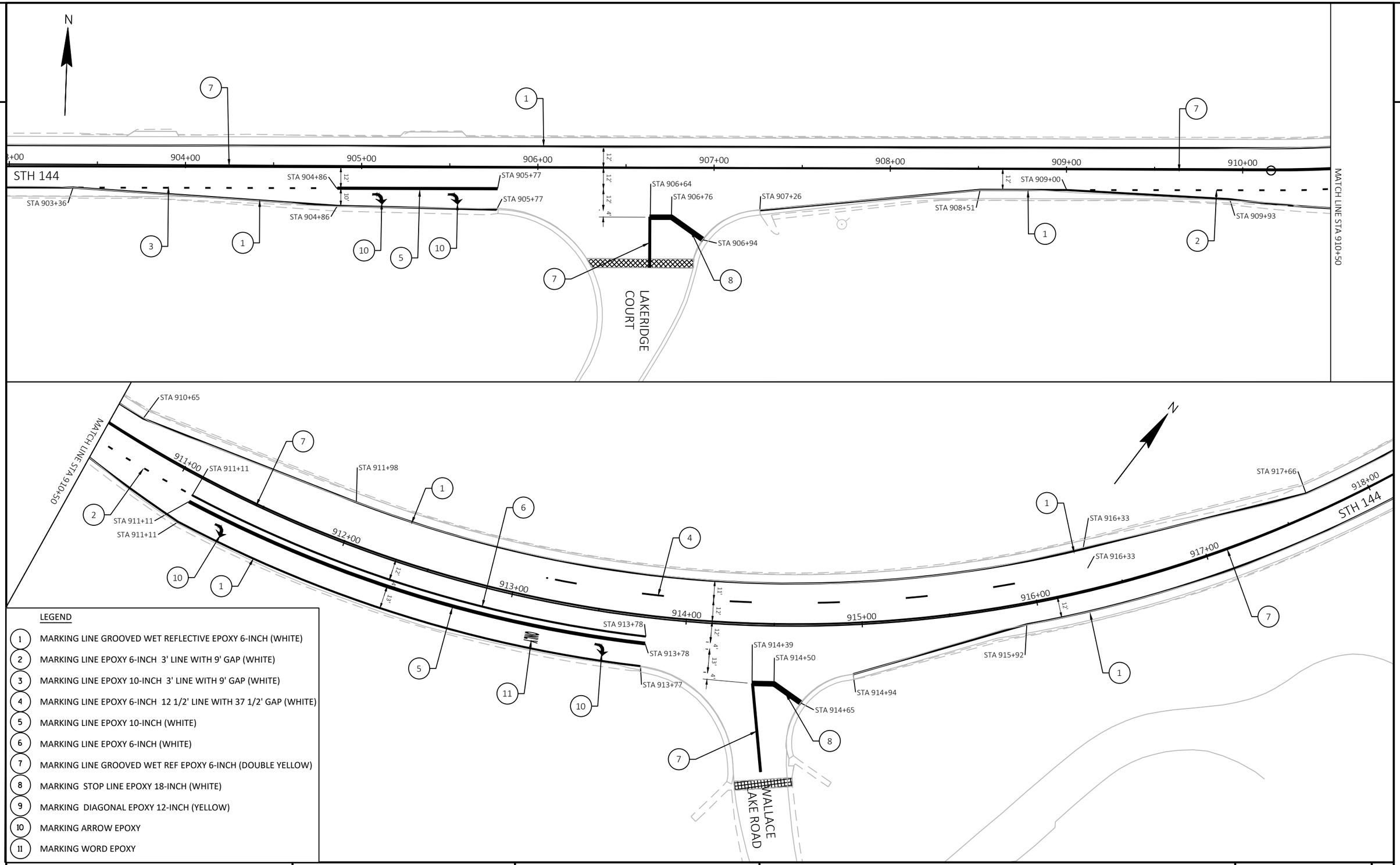

LEGEND

1. MARKING LINE GROOVED WET REFLECTIVE EPOXY 6-INCH (WHITE)
2. MARKING LINE EPOXY 6-INCH 3' LINE WITH 9' GAP (WHITE)
3. MARKING LINE EPOXY 10-INCH 3' LINE WITH 9' GAP (WHITE)
4. MARKING LINE EPOXY 6-INCH 12 1/2' LINE WITH 37 1/2' GAP (WHITE)
5. MARKING LINE EPOXY 10-INCH (WHITE)
6. MARKING LINE EPOXY 6-INCH (WHITE)
7. MARKING LINE GROOVED WET REF EPOXY 6-INCH (DOUBLE YELLOW)
8. MARKING STOP LINE EPOXY 18-INCH (WHITE)
9. MARKING DIAGONAL EPOXY 12-INCH (YELLOW)
10. MARKING ARROW EPOXY
11. MARKING WORD EPOXY

PROJECT NO: 4010-18-70	HWY: STH 144	COUNTY: WASHINGTON	PAVEMENT MARKING - LAKERIDGE COURT & WALLACE LAKE ROAD	SHEET 73	E

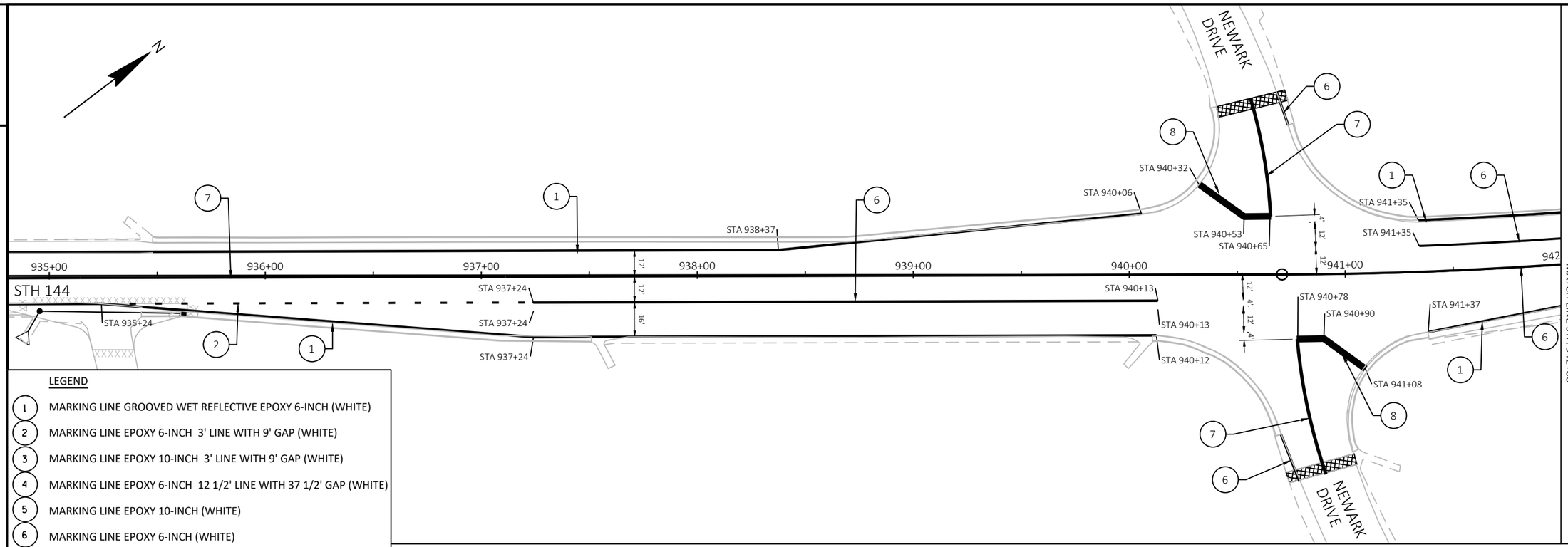

LEGEND

1. MARKING LINE GROOVED WET REFLECTIVE EPOXY 6-INCH (WHITE)
2. MARKING LINE EPOXY 6-INCH 3' LINE WITH 9' GAP (WHITE)
3. MARKING LINE EPOXY 10-INCH 3' LINE WITH 9' GAP (WHITE)
4. MARKING LINE EPOXY 6-INCH 12 1/2' LINE WITH 37 1/2' GAP (WHITE)
5. MARKING LINE EPOXY 10-INCH (WHITE)
6. MARKING LINE EPOXY 6-INCH (WHITE)
7. MARKING LINE GROOVED WET REF EPOXY 6-INCH (DOUBLE YELLOW)
8. MARKING STOP LINE EPOXY 18-INCH (WHITE)
9. MARKING DIAGONAL EPOXY 12-INCH (YELLOW)
10. MARKING ARROW EPOXY
11. MARKING WORD EPOXY

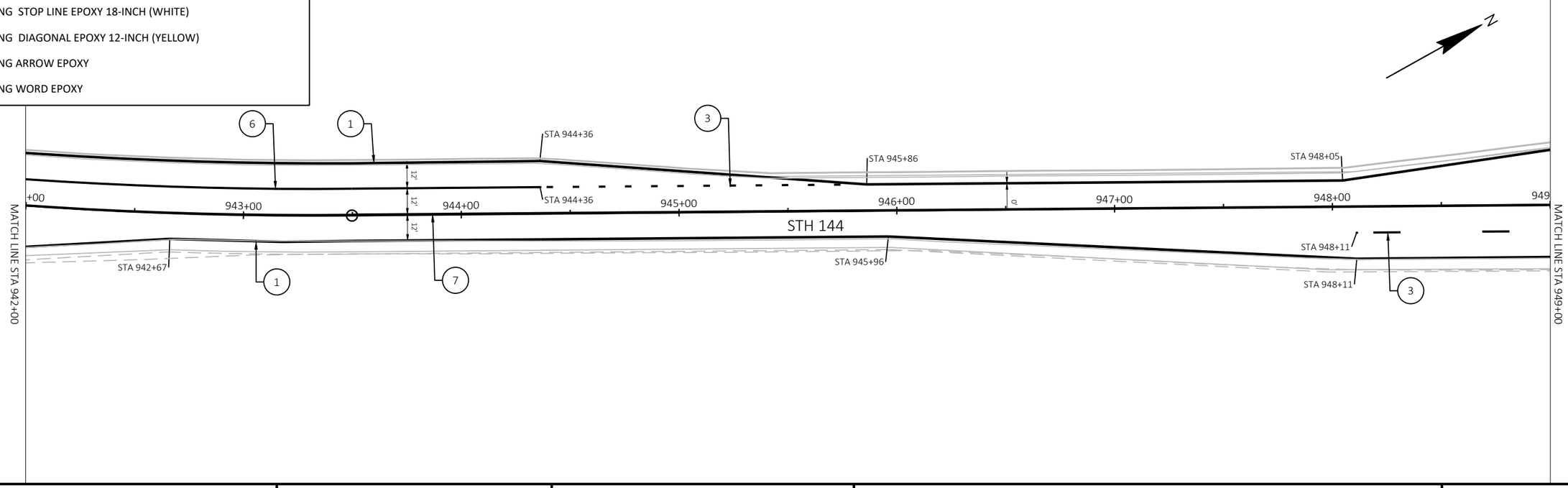

PROJECT NO: 4010-18-70	HWY: STH 144	COUNTY: WASHINGTON	PAVEMENT MARKING - NEWARK DRIVE	SHEET 74	E

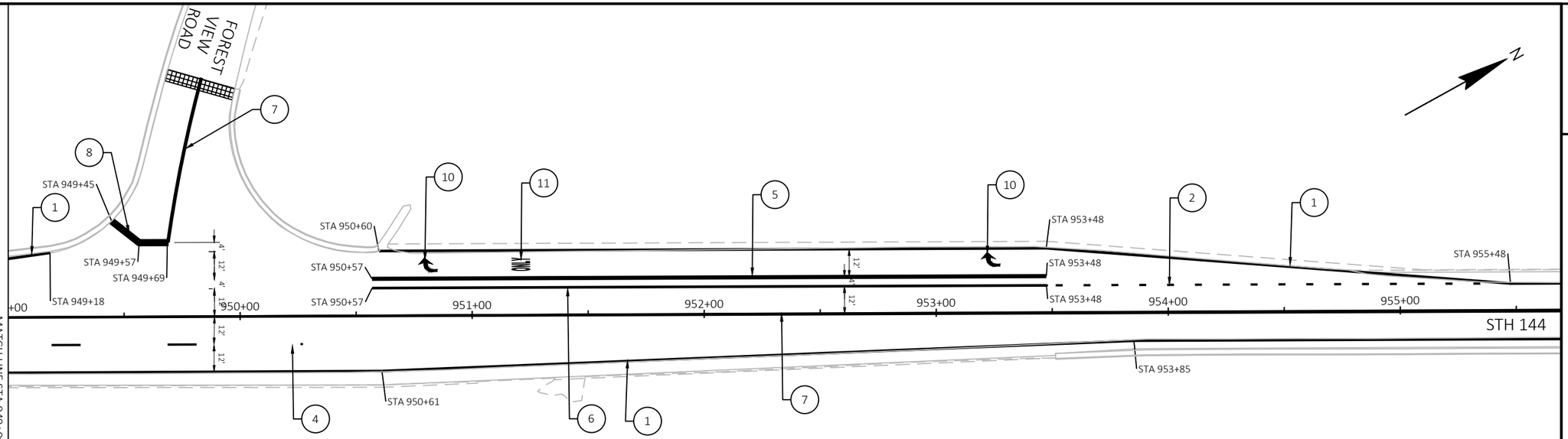

LEGEND

1. MARKING LINE GROOVED WET REFLECTIVE EPOXY 6-INCH (WHITE)
2. MARKING LINE EPOXY 6-INCH 3' LINE WITH 9' GAP (WHITE)
3. MARKING LINE EPOXY 10-INCH 3' LINE WITH 9' GAP (WHITE)
4. MARKING LINE EPOXY 6-INCH 12 1/2' LINE WITH 37 1/2' GAP (WHITE)
5. MARKING LINE EPOXY 10-INCH (WHITE)
6. MARKING LINE EPOXY 6-INCH (WHITE)
7. MARKING LINE GROOVED WET REF EPOXY 6-INCH (DOUBLE YELLOW)
8. MARKING STOP LINE EPOXY 18-INCH (WHITE)
9. MARKING DIAGONAL EPOXY 12-INCH (YELLOW)
10. MARKING ARROW EPOXY
11. MARKING WORD EPOXY

PROJECT NO: 4010-18-70	HWY: STH 144	COUNTY: WASHINGTON	PAVEMENT MARKING - FOREST VIEW ROAD	SHEET 75	E

FILE NAME : N:\PDS\C3D\40101800\SHEETSPLAN\024501-PM.DWG
LAYOUT NAME - pm-04
PLOT DATE : 6/30/2025 3:24 PM
PLOT BY : SCHMIDT, JUDENE M
PLOT NAME :
PLOT SCALE : 1 IN:50 FT
WISDOT/CADDS SHEET 42

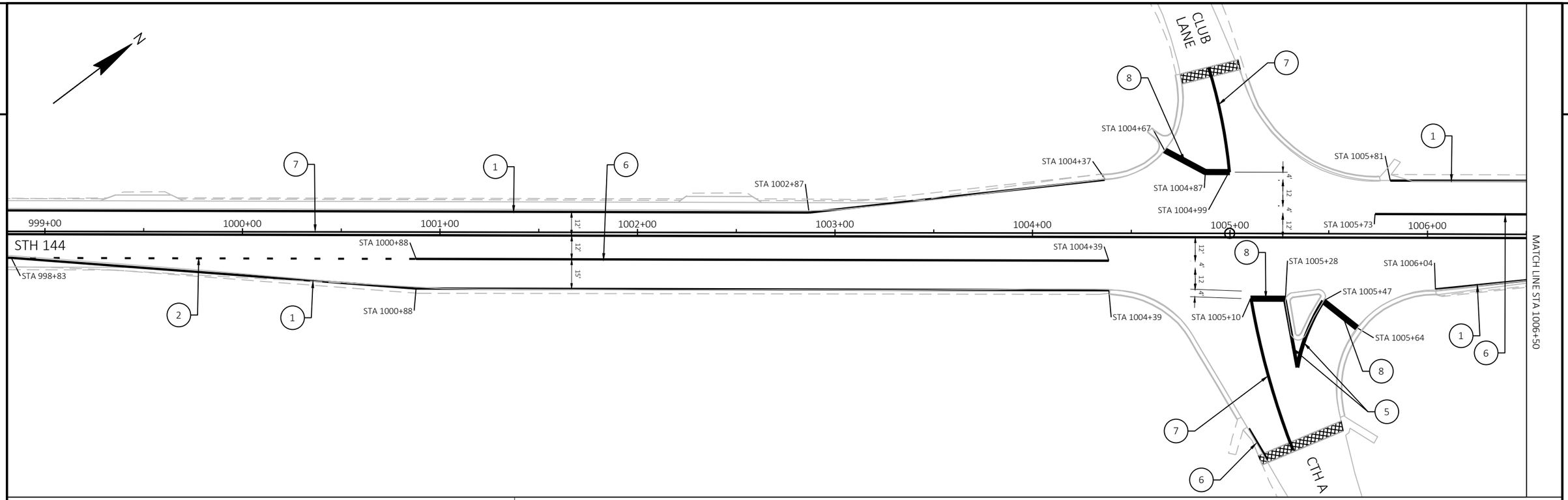

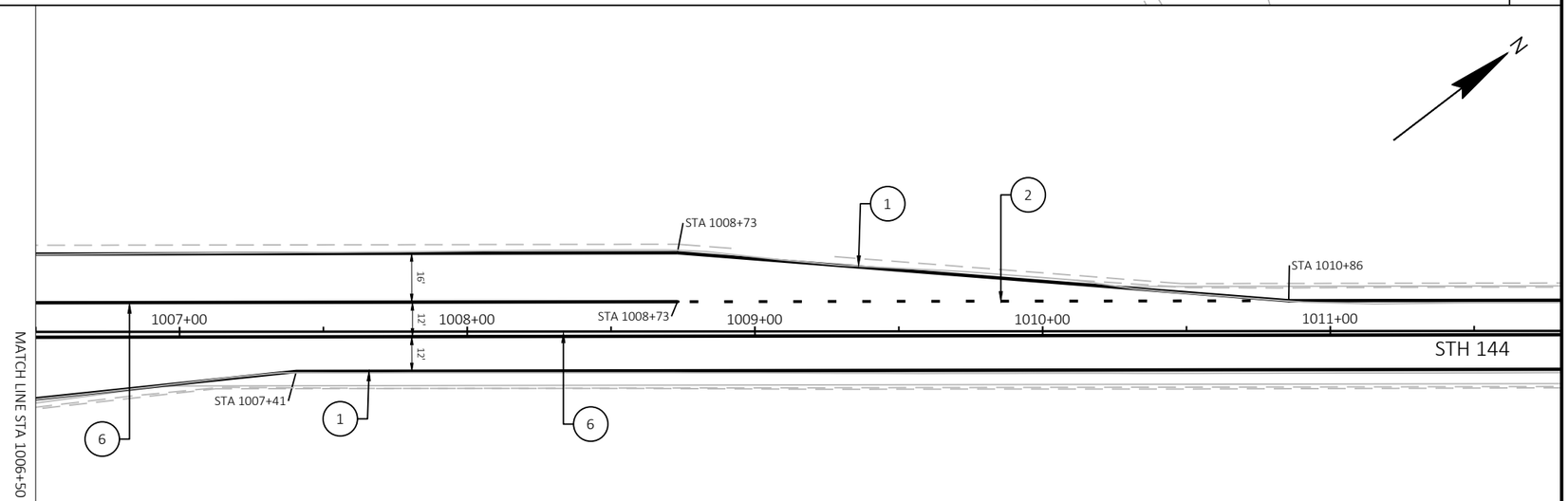

LEGEND

1. MARKING LINE GROOVED WET REFLECTIVE EPOXY 6-INCH (WHITE)
2. MARKING LINE EPOXY 6-INCH 3' LINE WITH 9' GAP (WHITE)
3. MARKING LINE EPOXY 10-INCH 3' LINE WITH 9' GAP (WHITE)
4. MARKING LINE EPOXY 6-INCH 12 1/2' LINE WITH 37 1/2' GAP (WHITE)
5. MARKING LINE EPOXY 10-INCH (WHITE)
6. MARKING LINE EPOXY 6-INCH (WHITE)
7. MARKING LINE GROOVED WET REF EPOXY 6-INCH (DOUBLE YELLOW)
8. MARKING STOP LINE EPOXY 18-INCH (WHITE)
9. MARKING DIAGONAL EPOXY 12-INCH (YELLOW)
10. MARKING ARROW EPOXY
11. MARKING WORD EPOXY

PROJECT NO: 4010-18-70	HWY: STH 144	COUNTY: WASHINGTON	PAVEMENT MARKING - CLUB LANE/ CTH A	SHEET 76	E

2

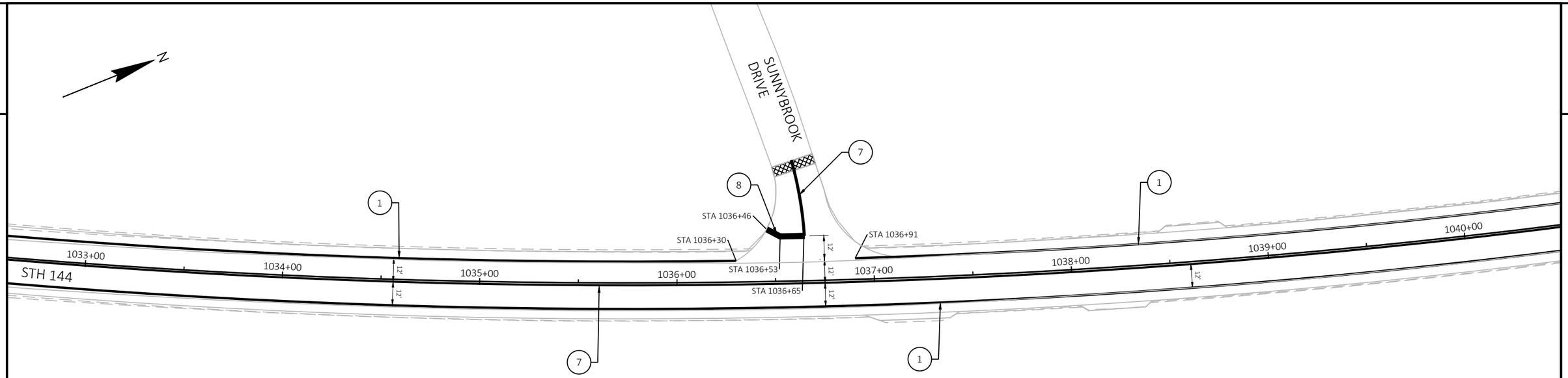

LEGEND

1	MARKING LINE GROOVED WET REFLECTIVE EPOXY 6-INCH (WHITE)
2	MARKING LINE EPOXY 6-INCH 3' LINE WITH 9' GAP (WHITE)
3	MARKING LINE EPOXY 10-INCH 3' LINE WITH 9' GAP (WHITE)
4	MARKING LINE EPOXY 6-INCH 12 1/2' LINE WITH 37 1/2' GAP (WHITE)
5	MARKING LINE EPOXY 10-INCH (WHITE)
6	MARKING LINE EPOXY 6-INCH (WHITE)
7	MARKING LINE GROOVED WET REF EPOXY 6-INCH (DOUBLE YELLOW)
8	MARKING STOP LINE EPOXY 18-INCH (WHITE)
9	MARKING DIAGONAL EPOXY 12-INCH (YELLOW)
10	MARKING ARROW EPOXY
11	MARKING WORD EPOXY

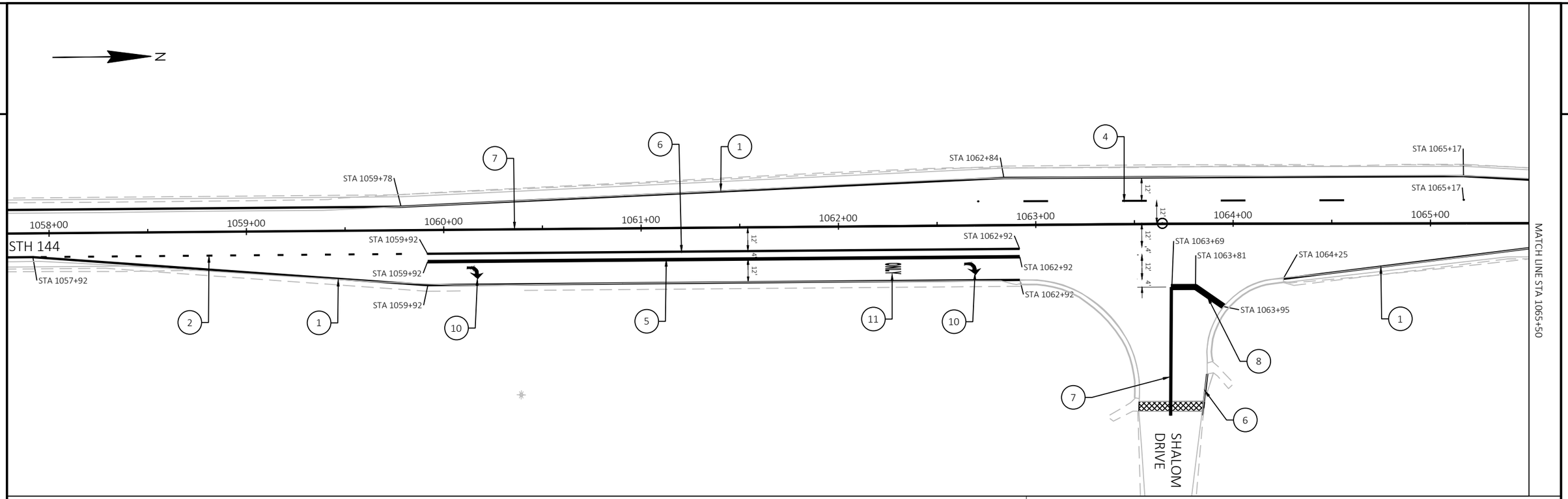

	LEGEND
1	MARKING LINE GROOVED WET REFLECTIVE EPOXY 6-INCH (WHITE)
2	MARKING LINE EPOXY 6-INCH 3' LINE WITH 9' GAP (WHITE)
3	MARKING LINE EPOXY 10-INCH 3' LINE WITH 9' GAP (WHITE)
4	MARKING LINE EPOXY 6-INCH 12 1/2' LINE WITH 37 1/2' GAP (WHITE)
5	MARKING LINE EPOXY 10-INCH (WHITE)
6	MARKING LINE EPOXY 6-INCH (WHITE)
7	MARKING LINE GROOVED WET REF EPOXY 6-INCH (DOUBLE YELLOW)
8	MARKING STOP LINE EPOXY 18-INCH (WHITE)
9	MARKING DIAGONAL EPOXY 12-INCH (YELLOW)
10	MARKING ARROW EPOXY
11	MARKING WORD EPOXY

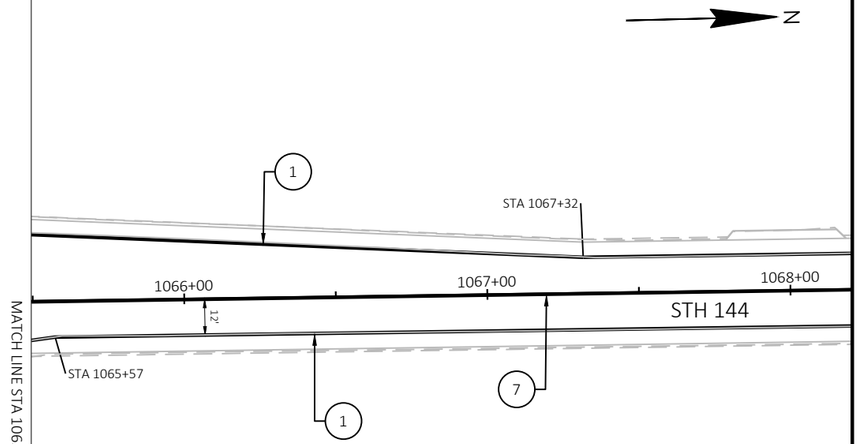

PROJECT NO: 4010-18-70	HWY: STH 144	COUNTY: WASHINGTON	PAVEMENT MARKING - SHALOM DRIVE	SHEET 78	E

FILE NAME : N:\PDS\C3D\40101800\SHEETSPLAN\024501-PM.DWG
LAYOUT NAME - pm-07
PLOT DATE : 6/30/2025 3:24 PM
PLOT BY : SCHMIDT, JUDENE M
PLOT NAME :
PLOT SCALE : 1 IN:50 FT
WISDOT/CADDS SHEET 42

2

N

1 4 7

STA 1072+86 STA 1075+91 STA 1078+43 STA 1080+62

STA 1078+43

1073+00 1074+00 1075+00 1076+00 1077+00 1078+00 1079+00 1080+00

12' 12' 12'

STH 144

STA 1076+94 STA 1077+06

STA 1073+83 STA 1076+23 STA 1077+51 STA 1079+25

1 1 1

STA 1077+21

8

7

ANN COURT

2

LEGEND

1. MARKING LINE GROOVED WET REFLECTIVE EPOXY 6-INCH (WHITE)
2. MARKING LINE EPOXY 6-INCH 3' LINE WITH 9' GAP (WHITE)
3. MARKING LINE EPOXY 10-INCH 3' LINE WITH 9' GAP (WHITE)
4. MARKING LINE EPOXY 6-INCH 12 1/2' LINE WITH 37 1/2' GAP (WHITE)
5. MARKING LINE EPOXY 10-INCH (WHITE)
6. MARKING LINE EPOXY 6-INCH (WHITE)
7. MARKING LINE GROOVED WET REF EPOXY 6-INCH (DOUBLE YELLOW)
8. MARKING STOP LINE EPOXY 18-INCH (WHITE)
9. MARKING DIAGONAL EPOXY 12-INCH (YELLOW)
10. MARKING ARROW EPOXY
11. MARKING WORD EPOXY

N

1 7

3+00 1084+00 1085+00 1086+00 1087+00 1088+00 1089+00 1090+00

12' 12' 12'

STA 1086+94 STA 1087+05

STH 144

STA 1086+65 STA 1087+27

STA 1087+13

1 1

8

7

ELM TREE DRIVE

PROJECT NO: 4010-18-70	HWY: STH 144	COUNTY: WASHINGTON	PAVEMENT MARKING - ANN COURT & ELM TREE DRIVE	SHEET 79	E

FILE NAME : N:\PDS\C3D\40101800\SHEETSPLAN\024501-PM.DWG
LAYOUT NAME - pm-08

PLOT DATE : 6/30/2025 3:24 PM PLOT BY : SCHMIDT, JUDENE M PLOT NAME : PLOT SCALE : 1 IN:50 FT

WISDOT/CADDS SHEET 42

2

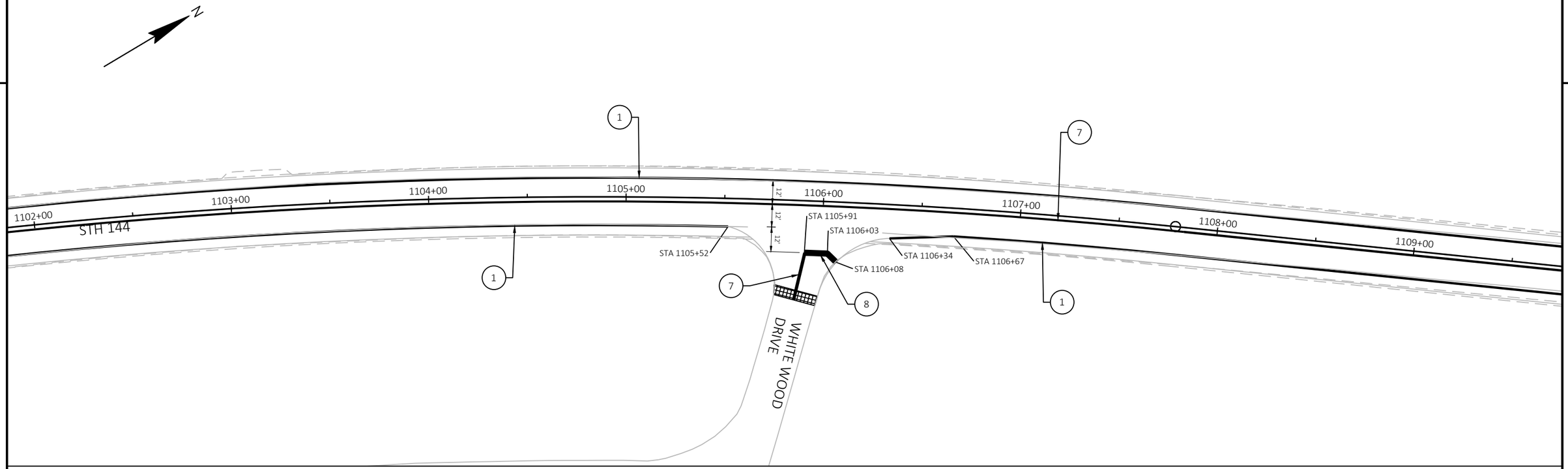

LEGEND

1	MARKING LINE GROOVED WET REFLECTIVE EPOXY 6-INCH (WHITE)
2	MARKING LINE EPOXY 6-INCH 3' LINE WITH 9' GAP (WHITE)
3	MARKING LINE EPOXY 10-INCH 3' LINE WITH 9' GAP (WHITE)
4	MARKING LINE EPOXY 6-INCH 12 1/2' LINE WITH 37 1/2' GAP (WHITE)
5	MARKING LINE EPOXY 10-INCH (WHITE)
6	MARKING LINE EPOXY 6-INCH (WHITE)
7	MARKING LINE GROOVED WET REF EPOXY 6-INCH (DOUBLE YELLOW)
8	MARKING STOP LINE EPOXY 18-INCH (WHITE)
9	MARKING DIAGONAL EPOXY 12-INCH (YELLOW)
10	MARKING ARROW EPOXY
11	MARKING WORD EPOXY

PROJECT NO: 4010-18-70	HWY: STH 144	COUNTY: WASHINGTON	PAVEMENT MARKING - WHITE WOOD DRIVE	SHEET 80	E

FILE NAME : N:\PDS\C3D\40101800\SHEETSPLAN\024501-PM.DWG
LAYOUT NAME - pm-09
PLOT DATE : 6/30/2025 3:24 PM
PLOT BY : SCHMIDT, JUDENE M
PLOT NAME :
PLOT SCALE : 1 IN:50 FT
WISDOT/CADDS SHEET 42

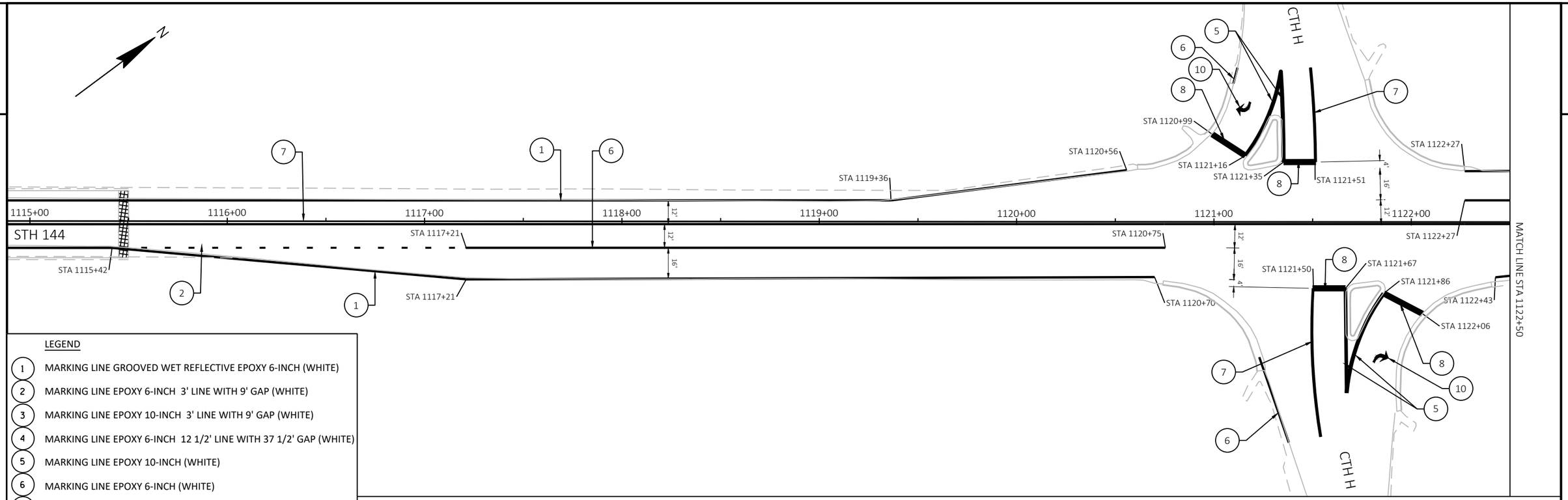

LEGEND

1. MARKING LINE GROOVED WET REFLECTIVE EPOXY 6-INCH (WHITE)
2. MARKING LINE EPOXY 6-INCH 3' LINE WITH 9' GAP (WHITE)
3. MARKING LINE EPOXY 10-INCH 3' LINE WITH 9' GAP (WHITE)
4. MARKING LINE EPOXY 6-INCH 12 1/2' LINE WITH 37 1/2' GAP (WHITE)
5. MARKING LINE EPOXY 10-INCH (WHITE)
6. MARKING LINE EPOXY 6-INCH (WHITE)
7. MARKING LINE GROOVED WET REF EPOXY 6-INCH (DOUBLE YELLOW)
8. MARKING STOP LINE EPOXY 18-INCH (WHITE)
9. MARKING DIAGONAL EPOXY 12-INCH (YELLOW)
10. MARKING ARROW EPOXY
11. MARKING WORD EPOXY

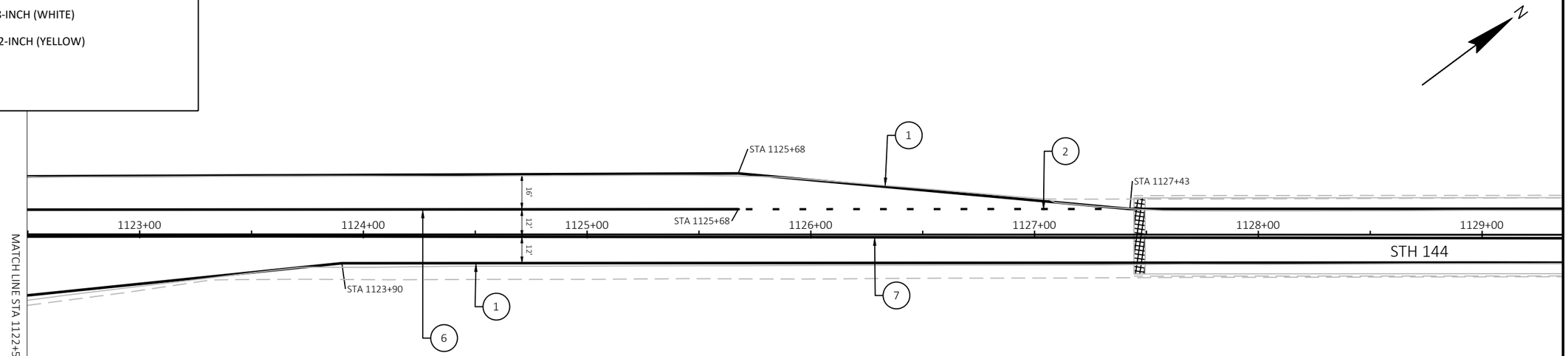

PROJECT NO: 4010-18-70	HWY: STH 144	COUNTY: WASHINGTON	PAVEMENT MARKING - CTH H	SHEET 81	E

2

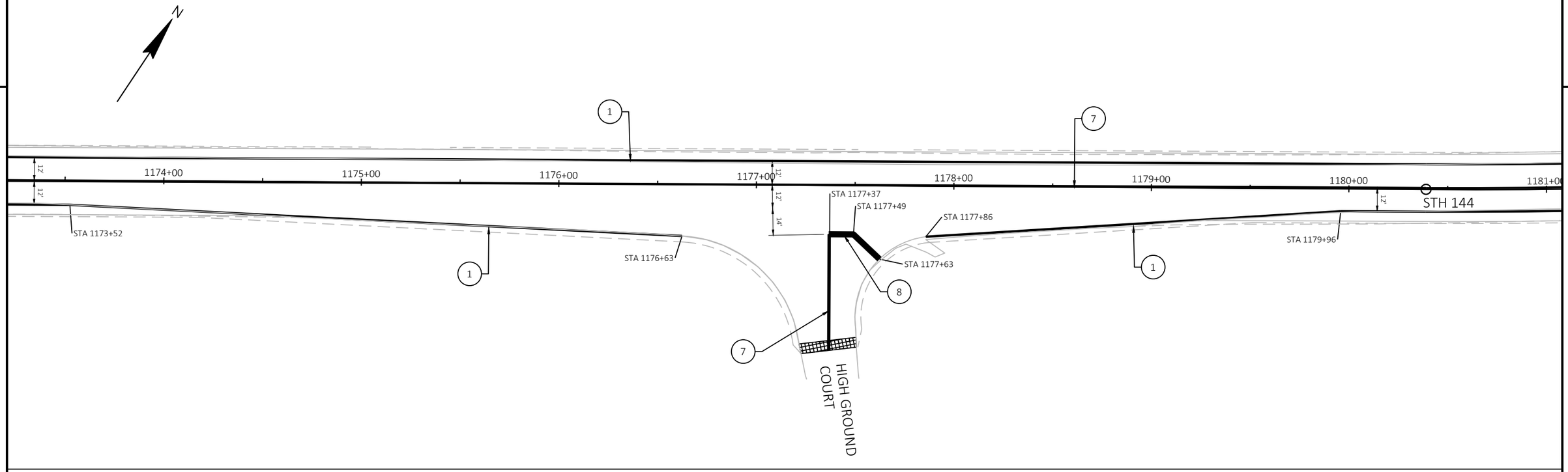

LEGEND

1	MARKING LINE GROOVED WET REFLECTIVE EPOXY 6-INCH (WHITE)
2	MARKING LINE EPOXY 6-INCH 3' LINE WITH 9' GAP (WHITE)
3	MARKING LINE EPOXY 10-INCH 3' LINE WITH 9' GAP (WHITE)
4	MARKING LINE EPOXY 6-INCH 12 1/2' LINE WITH 37 1/2' GAP (WHITE)
5	MARKING LINE EPOXY 10-INCH (WHITE)
6	MARKING LINE EPOXY 6-INCH (WHITE)
7	MARKING LINE GROOVED WET REF EPOXY 6-INCH (DOUBLE YELLOW)
8	MARKING STOP LINE EPOXY 18-INCH (WHITE)
9	MARKING DIAGONAL EPOXY 12-INCH (YELLOW)
10	MARKING ARROW EPOXY
11	MARKING WORD EPOXY

PROJECT NO: 4010-18-70	HWY: STH 144	COUNTY: WASHINGTON	PAVEMENT MARKING - HIGH GROUND COURT	SHEET 82	E

FILE NAME : N:\PDS\C3D\40101800\SHEETSPLAN\024501-PM.DWG
LAYOUT NAME - pm-11
PLOT DATE : 6/30/2025 3:24 PM
PLOT BY : SCHMIDT, JUDENE M
PLOT NAME :
PLOT SCALE : 1 IN:50 FT
WISDOT/CADDS SHEET 42

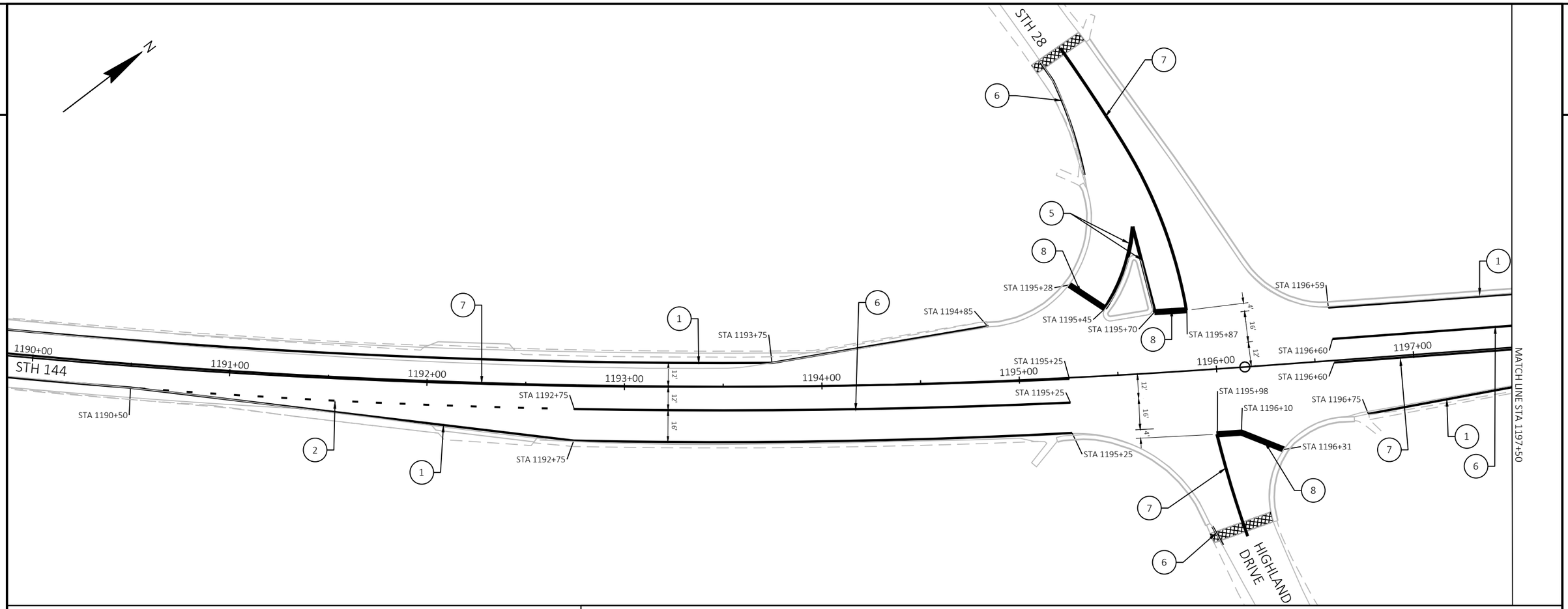

LEGEND	
1	MARKING LINE GROOVED WET REFLECTIVE EPOXY 6-INCH (WHITE)
2	MARKING LINE EPOXY 6-INCH 3' LINE WITH 9' GAP (WHITE)
3	MARKING LINE EPOXY 10-INCH 3' LINE WITH 9' GAP (WHITE)
4	MARKING LINE EPOXY 6-INCH 12 1/2' LINE WITH 37 1/2' GAP (WHITE)
5	MARKING LINE EPOXY 10-INCH (WHITE)
6	MARKING LINE EPOXY 6-INCH (WHITE)
7	MARKING LINE GROOVED WET REF EPOXY 6-INCH (DOUBLE YELLOW)
8	MARKING STOP LINE EPOXY 18-INCH (WHITE)
9	MARKING DIAGONAL EPOXY 12-INCH (YELLOW)
10	MARKING ARROW EPOXY
11	MARKING WORD EPOXY

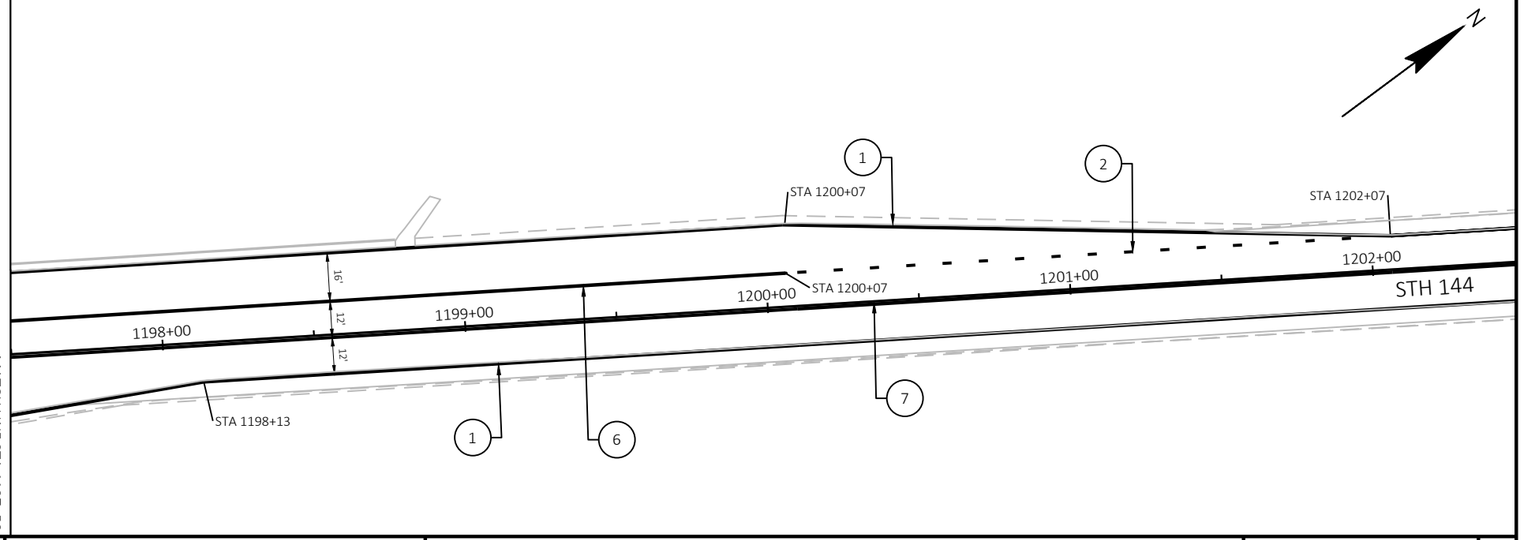

PROJECT NO: 4010-18-70	HWY: STH 144	COUNTY: WASHINGTON	PAVEMENT MARKING - STH 28/ HIGHLAND DRIVE	SHEET 83	E

FILE NAME : N:\PDS\C3D\40101800\SHEETSPLAN\024501-PM.DWG
LAYOUT NAME - pm-12
PLOT DATE : 6/30/2025 3:24 PM
PLOT BY : SCHMIDT, JUDENE M
PLOT NAME :
PLOT SCALE : 1 IN:50 FT
WISDOT/CADDS SHEET 42

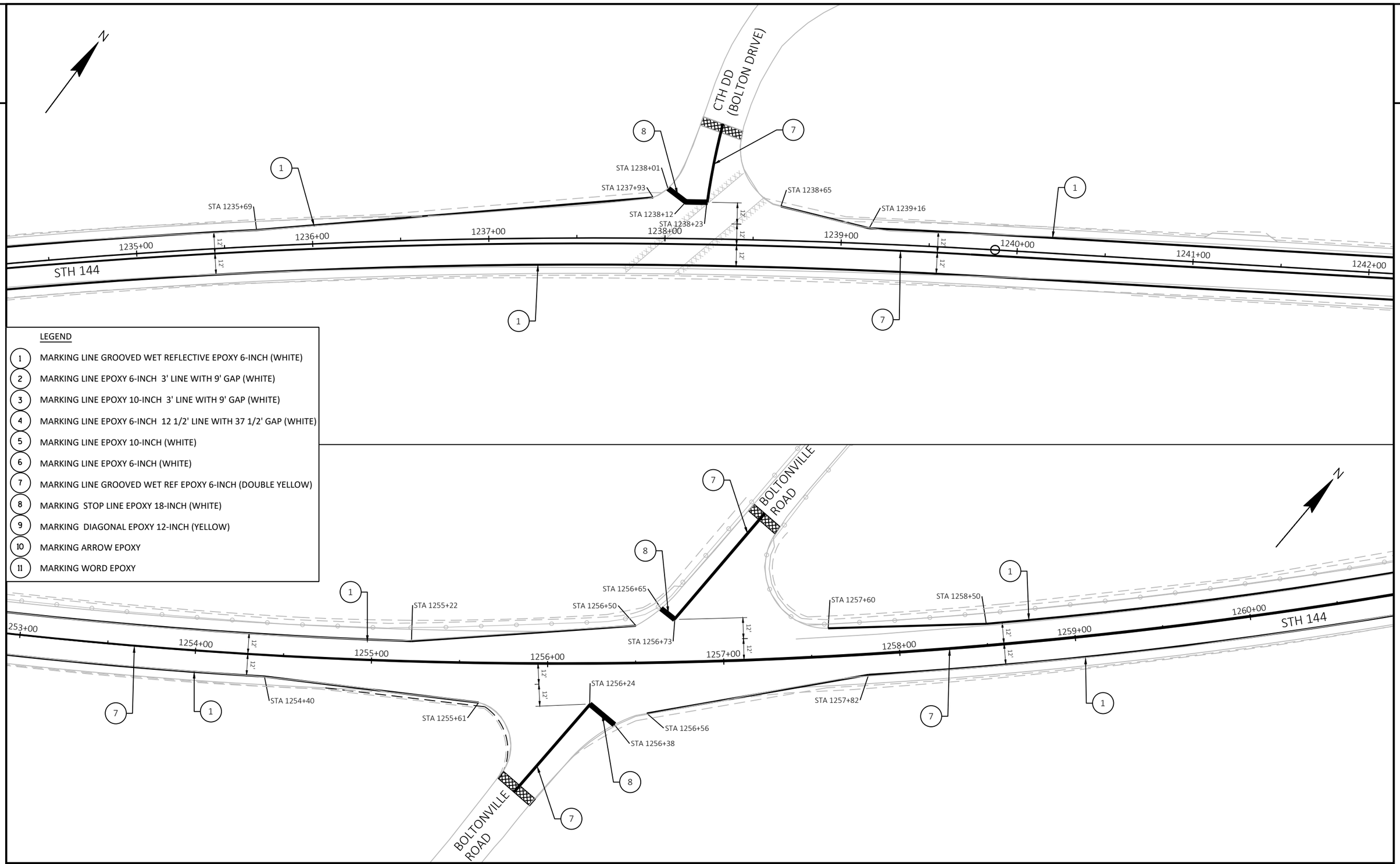

LEGEND

1. MARKING LINE GROOVED WET REFLECTIVE EPOXY 6-INCH (WHITE)
2. MARKING LINE EPOXY 6-INCH 3' LINE WITH 9' GAP (WHITE)
3. MARKING LINE EPOXY 10-INCH 3' LINE WITH 9' GAP (WHITE)
4. MARKING LINE EPOXY 6-INCH 12 1/2' LINE WITH 37 1/2' GAP (WHITE)
5. MARKING LINE EPOXY 10-INCH (WHITE)
6. MARKING LINE EPOXY 6-INCH (WHITE)
7. MARKING LINE GROOVED WET REF EPOXY 6-INCH (DOUBLE YELLOW)
8. MARKING STOP LINE EPOXY 18-INCH (WHITE)
9. MARKING DIAGONAL EPOXY 12-INCH (YELLOW)
10. MARKING ARROW EPOXY
11. MARKING WORD EPOXY

PROJECT NO: 4010-18-70	HWY: STH 144	COUNTY: WASHINGTON	PAVEMENT MARKING - CTH DD (BOLTON DRIVE) & BOLTONVILLE ROAD	SHEET 84	E

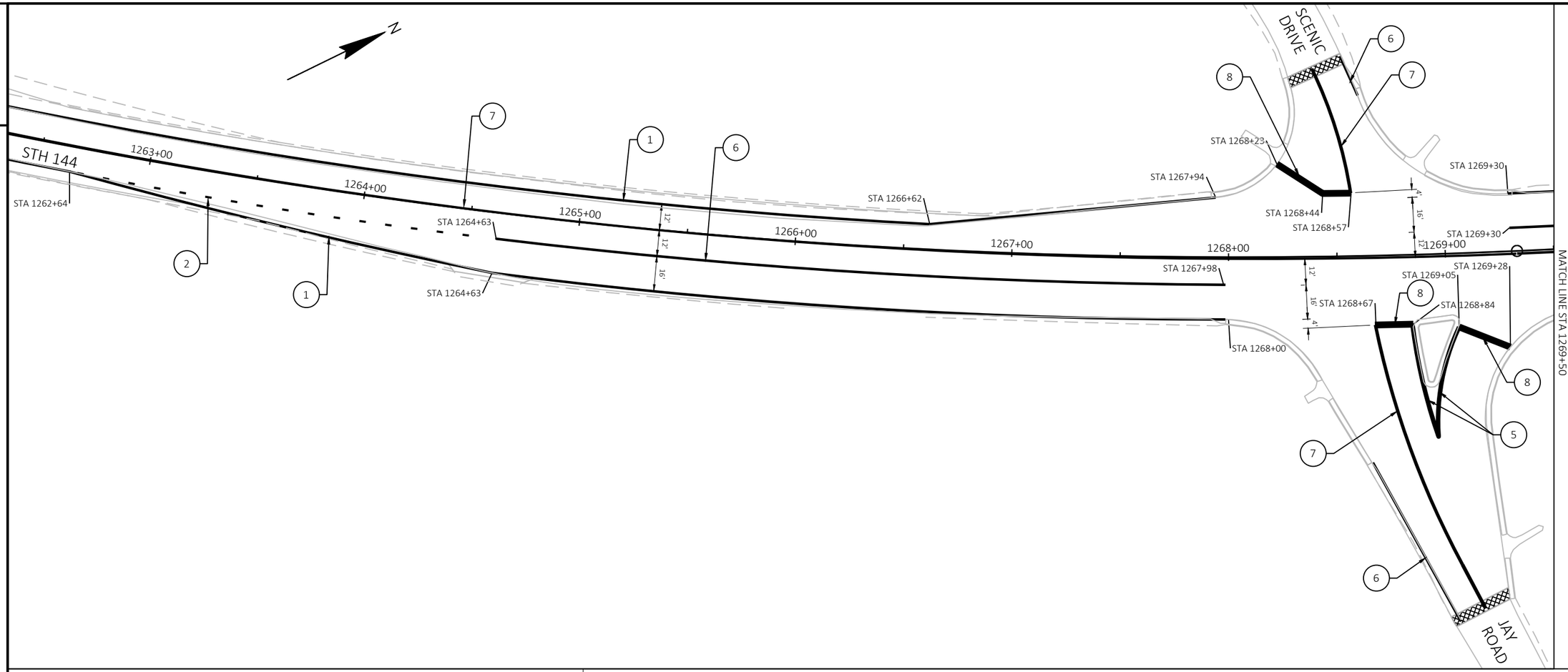

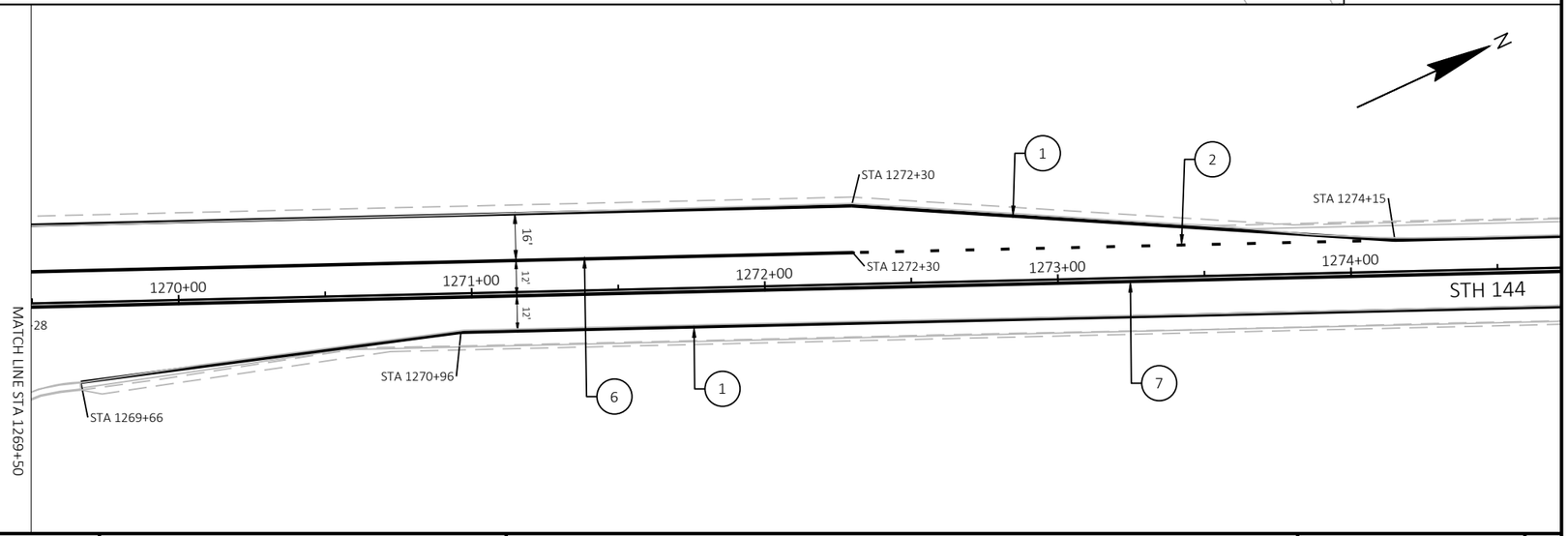

LEGEND

1	MARKING LINE GROOVED WET REFLECTIVE EPOXY 6-INCH (WHITE)
2	MARKING LINE EPOXY 6-INCH 3' LINE WITH 9' GAP (WHITE)
3	MARKING LINE EPOXY 10-INCH 3' LINE WITH 9' GAP (WHITE)
4	MARKING LINE EPOXY 6-INCH 12 1/2' LINE WITH 37 1/2' GAP (WHITE)
5	MARKING LINE EPOXY 10-INCH (WHITE)
6	MARKING LINE EPOXY 6-INCH (WHITE)
7	MARKING LINE GROOVED WET REF EPOXY 6-INCH (DOUBLE YELLOW)
8	MARKING STOP LINE EPOXY 18-INCH (WHITE)
9	MARKING DIAGONAL EPOXY 12-INCH (YELLOW)
10	MARKING ARROW EPOXY
11	MARKING WORD EPOXY

PROJECT NO: 4010-18-70	HWY: STH 144	COUNTY: WASHINGTON	PAVEMENT MARKING - SCENIC DRIVE/ JAY ROAD	SHEET 85	E

FILE NAME : N:\PDS\C3D\40101800\SHEETSPLAN\024501-PM.DWG
LAYOUT NAME - pm-14
PLOT DATE : 6/30/2025 3:24 PM
PLOT BY : SCHMIDT, JUDENE M
PLOT NAME :
PLOT SCALE : 1 IN:50 FT
WISDOT/CADDS SHEET 42

2

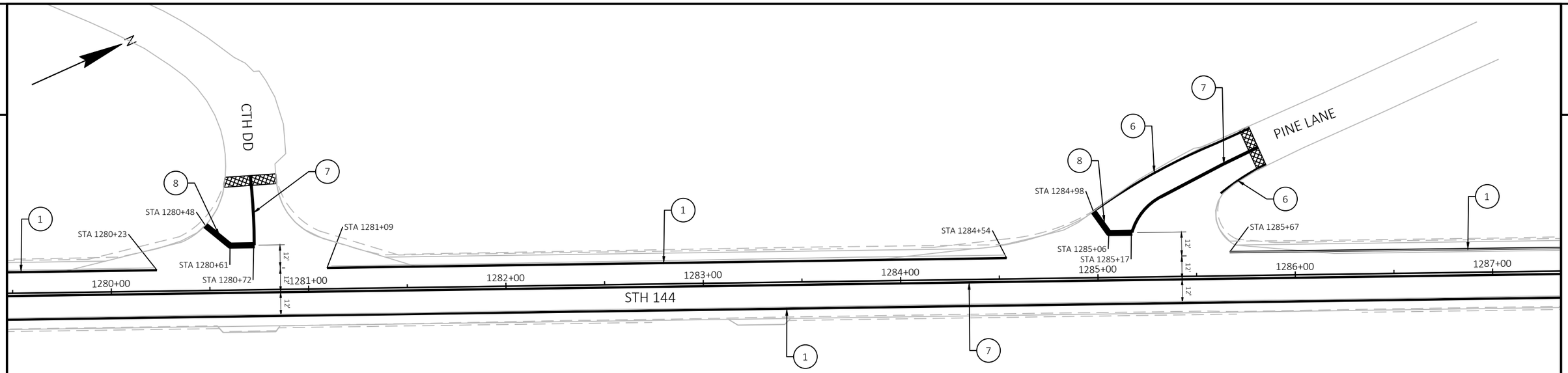

LEGEND

1. MARKING LINE GROOVED WET REFLECTIVE EPOXY 6-INCH (WHITE)
2. MARKING LINE EPOXY 6-INCH 3' LINE WITH 9' GAP (WHITE)
3. MARKING LINE EPOXY 10-INCH 3' LINE WITH 9' GAP (WHITE)
4. MARKING LINE EPOXY 6-INCH 12 1/2' LINE WITH 37 1/2' GAP (WHITE)
5. MARKING LINE EPOXY 10-INCH (WHITE)
6. MARKING LINE EPOXY 6-INCH (WHITE)
7. MARKING LINE GROOVED WET REF EPOXY 6-INCH (DOUBLE YELLOW)
8. MARKING STOP LINE EPOXY 18-INCH (WHITE)
9. MARKING DIAGONAL EPOXY 12-INCH (YELLOW)
10. MARKING ARROW EPOXY
11. MARKING WORD EPOXY

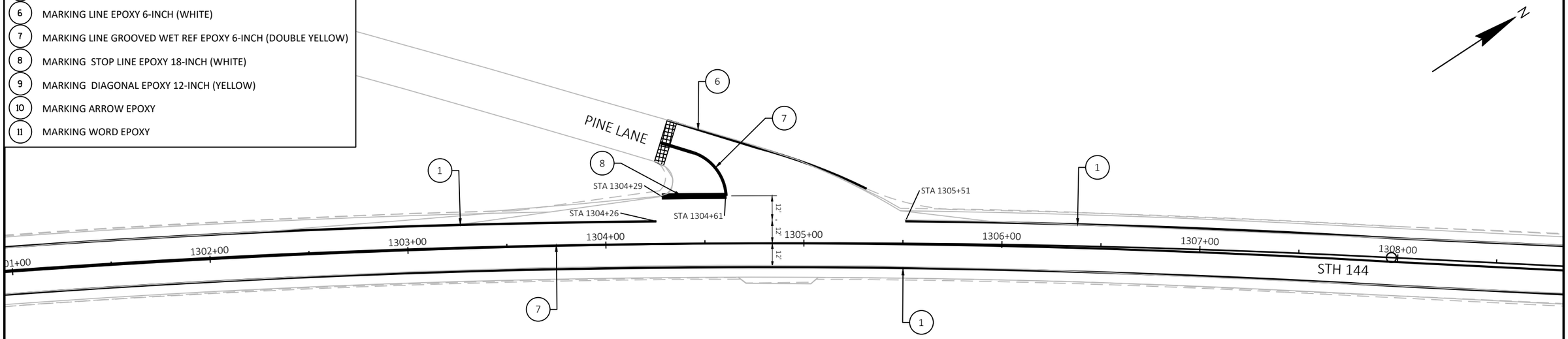

PROJECT NO: 4010-18-70	HWY: STH 144	COUNTY: WASHINGTON	PAVEMENT MARKING - CTH DD & PINE LANE	SHEET 86	E

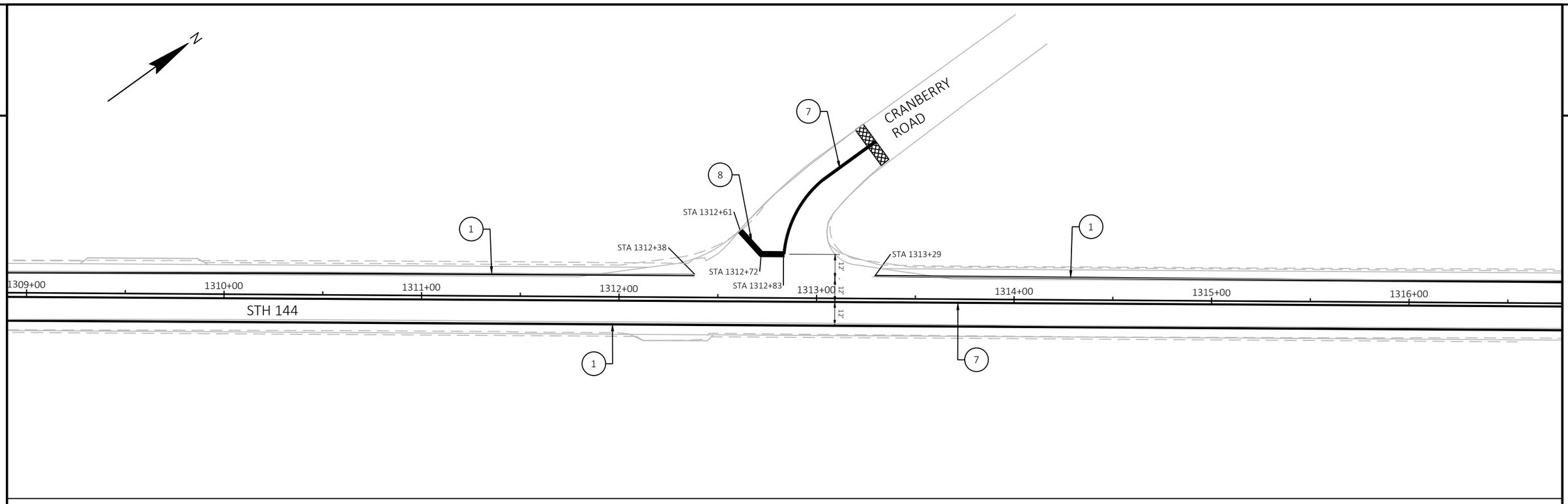

LEGEND

1	MARKING LINE GROOVED WET REFLECTIVE EPOXY 6-INCH (WHITE)
2	MARKING LINE EPOXY 6-INCH 3' LINE WITH 9' GAP (WHITE)
3	MARKING LINE EPOXY 10-INCH 3' LINE WITH 9' GAP (WHITE)
4	MARKING LINE EPOXY 6-INCH 12 1/2' LINE WITH 37 1/2' GAP (WHITE)
5	MARKING LINE EPOXY 10-INCH (WHITE)
6	MARKING LINE EPOXY 6-INCH (WHITE)
7	MARKING LINE GROOVED WET REF EPOXY 6-INCH (DOUBLE YELLOW)
8	MARKING STOP LINE EPOXY 18-INCH (WHITE)
9	MARKING DIAGONAL EPOXY 12-INCH (YELLOW)
10	MARKING ARROW EPOXY
11	MARKING WORD EPOXY

PROJECT NO: 4010-18-70	HWY: STH 144	COUNTY: WASHINGTON	PAVEMENT MARKING - CRANBERRY ROAD	SHEET 87	E

FILE NAME : N:\PDS\C3D\40101800\SHEETSPLAN\024501-PM.DWG
LAYOUT NAME - pm-16
PLOT DATE : 6/30/2025 3:24 PM
PLOT BY : SCHMIDT, JUDENE M
PLOT NAME :
PLOT SCALE : 1 IN:50 FT
WISDOT/CADDS SHEET 42

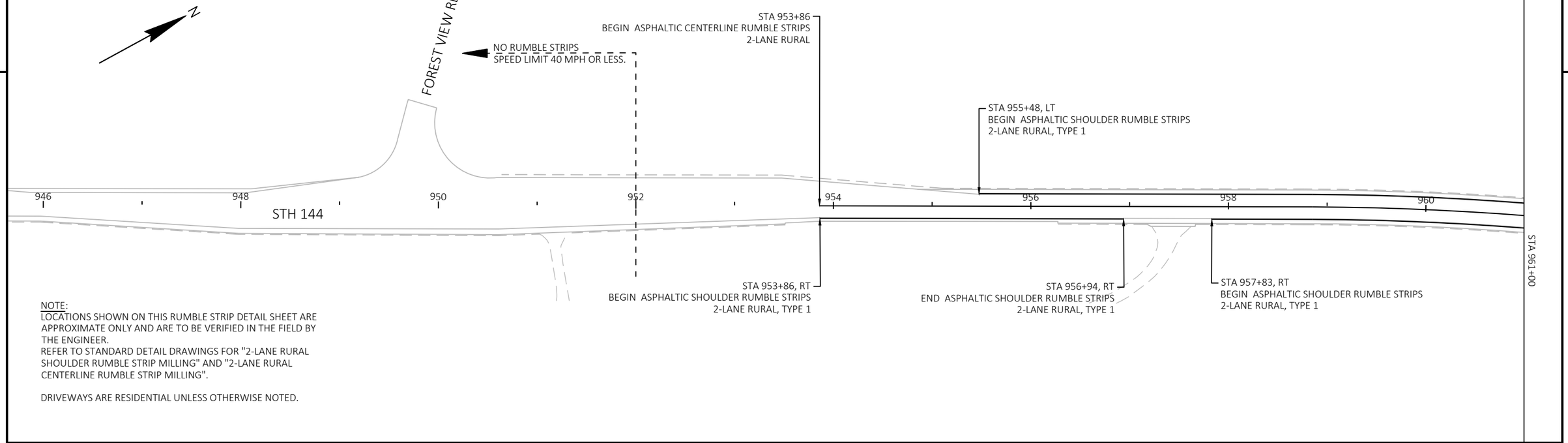

NOTE:
LOCATIONS SHOWN ON THIS RUMBLE STRIP DETAIL SHEET ARE APPROXIMATE ONLY AND ARE TO BE VERIFIED IN THE FIELD BY THE ENGINEER.
REFER TO STANDARD DETAIL DRAWINGS FOR "2-LANE RURAL SHOULDER RUMBLE STRIP MILLING" AND "2-LANE RURAL CENTERLINE RUMBLE STRIP MILLING".

DRIVEWAYS ARE RESIDENTIAL UNLESS OTHERWISE NOTED.

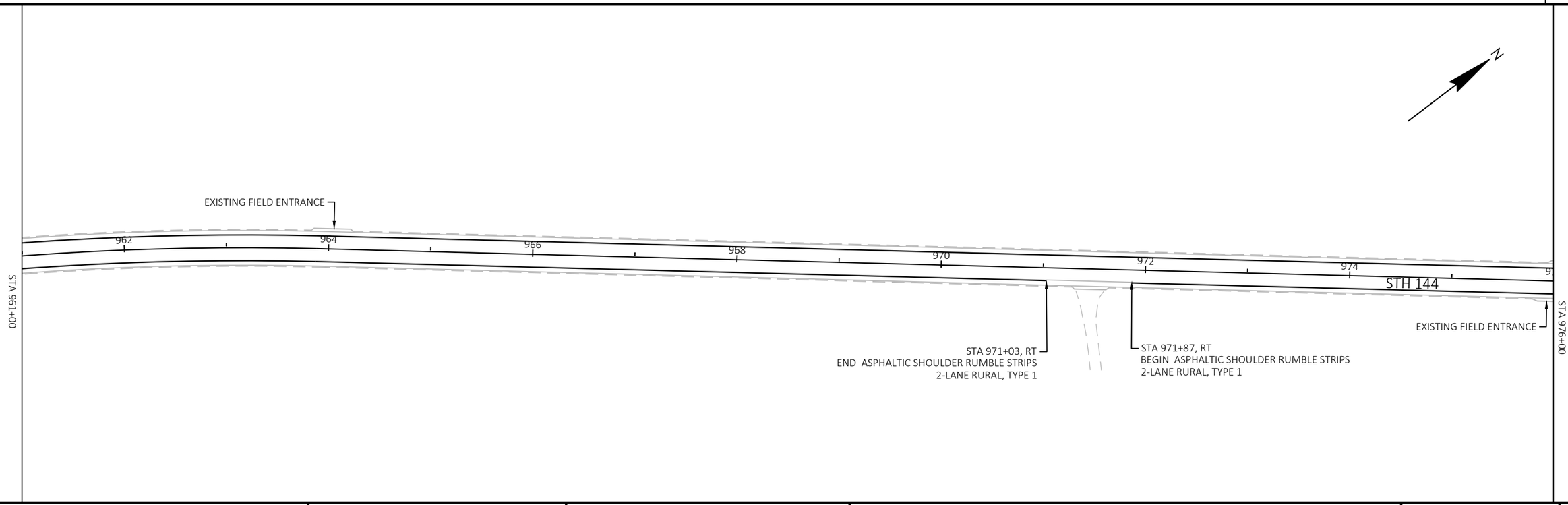

PROJECT NO: 4010-18-70	HWY: STH 144	COUNTY: WASHINGTON	RUMBLE STRIP PLAN	SHEET 88	E

NOTE:
LOCATIONS SHOWN ON THIS RUMBLE STRIP DETAIL SHEET ARE APPROXIMATE ONLY AND ARE TO BE VERIFIED IN THE FIELD BY THE ENGINEER.
REFER TO STANDARD DETAIL DRAWINGS FOR "2-LANE RURAL SHOULDER RUMBLE STRIP MILLING" AND "2-LANE RURAL CENTERLINE RUMBLE STRIP MILLING".

DRIVEWAYS ARE RESIDENTIAL UNLESS OTHERWISE NOTED.

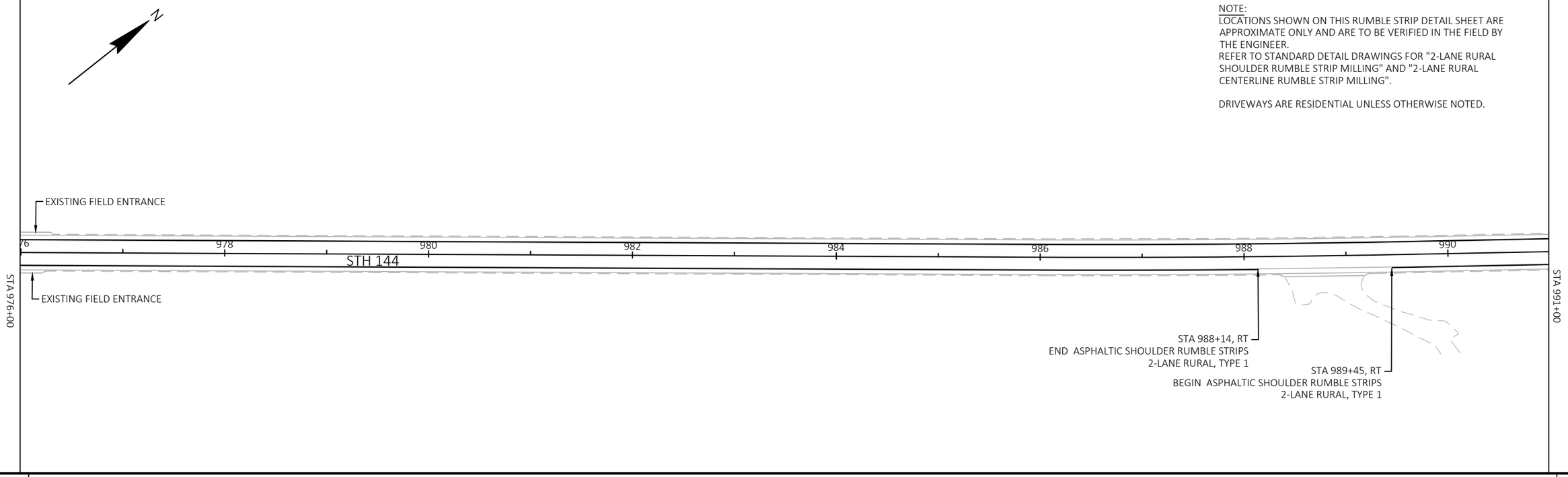

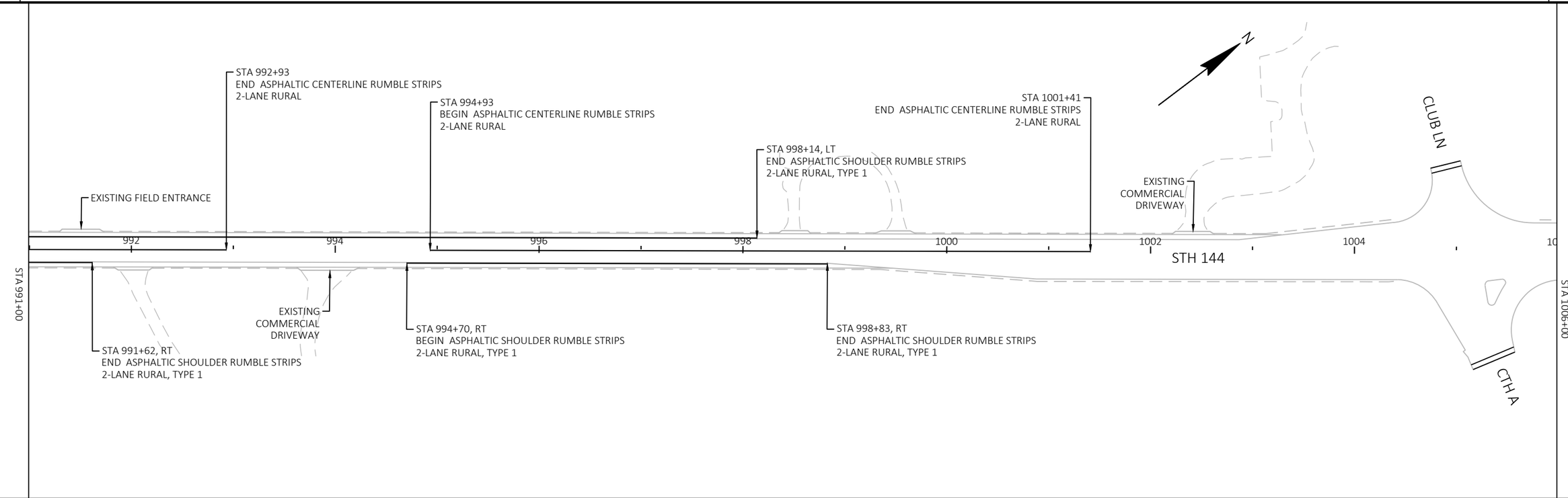

PROJECT NO: 4010-18-70	HWY: STH 144	COUNTY: WASHINGTON	RUMBLE STRIP PLAN	SHEET 89	E

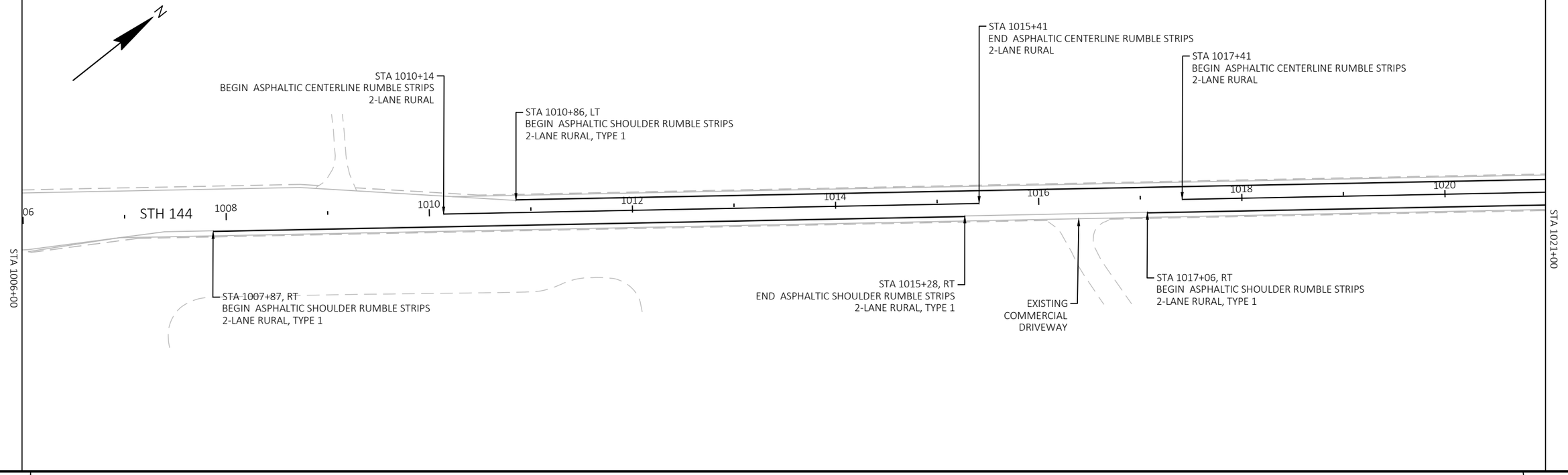

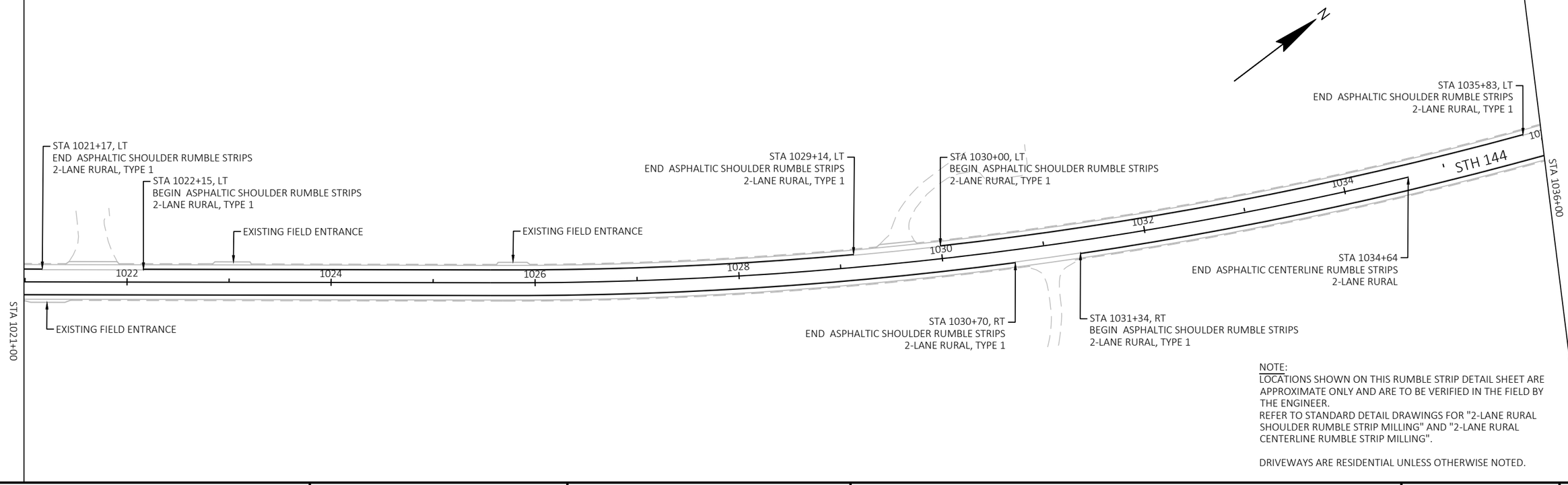

NOTE:
LOCATIONS SHOWN ON THIS RUMBLE STRIP DETAIL SHEET ARE APPROXIMATE ONLY AND ARE TO BE VERIFIED IN THE FIELD BY THE ENGINEER.
REFER TO STANDARD DETAIL DRAWINGS FOR "2-LANE RURAL SHOULDER RUMBLE STRIP MILLING" AND "2-LANE RURAL CENTERLINE RUMBLE STRIP MILLING".

DRIVEWAYS ARE RESIDENTIAL UNLESS OTHERWISE NOTED.

PROJECT NO: 4010-18-70	HWY: STH 144	COUNTY: WASHINGTON	RUMBLE STRIP PLAN	SHEET 90	E

2

2

N

SUNNYBROOK DR

STA 1037+95, LT
BEGIN ASPHALTIC SHOULDER RUMBLE STRIPS
2-LANE RURAL, TYPE 1

EXISTING FIELD ENTRANCE

STA 1050+93, LT
BEGIN ASPHALTIC SHOULDER RUMBLE STRIPS
2-LANE RURAL, TYPE 1

STA 1050+27, LT
END ASPHALTIC SHOULDER RUMBLE STRIPS
2-LANE RURAL, TYPE 1

1036

STA 1036+00

STH 144

1038

1040

1042

1044

1046

1048

1050

STA 1051+00

EXISTING FIELD ENTRANCE

EXISTING FIELD ENTRANCE

EXISTING FIELD ENTRANCE

STA 1038+67
BEGIN ASPHALTIC CENTERLINE RUMBLE STRIPS
2-LANE RURAL

STA 1044+62, RT
END ASPHALTIC SHOULDER RUMBLE STRIPS
2-LANE RURAL, TYPE 1

STA 1045+61, RT
BEGIN ASPHALTIC SHOULDER RUMBLE STRIPS
2-LANE RURAL, TYPE 1

NOTE:
LOCATIONS SHOWN ON THIS RUMBLE STRIP DETAIL SHEET ARE APPROXIMATE ONLY AND ARE TO BE VERIFIED IN THE FIELD BY THE ENGINEER.
REFER TO STANDARD DETAIL DRAWINGS FOR "2-LANE RURAL SHOULDER RUMBLE STRIP MILLING" AND "2-LANE RURAL CENTERLINE RUMBLE STRIP MILLING".

DRIVEWAYS ARE RESIDENTIAL UNLESS OTHERWISE NOTED.

N

STA 1064+95, LT
BEGIN ASPHALTIC SHOULDER RUMBLE STRIPS
2-LANE RURAL, TYPE 1

STA 1064+28, LT
END ASPHALTIC SHOULDER RUMBLE STRIPS
2-LANE RURAL, TYPE 1

STA 1056+55, LT
END ASPHALTIC SHOULDER RUMBLE STRIPS
2-LANE RURAL, TYPE 1

STA 1057+31, LT
BEGIN ASPHALTIC SHOULDER RUMBLE STRIPS
2-LANE RURAL, TYPE 1

1052

1054

1056

1058

1060

1062

STH 144

1064

STA 1051+00

STA 1066+00

Y=206207.139
X=373583.389
12201150

SHALOM DR

STA 1055+09, RT
END ASPHALTIC SHOULDER RUMBLE STRIPS
2-LANE RURAL, TYPE 1

STA 1061+64
END ASPHALTIC CENTERLINE RUMBLE STRIPS
2-LANE RURAL

STA 1065+64
BEGIN ASPHALTIC CENTERLINE RUMBLE STRIPS
2-LANE RURAL

PROJECT NO: 4010-18-70	HWY: STH 144	COUNTY: WASHINGTON	RUMBLE STRIP PLAN	SHEET 91	E

FILE NAME : N:\PDS\C3D\40101800\SHEETSPLAN\024601-RS.DWG
LAYOUT NAME - 04-rs

PLOT DATE : 7/1/2025 12:30 PM PLOT BY : SCHMIDT, JUDENE M PLOT NAME : PLOT SCALE : 1 IN:100 FT

WISDOT/CADDS SHEET 44

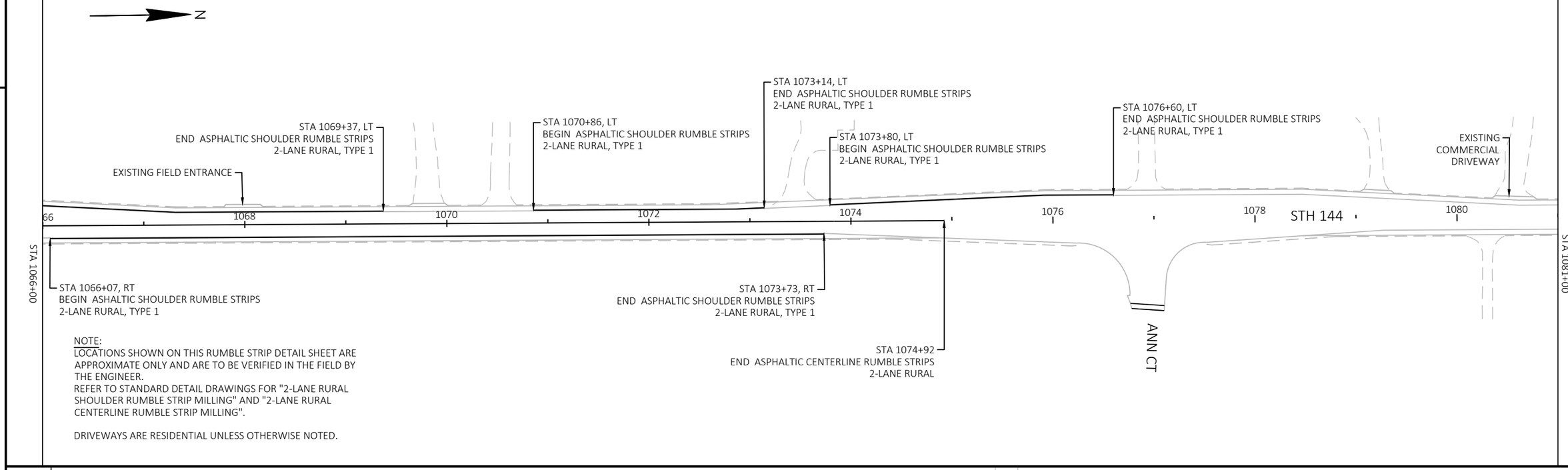

NOTE:
LOCATIONS SHOWN ON THIS RUMBLE STRIP DETAIL SHEET ARE APPROXIMATE ONLY AND ARE TO BE VERIFIED IN THE FIELD BY THE ENGINEER.
REFER TO STANDARD DETAIL DRAWINGS FOR "2-LANE RURAL SHOULDER RUMBLE STRIP MILLING" AND "2-LANE RURAL CENTERLINE RUMBLE STRIP MILLING".

DRIVEWAYS ARE RESIDENTIAL UNLESS OTHERWISE NOTED.

PROJECT NO: 4010-18-70	HWY: STH 144	COUNTY: WASHINGTON	RUMBLE STRIP PLAN	SHEET 92	E

FILE NAME : N:\PDS\C3D\40101800\SHEETSPLAN\024601-RS.DWG
LAYOUT NAME - 05-rs
PLOT DATE : 7/1/2025 12:30 PM
PLOT BY : SCHMIDT, JUDENE M
PLOT NAME :
PLOT SCALE : 1 IN:100 FT
WISDOT/CADDS SHEET 44

2

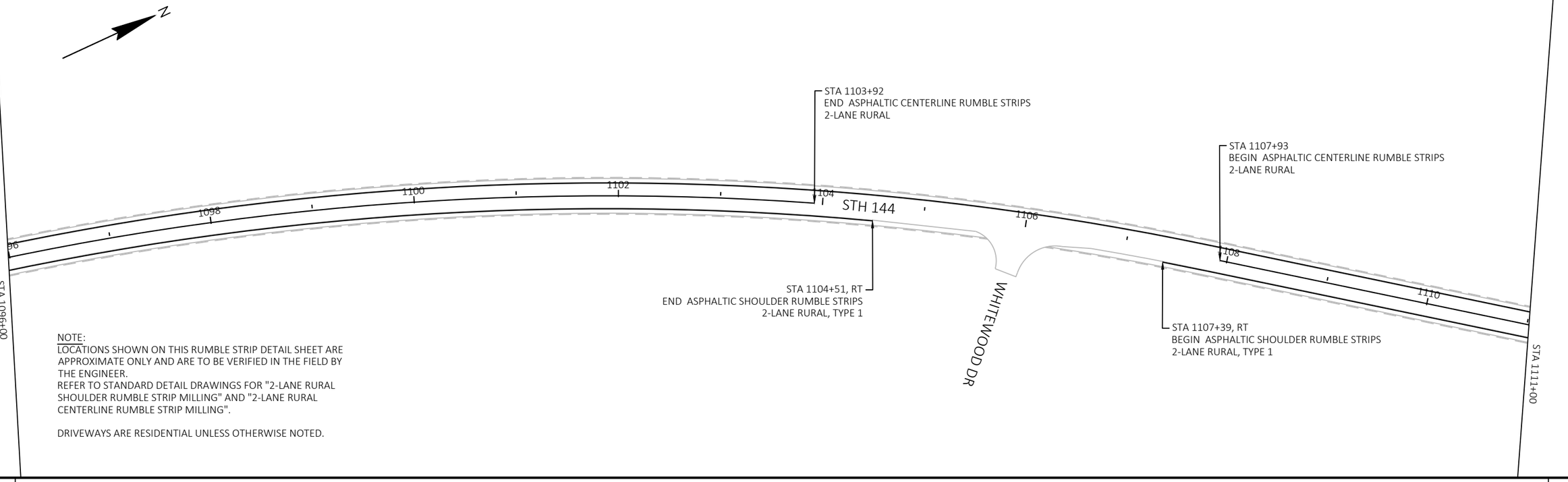

NOTE:
LOCATIONS SHOWN ON THIS RUMBLE STRIP DETAIL SHEET ARE APPROXIMATE ONLY AND ARE TO BE VERIFIED IN THE FIELD BY THE ENGINEER.
REFER TO STANDARD DETAIL DRAWINGS FOR "2-LANE RURAL SHOULDER RUMBLE STRIP MILLING" AND "2-LANE RURAL CENTERLINE RUMBLE STRIP MILLING".

DRIVEWAYS ARE RESIDENTIAL UNLESS OTHERWISE NOTED.

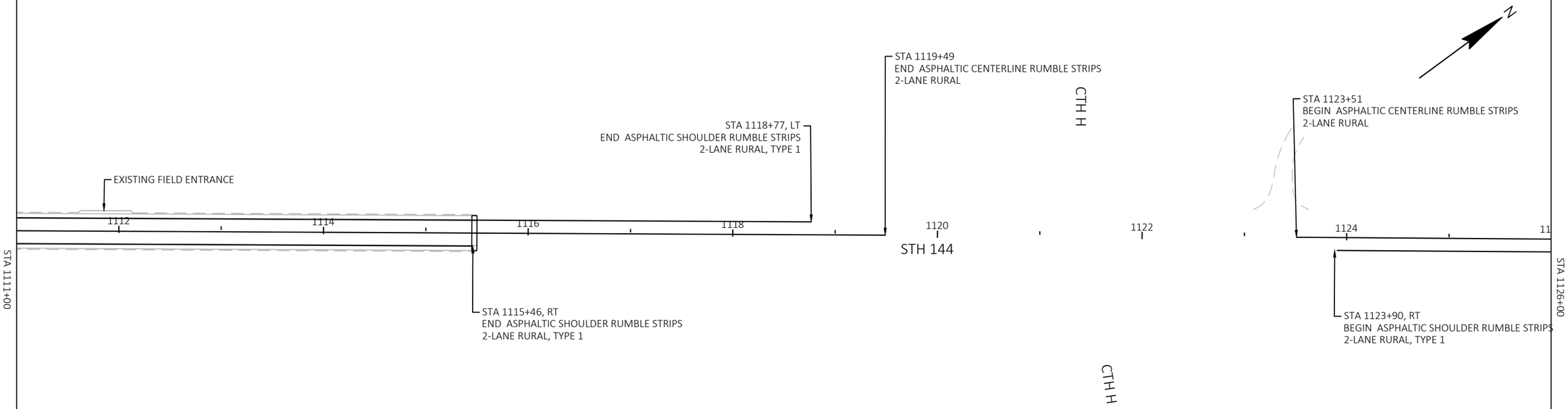

PROJECT NO: 4010-18-70	HWY: STH 144	COUNTY: WASHINGTON	RUMBLE STRIP PLAN	SHEET 93	E

2

2

STA 1127+74, LT
BEGIN ASPHALTIC SHOULDER RUMBLE STRIPS
2-LANE RURAL, TYPE 1

EXISTING FIELD ENTRANCE

26

1128 STH 144 1130 1132 1134 1136 1138 1140

STA 1126+00

STA 1141+00

STA 1138+12, RT
END ASPHALTIC SHOULDER RUMBLE STRIPS
2-LANE RURAL, TYPE 1

STA 1138+77, RT
BEGIN ASPHALTIC SHOULDER RUMBLE STRIPS
2-LANE RURAL, TYPE 1

NOTE:
LOCATIONS SHOWN ON THIS RUMBLE STRIP DETAIL SHEET ARE APPROXIMATE ONLY AND ARE TO BE VERIFIED IN THE FIELD BY THE ENGINEER.
REFER TO STANDARD DETAIL DRAWINGS FOR "2-LANE RURAL SHOULDER RUMBLE STRIP MILLING" AND "2-LANE RURAL CENTERLINE RUMBLE STRIP MILLING".

DRIVEWAYS ARE RESIDENTIAL UNLESS OTHERWISE NOTED.

STA 1141+76, LT
END ASPHALTIC SHOULDER RUMBLE STRIPS
2-LANE RURAL, TYPE 1

STA 1142+42, LT
BEGIN ASPHALTIC SHOULDER RUMBLE STRIPS
2-LANE RURAL, TYPE 1

1142 1144 1146 1148 1150 1152 STH 144 1154

STA 1154+47, LT
BEGIN ASPHALTIC SHOULDER RUMBLE STRIPS
2-LANE RURAL, TYPE 1

STA 1152+64, LT
END ASPHALTIC SHOULDER RUMBLE STRIPS
2-LANE RURAL, TYPE 1

EXISTING COMMERCIAL DRIVEWAY

EXISTING FIELD ENTRANCE

STA 1152+47
END ASPHALTIC CENTERLINE RUMBLE STRIPS
2-LANE RURAL

STA 1154+47
BEGIN ASPHALTIC CENTERLINE RUMBLE STRIPS
2-LANE RURAL

STA 1141+00

STA 1156+00

PROJECT NO: 4010-18-70	HWY: STH 144	COUNTY: WASHINGTON	RUMBLE STRIP PLAN	SHEET 94	E

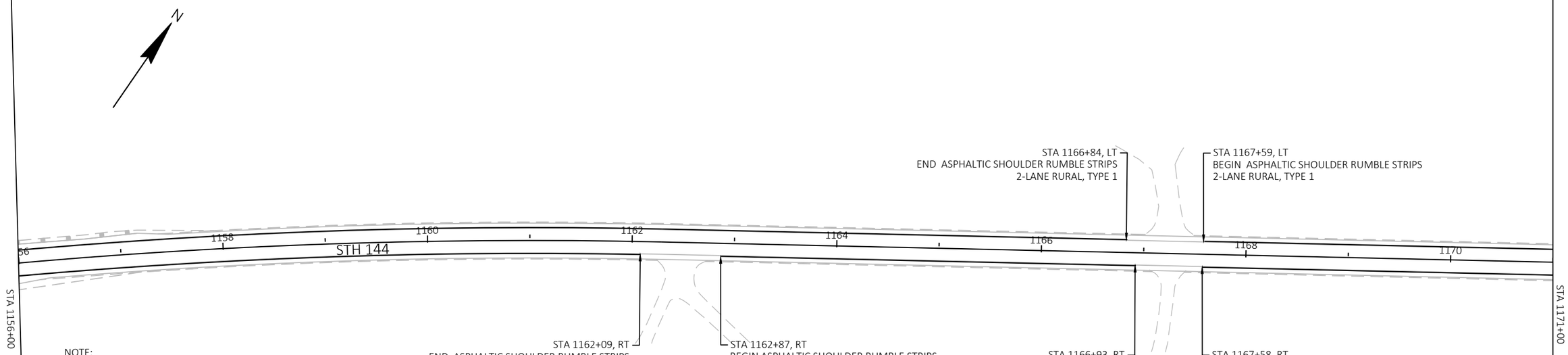

NOTE:
LOCATIONS SHOWN ON THIS RUMBLE STRIP DETAIL SHEET ARE APPROXIMATE ONLY AND ARE TO BE VERIFIED IN THE FIELD BY THE ENGINEER.
REFER TO STANDARD DETAIL DRAWINGS FOR "2-LANE RURAL SHOULDER RUMBLE STRIP MILLING" AND "2-LANE RURAL CENTERLINE RUMBLE STRIP MILLING".

DRIVEWAYS ARE RESIDENTIAL UNLESS OTHERWISE NOTED.

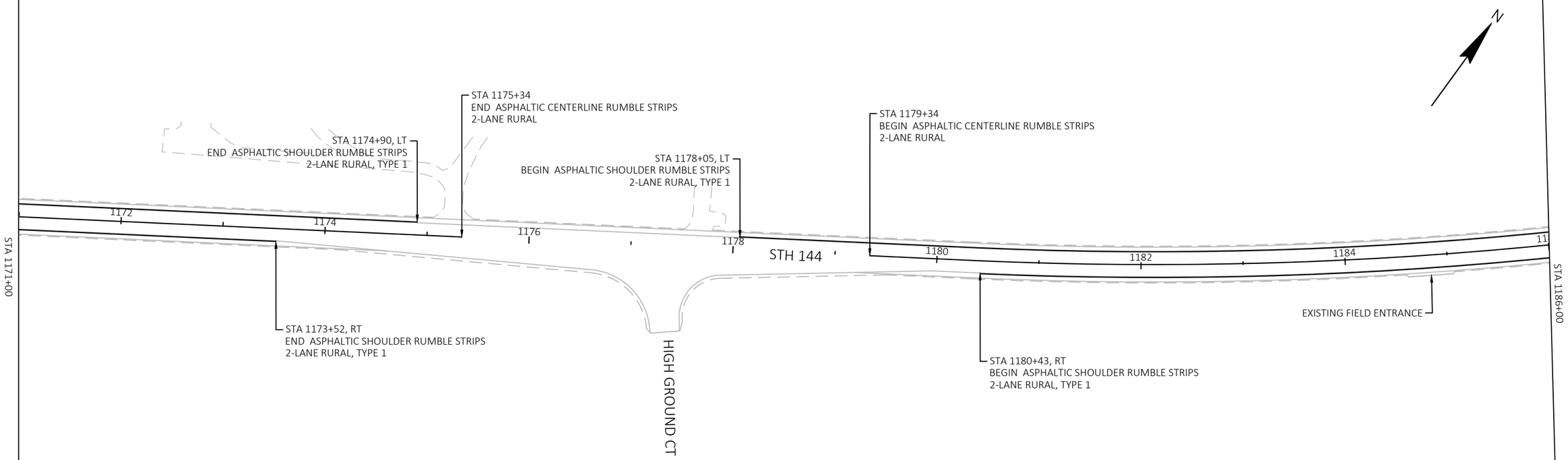

PROJECT NO: 4010-18-70	HWY: STH 144	COUNTY: WASHINGTON	RUMBLE STRIP PLAN	SHEET 95	E

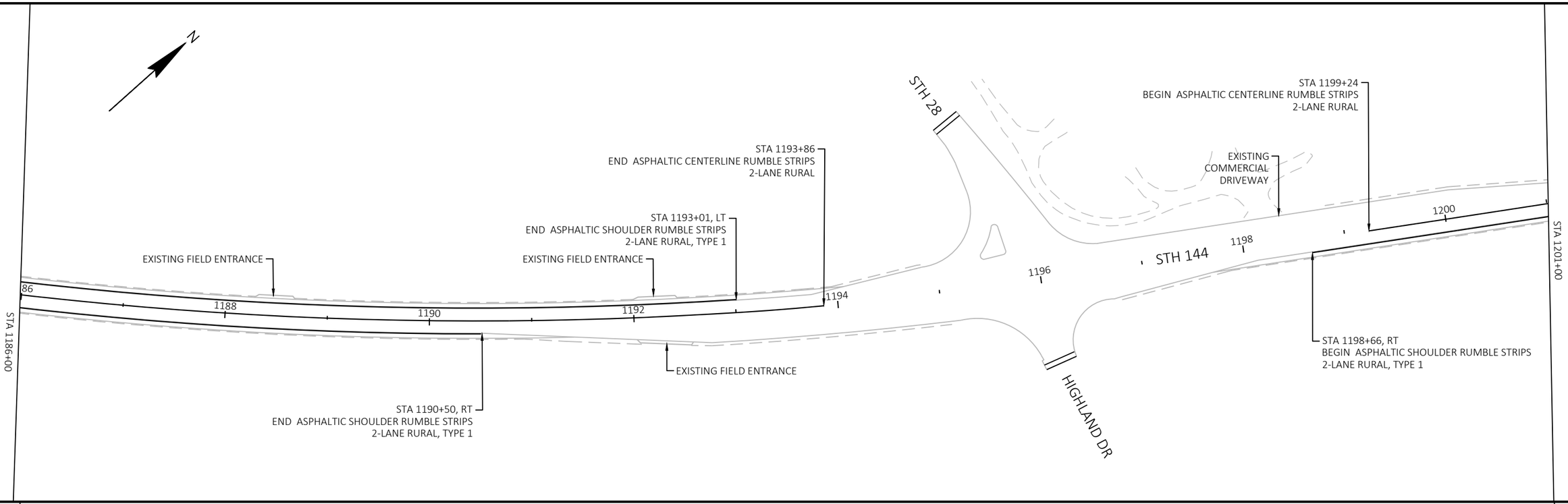

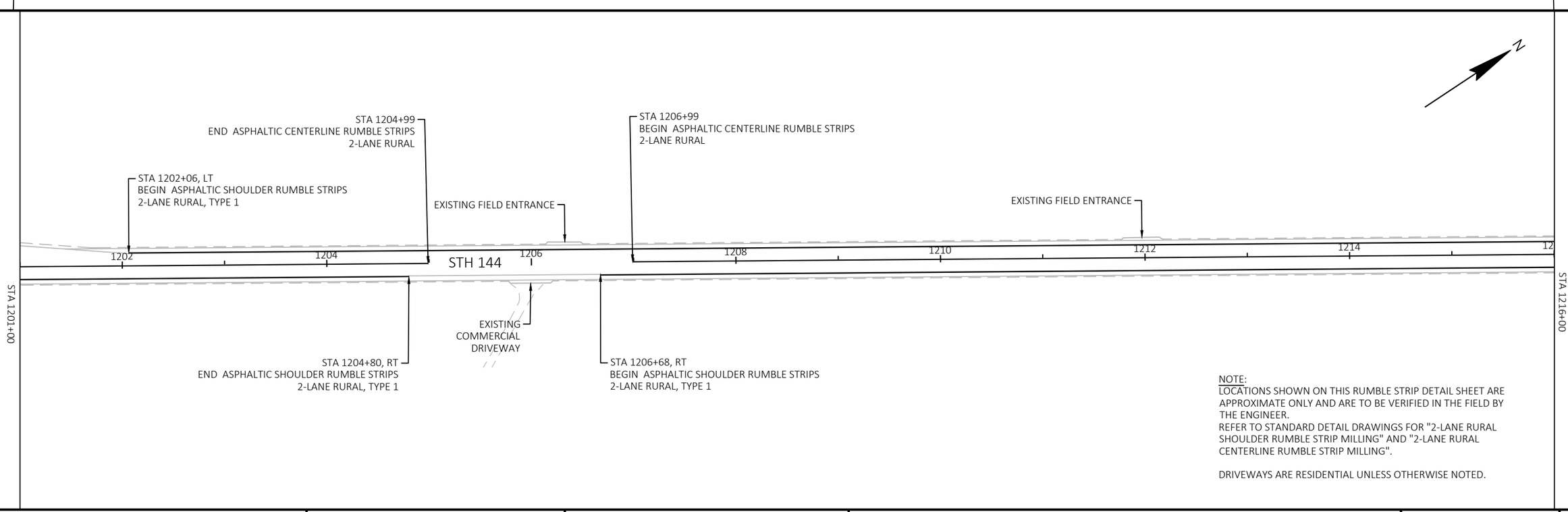

NOTE:
LOCATIONS SHOWN ON THIS RUMBLE STRIP DETAIL SHEET ARE APPROXIMATE ONLY AND ARE TO BE VERIFIED IN THE FIELD BY THE ENGINEER.
REFER TO STANDARD DETAIL DRAWINGS FOR "2-LANE RURAL SHOULDER RUMBLE STRIP MILLING" AND "2-LANE RURAL CENTERLINE RUMBLE STRIP MILLING".

DRIVEWAYS ARE RESIDENTIAL UNLESS OTHERWISE NOTED.

PROJECT NO: 4010-18-70	HWY: STH 144	COUNTY: WASHINGTON	RUMBLE STRIP PLAN	SHEET 96	E

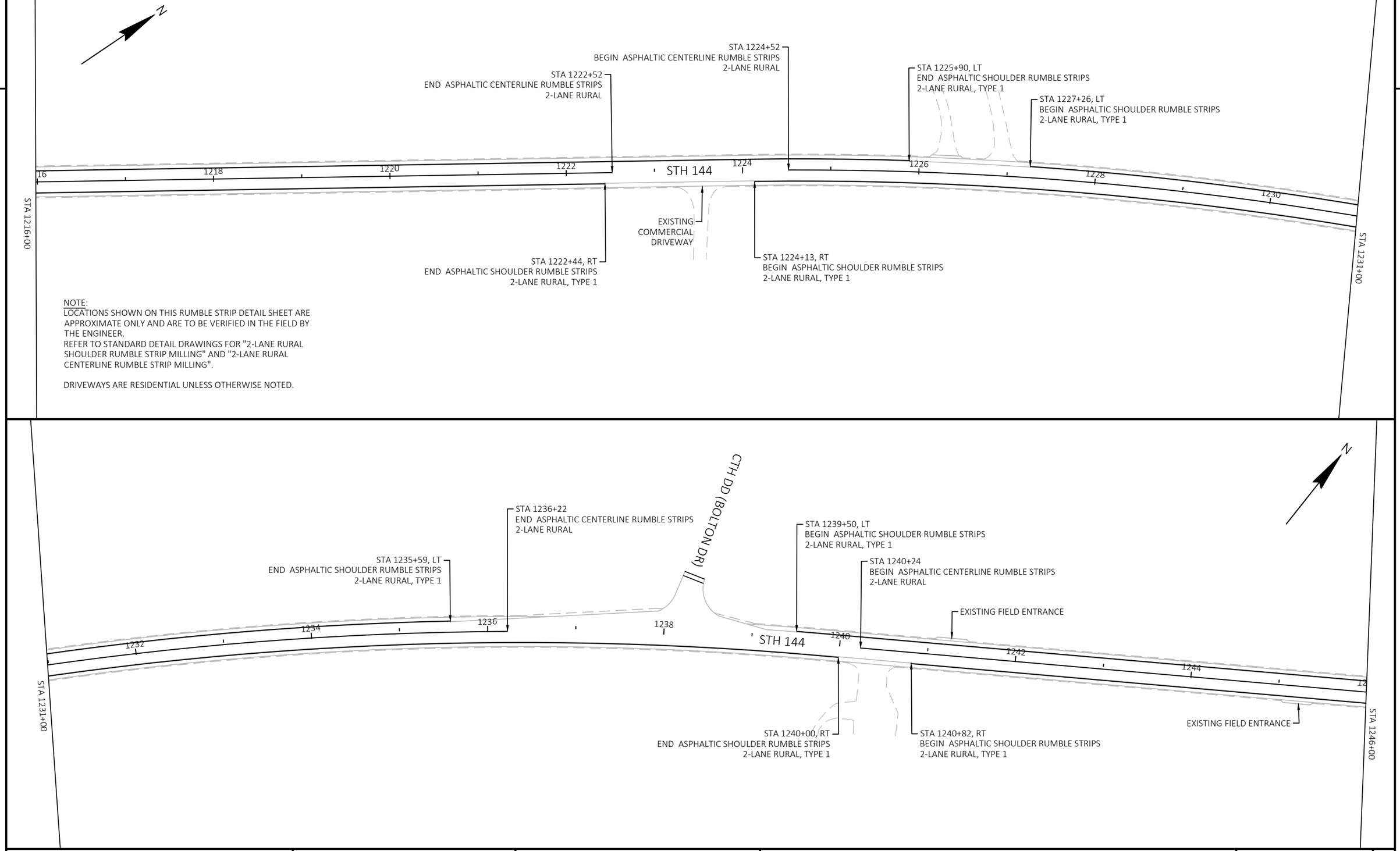

NOTE:
LOCATIONS SHOWN ON THIS RUMBLE STRIP DETAIL SHEET ARE APPROXIMATE ONLY AND ARE TO BE VERIFIED IN THE FIELD BY THE ENGINEER.
REFER TO STANDARD DETAIL DRAWINGS FOR "2-LANE RURAL SHOULDER RUMBLE STRIP MILLING" AND "2-LANE RURAL CENTERLINE RUMBLE STRIP MILLING".

DRIVEWAYS ARE RESIDENTIAL UNLESS OTHERWISE NOTED.

PROJECT NO: 4010-18-70	HWY: STH 144	COUNTY: WASHINGTON	RUMBLE STRIP PLAN	SHEET 97	E

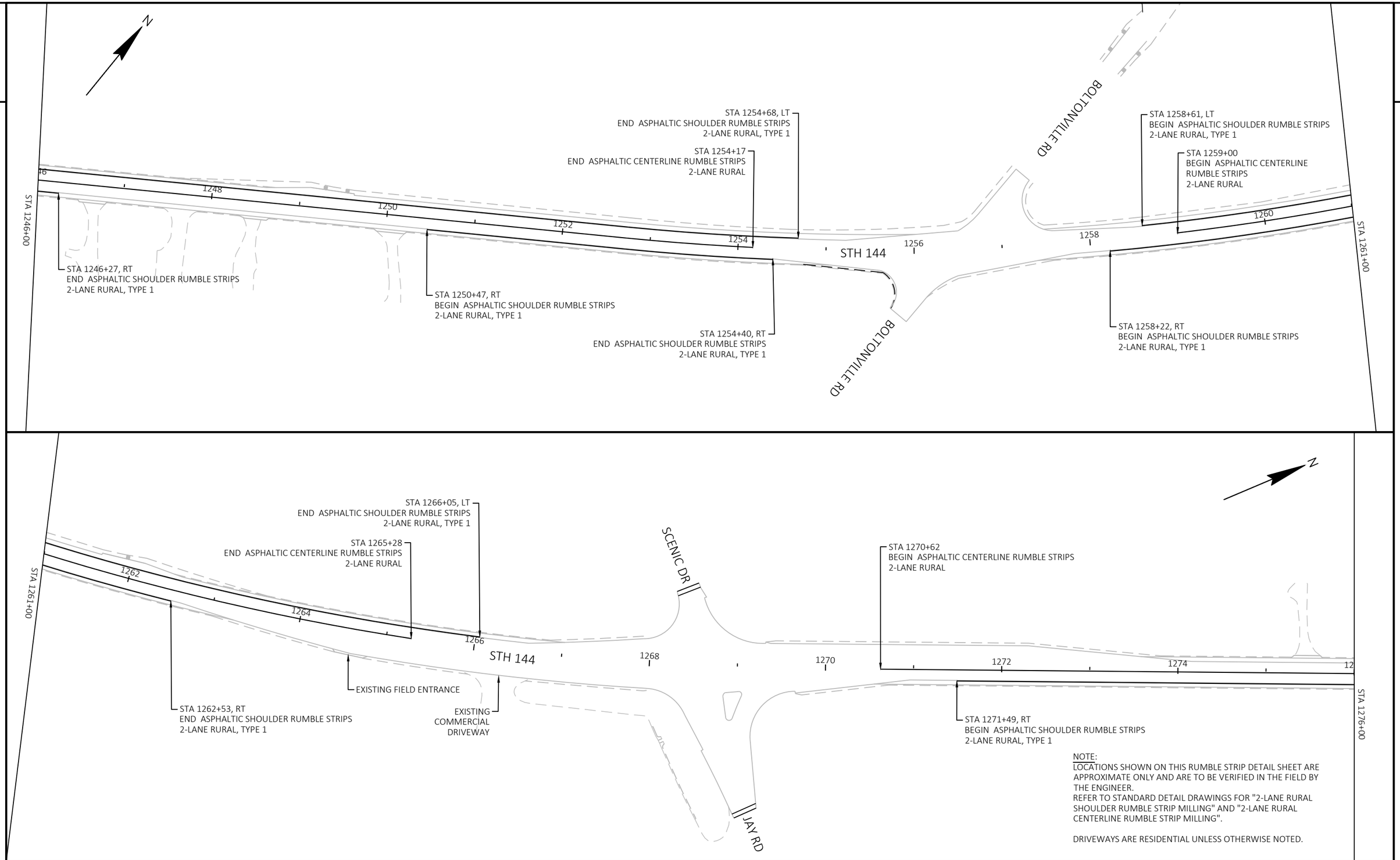

NOTE:
LOCATIONS SHOWN ON THIS RUMBLE STRIP DETAIL SHEET ARE APPROXIMATE ONLY AND ARE TO BE VERIFIED IN THE FIELD BY THE ENGINEER.
REFER TO STANDARD DETAIL DRAWINGS FOR "2-LANE RURAL SHOULDER RUMBLE STRIP MILLING" AND "2-LANE RURAL CENTERLINE RUMBLE STRIP MILLING".

DRIVEWAYS ARE RESIDENTIAL UNLESS OTHERWISE NOTED.

PROJECT NO: 4010-18-70	HWY: STH 144	COUNTY: WASHINGTON	RUMBLE STRIP PLAN	SHEET 98	E

FILE NAME : N:\PDS\C3D\40101800\SHEETSPLAN\024601-RS.DWG
LAYOUT NAME - 11-rs
PLOT DATE : 7/1/2025 12:30 PM
PLOT BY : SCHMIDT, JUDENE M
PLOT NAME :
PLOT SCALE : 1 IN:100 FT
WISDOT/CADDS SHEET 44

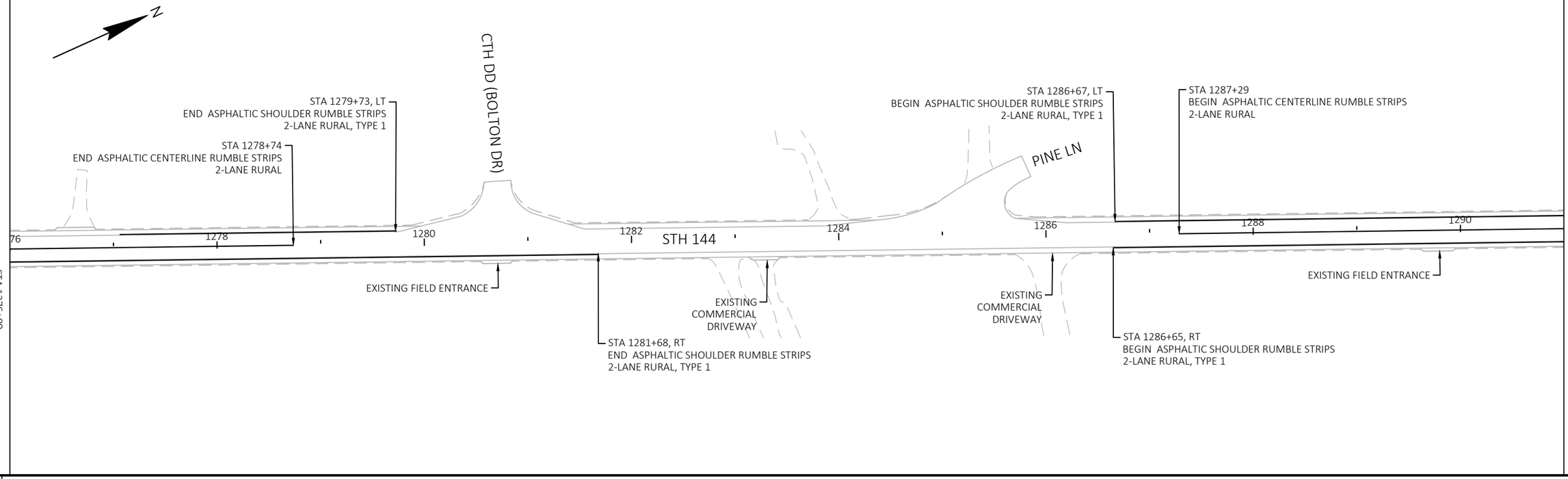

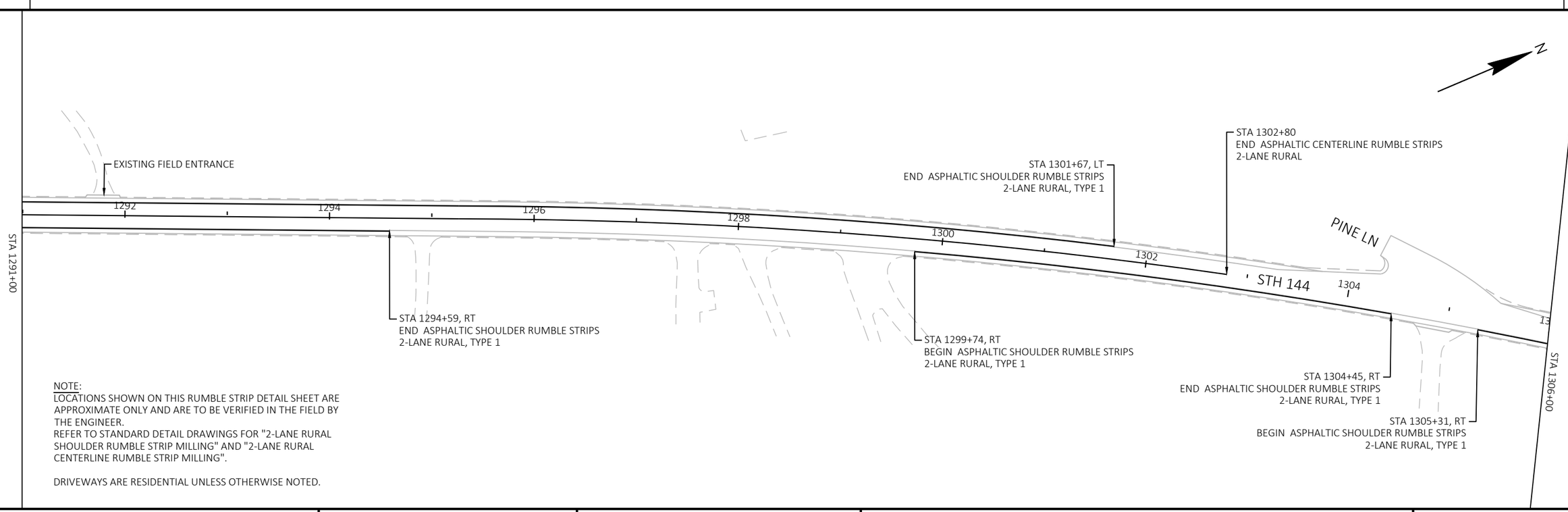

NOTE:
LOCATIONS SHOWN ON THIS RUMBLE STRIP DETAIL SHEET ARE APPROXIMATE ONLY AND ARE TO BE VERIFIED IN THE FIELD BY THE ENGINEER.
REFER TO STANDARD DETAIL DRAWINGS FOR "2-LANE RURAL SHOULDER RUMBLE STRIP MILLING" AND "2-LANE RURAL CENTERLINE RUMBLE STRIP MILLING".

DRIVEWAYS ARE RESIDENTIAL UNLESS OTHERWISE NOTED.

PROJECT NO: 4010-18-70	HWY: STH 144	COUNTY: WASHINGTON	RUMBLE STRIP PLAN	SHEET 99	E

FILE NAME : N:\PDS\C3D\40101800\SHEETSPLAN\024601-RS.DWG
LAYOUT NAME - 12-rs
PLOT DATE : 7/1/2025 12:30 PM
PLOT BY : SCHMIDT, JUDENE M
PLOT NAME :
PLOT SCALE : 1 IN:100 FT
WISDOT/CADDS SHEET 44

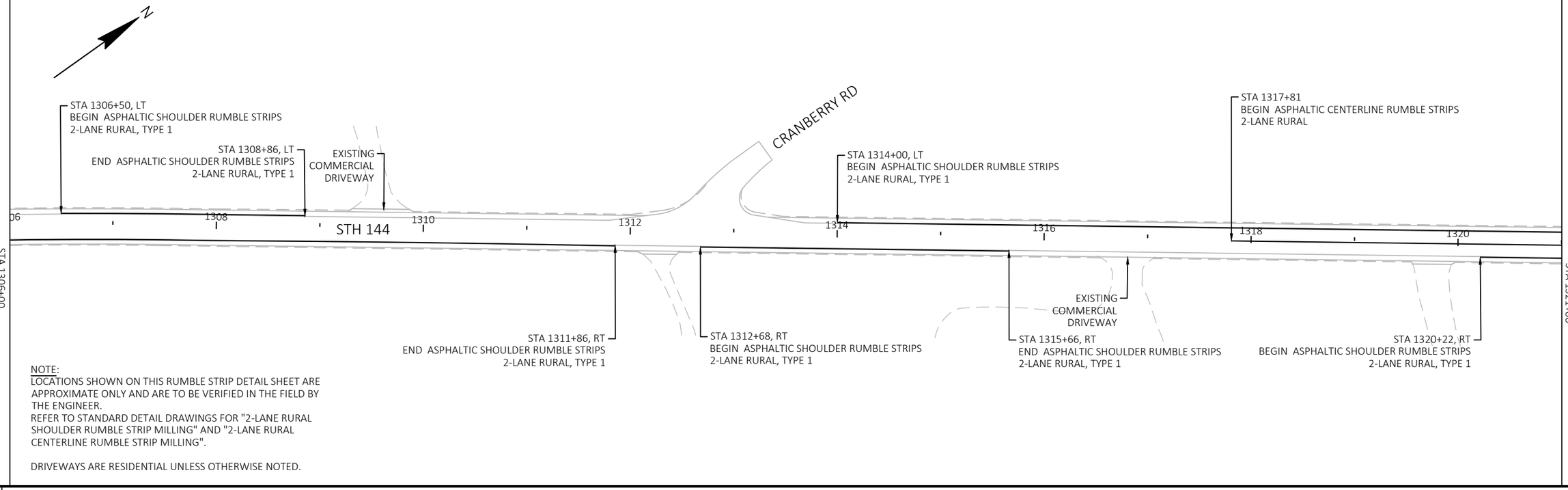

NOTE:
LOCATIONS SHOWN ON THIS RUMBLE STRIP DETAIL SHEET ARE APPROXIMATE ONLY AND ARE TO BE VERIFIED IN THE FIELD BY THE ENGINEER.
REFER TO STANDARD DETAIL DRAWINGS FOR "2-LANE RURAL SHOULDER RUMBLE STRIP MILLING" AND "2-LANE RURAL CENTERLINE RUMBLE STRIP MILLING".

DRIVEWAYS ARE RESIDENTIAL UNLESS OTHERWISE NOTED.

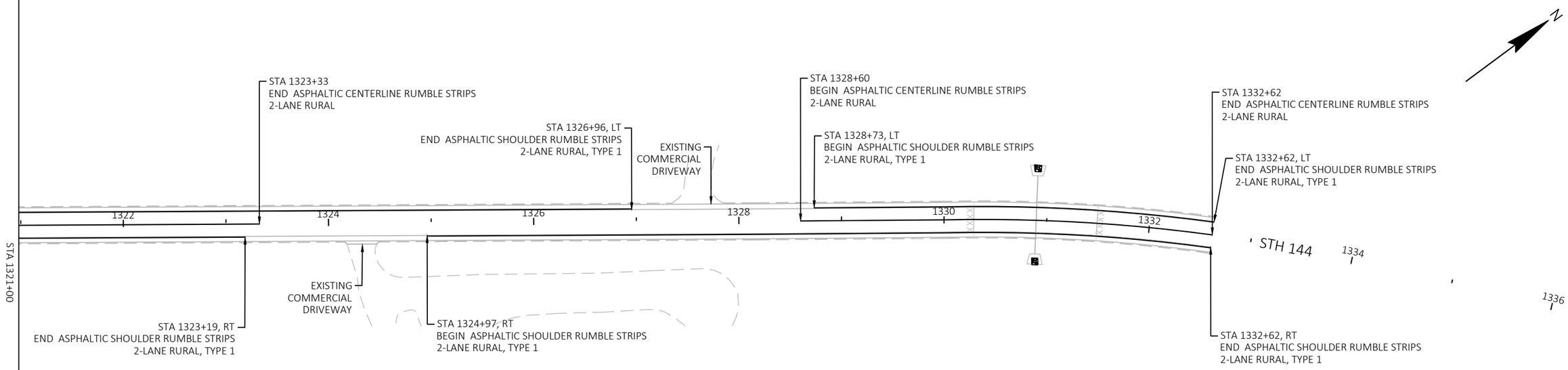

PROJECT NO: 4010-18-70	HWY: STH 144	COUNTY: WASHINGTON	RUMBLE STRIP PLAN	SHEET 100	E

FILE NAME : N:\PDS\C3D\40101800\SHEETSPLAN\024601-RS.DWG
LAYOUT NAME - 13-rs
PLOT DATE : 7/1/2025 12:30 PM
PLOT BY : SCHMIDT, JUDENE M
PLOT NAME :
PLOT SCALE : 1 IN:100 FT
WISDOT/CADDS SHEET 44

2

2

GENERAL NOTES FOR CONSTRUCTION STAGING AND TRAFFIC CONTROL

1. SIGN LOCATIONS ARE APPROXIMATE. THE ACTUAL LOCATION AND SPACING MAY BE ADJUSTED AS DIRECTED BY THE ENGINEER TO MEET FIELD CONDITIONS.

2. SIGNS IN CONFLICT WITH TRAFFIC CONTROL "IN USE" SHALL BE COVERED. THE COVERING OF TYPE II SIGNS IS INCLUDED UNDER THE BID ITEM TRAFFIC CONTROL COVERING SIGNS TYPE II. IN LIEU COVERING TYPE II SIGNS, THE CONTRACTOR MAY ELECT TO REMOVE AND REINSTALL THEM.

3. "WO" SIGNS ARE THE SAME AS "W" SIGNS EXCEPT THE BACKGROUND IS REFLECTIVE ORANGE.

4. ALL TRAFFIC CONTROL SIGNS SHALL BE 48" X 48" UNLESS OTHERWISE NOTED IN THE PLANS.

5. A FLAGGER MAY BE REQUIRED WITHIN "WORK/CLOSED" AREAS IF WARRANTED BY CONDITIONS AND/OR AS DIRECTED BY THE ENGINEER.

6. CONTRACTOR SHALL INSTALL PERMANENT SIGNS AND PERMANENT PAVEMENT MARKING WHEN APPROPRIATE DURING CONSTRUCTION STAGING AS SHOWN IN THE PLANS OR AS DIRECTED BY THE ENGINEER.

7. BARRICADE STRIPES SHALL POINT DOWNWARD IN THE DIRECTION OF TRAFFIC FLOW.

8. THE CONTRACTOR SHALL ENSURE ADEQUATE DRAINAGE AND AVOID ANY PONDING OR STANDING WATER DURING THE STAGED CONSTRUCTION.

9. INSTALL TEMPORARY RAISED PAVEMENT MARKERS, TYPE II, PER SDD 15C34 ALONG CENTERLINE AFTER PAVING AND BEFORE PERMANENT PAVEMENT MARKING AND/OR AS DIRECTED BY THE ENGINEER.

10. SEE SDD15D44 FOR SIGNING ON ROADWAYS WITH MILLED SURFACES.

PROJECT NO: 4010-18-70	HWY: STH 144	COUNTY: WASHINGTON	TRAFFIC CONTROL NOTES	SHEET 101	E

LEGEND

TYPE III BARRICADE WITH SIGN
WITH 2 TYPE A WARNING LIGHTS (FLASHING)

TYPE III BARRICADE
WITH 2 TYPE A WARNING LIGHTS (FLASHING)

SIGN ON FIXED SUPPORT

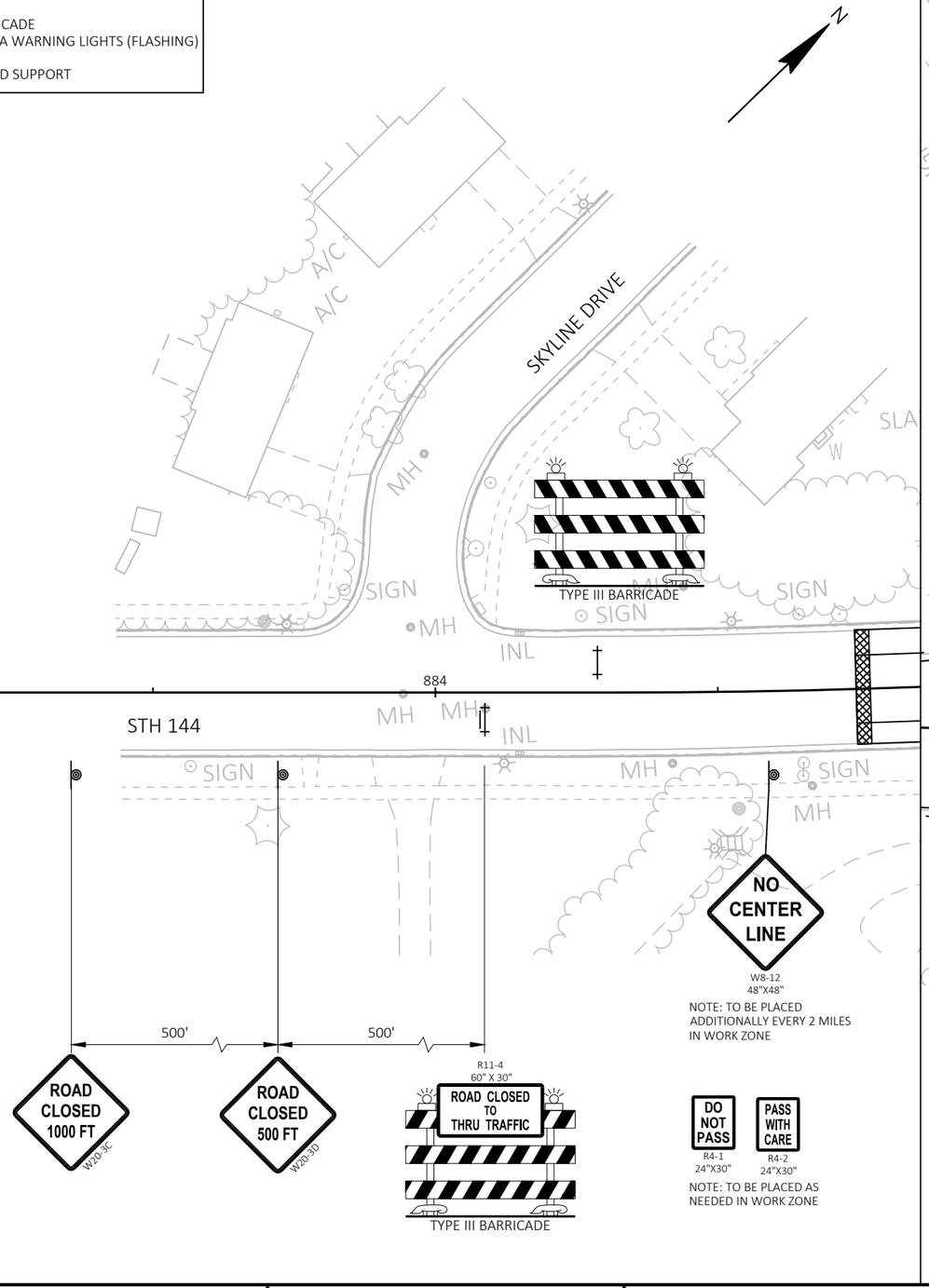

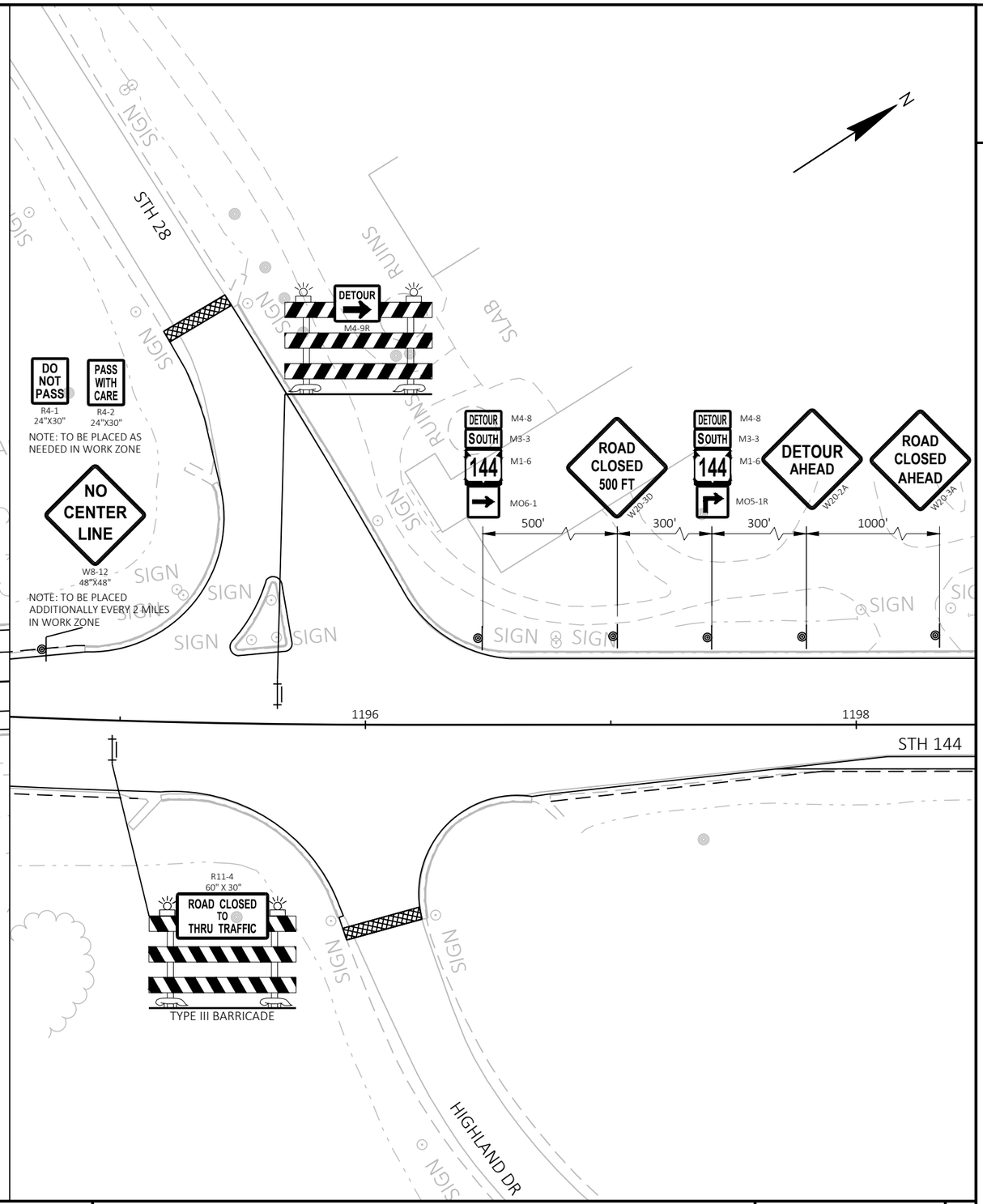

PROJECT NO: 4010-18-70	HWY: STH 144	COUNTY: WASHINGTON	TRAFFIC CONTROL SOUTH CLOSURE	SHEET 102	E

FILE NAME : N:\PDS\C3D\40101800\SHEETSPLAN\025001-TC.DWG
LAYOUT NAME - 00-tc

PLOT DATE : 7/1/2025 12:35 PM PLOT BY : SCHMIDT, JUDENE M PLOT NAME : PLOT SCALE : 1 IN:50 FT

CASCADE RANDOM LAKE
COVER

M4-8 DETOUR DETOUR M4-8
M3-1 NORTH EAST M3-2
M1-6 144 28 M1-6
MO5-1R MO5-1R

SIGN
SIGN
500'
STH 28
SIGN
SIGN
RUINS
SLAB

R11-3B
60" X 30"
BRIDGE OUT
2 1/2 MILES AHEAD
LOCAL TRAFFIC ONLY
TYPE III BARRICADE

CHANGE BARRICADE SIGN
DURING HARD CLOSURE

R11-4
60" X 30"
ROAD CLOSED
TO
THRU TRAFFIC
TYPE III BARRICADE

M4-8 DETOUR DETOUR M4-8
M3-1 NORTH EAST M3-2
M1-6 144 28 M1-6
MO6-1 MO6-1

COVER
NORTH
144

TYPE III BARRICADE

SIGN
SIGN
SIGN
SIGN
SIGN
SIGN
SIGN
SIGN

1194
1196

SIGN
SIGN

END DETOUR M4-8A
DETOUR M4-8
WEST M3-4
28 M1-6

SIGN
SIGN
SIGN

500'
500'

ROAD CLOSED 1000 FT
W20-3C

ROAD CLOSED 500 FT
W20-3D

HIGHLAND DR

R11-3B
60" X 30"
BRIDGE OUT
2 1/2 MILES AHEAD
LOCAL TRAFFIC ONLY
TYPE III BARRICADE

CHANGE BARRICADE SIGN
DURING HARD CLOSURE

R11-4
48" X 30"
ROAD CLOSED
TO
THRU TRAFFIC

NO CENTER LINE
W8-12
48"X48"

DETOUR DETOUR M4-8
WEST SOUTH M3-3
28 144 M1-6
MO6-1

ROAD CLOSED 500 FT
W20-3D

DETOUR DETOUR M4-8
WEST SOUTH M3-3
28 144 M1-6
M5-1L

DETOUR AHEAD
W20-2A

ROAD CLOSED AHEAD
W20-3A

500'
300'
300'
1000'

STH 144

DETOUR
M4-9L
TYPE III BARRICADE

END DETOUR END DETOUR M4-8A
DETOUR DETOUR M4-8
EAST NORTH M3-1
28 144 M1-6

CTH XX

LEGEND

TYPE III BARRICADE WITH SIGN
WITH 2 TYPE A WARNING LIGHTS (FLASHING)

TYPE III BARRICADE
WITH 2 TYPE A WARNING LIGHTS (FLASHING)

SIGN ON FIXED SUPPORT

PROJECT NO: 4010-18-70	HWY: STH 144	COUNTY: WASHINGTON	TRAFFIC CONTROL NORTH CLOSURE	SHEET 103	E

FILE NAME : N:\PDS\C3D\40101800\SHEETSPLAN\025001-TC.DWG
LAYOUT NAME - 00a-tc
PLOT DATE : 7/1/2025 12:35 PM
PLOT BY : SCHMIDT, JUDENE M
PLOT NAME :
PLOT SCALE : 1 IN:50 FT

2

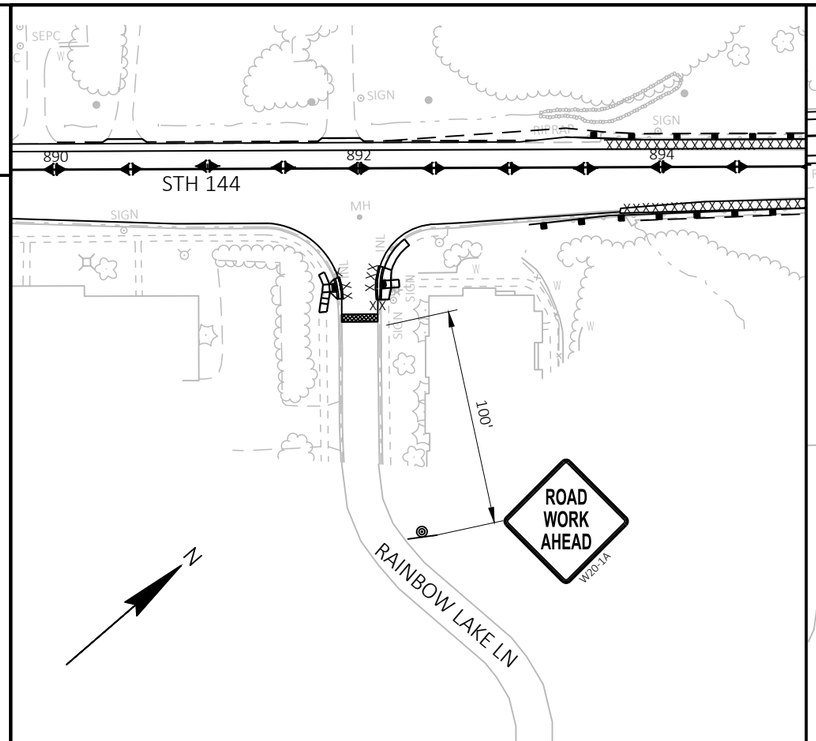

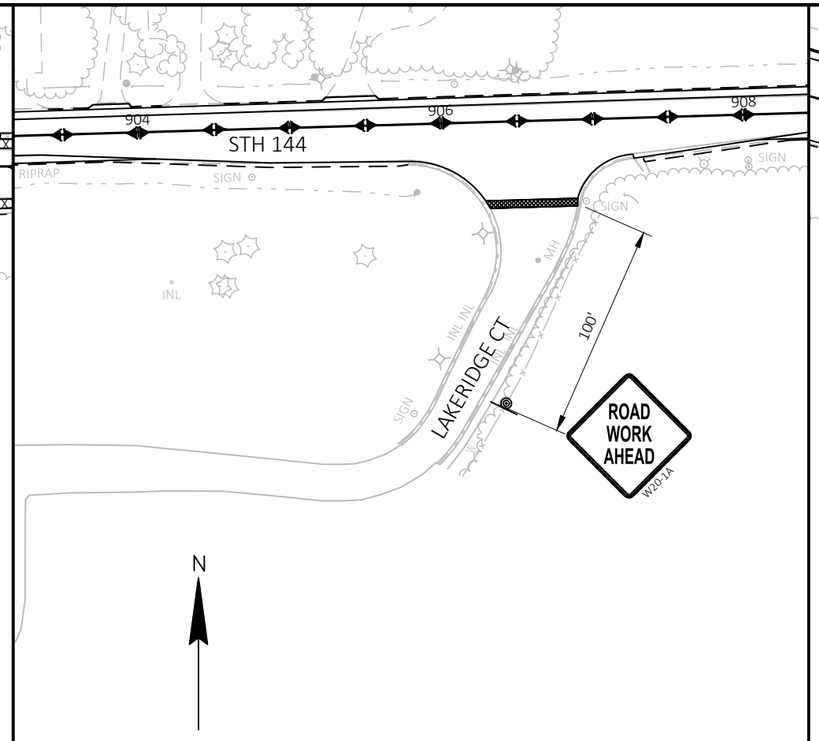

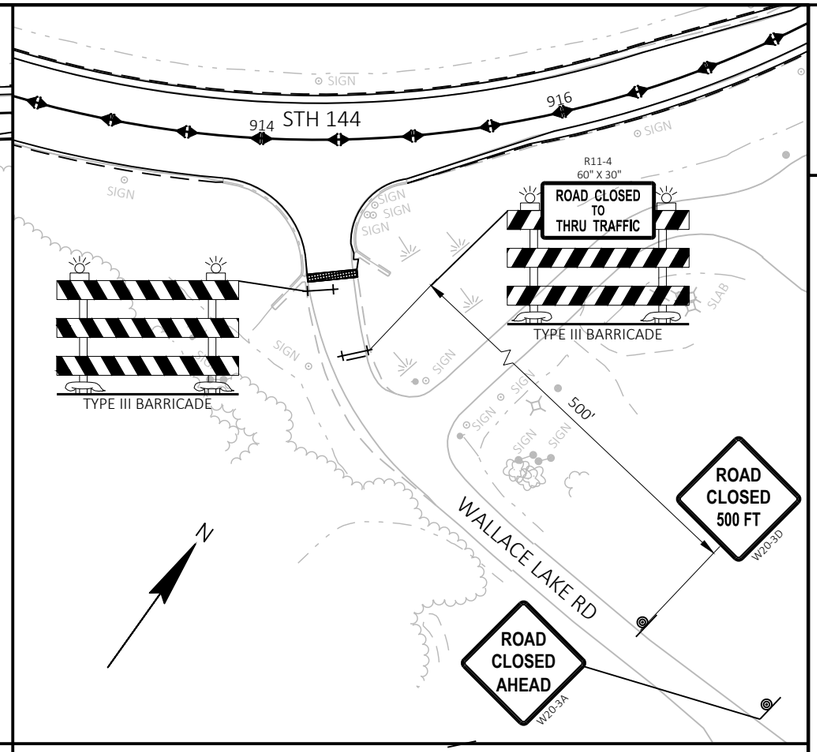

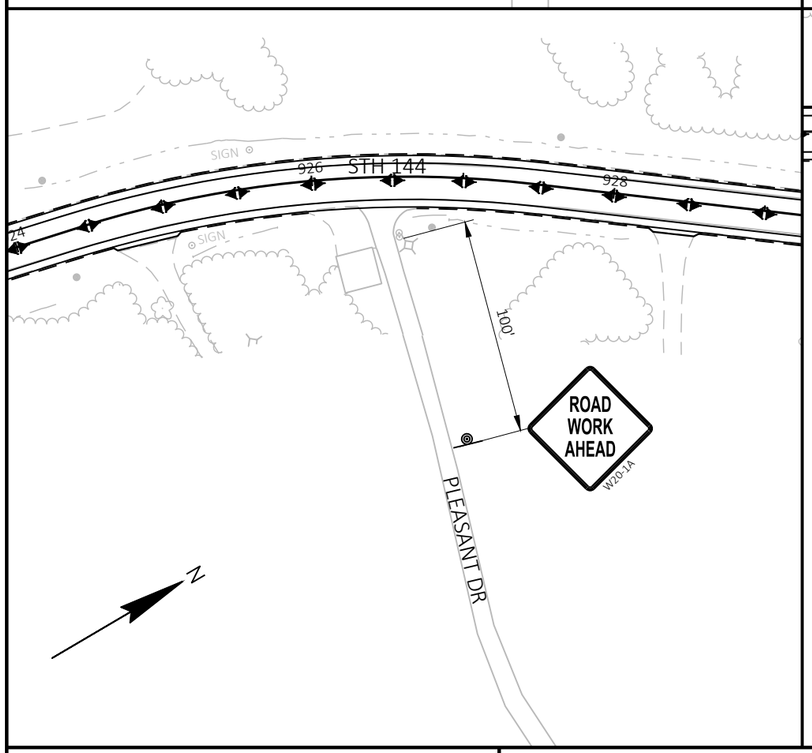

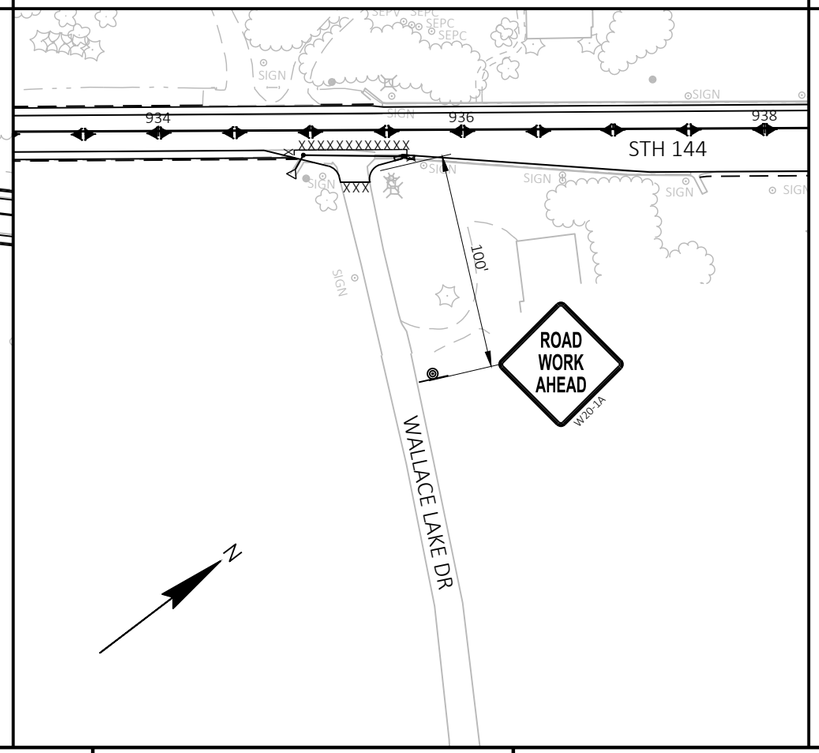

LEGEND

- TYPE lll BARRICADE WITH SIGN WITH 2 TYPE A WARNING LIGHTS (FLASHING)
- TYPE lll BARRICADE WITH 2 TYPE A WARNING LIGHTS (FLASHING)
- SIGN ON FIXED SUPPORT
- TEMPORARY RAISED PAVEMENT MARKER (TWO WAY REFLECTOR)

PROJECT NO: 4010-18-70	HWY: STH 144	COUNTY: WASHINGTON	TRAFFIC CONTROL	SHEET 104	E

FILE NAME : N:\PDS\C3D\40101800\SHEETSPLAN\025001-TC.DWG
LAYOUT NAME - 01-tc

PLOT DATE : 7/1/2025 12:36 PM PLOT BY : SCHMIDT, JUDENE M PLOT NAME : PLOT SCALE : 1 IN:100 FT

WISDOT/CADDS SHEET 42

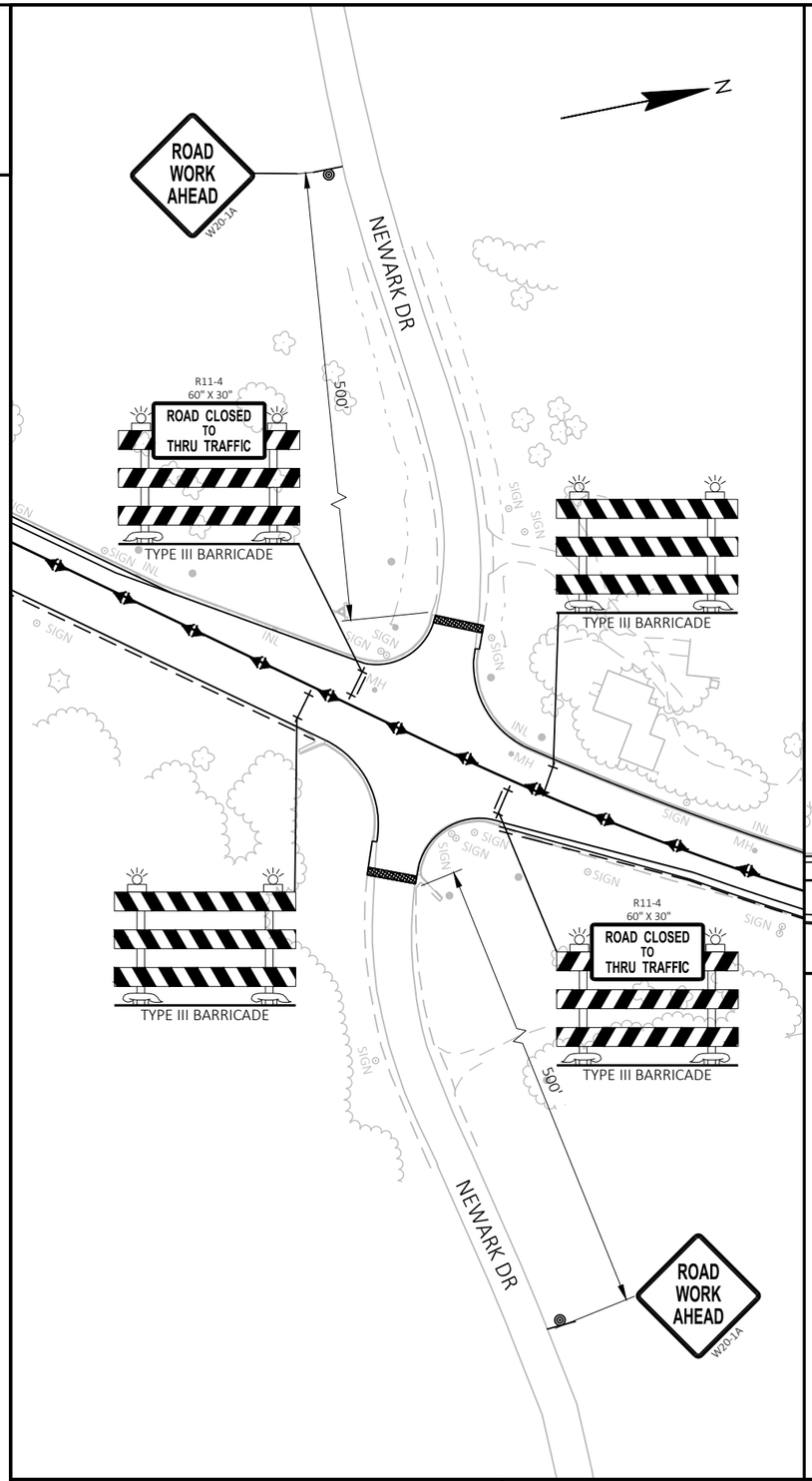

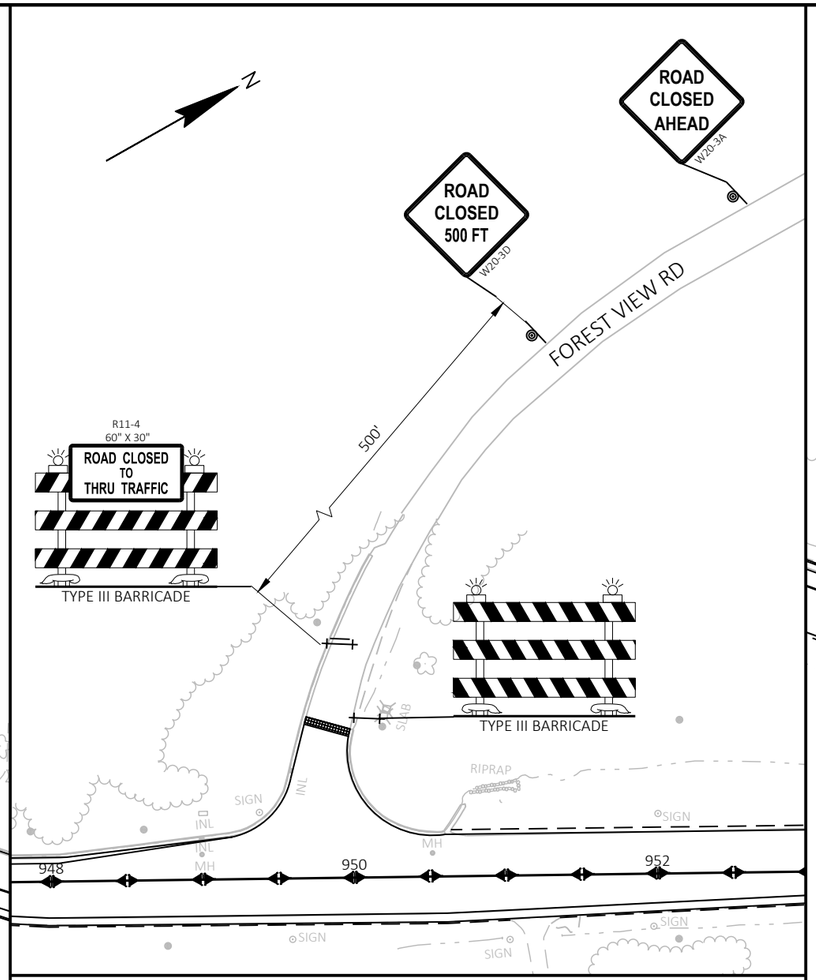

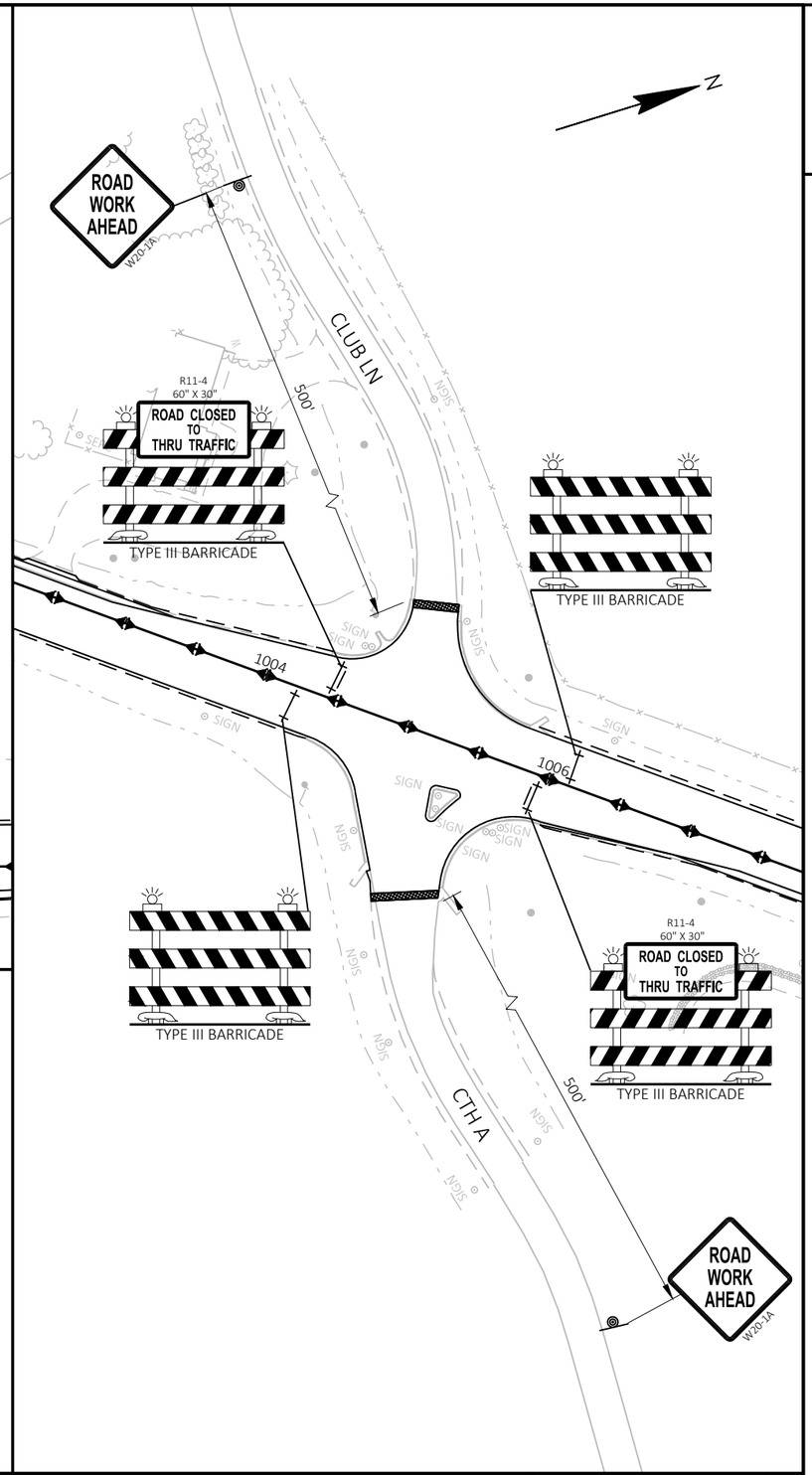

LEGEND

- TYPE III BARRICADE WITH SIGN WITH 2 TYPE A WARNING LIGHTS (FLASHING)
- TYPE III BARRICADE WITH 2 TYPE A WARNING LIGHTS (FLASHING)
- SIGN ON FIXED SUPPORT
- TEMPORARY RAISED PAVEMENT MARKER (TWO WAY REFLECTOR)

PROJECT NO: 4010-18-70	HWY: STH 144	COUNTY: WASHINGTON	TRAFFIC CONTROL	SHEET 105	E

FILE NAME : N:\PDS\C3D\40101800\SHEETSPLAN\025001-TC.DWG
LAYOUT NAME - 02-tc

PLOT DATE : 7/1/2025 12:36 PM PLOT BY : SCHMIDT, JUDENE M PLOT NAME : PLOT SCALE : 1 IN:100 FT

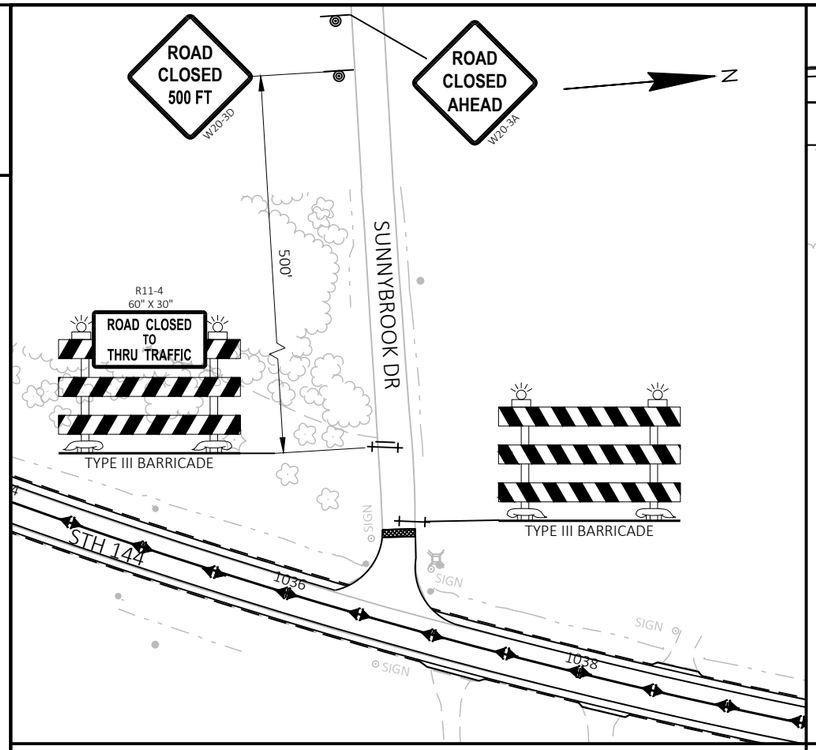

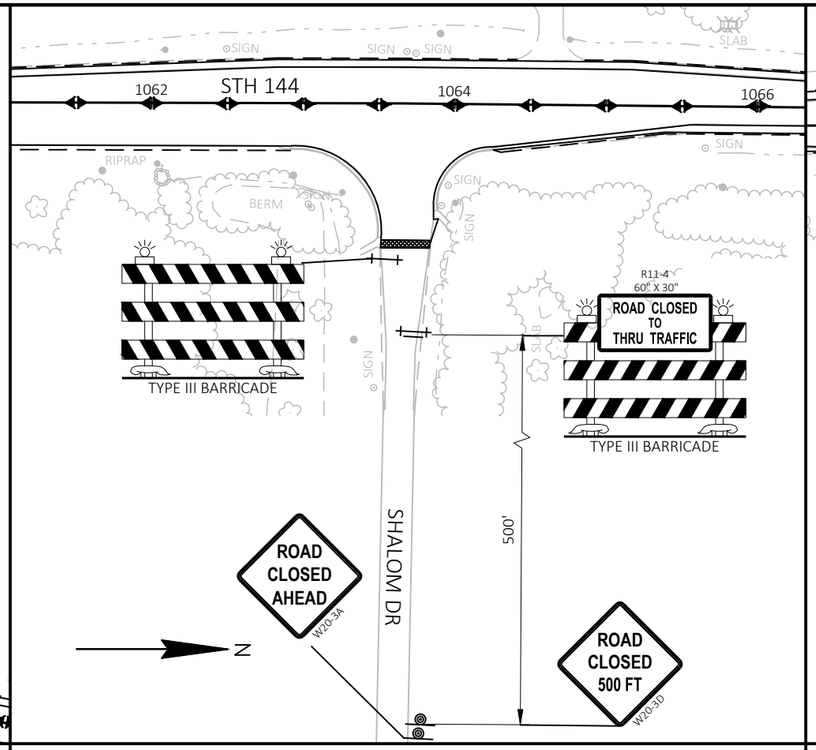

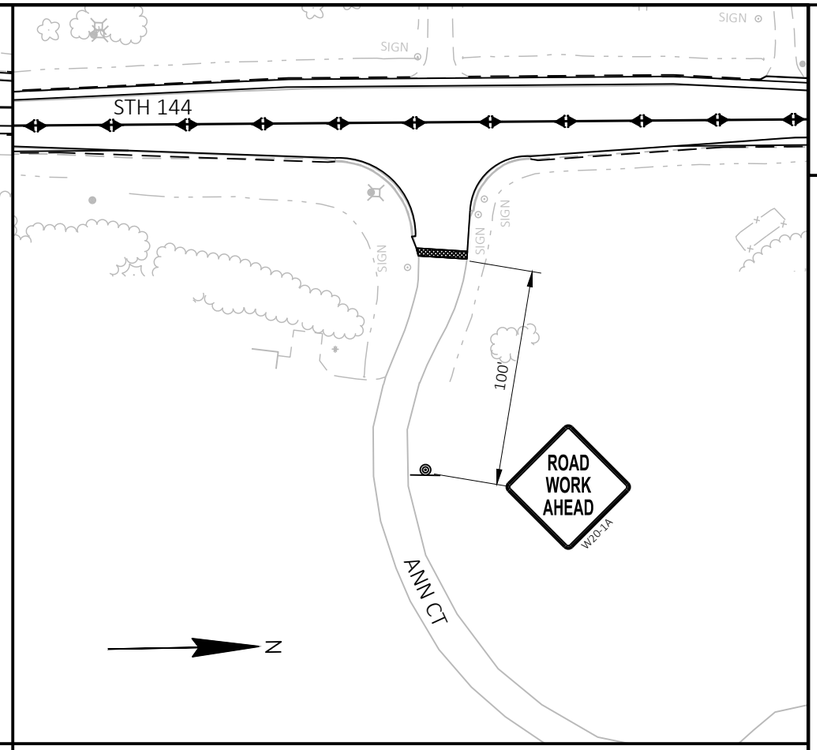

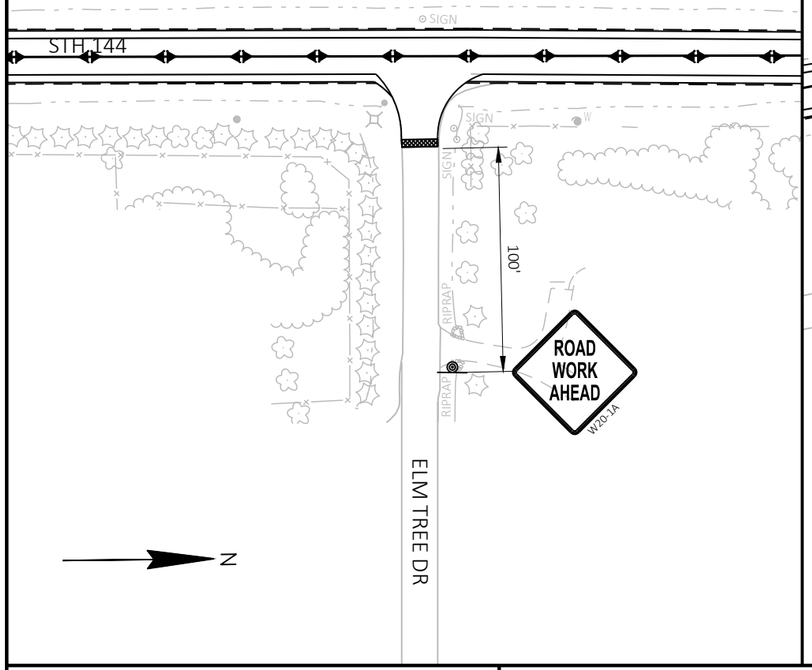

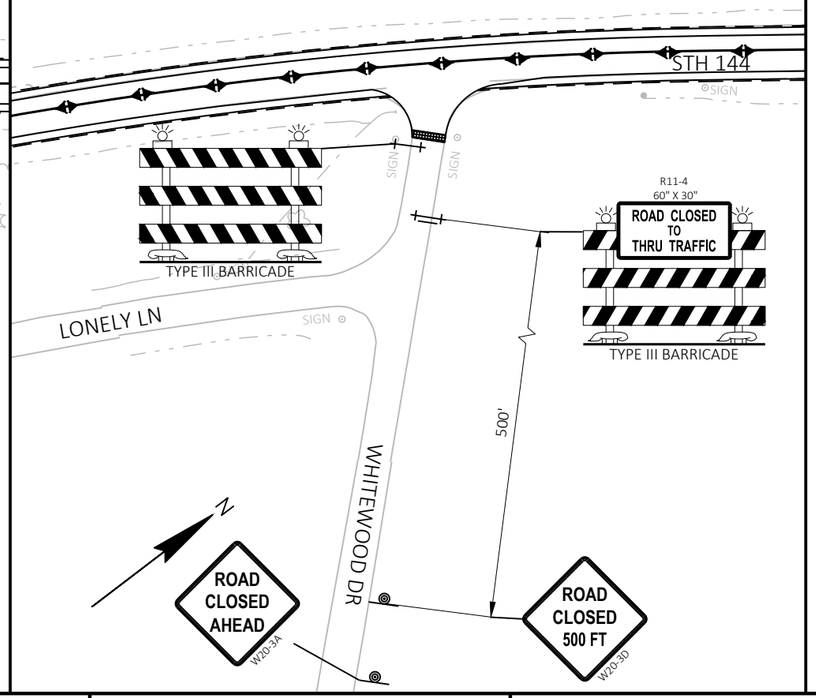

LEGEND

- TYPE III BARRICADE WITH SIGN WITH 2 TYPE A WARNING LIGHTS (FLASHING)
- TYPE III BARRICADE WITH 2 TYPE A WARNING LIGHTS (FLASHING)
- SIGN ON FIXED SUPPORT
- TEMPORARY RAISED PAVEMENT MARKER (TWO WAY REFLECTOR)

PROJECT NO: 4010-18-70	HWY: STH 144	COUNTY: WASHINGTON	TRAFFIC CONTROL	SHEET 106	E

2

N

ROAD WORK AHEAD W20-1A

500'

CTH H

R11-4 60" X 30" ROAD CLOSED TO THRU TRAFFIC

TYPE III BARRICADE

1118

STH 144

1120

1122

TYPE III BARRICADE

TYPE III BARRICADE

R11-4 60" X 30" ROAD CLOSED TO THRU TRAFFIC

TYPE III BARRICADE

300'

CTH H

ROAD WORK AHEAD W20-1A

1176

1178

STH 144

1180

100'

ROAD WORK AHEAD W20-1A

HIGH GROUND CT

N

LEGEND

TYPE III BARRICADE WITH SIGN WITH 2 TYPE A WARNING LIGHTS (FLASHING)

TYPE III BARRICADE WITH 2 TYPE A WARNING LIGHTS (FLASHING)

SIGN ON FIXED SUPPORT

TEMPORARY RAISED PAVEMENT MARKER (TWO WAY REFLECTOR)

N

ROAD WORK AHEAD W20-1A

500'

STH 28

1194

TYPE III BARRICADE

1196

1198 STH 144

R11-4 60" X 30" ROAD CLOSED TO THRU TRAFFIC

TYPE III BARRICADE

500'

HIGHLAND DR

ROAD WORK AHEAD W20-1A

2

PROJECT NO: 4010-18-70	HWY: STH 144	COUNTY: WASHINGTON	TRAFFIC CONTROL	SHEET 107	E

FILE NAME : N:\PDS\C3D\40101800\SHEETSPLAN\025001-TC.DWG
LAYOUT NAME - 04-tc

PLOT DATE : 7/1/2025 12:36 PM PLOT BY : SCHMIDT, JUDENE M PLOT NAME : PLOT SCALE : 1 IN:100 FT

WISDOT/CADDS SHEET 42

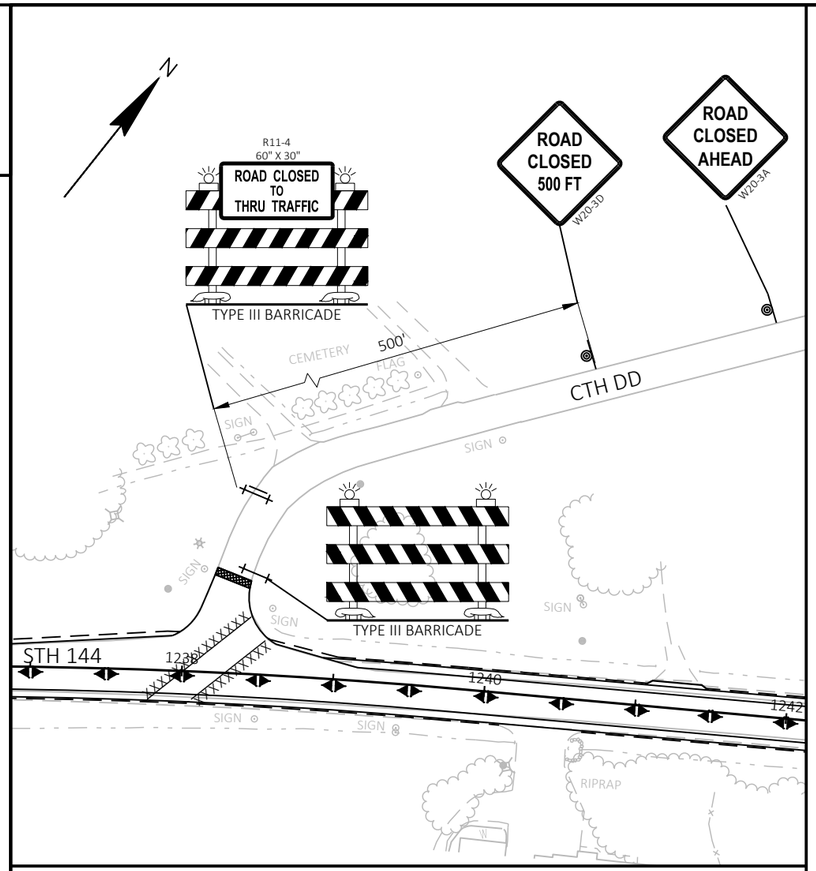

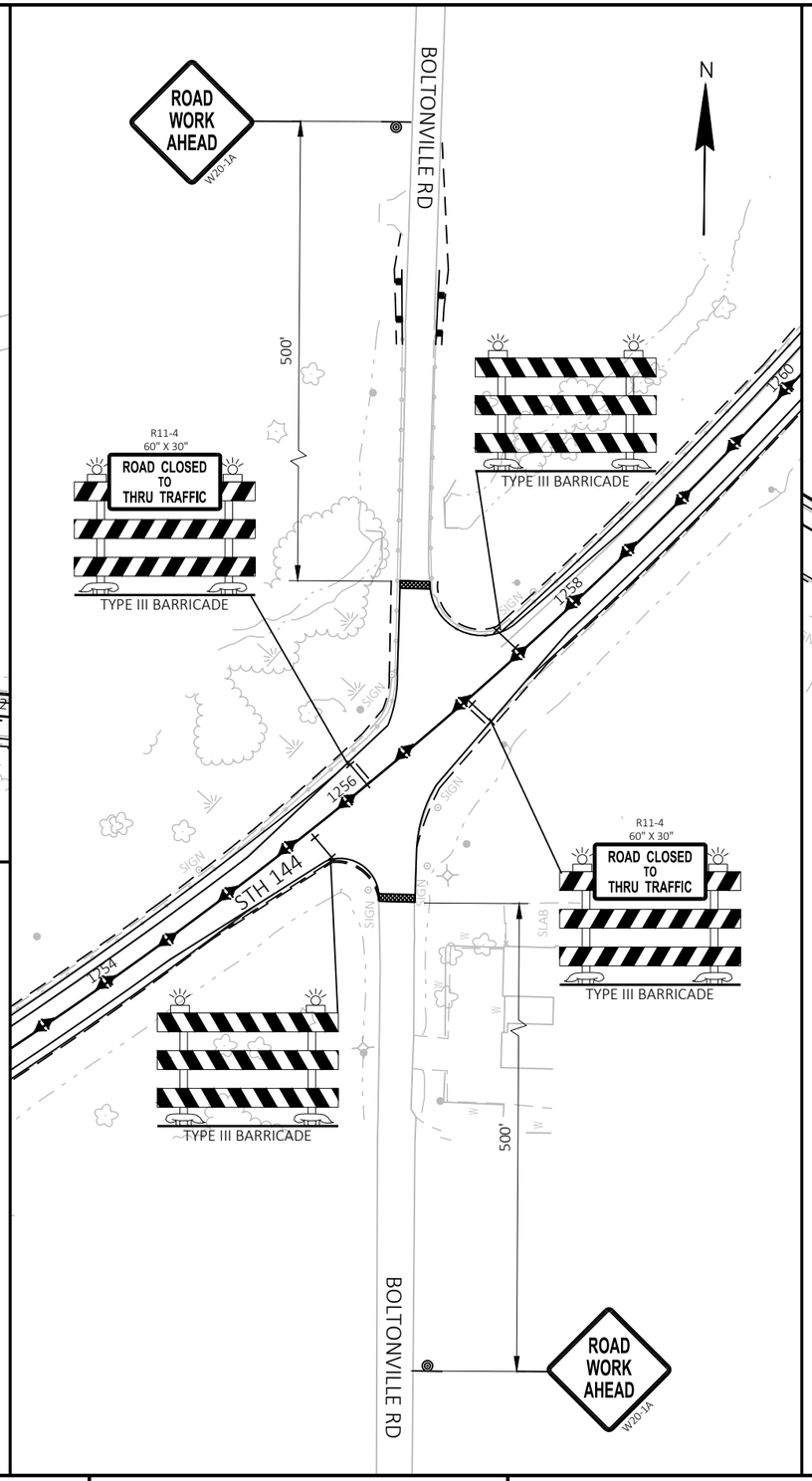

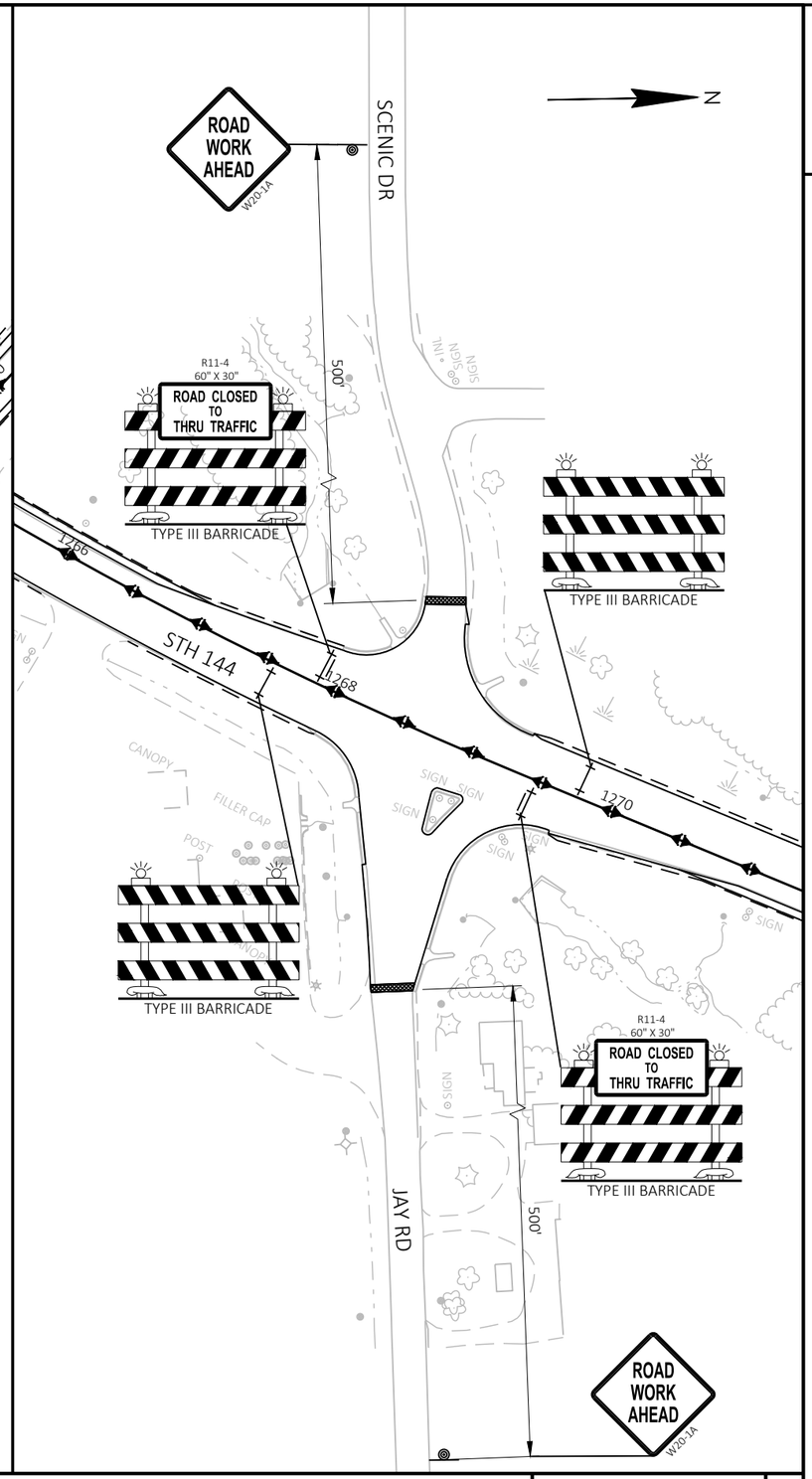

LEGEND

- TYPE III BARRICADE WITH SIGN WITH 2 TYPE A WARNING LIGHTS (FLASHING)
- TYPE III BARRICADE WITH 2 TYPE A WARNING LIGHTS (FLASHING)
- SIGN ON FIXED SUPPORT
- TEMPORARY RAISED PAVEMENT MARKER (TWO WAY REFLECTOR)

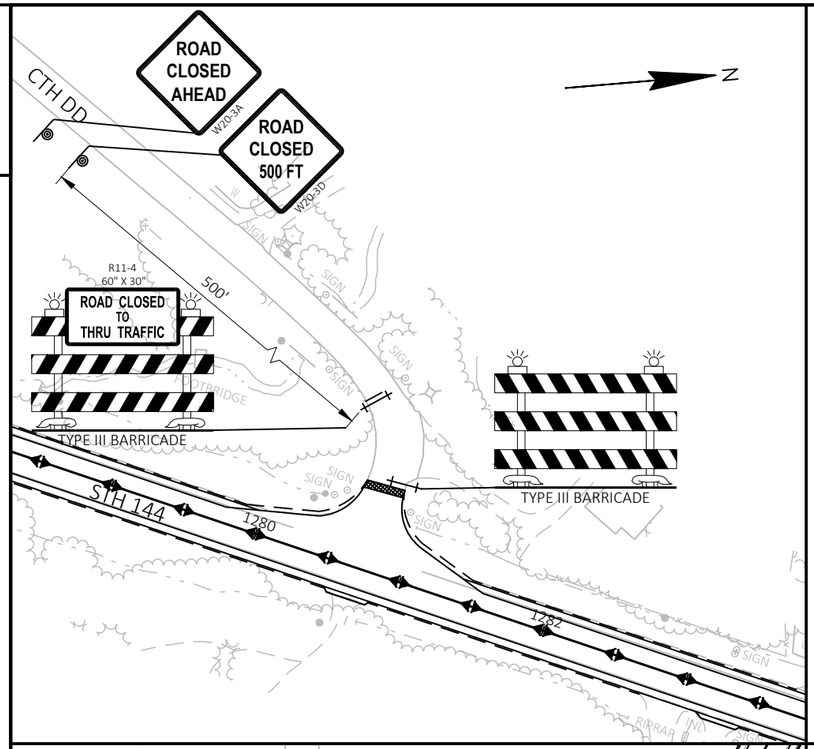

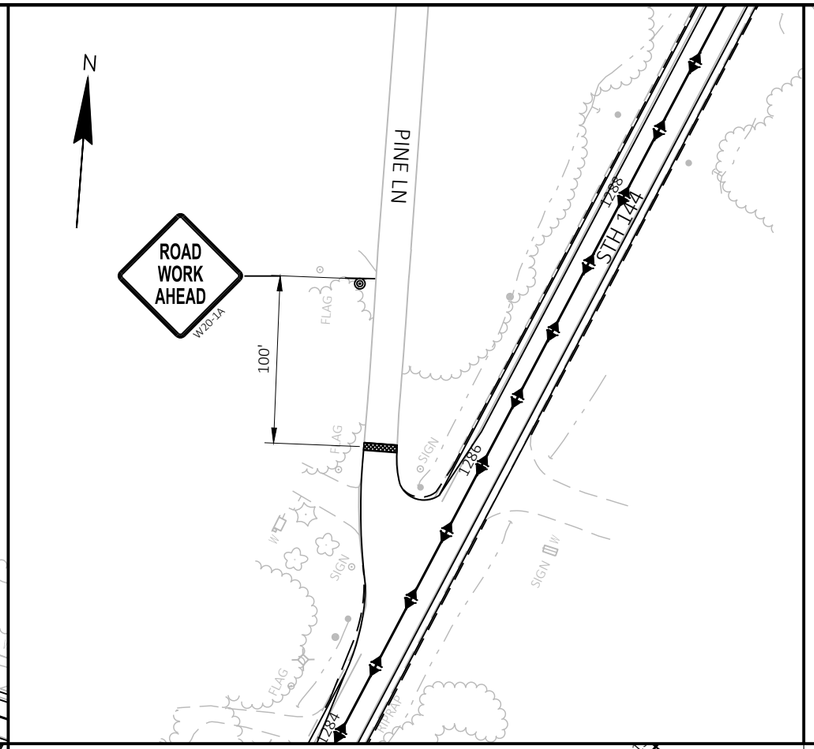

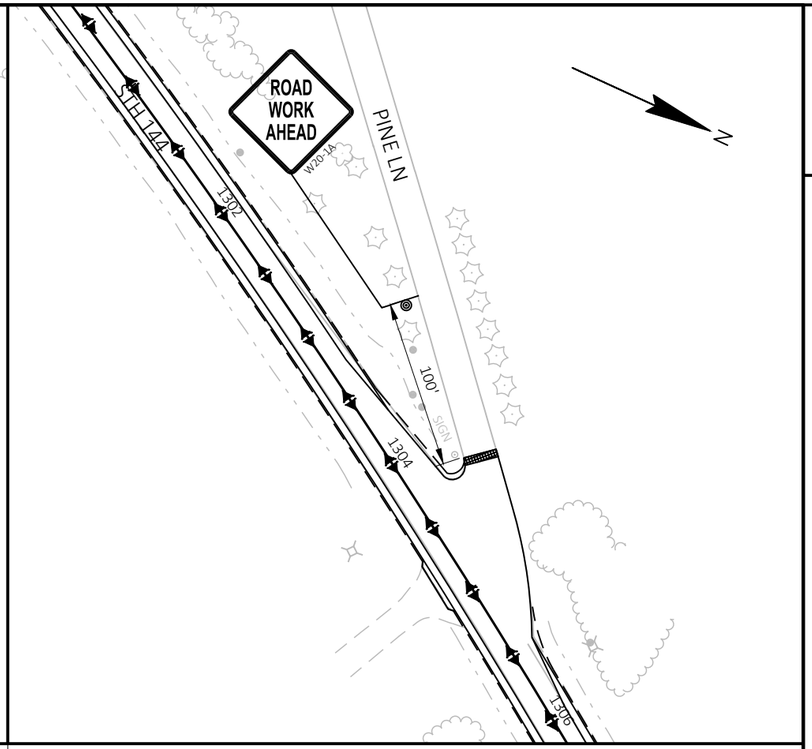

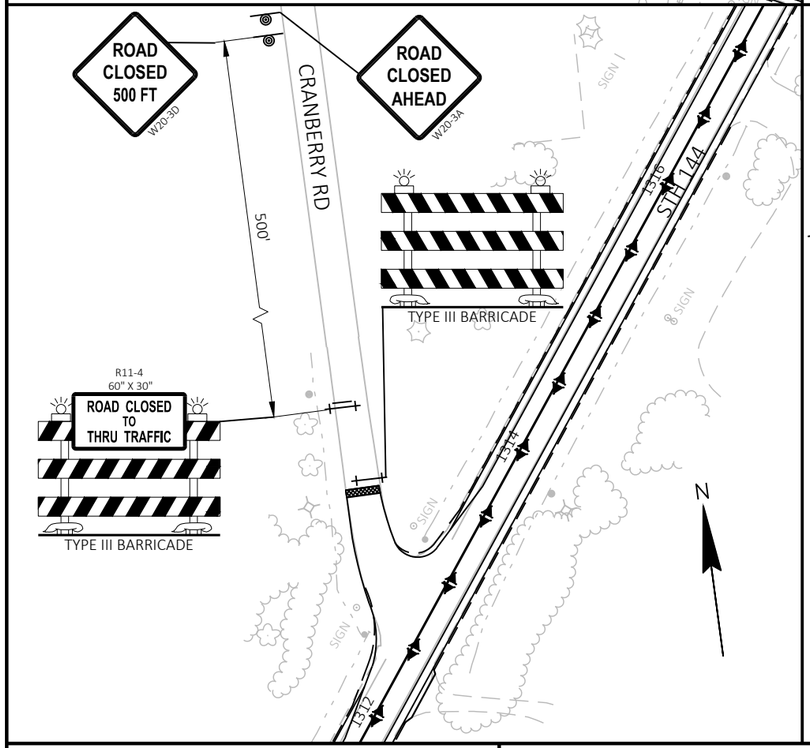

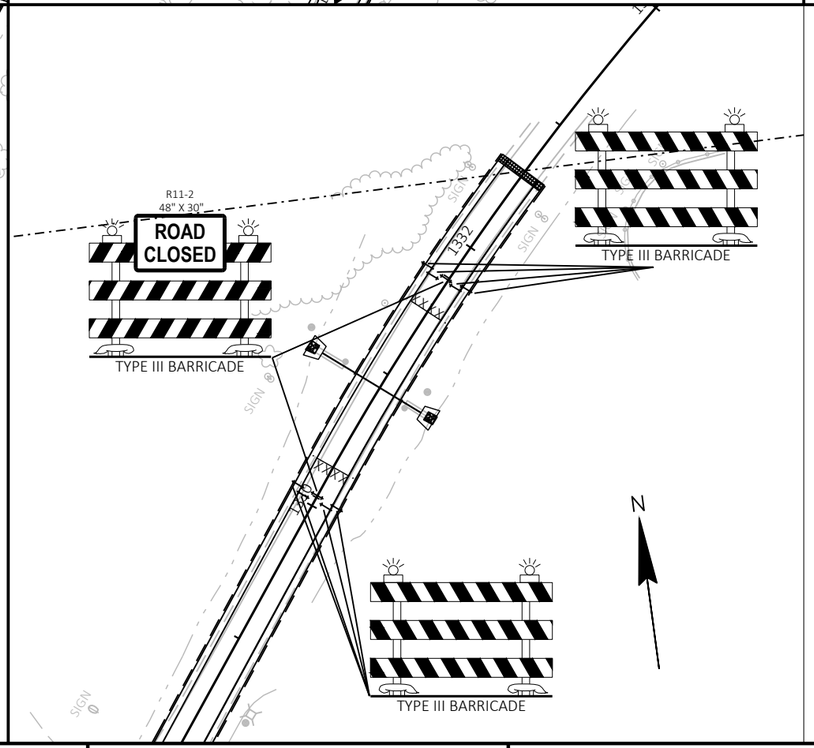

LEGEND

- TYPE III BARRICADE WITH SIGN WITH 2 TYPE A WARNING LIGHTS (FLASHING)
- TYPE III BARRICADE WITH 2 TYPE A WARNING LIGHTS (FLASHING)
- SIGN ON FIXED SUPPORT
- TEMPORARY RAISED PAVEMENT MARKER (TWO WAY REFLECTOR)

PROJECT NO: 4010-18-70	HWY: STH 144	COUNTY: WASHINGTON	TRAFFIC CONTROL	SHEET 109 E

FILE NAME : N:\PDS\C3D\40101800\SHEETSPLAN\025001-TC.DWG
LAYOUT NAME - 06-tc
PLOT DATE : 7/1/2025 12:37 PM
PLOT BY : SCHMIDT, JUDENE M
PLOT NAME :
PLOT SCALE : 1 IN:100 FT

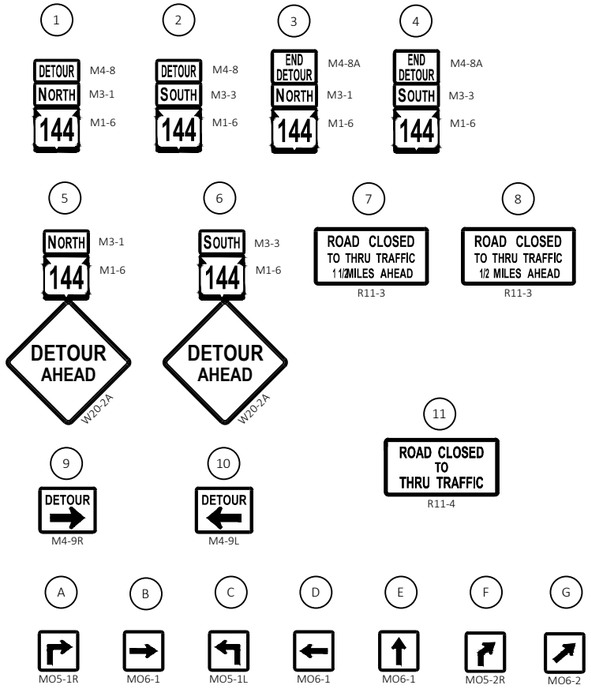

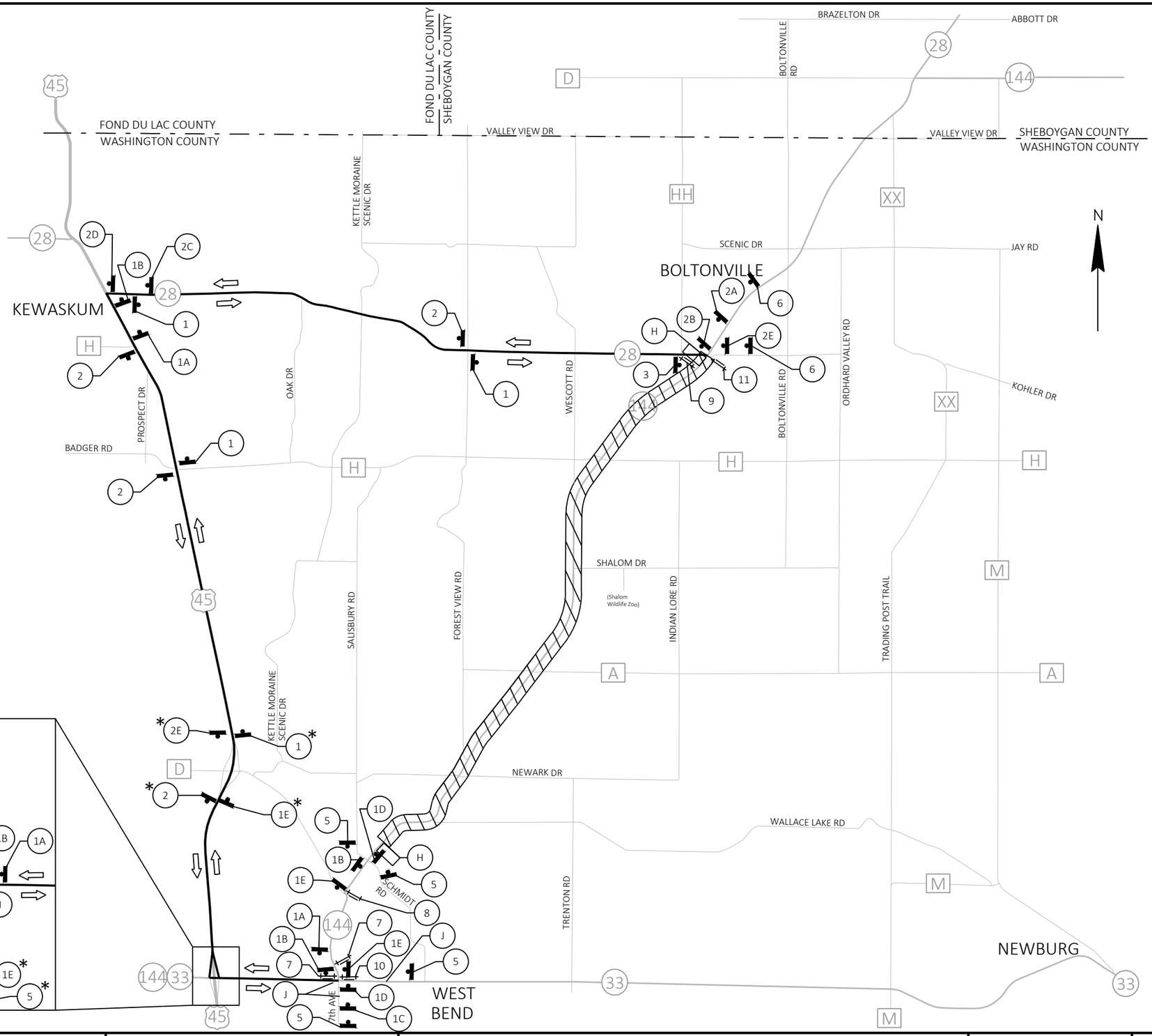

LEGEND

- WORK ZONE
- DETOUR
- SIGN ON FIXED SUPPORT
- TYPE III BARRICADE WITH SIGN WITH 2 TYPE A WARNING LIGHTS, FLASHING
- PCMS
- * SIZE 3 SIGNS. ALL OTHERS SIZE 2.

PROJECT NO: 4010-18-70	HWY: STH 144	COUNTY: WASHINGTON	DETOUR - STAGE 1	SHEET 110	E

FILE NAME : N:\PDS\C3D\40101800\SHEETSPLAN\027001A-DT.DWG
LAYOUT NAME - Plan 1 IN 1 MI

PLOT DATE : 6/30/2025 8:23 PM PLOT BY : VILLACA, MARTIN B PLOT NAME : PLOT SCALE : 1 IN:1 MI

WISDOT/CADDS SHEET 42

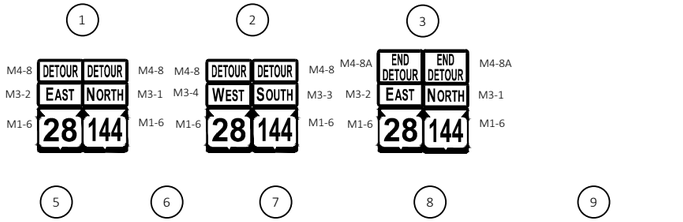

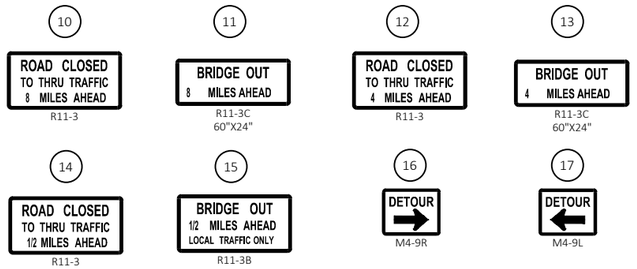

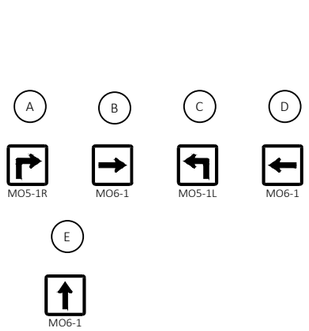

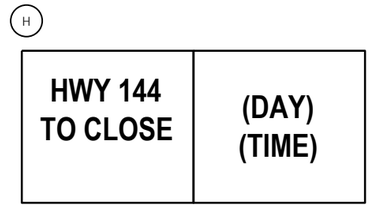

PCMS 7 DAYS PRIOR TO BEGINNING OF CONSTRUCTION

LEGEND

- WORK ZONE
- DETOUR
- SIGN ON FIXED SUPPORT
- TYPE III BARRICADE WITH SIGN WITH 2 TYPE A WARNING LIGHTS, FLASHING
- PCMS

* CHANGE BARRICADE SIGN DURING HARD CLOSURE.

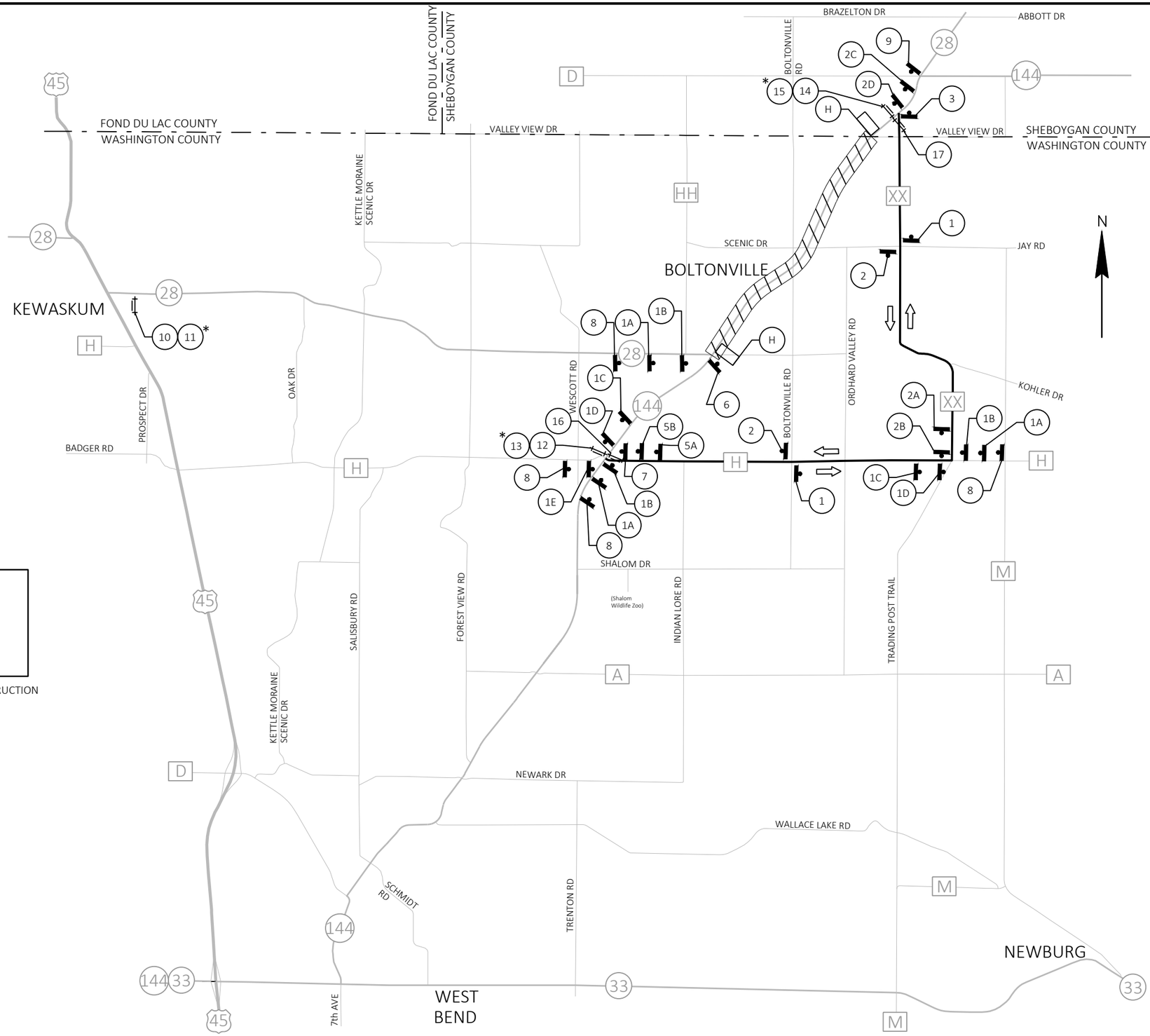

PROJECT NO: 4010-18-70	HWY: STH 144	COUNTY: WASHINGTON	DETOUR - STAGE 2	SHEET 111	E

1

M4-4 TRUCK TRUCK M4-4
M4-8 DETOUR DETOUR M4-8
M3-2 EAST NORTH M3-1
M1-6 28 144 M1-6

2

M4-4 TRUCK TRUCK M4-4
M4-8 DETOUR DETOUR M4-8
M3-4 WEST SOUTH M3-3
M1-6 28 144 M1-6

3

M4-4 TRUCK TRUCK M4-4
M4-8A END DETOUR END DETOUR M4-8A
M3-2 EAST NORTH M3-1
M1-6 28 144 M1-6

4

M4-4 TRUCK TRUCK M4-4
M4-8A END DETOUR END DETOUR M4-8A
M3-4 WEST SOUTH M3-3
M1-6 28 144 M1-6

5

M4-4 TRUCK TRUCK M4-4
M3-2 EAST NORTH M3-1
M1-6 28 144 M1-6
DETOUR AHEAD
W20-2A

6

M4-4 TRUCK TRUCK M4-4
M3-4 WEST SOUTH M3-3
M1-6 28 144 M1-6
DETOUR AHEAD
W20-2A

7

ROAD CLOSED TO THRU TRAFFIC 6 MILES AHEAD
R11-3

8

BRIDGE OUT 6 MILES AHEAD
R11-3C 60"X24"

9

ROAD CLOSED TO THRU TRAFFIC 1 1/4 MILES AHEAD
R11-3

10

BRIDGE OUT 1 1/4 MILES AHEAD
R11-3C 60"X24"

11

DETOUR
M4-9R

12

DETOUR
M4-9L

A B C D E

MO5-1R MO6-1 MO5-1L MO6-1 MO6-1

LEGEND

- WORK ZONE
- DETOUR
- SIGN ON FIXED SUPPORT
- TYPE III BARRICADE WITH SIGN WITH TYPE 2 WARNING LIGHTS, FLASHING
- PCMS

* CHANGE BARRICADE SIGN DURING HARD CLOSURE.

** ADD SECOND SIGN TO MEDIAN.

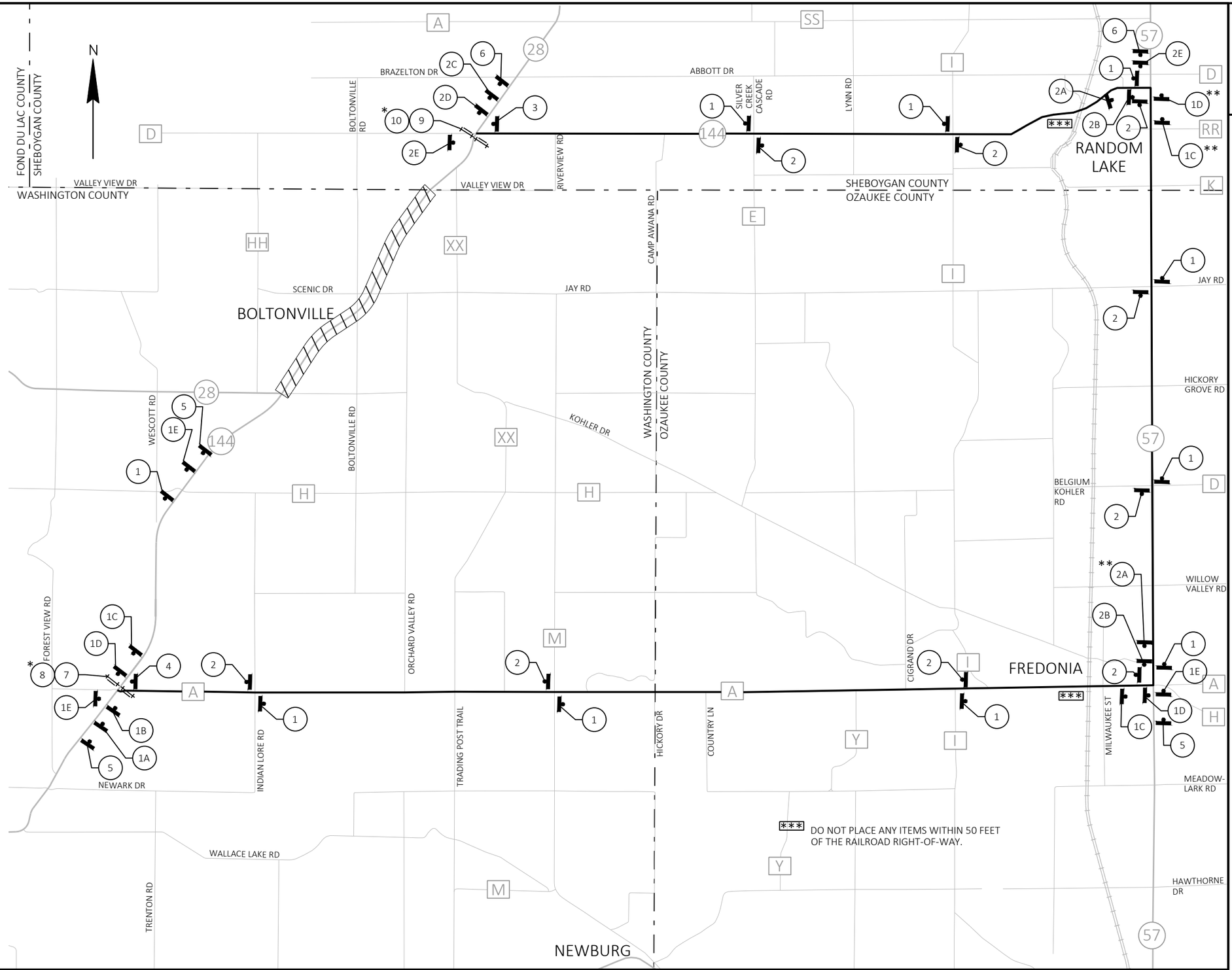

PROJECT NO: 4010-18-70	HWY: STH 144	COUNTY: WASHINGTON	TRUCK DETOUR - STAGE 2	SHEET 112	E

FILE NAME : N:\PDS\C3D\40101800\SHEETSPLAN\027002-DT.DWG
LAYOUT NAME - 027002

PLOT DATE : 7/1/2025 12:40 PM PLOT BY : SCHMIDT, JUDENE M PLOT NAME : PLOT SCALE : 1 IN:1 MI

WISDOT/CADDS SHEET 42

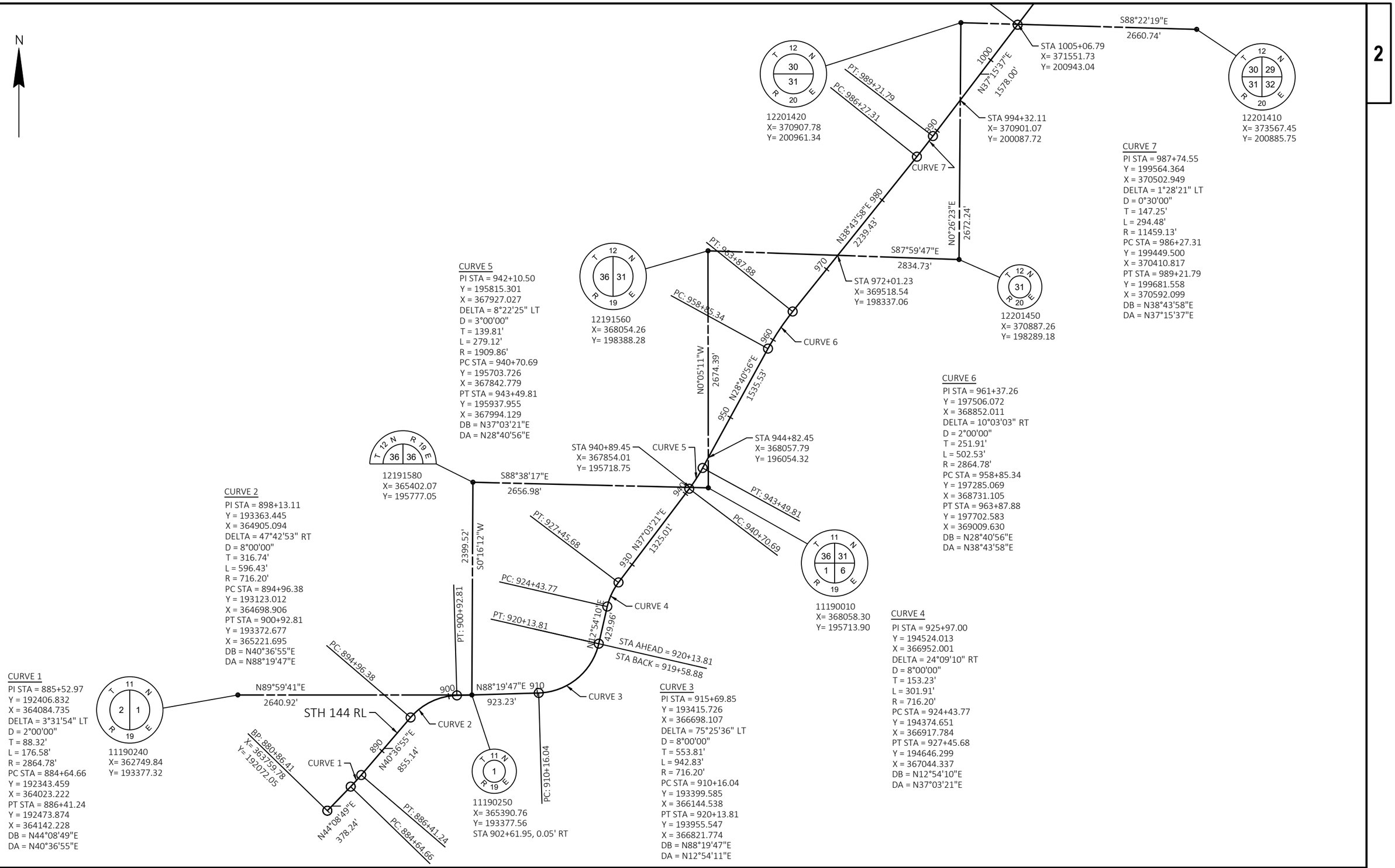

CURVE 7
PI STA = 987+74.55
Y = 199564.364
X = 370502.949
DELTA = 1°28'21" LT
D = 0°30'00"
T = 147.25'
L = 294.48'
R = 11459.13'
PC STA = 986+27.31
Y = 199449.500
X = 370410.817
PT STA = 989+21.79
Y = 199681.558
X = 370592.099
DB = N38°43'58"E
DA = N37°15'37"E

CURVE 5
PI STA = 942+10.50
Y = 195815.301
X = 367927.027
DELTA = 8°22'25" LT
D = 3°00'00"
T = 139.81'
L = 279.12'
R = 1909.86'
PC STA = 940+70.69
Y = 195703.726
X = 367842.779
PT STA = 943+49.81
Y = 195937.955
X = 367994.129
DB = N37°03'21"E
DA = N28°40'56"E

CURVE 6
PI STA = 961+37.26
Y = 197506.072
X = 368852.011
DELTA = 10°03'03" RT
D = 2°00'00"
T = 251.91'
L = 502.53'
R = 2864.78'
PC STA = 958+85.34
Y = 197285.069
X = 368731.105
PT STA = 963+87.88
Y = 197702.583
X = 369009.630
DB = N28°40'56"E
DA = N38°43'58"E

CURVE 2
PI STA = 898+13.11
Y = 193363.445
X = 364905.094
DELTA = 47°42'53" RT
D = 8°00'00"
T = 316.74'
L = 596.43'
R = 716.20'
PC STA = 894+96.38
Y = 193123.012
X = 364698.906
PT STA = 900+92.81
Y = 193372.677
X = 365221.695
DB = N40°36'55"E
DA = N88°19'47"E

CURVE 4
PI STA = 925+97.00
Y = 194524.013
X = 366952.001
DELTA = 24°09'10" RT
D = 8°00'00"
T = 153.23'
L = 301.91'
R = 716.20'
PC STA = 924+43.77
Y = 194374.651
X = 366917.784
PT STA = 927+45.68
Y = 194646.299
X = 367044.337
DB = N12°54'10"E
DA = N37°03'21"E

CURVE 1
PI STA = 885+52.97
Y = 192406.832
X = 364084.735
DELTA = 3°31'54" LT
D = 2°00'00"
T = 88.32'
L = 176.58'
R = 2864.78'
PC STA = 884+64.66
Y = 192343.459
X = 364023.222
PT STA = 886+41.24
Y = 192473.874
X = 364142.228
DB = N44°08'49"E
DA = N40°36'55"E

CURVE 3
PI STA = 915+69.85
Y = 193415.726
X = 366698.107
DELTA = 75°25'36" LT
D = 8°00'00"
T = 553.81'
L = 942.83'
R = 716.20'
PC STA = 910+16.04
Y = 193399.585
X = 366144.538
PT STA = 920+13.81
Y = 193955.547
X = 366821.774
DB = N88°19'47"E
DA = N12°54'11"E

PROJECT NO: 4010-18-70	HWY: STH 144	COUNTY: WASHINGTON	ALIGNMENT LAYOUT	SHEET 113	E

FILE NAME : N:\PDS\C3D\40101800\SHEETSPLAN\027201-AD.DWG
LAYOUT NAME - 01-ad
PLOT DATE : 7/1/2025 12:43 PM PLOT BY : SCHMIDT, JUDENE M PLOT NAME : PLOT SCALE : 1 IN:1000 FT
WISDOT/CADDS SHEET 42

2

N

CURVE 9
PI STA = 1099+06.94
Y = 209749.455
X = 373616.568
DELTA = 36°06'52" RT
D = 2°00'00"
T = 933.99'
L = 1805.72'
R = 2864.78'
PC STA = 1089+72.96
Y = 208815.510
X = 373607.585
PT STA = 1107+78.67
Y = 210498.640
X = 374174.293
DB = N00°33'04"E
DA = N36°39'56"E

N0°21'50"E 2659.47'

1100

CURVE 9

PC: 1089+72.96

1090

12200940
X= 373609.09
Y= 208868.85
STA 1090+26.33, 0.49' RT

1080

N0°33'04"E 2608.84'

1070

PI: 1063+64.12
X= 373582.49
Y= 206206.79

1060

12201150
X= 373583.39
Y= 206207.14
STA 1063+64.47, 0.89' RT

N0°07'13"E 1324.48'

1050

PT: 1050+39.63

STA 1036+80.69
X= 373337.72
Y= 203552.36

1040

N0°07'02"E 2661.83'

S88°19'05"E 2664.10'

12201190
X= 370914.99
Y= 203623.51

12201200
X= 373577.94
Y= 203545.31

PC: 1025+56.46

1030

CURVE 8

1020

STH 144 RL

PI: 1004+99.78
X= 371547.48
Y= 200937.47

1010 N37°22'04"E 2056.68'

S88°22'19"E

CURVE 8
PI STA = 1038+43.71
Y = 203595.073
X = 373577.008
DELTA = 37°14'51" LT
D = 1°30'00"
T = 1287.24'
L = 2483.17'
R = 3819.71'
PC STA = 1025+56.46
Y = 202572.031
X = 372795.742
PT STA = 1050+39.63
Y = 204882.312
X = 373579.710
DB = N37°22'04"E
DA = N00°07'13"E

PROJECT NO: 4010-18-70	HWY: STH 144	COUNTY: WASHINGTON	ALIGNMENT LAYOUT	SHEET 114	E

FILE NAME : N:\PDS\C3D\40101800\SHEETSPLAN\027201-AD.DWG
LAYOUT NAME - 02-ad
PLOT DATE : 7/1/2025 12:43 PM
PLOT BY : SCHMIDT, JUDENE M
PLOT NAME :
PLOT SCALE : 1 IN:1000 FT

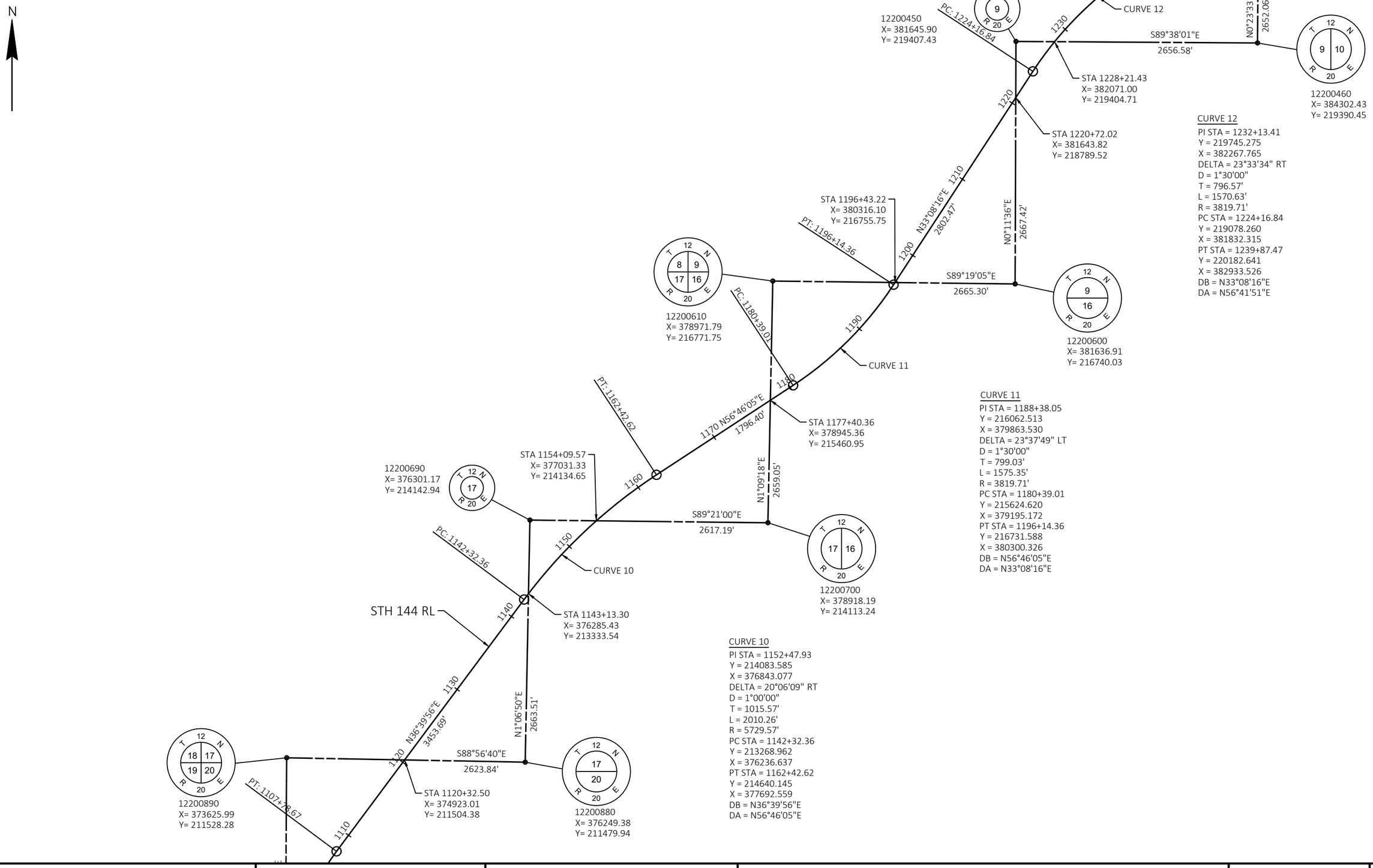

PROJECT NO: 4010-18-70	HWY: STH 144	COUNTY: WASHINGTON	ALIGNMENT LAYOUT	SHEET 115	E

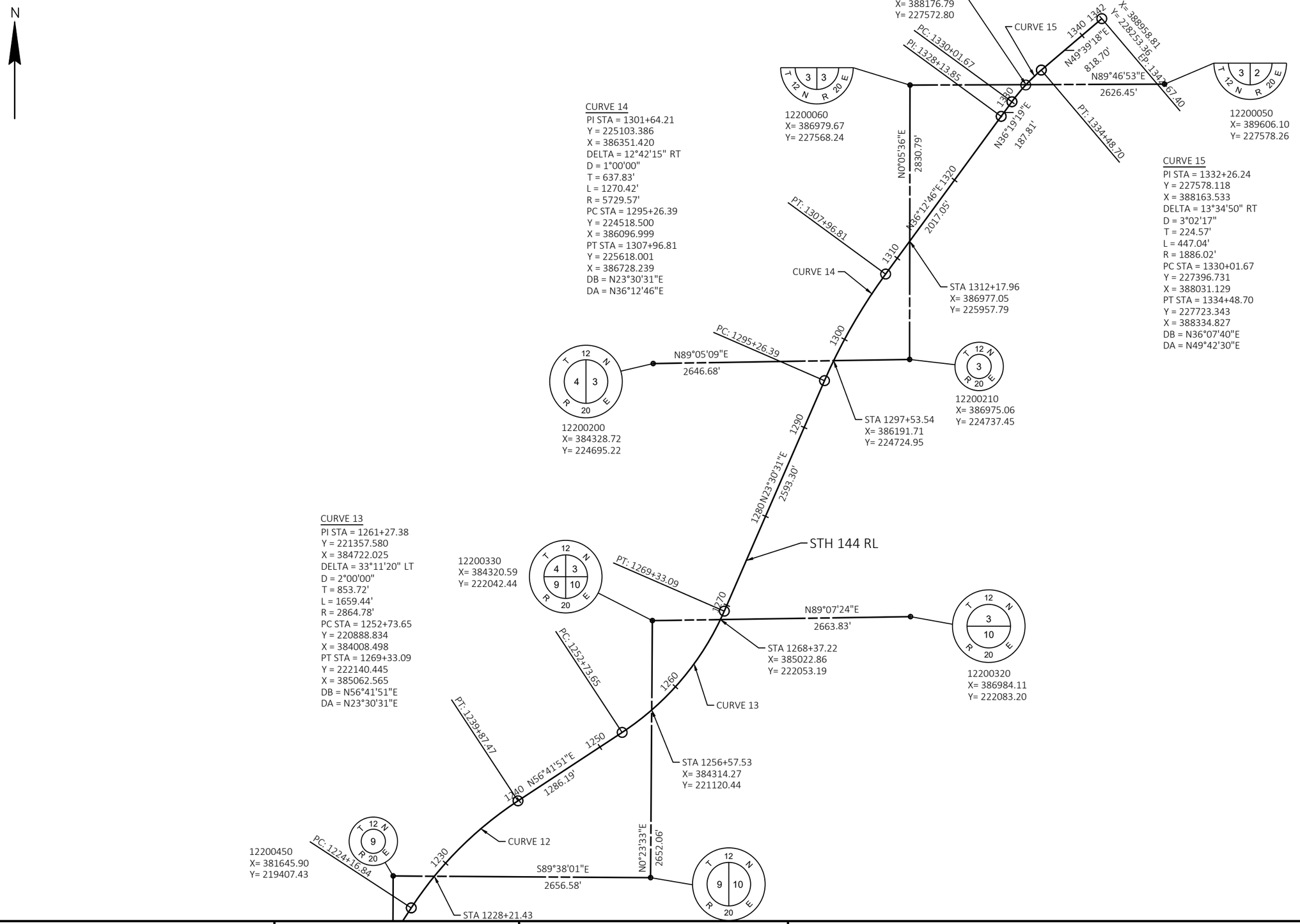

PROJECT NO: 4010-18-70	HWY: STH 144	COUNTY: WASHINGTON	ALIGNMENT LAYOUT	SHEET 116	E

FILE NAME : N:\PDS\C3D\40101800\SHEETSPLAN\027201-AD.DWG
LAYOUT NAME - 04-ad

PLOT DATE : 7/1/2025 12:43 PM PLOT BY : SCHMIDT, JUDENE M PLOT NAME : PLOT SCALE : 1 IN:1000 FT

WISDOT/CADDS SHEET 42

2

N

93497
BM MAG HUB W FACE
PP 0-30509
X= 367522.10
Y= 195227.10
ELEV= 961.54

93389
CP FENO
X= 367458.30
Y= 195139.86
ELEV= 960.20

940+70.69

PT: 989+21.79

990

PC: 986+27.31

98564
BM MAG HUB SE FACE
PP 11-02999
X= 370328.50
Y= 199433.70
ELEV= 925.22

98628
CP FENO
X= 370439.58
Y= 199427.68
ELEV= 919.83

980

N WALLACE LAKE DR

92636
CP FENO
X= 366948.91
Y= 194574.09
ELEV= 942.28

PT: 927+45.68

930

92680
BM RR SPK N FACE
PP 5-0186
X= 367035.00
Y= 194574.90
ELEV= 943.52

PC: 924+43.77

90259
BM NW BOLT HYDRANT
X= 365389.30
Y= 193344.40
ELEV= 930.50

92042
BM MAG HUB W FACE
PP 05-0513
X= 366862.20
Y= 193975.70
ELEV= 915.07

PT: 920+13.81

STA AHEAD = 920+13.81
STA BACK = 919+58.88

PT: 900+92.81

90908
CP FENO
X= 366035.23
Y= 193441.65
ELEV= 909.31

91830
CP FENO
X= 366740.40
Y= 193851.33
ELEV= 914.09

90108
CP FENO
X= 365238.02
Y= 193324.08
ELEV= 933.17

PC: 894+96.38

900

910

WALLACE LAKE RD

97585
BM MAG HUB SE FACE
PP 11-09478
X= 369732.80
Y= 198656.60
ELEV= 912.13

97651
CP FENO
X= 369774.16
Y= 198708.11
ELEV= 911.93

95836
BM MAG HUB SE FACE
PP 72-5634
X= 369282.10
Y= 198095.10
ELEV= 914.29

970

963+87.88

96827
CP FENO
X= 369317.19
Y= 198018.60
ELEV= 912.73

SKYLINE DR

89220
CP FENO
X= 364491.66
Y= 192937.25
ELEV= 972.89

LAKERIDGE CT

STH 144 RL

PC: 910+16.04

90773
BM NW BOLT HYDRANT
X= 365902.40
Y= 193360.70
ELEV= 915.54

95836
BM X TOP 48" RCCP
X= 368738.10
Y= 197225.10
ELEV= 923.92

PC: 958+85.34

960

95958
CP FENO
X= 368798.02
Y= 197329.71
ELEV= 922.18

FOREST VIEW RD

88544
BM NW BOLT HYDRANT
X= 364057.70
Y= 192419.60
ELEV= 1000.78

890

BP: 880+86.41

PT: 886+41.24

PC: 884+64.66

RAINBOW LAKE LN

89253
BM NW BOLT HYDRANT
X= 364577.60
Y= 192906.70
ELEV= 973.73

88473
CP FENO
X= 364008.34
Y= 192369.31
ELEV= 998.10

STH 144

STH 144 RL

95019
BM MAG HUB E FACE
PP 11-01030
X= 368228.80
Y= 196572.80
ELEV= 959.98

950

95032
CP FENO
X= 368256.86
Y= 196571.41
ELEV= 957.01

4643
HMOD 9A405
X= 367747.69
Y= 195666.19
ELEV= 967.30

94134
CP FENO
X= 367913.76
Y= 195731.45
ELEV= 965.04

PT: 943+49.81

NEWARK DR

HMOD

PC: 940+70.69

NEWARK DR

N

2

PROJECT NO: 4010-18-70	HWY: STH 144	COUNTY: WASHINGTON	ALIGNMENT LAYOUT - SURVEY CONTROL	SHEET 117	E

2

104601
CP FENO
X= 373595.25
Y= 204440.14
ELEV= 894.58

104678
BM MAG HUB W FACE
PP 00-30446
X= 373613.70
Y= 204515.90
ELEV= 891.99

1040

103793
CP FENO
X= 373428.23
Y= 203640.11
ELEV= 894.31

SUNNYBROOK DR

103711
BM MAG HUB W FACE PP
X= 373419.10
Y= 203554.80
ELEV= 893.56

103097
CP FENO
X= 373059.08
Y= 203041.62
ELEV= 892.88

1030

PC: 1025+56.46

103121
BM MAG TOP 15" CMCP
X= 373133.00
Y= 203028.40
ELEV= 892.17

102275
CP FENO
X= 372595.71
Y= 202370.45
ELEV= 895.66

STH 144 RL

1020

101221
CP FENO
X= 372015.65
Y= 201487.29
ELEV= 884.87

101895
BM X NW COR CONC
SIGN PAD
X= 372438.50
Y= 202012.20
ELEV= 893.23

100676
BM SW COR TOP SGN BSE
X= 371737.00
Y= 201014.60
ELEV= 893.10

1010

101425
BM BOX CULV DISC
C-66-107
X= 372148.00
Y= 201642.40
ELEV= 881.98

PI: 1004+99.78

CLUB LN

CTH A

100605
CP FENO
X= 371650.16
Y= 200991.07
ELEV= 892.78

99480
BM MAG HUB SE FACE
PP 72-5645
X= 370904.40
Y= 200145.50
ELEV= 907.05

1000

99551
CP FENO
X= 371003.76
Y= 200159.09
ELEV= 903.80

N

N

109651
CP FENO
X= 373734.68
Y= 209476.59
ELEV= 947.23

109710
BM X TOP 24" RCCP
X= 373743.20
Y= 209534.00
ELEV= 946.98

STH 144 RL

1090

PC: 1089+72.96

108612
CP FENO
X= 373566.59
Y= 208454.69
ELEV= 945.13

ELM TREE DR

108573
BM MAG HUB W FACE
PP 81-03165
X= 373645.00
Y= 208415.10
ELEV= 946.06

1080

107742
CP FENO
X= 373646.85
Y= 207583.63
ELEV= 940.84

ANN CT

107647
BM MAG HUB W FACE
PP 95-13200
X= 373639.80
Y= 207488.50
ELEV= 941.06

107217
CP FENO
X= 373541.66
Y= 206859.99
ELEV= 934.09

HMOD

6212
HMOD FARMINGTON W GPS
X= 373538.58
Y= 206795.34
ELEV= 933.95

PI: 1063+64.12

SHALOM DR

106263
CP FENO
X= 373525.23
Y= 206105.29
ELEV= 909.65

106325
BM X TOP OVAL CMCP
X= 373643.00
Y= 206167.50
ELEV= 910.58

1060

105418
CP FENO
X= 373551.12
Y= 205260.43
ELEV= 897.40

105532
BM X TOP 18" CMCP
X= 373616.70
Y= 205374.30
ELEV= 900.05

PT: 1050+39.63

2

PROJECT NO: 4010-18-70	HWY: STH 144	COUNTY: WASHINGTON	ALIGNMENT LAYOUT - SURVEY CONTROL	SHEET 118	E

FILE NAME : N:\PDS\C3D\40101800\SHEETSPLAN\027202-AD.DWG
LAYOUT NAME - 06-ad

PLOT DATE : 7/1/2025 12:44 PM PLOT BY : SCHMIDT, JUDENE M PLOT NAME : PLOT SCALE : ##########

WISDOT/CADDS SHEET 42

2

N

116275
BM MAG HUB SE FACE
PP 96-12481
X= 377690.40
Y= 214701.80
ELEV= 1021.85

116297
CP FENO
X= 377715.14
Y= 214705.28
ELEV= 1023.25

115407
CP FENO
X= 377012.23
Y= 214151.60
ELEV= 995.09

115404
BM MAG TOP 1ST
GUARD RAIL POST AT S END
X= 377014.50
Y= 214144.70
ELEV= 997.91

114601
BM MAG TOP LAST
GUARD RAIL POST AT N END
X= 376484.40
Y= 213541.30
ELEV= 972.76

PC: 1142+32.36

114602
CP FENO
X= 376490.33
Y= 213537.80
ELEV= 969.08

113729
CP FENO
X= 375956.79
Y= 212850.27
ELEV= 943.55

STH 144 RL

113791
BM MAG TOP LAST
GUARD RAIL POST AT N END
X= 375989.50
Y= 212902.50
ELEV= 949.03

113035
CP FENO
X= 375484.46
Y= 212336.60
ELEV= 937.80

113179
BM MAG TOP 1ST
GUARD RAIL POST AT S END
X= 375624.60
Y= 212411.10
ELEV= 940.03

112260
CP FENO
X= 375115.95
Y= 211644.29
ELEV= 920.91

112343
BM X TOP 30" RCCP
X= 375134.80
Y= 211733.40
ELEV= 924.66

CTH H

CTH H

111423
CP FENO
X= 374601.32
Y= 210983.59
ELEV= 930.36

111295
BM X TOP 24" CMCP
X= 374516.80
Y= 210887.40
ELEV= 933.16

110505
CP FENO
X= 373984.74
Y= 210294.32
ELEV= 946.77

PT: 1107+78.67

110567
BM MAG TOP 24" CMCP
X= 374079.60
Y= 2010308.50
ELEV= 943.59

WESCOTT RD

WHITEWOOD DR

1160
1150
1140
1130
1120
1110

PC: 1224+16.84

122661
CP FENO
X= 382022.30
Y= 219241.34
ELEV= 970.67

122659
BM MAG TOP 15" CMCP
X= 381994.60
Y= 219259.40
ELEV= 966.71

121984
CP FENO
X= 381634.85
Y= 218689.80
ELEV= 990.00

121964
BM MAG HUB NW FACE
PP 92-08034
X= 381639.90
Y= 218663.60
ELEV= 990.98

121271
BM MAG HUB NW FACE
PP 92-08033
X= 381257.20
Y= 218085.30
ELEV= 998.09

121186
CP FENO
X= 381194.54
Y= 218024.67
ELEV= 996.91

120337
CP FENO
X= 380659.62
Y= 217358.80
ELEV= 993.10

120284
BM MAG HUB SE FACE
14" ASPEN
X= 380622.10
Y= 217321.90
ELEV= 994.72

PT: 1196+14.36

119549
BM MAG HUB NW FACE
PP 11-08575
X= 380328.30
Y= 216633.00
ELEV= 1014.27

STH 28

HIGHLAND DR

119544
CP FENO
X= 380314.21
Y= 216637.61
ELEV= 1012.22

118822
CP FENO
X= 379765.36
Y= 216154.03
ELEV= 1013.35

118744
BM MAG HUB SE FACE
18" HICKORY
X= 379702.40
Y= 216408.80
ELEV= 1015.63

PC: 1180+39.01

STH 144 RL

117675
CP FENO
X= 378918.27
Y= 215383.70
ELEV= 1035.70

117703
BM MAG 18" CMCP
X= 378942.80
Y= 215397.00
ELEV= 1036.37

117199
BM NW COR TRANS PAD
X= 378456.10
Y= 215219.00
ELEV= 1041.69

117048
CP FENO
X= 378391.60
Y= 215042.51
ELEV= 1040.36

PT: 1162+42.62

HIGH GROUND CT

1230
1220
1210
1200
1190
1180
1170

N

2

PROJECT NO: 4010-18-70	HWY: STH 144	COUNTY: WASHINGTON	ALIGNMENT LAYOUT - SURVEY CONTROL	SHEET 119	E

FILE NAME : N:\PDS\C3D\40101800\SHEETSPLAN\027202-AD.DWG
LAYOUT NAME - 07-ad

PLOT DATE : 7/1/2025 12:44 PM PLOT BY : SCHMIDT, JUDENE M PLOT NAME : PLOT SCALE : ##########

2

N

129164
BM MAG TOP 15" CMCP
X= 385924.90
Y= 224198.40
ELEV= 889.05

129080
CP FENO
X= 385953.72
Y= 224093.57
ELEV= 887.83

PINE LN

1290

128029
BM MAG HUB E FACE PP
X= 385468.40
Y= 2223159.50
ELEV= 851.30

128134
CP FENO
X= 385510.42
Y= 223255.70
ELEV= 853.64

BOLTON DR

1280

STH 144 RL

127373
BM MAG HUB E FACE PP
X= 385196.30
Y= 222561.50
ELEV= 844.99

127425
CP FENO
X= 385231.76
Y= 222603.72
ELEV= 846.12

PT: 1269+33.09

1270

SCENIC DR

JAY RD

126611
BM NW BOLT GAS STATION
SIGN BASE
X= 384975.80
Y= 221819.00
ELEV= 852.23

126501
CP FENO
X= 384913.66
Y= 221725.37
ELEV= 854.04

125640
BM MAG HUB NW FACE PP
X= 384347.30
Y= 221054.80
ELEV= 868.55

BOLTONVILLE RD

1260

PC: 1252+73.65

125023
BM MAG TOP GUARD RAIL POST
AT STA 1250+23
X= 383789.00
Y= 220767.10
ELEV= 888.63

125754
CP FENO
X= 384425.06
Y= 221143.42
ELEV= 863.16

124234
CP FENO
X= 383118.09
Y= 220350.67
ELEV= 915.72

BOLTON DR

1250

PT: 1239+87.47

125021
CP FENO
X= 383782.20
Y= 220773.24
ELEV= 884.87

123344
CP FENO
X= 382458.06
Y= 219752.74
ELEV= 930.88

1240

124339
BM XMAG HUB SE FACE PP
X= 383206.10
Y= 220408.30
ELEV= 913.93

123617
BM X TOP 30" RCCP
X= 382656.20
Y= 219937.80
ELEV= 9918.70

HMOD

N

2

STH 144 RL

1342

1340

EP: 1342+67.40

PC: 1330+01.67

PI: 1328+13.85

VALLEY VIEW RD

PT: 1334+48.70

1330

1055
BM X N BOX CULV WALL
5.5' NW OF INV
X= 388060.30
Y= 227488.70
ELEV= 867.95

132175
CP FENO
X= 387569.11
Y= 226710.23
ELEV= 876.66

132952
CP FENO
X= 387980.90
Y= 227392.87
ELEV= 871.04

CRANBERRY RD

1320

132117
BM MAG HUB NW FACE
PP 91-01530
X= 387533.60
Y= 226664.50
ELEV= 878.06

131320
BM X TOP 18" CMCP
X= 387014.80
Y= 226056.50
ELEV= 897.29

131375
CP FENO
X= 387038.99
Y= 226107.38
ELEV= 896.14

PT: 1307+96.81

1310

130640
BM X MAG HUB
PP 11-09299
X= 386663.00
Y= 225472.00
ELEV= 905.26

130657
CP FENO
X= 386675.92
Y= 225484.69
ELEV= 905.22

129953
BM MAG HUB SE FACE PP
X= 386251.10
Y= 224919.20
ELEV= 903.30

PINE LN

1300

PC: 1295+26.39

129879
CP FENO
X= 386216.03
Y= 224853.56
ELEV= 901.22

PROJECT NO: 4010-18-70	HWY: STH 144	COUNTY: WASHINGTON	ALIGNMENT LAYOUT - SURVEY CONTROL	SHEET 120	E

FILE NAME : N:\PDS\C3D\40101800\SHEETSPLAN\027202-AD.DWG
LAYOUT NAME - 08-ad

PLOT DATE : 7/1/2025 12:44 PM PLOT BY : SCHMIDT, JUDENE M PLOT NAME : PLOT SCALE : ############

WISDOT/CADDS SHEET 42

Estimate Of Quantities

4010-18-70

Line	Item	Item Description	Unit	Total	Qty
0002	203.0220	Removing Structure (structure) 01. C-66-153	EACH	1.000	1.000
0004	204.0100	Removing Concrete Pavement	SY	283.000	283.000
0006	204.0110	Removing Asphaltic Surface	SY	1,954.000	1,954.000
0008	204.0115	Removing Asphaltic Surface Butt Joints	SY	503.000	503.000
0010	204.0120	Removing Asphaltic Surface Milling	SY	185,597.000	185,597.000
0012	204.0150	Removing Curb & Gutter	LF	91.000	91.000
0014	204.0155	Removing Concrete Sidewalk	SY	45.000	45.000
0016	204.0165	Removing Guardrail	LF	3,417.000	3,417.000
0018	205.0100	Excavation Common	CY	312.000	312.000
0020	209.0200.S	Backfill Controlled Low Strength	CY	5.000	5.000
0022	209.2100	Backfill Granular Grade 2	CY	292.000	292.000
0024	211.0101	Prepare Foundation for Asphaltic Paving (project) 01. 4010-18-70	EACH	1.000	1.000
0026	213.0100	Finishing Roadway (project) 01. 4010-18-70	EACH	1.000	1.000
0028	305.0110	Base Aggregate Dense 3/4-Inch	TON	1,815.000	1,815.000
0030	305.0120	Base Aggregate Dense 1 1/4-Inch	TON	2,142.000	2,142.000
0032	315.0200	Asphaltic Base Widening	TON	132.000	132.000
0034	455.0605	Tack Coat	GAL	13,368.000	13,368.000
0036	460.0105.S	HMA Percent Within Limits (PWL) Test Strip Volumetrics	EACH	1.000	1.000
0038	460.0110.S	HMA Percent Within Limits (PWL) Test Strip Density	EACH	1.000	1.000
0040	460.2005	Incentive Density PWL HMA Pavement	DOL	14,013.000	14,013.000
0042	460.2007	Incentive Density HMA Pavement Longitudinal Joints	DOL	21,732.000	21,732.000
0044	460.2010	Incentive Air Voids HMA Pavement	DOL	23,081.000	23,081.000
0046	460.6224	HMA Pavement 4 MT 58-28 S	TON	23,081.000	23,081.000
0048	460.6243	HMA Pavement 3 MT 58-34 S	TON	107.000	107.000
0050	465.0105	Asphaltic Surface	TON	49.000	49.000
0052	465.0315	Asphaltic Flumes	SY	9.000	9.000
0054	465.0520	Asphaltic Rumble Strips, Shoulder	LF	55,416.000	55,416.000
0056	465.0560	Asphaltic Rumble Strips, Centerline	LF	27,820.000	27,820.000
0058	522.1015	Apron Endwalls for Culvert Pipe Reinforced Concrete 15-Inch	EACH	1.000	1.000
0060	522.1024	Apron Endwalls for Culvert Pipe Reinforced Concrete 24-Inch	EACH	2.000	2.000
0062	601.0411	Concrete Curb & Gutter 30-Inch Type D	LF	10.000	10.000
0064	601.0557	Concrete Curb & Gutter 6-Inch Sloped 36-Inch Type D	LF	32.000	32.000
0066	602.0410	Concrete Sidewalk 5-Inch	SF	392.000	392.000
0068	602.0505	Curb Ramp Detectable Warning Field Yellow	SF	20.000	20.000
0070	606.0200	Riprap Medium	CY	2.000	2.000
0072	608.0315	Storm Sewer Pipe Reinforced Concrete Class III 15-Inch	LF	83.000	83.000
0074	608.0324	Storm Sewer Pipe Reinforced Concrete Class III 24-Inch	LF	72.000	72.000
0076	611.0530	Manhole Covers Type J	EACH	1.000	1.000
0078	611.0624	Inlet Covers Type H	EACH	1.000	1.000
0080	611.2004	Manholes 4-FT Diameter	EACH	1.000	1.000
0082	611.3004	Inlets 4-FT Diameter	EACH	1.000	1.000
0084	614.0010	Barrier System Grading Shaping Finishing	EACH	11.000	11.000
0086	614.0370	Steel Plate Beam Guard Energy Absorbing Terminal	EACH	4.000	4.000
0088	614.0396	Guardrail Mow Strip Asphalt	SY	1,512.000	1,512.000
0090	614.0397	Guardrail Mow Strip Emulsified Asphalt	SY	226.000	226.000
0092	614.0400	Adjusting Steel Plate Beam Guard	LF	1,576.000	1,576.000
0094	614.0950	Replacing Guardrail Posts and Blocks	EACH	24.000	24.000
0096	614.0951	Replacing Guardrail Rail and Hardware	LF	425.000	425.000
0098	614.0952	Replacing Guardrail Reflectors	EACH	100.000	100.000

4010-18-70

Line	Item	Item Description	Unit	Total	Qty
0100	614.2330	MGS Guardrail 3 K	LF	2,801.000	2,801.000
0102	614.2610	MGS Guardrail Terminal EAT	EACH	14.000	14.000
0104	618.0100	Maintenance and Repair of Haul Roads (project) 01. 4010-18-70	EACH	1.000	1.000
0106	619.1000	Mobilization	EACH	1.000	1.000
0108	624.0100	Water	MGAL	1.000	1.000
0110	625.0100	Topsoil	SY	56.000	56.000
0112	625.0500	Salvaged Topsoil	SY	367.000	367.000
0114	627.0200	Mulching	SY	423.000	423.000
0116	628.1504	Silt Fence	LF	3,925.000	3,925.000
0118	628.1520	Silt Fence Maintenance	LF	1,900.000	1,900.000
0120	628.1905	Mobilizations Erosion Control	EACH	4.000	4.000
0122	628.1910	Mobilizations Emergency Erosion Control	EACH	3.000	3.000
0124	628.2004	Erosion Mat Class I Type B	SY	516.000	516.000
0126	628.7005	Inlet Protection Type A	EACH	4.000	4.000
0128	628.7010	Inlet Protection Type B	EACH	6.000	6.000
0130	628.7015	Inlet Protection Type C	EACH	8.000	8.000
0132	628.7020	Inlet Protection Type D	EACH	2.000	2.000
0134	628.7504	Temporary Ditch Checks	LF	140.000	140.000
0136	628.7555	Culvert Pipe Checks	EACH	12.000	12.000
0138	629.0210	Fertilizer Type B	CWT	26.700	26.700
0140	630.0130	Seeding Mixture No. 30	LB	21.000	21.000
0142	630.0500	Seed Water	MGAL	7.200	7.200
0144	632.0101	Trees (species, root, size) 01. Trautman Juniper, 24-Inch Root	EACH	80.000	80.000
0146	632.0201	Shrubs (species, root, size) 01. Shrubs Snow Drift Control Deciduous 12 to 18-Inch Root	EACH	2,714.000	2,714.000
0148	632.9101	Landscape Planting Surveillance and Care Cycles	EACH	24.000	24.000
0150	634.0618	Posts Wood 4x6-Inch X 18-FT	EACH	65.000	65.000
0152	637.2210	Signs Type II Reflective H	SF	227.500	227.500
0154	637.2230	Signs Type II Reflective F	SF	14.560	14.560
0156	638.2102	Moving Signs Type II	EACH	12.000	12.000
0158	638.2602	Removing Signs Type II	EACH	7.000	7.000
0160	638.3000	Removing Small Sign Supports	EACH	23.000	23.000
0162	642.5401	Field Office Type D	EACH	1.000	1.000
0164	643.0300	Traffic Control Drums	DAY	4,395.000	4,395.000
0166	643.0420	Traffic Control Barricades Type III	DAY	1,601.000	1,601.000
0168	643.0705	Traffic Control Warning Lights Type A	DAY	3,202.000	3,202.000
0170	643.0900	Traffic Control Signs	DAY	20,064.000	20,064.000
0172	643.0920	Traffic Control Covering Signs Type II	EACH	12.000	12.000
0174	643.1050	Traffic Control Signs PCMS	DAY	28.000	28.000
0176	643.3770	Temporary Marking Raised Pavement Marker Type II	EACH	896.000	896.000
0178	643.5000	Traffic Control	EACH	1.000	1.000
0180	645.0112	Geotextile Type DF Schedule B	SY	4,433.000	4,433.000
0182	645.0120	Geotextile Type HR	SY	10.000	10.000
0184	646.2020	Marking Line Epoxy 6-Inch	LF	1,554.000	1,554.000
0186	646.2040	Marking Line Grooved Wet Ref Epoxy 6-Inch	LF	162,609.000	162,609.000
0188	646.4020	Marking Line Epoxy 10-Inch	LF	1,781.000	1,781.000
0190	646.5020	Marking Arrow Epoxy	EACH	15.000	15.000
0192	646.5120	Marking Word Epoxy	EACH	5.000	5.000
0194	646.6120	Marking Stop Line Epoxy 18-Inch	LF	834.000	834.000

Estimate Of Quantities

4010-18-70

Line	Item	Item Description	Unit	Total	Qty
0196	646.7120	Marking Diagonal Epoxy 12-Inch	LF	180.000	180.000
0198	646.8220	Marking Island Nose Epoxy	EACH	1.000	1.000
0200	650.4000	Construction Staking Storm Sewer	EACH	3.000	3.000
0202	650.5000	Construction Staking Base	LF	120.000	120.000
0204	650.6000	Construction Staking Pipe Culverts	EACH	2.000	2.000
0206	650.8000	Construction Staking Resurfacing Reference	LF	44,713.000	44,713.000
0208	650.9000	Construction Staking Curb Ramps	EACH	2.000	2.000
0210	650.9911	Construction Staking Supplemental Control (project) 01. 4010-18-70	EACH	1.000	1.000
0212	650.9920	Construction Staking Slope Stakes	LF	240.000	240.000
0214	690.0150	Sawing Asphalt	LF	3,122.000	3,122.000
0216	690.0250	Sawing Concrete	LF	235.000	235.000
0218	740.0440	Incentive IRI Ride	DOL	33,872.000	33,872.000
0220	ASP.1T0A	On-the-Job Training Apprentice at $5.00/HR	HRS	1,000.000	1,000.000
0222	ASP.1T0G	On-the-Job Training Graduate at $5.00/HR	HRS	2,800.000	2,800.000

3

REMOVING STRUCTURE

CATEGORY	LOCATION	203.0220 REMOVING STRUCTURE C-66-153 EA
0200	STA 1330+90	1
	TOTALS	1

REMOVING ASPHALTIC SURFACE BUTT JOINTS

STAGE	LOCATION	204.0115 REMOVING ASPHALTIC SURFACE BUTT JOINTS SY
1	885+49 - 960+00	165
1	960+00 - 1035+00	42
1	1035+00 - 1110+00	74
1	1110+00 - 1193+00	54
	STAGE1 TOTAL	335
2	1193+00 - 1265+00	72
2	1265+00 - 1332+62	96
	STAGE 2 TOTAL	168
	PROJECT TOTAL	503

REMOVING ASPHALTIC SURFACE MILLING

STAGE	LOCATION	204.0120 REMOVING ASPHALTIC SURFACE MILLNG SY
1	885+49 - 960+00	35,250
1	960+00 - 1035+00	30,684
1	1035+00 - 1110+00	31,697
1	1110+00 - 1193+00	27,960
1	UNDISTRIBUTED - FOR PATCHING	100
	STAGE 1 TOTAL	125,691
2	1193+00 - 1265+00	31,035
2	1265+00 - 1332+62	28,771
2	UNDISTRIBUTED - FOR PATCHING	100
	STAGE 2 TOTAL	59,906
	PROJECT TOTAL	185,597

REMOVALS AND SAWING

STAGE	LOCATION	204.0100 REMOVING CONCRETE PAVEMENT SY	204.0110 REMOVING ASPHALTIC SURFACE SY	204.0150 REMOVING CURB & GUTTER LF	204.0155 REMOVING CONCRETE SIDEWALK SY	690.0150 SAWING ASPHALT LF	690.0250 SAWING CONCRETE LF
1	885+49 - 960+00	16	377	91	45	906	187
1	960+00 - 1035+00	--	--	--	--	224	--
1	1035+00 - 1110+00	--	--	--	--	509	--
1	1110+00 - 1193+00	--	989	--	--	473	--
	STAGE 1 TOTALS	16	1,366	91	45	2,112	187
2	1193+00 - 1265+00	--	186	--	--	313	--
2	1265+00 - 1332+62	267	402	--	--	697	48
	STAGE 2 TOTALS	267	588	0	0	1,010	48
	PROJECT TOTALS	283	1,954	91	45	3,122	235

ALL ITEMS ARE CATEGORY 0100
UNLESS OTHERWISE NOTED.

3

Earthwork Summary			A	B	C	E	G	H	I	J
			Item #205.0100							
Division	From/To Station	Location	Common Excavation (1) (CY) Cut (2) (CY)	Common Excavation (1) (CY) EBS Excavation (CY)	Salvaged/ Unusable Pavement Material (3) (CY)	Available Material (4) (CY)	Unexpanded Fill (CY)	Expanded Fill (5) (CY) Factor 1.20	Mass Ordinate +/- (5)(10) (CY)	Waste (CY)
1	1330+29 - 1331+49	STH 144	312	0	116	196	170	204	0	0
Division 1 Subtotal			312	0	116	196	170	204	0	0
UNDISTRIBUTED	1330+29 - 1331+49	STH 144	0	0	0	0	0	0	0	0
Grand Total			312	0	116	196	170	204	0	0
Total Common Exc			312							

Notes:

(1) Common Excavation is the sum of the Cut (A) and EBS Excavation (B) columns. Item number 205.0100

(2) Salvaged/Unusable Pavement Material (C) is included in the Cut (A).

(3) Salvaged/Unusable Pavement Material (C) is included in the Cut (A). This assumes the existing pavement structure is salvaged or wasted by the contractor. The existing pavement tructure is not shown on the cross section

(4) Available Material (E) = Cut (A) - Salvaged/Unusable Pavement Material (C).

(5) Expanded Fill (H) = Unexpaned Fill (F)*Expanded Fill Factor (1.2)

3

PREPARING FOUNDATION

LOCATION	211.0101 PREPARE FOUNDATION FOR ASPHALTIC PAVING EA
4010-18-70	1
TOTALS	1

BASE AGGREGATE DENSE

STAGE	LOCATION			305.0110 BASE AGGREGATE DENSE 3/4-INCH TON	*305.0120 BASE AGGREGATE DENSE 1 1/4-INCH TON
1	885+49	-	960+00	252	409
1	960+00	-	1035+00	293	--
1	1035+00	-	1110+00	281	--
1	1110+00		1193+00	361	1,348
	STAGE 1 TOTALS			1,187	1,757
2	1193+00	-	1265+00	349	259
2	1265+00	-	1332+62	279	126
	STAGE 2 TOTALS			628	385
	PROJECT TOTALS			1,815	2,142

*ADDITIONAL QUANTITIES SHOWN ELSEWHERE

ASPHALT

STAGE	LOCATION			315.0200 ASPHALTIC BASE WIDENING TONS	455.0605* TACK COAT GAL	460.6224 HMA PAVEMENT 4 MT 58-28S TONS	460.6243 HMA PAVEMENT 3 MT 58-34S TONS	465.0105** ASPHALTIC SURFACE TONS	465.0315 ASPHALTIC FLUMES SY
1	885+49	-	960+00	5	2,481	4,253	--	1	--
1	960+00	-	1035+00	--	2,165	3,711	--	--	9
1	1035+00	-	1110+00	--	2,232	3,826	--	--	--
1	1110+00	-	1193+00	14	2,466	4,227	--	--	--
1	UNDISTRIBUTED							24	
	STAGE 1 TOTALS			19	9,344	16,017	-	25	9
2	1193+00	-	1265+00	7	1,963	3,366	--	--	--
2	1265+00	-	1330+39	-	1,999	3,427	--	--	--
2	1330+39	-	1331+49	-	28	168	--	--	--
2	1331+49	-	1332+62	106	34	103	107	--	--
2	UNDISTRIBUTED							24	
	STAGE 2 TOTALS			113	4,024	7,064	107	24	0
	PROJECT TOTALS			132	13,368	23,081	107	49	9

*ADDITONAL QUANTITIES SHOWN ELSEWHERE
**ITEM TO BE USED FOR POT HOLE REPAIR AND RAMPING AT BUTT JOINTS AS DIRECTED BY ENGINEER

HMA PAVEMENT PERCENT WITHIN LIMITS (PWL)

PROJECT	MIX	460.0105.S HMA PERCENT WITHIN LIMITS (PWL) TEST STRIP VOLUMETRICS EACH	460.0110.S HMA PERCENT WITHIN LIMITS (PWL) TEST STRIP DENSITY EACH
4010-18-70	4MT 58-28S	1	1
TOTAL		1	1

ALL ITEMS ARE CATEGORY 0100
UNLESS OTHERWISE NOTED.

3

HMA QUALITY MANAGEMENT

STATION	TO	STATION	LOCATION	MIXTURE USE:	UNDERLYING SURFACE	BID ITEM	TONS	THICKNESS	QUALITY MANAGEMENT PROGRAM TO BE USED FOR: MIXTURE ACCEPTANCE	QUALITY MANAGEMENT PROGRAM TO BE USED FOR: DENSITY ACCEPTANCE
885+49	-	960+00	2-12' DRIVING LANES	UPPER LAYER	MILLED SURFACE	4 MT 58-28S	2384	2"	PWL INCENTIVE AIR VOIDS HMA PAVEMENT 460.2010	INCENTIVE DENSITY PWL HMA PAVEMENT 460.2005
885+49	-	960+00	SHOULDERS, SIDEROADS, AND DRIVEWAY APRONS	UPPER LAYER	MILLED SURFACE	4 MT 58-28S	1869	2"	PWL INCENTIVE AIR VOIDS HMA PAVEMENT 460.2010	ACCEPTANCE TESTING BY DEPARTMENT, NOT ELIGIBLE FOR INCENTIVE
960+00	-	1035+00	2-12' DRIVING LANES	UPPER LAYER	MILLED SURFACE	4 MT 58-28S	2400	2"	PWL INCENTIVE AIR VOIDS HMA PAVEMENT 460.2010	INCENTIVE DENSITY PWL HMA PAVEMENT 460.2005
960+00	-	1035+00	SHOULDERS, SIDEROADS, AND DRIVEWAY APRONS	UPPER LAYER	MILLED SURFACE	4 MT 58-28S	1311	2"	PWL INCENTIVE AIR VOIDS HMA PAVEMENT 460.2010	ACCEPTANCE TESTING BY DEPARTMENT, NOT ELIGIBLE FOR INCENTIVE
1035+00	-	1110+00	2-12' DRIVING LANES	UPPER LAYER	MILLED SURFACE	4 MT 58-28S	2400	2"	PWL INCENTIVE AIR VOIDS HMA PAVEMENT 460.2010	INCENTIVE DENSITY PWL HMA PAVEMENT 460.2005
1035+00	-	1110+00	SHOULDERS, SIDEROADS, AND DRIVEWAY APRONS	UPPER LAYER	MILLED SURFACE	4 MT 58-28S	1426	2"	PWL INCENTIVE AIR VOIDS HMA PAVEMENT 460.2010	ACCEPTANCE TESTING BY DEPARTMENT, NOT ELIGIBLE FOR INCENTIVE
1110+00		1193+00	2-12' DRIVING LANES	UPPER LAYER	MILLED SURFACE	4 MT 58-28S	2274	2"	PWL INCENTIVE AIR VOIDS HMA PAVEMENT 460.2010	INCENTIVE DENSITY PWL HMA PAVEMENT 460.2005
1110+00		1193+00	SHOULDERS, SIDEROADS, AND DRIVEWAY APRONS	UPPER LAYER	MILLED SURFACE	4 MT 58-28S	1953	2"	PWL INCENTIVE AIR VOIDS HMA PAVEMENT 460.2010	ACCEPTANCE TESTING BY DEPARTMENT, NOT ELIGIBLE FOR INCENTIVE
1193+00	-	1265+00	2-12' DRIVING LANES	UPPER LAYER	MILLED SURFACE	4 MT 58-28S	2304	2"	PWL INCENTIVE AIR VOIDS HMA PAVEMENT 460.2010	INCENTIVE DENSITY PWL HMA PAVEMENT 460.2005
1193+00	-	1265+00	SHOULDERS, SIDEROADS, AND DRIVEWAY APRONS	UPPER LAYER	MILLED SURFACE	4 MT 58-28S	1062	2"	PWL INCENTIVE AIR VOIDS HMA PAVEMENT 460.2010	ACCEPTANCE TESTING BY DEPARTMENT, NOT ELIGIBLE FOR INCENTIVE
1265+00	-	1330+39	2-12' DRIVING LANES	UPPER LAYER	MILLED SURFACE	4 MT 58-28S	2092	2"	PWL INCENTIVE AIR VOIDS HMA PAVEMENT 460.2010	INCENTIVE DENSITY PWL HMA PAVEMENT 460.2005
1265+00	-	1330+39	SHOULDERS, SIDEROADS, AND DRIVEWAY APRONS	UPPER LAYER	MILLED SURFACE	4 MT 58-28S	1335	2"	PWL INCENTIVE AIR VOIDS HMA PAVEMENT 460.2010	ACCEPTANCE TESTING BY DEPARTMENT, NOT ELIGIBLE FOR INCENTIVE
1330+39	-	1331+49	2-12' DRIVING LANES	UPPER LAYER	MILLED SURFACE	4 MT 58-28S	123	2"	PWL INCENTIVE AIR VOIDS HMA PAVEMENT 460.2010	INCENTIVE DENSITY PWL HMA PAVEMENT 460.2005
1330+39	-	1331+49	SHOULDERS, SIDEROADS, AND DRIVEWAY APRONS	UPPER LAYER	MILLED SURFACE	4 MT 58-28S	45	2"	PWL INCENTIVE AIR VOIDS HMA PAVEMENT 460.2010	ACCEPTANCE TESTING BY DEPARTMENT, NOT ELIGIBLE FOR INCENTIVE
1330+39	-	1331+49	2-12' DRIVING LANES	UPPER LAYER	MILLED SURFACE	4 MT 58-28S	36	2"	PWL INCENTIVE AIR VOIDS HMA PAVEMENT 460.2010	INCENTIVE DENSITY PWL HMA PAVEMENT 460.2005
1330+39	-	1331+49	SHOULDERS, SIDEROADS, AND DRIVEWAY APRONS	UPPER LAYER	MILLED SURFACE	4 MT 58-28S	67	2"	PWL INCENTIVE AIR VOIDS HMA PAVEMENT 460.2010	ACCEPTANCE TESTING BY DEPARTMENT, NOT ELIGIBLE FOR INCENTIVE

FILE NAME: N:\PDS\C3D\10005030\SheetsPlan\030201_MQ.PPT PLOT DATE : 7/1/2025 1:55:12 PM PLOT BY : WISDOT PLOT NAME : 030201_MQ.ppt PLOT SCALE : 1:1

3

ASPHALTIC RUMBLE STRIPS 2-LANE RURAL

STAGE	LOCATION	465.0520 ASPHALTIC RUMBLE STRIPS SHOULDER LF	465.0560 ASPHALTIC RUMBLE STRIPS CENTERLINE LF
1	STH 144 885+49 - 960+00	978	614
1	STH 144 960+00 - 1035+00	11,731	6,191
1	STH 144 1035+00 - 1110+00	11,026	5,015
1	STH 144 1110+00 - 1193+00	13,066	7,274
	STAGE 1 TOTAL	36,801	19,094
2	STH 144 1193+00 - 1265+00	10,514	5,380
2	STH 144 1265+00 - 1332+62	8,101	3,346
	STAGE 2 TOTAL	18,615	8,726
	PROJECT TOTAL	55,416	27,820

CONCRETE ITEMS

STAGE	LOCATION	601.0411 CONCRETE CURB & GUTTER 30-INCH TYPE D LF	601.0557 CONCRETE CURB & GUTTER 6-INCH SLOPED 36-INCH TYPE D LF	602.0410 CONCRETE SIDEWALK 5-INCH SF	602.0505 DETECTABLE WARNING FIELD YELLOW SF
1	885+49 - 960+00	10	32	392	20
1	960+00 - 1035+00	--	--	--	--
1	1035+00 - 1110+00	--	--	--	--
1	1110+00 - 1193+00	--	--	--	--
	STAGE 1 TOTALS	10	32	392	20
2	1193+00 - 1265+00	--	--	--	--
2	1265+00 - 1332+62	--	--	--	--
	STAGE 2 TOTALS	0	0	0	0
	PROJECT TOTALS	10	32	392	20

STORM SEWER STRUCTURES

STAGE 1

STRUCTURE NUMBER	STATION	OFFSET	RIM ELEV	LOWEST PIPE INVERT ELEV	STRUCTURE DEPTH FT	522.1015 APRON ENDWALL FOR CPRC 15-INCH EA	611.0530 MANHOLE COVER TYPE J EA	611.0624 INLET COVER TYPE H EA	611.2004 MANHOLE 4 FT DIAMETER EA	611.3004 INLET 4 FT DIAMETER EA
1	935+62	17.4' RT	964.07	960.50	3.57	--	--	1	--	1
2	934+96	16.4' RT	963.71	959.75	3.96		1	--	1	--
3	934+90	25.6' RT	960.59	959.15	1.44	1	--	--	--	--
TOTALS						1	1	1	1	1

STORM SEWER PIPES

STAGE 1

PIPE NUMBER	FROM STRUCTURE	TO STRUCTURE	INLET ELEV	DISCHARGE ELEV	SLOPE {%}	608.0315 SSPRC CLASS III 15-INCH LF
P1	1	2	960.50	959.75	1.13	67
P2	2	3	959.75	959.15	5.61	16
TOTALS						83

CULVERT PIPE

STAGE 2

ROADWAY	INLET STATION	INLET OFFSET	INLET ELEV	DISCHARGE STATION	DISCHARGE OFFSET	DISCHARGE ELEV	SLOPE {%}	209.0200.S BACKFILL CONTROLLED LOW STRENGTH CY	209.2100 BACKFILL GRANULAR GRADE 2 CY	522.0124 SSPRC CLASS III 24-INCH LF	522.1024 APRON ENDWALL FOR CPRC 24-INCH EA	606.0200 RIPRAP MEDIUM CY	645.0120 GEOTEXTILE TYPE HR SY
STH 144	1330+90	33.80' RT	864.74	1330+90	40.35' LT	863.63	1.5	5	292	72	2	2	10
TOTALS								**5**	292	72	2	2	10

ALL ITEMS ARE CATEGORY 0100 UNLESS OTHERWISE NOTED.

FILE NAME: N:\PDS\C3D\10005030\SheetsPlan\030201_MQ.PPT PLOT DATE : 7/1/2025 1:55:12 PM PLOT BY : WISDOT PLOT NAME : 030201_MQ.ppt PLOT SCALE : 1:1

BEAM GUARD

STAGE	RUN	LOCATION	204.0165 REMOVING GUARDRAIL LF	614.001 BARRIER SYSTEM GRADING SHAPING FINISHING EACH	614.0370 STEEL PLATE BEAMGUARD ENERGY ABSORBING TERMINAL EACH	614.0396 GUARDRAIL MOW STRIP ASPHALT SY	614.0397 GUARDRAIL MOW STRIP EMULSIFIED ASPHALT SY	614.0400 ADJUSTING STEEL PLATE BEAM GUARD LF	614.0950 REPLACING GUARDRAIL POSTS AND BLOCKS EACH	614.0951 REPLACE GUARDRAIL RAIL AND HARDWARE LF	614.0952 REPLACING GUARDRAIL REFLECTORS EACH	614.2330 MGS GUARDRAIL 3 K LF	614.2610 MGS GUARDRAIL TERMINAL EAT EACH
1	RUN 1	893+11 - 897+50, RT	428	1	--	153	11	--	--	--	--	338	2
1	RUN 2	893+37 - 897+37, LT	404	1	--	170	16	--	--	--	--	302	2
1	RUN 3	1131+09 - 1137+92, RT	616	1	--	297	18	--	--	--	--	582	2
1	RUN 4	1131+12 - 1138+69, LT	616	1	--	282	22	--	--	--	--	557	2
1	RUN 5	1138+89 - 1145+97, RT	716	1	--	312	22	--	--	--	--	608	2
1	RUN 6	1153+04 - 1155+99, RT	216	1	--	141	22	--	--	--	--	195	2
1	RUN 7	1153+99 - 1157+18, LT	217	1	--	123	18	--	--	--	--	219	2
	STAGE 1 TOTALS		3,213	7	0	1478	129	0	0	0	0	2801	14
2	RUN 8	1249+10 - 13+20 (BOLTONVILLE RD), LT	102	2	2	17	50	938	12	200	50	--	--
2	RUN 9	13+20 (BOLTONVILLE RD), RT - 1262+14, LT	102	2	2	17	47	638	12	225	50	--	--
	STAGE 2 TOTALS		204	4	4	34	97	1,576	24	425	100	0	0
	PROJECT TOTALS		3,417	11	4	1,512	226	1,576	24	425	100	2,801	14

BARRIER SYSTEM GRADING SHAPING FINISHING ITEMS

STAGE	RUN	LOCATION	* CUT CY	* FILL CY	*625.0100 TOPSOIL SY	*627.0200 MULCHING SY	*629.0210 FERTILIZER TYPE B CWT	*630.0130 SEEDING MIX NO. 30 LB	*630.0200 SEEDING TEMPORARY LB	*630.0500 SEED WATER MGAL
1	RUN 1	893+11 - 897+50, RT	96	2	163	163	11	8	--	3
1	RUN 2	893+37 - 897+37, LT	92	1	136	136	9	7	--	3
1	RUN 3	1131+09 - 1137+92, RT	117	30	302	302	20	14	--	6
1	RUN 4	1131+12 - 1138+69, LT	151	2	173	173	11	8	--	3
1	RUN 5	1138+89 - 1145+97, RT	115	7	124	124	8	6	--	2
1	RUN 6	1153+04 - 1155+99, RT	72	3	204	204	13	10	--	4
1	RUN 7	1153+99 - 1157+18, LT	78	7	157	157	10	7	--	3
	STAGE 1 TOTALS		722	52	1259	1259	82	60	0	23
2	RUN 8	249+10 - 13+20 (BOLTONVILLE RD), L	14	0	64	64	5	3	--	1
2	RUN 9	·20 (BOLTONVILLE RD), RT - 1262+14,	95	2	156	156	10	7	--	3
	STAGE 2 TOTALS		109	2	220	220	15	10	0	4
	UNDISTRIBUTED		--	--	--	--	--	--	5	6
	PROJECT TOTALS		831	54	1479	1479	97	70	5	33

*INCIDENTAL, FOR BIDDING PURPOSES ONLY

ALL ITEMS ARE CATEGORY 0100
UNLESS OTHERWISE NOTED.

3

CURB RAMPS GRADING SHAPING FINISHING ITEMS

STAGE 1

LOCATION	LOCATION	625.0100* TOPSOIL SY	627.0200* MULCHING SY	629.0210* FERTILIZER TYPE B CWT	630.0130* SEEDING MIX NO. 30 LB	630.0500* SEED WATER MGAL
NE QUAD	RAINBOW LAKE LANE	6	6	1	1	0.1
SE QUAD	RAINBOW LAKE LANE	13	13	1	1	0.3
PROJECT TOTALS		19	19	2	2	0.4

*ADDITIONAL QUANTITIES SHOWN ELSEWHERE

EROSION CONTROL

STAGE	LOCATION	628.1504 SILT FENCE LF	628.1520 SILT FENCE MAINTENANCE LF	628.1905 MOBILIZATIONS EROSION CONTROL EACH	628.1910 MOBILIZATIONS EMERGENCY EROSION CONTROL EACH	628.7005 INLET PROTECTION TYPE A EACH	628.7010 INLET PROTECTION TYPE B EACH	628.7015 INLET PROTECTION TYPE C EACH	628.7020 INLET PROTECTION TYPE D EACH	628.7504 TEMPORARY DITCH CHECKS LF	628.7555 CULVERT PIPE CHECKS EACH
1	STH 144 884+28 - 960+00	939	500	--	--	3	6	8	2	30	--
1	STH 144 960+00 - 1035+00	--	--	--	--	--	--	--	--	--	--
1	STH 144 1035+00 - 1110+00	--	--	--	--	--	--	--	--	--	--
1	STH 144 1110+00 - 1193+00	2,133	1,000	--	--	--	--	--	--	70	7
	STAGE 1 TOTALS	3,072	1,500	0	0	3	6	8	2	100	7
2	STH 144 1193+00 - 1265+00	593	300	--	--	--	--	--	--	20	--
2	STH 144 1265+00 - 1332+62	260	100	--	--	1	--	--	--	20	5
	STAGE 2 TOTALS	853	400	0	0	1	0	0	0	40	5
	UNDISTRIBUTED			2	3						
	PROJECT TOTALS	3925	1900	2	3	4	6	8	2	140	12

*ADDITIONAL QUANTITIES SHOWN ELSEWHERE

ALL ITEMS ARE CATEGORY 0100
UNLESS OTHERWISE NOTED.

3

LANDSCAPING

LOCATION	625.0100* TOPSOIL SY	625.0500 SALVAGED TOPSOIL SY	627.0200* MULCHING SY	629.0210* FERTILIZER TYPE B CWT	630.0130* SEEDING MIX NO. 30 LB	630.0500* SEED WATER MGAL
\ 934+90 - 935+65,	37	--	37	2.3	2	0.6
STA 1330+90	--	367	367	23.1	17	6.2
TOTALS	37	367	404	25.4	19	6.8

*ADDITIONAL QUANTITIES SHOWN ELSEWHERE

DRIFT CONTROL PLANTINGS

CATEGORY	LIVING SNOW FENCE AREA IDENTIFICATION NUMBER	628.1905 MOBILIZATIONS EROSION CONTROL EA	632.0101 TREES TRAUTMAN JUNIPER 24-INCH ROOT EA	632.0201 SHRUBS SNOW DRIFT CONTROL DECIDUOUS 12 TO 18-INCH ROOT EA	632.9101 LANDSCAPING PLANTING SURVEILLANCE AND CARE CYCLES EA	645.0112 GEOTEXTILE TYPE DF SCHEDULE B SY
0300	P1A	--	--	194	--	301
0300	P1B	--	--	174	--	286
0300	P2	--	--	585	--	969
0300	P3A	1	80	--	--	--
0300	P3B	--	--	411	--	672
0300	P4A	--	--	738	--	1,203
0300	P4B	--	--	210	--	341
0300	P5	--	--	402	--	661
0300	UNDISTRIBUTED	1	--	--	24	
	TOTALS	2	80	2,714	24	4,433

*ADDITIONAL QUANTITIES SHOWN ELSEWHERE

ALL ITEMS ARE CATEGORY 0100
UNLESS OTHERWISE NOTED.

FILE NAME: N:\PDS\C3D\10005030\SheetsPlan\030201_MQ.PPT

PLOT DATE : 7/1/2025 1:55:12 PM PLOT BY : WISDOT PLOT NAME : 030201_MQ.ppt PLOT SCALE : 1:1

3

TRAFFIC CONTROL

LOCATION	DAYS	643.0300 TRAFFIC CONTROL DRUMS NO.	643.0300 TRAFFIC CONTROL DRUMS DAYS	643.0420 TRAFFIC CONTROL BARRICADES TYPE III NO.	643.0420 TRAFFIC CONTROL BARRICADES TYPE III DAYS	643.0705 TRAFFIC CONTROL WARNING LIGHTS TYPE A NO.	643.0705 TRAFFIC CONTROL WARNING LIGHTS TYPE A DAYS	643.0920 TRAFFIC CONTROL COVERING SIGNS TYPE II EACH	643.0900 TRAFFIC CONTROL SIGNS NO.	643.0900 TRAFFIC CONTROL SIGNS DAYS	643.1050 TRAFFIC CONTROL SIGNS PCMS NO.	643.1050 TRAFFIC CONTROL SIGNS PCMS DAY	643.3770 TEMPORARY RAISED PAVEMENT MARKERS TYPE II EACH
STAGE 1	STA 885+49 - 1196+00	30	135	4,050	32	1,120	64	2,240	4	213	7,455	2	14	622
STAGE 1 TOTALS				4,050		1,120		2,240	4		7,455		14	622
STAGE 2	STA 1196+00 - 1332+62	20	10	200	25	1,000	50	2,500	8	256	7,680	2	14	274
TRUCK DETOUR STAGE 2	CTH A - CTH D (WASHINGTON CO) - (SHEBOYGAN CO)			--	4	120	8	240	-	385	11,550	--	--	--
STAGE 2 TOTALS				200		1,120		2,740	8		19,230		14	274
PROJECT TOTALS				4,250		2,240		4,980	12		26,685		28	896

MOBILIZATION

LOCATION	619.1000 MOBILIZATIOI EACH
PROJECT 4010-18-70	1
TOTAL	1

TRAFFIC CONTROL PROJECT

LOCATION	643.5000 TRAFFIC CONTROL EACH
STA 885+49 - STA 1332+62	1
TOTAL	1

ALL ITEMS ARE CATEGORY 0100
UNLESS OTHERWISE NOTED.

3

PAVEMENT MARKING

STAGE	LOCATION	646.2020 MARKING LINE EPOXY 6-INCH (WHITE) LF	646.2020 MARKING LINE EPOXY 6-INCH 3' LINE W/ 9' GAP (WHITE) LF	646.2020 MARKING LINE EPOXY 6-INCH 12.5' LINE W/ 37.5' GAP (WHITE) LF	646.2040 MARKING LINE GROOVED WET REF EPOXY 6-INCH (WHITE) LF	646.2040 MARKING LINE GROOVED WET REF EPOXY 6-INCH (YELLOW) LF	646.4020 MARKING LINE EPOXY 10-INCH (WHITE) LF	646.6120 MARKING STOP LINE EPOXY 18-INCH (WHITE) LF	646.7120 MARKING DIAGONAL EPOXY 12-INCH (YELLOW) LF	646.5020 MARKING ARROW EPOXY EA	646.5120 MARKING WORD EPOXY EA	646.8220 MARKING ISLAND NOSE EPOXY EA
1	STH 144 885+49 - 960+00	--	276	150	14,982	15,874	1,015	--	180	10	4	1
1	STH 144 960+00 - 1035+00	--	102	--	15,344	8,465	-	--	--	-	-	--
1	STH 144 1035+00 - 1110+00	--	48	125	14,838	11,923	300	--	--	2	1	--
1	STH 144 1110+00 - 1193+00	--	144	--	16,814	12,206	-	--	--	2	--	--
1	RAINBOW LAKE LANE	--	--	--	--	123	--	27	--	--	--	--
1	LAKERIDGE COURT	--	--	--	--	58	--	35	--	--	--	--
1	WALLACE LAKE ROAD	--	--	--	--	101	--	32	--	--	--	--
1	NEWARK DRIVE	40	--	--	--	240	--	76	--	--	--	--
1	FOREST VIEW ROAD	--	--	--	--	145	--	28	--	--	--	--
1	CLUB LANE/ CTH A	19	--	--	--	268	73	76	--	--	--	--
1	SUNNYBROOK DRIVE	--	--	--	--	78	--	21	--	--	--	--
1	SHALOM DRIVE	21	--	--	--	131	--	30	--	--	--	--
1	ANN COURT	--	--	--	--	131	--	32	--	--	--	--
1	ELM TREE DRIVE	--	--	--	--	72	--	21	--	--	--	--
1	WHITE WOOD DRIVE	--	--	--	--	50	--	18	--	--	--	--
1	CTH H	55	--	--	--	247	202	78	--	--	--	--
1	HIGH GROUND COURT	--	--	--	--	118	--	31	--	--	--	--
	STAGE 1 TOTALS	135	570	275	61,978	50,230	1,590	505	180	14	5	1
2	STH 144 1193+00 - 1265+00	--	99	--	14,419	12,426	-	--	--	1	-	--
2	STH 144 1265+00 - 1332+62	--	45	--	13,410	8,470	-	--	--	-	-	--
2	STH 28/ HIGHLAND DRIVE	74	--	--	--	408	90	75	--	--	--	--
2	CTH DD - SOUTH	--	--	--	--	92	--	26	--	--	--	--
2	BOLTONVILLE ROAD	--	--	--	--	290	--	29	--	--	--	--
2	SCENIC DRIVE/ JAY ROAD	104	--	--	--	404	101	83	--	--	--	--
2	CTH DD - NORTH	--	--	--	--	72	--	29	--	--	--	--
2	PINE LANE - SOUTH	145	--	--	--	160	--	26	--	--	--	--
2	PINE LANE - NORTH	107	--	--	--	94	--	33	--	--	--	--
2	CRANBERRY ROAD	--	--	--	--	156	--	28	--	--	--	--
	STAGE 2 TOTALS	430	144	0	27,829	22,572	191	329	0	1	0	0
	PROJECT TOTALS	565	714	275	89,807	72,802	1,781	834	180	15	5	1

ALL ITEMS ARE CATEGORY 0010
UNLESS OTHERWISE NOTED.

3

STAKING

LOCATION	650.4000 CONSTRUCTION STAKING STORM SEWER EA	650.5000 CONSTRUCTION STAKING BASE LF	650.6000 CONSTRUCTION STAKING PIPE CULVERT EA	650.8000 CONSTRUCTION STAKING RESURFACING REFERENCE LF	650.9000 CONSTRUCTION STAKING CURB RAMPS EACH	650.9911 CONSTRUCTION STAKING SUPPLEMENTAL CONTROL 4010-18-70 EACH	650.9920 CONSTRUCTION STAKING SLOPE STAKES LF
STA 935+62, 17.4' RT	1	-	--	--	--	--	--
STA 934+96, 16.4' RT	1	-	--	--	--	--	--
STA 934+90, 25.6' RT	1	-	--	--	--	--	--
STA 1330+90, RT	--	-	1	--	--	--	--
STA 1330+90, LT	--	-	1	--	--	--	--
STA 885+49.00 - 919+58.88	--	-	--	3,409.88	2	-	-
STA 920+13.81-1332+62.00	--	120	--	41,248.19	-	1	240
TOTALS	3	120	2	44,658.07	2	1	240

FIELD OFFICE

	642.5401 FIELD OFFICE TYPE D EACH
PROJECT 4010-18-70	1
TOTAL	1

FINISHING ROADWAY

	213.01 FINISHING ROADWAY 4010-18-70 EACH
PROJECT 4010-18-70	1
TOTAL	1

ALL ITEMS ARE CATEGORY 0100
UNLESS OTHERWISE NOTED.

FILE NAME: N:\PDS\C3D\10005030\SheetsPlan\030201_MQ.PPT PLOT DATE : 7/1/2025 1:55:12 PM PLOT BY : WISDOT PLOT NAME : 030201_MQ.ppt PLOT SCALE : 1:1

NOTES:
THIS EXHIBIT IS A GRAPHIC REPRESENTATION AND IS FOR REFERENCE PURPOSES ONLY.
REFER TO THE CONVEYANCE DOCUMENT FOR PARCEL RELATED DETAILS.

POSITIONS SHOWN ON THIS PLAT ARE WISCONSIN COUNTY COORDINATE REFERENCE SYSTEM COORDINATES (WISCRS) WASHINGTON COUNTY, NAD 83 (2011) IN SURVEY FEET. VALUES SHOWN ARE GRID COORDINATES, GRID BEARINGS, AND GRID DISTANCES. GRID DISTANCES MAY BE USED AS GROUND DISTANCES ON THIS EXHIBIT.

R/W PROJECT NUMBER: 4010-18-20	SHEET NUMBER: 4.01

ROW ACQUISITION EXHIBIT
STH 144
STH 144; SKYLINE DR. - NCL
STH 144 WASHINGTON COUNTY

THAT PART OF LOT 1 CSM 6051, AND ALL OF THE NE 1/4 - SW 1/4 OF SECTION 1 TOWN 11 NORTH, RANGE 19 EAST CITY OF WEST BEND, WASHINGTON COUNTY, WISCONSIN

HWY	BASIS OF EXISTING R/W	R/W WIDTH	YEAR
STH 144	NO RECORD, STATUE 82.31(2)	33'	
STH 144	TOWN OF BARTON SURVEY	SURVEY	1867
STH 144	DJ 2585	50'	1941
RAINBOW LAKE LN	CSM 6051	60'	2006
STH 144	4010-05-70	50'	2011

Point	Station	Offset
1	892+17.26	87.850'
2	892+22.13	87.859'
3	892+22.17	67.446'
4	892+34.82	50.906'
10	892+17.21	89.850'
11	892+27.25	89.869'
12	892+27.29	68.715'
13	892+36.40	50.872'

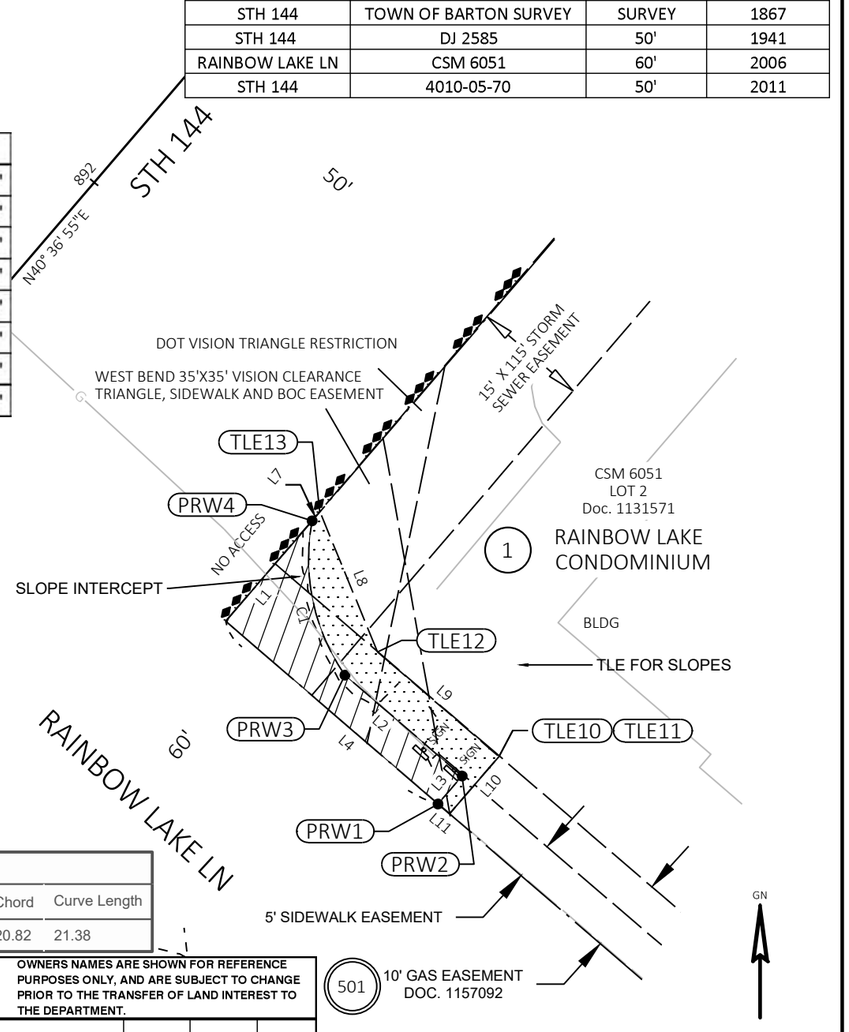

Line Table		
Line #	Length	Direction
L1	17.49'	N40° 43' 36"E
L2	20.41'	S49° 16' 24"E
L3	4.88'	S40° 43' 36"W
L4	36.98'	N49° 16' 24"W
L7	1.58'	N39° 22' 58"E
L8	20.03'	S22° 20' 39"E
L9	21.15'	S49° 16' 24"E
L10	10.00'	S40° 43' 36"W
L11	2.00'	N49° 16' 24"W

Curve Table				
Curve	Chord Direction	Radius	Chord	Curve Length
C1	S11° 58' 51"E	26.82	20.82	21.38

SCHEDULE OF LANDS & INTERESTS REQUIRED

OWNERS NAMES ARE SHOWN FOR REFERENCE PURPOSES ONLY, AND ARE SUBJECT TO CHANGE PRIOR TO THE TRANSFER OF LAND INTEREST TO THE DEPARTMENT.

PARCEL NUMBER	OWNER	INTEREST REQUIRED	TLE S.F.	FEE S.F.
1	RAINBOW LAKE CONDOMINIUM	FEE, TLE	215	255
--	--	--	--	--
--	--	--	--	--
--	--	--	--	--

UTILITY INTERESTS REQUIRED

UTILITY NUMBER	OWNER	INTEREST REQUIRED		
501	WE ENERGIES - GAS	ROR		

501 WE ENERGIES - GAS
PARCEL 1 - DOC 1157092

THIS MAP IS APPROVED FOR THE DEPARTMENT OF TRANSPORTATION
REGION AND CITY REGION OFFICE
SIGNATURE: Robert L Duffeck DATE: 10/31/2022
PRINT NAME: Robert L. Duffeck

FILE NAME : EXHIBIT.DWG PLOT DATE : 10/31/2022 9:58 AM R/W PROJECT: R/W PROJ NO

4

NOTES:
THIS EXHIBIT IS A GRAPHIC REPRESENTATION AND IS FOR REFERENCE PURPOSES ONLY.
REFER TO THE CONVEYANCE DOCUMENT FOR PARCEL RELATED DETAILS.

POSITIONS SHOWN ON THIS PLAT ARE WISCONSIN COUNTY COORDINATE REFERENCE SYSTEM COORDINATES (WISCRS) WASHINGTON COUNTY, NAD 83 (2011) IN SURVEY FEET. VALUES SHOWN ARE GRID COORDINATES, GRID BEARINGS, AND GRID DISTANCES. GRID DISTANCES MAY BE USED AS GROUND DISTANCES ON THIS EXHIBIT.

R/W PROJECT NUMBER: 4010-18-20	SHEET NUMBER: 4.02

TLE ACQUISITION EXHIBIT
STH 144
STH 144; SKYLINE DR. - NCL
STH 144 WASHINGTON COUNTY

THAT PART OF LOT 1 CSM 4796, ALSO, THAT PART OF THE NW 1/4 - NE 1/4, SECTION 3, TOWN 12 NORTH, RANGE 20 EAST, TOWN OF FARMINGTON, WASHINGTON COUNTY WISCONSIN.

HWY	BASIS OF EXISTING R/W	R/W WIDTH	YEAR
STH 144	DJ 2585	50'	1941
STH 144	CSM 4796	50'	1996
STH 144	4010-05-70	50'	2011

CURVE 2
PI STA = 1332
Y = 227578.118
X = 388163.533
LC = 446.0
LCB = N42° 55' 05"E
R = 1886.02'

Point	Station	Offset
14	1330+78.62	-55.953'
15	1331+16.43	-57.870'
16	1330+78.81	-50.957'
17	1331+16.72	-52.879'

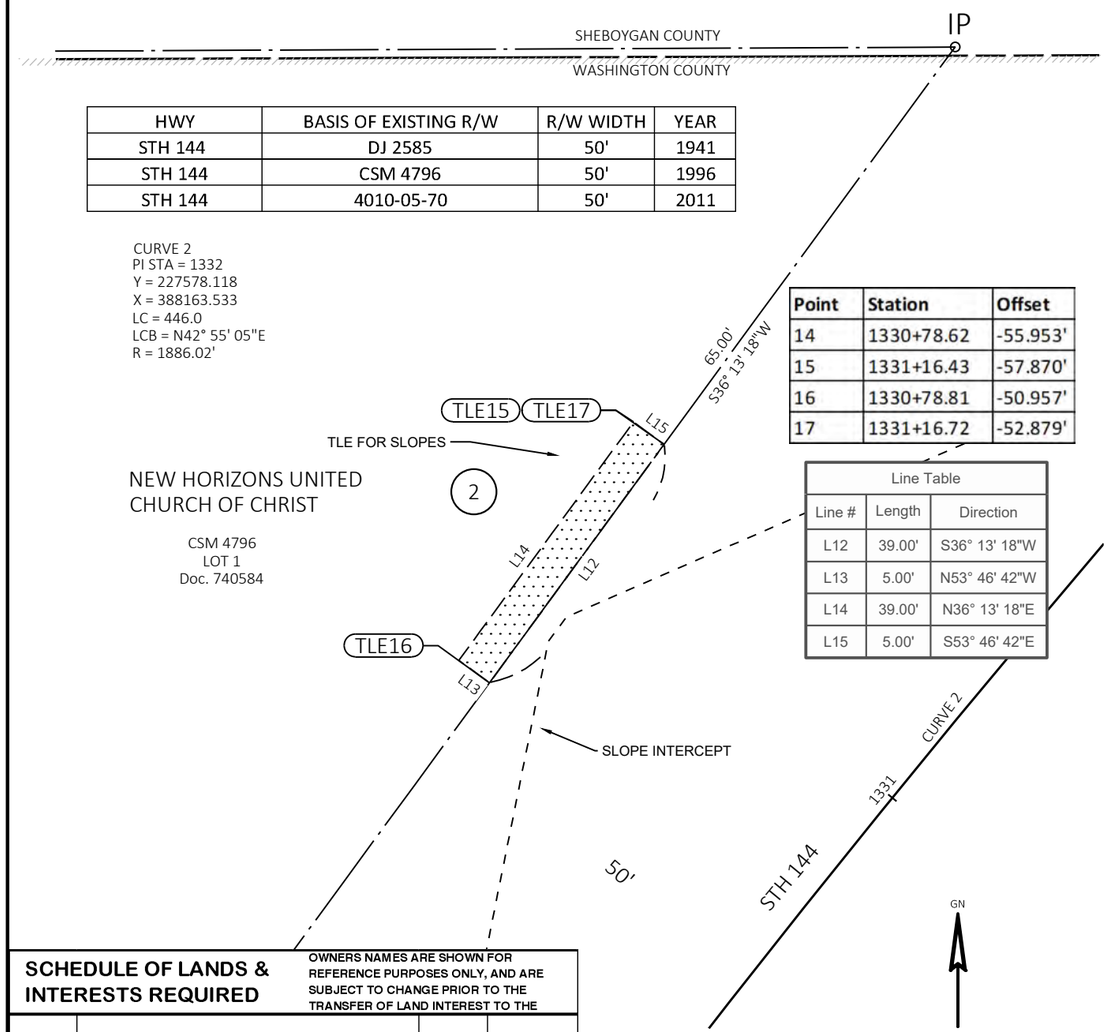

Line Table		
Line #	Length	Direction
L12	39.00'	S36° 13' 18"W
L13	5.00'	N53° 46' 42"W
L14	39.00'	N36° 13' 18"E
L15	5.00'	S53° 46' 42"E

SCHEDULE OF LANDS & INTERESTS REQUIRED

OWNERS NAMES ARE SHOWN FOR REFERENCE PURPOSES ONLY, AND ARE SUBJECT TO CHANGE PRIOR TO THE TRANSFER OF LAND INTEREST TO THE

PARCEL NUMBER	OWNER	INTEREST REQUIRED	TLE S.F.
2	NEW HORIZONS UNITED CHURCH OF CHRIST	TLE	195
--	--	--	--
--	--	--	--

UTILITY INTERESTS REQUIRED

UTILITY NUMBER	OWNER	INTEREST REQUIRED	

FILE NAME : EXHIBIT.DWG PLOT DATE : 10/31/2022 9:58 AM R/W PROJECT: R/W PROJ NO

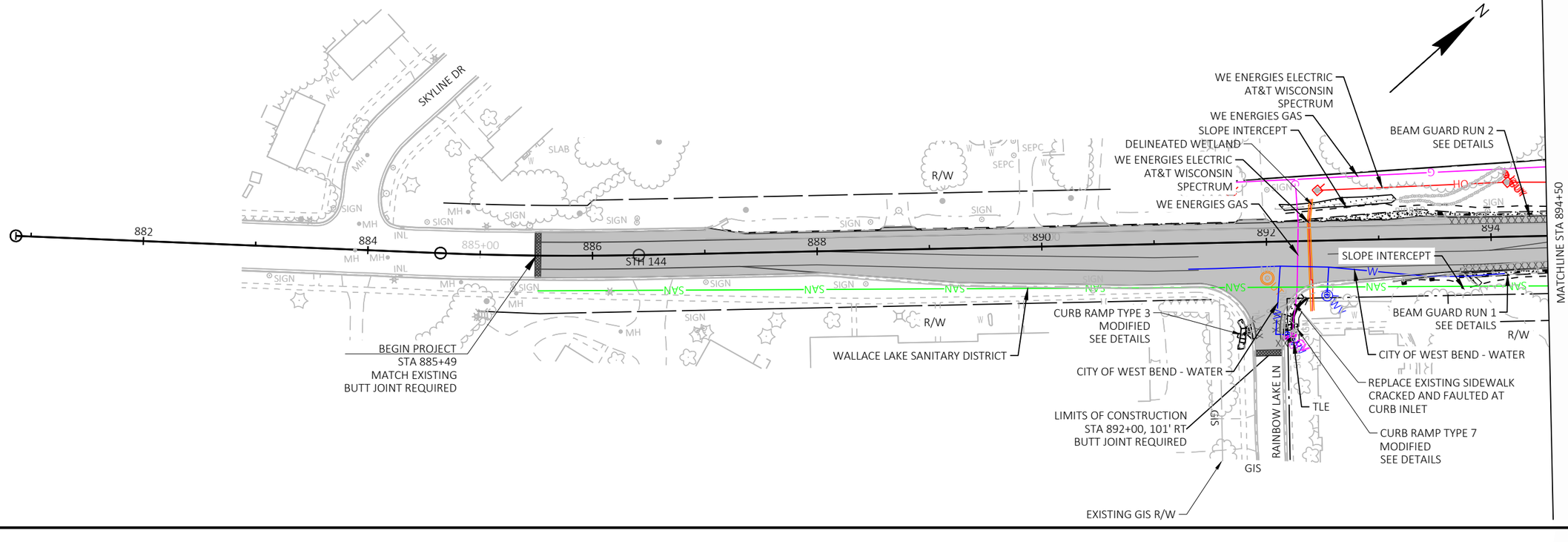

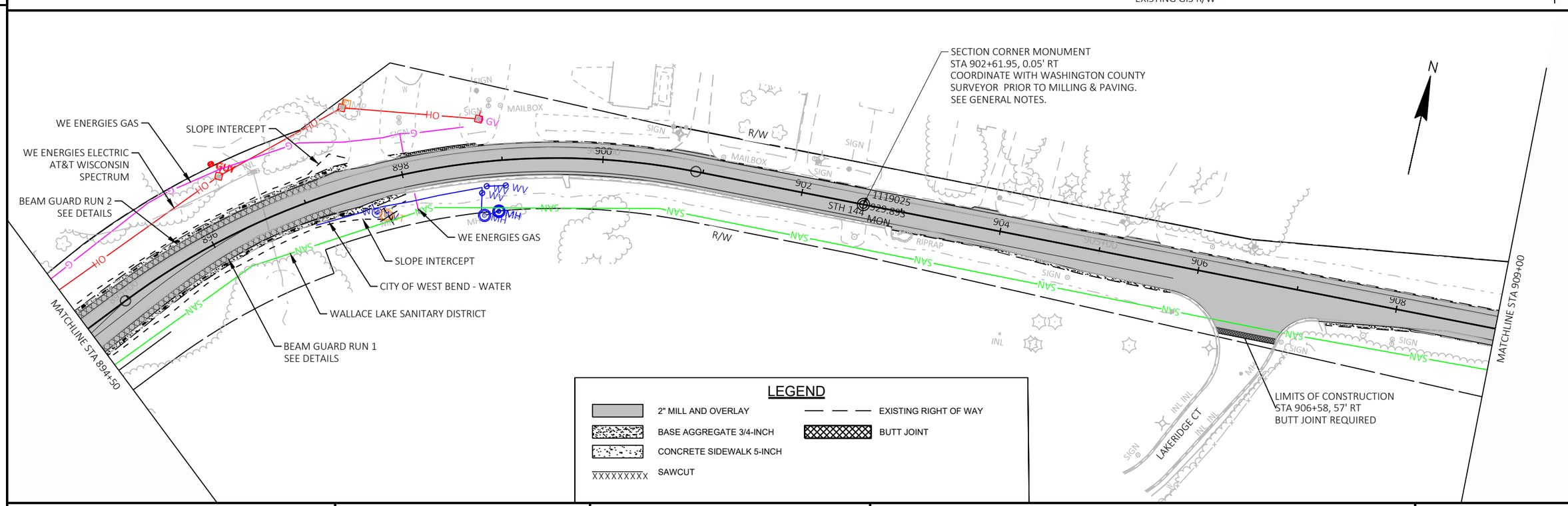

PROJECT NO: 4010-18-70	HWY: STH 144	COUNTY: WASHINGTON	PLAN DETAILS	SHEET 136	E

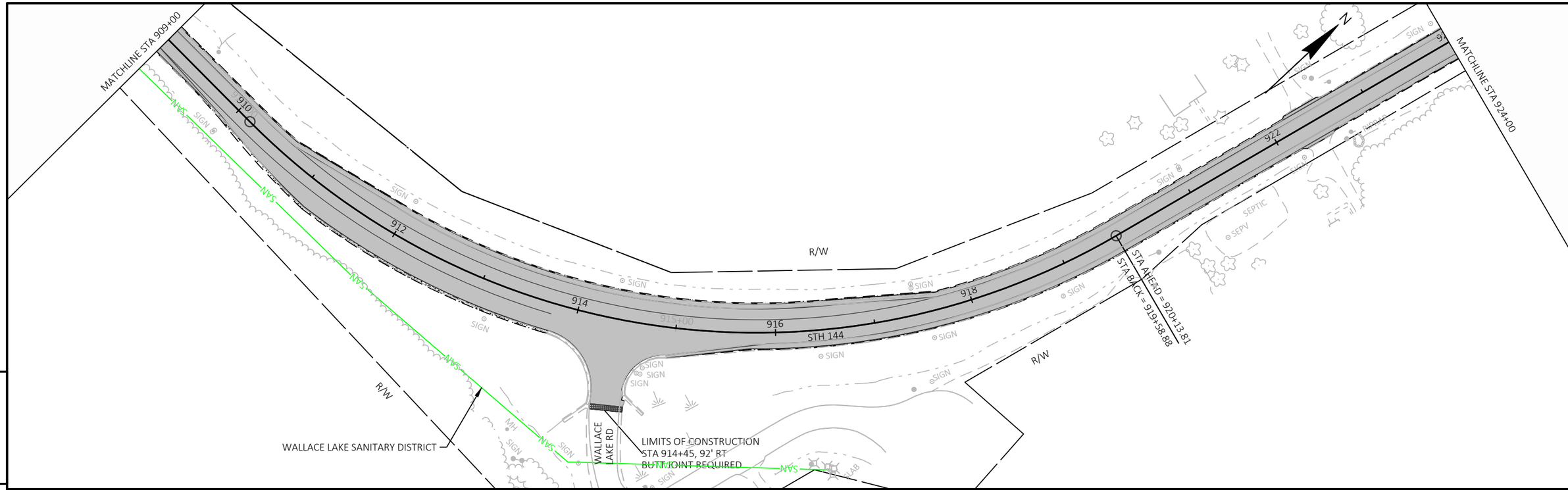

PROJECT NO: 4010-18-70	HWY: STH 144	COUNTY: WASHINGTON	PLAN DETAILS	SHEET 137	E

FILE NAME : N:\PDS\C3D\40101800\SHEETSPLAN\050101-PD.DWG
LAYOUT NAME - 050102-pd
PLOT DATE : 6/30/2025 1:54 PM PLOT BY : SCHMIDT, JUDENE M PLOT NAME : PLOT SCALE : 1 IN:100 FT
WISDOT/CADDS SHEET 44

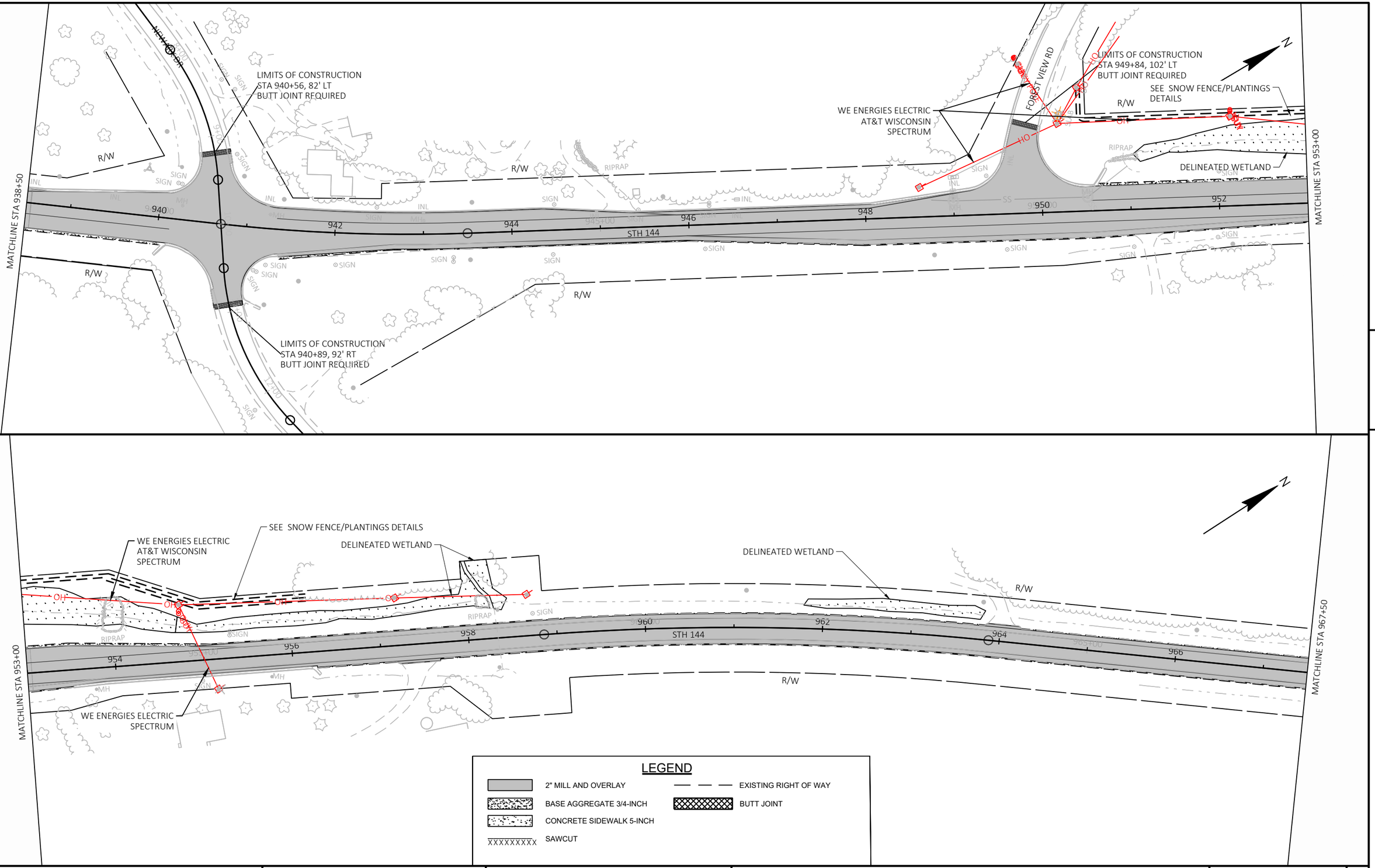

PROJECT NO: 4010-18-70	HWY: STH 144	COUNTY: WASHINGTON	PLAN DETAILS	SHEET 138	E

FILE NAME : N:\PDS\C3D\40101800\SHEETSPLAN\050101-PD.DWG
LAYOUT NAME - 050103-pd

PLOT DATE : 6/30/2025 1:54 PM PLOT BY : SCHMIDT, JUDENE M PLOT NAME : PLOT SCALE : 1 IN:100 FT

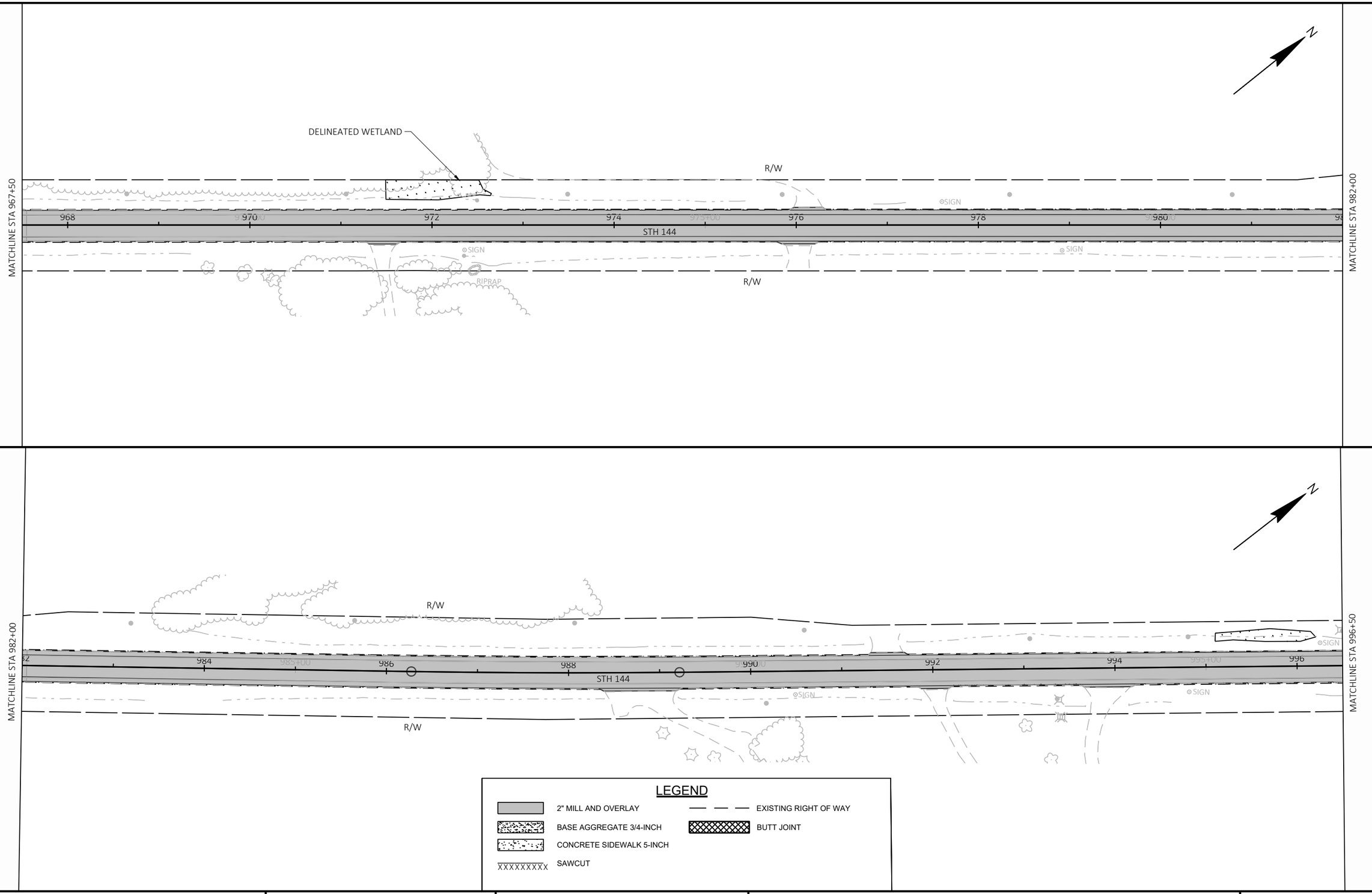

PROJECT NO: 4010-18-70	HWY: STH 144	COUNTY: WASHINGTON	PLAN DETAILS	SHEET 139 E

FILE NAME : N:\PDS\C3D\40101800\SHEETSPLAN\050101-PD.DWG
LAYOUT NAME - 050104-pd

PLOT DATE : 6/30/2025 1:55 PM PLOT BY : SCHMIDT, JUDENE M PLOT NAME : PLOT SCALE : 1 IN:100 FT

WISDOT/CADDS SHEET 44

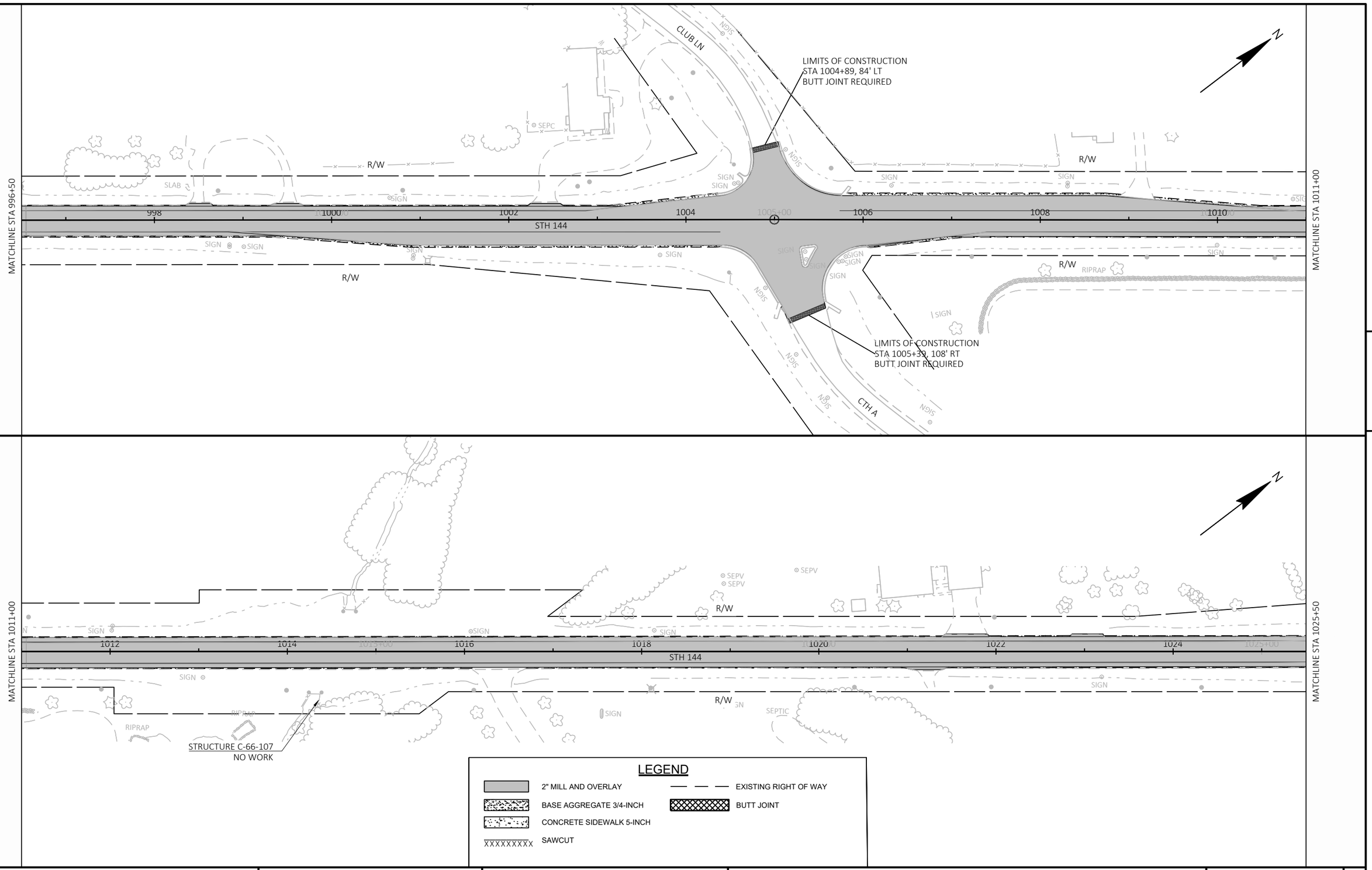

LEGEND

- 2" MILL AND OVERLAY
- BASE AGGREGATE 3/4-INCH
- CONCRETE SIDEWALK 5-INCH
- SAWCUT
- EXISTING RIGHT OF WAY
- BUTT JOINT

PROJECT NO: 4010-18-70	HWY: STH 144	COUNTY: WASHINGTON	PLAN DETAILS	SHEET 140 E

FILE NAME : N:\PDS\C3D\40101800\SHEETSPLAN\050101-PD.DWG
LAYOUT NAME - 050105-pd

PLOT DATE : 6/30/2025 1:55 PM PLOT BY : SCHMIDT, JUDENE M PLOT NAME : PLOT SCALE : 1 IN:100 FT

WISDOT/CADDS SHEET 44

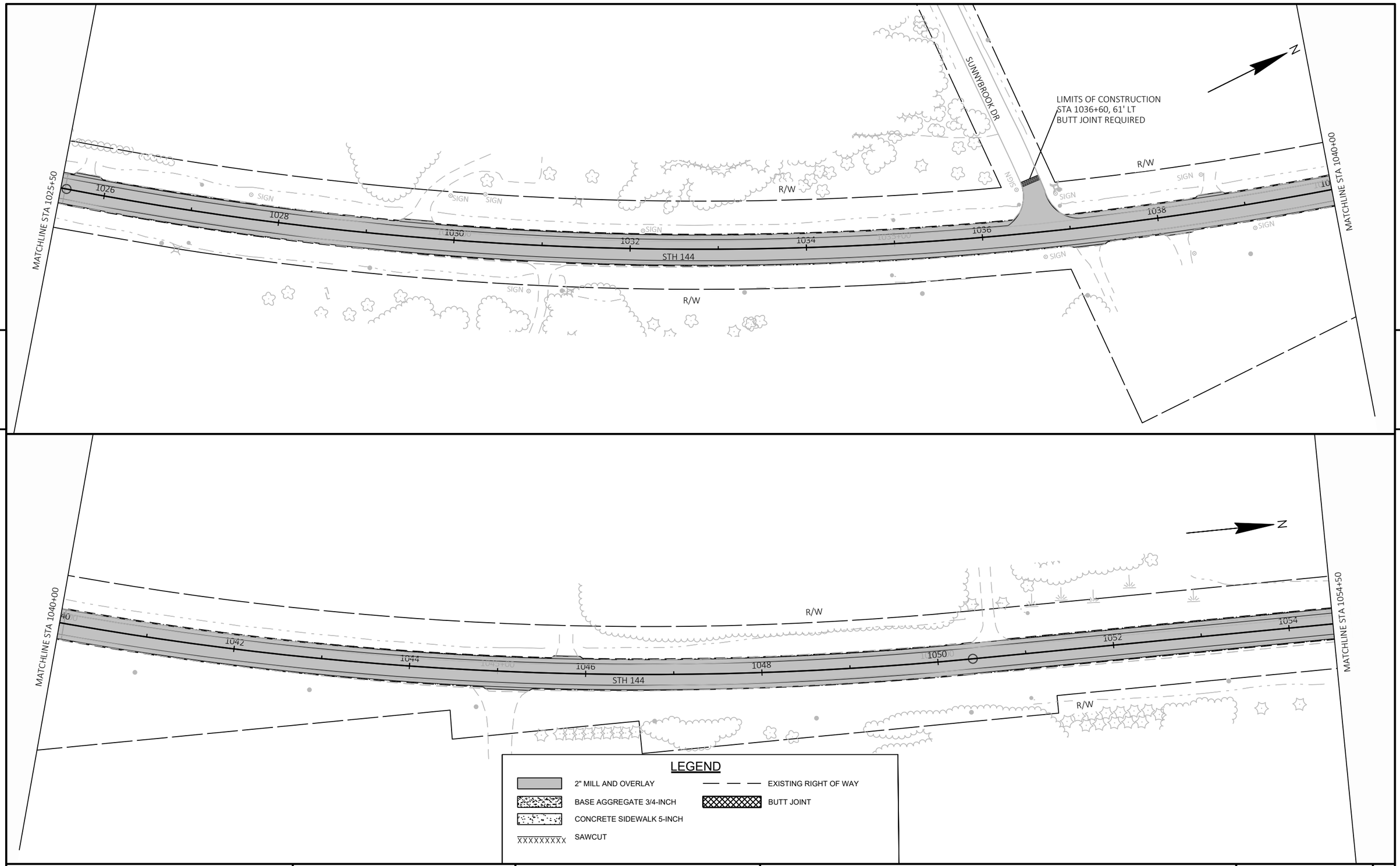

PROJECT NO: 4010-18-70	HWY: STH 144	COUNTY: WASHINGTON	PLAN DETAILS	SHEET 141	E

FILE NAME : N:\PDS\C3D\40101800\SHEETSPLAN\050101-PD.DWG
LAYOUT NAME - 050106-pd

PLOT DATE : 6/30/2025 1:55 PM PLOT BY : SCHMIDT, JUDENE M PLOT NAME : PLOT SCALE : 1 IN:100 FT

WISDOT/CADDS SHEET 44

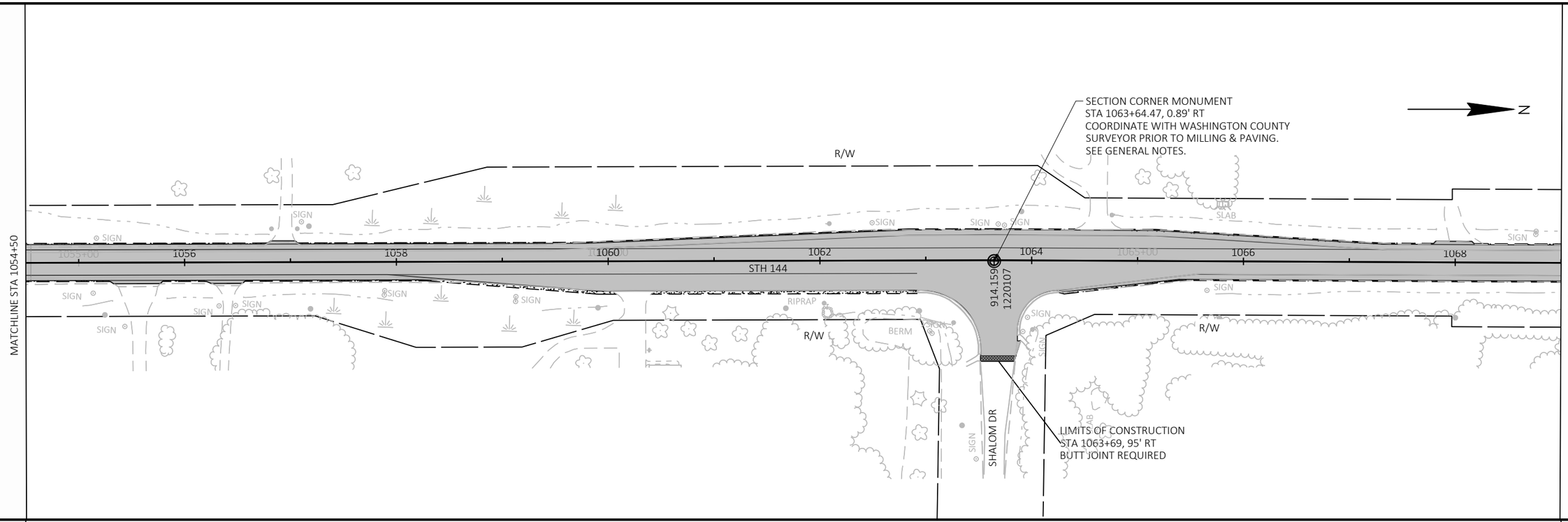

5

5

LEGEND

- 2" MILL AND OVERLAY
- BASE AGGREGATE 3/4-INCH
- CONCRETE SIDEWALK 5-INCH
- SAWCUT
- EXISTING RIGHT OF WAY
- BUTT JOINT

PROJECT NO: 4010-18-70	HWY: STH 144	COUNTY: WASHINGTON	PLAN DETAILS	SHEET 142	E

FILE NAME : N:\PDS\C3D\40101800\SHEETSPLAN\050101-PD.DWG
LAYOUT NAME - 050107-pd

PLOT DATE : 6/30/2025 1:56 PM PLOT BY : SCHMIDT, JUDENE M PLOT NAME : PLOT SCALE : 1 IN:100 FT

WISDOT/CADDS SHEET 44

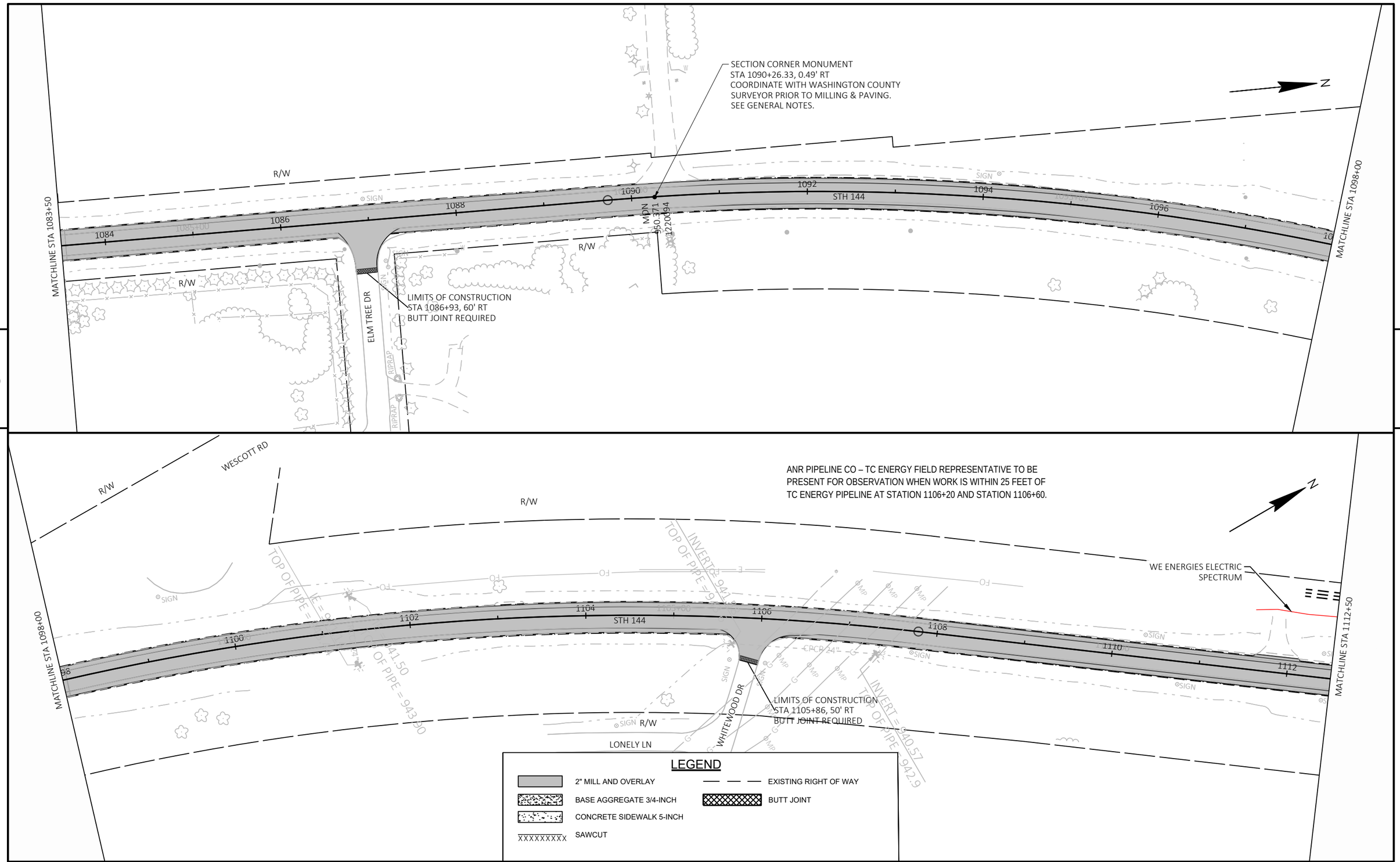

PROJECT NO: 4010-18-70	HWY: STH 144	COUNTY: WASHINGTON	PLAN DETAILS	SHEET 143 E

FILE NAME : N:\PDS\C3D\40101800\SHEETSPLAN\050101-PD.DWG
LAYOUT NAME - 050108-pd

PLOT DATE : 6/30/2025 1:56 PM PLOT BY : SCHMIDT, JUDENE M PLOT NAME : PLOT SCALE : 1 IN:100 FT

WISDOT/CADDS SHEET 44

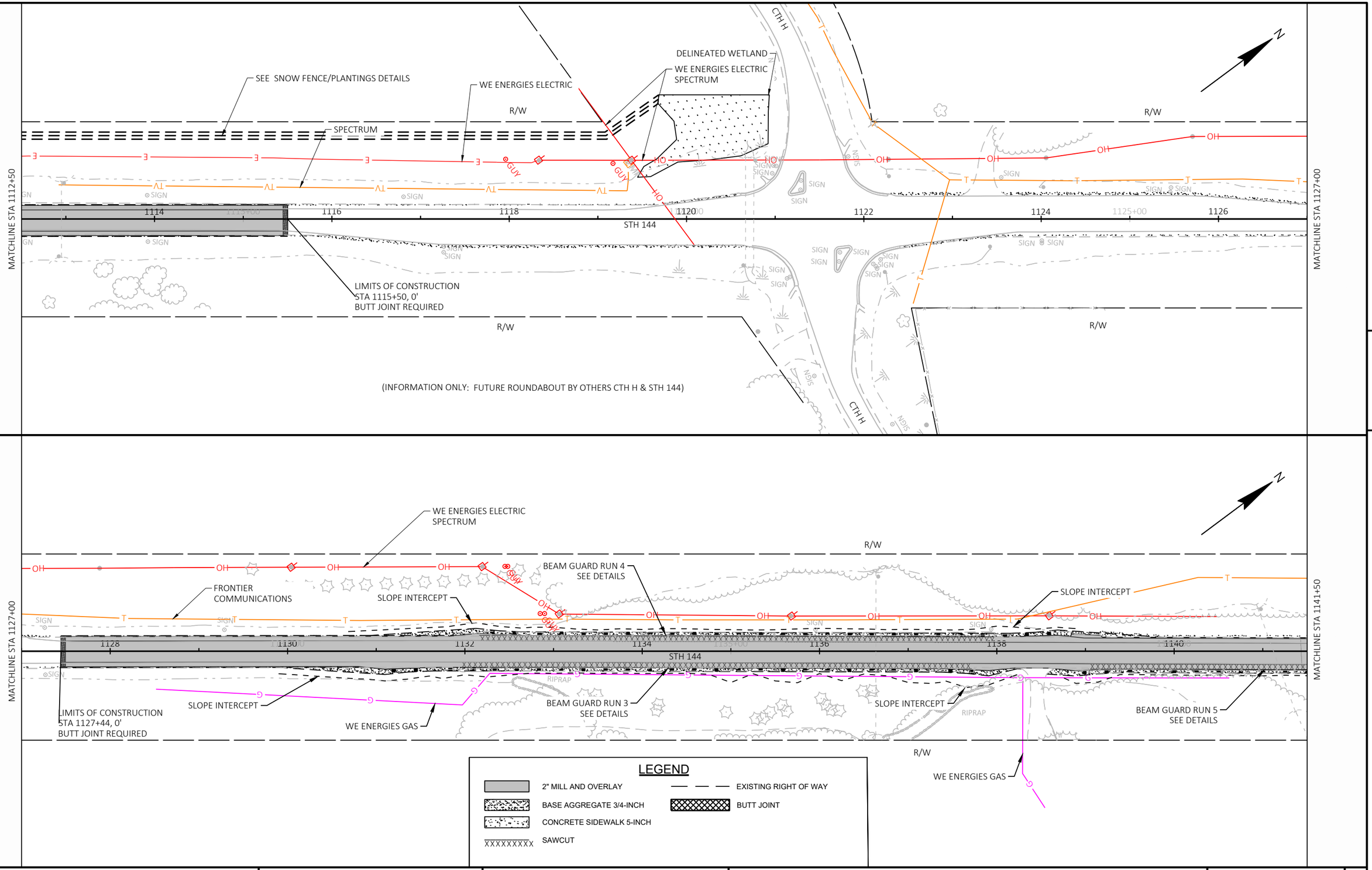

5

5

PROJECT NO: 4010-18-70	HWY: STH 144	COUNTY: WASHINGTON	PLAN DETAILS	SHEET 144	E

FILE NAME : N:\PDS\C3D\40101800\SHEETSPLAN\050101-PD.DWG
LAYOUT NAME - 050109-pd
PLOT DATE : 6/30/2025 1:56 PM
PLOT BY : SCHMIDT, JUDENE M
PLOT NAME :
PLOT SCALE : 1 IN:100 FT
WISDOT/CADDS SHEET 44

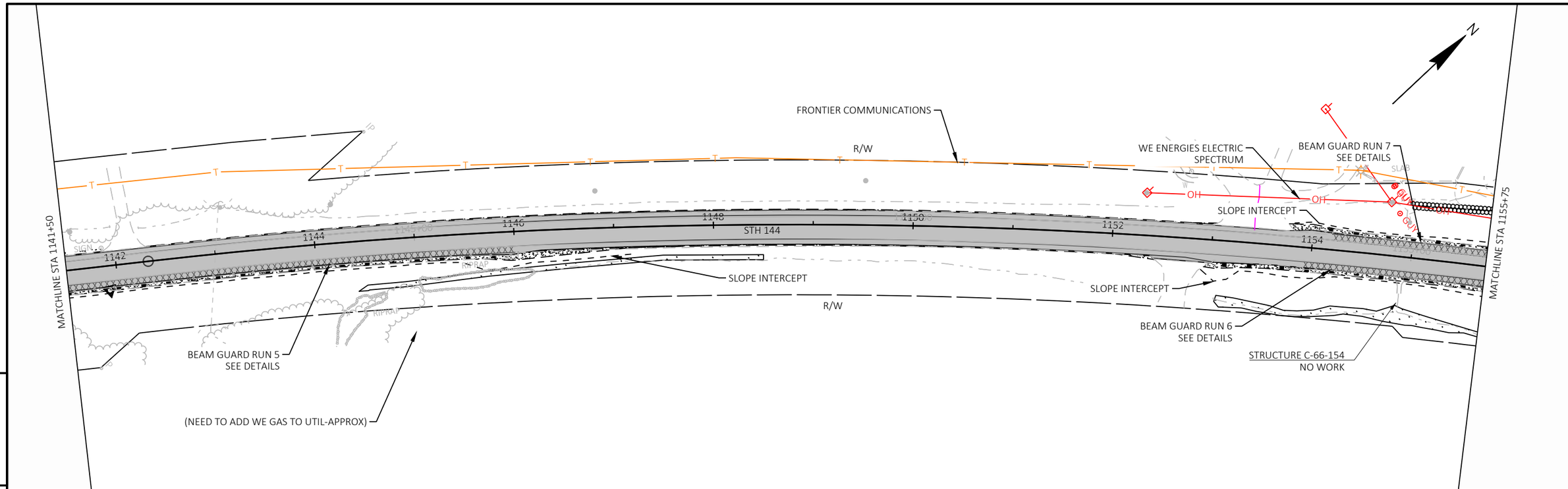

PROJECT NO: 4010-18-70	HWY: STH 144	COUNTY: WASHINGTON	PLAN DETAILS	SHEET 145	E

FILE NAME : N:\PDS\C3D\40101800\SHEETSPLAN\050101-PD.DWG
LAYOUT NAME - 050110-pd
PLOT DATE : 6/30/2025 1:56 PM
PLOT BY : SCHMIDT, JUDENE M
PLOT NAME :
PLOT SCALE : 1 IN:100 FT
WISDOT/CADDS SHEET 44

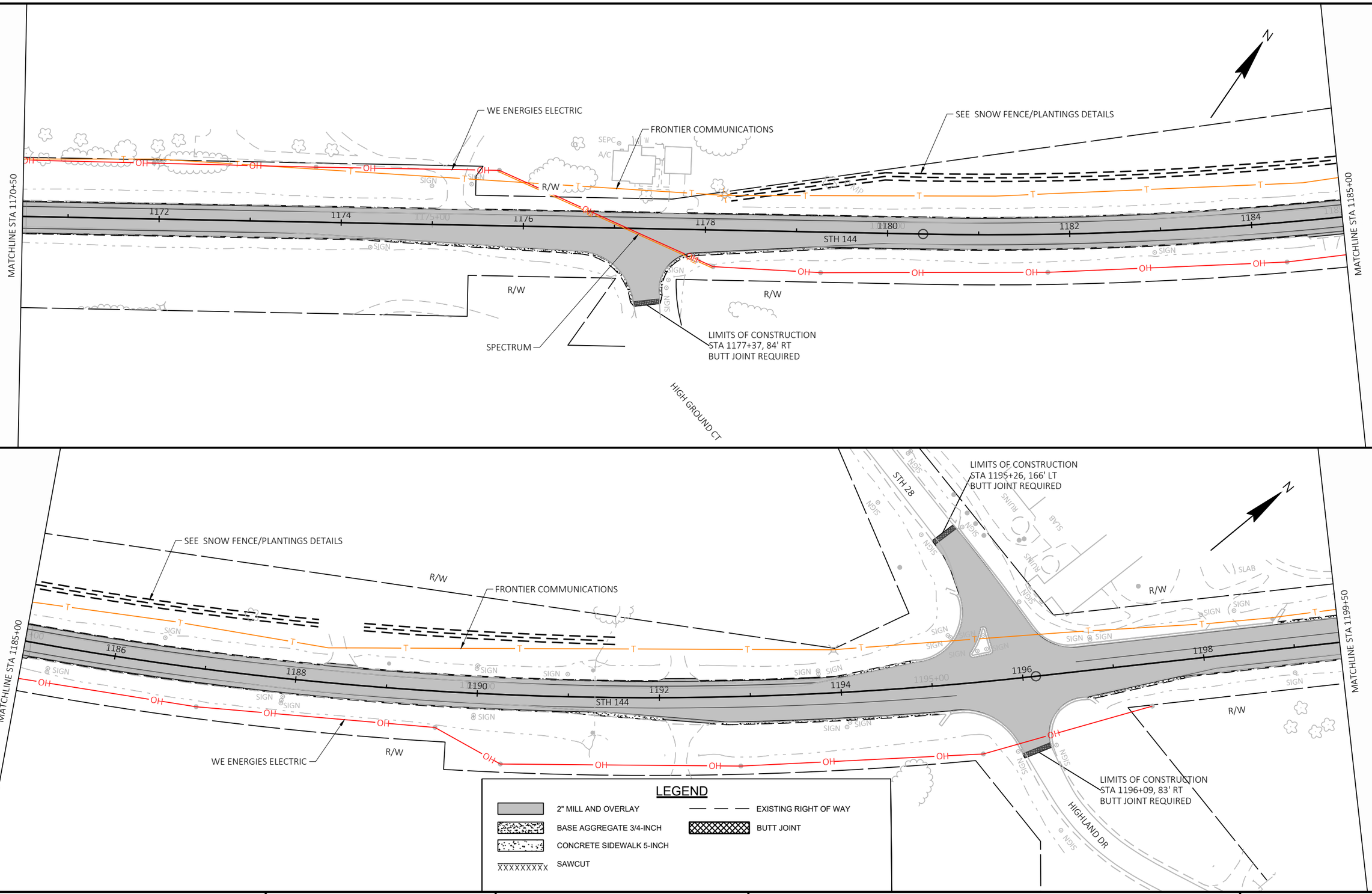

PROJECT NO: 4010-18-70	HWY: STH 144	COUNTY: WASHINGTON	PLAN DETAILS	SHEET 146 E

FILE NAME : N:\PDS\C3D\40101800\SHEETSPLAN\050101-PD.DWG
LAYOUT NAME - 050111-pd
PLOT DATE : 6/30/2025 1:57 PM
PLOT BY : SCHMIDT, JUDENE M
PLOT NAME :
PLOT SCALE : 1 IN:100 FT

WISDOT/CADDS SHEET 44

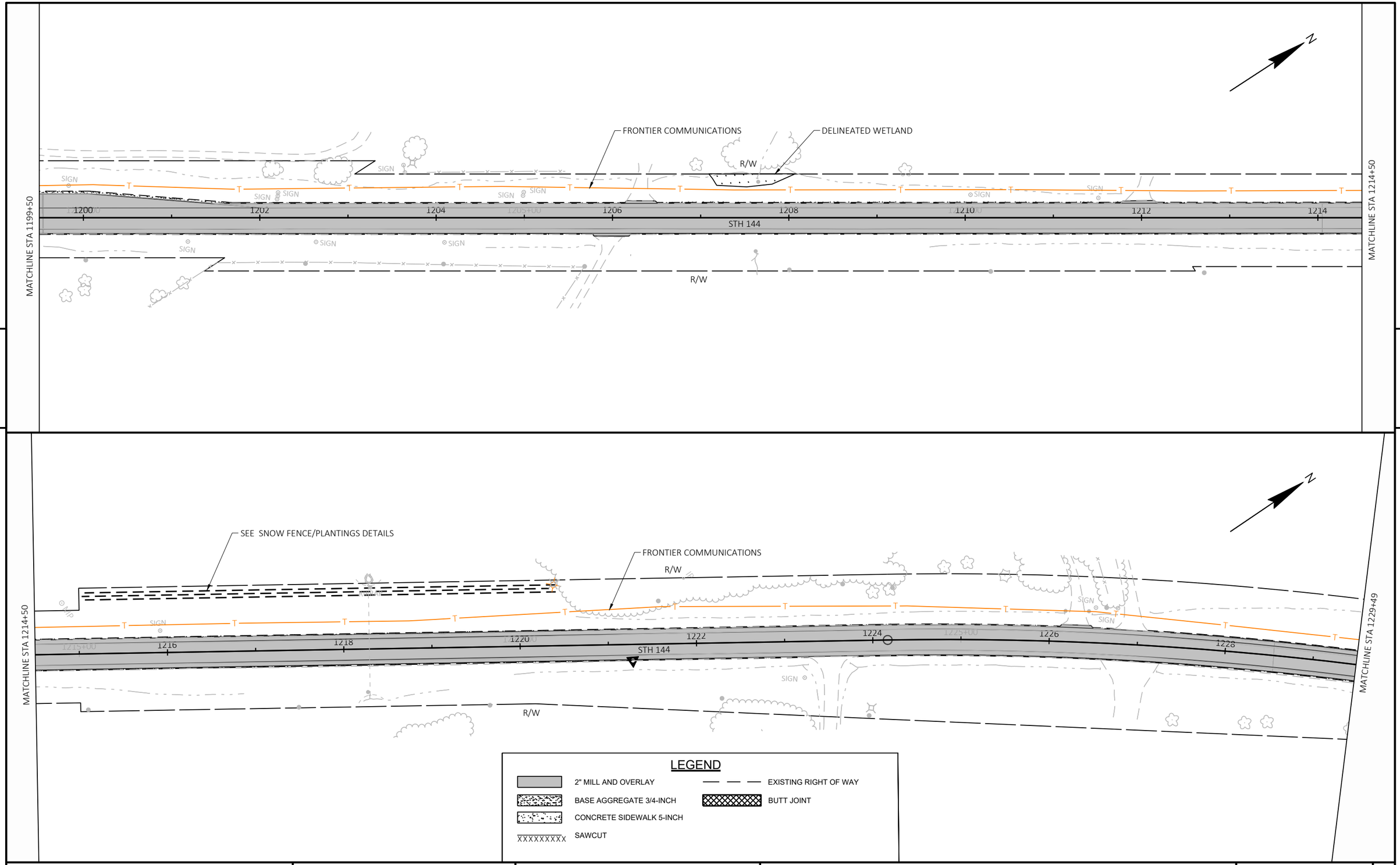

PROJECT NO: 4010-18-70	HWY: STH 144	COUNTY: WASHINGTON	PLAN DETAILS	SHEET 147	E

FILE NAME : N:\PDS\C3D\40101800\SHEETSPLAN\050101-PD.DWG
LAYOUT NAME - 050112-pd

PLOT DATE : 6/30/2025 1:57 PM PLOT BY : SCHMIDT, JUDENE M PLOT NAME : PLOT SCALE : 1 IN:100 FT

WISDOT/CADDS SHEET 44

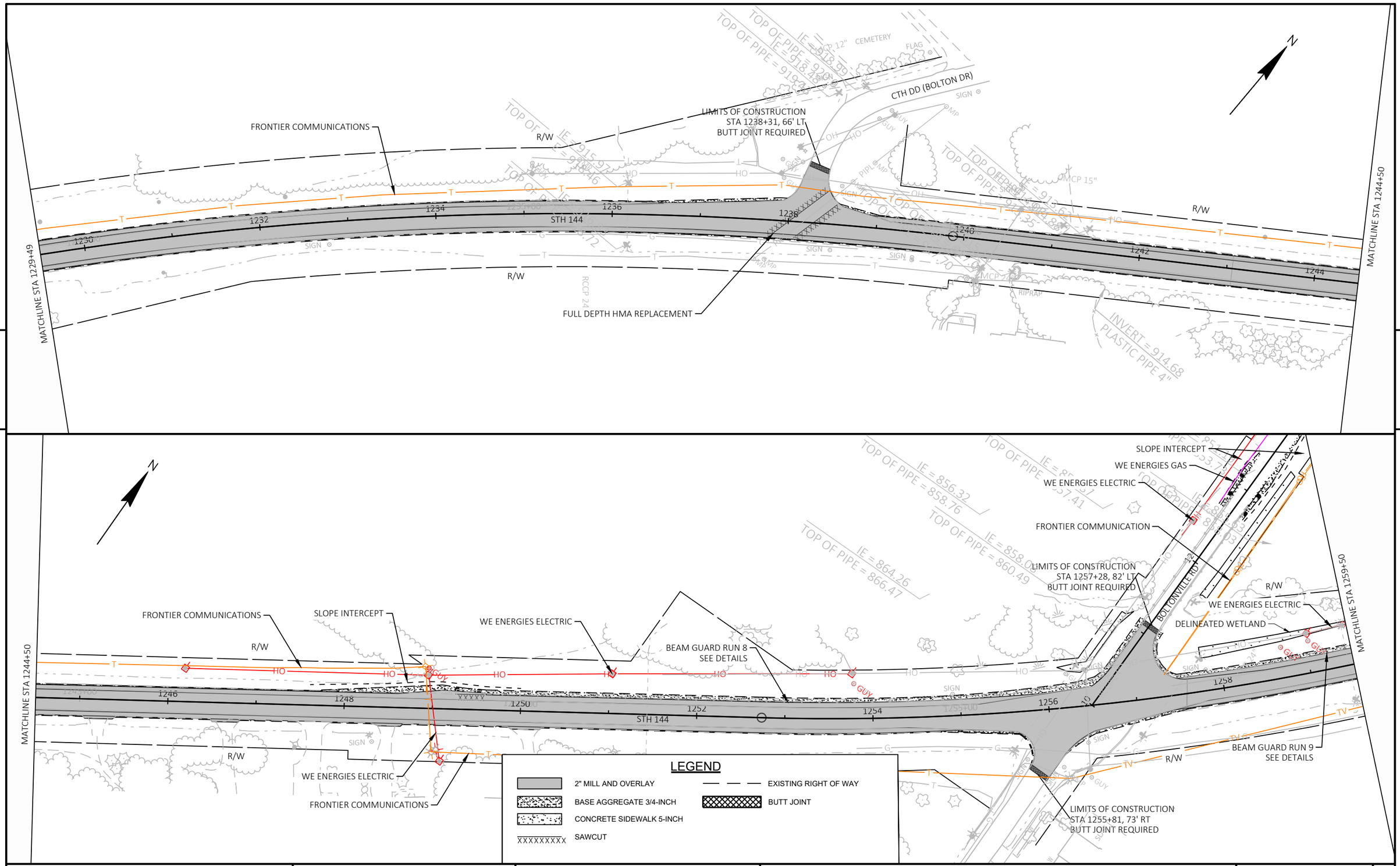

PROJECT NO: 4010-18-70	HWY: STH 144	COUNTY: WASHINGTON	PLAN DETAILS	SHEET 148	E

FILE NAME : N:\PDS\C3D\40101800\SHEETSPLAN\050101-PD.DWG
LAYOUT NAME - 050113-pd

PLOT DATE : 6/30/2025 1:57 PM PLOT BY : SCHMIDT, JUDENE M PLOT NAME : PLOT SCALE : 1 IN:100 FT

WISDOT/CADDS SHEET 44

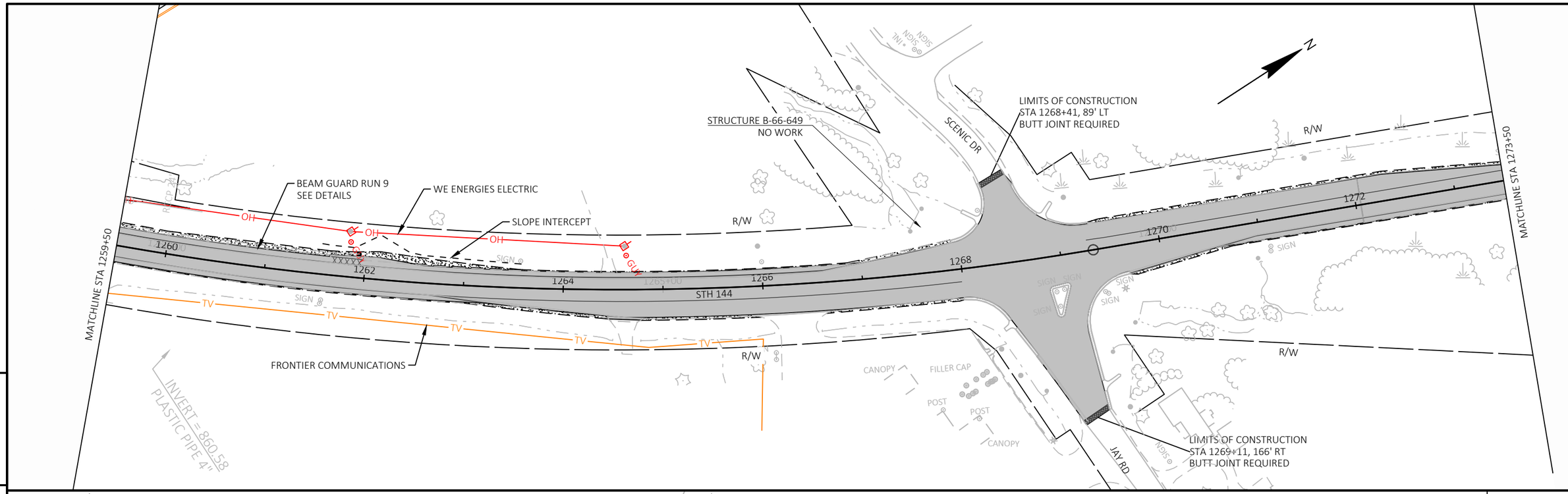

PROJECT NO: 4010-18-70	HWY: STH 144	COUNTY: WASHINGTON	PLAN DETAILS	SHEET 149	E

FILE NAME : N:\PDS\C3D\40101800\SHEETSPLAN\050101-PD.DWG
LAYOUT NAME - 050114-pd
PLOT DATE : 6/30/2025 1:57 PM
PLOT BY : SCHMIDT, JUDENE M
PLOT NAME :
PLOT SCALE : 1 IN:100 FT
WISDOT/CADDS SHEET 44

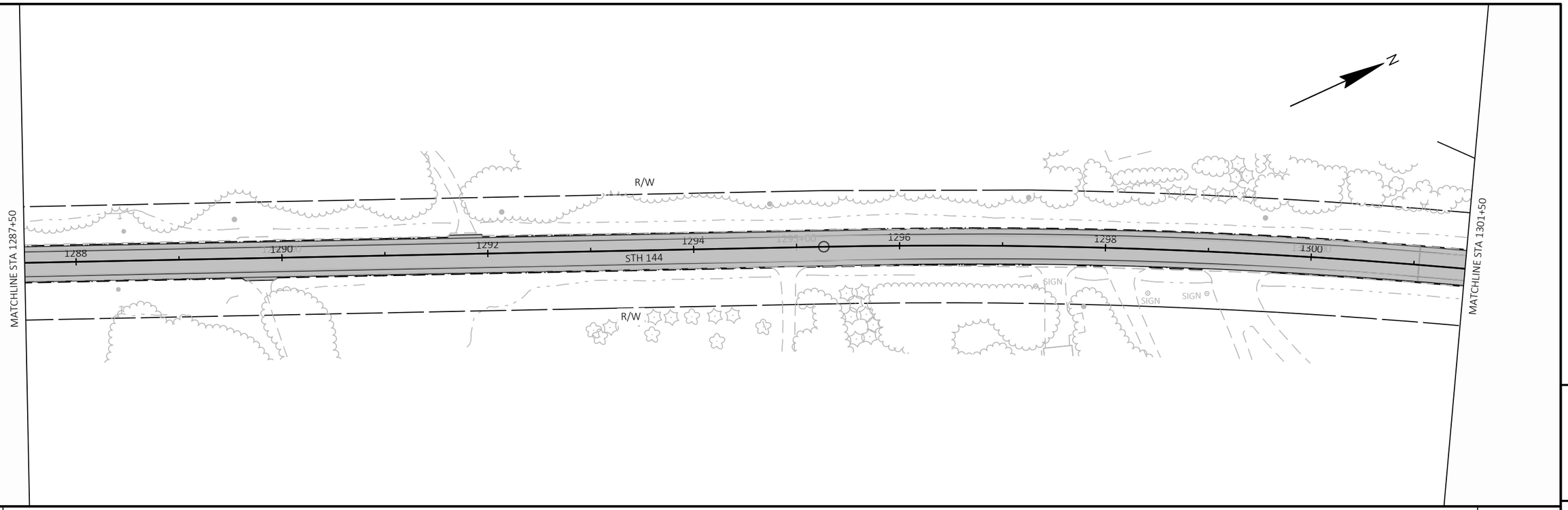

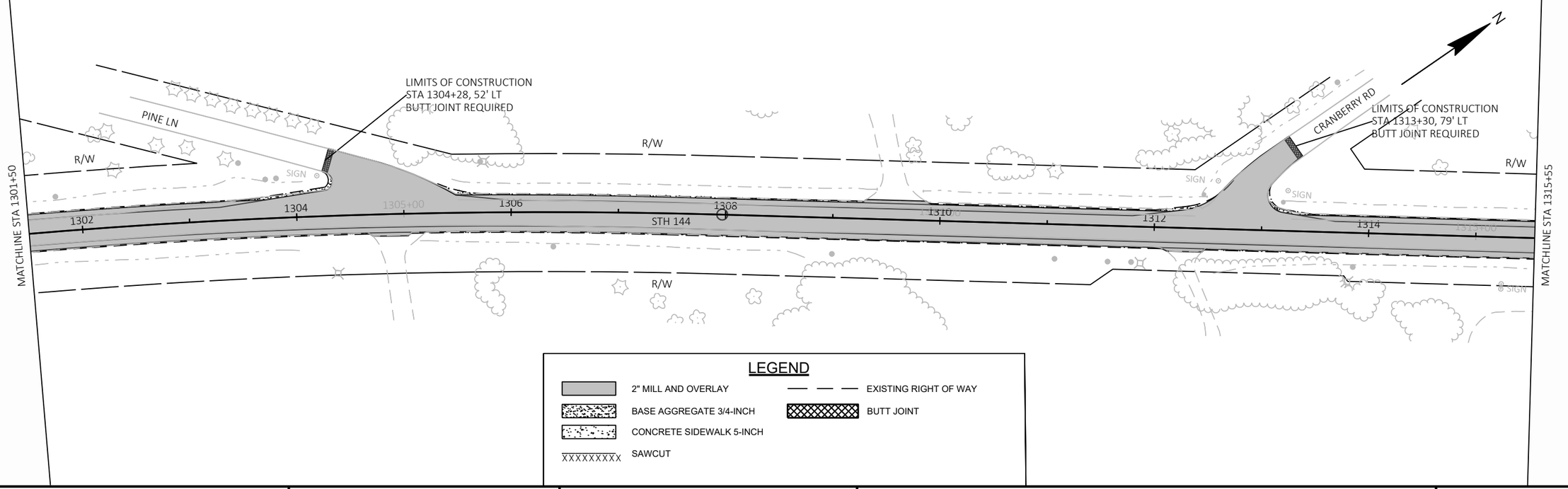

PROJECT NO: 4010-18-70	HWY: STH 144	COUNTY: WASHINGTON	PLAN DETAILS	SHEET 150	E

FILE NAME : N:\PDS\C3D\40101800\SHEETSPLAN\050101-PD.DWG
LAYOUT NAME - 050115-pd

PLOT DATE : 6/30/2025 1:57 PM PLOT BY : SCHMIDT, JUDENE M PLOT NAME : PLOT SCALE : 1 IN:100 FT

WISDOT/CADDS SHEET 44

MATCHLINE STA 1315+55

MATCHLINE STA 1330+05

R/W

SIGN

1316 1318 1320 1322 1324 1325+00 1326 1328

STH 144

R/W

WE ENERGIES ELECTRIC

WE ENERGIES GAS

FRONTIER COMMUNICATIONS

5

5

SHEBOYGAN COUNTY

WASHINGTON COUNTY

END PROJECT
STA 1332+62
MATCHLINE STA 1330+05
MATCH EXISTING
BUTT JOINT REQUIRED

MEDIUM
RIPRAP

WE ENERGIES GAS

WE ENERGIES ELECTRIC

SLOPE INTERCEPT

GUY POLE

R/W

1332 1334 1335+00 1336 1338 1340 1342

STH 144

ATC MANAGEMENT

OH

VALLEY VIEW DR

STRUCTURE C-66-153
REMOVE EXISTING CATTLE PASS
AND REPLACE WITH CULVERT
PIPE REINFORCED CONCRETE

WE ENERGIES ELECTRIC

WE ENERGIES GAS

FRONTIER COMMUNICATIONS

LEGEND

- 2" MILL AND OVERLAY
- BASE AGGREGATE 3/4-INCH
- CONCRETE SIDEWALK 5-INCH
- SAWCUT
- EXISTING RIGHT OF WAY
- BUTT JOINT

PROJECT NO: 4010-18-70	HWY: STH 144	COUNTY: WASHINGTON	PLAN DETAILS	SHEET 151	E

FILE NAME : N:\PDS\C3D\40101800\SHEETSPLAN\050101-PD.DWG
LAYOUT NAME - 050116-pd

PLOT DATE : 6/30/2025 1:58 PM PLOT BY : SCHMIDT, JUDENE M PLOT NAME : PLOT SCALE : 1 IN:100 FT

WISDOT/CADDS SHEET 44

Standard Detail Drawing List

08A05-21A	INLET COVERS TYPE A, H, A-S, H-S & Z
08A05-21E	INLET COVER TYPE BW, MANHOLE COVERS, TYPE K, J, J-S, L & M
08B09-04	MANHOLES 3-FT, 4-FT, 5-FT, 6-FT, 7-FT, 8-FT, 9-FT, 10-FT DIAMETER
08C06-03	INLETS 3-FT AND 4-FT DIAMETER
08D01-23A	CONCRETE CURB & GUTTER
08D01-23B	CONCRETE CURB, TIES AND CURB AND GUTTER APPLICATIONS
08D05-21A	CURB RAMPS TYPES 1 AND 1-A
08D05-21B	CURB RAMPS TYPES 2 AND 3
08D05-21C	CURB RAMPS TYPES 4A AND 4A1
08D05-21D	CURB RAMPS TYPE 4B AND 4B1
08D05-21E	CURB RAMPS TYPES 5, 6, 7A, 7B & 8
08D05-21F	CURB RAMPS RADIAL DETECTABLE WARNING FIELD APPLICATIONS
08D05-21G	CURB RAMPS RECTANGULAR AND RADIAL DETECTABLE WARNING PLATES
08E08-03	TYPICAL INSTALLATIONS OF EROSION BALES / TEMPORARY DITCH CHECKS
08E09-06	SILT FENCE
08E10-02	INLET PROTECTION TYPE A, B, C AND D
08E15-01	CULVERT PIPE CHECK
08F01-11	APRON ENDWALLS FOR CULVERT PIPE
08F04-08	JOINT TIES FOR CONCRETE PIPE AND CONCRETE COLLAR DETAIL
13A10-03A	SHOULDER RUMBLE STRIPS - ASPHALT
13A10-03G	SHOULDER AND EDGE LINE RUMBLE STRIPS - CROSSINGS, INTERSECTIONS, BRIDGES, DRIVEWAYS
13A10-03H	SHOULDER AND EDGE LINE RUMBLE STRIPS - RAILROAD, PASSING, CLIMBING AND BYPASS LANES
13A11-04A	CENTERLINE RUMBLE STRIPS - ASPHALT
13A11-04D	CENTERLINE RUMBLE STRIPS - INTERSECTIONS, DRIVEWAYS, BRIDGES, RAILROADS
13C19-03	HMA LONGITUDINAL JOINTS
14B15-11A	STEEL PLATE BEAM GUARD, CLASS "A" INSTALLATION & ELEMENTS
14B15-11B	STEEL PLATE BEAM GUARD, CLASS "A" INSTALLATION & ELEMENTS
14B15-11C	STEEL PLATE BEAM GUARD, CLASS "A", INSTALLATION & ELEMENTS
14B24-09A	STEEL PLATE BEAM GUARD ENERGY ABSORBING TERMINAL
14B24-09B	STEEL PLATE BEAM GUARD ENERGY ABSORBING TERMINAL
14B24-09C	STEEL PLATE BEAM GUARD ENERGY ABSORBING TERMINAL
14B28-04A	GUARDRAIL MOW STRIP
14B28-04B	GUARDRAIL MOW STRIP
14B42-07A	MIDWEST GUARDRAIL SYSTEM (MGS) GUARDRAIL
14B42-07B	MIDWEST GUARDRAIL SYSTEM (MGS) GUARDRAIL
14B42-07C	MIDWEST GUARDRAIL SYSTEM (MGS) GUARDRAIL
14B42-07D	MIDWEST GUARDRAIL SYSTEM (MGS) GUARDRAIL
14B44-04A	MIDWEST GUARDRAIL SYSTEM ENERGY ABSORBING TERMINAL (MGS)
14B44-04B	MIDWEST GUARDRAIL SYSTEM ENERGY ABSORBING TERMINAL (MGS)
14B44-04C	MIDWEST GUARDRAIL SYSTEM ENERGY ABSORBING TERMINAL (MGS)
15C02-09A	BARRICADES AND SIGNS FOR MAINLINE CLOSURES
15C02-09B	BARRICADES AND SIGNS FOR VARIOUS CLOSURES
15C02-09C	DETOUR SIGNING FOR MAINLINE CLOSURES
15C03-05	BARRICADES AND SIGNS FOR SIDEROAD CLOSURES
15C04-05	TRAFFIC CONTROL, ADVANCE WARNING SIGNS 45 M.P.H. OR GREATER TWO-WAY UNDIVIDED ROAD OPEN TO TRAFFIC
15C07-16B	PAVEMENT MARKING WORDS
15C07-16C	PAVEMENT MARKING ARROWS
15C08-23A	PERMANENT LONGITUDINAL PAVEMENT MARKINGS
15C08-23D	PAVEMENT MARKING (TURN LANES)
15C18-09A	MEDIAN ISLAND MARKINGS
15C18-09B	PAVEMENT MARKINGS, MEDIAN ISLAND NOSE
15C33-05	STOP LINE AND CROSSWALK PAVEMENT MARKING
15C34-04	STANDARD APPLICATION FOR TEMPORARY RAISED PAVEMENT MARKER, TYPE 2
15D44-02	TRAFFIC CONTROL, SIGNING ON ROADWAYS WITH MILLED SURFACES

6

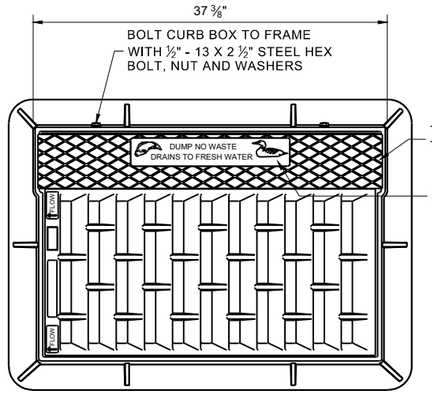

NOTE: EITHER CASTING IS ACCEPTABLE

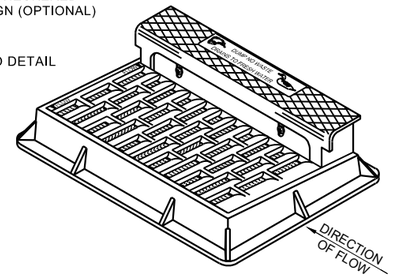

NOTE: CURB BOX HEIGHT ADJUSTABLE 6" - 9"

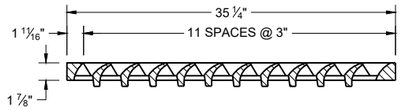

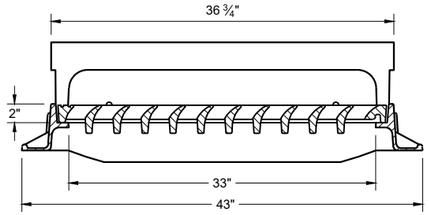

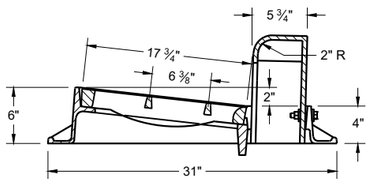

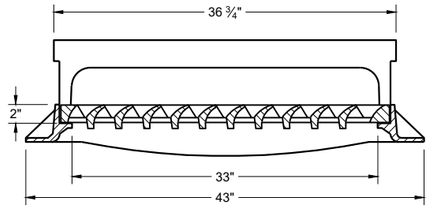

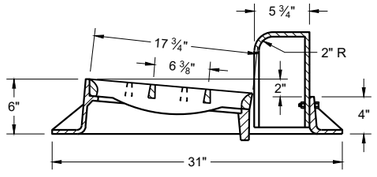

TYPE "H"

NOTE: EITHER CASTING IS ACCEPTABLE

1 ⅛" DIAGONAL BARS WITH 1 ⅝" OPENINGS

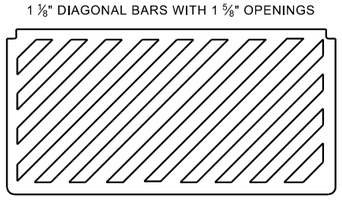

SPECIAL GRATE FOR TYPE "H" COVER

(MEASURES 35" X 17 ¾" X 2")

(NOTED AS TYPE H-S ON DRAINAGE TABLE)

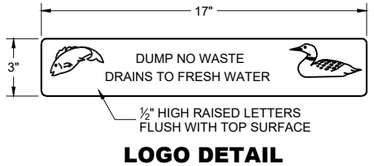

LOGO DETAIL

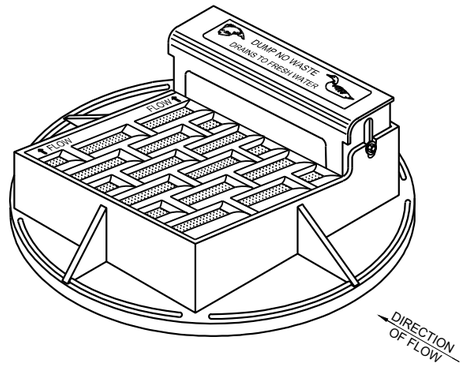

NOTE: CURB BOX HEIGHT ADJUSTABLE 6" - 9"

NOTE: EITHER CASTING IS ACCEPTABLE

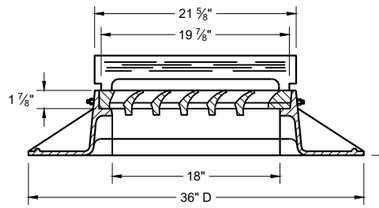

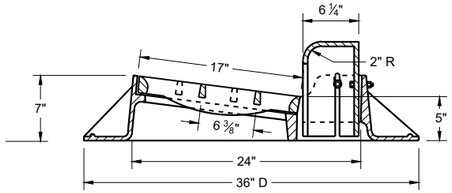

TYPE "A"

GENERAL NOTES

DETAILS OF CONSTRUCTION, MATERIALS AND WORKMANSHIP NOT SHOWN ON THIS DRAWING SHALL CONFORM TO THE PERTINENT REQUIREMENTS OF THE STANDARD SPECIFICATIONS AND THE APPLICABLE SPECIAL PROVISIONS.

DETAIL DRAWINGS FOR PROPOSED ALTERNATE DESIGNS FOR CATCH BASIN, MANHOLE AND INLET COVERS SHALL BE SUBMITTED TO THE ENGINEER FOR APPROVAL PROVIDING THAT SUCH ALTERNATE DESIGNS MAKE PROVISION FOR EQUIVALENT CAPACITY AND STRENGTH.

ROUND FRAMES AND COVERS SHALL HAVE CONTINUOUSLY MACHINED BEARING SURFACES TO PREVENT ROCKING AND RATTLING.

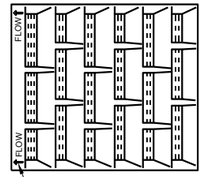

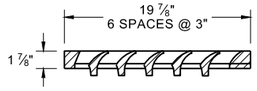

1" DIAGONAL BARS WITH 1 ½" OPENINGS

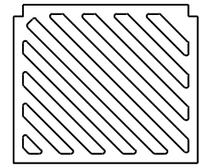

SPECIAL GRATE FOR TYPE "A" COVER

(MEASURES 19 ¾" X 17" X 1 ⅞")

(NOTED AS TYPE A-S ON DRAINAGE TABLE)

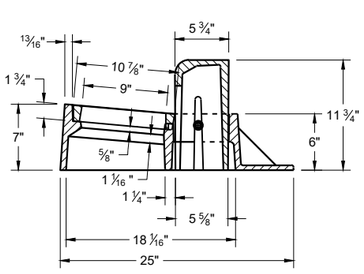

TYPE "Z"

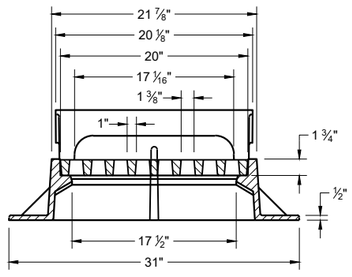

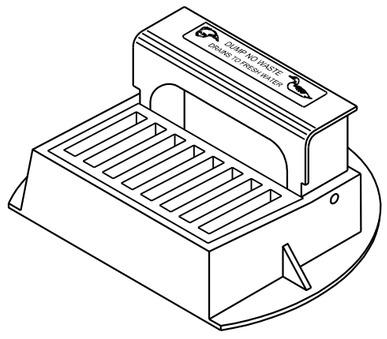

INLET COVERS
TYPES A, H, A-S, H-S AND Z

STATE OF WISCONSIN
DEPARTMENT OF TRANSPORTATION

APPROVED
December 2023
DATE

/S/ Rodney Taylor
ROADWAY STANDARDS DEVELOPMENT UNIT SUPERVISOR

FHWA

GENERAL NOTES

DETAILS OF CONSTRUCTION, MATERIALS AND WORKMANSHIP NOT SHOWN ON THIS DRAWING SHALL CONFORM TO THE PERTINENT REQUIREMENTS OF THE STANDARD SPECIFICATIONS AND THE APPLICABLE SPECIAL PROVISIONS.

DETAIL DRAWINGS FOR PROPOSED ALTERNATE DESIGNS FOR MANHOLE COVERS SHALL BE SUBMITTED TO THE ENGINEER FOR APPROVAL PROVIDING THAT SUCH ALTERNATE DESIGNS MAKE PROVISION FOR EQUIVALENT CAPACITY AND STRENGTH.

ROUND FRAMES AND COVERS SHALL HAVE CONTINUOUSLY MACHINED BEARING SURFACES TO PREVENT ROCKING AND RATTLING.

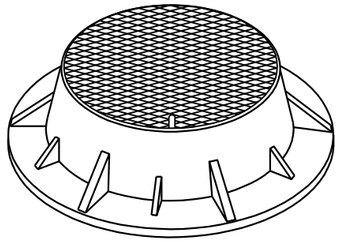

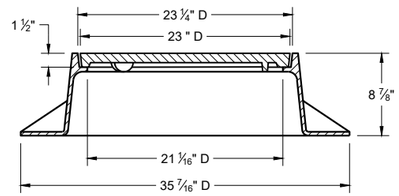

TYPE "J"

NOTE: EITHER CASTING IS ACCEPTABLE

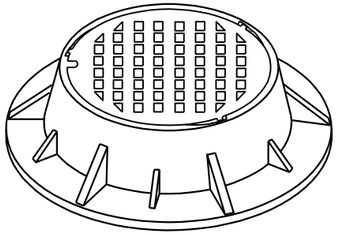

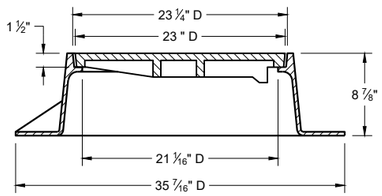

TYPE "J" SPECIAL

TYPE "B" NON-ROCKING SELF-SEAL LID
(NOTED AS TYPE J-S ON THE DRAINAGE TABLE)

NOTE: EITHER CASTING IS ACCEPTABLE

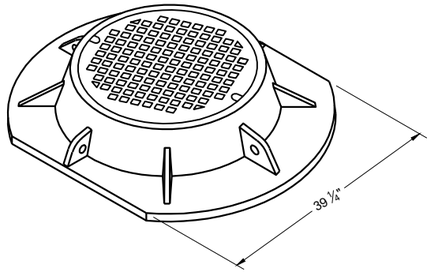

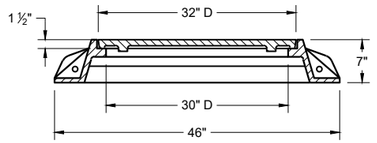

TYPE "K"

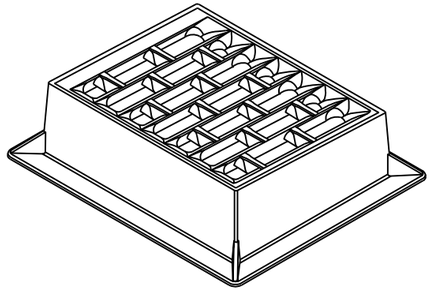

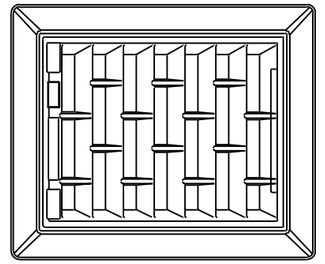

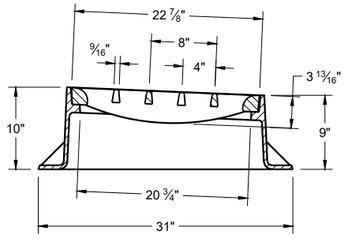

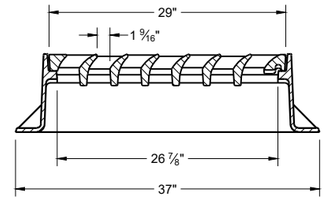

INLET COVER TYPE "BW"

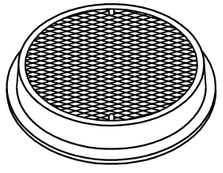

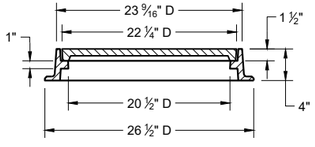

TYPE "L"

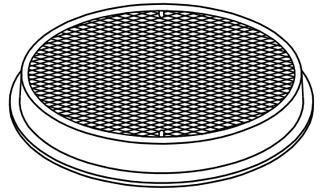

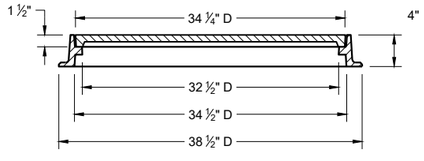

TYPE "M"

INLET COVERS TYPES BW
MANHOLE COVERS TYPES K, J, J-S, L, AND M

STATE OF WISCONSIN
DEPARTMENT OF TRANSPORTATION

APPROVED
December 2023 — DATE
/S/ Rodney Taylor — ROADWAY STANDARDS DEVELOPMENT UNIT SUPERVISOR

FHWA

6

SDD 08A05-21e

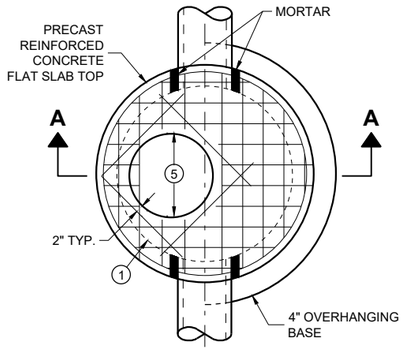

PLAN VIEW

CIRCULAR OPENING

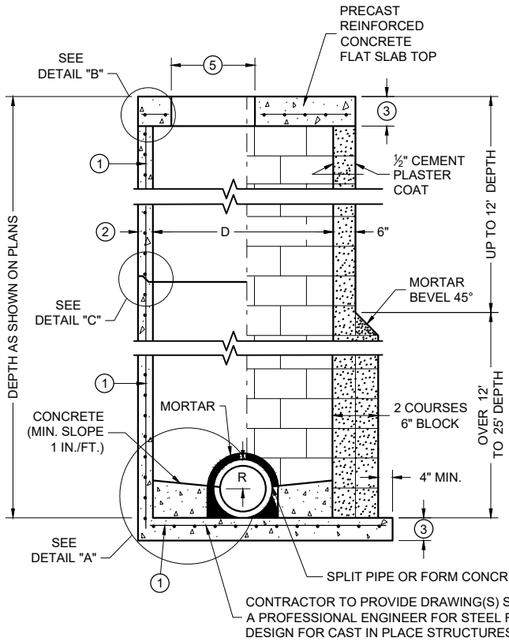

SECTION A - A

PRECAST REINFORCED CONCRETE WITH MONOLITHIC BASE

CONCRETE BLOCK WITH CAST IN PLACE OR PRECAST REINFORCED CONCRETE BASE (1)

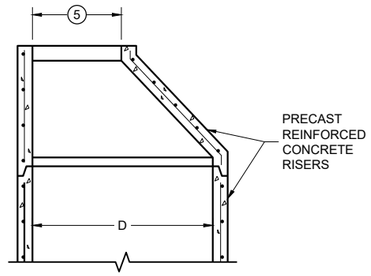

OPTIONAL PRECAST REINFORCED CONCRETE ECCENTRIC TOP

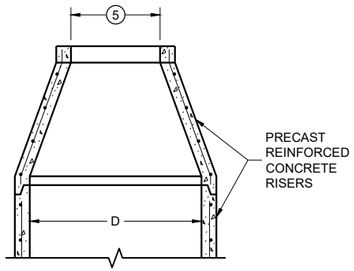

OPTIONAL PRECAST REINFORCED CONCRETE CONCENTRIC TOP

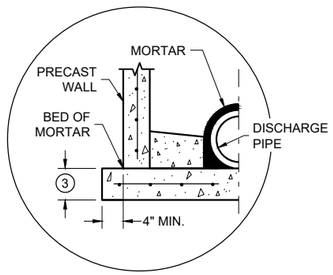

SEPARATE PRECAST REINFORCED CONCRETE BASE OPTION

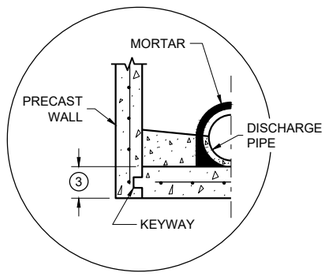

PRECAST REINFORCED CONCRETE WITH INTEGRAL BASE OPTION

DETAIL "A"

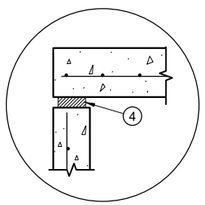

TOP WITH PLAIN END JOINT

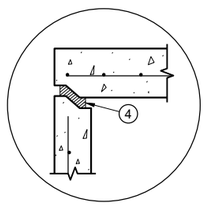

TOP WITH TONGUE AND GROOVE JOINT

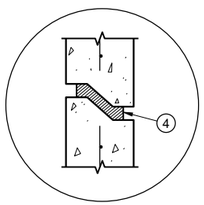

RISER WITH TONGUE AND GROOVE JOINT

DETAIL "B"

DETAIL "C"

MANHOLE COVER OPENING MATRIX

OPENING SIZE (FT.) (5) \ MANHOLE COVER TYPE	C	ALL J'S	K	L	M
2 DIA.	X	X		X	
3 DIA.			X		X

PIPE MATRIX

MANHOLE SIZE (DIA.)	MAXIMUM INSIDE PIPE DIAMETER FOR TWO PIPES		MINIMUM WALL THICKNESS (IN)	MINIMUM PRECAST FLAT SLAB TOP AND BASE THICKNESS
	180° SEPARATION (IN)	90° SEPARATION (IN)		
3-FT	15	12	4	6
4-FT	24	18	4	6
5-FT	36	24	5	8
6-FT	42	36	6	8
7-FT	48	36/42 *	7	8
8-FT	60	42	8	8
9-FT	66	54	9	10
10-FT	72	60	10	10

*A 36" PIPE AND A 42" PIPE CAN BE PLACED WITHIN 90 DEGREES. SEE MINIMUM HORIZONTAL PIPE SEPARATION DETAIL.

GENERAL NOTES

DETAILS OF CONSTRUCTION, MATERIALS AND WORKMANSHIP NOT SHOWN ON THIS DRAWING SHALL CONFORM TO THE PERTINENT REQUIREMENTS OF THE STANDARD SPECIFICATIONS AND THE APPLICABLE SPECIAL PROVISIONS.

UNLESS OTHERWISE AUTHORIZED IN WRITING BY THE ENGINEER, THE CONTRACTOR SHALL NOT ORDER AND DELIVER PRECAST MANHOLE UNITS REQUIRED FOR THE PROJECT UNTIL A LIST OF SIZES IS FURNISHED BY THE ENGINEER.

DETAILED DRAWINGS FOR PROPOSED ALTERNATE DESIGNS FOR UNDERGROUND DRAINAGE STRUCTURES SHALL BE SUBMITTED TO THE ENGINEER FOR APPROVAL PROVIDING THAT SUCH ALTERNATE DESIGNS MAKE PROVISION FOR EQUIVALENT CAPACITY AND STRENGTH.

ALL DRAINAGE STRUCTURES ARE DESIGNATED ON THE PLANS AS "MANHOLES 3X3-L", "CATCH BASINS 4-B", "INLETS 2X3-H", ETC. THE FIRST NUMBERS DESIGNATE THE SIZE OF THE STRUCTURE, AND THE FOLLOWING LETTER DESIGNATES THE TYPE OF COVER TO BE USED TO COMPRISE THE COMPLETE UNIT.

BASES SHALL BE PLACED ON A BED OF MATERIAL AT LEAST 6 INCHES IN DEPTH, WHICH MEETS THE REQUIREMENTS OF FOUNDATION BACKFILL. THIS BEDDING SHALL BE COMPACTED AND PROVIDE UNIFORM SUPPORT FOR THE ENTIRE AREA OF THE BASE.

PRECAST REINFORCED CONCRETE CONE TOPS (ECCENTRIC OR CONCENTRIC) OR PRECAST REINFORCED CONCRETE FLAT SLAB TOPS MAY BE USED ON CONCRETE BLOCK STRUCTURES.

ECCENTRIC CONE TOPS MAY BE USED ON ALL STRUCTURES. CONCENTRIC CONE TOPS SHALL BE USED ONLY ON STRUCTURES 5 FEET OR LESS IN DEPTH UNLESS OTHERWISE DIRECTED BY THE ENGINEER.

STEPS MEETING AASHTO M199 AND THE FOLLOWING REQUIREMENTS SHALL BE INSTALLED IN ALL STRUCTURES OVER 5 FEET IN DEPTH: 16 INCH C-C MAXIMUM SPACING; PROJECT A MINIMUM CLEAR DISTANCE OF 4 INCHES FROM THE WALL AT THE POINT OF EMBEDMENT; MINIMUM LENGTH OF 10 INCHES; MINIMUM WALL EMBEDMENT OF 3 INCHES. FERROUS METAL STEPS NOT PAINTED OR TREATED TO RESIST CORROSION SHALL HAVE A MINIMUM CROSS SECTIONAL IMENSION OF 1 INCH.

STEPS OF APPROVED POLYPROPYLENE PLASTIC COATED REINFORCEMENT BAR ARE ACCEPTABLE. REINFORCING BAR MUST BE A MINIMUM OF ½ INCH AND MEET THE REQUIREMENTS OF ASTM A615.

CERTIFICATION SHALL BE PROVIDED THAT INSTALLED STEPS WHEN TESTED IN ACCORDANCE WITH SECTION 10 OF AASHTO T280 CAN WITHSTAND A VERTICAL LOAD OF 800 LBS. AND A HORIZONTAL LOAD OF 400 LBS.

ALL BAR STEEL REINFORCEMENT SHALL BE EMBEDDED 2 INCHES CLEAR UNLESS OTHERWISE SHOWN OR NOTED.

ALL PRECAST MANHOLE UNITS SHALL CONFORM TO THE PERTINENT REQUIREMENTS OF AASHTO DESIGNATION M199.

PRECAST REINFORCED RISERS SHALL HAVE A TONGUE AND GROOVE JOINT WITH TONGUE UP OR DOWN.

CONCRETE BLOCK WILL NOT BE PERMITTED FOR STRUCTURES GREATER THAN 4 FEET IN DIAMETER.

4" OVERHANGING BASES ARE REQUIRED FOR ALL CONCRETE BLOCK INSTALLATIONS. 4" OVERHANG IS REQUIRED WHEN SEPARATE PRECAST BASE IS PROVIDED. OVERHANG IS NOT REQUIRED ON PRECAST STRUCTURES WITH AN INTEGRAL OR MONOLITHIC BASE.

FOR ADDITIONAL CONFIGURATIONS, MAINTAIN A MINIMUM OF 12 INCHES AS MEASURED FROM THE INSIDE OF THE STRUCTURE WALL BETWEEN THE OUTSIDE PIPE WALLS OF ADJACENT PIPES. SEE DETAIL "D".

(1) FOR PRECAST MANHOLES AND REINFORCED CONCRETE BASES PROVIDE REINFORCING STEEL IN ACCORDANCE TO AASHTO M199.

(2) SEE PIPE MATRIX TABLE FOR MINIMUM WALL THICKNESS FOR PRECAST MANHOLES

(3) SEE PIPE MATRIX TABLE FOR MINIMUM THICKNESS OF PRECAST FLAT SLAB TOPS AND BASES.

(4) JOINTS TO BE SEALED WITH A BUTYL RUBBER SEAL PER SEALANT MANUFACTURERS RECOMMENDATIONS CONFORMING TO ASTM C 990 OR RUBBER GASKETS CONFORMING TO ASTM C443.

(5) SEE MANHOLE COVER OPENING MATRIX.

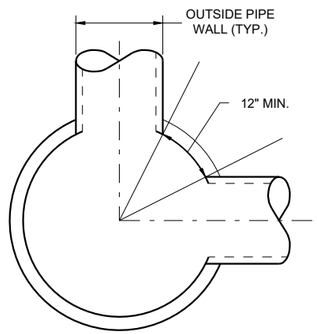

MINIMUM HORIZONTAL PIPE SEPARATION

DETAIL "D"

MANHOLES 3-FT, 4-FT, 5-FT, 6-FT, 7-FT, 8-FT, 9-FT AND 10-FT DIAMETER

MANHOLES, 3-FT, 4-FT 5-FT, 6-FT, 7-FT, 8-FT, 9-FT AND 10-FT DIAMETER

STATE OF WISCONSIN
DEPARTMENT OF TRANSPORTATION

APPROVED
December 2023 — DATE
/S/ Rodney Taylor — ROADWAY STANDARDS DEVELOPMENT UNIT SUPERVISOR

FHWA

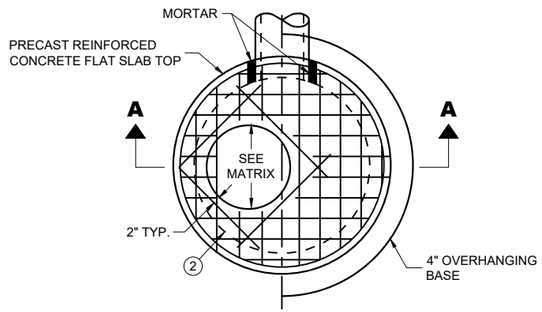

PLAN VIEW CIRCULAR OPENING

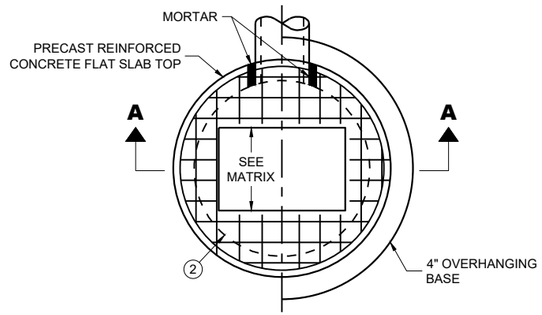

PLAN VIEW RECTANGULAR OPENING

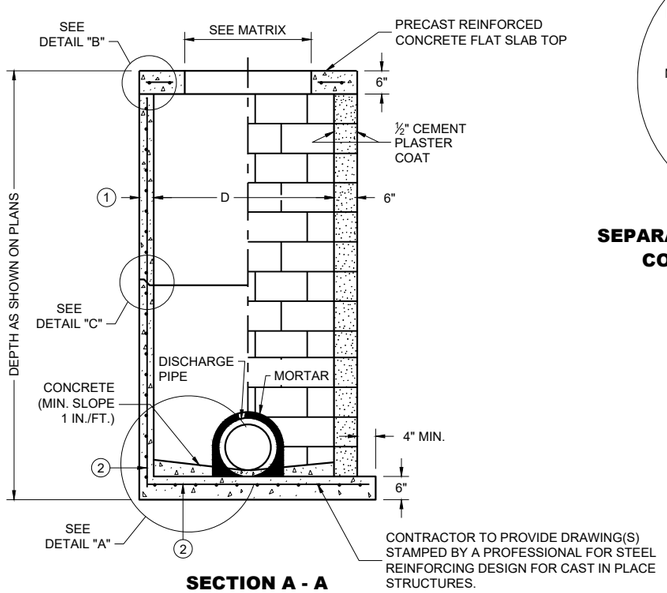

SECTION A - A

PRECAST REINFORCED CONCRETE WITH MONOLITHIC BASE

CONCRETE BLOCK WITH CAST IN PLACE OR PRECAST REINFORCED CONCRETE BASE (2)

CIRCULAR INLETS WITH FLAT TOP

CATCH BASIN COVER OPENING MATRIX

INLET SIZE	INLET COVER TYPE	ALL A'S	ALL B'S	BW	C	F	ALL H'S	S	T	V	WM	Z
	OPENING SIZE (FT.)											
3-FT	2 DIA.				X							X
	2 X 2	X	X					X		X		
4-FT	2 DIA.				X							X
	2 X 2	X	X					X		X		
	2 X 2.5			X				X	X	X	X	
	2 X 3						X					
	2.5 X 3					X						

PIPE MATRIX

INLET SIZE	MAXIMUM INSIDE PIPE DIAMETER FOR TWO PIPES	
	180° SEPARATION (IN)	90° SEPARATION (IN)
3-FT	15	12
4-FT	24	18

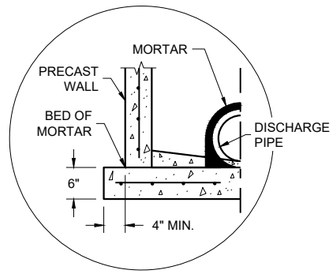

SEPARATE PRECAST REINFORCED CONCRETE BASE OPTION

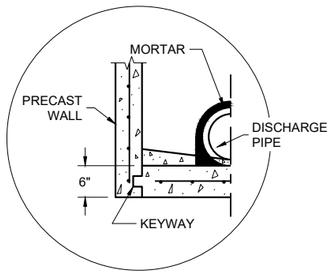

PRECAST REINFORCED CONCRETE WITH INTEGRAL BASE OPTION

DETAIL "A"

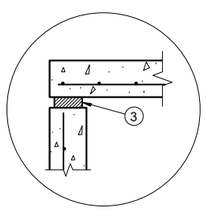

TOP WITH PLAIN END JOINT

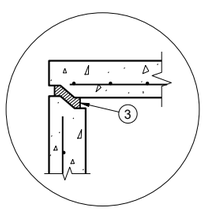

TOP WITH TONGUE AND GROOVE JOINT

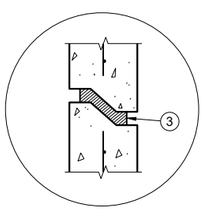

RISER WITH TONGUE AND GROOVE JOINT

DETAIL "B" **DETAIL "C"**

INLETS 3-FT AND 4-FT DIAMETER

GENERAL NOTES

DETAILS OF CONSTRUCTION, MATERIALS AND WORKMANSHIP NOT SHOWN ON THIS DRAWING SHALL CONFORM TO THE PERTINENT REQUIREMENTS OF THE STANDARD SPECIFICATIONS AND THE APPLICABLE SPECIAL PROVISIONS.

UNLESS OTHERWISE AUTHORIZED IN WRITING BY THE ENGINEER, THE CONTRACTOR SHALL NOT ORDER AND DELIVER PRECAST INLET UNITS REQUIRED FOR THE PROJECT UNTIL A LIST OF SIZES IS FURNISHED BY THE ENGINEER.

DETAILED DRAWINGS FOR PROPOSED ALTERNATE DESIGNS FOR UNDERGROUND DRAINAGE STRUCTURES SHALL BE SUBMITTED TO THE ENGINEER FOR APPROVAL PROVIDING THAT SUCH ALTERNATE DESIGNS MAKE PROVISION FOR EQUIVALENT CAPACITY AND STRENGTH.

ALL DRAINAGE STRUCTURES ARE DESIGNATED ON THE PLANS AS "MANHOLES 3X3-L", "CATCH BASINS 4-B", "INLETS 2X3-H", ETC. THE FIRST NUMBERS DESIGNATE THE SIZE OF THE STRUCTURE, AND THE FOLLOWING LETTER DESIGNATES THE TYPE OF COVER TO BE USED TO COMPRISE THE COMPLETE UNIT.

BASES SHALL BE PLACED ON A BED OF MATERIAL AT LEAST 6 INCHES IN DEPTH, WHICH MEETS THE REQUIREMENTS OF FOUNDATION BACKFILL. THIS BEDDING SHALL BE COMPACTED AND PROVIDE UNIFORM SUPPORT FOR THE ENTIRE AREA OF THE BASE.

ALL BAR STEEL REINFORCEMENT SHALL BE EMBEDDED 2 INCHES CLEAR UNLESS OTHERWISE SHOWN OR NOTED.

ALL PRECAST INLET UNITS SHALL CONFORM TO THE PERTINENT REQUIREMENTS OF AASHTO DESIGNATION M199.

PRECAST REINFORCED RISERS SHALL HAVE A TONGUE AND GROOVE JOINT WITH TONGUE UP OR DOWN.

4" OVERHANGING BASES ARE REQUIRED FOR ALL CONCRETE BLOCK INSTALLATIONS. 4" OVERHANG IS REQUIRED WHEN SEPARATE PRECAST BASE IS PROVIDED. OVERHANG IS NOT REQUIRED ON PRECAST STRUCTURES WITH AN INTEGRAL OR MONOLITHIC BASE.

FOR ADDITIONAL CONFIGURATIONS, MAINTAIN A MINIMUM OF 12 INCHES AS MEASURED FROM THE INSIDE OF THE STRUCTURE WALL BETWEEN THE OUTSIDE PIPE WALLS OF ADJACENT PIPES. SEE DETAIL "D".

(1) MINIMUM WALL THICKNESS SHALL BE 4 INCHES FOR 3-FT DIAMETER AND 5 INCHES FOR 4-FT DIAMTER PRECAST INLETS.

(2) FOR PRECAST INLETS AND REINFORCED CONCRETE BASES PROVIDE REINFORCING STEEL IN ACCORDANCE TO AASHTO M199.

(3) JOINTS TO BE SEALED WITH A BUTYL RUBBER SEAL PER SEALANT MANUFACTURERS RECOMMENDATIONS CONFORMING TO ASTM C 990 OR RUBBER GASKETS CONFORMING TO ASTM C443.

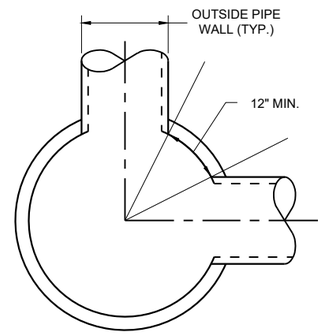

MINIMUM HORIZONTAL PIPE SEPARATION

DETAIL "D"

INLETS 3-FT AND 4-FT DIAMETER

STATE OF WISCONSIN
DEPARTMENT OF TRANSPORTATION

APPROVED
December 2023 — DATE
/S/ Rodney Taylor — ROADWAY STANDARDS DEVELOPMENT UNIT SUPERVISOR

FHWA

6
SDD 08C06-03

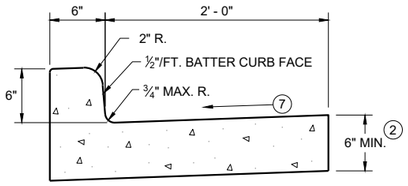

TYPES A (1) & D

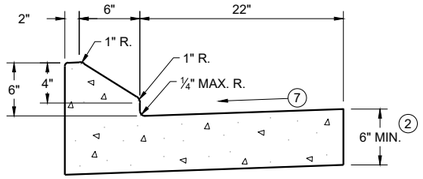

6" SLOPED CURB TYPES G (1) & J

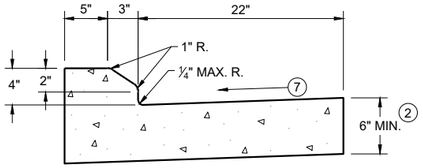

4" SLOPED CURB TYPES G (1) & J

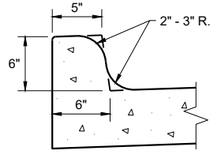

TYPES K (1) & L
(OPTIONAL CURB SHAPE)

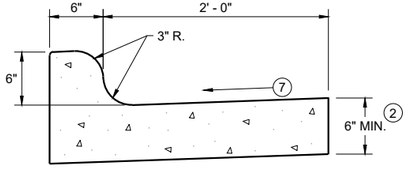

TYPES K (1) & L

CONCRETE CURB AND GUTTER 30"

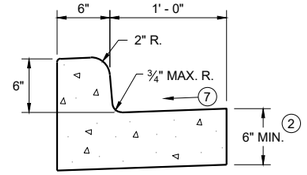

TYPES A (1) & D

CONCRETE CURB AND GUTTER 18"

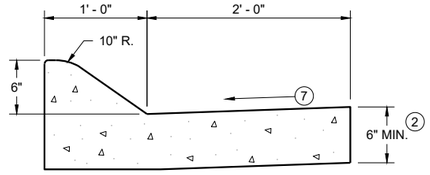

6" SLOPED CURB TYPES A (1) & D

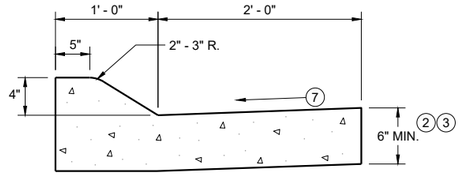

4" SLOPED CURB TYPES A (1) & D

CONCRETE CURB AND GUTTER 36"

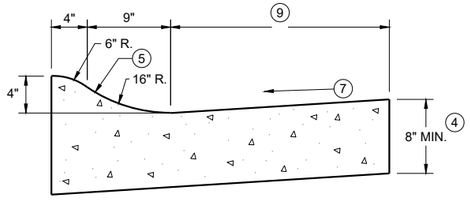

4" SLOPED CURB TYPES R (1) & T

TBT & TBTT	X
30"	22"
36"	28"

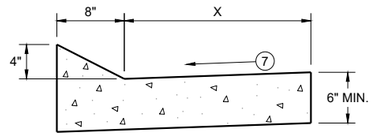

TYPES TBT & TBTT (1)

CONCRETE CURB AND GUTTER

PAVEMENT THICKNESS AND MAXIMUM CONCRETE PANEL WIDTH TABLE

PAVEMENT THICKNESS	MAXIMUM PANEL WIDTH
LESS THAN 10"	12'
10" & ABOVE	15'

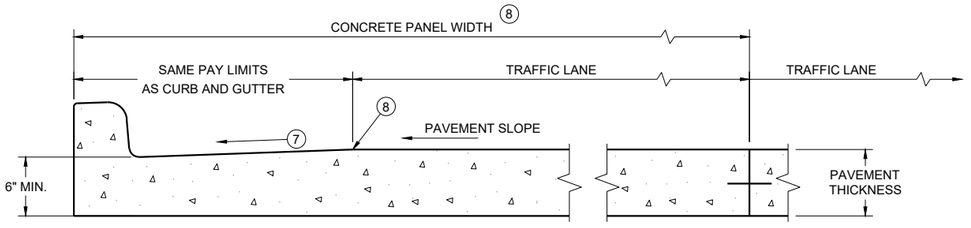

PARTIAL SECTION OF PAVEMENT WITH INTEGRAL CURB AND GUTTER *

* BIKE LANE IS NOT SHOWN

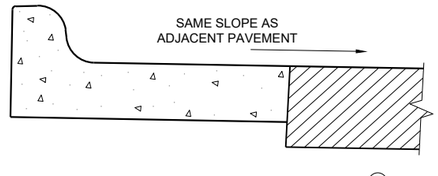

REVERSE SLOPE GUTTER (6)
(TYPICAL FOR ALL CURB & GUTTER TYPES)

GENERAL NOTES

DETAILS OF CONSTRUCTION AND WORKMANSHIP NOT SHOWN ON THIS DRAWING SHALL CONFORM TO THE PERTINENT REQUIREMENTS OF THE CONTRACT.

PAVEMENT TIES AND TIE BARS SHALL BE EPOXY COATED IN CONFORMANCE WITH SUBSECTION 505.2.6.2 OF THE STANDARD SPECIFICATIONS.

INTEGRAL CURB AND GUTTER SHALL CONFORM TO THE DETAILS SHOWN FOR CONCRETE CURB AND GUTTER INCLUDING THE TRANSVERSE GUTTER SLOPE.

UNLESS OTHERWISE SHOWN ON THE TYPICAL CROSS SECTIONS, THE BASE AGGREGATE AND COMMON EXCAVATION LIMITS ARE 2' - 0" BEHIND THE BACK OF CURBS.

(1) TIE BARS ARE REQUIRED FOR CURB AND GUTTERS TYPES A, G, K, R, AND TBTT.

(2) THE BOTTOM OF CURB AND GUTTER MAY BE CONSTRUCTED EITHER LEVEL OR PARALLEL TO THE SLOPE OF THE SUBGRADE OR BASE AGGREGATE PROVIDED A 6" MINIMUM GUTTER THICKNESS IS MAINTAINED.

(3) USE 8" MINIMUM GUTTER THICKNESS WHEN USED WITH AN ADJACENT CONCRETE TRUCK APRON PLACED BEHIND BACK OF CURB.

(4) THE BOTTOM OF CURB AND GUTTER MAY BE CONSTRUCTED EITHER LEVEL OR PARALLEL TO THE SLOPE OF THE SUBGRADE OR BASE AGGREGATE PROVIDED A 8" MINIMUM GUTTER THICKNESS IS MAINTAINED.

(5) UNLESS OTHERWISE NOTED, FOR STAKING PURPOSES THE FACE OF CURB IS 6" FROM THE BACK OF CURB.

(6) WHEN REVERSE SLOPE GUTTER IS REQUIRED, THE LOCATION(S) WILL BE SHOWN ELSEWHERE IN THE PLAN.

(7) USE 4% GUTTER CROSS SLOPE UNLESS OTHERWISE NOTED IN THE PLANS.

(8) INCLUDE LONGITUDINAL JOINT AND TIE BARS ALONG LANE EDGE WHEN CONCRETE PANEL WIDTH EXCEEDS THE MAXIMUM WIDTH PER TABLE BELOW. LONGITUDINAL JOINT(S) ARE NOT ALLOWED WITHIN TRAFFIC LANES AND BIKE LANES. LONGITUDINAL JOINT MAY BE SAWED.

(9) CONCRETE CURB AND GUTTER 4-INCH SLOPED 30-INCH TYPE "R" AND "T" = 17 INCHES
CONCRETE CURB AND GUTTER 4-INCH SLOPED 36-INCH TYPE "R" AND "T" = 23 INCHES

CONCRETE CURB AND GUTTER

STATE OF WISCONSIN
DEPARTMENT OF TRANSPORTATION

SDD 08D01-23a

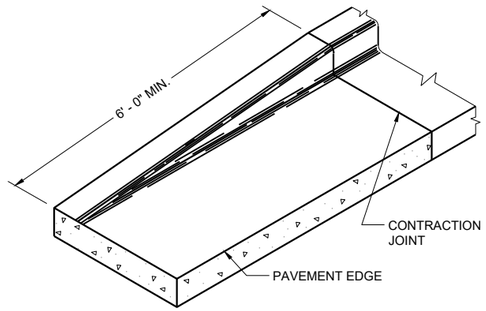

END SECTION CURB AND GUTTER

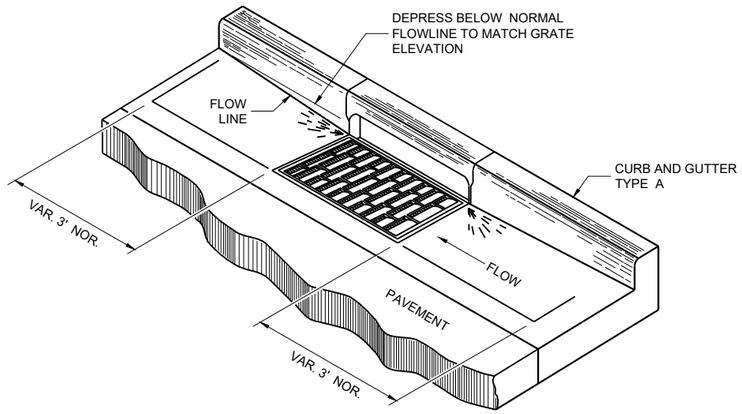

DETAIL OF CURB AND GUTTER AT INLETS

(TYPICAL H INLET COVER SHOWN)

GENERAL NOTES

DETAILS OF CONSTRUCTION AND WORKMANSHIP NOT SHOWN ON THIS DRAWING SHALL CONFORM TO THE PERTINENT REQUIREMENTS OF THE CONTRACT.

PAVEMENT TIES AND TIE BARS SHALL BE EPOXY COATED IN CONFORMANCE WITH SUBSECTION 505.2.6.2 OF THE STANDARD SPECIFICATIONS.

UNLESS OTHERWISE SHOWN ON THE TYPICAL CROSS SECTIONS, THE BASE AGGREGATE AND COMMON EXCAVATION LIMITS ARE 2' - 0" BEHIND THE BACK OF CURBS.

(1) TIE BARS ARE REQUIRED FOR CURB AND GUTTERS TYPES A, G, K, R, AND TBTT.

(2) THE BOTTOM OF CURB AND GUTTER MAY BE CONSTRUCTED EITHER LEVEL OR PARALLEL TO THE SLOPE OF THE SUBGRADE OR BASE AGGREGATE PROVIDED A 6" MINIMUM GUTTER THICKNESS IS MAINTAINED.

(10) REFER TO SDD 08D18 AND 08D19 FOR ADDITIONAL DRIVEWAY ENTRANCE CURB DETAILS.

(11) PLACE 1" THICK EXPANSION JOINT MATERIAL BETWEEN VERTICAL FACE CURB TYPES EXTENDING FROM THE TOP OF CURB TO 1 INCH BELOW THE ADJOINING CONCRETE SURFACE. RIGID CONCRETE STRUCTURES INCLUDE RAISED CONCRETE MEDIANS, CONCRETE SAFETY ISLANDS, SPLITTER ISLANDS, OR LOCATIONS IDENTIFIED ON THE PLANS.

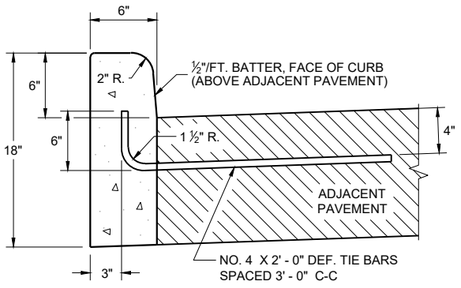

TYPES A (1) & D

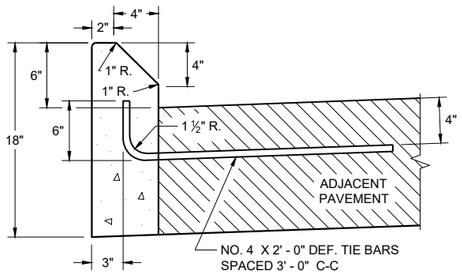

TYPES G (1) & J

CONCRETE CURB

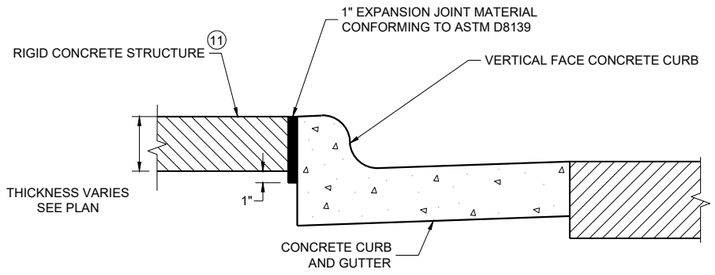

EXPANSION JOINT DETAIL FOR VERTICAL CURB ABUTTING A RIGID STRUCTURE (11)

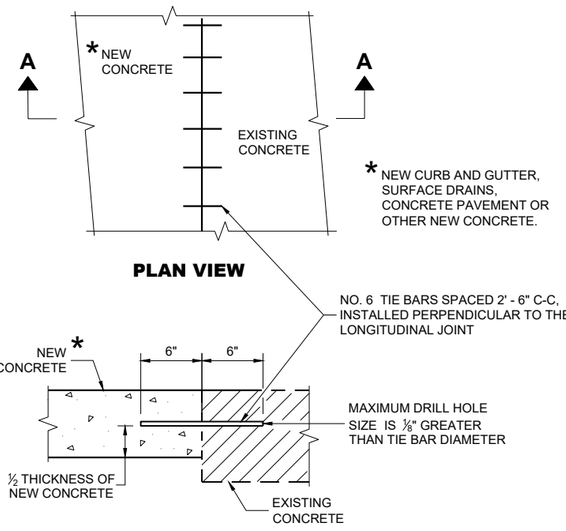

PLAN VIEW

SECTION A - A

TIE BARS DRILLED INTO EXISTING PAVEMENT

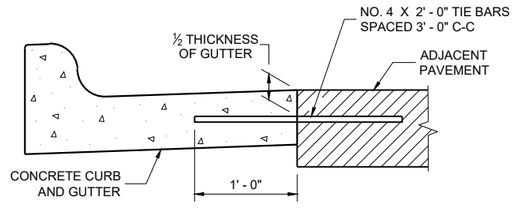

TYPICAL TIE BAR LOCATION (1)

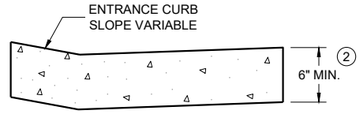

DRIVEWAY ENTRANCE CURB (10)

(WHEN DIRECTED BY THE ENGINEER)

CONCRETE CURB, TIES AND CURB AND GUTTER APPLICATIONS

STATE OF WISCONSIN
DEPARTMENT OF TRANSPORTATION

APPROVED
May 2023 — DATE
/S/ Rodnery Taylor — ROADWAY STANDARDS DEVELOPMENT UNIT SUPERVISOR

FHWA

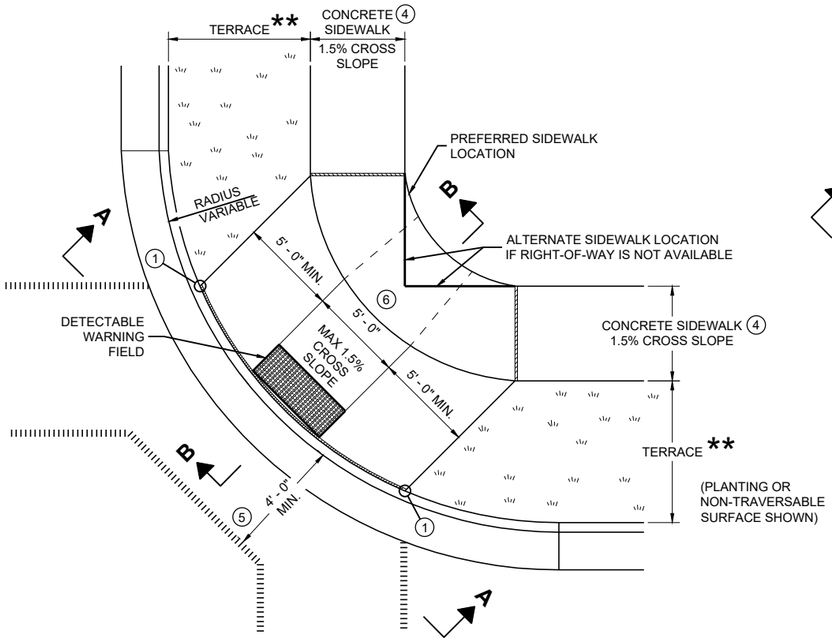

PLAN VIEW

CURB RAMP TYPE 1

(CENTER OF CORNER RADIUS)

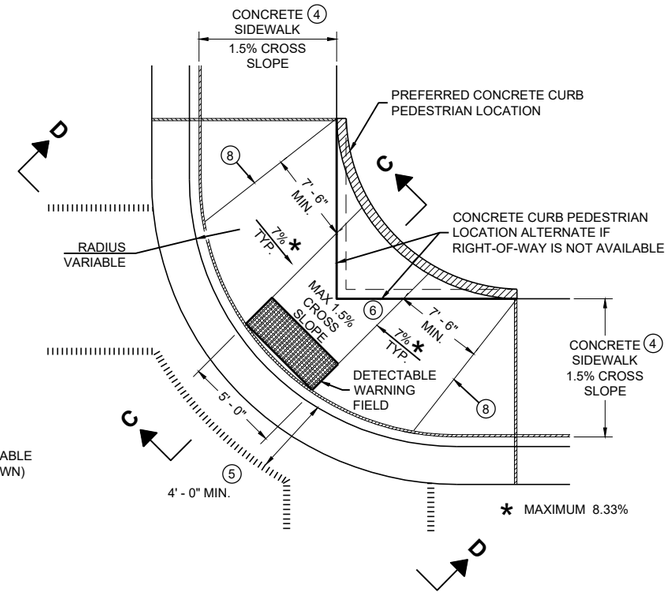

PLAN VIEW

CURB RAMP TYPE 1 - A

(NO TERRACE)

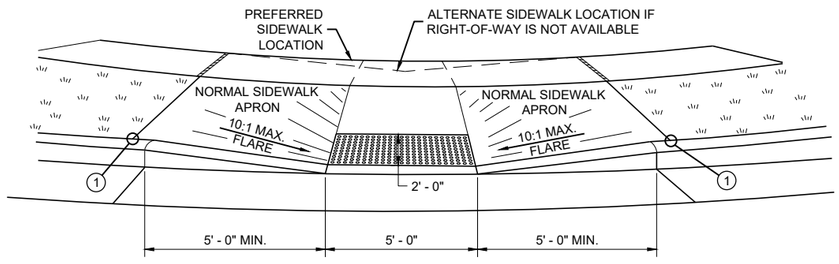

VIEW A - A FOR TYPE 1

** WIDTH SHOWN ELSEWHERE IN THE PLANS

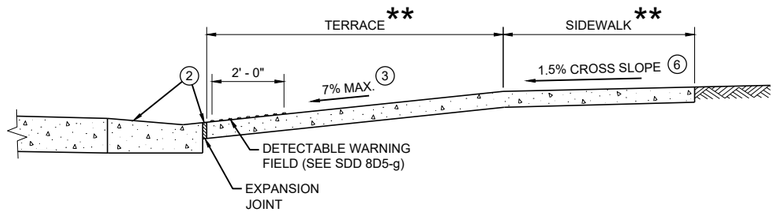

SECTION B - B FOR TYPE 1

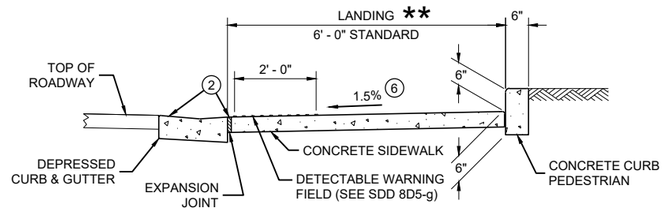

SECTION C - C FOR TYPE 1 - A

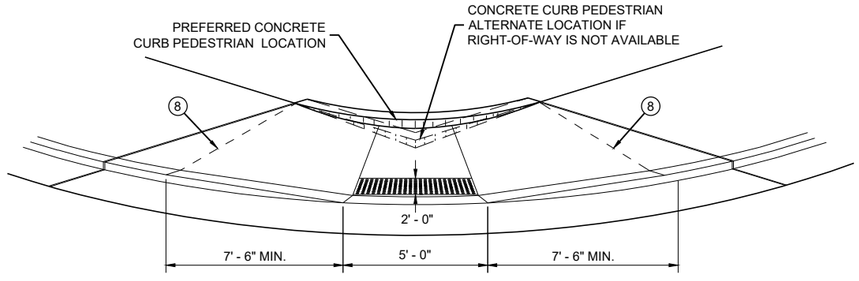

VIEW D - D FOR TYPE 1 - A

GENERAL NOTES

AVOID PLACING DRAINAGE STRUCTURES, JUNCTION BOXES OR OTHER OBSTRUCTIONS IN FRONT OF RAMP ACCESS AREAS.

DETAILS OF CONSTRUCTION, MATERIALS AND WORKMANSHIP NOT SHOWN ON THIS DRAWING SHALL CONFORM TO THE PERTINENT REQUIREMENTS OF THE STANDARD SPECIFICATIONS AND THE APPLICABLE SPECIAL PROVISIONS.

WHEN NECESSARY, THE SIDEWALK ELEVATION MAY BE LOWERED TO MEET THE HIGH POINT ON THE RAMP.

TYPE 1 CURB RAMPS SHALL HAVE A NORMAL SIDEWALK APRON AND CURB ON BOTH SIDES OF RAMP.

DETECTABLE WARNING FILED SHALL BE MEASURED AND PAID BY THE SQUARE FOOT AS "CURB RAMP DETECTABLE WARNING FIELD". THE CONCRETE PEDESTRIAN CURB, IF NEEDED, SHALL BE MEASURED AND PAID BY THE LINEAR FOOT AS "CONCRETE CURB PEDESTRIAN". CONCRETE SIDEWALK IN THE CURB RAMP AREA SHALL BE MEASURED AND PAID BY THE SQUARE FOOT AS CONCRETE SIDEWALK, INCLUDING THE AREA UNDER THE DETECTABLE WARNING FIELD.

SELECT CURB RAMP DETECTABLE WARNING FIELD MATERIALS AND DEVICES FROM THE DEPARTMENT'S APPROVED MATERIALS LIST. THE COLOR OF THE DETECTABLE WARNING FIELD IS SPECIFIED ELSEWHERE AND IS INCIDENTAL TO THE BID ITEM OF "CURB RAMP DETECTABLE WARNING FIELD"

DETECTABLE WARNING FIELDS THAT ARE INSTALLED AS A GROUP OR SIDE BY SIDE, SHALL BE FROM THE SAME MANUFACTURER.

SURFACE TEXTURE OF THE RAMP SHALL BE OBTAINED BY COARSE BROOMING TRANSVERSE TO THE SLOPE OF THE RAMP.

(1) THIS POINT IS AN EXTENSION OF OUTSIDE EDGE OF APPROACHING SIDEWALK WHERE IT MEETS THE BACK OF CONCRETE CURB. POINT LOCATION MAY BE ADJUSTED TO ALIGN WITH BEGINNING OF FULL-HEIGHT CURB IF THIS DISTANCE IS SHORT.

(2) GRADE CHANGE BETWEEN GUTTER FLAG SLOPE AND THE CURB RAMP SLOPE SHALL NOT EXCEED 11%. MAXIMUM GUTTER FLAG SLOPE IS 4%. PROVIDE LONGITUDINAL DRAINAGE AROUND CURB AND AWAY FROM CURB RAMP. NO VERTICAL LIPS OR DISCONTINUITIES GREATER THAN ¼ - INCH ARE ALLOWED. SLOPE OF CURB HEAD OPENING SHALL MATCH THE RAMP SLOPE, MINIMALLY 1.5% AND NOT TO EXCEED 7%. WHEN ADJACENT TO 1.5% LANDING, CONSTRUCT CURB HEAD OPENING AT 1.5% IN THE DIRECTION OF PEDESTRIAN TRAVEL.

(3) MAXIMUM 8.33% CURB RAMP SLOPE IS ALLOWABLE WITH FLATTENED GUTTER FLAG SLOPE AND NOT TO EXCEED 11% GRADE CHANGE.

(4) ±0.5% CONSTRUCTION TOLERANCE IN SIDEWALK CROSS SLOPE. THE SIDEWALK CROSS SLOPE SHALL NOT EXCEED 2% WITHOUT PRIOR APPROVAL FROM THE ENGINEER.

(5) PROVIDE A LEVEL LANDING IN THE STREET AND GUTTER AREA (2% MAXIMUM SLOPE IN ANY DIRECTION). WHEN THE GUTTER SLOPE EXCEEDS 2%, CONSTRUCT THE LEVEL LANDING IN THE STREET AREA. 4 FOOT WIDTH IS MEASURED FROM THE FLANGE LINE

(6) PROVIDE A LEVEL LANDING (MAXIMUM 2% SLOPE) IN ANY DIRECTION OF PEDESTRIAN TRAVEL. STANDARD LEVEL LANDING SIZE IS 5 FEET BY 5 FEET.

(8) PROVIDE GRADE BREAK PERPENDICULAR TO DIRECTION OF WHEELCHAIR TRAVEL.

LEGEND

- ½" EXPANSION JOINT SIDEWALK
- CONTRACTION JOINT FIELD LOCATED
- PAVEMENT MARKING CROSSWALK (WHITE)

CURB RAMPS TYPE 1 AND 1-A

STATE OF WISCONSIN
DEPARTMENT OF TRANSPORTATION

6
SDD 08D05-21a

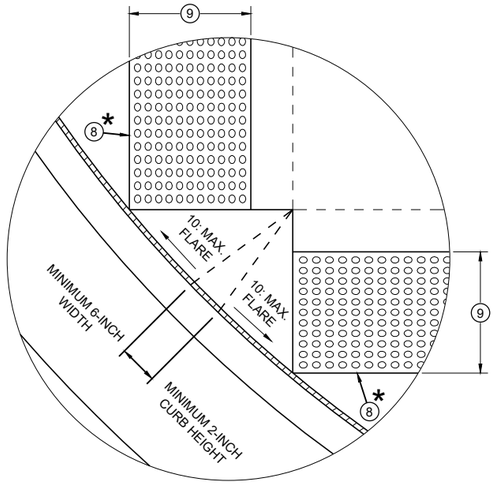

DETAIL A

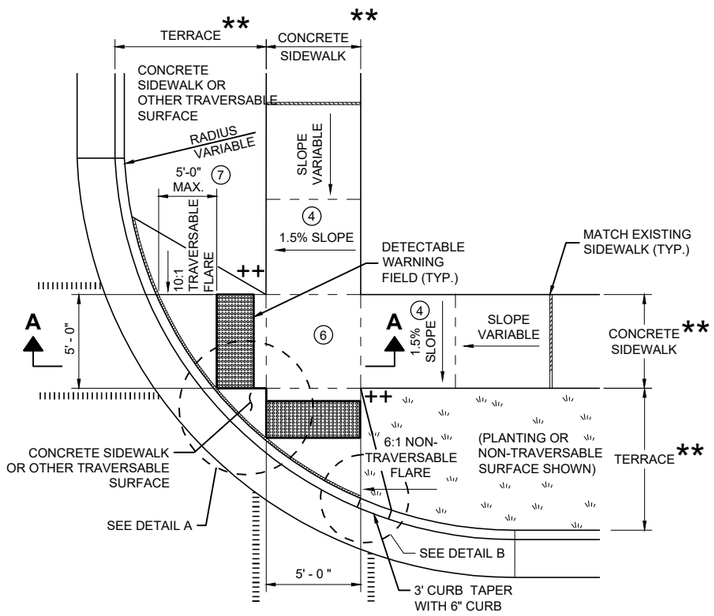

PLAN VIEW
CURB RAMP TYPE 2
(CENTER OF CORNER RADIUS)

GENERAL NOTES

AVOID PLACING DRAINAGE STRUCTURES, JUNCTION BOXES OR OTHER OBSTRUCTIONS IN FRONT OF RAMP ACCESS AREAS.

DETAILS OF CONSTRUCTION, MATERIALS AND WORKMANSHIP NOT SHOWN ON THIS DRAWING SHALL CONFORM TO THE PERTINENT REQUIREMENTS OF THE STANDARD SPECIFICATIONS AND THE APPLICABLE SPECIAL PROVISIONS.

DETECTABLE WARNING FIELDS THAT ARE INSTALLED AS A GROUP OR SIDE BY SIDE SHALL BE FROM THE SAME MANUFACTURER.

(2) GRADE CHANGE BETWEEN GUTTER FLAG SLOPE AND THE CURB RAMP SLOPE SHALL NOT EXCEED 11%. MAXIMUM GUTTER FLAG SLOPE IS 4%. PROVIDE LONGITUDINAL DRAINAGE AROUND CURB AND AWAY FROM CURB RAMP. NO VERTICAL LIPS OR DISCONTINUITIES GREATER THAN ¼ - INCH ARE ALLOWED. SLOPE OF CURB HEAD OPENING SHALL MATCH THE RAMP SLOPE, MINIMALLY 1.5% AND NOT TO EXCEED 7%. WHEN ADJACENT TO 1.5% LANDING, CONSTRUCT CURB HEAD OPENING AT 1.5% IN THE DIRECTION OF PEDESTRIAN TRAVEL.

(3) AN 8.33% CURB RAMP SLOPE IS ALLOWABLE WITH FLATTENED GUTTER FLAG SLOPE (2.67% OR LESS) AND NOT TO EXCEED 11% GRADE CHANGE.

(4) ±0.5% CONSTRUCTION TOLERANCE IN SIDEWALK CROSS SLOPE. THE SIDEWALK CROSS SLOPE SHALL NOT EXCEED 2% WITHOUT PRIOR APPROVAL FROM THE ENGINEER.

(6) PROVIDE A LEVEL LANDING (MAXIMUM 2% SLOPE) IN ANY DIRECTION OF PEDESTRIAN TRAVEL. STANDARD LEVEL LANDING SIZE IS 5 FEET X 5 FEET.

(7) WHEN GRADE BREAK DISTANCE EXCEEDS 5 FEET, USE RADIAL DETECTABLE WARNING FIELD PER SDD 8D5-f.

(8) PROVIDE GRADE BREAK PERPENDICULAR TO DIRECTION OF WHEELCHAIR TRAVEL.

(9) WHEN DISTANCE IS LESS THAN 6' - 0", IT MAY BE DIFFICULT TO ACHIEVE A 7% SLOPE OR FLATTER ALONG THE RAMP. REDUCE CURB HEIGHT IN TRIANGLE AREA TO ACHIEVE 7% SLOPE OR FLATTER ON RAMP. CONSTRUCT 2-INCH MINIMUM CURB HEIGHT BETWEEN 10:1 FLARES.

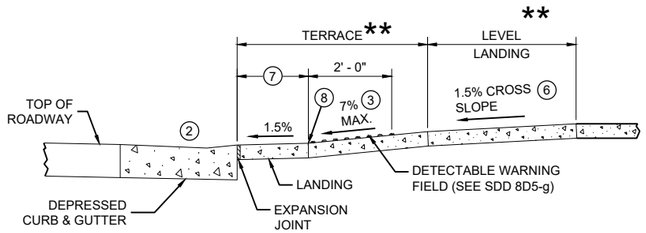

SECTION A - A FOR TYPE 2

* MAXIMUM 2.0% SLOPE IN ALL DIRECTIONS IN FRONT OF GRADE BREAK

** WIDTH SHOWN ELSEWHERE IN THE PLANS

++ CONSTRUCT 6" WEDGE TO AVOID CONCRETE BREAKAGE

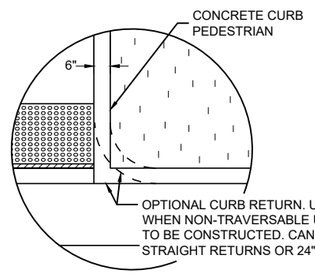

DETAIL B

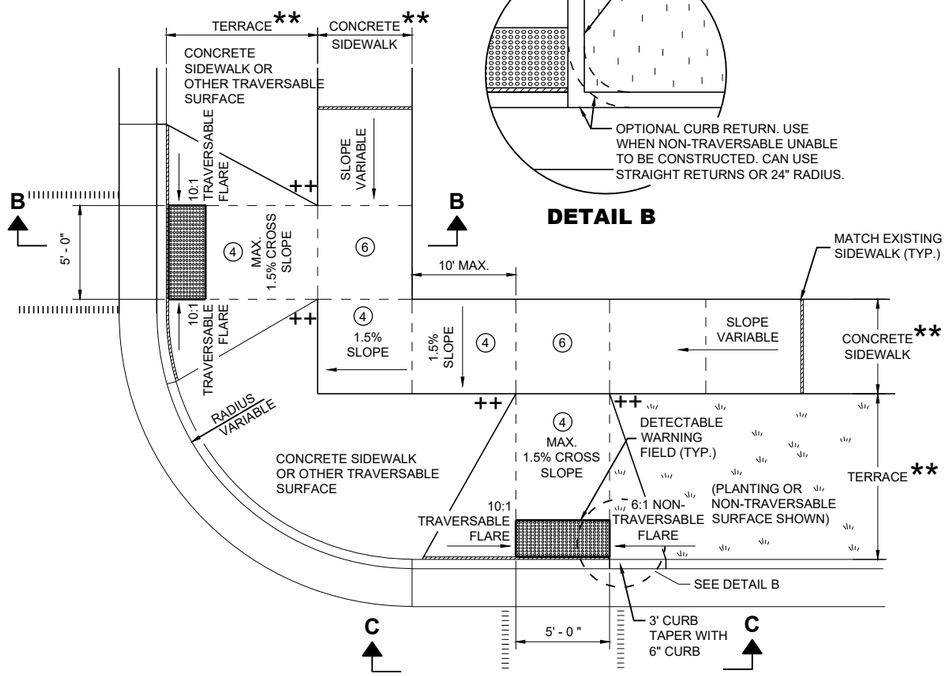

PLAN VIEW
CURB RAMP TYPE 3
(OUTSIDE OF CROSSWALK AREA)

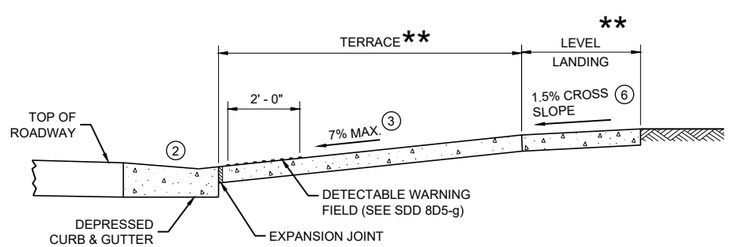

SECTION B - B FOR TYPE 3

LEGEND

½" EXPANSION JOINT SIDEWALK

CONTRACTION JOINT SIDEWALK

PAVEMENT MARKING CROSSWALK (WHITE)

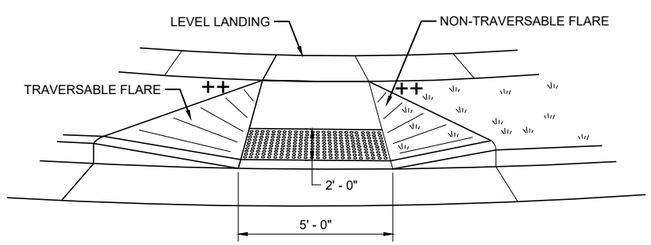

VIEW C - C FOR TYPE 3

CURB RAMPS TYPE 2 AND 3

STATE OF WISCONSIN
DEPARTMENT OF TRANSPORTATION

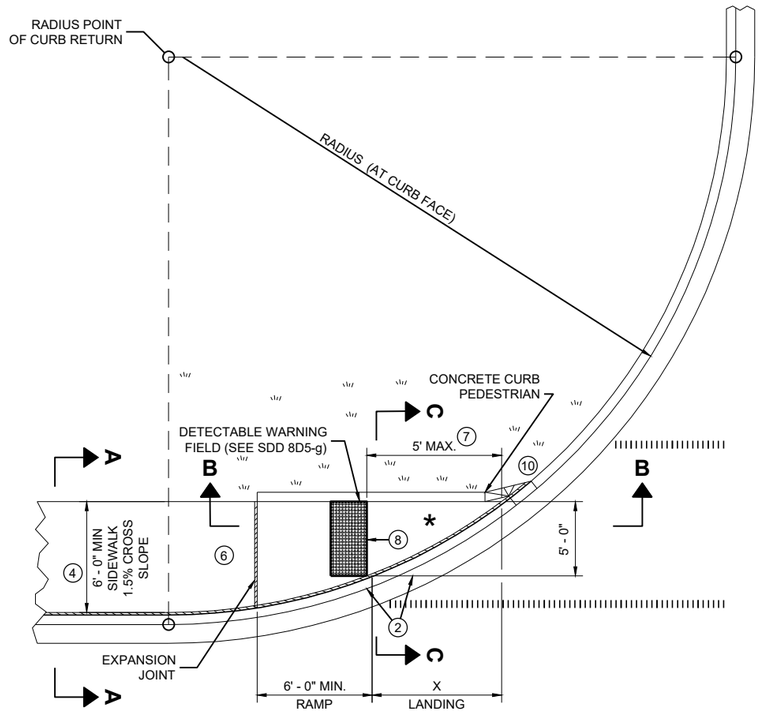

PLAN VIEW

CURB RAMP TYPE 4A

RADIUS (AT CURB FACE)	X
10 FEET	4' - 7"

INTERMEDIATE RADII CAN BE INTERPOLATED

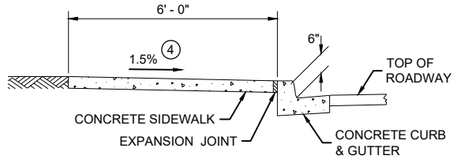

SECTION A - A FOR TYPE 4A

GENERAL NOTES

AVOID PLACING DRAINAGE STRUCTURES, JUNCTION BOXES OR OTHER OBSTRUCTIONS IN FRONT OF RAMP ACCESS AREAS.

DETAILS OF CONSTRUCTION, MATERIALS AND WORKMANSHIP NOT SHOWN ON THIS DRAWING SHALL CONFORM TO THE PERTINENT REQUIREMENTS OF THE STANDARD SPECIFICATIONS AND THE APPLICABLE SPECIAL PROVISIONS.

DETECTABLE WARNING FIELDS THAT ARE INSTALLED AS A GROUP OR SIDE BY SIDE, SHALL BE FROM THE SAME MANUFACTURER.

(2) GRADE CHANGE BETWEEN GUTTER FLAG SLOPE AND THE CURB RAMP SLOPE SHALL NOT EXCEED 11%. MAXIMUM GUTTER FLAG SLOPE IS 4%. PROVIDE LONGITUDINAL DRAINAGE AROUND CURB AND AWAY FROM CURB RAMP. NO VERTICAL LIPS OR DISCONTINUITIES GREATER THAN ¼ - INCH ARE ALLOWED. SLOPE OF CURB HEAD OPENING SHALL MATCH THE RAMP SLOPE, MINIMALLY 1.5% AND NOT TO EXCEED 7%. WHEN ADJACENT TO 1.5% LANDING, CONSTRUCT CURB HEAD OPENING AT 1.5% IN THE DIRECTION OF PEDESTRIAN TRAVEL.

(3) AN 8.33% CURB RAMP SLOPE IS ALLOWABLE WITH FLATTENED GUTTER FLAG SLOPE AND NOT TO EXCEED 11% GRADE CHANGE.

(4) ±0.5% CONSTRUCTION TOLERANCE IN SIDEWALK CROSS SLOPE. THE SIDEWALK CROSS SLOPE SHALL NOT EXCEED 2% WITHOUT PRIOR APPROVAL FROM THE ENGINEER.

(6) PROVIDE A LEVEL LANDING (MAXIMUM 2% SLOPE) IN ANY DIRECTION OF PEDESTRIAN TRAVEL. STANDARD LEVEL LANDING SIZE IS 5 FEET BY 5 FEET.

(7) WHEN THIS GRADE BREAK DISTANCE EXCEEDS 5 FEET, USE RADIAL DETECTABLE WARNING FIELD PER SDD 8D5-f.

(8) PROVIDE GRADE BREAK PERPENDICULAR TO DIRECTION OF WHEELCHAIR TRAVEL.

(10) INSTALL TRANSITION NOSE (INCIDENTAL TO OTHER PAY ITEMS). DO NOT MARK TRANSITION NOSE.

LEGEND

½" EXPANSION JOINT SIDEWALK

CONTRACTION JOINT SIDEWALK

PAVEMENT MARKING CROSSWALK (WHITE)

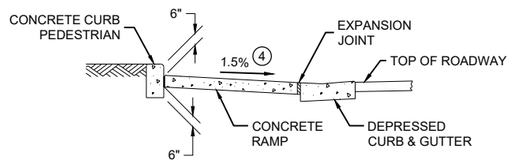

SECTION C - C FOR TYPE 4A

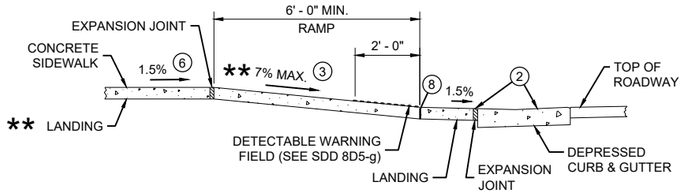

SECTION B - B FOR TYPE 4A AND TYPE 4A1

** IF RAMP SLOPE IS LESS THAN 5.0%, THEN NO ADJACENT UPHILL LANDING IS REQUIRED

* MAXIMUM 2.0% SLOPE IN ALL DIRECTIONS IF FRONT OF GRADE BREAK

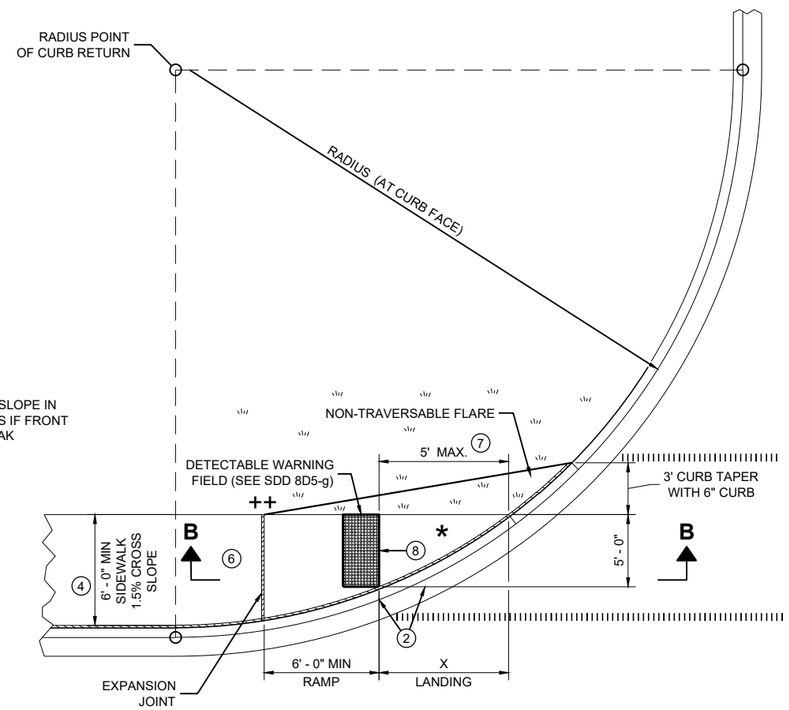

PLAN VIEW

CURB RAMP TYPE 4A1

++ CONSTRUCT 6" WEDGE TO AVOID CONCRETE BREAKAGE

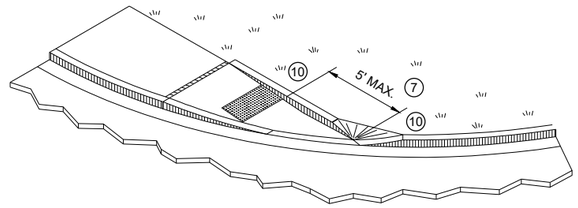

ISOMETRIC VIEW FOR TYPE 4A

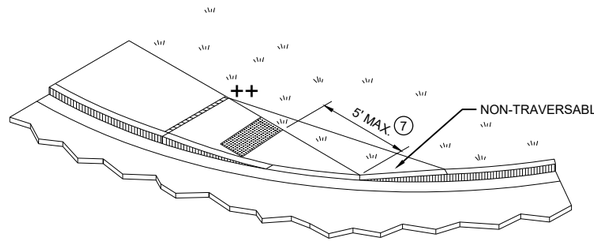

ISOMETRIC VIEW FOR TYPE 4A1

CURB RAMPS
TYPE 4A AND 4A1

STATE OF WISCONSIN
DEPARTMENT OF TRANSPORTATION

6

SDD 08D05-21c

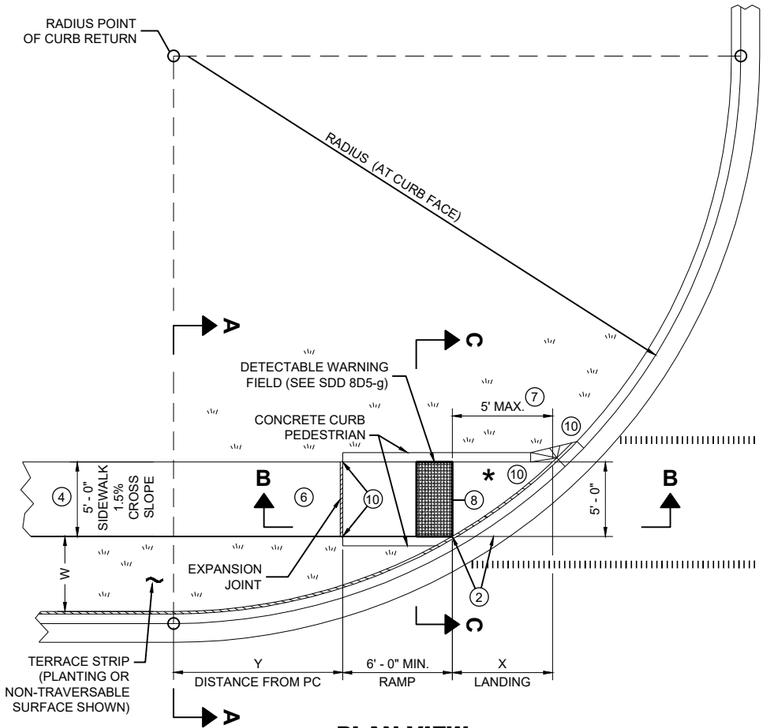

PLAN VIEW
CURB RAMP TYPE 4B

RADIUS (AT CURB FACE)	W = 3' - 0"		W = 4' - 0"		W = 5' - 0"		W = 6' - 0"		W = 7' - 0"		W = 8' - 0"		W = 9' - 0"		W = 10' - 0"	
	X	Y	X	Y	X	Y	X	Y	X	Y	X	Y	X	Y	X	Y
10 FEET	2' - 10 1/4"	0' - 5"	2' - 1"	1' - 4 1/2"	1' - 5"	2' - 1"	0' - 10"	2' - 7 1/2"	0' - 3 1/4"	3' - 0 1/4"						
15 FEET	4' - 6 3/4"	2' - 1 3/4"	3' - 9"	3' - 5 3/4"	3' - 1 1/4"	4' - 6"	2' - 6 3/4"	5' - 4 1/2"	2' - 1"	6' - 1"	1' - 8"	6' - 8 1/2"	1' - 3 1/4"	7' - 2 1/2"	0' - 10 3/4"	7' - 7 1/4"
20 FEET			4' - 11 1/2"	5' - 1 3/4"	4' - 3 1/4"	6' - 5 1/2"	3' - 8 3/4"	7' - 7"	3' - 3"	8' - 6 1/2"	2' - 10"	9' - 4 1/2"	2' - 5 1/2"	10' - 1 1/4"	2' - 1 1/4"	10' - 9"
30 FEET									4' - 10 3/4"	12' - 5 3/4"	4' - 5 1/2"	13' - 7 3/4"	4' - 0 3/4"	14' - 8 1/2"	3' - 8 1/2"	15' - 8 1/4"
40 FEET															4' - 10 3/4"	19' - 8 1/4"

INTERMEDIATE RADII CAN BE INTERPOLATED
DIMENSION "Y" IS CALCULATED BASED ON 6'-0" RAMP LENGTH
DIMENSION "X" IS CALCULATED BASED ON 5'-0" SIDEWALK WIDTH

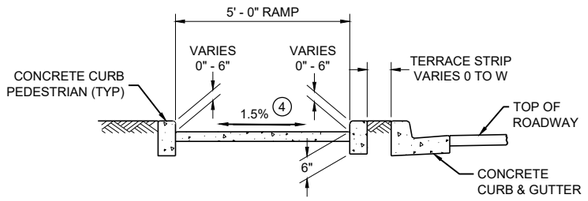

SECTION C - C FOR TYPE 4B

LEGEND

- ½" EXPANSION JOINT SIDEWALK
- CONTRACTION JOINT SIDEWALK
- PAVEMENT MARKING CROSSWALK (WHITE)

GENERAL NOTES

AVOID PLACING DRAINAGE STRUCTURES, JUNCTION BOXES OR OTHER OBSTRUCTIONS IN FRONT OF RAMP ACCESS AREAS.

DETAILS OF CONSTRUCTION, MATERIALS AND WORKMANSHIP NOT SHOWN ON THIS DRAWING SHALL CONFORM TO THE PERTINENT REQUIREMENTS OF THE STANDARD SPECIFICATIONS AND THE APPLICABLE SPECIAL PROVISIONS.

DETECTABLE WARNING FIELDS THAT ARE INSTALLED AS A GROUP OR SIDE BY SIDE, SHALL BE FROM THE SAME MANUFACTURER.

(2) GRADE CHANGE BETWEEN GUTTER FLAG SLOPE AND THE CURB RAMP SLOPE SHALL NOT EXCEED 11%. MAXIMUM GUTTER FLAG SLOPE IS 4%. PROVIDE LONGITUDINAL DRAINAGE AROUND CURB AND AWAY FROM CURB RAMP. NO VERTICAL LIPS OR DISCONTINUITIES GREATER THAN ¼ - INCH ARE ALLOWED. SLOPE OF CURB HEAD OPENING SHALL MATCH THE RAMP SLOPE, MINIMALLY 1.5% AND NOT TO EXCEED 7%. WHEN ADJACENT TO 1.5% LANDING, CONSTRUCT CURB HEAD OPENING AT 1.5% IN THE DIRECTION OF PEDESTRIAN TRAVEL.

(3) AN 8.33% CURB RAMP SLOPE IS ALLOWABLE WITH FLATTENED GUTTER FLAG SLOPE AND NOT TO EXCEED 11% GRADE CHANGE.

(4) ±0.5% CONSTRUCTION TOLERANCE IN SIDEWALK CROSS SLOPE. THE SIDEWALK CROSS SLOPE SHALL NOT EXCEED 2% WITHOUT PRIOR APPROVAL FROM THE ENGINEER.

(6) PROVIDE A LEVEL LANDING (MAXIMUM 2% SLOPE) IN ANY DIRECTION OF PEDESTRIAN TRAVEL. STANDARD LEVEL LANDING SIZE IS 5 FEET BY 5 FEET.

(7) WHEN THIS GRADE BREAK DISTANCE EXCEEDS 5 FEET, USE RADIAL DETECTABLE WARNING FIELD PER SDD 8D5-f.

(8) PROVIDE GRADE BREAK PERPENDICULAR TO DIRECTION OF WHEELCHAIR TRAVEL.

(10) INSTALL TRANSITION NOSE (INCIDENTAL TO OTHER PAY ITEMS). DO NOT MARK TRANSITION NOSE.

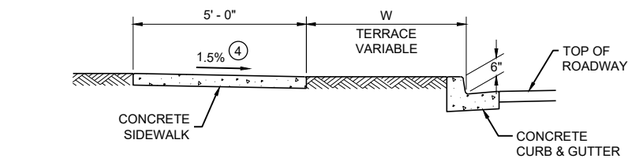

SECTION A - A FOR TYPE 4B

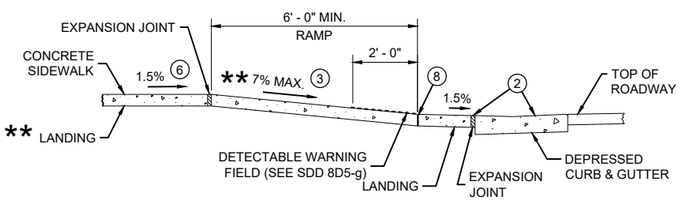

SECTION B - B FOR TYPE 4B AND TYPE 4B1

** IF RAMP SLOPE IS LESS THAN 5.0%, THEN NO ADJACENT UPHILL LANDING IS REQUIRED

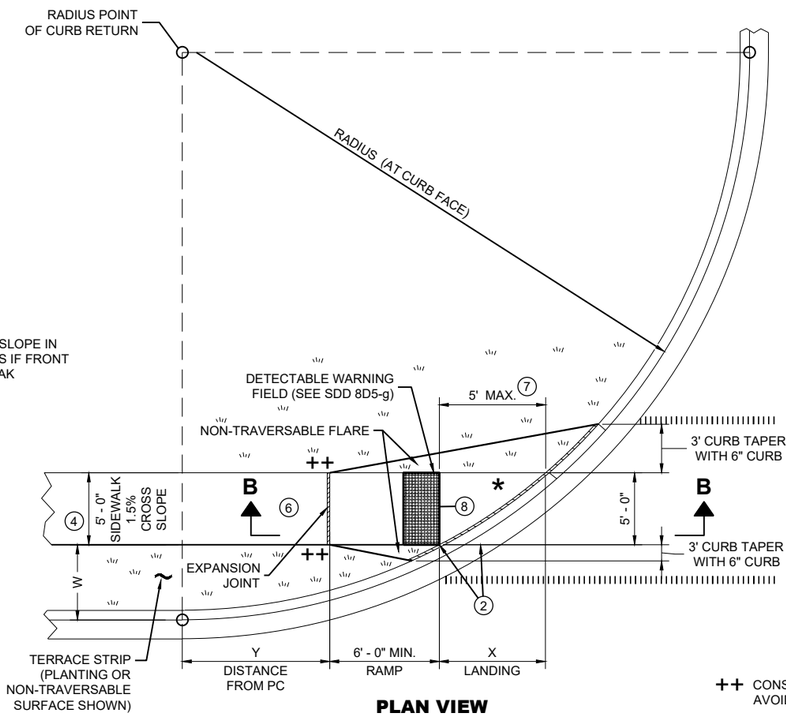

PLAN VIEW
CURB RAMP TYPE 4B1

* MAXIMUM 2.0% SLOPE IN ALL DIRECTIONS IF FRONT OF GRADE BREAK

++ CONSTRUCT 6" WEDGE TO AVOID CONCRETE BREAKAGE

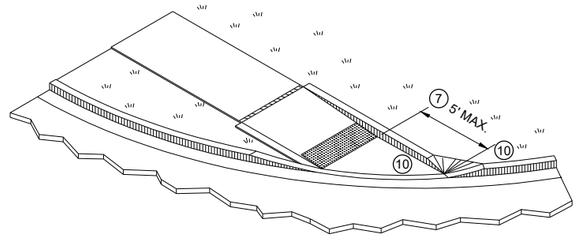

ISOMETRIC VIEW FOR TYPE 4B

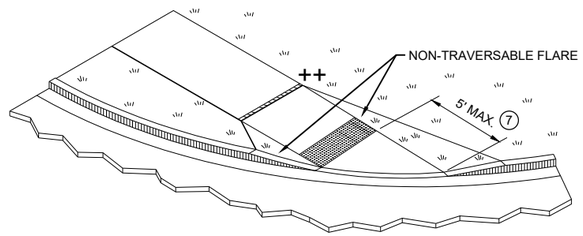

ISOMETRIC VIEW FOR TYPE 4B1

CURB RAMPS
TYPE 4B AND 4B1

STATE OF WISCONSIN
DEPARTMENT OF TRANSPORTATION

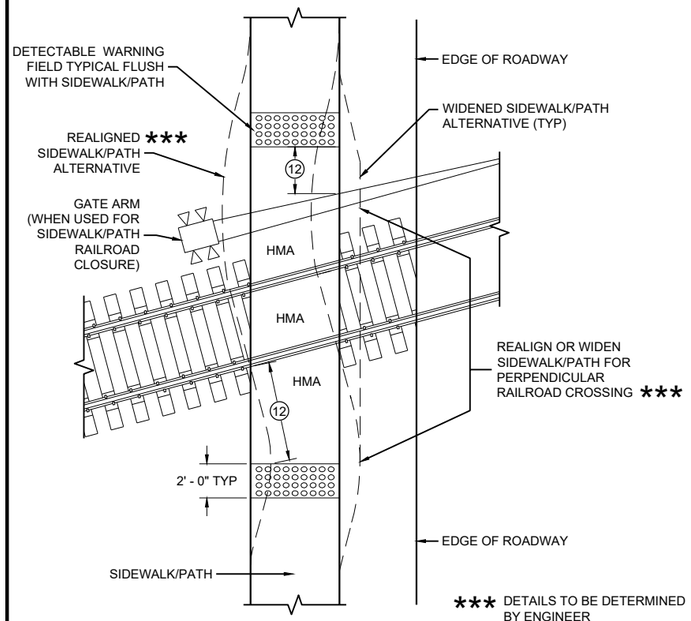

CURB RAMP TYPE 8

DETECTABLE WARNINGS FOR SIDEWALKS OR SHARED USE PATHS AT RAILROAD CROSSINGS

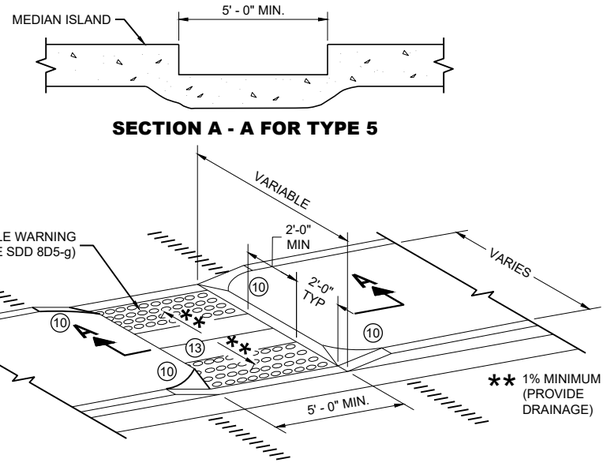

SECTION A - A FOR TYPE 5

CURB RAMP TYPE 5

MEDIAN ISLAND NON-ELEVATED PEDESTRIAN CROSSING

GENERAL NOTES

AVOID PLACING DRAINAGE STRUCTURES, JUNCTION BOXES OR OTHER OBSTRUCTIONS IN FRONT OF RAMP ACCESS AREAS.

DETAILS OF CONSTRUCTION, MATERIALS AND WORKMANSHIP NOT SHOWN ON THIS DRAWING SHALL CONFORM TO THE PERTINENT REQUIREMENTS OF THE STANDARD SPECIFICATIONS AND THE APPLICABLE SPECIAL PROVISIONS.

SIDEWALK CROSS SLOPE SHALL NOT EXCEED 2%.

DETECTABLE WARNING FIELDS THAT ARE INSTALLED AS A GROUP OR SIDE BY SIDE, SHALL BE FROM THE SAME MANUFACTURER.

(2) GRADE CHANGE BETWEEN GUTTER FLAG SLOPE AND THE CURB RAMP SLOPE SHALL NOT EXCEED 11%. MAXIMUM GUTTER FLAG SLOPE IS 4%. PROVIDE LONGITUDINAL DRAINAGE AROUND CURB AND AWAY FROM CURB RAMP. NO VERTICAL LIPS OR DISCONTINUITIES GREATER THAN ¼ - INCH ARE ALLOWED. SLOPE OF CURB HEAD OPENING SHALL MATCH THE RAMP SLOPE, MINIMALLY 1.5% AND NOT TO EXCEED 7%. WHEN ADJACENT TO 1.5% LANDING, CONSTRUCT CURB HEAD OPENING AT 1.5% IN THE DIRECTION OF PEDESTRIAN TRAVEL.

(3) AN 8.33% CURB RAMP SLOPE IS ALLOWABLE WITH FLATTENED GUTTER FLAG SLOPE AND NOT TO EXCEED 11% GRADE CHANGE.

(4) ±0.5% CONSTRUCTION TOLERANCE IN SIDEWALK CROSS SLOPE. THE SIDEWALK CROSS SLOPE SHALL NOT EXCEED 2% WITHOUT PRIOR APPROVAL FROM THE ENGINEER.

(6) PROVIDE A LEVEL LANDING (MAXIMUM 2% SLOPE) IN ANY DIRECTION OF PEDESTRIAN TRAVEL. STANDARD LEVEL LANDING SIZE IS 5 FEET BY 5 FEET.

(10) INSTALL TRANSITION NOSE (INCIDENTAL TO OTHER PAY ITEMS). DO NOT MARK TRANSITION NOSE.

(11) SLOPE SIDEWALK TOWARD LANDING AS SHOWN WHERE THERE IS NO TERRACE OR WHERE THE TERRACE WIDTH IS LESS THAN 6 FEET WIDE.

(12) THE EDGE OF THE DETECTABLE WARNING FIELD NEAREST TO A RAILROAD CROSSING SHALL BE 1.5 FEET ±0.1' FROM THE FACE OF THE GATE ARM IF THE GATE ARM EXTENDS ACROSS THE SIDEWALK/PATH. WHERE THERE IS NO PEDESTRIAN GATE, THE EDGE OF THE DETECTABLE WARNING FIELD NEAREST TO THE RAILROAD TRACK IS 15 FEET MAXIMUM AND 12 FEET MINIMUM, 15 FEET TYPICAL FROM THE NEAREST RAIL.

(13) DO NOT INSTALL DETECTABLE WARNING FIELDS AT THE EDGES OF STEET-LEVEL PEDESTRIAN REFUGE ISLANDS IF A MINIMUM 2 FOOT CONCRETE SURFACE WITHOUT DETECTABLE WARNINGS (MEASURED IN THE DIRECTION OF PEDESTRIAN TRAVEL) CANNOT BE ACHIEVED.

LEGEND

- ½" EXPANSION JOINT SIDEWALK
- CONTRACTION JOINT FIELD LOCATED
- PAVEMENT MARKING CROSSWALK (WHITE)

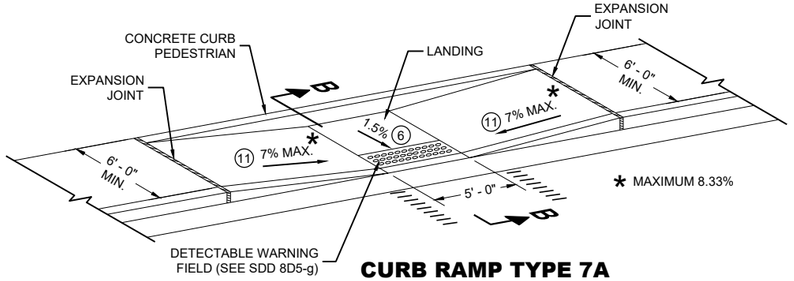

CURB RAMP TYPE 7A

FOR INTERSECTIONS AND MID BLOCK CROSSINGS

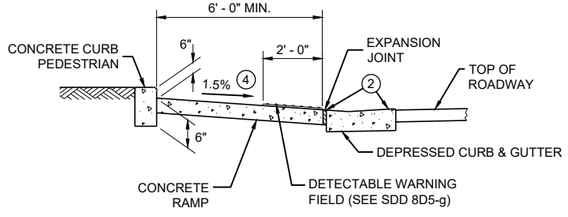

SECTION B - B FOR TYPE 7A

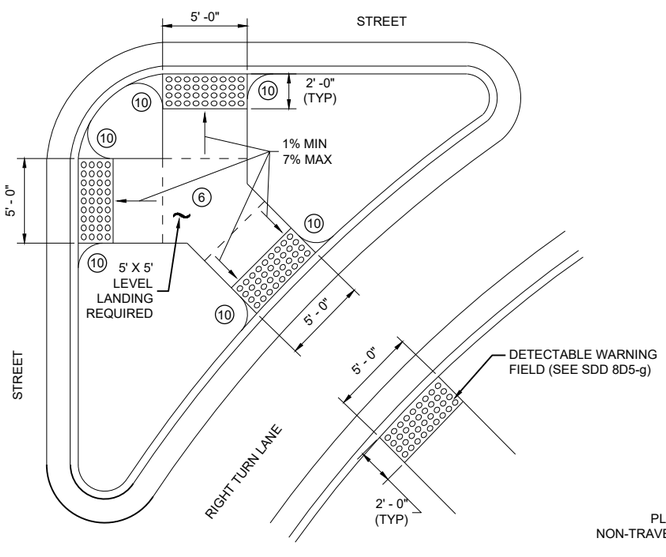

CURB RAMP TYPE 6

DETECTABLE WARNING AT ISLANDS

REFER TO GENERAL NOTES (2) AND (3) FOR ALL ISLAND CURB RAMPS

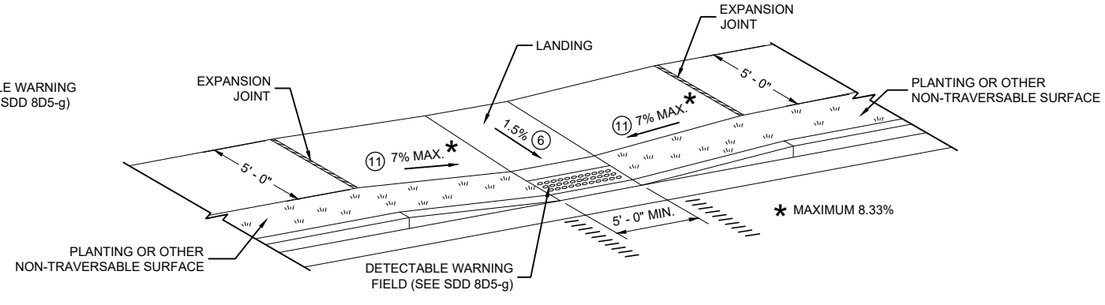

CURB RAMP TYPE 7B

FOR INTERSECTIONS AND MID BLOCK CROSSINGS

CURB RAMPS TYPE 5, 6, 7A, 7B & 8

STATE OF WISCONSIN
DEPARTMENT OF TRANSPORTATION

SDD 08D05-21e

RADIAL DETECTABLE WARNING FIELD PLACEMENT WHEN 5 FOOT GRADE BREAK DISTANCE PER SDD 8D5-c IS EXCEEDED

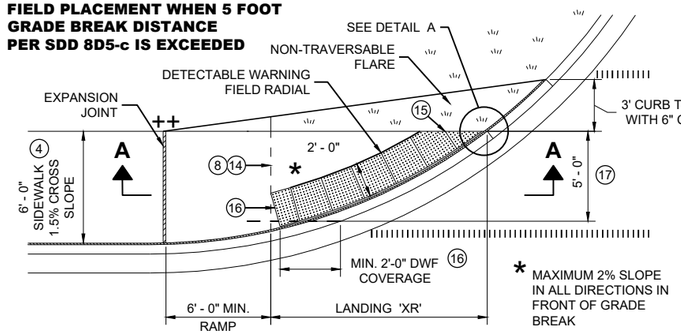

PLAN VIEW

CURB RAMP TYPE 4A1
(GRADE BREAK DISTANCE GREATER THAN 5 FEET)

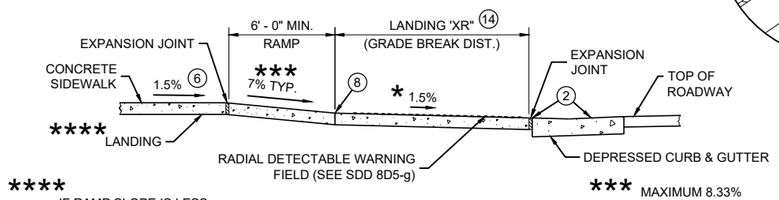

**** IF RAMP SLOPE IS LESS THAN 5.0%, THEN NO ADJACENT UPHILL LANDING IS REQUIRED

*** MAXIMUM 8.33%

SECTION A - A FOR TYPE 4A1

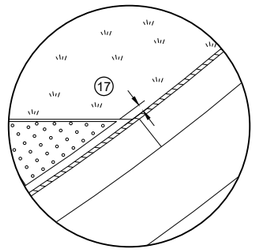

DETAIL A

LEGEND

- ½" EXPANSION JOINT SIDEWALK
- CONTRACTION JOINT SIDEWALK
- PAVEMENT MARKING CROSSWALK (WHITE)

GENERAL NOTES

AVOID PLACING DRAINAGE STRUCTURES, JUNCTION BOXES OR OTHER OBSTRUCTIONS IN FRONT OF RAMP ACCESS AREAS.

DETAILS OF CONSTRUCTION, MATERIALS AND WORKMANSHIP NOT SHOWN ON THIS DRAWING SHALL CONFORM TO THE PERTINENT REQUIREMENTS OF THE STANDARD SPECIFICATIONS AND THE APPLICABLE SPECIAL PROVISIONS.

DETECTABLE WARNING FIELDS THAT ARE INSTALLED AS A GROUP OR SIDE BY SIDE, SHALL BE FROM THE SAME MANUFACTURER.

APPLY RADIAL DETECTABLE WARNING PLACEMENT SIMILARLY FOR TYPE 4A AND 4A1 CURB RAMPS AND SIMILARLY FOR TYPE 4B AND 4B1 CURB RAMPS. TYPE 4A AND 4B CURB RAMPS ARE NOT SHOWN.

REFER TO SDD 8D5-g FOR ADDITIONAL RADIAL PLATE REQUIREMENTS.

FIELD CUTS AT INTERMEDIATE JOINTS WITHIN THE RADIAL DETECTABLE WARNING FILED ARE PROHIBITED.

DETERMINE FINAL RADIAL WARNING FIELD CONFIGURATION AD ITS INDIVIDUAL PLATE LOCATIONS. PERFORM PRE-LAYOUT PRIOR TO PLACEMENT IN PLASTIC CONCRETE. FOLLOW MANUFACTURER'S PRODUCT LIST AND INSTALLATION RECOMMENDATIONS.

(2) GRADE CHANGE BETWEEN GUTTER FLAG SLOPE AND THE CURB RAMP SLOPE SHALL NOT EXCEED 11%. MAXIMUM GUTTER FLAG SLOPE IS 4%. PROVIDE LONGITUDINAL DRAINAGE AROUND CURB AND AWAY FROM CURB RAMP. NO VERTICAL LIPS OR DISCONTINUITIES GREATER THAN ¼ - INCH ARE ALLOWED. SLOPE OF CURB HEAD OPENING SHALL MATCH THE RAMP SLOPE, MINIMALLY 1.5% AND NOT TO EXCEED 7%. WHEN ADJACENT TO 1.5% LANDING, CONSTRUCT CURB HEAD OPENING AT 1.5% IN THE DIRECTION OF PEDESTRIAN TRAVEL.

(3) AN 8.33% CURB RAMP SLOPE IS ALLOWABLE WITH FLATTENED GUTTER FLAG SLOPE AND NOT TO EXCEED 11% GRADE CHANGE.

(4) ±0.5% CONSTRUCTION TOLERANCE IN SIDEWALK CROSS SLOPE. THE SIDEWALK CROSS SLOPE SHALL NOT EXCEED 2% WITHOUT PRIOR APPROVAL FROM THE ENGINEER.

(6) PROVIDE A LEVEL LANDING (MAXIMUM 2% SLOPE) IN ANY DIRECTION OF PEDESTRIAN TRAVEL. STANDARD LANDING SIZE IS 5 FEET BY 5 FEET.

(8) PROVIDE GRADE BREAK PERPENDICULAR TO DIRECTION OF WHEELCHAIR TRAVEL.

(14) CONSULT ENGINEER IF GRADE BREAK LOCATION (END OF LANDING DIMENSION "XR") REQUIRES FIELD ADJUSTMENT WHEN ESTABLISHING FINAL RADIAL DETECTABLE WARNING FIELD LOCATION.

(15) FIELD SAW CUTS ALONG RADIAL DETECTABLE WARNING PLATES WILL BE NECESSARY TO MATCH EACH CURB RAMP EDGE. AVOID CUTTING THROUGH DOMES WHENEVER POSSIBLE. MAKE FIELD CUTS TRUE TO LINE AND WITHIN ⅛" DEVIATION. SMOOTH EDGES OF FIELD CUT PLATES.

(16) USE 1' X 2" RECTANGULAR END PLATE AT END OF TYPE 4A1 RAMP AND PROVIDE MINIMUM 2' - 0" DETECTABLE WARNING FIELD COVERAGE (IN DIRECTION OF PEDESTRIAN TRAVEL) ALONG THE ENTIRE CURB RAMP WIDTH.

(17) A MAXIMUM 3 INCH CONCRETE BORDER WIDTH IS ALLOWABLE IN FRONT OF RADIAL DETECTABLE WARNING FIELD FOR CONSTRUCTABILITY PURPOSES. CONCRETE BORDER WIDTH MAY VARY UP TO 1 INCH.

RADIAL DETECTABLE WARNING FIELD PLACEMENT WHEN 5 FOOT GRADE BREAK DISTANCE PER SDD 8D5-d IS EXCEEDED

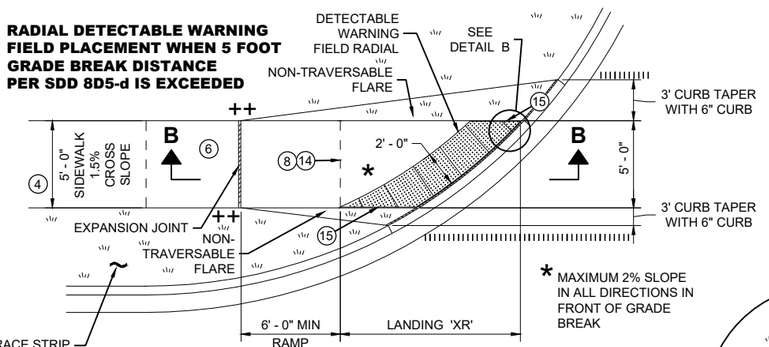

PLAN VIEW

CURB RAMP TYPE 4B1
(GRADE BREAK DISTANCE GREATER THAN 5 FEET)

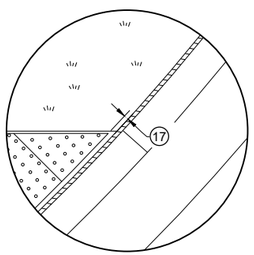

DETAIL B

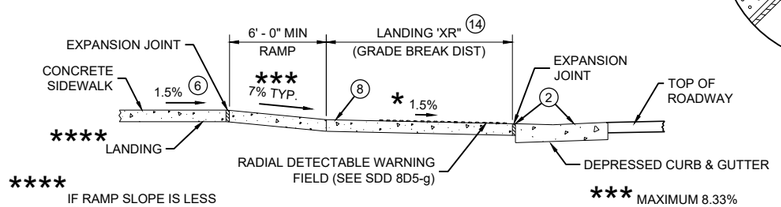

**** IF RAMP SLOPE IS LESS THAN 5.0%, THEN NO ADJACENT UPHILL LANDING IS REQUIRED

*** MAXIMUM 8.33%

SECTION B - B FOR TYPE 4B1

RADIAL DETECTABLE WARNING FIELD PLACEMENT WHEN 5 FOOT GRADE BREAK DISTANCE PER SDD 8D5-b IS EXCEEDED

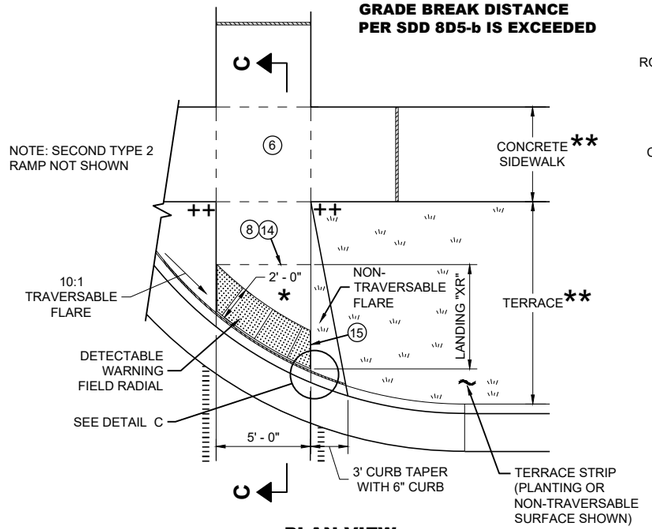

PLAN VIEW

CURB RAMP TYPE 2
(GRADE BREAK DISTANCE GREATER THAN 5 FEET)
(ON LINE WITH SIDEWALK)

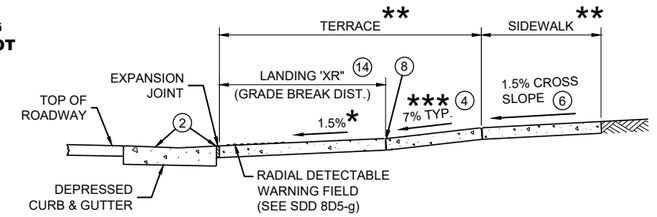

SECTION C - C FOR TYPE 2

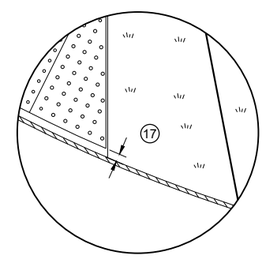

DETAIL C

* MAXIMUM 2% SLOPE IN ALL DIRECTIONS IN FRONT OF GRADE BREAK

** WIDTH SHOWN ELSEWHERE IN THE PLANS

*** MAXIMUM 8.33%

++ CONSTRUCT 6" WEDGE TO AVOID CONCRETE BREAKAGE

CURB RAMPS
RADIAL DETECTABLE WARNING

STATE OF WISCONSIN
DEPARTMENT OF TRANSPORTATION

6

SDD 08D05-21f

	MIN.	MAX.
A	1.6"	2.4"
B	0.65"	1.5"
C	*	*
D	0.9"	1.4"

* THE C DIMENSION IS 50% TO 65% OF THE D DIMENSION.

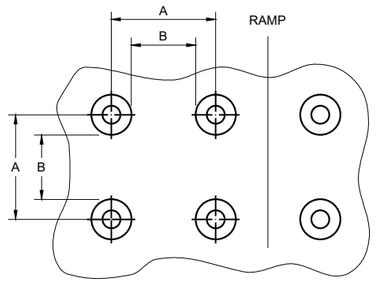

PLAN VIEW

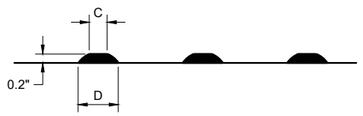

ELEVATION VIEW

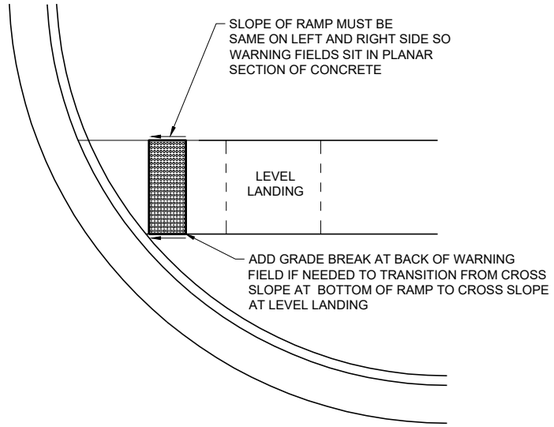

DETECTABLE WARNING FIELD

PLANAR INSTALLATION

GENERAL NOTES

DETECTABLE WARNING FIELDS THAT ARE INSTALLED AT A CURB RAMP SHALL BE FROM THE SAME MANUFACTURER.

PLACE ALL DETECTABLE WARNING FIELD SYSTEMS IN ACCORDANCE TO THE MANUFACTURER'S RECOMMENDATION.

FIELD CUTS AT INTERMEDIATE JOINTS WITHIN THE RADIAL DETECTABLE WARNING FILED ARE PROHIBITED.

DETERMINE FINAL RADIAL WARNING FIELD CONFIGURATION AND ITS INDIVIDUAL PLATE LOCATIONS. PERFORM PRE-LAYOUT PRIOR TO PLACEMENT IN PLASTIC CONCRETE. FOLLOW MANUFACTURER'S PRODUCT LIST AND INSTALLATION RECOMMENDATIONS.

FOR RADIAL DETECTABLE WARNING FIELD APPLICATIONS WHERE STANDARD RADIAL PLATES ARE NOT AVAILABLE AT AN INTERSECTION CURB RADIUS, A COMBINATION OF SQUARE OR RECTANGULAR PLATES AND RADIAL PLATES MAY BE USED TO FORM RADIAL CONFIGURATION. RADIAL WEDGE PLATES IN COMBINATION WITH SQUARE PLATES ARE ALSO ACCEPTABLE. FOLLOW MANUFACTURER'S RECOMMENDATIONS.

REFER TO CONTRACT AND STANDARD SPECIFICATIONS FOR FIELD CUTTING REQUIREMENTS.

DO NOT EMBED IN CONCRETE ANY FIELD-CUT PLATES WITH CUT EDGES SHORTER THAN 6 INCHES. CONSULT WITH MANUFACTURER FOR RE-DRILLING AND ANCHORING REQUIREMENTS OF FIELD-CUT PLATES.

(15) FIELD SAW CUTS ALONG RADIAL DETECTABLE WARNING PLATES WILL BE NECESSARY TO MATCH EACH CURB RAMP EDGE. AVOID CUTTING THROUGH DOMES WHENEVER POSSIBLE. MAKE FIELD CUTS TRUE TO LINE AND WITHIN ⅛" DEVIATION. SMOOTH EDGES OF FIELD CUT PLATES.

TRUNCATED DOMES
DETECTABLE WARNING PATTERN DETAIL

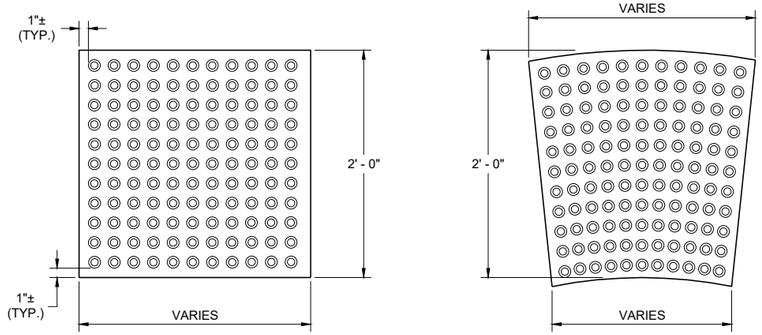

RECTANGULAR PLATES

RADIAL PLATES

PLAN VIEW

DETECTABLE WARNING FIELDS (TYPICAL)

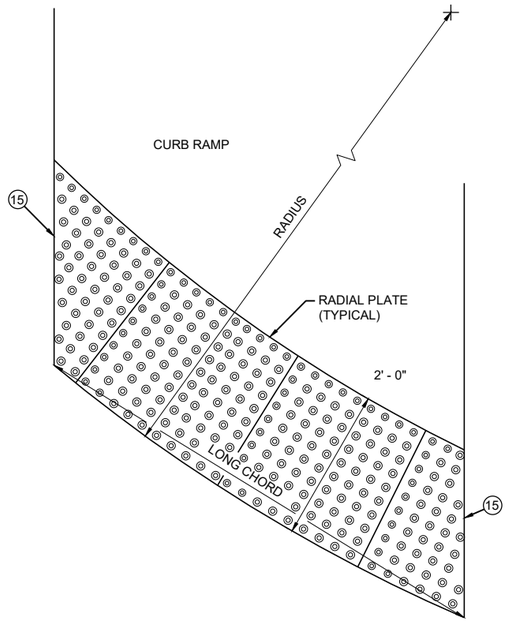

PLAN VIEW

RADIAL DETECTABLE WARNING FIELD ATTRIBUTES

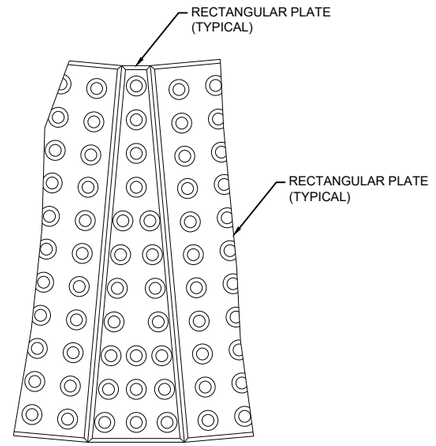

PLAN VIEW

RADIAL WEDGE PLATE CONNECTION DETAIL

CURB RAMPS
RECTANGULAR AND RADIAL DETECTABLE WARNING PLATES

STATE OF WISCONSIN
DEPARTMENT OF TRANSPORTATION

APPROVED

July 2023 — DATE

/S/ Rodney Taylor — ROADWAY STANDARDS DEVELOPMENT UNIT SUPERVISOR

FHWA

6
SDD 08D05-21g

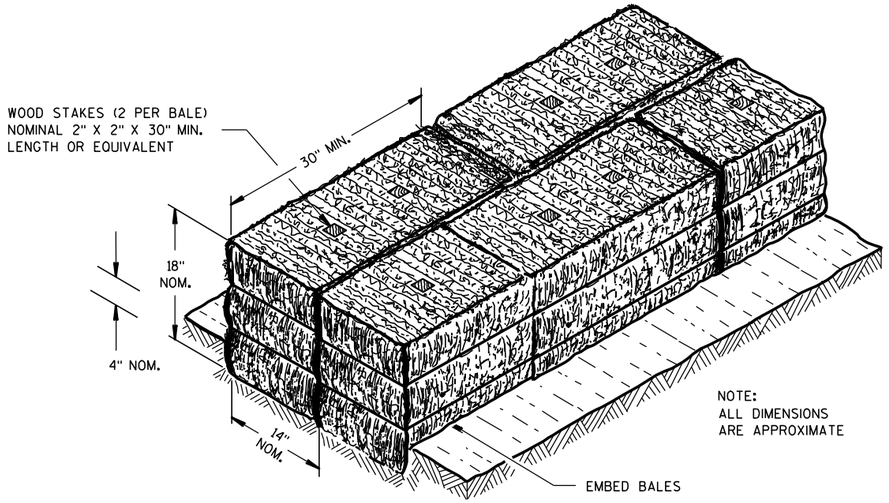

SECTION A-A

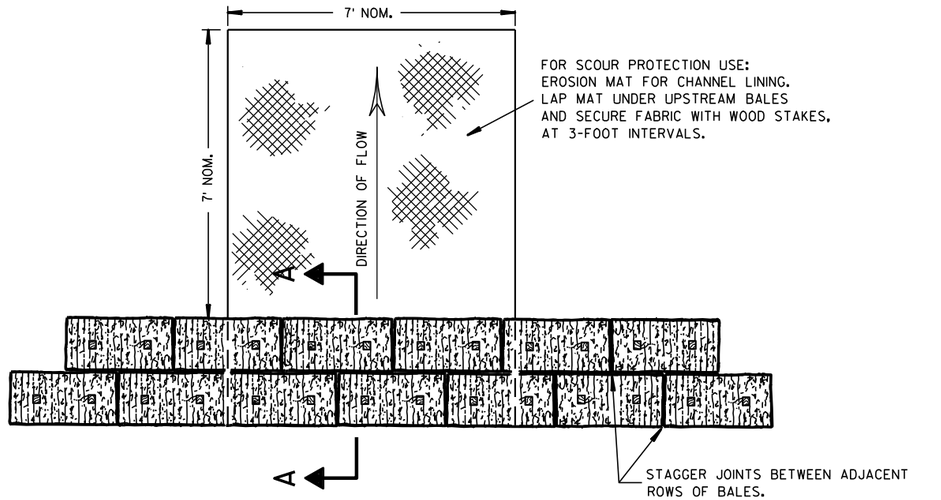

PLAN VIEW

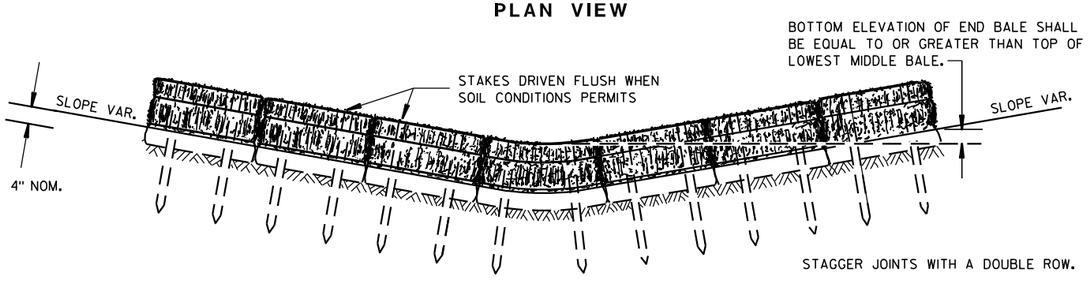

FRONT ELEVATION

TEMPORARY DITCH CHECK USING EROSION BALES (1)

GENERAL NOTES

DETAILS OF CONSTRUCTION, MATERIALS AND WORKMANSHIP NOT SHOWN ON THIS DRAWING SHALL CONFORM TO THE PERTINENT REQUIREMENTS OF THE STANDARD SPECIFICATIONS AND THE APPLICABLE SPECIAL PROVISIONS.

(1) TEMPORARY DITCH CHECKS EITHER EROSION BALES OR MANUFACTURED SHALL BE PAID FOR UNDER THE BID ITEM OF TEMPORARY DITCH CHECK. THE DEPARTMENT WILL NOT PAY FOR TEMPORARY DITCH CHECKS CONSTRUCTED OF A SINGLE ROW OF EROSION BALES.

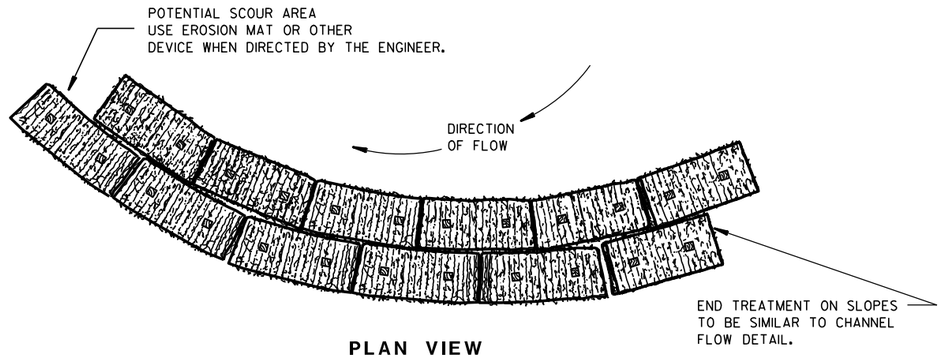

PLAN VIEW

WHEN ALTERING THE DIRECTION OF FLOW

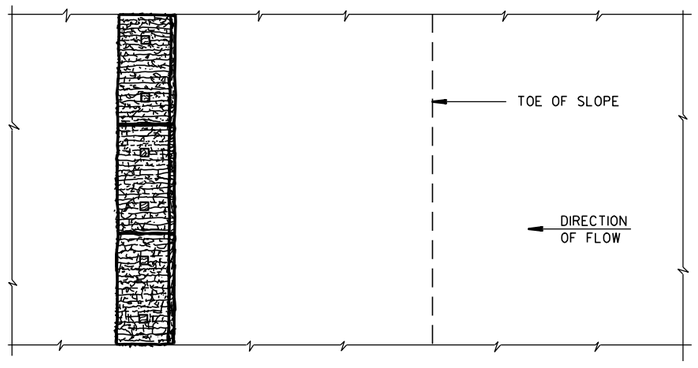

PLAN VIEW

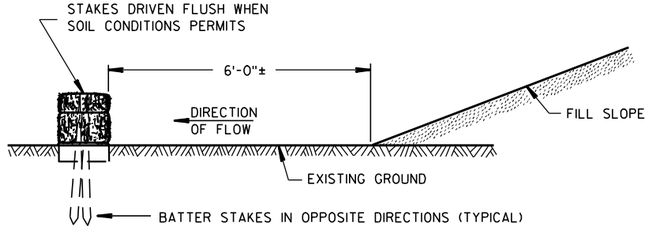

FRONT ELEVATION

WHEN EXISTING GROUND SLOPES AWAY FROM FILL SLOPE

EROSION BALES FOR SHEET FLOW

TYPICAL INSTALLATIONS OF EROSION BALES / TEMPORARY DITCH CHECKS

STATE OF WISCONSIN
DEPARTMENT OF TRANSPORTATION

APPROVED

6/04/02 — DATE

/S/ Beth Cannestra — CHIEF ROADWAY DEVELOPMENT ENGINEER

FHWA

6

S.D.D. 8 E 8-3

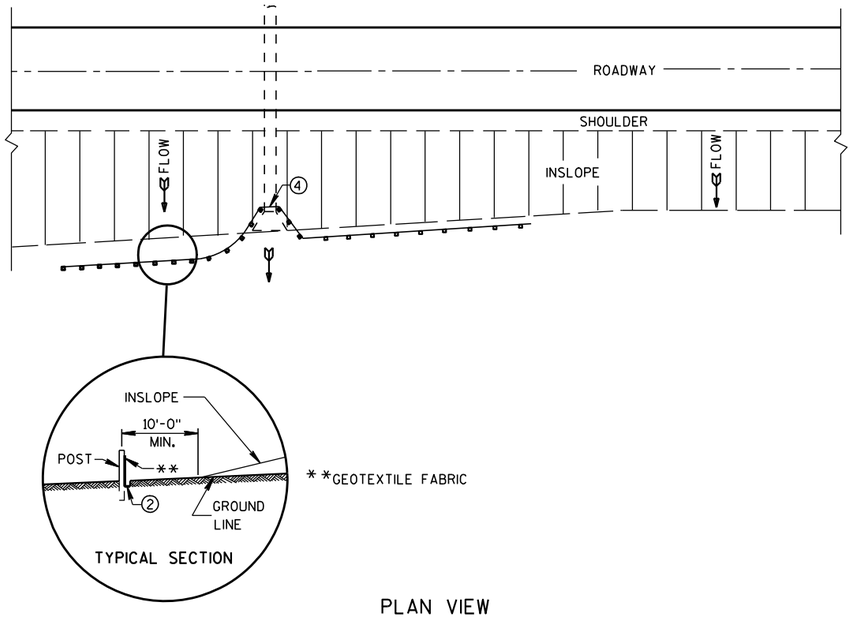

PLAN VIEW

TYPICAL APPLICATION OF SILT FENCE

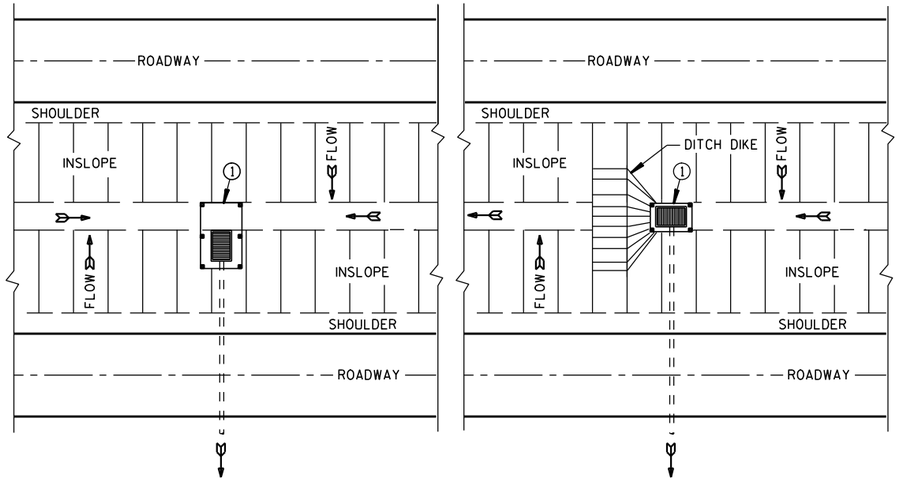

PLAN VIEW

SILT FENCE AT MEDIAN SURFACE DRAINS

GENERAL NOTES

DETAILS OF CONSTRUCTION NOT SHOWN ON THIS DRAWING SHALL CONFORM TO THE PERTINENT REQUIREMENTS OF THE STANDARD SPECIFICATIONS AND APPLICABLE SPECIAL PROVISIONS.

1. HORIZONTAL BRACE REQUIRED WITH 2" X 4" WOODEN FRAME OR EQUIVALENT AT TOP OF POSTS.
2. FOR MANUAL INSTALLATIONS THE TRENCH SHALL BE A MINIMUM OF 4" WIDE & 6" DEEP TO BURY AND ANCHOR THE GEOTEXTILE FABRIC. FOLD MATERIAL TO FIT TRENCH AND BACKFILL & COMPACT TRENCH WITH EXCAVATED SOIL.
3. WOOD POSTS SHALL BE A MINIMUM SIZE OF 1⅛" X 1⅛" OF OAK OR HICKORY.
4. SILT FENCE TO EXTEND ACROSS THE TOP OF THE PIPE.
5. CONSTRUCT SILT FENCE FROM A CONTINUOUS ROLL IF POSSIBLE BY CUTTING LENGTHS TO AVOID JOINTS. IF A JOINT IS NECESSARY USE ONE OF THE FOLLOWING TWO METHODS; A) OVERLAP THE END POSTS AND TWIST, OR ROTATE, AT LEAST 180 DEGREES, B) HOOK THE END OF EACH SILT FENCE LENGTH.

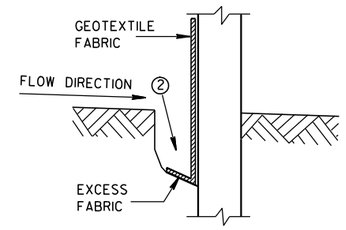

TRENCH DETAIL

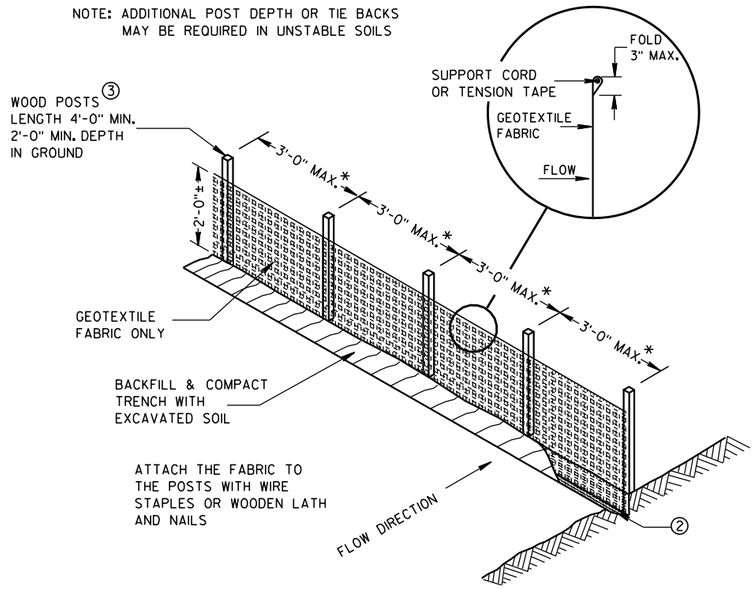

SILT FENCE

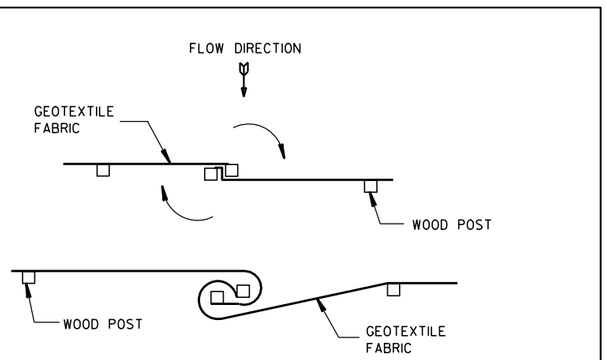

TWIST METHOD

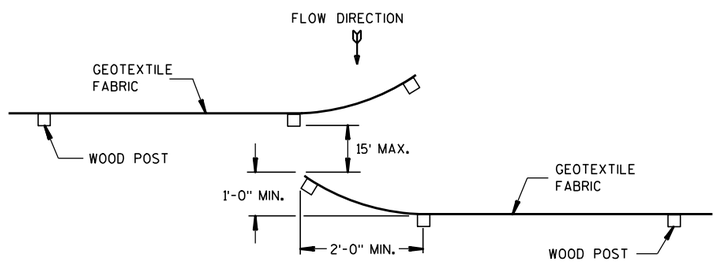

HOOK METHOD

JOINING TWO LENGTHS OF SILT FENCE 5

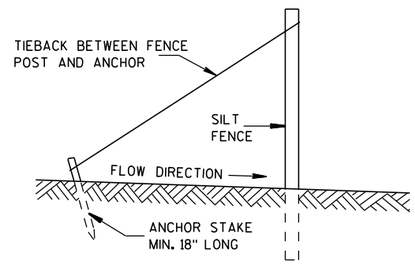

SILT FENCE TIE BACK

(WHEN REQUIRED BY THE ENGINEER)

SILT FENCE

STATE OF WISCONSIN
DEPARTMENT OF TRANSPORTATION

APPROVED
4-29-05 DATE
/S/ Beth Cannestra
CHIEF ROADWAY DEVELOPMENT ENGINEER
FHWA

6
S.D.D. 8 E 9-6

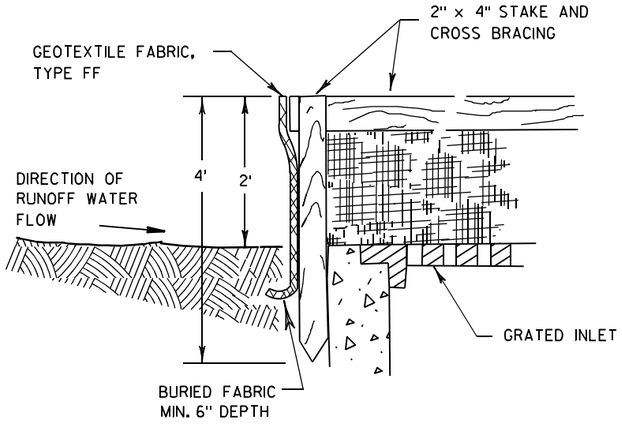

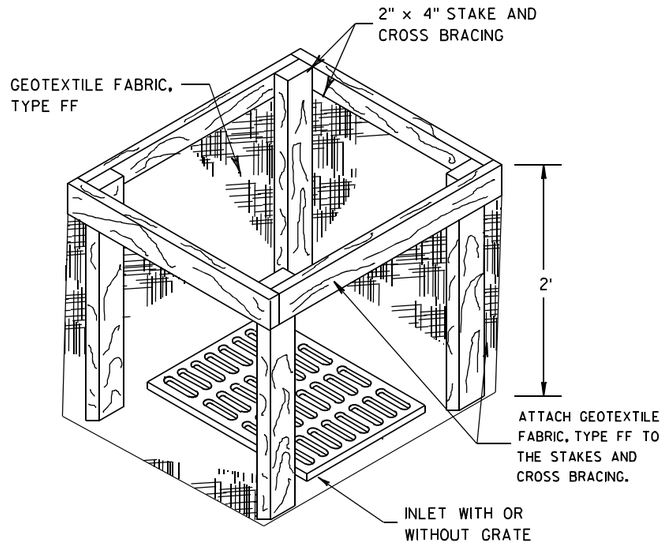

INLET PROTECTION, TYPE A

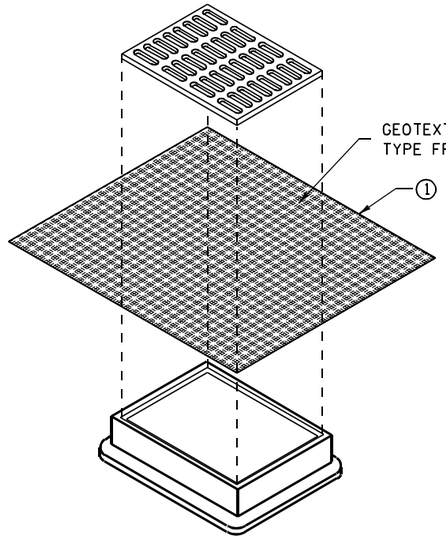

INLET PROTECTION, TYPE B
(WITHOUT CURB BOX)

(CAN BE INSTALLED IN ANY INLET WITHOUT A CURB BOX)

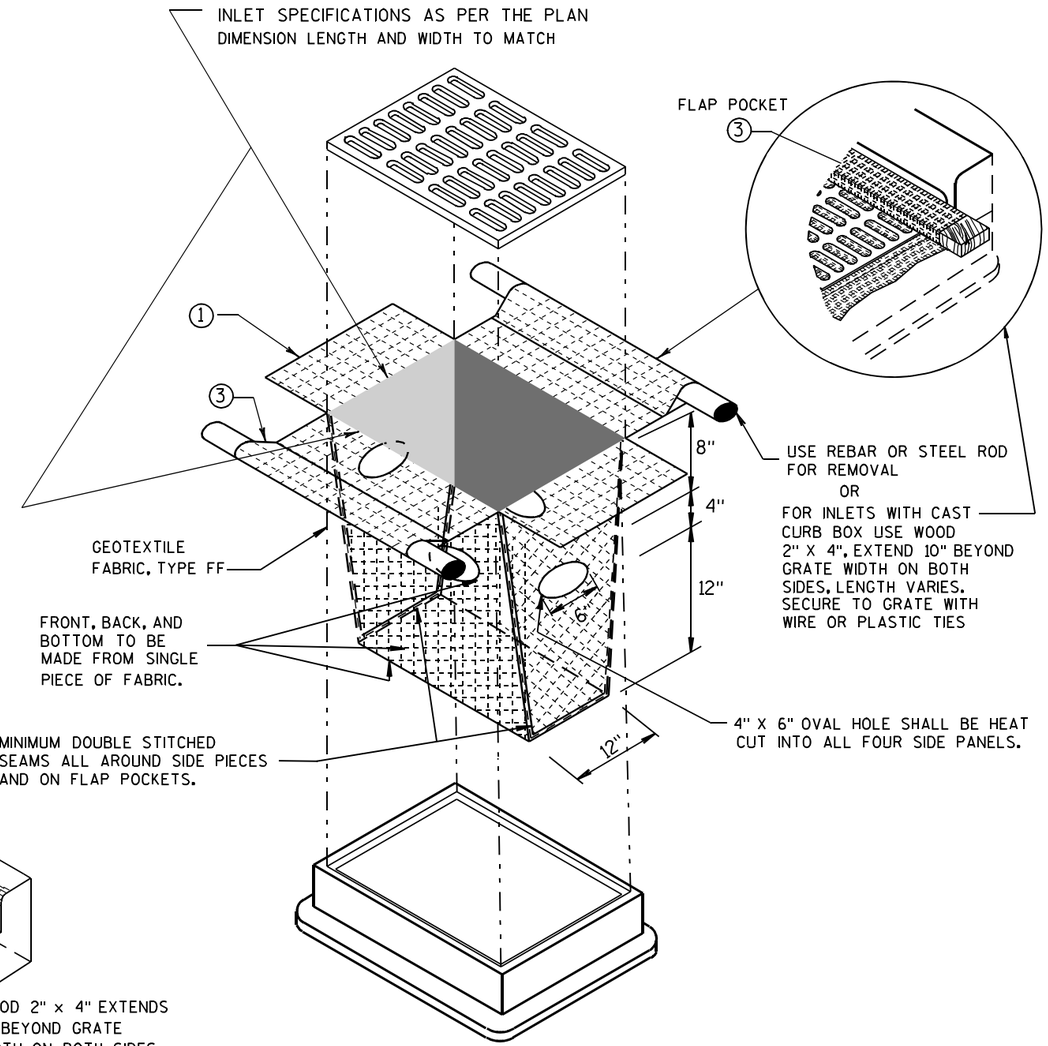

INLET PROTECTION, TYPE D

(CAN BE INSTALLED IN ANY INLET TYPE WITH
OR WITHOUT A CURB BOX AS PER NOTE ②)

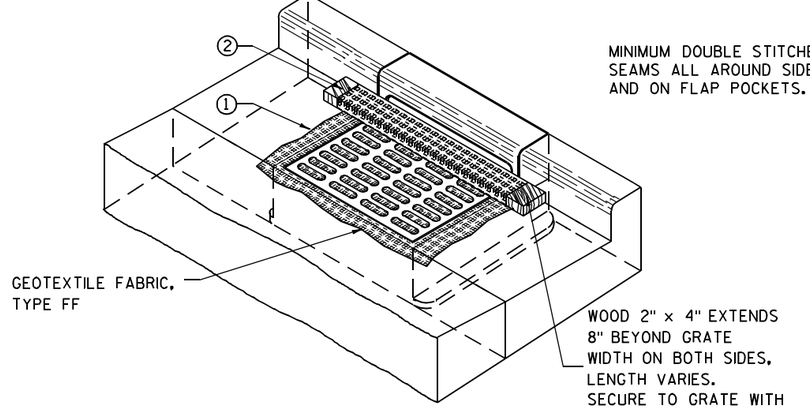

INLET PROTECTION, TYPE C (WITH CURB BOX)

GENERAL NOTES

INLET PROTECTION DEVICES SHALL BE MAINTAINED OR REPLACED AT THE DIRECTION OF THE ENGINEER.

MANUFACTURED ALTERNATIVES APPROVED AND LISTED ON THE DEPARTMENT'S EROSION CONTROL PRODUCT ACCEPTABILITY LIST MAY BE SUBSTITUTED.

WHEN REMOVING OR MAINTAINING INLET PROTECTION, CARE SHALL BE TAKEN SO THAT THE SEDIMENT TRAPPED ON THE GEOTEXTILE FABRIC DOES NOT FALL INTO THE INLET. ANY MATERIAL FALLING INTO THE INLET SHALL BE REMOVED IMMEDIATELY.

① FINISHED SIZE, INCLUDING FLAP POCKETS WHERE REQUIRED, SHALL EXTEND A MINIMUM OF 10" AROUND THE PERIMETER TO FACILITATE MAINTENANCE OR REMOVAL.

② FOR INLET PROTECTION, TYPE C (WITH CURB BOX), AN ADDITIONAL 18" OF FABRIC IS WRAPPED AROUND THE WOOD AND SECURED WITH STAPLES. THE WOOD SHALL NOT BLOCK THE ENTIRE HEIGHT OF THE CURB BOX OPENING.

③ FLAP POCKETS SHALL BE LARGE ENOUGH TO ACCEPT WOOD 2X4.

INSTALLATION NOTES

TYPE B & C

TRIM EXCESS FABRIC IN THE FLOW LINE TO WITHIN 3" OF THE GRATE.

THE CONTRACTOR SHALL DEMONSTRATE A METHOD OF MAINTENANCE, USING A SEWN FLAP, HAND HOLDS OR OTHER METHOD TO PREVENT ACCUMULATED SEDIMENT FROM ENTERING THE INLET.

TYPE D

DO NOT INSTALL INLET PROTECTION TYPE D IN INLETS SHALLOWER THAN 30", MEASURED FROM THE BOTTOM OF THE INLET TO THE TOP OF THE GRATE.

TRIM EXCESS FABRIC IN THE FLOW LINE TO WITHIN 3" OF THE GRATE.

THE INSTALLED BAG SHALL HAVE A MINIMUM SIDE CLEARANCE, BETWEEN THE INLET WALLS AND THE BAG, MEASURED AT THE BOTTOM OF THE OVERFLOW HOLES, OF 3". WHERE NECESSARY THE CONTRACTOR SHALL CINCH THE BAG, USING PLASTIC ZIP TIES, TO ACHIEVE THE 3" CLEARANCE. THE TIES SHALL BE PLACED AT A MAXIMUM OF 4" FROM THE BOTTOM OF THE BAG.

INLET PROTECTION
TYPE A, B, C, AND D

STATE OF WISCONSIN
DEPARTMENT OF TRANSPORTATION

APPROVED
10/16/02
DATE
/S/ Beth Cannestra
CHIEF ROADWAY DEVELOPMENT ENGINEER
FHWA

6
S.D.D. 8 E 10-2

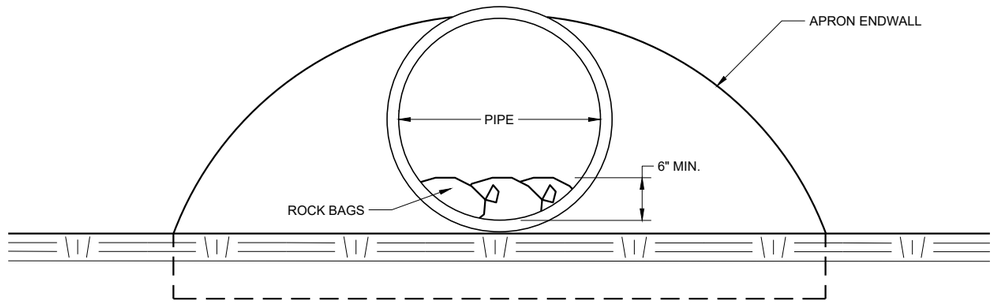

END VIEW

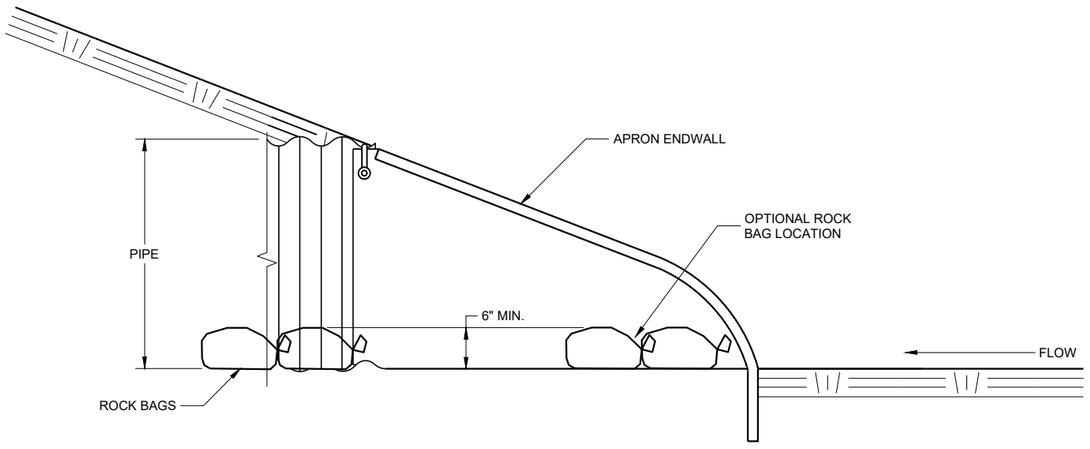

SIDE VIEW

CULVERT PIPE CHECK

(INSTALL ON INLET END ONLY)

CULVERT PIPE CHECK	
STATE OF WISCONSIN DEPARTMENT OF TRANSPORTATION	
APPROVED May 2019 DATE	/S/ Daniel Schave EROSION CONTROL ENGI
FHWA	

6

SDD 08E15 - 01

METAL APRON ENDWALLS

PIPE DIA. (IN.)	MIN. THICK. (Inches) STEEL	MIN. THICK. (Inches) ALUM.	DIMENSIONS (Inches) A (±1")	B (MAX.)	H (±1")	L (±1 1/2")	L1 ①	L2 ①	W (±2")	APPROX. SLOPE	BODY
12	.064	.060	6	6	6	21	12	17 1/2	24	2 1/2 to 1	1 Pc.
15	.064	.060	7	8	6	26	14	21 3/4	30	2 1/2 to 1	1 Pc.
18	.064	.060	8	10	6	31	15	28 1/4	36	2 1/2 to 1	1 Pc.
21	.064	.060	9	12	6	36	18	29 5/8	42	2 1/2 to 1	1 Pc.
24	.064	.075	10	13	6	41	18	37 1/4	48	2 1/2 to 1	1 Pc.
30	.079	.075	12	16	8	51	18	52 1/4	60	2 1/2 to 1	1 Pc.
36	.079	.105	14	19	9	60	24	59 3/4	72	2 1/2 to 1	2 Pc.
42	.109	.105	16	22	11	69	24	75 5/8	84	2 1/2 to 1	2 Pc.
48	.109	.105	18	27	12	78	24	81	90	2 1/4 to 1	3 Pc.
54	.109	.105	18	30	12	84	30	85 1/2	102	2 1/4 to 1	3 Pc.
60	.109×	.105×	18	33	12	87	—	—	114	2 to 1	3 Pc.
66	.109×	.105×	18	36	12	87	—	—	120	2 to 1	3 Pc.
72	.109×	.105×	18	39	12	87	—	—	126	2 to 1	3 Pc.
78	.109×	.105×	18	42	12	87	—	—	132	1 1/2 to 1	3 Pc.
84	.109×	.105×	18	45	12	87	—	—	138	1 1/2 to 1	3 Pc.
90	.109×	.105×	18	37	12	87	—	—	144	1 1/2 to 1	3 Pc.
96	.109×	.105×	18	35	12	87	—	—	150	1 1/2 to 1	3 Pc.

× EXCEPT CENTER PANEL SEE GENERAL NOTES

REINFORCED CONCRETE APRON ENDWALLS

PIPE DIA. (IN.)	DIMENSIONS (Inches) T	A	B	C	D	E	G	APPROX. SLOPE
12	2	4	24	48 7/8	72 1/8	24	2	3 to 1
15	2 1/4	6	27	46	73	30	2 1/4	3 to 1
18	2 1/2	9	27	46	73	36	2 1/2	3 to 1
21	2 3/4	9	36	37 1/2	73 1/2	42	2 3/4	3 to 1
24	3	9 1/2	43 1/2	30	73 1/2	48	3	3 to 1
27	3 1/4	10 1/2	49 1/2	24	73 1/2	54	3 1/4	3 to 1
30	3 1/2	12	54	19 3/4	73 1/2	60	3 1/2	3 to 1
36	4	15	63	34 3/4	97 3/4	72	4	3 to 1
42	4 1/2	21	63	35	98	78	4 1/2	3 to 1
48	5	24	72	26	98	84	5	3 to 1
54	5 1/2	27	65	* 33 1/4 - ** 35	* 98 1/4 - ** 100	90	5 1/2	2 2/5 to 1
60	6	* 30 - ** 35	60	39	99	96	5	2 to 1
66	6 1/2	* 24 - ** 30	* 72 - ** 78	* 21 - ** 27	99	102	5 1/2	2 to 1
72	7	* 24 - ** 36	78	21	99	108	6	2 to 1
78	7 1/2	* 24 - ** 36	78	21	99	114	6 1/2	2 to 1
84	8	36	90 1/2	21	111 1/2	120	6 1/2	1 1/2 to 1
90	8 1/2	41	87 1/2	24	111 1/2	132	6 1/2	1 1/2 to 1

*MINIMUM
**MAXIMUM

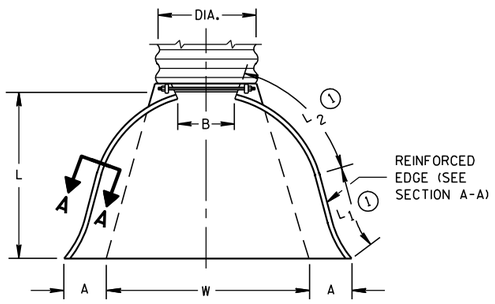

PLAN VIEW

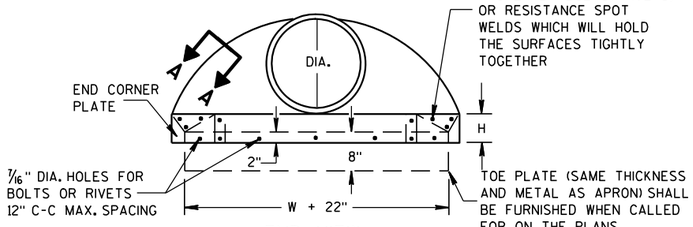

END VIEW

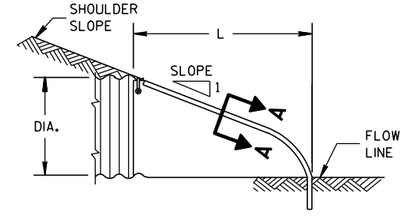

SIDE ELEVATION

METAL ENDWALLS

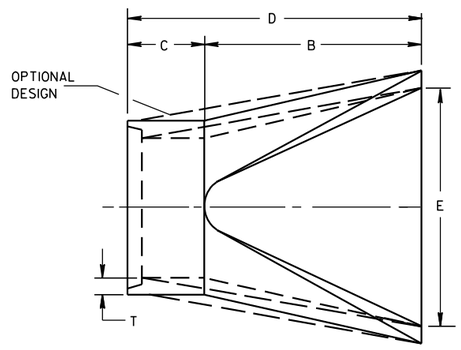

PLAN

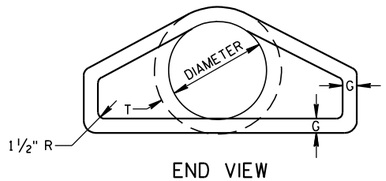

END VIEW

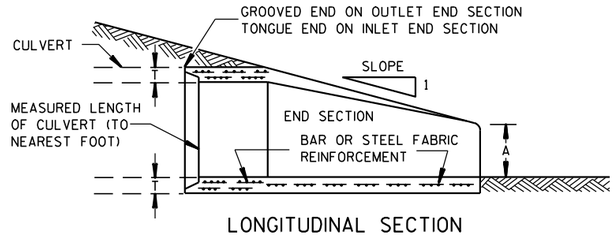

LONGITUDINAL SECTION

CONCRETE ENDWALLS

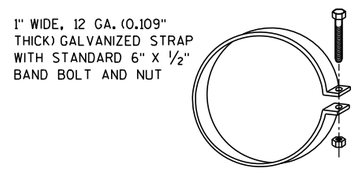

ALTERNATE FOR TYPE 1 CONNECTION

END SECTION CONNECTOR STRAP

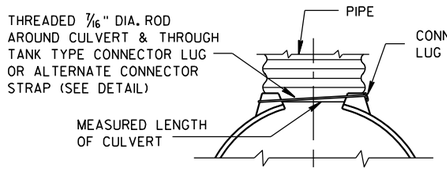

TYPE 1
FOR 12" THRU 24" CORR. PIPE

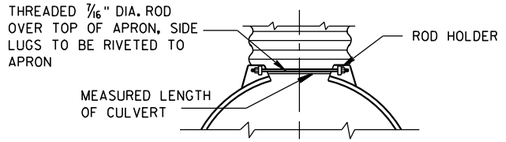

TYPE 2
FOR 30" THRU 96" CORR. PIPE

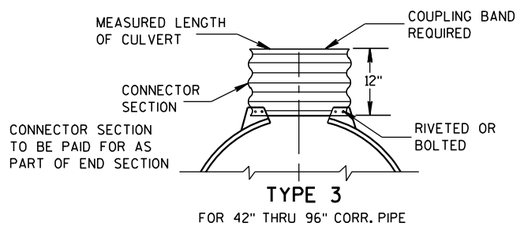

TYPE 3
FOR 42" THRU 96" CORR. PIPE

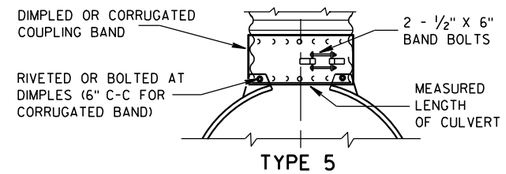

TYPE 5
ALTERNATE FOR:
ALL SIZES CORRUGATED CIRCULAR PIPE

NOTE: DIMPLED BAND FITS OVER OUTSIDE OF ENDWALL. AND CORRUGATED BAND FITS INSIDE ENDWALL. DIMPLED BAND MAY BE USED WITH HELICALLY CORRUGATED PIPE.

FOR CIRCUMFERENTIALLY CORRUGATED PIPE USE ENDWALL CONNECTION DETAILS 1, 2, 3 OR 5 AS APPLICABLE.

FOR HELICALLY CORRUGATED PIPE USE ENDWALL CONNECTION DETAILS 1, 2 OR 5.

FOR HELICALLY CORRUGATED PIPES WITH TWO CIRCUMFERENTIAL CORRUGATIONS AT EACH END USE ENDWALL CONNECTION DETAILS 1, 2 OR 3.

CONNECTION DETAILS

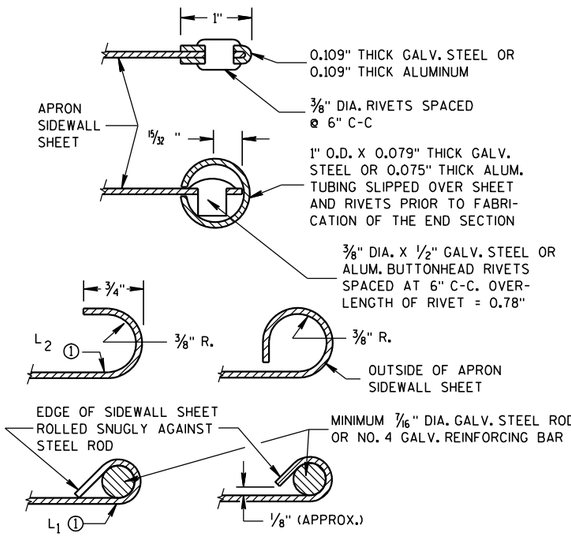

SECTION A-A

GENERAL NOTES

DETAILS OF CONSTRUCTION, MATERIALS AND WORKMANSHIP NOT SHOWN ON THIS DRAWING SHALL CONFORM TO THE PERTINENT REQUIREMENTS OF THE STANDARD SPECIFICATIONS AND THE APPLICABLE SPECIAL PROVISIONS.

CONCRETE CULVERT ENDWALLS MAY NOT BE USED WITH GALVANIZED STEEL OR ALUMINUM CULVERT PIPE OR VISE VERSA. GALVANIZED STEEL OR ALUMINUM ENDWALLS SHALL NORMALLY BE INSTALLED ON CULVERT PIPE OF THE SAME METAL.

ALL THREE PIECE STEEL APRON ENDWALLS FOR 60" DIAMETER PIPE AND LARGER SHALL HAVE 0.109" SIDES AND 0.138" CENTER PANELS. ALL THREE PIECE ALUMINUM APRON ENDWALLS FOR 60" DIAMETER PIPE AND LARGER SHALL HAVE 0.105" SIDES AND 0.134" CENTER PANELS. THE WIDTH OF CENTER PANELS SHALL BE GREATER THAN 20 PERCENT OF THE PIPE PERIMETER.

LAP SEAMS SHALL BE TIGHTLY JOINED BY GALVANIZED RIVETS OR BOLTS FOR STEEL UNITS AND ALUMINUM RIVETS AND BOLTS FOR ALUMINUM UNITS. FOR THE 60" THROUGH 96" DIAMETER APRON ENDWALL SIZES, THE REINFORCED EDGES AND CENTER PANEL SEAMS SHALL BE FURTHER REINFORCED WITH GALVANIZED STEEL OR ALUMINUM STIFFENER ANGLES. THE ANGLES SHALL BE ATTACHED BY GALVANIZED NUTS AND BOLTS FOR STEEL UNITS AND ALUMINUM NUTS AND BOLTS FOR ALUMINUM UNITS.

WHERE TWO OR MORE PIPES WITH APRON ENDWALLS ARE LAID ADJACENT TO EACH OTHER, THEY SHALL BE SEPARATED BY A DISTANCE SUFFICIENT TO PROVIDE A MINIMUM CLEARANCE OF 6 INCHES BETWEEN APRON ENDWALLS.

① FOR PIPE SIZES UP TO 60" DIAMETER, A 180° ROLLED EDGE MAY BE USED INSTEAD OF STEEL ROD REINFORCEMENT. SEE SECTION A-A.

APRON ENDWALLS FOR CULVERT PIPE

STATE OF WISCONSIN
DEPARTMENT OF TRANSPORTATION

APPROVED
11/30/94 DATE
/S/ Rory L. Rhinesmith
CHIEF ROADWAY DEVELOPMENT ENGINEER
FHWA

6
S.D.D. 8 F 1-11

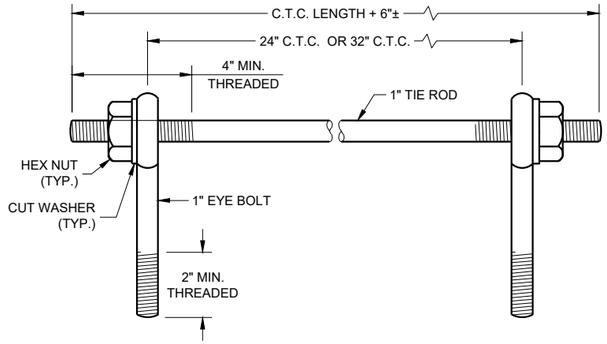

EYE BOLTS AND TIE ROD

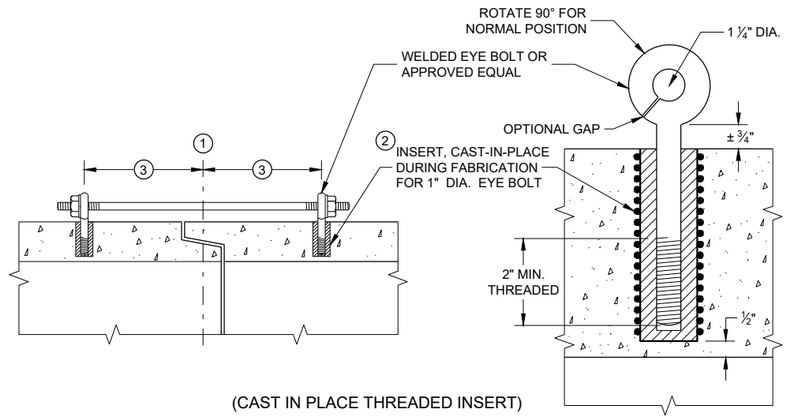

(CAST IN PLACE THREADED INSERT)

LONGITUDINAL SECTIONS

EYE BOLT AND TIE ROD ASSEMBLY (ALTERNATE NO. 1)

GENERAL NOTES

DETAILS OF CONSTRUCTION, MATERIALS, AND WORKMANSHIP NOT SHOWN ON THIS DRAWING SHALL CONFORM TO THE PERTINENT REQUIREMENTS OF THE STANDARD SPECIFICATIONS AND APPLICABLE SPECIAL PROVISIONS.

CONCRETE CULVERT AND STORM SEWER PIPE SHALL BE TIED TOGETHER IN THE MANNER ILLUSTRATED BY THIS DETAIL AT LOCATIONS DESIGNATED IN THE STANDARD SPECIFICATIONS AND THE PLAN. THE CONTRACTOR MAY USE EITHER ALTERNATE 1, 2 OR 3 FOR DRAINAGE STRUCTURES. ONLY ALTERNATE 1 AND 3 MAY BE USED FOR CATTLE PASSES, UNLESS OTHERWISE STATED IN THE CONTRACT. THE MATERIALS, FABRICATION AND WORK NECESSARY TO TIE THE PIPE BY THIS DETAIL WILL BE CONSIDERED INCIDENTAL TO THE PIPE AND APRON ENDWALLS IF REQUIRED.

DETAILED DRAWINGS FOR PROPOSED ALTERNATE DESIGNS FOR JOINT TIES SHALL BE SUBMITTED TO THE ENGINEER FOR APPROVAL.

JOINT TIES TO BE HOT-DIP GALVANIZED PER ASTM A 153.

(1) CENTER LINE OF TONGUE AND GROOVE OR BELL AND SPIGOT JOINTS.

(2) THE INSIDE OF THE THREADED INSERTS SHALL BE CLEAN TO ALLOW THE INSERTION OF THREADED EYE BOLTS.

(3) HOLES SHALL BE CAST-IN-PLACE OR DRILLED PER THE APPLICABLE DETAIL, AND EQUAL DISTANCE FROM THE CENTERLINE OF THE JOINT.

(4) BOLT PROJECTION INSIDE OF PIPE SHALL NOT EXCEED 2 INCHES.

(5) OPENING TO BE ROD DIAMETER PLUS 1 INCH.

(6) LENGTH ADEQUATE TO EXTEND TO WITHIN ½ INCH OF THE INNER SURFACE OF THE PIPE.

(7) EYE BOLT LENGTH DETERMINED BY WALL THICKNESS, BELL THICKNESS AND BOLT PROJECTION INSIDE PIPE.

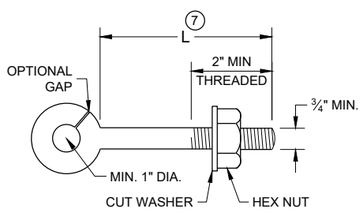

EYE BOLT (7)

NOTE: TWO EYE BOLTS MAY BE USED WITH A 30" OR 38" LONG THREADED ROD IN LIEU OF THE 90° BENT TIE ROD.

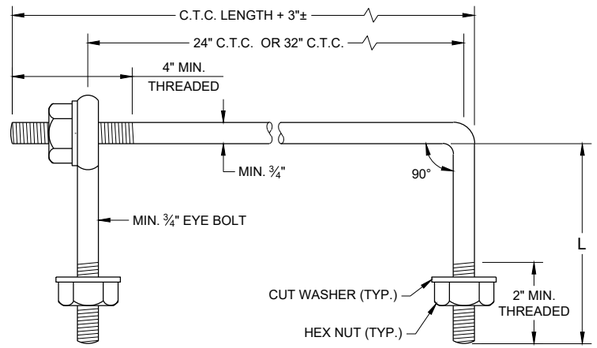

EYE BOLT AND TIE ROD

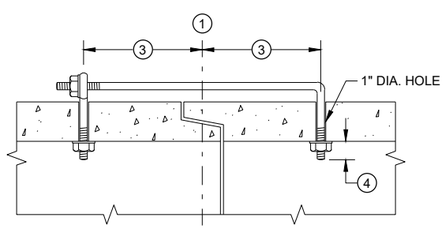

(TONGUE AND GROOVE PIPE)

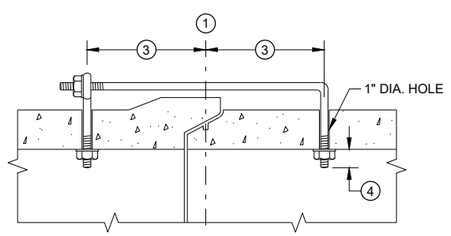

(MODIFIED BELL PIPE)

LONGITUDINAL SECTION

(JOINT TIES FOR 18" TO 66" DIA. CONCRETE PIPE)

EYE BOLT AND TIE ROD ASSEMBLY (ALTERNATE NO. 2)

ADJUSTABLE TIE ROD TABLE

PIPE DIAMETER	TIE ROD DIAMETER	D	L_1	N
12 - 60	⅝	⅝	5	½
66 - 84	¾	¾	5	½
90 - 144	1	1	7	1 7/16

DIMENSIONS SHOWN ARE IN INCHES

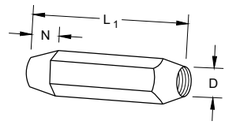

TAPERED

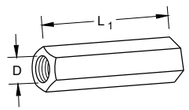

PLAIN

RIGHT AND LEFT THREADS

SLEEVE NUTS

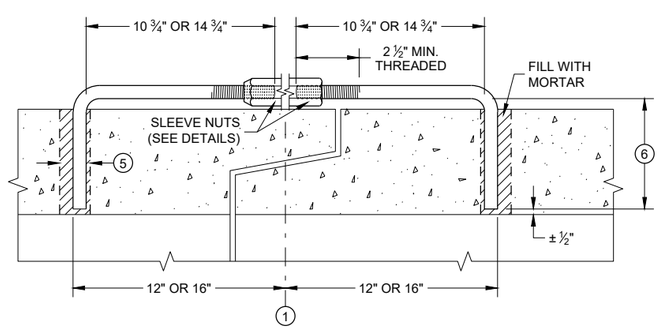

LONGITUDINAL SECTION

ADJUSTABLE TIE ROD (ALTERNATE NO. 3)

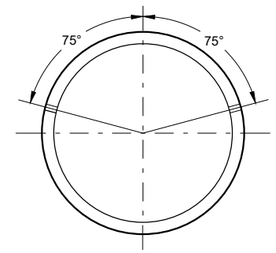

PLACEMENT OF (2) CAST-IN-PLACE INSERTS OR HOLES DURING FABRICATION FOR PIPE SECTIONS REQUIRING TIE RODS

TRANSVERSE SECTION

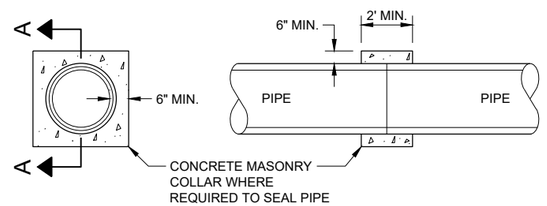

SECTION A - A

CONCRETE COLLAR DETAIL

JOINT TIES FOR CONCRETE PIPE AND CONCRETE COLLAR DETAIL

STATE OF WISCONSIN
DEPARTMENT OF TRANSPORTATION

APPROVED
November 2021 — DATE
/S/ Rodney Taylor — ROADWAY STANDARDS DEVE ENGINEER

FHWA

SDD 08F04 - 08

SDD 08F04 - 08

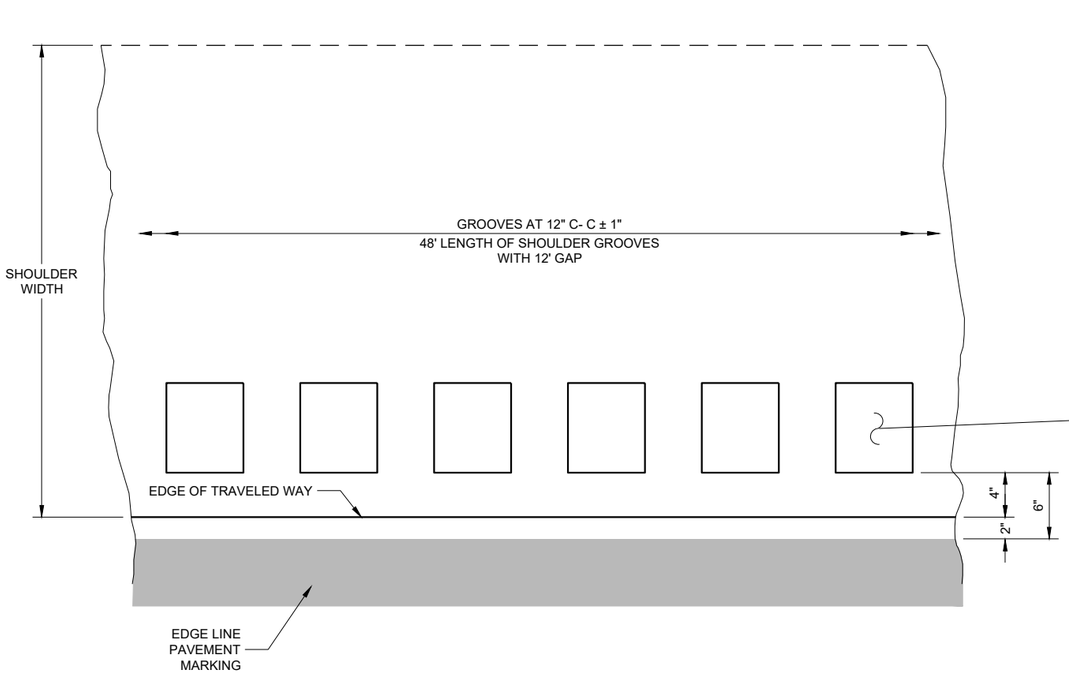

PLAN DETAIL VIEW
SHOULDER WITH GROOVES

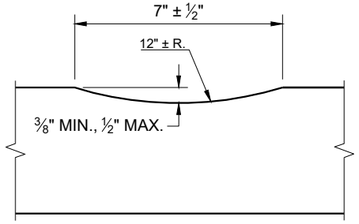

SECTION A - A

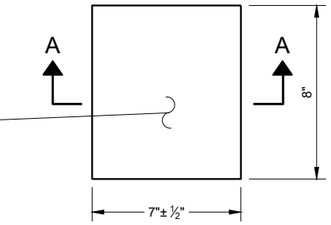

PLAN VIEW
(SINGLE GROOVE)

GENERAL NOTES

DO NOT MILL SHOULDER GROOVES THROUGH INTERSECTIONS, MARKED CROSSWALKS, NON-MOTORIZED PATH CROSSINGS, ETC. REFER TO SDD 13A10 SHEETS "g" AND "h".

SHOULDER GROOVES MAY BE OMITTED IN AREAS WITH HIGH CONCENTRATIONS OF DRIVEWAYS WHEN DIRECTED BY THE ENGINEER.

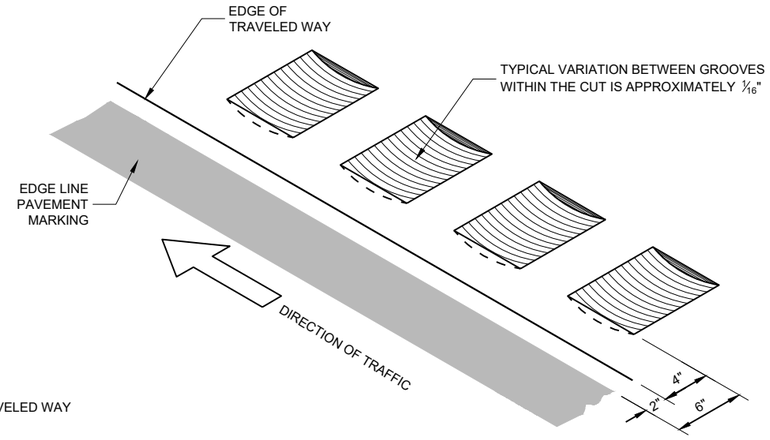

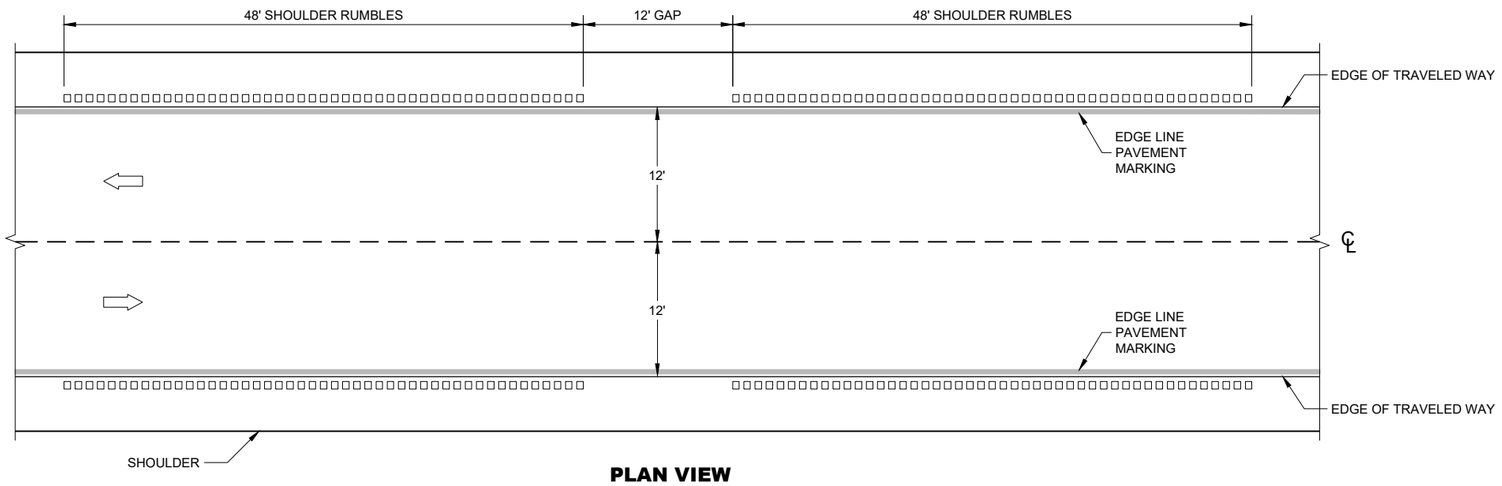

PLAN VIEW

SHOULDER RUMBLE STRIPS - ASPHALT

SHOULDER RUMBLE STRIPS ASPHALT

STATE OF WISCONSIN
DEPARTMENT OF TRANSPORTA

6
SDD 13A10 - 03a

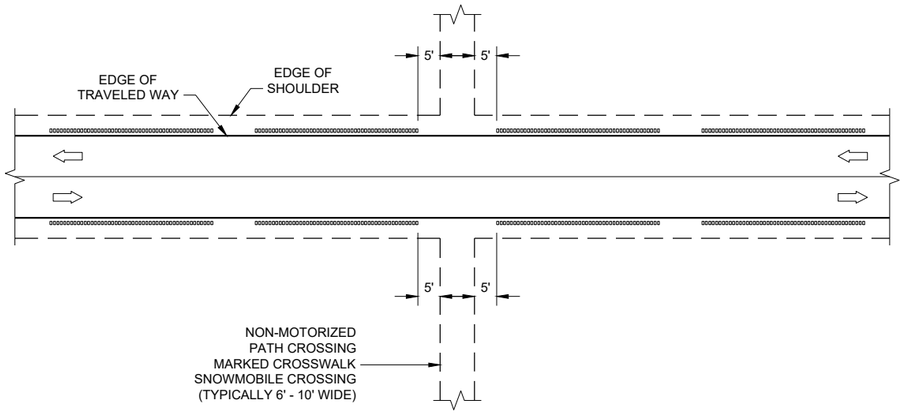

GROOVES AT MISCELLANEOUS CROSSINGS

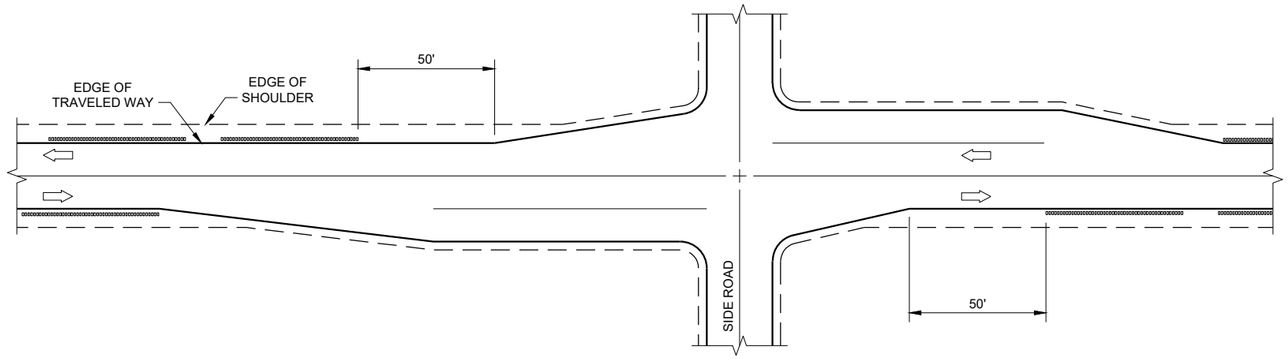

GROOVES AT RIGHT TURN LANE

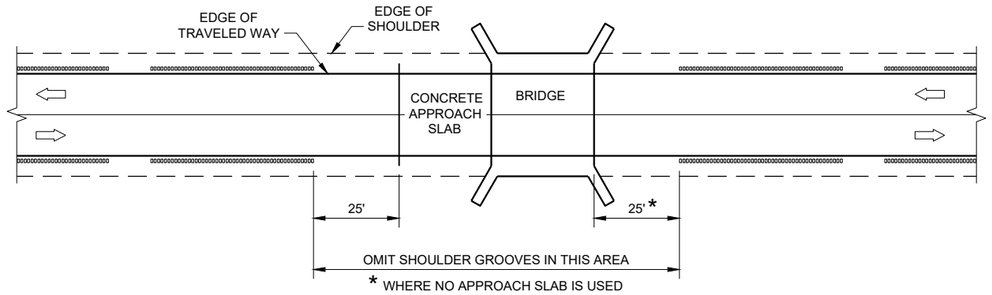

GROOVES AT BRIDGES

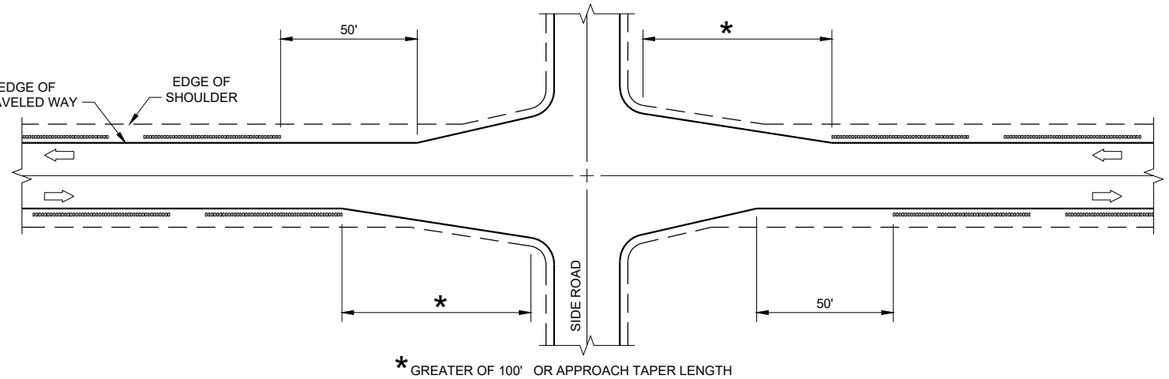

GROOVES AT INTERSECTIONS WITH APPROACH TAPER

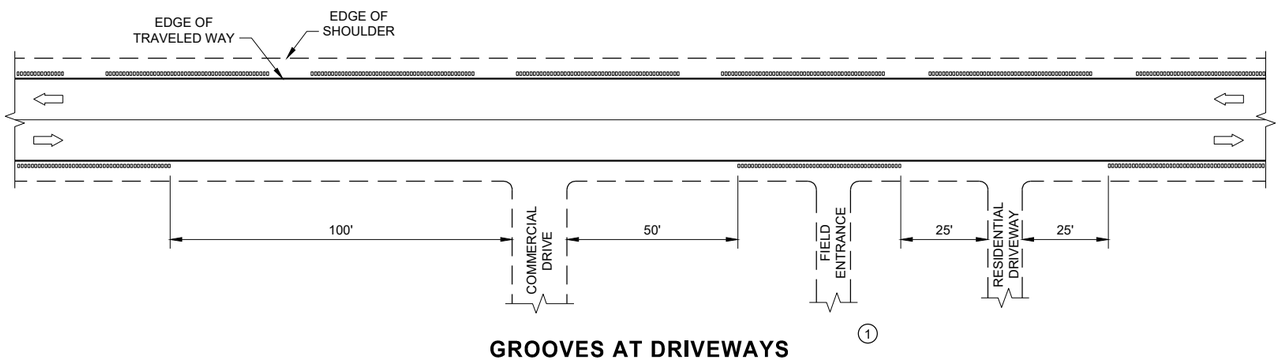

GROOVES AT DRIVEWAYS ①

GENERAL NOTES

① SHOULDER GROOVES MAY BE OMITTED IN AREAS WITH HIGH CONCENTRATIONS OF DRIVEWAYS. WHEN DIRECTED BY THE ENGINEER.

SHOULDER AND EDGE LINE RUMBLE STRIPS CROSSINGS, INTERSECTIONS, BRIDGES, DRIVEWAYS

STATE OF WISCONSIN
DEPARTMENT OF TRANSPORTA

6

SDD 13A10 - 03g

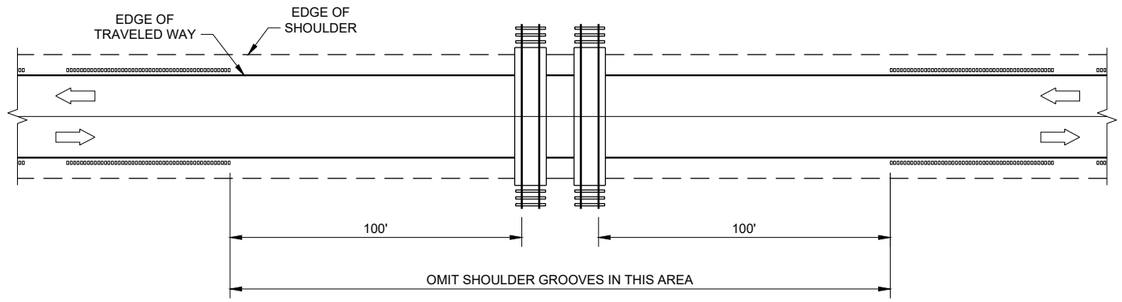

GROOVES AT RAILROADS

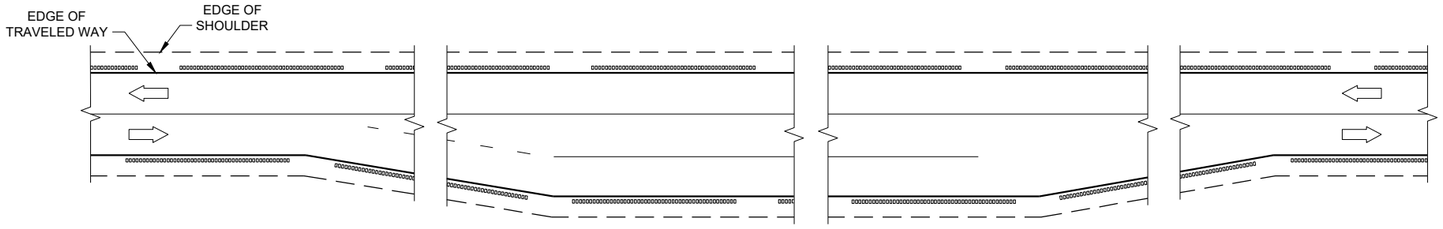

GROOVES AT PASSING AND CLIMBING LANES

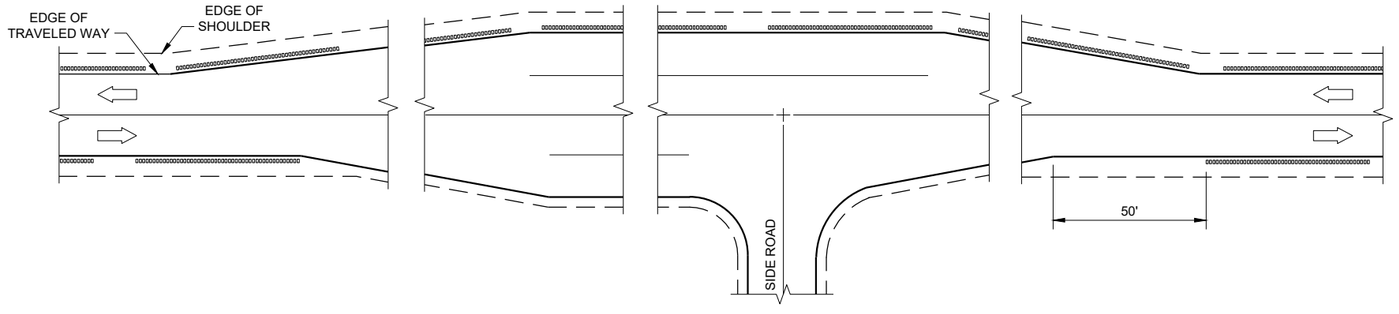

GROOVES AT BYPASS LANES

6

SDD 13A10 - 03h

SHOULDER AND EDGE LINE RUMBLE STRIPS - RAILROAD, PASSING, CLIMBING AND BYPASS LANES

STATE OF WISCONSIN
DEPARTMENT OF TRANSPORTATION

APPROVED

May 2023
DATE

/S/ John Jenkins
ROADWAY STANDARDS DEVE ENGINEER

FHWA

6

SDD 13A10 - 03h

GENERAL NOTES

DO NOT MILL SHOULDER GROOVES THROUGH INTERSECTIONS, MARKED CROSSWALKS, NON-MOTORIZED PATH CROSSINGS, ETC. REFER TO SDD 13A11 SHEETS "d" AND "e".

CENTERLINE GROOVES MAY BE OMITTED IN AREAS WITH HIGH CONCENTRATIONS OF DRIVEWAYS WHEN DIRECTED BY THE ENGINEER.

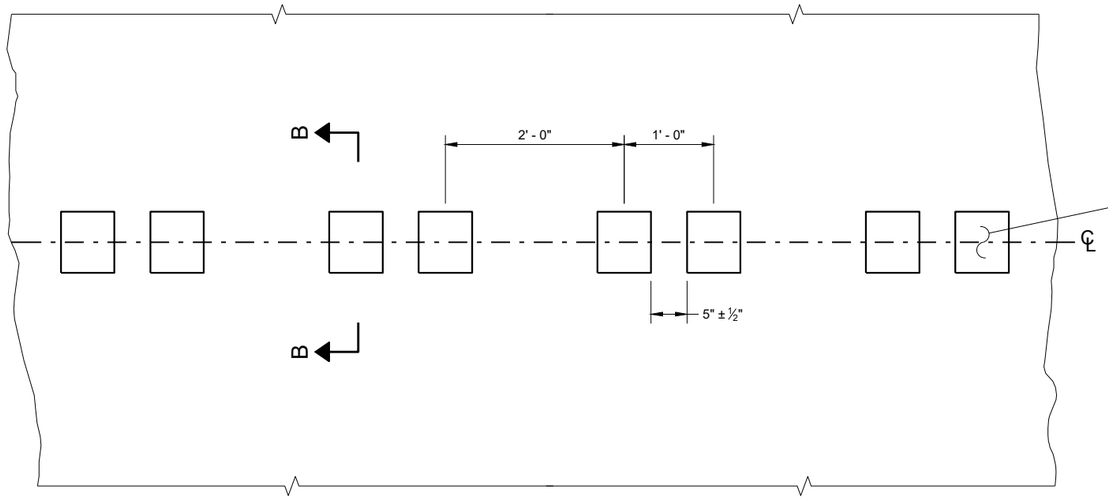

PLAN DETAIL VIEW

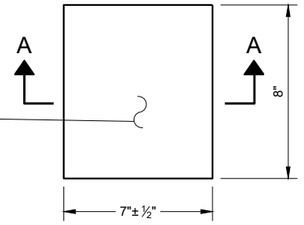

PLAN VIEW
(SINGLE GROOVE)

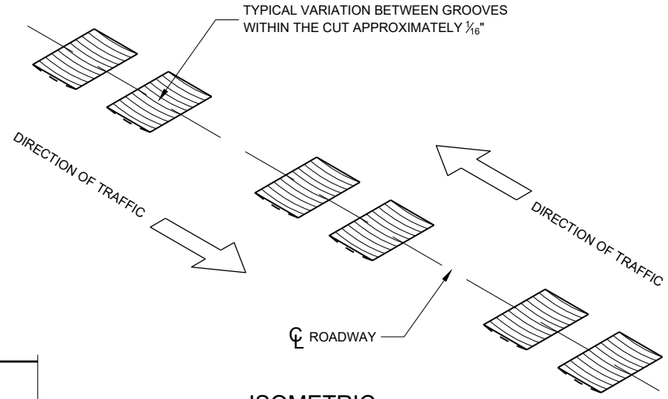

ISOMETRIC

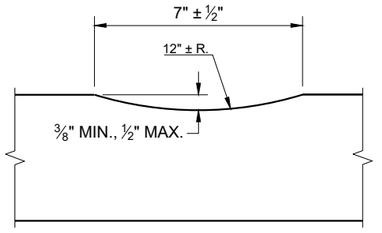

SECTION A - A

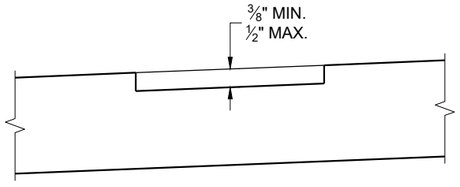

SECTION B - B
SUPERELEVATED ROADWAY

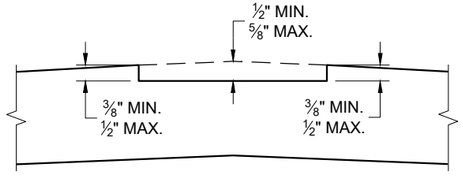

SECTION B - B
CROWNED ROADWAY

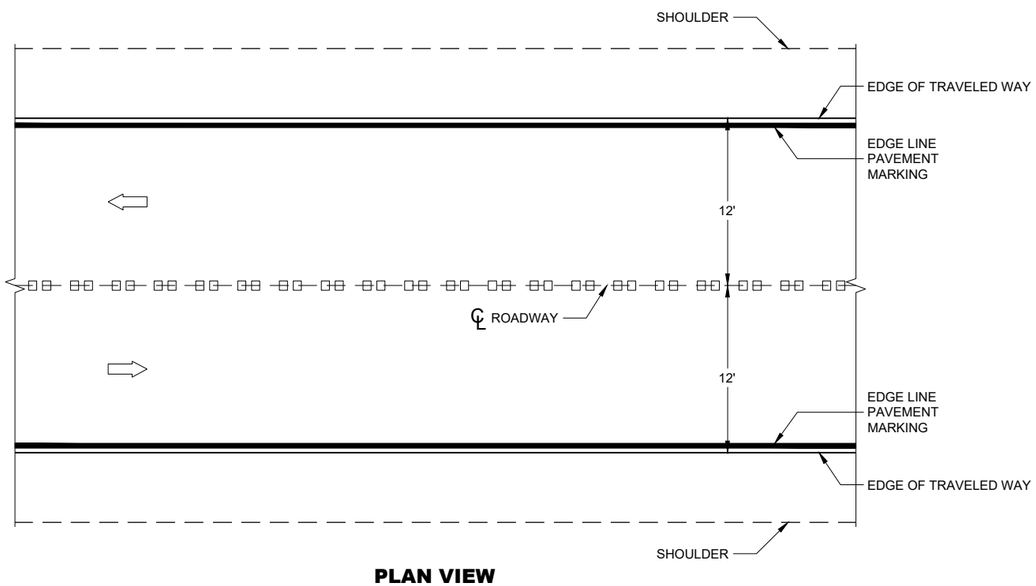

PLAN VIEW

CENTERLINE RUMBLE STRIPS - ASPHALT

CENTERLINE RUMBLE STRIPS - ASPHALT	
STATE OF WISCONSIN DEPARTMENT OF TRANSPORTA	175

6

SDD 13A11 - 04a

6

SDD 13A11 - 04a

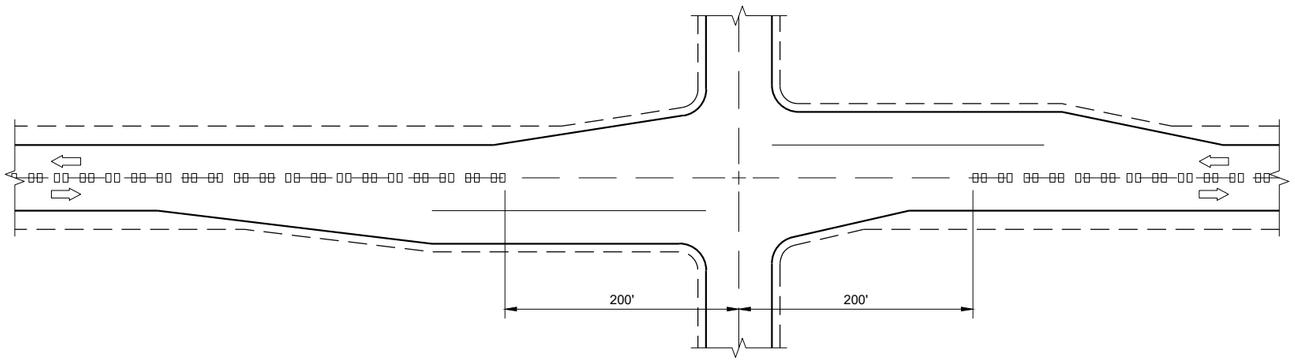

CENTERLINE GROOVES AT INTERSECTIONS

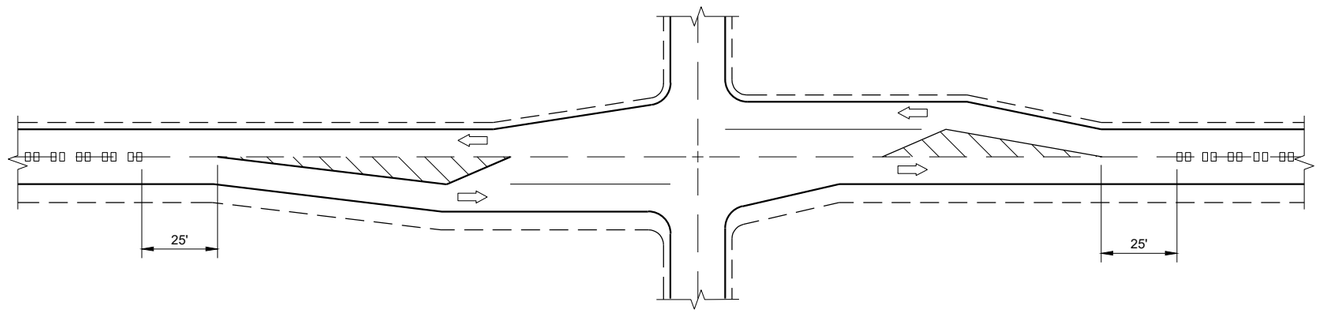

CENTERLINE GROOVES AT INTERSECTIONS (WITH LEFT TURN LANES)

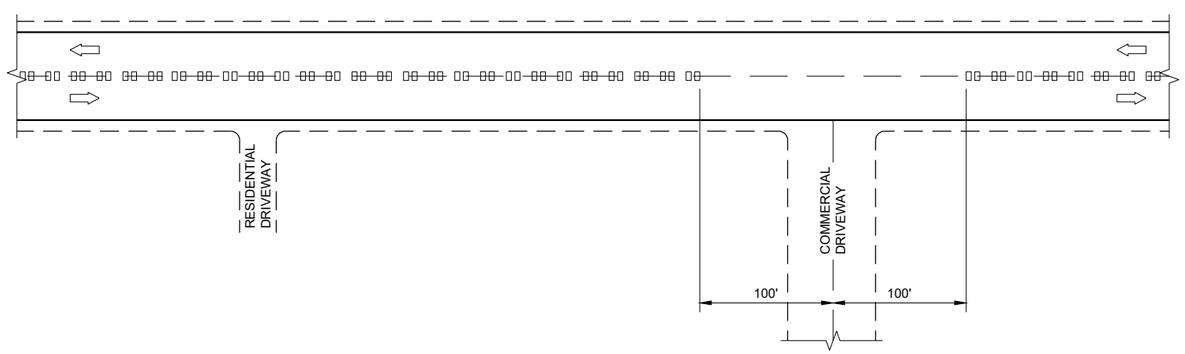

CENTERLINE GROOVES AT DRIVEWAYS (1)

GENERAL NOTES

(1) CENTERLINE GROOVES MAY BE OMITTED IN AREAS WITH HIGH CONCENTRATIONS OF DRIVEWAYS WHEN DIRECTED BY THE ENGINEER.

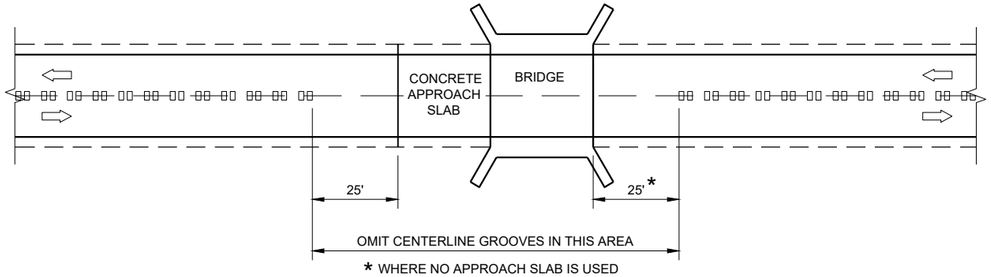

CENTERLINE GROOVES AT BRIDGES

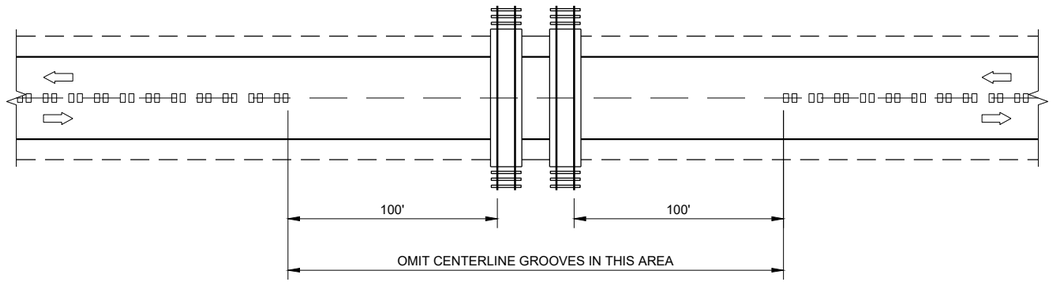

CENTERLINE GROOVES AT RAILROADS

CENTER LINE RUMBLE STRIPS - INTERSECTIONS, DRIVEWAYS, BRIDGES, RAIL ROADS

STATE OF WISCONSIN
DEPARTMENT OF TRANSPORTATION

APPROVED
May 2023 — DATE
/S/ John Jenkins — ROADWAY STANDARDS DEVE ENGINEER

FHWA

6

SDD 13A11 - 04d

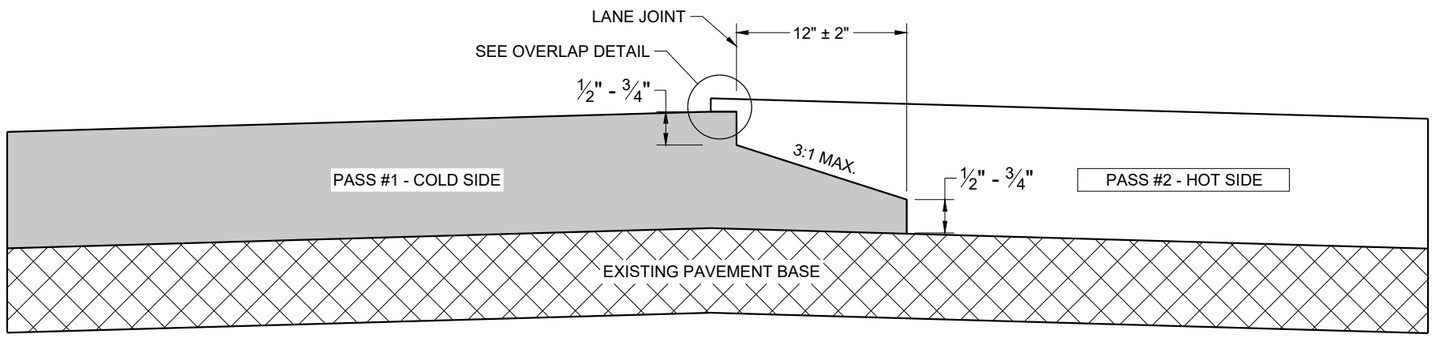

TYPICAL PAVEMENT CROSS SECTION
NOTCHED WEDGE JOINT

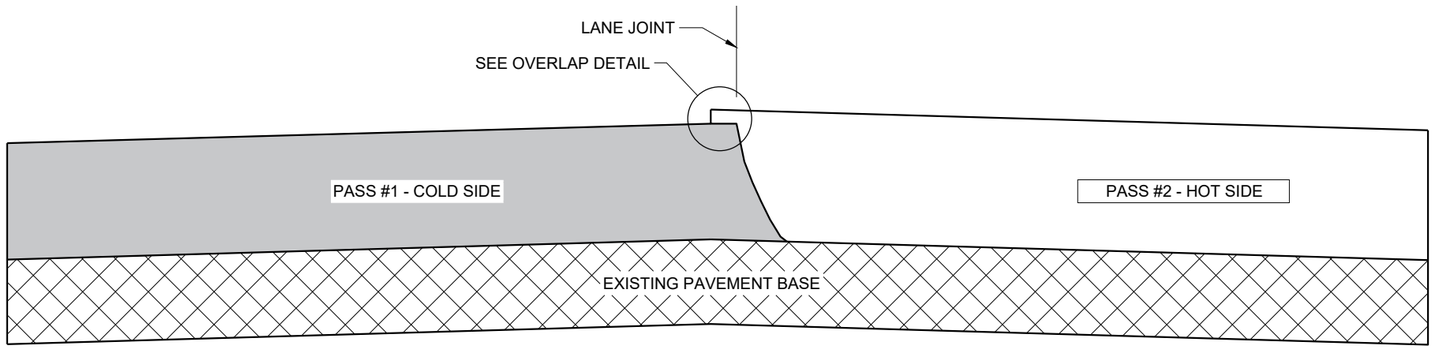

TYPICAL PAVEMENT CROSS SECTION
VERTICAL JOINT

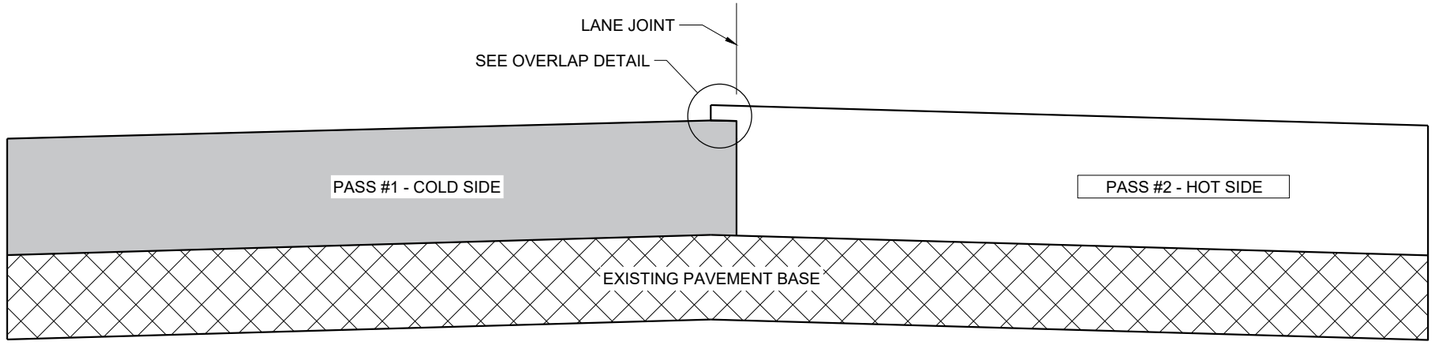

TYPICAL PAVEMENT CROSS SECTION
VERTICAL JOINT (MILLED)

GENERAL NOTES

IN ADDITION TO THE DETAILS PROVIDED IN THIS DRAWING, CONFORM TO STANDARD SPECIFICATION 450.3.2.8 FOR WHEN A NOTCHED WEDGE JOINT IS REQUIRED AND FOR GENERAL JOINT CONSTRUCTION REQUIREMENTS.

FOR ALL LONGITUDINAL JOINTS, ENSURE THE PAVER SCREED OVERLAPS THE PREVIOUSLY PLACED PAVEMENT BY 1" ± 0.5" AND THE HOT SIDE OF THE JOINT REMAINS HIGHER THAN THE COLD SIDE BY APPROXIMATELY 0.1" AFTER FINAL COMPACTION. (IT WILL BE FLUSH WHEN PAVING IN ECHELON.)

ONLY REMOVE THE LONGITUDINAL NOTCHED WEDGE JOINT FOR SMA PAVEMENT OR AS DIRECTED BY THE ENGINEER TO ADDRESS SPECIFIC LENGTHS OF JOINT DAMAGED BY TRAFFIC.

WHEN MILLING BACK OR REMOVING ANY LONGITUDINAL JOINT, LIMIT THE MATERIAL REMOVED TO 2" FROM THE TOP NOTCH OR FROM THE VERTICAL JOINT EDGE ON THE COLD SIDE OF THE JOINT.

USE LONGITUDINAL MILLED JOINT AS PLANS SHOW OR THE AS THE ENGINEER DIRECTS.

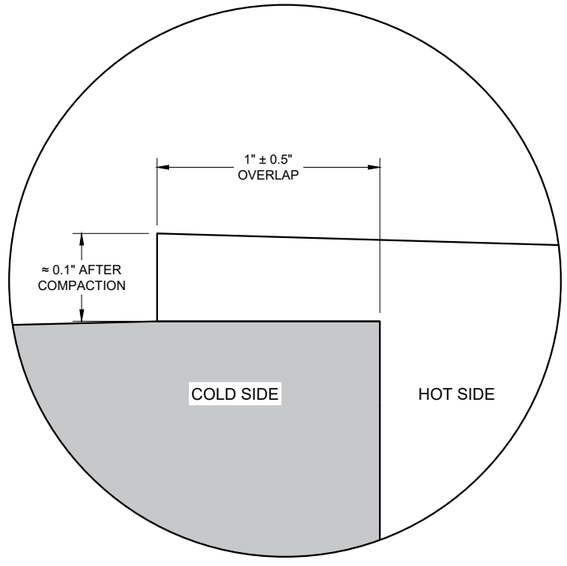

OVERLAP DETAIL (TYPICAL)

HMA LONGITUDINAL JOINTS	
STATE OF WISCONSIN DEPARTMENT OF TRANSPORTATION	
APPROVED November 2020 DATE	/S/ Steven Hefel HMA PAVEMENT ENGIN

FHWA

6

SDD 13C19 - 03

6

SDD 13C19 - 03

SDD 14B15a Steel Plate Beam Guard, Class "A", Installation and Elements

GENERAL NOTES

1. WOOD OR STEEL POSTS (w6X9 OR w6X8.5) AND NOTCHED PLASTIC BLOCKOUTS ARE ACCEPTABLE ALTERNATIVES FOR 6"X8" WOOD POSTS WITH WOOD OR PLASTIC BLOCKOUTS. USE APPROVED NOTCHED PLASTIC BLOCKOUTS WITH STEEL POSTS. APPROVED PLASTIC BLOCKOUT DESIGNS MAY VARY FROM THIS TYPICAL DETAIL WHEN USED IN CONJUNCTION WITH STEEL POSTS. DO NOT MIX STEEL AND WOOD POSTS IN A SINGLE INSTALLATION.

2. USE STRUCTURAL STEEL POSTS CONFORMING TO ASTM A 36. GALVANIZED POSTS ACCORDING TO AASHTO M 111. EITHER SET THE POSTS IN DRILLED HOLES OR DRIVE TO GRADE. REMOVE MUSHROOMING CAUSED BY DRIVING AND REPAIR DAMAGE SPELTER COATING ON GALVANIZED POSTS.

3. INSTALL STEEL POSTS WITH HOLES ON APPROACHING TRAFFIC SIDE.

4. USE EITHER WOOD OR APPROVED PLASTIC BLOCKOUTS ON WOOD POSTS.

5. IF THE DISTACE FROM BACK OF POST TO SHOULDER HIGHE POINT IS LESS THAN 2 FEET, INSTALL LONGER POST AT HALF POST SPACING, W BEAM (LHW).

6. IF ROCK IS ENCOUNTERED DURING EXCAVATION, THE ENGINEER MAY APPROVE USING A 12 INCHES IN DIAMETER POST HOLE EXTENDING 20 INCHES DEEP INTO THE ROCK. PLACE APPROXIMATELY 2 1/2" INCHES OF GRANULAR MATERIAL IN THE BOTTOM OF THE HOLE. CUT THE POSTS THE TO LENGTH AMD INSTALL. BACKFILL WITH EXCAVATED MATERIAL AND COMPACT ADEQUATELY.

7. WHEN USING STEEL POSTS AND WOOD BLOCKOUTS, INSTALL FOUR 16d GALVANIZED NAILS. INSTALL NAILS AT THE BACK CORNERS OF THE BLOCK AND BEND THE NAILS OVER THE FLANGE OF THE STEEL POST.

INSTALL BEAM GUARD SECTIONS AND ALL NECESSARY HARDWARE ACCORDING TO THE APPLICABLE PLAN AND CURRENT STANDARD AND SUPPLEMENTAL SPECIFICATIONS.

ALL DIMENSIONS ARE SUBJECT TO MANUFACTURER'S TOLERANCES EXCEPT WHERE ALLOWABLE TOLERANCES ARE SHOWN.

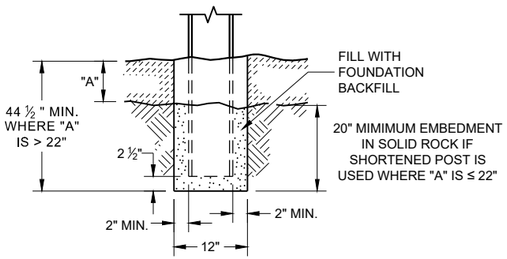

END VIEW

SETTING STEEL OR WOOD POST IN ROCK (6)

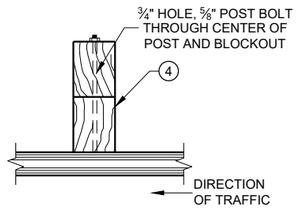

PLAN VIEW

WOOD POST, BLOCKOUT AND BEAM

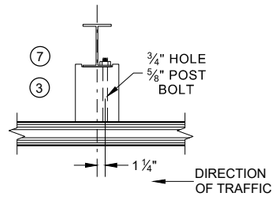

PLAN VIEW

WOOD POST, BLOCKOUT AND BEAM

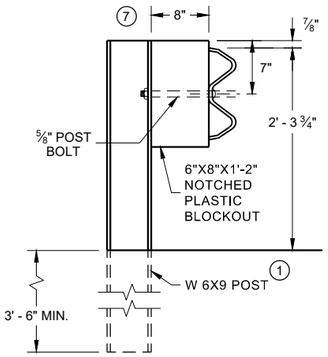

END VIEW

STEEL POST AND NOTCHED PLASTIC BLOCKOUT ALTERNATIVE STANDARD INSTALLATION

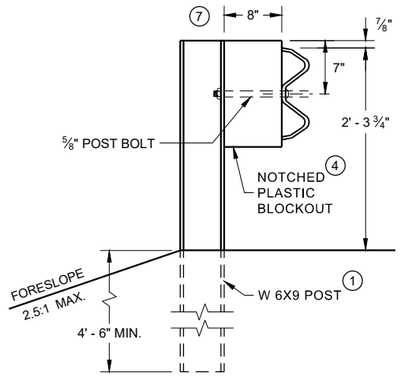

END VIEW

LONGER POST AT HALF POST SPACING W BEAM (LHW)

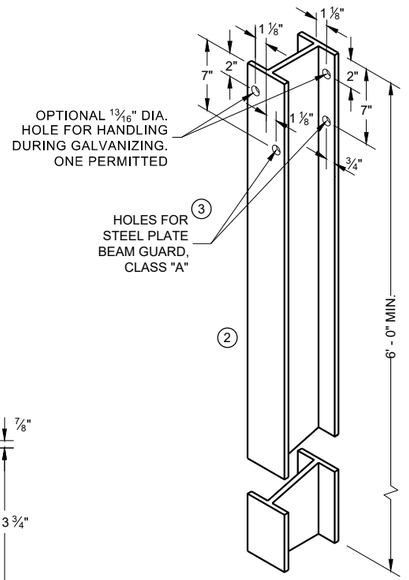

STEEL POST & HOLE PUNCHING DETAIL (W 6 X 9) (1)

ALL HOLES 13/16" DIAMETER EXCEPT AS NOTED

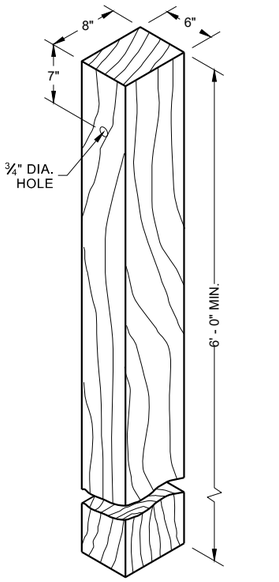

WOOD POST (6" X 8") NOMINAL (1)

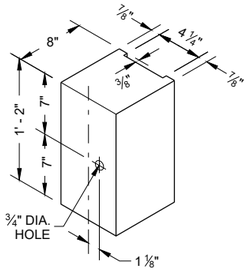

TYPICAL NOTCHED PLASTIC BLOCKOUT FOR STEEL POSTS

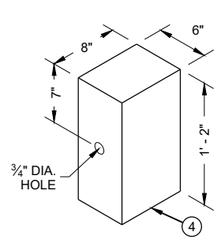

WOOD OR PLASTIC BLOCKOUT FOR WOOD POSTS

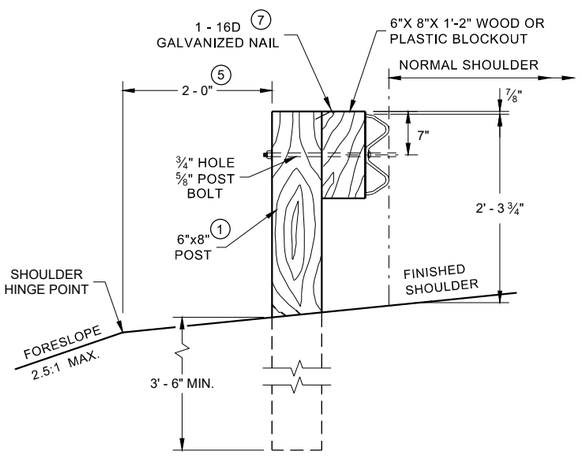

END VIEW

LOCATED ALONG A ROADWAY SHOULDER STANDARD INSTALLATION

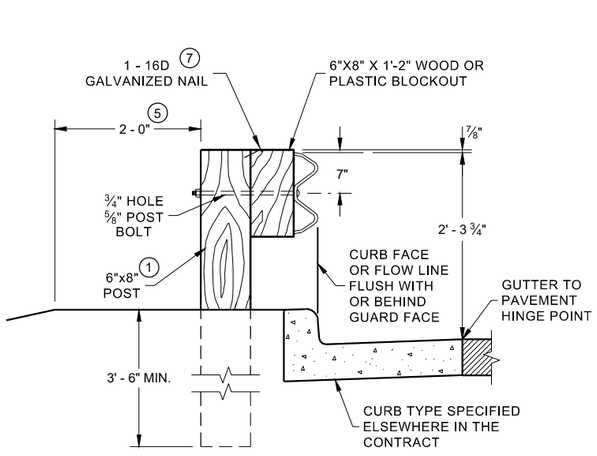

END VIEW

LOCATED ALONG A CURBED ROADWAY

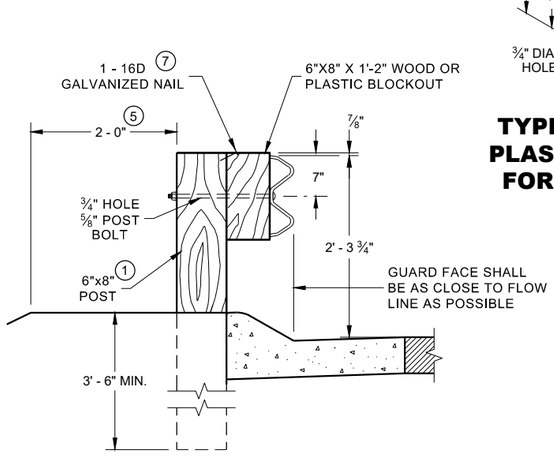

END VIEW

LOCATED ALONG A MOUNTABLE CURBED ROADWAY

STEEL PLATE BEAM GUARD, CLASS "A" INSTALLATION AND ELEMENTS

STATE OF WISCONSIN
DEPARTMENT OF TRANSPORTATION

6

SDD 14B15 -11a

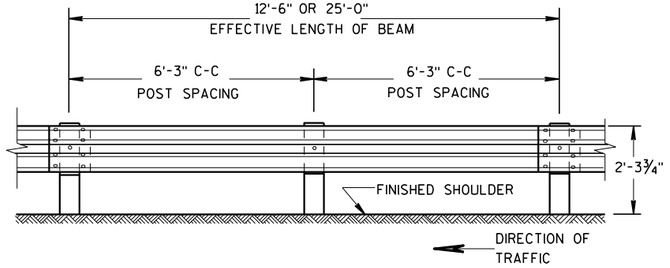

FRONT VIEW

POST SPACING STANDARD INSTALLATION

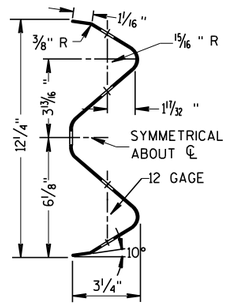

SECTION THRU W BEAM

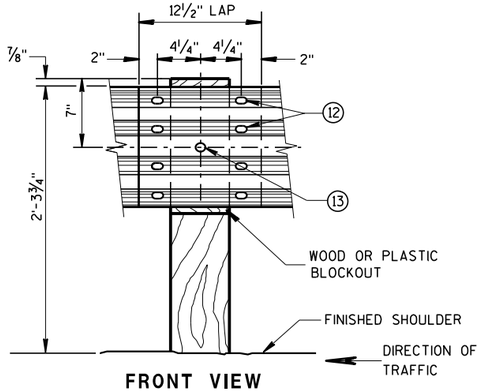

FRONT VIEW

BEAM SPLICE AT WOOD POST AND POST MOUNTING DETAIL

GENERAL NOTES

FURNISH GUARDRAIL DEFLECTORS FROM APPROVED PRODUCTS LIST.

(9) DO NOT INSTALL REFLECTORS ON THE FIRST 50 FEET OF THE APPROACH END OF THE ENERGY ABSORBING TERMINA. START REFLECTORS AT POST #9 AND SPACE EVENLY EVERY 100 FEET (MAX.) TO THE END OF GUARDRAIL RUN, USING A MINIMUM OF 3 REFLECTORS.

(12) 8 -5/8" ϕ X 2" BUTTON HEAD BOLTS WITH OVAL SHOULDERS & RECESS NUTS.

(13) 5/8" DIA. BUTTON HEAD BOLT AND RECESS NUT WITH 5/8" DIA. F844 FLAT WASHER UNDER NUT.

FRONT VIEW

POST SPACING FOR LONGER POST AT HALF POST SPACING W BEAM (LHW)

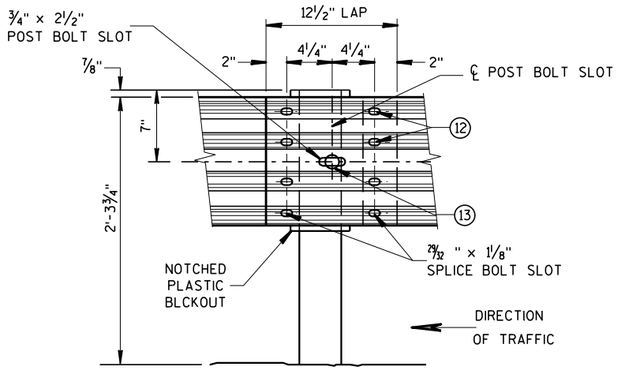

FRONT VIEW

BEAM SPLICE AT STEEL POST

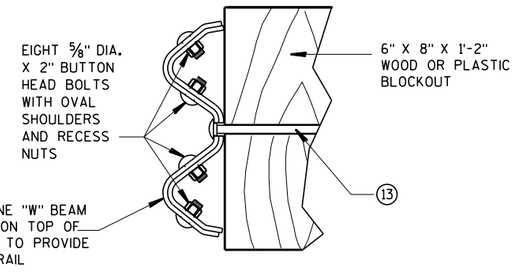

NESTED W BEAM (NW)

USE ALL OTHER STANDARD BEAM GUARD DETAILS FOR CONSTRUCTING NESTED W BEAM (NW)

TYPICAL SPLICING DETAILS OF STEEL PLATE BEAM GUARD

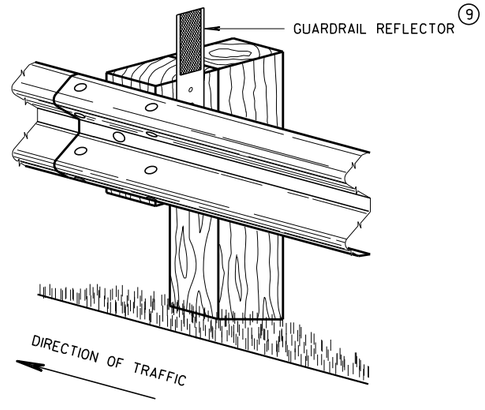

4" X 12" GUARDRAIL REFLECTOR DETAIL AND TYPICAL INSTALLATION *

* USE DOUBLE SIDED WHITE GUADRAIL REFLECTORS ON ROADWAYS WITH BI-DIRECTIONAL TRAFFIC (NO MEDIAN). USE SINGLE SIDED WHITE (RIGHT SIDE) AND SINGLE SIDED YELLOW (LEFT SIDE) ON ROADWAYS WITH MEDIAN SEPARATION.

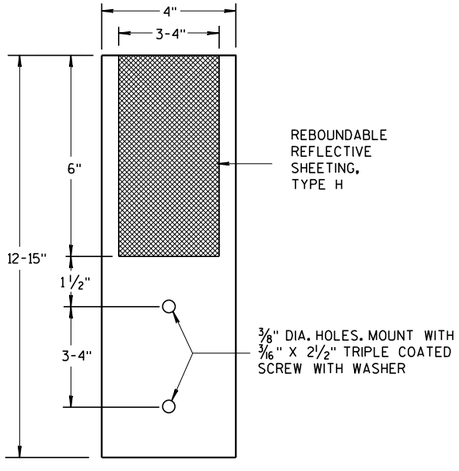

4"x 12" GUARDRAIL REFLECTOR

STEEL PLATE BEAM GUARD, CLASS "A", INSTALLATION & ELEMENTS

STATE OF WISCO 179
DEPARTMENT OF TRANSPORTATION

6

S.D.D. 14 B 15-11b

6

S.D.D. 14 B 15-11b

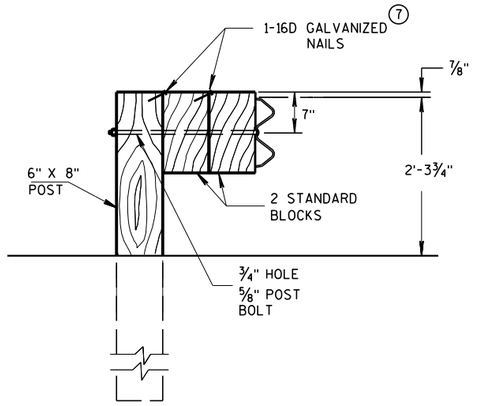

DETAIL FOR DOUBLE BLOCKS

THE NUMBER OF DOUBLE BLOCK POSTS WITHIN A BARRIER RUN IS UNLIMITED

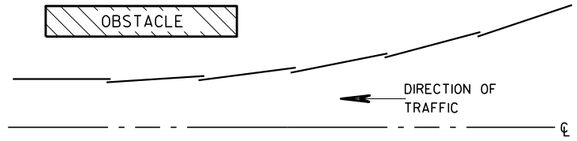

PLAN VIEW
BEAM LAPPING DETAIL

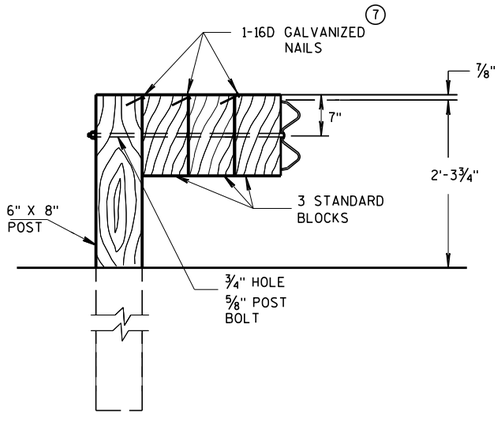

DETAIL FOR TRIPLE BLOCKS

TRIPLE BLOCK DETAIL IS LIMITED TO ONE LOCATION WITHIN A BEAM GUARD RUN.

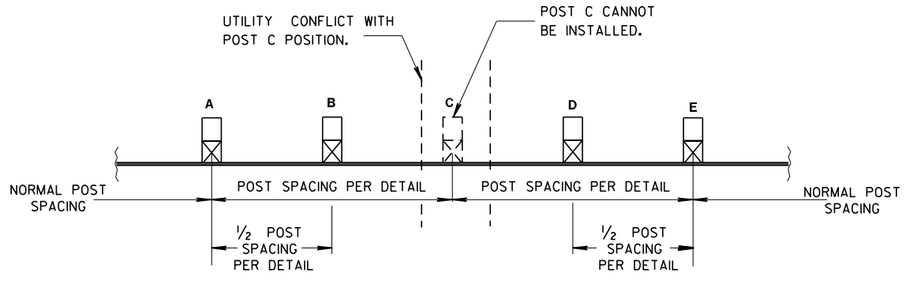

POST DRIVING FOR CONTINUOUS UNDERGROUND OBSTRUCTION

NOTES: USE DOUBLE OR TRIPLE BLOCKS WHEN UNDERGROUND OBSTACLES PREVENT THE POST FROM BEING INSTALLED.

DO NOT USE EXTRA BLOCKOUTS IF IT CAUSES THE POST TO BE DRIVEN BEYOND SHOULDER HINGE POINT OR CAUSES A FIXED OBJECT TO BE WITHIN THE DEFLECTION DISTANCE OF THE BARRIER.

STEEL PLATE BEAM GUARD, CLASS "A", INSTALLATION & ELEMENTS

STATE OF WISCONSIN
DEPARTMENT OF TRANSPORTATION

APPROVED
June 2017
DATE
/S/ Rodney Taylor
ROADWAY STANDARDS UNIT SUPERVISOR
FHWA

6
S.D.D. 14 B 15-11c

BILL OF MATERIALS

NOTE NO.	DESCRIPTION
①	WOOD BREAKAWAY TERMINAL POST: 5½" X 7½" X 3'-9"
②	STEEL TUBE TS 8" X 6" X 0.188", 6'-0"
④	WOOD BREAKAWAY CRT POST: 6" X 8" X 6'-0"
⑤	WOOD OFFSET BLOCKS: 6' X 8" X 1'-2"
⑥	PIPE SLEEVE: 2" X 5 ½" STANDARD PIPE
⑦	BEARING PLATE
⑧	BCT CABLE ASSEMBLY
⑨	CABLE ANCHOR BOX
⑩	STRUT & YOKE
⑪	STEEL PLATE BEAM, END PANEL 12 GA.
⑫	STEEL PLATE BEAM: 12 GA. 13'-6½"
⑬	IMPACT HEAD
⑭	0.040" ALUMINUM SHEET WITH REFLECTIVE SHEETING TYPE F PER SECTION 637 OF THE STANDARD SPECIFICATIONS

GENERAL NOTES

FOLLOW MANUFACTURE'S BOLTING RECOMMENDATIONS.

(A) THE SLOPE IN THE AREA BOUNDED BY THE GRADELINE, THE HINGE POINT LINE (HPL), AND THE CLEAR ZONE LIMITS (CZL) SHALL BE 4:1 OR FLATTER.

(B) AFTER FINAL ASSEMBLY, RECHECK CABLE TO BE SURE IT IS TAUT AND HAS NOT RELAXED.

(D) THE TOP OF THE STEEL TUBE ON POSTS 1 AND 2 SHALL NOT BE MORE THAN 3" ABOVE THE FINISH GROUND ELEVATION.

(E) THE CENTER OF THE UPPER 3½" DIAMETER HOLE ON POST 3 THROUGH 8 SHALL BE ¾" ABOVE THE FINISHED GROUND LINE.

(F) ATTACH ALUMINUM SHEET TO E.A.T. HEAD USING 4 STAINLESS STEEL SELF-TAPPING SCREWS. ONE SCREW PER CORNER.

STEEL POSTS SHALL NOT BE ALLOWED FOR USE WITH ENERGY ABSORBING TERMINALS.

DO NOT INSTALL REFLECTORS ON THE FIRST 50 FEET OF THE APPROACH END OF THE ENERGY ABSORBING TERMINAL.

* DO NOT ATTACH BLOCKOUTS TO POSTS 1 AND 2.

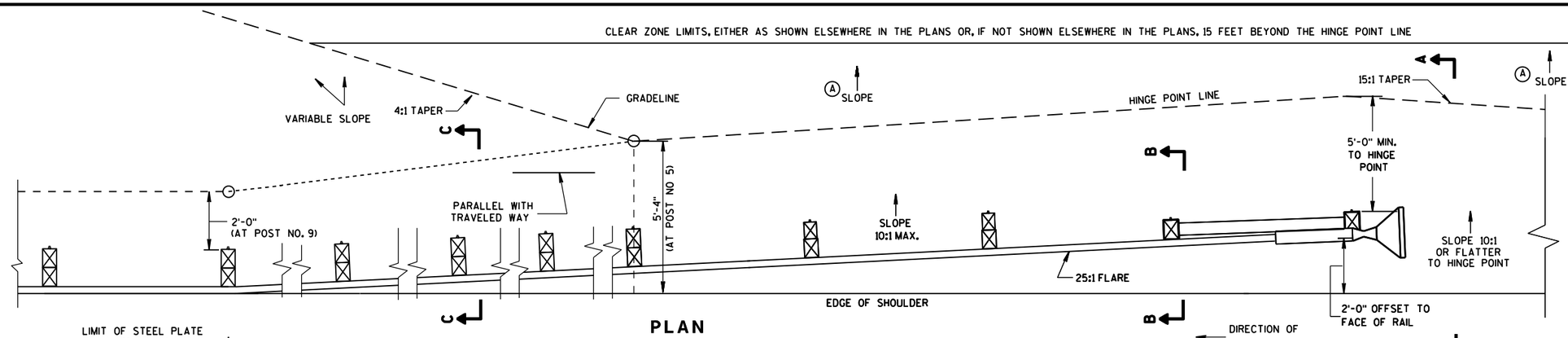

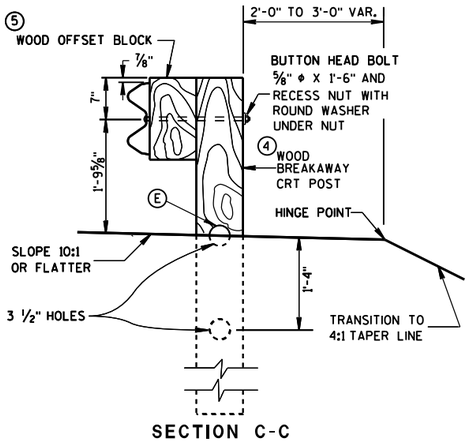

SECTION C-C
TYPICAL AT POST NOS. 6, 8

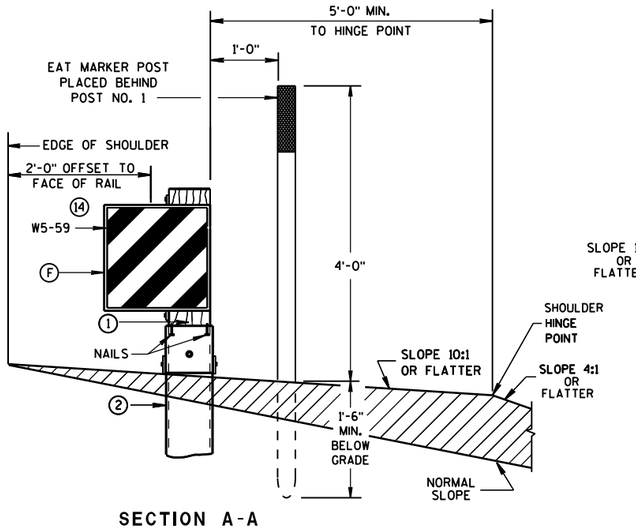

SECTION A-A
TYPICAL AT POST NO. 1*

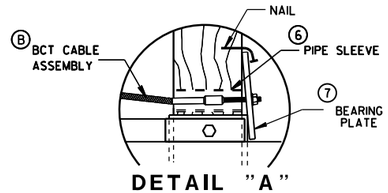

DETAIL "A"

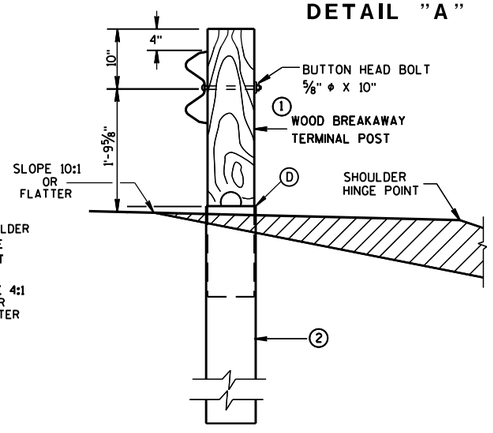

SECTION B-B
TYPICAL AT POST NO. 2*

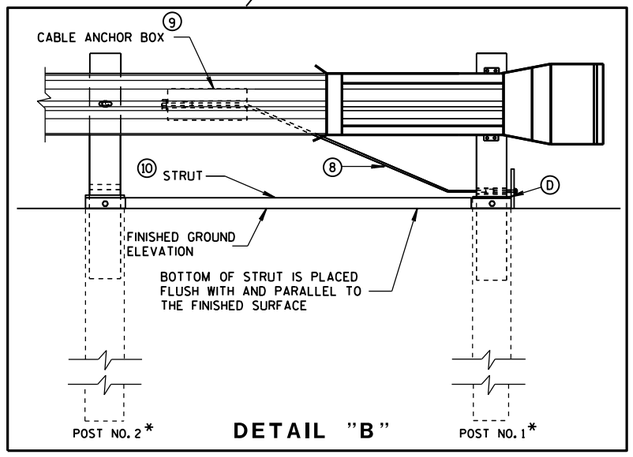

DETAIL "B"

STEEL PLATE BEAM GUARD ENERGY ABSORBING TERMINAL

STATE OF WISCONSIN
DEPARTMENT OF TRANSPOR

6
S.D.D. 14 B 24-9a

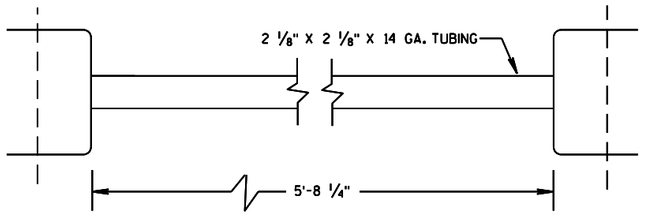

⑩ STRUT DETAIL

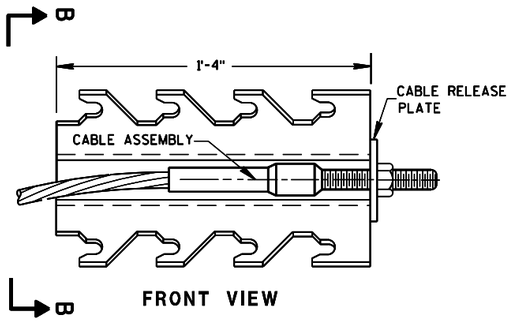

FRONT VIEW

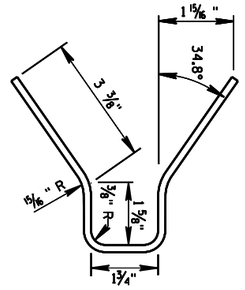

SECTION B-B

⑨ CABLE ANCHOR BOX

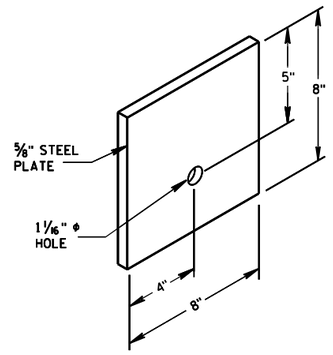

⑦ STEEL BEARING PLATE

6

6

S.D.D. 14 B 24-9b

S.D.D. 14 B 24-9b

STEEL PLATE BEAM GUARD
ENERGY ABSORBING TERMINAL

STATE OF WISCONSIN
DEPARTMENT OF TRANSPOI

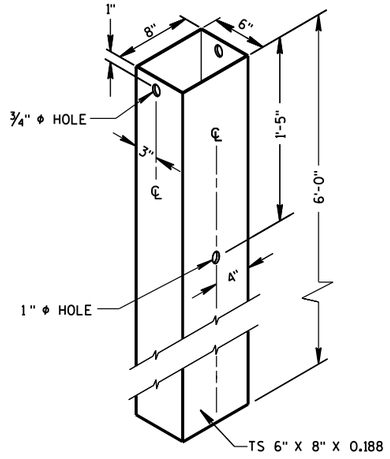

② 72" STEEL TUBE
(POSTS NO. 1-2

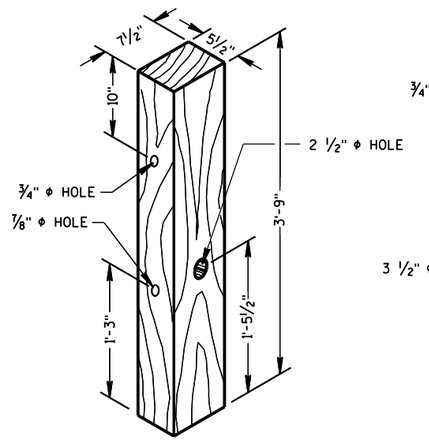

① TERMINAL POST

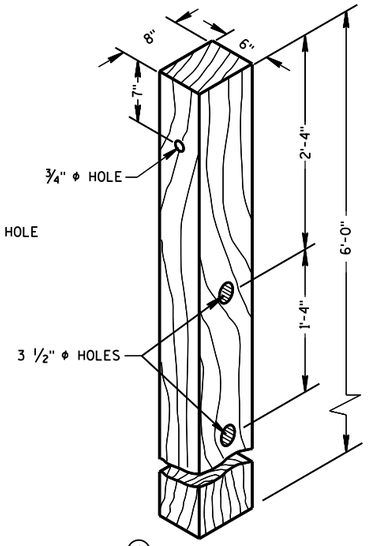

④ CRT POST
(POSTS NO'S 5-8

WOOD BREAKAWAY POSTS

GENERAL NOTES

WHEN ROCK IS ENCOUNTERED DURING EXCAVATION, A 12 INCH DIA. POST HOLE EXTENDING 20 INCHES DEEP INTO THE ROCK MAY BE USED IF APPROVED BY THE ENGINEER. GRANULAR MATERIAL SHALL BE PLACED IN THE BOTTOM OF THE HOLE APPROXIMATELY 2 1/2" INCHES DEEP TO PROVIDE DRAINAGE. THE SOIL TUBES SHALL BE FIELD CUT TO LENGTH, PLACED IN THE HOLE AND BACKFILLED WITH ADEQUATELY COMPACTED MATERIAL EXCAVATED FROM THE HOLE.

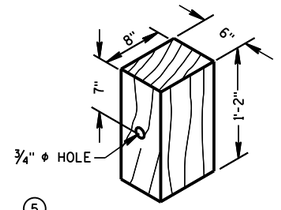

⑤ WOOD OFFSET BLOCK
REQ'D. AT ALL POSTS EXCEPT POST NO'S 1 & 2

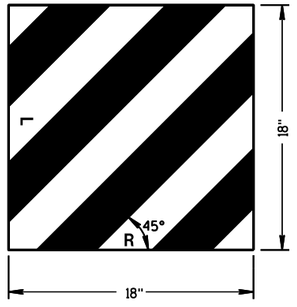

⑭ REFLECTIVE SHEETING DETAILS

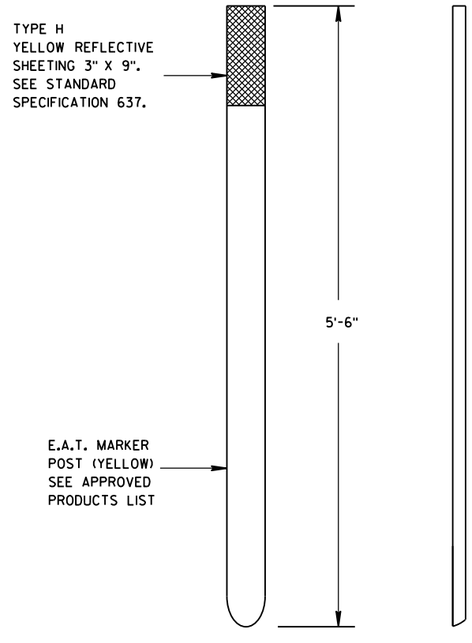

E.A.T. MARKER POST

STEEL PLATE BEAM GUARD
ENERGY ABSORBING TERMINAL

STATE OF WISCONSIN
DEPARTMENT OF TRANSPORTATION

APPROVED
June 2017
DATE
FHWA

/S/ Rodney Taylor
ROADWAY STANDARDS UNIT SUPERV...

ENT

6

S.D.D. 14 B 24-9c

6

S.D.D. 14 B 24-9c

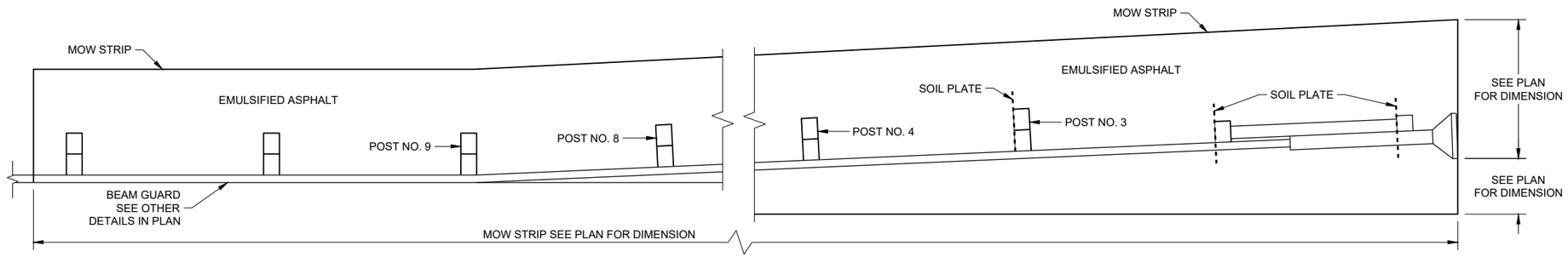

PLAN VIEW

MOW STRIP LAYOUT FOR ENERGY ABSORBING TERMINAL

GENERAL NOTES

ONLY USE STEEL POSTS IN CONCRETE AND ASPHALT MOW STRIPS.

1. CONTROLLED LOW-STRENGTH BACKFILL OR EMULSIFIED ASPHALT.
2. DEPTH OF MOW STRIP:
   ASPHALT - 4"
   CONCRETE - 4"
   EMULSIFIED ASPHALT - 1" OR LESS
3. FOR EMULSIFIED ASPHALT, MOW STRIP STRIP LEAVE OUTS NOT REQUIRED. (TYPICAL FOR ALL POSTS)

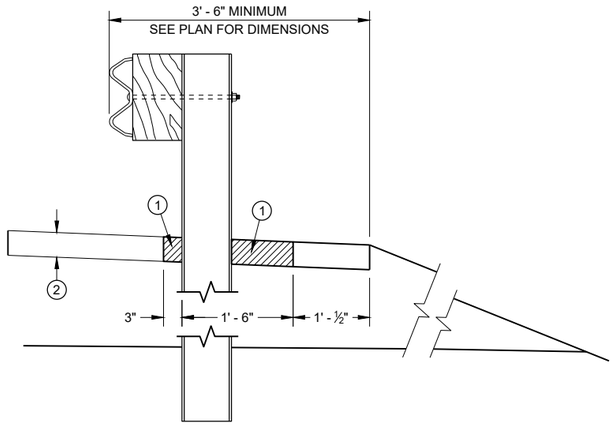

SECTION A - A

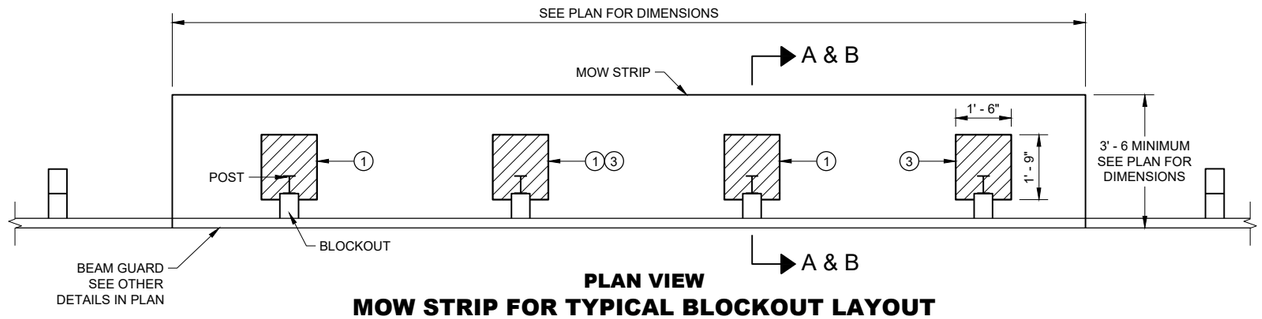

PLAN VIEW

MOW STRIP FOR TYPICAL BLOCKOUT LAYOUT

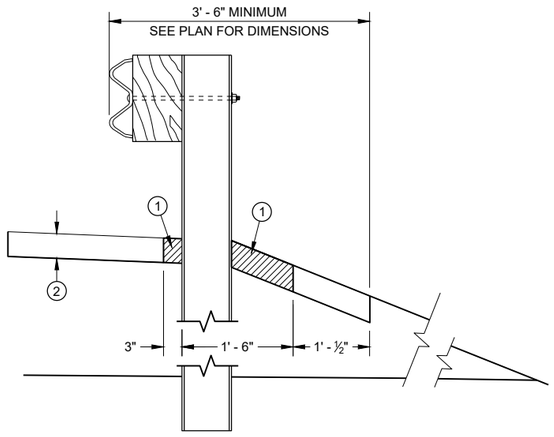

SECTION B - B

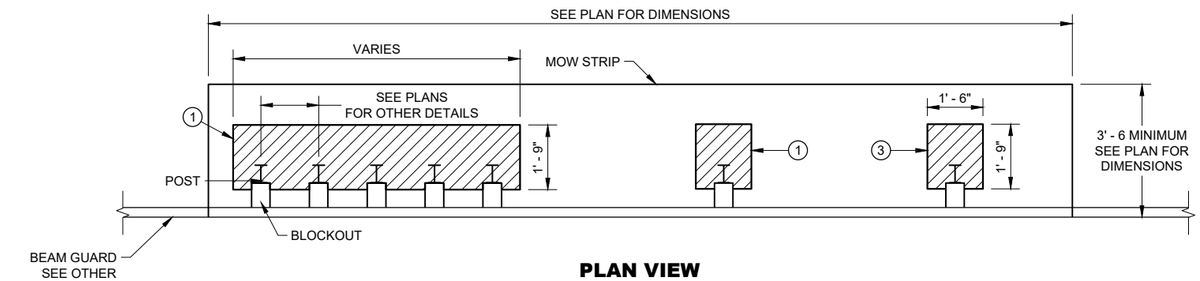

PLAN VIEW

MOW STRIP FOR TIGHT SPACING LAYOUT

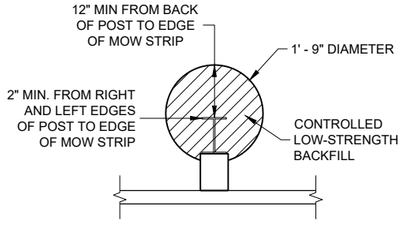

ALTERNATIVE HMA MOW STRIP DESIGN

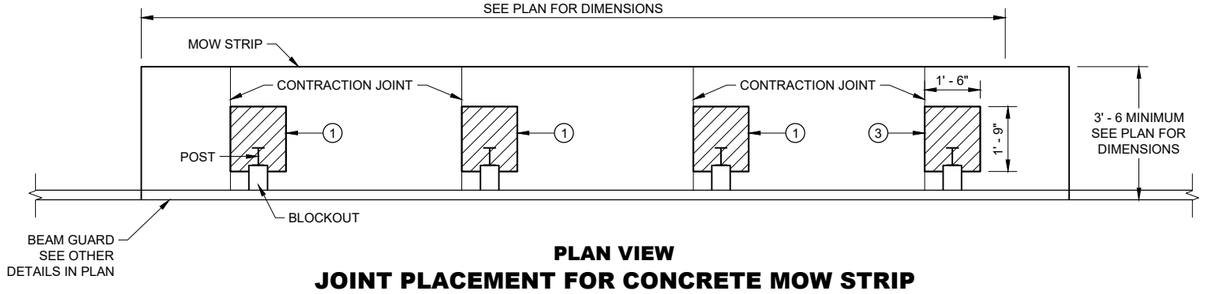

PLAN VIEW

JOINT PLACEMENT FOR CONCRETE MOW STRIP

GUARDRAIL MOW STRIP

STATE OF WISCONSIN
DEPARTMENT OF TRANSPORTA

6

SDD 14B28 - 04a

LEGEND

CONCRETE, ASPHALT, OR EMULSIFIED ASPHALT MOW STRIP (SEE OTHER DETAILS)

EMULSIFIED ASPHALT MOW STRIP (SEE OTHER DETAILS)

GENERAL NOTES

EXISTING THRIE BEAM BULLNOSES MAY HAVE WOOD POSTS. NEW THRIE BEAM BULLNOSE WILL HAVE STEEL POSTS.

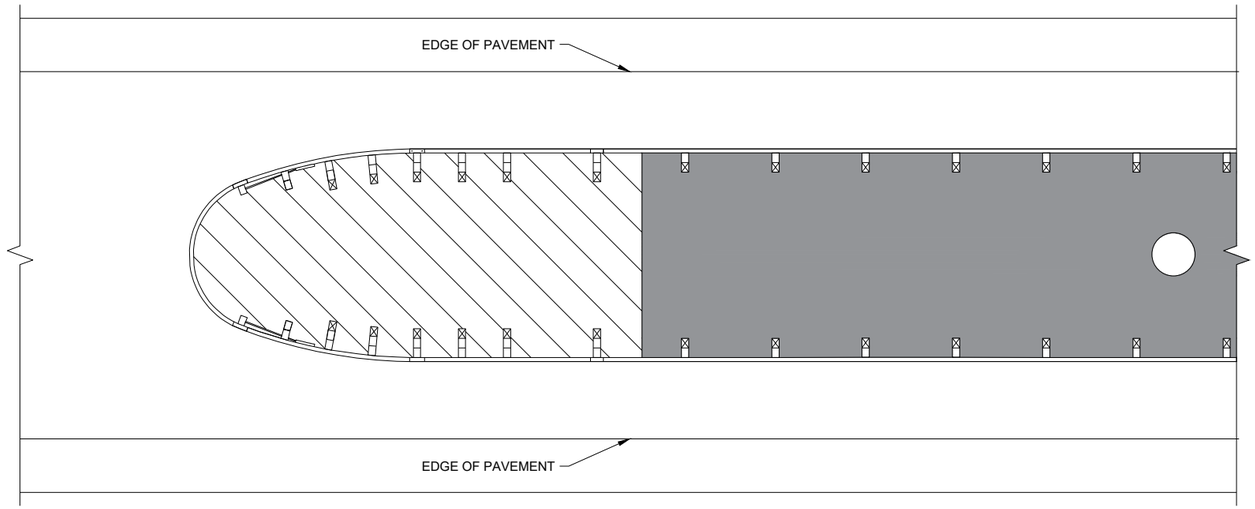

THRIE BEAM BULLNOSE

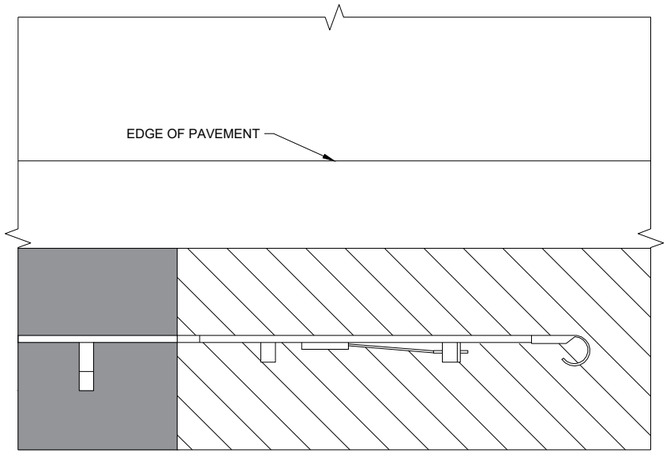

TYPE 2 TERMINAL

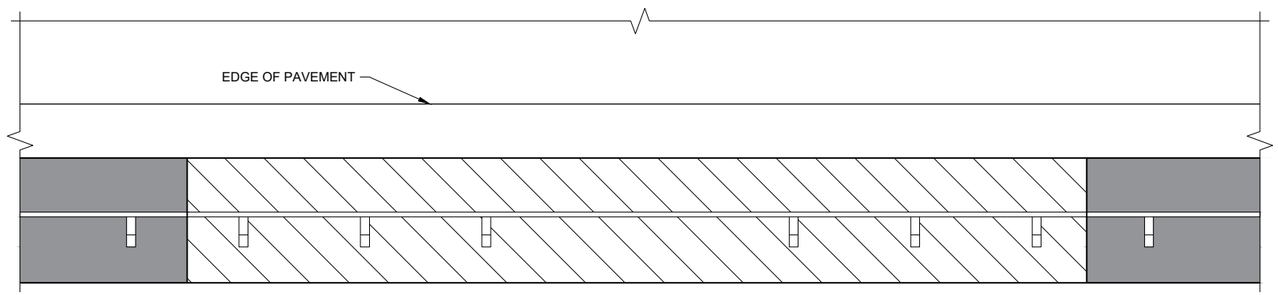

LONG - SPAN

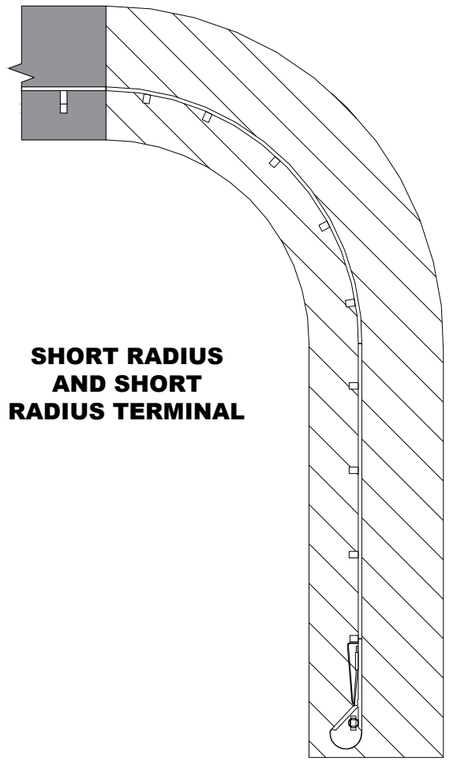

SHORT RADIUS AND SHORT RADIUS TERMINAL

GUARDRAIL MOW STRIP

STATE OF WISCONSIN
DEPARTMENT OF TRANSPORTATION

APPROVED
August 2020
DATE

/S/ Rodney Taylor
ROADWAY STANDARDS DEVE ENGINEER

FHWA

6

SDD 14B28 - 04b

6

SDD 14B28 - 04b

(1) WOOD OR STEEL POSTS (w6X9 OR w6X8.5) MAY BE USED. DO NOT INTERMIX WOOD AND STEEL POSTS. INSTALL STEEL POSTS WITH HOLES ON APPROACHING TRAFFIC SIDE.

(2) USE WOOD OR APPROVED PLASTIC BLOCKOUTS. WOOD BLOCKOUTS MAY BE CONSTRUCTED OUT OF TWO OR MORE WOOD BLOCKOUTS. SEE ALTERNATE WOOD BLOCKOUT DETAIL. DIMENSIONS OF APPROVED PLASTIC BLOCKOUTS MAY VARY.

(3) IF ROCK IS ENCOUNTERED DURING EXCAVATION, PROVIDE A HOLE 12 INCHES IN DIAMETER EXTENDING 20 INCHES DEEP INTO THE ROCK. PLACE APPROXIMATELY 2 1/2" INCHES OF GRANULAR MATERIAL IN THE BOTTOM OF THE HOLE. CUT THE POSTS THE TO LENGTH AMD INSTALL. BACKFILL WITH EXCAVATED MATERIAL AND COMPACT. BACKFILL IS TO BE FREE OF LARGE ROCKS.

(4) WHEN THE DISTANCE FROM BACK OF POST TO SHOULDER HINGE POINT IS LESS THAN 2 FEET INSTALL LONGER POST AT HALF POST SPACING (K).

(5) FOR NEW MGS INSTALLATION TOP OF W-BEAM RAIL TOLERANCE IS ±1". FOR EXISTING MGS INSTALLATION TOP OF W-BEAM IS BETWEEN 27 ¾" TO 32".

(6) WHEN USING STEEL POST AND WOOD BLOCKOUTS INSTALL FOUR 16D GALVANIZED NAILS. INSTALL NAILS AT THE BACK CORNERS OF THE BLOCK AND BEND THE NAILS OVER THE FLANGE OF THE STEEL POST.

(7) TOTAL POST LENGTH FOR TYPE K IS 7' - 0".
TOTAL POST LENGTH FOR OTHER MGS TYPES IS 6' - 0".

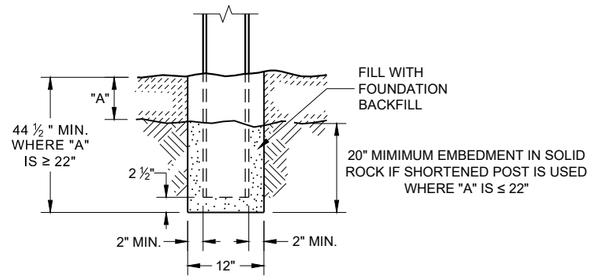

END VIEW
SETTING STEEL OR WOOD POST IN ROCK (3)

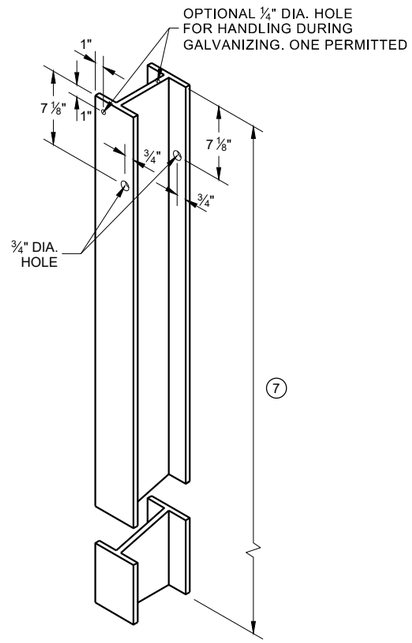

STEEL POST & HOLE PUNCHING DETAIL (W 6 X 9) (1)

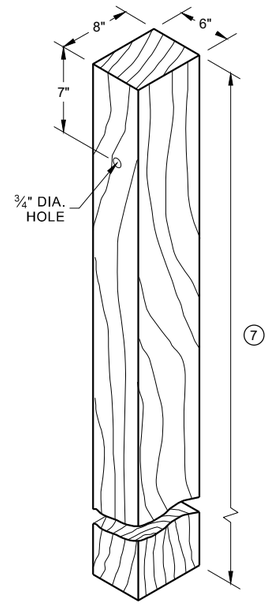

WOOD POST (6" X 8") NOMINAL (1)

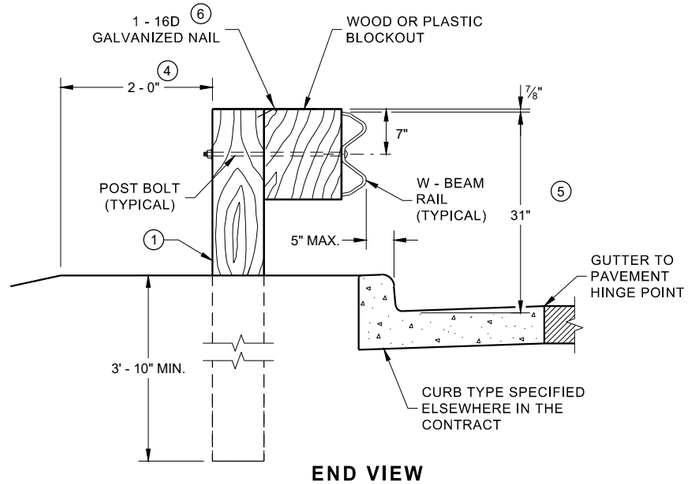

END VIEW
LOCATED ALONG A CURBED ROADWAY

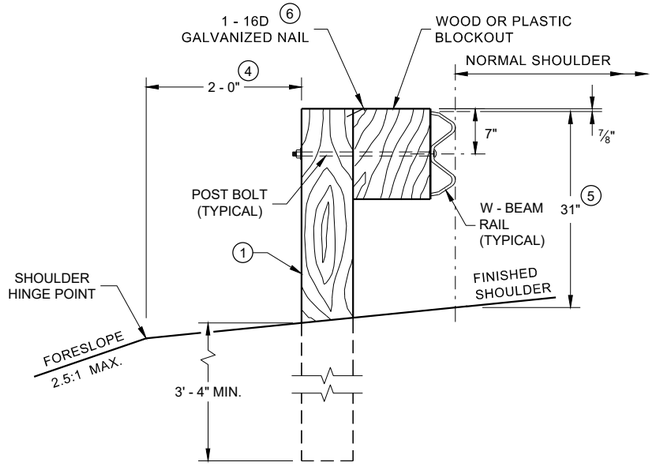

END VIEW
LOCATED ALONG A ROADWAY SHOULDER STANDARD INSTALLATION

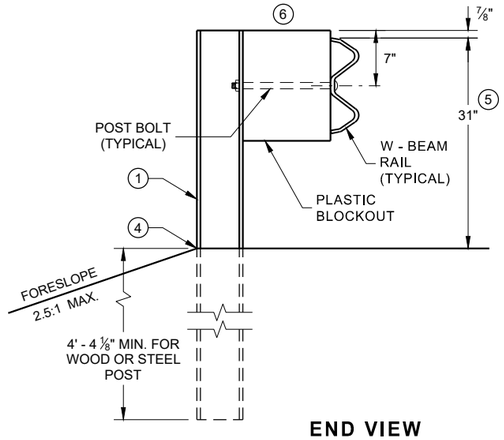

END VIEW
MGS LONGER POST AT HALFPOST SPACING W BEAM (K)

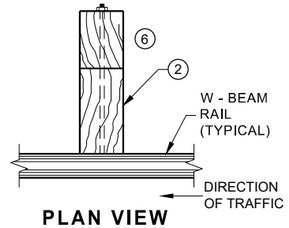

PLAN VIEW WOOD POST, BLOCKOUT & BEAM

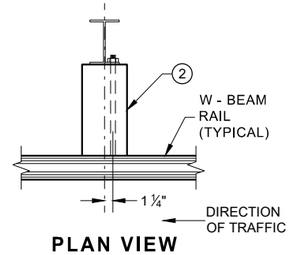

PLAN VIEW STEEL POST, PLASTIC BLOCKOUT & BEAM

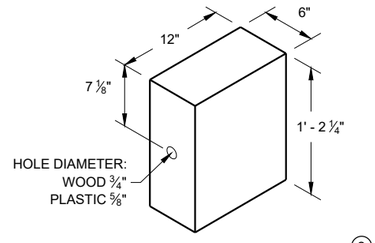

WOOD OR PLASTIC BLOCKOUT (2)

MIDWEST GUARDRAIL SYSTEM (MGS) GUARDRAIL

STATE OF WISCONSIN
DEPARTMENT OF TRANSPORTATION

6

SDD 14B42 - 07a

6

SDD 14B42 - 07a

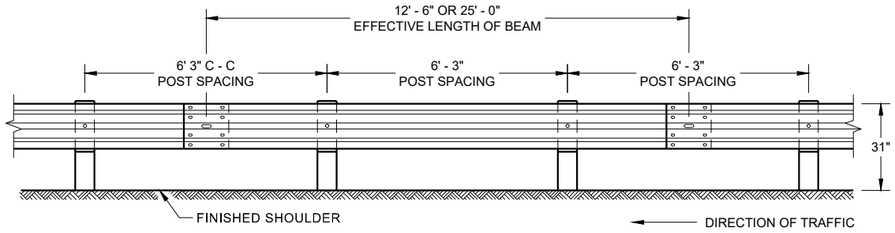

FRONT VIEW
POST SPACING STANDARD INSTALLATION

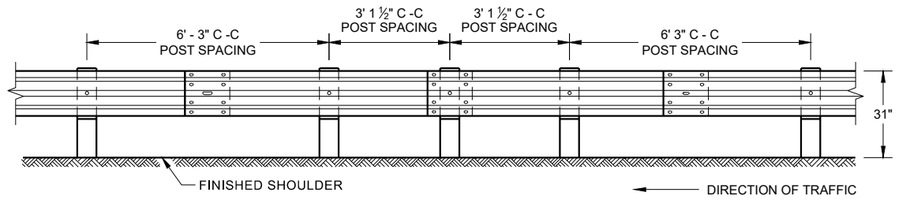

FRONT VIEW
HALF POST SPACING (HS) AND
HALF POST SPACING WITH LONGER POSTS (K)

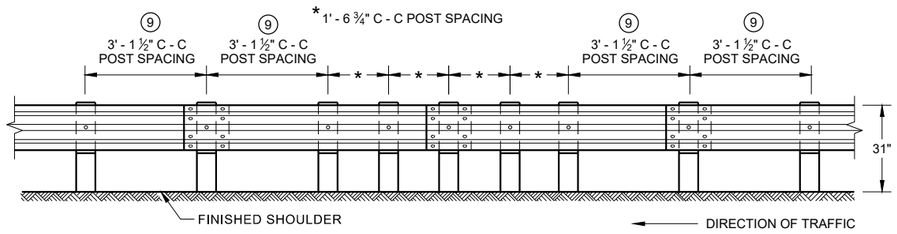

FRONT VIEW
QUARTER POST SPACING (QS)

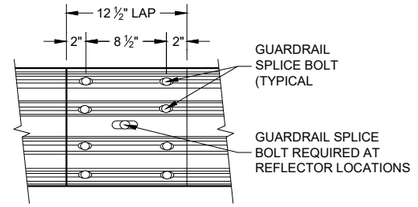

FRONT VIEW
MID-SPAN BEAM SPLICE

GENERAL NOTES

⑧ DO NOT INSTALL REFLECTORS ON THE FIRST 50 FEET OF THE APPROACH END OF THE ENERGY ABSORBING TERMINAL.

⑨ 25 FEET OF HALF POST SPACING IS REQUIRED ON APPROACH AND DEPARTURE ENDS OF QUARTER POST SPACING.

POST BOLTS ARE A ⅝" DIAMETER ASTM A307 GUARDRAIL BOLT. A POST BOLT REQUIRES ⅝" DIAMETER A563A DOUBLE RECESSED (DR) HEAVY HEX NUT AND ⅝" DIAMETER F844 FLAT WASHER. POST BOLTS MAY BE LONGER IF MULTIPLE BLOCKOUTS ARE BEING USED.

GUARD RAIL SPLICE BOLTS ARE A ⅝" DIAMETER ASTM A307 GUARDRAIL HEAD BOLT. A GUARDRAIL SPLICE BOLT REQUIRES ⅝" DIAMETER A563A DOUBLE RECESSED (DR) HEAVY HEX NUT.

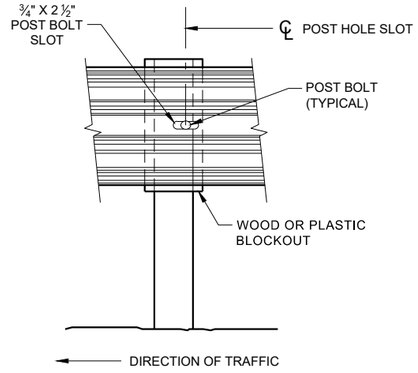

FRONT VIEW AT STEEL POST

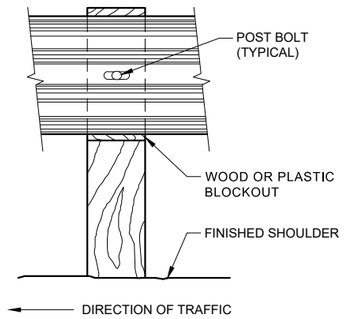

FRONT VIEW AT WOOD POST

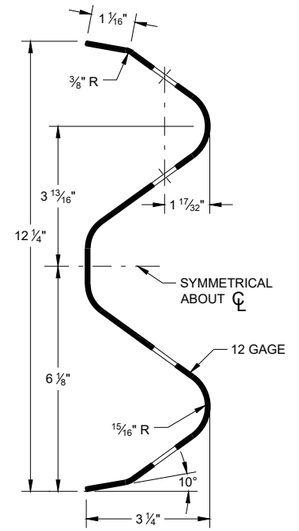

SECTION THRU W-BEAM RAIL

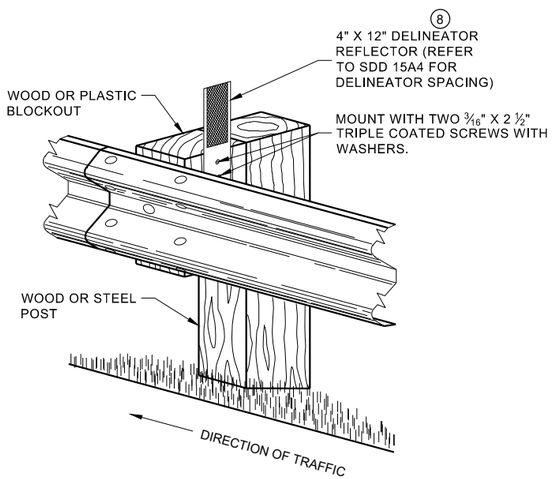

ONE SIDED REFLECTOR DETAIL
AND TYPICAL INSTALLATION

MIDWEST GUARDRAIL SYSTEM
(MGS) GUARDRAIL

STATE OF WISCONSIN
DEPARTMENT OF TRANSPORTATION

6

SDD 14B42 - 07b

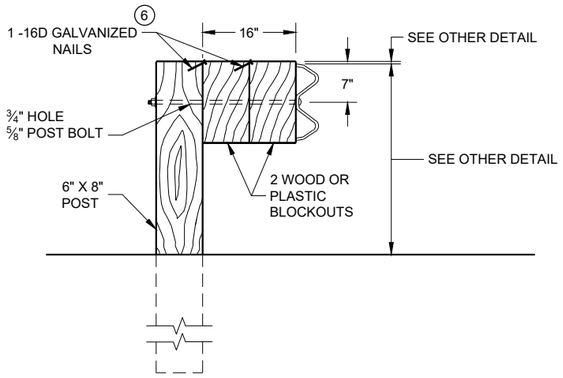

DETAIL FOR 16" BLOCKOUT DEPTH

IT IS ACCEPTABLE TO USE BLOCKOUTS UP TO 16" DEEP TO INCREASE THE POST OFFSET TO AVOID UNDERGROUND OBSTACLES. THERE IS NO LIMIT TO THE NUMBER OF POSTS THAT CAN HAVE ADDITIONAL BLOCKOUTS UP TO 16" DEEP.

NOTE:

1. ALL FILLETS SHALL HAVE A MINIMUM RADIUS OF 3⁄16".
2. IF THE BOLT EXTENDS MORE THAN ¼" FROM THE NUT THE BOLT SHOULD BE TRIMMED BACK.

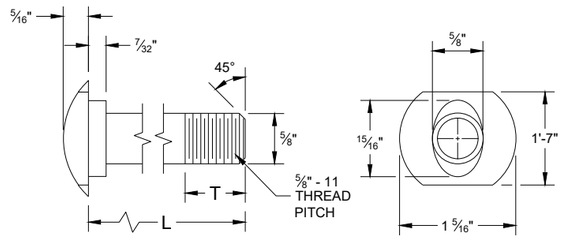

POST BOLT TABLE

L	T (MIN.)
1 ¼"	1 ⅛"
2"	1 ¾"
10"	4"
14"	4 1⁄16"
18"	4"
21"	4 1⁄16"
25"	4"

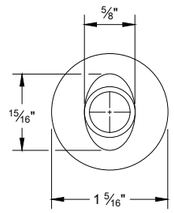

ALTERNATE BOLT HEAD

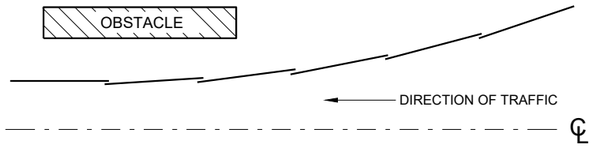

PLAN VIEW
BEAM LAPPING DETAIL

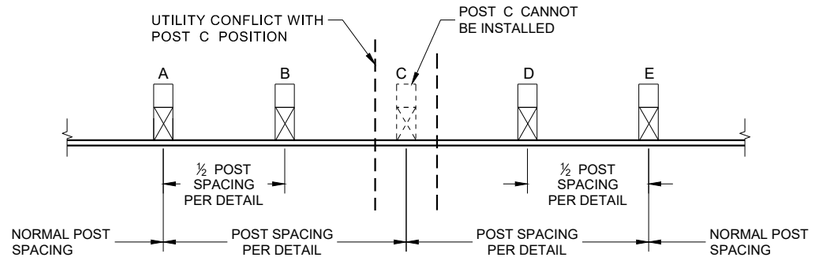

POST DRIVING FOR CONTINUOUS UNDERGROUND OBSTRUCTION

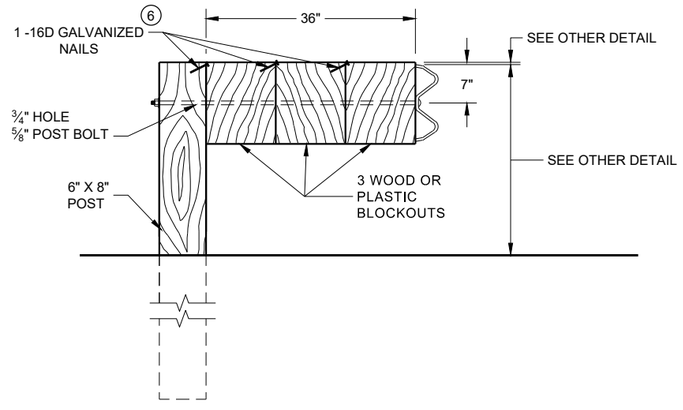

DETAIL FOR 36" BLOCKOUT DEPTH

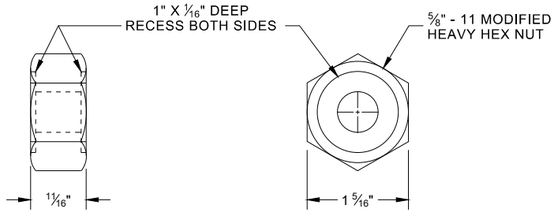

POST BOLT, SPLICE BOLT AND RECESS NUT

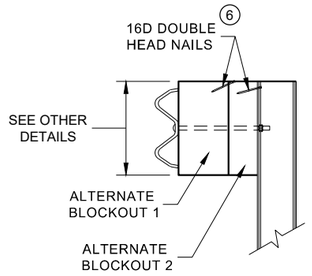

SIDE VIEW

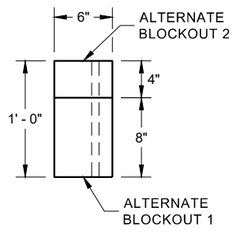

PLAN VIEW

ALTERNATE WOOD BLOCKOUT DETAIL

NOTES: UNDER SPECIAL CIRCUMSTANCES, SUCH AS AVOIDING OBSTACLES THAT ARE NOT RELOCATED, IT IS ACCEPTABLE TO INSTALL ADDITIONAL BLOCKOUTS TO OBTAIN UP TO 36" DEPTH FOR ONE OR TWO POSTS IN A SECTION OF GUARDRAIL.

DO NOT USE 16" OR 36" BLOCKOUTS IF IT CAUSES THE POST TO BE DRIVEN BEYOND SHOULDER HINGE POINT OR CAUSES A FIXED OBJECT TO BE WITHIN THE DEFLECTION DISTANCE OF THE BARRIER.

(6) WHEN USING STEEL POST AD WOOD BLOCKOUTS, INSTALL FOUR 16D GALVANIZED NAILS. INSTALL NAILS AT THE BACK CORNERS OF THE BLOCK AND BEND THE NAILS OVER THE FLANGE OF THE STEEL POST.

MIDWEST GUARDRAIL SYSTEM (MGS) GUARDRAIL

6
SDD 14B42 - 07c

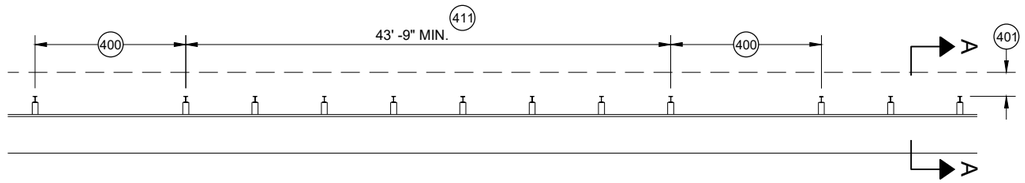

MISSING POST IN MGS GUARDRAIL

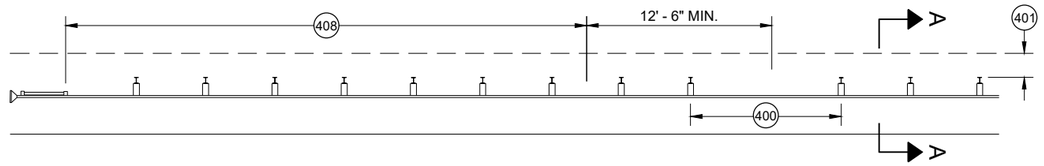

MISSING POST IN MGS GUARDRAIL NEAR EAT

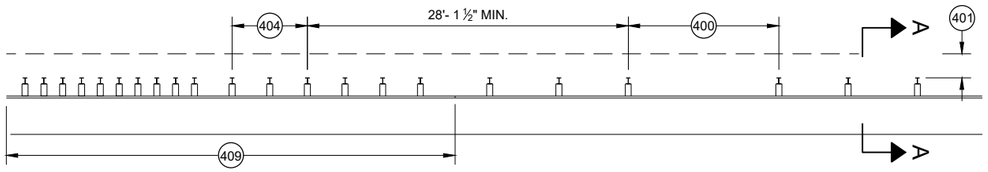

MISSING POST IN MGS GUARDRAIL NEAR AN APPROACH TRANSITION

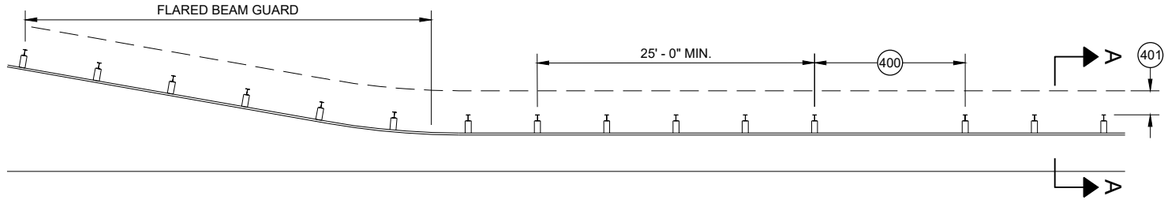

MISSING POST IN MGS GUARDRAIL NEAR FLARED BEAM GUARD

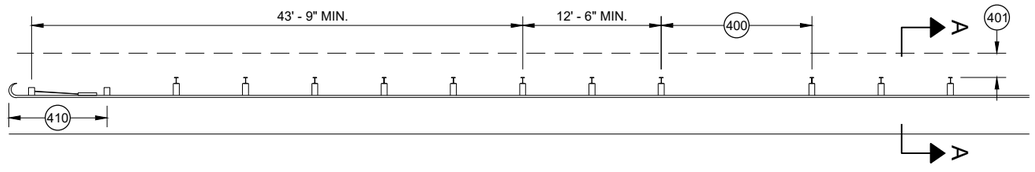

MISSING POST IN MGS GUARDRAIL NEAR A TYPE 2 END TERMINAL

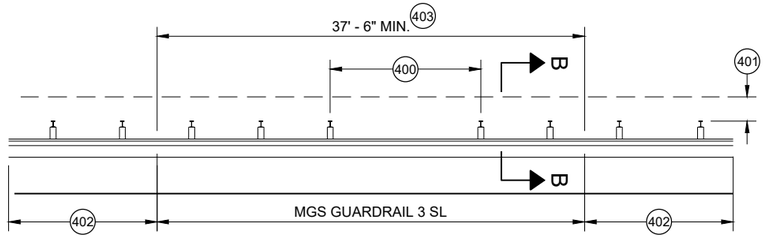

MISSING POST IN SHORT SPAN MGS GUARDRAIL NEAR CURB (SL) 407

(400) MAX SPAN 12' - 6"
(401) 2' MIN.
(402) MGS GUARDRAIL 3
(403) NESTING BEAM GUARD
(404) ASYMMETRIC TRANSITION
(405) SOIL WELL DRAINED AND COMPACTED
(406) SEE OTHER DRAWINGS IN THIS SDD
(407) SEE OTHER DRAWINGS FOR MIN. SPACING BETWEEN SPANS
(408) SEE SDD 14B44
(409) SEE SDD 14B45
(410) SEE SDD 14B47
(411) MINIMUM DISTANCE BETWEEN MISSING POST SPANS.

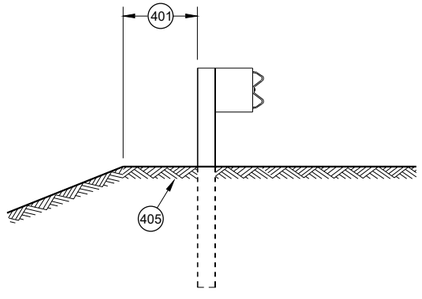

SECTION A - A 406

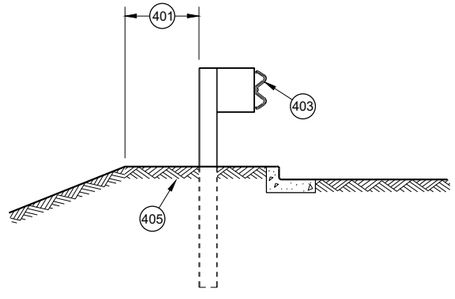

SECTION B - B 406

MIDWEST GUARDRAIL SYSTEM (MGS) GUARDRAIL

STATE OF WISCONSIN
DEPARTMENT OF TRANSPORTATION

APPROVED
May 2021
DATE
/S/ Rodney Taylor
ROADWAY STANDARDS DEVE
UNIT SUPERVISOR

FHWA

6

SDD 14B42 - 07d

GENERAL NOTES

(A) THE SLOPE IN THE AREA BOUNDED BY THE GRADELINE, THE HINGE POINT LINE (HPL) AND THE CLEAR ZONE LIMITS (CZL) SHALL BE 4:1 OR FLATTER.

(B) AFTER FINAL ASSEMBLY, RECHECK CABLE TO BE SURE IT IS TAUT AND HAS NOT RELAXED

(C) DIFFERENT MANUFACTURERS REQUIRE DIFFERENT PERFORATED W - BEAM RAIL END PANELS. SEE MANUFACTURER'S INFORMATION.

(D) ATTACH ALUMINUM SHEET TO E.A.T. HEAD USING 4 STAINLESS STEEL SELF - TAPPING SCREWS. ONE SCREW PER CORNER.

(E) HARDWARE MAY VARY BETWEEN MANUFACTURER. SEE MANUFACTURER'S DRAWING FOR INFORMATION.

DIMENSIONS MAY VARY, MANUFACTURER'S INFORMATION.

SEE SDD 14B42 FOR MORE INFORMATION.

* DO NOT ATTACH BLOCKOUTS TO POST 1 AND 2.

DO NOT INSTALL REFLECTORS ON THE FIRST 50 FEET OF THE APPROACH END OF THE ENERGY ABSORBING TERMINAL.

SEE MANUFACTURER'S DRAWING FOR SPLICE LOCATION, HARDWARE DIMENSIONS AND INSTALLATION INSTRUCTIONS.

THE CENTER OF THE UPPER 3 ½" DIAMETER HOLE ON POST NUMBER 3 THROUGH POST 9 IS TO BE FLUSH WITH THE GROUND LINE UP TO A MAXIMUM OF 2" ABOVE GROUND LINE. WOOD BLOCKS ON POSTS NUMBERED 3 THROUGH 9 MAY BE ADJUSTED UP TO 3" ABOVE THE TOP OF POST.

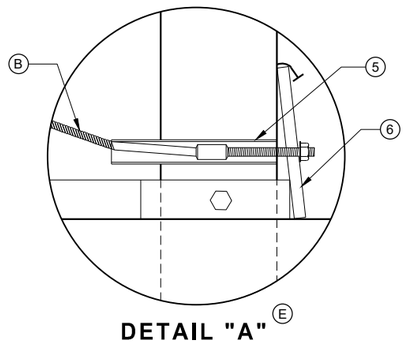

DETAIL "A" (E)

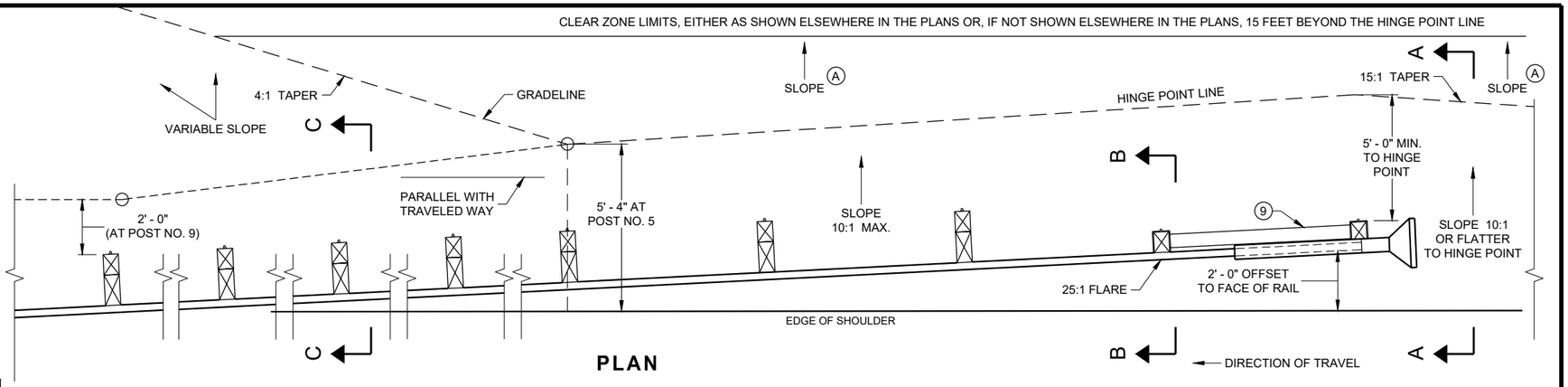

PLAN

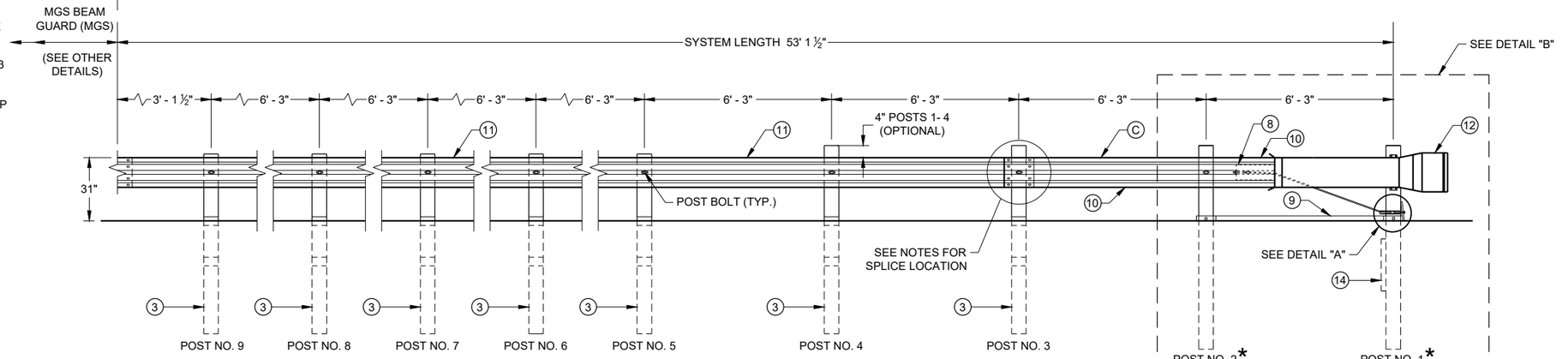

ELEVATION

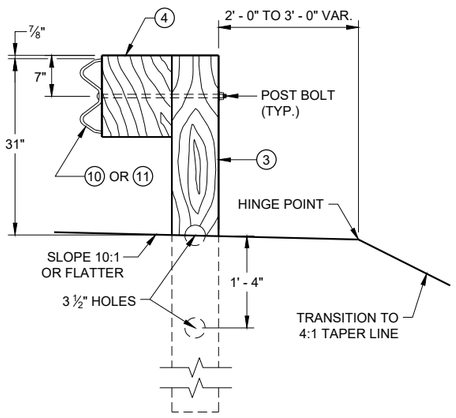

SECTION C - C
TYPICAL AT POST NOS. 3 - 9

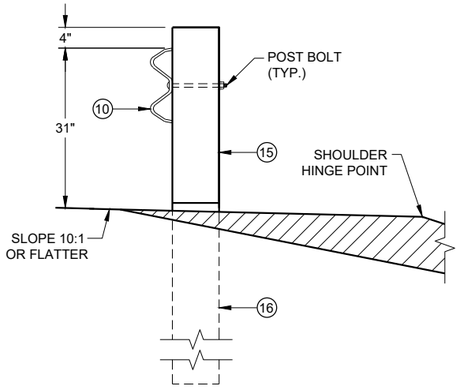

SECTION B - B
TYPICAL AT POST NO. 2*

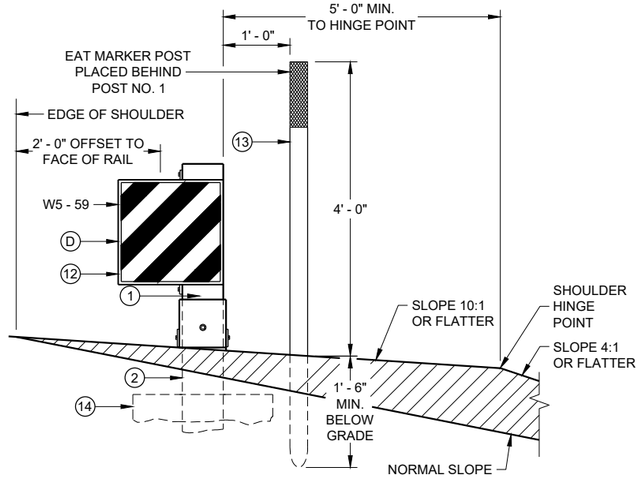

SECTION A - A
TYPICAL AT POST NO. 1*

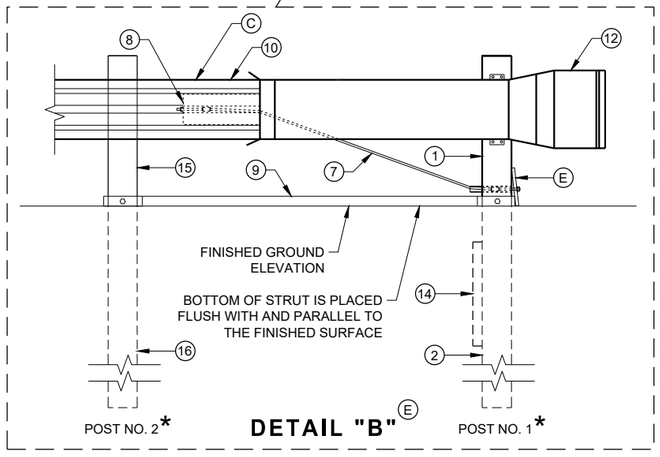

DETAIL "B" (E)

MIDWEST GUARDRAIL SYSTEM
ENERGY ABSORBING TERMINAL (MGS)

STATE OF WISCONSIN
DEPARTMENT OF TRANSPORTATION

SDD 14B44 - 04a

SDD 14B44 - 04a

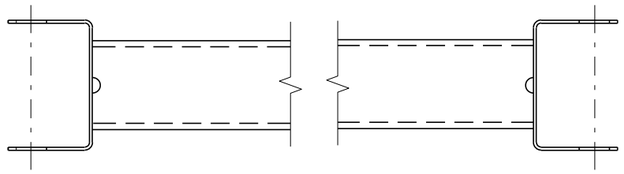

GENERIC GROUND STRUT (9) (E)

BILL OF MATERIALS

PART NO.	DESCRIPTION MATERIALS PROVIDED BY MGS EAT MANUFACTURER. SEE MANUGACTURER'S DETAILS FOR MORE INFORMATION.
(1)	UPPER POST NO. 1 6" X 6" TUBE
(2)	LOWER POST NO. 1
(3)	WOOD CRT
(4)	WOOD BLOCKOUT
(5)	PIPE SLEEVE
(6)	BEARING PLATE
(7)	BCT CABLE ASSEMBLY
(8)	ANCHOR CABLE BOX
(9)	GROUND STRUT
(10)	PERFORATED W-BEAM RAIL END PANEL, 12'-6" LONG.
(11)	STANDARD W-BEAM RAIL. MULTIPLE SECTIONS REQUIRED. SECTIONS VARY IN LENGTH.
(12)	IMPACT HEAD
(13)	EAT MARKER POST - YELLOW (SEE APPROVED PRODUCTS LIST)
(14)	SOIL PLATE
(15)	UPPER POST NO. 2
(16)	LOWER POST NO. 2

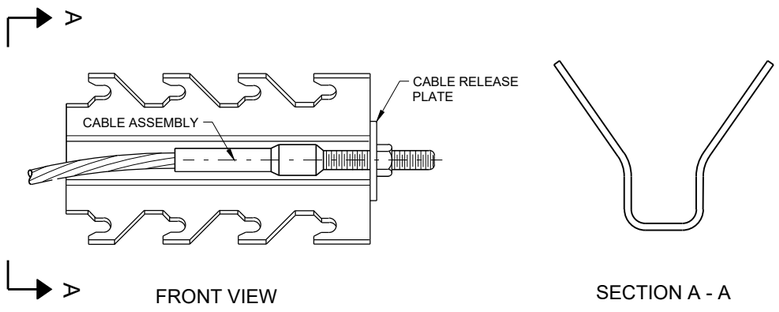

GENERIC ANCHOR CABLE BOX (9) (E)

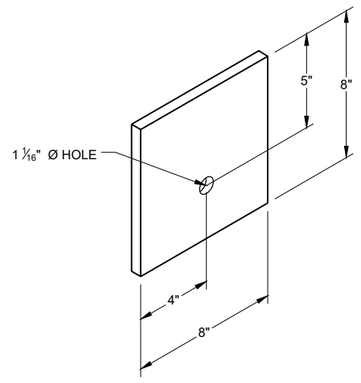

BEARING PLATE (6) (E)

6

6

SDD 14B44 - 04b

SDD 14B44 - 04b

MIDWEST GUARDRAIL SYSTEM
ENERGY ABSORBING TERMINAL
(MGS)

STATE OF WISCONSIN
DEPARTMENT OF TRANSPORTATION

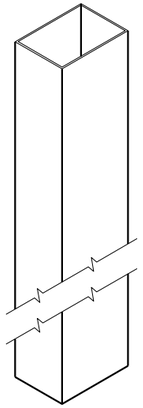

UPPER POST NO. 1 (1) (E)

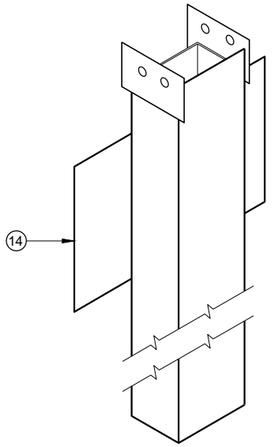

LOWER POST NO. 1 (2) (E)

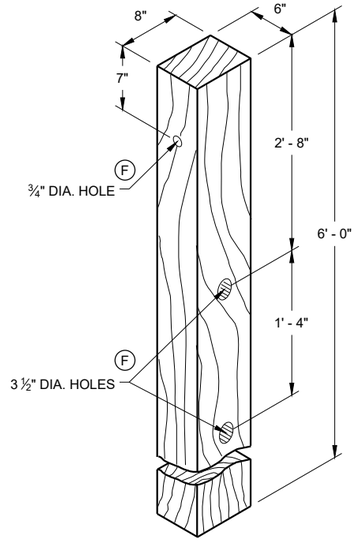

WOOD CRT POST (3) (E)
POSTS NUMBER 3-9

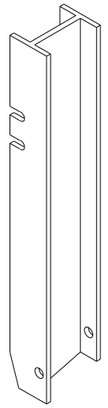

UPPER POST NO. 2 (15) (E)

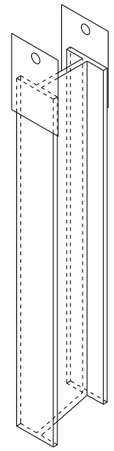

LOWER POST NO. 2 (16) (E)

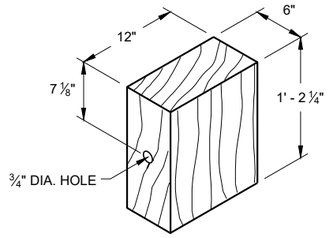

WOOD BLOCKOUT (4)
REQ'D. AT ALL POSTS EXCEPT POST NO'S 1 & 2

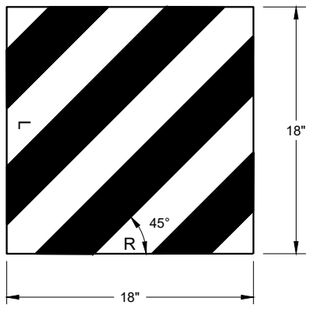

W5 - 59

REFLECTIVE SHEETING DETAIL (E)

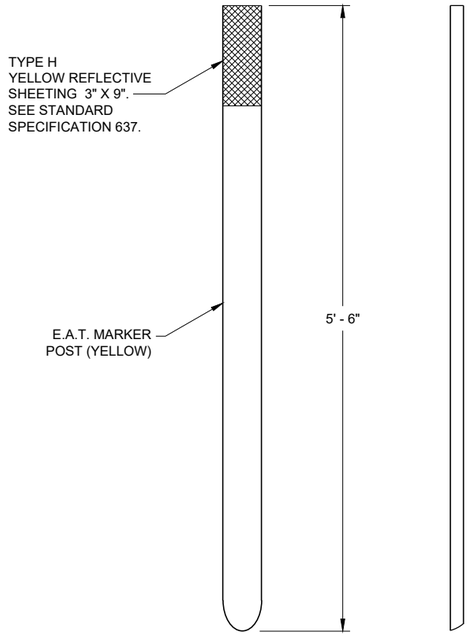

FRONT VIEW SIDE VIEW

E.A.T. MARKER POST (13)

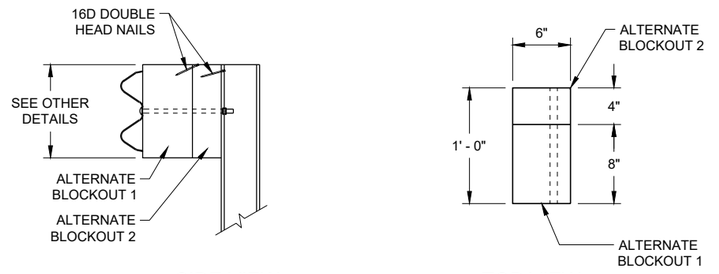

SIDE VIEW TOP VIEW

ALTERNATE WOOD BLOCKOUT DETAIL

MIDWEST GUARDRAIL SYSTEM ENERGY ABSORBING TERMINAL (MGS)

STATE OF WISCONSIN
DEPARTMENT OF TRANSPORTATION

APPROVED
7/2018 — DATE
/S/ Rodney Taylor — ROADWAY STANDARDS DEVE UNIT SUPERVISOR

FHWA

6

SDD 14B44 - 04c

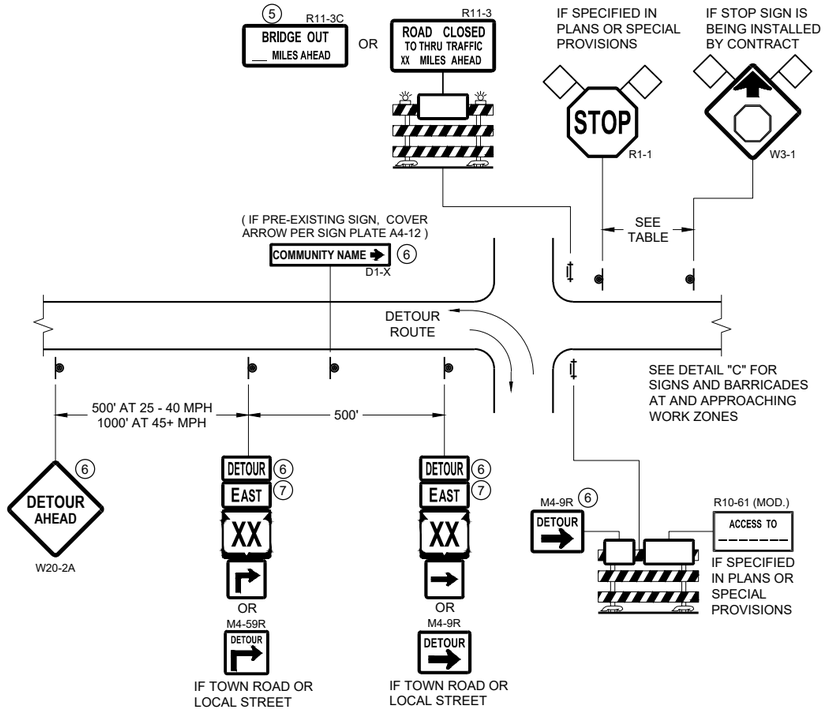

DETAIL A
MAINLINE CLOSURE WITH POSTED DETOUR

WORK ZONE GREATER THAN OR EQUAL TO ½ MILE FROM DETOUR ROUTE (1000 FEET IF URBAN)

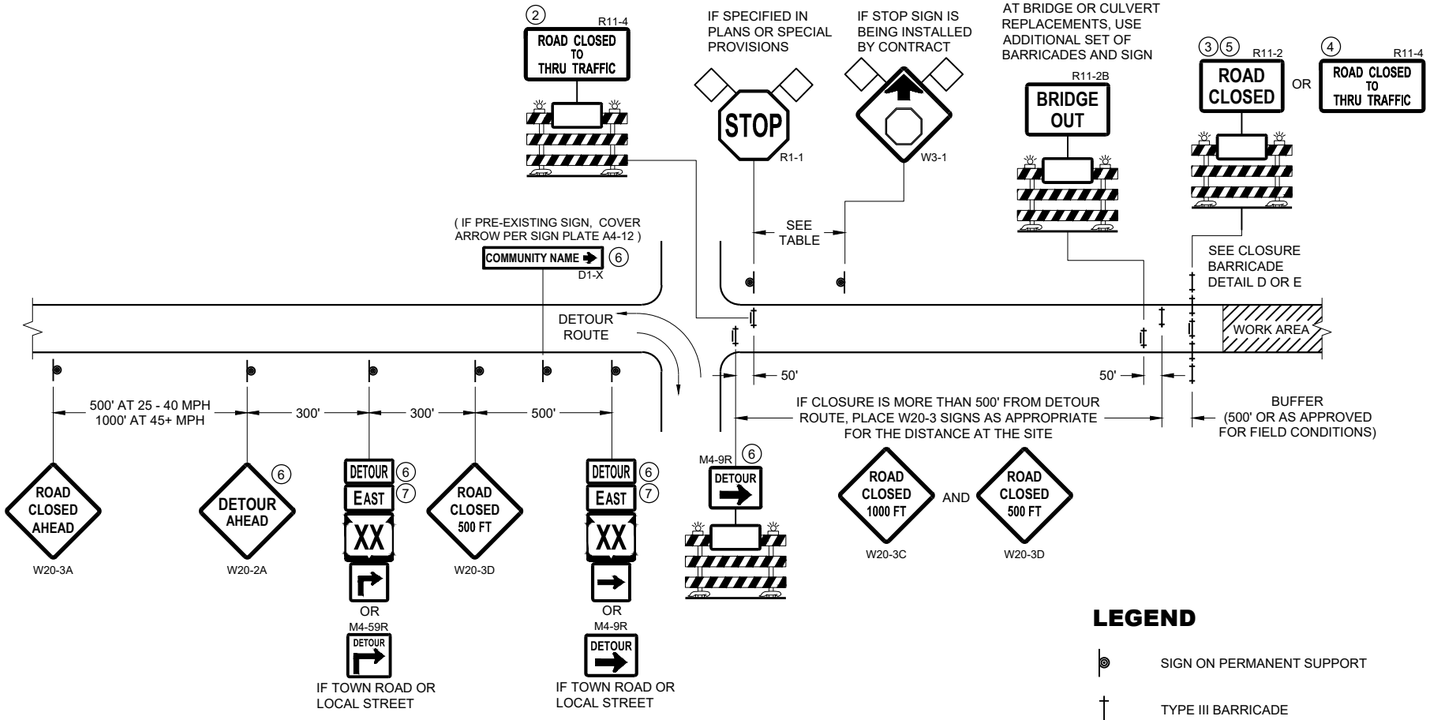

DETAIL B
MAINLINE CLOSURE WITH POSTED DETOUR

WORK ZONE LESS THAN ½ MILE FROM DETOUR ROUTE (1000 FEET IF URBAN)

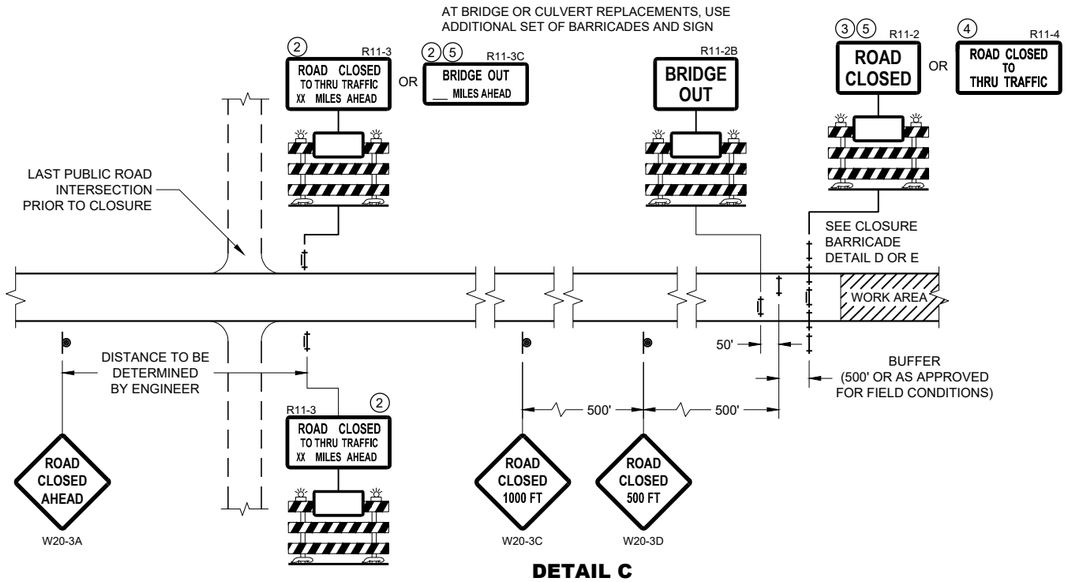

DETAIL C
MAINLINE CLOSURE, NO POSTED DETOUR

SPEED LIMIT (MPH)	"STOP AHEAD" ADVANCE WARNING DISTANCE (FT)
25	200
30	200
35	350
40	350
45	500
50	550
55	750

SEE SDD 15C2-SHEET "b"
FOR GENERAL NOTES
AND FOOTNOTES ① THROUGH ⑦

LEGEND

- SIGN ON PERMANENT SUPPORT
- TYPE III BARRICADE
- TYPE III BARRICADE WITH ATTACHED SIGN
- TYPE "A" WARNING LIGHT (FLASHING)
- WORK AREA
- FLAGS, 16" X 16" MIN. (ORANGE)
- DETOUR — M4 - 8
- EAST — M3 - X
- XX — M1 - 4 OR XX — M1 - 6 OR COUNTY X — M1 - 5A
- M05 - 1 OR M06 - 1

BARRICADES AND SIGNS FOR MAINLINE CLOSURES

STATE OF WISCONSIN
DEPARTMENT OF TRANSPORTATION

APPROVED
May 2023
DATE
/S/ Andrew Heidtke
WORK ZONE ENGINEER

FHWA

6

SDD 15C02 - 09a

SDD 15C02 - 09a

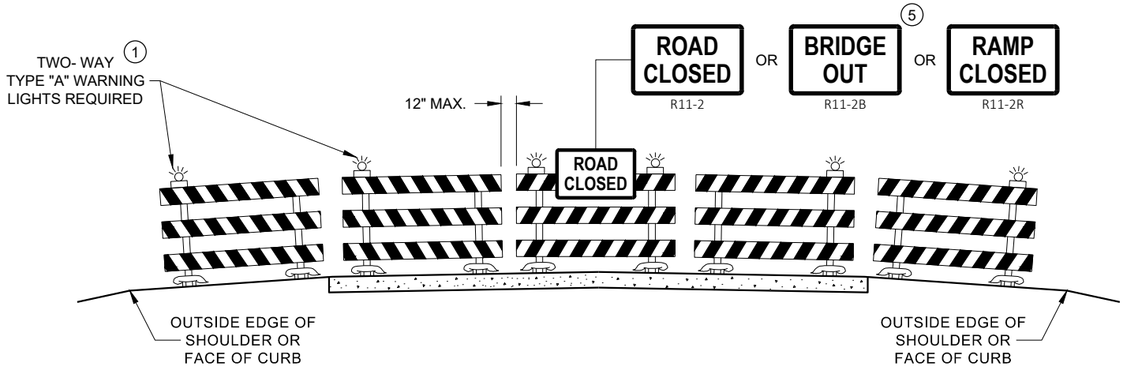

DETAIL D
ROAD CLOSURE BARRICADE DETAIL
APPROACH VIEW

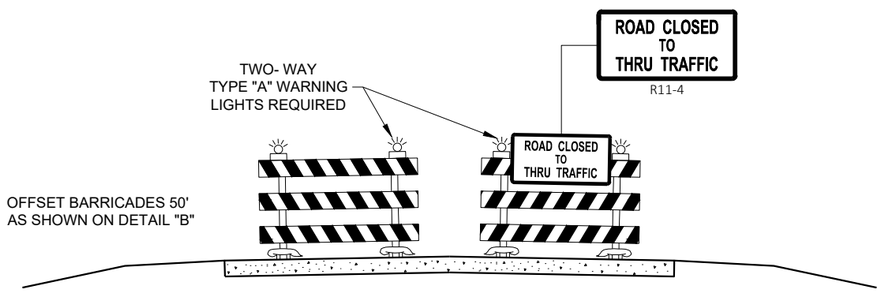

DETAIL E
LANE CLOSURE BARRICADE DETAIL
APPROACH VIEW

SEE SDD 15C2 - SHEET "a" FOR LEGEND

GENERAL NOTES

THE EXACT NUMBER, LOCATION, AND SPACING OF ALL SIGNS AND BARRICADES SHALL BE ADJUSTED TO FIT FIELD CONDITIONS AS APPROVED BY THE ENGINEER.

ANY SIGNS TEMPORARY OR EXISTING, WHICH CONFLICT WITH TRAFFIC CONTROL "IN USE", SHALL BE REMOVED OR COVERED AS NEEDED AND AS APPROVED BY THE ENGINEER.

THE SPACING BETWEEN TRAFFIC CONTROL SIGNS SHOULD BE ADJUSTED TO NOT CONFLICT WITH AND SHOULD PROVIDE A DESIRABLE MINIMUM OF 200 FEET CLEARANCE TO EXISTING SIGNS THAT WILL REMAIN IN PLACE.

BARRICADES THAT MUST BE MOVED FOR A WORK OPERATION SHALL BE IMMEDIATELY RE-ESTABLISHED UPON COMPLETION OF THE OPERATION, OR FOR CONTINUING OPERATIONS, AT THE END OF EACH WORKING DAY.

SIGNS THAT WILL BE IN PLACE LESS THAN 7 CONTINUOUS DAYS AND NIGHTS MAY BE MOUNTED ON PORTABLE SUPPORTS.

ALL TYPE III BARRICADES SHALL HAVE RAILS REFLECTORIZED ON BOTH FACES. STRIPES SHALL BE PROPERLY SLOPED DOWN TOWARD THE TRAFFIC SIDE OR AS SHOWN IN THE ROAD CLOSURE BARRICADE DETAIL "D" FOR FULL ROAD CLOSURES.

TYPE "A" LOW - INTENSITY FLASHING WARNING LIGHTS SHALL BE VISIBLE ON BOTH SIDES OF THE BARRICADE.

THE R11 - 2, R11 - 3, M4 - 9, R11 - 4, AND R10 - 61 SIGNS PLACED ON THE BARRICADES SHALL COVER NO MORE THAN THE TOP RAIL. THE SIGNS SHALL NOT COVER ANY PORTION OF THE MIDDLE RAIL OR BOTTOM RAILS.

"WO" AND "MO" SIGNS ARE THE SAME AS "W" AND "M" SIGNS EXCEPT THE BACKGROUND IS ORANGE.

ALL SIGNS SHALL BE 48" X 48" UNLESS OTHERWISE NOTED BELOW:
- R11 - 2 SHALL BE 48" X 30"
- R11 - 3 SHALL, R11 - 4 AND R10 - 61 SHALL BE 60 " X 30"
- M4 - 9 SHALL BE 30" X 24"
- M3 - X SHALL BE 24" X 12" (36" X 18" IF NEEDED TO MATCH EXISTING SIGNS)
- M4 - 8 SHALL BE 24" X 12" (36" X 18" IF NEEDED TO MATCH EXISTING SIGNS)
- M1 - 4, M1 - 5A AND M1 - 6 SHALL BE 24" X 24" (36" X 36" IF NEEDED TO MATCH EXISTING SIGNS)
- MO5 - 1 AND MO6 - 1 SHALL BE 21" X 21" (30" X 30" IF NEEDED TO MATCH EXISTING SIGNS)
- D1 - X SHALL BE AS SHOWN ON SPECIFIC PROJECT SIGNING DETAIL SHEETS.
- R1 - 1 SHALL BE 36" X 36"

(1) TWO WARNING LIGHTS SHALL BE PROVIDED ON THE CENTER BARRICADE AND A MINIMUM OF ONE WARNING LIGHT SHALL BE PROVIDED ON EACH OF THE OTHER BARRICADES WITHIN THE ROADWAY LIMITS. SPACING OF THE WARNING LIGHTS SHALL BE UNIFORM TO THE EDGE OF ROADWAY AS SHOWN (APPROX. 8 FOOT LIGHT SPACING.

(2) THESE SIGNS AND BARRICADES ARE NOT REQUIRED IF ROAD CLOSURE BEGINS AT AN INTERSECTION.

(3) FOR ROAD CLOSURE WITHOUT LOCAL ACCESS TO PROJECT, SEE ROAD CLOSURE BARRICADE DETAIL "D".

(4) FOR ROAD CLOSURE WITH LOCAL ACCESS TO PROJECT, SEE ROAD CLOSURE BARRICADE DETAIL "E".

(5) FOR BRIDGE OR CULVERT REPLACEMENTS, SUBSTITUTE "BRIDGE OUT" INSTEAD OF "ROAD CLOSED" ON R11 - 2 AND R11 - 3 SIGNS.

(6) INSTALL DETOUR AND COMMUNITY GUIDE SIGNS AND ARROWS ONLY IF SPECIFIED IN THE CONTRACT. IF THERE ARE EXISTING ROUTE MARKER ASSEMBLIES THAT WILL REMAIN IN PLACE, ADJUST THE LOCATION OF THE DETOUR ROUTE SIGNS TO CORRESPOND WITH THE EXISTING ASSEMBLIES. MODIFY EXISTING SIGNS WHERE POSSIBLE. SEE SPECIFIC PROJECT DETOUR SIGNING DETAIL SHEETS. IF DETOUR SIGNS ARE BEING INSTALLED BY OTHERS, PLACE THE CONTRACTED TRAFFIC CONTROL SIGNS TO ALLOW FOR PLACEMENT OF ALL WARNING, DETOUR AND GUIDE SIGNS AS SHOWN.

(7) "EAST" CARDINAL DIRECTION MARKERS AND RIGHT TURN ARROWS ARE SHOWN. USE OTHER CARDINAL DIRECTIONS AND ARROWS AS APPROPRIATE.

BARRICADES AND SIGNS FOR VARIOUS CLOSURES

STATE OF WISCONSIN
DEPARTMENT OF TRANSPORTATION

APPROVED
May 2023
DATE
/S/ Andrew Heidtke
WORK ZONE ENGINEE
FHWA

6

SDD 15C02 - 09b

6

SDD 15C02 - 09b

THIS DRAWING PROVIDES GENERAL GUIDANCE ON TYPICAL DETOUR SIGN LAYOUT AND SPACING. SEE PROJECT DETOUR SIGNING SHEETS FOR SPECIFIC DETAILS FOR EACH PROJECT.

LEGEND

- SIGN ON PERMANENT SUPPORT
- WORK AREA
- DETOUR / EAST — M4 - 8, M3 - X
- XX — M1 - 4; XX — M1 - 6; COUNTY X — M1 - 5A
- M05 - 1; M06 - 1; M06 - 1

GENERAL NOTES

THE EXACT NUMBER, LOCATION AND SPACING OF ALL SIGNS SHALL BE ADJUSTED TO FIT FIELD CONDITIONS AS APPROVED BY THE ENGINEER.

IF THERE ARE EXISTING ROUTE MARKER ASSEMBLIES THAT WILL REMAIN IN PLACE, ADJUST THE LOCATION OF THE DETOUR ROUTE SIGNS TO CORRESPOND WITH THE EXISTING ASSEMBLIES. SEE SPECIFIC PROJECT DETOUR SIGNING DETAIL SHEETS. MODIFY EXISTING SIGNS WHERE POSSIBLE.

THE SPACING BETWEEN TRAFFIC CONTROL AND DETOUR SIGNS SHOULD BE ADJUSTED TO NOT CONFLICT WITH AND TO PROVIDE A DESIRABLE MINIMUM OF 200 FEET CLEARANCE TO EXISTING SIGNS THAT WILL REMAIN IN PLACE.

ANY SIGNS TEMPORARY OR EXISTING, WHICH CONFLICT WITH TRAFFIC CONTROL "IN USE" SHALL BE REMOVED OR COVERED AS NEEDED AND AS APPROVED BY THE ENGINEER.

SIGNS THAT WILL BE IN PLACE LESS THAN 7 CONTINUOUS DAYS AND NIGHTS MAY BE MOUNTED ON PORTABLE SUPPORTS.

"MO" SIGNS ARE THE SAME AS "M" SIGNS EXCEPT THE BACKGROUND IS ORANGE.

SIGN SIZES SHALL BE AS FOLLOWS:

- M3-X SHALL BE 24" X 12" (36" X 18" IF NEEDED TO MATCH EXISTING SIGNS)
- M4-8 SHALL BE 24" X 12" (36" X 18" IF NEEDED TO MATCH EXISTING SIGNS)
- M1-4, M1-5A AND M1-6 SHALL BE 24" X 24" (36" X 36" IF NEEDED TO MATCH EXISTING SIGNS)
- M05-1 AND M06-1 SHALL BE 21" X 21" (30" X 30" IF NEEDED TO MATCH EXISTING SIGNS)
- M4-9 AND M4-59 SHALL BE 30" X 24"
- M4-8a SHALL BE 24" X 18"
- G20-51 SHALL BE 60" X 24"
- W20-2A SHALL BE 48" X 48"
- D1-X SHALL BE AS SHOWN ON SPECIFIC PROJECT SIGNING DETAIL SHEETS.

* OPTIONAL SIGNS. SEE SPECIFIC PROJECT DETOUR SIGNING DETAIL SHEETS.

** FOR A TOWN ROAD OR LOCAL STREET DETOURED ONTO A STATE TRUNK HIGHWAY, PLACE A ROAD NAME PLAQUE ABOVE THE M4-9 SIGN AS SPECIFIED IN THE CONTRACT.

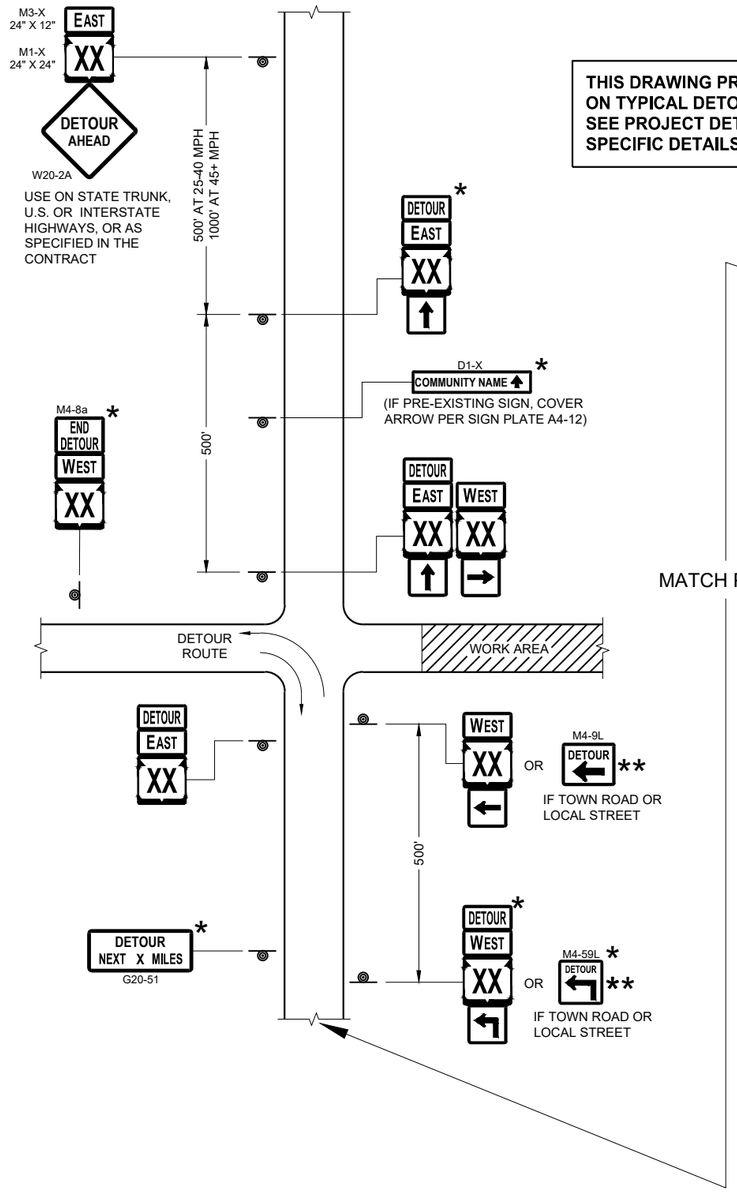

MATCH POINT

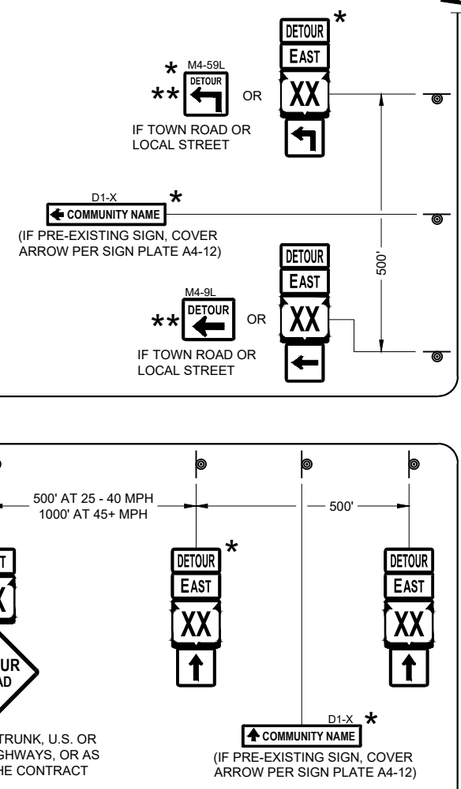

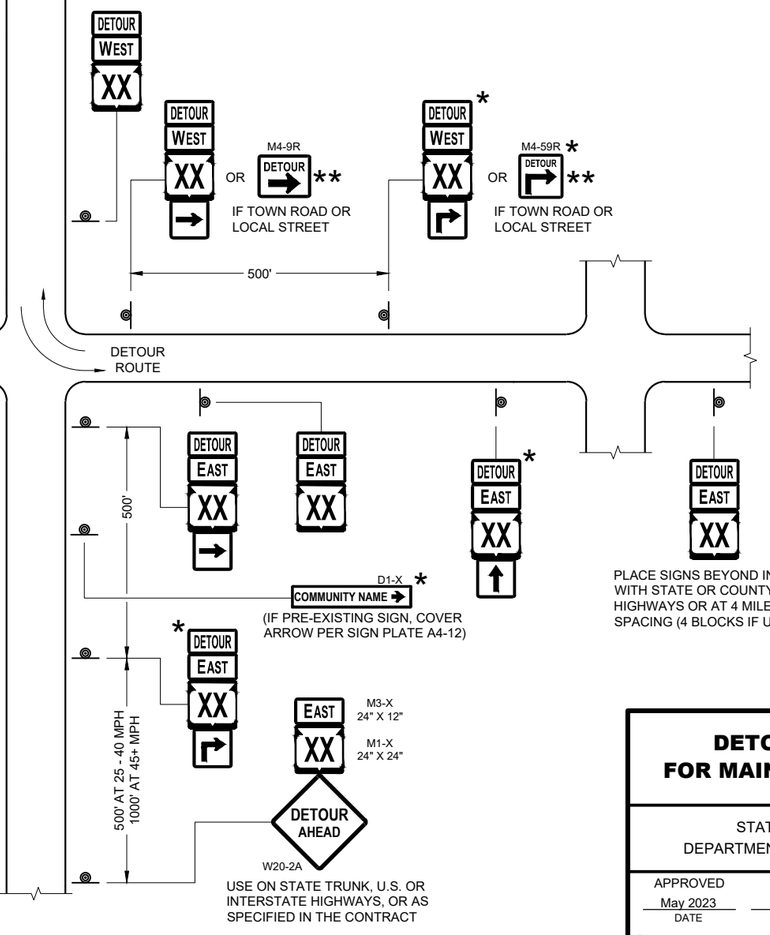

SEE SPECIFIC PROJECT DETOUR SIGNING DETAIL SHEETS AND DETAIL A OR B ON SDD SHEET 15C02 - SHEET "a"

DETAIL F
DETOUR SIGNING

DETOUR SIGNING FOR MAINLINE CLOSURES

STATE OF WISCONSIN
DEPARTMENT OF TRANSPORTATION

APPROVED
May 2023
DATE

/S/ Andrew Heidtke
WORK ZONE ENGINEER

FHWA

6

SDD 15C02 - 09c

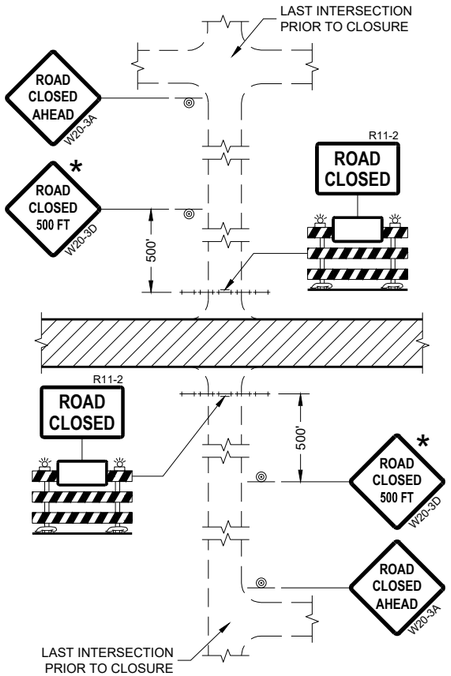

DETAIL 1
(NO ACCESS TO PROJECT)

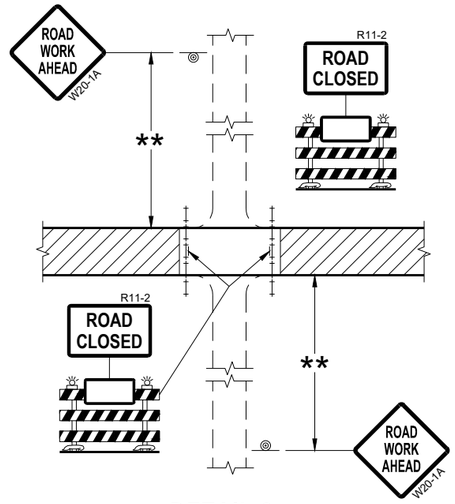

DETAIL 2
(PUBLIC CROSS-TRAFFIC MAINTAINED.
NO ACCESS TO PROJECT)

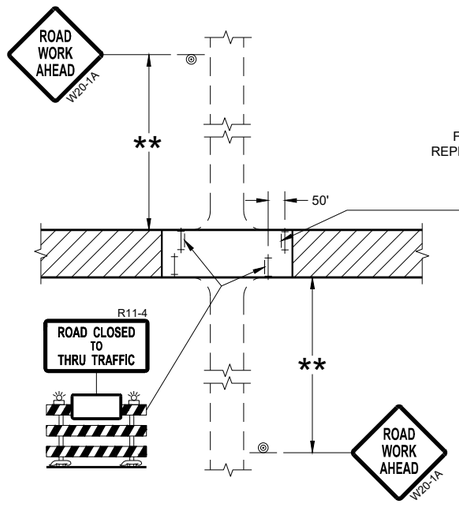

DETAIL 3
(PUBLIC CROSS-TRAFFIC MAINTAINED.
CONTRACTOR, LOCAL BUSINESS AND
RESIDENT ACCESS TO PROJECT)

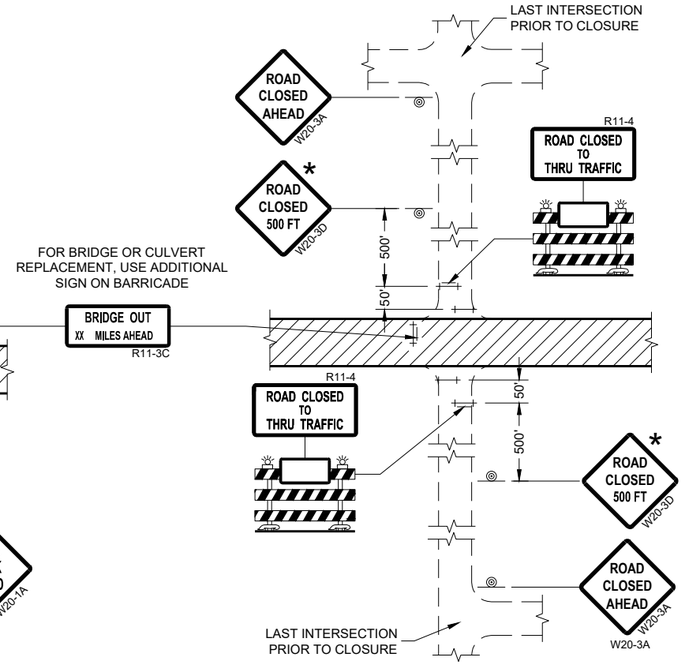

DETAIL 4
(CONTRACTOR, LOCAL BUSINESS AND
RESIDENT ACCESS TO PROJECT)

GENERAL NOTES

THE EXACT NUMBER, LOCATION, AND SPACING OF ALL SIGNS AND BARRICADES SHALL BE ADJUSTED TO FIT FIELD CONDITIONS AS APPROVED BY THE ENGINEER.

ANY SIGNS TEMPORARY OR EXISTING, WHICH CONFLICT WITH TRAFFIC CONTROL "IN USE" SHALL BE REMOVED OR COVERED AS NEEDED AND AS APPROVED BY THE ENGINEER.

THE SPACING BETWEEN TRAFFIC CONTROL SIGNS SHOULD BE ADJUSTED TO NOT CONFLICT WITH AND SHOULD PROVIDE A DESIRABLE MINIMUM OF 200 FEET CLEARANCE (500 FEET DESIRABLE) TO EXISTING SIGNS THAT WILL REMAIN IN PLACE.

IF A "STOP" SIGN MUST BE REMOVED FOR A WORK OPERATION, A TEMPORARY "STOP" SIGN SHALL BE PLACED PRIOR TO THE SIGN REMOVAL, OR A FLAGGER SHALL BE PROVIDED UNTIL THE SIGN IS REESTABLISHED.

BARRICADES THAT MUST BE MOVED FOR A WORK OPERATION SHALL BE IMMEDIATELY REESTABLISHED UPON COMPLETION OF THE OPERATION OR FOR CONTINUING OPERATIONS, AT THE END OF EACH WORKING DAY.

SIGNS THAT WILL BE IN PLACE LESS THAN SEVEN CONTINUOUS DAYS AND NIGHTS MAY BE MOUNTED ON PORTABLE SUPPORTS.

ALL TYPE III BARRICADES SHALL HAVE RAILS REFLECTORIZED ON BOTH FACES. STRIPES SHALL BE PROPERLY SLOPED DOWN TOWARD THE TRAFFIC SIDE OR AS SHOWN IN THE ROAD CLOSURE BARRICADE DETAIL "D" FOR FULL ROAD CLOSURES.

TYPE "A" LOW-INTENSITY FLASHING WARNING LIGHTS SHALL BE VISIBLE ON BOTH SIDES OF THE BARRICADE.

THE R11-2, R11-3, AND R11-4 SIGNS PLACED ON BARRICADES SHALL COVER NO MORE THAN THE TOP RAIL. THE SIGNS SHALL NOT COVER ANY PORTION OF THE MIDDLE OR BOTTOM RAILS.

ALL SIGNS SHALL BE 48" X 48" UNLESS OTHERWISE NOTED BELOW:
R11-2 SHALL BE 48" X 30".
R11-4 AND R11-3 SHALL BE 60" X 30".

* OMIT THE "ROAD CLOSED 500 FT." SIGN IF THE LAST INTERSECTION IS 500 FEET OR LESS FROM THE WORK ZONE.

** 500' MAX. OR AT LAST INTERSECTION, WHICHEVER IS CLOSEST.

LEGEND

- SIGN ON PERMANENT SUPPORT
- TYPE III BARRICADE
- TYPE III BARRICADE WITH ATTACHED SIGN
- TYPE "A" WARNING LIGHT (FLASHING)
- WORK AREA

BARRICADES AND SIGNS FOR SIDEROAD CLOSURES

STATE OF WISCONSIN
DEPARTMENT OF TRANSPORTATION

APPROVED
July 2018
DATE

/S/ Andrew Heidtke
WORK ZONE ENGINEE

FHWA

6

SDD 15C03 - 05

GENERAL NOTES

THE EXACT NUMBER, LOCATION, AND SPACING OF ALL SIGNS AND DEVICES SHALL BE ADJUSTED TO FIT FIELD CONDITIONS.

THE SPACING BETWEEN TRAFFIC CONTROL SIGNS SHOULD BE ADJUSTED TO NOT CONFLICT WITH AND SHOULD PROVIDE A MINIMUM OF 200 FEET (500 FEET DESIRABLE) CLEARANCE TO EXISTING SIGNS THAT WILL REMAIN IN PLACE.

ALL SIGNS ARE 48" X 48" UNLESS OTHERWISE NOTED.

SIGNS THAT WILL BE IN PLACE LESS THAN SEVEN CONTINUOUS DAYS AND NIGHTS MAY BE MOUNTED ON PORTABLE SUPPORTS.

IF A "STOP" SIGN MUST BE REMOVED FOR A WORK OPERATION, A TEMPORARY "STOP" SIGN SHALL BE PLACED PRIOR TO THE SIGN REMOVAL, OR A FLAGGER SHALL BE PROVIDED UNTIL THE SIGN IS REESTABLISHED.

* OMIT G20-1 SIGNS IF LENGTH OF WORK AREA IS 2 MILES OR LESS

** PLACE AN ADDITIONAL W20-1A "ROAD WORK AHEAD" SIGN IF WORK AREA WITHIN THE PROJECT IS SEPARATED BY MORE THAN 2 MILES FROM PREVIOUS WORK AREA.

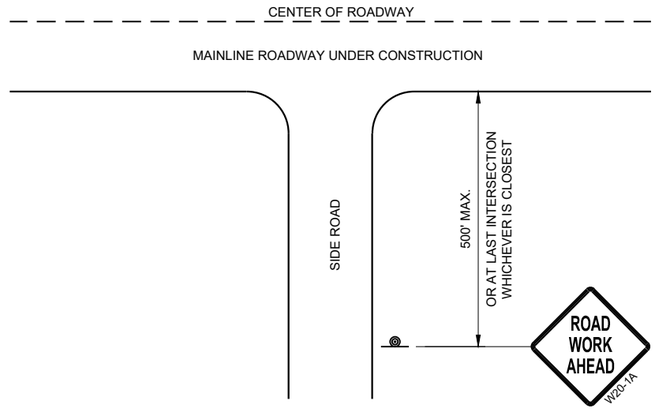

TYPICAL SIDE ROAD APPROACH WARNING SIGN DETAIL

LEGEND

SIGN ON PERMANENT SUPPORT

DIRECTION OF TRAFFIC

WORK AREA

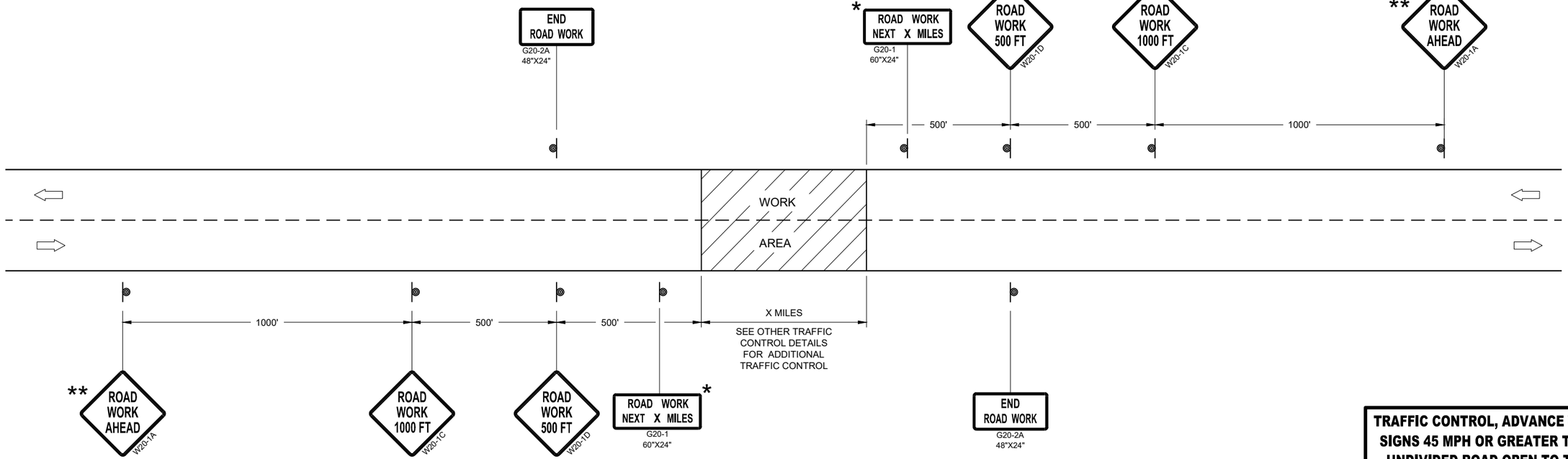

TRAFFIC CONTROL, ADVANCE WARNING SIGNS 45MPH OR GREATER

TRAFFIC CONTROL, ADVANCE WARNING SIGNS 45 MPH OR GREATER TWO-WAY UNDIVIDED ROAD OPEN TO TRAFFIC

STATE OF WISCONSIN
DEPARTMENT OF TRANSPORTATION

APPROVED
July 2018
DATE

/S/ Andrew Heidtke
WORK ZONE ENGINEE

FHWA

6

SDD 15C04 - 05

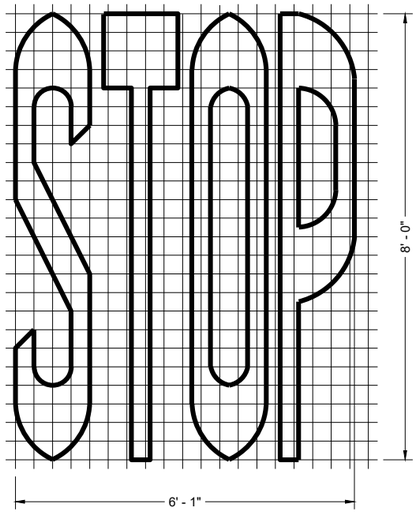

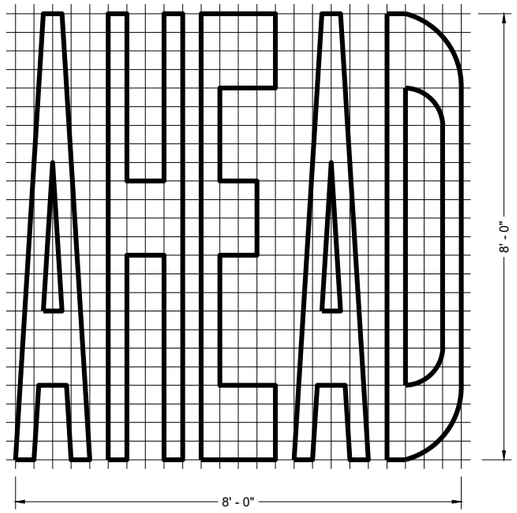

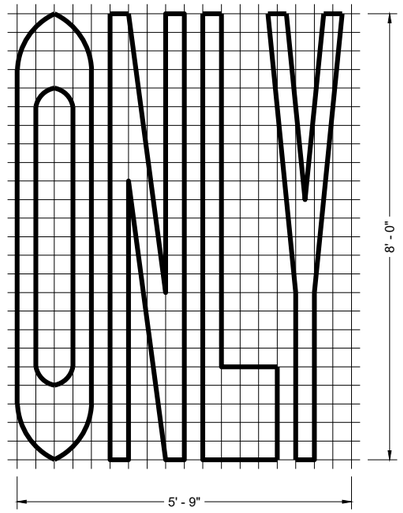

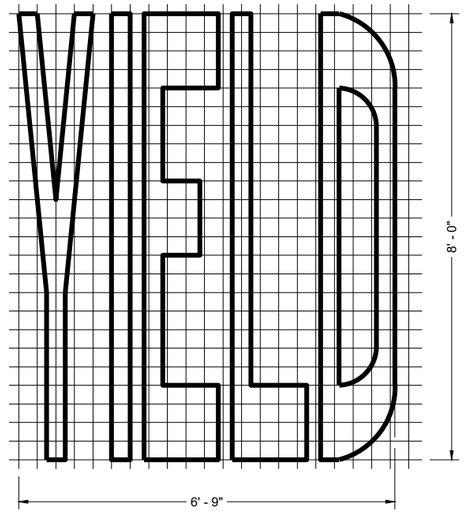

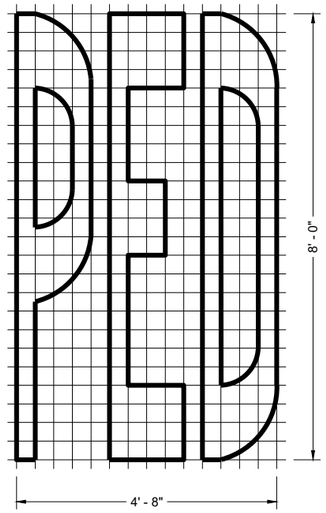

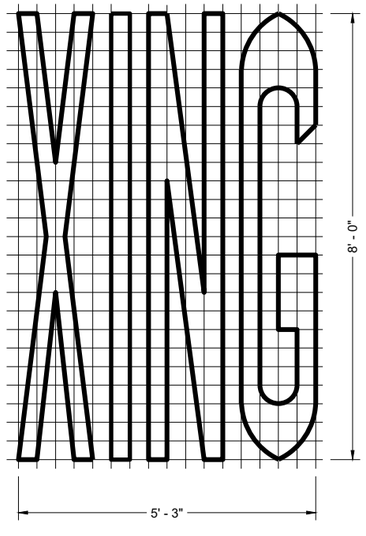

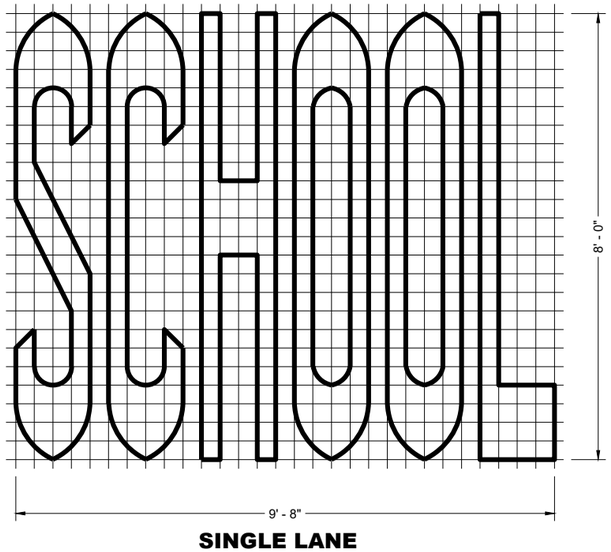

SINGLE LANE

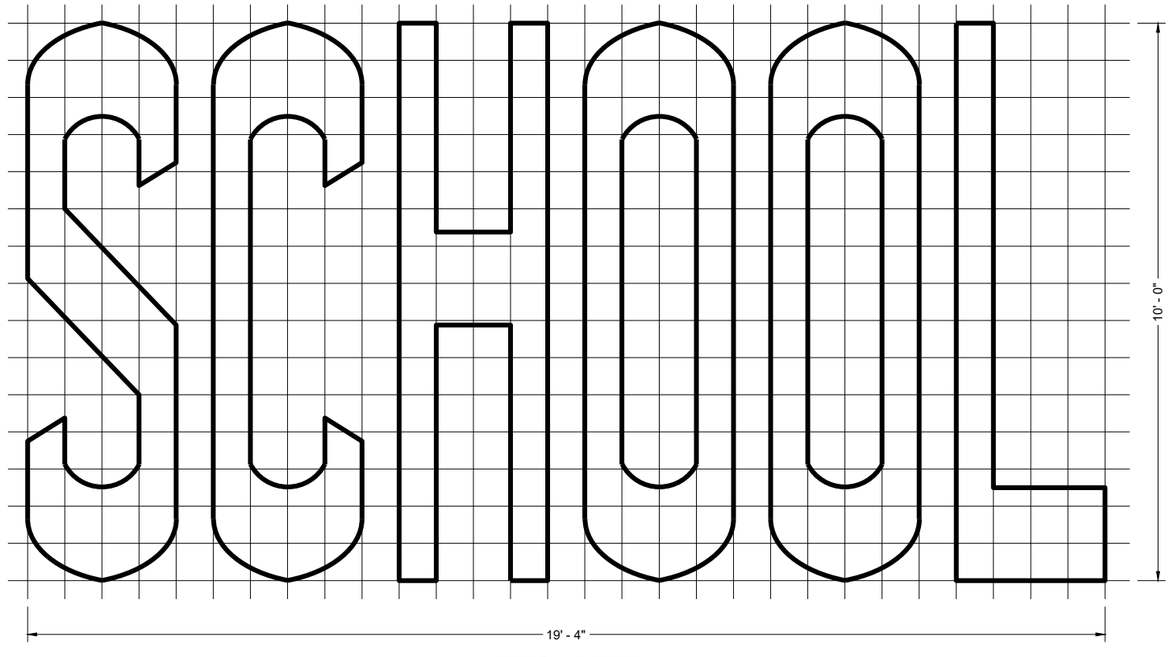

TWO - LANE

GENERAL NOTES

DETAILS OF INSTALLATION, MATERIALS AND WORKMANSHIP NOT SHOWN ON THIS DRAWING SHALL CONFORM TO THE PERTINENT REQUIREMENTS OF THE STANDARD SPECIFICATIONS AND APPLICABLE SPECIAL PROVISIONS.

PAVEMENT MARKING WORDS

STATE OF WISCONSIN
DEPARTMENT OF TRANSPORTATION

APPROVED
November 2024 — DATE
/S/ Matthew Rauch — STATE SIGNING AND MARKING ENGINEER

FHWA

6

SDD 15C07-16b

6

SDD 15C07-16b

GENERAL NOTES

DETAILS OF INSTALLATION, MATERIALS AND WORKMANSHIP NOT SHOWN ON THIS DRAWING SHALL CONFORM TO THE PERTINENT REQUIREMENTS OF THE STANDARD SPECIFICATIONS AND APPLICABLE SPECIAL PROVISIONS.

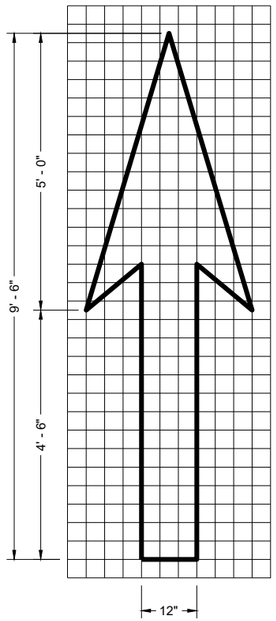

TYPE 1

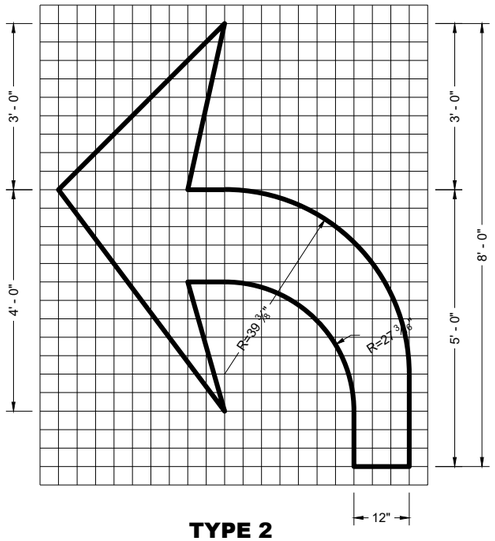

TYPE 2

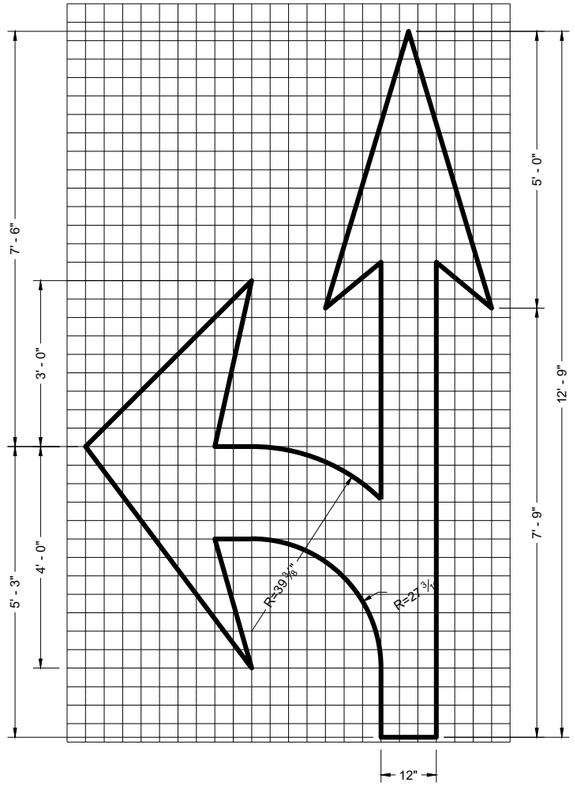

TYPE 3

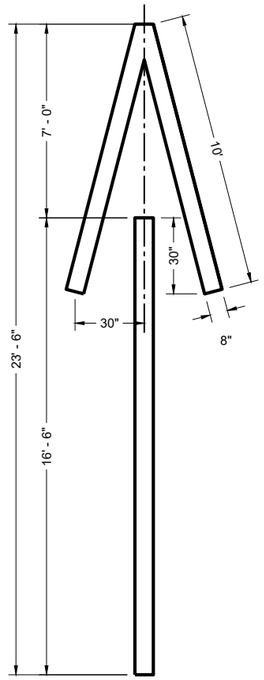

TYPE 4

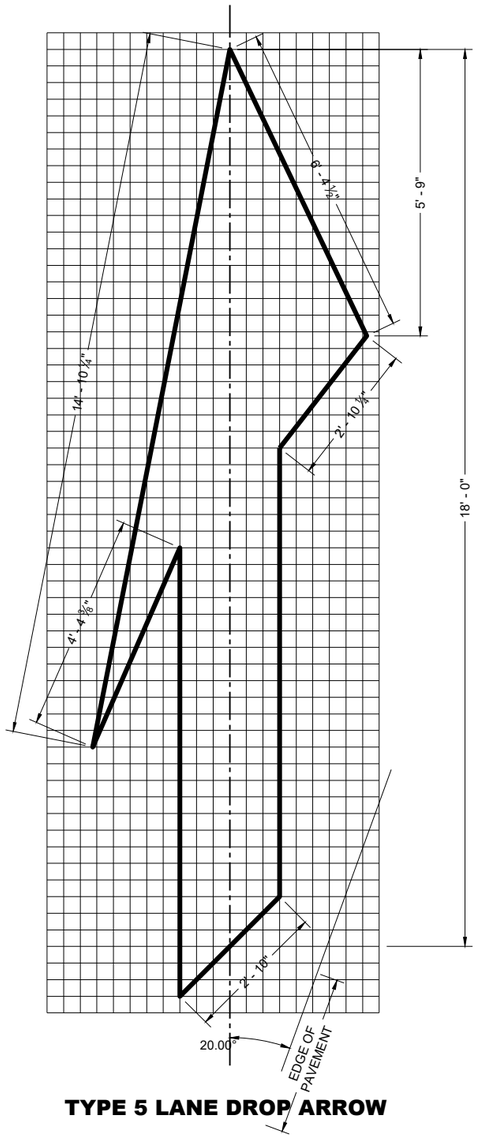

TYPE 5 LANE DROP ARROW

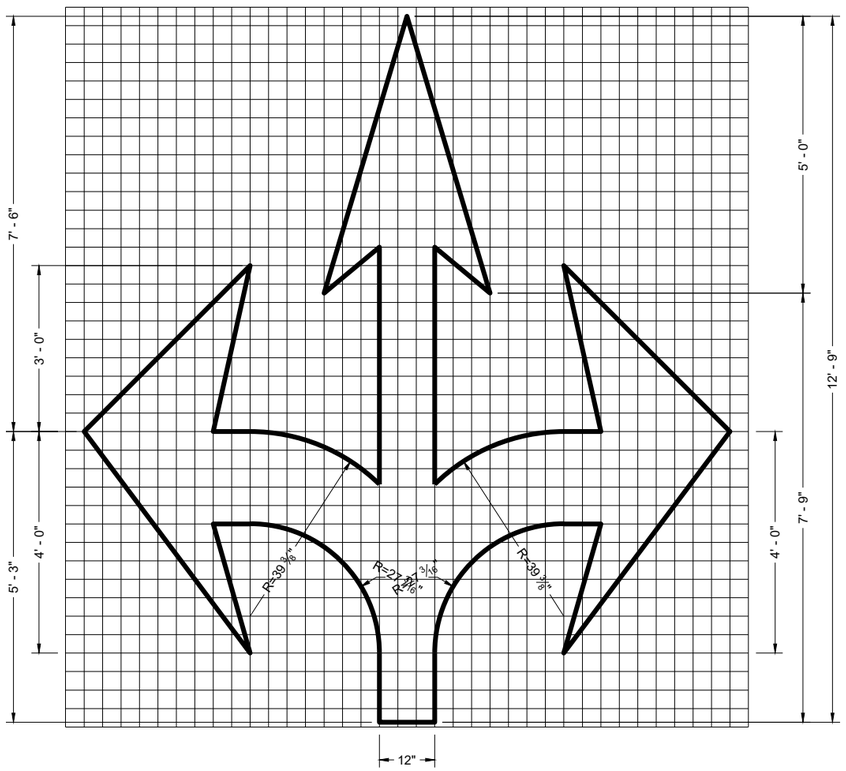

TYPE 6

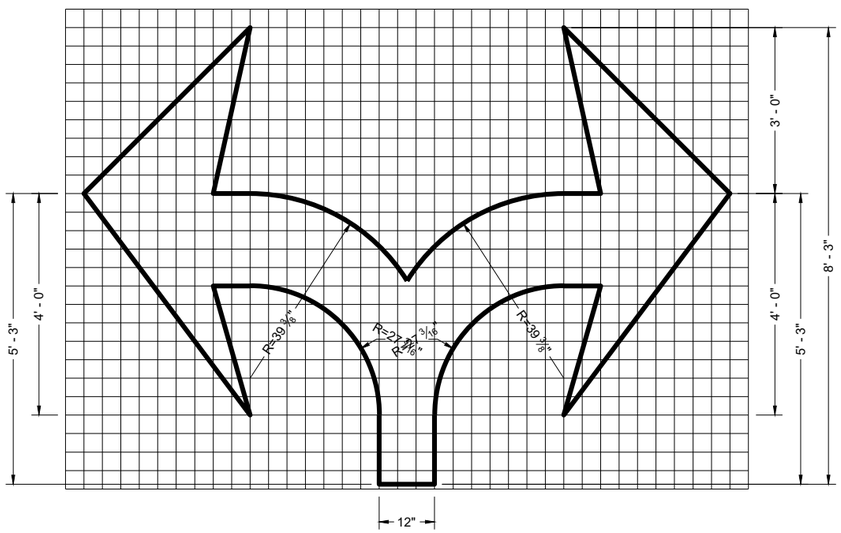

TYPE 7

6

SDD 15C07-16c

PAVEMENT MARKING ARROWS

STATE OF WISCONSIN
DEPARTMENT OF TRANSPORTATION

APPROVED
November 2024 — DATE
/S/ Matthew Rauch — STATE SIGNING AND MARKING ENGINEER

FHWA

6

SDD 15C07-16c

GENERAL NOTES

DETAILS OF CONSTRUCTION NOT SHOWN ON THIS DRAWING SHALL CONFORM TO STANDARD SPECIFICATIONS AND SPECIAL PROVISIONS.

(1) LOCATE THE NO PASSING ZONE W14-3 SIGN WITHIN 50 FEET OF THE "T" MARKING

(2) MEASURE FROM EDGE OF MARKING TO JOINT LINE. THIS DOES NOT INCLUDE SPACE NEEDED FOR GROOVING OPERATIONS.

*CONFIRM MARKING LINE WIDTH WITH THE MISCELLANEOUS QUANTITIES

LEGEND

"T" MARKING

SIGN ON PERMANENT SUPPORT

DIRECTION OF TRAFFIC

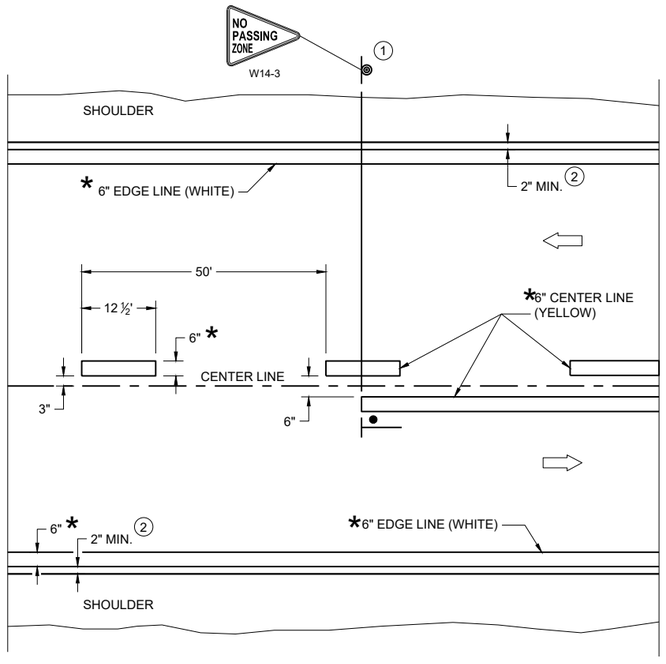

TWO WAY TRAFFIC

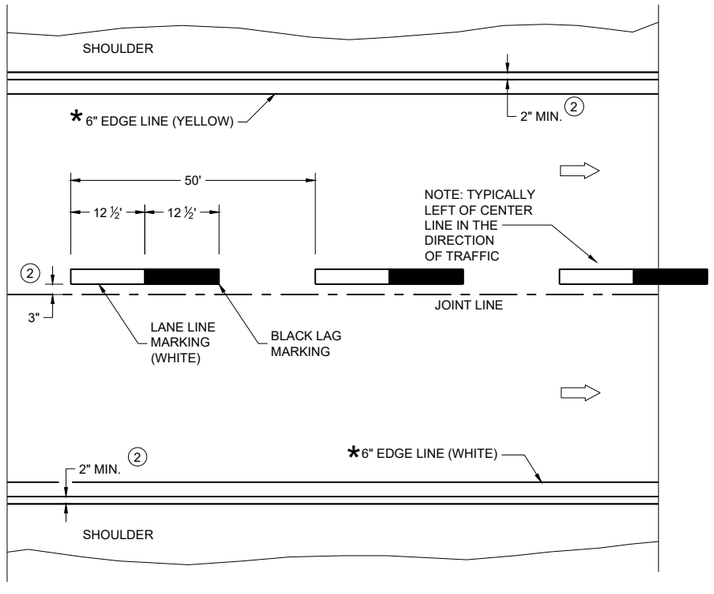

ONE WAY TRAFFIC

PERMANENT PAVEMENT MARKING

6

SDD 15C08-23a

PERMANENT LONGITUDINAL PAVEMENT MARKINGS

STATE OF WISCONSIN
DEPARTMENT OF TRANSPORTATION

APPROVED

May 2023
DATE

/S/ Jeannie Silver
Statewide Pavement Marking Engineer

FHWA

6

SDD 15C08-23a

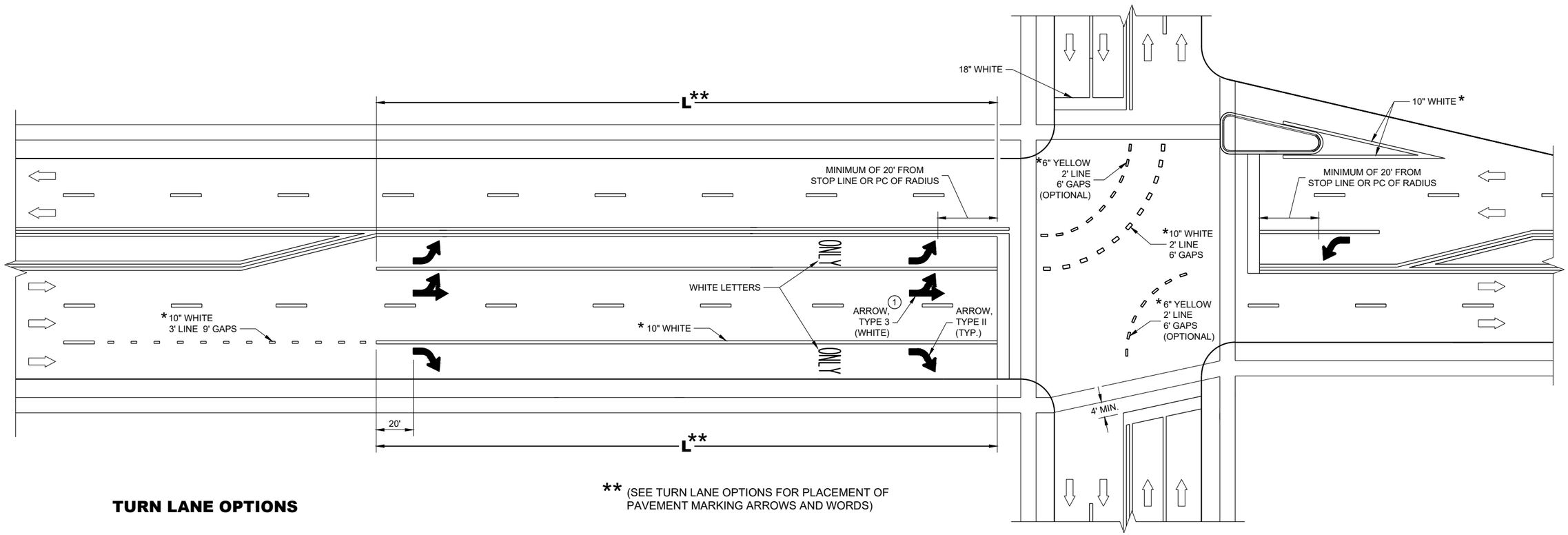

** (SEE TURN LANE OPTIONS FOR PLACEMENT OF PAVEMENT MARKING ARROWS AND WORDS)

TURN LANE OPTIONS

LENGTH OF TURN BAY (**L**) OF 0 - 47' DOES NOT REQUIRE PAVEMENT MARKING ARROWS OR WORDS

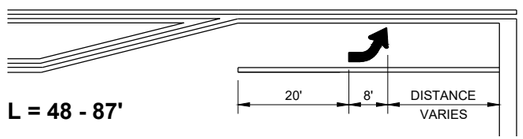

L = 48 - 87'

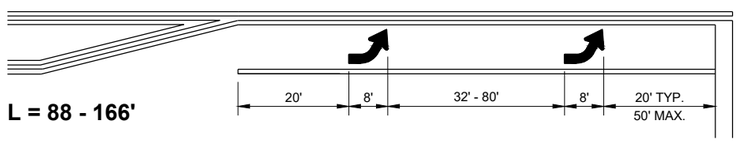

L = 88 - 166'

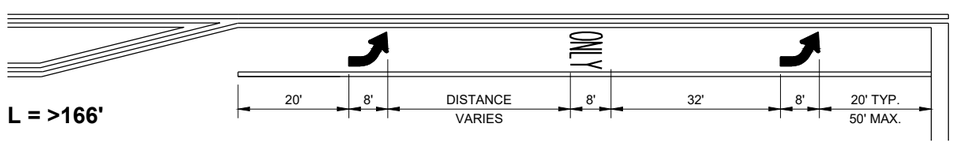

L = >166'

GENERAL NOTES

(1) QUANTITY AND LOCATION OF TYPE 3 ARROWS ARE THE SAME AS THE TYPE II ARROWS IN THE ADJACENT TURN LANE. FOR TURN LANES WITH A PHYSICAL SEPARATION IN THE SAME DIRECTION OF TRAVEL, THE ARROWS AND "ONLY" MARKING MAY BE ELIMINATED.

DIRECTION OF TRAFFIC

L = LENGTH OF TURN BAY

* CONFIRM MARKING LINE WIDTH WITH THE MISCELLANEOUS QUANTITIES

PAVEMENT MARKING (TURN LANES)

STATE OF WISCONSIN
DEPARTMENT OF TRANSPORTATION

6

SDD 15C08-23d

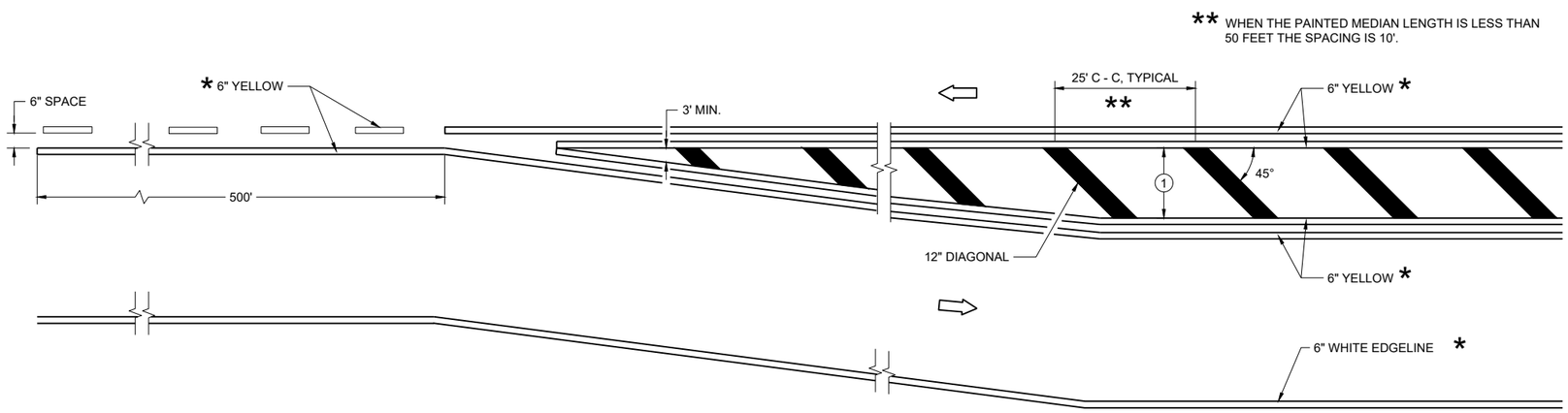

MEDIAN ISLAND DETAIL

GENERAL NOTES

(1) DIAGONALS ARE OPTIONAL WHEN PAINTED ISLAND IS LESS THAN 6 FEET AT THE WIDEST POINT. OMIT DIAGONALS IF WIDTH IS LESS THAN 4 FEET.

DIRECTION OF TRAVEL

*CONFIRM MARKING LINE WIDTH WITH THE MISCELLANEOUS QUANTITIES

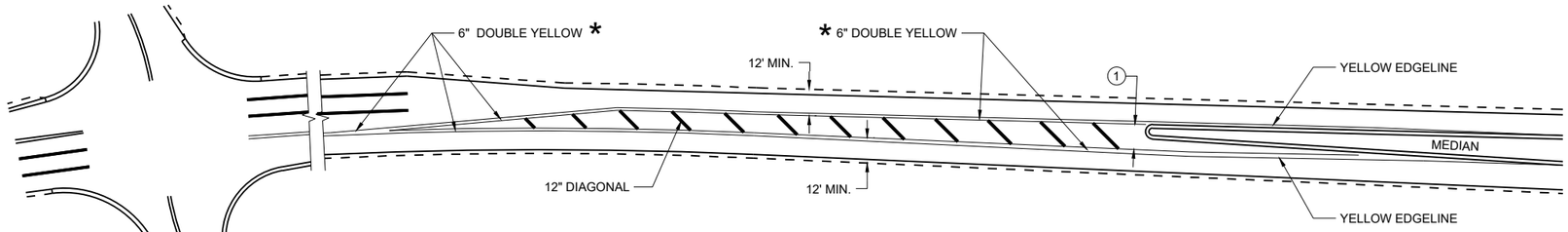

APPROACH MARKINGS FOR OTHER MEDIAN TYPES

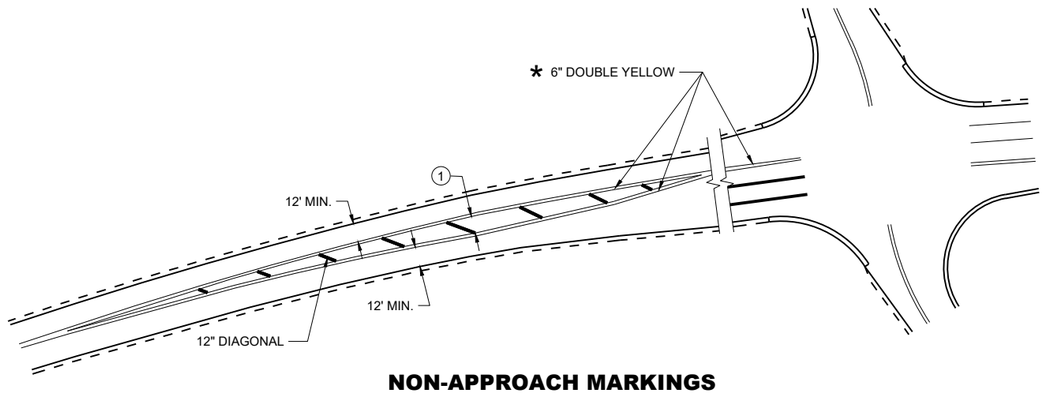

NON-APPROACH MARKINGS

MEDIAN ISLAND PAVEMENT MARKINGS

STATE OF WISCONSIN
DEPARTMENT OF TRANSPORTATION

APPROVED
August 2024
DATE

/S/ Jeannie Silver
Statewide Pavement Marking Engineer

FHWA

6

SDD 15C18-09a

SDD 15C18-09a

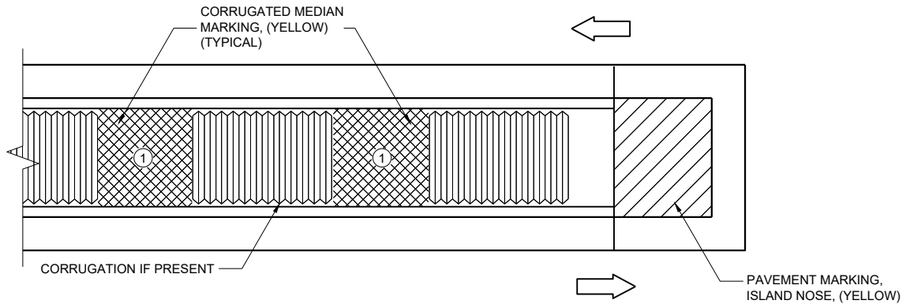

MEDIAN ISLAND WITH SQUARE BLUNT NOSE

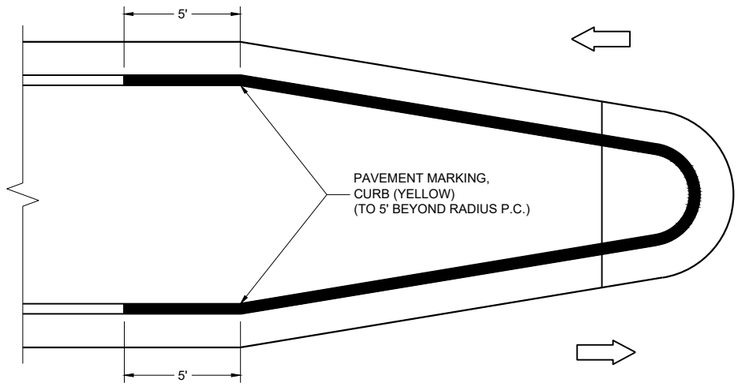

MEDIAN ISLAND WITH ROUND BLUNT NOSE

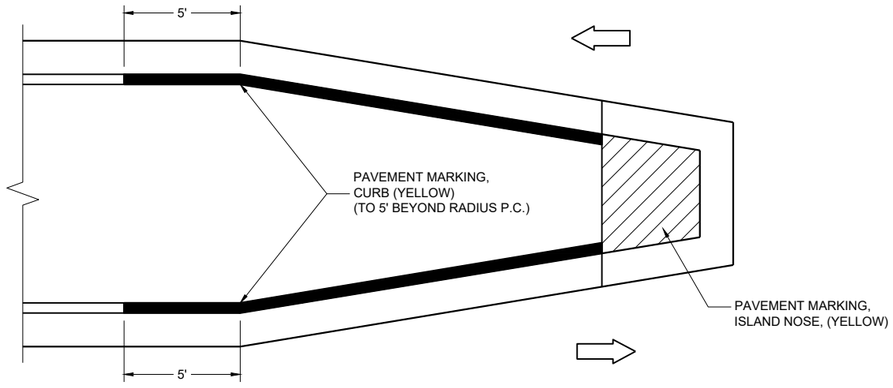

MEDIAN ISLAND WITH SLOPED NOSE

TYPICAL PLACEMENT OF PAVEMENT MARKING ON MEDIAN ISLANDS

GENERAL NOTES

WHEN CONCRETE CORRUGATED MEDIAN IS CONSTRUCTED TO SEPARATE TRAFFIC OPERATING IN THE OPPOSING DIRECTION, YELLOW PAVEMENT MARKING SHALL BE APPLIED TO THE FLAT PORTION OF THE CONCRETE CORRUGATED MEDIAN. THE ITEM OF PAVEMENT MARKING, CONCRETE CORRUGATED MEDIAN, WILL BE MEASURED IN PLACE AND ACCEPTED IN ACCORDANCE WITH THE CONTRACT AND PAID FOR AT THE CONTRACT UNIT PRICE PER SQUARE FOOT.

(1) APPLY PAVEMENT MARKING TO THE FLAT PORTION OF CORRUGATED MEDIAN.

ISLAND NOSE MARKING

CURB MARKING

CORRUGATED MEDIAN MARKING

DIRECTION OF TRAVEL

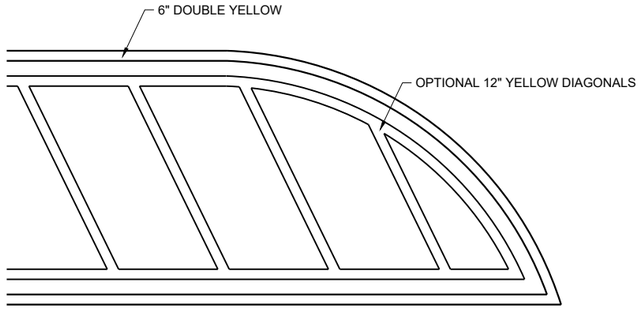

FLUSH MEDIAN ISLAND NOSE

PAVEMENT MARKINGS, MEDIAN ISLAND NOSE

STATE OF WISCONSIN
DEPARTMENT OF TRANSPORTATION

APPROVED
August 2024
DATE

/S/ Jeannie Silver
Statewide Pavement Marking Engineer

FHWA

6

SDD 15C18-09b

GENERAL NOTES

STOP SIGN SHALL BE PLACED A MINIMUM OF 6 FEET TO A MAXIMUM OF 50 FEET FROM THE EDGELINE LOCATION.

1. 18-INCH STOP LINES MAY BE DELETED OR ADDED BY THE REGION MARKING ENGINEER BASED ON VISIBILITY AND SIGHT LINES.
2. NO STOP LINE IS REQUIRED IF STOP SIGN IS LESS THAN OR EQUAL TO 40 FEET FROM THE EDGELINE.
3. NO STOP LINE IS REQUIRED IF STOP SIGN IS LESS THAN OR EQUAL TO 30 FEET FROM THE FLANGE LINE EXTENSION.
4. MOVE CLOSER TO THE EDGE OF TRAVEL LINE AS NEEDED FOR VISIBILITY AND SIGHT LINES (NO CLOSER THAN 4 FEET).
5. LADDER BAR CROSSWALKS SHOULD ONLY BE USED FOR MID BLOCK CROSSINGS. USE 2 - 6" TRANSVERSE LINES.
6. POSTED SPEED LIMITS OF 40 MPH OR GREATER USE A MINIMUM WIDTH OF 8' FOR MIDBLOCK CROSSWALKS

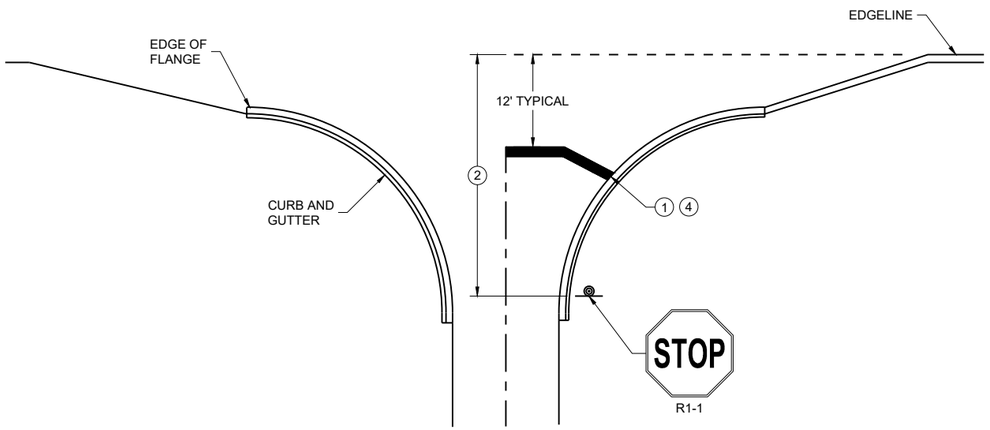

TYPICAL STOP LINE PAVEMENT MARKING WITH CURB AND GUTTER

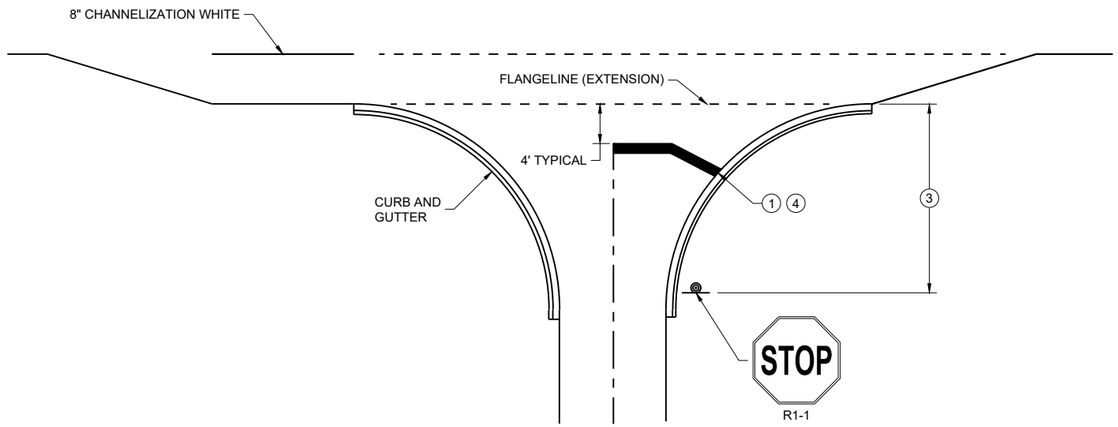

TYPICAL STOP LINE PAVEMENT MARKING FOR SIDE ROADS WITH RIGHT TURN LANE

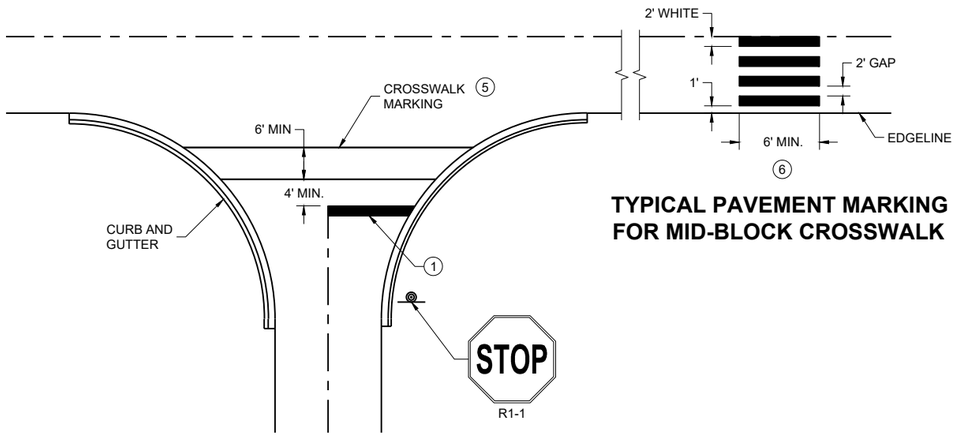

TYPICAL PAVEMENT MARKING FOR MID-BLOCK CROSSWALK 5

TYPICAL STOP LINE PAVEMENT MARKING FOR SIDE ROADS WITH CROSSWALK MARKING

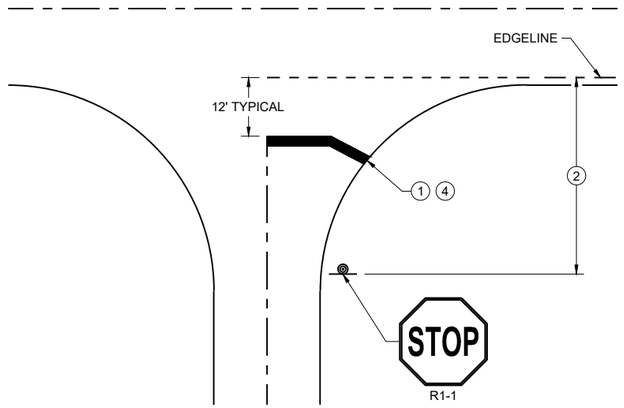

TYPICAL STOP LINE PAVEMENT MARKING WITHOUT CURB AND GUTTER

STOP LINE AND CROSSWALK PAVEMENT MARKING

STATE OF WISCONSIN
DEPARTMENT OF TRANSPORTATION

APPROVED

March 2024 — DATE

/S/ Matthew Rauch — STATE SIGNING AND MARKING ENGINEER

FHWA

6

SDD 15C33-05

6

SDD 15C33-05

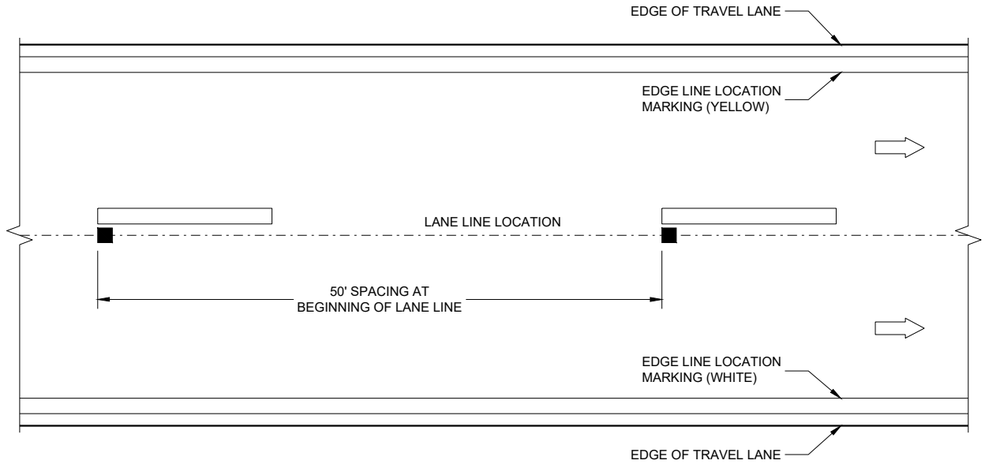

LONGITUDINAL PLACEMENT 6 - INCH LANE LINE

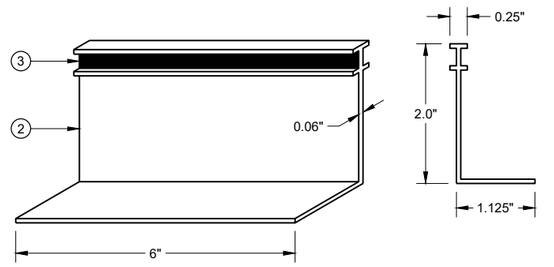

ISOMETRIC VIEW **SIDE VIEW**

TEMPORARY RAISED PAVEMENT MARKER, TYPE II

GENERAL NOTES

DETAILS OF CONSTRUCTION NOT SHOWN ON THIS DRAWING SHALL CONFORM TO THE STANDARD SPECIFICATIONS AND SPECIAL PROVISIONS.

COLOR OF TEMPORARY RAISED PAVEMENT MARKERS, TYPE II, SHALL MATCH THE COLOR OF THE MARKING THEY SUPPLEMENT.

PLACEMENT OF TEMPORARY RAISED PAVEMENT MARKERS ON EDGE LINES IS OPTIONAL. IF PLACED ON EDGE LINES, MAXIMUM SPACING SHALL BE 50 FEET.

PROVIDE SINGLE OR MULTI-COVER TEMPORARY RAISED PAVEMENT MARKERS AS SHOWN ON PLAN.

MARK "T"s ON PAVEMENT FOR REESTABLISHING NO PASSING ZONES.

SAME DAY TEMPORARY PAVEMENT MARKING MAY BE USED IN LIEU OF TEMPORARY RAISED PAVEMENT MARKERS, TYPE II.

SIGNS THAT WILL BE IN PLACE LESS THAN SEVEN CONTINUOUS DAYS AND NIGHTS OR THAT WILL BE PLACED IN A CLOSED LANE MAY BE MOUNTED ON PORTABLE SUPPORTS.

IF TEMPORARY SAME DAY PAVEMENT MARKING IS USED, ENSURE PROPOSED PAVEMENT MARKING ARE PLACED IN THE EXACT LOCATIONS AS THE EXISTING MARKINGS, USING A MINIMAL AMOUNT OF TEMPORARY RAISED MARKERS, TYPE II OR OTHER METHODS AS APPROVED BY THE ENGINEER.

IF ROADWAY IS DETOURED DURING CONSTRUCTION, THE "DO NOT PASS, "PASS WITH CARE" AND "NO CENTERLINE" SIGNS MAY BE OMITTED, PROVIDING A LIQUID MARKING IS INSTALLED BEFORE THE ROADWAY IS REOPENED TO TRAFFIC.

* CONFIRM MARKING LINE WIDTH WITH THE MISCELLANEOUS QUANTITIES

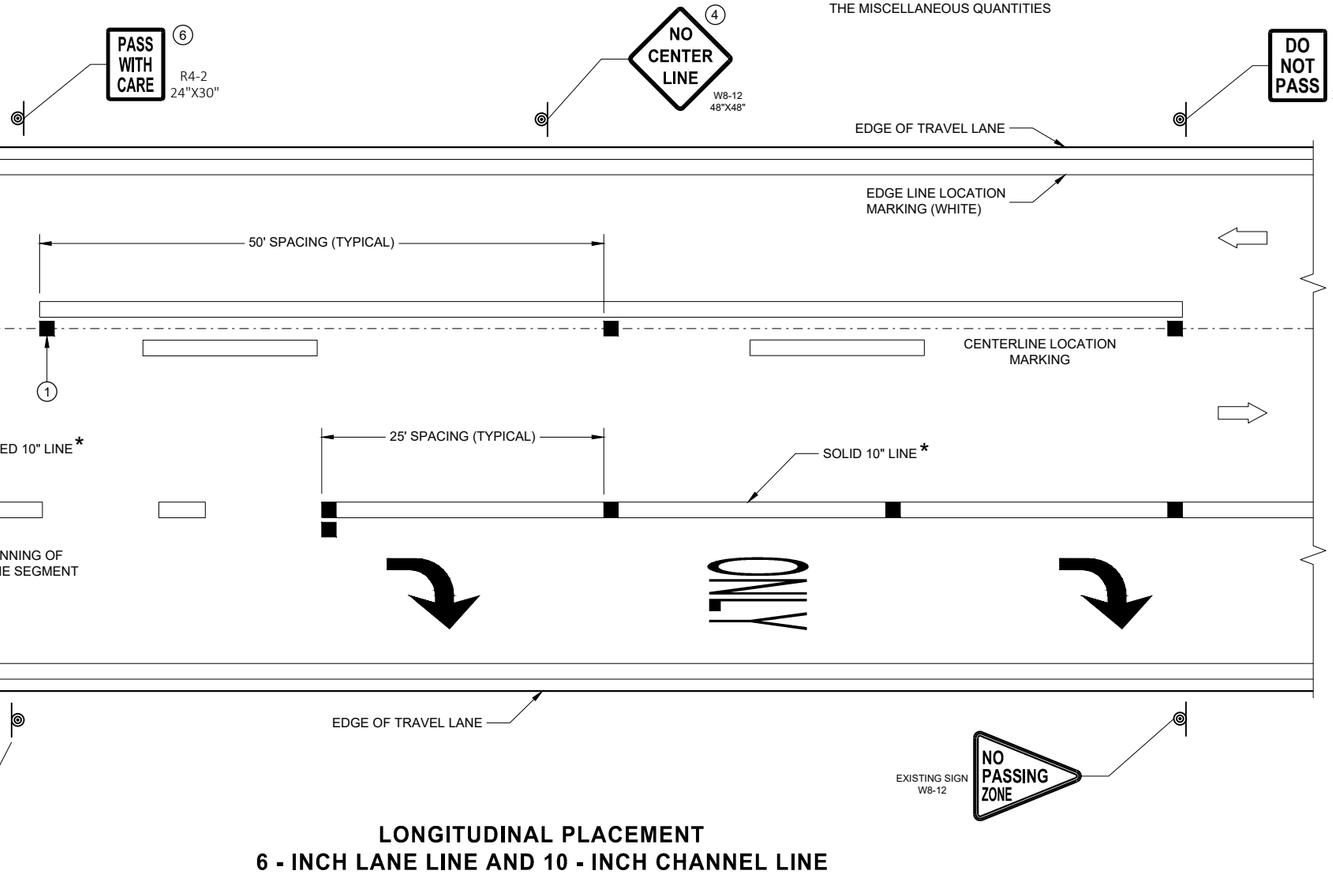

LONGITUDINAL PLACEMENT
6 - INCH LANE LINE AND 10 - INCH CHANNEL LINE

1. FOR DOUBLE SOLID YELLOW, PLACE THE MARKERS BETWEEN THE LINES.
2. MARKERS SHALL BE OF POLYURETHANE MATERIAL.
3. MARKERS SHALL HAVE A MINIMUM SIZE REFLECTIVE SURFACE OF 6-INCH WIDTH X 0.25 INCH HEIGHT.
4. "NO CENTER LINE" SIGNS SHALL BE PLACED AT THE BEGINNING OF PROJECT, AT TWO MILE INTERVALS AND AFTER STATE AND COUNTY HIGHWAY INTERSECTIONS.
5. "DO NOT PASS" SIGNS SHALL BE INSTALLED AT THE BEGINNING OF NO PASSING ZONES. ADDITIONAL "DO NOT PASS" SIGNS SHALL BE INSTALLED AT ONE MILE INTERVALS AND AFTER STATE AND COUNTY HIGHWAY INTERSECTIONS WITHIN THE NO PASSING ZONE.
6. "PASS WITH CARE" SIGNS SHALL BE PLACED AT THE DOWNSTREAM END OF NO PASSING ZONES.

LEGEND

- TEMPORARY RAISED PAVEMENT MARKER, TYPE II
- SIGN ON PORTABLE OR PERMANENT SUPPORT
- DIRECTION OF TRAFFIC.

STANDARD APPLICATION FOR TEMPORARY RAISED PAVEMENT MARKERS, TYPE II

STATE OF WISCONSIN
DEPARTMENT OF TRANSPORTATION

APPROVED
May 2023 — DATE
/S/ Matthew Rauch — STATE SIGNING AND MAF ENGINEER

FHWA

6 SDD 15C34-04

GENERAL NOTES

DRAWING NOT TO SCALE. ALL SIGNS AND POSTS ON THIS SHEET SHALL BE PAID FOR WITH 'TRAFFIC CONTROL SIGNS' BID ITEM. ALL SIDE ROADS WHICH ARE UNDER CONSTRUCTION OF CURB AND GUTTER AND/OR GRADING SHALL BE ADEQUATELY SIGNED.

ALL SIGNS AND DEVICES SHALL BE IN CONFORMANCE WITH THE WISCONSIN MANUAL OF UNIFORM TRAFFIC CONTROL DEVICES (WMUTCD). SIGN LAYOUTS SHALL BE IN ACCORDANCE WITH THE WISDOT STANDARD SIGN PLATES.

"WO" SIGNS ARE THE SAME AS "W" SIGNS EXCEPT THAT THE BACKGROUND IS ORANGE.

ALL SIGNS ARE 48" X 48" UNLESS OTHERWISE NOTED.

THE EXACT NUMBER, LOCATION AND SPACING OF ALL SIGNS AND DEVICES SHALL BE ADJUSTED TO FIT FIELD CONDITIONS AS DIRECTED BY THE ENGINEER.

ALL SIGNS INAPPROPRIATE TO THE STATUS OF THE CONTROL ZONE, INCLUDING PRE-EXISTING SIGNS IN THE VICINITY, SHALL BE COVERED OR REMOVED AS DIRECTED BY THE ENGINEER.

SEE 15C34 FOR ADDITIONAL TRAFFIC CONTROL SIGNING WHEN CENTERLINE PAVEMENT MAKINGS ARE MISSING. 'DO NOT PASS' SIGNS MUST BE INSTALLED ON THE SAME DAY AS MILLING OPERATIONS.

(1) PLACE SIGNS 350' IN ADVANCE OF MILLED SURFACES AND AT 1 MILE INTERVALS, OR AS DIRECTED BY THE ENGINEER.

(2) PLACE SIGN 200' MIN. FROM INTERSECTION AND 200' MIN. AFTER ADVANCE WARNING SIGN SHOWN IN SDD 15C04.

LEGEND

SIGN ON TEMPORARY SUPPORT

DIRECTION OF TRAFFIC

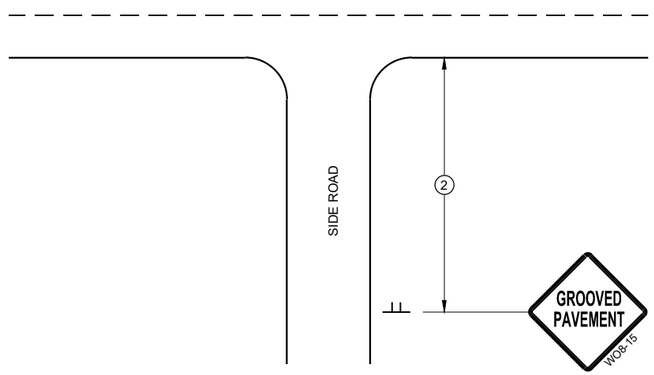

TYPICAL SIDE ROAD APPROACH SIGN DETAIL

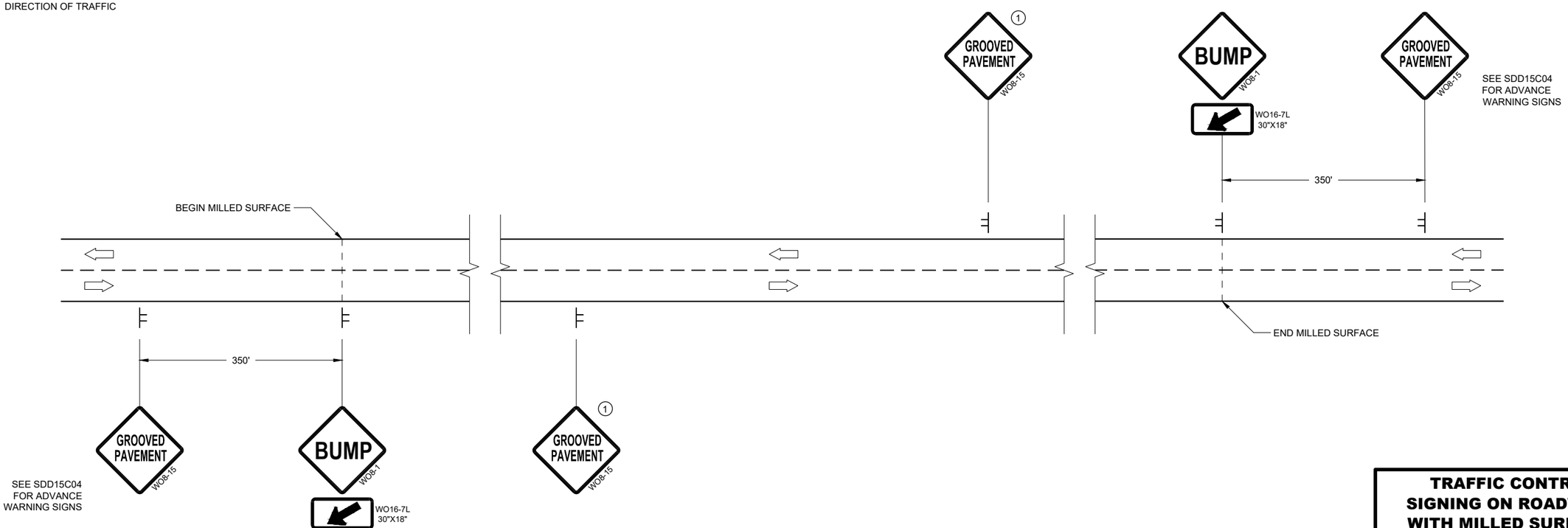

DETAIL FOR SIGNING ON MILLED SURFACES

TRAFFIC CONTROL, SIGNING ON ROADWAYS WITH MILLED SURFACES

STATE OF WISCONSIN
DEPARTMENT OF TRANSPORTATION

APPROVED
February 2020
DATE

/S/ Andrew Heidtke
WORK ZONE ENGINEE

FHWA

SDD 15D44 - 02

SDD 15D44 - 02

TYPICAL ASSEMBLIES

J1-1

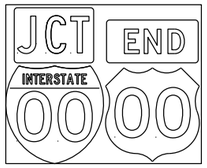

J1-2

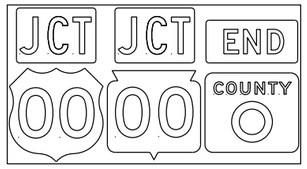

J1-3

JR1-1

J2-1

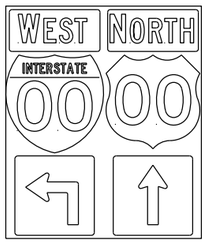

J2-2

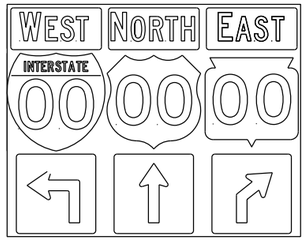

J2-3

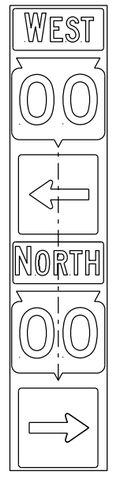

JV
(Typical Vertical J-Assembly
See Note 10 and 11)

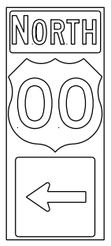

J3-1

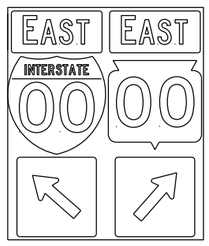

J3-2

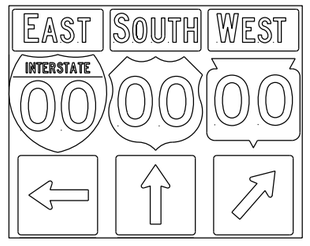

J3-3

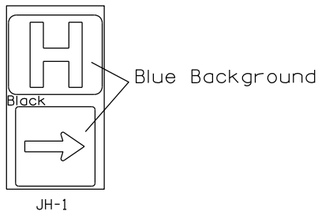

JH-1

J4-1

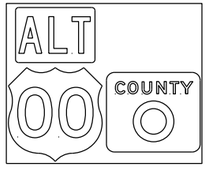

J4-2

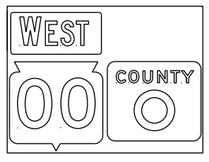

J4-2

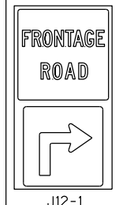

J12-1

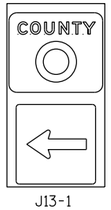

J13-1

J32-1

J33-1

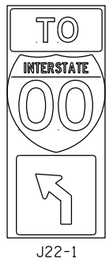

J22-1

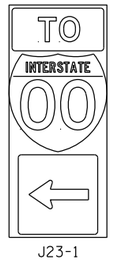

J23-1

JR13-1

JR23-1

JR99-1

NOTES

1. Signs are Type II - Type H Reflective
2. Color:
   Background - Black Non-reflective
   Message - see Note 4
3. Message Series - See Note 4
4. The colors and message spacing on each marker shall be according to the applicable route marker panel specifications.
5. Certain marker heads require the component pieces to be the same color. As an example, all the components used with an M1-1 Interstate marker shall be blue.
6. Single panel j-assemblies shall only be used with route marker shields that are same size. If the route marker shields are different size use multiple piece component.
7. Route assemblies that have 24 inch route shields and have dimensions greater than 48 inches (both vertical and horizontal) shall have one horizontal splice between the arrows and route shields. Vertical splices shall not be used on route assemblies with a horizontal dimension of 144 inches or less. The contractor shall not use more than one vertical joint per sign and the joint shall be between route shields.
8. Route assemblies that have 36 inch shields and have dimensions greater than 48 inchs (both vertical and horizontal) shall have two horizontal splices. One horizontal splice shall be between the cardinal direction and route shields and the other horizontal splice shall be between the arrows and route shields. Vertical splices shall not be used on route assemblies with a horizontal dimension of 144 or less. The contractor shall not use more than one vertical joint per sign and the joint shall be between route shields.
9. All Vertical J Assemblies are given a Sign Code of JV
10. For JV Assemblies that have a mixture of Interstate and Non-Interstate shields, arrows and cardinals shall be white on blue.
11. For JV Assemblies that have a mixture of Non-Interstate and Auto-Tour shields, arrows and cardinals shall be black on white.

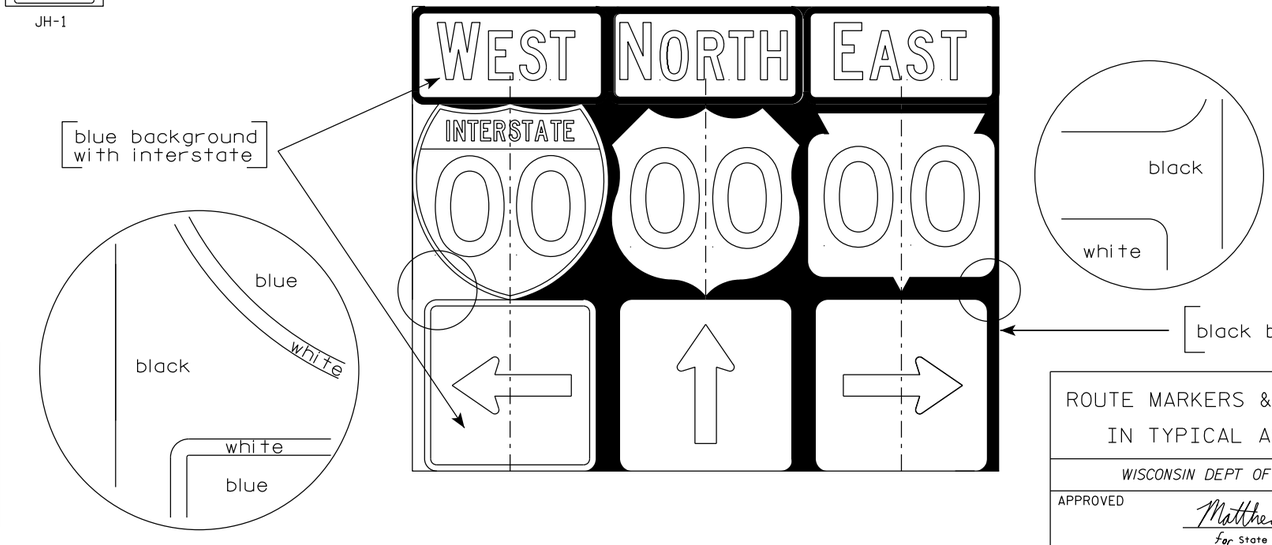

ROUTE MARKERS & COMPONENTS IN TYPICAL ASSEMBLIES

WISCONSIN DEPT OF TRANSPORTATION

APPROVED Matthew R Rauch
for State Traffic Engineer

DATE 6/7/23 PLATE NO. A2-1S.10

PROJECT NO:

SHEET NO: 207 E

URBAN AREA

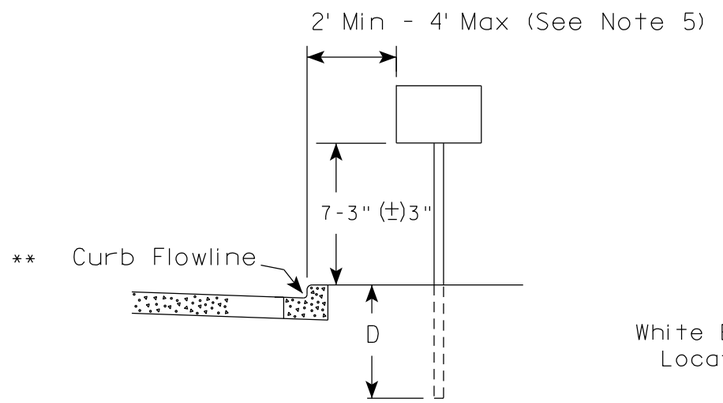

RURAL AREA (See Note 2)

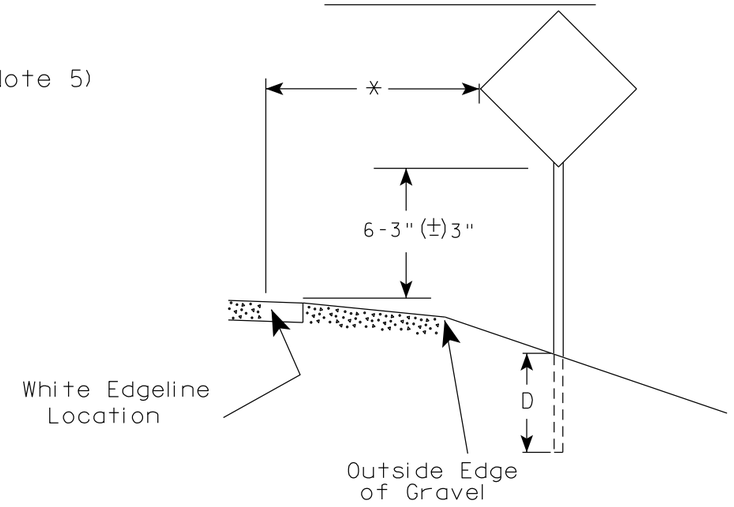

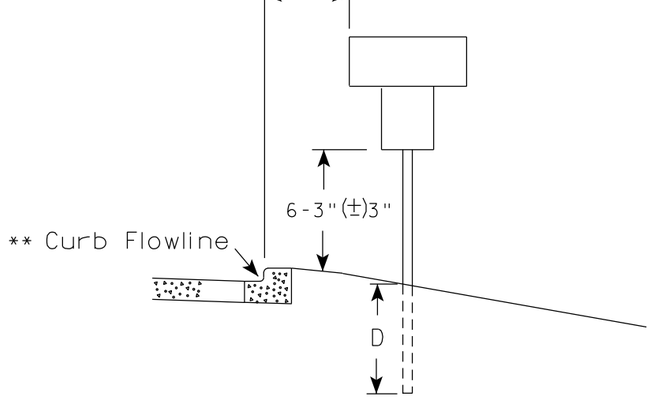

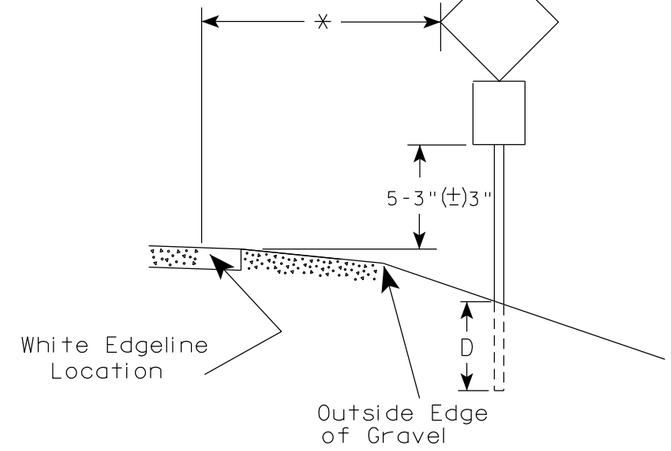

** The existence of curb and gutter does not in itself mandate the vertical clearance illustrated. That height is typically measured where there is sidewalk adjacent to the roadway or parking is permitted. In the absence of sidewalk vertical clearance is measured from the top of the curb. Offset of signs is measured from the flow line.

* 6 feet from edge of a paved shoulder or 12 feet from the edge of pavement (edge line location) or 2 feet from outside edge of gravel, whichever is greater unless directed by project engineer.

GENERAL NOTES

1. Signs wider than 4 feet or 20 sq.ft or larger, shall be mounted on multiple posts. Refer to plate A4-4.
2. If signs are mounted on or behind barrier wall, see A4-10 sign plate.
   The Double Arrow sign (W12-1D) shall be mounted at a height of 2'-3" (±) 3". The Chevron sign (W1-8), Roundabout Chevron panel (R6-4B), Enhanced Reference Markers, Clearance Markers (W5-52), Mile Markers (D10 series), In Road Object Markers (W5-54) & End of Road Markers (W5-56) shall be mounted at a height of 4'-3" (±) 3".
3. For expressways and freeways, mounting height is 7'- 3" (±) 3" or 6'-3" (±) 3" depending upon existence of a sub-sign.
4. Minimum mounting height for signs mounted on traffic signal poles is 5'- 3" (±) 3".
5. Offset distance shall be consistent with existing signs or consistent throughout length of project.
6. Folding signs shall be mounted at a height of 5'-3" (±) 3" or as directd by the Engineer.

POST EMBEDMENT DEPTH

Area of Sign Installation (Sq. Ft.)	D (Min)
20 or Less	4'
Greater than 20	5'

TYPICAL INSTALLATION OF PERMANENT TYPE II SIGNS ON SINGLE POSTS

WISCONSIN DEPT OF TRANSPORTATION

APPROVED Matthew R Rauch
for State Traffic Engineer

DATE 12/6/23 PLATE NO. A4-3.23

PROJECT NO:	HWY:	COUNTY:		SHEET NO: 208	E

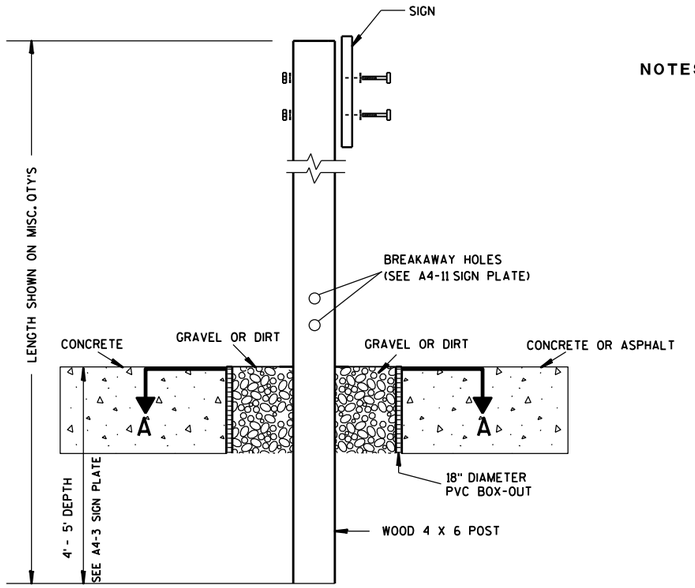

ELEVATION VIEW

DETAIL OF WOOD 4 X 6 SIGN POST IN BOX-OUT

NOTES:
1. ALL MATERIAL TO BE APPROVED BY ENGINEER PRIOR TO INSTALLATION
2. SEE SIGN PLATE A4-8 FOR SIGN HARDWARE REQUIREMENTS
3. 18 INCH X 18 INCH SQUARE BOX-OUTS MAY BE USED FOR INSTALLATIONS IN EXISTING CONCRETE OR ASPHALT LOCATIONS.

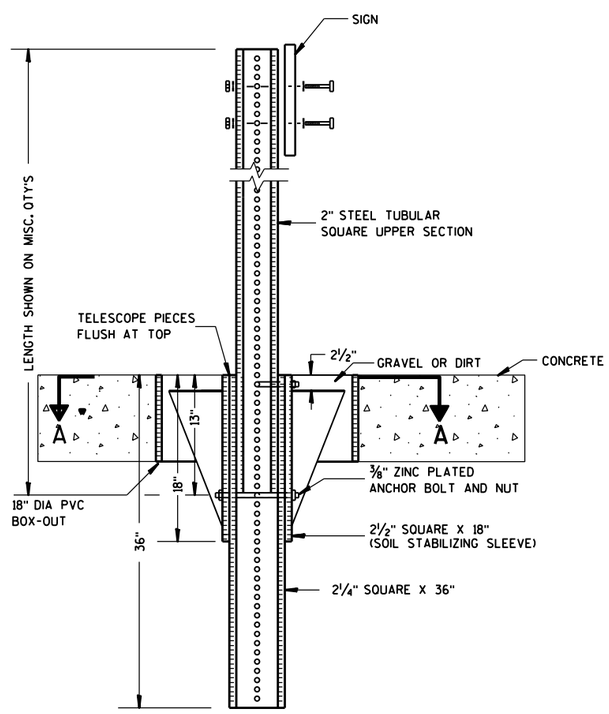

ELEVATION VIEW

DETAIL OF STEEL 2 X 2 SIGN POST IN BOX-OUT

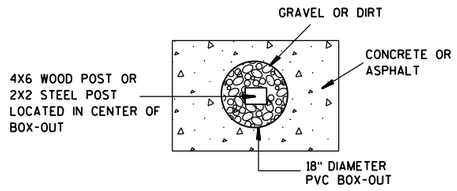

PLAN VIEW

FOR NEW CONCRETE/ASPHALT INSTALLATIONS

SIGN POST BOX-OUTS A4-3B

WISCONSIN DEPT OF TRANSPORTATION

APPROVED Matthew R Rauch
for State Traffic Engineer

DATE 1/27/14 PLATE NO. A4-3B.1

PROJECT NO:	HWY:	COUNTY:		SHEET NO:	E

URBAN AREA

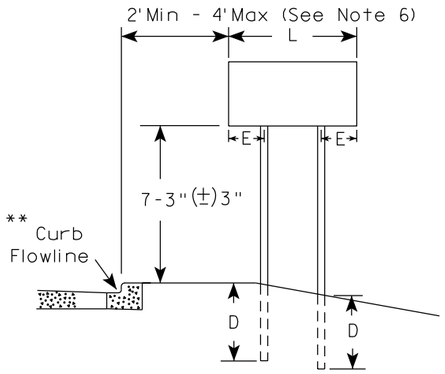

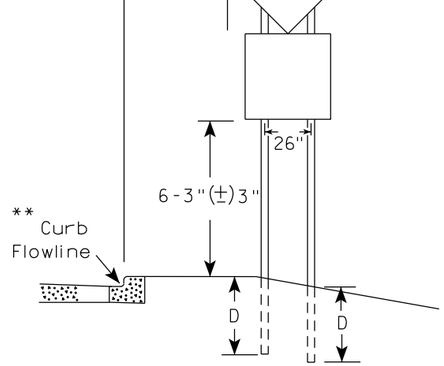

48" DIAMOND WARNING SIGN

RURAL AREA (See Note 3)

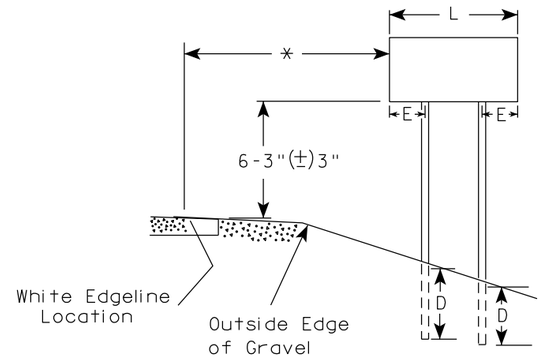

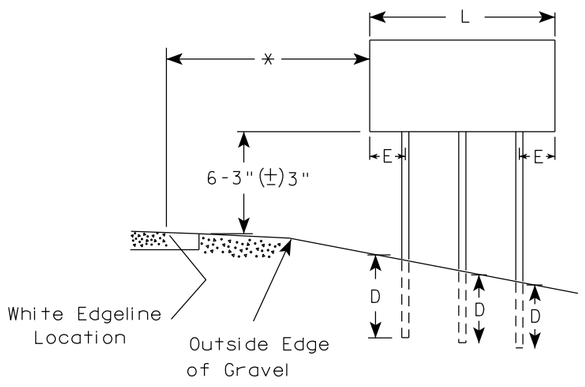

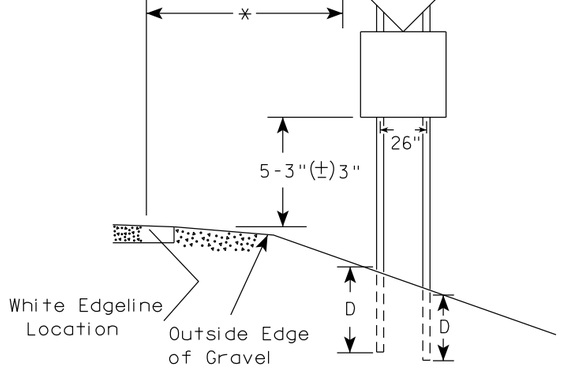

48" DIAMOND WARNING SIGN

SIGN SHAPE OTHER THAN DIAMOND (TWO POSTS REQUIRED)		
	L	E
***	Greater than 48" Less than 60"	12"
	60" to 108"	L/5

SIGN SHAPE OTHER THAN DIAMOND (THREE POSTS REQUIRED)	
L	E
Greater than 108" to 144"	12"

GENERAL NOTES

1. For 3 or 4 post installations, individual post spacing shall be greater than 3'-6".
2. See tables below for required number of posts.
3. For expressways and freeways, mounting height is 7'-3" (±) 3" or 6'-3" (±) 3" depending upon existence of sub-sign.
4. The (±) tolerance for mounting height is 3 inches.
5. J-Assemblies are considered to be one sign for mounting height.
6. Offset distance shall be consistent with existing signs or consistent throughout length of project.
7. Folding signs shall be mounted at a height of 5'-3" (±) 3" or as directed by the engineer.
8. The Double Arrow sign (W12-1) shall be mounted at a height of 2'-3" (±) 3". The Chevron sign (W1-8), Roundabout Chevron panel (R6-4B), Clearance Markers (W5-52), Mile Markers (D10 series), In Road Object Markers (W5-54) & End of Road Markers (W5-56) shall be mounted at a height of 4"-3" (±) 3".

* 6 feet from edge of a paved shoulder or 12 feet from the edge of pavement (edge line location) or 2 feet from outside edge of gravel, whichever is greater unless directed by project engineer.

** The existence of curb and gutter does not in itself mandate the vertical clearance illustrated. That height is typically measured where there is sidewalk adjacent to the roadway or parking is permitted. In the absence of sidewalk vertical clearance is measured from the top of the curb. Offset of signs is measured from the flow line.

*** See A4-3 sign plate for signs 4' or less in width and less than 20 S.F. in area.

POST EMBEDMENT DEPTH

Area of Sign Installation (Sq. Ft.)	D (Min)
20 or Less	4'
Greater than 20	5'

TYPICAL INSTALLATION OF TYPE II SIGNS ON MULTIPLE POSTS

WISCONSIN DEPT OF TRANSPORTATION

APPROVED Matthew R Rauch
for State Traffic Engineer

DATE 12/6/23 PLATE NO. A4-4.16

PROJECT NO:	HWY:	COUNTY:		SHEET NO: 210	E

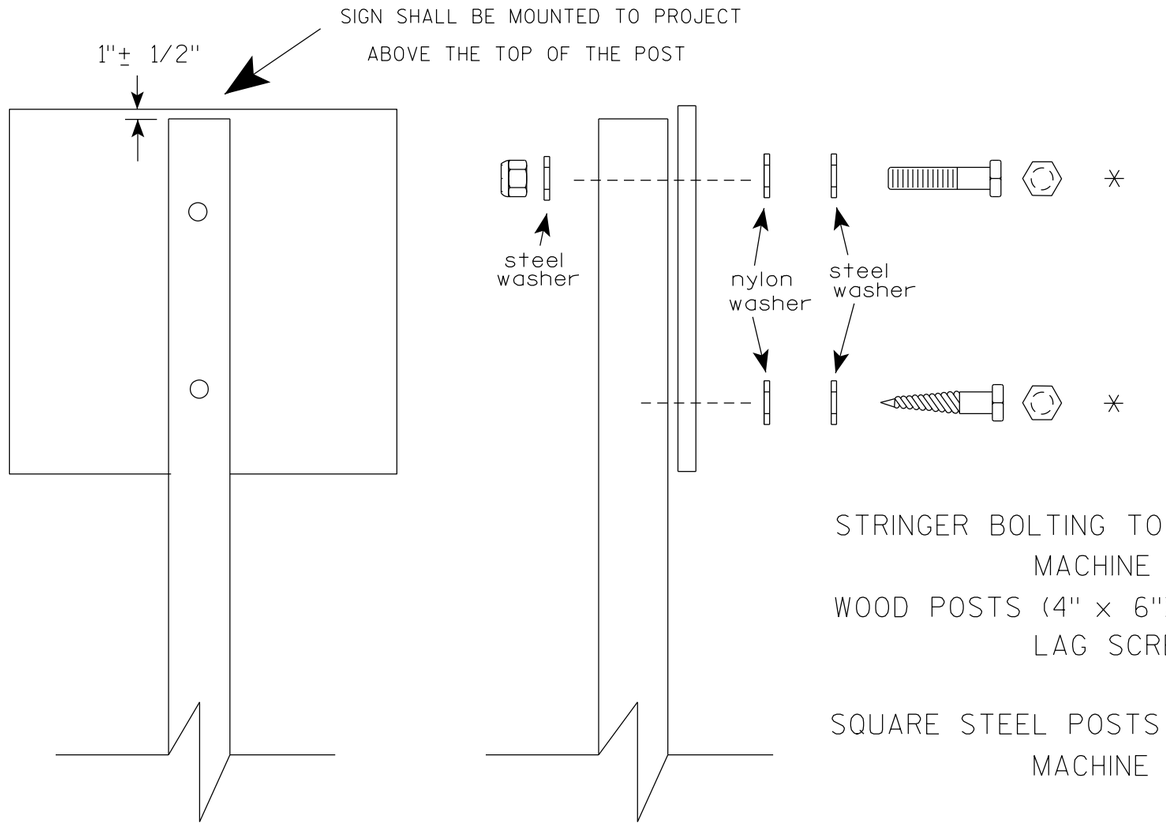

Nuts, bolts and lags used for mounting signs shall have hexagonal heads and shall be either :

a. Hot dip galvanized in accordance with ASTM Designation: A 153, Class D, or SC 3

b. Electro-galvanized in accordance with ASTM Designation : B 633, TYPE III, SC 3.

Threads on bolts and nuts shall be manufactured with sufficient allowance for the cadmium plate or galvanized coating to permit the nuts to run freely on the bolts.

STRINGER BOLTING TO ALUMINUM SIGNS (SEE SIGN PLATE A4-18)

MACHINE BOLTS - 5/16" X 1-3/4" Length w/ lock nuts

WOOD POSTS (4" x 6")

LAG SCREWS - 3/8" X 3" (NO STRINGERS ON BACK OF SIGN)
3/8" X 4" (STRINGERS ON BACK OF SIGN)

SQUARE STEEL POSTS (2" x 2")

MACHINE BOLTS - 3/8" X 3-1/4" Length w/ nuts (NO STRINGER ON BACK OF SIGN)
3/8" X 5" Length w/ nuts (STRINGERS ON BACK OF SIGN)

RIVETS - 9/32" (6605-9-6) BULB-TITE, TRI-FOLD, ALUMINUM BODY/MANDREL
O.D. FLANGE .720-.765 INCH, GRIP RANGE .042-.375 INCH

WASHERS (ALL POSTS) -

1-1/4" O.D. X 3/8" I.D. X 1/16" STEEL
1-1/4" O.D. X 3/8" I.D. X .080 NYLON

* Two different fastening systems are shown for illustration purposes. On any individual sign, either one or the other system shall be used. Actual number of fasteners per sign varies with the sign area, but normally there are two. For a single post installation, all signs greater than 9 sq. ft. require the use of 3 fasteners.

ATTACHMENT OF SIGNS TO POSTS

WISCONSIN DEPT OF TRANSPORTATION

APPROVED Matthew R Rauch
for State Traffic Engineer

DATE 4/1/2020 PLATE NO. A4-8.9

PROJECT NO:

SHEET NO: 211 E

TELESCOPIC TUBING ANCHORS
TWO PIECE SYSTEM

2 1/4 " SQUARE
12 GAUGE
PERFORATED
GALVANIZED FINISH

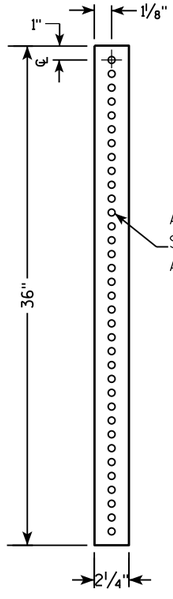

2 1/2 " SQUARE
12 GAUGE
OMNI-DIRECTIONAL
PERFORATED
SOIL STABILIZING SLEEVE
GALVANIZED FINISH

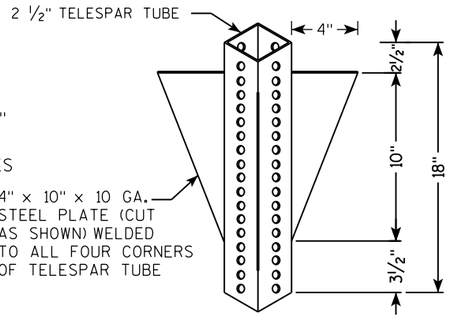

DETAIL OF TUBULAR STEEL SIGN POST
(IN POURED CONCRETE OR ASPHALT)

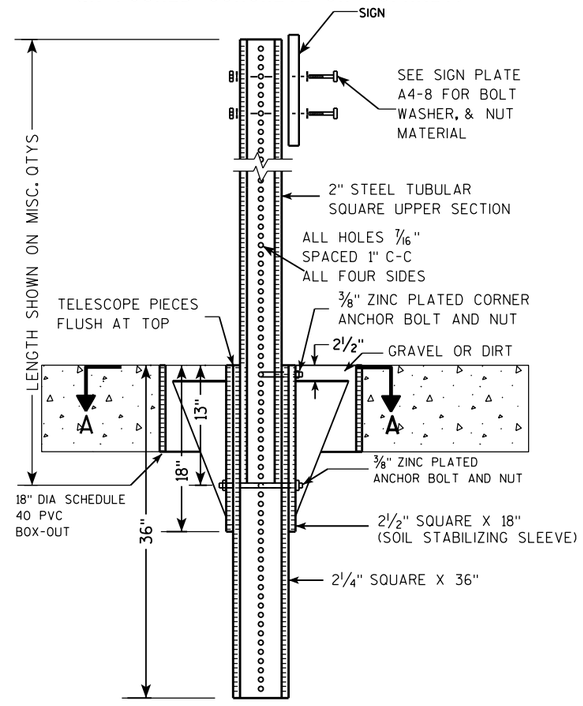

DETAIL OF TUBULAR STEEL SIGN POST
(IN LOCATIONS OTHER THAN POURED CONCRETE OR ASPHALT)

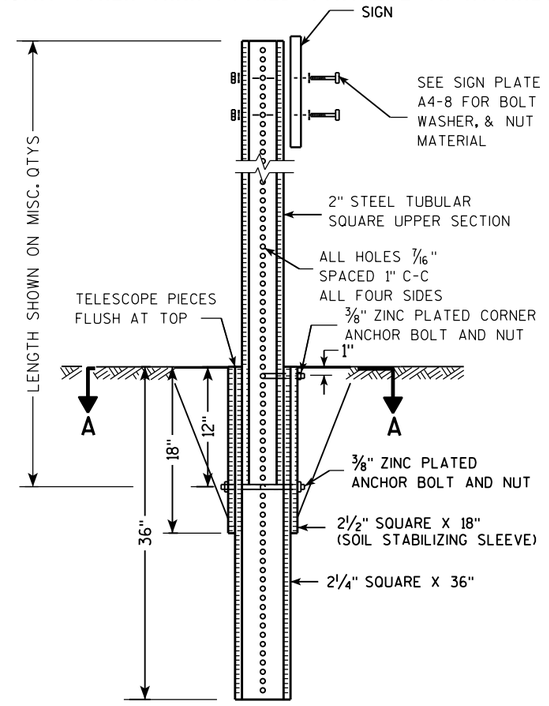

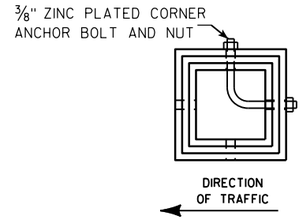

SECTION A-A

Area of Sign Installation (Sq. Ft.)	Number of Required Posts
9 or less	1
Greater than 9 less than or equal to 18	2
Greater than 18 less than or equal to 27	3

Signs wider than 3 feet or larger than 9 sq. ft shall be mounted on multiple posts (see above table).

TUBULAR STEEL
SIGN POST
A4-9

WISCONSIN DEPT OF TRANSPORTATION

APPROVED Matthew R Rauch
for State Traffic Engineer

DATE 2/05/15 PLATE 212 A4-9.9

PROJECT NO:	HWY:	COUNTY:		SHEET NO:	E

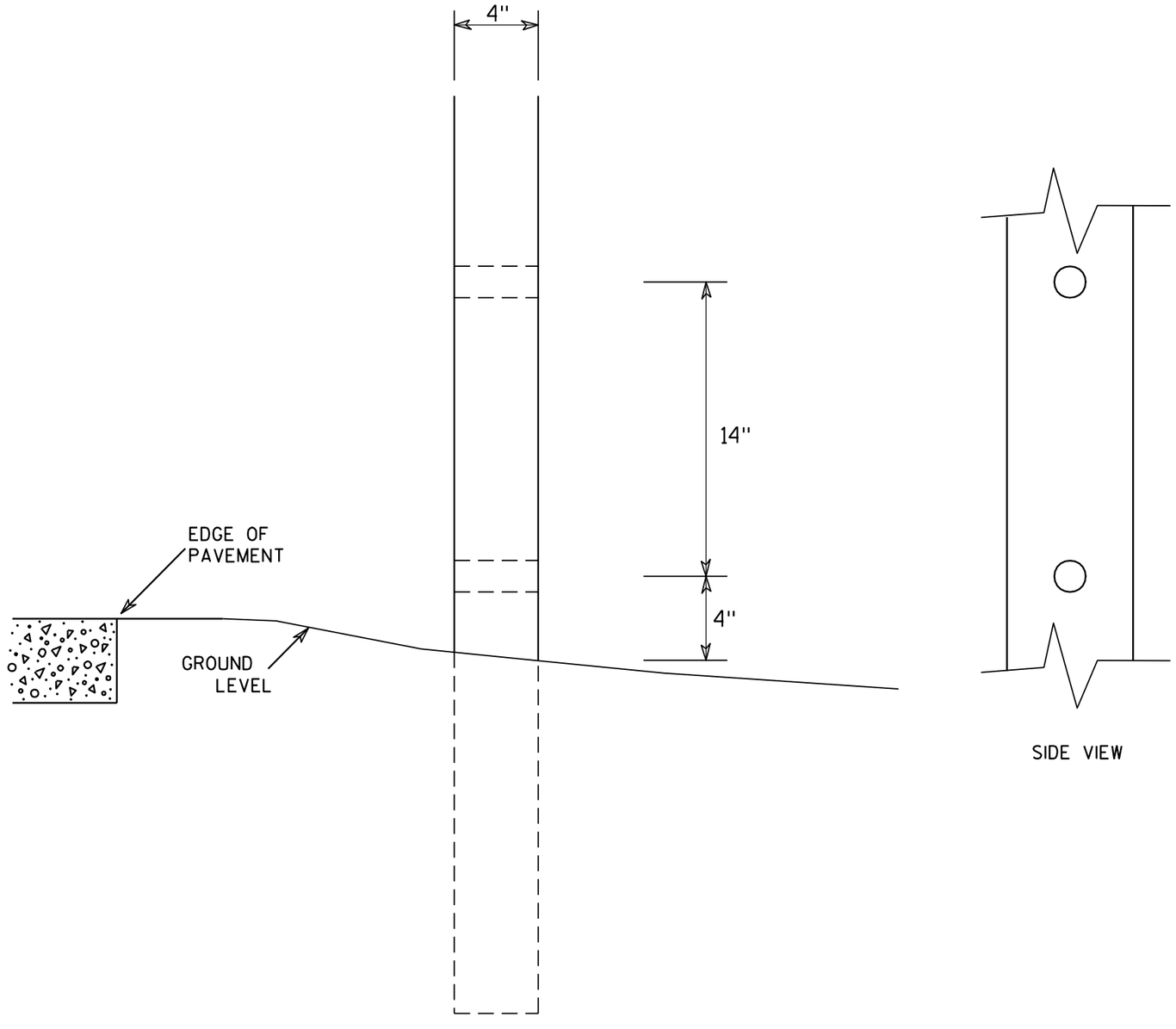

SIDE VIEW

GENERAL NOTES

1. All 4 x 6 Wood Posts shall be modified by having two 1½" diameter holes drilled perpendicular to the roadway centerline.

7

7

4 X 6 WOOD POST MODIFICATIONS

WISCONSIN DEPT OF TRANSPORTATION

APPROVED Chester J Spang for State Traffic Engineer

DATE 3/27/97 PLATE NO. A4-11.2

PROJECT NO:	HWY:	COUNTY:		SHEET NO: 213	E

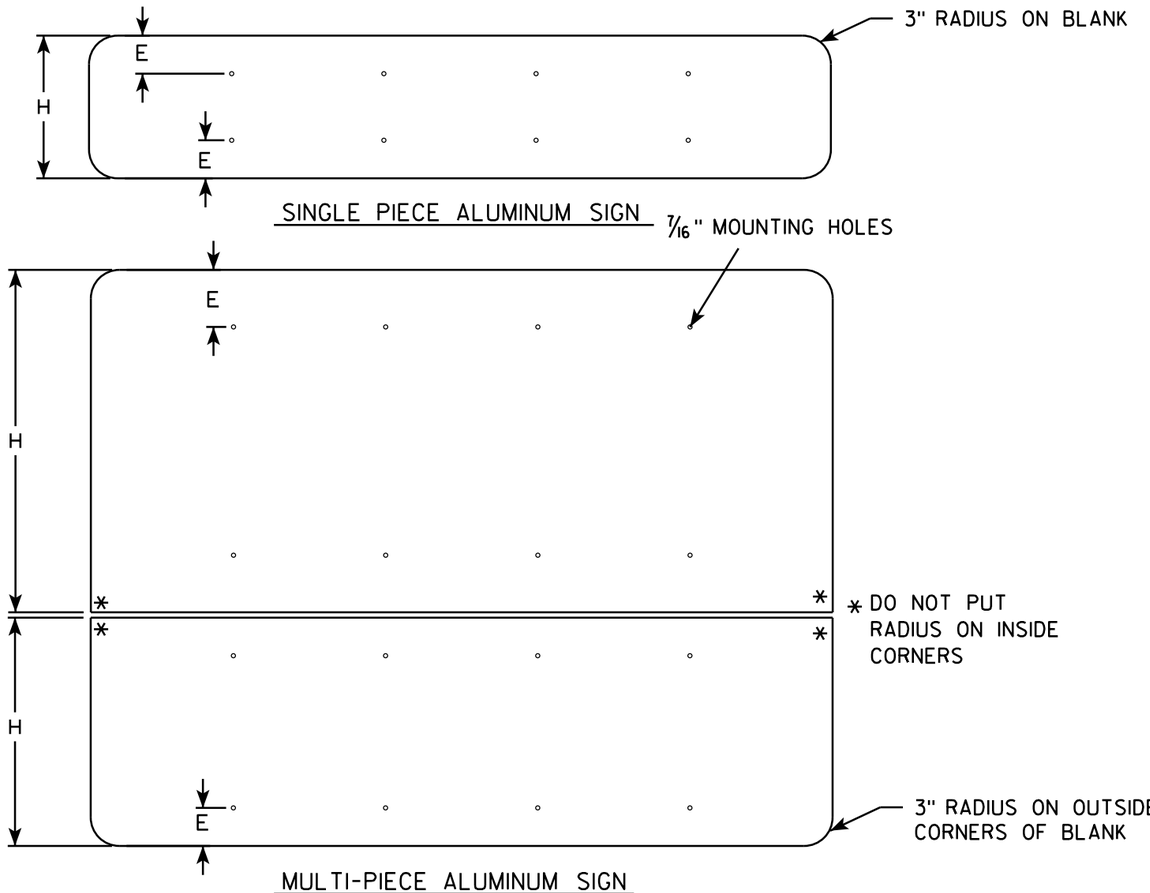

GENERAL NOTES

- ALL SIGNS OVER 60" IN WIDTH SHALL HAVE A 3" RADIUS ON THE OUTSIDE CORNERS OF THE ALUMINUM BLANK.
- MOUNTING HOLES SHALL BE 7/16" DIAMETER.
- SEE CHART FOR HOLE SPACING REQUIREMENTS
- FOR SIGN PANELS WITH DIMENSION (H) 36" AND OVER, DIMENSION E SHALL BE 6"
- FOR SIGN PANELS WITH DIMENSION (H) UNDER 36", DIMENSION E SHALL BE 4"
- SIGN STRINGER MATERIAL SHALL CONSIST OF STEEL CHANNEL POST SECTIONS, WEIGHING 1.12 LBS/FT IN ACCORDANCE WITH SECTION 633.2.1 OF THE STANDARD SPECIFICATIONS FOR HIGHWAY AND STRUCTURE CONSTRUCTION.
- SEE SIGN PLATE A4-8 FOR SIGN STRINGER BOLTING REQUIREMENTS.

SIGN WIDTH	STRINGER WIDTH	POSTS	HOLE SPACING	MOUNTING HOLES
78"	72"	2	16"	15" 31" 47" 63"
84"	72"	2	17"	16½" 33½" 50½" 67½"
90"	72"	2	18"	18" 36" 54" 72"
96"	90"	2	19"	19½" 38½" 57½" 76½"
102"	90"	2	20"	21" 41" 61" 81"
108"	90"	2	21"	22½" 43½" 64½" 85½"
114"	108"	3	15"	12" 27" 42" 57" 72" 87" 102"
120"	108"	3	16"	12" 28" 44" 60" 76" 92" 108"
126"	108"	3	17"	12" 29" 46" 63" 80" 97" 114"
132"	126"	3	18"	12" 30" 48" 66" 84" 102" 120"
138"	126"	3	19"	12" 31" 50" 69" 88" 107" 126"
144"	126"	3	20"	12" 32" 52" 72" 92" 112" 132"

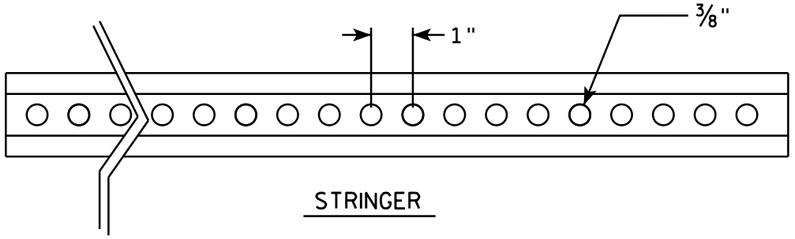

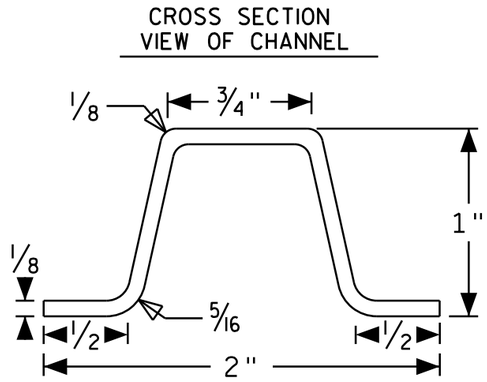

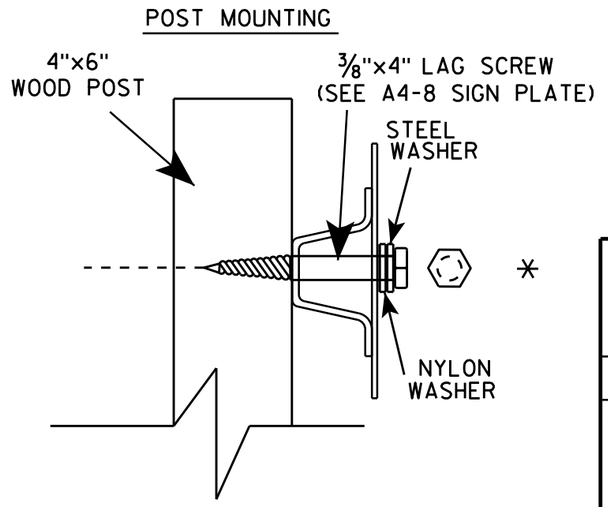

SIGN STRINGER MOUNTING REQUIREMENTS

WISCONSIN DEPT OF TRANSPORTATION

APPROVED Matthew R Rauch

for State Traffic Engineer

DATE 4/26/16 PLATE NO A4-18.1

PROJECT NO:	HWY:	COUNTY:		SHEET NO:	E

FILE NAME : C:\CAEfiles\Projects\tr_stdplate\A418.dgn PLOT DATE : 27-APR-2016 13:56 PLOT BY : mscj9h PLOT NAME : PLOT SCALE : 41.805205:1.000000 WISDOT/CADDS SHEET 42

BANDING

SINGLE SIGN

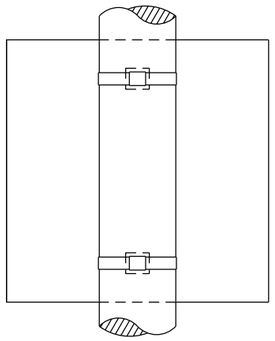

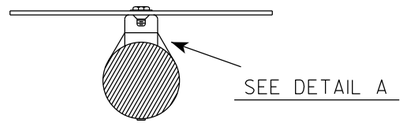

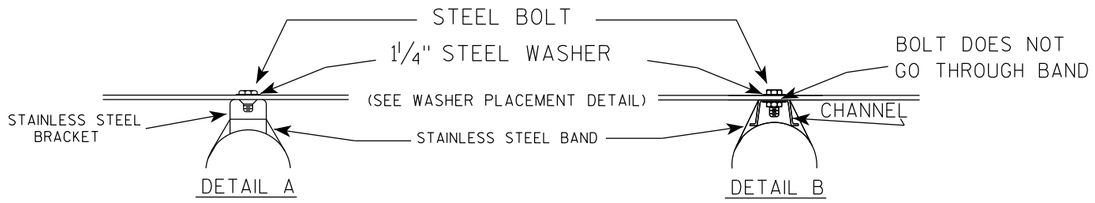

GENERAL NOTES

1. Any sign over 3 feet in width shall use the V-Block banding method. See A5-10 standard plate.
2. Signs 3 feet or greater in height shall have three bracket bands installed. Signs less than 3 feet in height shall have two bracket bands installed.
3. Banding and assembly bracket shall be stainless steel. All bands shall be ¾" in width and 0.025" thickness.
4. ALL SIGN MOUNTING BOLTS AND WASHERS SHALL BE EITHER:
   a. Hot dip or mechanically galvanized in accordance with ASTM Designation: A 153, Class D
   b. Electro-galvanized in accordance with ASTM designation: B 633, Type III, SC 3

"J" ASSEMBLY

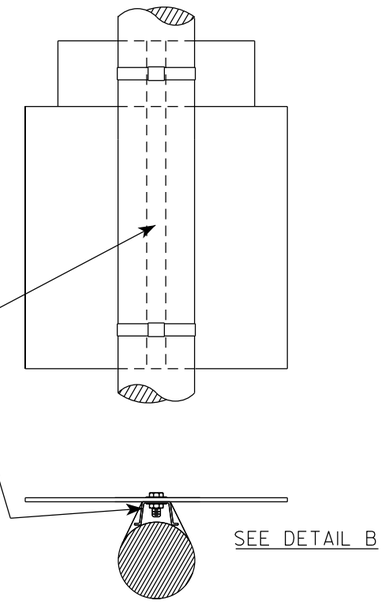

WASHER PLACEMENT

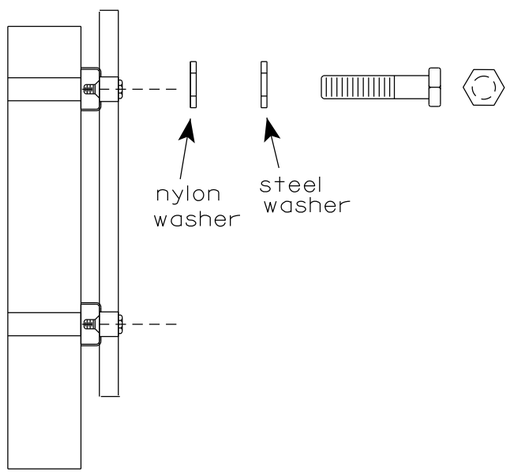

WASHERS (ALL POSTS) -
1-1/4" O.D. X ⅜" I.D. X 1/16" STEEL
1-1/4" O.D. X ⅜" I.D. X .080 NYLON
FOR ALL TYPE H SIGNS

STANDARD SIGN
SIGN BANDING DETAILS

WISCONSIN DEPT OF TRANSPORTATION

APPROVED Matthew R Rauch
for State Traffic Engineer

DATE 6/10/19 PLATE NO. A5-9.4

PROJECT NO:	HWY:	COUNTY:		SHEET NO: 215	E

FILE NAME : C:\CAEfiles\Projects\tr_stdplate\A59.dgn PLOT DATE : 10-JUN 2019 4:10 PLOT BY : mscj9h PLOT NAME : PLOT SCALE : $$.....plotscale.....$$ WISDOT/CADDS SHEET 42

7

7

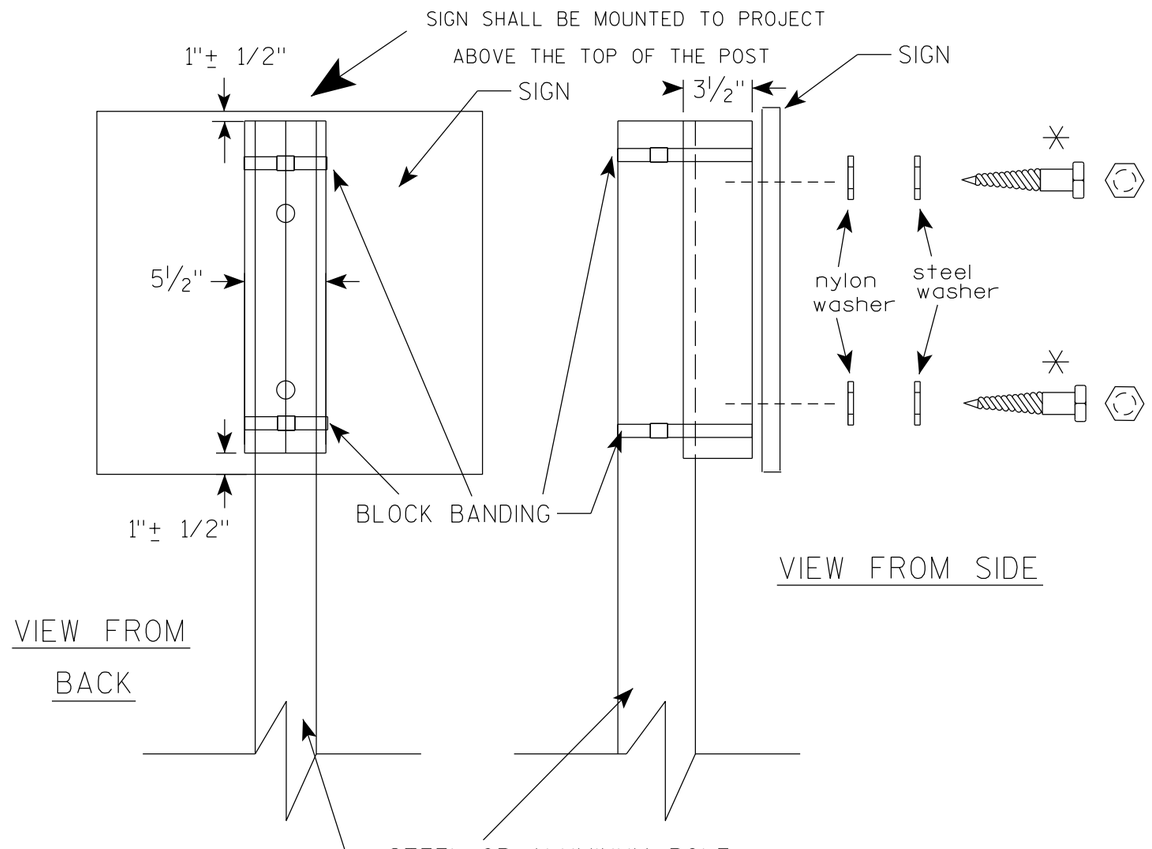

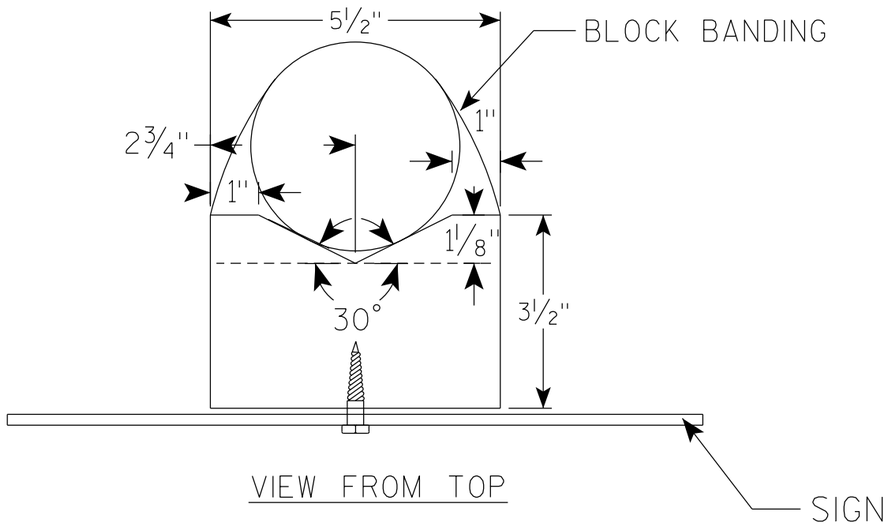

GENERAL NOTES

1. WOOD 4"X6" POST MATERIAL SHALL CONFORM TO 507.2.2 OF THE WisDOT STANDARD SPECIFICATIONS
2. BLOCK BANDING AND CLIPS SHALL BE STAINLESS STEEL, ¾" WIDTH AND 0.025" THICKNESS
3. SIGNS 3' OR GREATER IN HEIGHT SHALL UTILIZE 3 BLOCK BANDS. SIGNS UNDER 3' IN HEIGHT SHALL UTILIZE 2 BLOCK BANDS
4. ACTUAL NUMBER OF FASTENERS PER SIGN VARIES WITH THE SIGN AREA, BUT NORNALLY THERE ARE TWO. FOR SIGNS GREATER THAN 9 S.F. 3 FASTENERS SHALL BE USED.
5. ALL SIGN MOUNTING BOLTS AND WASHERS SHALL BE EITHER:
   a. Hot dip or mechanically galvanized in accordance with ASTM Designation: A 153, Class D
   b. Electro-galvanized in accordance with ASTM Designation : B 633, TYPE III, SC 3
6. ALL BOLTS SHALL HAVE HEXAGONAL HEADS.
7. STEEL WASHERS SHALL BE 1¼" O.D. X ⅜" I.D. X 1/16"
8. NYLON WASHERS SHALL BE 1¼" O.D. X ⅜" I.D. X .080 FOR TYPE H OR TYPE F FACE SIGN

✳ LAG BOLTS SHALL BE ⅜" X 2½"

BLOCK BANDING DETAIL (V-BLOCK OPTION)

WISCONSIN DEPT OF TRANSPORTATION

APPROVED Matthew R Rauch
for State Traffic Engineer

DATE 4/19/2022 PLATE NO. A5-10.3

PROJECT NO:

SHEET NO: 216 E

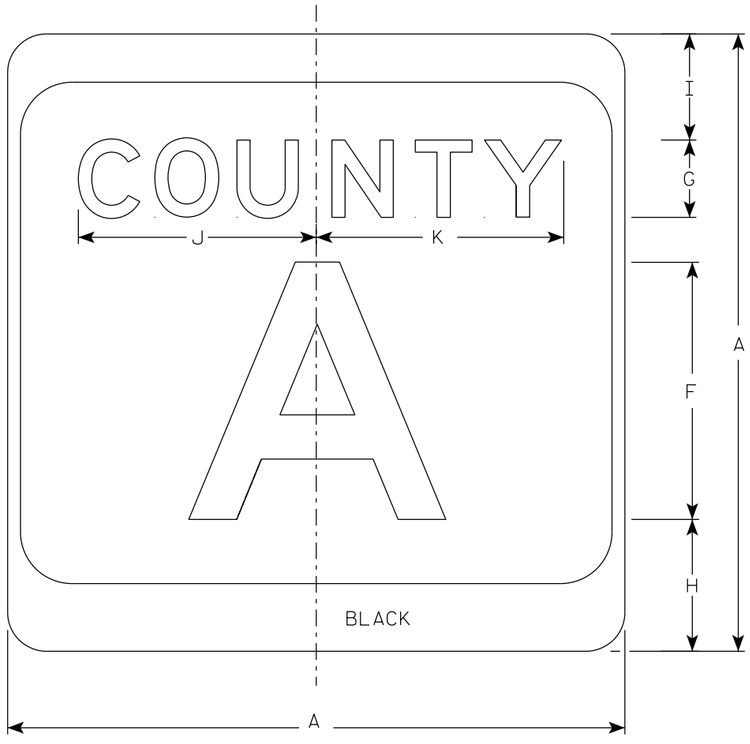

M1-5A

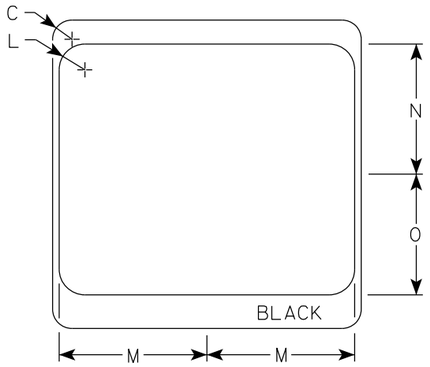

NOTES

1. Sign is Type II - Type H Reflective
2. Color:
   Background - White & Black
   Message - Black
3. Message Series - see Note 4
4. Message Series E for 1 letter.
   Message Series D for 2 letters unless message is too big then Series C.
   Message Series C for 3 letters unless message is too big then Series B.
5. Substitute appropriate letters & optically center to achieve proper balance.

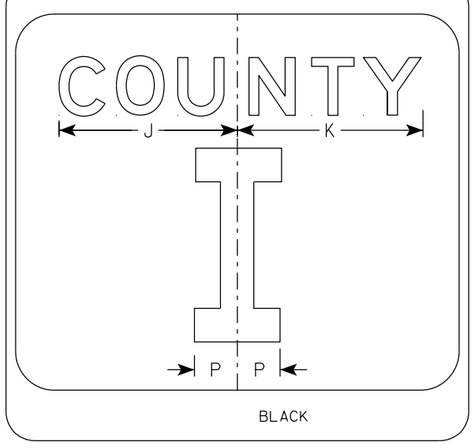

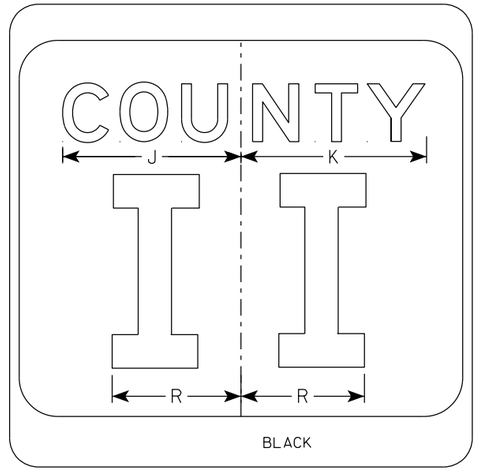

SIZE	A	B	C	D	E	F	G	H	I	J	K	L	M	N	O	P	Q	R	S	T	U	V	W	X	Y	Z	Area sq. ft.
1																											
2	24		1 1/2			10	3	5 1/8	4 1/8	9 1/4	9 5/8	2	11 1/2	10 1/8	9 3/8	2 1/4		6 5/8									4.0
2M	24		1 1/2			10	3	5 1/8	4 1/8	9 1/4	9 5/8	2	11 1/2	10 1/8	9 3/8	2 1/4		6 5/8									4.0
3	36		2 1/4			16	4	7 5/8	5 5/8	12 1/4	12 7/8	3	17 1/8	15 1/4	14	3 3/8		10									9.0
4	36		2 1/4			16	4	7 5/8	5 5/8	12 1/4	12 7/8	3	17 1/8	15 1/4	14	3 3/8		10									9.0
5	36		2 1/4			16	4	7 5/8	5 5/8	12 1/4	12 7/8	3	17 1/8	15 1/4	14	3 3/8		10									9.0

CTH MARKER
M1-5A FOR ASSEMBLIES

WISCONSIN DEPT OF TRANSPORTATION

APPROVED Matthew R Rauch
for State Traffic Engineer

DATE 11/8/2022 PLATE NO. M1-5A.9

PROJECT NO: | HWY: | COUNTY: | SHEET NO: E

FILE NAME : C:\CAEfiles\Projects\tr_stdplate\M15A.dgn PLOT DATE : 8-NOV 2022 8:26 PLOT BY : dotc4c PLOT NAME : PLOT SCALE : $$.....plotscale.....$$ WISDOT/CADDS SHEET 42

7

7

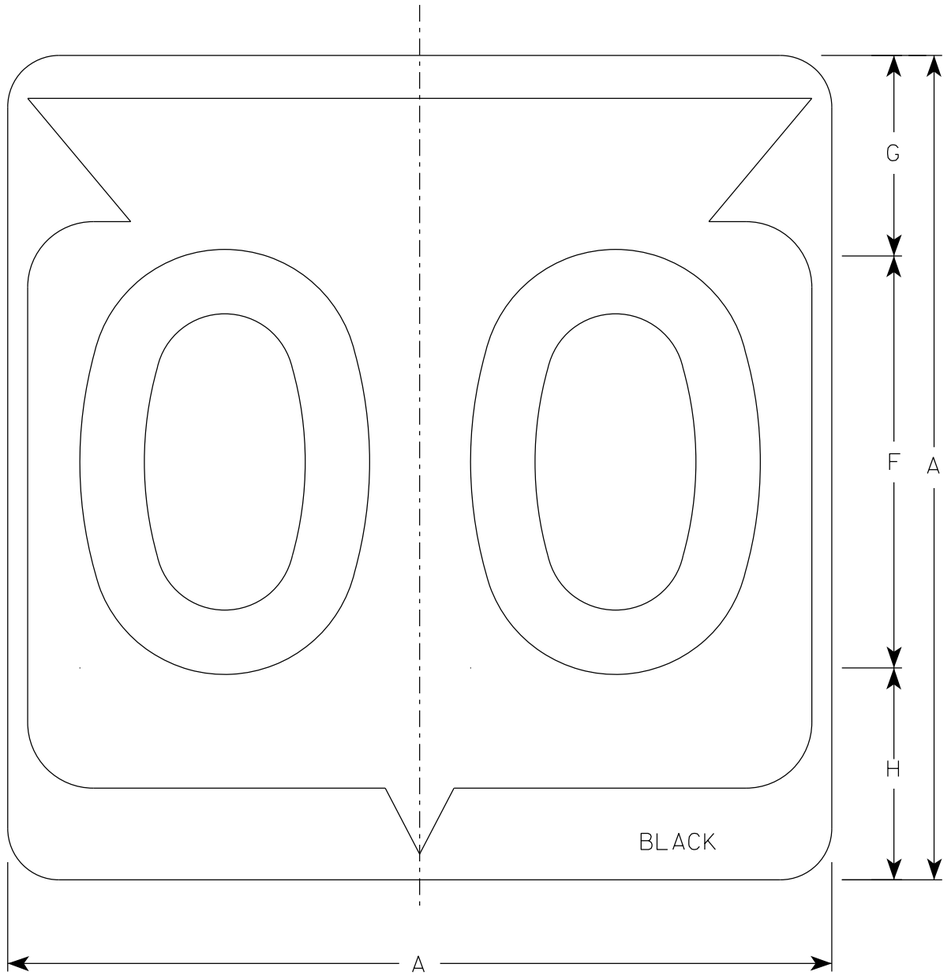

M1-6

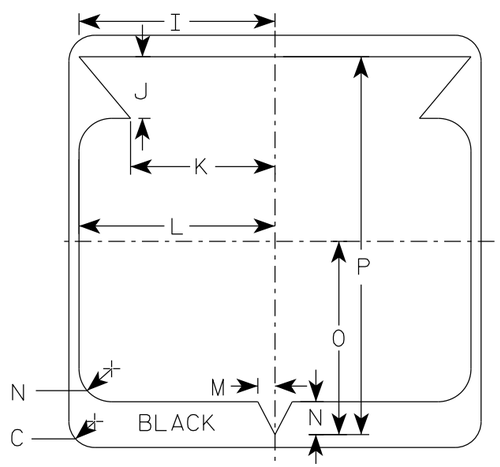

NOTES

1. Sign is Type II - Type H Reflective
2. Color:
   Background - White
   Message - Black
3. Message Series - D except 3 number signs Series C

SIZE	A	B	C	D	E	F	G	H	I	J	K	L	M	N	O	P	Q	R	S	T	U	V	W	X	Y	Z	Area sq. ft.
1																											
2	24		1 1/2			12	5 1/2	6 1/2	10 1/4	2 1/2	8 7/8	11 1/2	1	1 7/8	11 1/4	21 7/8											4.0
2M	24		1 1/2			12	5 1/2	6 1/2	10 1/4	2 1/2	8 7/8	11 1/2	1	1 7/8	11 1/4	21 7/8											4.0
3	36		2 1/4			18	8 3/4	9 1/4	15 3/8	5 3/8	12 5/8	17 1/8	1 1/2	2 7/8	16 7/8	33											9.0
4	36		2 1/4			18	8 3/4	9 1/4	15 3/8	5 3/8	12 5/8	17 1/8	1 1/2	2 7/8	16 7/8	33											9.0
5	36		2 1/4			18	8 3/4	9 1/4	15 3/8	5 3/8	12 5/8	17 1/8	1 1/2	2 7/8	16 7/8	33											9.0

STATE ROUTE MARKER
M1-6 FOR ASSEMBLIES

WISCONSIN DEPT OF TRANSPORTATION

APPROVED Matthew R Rauch
for State Traffic Engineer

DATE 11/8/2022 PLATE NO. M1-6.11

PROJECT NO:	HWY:	COUNTY:		SHEET NO: 218	E

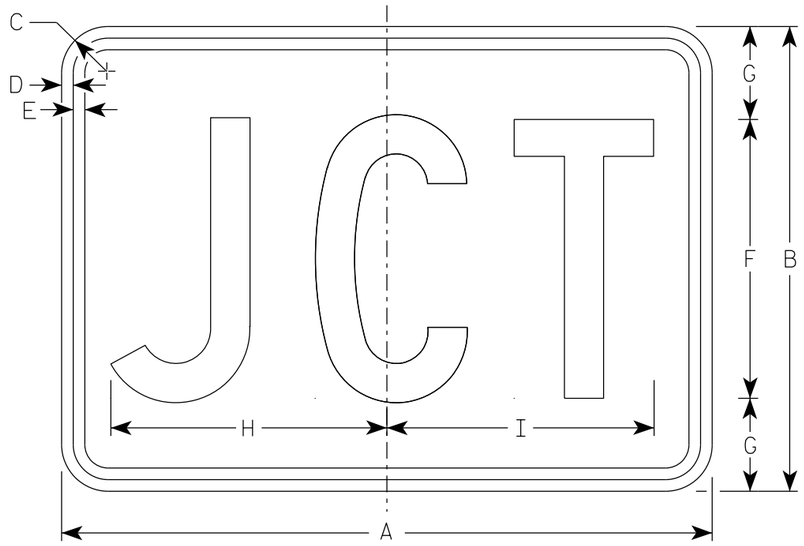

M2-1
MM2-1
MP2-1

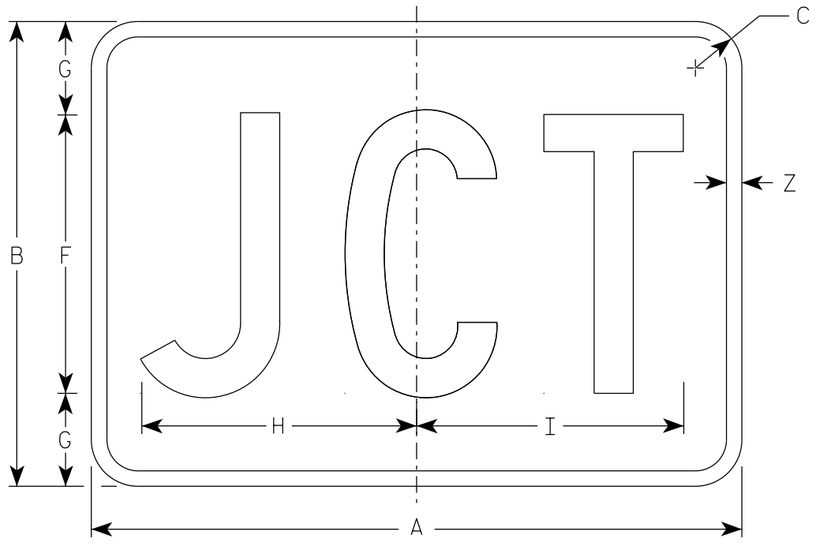

MB2-1
MK2-1
MN2-1
MR2-1

NOTES

1. Sign is Type II - Type H Reflective
2. Color:
   Background - See note 5
   Message - See note 5
3. Message Series - C
4. M2-1 Background - White
   Message - Black
   MB2-1 Background - Blue
   Message - White
   MK2-1 Background - Green
   Message - White
   MM2-1 Background - White
   Message - Green
   MN2-1 Background - Brown
   Message - White
   MP2-1 Background - White
   Message - Blue
   MR2-1 Background - Brown
   Message - Yellow

SIZE	A	B	C	D	E	F	G	H	I	J	K	L	M	N	O	P	Q	R	S	T	U	V	W	X	Y	Z	Area sq. ft.
1																											
2S	21	15	1 1/2	3/8	3/8	9	3	8 7/8	8 5/8																	1/2	2.20
2M	21	15	1 1/2	3/8	3/8	9	3	8 7/8	8 5/8																	1/2	2.20
3	30	21	1 1/2	3/8	3/8	13	4	12 7/8	12 3/8																	1/2	4.40
4	30	21	1 1/2	3/8	3/8	13	4	12 7/8	12 3/8																	1/2	4.40
5	30	21	1 1/2	3/8	3/8	13	4	12 7/8	12 3/8																	1/2	4.40

STANDARD SIGN
M2-1

WISCONSIN DEPT OF TRANSPORTATION

APPROVED Matthew R Rauch
for State Traffic Engineer

DATE 2/8/2023 PLATE NO. M2-1.14

PROJECT NO: | HWY: | COUNTY: | SHEET NO: 219 | E

NOTES

1. Sign is Type II - Type F Reflective
2. Color:
   Background - Orange
   Message - Black
3. Message Series - B
4. Corners may be square or rounded when base material is plywood but borders shall be rounded as shown. When base material is metal, the corners and borders shall be rounded.

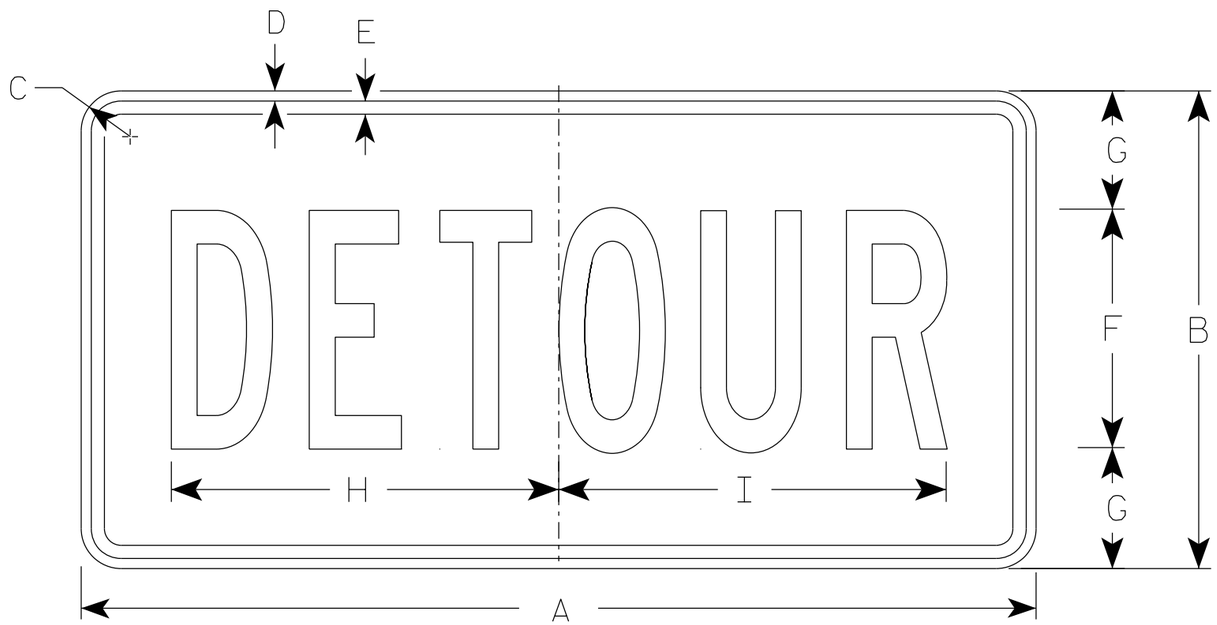

M4-8

SIZE	A	B	C	D	E	F	G	H	I	J	K	L	M	N	O	P	Q	R	S	T	U	V	W	X	Y	Z	Area sq. ft.
1																											
2	24	12	1 1/2	3/8	3/8	6	3	10	10 1/4																		2.0
2M	24	12	1 1/2	3/8	3/8	6	3	10	10 1/4																		2.0
3	36	18	1 1/2	3/8	1/2	9	4 1/2	14 5/8	14 1/2																		4.5
4	36	18	1 1/2	3/8	1/2	9	4 1/2	14 5/8	14 1/2																		4.5
5	36	18	1 1/2	3/8	1/2	9	4 1/2	14 5/8	14 1/2																		4.5

STANDARD SIGN
M4-8

WISCONSIN DEPT OF TRANSPORTATION

APPROVED Matthew R Rauch
for State Traffic Engineer

DATE 2/9/2023 PLATE NO. M4-8.4

PROJECT NO:	HWY:	COUNTY:		SHEET NO: 220	E

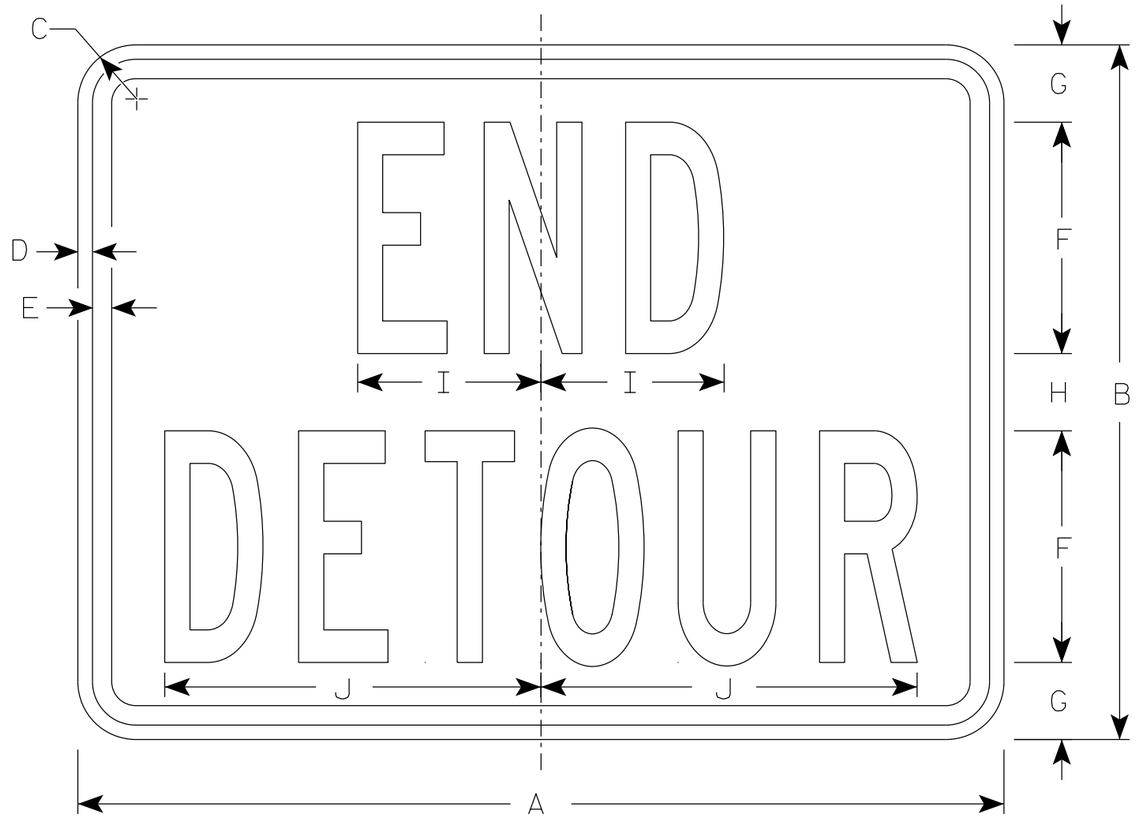

M4-8A

NOTES

1. Sign is Type II - Type F Reflective
2. Color:
   Background - Orange
   Message - Black
3. Message Series - B
4. Corners may be square or rounded when base material is plywood but borders shall be rounded as shown. When base material is metal, the corners and borders shall be rounded.

SIZE	A	B	C	D	E	F	G	H	I	J	K	L	M	N	O	P	Q	R	S	T	U	V	W	X	Y	Z	Area sq. ft.
1																											
2	24	18	1 ½	⅜	½	6	2	2	4 ¾	9 ¾																	3.0
2M	24	18	1 ½	⅜	½	6	2	2	4 ¾	9 ¾																	3.0
3	30	24	1 ½	⅜	½	8	2 ½	3	6 ¾	13																	5.0
4	30	24	1 ½	⅜	½	8	2 ½	3	6 ¾	13																	5.0
5	30	24	1 ½	⅜	½	8	2 ½	3	6 ¾	13																	5.0

STANDARD SIGN
M4-8A

WISCONSIN DEPT OF TRANSPORTATION

APPROVED Matthew R Rauch
for State Traffic Engineer

DATE 2/9/2023 PLATE NO. M4-8A.4

PROJECT NO: | HWY: | COUNTY: | SHEET NO: 221 | E

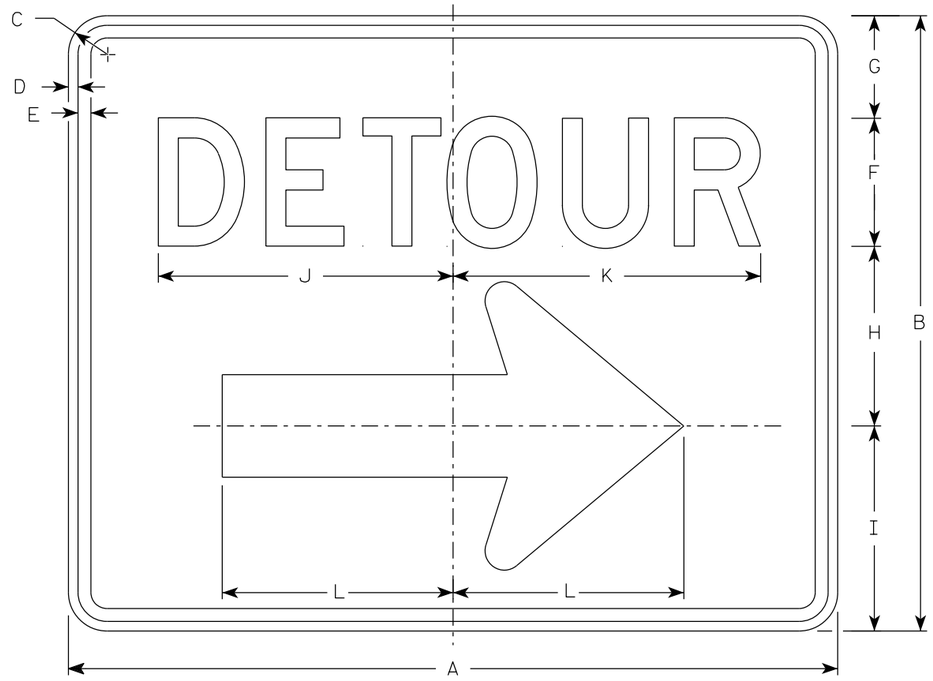

M4-9R

NOTES

1. Sign is Type II - Type F Reflective
2. Color:
   Background - Orange
   Message - Black
3. Message Series - D
4. Corners may be square or rounded when base material is plywood but borders shall be rounded as shown. When base material is metal, the corners and borders shall be rounded.
4. M4-9L is the same as M4-9R except the arrow is reversed.

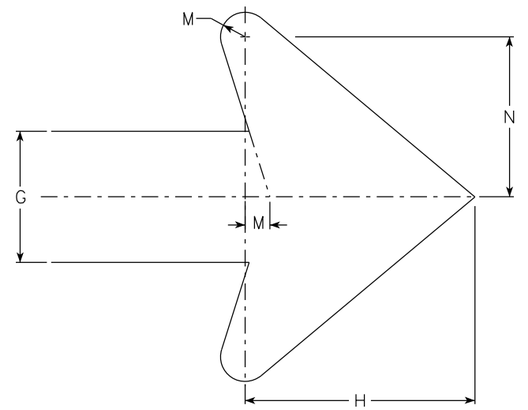

Arrow Detail

SIZE	A	B	C	D	E	F	G	H	I	J	K	L	M	N	O	P	Q	R	S	T	U	V	W	X	Y	Z	Area sq. ft.
1																											
2	30	24	1 1/2	3/8	1/2	5	4	7	8	11 1/2	12	9	3/4	4 7/8													5.00
2M	30	24	1 1/2	3/8	1/2	5	4	7	8	11 1/2	12	9	3/4	4 7/8													5.00
3	30	24	1 1/2	3/8	1/2	5	4	7	8	11 1/2	12	9	3/4	4 7/8													5.00
4	48	36	1 7/8	1/2	5/8	8	6	10 1/2	11 5/8	20 5/8	20 1/2	13 1/4	1 1/8	6 7/8													12.0
5	48	36	1 7/8	1/2	5/8	8	6	10 1/2	11 5/8	20 5/8	20 1/2	13 1/4	1 1/8	6 7/8													12.0

STANDARD SIGN
M4-9 R & L

WISCONSIN DEPT OF TRANSPORTATION

APPROVED Matthew R Rauch
For State Traffic Engineer

DATE 2/9/2023 PLATE NO. M4-9R.6

PROJECT NO:	HWY:	COUNTY:		SHEET NO:	E

FILE NAME : C:\CAEfiles\Projects\tr_stdplate\M49R.dgn PLOT DATE : 21-MARCH 2023 1:40 PLOT BY : dotc4c PLOT NAME : PLOT SCALE : $$.....plotscale.....$$ WISDOT/CADDS SHEET 42

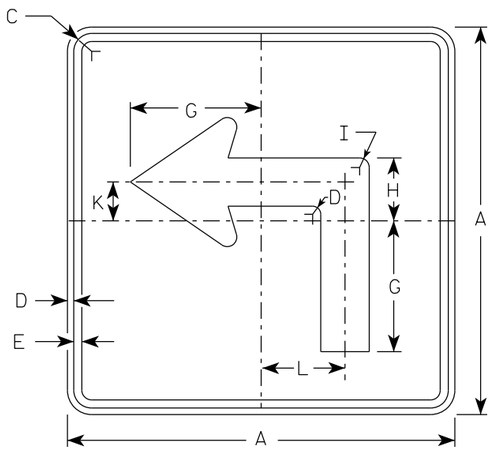

M5-1L
MM5-1L
MO5-1L
MP5-1L

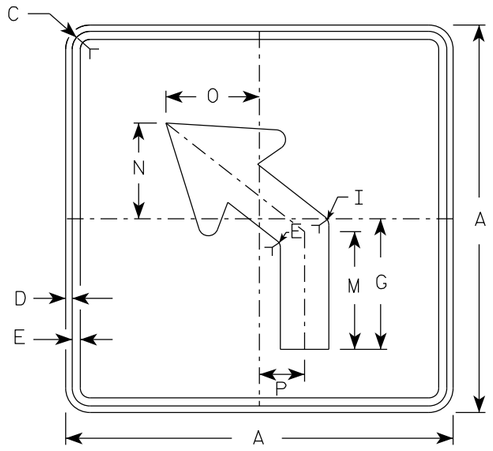

M5-2L
MM5-2L
MO5-2L
MP5-2L

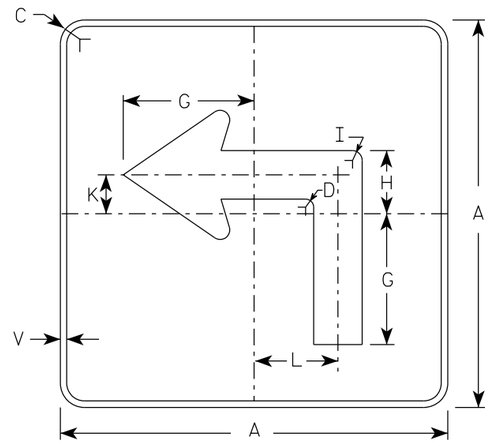

MB5-1L
MK5-1L
MN5-1L
MR5-1L

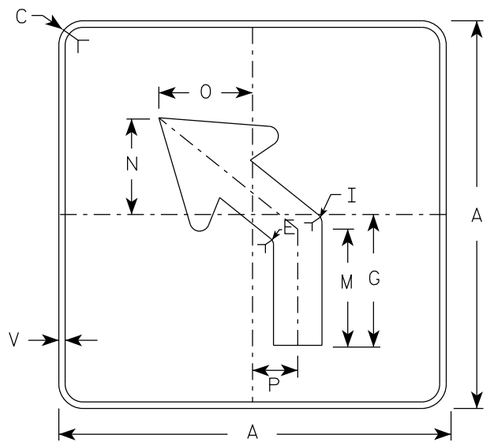

MB5-2L
MK5-2L
MN5-2L
MR5-2L

NOTES

1. Signs are Type II - Type H reflective except as shown
2. Color:
   Background - See note 4
   Message - See note 4
3. Corners may be square or rounded when base material is plywood but borders shall be rounded as shown. When base material is metal, the corners and borders shall be rounded.
4. M5-1 and M5-2 Background - White
   Message - Black
   MB5-1 and MB5-2 Background - Blue
   Message - White
   MK5-1 and MK5-2 Background - Green
   Message - White
   MM5-1 and MM5-2 Background - White
   Message - Green
   MN5-1 and MN5-2 Background - Brown
   Message - White
   MO5-1 and MO5-2 Background - Orange - Type F Reflective
   Message - Black
   MP5-1 and MP5-2 Background - White
   Message - Blue
   MR5-1 and MR5-2 Background - Brown
   Message - Yellow
5. M5-1R same as M5-1L except arrow points right.
6. M5-2R same as M5-2L except arrow tilts right.

ARROW DETAIL

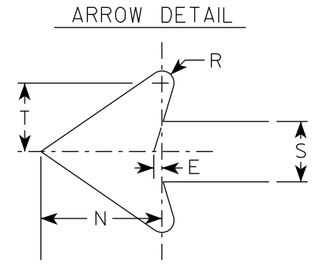

SIZE	A	B	C	D	E	F	G	H	I	J	K	L	M	N	O	P	Q	R	S	T	U	V	W	X	Y	Z	Area sq. ft.
1																											
2S	21		1 1/2	3/8	3/8		7	3 3/8	5/8		2 1/8	4 1/2	6 3/8	5 1/4	5	2 1/2		1/2	2 5/8	3		1/2					3.06
2M	21		1 1/2	3/8	3/8		7	3 3/8	5/8		2 1/8	4 1/2	6 3/8	5 1/4	5	2 1/2		1/2	2 5/8	3		1/2					3.06
3	30		1 7/8	1/2	5/8		10 1/8	4 7/8	7/8		3	6 1/2	9 1/8	7 1/2	7 1/4	3 1/2		3/4	3 3/4	4 1/4		1/2					6.25
4	30		1 7/8	1/2	5/8		10 1/8	4 7/8	7/8		3	6 1/2	9 1/8	7 1/2	7 1/4	3 1/2		3/4	3 3/4	4 1/4		1/2					6.25
5	30		1 7/8	1/2	5/8		10 1/8	4 7/8	7/8		3	6 1/2	9 1/8	7 1/2	7 1/4	3 1/2		3/4	3 3/4	4 1/4		1/2					6.25

STANDARD SIGN
M5-1 & M5-2

WISCONSIN DEPT OF TRANSPORTATION

APPROVED Matthew R Rauch
for State Traffic Engineer

DATE 2/13/2023 PLATE NO. M5-1.15

PROJECT NO: | HWY: | COUNTY: | SHEET NO: 223 | E

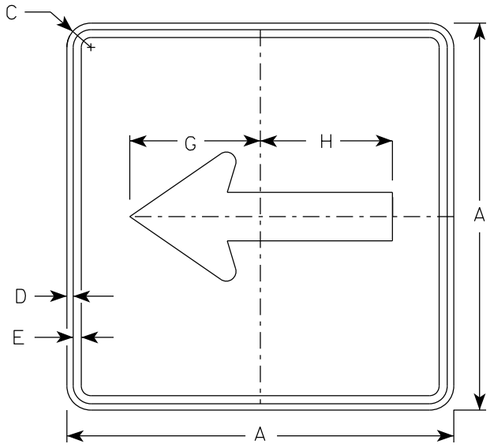

M6-1
MM6-1
MO6-1
MP6-1

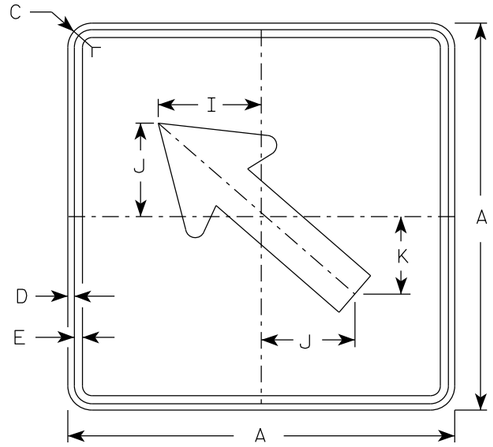

M6-2
MM6-2
MO6-2
MP6-2

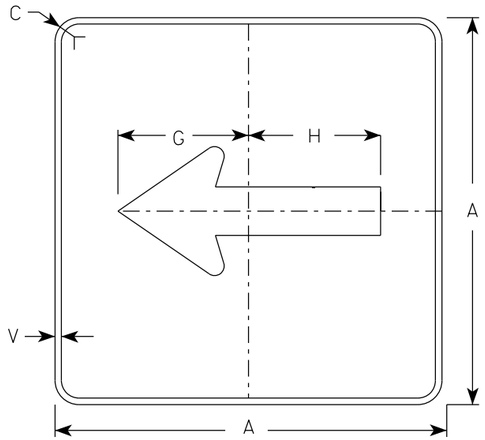

MB6-1
MK6-1
MN6-1
MR6-1

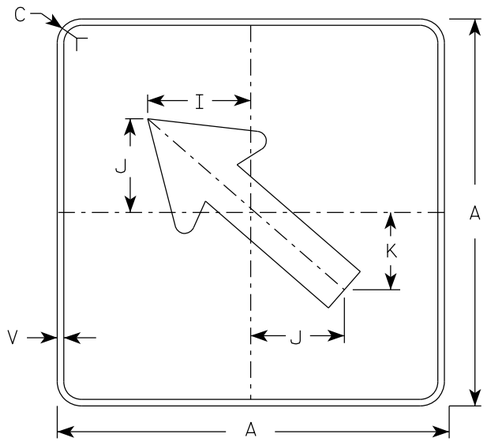

MB6-2
MK6-2
MN6-2
MR6-2

NOTES

1. Signs are Type II - Type H Reflective except as Shown
2. Color:
   Background - See note 4
   Message - See note 4
3. Corners may be square or rounded when base material is plywood but borders shall be rounded as shown. When base material is metal, the corners and borders shall be rounded.
4. M6-1 and M6-2 Background - White
   Message - Black
   MB6-1 and MB6-2 Background - Blue
   Message - White
   MK6-1 and MK6-2 Background - Green
   Message - White
   MM6-1 and MM6-2 Background - White
   Message - Green
   MN6-1 and MN6-2 Background - Brown
   Message - White
   MO6-1 and MO6-2 Background - Orange - Type F Reflective
   Message - Black
   MP6-1 and MP6-2 Background - White
   Message - Blue
   MR6-1 and MR6-2 Background - Brown
   Message - Yellow

ARROW DETAIL

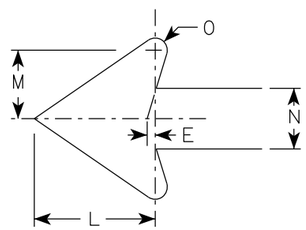

SIZE	A	B	C	D	E	F	G	H	I	J	K	L	M	N	O	P	Q	R	S	T	U	V	W	X	Y	Z	Area sq. ft.
1																											
2S	21		1 1/2	3/8	3/8		7 1/2	7 1/8	5 5/8	5	4 1/4	5 1/4	3	2 5/8	1/2							1/2					3.06
2M	21		1 1/2	3/8	3/8		7 1/2	7 1/8	5 5/8	5	4 1/4	5 1/4	3	2 5/8	1/2							1/2					3.06
3	30		1 7/8	1/2	5/8		10 3/4	10 1/4	8	7 1/4	6	7 1/2	4 1/4	3 3/4	3/4							1/2					6.25
4	30		1 7/8	1/2	5/8		10 3/4	10 1/4	8	7 1/4	6	7 1/2	4 1/4	3 3/4	3/4							1/2					6.25
5	30		1 7/8	1/2	5/8		10 3/4	10 1/4	8	7 1/4	6	7 1/2	4 1/4	3 3/4	3/4							1/2					6.25

STANDARD SIGN
M6-1 & M6-2
SERIES

WISCONSIN DEPT OF TRANSPORTATION

APPROVED Matthew R Rauch
for State Traffic Engineer

DATE 2/13/2023 PLATE NO. M6-1.16

PROJECT NO: | HWY: | COUNTY: | SHEET NO: 224 | E

7

7

NOTES

1. Sign is Type II - Type H Reflective
2. Color:
   Background - White
   Message - Black
3. Message Series - D

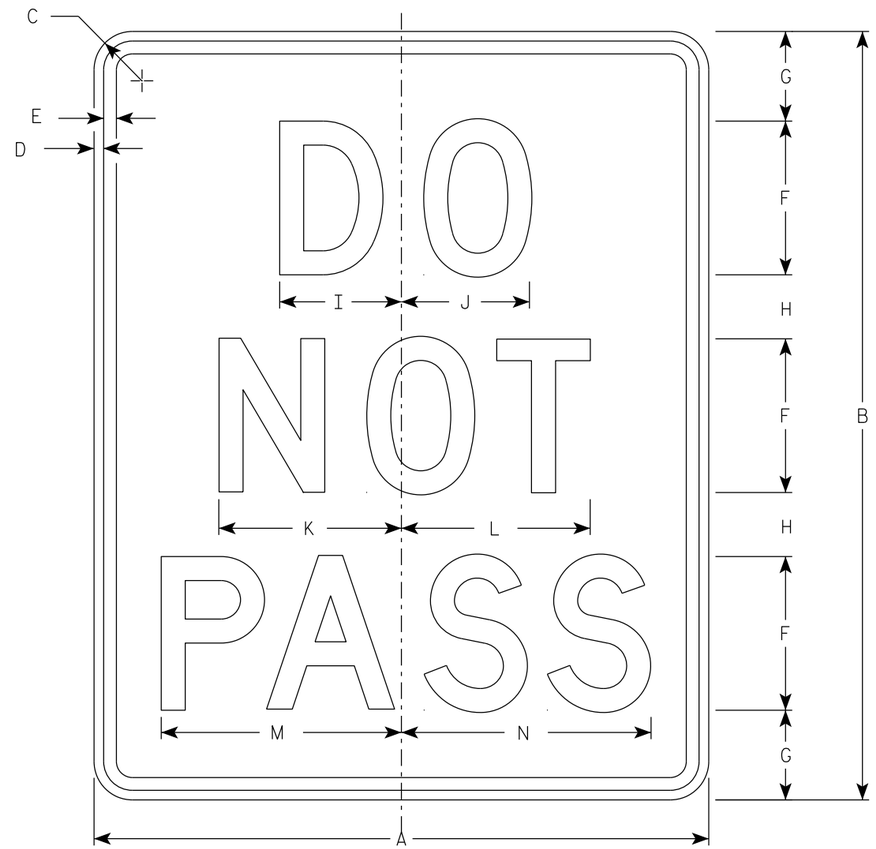

R4-1

SIZE	A	B	C	D	E	F	G	H	I	J	K	L	M	N	O	P	Q	R	S	T	U	V	W	X	Y	Z	Area sq. ft.
1	18	24	1 1/2	3/8	1/2	4	3 1/2	2 1/2	3 1/8	3 1/4	4 3/4	4 7/8	6 1/4	6 1/2													3.0
2S	24	30	1 1/2	3/8	1/2	6	3 1/2	2 1/2	4 3/4	5	7 1/8	7 3/8	9 3/8	9 3/4													5.0
2M	24	30	1 1/2	3/8	1/2	6	3 1/2	2 1/2	4 3/4	5	7 1/8	7 3/8	9 3/8	9 3/4													5.0
3	36	48	1 7/8	5/8	3/4	8	7	5	6 1/4	6 5/8	9 1/2	9 3/4	12 1/2	13													12.0
4	36	48	1 7/8	5/8	3/4	8	7	5	6 1/4	6 5/8	9 1/2	9 3/4	12 1/2	13													12.0
5	48	60	3	3/4	1	10	8	7	7 3/4	8 3/8	11 7/8	12 1/4	15 5/8	16 1/4													20.0

STANDARD SIGN
R4-1

WISCONSIN DEPT OF TRANSPORTATION

APPROVED Matthew R Rauch
for State Traffic Engineer

DATE 3/16/23 PLATE NO. R4-1.8

PROJECT NO: | HWY: | COUNTY: | SHEET NO: 225 | E

NOTES

1. Sign is Type II - Type H Reflective
2. Color:
   Background - White
   Message - Black
3. Message Series - C

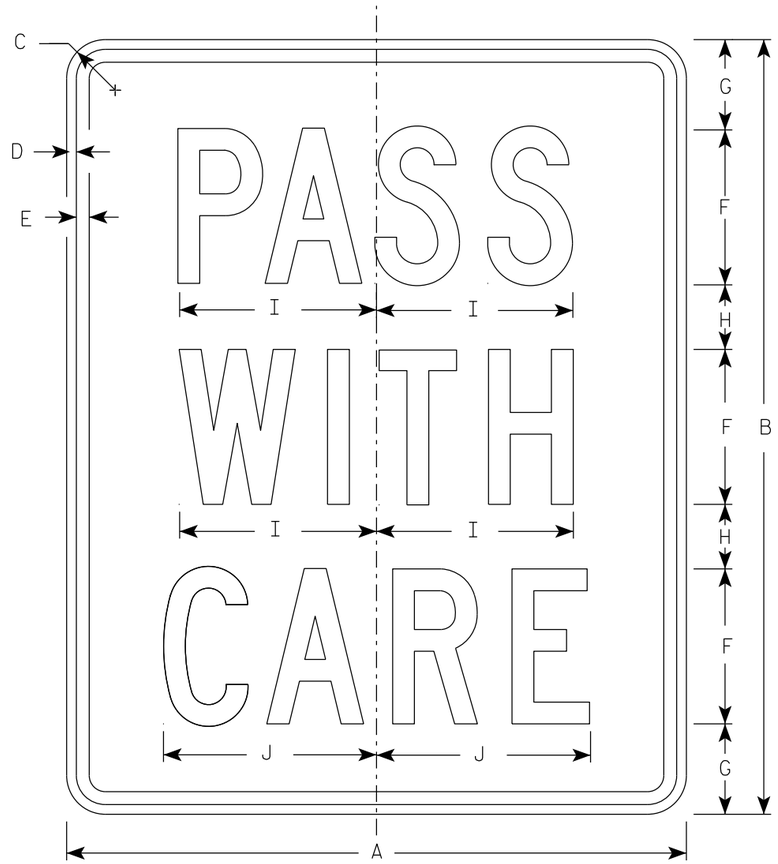

R4-2

SIZE	A	B	C	D	E	F	G	H	I	J	K	L	M	N	O	P	Q	R	S	T	U	V	W	X	Y	Z	Area sq. ft.
1	18	24	1 1/2	3/8	1/2	5	2 3/4	1 3/4	6 3/8	6 7/8																	3.0
2S	24	30	1 1/2	3/8	1/2	6	3 1/2	2 1/2	7 5/8	8 1/4																	5.0
2M	24	30	1 1/2	3/8	1/2	6	3 1/2	2 1/2	7 5/8	8 1/4																	5.0
3	36	48	1 7/8	1/2	5/8	10	5 1/2	3 1/2	12 3/4	13 3/4																	12.0
4																											
5																											

STANDARD SIGN
R4-2

WISCONSIN DEPT OF TRANSPORTATION

APPROVED Matthew R Rauch
for State Traffic Engineer

DATE 3/16/23 PLATE NO. R4-2.7

PROJECT NO:	HWY:	COUNTY:		SHEET NO: 226	E

FILE NAME : C:\CAEfiles\Projects\tr_stdplate\R42.dgn PLOT DATE : 16-MAR 2023 3:26 PLOT BY : mscj9h PLOT NAME : PLOT SCALE : $$.....plotscale.....$$ WISDOT/CADDS SHEET 42

7

7

NOTES

1. Sign is Type II - Type H Reflective
2. Color:
   Background - White
   Message - Black
3. Message Series - C
4. Corners may be square or rounded when base material is plywood but borders shall be rounded as shown. When base material is metal, the corners and borders shall be rounded.
5. Substitute appropriate numerals to nearest quarter mile and optically adjust spacing to achieve proper balance.

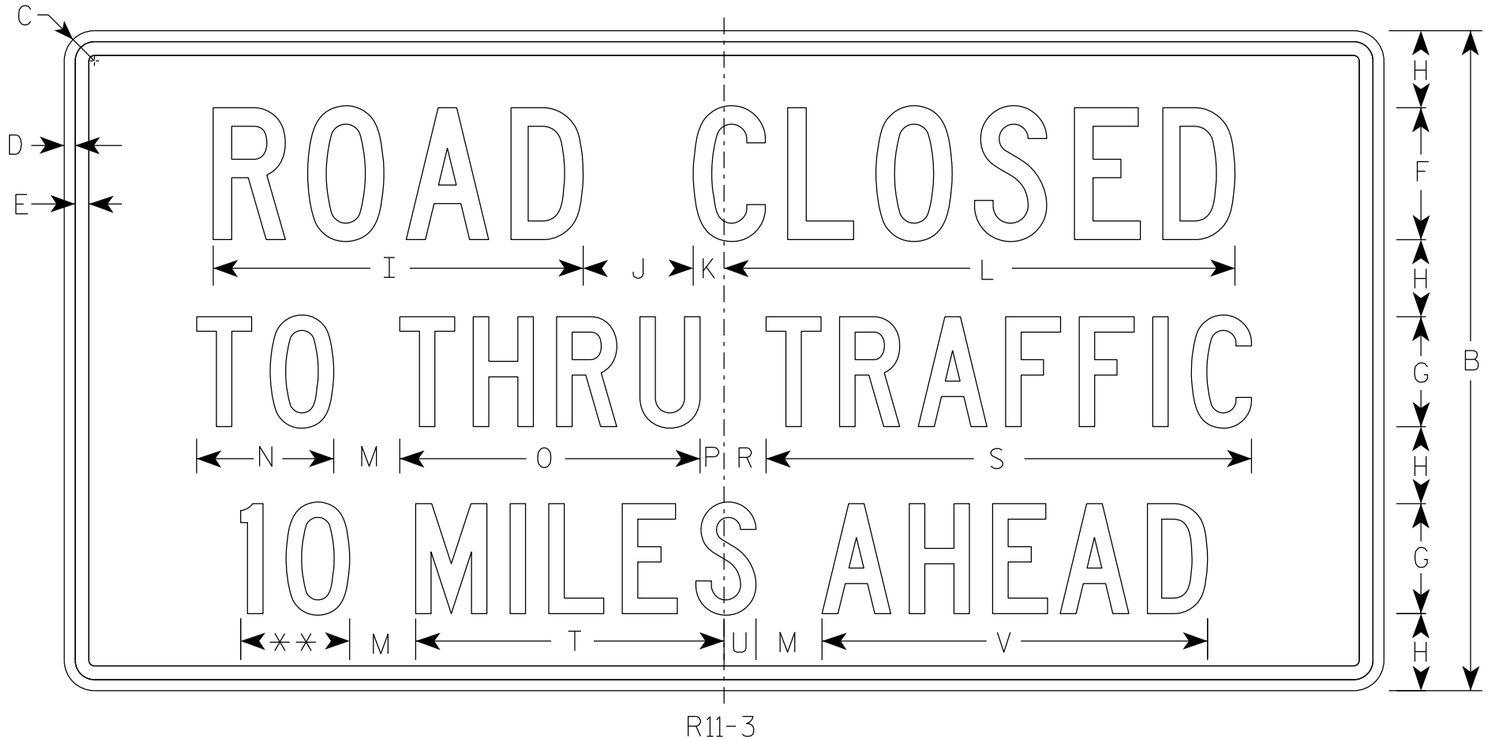

R11-3

** See Note 5

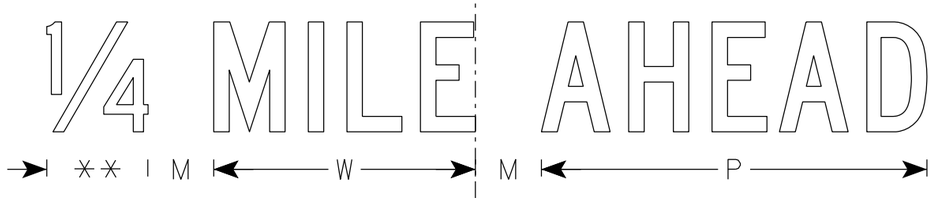

SIZE	A	B	C	D	E	F	G	H	I	J	K	L	M	N	O	P	Q	R	S	T	U	V	W	X	Y	Z	Area sq. ft.
1	36	18	1 1/2	3/8	3/8	4	3	2	11 1/4	3	1 1/8	15 3/8	2	3 3/4	8 1/4	5/8		1 3/8	13 1/4	8 3/8	7/8	10 1/2	7 1/8				4.5
2S	60	30	1 7/8	1/2	5/8	6	5	3 1/2	16 7/8	5	1 3/8	23 1/4	3	6 1/4	13 5/8	1 1/8		1 7/8	22 1/8	14	1 1/2	17 1/2	11 7/8				12.5
2M	60	30	1 7/8	1/2	5/8	6	5	3 1/2	16 7/8	5	1 3/8	23 1/4	3	6 1/4	13 5/8	1 1/8		1 7/8	22 1/8	14	1 1/2	17 1/2	11 7/8				12.5
3																											
4																											
5																											

STANDARD SIGN
R11-3

WISCONSIN DEPT OF TRANSPORTATION

APPROVED Matthew R Rauch
for State Traffic Engineer

DATE 2/5/24 PLATE NO. R11-3.10

PROJECT NO:	HWY:	COUNTY:		SHEET NO: 227	E

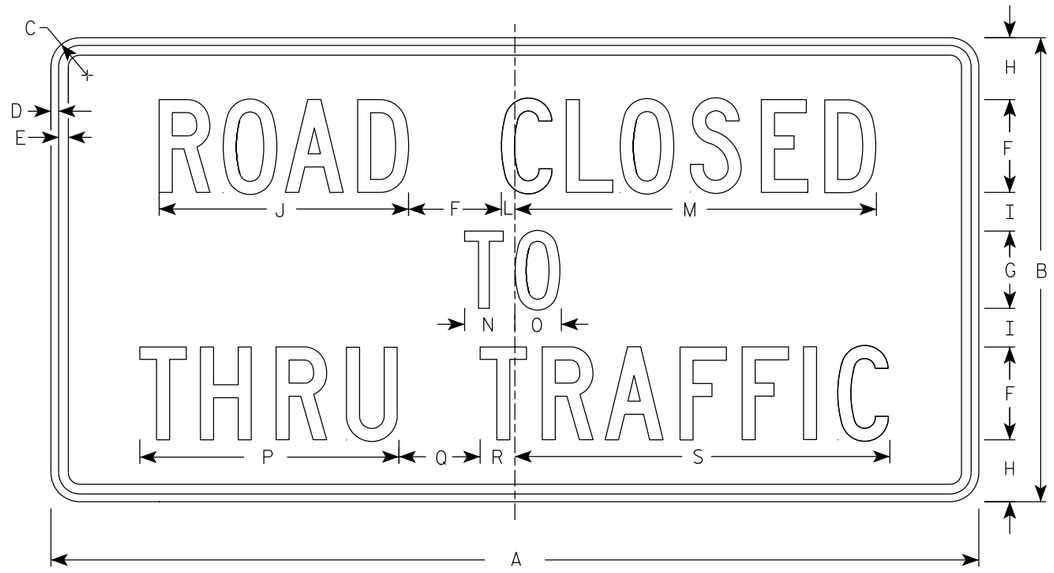

R11-4

NOTES

1. Sign is Type II - Type H Reflective
2. Color:
   Background - White
   Message - Black
3. Message Series - C
4. Corners may be square or rounded when base material is plywood but borders shall be rounded as shown. When base material is metal, the corners and borders shall be rounded.

SIZE	A	B	C	D	E	F	G	H	I	J	K	L	M	N	O	P	Q	R	S	T	U	V	W	X	Y	Z	Area sq. ft.
1																											
2S	60	30	1 7/8	1/2	5/8	6	5	4	2 1/2	16 1/8		7/8	23 3/8	3 1/4	3	16 3/4	5 1/4	2 1/4	24 1/4								12.5
2M	60	30	1 7/8	1/2	5/8	6	5	4	2 1/2	16 1/8		7/8	23 3/8	3 1/4	3	16 3/4	5 1/4	2 1/4	24 1/4								12.5
3																											
4																											
5																											

STANDARD SIGN
R11 - 4

WISCONSIN DEPT OF TRANSPORTATION

APPROVED Matthew R Rauch
for State Traffic Engineer

DATE 2/5/24 PLATE NO. R11-4.4

PROJECT NO: | HWY: | COUNTY: | SHEET NO: 228 | E

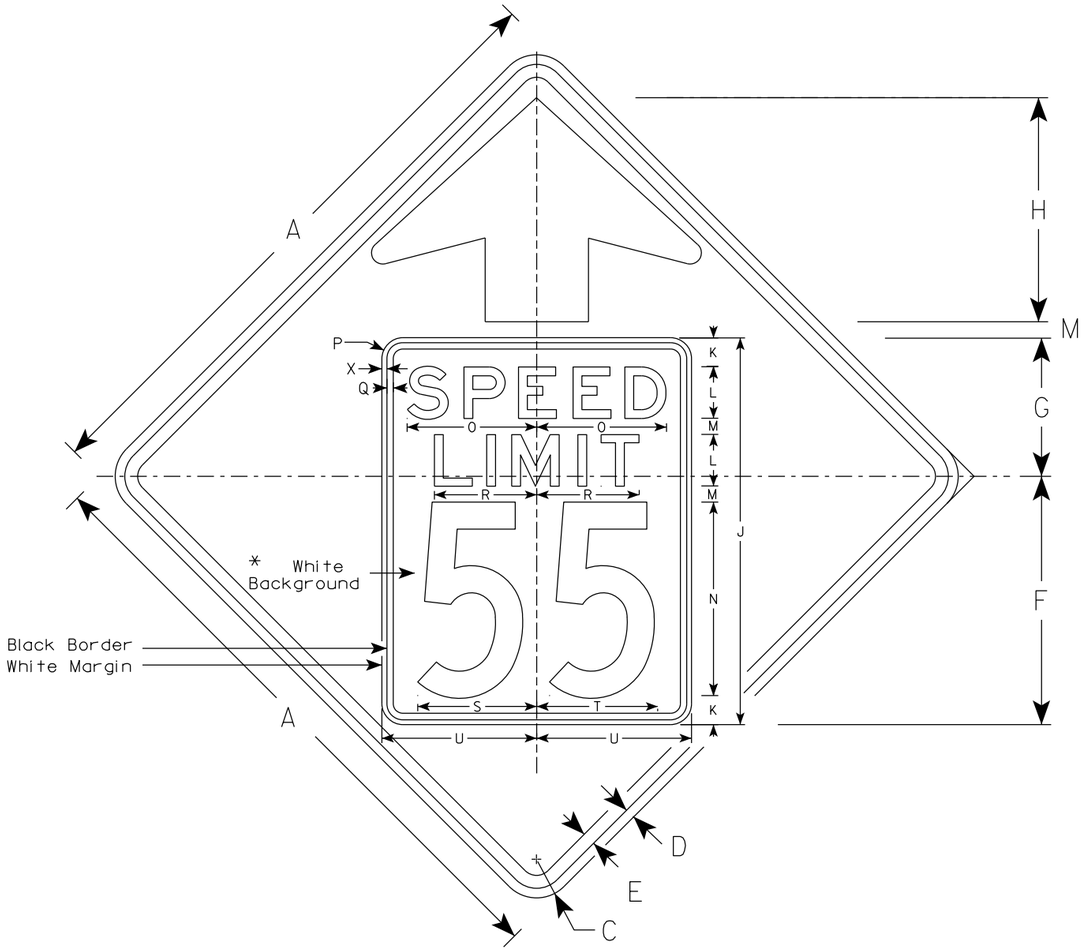

W3-5

NOTES

1. Sign is Type II - See Note 2 for Sheeting Type
2. Color: *
   Background - Yellow* (Type F Reflective)
   Message - Black
3. Message Series - C for numbers Series E for wording
4. Substitute appropriate numerals and optically adjust spacing to achieve proper balance

*Speed Limit Sign shall have a White Background with black message (Type SH Reflective)

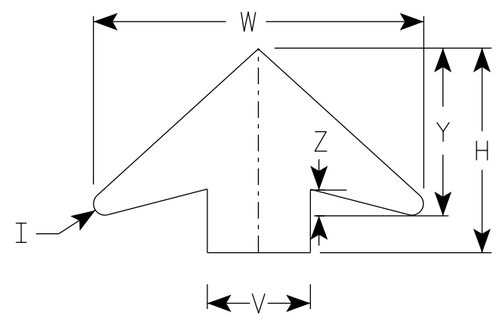

ARROW DETAIL

SIZE	A	B	C	D	E	F	G	H	I	J	K	L	M	N	O	P	Q	R	S	T	U	V	W	X	Y	Z	Area sq. ft.
1																											
2S	36		2 1/4	5/8	3/4	14 1/2	9 1/2	11 1/2	5/8	24	2	3	1	12	7 1/8	1 1/2	3/8	5 3/4	7 1/4	7 1/8	9	6	19 1/4	3/8	9 3/4	1 5/8	9.0
2M	36		2 1/4	5/8	3/4	14 1/2	9 1/2	11 1/2	5/8	24	2	3	1	12	7 1/8	1 1/2	3/8	5 3/4	7 1/4	7 1/8	9	6	19 1/4	3/8	9 3/4	1 5/8	9.0
3	36		2 1/4	5/8	3/4	14 1/2	9 1/2	11 1/2	5/8	24	2	3	1	12	7 1/8	1 1/2	3/8	5 3/4	7 1/4	7 1/8	9	6	19 1/4	3/8	9 3/4	1 5/8	9.0
4	48		3	3/4	1	19 1/4	10 3/4	17 3/8	7/8	30	2 1/4	4	1 1/4	15	10	1 5/8	1/2	8	9 1/4	9 3/8	12	8	25 5/8	3/8	13	2	16.0
5	48		3	3/4	1	19 1/4	10 3/4	17 3/8	7/8	30	2 1/4	4	1 1/4	15	10	1 5/8	1/2	8	9 1/4	9 3/8	12	8	25 5/8	3/8	13	2	16.0

STANDARD SIGN

W3-5

WISCONSIN DEPT OF TRANSPORTATION

APPROVED Matthew R Rauch
for State Traffic Engineer

DATE 8/30/2023 PLATE NO. W3-5.7

PROJECT NO:

SHEET NO: 229 E

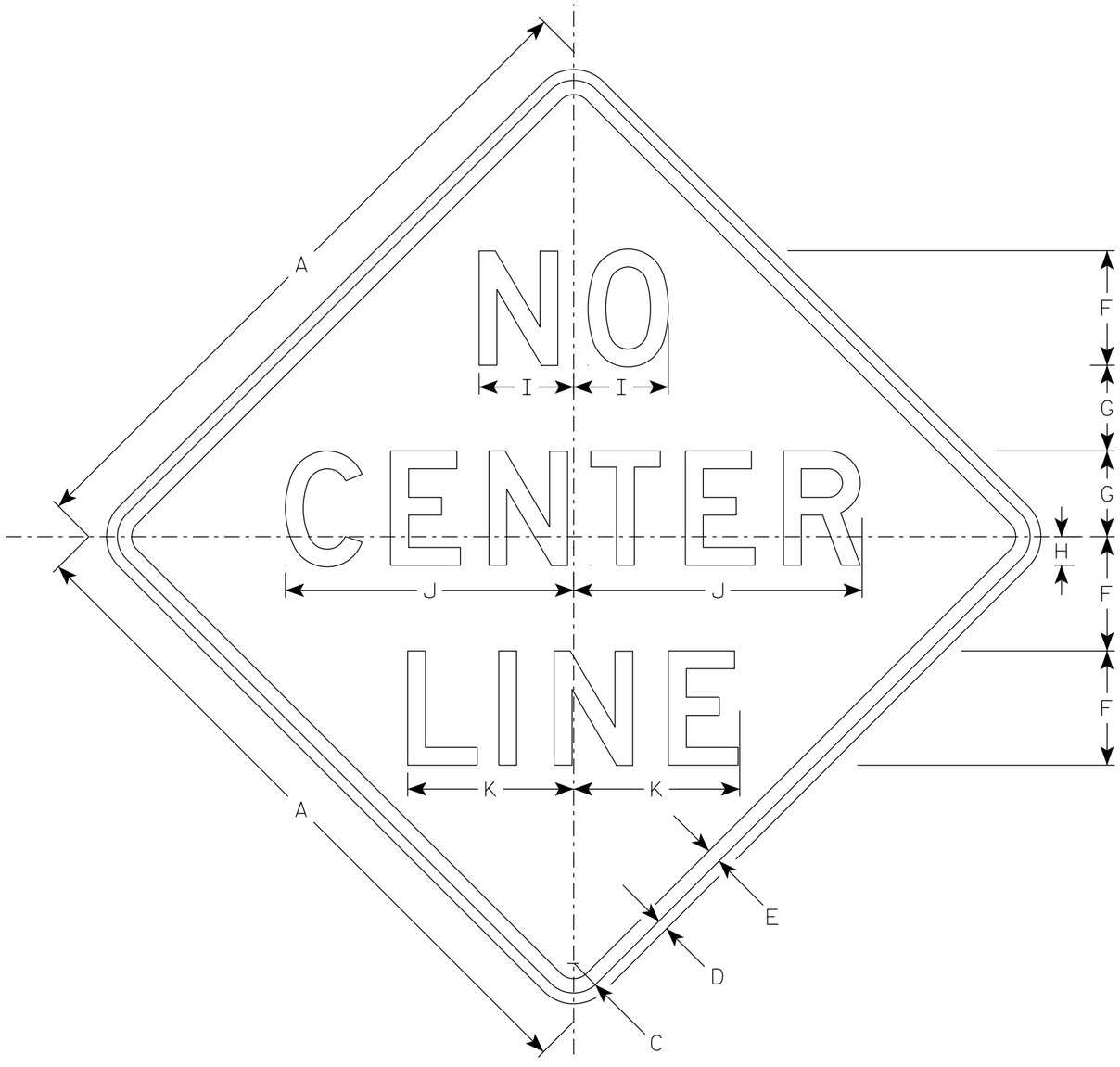

W8-12

NOTES

1. Sign is Type II - Type F Reflective
2. Color:
   Background - Orange
   Message - Black
3. Message Series - D
4. Corners may be square or rounded when base material is plywood but borders shall be rounded as shown. When base material is metal, the corners and borders shall be rounded.

SIZE	A	B	C	D	E	F	G	H	I	J	K	L	M	N	O	P	Q	R	S	T	U	V	W	X	Y	Z	Area sq. ft.
1	36		2 1/4	5/8	3/4	6	4 1/2	1 1/2	5 1/8	16	9																9.0
2S	48		3	3/4	1	8	6	2	6 5/8	20 1/4	11 5/8																16.0
2M	48		3	3/4	1	8	6	2	6 5/8	20 1/4	11 5/8																16.0
3	48		3	3/4	1	8	6	2	6 5/8	20 1/4	11 5/8																16.0
4	48		3	3/4	1	8	6	2	6 5/8	20 1/4	11 5/8																16.0
5	48		3	3/4	1	8	6	2	6 5/8	20 1/4	11 5/8																16.0

STANDARD SIGN
W8-12

WISCONSIN DEPT OF TRANSPORTATION

APPROVED Matthew R Rauch
for State Traffic Engineer

DATE 10/26/2023 PLATE NO. W8-12.5

PROJECT NO: | HWY: | COUNTY: | SHEET NO: 230 E

NOTES

1. Sign is Type II- Type F Reflective
2. Color:
   Background - Yellow
   Message - Black
3. Message Series - Lines 1 and 2 are Series D.
   Line 3 is series C.
4. Corners and borders shall be rounded on all base materials for this sign.

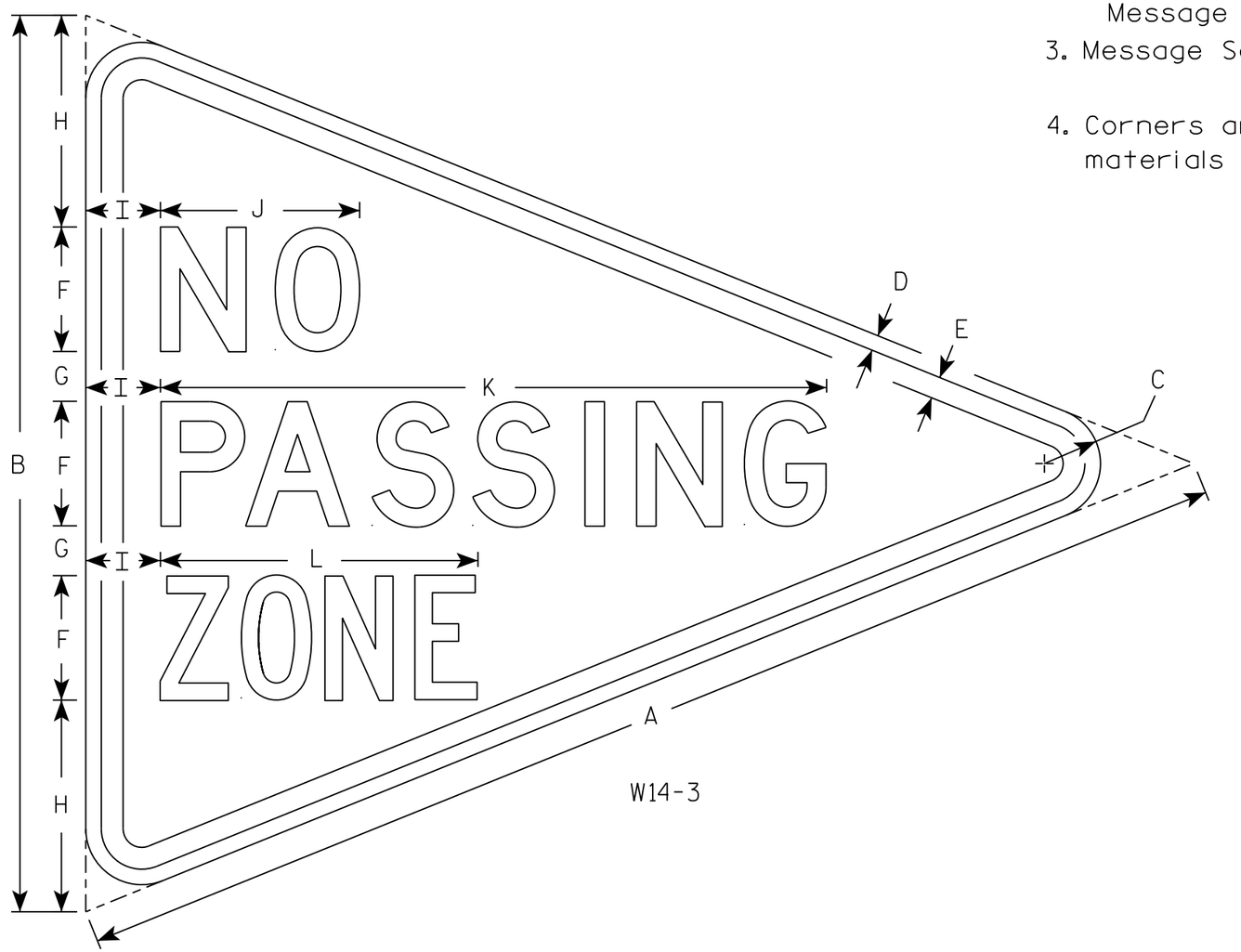

W14-3

SIZE	A	B	C	D	E	F	G	H	I	J	K	L	M	N	O	P	Q	R	S	T	U	V	W	X	Y	Z	Area sq. ft.
1																											
2S	48	36	2 1/4	5/8	7/8	5	2	8 1/2	3	8	26 3/4	12 3/4															5.56
2M																											
3																											
4																											
5																											

STANDARD SIGN
W14-3

WISCONSIN DEPT OF TRANSPORTATION

APPROVED Matthew R Rauch
for State Traffic Engineer

DATE 3/21/17 PLATE NO. W14-3.10

PROJECT NO: | HWY: | COUNTY: | SHEET NO: 231 | E

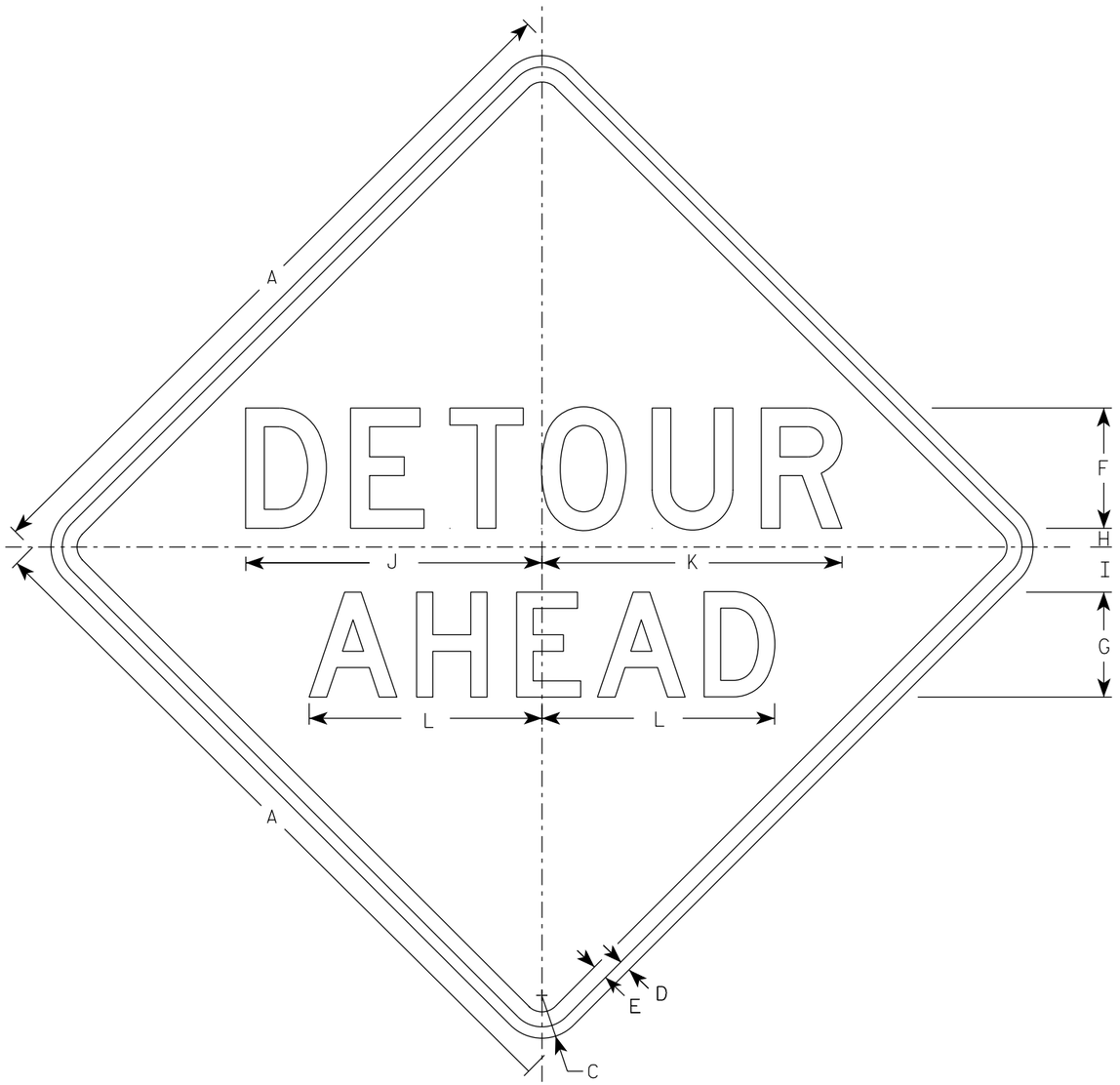

W20-2A

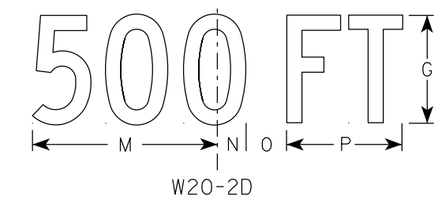

W20-2D

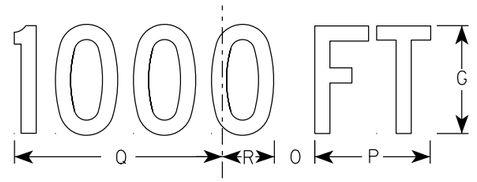

W20-2C

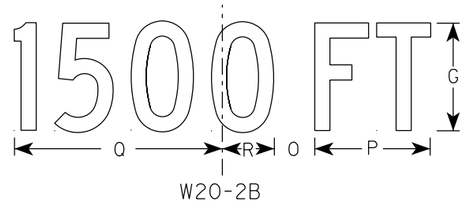

W20-2B

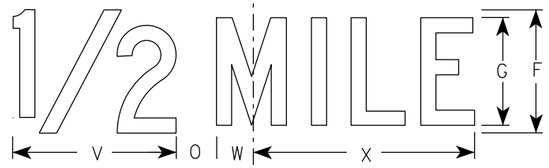

W20-2G

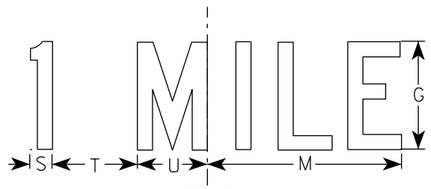

W20-2F

NOTES

1. Sign is Type II - Type F Reflective
2. Color:
   Background - Orange
   Message - Black
3. Message Series - See note 5
4. Corners may be square or rounded when base material is plywood but borders shall be rounded as shown. When base material is metal, the corners and borders shall be rounded.
5. Line 1 is Series D.
   Line 2 is Series D for AHEAD and Series C for all other distances.

SIZE	A	B	C	D	E	F	G	H	I	J	K	L	M	N	O	P	Q	R	S	T	U	V	W	X	Y	Z	Area sq. ft.
1	36		2 1/4	5/8	3/4	6	5	1	2 1/4	14 3/4	15	11 5/8	9	1 3/8	1 7/8	5 5/8	10 1/8	2 1/2	1 1/8	4 1/2	3 1/2	8	1 3/4	10 3/4			9.0
2S	48		3	3/4	1	8	7	1 1/4	3	19 3/4	20	15 1/2	12	1 7/8	2 5/8	7 1/2	13 1/2	3 3/8	1 1/2	6	4 5/8	10 5/8	2 3/8	14 3/8			16.0
2M	48		3	3/4	1	8	7	1 1/4	3	19 3/4	20	15 1/2	12	1 7/8	2 5/8	7 1/2	13 1/2	3 3/8	1 1/2	6	4 5/8	10 5/8	2 3/8	14 3/8			16.0
3	48		3	3/4	1	8	7	1 1/4	3	19 3/4	20	15 1/2	12	1 7/8	2 5/8	7 1/2	13 1/2	3 3/8	1 1/2	6	4 5/8	10 5/8	2 3/8	14 3/8			16.0
4	48		3	3/4	1	8	7	1 1/4	3	19 3/4	20	15 1/2	12	1 7/8	2 5/8	7 1/2	13 1/2	3 3/8	1 1/2	6	4 5/8	10 5/8	2 3/8	14 3/8			16.0
5	48		3	3/4	1	8	7	1 1/4	3	19 3/4	20	15 1/2	12	1 7/8	2 5/8	7 1/2	13 1/2	3 3/8	1 1/2	6	4 5/8	10 5/8	2 3/8	14 3/8			16.0

STANDARD SIGN
W20-2A,B,C,D,F & G

WISCONSIN DEPT OF TRANSPORTATION

APPROVED Matthew R Rauch
For State Traffic Engineer

DATE 1/10/2024 PLATE NO. W20-2.7

PROJECT NO:	HWY:	COUNTY:		SHEET NO: E

FILE NAME : C:\CAEfiles\Projects\tr_stdplate\W202.DGN PLOT DATE : 10-JAN 2024 11:36 PLOT BY : dotc4c PLOT NAME : PLOT SCALE : $$.....plotscale.....$$ WISDOT/CADDS SHEET 42

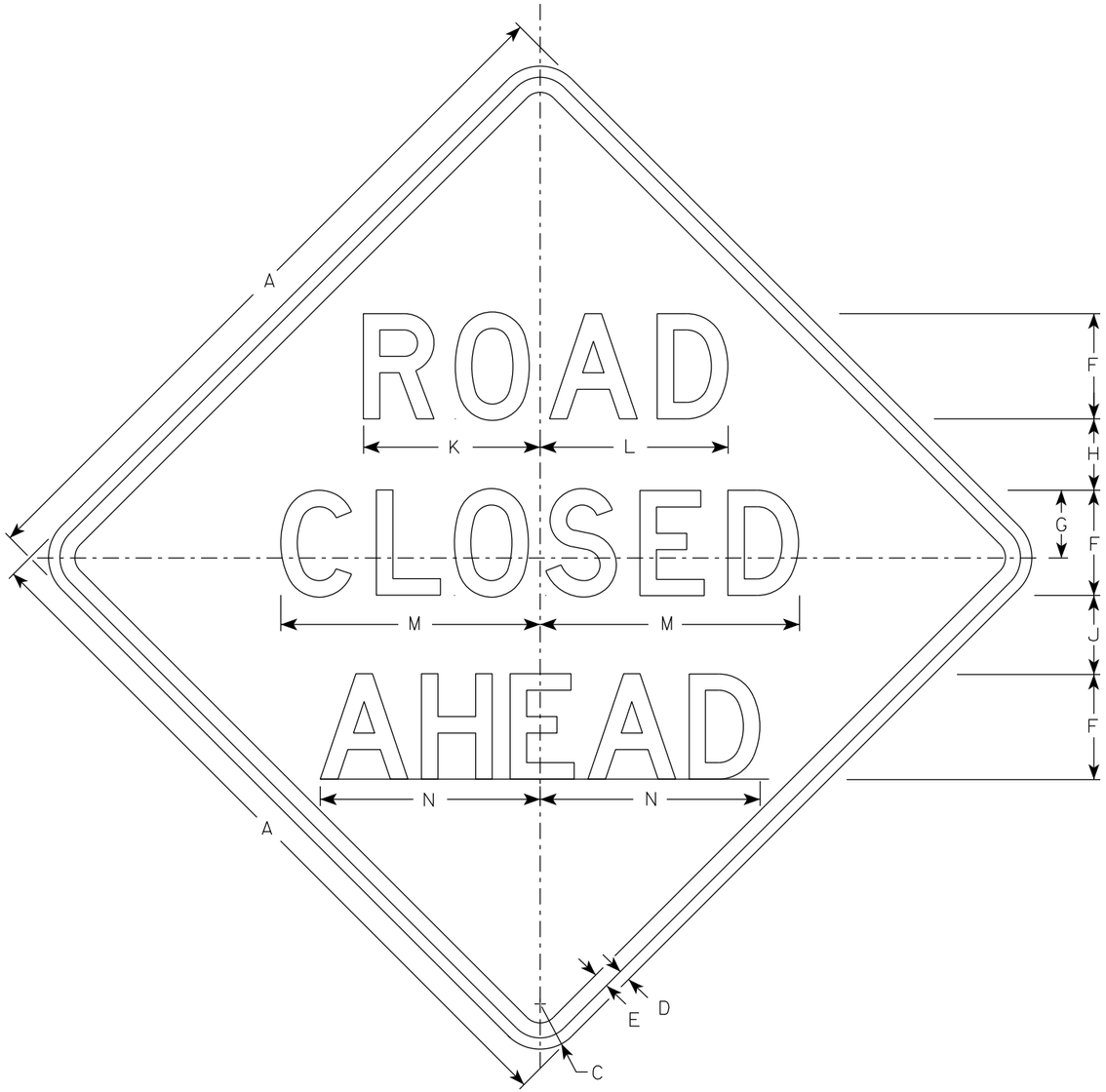

W20-3A

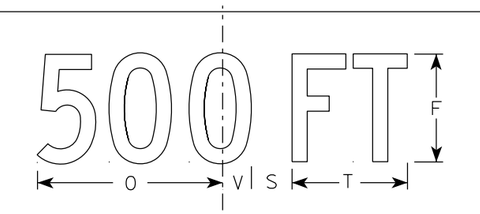

W20-3D

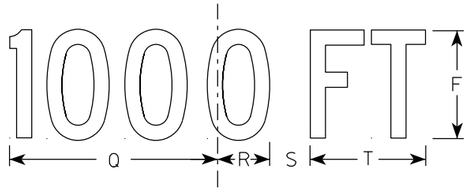

W20-3C

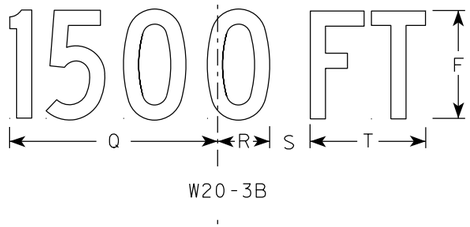

W20-3B

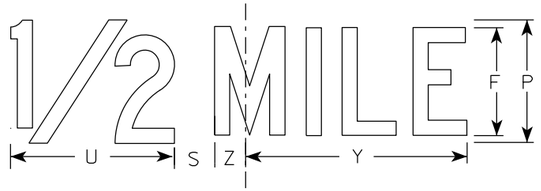

W20-3G

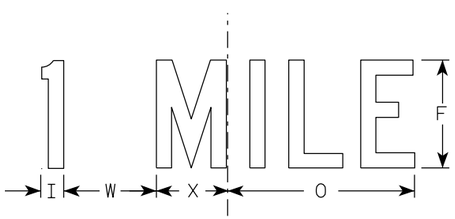

W20-3F

NOTES

1. Sign is Type II - Type F Reflective
2. Color:
   Background - Orange
   Message - Black
3. Message Series - see note 5
4. Corners may be square or rounded when base material is plywood but borders shall be rounded as shown. When base material is metal, the corners and borders shall be rounded.
5. Lines 1 and 2 are Series D.
   Line 3 is Series D for AHEAD and Series C for all other distances.

SIZE	A	B	C	D	E	F	G	H	I	J	K	L	M	N	O	P	Q	R	S	T	U	V	W	X	Y	Z	Area sq. ft.
1	36		2 1/4	5/8	3/4	5	3 3/8	3 1/2	1 1/8	4	8 3/8	8 7/8	12 1/2	11	9	6	10 1/8	2 1/2	1 7/8	5 5/8	8	1 3/8	4 1/2	3 1/2	10 3/4	1 3/4	9.0
2S	48		3	3/4	1	7	4 1/2	4 3/4	1 1/2	5 1/4	11 3/4	12 1/2	17 1/4	14 5/8	12	8	13 1/2	3 3/8	2 5/8	7 1/2	10 5/8	1 7/8	6	4 5/8	14 3/8	2 3/8	16.0
2M	48		3	3/4	1	7	4 1/2	4 3/4	1 1/2	5 1/4	11 3/4	12 1/2	17 1/4	14 5/8	12	8	13 1/2	3 3/8	2 5/8	7 1/2	10 5/8	1 7/8	6	4 5/8	14 3/8	2 3/8	16.0
3	48		3	3/4	1	7	4 1/2	4 3/4	1 1/2	5 1/4	11 3/4	12 1/2	17 1/4	14 5/8	12	8	13 1/2	3 3/8	2 5/8	7 1/2	10 5/8	1 7/8	6	4 5/8	14 3/8	2 3/8	16.0
4	48		3	3/4	1	7	4 1/2	4 3/4	1 1/2	5 1/4	11 3/4	12 1/2	17 1/4	14 5/8	12	8	13 1/2	3 3/8	2 5/8	7 1/2	10 5/8	1 7/8	6	4 5/8	14 3/8	2 3/8	16.0
5	48		3	3/4	1	7	4 1/2	4 3/4	1 1/2	5 1/4	11 3/4	12 1/2	17 1/4	14 5/8	12	8	13 1/2	3 3/8	2 5/8	7 1/2	10 5/8	1 7/8	6	4 5/8	14 3/8	2 3/8	16.0

STANDARD SIGN
W20-3A, B, C, D, F & G

WISCONSIN DEPT OF TRANSPORTATION

APPROVED Matthew R Rauch
for State Traffic Engineer

DATE 1/10/2024 PLATE NO. W20-3.8

PROJECT NO: | HWY: | COUNTY: | SHEET NO: E

FILE NAME : C:\CAEfiles\Projects\tr_stdplate\W203.DGN PLOT DATE : 10-JAN 2024 12:02 PLOT BY : dotc4c PLOT NAME : PLOT SCALE : $$.....plotscale.....$$ WISDOT/CADDS SHEET 42

7

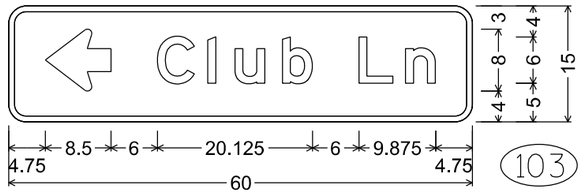

D1-1; 2.250" Radius, 0.750" Border

D1-1; 2.250" Radius, 0.750" Border

NOTES

1. All Signs Type II - Type H Reflective
2. Color:
   Background - Green
   Message - White
3. Message Series - E

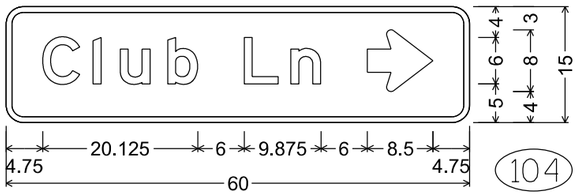

D1-1; 2.250" Radius, 0.750" Border

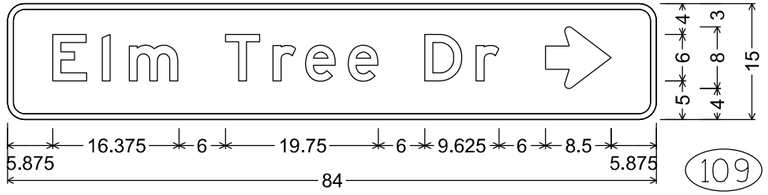

D1-1; 2.250" Radius, 0.750" Border

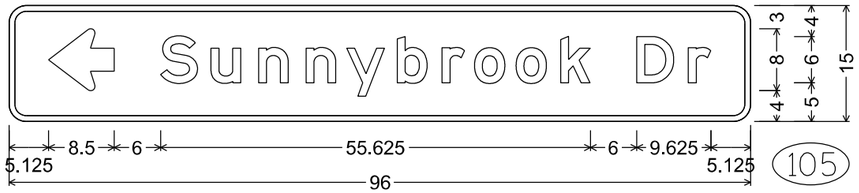

D1-1; 2.250" Radius, 0.750" Border

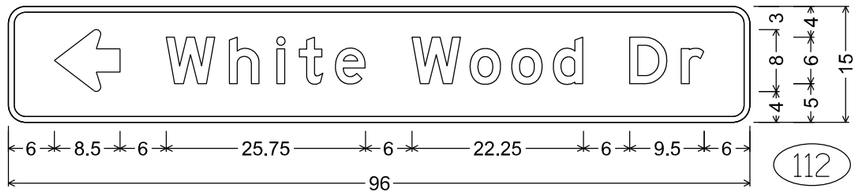

D1-1; 2.250" Radius, 0.750" Border

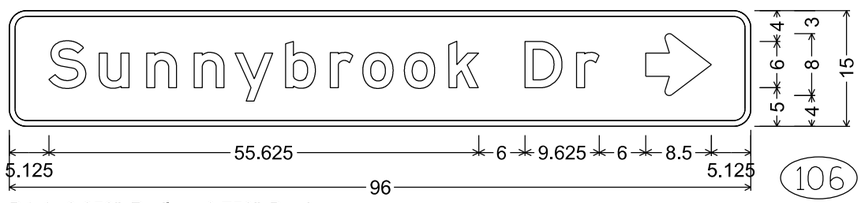

D1-1; 2.250" Radius, 0.750" Border

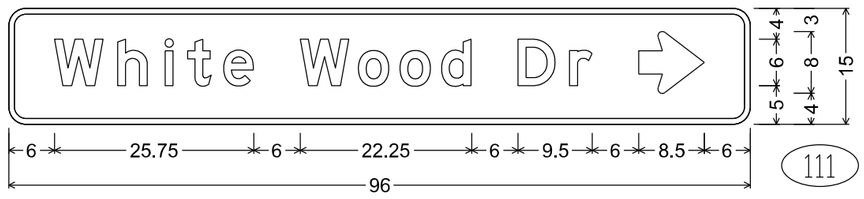

D1-1; 2.250" Radius, 0.750" Border

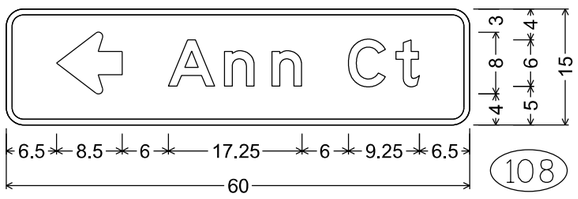

D1-1; 2.250" Radius, 0.750" Border

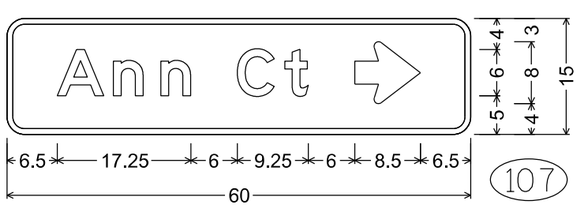

D1-1; 2.250" Radius, 0.750" Border

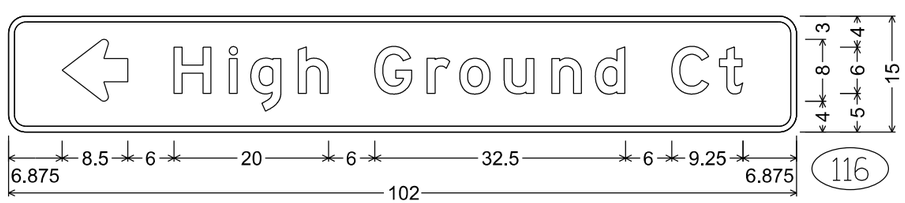

D1-1; 2.250" Radius, 0.750" Border

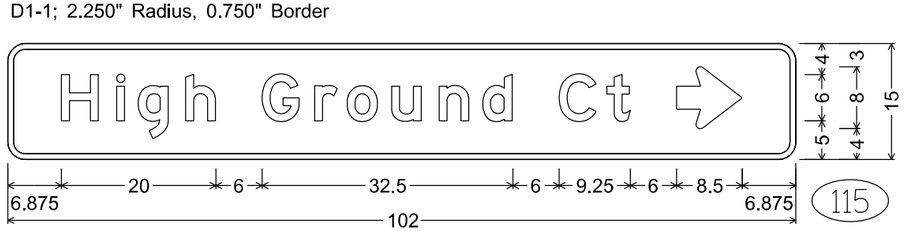

D1-1; 2.250" Radius, 0.750" Border

7

7

PROJECT NO: 4010-18-70	HWY: STH 144	COUNTY: WASHINGTON	PERMANENT SIGNING	SHEET NO: 234	E

118

D1-1; 2.250" Radius, 0.750" Border

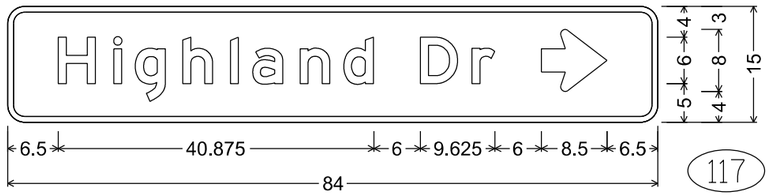

117

D1-1; 2.250" Radius, 0.750" Border

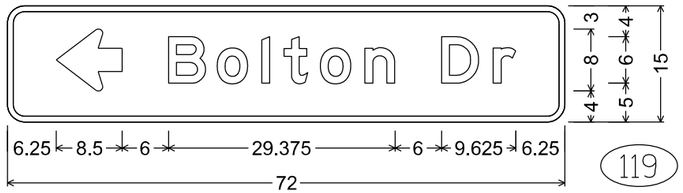

119 123

D1-1; 2.250" Radius, 0.750" Border

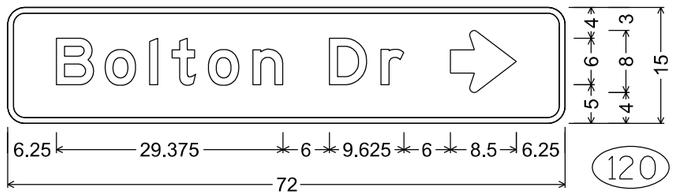

120 125

D1-1; 2.250" Radius, 0.750" Border

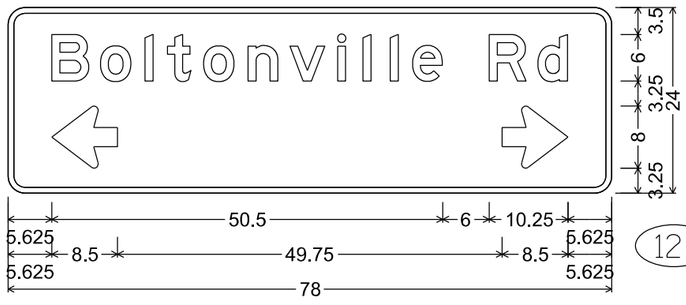

121 122

D1-61; 2.250" Radius, 0.750" Border

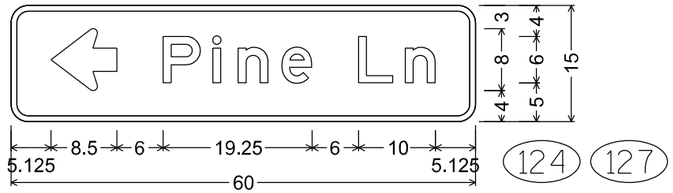

124 127

D1-1; 2.250" Radius, 0.750" Border

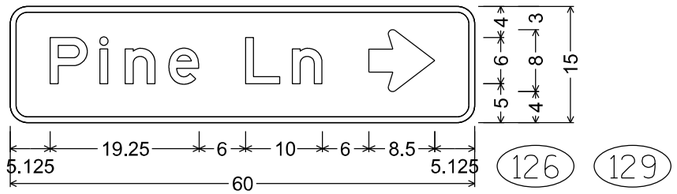

126 129

D1-1; 2.250" Radius, 0.750" Border

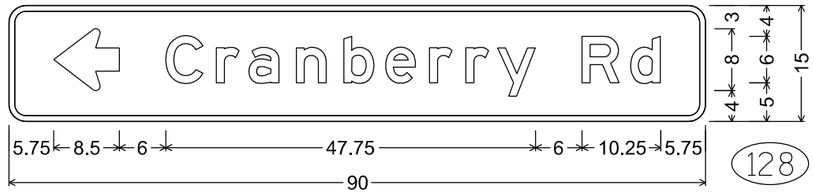

128

D1-1; 2.250" Radius, 0.750" Border

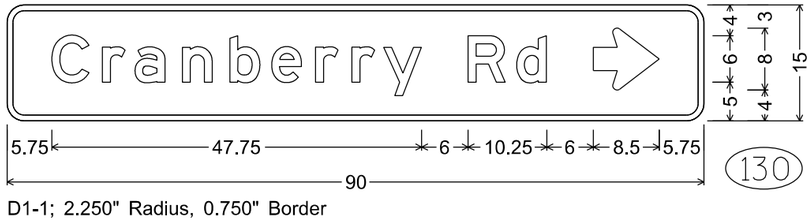

130

D1-1; 2.250" Radius, 0.750" Border

NOTES

1. All Signs Type II - Type H Reflective
2. Color:
   Background - Green
   Message - White
3. Message Series - E

						Cumulative Vol (CY)		
STH 144		AREA (SF)		Incremental Vol (CY) (Unadjusted)		Cut 1.00	Expanded Fill 1.2	Mass Ordinate
STATION	Distance	Cut	Fill	Note 1 Cut	Note 3 Fill	Note 1	Note 9	Note 10
1330+29	0	69.79	15.15					
1330+50	21	70.33	19.60	54	14	54	17	37
1330+90	40	60.30	136.52	97	116	151	156	-5
1331+00	10	70.80	13.75	24	28	175	190	-15
1331+49	49	79.63	0.00	137	12	312	204	108
			Totals	312	170			

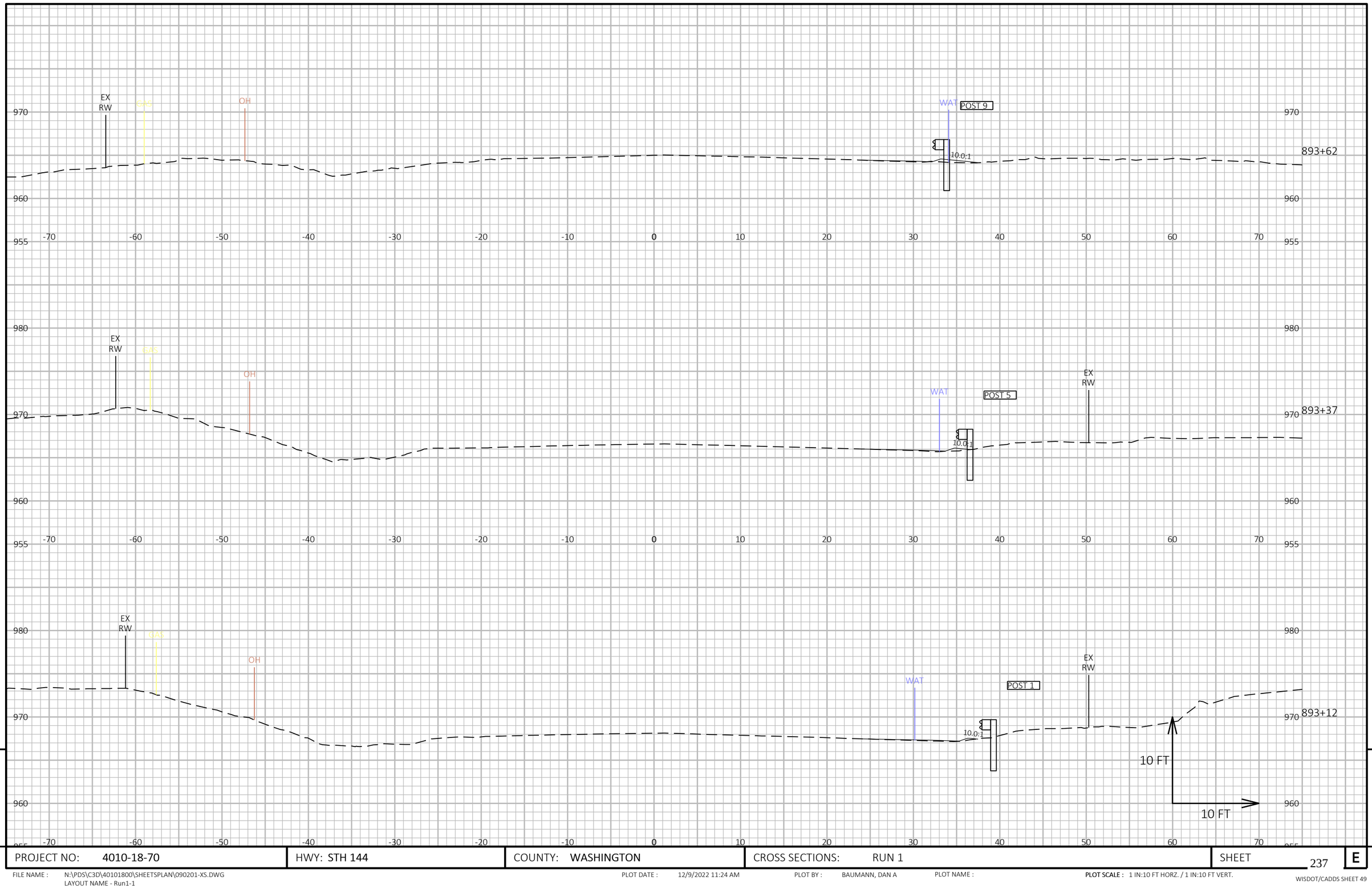

9

9

PROJECT NO: 4010-18-70	HWY: STH 144	COUNTY: WASHINGTON	CROSS SECTIONS: RUN 1	SHEET 237	E

FILE NAME : N:\PDS\C3D\40101800\SHEETSPLAN\090201-XS.DWG
LAYOUT NAME - Run1-1

PLOT DATE : 12/9/2022 11:24 AM

PLOT BY : BAUMANN, DAN A

PLOT NAME :

PLOT SCALE : 1 IN:10 FT HORZ. / 1 IN:10 FT VERT.

WISDOT/CADDS SHEET 49

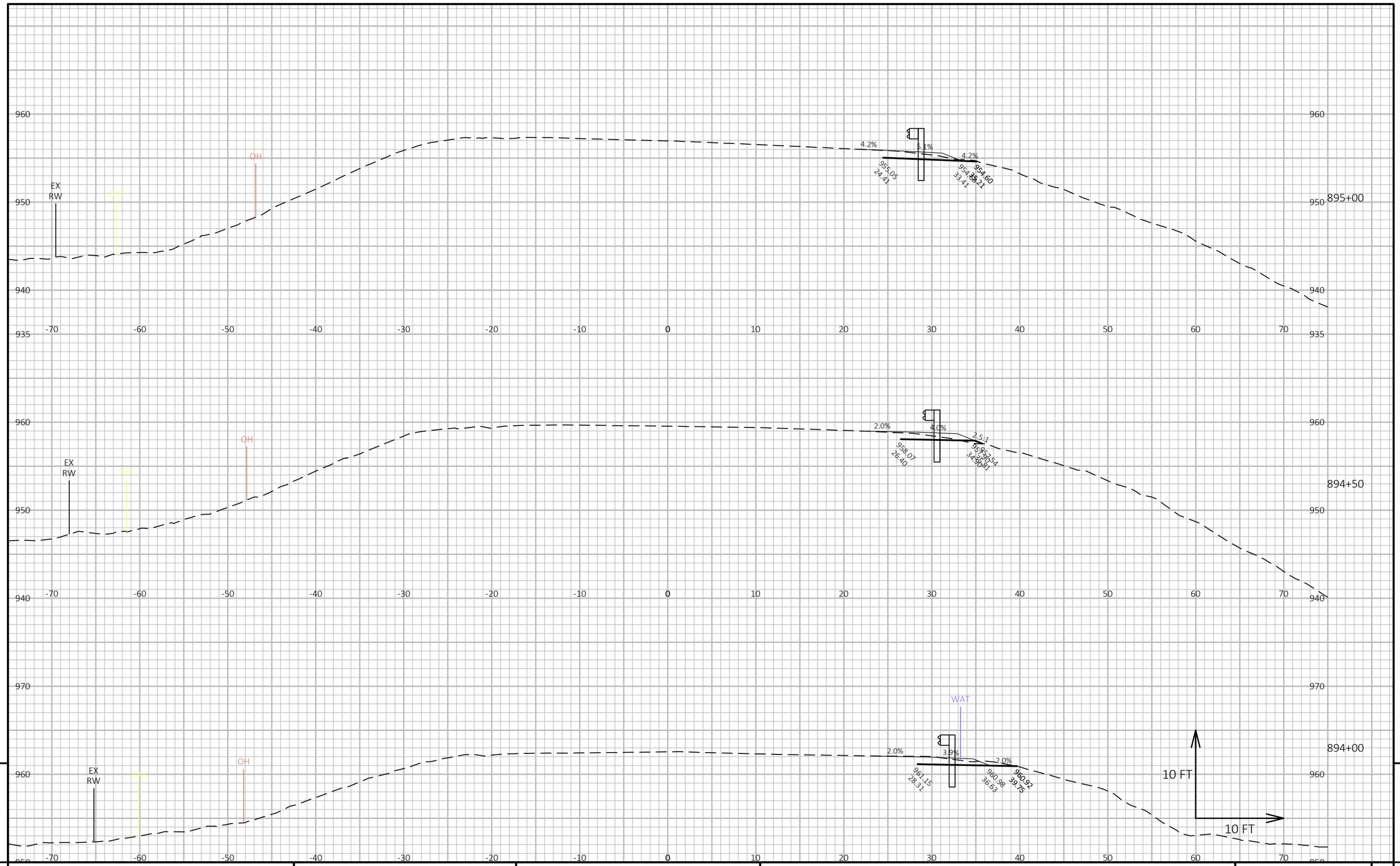

9

PROJECT NO: 4010-18-70	HWY: STH 144	COUNTY: WASHINGTON	CROSS SECTIONS: RUN 1	SHEET 238	E

FILE NAME : N:\PDS\C3D\40101800\SHEETSPLAN\090201-XS.DWG
LAYOUT NAME - Run1-2

PLOT DATE : 12/9/2022 11:24 AM

PLOT BY : BAUMANN, DAN A

PLOT NAME :

PLOT SCALE : 1 IN:10 FT HORZ. / 1 IN:10 FT VERT.

WISDOT/CADDS SHEET 49

9

960
930
925
-70
-60
-50
-40
-30
-20
-10
0
10
20
30
40
50
60
70
EX
RW
CAS
OH
6.0%
6.0%
6.0%
950.61
19.05
950.11
27.43
949.96
29.94
896+00
952.60
21.52
952.06
30.53
951.87
33.68
895+50
10 FT
10 FT

9

9

PROJECT NO: 4010-18-70	HWY: STH 144	COUNTY: WASHINGTON	CROSS SECTIONS: RUN 1	SHEET 239	E

FILE NAME : N:\PDS\C3D\40101800\SHEETSPLAN\090201-XS.DWG
LAYOUT NAME - Run1-3

PLOT DATE : 12/9/2022 11:24 AM

PLOT BY : BAUMANN, DAN A

PLOT NAME :

PLOT SCALE : 1 IN:10 FT HORZ. / 1 IN:10 FT VERT.

WISDOT/CADDS SHEET 49

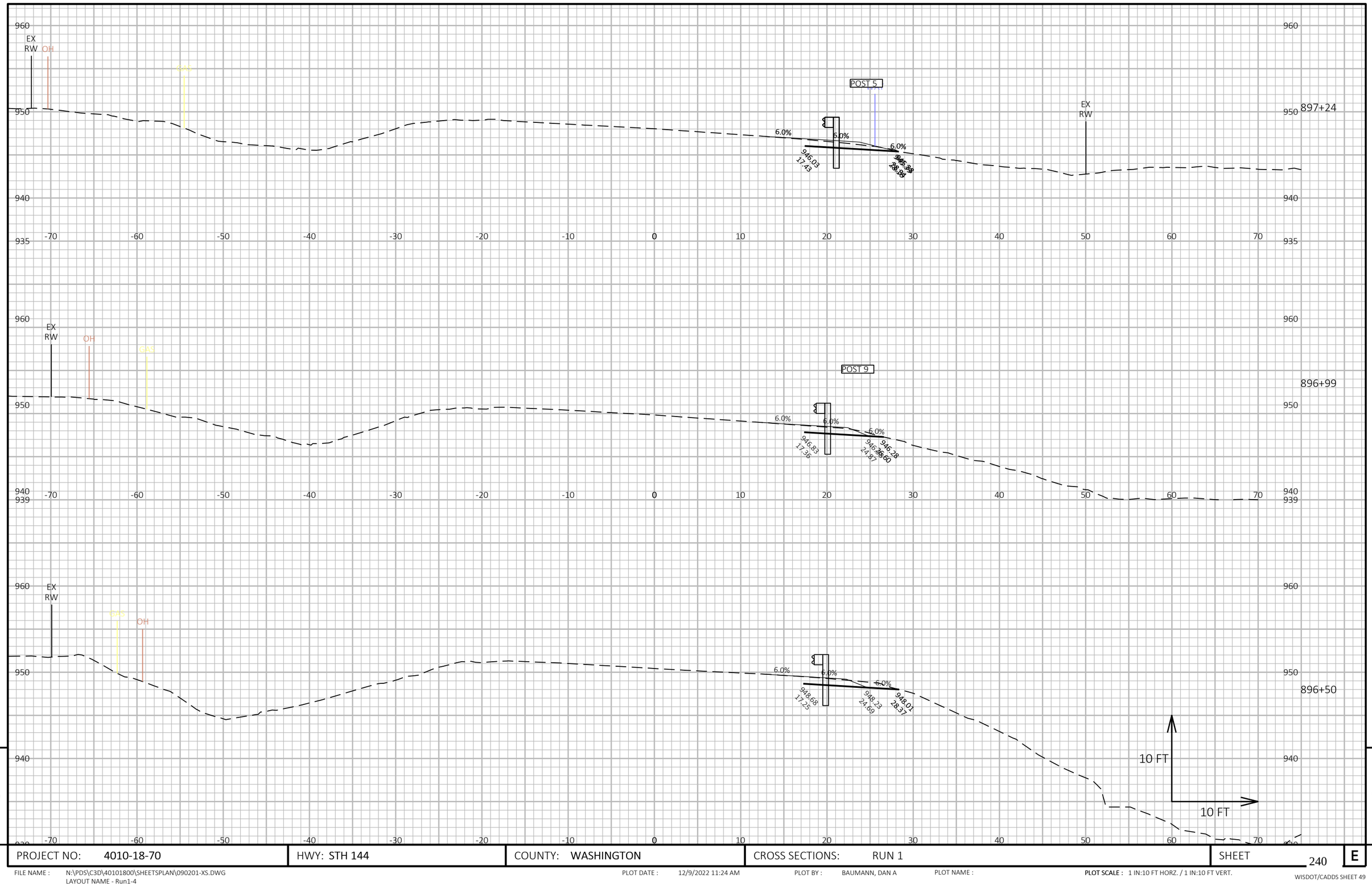

9

9

PROJECT NO: 4010-18-70	HWY: STH 144	COUNTY: WASHINGTON	CROSS SECTIONS: RUN 1	SHEET 240	E

FILE NAME : N:\PDS\C3D\40101800\SHEETSPLAN\090201-XS.DWG
LAYOUT NAME - Run1-4

PLOT DATE : 12/9/2022 11:24 AM PLOT BY : BAUMANN, DAN A PLOT NAME : **PLOT SCALE :** 1 IN:10 FT HORZ. / 1 IN:10 FT VERT.

WISDOT/CADDS SHEET 49

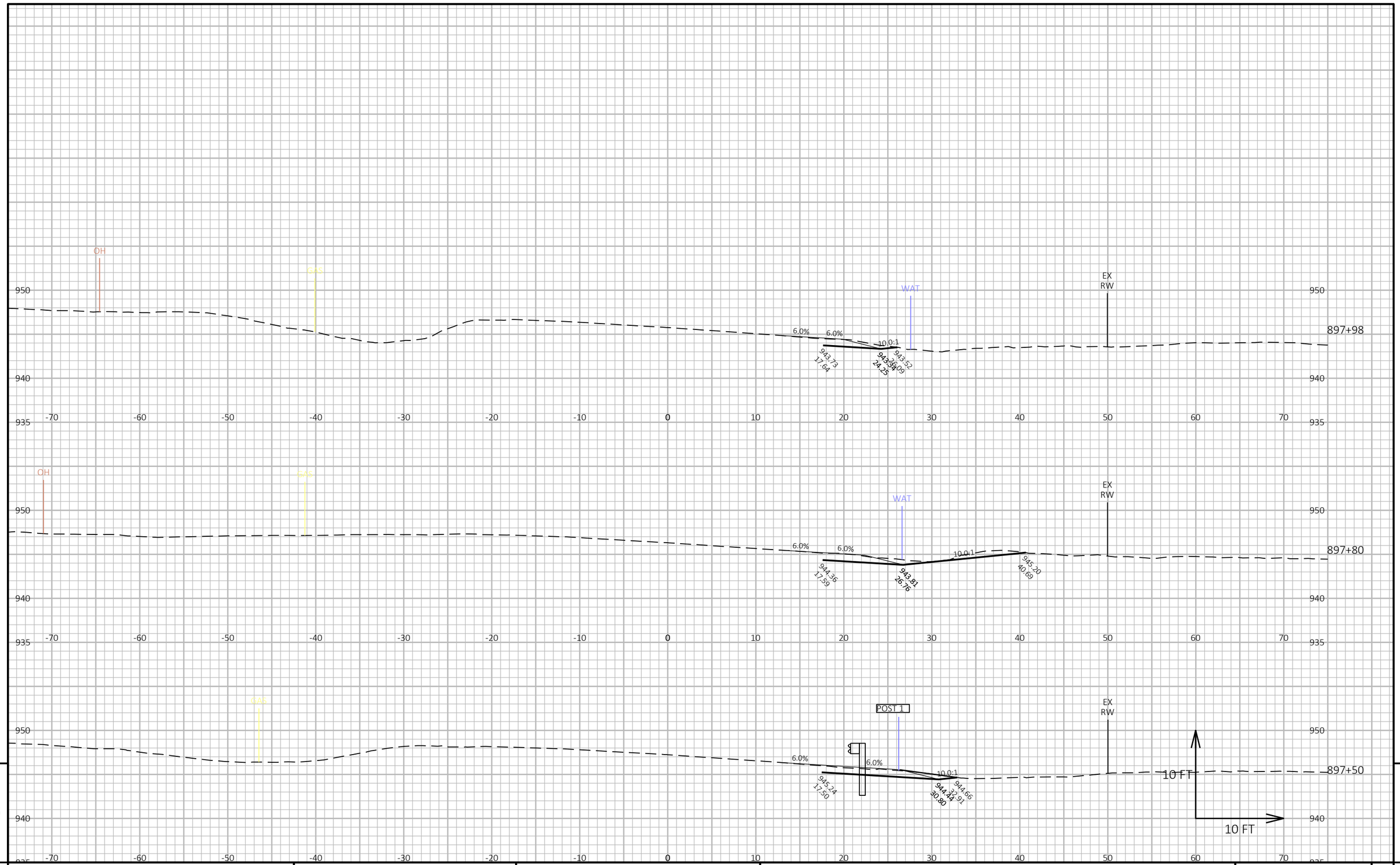

9

9

PROJECT NO: 4010-18-70	HWY: STH 144	COUNTY: WASHINGTON	CROSS SECTIONS: RUN 1	SHEET 241	E

FILE NAME : N:\PDS\C3D\40101800\SHEETSPLAN\090201-XS.DWG
LAYOUT NAME - Run1-5

PLOT DATE : 12/9/2022 11:24 AM

PLOT BY : BAUMANN, DAN A

PLOT NAME :

PLOT SCALE : 1 IN:10 FT HORZ. / 1 IN:10 FT VERT.

WISDOT/CADDS SHEET 49

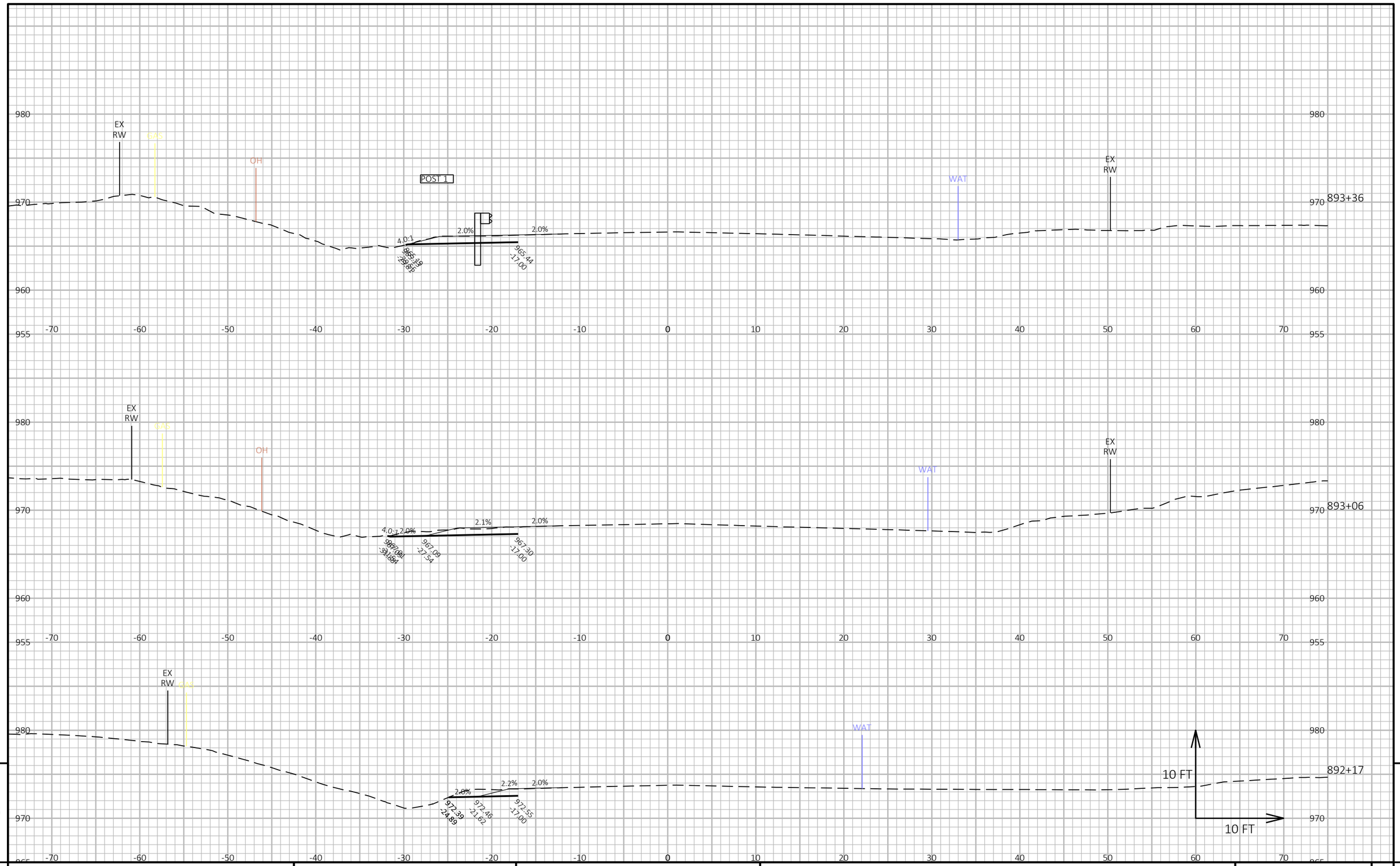

9

9

PROJECT NO: 4010-18-70	HWY: STH 144	COUNTY: WASHINGTON	CROSS SECTIONS: RUN 2	SHEET 242	E

FILE NAME : N:\PDS\C3D\40101800\SHEETSPLAN\090201-XS.DWG
LAYOUT NAME - Run2-1

PLOT DATE : 12/9/2022 11:24 AM

PLOT BY : BAUMANN, DAN A

PLOT NAME :

PLOT SCALE : 1 IN:10 FT HORZ. / 1 IN:10 FT VERT.

WISDOT/CADDS SHEET 49

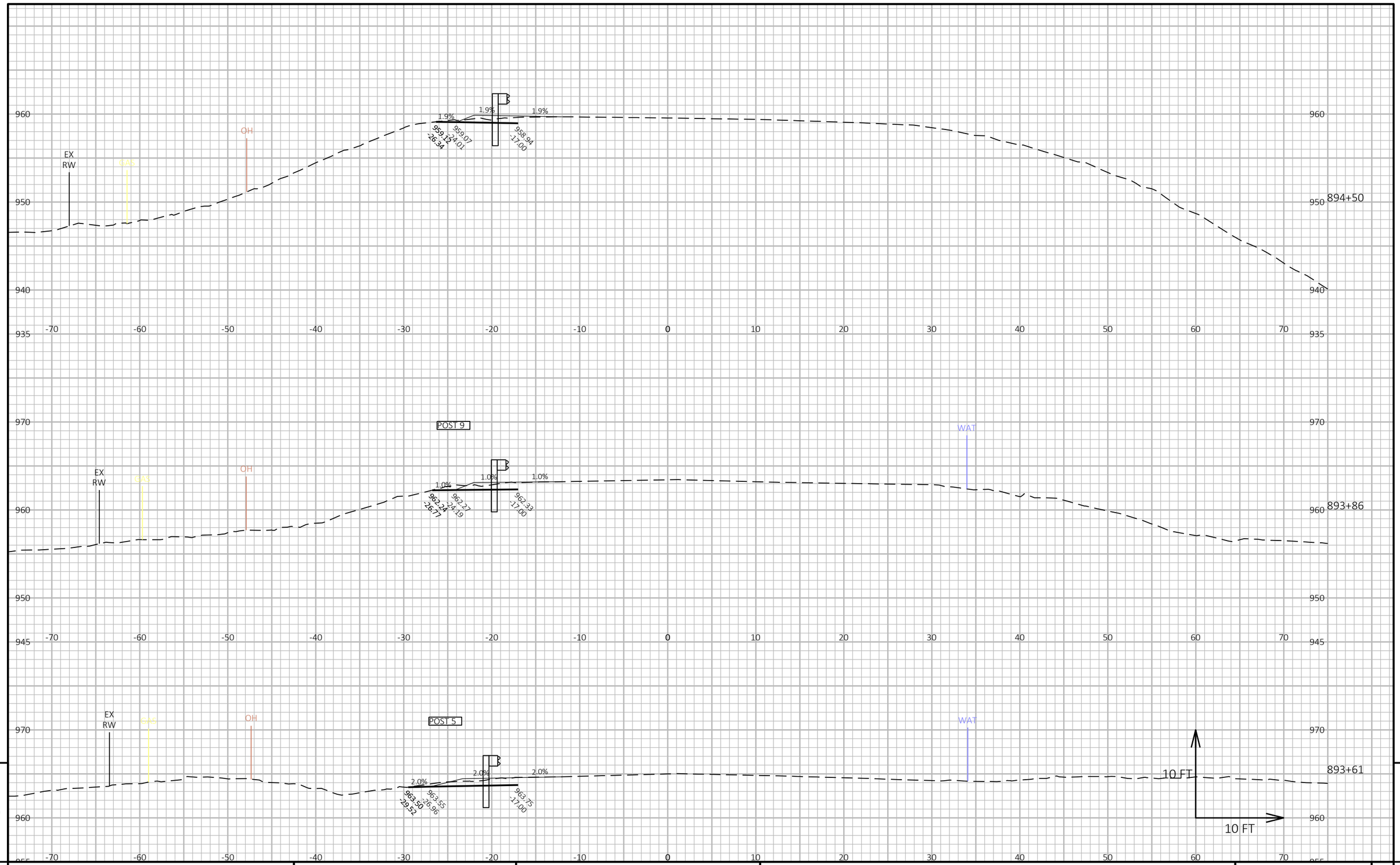

PROJECT NO: 4010-18-70	HWY: STH 144	COUNTY: WASHINGTON	CROSS SECTIONS: RUN 2	SHEET 243	E

FILE NAME : N:\PDS\C3D\40101800\SHEETSPLAN\090201-XS.DWG
LAYOUT NAME - Run2-2

PLOT DATE : 12/9/2022 11:24 AM PLOT BY : BAUMANN, DAN A PLOT NAME :

PLOT SCALE : 1 IN:10 FT HORZ. / 1 IN:10 FT VERT.

WISDOT/CADDS SHEET 49

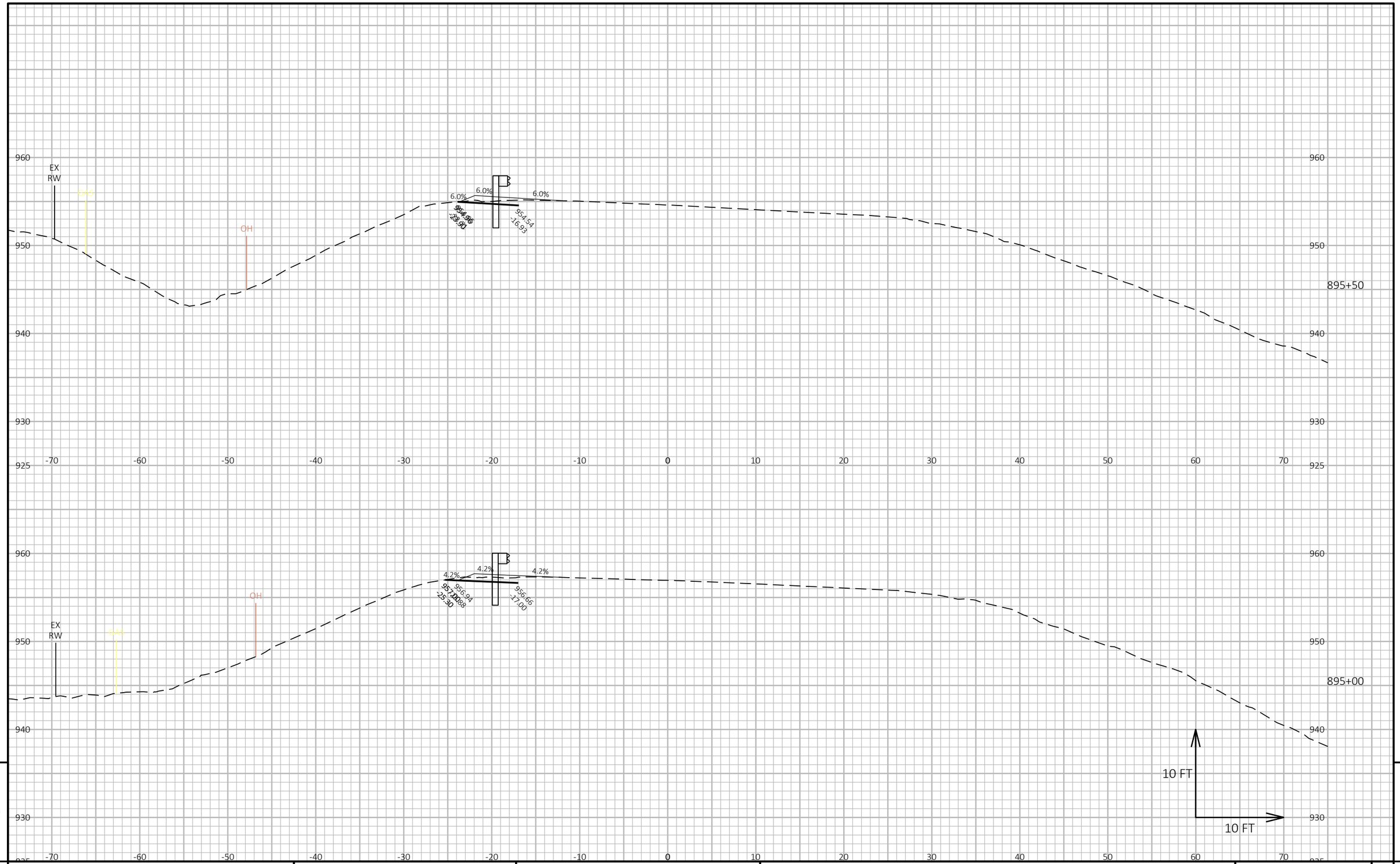

9

9

PROJECT NO: 4010-18-70	HWY: STH 144	COUNTY: WASHINGTON	CROSS SECTIONS: RUN 2	SHEET 244	E

FILE NAME : N:\PDS\C3D\40101800\SHEETSPLAN\090201-XS.DWG
LAYOUT NAME - Run2-3

PLOT DATE : 12/9/2022 11:24 AM

PLOT BY : BAUMANN, DAN A

PLOT NAME :

PLOT SCALE : 1 IN:10 FT HORZ. / 1 IN:10 FT VERT.

WISDOT/CADDS SHEET 49

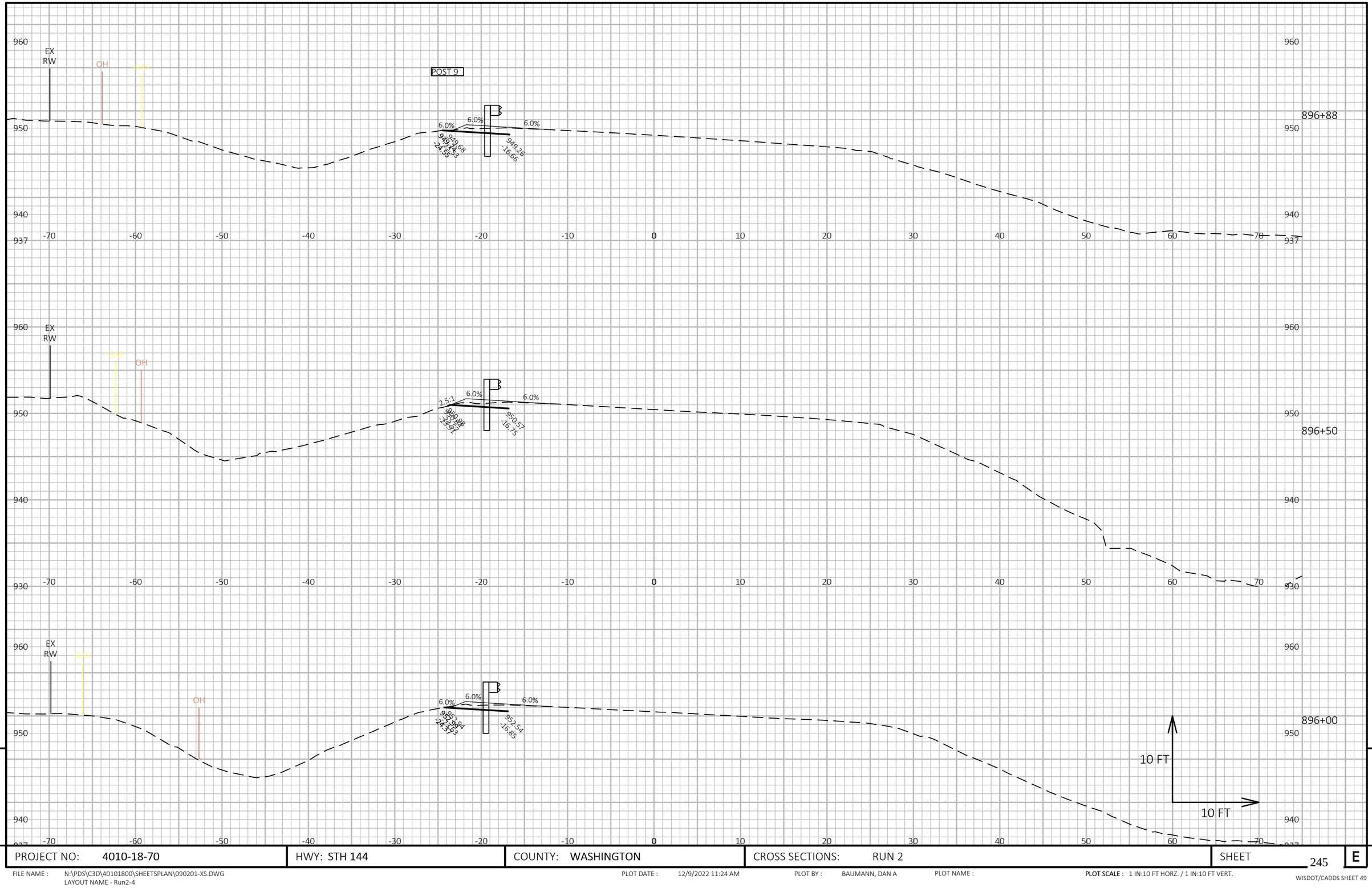

9

9

PROJECT NO: 4010-18-70	HWY: STH 144	COUNTY: WASHINGTON	CROSS SECTIONS: RUN 2	SHEET 245	E

FILE NAME : N:\PDS\C3D\40101800\SHEETSPLAN\090201-XS.DWG
LAYOUT NAME - Run2-4

PLOT DATE : 12/9/2022 11:24 AM

PLOT BY : BAUMANN, DAN A

PLOT NAME :

PLOT SCALE : 1 IN:10 FT HORZ. / 1 IN:10 FT VERT.

WISDOT/CADDS SHEET 49

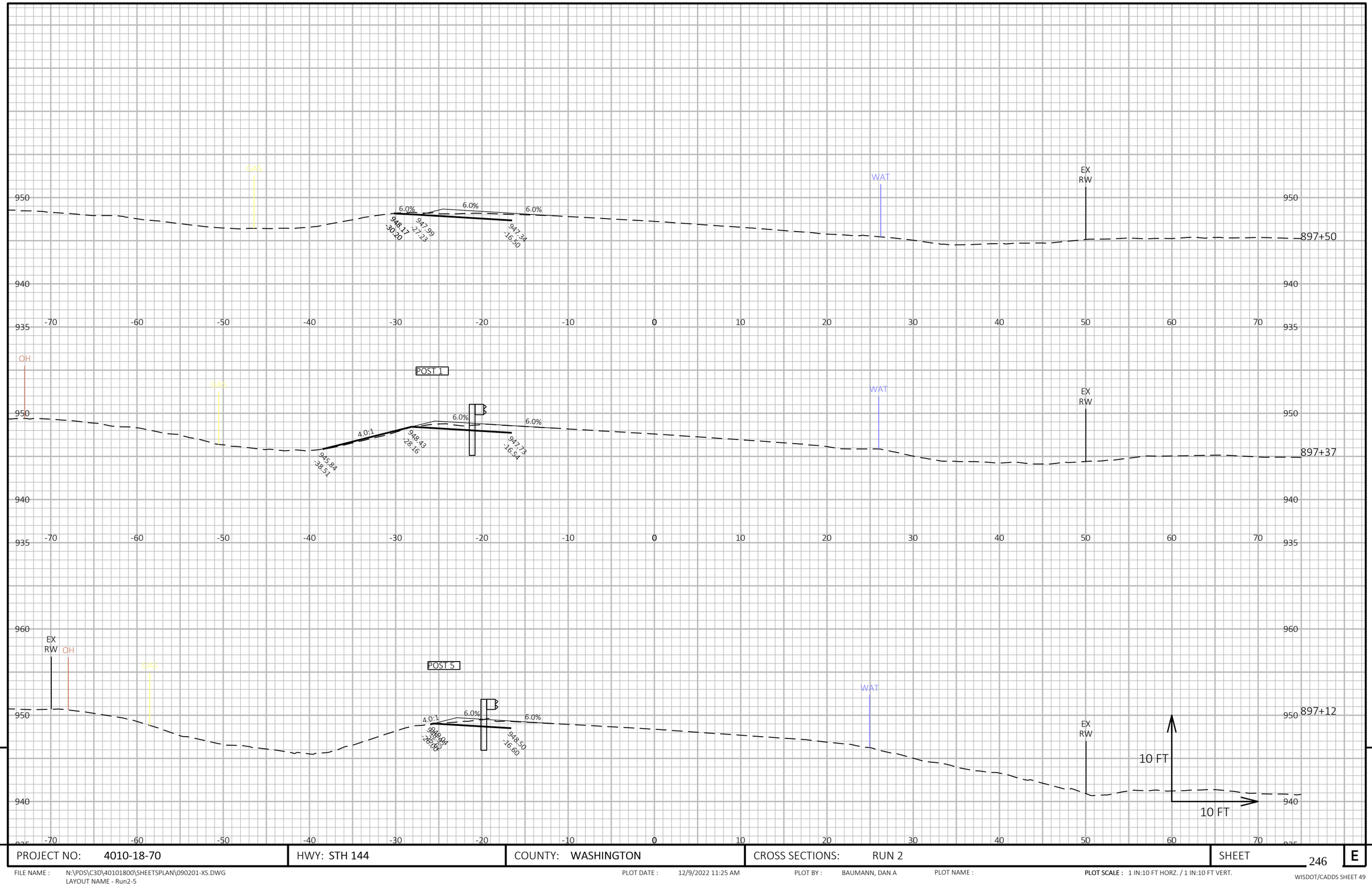

9

PROJECT NO: 4010-18-70	HWY: STH 144	COUNTY: WASHINGTON	CROSS SECTIONS: RUN 2	SHEET 246	E

FILE NAME : N:\PDS\C3D\40101800\SHEETSPLAN\090201-XS.DWG
LAYOUT NAME - Run2-5

PLOT DATE : 12/9/2022 11:25 AM

PLOT BY : BAUMANN, DAN A

PLOT NAME :

PLOT SCALE : 1 IN:10 FT HORZ. / 1 IN:10 FT VERT.

WISDOT/CADDS SHEET 49

9

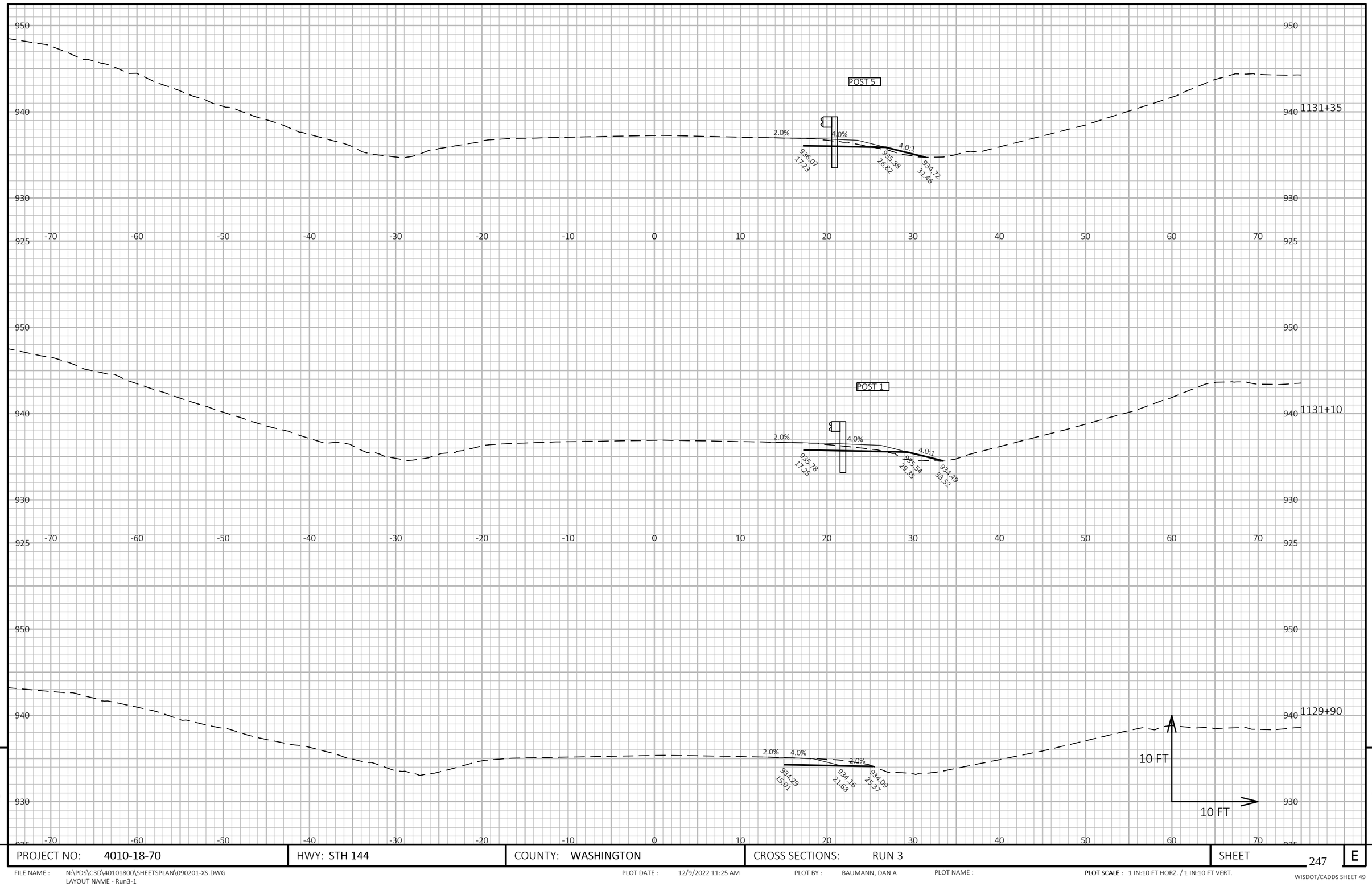

9

9

PROJECT NO: 4010-18-70	HWY: STH 144	COUNTY: WASHINGTON	CROSS SECTIONS: RUN 3	SHEET 247	E

FILE NAME : N:\PDS\C3D\40101800\SHEETSPLAN\090201-XS.DWG
LAYOUT NAME - Run3-1

PLOT DATE : 12/9/2022 11:25 AM

PLOT BY : BAUMANN, DAN A

PLOT NAME :

PLOT SCALE : 1 IN:10 FT HORZ. / 1 IN:10 FT VERT.

WISDOT/CADDS SHEET 49

960
950
940
930
925

-70 -60 -50 -40 -30 -20 -10 0 10 20 30 40 50 60 70

2.0% 4.0% 2.0%

936.93 17.17

936.60 24.16

936.75 806.49

1132+00

POST 9

2.0% 4.0% 2.0%

936.42 17.21

936.27 24.34

936.30 27.98

1131+60

10 FT

10 FT

9

9

PROJECT NO: 4010-18-70	HWY: STH 144	COUNTY: WASHINGTON	CROSS SECTIONS: RUN 3	SHEET 248	E

FILE NAME : N:\PDS\C3D\40101800\SHEETSPLAN\090201-XS.DWG
LAYOUT NAME - Run3-2

PLOT DATE : 12/9/2022 11:25 AM PLOT BY : BAUMANN, DAN A PLOT NAME :

PLOT SCALE : 1 IN:10 FT HORZ. / 1 IN:10 FT VERT.

WISDOT/CADDS SHEET 49

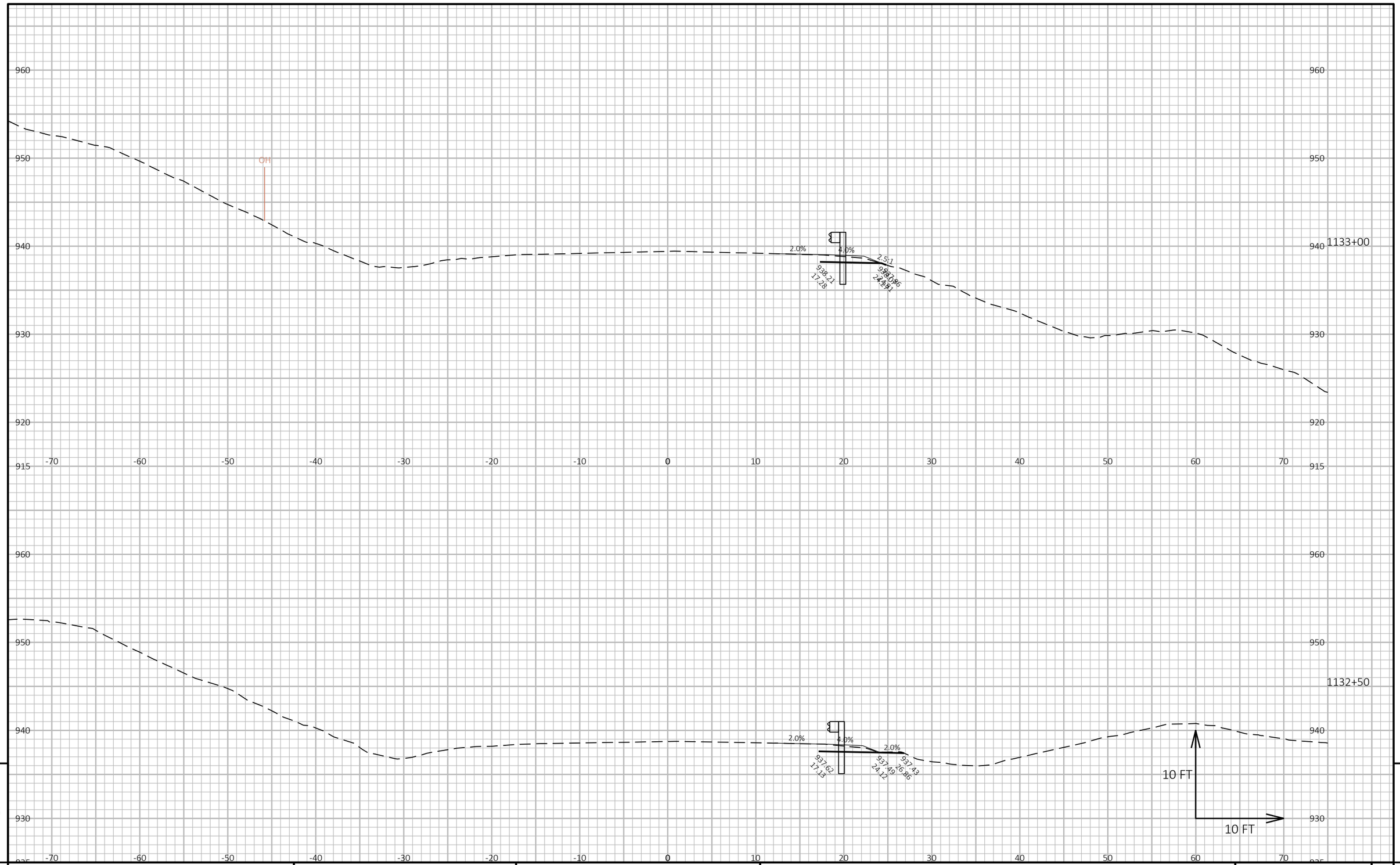

9

9

PROJECT NO: 4010-18-70	HWY: STH 144	COUNTY: WASHINGTON	CROSS SECTIONS: RUN 3	SHEET 249	E

FILE NAME : N:\PDS\C3D\40101800\SHEETSPLAN\090201-XS.DWG
LAYOUT NAME - Run3-3

PLOT DATE : 12/9/2022 11:25 AM

PLOT BY : BAUMANN, DAN A

PLOT NAME :

PLOT SCALE : 1 IN:10 FT HORZ. / 1 IN:10 FT VERT.

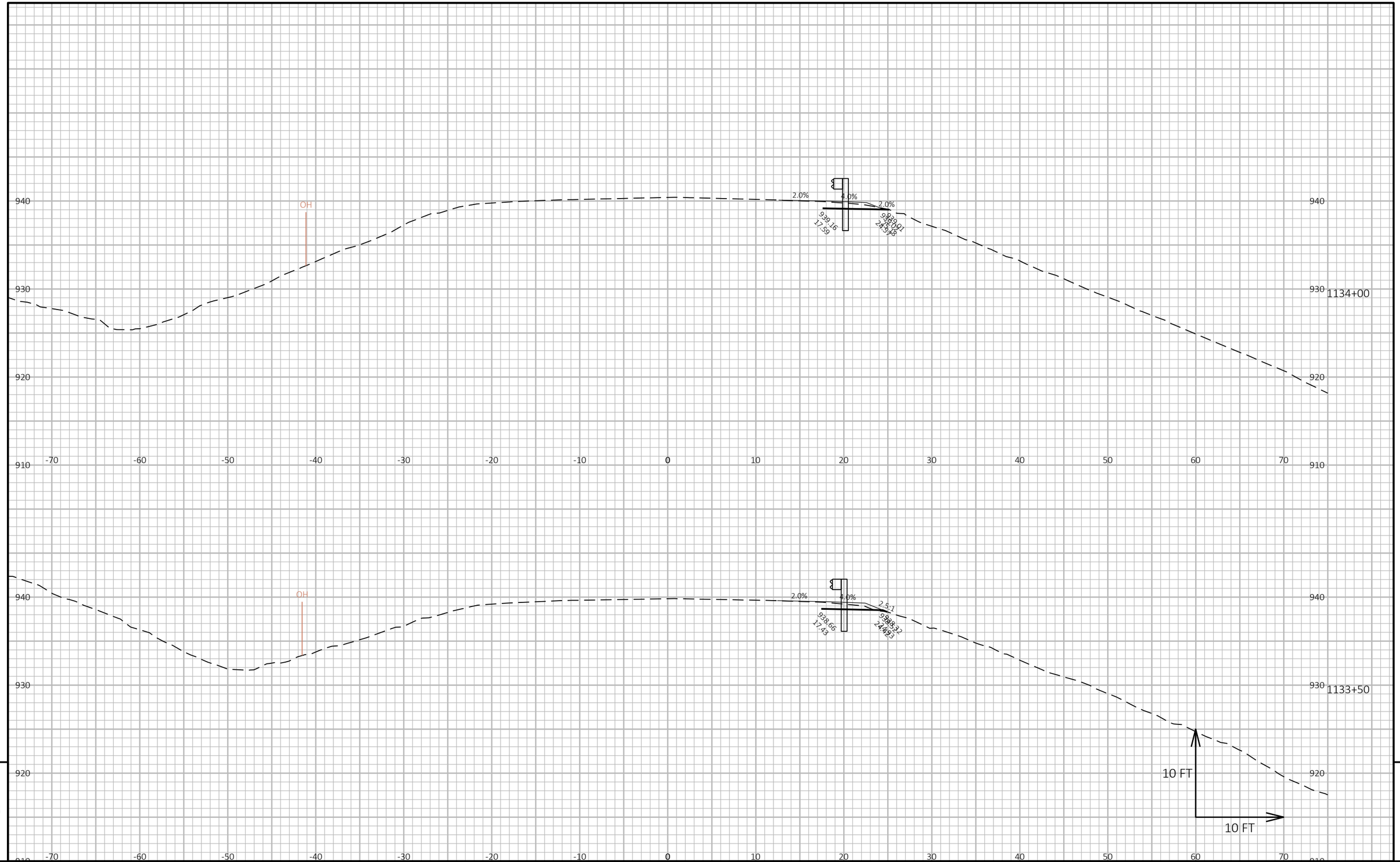

9

9

PROJECT NO: 4010-18-70	HWY: STH 144	COUNTY: WASHINGTON	CROSS SECTIONS: RUN 3	SHEET 250	E

FILE NAME : N:\PDS\C3D\40101800\SHEETSPLAN\090201-XS.DWG
LAYOUT NAME - Run3-4

PLOT DATE : 12/9/2022 11:25 AM

PLOT BY : BAUMANN, DAN A

PLOT NAME :

PLOT SCALE : 1 IN:10 FT HORZ. / 1 IN:10 FT VERT.

WISDOT/CADDS SHEET 49

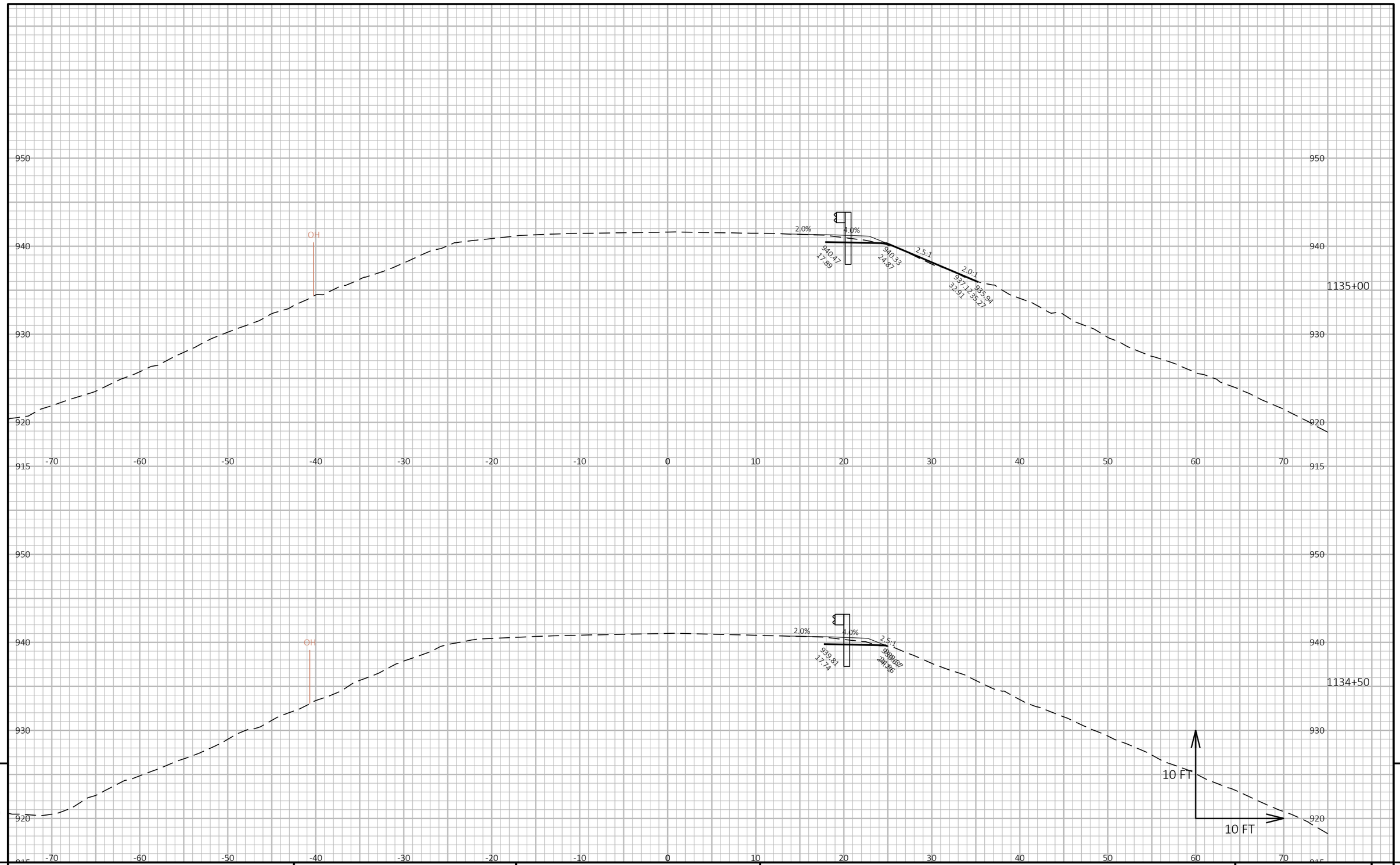

9

9

PROJECT NO: 4010-18-70	HWY: STH 144	COUNTY: WASHINGTON	CROSS SECTIONS: RUN 3	SHEET 251	E

FILE NAME : N:\PDS\C3D\40101800\SHEETSPLAN\090201-XS.DWG
LAYOUT NAME - Run3-5

PLOT DATE : 12/9/2022 11:25 AM

PLOT BY : BAUMANN, DAN A

PLOT NAME :

PLOT SCALE : 1 IN:10 FT HORZ. / 1 IN:10 FT VERT.

WISDOT/CADDS SHEET 49

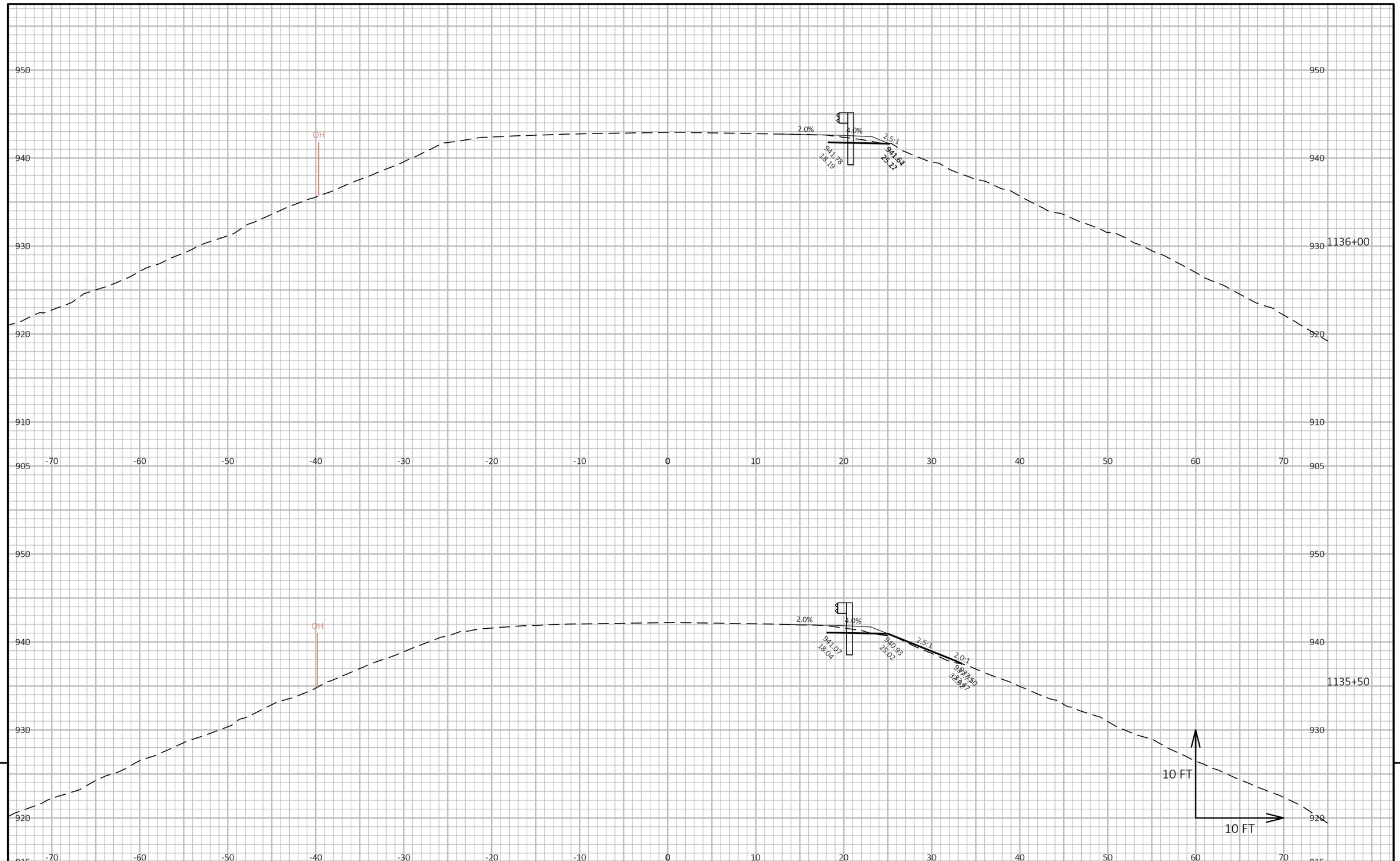

9 9

PROJECT NO: 4010-18-70	HWY: STH 144	COUNTY: WASHINGTON	CROSS SECTIONS: RUN 3	SHEET 252	E

FILE NAME : N:\PDS\C3D\40101800\SHEETSPLAN\090201-XS.DWG
LAYOUT NAME - Run3-6

PLOT DATE : 12/9/2022 11:25 AM PLOT BY : BAUMANN, DAN A PLOT NAME :

PLOT SCALE : 1 IN:10 FT HORZ. / 1 IN:10 FT VERT.

WISDOT/CADDS SHEET 49

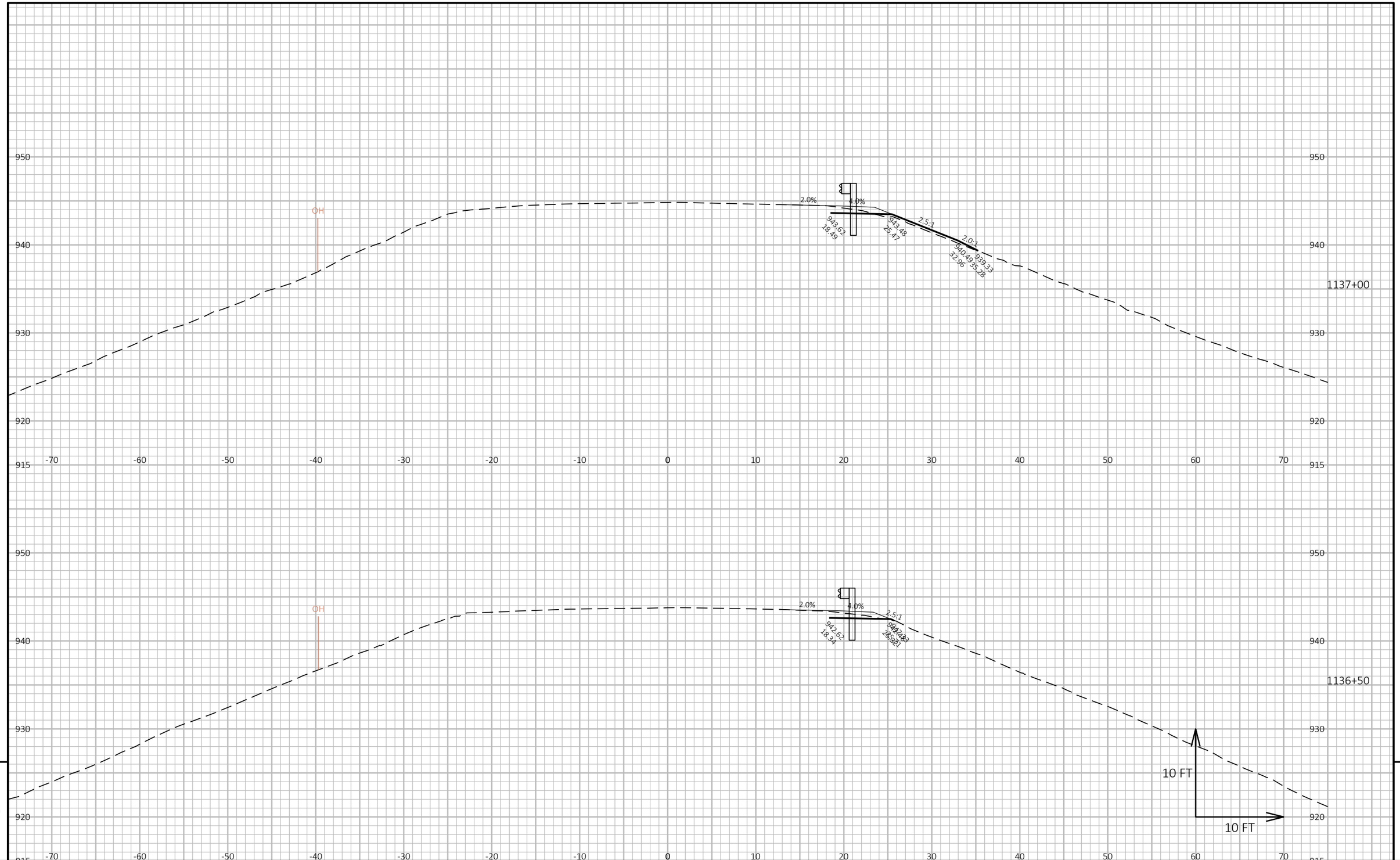

9

9

PROJECT NO: 4010-18-70	HWY: STH 144	COUNTY: WASHINGTON	CROSS SECTIONS: RUN 3	SHEET 253	E

FILE NAME : N:\PDS\C3D\40101800\SHEETSPLAN\090201-XS.DWG
LAYOUT NAME - Run3-7

PLOT DATE : 12/9/2022 11:25 AM

PLOT BY : BAUMANN, DAN A

PLOT NAME :

PLOT SCALE : 1 IN:10 FT HORZ. / 1 IN:10 FT VERT.

WISDOT/CADDS SHEET 49

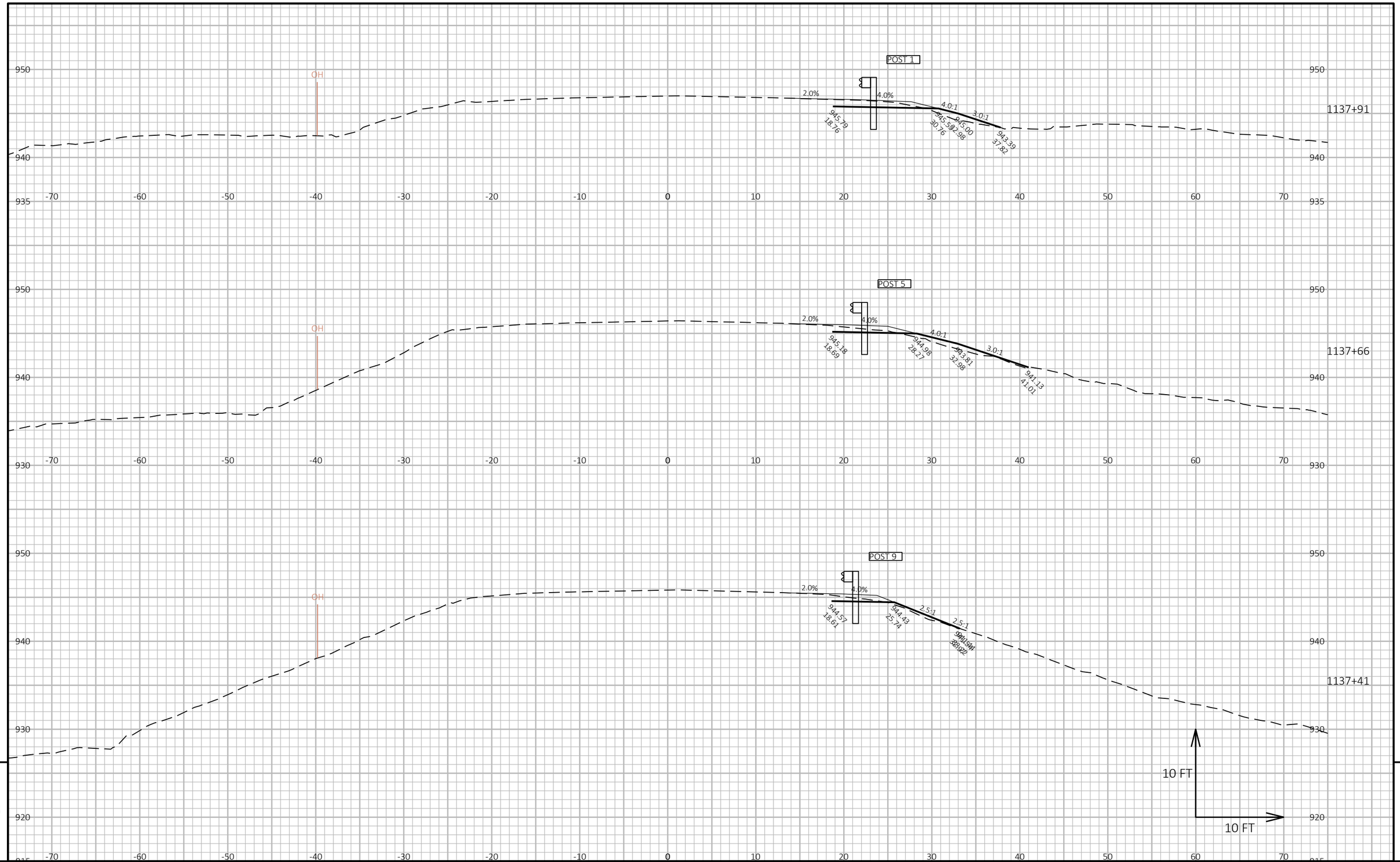

9

9

PROJECT NO: 4010-18-70	HWY: STH 144	COUNTY: WASHINGTON	CROSS SECTIONS: RUN 3	SHEET 254	E

FILE NAME : N:\PDS\C3D\40101800\SHEETSPLAN\090201-XS.DWG
LAYOUT NAME - Run3-8

PLOT DATE : 12/9/2022 11:25 AM

PLOT BY : BAUMANN, DAN A

PLOT NAME :

PLOT SCALE : 1 IN:10 FT HORZ. / 1 IN:10 FT VERT.

WISDOT/CADDS SHEET 49

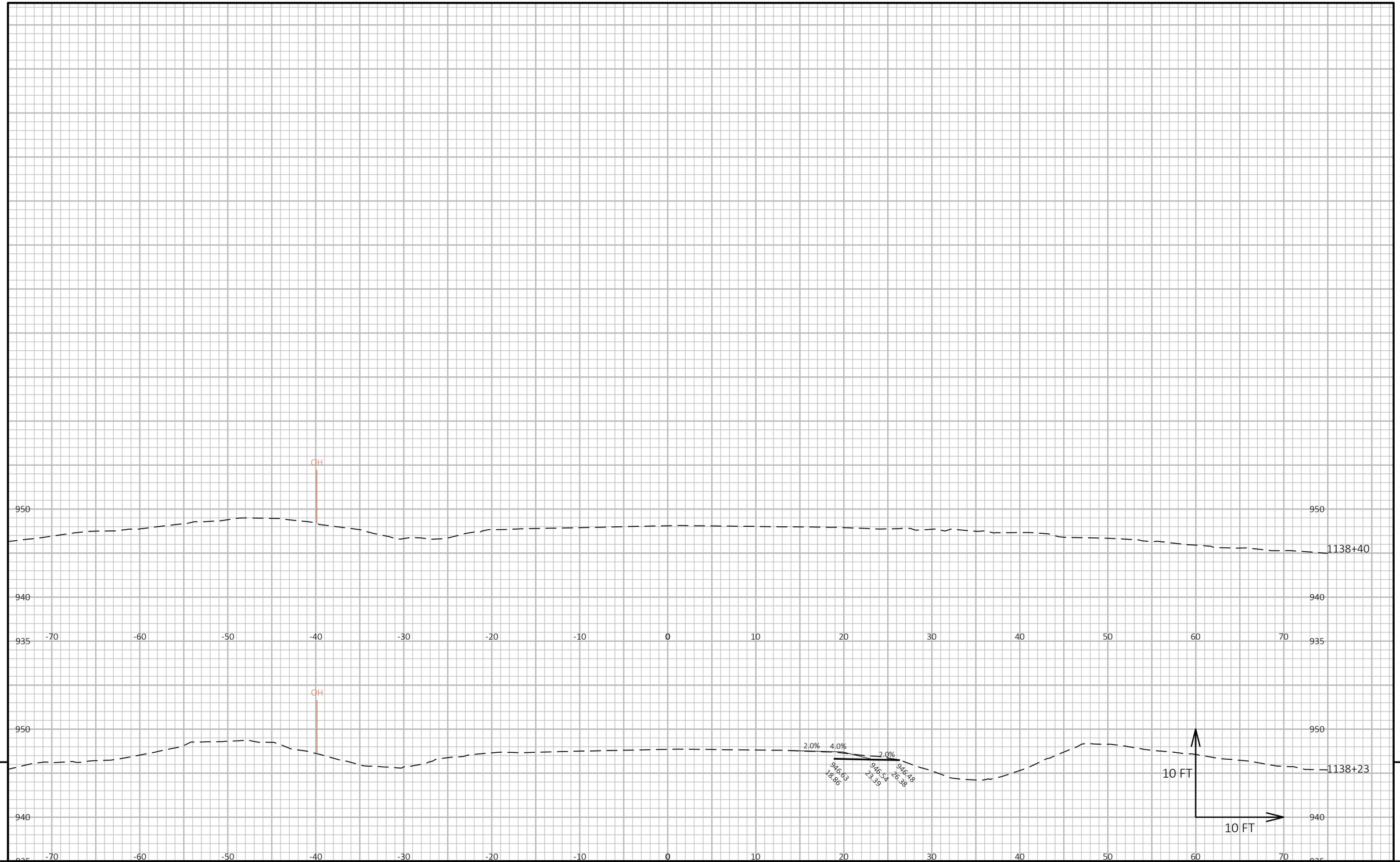

9

9

PROJECT NO: 4010-18-70	HWY: STH 144	COUNTY: WASHINGTON	CROSS SECTIONS: RUN 3	SHEET 255	E

FILE NAME : N:\PDS\C3D\40101800\SHEETSPLAN\090201-XS.DWG
LAYOUT NAME - Run3-9

PLOT DATE : 12/9/2022 11:25 AM

PLOT BY : BAUMANN, DAN A

PLOT NAME :

PLOT SCALE : 1 IN:10 FT HORZ. / 1 IN:10 FT VERT.

WISDOT/CADDS SHEET 49

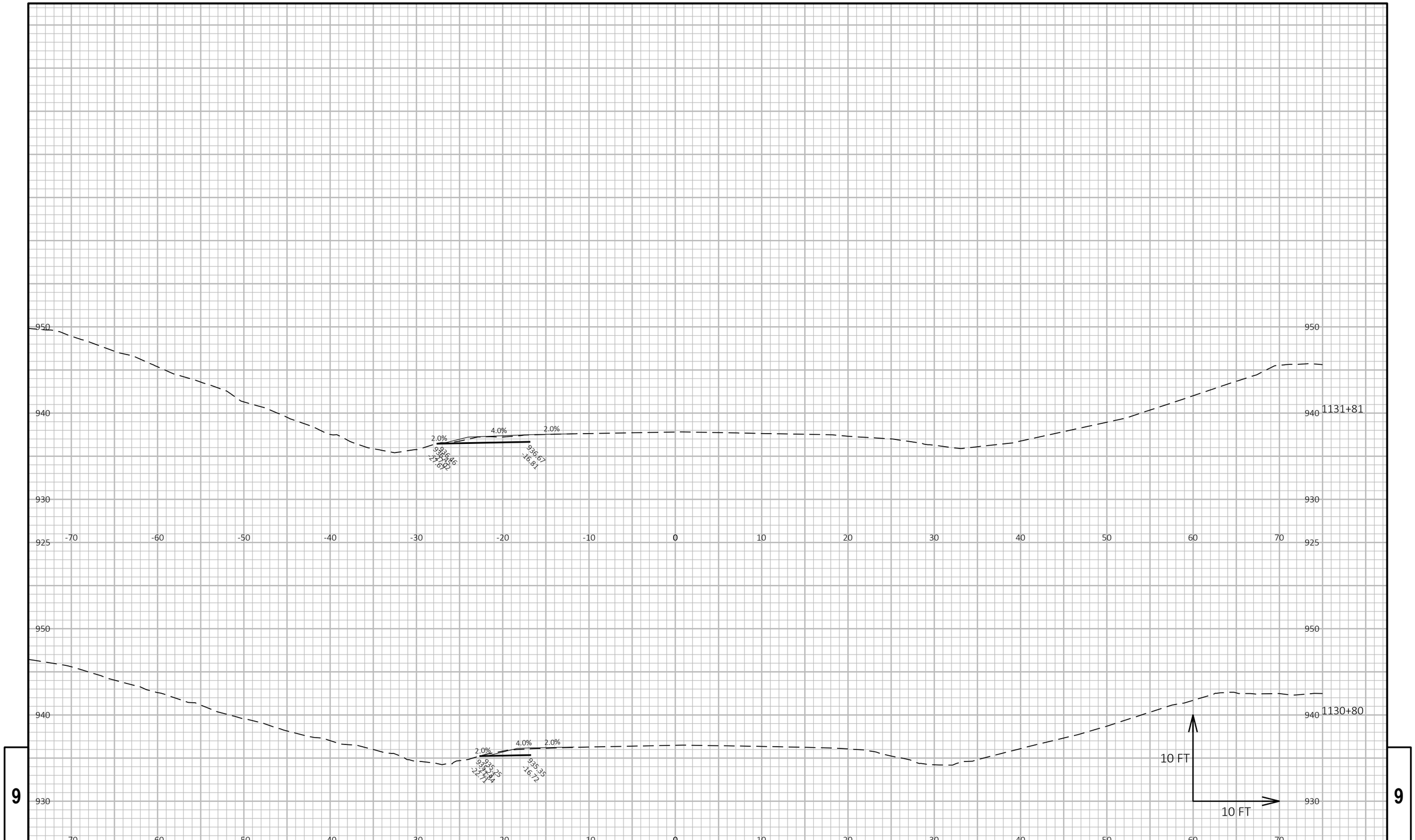

9

9

PROJECT NO: 4010-18-70	HWY: STH 144	COUNTY: WASHINGTON	CROSS SECTIONS: RUN 4	SHEET 256	E

FILE NAME : N:\PDS\C3D\40101800\SHEETSPLAN\090201-XS.DWG
LAYOUT NAME - Run4-1
PLOT DATE : 12/9/2022 11:25 AM
PLOT BY : BAUMANN, DAN A
PLOT NAME :
PLOT SCALE : 1 IN:10 FT HORZ. / 1 IN:10 FT VERT.
WISDOT/CADDS SHEET 49

960
950
940
930
925
-70 -60 -50 -40 -30 -20 -10 0 10 20 30 40 50 60 70

POST 5

2.0%
4.0%
2.0%
4:0:1
937.22
-28.14
937.28
-25.13
937.45
-16.96

1132+37

960
950
940
930
925
-70 -60 -50 -40 -30 -20 -10 0 10 20 30 40 50 60 70

POST 1

4.0%
2.0%
4:0:1
936.05
-32.07
936.85
-28.88
937.09
-16.84

1132+12

10 FT
10 FT

9

9

PROJECT NO: 4010-18-70	HWY: STH 144	COUNTY: WASHINGTON	CROSS SECTIONS: RUN 4	SHEET 257	E

FILE NAME : N:\PDS\C3D\40101800\SHEETSPLAN\090201-XS.DWG
LAYOUT NAME - Run4-2

PLOT DATE : 12/9/2022 11:25 AM PLOT BY : BAUMANN, DAN A PLOT NAME :

PLOT SCALE : 1 IN:10 FT HORZ. / 1 IN:10 FT VERT.

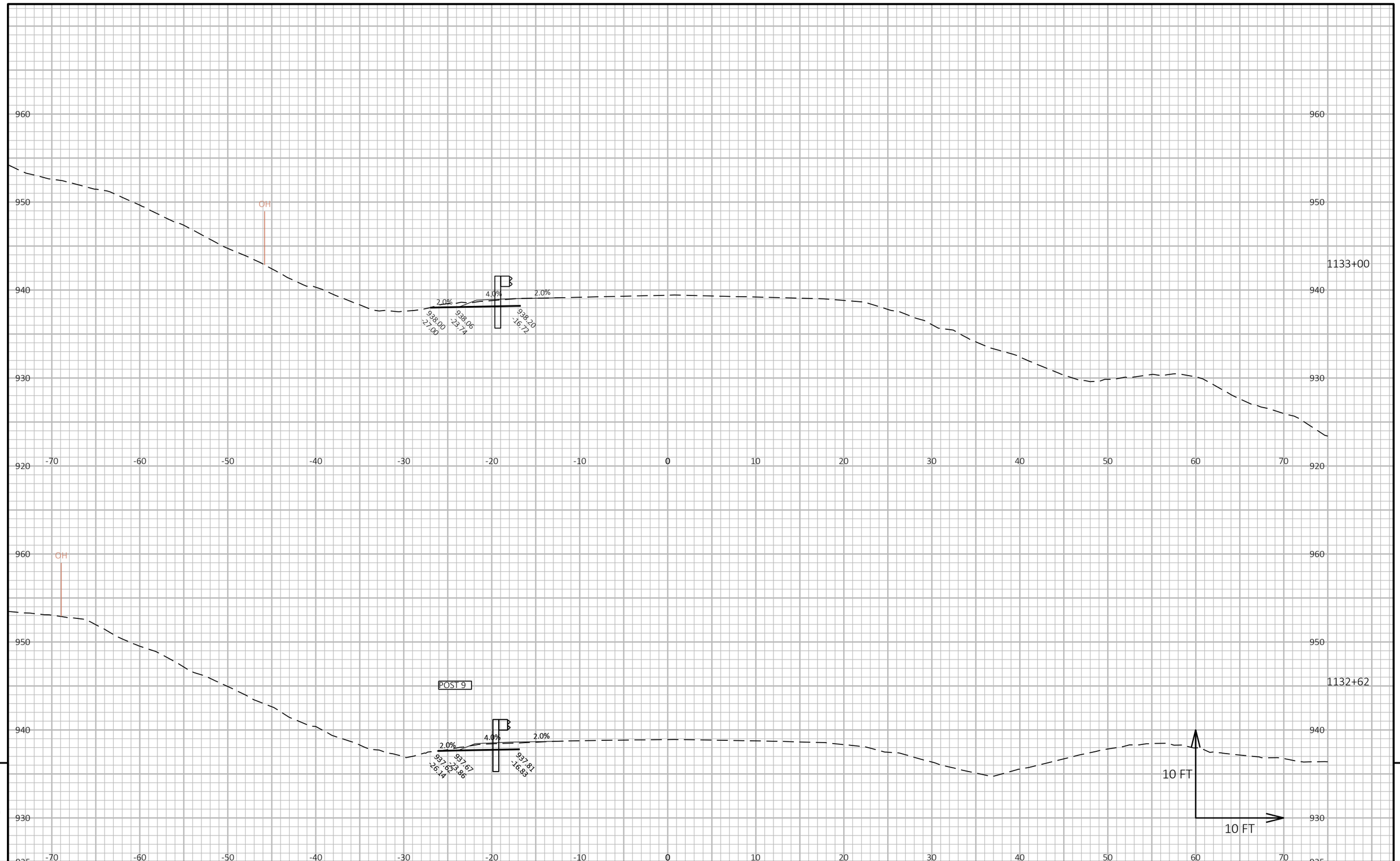

9

9

PROJECT NO: 4010-18-70	HWY: STH 144	COUNTY: WASHINGTON	CROSS SECTIONS: RUN 4	SHEET 258	E

FILE NAME : N:\PDS\C3D\40101800\SHEETSPLAN\090201-XS.DWG
LAYOUT NAME - Run4-3

PLOT DATE : 12/9/2022 11:25 AM

PLOT BY : BAUMANN, DAN A

PLOT NAME :

PLOT SCALE : 1 IN:10 FT HORZ. / 1 IN:10 FT VERT.

WISDOT/CADDS SHEET 49

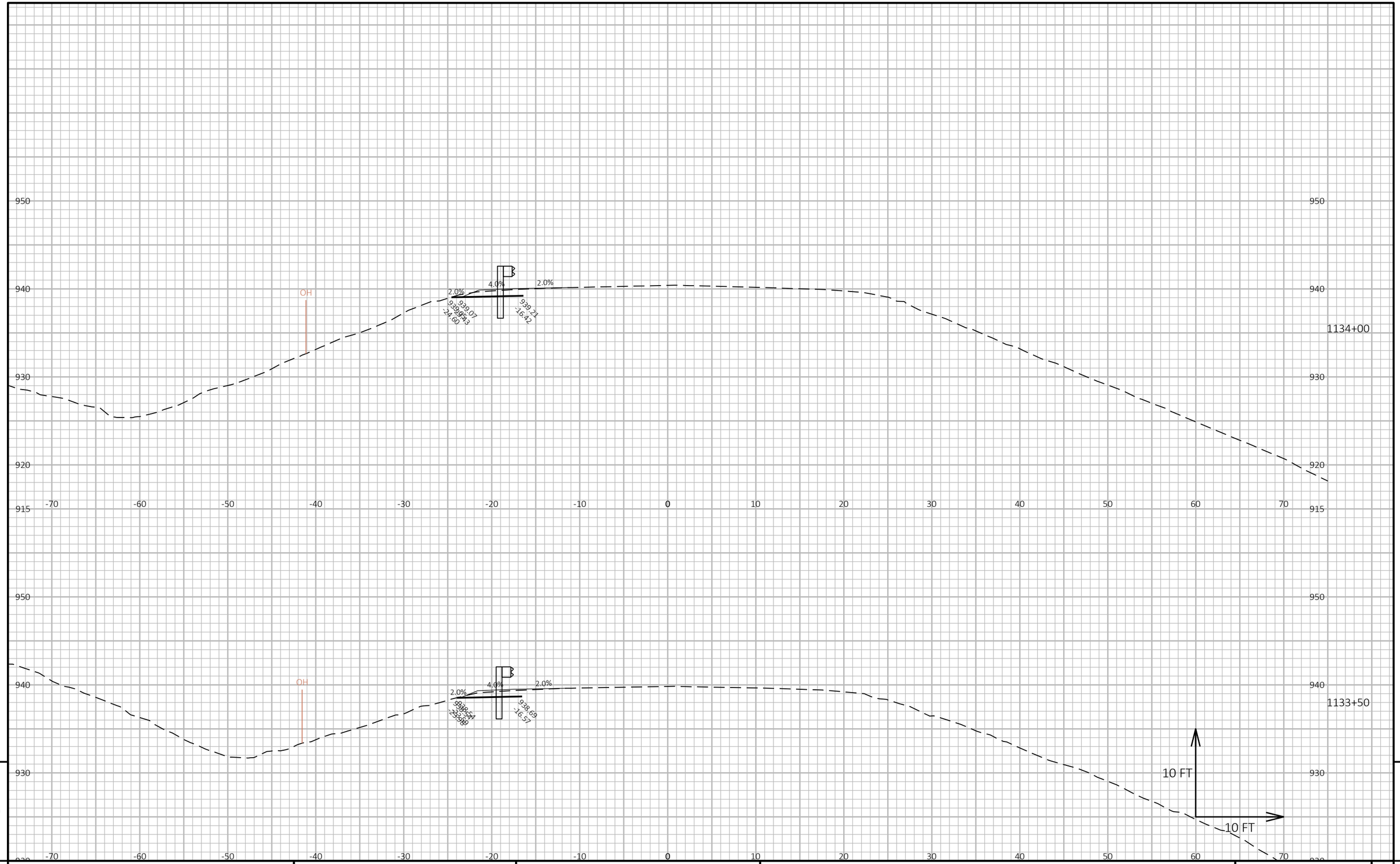

9

9

PROJECT NO: 4010-18-70	HWY: STH 144	COUNTY: WASHINGTON	CROSS SECTIONS: RUN 4	SHEET 259	E

FILE NAME : N:\PDS\C3D\40101800\SHEETSPLAN\090201-XS.DWG
LAYOUT NAME - Run4-4

PLOT DATE : 12/9/2022 11:25 AM

PLOT BY : BAUMANN, DAN A

PLOT NAME :

PLOT SCALE : 1 IN:10 FT HORZ. / 1 IN:10 FT VERT.

WISDOT/CADDS SHEET 49

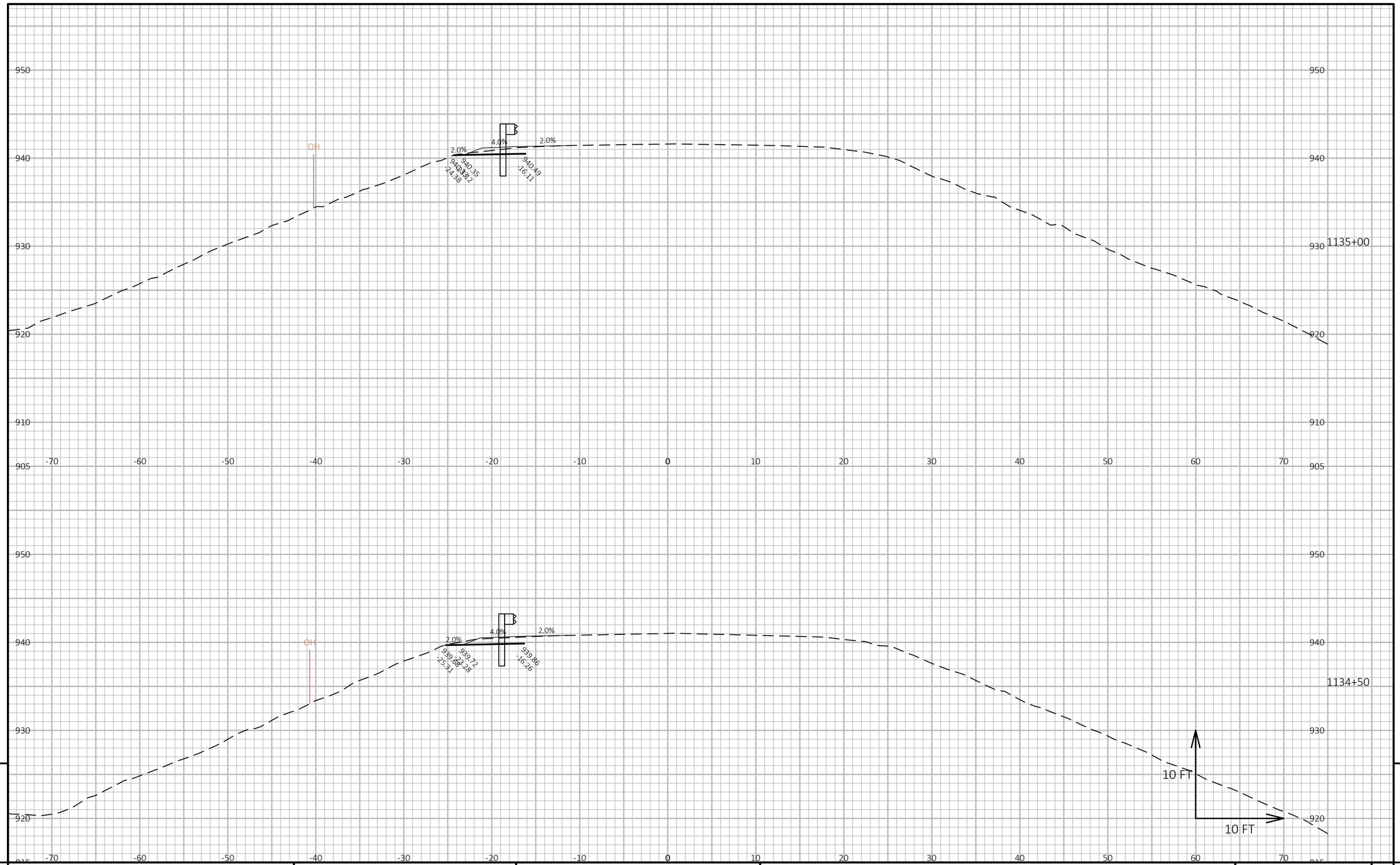

9

9

PROJECT NO: 4010-18-70	HWY: STH 144	COUNTY: WASHINGTON	CROSS SECTIONS: RUN 4	SHEET 260	E

FILE NAME : N:\PDS\C3D\40101800\SHEETSPLAN\090201-XS.DWG
LAYOUT NAME - Run4-5

PLOT DATE : 12/9/2022 11:26 AM

PLOT BY : BAUMANN, DAN A

PLOT NAME :

PLOT SCALE : 1 IN:10 FT HORZ. / 1 IN:10 FT VERT.

WISDOT/CADDS SHEET 49

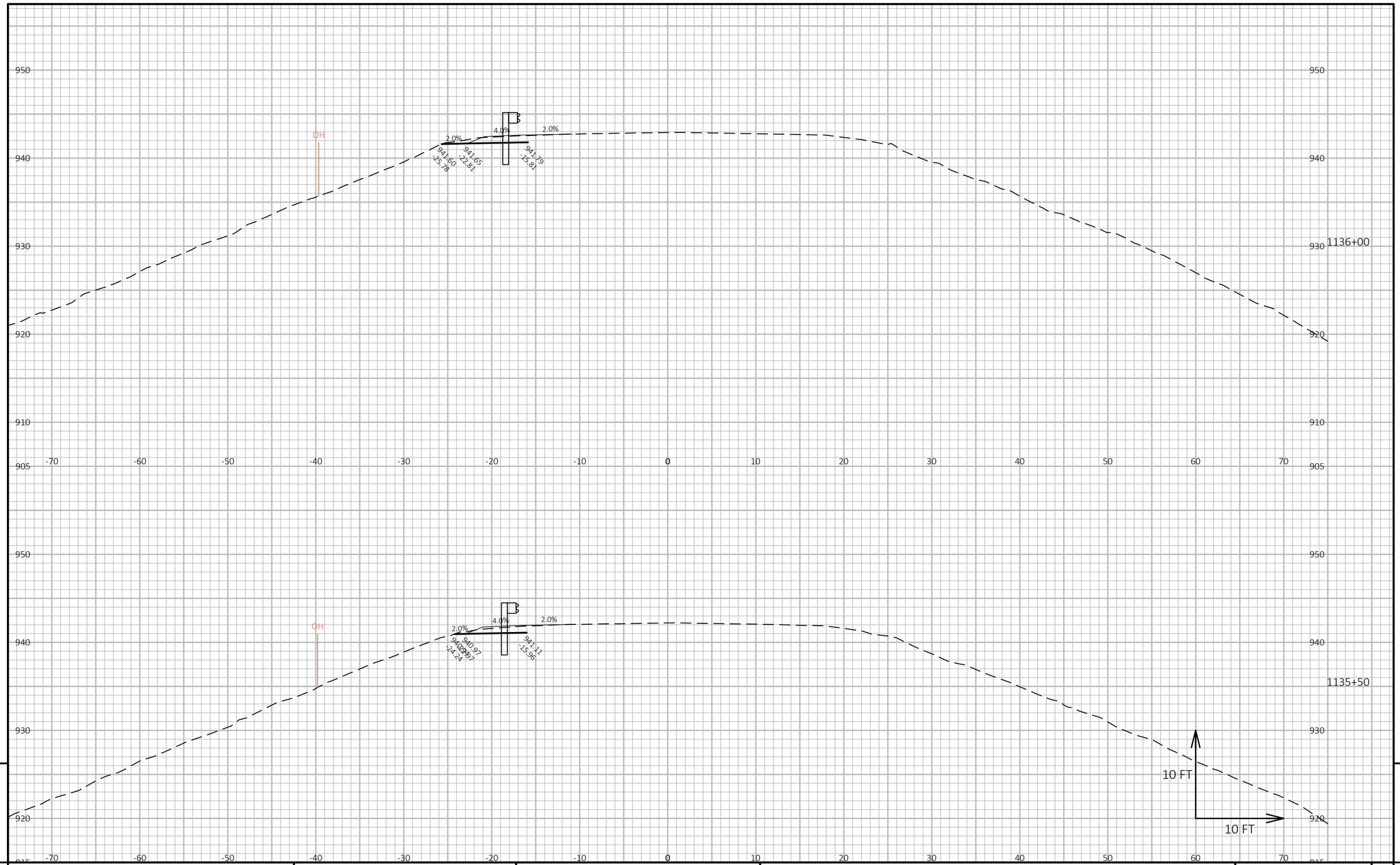

9

9

PROJECT NO: 4010-18-70	HWY: STH 144	COUNTY: WASHINGTON	CROSS SECTIONS: RUN 4	SHEET 261	E

FILE NAME : N:\PDS\C3D\40101800\SHEETSPLAN\090201-XS.DWG
LAYOUT NAME - Run4-6

PLOT DATE : 12/9/2022 11:26 AM

PLOT BY : BAUMANN, DAN A

PLOT NAME :

PLOT SCALE : 1 IN:10 FT HORZ. / 1 IN:10 FT VERT.

WISDOT/CADDS SHEET 49

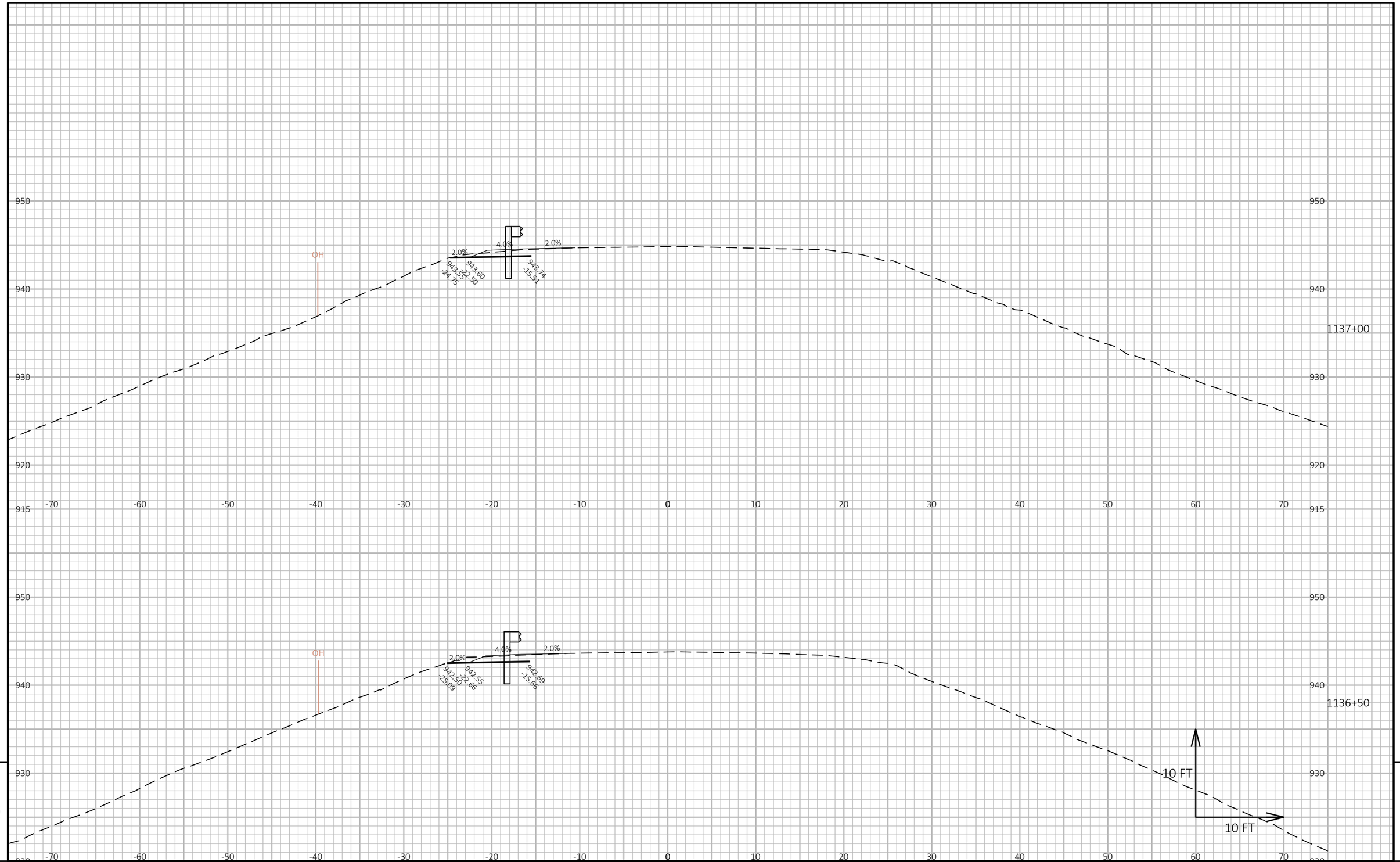

9

9

PROJECT NO: 4010-18-70	HWY: STH 144	COUNTY: WASHINGTON	CROSS SECTIONS: RUN 4	SHEET 262	E

FILE NAME : N:\PDS\C3D\40101800\SHEETSPLAN\090201-XS.DWG
LAYOUT NAME - Run4-7

PLOT DATE : 12/9/2022 11:26 AM PLOT BY : BAUMANN, DAN A PLOT NAME :

PLOT SCALE : 1 IN:10 FT HORZ. / 1 IN:10 FT VERT.

WISDOT/CADDS SHEET 49

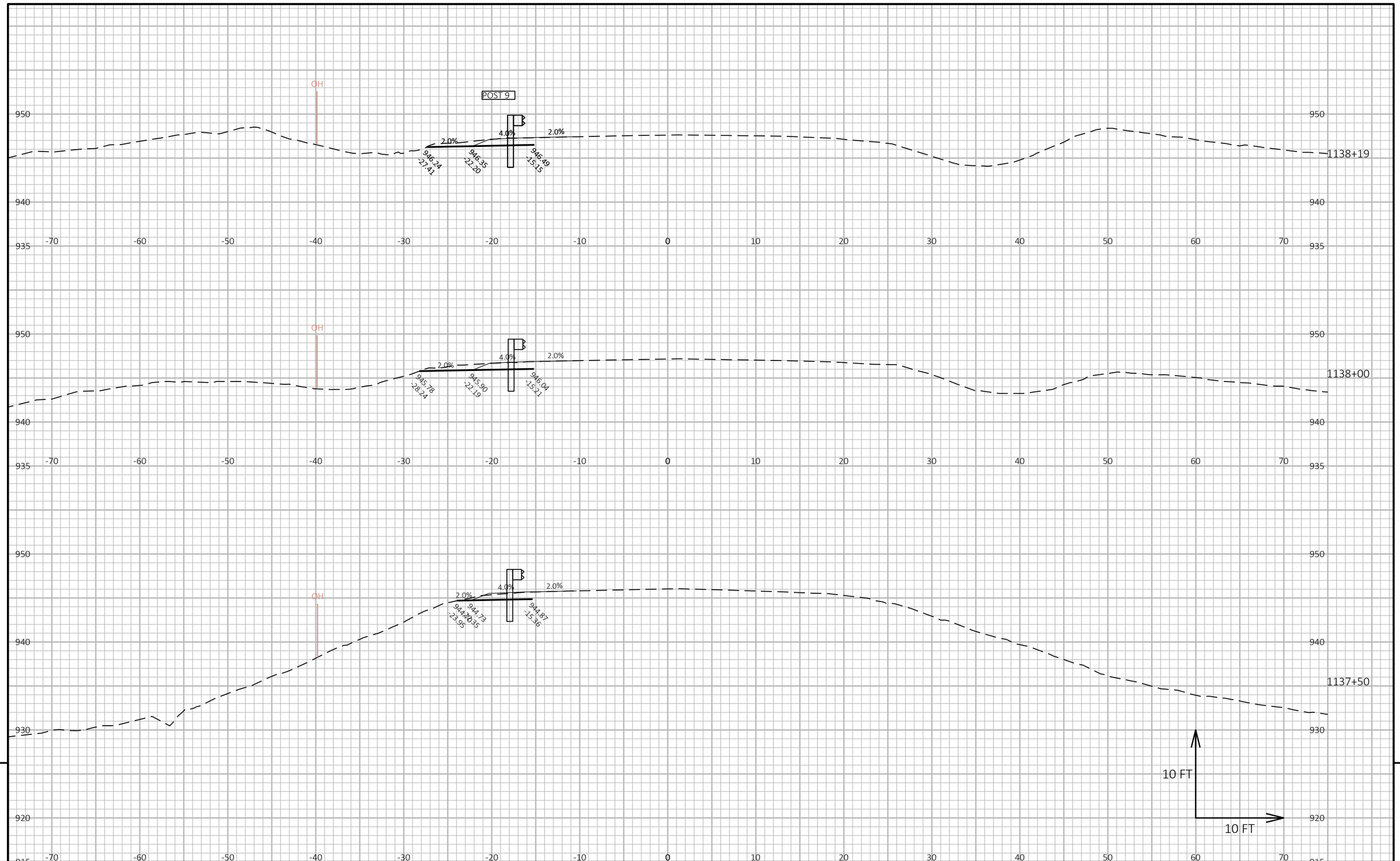

9

9

PROJECT NO: 4010-18-70	HWY: STH 144	COUNTY: WASHINGTON	CROSS SECTIONS: RUN 4	SHEET 263	E

FILE NAME : N:\PDS\C3D\40101800\SHEETSPLAN\090201-XS.DWG
LAYOUT NAME - Run4-8

PLOT DATE : 12/9/2022 11:26 AM

PLOT BY : BAUMANN, DAN A

PLOT NAME :

PLOT SCALE : 1 IN:10 FT HORZ. / 1 IN:10 FT VERT.

WISDOT/CADDS SHEET 49

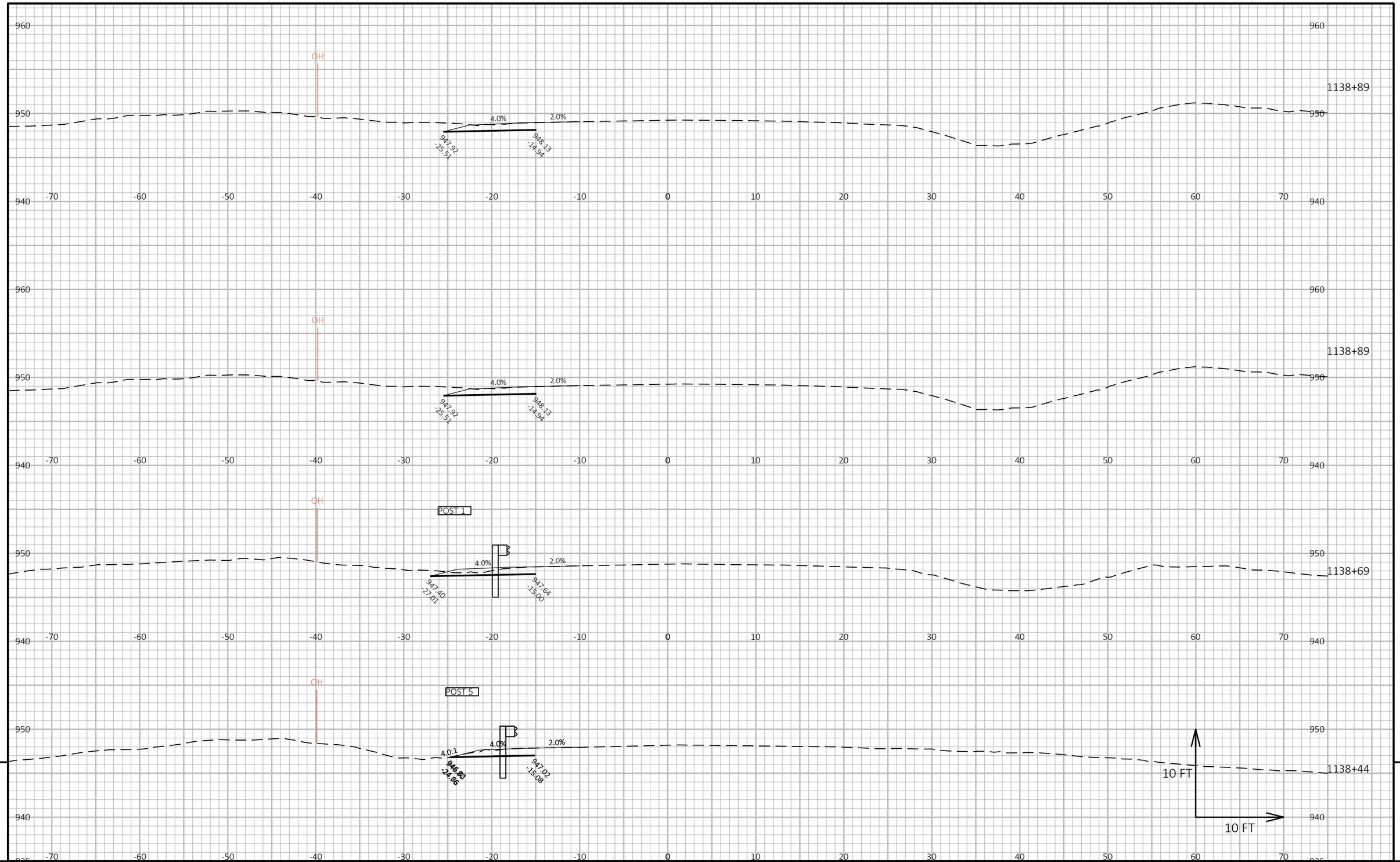

9

9

PROJECT NO: 4010-18-70	HWY: STH 144	COUNTY: WASHINGTON	CROSS SECTIONS: RUN 4	SHEET 264	E

FILE NAME : N:\PDS\C3D\40101800\SHEETSPLAN\090201-XS.DWG
LAYOUT NAME - Run4-9

PLOT DATE : 12/9/2022 11:26 AM

PLOT BY : BAUMANN, DAN A

PLOT NAME :

PLOT SCALE : 1 IN:10 FT HORZ. / 1 IN:10 FT VERT.

WISDOT/CADDS SHEET 49

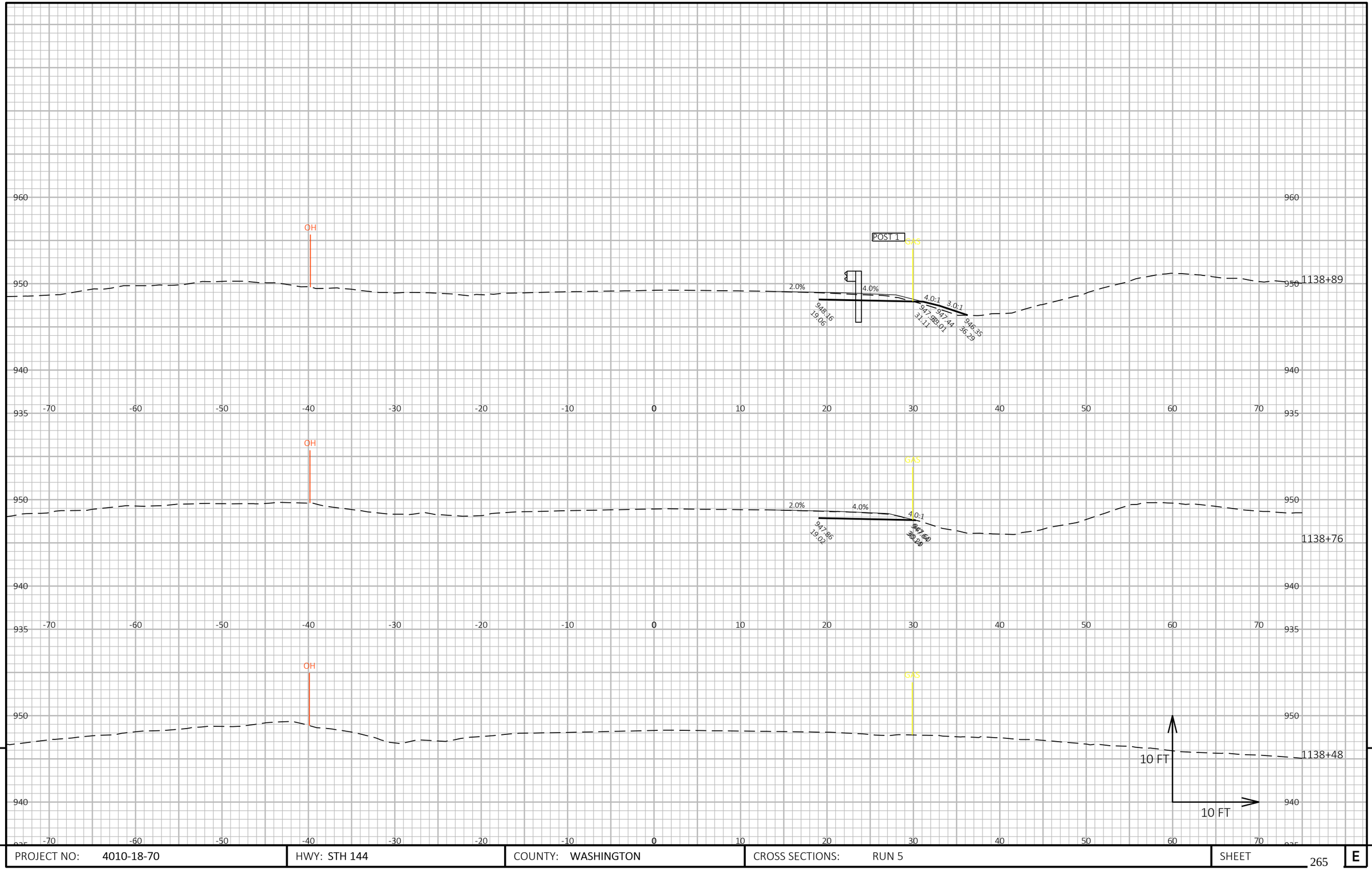

9

9

PROJECT NO: 4010-18-70	HWY: STH 144	COUNTY: WASHINGTON	CROSS SECTIONS: RUN 5	SHEET 265	E

FILE NAME : N:\PDS\C3D\40101800\SHEETSPLAN\090202-XS.DWG
LAYOUT NAME - Run5-1

PLOT DATE : 9/8/2022 1:51 PM

PLOT BY : MAY, MATTHEW

PLOT NAME :

PLOT SCALE : 1 IN:10 FT HORZ. / 1 IN:10 FT VERT.

WISDOT/CADDS SHEET 49

960
950
940
935
-70 -60 -50 -40 -30 -20 -10 0 10 20 30 40 50 60 70
OH
GAS
2.0%
4.0%
2.0%
950.94
19.39
950.39
26.96
1140+00

960
950
940
935
-70 -60 -50 -40 -30 -20 -10 0 10 20 30 40 50 60 70
OH
POST 9
GAS
2.0%
4.0%
2.0%
949.36
19.21
949.22
26.35
1139+39

960
950
940
935
-70 -60 -50 -40 -30 -20 -10 0 10 20 30 40 50 60 70
OH
POST 5
GAS
2.0%
4.0%
4.0:1
3.0:1
948.75
19.13
948.56
28.72
947.48
33.01
946.88
38.82
1139+14
10 FT
10 FT

9

9

PROJECT NO: 4010-18-70	HWY: STH 144	COUNTY: WASHINGTON	CROSS SECTIONS: RUN 5	SHEET 266	E

FILE NAME : N:\PDS\C3D\40101800\SHEETSPLAN\090202-XS.DWG
LAYOUT NAME - Run5-2

PLOT DATE : 9/8/2022 1:51 PM

PLOT BY : MAY, MATTHEW

PLOT NAME :

PLOT SCALE : 1 IN:10 FT HORZ. / 1 IN:10 FT VERT.

WISDOT/CADDS SHEET 49

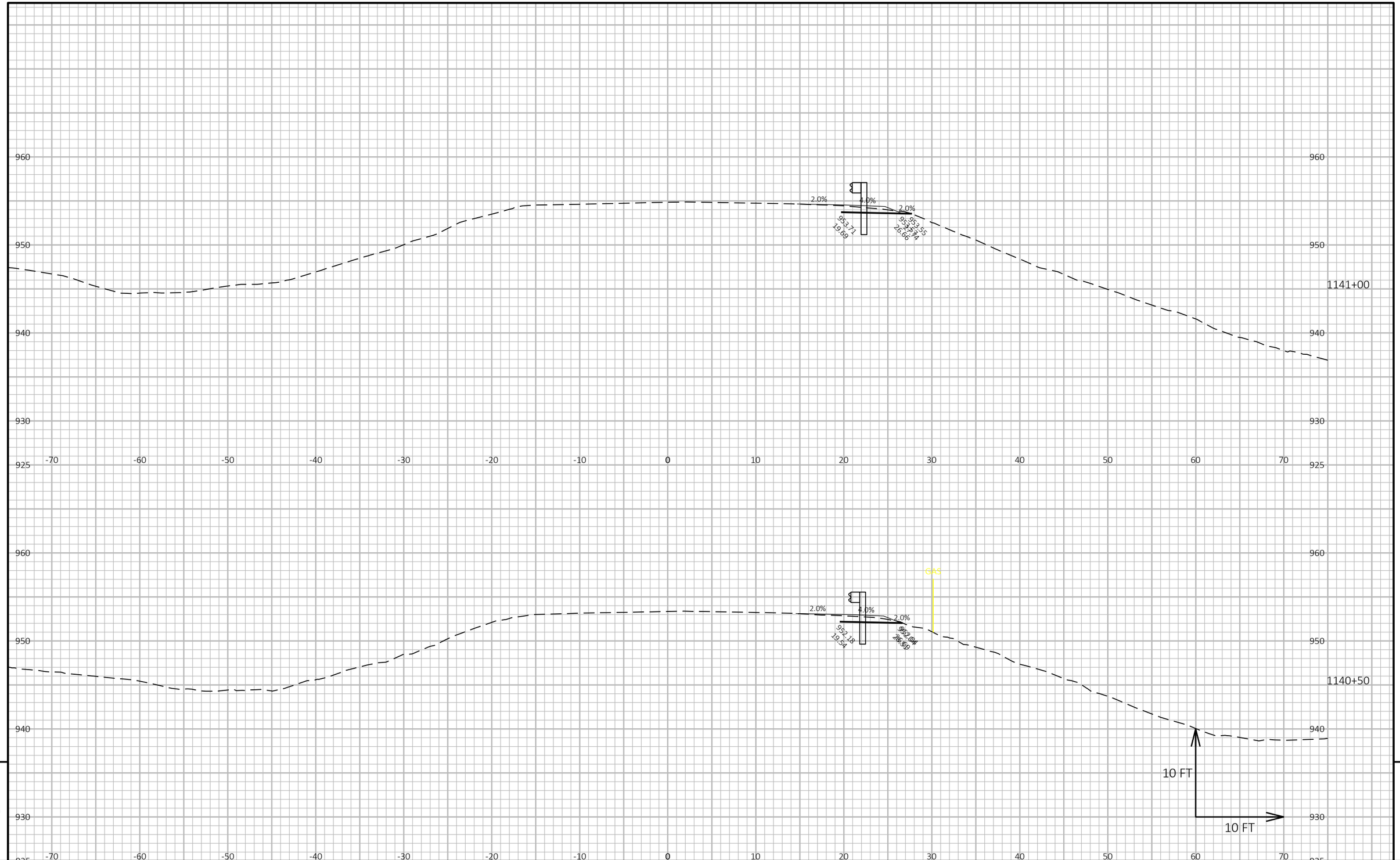

9

9

PROJECT NO: 4010-18-70	HWY: STH 144	COUNTY: WASHINGTON	CROSS SECTIONS: RUN 5	SHEET 267	E

FILE NAME : N:\PDS\C3D\40101800\SHEETSPLAN\090202-XS.DWG
LAYOUT NAME - Run5-3

PLOT DATE : 9/8/2022 1:51 PM

PLOT BY : MAY, MATTHEW

PLOT NAME :

PLOT SCALE : 1 IN:10 FT HORZ. / 1 IN:10 FT VERT.

WISDOT/CADDS SHEET 49

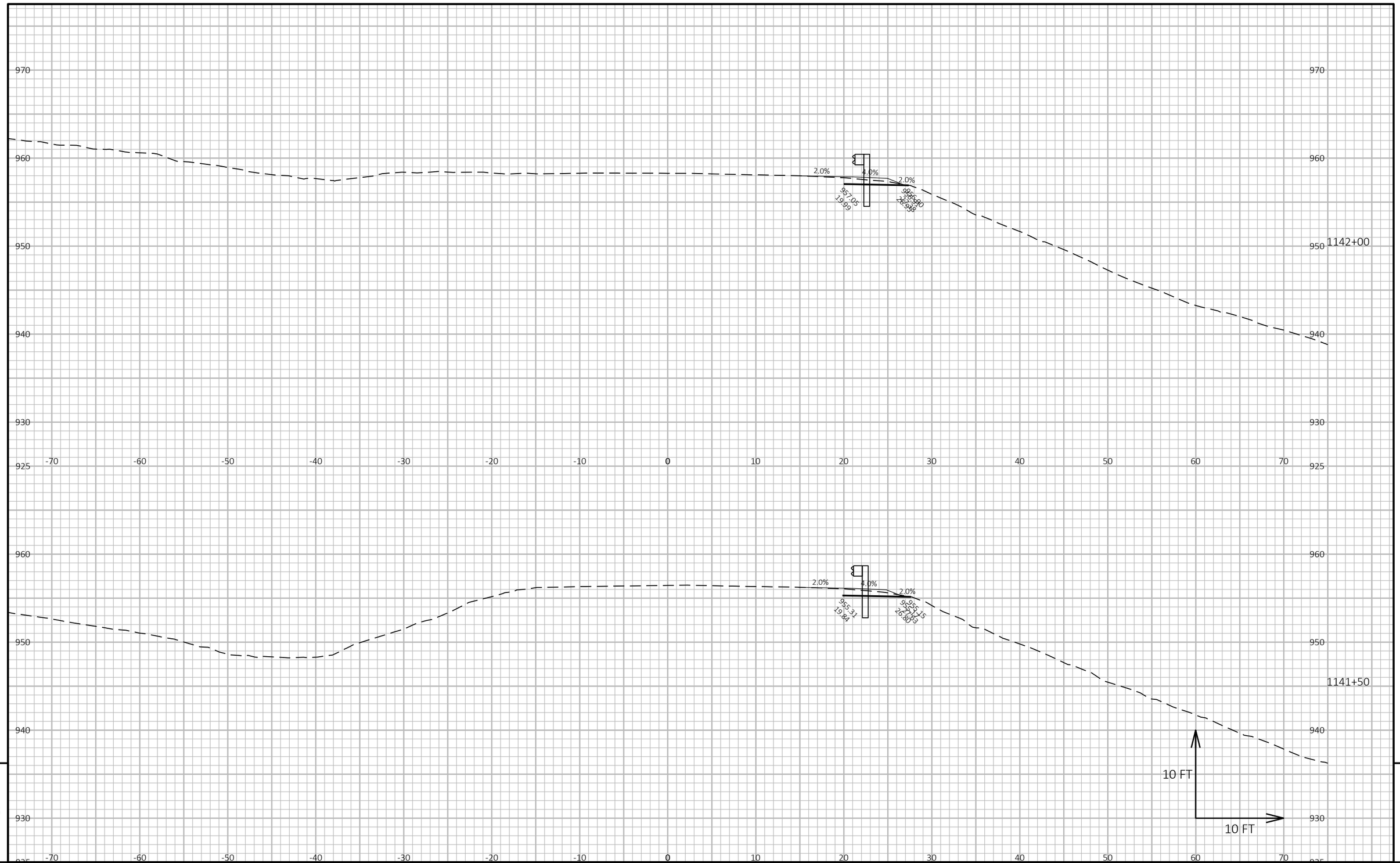

9

9

PROJECT NO: 4010-18-70	HWY: STH 144	COUNTY: WASHINGTON	CROSS SECTIONS: RUN 5	SHEET 268	E

FILE NAME : N:\PDS\C3D\40101800\SHEETSPLAN\090202-XS.DWG
LAYOUT NAME - Run5-4

PLOT DATE : 9/8/2022 1:51 PM

PLOT BY : MAY, MATTHEW

PLOT NAME :

PLOT SCALE : 1 IN:10 FT HORZ. / 1 IN:10 FT VERT.

WISDOT/CADDS SHEET 49

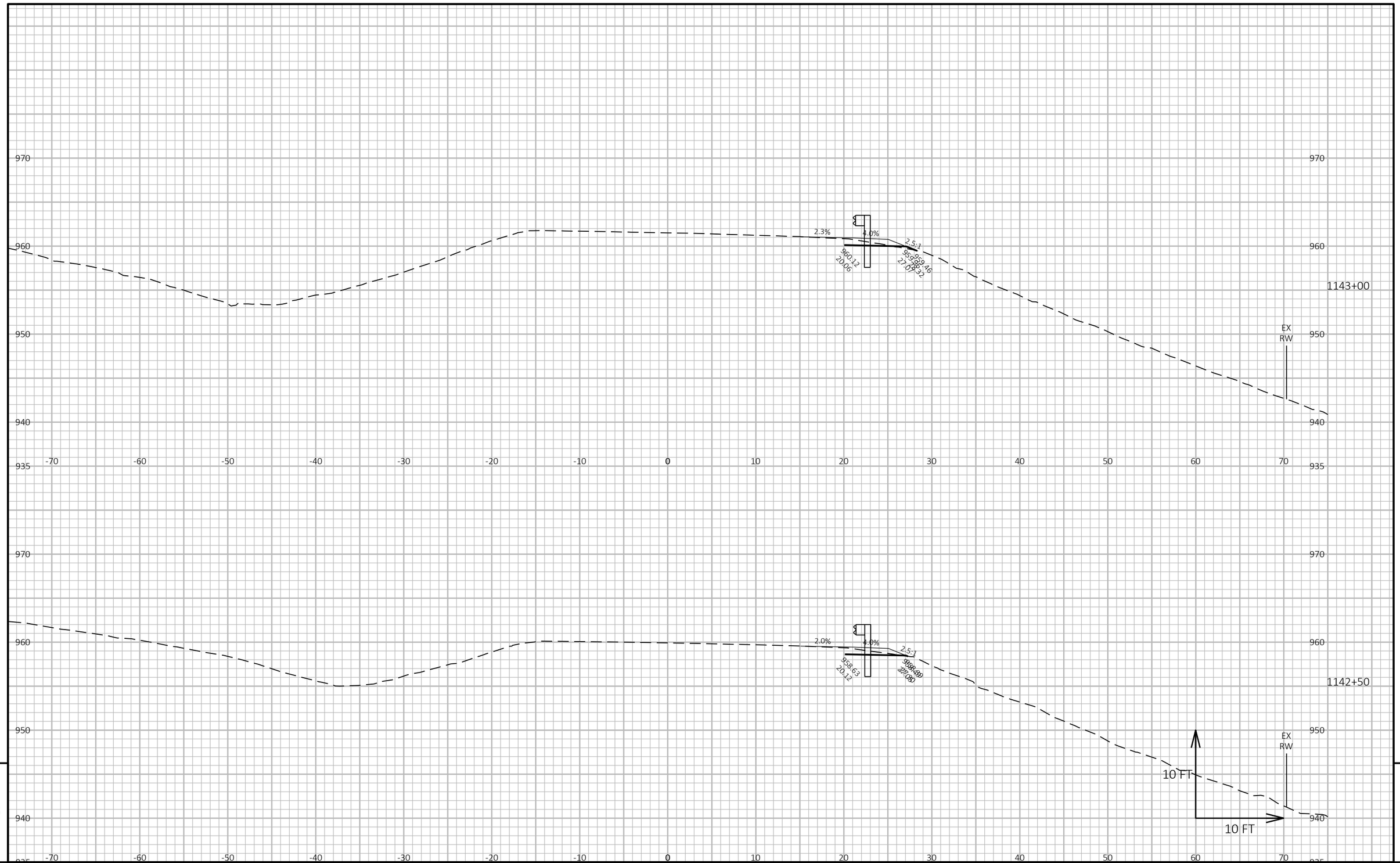

9

9

PROJECT NO: 4010-18-70	HWY: STH 144	COUNTY: WASHINGTON	CROSS SECTIONS: RUN 5	SHEET 269	E

FILE NAME : N:\PDS\C3D\40101800\SHEETSPLAN\090202-XS.DWG
LAYOUT NAME - Run5-5

PLOT DATE : 9/8/2022 1:51 PM

PLOT BY : MAY, MATTHEW

PLOT NAME :

PLOT SCALE : 1 IN:10 FT HORZ. / 1 IN:10 FT VERT.

WISDOT/CADDS SHEET 49

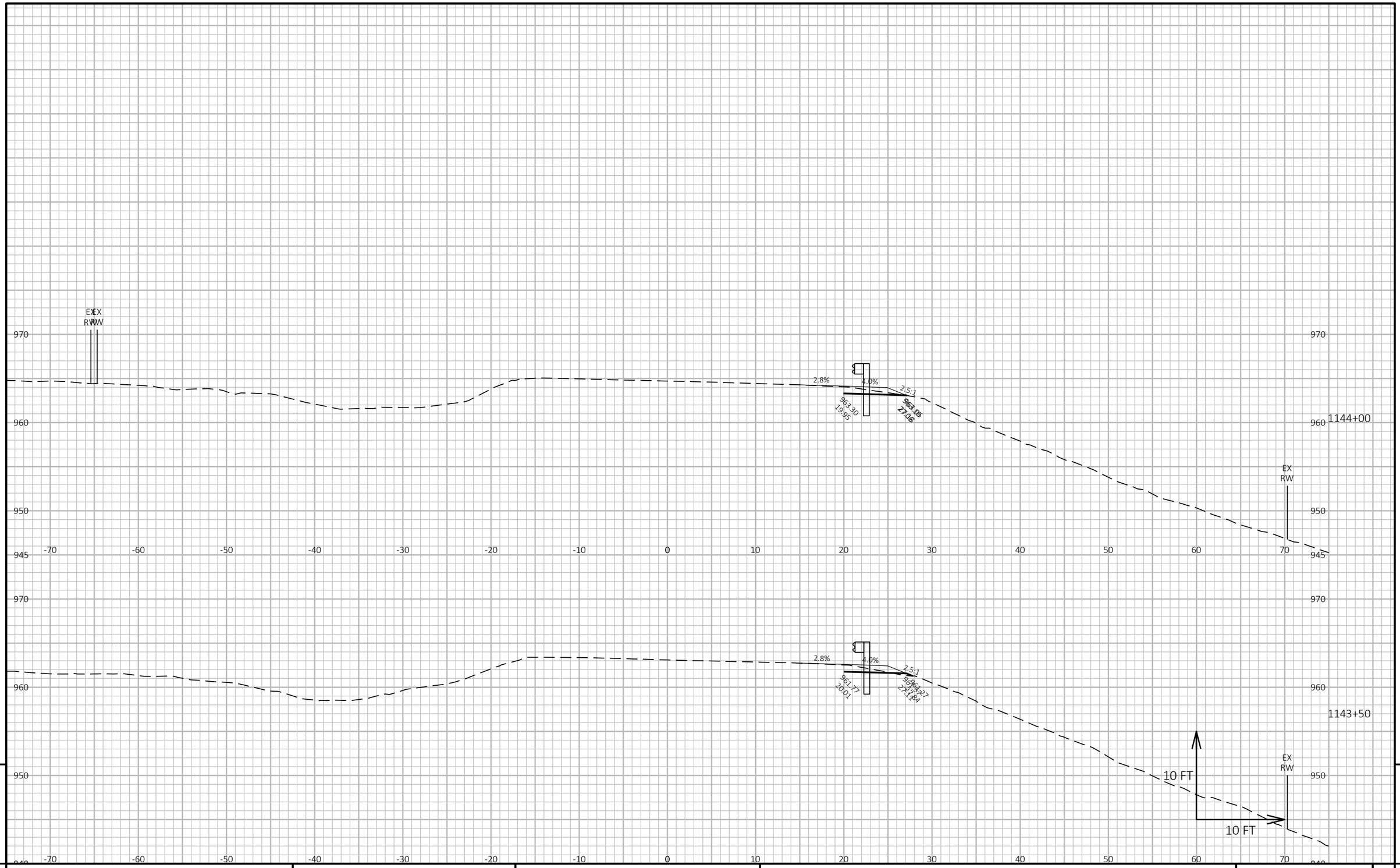

9

9

PROJECT NO: 4010-18-70	HWY: STH 144	COUNTY: WASHINGTON	CROSS SECTIONS: RUN 5	SHEET 270	E

FILE NAME : N:\PDS\C3D\40101800\SHEETSPLAN\090202-XS.DWG
LAYOUT NAME - Run5-6

PLOT DATE : 9/8/2022 1:51 PM

PLOT BY : MAY, MATTHEW

PLOT NAME :

PLOT SCALE : 1 IN:10 FT HORZ. / 1 IN:10 FT VERT.

WISDOT/CADDS SHEET 49

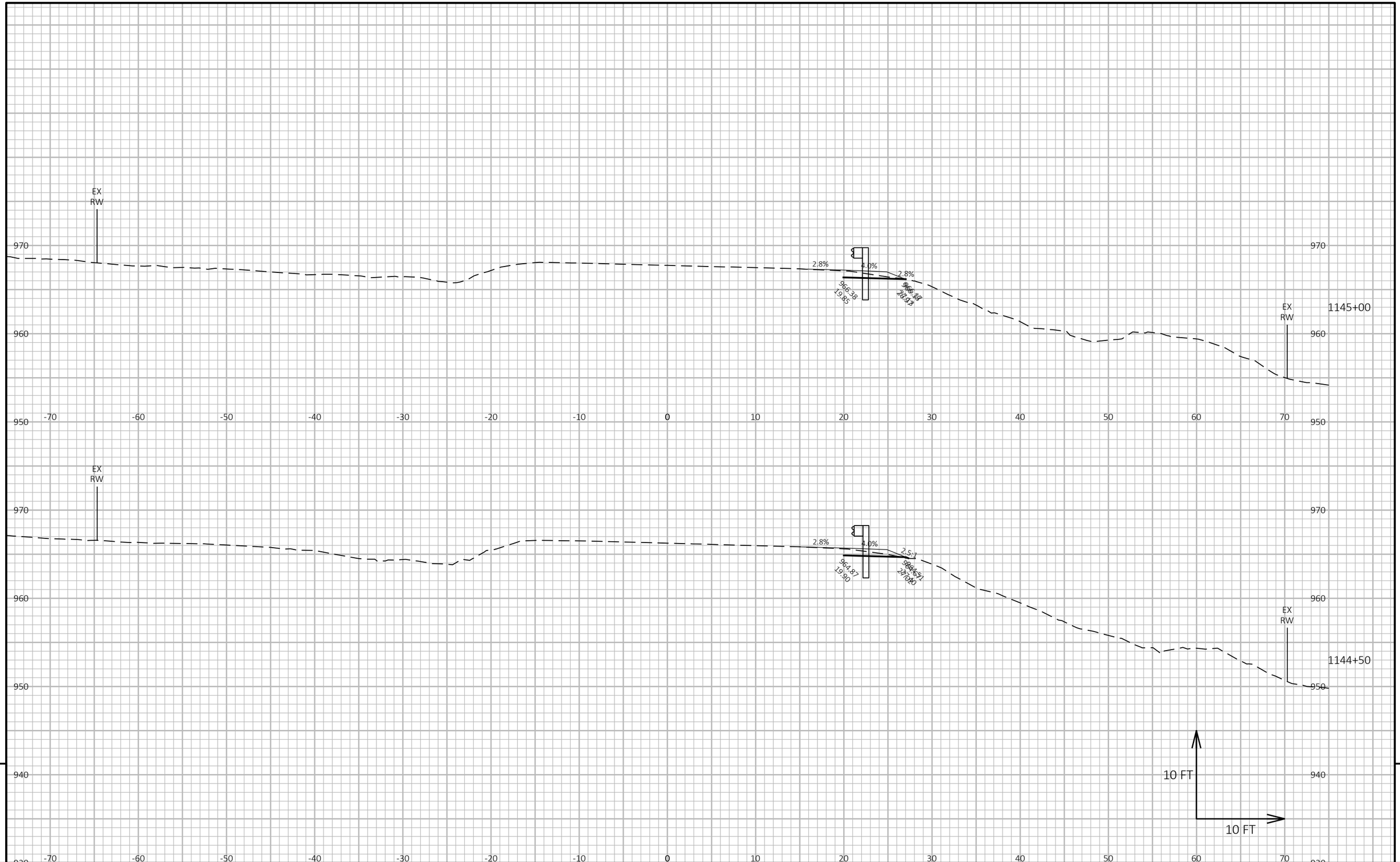

9

9

PROJECT NO: 4010-18-70	HWY: STH 144	COUNTY: WASHINGTON	CROSS SECTIONS: RUN 5	SHEET 271	E

FILE NAME : N:\PDS\C3D\40101800\SHEETSPLAN\090202-XS.DWG
LAYOUT NAME - Run5-7

PLOT DATE : 9/8/2022 1:51 PM

PLOT BY : MAY, MATTHEW

PLOT NAME :

PLOT SCALE : 1 IN:10 FT HORZ. / 1 IN:10 FT VERT.

WISDOT/CADDS SHEET 49

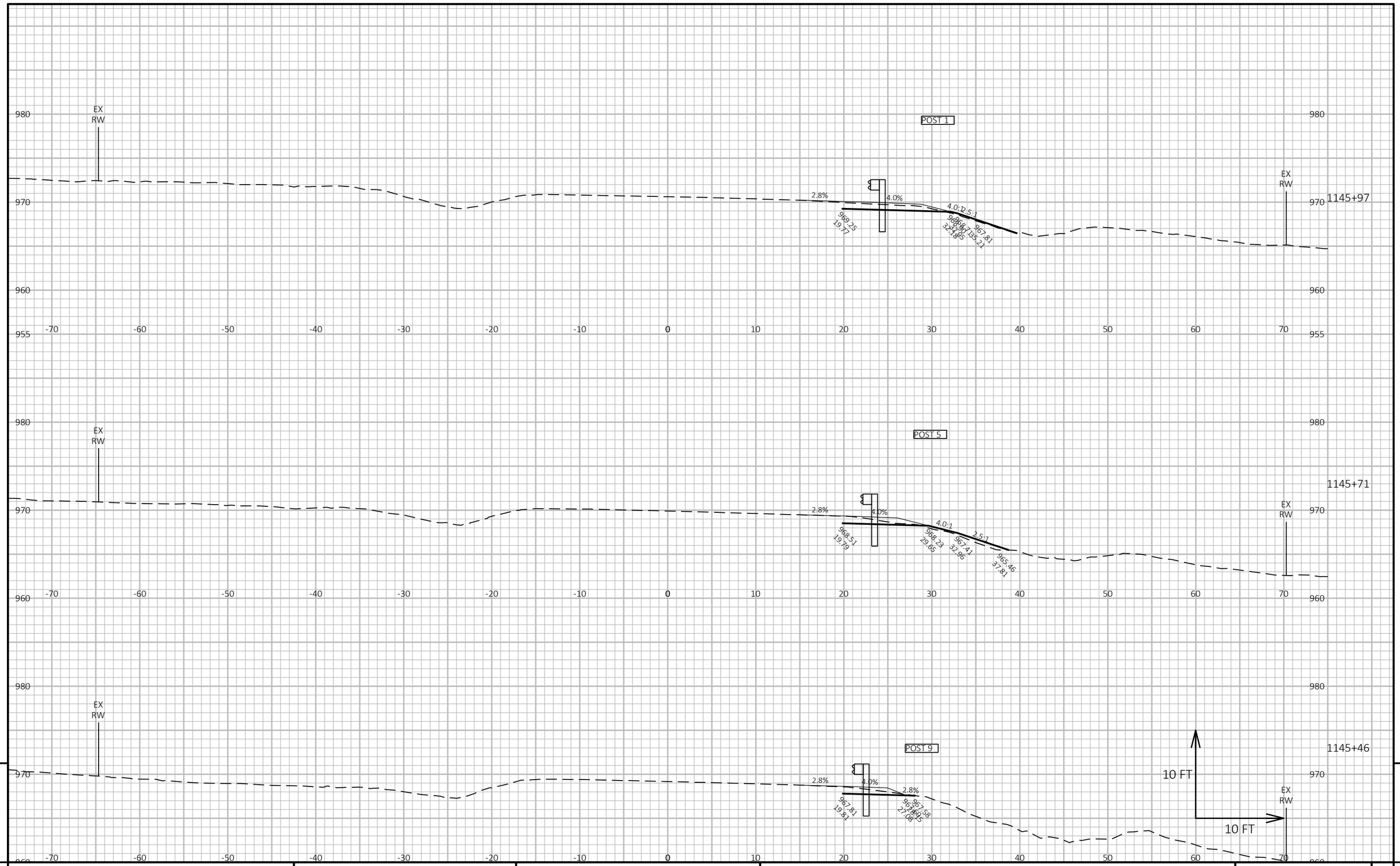

9

9

PROJECT NO: 4010-18-70	HWY: STH 144	COUNTY: WASHINGTON	CROSS SECTIONS: RUN 5	SHEET 272	E

FILE NAME : N:\PDS\C3D\40101800\SHEETSPLAN\090202-XS.DWG
LAYOUT NAME - Run5-8

PLOT DATE : 9/8/2022 1:51 PM

PLOT BY : MAY, MATTHEW

PLOT NAME :

PLOT SCALE : 1 IN:10 FT HORZ. / 1 IN:10 FT VERT.

WISDOT/CADDS SHEET 49

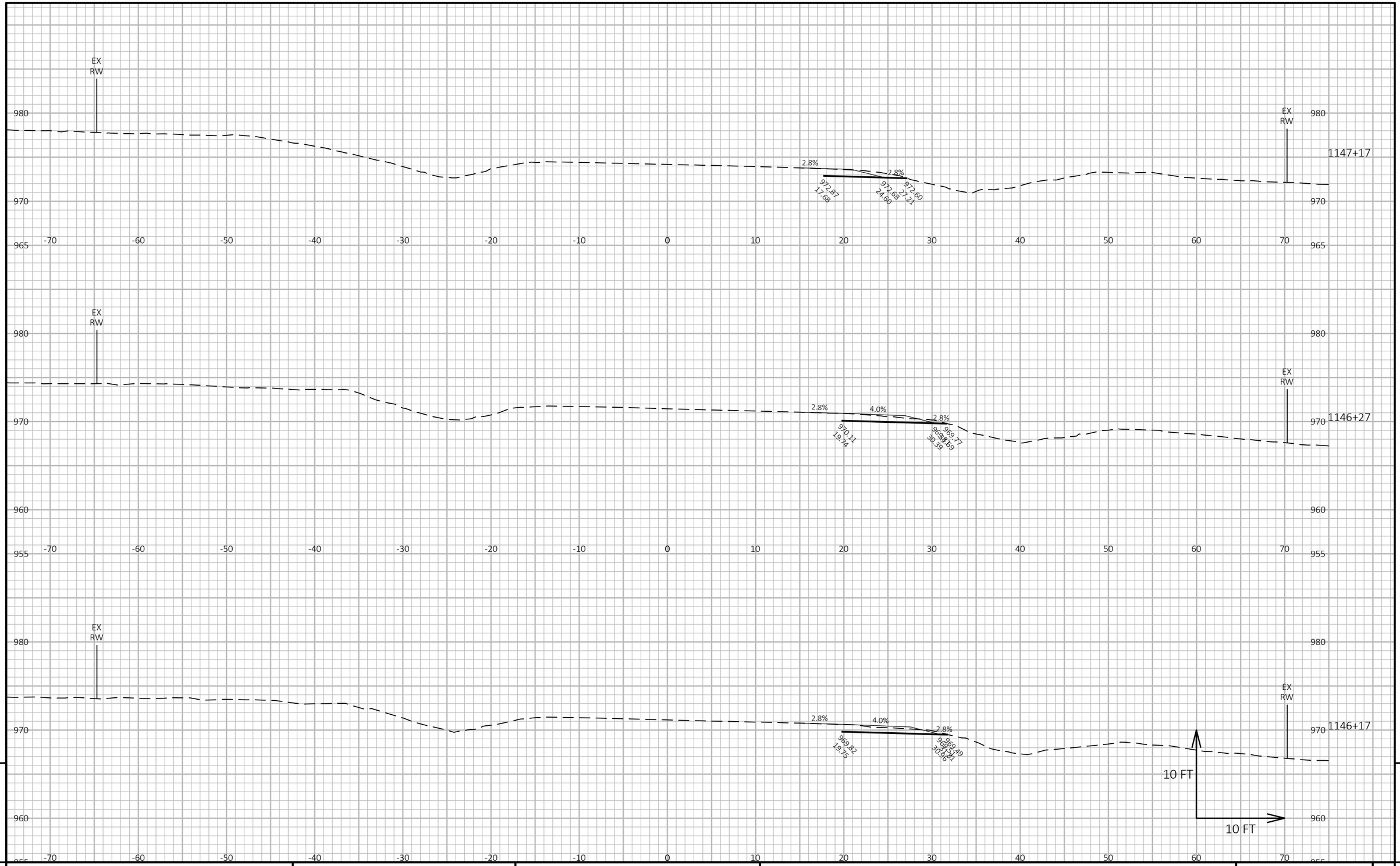

9

9

PROJECT NO: 4010-18-70	HWY: STH 144	COUNTY: WASHINGTON	CROSS SECTIONS: RUN 5	SHEET 273	E

FILE NAME : N:\PDS\C3D\40101800\SHEETSPLAN\090202-XS.DWG
LAYOUT NAME - Run5-9

PLOT DATE : 9/8/2022 1:52 PM PLOT BY : MAY, MATTHEW PLOT NAME : PLOT SCALE : 1 IN:10 FT HORZ. / 1 IN:10 FT VERT.

WISDOT/CADDS SHEET 49

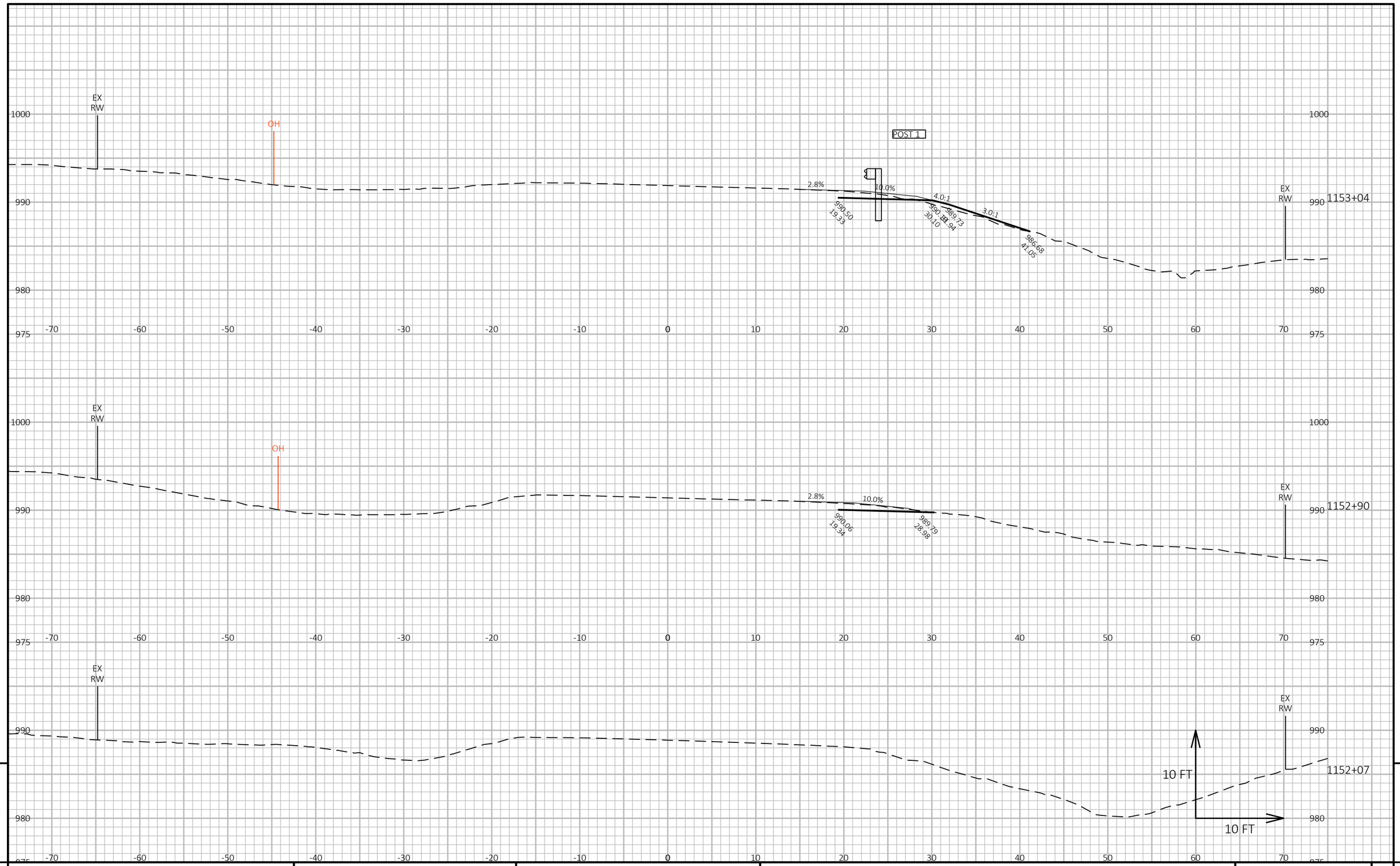

9

9

PROJECT NO: 4010-18-70	HWY: STH 144	COUNTY: WASHINGTON	CROSS SECTIONS: RUN 6	SHEET 274	E

FILE NAME : N:\PDS\C3D\40101800\SHEETSPLAN\090202-XS.DWG
LAYOUT NAME - Run6-01

PLOT DATE : 9/8/2022 1:52 PM

PLOT BY : MAY, MATTHEW

PLOT NAME :

PLOT SCALE : 1 IN:10 FT HORZ. / 1 IN:10 FT VERT.

WISDOT/CADDS SHEET 49

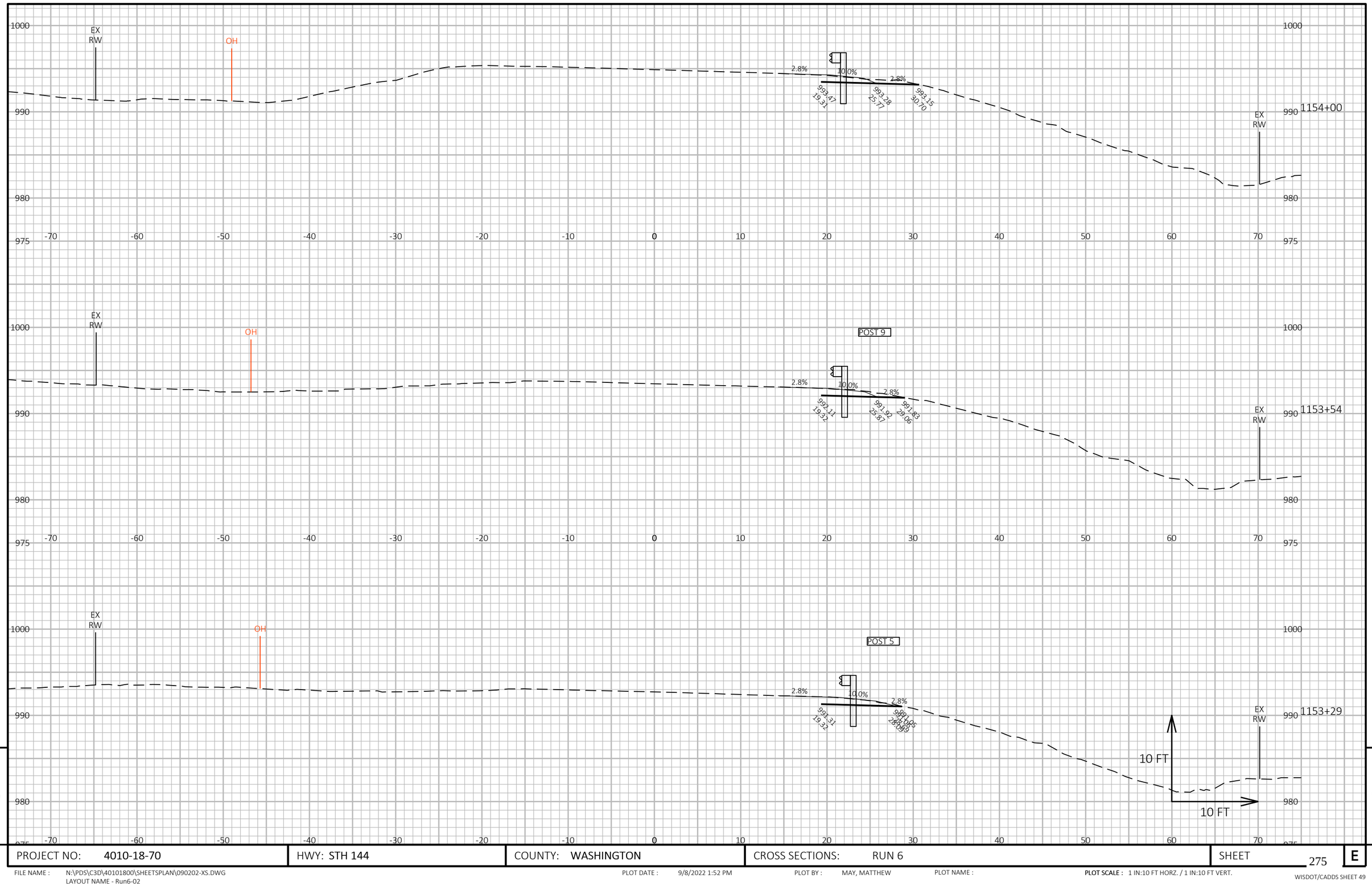

9

9

PROJECT NO: 4010-18-70	HWY: STH 144	COUNTY: WASHINGTON	CROSS SECTIONS: RUN 6	SHEET 275	E

FILE NAME : N:\PDS\C3D\40101800\SHEETSPLAN\090202-XS.DWG
LAYOUT NAME - Run6-02

PLOT DATE : 9/8/2022 1:52 PM

PLOT BY : MAY, MATTHEW

PLOT NAME :

PLOT SCALE : 1 IN:10 FT HORZ. / 1 IN:10 FT VERT.

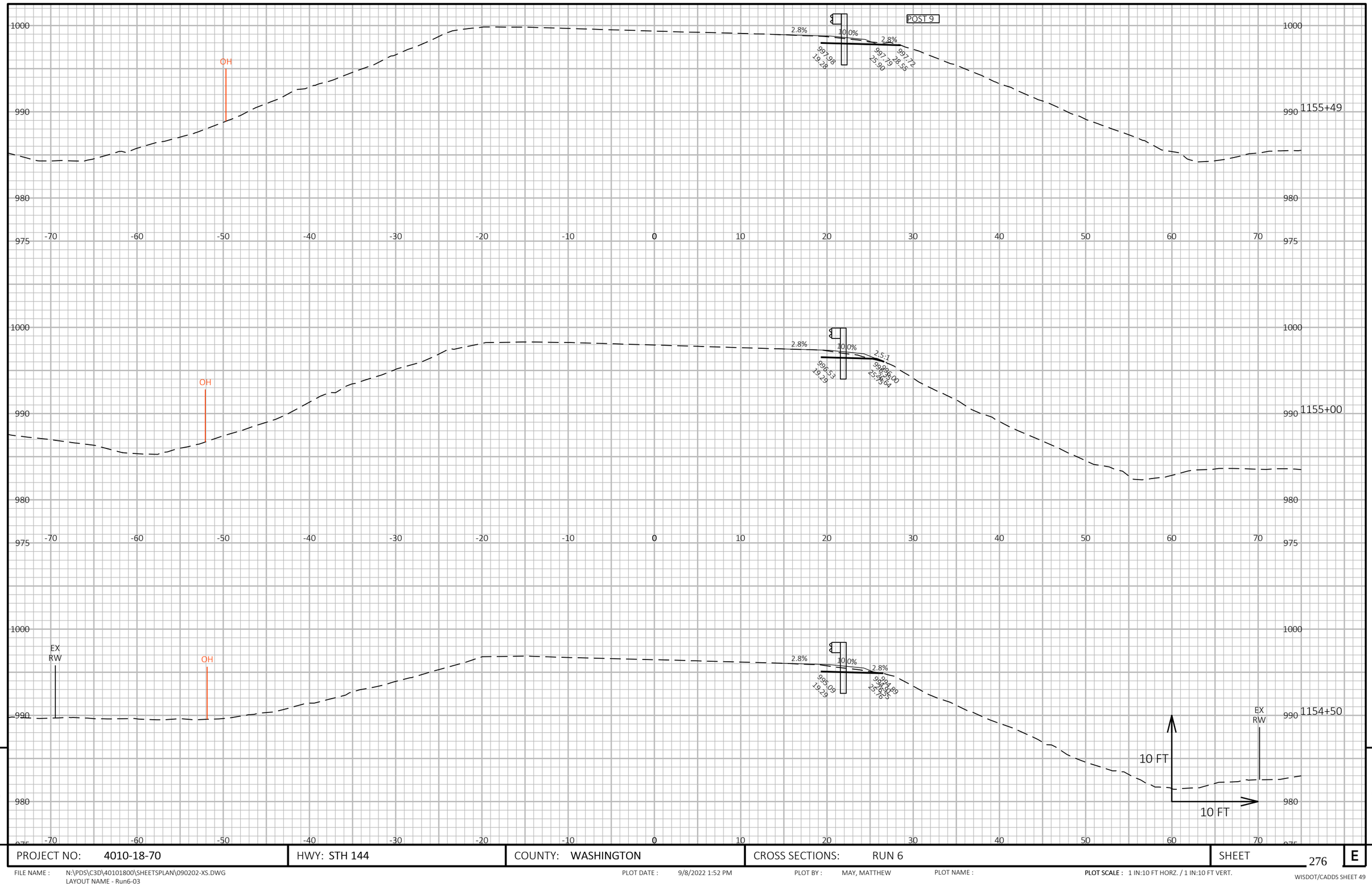

9

9

PROJECT NO: 4010-18-70	HWY: STH 144	COUNTY: WASHINGTON	CROSS SECTIONS: RUN 6	SHEET 276	E

FILE NAME : N:\PDS\C3D\40101800\SHEETSPLAN\090202-XS.DWG
LAYOUT NAME - Run6-03

PLOT DATE : 9/8/2022 1:52 PM

PLOT BY : MAY, MATTHEW

PLOT NAME :

PLOT SCALE : 1 IN:10 FT HORZ. / 1 IN:10 FT VERT.

WISDOT/CADDS SHEET 49

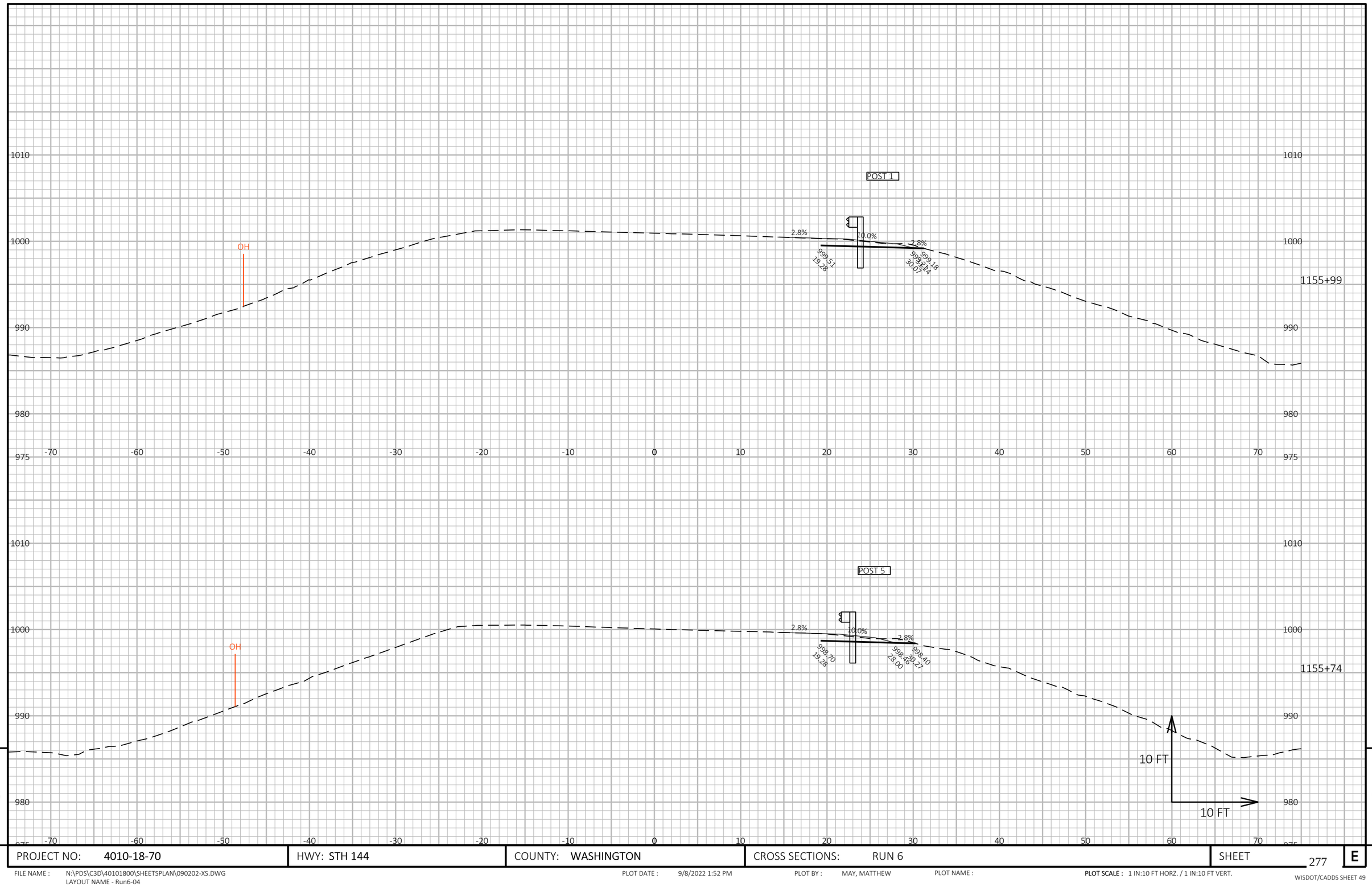

9

9

PROJECT NO: 4010-18-70	HWY: STH 144	COUNTY: WASHINGTON	CROSS SECTIONS: RUN 6	SHEET 277	E

FILE NAME : N:\PDS\C3D\40101800\SHEETSPLAN\090202-XS.DWG
LAYOUT NAME - Run6-04

PLOT DATE : 9/8/2022 1:52 PM

PLOT BY : MAY, MATTHEW

PLOT NAME :

PLOT SCALE : 1 IN:10 FT HORZ. / 1 IN:10 FT VERT.

WISDOT/CADDS SHEET 49

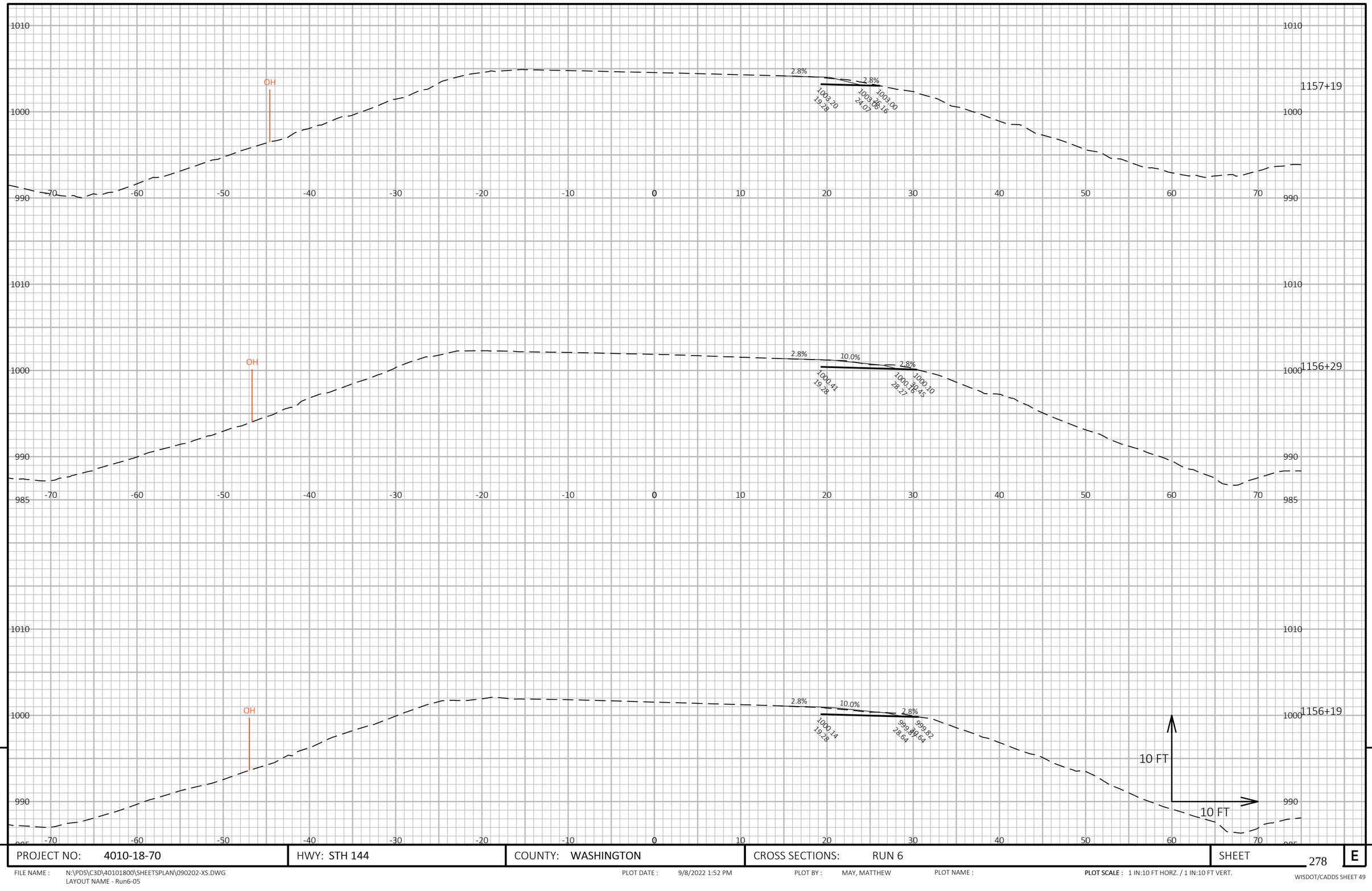

9

9

PROJECT NO: 4010-18-70	HWY: STH 144	COUNTY: WASHINGTON	CROSS SECTIONS: RUN 6	SHEET 278	E

FILE NAME : N:\PDS\C3D\40101800\SHEETSPLAN\090202-XS.DWG
LAYOUT NAME - Run6-05

PLOT DATE : 9/8/2022 1:52 PM

PLOT BY : MAY, MATTHEW

PLOT NAME :

PLOT SCALE : 1 IN:10 FT HORZ. / 1 IN:10 FT VERT.

WISDOT/CADDS SHEET 49

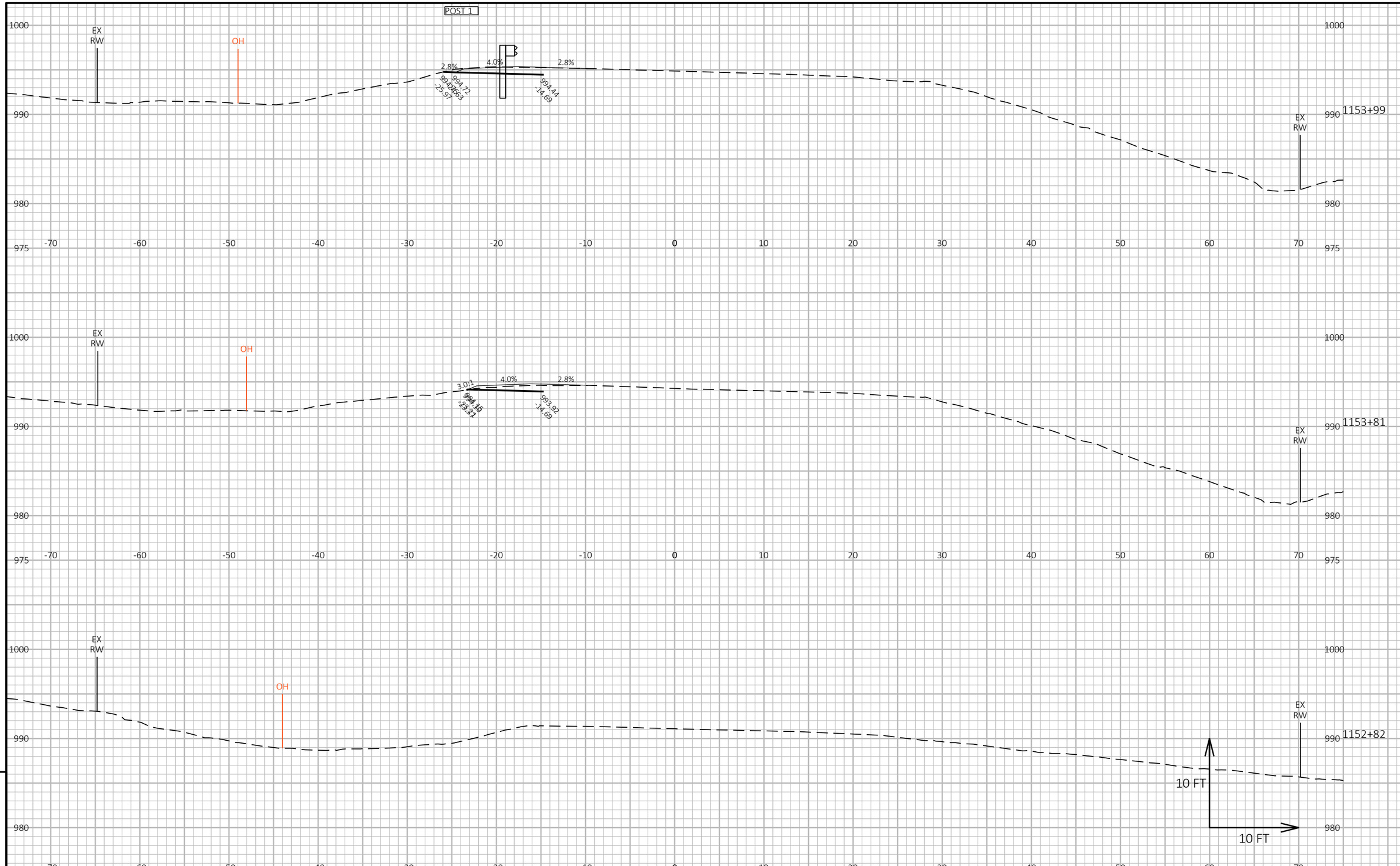

9

9

PROJECT NO: 4010-18-70	HWY: STH 144	COUNTY: WASHINGTON	CROSS SECTIONS: RUN 7	SHEET 279	E

FILE NAME : N:\PDS\C3D\40101800\SHEETSPLAN\090202-XS.DWG
LAYOUT NAME - Run7-1
PLOT DATE : 9/8/2022 1:52 PM
PLOT BY : MAY, MATTHEW
PLOT NAME :
PLOT SCALE : 1 IN:10 FT HORZ. / 1 IN:10 FT VERT.
WISDOT/CADDS SHEET 49

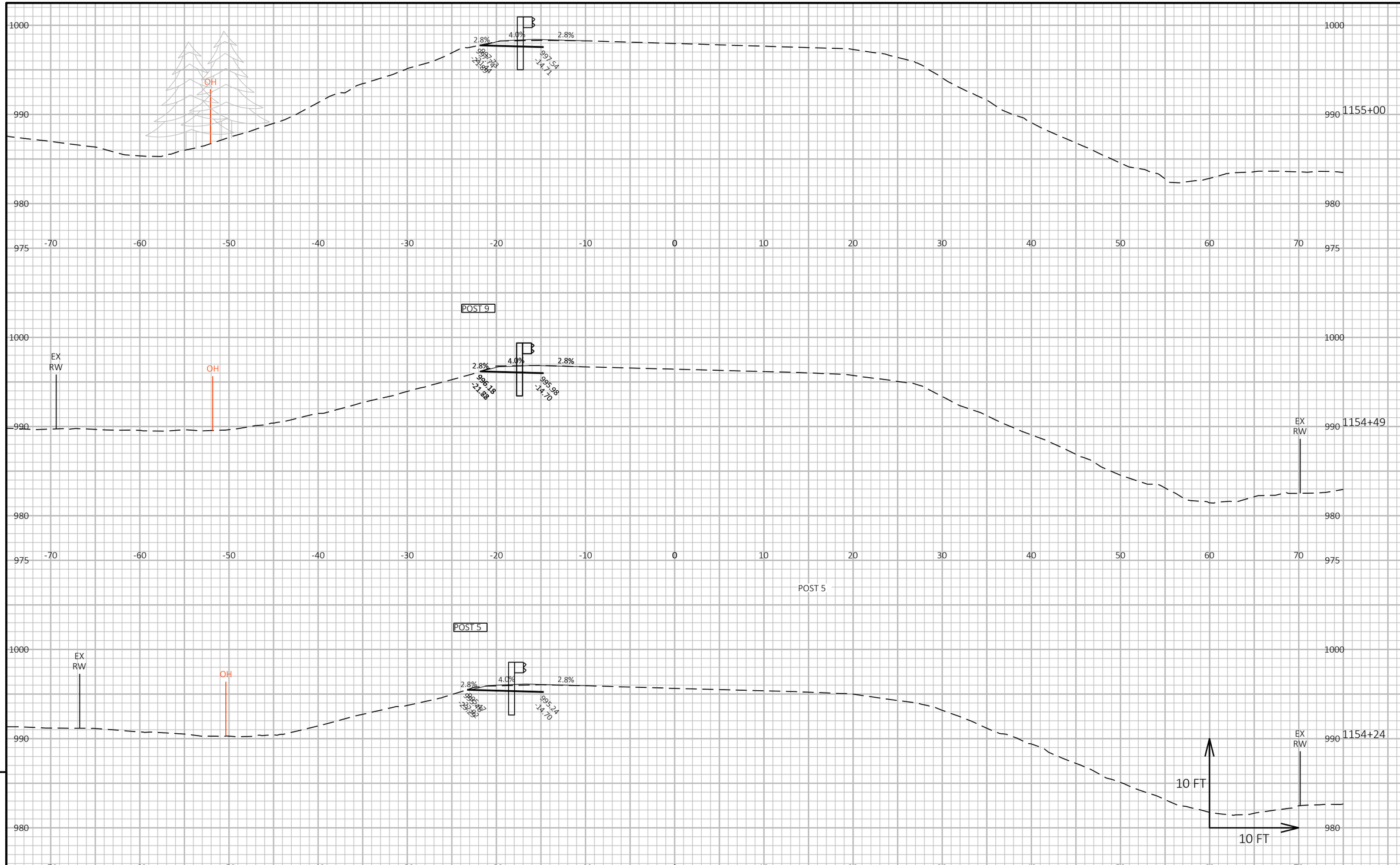

9

9

PROJECT NO: 4010-18-70	HWY: STH 144	COUNTY: WASHINGTON	CROSS SECTIONS: RUN 7	SHEET 280	E

FILE NAME : N:\PDS\C3D\40101800\SHEETSPLAN\090202-XS.DWG
LAYOUT NAME - Run7-2
PLOT DATE : 9/8/2022 1:52 PM
PLOT BY : MAY, MATTHEW
PLOT NAME :
PLOT SCALE : 1 IN:10 FT HORZ. / 1 IN:10 FT VERT.
WISDOT/CADDS SHEET 49

1010
1000
990
980
975
-70 -60 -50 -40 -30 -20 -10 0 10 20 30 40 50 60 70

OH
2.8% 4.0% 2.8%
1000.76 -23.47
1000.73 -21.11
1000.55 -14.73
1156+00

OH
2.8% 4.0% 2.8%
999.26 -23.88
999.19 -21.24
999.00 -14.72
1155+50

10 FT
10 FT

9 9

PROJECT NO: 4010-18-70	HWY: STH 144	COUNTY: WASHINGTON	CROSS SECTIONS: RUN 7	SHEET 281	E

FILE NAME : N:\PDS\C3D\40101800\SHEETSPLAN\090202-XS.DWG
LAYOUT NAME - Run7-3
PLOT DATE : 9/8/2022 1:52 PM
PLOT BY : MAY, MATTHEW
PLOT NAME :
PLOT SCALE : 1 IN:10 FT HORZ. / 1 IN:10 FT VERT.
WISDOT/CADDS SHEET 49

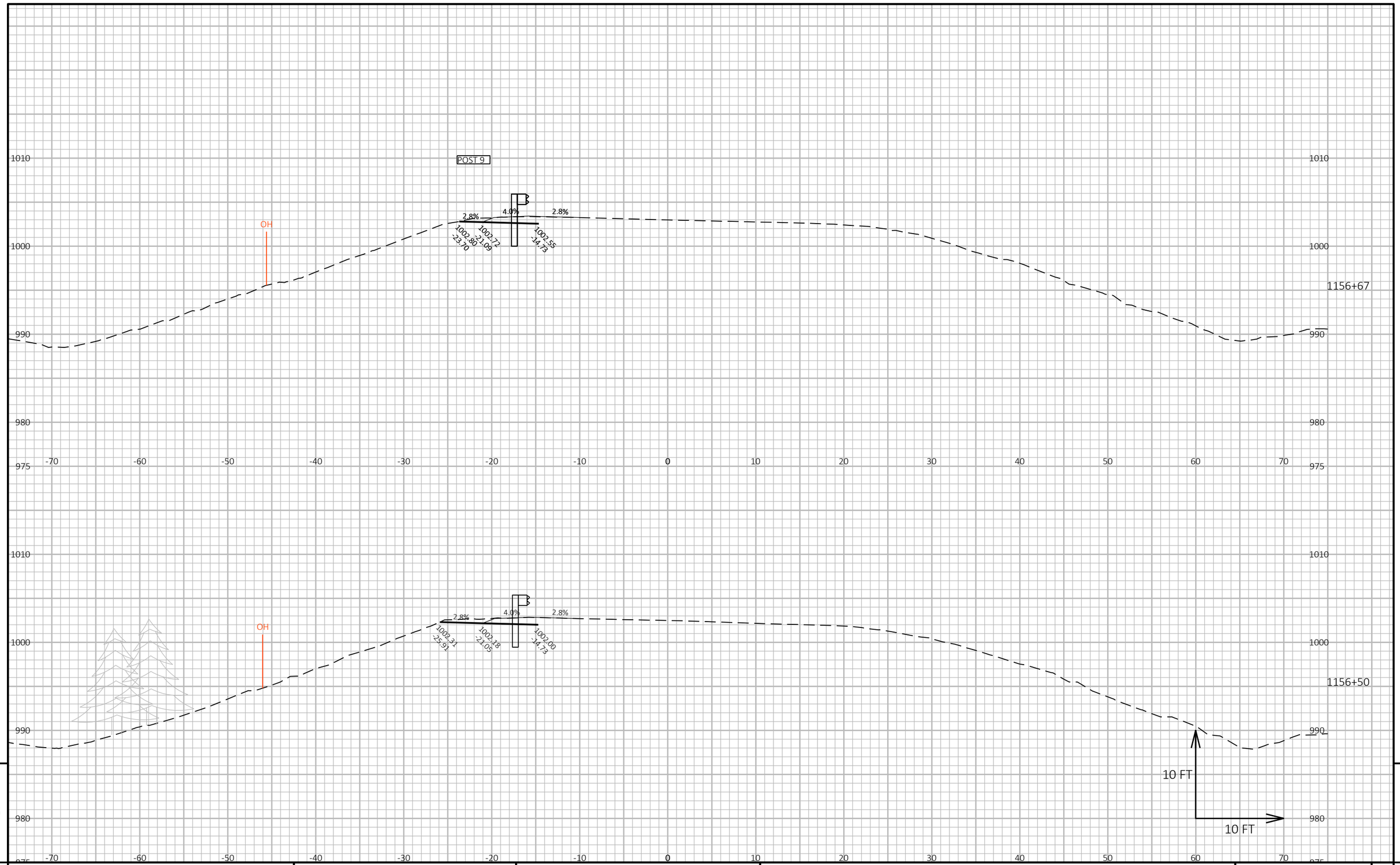

9

9

PROJECT NO: 4010-18-70	HWY: STH 144	COUNTY: WASHINGTON	CROSS SECTIONS: RUN 7	SHEET 282	E

FILE NAME : N:\PDS\C3D\40101800\SHEETSPLAN\090202-XS.DWG
LAYOUT NAME - Run7-4

PLOT DATE : 9/8/2022 1:52 PM

PLOT BY : MAY, MATTHEW

PLOT NAME :

PLOT SCALE : 1 IN:10 FT HORZ. / 1 IN:10 FT VERT.

WISDOT/CADDS SHEET 49

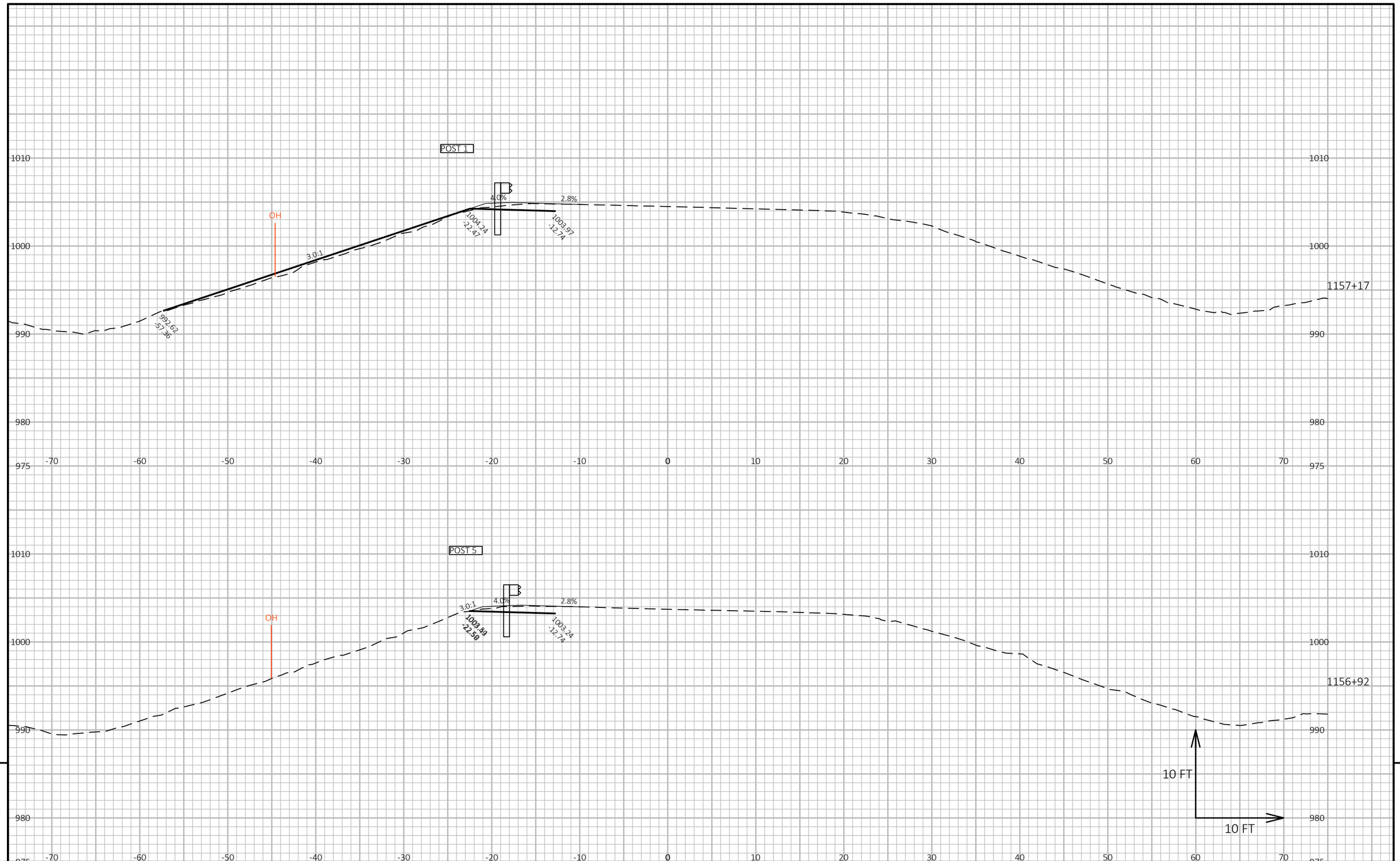

9

9

PROJECT NO: 4010-18-70	HWY: STH 144	COUNTY: WASHINGTON	CROSS SECTIONS: RUN 7	SHEET 283	E

FILE NAME : N:\PDS\C3D\40101800\SHEETSPLAN\090202-XS.DWG
LAYOUT NAME - Run7-5

PLOT DATE : 9/8/2022 1:52 PM

PLOT BY : MAY, MATTHEW

PLOT NAME :

PLOT SCALE : 1 IN:10 FT HORZ. / 1 IN:10 FT VERT.

WISDOT/CADDS SHEET 49

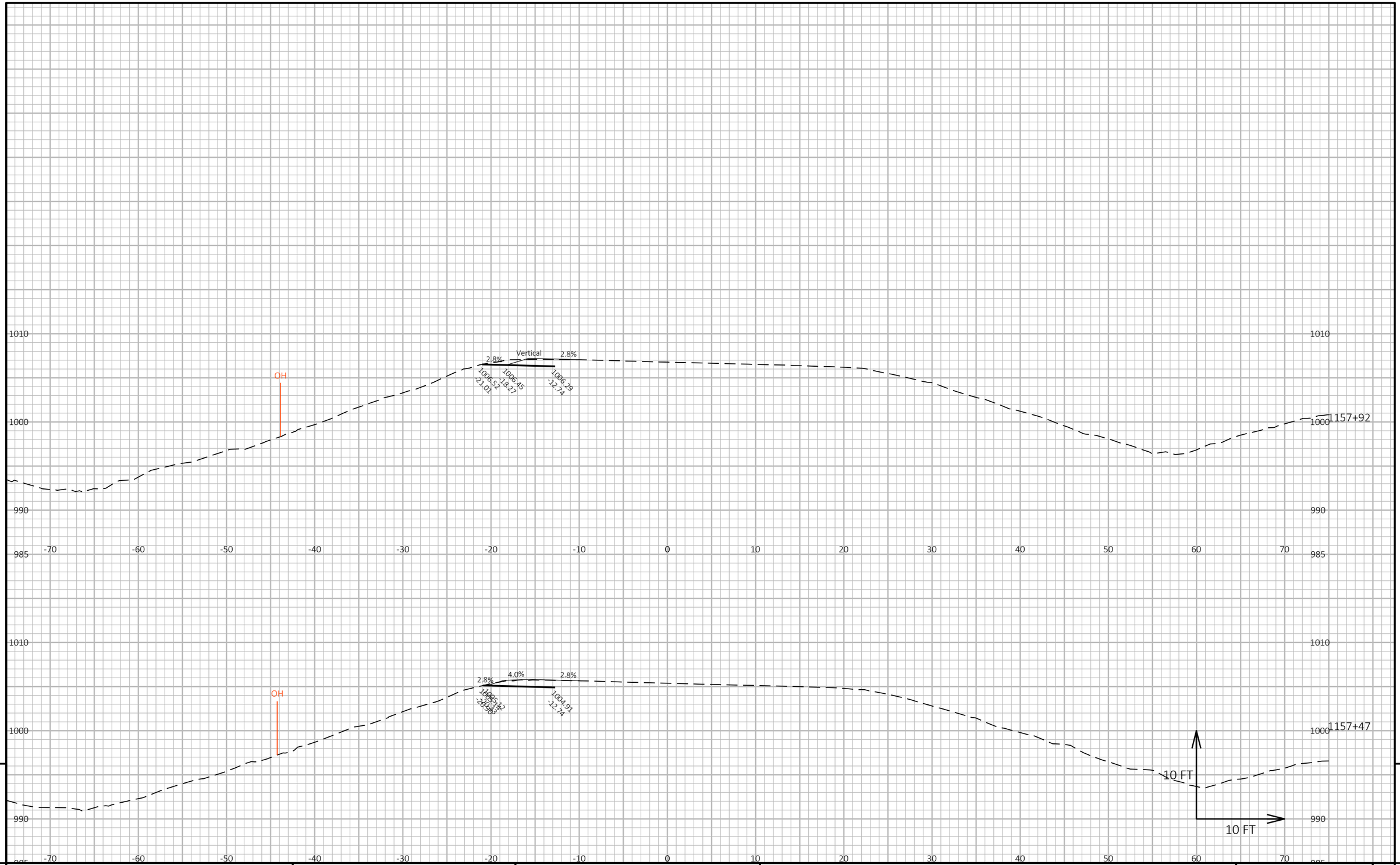

9

9

PROJECT NO: 4010-18-70	HWY: STH 144	COUNTY: WASHINGTON	CROSS SECTIONS: RUN 7	SHEET 284	E

FILE NAME : N:\PDS\C3D\40101800\SHEETSPLAN\090202-XS.DWG
LAYOUT NAME - Run7-6

PLOT DATE : 9/8/2022 1:52 PM

PLOT BY : MAY, MATTHEW

PLOT NAME :

PLOT SCALE : 1 IN:10 FT HORZ. / 1 IN:10 FT VERT.

WISDOT/CADDS SHEET 49

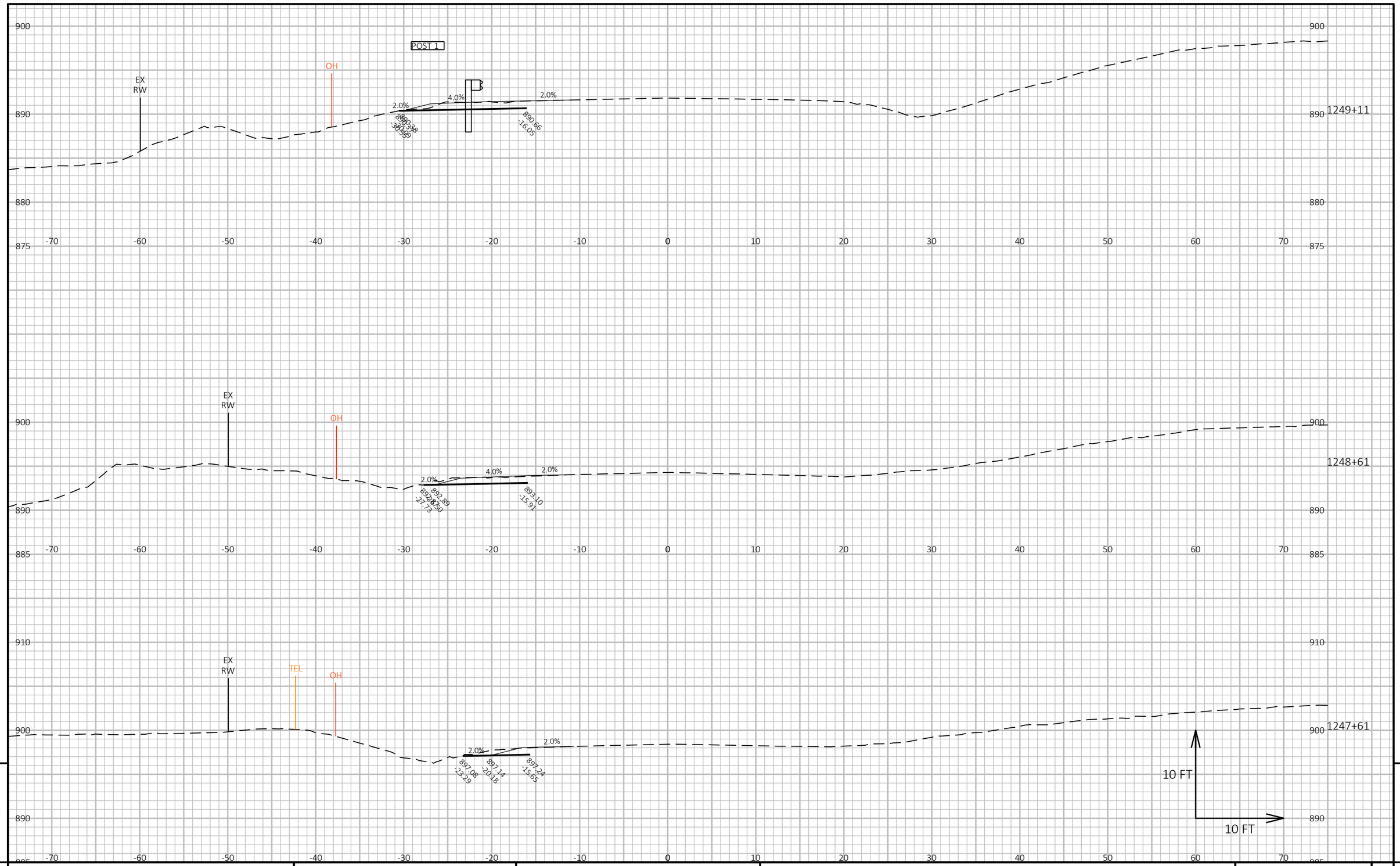

9

9

PROJECT NO: 4010-18-70	HWY: STH 144	COUNTY: WASHINGTON	CROSS SECTIONS: RUN 8	SHEET 285	E

FILE NAME : N:\PDS\C3D\40101800\SHEETSPLAN\090202-XS.DWG
LAYOUT NAME - Run8Eat1-1

PLOT DATE : 9/8/2022 1:53 PM

PLOT BY : MAY, MATTHEW

PLOT NAME :

PLOT SCALE : 1 IN:10 FT HORZ. / 1 IN:10 FT VERT.

WISDOT/CADDS SHEET 49

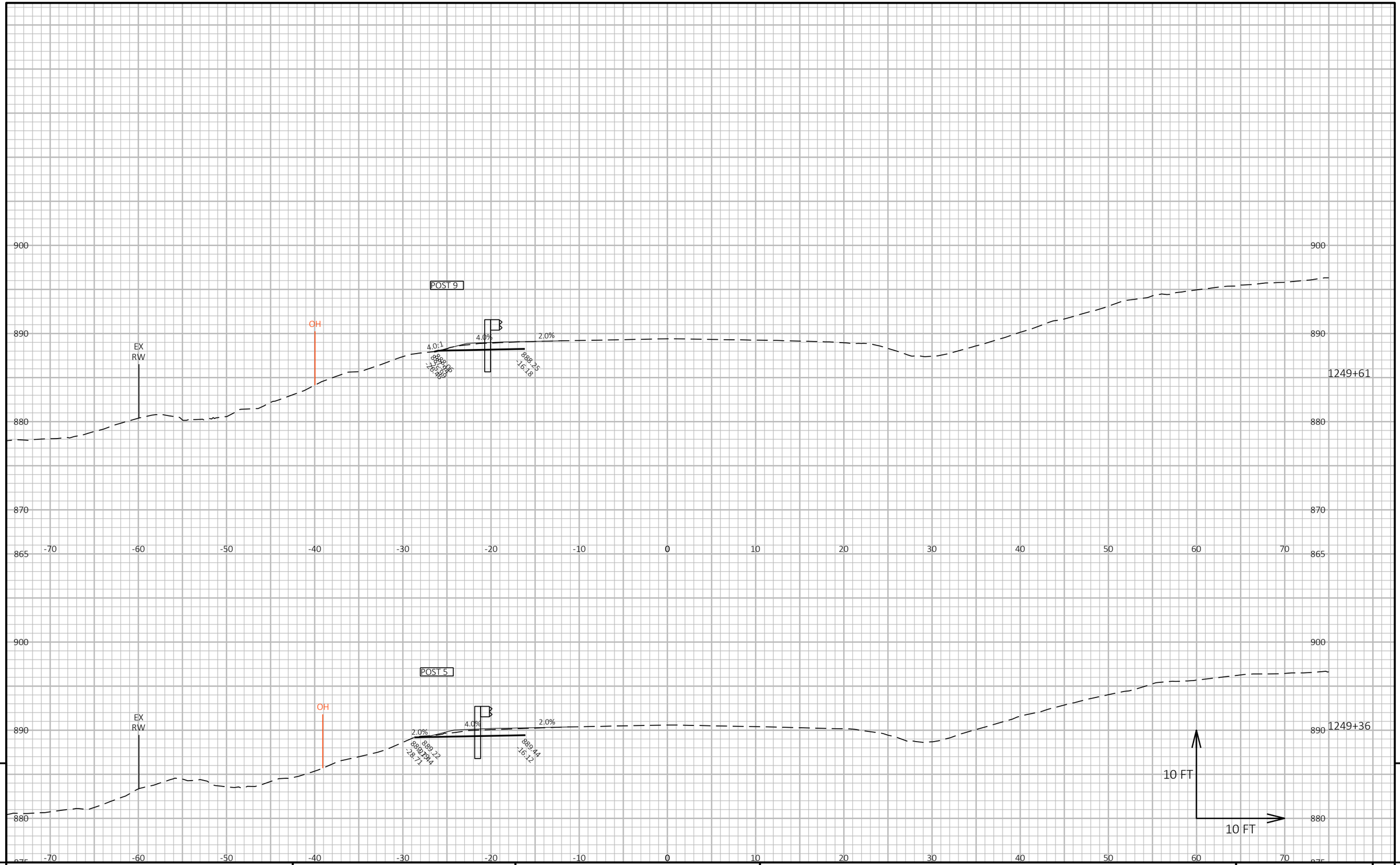

9

9

PROJECT NO: 4010-18-70	HWY: STH 144	COUNTY: WASHINGTON	CROSS SECTIONS: RUN 8	SHEET 286	E

FILE NAME : N:\PDS\C3D\40101800\SHEETSPLAN\090202-XS.DWG
LAYOUT NAME - Run8Eat1-2

PLOT DATE : 9/8/2022 1:53 PM

PLOT BY : MAY, MATTHEW

PLOT NAME :

PLOT SCALE : 1 IN:10 FT HORZ. / 1 IN:10 FT VERT.

WISDOT/CADDS SHEET 49

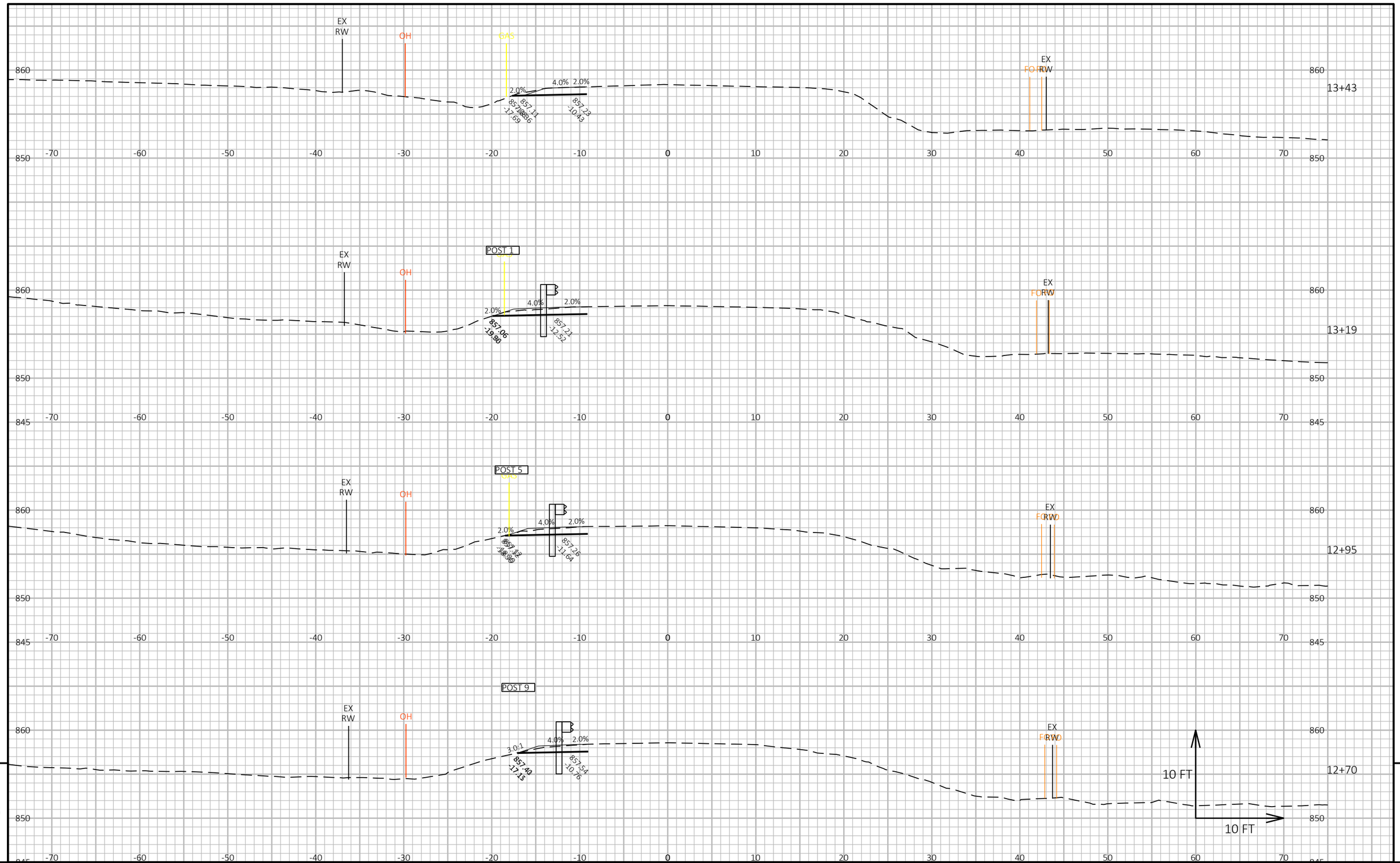

9

PROJECT NO: 4010-18-70	HWY: STH 144	COUNTY: WASHINGTON	CROSS SECTIONS: RUN 8	SHEET 287	E

FILE NAME : N:\PDS\C3D\40101800\SHEETSPLAN\090202-XS.DWG
LAYOUT NAME - Run8Eat2-01

PLOT DATE : 9/8/2022 1:53 PM

PLOT BY : MAY, MATTHEW

PLOT NAME :

PLOT SCALE : 1 IN:10 FT HORZ. / 1 IN:10 FT VERT.

WISDOT/CADDS SHEET 49

9

9

PROJECT NO: 4010-18-70	HWY: STH 144	COUNTY: WASHINGTON	CROSS SECTIONS: RUN 8	SHEET 288	E

FILE NAME : N:\PDS\C3D\40101800\SHEETSPLAN\090202-XS.DWG
LAYOUT NAME - Run8Eat2-02

PLOT DATE : 9/8/2022 1:53 PM

PLOT BY : MAY, MATTHEW

PLOT NAME :

PLOT SCALE : 1 IN:10 FT HORZ. / 1 IN:10 FT VERT.

WISDOT/CADDS SHEET 49

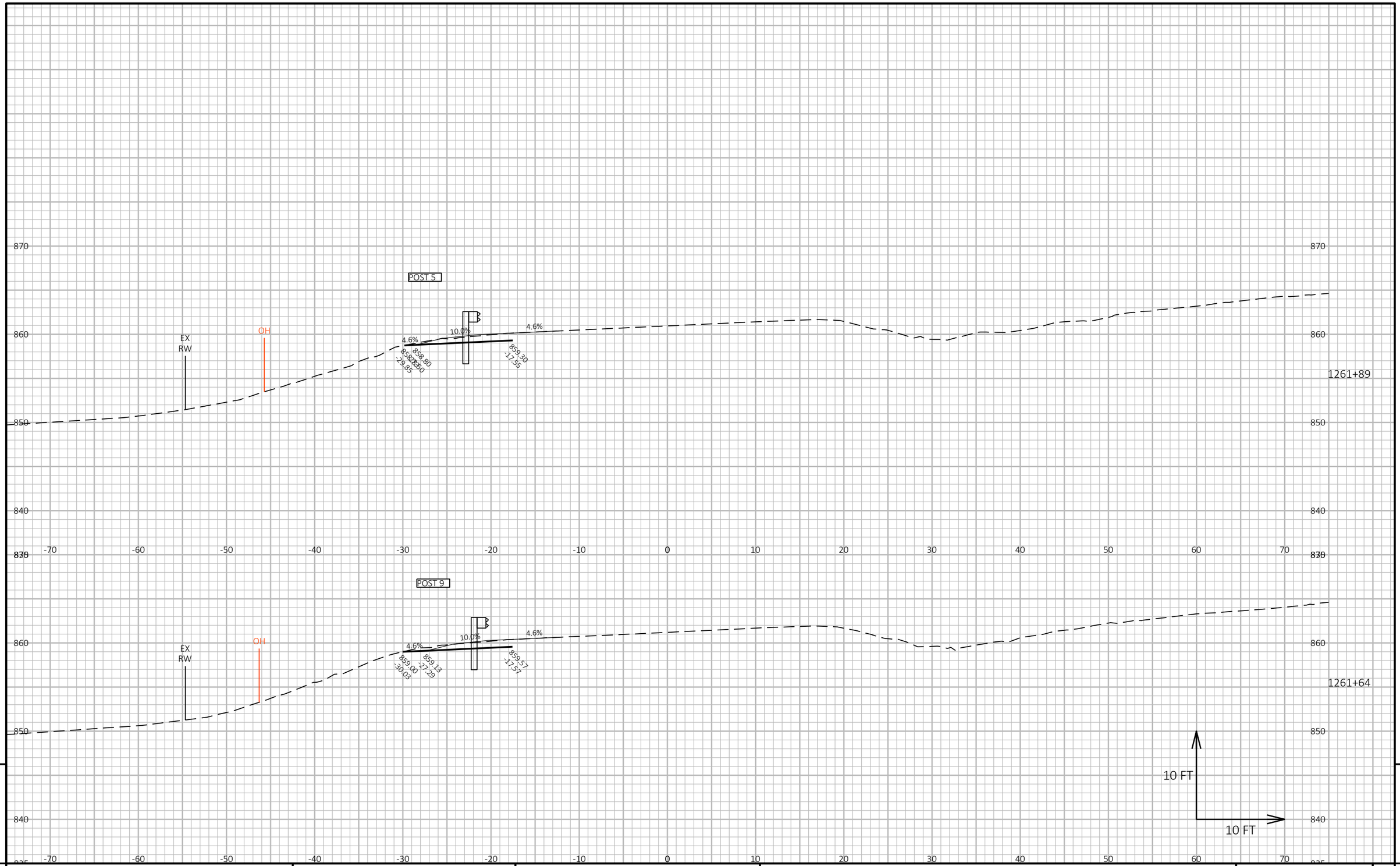

9

9

PROJECT NO: 4010-18-70	HWY: STH 144	COUNTY: WASHINGTON	CROSS SECTIONS: RUN 9	SHEET 289	E

FILE NAME : N:\PDS\C3D\40101800\SHEETSPLAN\090202-XS.DWG
LAYOUT NAME - Run9Eat1-01

PLOT DATE : 9/8/2022 1:53 PM

PLOT BY : MAY, MATTHEW

PLOT NAME :

PLOT SCALE : 1 IN:10 FT HORZ. / 1 IN:10 FT VERT.

WISDOT/CADDS SHEET 49

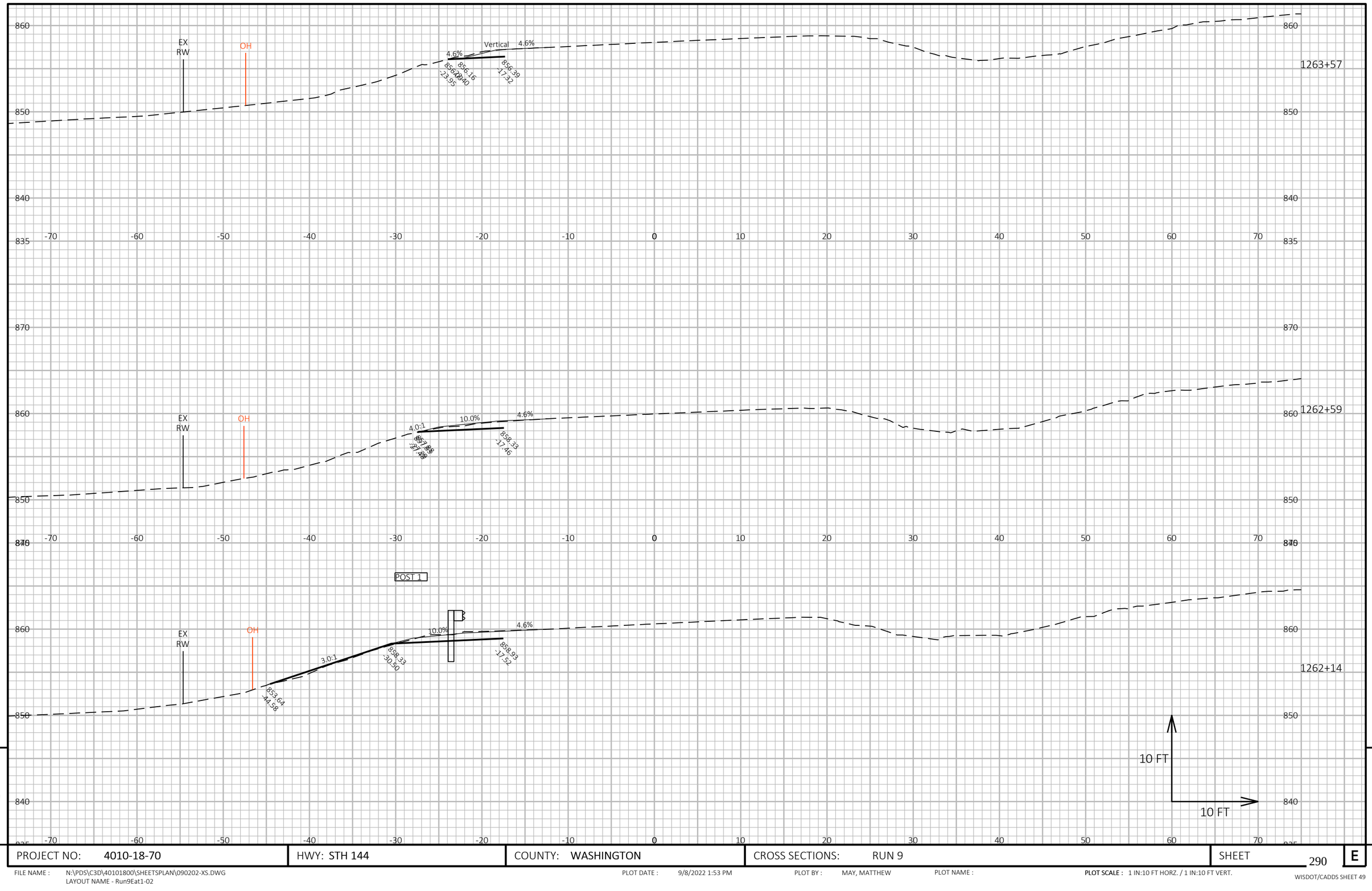

PROJECT NO: 4010-18-70	HWY: STH 144	COUNTY: WASHINGTON	CROSS SECTIONS: RUN 9	SHEET 290	E

FILE NAME : N:\PDS\C3D\40101800\SHEETSPLAN\090202-XS.DWG
LAYOUT NAME - Run9Eat1-02

PLOT DATE : 9/8/2022 1:53 PM PLOT BY : MAY, MATTHEW PLOT NAME : **PLOT SCALE :** 1 IN:10 FT HORZ. / 1 IN:10 FT VERT.

WISDOT/CADDS SHEET 49

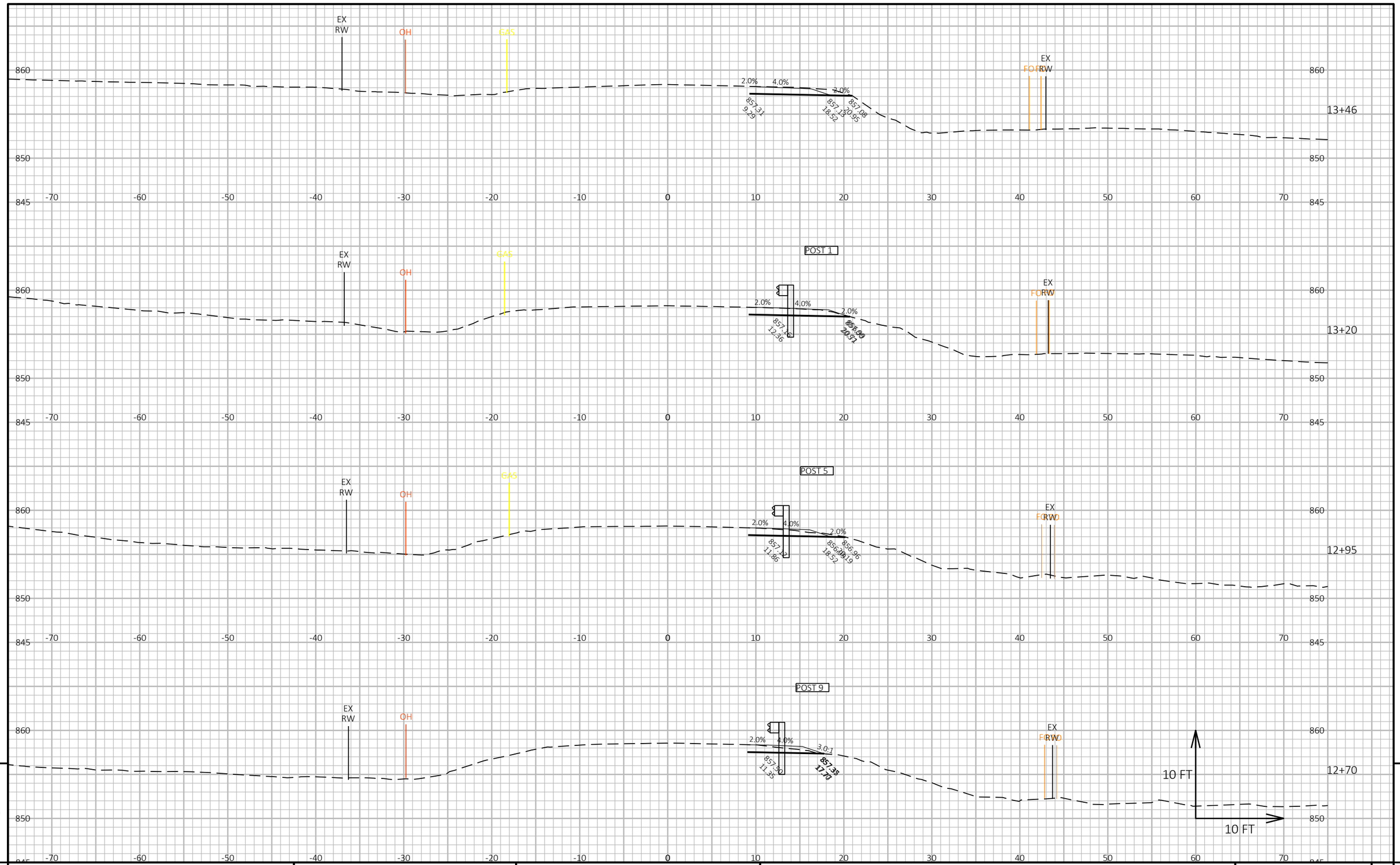

9

9

PROJECT NO: 4010-18-70	HWY: STH 144	COUNTY: WASHINGTON	CROSS SECTIONS: RUN 9	SHEET 291	E

FILE NAME : N:\PDS\C3D\40101800\SHEETSPLAN\090202-XS.DWG
LAYOUT NAME - Run9Eat2-01

PLOT DATE : 9/8/2022 1:53 PM

PLOT BY : MAY, MATTHEW

PLOT NAME :

PLOT SCALE : 1 IN:10 FT HORZ. / 1 IN:10 FT VERT.

WISDOT/CADDS SHEET 49

9

9

PROJECT NO: 4010-18-70	HWY: STH 144	COUNTY: WASHINGTON	CROSS SECTIONS: RUN 9	SHEET 292	E

FILE NAME : N:\PDS\C3D\40101800\SHEETSPLAN\090202-XS.DWG
LAYOUT NAME - Run9Eat2-02

PLOT DATE : 9/8/2022 1:53 PM

PLOT BY : MAY, MATTHEW

PLOT NAME :

PLOT SCALE : 1 IN:10 FT HORZ. / 1 IN:10 FT VERT.

WISDOT/CADDS SHEET 49

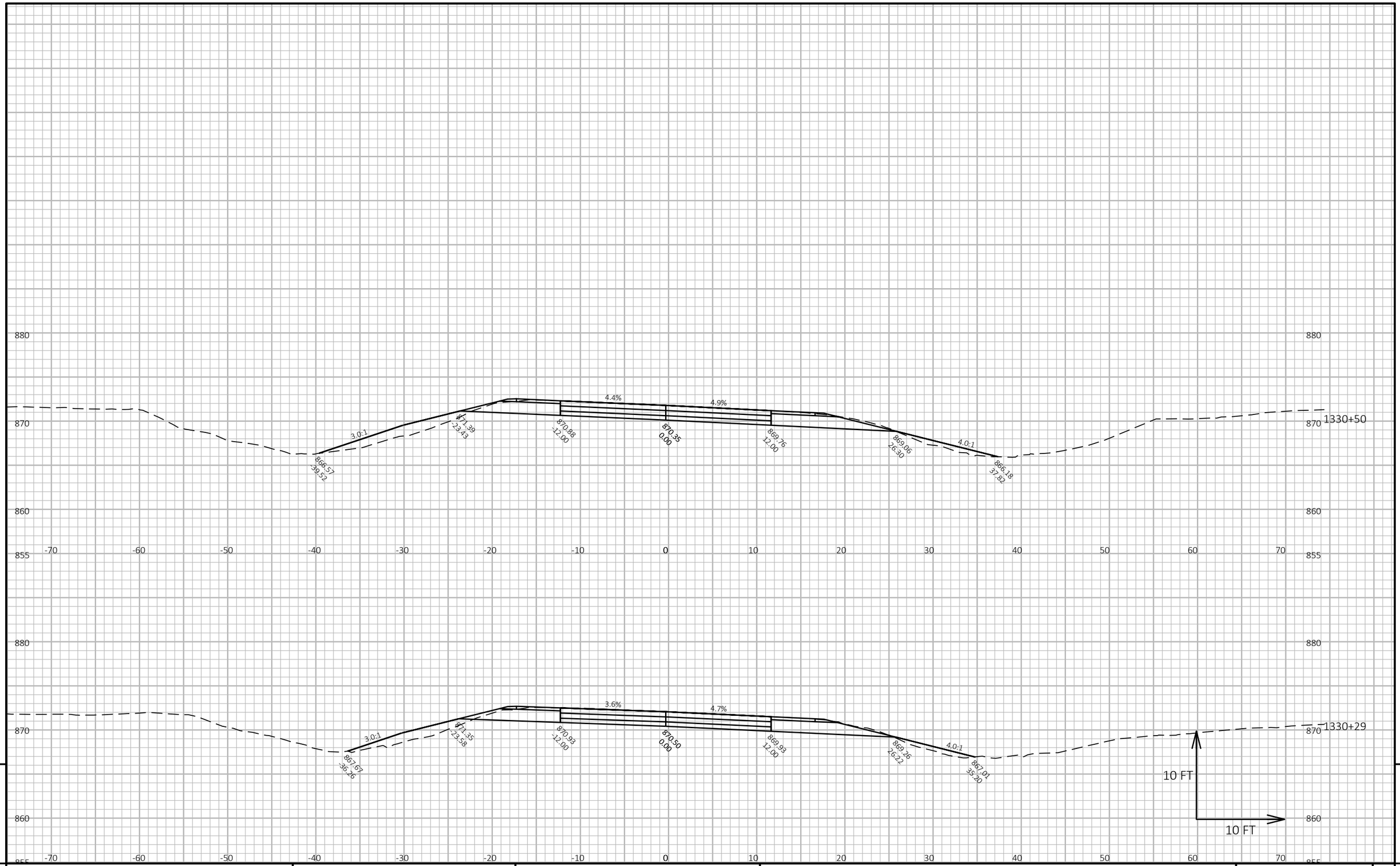

9

PROJECT NO: 4010-18-70	HWY: STH 144	COUNTY: WASHINGTON	CROSS SECTIONS: CATTLE PASS	SHEET 293	E

9

FILE NAME : N:\PDS\C3D\40101800\SHEETSPLAN\090202-XS.DWG
LAYOUT NAME - CattlePass-1

PLOT DATE : 12/5/2023 2:42 PM

PLOT BY : YANG, VANG NENG

PLOT NAME :

PLOT SCALE : 1 IN:10 FT HORZ. / 1 IN:10 FT VERT.

WISDOT/CADDS SHEET 49

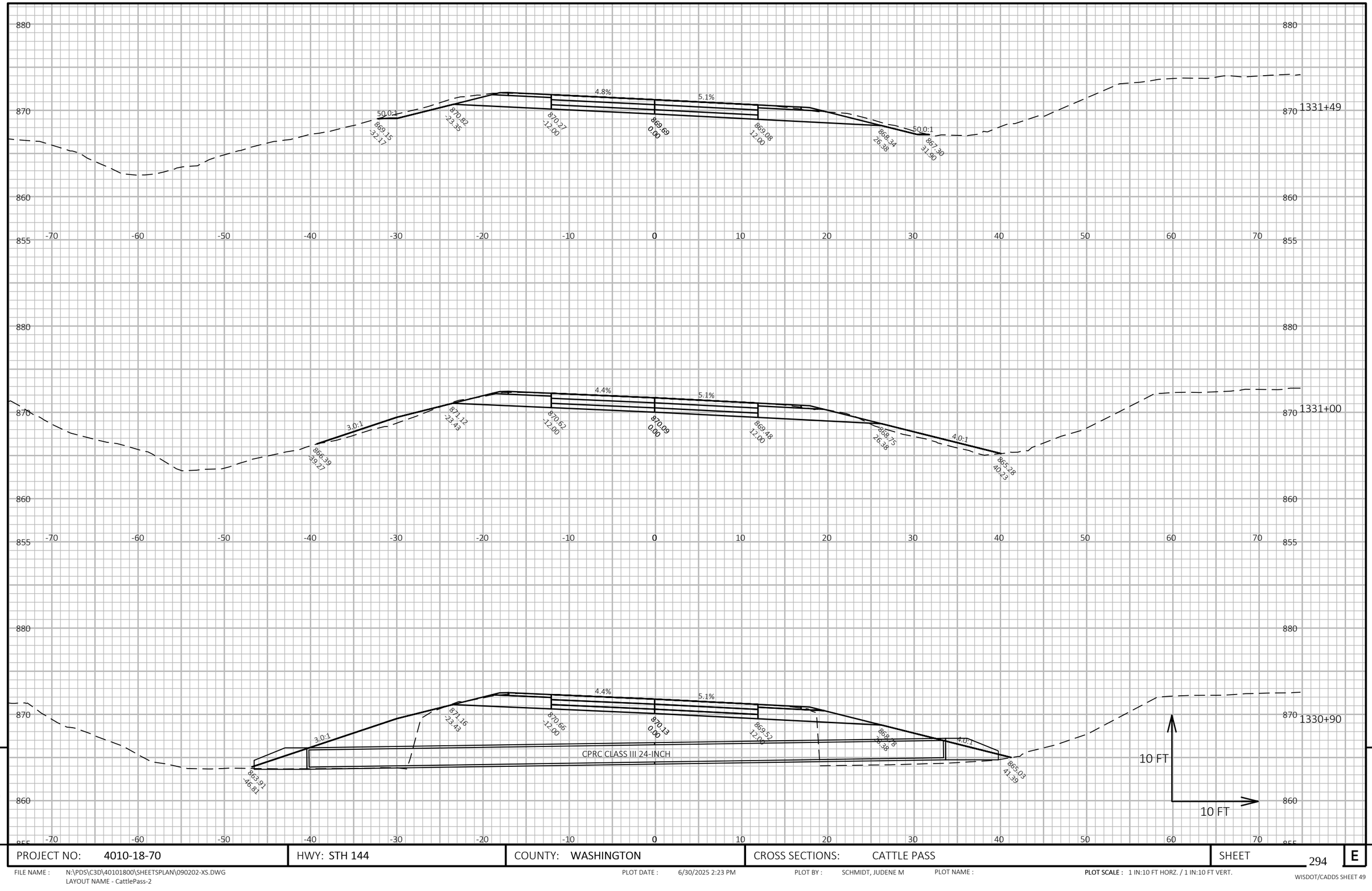

9

9

PROJECT NO: 4010-18-70	HWY: STH 144	COUNTY: WASHINGTON	CROSS SECTIONS: CATTLE PASS	SHEET 294	E

FILE NAME : N:\PDS\C3D\40101800\SHEETSPLAN\090202-XS.DWG
LAYOUT NAME - CattlePass-2

PLOT DATE : 6/30/2025 2:23 PM

PLOT BY : SCHMIDT, JUDENE M

PLOT NAME :

PLOT SCALE : 1 IN:10 FT HORZ. / 1 IN:10 FT VERT.

WISDOT/CADDS SHEET 49

Notes

Wisconsin Department of Transportation

Dedicated people creating transportation solutions
through innovation and exceptional service.

http://www.dot.wisconsin.gov