LAX

AUGUST 2025

PROJECT ID: 5163-07-72

WITH: 5991-06-73

COUNTY: LA CROSSE/VERNON

ORDER OF SHEETS

TOTAL SHEETS = 558

STATE PROJECT	FEDERAL PROJECT	
	PROJECT	CONTRACT
5163-07-72	WISC 2025569	1

STATE OF WISCONSIN
DEPARTMENT OF TRANSPORTATION

PLAN OF PROPOSED IMPROVEMENT

GENOA - LA CROSSE

LA CROSSE CO LINE TO SUNNYSIDE DRIVE

STH 35

LA CROSSE & VERNON COUNTY

STATE PROJECT NUMBER
5163-07-72

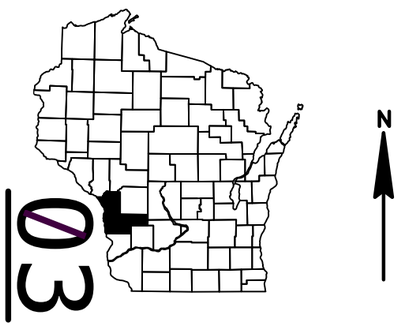

N

DESIGN DESIGNATION

A.A.D.T.	(2026	=	10,820
A.A.D.T.	(2046)	=	13,460
D.H.V.		=	1,346
D.D.		=	66/34
T.		=	11.1%
DESIGN SPEED		=	60 MPH
ESALS		=	1,900,000

END PROJECT
STH 35 STA 648+49.88

BEGIN PROJECT
STH 35 STA 568+75.00
Y=99940.869
X=458707.832

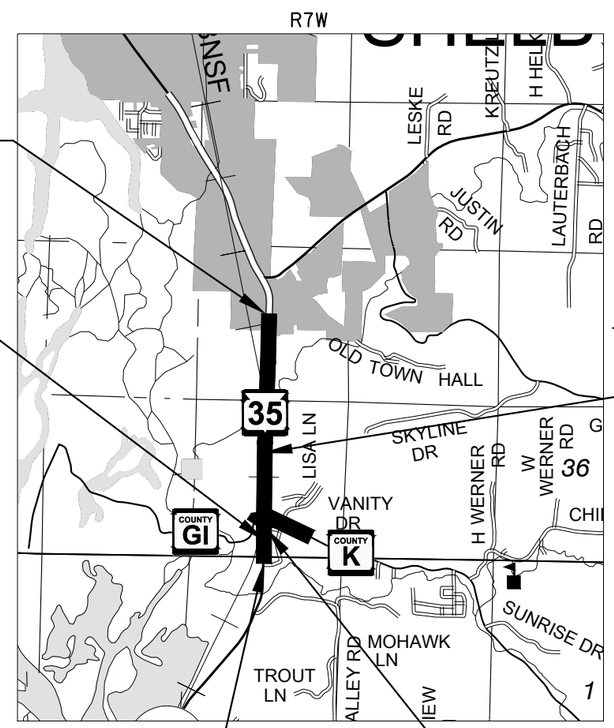

STRUCTURE B-32-163
STA 619+58.85

BEGIN CONSTRUCTION
STH 35 STA 565+72.14

STRUCTURE C-32-104
STA 573+64

CONVENTIONAL SYMBOLS

PLAN
- CORPORATE LIMITS
- PROPERTY LINE
- LOT LINE
- LIMITED HIGHWAY EASEMENT
- EXISTING RIGHT OF WAY
- PROPOSED OR NEW R/W LINE
- SLOPE INTERCEPT
- REFERENCE LINE
- EXISTING CULVERT
- PROPOSED CULVERT (Box or Pipe)
- COMBUSTIBLE FLUIDS — CAUTION
- MARSH AREA
- WOODED OR SHRUB AREA

PROFILE
- GRADE LINE
- ORIGINAL GROUND
- MARSH OR ROCK PROFILE (To be noted as such) — ROCK
- SPECIAL DITCH — LABEL
- GRADE ELEVATION — 95.36
- CULVERT (Profile View)

UTILITIES
- ELECTRIC — E
- FIBER OPTIC — FO
- GAS — G
- SANITARY SEWER — SAN
- STORM SEWER — SS
- TELEPHONE — T
- WATER — W
- UTILITY PEDESTAL
- POWER POLE
- TELEPHONE POLE

LAYOUT
SCALE 0 — 0.5 MI

TOTAL NET LENGTH OF CENTERLINE = 1.510 MI

HORIZONTAL POSITIONS SHOWN ON THIS PLAN ARE WISCONSIN COORDINATE REFERENCE SYSTEMS COORDINATES (WISCRS), LA CROSSE COUNTY, NAD83 (2011), IN U.S. SURVEY FEET. VALUES ARE GRID COORDINATES, GRID BEARINGS, AND GRID DISTANCES. GRID DISTANCES MAY BE USED AS GROUND DISTANCES. ELEVATIONS SHOWN ON THIS PLAN ARE REFERENCE TO THE NORTH AMERICAN VERTICAL DATUM OF 1988, NAVD (2012)

ORIGINAL PLANS PREPARED BY

cbs²

WISCONSIN
TAMMY S. TUCKER
E-40780
WAUKESHA, WI
PROFESSIONAL ENGINEER

DATE: 4/9/2025 Tammy Tucker
(Professional Engineer Signature)

STATE OF WISCONSIN
DEPARTMENT OF TRANSPORTATION

PREPARED BY

Surveyor	CBS SQUARED INC.
Designer	CBS SQUARED INC.
Project Manager	VALERIE GUIDER
Regional Examiner	SW REGION
Regional Supervisor	JOHN BAINTER

APPROVED FOR THE DEPARTMENT

DATE: 4/11/2025 Valerie Guider
(Signature)

E

GENERAL NOTES

THERE ARE UTILITY FACILITIES WITHIN THE PROJECT AREA THAT ARE NOT SHOWN ON THE PLANS. THE CONTRACTOR SHALL COORDINATE THEIR CONSTRUCTION ACTIVITIES WITH A CALL TO DIGGER'S HOTLINE AND/OR A DIRECT CALL TO THE UTILITIES THAT HAVE FACILITIES IN THE AREA.

THE LOCATION OF EXISTING OR PROPOSED UTILITIES, AS NOTED ON THE PLANS, IS APPROXIMATE. THERE MAY BE OTHER UTILITY INSTALLATIONS WITHIN THE PROJECT AREA THAT ARE NOT SHOWN.

NO TREES OR SHRUBS ARE TO BE REMOVED WITHOUT THE APPROVAL OF THE ENGINEER.

ALL DISTURBED AREAS WITHIN THE RIGHT OF WAY THAT ARE NOT INCIDENTAL TO CONTRACT WORK ITEMS SHALL BE FERTILIZED SEEDED AND MULCHED AT THE CONTRACTORS EXPENSE.

UNLESS NOTED ON THE PLAN, ALL RADII ARE MEASURED TO THE FLANGE LINE.

CURB AND GUTTER GRADES ARE GIVEN TO THE FLANGE LINE.

EXPANSION JOINTS ARE TO BE CONSTRUCTED AT ALL END RADIUS POINTS IN CURB AND GUTTER ADJACENT TO HMA PAVEMENT.

SIGN LAYOUTS SHALL BE IN ACCORDANCE WITH THE FEDERAL HIGHWAY ADMINISTRATION MANUAL ON UNIFORM TRAFFIC CONTROL DEVICES.

WHEN THE QUANTITY OF ASPHALTIC CONCRETE PAVEMENT OR BASE COURSE IS MEASURED FOR PAYMENT BY THE TON, THE DEPTH OR THICKNESS OF THE COURSE SHOWN ON THE PLAN IS APPROXIMATE AND THE ACTUAL THICKNESS WILL DEPEND ON THE DISTRIBUTION OF THE MATERIAL AS DIRECTED BY THE ENGINEER.

ALL HOLES OR OPENINGS RESULTING FROM REMOVAL OF EXISTING STRUCTURES SHALL BE FILLED WITH GRANULAR BACKFILL WHICH SHALL BE INCIDENTAL TO THE RESPECTIVE REMOVAL ITEMS.

PRIOR TO ORDERING DRAINAGE PIPES, THE CONTRACTOR SHALL FIELD VERIFY RELATED DRAINAGE INFORMATION IN THE PLAN WITH THE ENGINEER.

ADDRESS NUMBER SIGNS WILL BE RELOCATED BY LOCAL MUNICIPALITIES. CONTACT MUNICIPALITY TWO WEEKS PRIOR TO BEGINNING WORK WHICH MAY DISTURB ADDRESS NUMBER SIGNS.

HMA PAVEMENT WEIGHT CALCULATIONS ARE BASED ON 112 LB/SY/IN.

APPLY TACK COAT AT A RATE OF 0.05 GAL/SY BETWEEN LAYERS OF HMA PAVEMENT.

THE CONTRACTOR'S PAVING OPERATIONS SHALL BE CONSISTENT WITH THE PLAN TYPICAL SECTIONS AND CONSTRUCTED TO PREVENT HMA LONGITUDINAL JOINTS FROM BEING LOCATED WITHIN A DRIVING, TURNING, PASSING OR PARKING LANE.

CONTRACTOR TO PROTECT ON1334, ON0240 GPS AND KEEP CONSTRUCTION EQUIPMENT AT LEAST 10 FEET AWAY FROM ON1334, ON0240 GPS.

ENSURE THAT ON1334, ON0240 GPS IS/ARE NOT DISTURBED, BUMPED OR MOVED DURING THE DURATION OF THE PROJECT. NOTIFY JACOB ROCKWEILER IMMEDIATELY IF ON1334, ON0240 GPS IS/ARE DISTURBED, BUMPED OR DURING CONSTRUCTION OPERATIONS.

JACOB ROCKWEILER, P.E., WISCONSIN HEIGHT MODERNIZATION PROGRAM MANAGER WITH THE WISCONSIN DEPARTMENT OF TRANSPORATION WHOSE PHONE NUMBER IS (608) 516-6362 AND EMAIL IS JACOB.ROCKWEILER@DOT.WI.GOV

RUNOFF COEFFICIENT TABLE

	HYDROLOGIC SOIL GROUP											
	A			B			C			D		
	SLOPE RANGE (PERCENT)			SLOPE RANGE (PERCENT)			SLOPE RANGE (PERCENT)			SLOPE RANGE (PERCENT)		
LAND USE:	0-2	2-6	6 & OVER	0-2	2-6	6 & OVER	0-2	2-6	6 & OVER	0-2	2-6	6 & OVER
ROW CROPS:	.08 .22	.16 .30	.22 .38	.12 .26	.20 .34	.27 .44	.15 .30	.24 .37	.33 .50	.19 .34	.28 .41	.38 .56
MEDIAN STRIPTURF:	.19 .24	.20 .26	.24 .30	.19 .25	.22 .28	.26 .33	.20 .26	.23 .30	.30 .37	.20 .27	.25 .32	.30 .40
SIDE SLOPETURF:			.25 .32			.27 .34			.28 .36			.30 .38
PAVEMENT:												
ASPHALT:	.70 - .95											
CONCRETE:	.80 - .95											
BRICK:	.70 - .80											
DRIVES, WALKS:	.75 - .85											
ROOFS:	.75 - .95											
GRAVEL ROADS, SHOULDERS:	.40 - .60											

TOTAL PROJECT AREA = 37.12 ACRES
TOTAL AREA EXPECTED TO BE DISTURBED BY CONSTRUCTION ACTIVITIES = 22.12 ACRES

ORDER OF DETAIL SHEETS

COMPLETED BY OTHERS

STRUCTURE B-32-163 PLANS COMPLETED BY MSA PROFESSIONAL SERVICES, INC.
STRUCTURE C-32-104 PLANS COMPLETED BY MEAD AND HUNT, INC

DIGGERS HOTLINE
Dial 811 or (800)242-8511
www.DiggersHotline.com

UTILITY CONTACTS

THOMAS MURRAY
BRIGHTSPEED - COMMUNICATION LINE
1905 WARD AVENUE
LA CROSSE, WI 54601
(608) 780-0895
TOM.L.MURRAY@BRIGHTSPEED.COM

BRANDON SEELEY
COON VLY TELECOM INC - COMMUNICATION LINE
105 CENTRAL AVE
COON VALLEY, WI 54623
(608) 452-3101
CVTCLOCATES@GMAIL.COM

CRAIG EGGERT
MEDIACOM WI LLC - COMMUNICATION LINE
1240 HIGHWAY 52
CHATFIELD, MN 55923
(563) 419-5160
CEGGERT@MEDIACOMCC.COM

MITCHELL DIENGER
XCEL ENERGY - ELECTRICITY-TRANSMISSION
414 NICOLLET MALL 5TH FLOOR
MINNEAPOLIS, MN 55401
(612) 321-3109
MITCHELL.A.DIENGER@XCELENERGY.COM

JASON MCROBERTS
XCEL ENERGY - ELECTRICITY DISTRIBUTION
3215 COMMERCE STREET
LA CROSSE, WI 54601
(715) 577-1132 (CELL)
(608) 789-3689 (OFFICE)
JASON.L.MCROBERTS@XCELENERGY.COM

WISCONSIN DNR LIAISON

KAREN KALVELAGE
DNR SERVICE CENTER
3550 MORMON COULEE RD
LA CROSSE, WI 54650
(608) 785-9115
KAREN.KALVELAGE@WISCONSIN.GOV

DESIGN CONTACT

VALERIE GUIDER
WISCONSIN DEPARTMENT OF TRANSPORTATION
2101 WRIGHT ST
MADISON, WI 53704
(608) 789-6303
VALERIE.GUIDER@DOT.WI.GOV

TAMMY TUCKER
CBS SQUARED, INC.
2500 E. ENTERPRISE AVE. SUITE A
APPLETON, WI 54913
(920) 574-3135
TTUCKER@CBSSQUAREDINC.COM

BORING & CORING LOG SUMMARY - FOR REFERENCE ONLY

POINT	STATION	OFFSET	LAYER 1 HMA (IN)	LAYER 2 MATERIAL	LAYER 2 (INCHES)	LAYER 3 MATERIAL	LAYER 3 (THICKNESS)	LAYER 4 (THICKNESS)	LAYER 5 (THICKNESS)
B1	567+90	15' RT	7" ASPH.	BASE	11.0"	SAND, LITTLE SILT	3.0 FT	SANDY SILT LITTLE GR 0.5 FT	
B2	570+00	16' RT	4" ASPH.	BASE	11.0"	SAND, LITTLE SILT	2.7 FT	SILTY SAND LITTLE GR 0.7 FT	SAND 3.0 FT SILT 4.0 FT
B3	575+20	20' RT	3" ASPH.	BASE	9.5"	SAND, LITTLE SILT	2.4 FT	SANDY SILT LITTLE GR 0.7 FT	SILTY SAND 0.8 FT
B4	581+00	0'	6" TOPSOIL	SAND, LITTLE GR	6"	SILTY SAND	1.5 FT	SILT, LITTLE SAND 2.5 FT	
B5	585+00	10' LT	7" TOPSOIL	SAND, SILT LITTLE GR	40.8"	SANDY SILT	2.0 FT	SANDSTONE 4.0 FT	
B6	595+00	12' LT	4" TOPSOIL	SAND, SILT LITTLE GR	56.4"				
B7	600+00	11' LT	4" TOPSOIL	SILTY, SAND LITTLE GR	56.4"				
B8	605+00	9' LT	8" TOPSOIL	SAND, SILT LITTLE GR	51.6"				
B9	610+00	4' RT	6" TOPSOIL	SILTY, SAND LITTLE GR	114.0"				
B10	615+00	4' RT	7.5" ASPH.	BASE	14.0"	SILTY SAND	3.2 FT		
B11	620+00	5' RT	7.5" ASPH.	BASE	15.0"	SAND, SILT LITTLE GR	2.5 FT	SILTY SAND 0.7 FT	
B12	625+00	3' LT	7.5" ASPH.	BASE	13.0"	SAND, LITTLE SILT	3.3 FT		
B13	630+00	9' RT	4" TOPSOIL	SAND, LITTLE SILT	78"	SILTY SAND	1.8-FT	SANDY SILT 2.2 FT	
B14	635+00	26' RT	6" TOPSOIL	SAND, LITTLE SILT	54"				
B15	640+00	25' RT	6" TOPSOIL	SAND, LITTLE SILT	54"				
B16	648+42	20' RT	4" ASPH	BASE	9.0"	SAND, LITTLE SILT	3.5-FT		

NOTES:
GR = GRAVEL

STANDARD ABBREVIATIONS

ABUT	ABUTMENT
AC	ACRE
AGG	AGGREGATE
AH	AHEAD
∠	ANGLE
AADT	ANNUAL AVERAGE DAILY TRAFFIC
AEW	APRON ENDWALL
ASPH	ASPHALTIC
BK	BACK
BC	BACK OF CURB
BAD	BASE AGGREGATE DENSE
BL OR B/L	BASE LINE
BM	BENCH MARK
CB	CATCH BASIN
CL OR C/L	CENTER LINE
Δ	CENTRAL ANGLE OR DELTA
CE	COMMERCIAL ENTRANCE
CONC	CONCRETE
CSW	CONCRETE SIDEWALK
CONST	CONSTRUCTION
CP	CONTROL POINT
CO	COUNTY
CTH	COUNTY TRUCK HIGHWAY
CY	CUBIC YARD
CP	CULVERT PIPE
CPCA	CULVERT PIPE CORRUGATED ALUMINUM
CPCPE	CULVERT PIPE CORRUGATED POLYETHYLENE
CPCPP	CULVERT PIPE CORRUGATED POLYPROPYLENE
CPCS	CULVERT PIPE CORRUGATED STEEL
CPCSAC	CULVERT PIPE CORRUGATED STEEL ALUMINUM COATED
CPCSPC	CULVERT PIPE CORRUGATED STEEL POLYMER COATED
CPRC	CULVERT PIPE REINFORCED CONCRETE
CPRCHE	CULVERT PIPE REINFORCED CONCRETE HORIZONTAL ELLIPTICAL
CPS	CULVERT PIPE SALVAGED
CPT	CULVERT PIPE TEMPORARY
C & G	CURB AND GUTTER
D	DEGREE OF CURVE
DHV	DESIGN HOUR VOLUME
DIA	DIAMETER
DD	DIRECTIONAL DISTRIBUTION
DE	DRAINAGE EASEMENT
DWY	DRIVEWAY
EA	EACH
EB	EASTBOUND
EL OR ELEV	ELEVATION
EMB	EMBANKMENT
EW	ENDWALL
EAT	ENERGY ABSORBING TERMINAL
ESALS	EQUIVALENT SINGLE AXLE LOADS
EXC	EXCAVATION
EBS	EXCAVATION BELOW SUBGRADE
EXIST	EXISTING
FERT	FERTILIZER
FE	FIELD ENTRANCE
FL OR F/L	FLOW LINE
FT	FOOT
FTMS	FREE TRAFFIC MANAGEMENT SYSTEM
HES	HIGH EARLY STRENGTH
HE	HIGHWAY EASEMENT
CWT	HUNDRED WEIGHT
IN DIA	INCH DIAMETER
INL	INLET
ID	INSIDE DIAMETER
INTERS	INTERSECTION
IH	INTERSTATE HIGHWAY
INV	INVERT
JT	JOINT
LT	LEFT
LHF	LEFT HAND FORWARD
L	LENGTH OF CURVE
LF	LINEAR FOOT
LC	LONG CHORD OF CURVE
LS	LUMP SUM
MGAL	ONE THOUSAND GALLONS
MH	MANHOLE
ML OR M/L	MATCH LINE
NOM	NOMINAL
NC	NORMAL CROWN
NB	NORTHBOUND
NO	NUMBER
OD	OUTSIDE DIAMETER
PAVT	PAVEMENT
PLE	PERMANENT LIMITED EASEMENT
PC	POINT OF CURVATURE
PI	POINT OF INTERSECTION
PT	POINT OF TANGENCY
PCC	PORTLAND CEMENT CONCRETE
LB	POUND
PSI	POUNDS PER SQUARE INCH
PE	PRIVATE ENTRANCE
PROJ	PROJECT
PL	PROPERTY LINE
PRW	PROPOSED RIGHT OF WAY
R	RADIUS
RL OR R/L	REFERENCE LINE
REQD	REQUIRED
RT	RIGHT
RHF	RIGHT HAND FORWARD
R/W	RIGHT OF WAY
RD	ROAD
RDWY	ROADWAY
SHLDR	SHOULDER
SW	SIDEWALK
SB	SOUTHBOUND
SPECS	SPECIFICATIONS
SF	SQUARE FEET
SY	SQUARE YARD
SDD	STANDARD DETAIL DRAWINGS
STH	STATE TRUNK HIGHWAY
STA	STATION
SSPC	STORM SEWER PIPE COMPOSITE
SSCPE	STORM SEWER PIPE CORRUGATED POLYETHYLENE
SSCPP	STORM SEWER PIPE CORRUGATED POLYPROPYLENE
SSPNRC	STORM SEWER PIPE NON-REINFORCED CONCRETE
SSPRC	STORM SEWER PIPE REINFORCED CONCRETE
SSPRC	STORM SEWER PIPE REINFORCED CONCRETE
SSPRCHE	STORM SEWER PIPE REINFORCED CONCRETE HORIZONTAL ELLIPTICAL
SE	SUPERELEVATION
SL OR S/L	SURVEY LINE
TEMP	TEMPORARY
TI	TEMPORARY INTEREST
TLE	TEMPORARY LIMITED EASEMENT
TC	TOP OF CURB
TL OR T/L	TRANSIT LINE
T	TRUCKS (PERCENT OF)
TYP	TYPICAL
USH	UNITED STATES HIGHWAY
VAR	VARIABLE
VC	VERTICAL CURVE
VPC	VERTICAL POINT OF CURVATURE
VPI	VERTICAL POINT OF INTERSECTION
VPT	VERTICAL POINT OF TANGENCY
W	WEST
WB	WESTBOUND

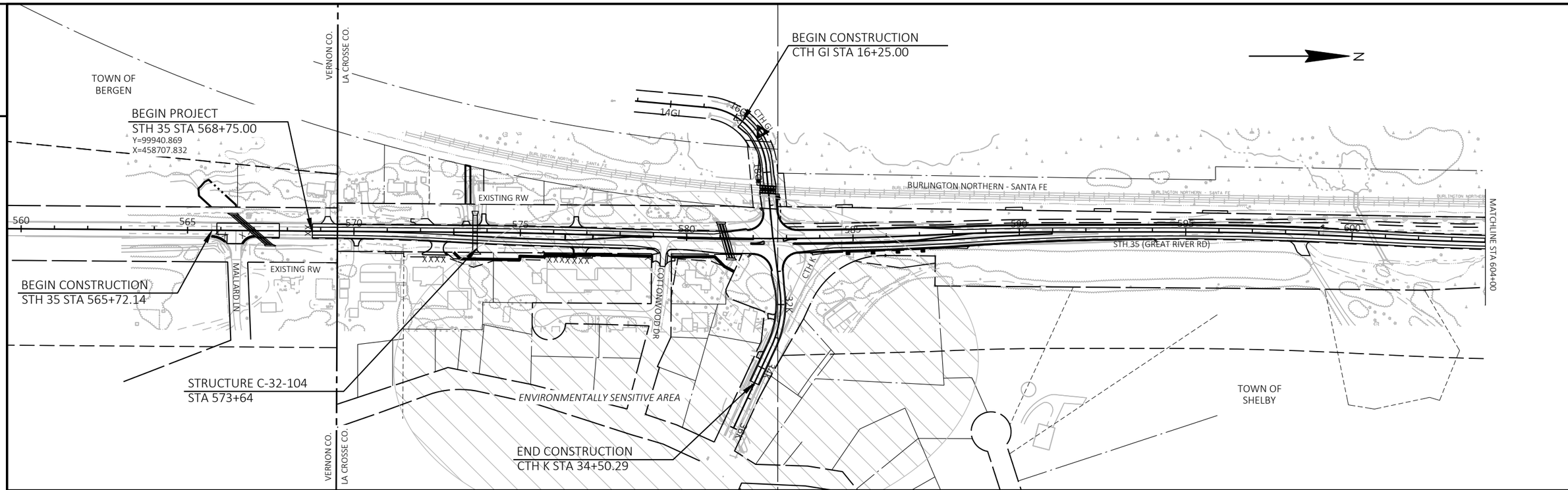

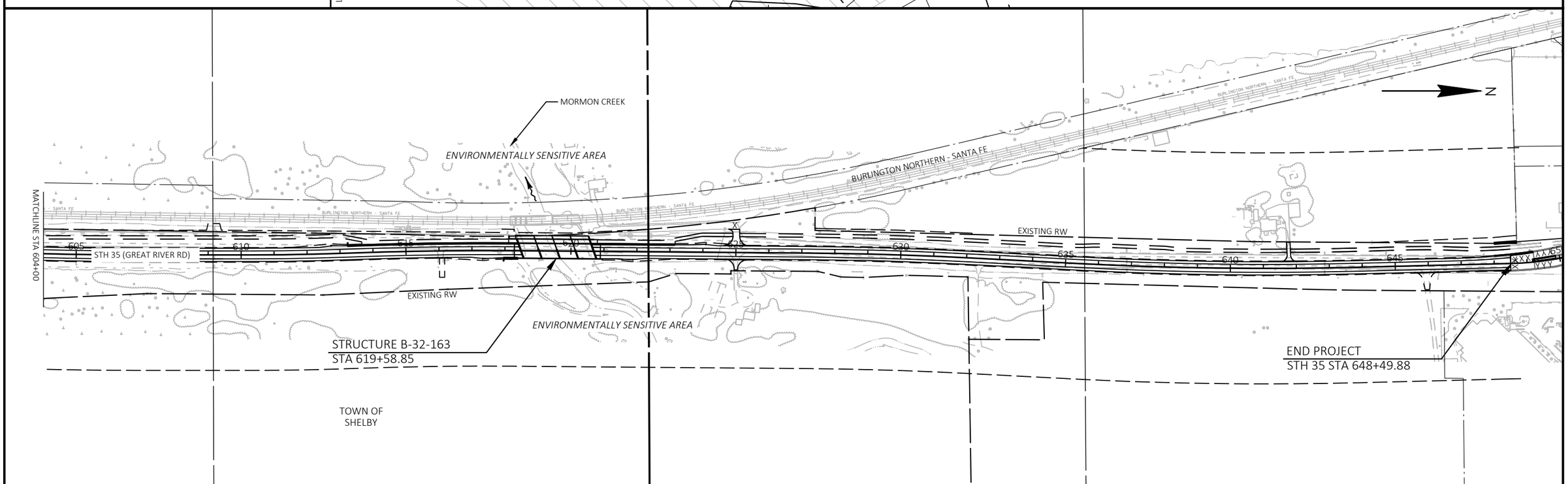

PROJECT NO: 5163-07-72	HWY: STH 35	COUNTY: LA CROSSE/VERNON	PROJECT OVERVIEW	SHEET 4	E

FILE NAME : O:\PDS\C3D\51630702\SHEETSPLAN\020201_PO.DWG
LAYOUT NAME - 01
PLOT DATE : 4/29/2025 3:12 PM
PLOT BY : CORY IHDE
PLOT NAME :
PLOT SCALE : 1 IN:100 FT
WISDOT/CADDS SHEET 44

2

NOTES:

1. CONCRETE CORRUGATED MEDIAN WIDTH VARIES:
   5.0' TO 10.5':
   STA 577+09.64 SB TO STA 578+99.97
   5.0' TO 15.0':
   STA 582+78.20 SB TO STA 583+55.21
   NO CONCRETE CORRUGATED MEDIAN:
   STA 578+99.97 SB TO STA 579+76.27
   STA 581+93.58 SB TO STA 582+78.20
   STA 583+55.21 SB TO STA 584+45.22

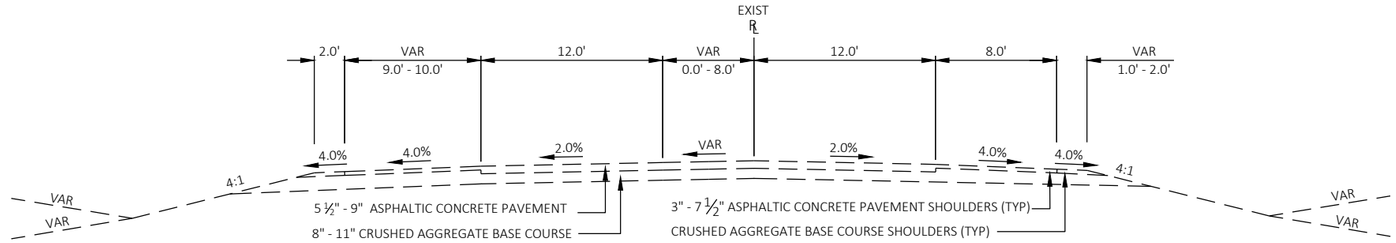

TYPICAL EXISTING SECTION
STH 35
STA 568+75.00 TO STA 577+09.64

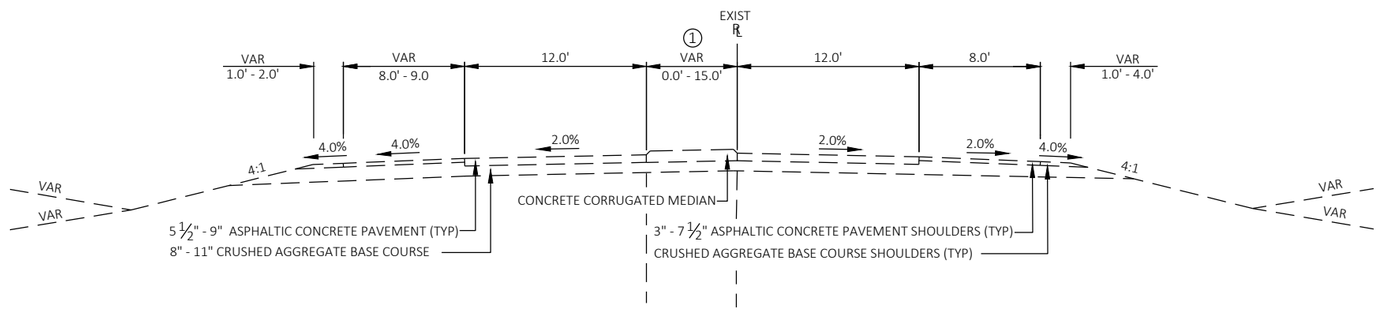

TYPICAL EXISTING SECTION
STH 35
STA 577+09.64 TO STA 584+45.22

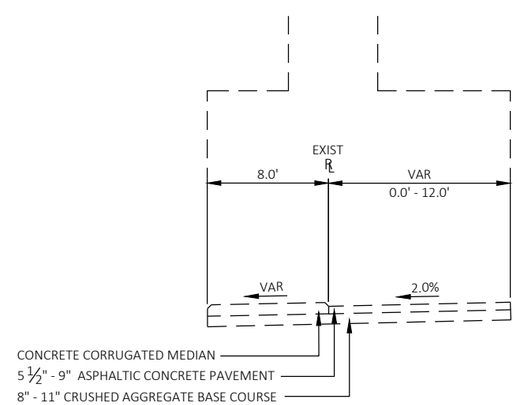

TYPICAL EXISTING PARTIAL SECTION - LEFT TURN LANE
STH 35
STA 579+76.27 TO STA 581+93.58

PROJECT NO: 5163-07-72	HWY: STH 35	COUNTY: LA CROSSE/VERNON	TYPICAL SECTIONS	SHEET 5	E

2

NOTES:

1. CONCRETE CORRUGATED MEDIAN BETWEEN TRAVEL LANES (WIDTH VARIES FROM 11.0' TO 4.0') FROM STA 589+14.26 TO STA 592+36.87.

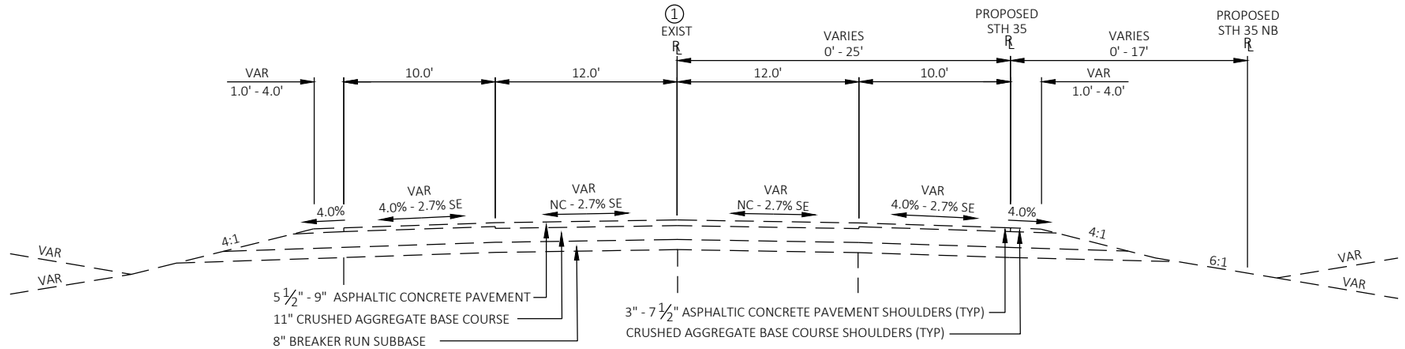

TYPICAL EXISTING SECTION
STH 35
STA 584+45.22 TO STA 618+27.34
STA 620+90.40 TO STA 637+19.0

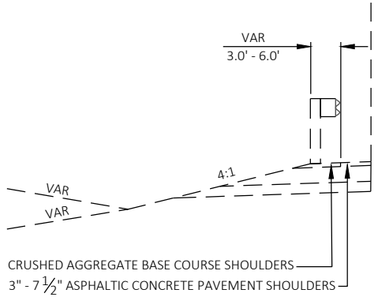

TYPICAL EXISTING PARTIAL SECTION
STH 35
STA 594+16.32 TO STA 618+27.34

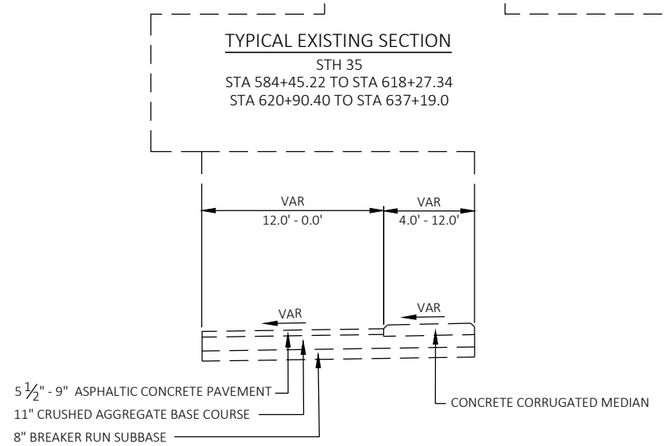

TYPICAL EXISTING PARTIAL SECTION - LEFT TURN LANE
STH 35
STA 584+45.22 TO STA 589+14.26

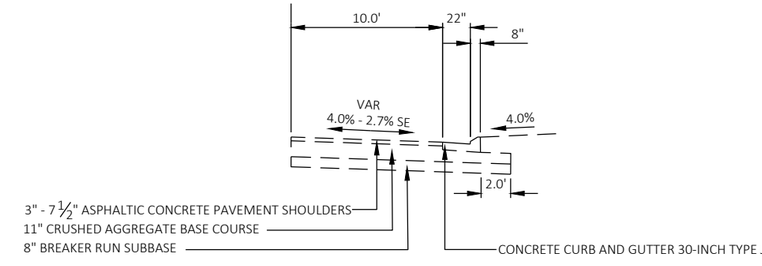

TYPICAL EXISTING PARTIAL SECTION
STH 35
STA 586+67.33 TO STA 593+17.63

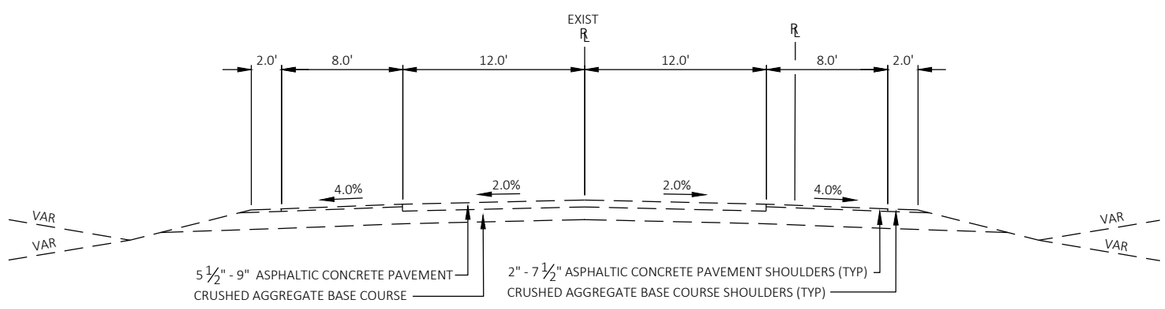

TYPICAL EXISTING SECTION
STH 35
STA 637+19.09 TO STA 648+49.88

2

PROJECT NO: 5163-07-72	HWY: STH 35	COUNTY: LA CROSSE/VERNON	TYPICAL SECTIONS	SHEET 6	E

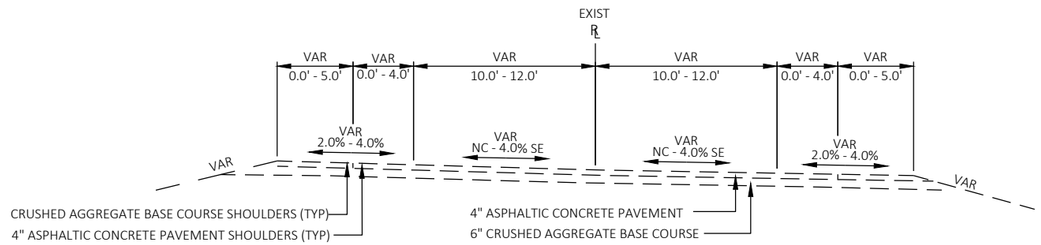

TYPICAL EXISTING SECTION

CTH GI

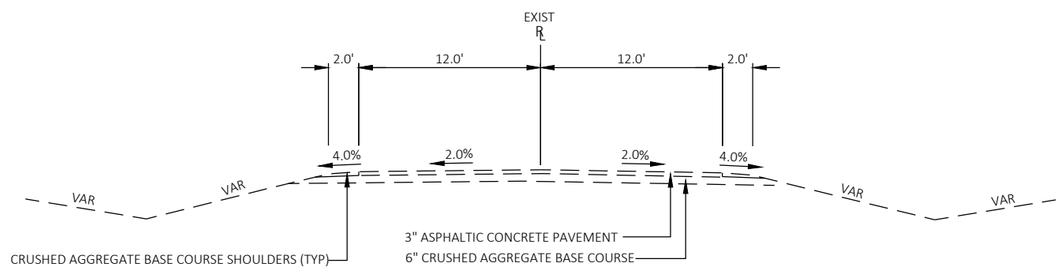

TYPICAL EXISTING SECTION

CTH K

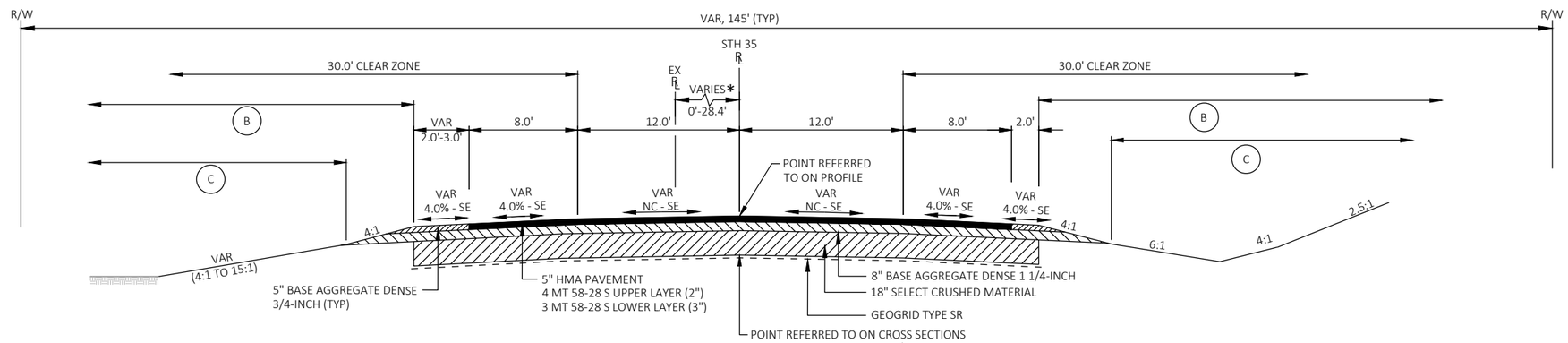

TYPICAL FINISHED SECTION

STH 35

STA 568+75.00 TO STA 582+60.16

* SEE ALIGNMENT PLAN

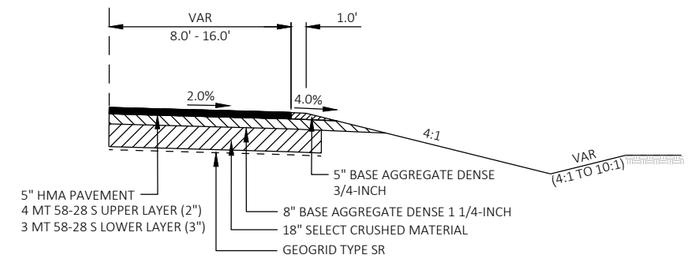

TYPICAL FINISHED PARTIAL SECTION - RIGHT TURN LANE

STH 35

STA 578+00.00 TO STA 581+98.45

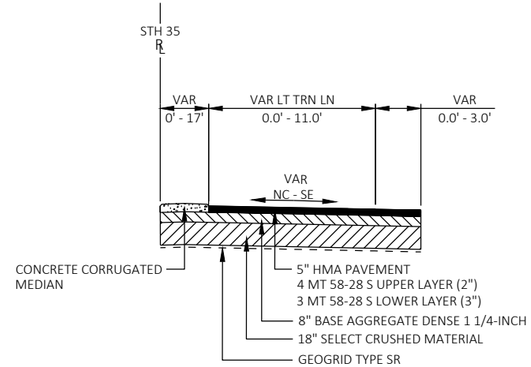

TYPICAL FINISHED PARTIAL SECTION - LEFT TURN LANE

STH 35

STA 572+39.82 TO STA 582+02.00

LEGEND:

(A) 4" SALVAGED TOPSOIL, SEEDING MIXTURE NO. 75, FERTILIZER TYPE B, & EROSION MAT.

(B) SEEDING MIXTURE NO. 75 & FERTILIZER TYPE B, 5' PAST SLOPE INTERCEPT.

(C) 4" SALVAGED TOPSOIL & EROSION MAT.

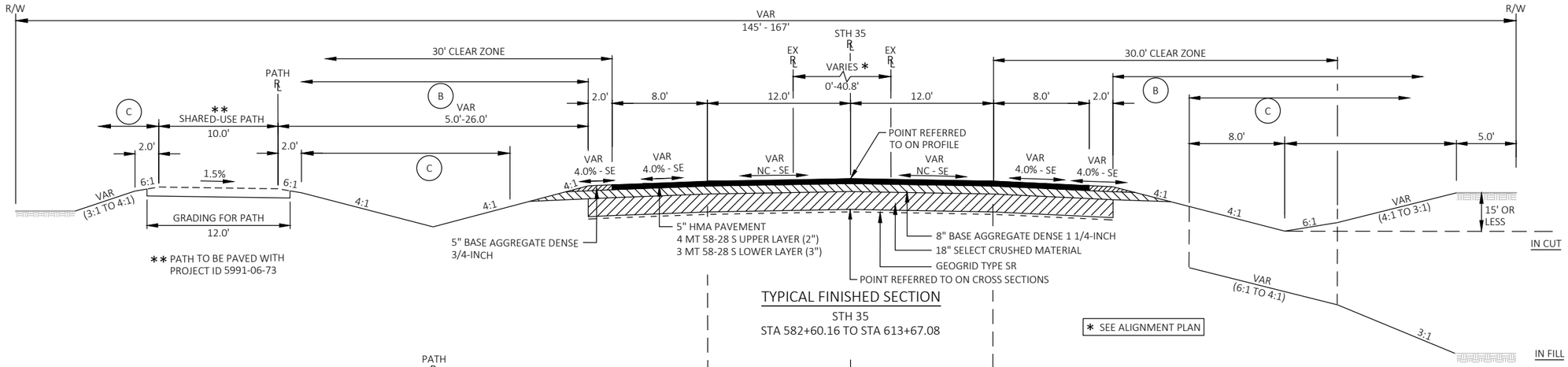

TYPICAL FINISHED SECTION

STH 35

STA 582+60.16 TO STA 613+67.08

* SEE ALIGNMENT PLAN

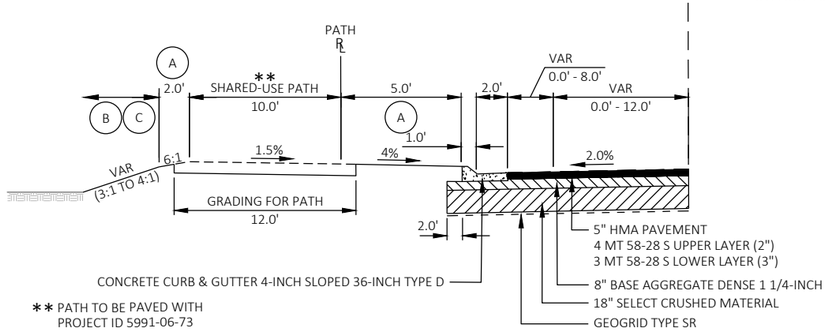

TYPICAL FINISHED PARTIAL SECTION - RIGHT TURN LANE AND CURB AND GUTTER

STH 35

STA 583+32.70 TO STA 599+00.00

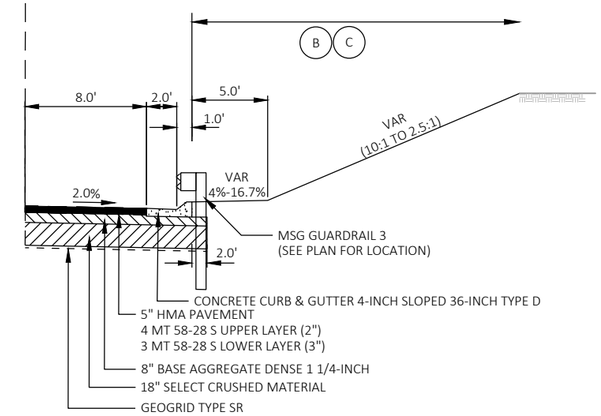

TYPICAL FINISHED PARTIAL SECTION - CURB AND GUTTER

STH 35

STA 583+37.06 TO STA 594+00.00

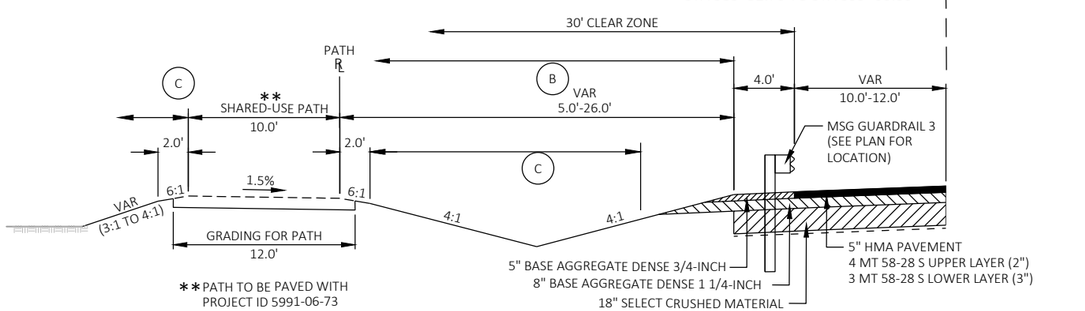

TYPICAL FINISHED PARTIAL SECTION - MGS GUARDRAIL

STH 35

STA 583+32.70 TO STA 599+00.00

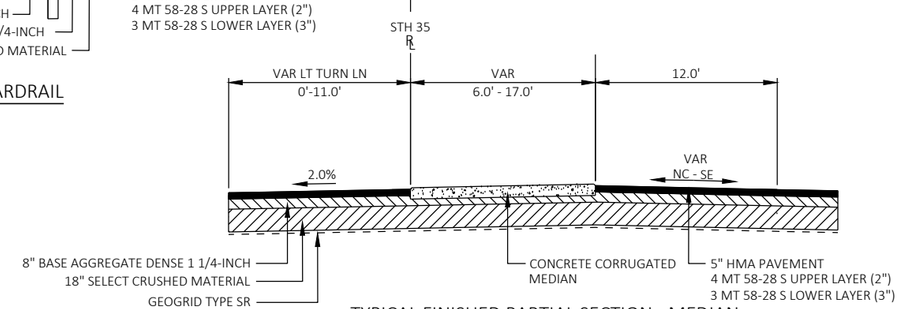

TYPICAL FINISHED PARTIAL SECTION - MEDIAN

STH 35

STA 582+60.16 TO STA 590+98.00

LEGEND:

(A) 4" SALVAGED TOPSOIL, SEEDING MIXTURE NO. 75, FERTILIZER TYPE B, & EROSION MAT.

(B) SEEDING MIXTURE NO. 75 & FERTILIZER TYPE B, 5' PAST SLOPE INTERCEPT.

(C) 4" SALVAGED TOPSOIL & EROSION MAT.

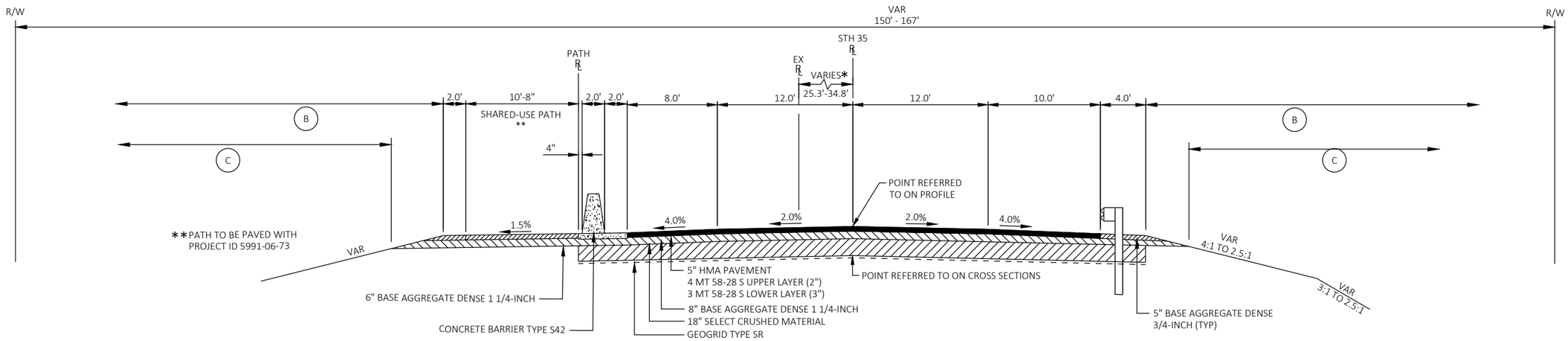

TYPICAL FINISHED SECTION

STH 35

STA 613+67.08 TO STA 618+28.47

* SEE ALIGNMENT PLAN

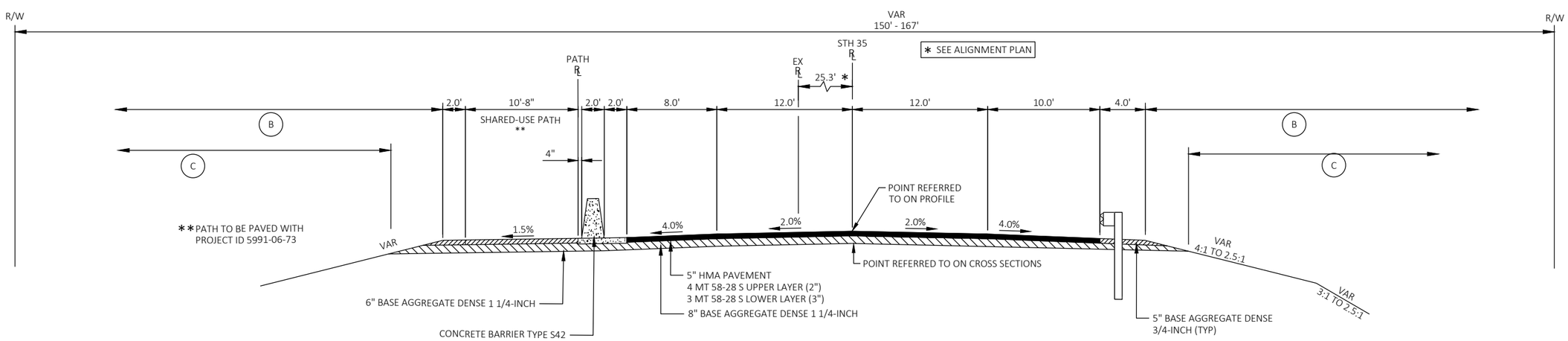

TYPICAL FINISHED SECTION

STH 35

STA 620+89.25 TO STA 623+15.55

LEGEND:

- (A) 4" SALVAGED TOPSOIL, SEEDING MIXTURE NO. 75, FERTILIZER TYPE B, & EROSION MAT.
- (B) SEEDING MIXTURE NO. 75 & FERTILIZER TYPE B, 5' PAST SLOPE INTERCEPT.
- (C) 4" SALVAGED TOPSOIL & EROSION MAT.

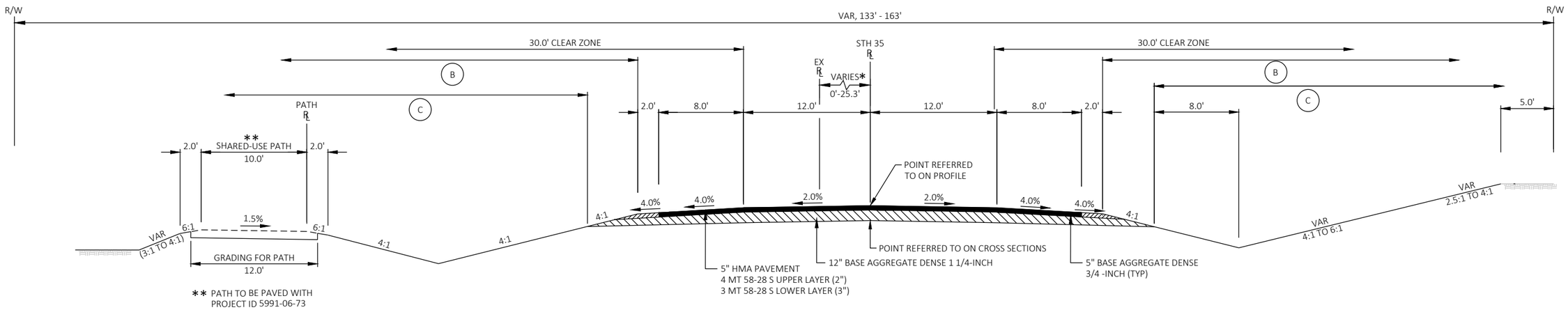

** PATH TO BE PAVED WITH
PROJECT ID 5991-06-73

* SEE ALIGNMENT PLAN

TYPICAL FINISHED SECTION

STH 35

STA 623+15.55 TO STA 648+49.88

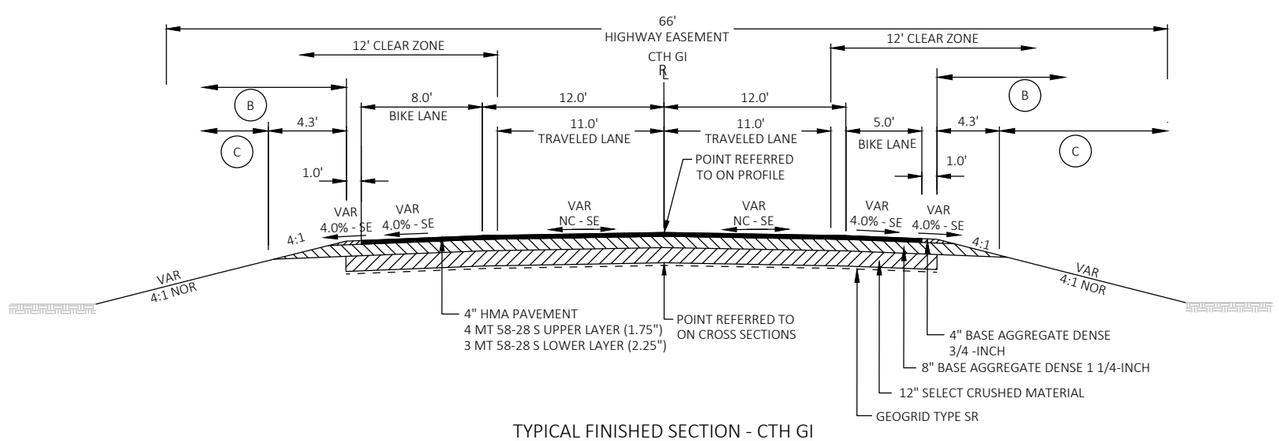

TYPICAL FINISHED SECTION - CTH GI

CTH GI

STA 16+25.00 TO STA 19+08.91

NOTE: EVALUATE THE USE OF THE SELECT CRUSHED MATERIAL ON THE CTH GI. IF THE SUB-BASE MATERIAL AND CONDITION ARE ACCEPTABLE, THERE IS NO NEED TO CONSTRUCT A FULL SUBGRADE IMPROVEMENT.

LEGEND:

- (A) 4" SALVAGED TOPSOIL, SEEDING MIXTURE NO. 75, FERTILIZER TYPE B, & EROSION MAT.
- (B) SEEDING MIXTURE NO. 75 & FERTILIZER TYPE B, 5' PAST SLOPE INTERCEPT.
- (C) 4" SALVAGED TOPSOIL & EROSION MAT.

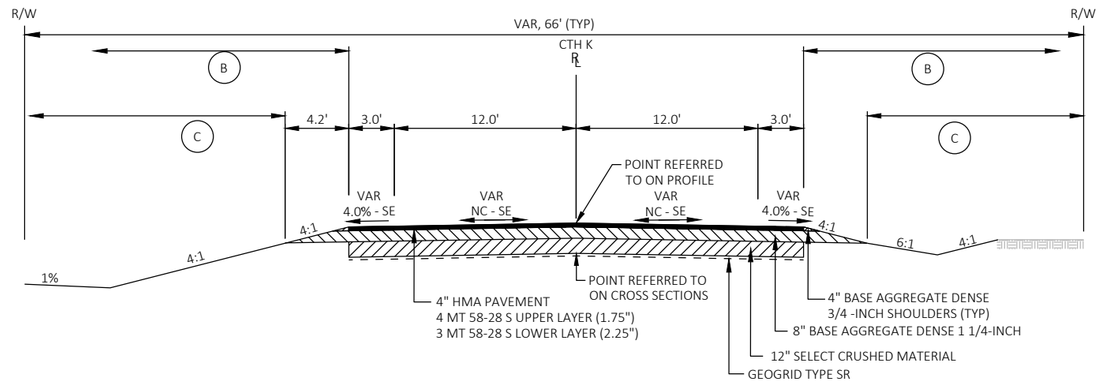

TYPICAL FINISHED SECTION - CTH K

CTH K
STA 12+64.14 TO STA 34+50.29

LEGEND:

(A) 4" SALVAGED TOPSOIL, SEEDING MIXTURE NO. 75, FERTILIZER TYPE B, & EROSION MAT.

(B) SEEDING MIXTURE NO. 75 & FERTILIZER TYPE B, 5' PAST SLOPE INTERCEPT.

(C) 4" SALVAGED TOPSOIL & EROSION MAT.

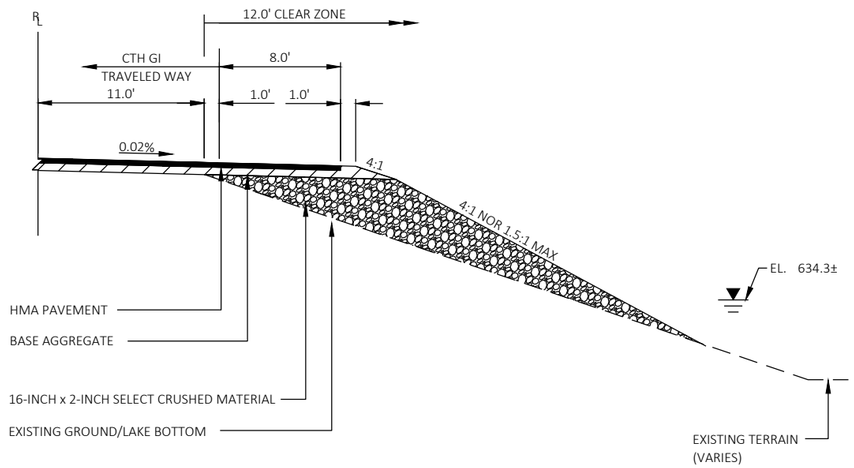

CAUSEWAY

CTH GI NEAR AT-GRADE RAILROAD CROSSING

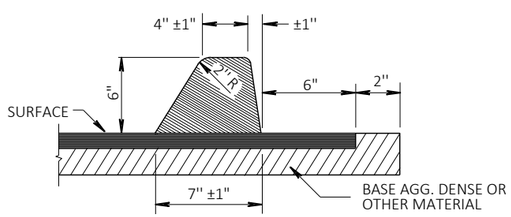

ASPHALTIC CURB DETAIL

CTH K

SEE MISCELLANEOUS QUANTITIES FOR LOCATIONS

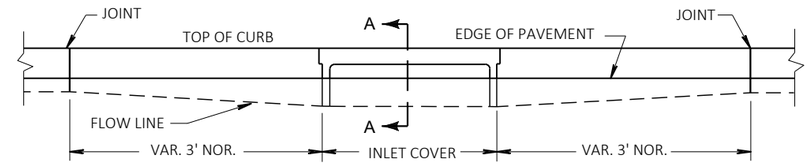

ELEVATION

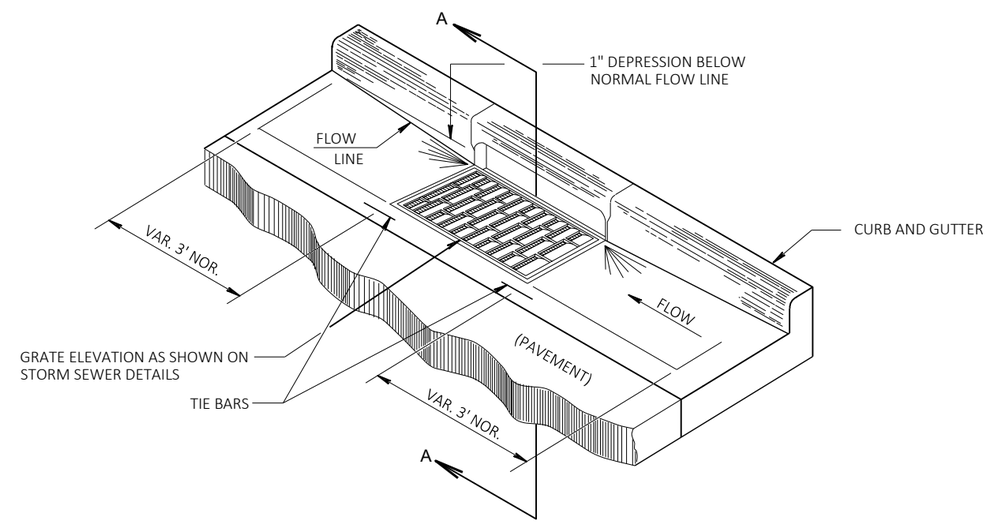

DETAIL OF CURB AND GUTTER AT INLETS

(TYPICAL INLET COVER TYPE H SHOWN)

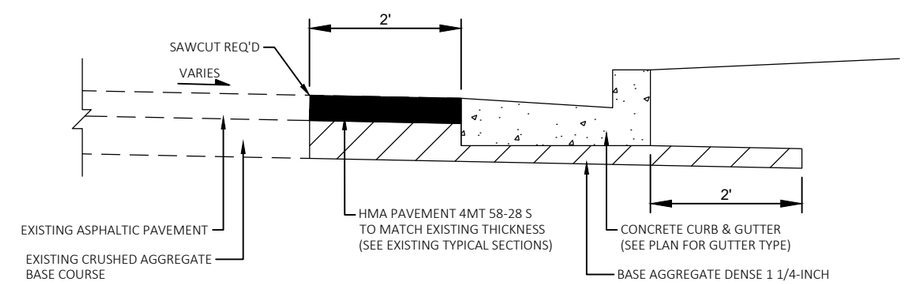

CONCRETE CURB AND GUTTER TYPE D REPLACEMENT

SEE SHEET PLANS FOR REPLACEMENT LOCATIONS

2

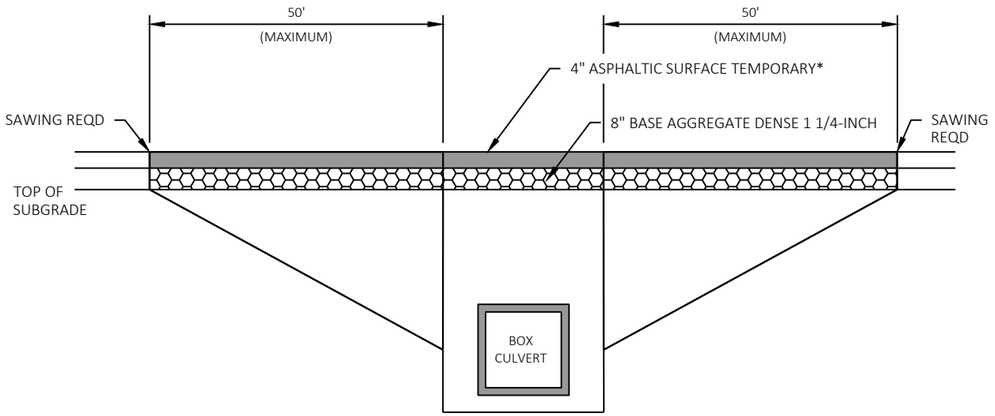

SEE C-32-104 STUCTURE PLAN FOR
EXCAVATION AND BACKFILL REQUIREMENTS.

CULVERT PIPE TRANSITION

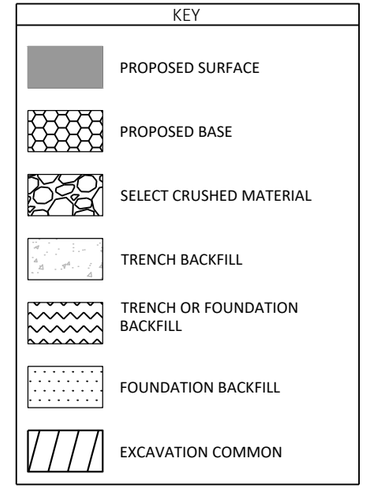

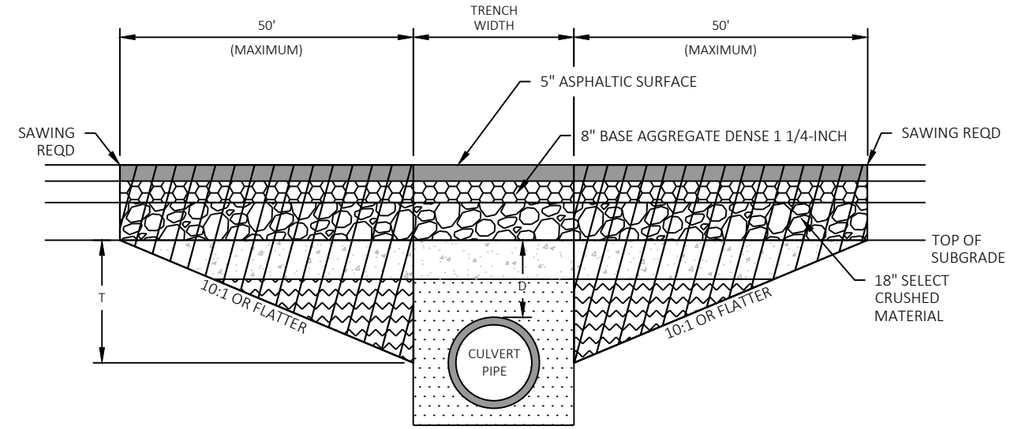

TRANSITION CUT DEPTH (T) = THE LESSER OF DEPTH TO CENTER OF PIPE OR 5 FT.
DO NOT EXTEND TRANSITION CUT BELOW HORIZONTAL CENTER OF PIPE.

CULVERT PIPE TRANSITION

ROUTE	STA (CL)	DEPTH D (FT)	PIPE DIA (IN)	REMARKS
STH 35	566+92	2.0	36	CULVERT PIPE C100, C101, C102

NOTES

COMMON EXCAVATION WIDTH IS FROM SUBGRADE SHOULDER POINT TO SUBGRADE SHOULDER POINT.

BACKFILL THE COMMON EXCAVATION AREAS WITH FOUNDATION AND TRENCH BACKFILL AS SPECIFIED IN STANDARD SPEC 520.

PLACE 465.0105 ASPHALTIC SURFACE PER SPECIAL PROVISION.

DEPTH LISTED IN TABLE BELOW IS MEASURED AT THE ALIGNMENT CROSSING.

*PLACE ASPHALTIC SURFACE TEMPORARY AT BOX CULVERT C-32-104 ONLY.

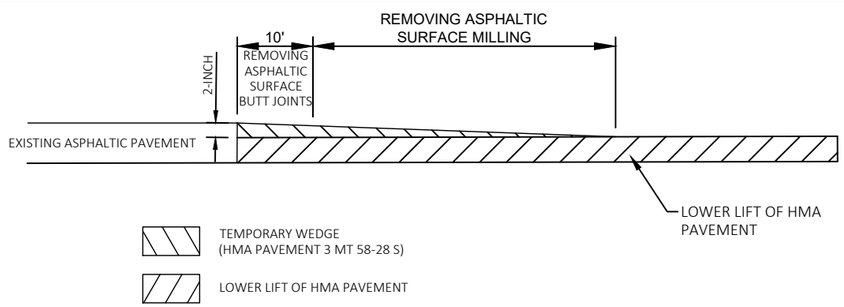

ASPHALTIC SURFACE TEMPORARY WEDGE

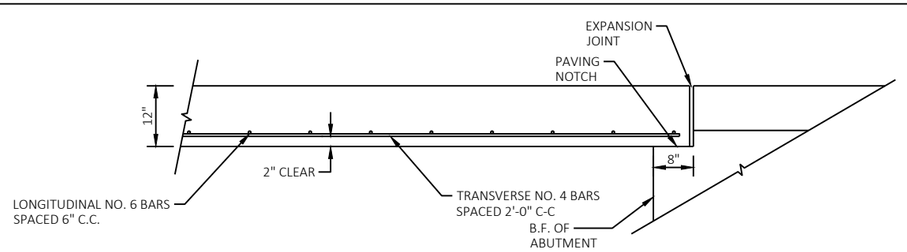

CONCRETE PAVEMENT 12-INCH

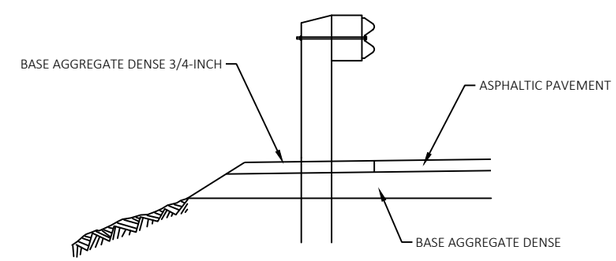

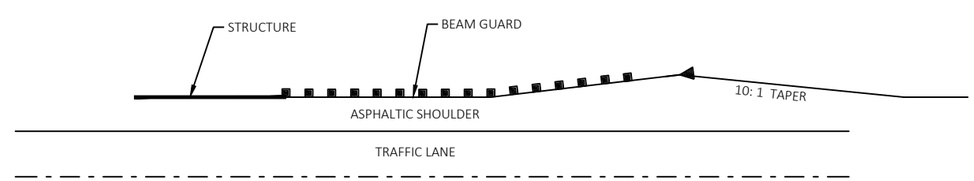

DETAIL FOR ASPHALTIC SHOULDER AT BEAM GUARD

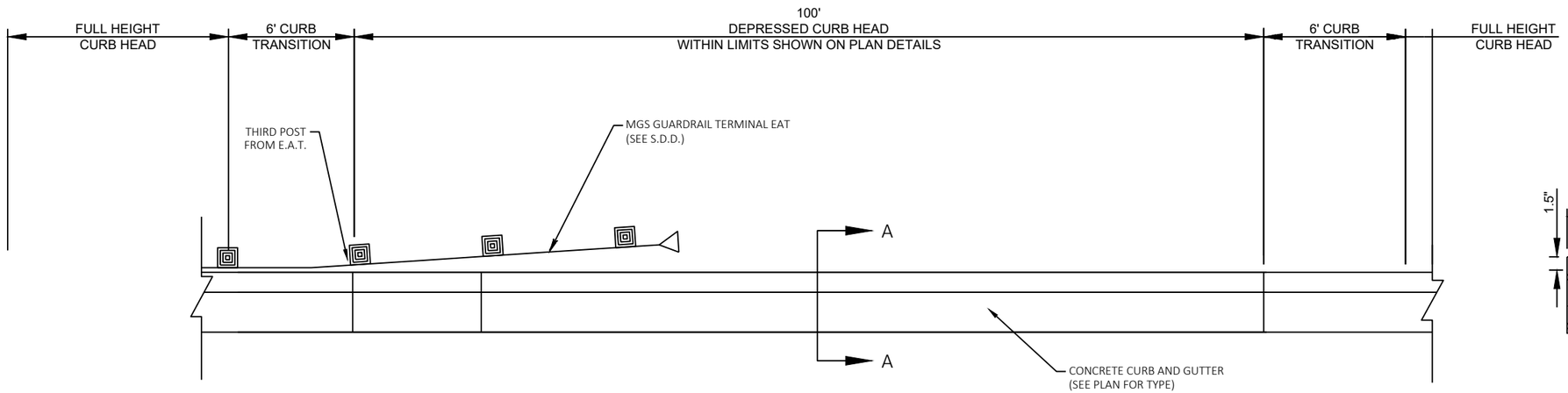

DEPRESSED CURB HEAD AT GUARDRAIL EAT

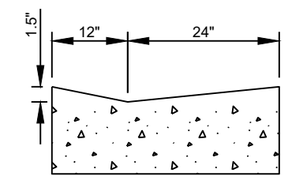

SECTION A-A
DEPRESSED CURB

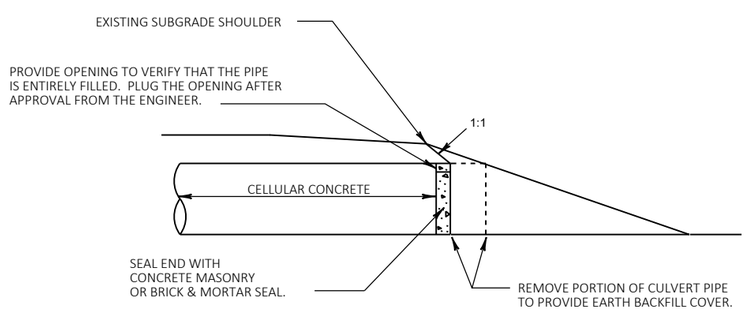

ABANDONING SEWER DETAIL

ITEM TO BE PAID FOR UNDER ITEM "SEALING PIPES" FOR
LOCATIONS SEE MISCELLANEOUS QUANTITIES SHEETS

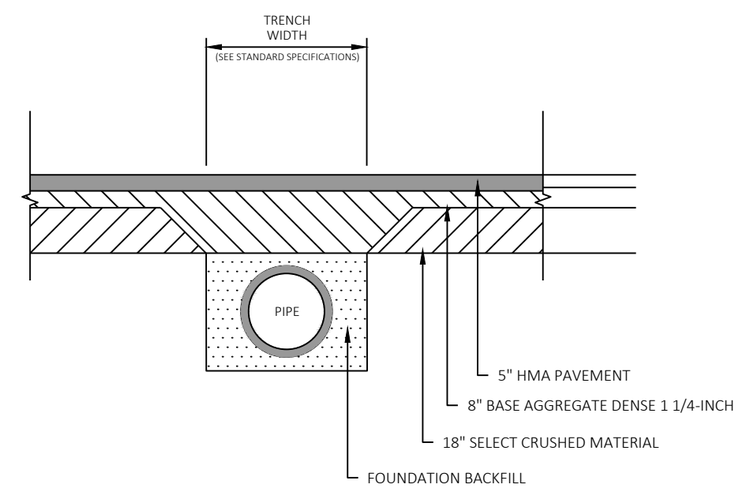

STORM SEWER OR CULVERT PIPE LOCATED WITHIN
SUBGRADE IMPROVEMENT LAYER DETAIL

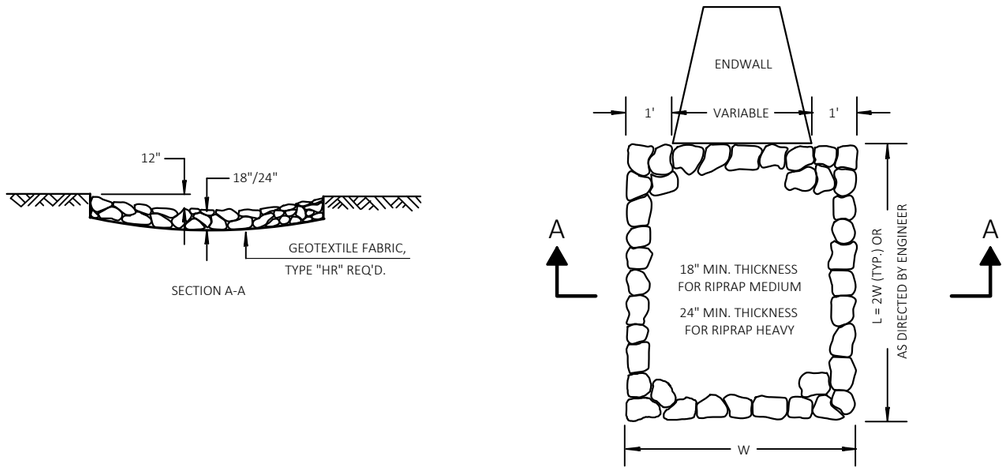

RIPRAP TREATMENT AT CULVERTS

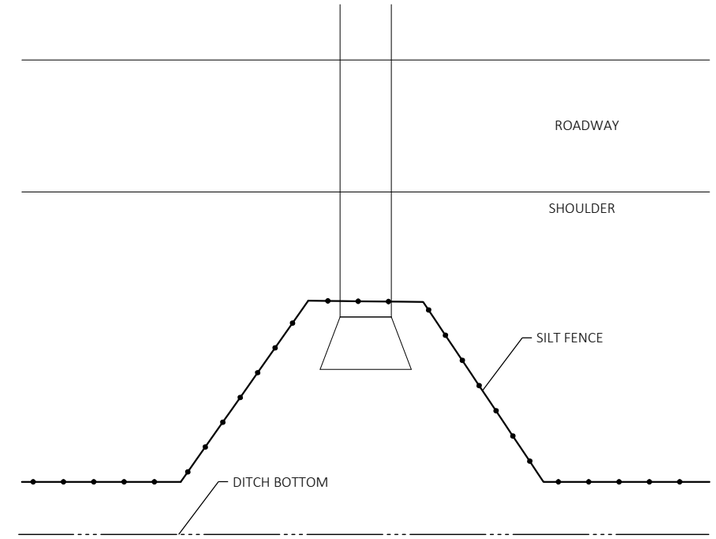

TYPICAL SILT FENCE DETAIL AT PIPE INLET

NOTE
SEE SILT FENCE SDD FOR ADDITIONAL INFORMATION.
TERMINATE SILT FENCE ENDS UP SLOPE.

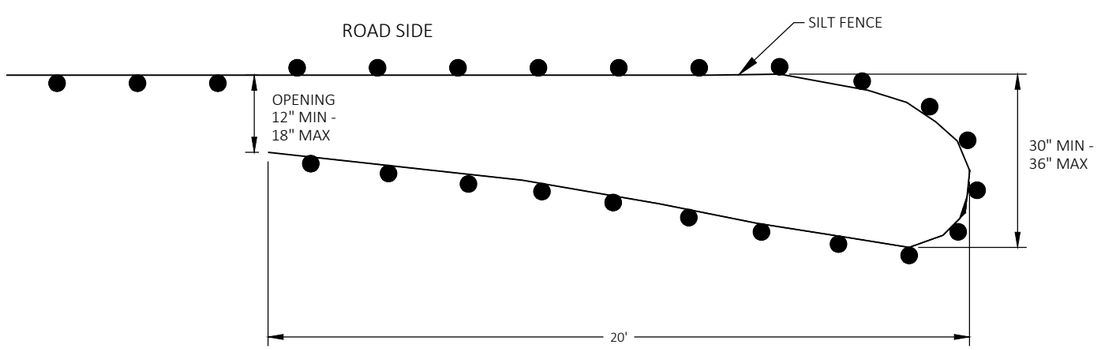

PLAN VIEW

TEMPORARY SMALL ANIMAL TURN-AROUND

STA 561+00 LT	STA 620+50 LT
STA 566+00 LT	STA 623+50 LT
STA 567+00 LT	STA 634+00 LT
STA 568+75 LT	STA 648+50 LT
STA 618+00 LT	

GENERAL NOTES:
SILT FENCE POSTS FOR THE TURN-AROUND SHOULD BE ON THE OUTSIDE OF THE TURN-AROUND. AND TRENCHED IN ACCORDING TO SILT FENCE REQUIREMENTS.

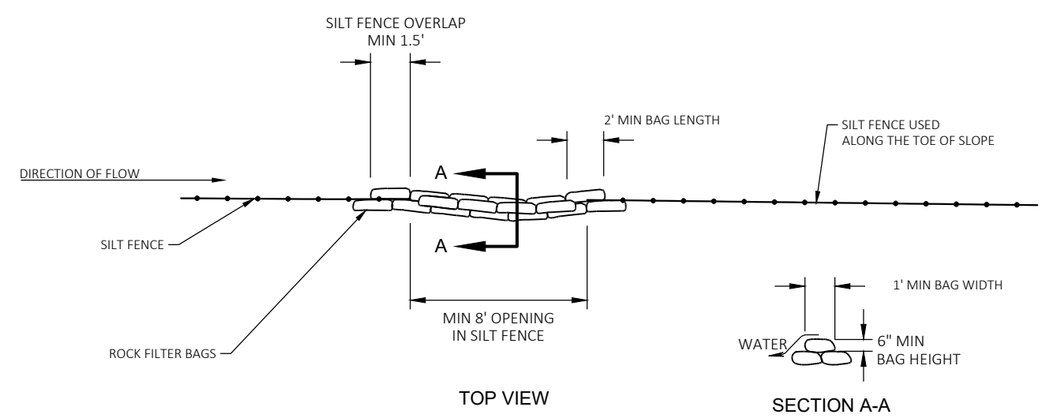

TOP VIEW

SECTION A-A

ROCK BAGS USED FOR SILT FENCE RELIEF

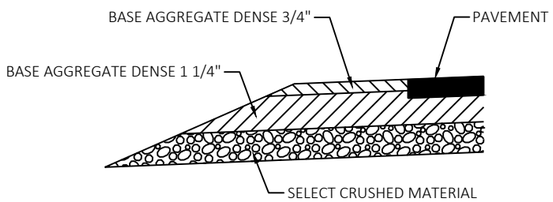

SECTION A-A

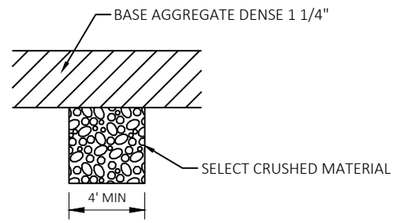

SECTION B-B

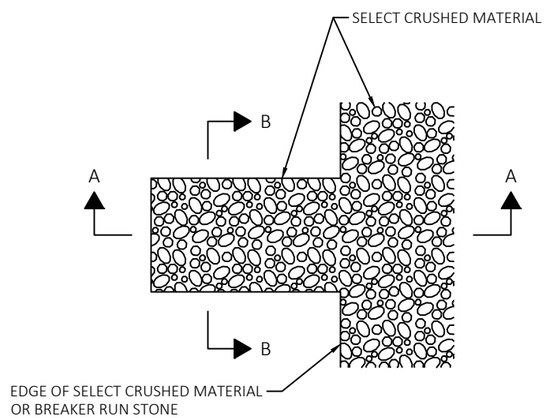

RELIEF TRENCH DETAIL

DRAINS ARE TO BE CONSTRUCTED AT LEAST EVERY 250'
AND AT EACH SAG VERTICAL CURVE IN THE PROFILE.

SEE PLAN FOR LOCATIONS. LOCATIONS MAY BE ADJUSTED IN THE
FIELD BY THE ENGINEER.

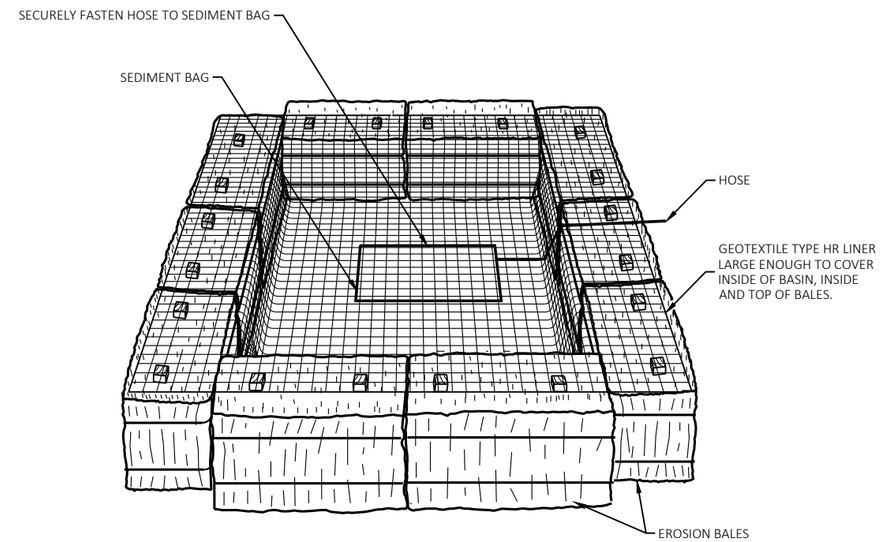

TEMPORARY SETTLING BASIN

(SIZE TO BE DETERMINED IN FIELD AS INDICATED BELOW:)

STORAGE VOLUME (CF) = 16 X GPM (PUMP RATE)

EXAMPLE:
CONTRACTOR INDICATES PUMP CAPABLE OF 50 GPM
HEIGHT OF BALES = 1.5 FT

SOLUTION:
SV (CF) = 16 X 50
SV = 800 CF

$$\frac{800\ CF}{1.5\ FT} = 533\ SF$$

USE A 20 FT X 27 FT BASIN

NOTES

1. CONTRACTOR SHALL PUMP TURBID WATER FROM EXCAVATION TO SEDIMENT BAG PLACED INSIDE FABRIC LINED STAKED BALE ENCLOSURE PRIOR TO DISCHARGING TO DITCHES/INLETS/WETLANDS OR WATERWAYS.
2. SEDIMENT BAG TO BE PLACED IN AN UPLAND VEGETATED AREA OR EQUIVALENT LOCATION APPROVED BY THE ENGINEER.
3. BASIN TO BE KEPT LESS THAN 10% FULL OF SEDIMENT. GEOTEXTILE FABRIC AND SEDIMENTS TO BE DISPOSED BY THE CONTRACTOR OFF OF THE PROJECT SITE.
4. TEMPORARY SETTLING BASIN AND SEDIMENT BAG TO BE INCIDENTAL TO CONTRACT.
5. SEDIMENT BAG, BALES AND FABRIC TO BE REPLACED AS NECESSARY AND IS INCIDENTAL TO CONTRACT.
6. SIZE TO BE DETERMINED BY THE CONTRACTOR AS PART OF THE ECIP SUBMITTAL.

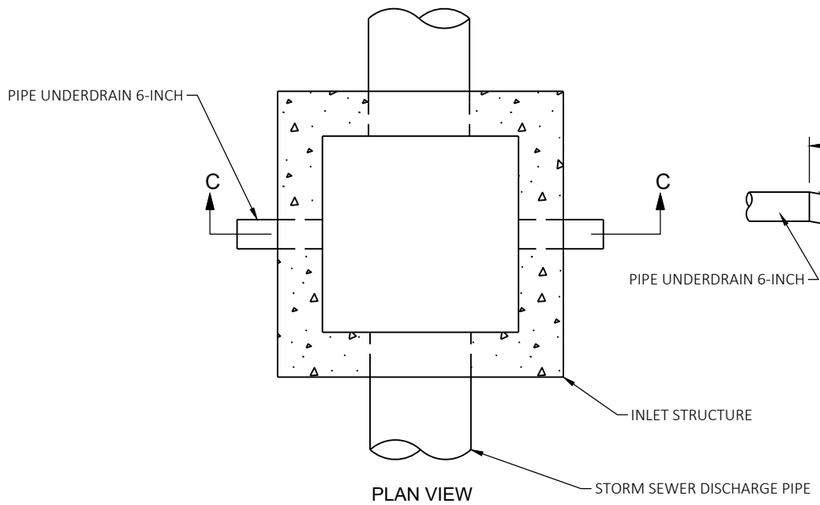

PLAN VIEW

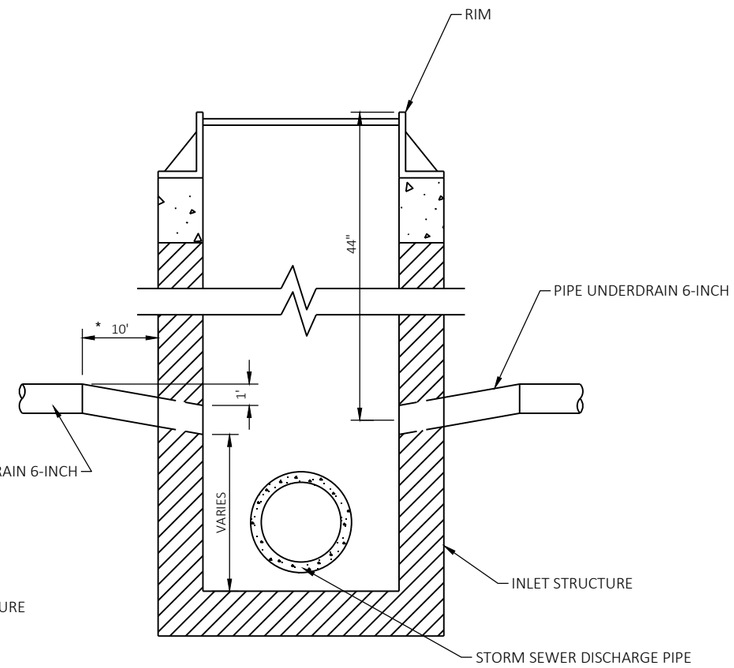

SECTION C-C

UNDERDRAIN OUTFALL AT DRAINAGE STRUCTURE

UNDERDRAIN OUTFALL AT INLET

NOTES

1. PROVIDE 6" DIA. OPENINGS FOR UNDERDRAIN PIPE A MINIMUM OF 38" BELOW THE RIM ELEVATION. CORE INTO EXISTING INLETS TO REMAIN.
2. PIPE UNDERDRAIN ONLY REQUIRED ON BOTH SIDES OF INLET IN SAG CONDITION.

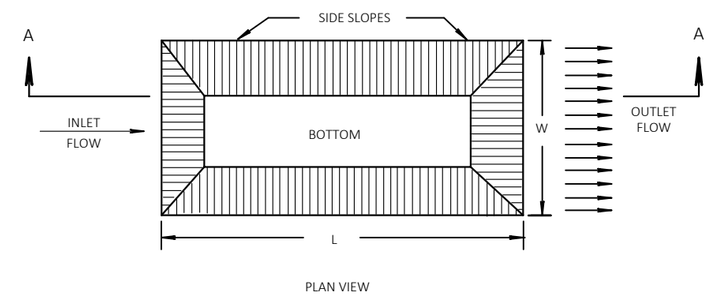

PLAN VIEW

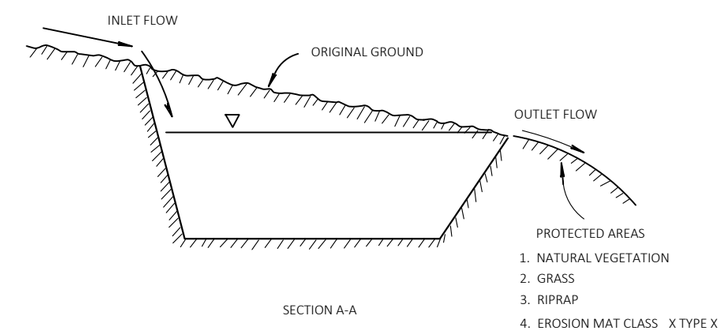

SECTION A-A

TYPICAL EXCAVATED SEDIMENT TRAP

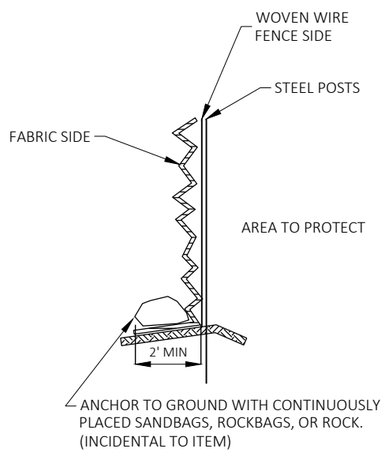

ANCHORED INSTALLATION FOR WET CONDITION

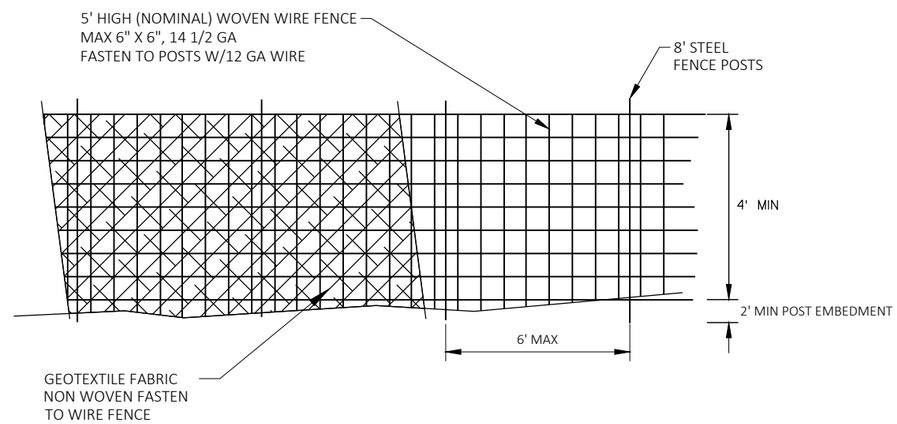

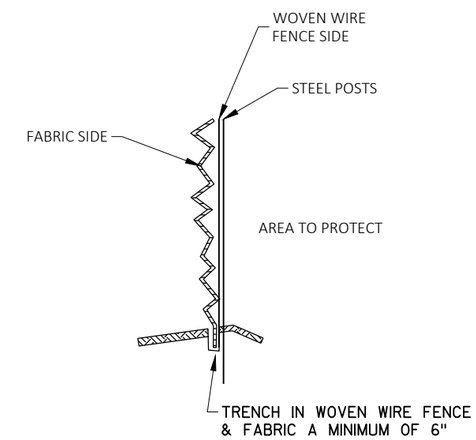

TRENCH INSTALLATION FOR DRY CONDITION

HEAVY DUTY SILT FENCE

GENERAL NOTES:

1. ATTACH FENCE FABRIC TO POSTS A MINIMUM OF 3 TIES PER POST (TOP, MIDDLE, BOTTOM).
2. ATTACH GEOTEXTILE FABRIC TO FENCE FABRIC AND/OR POSTS AT A MAXIMUM SPACING OF EVERY 2 FEET ALONG THE TOP AND ADDITIONALLY AS NECESSARY TO PREVENT DISPLACEMENT BY WIND AND WAVE ACTIONS.

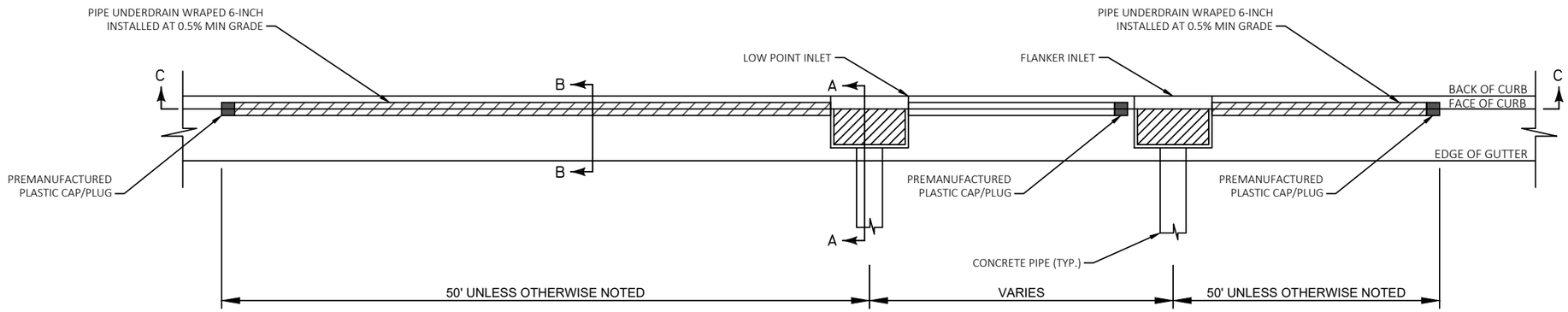

LOW POINT INLET
WITH FLANKING INLETS

TOP VIEW
SPLIT DETAIL

LOW POINT INLET
WITH FLANKING INLETS

INLET CONFIGURATION WITH
UNDERDRAIN AT LOW POINTS

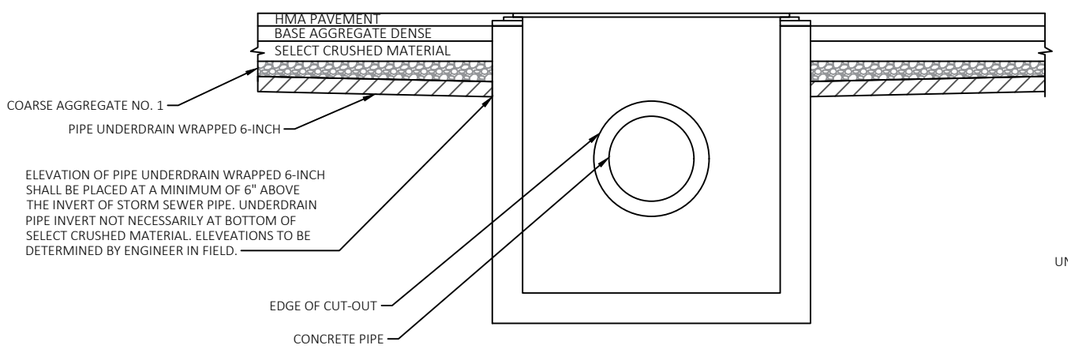

SECTION C-C

TYPICAL INLET CONFIGURATION WITH
UNDERDRAIN CORED INTO WALL AT LOW POINTS
WITHOUT FLANKING INLETS

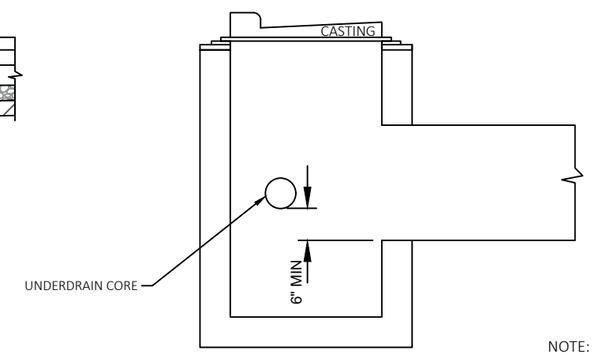

SECTION A-A

TYPICAL INLET CONFIGURATION WITH
UNDERDRAIN CORED INTO WALL AT LOW POINTS
WITHOUT FLANKING INLETS

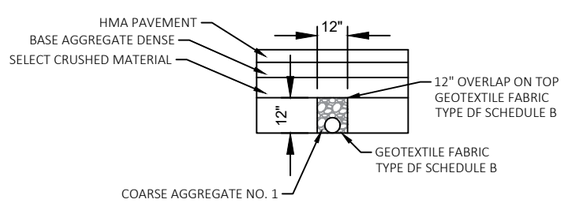

SECTION B-B

NOTE:
WHERE MULTIPLE INLETS ARE USED AT LOW POINTS, PIPE UNDERDRAIN WRAPPED 6-INCH SHALL BE INSTALLED 50 FEET TO EITHER DIRECTION FROM THE LOW POINT AT A MINIMUM POSITIVE GRADE OF 0.5%. THE SECTION OF UNDERDRAIN BETWEEN THE CENTER AND OUTER INLETS SHALL BE PLACED TIGHT TO THE OUTER INLET, CAPPED WITH A PREMANUFACTURED PLASTIC CAP OR PLUG, AND LAID AS SPECIFIED ABOVE TO THE CENTER OF THE INLET.

ATTACHMENT TO REAR OF INLET IS SATISFACTORY IF PIPE SIZE RESTRICTS SPACE FOR UNDERDRAIN CORE.

BOTTOM OF PIPE SHALL BE PLACED AT THE BOTTOM OF COARSE AGGREGATE NO. 1 MATERIAL.

BOTTOM OF COARSE AGGREGATE NO. 1 MATERIAL IS NOT NECESSARILY THE BOTTOM OF THE SELECT CRUSHED MATERIAL.

BOTTOM OF CORE PLACED A MINIMUM OF 6" ABOVE THE INVERT OF THE CROSS PIPE.

DRAIN TILES SHALL NOT BE ALLOWED IN THE ADJUSTING RINGS OF THE STRUCTURE OF INLETS OR MANHOLES.

CORE HOLES SHALL PROVIDE FOR A MINIMUM OF 2" OF CONCRETE BETWEEN THE CUTOUT FOR A CONCRETE PIPE AND THE EDGE OF THE CORE HOLE.

CORE HOLES SHALL HAVE 1" CLEARANCE FROM THE INSIDE WALLS OF A STRUCTURE.

PIPE UNDERDRAIN 6-INCH WITH GEOTEXTILE FABRIC AND AGGREGATE

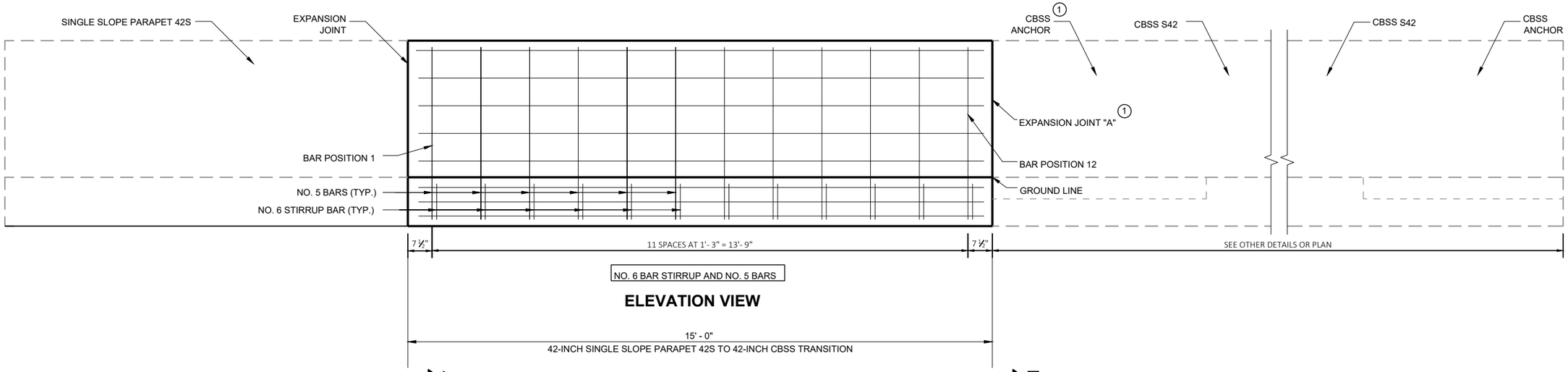

ELEVATION VIEW

15' - 0"
42-INCH SINGLE SLOPE PARAPET 42S TO 42-INCH CBSS TRANSITION

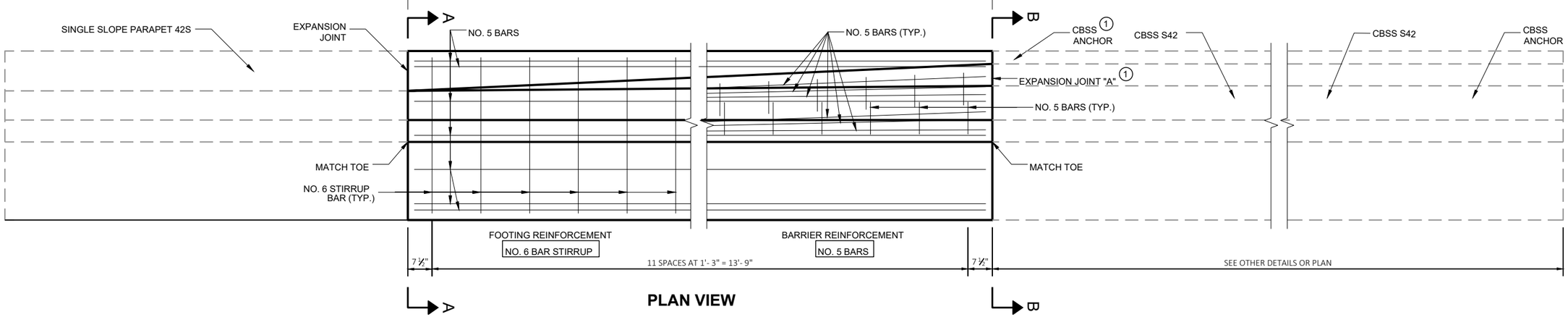

PLAN VIEW

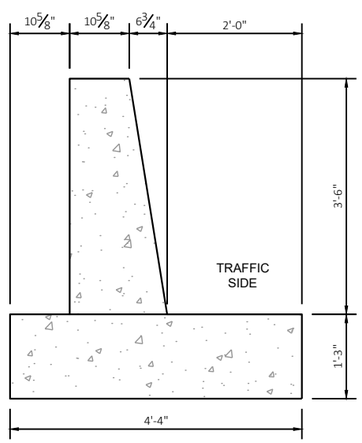

SECTION A - A

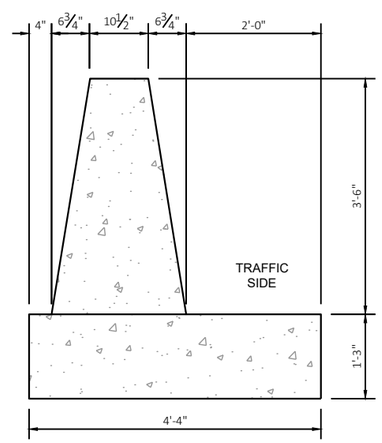

SECTION B - B

GENERAL NOTES

CONSTRUCT PER STANDARD SPECIFICATION 603.

SPLICES OF LONGITUDINAL BARS TO BE 2' LONG AND FIRMLY TIED AND FASTENED TOGETHER UNLESS OTHERWISE NOTED.

4000 PSI CONCRETE AIR ENTRAINMENT PER STANDARD SPECIFICATIONS SECTION 501.

USE 3/4" BEVEL OR 1" RADIUS ON ALL EXPOSED SHARP EDGES UNLESS OTHERWISE NOTED.

THE NUMBER IN BAR DESIGNATION REPRESENTS THE BARS LOCATION.

2" CLEAR COVER TYPICAL.

1 EXPANSION JOINT "A" MAY BE REPLACED WITH A COLD JOINT PROVIDED THAT 3 FEET OF LAP OF LONGITUDINAL STEEL IS PROVIDED. IF COLD JOINT IS USED, ANCHOR IS NOT REQUIRED.

42-INCH SINGLE SLOPED FACE PARAPET TO 42-INCH SINGLE SLOPE CONCRETE BARRIER TRANSITION (PAID UNDER CONCRETE BARRIER TYPE S42)

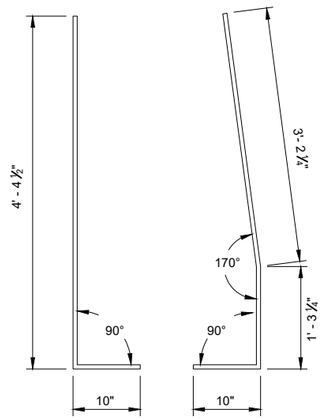

BENDING DETAIL
BAR 1

BAR CHART
BAR POSITIONS
2 - 12

BAR	A	B
2	179°	3' - 1 ¾"
3	178°	3' - 1 ¾"
4	177°	3' - 1 ¾"
5	176°	3' - 2"
6	175°	3' - 1 ¾"
7	175°	3' - 1 ¾"
8	174°	3' - 1 ¾"
9	173°	3' - 2"
10	172°	3' - 2"
11	172°	3' - 2"
12	170°	3' - 2 1/4"

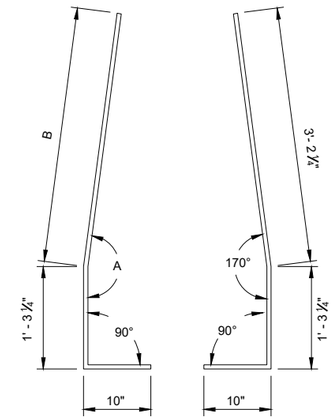

BENDING DETAIL
BAR 2 - 12

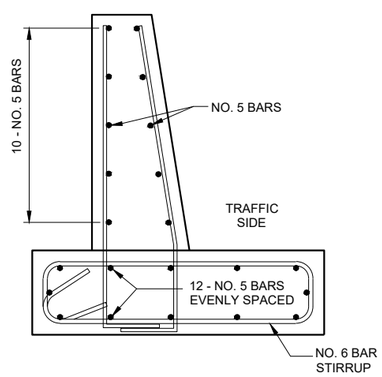

BAR DETAIL
BAR POSITION 1

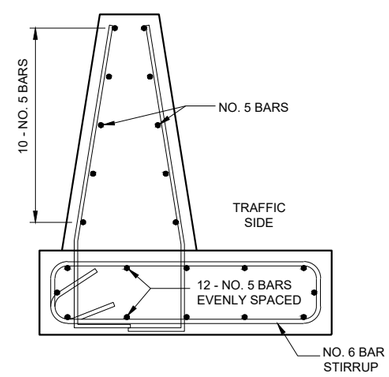

BAR DETAIL
BAR POSITIONS 2 - 12

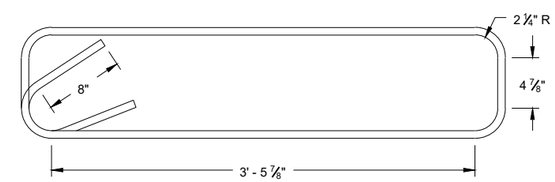

STIRRUP BAR
BENDING DETAIL

42-INCH SINGLE SLOPED FACE
PARAPET TO 42-INCH SINGLE SLOPE
CONCRETE BARRIER TRANSITION

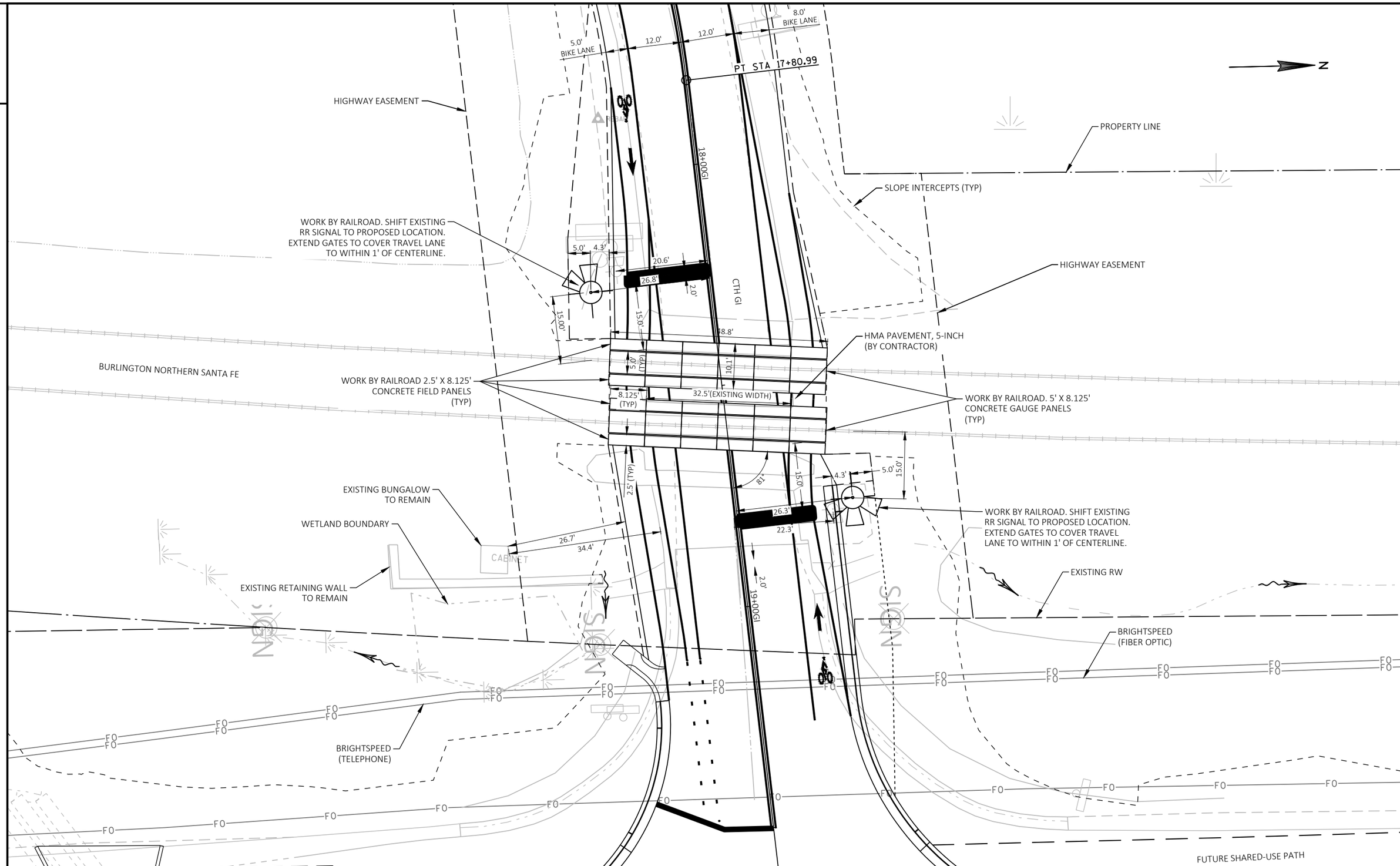

PROJECT NO: 5163-07-72	HWY: STH 35	COUNTY: LA CROSSE/VERNON	RAILROAD CROSSING DETAILS	SHEET 23	E

FILE NAME : O:\PDS\C3D\51630702\SHEETSPLAN\021102_ID.DWG
LAYOUT NAME - 08
PLOT DATE : 4/22/2025 8:46 AM
PLOT BY : BEN PIECHOWSKI
PLOT NAME :
PLOT SCALE : 1 IN:20 FT

2

STATION & OFFSET TABLE				
POINT	STATION	OFFSET	Y COORDS	X COORDS
100	569+28.88	20.00 RT	99994.585	458728.257
101	572+39.82	0.00 RT	100305.674	458710.716
102	572+39.82	6.00 RT	100305.627	458716.716
103	576+35.20	0.00 RT	100700.998	458716.950
104	576+35.20	17.00 RT	100700.548	458733.944
105	576+60.89	17.00 RT	100726.230	458734.625

STATION & OFFSET TABLE				
POINT	STATION	OFFSET	Y COORDS	X COORDS
106	577+18.36	0.00 RT	100784.131	458719.154
107	577+18.36	12.33 RT	100783.804	458731.484
108	578+33.34	3.00 RT	100898.988	458725.201
109	578+93.71	0.00 RT	100959.418	458723.802
110	578+93.71	3.00 RT	100959.338	458726.801
111	578+97.99	60.10 RT	100962.103	458783.997

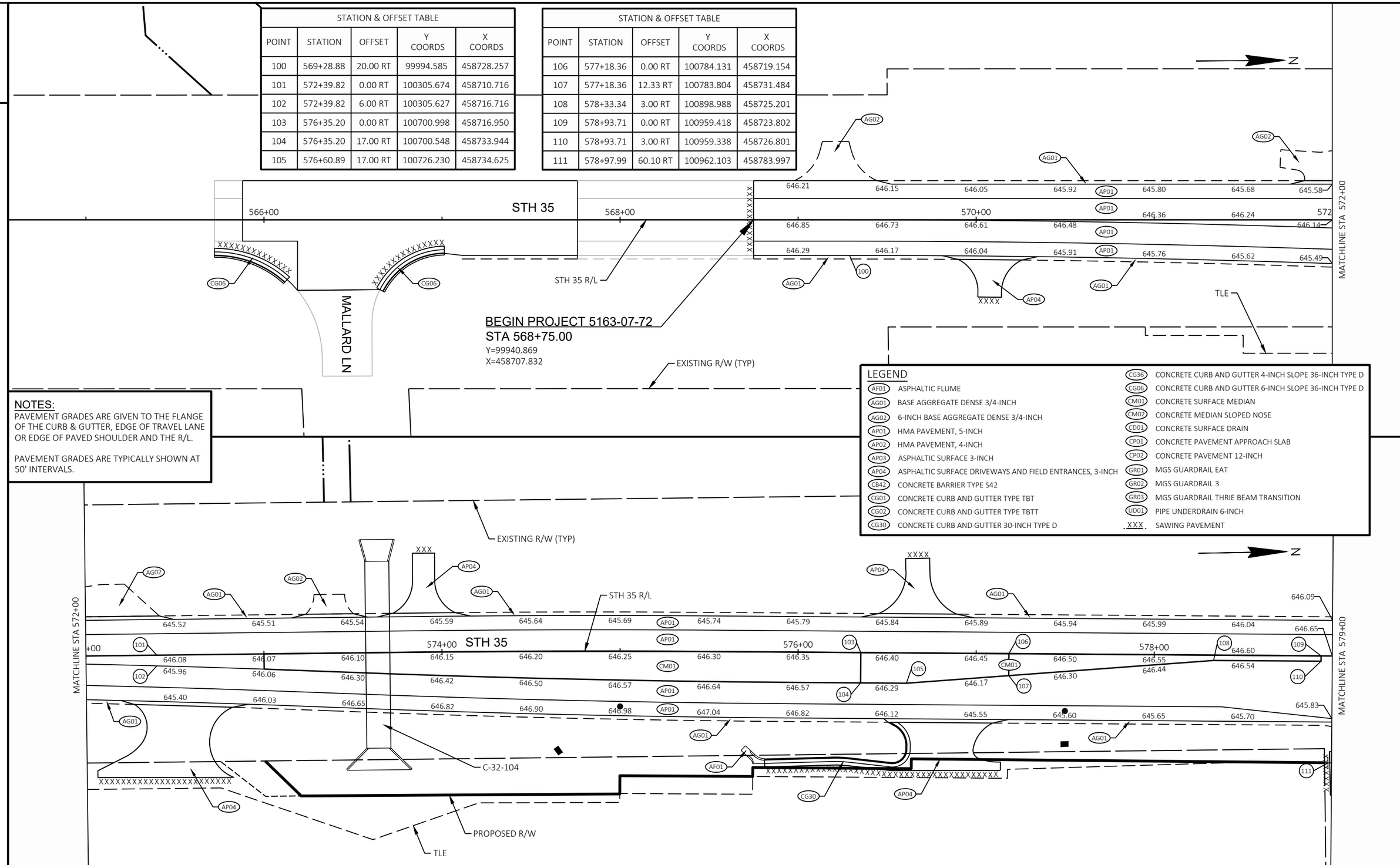

NOTES:
PAVEMENT GRADES ARE GIVEN TO THE FLANGE OF THE CURB & GUTTER, EDGE OF TRAVEL LANE OR EDGE OF PAVED SHOULDER AND THE R/L.

PAVEMENT GRADES ARE TYPICALLY SHOWN AT 50' INTERVALS.

LEGEND

AF01	ASPHALTIC FLUME	CG36	CONCRETE CURB AND GUTTER 4-INCH SLOPE 36-INCH TYPE D
AG01	BASE AGGREGATE DENSE 3/4-INCH	CG06	CONCRETE CURB AND GUTTER 6-INCH SLOPE 36-INCH TYPE D
AG02	6-INCH BASE AGGREGATE DENSE 3/4-INCH	CM01	CONCRETE SURFACE MEDIAN
AP01	HMA PAVEMENT, 5-INCH	CM02	CONCRETE MEDIAN SLOPED NOSE
AP02	HMA PAVEMENT, 4-INCH	CD01	CONCRETE SURFACE DRAIN
AP03	ASPHALTIC SURFACE 3-INCH	CP01	CONCRETE PAVEMENT APPROACH SLAB
AP04	ASPHALTIC SURFACE DRIVEWAYS AND FIELD ENTRANCES, 3-INCH	CP02	CONCRETE PAVEMENT 12-INCH
CB42	CONCRETE BARRIER TYPE S42	GR01	MGS GUARDRAIL EAT
CG01	CONCRETE CURB AND GUTTER TYPE TBT	GR02	MGS GUARDRAIL 3
CG02	CONCRETE CURB AND GUTTER TYPE TBTT	GR03	MGS GUARDRAIL THRIE BEAM TRANSITION
CG30	CONCRETE CURB AND GUTTER 30-INCH TYPE D	UD01	PIPE UNDERDRAIN 6-INCH
		XXX	SAWING PAVEMENT

2

PROJECT NO: 5163-07-72	HWY: STH 35	COUNTY: LA CROSSE/VERNON	PLAN DETAILS	SHEET 24	E

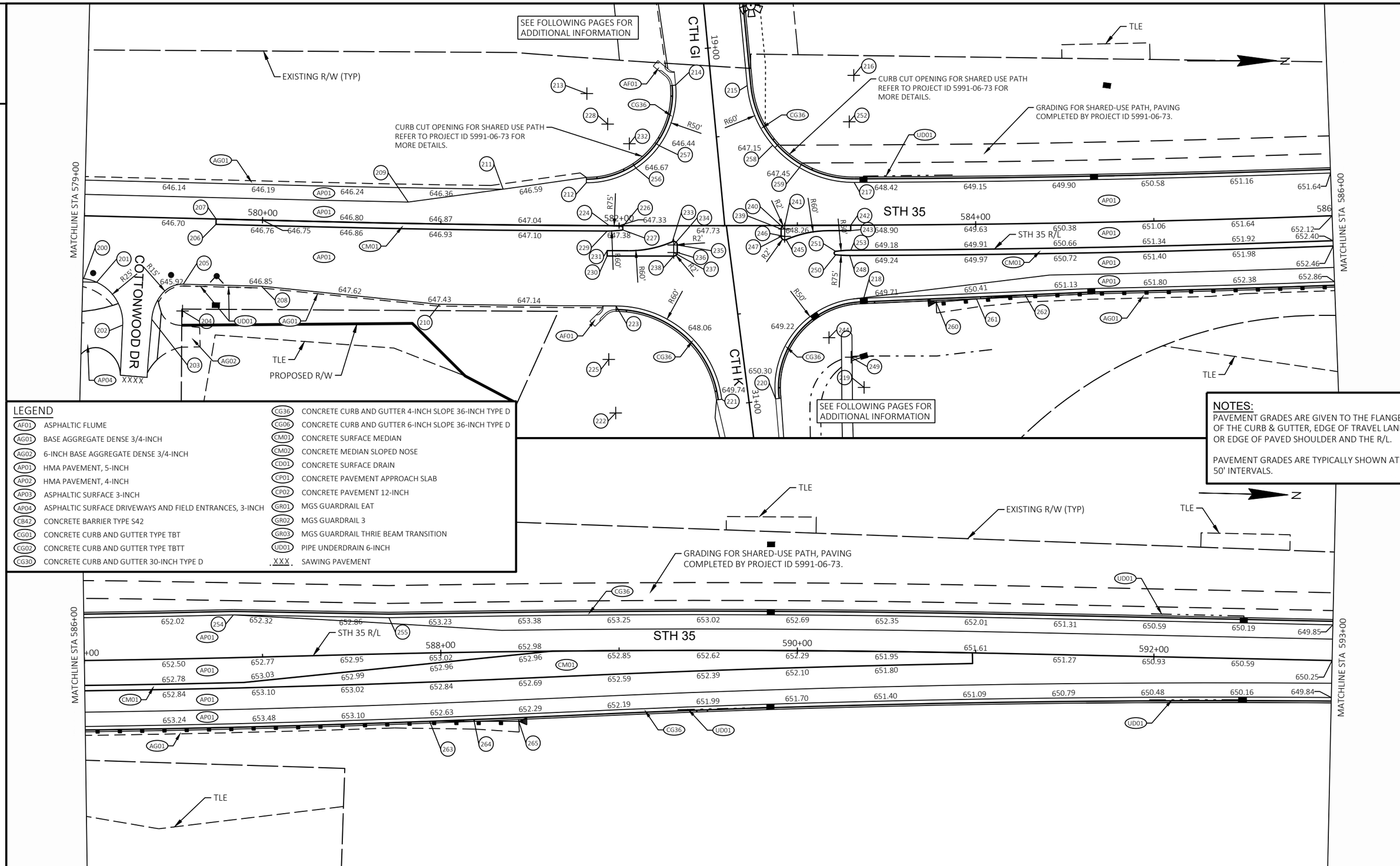

LEGEND

AF01	ASPHALTIC FLUME	CG36	CONCRETE CURB AND GUTTER 4-INCH SLOPE 36-INCH TYPE D
AG01	BASE AGGREGATE DENSE 3/4-INCH	CG06	CONCRETE CURB AND GUTTER 6-INCH SLOPE 36-INCH TYPE D
AG02	6-INCH BASE AGGREGATE DENSE 3/4-INCH	CM01	CONCRETE SURFACE MEDIAN
AP01	HMA PAVEMENT, 5-INCH	CM02	CONCRETE MEDIAN SLOPED NOSE
AP02	HMA PAVEMENT, 4-INCH	CD01	CONCRETE SURFACE DRAIN
AP03	ASPHALTIC SURFACE 3-INCH	CP01	CONCRETE PAVEMENT APPROACH SLAB
AP04	ASPHALTIC SURFACE DRIVEWAYS AND FIELD ENTRANCES, 3-INCH	CP02	CONCRETE PAVEMENT 12-INCH
CB42	CONCRETE BARRIER TYPE S42	GR01	MGS GUARDRAIL EAT
CG01	CONCRETE CURB AND GUTTER TYPE TBT	GR02	MGS GUARDRAIL 3
CG02	CONCRETE CURB AND GUTTER TYPE TBTT	GR03	MGS GUARDRAIL THRIE BEAM TRANSITION
CG30	CONCRETE CURB AND GUTTER 30-INCH TYPE D	UD01	PIPE UNDERDRAIN 6-INCH
		.XXX.	SAWING PAVEMENT

NOTES:

PAVEMENT GRADES ARE GIVEN TO THE FLANGE OF THE CURB & GUTTER, EDGE OF TRAVEL LANE OR EDGE OF PAVED SHOULDER AND THE R/L.

PAVEMENT GRADES ARE TYPICALLY SHOWN AT 50' INTERVALS.

STATION & OFFSET TABLE				
POINT	STATION	OFFSET	Y COORDS	X COORDS
200	579+00.47	35.23 RT	100965.241	458759.195
201	579+07.80	37.11 RT	100972.517	458761.270
202	579+22.99	60.69 RT	100987.071	458785.248
203	579+39.21	57.09 RT	101003.386	458782.081
204	579+56.38	52.00 RT	101020.686	458777.445
205	579+56.38	37.00 RT	101021.083	458762.450
206	579+73.94	3.00 RT	101039.536	458728.927
207	579+73.94	0.00 RT	101039.615	458725.928
208	580+00.21	37.00 RT	101064.895	458763.612
209	580+81.49	12.00 LT	101147.374	458716.604
210	581+00.00	45.00 RT	101164.849	458773.942
211	581+34.71	20.00 LT	101200.615	458709.486
212	581+81.49	24.00 LT	101247.304	458705.970
213	581+81.49	74.00 LT	101247.678	458655.972
214	582+31.73	78.88 LT	101297.460	458651.305
215	582+72.18	78.52 LT	101337.666	458651.634
216	583+31.93	84.00 LT	101397.404	458646.038
217	583+31.93	24.00 LT	101397.518	458706.038
218	583+37.06	41.00 RT	101402.767	458771.028
219	583+37.06	91.00 RT	101402.862	458821.028
220	582+87.44	97.21 RT	101353.261	458827.332
221	582+57.22	97.33 RT	101323.043	458827.512
222	581+98.45	105.00 RT	101263.522	458835.077
223	581+98.45	45.00 RT	101263.844	458775.078
224	581+94.51	0.00 RT	101260.145	458730.057

STATION & OFFSET TABLE				
POINT	STATION	OFFSET	Y COORDS	X COORDS
225	581+94.51	75.00 RT	101259.706	458805.055
226	582+02.03	0.38 RT	101267.664	458730.479
227	582+02.08	2.37 RT	101267.697	458732.463
228	581+93.35	57.00 LT	101259.322	458673.051
229	581+93.35	3.00 RT	101258.961	458733.050
230	581+93.35	17.00 RT	101258.877	458747.049
231	581+93.35	14.00 RT	101258.895	458744.049
232	582+05.62	46.00 LT	101271.462	458684.112
233	582+29.82	8.93 RT	101295.435	458739.115
234	582+30.62	10.76 RT	101296.234	458740.948
235	582+32.61	10.76 RT	101298.234	458740.949
236	582+32.61	15.00 RT	101298.229	458745.185
237	582+30.62	15.00 RT	101296.229	458745.183
238	582+30.61	17.00 RT	101296.222	458747.183
239	582+90.85	2.00 RT	101356.487	458732.116
240	582+92.85	2.00 RT	101358.487	458732.112
241	582+92.86	0.00 RT	101358.490	458730.112
242	583+29.89	0.00 RT	101395.522	458730.042
243	583+29.89	3.00 RT	101395.527	458733.042
244	583+17.53	63.00 RT	101383.282	458793.065
245	582+93.65	7.96 RT	101359.294	458738.069
246	582+92.85	6.12 RT	101358.495	458736.236
247	582+90.85	6.15 RT	101356.495	458736.261
248	583+29.30	17.00 RT	101394.961	458747.043
249	583+29.89	74.00 RT	101395.663	458804.041

STATION & OFFSET TABLE				
POINT	STATION	OFFSET	Y COORDS	X COORDS
250	583+21.44	16.59 RT	101387.105	458746.645
251	583+21.40	14.60 RT	101387.065	458744.661
252	583+29.30	58.00 LT	101394.818	458672.043
253	583+29.89	14.00 RT	101395.549	458744.042
254	586+84.17	24.00 LT	101748.597	458697.915
255	587+71.30	20.25 LT	101835.849	458697.607
256	582+09.33	32.34 LT	101275.088	458697.789
257	582+22.47	44.92 LT	101288.208	458685.251
258	582+86.34	45.00 LT	101351.884	458685.127
259	583+01.28	32.42 LT	101366.852	458697.677
260	583+77.50	43.51 RT	101443.428	458773.363
261	584+00.00	41.87 RT	101466.038	458771.530
262	584+27.11	39.97 RT	101493.267	458769.321
263	587+92.99	38.34 RT	101859.930	458755.242
264	588+18.11	38.77 RT	101884.925	458754.705
265	588+43.23	39.12 RT	101909.918	458754.170

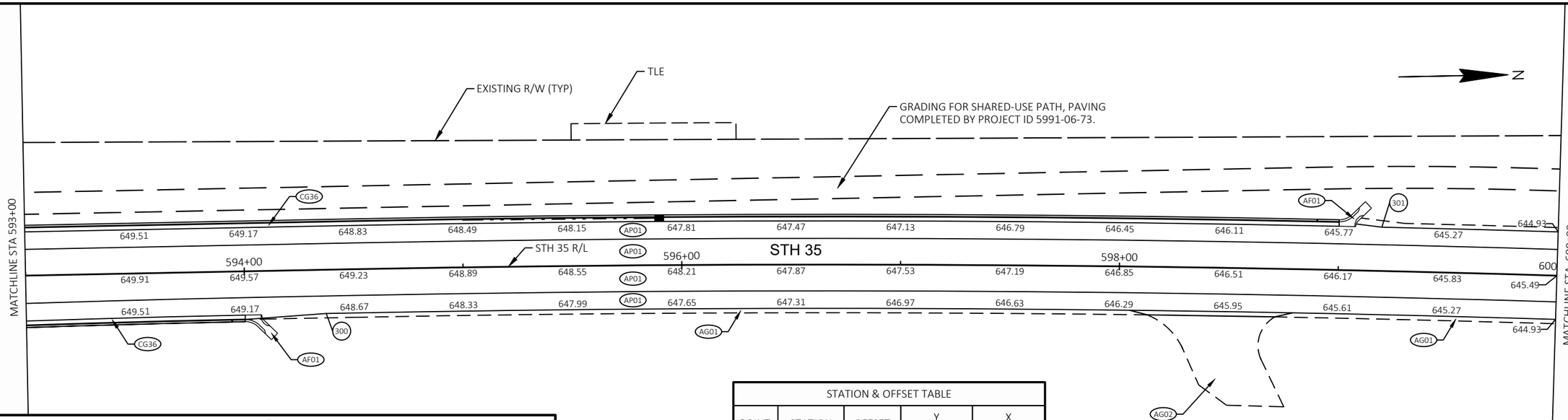

STATION & OFFSET TABLE				
POINT	STATION	OFFSET	Y COORDS	X COORDS
300	594+37.04	20.01 RT	102502.347	458730.504
301	599+19.52	20.00 LT	102985.537	458700.587

LEGEND

AF01	ASPHALTIC FLUME
AG01	BASE AGGREGATE DENSE 3/4-INCH
AG02	6-INCH BASE AGGREGATE DENSE 3/4-INCH
AP01	HMA PAVEMENT, 5-INCH
AP02	HMA PAVEMENT, 4-INCH
AP03	ASPHALTIC SURFACE 3-INCH
AP04	ASPHALTIC SURFACE DRIVEWAYS AND FIELD ENTRANCES, 3-INCH
CB42	CONCRETE BARRIER TYPE S42
CG01	CONCRETE CURB AND GUTTER TYPE TBT
CG02	CONCRETE CURB AND GUTTER TYPE TBTT
CG30	CONCRETE CURB AND GUTTER 30-INCH TYPE D
CG36	CONCRETE CURB AND GUTTER 4-INCH SLOPE 36-INCH TYPE D
CG06	CONCRETE CURB AND GUTTER 6-INCH SLOPE 36-INCH TYPE D
CM01	CONCRETE SURFACE MEDIAN
CM02	CONCRETE MEDIAN SLOPED NOSE
CD01	CONCRETE SURFACE DRAIN
CP01	CONCRETE PAVEMENT APPROACH SLAB
CP02	CONCRETE PAVEMENT 12-INCH
GR01	MGS GUARDRAIL EAT
GR02	MGS GUARDRAIL 3
GR03	MGS GUARDRAIL THRIE BEAM TRANSITION
UD01	PIPE UNDERDRAIN 6-INCH
.XXX.	SAWING PAVEMENT

NOTES:

PAVEMENT GRADES ARE GIVEN TO THE FLANGE OF THE CURB & GUTTER, EDGE OF TRAVEL LANE OR EDGE OF PAVED SHOULDER AND THE R/L.

PAVEMENT GRADES ARE TYPICALLY SHOWN AT 50' INTERVALS.

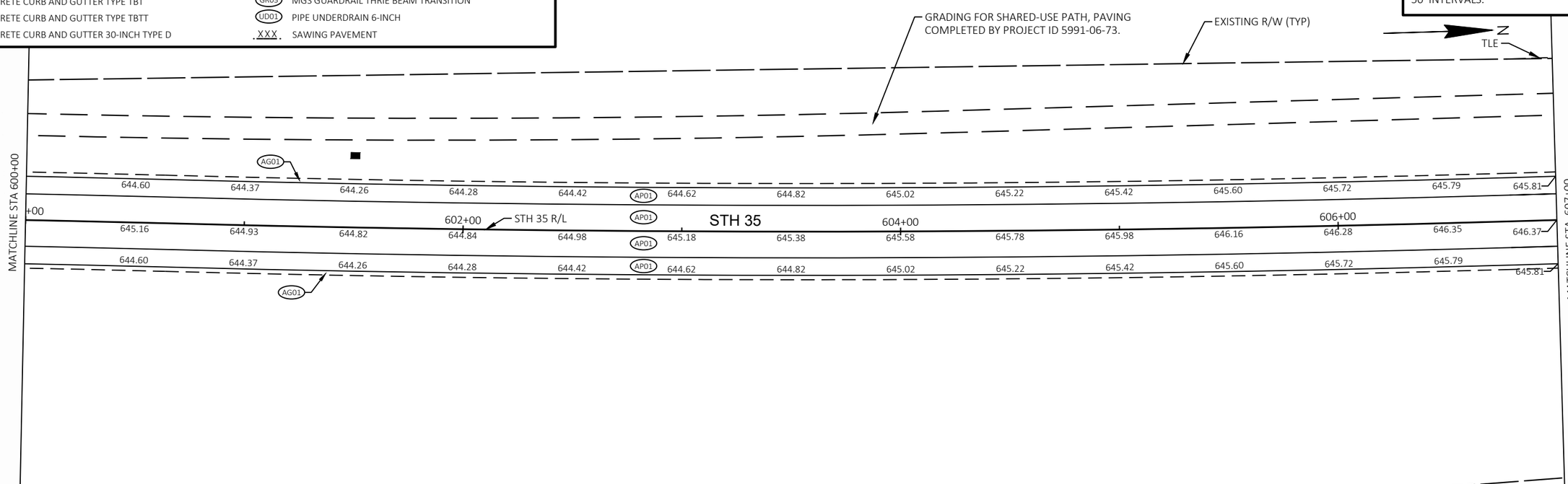

PROJECT NO: 5163-07-72	HWY: STH 35	COUNTY: LA CROSSE/VERNON	PLAN DETAILS	SHEET 27	E

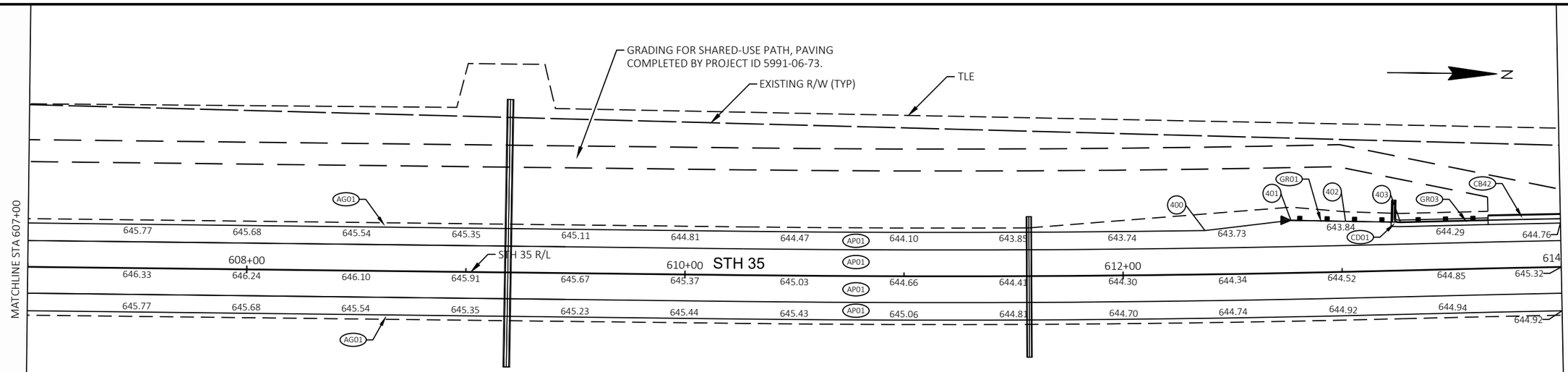

STATION & OFFSET TABLE				
POINT	STATION	OFFSET	Y COORDS	X COORDS
400	612+37.67	20.00 LT	104301.797	458722.278
401	612+77.03	24.00 LT	104340.922	458717.171
402	613+02.07	23.04 LT	104365.907	458717.321
403	613+27.13	22.00 LT	104390.923	458717.474

LEGEND

- AF01 ASPHALTIC FLUME
- AG01 BASE AGGREGATE DENSE 3/4-INCH
- AG02 6-INCH BASE AGGREGATE DENSE 3/4-INCH
- AP01 HMA PAVEMENT, 5-INCH
- AP02 HMA PAVEMENT, 4-INCH
- AP03 ASPHALTIC SURFACE 3-INCH
- AP04 ASPHALTIC SURFACE DRIVEWAYS AND FIELD ENTRANCES, 3-INCH
- CB42 CONCRETE BARRIER TYPE S42
- CG01 CONCRETE CURB AND GUTTER TYPE TBT
- CG02 CONCRETE CURB AND GUTTER TYPE TBTT
- CG30 CONCRETE CURB AND GUTTER 30-INCH TYPE D
- CG36 CONCRETE CURB AND GUTTER 4-INCH SLOPE 36-INCH TYPE D
- CG06 CONCRETE CURB AND GUTTER 6-INCH SLOPE 36-INCH TYPE D
- CM01 CONCRETE SURFACE MEDIAN
- CM02 CONCRETE MEDIAN SLOPED NOSE
- CD01 CONCRETE SURFACE DRAIN
- CP01 CONCRETE PAVEMENT APPROACH SLAB
- CP02 CONCRETE PAVEMENT 12-INCH
- GR01 MGS GUARDRAIL EAT
- GR02 MGS GUARDRAIL 3
- GR03 MGS GUARDRAIL THRIE BEAM TRANSITION
- UD01 PIPE UNDERDRAIN 6-INCH
- XXX SAWING PAVEMENT

NOTES:

PAVEMENT GRADES ARE GIVEN TO THE FLANGE OF THE CURB & GUTTER, EDGE OF TRAVEL LANE OR EDGE OF PAVED SHOULDER AND THE R/L.

PAVEMENT GRADES ARE TYPICALLY SHOWN AT 50' INTERVALS.

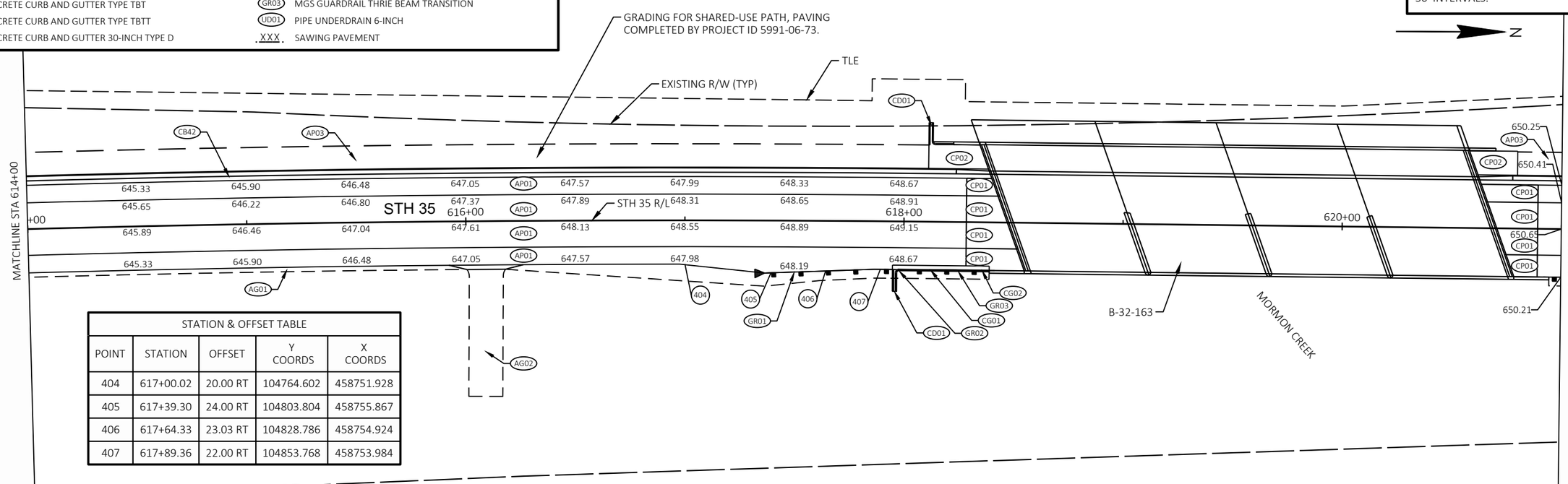

STATION & OFFSET TABLE				
POINT	STATION	OFFSET	Y COORDS	X COORDS
404	617+00.02	20.00 RT	104764.602	458751.928
405	617+39.30	24.00 RT	104803.804	458755.867
406	617+64.33	23.03 RT	104828.786	458754.924
407	617+89.36	22.00 RT	104853.768	458753.984

2

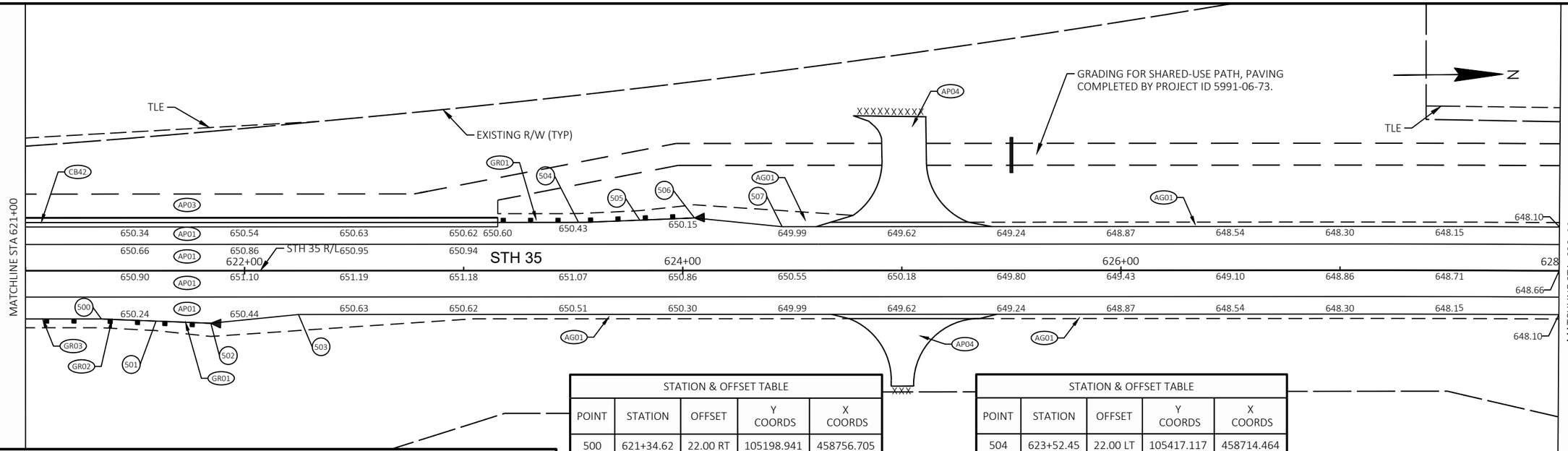

STATION & OFFSET TABLE				
POINT	STATION	OFFSET	Y COORDS	X COORDS
500	621+34.62	22.00 RT	105198.941	458756.705
501	621+59.59	23.00 RT	105223.907	458757.906
502	621+84.58	24.00 RT	105248.880	458759.112
503	622+24.58	20.00 RT	105288.914	458755.431

STATION & OFFSET TABLE				
POINT	STATION	OFFSET	Y COORDS	X COORDS
504	623+52.45	22.00 LT	105417.117	458714.464
505	623+80.38	23.00 LT	105445.057	458713.690
506	624+05.36	24.00 LT	105470.044	458712.891
507	624+45.36	20.00 LT	105510.010	458717.214

LEGEND

- AF01 ASPHALTIC FLUME
- AG01 BASE AGGREGATE DENSE 3/4-INCH
- AG02 6-INCH BASE AGGREGATE DENSE 3/4-INCH
- AP01 HMA PAVEMENT, 5-INCH
- AP02 HMA PAVEMENT, 4-INCH
- AP03 ASPHALTIC SURFACE 3-INCH
- AP04 ASPHALTIC SURFACE DRIVEWAYS AND FIELD ENTRANCES, 3-INCH
- CB42 CONCRETE BARRIER TYPE S42
- CG01 CONCRETE CURB AND GUTTER TYPE TBT
- CG02 CONCRETE CURB AND GUTTER TYPE TBTT
- CG30 CONCRETE CURB AND GUTTER 30-INCH TYPE D
- CG36 CONCRETE CURB AND GUTTER 4-INCH SLOPE 36-INCH TYPE D
- CG06 CONCRETE CURB AND GUTTER 6-INCH SLOPE 36-INCH TYPE D
- CM01 CONCRETE SURFACE MEDIAN
- CM02 CONCRETE MEDIAN SLOPED NOSE
- CD01 CONCRETE SURFACE DRAIN
- CP01 CONCRETE PAVEMENT APPROACH SLAB
- CP02 CONCRETE PAVEMENT 12-INCH
- GR01 MGS GUARDRAIL EAT
- GR02 MGS GUARDRAIL 3
- GR03 MGS GUARDRAIL THRIE BEAM TRANSITION
- UD01 PIPE UNDERDRAIN 6-INCH
- XXX SAWING PAVEMENT

NOTES:

PAVEMENT GRADES ARE GIVEN TO THE FLANGE OF THE CURB & GUTTER, EDGE OF TRAVEL LANE OR EDGE OF PAVED SHOULDER AND THE R/L.

PAVEMENT GRADES ARE TYPICALLY SHOWN AT 50' INTERVALS.

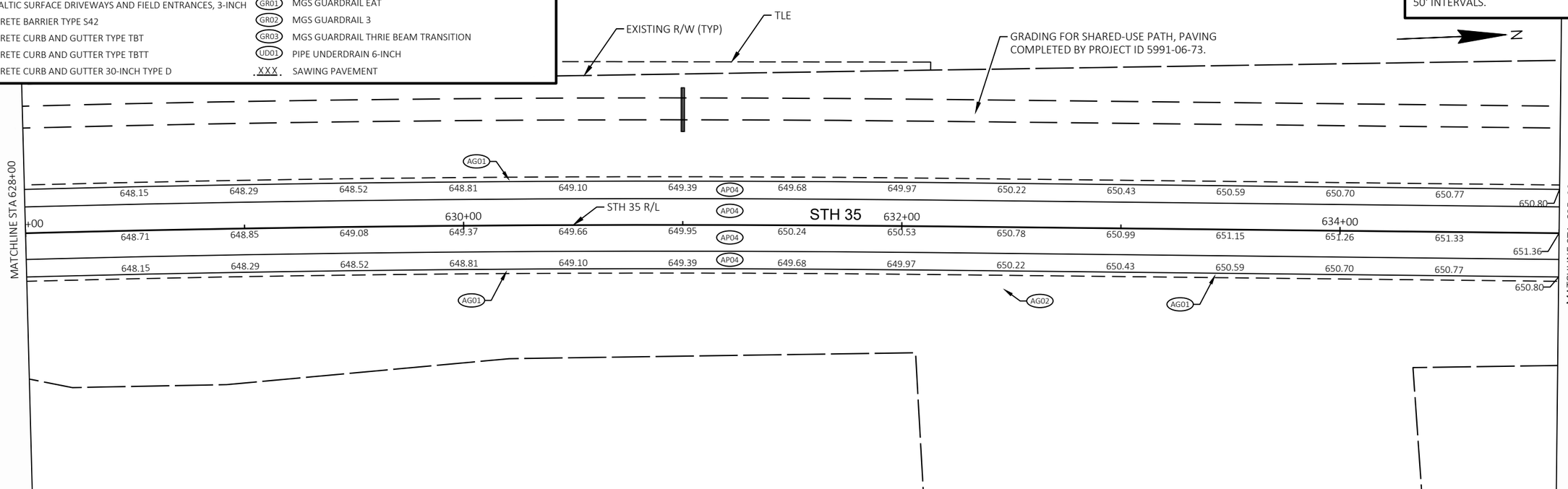

PROJECT NO: 5163-07-72	HWY: STH 35	COUNTY: LA CROSSE/VERNON	PLAN DETAILS	SHEET 29	E

2

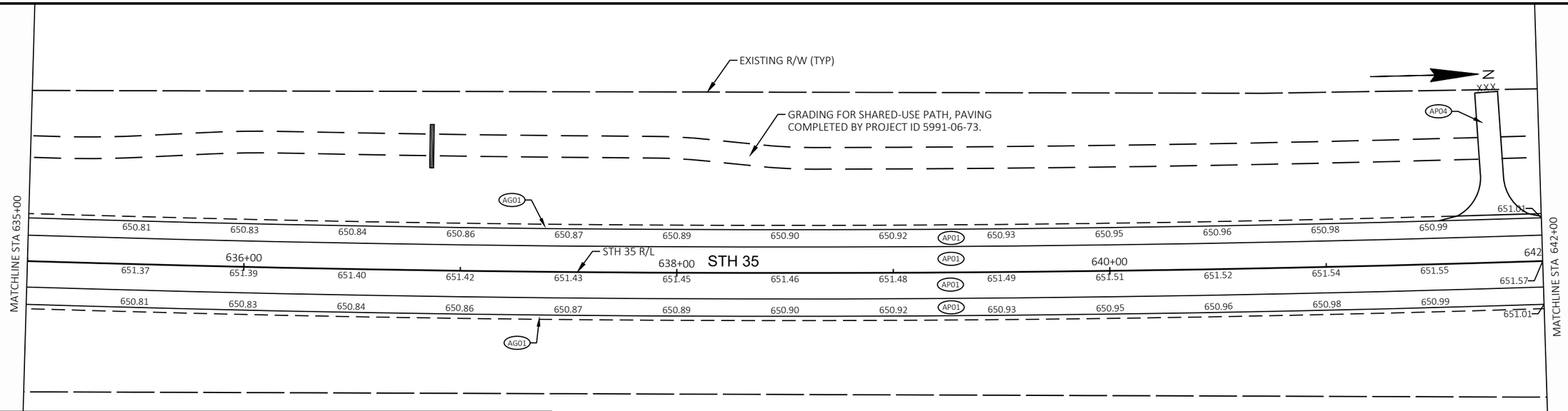

LEGEND

AF01	ASPHALTIC FLUME
AG01	BASE AGGREGATE DENSE 3/4-INCH
AG02	6-INCH BASE AGGREGATE DENSE 3/4-INCH
AP01	HMA PAVEMENT, 5-INCH
AP02	HMA PAVEMENT, 4-INCH
AP03	ASPHALTIC SURFACE 3-INCH
AP04	ASPHALTIC SURFACE DRIVEWAYS AND FIELD ENTRANCES, 3-INCH
CB42	CONCRETE BARRIER TYPE S42
CG01	CONCRETE CURB AND GUTTER TYPE TBT
CG02	CONCRETE CURB AND GUTTER TYPE TBTT
CG30	CONCRETE CURB AND GUTTER 30-INCH TYPE D
CG36	CONCRETE CURB AND GUTTER 4-INCH SLOPE 36-INCH TYPE D
CG06	CONCRETE CURB AND GUTTER 6-INCH SLOPE 36-INCH TYPE D
CM01	CONCRETE SURFACE MEDIAN
CM02	CONCRETE MEDIAN SLOPED NOSE
CD01	CONCRETE SURFACE DRAIN
CP01	CONCRETE PAVEMENT APPROACH SLAB
CP02	CONCRETE PAVEMENT 12-INCH
GR01	MGS GUARDRAIL EAT
GR02	MGS GUARDRAIL 3
GR03	MGS GUARDRAIL THRIE BEAM TRANSITION
UD01	PIPE UNDERDRAIN 6-INCH
XXX	SAWING PAVEMENT

NOTES:

PAVEMENT GRADES ARE GIVEN TO THE FLANGE OF THE CURB & GUTTER, EDGE OF TRAVEL LANE OR EDGE OF PAVED SHOULDER AND THE R/L.

PAVEMENT GRADES ARE TYPICALLY SHOWN AT 50' INTERVALS.

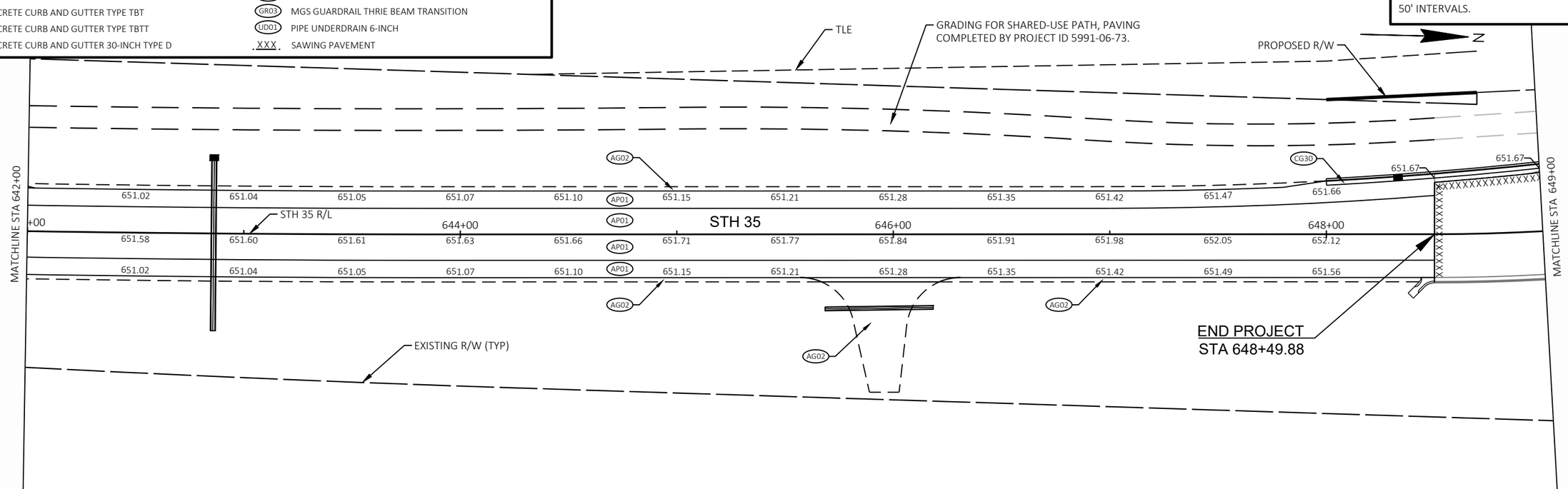

PROJECT NO: 5163-07-72	HWY: STH 35	COUNTY: LA CROSSE/VERNON	PLAN DETAILS	SHEET 30	E

GRADING FOR SHARED-USE PATH, PAVING COMPLETED BY PROJECT ID 5991-06-73.

N

SUNNYSIDE DR W

STH 35

651.67

650+00

STH 35 R/L

MATCHLINE STA 649+00

652+00

STH 35

654+00

END CONSTRUCTION
STA 649+87.86

CM02

CG30

SUNNYSIDE DR

EXISTING R/W (TYP)

LEGEND

AF01	ASPHALTIC FLUME	CG36	CONCRETE CURB AND GUTTER 4-INCH SLOPE 36-INCH TYPE D
AG01	BASE AGGREGATE DENSE 3/4-INCH	CG06	CONCRETE CURB AND GUTTER 6-INCH SLOPE 36-INCH TYPE D
AG02	6-INCH BASE AGGREGATE DENSE 3/4-INCH	CM01	CONCRETE SURFACE MEDIAN
AP01	HMA PAVEMENT, 5-INCH	CM02	CONCRETE MEDIAN SLOPED NOSE
AP02	HMA PAVEMENT, 4-INCH	CD01	CONCRETE SURFACE DRAIN
AP03	ASPHALTIC SURFACE 3-INCH	CP01	CONCRETE PAVEMENT APPROACH SLAB
AP04	ASPHALTIC SURFACE DRIVEWAYS AND FIELD ENTRANCES, 3-INCH	CP02	CONCRETE PAVEMENT 12-INCH
CB42	CONCRETE BARRIER TYPE S42	GR01	MGS GUARDRAIL EAT
CG01	CONCRETE CURB AND GUTTER TYPE TBT	GR02	MGS GUARDRAIL 3
CG02	CONCRETE CURB AND GUTTER TYPE TBTT	GR03	MGS GUARDRAIL THRIE BEAM TRANSITION
CG30	CONCRETE CURB AND GUTTER 30-INCH TYPE D	UD01	PIPE UNDERDRAIN 6-INCH
		XXX	SAWING PAVEMENT

NOTES:

PAVEMENT GRADES ARE GIVEN TO THE FLANGE OF THE CURB & GUTTER, EDGE OF TRAVEL LANE OR EDGE OF PAVED SHOULDER AND THE R/L.

PAVEMENT GRADES ARE TYPICALLY SHOWN AT 50' INTERVALS.

TLE

N

AG01

641.49

640.91

641.54

17+00

641.67

642.14

702

BEGIN CONSTRUCTION
STA 16+25.00'GI'
MATCH PROJECT ID 5085-00-70
(ALREADY CONSTRUCTED)
Y=101232.584
X=458378.369

640.99

641.62

641.13

18+00

642.14

AP02

CG36

16+00

640.49

700

AG01

CTH GI R/L

701

641.18

641.79

AP02

AP02

AP02

703

645.05

AP01

19+00

644.95

AP01

CTH GI

AP01

644.83

AG01

EXISTING R/W (TYP)

TLE

STH 35

584+00

STH 35 R/L

SEE NEXT PAGE FOR ADDITIONAL INFORMATION

CTH K

31+00

582+00

STATION & OFFSET TABLE				
POINT	STATION	OFFSET	Y COORDS	X COORDS
700	581+77.25	315.60 LT	101245.404	458414.350
701	582+21.37	216.82 LT	101287.548	458513.353
702	582+61.75	192.21 LT	101327.016	458537.966
703	582+67.81	126.12 LT	101333.207	458604.042

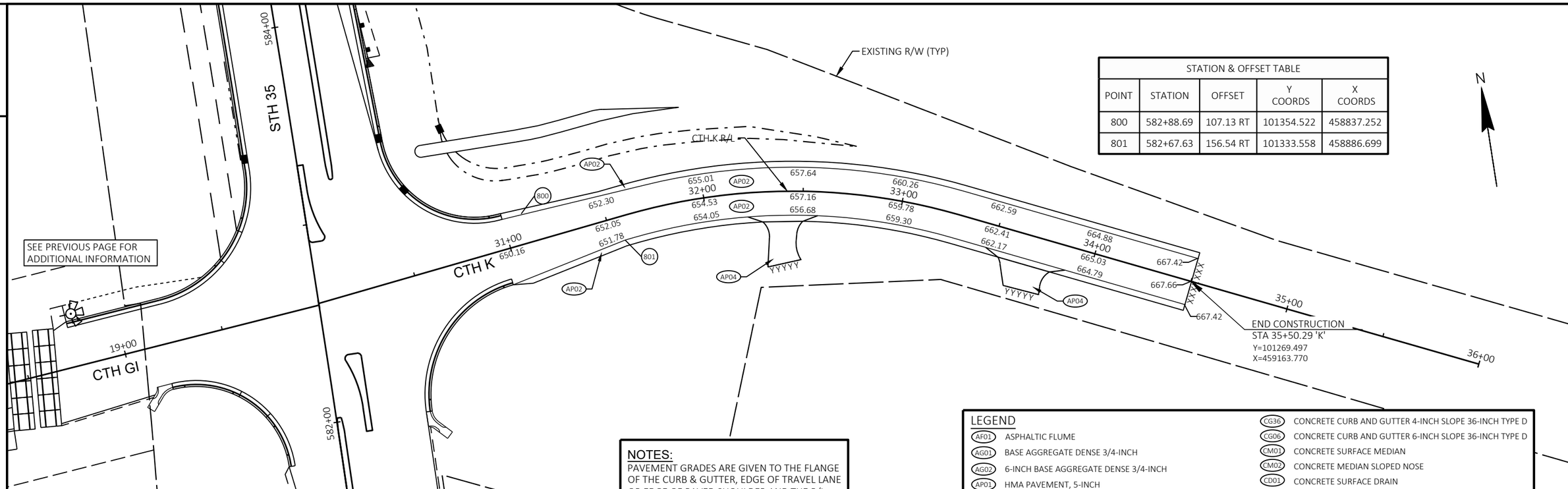

STATION & OFFSET TABLE				
POINT	STATION	OFFSET	Y COORDS	X COORDS
800	582+88.69	107.13 RT	101354.522	458837.252
801	582+67.63	156.54 RT	101333.558	458886.699

NOTES:
PAVEMENT GRADES ARE GIVEN TO THE FLANGE OF THE CURB & GUTTER, EDGE OF TRAVEL LANE OR EDGE OF PAVED SHOULDER AND THE R/L.

PAVEMENT GRADES ARE TYPICALLY SHOWN AT 50' INTERVALS.

LEGEND

AF01	ASPHALTIC FLUME	CG36	CONCRETE CURB AND GUTTER 4-INCH SLOPE 36-INCH TYPE D
AG01	BASE AGGREGATE DENSE 3/4-INCH	CG06	CONCRETE CURB AND GUTTER 6-INCH SLOPE 36-INCH TYPE D
AG02	6-INCH BASE AGGREGATE DENSE 3/4-INCH	CM01	CONCRETE SURFACE MEDIAN
AP01	HMA PAVEMENT, 5-INCH	CM02	CONCRETE MEDIAN SLOPED NOSE
AP02	HMA PAVEMENT, 4-INCH	CD01	CONCRETE SURFACE DRAIN
AP03	ASPHALTIC SURFACE 3-INCH	CP01	CONCRETE PAVEMENT APPROACH SLAB
AP04	ASPHALTIC SURFACE DRIVEWAYS AND FIELD ENTRANCES, 3-INCH	CP02	CONCRETE PAVEMENT 12-INCH
CB42	CONCRETE BARRIER TYPE S42	GR01	MGS GUARDRAIL EAT
CG01	CONCRETE CURB AND GUTTER TYPE TBT	GR02	MGS GUARDRAIL 3
CG02	CONCRETE CURB AND GUTTER TYPE TBTT	GR03	MGS GUARDRAIL THRIE BEAM TRANSITION
CG30	CONCRETE CURB AND GUTTER 30-INCH TYPE D	UD01	PIPE UNDERDRAIN 6-INCH
		XXX	SAWING PAVEMENT

2

LEGEND

- EROSION MAT URBAN CLASS 1 TYPE B
- SILT FENCE
- TEMPORARY DITCH CHECKS
- SLOPE INTERCEPT
- (A) INLET PROTECTION TYPE A
- (*C) INLET PROTECTION TYPE A (BEFORE CURB AND GUTTER INSTALLATION) INLET PROTECTION TYPE C (AFTER CURB AND GUTTER INSTALLATION)
- ROCK BAGS (CULVERT PIPE CHECKS)
- SURFACE WATER FLOW
- RIPRAP (TYPE NOTED)

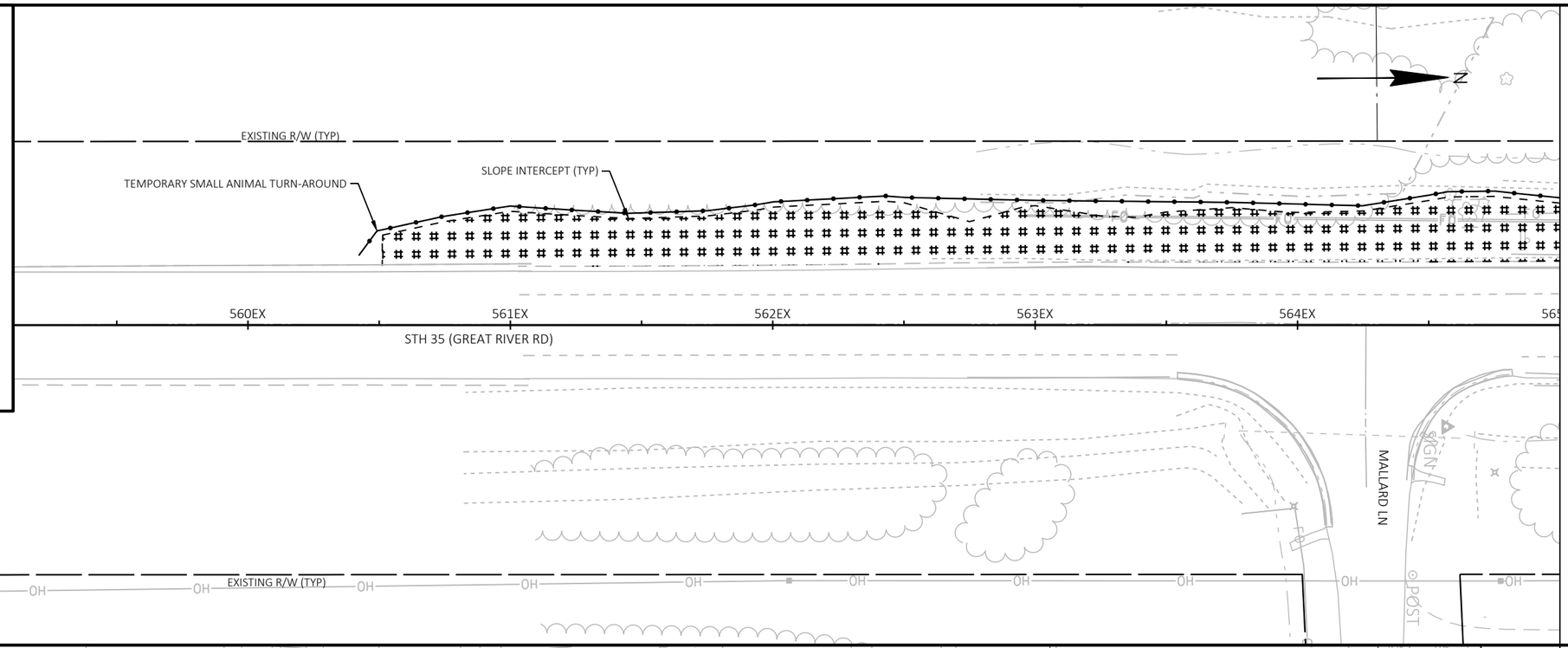

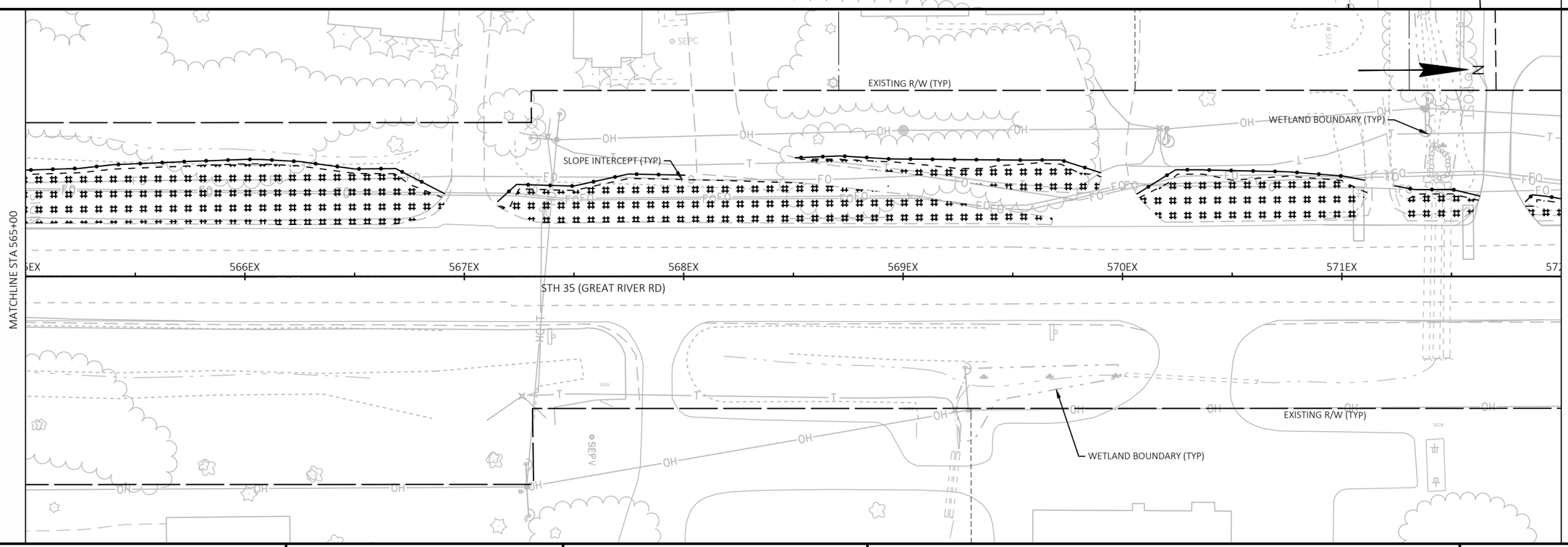

PROJECT NO: 5163-07-72	HWY: STH 35	COUNTY: LA CROSSE/VERNON	EROSION CONTROL STAGED - STAGE 2A	SHEET 33	E

FILE NAME : O:\PDS\C3D\51630702\SHEETSPLAN\022001_EC2A.DWG
LAYOUT NAME - 01
PLOT DATE : 7/1/2025 4:13 PM PLOT BY : ED OCHS PLOT NAME : PLOT SCALE : 1 IN:50 FT

WISDOT/CADDS SHEET 44

2

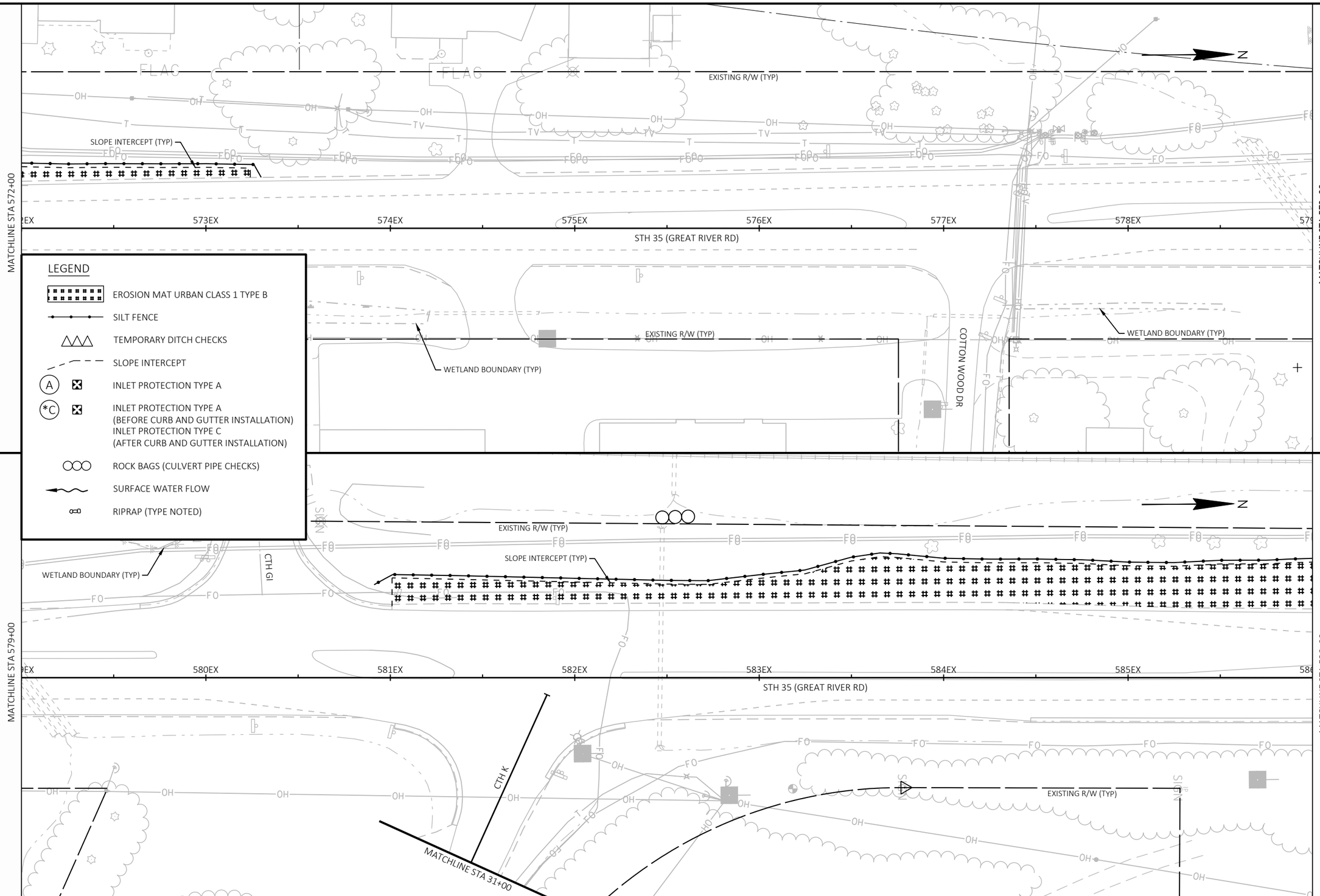

2

PROJECT NO: 5163-07-72	HWY: STH 35	COUNTY: LA CROSSE/VERNON	EROSION CONTROL STAGED - STAGE 2A	SHEET 34	E

FILE NAME : O:\PDS\C3D\51630702\SHEETSPLAN\022001_EC2A.DWG
LAYOUT NAME - 02
PLOT DATE : 7/1/2025 4:13 PM
PLOT BY : ED OCHS
PLOT NAME :
PLOT SCALE : 1 IN:50 FT

2

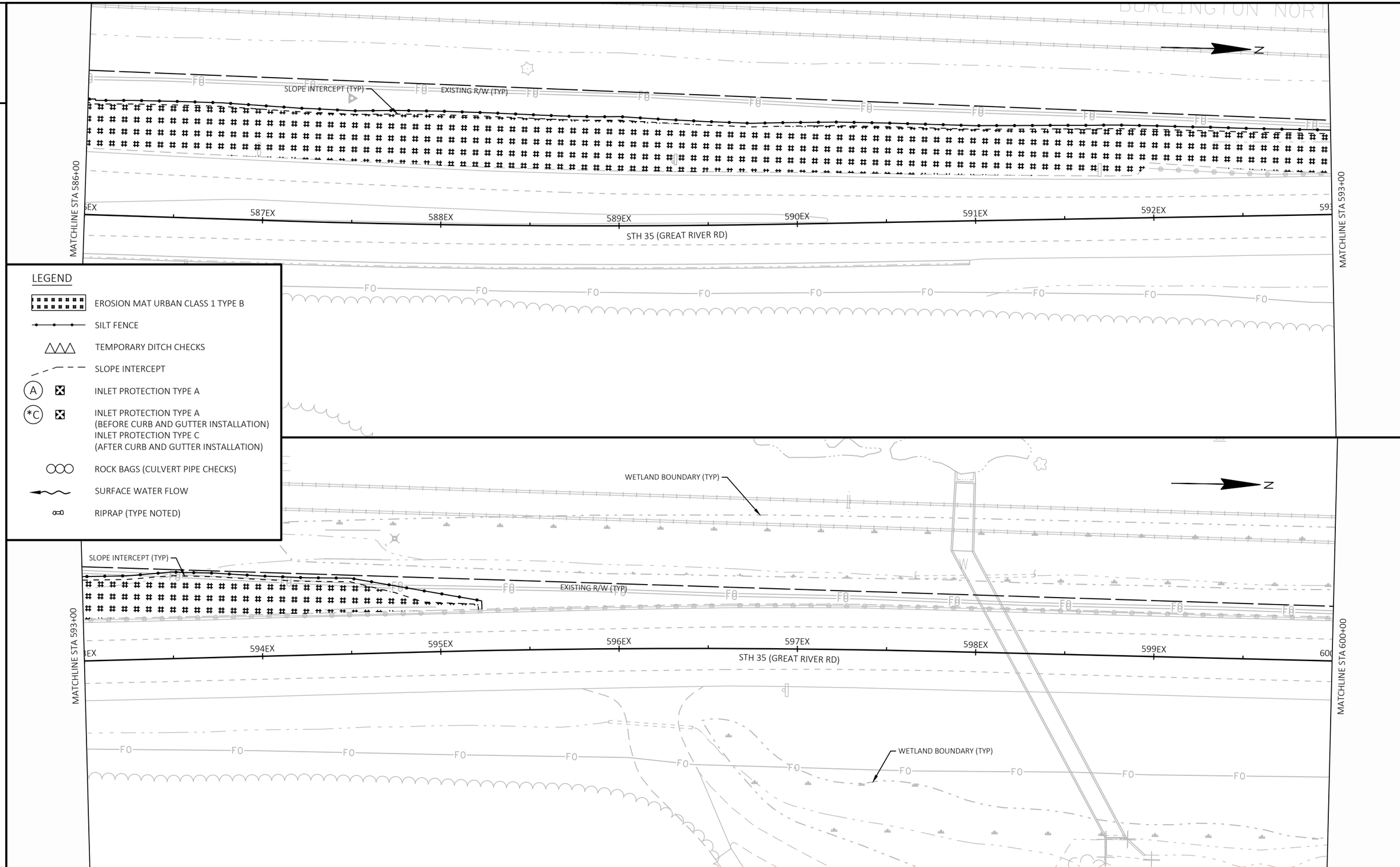

2

PROJECT NO: 5163-07-72	HWY: STH 35	COUNTY: LA CROSSE/VERNON	EROSION CONTROL STAGED - STAGE 2A	SHEET 35	E

FILE NAME : O:\PDS\C3D\51630702\SHEETSPLAN\022001_EC2A.DWG
LAYOUT NAME - 03
PLOT DATE : 7/1/2025 4:13 PM
PLOT BY : ED OCHS
PLOT NAME :
PLOT SCALE : 1 IN:50 FT
WISDOT/CADDS SHEET 44

2

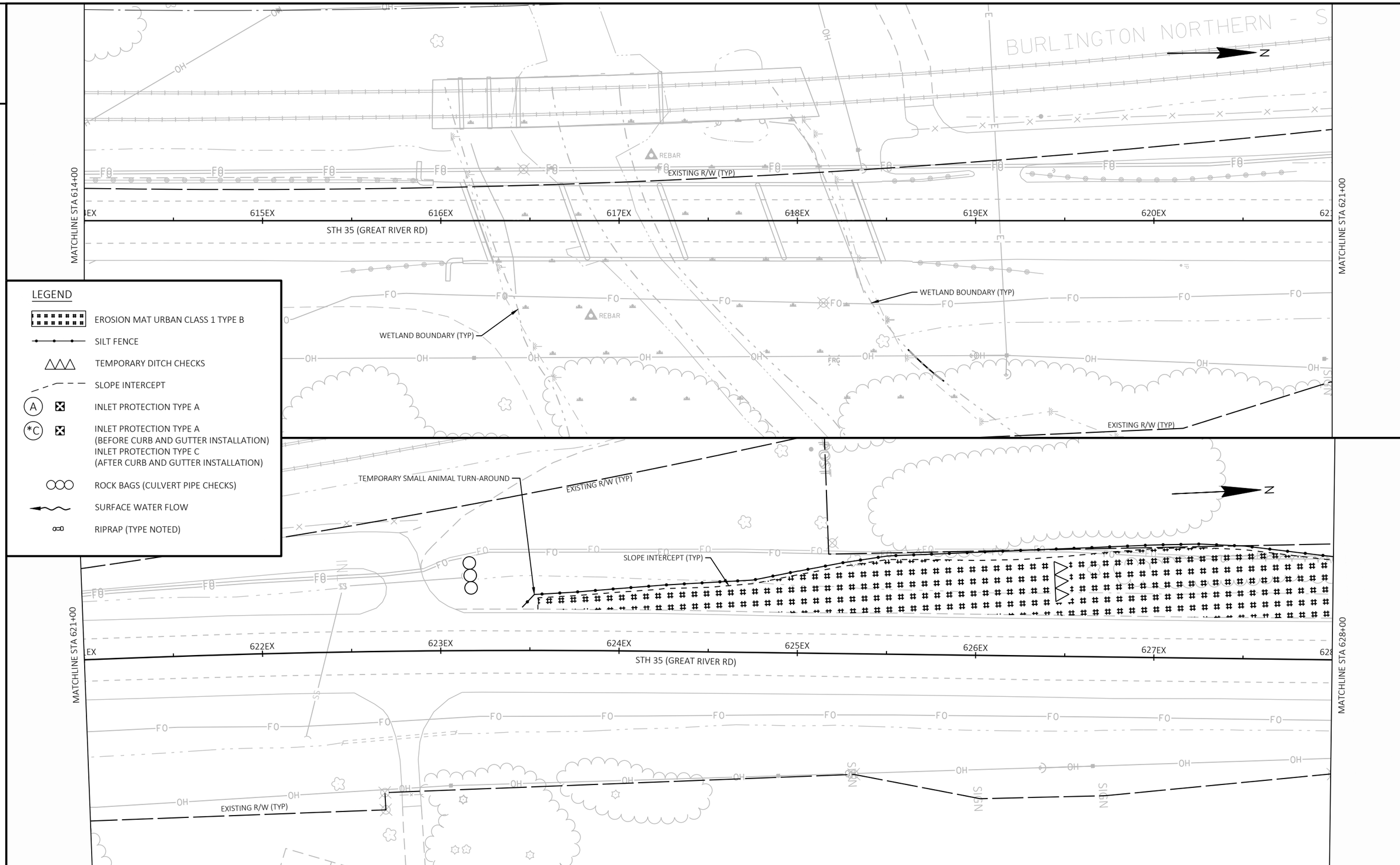

2

PROJECT NO: 5163-07-72	HWY: STH 35	COUNTY: LA CROSSE/VERNON	EROSION CONTROL STAGED - STAGE 2A	SHEET 36	E

FILE NAME : O:\PDS\C3D\51630702\SHEETSPLAN\022001_EC2A.DWG
LAYOUT NAME - 05
PLOT DATE : 7/1/2025 4:14 PM
PLOT BY : ED OCHS
PLOT NAME :
PLOT SCALE : 1 IN:50 FT
WISDOT/CADDS SHEET 44

2

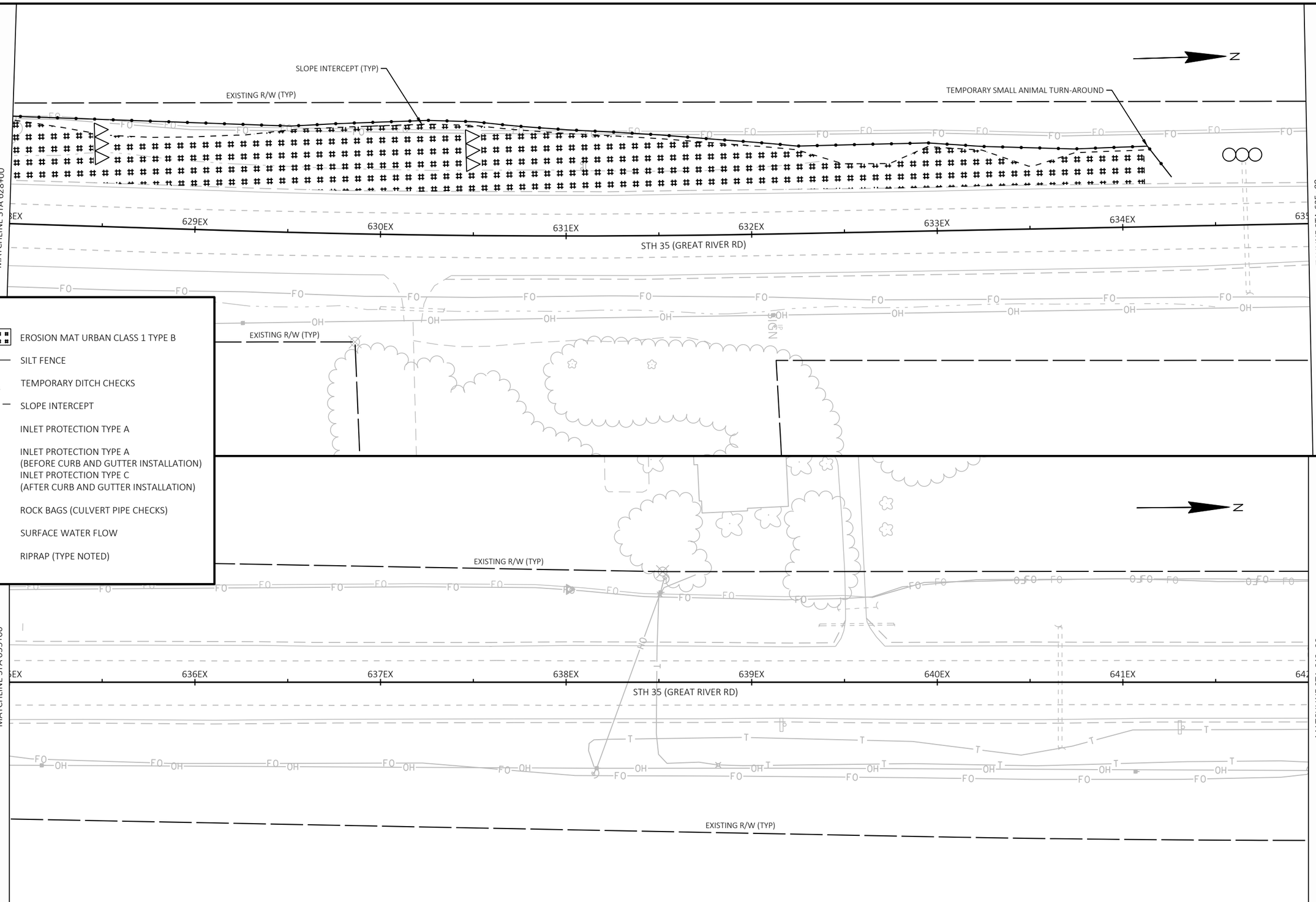

LEGEND

- EROSION MAT URBAN CLASS 1 TYPE B
- SILT FENCE
- TEMPORARY DITCH CHECKS
- SLOPE INTERCEPT
- (A) INLET PROTECTION TYPE A
- (*C) INLET PROTECTION TYPE A (BEFORE CURB AND GUTTER INSTALLATION) INLET PROTECTION TYPE C (AFTER CURB AND GUTTER INSTALLATION)
- ROCK BAGS (CULVERT PIPE CHECKS)
- SURFACE WATER FLOW
- RIPRAP (TYPE NOTED)

2

PROJECT NO: 5163-07-72	HWY: STH 35	COUNTY: LA CROSSE/VERNON	EROSION CONTROL STAGED - STAGE 2A	SHEET 37	E

FILE NAME : O:\PDS\C3D\51630702\SHEETSPLAN\022001_EC2A.DWG
LAYOUT NAME - 06
PLOT DATE : 7/1/2025 4:14 PM
PLOT BY : ED OCHS
PLOT NAME :
PLOT SCALE : 1 IN:50 FT

2

2

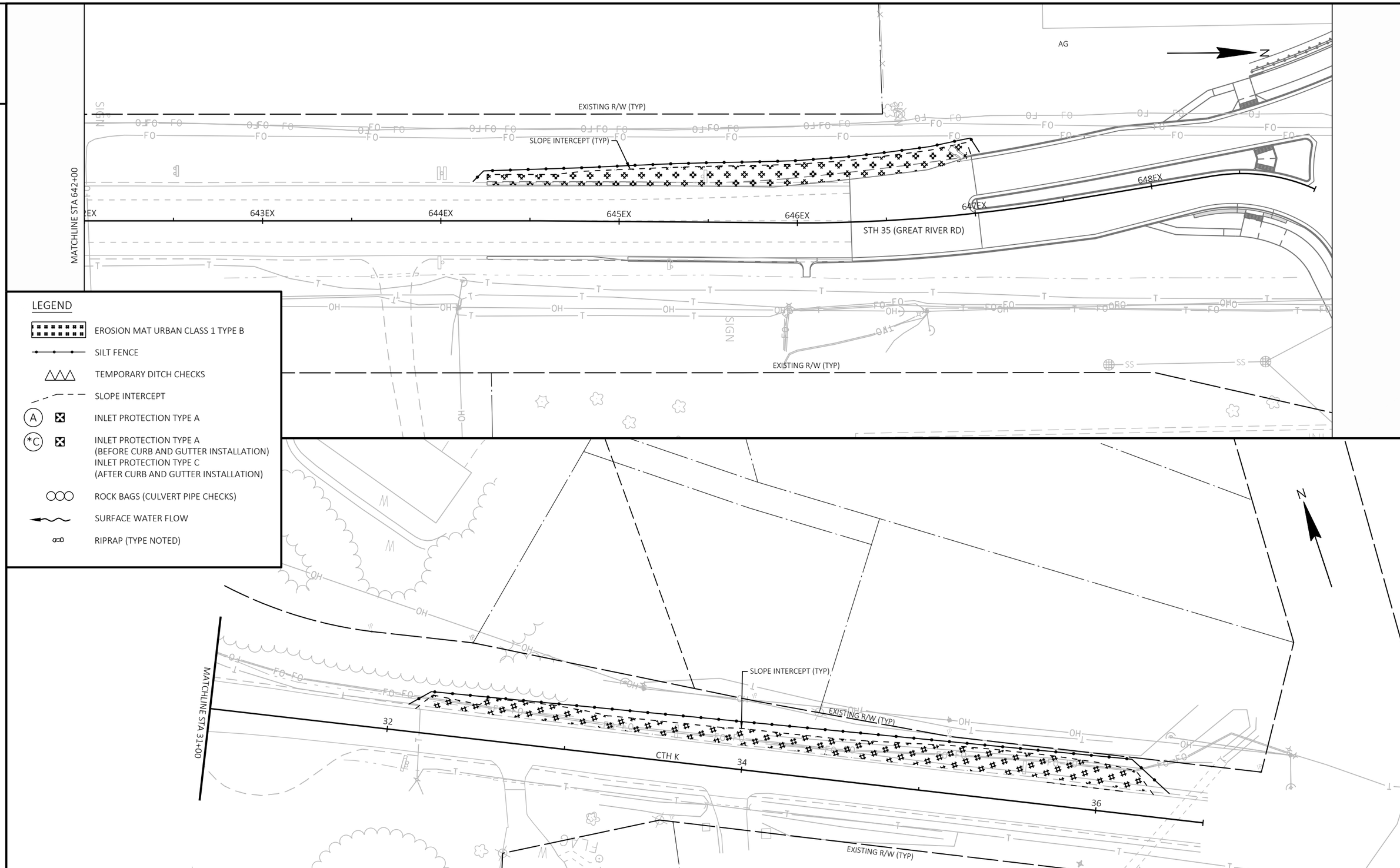

LEGEND

- EROSION MAT URBAN CLASS 1 TYPE B
- SILT FENCE
- TEMPORARY DITCH CHECKS
- SLOPE INTERCEPT
- (A) INLET PROTECTION TYPE A
- (*C) INLET PROTECTION TYPE A (BEFORE CURB AND GUTTER INSTALLATION) INLET PROTECTION TYPE C (AFTER CURB AND GUTTER INSTALLATION)
- ROCK BAGS (CULVERT PIPE CHECKS)
- SURFACE WATER FLOW
- RIPRAP (TYPE NOTED)

PROJECT NO: 5163-07-72	HWY: STH 35	COUNTY: LA CROSSE/VERNON	EROSION CONTROL STAGED - STAGE 2A	SHEET 38	E

FILE NAME : O:\PDS\C3D\51630702\SHEETSPLAN\022001_EC2A.DWG
LAYOUT NAME - 07
PLOT DATE : 7/1/2025 4:14 PM
PLOT BY : ED OCHS
PLOT NAME :
PLOT SCALE : 1 IN:50 FT
WISDOT/CADDS SHEET 44

2

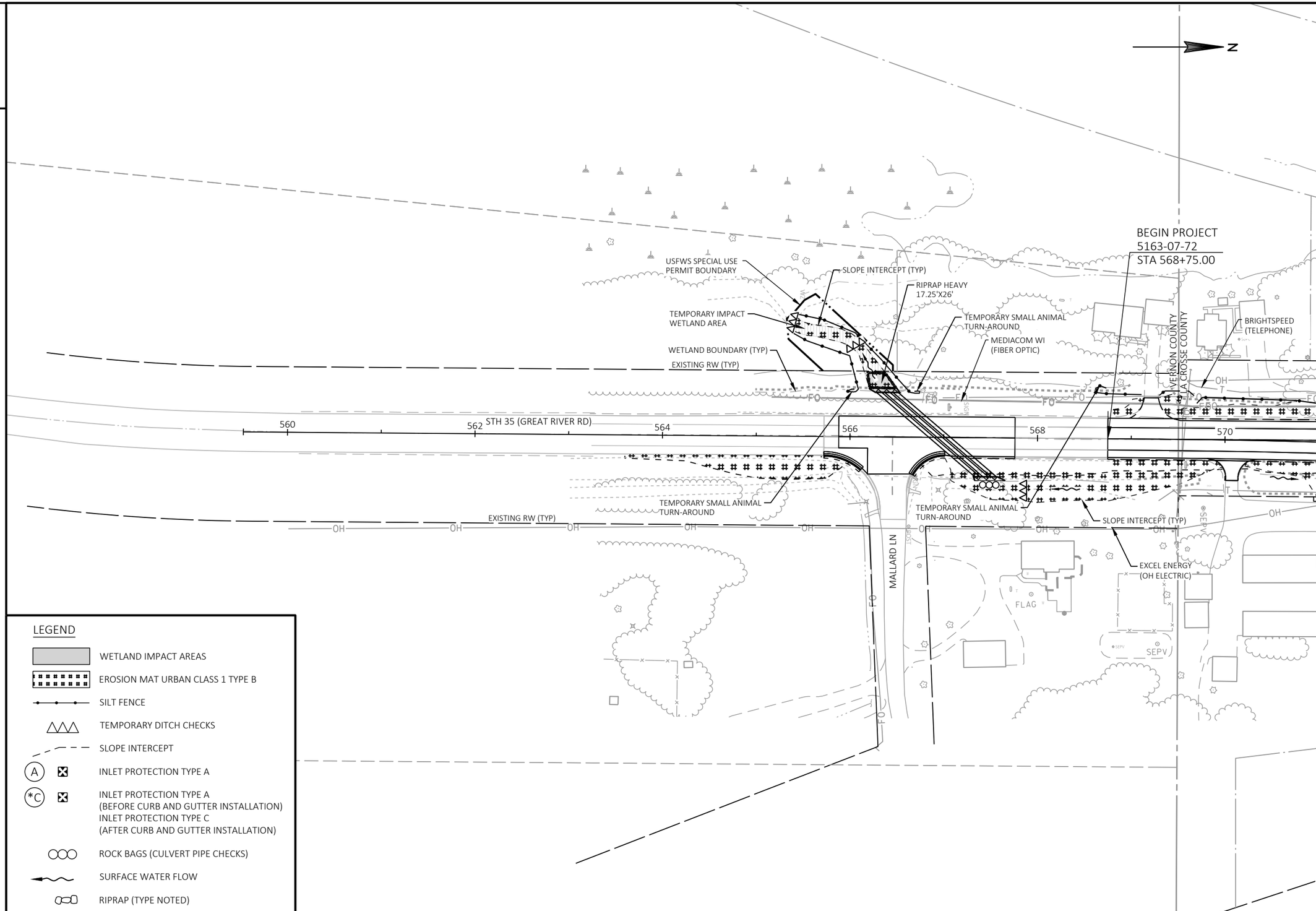

LEGEND

- WETLAND IMPACT AREAS
- EROSION MAT URBAN CLASS 1 TYPE B
- SILT FENCE
- TEMPORARY DITCH CHECKS
- SLOPE INTERCEPT
- (A) INLET PROTECTION TYPE A
- (*C) INLET PROTECTION TYPE A (BEFORE CURB AND GUTTER INSTALLATION) INLET PROTECTION TYPE C (AFTER CURB AND GUTTER INSTALLATION)
- ROCK BAGS (CULVERT PIPE CHECKS)
- SURFACE WATER FLOW
- RIPRAP (TYPE NOTED)

2

PROJECT NO: 5163-07-72	HWY: STH 35	COUNTY: LA CROSSE	EROSION CONTROL	SHEET 39	E

2

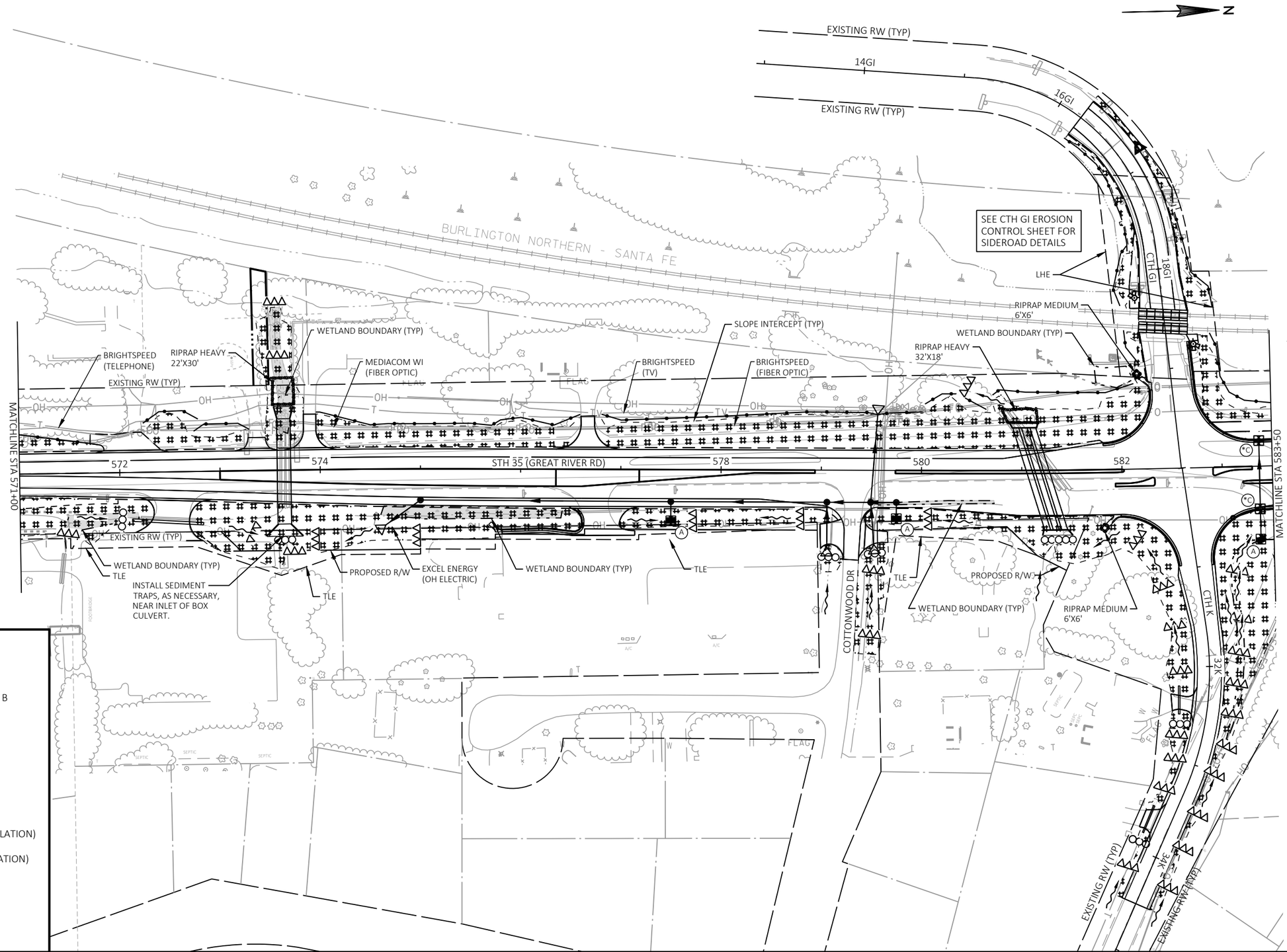

LEGEND

- WETLAND IMPACT AREAS
- EROSION MAT URBAN CLASS 1 TYPE B
- SILT FENCE
- TEMPORARY DITCH CHECKS
- SLOPE INTERCEPT
- (A) INLET PROTECTION TYPE A
- (*C) INLET PROTECTION TYPE A (BEFORE CURB AND GUTTER INSTALLATION) INLET PROTECTION TYPE C (AFTER CURB AND GUTTER INSTALLATION)
- ROCK BAGS (CULVERT PIPE CHECKS)
- SURFACE WATER FLOW
- RIPRAP (TYPE NOTED)

2

PROJECT NO: 5163-07-72	HWY: STH 35	COUNTY: LA CROSSE	EROSION CONTROL	SHEET 40	E

2

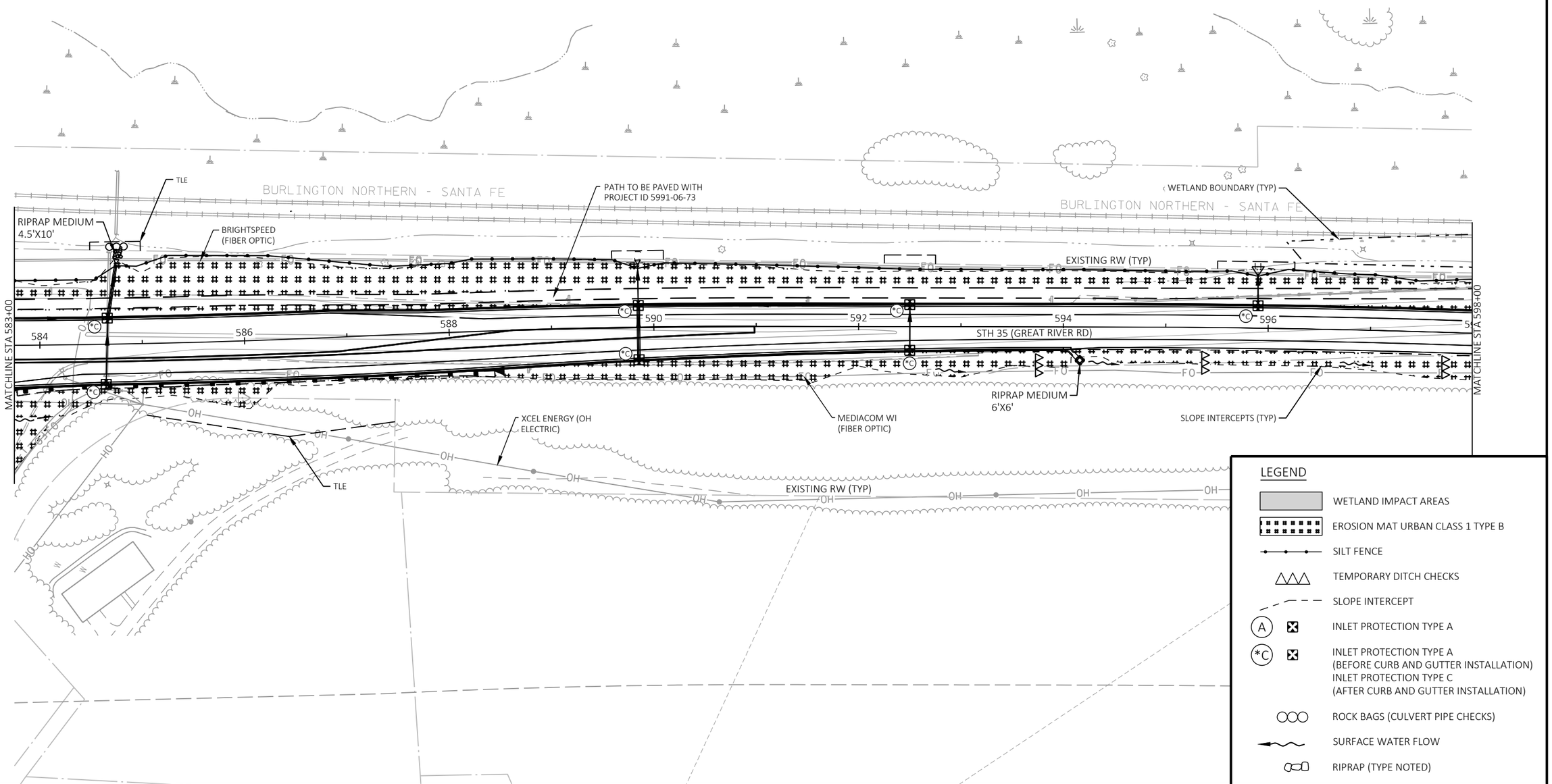

PROJECT NO: 5163-07-72	HWY: STH 35	COUNTY: LA CROSSE	EROSION CONTROL	SHEET	E

FILE NAME : O:\PDS\C3D\51630702\SHEETSPLAN\022001_EC.DWG PLOT DATE : 7/1/2025 4:43 PM PLOT BY : ED OCHS PLOT NAME :

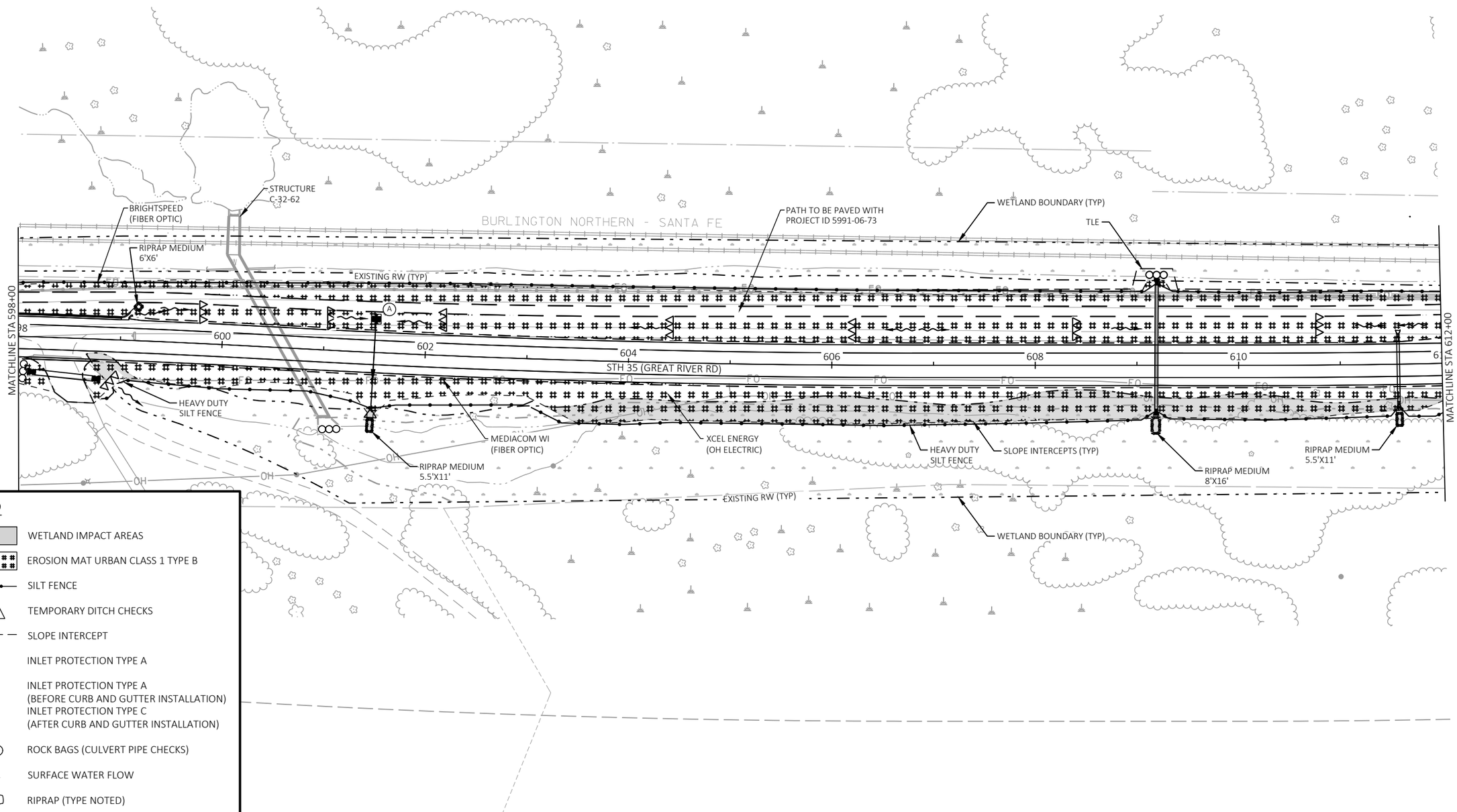

PROJECT NO: 5163-07-72	HWY: STH 35	COUNTY: LA CROSSE	EROSION CONTROL	SHEET 42	E

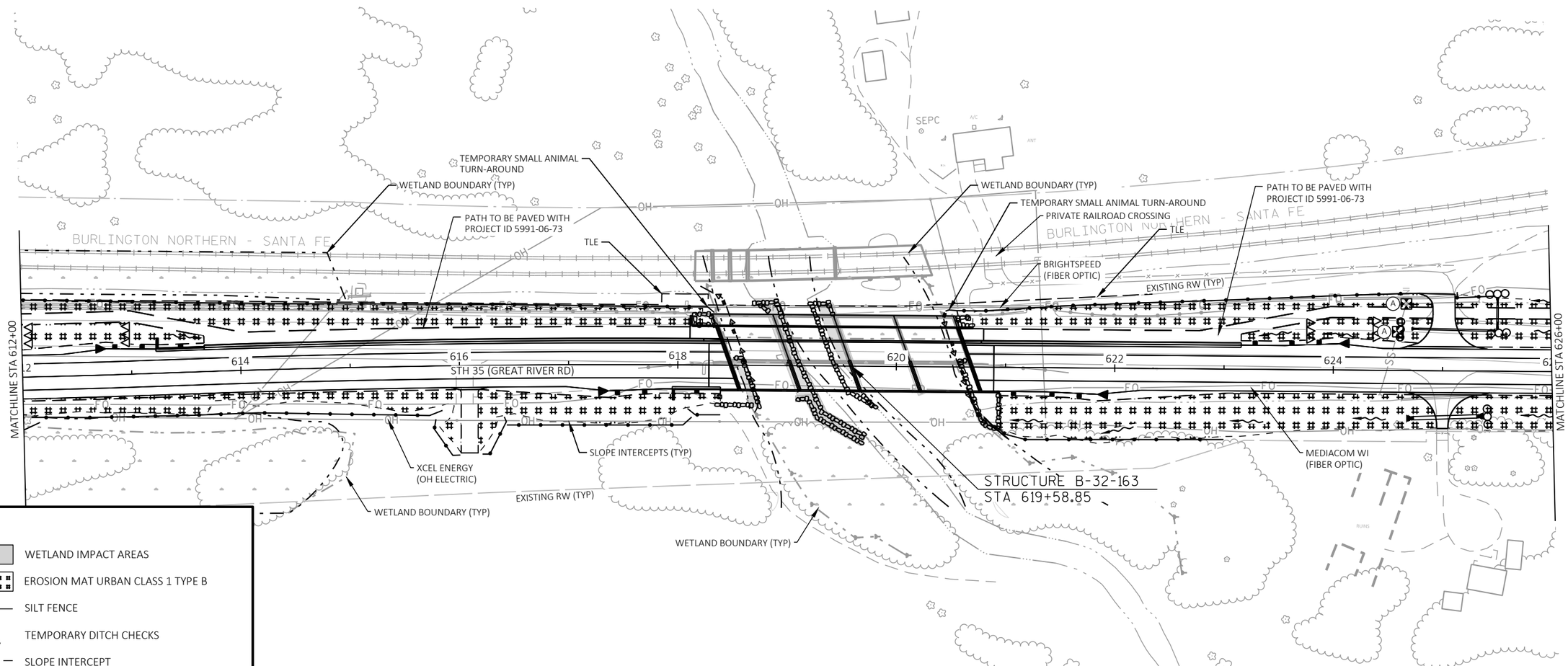

LEGEND

- WETLAND IMPACT AREAS
- EROSION MAT URBAN CLASS 1 TYPE B
- SILT FENCE
- TEMPORARY DITCH CHECKS
- SLOPE INTERCEPT
- (A) INLET PROTECTION TYPE A
- (*C) INLET PROTECTION TYPE A (BEFORE CURB AND GUTTER INSTALLATION) INLET PROTECTION TYPE C (AFTER CURB AND GUTTER INSTALLATION)
- ROCK BAGS (CULVERT PIPE CHECKS)
- SURFACE WATER FLOW
- RIPRAP (TYPE NOTED)

PROJECT NO: 5163-07-72	HWY: STH 35	COUNTY: LA CROSSE	EROSION CONTROL	SHEET 43	E

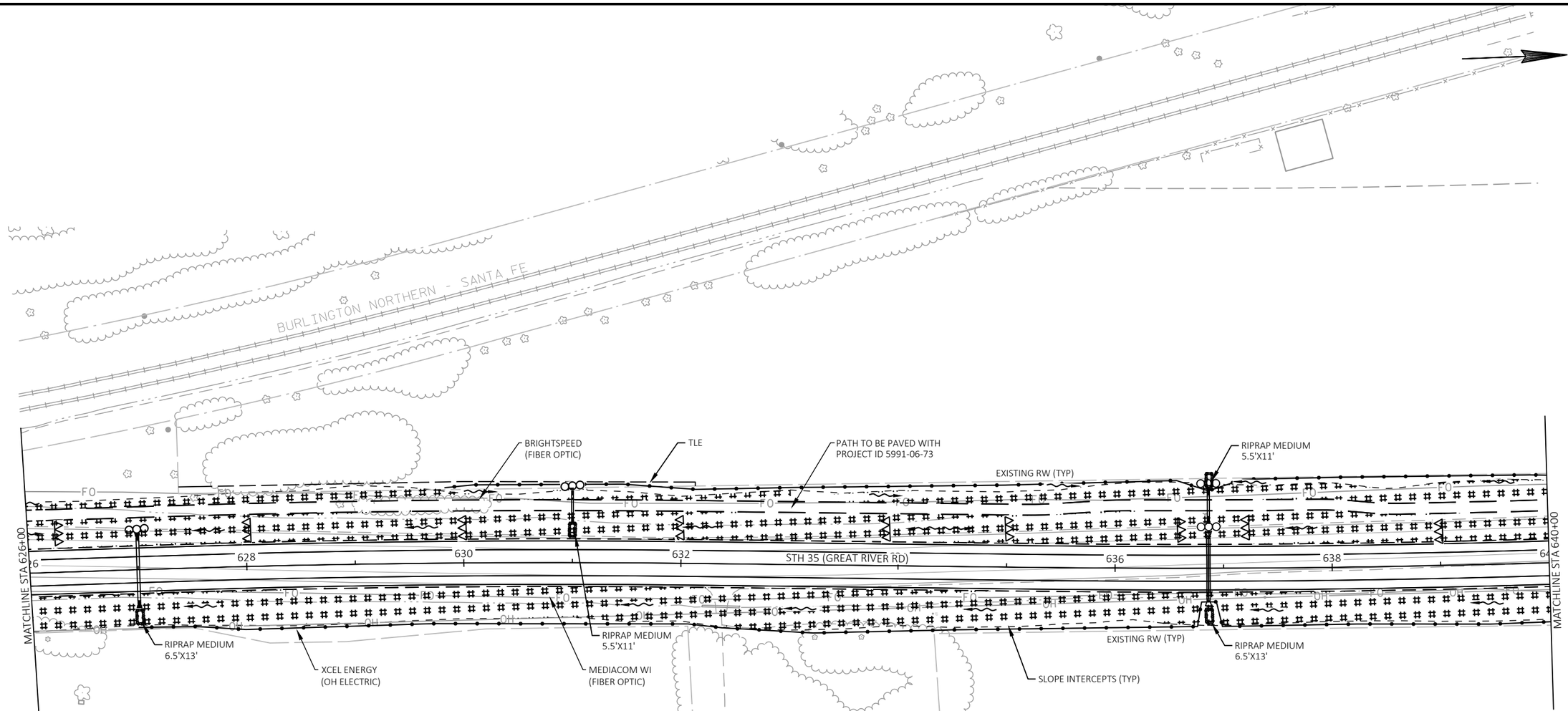

LEGEND

- WETLAND IMPACT AREAS
- EROSION MAT URBAN CLASS 1 TYPE B
- SILT FENCE
- TEMPORARY DITCH CHECKS
- SLOPE INTERCEPT
- (A) INLET PROTECTION TYPE A
- (*C) INLET PROTECTION TYPE A (BEFORE CURB AND GUTTER INSTALLATION) INLET PROTECTION TYPE C (AFTER CURB AND GUTTER INSTALLATION)
- ROCK BAGS (CULVERT PIPE CHECKS)
- SURFACE WATER FLOW
- RIPRAP (TYPE NOTED)

PROJECT NO: 5163-07-72	HWY: STH 35	COUNTY: LA CROSSE	EROSION CONTROL	SHEET 44	E

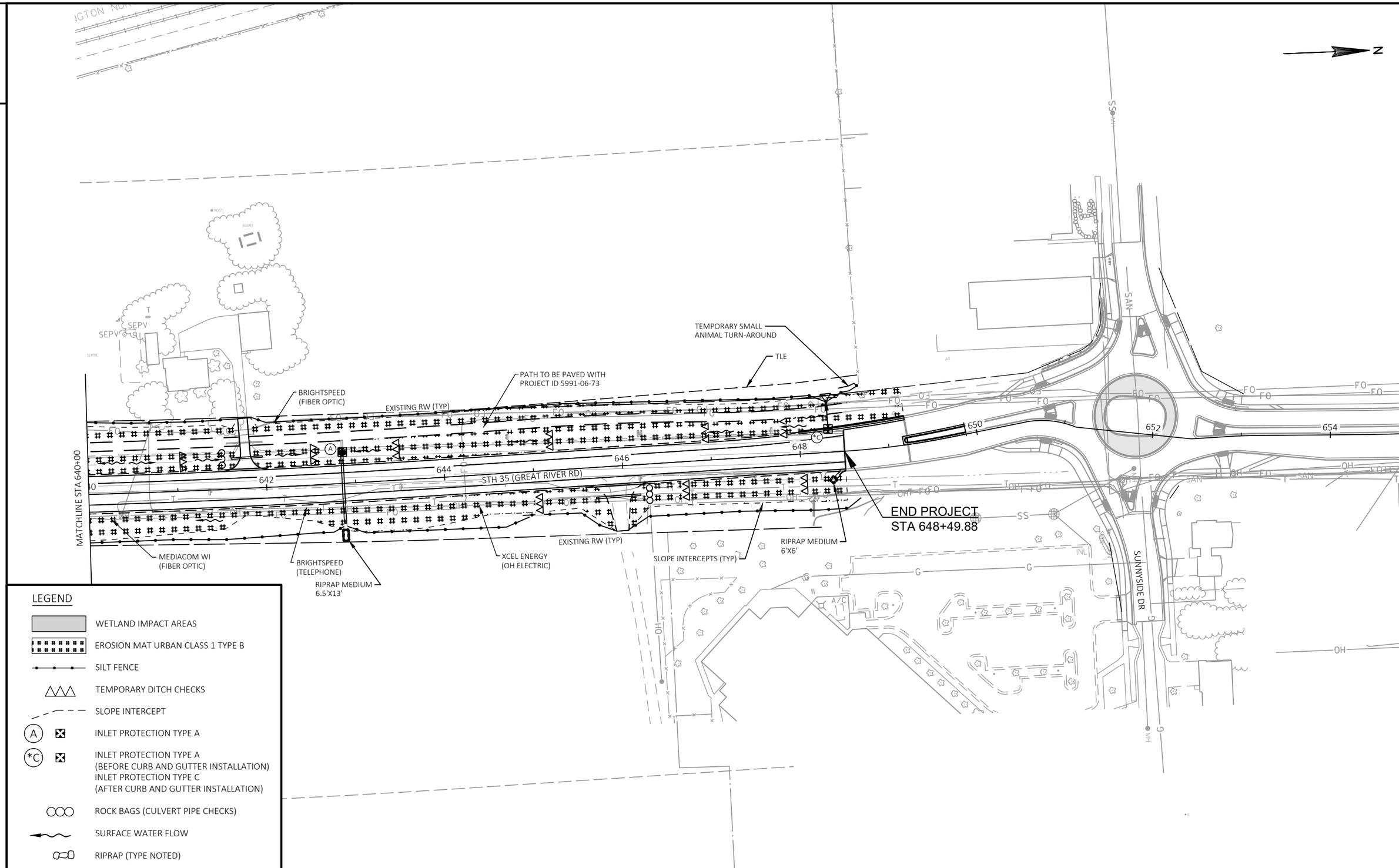
N
TEMPORARY SMALL ANIMAL TURN-AROUND
TLE
PATH TO BE PAVED WITH PROJECT ID 5991-06-73
BRIGHTSPEED (FIBER OPTIC)
EXISTING RW (TYP)
MATCHLINE STA 640+00
STH 35 (GREAT RIVER RD)
END PROJECT
STA 648+49.88
MEDIACOM WI (FIBER OPTIC)
BRIGHTSPEED (TELEPHONE)
RIPRAP MEDIUM 6.5'X13'
XCEL ENERGY (OH ELECTRIC)
EXISTING RW (TYP)
SLOPE INTERCEPTS (TYP)
RIPRAP MEDIUM 6'X6'
SUNNYSIDE DR
SAN
SS
OH
FO
G
INL
M/H
SEPV
SEPTIC
POST
RUINS
A/C
W
642
644
646
648
650
652
654
LEGEND
WETLAND IMPACT AREAS
EROSION MAT URBAN CLASS 1 TYPE B
SILT FENCE
TEMPORARY DITCH CHECKS
SLOPE INTERCEPT
INLET PROTECTION TYPE A
INLET PROTECTION TYPE A (BEFORE CURB AND GUTTER INSTALLATION) INLET PROTECTION TYPE C (AFTER CURB AND GUTTER INSTALLATION)
ROCK BAGS (CULVERT PIPE CHECKS)
SURFACE WATER FLOW
RIPRAP (TYPE NOTED)

2

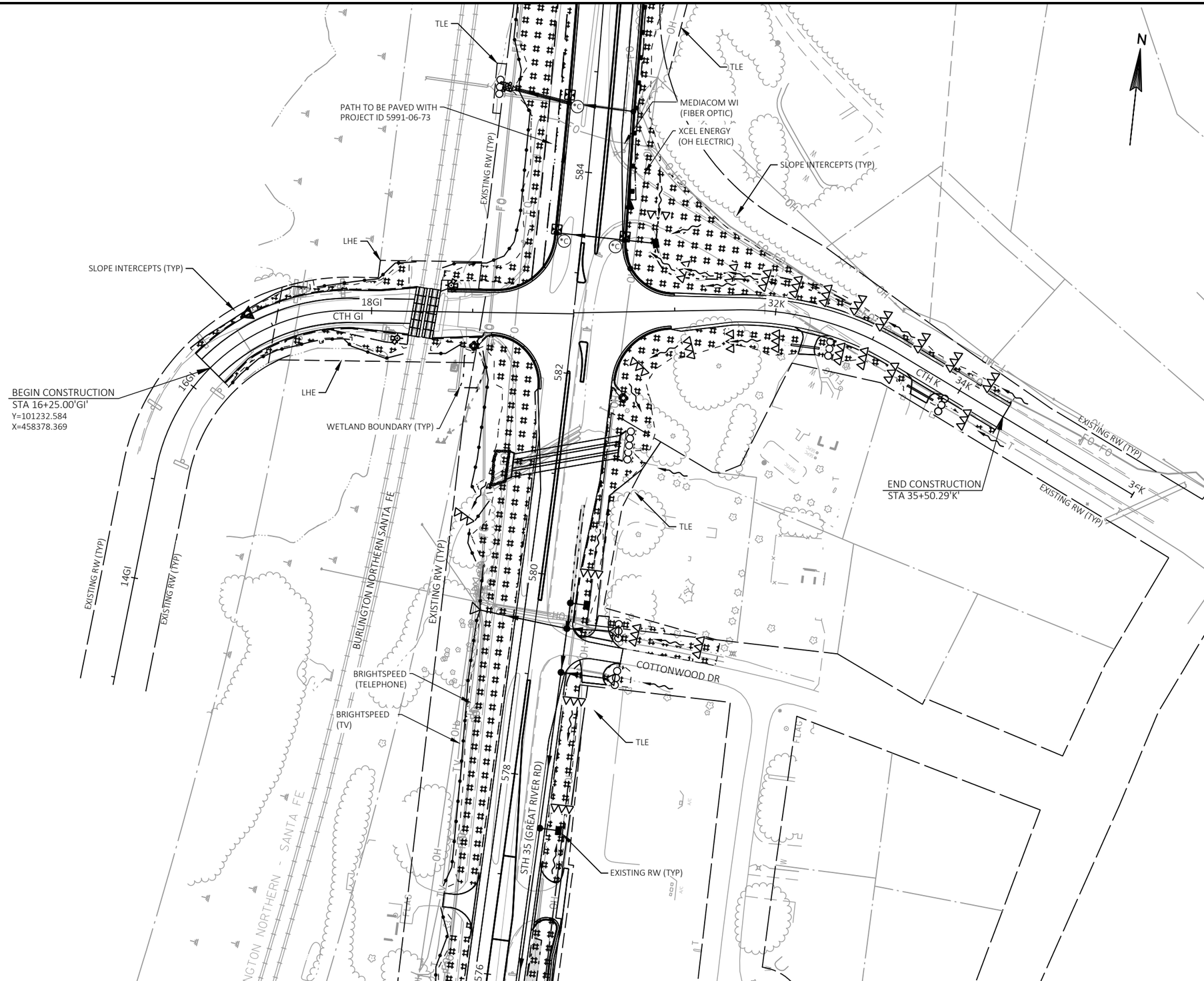

LEGEND

- WETLAND IMPACT AREAS
- EROSION MAT URBAN CLASS 1 TYPE B
- SILT FENCE
- TEMPORARY DITCH CHECKS
- SLOPE INTERCEPT
- (A) INLET PROTECTION TYPE A
- (*C) INLET PROTECTION TYPE A (BEFORE CURB AND GUTTER INSTALLATION) INLET PROTECTION TYPE C (AFTER CURB AND GUTTER INSTALLATION)
- ROCK BAGS (CULVERT PIPE CHECKS)
- SURFACE WATER FLOW
- RIPRAP (TYPE NOTED)

2

PROJECT NO: 5163-07-72	HWY: STH 35	COUNTY: LA CROSSE	EROSION CONTROL	SHEET 46	E

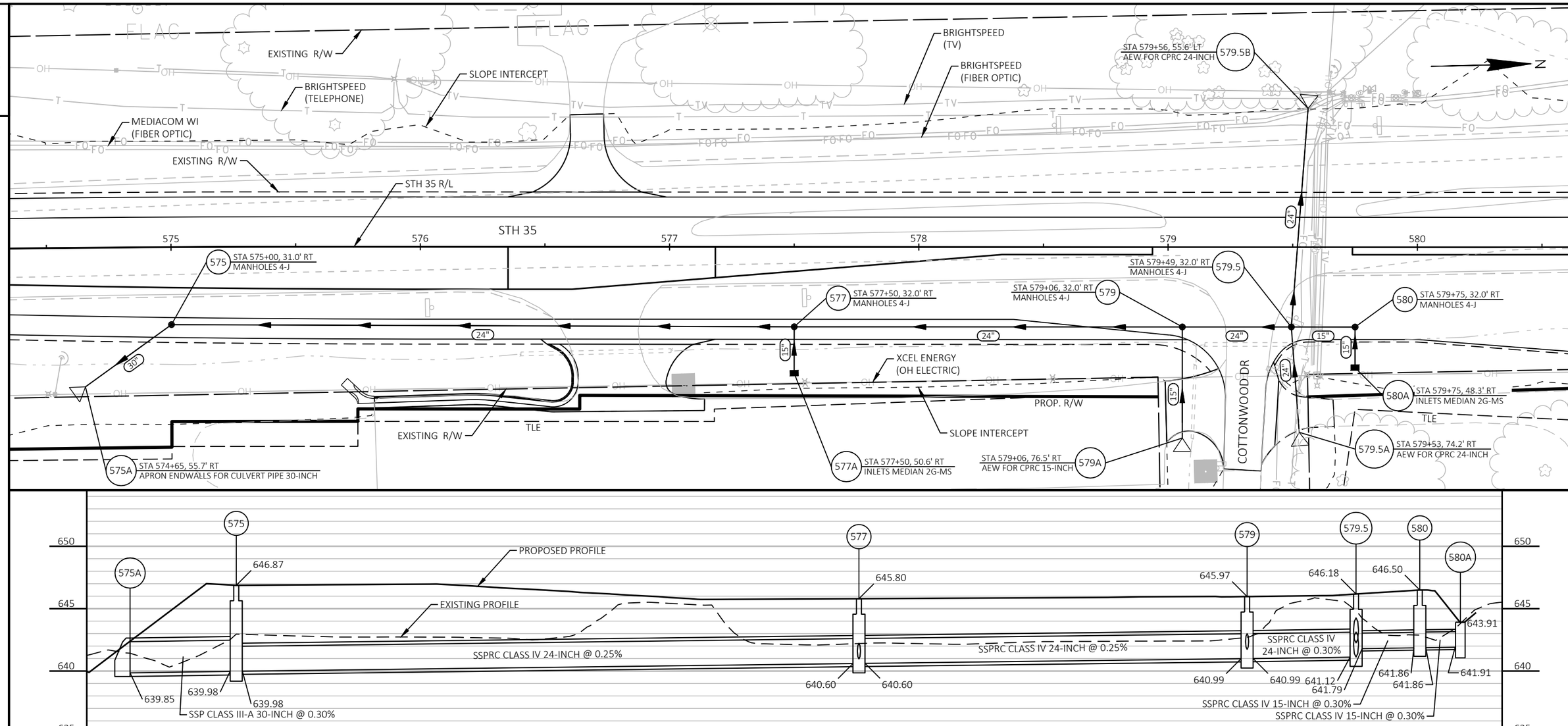

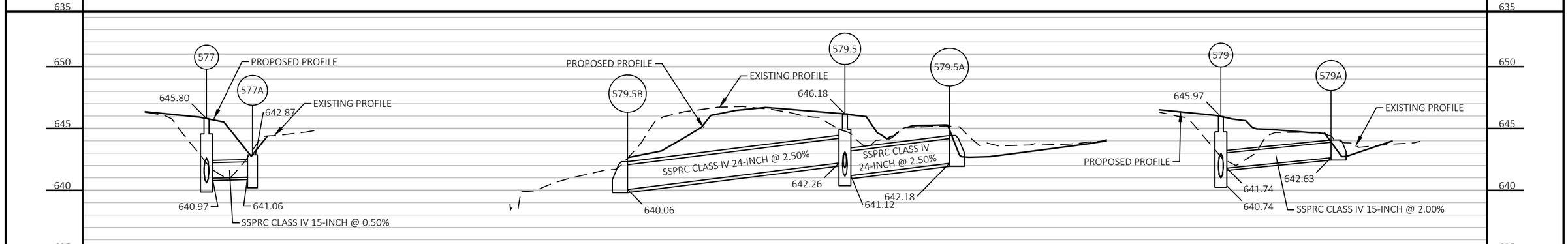

PROJECT NO: 5163-07-72	HWY: STH 35	COUNTY: LA CROSSE/VERNON	STORM SEWER & CULVERTS	SHEET 47	E

FILE NAME : O:\PDS\C3D\51630702\SHEETSPLAN\022501_SS.DWG
LAYOUT NAME - 01
PLOT DATE : 7/1/2025 4:09 PM
PLOT BY : ED OCHS
PLOT NAME :
PLOT SCALE : 1 IN:40 FT
WISDOT/CADDS SHEET 41

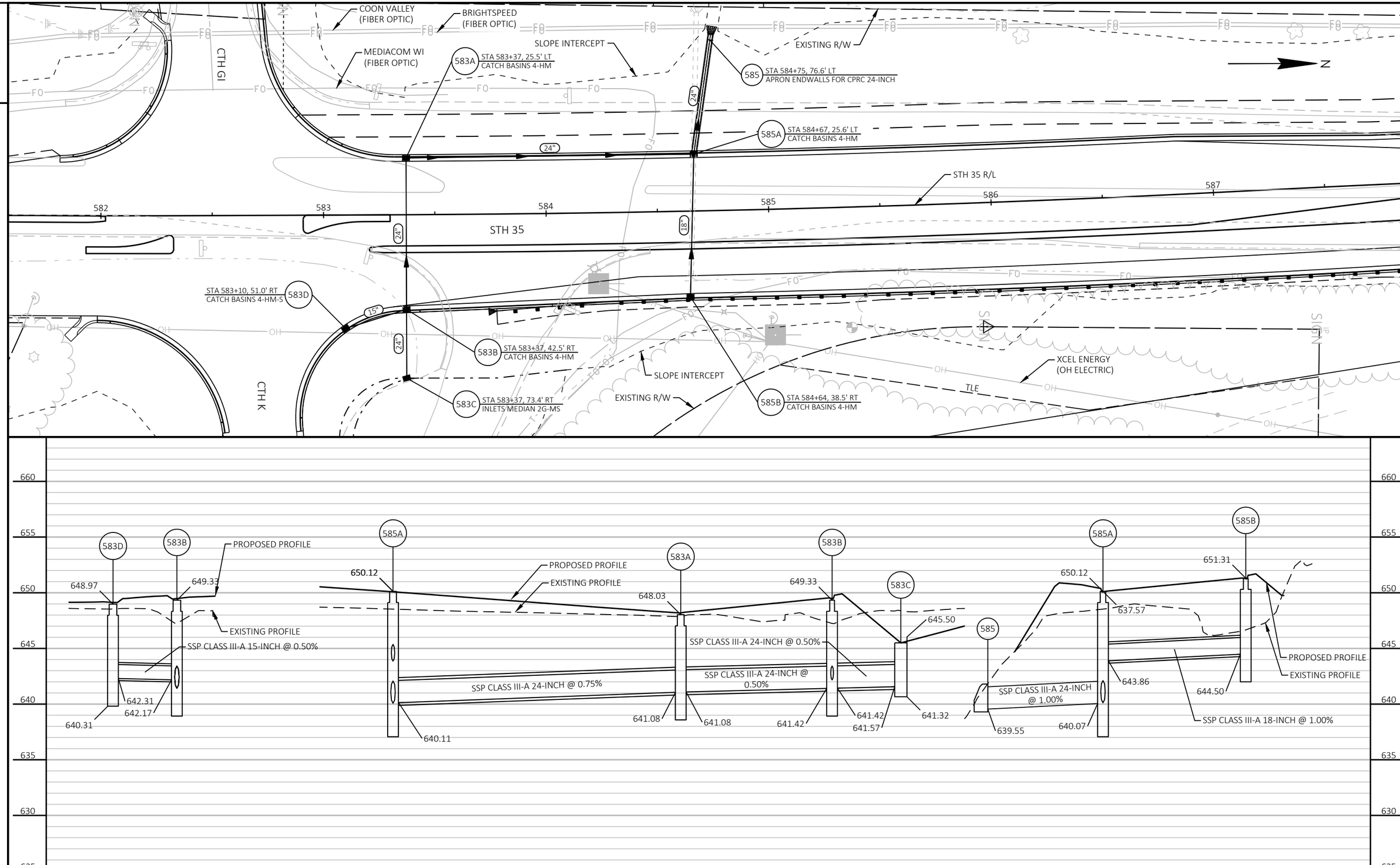

PROJECT NO: 5163-07-72	HWY: STH 35	COUNTY: LA CROSSE/VERNON	STORM SEWER & CULVERTS	SHEET 48	E

FILE NAME : O:\PDS\C3D\51630702\SHEETSPLAN\022501_SS.DWG
LAYOUT NAME - 02
PLOT DATE : 7/1/2025 4:09 PM
PLOT BY : ED OCHS
PLOT NAME :
PLOT SCALE : 1 IN:40 FT

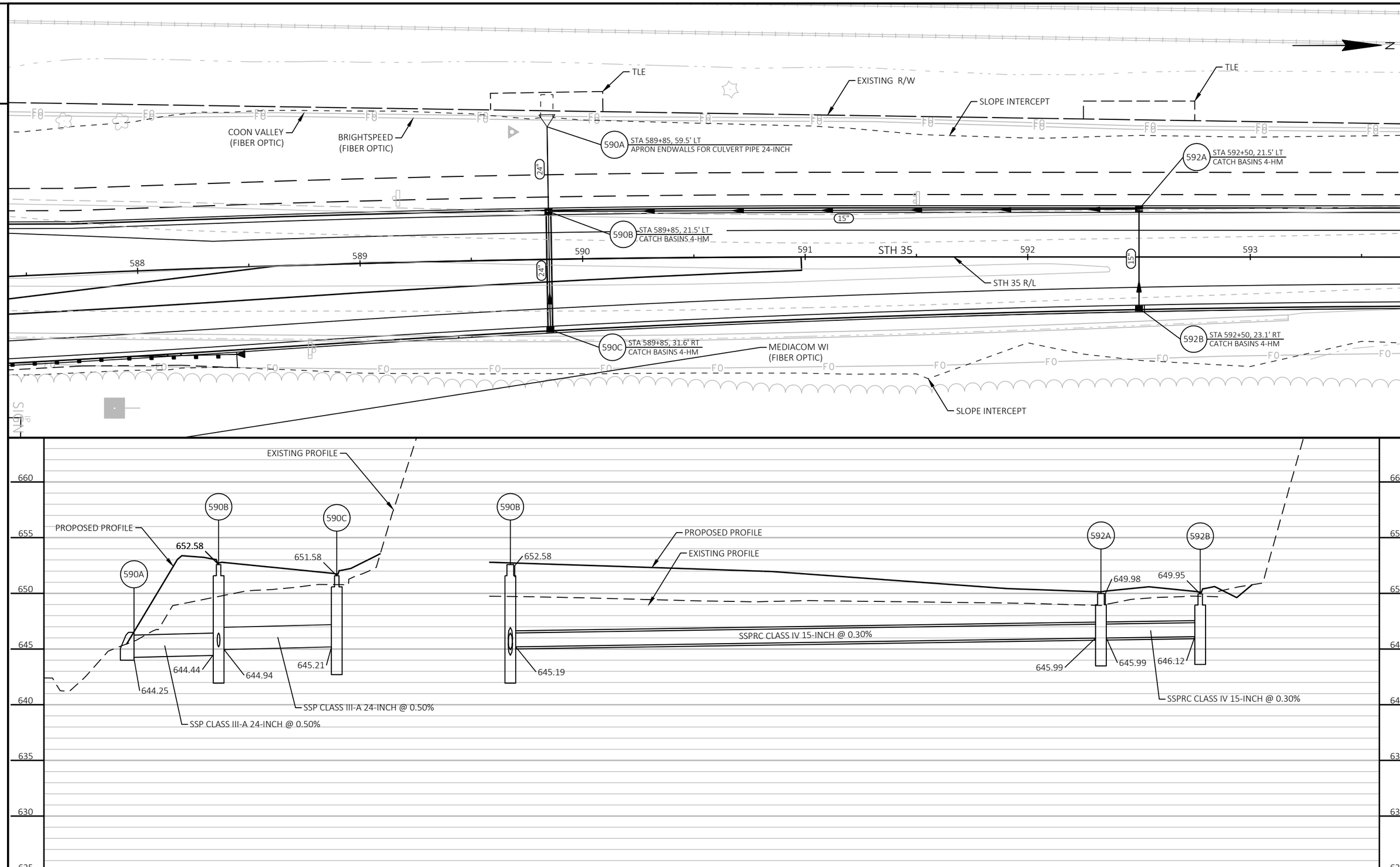

PROJECT NO: 5163-07-72	HWY: STH 35	COUNTY: LA CROSSE/VERNON	STORM SEWER & CULVERTS	SHEET 49	E

FILE NAME : O:\PDS\C3D\51630702\SHEETSPLAN\022501_SS.DWG
LAYOUT NAME - 03
PLOT DATE : 7/1/2025 4:09 PM
PLOT BY : ED OCHS
PLOT NAME :
PLOT SCALE : 1 IN:40 FT
WISDOT/CADDS SHEET 41

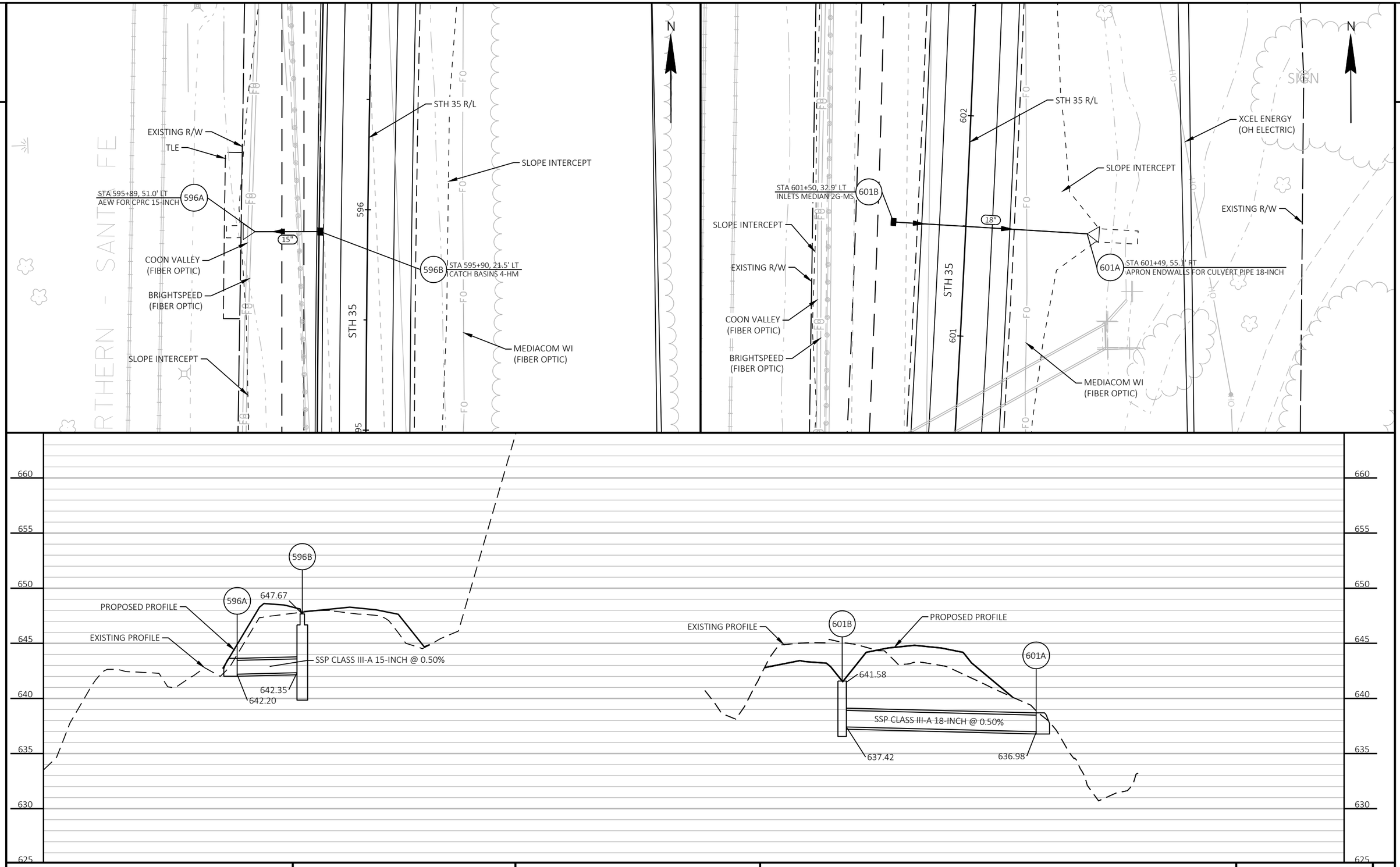

PROJECT NO: 5163-07-72	HWY: STH 35	COUNTY: LA CROSSE/VERNON	STORM SEWER & CULVERTS	SHEET 50	E

FILE NAME : O:\PDS\C3D\51630702\SHEETSPLAN\022501_SS.DWG
LAYOUT NAME - 04
PLOT DATE : 7/1/2025 4:10 PM
PLOT BY : ED OCHS
PLOT NAME :
PLOT SCALE : 1 IN:40 FT
WISDOT/CADDS SHEET 41

2

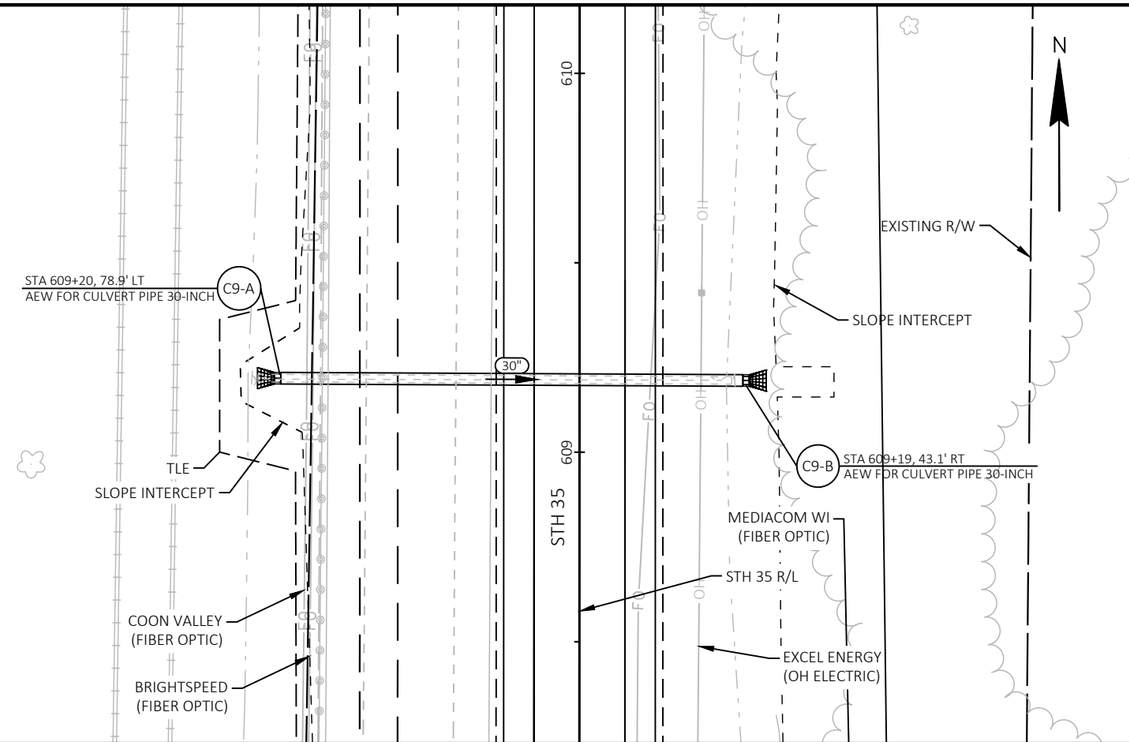

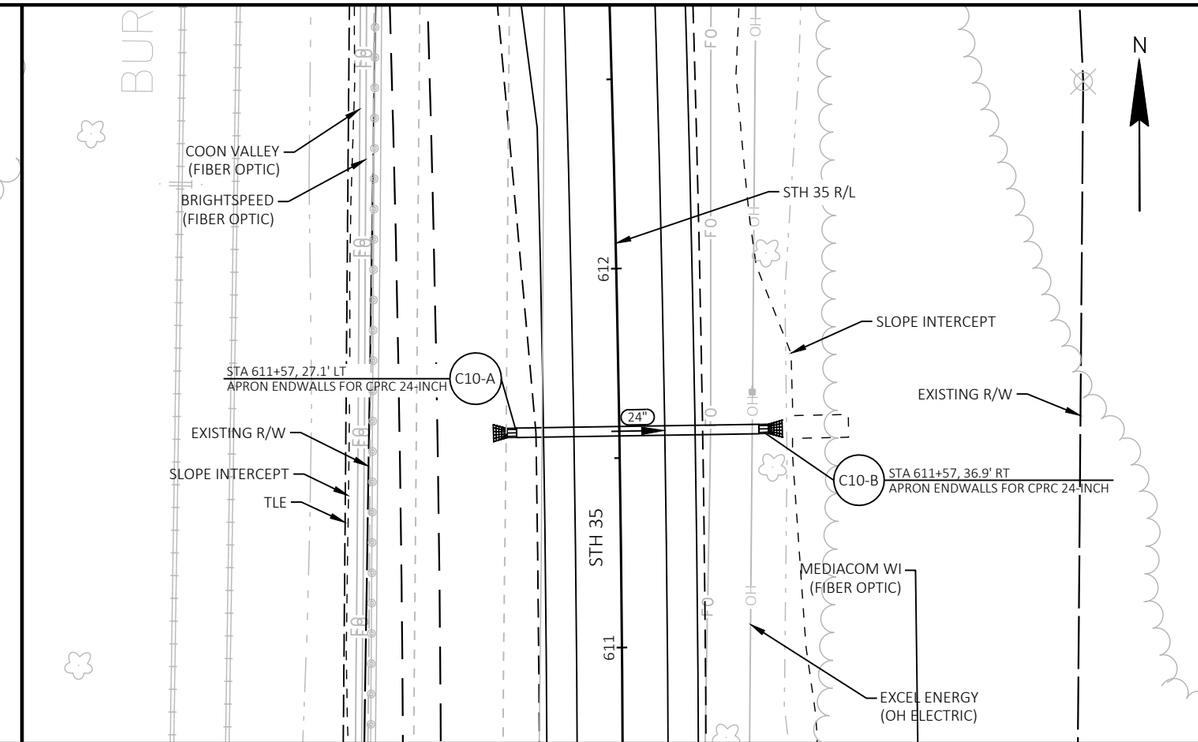

2

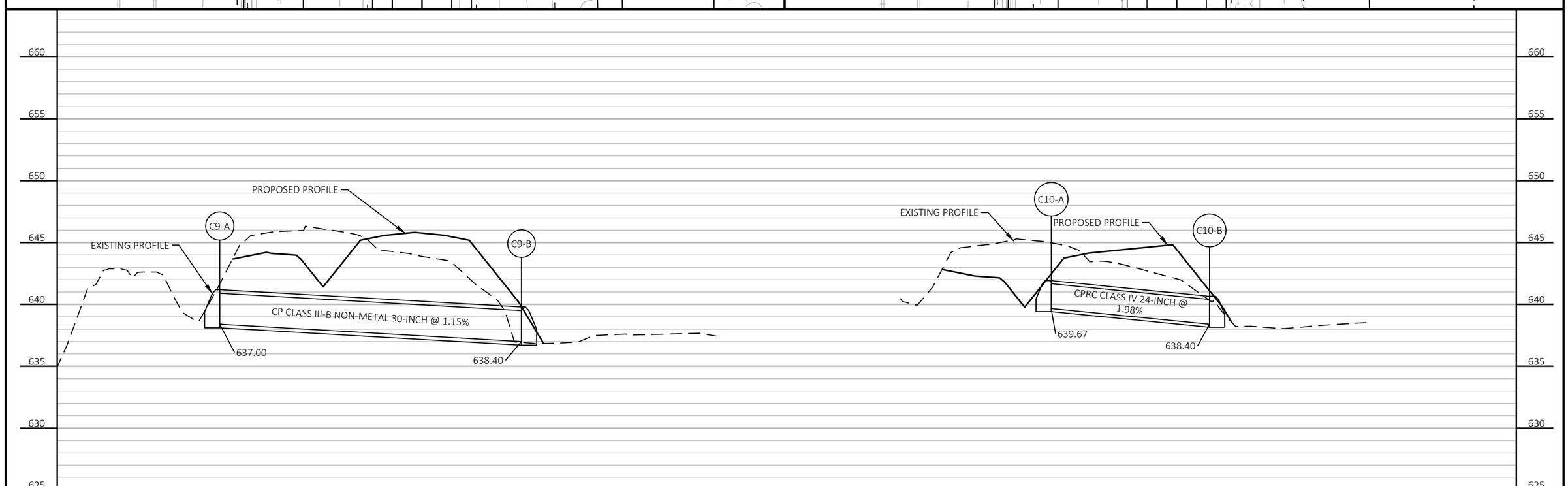

PROJECT NO:	HWY:	COUNTY:		SHEET 51	E

FILE NAME : O:\PDS\C3D\51630702\SHEETSPLAN\022501_SS.DWG
LAYOUT NAME - 05
PLOT DATE : 7/1/2025 4:10 PM
PLOT BY : ED OCHS
PLOT NAME :
PLOT SCALE : ##########

2

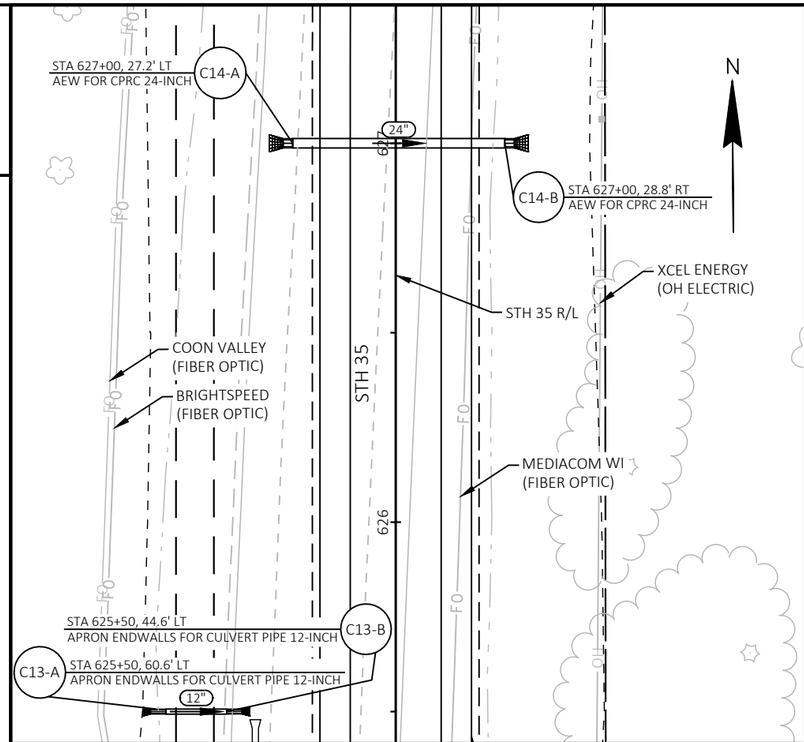

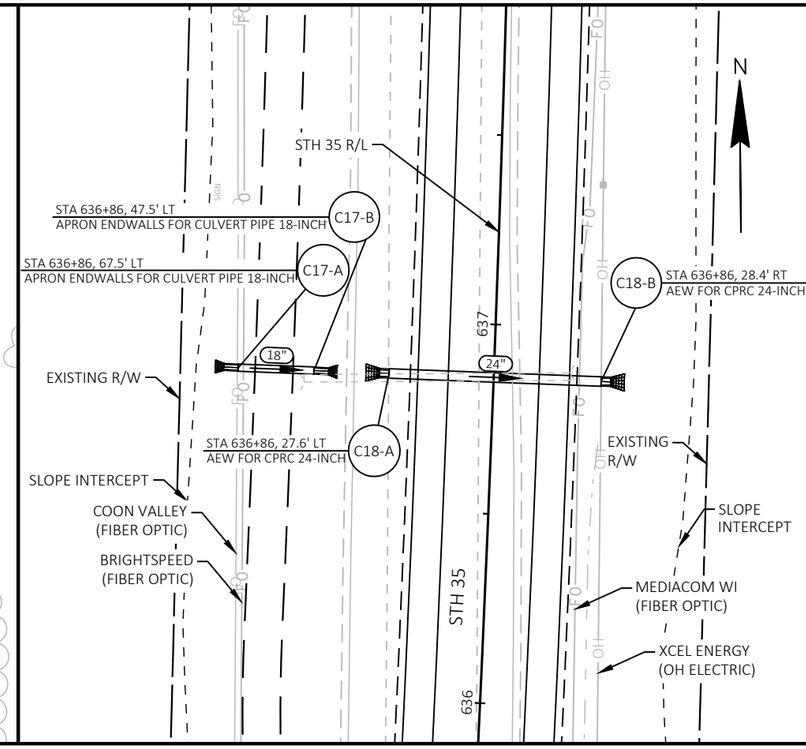

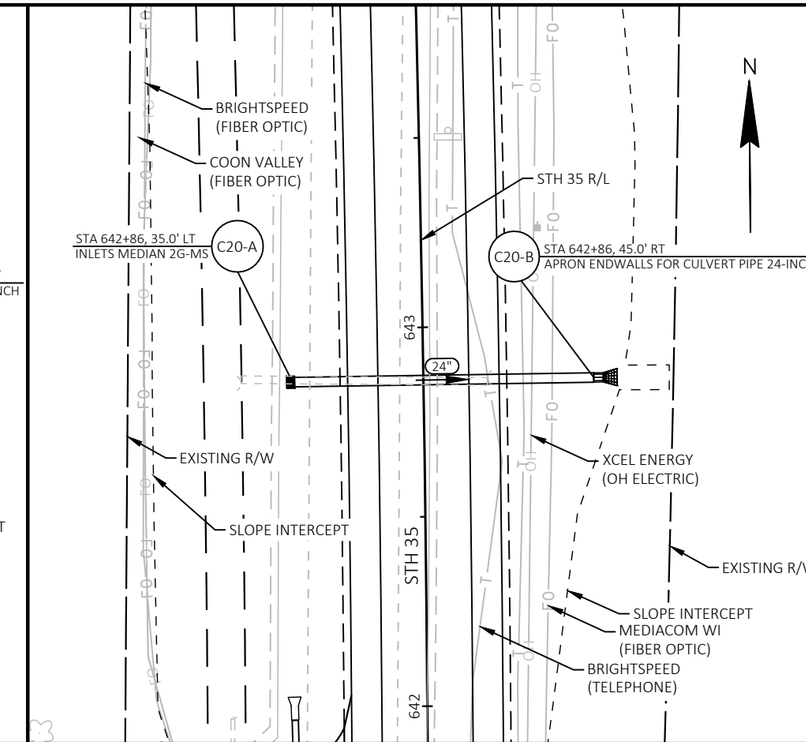

2

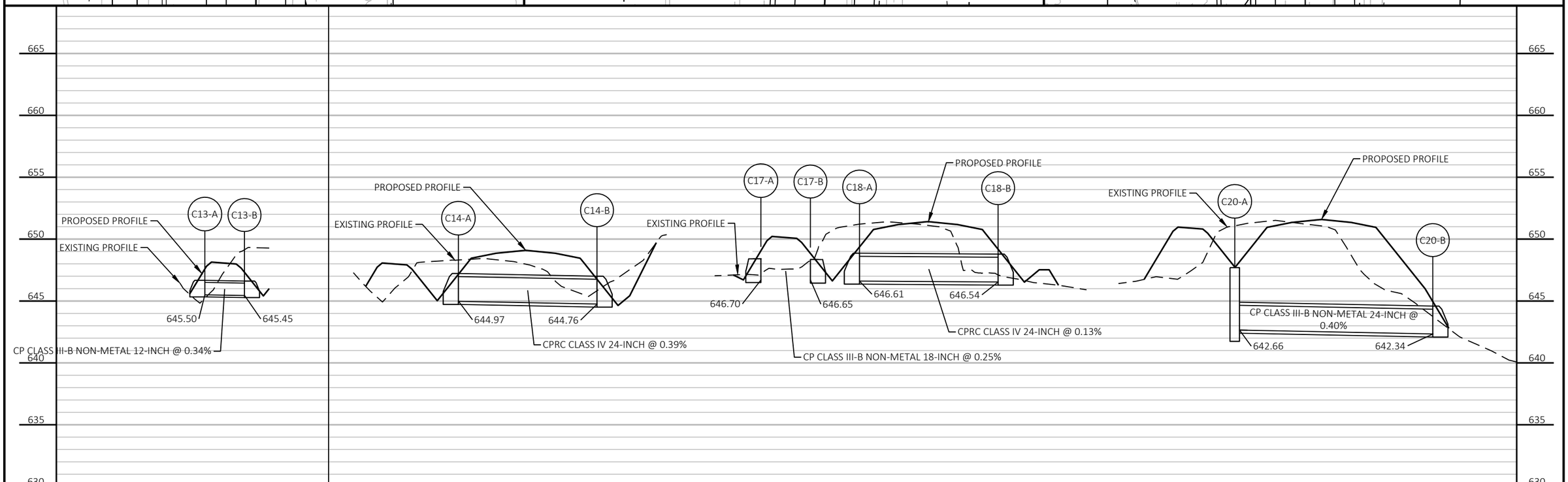

PROJECT NO: 5163-07-72	HWY: STH 35	COUNTY: LA CROSSE/VERNON	STORM SEWER & CULVERTS	SHEET 52	E

2

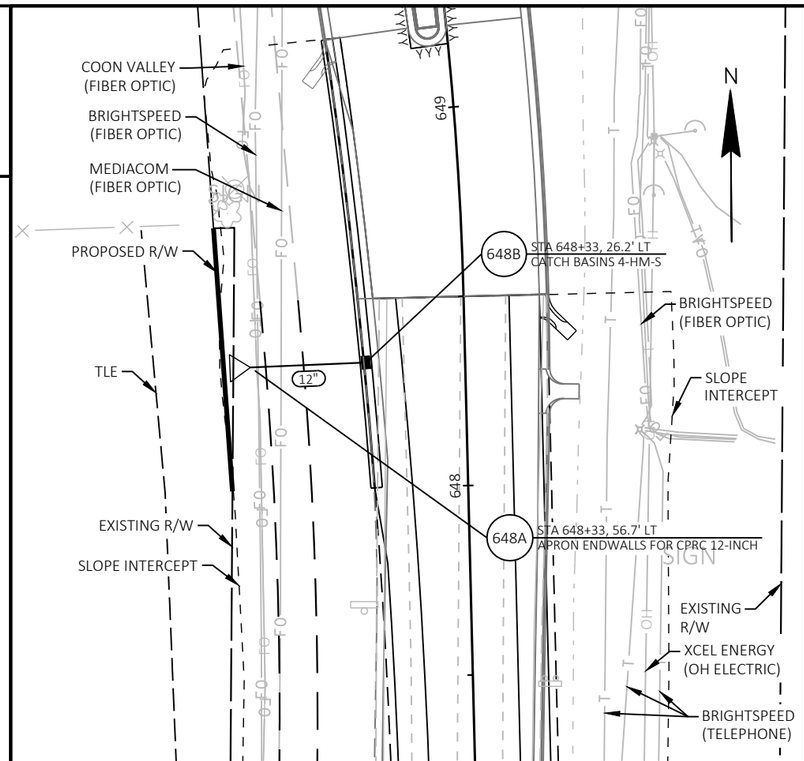

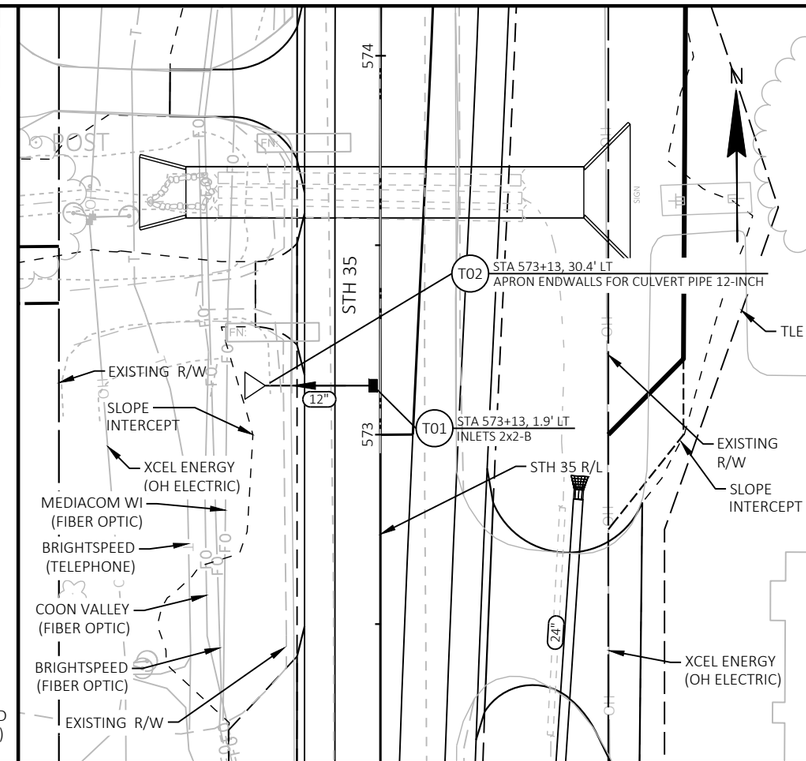

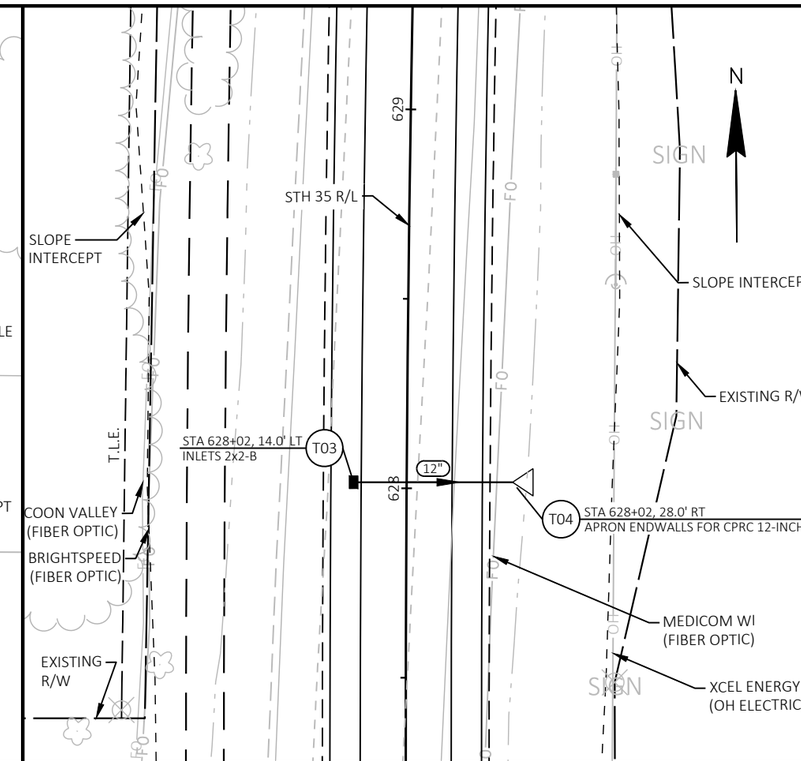

2

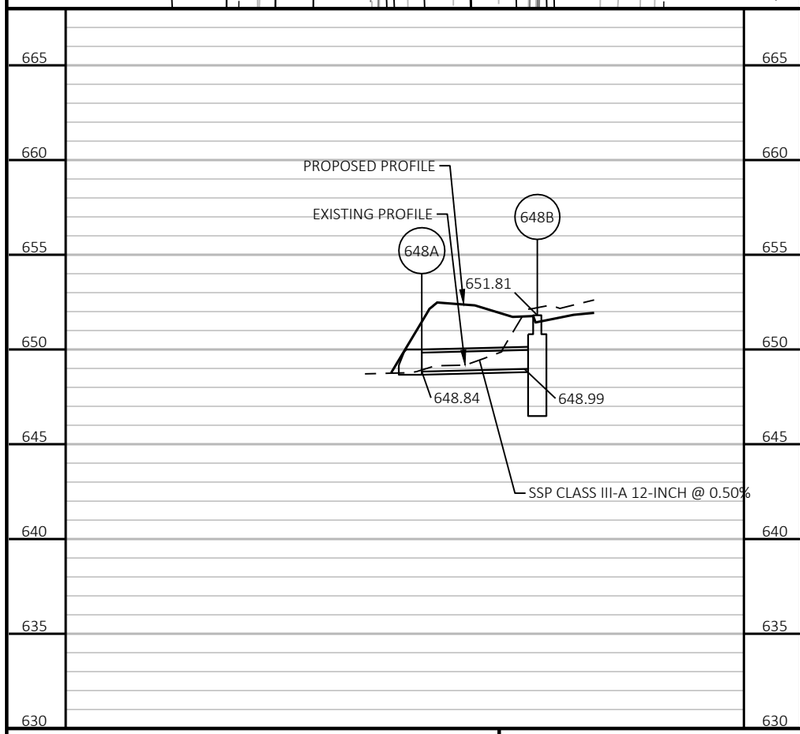

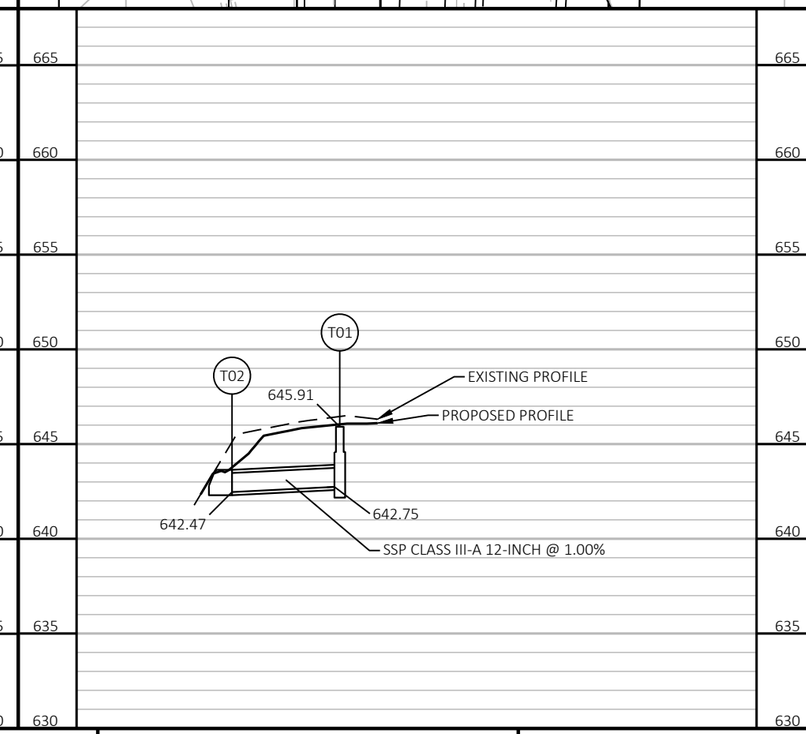

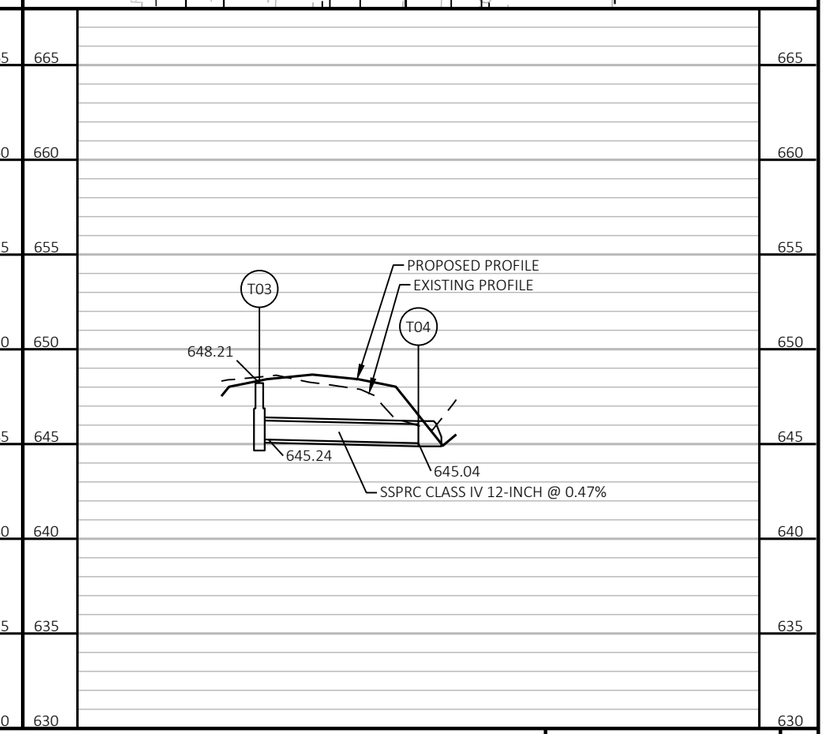

PROJECT NO: 5163-07-72	HWY: STH 35	COUNTY: LA CROSSE/VERNON	STORM SEWER & CULVERTS	SHEET 53	E

2

PAVEMENT MARKING LEGEND

- PM1 MARKING LINE GROOVED WET REF EPOXY 6-INCH (YELLOW)
- PM3 MARKING LINE GROOVED WET REF EPOXY 6-INCH (YELLOW)(12.5 FT LINE 37.5 FT SKIP)
- PM4 MARKING LINE GROOVED WET REF EPOXY 6-INCH (WHITE)
- PM5 MARKING LINE GROOVED WET REF EPOXY 6-INCH (WHITE)(3 FT LINE 9 FT SKIP)
- PM7 MARKING LINE GROOVED WET REF EPOXY 10-INCH (WHITE)
- PM8 MARKING DIAGONAL EPOXY 12-INCH (YELLOW)(25 FT SPACING C-C)
- PM9 MARKING STOP LINE EPOXY 18-INCH (WHITE)
- PM10 MARKING CURB EPOXY (YELLOW)
- PM11 MARKING ARROW EPOXY (WHITE)
- PM12 MARKING WORD EPOXY (WHITE)
- PM13 MARKING CORRUGATED MEDIAN EPOXY (YELLOW)
- PM14 MARKING SYMBOL EPOXY (WHITE)
- PM15 PM15 to MARKING LINE GROOVED WET REF EPOXY 6-INCH (WHITE) (3FT LINE 9 FT SKIP)
- PM16 MARKING EPOXY 6-INCH (WHITE)
- PM17 MARKING LINE EPOXY 6-INCH (YELLOW)(12.5 FT LINE 37.5 FT SKIP)
- PM18 MARKING ISLAND NOSE EPOXY (YELLOW)
- PM19 MARKING STOP LINE EPOXY 24-INCH (WHITE)
- PM20 MARKING EPOXY 4-INCH (WHITE)
- PM21 MARKING EPOXY 4-INCH (YELLOW)

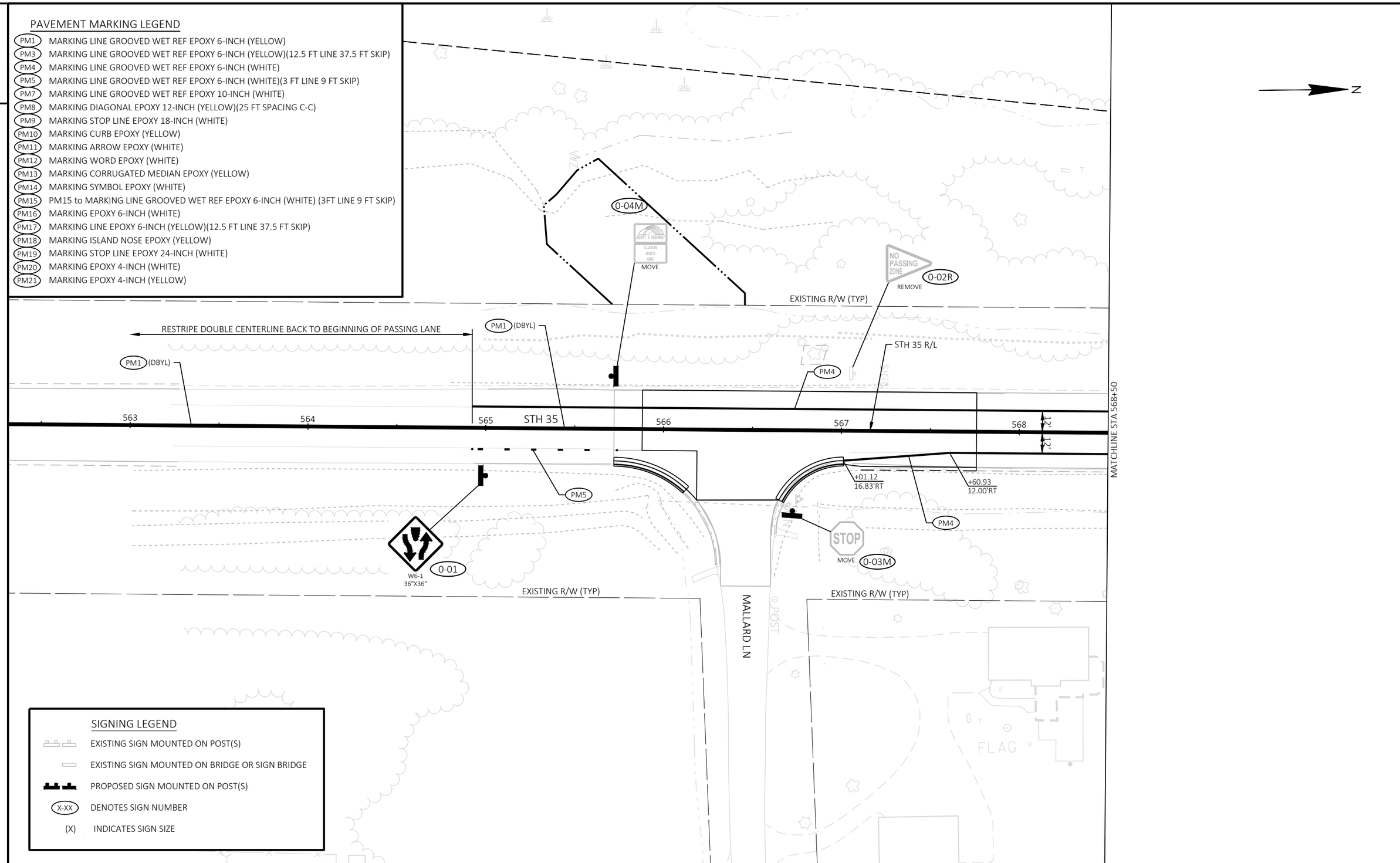

SIGNING LEGEND

- EXISTING SIGN MOUNTED ON POST(S)
- EXISTING SIGN MOUNTED ON BRIDGE OR SIGN BRIDGE
- PROPOSED SIGN MOUNTED ON POST(S)
- X-XX DENOTES SIGN NUMBER
- (X) INDICATES SIGN SIZE

2

PROJECT NO: 5163-07-72	HWY: STH 35	COUNTY: LA CROSSE/VERNON	SIGNING & PAVEMENT MARKING	SHEET 54	E

2

PAVEMENT MARKING LEGEND

- PM1 MARKING LINE GROOVED WET REF EPOXY 6-INCH (YELLOW)
- PM3 MARKING LINE GROOVED WET REF EPOXY 6-INCH (YELLOW)(12.5 FT LINE 37.5 FT SKIP)
- PM4 MARKING LINE GROOVED WET REF EPOXY 6-INCH (WHITE)
- PM5 MARKING LINE GROOVED WET REF EPOXY 6-INCH (WHITE)(3 FT LINE 9 FT SKIP)
- PM7 MARKING LINE GROOVED WET REF EPOXY 10-INCH (WHITE)
- PM8 MARKING DIAGONAL EPOXY 12-INCH (YELLOW)(25 FT SPACING C-C)
- PM9 MARKING STOP LINE EPOXY 18-INCH (WHITE)
- PM10 MARKING CURB EPOXY (YELLOW)
- PM11 MARKING ARROW EPOXY (WHITE)
- PM12 MARKING WORD EPOXY (WHITE)
- PM13 MARKING CORRUGATED MEDIAN EPOXY (YELLOW)
- PM14 MARKING SYMBOL EPOXY (WHITE)
- PM15 PM15 to MARKING LINE GROOVED WET REF EPOXY 6-INCH (WHITE) (3FT LINE 9 FT SKIP)
- PM16 MARKING EPOXY 6-INCH (WHITE)
- PM17 MARKING LINE EPOXY 6-INCH (YELLOW)(12.5 FT LINE 37.5 FT SKIP)
- PM18 MARKING ISLAND NOSE EPOXY (YELLOW)
- PM19 MARKING STOP LINE EPOXY 24-INCH (WHITE)
- PM20 MARKING EPOXY 4-INCH (WHITE)
- PM21 MARKING EPOXY 4-INCH (YELLOW)

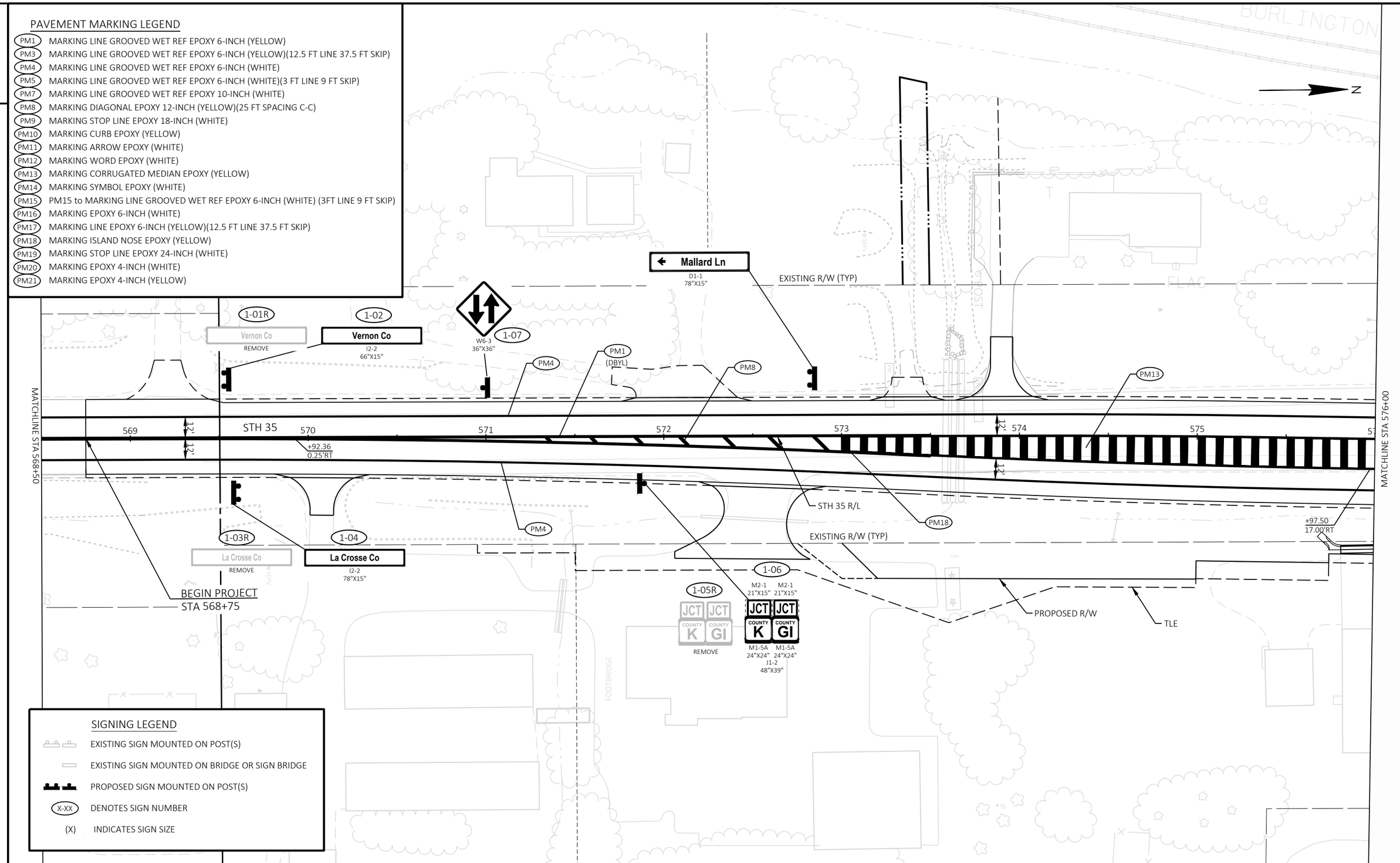

SIGNING LEGEND

- EXISTING SIGN MOUNTED ON POST(S)
- EXISTING SIGN MOUNTED ON BRIDGE OR SIGN BRIDGE
- PROPOSED SIGN MOUNTED ON POST(S)
- X-XX DENOTES SIGN NUMBER
- (X) INDICATES SIGN SIZE

2

PROJECT NO: 5163-07-72	HWY: STH 35	COUNTY: LA CROSSE/VERNON	SIGNING & PAVEMENT MARKING	SHEET 55	E

2

PAVEMENT MARKING LEGEND

- PM1 MARKING LINE GROOVED WET REF EPOXY 6-INCH (YELLOW)
- PM3 MARKING LINE GROOVED WET REF EPOXY 6-INCH (YELLOW)(12.5 FT LINE 37.5 FT SKIP)
- PM4 MARKING LINE GROOVED WET REF EPOXY 6-INCH (WHITE)
- PM5 MARKING LINE GROOVED WET REF EPOXY 6-INCH (WHITE)(3 FT LINE 9 FT SKIP)
- PM7 MARKING LINE GROOVED WET REF EPOXY 10-INCH (WHITE)
- PM8 MARKING DIAGONAL EPOXY 12-INCH (YELLOW)(25 FT SPACING C-C)
- PM9 MARKING STOP LINE EPOXY 18-INCH (WHITE)
- PM10 MARKING CURB EPOXY (YELLOW)
- PM11 MARKING ARROW EPOXY (WHITE)
- PM12 MARKING WORD EPOXY (WHITE)
- PM13 MARKING CORRUGATED MEDIAN EPOXY (YELLOW)
- PM14 MARKING SYMBOL EPOXY (WHITE)
- PM15 PM15 to MARKING LINE GROOVED WET REF EPOXY 6-INCH (WHITE) (3FT LINE 9 FT SKIP)
- PM16 MARKING EPOXY 6-INCH (WHITE)
- PM17 MARKING LINE EPOXY 6-INCH (YELLOW)(12.5 FT LINE 37.5 FT SKIP)
- PM18 MARKING ISLAND NOSE EPOXY (YELLOW)
- PM19 MARKING STOP LINE EPOXY 24-INCH (WHITE)
- PM20 MARKING EPOXY 4-INCH (WHITE)
- PM21 MARKING EPOXY 4-INCH (YELLOW)

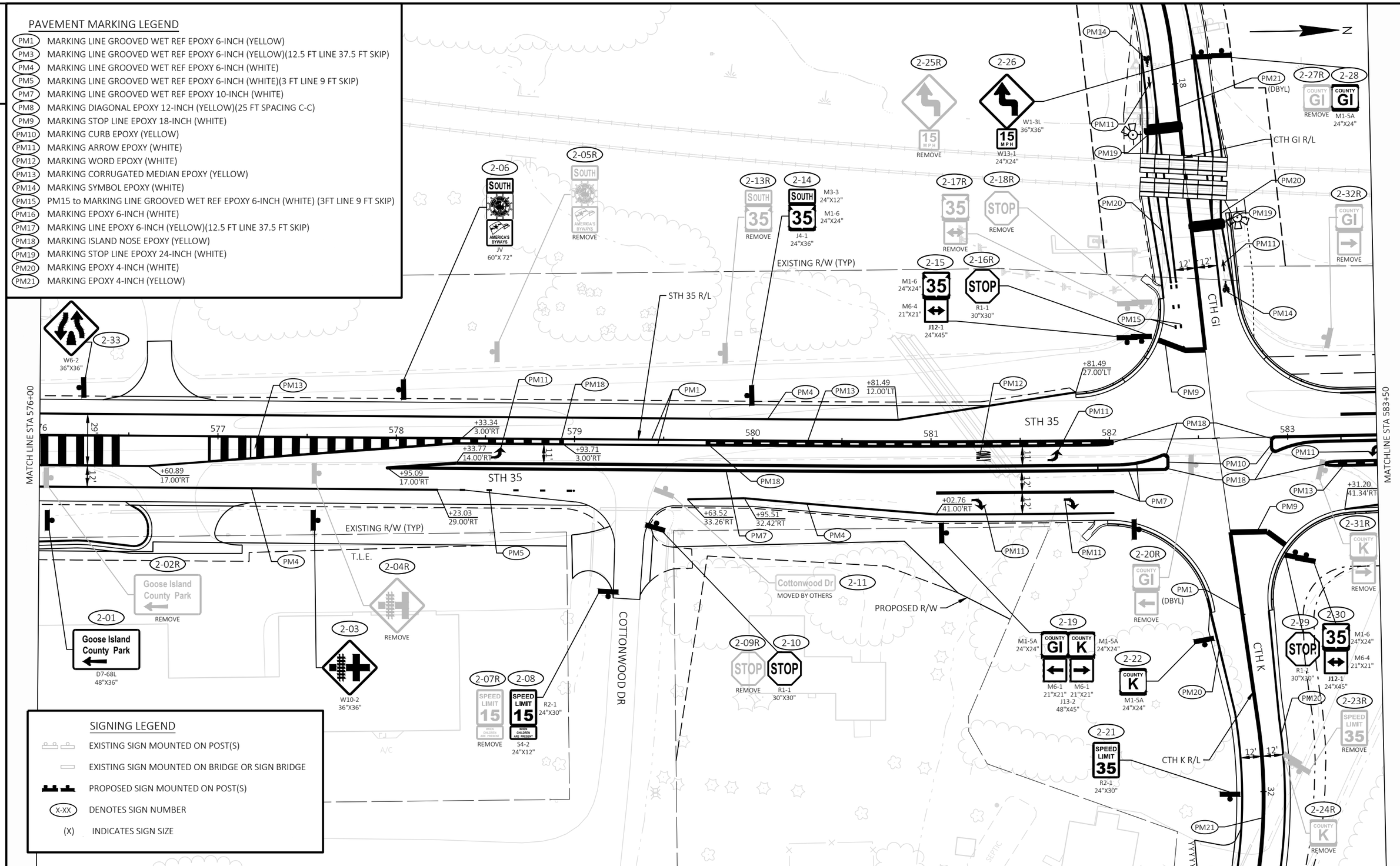

SIGNING LEGEND

- EXISTING SIGN MOUNTED ON POST(S)
- EXISTING SIGN MOUNTED ON BRIDGE OR SIGN BRIDGE
- PROPOSED SIGN MOUNTED ON POST(S)
- X-XX DENOTES SIGN NUMBER
- (X) INDICATES SIGN SIZE

2

PROJECT NO: 5163-07-72	HWY: STH 35	COUNTY: LA CROSSE/VERNON	SIGNING & PAVEMENT MARKING	SHEET 56	E

FILE NAME : O:\PDS\C3D\51630702\SHEETSPLAN\023201_PS.DWG
LAYOUT NAME - 02
PLOT DATE : 7/1/2025 4:31 PM
PLOT BY : ED OCHS
PLOT NAME :
PLOT SCALE : 1 IN:50 FT
WISDOT/CADDS SHEET 42

2

PAVEMENT MARKING LEGEND

- PM1 MARKING LINE GROOVED WET REF EPOXY 6-INCH (YELLOW)
- PM3 MARKING LINE GROOVED WET REF EPOXY 6-INCH (YELLOW)(12.5 FT LINE 37.5 FT SKIP)
- PM4 MARKING LINE GROOVED WET REF EPOXY 6-INCH (WHITE)
- PM5 MARKING LINE GROOVED WET REF EPOXY 6-INCH (WHITE)(3 FT LINE 9 FT SKIP)
- PM7 MARKING LINE GROOVED WET REF EPOXY 10-INCH (WHITE)
- PM8 MARKING DIAGONAL EPOXY 12-INCH (YELLOW)(25 FT SPACING C-C)
- PM9 MARKING STOP LINE EPOXY 18-INCH (WHITE)
- PM10 MARKING CURB EPOXY (YELLOW)
- PM11 MARKING ARROW EPOXY (WHITE)
- PM12 MARKING WORD EPOXY (WHITE)
- PM13 MARKING CORRUGATED MEDIAN EPOXY (YELLOW)
- PM14 MARKING SYMBOL EPOXY (WHITE)
- PM15 PM15 to MARKING LINE GROOVED WET REF EPOXY 6-INCH (WHITE) (3FT LINE 9 FT SKIP)
- PM16 MARKING EPOXY 6-INCH (WHITE)
- PM17 MARKING LINE EPOXY 6-INCH (YELLOW)(12.5 FT LINE 37.5 FT SKIP)
- PM18 MARKING ISLAND NOSE EPOXY (YELLOW)
- PM19 MARKING STOP LINE EPOXY 24-INCH (WHITE)
- PM20 MARKING EPOXY 4-INCH (WHITE)
- PM21 MARKING EPOXY 4-INCH (YELLOW)

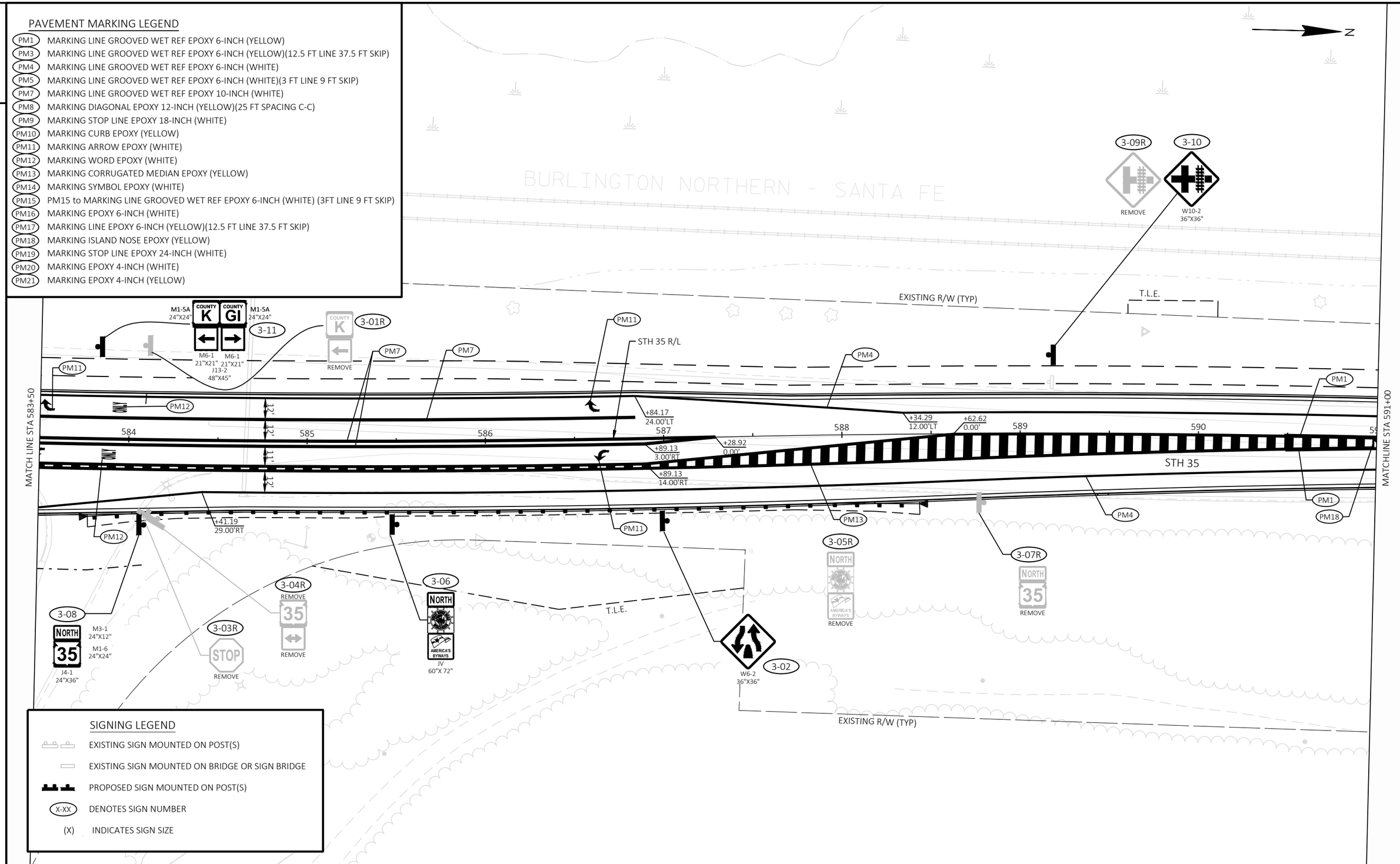

SIGNING LEGEND

- EXISTING SIGN MOUNTED ON POST(S)
- EXISTING SIGN MOUNTED ON BRIDGE OR SIGN BRIDGE
- PROPOSED SIGN MOUNTED ON POST(S)
- X-XX DENOTES SIGN NUMBER
- (X) INDICATES SIGN SIZE

2

PROJECT NO: 5163-07-72	HWY: STH 35	COUNTY: LA CROSSE/VERNON	SIGNING & PAVEMENT MARKING	SHEET 57	E

2

PAVEMENT MARKING LEGEND

- PM1 MARKING LINE GROOVED WET REF EPOXY 6-INCH (YELLOW)
- PM3 MARKING LINE GROOVED WET REF EPOXY 6-INCH (YELLOW)(12.5 FT LINE 37.5 FT SKIP)
- PM4 MARKING LINE GROOVED WET REF EPOXY 6-INCH (WHITE)
- PM5 MARKING LINE GROOVED WET REF EPOXY 6-INCH (WHITE)(3 FT LINE 9 FT SKIP)
- PM7 MARKING LINE GROOVED WET REF EPOXY 10-INCH (WHITE)
- PM8 MARKING DIAGONAL EPOXY 12-INCH (YELLOW)(25 FT SPACING C-C)
- PM9 MARKING STOP LINE EPOXY 18-INCH (WHITE)
- PM10 MARKING CURB EPOXY (YELLOW)
- PM11 MARKING ARROW EPOXY (WHITE)
- PM12 MARKING WORD EPOXY (WHITE)
- PM13 MARKING CORRUGATED MEDIAN EPOXY (YELLOW)
- PM14 MARKING SYMBOL EPOXY (WHITE)
- PM15 PM15 to MARKING LINE GROOVED WET REF EPOXY 6-INCH (WHITE) (3FT LINE 9 FT SKIP)
- PM16 MARKING EPOXY 6-INCH (WHITE)
- PM17 MARKING LINE EPOXY 6-INCH (YELLOW)(12.5 FT LINE 37.5 FT SKIP)
- PM18 MARKING ISLAND NOSE EPOXY (YELLOW)
- PM19 MARKING STOP LINE EPOXY 24-INCH (WHITE)
- PM20 MARKING EPOXY 4-INCH (WHITE)
- PM21 MARKING EPOXY 4-INCH (YELLOW)

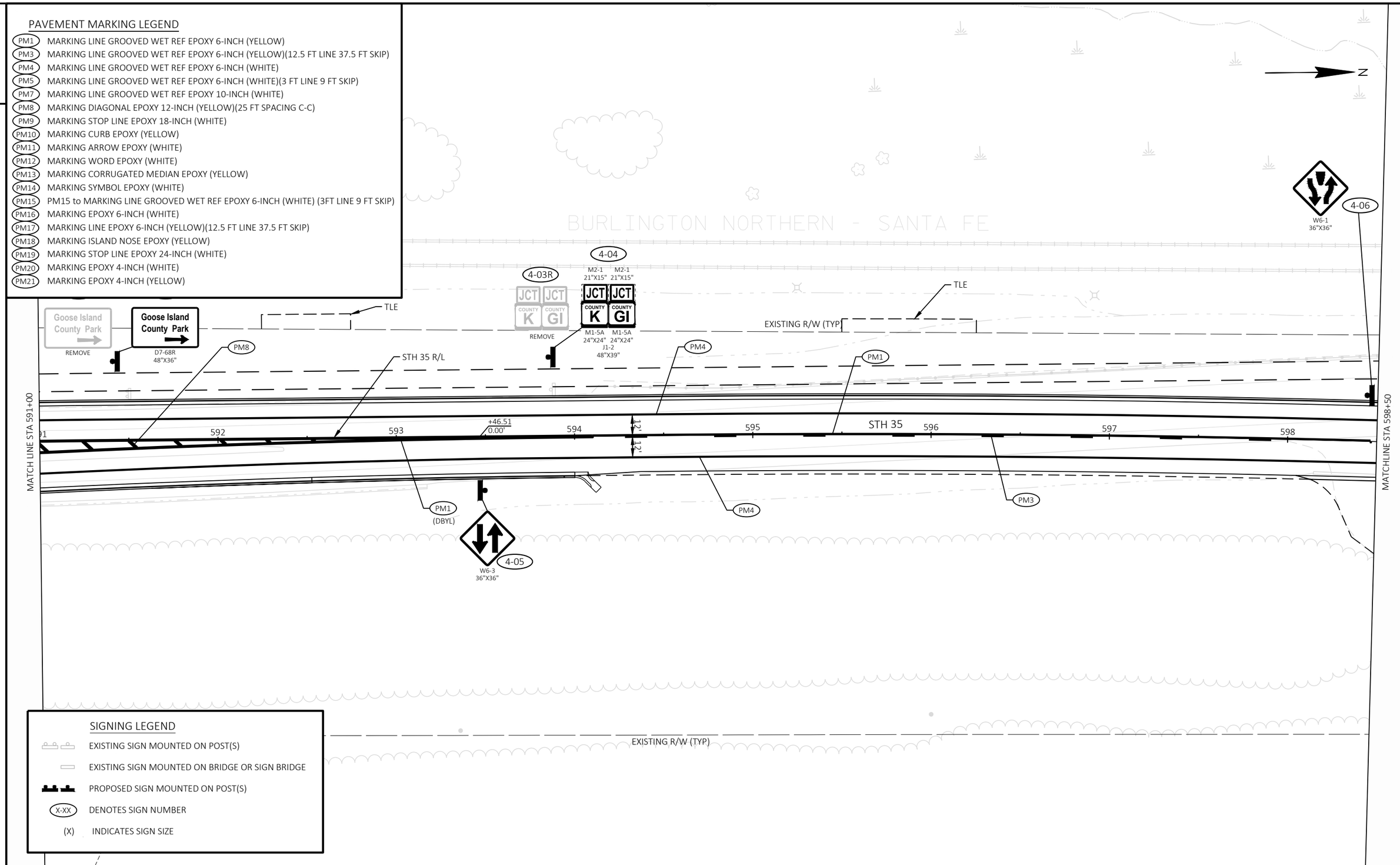

SIGNING LEGEND

- EXISTING SIGN MOUNTED ON POST(S)
- EXISTING SIGN MOUNTED ON BRIDGE OR SIGN BRIDGE
- PROPOSED SIGN MOUNTED ON POST(S)
- X-XX DENOTES SIGN NUMBER
- (X) INDICATES SIGN SIZE

2

PROJECT NO: 5163-07-72	HWY: STH 35	COUNTY: LA CROSSE/VERNON	SIGNING & PAVEMENT MARKING	SHEET 58	E

FILE NAME : O:\PDS\C3D\51630702\SHEETSPLAN\023201_PS.DWG
LAYOUT NAME - 04
PLOT DATE : 7/1/2025 4:31 PM
PLOT BY : ED OCHS
PLOT NAME :
PLOT SCALE : 1 IN:50 FT
WISDOT/CADDS SHEET 42

2

PAVEMENT MARKING LEGEND

- PM1 MARKING LINE GROOVED WET REF EPOXY 6-INCH (YELLOW)
- PM3 MARKING LINE GROOVED WET REF EPOXY 6-INCH (YELLOW)(12.5 FT LINE 37.5 FT SKIP)
- PM4 MARKING LINE GROOVED WET REF EPOXY 6-INCH (WHITE)
- PM5 MARKING LINE GROOVED WET REF EPOXY 6-INCH (WHITE)(3 FT LINE 9 FT SKIP)
- PM7 MARKING LINE GROOVED WET REF EPOXY 10-INCH (WHITE)
- PM8 MARKING DIAGONAL EPOXY 12-INCH (YELLOW)(25 FT SPACING C-C)
- PM9 MARKING STOP LINE EPOXY 18-INCH (WHITE)
- PM10 MARKING CURB EPOXY (YELLOW)
- PM11 MARKING ARROW EPOXY (WHITE)
- PM12 MARKING WORD EPOXY (WHITE)
- PM13 MARKING CORRUGATED MEDIAN EPOXY (YELLOW)
- PM14 MARKING SYMBOL EPOXY (WHITE)
- PM15 PM15 to MARKING LINE GROOVED WET REF EPOXY 6-INCH (WHITE) (3FT LINE 9 FT SKIP)
- PM16 MARKING EPOXY 6-INCH (WHITE)
- PM17 MARKING LINE EPOXY 6-INCH (YELLOW)(12.5 FT LINE 37.5 FT SKIP)
- PM18 MARKING ISLAND NOSE EPOXY (YELLOW)
- PM19 MARKING STOP LINE EPOXY 24-INCH (WHITE)
- PM20 MARKING EPOXY 4-INCH (WHITE)
- PM21 MARKING EPOXY 4-INCH (YELLOW)

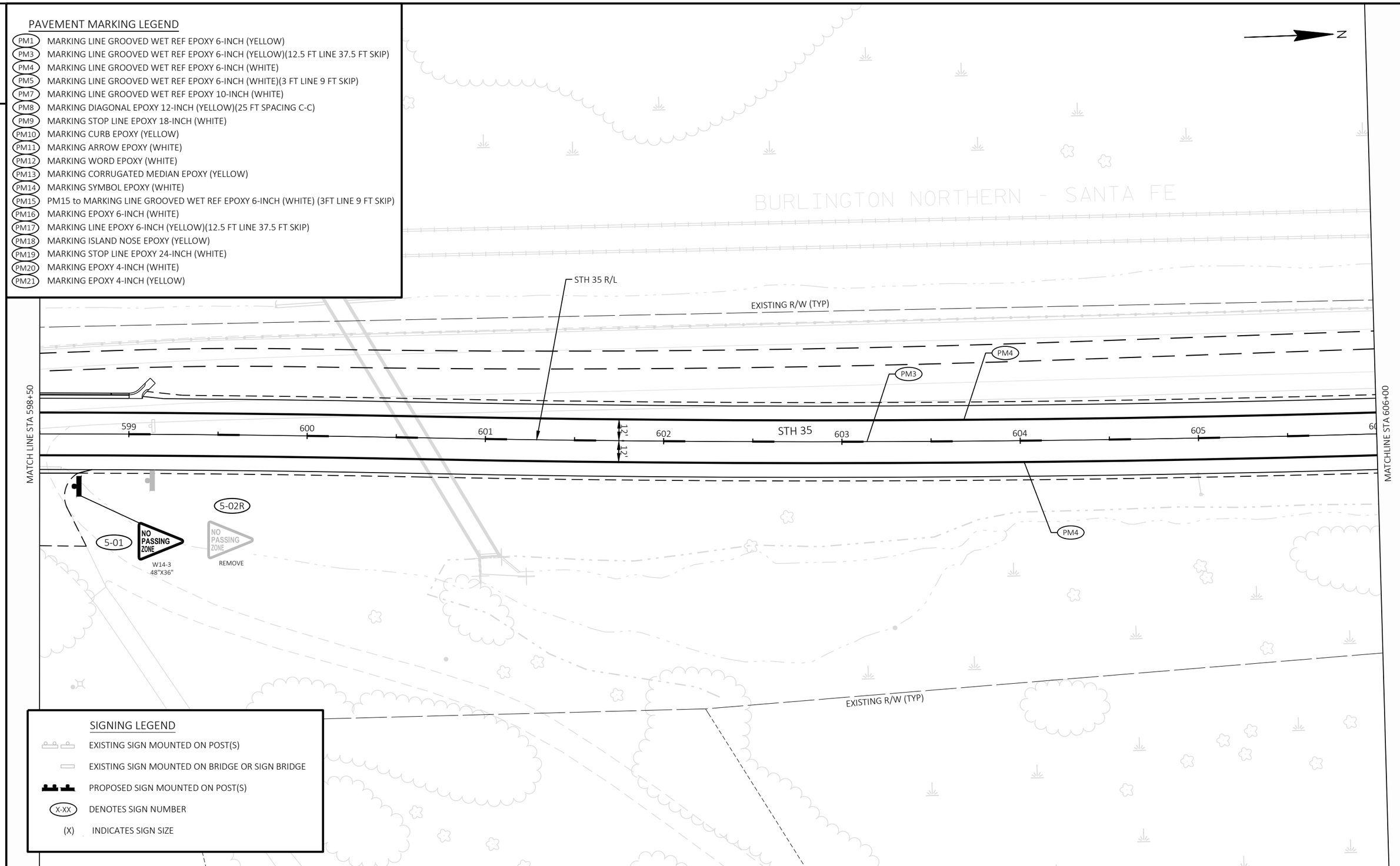

SIGNING LEGEND

- EXISTING SIGN MOUNTED ON POST(S)
- EXISTING SIGN MOUNTED ON BRIDGE OR SIGN BRIDGE
- PROPOSED SIGN MOUNTED ON POST(S)
- X-XX DENOTES SIGN NUMBER
- (X) INDICATES SIGN SIZE

2

PROJECT NO: 5163-07-72	HWY: STH 35	COUNTY: LA CROSSE/VERNON	SIGNING & PAVEMENT MARKING	SHEET 59	E

FILE NAME : O:\PDS\C3D\51630702\SHEETSPLAN\023201_PS.DWG
LAYOUT NAME - 05
PLOT DATE : 7/1/2025 4:31 PM
PLOT BY : ED OCHS
PLOT NAME :
PLOT SCALE : 1 IN:50 FT

2

PAVEMENT MARKING LEGEND

- PM1 MARKING LINE GROOVED WET REF EPOXY 6-INCH (YELLOW)
- PM3 MARKING LINE GROOVED WET REF EPOXY 6-INCH (YELLOW)(12.5 FT LINE 37.5 FT SKIP)
- PM4 MARKING LINE GROOVED WET REF EPOXY 6-INCH (WHITE)
- PM5 MARKING LINE GROOVED WET REF EPOXY 6-INCH (WHITE)(3 FT LINE 9 FT SKIP)
- PM7 MARKING LINE GROOVED WET REF EPOXY 10-INCH (WHITE)
- PM8 MARKING DIAGONAL EPOXY 12-INCH (YELLOW)(25 FT SPACING C-C)
- PM9 MARKING STOP LINE EPOXY 18-INCH (WHITE)
- PM10 MARKING CURB EPOXY (YELLOW)
- PM11 MARKING ARROW EPOXY (WHITE)
- PM12 MARKING WORD EPOXY (WHITE)
- PM13 MARKING CORRUGATED MEDIAN EPOXY (YELLOW)
- PM14 MARKING SYMBOL EPOXY (WHITE)
- PM15 PM15 to MARKING LINE GROOVED WET REF EPOXY 6-INCH (WHITE) (3FT LINE 9 FT SKIP)
- PM16 MARKING EPOXY 6-INCH (WHITE)
- PM17 MARKING LINE EPOXY 6-INCH (YELLOW)(12.5 FT LINE 37.5 FT SKIP)
- PM18 MARKING ISLAND NOSE EPOXY (YELLOW)
- PM19 MARKING STOP LINE EPOXY 24-INCH (WHITE)
- PM20 MARKING EPOXY 4-INCH (WHITE)
- PM21 MARKING EPOXY 4-INCH (YELLOW)

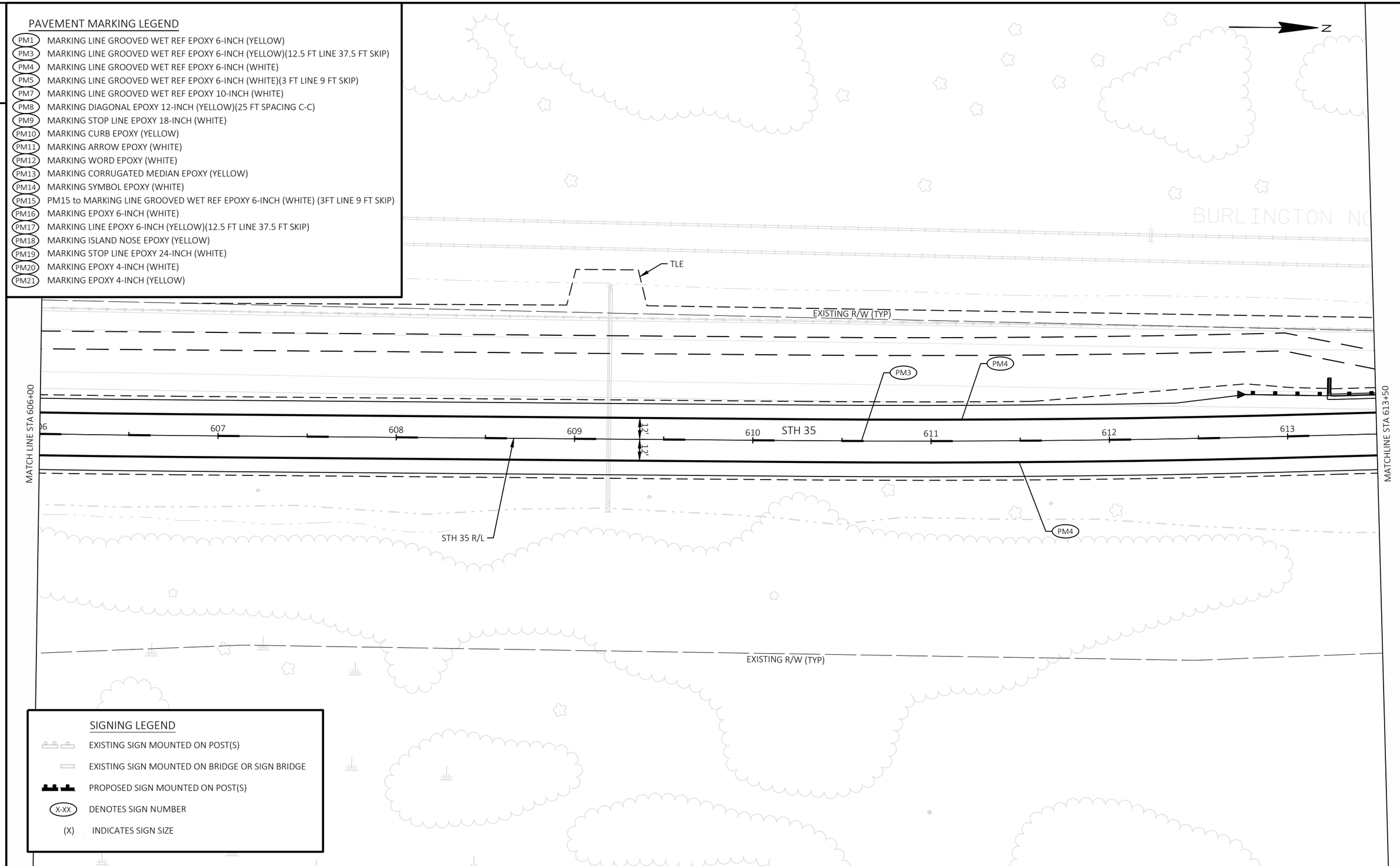

SIGNING LEGEND

- EXISTING SIGN MOUNTED ON POST(S)
- EXISTING SIGN MOUNTED ON BRIDGE OR SIGN BRIDGE
- PROPOSED SIGN MOUNTED ON POST(S)
- X-XX DENOTES SIGN NUMBER
- (X) INDICATES SIGN SIZE

2

PROJECT NO: 5163-07-72	HWY: STH 35	COUNTY: LA CROSSE/VERNON	SIGNING & PAVEMENT MARKING	SHEET 60	E

FILE NAME : O:\PDS\C3D\51630702\SHEETSPLAN\023201_PS.DWG
LAYOUT NAME - 06
PLOT DATE : 7/1/2025 4:31 PM PLOT BY : ED OCHS PLOT NAME : PLOT SCALE : 1 IN:50 FT
WISDOT/CADDS SHEET 42

2

PAVEMENT MARKING LEGEND

- PM1 MARKING LINE GROOVED WET REF EPOXY 6-INCH (YELLOW)
- PM3 MARKING LINE GROOVED WET REF EPOXY 6-INCH (YELLOW)(12.5 FT LINE 37.5 FT SKIP)
- PM4 MARKING LINE GROOVED WET REF EPOXY 6-INCH (WHITE)
- PM5 MARKING LINE GROOVED WET REF EPOXY 6-INCH (WHITE)(3 FT LINE 9 FT SKIP)
- PM7 MARKING LINE GROOVED WET REF EPOXY 10-INCH (WHITE)
- PM8 MARKING DIAGONAL EPOXY 12-INCH (YELLOW)(25 FT SPACING C-C)
- PM9 MARKING STOP LINE EPOXY 18-INCH (WHITE)
- PM10 MARKING CURB EPOXY (YELLOW)
- PM11 MARKING ARROW EPOXY (WHITE)
- PM12 MARKING WORD EPOXY (WHITE)
- PM13 MARKING CORRUGATED MEDIAN EPOXY (YELLOW)
- PM14 MARKING SYMBOL EPOXY (WHITE)
- PM15 PM15 to MARKING LINE GROOVED WET REF EPOXY 6-INCH (WHITE) (3FT LINE 9 FT SKIP)
- PM16 MARKING EPOXY 6-INCH (WHITE)
- PM17 MARKING LINE EPOXY 6-INCH (YELLOW)(12.5 FT LINE 37.5 FT SKIP)
- PM18 MARKING ISLAND NOSE EPOXY (YELLOW)
- PM19 MARKING STOP LINE EPOXY 24-INCH (WHITE)
- PM20 MARKING EPOXY 4-INCH (WHITE)
- PM21 MARKING EPOXY 4-INCH (YELLOW)

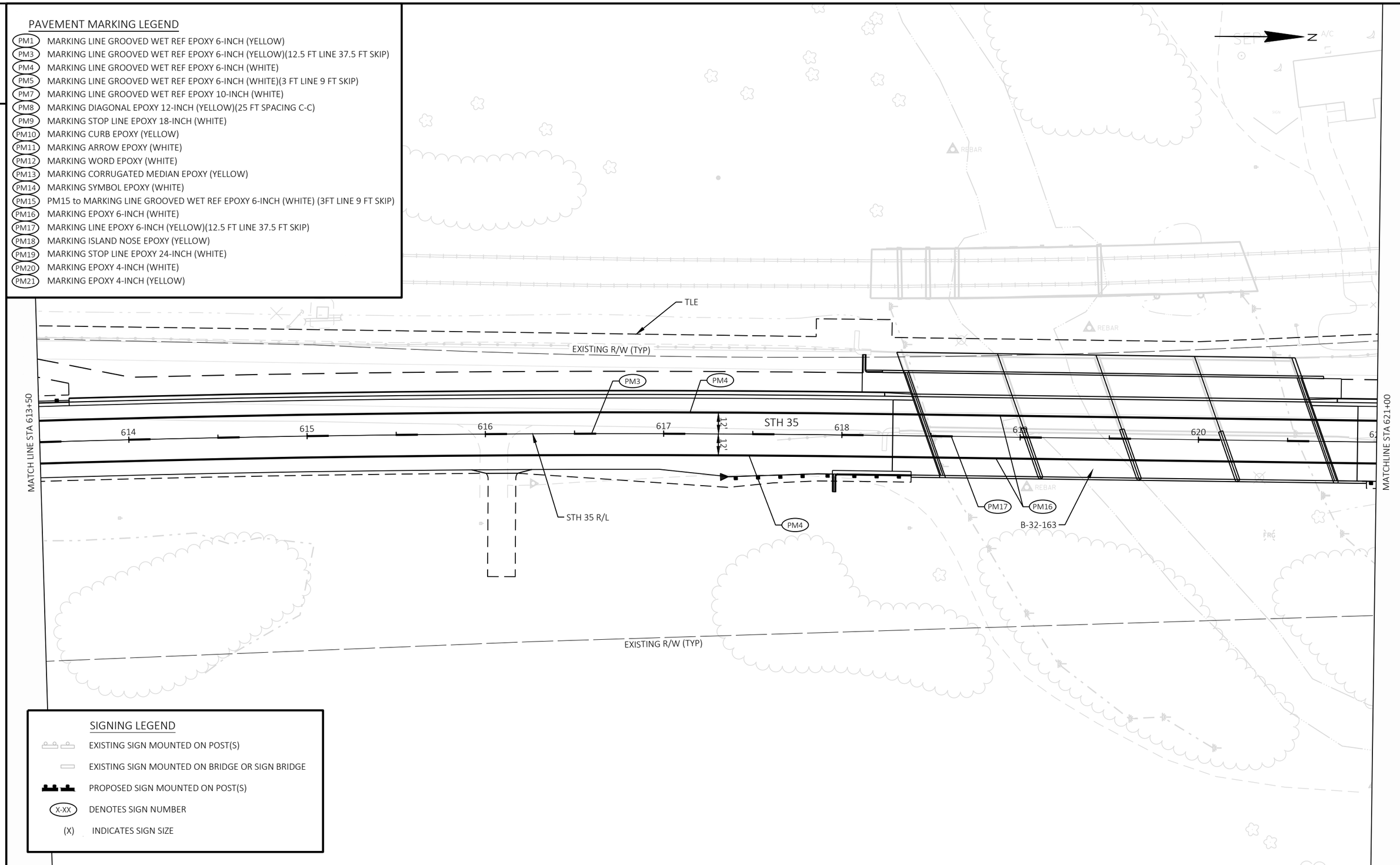

2

PROJECT NO: 5163-07-72	HWY: STH 35	COUNTY: LA CROSSE/VERNON	SIGNING & PAVEMENT MARKING	SHEET 61	E

FILE NAME : O:\PDS\C3D\51630702\SHEETSPLAN\023201_PS.DWG
LAYOUT NAME - 07
PLOT DATE : 7/1/2025 4:31 PM
PLOT BY : ED OCHS
PLOT NAME :
PLOT SCALE : 1 IN:50 FT
WISDOT/CADDS SHEET 42

2

PAVEMENT MARKING LEGEND

- PM1 MARKING LINE GROOVED WET REF EPOXY 6-INCH (YELLOW)
- PM3 MARKING LINE GROOVED WET REF EPOXY 6-INCH (YELLOW)(12.5 FT LINE 37.5 FT SKIP)
- PM4 MARKING LINE GROOVED WET REF EPOXY 6-INCH (WHITE)
- PM5 MARKING LINE GROOVED WET REF EPOXY 6-INCH (WHITE)(3 FT LINE 9 FT SKIP)
- PM7 MARKING LINE GROOVED WET REF EPOXY 10-INCH (WHITE)
- PM8 MARKING DIAGONAL EPOXY 12-INCH (YELLOW)(25 FT SPACING C-C)
- PM9 MARKING STOP LINE EPOXY 18-INCH (WHITE)
- PM10 MARKING CURB EPOXY (YELLOW)
- PM11 MARKING ARROW EPOXY (WHITE)
- PM12 MARKING WORD EPOXY (WHITE)
- PM13 MARKING CORRUGATED MEDIAN EPOXY (YELLOW)
- PM14 MARKING SYMBOL EPOXY (WHITE)
- PM15 PM15 to MARKING LINE GROOVED WET REF EPOXY 6-INCH (WHITE) (3FT LINE 9 FT SKIP)
- PM16 MARKING EPOXY 6-INCH (WHITE)
- PM17 MARKING LINE EPOXY 6-INCH (YELLOW)(12.5 FT LINE 37.5 FT SKIP)
- PM18 MARKING ISLAND NOSE EPOXY (YELLOW)
- PM19 MARKING STOP LINE EPOXY 24-INCH (WHITE)
- PM20 MARKING EPOXY 4-INCH (WHITE)
- PM21 MARKING EPOXY 4-INCH (YELLOW)

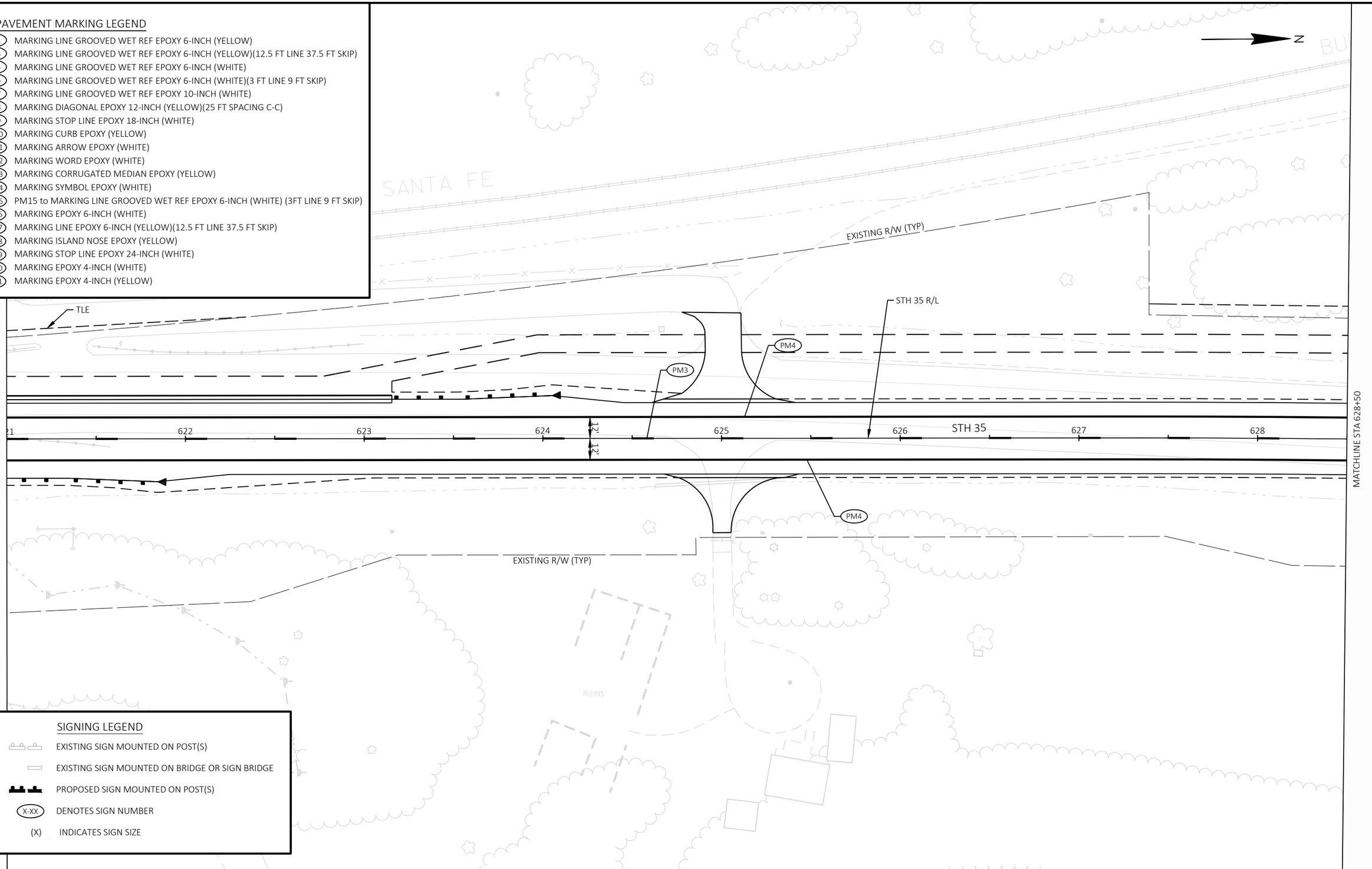

SIGNING LEGEND

- EXISTING SIGN MOUNTED ON POST(S)
- EXISTING SIGN MOUNTED ON BRIDGE OR SIGN BRIDGE
- PROPOSED SIGN MOUNTED ON POST(S)
- X-XX DENOTES SIGN NUMBER
- (X) INDICATES SIGN SIZE

2

PROJECT NO: 5163-07-72	HWY: STH 35	COUNTY: LA CROSSE/VERNON	SIGNING & PAVEMENT MARKING	SHEET 62	E

2

PAVEMENT MARKING LEGEND

- PM1 MARKING LINE GROOVED WET REF EPOXY 6-INCH (YELLOW)
- PM3 MARKING LINE GROOVED WET REF EPOXY 6-INCH (YELLOW)(12.5 FT LINE 37.5 FT SKIP)
- PM4 MARKING LINE GROOVED WET REF EPOXY 6-INCH (WHITE)
- PM5 MARKING LINE GROOVED WET REF EPOXY 6-INCH (WHITE)(3 FT LINE 9 FT SKIP)
- PM7 MARKING LINE GROOVED WET REF EPOXY 10-INCH (WHITE)
- PM8 MARKING DIAGONAL EPOXY 12-INCH (YELLOW)(25 FT SPACING C-C)
- PM9 MARKING STOP LINE EPOXY 18-INCH (WHITE)
- PM10 MARKING CURB EPOXY (YELLOW)
- PM11 MARKING ARROW EPOXY (WHITE)
- PM12 MARKING WORD EPOXY (WHITE)
- PM13 MARKING CORRUGATED MEDIAN EPOXY (YELLOW)
- PM14 MARKING SYMBOL EPOXY (WHITE)
- PM15 PM15 to MARKING LINE GROOVED WET REF EPOXY 6-INCH (WHITE) (3FT LINE 9 FT SKIP)
- PM16 MARKING EPOXY 6-INCH (WHITE)
- PM17 MARKING LINE EPOXY 6-INCH (YELLOW)(12.5 FT LINE 37.5 FT SKIP)
- PM18 MARKING ISLAND NOSE EPOXY (YELLOW)
- PM19 MARKING STOP LINE EPOXY 24-INCH (WHITE)
- PM20 MARKING EPOXY 4-INCH (WHITE)
- PM21 MARKING EPOXY 4-INCH (YELLOW)

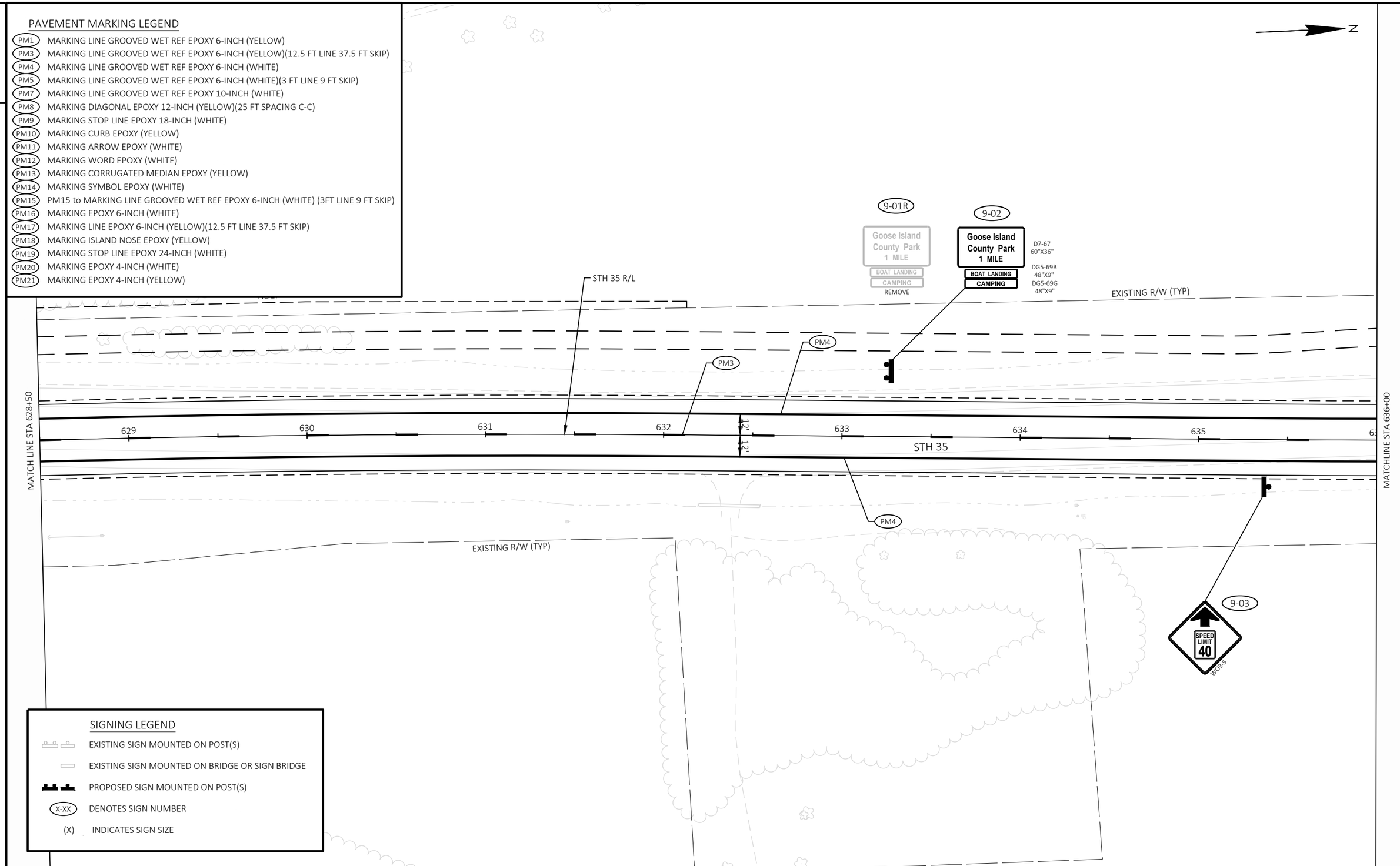

SIGNING LEGEND

- EXISTING SIGN MOUNTED ON POST(S)
- EXISTING SIGN MOUNTED ON BRIDGE OR SIGN BRIDGE
- PROPOSED SIGN MOUNTED ON POST(S)
- X-XX DENOTES SIGN NUMBER
- (X) INDICATES SIGN SIZE

PROJECT NO: 5163-07-72	HWY: STH 35	COUNTY: LA CROSSE/VERNON	SIGNING & PAVEMENT MARKING	SHEET 63	E

FILE NAME : O:\PDS\C3D\51630702\SHEETSPLAN\023201_PS.DWG
LAYOUT NAME - 09
PLOT DATE : 7/1/2025 4:31 PM PLOT BY : ED OCHS PLOT NAME : PLOT SCALE : 1 IN:50 FT

2

PAVEMENT MARKING LEGEND

- PM1 MARKING LINE GROOVED WET REF EPOXY 6-INCH (YELLOW)
- PM3 MARKING LINE GROOVED WET REF EPOXY 6-INCH (YELLOW)(12.5 FT LINE 37.5 FT SKIP)
- PM4 MARKING LINE GROOVED WET REF EPOXY 6-INCH (WHITE)
- PM5 MARKING LINE GROOVED WET REF EPOXY 6-INCH (WHITE)(3 FT LINE 9 FT SKIP)
- PM7 MARKING LINE GROOVED WET REF EPOXY 10-INCH (WHITE)
- PM8 MARKING DIAGONAL EPOXY 12-INCH (YELLOW)(25 FT SPACING C-C)
- PM9 MARKING STOP LINE EPOXY 18-INCH (WHITE)
- PM10 MARKING CURB EPOXY (YELLOW)
- PM11 MARKING ARROW EPOXY (WHITE)
- PM12 MARKING WORD EPOXY (WHITE)
- PM13 MARKING CORRUGATED MEDIAN EPOXY (YELLOW)
- PM14 MARKING SYMBOL EPOXY (WHITE)
- PM15 PM15 to MARKING LINE GROOVED WET REF EPOXY 6-INCH (WHITE) (3FT LINE 9 FT SKIP)
- PM16 MARKING EPOXY 6-INCH (WHITE)
- PM17 MARKING LINE EPOXY 6-INCH (YELLOW)(12.5 FT LINE 37.5 FT SKIP)
- PM18 MARKING ISLAND NOSE EPOXY (YELLOW)
- PM19 MARKING STOP LINE EPOXY 24-INCH (WHITE)
- PM20 MARKING EPOXY 4-INCH (WHITE)
- PM21 MARKING EPOXY 4-INCH (YELLOW)

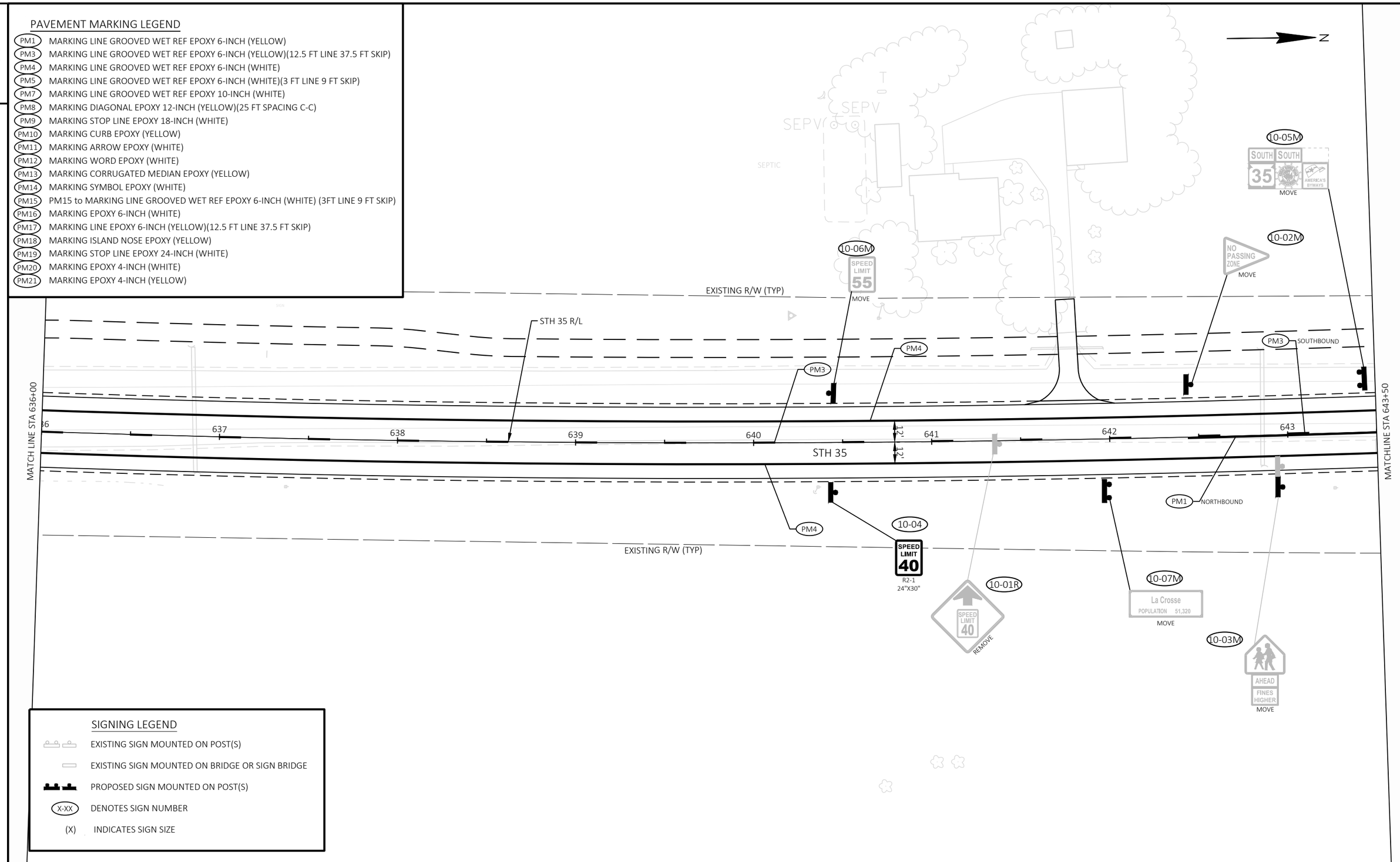

SIGNING LEGEND

- EXISTING SIGN MOUNTED ON POST(S)
- EXISTING SIGN MOUNTED ON BRIDGE OR SIGN BRIDGE
- PROPOSED SIGN MOUNTED ON POST(S)
- X-XX DENOTES SIGN NUMBER
- (X) INDICATES SIGN SIZE

2

PROJECT NO: 5163-07-72	HWY: STH 35	COUNTY: LA CROSSE/VERNON	SIGNING & PAVEMENT MARKING	SHEET 64	E

FILE NAME : O:\PDS\C3D\51630702\SHEETSPLAN\023201_PS.DWG
LAYOUT NAME - 10
PLOT DATE : 7/1/2025 4:31 PM PLOT BY : ED OCHS PLOT NAME : PLOT SCALE : 1 IN:50 FT

2

PAVEMENT MARKING LEGEND

- PM1 MARKING LINE GROOVED WET REF EPOXY 6-INCH (YELLOW)
- PM3 MARKING LINE GROOVED WET REF EPOXY 6-INCH (YELLOW)(12.5 FT LINE 37.5 FT SKIP)
- PM4 MARKING LINE GROOVED WET REF EPOXY 6-INCH (WHITE)
- PM5 MARKING LINE GROOVED WET REF EPOXY 6-INCH (WHITE)(3 FT LINE 9 FT SKIP)
- PM7 MARKING LINE GROOVED WET REF EPOXY 10-INCH (WHITE)
- PM8 MARKING DIAGONAL EPOXY 12-INCH (YELLOW)(25 FT SPACING C-C)
- PM9 MARKING STOP LINE EPOXY 18-INCH (WHITE)
- PM10 MARKING CURB EPOXY (YELLOW)
- PM11 MARKING ARROW EPOXY (WHITE)
- PM12 MARKING WORD EPOXY (WHITE)
- PM13 MARKING CORRUGATED MEDIAN EPOXY (YELLOW)
- PM14 MARKING SYMBOL EPOXY (WHITE)
- PM15 PM15 to MARKING LINE GROOVED WET REF EPOXY 6-INCH (WHITE) (3FT LINE 9 FT SKIP)
- PM16 MARKING EPOXY 6-INCH (WHITE)
- PM17 MARKING LINE EPOXY 6-INCH (YELLOW)(12.5 FT LINE 37.5 FT SKIP)
- PM18 MARKING ISLAND NOSE EPOXY (YELLOW)
- PM19 MARKING STOP LINE EPOXY 24-INCH (WHITE)
- PM20 MARKING EPOXY 4-INCH (WHITE)
- PM21 MARKING EPOXY 4-INCH (YELLOW)

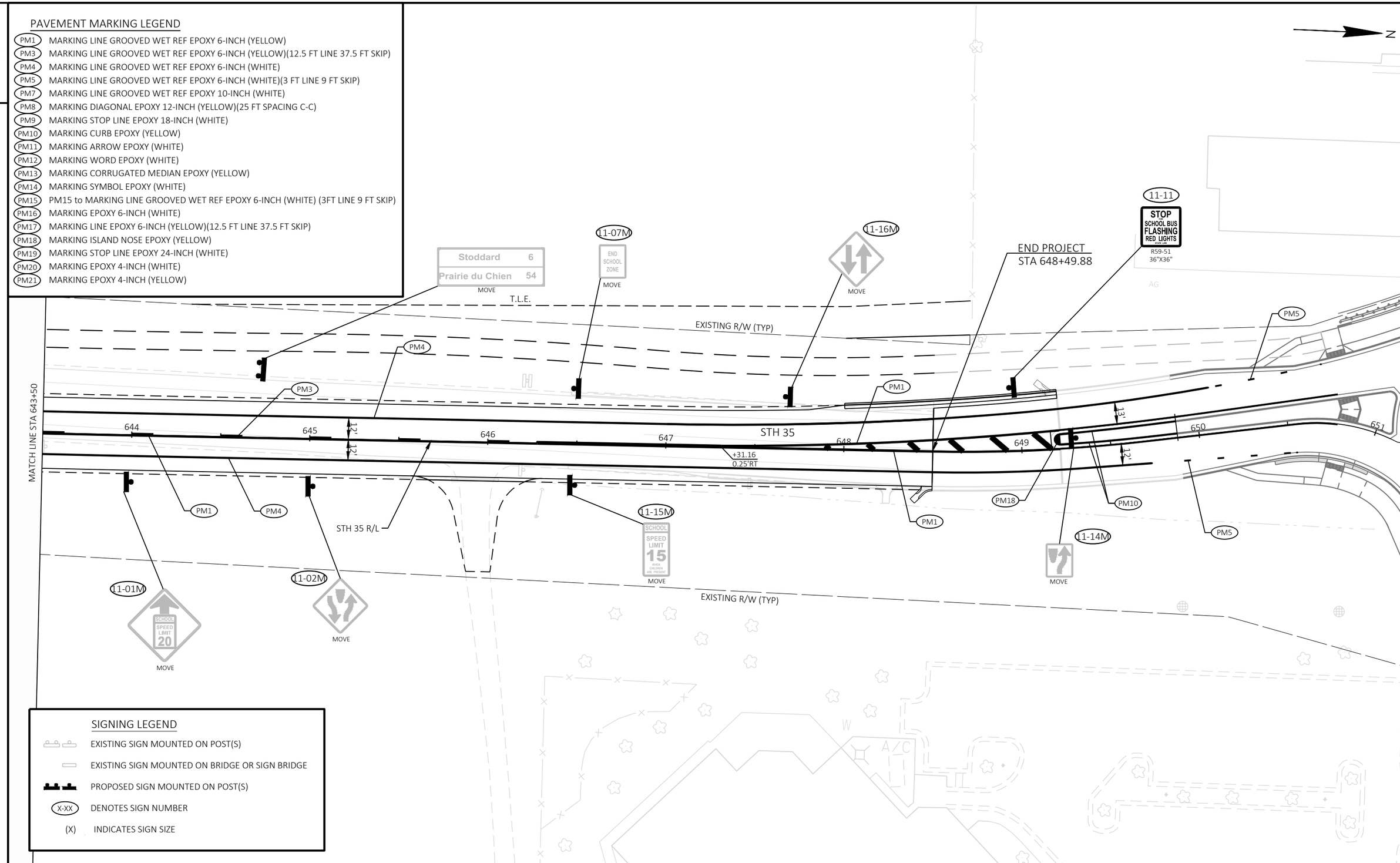

SIGNING LEGEND

- EXISTING SIGN MOUNTED ON POST(S)
- EXISTING SIGN MOUNTED ON BRIDGE OR SIGN BRIDGE
- PROPOSED SIGN MOUNTED ON POST(S)
- X-XX DENOTES SIGN NUMBER
- (X) INDICATES SIGN SIZE

2

PROJECT NO: 5163-07-72	HWY: STH 35	COUNTY: LA CROSSE/VERNON	SIGNING & PAVEMENT MARKING	SHEET 65	E

2

PAVEMENT MARKING LEGEND

- PM1 MARKING LINE GROOVED WET REF EPOXY 6-INCH (YELLOW)
- PM3 MARKING LINE GROOVED WET REF EPOXY 6-INCH (YELLOW)(12.5 FT LINE 37.5 FT SKIP)
- PM4 MARKING LINE GROOVED WET REF EPOXY 6-INCH (WHITE)
- PM5 MARKING LINE GROOVED WET REF EPOXY 6-INCH (WHITE)(3 FT LINE 9 FT SKIP)
- PM7 MARKING LINE GROOVED WET REF EPOXY 10-INCH (WHITE)
- PM8 MARKING DIAGONAL EPOXY 12-INCH (YELLOW)(25 FT SPACING C-C)
- PM9 MARKING STOP LINE EPOXY 18-INCH (WHITE)
- PM10 MARKING CURB EPOXY (YELLOW)
- PM11 MARKING ARROW EPOXY (WHITE)
- PM12 MARKING WORD EPOXY (WHITE)
- PM13 MARKING CORRUGATED MEDIAN EPOXY (YELLOW)
- PM14 MARKING SYMBOL EPOXY (WHITE)
- PM15 PM15 to MARKING LINE GROOVED WET REF EPOXY 6-INCH (WHITE) (3FT LINE 9 FT SKIP)
- PM16 MARKING EPOXY 6-INCH (WHITE)
- PM17 MARKING LINE EPOXY 6-INCH (YELLOW)(12.5 FT LINE 37.5 FT SKIP)
- PM18 MARKING ISLAND NOSE EPOXY (YELLOW)
- PM19 MARKING STOP LINE EPOXY 24-INCH (WHITE)
- PM20 MARKING EPOXY 4-INCH (WHITE)
- PM21 MARKING EPOXY 4-INCH (YELLOW)

SIGNING LEGEND

- EXISTING SIGN MOUNTED ON POST(S)
- EXISTING SIGN MOUNTED ON BRIDGE OR SIGN BRIDGE
- PROPOSED SIGN MOUNTED ON POST(S)
- X-XX DENOTES SIGN NUMBER
- (X) INDICATES SIGN SIZE

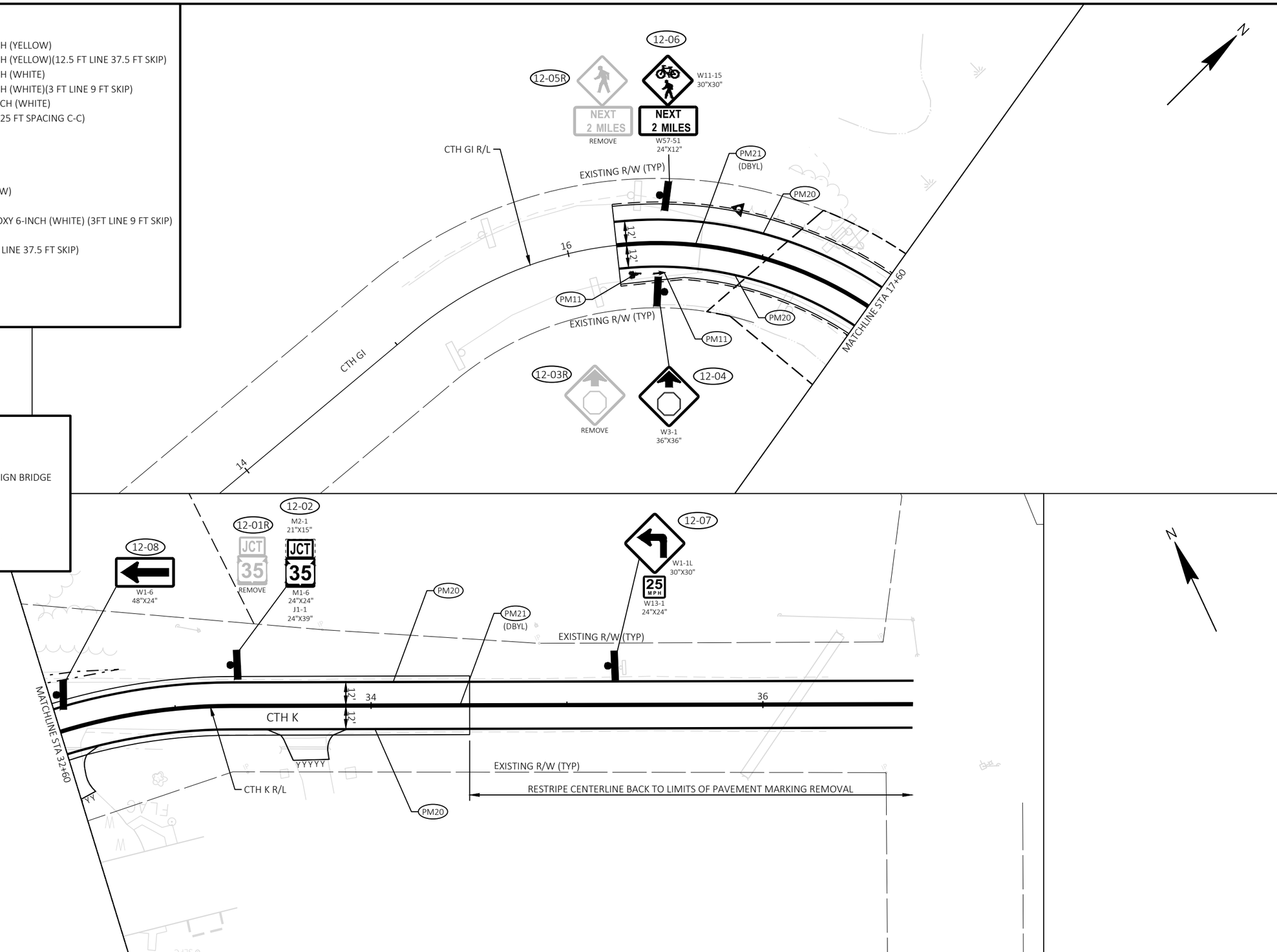

2

PROJECT NO: 5163-07-72	HWY: STH 35	COUNTY: LA CROSSE/VERNON	SIGNING & PAVEMENT MARKING	SHEET 66	E

FILE NAME : O:\PDS\C3D\51630702\SHEETSPLAN\023201_PS.DWG
LAYOUT NAME - 12
PLOT DATE : 7/1/2025 4:31 PM PLOT BY : ED OCHS PLOT NAME : PLOT SCALE : 1 IN:50 FT
WISDOT/CADDS SHEET 42

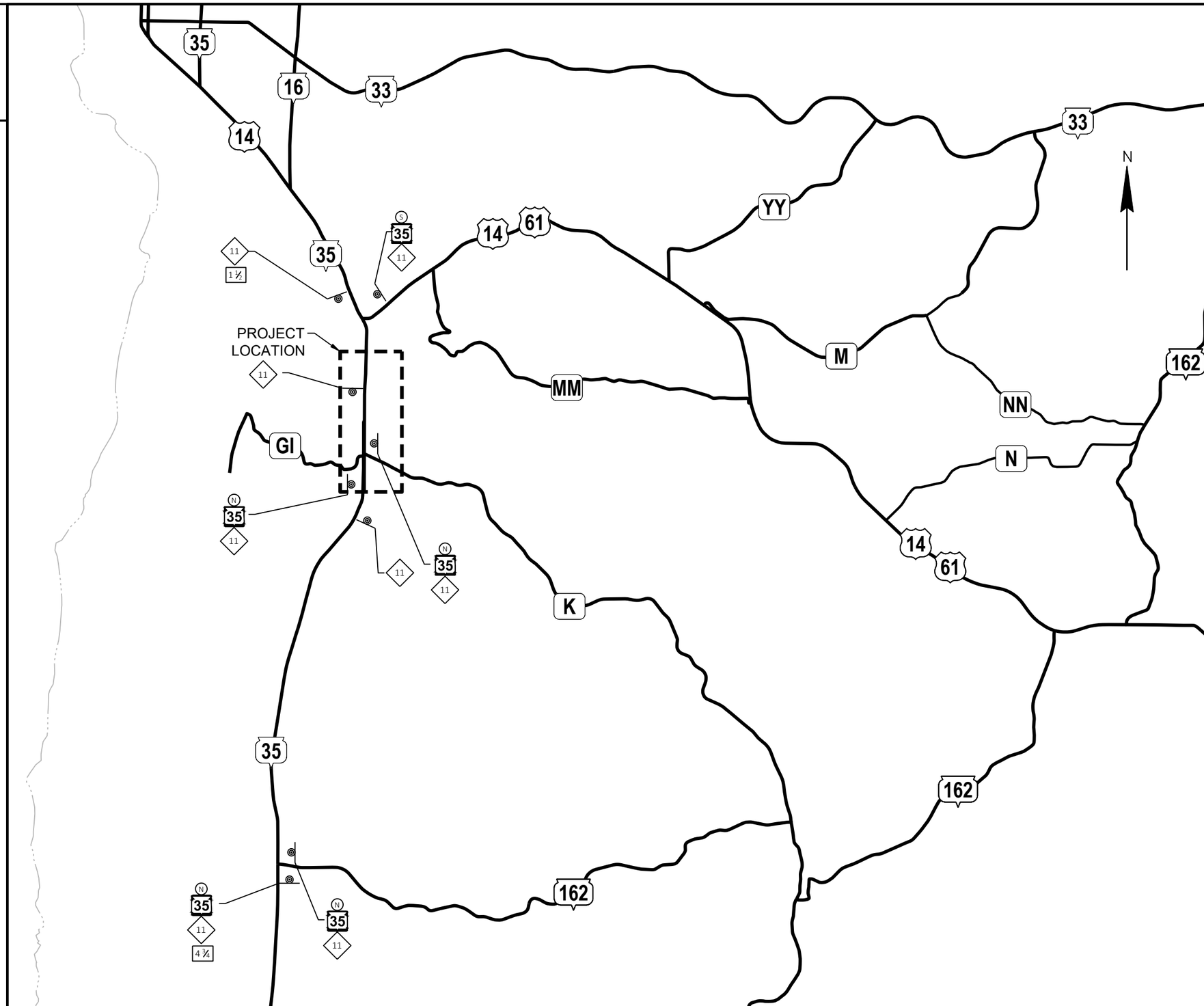

LEGEND

SIGN ON PERMANENT SUPPORT

NORTH
M3-1
24"X12"

SOUTH
M3-3
24"X12"

35
M1-6
24"X24"

MAX.
11'
WIDTH
W12-52
48"X48"

00 MILES
AHEAD
WO57-52
48"X36"

2

PROJECT NO: 5163-07-72	HWY: STH 35	COUNTY: LA CROSSE/VERNON	ADVANCED WARNING SIGNING	SHEET 67	E

FILE NAME : O:\PDS\C3D\51630702\SHEETSPLAN\025001_AW.DWG
LAYOUT NAME - 01
PLOT DATE : 4/29/2025 3:23 PM
PLOT BY : CORY IHDE
PLOT NAME :
PLOT SCALE : 1 IN:1.2 MI
WISDOT/CADDS SHEET 44

2

TRAFFIC CONTROL LEGEND

- TYPE III BARRICADE
- TYPE III BARRICADE WTH ATTACHED SIGN
- TRAFFIC CONTROL DRUM
- TRAFFIC CONTROL DRUM WITH TYPE C STEADY BURN LIGHT
- SIGN ON PERMANENT SUPPORT
- SIGN ON TEMPORARY SUPPORT
- TRAFFIC CONTROL CONES 42-INCH
- FLEXIBLE TUBULAR MARKER POST
- CONCRETE BARRIER TEMPORARY PRECAST
- CC — CRASH CUSHION TEMPORARY
- DIRECTION OF TRAFFIC
- MB — PORTABLE CHANGEABLE MESSAGE BOARD
- WORK AREA
- WORK AREA TEMP PAVEMENT (NEW FULL DEPTH TEMP PAVEMENT) (4-INCH ASPHALTIC SURFACE TEMP OVER 8 INCHES BAD DENSE 1 1/4-INCH)
- WORK AREA TEMP PAVEMENT (EXISTING SHOULDER IMPROVEMENT) (4-INCH ASPHALTIC SURFACE TEMP OVER 2 INCHES BAD DENSE 1 1/4-INCH)
- TEMPORARY PAVEMENT FROM PREVIOUS STAGE
- TRAILER MOUNTED TRAFFIC SIGNAL
- FLAGGER, EQUIPPED WITH STOP/SLOW PADDLE FASTENED ON SUPPORT STAFF
- REMOVING PAVEMENT MARKING
- FLAGS, 16" X 16" MIN. (ORANGE)

PAVEMENT MARKING LEGEND

P4W	TEMPORARY MARKING LINE PAINT 4-INCH (WHITE)
P4Y	TEMPORARY MARKING LINE PAINT 4-INCH (YELLOW)
P4DY	TEMPORARY MARKING LINE PAINT 4-INCH (DOUBLE YELLOW)
R6W	TEMPORARY MARKING LINE REMOVABLE TAPE 6-INCH (WHITE)
R6Y	TEMPORARY MARKING LINE REMOVABLE TAPE 6-INCH (YELLOW)
R6DY	TEMPORARY MARKING LINE REMOVABLE TAPE 6-INCH (DOUBLE YELLOW)
P6W	TEMPORARY MARKING LINE PAINT 6-INCH (WHITE)
P6DY	TEMPORARY MARKING LINE PAINT 6-INCH (DOUBLE YELLOW)
P6W3	TEMPORARY MARKING LINE PAINT 6-INCH (WHITE) (3' SKIP)
P6Y3	TEMPORARY MARKING LINE PAINT 6-INCH (YELLOW) (3' SKIP)
P10W3	TEMPORARY MARKING LINE PAINT 10-INCH (WHITE) (3' SKIP)
P10W	TEMPORARY MARKING LINE PAINT 10-INCH (WHITE)
P18W	TEMPORARY MARKING STOP LINE PAINT 18-INCH (WHITE)

TEMPORARY DRAINAGE LEGEND

SING	SEAL INLET GRATE - ALLOW WATER TO BYPASS TO NEXT INLET (INCIDENTAL TO INLET OR CATCH BASIN BID ITEM)
TCP	INSTALL TEMPORARY COVER PLATE
TPC	INSTALL TEMPORARY PIPE CONNECTION
TPS	TEMPORARY PIPE SEAL (INCIDENTAL TO PIPE REMOVAL OR PIPE BID ITEM)
ADJ	ADJUST STRUCTURE COVER TO FINAL SURFACE ELEVATION (PAID AS ADJUSTING MANHOLE COVER)

TRAFFIC CONTROL GENERAL NOTES:

ALL TRAFFIC CONTROL SIGNS AND DEVICES AND THEIR LOCATION SHALL BE IN CONFORMANCE WITH THE WISCONSIN MANUAL OF UNIFORM TRAFFIC CONTROL DEVICES (WMUTCD), THE PLANS, SPECIFICATIONS, CONTRACT AND APPLICABLE STANDARD DETAIL DRAWINGS.

THE EXACT NUMBER, LOCATION AND SPACING OF ALL SIGNS AND DEVICES SHALL BE ADJUSTED TO FIT FIELD CONDITIONS AS DIRECTED BY THE ENGINEER.

ALL SIGNS ARE 48" X 48" UNLESS OTHERWISE NOTED.

"WO" SIGNS ARE THE SAME AS "W" EXCEPT THE BACKGROUND IS ORANGE.

ALL SIGNS INAPPROPRIATE TO THE WORKZONE, INCLUDING PRE-EXISTING SIGNING, SHALL BE COVERED, REMOVED, OR ALTERED AS SPECIFIED IN THE PLANS AND/OR SPECIALS PROVISIONS OR AS DIRECTED BY THE ENGINEER.

ALL EXISTING CONFLICTING PAVEMENT MARKING SHALL BE REMOVED.

SHEETING OR SHORING REQUIRED FOR STORM SEWER CONSTRUCTION SHOWN ON THE STAGING PLANS IS FOR INFORMATION ONLY. CONTRACTOR SHALL DETERMINE SHORING SYSTEM LOCATIONS AND NEEDS. SHEETING OR SHORING REQUIRED FOR STORM SEWER CONSTRUCTION IS INCIDENTAL TO THE STORM SEWER BID ITEMS.

GENERAL TRAFFIC CONTROL REQUIREMENTS:

MINIMUM LANE WIDTH REQUIRED ON STH 35 IS 11'. MINIMUM LANE WIDTH REQUIRED ON CTH GI AND CTH K IS 10'.

USE TEMPORARY MARKING LINE REMOVABLE TAPE X-INCH ON FINISHED PAVEMENT SURFACES THAT WILL REMAIN.

ALIGNMENT NOTES:

STH 35 EX = EXISTING STH 35 (STAGES 1 & 2)
STH 35 = PROPOSED STH 35 (STAGES 3 TO 5)
CTH K EX =EXISTING CTH K (STAGES 1 TO 3A)
CTH K =PROPOSED CTH K (STAGES 3B TO 5)

2

2

TRAFFIC CONTROL NOTES

DRIVEWAY ASSISTANCE DEVICE SHALL BE CONTROLLED BY THE TEMPORARY TRAFFIC SIGNAL CONTROLLER VIA WIRELESS OR HARDWIRED INTERCONNECT.

DURING TRAFFIC SIGNAL EMERGENCY FLASH, THE DRIVEWAY ASSISTANCE DEVICE SHALL FLASH RED.

CONTRACTOR SHALL CONDUCT AN EDUCATION SESSION WITH PROPERTY OWNERS WITHIN 7 DAYS PRIOR TO IMPLEMENTING ALTERNATING OPERATION. THE CONTRACTOR SHALL HAVE A REPRESENTATIVE AT EACH DRIVEWAY FOR THE FIRST 12 HOURS OF OPERATION TO ANSWER ANY QUESTIONS OF PROPERTY OWNERS.

TEMPORARY TRAFFIC SIGNAL SHALL OPERATE PRE-TIMED UNLESS VEHICLE DETECTION IS PROVIDED AT EACH APPROACH AND DRIVEWAY.

EACH DRIVEWAY ASSISTANCE DEVICE MUST HAVE ONE SIGNAL HEAD CONSISTING OF THREE LED INDICATIONS AS FOLLOWS; ONE 12 IN. DIAMETER STEADY RED BALL INDICATION CENTERED OVER ONE 12 IN. DIAMETER YELLOW FLASHING LEFT ARROW AND ONE 12 IN. DIAMETER YELLOW FLASHING RIGHT ARROW.

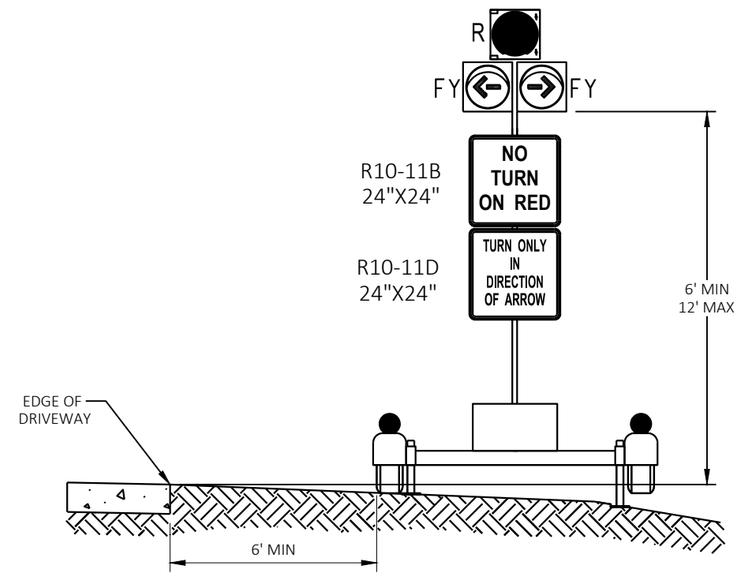

DRIVEWAY ASSISTANCE DEVICE THREE HEAD DEVICE

ELEVATION VIEW

2

2

NOTE:

SEE S.D.D. "TRAFFIC CONTROL, ONE LANE ROAD WITH TEMPORARY SIGNALS" AND BRIDGE TEMPORARY TRAFFIC SIGNAL INSTALLATION."

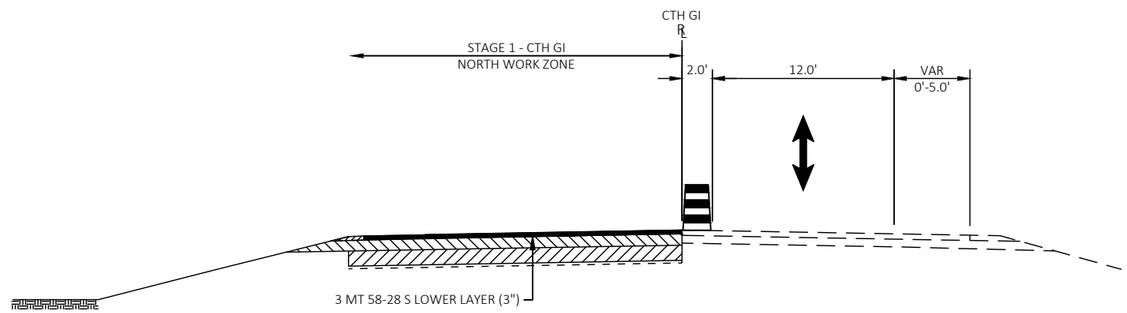

TYPICAL SECTION - STAGE 1 - CTH GI

NORTH HALF

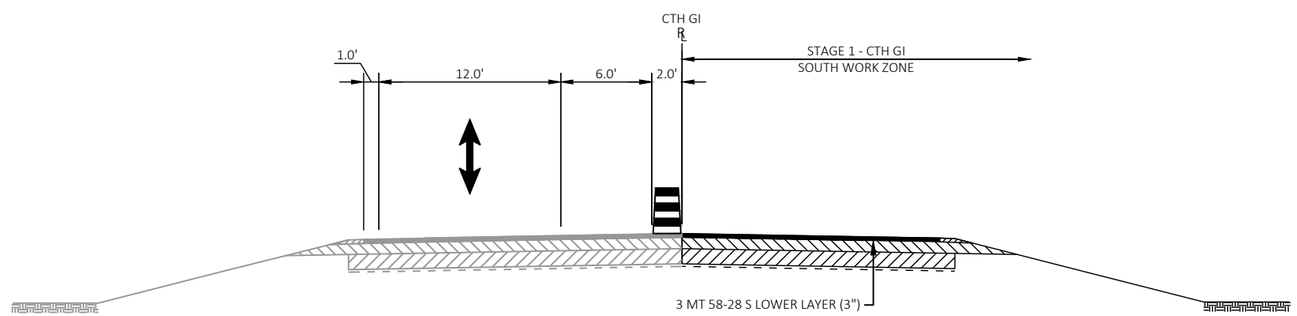

TYPICAL SECTION - STAGE 1 - CTH GI

SOUTH HALF

2

NOTE:

SEE S.D.D. "TRAFFIC CONTROL, ONE LANE ROAD WITH TEMPORARY SIGNALS" AND BRIDGE TEMPORARY TRAFFIC SIGNAL INSTALLATION."

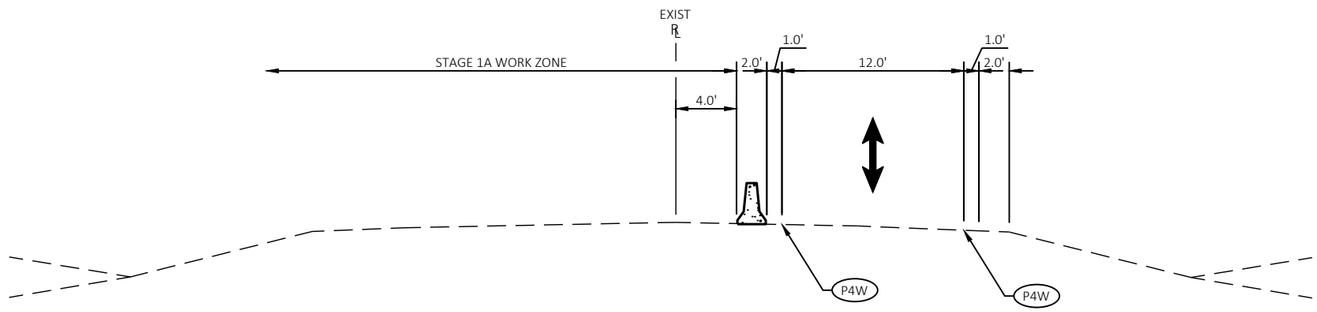

TYPICAL SECTION - STAGE 1A

STH 35
(BOX CULVERT CONSTRUCTION)
C-32-104

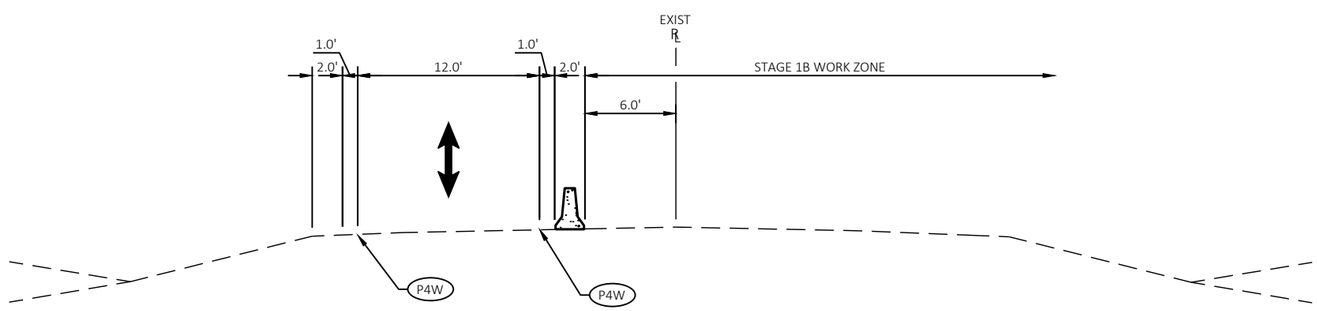

TYPICAL SECTION - STAGE 1B

STH 35
(BOX CULVERT CONSTRUCTION)
C-32-104

PROJECT NO: 5163-07-72	HWY: STH 35	COUNTY: LA CROSSE/VERNON	STAGED TYPICAL SECTIONS	SHEET 71	E

FILE NAME : O:\PDS\C3D\51630702\SHEETSPLAN\025100-TC-TS.DWG
LAYOUT NAME - 02
PLOT DATE : 6/26/2025 12:58 PM
PLOT BY : ED OCHS
PLOT NAME :
PLOT SCALE : 1 IN:10 FT

2

NOTE:

SEE S.D.D. "TRAFFIC CONTROL, WORK ON SHOULDER OR PARKING LANE, UNDIVIDED ROADWAY," "TRAFFIC CONTROL FOR LANE CLOSURE WITH FLAGGING OPERATION," AND "TRAFFIC CONTROL, LANE CLOSURE WITH AUTOMATED FLAGGER ASSISTANCE DEVICE."

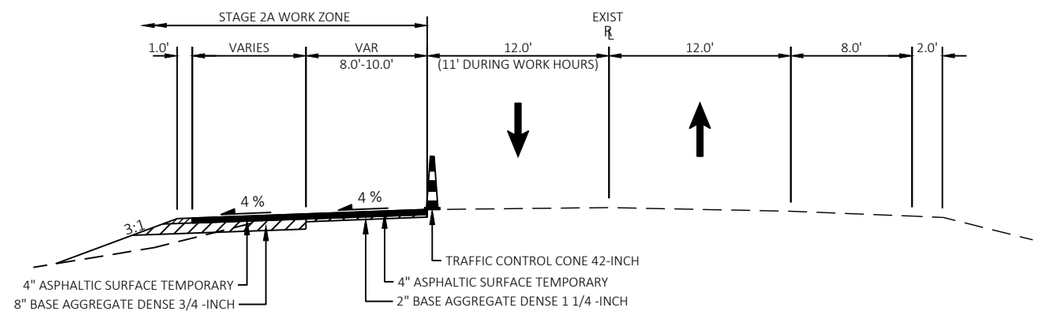

TYPICAL SECTION - STAGE 2A

STH 35

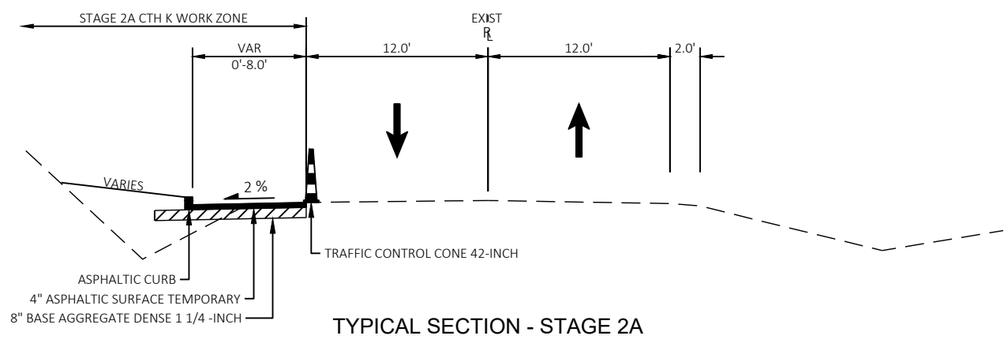

TYPICAL SECTION - STAGE 2A

CTH K

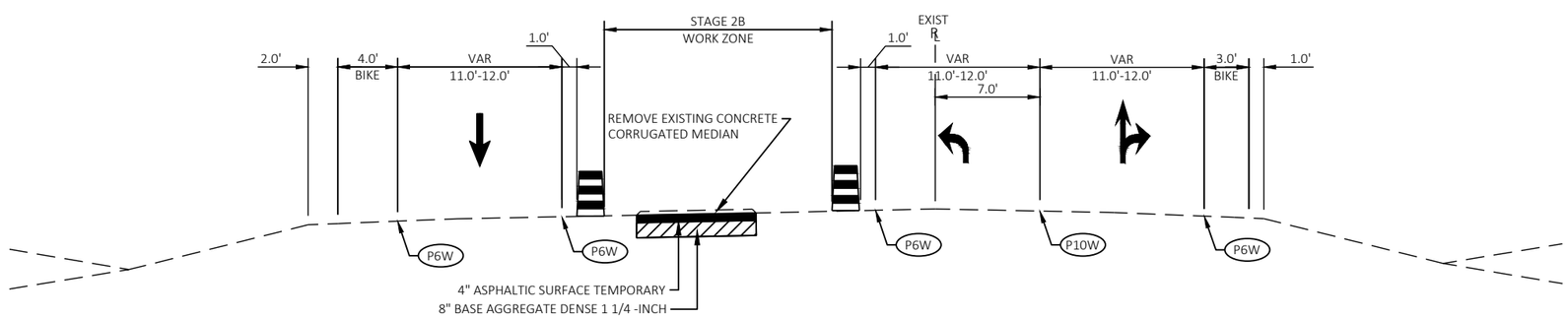

TYPICAL SECTION - STAGE 2B

STH 35

PROJECT NO: 5163-07-72	HWY: STH 35	COUNTY: LA CROSSE/VERNON	STAGED TYPICAL SECTIONS	SHEET 72	E

2

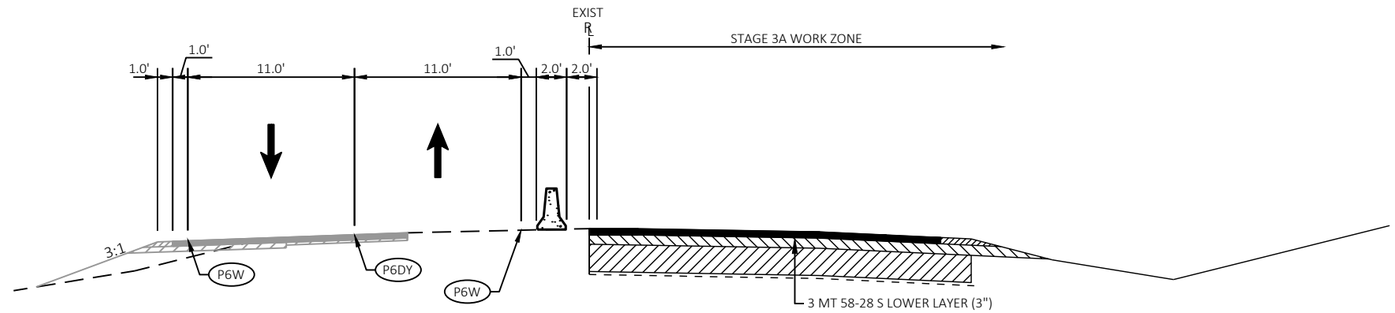

TYPICAL SECTION - STAGE 3A

STH 35

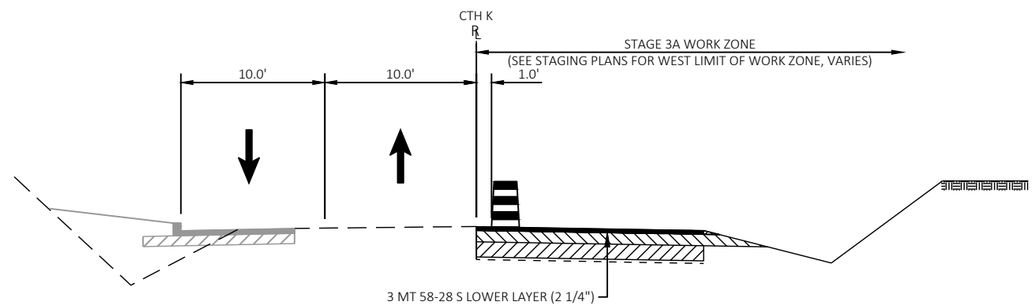

TYPICAL SECTION - STAGE 3A

CTH K

NOTE:

SEE S.D.D. "TRAFFIC CONTROL, ONE LANE ROAD WITH TEMPORARY SIGNALS" AND BRIDGE TEMPORARY TRAFFIC SIGNAL INSTALLATION."

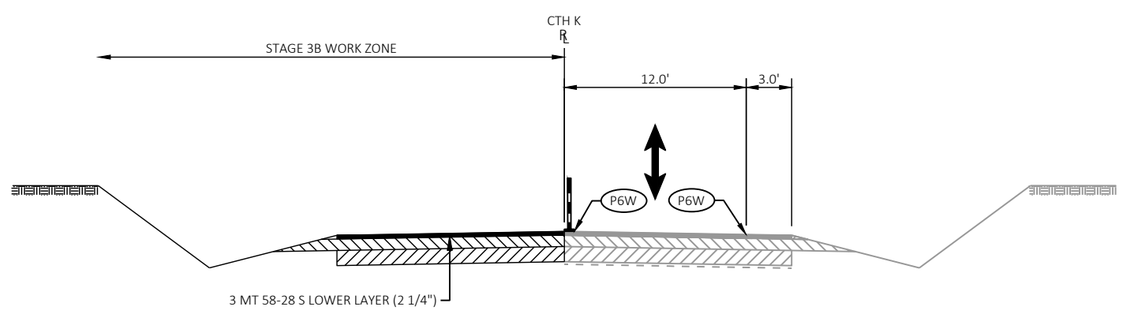

TYPICAL SECTION - STAGE 3B

CTH K

2

PROJECT NO: 5163-07-72	HWY: STH 35	COUNTY: LA CROSSE/VERNON	STAGED TYPICAL SECTIONS	SHEET 73	E

FILE NAME : O:\PDS\C3D\51630702\SHEETSPLAN\025100-TC-TS.DWG
LAYOUT NAME - 04
PLOT DATE : 6/26/2025 12:58 PM
PLOT BY : ED OCHS
PLOT NAME :
PLOT SCALE : 1 IN:10 FT

2

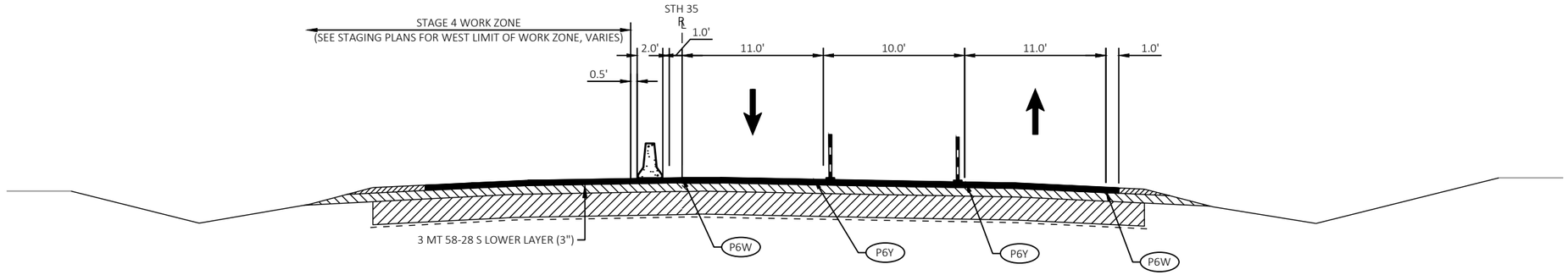

TYPICAL SECTION - STAGE 4

STH 35
(SOUTH OF CTH GI/K)

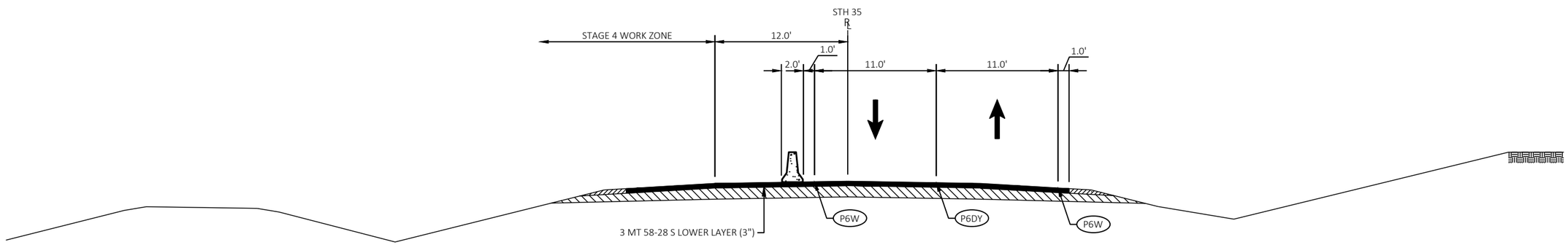

TYPICAL SECTION - STAGE 4

STH 35
(NORTH OF CTH GI/K)

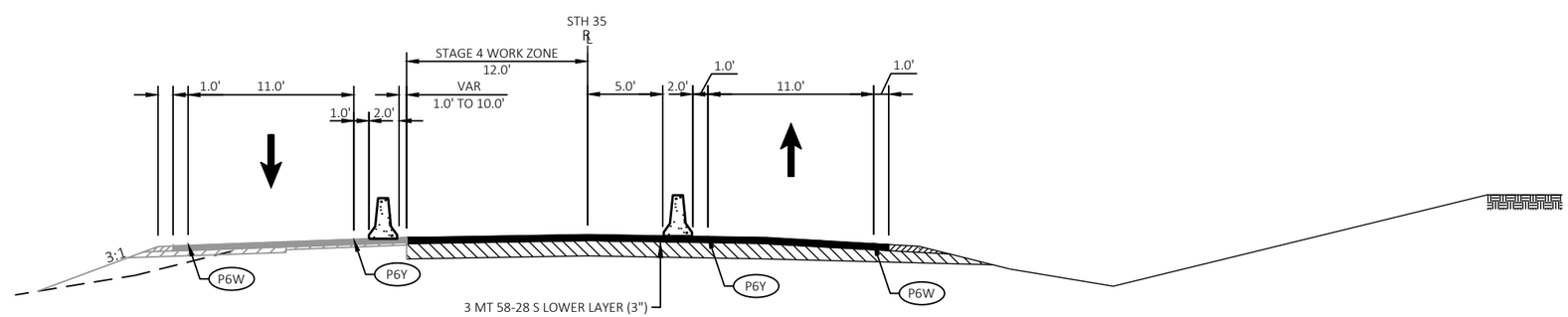

TYPICAL SECTION - STAGE 4

STH 35
(STA 635+00 TO END OF PROJECT)

PROJECT NO: 5163-07-72	HWY: STH 35	COUNTY: LA CROSSE/VERNON	STAGED TYPICAL SECTIONS	SHEET 74	E

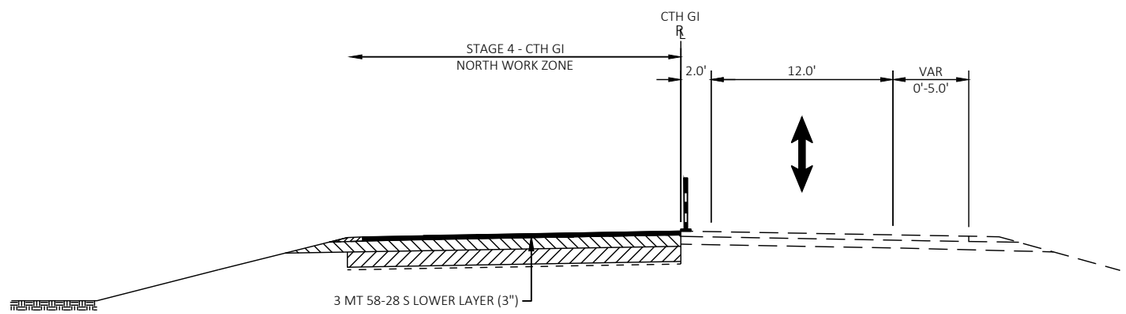

TYPICAL SECTION - STAGE 4 - CTH GI

NORTH HALF

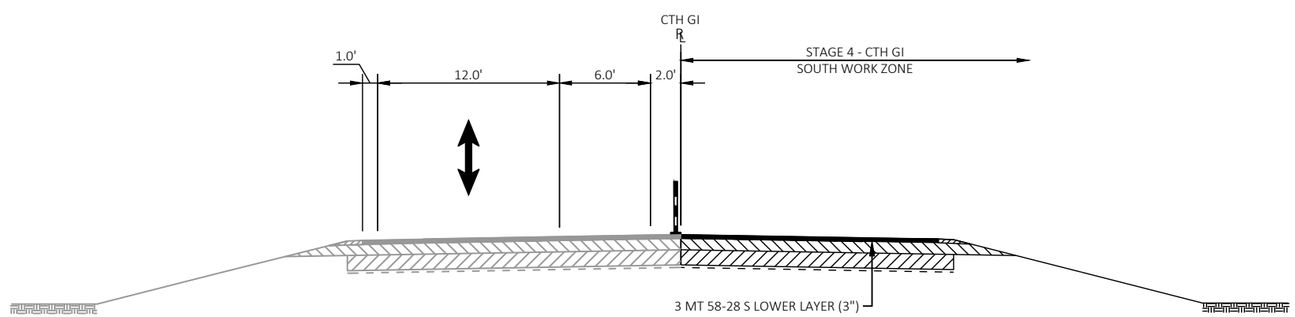

TYPICAL SECTION - STAGE 4 - CTH GI

SOUTH HALF

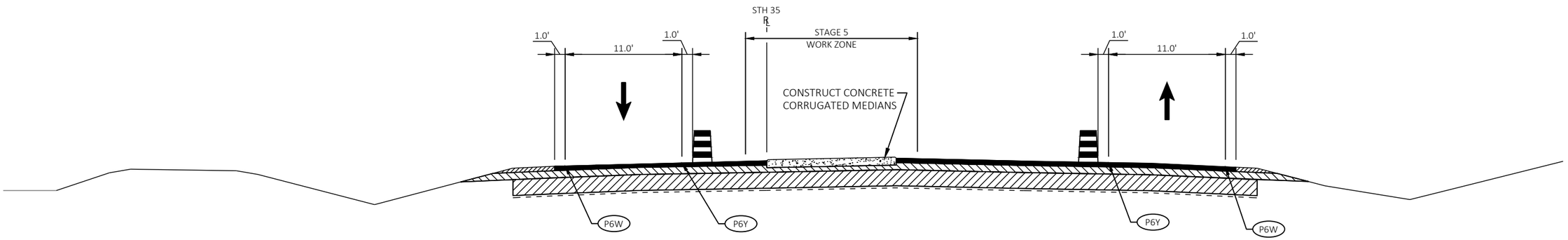

TYPICAL SECTION - STAGE 5

INTERSECTION OF CTH GI/K

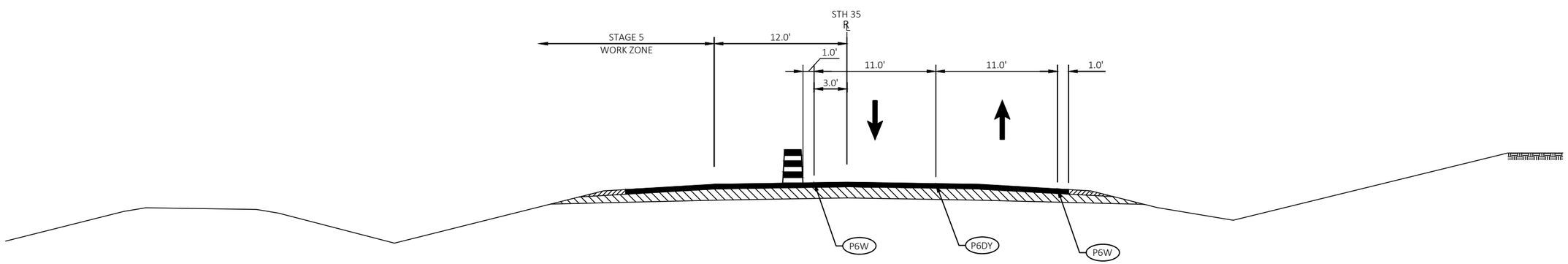

TYPICAL SECTION - STAGE 5

STH 35

STA 627+20 TO END OF PROJECT

PROJECT NO: 5163-07-72	HWY: STH 35	COUNTY: LA CROSSE/VERNON	STAGED TYPICAL SECTIONS	SHEET 76	E

2

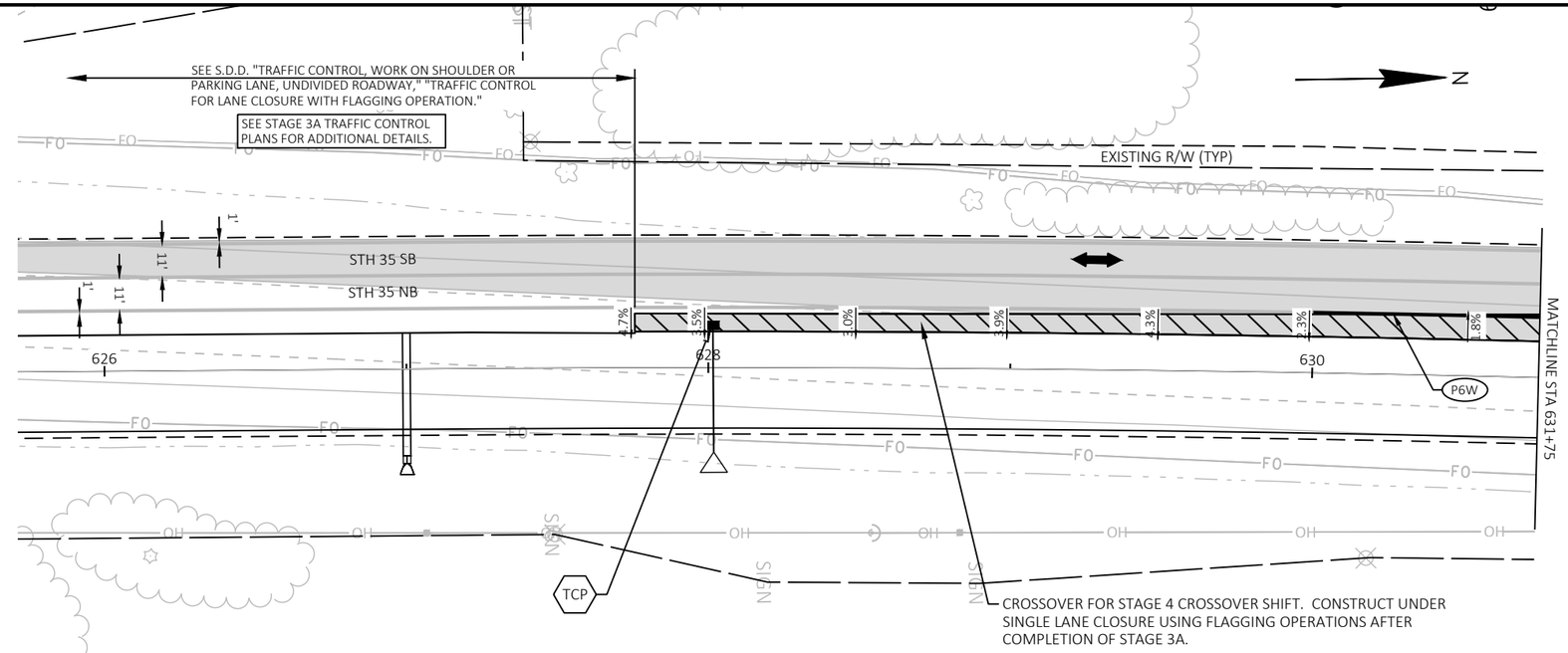

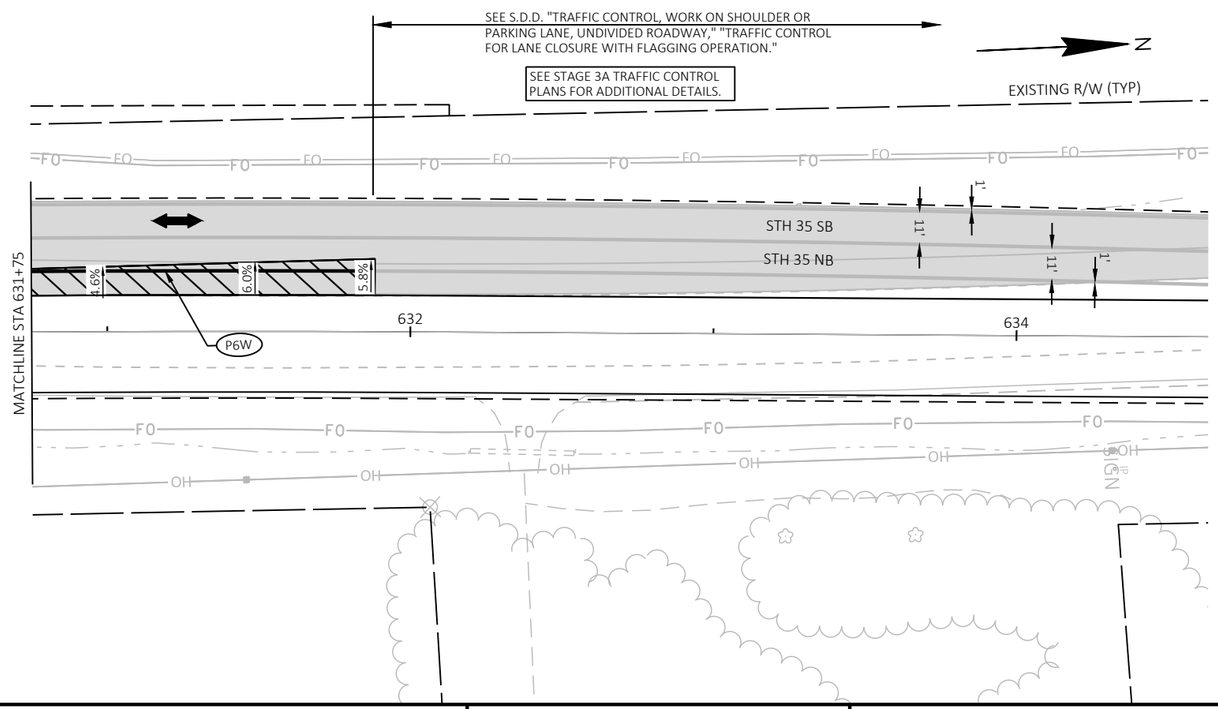

PROJECT NO: 5163-07-72	HWY: STH 35	COUNTY: LA CROSSE/VERNON	STAGED CONSTRUCTION - STAGE 3B -TEMP CROSSOVER DETAIL	SHEET 77	E

2

STAGE 1 CONSTRUCTION – CTH GI

- CLOSE THE SOUTHBOUND STH 35 RIGHT TURN LANE ONTO CTH GI.
- CLOSE THE NORTHBOUND STH 35 LEFT TURN LANE ONTO CTH GI.
- CLOSE CTH GI TO THRU TRAFFIC.
- CONSTRUCT CTH GI FROM STA 16+25 UP TO APPROXIMATELY STATION 19+00.

STAGE 1 TRAFFIC – CTH GI

- UTILIZE THE EXISTING STH 35 LANES FOR NORTHBOUND AND SOUTHBOUND TRAFFIC.
- STANDARD DETAIL DRAWING: "TRAFFIC CONTROL, WORK ON SHOULDER OR PARKING LANE, UNDIVIDED ROADWAY," AND "BARRICADES AND SIGNS FOR SIDEROAD CLOSURES," DETAIL 2.
- MAINTAIN LOCAL ACCESS ON CTH GI. SEE SPECIAL PROVISIONS FOR REQUIREMENTS.

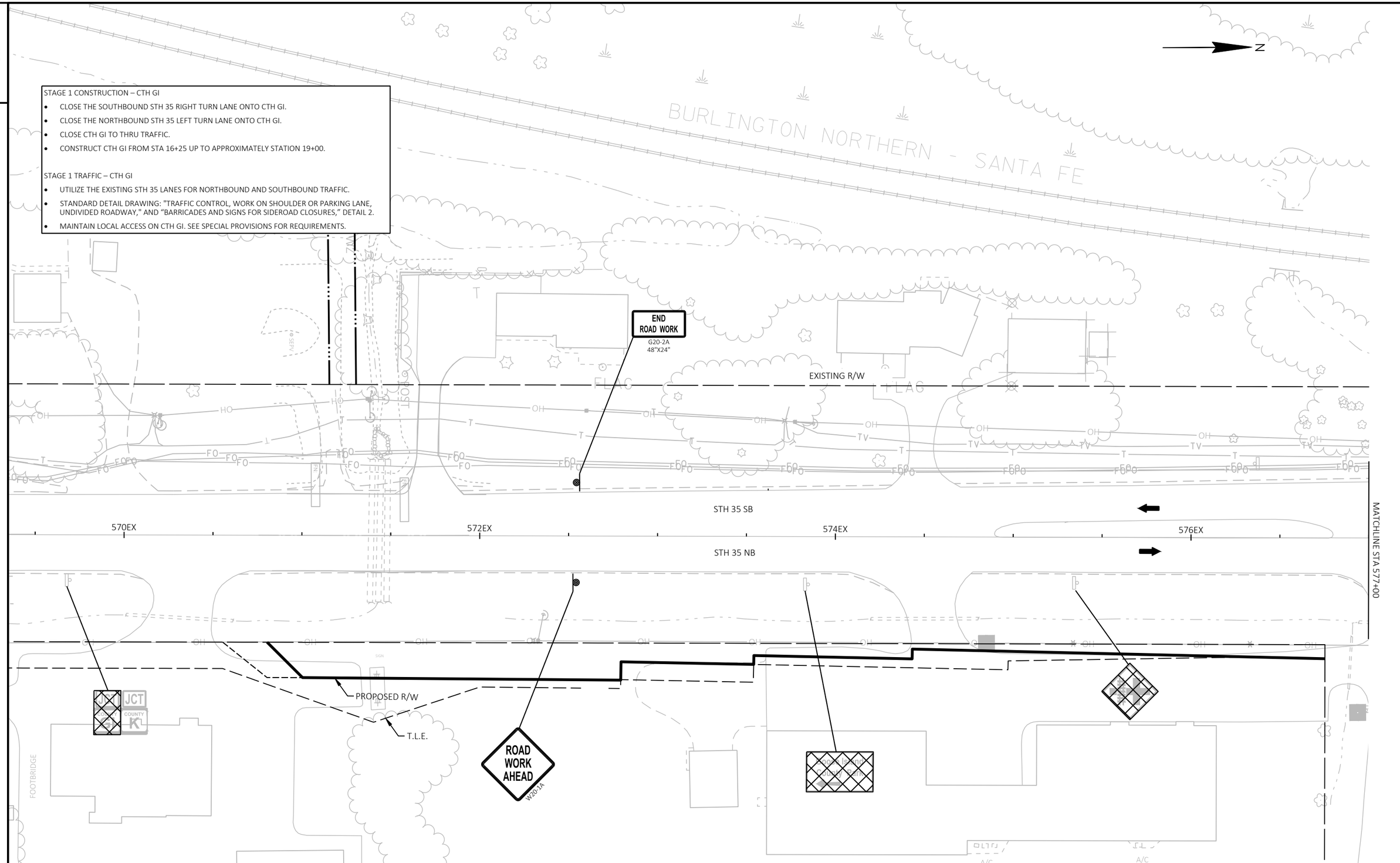

2

PROJECT NO: 5163-07-72	HWY: STH 35	COUNTY: LA CROSSE/VERNON	STAGED CONSTRUCTION - STAGE 1 - CTH GI NORTH	SHEET 78	E

FILE NAME : O:\PDS\C3D\51630702\SHEETSPLAN\026000-S1-GI.NORTH.DWG
LAYOUT NAME - 01
PLOT DATE : 6/26/2025 12:22 PM
PLOT BY : ED OCHS
PLOT NAME :
PLOT SCALE : 1 IN:50 FT
WISDOT/CADDS SHEET 44

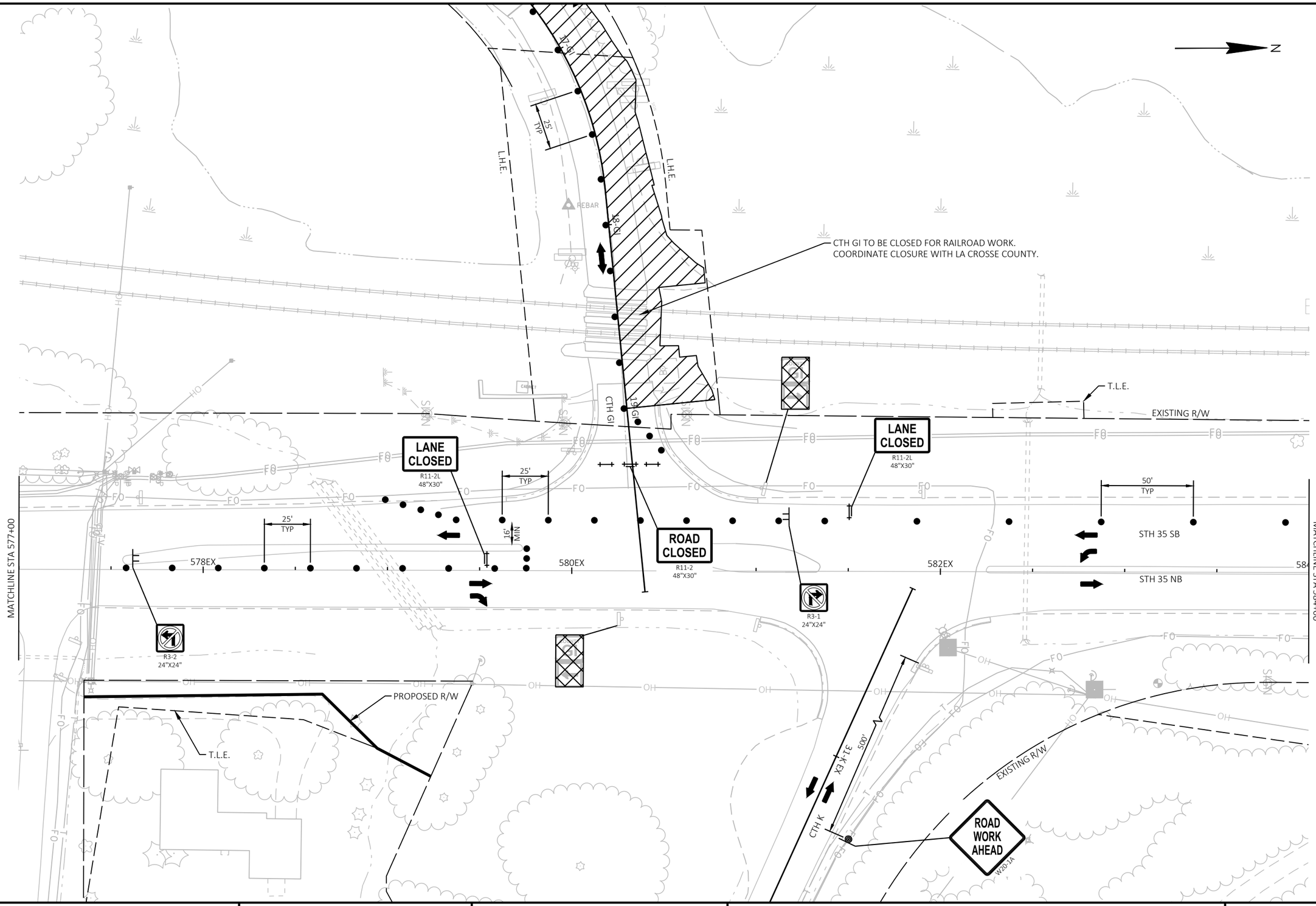

PROJECT NO: 5163-07-72	HWY: STH 35	COUNTY: LA CROSSE/VERNON	STAGED CONSTRUCTION - STAGE 1 - CTH GI NORTH	SHEET 79	E

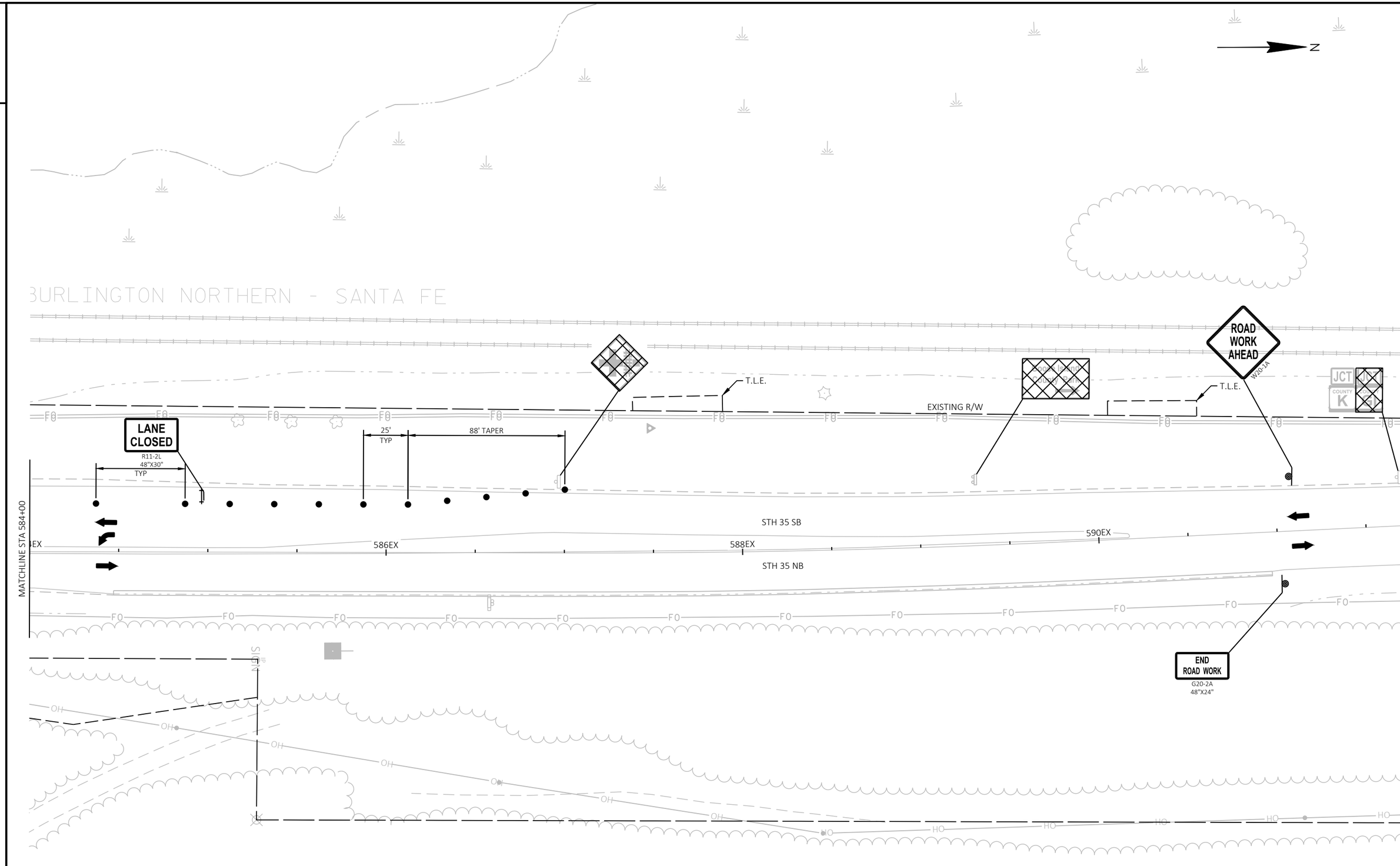

PROJECT NO: 5163-07-72	HWY: STH 35	COUNTY: LA CROSSE/VERNON	STAGED CONSTRUCTION - STAGE 1 - CTH GI NORTH	SHEET 80	E

FILE NAME : O:\PDS\C3D\51630702\SHEETSPLAN\026000-S1-GI.NORTH.DWG
LAYOUT NAME - 03
PLOT DATE : 6/26/2025 12:22 PM
PLOT BY : ED OCHS
PLOT NAME :
PLOT SCALE : 1 IN:50 FT

2

STAGE 1 CONSTRUCTION – CTH GI

- CLOSE THE SOUTHBOUND STH 35 RIGHT TURN LANE ONTO CTH GI.
- CLOSE THE NORTHBOUND STH 35 LEFT TURN LANE ONTO CTH GI.
- CLOSE CTH GI TO THRU TRAFFIC.
- CONSTRUCT CTH GI FROM STA 16+25 UP TO APPROXIMATELY STATION 19+00.

STAGE 1 TRAFFIC – CTH GI

- UTILIZE THE EXISTING STH 35 LANES FOR NORTHBOUND AND SOUTHBOUND TRAFFIC.
- STANDARD DETAIL DRAWING: "TRAFFIC CONTROL, WORK ON SHOULDER OR PARKING LANE, UNDIVIDED ROADWAY," AND "BARRICADES AND SIGNS FOR SIDEROAD CLOSURES," DETAIL 2.
- MAINTAIN LOCAL ACCESS ON CTH GI. SEE SPECIAL PROVISIONS FOR REQUIREMENTS.

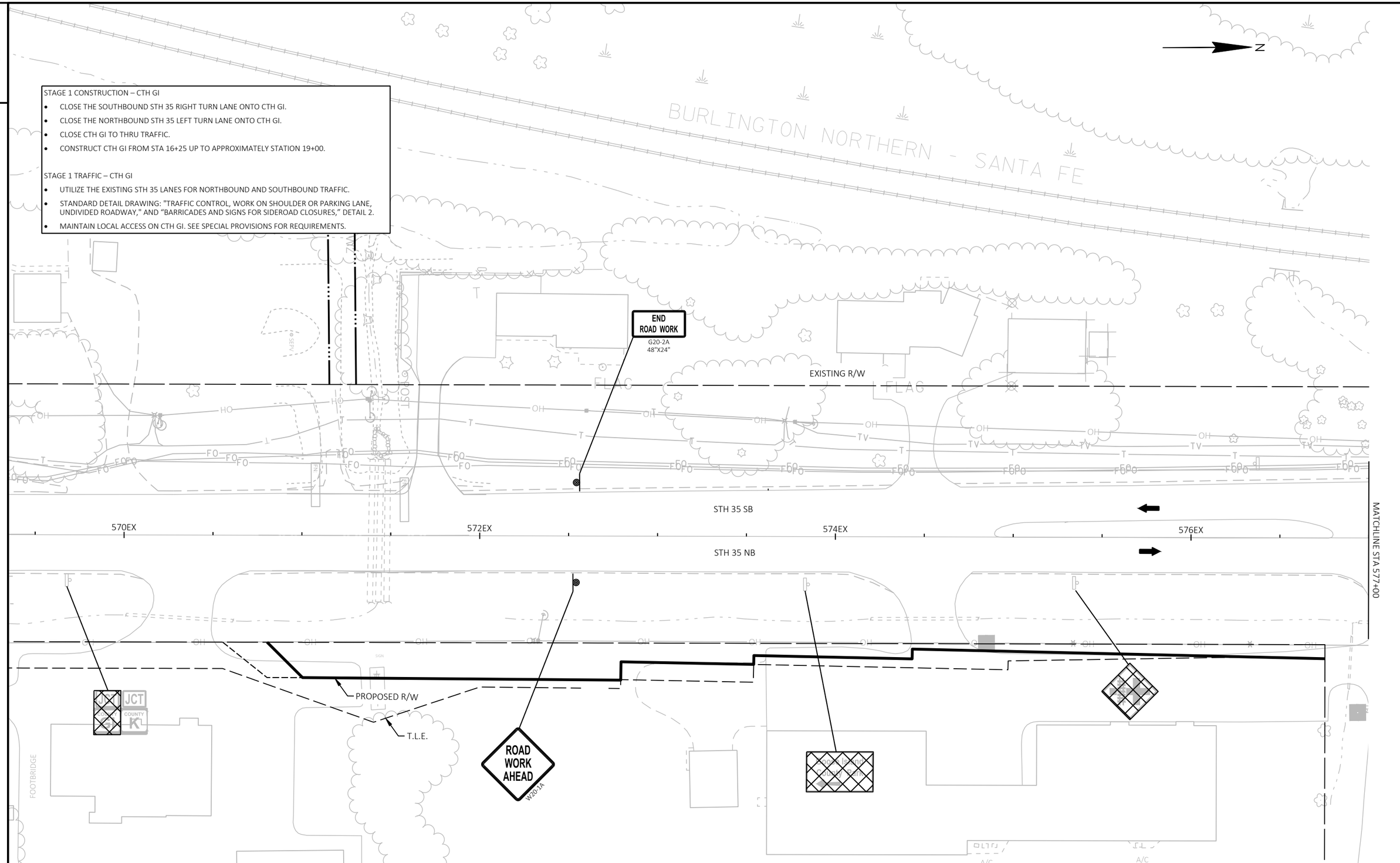

2

PROJECT NO: 5163-07-72	HWY: STH 35	COUNTY: LA CROSSE/VERNON	STAGED CONSTRUCTION - STAGE 1 - CTH GI SOUTH	SHEET 81	E

FILE NAME : O:\PDS\C3D\51630702\SHEETSPLAN\026000-S1-GI.SOUTH.DWG
LAYOUT NAME - 01
PLOT DATE : 6/26/2025 12:25 PM
PLOT BY : ED OCHS
PLOT NAME :
PLOT SCALE : 1 IN:50 FT

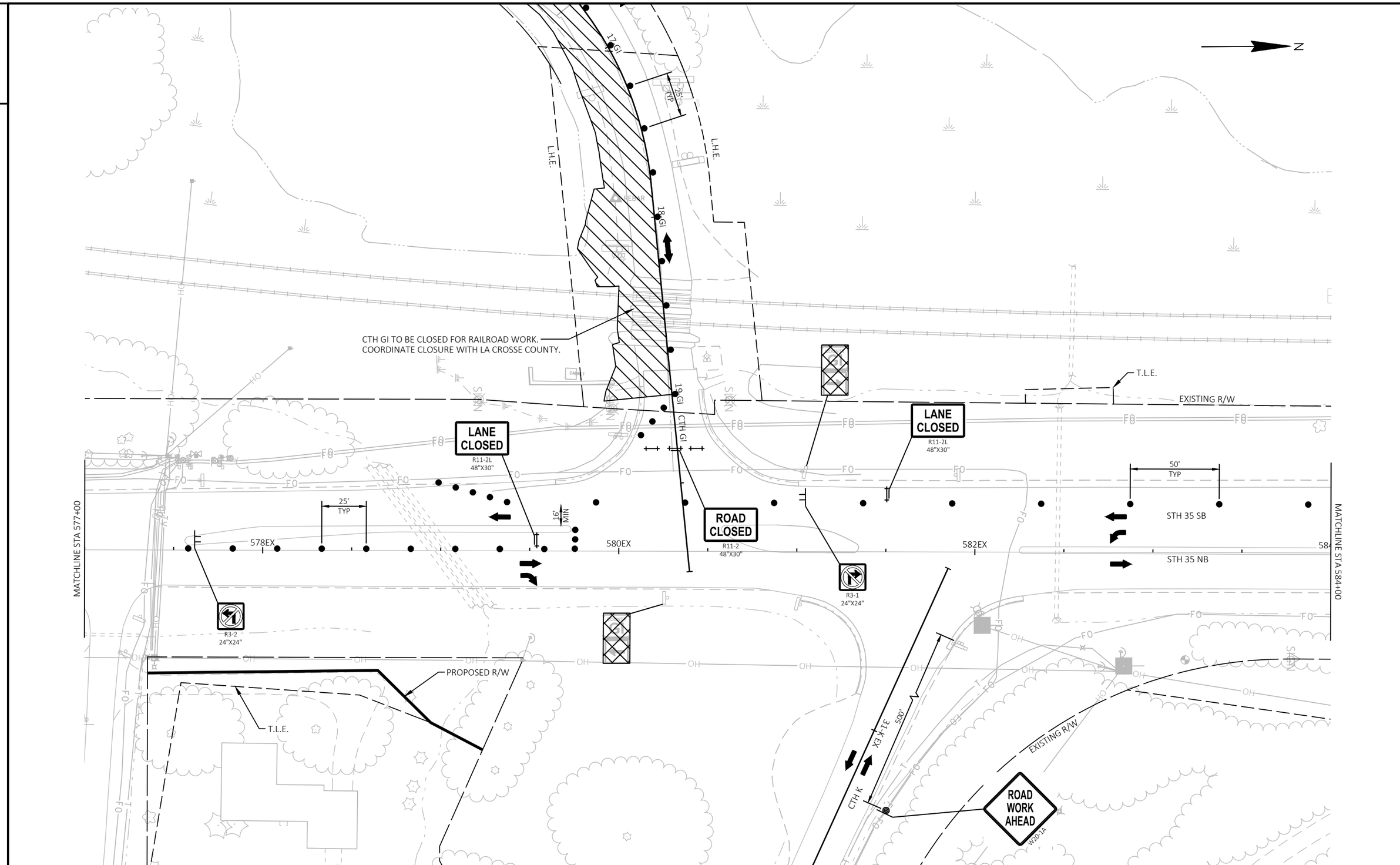

PROJECT NO: 5163-07-72	HWY: STH 35	COUNTY: LA CROSSE/VERNON	STAGED CONSTRUCTION - STAGE 1 - CTH GI SOUTH	SHEET 82	E

FILE NAME : O:\PDS\C3D\51630702\SHEETSPLAN\026000-S1-GI.SOUTH.DWG
LAYOUT NAME - 02
PLOT DATE : 6/26/2025 12:25 PM
PLOT BY : ED OCHS
PLOT NAME :
PLOT SCALE : 1 IN:50 FT

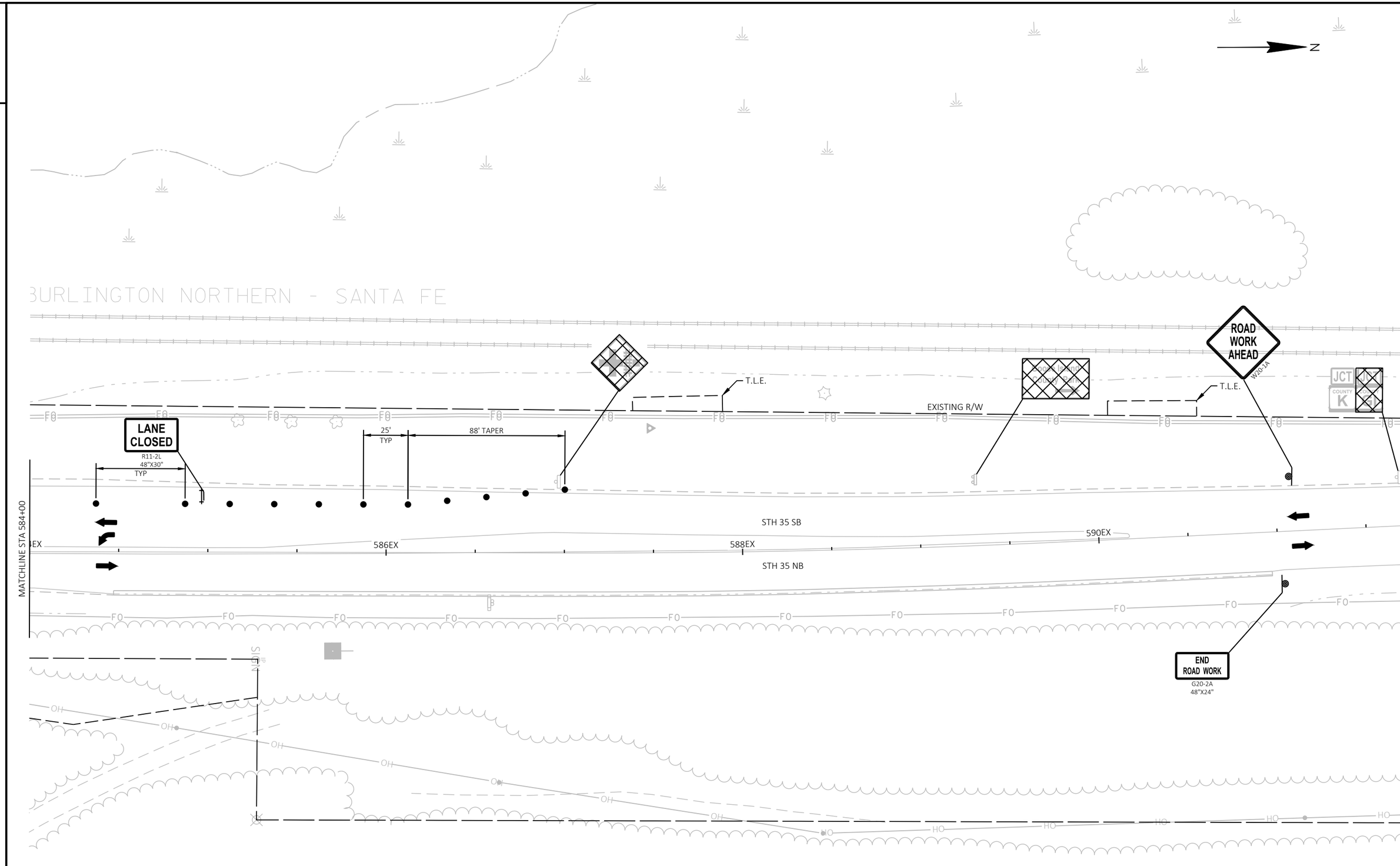
N
BURLINGTON NORTHERN - SANTA FE
ROAD WORK AHEAD
W20-1A
T.L.E.
T.L.E.
EXISTING R/W
JCT
COUNTY
K
LANE CLOSED
R11-2L
48"X30"
TYP
25'
TYP
88' TAPER
MATCHLINE STA 584+00
STH 35 SB
STH 35 NB
586EX
588EX
590EX
END ROAD WORK
G20-2A
48"X24"

2

STAGE 1A CONSTRUCTION

- INSTALL PORTABLE TEMPORARY SIGNALS TO CONSTRUCT THE WEST HALF OF THE PROPOSED BOX CULVERT, C-32-104, UNDER STH 35 APPROXIMATELY 550' SOUTH OF COTTONWOOD DRIVE.
- INSTALL DRIVEWAY ASSISTANCE DEVICES (DAD) TO MAINTAIN ACCESS TO DRIVEWAYS WITHIN THE WORK ZONE.
- INSTALL TEMPORARY SHORING AND TEMPORARY CONCRETE BARRIER FOR BOX CULVERT CONSTRUCTION.
- INSTALL TEMPORARY STORM SEWER TO MAINTAIN DRAINAGE.
- INSTALL TEMPORARY WIDENING ALONG COTTONWOOD DR.

STAGE 1 TRAFFIC

- SHIFT TRAFFIC TO NORTHBOUND STH 35 LANE AND SHOULDER.
- UTILIZE PORTABLE TEMPORARY SIGNALS AND DRIVEWAY ASSISTANCE DEVICES (DAD) ON STH 35.

STANDARD DETAIL DRAWING: "TRAFFIC CONTROL, ONE LANE ROAD WITH TEMPORARY SIGNALS" AND "BRIDGE TEMPORARY TRAFFIC SIGNAL INSTALLATION"

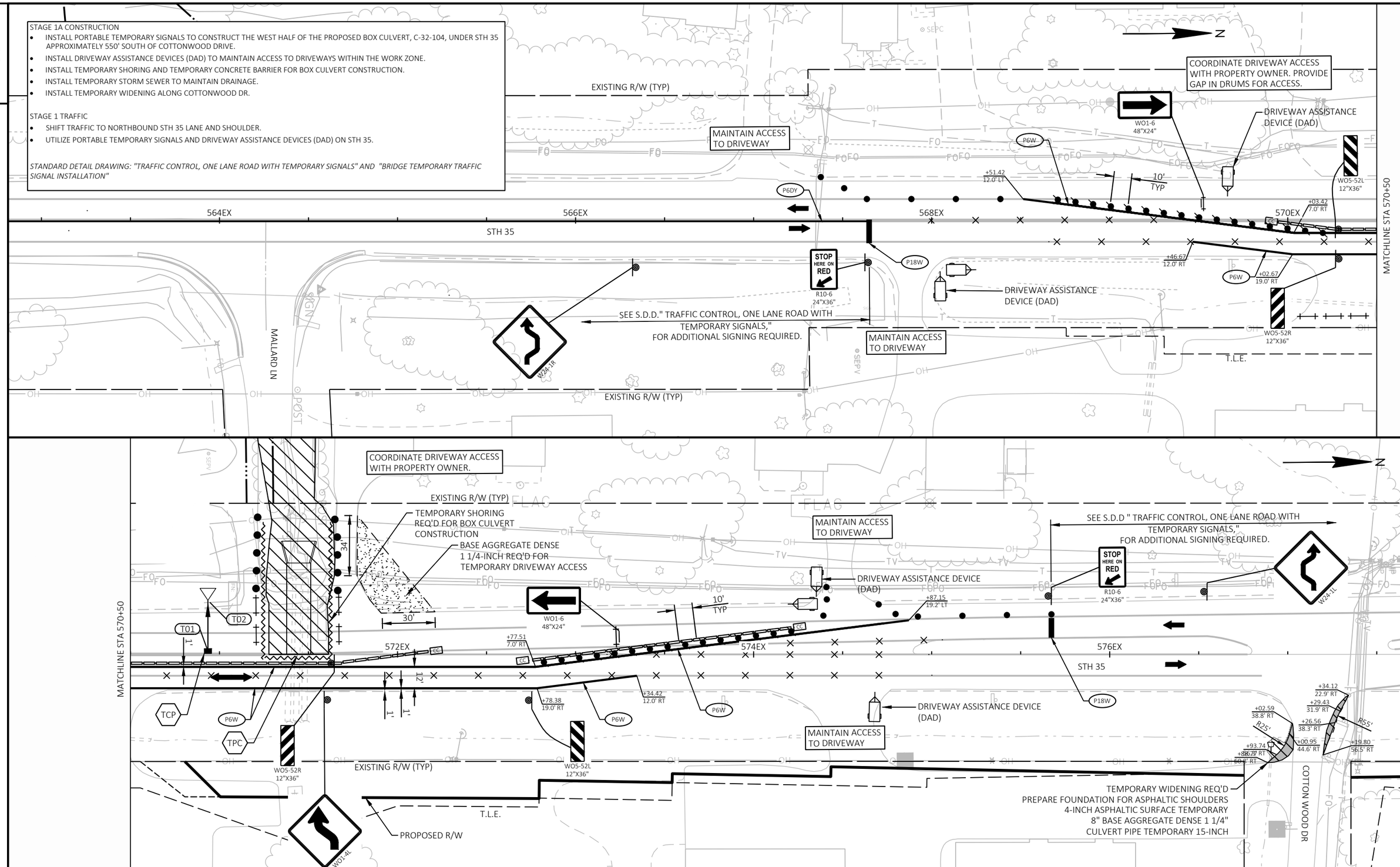

PROJECT NO: 5163-07-72	HWY: STH 35	COUNTY: LA CROSSE/VERNON	STAGED CONSTRUCTION - STAGE 1A	SHEET 84	E

2

STAGE 1B CONSTRUCTION

- MOVE PORTABLE TEMPORARY SIGNALS TO CONSTRUCT THE EAST HALF OF THE PROPOSED BOX CULVERT, C-32-104, UNDER STH 35 APPROXIMATELY 550' SOUTH OF COTTONWOOD DRIVE.
- UTILIZE DRIVEWAY ASSISTANCE DEVICES (DAD) TO MAINTAIN ACCESS TO DRIVEWAYS WITHIN THE WORK ZONE.
- REMOVE TEMPORARY SHORING AND MOVE TEMPORARY CONCRETE BARRIER FOR BOX CULVERT CONSTRUCTION.

STAGE 1B TRAFFIC

- SHIFT TRAFFIC TO SOUTHBOUND STH 35 LANE AND SHOULDER.
- UTILIZE PORTABLE TEMPORARY SIGNALS AND DRIVEWAY ASSISTANCE DEVICES (DAD) ON STH 35.

STANDARD DETAIL DRAWING: "TRAFFIC CONTROL, ONE LANE ROAD WITH TEMPORARY SIGNALS" AND "BRIDGE TEMPORARY TRAFFIC SIGNAL INSTALLATION"

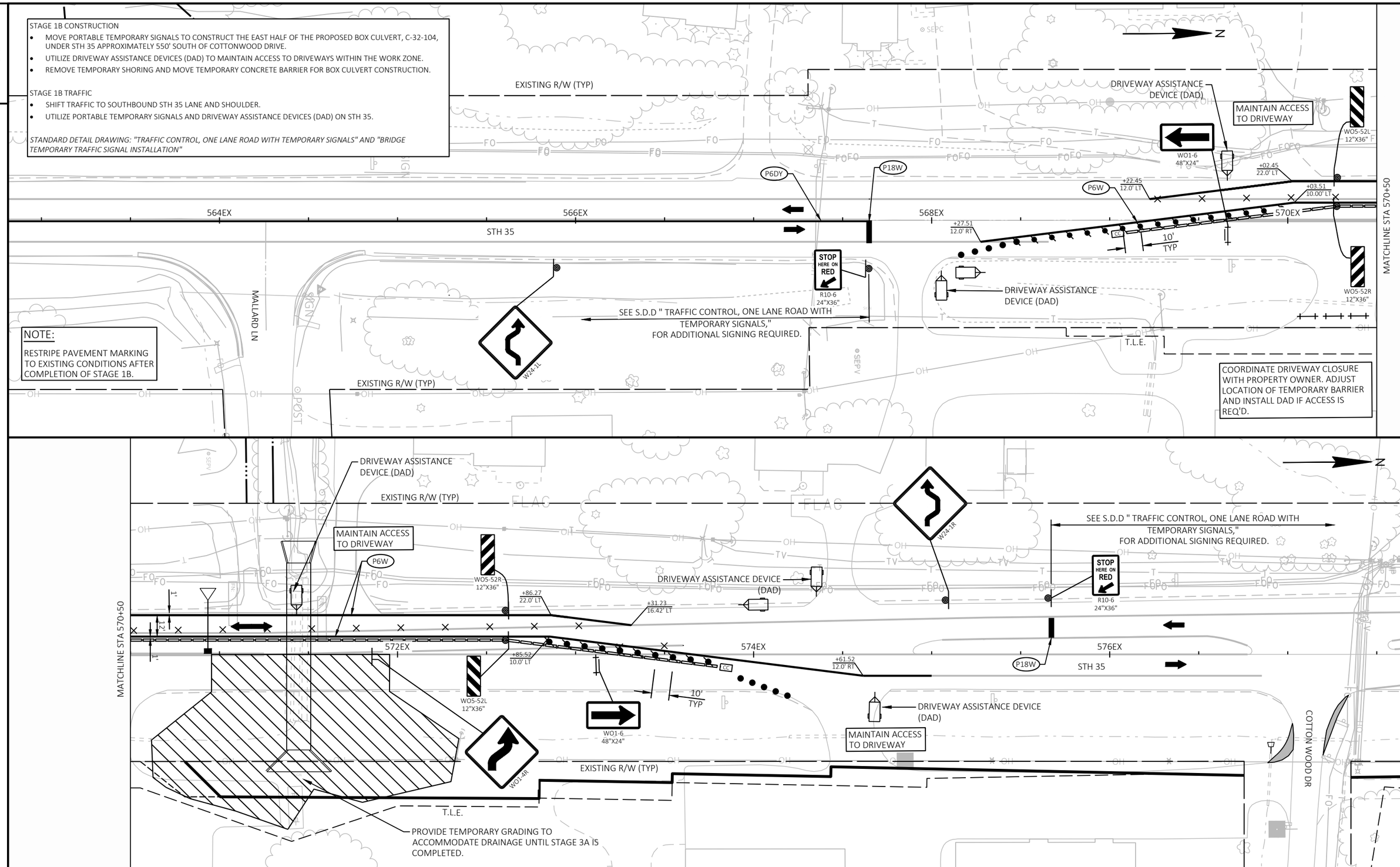

PROJECT NO: 5163-07-72	HWY: STH 35	COUNTY: LA CROSSE/VERNON	STAGED CONSTRUCTION - STAGE 1B	SHEET 85	E

2

STAGE 2A CONSTRUCTION

- CLOSE THE SOUTHBOUND STH 35 SHOULDER.
- CONSTRUCT THE TEMPORARY WIDENING AND PREPARE SHOULDER ON SOUTHBOUND STH 35 AS NOTED IN THE PLAN FOR TRAFFIC SHIFT.
- CLOSE THE WESTBOUND CTH K SHOULDER.
- CONSTRUCT THE TEMPORARY WIDENING AND INSTALL ASPHALTIC CURB ON WESTBOUND CTH K AS NOTED IN THE PLAN FOR TRAFFIC SHIFT.
- INSTALL TEMPORARY WIDENING ALONG COTTONWOOD DRIVE.

STAGE 2A TRAFFIC

- UTILIZE THE EXISTING STH 35 LANES FOR NORTHBOUND AND SOUTHBOUND TRAFFIC.
- UTILIZE 11' LANES ON STH 35 DURING WORK HOURS.
- UTILIZE THE EXISTING CTH K LANES FOR WESTBOUND AND EASTBOUND TRAFFIC.
- UTILIZE FLAGGING OPERATIONS ON STH 35 AND CTH K, AS REQUIRED.

STANDARD DETAIL DRAWING: "TRAFFIC CONTROL, WORK ON SHOULDER OR PARKING LANE, UNDIVIDED ROADWAY," "TRAFFIC CONTROL FOR LANE CLOSURE WITH FLAGGING OPERATION," AND " TRAFFIC CONTROL, LANE CLOSURE WITH AUTOMATED FLAGGER ASSISTANCE DEVICE"

(A) 11' LANES DURING WORKING HOURS

THIS PAGE INTENTIONALLY LEFT BLANK

2

PCMS MESSAGE OVERVIEW			
SIGN OWNER	PCMS SITE NO. (DIR.)	7 DAYS PRIOR TO STAGE CHANGE	
		FRAME 1 (2 SEC)	FRAME 2 (2 SEC)
CONTRACTOR	STH 35 SB	ROADWORK BEGINS	{DAY} {DATE}

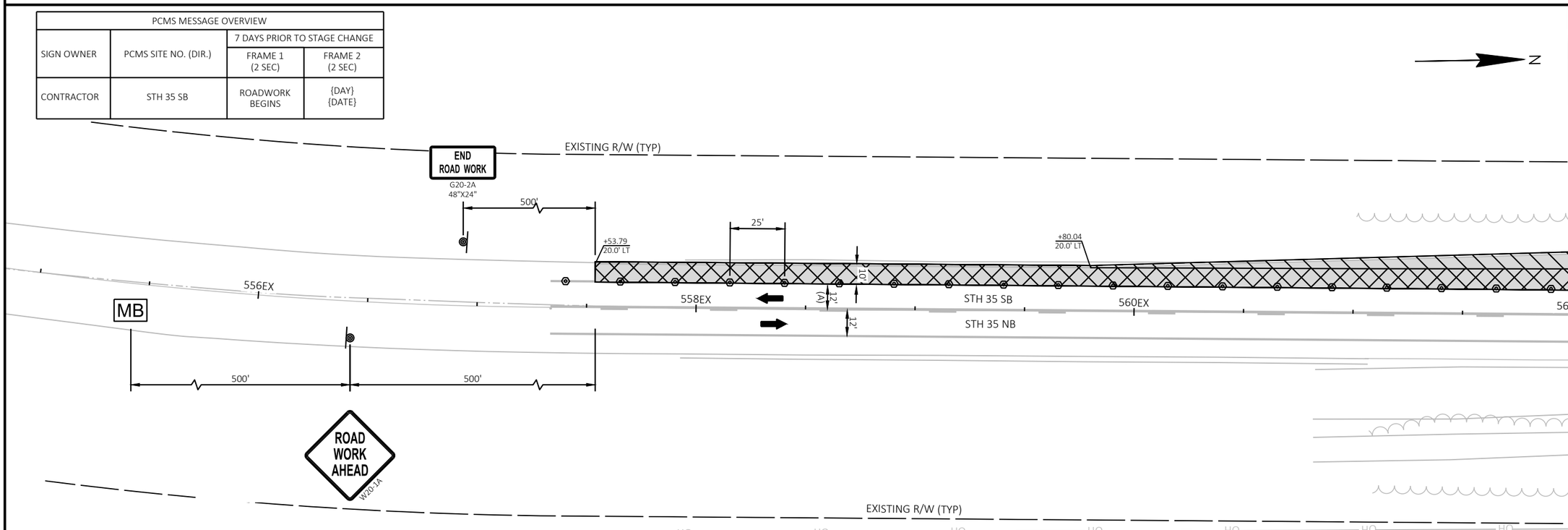

PROJECT NO: 5163-07-72	HWY: STH 35	COUNTY: LA CROSSE/VERNON	STAGED CONSTRUCTION - STAGE 2A	SHEET 86	E

FILE NAME : O:\PDS\C3D\51630702\SHEETSPLAN\026001-S2A.DWG
LAYOUT NAME - 01
PLOT DATE : 4/29/2025 12:59 PM PLOT BY : ED OCHS PLOT NAME : PLOT SCALE : 1 IN:50 FT

2

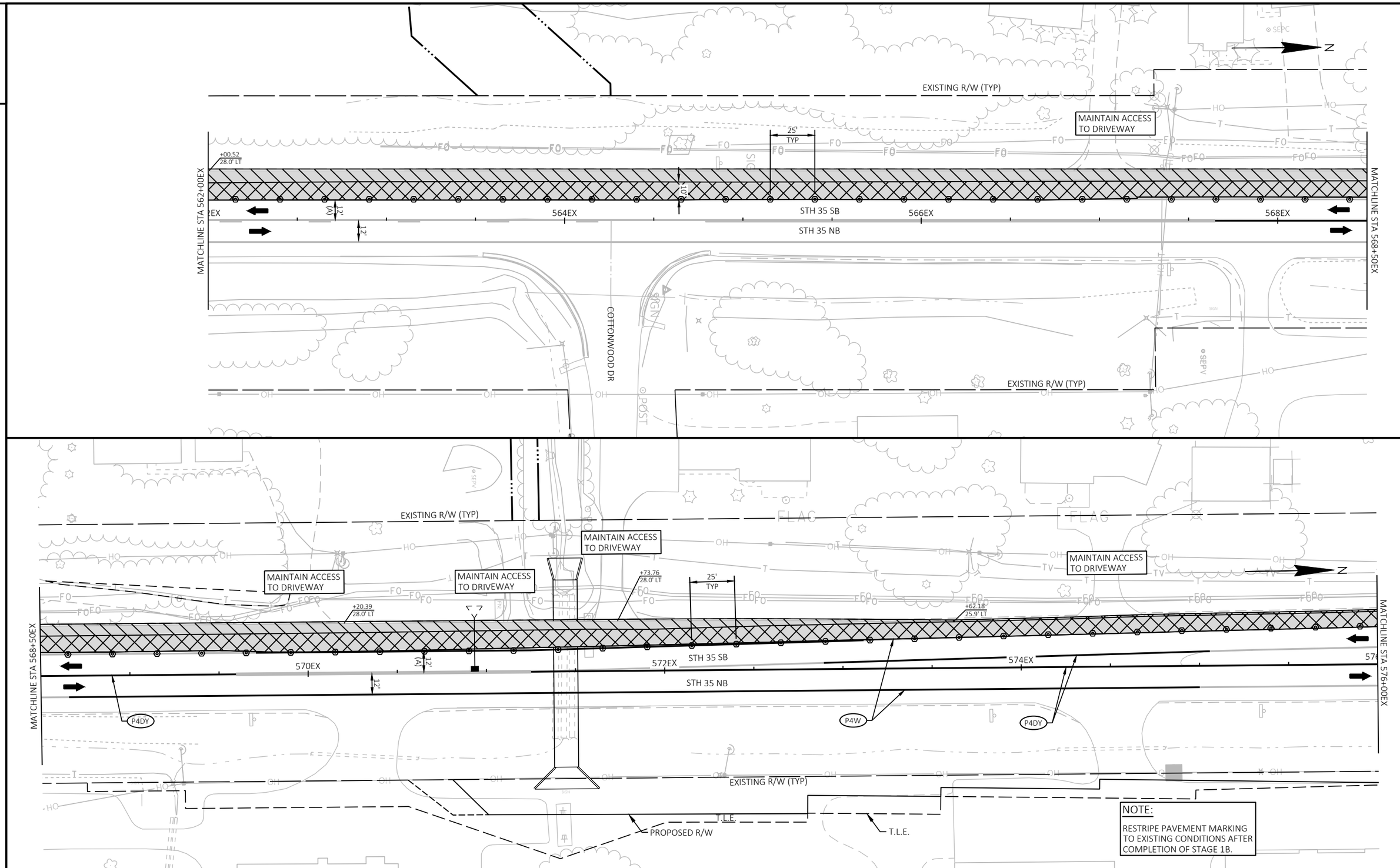

2

PROJECT NO: 5163-07-72	HWY: STH 35	COUNTY: LA CROSSE/VERNON	STAGED CONSTRUCTION - STAGE 2A	SHEET 87	E

FILE NAME : O:\PDS\C3D\51630702\SHEETSPLAN\026001-S2A.DWG
LAYOUT NAME - 02
PLOT DATE : 4/29/2025 12:59 PM
PLOT BY : ED OCHS
PLOT NAME :
PLOT SCALE : 1 IN:50 FT

WISDOT/CADDS SHEET 44

2

ROAD WORK AHEAD
W20-1A
200'
CTH GI
EXISTING R/W (TYP)
T.L.E.
N
12.5' TYP
25' TYP
+34.97
30.4' LT
+00.83
37.7' LT
MATCHLINE STA 576+00EX
MATCHLINE STA 583+50EX
STH 35 SB
STH 35 NB
578EX
580EX
582EX
PROPOSED R/W
T.L.E.
CTH K
31-X-EX

2

W01-4R
N
T.L.E.
EXISTING R/W (TYP)
+86.57
52.8' LT
+02.16
35.3' LT
+02.07
24.7' LT
MATCHLINE STA 583+50EX
MATCHLINE STA 591+00EX
584EX
586EX
588EX
590EX
STH 35 SB
STH 35 NB
12.5' TYP
12' (A)
10'
12'
25' TYP
BEGIN RIGHT TURN LANE
R3-20R
24"X36"
EXISTING R/W (TYP)
T.L.E.

PROJECT NO: 5163-07-72	HWY: STH 35	COUNTY: LA CROSSE/VERNON	STAGED CONSTRUCTION - STAGE 2A	SHEET 88	E

FILE NAME : O:\PDS\C3D\51630702\SHEETSPLAN\026001-S2A.DWG
LAYOUT NAME - 03
PLOT DATE : 4/29/2025 12:59 PM
PLOT BY : ED OCHS
PLOT NAME :
PLOT SCALE : 1 IN:50 FT
WISDOT/CADDS SHEET 44

2

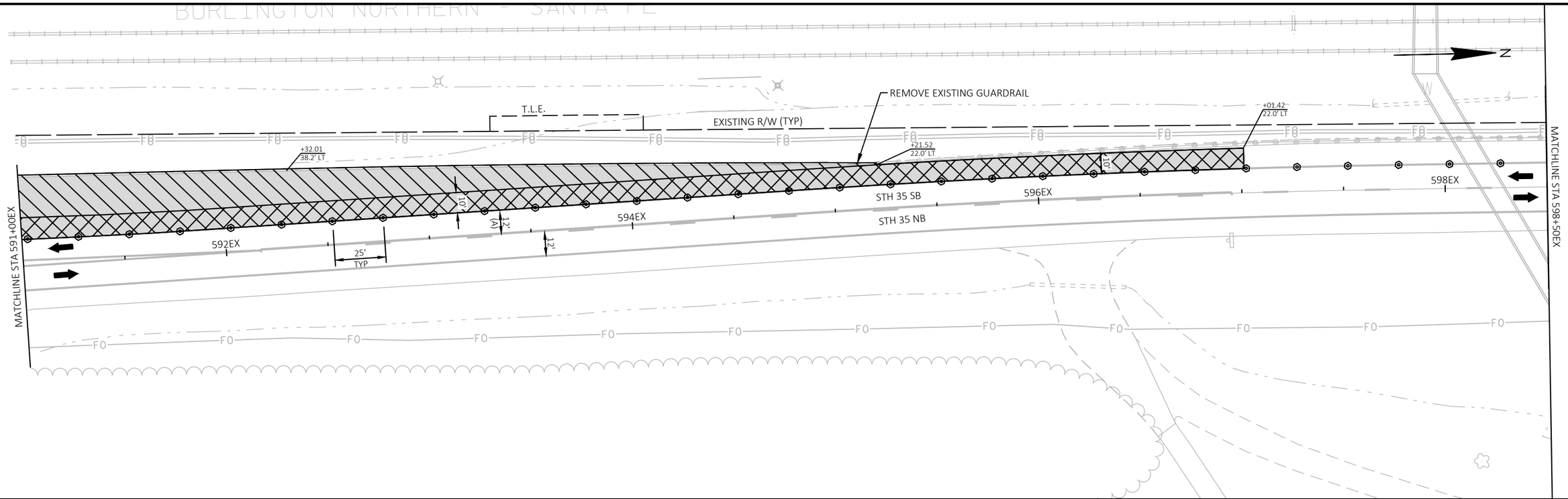

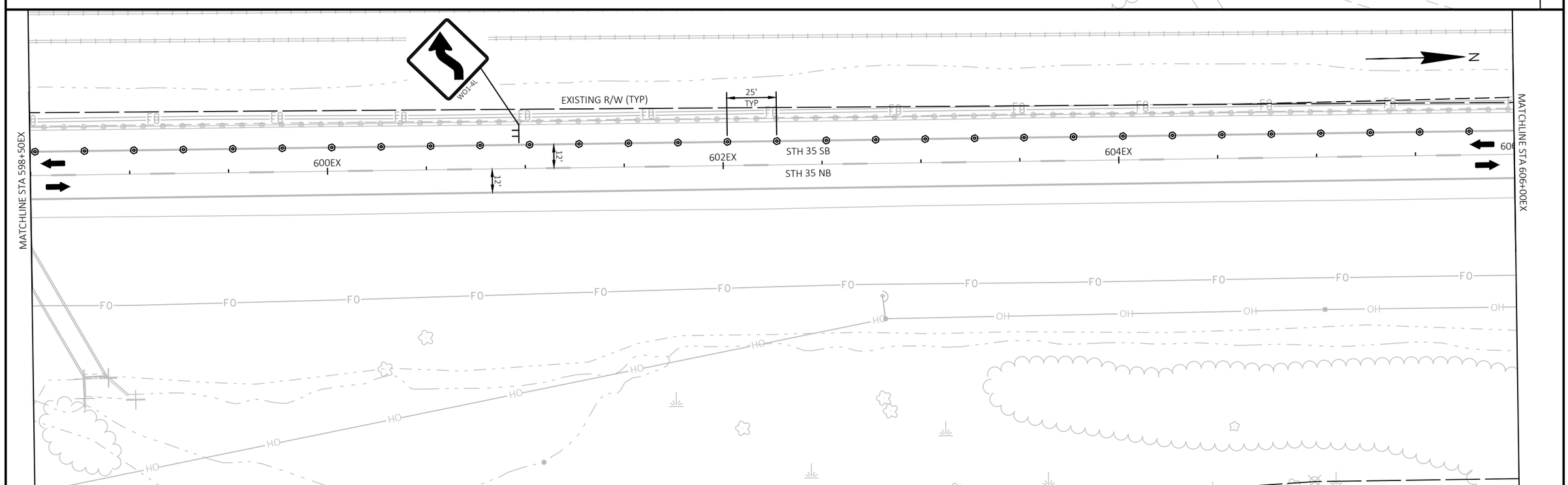

PROJECT NO: 5163-07-72	HWY: STH 35	COUNTY: LA CROSSE/VERNON	STAGED CONSTRUCTION - STAGE 2A	SHEET 89	E

FILE NAME : O:\PDS\C3D\51630702\SHEETSPLAN\026001-S2A.DWG
LAYOUT NAME - 04
PLOT DATE : 4/29/2025 12:59 PM
PLOT BY : ED OCHS
PLOT NAME :
PLOT SCALE : 1 IN:50 FT

2

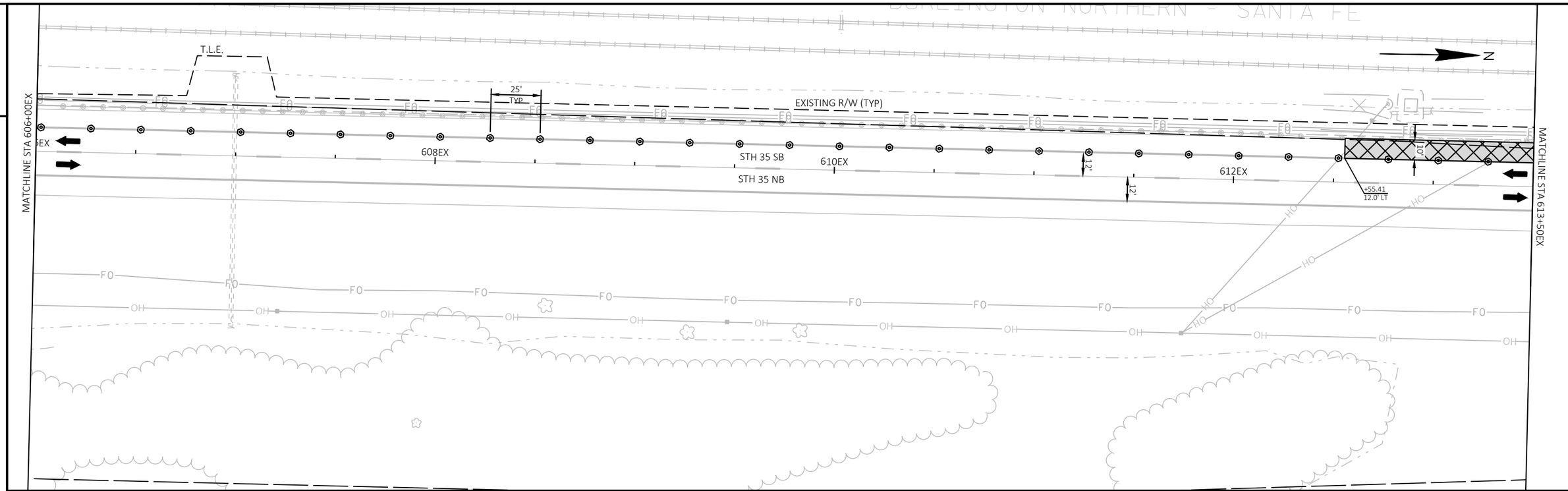

2

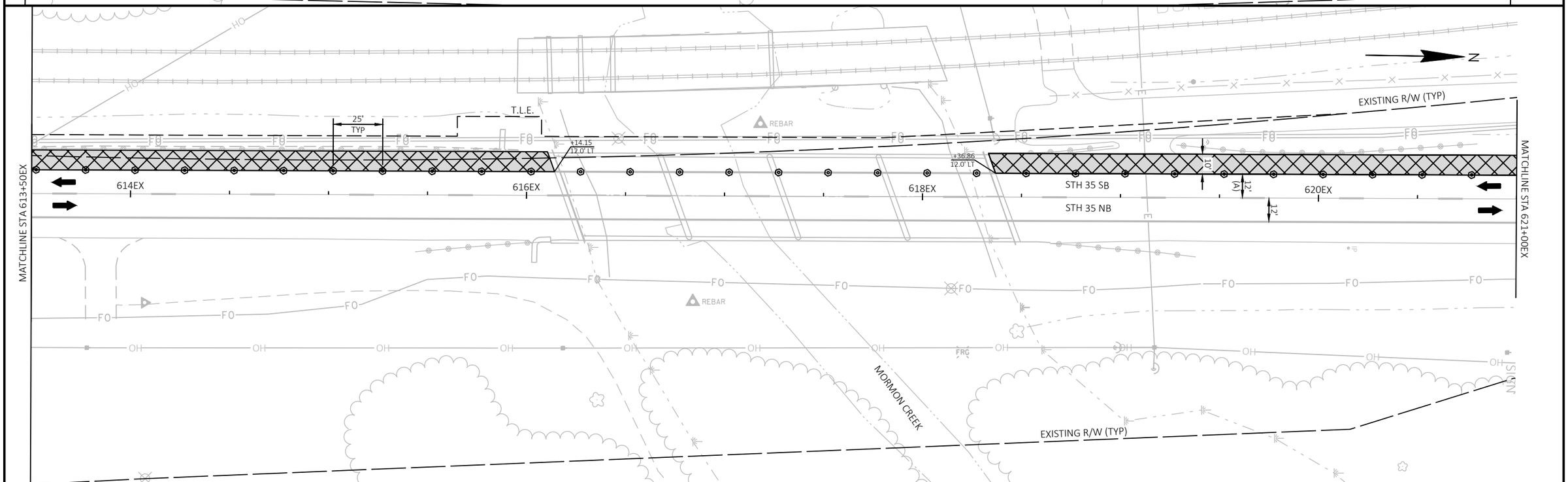

PROJECT NO: 5163-07-72	HWY: STH 35	COUNTY: LA CROSSE/VERNON	STAGED CONSTRUCTION - STAGE 2A	SHEET 90	E

FILE NAME : O:\PDS\C3D\51630702\SHEETSPLAN\026001-S2A.DWG
LAYOUT NAME - 05
PLOT DATE : 4/29/2025 12:59 PM
PLOT BY : ED OCHS
PLOT NAME :
PLOT SCALE : 1 IN:50 FT

WISDOT/CADDS SHEET 44

2

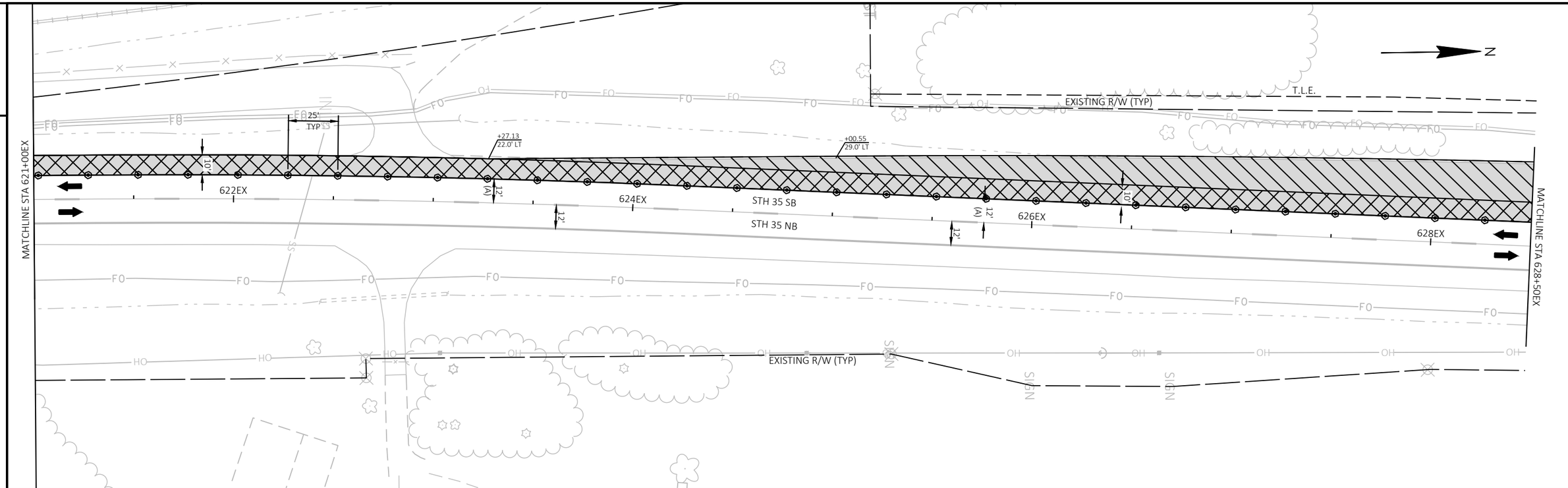

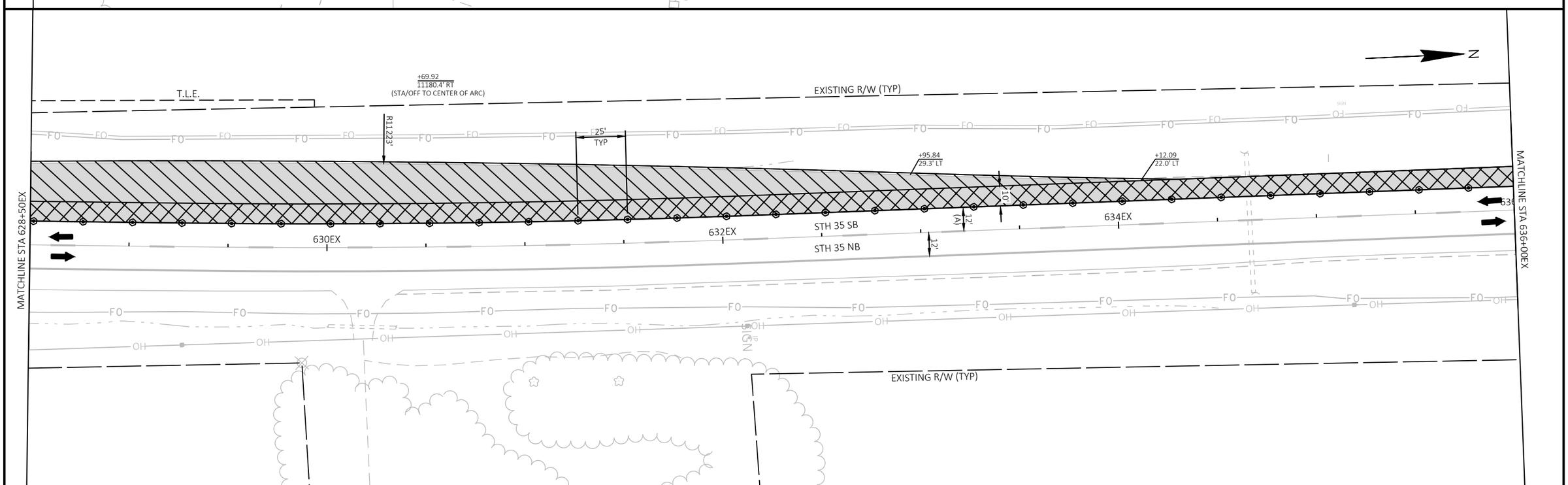

2

PROJECT NO: 5163-07-72	HWY: STH 35	COUNTY: LA CROSSE/VERNON	STAGED CONSTRUCTION - STAGE 2A	SHEET 91	E

FILE NAME : O:\PDS\C3D\51630702\SHEETSPLAN\026001-S2A.DWG
LAYOUT NAME - 06
PLOT DATE : 4/29/2025 1:00 PM
PLOT BY : ED OCHS
PLOT NAME :
PLOT SCALE : 1 IN:50 FT
WISDOT/CADDS SHEET 44

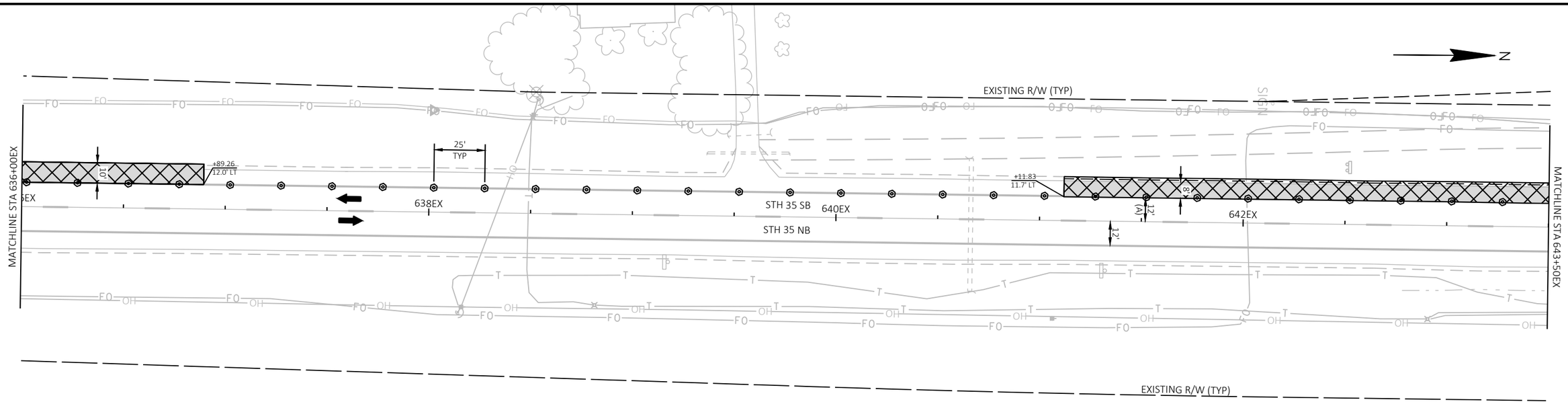
EXISTING R/W (TYP)
MATCHLINE STA 636+00EX
MATCHLINE STA 643+50EX
10'
+89.26
12.0' LT
25'
TYP
638EX
STH 35 SB
640EX
STH 35 NB
+11.83
11.7' LT
8'
12'
(A)
12'
642EX
EXISTING R/W (TYP)

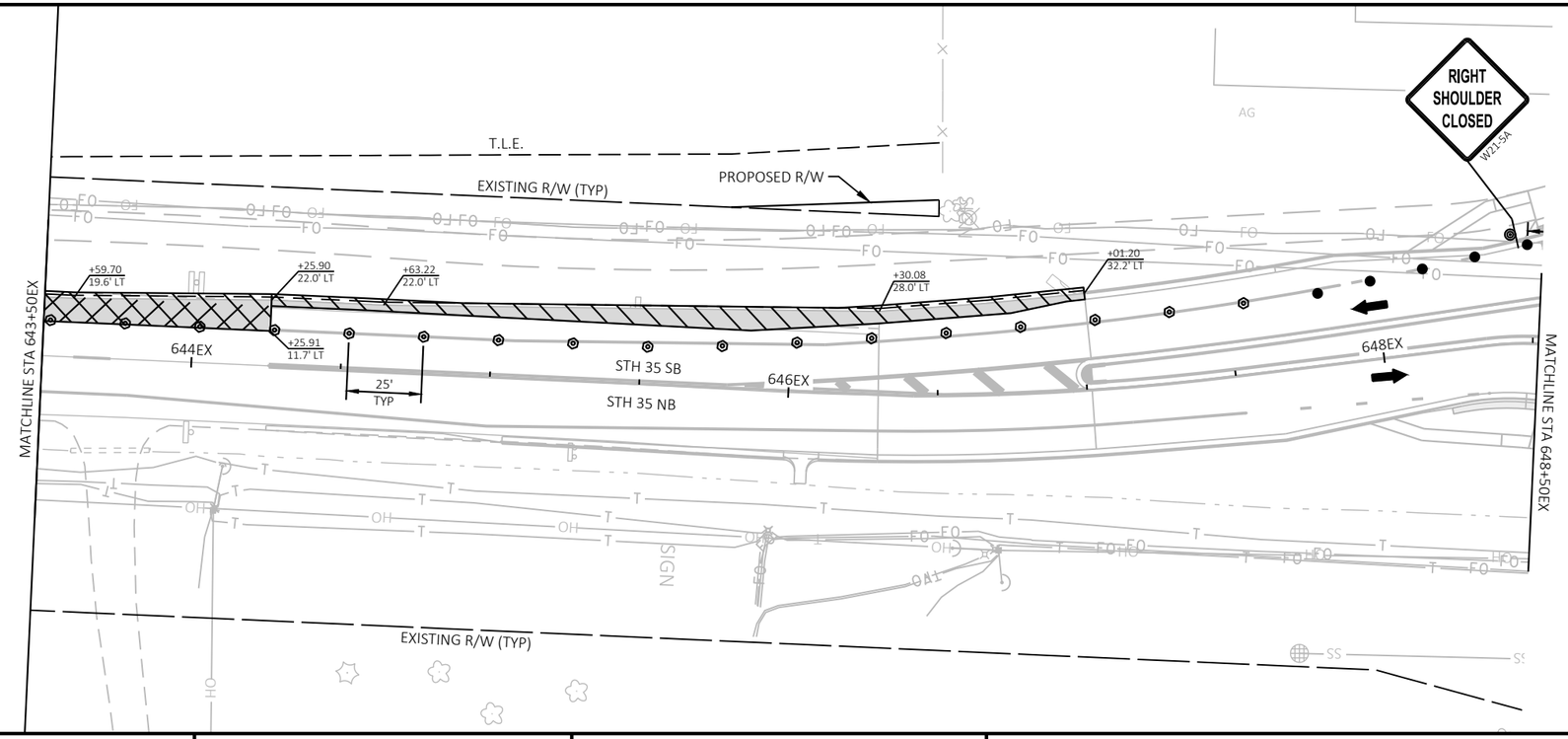
RIGHT
SHOULDER
CLOSED
W21-5A
T.L.E.
EXISTING R/W (TYP)
PROPOSED R/W
MATCHLINE STA 643+50EX
MATCHLINE STA 648+50EX
+59.70
19.6' LT
+25.90
22.0' LT
+63.22
22.0' LT
+30.08
28.0' LT
+01.20
32.2' LT
+25.91
11.7' LT
644EX
25'
TYP
STH 35 SB
646EX
STH 35 NB
648EX
EXISTING R/W (TYP)

2

PCMS MESSAGE OVERVIEW			
SIGN OWNER	PCMS SITE NO. (DIR.)	7 DAYS PRIOR TO STAGE CHANGE	
		FRAME 1 (2 SEC)	FRAME 2 (2 SEC)
CONTRACTOR	STH 35 SB	ROADWORK BEGINS X.XX.XX	{DAY} {DATE}

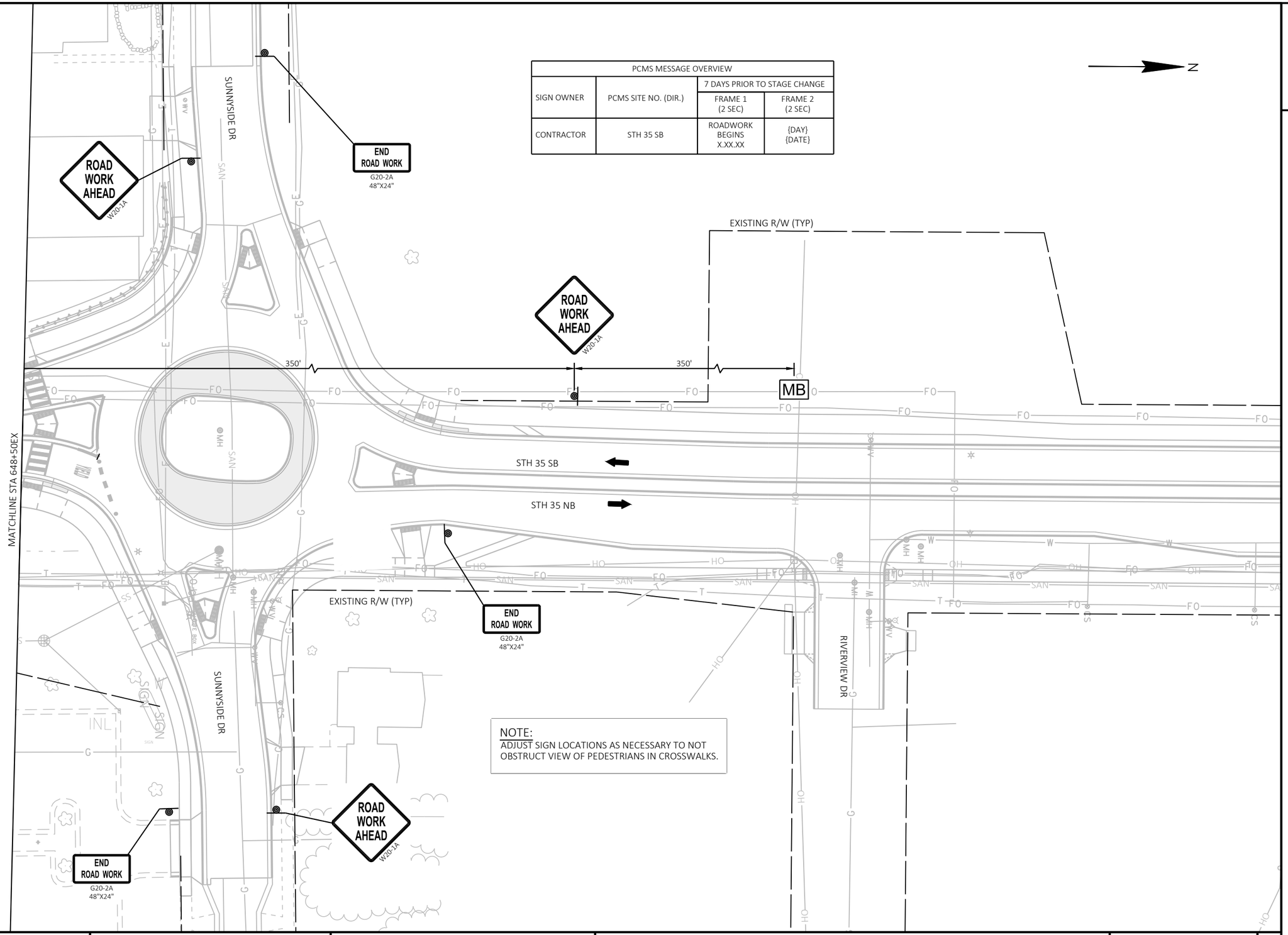

2

PROJECT NO: 5163-07-72	HWY: STH 35	COUNTY: LA CROSSE/VERNON	STAGED CONSTRUCTION - STAGE 2A	SHEET 93	E

FILE NAME : O:\PDS\C3D\51630702\SHEETSPLAN\026001-S2A.DWG
LAYOUT NAME - 08
PLOT DATE : 4/29/2025 1:00 PM
PLOT BY : ED OCHS
PLOT NAME :
PLOT SCALE : 1 IN:50 FT
WISDOT/CADDS SHEET 44

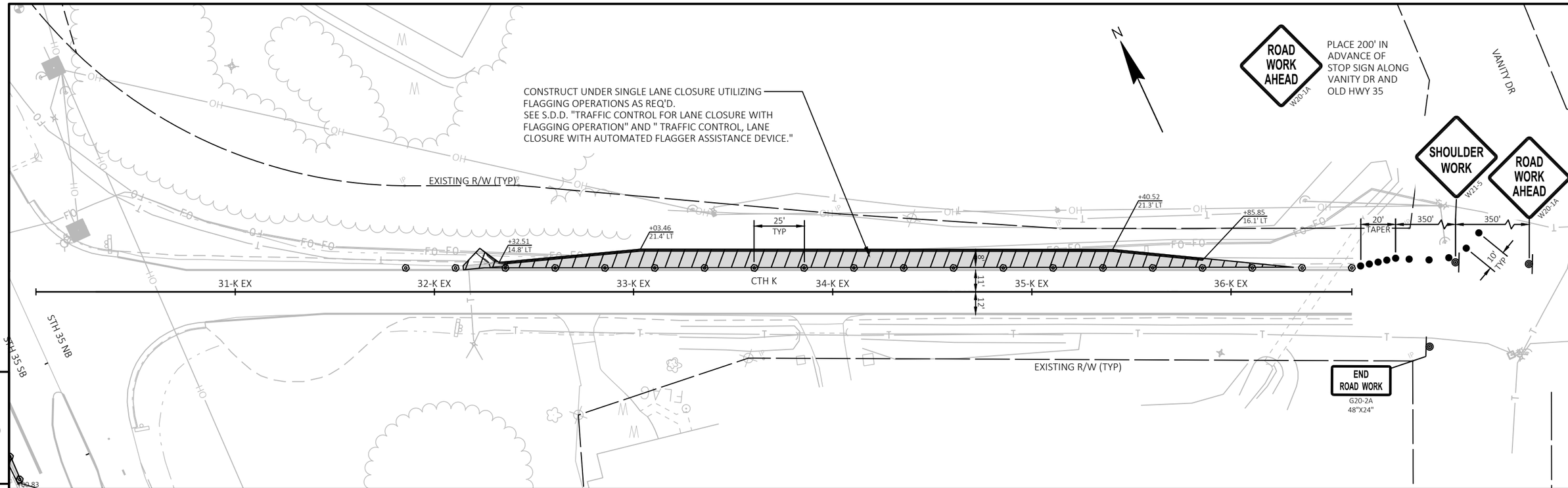

THIS PAGE INTENTIONALLY LEFT BLANK

2

STAGE 2B CONSTRUCTION

- REMOVE CORRUGATED MEDIANS ON STH 35 NEAR THE CTH GI AND CTH K INTERSECTIONS AND INSTALL TEMPORARY ASPHALT.
- REMOVE THE SOUTH SECTION OF THE SPLITTER ISLAND ON STH 35 JUST SOUTH OF SUNNYSIDE DRIVE AND INSTALL TEMPORARY ASPHALT.

STAGE 2B TRAFFIC

- SHIFT STH 35 TRAFFIC TO THE EXISTING SHOULDERS/TEMPORARY PAVEMENT AND OUTSIDE PORTION OF THE EXISTING TRAVEL LANES NEAR THE CTH GI AND CTH K INTERSECTIONS AND JUST SOUTH OF SUNNYSIDE DRIVE.
- COMBINE THE THRU/RIGHT-TURN LANE MOVEMENT FOR TRAFFIC HEADING SOUTHBOUND ON STH 35 AT THE CTH GI INTERSECTION.

STANDARD DETAIL DRAWING: "TRAFFIC CONTROL, INTERSECTION WITHIN SINGLE LEFT LANE CLOSURE," "TRAFFIC CONTROL, WORK ON SHOULDER OR PARKING LANE, UNDIVIDED ROADWAY," & "TRAFFIC CONTROL FOR LANE CLOSURE WITH FLAGGING OPERATION."

NOTE TO REVIEWER:

WINTER SHUTDOWN PLAN AFTER STAGE 2B TO BE COMPLETED IF PROJECT IS ADVANCED.

2

THIS PAGE INTENTIONALLY LEFT BLANK

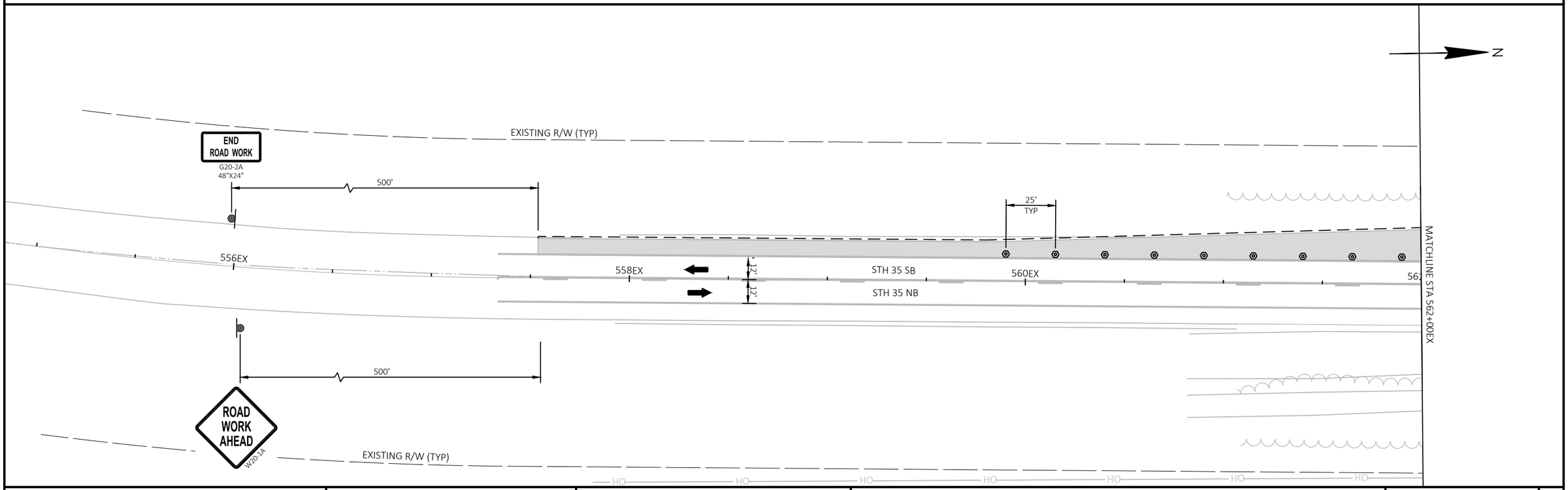

PROJECT NO: 5163-07-72	HWY: STH 35	COUNTY: LA CROSSE/VERNON	STAGED CONSTRUCTION - STAGE 2B	SHEET 95	E

2

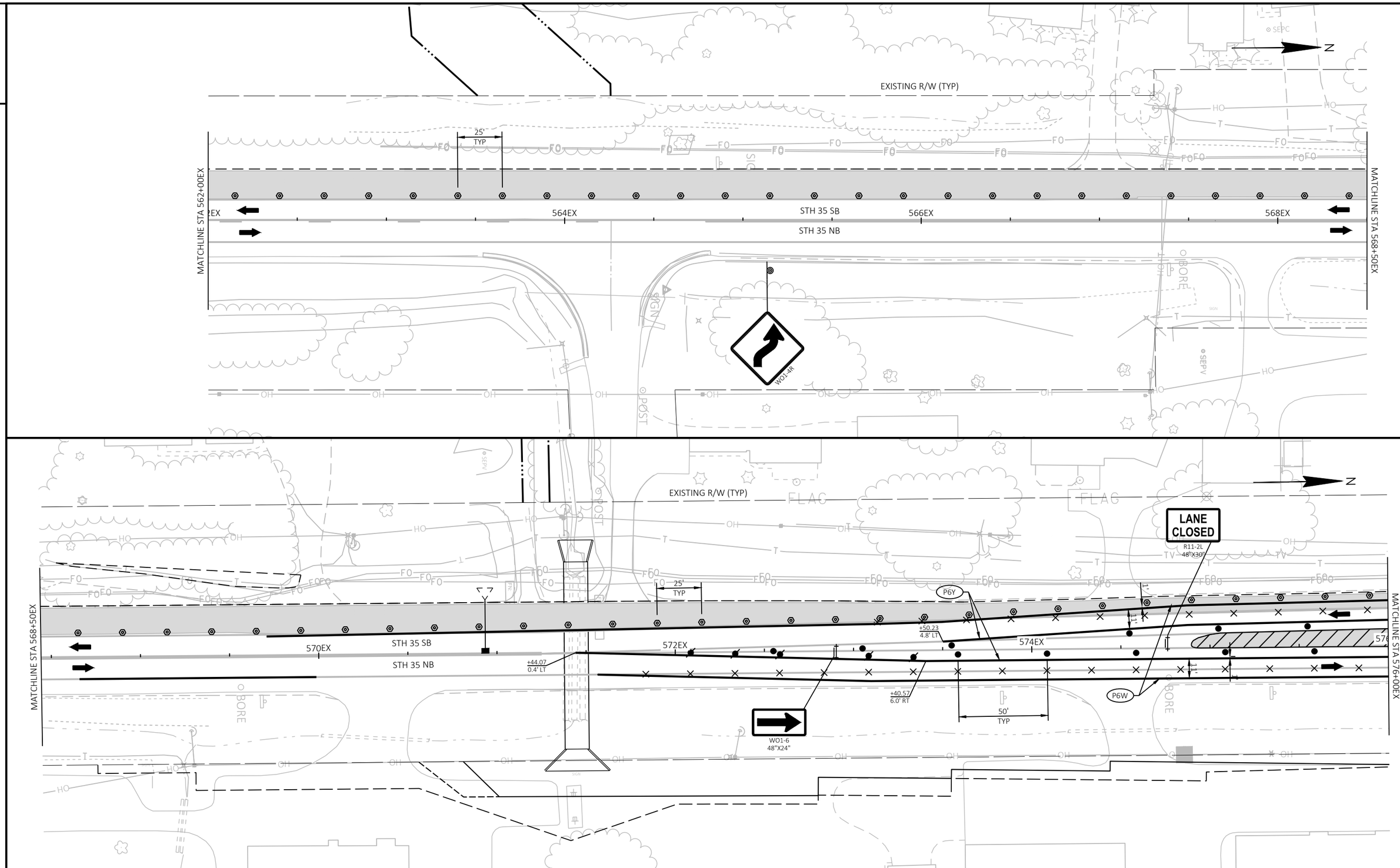

2

PROJECT NO: 5163-07-72	HWY: STH 35	COUNTY: LA CROSSE/VERNON	STAGED CONSTRUCTION - STAGE 2B	SHEET 96	E

FILE NAME : O:\PDS\C3D\51630702\SHEETSPLAN\026001-S2B.DWG
LAYOUT NAME - 02
PLOT DATE : 4/29/2025 12:14 PM
PLOT BY : ED OCHS
PLOT NAME :
PLOT SCALE : 1 IN:50 FT

WISDOT/CADDS SHEET 44

2

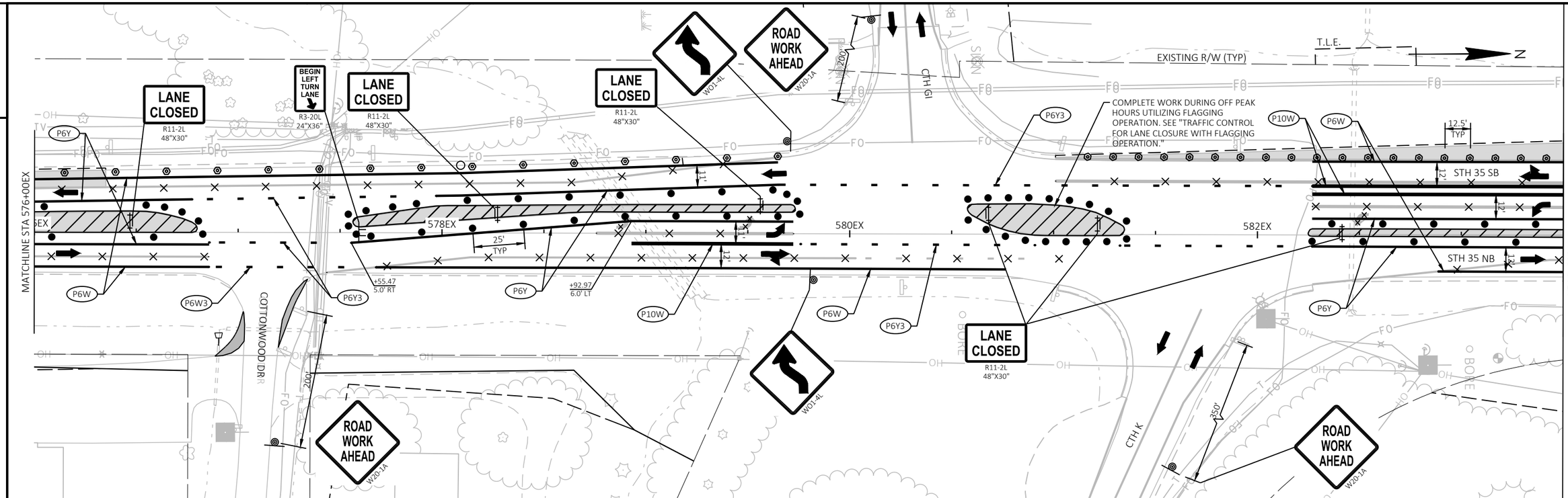

2

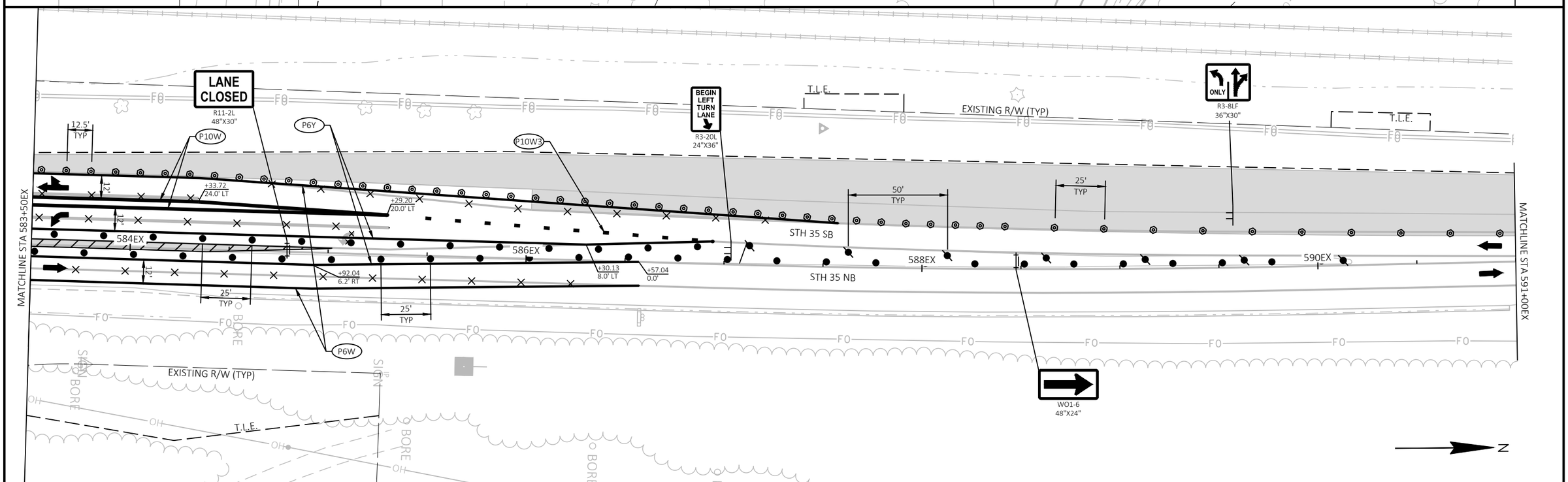

PROJECT NO: 5163-07-72	HWY: STH 35	COUNTY: LA CROSSE/VERNON	STAGED CONSTRUCTION - STAGE 2B	SHEET 97	E

FILE NAME : O:\PDS\C3D\51630702\SHEETSPLAN\026001-S2B.DWG
LAYOUT NAME - 03
PLOT DATE : 4/29/2025 12:14 PM
PLOT BY : ED OCHS
PLOT NAME :
PLOT SCALE : 1 IN:50 FT

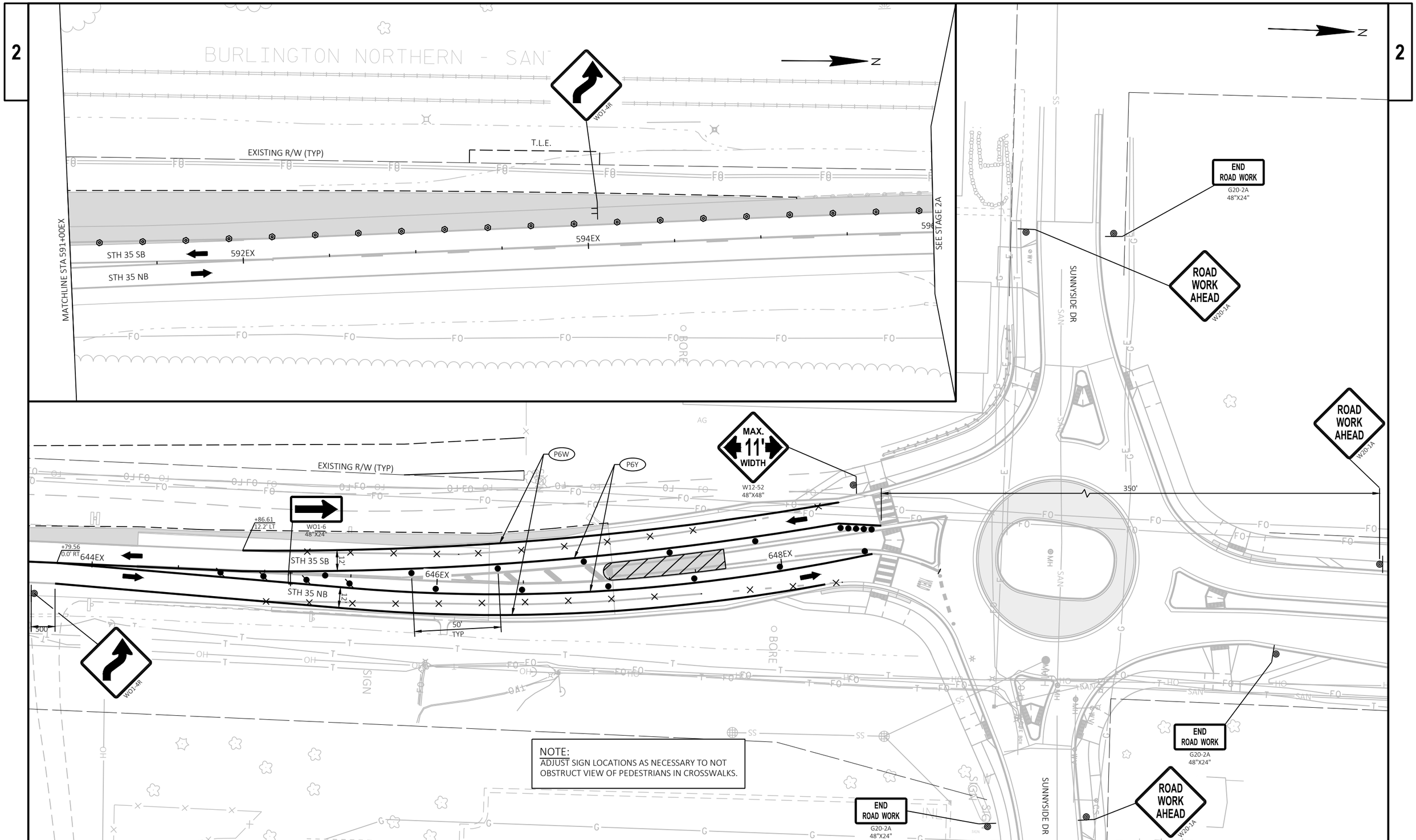

PROJECT NO: 5163-07-72	HWY: STH 35	COUNTY: LA CROSSE/VERNON	STAGED CONSTRUCTION - STAGE 2B	SHEET 98	E

FILE NAME : O:\PDS\C3D\51630702\SHEETSPLAN\026001-S2B.DWG
LAYOUT NAME - 04
PLOT DATE : 4/29/2025 12:14 PM
PLOT BY : ED OCHS
PLOT NAME :
PLOT SCALE : 1 IN:50 FT

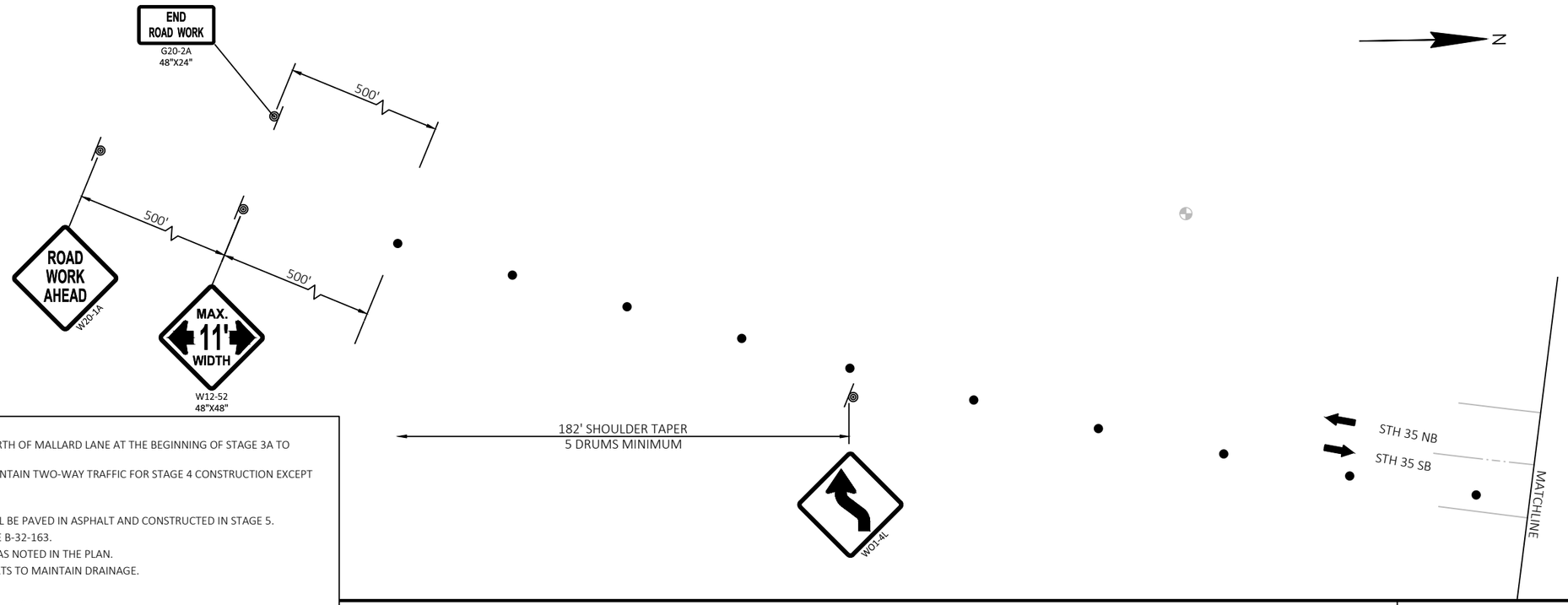

STAGE 3A CONSTRUCTION

- INSTALL THE EAST HALVES OF THE NEW TRIPLE CULVERT PIPES JUST NORTH OF MALLARD LANE AT THE BEGINNING OF STAGE 3A TO MAINTAIN ACCESS TO THE MALLARD LANE INTERSECTION.
- CONSTRUCT THE NEW STH 35 EAST OF THE EXISTING ROADWAY TO MAINTAIN TWO-WAY TRAFFIC FOR STAGE 4 CONSTRUCTION EXCEPT BETWEEN STATION 635+00 TO 648+49.
- PLACE LOWER LAYER OF ASPHALT ON STH 35.
- DO NOT CONSTRUCT CONCRETE CORRUGATED MEDIANS. MEDIANS WILL BE PAVED IN ASPHALT AND CONSTRUCTED IN STAGE 5.
- REMOVE THE OUTSIDE EAST END OF THE EXISTING DECK ON STRUCTURE B-32-163.
- WIDEN STRUCTURE B-32-163 TO THE EAST AND REPLACE BRIDGE DECK AS NOTED IN THE PLAN.
- INSTALL TEMPORARY STORM SEWER, NEW STORM SEWER, AND CULVERTS TO MAINTAIN DRAINAGE.
- INSTALL NEW GUARDRAIL ON NORTHBOUND STH 35.
- CONSTRUCT NEW INTERSECTION LOCATION FOR CTH K.
- CONSTRUCT EASTBOUND CTH K BETWEEN STATION 33+00 TO 35+50.
- PLACE LOWER LAYER OF ASPHALT ON CTH K.
- CLOSE COTTONWOOD DRIVE AND RECONSTRUCT THE INTERSECTION WITH STH 35.

STAGE 3A TRAFFIC

- SHIFT STH 35 TRAFFIC TO TEMPORARY WIDENING AND EXISTING SOUTHBOUND LANE AND SHOULDER.
- UTILIZE FLAGGING OPERATIONS FOR CONSTRUCTION ON CTH K. OPEN CTH K AT THE END OF EACH DAY.
- COMPLY WITH STANDARD SPECIFICATION 104.6.1.2.3(2), ELIMINATE VERTICAL DROP-OFFS 2 INCHES OR GREATER AND EDGE SLOPES STEEPER THAN 3:1 WITHIN 72 HOURS OR BEFORE A WEEKEND OR HOLIDAY WHICHEVER COMES FIRST DURING CONSTRUCTION ON CTH K.
- MAINTAIN ACCESS TO CTH GI AND CTH K AT ALL TIMES.

STANDARD DETAIL DRAWING: "TRAFFIC CONTROL, WORK ON SHOULDER OR PARKING LANE, UNDIVIDED ROADWAY," "TRAFFIC CONTROL FOR LANE CLOSURE WITH FLAGGING OPERATION," " TRAFFIC CONTROL, LANE CLOSURE WITH AUTOMATED FLAGGER ASSISTANCE DEVICE," AND "BARRICADES AND SIGNS FOR SIDEROAD CLOSURES"

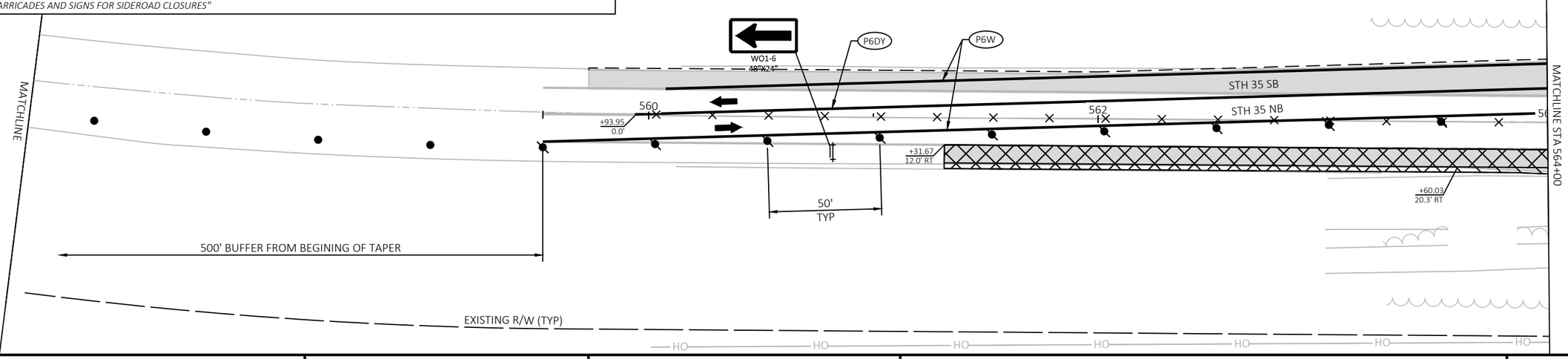

2

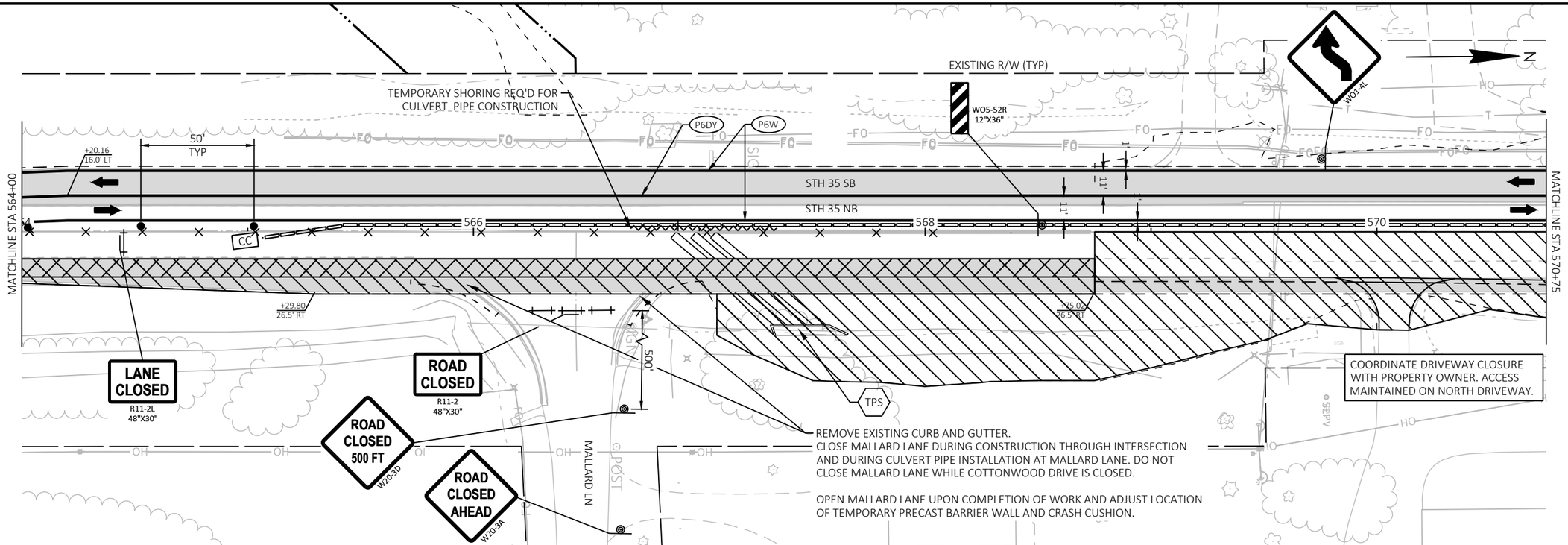

2

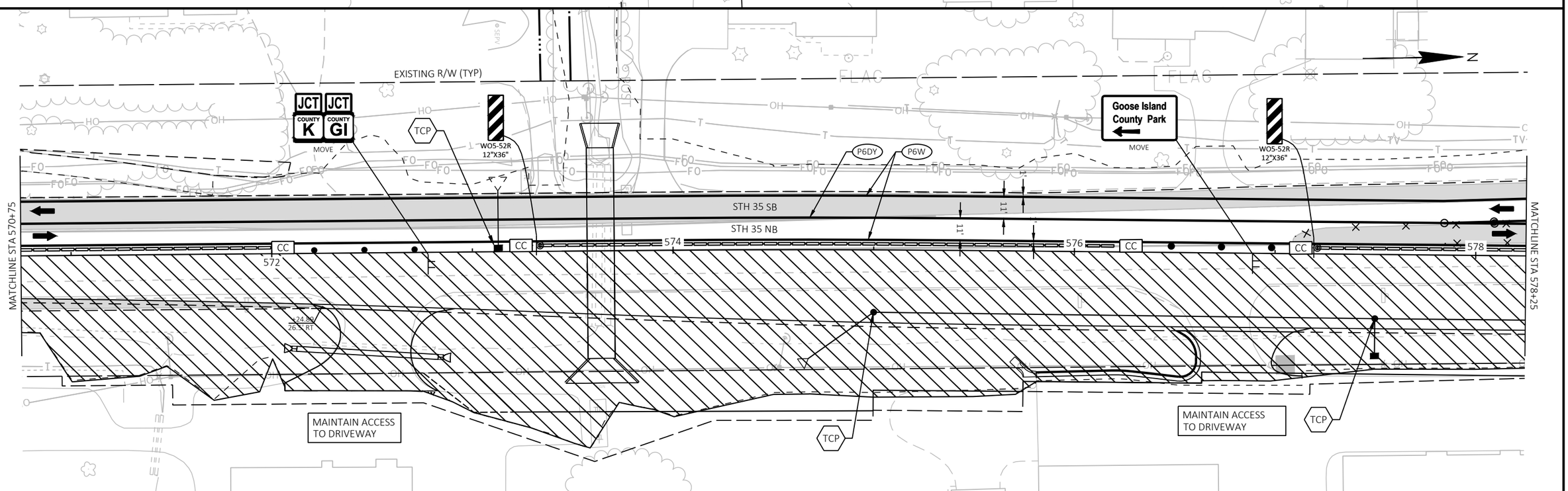

PROJECT NO: 5163-07-72	HWY: STH 35	COUNTY: LA CROSSE/VERNON	STAGED CONSTRUCTION - STAGE 3A	SHEET 100	E

FILE NAME : O:\PDS\C3D\51630702\SHEETSPLAN\026001-S3A.DWG
LAYOUT NAME - 02
PLOT DATE : 4/29/2025 1:02 PM
PLOT BY : ED OCHS
PLOT NAME :
PLOT SCALE : 1 IN:50 FT
WISDOT/CADDS SHEET 44

2

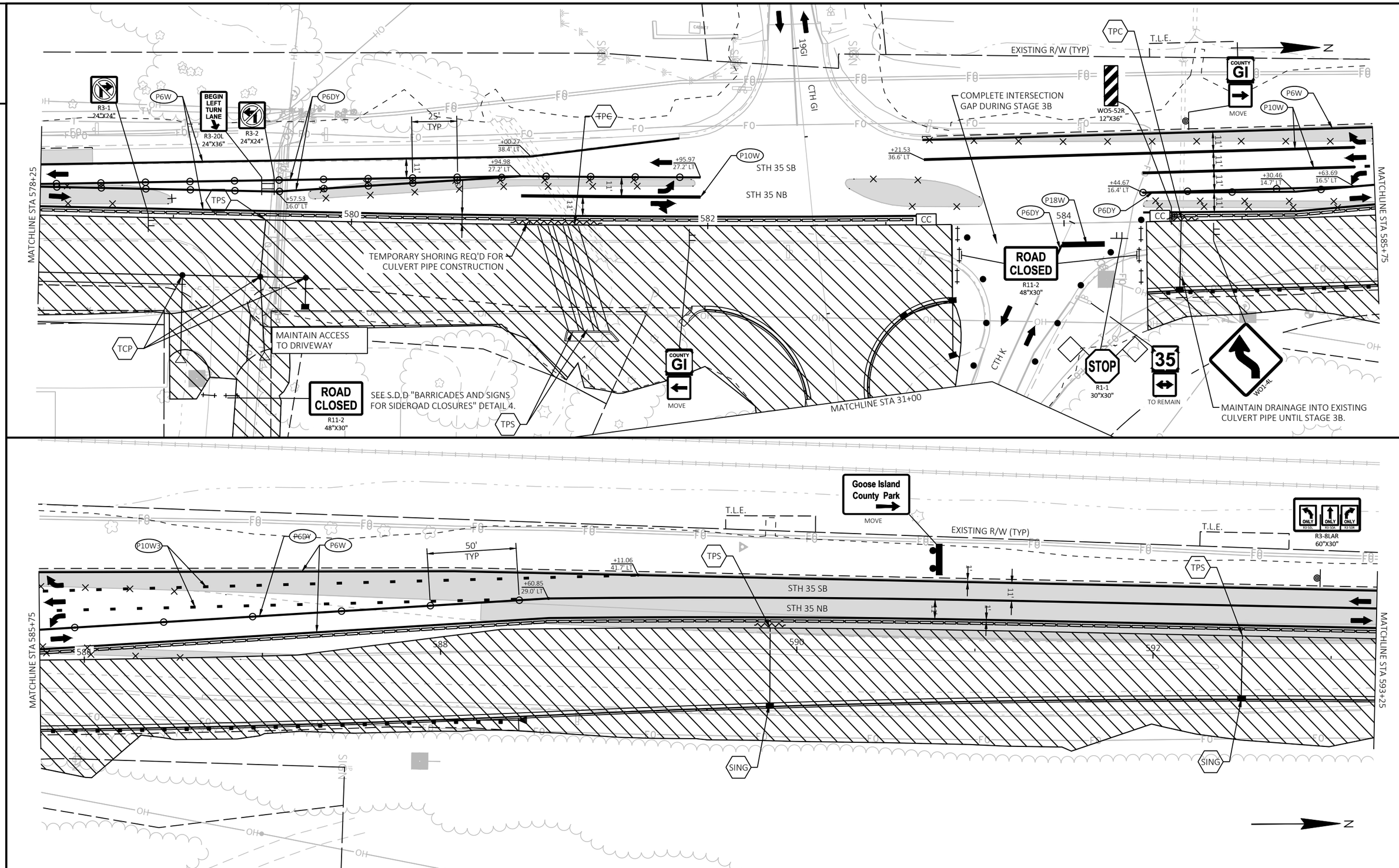

2

PROJECT NO: 5163-07-72	HWY: STH 35	COUNTY: LA CROSSE/VERNON	STAGED CONSTRUCTION - STAGE 3A	SHEET 101	E

FILE NAME : O:\PDS\C3D\51630702\SHEETSPLAN\026001-S3A.DWG
LAYOUT NAME - 03
PLOT DATE : 4/29/2025 1:03 PM
PLOT BY : ED OCHS
PLOT NAME :
PLOT SCALE : 1 IN:50 FT

2

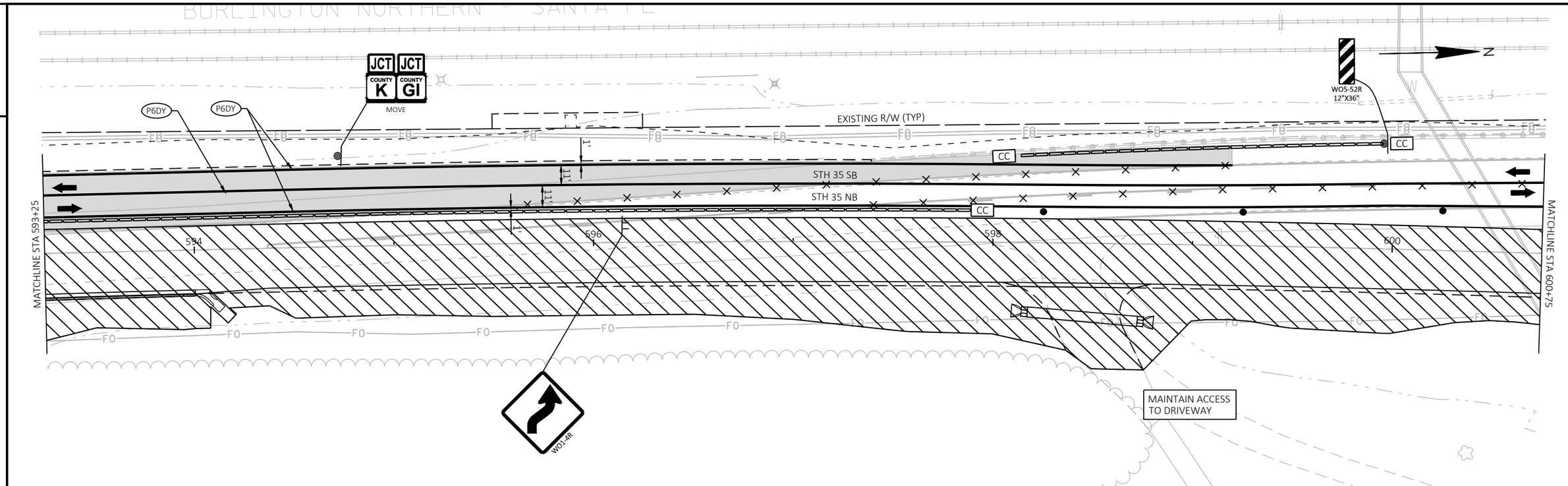

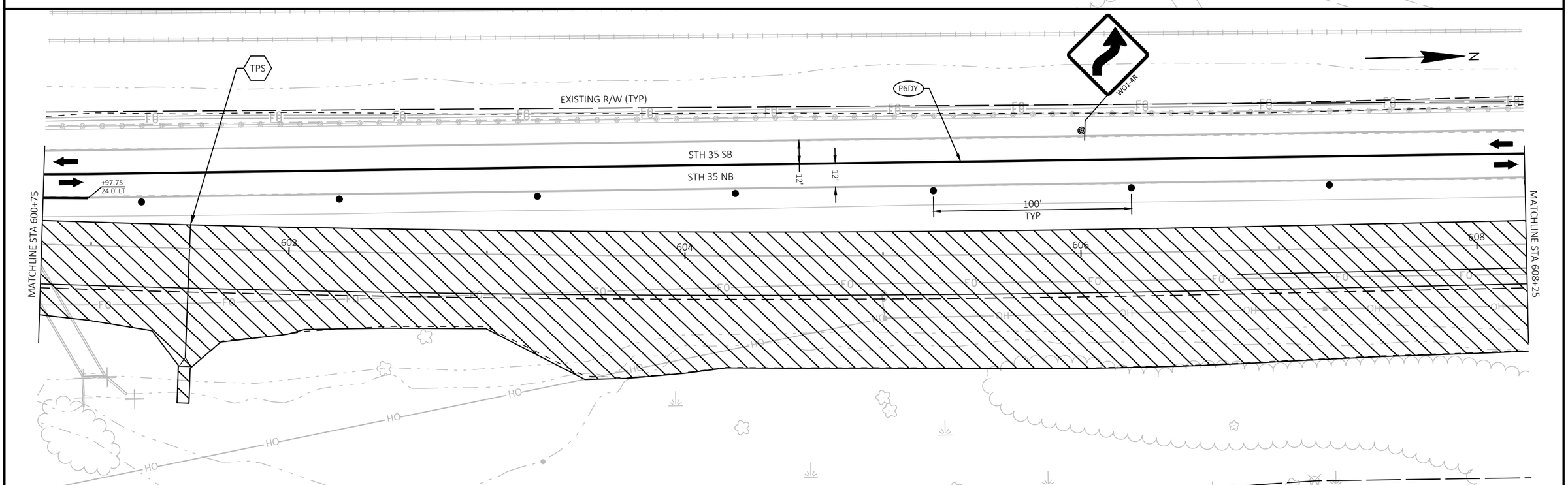

2

PROJECT NO: 5163-07-72	HWY: STH 35	COUNTY: LA CROSSE/VERNON	STAGED CONSTRUCTION - STAGE 3A	SHEET 102	E

FILE NAME : O:\PDS\C3D\51630702\SHEETSPLAN\026001-S3A.DWG
LAYOUT NAME - 04
PLOT DATE : 4/29/2025 1:03 PM
PLOT BY : ED OCHS
PLOT NAME :
PLOT SCALE : 1 IN:50 FT
WISDOT/CADDS SHEET 44

2

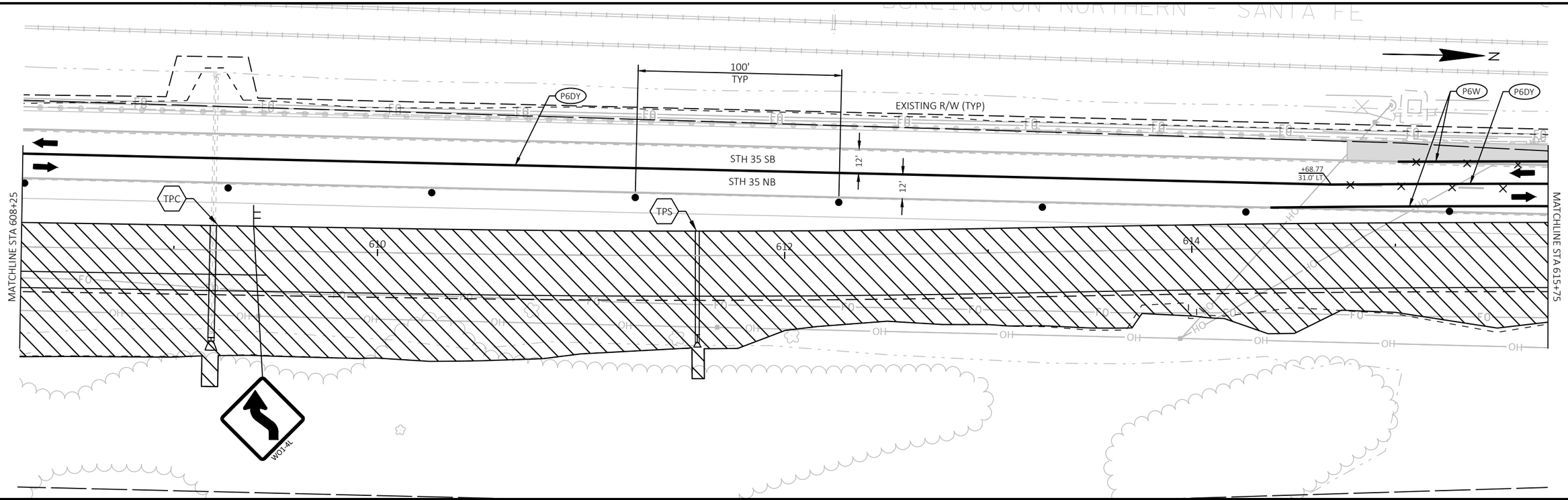

2

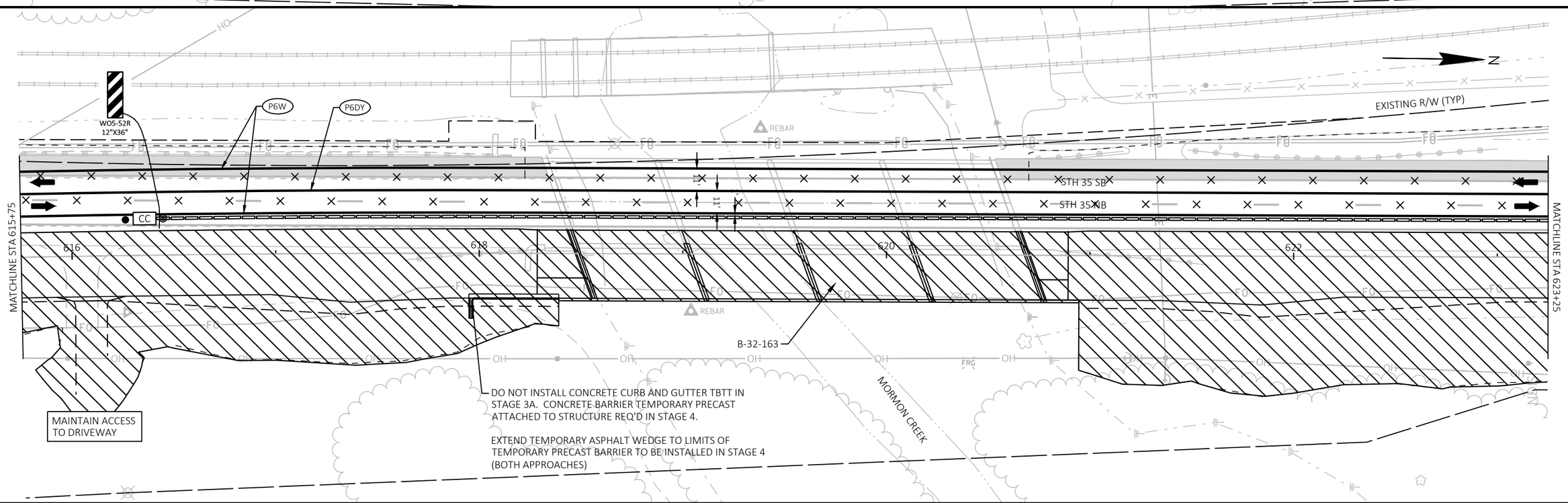

PROJECT NO: 5163-07-72	HWY: STH 35	COUNTY: LA CROSSE/VERNON	STAGED CONSTRUCTION - STAGE 3A	SHEET 103	E

2

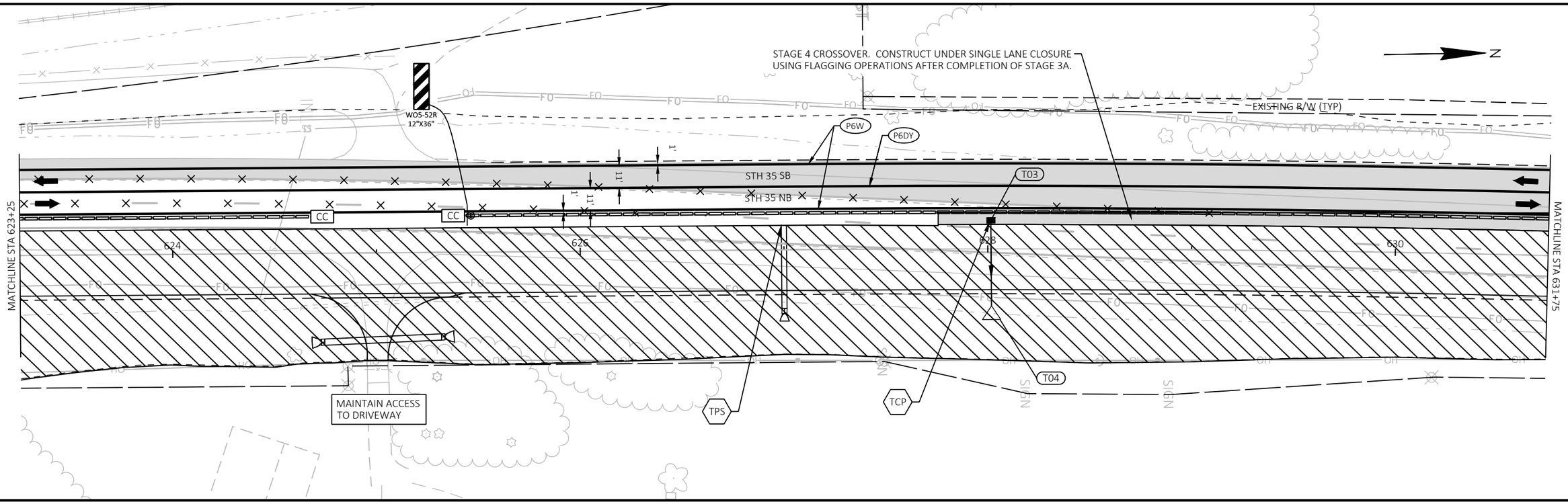

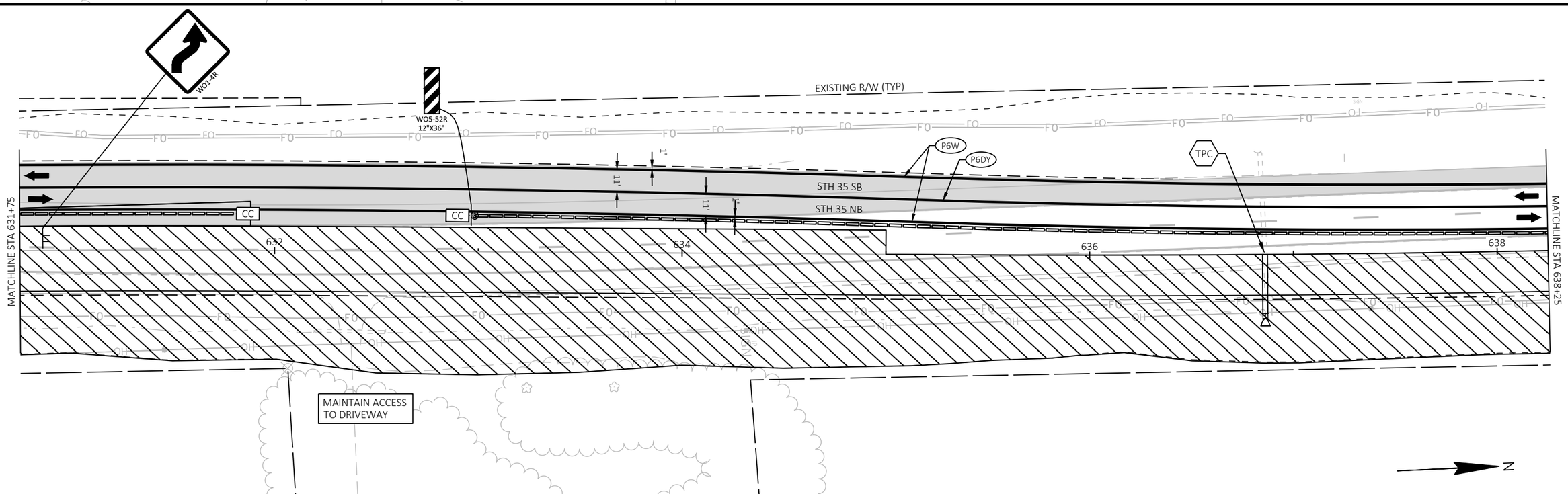

2

PROJECT NO: 5163-07-72	HWY: STH 35	COUNTY: LA CROSSE/VERNON	STAGED CONSTRUCTION - STAGE 3A	SHEET 104	E

FILE NAME : O:\PDS\C3D\51630702\SHEETSPLAN\026001-S3A.DWG
LAYOUT NAME - 06
PLOT DATE : 4/29/2025 1:03 PM
PLOT BY : ED OCHS
PLOT NAME :
PLOT SCALE : 1 IN:50 FT

2

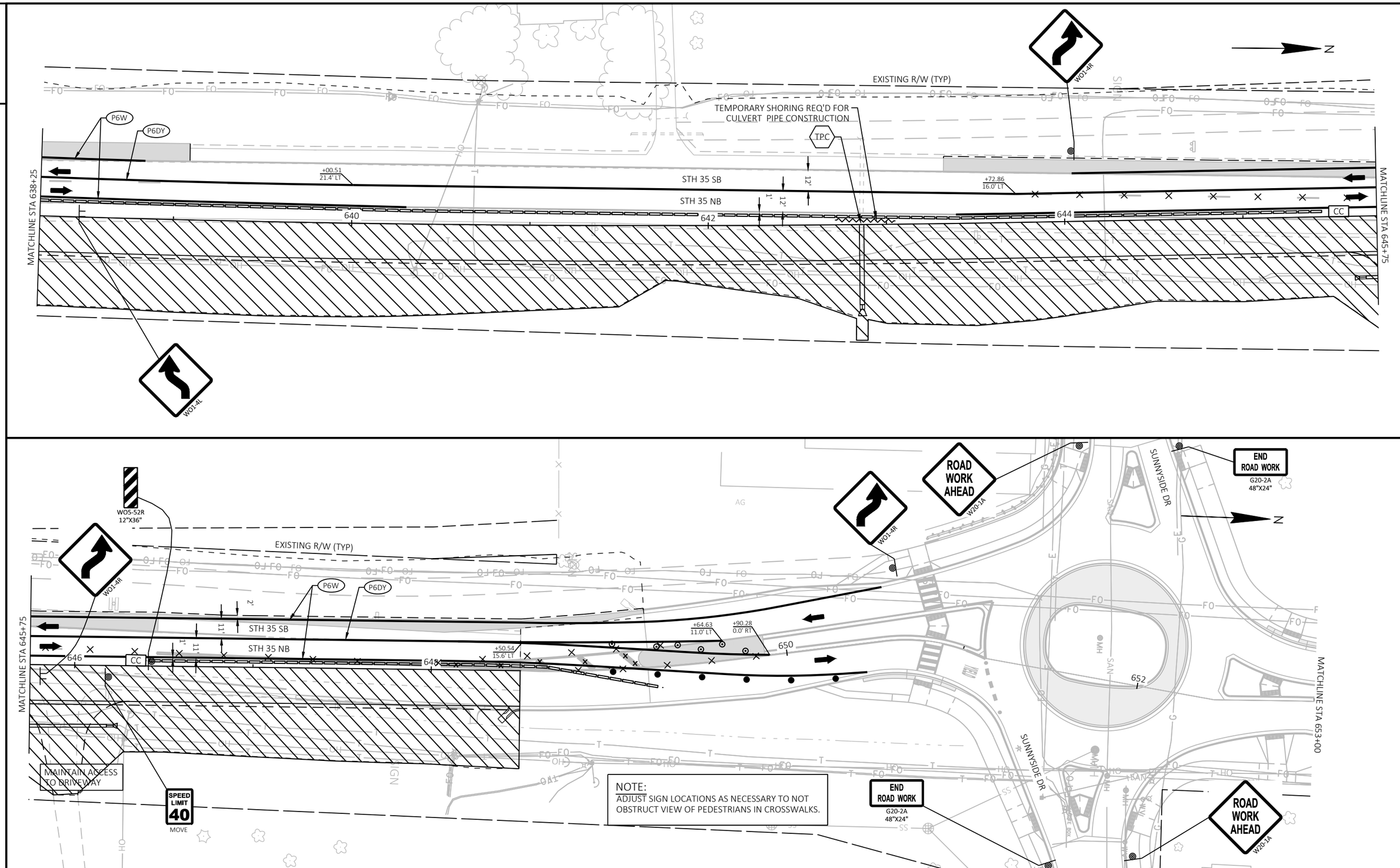

PROJECT NO: 5163-07-72	HWY: STH 35	COUNTY: LA CROSSE/VERNON	STAGED CONSTRUCTION - STAGE 3A	SHEET 105	E

FILE NAME : O:\PDS\C3D\51630702\SHEETSPLAN\026001-S3A.DWG
LAYOUT NAME - 07
PLOT DATE : 4/29/2025 1:04 PM
PLOT BY : ED OCHS
PLOT NAME :
PLOT SCALE : 1 IN:50 FT

WISDOT/CADDS SHEET 44

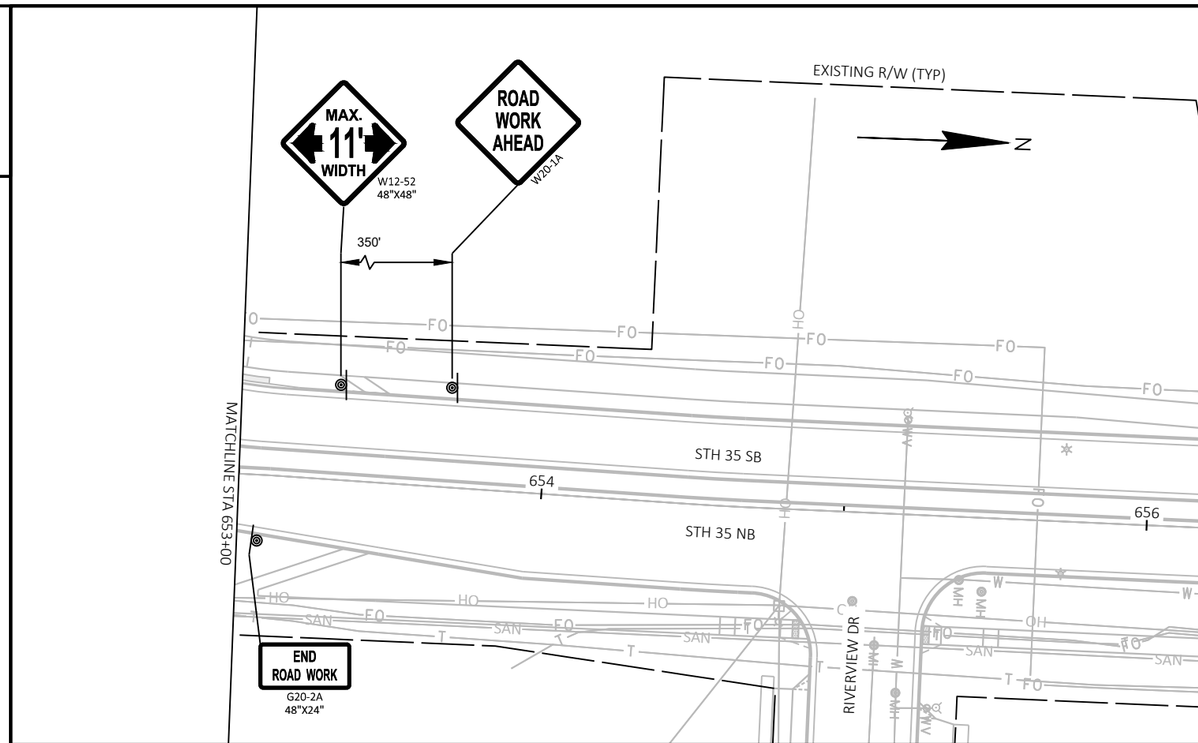

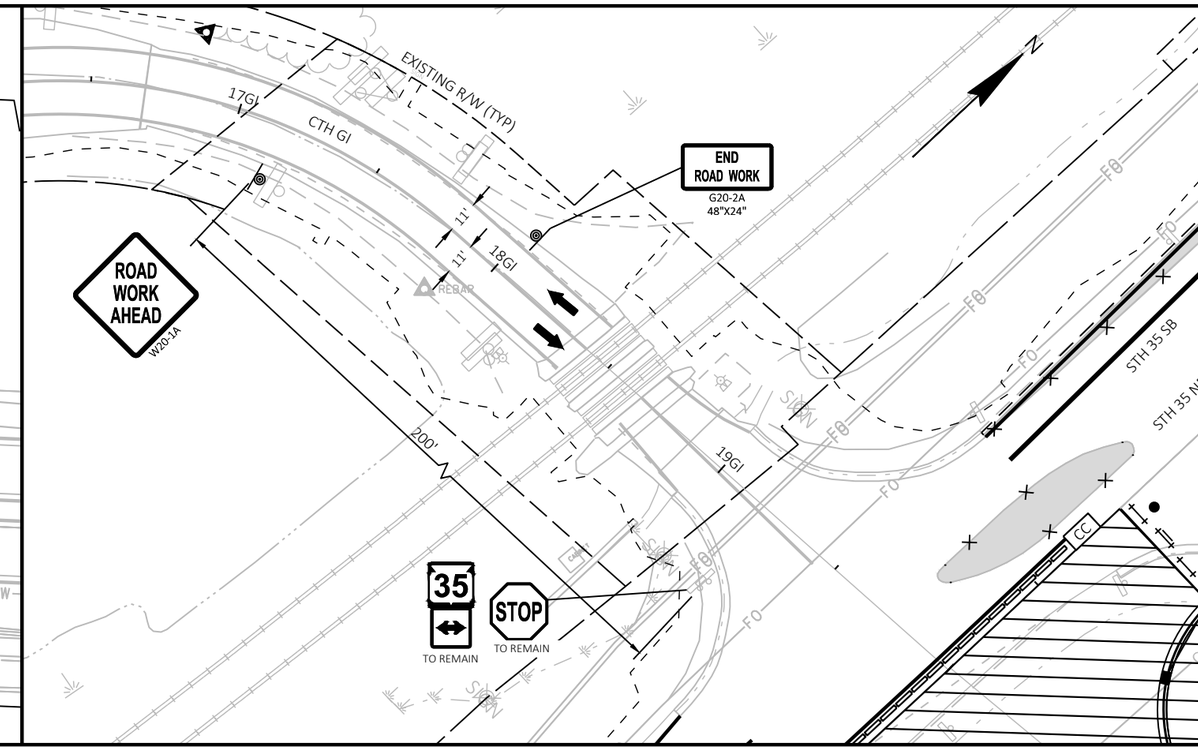

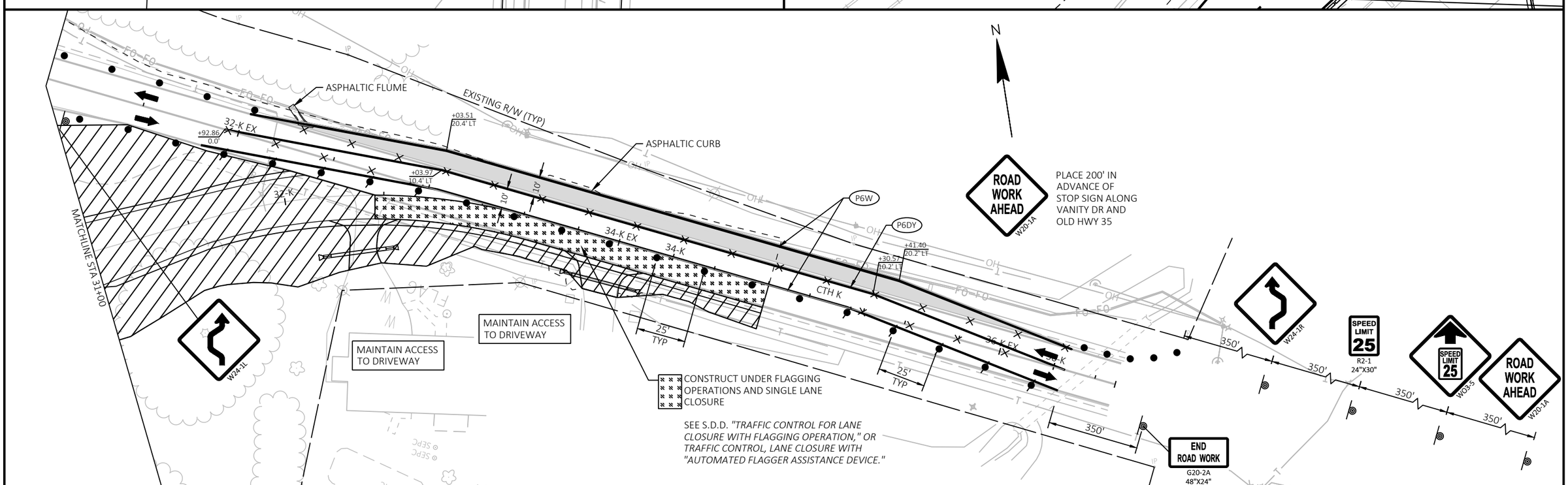

PROJECT NO: 5163-07-72	HWY: STH 35	COUNTY: LA CROSSE/VERNON	STAGED CONSTRUCTION - STAGE 3A	SHEET 106	E

2

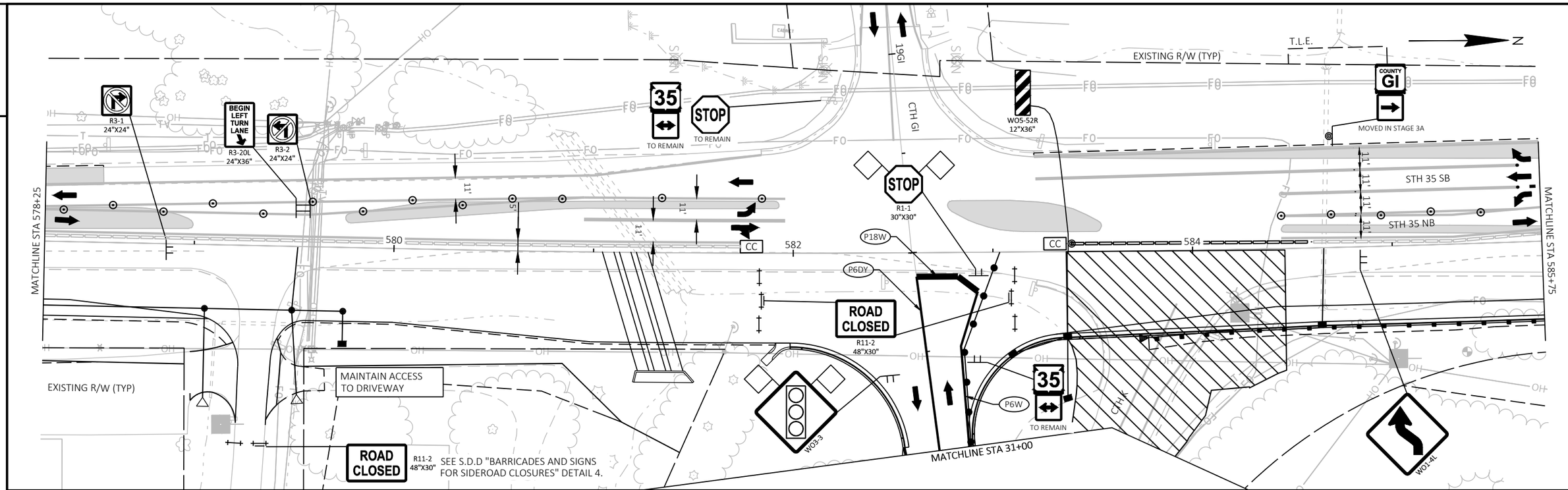

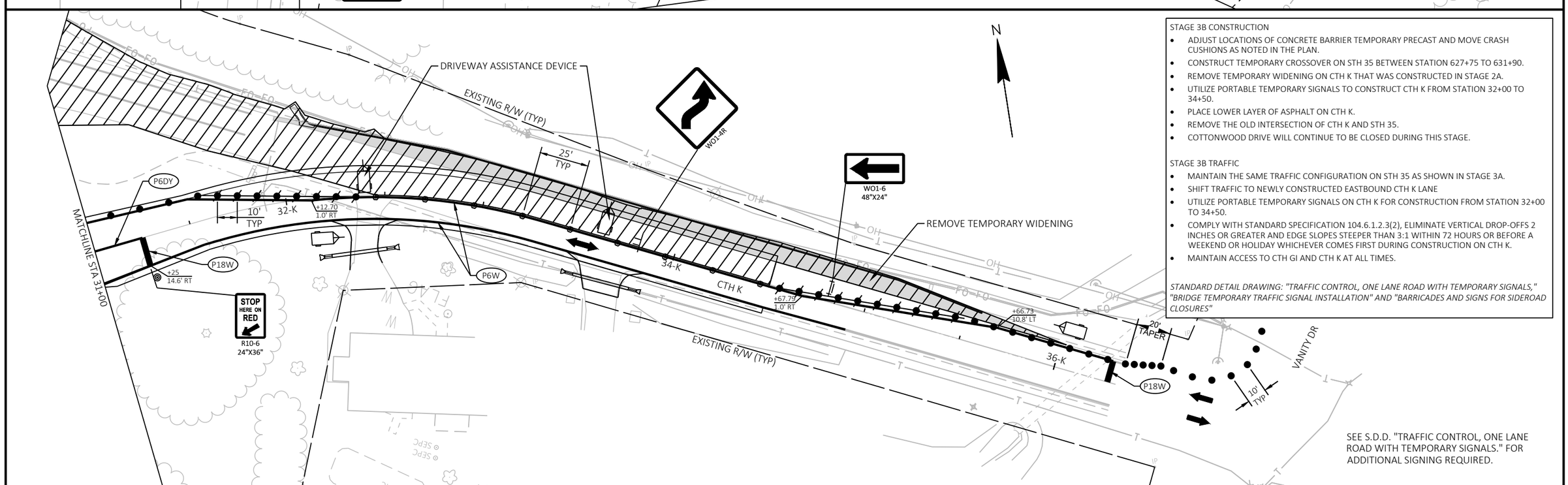

STAGE 3B CONSTRUCTION

- ADJUST LOCATIONS OF CONCRETE BARRIER TEMPORARY PRECAST AND MOVE CRASH CUSHIONS AS NOTED IN THE PLAN.
- CONSTRUCT TEMPORARY CROSSOVER ON STH 35 BETWEEN STATION 627+75 TO 631+90.
- REMOVE TEMPORARY WIDENING ON CTH K THAT WAS CONSTRUCTED IN STAGE 2A.
- UTILIZE PORTABLE TEMPORARY SIGNALS TO CONSTRUCT CTH K FROM STATION 32+00 TO 34+50.
- PLACE LOWER LAYER OF ASPHALT ON CTH K.
- REMOVE THE OLD INTERSECTION OF CTH K AND STH 35.
- COTTONWOOD DRIVE WILL CONTINUE TO BE CLOSED DURING THIS STAGE.

STAGE 3B TRAFFIC

- MAINTAIN THE SAME TRAFFIC CONFIGURATION ON STH 35 AS SHOWN IN STAGE 3A.
- SHIFT TRAFFIC TO NEWLY CONSTRUCTED EASTBOUND CTH K LANE
- UTILIZE PORTABLE TEMPORARY SIGNALS ON CTH K FOR CONSTRUCTION FROM STATION 32+00 TO 34+50.
- COMPLY WITH STANDARD SPECIFICATION 104.6.1.2.3(2), ELIMINATE VERTICAL DROP-OFFS 2 INCHES OR GREATER AND EDGE SLOPES STEEPER THAN 3:1 WITHIN 72 HOURS OR BEFORE A WEEKEND OR HOLIDAY WHICHEVER COMES FIRST DURING CONSTRUCTION ON CTH K.
- MAINTAIN ACCESS TO CTH GI AND CTH K AT ALL TIMES.

STANDARD DETAIL DRAWING: "TRAFFIC CONTROL, ONE LANE ROAD WITH TEMPORARY SIGNALS," "BRIDGE TEMPORARY TRAFFIC SIGNAL INSTALLATION" AND "BARRICADES AND SIGNS FOR SIDEROAD CLOSURES"

MAINTAIN ACCESS TO DRIVEWAY

PROJECT NO: 5163-07-72	HWY: STH 35	COUNTY: LA CROSSE/VERNON	STAGED CONSTRUCTION - STAGE 3B	SHEET 107	E

2

STAGE 4 CONSTRUCTION

- CONSTRUCT THE NEW SOUTHBOUND LANES AND/OR SHOULDERS FROM THE BEGINNING OF THE PROJECT TO STATION 627+25.
- CONSTRUCT THE NEW SOUTHBOUND STH 35 LANE FROM STATION 635+00 TO THE END OF THE PROJECT.
- PLACE LOWER LAYER OF ASPHALT ON STH 35.
- REMOVE THE OLD STH 35 ROADWAY AND TEMPORARY WIDENING AS NOTED IN THE PLAN.
- GRADE FOR SHARED-USE PATH TO STA 627+25.
- REMOVE THE REMAINING EXISTING DECK AND WEST OUTSIDE GIRDER ON STRUCTURE B-32-163.
- REPLACE BRIDGE DECK AS NOTED IN THE PLAN.
- INSTALL NEW STORM SEWER AND CULVERTS.
- CONSTRUCT CTH GI IN HALVES.
- CONSTRUCT CURB RAMPS FOR THE SHARED-USE PATH (ID 5991-06-73).
- PLACE LOWER LAYER OF ASPHALT ON CTH GI.
- RAILROAD CROSSING IMPROVEMENTS TO BE INSTALLED BY BNSF.

STAGE 4 TRAFFIC

- SHIFT TRAFFIC TO THE NEW STH 35 LANES CONSTRUCTED IN STAGE 3A FROM THE BEGINNING OF THE PROJECT TO STATION 627+00.
- SHIFT SOUTHBOUND STH 35 TRAFFIC FROM STATION 627+00 TO 632+00 VIA THE TEMPORARY CROSSOVER CONSTRUCTED IN STAGE 3B.
- MATCH THE SOUTHBOUND STH 35 TRAFFIC CONFIGURATION IN STAGE 3A FROM STATION 636+75 TO THE END OF THE PROJECT.
- NORTHBOUND TRAFFIC TO REMAIN ON THE NEW STH 35 LANES AND SHOULDER CONSTRUCTED IN STAGE 3A TO THE END OF THE PROJECT.

STANDARD DETAIL DRAWINGS: "TRAFFIC CONTROL, WORK ON SHOULDER OR PARKING LANE, UNDIVIDED ROADWAY"

THIS PAGE INTENTIONALLY LEFT BLANK

2

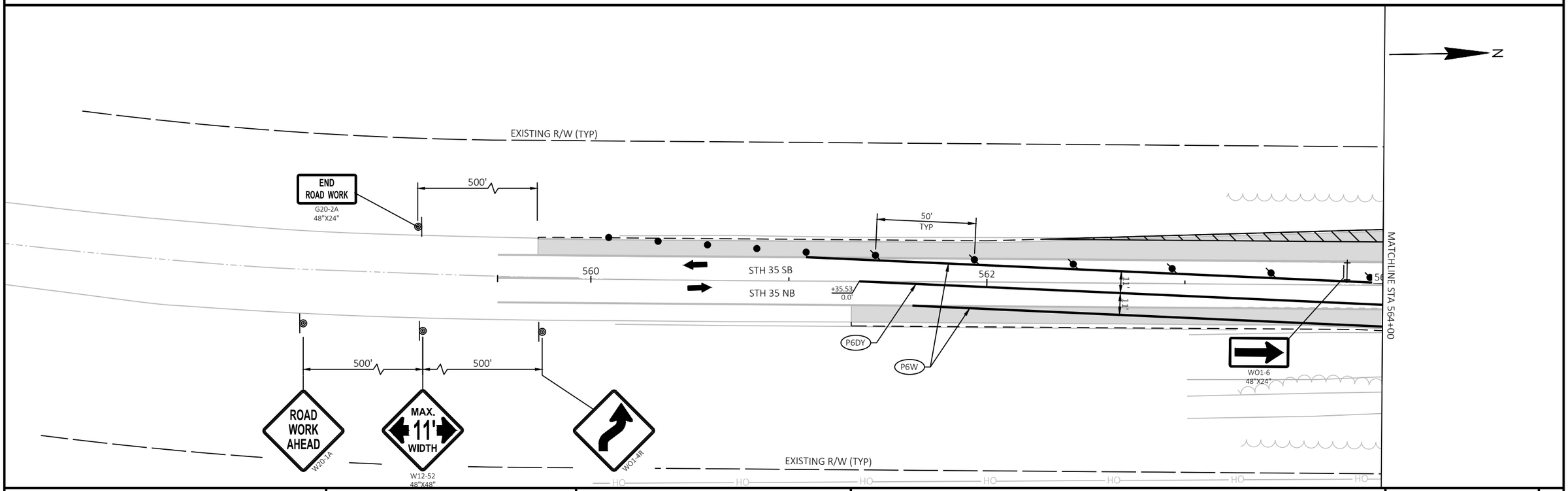

PROJECT NO: 5163-07-72	HWY: STH 35	COUNTY: LA CROSSE/VERNON	STAGED CONSTRUCTION - STAGE 4	SHEET 108	E

2

FLAG CULVERT CONSTRUCTION AS NECESSARY WHEN WORK ACTIVITIES ENCROACH INTO TRAVEL LANE OR WITHIN 15' CLEAR ZONE OF STH 35 SB.

REMOVE TEMPORARY WIDENING CONSTRUCTED IN PREVIOUS STAGES

COORDINATE DRIVEWAY ACCESS TO SOUTH ACCESS POINT

EXISTING R/W (TYP)

COORDINATE DRIVEWAY ACCESS TO SOUTH ACCESS POINT

N

50' TYP

100' TYP

WO5-52L 12"X36"

WO1-4R

MATCHLINE STA 564+00

566

568

570

MATCHLINE STA 570+75

STH 35 SB

STH 35 NB

11'

1'

+30.02 14.5' RT

LANE CLOSED

R11-2L 48"X30"

P6W

P6DY

P18W

MALLARD LN

EXISTING R/W (TYP)

WO1-4R

570+75.00

EXISTING R/W (TYP)

WO5-52R 12"X36"

MAINTAIN ACCESS TO DRIVEWAY

MAINTAIN ACCESS TO DRIVEWAY

COORDINATE DRIVEWAY ACCESS TO SOUTH ACCESS POINT

R3-2 24"X24"

MATCHLINE STA 570+75

572

574

576

578

MATCHLINE STA 578+25

STH 35 SB

STH 35 NB

25' TYP

+67.43 14.5' RT

+98.10 25.0' RT

P6W

P6Y

EXISTING R/W (TYP)

REMOVE TEMPORARY INLET AND STORM SEWER

JCT COUNTY K

JCT COUNTY GI

MOVE

Goose Island County Park

MOVE

ONE WAY R6-1R 36"X12"

R3-2 24"X24"

2

PROJECT NO: 5163-07-72	HWY: STH 35	COUNTY: LA CROSSE/VERNON	STAGED CONSTRUCTION - STAGE 4	SHEET 109	E

FILE NAME : O:\PDS\C3D\51630702\SHEETSPLAN\026001-S4.DWG
LAYOUT NAME - 02

PLOT DATE : 4/29/2025 1:24 PM PLOT BY : ED OCHS PLOT NAME : PLOT SCALE : 1 IN:50 FT

WISDOT/CADDS SHEET 44

2

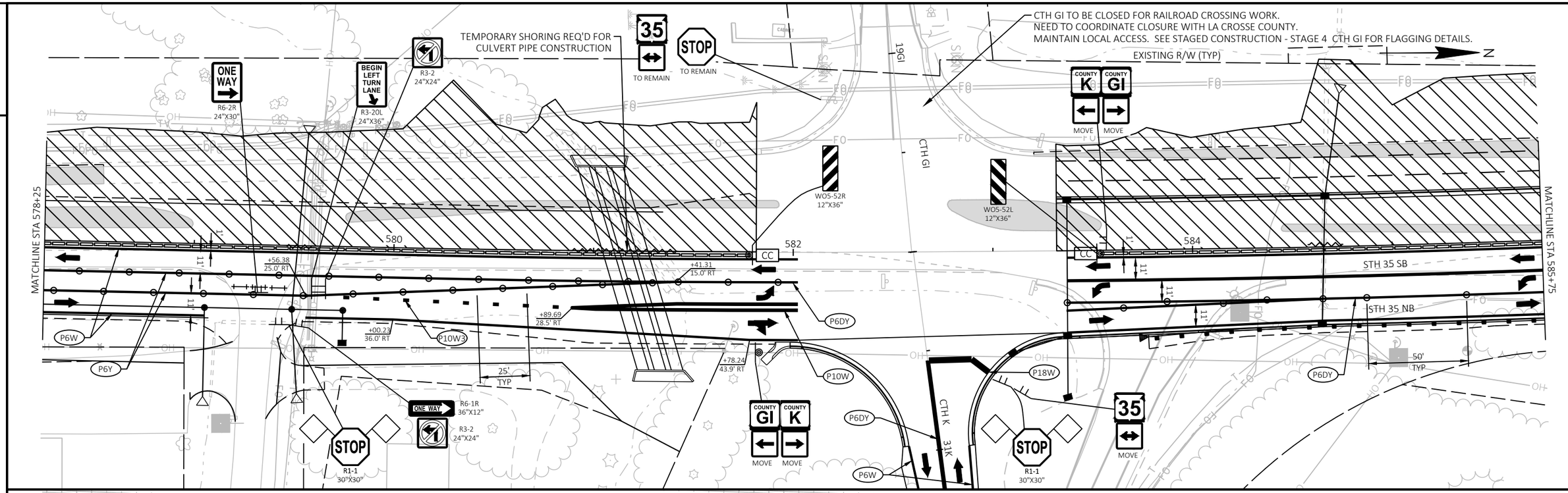

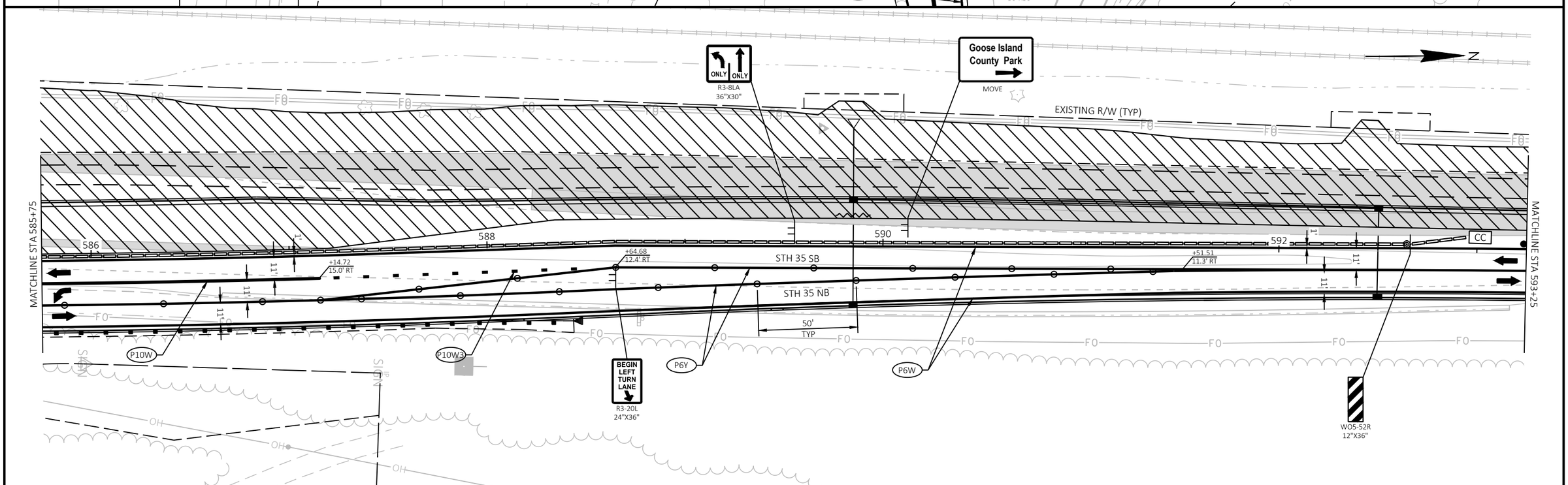

2

PROJECT NO: 5163-07-72	HWY: STH 35	COUNTY: LA CROSSE/VERNON	STAGED CONSTRUCTION - STAGE 4	SHEET 110	E

FILE NAME : O:\PDS\C3D\51630702\SHEETSPLAN\026001-S4.DWG
LAYOUT NAME - 03
PLOT DATE : 4/29/2025 1:24 PM
PLOT BY : ED OCHS
PLOT NAME :
PLOT SCALE : 1 IN:50 FT
WISDOT/CADDS SHEET 44

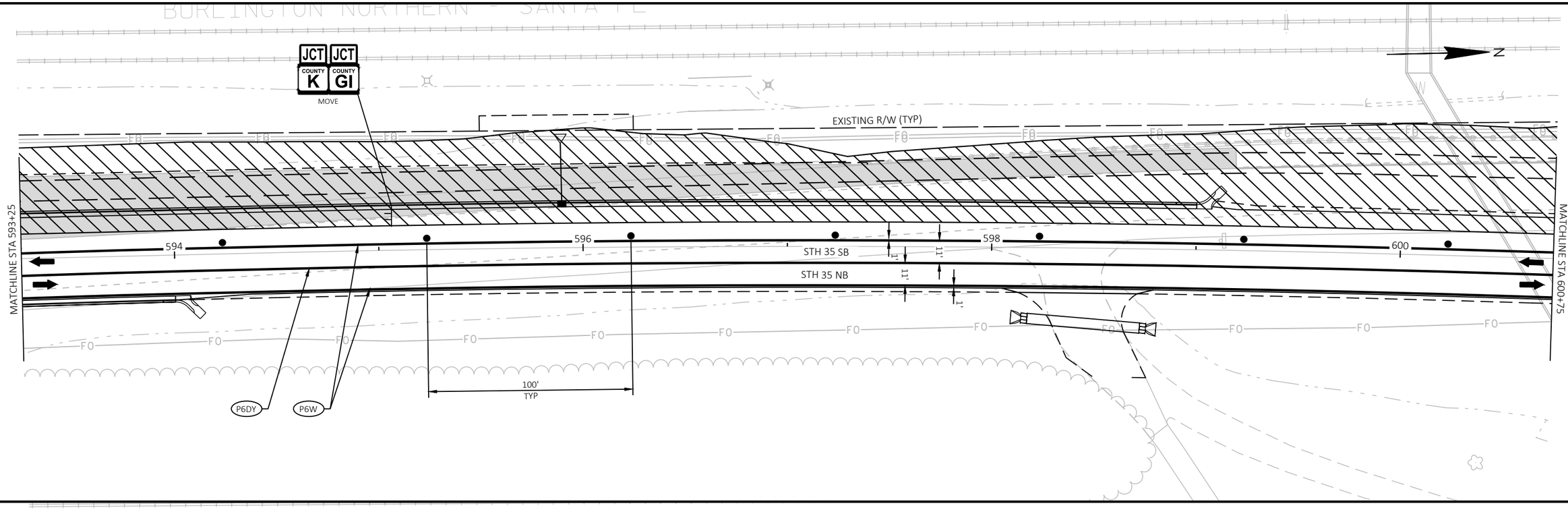
JCT COUNTY K
JCT COUNTY GI
MOVE
EXISTING R/W (TYP)
MATCHLINE STA 593+25
MATCHLINE STA 600+75
594
596
598
600
STH 35 SB
STH 35 NB
1'
11'
11'
1'
100'
TYP
P6DY
P6W
N

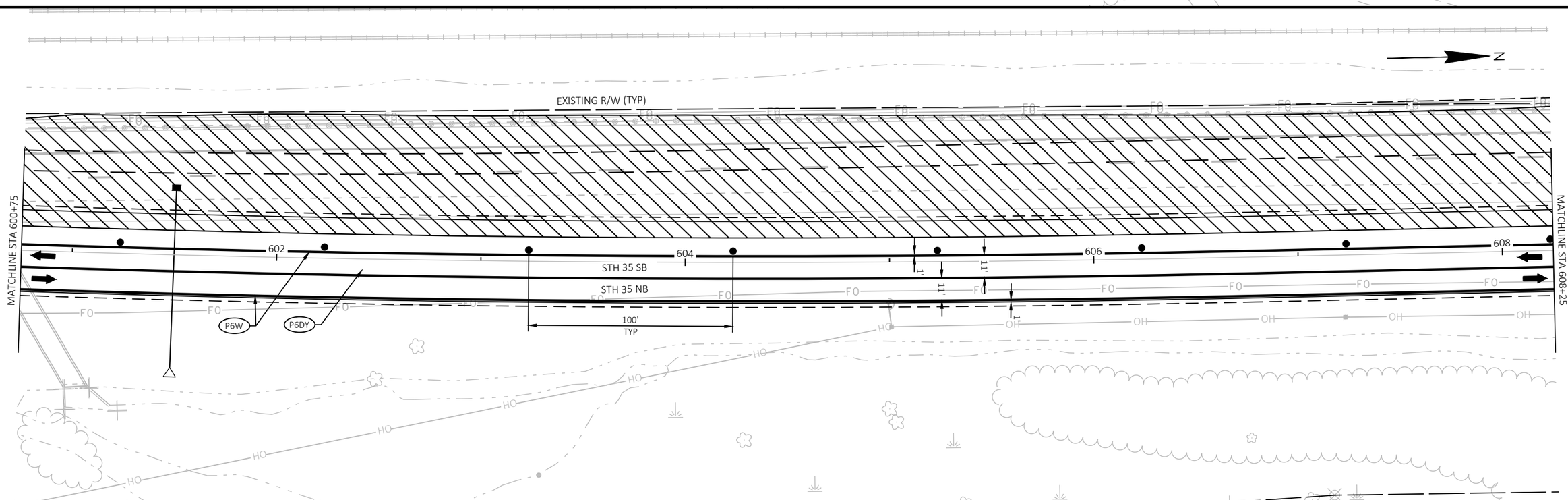
EXISTING R/W (TYP)
MATCHLINE STA 600+75
MATCHLINE STA 608+25
602
604
606
608
STH 35 SB
STH 35 NB
1'
11'
11'
1'
100'
TYP
P6W
P6DY
N

2

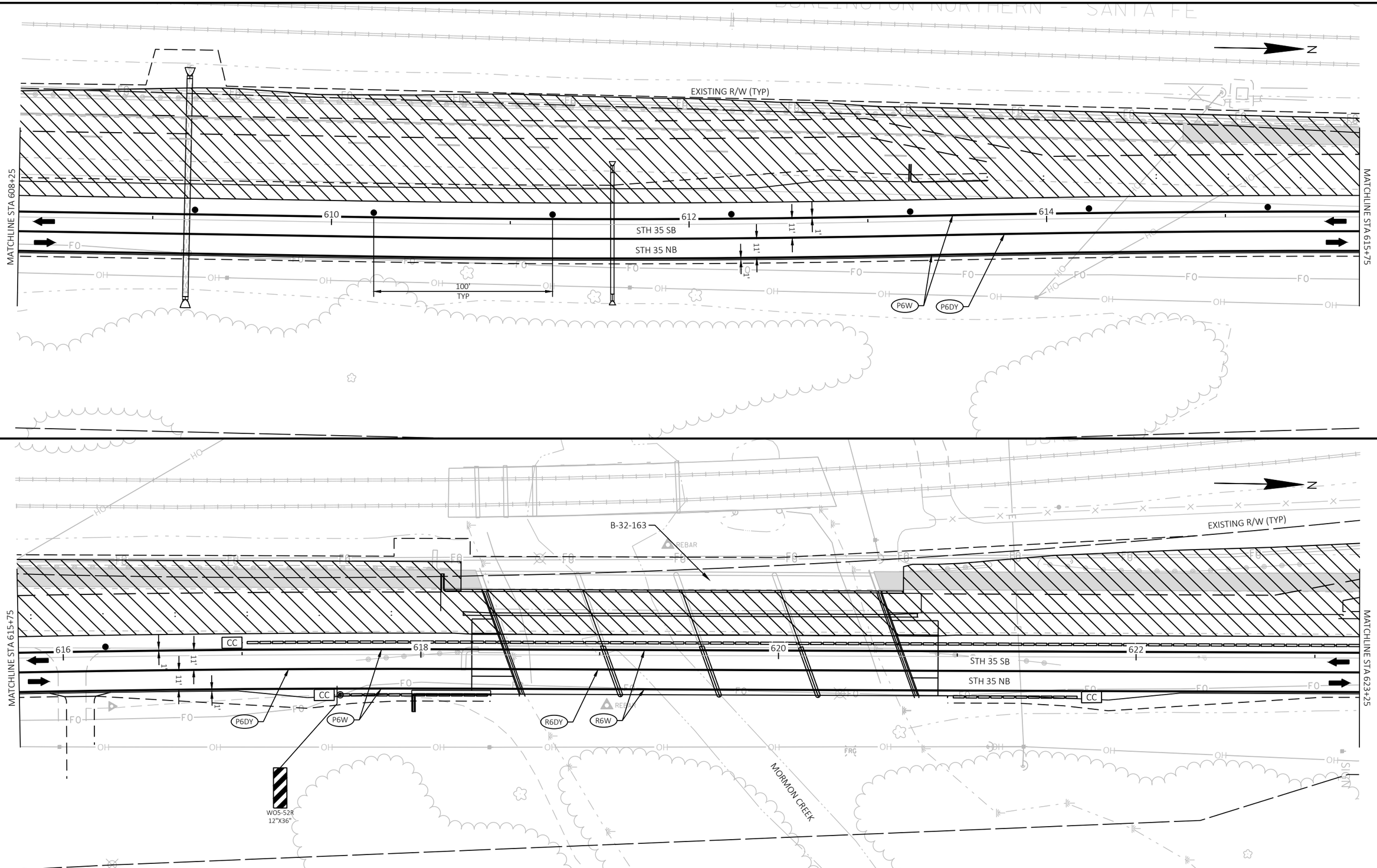

2

PROJECT NO: 5163-07-72	HWY: STH 35	COUNTY: LA CROSSE/VERNON	STAGED CONSTRUCTION - STAGE 4	SHEET 112	E

FILE NAME : O:\PDS\C3D\51630702\SHEETSPLAN\026001-S4.DWG
LAYOUT NAME - 05
PLOT DATE : 4/29/2025 1:24 PM
PLOT BY : ED OCHS
PLOT NAME :
PLOT SCALE : 1 IN:50 FT
WISDOT/CADDS SHEET 44

2

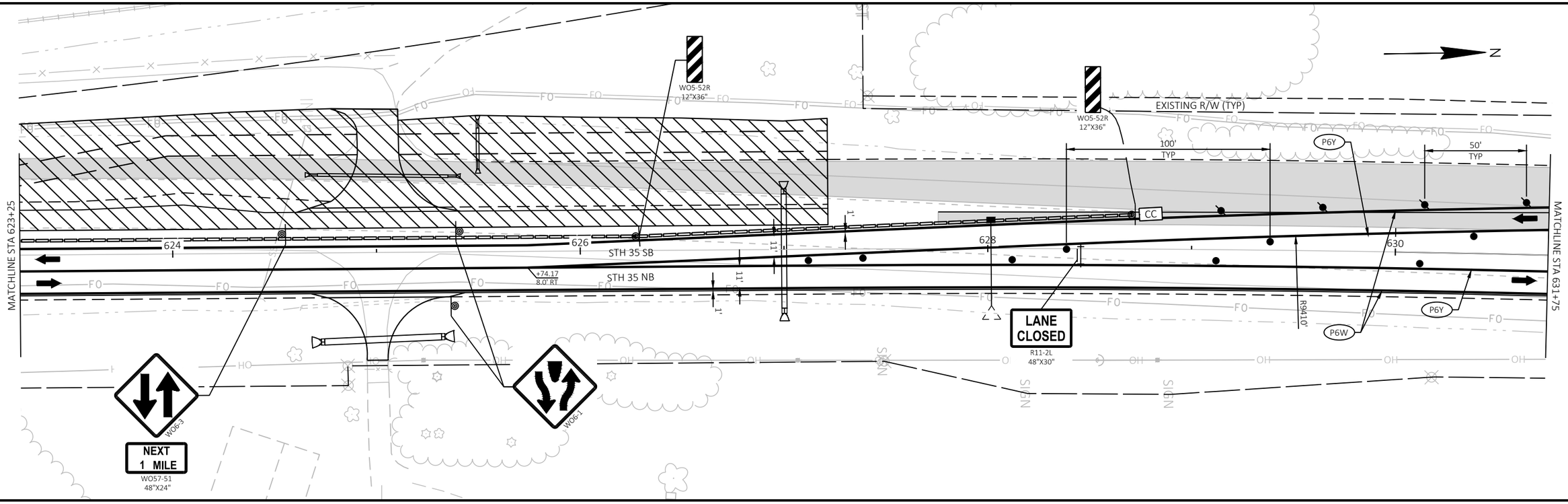

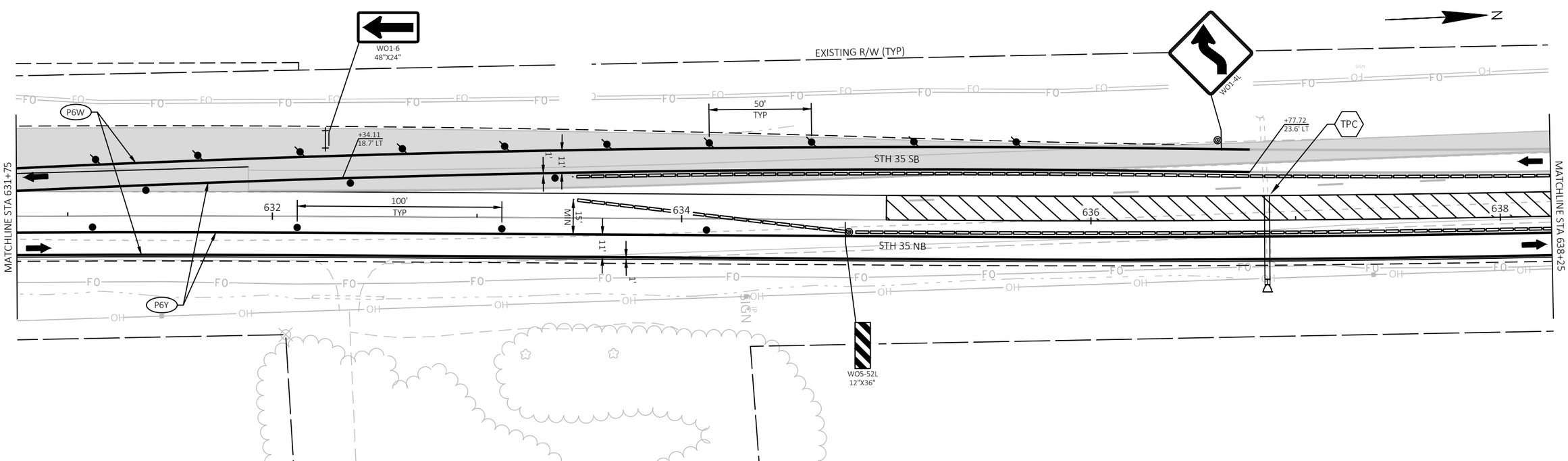

2

PROJECT NO: 5163-07-72	HWY: STH 35	COUNTY: LA CROSSE/VERNON	STAGED CONSTRUCTION - STAGE 4	SHEET 113	E

FILE NAME : O:\PDS\C3D\51630702\SHEETSPLAN\026001-S4.DWG
LAYOUT NAME - 06
PLOT DATE : 4/29/2025 1:25 PM
PLOT BY : ED OCHS
PLOT NAME :
PLOT SCALE : 1 IN:50 FT
WISDOT/CADDS SHEET 44

2

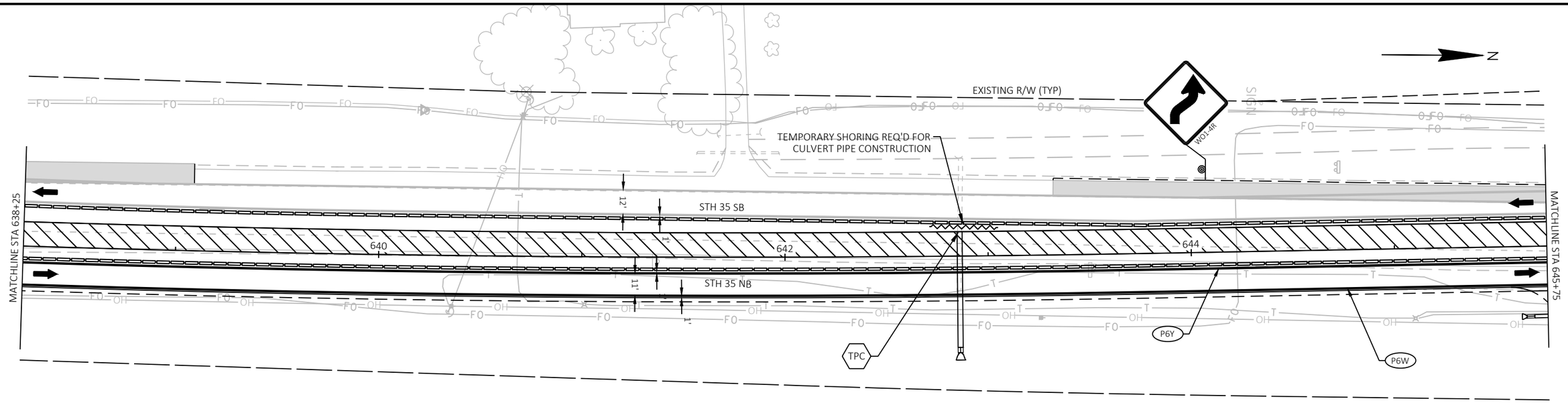

2

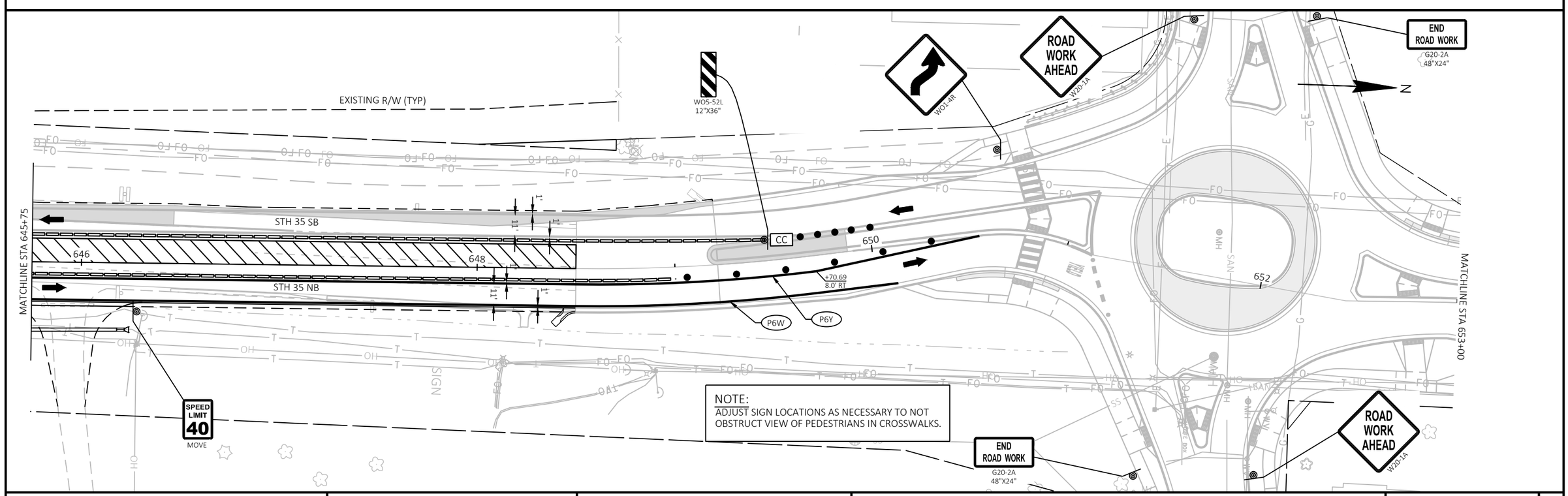

PROJECT NO: 5163-07-72	HWY: STH 35	COUNTY: LA CROSSE/VERNON	STAGED CONSTRUCTION - STAGE 4	SHEET 114	E

FILE NAME : O:\PDS\C3D\51630702\SHEETSPLAN\026001-S4.DWG
LAYOUT NAME - 07
PLOT DATE : 4/29/2025 1:25 PM
PLOT BY : ED OCHS
PLOT NAME :
PLOT SCALE : 1 IN:50 FT


MAX. 11' WIDTH
W12-52
48"X48"
ROAD WORK AHEAD
W20-1A
350'
EXISTING R/W (TYP)
STH 35 SB
STH 35 NB
654
656
658
660
MATCHLINE STA 653+00
END ROAD WORK
G20-2A
48"X24"
RIVERVIEW DR
N
ROAD WORK AHEAD
W20-1A
EXISTING R/W (TYP)
P6DY
P6W
32K
33K
34K
CTH K
MATCHLINE STA 31+00
CTH G
N

2

CTH GI NORTH STAGED CONSTRUCTION

CTH GI CONSTRUCTION
- CONSTRUCTION CTH GI IN HALVES FROM STA 19+00 TO STH 35.
- PLACE LOWER OF ASPHALT ON CTH GI.

CTH GI TRAFFIC
- UTILIZE FLAGGING OPERATIONS FOR CONSTRUCTING CTH GI IN HALVES. FLAGGING IS NOT ALLOWED ON CTH GI AFTER 12 PM ON FRIDAYS.
- OPEN CTH GI TO TWO-WAY TRAFFIC WITH AN ACCEPTABLE SURFACE (COMPACTED AGGREGATE OR ASPHALT) AT THE END OF EACH WORKDAY.
- FOUR FLAGGERS ARE REQUIRED AT ALL TIMES TO COMPLETE THE WORK ALONG CTH GI.

STANDARD DETAIL DRAWINGS: "TRAFFIC CONTROL FOR LANE CLOSURE WITH FLAGGING OPERATION" AND "TRAFFIC CONTROL, INTERSECTION WITHIN SINGLE RIGHT LANE CLOSURE."

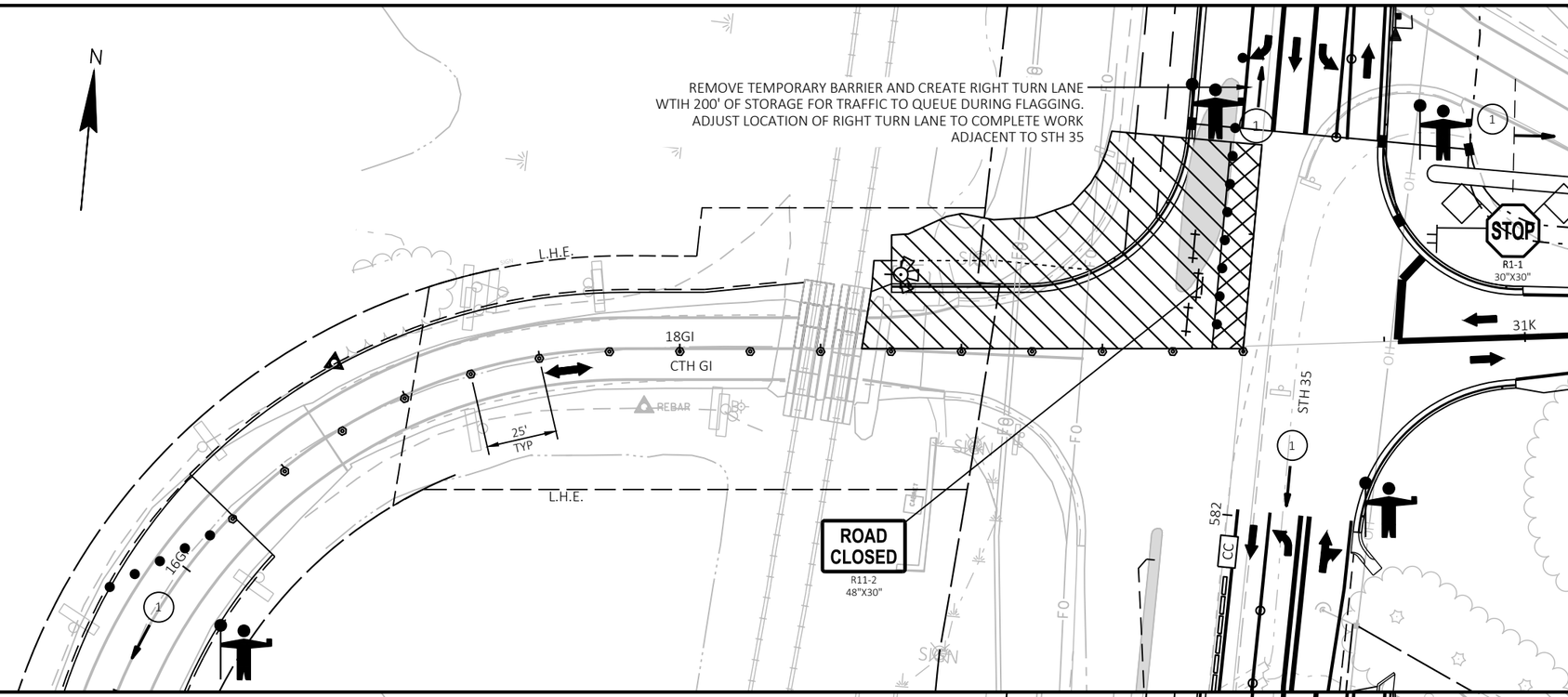

CTH GI SOUTH STAGED CONSTRUCTION

NOTE:

1 SEE S.D.D. "TRAFFIC CONTROL FOR LANE CLOSURE WITH FLAGGING OPERATION," FOR ADDITIONAL DETAILS AND SIGNING REQUIRED.

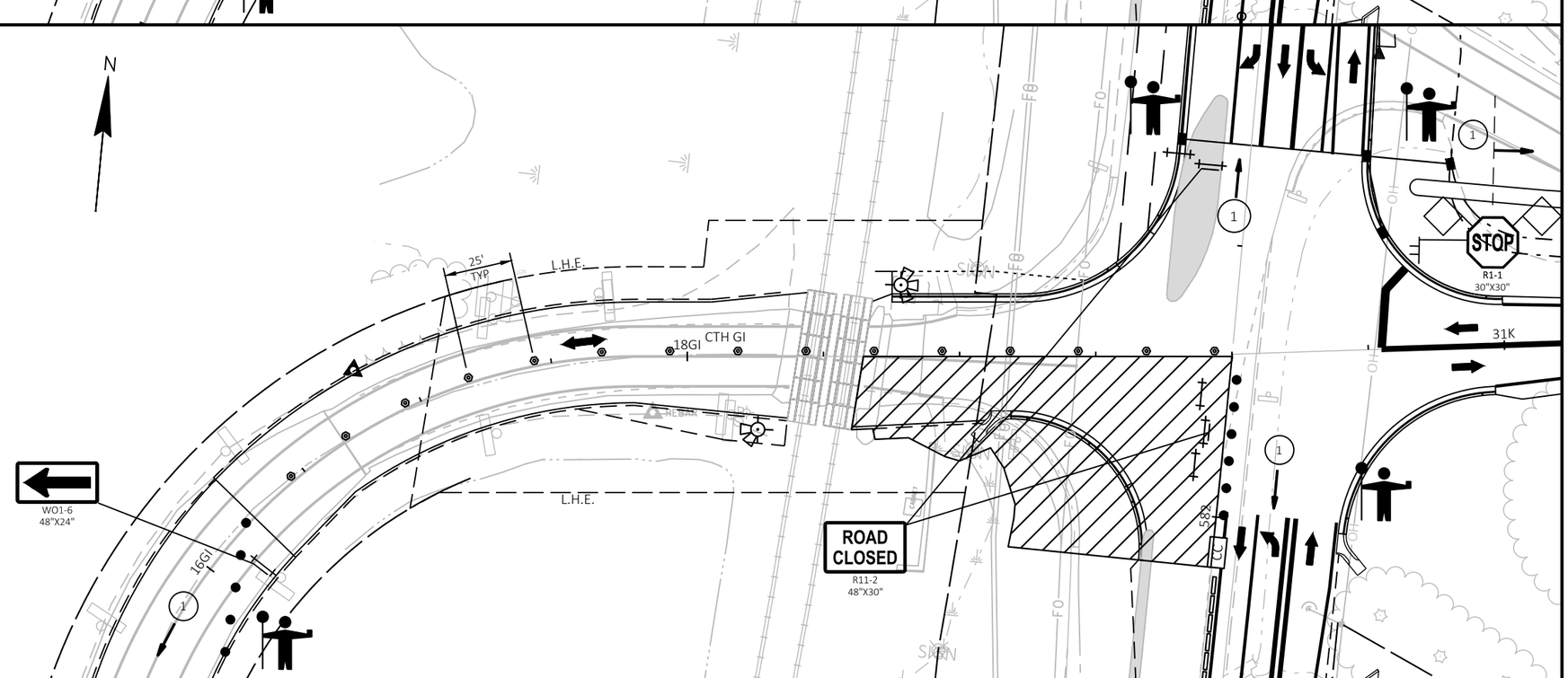

PROJECT NO: 5163-07-72	HWY: STH 35	COUNTY: LA CROSSE/VERNON	STAGED CONSTRUCTION - STAGE 4 - CTH GI	SHEET 116	E

2

STAGE 5 CONSTRUCTION

- REMOVE OLD ROADWAY AND TEMPORARY WIDENING ON NORTHBOUND STH 35 FROM THE BEGINNING OF PROJECT THROUGH MALLARD LANE.
- CLOSE MALLARD LANE INTERSECTION TO REPLACE CURB AND GUTTER IMPACTED BY THE TEMPORARY WIDENING.
- CONSTRUCT CONCRETE CORRUGATED MEDIANS AT THE INTERSECTION OF STH 35 AND CTH GI/CTH K.
- REMOVE OLD ROADWAY AND TEMPORARY WIDENING, CONSTRUCT THE REMAINING SOUTHBOUND STH 35 PAVEMENT, AND GRADE FOR THE FUTURE MULTI-USE PATH BETWEEN STATION 627+25 TO THE END OF THE PROJECT.
- INSTALL REMAINING NEW STORM SEWER AND CULVERTS.
- REMOVE TEMPORARY ASPHALT AND REPLACE SPLITTER ISLAND ON STH 35 JUST SOUTH OF SUNNYSIDE DRIVE.
- PAVE TOP LAYER OF ASPHALT ON STH 35, CTH GI, AND CTH K.
- INSTALL NEW GUARDRAIL AT STRUCTURE B-32-163.

STAGE 5 TRAFFIC

- UTILIZE THE NEW STH 35 LANES FROM BEGINNING OF THE PROJECT TO STATION 570+00, AND FROM STATION 597+12 TO 621+66 FOR NORTHBOUND AND SOUTHBOUND TRAFFIC.
- SHIFT STH 35 TRAFFIC TO THE NEW SHOULDERS AND OUTSIDE PORTION OF THE NEW TRAVEL LANES THROUGH THE CTH GI AND CTH K INTERSECTION FROM STATION 570+00 TO 597+12 AND AT THE END OF THE PROJECT TO COMPLETE THE SPLITTER ISLAND CONSTRUCTION JUST SOUTH OF SUNNYSIDE DRIVE.
- SHIFT STH 35 NORTHBOUND AND SOUTHBOUND TRAFFIC TO THE NEW NORTHBOUND SHOULDER, LANE, AND INSIDE PORTION OF THE NEW SOUTHBOUND LANE FROM STATION 621+66 TO 648+00.

STANDARD DETAIL DRAWINGS: TRAFFIC CONTROL, WORK ON SHOULDER OR PARKING LANE, UNDIVIDED ROADWAY.

THIS PAGE INTENTIONALLY LEFT BLANK

2

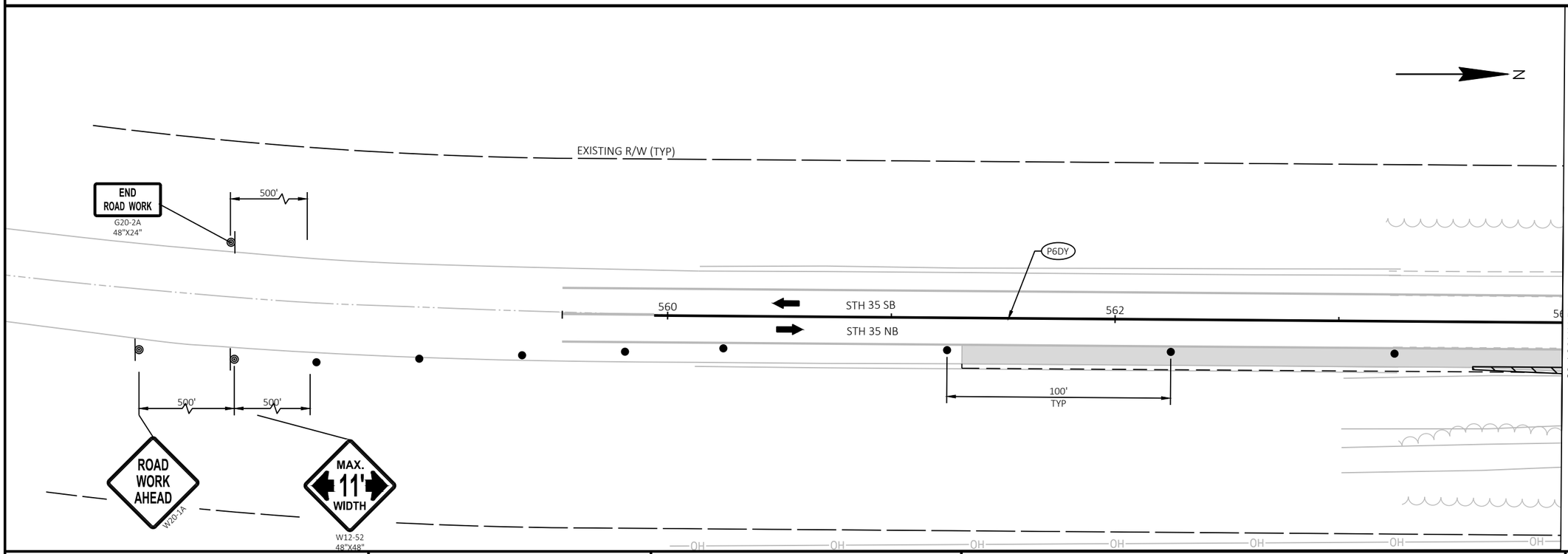

PROJECT NO: 5163-07-72	HWY: STH 35	COUNTY: LA CROSSE/VERNON	STAGED CONSTRUCTION - STAGE 5	SHEET 117	E

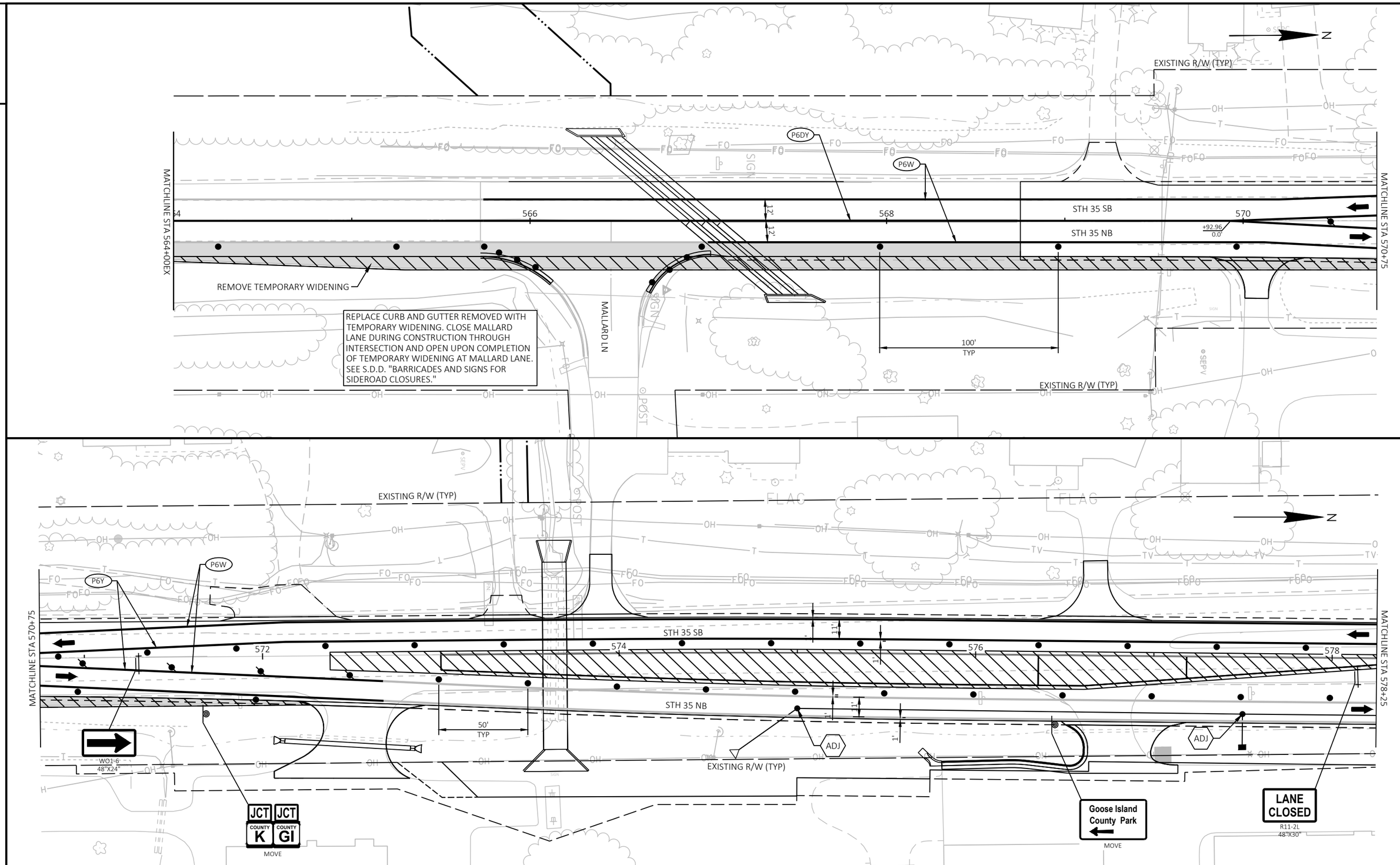

PROJECT NO: 5163-07-72	HWY: STH 35	COUNTY: LA CROSSE/VERNON	STAGED CONSTRUCTION - STAGE 5	SHEET 118	E

FILE NAME : O:\PDS\C3D\51630702\SHEETSPLAN\026001-S5.DWG
LAYOUT NAME - 02
PLOT DATE : 5/1/2025 9:23 AM
PLOT BY : ED OCHS
PLOT NAME :
PLOT SCALE : 1 IN:50 FT

2

CLOSE LEFT TURNS TO CONSTRUCT ISLAND DURING OFF PEAK HOURS. FLAG AS NECESSARY. SEE S.D.D. "TRAFFIC CONTROL FOR LANE CLOSURE WITH FLAGGING T.L.E. OPERATION."

N

ONE WAY R6-2R 24"X30"

R3-2 24"X24"

FLAG AS NECESSARY. IF REQ'D COMPLETE WORK DURING OFF PEAK HOURS SEE "TRAFFIC CONTROL FOR LANE CLOSURE WITH FLAGGING OPERATION."

STOP R1-1 30"X30"

ROAD WORK AHEAD W20-1A

35 MOVE

200'

19GI

CTH GI

COUNTY K MOVE

COUNTY GI MOVE

P6W

P6Y

P10W

25' TYP

MATCHLINE STA 578+25

580

582

ADJ

+14.36 25.0' RT

+66.08 27.3' RT

+61.04 10.0' RT

STH 35 SB

584

STH 35 NB

MATCHLINE STA 585+75

STOP R1-1 30"X30"

ONE WAY R6-1R 36"X12"

R3-2 24"X24"

BEGIN LEFT TURN LANE R3-20L 24"X36"

COUNTY GI MOVE

COUNTY K MOVE

ROAD WORK AHEAD W20-1A

CTH K

31K

35' 35 MOVE

50' TYP

STOP R1-1 30"X30"

FLAG AS NECESSARY. IF REQ'D COMPLETE WORK DURING OFF PEAK HOURS SEE "TRAFFIC CONTROL FOR LANE CLOSURE WITH FLAGGING OPERATION."

2

N

Goose Island County Park MOVE

T.L.E.

EXISTING R/W (TYP)

ONLY ONLY ONLY R3-8LAR 54"X30"

T.L.E.

P6W3

P6W

P6Y

+73.31 17.0' LT

MATCHLINE STA 585+75

+84.37 2.0' LT

586

25' TYP

588

STH 35 SB

590

592

STH 35 NB

MATCHLINE STA 593+25

50' TYP

P10W

P10W3

BEGIN LEFT TURN LANE R3-20L 24"X36"

EXISTING R/W (TYP)

FLAG AS NECESSARY. IF REQ'D COMPLETE WORK DURING OFF PEAK HOURS SEE "TRAFFIC CONTROL FOR LANE CLOSURE WITH FLAGGING OPERATION."

PROJECT NO: 5163-07-72	HWY: STH 35	COUNTY: LA CROSSE/VERNON	STAGED CONSTRUCTION - STAGE 5	SHEET 119	E

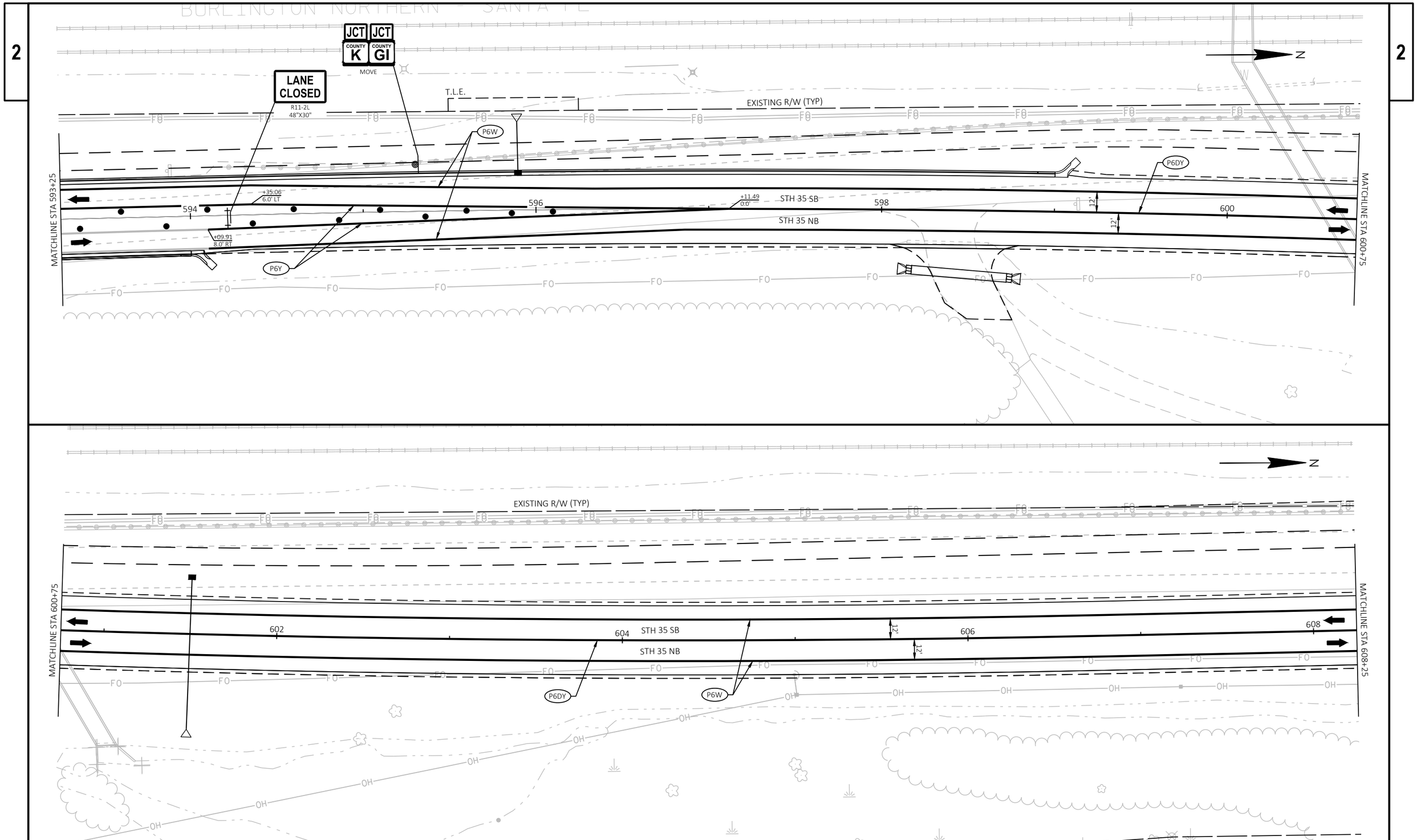

PROJECT NO: 5163-07-72	HWY: STH 35	COUNTY: LA CROSSE/VERNON	STAGED CONSTRUCTION - STAGE 5	SHEET 120	E

FILE NAME : O:\PDS\C3D\51630702\SHEETSPLAN\026001-S5.DWG
LAYOUT NAME - 04
PLOT DATE : 5/1/2025 9:24 AM
PLOT BY : ED OCHS
PLOT NAME :
PLOT SCALE : 1 IN:50 FT
WISDOT/CADDS SHEET 44

2

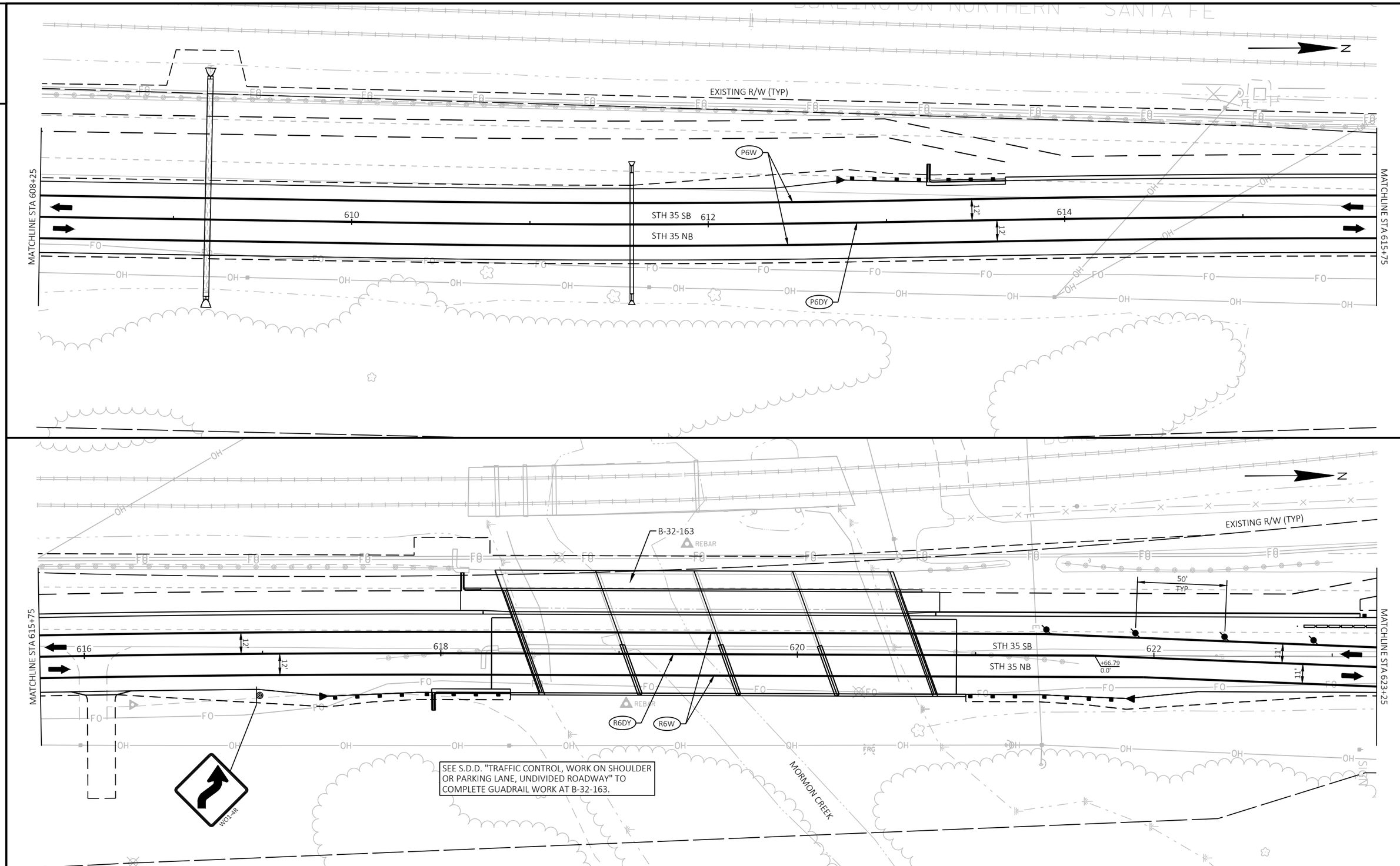

2

PROJECT NO: 5163-07-72	HWY: STH 35	COUNTY: LA CROSSE/VERNON	STAGED CONSTRUCTION - STAGE 5	SHEET 121	E

FILE NAME : O:\PDS\C3D\51630702\SHEETSPLAN\026001-S5.DWG
LAYOUT NAME - 05
PLOT DATE : 5/1/2025 9:24 AM
PLOT BY : ED OCHS
PLOT NAME :
PLOT SCALE : 1 IN:50 FT

2

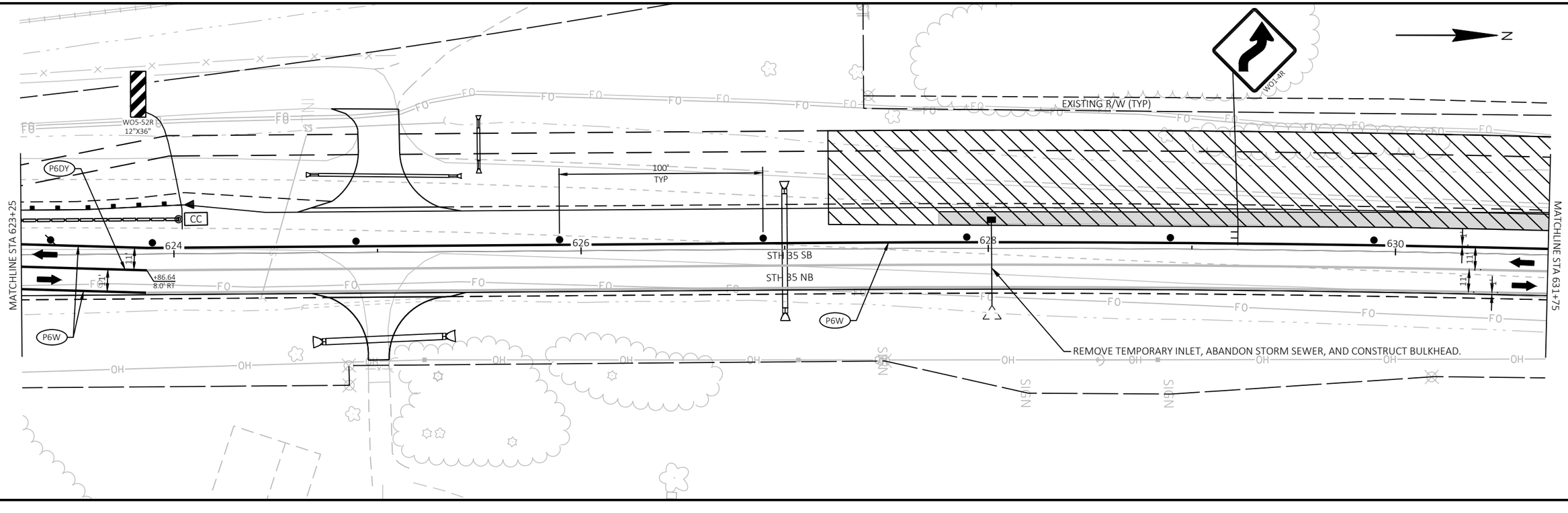

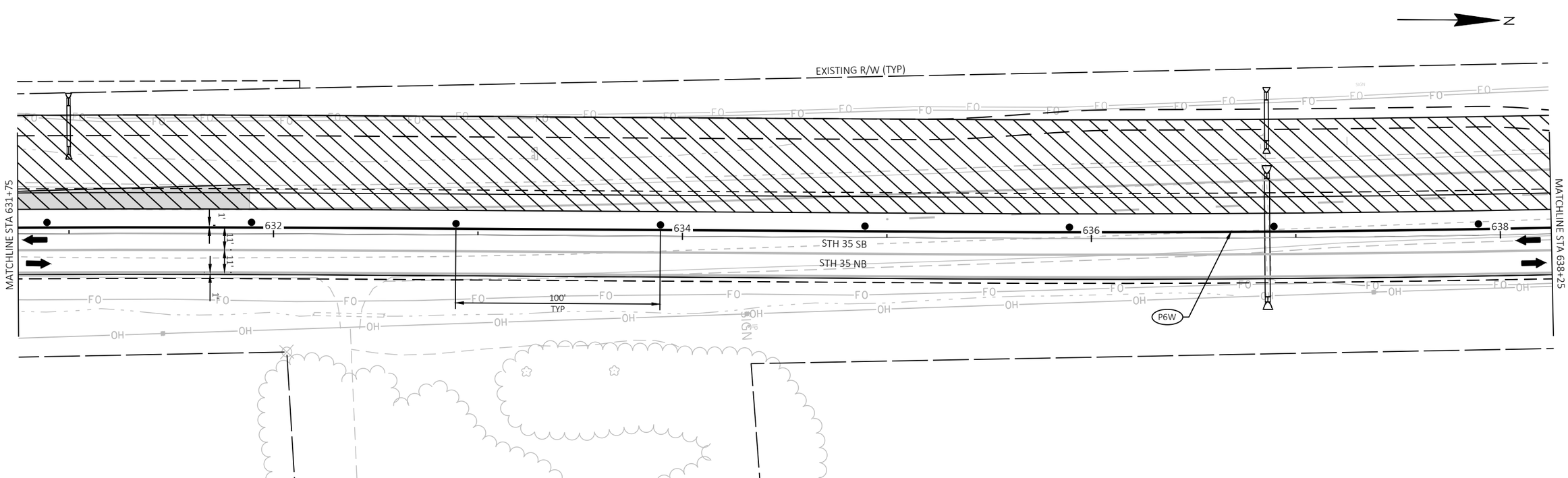

PROJECT NO: 5163-07-72	HWY: STH 35	COUNTY: LA CROSSE/VERNON	STAGED CONSTRUCTION - STAGE 5	SHEET 122	E

FILE NAME : O:\PDS\C3D\51630702\SHEETSPLAN\026001-S5.DWG
LAYOUT NAME - 06
PLOT DATE : 5/1/2025 9:24 AM
PLOT BY : ED OCHS
PLOT NAME :
PLOT SCALE : 1 IN:50 FT

2

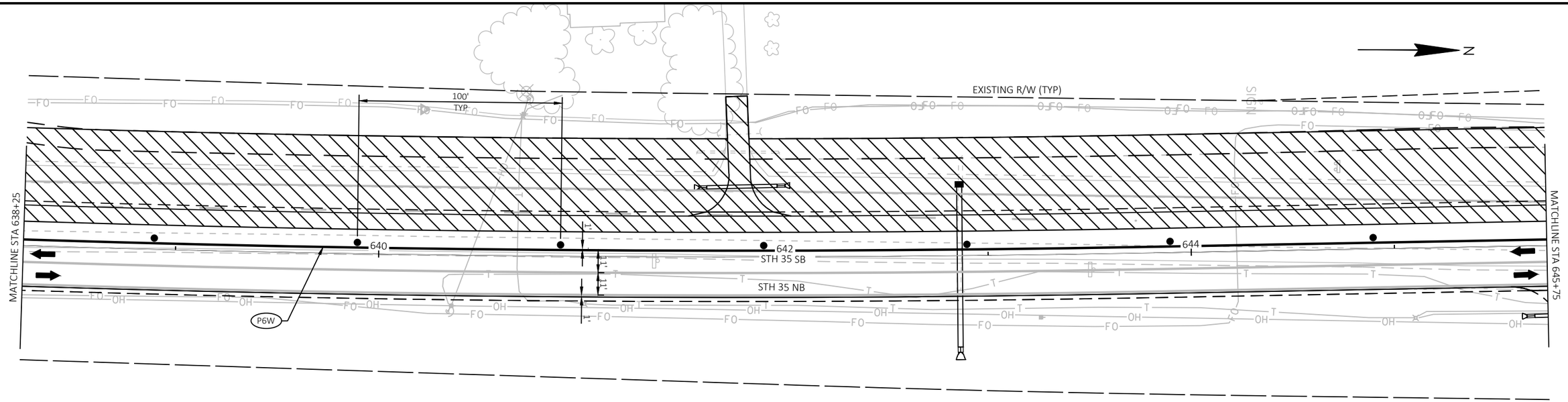

2

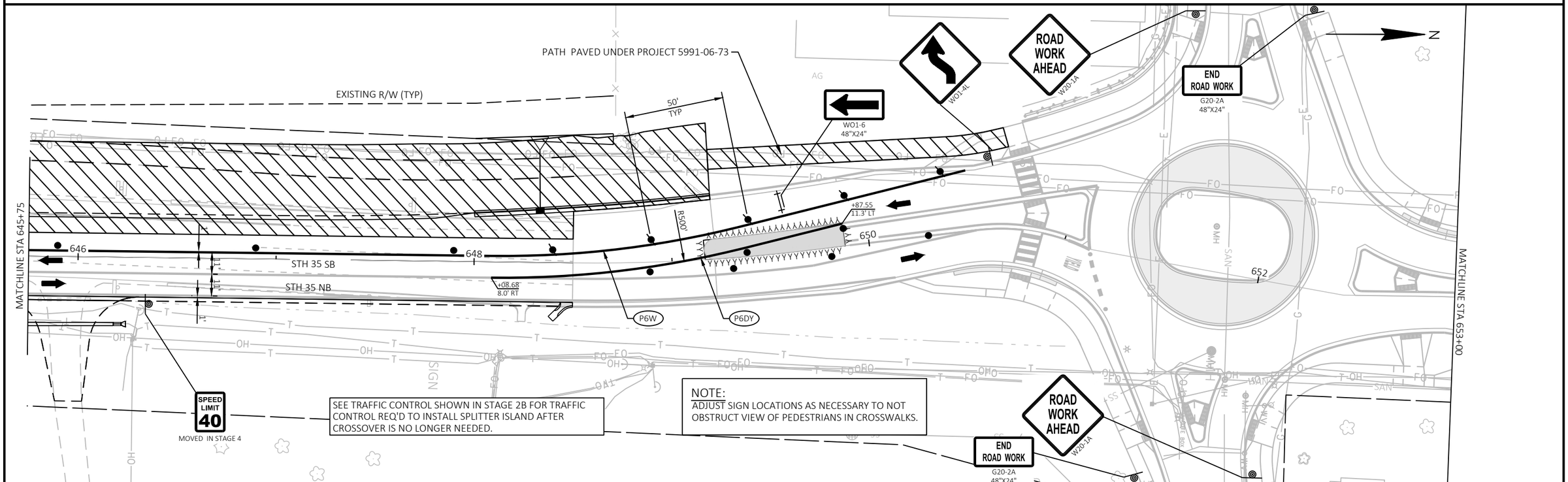

PROJECT NO: 5163-07-72	HWY: STH 35	COUNTY: LA CROSSE/VERNON	STAGED CONSTRUCTION - STAGE 5	SHEET 123	E

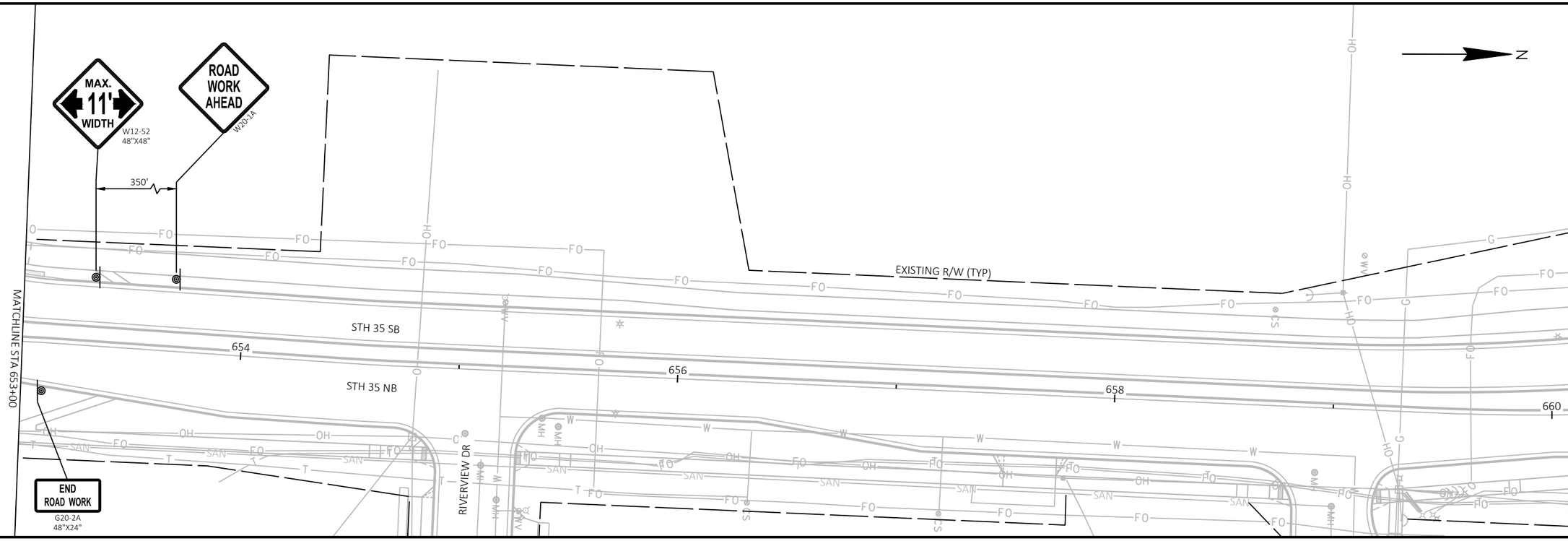

2

PROJECT NO: 5163-07-72	HWY: STH 35	COUNTY: LA CROSSE/VERNON	STAGED CONSTRUCTION - STAGE 5	SHEET 124	E

FILE NAME : O:\PDS\C3D\51630702\SHEETSPLAN\026001-S5.DWG
LAYOUT NAME - 08
PLOT DATE : 5/1/2025 9:24 AM
PLOT BY : ED OCHS
PLOT NAME :
PLOT SCALE : ##########

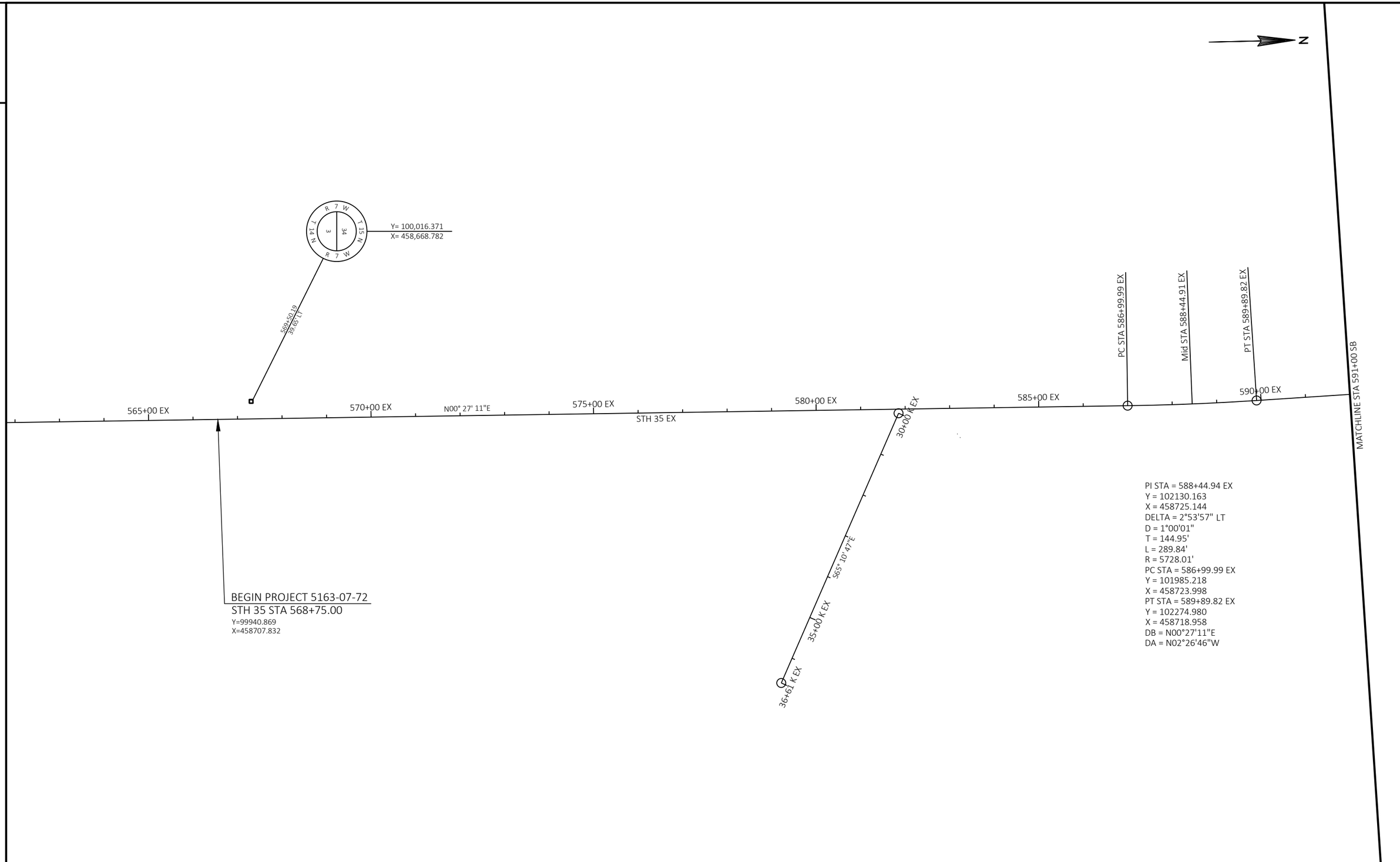
N
Y= 100,016.371
X= 458,668.782
569+50.19
39.65' LT
565+00 EX
570+00 EX
N00° 27' 11"E
575+00 EX
STH 35 EX
580+00 EX
30+00 K EX
585+00 EX
PC STA 586+99.99 EX
Mid STA 588+44.91 EX
PT STA 589+89.82 EX
590+00 EX
MATCHLINE STA 591+00 SB
S65° 10' 47"E
35+00 K EX
36+61 K EX
BEGIN PROJECT 5163-07-72
STH 35 STA 568+75.00
Y=99940.869
X=458707.832
PI STA = 588+44.94 EX
Y = 102130.163
X = 458725.144
DELTA = 2°53'57" LT
D = 1°00'01"
T = 144.95'
L = 289.84'
R = 5728.01'
PC STA = 586+99.99 EX
Y = 101985.218
X = 458723.998
PT STA = 589+89.82 EX
Y = 102274.980
X = 458718.958
DB = N00°27'11"E
DA = N02°26'46"W

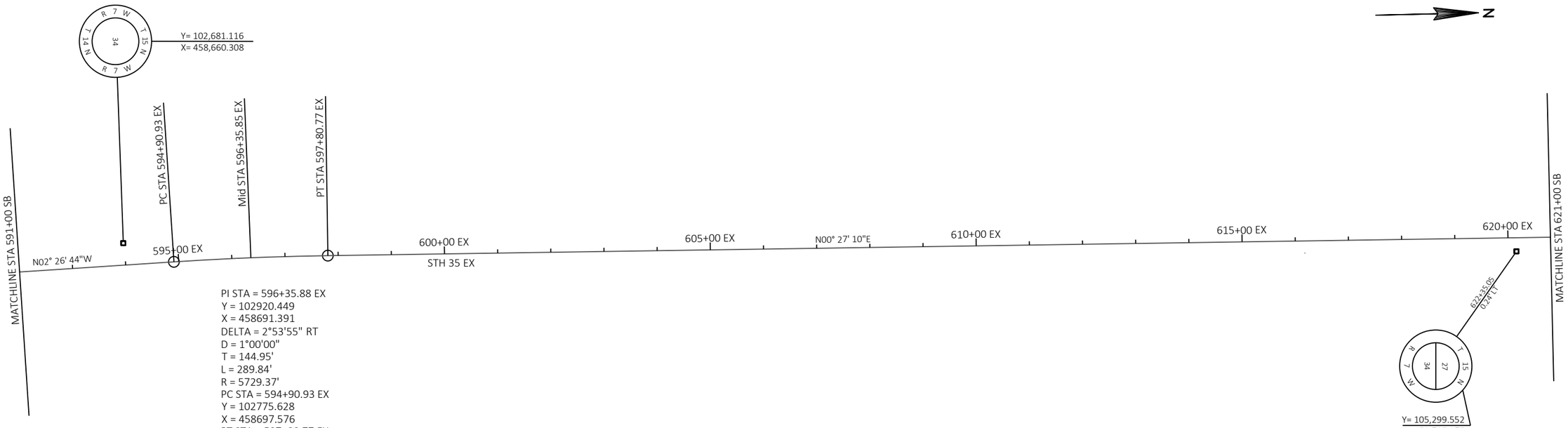
Y= 102,681.116
X= 458,660.308
MATCHLINE STA 591+00 SB
N02° 26' 44"W
PC STA 594+90.93 EX
Mid STA 596+35.85 EX
PT STA 597+80.77 EX
595+00 EX
600+00 EX
STH 35 EX
605+00 EX
N00° 27' 10"E
610+00 EX
615+00 EX
620+00 EX
MATCHLINE STA 621+00 SB
622+35.05
0.24 ft
Y= 105,299.552
X= 458,735.275
PI STA = 596+35.88 EX
Y = 102920.449
X = 458691.391
DELTA = 2°53'55" RT
D = 1°00'00"
T = 144.95'
L = 289.84'
R = 5729.37'
PC STA = 594+90.93 EX
Y = 102775.628
X = 458697.576
PT STA = 597+80.77 EX
Y = 103065.397
X = 458692.537
DB = N02°26'44"W
DA = N00°27'11"E

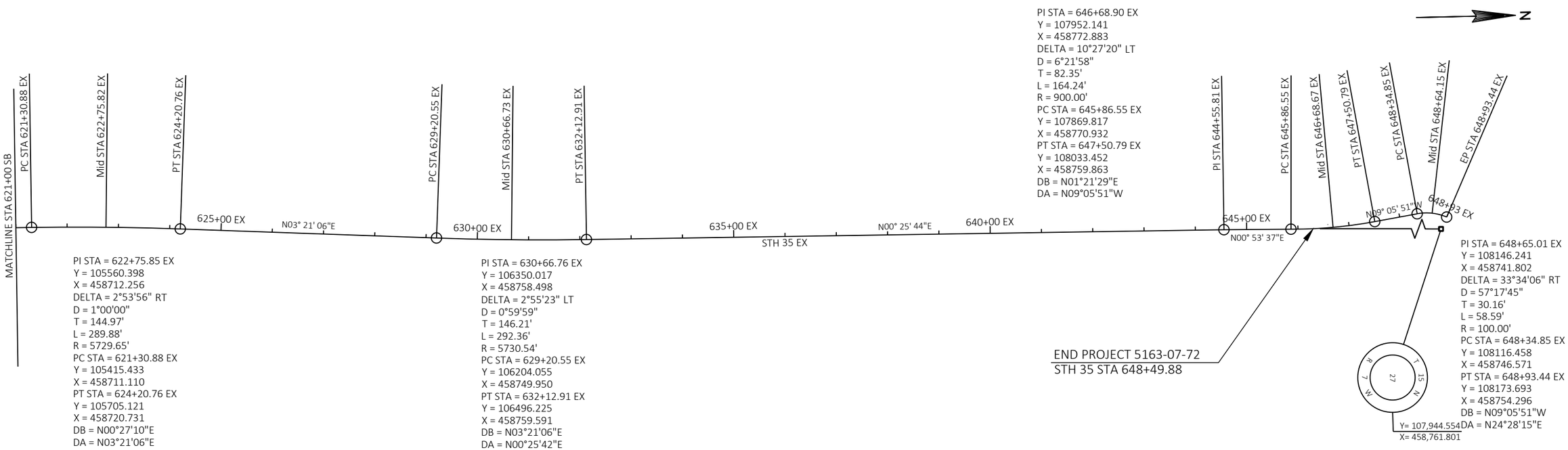
MATCHLINE STA 621+00 SB
PC STA 621+30.88 EX
Mid STA 622+75.82 EX
PT STA 624+20.76 EX
625+00 EX
N03° 21' 06"E
PC STA 629+20.55 EX
630+00 EX
Mid STA 630+66.73 EX
PT STA 632+12.91 EX
635+00 EX
STH 35 EX
N00° 25' 44"E
640+00 EX
PI STA 644+55.81 EX
645+00 EX
N00° 53' 37"E
PC STA 645+86.55 EX
Mid STA 646+68.67 EX
PT STA 647+50.79 EX
PC STA 648+34.85 EX
Mid STA 648+64.15 EX
EP STA 648+93.44 EX
N09° 05' 51"W
648+93 EX
PI STA = 646+68.90 EX
Y = 107952.141
X = 458772.883
DELTA = 10°27'20" LT
D = 6°21'58"
T = 82.35'
L = 164.24'
R = 900.00'
PC STA = 645+86.55 EX
Y = 107869.817
X = 458770.932
PT STA = 647+50.79 EX
Y = 108033.452
X = 458759.863
DB = N01°21'29"E
DA = N09°05'51"W
END PROJECT 5163-07-72
STH 35 STA 648+49.88
Y= 107,944.554
X= 458,761.801
PI STA = 648+65.01 EX
Y = 108146.241
X = 458741.802
DELTA = 33°34'06" RT
D = 57°17'45"
T = 30.16'
L = 58.59'
R = 100.00'
PC STA = 648+34.85 EX
Y = 108116.458
X = 458746.571
PT STA = 648+93.44 EX
Y = 108173.693
X = 458754.296
DB = N09°05'51"W
DA = N24°28'15"E
PI STA = 622+75.85 EX
Y = 105560.398
X = 458712.256
DELTA = 2°53'56" RT
D = 1°00'00"
T = 144.97'
L = 289.88'
R = 5729.65'
PC STA = 621+30.88 EX
Y = 105415.433
X = 458711.110
PT STA = 624+20.76 EX
Y = 105705.121
X = 458720.731
DB = N00°27'10"E
DA = N03°21'06"E
PI STA = 630+66.76 EX
Y = 106350.017
X = 458758.498
DELTA = 2°55'23" LT
D = 0°59'59"
T = 146.21'
L = 292.36'
R = 5730.54'
PC STA = 629+20.55 EX
Y = 106204.055
X = 458749.950
PT STA = 632+12.91 EX
Y = 106496.225
X = 458759.591
DB = N03°21'06"E
DA = N00°25'42"E

PI STA = 574+68.15
Y = 100534.00
X = 458712.52
DELTA = 1°03'57"
D = 0°30'58"
T = 103.24
L = 206.47
R = 11100.00
PC STA = 573+64.91
PT STA = 575+71.38
SE = RC

PI STA = 581+42.60
Y = 101208.22
X = 458730.40
DELTA = 1°37'41"
D = 0°42'39"
T = 114.52
L = 229.02
R = 8060.00
PC STA = 580+28.08
PT STA = 582+57.10
SE = RC

CTH GI

PI STA = 16+72.58 GI
Y = 101289.37
X = 458350.56
DELTA = 79°31'47"
D = 29°22'57"
T = 162.27
L = 270.67
R = 195.00
PC STA = 15+10.32 GI
PT STA = 17+80.99 GI

PI STA = 585+28.37
Y = 101594.01
X = 458729.66
DELTA = 2°43'10"
D = 0°42'39"
T = 191.32
L = 382.56
R = 8060.00
PC STA = 583+37.06
PT STA = 587+19.62

PI STA = 589+19.83
Y = 101985.06
X = 458710.34
DELTA = 2°50'45"
D = 0°42'39"
T = 200.21
L = 400.35
R = 8060.00
PC STA = 587+19.62
PT STA = 591+19.96

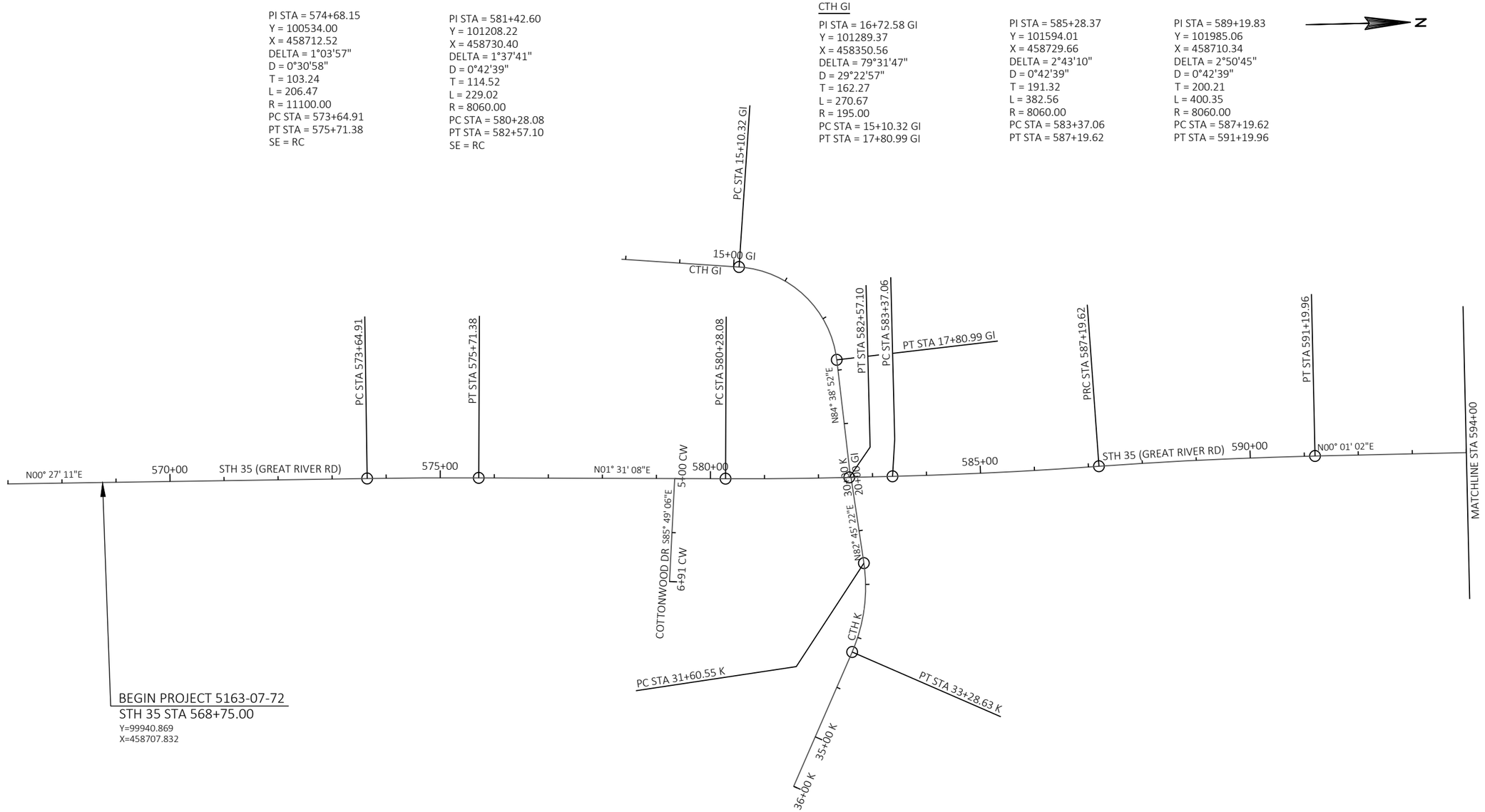

BEGIN PROJECT 5163-07-72
STH 35 STA 568+75.00
Y=99940.869
X=458707.832

CTH K

PI STA = 32+46.86 K
Y = 101356.92
X = 458975.06
DELTA = 32°06'01"
T = 86.31
L = 168.08
R = 300.00
PC STA = 31+60.55 K
PT STA = 33+28.63 K
SE = 4.0%

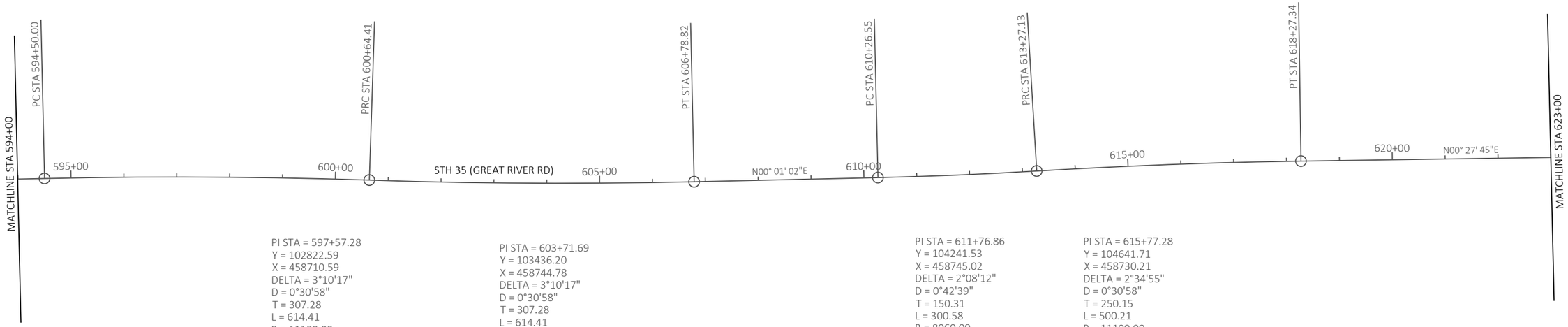

PI STA = 597+57.28
Y = 102822.59
X = 458710.59
DELTA = 3°10'17"
D = 0°30'58"
T = 307.28
L = 614.41
R = 11100.00
PC STA = 594+50.00
PT STA = 600+64.41

PI STA = 603+71.69
Y = 103436.20
X = 458744.78
DELTA = 3°10'17"
D = 0°30'58"
T = 307.28
L = 614.41
R = 11100.00
PC STA = 600+64.41
PT STA = 606+78.82

PI STA = 611+76.86
Y = 104241.53
X = 458745.02
DELTA = 2°08'12"
D = 0°42'39"
T = 150.31
L = 300.58
R = 8060.00
PC STA = 610+26.55
PT STA = 613+27.13
SE = RC

PI STA = 615+77.28
Y = 104641.71
X = 458730.21
DELTA = 2°34'55"
D = 0°30'58"
T = 250.15
L = 500.21
R = 11100.00
PC STA = 613+27.13
PT STA = 618+27.34

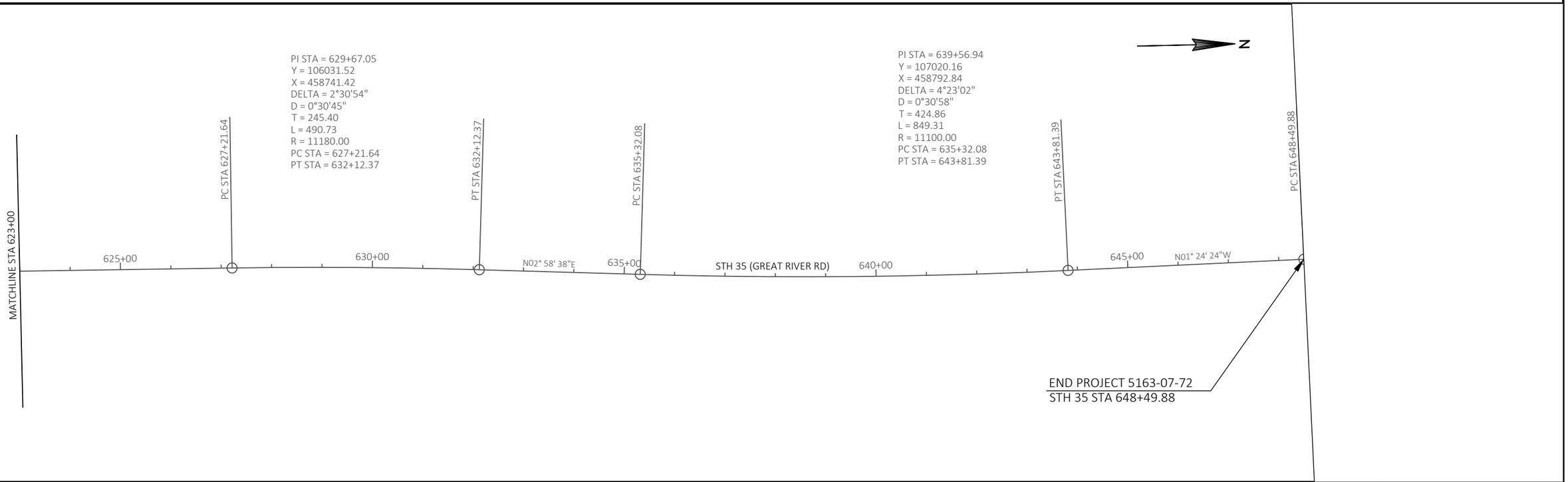

PI STA = 629+67.05
Y = 106031.52
X = 458741.42
DELTA = 2°30'54"
D = 0°30'45"
T = 245.40
L = 490.73
R = 11180.00
PC STA = 627+21.64
PT STA = 632+12.37

PI STA = 639+56.94
Y = 107020.16
X = 458792.84
DELTA = 4°23'02"
D = 0°30'58"
T = 424.86
L = 849.31
R = 11100.00
PC STA = 635+32.08
PT STA = 643+81.39

2

STH 35					
SUPERELEVATION TABLE					
	STATION	LEFT SHOULDER	LEFT LANE	RIGHT LANE	RIGHT SHOULDER
END NORMAL CROWN	572+50.03	-4.00%	-2.00%	-2.00%	-4.00%
LEVEL CROWN	573+02.98	-4.00%	-2.00%	0.00%	0.00%
BEGIN FULL SUPER	573+55.92	-4.00%	-2.00%	2.00%	2.00%
END FULLSUPER	575+80.44	-4.00%	-2.00%	2.00%	2.00%
LEVEL CROWN	576+33.44	-4.00%	-2.00%	0.00%	0.00%
BEGIN NORMAL CROWN	576+86.44	-4.00%	-2.00%	-2.00%	-4.00%
END NORMAL SHOULDER	579+39.74	-4.00%	-2.00%	-2.00%	-4.00%
LEVEL CROWN	579+92.74	-4.00%	-2.00%	0.00%	0.00%
BEGIN FULL SUPER	580+45.74	-4.00%	-2.00%	2.00%	2.00%
END FULL SUPER	586+97.29	-4.00%	-2.00%	2.00%	2.00%
BEGIN FULL SUPER	588+31.20	2.00%	2.00%	-2.00%	-2.00%
END FULL SUPER	591+02.30	2.00%	2.00%	-2.00%	-2.00%
LEVEL CROWN	591+55.30	0.00%	0.00%	-2.00%	-2.00%
BEGIN NORMAL CROWN	592+08.30	-4.00%	-2.00%	-2.00%	-2.00%
END NORMAL CROWN	609+38.21	-4.00%	-2.00%	-2.00%	-4.00%
LEVEL CROWN	609+91.21	-4.00%	-2.00%	0.00%	0.00%
BEGIN FULL SUPER	610+44.21	-4.00%	-2.00%	2.00%	2.00%
END FULL SUPER	613+09.47	-4.00%	-2.00%	2.00%	2.00%
LEVEL CROWN	613+62.47	-4.00%	-2.00%	0.00%	0.00%
BEGIN NORMAL CROWN	614+15.47	-4.00%	-2.00%	-2.00%	-4.00%

CTH GI					
SUPERELEVATION TABLE					
	STATION	LEFT SHOULDER	LEFT LANE	RIGHT LANE	RIGHT SHOULDER
END NORMAL CROWN	14+59.32	-4.00%	-2.00%	-2.00%	-2.00%
LEVEL CROWN	14+93.32	-4.00%	0.00%	-2.00%	-2.00%
BEGIN FULL SUPER	15+27.32	-4.00%	2.00%	-2.00%	-4.00%
END FULL SUPER	17+63.99	-4.00%	2.00%	-2.00%	-4.00%
LEVEL CROWN	17+97.99	-4.00%	0.00%	-2.00%	-4.00%
BEGIN FULL SUPER	18+31.99	-0.20%	-0.20%	0.20%	0.20%
END FULL SUPER	18+68.06	-0.20%	-0.20%	0.20%	0.20%
BEGIN FULL SUPER	19+18.91	0.97%	0.97%	-0.97%	-0.97%
END FULL SUPER	20+00.00	0.97%	0.97%	-0.97%	-0.97%

CTH K					
SUPERELEVATION TABLE					
	STATION	LEFT SHOULDER	LEFT LANE	RIGHT LANE	RIGHT SHOULDER
BEGIN FULL SUPER	30+00.00	0.97%	0.97%	-0.97%	-0.97%
END FULL SUPER	30+29.23	0.97%	0.97%	-0.97%	-0.97%
END NORMAL SHOULDER	30+75.38	0.97%	0.97%	-2.00%	-4.00%
END NORMAL CROWN	30+75.38	0.97%	0.97%	-2.00%	-4.00%
LEVEL CROWN	31+30.13	0.97%	0.97%	-2.00%	-4.00%
REVERSE CROWN	31+48.38	2.00%	2.00%	-2.00%	-4.00%
BEGIN FULL SUPER	31+84.88	4.00%	4.00%	-4.00%	-4.00%
END FULL SUPER	33+04.30	4.00%	4.00%	-4.00%	-4.00%
REVERSE CROWN	33+40.80	2.00%	2.00%	-2.00%	-4.00%
LEVEL CROWN	33+77.30	0.00%	0.00%	-2.00%	-4.00%
BEGIN NORMAL CROWN	34+13.80	-4.00%	-2.00%	-2.00%	-4.00%

2

SEE PROJECT ID 5991-06-73
FOR MORE DETAILS.

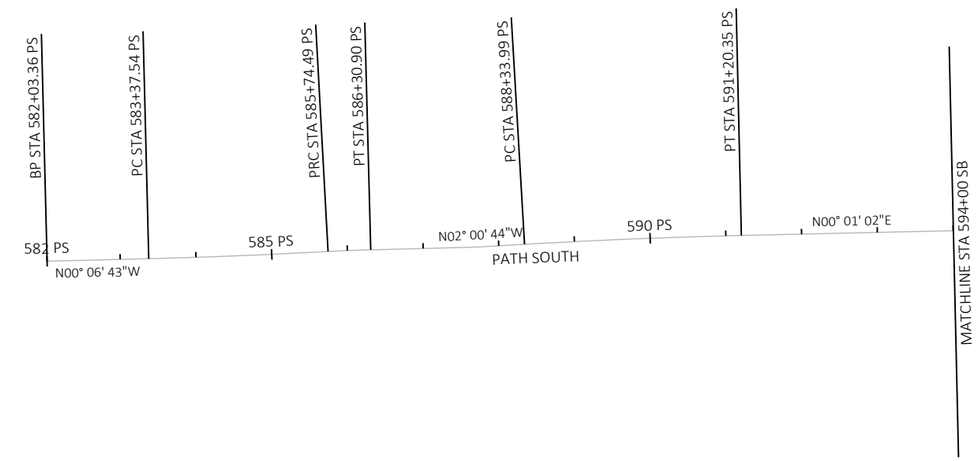

PI STA = 584+56.02PS
Y = 101521.10
X = 458694.80
DELTA = 1°41'30"
D = 0°42'50"
T = 118.48
L = 236.94
R = 8025.00
PC STA = 583+37.54PS
PT STA = 585+74.49PS

PI STA = 586+02.70PS
Y = 101667.72
X = 458690.18
DELTA = 1°36'58"
D = 2°51'53"
T = 28.21
L = 56.42
R = 2000.00
PC STA = 585+74.49PS
PT STA = 586+30.90PS

2

SEE PROJECT ID 5991-06-73
FOR MORE DETAILS.

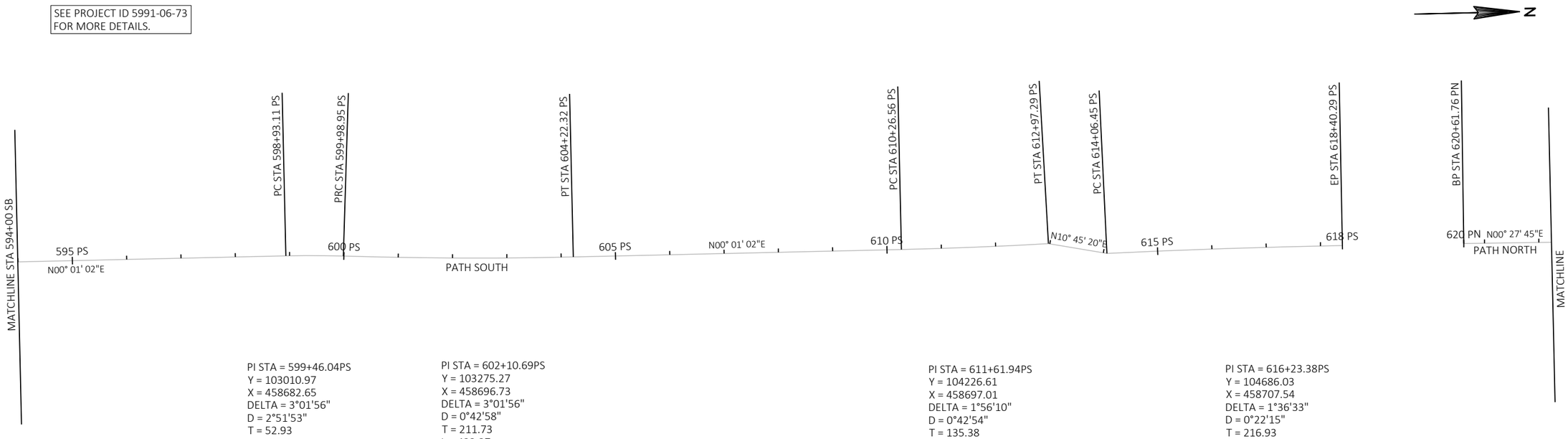

PI STA = 599+46.04PS
Y = 103010.97
X = 458682.65
DELTA = 3°01'56"
D = 2°51'53"
T = 52.93
L = 105.84
R = 2000.00
PC STA = 598+93.11PS
PT STA = 599+98.95PS

PI STA = 602+10.69PS
Y = 103275.27
X = 458696.73
DELTA = 3°01'56"
D = 0°42'58"
T = 211.73
L = 423.37
R = 8000.00
PC STA = 599+98.95PS
PT STA = 604+22.32PS

PI STA = 611+61.94PS
Y = 104226.61
X = 458697.01
DELTA = 1°56'10"
D = 0°42'54"
T = 135.38
L = 270.73
R = 8012.00
PC STA = 610+26.56PS
PT STA = 612+97.29PS

PI STA = 616+23.38PS
Y = 104686.03
X = 458707.54
DELTA = 1°36'33"
D = 0°22'15"
T = 216.93
L = 433.83
R = 15446.96
PC STA = 614+06.45PS
PT STA = 618+40.29PS

2

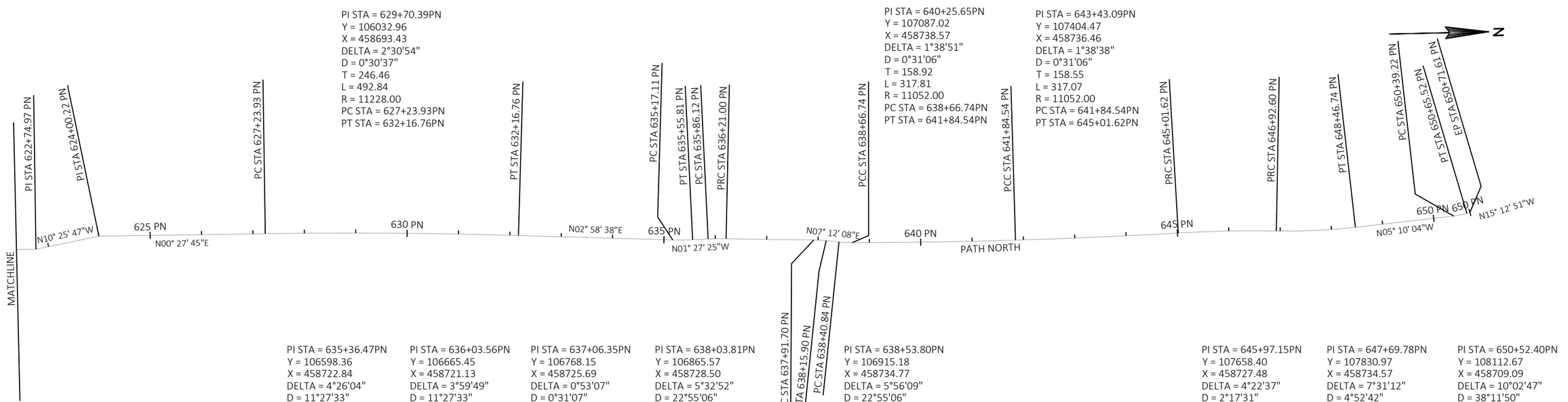

PI STA = 629+70.39PN
Y = 106032.96
X = 458693.43
DELTA = 2°30'54"
D = 0°30'37"
T = 246.46
L = 492.84
R = 11228.00
PC STA = 627+23.93PN
PT STA = 632+16.76PN

PI STA = 640+25.65PN
Y = 107087.02
X = 458738.57
DELTA = 1°38'51"
D = 0°31'06"
T = 158.92
L = 317.81
R = 11052.00
PC STA = 638+66.74PN
PT STA = 641+84.54PN

PI STA = 643+43.09PN
Y = 107404.47
X = 458736.46
DELTA = 1°38'38"
D = 0°31'06"
T = 158.55
L = 317.07
R = 11052.00
PC STA = 641+84.54PN
PT STA = 645+01.62PN

PI STA = 635+36.47PN
Y = 106598.36
X = 458722.84
DELTA = 4°26'04"
D = 11°27'33"
T = 19.36
L = 38.70
R = 500.00
PC STA = 635+17.11PN
PT STA = 635+55.81PN

PI STA = 636+03.56PN
Y = 106665.45
X = 458721.13
DELTA = 3°59'49"
D = 11°27'33"
T = 17.45
L = 34.88
R = 500.00
PC STA = 635+86.12PN
PT STA = 636+21.00PN

PI STA = 637+06.35PN
Y = 106768.15
X = 458725.69
DELTA = 0°53'07"
D = 0°31'07"
T = 85.35
L = 170.70
R = 11047.00
PC STA = 636+21.00PN
PT STA = 637+91.70PN

PI STA = 638+03.81PN
Y = 106865.57
X = 458728.50
DELTA = 5°32'52"
D = 22°55'06"
T = 12.11
L = 24.21
R = 250.00
PC STA = 637+91.70PN
PT STA = 638+15.90PN

PI STA = 638+53.80PN
Y = 106915.18
X = 458734.77
DELTA = 5°56'09"
D = 22°55'06"
T = 12.96
L = 25.90
R = 250.00
PC STA = 638+40.84PN
PT STA = 638+66.74PN

PI STA = 645+97.15PN
Y = 107658.40
X = 458727.48
DELTA = 4°22'37"
D = 2°17'31"
T = 95.54
L = 190.98
R = 2500.00
PC STA = 645+01.62PN
PT STA = 646+92.60PN

PI STA = 647+69.78PN
Y = 107830.97
X = 458734.57
DELTA = 7°31'12"
D = 4°52'42"
T = 77.19
L = 154.15
R = 1174.50
PC STA = 646+92.60PN
PT STA = 648+46.74PN

PI STA = 650+52.40PN
Y = 108112.67
X = 458709.09
DELTA = 10°02'47"
D = 38°11'50"
T = 13.18
L = 26.30
R = 150.00
PC STA = 650+39.22PN
PT STA = 650+65.52PN

PROJECT NO: 5163-07-72	HWY: STH 35	COUNTY: LA CROSSE	ALIGNMENT - SHARED USE PATH	SHEET 131	E

5163-07-72

Line	Item	Item Description	Unit	Total	Qty
0002	201.0105	Clearing	STA	19.000	19.000
0004	201.0205	Grubbing	STA	19.000	19.000
0006	203.0100	Removing Small Pipe Culverts	EACH	19.000	19.000
0008	203.0260	Removing Structure Over Waterway Minimal Debris (structure) 01. B-32-163	EACH	1.000	1.000
0010	204.0100	Removing Concrete Pavement	SY	512.000	512.000
0012	204.0110	Removing Asphaltic Surface	SY	9,242.000	9,242.000
0014	204.0115	Removing Asphaltic Surface Butt Joints	SY	262.000	262.000
0016	204.0120	Removing Asphaltic Surface Milling	SY	1,050.000	1,050.000
0018	204.0150	Removing Curb & Gutter	LF	1,088.000	1,088.000
0022	204.0165	Removing Guardrail	LF	2,753.000	2,753.000
0024	204.0190	Removing Surface Drains	EACH	8.000	8.000
0026	204.0195	Removing Concrete Bases	EACH	1.000	1.000
0028	204.0220	Removing Inlets	EACH	3.000	3.000
0030	204.0245	Removing Storm Sewer (size) 01. 12-Inch	LF	28.000	28.000
0032	204.0245	Removing Storm Sewer (size) 02. 24-Inch	LF	160.000	160.000
0034	204.0280	Sealing Pipes	EACH	1.000	1.000
0036	205.0100	Excavation Common	CY	43,129.000	43,129.000
0038	206.1001	Excavation for Structures Bridges (structure) 01. B-32-163	EACH	1.000	1.000
0040	206.2001	Excavation for Structures Culverts (structure) 01. C-32-104	EACH	1.000	1.000
0042	208.0100	Borrow	CY	6,231.000	6,231.000
0044	210.1500	Backfill Structure Type A	TON	770.000	770.000
0046	210.2500	Backfill Structure Type B	TON	1,348.000	1,348.000
0048	211.0400	Prepare Foundation for Asphaltic Shoulders	STA	1.000	1.000
0050	213.0100	Finishing Roadway (project) 01. 5163-07-72	EACH	1.000	1.000
0052	305.0110	Base Aggregate Dense 3/4-Inch	TON	1,655.000	1,655.000
0054	305.0120	Base Aggregate Dense 1 1/4-Inch	TON	30,278.000	30,278.000
0056	312.0110	Select Crushed Material	TON	35,680.000	35,680.000
0058	371.2000.S	QMP Base Aggregate Dense 1 1/4-Inch Compaction	EACH	17.000	17.000
0060	415.0120	Concrete Pavement 12-Inch	SY	79.000	79.000
0062	415.0410	Concrete Pavement Approach Slab	SY	172.000	172.000
0064	450.4000	HMA Cold Weather Paving	TON	65.000	65.000
0066	455.0605	Tack Coat	GAL	4,052.000	4,052.000
0068	460.2000	Incentive Density HMA Pavement	DOL	7,260.000	7,260.000
0070	460.6223	HMA Pavement 3 MT 58-28 S	TON	7,230.000	7,230.000
0072	460.6224	HMA Pavement 4 MT 58-28 S	TON	4,360.000	4,360.000
0074	465.0105	Asphaltic Surface	TON	270.000	270.000
0076	465.0120	Asphaltic Surface Driveways and Field Entrances	TON	161.000	161.000
0078	465.0125	Asphaltic Surface Temporary	TON	2,822.000	2,822.000
0080	465.0310	Asphaltic Curb	LF	351.000	351.000
0082	465.0315	Asphaltic Flumes	SY	35.000	35.000
0084	465.0520	Asphaltic Rumble Strips, Shoulder	LF	12,691.000	12,691.000
0086	465.0560	Asphaltic Rumble Strips, Centerline	LF	5,104.000	5,104.000
0088	502.0100	Concrete Masonry Bridges	CY	735.000	735.000
0090	502.3200	Protective Surface Treatment	SY	1,410.000	1,410.000
0092	502.3210	Pigmented Surface Sealer	SY	430.000	430.000
0094	502.4205	Adhesive Anchors No. 5 Bar	EACH	269.000	269.000
0096	502.4206	Adhesive Anchors No. 6 Bar	EACH	32.000	32.000
0098	503.0136	Prestressed Girder Type I 36-Inch	LF	660.000	660.000
0100	503.1006.S	Removing and Resetting Prestressed Girders (structure) 01. B-32-0163	EACH	16.000	16.000

5163-07-72

Line	Item	Item Description	Unit	Total	Qty
0102	504.0100	Concrete Masonry Culverts	CY	177.000	177.000
0104	504.0900	Concrete Masonry Endwalls	CY	30.000	30.000
0106	505.0400	Bar Steel Reinforcement HS Structures	LB	20,550.000	20,550.000
0108	505.0600	Bar Steel Reinforcement HS Coated Structures	LB	140,890.000	140,890.000
0110	505.0906	Bar Couplers No. 6	EACH	12.000	12.000
0112	506.2605	Bearing Pads Elastomeric Non-Laminated	EACH	56.000	56.000
0114	506.4000	Steel Diaphragms (structure) 01. B-32-163	EACH	24.000	24.000
0116	511.1100	Temporary Shoring	SF	920.000	920.000
0118	511.1200	Temporary Shoring (structure) 01. B-32-163	SF	680.000	680.000
0120	511.1200	Temporary Shoring (structure) 02. C-32-0104	SF	2,153.000	2,153.000
0122	513.7011	Railing Steel Type C2	LF	248.000	248.000
0124	516.0500	Rubberized Membrane Waterproofing	SY	69.000	69.000
0126	520.1012	Apron Endwalls for Culvert Pipe 12-Inch	EACH	7.000	7.000
0128	520.1015	Apron Endwalls for Culvert Pipe 15-Inch	EACH	7.000	7.000
0130	520.1018	Apron Endwalls for Culvert Pipe 18-Inch	EACH	5.000	5.000
0132	520.1024	Apron Endwalls for Culvert Pipe 24-Inch	EACH	5.000	5.000
0134	520.1030	Apron Endwalls for Culvert Pipe 30-Inch	EACH	5.000	5.000
0136	520.2015	Culvert Pipe Temporary 15-Inch	LF	4.000	4.000
0138	520.3312	Culvert Pipe Class III-A 12-Inch	LF	64.000	64.000
0140	520.3315	Culvert Pipe Class III-A 15-Inch	LF	63.000	63.000
0142	520.3318	Culvert Pipe Class III-A 18-Inch	LF	50.000	50.000
0144	520.3324	Culvert Pipe Class III-A 24-Inch	LF	71.000	71.000
0146	520.3330	Culvert Pipe Class III-A 30-Inch	LF	58.000	58.000
0148	520.3612	Culvert Pipe Class III-B Non-metal 12-Inch	LF	16.000	16.000
0150	520.3615	Culvert Pipe Class III-B Non-metal 15-Inch	LF	20.000	20.000
0152	520.3618	Culvert Pipe Class III-B Non-metal 18-Inch	LF	20.000	20.000
0154	520.3624	Culvert Pipe Class III-B Non-metal 24-Inch	LF	80.000	80.000
0156	520.3630	Culvert Pipe Class III-B Non-metal 30-Inch	LF	122.000	122.000
0158	520.4112	Culvert Pipe Class IV 12-Inch	LF	29.000	29.000
0160	520.8000	Concrete Collars for Pipe	EACH	6.000	6.000
0162	520.8700	Cleaning Culvert Pipes	EACH	3.000	3.000
0164	522.0424	Culvert Pipe Reinforced Concrete Class IV 24-Inch	LF	176.000	176.000
0166	522.0436	Culvert Pipe Reinforced Concrete Class IV 36-Inch	LF	432.000	432.000
0168	522.1012	Apron Endwalls for Culvert Pipe Reinforced Concrete 12-Inch	EACH	2.000	2.000
0170	522.1015	Apron Endwalls for Culvert Pipe Reinforced Concrete 15-Inch	EACH	2.000	2.000
0172	522.1024	Apron Endwalls for Culvert Pipe Reinforced Concrete 24-Inch	EACH	8.000	8.000
0174	522.2434	Culvert Pipe Reinforced Concrete Horizontal Elliptical Class HE-IV 34x53-Inch	LF	56.000	56.000
0176	522.2634	Apron Endwalls for Culvert Pipe Reinforced Concrete Horizontal Elliptical 34x53-Inch	EACH	2.000	2.000
0178	550.0500	Pile Points	EACH	27.000	27.000
0180	550.1120	Piling Steel HP 12-Inch X 53 Lb	LF	2,430.000	2,430.000
0182	601.0409	Concrete Curb & Gutter 30-Inch Type A	LF	132.000	132.000
0184	601.0553	Concrete Curb & Gutter 4-Inch Sloped 36-Inch Type D	LF	3,130.000	3,130.000
0186	601.0557	Concrete Curb & Gutter 6-Inch Sloped 36-Inch Type D	LF	86.000	86.000
0188	601.0584	Concrete Curb & Gutter 4-Inch Sloped 30-Inch Type TBT	LF	71.000	71.000
0190	601.0586	Concrete Curb & Gutter 4-Inch Sloped 30-Inch Type TBTT	LF	11.000	11.000
0192	602.0410	Concrete Sidewalk 5-Inch	SF	414.000	414.000
0198	602.3010	Concrete Surface Drains	CY	9.000	9.000
0200	603.1142	Concrete Barrier Type S42	LF	725.000	725.000
0202	603.8000	Concrete Barrier Temporary Precast Delivered	LF	8,350.000	8,350.000

5163-07-72

Line	Item	Item Description	Unit	Total	Qty
0204	603.8125	Concrete Barrier Temporary Precast Installed	LF	13,919.000	13,919.000
0206	603.8500	Anchoring Concrete Barrier Temporary Precast	LF	5,116.000	5,116.000
0208	603.8505	Anchoring Concrete Barrier Temporary Precast on Bridge Decks	LF	446.000	446.000
0210	606.0200	Riprap Medium	CY	65.000	65.000
0212	606.0300	Riprap Heavy	CY	606.000	606.000
0214	608.0412	Storm Sewer Pipe Reinforced Concrete Class IV 12-Inch	LF	42.000	42.000
0216	608.0415	Storm Sewer Pipe Reinforced Concrete Class IV 15-Inch	LF	416.000	416.000
0218	608.0424	Storm Sewer Pipe Reinforced Concrete Class IV 24-Inch	LF	580.000	580.000
0220	608.3012	Storm Sewer Pipe Class III-A 12-Inch	LF	58.000	58.000
0222	608.3015	Storm Sewer Pipe Class III-A 15-Inch	LF	59.000	59.000
0224	608.3018	Storm Sewer Pipe Class III-A 18-Inch	LF	152.000	152.000
0226	608.3024	Storm Sewer Pipe Class III-A 24-Inch	LF	371.000	371.000
0228	608.3030	Storm Sewer Pipe Class III-A 30-Inch	LF	43.000	43.000
0230	611.0530	Manhole Covers Type J	EACH	5.000	5.000
0232	611.0606	Inlet Covers Type B	EACH	2.000	2.000
0234	611.0627	Inlet Covers Type HM	EACH	9.000	9.000
0236	611.0636	Inlet Covers Type HM-S	EACH	2.000	2.000
0238	611.0642	Inlet Covers Type MS	EACH	5.000	5.000
0240	611.1004	Catch Basins 4-FT Diameter	EACH	11.000	11.000
0242	611.2004	Manholes 4-FT Diameter	EACH	5.000	5.000
0244	611.3220	Inlets 2x2-FT	EACH	2.000	2.000
0246	611.3902	Inlets Median 2 Grate	EACH	5.000	5.000
0248	611.8110	Adjusting Manhole Covers	EACH	5.000	5.000
0250	611.8120.S	Cover Plates Temporary	EACH	5.000	5.000
0252	612.0406	Pipe Underdrain Wrapped 6-Inch	LF	100.000	100.000
0254	614.0150	Anchor Assemblies for Steel Plate Beam Guard	EACH	2.000	2.000
0256	614.0905	Crash Cushions Temporary	EACH	35.000	35.000
0258	614.2300	MGS Guardrail 3	LF	382.000	382.000
0260	614.2500	MGS Thrie Beam Transition	LF	160.000	160.000
0262	614.2610	MGS Guardrail Terminal EAT	EACH	6.000	6.000
0264	618.0100	Maintenance and Repair of Haul Roads (project) 01. 5163-07-72	EACH	1.000	1.000
0266	619.1000	Mobilization	EACH	0.950	0.950
0268	620.0100	Concrete Corrugated Median	SF	13,319.000	13,319.000
0270	620.0300	Concrete Median Sloped Nose	SF	49.000	49.000
0272	624.0100	Water	MGAL	578.000	578.000
0274	625.0500	Salvaged Topsoil	SY	86,630.000	86,630.000
0276	628.1504	Silt Fence	LF	16,320.000	16,320.000
0278	628.1520	Silt Fence Maintenance	LF	16,320.000	16,320.000
0280	628.1530.S	Silt Fence Heavy Duty	LF	3,900.000	3,900.000
0282	628.1535.S	Silt Fence Heavy Duty Maintenance	LF	3,900.000	3,900.000
0284	628.1905	Mobilizations Erosion Control	EACH	10.000	10.000
0286	628.1910	Mobilizations Emergency Erosion Control	EACH	5.000	5.000
0288	628.2008	Erosion Mat Urban Class I Type B	SY	86,630.000	86,630.000
0290	628.7005	Inlet Protection Type A	EACH	22.000	22.000
0292	628.7015	Inlet Protection Type C	EACH	13.000	13.000
0294	628.7504	Temporary Ditch Checks	LF	862.000	862.000
0296	628.7555	Culvert Pipe Checks	EACH	277.000	277.000
0298	628.7570	Rock Bags	EACH	400.000	400.000
0300	629.0210	Fertilizer Type B	CWT	66.000	66.000

Line	Item	Item Description	Unit	Total	Qty
0302	630.0140	Seeding Mixture No. 40	LB	93.000	93.000
0304	630.0175	Seeding Mixture No. 75	LB	567.000	567.000
0306	630.0200	Seeding Temporary	LB	330.000	330.000
0308	630.0400	Seeding Nurse Crop	LB	648.000	648.000
0310	630.0500	Seed Water	MGAL	1,523.000	1,523.000
0312	634.0614	Posts Wood 4x6-Inch X 14-FT	EACH	21.000	21.000
0314	634.0616	Posts Wood 4x6-Inch X 16-FT	EACH	35.000	35.000
0316	634.0618	Posts Wood 4x6-Inch X 18-FT	EACH	8.000	8.000
0318	637.2210	Signs Type II Reflective H	SF	222.210	222.210
0320	637.2230	Signs Type II Reflective F	SF	144.810	144.810
0322	638.2102	Moving Signs Type II	EACH	23.000	23.000
0324	638.2602	Removing Signs Type II	EACH	36.000	36.000
0326	638.3000	Removing Small Sign Supports	EACH	57.000	57.000
0328	642.5201	Field Office Type C	EACH	1.000	1.000
0330	643.0300	Traffic Control Drums	DAY	28,682.000	28,682.000
0332	643.0420	Traffic Control Barricades Type III	DAY	2,315.000	2,315.000
0334	643.0500	Traffic Control Flexible Tubular Marker Posts	EACH	225.000	225.000
0336	643.0600	Traffic Control Flexible Tubular Marker Bases	EACH	225.000	225.000
0338	643.0705	Traffic Control Warning Lights Type A	DAY	2,310.000	2,310.000
0340	643.0715	Traffic Control Warning Lights Type C	DAY	5,727.000	5,727.000
0342	643.0900	Traffic Control Signs	DAY	15,341.000	15,341.000
0344	643.0920	Traffic Control Covering Signs Type II	EACH	8.000	8.000
0346	643.1050	Traffic Control Signs PCMS	DAY	14.000	14.000
0348	643.1070	Traffic Control Cones 42-Inch	DAY	5,156.000	5,156.000
0350	643.3105	Temporary Marking Line Paint 4-Inch	LF	1,939.000	1,939.000
0352	643.3165	Temporary Marking Line Paint 6-Inch	LF	139,643.000	139,643.000
0354	643.3180	Temporary Marking Line Removable Tape 6-Inch	LF	2,088.000	2,088.000
0356	643.3265	Temporary Marking Line Paint 10-Inch	LF	6,227.000	6,227.000
0358	643.3805	Temporary Marking Stop Line Paint 18-Inch	LF	102.000	102.000
0360	643.5000	Traffic Control	EACH	1.000	1.000
0364	645.0105	Geotextile Type C	SY	298.000	298.000
0366	645.0111	Geotextile Type DF Schedule A	SY	52.000	52.000
0368	645.0120	Geotextile Type HR	SY	1,478.000	1,478.000
0370	645.0220	Geogrid Type SR	SY	33,417.000	33,417.000
0372	646.1020	Marking Line Epoxy 4-Inch	LF	3,973.000	3,973.000
0374	646.2020	Marking Line Epoxy 6-Inch	LF	490.000	490.000
0376	646.2040	Marking Line Grooved Wet Ref Epoxy 6-Inch	LF	28,243.000	28,243.000
0378	646.4040	Marking Line Grooved Wet Ref Epoxy 10-Inch	LF	2,195.000	2,195.000
0380	646.5020	Marking Arrow Epoxy	EACH	10.000	10.000
0382	646.5120	Marking Word Epoxy	EACH	3.000	3.000
0384	646.5220	Marking Symbol Epoxy	EACH	2.000	2.000
0386	646.6120	Marking Stop Line Epoxy 18-Inch	LF	62.000	62.000
0388	646.7120	Marking Diagonal Epoxy 12-Inch	LF	162.000	162.000
0390	646.8020	Marking Corrugated Median Epoxy	SF	3,581.000	3,581.000
0392	646.8120	Marking Curb Epoxy	LF	10.000	10.000
0394	646.8220	Marking Island Nose Epoxy	EACH	7.000	7.000
0396	646.9000	Marking Removal Line 4-Inch	LF	9,230.000	9,230.000
0398	646.9100	Marking Removal Line 8-Inch	LF	734.000	734.000
0400	646.9200	Marking Removal Line Wide	LF	39.000	39.000

5163-07-72

Line	Item	Item Description	Unit	Total	Qty
0402	646.9300	Marking Removal Special Marking	EACH	4.000	4.000
0404	648.0100	Locating No-Passing Zones	MI	1.520	1.520
0406	650.4000	Construction Staking Storm Sewer	EACH	26.000	26.000
0408	650.4500	Construction Staking Subgrade	LF	8,900.000	8,900.000
0410	650.5000	Construction Staking Base	LF	8,900.000	8,900.000
0412	650.5500	Construction Staking Curb Gutter and Curb & Gutter	LF	3,348.000	3,348.000
0414	650.6000	Construction Staking Pipe Culverts	EACH	22.000	22.000
0416	650.6501	Construction Staking Structure Layout (structure) 01. B-32-163	EACH	1.000	1.000
0418	650.6501	Construction Staking Structure Layout (structure) 02. C-32-104	EACH	1.000	1.000
0420	650.7500	Construction Staking Concrete Barrier	LF	446.000	446.000
0424	650.9500	Construction Staking Sidewalk (project) 01. 5163-07-72	EACH	1.000	1.000
0428	650.9911	Construction Staking Supplemental Control (project) 01. 5163-07-72	EACH	1.000	1.000
0432	650.9920	Construction Staking Slope Stakes	LF	8,900.000	8,900.000
0434	690.0150	Sawing Asphalt	LF	18,187.000	18,187.000
0436	690.0250	Sawing Concrete	LF	163.000	163.000
0438	715.0502	Incentive Strength Concrete Structures	DOL	5,472.000	5,472.000
0440	715.0603	Incentive Strength Concrete Barrier	DOL	363.000	363.000
0442	715.0720	Incentive Compressive Strength Concrete Pavement	DOL	500.000	500.000
0444	740.0440	Incentive IRI Ride	DOL	6,050.000	6,050.000
0446	801.0117	Railroad Flagging Reimbursement	DOL	1.000	1.000
0448	999.2000.S	Installing and Maintaining Bird Deterrent System (station) 01. Station 619+58.35	EACH	1.000	1.000
0450	ASP.1T0A	On-the-Job Training Apprentice at $5.00/HR	HRS	2,400.000	2,400.000
0452	ASP.1T0G	On-the-Job Training Graduate at $5.00/HR	HRS	4,900.000	4,900.000
0454	SPV.0045	Special 01. Driveway Assistance Device System	DAY	28.000	28.000
0456	SPV.0045	Special 01. Driveway Assistance Device System 5163-07-72	DAY	252.000	252.000
0458	SPV.0060	Special 01. Research and Locate Existing Land Parcel Monuments	EACH	18.000	18.000
0460	SPV.0060	Special 02. Verify Landmark Reference Monuments	EACH	4.000	4.000
0462	SPV.0060	Special 03. Verify and Replace Existing Land Parcel Monuments	EACH	18.000	18.000
0464	SPV.0060	Special 04. Inlet Covers Flat Temporary	EACH	2.000	2.000
0466	SPV.0060	Special 05. Temporary Support B-32-0163	EACH	1.000	1.000
0468	SPV.0060	Special 06. Temporary Water Diversion, C-32-104	EACH	1.000	1.000
0470	SPV.0060	Special 07. Temporary Water Diversion, STA 581+45	EACH	1.000	1.000
0472	SPV.0060	Special 08. Temporary Pipe Connection	EACH	4.000	4.000
0476	SPV.0085	Special 01. Shortgrass Prairie Seed Mix	LB	1.000	1.000
0478	SPV.0090	Special 01. Culvert Pipe Reinforced Concrete Pipe Arch Class IV 59x36-Inch	LF	330.000	330.000
0480	SPV.0090	Special 02. Pipe Underdrain (6-Inch) With Geotextile Fabric And Aggregate	LF	385.000	385.000
0482	SPV.0090	Special 03. Removing Centerline Rumble Strips	LF	442.000	442.000
0484	SPV.0090	Special 04. Marking Railroad Stop Line Epoxy 24-Inch	LF	35.000	35.000
0486	SPV.0195	Special 01. 16-Inch X 2-Inch Select Crushed Material	TON	42.000	42.000

3

201 - CLEARING AND GRUBBING

CATEGORY	STATION	TO	STATION	LOCATION	201.0105 CLEARING STA	201.0205 GRUBBING STA	REMARKS
0010	581+15	-	581+98	STH 35 RT	1	1	
0010	585+34	-	586+17	STH 35 LT & RT	2	2	
0010	609+79	-	612+15	STH 35 RT	4	4	
0010	617+72	-	618+45	STH 35 RT	2	2	
0010	621+10	-	622+76	STH 35 RT	2	2	
0010	624+50	-	624+89	STH 35 RT	1	1	
0010	628+78	-	630+22	STH 35 LT	4	4	
				TOTAL 0010	16	16	
0040	565+32	-	566+42	STH 35 LT	2	2	
0040	573+46	-	573+83	STH 35 LT	1	1	
				TOTAL 0040	3	3	
				PROJECT TOTAL	19	19	

204 - REMOVING C&G

CATEGORY	STATION	TO	STATION	LOCATION	204.0150 REMOVING CURB & GUTTER LF	204.0190 REMOVING SURFACE DRAINS EACH
0010	581+84	-	582+32	STH 35 LT	81	1
0010	582+67	-	583+21	STH 35 LT	83	1
0010	583+22	-	583+55	STH 35 RT	71	1
0010	584+05	-	584+46	STH 35 RT	52	1
0010	586+65	-	593+17	STH 35 RT	650	--
0010	617+96	-	618+12	STH 35 LT&RT	--	2
				TOTAL 0010	937	6
0040	565+72	-	566+14	STH 35 RT	89	1
0040	566+63	-	567+01	STH 35 RT	62	1
				TOTAL 0040	151	2
				PROJECT TOTAL	1088	8

204 - REMOVING GUARDRAIL

CATEGORY	STATION	TO	STATION	LOCATION	204.0165 REMOVING GUARDRAIL LF
0010	594+16	-	618+16	STH 35	2,400
0010	617+64	-	618+32	STH 35	69
0010	620+67	-	623+00	STH 35	210
0010	620+84	-	621+58	STH 35	74
				TOTAL 0010	2,753

204 - REM CULVERT AND SS

CATEGORY	STATION	TO STATION	LOCATION	PIPE SIZE IN	203.0100 REMOVING SMALL PIPE CULVERTS EACH	204.0220 REMOVING INLETS EACH	204.0245.01 REMOVING STORM SEWER (SIZE) (01. 12-INCH) LF	204.0245.02 REMOVING STORM SEWER (SIZE) (02. 24-INCH) LF	REMARKS
0010	572+53		STH 35 RT	24	1	--	--	--	60'
0010	576+79		STH 35 RT	18	1	--	--	--	60'
0010	5+63		COTTONWOOD LT	12	1	--	--	--	30'
0010	5+66		COTTONWOOD RT	12	1	--	--	--	28'
0010	573+13		STH 35 LT	12	--	1	28	--	TEMPORARY INLET/PIPE
0010	581+10		STH 35	36	3	--	--	--	100'
0010	584+60		STH 35	24	1	--	--	--	118'
0010	609+15		STH 35	24	1	--	--	--	125'
0010	624+40	- 625+50	STH 35 LT & RT	24	--	1	--	160	
0010	625+00		STH 35 RT	18	1	--	--	--	63'
0010	628+02		STH 35 RT	--	--	1	--	--	TEMPORARY INLET/PIPE
0010	632+39		STH 35 RT	12	1	--	--	--	34'
0010	641+76		STH 35 LT	12	1	--	--	--	40'
0010	642+90		STH 35 LT & RT	24	1	--	--	--	65'
0010	645+94		STH 35 RT	12	1	--	--	--	26'
0010	32+41		CTH K RT	12	1	--	--	--	28'
0010	33+66		CTH K RT	12	1	--	--	--	27'
			TOTAL 0010		16	3	28	160	

204 - TEMP ASPHALT WEDGE

CATEGORY	STATION	TO	STATION	LOCATION	204.0115 REMOVING ASPHALTIC SURFACE BUTT JOINTS SY	204.0120 REMOVING ASPHALTIC SURFACE MILLING SY	REMARKS
0010	568+75	-	569+25	STH 35	43	169	BOP
0010	34+00 K	-	34+50 K	CTH K	27	107	MATCH LIMITS
0010	16+25 GI	-	16+75 GI	CTH GI	45	180	MATCH LIMITS
0010	617+80	-	618+30	STH 35	49	198	BRIDGE - S APPROACH
0010	620+89	-	621+39	STH 35	49	198	BRIDGE - N APPROACH
0010	648+00	-	648+50	STH 35	49	198	EOP
				TOTAL 0010	262	1,050	

204 - REM CONC BASES

CATEGORY	STATION	LOCATION	204.0195 REMOVING CONCRETE BASES EACH
0010	573+63	STH 35 RT	1
		TOTAL 0010	1

204 - SEALING PIPES

CATEGORY	STATION	LOCATION	204.0280 SEALING PIPES EACH	REMARKS
0010	628+02	T03 TO T04	1	SEAL AFTER STAGE 4
		TOTAL 0010	1	

3

3

EARTHWORK SUMMARY

DIVISION	FROM/TO STATION	LOCATION	205.0100 COMMON EXCAVATION (1) CUT (2)	EBS EXCAVATION (3)	SALVAGED/UNUSABLE PAVEMENT MATERIAL (4)	AVAILABLE MATERIAL (5)	UNEXPANDED FILL	EXPANDED FILL (6) FACTOR 1.30	MASS ORDINATE +/- (7)	WASTE	208.0100 BORROW	COMMENT
CATEGORY 0010												
DIVISION 1 - CTH GI												
CTH GI - STAGE 1	16+25/19+00	GI	1,029	103	81	948	74	96	852	852	0	
DIVISION 1 SUBTOTAL			1,029	103	81	948	74	96	852	852	0	
DIVISION 1A/B												
BOX CULVERT DITCHING - STAGE 1	28+36.96/29+30.00	35-EX	25	0	0	25	22	29	-4	0	4	CATEGORY 0040
DIVISION 1A/B SUBTOTAL			25	0	0	25	22	29	-4	0	4	
DIVISION 2A												
STH 35 TEMP WIDENING - STAGE 2A	560+51.18/634+12.09	35-EX	1,383	139	0	1,383	954	1,240	143	143	0	
CTH K TEMP WIDENING - STAGE 2A	32+24.47/36+21.38	K-EX	63	7	0	63	51	66	-3	0	4	
DIVISION 2A SUBTOTAL			1,446	146	0	1,446	1,005	1,307	140	143	4	
DIVISION 3A												
STH 35 TEMP WIDENING - STAGE 3A	563+60.04/571+97.81	35	133	14	0	133	121	157	-24	0	25	
STH 35 -STAGE 3A	567+07.76/649+21.31	35	14,396	1,440	2,811	11,585	9,959	12,947	-3,679	2,317	3,679	ASSUMED 20% OF AVAILABLE MATERIAL NOT SUITABLE FOR FILL
CTH K - STAGE 3A	30+38.33/34+50.00	K	1,055	106	18	1,037	96	125	912	912	0	
CULV PIPES AT MALLARD LN	563+68/564+57	35-EX	602	0	115	487	0	0	487	0	0	CATEGORY 0040
COTTONWOOD DR DITCHING - STAGE 3A	5+81.19/6+82.68	COTTONWOOD	24	3	0	24	3	4	20	20	0	CATEGORY 0040
DIVISION 3A SUBTOTAL			16,210	1,563	2,944	13,266	10,179	13,233	-2,284	3,249	3,704	
DIVISION 3B												
CTH K - STAGE 3B	30+38.33/34+50.00	K	493	50	90	403	22	29	374	374	0	
DIVISION 3B SUBTOTAL			493	50	90	403	22	29	374	374	0	
DIVISION 4												
STH 35 - STAGE 4	568+75.00/62725	35	15,048	1,505	4,977	10,071	3,836	19,562	4,867	4,867	0	
CTH GI - STAGE 4	19+00/19+81	GI	530	53	40	490	51	0	424	424	0	
CULV PIPES AT MALLARD LN	563+68/564+57	35-EX	424	0	126	298	0	0	298	0	0	CATEGORY 0040
CP C100-C102 DITCHING - STAGE 4	7+94.45/9+05.00	35	32	0	0	32	0	0	32	32	0	CATEGORY 0040
DIVISION 4 SUBTOTAL			16,034	1,558	5,143	10,891	3,887	19,562	5,621	5,323	0	
DIVISION 5												
STH 35 - STAGE 5	627+25.00/649+21.31	35	4,065	407	1,202	2,863	4,140	5,382	-2,519	0	2,519	
DIVISION 5 SUBTOTAL			4,065	407	1,202	2,863	4,140	5,382	-2,519	0	2,519	
CATEGORY 0010 TOTAL			38,220	3,824	9,219	29,001	19,326	39,633	1,343	9,889	6,231	
	TOTAL COMMON EXC		42,044									
CATEGORY 0040 TOTAL			1,082	3	241	841	3	4	837	52	0	
	TOTAL COMMON EXC		1,085									
PROJECT TOTAL			39,302	3,827	9,460	29,842	19,329	39,637	2,180	9,941	6,231	
	TOTAL COMMON EXC		43,129									

NOTES: (1) COMMON EXCAVATION IS THE SUM OF THE CUT AND EBS EXCAVATION COLUMNS. ITEM NUMBER 205.0100
(2) SALVAGED/UNSUABLE PAVEMENT MATERIAL IS INCLUDED IN CUT.
(3) EBS EXCAVATION TO BE BACKFILLED WITH SELECT CRUSHED MATERIAL.
(4) SALVAGED/UNUSABLE PAVEMENT MATERIAL
5) AVAILABLE MATERIAL = CUT - SALVAGED/UNUSUABLE PAVEMENT MATERIAL
(6) EXPANDED FILL FACTOR = 1.30
EXPANDED FILL = (UNEXPANDED FILL) * FILL FACTOR
(7) THE MASS ORDINATE + OR - QTY CALCULATED FOR THE DIVISION. PLUS QUANTITY INDICATES AN EXCESS OF MATERIAL WITHIN THE DIVISION. MINUS INDICATES A SHORTAGE OF MATERIAL WITHIN THE DIVISION.
(8) FACTORS USED TO COMPUTE ANTICIPATED WASTE AND THE COMPUTED WASTE VOLUME IDENTIFIED ARE FOR GENERAL INFORMATION ONLY.
CATEGORY 0010 UNLESS OTHERWISE NOTED.

3

305 - BASE AGG

CATEGORY	STATION	TO	STATION	LOCATION	305.0110 BASE AGGREGATE DENSE 3/4-INCH TON	* 305.0120 BASE AGGREGATE DENSE 1 1/4-INCH TON	* 312.0110 SELECT CRUSHED MATERIAL TON	624.0100 WATER MGAL	* 645.0220 GEOGRID TYPE SR SY	SPV.0195.01 SPECIAL (01. 16-INCH X 2-INCH SELECT CRUSHED MATERIAL) TON	REMARKS	
STAGE 2A												
0010	561+99	-	568+75	STH 35	75	300	--	8	--	--		STH 35 LT Shoulder Widening
0010	563+09	-	568+75	STH 35	--	240	--	5	--	--		STH 35 LT Shoulder Improvement
		-		STAGE 2A SUBTOTAL	75	540	--	13	--	--		
STAGE 2B												
0010	577+28	-	587+20	STH 35	--	230	--	5	--	--		TEMP MEDIAN ASPHALT BASE (4 ON 8)
				STAGE 2B SUBTOTAL	--	230	--	5	--	--		
STAGE 3A												
0010	561+33	-	568+75	STH 35	31	120	—	4	--	--		STH 35 RT Shoulder Widening
0010	563+88	-	568+75	STH 35	--	390	--	8	--	--		STH 35 RT Shoulder Improvement
0010	568+75	-	583+37	STH 35	--	3,040	5,920	61	6,393	--		35 S LEG BASE IMPROVEMENTS
0010	34+50 'K'	-	30+98 'K'	CTH K	--	440	760	9	819	--		CTH K BASE IMPROVEMENTS/REALLIGN
0010	584+46	-	618+43	STH 35	--	7,160	14,000	144	15,053	--		35 M LEG BASE IMPROVEMENTS
0010	620+71	-	648+50	STH 35	--	6,440	--	129	--	--		36 N LEG BASE
				STAGE 3 SUBTOTAL	31	17,590	20,680	355	22,265	--		
STAGE 3B												
0010	34+50 'K'	-	32+05 'K'	CTH K	--	210	360	5	383	--		CTH K BASE IMPROVEMENTS
0010	583+37	-	584+46	STH 35	--	250	520	5	555	--		STH 35 BASE IMPROVEMENTS
				STAGE 3B SUBTOTAL	--	460	880	10	938	--		
STAGE 4												
0010	568+75	-	582+52	STH 35	--	1,810	3,390	37	3,658	--		35 S LEG BASE IMPROVEMENTS
0010	582+52	-	618+43	STH 35	--	2,490	4,360	50	4,680	--		35 M LEG BASE IMPROVEMENTS
0010	620+71	-	649+21	STH 35	--	3,710	--	75	--	--		36 N LEG BASE
				STAGE 4 SUBTOTAL	--	8,010	7,750	162	8,338	—		
STAGE 5												
0010	627+22	-	648+50	STH 35	--	590	--	--	--	--		
				STAGE 5 SUBTOTAL	--	590	--	--	--	--		
STAGE 5 SURFACE LIFT												
0010	568+75	-	582+52	STH 35	300	--	--	6	--	--		
0010	582+52	-	618+43	STH 35	470	--	--	10	--	--		
0010	620+71	-	649+21	STH 35	715	--	--	15	--	--		
0010	34+50 'K'	-	30+98 'K'	CTH K	--	--	--	—	--	--		
				STAGE 5 SURFACE LIFT SUBTOTAL	1,485	--	--	--	--	--		
STAGE 1 - CTH GI												
0010	16+25	-	19+00	CTH GI	64	620	1,190	15	1,281	42		CTH GI BASE IMPROVEMENTS/REALLIGN
				STAGE 5 SUBTOTAL	64	620	1,190	15	1,281	42		
PROJECT												
0010	568+75	-	648+50	STH 35	--	--	3,519	--	--	--	EBS	
0010	-	-	-	UNDISTRIBUTED	--	1,423	--	--	--	--		
				PROJECT SUBTOTAL	--	1,423	3,519	--	--	--		
				TOTAL 0010	1,655	29,463	34,019	560	32,822	42		
STAGE 1A												
0040	570+96	--	571+96	STH 35 LT	--	180	--	4	--	--		CULVERT PATCH
0040	570+96	--	571+96	STH 35 LT	--	17	126	1	--	--		TRENCH BACKFILL
				STAGE 1A SUBTOTAL	--	197	126	5	--	--		
STAGE 1B												
0040	570+96	--	571+96	STH 35 RT	--	150	--	3	--	--		CULVERT PATCH
0040	570+96	--	571+96	STH 35 RT	--	17	125	1	--	--		TRENCH BACKFILL
				STAGE 1B SUBTOTAL	--	167	125	4	--	--		
STAGE 3A												
0040	561+33	-	568+75	STH 35	—	212	470	5		--		CULVERT PATCH
				STAGE 3 SUBTOTAL	—	212	470	5	—	—		
STAGE 4												
0040	563+69	-	565+57	STH 35 LT	--	194	430	4		--		CULVERT PATCH
				STAGE 3 SUBTOTAL	—	194	430	4	—	—		
				TOTAL 0040	—	770	1,151	18	—	—		
				PROJECT TOTAL	1,655	30,233	35,170	578	32,822	42		

*ADDITIONAL QUANTITIES LISTED ELSEWHERE

312 - RELIEF TRENCHES

CATEGORY	STATION	LOCATION	* 312.0110 SELECT CRUSHED MATERIAL TON
0010	570+50	STH 35 LT & RT	7
0010	572+90	STH 35 LT & RT	7
0010	575+50	STH 35 LT	4
0010	578+00	STH 35 LT & RT	7
0010	580+50	STH 35 LT	4
0010	581+75	STH 35 LT & RT	7
0010	16+25 'GI'	CTH GI LT & RT	7
0010	17+45 'GI'	CTH GI LT & RT	7
0010	18+70 'GI'	CTH GI LT & RT	7
0010	32+00 'K'	CTH K RT	4
0010	595+00	STH 35 RT	4
0010	597+00	STH 35 LT	4
0010	597+50	STH 35 RT	4
0010	600+00	STH 35 LT & RT	7
0010	601+45	STH 35 LT & RT	7
0010	604+25	STH 35 LT & RT	7
0010	606+50	STH 35 LT & RT	7
0010	610+25	STH 35 LT	4
0010	612+25	STH 35 LT	4
0010	614+00	STH 35 RT	4
0010	616+50	STH 35 RT	4
		TOTAL 0010	117

*ADDITIONAL QUANTITIES LISTED ELSEWHERE

3

415 - BRIDGE APPROACHES

CATEGORY	STATION	TO	STATION	LOCATION	415.0120 CONCRETE PAVEMENT 12-INCH SY	415.0410 CONCRETE PAVEMENT APPROACH SLAB SY	603.1142 CONCRETE BARRIER TYPE S42 LF
0010	613+67	-	618+12	STH 35	--	--	472
0010	618+28	-	620+89	STH 35	79	172	--
0010	620+80	-	623+16	STH 35	--	--	253
				TOTAL 0010	79	172	725

3

460 - HMA

CATEGORY	STATION	TO	STATION	LOCATION	450.4000 HMA COLD WEATHER PAVING TON	455.0605 TACK COAT GAL	460.6223 HMA PAVEMENT 3 MT 58-28 S TON	460.6224 HMA PAVEMENT 4 MT 58-28 S TON	REMARKS
STAGE 3A									
0010	568+75	--	583+37	STH 35/CTH K	--	338	1,140	--	
0010	584+46	--	618+28	STH 35	--	684	2,300	--	
0010	620+89	--	648+50	STH 35	--	417	1,400	--	
				STAGE 3A SUBTOTAL	--	1,439	4,840	--	
STAGE 3B									
0010	583+37	--	584+46	STH 35/CTH K	--	42	140	--	
				STAGE 3B SUBTOTAL		42	140	--	
STAGE 4									
0010	568+75	--	582+59	STH 35	--	196	660	--	
0010	582+59	--	602+00	STH 35	--	206	700	--	
0010	620+89	--	627+22	STH 35	--	33	110	--	
0010	635+00	--	648+50	STH 35	--	90	310	--	
				STAGE 4 SUBTOTAL	--	525	1,780	--	
STAGE 5									
0010	627+22	--	648+50	STH 35	--	98	330	--	
				STAGE 5 SUBTOTAL	--	98	330	--	
STAGE 5 SURFACE LIFT									
0010	568+75	--	582+59	STH 35	--	486	--	1,090	
0010	582+59	--	618+28	STH 35	--	860	--	1,930	
0010	620+89	--	648+50	STH 35	--	546	--	1,230	
				STAGE 5 SURFACE LIFT SUBTOTAL	--	1,892	--	4,250	
STAGE 1 - CTH GI									
0010	16+25	--	19+00	CTH GI	65	56	140	110	
				STAGE 5 SUBTOTAL	65	56	140	110	
				TOTAL 0010	65	4,052	7,230	4,360	

465 - RUMBLE STRIPS

CATEGORY	STATION	TO	STATION	LOCATION	465.0520 ASPHALTIC RUMBLE STRIPS, SHOULDER LF	465.0560 ASPHALTIC RUMBLE STRIPS, CENTERLINE LF	SPV.0090.03 SPECIAL (03. REMOVING CENTERLINE RUMBLE STRIPS) LF
0010	559+94	-	562+83	STH 35 C/L	--	--	289
0010	561+36	-	564+35	STH 35 C/L	--	--	153
0010	564+46	-	580+64	STH 35 LT	1,106	--	--
0010	584+64	-	618+14	STH 35 RT	3,188	--	--
0010	587+70	-	618+14	STH 35 LT	3,589	--	--
0010	594+35	-	618+14	STH 35 C/L	--	2,368	--
0010	621+26	-	647+43	STH 35 LT	2,435	--	--
0010	621+26	-	648+13	STH 35 C/L & RT	2,373	2,736	--
				TOTAL 0010	12,691	5,104	442

465 - ASPHALTIC SURFACE

CATEGORY	STATION	TO	STATION	LOCATION	204.0100 REMOVING CONCRETE PAVEMENT SY	* 204.0110 REMOVING ASPHALTIC SURFACE SY	211.0400 PREPARE FOUNDATION FOR ASPHALTIC SHOULDERS STA	* 465.0105 ASPHALTIC SURFACE TON	* 465.0125 ASPHALTIC SURFACE TEMPORARY TON	465.0310 ASPHALTIC CURB LF	* 690.0150 SAWING ASPHALT LF	REMARKS
STAGE 1A												
0010	570+96	--	571+96	STH 35 LT	--	--	1	--	5	--	0	COTTONWOOD DR
				STAGE 1A SUBTOTAL	--	--	1	--	5	--	0	
STAGE 2A												
0010	557+54	--	576+35	STH 35	--	1,952	--	--	609	--	3,281	
0010	581+01	--	597+01	STH 35	--	1,266	--	--	781	--	2,540	
0010	612+55	--	616+14	STH 35	--	397	--	--	89	--	380	
0010	618+33	--	363+89	STH 35	--	2,061	--	--	796	--	2,930	
0010	641+12	--	646+98	STH 35	--	407	--	--	92	--	606	
0010	33+37 'K'	--	32+00 'K'	CTH K	--	338	--	--	76	351	419	CONCRETE CORRUGATED MEDIAN
				STAGE 2A SUBTOTAL	--	6,083		--	2,367	351	9,737	
STAGE 2B												
0010	577+28	--	587+20	STH 35	512	--	--	--	115	--	1,546	
				STAGE 2B SUBTOTAL	512	--		--	115	--	1,546	
STAGE 3A												
0010	561+32	--	568+75	STH 35	--	661	--	--	221	--	1,535	
0010	627+76	--	631+88	STH 35	--	--	--	--	65	--	--	
				STAGE 3A SUBTOTAL	--	661		--	221	--	1,535	
STAGE 3B												
0010	34+00 K	--	34+50 K	CTH K	--	--	--	--	--	--	--	
				STAGE 3B SUBTOTAL	--	--		--	--	--	--	
STAGE 4												
0010	563+69	--	565+57	STH 35	--	--	--	--	--	--	44	
0010	16+25 GI	--	16+75 GI	CTH GI	--	--	--	--	--	--	--	
				STAGE 4 SUBTOTAL	--	--	--	--	--	--	44	
STAGE 5 SURFACE LIFT												
0010	557+54	--	576+35	STH 35	--	1,533	--	--	--	--	3,520	
				STAGE 5 SURFACE LIFT SUBTOTAL	--	1,533	--	--	--	--	3,520	
				TOTAL 0010	512	8,277	1	0	2,708	351	16,382	
STAGE 1A												
0040	570+96	--	571+96	STH 35 LT	--	--	--	--	59	--	44	
				STAGE 1A SUBTOTAL	--	--	--	--	59	--	44	
STAGE 1B												
0040	570+96	--	571+96	STH 35 RT	--	--	--	--	50	--	43	
				STAGE 1B SUBTOTAL	--	--	--	--	50	--	43	
STAGE 3A												
0040	561+32	--	568+75	STH 35	--	495	--	140	--		545	MALLARD LANE PAVEMENT PATCH
				STAGE 3A SUBTOTAL	--	495	--	140	--	0	545	
STAGE 4												
0040	563+69	--	565+57	STH 35	--	460	--	130	--	--	420	MALLARD LANE PAVEMENT PATCH
				STAGE 4 SUBTOTAL	--	460	--	130	--	--	420	
				TOTAL 0040	0	955	0	270	109	0	1,052	
				PROJECT TOTAL	512	9,232	1	270	2,817	351	17,434	

*ADDITIONAL QUANTITIES LISTED ELSEWHERE

**FOR REMOVAL OF CORRUGATED MEDIAN

3

3

465 - DRIVEWAYS AND SAWING

CATEGORY	STATION	LOCATION	465.0120 ASPHALTIC SURFACE DRIVEWAYS AND FIELD ENTRANCES TON	* 690.0150 SAWING ASPHALT LF	690.0250 SAWING CONCRETE LF	REMARKS
0010	566+42	STH 35	--	93	--	Mallard Ln C&G
0010	568+75	STH 35	--	40	--	Start Reconstruction
0010	570+08	STH 35	8	13	--	
0010	572+44	STH 35	36	76	--	
0010	573+90	STH 35	10	12	--	
0010	576+03	STH 35	--	57	--	Asph Parking Lot
0010	576+67	STH 35	12	60	--	
0010	576+84	STH 35	20	14	--	
0010	578+99	STH 35	11	25	--	
0010	579+30	STH 35	--	15	--	Cottonwood Dr
0010	16+25 'GI'	CTH GI	--	40	--	CTH GI Start Construction
0010	32+40 'K'	CTH K	6	17	--	
0010	33+69 'K'	CTH K	6	18	--	
0010	34+50 'K'	CTH K	--	24	--	CTH K Start Construction
0010	624+94	STH 35	25	33	--	
0010	625+00	STH 35	13	10	--	
0010	641+76	STH 35	14	11	--	
0010	648+50	STH 35	--	115	--	End Reconstruction
0010	649+55	STH 35	--	--	163	Median Removal
		TOTAL 0010	161	673	163	

*ADDITIONAL QUANTITIES LISTED ELSEWHERE

520 - CULVERT EXTENSION

CATEGORY	STATION	TO	STATION	LOCATION	* 305.0120 BASE AGGREGATE DENSE 1 1/4-INCH TON	* 465.0125 ASPHALTIC SURFACE TEMPORARY TON	* 520.1015 APRON ENDWALLS FOR CULVERT PIPE 15-INCH EACH	520.2015 CULVERT PIPE TEMPORARY 15-INCH LF	REMARKS
0010	576+80	-	577+30	STH 35	11	5	1	4	COTTONWOOD DR
				TOTAL 0010	11	5	1	4	

504 - CONC MASONRY ENDWALL

CATEGORY	STATION	TO	STATION	LOCATION	504.0900 CONCRETE MASONRY ENDWALLS CY
0010	580+88	-	581+51	STH 35	15
				TOTAL 0010	15
0040	566+20	-	567+66	STH 35	15
				TOTAL 0040	15

511 - TEMP SHORING

CATEGORY	STATION	TO	STATION	LOCATION	511.1100 TEMPORARY SHORING SF	REMARKS
0010	581+07	-	581+16	STH 35	360	CULVERT PIPE C3-C5
0010	642+82	-	642+88	STH 35	240	CULVERT PIPE C-20
				TOTAL 0010	600	
0040	566+83	-	567+01	STH 35	320	CULVERT PIPE C100 - C102
				TOTAL 0040	320	
				PROJECT TOTAL	920	

3

520 - CLEANING CULVERTS

CATEGORY	STATION	LOCATION	520.8700 CLEANING CULVERT PIPES EACH	REMARKS
0010	581+07	C3	1	CLEAN BEFORE STAGE 1A
0010	581+16	C4	1	CLEAN BEFORE STAGE 1A
0010	581+25	C5	1	CLEAN BEFORE STAGE 1A
		TOTAL 0010	3	

520.8000 CONCRETE COLLARS FOR PIPE

CATEGORY	STATION	LOCATION	EACH	REMARKS
0010	581+07	C3	1	FOR STAGED CONSTRUCTION JOINT
0010	581+16	C4	1	FOR STAGED CONSTRUCTION JOINT
0010	581+25	C5	1	FOR STAGED CONSTRUCTION JOINT
		TOTAL 0010	3	
0040	566+83	C100	1	FOR STAGED CONSTRUCTION JOINT
0040	566+92	C101	1	FOR STAGED CONSTRUCTION JOINT
0040	567+01	C102	1	FOR STAGED CONSTRUCTION JOINT
		TOTAL 0040	3	
		PROJECT TOTAL	6	

CULVERT STRUCTURES

STRUCTURE	STATION	OFFSET	LOCATION	520.1012* APRON ENDWALLS FOR CULVERT PIPE 12-INCH EACH	520.1015* APRON ENDWALLS FOR CULVERT PIPE 15-INCH EACH	520.1018* APRON ENDWALLS FOR CULVERT PIPE 18-INCH EACH	520.1024* APRON ENDWALLS FOR CULVERT PIPE 24-INCH EACH	520.1030* APRON ENDWALLS FOR CULVERT PIPE 30-INCH EACH	522.1024* APRON ENDWALLS FOR CPRC 24-INCH EACH	522.2634 APRON ENDWALLS FOR CPRCHE 34X53-INCH EACH	611.0642* INLET COVERS TYPE MS EACH	611.3902* INLETS MEDIAN 2 GRATE EACH	650.4000* CONSTRUCTION STAKING STORM SEWER EACH	RIM** ELEVATION	INVERT*** ELEVATION	DEPTH**** FT
C1-A	572+12.10	47.54' RT	35				1									
C1-B	572+82.95	52.22' RT	35				1									
C6-A	32+51.75	26.97' RT	CTY-K		1											
C6-B	32+20.98	29.93' RT	CTY-K		1											
C7-A	33+82.19	21.73' RT	CTY-K	1												
C7-B	33+53.20	22.35' RT	CTY-K	1												
C8-A	598+17.50	34.72' RT	35							1						
C8-B	598+73.53	38.80' RT	35							1						
C9-A	609+19.51	78.88' LT	35					1								
C9-B	609+18.95	43.12' RT	35					1								
C10-A	611+57.09	27.12' LT	35						1							
C10-B	611+57.09	36.88' RT	35						1							
C11-A	624+77.81	38.14' LT	35	1												
C11-B	625+41.79	37.06' LT	35	1												
C12-A	625+31.63	41.52' RT	35					1								
C12-B	624+73.67	43.65' RT	35					1								
C13-A	625+50.00	60.65' LT	35	1												
C13-B	625+50.00	44.65' LT	35	1												
C14-A	627+00.00	27.22' LT	35						1							
C14-B	627+00.00	28.78' RT	35						1							
C15-A	631+00.00	62.59' LT	35		1											
C15-B	631+00.00	42.59' LT	35		1											
C17-A	636+86.03	67.46' LT	35			1										
C17-B	636+86.03	47.46' LT	35			1										
C18-A	636+86.03	27.62' LT	35						1							
C18-B	636+86.03	28.38' RT	35						1							
C19-A	641+61.47	34.14' LT	35		1											
C19-B	641+96.57	34.91' LT	35		1											
C20-A	642+86.07	35.05' LT	35								1	1	1	647.70	642.66	5.29
C20-B	642+86.04	44.95' RT	35				1									
C21-A	646+18.48	33.81' RT	35			1										
C21-B	645+68.49	34.44' RT	35			1										
			TOTALS	6	6	4	3	4	6	2	1	1	1			

REMARKS:
STATIONS AND OFFSETS ARE TO CENTER OF STRUCTURE OR END OF PIPE FOR ENDWALLS
*ADDITIONAL QUANTITIES LISTED ELSEWHERE.
**RIM ELEV IS AT THE INLET COVER FLANGE LOCATION
***FOR STRUCTURES WITH SUMPS, THE INVERT ELEVATION IS THE ELEVATION OF THE SUMP. FOR STRUCTURES WITHOUT SUMPS, THE INVERT ELEVATION IS THE ELEVATION OF THE LOWEST PIPE FLOW LINE
****DEPTH = RIM ELEV - TOP OF STRUCTURE BASE ELEV - COVER HEIGHT - 6-INCH ADJUSTMENT RING HEIGHT
ALL ITEMS ARE CATEGORY 0010 UNLESS OTHERWISE NOTED

CULVERT PIPE SUMMARY

STATION	LOCATION	520.3312 CULVERT PIPE CLASS III-A 12-INCH LF***	520.3315 CULVERT PIPE CLASS III-A 15-INCH LF***	520.3318 CULVERT PIPE CLASS III-A 18-INCH LF***	520.3324 CULVERT PIPE CLASS III-A 24-INCH LF***	520.3330 CULVERT PIPE CLASS III-A 30-INCH LF***	520.3612 CULVERT PIPE CLASS III-B NON-METAL 12-INCH LF***	520.3615 CULVERT PIPE CLASS III-B NON-METAL 15-INCH LF***	520.3618 CULVERT PIPE CLASS III-B NON-METAL 18-INCH LF***	520.3624 CULVERT PIPE CLASS III-B NON-METAL 24-INCH LF***	520.3630 CULVERT PIPE CLASS III-B NON-METAL 30-INCH LF***	520.4112 CULVERT PIPE CLASS IV 12-INCH LF***	522.0424 CPRC CLASS IV 24-INCH LF	522.0436 CPRC CLASS IV 36-INCH LF	522.2434 CPRCHE CLASS-IV 34X53-INCH LF	650.6000 CONSTRUCTION STAKING PIPE CULVERTS	SPV.0090.01 CPRCPA CLASS IV 59X36-INCH LF	STEEL THICKNESS (APPLICABLE TO CLASS III-A BID ITEMS) (INCHES)	INLET** ELEVATION	OUTLET** ELEVATION	COMMENTS
32+36.37' RT	CTH K		28													1		0.064	654.26	652.54	
33+67.70' RT	CTH K											29				1			662.19	660.56	
566+83.41	35													144		1			640.00	637.50	CATEGORY 0040
566+92.19	35													144		1			640.00	637.50	CATEGORY 0040
567+00.97	35													144		1			640.00	637.50	CATEGORY 0040
581+07.00	35															1	110				
581+16.00	35															1	110				
581+25.00	35															1	110				
572+47.52' RT	35				71											1		0.064	640.47	640.30	
598+45.52' RT	35														56	1			643.15	642.67	
609+19.23	35										122					1			638.40	637.00	
611+57.09	35												64			1			639.67	638.40	
625+02.65' RT	35					58										1			644.42	644.32	
625+09.80' LT	35	64														1		0.064	646.34	645.53	
625+50.00' LT	35						16									1			645.50	645.45	
627+00.00	35												56			1			644.97	644.76	
631+00.00' LT	35							20								1			646.75	646.47	
636+86.03	35												56			1			646.61	646.54	
636+86.03' LT	35								20							1			646.70	646.65	
641+79.02' LT	35		35													1		0.064	647.95	647.90	
642+86.06	35									80						1			642.66	642.34	
645+93.48' RT	35			50												1		0.064	648.38	648.11	
	TOTALS	64	63	50	71	58	16	20	20	80	122	29	176	432	56	22	330				

**PIPE INVERT AT END OF PIPE. FIELD VERIFY

***LENGTH BASED ON THE USE OF CONCRETE PIPE WITH CONCRETE ENDWALLS. ADJUST PIPE LENGTH FOR OTHER MATERIAL TYPES.

ALL ITEMS ARE CATEGORY 0010 UNLESS OTHERWISE NOTED

STORM SEWER STRUCTURES

STRUCTURE	STATION	OFFSET*	LOCATION	520.1012* AEW FOR CULVERT PIPE 12-INCH EACH	520.1018* AEW FOR CULVERT PIPE 18-INCH EACH	520.1024* AEW FOR CULVERT PIPE 24-INCH EACH	520.1030* AEW FOR CULVERT PIPE 30-INCH EACH	522.1012 AEW FOR CPRC 12-INCH EACH	522.1015 AEW FOR CPRC 15-INCH EACH	522.1024* AEW FOR CPRC 24-INCH EACH	611.0530 MANHOLE COVERS TYPE J EACH	611.0606 INLET COVERS TYPE B EACH	611.0627 INLET COVERS TYPE HM EACH	611.0636 INLET COVERS TYPE HM-S EACH	611.0642* INLET COVERS TYPE MS EACH	611.1004 CATCH BASINS 4-FT DIAMETER EACH	611.2004 MANHOLES 4-FT DIAMETER EACH	611.3220 INLETS 2X2-FT EACH	611.3902* INLETS MEDIAN 2 GRATE EACH	650.4000* CONSTRUCTION STAKING STORM SEWER EACH	SPV.0060.04 SPECIAL (04. INLET COVERS FLAT TEMPORARY) EACH	RIM** ELEVATION	INVERT*** ELEVATION	DEPTH**** FT	REMARKS
575	575+00.00	31.02' RT	35								1						1			1		646.87	639.98	5.94	
575A	574+65.19	55.71' RT	35				1																639.85		
577	577+50.00	32.00' RT	35								1						1			1		645.80	640.60	4.21	
577A	577+50.00	50.60' RT	35												1				1	1		642.87	640.87	2.00	
579	579+05.72	32.00' RT	35								1						1			1		645.97	640.99	3.99	
579.5	579+49.43	32.00' RT	35								1						1			1		646.18	641.12	4.06	
579.5A	579+52.63	74.20' RT	35							1										1			642.18		
579.5B	579+56.14	55.62' LT	35							1										1			640.06		CATEGORY 0040
579A	579+05.72	76.55' RT	35						1											1			642.63		
580	579+75.00	32.00' RT	35								1						1			1		646.50	641.86	3.58	
580A	579+75.00	48.28' RT	35												1				1	1		643.91	641.91	2.18	
583A	583+37.19	25.50' LT	35										1			1				1		648.03	639.08	7.95	
583B	583+37.11	42.50' RT	35										1			1				1		649.33	639.42	8.91	
583C	583+37.06	73.38' RT	35												1				1	1		645.50	641.57	4.18	
583D	583+09.68	50.96' RT	35											1		1				1		648.97	640.31	7.66	
585	584+75.24	76.65' LT	35			1																	639.05		
585A	584+66.88	25.57' LT	35										1			1				1		650.12	638.07	11.05	
585B	584+64.10	38.52' RT	35										1			1				1		651.31	642.50	7.81	
590A	589+85.00	59.51' LT	35			1																	644.25		
590B	589+85.00	21.50' LT	35										1			1				1		652.58	642.44	9.14	
590C	589+85.00	31.59' RT	35										1			1				1		651.58	643.21	7.38	
592A	592+50.00	21.50' LT	35										1			1				1		649.98	643.99	4.99	
592B	592+50.00	23.09' RT	35										1			1				1		649.95	644.12	4.83	
596A	595+89.38	51.02' LT	35						1											1			642.20		
596B	595+89.81	21.50' LT	35										1			1				1		647.67	640.35	6.32	
601A	601+49.05	55.13' RT	35		1																		636.99		
601B	601+50.20	32.86' LT	35												1				1	1		641.58	637.42	4.36	
648A	648+32.56	56.68' LT	35					1															648.84		
648B	648+33.11	26.20' LT	35											1		1				1		651.81	646.99	3.82	
T01	573+12.93	1.91' LT	35									1						1		1	1	645.91	642.75	1.99	REMOVE IN STAGE 4
T02	573+12.92	30.36' LT	35	1																			642.47		REMOVE IN STAGE 4
T03	628+01.50	14.00' LT	35									1						1		1	1	648.21	645.24	1.80	REMOVE IN STAGE 5
T04	628+01.79	27.97' RT	35					1															646.21		REMOVE IN STAGE 5
			TOTALS	1	1	2	1	2	2	2	5	2	9	2	4	11	5	2	4	26	2				

REMARKS:
STATIONS AND OFFSETS ARE TO CENTER OF STRUCTURE
*ADDITIONAL QUANTITIES LISTED ELSEWHERE
**RIM ELEV IS AT THE INLET COVER FLANGE LOCATION
***FOR STRUCTURES WITH SUMPS, THE INVERT ELEVATION IS THE ELEVATION OF THE SUMP. FOR STRUCTURES WITHOUT SUMPS, THE INVERT ELEVATION IS THE ELEVATION OF THE LOWEST PIPE FLOW LINE
****DEPTH = RIM ELEV - TOP OF STRUCTURE BASE ELEV - COVER HEIGHT - 6-INCH ADJUSTMENT RING HEIGHT
ALL ITEMS ARE CATEGORY 0010 UNLESS OTHERWISE NOTED

STORM SEWER PIPES

FROM - TO	LOCATION	608.0412 STORM SEWER PIPE REINFORCED CONCRETE CLASS IV 12-INCH LF	608.0415 STORM SEWER PIPE REINFORCED CONCRETE CLASS IV 15-INCH LF	608.0424 STORM SEWER PIPE REINFORCED CONCRETE CLASS IV 24-INCH LF	608.3012 STORM SEWER PIPE CLASS III-A 12-INCH LF	608.3015 STORM SEWER PIPE CLASS III-A 15-INCH LF	608.3018 STORM SEWER PIPE CLASS III-A 18-INCH LF	608.3024 STORM SEWER PIPE CLASS III-A 24-INCH LF	608.3030 STORM SEWER PIPE CLASS III-A 30-INCH LF	INLET ELEVATION	DISCHARGE ELEVATION	SLOPE FT/FT	REMARKS
575 - 575A	35								43	639.98	639.85	0.0030	
577 - 575	35			250						640.60	639.98	0.0025	
577A - 577	35		19							641.06	640.97	0.0050	
579 - 577	35			156						640.99	640.60	0.0025	
579.5 - 579	35			44						641.12	640.99	0.0030	
579.5 - 579.5B	35			88						642.26	640.06	0.0250	CATEGORY 0040
579.5A - 579.5	35			42						642.18	641.12	0.0250	
579A - 579	35		45							642.63	641.74	0.0200	
580 - 579.5	35		26							641.86	641.79	0.0030	
580A - 580	35		16							641.91	641.86	0.0030	
583A - 585A	35							129		641.08	640.11	0.0075	
583B - 583A	35							68		641.42	641.08	0.0050	
583C - 583B	35							31		641.57	641.42	0.0050	
583D - 583B	35					29				642.31	642.17	0.0050	
585A - 585	35							52		639.57	639.05	0.0100	
585B - 585A	35						64			644.50	643.86	0.0100	
590B - 590A	35							38		644.44	644.25	0.0050	
590C - 590B	35							53		645.21	644.94	0.0050	
592A - 590B	35		265							645.99	645.19	0.0030	
592B - 592A	35		45							646.12	645.99	0.0030	
596B - 596A	35					30				642.35	642.20	0.0050	
601B - 601A	35						88			637.42	636.98	0.0050	
648B - 648A	35				30					648.99	648.84	0.0050	
T01 - T02	35				28					642.75	642.47	0.0100	REMOVE PIPE IN STAGE 4
T03 - T04	35	42								645.24	645.04	0.0047	SEAL PIPE IN STAGE 5
	TOTALS	42	416	580	58	59	152	371	43				

ALL ITEMS ARE CATEGORY 0010 UNLESS OTHERWISE NOTED

3

601 - CURB AND GUTTER

CATEGORY	STATION	TO	STATION	LOCATION	465.0315 ASPHALTIC FLUMES SY	601.0409 CONCRETE CURB & GUTTER 30-INCH TYPE A LF	601.0553 CONCRETE CURB & GUTTER 4-INCH SLOPED 36-INCH TYPE D LF	601.0557 CONCRETE CURB & GUTTER 6-INCH SLOPED 36-INCH TYPE D LF	601.0584 CONCRETE CURB & GUTTER 4-INCH SLOPED 30-INCH TYPE TBT LF	601.0586 CONCRETE CURB & GUTTER 4-INCH SLOPED 30-INCH TYPE TBTT LF	602.0410 CONCRETE SIDEWALK 5-INCH SF	602.3010 CONCRETE SURFACE DRAINS CY	620.0300 CONCRETE MEDIAN SLOPED NOSE SF	REMARKS
0010	581+81	-	582+30	STH 35 LT	7	--	80	--	--	--	--	--	--	
0010	581+98	-	582+55	STH 35 RT	7	--	83	--	--	--	--	--	--	
0010	582+70	-	599+00	STH 35 LT	7	--	1,703	--	--	--	--	--	--	
0010	582+89	-	594+00	STH 35 RT	7	--	1,145	--	--	--	--	--	--	
0010	613+23	-	613+67	STH 35 LT	--	--	--	--	41	--	--	3	--	
0010	617+95	-	618+39	STH 35 RT	--	--	--	--	30	11	--	3	--	
0010	618+12	-	618+22	STH 35 LT	--	--	--	--	--	--	--	3	--	
0010	648+00	-	649+21	STH 35 LT	--	--	119	--	--	--	--	--	--	
0010	648+50			STH 35 RT	7	--	--	--	--	--	--	--	--	
0010	649+19	-	649+88	STH 35 MEDIAN	--	132	--	--	--	--	414	--	49	Type 1 Median Sloped Nose
				TOTAL 0010	35	132	3,130	0	71	11	414	9	49	
0040	565+72	-	566+12	STH 35 RT				43						
0040	566+67	-	567+01	STH 35 RT				43						
				TOTAL 0040	0	0	0	86	0	0	0	0	0	
				PROJECT TOTAL	35	35	35	121	35	35	35	35	35	

603 - CONCRETE BARRIER

CATEGORY	STATION	TO	STATION	LOCATION	603.8000 CONCRETE BARRIER TEMPORARY PRECAST DELIVERED LF	603.8125 CONCRETE BARRIER TEMPORARY PRECAST INSTALLED LF	603.8500 ANCHORING CONCRETE BARRIER TEMPORARY PRECAST LF	603.8505 ANCHORING CONCRETE BARRIER TEMPORARY PRECAST ON BRIDGE DECKS LF	614.0905 CRASH CUSHIONS TEMPORARY EACH
STAGE 3A									
0010	567+80	-	649+29	STH 35	6114	6114	2781	223	18
				STAGE 3A SUBTOTAL	6114	6114	2781	223	18
STAGE 3B									
0010	583+37		584+60	STH 35	--	123	123	--	1
				STAGE 3B SUBTOTAL	--	123	123	--	1
STAGE 4									
0010	568+76	-	649+46	STH 35	1703	6674	2,112	223	10
				STAGE 4 SUBTOTAL	1703	6674	2112	223	10
				TOTAL 0010	7,817	12,911	5,016	446	29
STAGE 1A									
0040	569+01	-	574+29	STH 35	533	533	100	--	4
				STAGE 1A SUBTOTAL	533	533	100	--	4
STAGE 1B									
0040	569+09	-	573+80	STH 35	--	475	--	--	2
				STAGE 1B SUBTOTAL	--	475	--	--	2
				TOTAL 0040	533	1,008	100	--	6
				PROJECT TOTAL	8,350	13,919	5,116	446	35

611 - ADJ MH COVERS

CATEGORY	STATION	LOCATION	* 204.0110 REMOVING ASPHALTIC SURFACE SY	* 465.0105 ASPHALTIC SURFACE TON	611.8110 ADJUSTING MANHOLE COVERS EACH	611.8120.S COVER PLATES TEMPORARY EACH	* 690.0150 SAWING ASPHALT LF	REMARKS
0010	575+00	STR 575	2	1	1	1	16	PLACE TEMP COVER PLATE FOR LOWER LAYER
0010	577+50	STR 577	2	1	1	1	16	PLACE TEMP COVER PLATE FOR LOWER LAYER
0010	579+06	STR 579	2	1	1	1	16	PLACE TEMP COVER PLATE FOR LOWER LAYER
0010	579+49	STR 579.5	2	1	1	1	16	PLACE TEMP COVER PLATE FOR LOWER LAYER
0010	579+75	STR 580	2	1	1	1	16	PLACE TEMP COVER PLATE FOR LOWER LAYER
		TOTAL 0010	10	5	5	5	80	

*ADDITIONAL QUANTITIES LISTED ELSEWHERE

3

612 - UNDERDRAIN

CATEGORY	STATION	TO	STATION	LOCATION	SPV.0090.02 SPECIAL (02. PIPE UNDERDRAIN (6-INCH) WITH GEOTEXTILE FABRIC AND AGGREGATE) LF	REMARKS
0010	579+56	-	579+95	STH 35 RT	40	CONNECTS TO STRUCTURE #580
0010	583+37	-	583+87	STH 35 LT	52	CONNECTS TO STRUCTURE #583A
0010	584+67	-	585+19	STH 35 LT	50	CONNECTS TO STRUCTURE #585A
0010	589+33	-	589+85	STH 35 RT	51	CONNECTS TO STRUCTURE #590C
0010	591+98	-	592+50	STH 35 LT & RT	104	CONNECTS TO STRUCTURES #592A, #592B
0010	595+00	-	595+90	STH 35 LT	88	CONNECTS TO STRUCTURE #596B
				TOTAL 0010	385	

614 - MGS

CATEGORY	STATION	TO	STATION	LOCATION	614.2300 MGS GUARDRAIL 3 LF	614.2500 MGS THRIE BEAM TRANSITION LF	614.2610 MGS GUARDRAIL TERMINAL EAT EACH
0010	583+73	-	588+48	STH 35 RT	366	--	2
0010	612+72	-	624+10	STH 35 LT	--	80	2
0010	617+32	-	621+89	STH 35 RT	16	80	2
				TOTAL 0010	382	160	6

3

620 - CONC MEDIAN

CATEGORY	STATION	TO	STATION	LOCATION	620.0100 CONCRETE CORRUGATED MEDIAN SF
0010	573+00	-	578+94	STH 35	7,214
0010	579+74	-	582+03	STH 35	682
0010	581+94	-	582+33	STH 35	171
0010	582+91	-	583+31	STH 35	169
0010	583+21	-	591+00	STH 35	5,083
				TOTAL 0010	13,319

3

628 - RESTORATION

CATEGORY	STATION	TO	STATION	LOCATION	606.0200 RIPRAP MEDIUM CY	* 606.0300 RIPRAP HEAVY CY	625.0500 SALVAGED TOPSOIL SY	628.1504 SILT FENCE LF	628.1520 SILT FENCE MAINTENANCE LF	628.2008 EROSION MAT URBAN CLASS I TYPE B SY	628.7005 INLET PROTECTION TYPE A EACH	628.7015 INLET PROTECTION TYPE C EACH	628.7504 TEMPORARY DITCH CHECKS LF	628.7555 CULVERT PIPE CHECKS EACH	628.7570 ROCK BAGS EACH	629.0210 FERTILIZER TYPE B CWT	630.0140 SEEDING MIXTURE NO. 40 LB	630.0175 SEEDING MIXTURE NO. 75 LB	630.0200 SEEDING TEMPORARY LB	630.0400 SEEDING NURSE CROP LB	630.0500 SEED WATER MGAL	* 645.0120 GEOTEXTILE TYPE HR SY	SPV.0085.01 SPECIAL (01. SHORTGRASS PRAIRIE SEED MIX) LB
STAGE 2A																							
0010	560+50	-	573+50	STH 35 LT	--	--	2370	1190	1190	2370	--	--	--	3	--	2	3	15	9	18	40	--	--
0010	581+00	-	595+50	STH 35 LT	--	--	3410	1440	1440	3410	--	--	--	6	--	3	4	22	13	25	58	--	--
0010	623+50	-	647+00	STH 35 LT	--	--	3340	1390	1390	3340	--	--	--	--	--	3	4	22	13	25	57	--	--
0010	32+00	-	36+50	CTH K LT	--	--	450	440	440	450	--	--	--	--	--	1	1	3	2	4	8	--	--
				STAGE 2A SUBTOTAL	--	--	9570	4460	4460	9570	--	--	--	9	--	9	12	62	37	72	163	--	--
PROJECT																							
0010	563+50	-	582+75	STH 35	4	72	9330	1375	1375	9330	2	--	120	68	--	6	9	59	34	68	160	170	0.7
0010	582+75	-	619+00	STH 35	25	--	24000	2035	2035	24000	11	9	130	63	210	16	22	152	87	173	410	96	--
0010	619+00	-	649+50	STH 35	23	--	23000	4885	4885	23000	4	1	200	25	105	15	21	145	83	166	390	87	--
0010	30+00	-	34+50	CTH K	--	--	1,590	--	--	1,590	--	--	180	3	--	2	2	11	7	12	27	--	--
				PROJECT SUBTOTAL	52	72	57,920	8,295	8,295	57,920	17	10	630	159	315	39	54	367	211	419	987	353	0.7
STAGE 1 - CTH GI																							
0010	16+25	-	19+00	CTH GI	--	--	320	300	300	320	--	--	--	--	--	1	1	3	2	3	6	--	--
				PROJECT SUBTOTAL	0	0	320	300	300	320	0	0	0	0	0	1	1	3	2	3	6	0	0
0010				UNDISTRIBUTED (25%)	13	18	16,980	3,265	3,265	16,980	5	3	160	44	85	15	23	115	68	132	312	94	0.3
				TOTAL 0010	65	90	84,790	16,320	16,320	84,790	22	13	790	212	400	64	90	547	318	626	1,468	447	1
STAGE 1																							
0040	572+60	-	574+50	STH 35	--	49	1450	--	--	1450	--	--	56	50	--	1	2	10	6	11	25	99	--
				STAGE 1 SUBTOTAL	--	49	1450	--	--	1450	--	--	56	50	--	1	2	10	6	11	25	99	--
0040				UNDISTRIBUTED (25%)	0	13	390			390			16	15		1	1	10	6	11	30	30	
				TOTAL 0040	0	62	1,840	0	0	1,840	0	0	72	65	0	2	3	20	12	22	55	129	0
				PROJECT TOTAL	65	152	86,630	16,320	16,320	86,630	22	13	862	277	400	66	93	567	330	648	1,523	576	1

628 - SILT FENCE HEAVY DUTY

CATEGORY	STATION	TO	STATION	LOCATION	628.1530.S SILT FENCE HEAVY DUTY LF	628.1535.S SILT FENCE HEAVY DUTY MAINTENANCE LF
0010	563+50	-	582+75	STH 35	300	300
0010	582+75	-	619+00	STH 35	3,600	3,600
				TOTAL 0010	3,900	3,900

SPV - MONUMENTS

CATEGORY	STATION	OFFSET	LOCATION	SPV.0060.01 SPECIAL (01. RESEARCH AND LOCATE EXISTING LAND PARCEL MONUMENTS) EACH	SPV.0060.02 SPECIAL (02. VERIFY LANDMARK REFERENCE MONUMENTS) EACH	SPV.0060.03 SPECIAL (03. VERIFY AND REPLACE EXISTING LAND PARCEL MONUMENTS) EACH
0010	569+53	41.11 LT	STH 35	--	1	--
0010	596+15	51.47 LT	STH 35	--	1	--
0010	622+38	1.59 LT	STH 35	--	1	--
0010	648+82	7.78 LT	STH 35	--	1	--
0010	--	--	STH 35	14	--	14
0010	--	--	CTH K	4	--	4
			TOTAL 0010	18	4	18

3

643 - TRAFFIC CONTROL

CATEGORY	STATION	TO	STATION	LOCATION	DURATION DAYS	643.0300 TRAFFIC CONTROL DRUMS EACH **	DAY	643.0420 TRAFFIC CONTROL BARRICADES TYPE III EACH **	DAY	643.0500 TRAFFIC CONTROL FLEXIBLE TUBULAR MARKER POSTS EACH	643.0600 TRAFFIC CONTROL FLEXIBLE TUBULAR MARKER BASES EACH	643.0705 TRAFFIC CONTROL WARNING LIGHTS TYPE A EACH **	DAY	643.0715 TRAFFIC CONTROL WARNING LIGHTS TYPE C EACH **	DAY	643.0900 TRAFFIC CONTROL SIGNS EACH **	DAY	643.0920 TRAFFIC CONTROL COVERING SIGNS TYPE II EACH	643.1050 TRAFFIC CONTROL SIGNS PCMS EACH	DAY	643.1070 TRAFFIC CONTROL CONES 42-INCH EACH **	DAY	SPV.0045.01 SPECIAL (01 DRIVEWAY ASSISTANCE DEVICE SYSTEM 5163-07-72) EACH **	DAY	REMARKS
PROJECT																									
0010	-	-	-	ADVANCED WARNING	243	--	--	--	--	--	--	--	--	--	--	21	5103	--	--	--	--	--	--	--	
0010	-	-	-	UNDISTRIBUTED			2778		246	45	45		241		499		1402	--		--		610		--	
				PROJECT SUBTOTAL			2778		246	45	45		241		499	21	6505					610			
STAGE 2A																									
0010	568+75	-	648+50	STH 35	10	10	100	--	--	--	--	--	--	--	--	15	150	--	2	14	352	3520	--	--	
0010	30+00	-	34+50	CTH K	10	--	--	--	--	--	--	--	--	--	--	3	30	--	--	--	20	200	--	--	
				STAGE 2A SUBTOTAL			100		--	--	--		--		--		180			14		3720		--	
STAGE 2B																									
0010	568+75	-	648+50	STH 35	5	130	650	10	50	--	--	10	50	13	65	33	165	--	--	--	140	700	--	--	
				STAGE 2B SUBTOTAL			650		50	--	--		50		65		165			--		700		--	
STAGE 3A																									
0010	567+80	-	599+95	STH 35	85	69	5865	4	340	45	45	4	340	10	850	36	3060	--	--	--	--	--	--	--	
0010	16+25	-	34+50	CTH GI, CTH K	85	40	3400	6	510	--	--	6	510	10	850	11	935	--	--	--	--	--	--	--	
				STAGE 3A SUBTOTAL			9265		850	45	45		850		1700		3995			--		--		--	
STAGE 3B																									
0010	568+75	-	648+50	STH 35	14	69	966	4	56	33	33	4	56	10	140	36	504	--	--	--	--	--	--	--	
0010	30+00	-	34+50	CTH K	14	37	518	7	98	--	--	7	98	18	252	6	84	--	--	--	9	126	2	28	
				STAGE 3B SUBTOTAL			1484		154	33	33		154		392		588			--		126		28	
STAGE 4																									
0010	568+76	-	649+46	STH 35	50	81	4050	7	350	102	102	7	350	22	1100	35	1750	--	--	--	--	--	--	--	
				STAGE 4 SUBTOTAL			4050		350	102	102		350		1100		1750			--		0		--	
STAGE 5																									
0010	568+75	-	648+50	STH 35	37	205	7585	7	259	--	--	7	259	15	555	32	1184	--	--	--	--	--	--	--	
				STAGE 5 SUBTOTAL			7585		259	--	--		259		555		1184			--		--		--	
STAGE 1 - CTH GI																									
0010	16+25	-	19+00	CTH GI	16	55	880	7	112	--	--	7	112	15	240	11	176	8	--	--	--	--	--	--	
				STAGE 1 SUBTOTAL			880		112	--	--		112		240		176	8		--		--		--	
				TOTAL 0010		26,792		2,021		225	225	2,016		4,551		14,543		8	14		5,156		28		
STAGE 1A																									
0040	569+01	-	574+29	STH 35	21	56	1176	9	189	--	--	9	189	31	651	19	399	--	--	--	--	--	6	126	
				STAGE 1A SUBTOTAL			1176		189	--	--		189		651		399	--		--		--		126	
STAGE 1B																									
0040	569+09	-	573+80	STH 35	21	34	714	5	105	--	--	5	105	25	525	19	399	--	--	--	--	--	6	126	
				STAGE 1B SUBTOTAL			714		105	--	--		105		525		399	--		--		--		126	
				TOTAL 0040		1,890		294		0	0	294		1,176		798		0	0		0		252		
				PROJECT TOTAL		28,682		2,315		225	225	2,310		5,727		15,341		8	14		5,156		280		

3

PROJECT NO: 5163-07-72	HWY: STH 35	COUNTY: LA CROSSE	MISCELLANEOUS QUANTITIES	SHEET 149	E

FILE NAME : PLOT DATE : _____ PLOT BY : _____ PLOT NAME : _____ ORG DATE : _____ ORIGINATOR : DIST _ PLOT SCALE : 1:1

3

CRASH CUSHION DETAIL TABLE - FOR INFORMATION

STATION	LOCATION	OFFSET	614.0905 CRASH CUSHIONS TEMPORARY EACH	BACK WIDTH FT	OBJECT MARKING PATTERN	CRASH TEST LEVEL	TRAFFIC DIRECTION	TRAFFIC LOCATION	CRASH CUSHION SHIELDS
STAGE 1A									
569+94	STH 35	0.8' RT	1	2	OM-3L (W05- 58L)	TL-3	RT	UNIDIRECTIONAL	WORK ZONE
572+18	STH 35	1.7' LT	1	2	OM-3R (W05- 58R)	TL-3	LT	UNIDIRECTIONAL	WORK ZONE
573+76	STH 35	3.1' RT	1	2	OM-3L (W05- 58L)	TL-3	RT	UNIDIRECTIONAL	WORK ZONE
574+23	STH 35	15.1' LT	1	2	OM-3R (W05- 58R)	TL-3	LT	UNIDIRECTIONAL	WORK ZONE
STAGE 1B									
569+09	STH 35	6.7' RT	1	2	OM-3R (W05- 58R)	TL-3	LT	UNIDIRECTIONAL	WORK ZONE
573+79	STH 35	6.8 RT	1	2	OM-3L (W05- 58L)	TL-3	RT	UNIDIRECTIONAL	WORK ZONE
STAGE 3A									
569+09	STH 35	6.7' RT	1	2	OM-3R (W05- 58R)	TL-3	LT	UNIDIRECTIONAL	WORK ZONE
565+07	STH 35	2.6' RT	1	2	OM-3R (W05- 58R)	TL-3	LT	UNIDIRECTIONAL	WORK ZONE
572+00	STH 35	3.O' LT	1	2	OM-3L (W05- 58L)	TL-3	RT	UNIDIRECTIONAL	WORK ZONE
573+33	STH 35	3.0' LT	1	2	OM-3R (W05- 58R)	TL-3	LT	UNIDIRECTIONAL	WORK ZONE
576+20	STH 35	2.8' LT	1	2	OM-3L (W05- 58L)	TL-3	RT	UNIDIRECTIONAL	WORK ZONE
577+21	STH 35	3.0 LT	1	2	OM-3R (W05- 58R)	TL-3	LT	UNIDIRECTIONAL	WORK ZONE
583+15	STH 35	3.0' LT	1	2	OM-3L (W05- 58L)	TL-3	RT	UNIDIRECTIONAL	WORK ZONE
584+61	STH 35	3.1 LT	1	2	OM-3R (W05- 58R)	TL-3	LT	UNIDIRECTIONAL	WORK ZONE
597+89	STH 35	16.0' LT	1	2	OM-3L (W05- 58L)	TL-3	RT	UNIDIRECTIONAL	WORK ZONE
598+14	STH 35	43.5' LT	1	2	OM-3L (W05- 58L)	TL-3	RT	UNIDIRECTIONAL	WORK ZONE
599+94	STH 35	52.5' LT	1	2	OM-3R (W05- 58R)	TL-3	LT	UNIDIRECTIONAL	WORK ZONE
616+42	STH 35	18.0' LT	1	2	OM-3R (W05- 58R)	TL-3	LT	UNIDIRECTIONAL	WORK ZONE
624+67	STH 35	18.0' LT	1	2	OM-3L (W05- 58L)	TL-3	RT	UNIDIRECTIONAL	WORK ZONE
625+44	STH 35	18.0' LT	1	2	OM-3R (W05- 58R)	TL-3	LT	UNIDIRECTIONAL	WORK ZONE
631+80	STH 35	18.0' LT	1	2	OM-3L (W05- 58L)	TL-3	RT	UNIDIRECTIONAL	WORK ZONE
632+98	STH 35	17.7' LT	1	2	OM-3R (W05- 58R)	TL-3	LT	UNIDIRECTIONAL	WORK ZONE
645+44	STH 35	3.0' LT	1	2	OM-3L (W05- 58L)	TL-3	RT	UNIDIRECTIONAL	WORK ZONE
646+42	STH 35	2.6' LT	1	2	OM-3R (W05- 58R)	TL-3	LT	UNIDIRECTIONAL	WORK ZONE
STAGE 3B									
583+39	STH 35	4.0' LT	1	2	OM-3L (W05- 58L)	TL-3	RT	UNIDIRECTIONAL	WORK ZONE
STAGE 4									
572+88	STH 35	1.5' RT	1	2	OM-3R (W05- 58R)	TL-3	LT	UNIDIRECTIONAL	WORK ZONE
574+44	STH 35	1.4' RT	1	2	OM-3L (W05- 58L)	TL-3	RT	UNIDIRECTIONAL	WORK ZONE
581+78	STH 35	1.4' RT	1	2	OM-3R (W05- 58R)	TL-3	LT	UNIDIRECTIONAL	WORK ZONE
583+54	STH 35	1.4' RT	1	2	OM-3L (W05- 58L)	TL-3	RT	UNIDIRECTIONAL	WORK ZONE
592+94	STH 35	8.0' LT	1	2	OM-3R (W05- 58R)	TL-3	LT	UNIDIRECTIONAL	WORK ZONE
617+03	STH 35	6.9' LT	1	2	OM-3L (W05- 58L)	TL-3	RT	UNIDIRECTIONAL	WORK ZONE
617+54	STH 35	22.6' RT	1	2	OM-3R (W05- 58R)	TL-3	LT	UNIDIRECTIONAL	WORK ZONE
621+67	STH 35	22.5' RT	1	2	OM-3L (W05- 58L)	TL-3	RT	UNIDIRECTIONAL	WORK ZONE
628+71	STH 35	16.7' LT	1	2	OM-3R (W05- 58R)	TL-3	LT	UNIDIRECTIONAL	WORK ZONE
649+47	STH 35	10.4' LT	1	2	OM-3R (W05- 58R)	TL-3	LT	UNIDIRECTIONAL	WORK ZONE

643 - TEMP MARKING LINE

CATEGORY	STATION	TO	STATION	LOCATION	643.3105 TEMPORARY MARKING LINE PAINT 4-INCH SOLID WHITE LF	643.3105 TEMPORARY MARKING LINE PAINT 4-INCH SOLID YELLOW LF	* 643.3165 TEMPORARY MARKING LINE PAINT 6-INCH SOLID WHITE LF	643.3165 TEMPORARY MARKING LINE PAINT 6-INCH 3' SKIPS WHITE LF	643.3165 TEMPORARY MARKING LINE PAINT 6-INCH SOLID YELLOW LF	643.3165 TEMPORARY MARKING LINE PAINT 6-INCH 3' SKIPS YELLOW LF	643.3180 TEMPORARY MARKING LINE REMOVABLE TAPE 6-INCH SOLID WHITE LF	643.3180 TEMPORARY MARKING LINE REMOVABLE TAPE 6-INCH SOLID YELLOW LF	* 643.3265 TEMPORARY MARKING LINE PAINT 10-INCH SOLID WHITE LF	643.3265 TEMPORARY MARKING LINE PAINT 10-INCH 3' SKIPS LF	643.3805 TEMPORARY MARKING STOP LINE PAINT 18-INCH SOLID WHITE LF	646.9000 MARKING REMOVAL LINE 4-INCH LF	646.9100 MARKING REMOVAL LINE 8-INCH LF	646.9200 MARKING REMOVAL LINE WIDE LF	646.9300 MARKING REMOVAL SPECIAL MARKING EACH	REMARKS
STAGE 1A																				
0010	560+65 EX	-	575+68 EX	STH 35	--	--	1,027	--	700	--	--	--	--	--	24	1,350	--	--	--	
				STAGE 1A SUBTOTAL	--	--	1,027	--	700	--	--	--	--	--	24	1,350	--	--	--	
STAGE 1B																				
0010	560+65 EX	-	575+68 EX	STH 35	--	--	1,085	--	--	--	--	--	--	--	--	480	--	--	--	
				STAGE 1B SUBTOTAL	--	--	1,085	--	--	--	--	--	--	--	--	480	--	--	--	
STAGE 2A																				
0010	567+65 EX	-	576+77 EX	STH 35	975	964	--	--	--	--	--	--	--	--	--	--	--	--	--	
				STAGE 2A SUBTOTAL	975	964	--	--	--	--	--	--	--	--	--	--	--	--	--	
STAGE 2B																				
0010	568+66 EX	-	587+57 EX	STH 35	--	--	3,023	82	2,282	661	--	--	684	42	--	2,293	734	--	4	
				STAGE 2B SUBTOTAL	--	--	3,023	82	2,282	661	--	--	684	42	--	2,293	734	--	4	
STAGE 3A																				
0010	559+94		649+90	STH 35	--	--	14,042	--	9,326	--	--	--	461	162	--	5,107	--	39	--	
0010	30+12 K		36+28 K	CTH K	--	--	1,000	--	113	--	--	--	--	--	--	--	--	--	--	
				STAGE 3A SUBTOTAL	--	--	14,042	--	9,326	--	--	--	461	162	--	5,107	--	39	--	
STAGE 3B																				
0010	30+54 K		36+06 K	CTH K	--	--	861	--	1,102	--	--	--	--	--	32	--	--	--	--	
				STAGE 3B SUBTOTAL	--	--	861	--	1,102	--	--	--	--	--	32	--	--	--	--	
STAGE 4																				
0010	561+09		650+55	STH 35	--	--	15,582	--	18,948	--	522	522	593	71	22	--	--	--	--	
0010	16+25 GI		19+50 GI	CTH GI	--	--	--	--	608	--	--	--	--	--	24	--	--	--	--	
				STAGE 4 SUBTOTAL	--	--	15,582	--	19,556	--	522	522	593	71	46	--	--	--	--	
STAGE 5																				
0010	559+94		649+88	STH 35	--	--	11,163	48	11,199	--	522	522	873	48	--	--	--	--	--	
0010	572+38		648+50	STH 35	--	--	2,128	--	3,410	--	--	--	--	--	--	--	--	--	--	Painted before paving upper layer
				STAGE 5 SUBTOTAL	--	--	13,291	48	14,609	--	522	522	873	48		--	--	--	--	
				PROJECT SUBTOTAL	975	964	48,911	130	47,575	661	1,044	1,044	2,611	323	102	9,230	734	39	4	
				TOTAL 0010	1,939		97,277				2,088		2,934		102	9,230	734	39	4	

*ADDITIONAL QUANTITIES LISTED ELSEWHERE

3

646 - PAVEMENT MARKING

CATEGORY	STATION	TO	STATION	LOCATION	* 643.3165 TEMPORARY MARKING LINE PAINT 6-INCH SOLID WHITE LF	3' SKIPS WHITE LF	SOLID YELLOW LF	12.5' SKIPS YELLOW LF	* 643.3265 TEMPORARY MARKING LINE PAINT 10-INCH SOLID WHITE LF	646.1020 MARKING LINE EPOXY 4-INCH SOLID WHITE LF	3' SKIPS WHITE LF	SOLID YELLOW LF	646.2020 MARKING LINE EPOXY 6-INCH SOLID WHITE LF	12.5' SKIPS YELLOW LF	646.2040 MARKING LINE GROOVED WET REF EPOXY 6-INCH SOLID WHITE LF	3' SKIPS WHITE LF	SOLID YELLOW LF	12.5' SKIPS YELLOW LF	646.4040 MARKING LINE GROOVED WET REF EPOXY 10-INCH SOLID WHITE LF	646.5020 MARKING ARROW EPOXY WHITE EACH	646.5120 MARKING WORD EPOXY WHITE EACH	646.5220 MARKING SYMBOL EPOXY WHITE EACH	646.6120 MARKING STOP LINE EPOXY 18-INCH WHITE LF	646.7120 MARKING DIAGONAL EPOXY 12-INCH YELLOW LF	646.8020 MARKING CORRUGATED MEDIAN EPOXY YELLOW SF	646.8120 MARKING CURB EPOXY YELLOW LF	646.8220 MARKING ISLAND NOSE EPOXY YELLOW EACH	648.0100 LOCATING NO-PASSING ZONES MI	SPV.0090.04 SPECIAL (04. MARKING RAILROAD STOP LINE EPOXY 24-INCH) WHITE LF	REMARKS
0010	559+94	-	650+78	STH 35	16,371	77	10,695	1,100	2,195	--	--	--	440	50	16,371	77	10,695	1,100	2195	8	3	--	--	162	3,581	10	7	1.52	--	
0010	559+94	-	650+78	STH 35	8,186	39	5,348	550	1,098	--	--	--	--	--	--	--	--	--	--	--	--	--	--	--	--	--	--	--	--	WINTER SHUTDOWN MARKING
0010	30+53	-	36+77	CTH K	--	--	--	--	--	1,166	--	1,247	--	--	--	--	--	--	--	--	--	--	34	--	--	--	--	--	--	
0010	16+25	-	19+50	CTH GI	--	--	--	--	--	933	19	608	--	--	--	--	--	--	--	2	--	2	28	--	--	--	--	--	35	
				SUBTOTAL	24,557	116	16,043	1,650	3,293	2,099	19	1,855	440	50	16,371	77	10,695	1,100	2,195	10	3	2	62	162	3,581	10	7	1.52	35	
				TOTAL 0010	42,366				3,293	3,973			490		28,243				2,195	10	3	2	62	162	3,581	10	7	1.52	35	

*ADDITIONAL QUANTITIES LISTED ELSEWHERE

TEMPORARY MARKING LINE USED PRIOR TO GROOVING AND OR RUMBLING. GROOVED WET REFLECTIVE EPOXY APPLIED AFTER.

650 - STAKING

CATEGORY	STATION	TO	STATION	LOCATION	650.4500 CONSTRUCTION STAKING SUBGRADE LF	650.5000 CONSTRUCTION STAKING BASE LF	650.5500 CONSTRUCTION STAKING CURB GUTTER AND CURB & GUTTER LF	650.7500 CONSTRUCTION STAKING CONCRETE BARRIER LF	650.9911.01 CONSTRUCTION STAKING SUPPLEMENTAL CONTROL (PROJECT) (01. 5163-07-72) EACH	650.9920 CONSTRUCTION STAKING SLOPE STAKES LF
0010	565+72	-	566+12	STH 35 RT	--	--	43	--	--	--
0010	566+67	-	567+01	STH 35 RT	--	--	43	--	--	--
0010	568+75	-	648+50	STH 35	7,975	7,975	--	--	1	7,975
0010	581+81	-	582+30	STH 35 LT	--	--	80	--	--	--
0010	581+98	-	582+55	STH 35 RT	--	--	83	--	--	--
0010	582+70	-	599+00	STH 35 LT	--	--	1,703	--	--	--
0010	582+89	-	594+00	STH 35 RT	--	--	1,145	--	--	--
0010	16+25	-	20+00	CTH GI	375	375	--	--	--	375
0010	30+00	-	35+50	CTH K	550	550	--	--	--	550
0010	613+67	-	618+12	STH 35 LT	--	--	--	446	--	--
0010	648+00	-	649+21	STH 35 LT	--	--	119	--	--	--
0010	649+19	-	649+88	STH 35 MEDIAN	--	--	132	--	--	--
				TOTAL 0010	8,900	8,900	3,348	446	1	8,900

SPV - TEMP PIPE CONNECTION

CATEGORY	STATION	LOCATION	SPV.0060.08 SPECIAL (08. TEMPORARY PIPE CONNECTION) EACH
0010	584+65	STH 35	1
0010	609+18	STH 35	1
0010	636+85	STH 35	1
0010	642+85	STH 35	1
		TOTAL 0010	4

3

634-638 SIGNING

CATEGORY	STATION	LOCATION	SIGN #	SIGN CODE	SIZE IN X IN	DESCRIPTION	634.0614 POSTS WOOD 4X6-INCH X 14-FT EACH	634.0616 POSTS WOOD 4X6-INCH X 16-FT EACH	634.0618 POSTS WOOD 4X6-INCH X 18-FT EACH	637.2210 SIGNS TYPE II REFLECTIVE H SF	637.2230 SIGNS TYPE II REFLECTIVE F SF	638.2102 MOVING SIGNS TYPE II EACH	638.2602 REMOVING SIGNS TYPE II EACH	638.3000 REMOVING SMALL SIGN SUPPORTS EACH	MOUNTED ON SAME POST AS SIGN #
0010	566+74	RT	0-01	W6-1	36 X 36	Two-Way Traffic Symbol	-	1	-	-	9.00	-	-	-	
0010	565+75	LT	0-04M	I-55-56	- X -	Adopt-A-Highway	-	1	-	-	-	1	-	1	
0010	565+75	LT		I-55-56P	- X -	Adopt-A-Highway Sponsor	-	-	-	-	-	1	-	-	0-04M
0010	567+00	LT	0-02R	W14-3	- X -	No Passing Zone	-	-	-	-	-	-	1	1	
0010	579+41	LT	0-03M	R1-1	- X -	Stop	-	1	-	-	-	1	-	1	
0010	569+47	LT	1-01R	I2-2	- X -	Vernon Co	-	-	-	-	-	-	1	2	
0010	569+53	LT	1-02	I2-2	66 X 15	Vernon Co	2	-	-	6.88	-	-	-	-	
0010	569+47	RT	1-03R	I2-2	- X -	La Crosse Co	-	-	-	-	-	-	1	2	
0010	569+56	RT	1-04	I2-2	78 X 15	La Crosse Co	2	-	-	8.13	-	-	-	-	
0010	571+84	RT	1-05R	J1-2	- X -	Junction or End Assembly (2 Headed Panel)	-	-	-	-	-	-	1	1	
0010	571+84	RT	1-06	J1-2	48 X 39	Junction or End Assembly (2 Headed Panel)	-	1	-	13.00	-	-	-	-	
0010	571+00	LT	1-07	W6-3	36 X 36	Two-Way Traffic Symbol	-	1	-	-	9.00	-	-	-	
0010	576+02	LT	1-08	D1-1	78 X 15	Mallard Ln/Arrow Left	2	-	-	8.13	-	-	-	-	
0010	576+02	RT	2-01	D7-68L	48 X 36	Goose Island County Park/Arrow Left	-	1	-	12.00	-	-	-	-	
0010	576+05	RT	2-02R	D7-68L	- X -	Goose Island County Park/Arrow Left	-	-	-	-	-	-	1	2	
0010	577+51	RT	2-03	W10-2	36 X 36	Cross Road Tracks LEFT Side	-	1	-	-	9.00	-	-	-	
0010	577+51	RT	2-04R	W10-2	- X -	Cross Road Tracks LEFT Side	-	-	-	-	-	-	1	1	
0010	578+54	LT	2-05R	J4-1	- X -	Reassurance Assembly (1 Headed Route Panel)	-	-	-	-	-	-	1	1	
0010	578+00	LT	2-06	JV	24 X 60	Vertically Configured J - Panel	-	-	1	10.00	-	-	-	-	
0010	579+19	RT	2-07R	R2-1/S4-2	- X -	Speed Limit 15MPH & When Children Are Present	-	-	-	-	-	-	1	1	
0010	579+19	RT	2-08	R2-1	24 X 30	Speed Limit 15MPH	1	-	-	5.00	-	-	-	-	
0010	579+19	RT		S4-2	24 X 12	When Children Are Present	1	-	-	2.00	-	-	-	-	2-08
0010	579+41	LT	2-09R	R1-1	- X -	Stop	-	-	-	-	-	-	1	1	
0010	579+41	LT	2-10	R1-1	30 X 30	Stop	-	1	-	5.19	-	-	-	-	
0010	579+52	LT	2-11	-	- X -	Cottonwood Dr (Moved By Others)	-	-	-	-	-	-	-	-	
0010	579+85	LT	2-13R	J4-1	- X -	Reassurance Assembly (1 Headed Route Panel)	-	-	-	-	-	-	1	1	
0010	580+00	LT	2-14	J4-1	24 X 36	Reassurance Assembly (1 Headed Route Panel)	-	1	-	6.00	-	-	-	-	
0010	582+09	RT	2-15	J13-1	24 X 45	Directional without Cardinal (1 Headed Route Panel)	-	1	-	7.50	-	-	-	-	
0010	582+19	RT	2-16	R1-1	30 X 30	Stop	1	-	-	5.19	-	-	-	-	
0010	582+11	RT	2-17R	J13-1	- X -	Directional without Cardinal (1 Headed Route Panel)	-	-	-	-	-	-	1	1	
0010	582+19	RT	2-18R	R1-1	- X -	Stop	-	-	-	-	-	-	1	1	
0010	581+08	RT	2-19	J13-2	48 X 45	Directional Without Cardinal	-	1	-	15.00	-	-	-	-	
0010	582+48	RT	2-20R	J13-1	- X -	Directional without Cardinal (1 Headed Route Panel)	-	-	-	-	-	-	1	1	
0010	32+04	RT	2-21	R2-1	24 X 30	Speed Limit 35 MPH	1	-	-	5.00	-	-	-	-	
0010	31+14	RT	2-22	M1-5A	24 X 24	County Marker	1	-	-	4.00	-	-	-	-	
0010	31+90	LT	2-23R	R2-1	- X -	Speed Limit 35 MPH	-	-	-	-	-	-	1	1	
0010	31+85	LT	2-24R	M1-5A	- X -	County Marker	-	-	-	-	-	-	1	1	
0010	17+84	LT	2-25R	W1-3L	- X -	Left Reverse Turn	-	-	-	-	-	-	1	1	
0010	17+84	LT		W13-1	- X -	Advisory Speed Plate (Yellow Back)	-	-	-	-	-	-	1	-	2-25R
0010	17+84	LT	2-26	W1-3L	36 X 36	Left Reverse Turn	-	-	1	-	9.00	-	-	-	
0010	17+84	LT		W13-1	24 X 24	Advisory Speed Plate (Yellow Back)	-	-	-	-	4.00	-	-	-	2-26
0010	17+84	RT	2-27R	M1-5A	- X -	County Marker	-	-	-	-	-	-	1	1	
0010	17+84	RT	2-28	M1-5A	24 X 24	County Marker	-	1	-	4.00	-	-	-	-	
0010	583+03	LT	2-29	R1-1	30 X 30	Stop	1	-	-	5.19	-	-	-	-	
0010	583+09	LT	2-30	J13-1	24 X 45	Directional without Cardinal (1 Headed Route Panel)	-	1	-	7.50	-	-	-	-	
0010	583+20	RT	2-31R	J12-1	- X -	Route Turn without Cardinal (2 Headed Route Panel)	-	-	-	-	-	-	1	1	
0010	583+21	LT	2-32R	J12-1	- X -	Route Turn without Cardinal (2 Headed Route Panel)	-	-	-	-	-	-	1	1	
0010	576+22	LT	2-33	W6-2	36 X 36	Divided Highway Ends Symbol	-	1	-	-	9.00	-	-	-	
0010	584+07	LT	3-01R	J13-1	- X -	Directional without Cardinal (1 Headed Route Panel)	-	-	-	-	-	-	1	1	
0010	587+00	RT	3-02	W6-2	36 X 36	Divided Highway Ends Symbol	-	1	-	-	9.00	-	-	-	
0010	584+11	RT	3-03R	R1-1	- X -	STOP	-	-	-	-	-	-	1	1	
0010	584+16	RT	3-04R	J13-1	- X -	Route Turn without Cardinal (2 Headed Route Panel)	-	-	-	-	-	-	1	1	
0010	588+80	RT	3-05R	JV	- X -	Vertically Configured J - Panel	-	-	-	-	-	-	1	1	
0010	584+08	RT	3-06	JV	24 X 60	Vertically Configured J - Panel	-	1	-	10.00	-	-	-	-	
0010	588+80	RT	3-07R	J4-1	- X -	Reassurance Assembly (1 Headed Route Panel)	-	-	-	-	-	-	1	1	

CONTINUED ON NEXT PAGE

3

3

634-638 SIGNING

CATEGORY	STATION	LOCATION	SIGN #	SIGN CODE	SIZE IN X IN	DESCRIPTION	634.0614 POSTS WOOD 4X6-INCH X 14-FT EACH	634.0616 POSTS WOOD 4X6-INCH X 16-FT EACH	634.0618 POSTS WOOD 4X6-INCH X 18-FT EACH	637.2210 SIGNS TYPE II REFLECTIVE H SF	637.2230 SIGNS TYPE II REFLECTIVE F SF	638.2102 MOVING SIGNS TYPE II EACH	638.2602 REMOVING SIGNS TYPE II EACH	638.3000 REMOVING SMALL SIGN SUPPORTS EACH	MOUNTED ON SAME POST AS SIGN #
										CONTINUED FROM PREVIOUS PAGE					
0010	585+50	RT	3-08	J4-1	24 X 36	Reassurance Assembly (1 Headed Route Panel)	1	-	-	6.00	-	-	-	-	
0010	590+50	LT	3-09R	W10-2	- X -	Cross Road Tracks RIGHT Side	-	-	-	-	-	-	1	1	
0010	590+50	LT	3-10	W10-2	36 X 36	Cross Road Tracks RIGHT Side	-	1	-	-	9.00	-	-	-	
0010	583+84	RT	3-11	J13-2	48 X 45	Directional Without Cardinal	-	1	-	15.00	-	-	-	-	
0010	588+00	LT	4-01R	D7-68R	- X -	Goose Island County Park/Arrow Right	-	-	-	-	-	-	1	2	
0010	588+00	LT	4-02	D7-68R	48 X 36	Goose Island County Park/Arrow Right	-	1	-	12.00	-	-	-	-	
0010	593+00	LT	4-03R	J1-2	- X -	Junction or End Assembly (2 Headed Panel)	-	-	-	-	-	-	-	-	
0010	593+00	LT	4-04	J1-2	48 X 39	Junction or End Assembly (2 Headed Panel)	-	1	-	13.00	-	-	-	-	
0010	593+49	RT	4-05	W6-1	36 X 36	Two-Way Traffic Symbol	-	1	-	-	9.00	-	-	-	
0010	598+46	LT	4-06	W6-3	36 X 36	Divided Highway Symbol	-	1	-	-	9.00	-	-	-	
0010	598+70	RT	5-01	W14-3	48 X 36	No Passing Zone	-	1	-	-	5.56	-	-	-	
0010	599+11	RT	5-02R	W14-3	- X -	No Passing Zone	-	-	-	-	-	-	1	1	
0010	633+25	LT	9-01R	D7-67	- X -	Goose Island County Park [1] Mile	-	-	-	-	-	-	1	2	
0010	633+25	LT		DG5-69B	- X -	Boat Landing	-	-	-	-	-	-	1	-	9-01R
0010	633+25	LT		DG5-69G	- X -	Camping	-	-	-	-	-	-	1	-	9-01R
0010	633+25	LT	9-02	D7-67	60 X 36	Goose Island County Park [1] Mile	-	-	2	15.00	-	-	-	-	
0010	633+25	LT		DG5-69B	48 X 9	Boat Landing	-	-	-	3.00	-	-	-	-	9-02
0010	633+25	LT		DG5-69G	48 X 9	Camping	-	-	-	3.00	-	-	-	-	9-02
0010	635+40	RT	9-03	W03-5	48 X 48	Speed Limit 40 Ahead (Arrow)	-	1	-	-	16.00	-	-	-	
0010	641+38	RT	10-01R	W03-5	- X -	Speed Limit 40 Ahead (Arrow)	-	-	-	-	-	1	-	1	
0010	598+70	LT	10-02M	W14-3	- X -	No Passing Zone	-	1	-	-	-	1	-	1	
0010	642+96	RT	10-03M	S1-1/S16-9P/R2-6P	- X -	School Advance/AHEAD Plaque/Fines Higher Plaque	-	-	1	-	-	3	-	1	
0010	642+96	RT		S16-9P	- X -	AHEAD Plaque (Fluorescent Yellow Green)	-	-	-	-	-	1	-	-	10-03M
0010	642+96	RT		R2-6P	- X -	Fines Higher Plaque	-	-	-	-	-	1	-	-	10-03M
0010	640+30	RT	10-04	R2-1	24 X 30	Speed Limit 40 MPH	1	-	-	-	-	1	-	1	
0010	643+50	LT	10-05M	J4-3	- X -	Reassurance Assembly (1 Headed Route Panel)	-	2	-	-	-	1	-	2	
0010	640+30	LT	10-06M	R2-1	- X -	Speed Limit 55 MPH	1	-	-	-	-	1	-	1	
0010	642+00	RT	10-07M	I2-3	- X -	Community Population Name Sign (With Number)	2	-	-	-	-	1	-	2	
0010	644+00	RT	11-01M	S4-51	- X -	School Speed Limit 25 Ahead	-	1	-	-	-	1	-	1	
0010	645+00	RT	11-02M	W6-1	- X -	Divided Highway Ahead	-	1	-	-	-	1	-	1	
0010	644+70	LT	11-03M	D2-2	- X -	Two Destinations (Distances)	1	1	-	-	-	1	-	2	
0010	646+22	LT	11-05R	W14-3	- X -	No Passing Zone	-	-	-	-	-	-	1	1	
0010	646+21	LT	11-06R	R2-1	- X -	Speed Limit 55 MPH	1	-	-	-	-	1	-	1	
0010	646+26	LT	11-07M	S5-2	- X -	End School Zone	-	-	1	-	-	1	-	1	
0010	648+90	LT	11-11	R59-51	36 X 36	Stop for Bus Flashing Lights	-	1	-	9.00	-	-	-	-	
0010	649+30	LT	11-14M	J4-3	- X -	Keep Right Symbol	1	-	-	-	-	1	-	1	
0010	646+50	RT	11-15M	S4-51	- X -	School Speed Limit 25 MPH	-	1	-	-	-	2	-	1	
0010	647+75	RT	11-16M	W6-3	- X -	Two-Way Traffic	-	1	-	-	-	1	-	1	
0010	33+28	LT	12-01R	J1-1	- X -	Junction or End Assembly	-	-	-	-	-	-	1	1	
0010	33+28	LT	12-02	J1-1	24 X 39	Junction or End Assembly	-	1	-	6.50	-	-	-	-	
0010	16+50	RT	12-03R	W3-1	- X -	Stop Ahead	-	-	-	-	-	-	1	1	
0010	16+50	RT	12-04	W3-1	36 X 36	Stop Ahead	-	-	1	-	9.00	-	-	-	
0010	16+46	LT	12-05R	W11-2	- X -	Pedestrian Crossing Symbol	-	-	-	-	-	-	1	1	
0010	16+46	LT		W57-51	- X -	Next 2 Miles	-	-	-	-	-	-	1	-	12-05R
0010	16+46	LT	12-06	W11-15	30 X 30	Trail Crossing (Bike and Ped Symbol)	-	1	-	-	6.25	-	-	-	
0010	16+46	LT		W57-51	24 X 12	Next 2 Miles	-	-	-	-	2.00	-	-	-	12-06
0010	35+27	LT	12-07	W1-1L	36 X 36	Left Turn	-	-	1	-	9.00	-	-	-	
0010	35+27	LT		W13-1	24 X 24	25 MPH	-	-	-	-	4.00	-	-	-	12-07
0010	32+42	LT	12-8	W6-1	48 X 24	Single Night Arrow (Left)	1	-	-	-	8.00	-	-	-	
						TOTAL 0010	21	35	8	222.21	144.81	23	36	57	

3

STATE OF WISCONSIN
DEPARTMENT OF TRANSPORTATION
TRANSPORTATION PROJECT PLAT TITLE SHEET
PROJECT NO 5163-07-24
GENOA - LA CROSSE
LA CROSSE CO LINE TO GARNER PLACE
STH 35
LA CROSSE COUNTY

4

THE NOTES, CONVENTIONAL SIGNS, AND ABBREVIATIONS ARE ASSOCIATED WITH EACH TRANSPORTATION PROJECT PLAT FOR PROJECT 5163-07-24.

NOTES:

POSITIONS SHOWN ON THIS PLAT ARE WISCONSIN COORDINATE REFERENCE SYSTEM COORDINATES (WISCRS), LA CROSSE COUNTY, NAD83 (2011), IN U.S. SURVEY FEET. VALUES SHOWN ARE GRID COORDINATES, GRID BEARINGS, AND GRID DISTANCES. GRID DISTANCES MAY BE USED AS GROUND DISTANCES. NGS POINT UTILIZED WAS DH5434.

ALL NEW RIGHT-OF-WAY MONUMENTS WILL BE TYPE 2 (TYPICALLY ⅜" X 24" IRON REBARS), UNLESS OTHERWISE NOTED, AND WILL BE PLACED PRIOR TO THE COMPLETION OF THE PROJECT.

ALL RIGHT-OF-WAY LINES DEPICTED IN THE NON-ACQUISITION AREAS ARE INTENDED TO RE-ESTABLISH EXISTING RIGHT-OF-WAY LINES AS DETERMINED FROM PREVIOUS PROJECTS, OTHER RECORDED DOCUMENTS, OR FROM CENTERLINE OF EXISTING PAVEMENTS.

RIGHT-OF-WAY BOUNDARIES ARE DEFINED WITH COURSES OF THE PERIMETER OF THE HIGHWAY LANDS REFERENCED TO THE U.S. PUBLIC LAND SURVEY SYSTEM OR OTHER "SURVEYS" OF PUBLIC RECORD.

DIMENSIONING FOR THE NEW RIGHT-OF-WAY IS MEASURED ALONG AND PERPENDICULAR TO THE NEW REFERENCE LINES.

A TEMPORARY LIMITED EASEMENT (TLE) IS A RIGHT FOR CONSTRUCTION PURPOSES, AS DEFINED HEREIN, INCLUDING THE RIGHT TO OPERATE NECESSARY EQUIPMENT THEREON, THE RIGHT OF INGRESS AND EGRESS, AS LONG AS REQUIRED FOR SUCH PUBLIC PURPOSE, INCLUDING THE RIGHT TO PRESERVE, PROTECT, REMOVE, OR PLANT THEREON ANY VEGETATION THAT THE HIGHWAY AUTHORITIES MAY DEEM DESIRABLE. ALL (TLEs) ON THIS PLAT EXPIRE AT THE COMPLETION OF THE CONSTRUCTION PROJECT FOR WHICH THIS INSTRUMENT IS GIVEN.

AN EASEMENT FOR HIGHWAY PURPOSES (HE), AS LONG AS SO USED, INCLUDING THE RIGHT TO PRESERVE, PROTECT, REMOVE, OR PLANT THEREON ANY VEGETATION THAT THE HIGHWAY AUTHORITIES MAY DEEM DESIRABLE.

PROPERTY LINES SHOWN ON THIS PLAT ARE DRAWN FROM DATA DERIVED FROM MAPS AND DOCUMENTS OF PUBLIC RECORD AND/OR EXISTING OCCUPATIONAL LINES. THIS PLAT MAY NOT BE A TRUE REPRESENTATION OF EXISTING PROPERTY LINES, EXCLUDING RIGHT-OF-WAY, AND SHOULD NOT BE USED AS A SUBSTITUTE FOR AN ACCURATE FIELD SURVEY.

FOR THE CURRENT ACCESS/DRIVEWAY INFORMATION, CONTACT THE PLANNING UNIT OF THE WISCONSIN DEPARTMENT OF TRANSPORTATION OFFICE IN THE SW REGION.

PARCEL AND UTILITY IDENTIFICATION NUMBERS MAY NOT POINT TO ALL AREAS OF ACQUISITION, AS NOTED ON THE TPP DETAIL PAGES.

INFORMATION FOR THE BASIS OF EXISTING HIGHWAY RIGHT-OF-WAY POINTS OF REFERENCE AND ACCESS CONTROL ARE LISTED ON THE TPP DETAIL PAGES.

N

PROJECT LOCATION

T 15 N

T 14 N

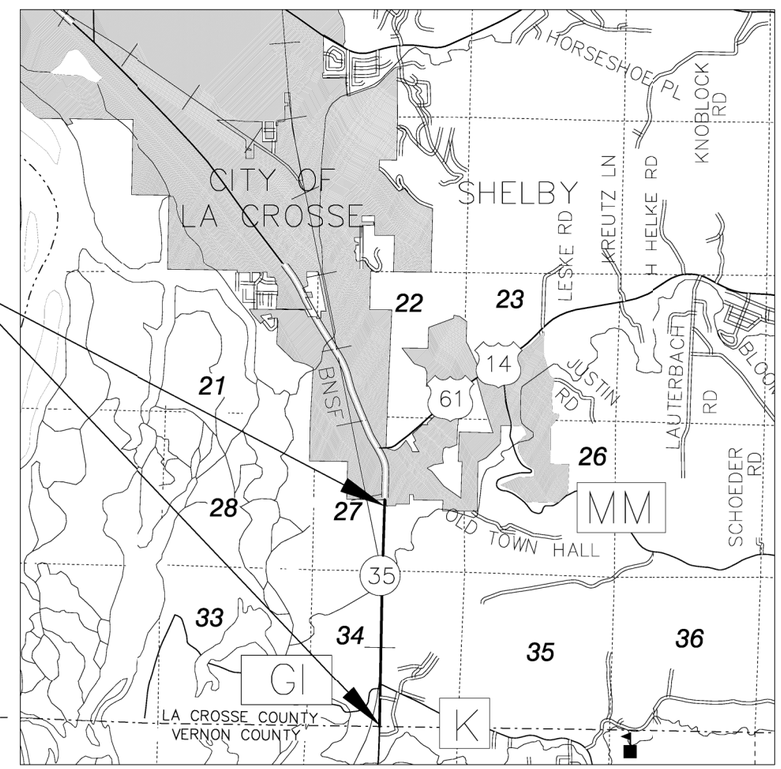

R 7 W

LAYOUT

SCALE 0 1 MI.

CONVENTIONAL ABBREVIATIONS

ACCESS RIGHTS	AR
ACRES	AC
AHEAD	AH
ALUMINUM	ALUM
AND OTHERS	ET AL
BACK	BK
BLOCK	BLK
BUILDING	B
CENTERLINE	C/L
CERTIFIED SURVEY MAP	CSM
CONCRETE	CONC
COUNTY	CO
COUNTY TRUNK HIGHWAY	CTH
DISTANCE	DIST
CORNER	COR
DOCUMENT NUMBER	DOC
EASEMENT	EASE
EXISTING	EX
FRACTIONAL	FRAC
GAS VALVE	GV
GRID NORTH	GN
HIGHWAY EASEMENT	HE
IDENTIFICATION	ID
LAND CONTRACT	LC
LEFT	LT
LIMITED HIGHWAY EASEMENT	LHE
MONUMENT	MON
NATIONAL GEODETIC SURVEY	NGS
NUMBER	NO
OUTLOT	OL
PAGE	P
POINT OF TANGENCY	PT
PERMANENT LIMITED EASEMENT	PLE
POINT OF BEGINNING	POB
POINT OF CURVATURE	PC
POINT OF COMPOUND CURVE	PCC
POINT OF INTERSECTION	PI
PROPERTY LINE	PL
RECORDED AS	(100')
REEL / IMAGE	R/I
REFERENCE LINE	R/L
REMAINING	REM
RESTICTIVE DEVELOPMENT EASEMENT	RDE
RIGHT	RT
RIGHT OF WAY	R/W
SECTION	SEC
SEPTIC VENT	SEPV
SQUARE FEET	SF
STATE TRUNK HIGHWAY	STH
STATION	STA
TELEPHONE PEDESTAL	TP
TEMPORARY LIMITED EASEMENT	TLE
TRANSPORTATION PROJECT PLAT	TPP
UNITED STATES HIGHWAY	USH
VOLUME	V

CURVE DATA

LONG CHORD	LCH
LONG CHORD BEARING	LCB
RADIUS	R
DEGREE OF CURVE	D
CENTRAL ANGLE	Δ/DELTA
LENGTH OF CURVE	L
TANGENT	T
DIRECTION AHEAD	DA
DIRECTION BACK	DB

4

CONVENTIONAL SYMBOLS

SECTION LINE
QUARTER LINE
SIXTEENTH LINE
NEW REFERENCE LINE
NEW R/W LINE
EXISTING R/W OR HE LINE
PROPERTY LINE
LOT, TIE & OTHER MINOR LINES
SLOPE INTERCEPT
CORPORATE LIMITS
UNDERGROUND FACILITY (COMMUNICATIONS, ELECTRIC, ETC)
NEW R/W (FEE OR HE) (HATCHING VARIES BY OWNER)
TEMPORARY LIMITED EASEMENT AREA
EASEMENT AREA (PERMANENT LIMITED OR RESTRICTED DEVELOPMENT)
TRANSMISSION STRUCTURES
BUILDING
TO BE REMOVED
BRIDGE

SECTION CORNER SYMBOL
SECTION CORNER MONUMENT

R/W MONUMENT (TO BE SET)
NON-MONUMENTED R/W POINT
FOUND IRON PIN (1-INCH UNLESS NOTED)
GEODETIC SURVEY MONUMENT
SIXTEENTH CORNER MONUMENT
SIGN
OFF-PREMISE SIGN
ACCESS RESTRICTED BY ACQUISITION
NO ACCESS (BY STATUTORY AUTHORITY)
ACCESS RESTRICTED (BY PREVIOUS PROJECT OR CONTROL)
NO ACCESS (NEW HIGHWAY)
PARCEL NUMBER 25
UTILITY NUMBER 40
PARALLEL OFFSETS

CONVENTIONAL UTILITY SYMBOLS

WATER	W
GAS	G
TELEPHONE	T
OVERHEAD TRANSMISSION LINES	OH
ELECTRIC	E
CABLE TELEVISION	TV
FIBER OPTIC	FO
SANITARY SEWER	SAN
STORM SEWER	SS

	NON COMPENSABLE	COMPENSABLE
POWER POLE		
TELEPHONE POLE		
TELEPHONE PEDESTAL		
ELECTRIC TOWER		

RESERVED FOR REGISTER OF DEEDS

PROJECT NUMBER 5163-07-24-4.01

SHEET 2 OF 2

TRANSPORTATION PROJECT PLAT NO: 5163-07-24-4.01 AMENDMENT NO: 4
AMENDS PARCELS NO: 2 AND 3 OF TRANSPORTATION PROJECT PLAT 5163-07-24-4.01 AMENDMENT NO: 3 RECORDED AS DOCUMENT NO: 1813864, VOLUME: TPP CAB, PAGE: 127B

THAT PART OF GOVERNMENT LOT 4, AND PART OF THE NE 1/4 OF THE SW 1/4, AND PART OF THE NW 1/4 OF THE SE 1/4, AND PART OF THE SW 1/4 OF THE SE 1/4, ALL IN SECTION 34, TOWNSHIP 15 NORTH, RANGE 7 WEST, TOWN OF SHELBY, LA CROSSE COUNTY, WISCONSIN.

RELOCATION ORDER OF STH 35 GENOA - LA CROSSE, LA CROSSE CO LINE TO GARNER PLACE, LA CROSSE COUNTY

TO PROPERLY ESTABLISH, LAY OUT, WIDEN, ENLARGE, EXTEND, CONSTRUCT, RECONSTRUCT, IMPROVE, OR MAINTAIN A PORTION OF THE HIGHWAY DESIGNATED ABOVE, THE STATE OF WISCONSIN DEPARTMENT OF TRANSPORTATION DEEMS IT NECESSARY TO RELOCATE OR CHANGE SAID HIGHWAY AND ACQUIRE CERTAIN LANDS AND INTERESTS OR RIGHTS IN LANDS FOR THE ABOVE NAMED PROJECT.

TO EFFECT THIS CHANGE, PURSUANT TO AUTHORITY GRANTED UNDER SECTION 84.02 (3), 84.09 AND 84.30, WISCONSIN STATUTES, THE DEPARTMENT OF TRANSPORTATION HEREBY ORDERS THAT:

1. THAT PORTION OF SAID HIGHWAY AS SHOWN ON THIS PLAT IS LAID OUT AND ESTABLISHED TO THE LINES AND WIDTHS AS SO SHOWN FOR THE ABOVE PROJECT.
2. THE LANDS OR INTERESTS OR RIGHTS IN LANDS AS SHOWN ON THIS PLAT ARE REQUIRED BY THE DEPARTMENT FOR THE ABOVE PROJECT AND SHALL BE ACQUIRED IN THE NAME OF THE STATE OF WISCONSIN, PURSUANT TO THE PROVISIONS OF SECTION 84.09 (1) OR (2), WISCONSIN STATUTES.

LOCATION SKETCH
NOT TO SCALE

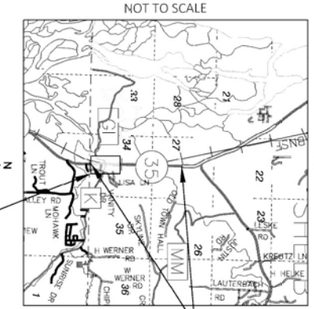

SCALE, FEET
0 100 200

FOR ADDITIONAL INFORMATION REFER TO THE TITLE SHEET, RECORDED IN THE OFFICE OF THE REGISTER OF DEEDS IN LA CROSSE COUNTY AS SHEET 2 OF 2 OF DOCUMENT NUMBER 1771700, VOLUME: TPP CAB, PAGE: 124B.

POSITIONS SHOWN ON THIS PLAT ARE WISCONSIN COORDINATE REFERENCE SYSTEM COORDINATES (WISCRS), LA CROSSE COUNTY, NAD83 (2011), IN U.S. SURVEY FEET. VALUES SHOWN ARE GRID COORDINATES, GRID BEARINGS, AND GRID DISTANCES. GRID DISTANCES MAY BE USED AS GROUND DISTANCES. NGS POINT UTILIZED WAS DH5434.

ALL NEW RIGHT-OF-WAY AND PERMANENT EASEMENT MONUMENTS WILL BE TYPE 2 (TYPICALLY 36" X 24" IRON REBARS), UNLESS OTHERWISE NOTED, AND WILL BE PLACED PRIOR TO THE COMPLETION OF THE PROJECT.

FOR THE CURRENT ACCESS/DRIVEWAY INFORMATION, CONTACT THE PLANNING UNIT OF THE WISCONSIN DEPARTMENT OF TRANSPORTATION OFFICE IN THE SW REGION.

EXISTING ACCESS CONTROL ALONG STH 35 HAS BEEN ESTABLISHED FROM PREVIOUS PLAT 5163-07-21.

OWNER'S NAMES ARE SHOWN FOR REFERENCE PURPOSES ONLY AND ARE SUBJECT TO CHANGE PRIOR TO TRANSFER OF LAND INTERESTS TO THE DEPARTMENT.

SCHEDULE OF LANDS & INTERESTS REQUIRED

PARCEL NUMBER	OWNER(S)	INTEREST REQUIRED	R/W SQUARE FEET REQUIRED			HE SQUARE FEET	PLE SQUARE FEET	TLE SQUARE FEET
			NEW	EXISTING	TOTAL			
1	BURLINGTON NORTHERN RAILROAD	HE, TLE	-	-	-	18224	-	1563
2	BERTHOLD P & BETTY W GASCH TRUS" & LAMAR ADVERTISING LLC	FEE, PLE, TLE	2207	-	2207	-	447	4097
3	WICHELT IMPORTS INC	FEE, TLE	4407	-	4407	-	-	2504
4	ANTHONY J AND CHERYL WUENSCH	FEE, TLE	3585	-	3585	-	-	2578
5	-	-	-	-	-	-	-	-
6	DUANE J & LINDA A SCHOEN	TLE	-	-	-	-	-	6309
10	BRANDON M WELSCH	PLE	-	-	-	-	1728	-

UTILITY INTERESTS REQUIRED		
UTILITY NUMBER	OWNER (S)	INTEREST REQUIRED
50	CENTURYLINK	RELEASE OF RIGHTS
51	NORTHERN STATES POWER COMPANY d/b/a XCEL ENERGY (ELECTRIC)	RELEASE OF RIGHTS

UTILITY EASEMENT TABLE			
UTILITY NUMBER	PARCEL	RECORDING INFORMATION	NAME
50	4.2	NO RECORD OF EASEMENT	CENTURYLINK
51	3,6	V 163, P210	NORTHERN STATES POWER COMPANY
	2	DOC 611260, P519	
	2,3	DOC 611261, V245, P520	
	2,3,4,6	DOC 611262, V245, P521	
	2,3,6	DOC 643698, V258, P1	
	2	DOC 731282, V350, P364	

STATION & OFFSET TABLE		
POINT	STATION	OFFSET
127	31+63.80'K'	153.68' RT
128	31+42.49'K'	161.36' RT
129	31+34.19'K'	160.24' RT
130	581+43.74	100.00' RT
131	581+14.85	85.00' RT
132	581+85.00	56.00' RT
160	579+56.11	60.00' RT
606	579+58.36	180.00' RT
607	579+75.00	65.00' RT
608	580+75.00	70.00' RT
142	16+76.42'G1'	33.00' RT
156	16+30.85'G1'	33.00' RT
143	17+20.22'G1'	33.00' LT
145	18+36.02'G1'	32.86' LT
146	18+37.89'G1'	50.00' LT
240	595+92.00	9.43' LT
242	19+54.82'G1'	0.00'
	582+55.16	44.99' LT
373	573+34.69	84.86' LT
374	573+33.94	149.86' LT
956	573+33.94	201.69' LT
957	573+88.48	189.98' LT
375	573+88.95	149.87' LT
376	573+89.70	84.87' LT
401	573+20.00	80.00' RT

COURSE TABLE - 1/4 LINE			
FROM	TO	DIRECTION	DISTANCE
41793	242	N 00° 43' 16" E	1304.45'
242	240	N 00° 43' 16" E	1336.82'
240	41792	N 00° 43' 16" E	2642.33'
41793	41792	N 00° 43' 16" E	5283.60'

RESERVED FOR REGISTER OF DEEDS
PROJECT NUMBER 5163-07-24-4.01
AMENDMENT NO: 4

1817459
LACROSSE COUNTY
REGISTER OF DEEDS
ROBIN L. KADRMAS

RECORDED ON
02/22/2024 12:00 PM
PAGE COUNT: 1
VOLUME: TPPCAB PAGE: 128A

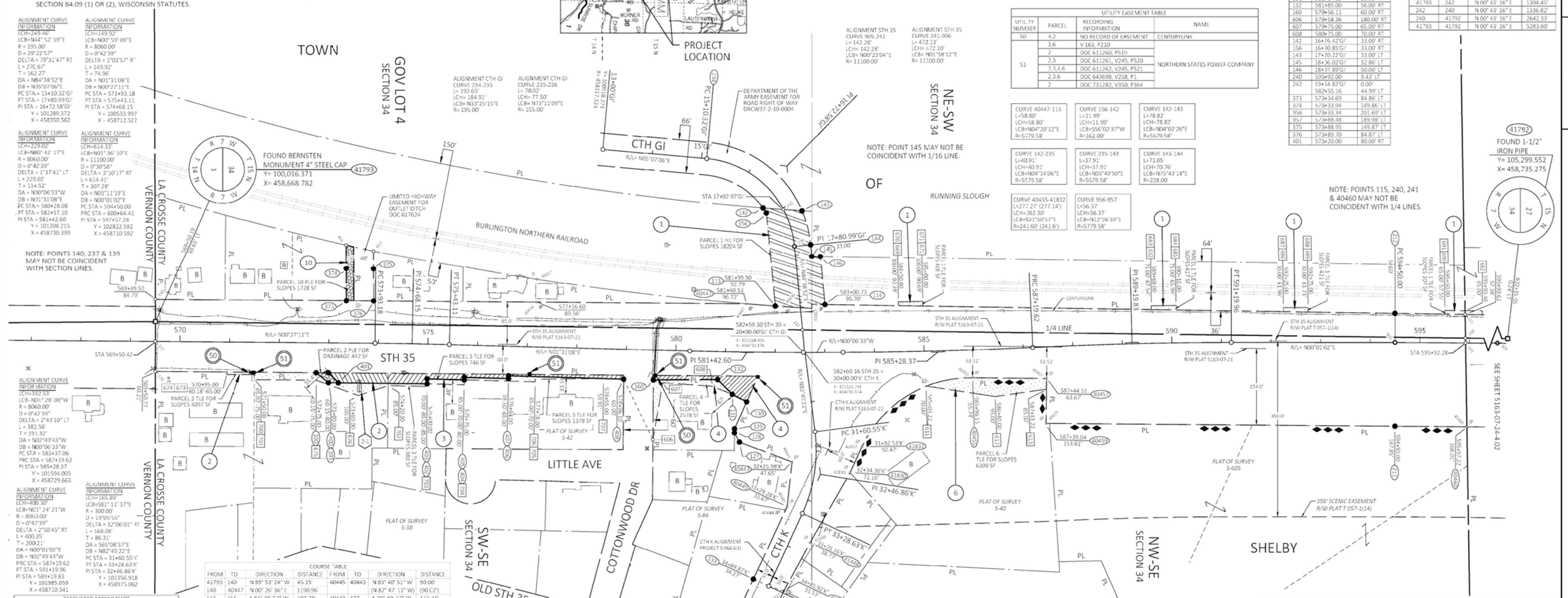

RECOVERED MONUMENTS			
POINT	Y	X	DESCRIPTION
40430	100784.737	458629.579	3/4" REBAR W/YCAP
40437	100785.364	458582.979	3/4" REBAR BENT
40443	101299.721	458950.368	3/4" REBAR
40444	101286.277	459046.607	1-1/2" IRON PIPE
40445	101289.816	459039.819	3/4" REBAR W/YCAP
40446	101282.478	458638.436	3/4" REBAR W/YCAP
40447	101207.382	458632.849	3/4" REBAR W/YCAP
40455	101663.629	458781.076	1-1/2" IRON PIPE IN CONC
40457	101812.897	458782.630	1-1/2" IRON PIPE IN CONC
40459	101811.701	458872.731	3/4" REBAR W/YCAP
40460	102660.248	458879.512	3/4" REBAR W/YCAP
41448	101336.254	459111.888	1/14" IRON PIPE IN CONC
41467	101348.353	458634.121	3/4" REBAR W/YCAP
41827	101283.129	459209.351	1-1/2" IRON PIPE
41830	101416.937	458971.555	1-1/2" IRON PIPE
41832	101440.819	458919.488	1-1/2" IRON PIPE

FOUND MONUMENT INFORMATION SHOWN REPRESENTS TYPE AND LOCATION OF EXISTING MONUMENTS W THOUT OPINION AS TO THEIR VALIDITY AND USE AS A PROPERTY CORNER.

COURSE TABLE							
FROM	TO	DIRECTION	DISTANCE	FROM	TO	DIRECTION	DISTANCE
41793	140	N 89° 53' 24" W	45.15'	40445	40443	N 83° 40' 51" W	90.00'
140	40447	N 00° 26' 36" E	1190.96'			(N 82° 47' 11" W)	(90.02')
113	156	S 84° 38' 52" W	193.28'	40443	127	S 20° 40' 12" W	113.24'
144	145	N 84° 58' 43" E	25.03'	127	128	S 61° 26' 39" W	21.09'
145	146	N 00° 52' 22" E	17.25'	128	129	N 89° 33' 24" W	8.37'
146	114	N 84° 38' 52" E	100.59'	129	130	N 65° 38' 54" W	59.18'
114	115	N 00° 52' 22" E	1290.64'	130	131	S 27° 57' 42" W	32.85'
115	40460	N 89° 05' 28" E	225.49'	131	132	S 44° 56' 10" W	41.80'
40460	40459	S 00° 27' 28" W	848.57'	132	160	S 00° 20' 34" E	129.36'
		(S 01° 21' 30" W)	(848.13')	160	606	S 89° 33' 24" E	120.02'
40459	40457	N 89° 14' 21" W	90.11'	606	408	S 64° 05' 45" W	135.19'
		(N 88° 38' 30" W)	(90.48')	408	407	S 01° 38' 32" W	232.10'
40457	40455	S 00° 35' 47" W	149.28'	407	406	S 88° 28' 52" E	5.58'
		(N 00° 28' 00" E)	(149.0')	406	405	S 01° 31' 08" W	89.60'
41832	41830	S 65° 21' 36" E	57.28'	405	404	S 88° 28' 52" E	5.00'
		(N 65° 16' W)	(57.4')	404	403	S 01° 25' 52" W	74.63'
41830	41448	S 60° 06' 14" E	161.87'	403	402	S 88° 47' 15" E	10.00'
		(N 60° 07' W)	(162.0')	402	401	S 00° 40' 39" W	178.94'
41448	41827	S 61° 24' 21" E	111.00'	401	400	S 45° 14' 20" W	28.38'
		(N 61° 32' W)	(111.00')	400	139	S 00° 26' 36" W	349.23'
41827	221	S 17° 28' 49" W	31.79'	139	237	N 89° 52' 52" W	60.21'
221	133	S 25° 04' 14" W	34.27'	237	41793	N 89° 52' 52" W	39.65'
133	40445	N 64° 55' 46" W	160.59'				

COURSE TABLE - SEGMENTS			
FROM	TO	DIRECTION	DISTANCE
140	40430	N 00° 26' 36" E	768.30'
376	40430	N 00° 26' 36" E	328.53'
40430	40447	N 00° 26' 36" E	422.66'
114	212	N 00° 52' 22" E	1149.28'
212	115	N 00° 52' 22" E	141.36'
115	240	N 89° 05' 28" E	47.97'
240	241	N 89° 05' 28" E	9.43'
241	40460	N 89° 05' 28" E	168.09'
40460	211	S 00° 27' 28" W	144.99'
211	40459	S 00° 27' 28" W	703.58'

COURSE TABLE - PLE - PARCEL 1			
FROM	TO	DIRECTION	DISTANCE
140	373	N 00° 26' 36" E	384.77'
373	374	S 89° 47' 27" W	65.00'
374	956	S 89° 47' 27" W	51.84'
373	956	S 89° 47' 27" W	116.84'
957	375	N 89° 47' 27" E	40.12'
375	376	N 89° 47' 27" E	65.00'
957	376	N 89° 47' 27" E	105.12'
376	373	S 00° 26' 36" W	55.00'

COURSE TABLE - PLE - PARCEL 2			
FROM	TO	DIRECTION	DISTANCE
139	390	N 00° 26' 36" E	324.22'
39C	391	N 38° 53' 43" E	31.92'
391	401	N 00° 27' 11" E	20.00'
401	400	S 45° 14' 20" W	28.18'
40C	390	S 00° 26' 36" W	25.00'

SCHEDULE OF SIGN STRUCTURES		
SIGN NUMBER	SIGN OWNER	OASIS
2-1	LAMAR ADVERTISING, LLC BER"HOLD P & BETTY W GASCH TRUST	2601

ROAD NAME	BASIS OF EXISTING R/W	YEAR
CTH GI	EASEMENT NO DACW37-2-10-0004	2009
STH 35	PLAT OF SURVEY S-605	1992
STH 35	R/W PLAT 5163-07-21	1989
CTH K	R/W PLAT 5163-07-22	1988
STH 35	PLAT OF SURVEY S-42	1976
CTH K	PLAT OF SURVEY S-86	1964
STH 35	R/W PLAT T 057-1(14)	1963
STH 35	PLAT OF SURVEY S-38	1956
STH 35	DIVISION JOB NO 5422	1954
CTH K	S 0621(1)	1954
CTH K	PLAT OF SURVEY S-40	1948

cbs²
770 TECHNOLOGY WAY
CHIPPEWA FALLS, WI 54729

I, NEIL C. BOWE, PROFESSIONAL LAND SURVEYOR, HEREBY CERTIFY THAT IN FULL COMPLIANCE WITH THE PROVISIONS OF SECTION 84.095 OF THE WISCONSIN STATUTES AND UNDER THE DIRECTION OF THE DEPARTMENT, I HAVE SURVEYED AND MAPPED THIS TRANSPORTATION PROJECT PLAT AND SUCH PLAT CORRECTLY REPRESENTS ALL EXTERIOR BOUNDARIES OF THE SURVEYED LAND.

WISCONSIN NEIL C. BOWE S-2827 CHIPPEWA FALLS, WI LAND SURVEYOR

SIGNATURE: Neil C. Bowe DATE: 2/21/2024
PRINT NAME: NEIL C. BOWE
REGISTRATION NUMBER: S-2827

THIS PLAT AND RELOCATION ORDER ARE APPROVED FOR THE WISCONSIN DEPARTMENT OF TRANSPORTATION.

SIGNATURE: Cory Schlagel DATE: 2/21/2024
PRINT NAME: CORY SCHLAGEL

FILE NAME : N:\PDS\C3D\51630702 (SEE O DRIVE)\RW\040102-RP_RD-24-4.01A4.DWG
APPRAISAL PLAT DATE : 2/21/2024
PLOT DATE : 2/21/2024 12:48 PM
WISDOT 5163-07-24-4.01A4

TRANSPORTATION PROJECT PLAT NO: 5163-07-24-4.02

THAT PART OF THE SE 1/4 OF THE NW 1/4, AND PART OF THE NE 1/4 OF THE NW 1/4, ALL IN SECTION 34, TOWNSHIP 15 NORTH, RANGE 7 WEST, TOWN OF SHELBY, LA CROSSE COUNTY, WISCONSIN.

RELOCATION ORDER OF STH 35 GENOA - LA CROSSE, LA CROSSE CO LINE TO GARNER PLACE, LA CROSSE COUNTY

TO PROPERLY ESTABLISH, LAY OUT, WIDEN, ENLARGE, EXTEND, CONSTRUCT, RECONSTRUCT, IMPROVE, OR MAINTAIN A PORTION OF THE HIGHWAY DESIGNATED ABOVE, THE STATE OF WISCONSIN DEPARTMENT OF TRANSPORTATION DEEMS IT NECESSARY TO RELOCATE OR CHANGE SAID HIGHWAY AND ACQUIRE CERTAIN LANDS AND INTERESTS OR RIGHTS IN LANDS FOR THE ABOVE NAMED PROJECT.

TO EFFECT THIS CHANGE, PURSUANT TO AUTHORITY GRANTED UNDER SECTION 84.02 (3), 84.09 AND 84.30, WISCONSIN STATUTES, THE DEPARTMENT OF TRANSPORTATION HEREBY ORDERS THAT:

1. THAT PORTION OF SAID HIGHWAY AS SHOWN ON THIS PLAT IS LAID OUT AND ESTABLISHED TO THE LINES AND WIDTHS AS SO SHOWN FOR THE ABOVE PROJECT.
2. THE LANDS OR INTERESTS OR RIGHTS IN LANDS AS SHOWN ON THIS PLAT ARE REQUIRED BY THE DEPARTMENT FOR THE ABOVE PROJECT AND SHALL BE ACQUIRED IN THE NAME OF THE STATE OF WISCONSIN, PURSUANT TO THE PROVISIONS OF SECTION 84.09 (1) OR (2), WISCONSIN STATUTES.

LOCATION SKETCH
NOT TO SCALE

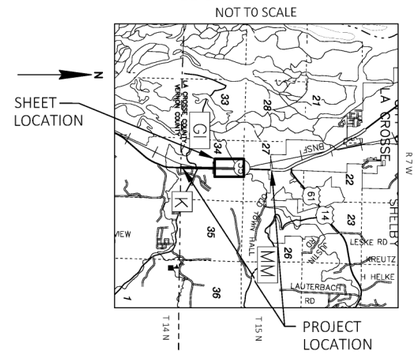

N

SCALE, FEET
0 100 200

FOR ADDITIONAL INFORMATION REFER TO THE TITLE SHEET, RECORDED IN THE OFFICE OF THE REGISTER OF DEEDS IN LA CROSSE COUNTY AS SHEET 2 OF 2 OF DOCUMENT NUMBER 1771700, VOLUME: TPP CAB, PAGE: 124B.

POSITIONS SHOWN ON THIS PLAT ARE WISCONSIN COORDINATE REFERENCE SYSTEM COORDINATES (WISCRS), LA CROSSE COUNTY, NAD83 (2011), IN U.S. SURVEY FEET. VALUES SHOWN ARE GRID COORDINATES, GRID BEARINGS, AND GRID DISTANCES. GRID DISTANCES MAY BE USED AS GROUND DISTANCES. NGS POINT UTILIZED WAS DH5434.

ALL NEW RIGHT-OF-WAY MONUMENTS WILL BE TYPE 2 (TYPICALLY ¾"X 24" IRON REBARS), UNLESS OTHERWISE NOTED, AND WILL BE PLACED PRIOR TO THE COMPLETION OF THE PROJECT.

FOR THE CURRENT ACCESS/DRIVEWAY INFORMATION, CONTACT THE PLANNING UNIT OF THE WISCONSIN DEPARTMENT OF TRANSPORTATION OFFICE IN THE SW REGION.

EXISTING ACCESS CONTROL ALONG STH 35 HAS BEEN ESTABLISHED FROM PREVIOUS PLAT 5163-07-21.

OWNER'S NAMES ARE SHOWN FOR REFERENCE PURPOSES ONLY AND ARE SUBJECT TO CHANGE PRIOR TO TRANSFER OF LAND INTERESTS TO THE DEPARTMENT.

SCHEDULE OF LANDS & INTERESTS REQUIRED

PARCEL NUMBER	OWNER(S)	INTEREST REQUIRED	R/W SQUARE FEET REQUIRED			TLE SQUARE FEET
			NEW	EXISTING	TOTAL	
1	BURLINGTON NORTHERN RAILROAD	TLE	-	-	-	11611

UTILITY INTERESTS REQUIRED		
UTILITY NUMBER	OWNER (S)	INTEREST REQUIRED
50	CENTURYLINK	RELEASE OF RIGHTS
51	NORTHERN STATES POWER COMPANY d/b/a XCEL ENERGY (ELECTRIC)	RELEASE OF RIGHTS

UTILITY EASEMENT TABLE			
UTILITY NUMBER	PARCEL	RECORDING INFORMATION	NAME
50	1	NO RECORD OF EASEMENT	CENTURYLINK
51	1	V 163, P 210	NORTHERN STATES POWER COMPANY
	1	DOC 696422, V 1039, P 745	

1772337
LACROSSE COUNTY
REGISTER OF DEEDS
CHERYL A. MCBRIDE

RECORDED ON
05/13/2021 08:52 AM
PAGE COUNT: 1
VOLUME: TPP CAB PAGE: 125A

RESERVED FOR REGISTER OF DEEDS
PROJECT NUMBER 5163-07-24-4.02

4

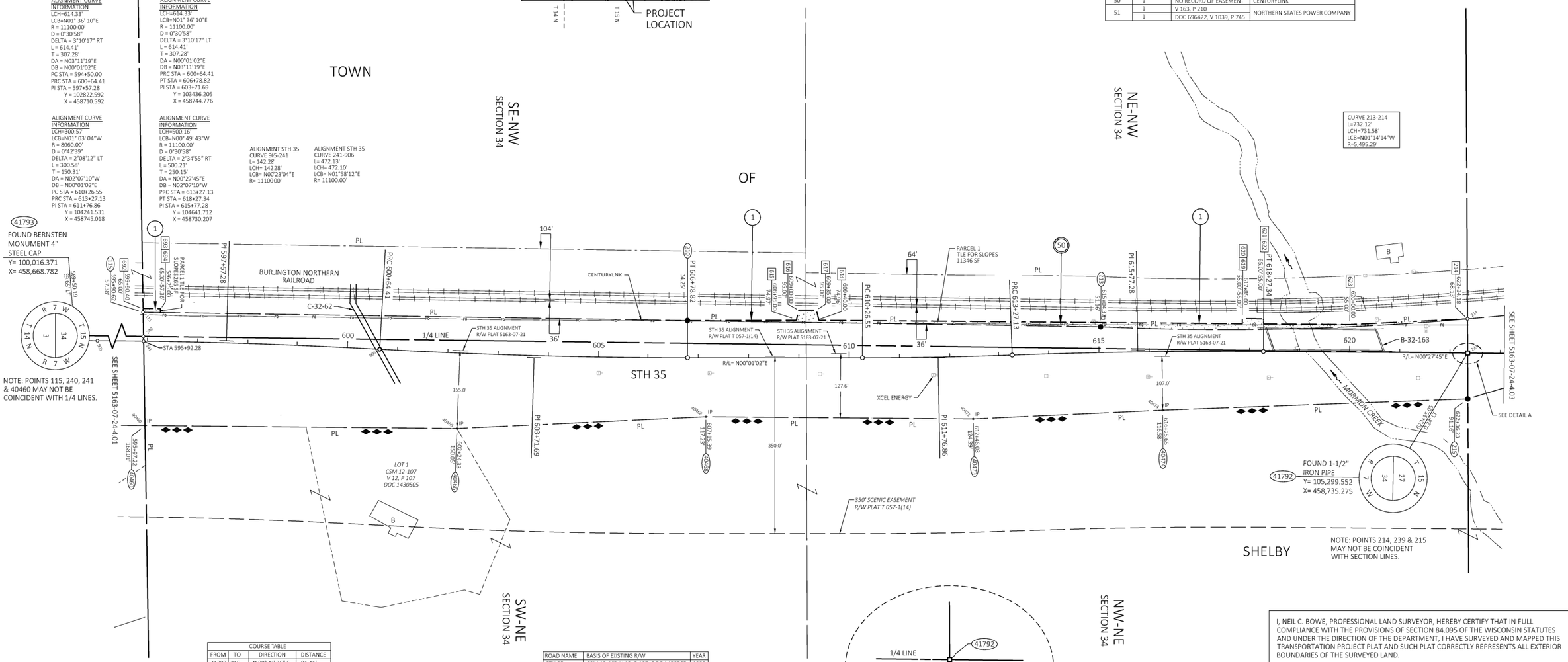

4

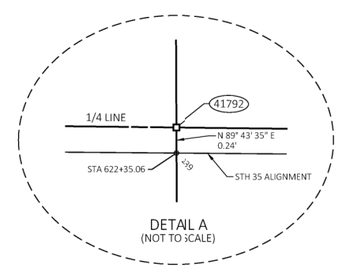

DETAIL A
(NOT TO SCALE)

RECOVERED MONUMENTS			
POINT	Y	X	DESCRIPTION
40460	102660.248	458879.512	3/4" REBAR W/YCAP
40466	103282.941	458885.355	3/4" REBAR W/YCAP
40468	103780.025	458862.109	3/4" REBAR W/YCAP
40473	104314.029	458866.390	3/4" REBAR
40474	104691.338	458849.004	3/4" REBAR

COURSE TABLE			
FROM	TO	DIRECTION	DISTANCE
41792	215	N 89° 43' 35" E	91.41'
215	40474	S 02° 06' 01" E	609.06'
40474	40473	S 02° 38' 18" E (S 01° 44' 10" E)	377.71' (377.56')
40473	40468	S 00° 27' 34" W (S 01° 2.' 30" W)	534.02' (534.00')
40468	40466	S 02° 40' 39" E (S 01° 4'' 50" E)	497.63' (497.75')
40466	40460	S 00° 32' 15" W (S 01° 2'' 01" W)	622.72' (622.82')
40460	115	S 89° 05' 28" W	225.49'
115	210	N 00° 5,' 22" E	1086.96'
210	213	N 00° 5,' 22" E	824.41'
214	41792	N 89° 4,' 35" E	67.90'

COURSE TABLE - 1/4 LINE			
FROM	TO	DIRECTION	DISTANCE
41793	240	N 00° 43' 16" E	2641.27'
240	41792	N 00° 43' 16" E	2642.33'
41793	41792	N 00° 43' 16" E	5283.60'

ROAD NAME	BASIS OF EIISTING R/W	YEAR
STH 35	CSM 12-10', V 12, P 107, DOC 1430505	1989
STH 35	R/W PLAT 1163-07-21	1989
STH 35	R/W PLAT ˜ 057-1(14)	1963
STH 35	DIVISION J0B NO 5422	1954

COURSE TABLE - SEGMENTS			
FROM	TO	DIRECTION	DISTANCE
41792	239	N 89° 43' 35" E	0.24'
239	215	N 89° 43' 35" E	91.17'
40460	241	S 89° 05' 28" W	168.09'
241	240	S 89° 05' 28" W	9.43'
240	115	S 89° 05' 28" W	47.97'

cbs²
770 TECHNOLOGY WAY
CHIPPEWA FALLS, WI 54729

I, NEIL C. BOWE, PROFESSIONAL LAND SURVEYOR, HEREBY CERTIFY THAT IN FULL COMPLIANCE WITH THE PROVISIONS OF SECTION 84.095 OF THE WISCONSIN STATUTES AND UNDER THE DIRECTION OF THE DEPARTMENT, I HAVE SURVEYED AND MAPPED THIS TRANSPORTATION PROJECT PLAT AND SUCH PLAT CORRECTLY REPRESENTS ALL EXTERIOR BOUNDARIES OF THE SURVEYED LAND.

WISCONSIN NEIL C. BOWE S-2827 CHIPPEWA FALLS WI LAND SURVEYOR

SIGNATURE: Neil C. Bowe DATE: 5/5/21
PRINT NAME: NEIL C. BOWE
REGISTRATION NUMBER: S-2827

THIS PLAT AND RELOCATION ORDER ARE APPROVED FOR THE WISCONSIN DEPARTMENT OF TRANSPORTATION.

SIGNATURE: Cory Schlagel DATE: 5/12/2021
PRINT NAME: CORY SCHLAGEL

FILE NAME : P:\WIDOT\15009 - STH 35\RIGHT OF WAY\CAD\040102-RP_RD-24.DWG PLOT DATE : 5/5/2021 11:43 AM
APPRAISAL PLAT DATE : 5/5/21

TRANSPORTATION PROJECT PLAT NO: 5163-07-24-4.03 AMENDMENT NO: 1 AMENDS PARCEL NO: 9 AND REVISES EXISTING R/W OF TRANSPORTATION PROJECT PLAT 5163-07-24-4.03 RECORDED AS DOCUMENT NO: 1772338, VOLUME: TPP CAB, PAGE: 125B

THAT PART OF THE SE 1/4 OF THE SW 1/4, AND PART OF THE NE 1/4 OF THE SW 1/4, AND PART OF THE NW 1/4 OF THE SE 1/4, TOWN OF SHELBY, AND PART OF LOT 1, WATERVIEW SUBDIVISION, LOCATED IN PART OF THE NE 1/4 OF THE SW 1/4, AND PART OF THE SE 1/4 OF THE NW 1/4, CITY OF LA CROSSE, ALL IN SECTION 27, TOWNSHIP 15 NORTH, RANGE 7 WEST, LA CROSSE COUNTY, WISCONSIN.

RELOCATION ORDER OF STH 35 GENOA - LA CROSSE, LA CROSSE CO LINE TO GARNER PLACE, LA CROSSE COUNTY

TO PROPERLY ESTABLISH, LAY OUT, WIDEN, ENLARGE, EXTEND, CONSTRUCT, RECONSTRUCT, IMPROVE, OR MAINTAIN A PORTION OF THE HIGHWAY DESIGNATED ABOVE, THE STATE OF WISCONSIN DEPARTMENT OF TRANSPORTATION DEEMS IT NECESSARY TO RELOCATE OR CHANGE SAID HIGHWAY AND ACQUIRE CERTAIN LANDS AND INTERESTS OR RIGHTS IN LANDS FOR THE ABOVE NAMED PROJECT.

TO EFFECT THIS CHANGE, PURSUANT TO AUTHORITY GRANTED UNDER SECTION 84.02 (3), 84.09 AND 84.30, WISCONSIN STATUTES, THE DEPARTMENT OF TRANSPORTATION HEREBY ORDERS THAT:

1. THAT PORTION OF SAID HIGHWAY AS SHOWN ON THIS PLAT IS LAID OUT AND ESTABLISHED TO THE LINES AND WIDTHS AS SO SHOWN FOR THE ABOVE PROJECT.
2. THE LANDS OR INTERESTS OR RIGHTS IN LANDS AS SHOWN ON THIS PLAT ARE REQUIRED BY THE DEPARTMENT FOR THE ABOVE PROJECT AND SHALL BE ACQUIRED IN THE NAME OF THE STATE OF WISCONSIN, PURSUANT TO THE PROVISIONS OF SECTION 84.09 (1) OR (2), WISCONSIN STATUTES.

LOCATION SKETCH
NOT TO SCALE

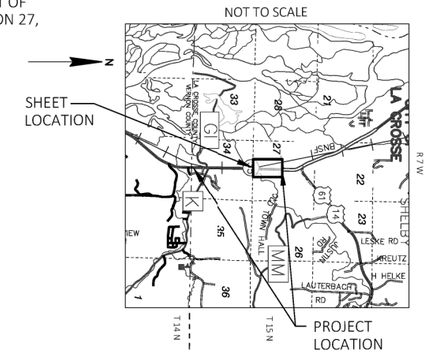

SCALE, FEET
0 100 200

FOR ADDITIONAL INFORMATION REFER TO THE TITLE SHEET, RECORDED IN THE OFFICE OF THE REGISTER OF DEEDS IN LA CROSSE COUNTY AS SHEET 2 OF 2 OF DOCUMENT NUMBER 1771700, VOLUME: TPP CAB, PAGE: 124B.

POSITIONS SHOWN ON THIS PLAT ARE WISCONSIN COORDINATE REFERENCE SYSTEM COORDINATES (WISCRS), LA CROSSE COUNTY, NAD83 (2011), IN U.S. SURVEY FEET. VALUES SHOWN ARE GRID COORDINATES, GRID BEARINGS, AND GRID DISTANCES. GRID DISTANCES MAY BE USED AS GROUND DISTANCES. NGSPOINT UTILIZED WAS DH5434.

ALL NEW RIGHT-OF-WAY MONUMENTS WILL BE TYPE 2(TYPICALLY ¾" X 24" IRON REBARS), UNLESS OTHERWISE NOTED, AND WILL BE PLACED PRIOR TO THE COMPLETION OF THE PROJECT.

FOR THE CURRENT ACCESS/DRIVEWAY INFORMATION, CONTACT THE PLANNING UNIT OF THE WISCONSIN DEPARTMENT OF TRANSPORTATION OFFICE IN THE SW REGION.

EXISTING ACCESS CONTROL ALONG STH 35 HAS BEEN ESTABLISHED FROM PREVIOUS PLAT 5163-07-21.

UTILITY EASEMENT TABLE			
UTILITY NUMBER	PARCEL	RECORDING INFORMATION	NAME
50	7	NO RECORD OF EASEMENT	CENTURYLINK
51	8	DOC 1043671, V 880, P 53	NORTHERN STATES POWER COMPANY

OWNER'S NAMES ARE SHOWN FOR REFERENCE PURPOSES ONLY AND ARE SUBJECT TO CHANGE PRIOR TO TRANSFER OF LAND INTERESTS TO THE DEPARTMENT.

SCHEDULE OF LANDS & INTERESTS REQUIRED

PARCEL NUMBER	OWNER(S)	INTEREST REQUIRED	R/W SQUARE FEET REQUIRED			TLE SQUARE FEET
			NEW	EXISTING	TOTAL	
7	GREAT RIVER HOMES LLC	FEE, TLE	191	-	191	7485
8	LOREN D & SANDRA E OELKE REVOCABLE FAMILY TRUST	TLE	-	-	-	854
9	SUNNYSIDE APARTMENTS LLC	FEE, TLE	60	-	60	1042

UTILITY INTERESTS REQUIRED		
UTILITY NUMBER	OWNER (S)	INTEREST REQUIRED
50	CENTURYLINK	RELEASE OF RIGHTS
51	NORTHERN STATES POWER COMPANY d/b/a XCEL ENERGY (ELECTRIC)	RELEASE OF RIGHTS

1800594
LACROSSE COUNTY
REGISTER OF DEEDS
ROBIN L. KADRMAS

RECORDED ON
10/10/2022 08:27 AM
PAGE COUNT: 1
VOLUME: TPPCAB PAGE: 126B

RESERVED FOR REGISTER OF DEEDS
PROJECT NUMBER 5163-07-24-4.03
AMENDMENT NO: 1

4

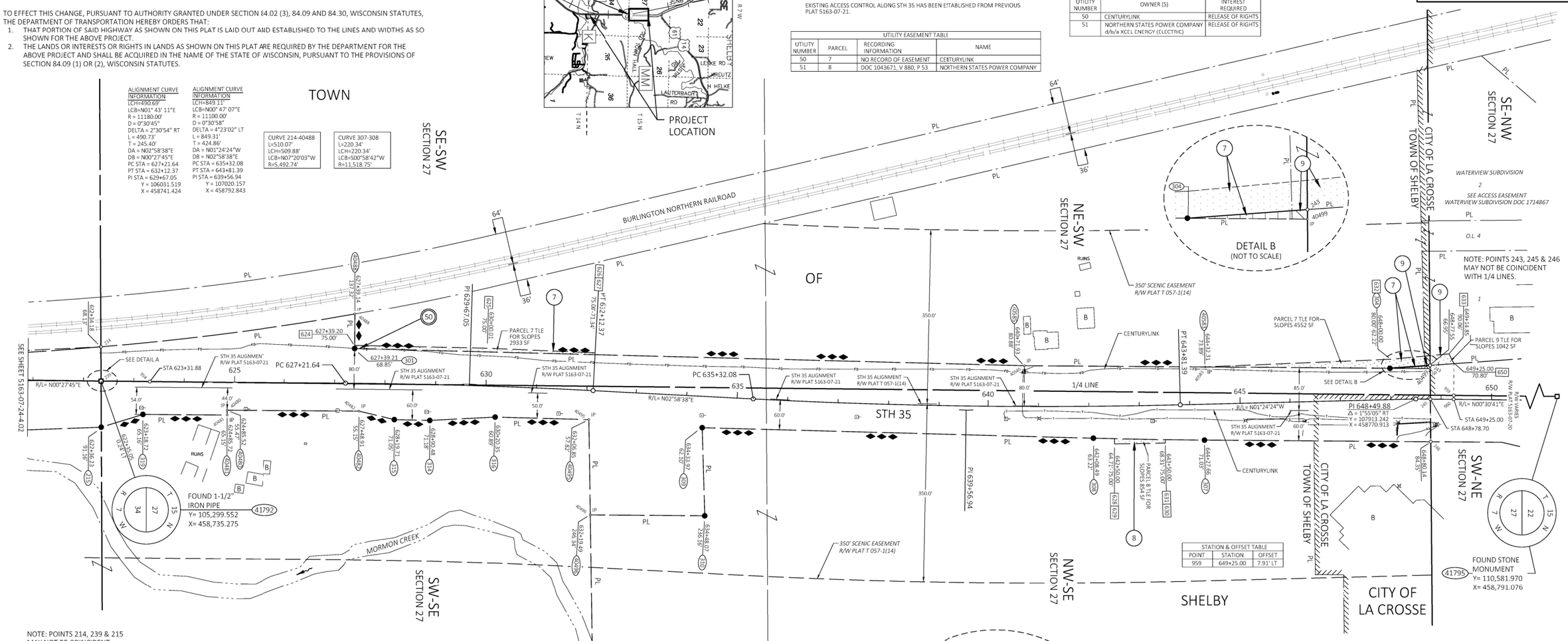

STATION & OFFSET TABLE		
POINT	STATION	OFFSET
959	649+25.00	7.91' LT

NOTE: POINTS 214, 239 & 215 MAY NOT BE COINCIDENT WITH SECTION LINES.

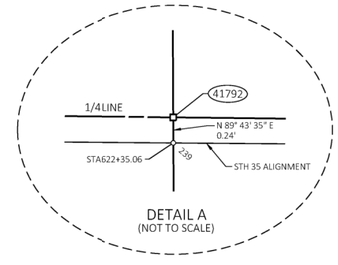

ALIGNMENT CURVE INFORMATION
LCH=490.69'
LCB=N01° 43' 11"E
R = 11180.00'
D = 0°30'45"
DELTA = 2°30'54" RT
L = 490.73'
T = 245.40'
DA = N02°58'38"E
DB = N00°27'45"E
PC STA = 627+21.64
PT STA = 632+12.37
PI STA = 629+67.05
Y = 106031.519
X = 458741.424

ALIGNMENT CURVE INFORMATION
LCH=849.11'
LCB=N00° 47' 07"E
R = 11100.00'
D = 0°30'58"
DELTA = 4°23'02" LT
L = 849.31'
T = 424.86'
DA = N01°24'24"W
DB = N02°58'38"E
PC STA = 635+32.08
PT STA = 643+81.39
PI STA = 639+56.94
Y = 107020.157
X = 458792.843

TOWN	
CURVE 214-40488 L=510.07' LCH=509.88' LCB=N07°20'03"W R=5,492.74'	CURVE 307-308 L=220.34' LCH=220.34' LCB=S00°58'42"W R=11,518.75'

RECOVERED MONUMENTS			
POINT	Y	X	DESCRIPTION
40480	105549.563	458793.004	3/4" REBAR W/YCAP(BENT)
40481	105549.678	458802.686	3/4" REBAR W/YCAP
40482	105812.814	458794.844	3/4" REBAR W/YCAP
40488	105804.942	458602.288	3/4" REBAR
40495	106268.098	458811.631	3/4" REBAR W/YCAP
40496	106270.906	459000.547	1/2" REBAR
40499	107941.562	458710.511	3/4" REBAR W/YCAP
40583	107493.982	458707.292	3/4" IRON PIPE W/YCAP
40585	107135.732	458704.815	3/4" REBAR W/YCAP

COURSE TABLE							
FROM	TO	DIREC'ION	DISTANCE	FROM	TO	DIRECTION	DISTANCE
41792	214	S 89° 43'35" W	67.90'	40496	40495	S 89° 08' 54" W	188.94'
40488	301	S 89° 30'41" W	68.47'			(S 89° 09' 54" W)	(188.96')
301	40585	N 01° 27' 56" E	1331.81'	40495	316	S 01° 31' 21" W	185.53'
40585	40583	N 00° 23 46" E	358.26'	316	314	S 02° 53' 48" E	129.51'
		(N 01° 1" 22" E)	(358.22')	314	315	S 01° 15' 24" W	70.32'
40583	304	N 00° 24 45" E	367.88'	315	40482	S 13° 30' 33" W	72.17'
304	650	N 04° 06 58" W	127.47'	40482	40480	S 00° 24' 02" W	263.26'
650	960	S 89° 29' 19" E	70.79'			(S 01° 21' 30" W)	(263.12')
960	245	S 00° 30'41" W	46.30'	40480	40481	N 89° 18' 59" E	9.68'
245	246	N 89° 31 58" E	84.36'			(S 88° 38' 30" E)	(10.00')
246	307	S 0° 24' 45" W	449.86'	40481	319	S 00° 27' 34" W	167.00'
308	309	S 01° 32'00" W	778.20'	319	215	S 17° 02' 02" E	86.49'
309	310	N 88° 20 46" E	174.63'	215	41792	S 89° 43' 35" W	91.41'
310	40496	S 00° 25'42" W	228.81'				

COURSE TABLE - 1/4 LINE			
FROM	TO	DIRECTION	DISTANCE
41792	954	N 00° 36' 19" E	96.82'
954	959	N 00° 36' 19" E	2592.20'
959	41795	N 00° 36' 19" E	2593.69'
41792	41795	N 00° 36' 19" E	5282.71'

COURSE TABLE - SEGMENTS			
FROM	TO	DIRECTION	DISTANCE
304	243	N 00° 06' 58" W	79.87'
243	650	N 00° 06' 58" W	47.60'
650	959	S 89° 29' 19" E	62.89'
959	960	S 89° 29' 19" E	7.90'
215	239	S 89° 43' 35" W	91.17'
239	41792	S 89° 43' 35" W	0.24'

ROAD NAME	BASIS OF EXISTING R/W	YEAR
STH 35	WATERVIEW SUBDIVISION DOC 1714867	2018
STH 35	R/W PLAT 5163-07-21	1989
STH 35	R/W PLAT T 057-1(14)	1963
STH 35	DIVISION JOB NO 5422	1954

cbs²
770 TECHNOLOGY WAY
CHIPPEWA FALLS, WI 54729

I, NEIL C. BOWE, PROFESSIONAL LAND SURVEYOR, HEREBY CERTIFY THAT IN FULL COMPLIANCE WITH THE PROVISIONS OF SECTION 84.095 OF THE WISCONSIN STATUTES AND UNDER THE DIRECTION OF THE DEPARTMENT, I HAVE SURVEYED AND MAPPED THIS TRANSPORTATION PROJECT PLAT AND SUCH PLAT CORRECTLY REPRESENTS ALL EXTERIOR BOUNDARIES OF THE SURVEYED LAND.

WISCONSIN NEIL C. BOWE S-2827 CHIPPEWA FALLS, WI LAND SURVEYOR

SIGNATURE: Neil C. Bowe DATE: 10/6/2022
PRINT NAME: NEIL C. BOWE
REGISTRATION NUMBER: S-2827

THIS PLAT AND RELOCATION ORDER ARE APPROVED FOR THE WISCONSIN DEPARTMENT OF TRANSPORTATION.

SIGNATURE: Cory Schlagel DATE: 10/6/2022
PRINT NAME: CORY SCHLAGEL

FILE NAME : P:\WIDOT\15009 - STH 35\RIGHT OF WAY\CAD\040102-RP_RD-24-SHEET 4.03 AMEND.DWG PLOT DATE : 10/6/2022 6:55 AM WISDOT 5163-07-24-4.03A1
APPRAISAL PLAT DATE : 10/6/2022

4

Document Number
VACATION ORDER
TRANSPORTATION PROJECT PLAT
Wisconsin Department of Transportation
DT2222 4/2017 s.84.095(3)(b) Wis. Stats.

1809534
LACROSSE COUNTY
REGISTER OF DEEDS
ROBIN L. KADRMAS

RECORDED ON
07/05/2023 08:29 AM
PAGE COUNT: 1
EXEMPT #:
RECORDING FEE 30.00
ELECTRONICALLY RECORDED
AND RETURNED TO SUBMITTER

This Vacation Order applies to Transportation Project Plat 5163-07-24-4.03, recorded on 5/13/2021 as Document Number 1772338 in the Office of the Register of Deeds for La Crosse County.

Whereas, parcel 8 of the above-described Transportation Project Plat has been determined to be unnecessary for transportation improvement project purposes, said parcel is vacated and rescinded.

Parcel 8 of Transportation Project Plat 5163-07-24-4.03, Document 1772338, Volume TPP CAB, Page 125B, recorded in La Crosse County, Wisconsin.

Property interests and rights of said Parcel 8 consist of:

Temporary limited easement.

This space is reserved for recording data

Return to
Joerg Feldbinder,
WisDOT - 3550 Mormon Coulee Rd
La Crosse, WI, 54601
office: (608) 785-9037
e-mail: joerg.feldbinder@dot.wi.govl

Parcel Identification Number/Tax Key Number
11-2087-0

This Vacation Order has been approved by the Wisconsin Department of Transportation.

x Cory Schlagel 7/3/2023
(Signature)

07/03/2023
(Date – m/d/yyyy)

CORY SCHLAGEL
(Print Name)

Real Estate Supervisor
(Title)

AMANDA L. WEAVER NOTARY PUBLIC STATE OF WISCONSIN
(Seal)

State of Wisconsin
La Crosse County } ss.

On the above date, this instrument was acknowledged before me by the named person(s).

x Amanda L. Weaver
(Signature, Notary Public, State of Wisconsin)

Amanda L. Weaver
(Print or Type Name, Notary Public, State of Wisconsin)

08-26-2023
(Date Commission Expires)

Project ID 5163-07-24

This instrument was drafted by Joerg Feldbinder

LaCrosse County 1809534 Page 1 of 1

4

LEGEND:
- X CLEARING & GRUBBING
- XX SAWCUTS
- TRENCH RELIEF
- XX REMOVE ACCESS

CONTROL POINT DATA

POINT NO.	FEATURE	NORTHING	EASTING	ELEVATION	DESCRIPTION
CP 906	CP	99741.620	458744.960	644.67'	FENO

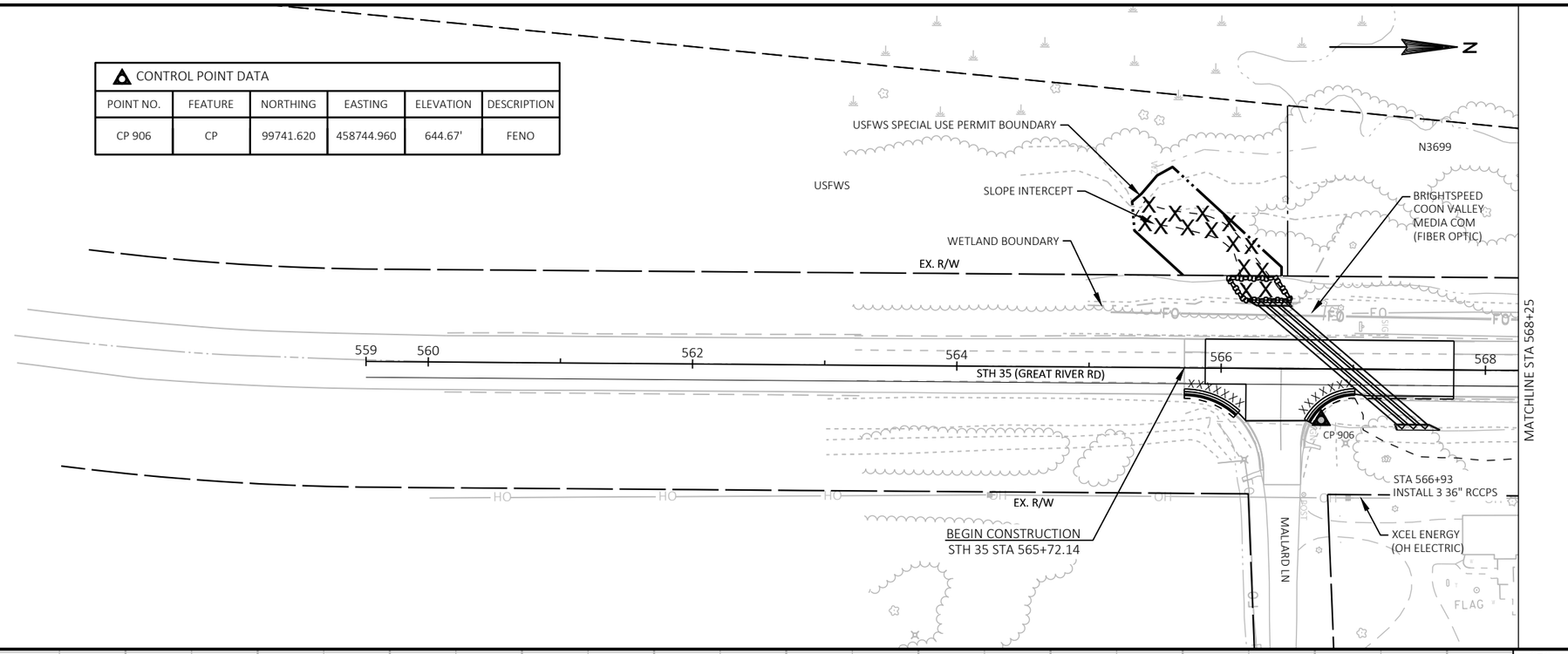

5

BENCHMARK TABLE

NO.	COORDINATES	DESCRIPTION	ELEVATION
BM D 124	Y=98655.995 X=458587.123	N/A	640.39'

5

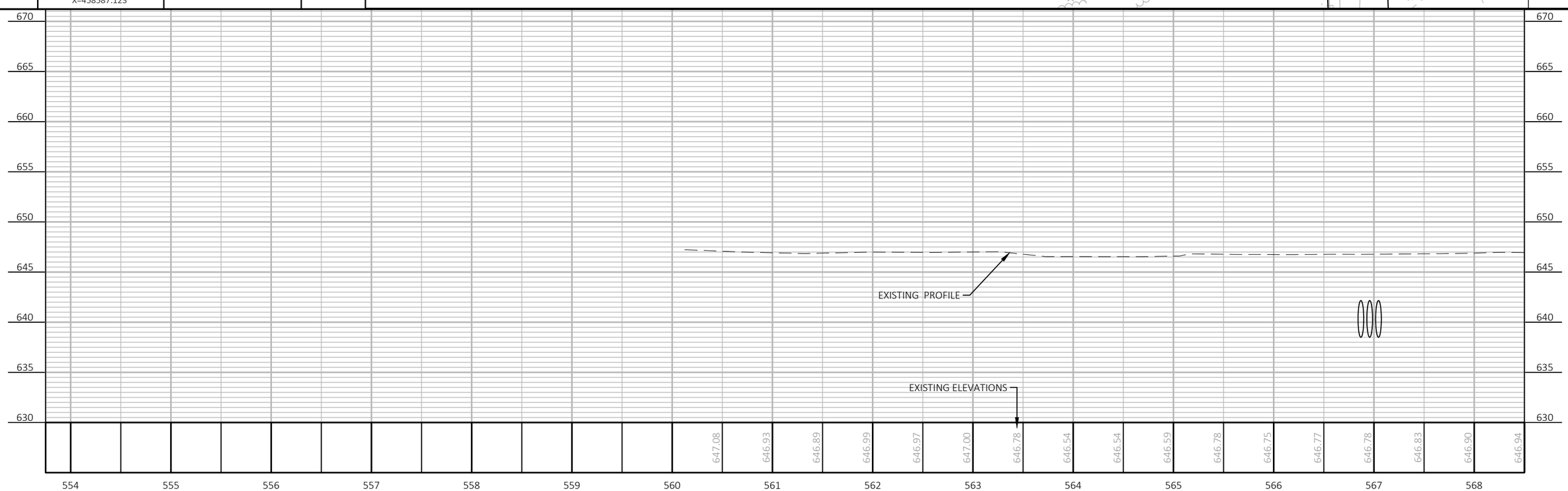

PROJECT NO: 5163-07-72	HWY: STH 35	COUNTY: LA CROSSE/VERNON	PLAN PROFILE	SHEET 160	E

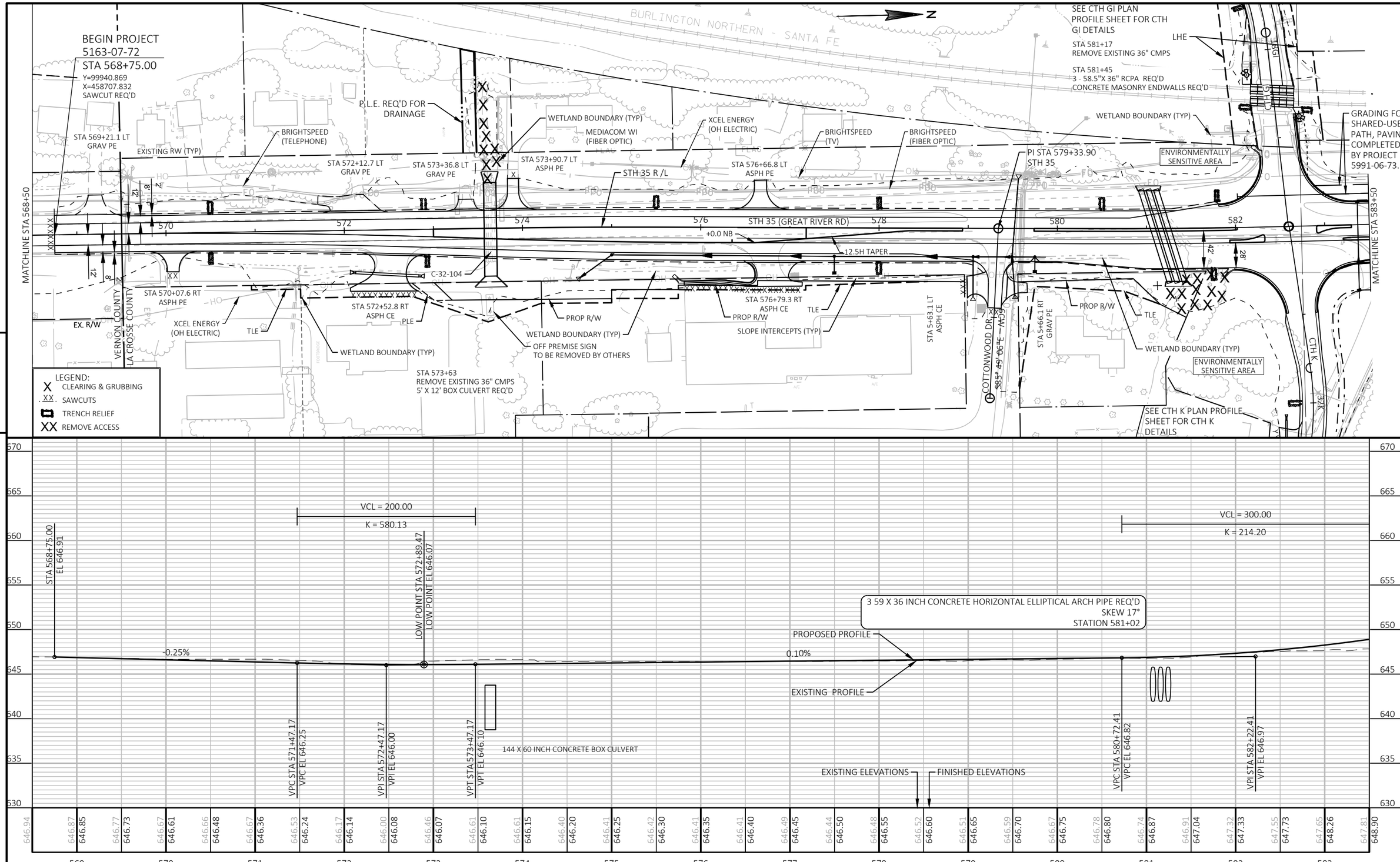

PROJECT NO: 5163-07-72	HWY: STH 35	COUNTY: LA CROSSE/VERNON	PLAN PROFILE	SHEET 161	E

FILE NAME : O:\PDS\C3D\51630702\SHEETSPLAN\050101_PP.DWG
LAYOUT NAME - 050101_pp
PLOT DATE : 7/1/2025 4:22 PM
PLOT BY : ED OCHS
PLOT NAME :
PLOT SCALE : 1 IN:100 FT

LEGEND:
X CLEARING & GRUBBING
XX SAWCUTS
TRENCH RELIEF
XX REMOVE ACCESS

CONTROL POINT DATA

POINT NO.	FEATURE	NORTHING	EASTING	ELEVATION	DESCRIPTION
CP 905	CP	102033.56	458654.29	646.08'	FENO

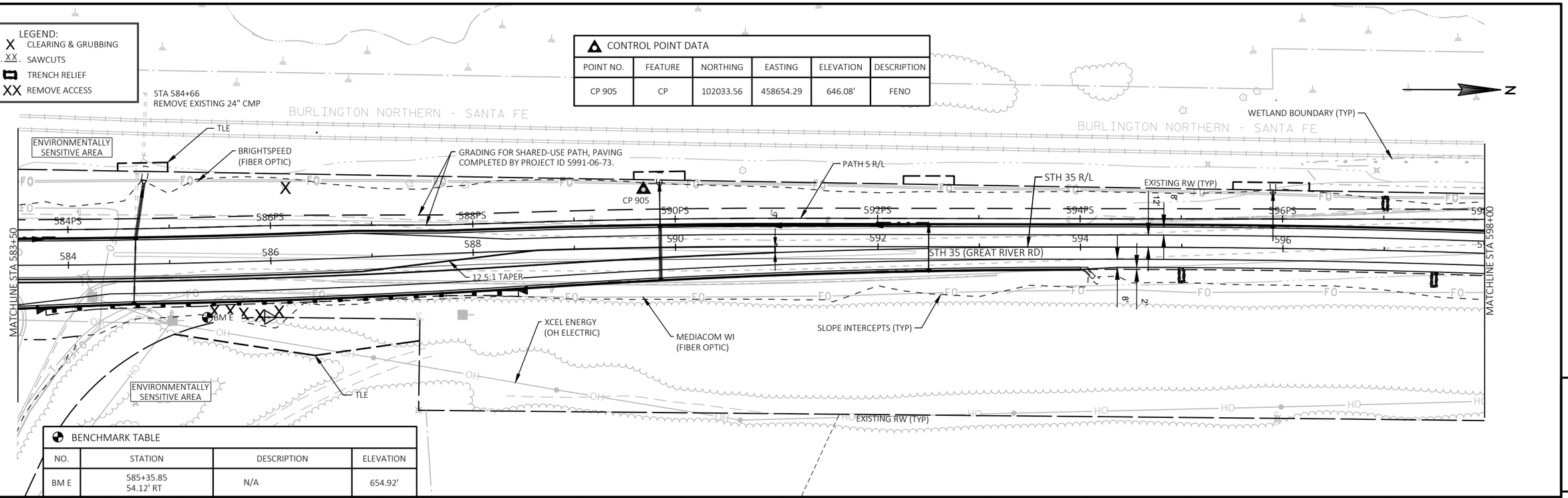

BENCHMARK TABLE

NO.	STATION	DESCRIPTION	ELEVATION
BM E	585+35.85 54.12' RT	N/A	654.92'

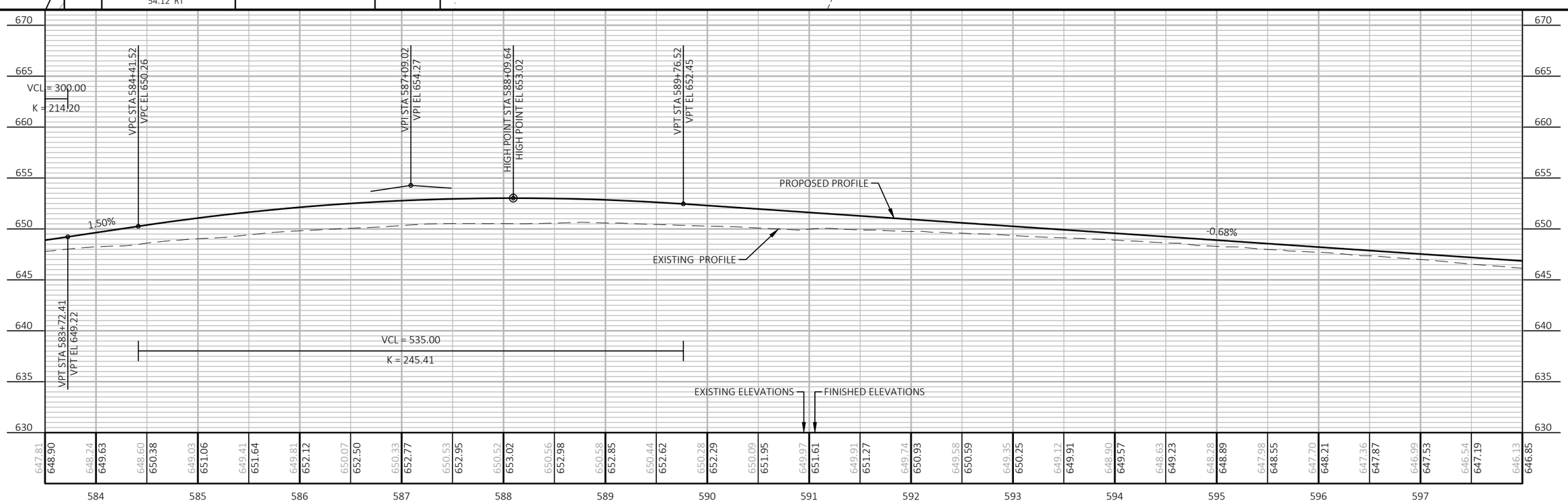

PROJECT NO: 5163-07-72	HWY: STH 35	COUNTY: LA CROSSE/VERNON	PLAN PROFILE	SHEET 162	E

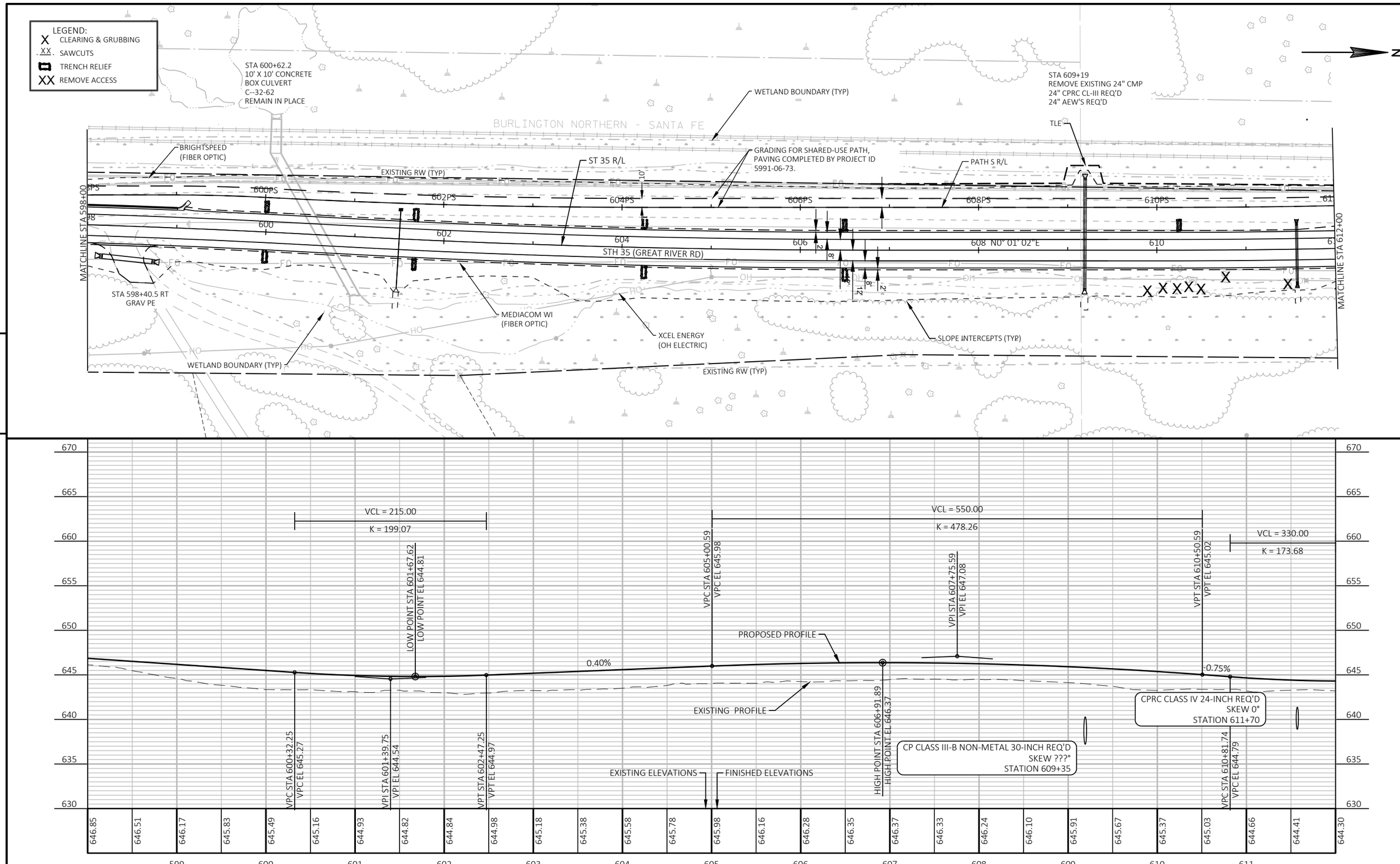

PROJECT NO: 5163-07-72	HWY: STH 35	COUNTY: LA CROSSE/VERNON	PLAN PROFILE	SHEET 163	E

FILE NAME : O:\PDS\C3D\51630702\SHEETSPLAN\050101_PP.DWG
LAYOUT NAME - 050103_pp
PLOT DATE : 7/1/2025 4:23 PM
PLOT BY : ED OCHS
PLOT NAME :
PLOT SCALE : 1 IN:100 FT

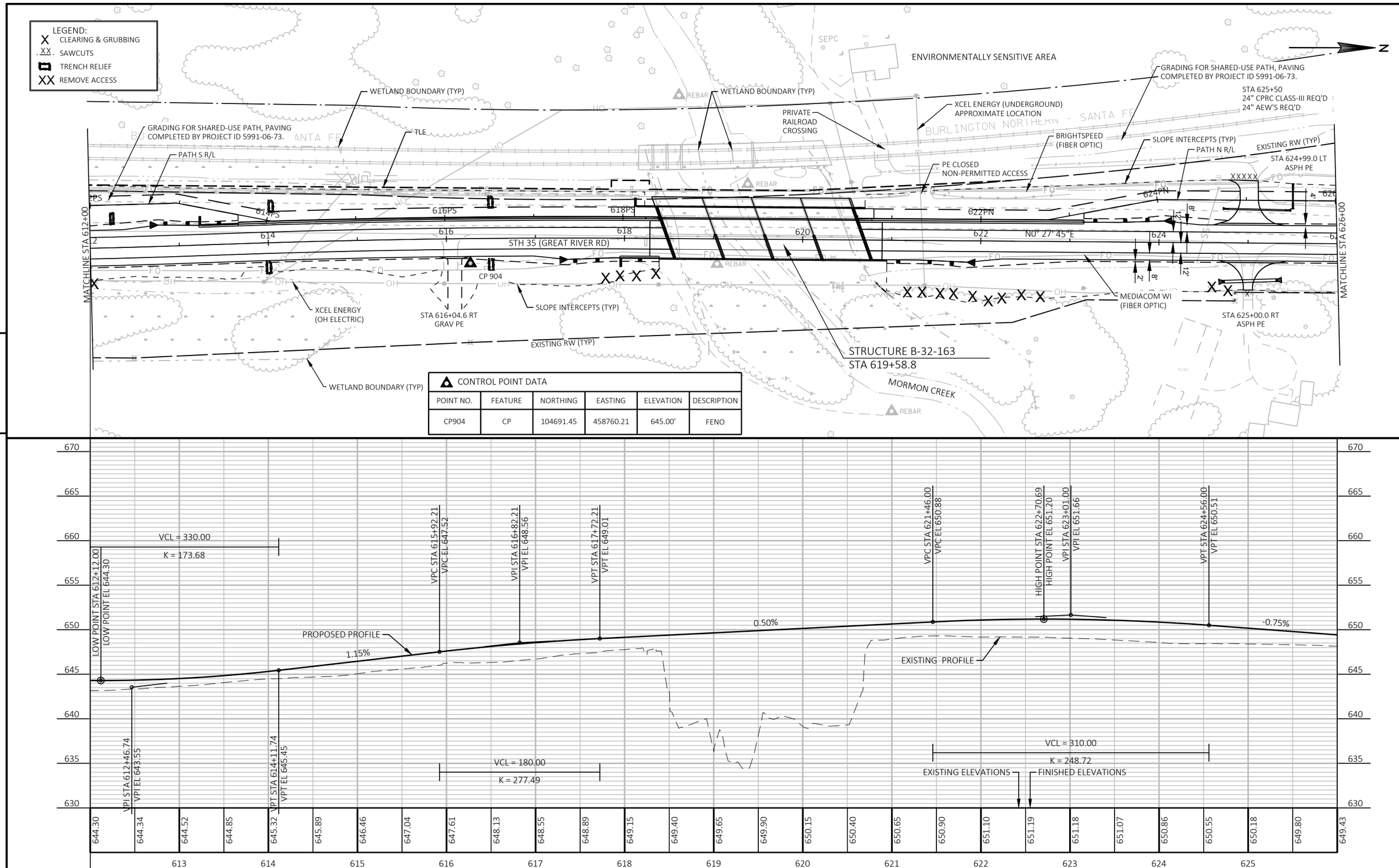

PROJECT NO: 5163-07-72	HWY: STH 35	COUNTY: LA CROSSE/VERNON	PLAN PROFILE	SHEET 164	E

FILE NAME : O:\PDS\C3D\51630702\SHEETSPLAN\050101_PP.DWG
LAYOUT NAME - 050104_pp
PLOT DATE : 7/1/2025 4:23 PM
PLOT BY : ED OCHS
PLOT NAME :
PLOT SCALE : 1 IN:100 FT
WISDOT/CADDS SHEET 44

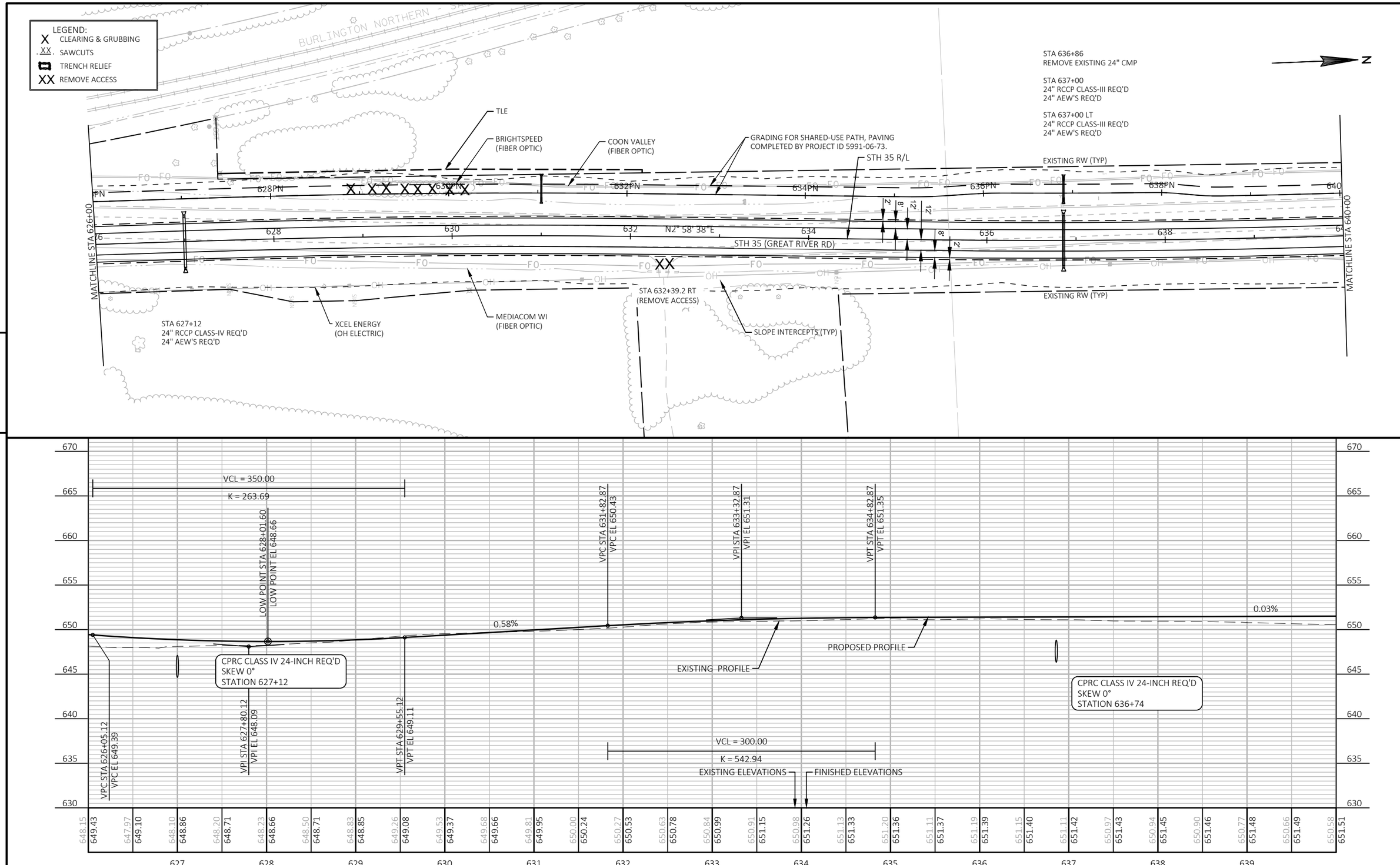

PROJECT NO: 5163-07-72	HWY: STH 35	COUNTY: LA CROSSE/VERNON	PLAN PROFILE	SHEET 165	E

FILE NAME : O:\PDS\C3D\51630702\SHEETSPLAN\050101_PP.DWG
LAYOUT NAME - 050105_pp
PLOT DATE : 7/1/2025 4:23 PM
PLOT BY : ED OCHS
PLOT NAME :
PLOT SCALE : 1 IN:100 FT

WISDOT/CADDS SHEET 44

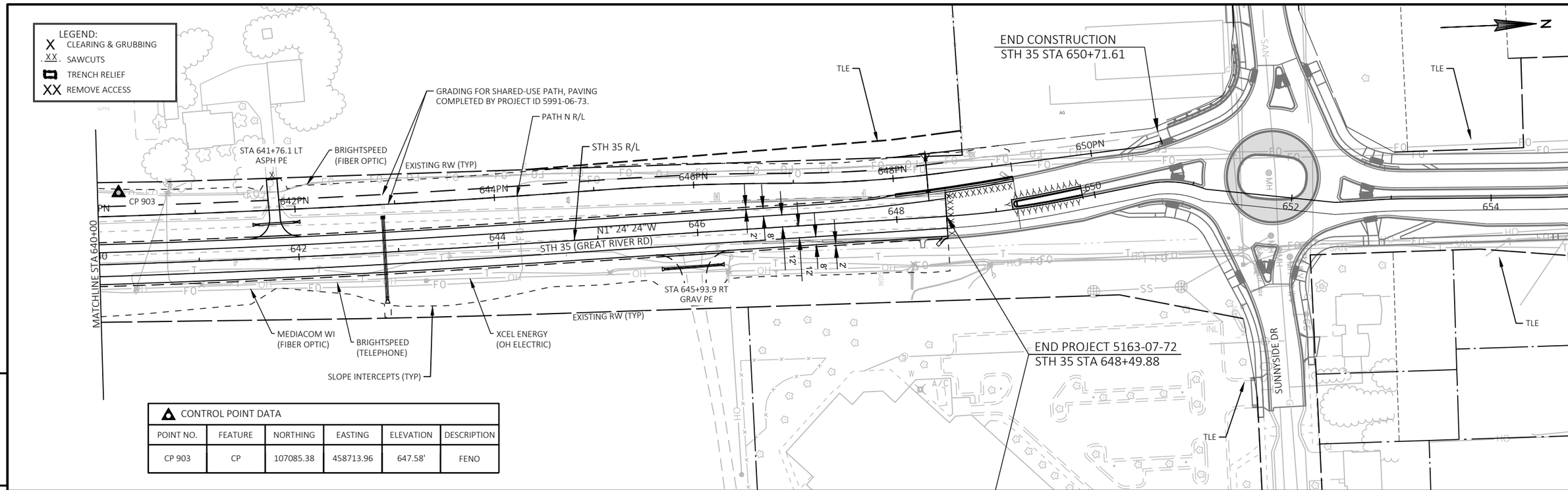

5

CONTROL POINT DATA					
POINT NO.	FEATURE	NORTHING	EASTING	ELEVATION	DESCRIPTION
CP 903	CP	107085.38	458713.96	647.58'	FENO

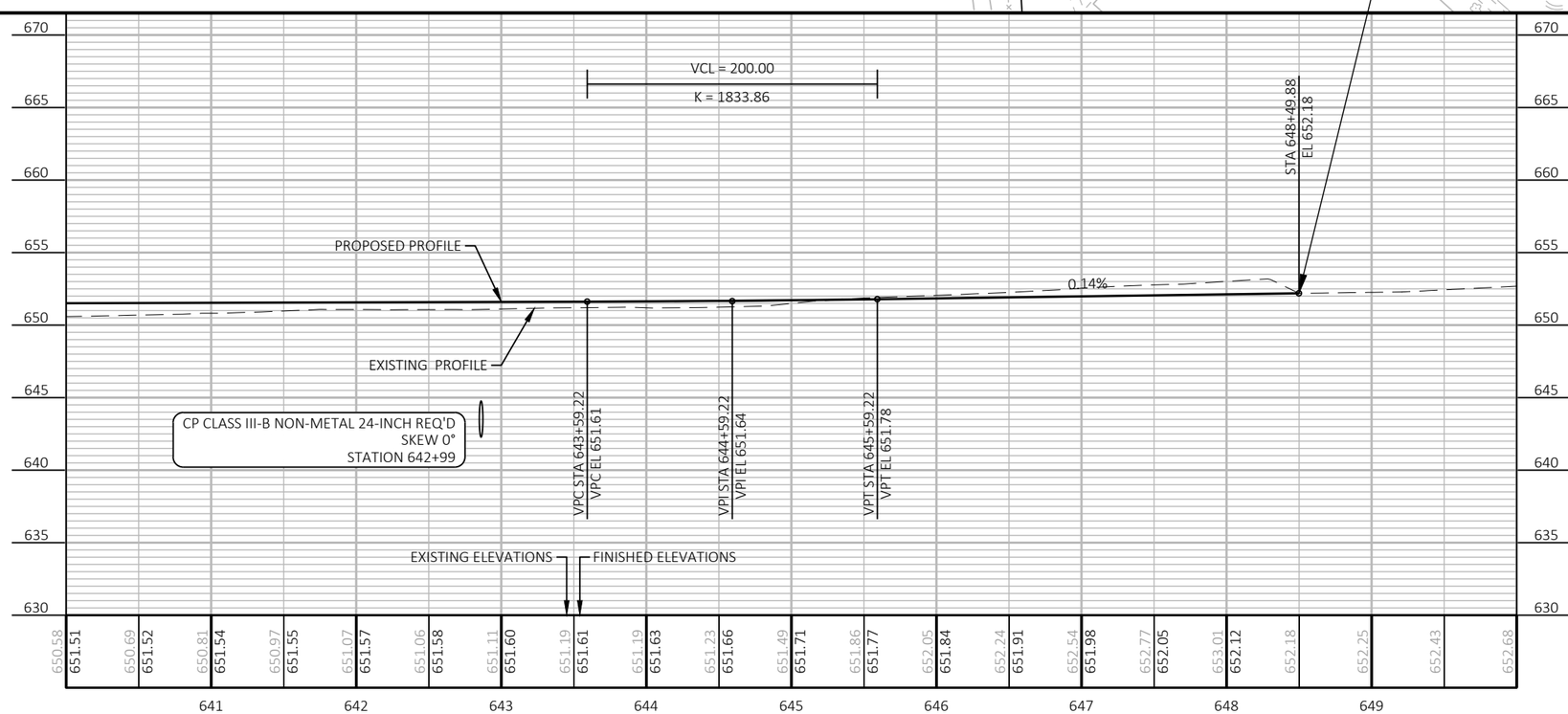

5

PROJECT NO: 5163-07-72	HWY: STH 35	COUNTY: LA CROSSE/VERNON	PLAN PROFILE	SHEET 166	E

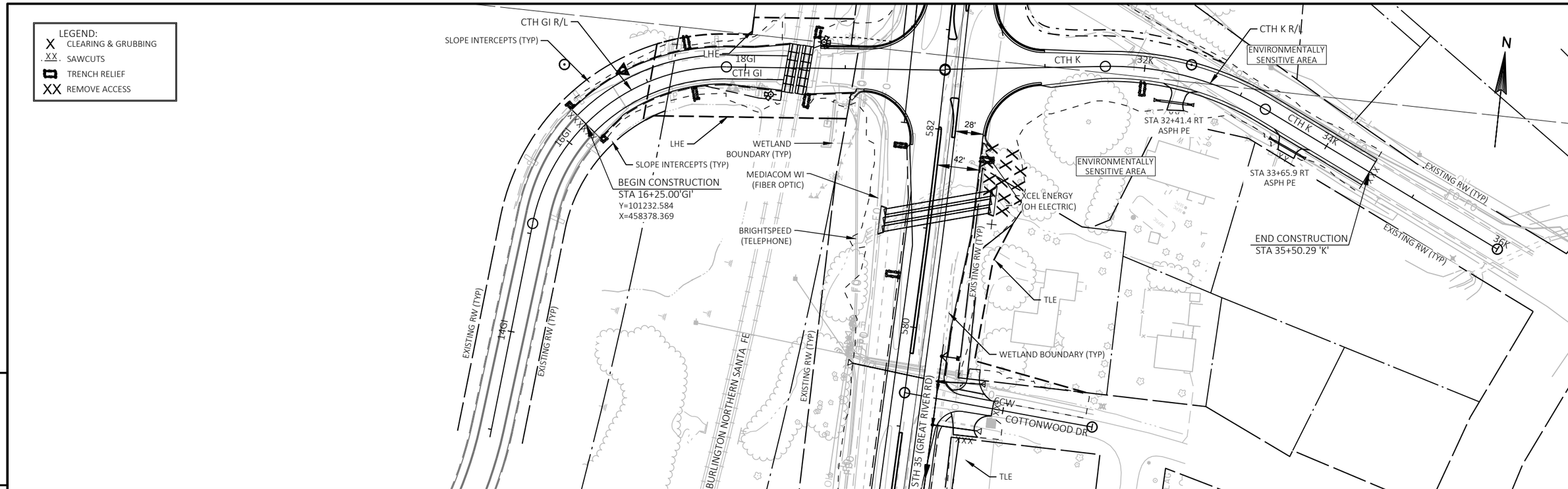

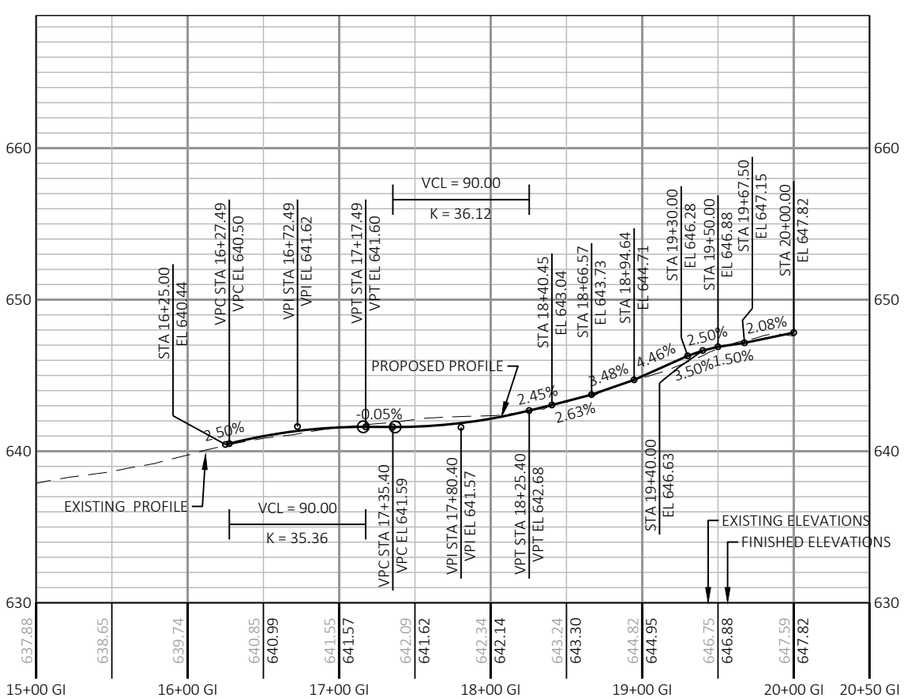

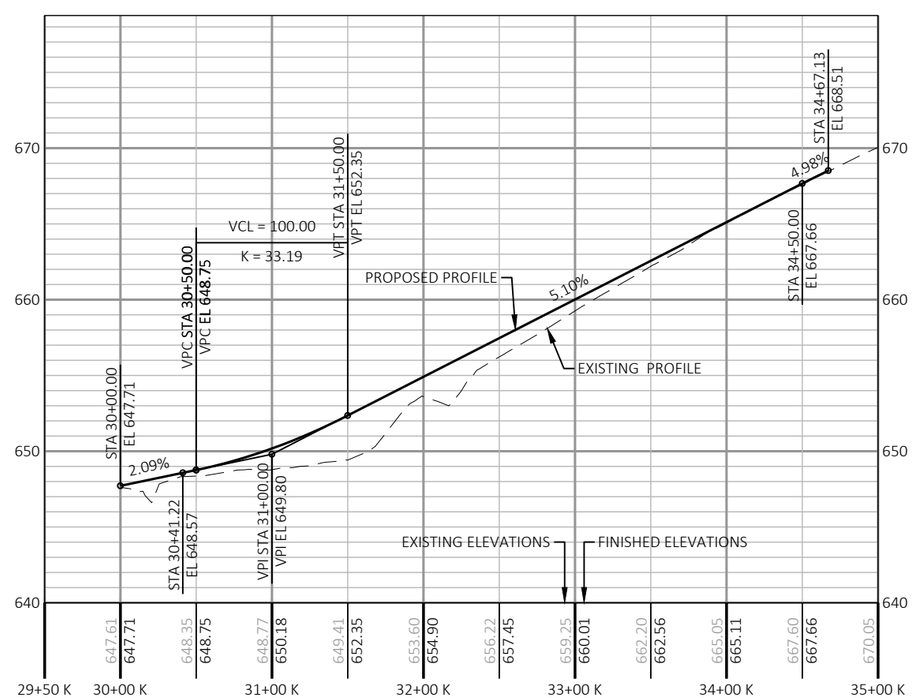

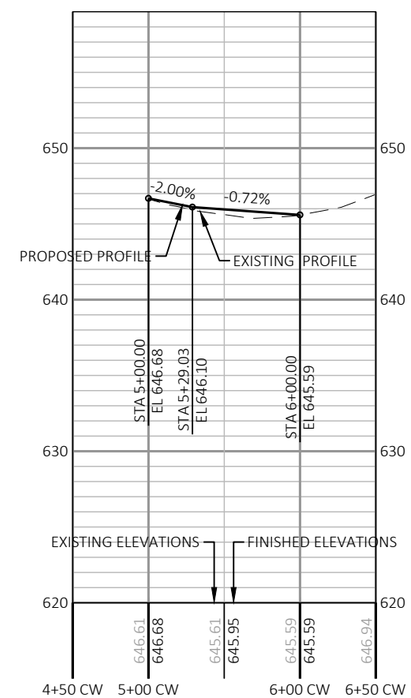

PROJECT NO: 5163-07-72	HWY: STH 35	COUNTY: LA CROSSE/VERNON	PLAN PROFILE - CTH GI / CTH K	SHEET 167	E

PI STA = 8+02.44
Y = 99613.403
X = 458589.687
DELTA = 23°33'09" LT
D = 163°42'08"
T = 7.30'
L = 14.39'
R = 35.00'
PC STA = 7+95.14
Y = 99607.278
X = 458585.721
PT STA = 8+09.53
Y = 99620.603
X = 458590.875
DB = N32°55'14"E
DA = N09°22'06"E

PI STA = 9+22.79
Y = 99702.862
X = 458655.967
DELTA = 21°01'04" LT
D = 114°35'30"
T = 9.27'
L = 18.34'
R = 50.00'
PC STA = 9+13.52
Y = 99698.462
X = 458647.802
PT STA = 9+31.86
Y = 99709.898
X = 458662.011
DB = N61°40'52"E
DA = N40°39'48"E

PI STA = 8+62.01
Y = 99672.390
X = 458599.418
DELTA = 52°18'46" RT
D = 114°35'30"
T = 24.56'
L = 45.65'
R = 50.00'
PC STA = 8+37.46
Y = 99648.161
X = 458595.421
PT STA = 8+83.11
Y = 99684.038
X = 458621.035
DB = N09°22'06"E
DA = N61°40'52"E

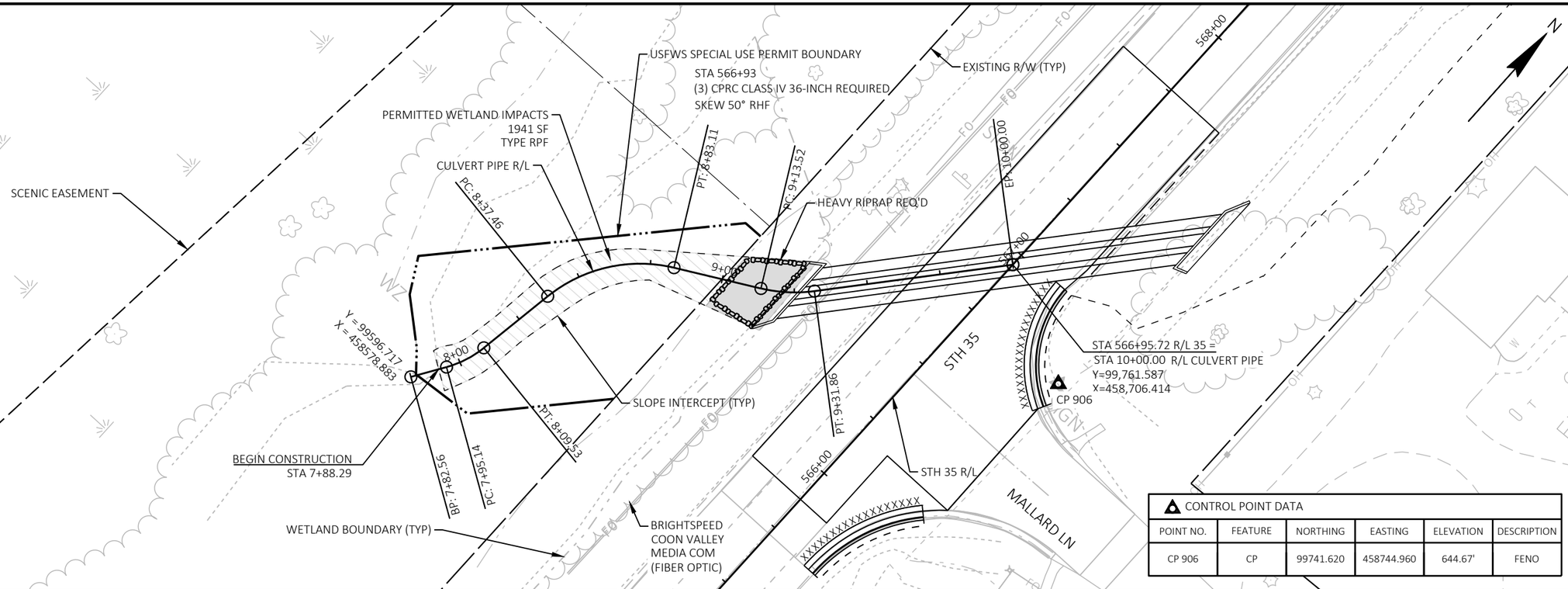

CONTROL POINT DATA					
POINT NO.	FEATURE	NORTHING	EASTING	ELEVATION	DESCRIPTION
CP 906	CP	99741.620	458744.960	644.67'	FENO

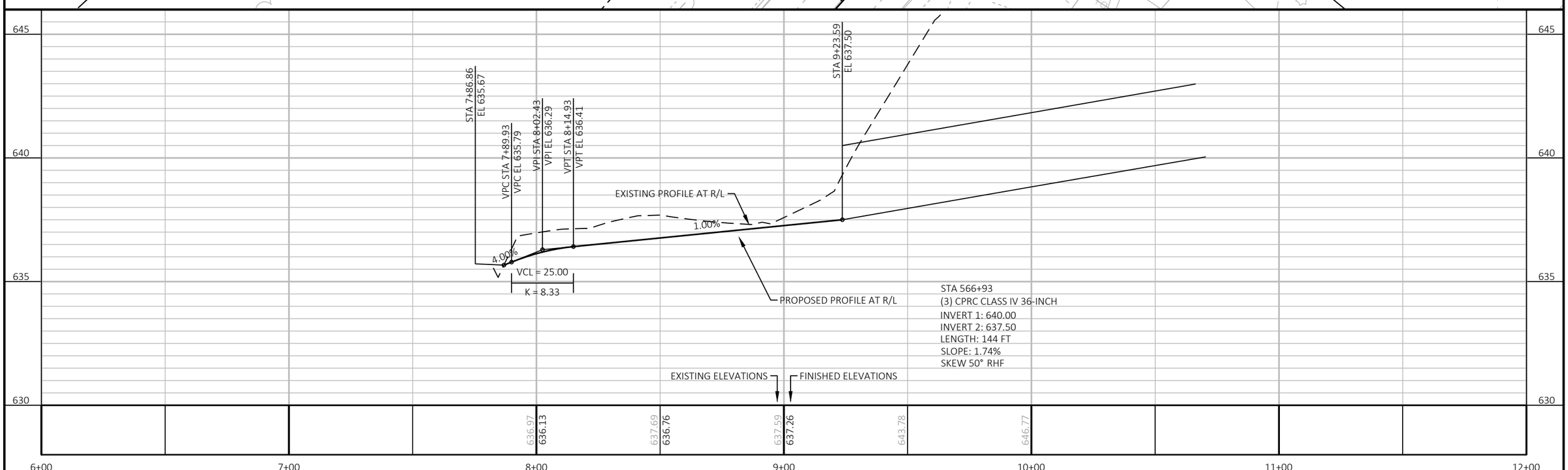

PROJECT NO: 5163-07-72	HWY: STH 35	COUNTY: LA CROSSE/VERNON	PLAN AND PROFILE: CULVERT PIPE DITCHING (MALLARD LN)	SHEET 168	E

Standard Detail Drawing List

08A05-21B	INLET COVERS TYPE B, B-A, C, MS, MS-A, & WM
08A05-21C	INLET COVERS TYPE F, HM, HM-S, S, T, HM-GJ & HM-GJ-S
08A05-21E	INLET COVER TYPE BW, MANHOLE COVERS, TYPE K, J, J-S, L & M
08A08-03	CATCH BASINS 3-FT, 4-FT, 5-FT AND 6-FT DIAMETER
08C06-03	INLETS 3-FT AND 4-FT DIAMETER
08C07-03	INLETS 2X2-FT, 2X2.5-FT, 2X3-FT, 2.5X3-FT & 2X3.5-FT
08C08-03	INLETS MEDIAN 1 AND 2 GRATE
08D01-23A	CONCRETE CURB & GUTTER
08D01-23B	CONCRETE CURB, TIES AND CURB AND GUTTER APPLICATIONS
08D02-08A	CONCRETE SURFACE DRAINS FLUME TYPE AT STRUCTURES
08D02-08B	CONCRETE SURFACE DRAINS FLUME TYPE AT STRUCTURES
08D02-08C	CONCRETE SURFACE DRAINS FLUME TYPE AT STRUCTURES
08D21-01	DRIVEWAYS WITHOUT CURB & GUTTER
08E08-03	TYPICAL INSTALLATIONS OF EROSION BALES / TEMPORARY DITCH CHECKS
08E09-06	SILT FENCE
08E10-02	INLET PROTECTION TYPE A, B, C AND D
08E11-02	TURBIDITY BARRIER
08E15-01	CULVERT PIPE CHECK
08F01-11	APRON ENDWALLS FOR CULVERT PIPE
08F02-01	APRON ENDWALLS FOR PIPE ARCH AND ELLIPTICAL PIPE
08F04-08	JOINT TIES FOR CONCRETE PIPE AND CONCRETE COLLAR DETAIL
08F10-02	CONCRETE MASONRY ENDWALLS FOR CULVERT PIPE AND PIPE ARCH
09G02-05A	BRIDGE TEMPORARY TRAFFIC SIGNAL INSTALLATION
09G02-05B	BRIDGE TEMPORARY TRAFFIC SIGNAL INSTALLATION
09G02-05C	BRIDGE TEMPORARY TRAFFIC SIGNAL INSTALLATION
11B01-05	CONCRETE CORRUGATED MEDIAN
11B02-02	CONCRETE MEDIAN NOSE
12A03-10	NAME PLATE (STRUCTURES)
13A10-03A	SHOULDER RUMBLE STRIPS - ASPHALT
13A10-03G	SHOULDER AND EDGE LINE RUMBLE STRIPS - CROSSINGS, INTERSECTIONS, BRIDGES, DRIVEWAYS
13A10-03H	SHOULDER AND EDGE LINE RUMBLE STRIPS - RAILROAD, PASSING, CLIMBING AND BYPASS LANES
13A11-04A	CENTERLINE RUMBLE STRIPS - ASPHALT
13A11-04D	CENTERLINE RUMBLE STRIPS - INTERSECTIONS, DRIVEWAYS, BRIDGES, RAILROADS
13B01-11A	PAVEMENT DETAILS FOR RAILROAD APPROACH
13B01-11B	TYPICAL SECTIONS FOR RAILWAY APPROACH
13B02-09A	CONCRETE PAVEMENT APPROACH SLAB
13C01-19	CONCRETE PAVEMENT LONGITUDINAL JOINTS AND TIES
13C11-14A	RURAL DOWELED CONCRETE PAVEMENT
13C11-14B	RURAL DOWELED CONCRETE PAVEMENT
13C18-08A	CONCRETE PAVEMENT JOINTING
13C18-08B	CONCRETE PAVEMENT STEEL REINFORCEMENT
13C18-08C	CONCRETE PAVEMENT JOINT TYPES
13C18-08D	CONCRETE PAVEMENT JOINTING AT UTILITY FIXTURES
13C18-08F	CONCRETE PAVEMENT INTERSECTION BOXOUT FOR INTEGRAL CURB AND GUTTER
13C19-03	HMA LONGITUDINAL JOINTS
14B07-16A	CONCRETE BARRIER TEMPORARY PRECAST, 12'-6"
14B07-16B	CONCRETE BARRIER TEMPORARY PRECAST, 12'-6"
14B07-16C	CONCRETE BARRIER TEMPORARY PRECAST, 12'-6"
14B07-16D	CONCRETE BARRIER TEMPORARY PRECAST, 12'-6"
14B07-16E	CONCRETE BARRIER TEMPORARY PRECAST, 12'-6"
14B07-16F	CONCRETE BARRIER TEMPORARY PRECAST, 12'-6"
14B07-16G	CONCRETE BARRIER TEMPORARY PRECAST, 12'-6"
14B07-16H	CONCRETE BARRIER TEMPORARY PRECAST, 12'-6"
14B07-16I	CONCRETE BARRIER TEMPORARY PRECAST, 12'-6"
14B07-16J	CONCRETE BARRIER TEMPORARY PRECAST, 12'-6"
14B07-16K	CONCRETE BARRIER TEMPORARY PRECAST, 12'-6"
14B07-16L	CONCRETE BARRIER TEMPORARY PRECAST, 12'-6"
14B07-16M	CONCRETE BARRIER TEMPORARY PRECAST, 12'-6"
14B07-16N	CONCRETE BARRIER TEMPORARY PRECAST, 12'-6"
14B08-02A	CRASH CUSHION/SAND BARREL ARRAY AND OTHER TEMPORARY BARRIER LAYOUT DETAILS
14B08-02B	CRASH CUSHION/SAND BARREL ARRAY AND OTHER TEMPORARY BARRIER LAYOUT DETAILS
14B08-02C	CRASH CUSHION/SAND BARREL ARRAY AND OTHER TEMPORARY BARRIER LAYOUT DETAILS
14B08-02D	CRASH CUSHION/SAND BARREL ARRAY AND OTHER TEMPORARY BARRIER LAYOUT DETAILS
14B08-02E	CRASH CUSHION/SAND BARREL ARRAY AND OTHER TEMPORARY BARRIER LAYOUT DETAILS
14B32-11A	CONCRETE BARRIER SINGLE SLOPE (CBSS)
14B32-11B	CONCRETE BARRIER SINGLE SLOPE (CBSS)
14B32-11H	CONCRETE BARRIER SINGLE SLOPE (CBSS)

6

Standard Detail Drawing List

14B33-02G	CONCRETE BARRIER SINGLE SLOPE 42" THRIE BEAM ANCHOR
14B33-02H	CONCRETE BARRIER SINGLE SLOPE 42" THRIE BEAM ANCHOR
14B42-07A	MIDWEST GUARDRAIL SYSTEM (MGS) GUARDRAIL
14B42-07B	MIDWEST GUARDRAIL SYSTEM (MGS) GUARDRAIL
14B42-07C	MIDWEST GUARDRAIL SYSTEM (MGS) GUARDRAIL
14B42-07D	MIDWEST GUARDRAIL SYSTEM (MGS) GUARDRAIL
14B44-04A	MIDWEST GUARDRAIL SYSTEM ENERGY ABSORBING TERMINAL (MGS)
14B44-04B	MIDWEST GUARDRAIL SYSTEM ENERGY ABSORBING TERMINAL (MGS)
14B44-04C	MIDWEST GUARDRAIL SYSTEM ENERGY ABSORBING TERMINAL (MGS)
14B45-05A	MIDWEST GUARDRAIL SYSTEM THRIE BEAM TRANSITION (MGS)
14B45-05B	MIDWEST GUARDRAIL SYSTEM THRIE BEAM TRANSITION (MGS)
14B45-05C	MIDWEST GUARDRAIL SYSTEM THRIE BEAM TRANSITION (MGS)
14B45-05D	MIDWEST GUARDRAIL SYSTEM THRIE BEAM TRANSITION (MGS)
14B45-05I	MIDWEST GUARDRAIL SYSTEM THRIE BEAM TRANSITION (MGS)
14B45-05J	MIDWEST GUARDRAIL SYSTEM THRIE BEAM TRANSITION (MGS)
15C02-09A	BARRICADES AND SIGNS FOR MAINLINE CLOSURES
15C02-09B	BARRICADES AND SIGNS FOR VARIOUS CLOSURES
15C02-09F	ADVANCED WIDTH RESTRICTION SIGNING
15C03-05	BARRICADES AND SIGNS FOR SIDEROAD CLOSURES
15C04-05	TRAFFIC CONTROL, ADVANCE WARNING SIGNS 45 M.P.H. OR GREATER TWO-WAY UNDIVIDED ROAD OPEN TO TRAFFIC
15C05-05	TRAFFIC CONTROL, ADVANCE WARNING SIGNS 40 M.P.H. OR LESS
15C07-16A	PAVEMENT MARKING SYMBOLS
15C07-16B	PAVEMENT MARKING WORDS
15C07-16C	PAVEMENT MARKING ARROWS
15C07-16E	PAVEMENT MARKING FOR BIKE LANES
15C08-23A	PERMANENT LONGITUDINAL PAVEMENT MARKINGS
15C08-23B	TEMPORARY LONGITUDINAL PAVEMENT MARKING
15C08-23C	PAVEMENT MARKING (TURN LANES)
15C08-23D	PAVEMENT MARKING (TURN LANES)
15C09-13A	SIGNING AND PAVEMENT MARKING DETAILS FOR RAILROAD-HIGHWAY GRADE CROSSINGS
15C11-10A	CHANNELIZING DEVICES FLEXIBLE TUBULAR MARKER POST
15C11-10B	CHANNELIZING DEVICES DRUMS, CONES, BARRICADES AND VERTICAL PANELS
15C12-09A	TRAFFIC CONTROL FOR LANE CLOSURE WITH FLAGGING OPERATION
15C12-09B	TRAFFIC CONTROL, LANE CLOSURE WITH AUTOMATED FLAGGER ASSISTANCE DEVICE
15C18-09A	MEDIAN ISLAND MARKINGS
15C18-09B	PAVEMENT MARKINGS, MEDIAN ISLAND NOSE
15C19-09A	MOVING PAVEMENT MARKING OPERATION TWO-LANE TWO-WAY ROADWAY
15C29-08A	BICYCLE LANE MARKING
15C33-05	STOP LINE AND CROSSWALK PAVEMENT MARKING
15C35-06A	PAVEMENT MARKING (INTERSECTIONS)
15D21-07A	TRAFFIC CONTROL, INTERSECTION WITHIN SINGLE LANE CLOSURE
15D21-07B	TRAFFIC CONTROL, INTERSECTION WITHIN SINGLE LANE CLOSURE
15D28-04	TRAFFIC CONTROL, WORK ON SHOULDER OR PARKING LANE, UNDIVIDED ROADWAY
15D29-06	TRAFFIC CONTROL, VEHICLE ENTRANCE/EXIT OR HAUL ROAD
15D33-09	TRAFFIC CONTROL, ONE LANE ROAD WITH TEMPORARY SIGNALS
15D37-03	TRAFFIC CONTROL, 2-LANE ROUNDABOUT
15D39-02	TRAFFIC CONTROL, DROP-OFF SIGNING
15D44-02	TRAFFIC CONTROL, SIGNING ON ROADWAYS WITH MILLED SURFACES
15D45-03	TRAFFIC CONTROL, SIGNING ON ROADWAYS WITH LOOSE GRAVEL
15D46-01	TRAFFIC CONTROL, ONE - WAY SIGNING
15D51-01	TRAFFIC CONTROL, MOBILE OPERATIONS ON AN UNDIVIDED ROADWAY
16A01-07	LANDMARK REFERENCE MONUMENTS AND COVERS

6

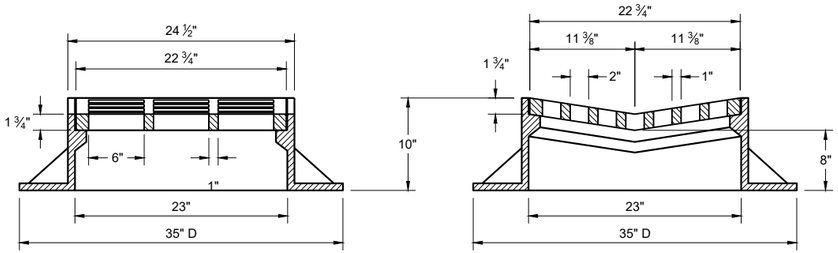

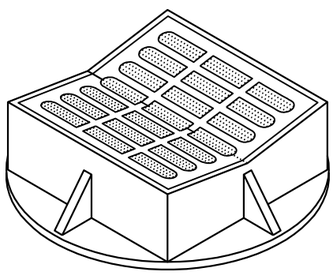

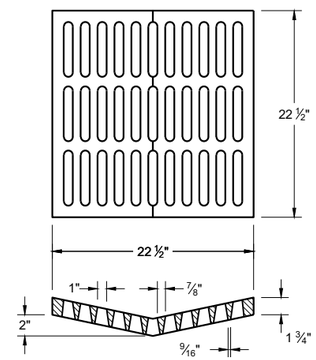

TYPE "B"

ALTERNATIVE GRATE FOR TYPE "B" COVER

USE WHERE PEDESTRIAN OF BICYCLE TRAFFIC IS POSSIBLE

NOTED AS TYPE B - A ON THE DRAINAGE TABLE

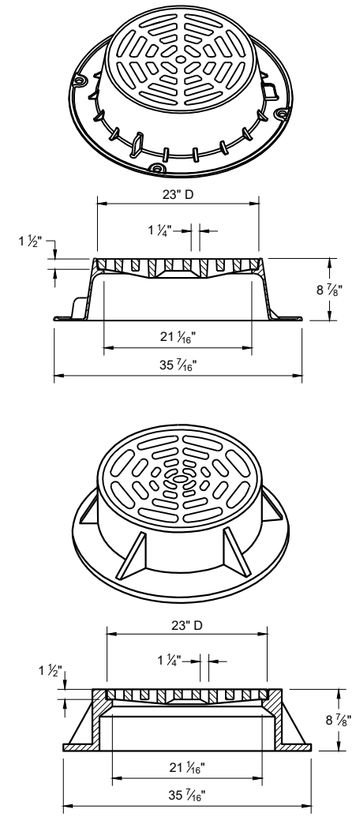

TYPE "C"

NOTE: EITHER CASTING IS ACCEPTABLE

GENERAL NOTES

DETAILS OF CONSTRUCTION, MATERIALS AND WORKMANSHIP NOT SHOWN ON THIS DRAWING SHALL CONFORM TO THE PERTINENT REQUIREMENTS OF THE STANDARD SPECIFICATIONS AND THE APPLICABLE SPECIAL PROVISIONS.

DETAIL DRAWINGS FOR PROPOSED ALTERNATE DESIGNS FOR CATCH BASIN, MANHOLE AND INLET COVERS SHALL BE SUBMITTED TO THE ENGINEER FOR APPROVAL PROVIDING THAT SUCH ALTERNATE DESIGNS MAKE PROVISION FOR EQUIVALENT CAPACITY AND STRENGTH.

ROUND FRAMES AND COVERS SHALL HAVE CONTINUOUSLY MACHINED BEARING SURFACES TO PREVENT ROCKING AND RATTLING.

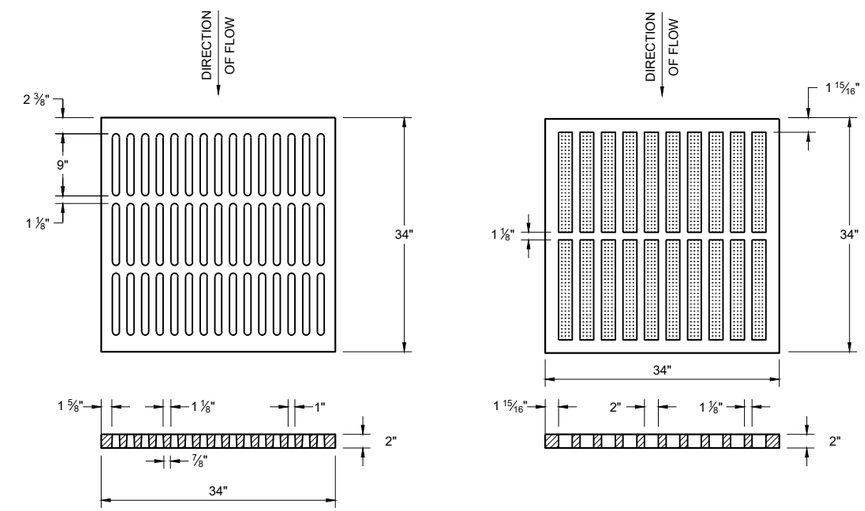

ALTERNATIVE TYPE "MS"

USE WHERE PEDESTRIAN OF BICYCLE TRAFFIC IS PERMITTED

NOTED AS TYPE MS-A ON THE DRAINAGE TABLE

TYPE "MS"

USE ON FREEWAYS AND EXPRESSWAYS

NOTED AS TYPE MS ON THE DRAINAGE TABLE

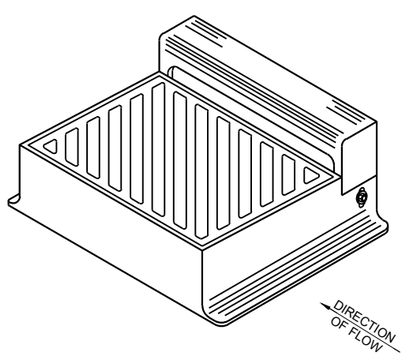

DIAGONAL SLOTS SHALL BE ORIENTEDTO THE DIRECTION OF FLOW AS ILLUSTRATED.
GRATES ARE MANUFACTURED TO BE REVERSIBLE.

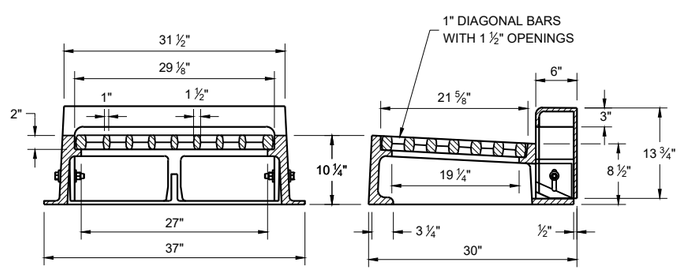

TYPE "WM"

NOTE: CURB BOX HEIGHT ADJUSTABLE 6" - 9"

INLET COVERS
TYPES B, B-A, C,
MS, MS-A AND WM

STATE OF WISCONSIN
DEPARTMENT OF TRANSPORTATION

APPROVED
December 2023 — DATE
/S/ Rodney Taylor — ROADWAY STANDARDS DEVELOPMENT UNIT SUPERVISOR
FHWA

6

SDD 08A05-21b

GENERAL NOTES

DETAILS OF CONSTRUCTION, MATERIALS AND WORKMANSHIP NOT SHOWN ON THIS DRAWING SHALL CONFORM TO THE PERTINENT REQUIREMENTS OF THE STANDARD SPECIFICATIONS AND THE APPLICABLE SPECIAL PROVISIONS.

DETAIL DRAWINGS FOR PROPOSED ALTERNATE DESIGNS FOR INLET COVERS SHALL BE SUBMITTED TO THE ENGINEER FOR APPROVAL PROVIDING THAT SUCH ALTERNATE DESIGNS MAKE PROVISION FOR EQUIVALENT CAPACITY AND STRENGTH.

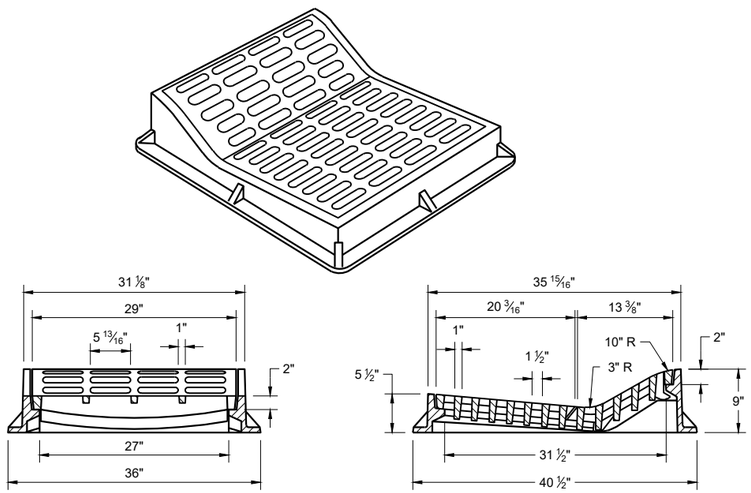

TYPE "F"

USE WITH TYPES "A" AND "D" CONCRETE CURB AND GUTTER, 36"

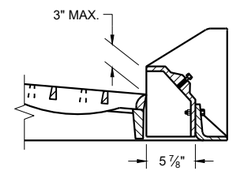

ALTERNATIVE CURB BOX FOR TYPE "HM" COVER

USE WITH TYPES "G" AND "J" CONCRETE CURB AND GUTTER, 30 INCH
NOTED AS TYP "HM-GJ" ON DRAINAGE TABLE

NOTE:
SPECIAL GRATE FOR THE TYPE "H" COVER MAY ALSO BE USED FOR THE TYPE "HM-GJ" COVER.

NOTED AS TYPE HM-GJ-S ON THE DRAINAGE TABLE.

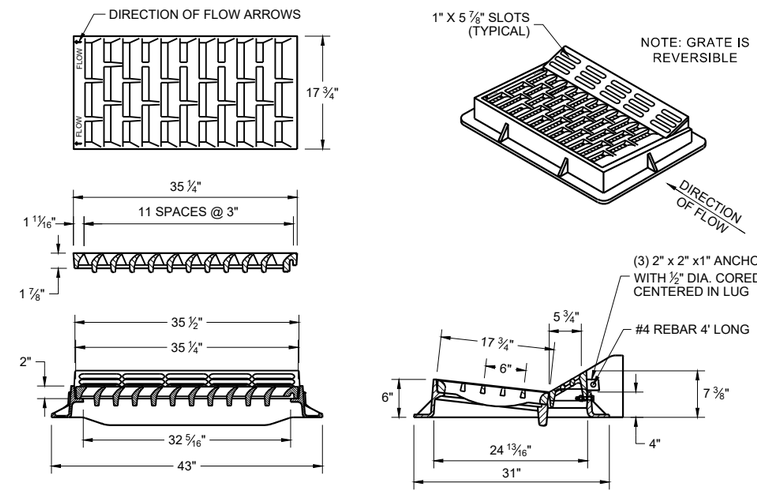

TYPE "HM"

USE WITH TYPES "A" AND "D" CONCRETE CURB AND GUTTER, 36"

NOTE:
SPECIAL GRATE FOR THE TYPE "H" COVER MAY ALSO BE USED FOR THE TYPE "HM-GJ" COVER.

NOTED AS TYPE HM-GJ-S ON THE DRAINAGE TABLE.

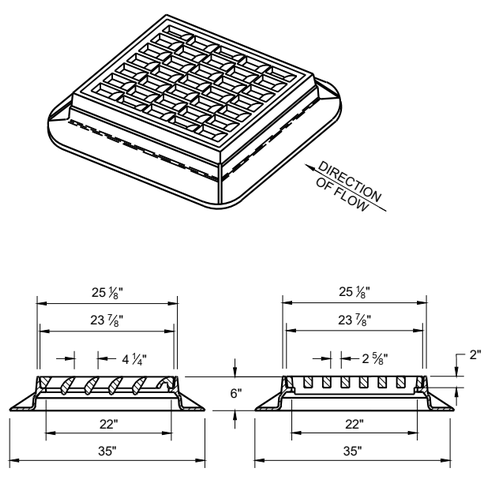

TYPE "S"

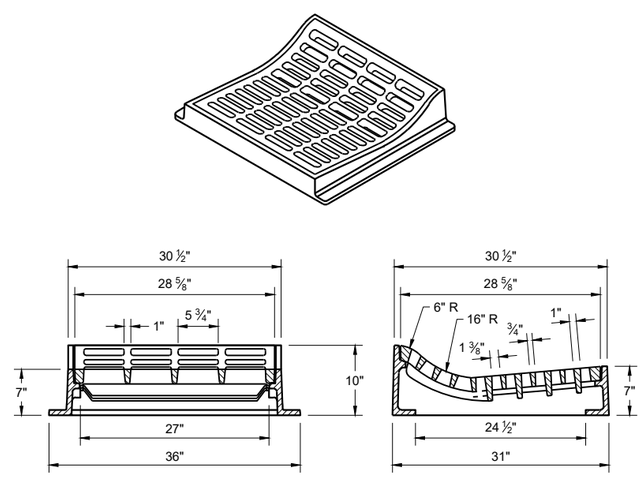

TYPE "T"

USE WITH TYPES "R" AND "T" CONCRETE CURB AND GUTTER, 36"

INLET COVERS
TYPES F, HM, HM-S, S, T, HM-GJ AND HM-GJ-S

STATE OF WISCONSIN
DEPARTMENT OF TRANSPORTATION

APPROVED
December 2023 — DATE
/S/ Rodney Taylor — ROADWAY STANDARDS DEVELOPMENT UNIT SUPERVISOR

FHWA

6
SDD 08A05-21c

GENERAL NOTES

DETAILS OF CONSTRUCTION, MATERIALS AND WORKMANSHIP NOT SHOWN ON THIS DRAWING SHALL CONFORM TO THE PERTINENT REQUIREMENTS OF THE STANDARD SPECIFICATIONS AND THE APPLICABLE SPECIAL PROVISIONS.

DETAIL DRAWINGS FOR PROPOSED ALTERNATE DESIGNS FOR MANHOLE COVERS SHALL BE SUBMITTED TO THE ENGINEER FOR APPROVAL PROVIDING THAT SUCH ALTERNATE DESIGNS MAKE PROVISION FOR EQUIVALENT CAPACITY AND STRENGTH.

ROUND FRAMES AND COVERS SHALL HAVE CONTINUOUSLY MACHINED BEARING SURFACES TO PREVENT ROCKING AND RATTLING.

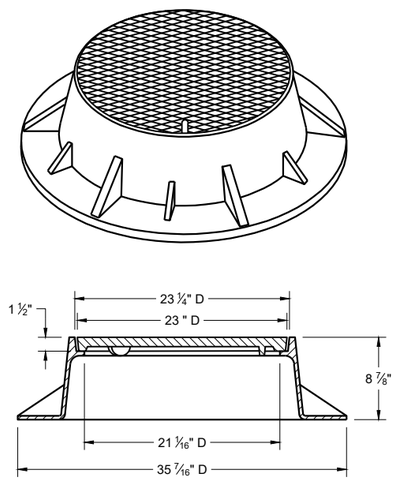

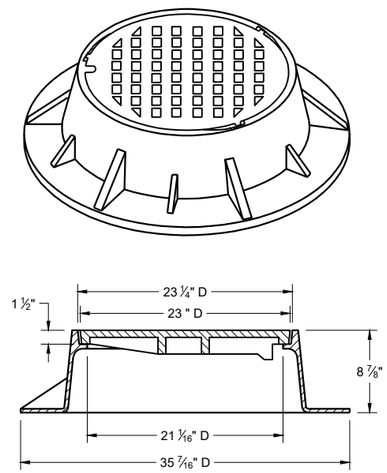

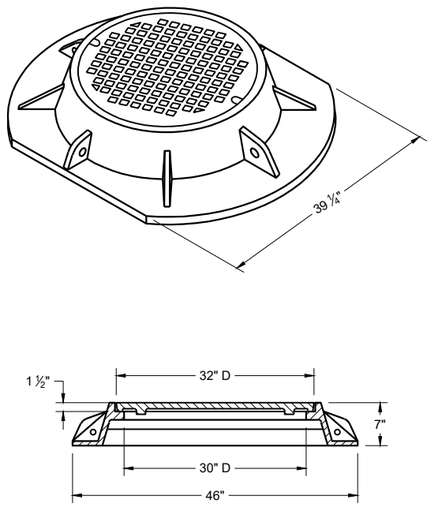

TYPE "K"

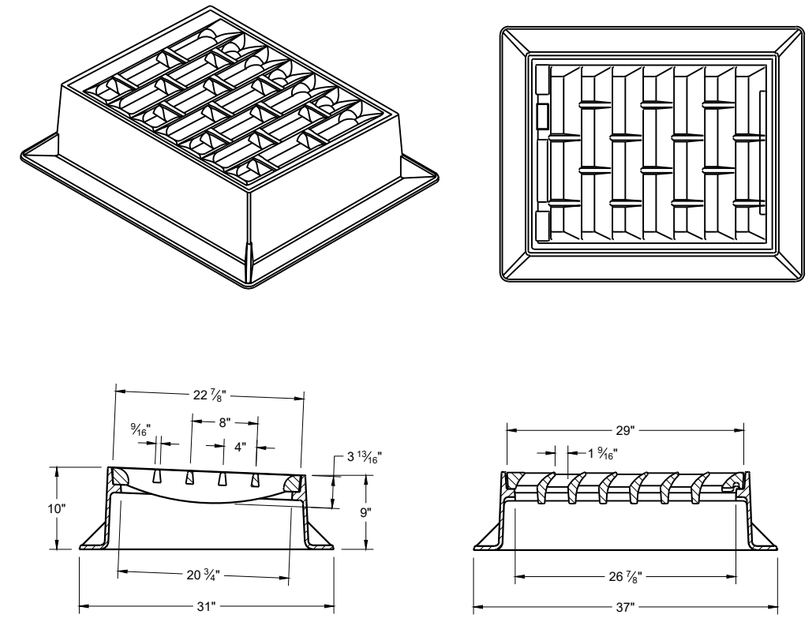

INLET COVER TYPE "BW"

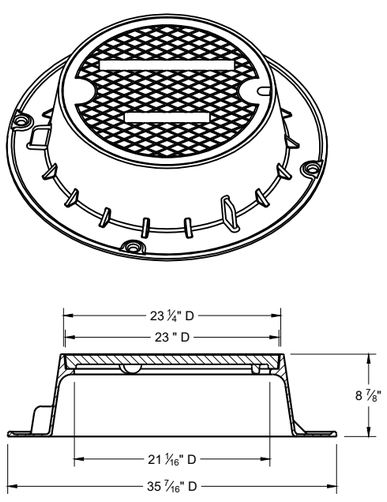

TYPE "J"

NOTE: EITHER CASTING IS ACCEPTABLE

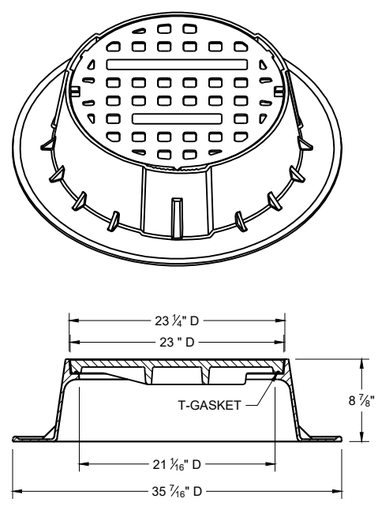

TYPE "J" SPECIAL

TYPE "B" NON-ROCKING SELF-SEAL LID
(NOTED AS TYPE J-S ON THE DRAINAGE TABLE)

NOTE: EITHER CASTING IS ACCEPTABLE

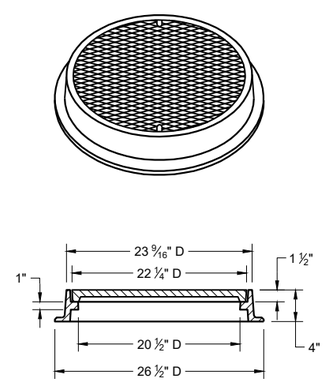

TYPE "L"

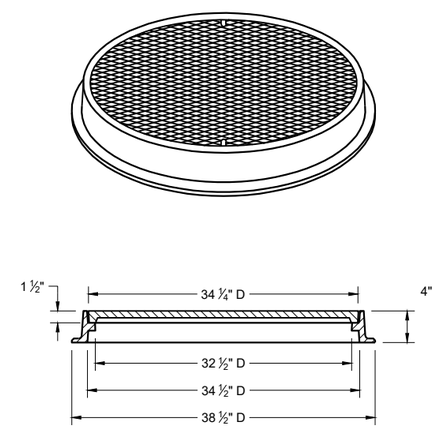

TYPE "M"

INLET COVERS TYPES BW
MANHOLE COVERS TYPES K, J, J-S, L, AND M

STATE OF WISCONSIN
DEPARTMENT OF TRANSPORTATION

APPROVED
December 2023 — DATE
/S/ Rodney Taylor — ROADWAY STANDARDS DEVELOPMENT UNIT SUPERVISOR

FHWA

6

SDD 08A05-21e

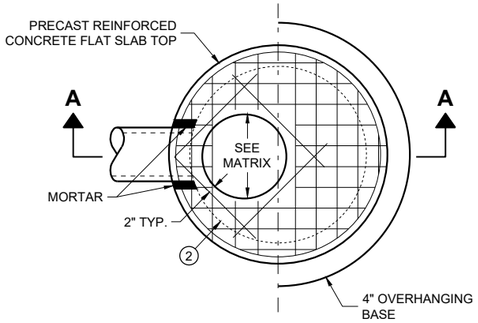

PLAN VIEW CIRCULAR OPENING

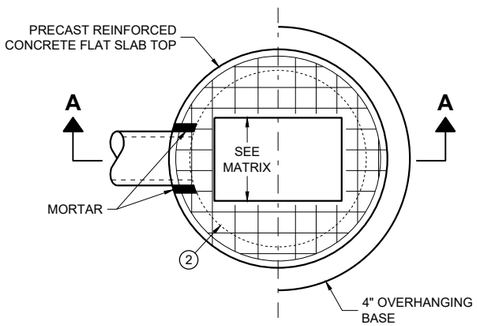

PLAN VIEW RECTANGULAR OPENING

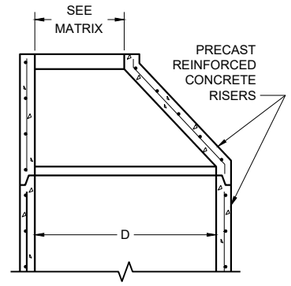

OPTIONAL PRECAST REINFORCED CONCRETE ECCENTRIC TOP

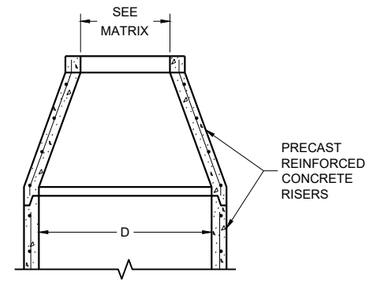

OPTIONAL PRECAST REINFORCED CONCRETE CONCENTRIC TOP

COVER MATRIX

CATCH BASIN SIZE	INLET COVER TYPE / OPENING SIZE (FT.)	ALL A'S	ALL B'S	BW	C	F	ALL H'S	S	T	V V-B	VV-B	WM	Z
3-FT	2 X 2	X	X					X		X			
	2 DIA.				X								X
4-FT TO 6-FT	2 X 2	X	X					X		X			
	2 X 2.5			X				X	X	X		X	
	2 DIA.				X								X
	2 X 3						X						
	2.5 X 3					X							
	2 X 3.5*										X*		

* REQUIRES 5-FT DIAMETER OR LARGER STRUCTURE

PIPE MATRIX

CATCH BASIN SIZE	MAXIMUM INSIDE PIPE DIAMETER FOR TWO PIPES	
	180° SEPARATION (IN)	90° SEPARATION (IN)
3-FT	15	12
4-FT	24	18
5-FT	36	24
6-FT	42	30

CATCH BASINS
3-FT, 4-FT, 5-FT AND 6-FT DIAMETER

GENERAL NOTES

DETAILS OF CONSTRUCTION, MATERIALS AND WORKMANSHIP NOT SHOWN ON THIS DRAWING SHALL CONFORM TO THE PERTINENT REQUIREMENTS OF THE STANDARD SPECIFICATIONS AND THE APPLICABLE SPECIAL PROVISIONS.

UNLESS OTHERWISE AUTHORIZED IN WRITING BY THE ENGINEER, THE CONTRACTOR SHALL NOT ORDER AND DELIVER PRECAST CATCH BASIN UNITS REQUIRED FOR THE PROJECT UNTIL A LIST OF SIZES IS FURNISHED BY THE ENGINEER.

DETAILED DRAWINGS FOR PROPOSED ALTERNATE DESIGNS FOR UNDERGROUND DRAINAGE STRUCTURES SHALL BE SUBMITTED TO THE ENGINEER FOR APPROVAL PROVIDING THAT SUCH ALTERNATE DESIGNS MAKE PROVISION FOR EQUIVALENT CAPACITY AND STRENGTH.

ALL DRAINAGE STRUCTURES ARE DESIGNATED ON THE PLANS AS "MANHOLES 3X3-L", "CATCH BASINS 4-B", "INLETS 2X3-H", ETC. THE FIRST NUMBERS DESIGNATE THE SIZE OF THE STRUCTURE, AND THE FOLLOWING LETTER DESIGNATES THE TYPE OF COVER TO BE USED TO COMPRISE THE COMPLETE UNIT.

BASES SHALL BE PLACED ON A BED OF MATERIAL AT LEAST 6 INCHES IN DEPTH, WHICH MEETS THE REQUIREMENTS OF FOUNDATION BACKFILL. THIS BEDDING SHALL BE COMPACTED AND PROVIDE UNIFORM SUPPORT FOR THE ENTIRE AREA OF THE BASE.

PRECAST REINFORCED CONCRETE CONE TOPS (ECCENTRIC OR CONCENTRIC) OR PRECAST REINFORCED CONCRETE FLAT SLAB TOPS MAY BE USED ON CONCRETE BLOCK STRUCTURES.

ECCENTRIC CONE TOPS MAY BE USED ON ALL STRUCTURES. CONCENTRIC CONE TOPS SHALL BE USE ONLY ON STRUCTURES 5 FEET OR LESS IN DEPTH UNLESS OTHERWISE DIRECTED BY THE ENGINEER.

STEPS MEETING AASHTO M199 AND THE FOLLOWING REQUIREMENTS SHALL BE INSTALLED IN ALL STRUCTURES OVER 5 FEET IN DEPTH: 16 INCH C-C MAXIMUM SPACING; PROJECT A MINIMUM CLEAR DISTANCE OF 4 INCHES FROM THE WALL AT THE POINT OF EMBEDMENT; MINIMUM LENGTH OF 10 INCHES; MINIMUM WALL EMBEDMENT OF 3 INCHES. FERROUS METAL STEPS NOT PAINTED OR TREATED TO RESIST CORROSION SHALL HAVE A MINIMUM CROSS SECTIONAL DIMENSION OF 1 INCH.

STEPS OF APPROVED POLYPROPYLENE PLASTIC COATED REINFORCEMENT BAR ARE ACCEPTABLE. REINFORCING BAR MUST BE A MINIMUM OF ½ INCH AND MEET THE REQUIREMENTS OF ASTM A615.

CERTIFICATION SHALL BE PROVIDED THAT INSTALLED STEPS WHEN TESTED IN ACCORDANCE WITH SECTION 10 OF AASHTO T280 CAN WITHSTAND A VERTICAL LOAD OF 800 LBS. AND A HORIZONTAL LOAD OF 400 LBS.

ALL BAR STEEL REINFORCEMENT SHALL BE EMBEDDED 2 INCHES CLEAR UNLESS OTHERWISE SHOWN OR NOTED.

ALL PRECAST INLET UNITS SHALL CONFORM TO THE PERTINENT REQUIREMENTS OF AASHTO DESIGNATION M199.

PRECAST REINFORCED RISERS SHALL HAVE A TONGUE AND GROOVE JOINT WITH TONGUE UP OR DOWN.

CONCRETE BLOCK WILL NOT BE PERMITTED FOR STRUCTURES GREATER THAN 4 FEET IN DIAMETER.

4" OVERHANGING BASES ARE REQUIRED FOR ALL CONCRETE BLOCK INSTALLATIONS. 4" OVERHANG IS REQUIRED WHEN SEPARATE PRECAST BASE IS PROVIDED. OVERHANG IS NOT REQUIRED ON PRECAST STRUCTURES WITH AN INTEGRAL OR MONOLITHIC BASE.

FOR ADDITIONAL CONFIGURATIONS, MAINTAIN A MINIMUM OF 12 INCHES AS MEASURED FROM THE INSIDE OF THE STRUCTURE WALL BETWEEN THE OUTSIDE PIPE WALLS OF ADJACENT PIPES. SEE DETAIL "D".

1. MINIMUM WALL THICKNESS SHALL BE 4 INCHES FOR 3-FT, 5 INCHES FOR 4-FT, 6 INCHES FOR 5-FT AND 7 INCHES FOR 6-FT DIAMETER PRECAST CATCH BASINS.
2. FOR PRECAST CATCH BASINS AND REINFORCED CONCRETE BASES PROVIDE REINFORCING STEEL IN ACCORDANCE TO AASHTO M199.
3. PRECAST FLAT SLAB TOPS AND BASES WITH A DIAMETER OF 48" AND LESS SHALL HAVE A MINIMUM THICKNESS OF 6". PRECAST FLAT SLAB TOPS AND BASES WITH A DIAMETER LARGER THAN 48" SHALL HAVE A MINIMUM THICKNESS OF 8".
4. 1" CONCRETE KEY POURED AFTER INSTALLATION. 2' SUMP MEASURED FROM TOP OF KEY.
5. JOINTS TO BE SEALED WITH A BUTYL RUBBER SEAL PER SEALANT MANUFACTURERS RECOMMENDATIONS CONFORMING TO ASTM C 990 OR RUBBER GASKETS CONFROMING TO ASTM C443.

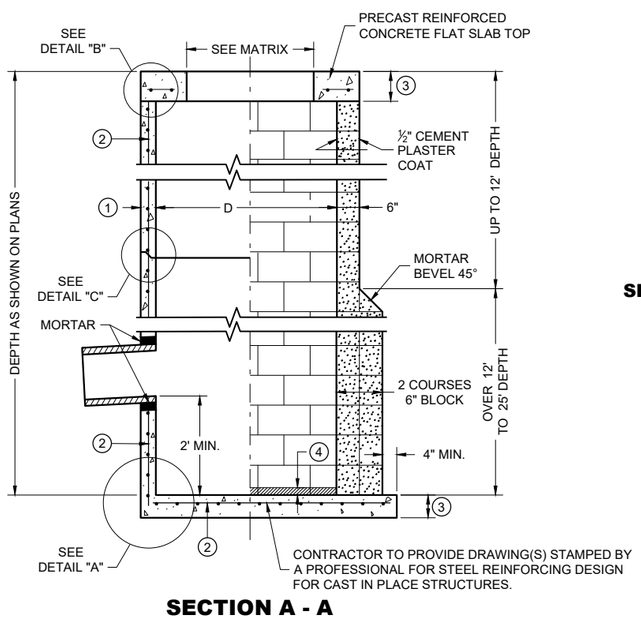

SECTION A - A

PRECAST REINFORCED CONCRETE WITH MONOLITHIC BASE

CONCRETE BLOCK WITH CAST IN PLACE OR PRECAST REINFORCED CONCRETE BASE 2

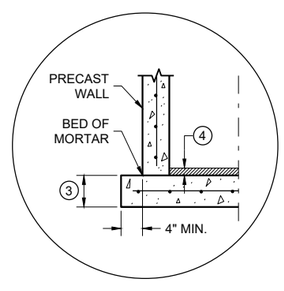

SEPARATE PRECAST REINFORCED CONCRETE BASE OPTION

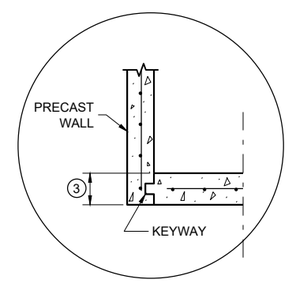

PRECAST REINFORCED CONCRETE WITH INTEGRAL BASE OPTION

DETAIL "A"

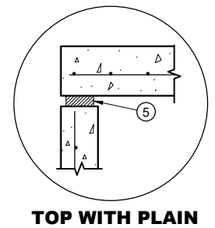

TOP WITH PLAIN END JOINT

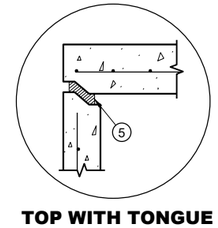

TOP WITH TONGUE AND GROOVE JOINT

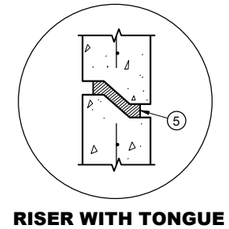

RISER WITH TONGUE AND GROOVE JOINT

DETAIL "B"

DETAIL "C"

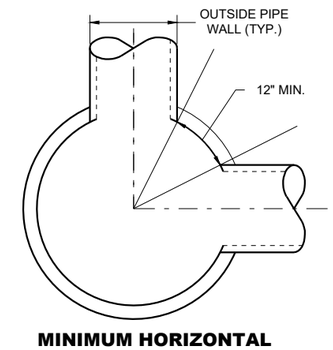

MINIMUM HORIZONTAL PIPE SEPARATION

DETAIL "D"

CATCH BASINS, 3-FT. 4-FT., 5 FT., AND 6-FT. DIAMETER

STATE OF WISCONSIN
DEPARTMENT OF TRANSPORTATION

APPROVED
December 2023 — DATE
/S/ Rodney Taylor — ROADWAY STANDARDS DEVELOPMENT UNIT SUPERVISOR
FHWA

6

6

SDD 08A08-03

SDD 08A08-03

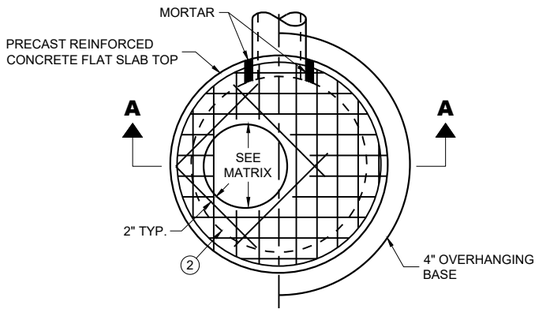

PLAN VIEW CIRCULAR OPENING

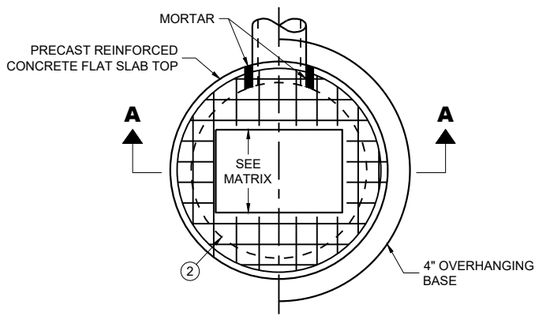

PLAN VIEW RECTANGULAR OPENING

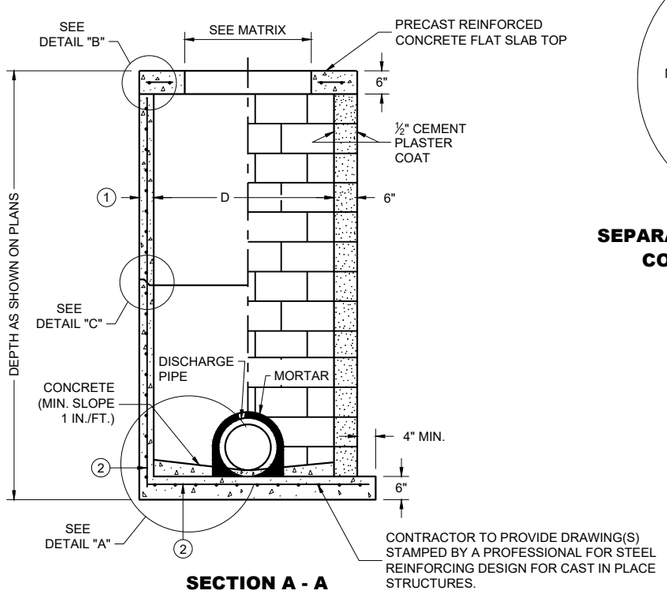

SECTION A - A

PRECAST REINFORCED CONCRETE WITH MONOLITHIC BASE

CONCRETE BLOCK WITH CAST IN PLACE OR PRECAST REINFORCED CONCRETE BASE 2

CIRCULAR INLETS WITH FLAT TOP

CATCH BASIN COVER OPENING MATRIX

INLET SIZE	INLET COVER TYPE	ALL A'S	ALL B'S	BW	C	F	ALL H'S	S	T	V	WM	Z
	OPENING SIZE (FT.)											
3-FT	2 DIA.				X							X
	2 X 2	X	X					X		X		
4-FT	2 DIA.				X							X
	2 X 2	X	X					X		X		
	2 X 2.5			X				X	X	X	X	
	2 X 3						X					
	2.5 X 3					X						

PIPE MATRIX

INLET SIZE	MAXIMUM INSIDE PIPE DIAMETER FOR TWO PIPES	
	180° SEPARATION (IN)	90° SEPARATION (IN)
3-FT	15	12
4-FT	24	18

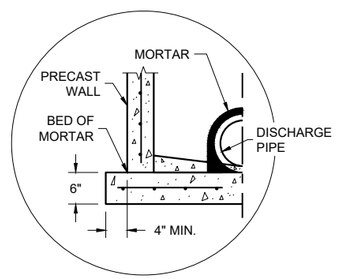

SEPARATE PRECAST REINFORCED CONCRETE BASE OPTION

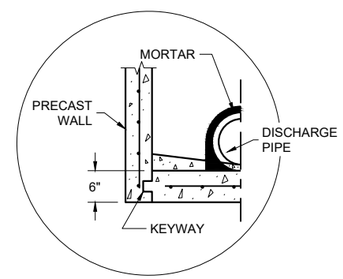

PRECAST REINFORCED CONCRETE WITH INTEGRAL BASE OPTION

DETAIL "A"

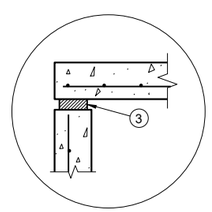

TOP WITH PLAIN END JOINT

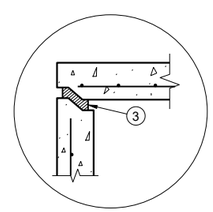

TOP WITH TONGUE AND GROOVE JOINT

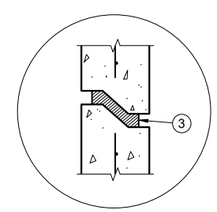

RISER WITH TONGUE AND GROOVE JOINT

DETAIL "B"

DETAIL "C"

INLETS 3-FT AND 4-FT DIAMETER

GENERAL NOTES

DETAILS OF CONSTRUCTION, MATERIALS AND WORKMANSHIP NOT SHOWN ON THIS DRAWING SHALL CONFORM TO THE PERTINENT REQUIREMENTS OF THE STANDARD SPECIFICATIONS AND THE APPLICABLE SPECIAL PROVISIONS.

UNLESS OTHERWISE AUTHORIZED IN WRITING BY THE ENGINEER, THE CONTRACTOR SHALL NOT ORDER AND DELIVER PRECAST INLET UNITS REQUIRED FOR THE PROJECT UNTIL A LIST OF SIZES IS FURNISHED BY THE ENGINEER.

DETAILED DRAWINGS FOR PROPOSED ALTERNATE DESIGNS FOR UNDERGROUND DRAINAGE STRUCTURES SHALL BE SUBMITTED TO THE ENGINEER FOR APPROVAL PROVIDING THAT SUCH ALTERNATE DESIGNS MAKE PROVISION FOR EQUIVALENT CAPACITY AND STRENGTH.

ALL DRAINAGE STRUCTURES ARE DESIGNATED ON THE PLANS AS "MANHOLES 3X3-L", "CATCH BASINS 4-B", "INLETS 2X3-H", ETC. THE FIRST NUMBERS DESIGNATE THE SIZE OF THE STRUCTURE, AND THE FOLLOWING LETTER DESIGNATES THE TYPE OF COVER TO BE USED TO COMPRISE THE COMPLETE UNIT.

BASES SHALL BE PLACED ON A BED OF MATERIAL AT LEAST 6 INCHES IN DEPTH, WHICH MEETS THE REQUIREMENTS OF FOUNDATION BACKFILL. THIS BEDDING SHALL BE COMPACTED AND PROVIDE UNIFORM SUPPORT FOR THE ENTIRE AREA OF THE BASE.

ALL BAR STEEL REINFORCEMENT SHALL BE EMBEDDED 2 INCHES CLEAR UNLESS OTHERWISE SHOWN OR NOTED.

ALL PRECAST INLET UNITS SHALL CONFORM TO THE PERTINENT REQUIREMENTS OF AASHTO DESIGNATION M199.

PRECAST REINFORCED RISERS SHALL HAVE A TONGUE AND GROOVE JOINT WITH TONGUE UP OR DOWN.

4" OVERHANGING BASES ARE REQUIRED FOR ALL CONCRETE BLOCK INSTALLATIONS. 4" OVERHANG IS REQUIRED WHEN SEPARATE PRECAST BASE IS PROVIDED. OVERHANG IS NOT REQUIRED ON PRECAST STRUCTURES WITH AN INTEGRAL OR MONOLITHIC BASE.

FOR ADDITIONAL CONFIGURATIONS, MAINTAIN A MINIMUM OF 12 INCHES AS MEASURED FROM THE INSIDE OF THE STRUCTURE WALL BETWEEN THE OUTSIDE PIPE WALLS OF ADJACENT PIPES. SEE DETAIL "D".

1. MINIMUM WALL THICKNESS SHALL BE 4 INCHES FOR 3-FT DIAMETER AND 5 INCHES FOR 4-FT DIAMTER PRECAST INLETS.
2. FOR PRECAST INLETS AND REINFORCED CONCRETE BASES PROVIDE REINFORCING STEEL IN ACCORDANCE TO AASHTO M199.
3. JOINTS TO BE SEALED WITH A BUTYL RUBBER SEAL PER SEALANT MANUFACTURERS RECOMMENDATIONS CONFORMING TO ASTM C 990 OR RUBBER GASKETS CONFORMING TO ASTM C443.

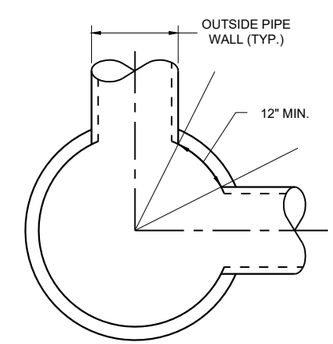

MINIMUM HORIZONTAL PIPE SEPARATION

DETAIL "D"

INLETS 3-FT AND 4-FT DIAMETER

STATE OF WISCONSIN
DEPARTMENT OF TRANSPORTATION

APPROVED
December 2023 — DATE
/S/ Rodney Taylor — ROADWAY STANDARDS DEVELOPMENT UNIT SUPERVISOR
FHWA

6

SDD 08C06-03

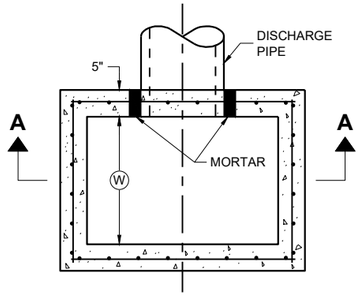

PLAN VIEW

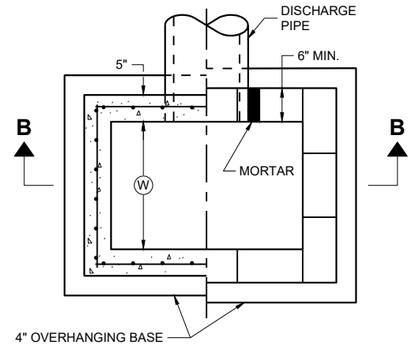

PLAN VIEW

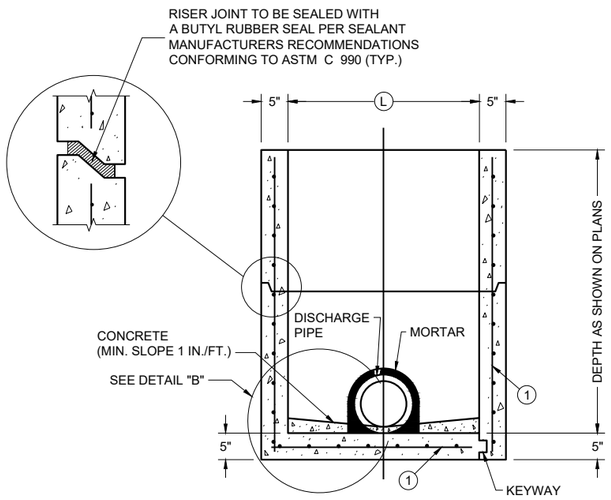

PRECAST REINFORCED CONCRETE WITH MONOLITHIC BASE

PRECAST REINFORCED CONCRETE WITH INTEGRAL BASE

SECTION A - A

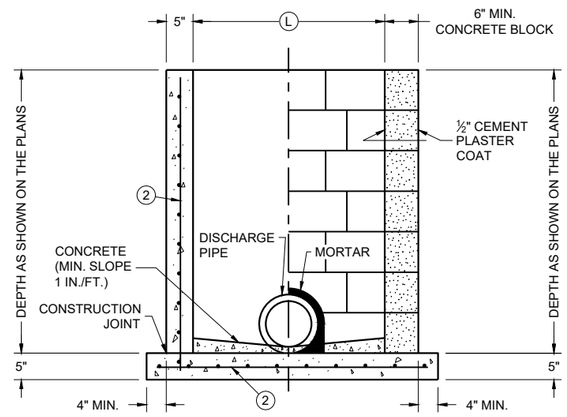

CAST IN PLACE REINFORCED CONCRETE

CONCRETE BLOCK WITH CAST IN PLACE OR PRECAST REINFORCED CONCRETE BASE (1)

SECTION B - B

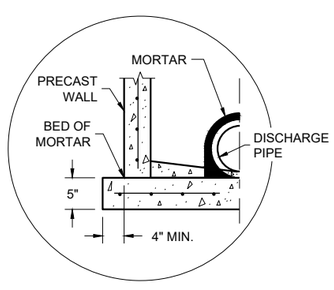

SEPARATE PRECAST REINFORCED CONCRETE BASE OPTION

DETAIL "B"

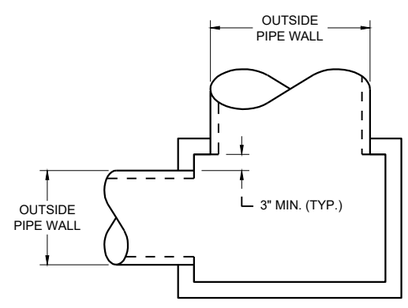

DETAIL "A"

GENERAL NOTES

DETAILS OF CONSTRUCTION, MATERIALS AND WORKMANSHIP N0T SHOWN ON THIS DRAWING SHALL CONFORM TO THE PERTINENT REQUIREMENTS OF THE STANDARD SPECIFICATIONS AND THE APPLICABLE SPECIAL PROVISIONS.

UNLESS OTHERWISE AUTHORIZED IN WRITING BY THE ENGINEER, THE CONTRACTOR SHALL NOT ORDER AND DELIVER PRECAST INLET UNITS REQUIRED FOR THE PROJECT UNTIL A LIST OF SIZES IS FURNISHED BY THE ENGINEER.

DETAILED DRAWINGS FOR PROPOSED ALTERNATE DESIGNS FOR UNDERGROUND DRAINAGE STRUCTURES SHALL BE SUBMITTED TO THE ENGINEER FOR APPROVAL PROVIDING THAT SUCH ALTERNATE DESIGNS MAKE PROVISION FOR EQUIVALENT CAPACITY AND STRENGTH.

ALL PRECAST INLET UNITS SHALL CONFORM TO THE PERTINENT REQUIREMENTS OF ASTM C 913.

ALL DRAINAGE STRUCTURES ARE DESIGNATED ON THE PLANS AS "MANHOLES 3X3-L", "CATCH BASINS 4-B", "INLETS 2X3-H", ETC. THE FIRST NUMBERS DESIGNATES THE SIZE OF THE STRUCTURE, AND THE FOLLOWING LETTER DESIGNATES THE TYPE OF COVER TO BE USED TO COMPRISE THE COMPLETE UNIT.

BASES SHALL BE PLACED ON A BED OF MATERIAL AT LEAST 6 INCHES IN DEPTH, WHICH MEETS THE REQUIREMENTS OF FOUNDATION BACKFILL. THIS BEDDING SHALL BE COMPACTED AND PROVIDE UNIFORM SUPPORT FOR THE ENTIRE AREA OF THE BASE.

ALL BAR STEEL REINFORCEMENT SHALL BE EMBEDDED 2 INCHES CLEAR UNLESS OTHERWISE SHOWN OR NOTED.

PRECAST REINFORCED RISERS SHALL HAVE A TONGUE AND GROOVE JOINT WITH TONGUE UP OR DOWN.

4" OVERHANGING BASES ARE REQUIRED FOR CAST-IN-PLACE REINFORCED CONCRETE AND CONCRETE BLOCK INSTALLATIONS. 4" OVERHANG IS REQUIRED WHEN SEPARATE PRECAST BASE IS PROVIDED. OVERHANG IS NOT REQUIRED ON PRECAST STRUCTURES WITH AN INTEGRAL OR MONOLITHIC BASE.

MAXIMUM INSIDE PIPE DIAMETER DETERMINED BY 3" CLEARANCE ON EACH SIDE OF THE OUTSIDE WALL OF THE PIPE. SEE DETAIL "A". ASSUMES PIPE ENTERS PERPENDICULAR TO THE STRUCTURE.

(1) FOR PRECAST INLETS AND REINFORCED CONCRETE BASES PROVIDE REINFORCING STEEL IN ACCORDANCE TO ASTM C 913
(2) CONTRACTOR TO PROVIDE DRAWING(S) STAMPED BY A PROFESSIONAL ENGINEER FOR STEEL REINFORCING DESIGN FOR CAST-IN-PLACE STRUCTURES.

CATCH BASIN COVER MATRIX

INLET SIZE	WIDTH (W) (FT.)	LENGTH (L) (FT.)	INLET COVER TYPE									
			ALL A'S	ALL B'S	BW	F	ALL H'S	S	T	V	WM	V V-B
2 X 2-FT	2	2	X	X				X				
2 X 2.5-FT	2	2.5			X			X	X	X	X	
2 X 3-FT	2	3					X					
2.5 X 3-FT	2.5	3				X						
2 X 3.5-FT	2	3.5										X

PIPE MATRIX

CATCH BASIN SIZE	MAXIMUM INSIDE PIPE DIAMETER FOR TWO PIPES	
	WIDTH (IN)	LENGTH (IN)
2 X 2-FT	12	12
2 X 2.5-FT	12	18
2 X 3-FT	12	24
2.5 X 3-FT	18	24
2 X 3.5-FT	12	30

INLETS 2 X 2-FT, 2 X 2.5-FT, 2 X 3-FT, 2.5 X 3-FT AND 2X3.5-FT

INLETS 2 X 2-FT, 2 X 2.5-FT, 2 X 3-FT, 2.5 X 3-FT AND 2 X 3.5-FT

STATE OF WISCONSIN
DEPARTMENT OF TRANSPORTATION

APPROVED
December 2023 — DATE
/S/ Rodney Taylor — ROADWAY STANDARDS DEVELOPMENT UNIT SUPERVISOR
FHWA

6

SDD 08C07-03

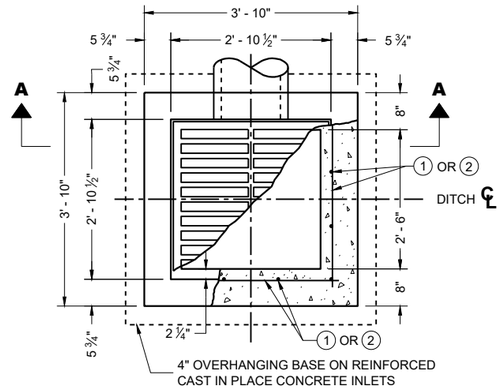

PLAN VIEW

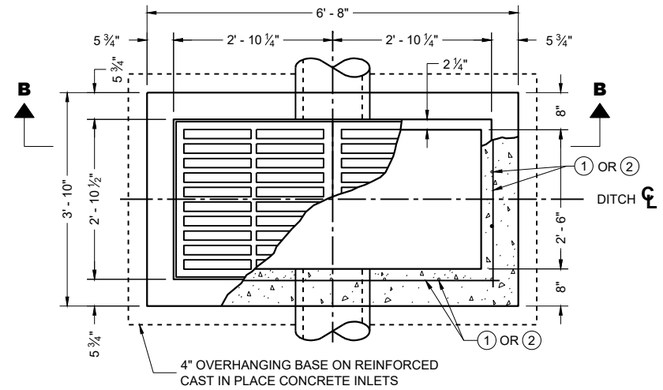

PLAN VIEW

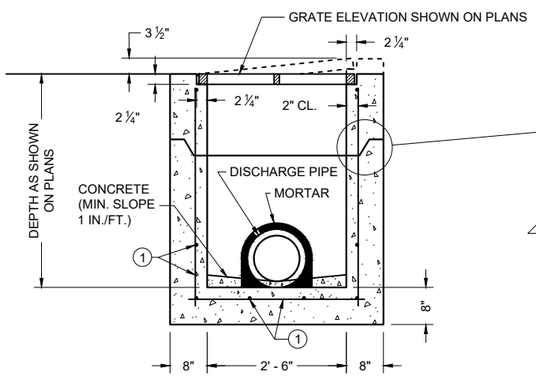

PRECAST REINFORCED CONCRETE SECTION A - A

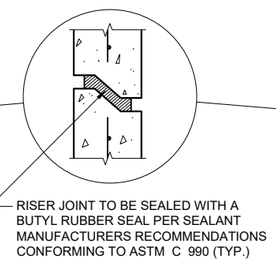

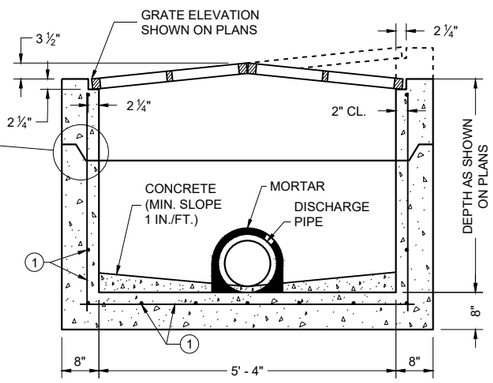

PRECAST REINFORCED CONCRETE SECTION B - B

GENERAL NOTES

DETAILS OF CONSTRUCTION, MATERIALS AND WORKMANSHIP N0T SHOWN ON THIS DRAWING SHALL CONFORM TO THE PERTINENT REQUIREMENTS OF THE STANDARD SPECIFICATIONS AND THE APPLICABLE SPECIAL PROVISIONS.

UNLESS OTHERWISE AUTHORIZED IN WRITING BY THE ENGINEER, THE CONTRACTOR SHALL NOT ORDER AND DELIVER PRECAST INLET UNITS REQUIRED FOR THE PROJECT UNTIL A LIST OF SIZES IS FURNISHED BY THE ENGINEER.

DETAILED DRAWINGS FOR PROPOSED ALTERNATE DESIGNS FOR INLETS WHICH MAY INCLUDE PRECAST REINFORCED CONCRETE INLETS, SHALL BE SUBMITTED TO THE ENGINEER FOR APPROVAL PROVIDING THAT SUCH ALTERNATE DESIGNS MAKE PROVISION FOR EQUIVALENT CAPACITY AND STRENGTH.

ALL MEDIAN INLETS ARE DESIGNATED ON THE PLANS AS "INLETS, 1G-MS", ETC. THE FIRST NUMBER AND LETTER DESIGNATE THE TYPE OF STRUCTURE, AND THE FOLLOWING LETTERS DESIGNATE THE TYPE OF COVER TO BE USED TO COMPRISE THE COMPLETE UNIT.

BASES SHALL BE PLACED ON A BED OF MATERIAL AT LEAST 6 INCHES IN DEPTH, WHICH MEETS THE REQUIREMENTS OF FOUNDATION BACKFILL. THIS BEDDING SHALL BE COMPACTED AND PROVIDE UNIFORM SUPPORT FOR THE ENTIRE AREA OF THE BASE.

ALL PRECAST INLET UNITS SHALL CONFORM TO THE PERTINENT REQUIREMENTS OF ASTM C 913.

ALL BAR STEEL REINFORCEMENT SHALL BE EMBEDDED 2 INCHES CLEAR UNLESS OTHERWISE SHOWN OR NOTED.

PRECAST REINFORCED RISERS SHALL HAVE A TONGUE AND GROOVE JOINT WITH TONGUE UP OR DOWN.

MAXIMUM INSIDE PIPE DIAMETER DETERMINED BY 3" CLEARANCE ON EACH SIDE OF THE OUTSIDE WALL OF THE PIPE. SEE DETAIL "A". ASSUMES PIPE ENTERS PERPENDICULAR TO THE STRUCTURE.

1 FOR PRECAST INLETS AND REINFORCED CONCRETE BASES PROVIDE REINFORCING STEEL IN ACCORDANCE TO ASTM C 913.

2 CONTRACTOR TO PROVIDE DRAWING(S) STAMPED BY A PROFESSIONAL ENGINEER FOR STEEL REINFORCING DESIGN FOR CAST-IN-PLACE STRUCTURES.

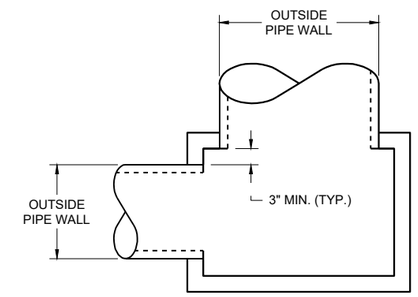

DETAIL "A"

PIPE MATRIX

INLET SIZE	MAXIMUM INSIDE PIPE DIAMETER	
	WIDTH (IN)	LENGTH (IN)
1 GRATE	18	18
2 GRATE	18	42

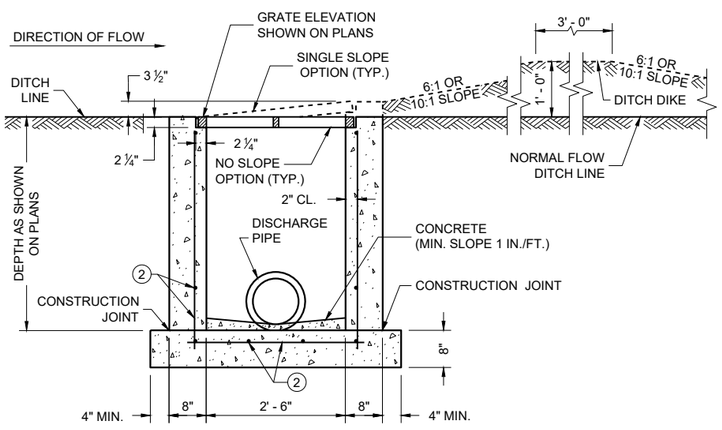

REINFORCED CAST IN PLACE CONCRETE SECTION A - A

INLETS MEDIAN 1 GRATE

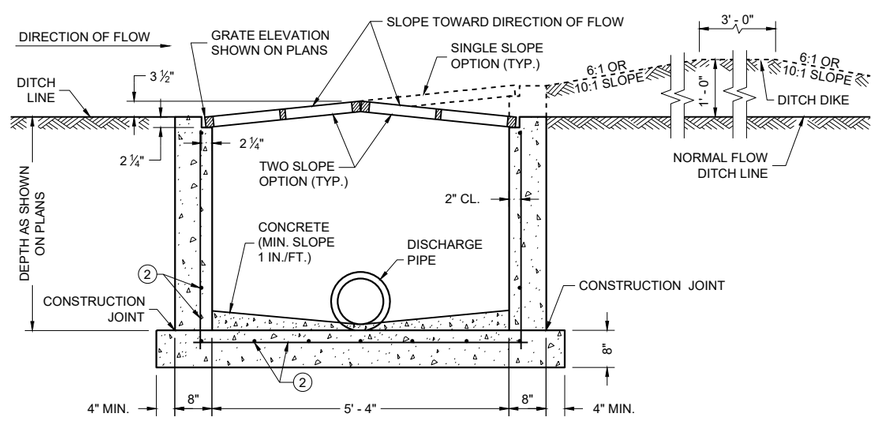

REINFORCED CAST IN PLACE CONCRETE SECTION B - B

INLETS MEDIAN 2 GRATE

INLETS
MEDIAN 1 AND 2 GRATE

STATE OF WISCONSIN
DEPARTMENT OF TRANSPORTATION

APPROVED
December 2023 — DATE
/S/ Rodney Taylor — ROADWAY STANDARDS DEVELOPMENT UNIT SUPERVISOR
FHWA

6
SDD 08C08-03

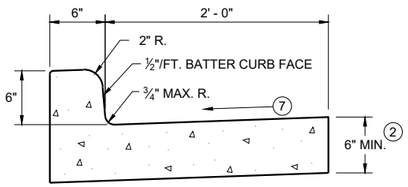

TYPES A (1) & D

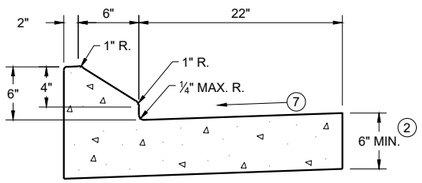

6" SLOPED CURB TYPES G (1) & J

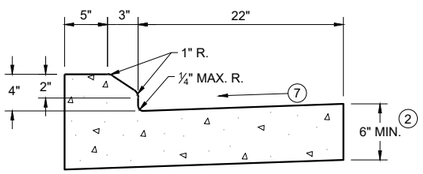

4" SLOPED CURB TYPES G (1) & J

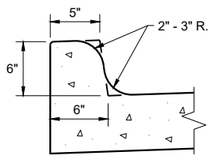

TYPES K (1) & L
(OPTIONAL CURB SHAPE)

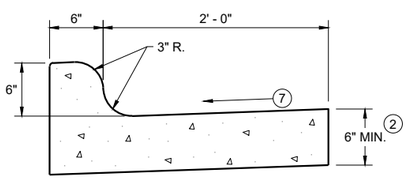

TYPES K (1) & L

CONCRETE CURB AND GUTTER 30"

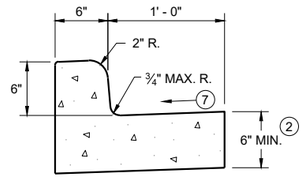

TYPES A (1) & D

CONCRETE CURB AND GUTTER 18"

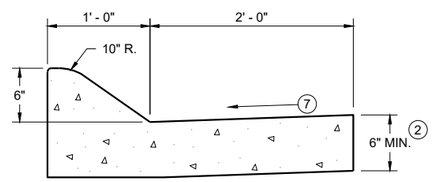

6" SLOPED CURB TYPES A (1) & D

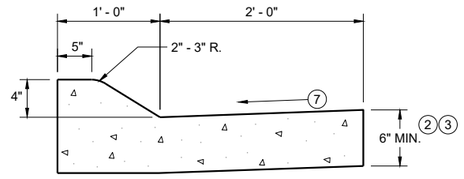

4" SLOPED CURB TYPES A (1) & D

CONCRETE CURB AND GUTTER 36"

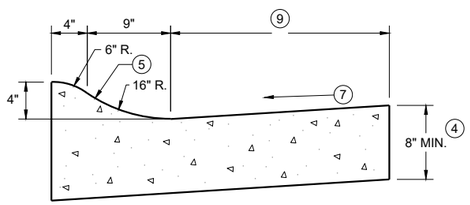

4" SLOPED CURB TYPES R (1) & T

TBT & TBTT	X
30"	22"
36"	28"

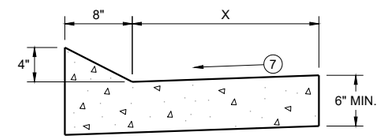

TYPES TBT & TBTT (1)

CONCRETE CURB AND GUTTER

PAVEMENT THICKNESS AND MAXIMUM CONCRETE PANEL WIDTH TABLE

PAVEMENT THICKNESS	MAXIMUM PANEL WIDTH
LESS THAN 10"	12'
10" & ABOVE	15'

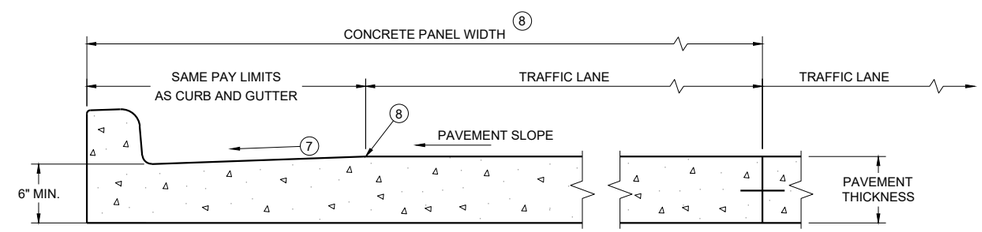

PARTIAL SECTION OF PAVEMENT * WITH INTEGRAL CURB AND GUTTER

* BIKE LANE IS NOT SHOWN

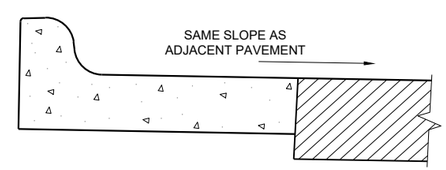

REVERSE SLOPE GUTTER (6)
(TYPICAL FOR ALL CURB & GUTTER TYPES)

GENERAL NOTES

DETAILS OF CONSTRUCTION AND WORKMANSHIP NOT SHOWN ON THIS DRAWING SHALL CONFORM TO THE PERTINENT REQUIREMENTS OF THE CONTRACT.

PAVEMENT TIES AND TIE BARS SHALL BE EPOXY COATED IN CONFORMANCE WITH SUBSECTION 505.2.6.2 OF THE STANDARD SPECIFICATIONS.

INTEGRAL CURB AND GUTTER SHALL CONFORM TO THE DETAILS SHOWN FOR CONCRETE CURB AND GUTTER INCLUDING THE TRANSVERSE GUTTER SLOPE.

UNLESS OTHERWISE SHOWN ON THE TYPICAL CROSS SECTIONS, THE BASE AGGREGATE AND COMMON EXCAVATION LIMITS ARE 2' - 0" BEHIND THE BACK OF CURBS.

(1) TIE BARS ARE REQUIRED FOR CURB AND GUTTERS TYPES A, G, K, R, AND TBTT.

(2) THE BOTTOM OF CURB AND GUTTER MAY BE CONSTRUCTED EITHER LEVEL OR PARALLEL TO THE SLOPE OF THE SUBGRADE OR BASE AGGREGATE PROVIDED A 6" MINIMUM GUTTER THICKNESS IS MAINTAINED.

(3) USE 8" MINIMUM GUTTER THICKNESS WHEN USED WITH AN ADJACENT CONCRETE TRUCK APRON PLACED BEHIND BACK OF CURB.

(4) THE BOTTOM OF CURB AND GUTTER MAY BE CONSTRUCTED EITHER LEVEL OR PARALLEL TO THE SLOPE OF THE SUBGRADE OR BASE AGGREGATE PROVIDED A 8" MINIMUM GUTTER THICKNESS IS MAINTAINED.

(5) UNLESS OTHERWISE NOTED, FOR STAKING PURPOSES THE FACE OF CURB IS 6" FROM THE BACK OF CURB.

(6) WHEN REVERSE SLOPE GUTTER IS REQUIRED, THE LOCATION(S) WILL BE SHOWN ELSEWHERE IN THE PLAN.

(7) USE 4% GUTTER CROSS SLOPE UNLESS OTHERWISE NOTED IN THE PLANS.

(8) INCLUDE LONGITUDINAL JOINT AND TIE BARS ALONG LANE EDGE WHEN CONCRETE PANEL WIDTH EXCEEDS THE MAXIMUM WIDTH PER TABLE BELOW. LONGITUDINAL JOINT(S) ARE NOT ALLOWED WITHIN TRAFFIC LANES AND BIKE LANES. LONGITUDINAL JOINT MAY BE SAWED.

(9) CONCRETE CURB AND GUTTER 4-INCH SLOPED 30-INCH TYPE "R" AND "T" = 17 INCHES
CONCRETE CURB AND GUTTER 4-INCH SLOPED 36-INCH TYPE "R" AND "T" = 23 INCHES

CONCRETE CURB AND GUTTER

STATE OF WISCONSIN
DEPARTMENT OF TRANSPORTATION

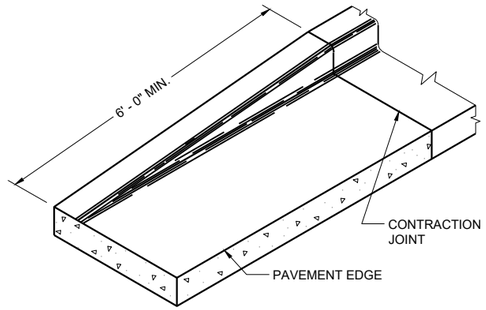

END SECTION CURB AND GUTTER

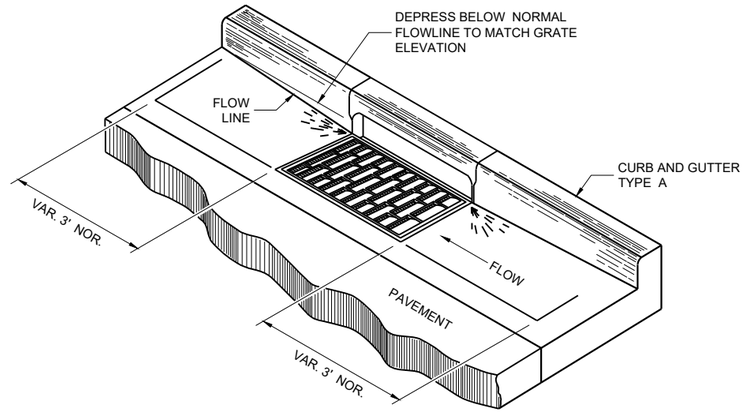

DETAIL OF CURB AND GUTTER AT INLETS

(TYPICAL H INLET COVER SHOWN)

GENERAL NOTES

DETAILS OF CONSTRUCTION AND WORKMANSHIP NOT SHOWN ON THIS DRAWING SHALL CONFORM TO THE PERTINENT REQUIREMENTS OF THE CONTRACT.

PAVEMENT TIES AND TIE BARS SHALL BE EPOXY COATED IN CONFORMANCE WITH SUBSECTION 505.2.6.2 OF THE STANDARD SPECIFICATIONS.

UNLESS OTHERWISE SHOWN ON THE TYPICAL CROSS SECTIONS, THE BASE AGGREGATE AND COMMON EXCAVATION LIMITS ARE 2' - 0" BEHIND THE BACK OF CURBS.

(1) TIE BARS ARE REQUIRED FOR CURB AND GUTTERS TYPES A, G, K, R, AND TBTT.

(2) THE BOTTOM OF CURB AND GUTTER MAY BE CONSTRUCTED EITHER LEVEL OR PARALLEL TO THE SLOPE OF THE SUBGRADE OR BASE AGGREGATE PROVIDED A 6" MINIMUM GUTTER THICKNESS IS MAINTAINED.

(10) REFER TO SDD 08D18 AND 08D19 FOR ADDITIONAL DRIVEWAY ENTRANCE CURB DETAILS.

(11) PLACE 1" THICK EXPANSION JOINT MATERIAL BETWEEN VERTICAL FACE CURB TYPES EXTENDING FROM THE TOP OF CURB TO 1 INCH BELOW THE ADJOINING CONCRETE SURFACE. RIGID CONCRETE STRUCTURES INCLUDE RAISED CONCRETE MEDIANS, CONCRETE SAFETY ISLANDS, SPLITTER ISLANDS, OR LOCATIONS IDENTIFIED ON THE PLANS.

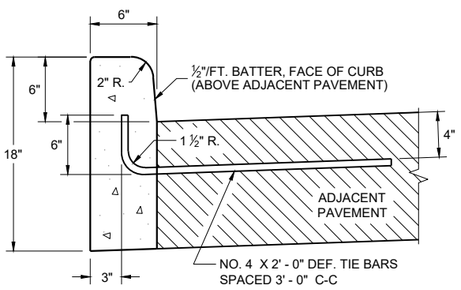

TYPES A (1) & D

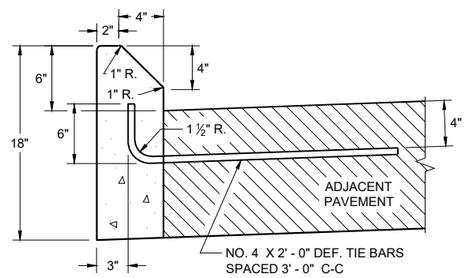

TYPES G (1) & J

CONCRETE CURB

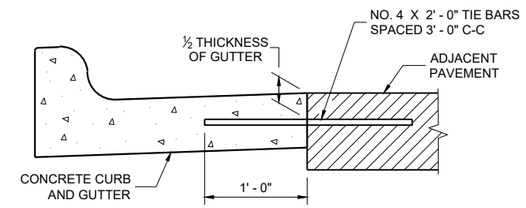

TYPICAL TIE BAR LOCATION (1)

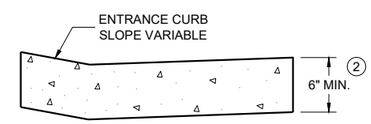

DRIVEWAY ENTRANCE CURB (10)

(WHEN DIRECTED BY THE ENGINEER)

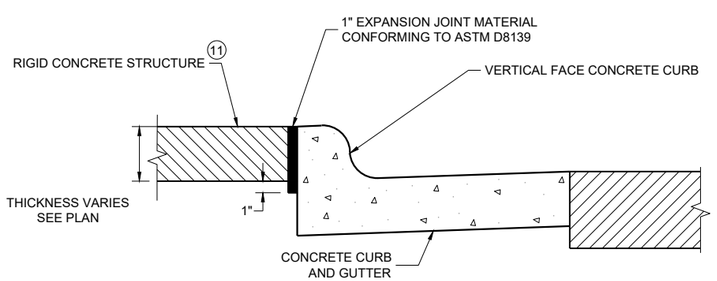

EXPANSION JOINT DETAIL FOR VERTICAL CURB ABUTTING A RIGID STRUCTURE (11)

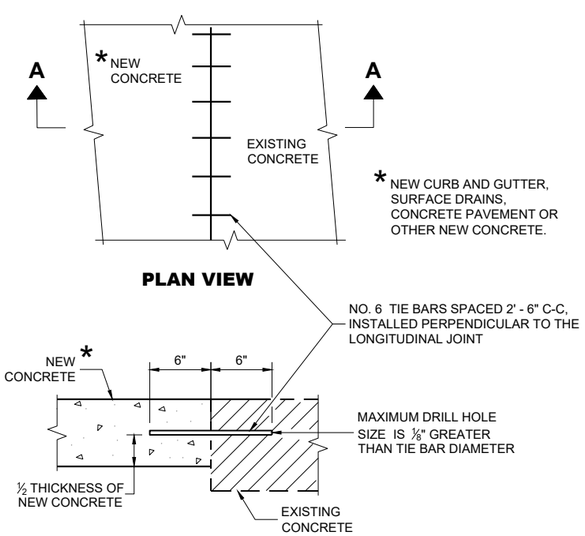

PLAN VIEW

SECTION A - A

TIE BARS DRILLED INTO EXISTING PAVEMENT

CONCRETE CURB, TIES AND CURB AND GUTTER APPLICATIONS

STATE OF WISCONSIN
DEPARTMENT OF TRANSPORTATION

APPROVED
May 2023 — DATE
/S/ Rodnery Taylor — ROADWAY STANDARDS DEVELOPMENT UNIT SUPERVISOR

FHWA

GENERAL NOTES

DETAILS OF CONSTRUCTION, MATERIALS AND WORKMANSHIP NOT SHOWN ON THIS DRAWING SHALL CONFORM TO THE PERTINENT REQUIREMENTS OF THE STANDARD SPECIFICATIONS AND THE APPLICABLE SPECIAL PROVISIONS.

ALL STEEL REINFORCEMENT SHALL BE EMBEDDED 2 INCHES CLEAR UNLESS OTHERWISE SHOWN OR NOTED.

1. USE A JOINT SEALANT CONFORMING TO STANDARD SPECIFICATION 415.2.6.
2. NO. 4 X 2' - 0" TIE BARS SPACED AT 12" C-C TO BE PLACED BY BRIDGE CONTRACTOR OR DRILLED TIE BARS PLACED AS DIRECTED BY THE ENGINEER.
3. PAVED CONCRETE SHOULDER (SDD 13A03) OR CONCRETE DRAINAGE SLAB.
4. CONCRETE PAVEMENT APPROACH SLAB (SHOWN) OR STRUCTURE APPROACH SLAB AND CONCRETE PAVEMENT APPROACH SLAB. SEE SDD 13B02.
5. PAVED CONCRETE SHOULDER (SDD 13A03) OR ASPHALT SHOULDER.
6. CONCRETE CURB AND GUTTER 4-INCH SLOPED 36-INCH TYPE TBT OR TBTT. USE TYPE TBTT CURB WITH NO. 4 X 2' -0" TIE BARS SPACED AT 3' - 0" C-C ONLY WHEN ADJACENT TO CONCRETE PAVEMENTS.
7. PLACE FLUME BEFORE MSG THRIE BEAM TRANSITION POST 1 (SEE SDD 14B45)
8. CENTER FLUME BETWEEN POSTS. 6-INCH MINIMUM SEPARATION FROM OUTSIDE EDGE OF FLUME TO POSTS.
9. MINIMUM REINFORCEMENT SHALL BE 4" X 4" - W3.0 X W3.0 OR NO. 3 BARS LONGITUDINAL AND TRANSVERSE SPACING 12" C -C.
10. SEE ROADWAY PLANS FOR FLUME LOCATION.
11. START CURB AND GUTTER TRANSITION OR END SECTION.
12. DEPRESS FLOW LINE (SEE DETAIL)

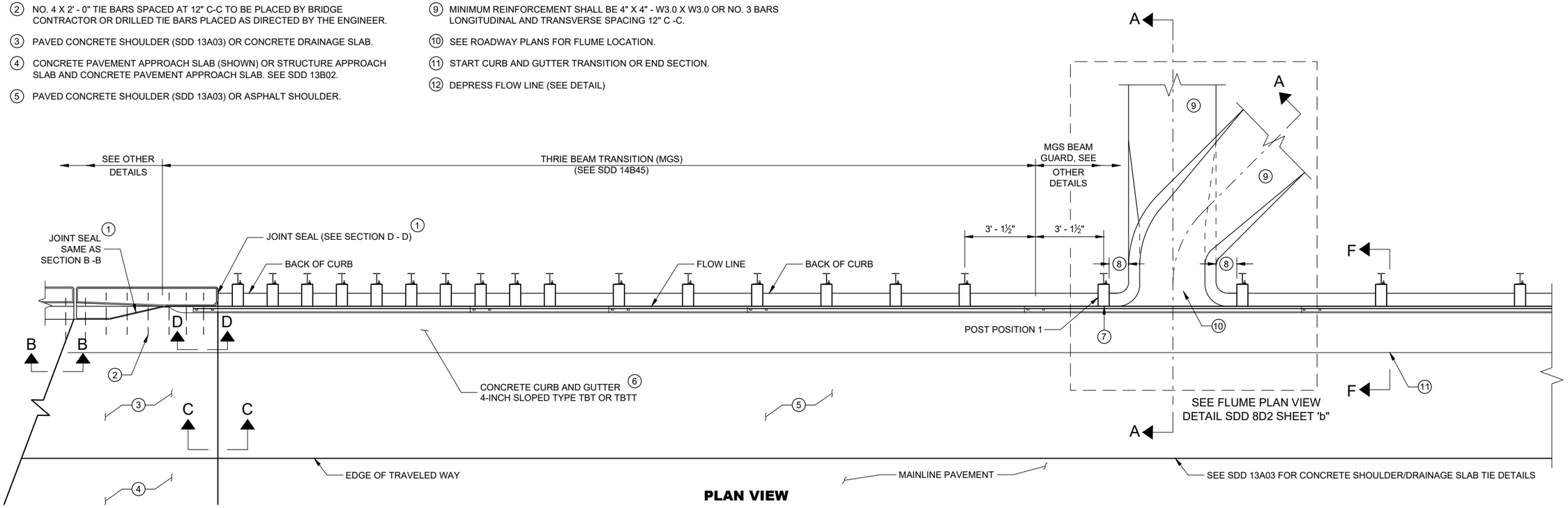

PLAN VIEW

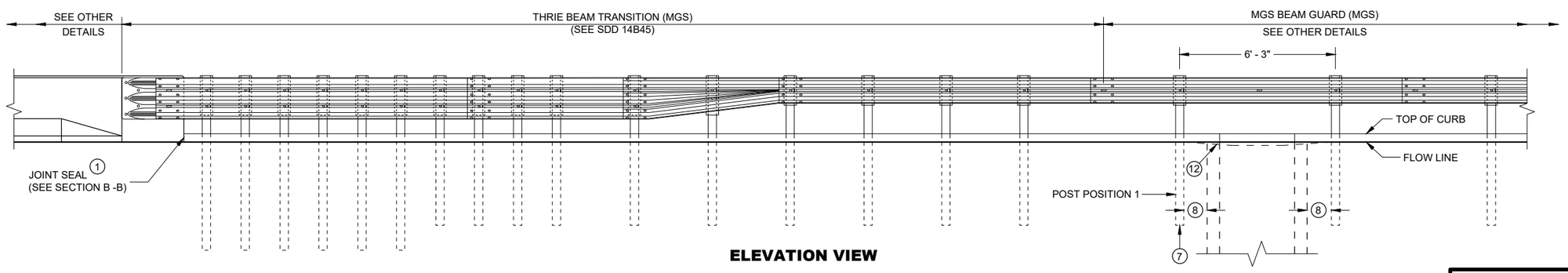

ELEVATION VIEW

CONCRETE SURFACE DRAINS FLUME TYPE AT STRUCTURES

STATE OF WISCONSIN
DEPARTMENT OF TRANSPORTAT

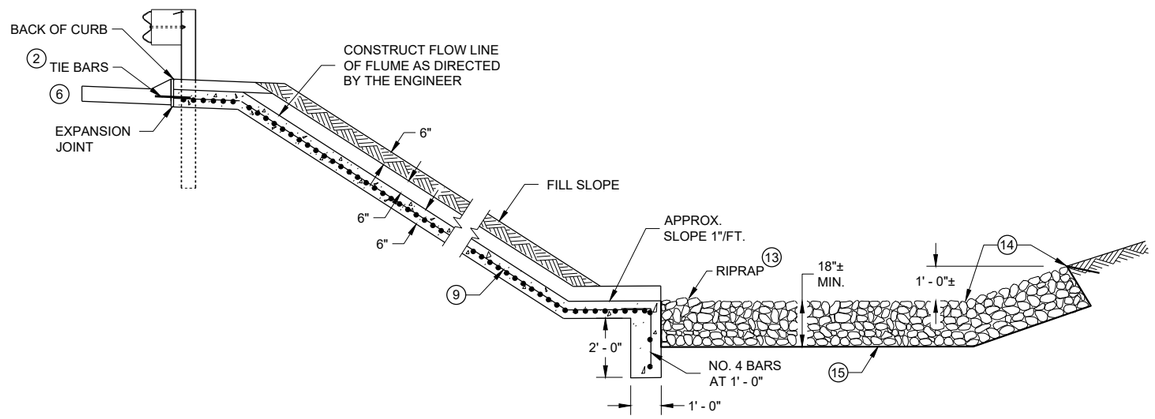

SECTION A - A

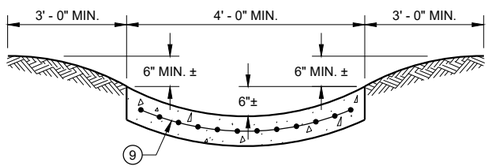

SECTION G - G

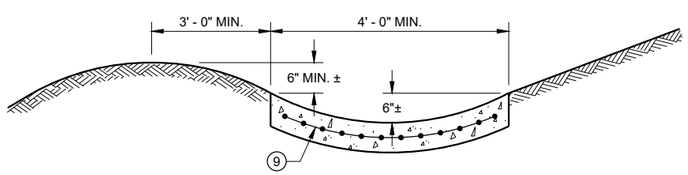

SECTION H - H

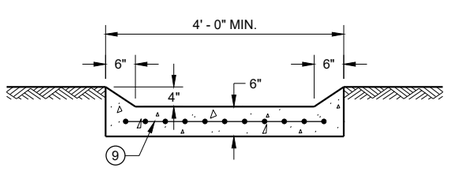

SECTION I - I

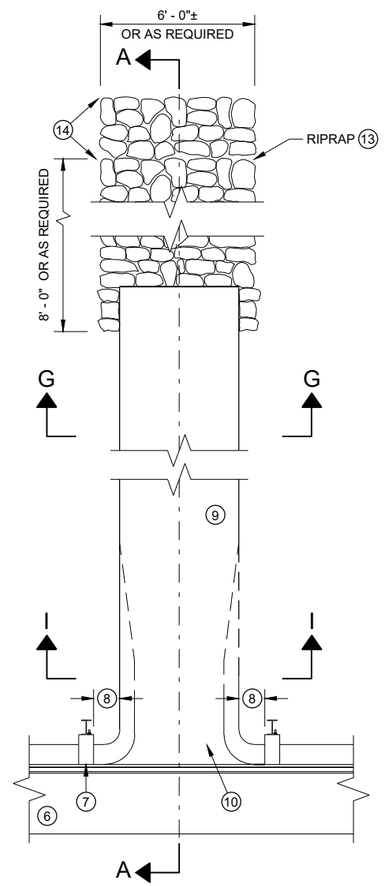

PLAN VIEW PERPENDICULAR FLUME

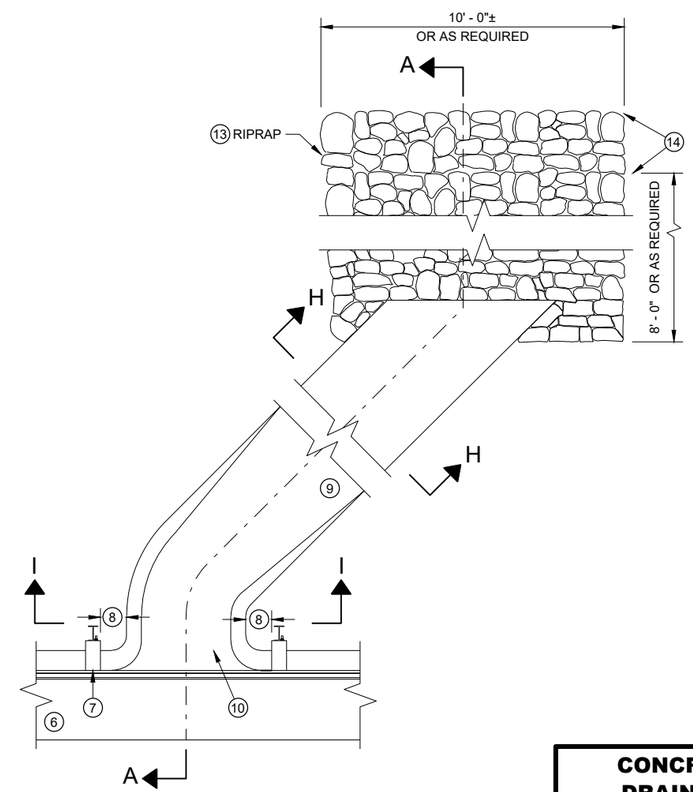

PLAN VIEW SKEWED FLUME

GENERAL NOTES

DETAILS OF CONSTRUCTION, MATERIALS AND WORKMANSHIP NOT SHOWN ON THIS DRAWING SHALL CONFORM TO THE PERTINENT REQUIREMENTS OF THE STANDARD SPECIFICATIONS AND THE APPLICABLE SPECIAL PROVISIONS.

ALL STEEL REINFORCEMENT SHALL BE EMBEDDED 2 INCHES CLEAR UNLESS OTHERWISE SHOWN OR NOTED.

1. USE A JOINT SEALANT CONFORMING TO STANDARD SPECIFICATION 415.2.6.
2. NO. 4 X 2' - 0" TIE BARS SPACED AT 12" C-C TO BE PLACED BY BRIDGE CONTRACTOR OR DRILLED TIE BARS PLACED AS DIRECTED BY THE ENGINEER.
3. PAVED CONCRETE SHOULDER (SDD 13A03) OR CONCRETE DRAINAGE SLAB.
4. CONCRETE PAVEMENT APPROACH SLAB (SHOWN) OR STRUCTURE APPROACH SLAB AND CONCRETE PAVEMENT APPROACH SLAB. SEE SDD 13B02 AND STRUCTURE PLANS.
5. PAVED CONCRETE SHOULDER (SDD 13A03) OR ASPHALT SHOULDER.
6. CONCRETE CURB AND GUTTER 4-INCH SLOPED 36-INCH TYPE TBT OR TBTT. USE TYPE TBTT CURB WITH NO. 4 X 2' -0" TIE BARS SPACED AT 3' - 0" C-C ONLY WHEN ADJACENT TO CONCRETE PAVEMENTS.
7. PLACE FLUME BEFORE MSG THRIE BEAM TRANSITION POST 1 (SEE SDD 14B45)
8. CENTER FLUME BETWEEN POSTS. 6-INCH MINIMUM SEPARATION FROM OUTSIDE EDGE OF FLUME TO POSTS.
9. MINIMUM REINFORCEMENT SHALL BE 4" X 4" - W3.0 X W3.0 OR NO. 3 BARS LONGITUDINAL AND TRANSVERSE SPACING 12" C -C.
10. SEE ROADWAY PLANS FOR FLUME LOCATION.
11. START CURB AND GUTTER TRANSITION OR END SECTION.
12. DEPRESS FLOW LINE (SEE DETAIL)
13. MEDIUM RIPRAP UNLESS OTHERWISE SPECIFIED.
14. LIMITS OF ADDITIONAL RIPRAP WHEN SPECIAL DITCH AS REQUIRED.
15. GEOTEXTILE TYPE HR.

CONCRETE SURFACE DRAINS FLUME TYPE AT STRUCTURES

STATE OF WISCONSIN
DEPARTMENT OF TRANSPORTAT

6

SDD 08D02 - 08b

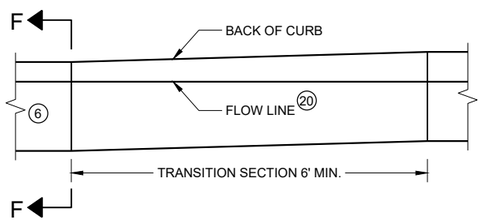

CURB AND GUTTER TRANSITION SECTION
CONCRETE CURB AND GUTTER 4-INCH SLOPED
36 INCH TYPE TBT OR TBTT

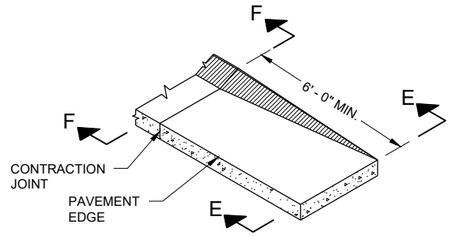

CURB AND GUTTER END SECTION
CONCRETE CURB AND GUTTER 4-INCH SLOPED
36 INCH TYPE TBT OR TBTT

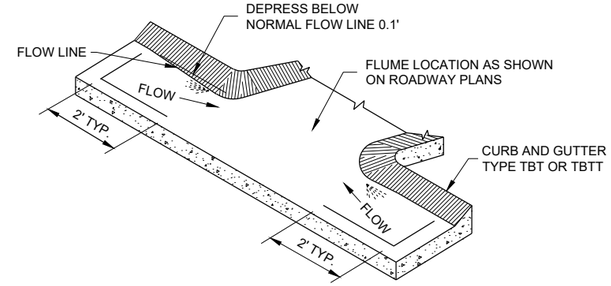

CURB AND GUTTER FLOW LINE DEPRESSION
AT FLUMES CONCRETE CURB AND GUTTER
4-INCH SLOPED 36 INCH TYPE TBT OR TBTT

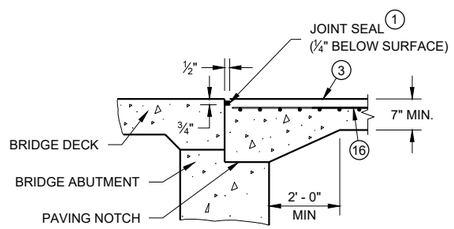

SECTION B-B 4

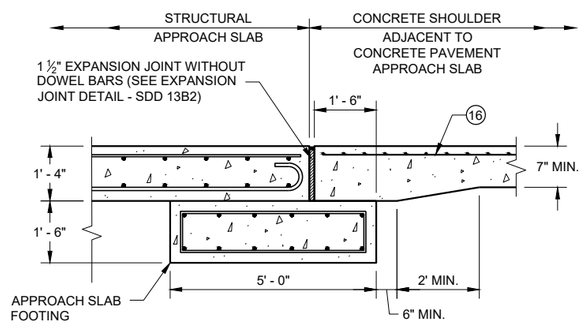

SECTION C - C
JOINT DETAIL FOR BRIDGE WITH STRUCTURAL
APPROACH SLAB AND CONCRETE APPROACH SLAB

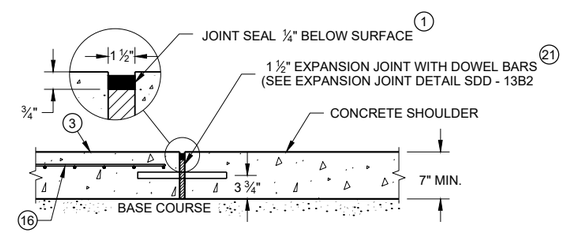

SECTION C - C
JOINT DETAIL FOR BRIDGE APPROACH
WITH CONCRETE SHOULDERS

GENERAL NOTES

DETAILS OF CONSTRUCTION, MATERIALS AND WORKMANSHIP NOT SHOWN ON THIS DRAWING SHALL CONFORM TO THE PERTINENT REQUIREMENTS OF THE STANDARD SPECIFICATIONS AND THE APPLICABLE SPECIAL PROVISIONS.

ALL STEEL REINFORCEMENT SHALL BE EMBEDDED 2 INCHES CLEAR UNLESS OTHERWISE SHOWN OR NOTED.

1. USE A JOINT SEALANT CONFORMING TO STANDARD SPECIFICATION 415.2.6.
2. NO. 4 X 2' - 0" TIE BARS SPACED AT 12" C-C TO BE PLACED BY BRIDGE CONTRACTOR OR DRILLED TIE BARS PLACED AS DIRECTED BY THE ENGINEER.
3. PAVED CONCRETE SHOULDER (SDD 13A03) OR CONCRETE DRAINAGE SLAB.
4. CONCRETE PAVEMENT APPROACH SLAB (SHOWN) OR STRUCTURE APPROACH SLAB AND CONCRETE PAVEMENT APPROACH SLAB. SEE SDD 13B02 AND STRUCTURE PLANS.
5. PAVED CONCRETE SHOULDER (SDD 13A03) OR ASPHALT SHOULDER.
6. CONCRETE CURB AND GUTTER 4-INCH SLOPED 36-INCH TYPE TBT OR TBTT. USE TYPE TBTT CURB WITH NO. 4 X 2' -0" TIE BARS SPACED AT 3' - 0" C-C ONLY WHEN ADJACENT TO CONCRETE PAVEMENTS.
7. PLACE FLUME BEFORE MSG THRIE BEAM TRANSITION POST 1 (SEE SDD 14B45)
8. CENTER FLUME BETWEEN POSTS. 6-INCH MINIMUM SEPARATION FROM OUTSIDE EDGE OF FLUME TO POSTS.
9. MINIMUM REINFORCEMENT SHALL BE 4" X 4" - W3.0 X W3.0 OR NO. 3 BARS LONGITUDINAL AND TRANSVERSE SPACING 12" C -C.
10. SEE ROADWAY PLANS FOR FLUME LOCATION.
11. START CURB AND GUTTER TRANSITION OR END SECTION.
12. DEPRESS FLOW LINE (SEE DETAIL)
13. MEDIUM RIPRAP UNLESS OTHERWISE SPECIFIED.
14. LIMITS OF ADDITIONAL RIPRAP WHEN SPECIAL DITCH IS REQUIRED.
15. GEOTEXTILE TYPE HR.
16. MINIMUM REINFORCEMENT SHALL BE 6" X 6" - W4.0 X W4.0 OR NO. 3 BARS LONGITUDINAL AND TRANSVERSE SPACING 12" C - C.
17. MSG THRIE BEAM TRANSITION POST 1. SEE SDD 14B45 FOR ADDITIONAL CONSTRUCTION DETAILS AND ACCEPTABLE MATERIALS.
18. MAINTAIN WIDTH, THICKNESS AND CROSS SLOPE OF ADJACENT TYPE TBT OR TBTT CURB. SEE NOTE 6 FOR TIE BAR SPACING.
19. ALIGN FACE OF POST BLOCK WITH FLOW LINE.
20. MAINTAIN FLOW LINE AT EDGE OF PAVEMENT/FACE OF BEAM GUARD AS APPLICABLE.
21. DO NOT CONSTRUCT AN EXPANSION JOINT OR INSTALL DOWEL BARS WHEN ABUTTING HMA PAVEMENTS.

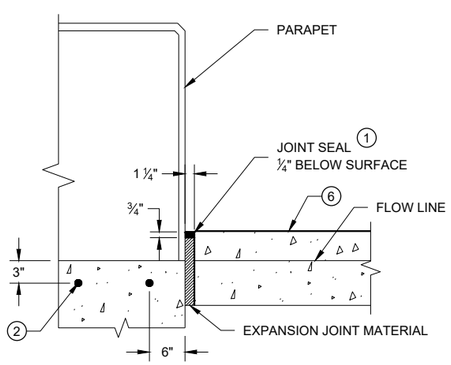

SECTION D - D

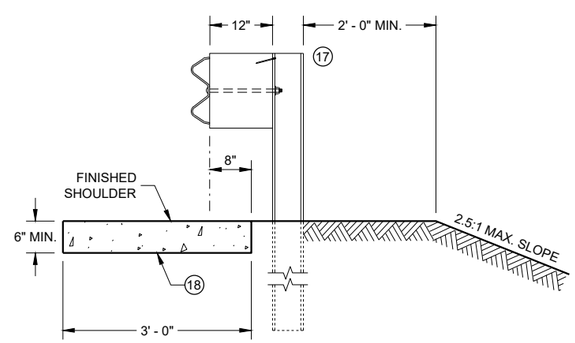

SECTION E - E

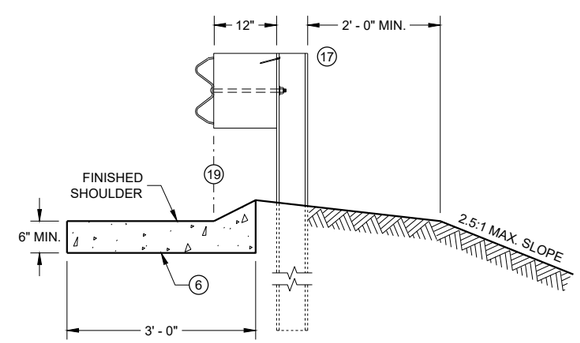

SECTION F - F

CONCRETE SURFACE DRAINS FLUME TYPE AT STRUCTURES

STATE OF WISCONSIN
DEPARTMENT OF TRANSPORTATION

APPROVED
May 2023 — DATE
/S/ Rodney Taylor — ROADWAY STANDARDS DEVE ENGINEER

FHWA

6

SDD 08D02 - 08c

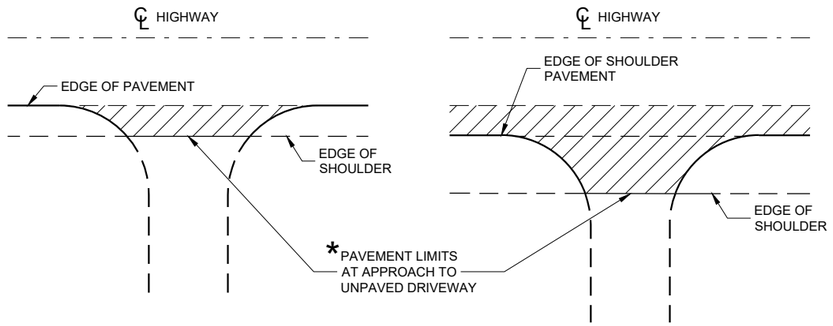

* WHERE DRIVEWAY IS PAVED, APPROACH PAVEMENT SHOULD BE EXTENDED TO MATCH DRIVEWAY PAVEMENT.

PLAN VIEW
(UNPAVED SHOULDER ON HIGHWAY)

PLAN VIEW
(PAVED SHOULDER ON HIGHWAY)

RURAL DRIVEWAY INTERSECTION DETAIL
(NO CURB AND GUTTER OR SIDEWALK)

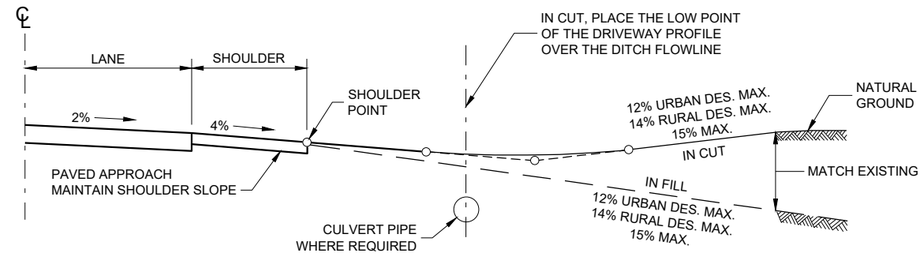

TYPICAL DRIVEWAY PROFILES

6

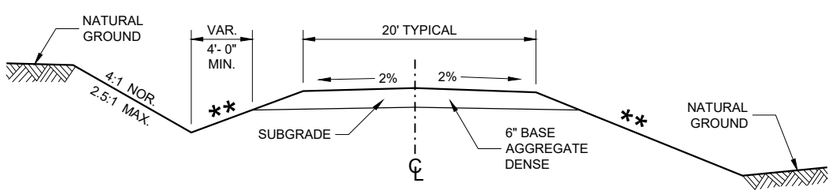

IN CUT **IN FILL**

TYPICAL CROSS SECTION FOR PRIVATE DRIVE OR FIELD ENTRANCE AGGREGATE SURFACE

** SLOPE CAN VARY WITH SPEED. SEE 11-45-30.6.2

POSTED SPEED MPH	MAX. SLOPE
<35	4:1
≥ 35 TO < 60	6:1
≥60	10:1

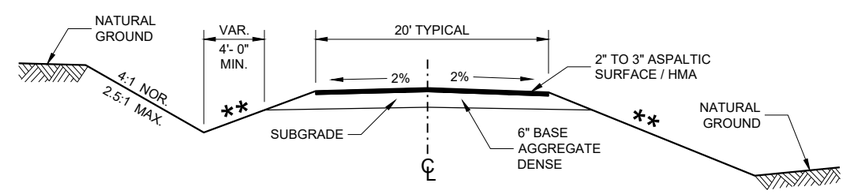

IN CUT **IN FILL**

TYPICAL CROSS SECTION FOR PRIVATE DRIVE OR FIELD ENTRANCE ASPHALTIC SURFACE

DRIVEWAYS WITHOUT CURB AND GUTTER

STATE OF WISCONSIN
DEPARTMENT OF TRANSPORTATION

APPROVED
December 2017 — DATE
/S/ Rodney Taylor — ROADWAY STANDARDS DEVE UNIT SUPERVISOR
FHWA

SDD 08D21 - 01

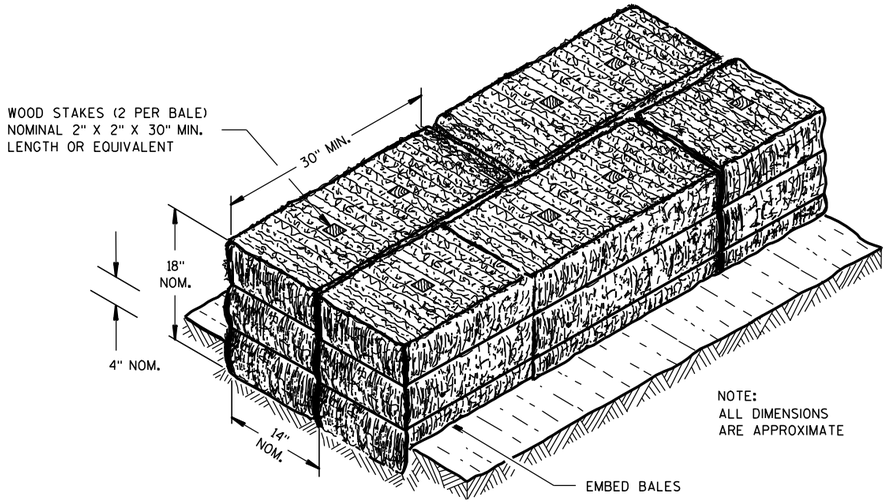

SECTION A-A

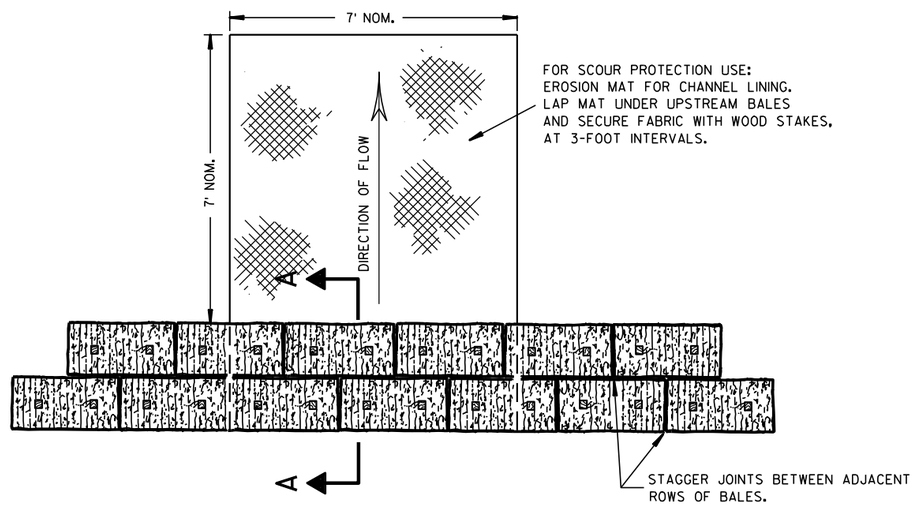

PLAN VIEW

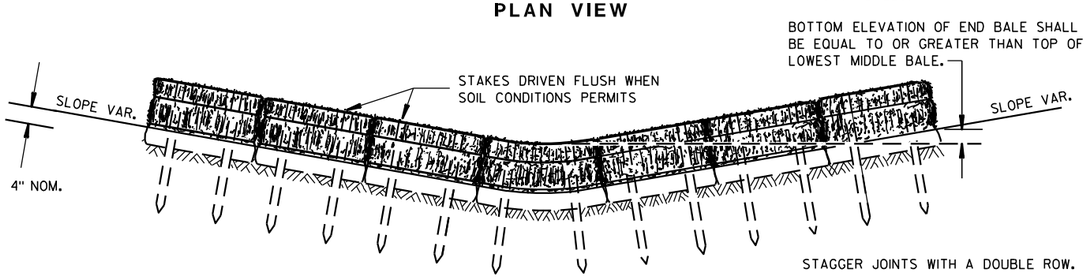

FRONT ELEVATION

TEMPORARY DITCH CHECK USING EROSION BALES ①

GENERAL NOTES

DETAILS OF CONSTRUCTION, MATERIALS AND WORKMANSHIP NOT SHOWN ON THIS DRAWING SHALL CONFORM TO THE PERTINENT REQUIREMENTS OF THE STANDARD SPECIFICATIONS AND THE APPLICABLE SPECIAL PROVISIONS.

① TEMPORARY DITCH CHECKS EITHER EROSION BALES OR MANUFACTURED SHALL BE PAID FOR UNDER THE BID ITEM OF TEMPORARY DITCH CHECK. THE DEPARTMENT WILL NOT PAY FOR TEMPORARY DITCH CHECKS CONSTRUCTED OF A SINGLE ROW OF EROSION BALES.

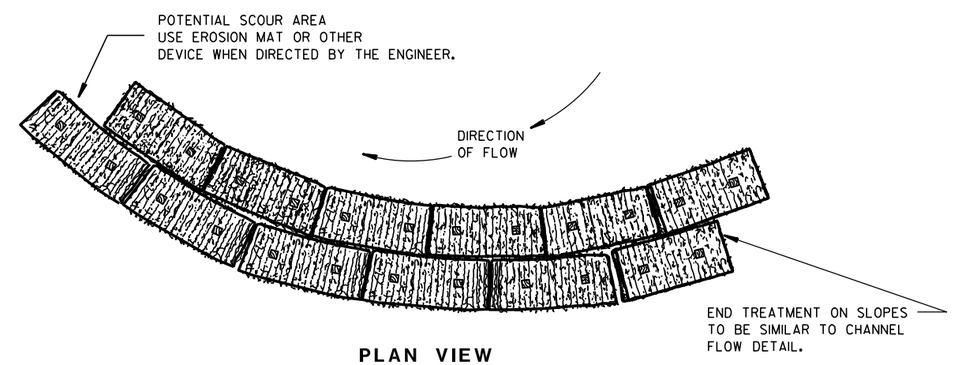

PLAN VIEW

WHEN ALTERING THE DIRECTION OF FLOW

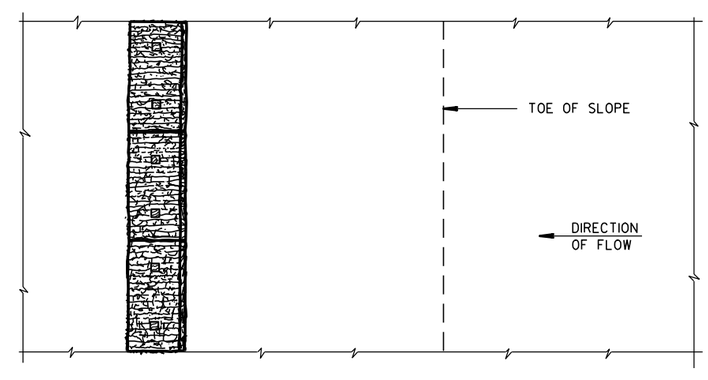

PLAN VIEW

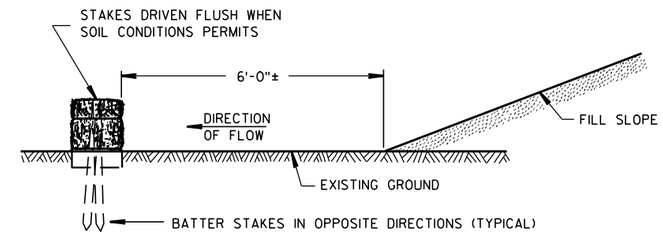

FRONT ELEVATION

WHEN EXISTING GROUND SLOPES AWAY FROM FILL SLOPE

EROSION BALES FOR SHEET FLOW

TYPICAL INSTALLATIONS OF EROSION BALES / TEMPORARY DITCH CHECKS

STATE OF WISCONSIN
DEPARTMENT OF TRANSPORTATION

APPROVED
6/04/02 — DATE
/S/ Beth Cann — CHIEF ROADWAY DEVELOPMENT ENGINEER
FHWA

6

6

S.D.D. 8 E 8-3

S.D.D. 8 E 8-3

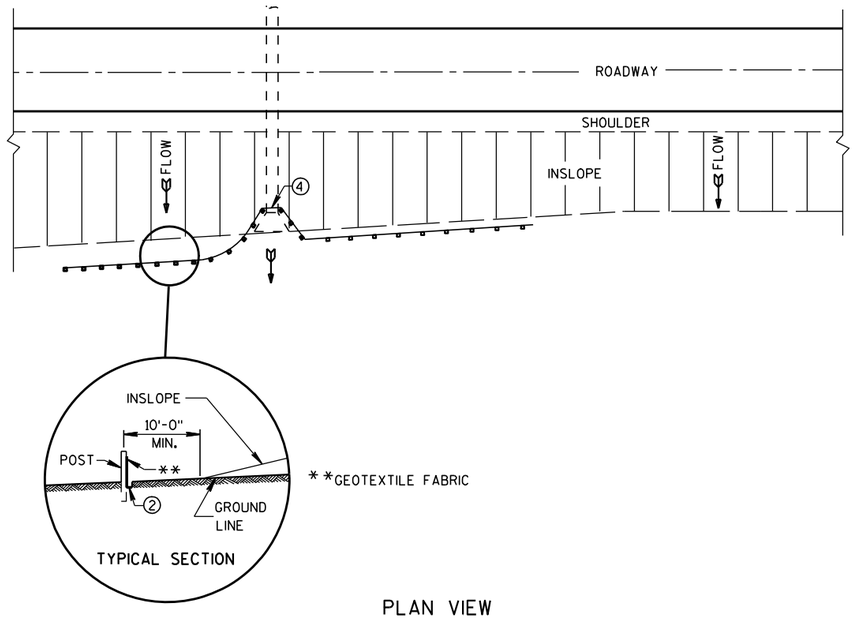

PLAN VIEW

TYPICAL APPLICATION OF SILT FENCE

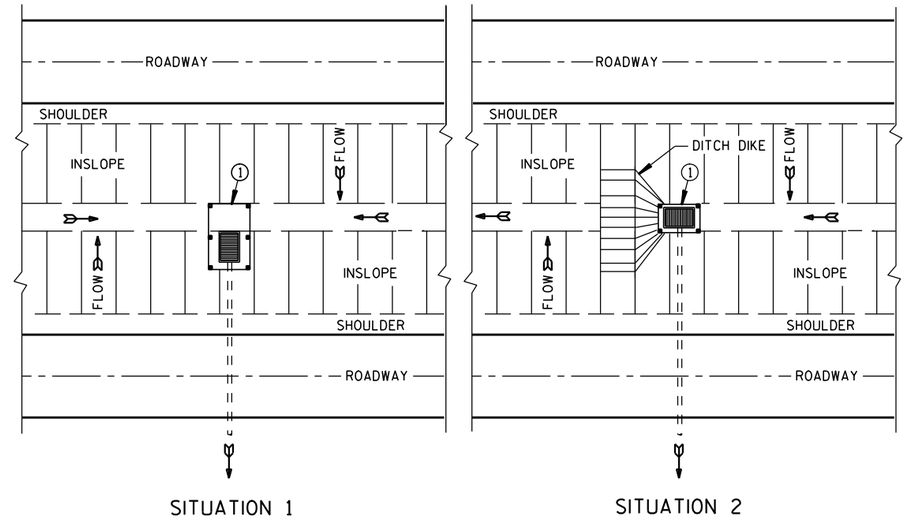

PLAN VIEW

SILT FENCE AT MEDIAN SURFACE DRAINS

GENERAL NOTES

DETAILS OF CONSTRUCTION NOT SHOWN ON THIS DRAWING SHALL CONFORM TO THE PERTINENT REQUIREMENTS OF THE STANDARD SPECIFICATIONS AND APPLICABLE SPECIAL PROVISIONS.

① HORIZONTAL BRACE REQUIRED WITH 2" X 4" WOODEN FRAME OR EQUIVALENT AT TOP OF POSTS.

② FOR MANUAL INSTALLATIONS THE TRENCH SHALL BE A MINIMUM OF 4" WIDE & 6" DEEP TO BURY AND ANCHOR THE GEOTEXTILE FABRIC. FOLD MATERIAL TO FIT TRENCH AND BACKFILL & COMPACT TRENCH WITH EXCAVATED SOIL.

③ WOOD POSTS SHALL BE A MINIMUM SIZE OF 1⅛" X 1⅛" OF OAK OR HICKORY.

④ SILT FENCE TO EXTEND ACROSS THE TOP OF THE PIPE.

⑤ CONSTRUCT SILT FENCE FROM A CONTINUOUS ROLL IF POSSIBLE BY CUTTING LENGTHS TO AVOID JOINTS. IF A JOINT IS NECESSARY USE ONE OF THE FOLLOWING TWO METHODS; A) OVERLAP THE END POSTS AND TWIST, OR ROTATE, AT LEAST 180 DEGREES. B) HOOK THE END OF EACH SILT FENCE LENGTH.

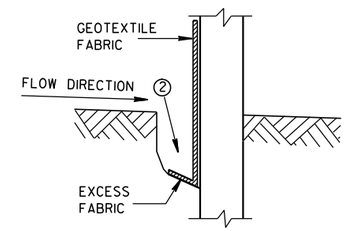

TRENCH DETAIL

NOTE: ADDITIONAL POST DEPTH OR TIE BACKS MAY BE REQUIRED IN UNSTABLE SOILS

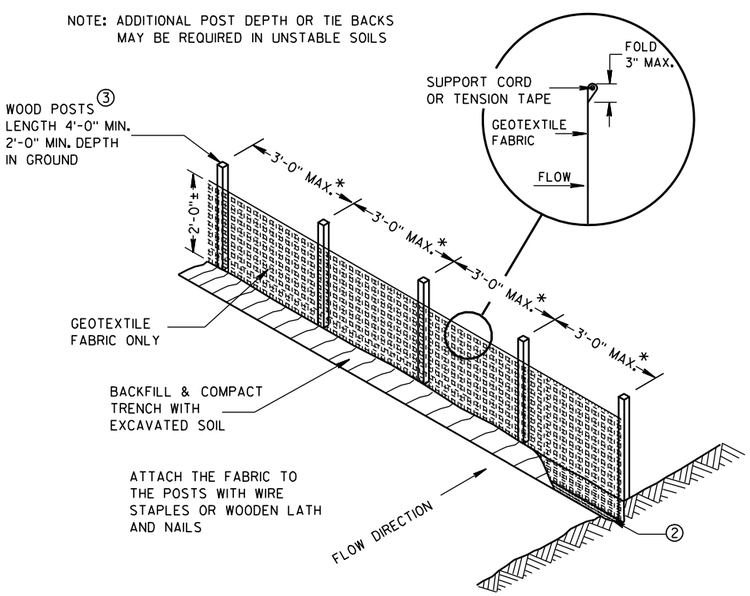

*NOTE: 8'-0" POST SPACING ALLOWED IF A WOVEN GEOTEXTILE FABRIC IS USED.

SILT FENCE

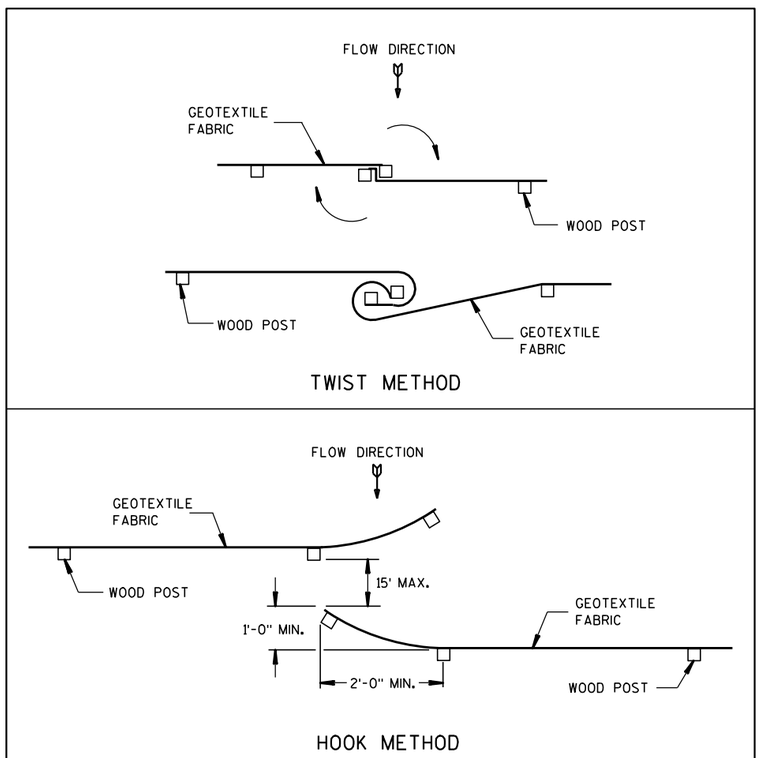

JOINING TWO LENGTHS OF SILT FENCE ⑤

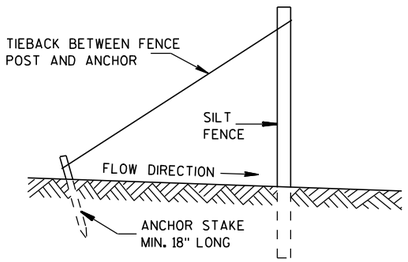

SILT FENCE TIE BACK

(WHEN REQUIRED BY THE ENGINEER)

SILT FENCE
STATE OF WISCONSIN DEPARTMENT OF TRANSPORTATION
APPROVED 4-29-05 /S/ Beth Cann----- DATE CHIEF ROADWAY DEVELOP ENGINEER FHWA

6

6

S.D.D. 8 E 9-6

S.D.D. 8 E 9-6

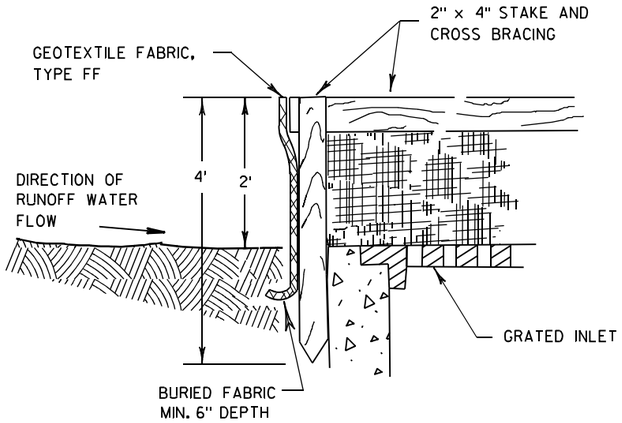

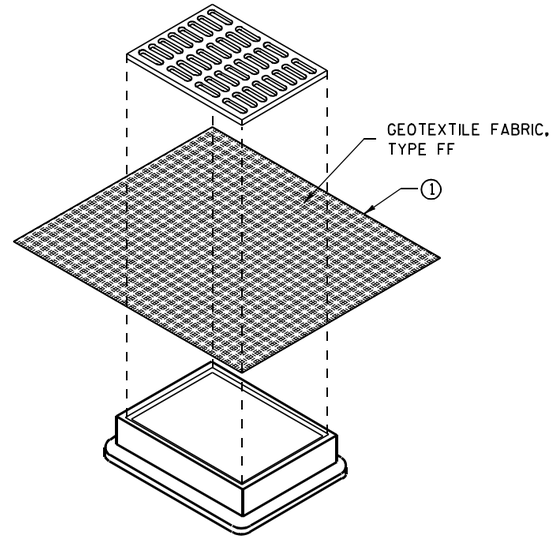

INLET PROTECTION, TYPE B
(WITHOUT CURB BOX)

(CAN BE INSTALLED IN ANY INLET WITHOUT A CURB BOX)

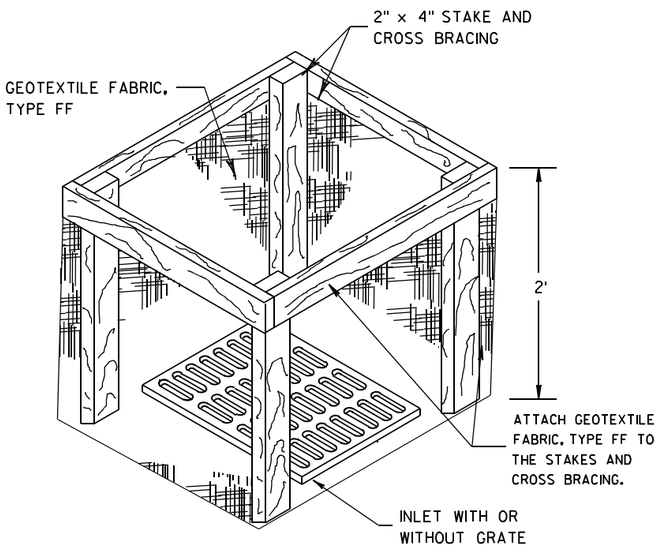

INLET PROTECTION, TYPE A

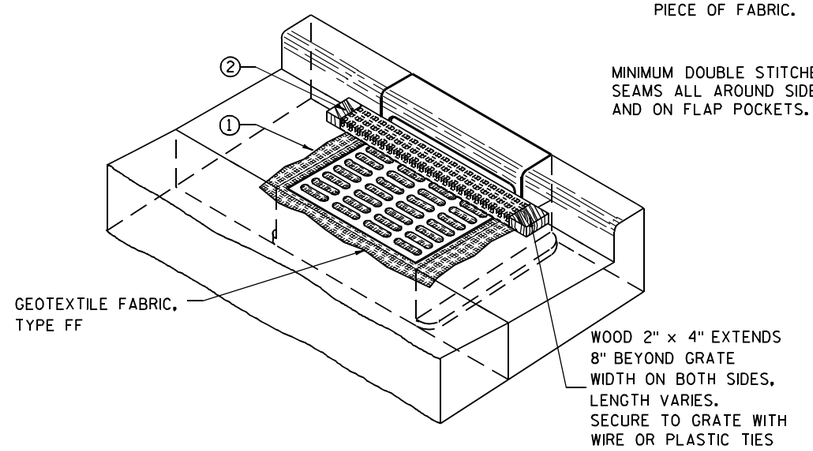

INLET PROTECTION, TYPE C (WITH CURB BOX)

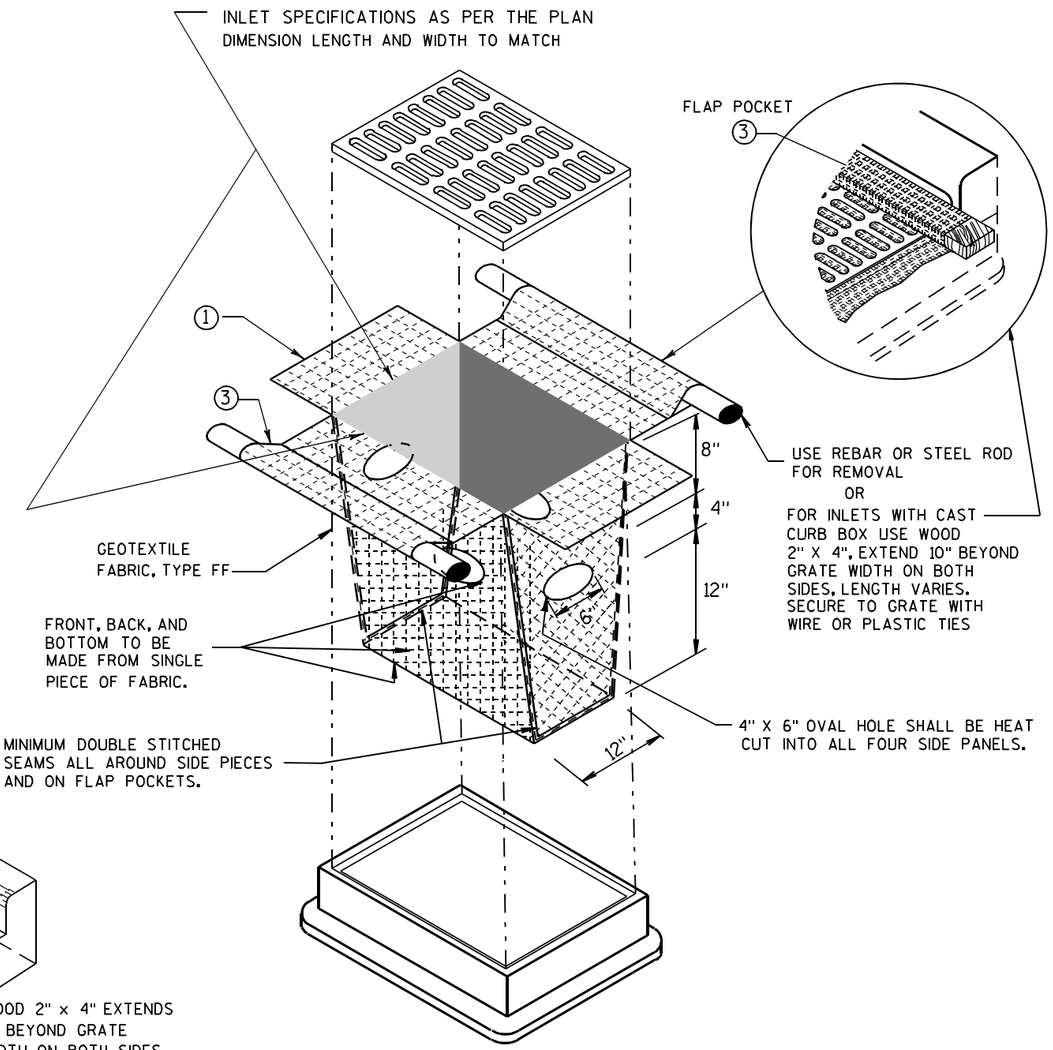

INLET PROTECTION, TYPE D

(CAN BE INSTALLED IN ANY INLET TYPE WITH
OR WITHOUT A CURB BOX AS PER NOTE ②)

GENERAL NOTES

INLET PROTECTION DEVICES SHALL BE MAINTAINED OR REPLACED AT THE DIRECTION OF THE ENGINEER.

MANUFACTURED ALTERNATIVES APPROVED AND LISTED ON THE DEPARTMENT'S EROSION CONTROL PRODUCT ACCEPTABILITY LIST MAY BE SUBSTITUTED.

WHEN REMOVING OR MAINTAINING INLET PROTECTION, CARE SHALL BE TAKEN SO THAT THE SEDIMENT TRAPPED ON THE GEOTEXTILE FABRIC DOES NOT FALL INTO THE INLET. ANY MATERIAL FALLING INTO THE INLET SHALL BE REMOVED IMMEDIATELY.

① FINISHED SIZE, INCLUDING FLAP POCKETS WHERE REQUIRED, SHALL EXTEND A MINIMUM OF 10" AROUND THE PERIMETER TO FACILITATE MAINTENANCE OR REMOVAL.

② FOR INLET PROTECTION, TYPE C (WITH CURB BOX), AN ADDITIONAL 18" OF FABRIC IS WRAPPED AROUND THE WOOD AND SECURED WITH STAPLES. THE WOOD SHALL NOT BLOCK THE ENTIRE HEIGHT OF THE CURB BOX OPENING.

③ FLAP POCKETS SHALL BE LARGE ENOUGH TO ACCEPT WOOD 2X4.

INSTALLATION NOTES

TYPE B & C

TRIM EXCESS FABRIC IN THE FLOW LINE TO WITHIN 3" OF THE GRATE.

THE CONTRACTOR SHALL DEMONSTRATE A METHOD OF MAINTENANCE, USING A SEWN FLAP, HAND HOLDS OR OTHER METHOD TO PREVENT ACCUMULATED SEDIMENT FROM ENTERING THE INLET.

TYPE D

DO NOT INSTALL INLET PROTECTION TYPE D IN INLETS SHALLOWER THAN 30", MEASURED FROM THE BOTTOM OF THE INLET TO THE TOP OF THE GRATE.

TRIM EXCESS FABRIC IN THE FLOW LINE TO WITHIN 3" OF THE GRATE.

THE INSTALLED BAG SHALL HAVE A MINIMUM SIDE CLEARANCE, BETWEEN THE INLET WALLS AND THE BAG, MEASURED AT THE BOTTOM OF THE OVERFLOW HOLES, OF 3". WHERE NECESSARY THE CONTRACTOR SHALL CINCH THE BAG, USING PLASTIC ZIP TIES, TO ACHIEVE THE 3" CLEARANCE. THE TIES SHALL BE PLACED AT A MAXIMUM OF 4" FROM THE BOTTOM OF THE BAG.

INLET PROTECTION
TYPE A, B, C, AND D

STATE OF WISCONSIN
DEPARTMENT OF TRANSPORTATION

APPROVED
10/16/02 — DATE
/S/ Beth Cannestra
CHIEF ROADWAY DEVELOPMENT ENGINEER
FHWA

6

S.D.D. 8 E 10-2

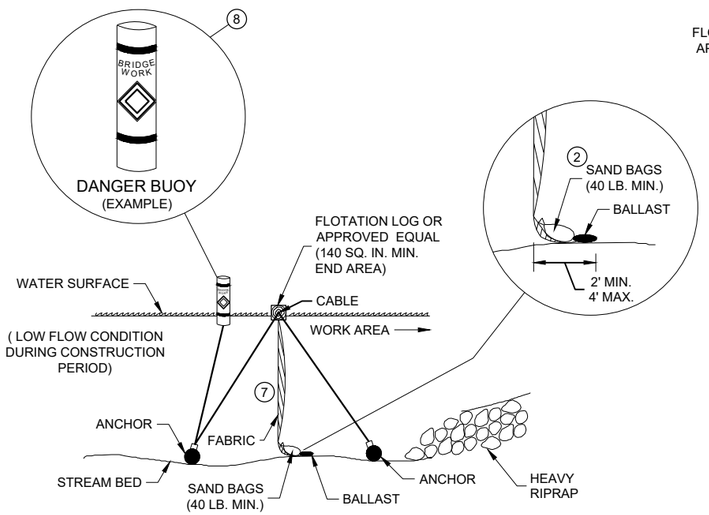

SECTION B - B

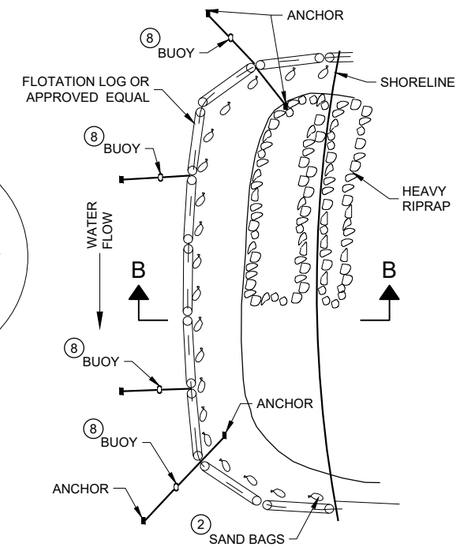

PLAN VIEW

TURBIDITY BARRIER - FLOAT ALTERNATIVE
CAUTION - SEE NOTE 6

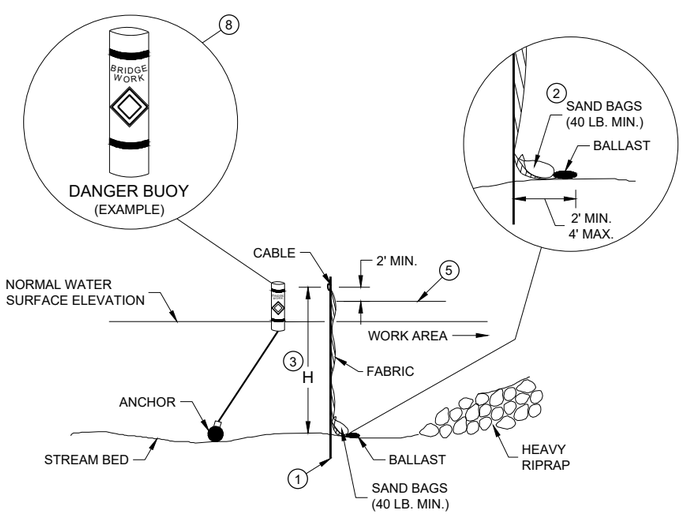

SECTION A - A

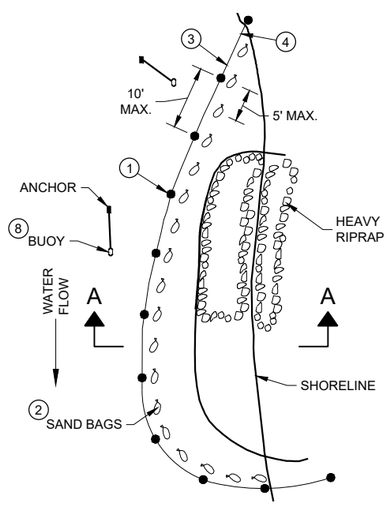

PLAN VIEW

TURBIDITY BARRIER - STANDARD POST INSTALLATION

TURBIDITY BARRIER PLACEMENT DETAILS

GENERAL NOTES

DETAILS OF CONSTRUCTION, MATERIALS AND WORKMANSHIP NOT SHOWN ON THIS DRAWING SHALL CONFORM TO THE PERTINENT REQUIREMENTS OF THE STANDARD SPECIFICATIONS AND THE APPLICABLE SPECIAL PROVISIONS.

TURBIDITY BARRIER MAY BE REMOVED AT THE ENGINEERS DISCRETION, WHEN PERMANENT EROSION CONTROL MEASURES HAVE BEEN ESTABLISHED.

1. DRIVEN STEEL POSTS, PIPES, OR CHANNELS. LENGTH SHALL BE SUFFICIENT TO SECURELY SUPPORT BARRIER AT HIGH WATER ELEVATIONS.
2. SAND BAGS TO BE USED AS ADDITIONAL BALLAST WHEN ORDERED BY THE ENGINEER TO MEET ADVERSE FIELD CONDITIONS. SPACE AS APPROPRIATE FOR SITE CONDITIONS.
3. WHEN BARRIER HEIGHT "H" EXCEEDS 8 FEET, POST SPACING MAY NEED TO BE DECREASED.
4. IN WATERWAYS SUBJECT TO FLUCTUATING WATER ELEVATIONS, PROVISIONS SHOULD BE MADE TO ALLOW THE WATER TO EQUALIZE ON EACH SIDE OF THE BARRIER. THIS MAY BE ACCOMPLISHED BY LEAVING A PORTION OF THE BARRIER OPEN ON THE UPSTREAM END.
5. ESTIMATED HIGH WATER ELEVATION DURING CONSTRUCTION PERIOD. MINIMUM BARRIER HEIGHT SHALL BE 2' GREATER THAN EITHER THE Q2 ELEVATION OR THE ESTIMATED HIGH WATER ELEVATION DURING CONSTRUCTION, WHICHEVER IS GREATER.
6. FLOAT ALTERNATIVE WILL ONLY BE ALLOWED WITH WRITTEN APPROVAL OF THE ENGINEER, AND IS MEANT FOR LOCATIONS WHERE BEDROCK PREVENTS THE INSTALLATION OF POSTS.
7. ALLOW SUFFICIENT SLACK VERTICALLY AND HORIZONTALLY SO THAT SEDIMENT BUILD UP WILL NOT SEPARATE OR LOWER THE TURBIDITY BARRIER.
8. USE AS DIRECTED BY COAST GUARD OR DNR PERMIT WHEN WORKING IN NAVIGABLE WATERWAYS.

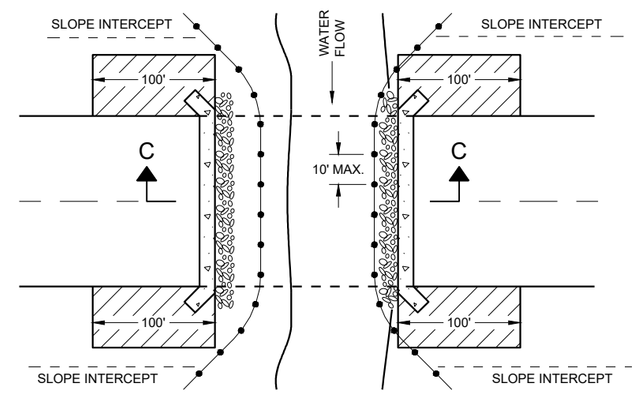

PLAN VIEW

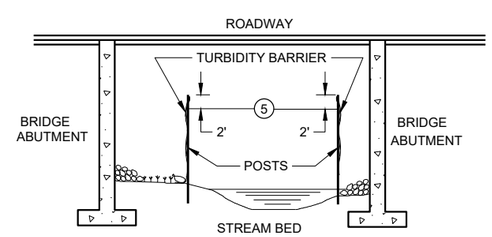

SECTION C - C

TURBIDITY BARRIER DETAIL SHOWING TYPICAL PLACEMENT AT STRUCTURES

TURBIDITY BARRIER

STATE OF WISCONSIN
DEPARTMENT OF TRANSPORTATION

APPROVED
6/4/02 — DATE
/S/ Beth Cannestra — CHIEF ROADWAY DEVELOPMENT ENGINEER
FHWA

6

SDD 08E11 - 02

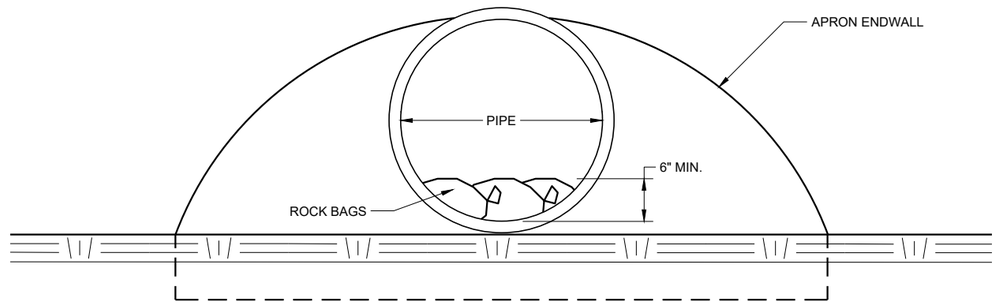

END VIEW

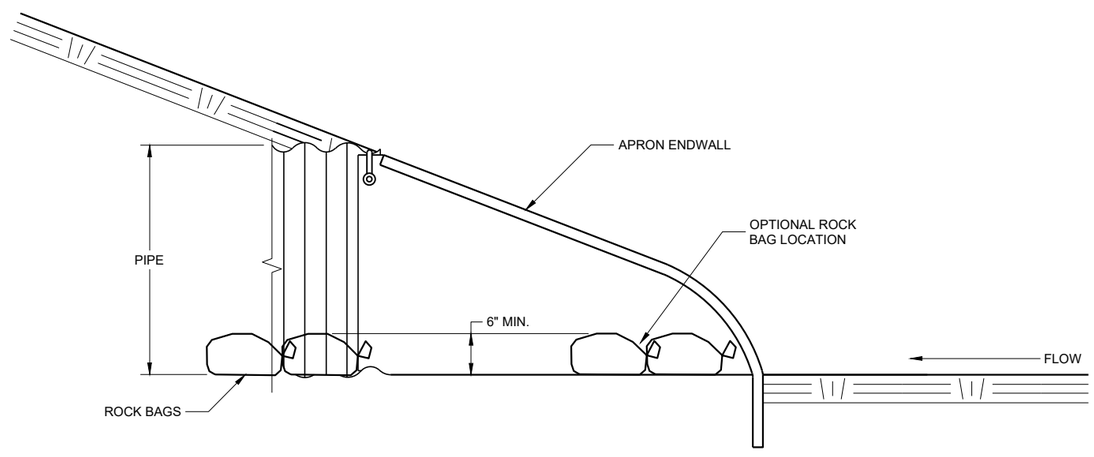

SIDE VIEW

CULVERT PIPE CHECK

(INSTALL ON INLET END ONLY)

CULVERT PIPE CHECK

STATE OF WISCONSIN
DEPARTMENT OF TRANSPORTATION

APPROVED
May 2019 — DATE
/S/ Daniel Schave — EROSION CONTROL ENGI
FHWA

6

6

SDD 08E15 - 01

SDD 08E15 - 01

METAL APRON ENDWALLS

PIPE DIA. (IN.)	MIN. THICK. (Inches) STEEL	MIN. THICK. (Inches) ALUM.	DIMENSIONS (Inches) A (±1")	B (MAX.)	H (±1")	L (±1 1/2")	L1 ①	L2 ①	W (±2")	APPROX. SLOPE	BODY
12	.064	.060	6	6	6	21	12	17 1/2	24	2 1/2 to 1	1 Pc.
15	.064	.060	7	8	6	26	14	21 3/4	30	2 1/2 to 1	1 Pc.
18	.064	.060	8	10	6	31	15	28 1/4	36	2 1/2 to 1	1 Pc.
21	.064	.060	9	12	6	36	18	29 5/8	42	2 1/2 to 1	1 Pc.
24	.064	.075	10	13	6	41	18	37 1/4	48	2 1/2 to 1	1 Pc.
30	.079	.075	12	16	8	51	18	52 1/4	60	2 1/2 to 1	1 Pc.
36	.079	.105	14	19	9	60	24	59 3/4	72	2 1/2 to 1	2 Pc.
42	.109	.105	16	22	11	69	24	75 5/8	84	2 1/2 to 1	2 Pc.
48	.109	.105	18	27	12	78	24	81	90	2 1/4 to 1	3 Pc.
54	.109	.105	18	30	12	84	30	85 1/2	102	2 1/4 to 1	3 Pc.
60	.109×	.105×	18	33	12	87	—	—	114	2 to 1	3 Pc.
66	.109×	.105×	18	36	12	87	—	—	120	2 to 1	3 Pc.
72	.109×	.105×	18	39	12	87	—	—	126	2 to 1	3 Pc.
78	.109×	.105×	18	42	12	87	—	—	132	1 1/2 to 1	3 Pc.
84	.109×	.105×	18	45	12	87	—	—	138	1 1/2 to 1	3 Pc.
90	.109×	.105×	18	37	12	87	—	—	144	1 1/2 to 1	3 Pc.
96	.109×	.105×	18	35	12	87	—	—	150	1 1/2 to 1	3 Pc.

× EXCEPT CENTER PANEL
SEE GENERAL NOTES

REINFORCED CONCRETE APRON ENDWALLS

PIPE DIA. (IN.)	DIMENSIONS (Inches) T	A	B	C	D	E	G	APPROX. SLOPE
12	2	4	24	48 7/8	72 7/8	24	2	3 to 1
15	2 1/4	6	27	46	73	30	2 1/4	3 to 1
18	2 1/2	9	27	46	73	36	2 1/2	3 to 1
21	2 3/4	9	36	37 1/2	73 1/2	42	2 3/4	3 to 1
24	3	9 1/2	43 1/2	30	73 1/2	48	3	3 to 1
27	3 1/4	10 1/2	49 1/2	24	73 1/2	54	3 1/4	3 to 1
30	3 1/2	12	54	19 3/4	73 1/2	60	3 1/2	3 to 1
36	4	15	63	34 3/4	97 3/4	72	4	3 to 1
42	4 1/2	21	63	35	98	78	4 1/2	3 to 1
48	5	24	72	26	98	84	5	3 to 1
54	5 1/2	27	65	*33 1/4-**35	*98 1/4-**100	90	5 1/2	2 2/5 to 1
60	6	*30-**35	60	39	99	96	5	2 to 1
66	6 1/2	*24-**30	*72-**78	*21-**27	99	102	5 1/2	2 to 1
72	7	*24-**36	78	21	99	108	6	2 to 1
78	7 1/2	*24-**36	78	21	99	114	6 1/2	2 to 1
84	8	36	90 1/2	21	111 1/2	120	6 1/2	1 1/2 to 1
90	8 1/2	41	87 1/2	24	111 1/2	132	6 1/2	1 1/2 to 1

*MINIMUM
**MAXIMUM

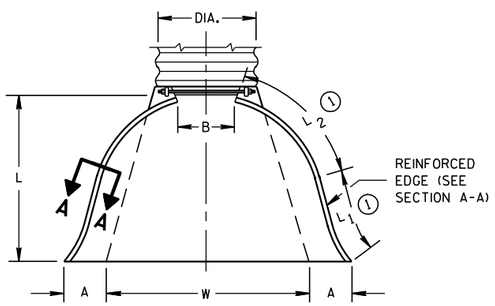

PLAN VIEW

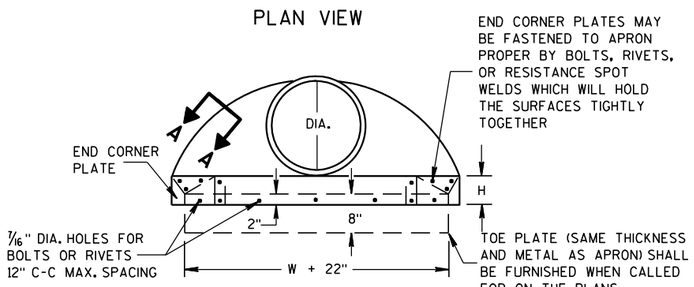

END VIEW

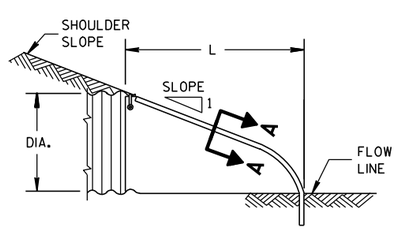

SIDE ELEVATION

METAL ENDWALLS

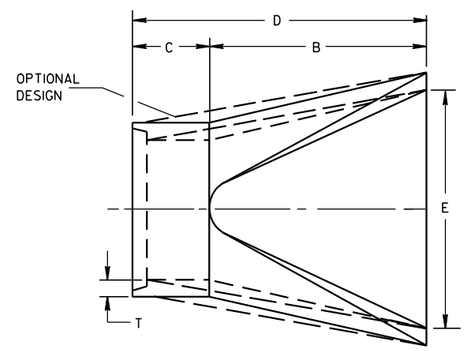

PLAN

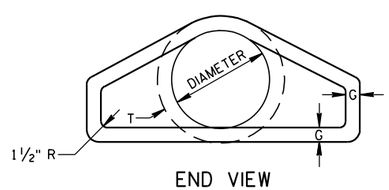

END VIEW

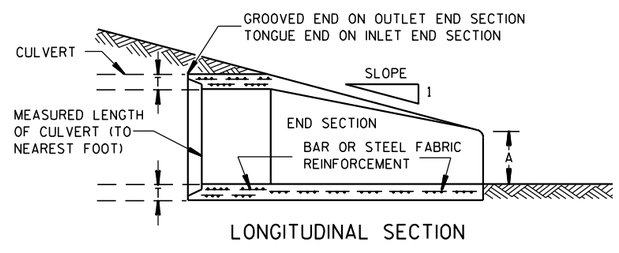

LONGITUDINAL SECTION

CONCRETE ENDWALLS

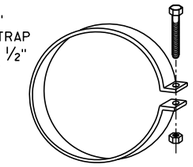

ALTERNATE FOR TYPE 1 CONNECTION

END SECTION CONNECTOR STRAP

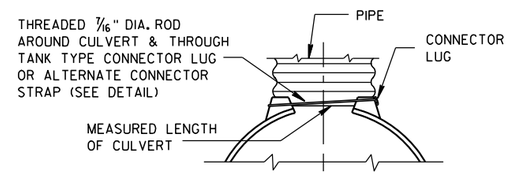

TYPE 1
FOR 12" THRU 24" CORR. PIPE

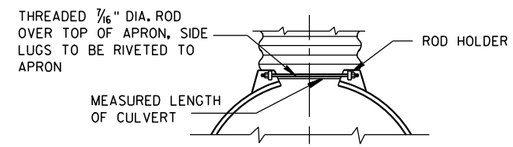

TYPE 2
FOR 30" THRU 96" CORR. PIPE

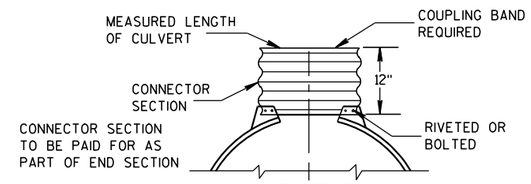

TYPE 3
FOR 42" THRU 96" CORR. PIPE

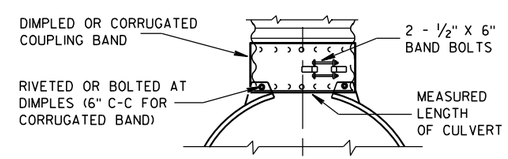

TYPE 5
ALTERNATE FOR:
ALL SIZES CORRUGATED CIRCULAR PIPE

NOTE: DIMPLED BAND FITS OVER OUTSIDE OF ENDWALL, AND CORRUGATED BAND FITS INSIDE ENDWALL. DIMPLED BAND MAY BE USED WITH HELICALLY CORRUGATED PIPE.

FOR CIRCUMFERENTIALLY CORRUGATED PIPE USE ENDWALL CONNECTION DETAILS 1, 2, 3 OR 5 AS APPLICABLE.

FOR HELICALLY CORRUGATED PIPE USE ENDWALL CONNECTION DETAILS 1, 2 OR 5.

FOR HELICALLY CORRUGATED PIPES WITH TWO CIRCUMFERENTIAL CORRUGATIONS AT EACH END USE ENDWALL CONNECTION DETAILS 1, 2 OR 3.

CONNECTION DETAILS

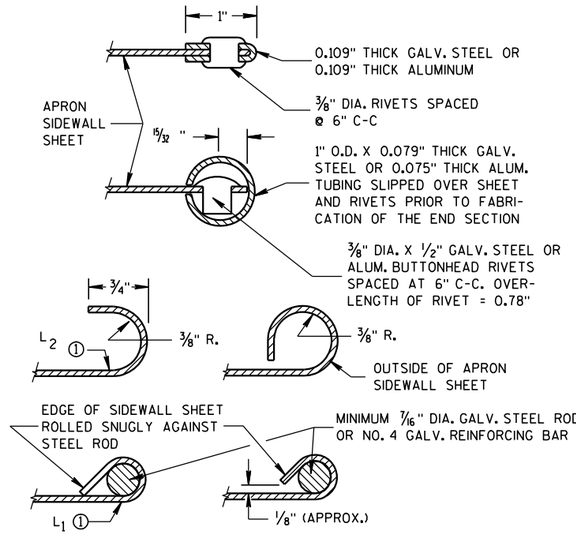

SECTION A-A

GENERAL NOTES

DETAILS OF CONSTRUCTION, MATERIALS AND WORKMANSHIP NOT SHOWN ON THIS DRAWING SHALL CONFORM TO THE PERTINENT REQUIREMENTS OF THE STANDARD SPECIFICATIONS AND THE APPLICABLE SPECIAL PROVISIONS.

CONCRETE CULVERT ENDWALLS MAY NOT BE USED WITH GALVANIZED STEEL OR ALUMINUM CULVERT PIPE OR VISE VERSA. GALVANIZED STEEL OR ALUMINUM ENDWALLS SHALL NORMALLY BE INSTALLED ON CULVERT PIPE OF THE SAME METAL.

ALL THREE PIECE STEEL APRON ENDWALLS FOR 60" DIAMETER PIPE AND LARGER SHALL HAVE 0.109" SIDES AND 0.138" CENTER PANELS. ALL THREE PIECE ALUMINUM APRON ENDWALLS FOR 60" DIAMETER PIPE AND LARGER SHALL HAVE 0.105" SIDES AND 0.134" CENTER PANELS. THE WIDTH OF CENTER PANELS SHALL BE GREATER THAN 20 PERCENT OF THE PIPE PERIMETER.

LAP SEAMS SHALL BE TIGHTLY JOINED BY GALVANIZED RIVETS OR BOLTS FOR STEEL UNITS AND ALUMINUM RIVETS AND BOLTS FOR ALUMINUM UNITS. FOR THE 60" THROUGH 96" DIAMETER APRON ENDWALL SIZES, THE REINFORCED EDGES AND CENTER PANEL SEAMS SHALL BE FURTHER REINFORCED WITH GALVANIZED STEEL OR ALUMINUM STIFFENER ANGLES. THE ANGLES SHALL BE ATTACHED BY GALVANIZED NUTS AND BOLTS FOR STEEL UNITS AND ALUMINUM NUTS AND BOLTS FOR ALUMINUM UNITS.

WHERE TWO OR MORE PIPES WITH APRON ENDWALLS ARE LAID ADJACENT TO EACH OTHER, THEY SHALL BE SEPARATED BY A DISTANCE SUFFICIENT TO PROVIDE A MINIMUM CLEARANCE OF 6 INCHES BETWEEN APRON ENDWALLS.

① FOR PIPE SIZES UP TO 60" DIAMETER, A 180° ROLLED EDGE MAY BE USED INSTEAD OF STEEL ROD REINFORCEMENT. SEE SECTION A-A.

APRON ENDWALLS FOR CULVERT PIPE

STATE OF WISCONSIN
DEPARTMENT OF TRANSPORTATION

APPROVED
11/30/94 — DATE
/S/ Rory L. Rhinesmith — CHIEF ROADWAY DEVELOPMENT ENGINEER
FHWA

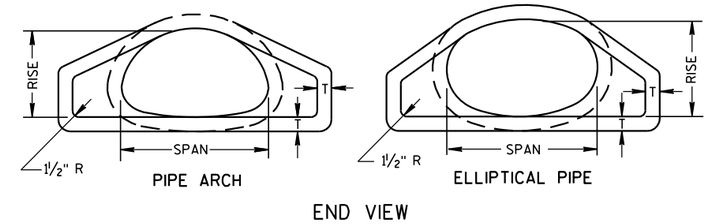

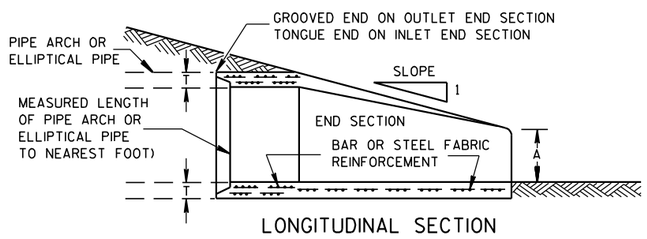

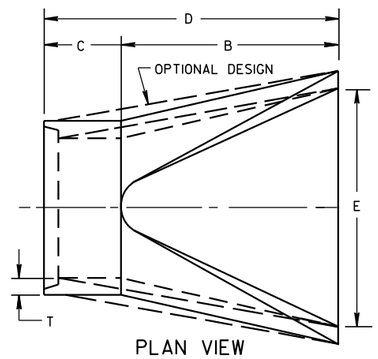

CONCRETE ENDWALLS

2- ⅔" X ½" CORRUGATIONS														
EQUIV. DIA. (Inches)	(Inches)		MIN. THICK. (Inches)		DIMENSIONS (Inches)							APPROX. SLOPE	BODY
	SPAN	RISE	STEEL	ALUM.	A (±1")	B (MAX.)	H (±1")	L (±1½")	L1 ①	L2 ①	W (±2")		
15	17	13	.064	.060	7	9	6	19	14	16	30	2½ to 1	1 Pc.
18	21	15	.064	.060	7	10	6	23	14	19⅜	36	2½ to 1	1 Pc.
21	24	18	.064	.060	8	12	6	28	18	21¾	42	2½ to 1	1 Pc.
24	28	20	.064	.060	9	14	6	32	18	27½	48	2½ to 1	1 Pc.
30	35	24	.079	.075	10	16	6	39	18	37⅝	60	2½ to 1	1 Pc.
36	42	29	.079	.075	12	18	8	46	24	45⅜	75	2½ to 1	1 Pc.
42	49	33	.109	.105	13	21	9	53	24	54¾	85	2½ to 1	2 Pc.
48	57	38	.109	.105	18	26	12	63	24	68	90	2½ to 1	3 Pc.
54	64	43	.109	.105	18	30	12	70	24	72¾	102	2¼ to 1	3 Pc.
60	71	47	.109*	.105*	18	33	12	77	30	82¼	114	2¼ to 1	3 Pc.
66	77	52	.109*	.105*	18	36	12	77	—	—	126	2 to 1	3 Pc.
72	83	57	.109*	.105*	18	39	12	77	—	—	138	2 to 1	3 Pc.

3" X 1" CORRUGATIONS														
EQUIV. DIA. (Inches)	(Inches)		MIN. THICK. (Inches)		DIMENSIONS (Inches)							APPROX. SLOPE	BODY
	SPAN	RISE	STEEL	ALUM.	A (±1")	B (MAX.)	H (±1")	L (±1½")	L1 ①	L2 ①	W (±2")		
48	53	41	.109	.105	18	26	12	63	24	72¾	90	2½ to 1	2 Pc.
54	60	46	.109	.105	18	30	12	70	30	82¼	102	2 to 1	2 Pc.
60	66	51	.109*	.105*	18	33	12	77	—	—	114	1½ to 1	3 Pc.
66	73	55	.109*	.105*	18	36	12	77	—	—	126	1½ to 1	3 Pc.
72	81	59	.109*	.105*	18	39	12	77	—	—	138	2 to 1	3 Pc.
78	87	63	.109*	.105*	22	38	12	77	—	—	148	1½ to 1	3 Pc.
84	95	67	.109*	.105*	22	34	12	77	—	—	162	1½ to 1	3 Pc.
90	103	71	.109*	.105*	22	38	12	77	—	—	174	1½ to 1	3 Pc.
96	112	75	.109*	.105*	24	40	12	77	—	—	174	1½ to 1	3 Pc.

NOTE: ALL SPLICES TO BE LAP RIVETED OR BOLTED.

* EXCEPT CENTER PANEL SEE GENERAL NOTES

REINFORCED CONCRETE PIPE ARCH									
EQUIV. DIA. (Inches)	DIMENSIONS (Inches)								APPROX. SLOPE
	** SPAN	** RISE	T	A	B	C	D	E	
24	29	18	3	8½	39	33	72	48	3 to 1
30	36	22	3½	9½	50	46	96	60	3 to 1
36	44	27	4	11⅛	60	36	96	72	3 to 1
42	51	31	4½	15 13/16	60	36	96	78	3 to 1
48	58	36	5	21	60	36	96	84	3 to 1
54	65	40	5½	25½	60	36	96	90	3 to 1
60	73	45	6	31	60	36	96	96	3 to 1
72	88	54	7	31	60	39	99	120	2 to 1
84	102	62	8	28½	83	19	102	144	2 to 1

REINFORCED CONCRETE ELLIPTICAL PIPE									
EQUIV. DIA. (Inches)	DIMENSIONS (Inches)								APPROX. SLOPE
	** SPAN	** RISE	T	A	B	C	D	E	
24	30	19	3¼	8½	39	33	72	48	3 to 1
30	38	24	3¾	9½	54	18	72	60	3 to 1
36	45	29	4½	11⅛	60	24	84	72	2½ to 1
42	53	34	5	15¾	60	36	96	78	2½ to 1
48	60	38	5½	21	60	36	96	84	2½ to 1
54	68	43	6	25½	60	36	96	90	2½ to 1
60	76	48	6½	30	60	36	96	96	2½ to 1

**NOMINAL SIZE

GENERAL NOTES

DETAILS OF CONSTRUCTION, MATERIALS AND WORKMANSHIP NOT SHOWN ON THIS DRAWING SHALL CONFORM TO THE PERTINENT REQUIREMENTS OF THE STANDARD SPECIFICATIONS AND THE APPLICABLE SPECIAL PROVISIONS.

CONCRETE APRON ENDWALLS MAY NOT BE USED WITH GALVANIZED STEEL OR ALUMINUM CULVERT PIPE OR VISE VERSA. GALVANIZED STEEL OR ALUMINUM APRON ENDWALLS SHALL NORMALLY BE INSTALLED ON CULVERT PIPE OF THE SAME METAL.

ALL THREE PIECE STEEL APRON ENDWALLS FOR 66" X 51" PIPE ARCH AND LARGER SHALL HAVE 0.109" SIDES AND 0.138" CENTER PANELS. ALL THREE PIECE ALUMINUM APRON ENDWALLS FOR 66" X 51" PIPE ARCH AND LARGER SHALL HAVE 0.105" SIDES AND 0.134" CENTER PANELS. THE WIDTH OF CENTER PANELS SHALL BE GREATER THAN 20 PERCENT OF THE PIPE ARCH PERIMETER.

LAP SEAMS SHALL BE TIGHTLY JOINED BY GALVANIZED RIVETS OR BOLTS FOR STEEL UNITS AND ALUMINUM RIVETS AND BOLTS FOR ALUMINUM UNITS. FOR THE 77" X 52" THROUGH 112" X 75" APRON ENDWALL SIZES, THE REINFORCED EDGES AND CENTER PANEL SEAMS SHALL BE FURTHER REINFORCED WITH GALVANIZED STEEL OR ALUMINUM STIFFENER ANGLES. THE ANGLES SHALL BE ATTACHED BY GALVANIZED NUTS AND BOLTS FOR STEEL UNITS AND ALUMINUM NUTS AND BOLTS FOR ALUMINUM UNITS.

WHERE TWO OR MORE PIPES WITH APRON ENDWALLS ARE LAID ADJACENT TO EACH OTHER, THEY SHALL BE SEPARATED BY A DISTANCE SUFFICIENT TO PROVIDE A MINIMUM CLEARANCE OF 6 INCHES BETWEEN APRON ENDWALLS.

① FOR PIPE ARCH SIZES UP TO 73" X 55" A 180° ROLLED EDGE MAY BE USED INSTEAD OF STEEL ROD REINFORCEMENT. SEE SECTION A-A.

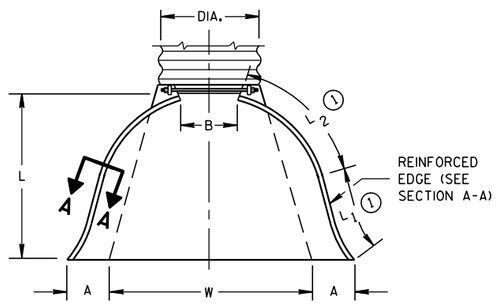

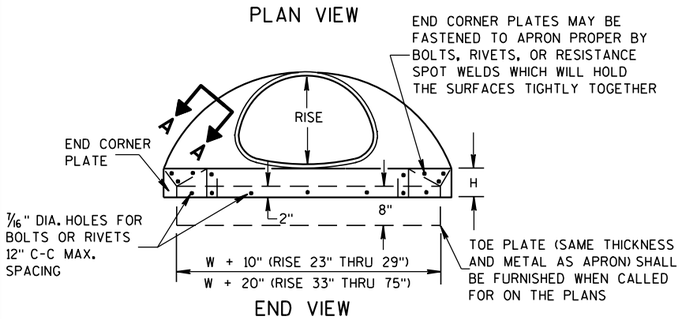

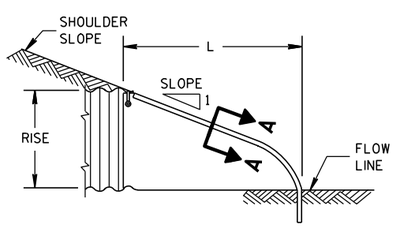

METAL ENDWALLS

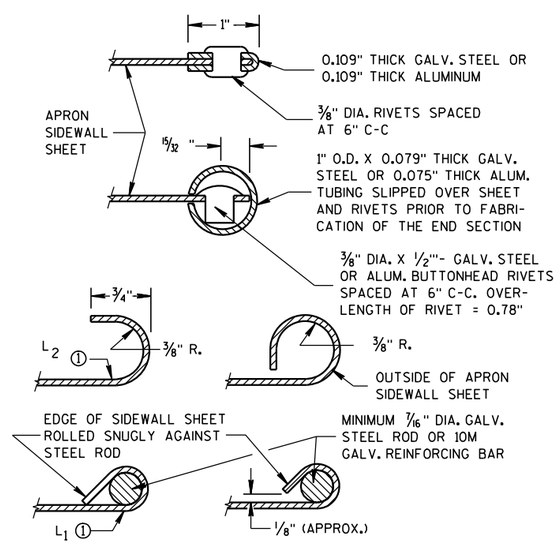

SECTION A-A

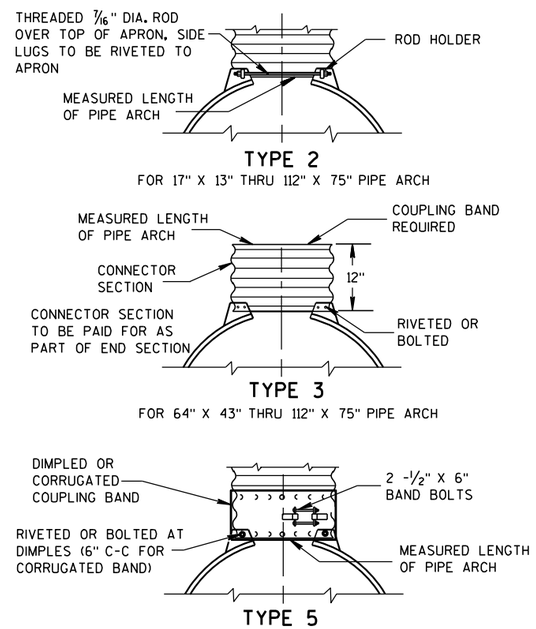

NOTE: DIMPLED BAND FITS OVER OUTSIDE OF ENDWALL, AND CORRUGATED BAND FITS INSIDE ENDWALL.

CONNECTION DETAILS

APRON ENDWALLS FOR PIPE ARCH AND ELLIPTICAL PIPE

STATE OF WISCONSIN
DEPARTMENT OF TRANSPORTATION

APPROVED

11/30/94 — DATE

/S/ Rory L. Rhinesmith — CHIEF ROADWAY DEVELOPMENT ENGINEER

FHWA

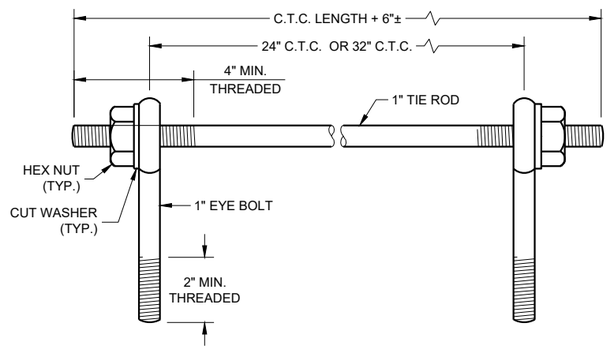

EYE BOLTS AND TIE ROD

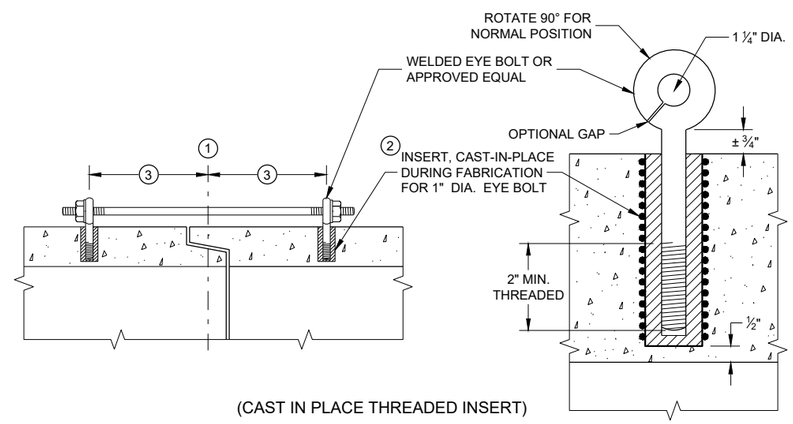

(CAST IN PLACE THREADED INSERT)

LONGITUDINAL SECTIONS

EYE BOLT AND TIE ROD ASSEMBLY (ALTERNATE NO. 1)

GENERAL NOTES

DETAILS OF CONSTRUCTION, MATERIALS, AND WORKMANSHIP NOT SHOWN ON THIS DRAWING SHALL CONFORM TO THE PERTINENT REQUIREMENTS OF THE STANDARD SPECIFICATIONS AND APPLICABLE SPECIAL PROVISIONS.

CONCRETE CULVERT AND STORM SEWER PIPE SHALL BE TIED TOGETHER IN THE MANNER ILLUSTRATED BY THIS DETAIL AT LOCATIONS DESIGNATED IN THE STANDARD SPECIFICATIONS AND THE PLAN. THE CONTRACTOR MAY USE EITHER ALTERNATE 1, 2 OR 3 FOR DRAINAGE STRUCTURES. ONLY ALTERNATE 1 AND 3 MAY BE USED FOR CATTLE PASSES, UNLESS OTHERWISE STATED IN THE CONTRACT. THE MATERIALS, FABRICATION AND WORK NECESSARY TO TIE THE PIPE BY THIS DETAIL WILL BE CONSIDERED INCIDENTAL TO THE PIPE AND APRON ENDWALLS IF REQUIRED.

DETAILED DRAWINGS FOR PROPOSED ALTERNATE DESIGNS FOR JOINT TIES SHALL BE SUBMITTED TO THE ENGINEER FOR APPROVAL.

JOINT TIES TO BE HOT-DIP GALVANIZED PER ASTM A 153.

1. CENTER LINE OF TONGUE AND GROOVE OR BELL AND SPIGOT JOINTS.
2. THE INSIDE OF THE THREADED INSERTS SHALL BE CLEAN TO ALLOW THE INSERTION OF THREADED EYE BOLTS.
3. HOLES SHALL BE CAST-IN-PLACE OR DRILLED PER THE APPLICABLE DETAIL, AND EQUAL DISTANCE FROM THE CENTERLINE OF THE JOINT.
4. BOLT PROJECTION INSIDE OF PIPE SHALL NOT EXCEED 2 INCHES.
5. OPENING TO BE ROD DIAMETER PLUS 1 INCH.
6. LENGTH ADEQUATE TO EXTEND TO WITHIN ½ INCH OF THE INNER SURFACE OF THE PIPE.
7. EYE BOLT LENGTH DETERMINED BY WALL THICKNESS, BELL THICKNESS AND BOLT PROJECTION INSIDE PIPE.

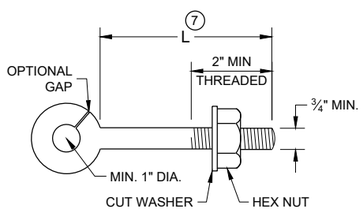

EYE BOLT 7

NOTE: TWO EYE BOLTS MAY BE USED WITH A 30" OR 38" LONG THREADED ROD IN LIEU OF THE 90° BENT TIE ROD.

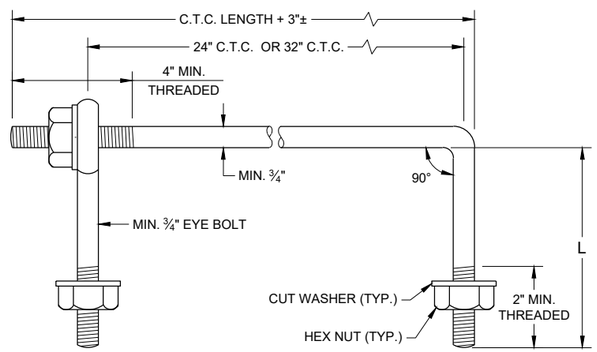

EYE BOLT AND TIE ROD

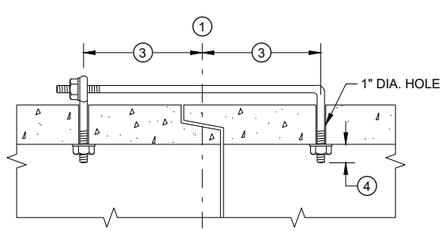

(TONGUE AND GROOVE PIPE)

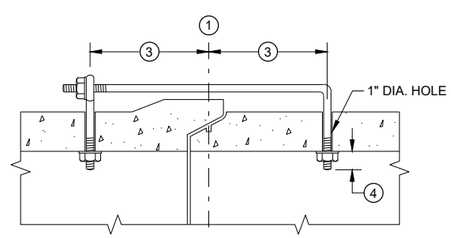

(MODIFIED BELL PIPE)

LONGITUDINAL SECTION

(JOINT TIES FOR 18" TO 66" DIA. CONCRETE PIPE)

EYE BOLT AND TIE ROD ASSEMBLY (ALTERNATE NO. 2)

ADJUSTABLE TIE ROD TABLE

PIPE DIAMETER	TIE ROD DIAMETER	D	L_1	N
12 - 60	⅝	⅝	5	½
66 - 84	¾	¾	5	½
90 - 144	1	1	7	1 7/16

DIMENSIONS SHOWN ARE IN INCHES

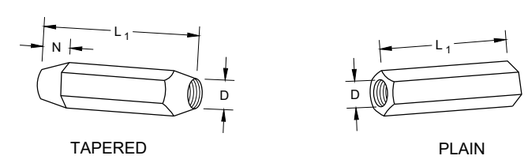

RIGHT AND LEFT THREADS

SLEEVE NUTS

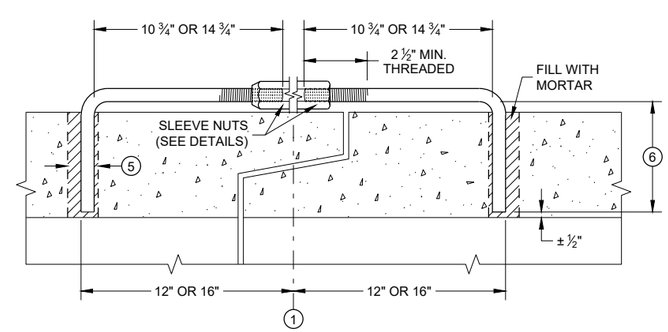

LONGITUDINAL SECTION

ADJUSTABLE TIE ROD (ALTERNATE NO. 3)

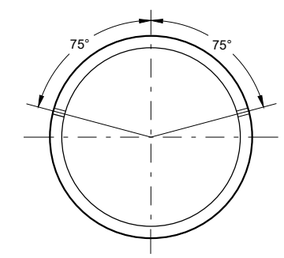

PLACEMENT OF (2) CAST-IN-PLACE INSERTS OR HOLES DURING FABRICATION FOR PIPE SECTIONS REQUIRING TIE RODS

TRANSVERSE SECTION

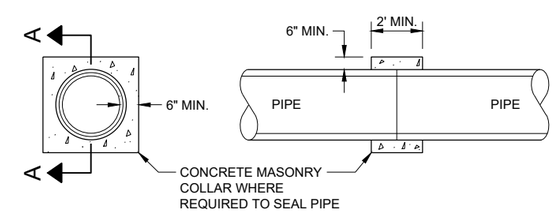

SECTION A - A

CONCRETE COLLAR DETAIL

JOINT TIES FOR CONCRETE PIPE AND CONCRETE COLLAR DETAIL

STATE OF WISCONSIN
DEPARTMENT OF TRANSPORTATION

APPROVED
November 2021 — DATE
/S/ Rodney Taylor — ROADWAY STANDARDS DEVE ENGINEER
FHWA

6

SDD 08F04 - 08

GENERAL NOTES

DETAILS OF CONSTRUCTION, MATERIALS AND WORKMANSHIP NOT SHOWN ON THIS DRAWING SHALL CONFORM TO THE PERTINENT REQUIREMENTS OF THE STANDARD SPECIFICATIONS AND THE APPLICABLE SPECIAL PROVISIONS.

FILL SLOPES FLATTER THAN 2 ½:1 SHALL BE WARPED TO MEET THE TOP OF THE WINGWALLS.

ALL STEEL REINFORCEMENT AND WELDED STEEL WIRE FABRIC SHALL BE EMBEDDED 2 INCHES CLEAR UNLESS OTHERWISE NOTED.

(1) MINIMUM REINFORCEMENT SHALL BE 6" X 6" - W4.0 X W4.0 OR NO. 3 BARS SPACED 12" C-C IN BOTH DIRECTIONS.

(2) THE SPACE BETWEEN PIPES SHALL BE AS FOLLOWS:

DIAMETER OR SPAN	SPACE
UP TO AND INCLUDING 48"	2' - 0"
OVER 48" TO 72"	½ DIA. OR SPAN
OVER 72"	3' - 0"

(3) LIMITS OF TRENCH BACKFILL

(4) LIMITS OF FOUNDATION BACKFILL

(5) FOUNDATION AND TRENCH BACKFILL ARE MATERIALS INCLUDED IN PAYMENT FOR CULVERT PIPE, PIPE ARCH, CULVERT PIPE REINFORCED CONCRETE HORIZONTAL ELLIPSE OR CONCRETE MASONRY ENDWALLS.

(6) DO NOT PLACE FOUNDATION BACK FILL OR ANY OTHER GRANULAR BACKFILL AROUND OR BELOW CUT OFF WALL. POUR CUT OFF WALL AGAINST NATIVE SOIL

(7) MINIMUM HEIGHT SHALL BE THE GREATER OF 1'- 0" OR ¼ HEIGHT OF CULVERT PIPE.

TRENCH BACKFILL

FOUNDATION BACKFILL

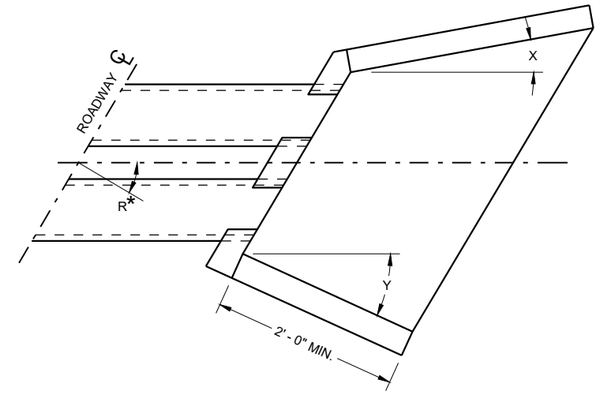

WINGWALL ANGLE DETAILS

INLET			OUTLET		
R*	X	Y	R*	X	Y
0 - 7°	30°	30°	0 - 15°	15°	15°
8 - 22°	25°	30°	16 - 45°	10°	15°
23 - 37°	20°	30°	46 - 75°	5°	15°
38 - 52°	15°	30°	OVER 75°	0°	15°
53 - 67°	10°	30°			
68 - 82°	5°	30°			
OVER 82°	0°	30°			

R* = NUMBER OF DEGREES RIGHT OR LEFT HAND FORWARD

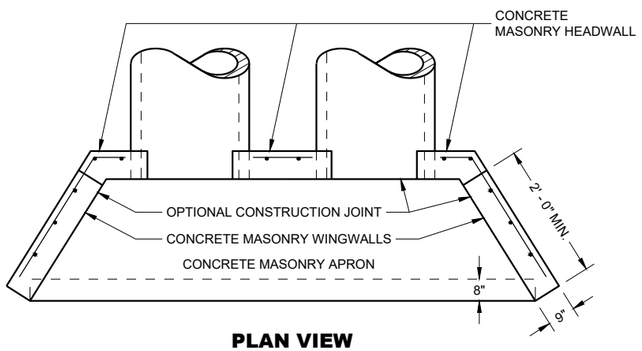

PLAN VIEW

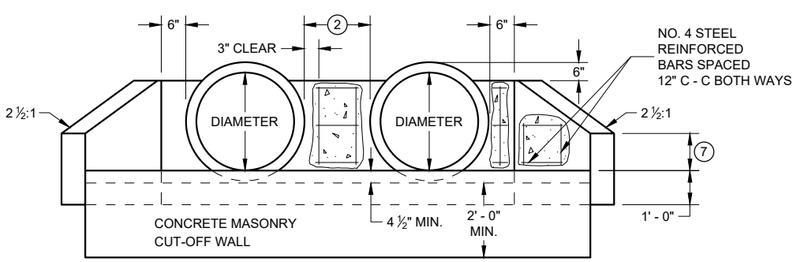

END VIEW
CIRCULAR PIPE

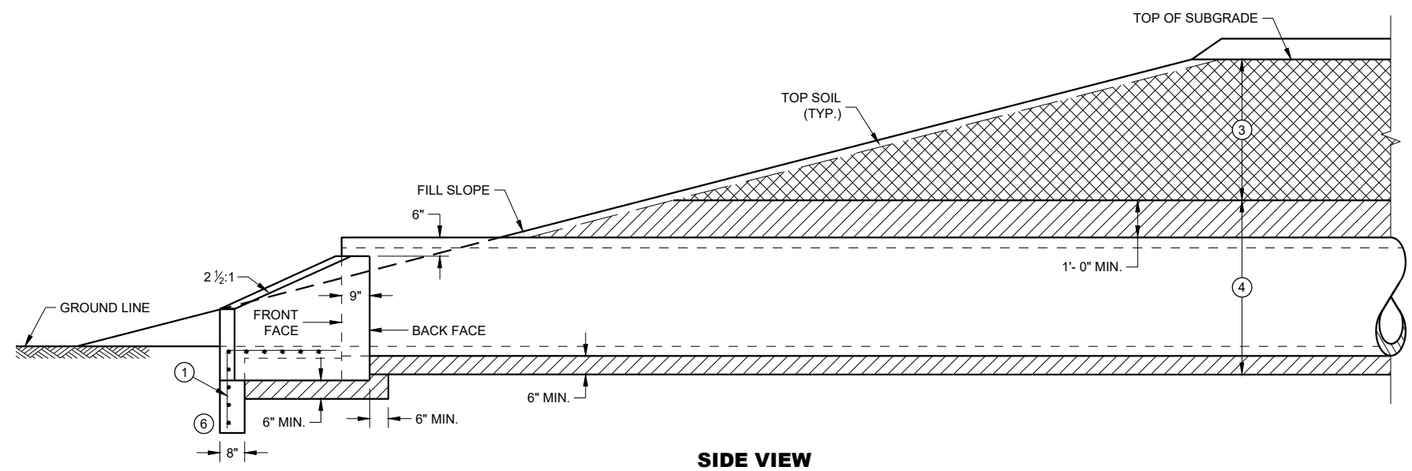

SIDE VIEW
CIRCULAR PIPE, PIPE ARCH OR HORIZONTAL ELLIPSE

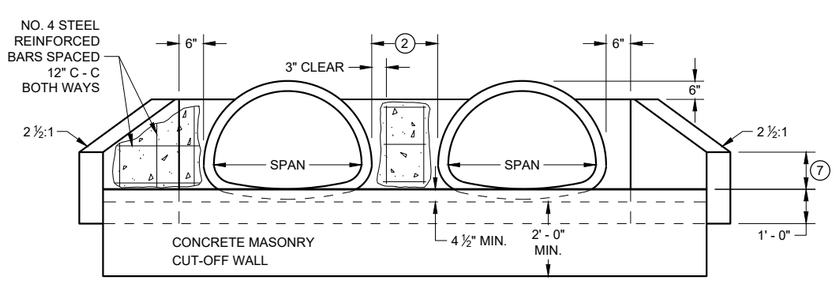

END VIEW
PIPE ARCH

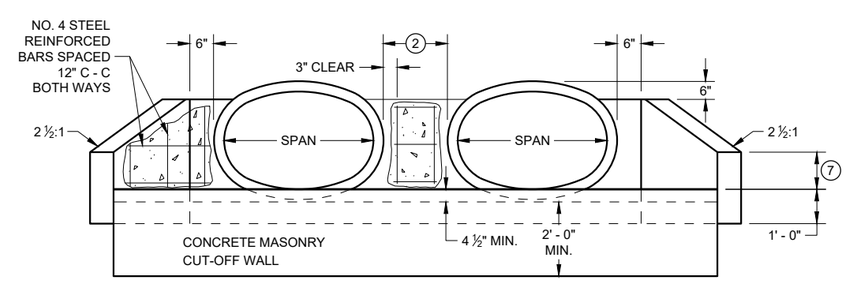

END VIEW
HORIZONTAL ELLIPSE

CONCRETE MASONRY ENDWALLS FOR CULVERT PIPE AND PIPE ARCH

STATE OF WISCONSIN
DEPARTMENT OF TRANSPORTATION

APPROVED
May 2022 — DATE
/S/ Rodney Taylor — ROADWAY STANDARDS DEVE ENGINEER
FHWA

6

SDD 08F10 - 02

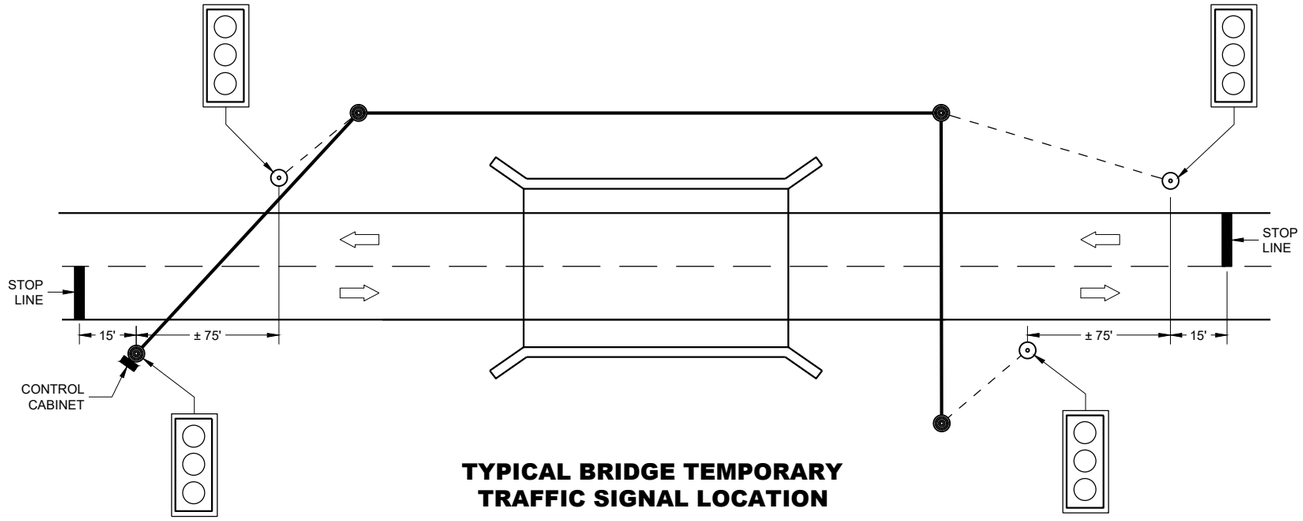

TYPICAL BRIDGE TEMPORARY TRAFFIC SIGNAL LOCATION

LEGEND

- WOOD POLE (NON-BREAKAWAY)
- WOOD POST (BREADAWAY)
- SIGNAL CABLE
- SIGNAL CABLE W/MESSENGER
- DIRECTION OF TRAFFIC
- LED TRAFFIC SIGNAL WITH BACKPLATE (3-12")

GENERAL NOTES

DETAILS OF CONSTRUCTION, MATERIALS AND WORKMANSHIP NOT SHOWN ON THIS DRAWING SHALL CONFORM TO THE PERTINENT REQUIREMENTS OF THE CONTRACT.

POLE MOUNTED TRAFFIC SIGNAL CONTROL CABINET MAY BE MOUNTED ON THE SERVICE POLE IF THE ELECTRICAL UTILITY ALLOWS THE INSTALLATION.

WHEN UTILITY POLES ARE USED TO SPAN THE TEMPORARY OVERHEAD CABLE, WRITTEN PERMISSION MUST BE OBTAINED FROM THE OWNER OF THE POLES AND GIVEN TO THE PROJECT MANAGER. ALL PERTINENT UTILITY AND CODE CLEARANCES SHALL BE MAINTAINED.

WOOD POLES (NON-BREAKAWAY) SHALL BE NO CLOSER TO EDGE OF PAVEMENT THAN OFFSET DISTANCE CHART ALLOWS OR 4 FEET BEHIND PROTECTIVE BARRIER (BEAM GUARD, ETC.).

WOOD POSTS (BREAKAWAY) SHALL BE NO CLOSER THAN 2 FEET OUTSIDE OF SHOULDER.

VERTICAL CLEARANCE ETC. PER NEC.

TRAFFIC SIGNAL FACES SHALL BE TYPICALLY PLACED 12 FEET FROM EDGE OF PAVEMENT.

EACH TRAFFIC SIGNAL SHALL HAVE A BACKPLATE.

SIGNING, PAVEMENT MARKING AND LANE CONTROL REQUIREMENTS SHALL CONFORM TO STANDARD DETAIL DRAWING 15D33.

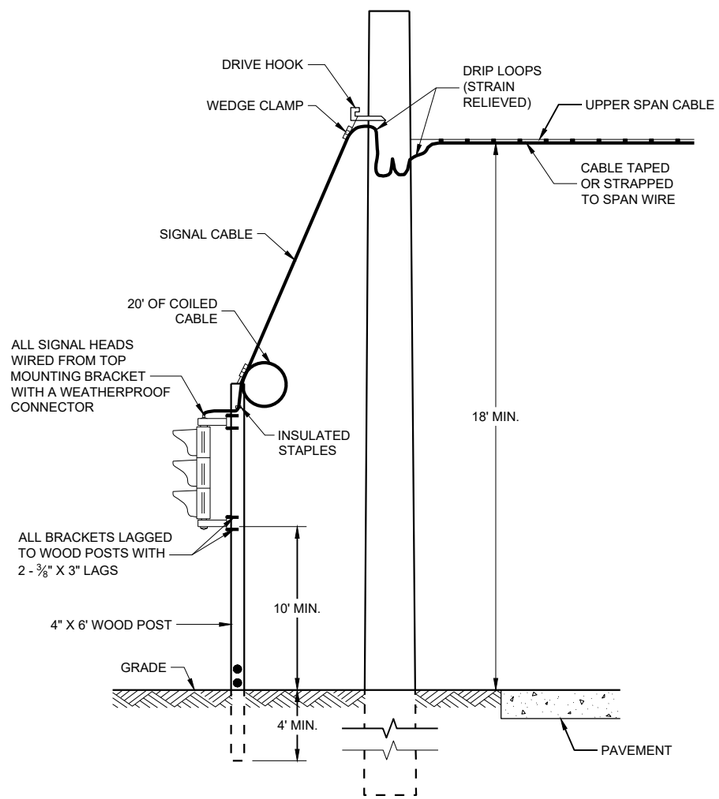

TYPICAL DROP TO TRAFFIC SIGNAL FACE

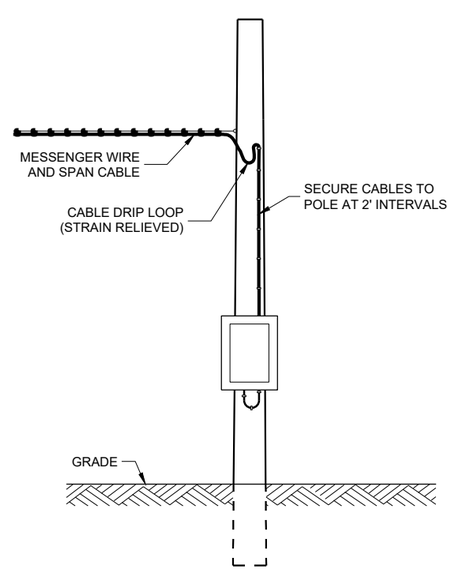

POLE MOUNT CABINET INSTALLATION

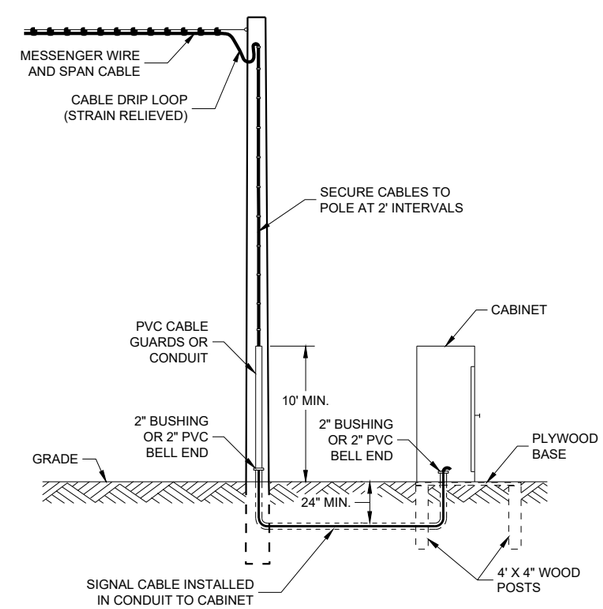

GROUND MOUNT CABINET INSTALLATION

MINIMUM POLE LENGTHS	CLASS	POLE BURIAL DEPTHS
25'	V	5'
30'	V	6'
35'	IV	7'
40'	IV	8'
45'	IV	9'

OFFSET DISTANCES FOR TEMPORARY NON-BREAKAWAY POLES	
SPEED LIMIT	OFFSET DISTANCE*
GREATER THAN 45 MPH	18 FT
45 MPH OR LESS	12 FT
45 MPH OR LESS W/CURBS	2 FT

* NOTE: OFFSET MEASURED FROM OUTER EDGE OF OUTSIDE THRU LANE.

BRIDGE TEMPORARY TRAFFIC SIGNAL INSTALLATION

STATE OF WISCONSIN
DEPARTMENT OF TRANSPORTATION

APPROVED
March 2018 — DATE
/S/ Ahmet Demirbilek — ROADWAY STANDARDS DEVE ENGINEER
FHWA

6

SDD09G02 - 05a

6

SDD09G02 - 05a

GENERAL NOTES

USE ¾" DRILL IN WOOD POLE TO PROVIDE FOR ⅝" BOLTS.

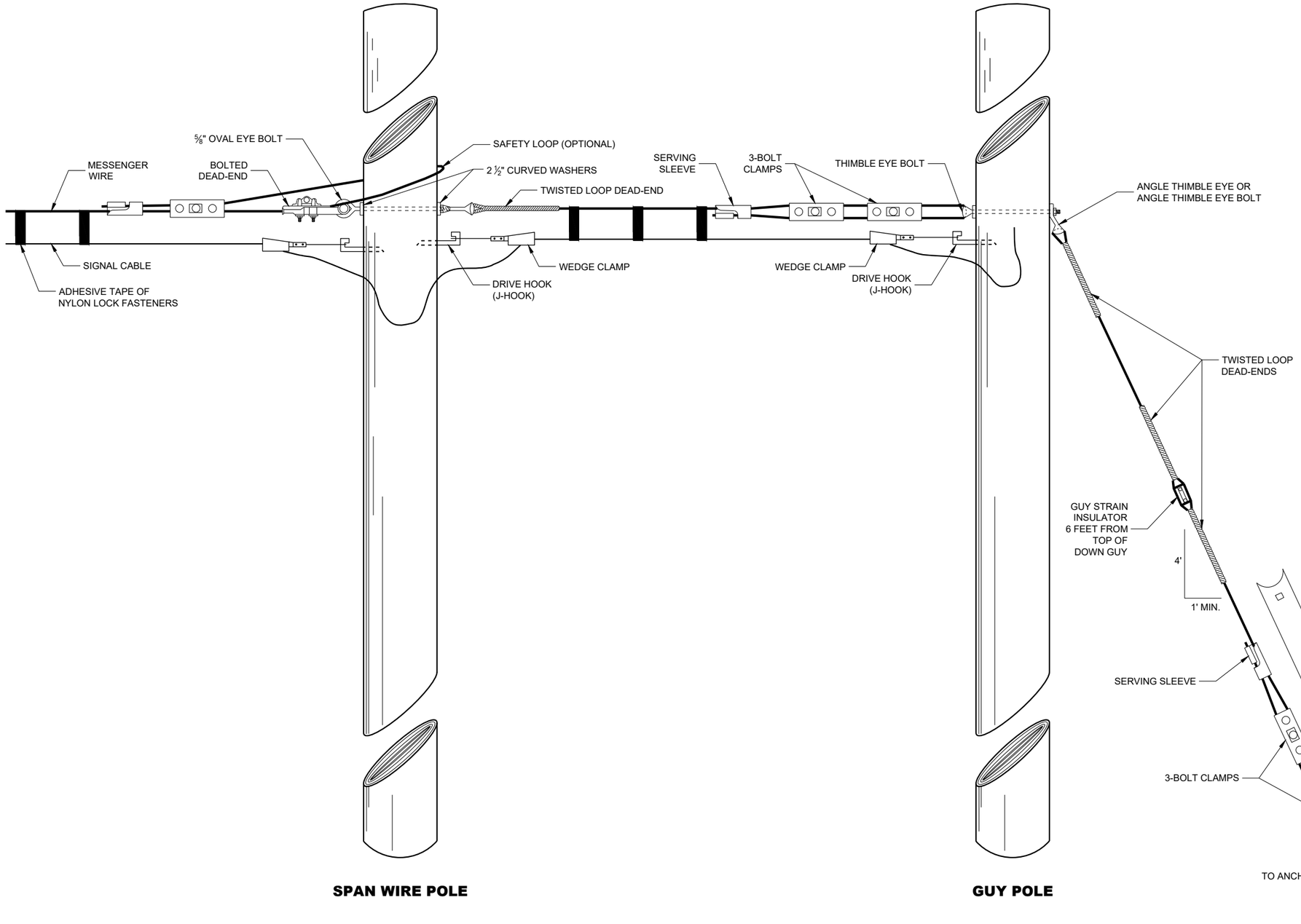

TYPICAL DEAD-ENDINGS OR GUYING

BRIDGE TEMPORARY TRAFFIC SIGNAL INSTALLATION

STATE OF WISCONSIN
DEPARTMENT OF TRANSPORTATION

APPROVED
June 2015 — DATE
/S/ Ahmet Demerbilek — ROADWAY STANDARDS DEVE ENGINEER

FHWA

6

SDD09G02 - 05b

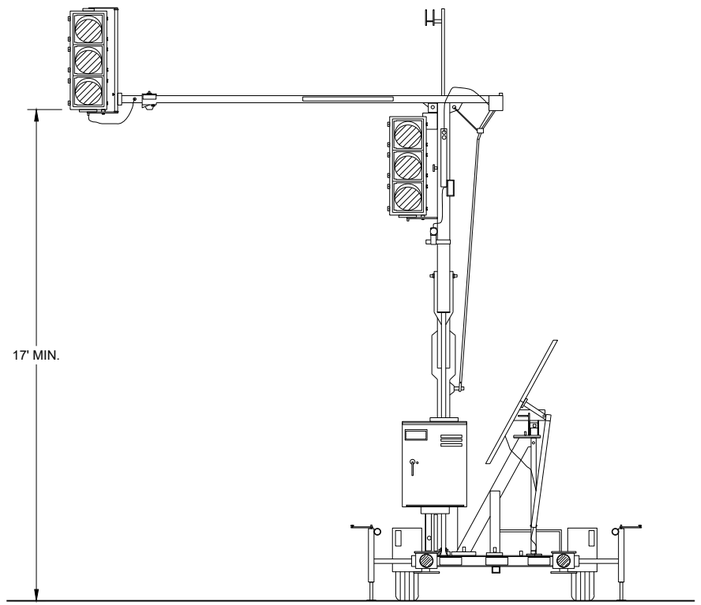

TRAILER MOUNTED TRAFFIC SIGNAL

GENERAL NOTES

DETAIL OF CONSTRUCTION, MATERIALS AND WORKMANSHIP NOT SHOWN ON THIS DRAWING SHALL CONFORM TO THE PERTINENT REQUIREMENTS OF THE CONTRACT.

SIGNING, PAVEMENT MARKING AND LANE CONTROL REQUIREMENTS SHALL CONFORM TO STANDARD DETAIL DRAWING 15D33.

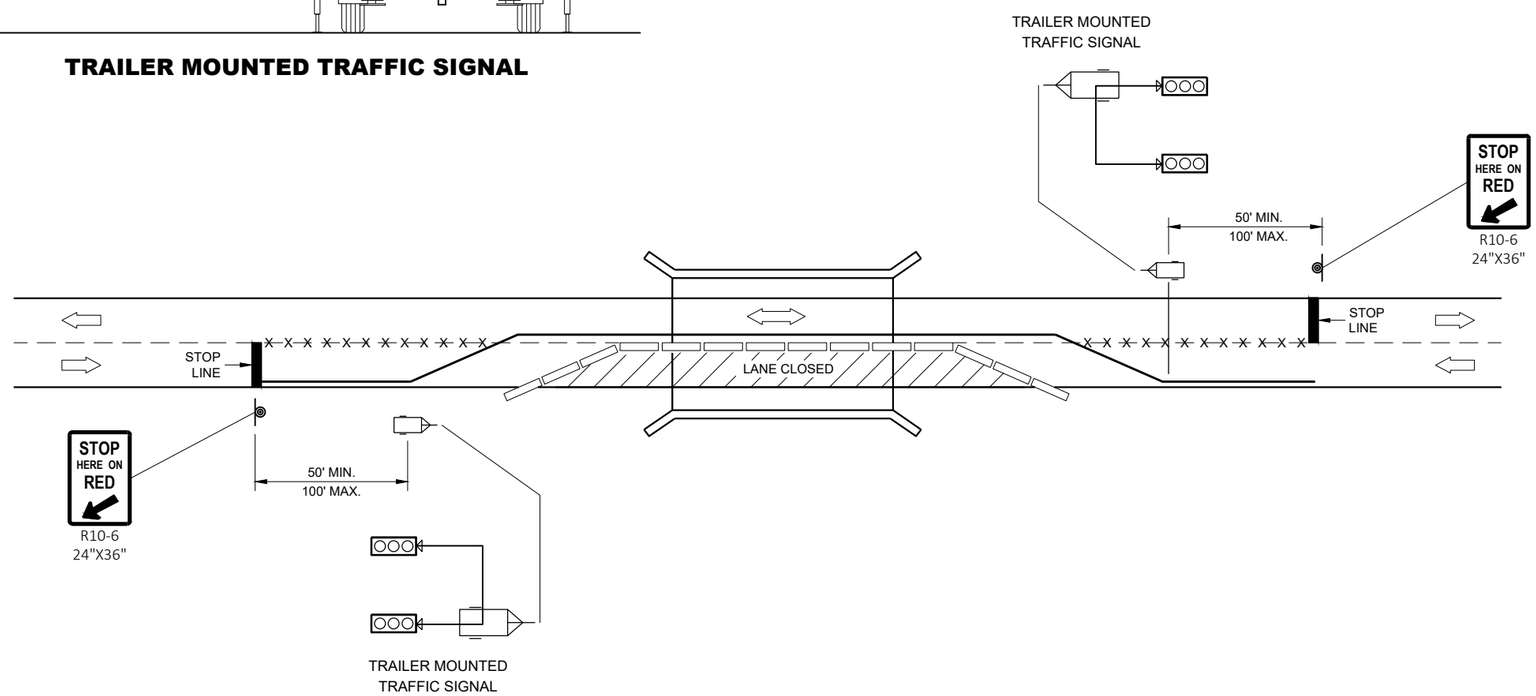

TYPICAL TRAILER MOUNTED TRAFFIC SIGNAL LOCATION

LEGEND

- POST MOUNTED SIGN
- TEMPORARY PRECAST CONCRETE BARRIER
- TRAILER MOUNTED TRAFFIC SIGNAL
- REMOVE PAVEMENT MARKINGS
- DIRECTION OF TRAFFIC

BRIDGE TEMPORARY TRAFFIC SIGNAL INSTALLATION

STATE OF WISCONSIN
DEPARTMENT OF TRANSPORTATION

APPROVED
June 2015 — DATE
/S/ Ahmet Demerbilek — ROADWAY STANDARDS DEVE ENGINEER

FHWA

6

SDD 09G02 - 05c

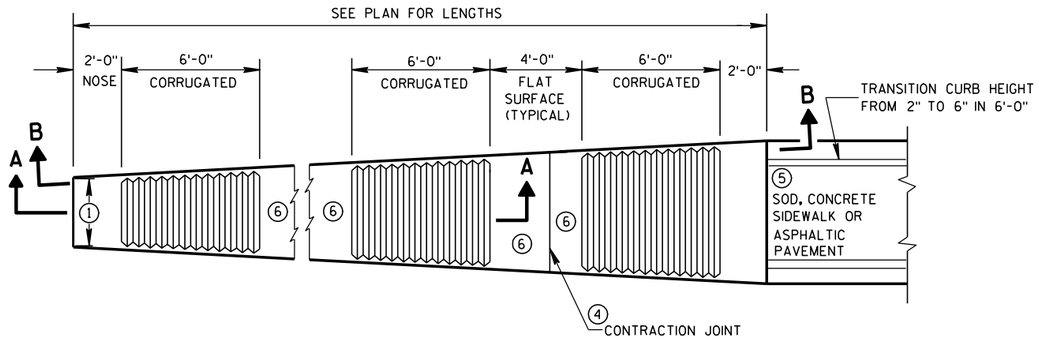

PLAN VIEW

VARIABLE WIDTH CONCRETE CORRUGATED MEDIAN

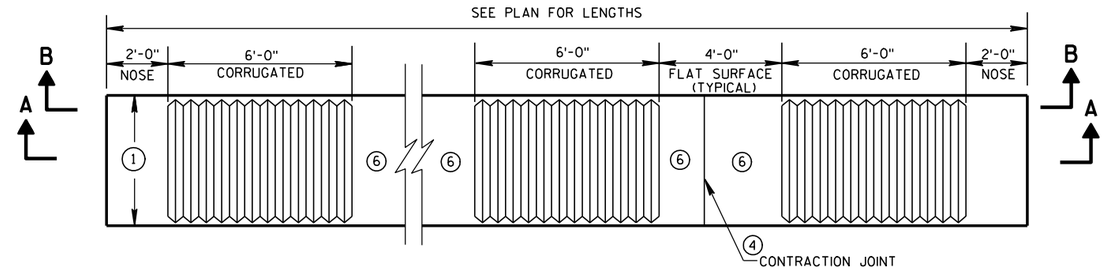

PLAN VIEW

UNIFORM WIDTH CONCRETE CORRUGATED MEDIAN

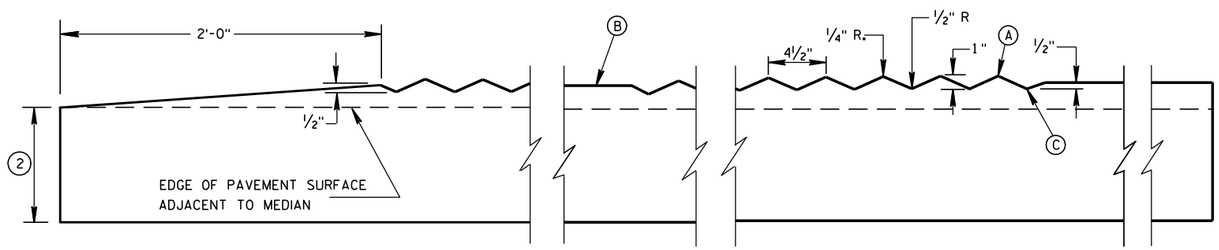

SECTION A-A

LONGITUDINAL SECTION

GENERAL NOTES

1. SEE PLANS FOR CONSTANT OR VARIABLE WIDTH.
2. THE DEPTH OF THE CONCRETE CORRUGATED MEDIAN SHALL BE 9-INCHES UNLESS SHOWN OTHERWISE IN THE PLAN.
   ADJACENT PAVEMENT STRUCTURE DETAILS ARE SHOWN IN THE PLAN. TYPICAL OPTIONS ARE:
   (1) NEW OR EXISTING CONCRETE PAVEMENT.
   (2) ASPHALTIC CONCRETE OVER NEW OR EXISTING CONCRETE BASE COURSE, OR PAVEMENT.
   (3) ASPHALTIC PAVEMENT OVER BASE AGGREGATE DENSE.
3. TIE BARS OR PAVEMENT TIES REQUIRED IN NEW CONCRETE PAVEMENT OR CONCRETE BASE COURSE. TIE BARS SHALL BE NO. 4 X 2'-0" SPACED AT 2'-0" C-C.
   INSTALL TIE BARS TO MAINTAIN A MINIMUM OF 3-INCHES OF COVER BETWEEN THE TIE BAR AND THE CONCRETE SURFACE (BOTTOM AND TOP).
   PAVEMENT TIES REQUIRED IN EXISTING CONCRETE PAVEMENT OR CONCRETE BASE COURSE, PAVEMENT TIES SHALL BE NO. 6 X 1'-0" SPACED AT 3'-0" C-C INSTALLED ON A HORIZONTAL SKEW OF 6:1. THE DIRECTION OF SKEW SHALL ALTERNATE AFTER EVERY ONE OR TWO BARS.
4. CONCRETE CORRUGATED MEDIAN CONTRACTION JOINTS SHALL BE CONSTRUCTED TO MATCH THE JOINTS IN ADJACENT CONCRETE PAVEMENT. WHERE ADJACENT PAVEMENT IS ASPHALT WITH BASE AGGREGATE DENSE. TRANSVERSE CONTRACTION JOINTS SHALL BE PROVIDED AT 20 FOOT INTERVALS.
5. SURFACE TYPE AND DETAILS ARE DEFINED ELSEWHERE IN THE PLAN.
6. YELLOW MARKING ON FLAT SURFACE WHEN MEDIAN SEPARATES OPPOSING TRAFFIC.

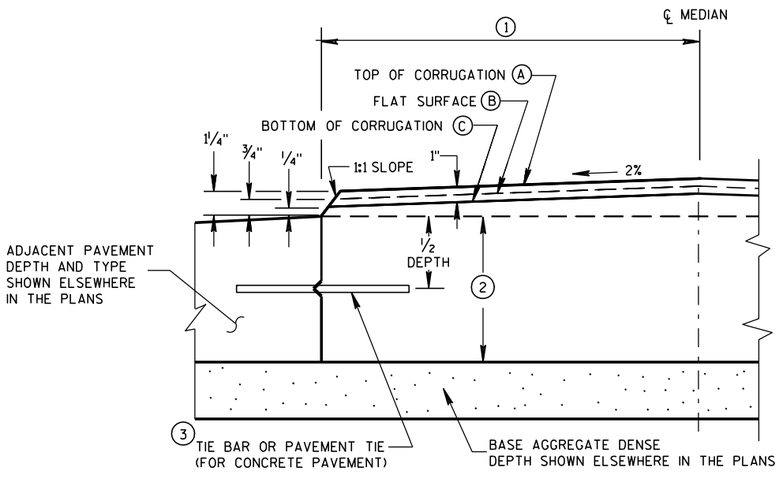

HALF CROSS SECTION

CONCRETE CORRUGATED MEDIAN AND ADJACENT PAVEMENT

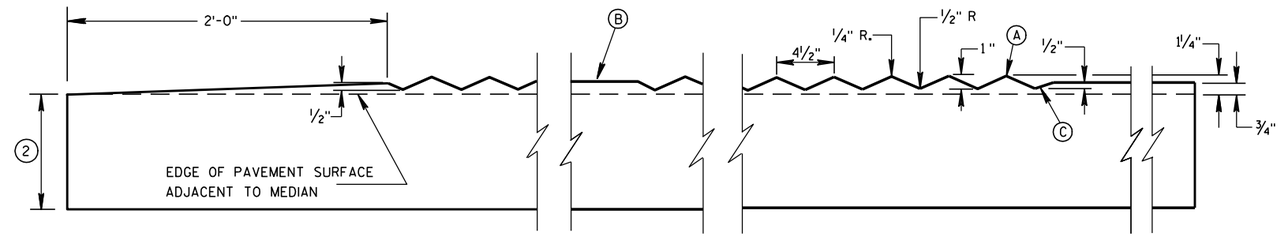

SECTION B-B

LONGITUDINAL SECTION

CONCRETE CORRUGATED MEDIAN	
STATE OF WISCONSIN DEPARTMENT OF TRANSPORTATION	
APPROVED	
12/17/07 DATE	/S/ Jerry H. Zogg ROADWAY STANDARDS DEVELOPMENT ENGINEER
FHWA	

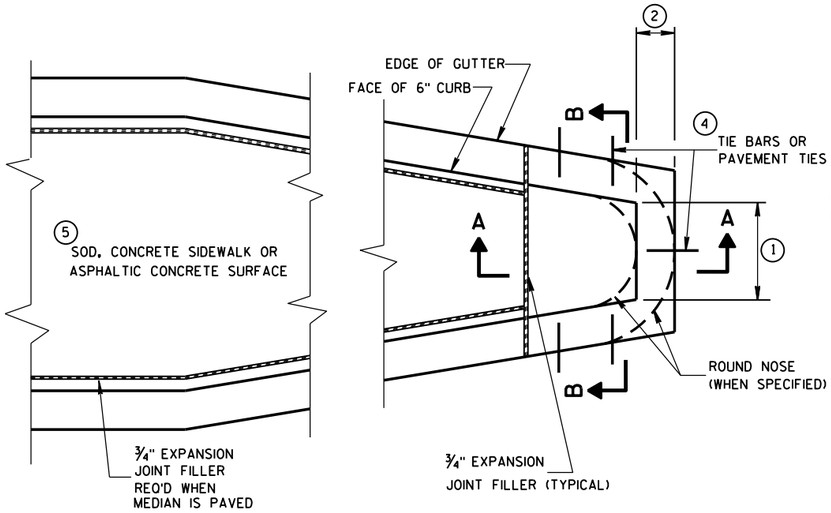

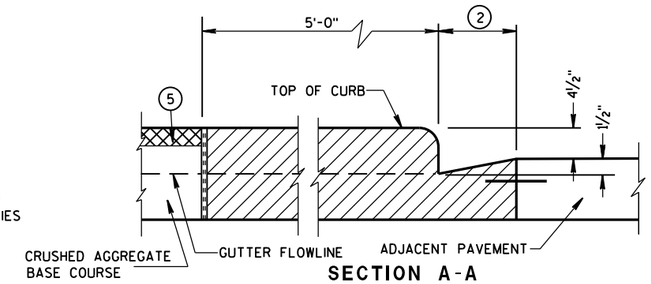

SECTION A-A

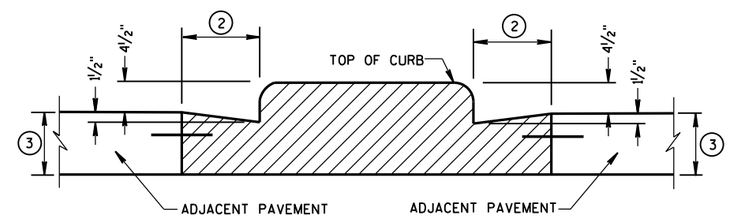

SECTION B-B

CONCRETE MEDIAN BLUNT NOSE DETAIL

GENERAL NOTES

DETAILS OF CONSTRUCTION, MATERIALS AND WORKMANSHIP NOT SHOWN ON THIS DRAWING SHALL CONFORM TO THE PERTINENT REQUIREMENTS OF THE STANDARD SPECIFICATIONS AND THE APPLICABLE SPECIAL PROVISIONS.

1. SEE PLAN FOR MEDIAN NOSE WIDTH AND RADIUS (FOR ROUND NOSE ALTERNATE).
2. WIDTH OF GUTTER TO MATCH EXISTING ADJACENT GUTTER OR AS SPECIFIED ELSEWHERE IN THE PLAN.
3. DEPTH EQUAL TO ADJACENT PAVEMENT. ADJACENT PAVEMENT STRUCTURE DETAILS ARE SHOWN ON THE PLAN. TYPICAL OPTIONS ARE:
   (1) NEW OR EXISTING CONCRETE PAVEMENT.
   (2) ASPHALTIC CONCRETE PAVEMENT OVER NEW OR EXISTING CONCRETE BASE COURSE.
   (3) ASPHALTIC CONCRETE PAVEMENT OVER CRUSHED AGGREGATE BASE COURSE.
4. TIE BARS OR PAVEMENT TIES REQUIRED IN NEW CONCRETE PAVEMENT OR CONCRETE BASE COURSE. TIE BARS SHALL BE NO. 4 X 2'-0" SPACED AT 2'-0" C-C.

   PAVEMENT TIES REQUIRED IN EXISTING CONCRETE BASE COURSE. PAVEMENT TIES SHALL BE NO. 6 X 1'-0" SPACED AT 3'-0" C-C INSTALLED ON A HORIZONTAL SKEW OF 6:1. THE DIRECTION OF SKEW SHALL ALTERNATE AFTER EVERY ONE OR TWO BARS.
5. SURFACE TYPE AND DETAILS ARE SHOWN ELSEWHERE IN THE PLAN.

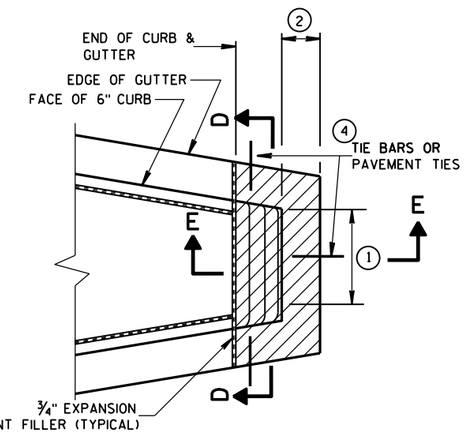

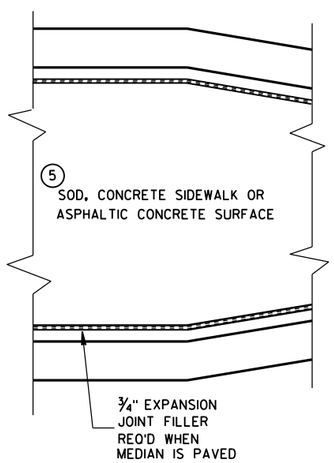

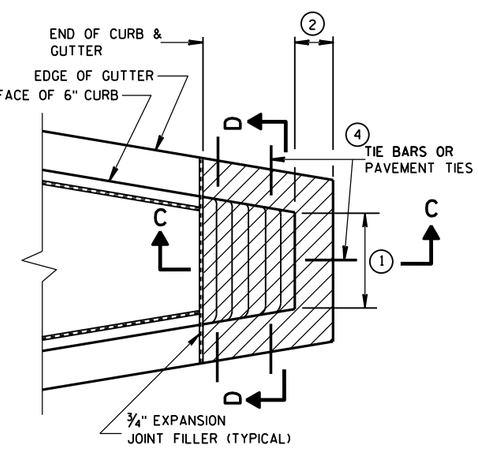

CONCRETE MEDIAN SLOPED NOSE TYPE 1

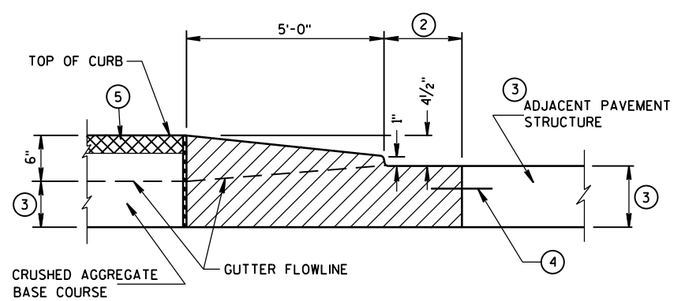

SECTION C-C

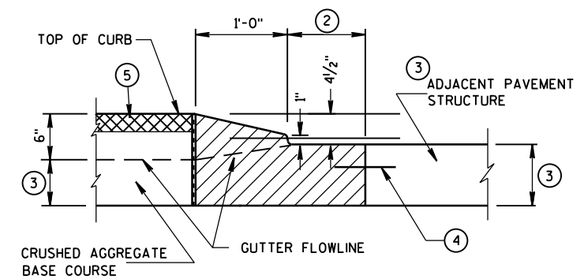

SECTION E-E

CONCRETE MEDIAN SLOPED NOSE TYPE 2

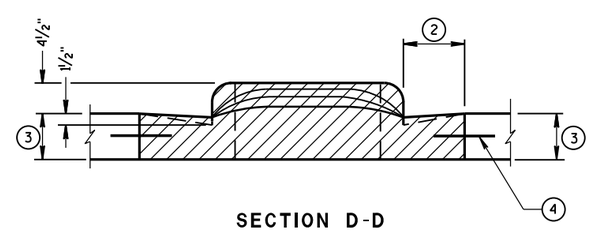

SECTION D-D

CONCRETE MEDIAN NOSE

STATE OF WISCONSIN
DEPARTMENT OF TRANSPORTATION

APPROVED
6/8/2006 — DATE
/S/ Jerry H. Zogg — ROADWAY STANDARDS DEVELOPMENT ENGINEER
FHWA

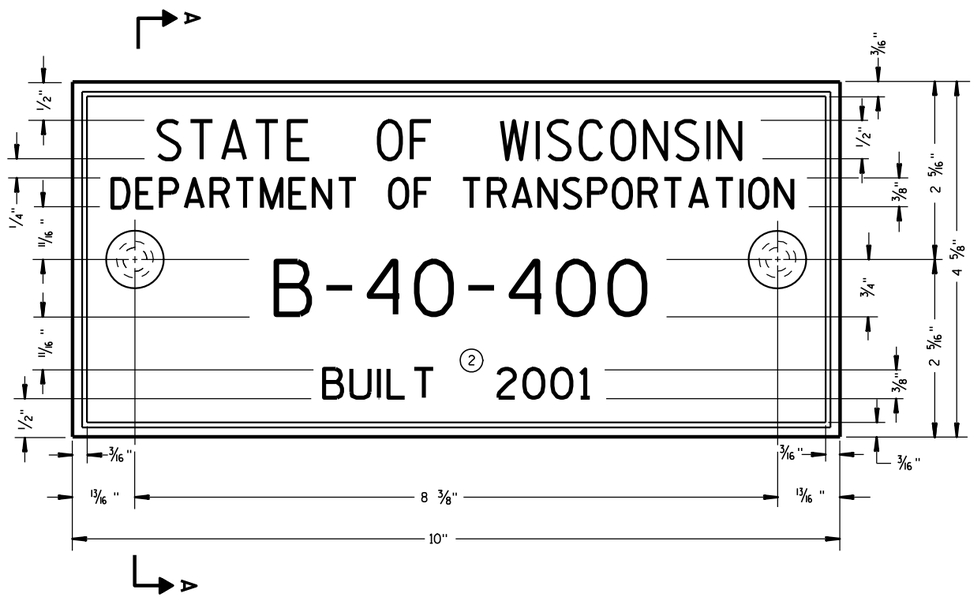

TYPICAL NAME PLATE

(BRIDGES, CULVERTS, AND RETAINING WALLS)

GENERAL NOTES

NAME PLATES TO BE INSTALLED ON BRIDGES, CULVERTS, AND RETAINING WALLS SHALL CONFORM TO THE REQUIREMENTS OF SECTION 502.3.11 OF THE STANDARD SPECIFICATIONS.

THE BRIDGE NUMBER AND YEAR BUILT SHOWN ON THIS DRAWING ARE EXAMPLES ONLY. SEE CONSTRUCTION PLANS FOR INDIVIDUAL NUMBERING AND YEAR BUILT.

(1) EPOXY RESIN SHALL BE FROM AN APPROVED MANUFACTURER AND USED IN ACCORDANCE WITH MANUFACTURER'S RECOMMENDATIONS.

(2) REHABILITATION OF AN EXISTING STRUCTURE SHOULD USE THE DATE OF ORIGINAL STRUCTURE CONSTRUCTION.

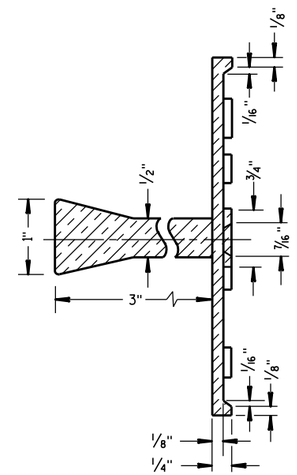

SECTION A-A

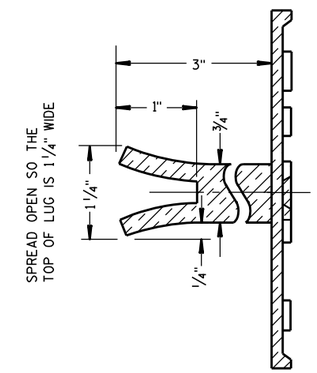

ALTERNATE LUG

FOR MULTI-UNIT STRUCTURES
LINE 3 ABOVE SHALL READ

B = BRIDGE
C = CULVERT
R = RETAINING WALL

COUNTY NO.

BRIDGE NO.

UNIT NO. FOR MULTIPLE
UNIT BRIDGE

B-40-400-1A

NUMBERING DESIGNATION
MULTI-UNIT STRUCTURES

(1) ADHERE ANCHOR LUG TO PRECAST RETAINING WALL WITH EPOXY RESIN.

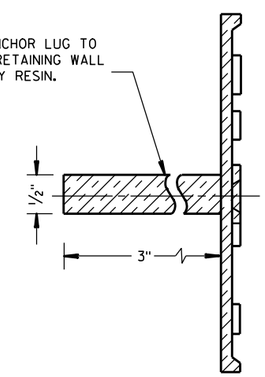

ALTERNATE LUG

(FOR ATTACHMENT TO PRECAST STRUCTURES)

NAME PLATE (STRUCTURES)	
STATE OF WISCONSIN DEPARTMENT OF TRANSPORTATION	
APPROVED	
3/26/10 DATE	/S/ Scot Beck -- CHIEF STRUCTURAL DEVELOP ENGINEER
FHWA	

6

6

S.D.D. 12 A 3-10

S.D.D. 12 A 3-10

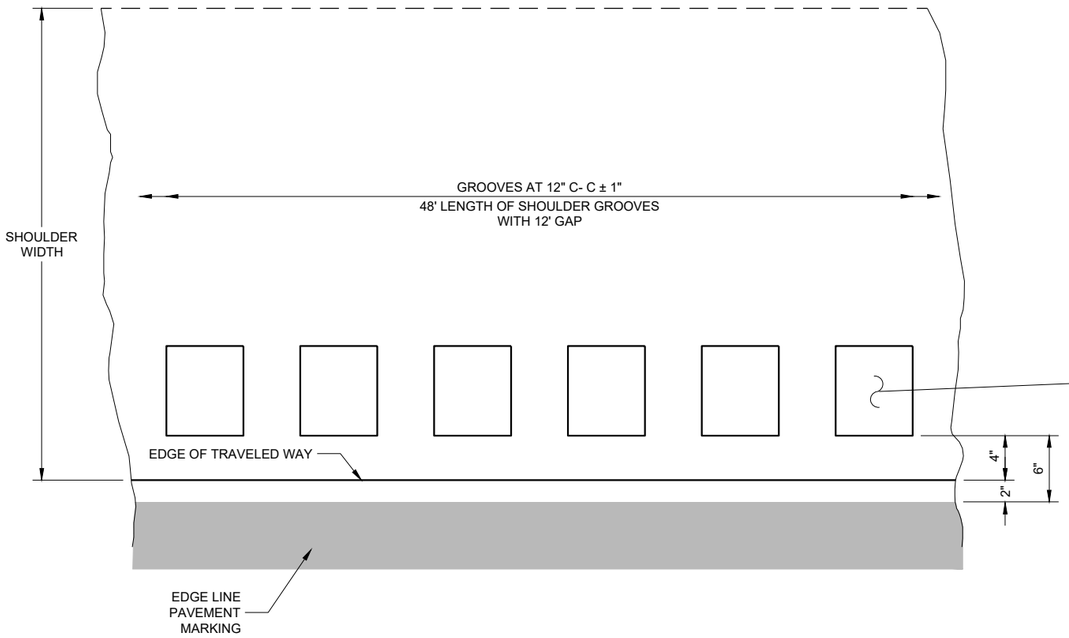

PLAN DETAIL VIEW
SHOULDER WITH GROOVES

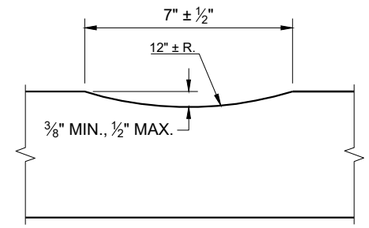

SECTION A - A

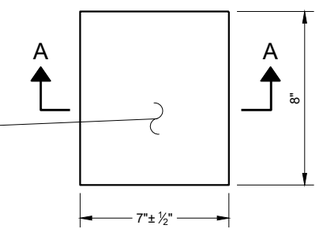

PLAN VIEW
(SINGLE GROOVE)

GENERAL NOTES

DO NOT MILL SHOULDER GROOVES THROUGH INTERSECTIONS, MARKED CROSSWALKS, NON-MOTORIZED PATH CROSSINGS, ETC. REFER TO SDD 13A10 SHEETS "g" AND "h".

SHOULDER GROOVES MAY BE OMITTED IN AREAS WITH HIGH CONCENTRATIONS OF DRIVEWAYS WHEN DIRECTED BY THE ENGINEER.

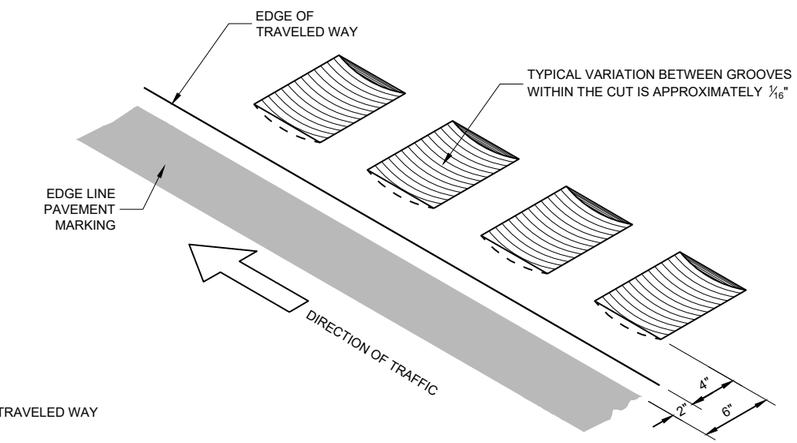

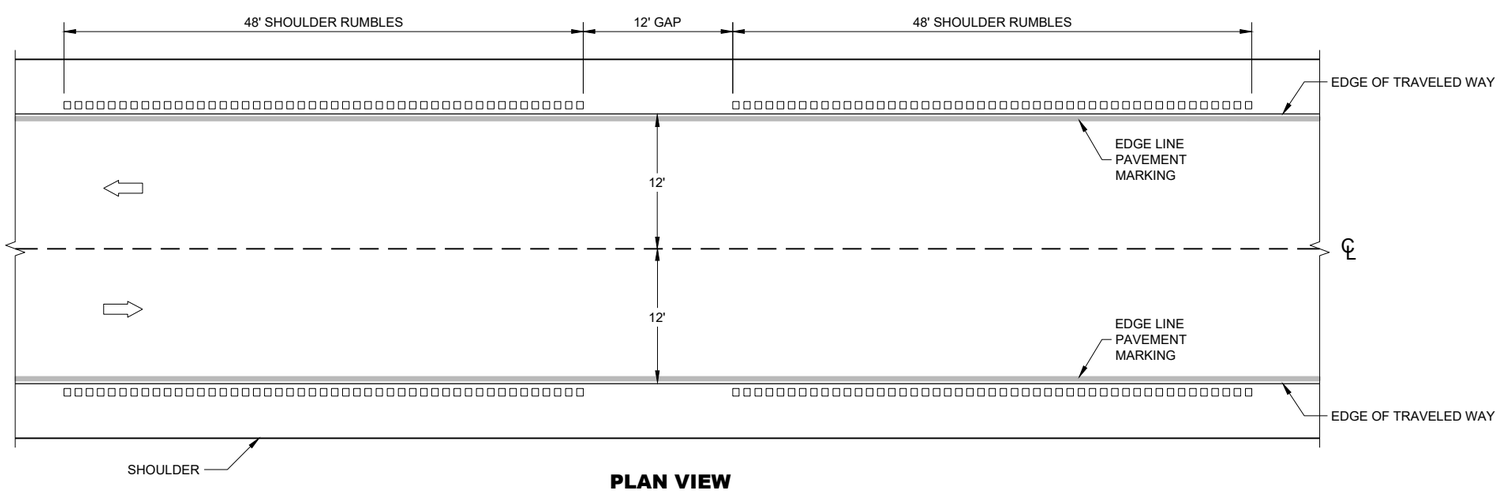

PLAN VIEW

SHOULDER RUMBLE STRIPS - ASPHALT

SHOULDER RUMBLE STRIPS ASPHALT

STATE OF WISCONSIN
DEPARTMENT OF TRANSPORTAT

6

SDD 13A10 - 03a

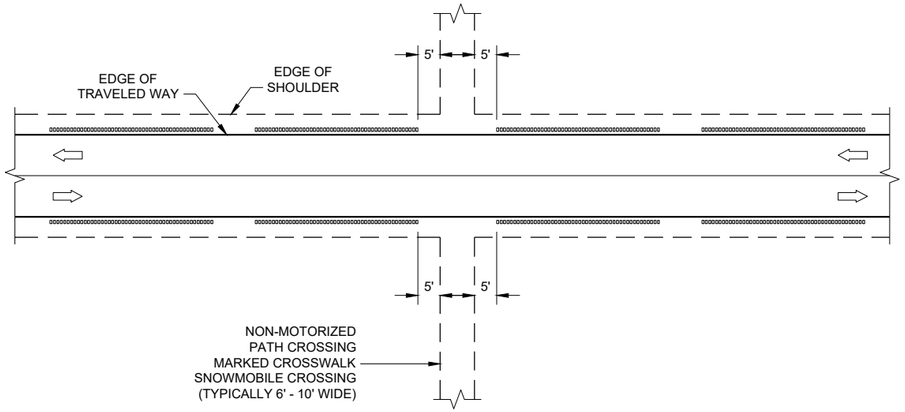

GROOVES AT MISCELLANEOUS CROSSINGS

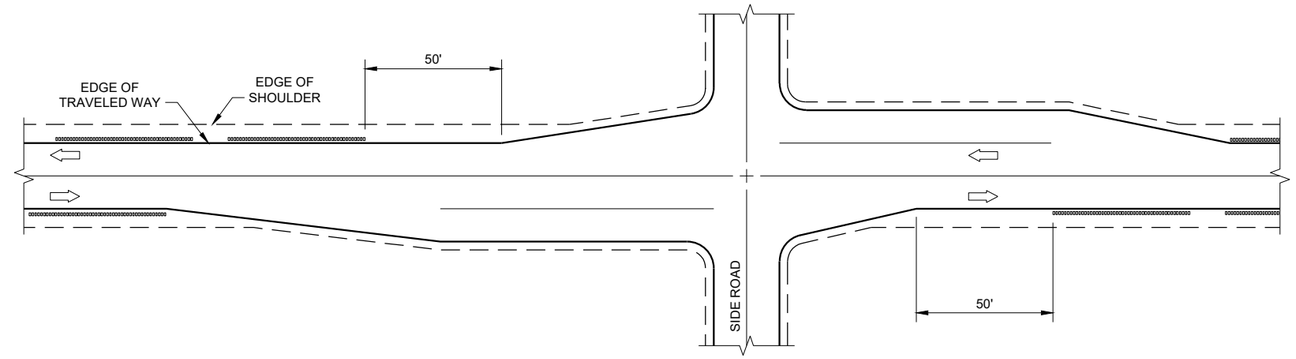

GROOVES AT RIGHT TURN LANE

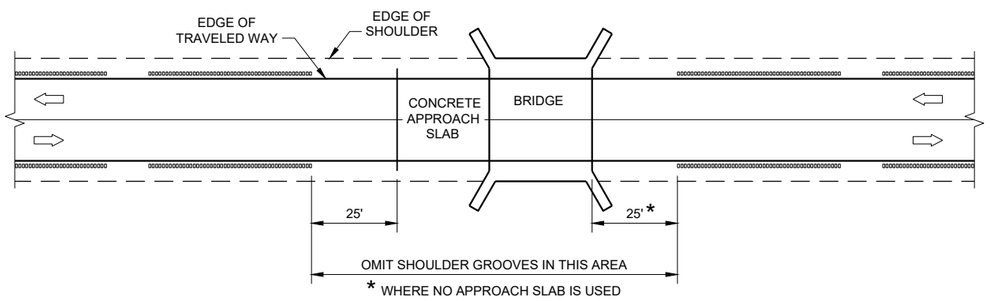

GROOVES AT BRIDGES

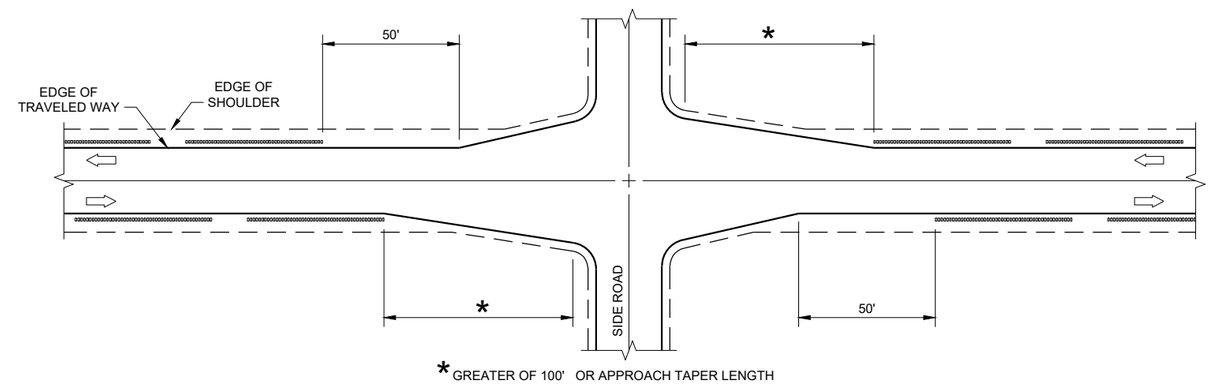

GROOVES AT INTERSECTIONS WITH APPROACH TAPER

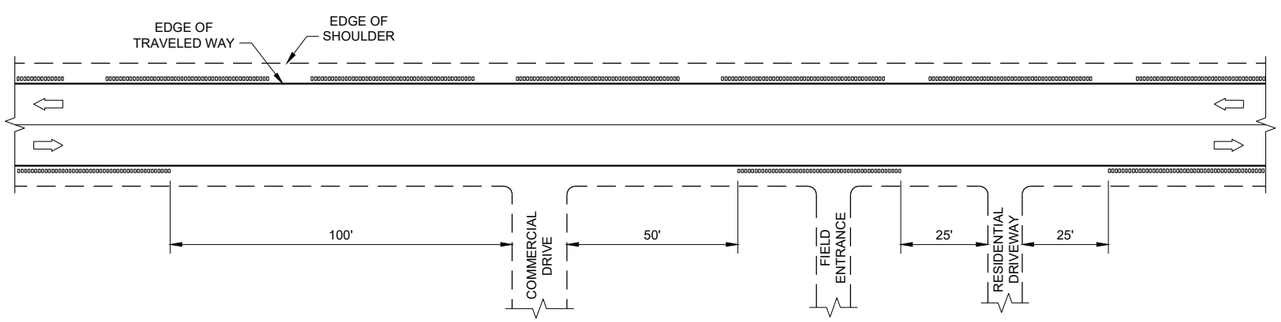

GROOVES AT DRIVEWAYS (1)

GENERAL NOTES

(1) SHOULDER GROOVES MAY BE OMITTED IN AREAS WITH HIGH CONCENTRATIONS OF DRIVEWAYS. WHEN DIRECTED BY THE ENGINEER.

SHOULDER AND EDGE LINE RUMBLE STRIPS CROSSINGS, INTERSECTIONS, BRIDGES, DRIVEWAYS

STATE OF WISCONSIN
DEPARTMENT OF TRANSPORTAT 200

6

SDD 13A10 - 03g

6

SDD 13A10 - 03g

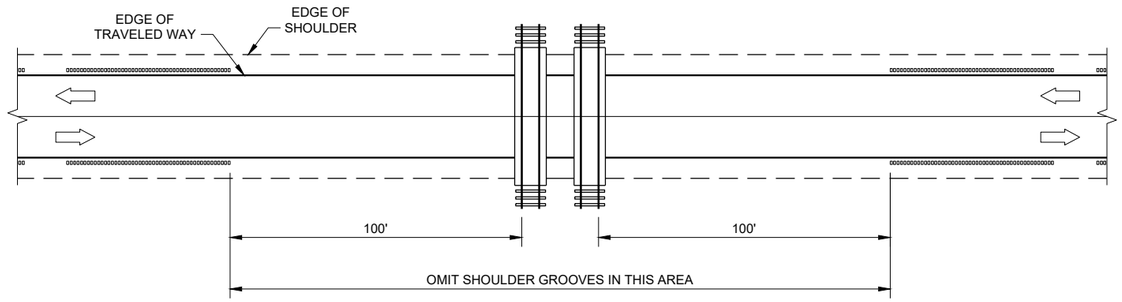

GROOVES AT RAILROADS

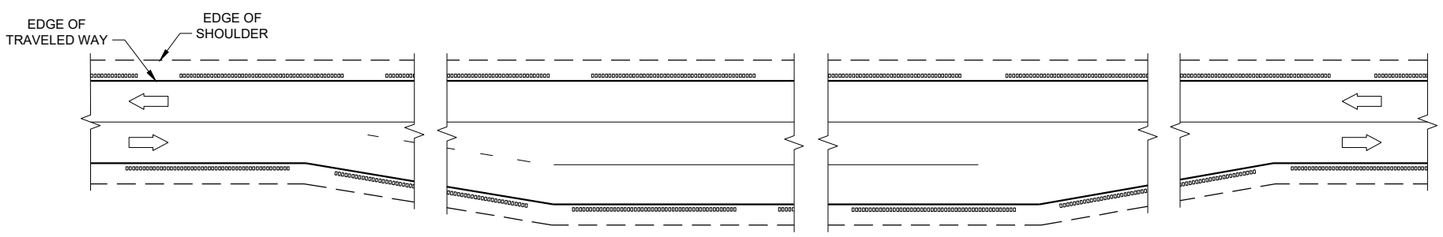

GROOVES AT PASSING AND CLIMBING LANES

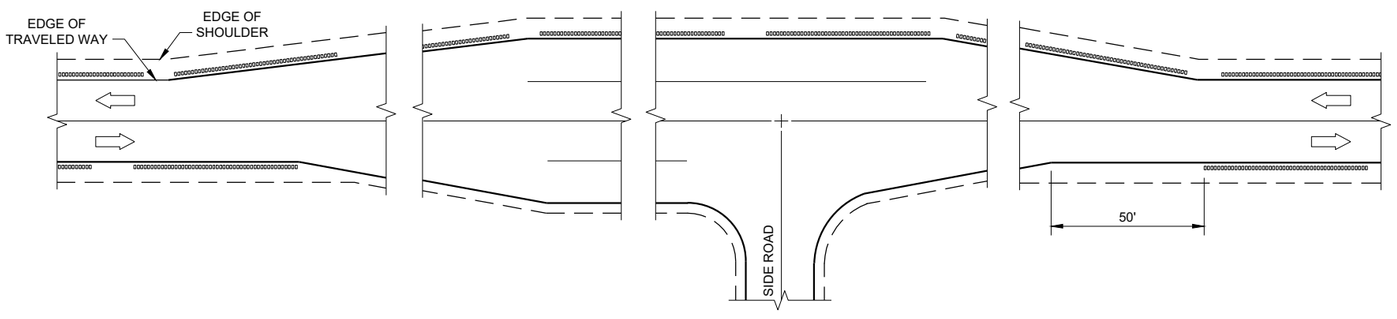

GROOVES AT BYPASS LANES

6

6

SHOULDER AND EDGE LINE RUMBLE STRIPS - RAILROAD, PASSING, CLIMBING AND BYPASS LANES

STATE OF WISCONSIN
DEPARTMENT OF TRANSPORTATION

APPROVED

May 2023 — DATE

/S/ John Jenkins — ROADWAY STANDARDS DEVE ENGINEER

FHWA

SDD 13A10 - 03h

SDD 13A10 - 03h

GENERAL NOTES

DO NOT MILL SHOULDER GROOVES THROUGH INTERSECTIONS, MARKED CROSSWALKS, NON-MOTORIZED PATH CROSSINGS, ETC. REFER TO SDD 13A11 SHEETS "d" AND "e".

CENTERLINE GROOVES MAY BE OMITTED IN AREAS WITH HIGH CONCENTRATIONS OF DRIVEWAYS WHEN DIRECTED BY THE ENGINEER.

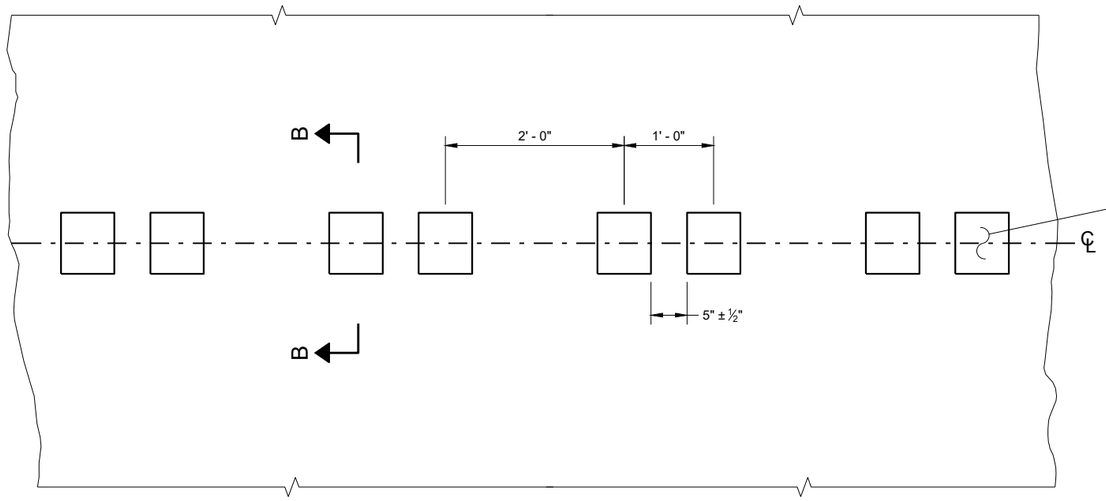

PLAN DETAIL VIEW

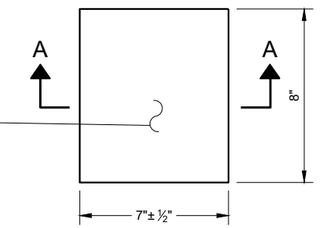

PLAN VIEW
(SINGLE GROOVE)

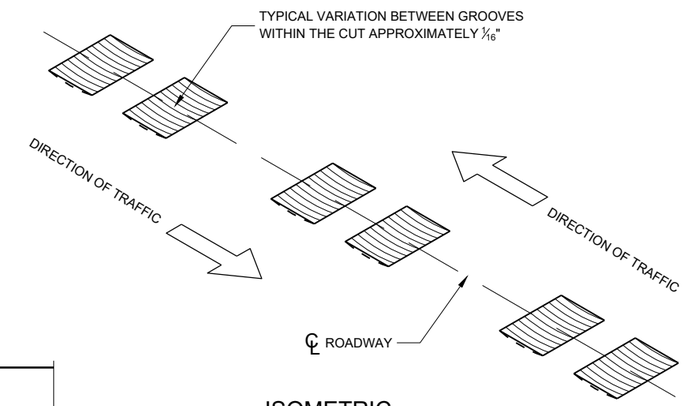

ISOMETRIC

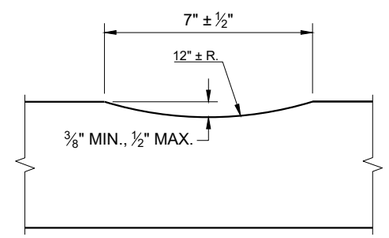

SECTION A - A

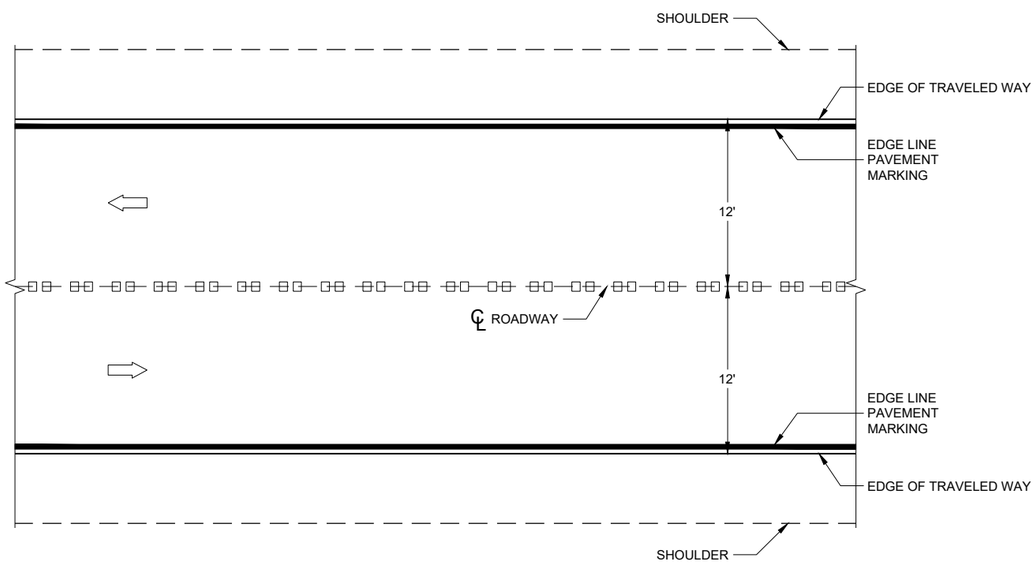

PLAN VIEW

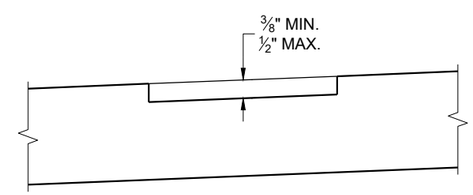

SECTION B - B
SUPERELEVATED ROADWAY

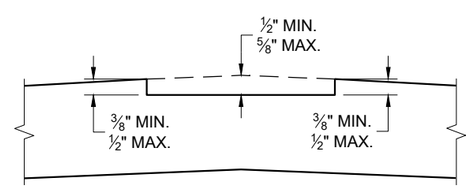

SECTION B - B
CROWNED ROADWAY

CENTERLINE RUMBLE STRIPS - ASPHALT

6

SDD 13A11 - 04a

CENTERLINE RUMBLE STRIPS - ASPHALT

STATE OF WISCONSIN
DEPARTMENT OF TRANSPORTAT

6

SDD 13A11 - 04a

GENERAL NOTES

1. CENTERLINE GROOVES MAY BE OMITTED IN AREAS WITH HIGH CONCENTRATIONS OF DRIVEWAYS WHEN DIRECTED BY THE ENGINEER.

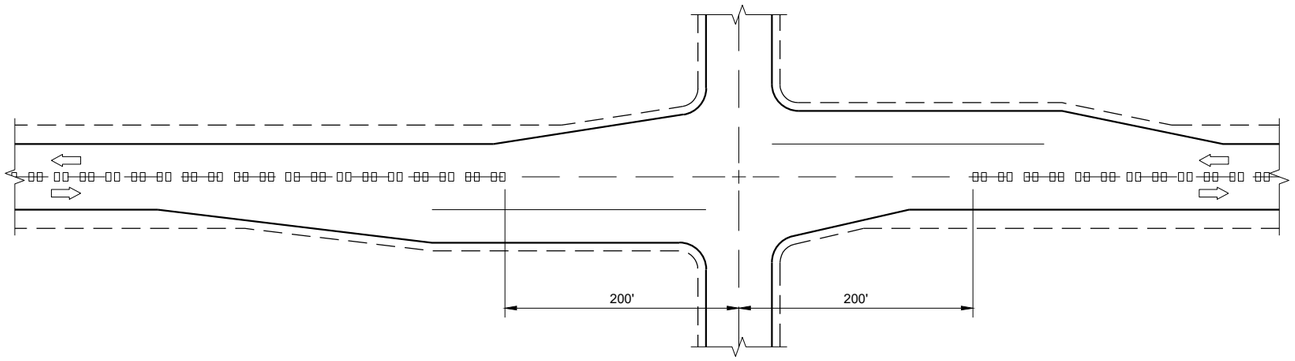

CENTERLINE GROOVES AT INTERSECTIONS

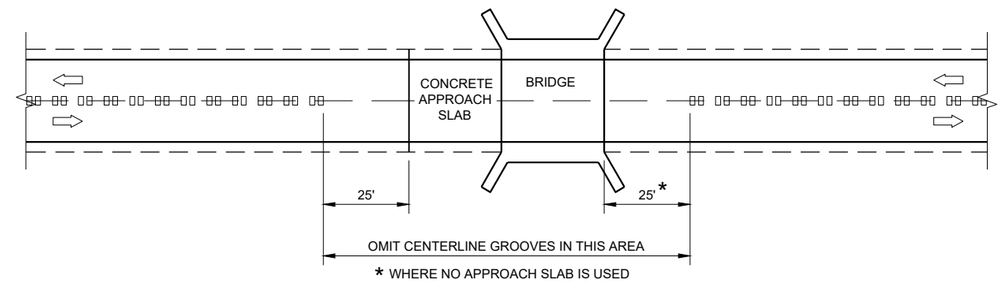

CENTERLINE GROOVES AT BRIDGES

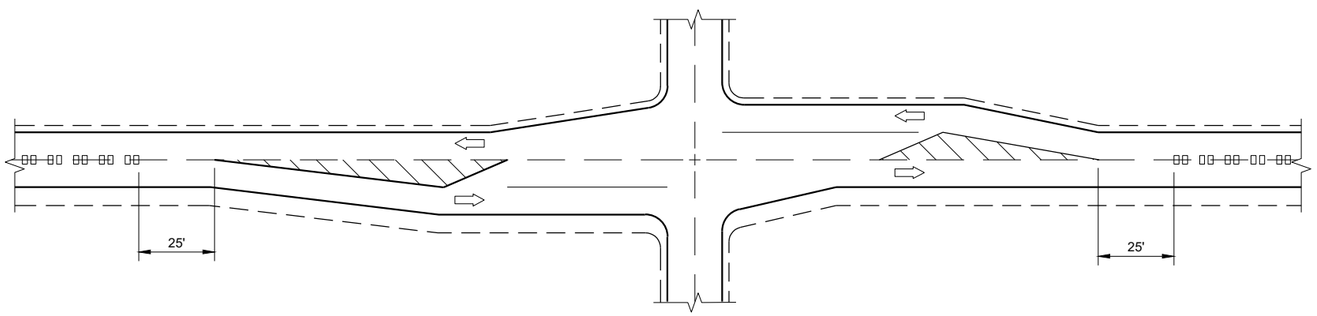

CENTERLINE GROOVES AT INTERSECTIONS (WITH LEFT TURN LANES)

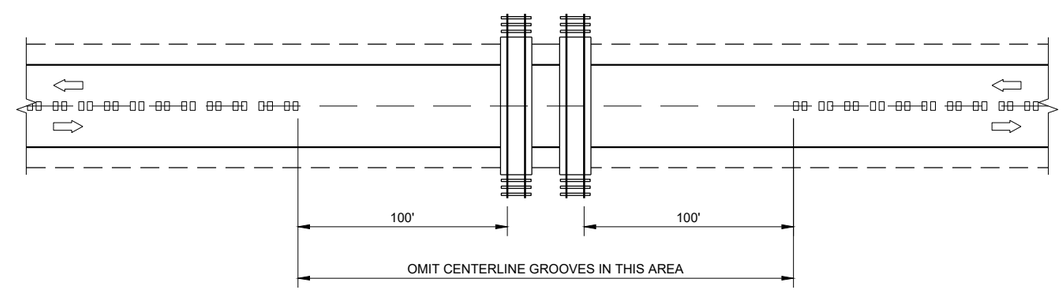

CENTERLINE GROOVES AT RAILROADS

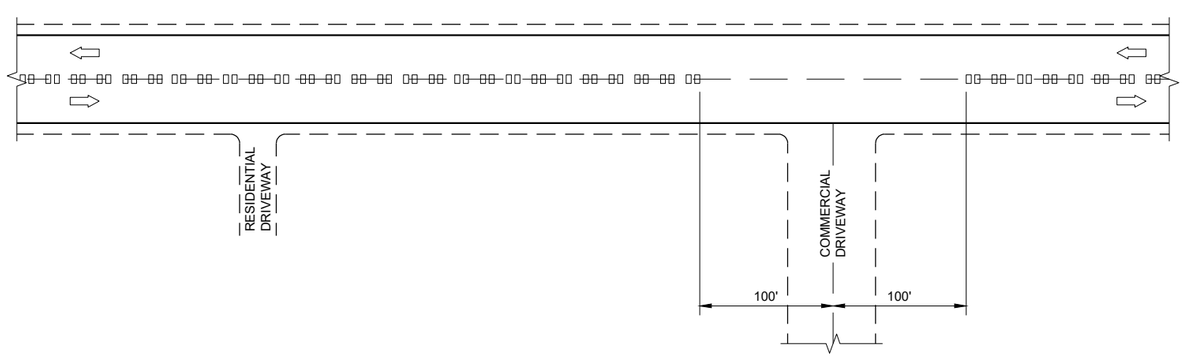

CENTERLINE GROOVES AT DRIVEWAYS (1)

6

SDD 13A11 - 04d

CENTER LINE RUMBLE STRIPS - INTERSECTIONS, DRIVEWAYS, BRIDGES, RAIL ROADS

STATE OF WISCONSIN
DEPARTMENT OF TRANSPORTATION

APPROVED
May 2023 — DATE
/S/ John Jenkins — ROADWAY STANDARDS DEVE ENGINEER

FHWA

6

SDD 13A11 - 04d

PAVEMENT DETAILS FOR RAILROAD APPROACH

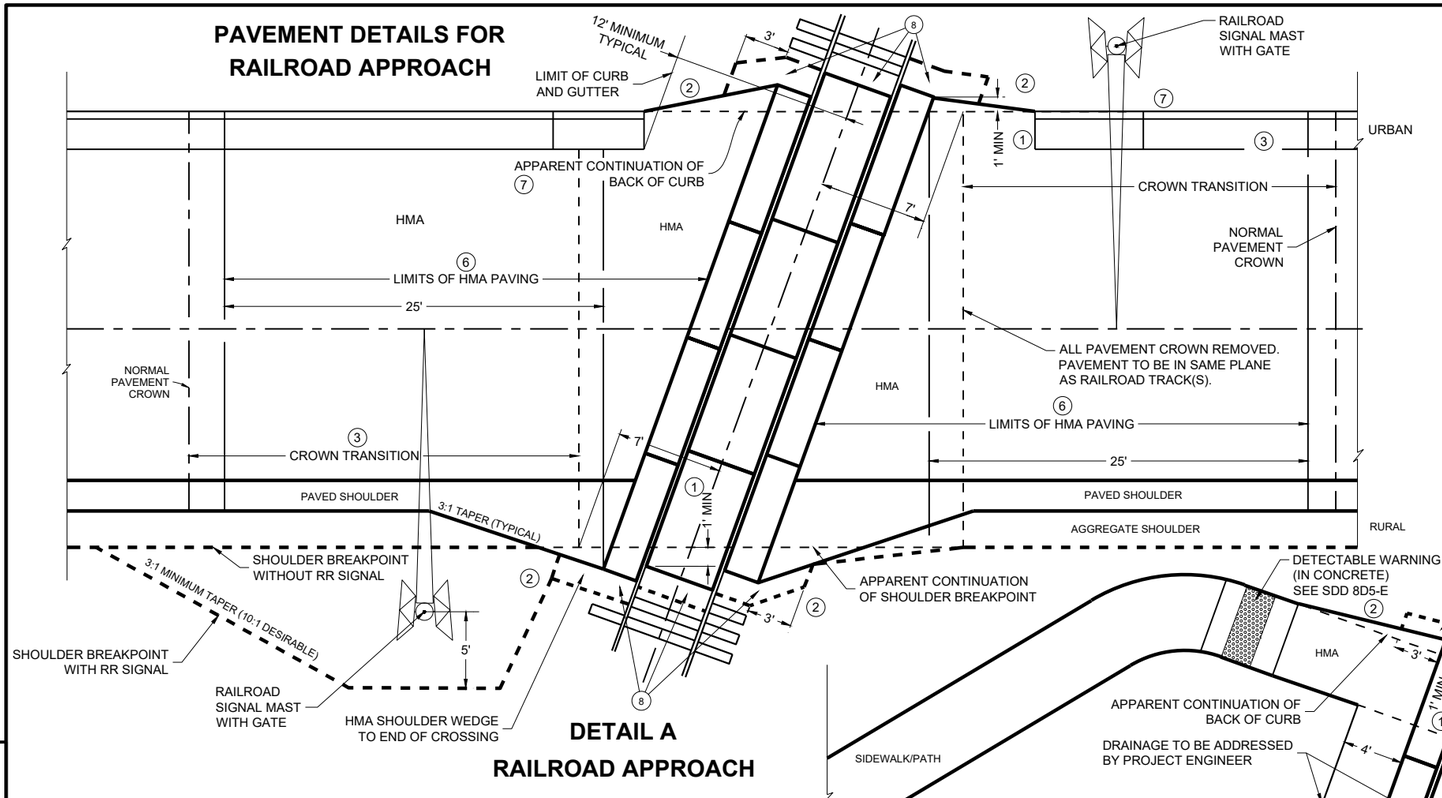

DETAIL A
RAILROAD APPROACH

GENERAL NOTES

PLANS AND SECTIONS ARE TYPICAL. DIMENSIONS VARY PER PROJECT.

DETAILS OF CONSTRUCTION, MATERIALS AND WORKMANSHIP NOT SHOWN ON THIS DRAWING SHALL CONFORM TO THE PERTINENT REQUIREMENTS OF THE STANDARD SPECIFICATIONS, PROJECT PLANS, AND THE APPLICABLE SPECIAL PROVISIONS.

CROSSING SURFACE MATERIAL, RAILS, TIES, BALLAST, AND CROSSING DRAINAGE SYSTEM BY OTHERS UNLESS DIRECTED OTHERWISE. IF THE FINAL GRADES DON'T MATCH TO THE PLAN GRADES THEN GRADE ADJUSTMENTS WILL BE NECESSARY. CONFIRM NEW GRADES WITH PROJECT ENGINEER.

HMA PAVEMENT APPROACHES, HMA PAVEMENT CROSSING SURFACES, AND HMA FLANGEWAY/FIELD FILLERS TO BE REPLACED BY ROADWAY CONTRACTOR UNLESS DIRECTED OTHERWISE BY THE PLANS, SPECIAL PROVISIONS, RAILROAD ENGINEER, OR PROJECT ENGINEER.

HMA PAVEMENT SHALL BE ROLLED PARALLEL TO THE TRACK.

WHEN THERE IS A SIDEWALK OR SHARED-USE PATH, ADD DETECTABLE WARNING FIELDS PER CURRENT STANDARD DETAIL DRAWING 8D5-E.

THE CROSSING SHALL NOT BE OPENED TO ANY TYPE OF TRAFFIC UNTIL IT IS FULLY PAVED AND COOLED SUFFICIENTLY UNLESS OTHERWISE APPROVED BY THE RAILROAD ENGINEER AND THE PROJECT ENGINEER.

NO NON-RUBBER TIRED OR TRACKED EQUIPMENT SHALL CROSS OR SIT ON THE CROSSING SURFACE WITHOUT PROTECTING THE CROSSING SURFACE WITH A METHOD APPROVED BY THE RAILROAD ENGINEER AND PROJECT ENGINEER.

PLACE BASE AGGREGATE DENSELY AROUND SIGNAL BASE. COORDINATE WITH THE RAILROAD ENGINEER.

GENERAL NOTES CONTINUED

1. 1' MINIMUM CROSSING SURFACE COVERAGE PAST THE APPARENT CONTINUATION OF SHOULDER BREAKPOINT, BACK OF CURB, OR OUTSIDE EDGE OF SIDEWALK/PATH. INDIVIDUAL RAILROADS MAY HAVE DIFFERENT MINIMUM STANDARDS.
2. HMA FLARE FROM OUTSIDE EDGE OF SIDEWALK/PATH, BACK OF CURB, OR AGGREGATE SHOULDER BREAKPOINT TO THE END OF CROSSING SURFACE MATERIAL.
3. CROWN TRANSITION LENGTH SHOWN ELSEWHERE IN THE PLAN.
4. NEAR EDGE OF PATH TO THE CENTER OF SIGNAL OR GATE MAST SHOULD BE A MINIMUM OF 5'-0". FOR SIDEWALK, THE NEAR EDGE SHOULD BE A MINIMUM OF 3'-0" TO THE CENTER OF SIGNAL OR GATE. NEAR EDGE OF SIDEWALK TO A NON-GATED MAST OR CANTILEVER SHOULD BE A MINIMUM OF 2'-6". SEE PLAN FOR RAILROAD SIGNAL AND GATE LOCATION IF THEY ARE NOT ALREADY INSTALLED.
5. TERRACE WIDTH VARIES. SEE PLAN FOR RAILROAD SIGNAL AND GATE LOCATIONS. PER PLAN OR PROJECT ENGINEER THE TERRACE AND SIDEWALK/PATH GRADES SHALL BE TRANSITIONED TO MATCH THE GRADE OF THE TRACK. FIELD FIT TO AVOID PONDING.
6. 25' MINIMUM HMA PAVING MEASURED PARALLEL TO THE ROAD OR 10' MINIMUM MEASURED PERPENDICULAR TO THE TRACK FROM THE EDGE OF THE CROSSING SURFACE, WHICHEVER IS GREATER.
7. REFERENCE SDD 8-D-01 END SECTION CURB AND GUTTER. MEDIAN END NEAR THE TRACK SHOULD BE PARALLEL TO THE TRACK. 6'-0" TAPER FOR A MEDIAN SHOULD BE REDUCED TO GET FULL HEIGHT CURB WHERE THE GATE COMES DOWN. DESIGN OPTION TO POUR MEDIAN TAPER IN ONE PIECE. BUILD PER PLAN UNLESS OTHERWISE APPROVED BY THE RAILROAD ENGINEER AND THE PROJECT ENGINEER.
8. IF METAL END PLATES ARE NOT INSTALLED BY THE RAILROAD THEN HMA PAVEMENT WEDGE SHALL BE PLACED AT THE END OF THE LAST PANEL TAPERED TO BACK EDGE OF NEXT TIE AND THOROUGHLY COMPACTED. SEE DETAIL G.

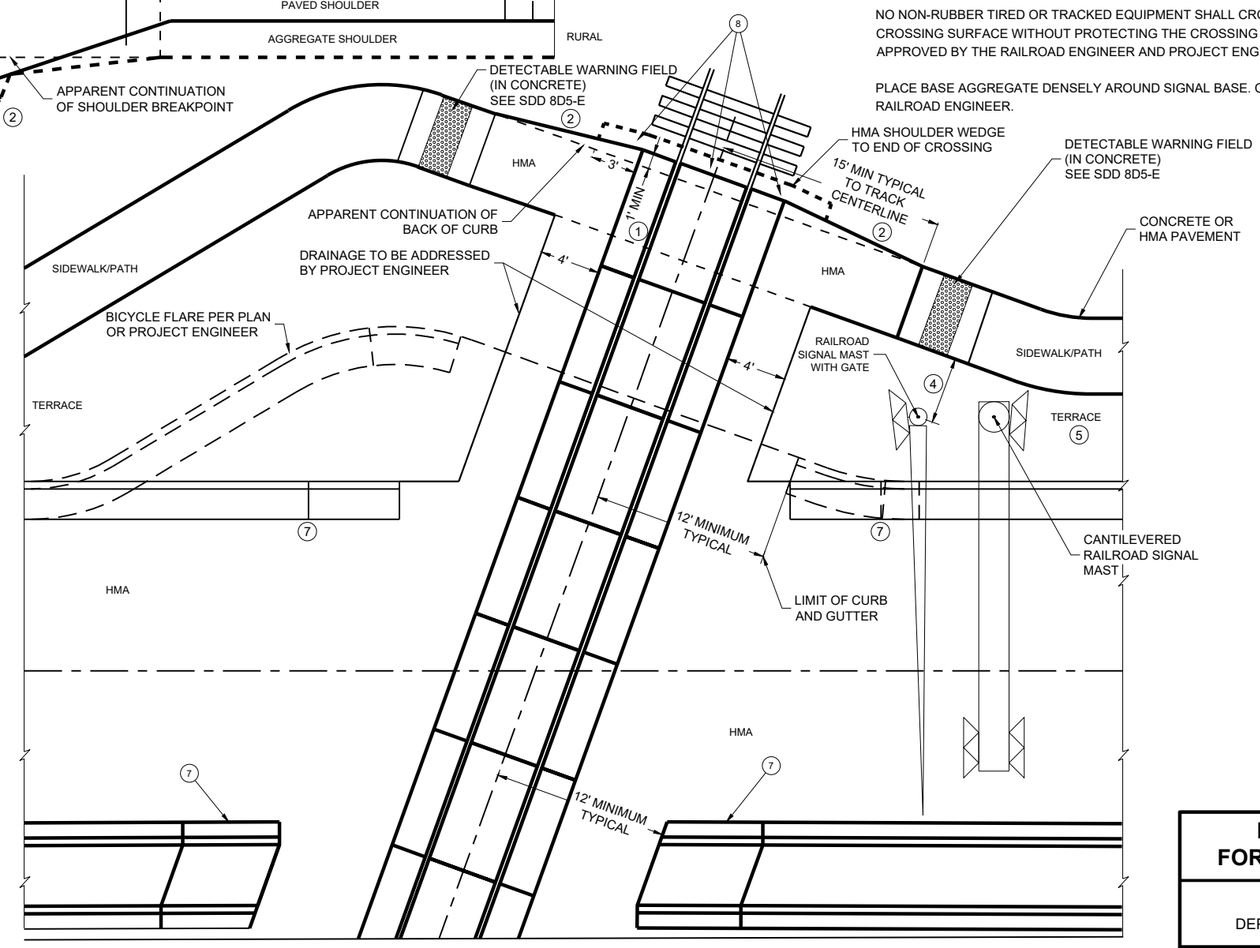

DETAIL B
MEDIAN AND SIDEWALK/SHARED-USE PATH APPROACH

PAVEMENT DETAILS FOR RAILROAD APPROACH

STATE OF WISCONSIN
DEPARTMENT OF TRANSPORTATION

APPROVED
May 2023 — DATE
/S/ Kristen Sommers — STATE RAILROAD ENGINEERING AND SAFETY SUPERVISOR
FHWA

6

SDD 13B01-11a

TYPICAL SECTIONS FOR RAILROAD APPROACH

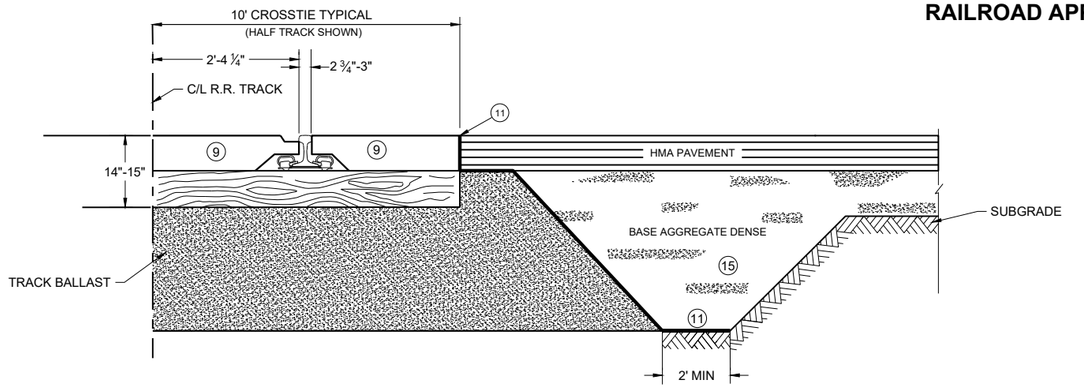

DETAIL C
ROADWAY PROJECT AT RAILROAD
CROSSING WITHOUT SUBGRADE IMPROVEMENT
TYPICAL SECTION

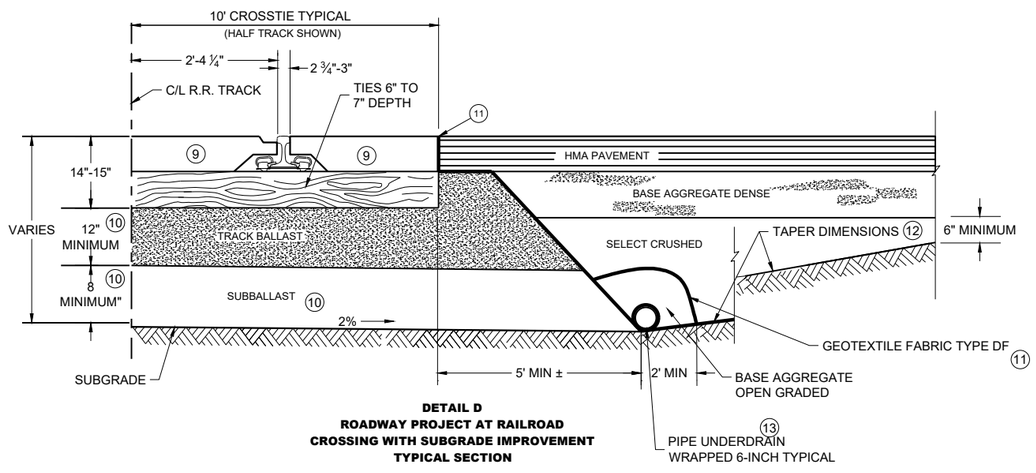

DETAIL D
ROADWAY PROJECT AT RAILROAD
CROSSING WITH SUBGRADE IMPROVEMENT
TYPICAL SECTION

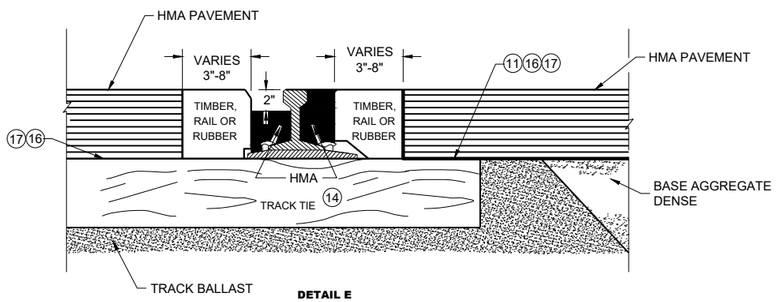

DETAIL E
TIMBER, RAIL OR
RUBBER SECTION
HMA FLANGEWAY
AND FIELD FILLERS

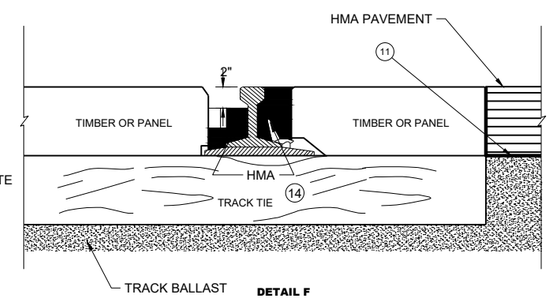

DETAIL F
PANEL SECTION
HMA FLANGEWAY
AND FIELD FILLERS

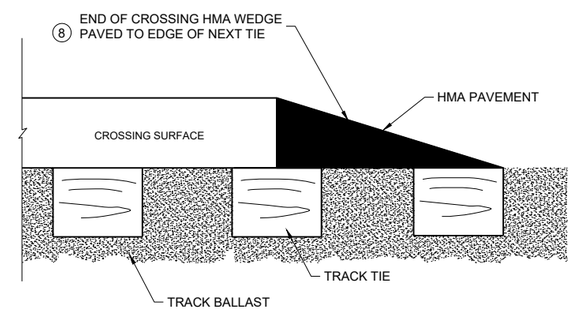

DETAIL G
END OF CROSSING HMA WEDGE

GENERAL NOTES

8. IF METAL END PLATES ARE NOT INSTALLED BY THE RAILROAD THEN HMA PAVEMENT WEDGE SHALL BE PLACED AT THE END OF THE LAST PANEL TAPERED TO BACK EDGE OF NEXT TIE AND THOROUGHLY COMPACTED. SEE DETAIL A AND B.

9. MATCH THE CROSSING TYPE THAT IS INSTALLED UNLESS OTHERWISE DIRECTED BY PROJECT ENGINEER.

10. TRACK BALLAST AND SUBBALLAST REQUIRED 12" AND 8" MINIMUM DEPTHS RESPECTIVELY. DIMENSION FROM BOTTOM OF TRACK TIE TO HIGH SIDE OF 2% SLOPE. THE 2% SLOPE IS REQUIRED ON RAILROAD SUBBALLAST. SEE PLAN FOR CROWN, MATERIAL THICKNESS, AND SLOPE DIRECTION. SUBBALLAST CAN BE HMA, 1 1/2" BASE AGGREGATE DENSE, SELECT CRUSHED, OR A COMBINATION OF THEM.

11. GEOTEXTILE FABRIC TYPE SAS PLACED IN ORDER TO PROVIDE STABILIZATION AND SEPARATION ON TOP OF THE TRACK BALLAST WHERE IT IS UNDER HMA PAVEMENT, BASE AGGREGATE DENSE OR SELECT CRUSHED MATERIAL AND THE FIELD SIDE BALLAST CRIBS. GEOTEXTILE FABRIC TYPE DF PLACED IN ORDER TO PROVIDE STABILIZATION AND SEPARATION UNDER AND AROUND THE PIPE UNDERDRAIN. PLACING GEOTEXTILE FABRIC OR GEOGRID UNDER THE SUBBALLAST IS OPTIONAL.

12. TAPER DIMENSIONS PROVIDED BY PLAN OR BY PROJECT ENGINEER.

13. IF SHOWN ON THE PLAN, TYPICAL 6-INCH PERFORATED PVC SCHEDULE 80 PIPE UNDERDRAIN TO BE PLACED ALONG THE TOE OF SLOPE, GRADED TO DRAIN AND DAYLIGHT OR INTO STORM SEWER. BASE AGGREGATE OPEN GRADED OVER PIPE UNDERDRAIN AND THEN WRAPPED IN GEOTEXTILE FABRIC TYPE DF SCHEDULE A IN ORDER TO STABILIZE AND SEPARATE FROM SELECT CRUSHED.

14. HMA FLANGEWAY AND FIELD FILLERS ARE TO BE PLACED AND THOROUGHLY HAND COMPACTED BY THE CONTRACTOR, WHEN NOT PROVIDED BY OTHERS AS PART OF THE CROSSING SURFACE MATERIAL. IF THE CROSSING SURFACE IS NOT BEING REPLACED, THEN REMOVE AND REPLACE THE HMA FLANGEWAY AND FIELD FILLERS AS DIRECTED BY THE RAILROAD OR PROJECT ENGINEER.

15. GRADE TO MATCH EXISTING OR PROPOSED TYPICAL SECTION OF ROADWAY. SEE PLAN OR PROJECT ENGINEER FOR MORE DETAIL. IF NOT NOTED OTHERWISE IN THE PLAN, BACKFILL ANY REMOVED BASE AND SUBGRADE WITH BASE AGGREGATE DENSE.

16. IF THE CROSSING IS NOT BEING REPLACED, REMOVE AND REPLACE HMA AS DIRECTED BY RAILROAD AND PROJECT ENGINEER. CARE MUST BE TAKEN TO NOT DAMAGE CROSSING PANELS, TIES, RAIL, PLATES AND SPIKES.

17. PLACE HMA FULL DEPTH. AGGREGATE IS NOT TO BE PLACED BETWEEN THE RAILROAD TIES AND THE HMA PAVEMENT.

TYPICAL SECTIONS FOR RAILWAY APPROACH

STATE OF WISCONSIN
DEPARTMENT OF TRANSPORTATION

APPROVED
May 2023 — DATE
/S/ Kristen Sommers — STATE RAILROAD ENGINEERING AND SAFETY SUPERVISOR
FHWA

6

SDD 13B01-11b

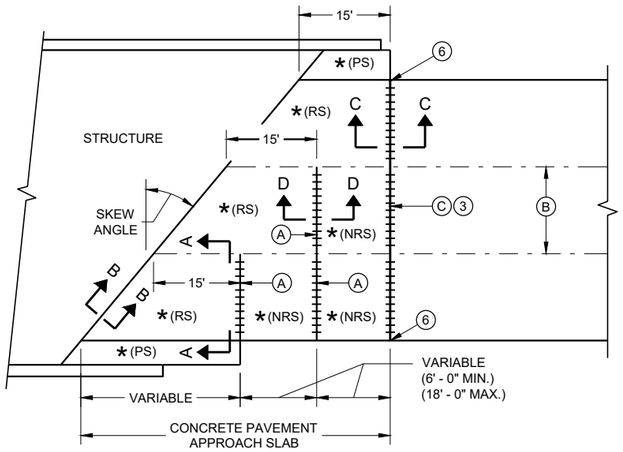

SKEWED APPROACH
(PAVEMENT MORE THAN TWO LANES)

* (RS) = REINFORCED CONCRETE SLAB

* (PS) = PAVED CONCRETE SHOULDER OR CONCRETE DRAINAGE SLAB

* (NRS) - NON - REINFORCED CONCRETE SLAB

*** STANDARD DOWEL BAR DIAMETER (SEE SDD 13C11 AND SDD 13C13)

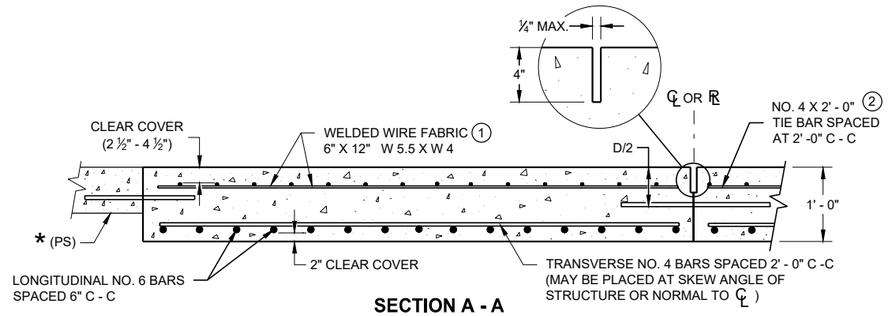

SECTION A - A
REINFORCEMENT POSITIONING DETAIL

GENERAL NOTES

THE CONTRACTOR MAY SPLICE NO. 6 BARS IN THE APPROACH SLAB FOR SKEWED STRUCTURES ONLY. STAGGER SPLICES WITH A MAXIMUM OF ONE SPLICE PER BAR. THE LENGTH OF LAP IS 20 INCHES.

TACK WELD DOWEL BARS TO THE BASKETS ON ALTERNATE ENDS.

1. THE CONTRACTOR MAY USE NO. 4 BARS SPACED AT 2' - 0 " C - C IN BOTH THE LONGITUDINAL AND TRANSVERSE DIRECTIONS FOR TOP REINFORCEMENT AS AN ALTERNATIVE TO THE WELDED WIRE FABRIC.
2. THE CONTRACTOR MAY OMIT THE BARS BETWEEN REINFORCED SLABS WHERE SLAB REINFORCEMENT BARS EXTEND ACROSS THE CENTERLINE OR REFERENCE LINE.
3. DO NOT CONSTRUCT AN EXPANSION JOINT OR INSTALL DOWEL BARS WHEN ABUTTING AN HMA PAVEMENT.
4. USE A JOINT SEALANT CONFORMING TO STANDARD SPECIFICATION 415.2.6.
5. PLACE EXPANSION CAP ON THE END OF THE DOWEL THAT IS NOT TACK WELDED TO THE BASKET. DO NOT FORCE DOWEL BAR PAST THE DOWEL STOP.
6. EXTEND EXPANSION JOINT THROUGH ANY ADJACENT TIED CONCRETE.

A. STANDARD CONTRACTION JOINT NORMAL TO ℄ OR ℞.

B. STANDARD LONGITUDINAL JOINT WITH TIE BARS.

C. 1 ½" EXPANSION JOINT WITH DOWEL BARS NORMAL TO ℄ OR ℞ .

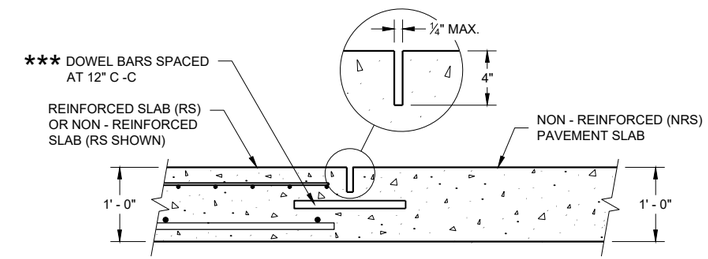

SECTION D - D
CONTRACTION JOINT

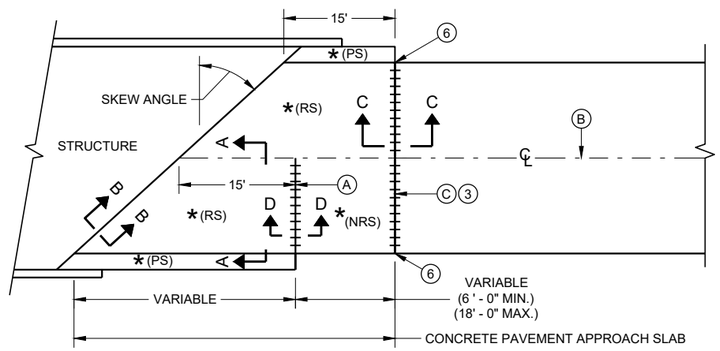

SKEWS > 20°
(PAVEMENT WIDTH ≤ 30')

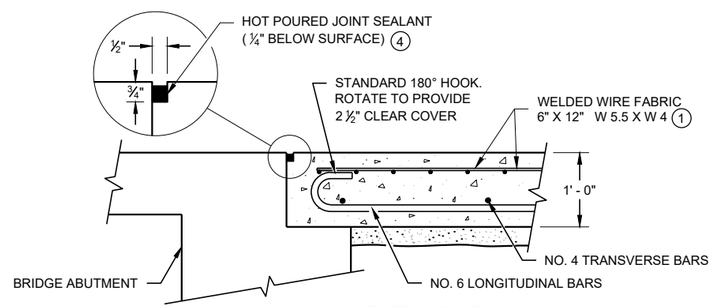

SECTION B - B
BEND DETAIL
BOTTOM REINFORCEMENT

EXPANSION JOINT DETAIL

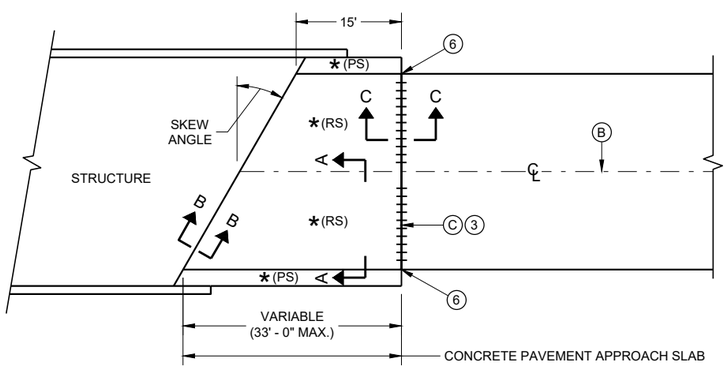

SKEWS ≤ 20°
(PAVEMENT WIDTH ≤ 30')

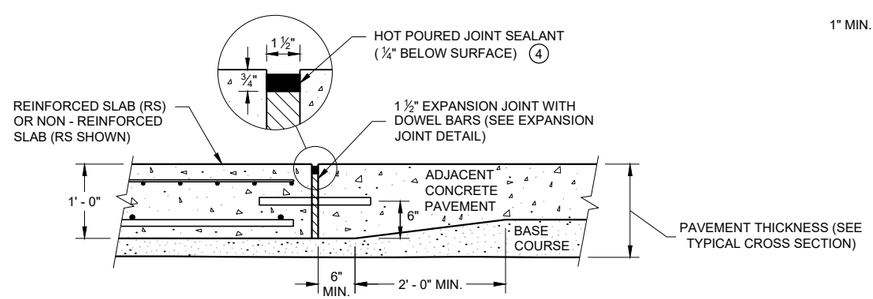

SECTION C - C
TRANSITION DETAIL
APPROACH SLAB TO ADJACENT PAVEMENT

APPROACH SLAB AND ADJACENT PAVEMENT

CONCRETE PAVEMENT APPROACH SLAB

STATE OF WISCONSIN
DEPARTMENT OF TRANSPORTATION

APPROVED
November 2018 /S/ Peter Kemp, P.E.
DATE PAVEMENT SUPERVISOR
FHWA

6

SDD 13B02 - 09a

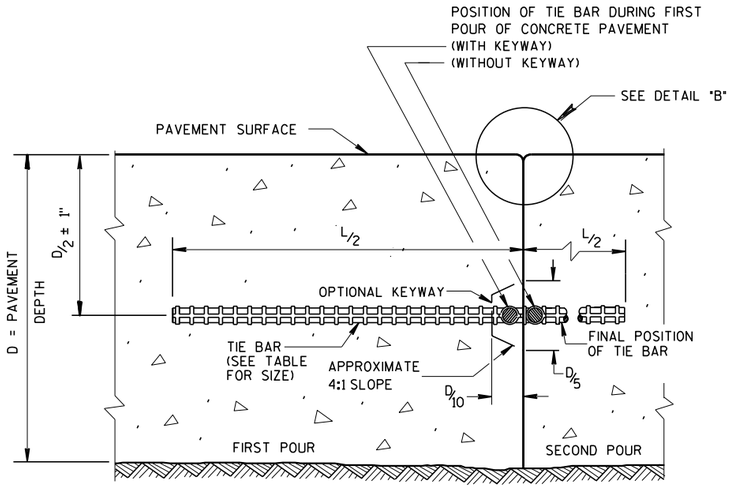

CONSTRUCTION JOINT

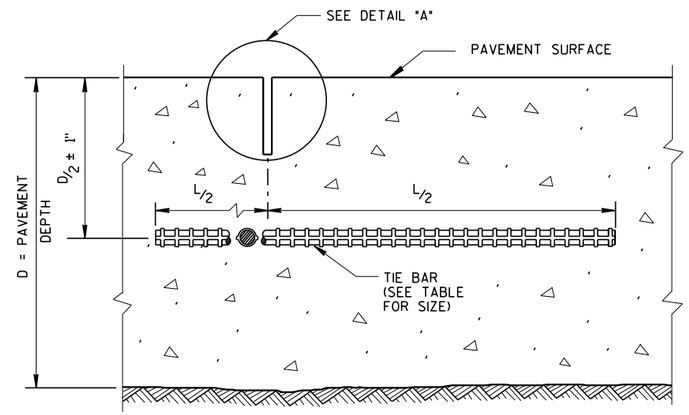

SAWED JOINT

GENERAL NOTES

CREATE A LONGITUDINAL JOINT FOR PAVEMENT WIDTHS GREATER THAN 15 FEET.

CORRELATE LONGITUDINAL JOINTS WITH LANE LINES WHEN POSSIBLE.

1. ANCHOR TIE BARS INTO DRILLED HOLES WITH AN EPOXY.
2. PAVEMENT THAT WAS IN PLACE PRIOR TO THE CONTRACT.

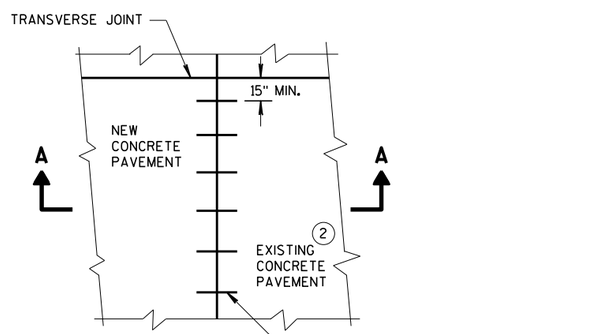

PLAN VIEW

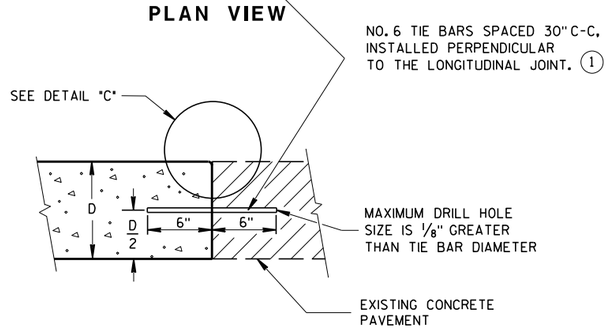

SECTION A-A
LONGITUDINAL CONSTRUCTION JOINT TIE BARS ANCHORED INTO EXISTING PAVEMENT

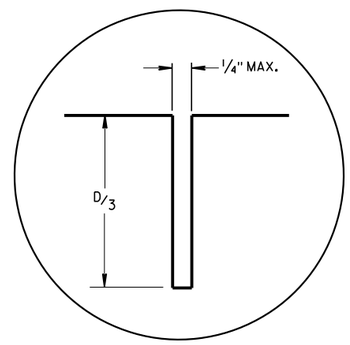

DETAIL "A"

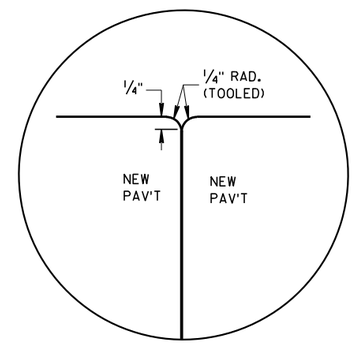

DETAIL "B"

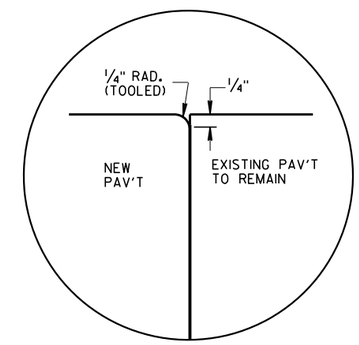

DETAIL "C"

TIE BAR TABLE

PAVEMENT DEPTH (D)	TIE BAR SIZE	TIE BAR LENGTH (L)	MAX. TIE BAR SPACING
< 10 1/2"	NO. 4	30"	36"
≥ 10 1/2"	NO. 5	36"	36"
	NO. 4 *	30"	24" **

* SUBSTITUTE BENT BARS AT LONGITUDINAL JOINTS WHEN EQUIPMENT LIMITATIONS DURING CONSTRUCTION WARRANT (e.g. AUXILIARY LANES OR TURN LANES)

** CONFORM TO 15" MINUMUM SPACING FROM TRANSVERSE JOINTS; SPACING BETWEEN TIE BARS WILL BE 30" AT TRANSVERSE JOINTS.

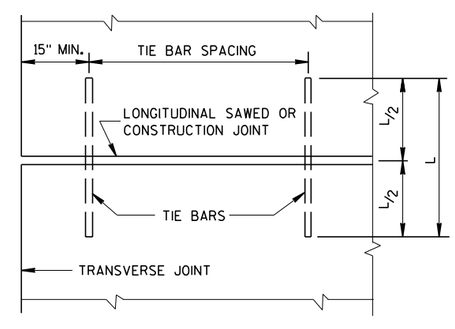

PLAN VIEW
SHOWING LOCATION OF TIE BARS

CONCRETE PAVEMENT
LONGITUDINAL JOINTS AND TIES

STATE OF WISCONSIN
DEPARTMENT OF TRANSPORTATION

APPROVED
March 2018 — DATE
/S/ Peter Kerr — PAVEMENT SUPE
FHWA

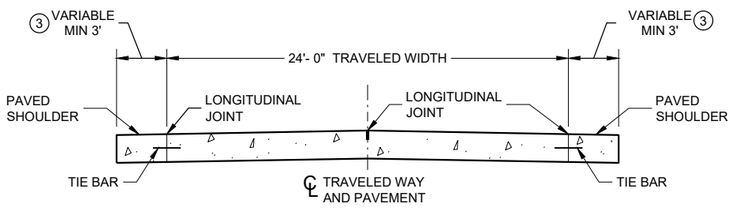

SECTION A - A

TWO-LANE TWO-WAY HIGHWAY 1

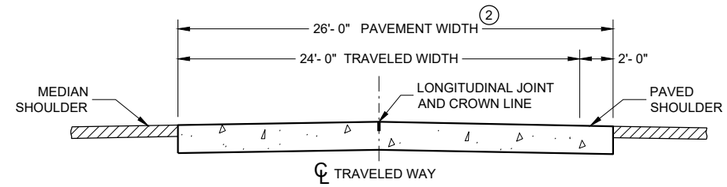

SECTION B - B

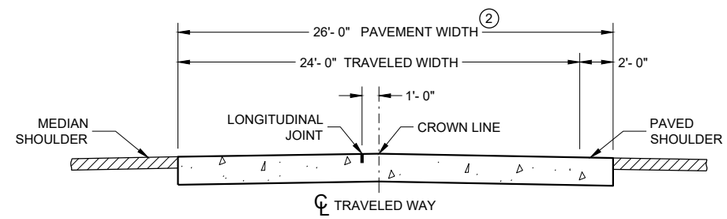

ALTERNATIVE SECTION B - B

DIVIDED HIGHWAY 1

GENERAL NOTES

CONTRACTION JOINTS

CONSTRUCT TRANSVERSE CONTRACTION JOINTS NORMAL TO THE CENTERLINE. SHOW THE LOCATION OF CONTRACTION JOINTS THROUGH INTERSECTIONS ON THE PLANS OR AS DIRECTED BY THE ENGINEER.

INSTALL DOWEL BARS PARALLEL TO THE PAVEMENT CENTERLINE AND PAVEMENT SURFACE.

FOR PAVEMENT SLABS OF VARYING WIDTHS, LOCATE THE OUTER MOST DOWEL BAR SO THAT THE CENTER OF THE BAR IS A MINIMUM OF 6 INCHES FROM AND A MAXIMUM OF 18 INCHES FROM THE FREE EDGE OF PAVEMENT.

CONSTRUCTION JOINTS

LOCATE CONSTRUCTION JOINTS A MINIMUM OF 6 FEET FROM THE NEAREST CONTRACTION JOINT AND ALIGN PARALLEL TO THE CONTRACTION JOINTS.

1. REFER TO TYPICAL CROSS SECTIONS FOR ADDITIONAL DETAILS.
2. MEASURE THE ENTIRE PAVED WIDTH INCLUDING THE PORTION(S) LABELED "PAVED SHOULDER" AS CONCRETE PAVEMENT.
3. SHOULDER WIDTHS LESS THAN 3 FEET SHALL BE PAVED INTEGRAL TO THE MAINLINE CONCRETE PAVEMENT, SEE SECTION B-B.

PAVEMENT DEPTH, DOWEL BAR SIZE AND JOINT SPACING TABLE

PAVEMENT DEPTH (D)	DOWEL BAR DIAMETER	CONTRACTION JOINT SPACING
6", 6 ½"	NONE	12'
7", 7 ½"	1"	14'
8" & ABOVE	1 ¼"	15'

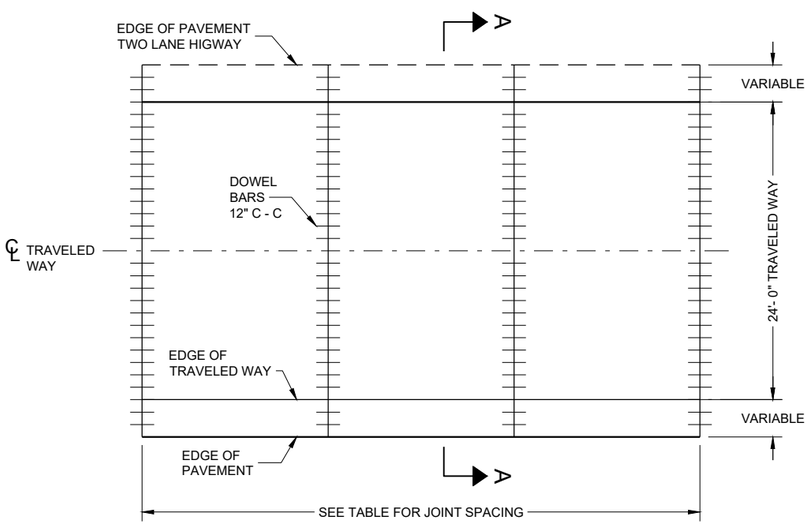

CONTRACTION JOINT LAYOUT FOR TWO-LANE TWO-WAY HIGHWAY

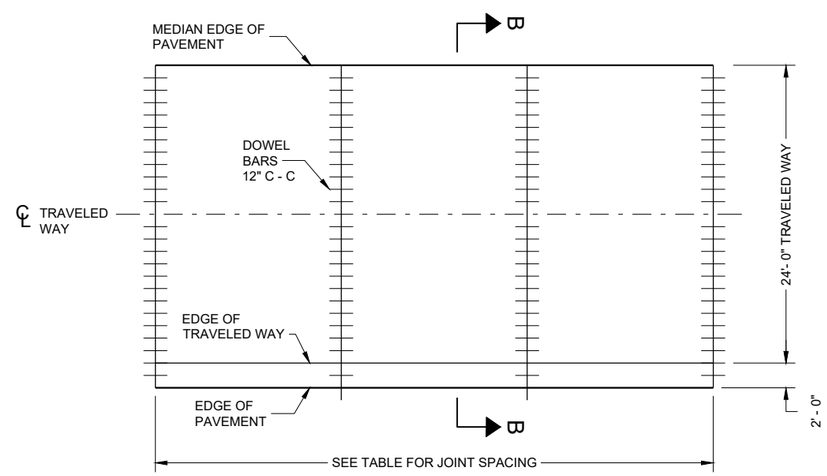

CONTRACTION JOINT LAYOUT FOR DIVIDED HIGHWAY

RURAL DOWELED CONCRETE PAVEMENT

STATE OF WISCONSIN
DEPARTMENT OF TRANSPORTAT

6

SDD 13C11 - 14a

GENERAL NOTES

1. OBTAIN THE ENGINEER'S APPROVAL FOR THE USE OF ALTERNATIVE DESIGNS OF THE DOWEL ASSEMBLY. USE MECHANICAL DOWEL BAR INSERTERS OR DOWEL ASSEMBLIES WHEN CONSTRUCTION CONTRACTION JOINTS.
2. SECURE BASKETS WITH ANCHORS TO HOLD DOWEL BARS IN THE CORRECT POSITION AND ALIGNMENT. TYPE, LOCATION, NUMBER AND LENGTH OF ANCHORS ARE DEPENDENT UPON FIELD CONDITIONS.
3. FORM OR SAW CONSTRUCTION JOINTS. PROVIDE A ¼" RADIUS AT FORMED JOINTS.
4. PROVIDE A SMOOTH VERTICAL FACE FOR THE ENTIRE DEPTH OF THE PAVEMENT WHEN FORMING CONSTRUCTION JOINTS.
5. INSTALL DOWEL BARS AT CONSTRUCTION JOINTS BY FORMING OR DRILLING. INSTALL FORMED DOWEL BARS 12 INCHES C - C AND 12 INCHES FROM PAVEMENT EDGE. REMOVE EXCESS CONCRETE FROM THE FREE END OF THE DOWEL BAR IF DOWEL BARS ARE FORMED THROUGH A HEADER BOARD. INSTALL DRILLED DOWEL BARS ACCORDING TO THE "DRILLED DOWEL BAR CONSTRUCTION JOINT" DETAIL.
6. APPLY A THIN UNIFORM COATING OF SURFACE TREATMENT TO THE FREE END OF DOWEL BARS TO PREVENT BONDING.
7. ANCHOR DOWEL BARS AND TIE BARS INTO DRILLED HOLES WITH AN EPOXY. MAXIMUM DRILLED HOLE SIZE IS ⅛" GREATER THAN DOWEL BAR DIAMETER, 9 INCHES IN LENGTH.

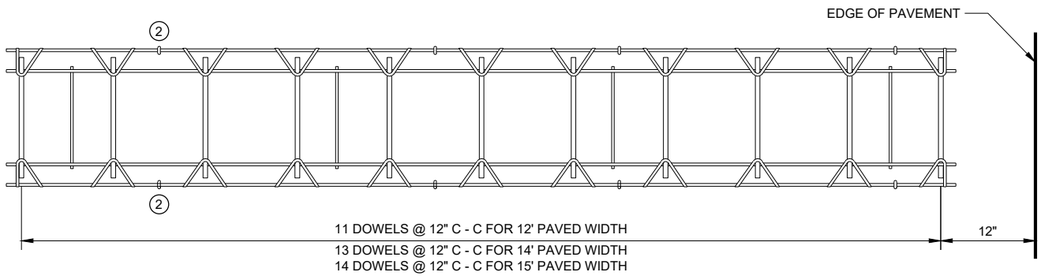

PLAN VIEW

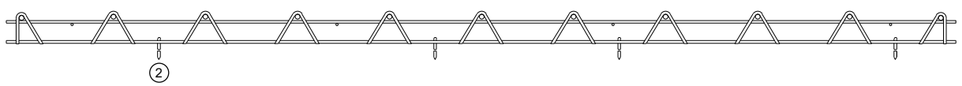

SIDE VIEW

(NORMAL TO CENTERLINE)

CONTRACTION JOINT DOWEL ASSEMBLY (1)

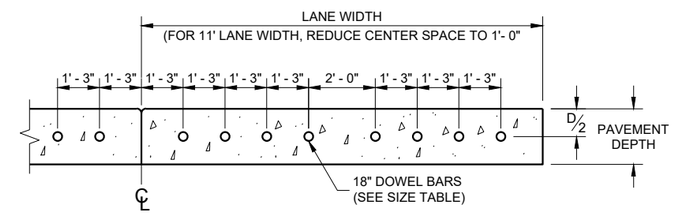

DRILLED DOWEL BAR CONSTRUCTION JOINT (7)

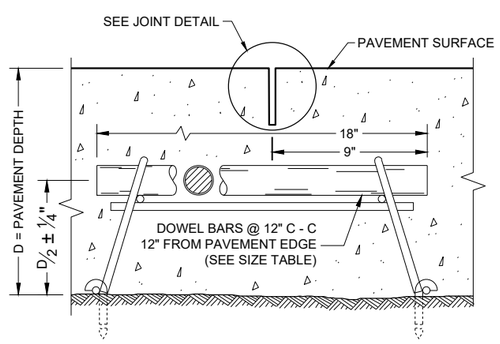

DOWELED CONTRACTION JOINT

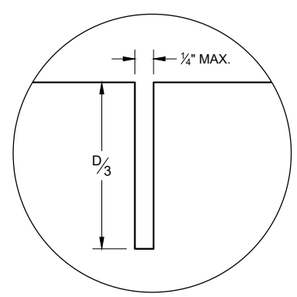

JOINT DETAIL

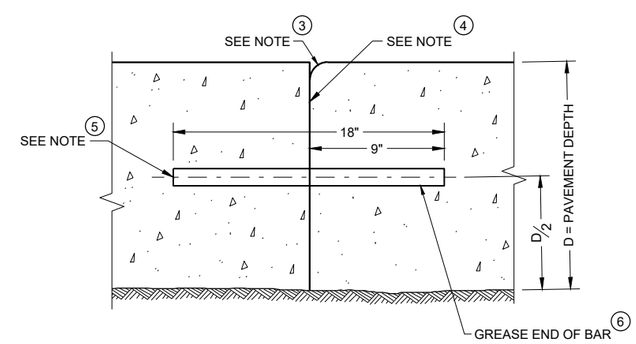

TRANSVERSE CONSTRUCTION JOINT

RURAL DOWELED CONCRETE PAVEMENT

STATE OF WISCONSIN
DEPARTMENT OF TRANSPORTATION

APPROVED
November 2022 — DATE
/S/ Peter Kemp P.E. — PAVEMENT SUPERVISOR
FHWA

6

SDD 13C11 - 14b

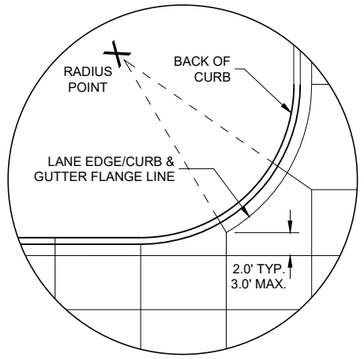

DETAIL "A"

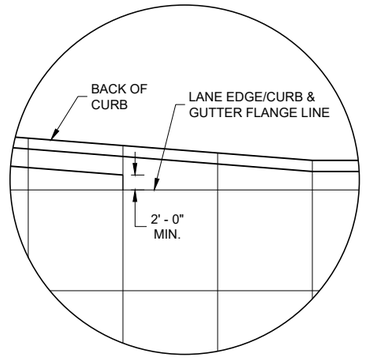

DETAIL "B"

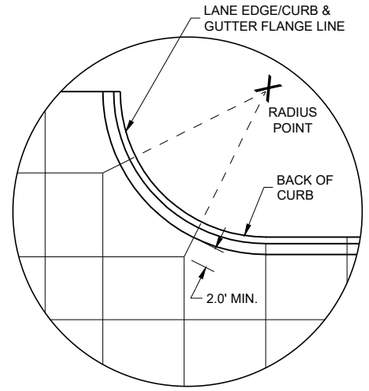

DETAIL "C"

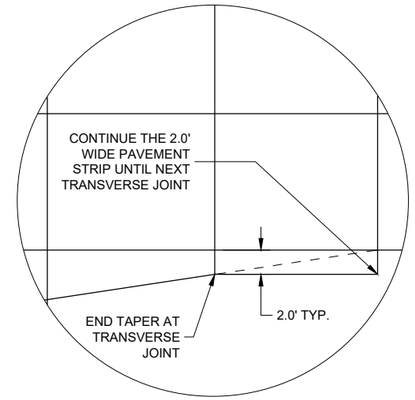

DETAIL "D"

GENERAL NOTES

THE PRIMARY ROADWAY CONTROLS THE TRANSVERSE JOINT PATTERN.

ALIGN NEW JOINTS WITH EXISTING JOINTS OR CRACKS.

CONSTRUCT TRANSVERSE JOINTS PERPENDICULAR TO THE ROADWAY.

ADJUST TRANSVERSE JOINTS TO ALIGN WITH UTILITY FIXTURES (E.G MANHOLES AND INLETS) IN THE PAVEMENT STRUCTURE WHEN POSSIBLE. WATER VALVES DO NOT REQUIRE JOINT ADJUSTMENT.

AVOID SLABS LESS THAN 2 FEET WIDE OR GREATER THAN 15 FEET WIDE.

SEE TABLE FOR TRANSVERSE JOINT SPACING. JOINT SPACING SPECIFIED IS MAXIMUM AND ACTUAL SPACING CAN BE ADJUSTED TO ACCOMMODATE INTERSECTIONS.

AVOID ANGLES LESS THAN 60° BY DOGLEGGING JOINTS THROUGH CURVE RADIUS POINTS. USE 90° ANGLES WHEN POSSIBLE.

CORRELATE LONGITUDINAL JOINTS WITH LANE LINES WHEN POSSIBLE.

1. PROVIDE TRANSVERSE JOINTS AT ALL PAVEMENT WIDTH CHANGES.
2. CONSTRUCT DOWELED EXPANSION JOINT ON THE SIDE ROAD OF AN INTERSECTION IF THE SIDE ROAD IS CONCRETE PAVEMENT AND GREATER THAN 300 FEET IN LENGTH. ALIGN EXPANSION JOINT WITH EDGE OF RADIUS.
3. THE ENGINEER MAY APPROVE SLIGHT VARIATIONS FROM THESE JOINTING DETAILS.

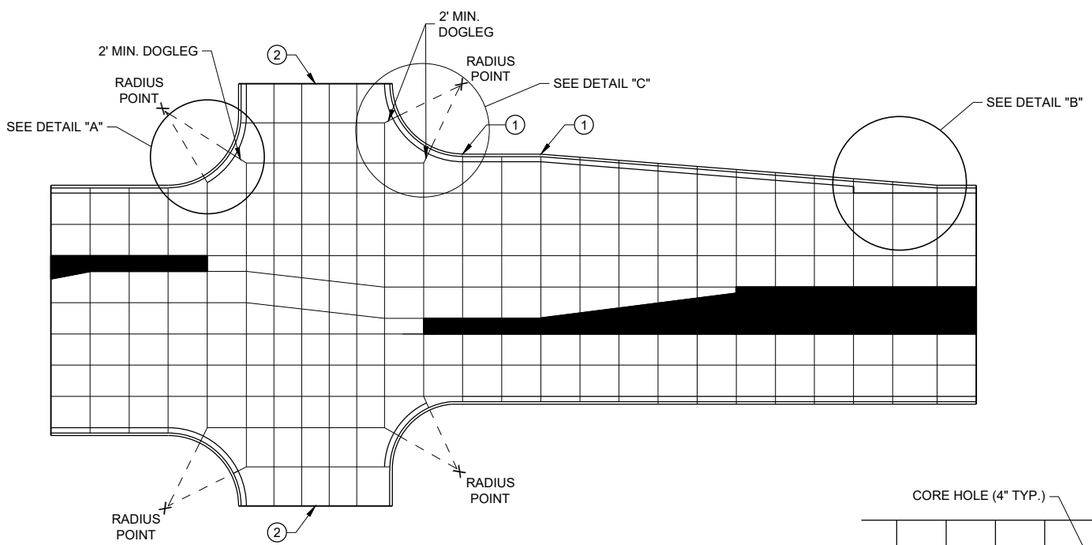

STANDARD INTERSECTION

PAVEMENT DEPTH AND JOINT SPACING TABLE

PAVEMENT DEPTH (D)	CONTRACTION JOINT SPACING
6", 6 ½"	12'
7", 7 ½"	14'
8" & ABOVE	15'

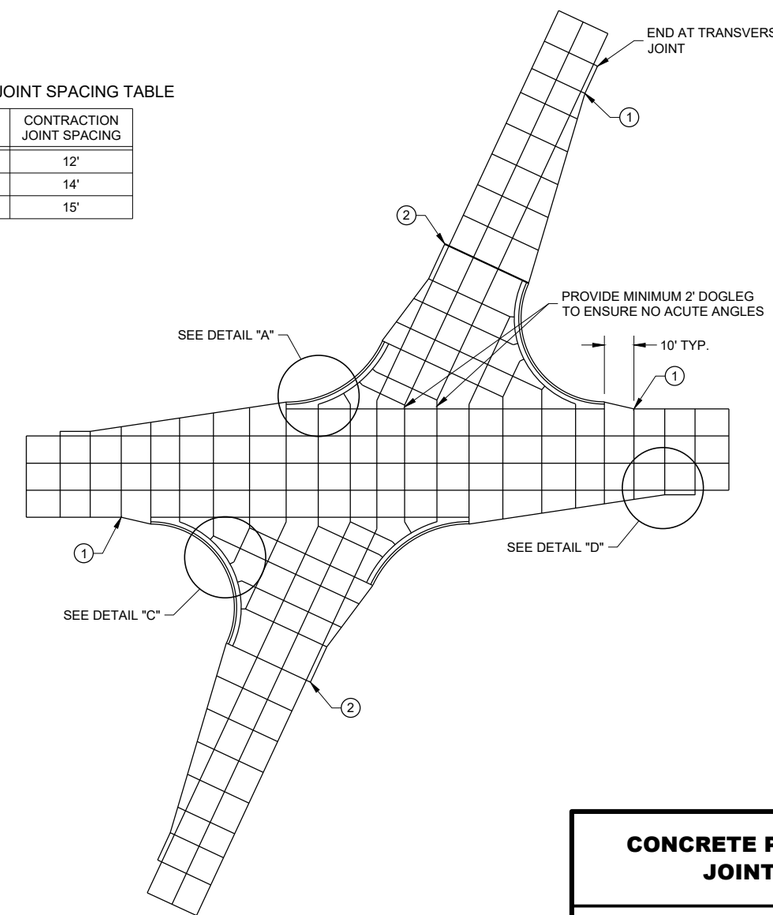

SKEWED INTERSECTION

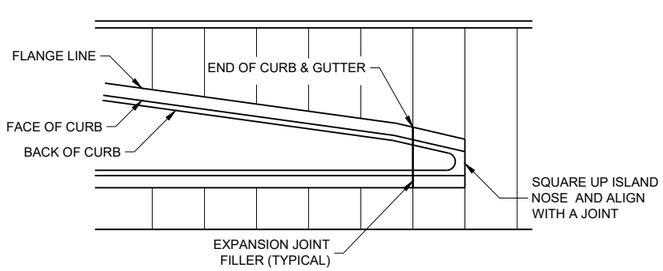

APPROACH TO MEDIAN

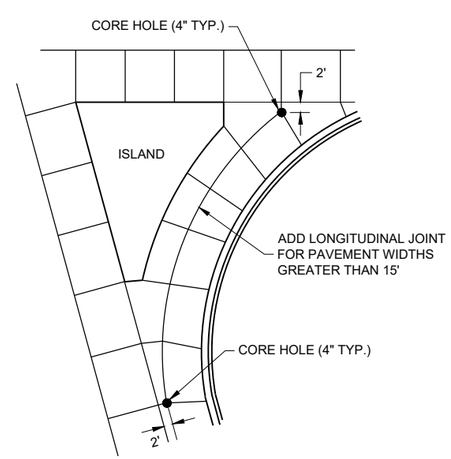

LARGE RIGHT TURN

CONCRETE PAVEMENT JOINTING

STATE OF WISCONSIN
DEPARTMENT OF TRANSPORTA

6

SDD 13C18 - 08a

LEGEND

POTENTIAL DOWELED EXPANSION JOINT

DOWELED JOINT

TIED JOINT

GENERAL NOTES

USE AN EXPANSION JOINT FILLER MEETING THE REQUIREMENTS OF STANDARD SPECIFICATION 415.

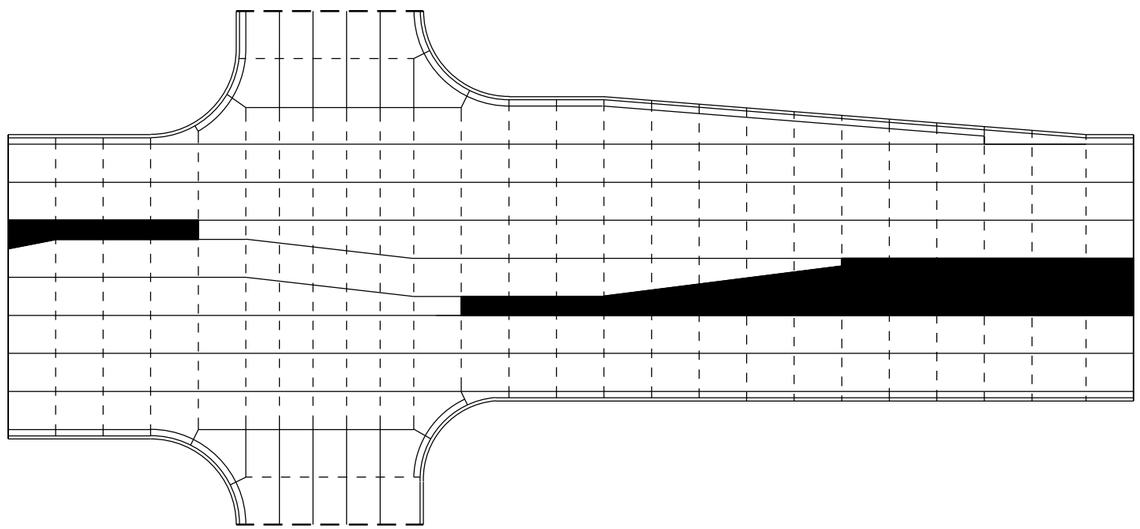

STANDARD INTERSECTION

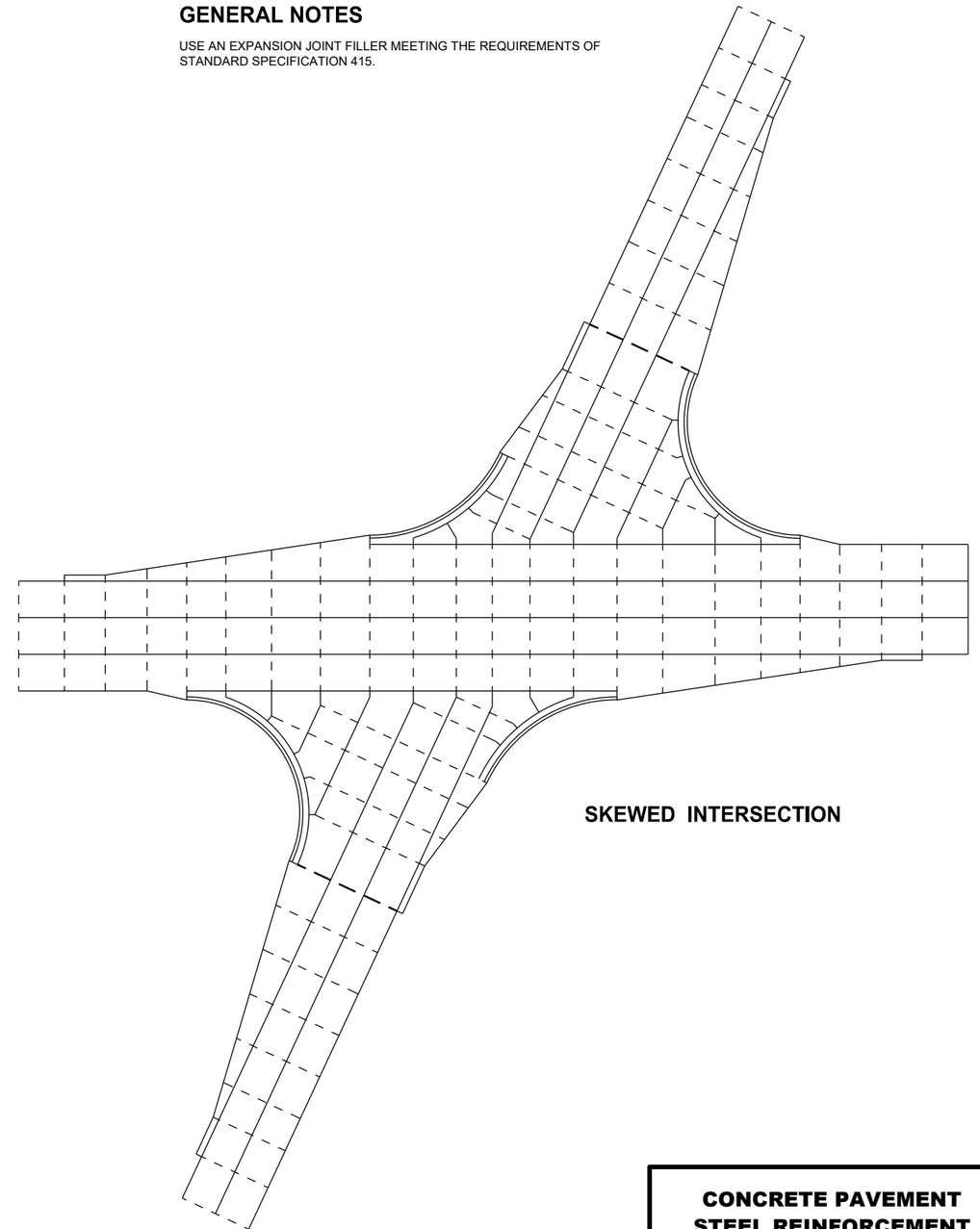

SKEWED INTERSECTION

CONCRETE PAVEMENT STEEL REINFORCEMENT

STATE OF WISCONSIN
DEPARTMENT OF TRANSPORTA

6

SDD 13C18 - 08b

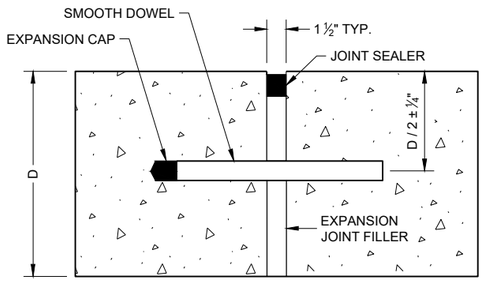

DOWELED TRANSVERSE (1)

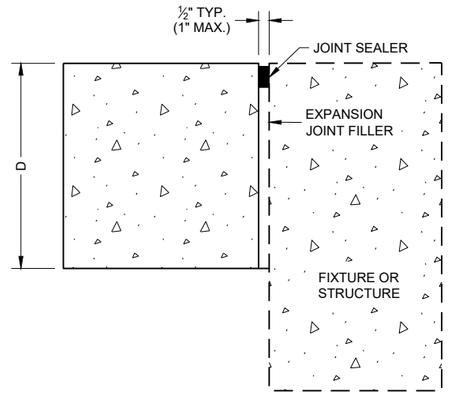

UNTIED - LONGITUDINAL

EXPANSION JOINTS

TIE BAR TABLE

PAVEMENT DEPTH (D)	TIE BAR SIZE	TIE BAR LENGTH (L)	MAX. TIE BAR SPACING
< 10 ½"	NO. 4	30"	36"
≥ 10 ½"	NO. 5	36"	36"
	NO. 4 *	30"	24" **

* SUBSTITUTE BENT BARS AT LONGITUDINAL JOINTS WHEN EQUIPMENT LIMITATIONS DURING CONSTRUCTION WARRANT (e.g. AUXILIARY LANES OR TURN LANES)

** CONFORM TO 15" MINIMUM SPACING FROM TRANSVERSE JOINTS; SPACING BETWEEN TIE BARS WILL BE 30" AT TRANSVERSE JOINTS.

GENERAL NOTES

1. USE DOWELED EXPANSION JOINTS ON SIDE ROADS AT INTERSECTIONS (TO ISOLATETHE SIDE ROAD FROM THE THROUGH STREET) IF THE SIDE ROAD IS CONCRETE PAVEMENT AND GREATER THAN 300 FEET IN LENGTH.
2. SPACE CONTRACTION JOINTS IN ACCORDANCE WITH SDD 13C4, 13C11 OR 13C13.
3. LOCATE CONSTRUCTION JOINTS A MINIMUM OF 6 FEET FROM THE NEAREST CONTRACTION JOINT AND ALIGN PARALLEL TO CONTRACTION JOINTS.
4. CONSTRUCTION JOINTS CAN BE FORMED OR SAWED.
5. IF JOINT IS FORMED, PROVIDE A ¼" RADIUS.
6. ANCHOR TIE BARS INTO DRILLED HOLES WITH AN EPOXY.

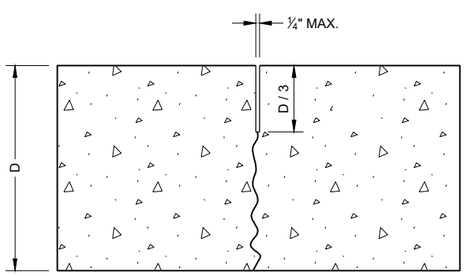

UNDOWELED TRANSVERSE

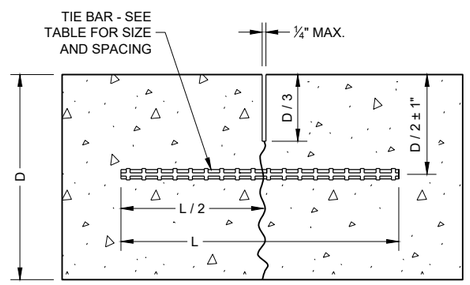

TIED LONGITUDINAL

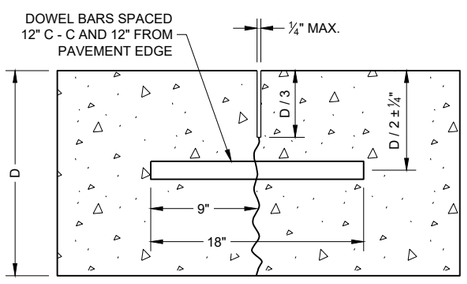

DOWELED TRANSVERSE

CONTRACTION JOINTS (2)

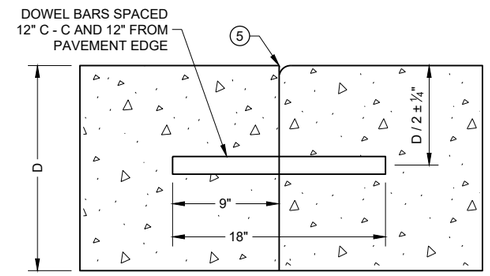

DOWELED TRANSVERSE (3)

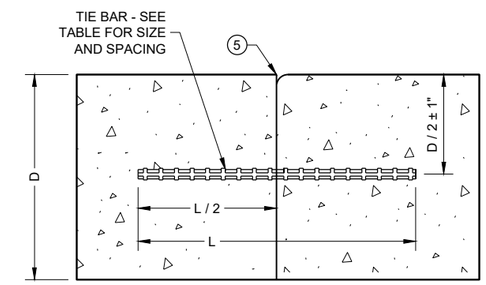

TIED LONGITUDINAL

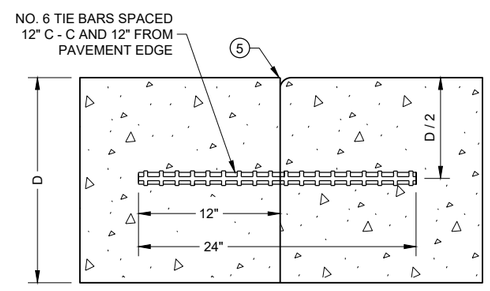

TIED TRANSVERSE (3)

(FOR USE ON NON-DOWELED PAVEMENTS ONLY)

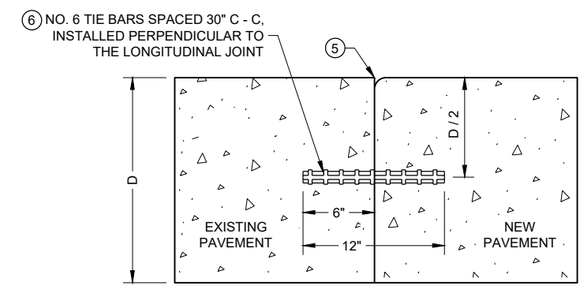

TIED LONGITUDINAL TO EXISTING

CONSTRUCTION JOINTS (4)

CONCRETE PAVEMENT JOINT TYPES

STATE OF WISCONSIN
DEPARTMENT OF TRANSPORTAT

6
SDD 13C18 - 08c

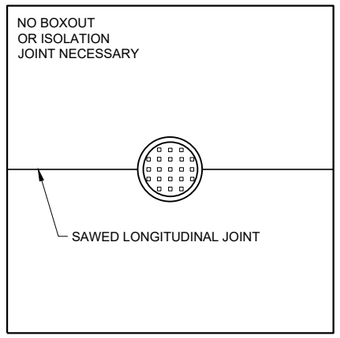

MANHOLE WITH LONGITUDINAL JOINT

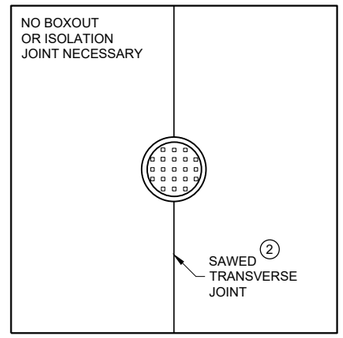

MANHOLE WITH TRANSVERSE JOINT

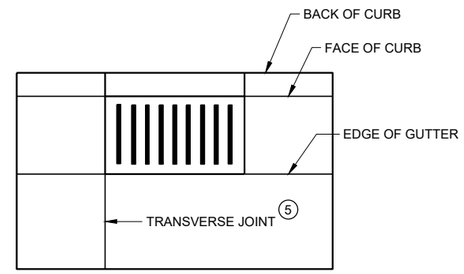

INLET WITH TRANSVERSE JOINT

GENERAL NOTES

1. USE BOXOUTS WHEN UTILITY STRUCTURE IS IN THE PATH OF CONSTRUCTION JOINTS. PROVIDE A 1 FOOT MINIMUM CLEARANCE BETWEEN THE EXTERIOR LIMIT OF THE STRUCTURE TO THE DIAMOND BOXOUT.
2. ADJUST TRANSVERSE JOINT TO INTERSECT MANHOLE IF POSSIBLE.
3. IF DISTANCE BETWEEN THE LONGITUDINAL JOINT AND THE EDGE OF MANHOLE IS 2 FEET OR LESS, DIVERT THE LONGITUDINAL JOINT AT A 2:1 TAPER RATE TO THE CENTER OF THE MANHOLE. IF THE DISTANCE IS GREATER THAN 2 FEET, DO NOT DIVERT THE JOINT AND SAW AS NORMAL. PLACE REINFORCEMENT REBAR AROUND THE MANHOLE.
4. IF THE DISTANCE FROM THE EDGE OF THE MANHOLE TO THE NEAREST TRANSVERSE JOINT IS LESS 4 FEET OR LESS, REDIRECT JOINT TO INTERSECT THE CENTER OF THE MANHOLE. IF DISTANCE IS GREATER THAN 4 FEET, DO NOT DIVERT THE JOINT AND SAW AS NORMAL. PLACE REINFORCEMENT REBAR AROUND THE MANHOLE.
5. ALIGN TRANSVERSE JOINT WITH ONE EDGE OF INLET WHEN PRACTICAL.

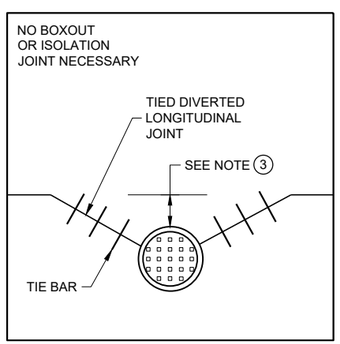

MANHOLE WITH DIVERTED LONGITUDINAL CONTRACTION JOINT

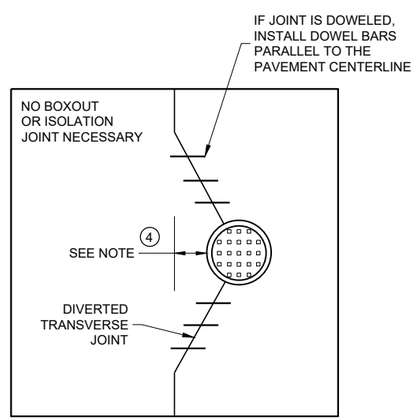

MANHOLE WITH DIVERTED TRANSVERSE CONTRACTION JOINT

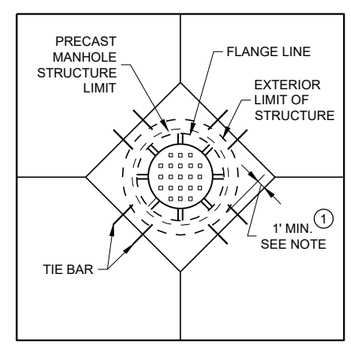

DIAGONAL MANHOLE BOXOUT FOR CONSTRUCTION JOINTS

CONCRETE PAVEMENT JOINTING AT UTILITY FIXTURES

STATE OF WISCONSIN
DEPARTMENT OF TRANSPORTATION

APPROVED
May 2023 — DATE
/S/ Peter Kemp P.E. — PAVEMENT SUPERVISO
FHWA

6

SDD 13C18 - 08d

LEGEND

- - - - - - DOWELED JOINT
——— TIED JOINT
EXPANSION JOINT
— — POTENTIAL DOWELED EXPANSION JOINT (1)
DIRECTION OF TRAFFIC

GENERAL NOTES

(1) CONSTRUCT DOWELED EXPANSION JOINT ON THE SIDE ROAD OF AN INTERSECTION IF THE SIDE ROAD IS CONCRETE PAVEMENT AND GREATER THAN 300 FEET IN LENGTH. ALIGN EXPANSION JOINT WITH THE EDGE OF RADIUS.

(2) PROVIDE TIED JOINT AT THE FLANGE OF SCAB ON CURB IF SCAB ON CURB AND GUTTER IS USE.

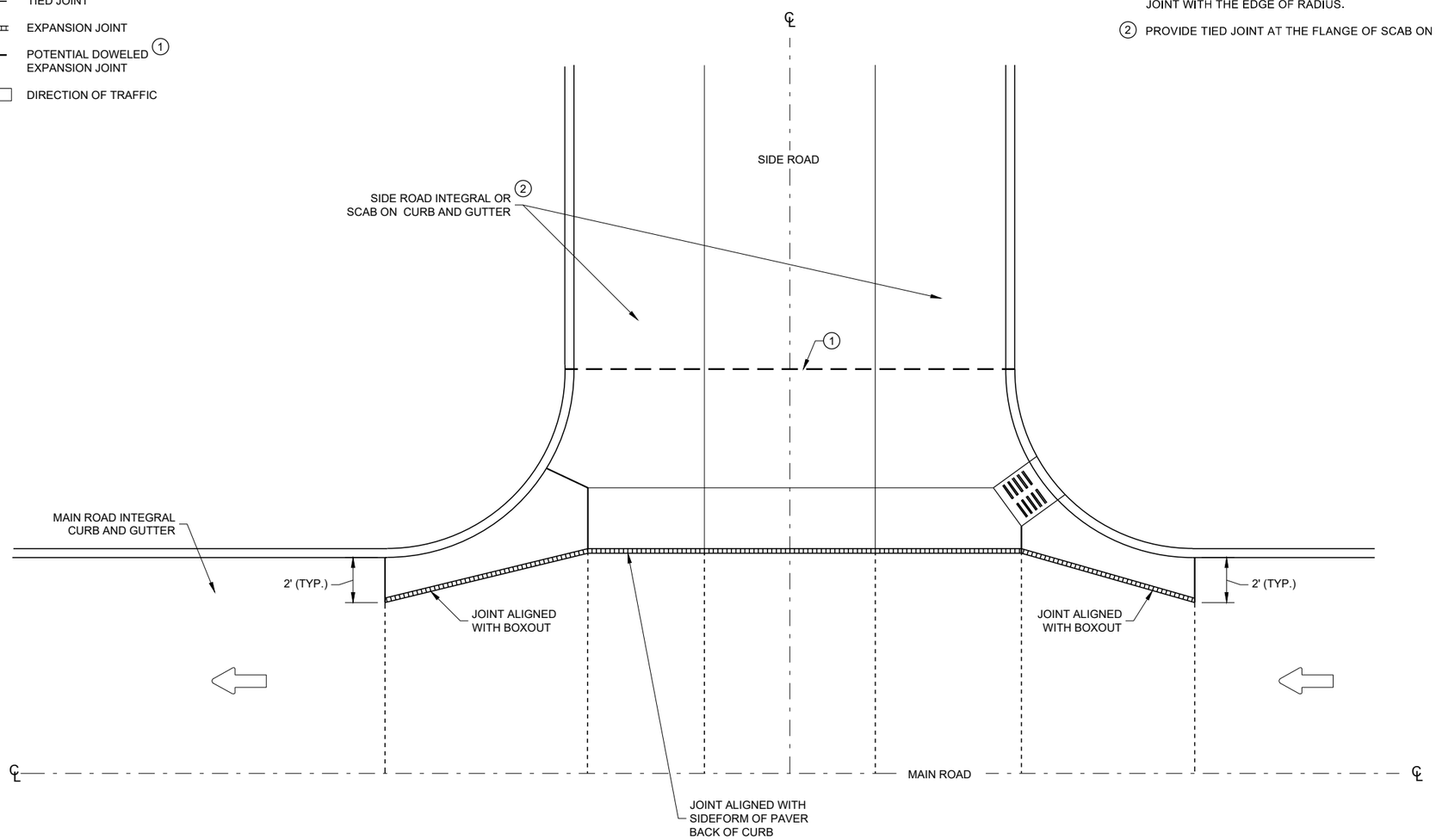

INTERSECTION BOXOUT FOR INTEGRAL CURB AND GUTTER

CONCRETE PAVEMENT INTERSECTION BOXOUT FOR INTEGRAL CURB AND GUTTER

STATE OF WISCONSIN
DEPARTMENT OF TRANSPORTATION

APPROVED
May 2023 — DATE
/S/ Peter Kemp P.E. — PAVEMENT SUPERVISOR
FHWA

6
SDD 13C18 - 08f

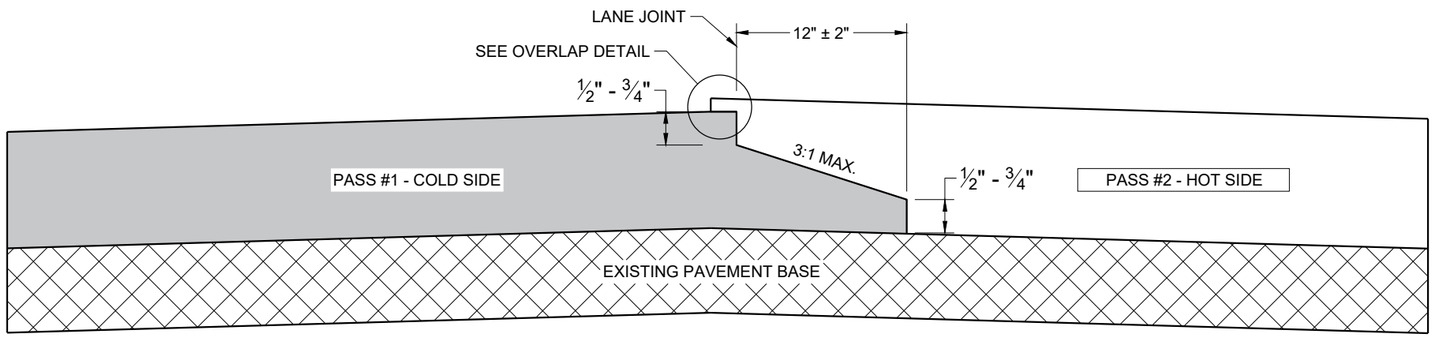

TYPICAL PAVEMENT CROSS SECTION
NOTCHED WEDGE JOINT

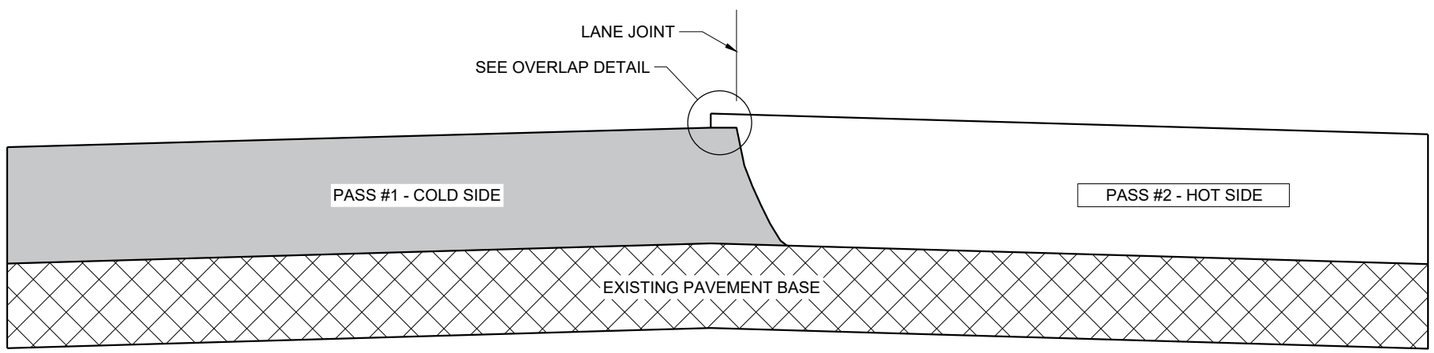

TYPICAL PAVEMENT CROSS SECTION
VERTICAL JOINT

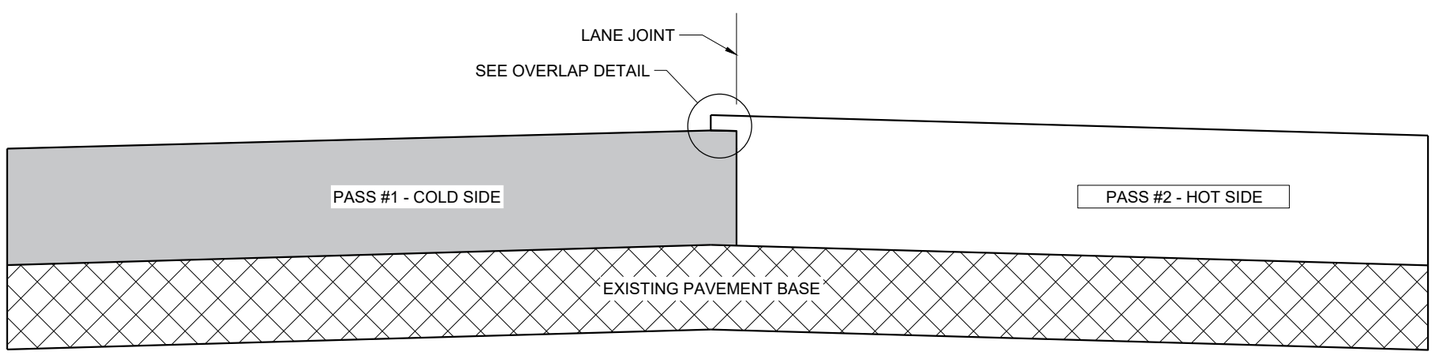

TYPICAL PAVEMENT CROSS SECTION
VERTICAL JOINT (MILLED)

GENERAL NOTES

IN ADDITION TO THE DETAILS PROVIDED IN THIS DRAWING, CONFORM TO STANDARD SPECIFICATION 450.3.2.8 FOR WHEN A NOTCHED WEDGE JOINT IS REQUIRED AND FOR GENERAL JOINT CONSTRUCTION REQUIREMENTS.

FOR ALL LONGITUDINAL JOINTS, ENSURE THE PAVER SCREED OVERLAPS THE PREVIOUSLY PLACED PAVEMENT BY 1" ± 0.5" AND THE HOT SIDE OF THE JOINT REMAINS HIGHER THAN THE COLD SIDE BY APPROXIMATELY 0.1" AFTER FINAL COMPACTION. (IT WILL BE FLUSH WHEN PAVING IN ECHELON.)

ONLY REMOVE THE LONGITUDINAL NOTCHED WEDGE JOINT FOR SMA PAVEMENT OR AS DIRECTED BY THE ENGINEER TO ADDRESS SPECIFIC LENGTHS OF JOINT DAMAGED BY TRAFFIC.

WHEN MILLING BACK OR REMOVING ANY LONGITUDINAL JOINT, LIMIT THE MATERIAL REMOVED TO 2" FROM THE TOP NOTCH OR FROM THE VERTICAL JOINT EDGE ON THE COLD SIDE OF THE JOINT.

USE LONGITUDINAL MILLED JOINT AS PLANS SHOW OR THE AS THE ENGINEER DIRECTS.

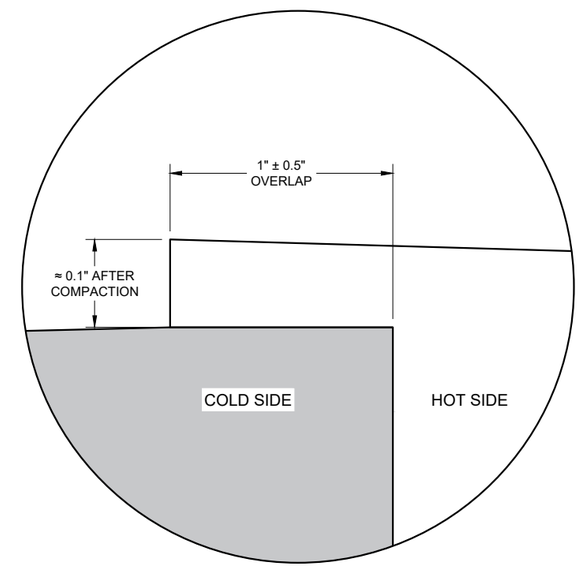

OVERLAP DETAIL (TYPICAL)

6

6

SDD 13C19 - 03

SDD 13C19 - 03

HMA LONGITUDINAL JOINTS

STATE OF WISCONSIN
DEPARTMENT OF TRANSPORTATION

APPROVED
November 2020 /S/ Steven Hefel
DATE HMA PAVEMENT ENGIN
FHWA

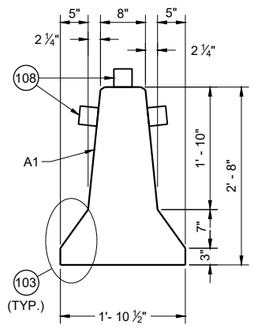

CROSS SECTION

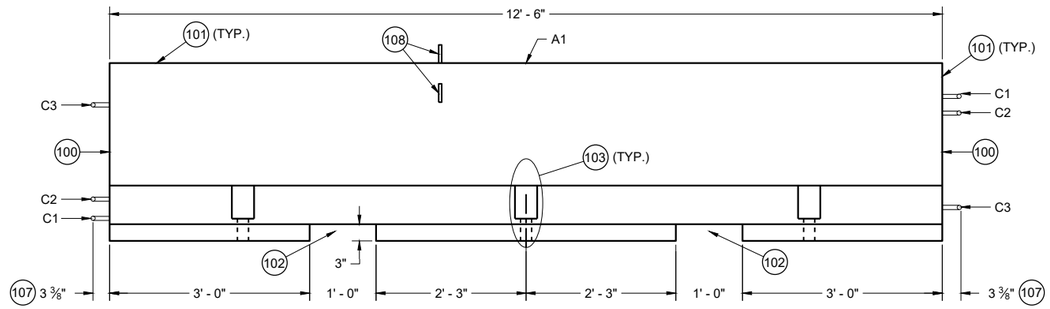

PROFILE VIEW

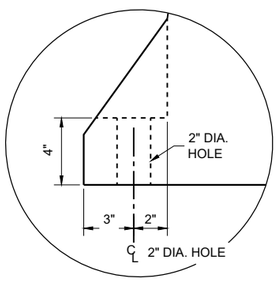

ANCHOR BLOCK DETAIL

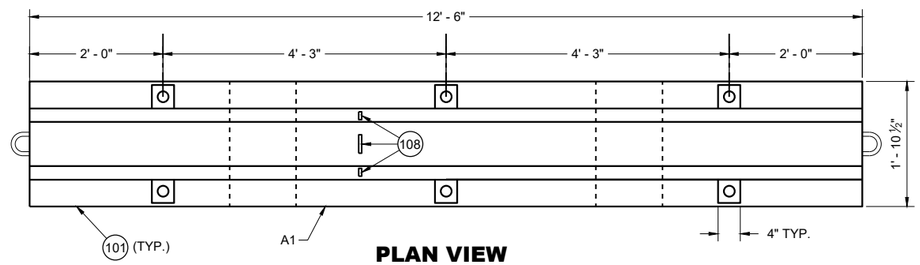

PLAN VIEW

TEMPORARY BARRIER

GENERAL NOTES

PLACE BARRIER ON PAVED SURFACE. BEFORE PLACEMENT OF TEMPORARY BARRIER, REMOVE ALL LOOSE MATERIAL FROM PAVED SURFACE.

LOOP BARS C1, C2 AND C3 ARE NOT FOR PLACEMENT OR MOVEMENT OF BARRIER.

100 PERMANENTLY FORM INTO ONE END OF BARRIER THE FOLLOWING INFORMATION:
- A. TYPE OF BARRIER: WI-CBTP
- B. MANUFACTURER
- C. DATE OF MANUFACTURE (MONTH AND YEAR)

101 1" OPTIONAL CHAMFER

102 SEE LIFTING SLOT DETAIL

103 SEE ANCHOR BLOCK DETAIL

104 1 ¾" MIN. CLEAR COVER

105 2" MIN. CLEAR COVER

106 1" MIN. CLEAR COVER

107 ± ⅛" MEASURED FROM FACE OF CONCRETE BARRIER TO OUTSIDE OF LOOP BAR (TYP.)

108 USE DELINEATORS CONFORMING TO SECTION 633 OF THE STANDARD SPECIFICATIONS. CONTRACTOR MY USE ALTERNATE SHAPES AND HOUSING. INSTALL DELINEATORS ACCORDING TO MANUFACTURERS INSTRUCTION. INSTALL YELLOW REFLECTORS WHEN BARRIER IS LOCATED LEFT OF TRAFFIC AND WHITE WHEN BARRIER IS LOCATED RIGHT OF TRAFFIC. SPACE DELINEATORS A MAXIMUM OF 25 FEET APART, PROVIDE TOP MOUNTED DELINEATORS IN ADDITION TO SIDE MOUNTED DELINEATORS ON BARRIER INSTALLATIONS LOCATED ON A CURVED ALIGNMENT LONGER THAT 200 FEET AND ON BARRIERS USED TO SEPARATE OPPOSING TRAFFIC.

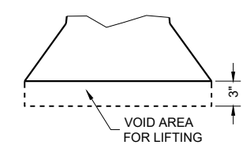

LIFTING SLOT DETAIL (TYP.)

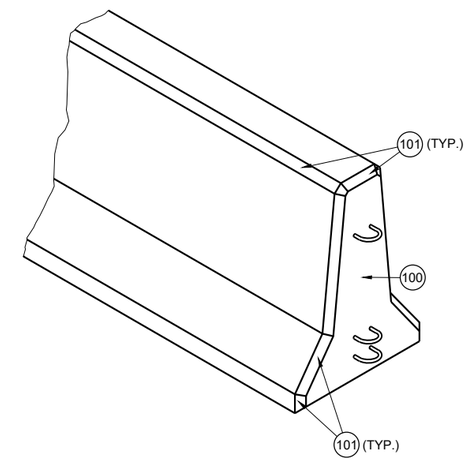

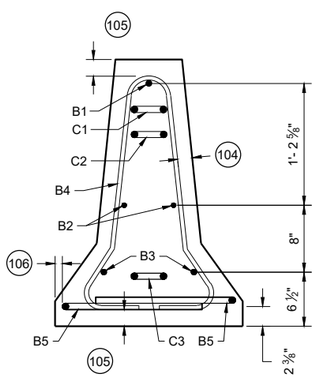

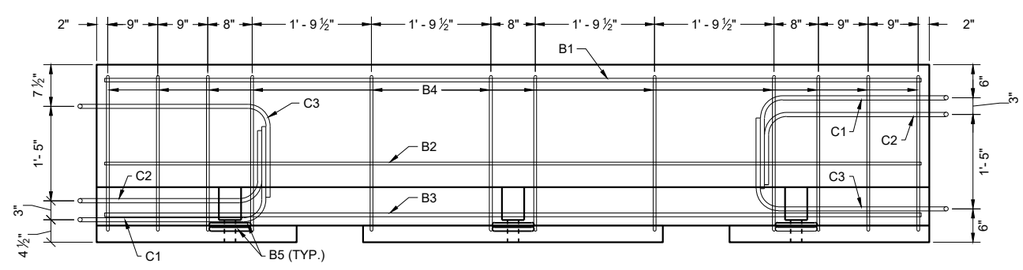

PROFILE VIEW

TEMPORARY BARRIER REINFORCEMENT

CONCRETE BARRIER TEMPORARY PRECAST, 12' - 6"

STATE OF WISCONSIN
DEPARTMENT OF TRANSPORTATION

6

SDD 14B07-16a

6

SDD 14B07-16a

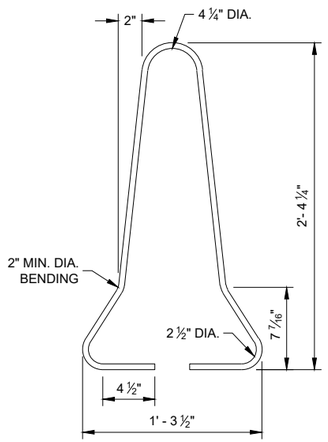

B4 BAR DETAIL

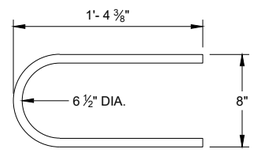

B5 BAR DETAIL

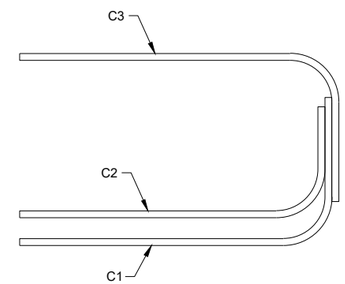

PROFILE VIEW

LOOP BAR ASSEMBLY

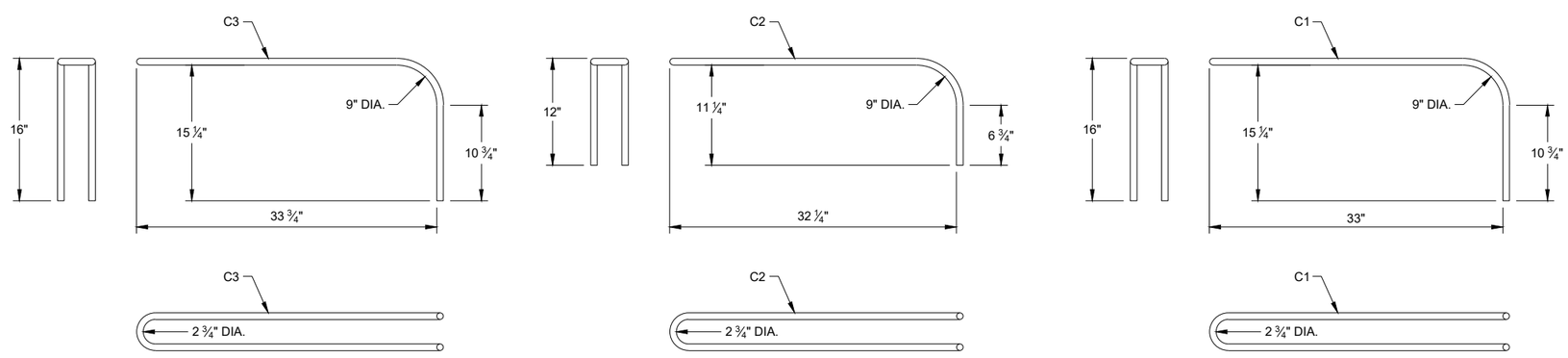

C BAR DETAILS

CONCRETE BARRIER TEMPORARY PRECAST, 12' - 6"

STATE OF WISCONSIN
DEPARTMENT OF TRANSPORTAT

6

SDD 14B07-16b

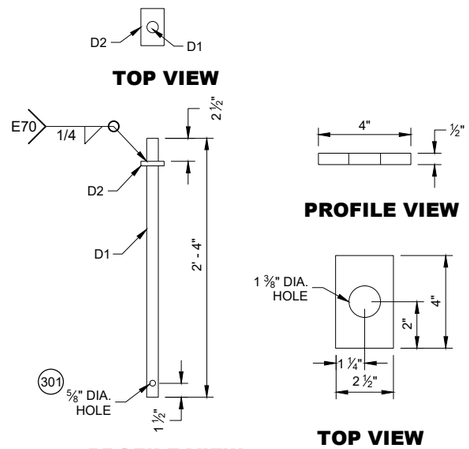

CONNECTOR PIN ASSEMBLY

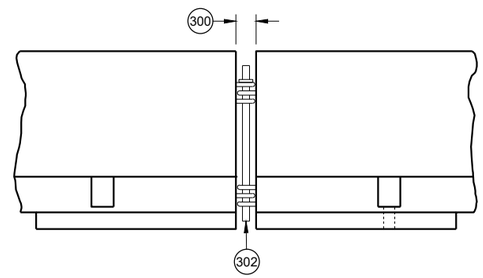

CONNECTING TEMPORARY BARRIER SECTIONS

GENERAL NOTES

300 SET WITH 3 ⅝" WOOD BLOCK.

301 HOLE IS OPTIONAL.

302 CONNECTOR PIN ASSEMBLY.

303 CONCRETE PAVEMENT, APPROACH SLAB, OR DECK.

304 CONCRETE DECK.

305 DO NOT USE ON CONCRETE BRIDGE DECK WITH ASPHALT OVERLAY OR CONCRETE PAVEMENT WITH ASPHALT OVERLAY.

306 MINIMUM OF 2" OF ASPHALT.

307 ASPHALT ANCHOR PIN ASSEMBLY

308 IF DRILLING A PILOT HOLE, THE MAX, DIA. OF THE HOLE IS 3/4"

309 WHEN THERE IS ASPHALT OVERLAYING CONCRETE PAVEMENT, A 1 5/8" DIA. PILOT HOLE CAN BE DRILLED INTO THE OVERLAY AND CONCRETE. IF NEEDED DRILL A 3/4" PILOT HOLE IN BASE COURSE.

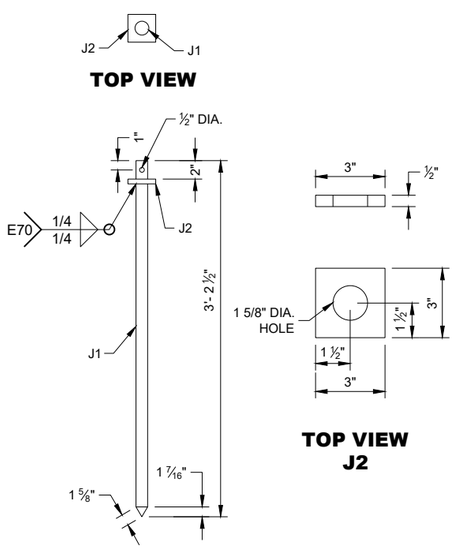

PROFILE VIEW

ASPHALT ANCHOR PIN ASSEMBLY

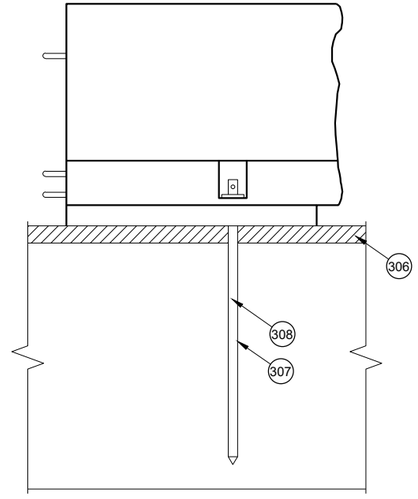

SIDE VIEW

ASPHALT ANCHOR INSTALLATION THROUGH ASPHALT PAVEMENT

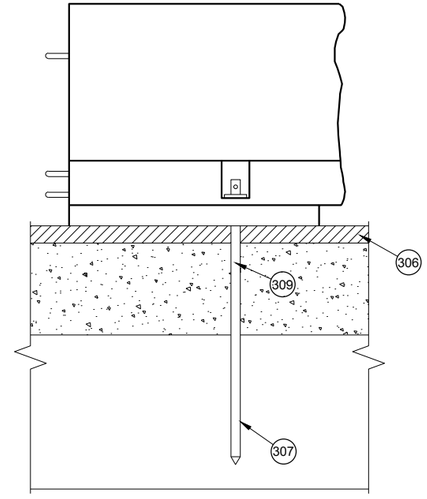

SIDE VIEW

ASPHALT ANCHOR INSTALLATION THROUGH ASPHALT OVERLAY ON TOP OF CONCRETE PAVEMENT

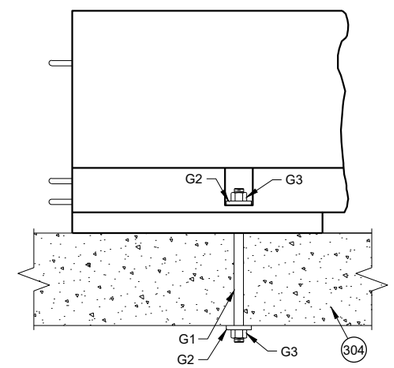

SIDE VIEW

THROUGH BOLT ANCHOR INSTALLATION 305

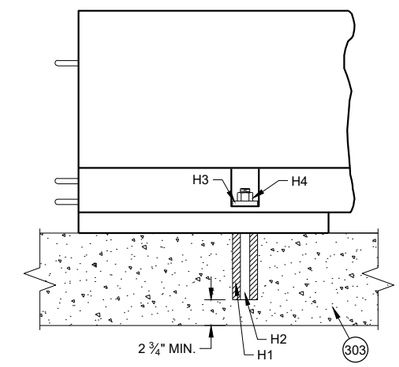

SIDE VIEW

ADHESIVE ANCHOR INSTALLATION 305

CONCRETE BARRIER TEMPORARY PRECAST, 12' - 6"

STATE OF WISCONSIN
DEPARTMENT OF TRANSPORTAT

6

SDD 14B07-16c

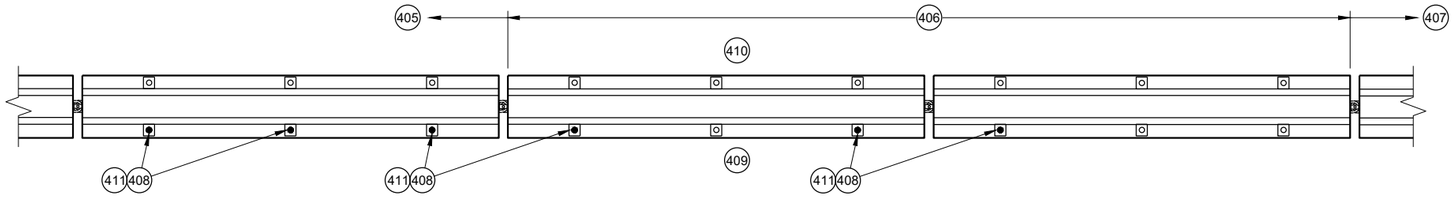

PLAN VIEW

TRANSITION FROM FREE STANDING TO ANCHORED BARRIER

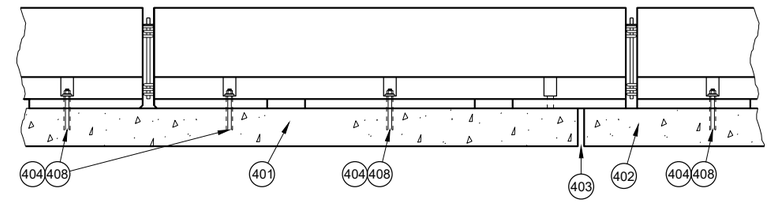

PROFILE VIEW

ANCHORED BARRIER NEAR EXPANSION JOINT (400)

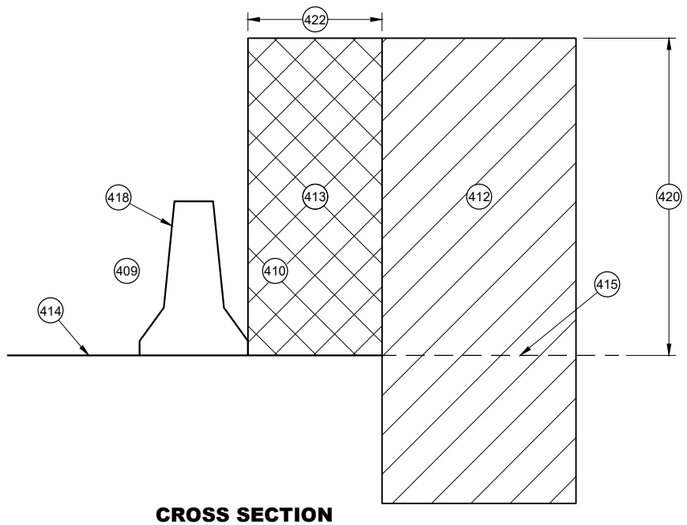

CROSS SECTION

FREE STANDING BARRIER

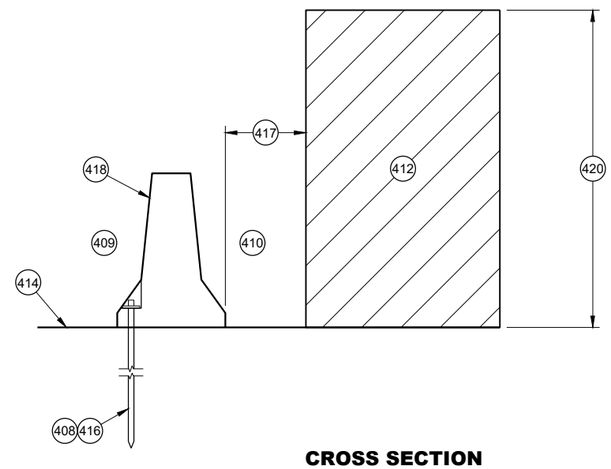

CROSS SECTION

ANCHORED BARRIER FOR OBJECTS ABOVE THE GRADE LINE AND NEAR THE BARRIER

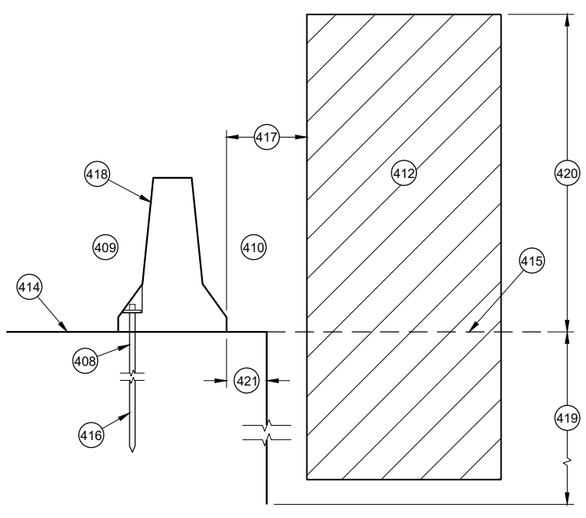

CROSS SECTION

ANCHORED BARRIER NEAR VERTICAL DROP OFF

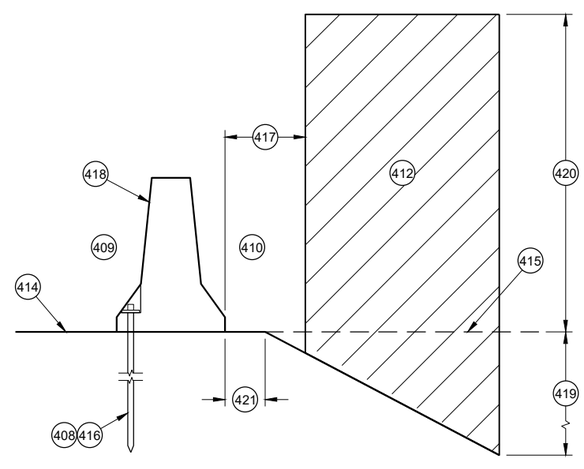

CROSS SECTION

ANCHORED BARRIER NEAR A SLOPE

GENERAL NOTES

(400) NO SINGLE CONCRETE BARRIER SECTION SHALL BE ANCHORED TO BOTH THE BRIDGE DECK AND THE APPROACH SLAB. ALL ANCHOR BOLT LOCATIONS SHALL BE ANCHORED TO THE DECK IN ACCORDANCE WITH THE DETAIL. NO MORE THAN ONE ANCHOR BOLT SHALL BE ELIMINATED FROM A BARRIER SECTION WHEN SPANNING AN EXPANSION JOINT.

(401) CONCRETE DECK

(402) CONCRETE DECK OR APPROACH SLAB.

(403) EXPANSION JOINT

(404) ADHESIVE ANCHOR SHOWN. SEE ANCHOR DETAILS.

(405) ANCHORED TEMPORARY BARRIER

(406) TRANSITION FROM ANCHORED TEMPORARY BARRIER TO FREE STANDING

(407) FREE STANDING BARRIER

(408) REMOVE ALL ANCHORS WHEN NO LONGER NEEDED. FILL CONCRETE PAVEMENTS, DECKS AND APPROACH SLABS WITH NON-SHRINK COMMERCIAL GROUT FROM THE APPROVED PRODUCT LIST. FILL ASPHALT PAVEMENTS WITH ASTM D6690 TYPE II RUBBERIZED CRACK FILLER.

(409) TRAFFIC SIDE

(410) NON-TRAFFIC SIDE

(411) ANCHOR LOCATION. SEE ANCHORING DETAILS.

(412) WORK AREA

(413) AREA FREE OF OBJECTS AND WORKERS

(414) GRADE LINE

(415) EXTENDED GRADE LINE

(416) ANCHORED TEMPORARY BARRIER. SEE BOLT THROUGH DECK, REMOVABLE ADHESIVE ANCHOR, OR AN ASPHALT ANCHOR ROD DETAILS FOR MORE INFORMATION. ASPHALT ANCHOR ROD SHOWN.

(417) WHEN OBJECTS EXTEND ABOVE THE GRADE. A MINIMUM OF 1 FOOT IS REQUIRED FROM BACK OF BARRIER TO OBJECT.

(418) OBJECTS ARE NOT TO BE PLACED ON, MOUNTED TO, OR ALLOWED TO LEAN AGAINST THE BARRIER WITHOUT WRITTEN PERMISSION OF THE PROJECT ENGINEER.

(419) DEPTHS OF 3 FEET OR MORE.

(420) Y = 6.5'

(421) OFFSET FROM BACK OF BARRIER EDGE:

CONCRETE PAVEMENT	0.5'
ASPHALT	0.5'

(422) POSTED SPEED (MPH):

45 OR GREATER	4.0'
40 OR LOWER	2.0'

CONCRETE BARRIER TEMPORARY PRECAST, 12' - 6"

STATE OF WISCONSIN
DEPARTMENT OF TRANSPORTAT

6

SDD 14B07-16d

GENERAL NOTES

500 EXISTING RIGID BARRIERS (VARIES)

501 TEMPORARY BARRIER

502 SEE OTHER DETAIL ON HOW TO ANCHOR TEMPORARY BARRIER (BARRIER ASPHALT ANCHOR SHOWN).

503 ANCHORS ARE REQUIRED ON BOTH SIDE OF THE TEMPORARY BARRIER.

504 NESTED RAILS ARE REQUIRED ON BOTH SIDES OF THE TEMPORARY BARRIER FOR ALL INSTALLATIONS.

505 TRAFFIC TRAVELS FROM PERMANENT BARRIER TO TEMPORARY BARRIER.

506 TRAFFIC TRAVELS FROM TEMPORARY BARRIER TO PERMANENT BARRIER.

507 VERTICAL BARRIER

508 SAFETY SHAPE BARRIER

509 SINGLE SLOPE BARRIER

510 CAP END PLATE PLACED FLUSH WITH UPSTREAM END OF RIGID BARRIER.

511 BENT THRIE BEAM TO FIT.

512 THRIE BEAM PIECES ARE OFFSET 15 ¼" TO PREVENT INTERFERENCE FROM THE ANCHORS ON OPPOSING SIDES.

513 TWO (2) P1, P2 AND P3 ARE REQUIRED

514 FIVE (5) N1, N2 AND N3 ARE REQUIRED

515 TWO (2) R1, R2 AND R3 ARE REQUIRED

516 CUT WOOD BLOCK TO FIT.

517 SEE THRIE BEAM RAIL TERMINAL CONNECTOR DETAIL ASSEMBLY.

518 CAP ASSEMBLY

519 4" MAX. GAP BETWEEN TEMPORARY BARRIER AND RIGID BARRIER.

520 ALL TWELVE SPLICE HOLES REQUIRE M1 AND M2

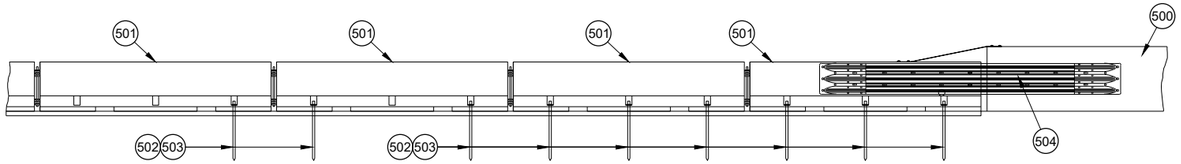

PROFILE VIEW

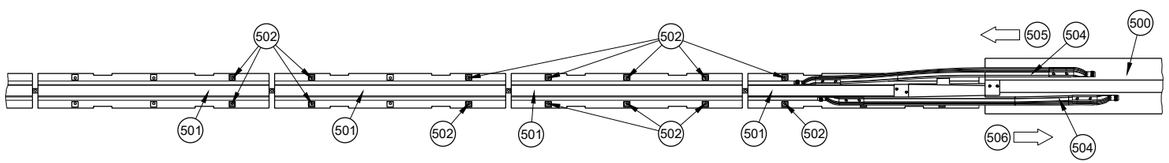

PLAN VIEW
TRANSITION TO RIGID BARRIER

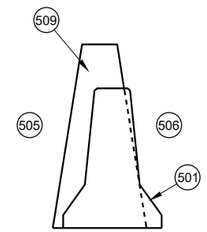

CROSS SECTION TEMPORARY BARRIER PLACEMENT SINGLE SLOPE

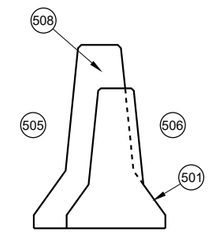

CROSS SECTION TEMPORARY BARRIER PLACEMENT SAFETY SHAPE

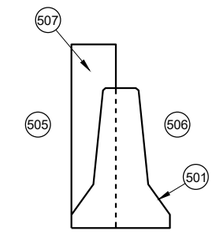

CROSS SECTION TEMPORARY BARRIER PLACEMENT VERTICAL

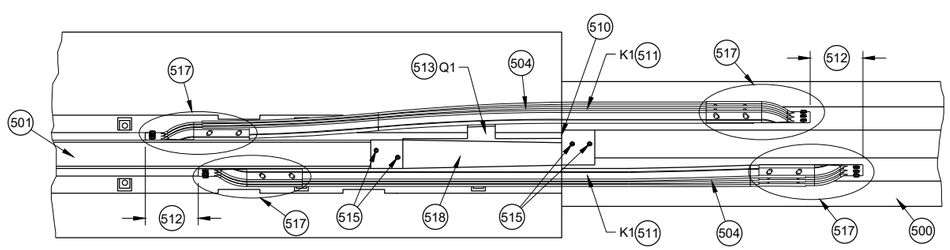

PLAN DETAIL VIEW
TRANSITION TO RIGID BARRIER

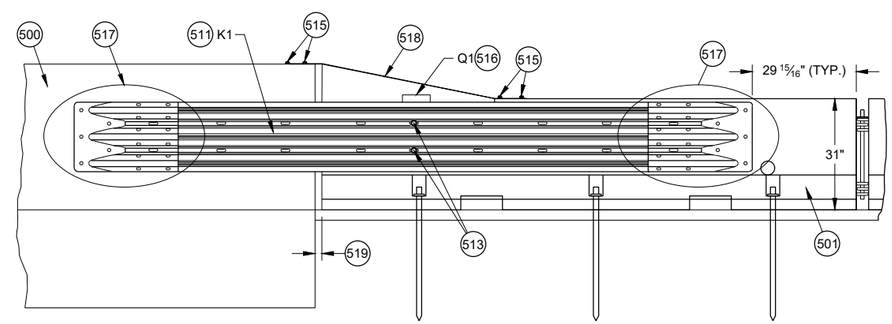

BACK DETAIL VIEW
TRANSITION TO RIGID BARRIER

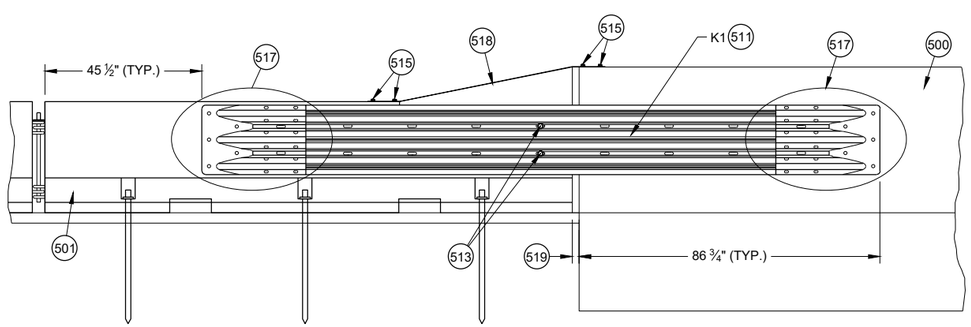

FRONT DETAIL VIEW
TRANSITION TO RIGID BARRIER

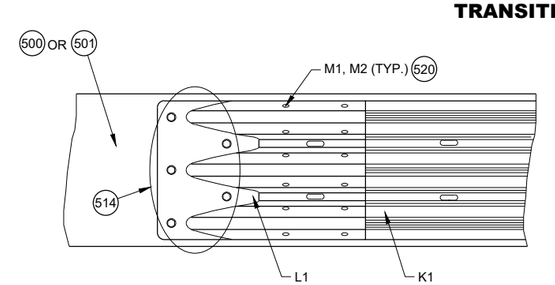

517 DETAIL PLAN VIEW
THRIE BEAM RAIL TERMINAL CONNECTOR ASSEMBLY

CONCRETE BARRIER TEMPORARY PRECAST, 12' - 6"

STATE OF WISCONSIN
DEPARTMENT OF TRANSPORTAT

6

SDD 14B07-16e

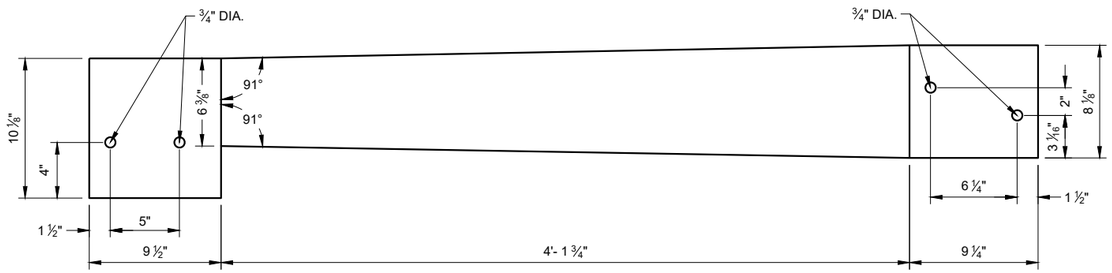

TOP VIEW
S1

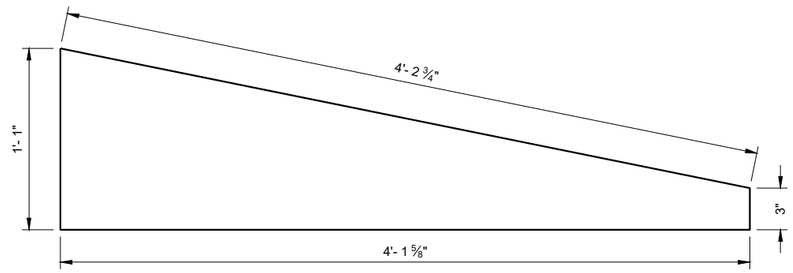

SIDE VIEW
S3

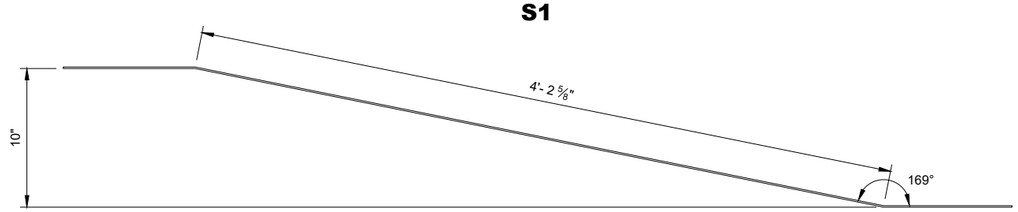

ELEVATION VIEW
S1

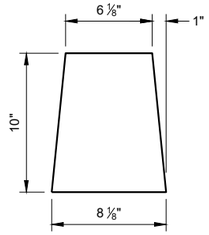

S2

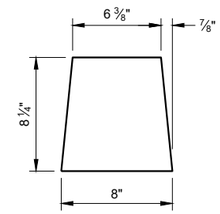

S4

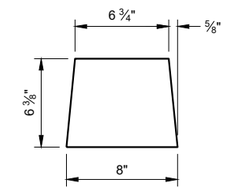

S5

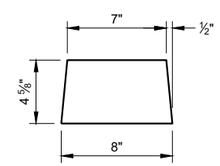

S6

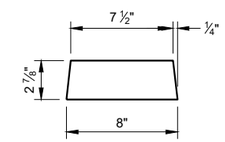

S7

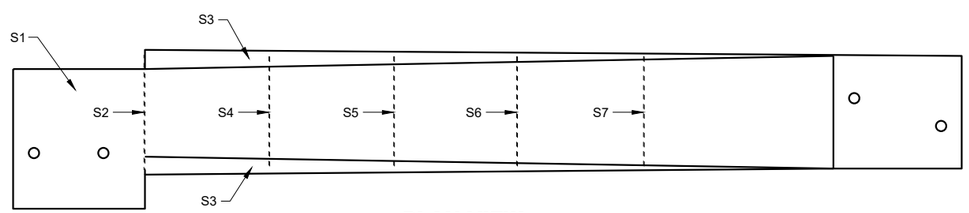

PLAN VIEW

GENERAL NOTES

STITCH WELD GUSSET PLATES AND END PLATES ON THREE SIDES

STITCH WELD TWO SIDE PLATES TO TOP PLATE, END PLATE AND GUSSETS.

600 SIDE PLATES (S3) NOT SHOWN FOR CLARITY.

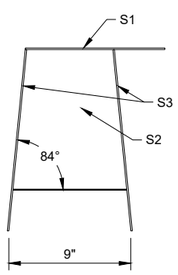

BACK VIEW

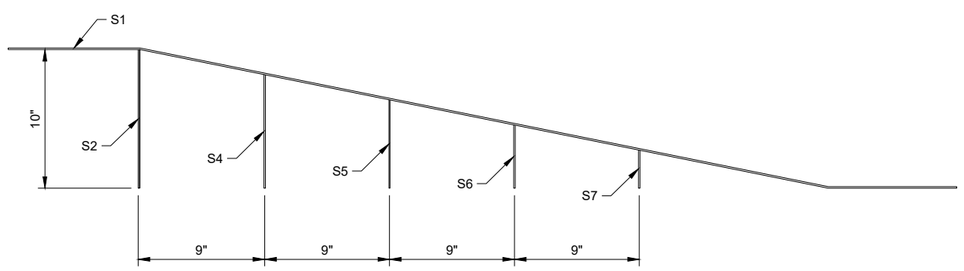

SIDE VIEW 600

42" TOP CAP ASSEMBLY

CONCRETE BARRIER TEMPORARY PRECAST, 12' - 6"

STATE OF WISCONSIN
DEPARTMENT OF TRANSPORTAT

6

SDD 14B07-16f

6

SDD 14B07-16f

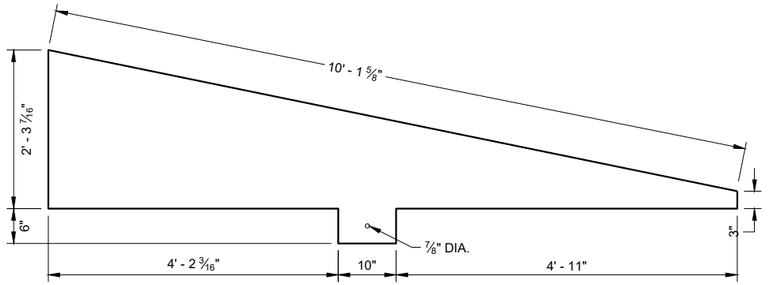

SIDE VIEW
T4

END VIEW

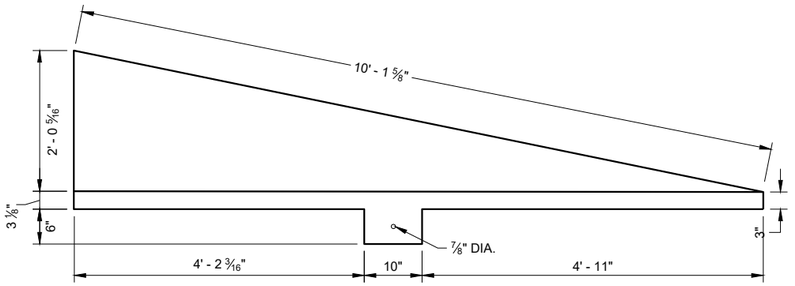

SIDE VIEW
T3

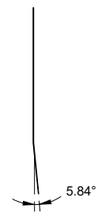

END VIEW

GENERAL NOTES

STITCH WELD GUSSET PLATES AND END PLATES ON THRIE SIDES

STITCH WELD TWO SIDE PLATES TO TOP PLATE, END PLATE AND GUSSETS.

SIDE PLATES, TOP PLATE, END PLATE AND GUSSETS ARE 12 GAUGE ASTM A36 GALVANIZED STEEL.

700 SIDE PLATES (T3 AND T4) NOT SHOWN FOR CLARITY.

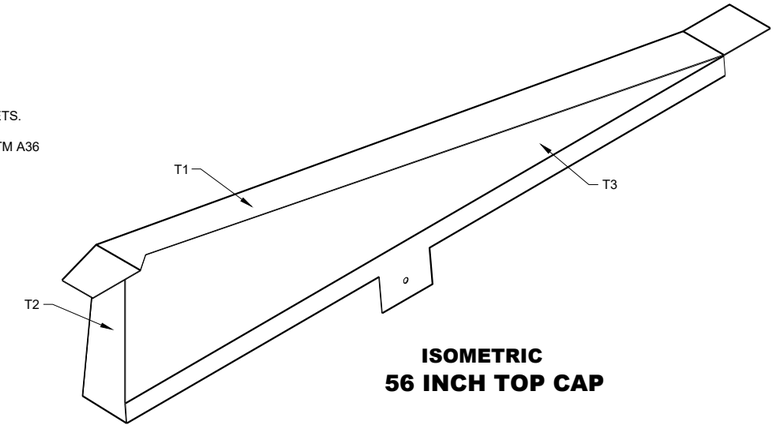

ISOMETRIC
56 INCH TOP CAP

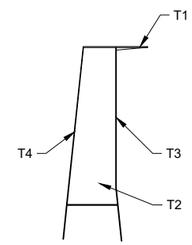

END VIEW
56 INCH TOP CAP

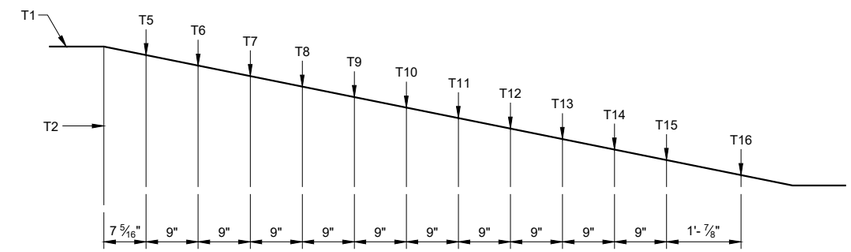

SIDE VIEW
56 INCH TOP CAP 700

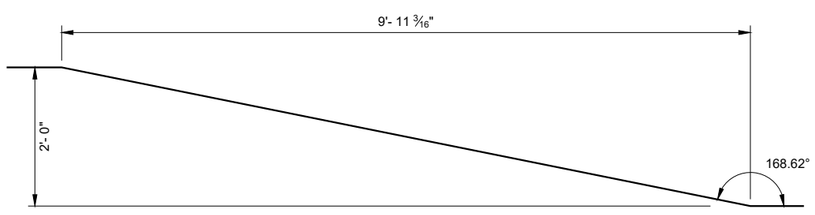

SIDE VIEW
TOP PLATE T1

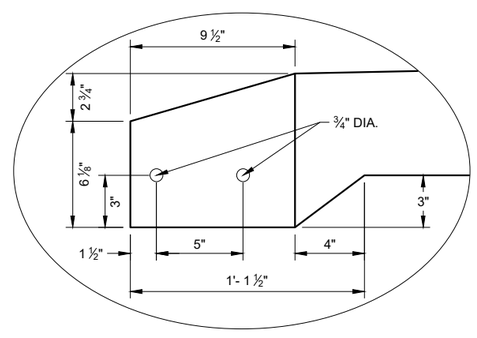

DETAIL "A"

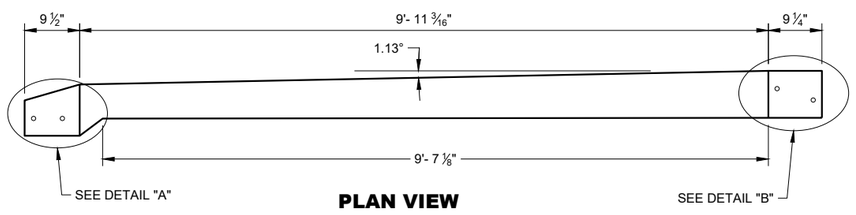

PLAN VIEW
TOP PLATE T1

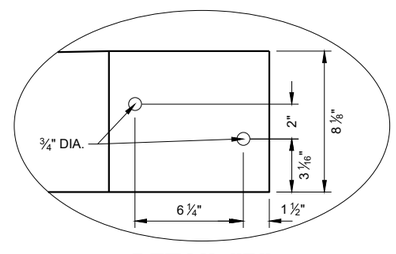

DETAIL "B"

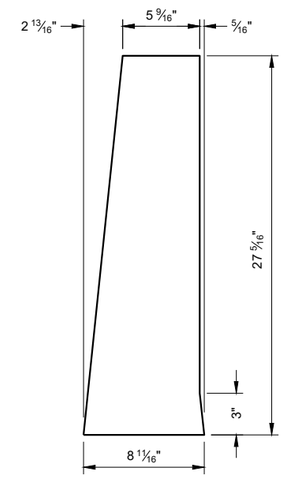

END PLATE T2

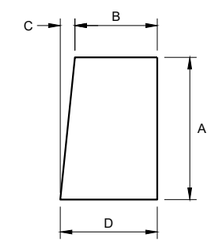

GUSSET PLATES
T5 - T16

GUSSET DIMENSIONS				
GUSSET NO.	A	B	C	D
T5	22 13/16"	5 11/16"	2 5/16"	8 1/16"
T6	21"	5 7/8"	2 3/16"	8 1/16"
T7	19 3/16"	6 1/16"	1 15/16"	8 1/16"
T8	17 3/8"	6 1/4"	1 13/16"	8 1/16"
T9	15 5/16"	6 7/16"	1 9/16"	8 1/16"
T10	13 3/4"	6 5/8"	1 7/16"	8 1/16"
T11	11 15/16"	6 13/16"	1 1/4"	8 1/16"
T12	10 1/8"	7"	1 1/16"	8 1/16"
T13	8 5/16"	7 3/16"	7/8"	8 1/16"
T14	6 1/2"	7 3/8"	11/16"	8 1/16"
T15	4 11/16"	7 9/16"	1/2"	8"
T16	2 7/8"	7 3/4"	1/4"	8"

CONCRETE BARRIER TEMPORARY PRECAST, 12' - 6"

STATE OF WISCONSIN
DEPARTMENT OF TRANSPORTATION

6

SDD 14B07-16g

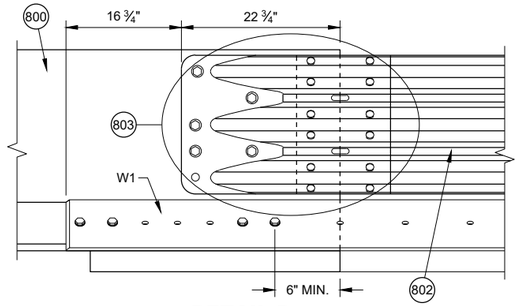

DETAIL D

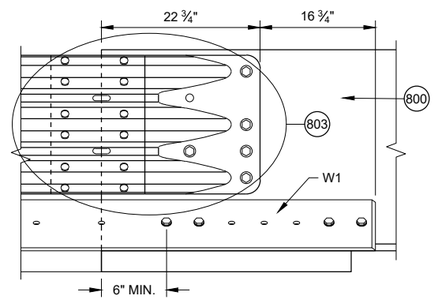

DETAIL E

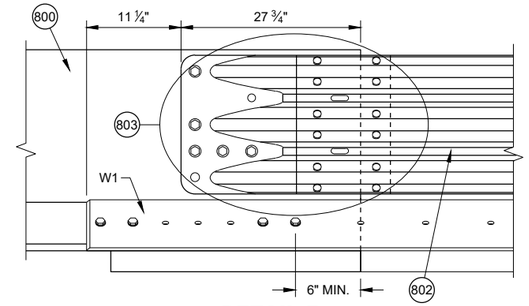

DETAIL F

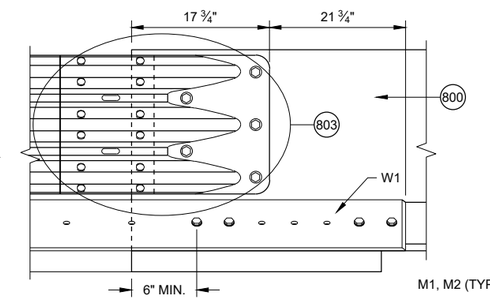

DETAIL G

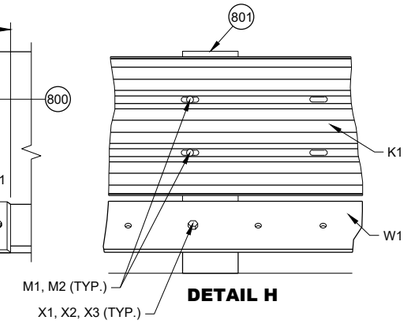

DETAIL H

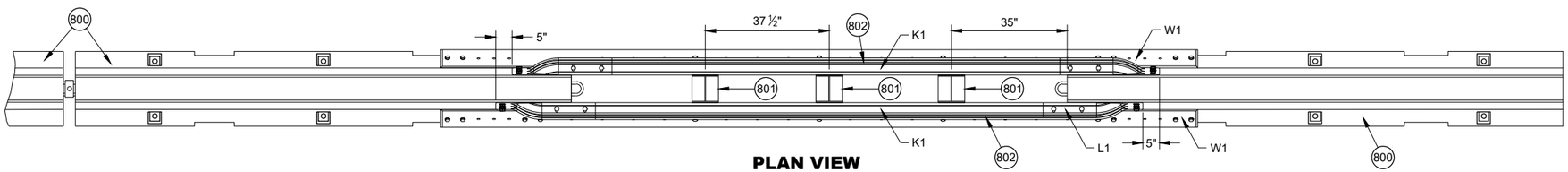

PLAN VIEW

GENERAL NOTES

(800) FREE STANDING TEMPORARY BARRIER

(801) GAP STIFFENER ASSEMBLY

(802) THRIE BEAMS ARE NESTED ON BOTH SIDES OF THE TEMPORARY BARRIER.

(803) SEE THRIE BEAM RAIL TERMINAL CONNECTOR DETAIL

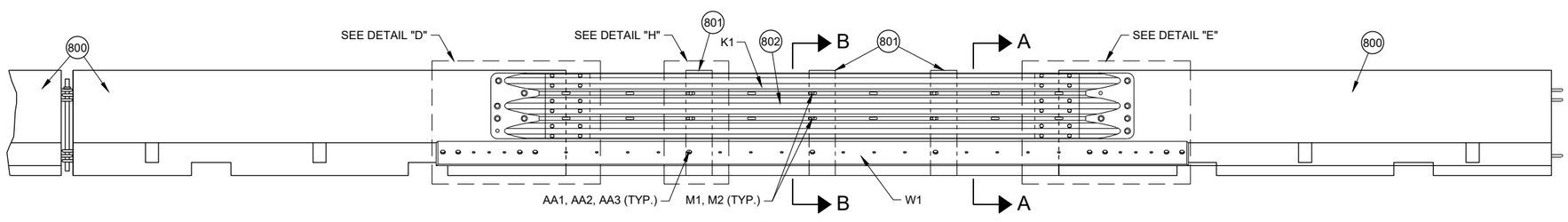

FRONT ELEVATION VIEW

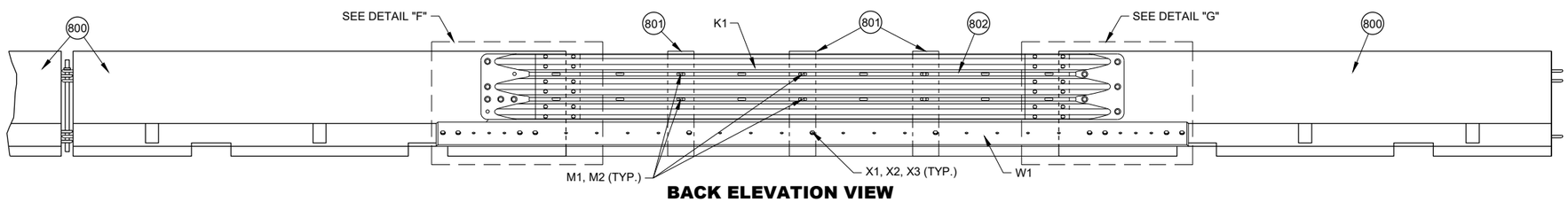

BACK ELEVATION VIEW

PORTABLE CONCRETE BARRIER GAP THRIE BEAM COVER

CONCRETE BARRIER TEMPORARY PRECAST, 12' - 6"

STATE OF WISCONSIN
DEPARTMENT OF TRANSPORTATION

6
SDD 14B07-16h

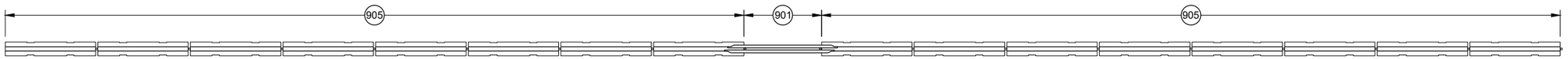

PLAN VIEW
GAP WITHIN SPACING

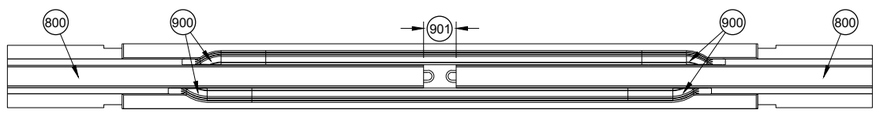

PLAN VIEW
TEMPORARY BARRIER GAP OVER 4" TO 1' MAX. 904

GENERAL NOTES

900 SEE OTHER DETAILS FOR TEMPORARY GAP HARDWARE (TYP.)

901 TEMPORARY BARRIER GAP

902 GAP STIFFENER ASSEMBLY CENTERED IN THE GAP.

903 GAP STIFFENER ASSEMBLY IS OFFSET 18 ¾" FROM CENTER

904 MINIMUM NUMBER OF GAP STIFFENERS SHOWN FOR THE GAP RANGE SHOWN.

905 MINIMUM OF 8 CONTINUOUS FREE STANDING TEMPORARY BARRIERS

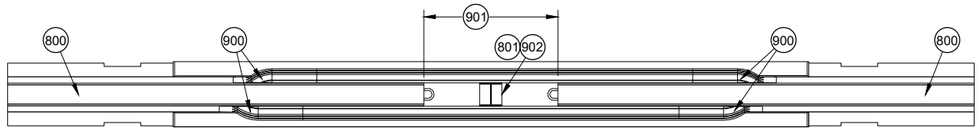

PLAN VIEW
TEMPORARY BARRIER GAP OVER 1' TO 4' MAX. 904

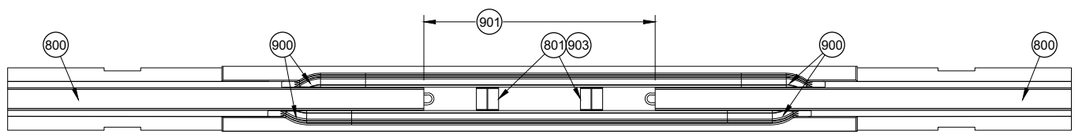

PLAN VIEW
TEMPORARY BARRIER GAP OVER 4' TO 7' MAX. 904

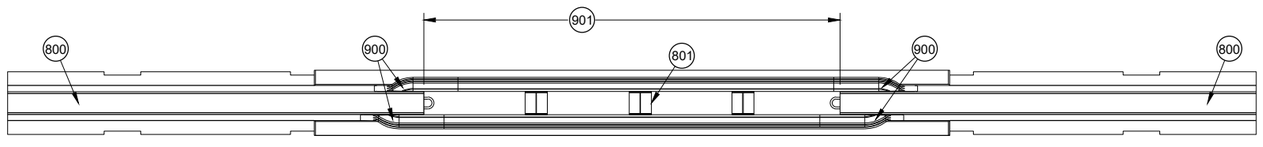

PLAN VIEW
TEMPORARY BARRIER GAP OVER 7' TO 12.5' MAX. 904

CONCRETE BARRIER TEMPORARY PRECAST, 12' - 6"

STATE OF WISCONSIN
DEPARTMENT OF TRANSPORTAT

6

SDD 14B07-16i

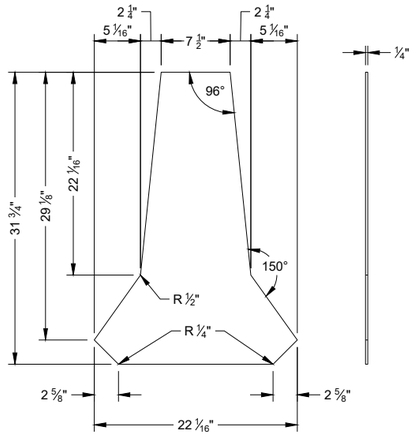

PROFILE VIEW

SIDE VIEW

STIFFENER ASSEMBLY CENTER PANEL U1

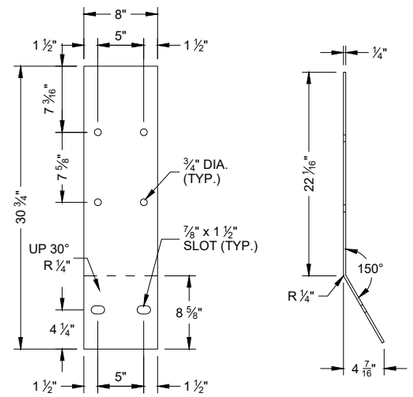

FLAT PATTERN

SIDE VIEW

STIFFENER ASSEMBLY SIDE PANEL U2

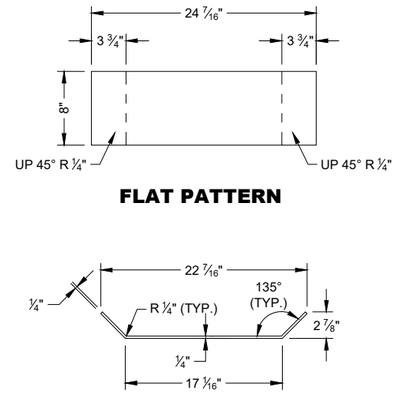

FLAT PATTERN

PROFILE VIEW

STIFFENER ASSEMBLY BOTTOM PANEL U3

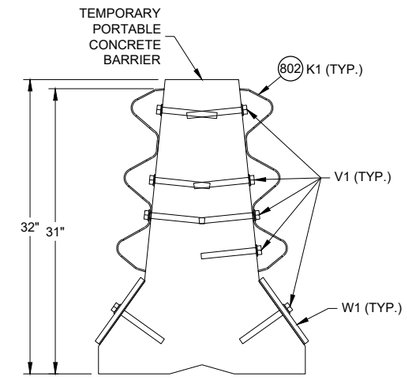

SECTION A - A

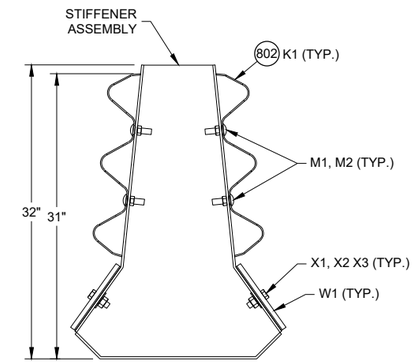

SECTION B - B

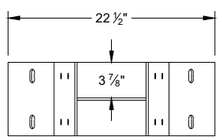

PLAN VIEW

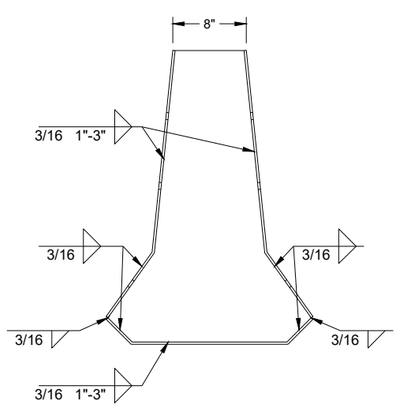

PROFILE VIEW

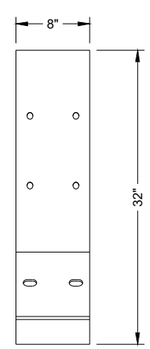

SIDE VIEW

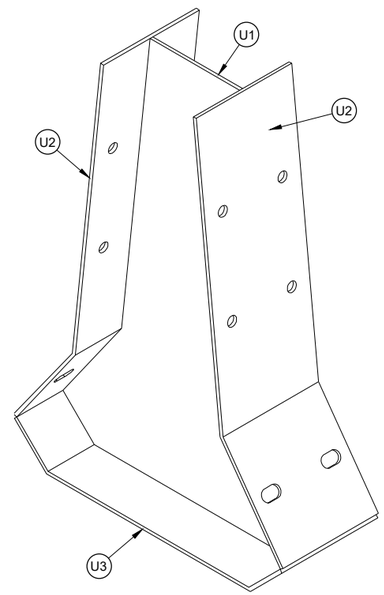

ISOMETRIC

GAP STIFFENER ASSEMBLY

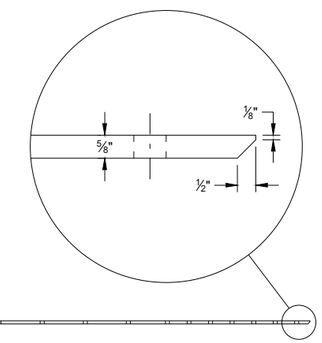

PLAN VIEW

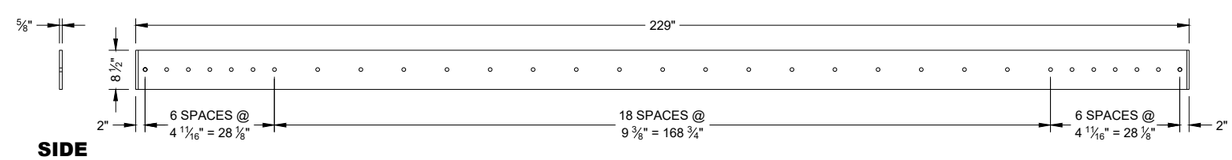

SIDE VIEW

ELEVATION VIEW

W1 TOE PLATE

6

SDD 14B07-16j

CONCRETE BARRIER TEMPORARY PRECAST, 12' - 6"

STATE OF WISCONSIN
DEPARTMENT OF TRANSPORTATION

6

SDD 14B07-16j

GENERAL NOTES

(1100) 1" DIA. HOLE

(1101) ¾" DIA. HOLE

(1102) PROVIDE HOLES IN THRIE BEAM TERMINAL CONNECTOR TO LIMIT STEEL REINFORCEMENT OR LOOP BAR CONFLICT. CONTRACTOR MAY FIELD DRILL ADDITIONAL HOLE OR PROVIDE THRIE BEAM TERMINAL CONNECTOR WITH ADDITIONAL HOLES FROM SUPPLIER.

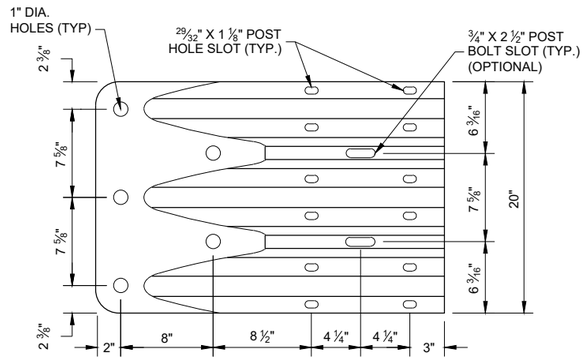

ELEVATION VIEW

THRIE BEAM TERMINAL CONNECTOR

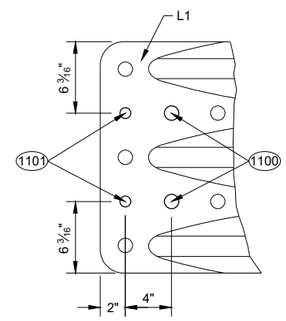

ELEVATION VIEW

ADDITIONAL THRIE BEAM (1102) TERMINAL CONNECTOR HOLE DETAIL

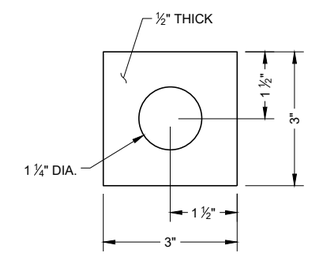

PLATE WASHER DETAIL G2, H3

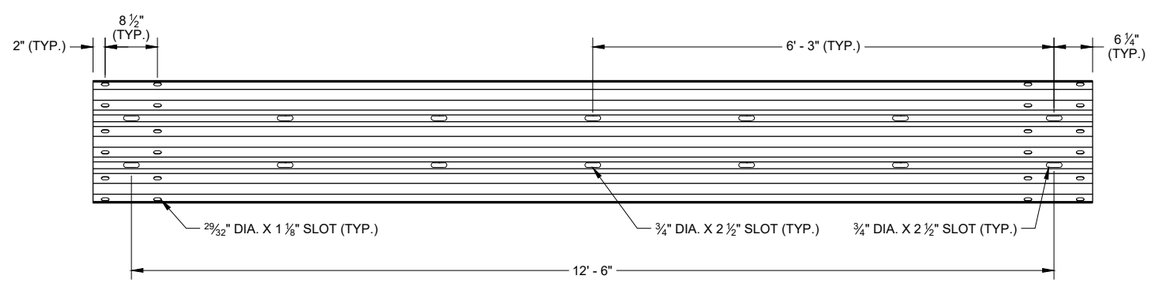

SLOTTED THRIE BEAM RAIL K1

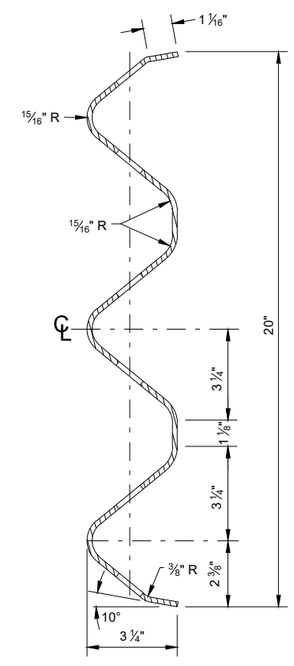

SECTION THROUGH BEAM K1

CONCRETE BARRIER TEMPORARY PRECAST, 12' - 6"

STATE OF WISCONSIN
DEPARTMENT OF TRANSPORTAT

6

SDD 14B07-16k

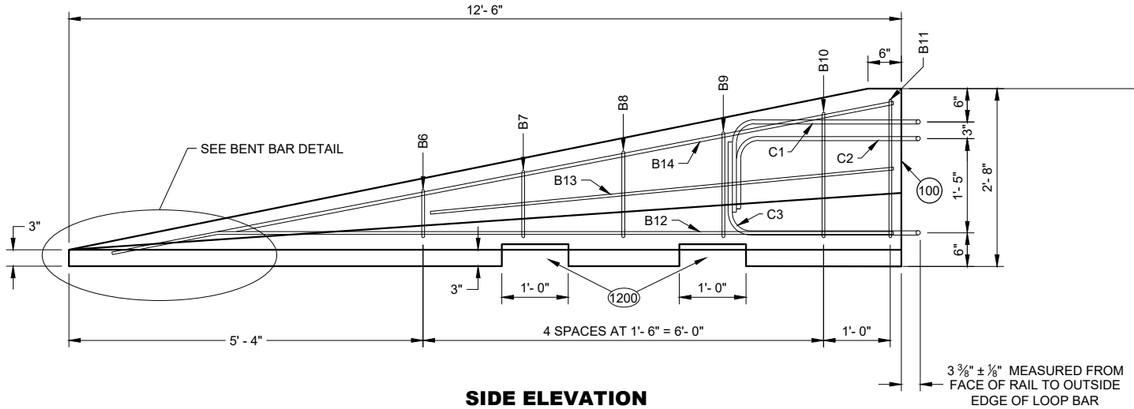

SIDE ELEVATION
(FOR CONNECTION TO LEFT END OF BARRIER)

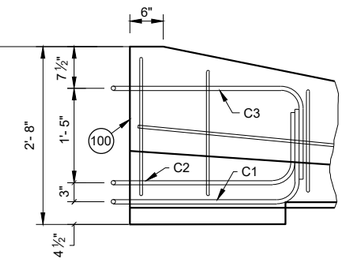

SIDE ELEVATION
LOOP BAR ASSEMBLY INVERTED FOR OPPOSITE END
(FOR CONNECTION TO RIGHT END OF BARRIER)

GENERAL NOTES

1200 SEE LIFTING SLOT DETAIL. LOCATION OF LIFTING SLOTS DETERMINED BY CONTRACTOR.

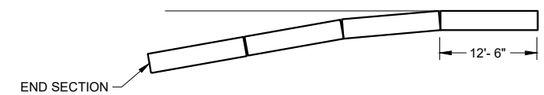

FLARE AT BARRIER END

POSTED SPEED, (MPH)	FLARE RATE
40 OR LESS	6:1
45 OR GREATER	8:1

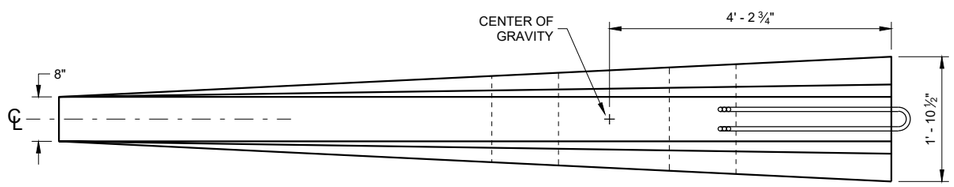

PLAN VIEW

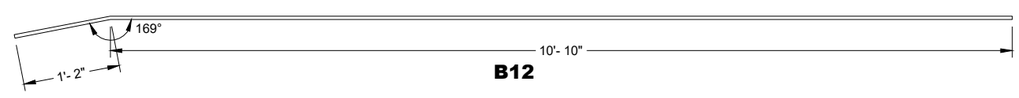

B12

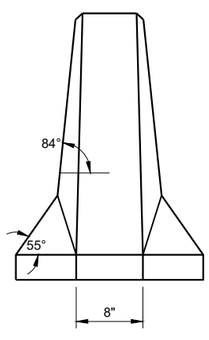

FRONT ELEVATION

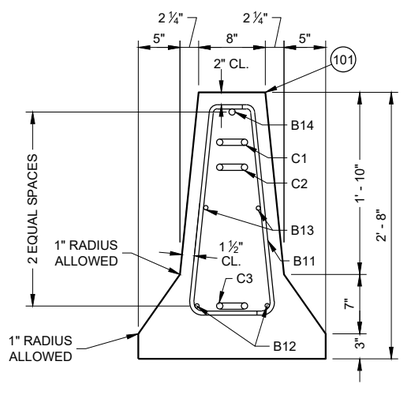

END SECTION

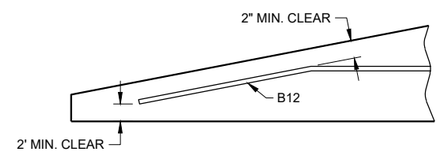

BENT BAR DETAIL

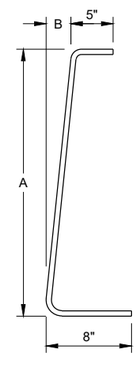

BAR	A	B
B6	10"	1"
B7	1'- 1"	1 1/4"
B8	1'- 5"	1 5/8"
B9	1'- 8"	1 7/8"
B10	2'- 0 1/2"	2 3/8"
B11	2'- 3"	2 3/4"

B BARS
2 OF EACH SIZE REQUIRED FOR STIRRUP ASSEMBLY

DETAILS OF BARRIER TAPER SECTION

CONCRETE BARRIER TEMPORARY PRECAST, 12' - 6"

STATE OF WISCONSIN
DEPARTMENT OF TRANSPORTAT

6

SDD 14B07-16I

BILL OF MATERIALS - CONCRETE BARRIER PRECAST

PART	DESCRIPTION	MATERIALS SPECIFICATIONS	NOTES
A1	PRECAST TEMPORARY BARRIER - CONCRETE	MIN. = f'c 5000 PSI	
B1	REBAR	STANDARD SPEC. 505.2 GRADE 60 UNCOATED REBAR	#5 REBAR, LENGTH 12'-2"
B2	REBAR	STANDARD SPEC. 505.2 GRADE 60 UNCOATED REBAR	#4 REBAR, LENGTH 12'-2"
B3	REBAR	STANDARD SPEC. 505.2 GRADE 60 UNCOATED REBAR	#5 REBAR, LENGTH 12'-2"
B4	REBAR	STANDARD SPEC. 505.2 GRADE 60 UNCOATED REBAR	#4 REBAR, LENGTH 6'-0"
B5	REBAR	STANDARD SPEC. 505.2 GRADE 60 UNCOATED REBAR	#6 REBAR, LENGTH 2'-11"
B6	REBAR	STANDARD SPEC. 505.2 GRADE 60 UNCOATED REBAR	#4 REBAR, LENGTH 1'-11"
B7	REBAR	STANDARD SPEC. 505.2 GRADE 60 UNCOATED REBAR	#4 REBAR, LENGTH 2'-2"
B8	REBAR	STANDARD SPEC. 505.2 GRADE 60 UNCOATED REBAR	#4 REBAR, LENGTH 2'-6"
B9	REBAR	STANDARD SPEC. 505.2 GRADE 60 UNCOATED REBAR	#4 REBAR, LENGTH 2'-9"
B10	REBAR	STANDARD SPEC. 505.2 GRADE 60 UNCOATED REBAR	#4 REBAR, LENGTH 3'-2"
B11	REBAR	STANDARD SPEC. 505.2 GRADE 60 UNCOATED REBAR	#4 REBAR, LENGTH 3'-4"
B12	REBAR	STANDARD SPEC. 505.2 GRADE 60 UNCOATED REBAR	#4 REBAR, LENGTH 12'-0"
B13	REBAR	STANDARD SPEC. 505.2 GRADE 60 UNCOATED REBAR	#4 REBAR, LENGTH 7'-9"
B14	REBAR	STANDARD SPEC. 505.2 GRADE 60 UNCOATED REBAR	#5 REBAR, LENGTH 11'-9"
C1	LOOP BAR	ASTM A709 GRADE 70 SMOOTH BAR OR ASTM A706 GRADE 60 REBAR UNCOATED	¾" DIA.
C2	LOOP BAR	ASTM A709 GRADE 70 SMOOTH BAR OR ASTM A706 GRADE 60 REBAR UNCOATED	¾" DIA.
C3	LOOP BAR	ASTM A709 GRADE 70 SMOOTH BAR OR ASTM A706 GRADE 60 REBAR UNCOATED	¾" DIA.
D1	CONNECTION PIN - ROD	ASTM A36 MIN. STRENGTH 36 KSI / ASTM A529 MAX. STRENGTH 50 KSI / ASTM A572 MAX STRENGTH 50 KSI / ASTM A709 MAX STRENGTH 50 KSI / ASTM A992 MAX STRENGTH 50 KSI	1 ¼" DIA.
D2	CONNECTION PIN - TOP PLATE	ASTM A36 MIN. STRENGTH 36 KSI / ASTM A529 MAX. STRENGTH 50 KSI / ASTM A572 MAX STRENGTH 50 KSI / ASTM A709 MAX STRENGTH 50 KSI / ASTM A992 MAX STRENGTH 50 KSI	
G1	BOLT THROUGH ANCHOR - THREADED ROD	HOT DIP AASHTO M232 CLASS / ASTM A153 CLASS C / ASTM F2329 C OR MECHANICAL GALVANIZE TO AASHTO M298 CLASS 55 TYPE 2 / ASTM B695 CLASS 55 TYPE 2 A307 GRADE A OR SAE J429 GRADE 2 UNC	1 ⅛" DIA.
G2	BOLT THROUGH ANCHOR - WASHER, SQUARE	ASTM A36 MIN. STRENGTH 36 KSI / ASTM A529 MAX. STRENGTH 50 KSI / ASTM A572 MAX STRENGTH 50 KSI / ASTM A709 MAX STRENGTH 50 KSI / ASTM A992 MAX STRENGTH 50 KSI	
G3	BOLT THROUGH ANCHOR - NUT	HOT DIP AASHTO M232 CLASS / ASTM A153 CLASS C / ASTM F2329 C OR MECHANICAL GALVANIZE TO AASHTO M298 CLASS 55 TYPE 2 / ASTM B695 CLASS 55 UNC OVER TAP NUTS AS SPECIFIED IN AASHTO 291 / ASTM A 563 HEAVY HEX HEAD ASTM A563DH OR SAE J995 GRADE 5	
H1	ADHESIVE ANCHOR - ADHESIVE	ICC-ES-AC308 5 ¼" EMBEDMENT WITH A MIN. BOND STRENGTH OF 1,650 PSI. SEE 603.2 AND 603.3.1.2 OF THE WISCONSIN STANDARD SPECIFICATIONS FOR MORE INFORMATION ON ADHESIVE ANCHORS.	
H2	ADHESIVE ANCHOR - THREADED ROD	HOT DIP AASHTO M232 CLASS / ASTM A153 CLASS C / ASTM F2329 C OR MECHANICAL GALVANIZE TO AASHTO M298 CLASS 55 TYPE 2 / ASTM B695 CLASS 55 TYPE 2 A307 GRADE A / SAE J429 GRADE 2 UNC	1 ⅛" DIA.
H3	ADHESIVE ANCHOR - WASHER, SQUARE	ASTM A36 MIN. STRENGTH 36 KSI / ASTM A529 MAX. STRENGTH 50 KSI / ASTM A572 MAX STRENGTH 50 KSI / ASTM A709 MAX STRENGTH 50 KSI / ASTM A992 MAX STRENGTH 50 KSI	
H4	ADHESIVE ANCHOR - NUT	HOT DIP AASHTO M232 CLASS / ASTM A153 CLASS C / ASTM F2329 C OR MECHANICAL GALVANIZE TO AASHTO M298 CLASS 55 TYPE 2 / ASTM B695 CLASS 55 UNC OVER TAP NUTS AS SPECIFIED IN AASHTO 291 / ASTM A 563 HEAVY HEX HEAD ASTM A563DH OR SAE J995 GRADE 5	
J1	ASPHALT ANCHOR PIN - ROD	ASTM A36 MIN. STRENGTH 36 KSI / ASTM A529 MAX. STRENGTH 50 KSI / ASTM A572 MAX STRENGTH 50 KSI / ASTM A709 MAX STRENGTH 50 KSI / ASTM A992 MAX STRENGTH 50 KSI	1 ½" DIA.
J2	ASPHALT ANCHOR PIN - STOP PLATE	ASTM A36 MIN. STRENGTH 36 KSI / ASTM A529 MAX. STRENGTH 50 KSI / ASTM A572 MAX STRENGTH 50 KSI / ASTM A709 MAX STRENGTH 50 KSI / ASTM A992 MAX STRENGTH 50 KSI	
K1	THRIE BEAM RAIL	AASHTO M180 CLASS A TYPE 2 APPROVED PRODUCER	12 GAUGE
L1	THRIE BEAM RAIL - TERMINAL	AASHTO M180 CLASS A TYPE 2 APPROVED PRODUCER	12 GAUGE

PART	DESCRIPTION	MATERIALS SPECIFICATIONS	NOTES
M1	SPLICE BOLT	HOT DIP AASHTO M232 CLASS / ASTM A153 CLASS C / ASTM F2329 C OR MECHANICAL GAL. TO AASHTO M298 CLASS 55 TYPE 2 / ASTM B695 CLASS 55 TYPE 2 UNC AASHTO M180 HEAD ASTM A307 GRADE B OR SAE J429 GRADE 2 OR ASTM F1554 GRADE 36	⅝" DIA.
M2	SPLICE BOLT - NUT	HOT DIP AASHTO M232 CLASS / ASTM A153 CLASS C / ASTM F2329 C OR MECHANICAL GALVANIZE TO AASHTO M298 CLASS 55 TYPE 2 / ASTM B695 CLASS 55 UNC OVER TAP NUTS AS SPECIFIED IN AASHTO 291 / ASTM A 563 AASHTO M180 RECESSED HEAVY HEX HEAD ASTM A563DH OR SAE J995 GRADE 5	
N1	THRIE BEAM RAIL TERMINAL - MECHANICAL ANCHOR	HOT DIP AASHTO M232 CLASS / ASTM A153 CLASS C / ASTM F2329 C OR MECHANICAL GALVANIZE TO AASHTO M298 CLASS 55 TYPE 2 / ASTM B695 CLASS 55 UNC OVER TAP NUTS AS SPECIFIED IN AASHTO 291 / ASTM A 563 AASHTO M180 RECESSED HEAVY HEX HEAD ASTM A563DH OR SAE J995 GRADE 5	¾" DIA. LENGTH 6"
N2	THRIE BEAM RAIL TERMINAL - WASHER	HOT DIP AASHTO M232 CLASS / ASTM A153 CLASS C / ASTM F2329 C OR MECHANICAL GALVANIZE TO AASHTO M298 CLASS 55 TYPE 2 / ASTM B695 CLASS 55 TYPE 2 F436 TYPE 1	
N3	THRIE BEAM RAIL TERMINAL MECHANICAL OR ADHESIVE ANCHOR	MINIMUM MECHANICAL OR ADHESIVE ANCHOR STRENGTH REQUIREMENTS: ULTIMATE TENSILE LOAD 17.9 KIPS AND ULTIMATE SHEAR LOAD 21.96 KIPS. SEE 603.2 AND 603.3.1.2 OF THE WISCONSIN STANDARD SPECIFICATIONS FOR MORE INFORMATION ON ADHESIVE ANCHORS.	
P1	THRIE BEAM RAIL CONNECTION 1-BOLT	HOT DIP AASHTO M232 CLASS / ASTM A153 CLASS C / ASTM F2329 C OR MECHANICAL GALVANIZE TO AASHTO M298 CLASS 55 TYPE 2 / ASTM B695 CLASS 55 UNC OVER TAP NUTS AS SPECIFIED IN AASHTO 291 / ASTM A 563 AASHTO M180 RECESSED HEAVY HEX HEAD ASTM A563DH OR SAE J995 GRADE 5	¾" DIA.
P2	THRIE BEAM RAIL CONNECTION 1-WASHER	HOT DIP AASHTO M232 CLASS / ASTM A153 CLASS C / ASTM F2329 C OR MECHANICAL GAL. TO AASHTO M298 CLASS 55 TYPE 2 / ASTM B695 CLASS 55 TYPE 2 F436 TYPE 1	
P3	THRIE BEAM RAIL CONNETION 1- MECHANICAL OR ADHESIVE ANCHOR	MINIMUM MECHANICAL OR ADHESIVE ANCHOR STRENGTH REQUIREMENTS: ULTIMATE TENSILE LOAD 9.48 KIPS AND ULTIMATE SHEAR LOAD 10.48 KIPS. SEE 603.2 AND 603.3.1.2 OF THE WISCONSIN STANDARD SPECIFICATIONS FOR MORE INFORMATION ON ADHESIVE ANCHORS.	
Q1	BLOCK WOOD	SEE STANDARD SPEC. 614	
R1	CAP - BOLT	HOT DIP AASHTO M232 CLASS / ASTM A153 CLASS C / ASTM F2329 C OR MECHANICAL GALVANIZE TO AASHTO M298 CLASS 55 TYPE 2 / ASTM B695 CLASS 55 UNC OVER TAP NUTS AS SPECIFIED IN AASHTO 291 / ASTM A 563 AASHTO M180 RECESSED HEAVY HEX HEAD ASTM A563DH OR SAE J995 GRADE 5	⅝" DIA.
R2	CAP- BOLT - WASHER	HOT DIP AASHTO M232 CLASS / ASTM A153 CLASS C / ASTM F2329 C OR MECHANICAL GAL. TO AASHTO M298 CLASS 55 TYPE 2 / ASTM B695 CLASS 55 TYPE 2 F436 TYPE 1	
R3	CAP - BOLT - MECHANICAL ANCHOR	MINIMUM MECHANICAL OR ADHESIVE ANCHOR STRENGTH REQUIREMENTS ULTIMATE TENSILE LOAD 12.14 KIPS AND ULTIMATE SHEAR LOAD 17.5 KIPS.SEE 603.2 AND 603.3.1.2 OF THE WISCONSIN STANDARD SPECIFICATIONS FOR MORE INFORMATION ON ADHESIVE ANCHORS.	12 GAUGE
S1	CAP 42-INCH TOP PLATE	AASHTO M111 / ASTM A123 ASTM A36 MIN. STRENGTH 36 KSI, OR ASTM A529 MAX. STRENGTH 50 KSI, OR ASTM A572 MAX. STRENGTH 50 KSI, OR ASTM A709 MAX. STRENGTH 50 KSI, OR ASTM A992 MAX. STRENGTH 50 KSI	12 GAUGE
S2	CAP 42-INCH END PLATE	AASHTO M111 / ASTM A123 ASTM A36 MIN. STRENGTH 36 KSI, OR ASTM A529 MAX. STRENGTH 50 KSI, OR ASTM A572 MAX. STRENGTH 50 KSI, OR ASTM A709 MAX. STRENGTH 50 KSI, OR ASTM A992 MAX. STRENGTH 50 KSI	12 GAUGE
S3	CAP 42-INCH SIDE PLATE	AASHTO M111 / ASTM A123 ASTM A36 MIN. STRENGTH 36 KSI, OR ASTM A529 MAX. STRENGTH 50 KSI, OR ASTM A572 MAX. STRENGTH 50 KSI, OR ASTM A709 MAX. STRENGTH 50 KSI, OR ASTM A992 MAX. STRENGTH 50 KSI	12 GAUGE
S4	CAP 42-INCH GUSSET 1	AASHTO M111 / ASTM A123 ASTM A36 MIN. STRENGTH 36 KSI, OR ASTM A529 MAX. STRENGTH 50 KSI, OR ASTM A572 MAX. STRENGTH 50 KSI, OR ASTM A709 MAX. STRENGTH 50 KSI, OR ASTM A992 MAX. STRENGTH 50 KSI	12 GAUGE
S5	CAP 42-INCH GUSSET 2	AASHTO M111 / ASTM A123 ASTM A36 MIN. STRENGTH 36 KSI, OR ASTM A529 MAX. STRENGTH 50 KSI, OR ASTM A572 MAX. STRENGTH 50 KSI, OR ASTM A709 MAX. STRENGTH 50 KSI, OR ASTM A992 MAX. STRENGTH 50 KSI	12 GAUGE
S6	CAP 42-INCH GUSSET 3	AASHTO M111 / ASTM A123 ASTM A36 MIN. STRENGTH 36 KSI, OR ASTM A529 MAX. STRENGTH 50 KSI, OR ASTM A572 MAX. STRENGTH 50 KSI, OR ASTM A709 MAX. STRENGTH 50 KSI, OR ASTM A992 MAX. STRENGTH 50 KSI	12 GAUGE
S7	CAP 42-INCH GUSSET 4	AASHTO M111 / ASTM A123 ASTM A36 MIN. STRENGTH 36 KSI, OR ASTM A529 MAX. STRENGTH 50 KSI, OR ASTM A572 MAX. STRENGTH 50 KSI, OR ASTM A709 MAX. STRENGTH 50 KSI, OR ASTM A992 MAX. STRENGTH 50 KSI	12 GAUGE

CONCRETE BARRIER TEMPORARY PRECAST, 12' - 6"

STATE OF WISCONSIN
DEPARTMENT OF TRANSPORTAT

6

SDD 14B07-16m

BILL OF MATERIALS - CONCRETE BARRIER PRECAST

PART	DESCRIPTION	MATERIALS SPECIFICATIONS	NOTES
T1	CAP 56-INCH TOP PLATE	AASHTO M111 / ASTM A123 ASTM A36 MIN. STRENGTH 36 KSI, OR ASTM A529 MAX. STRENGTH 50 KSI, OR ASTM A572 MAX. STRENGTH 50 KSI, OR ASTM A709 MAX. STRENGTH 50 KSI, OR ASTM A992 MAX. STRENGTH 50 KSI	12 GAUGE
T2	CAP 56-INCH END PLATE	AASHTO M111 / ASTM A123 ASTM A36 MIN. STRENGTH 36 KSI, OR ASTM A529 MAX. STRENGTH 50 KSI, OR ASTM A572 MAX. STRENGTH 50 KSI, OR ASTM A709 MAX. STRENGTH 50 KSI, OR ASTM A992 MAX. STRENGTH 50 KSI	12 GAUGE
T3	CAP 56-INCH SIDE PLATE 1	AASHTO M111 / ASTM A123 ASTM A36 MIN. STRENGTH 36 KSI, OR ASTM A529 MAX. STRENGTH 50 KSI, OR ASTM A572 MAX. STRENGTH 50 KSI, OR ASTM A709 MAX. STRENGTH 50 KSI, OR ASTM A992 MAX. STRENGTH 50 KSI	12 GAUGE
T4	CAP 56-INCH SIDE PLATE 2	AASHTO M111 / ASTM A123 ASTM A36 MIN. STRENGTH 36 KSI, OR ASTM A529 MAX. STRENGTH 50 KSI, OR ASTM A572 MAX. STRENGTH 50 KSI, OR ASTM A709 MAX. STRENGTH 50 KSI, OR ASTM A992 MAX. STRENGTH 50 KSI	12 GAUGE
T5	CAP 56-INCH GUSSET 1	AASHTO M111 / ASTM A123 ASTM A36 MIN. STRENGTH 36 KSI, OR ASTM A529 MAX. STRENGTH 50 KSI, OR ASTM A572 MAX. STRENGTH 50 KSI, OR ASTM A709 MAX. STRENGTH 50 KSI, OR ASTM A992 MAX. STRENGTH 50 KSI	12 GAUGE
T6	CAP 56-INCH GUSSET 2	AASHTO M111 / ASTM A123 ASTM A36 MIN. STRENGTH 36 KSI, OR ASTM A529 MAX. STRENGTH 50 KSI, OR ASTM A572 MAX. STRENGTH 50 KSI, OR ASTM A709 MAX. STRENGTH 50 KSI, OR ASTM A992 MAX. STRENGTH 50 KSI	12 GAUGE
T7	CAP 56-INCH GUSSET 3	AASHTO M111 / ASTM A123 ASTM A36 MIN. STRENGTH 36 KSI, OR ASTM A529 MAX. STRENGTH 50 KSI, OR ASTM A572 MAX. STRENGTH 50 KSI, OR ASTM A709 MAX. STRENGTH 50 KSI, OR ASTM A992 MAX. STRENGTH 50 KSI	12 GAUGE
T8	CAP 42-INCH GUSSET 4	AASHTO M111 / ASTM A123 ASTM A36 MIN. STRENGTH 36 KSI, OR ASTM A529 MAX. STRENGTH 50 KSI, OR ASTM A572 MAX. STRENGTH 50 KSI, OR ASTM A709 MAX. STRENGTH 50 KSI, OR ASTM A992 MAX. STRENGTH 50 KSI	12 GAUGE
T9	CAP 42-INCH GUSSET 5	AASHTO M111 / ASTM A123 ASTM A36 MIN. STRENGTH 36 KSI, OR ASTM A529 MAX. STRENGTH 50 KSI, OR ASTM A572 MAX. STRENGTH 50 KSI, OR ASTM A709 MAX. STRENGTH 50 KSI, OR ASTM A992 MAX. STRENGTH 50 KSI	12 GAUGE
T10	CAP 42-INCH GUSSET 6	AASHTO M111 / ASTM A123 ASTM A36 MIN. STRENGTH 36 KSI, OR ASTM A529 MAX. STRENGTH 50 KSI, OR ASTM A572 MAX. STRENGTH 50 KSI, OR ASTM A709 MAX. STRENGTH 50 KSI, OR ASTM A992 MAX. STRENGTH 50 KSI	12 GAUGE
T11	CAP 42-INCH GUSSET 7	AASHTO M111 / ASTM A123 ASTM A36 MIN. STRENGTH 36 KSI, OR ASTM A529 MAX. STRENGTH 50 KSI, OR ASTM A572 MAX. STRENGTH 50 KSI, OR ASTM A709 MAX. STRENGTH 50 KSI, OR ASTM A992 MAX. STRENGTH 50 KSI	12 GAUGE
T12	CAP 42-INCH GUSSET 8	AASHTO M111 / ASTM A123 ASTM A36 MIN. STRENGTH 36 KSI, OR ASTM A529 MAX. STRENGTH 50 KSI, OR ASTM A572 MAX. STRENGTH 50 KSI, OR ASTM A709 MAX. STRENGTH 50 KSI, OR ASTM A992 MAX. STRENGTH 50 KSI	12 GAUGE
T13	CAP 42-INCH GUSSET 9	AASHTO M111 / ASTM A123 ASTM A36 MIN. STRENGTH 36 KSI, OR ASTM A529 MAX. STRENGTH 50 KSI, OR ASTM A572 MAX. STRENGTH 50 KSI, OR ASTM A709 MAX. STRENGTH 50 KSI, OR ASTM A992 MAX. STRENGTH 50 KSI	12 GAUGE
T14	CAP 42-INCH GUSSET 10	AASHTO M111 / ASTM A123 ASTM A36 MIN. STRENGTH 36 KSI, OR ASTM A529 MAX. STRENGTH 50 KSI, OR ASTM A572 MAX. STRENGTH 50 KSI, OR ASTM A709 MAX. STRENGTH 50 KSI, OR ASTM A992 MAX. STRENGTH 50 KSI	12 GAUGE
T15	CAP 42-INCH GUSSET 11	AASHTO M111 / ASTM A123 ASTM A36 MIN. STRENGTH 36 KSI, OR ASTM A529 MAX. STRENGTH 50 KSI, OR ASTM A572 MAX. STRENGTH 50 KSI, OR ASTM A709 MAX. STRENGTH 50 KSI, OR ASTM A992 MAX. STRENGTH 50 KSI	12 GAUGE
T16	CAP 42-INCH GUSSET 12	AASHTO M111 / ASTM A123 ASTM A36 MIN. STRENGTH 36 KSI, OR ASTM A529 MAX. STRENGTH 50 KSI, OR ASTM A572 MAX. STRENGTH 50 KSI, OR ASTM A709 MAX. STRENGTH 50 KSI, OR ASTM A992 MAX. STRENGTH 50 KSI	12 GAUGE
U1	GAP STIFFENER	AASHTO M111 / ASTM A123 ASTM A36 MIN. STRENGTH 36 KSI, OR ASTM A529 MAX. STRENGTH 50 KSI, OR ASTM A572 MAX. STRENGTH 50 KSI, OR ASTM A709 MAX. STRENGTH 50 KSI, OR ASTM A992 MAX. STRENGTH 50 KSI	
U2	GAP STIFFENER - CONNECTOR PLATE 1	AASHTO M111 / ASTM A123 ASTM A36 MIN. STRENGTH 36 KSI, OR ASTM A529 MAX. STRENGTH 50 KSI, OR ASTM A572 MAX. STRENGTH 50 KSI, OR ASTM A709 MAX. STRENGTH 50 KSI, OR ASTM A992 MAX. STRENGTH 50 KSI	
U3	GAP STIFFENER - CONNECTOR PLATE 2	AASHTO M111 / ASTM A123 ASTM A36 MIN. STRENGTH 36 KSI, OR ASTM A529 MAX. STRENGTH 50 KSI, OR ASTM A572 MAX. STRENGTH 50 KSI, OR ASTM A709 MAX. STRENGTH 50 KSI, OR ASTM A992 MAX. STRENGTH 50 KSI	

PART	DESCRIPTION	MATERIALS SPECIFICATIONS	NOTES
V1	THRIE BEAM RAIL TERMINAL MECHANICAL OR ADHESIVE ANCHOR	MINIMUM MECHANICAL OR ADHESIVE ANCHOR STRENGTH REQUIREMENTS ULTIMATE TENSILE LOAD 24.0 KIPS AND ULTIMATE SHEAR LOAD 21.5 KIPS. SEE 603.2 AND 603.3.1.2 OF THE WISCONSIN STANDARD SPECIFICATIONS FOR MORE INFORMATION ON ADHESIVE ANCHORS.	¾" DIA.
V2	GAP STIFFENER - BOLT - NUT	HOT DIP AASHTO M232 CLASS / ASTM A153 CLASS C / ASTM F2329 C O R MECHANICAL GALVANIZE TO AASHTO M298 CLASS 50 TYPE 1 / ASTM B695 CLASS 50 TYPE 1 UNC OVER TAP NUTS AS SPECIFIED IN AASHTO 291/ASTM A 563 HEAVY HEX HEAD ASTM A563DH OR SAE J995 GRADE 5	
W1	TOE PLATE	AASHTO M111/ASTM A123 ASTM A36 MIN STRENGTH 36 KSI, OR ASTM A529 MAX. STRENGTH 50 KSI, OR ASTM A572 MAX. STRENGTH 50 KSI, OR ASTM A709 MAX. STRENGTH 50 KSI, OR ASTM A992 MAX. STRENGTH 50 KSI	
X1	TOE PLATE - CONNECTION BOLT	HOT DIP AASHTO M232 CLASS / ASTM A153 CLASS C / ASTM F2329 C OR MECHANICAL GALVANIZE TO AASHTO M298 CLASS 55 TYPE 2 / ASTM B695 CLASS 55 TYPE 2 UNC HEAVY HEX HEAD OR AASTHO M180 HEAD, ASTM F3125 GRADE A325 TYPE 1 HEAVY HEX HEAD OR SAE J429 GRADE 5 HEAVY HEX HEAD / ASTM A449 TYPE 1 HEAVY HEX HEAD. BOLTS MAY BE FULLY THREADED. PROVIDE ENOUGH THREADING FOR PROPER TIGHTENING OF BOLT.	¾" DIA.
X2	TOE PLATE - CONNECTION BOLT - WASHER	HOT DIP AASHTO M232 CLASS / ASTM A153 CLASS C / ASTM F2329 C OR MECHANICAL GALVANIZE TO AASHTO M298 CLASS 55 TYPE 2 / ASTM B695 CLASS 55 TYPE 2 F436 TYPE 1 (HARDEN WASHER ONLY)	
X3	TOE PLATE - CONNECTION BOLT - NUT	HOT DIP AASHTO M232 CLASS / ASTM A153 CLASS C / ASTM F2329 C OR MECHANICAL GALVANIZE TO AASHTO M298 CLASS 55 TYPE 2 / ASTM B695 CLASS 55 UNC OVER TAP NUTS AS SPECIFIED IN AASHTO 291 / ASTM A 563 HEAVY HEX HEAD ASTM A563DH OR SAE J995 GRADE 5	

CONCRETE BARRIER TEMPORARY PRECAST, 12' - 6"

STATE OF WISCONSIN
DEPARTMENT OF TRANSPORTATION

APPROVED
February 2023 — DATE
/S/ Rodney Taylor — ROADWAY STANDARDS DEVE ENGINEER
FHWA

6

SDD 14B07-16n

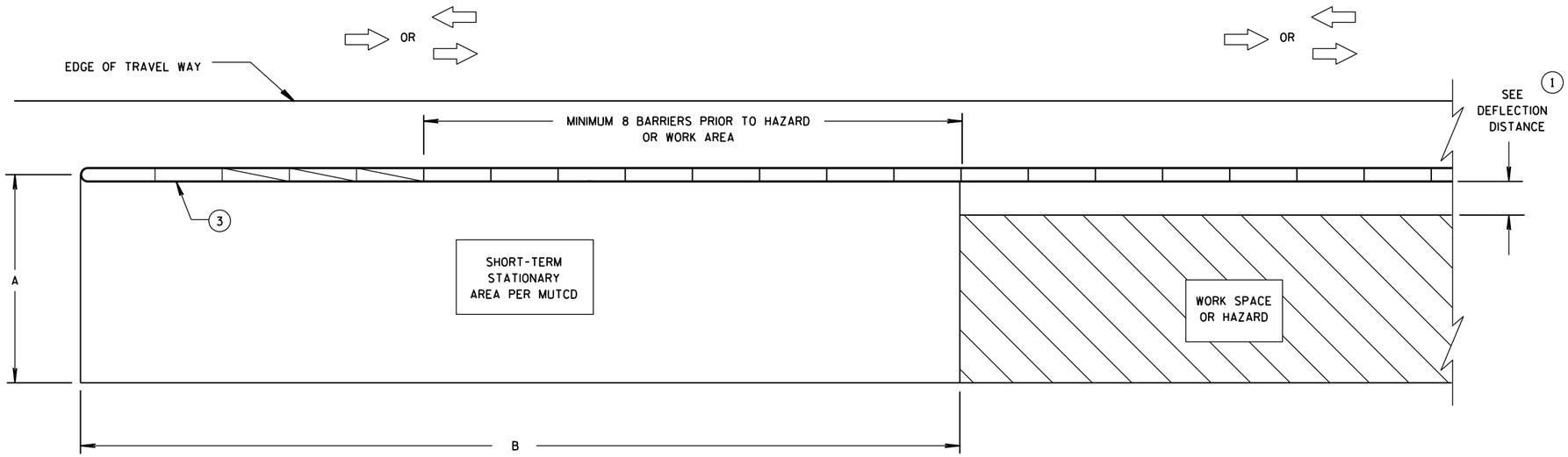

CRASH CUSHION/SAND BARREL ARRAY AND TEMPORARY BARRIER INSTALLATION FOR TRAFFIC ON ONE SIDE OF BARRIER

DIMENSION A TABLE (2)

FACILITY	POSTED SPEED MPH	DIMENSION A MIN. FT	DIMENSION A MAX. FT
FREEWAY/EXPRESSWAY	ALL	15	20
NON-FREEWAY/EXPRESSWAY	GREATER THAN OR EQUAL TO 45	10	15
NON-FREEWAY/EXPRESSWAY	LESS THAN 45	8	10
AADT LESS THAN 1,500	ALL	8	10

DIMENSION B TABLE (2)

POSTED SPEEDS MPH	DIMENSION B FT
20	115
25	155
30	200
35	250
40	305
45	360
50	425
55	495
60	570
65	645

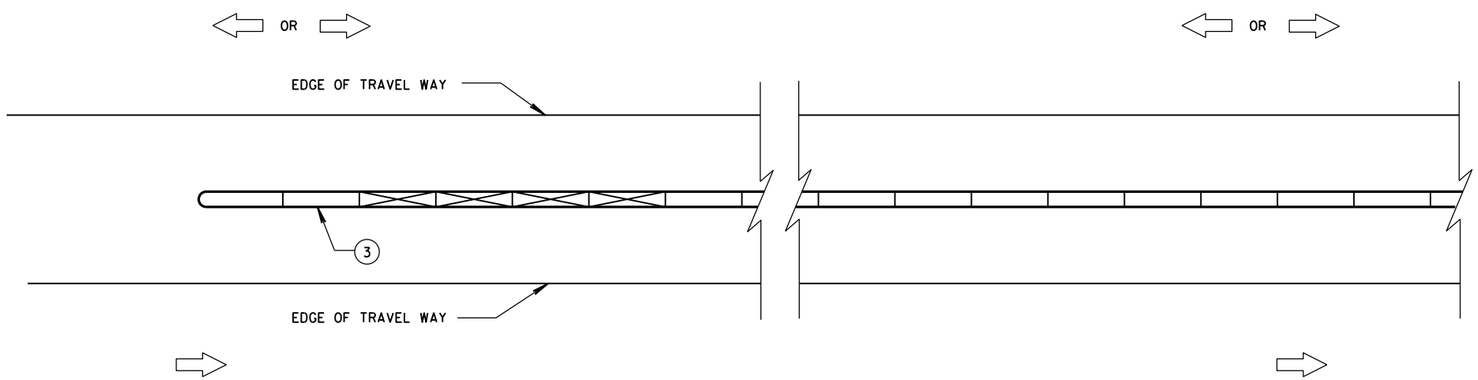

CRASH CUSHION/SAND BARREL ARRAY AND TEMPORARY BARRIER INSTALLATION FOR TRAFFIC ON BOTH SIDES OF BARRIER

LEGEND

- DIRECTION OF TRAVEL
- CRASH CUSHION OR SAND BARREL ARRAY
- SEE FREE STANDING TRANSITION TO TIED-DOWN SYSTEM DETAILS
- SEE BI-DIRECTIONAL TRANSITION TO TIED-DOWN SYSTEM DETAILS
- 3 PINS PLACED ON TRAFFIC SIDE OF BARRIER
- PERMANENT CONCRETE BARRIER OR CONCRETE PARAPET
- FREE STANDING TEMPORARY BARRIER

GENERAL NOTES

SEE STANDARD DETAIL DRAWING 14B7 FOR MORE INFORMATION.

DETAILS PROVIDE A GENERAL LAYOUT OF TEMPORARY CONCRETE BARRIER, CRASH CUSHIONS, SAND BARREL ARRAYS AND TIE DOWN TRANSITIONS. DETAILS PROVIDED MAY NOT FIT ALL POSSIBLE SITUATIONS OR SITE CONDITIONS. SEE OTHER SECTIONS OF THE CONTRACT OR PROJECT ENGINEER FOR MORE DETAILS.

ADDITIONAL TEMPORARY BARRIER MAY BE REQUIRED TO PROTECT TRAVELING PUBLIC FROM HAZARDS, CONTRACTOR'S OPERATIONS OR TO CONTROL TRAFFIC.

TEMPORARY BARRIER MAY BE REQUIRED TO BE ANCHORED TO PAVEMENT OR BRIDGE DECK.

FOR DETAILS ON CRASH CUSHION OR SAND BARREL ARRAYS SEE OTHER SECTIONS OF THE PLAN AND MANUFACTURE'S DETAILS.

SLOPES LEADING TO TEMPORARY BARRIER, CRASH CUSHION OR SAND BARREL ARRAY ARE 10:1 OR LESS.

(1) FOR DEFLECTION INFORMATION SEE STANDARD DETAIL DRAWING 14B7.

(2) VALUES PROVIDED MAY NOT FIT ALL POSSIBLE SITUATIONS OR SITE CONDITIONS. SEE OTHER SECTIONS OF THE CONTRACT OR PROJECT ENGINEER FOR MORE DETAILS.

(3) ANCHOR TEMPORARY BARRIER ACCORDING TO CRASH CUSHION OR SAND BARREL MANUFACTURER'S RECOMMENDATIONS. IF MANUFACTURER'S RECOMMENDATIONS ARE NOT PROVIDED, ANCHOR 3 PINS ON TRAFFIC SIDE.

CRASH CUSHION/SAND BARREL ARRAY AND OTHER TEMPORARY BARRIER LAYOUT DETAILS

STATE OF WISCONSIN
DEPARTMENT OF TRANSPOR

6

S.D.D. 14 B 8-2a

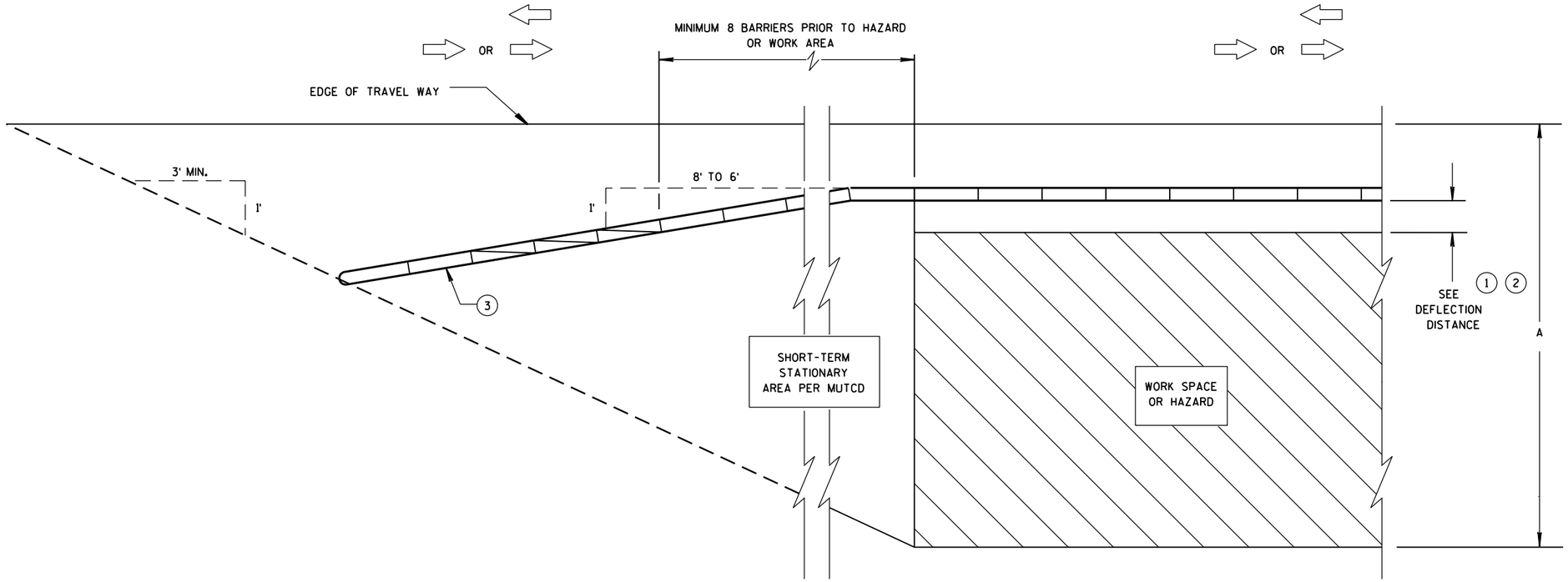

CRASH CUSHION/SAND BARREL ARRAY AND TEMPORARY BARRIER INSTALLATION FOR TRAFFIC ON ONE SIDE - FLARED INSTALLATION

6

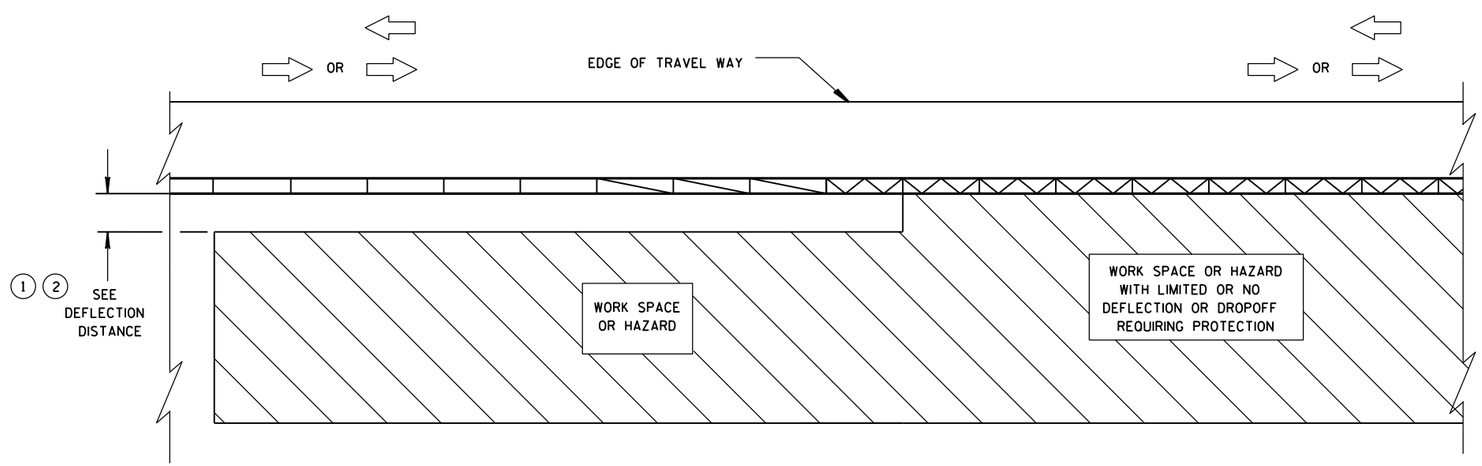

TRANSITION FROM FREE STANDING TEMPORARY BARRIER TO ANCHORED BARRIER

LEGEND

- DIRECTION OF TRAVEL
- CRASH CUSHION OR SAND BARREL ARRAY
- SEE FREE STANDING TRANSITION TO TIED-DOWN SYSTEM DETAILS
- SEE BI-DIRECTIONAL TRANSITION TO TIED-DOWN SYSTEM DETAILS
- 3 PINS PLACED ON TRAFFIC SIDE OF BARRIER
- PERMANENT CONCRETE BARRIER OR CONCRETE PARAPET
- FREE STANDING TEMPORARY BARRIER

CRASH CUSHION/SAND BARREL ARRAY AND OTHER TEMPORARY BARRIER LAYOUT DETAILS

STATE OF WISCONSIN
DEPARTMENT OF TRANSPOI

S.D.D. 14 B 8-2b

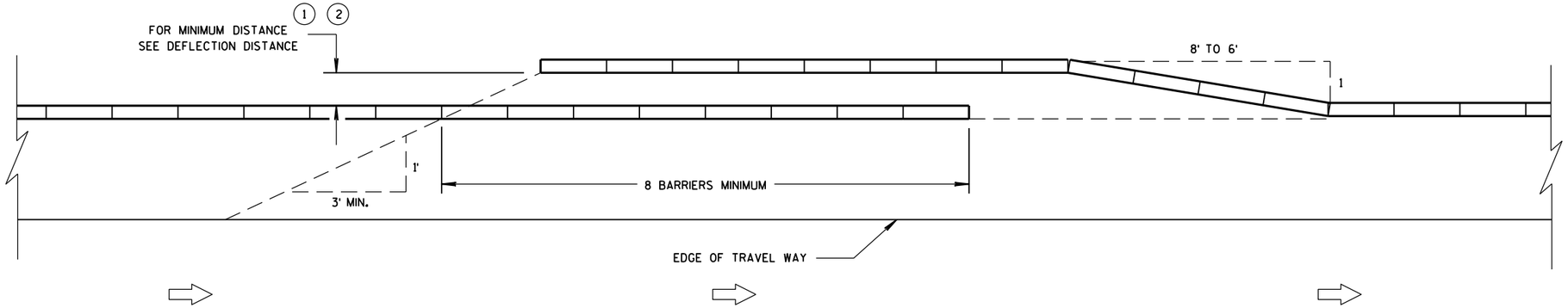

TEMPORARY BARRIER OVERLAP - ONE-WAY TRAFFIC

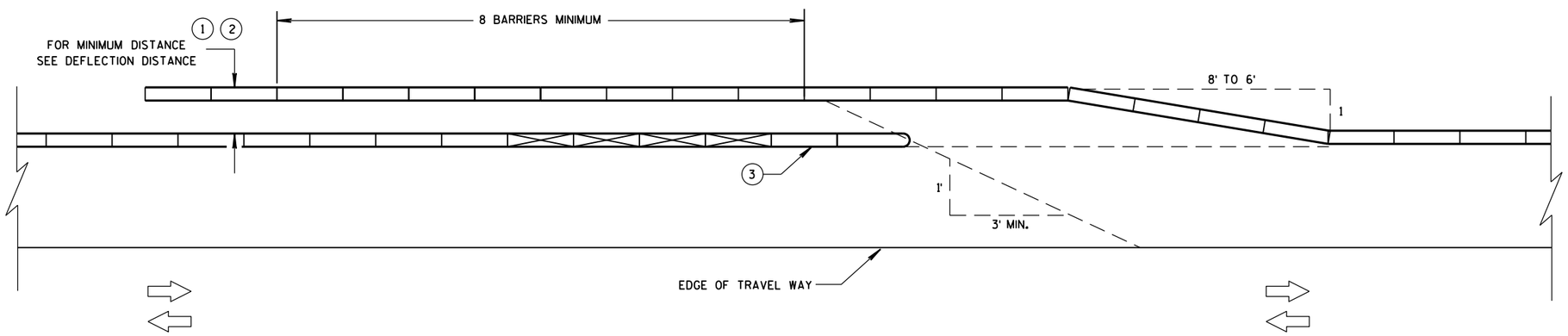

TEMPORARY BARRIER OVERLAP - TWO-WAY TRAFFIC

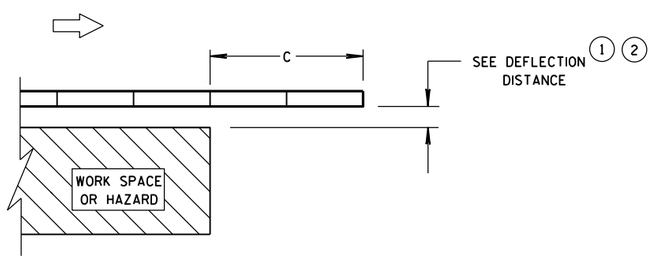

ENDING TEMPORARY BARRIER DOWNSTREAM - UNANCHORED

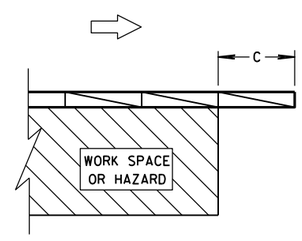

ENDING TEMPORARY BARRIER DOWNSTREAM - ANCHORED

LEGEND

- DIRECTION OF TRAVEL
- CRASH CUSHION OR SAND BARREL ARRAY
- SEE FREE STANDING TRANSITION TO TIED-DOWN SYSTEM DETAILS
- SEE BI-DIRECTIONAL TRANSITION TO TIED-DOWN SYSTEM DETAILS
- 3 PINS PLACED ON TRAFFIC SIDE OF BARRIER
- PERMANENT CONCRETE BARRIER OR CONCRETE PARAPET
- FREE STANDING TEMPORARY BARRIER

CRASH CUSHION/SAND BARREL ARRAY AND OTHER TEMPORARY BARRIER LAYOUT DETAILS

STATE OF WISCONSIN
DEPARTMENT OF TRANSPO

6

6

S.D.D. 14 B 8-2c

S.D.D. 14 B 8-2c

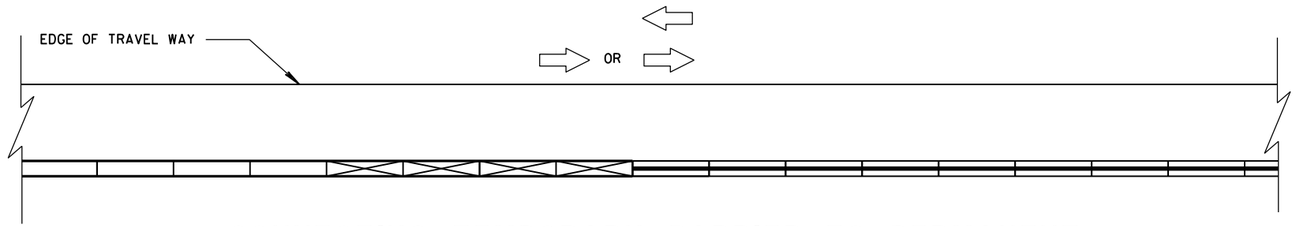

CONNECTING TEMPORARY BARRIER TO PERMANENT
CONCRETE BARRIER-TRAFFIC ON ONE SIDE

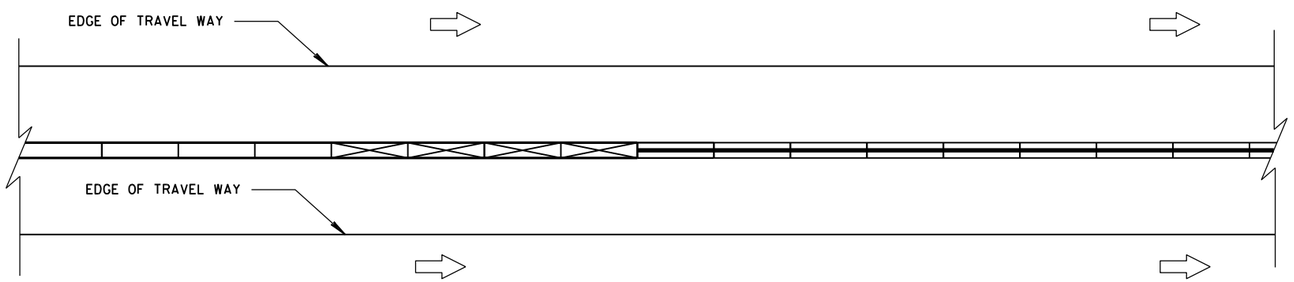

CONNECTING TEMPORARY BARRIER TO PERMANENT
CONCRETE BARRIER-TRAFFIC ON BOTH SIDES

LEGEND

DIRECTION OF TRAVEL

CRASH CUSHION OR
SAND BARREL ARRAY

SEE FREE STANDING TRANSITION
TO TIED-DOWN SYSTEM DETAILS

SEE BI-DIRECTIONAL TRANSITION
TO TIED-DOWN SYSTEM DETAILS

3 PINS PLACED ON
TRAFFIC SIDE OF BARRIER

PERMANENT CONCRETE BARRIER
OR CONCRETE PARAPET

FREE STANDING TEMPORARY
BARRIER

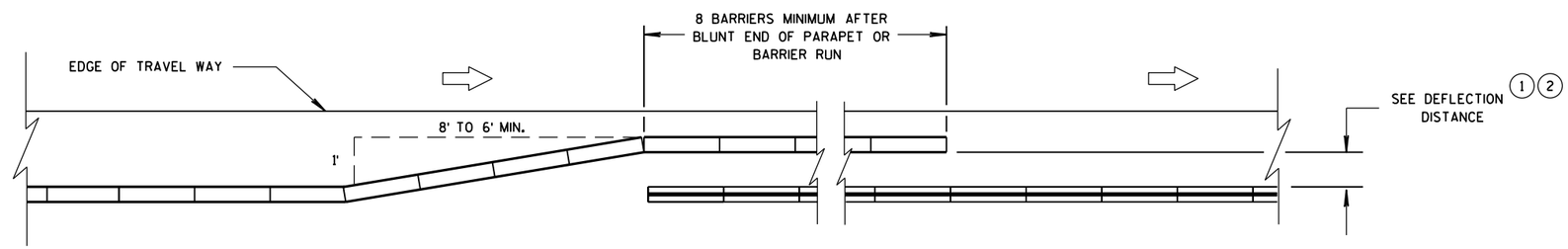

OVERLAPPING TEMPORARY BARRIER AND PERMANENT BARRIER -
ONE WAY TRAFFIC

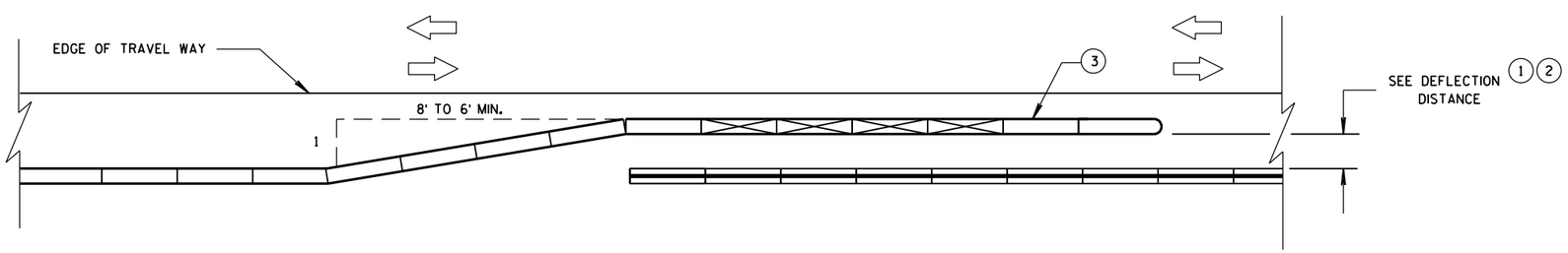

OVERLAPPING TEMPORARY BARRIER AND PERMANENT BARRIER -
TWO WAY TRAFFIC

CRASH CUSHION/SAND BARREL
ARRAY AND OTHER TEMPORARY
BARRIER LAYOUT DETAILS

STATE OF WISCONSIN
DEPARTMENT OF TRANSPORTATION

6

S.D.D. 14 B 8-2d

LEGEND

DIRECTION OF TRAVEL

CRASH CUSHION OR SAND BARREL ARRAY

SEE FREE STANDING TRANSITION TO TIED-DOWN SYSTEM DETAILS

SEE BI-DIRECTIONAL TRANSITION TO TIED-DOWN SYSTEM DETAILS

3 PINS PLACED ON TRAFFIC SIDE OF BARRIER

PERMANENT CONCRETE BARRIER OR CONCRETE PARAPET

FREE STANDING TEMPORARY BARRIER

DIMENSION C TABLE (2)

AVAILABLE DEFLECTION DISTANCE	MINIMUM LENGTH OF BARRIER BEYOND HAZARD FT
GREATER THAN 8'	12.5
LESS THAN OR EQUAL TO 8' BUT GREATER THAN 4'	50
LESS THAN OR EQUAL TO 4'	100

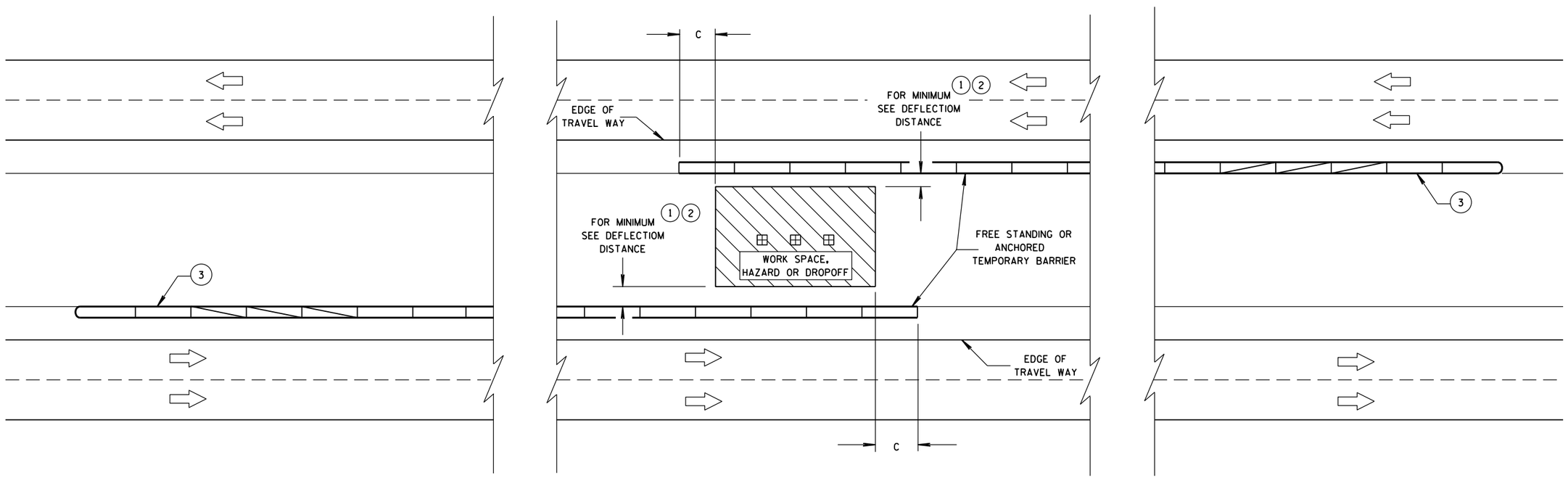

CRASH CUSHION/SAND BARREL ARRAY AND OTHER TEMPORARY BARRIER LAYOUT DETAILS

STATE OF WISCONSIN
DEPARTMENT OF TRANSPORTATION

APPROVED
June, 2015 — DATE
/S/ Jerry H. Zogg — ROADWAY STANDARDS DEVELOPMENT ENGINNER
FHWA

6

S.D.D. 14 B 8-2e

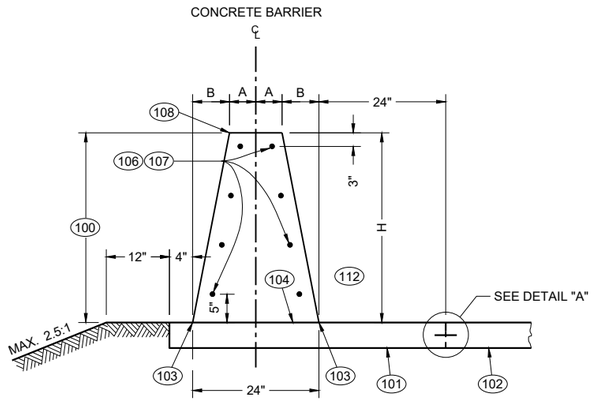

32 - INCH, 36 - INCH OR 42 - INCH SINGLE SLOPE CONCRETE BARRIER

(TYPE S32, TYPE S36, TYPE S42)

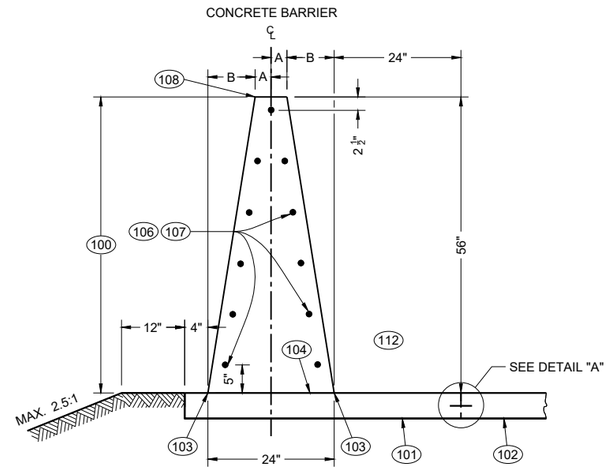

56 - INCH SINGLE SLOPE CONCRETE BARRIER

(TYPE S56)

TABLE "A"

BARRIER HEIGHT H INCHES	A INCHES	B INCHES	NUMBER OF NO. 5 BARS EACH
32	7	5	8
36	6 ¼	5 ¾	8
42	5 ¼	6 ¾	10
56	3	9	11

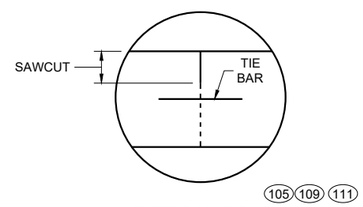

DETAIL "A"

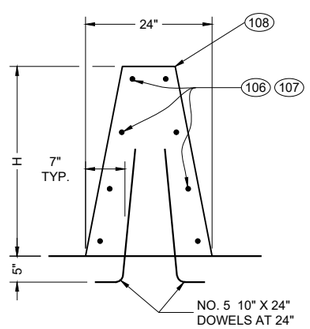

SINGLE SLOPE CONCRETE BARRIER ON BRIDGE

(NON OUTER PARAPET APPLICATION)

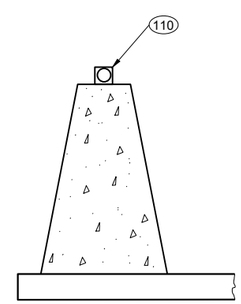

DELINEATION

GENERAL NOTES

WHERE THE CONCRETE BARRIER IS ADDED TO THE FACE OF EXISTING CONCRETE STRUCTURE, MATCH EXISTING WEEP HOLES.

LOCATE EXPANSION JOINTS IN CONCRETE BARRIER SHALL AT ALL DECK AND PRINCIPAL WALL JOINTS. FILL EXPANSION JOINT WITH EXPANSION JOINT MATERIAL. SEAL THE EXPANSION JOINT CONFORMING TO STANDARD SPECIFICATION 415.2.6.

PLACE BARRIER PERPENDICULAR TO SHOULDER GRADE, UNLESS INDICATED IN PLAN.

4000 PSI CONCRETE AIR ENTRAINMENT PER STANDARD SPECIFICATION 501.

2" CLEAR COVER TYPICAL

ANCHORS ARE REQUIRED AT CONCRETE BARRIER ENDS AND AT INTERRUPTIONS IN CONCRETE BARRIER. ANCHOR MAY BE AS SHOWN IN THIS SDD OR DETAIL SHOWN ON SDD 14B33. ANCHORS INCIDENTAL TO CBSS.

PROVIDE A 1" DEEP CONTRACTION JOINT IN BARRIER PAD AND BARRIER. JOINT IS TO MATCH ADJACENT CONCRETE JOINTS. NO DOWEL BARS ARE REQUIRED FOR BARRIER PAD. IF ADJACENT TO ASPHALT, CONTRACTION JOINT IS REQUIRED EVERY 15'.

ALL REBAR SHALL BE EPOXY COATED M31 TYPE S. SEE STANDARD SPECIFICATION 505.

CONCRETE BARRIER, UPPER CONCRETE BARRIER, LOWER CONCRETE BARRIER, CONCRETE BARRIER PAD, AND FOOTINGS ARE TERMS USED TO DESCRIBE PARTS OF SINGLE SLOPE CONCRETE BARRIER BID ITEMS. THESE PARTS ARE INCIDENTAL TO THE SINGLE SLOPE CONCRETE BARRIER BID ITEMS.

100 CONCRETE BARRIER

101 CONCRETE BARRIER PAD

102 PAVEMENT

103 WHERE VERTICAL ROADWAY OFFSET IS GREATER THAN 1 ½", USE TYPE A SINGLE SLOPE BARRIER.

104 OPTIONAL CONSTRUCTION JOINT.

105 CONSTRUCTION JOINTS MAY BE ELIMINATED WHEN CONCRETE SHOULDER IS LESS THAT 10'.

106 STAGGER LAPPING OF LONGITUDINAL STEEL. MINIMUM OVERLAP OF STEEL IS 2' BARS AT LAPS TO BE FIRMLY TIED OR CONNECTED.

107 NO. 5 CONTINUOUS BARS EVENLY SPACED (SEE TABLE "A").

108 USE ¾" BEVEL OR 1" RADIUS ON ALL EXPOSED SHARP EDGES UNLESS OTHERWISE NOTED.

109 CONCRETE BARRIER PAD UNDER CBSS MAY BE PLACED SEPARATELY OR PLACED WITH CONCRETE SHOULDER AND SAWED ⅓ DEPTH. CONCRETE BARRIER PAD AND SAWING OF CONCRETE SHOULDER IS INCIDENTAL TO CONCRETE BARRIER BID ITEM. CONCRETE BARRIER PAD MINIMUM DEPTH IS 6", OR EQUAL TO THE DEPTH OF THE CONCRETE SHOULDER.

110 SEE SDD 15A04 FOR DELINEATOR DETAILS AND SPACING.

111 SEE SDD 13C01 FOR DETAILS TYPING CONCRETE BARRIER TO ADJACENT CONCRETE

112 TRAFFIC SIDE

CONCRETE BARRIER SINGLE SLOPE (CBSS)

STATE OF WISCONSIN
DEPARTMENT OF TRANSPORTATION

6

SDD 14B32-11a

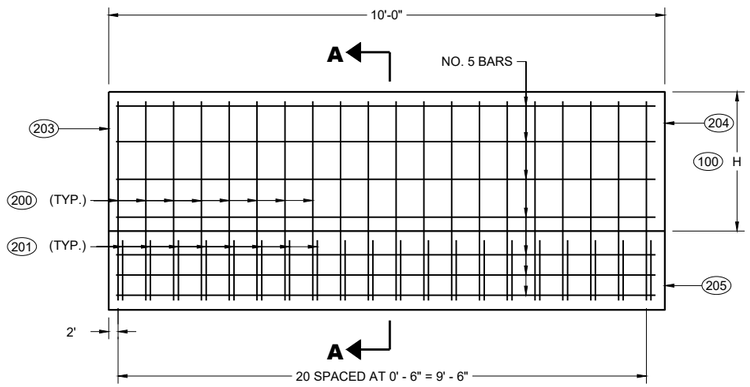

END ANCHOR SINGLE SLOPE CONCRETE BARRIER

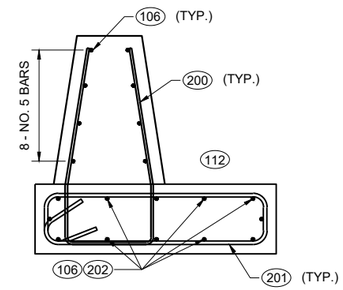

32" AND 36" CBSS

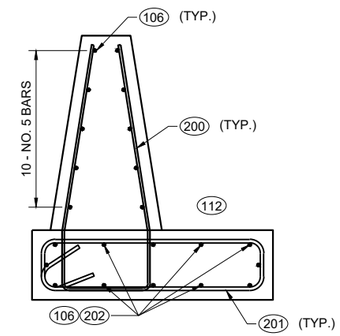

42" CBSS

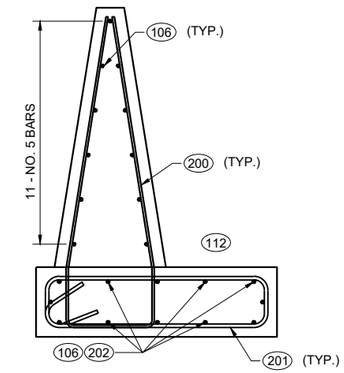

56" CBSS

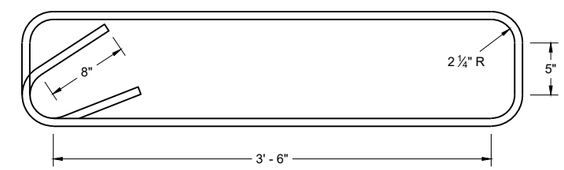

STIRRUP BAR BENDING DETAIL

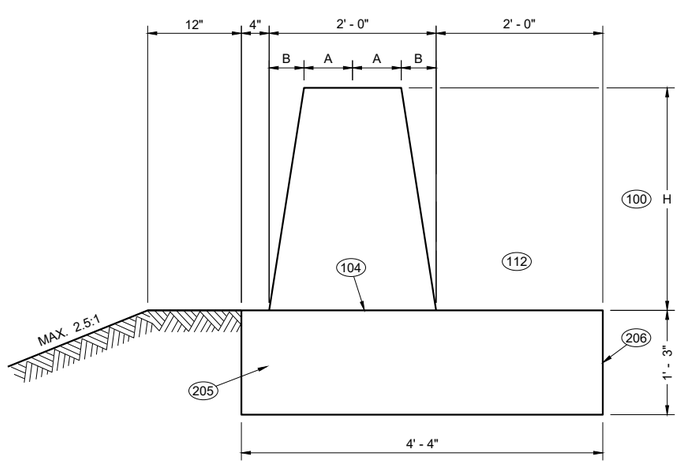

SECTION A - A

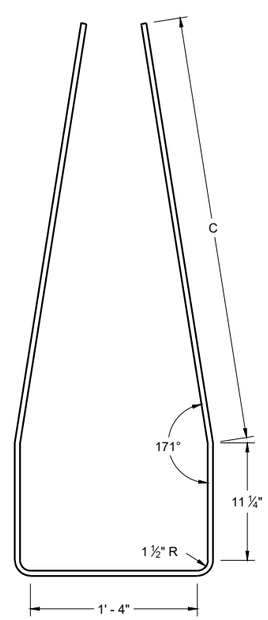

V1 BAR BENDING DETAIL

TABLE "B"

BARRIER HEIGHT H INCHES	C INCHES
32	2' - 6"
36	2' - 11"
42	3' - 4"
56	4' - 6 ½"

GENERAL NOTES

200 V1 BARS ARE NO. 5 BARS. (SEE BAR BENDING DETAIL)

201 STIRRUPS ARE NO. 6 BARS. (SEE BAR BENDING DETAIL)

202 TWELVE (12) NO. 5 BARS EVENLY SPACED

203 END OF INSTALLATION OR EXPANSION JOINT.

204 SEE COLD JOINT DETAIL TO CONNECT END ANCHOR SINGLE SLOPE CONCRETE BARRIER TO SINGLE SLOPE CONCRETE BARRIER.

205 FOOTING

206 DO NOT TIE TO FOOTING TO ADJACENT PAVEMENT.

CONCRETE BARRIER SINGLE SLOPE (CBSS)

STATE OF WISCONSIN
DEPARTMENT OF TRANSPORTATION

6

SDD 14B32-11b

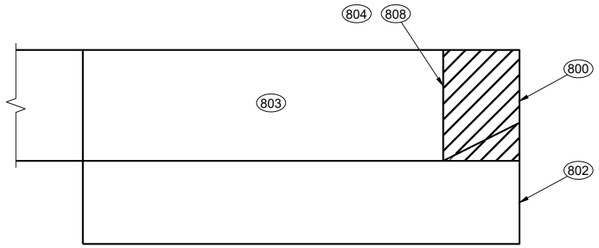

REMOVAL AREA OF
32" CONCRETE THRIE BEAM ANCHORAGE

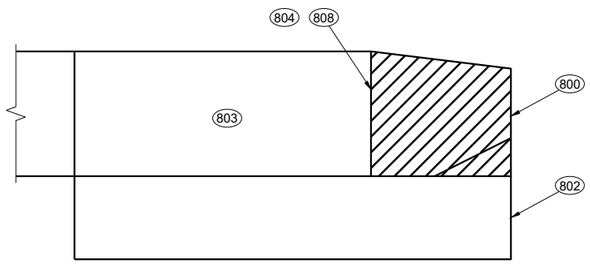

REMOVAL AREA OF CONCRETE THRIE BEAM
ANCHORAGE WITH HEIGHT GREATER THAN 32"

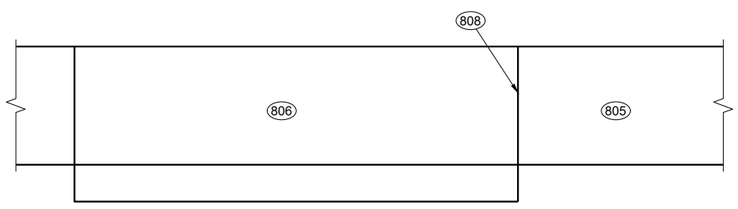

CONCRETE BARRIER EXTENSION NEAR END ANCHORAGE

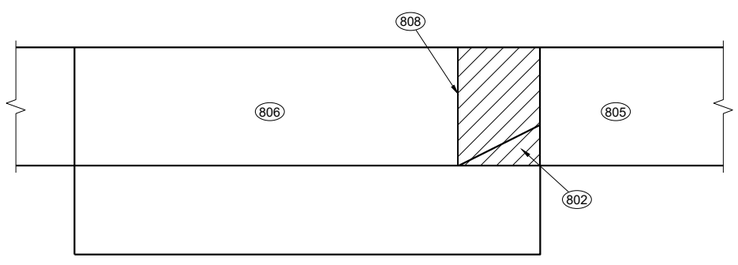

CONCRETE BARRIER EXTENSION NEAR THRIE BEAM TERMINAL

GENERAL NOTES

END ANCHORAGE MAY OR MAY NOT BE PRESENT ON EXISTING BARRIER.

REMOVE THRIE BEAM ANCHORAGE AS SHOWN.

800 AREA OF BARRIER REMOVAL AN NEW CONCRETE AND STEEL IS INSTALLED.

801 MINIMUM LENGTH OF REMOVAL IS 15'

802 FOOTING BELOW GROUND MAY REMAIN IN PLACE.

803 CONCRETE BARRIER SINGLE SLOPE THRIE BEAM ANCHOR TO REMAIN.

804 SAW CUT

805 NEW SINGLE SLOPE CONCRETE BARRIER.

806 CONCRETE BARRIE SINGLE SLOPE TO REMAIN.

807 SINGLE SLOPE CONCRETE BARRIER OR CONCRETE BARRIER SINGLE SLOPE THRIE BEAM ANCHOR TO REMAIN.

808 SEE CONNECTION DETAIL.

809 NO. 5 CONTINUOUS BAR.

810 3' MIN. DRILL HOLES. USES NO. 5 ADHESIVE ANCHORS.

811 THE NUMBER OF DRILL HOLES IS EQUAL TO THE NUMBER OF HORIZONTAL REBAR IN BARRIER. DRILL HOLES ARE TO BE A MINIMUM OF 4" FROM EDGE OF CONCRETE.

812 EXISTING REBAR IN EXISTING BARRIER OR END ANCHOR.

813 3' BAR OVERLAP

814 EXISTING REINFORCEMENT

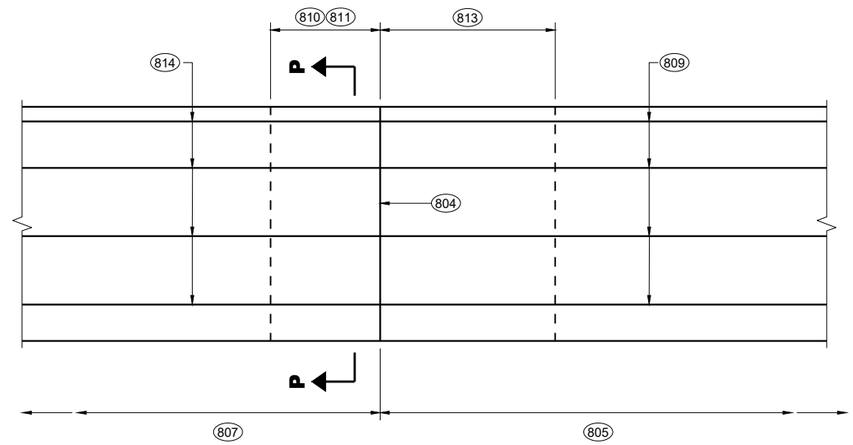

CONNECTION DETAIL

SINGLE SLOPE CONCRETE BARRIER TO
NEW SINGLE SLOPE CONCRETE BARRIER

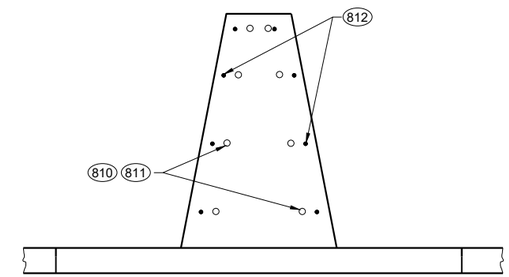

SECTION P - P

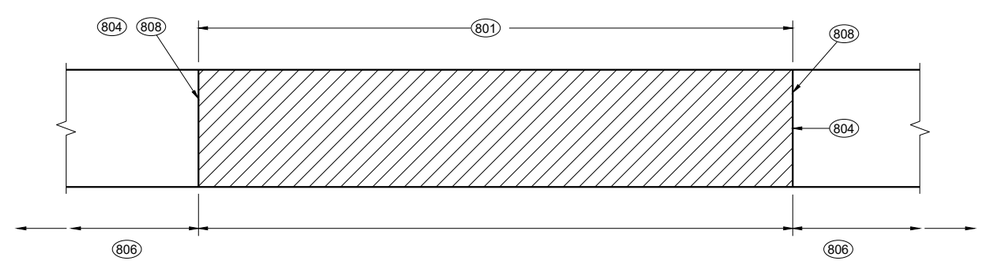

BARRIER REMOVAL AND REPLACEMENT

RETROFIT OR REPAIR SINGLE SLOPE CONCRETE BARRIER

CONCRETE BARRIER
SINGLE SLOPE (CBSS)

STATE OF WISCONSIN
DEPARTMENT OF TRANSPORTATION

APPROVED
November 2024 /S/ Rodney Taylor
DATE ROADWAY STANDARDS DEVELOPMENT ENGINEER

FHWA

6

SDD 14B32-11h

6

SDD 14B32-11h

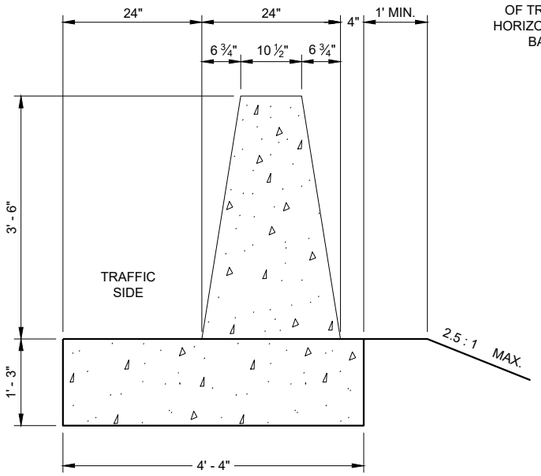

SECTION A - A

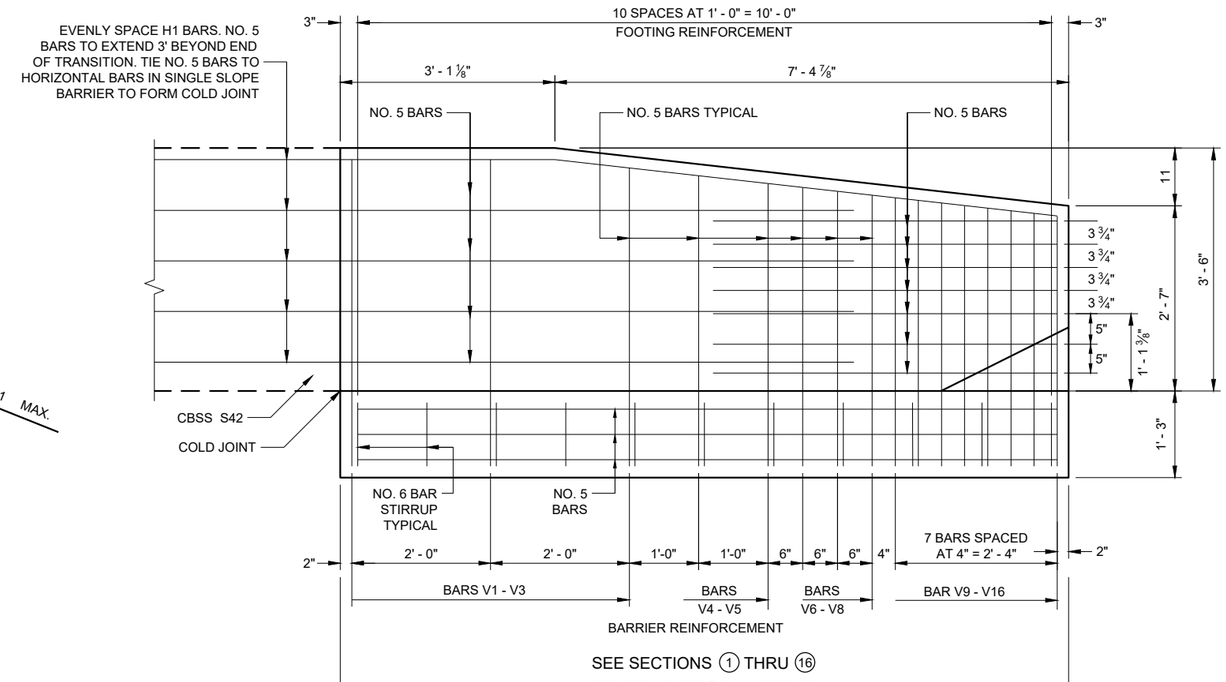

SEE SECTIONS ① THRU ⑯

ELEVATION VIEW

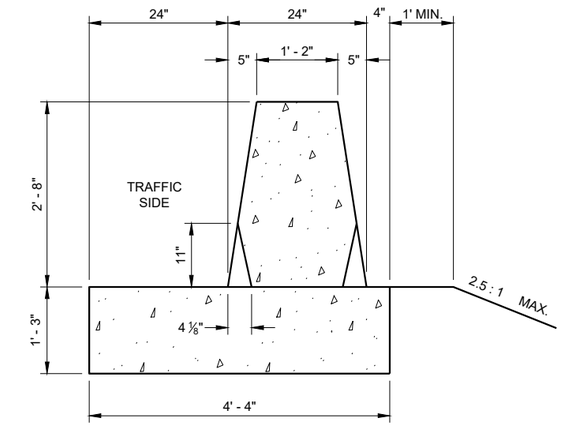

SECTION B - B

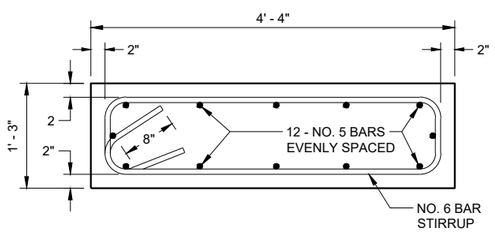

TYPICAL FOOTING

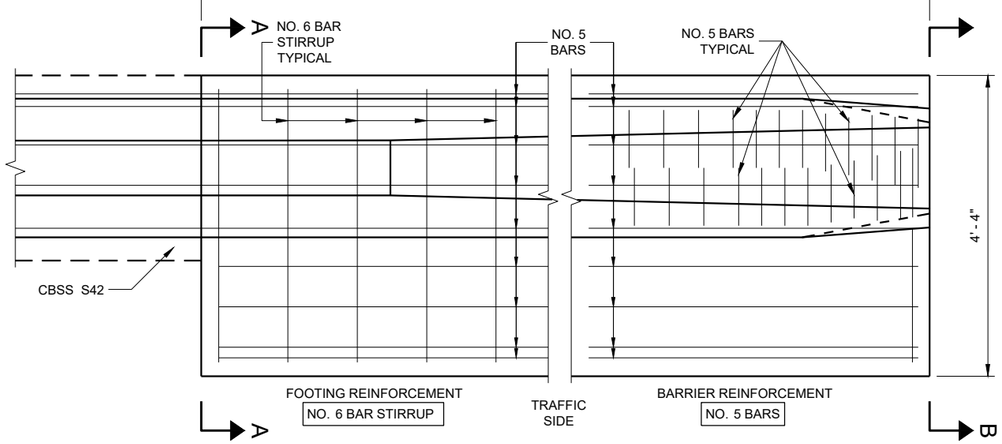

PLAN VIEW

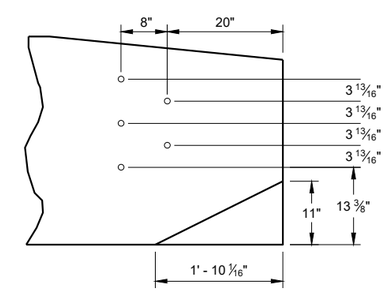

PVC PIPE LOCATIONS

GENERAL NOTES

CONSTRUCT PER STANDARD SPECIFICATION 603.

SPLICES OF LONGITUDINAL BARS TO BE 2' LONG AND FIRMLY TIED AND FASTENED TOGETHER UNLESS OTHERWISE NOTED.

4000 PSI CONCRETE AIR ENTRAINMENT PER STANDARD SPECIFICATIONS SECTION 501.

USE ¾" BEVEL OR 1" RADIUS ON ALL EXPOSED SHARP EDGES UNLESS OTHERWISE NOTED.

THRIE BEAM ANCHOR INCIDENTAL TO CONCRETE BARRIER ITEM.

INSTALL SCHEDULE 40 PVC PIPE 1" DIAMETER AT LOCATIONS INDICATED.

EXTEND PVC PIPE COMPLETELY THROUGH BARRIER.

CUT ENDS OF PVC PIPE FLUSH WITH FINISHED FACE OF BARRIER.

THE NUMBER IN BAR DESIGNATION REPRESENTS THE BARS LOCATION.

2" CLEAR COVER TYPICAL.

CONCRETE BARRIER SINGLE SLOPE 42" THRIE BEAM ANCHOR

STATE OF WISCONSIN
DEPARTMENT OF TRANSPORTATION

6

SDD 14B33 - 02g

BAR CHART
BAR POSITIONS
1 - 11

BAR	A
V1	3' - 4 ½"
V2	3' - 4 ½"
V3	3' - 2 ½"
V4	3' - 1"
V5	2' - 11 ½"
V6	2' - 11"
V7	2' - 10 ½"
V8	2' - 9 ½"
V9	2' - 9"
V10	2' - 8 ½"
V11	2' - 8"

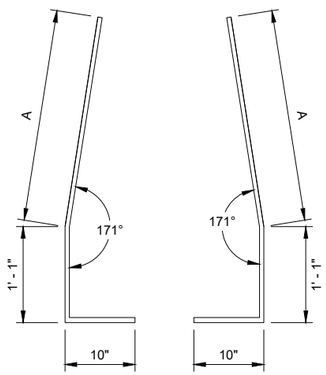

BAR BENDING DETAIL
SECTIONS V1 - V4

BAR CHART
BAR POSITIONS
12 - 13

BAR	A	B
V12	1' - 3"	2' - 6"
V13	1' - 8"	2' - 1 ½"

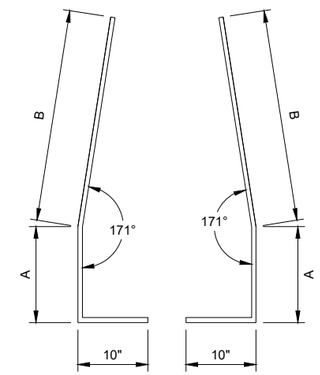

BAR BENDING DETAIL
SECTIONS V12 - V13

BAR CHART
BAR POSITIONS
14 - 16

BAR	A	B
V14	6"	2' - 1"
V15	8"	1' - 11"
V16	10"	1' - 8 ½"

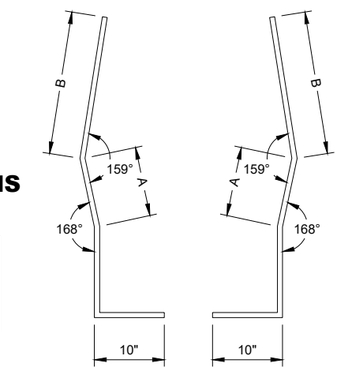

BAR BENDING DETAIL
SECTIONS V14 - V16

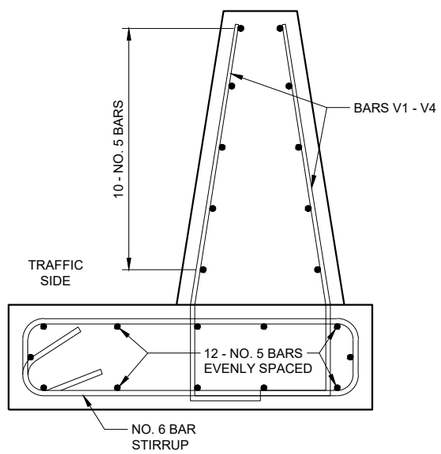

BAR DETAIL
SECTIONS 1 - 4

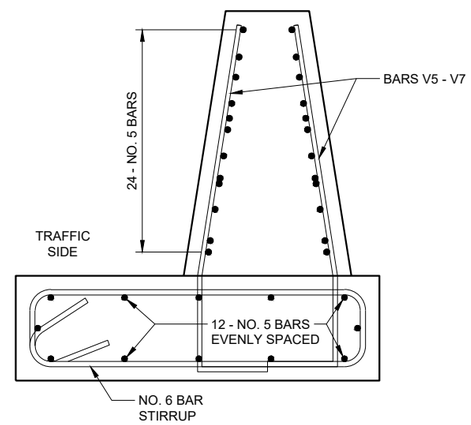

BAR DETAIL
SECTIONS 5 - 7

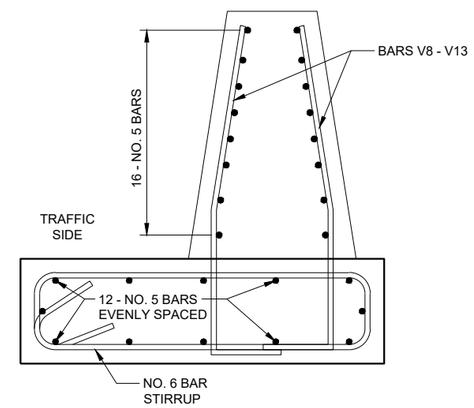

BAR DETAIL
SECTIONS 8 - 13

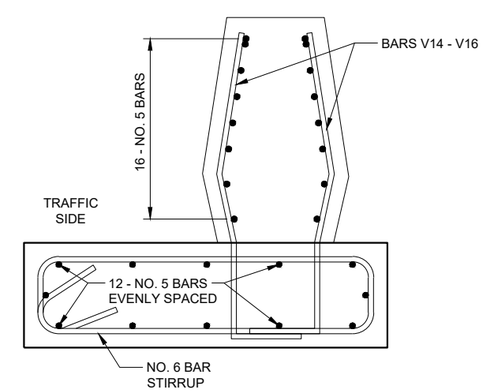

BAR DETAIL
SECTIONS 14 - 16

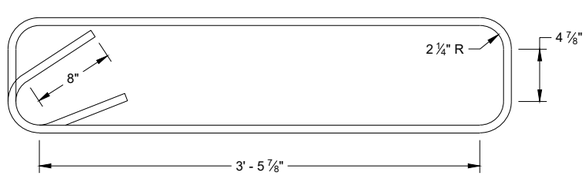

STIRRUP BAR
BENDING DETAIL

CONCRETE BARRIER
SINGLE SLOPE 42"
THRIE BEAM ANCHOR

STATE OF WISCONSIN
DEPARTMENT OF TRANSPORTATION

APPROVED
February 2020 — DATE
/S/ Rodney Taylor — ROADWAY STANDARDS DEVE ENGINEER
FHWA

6
SDD 14B33 - 02h

1. WOOD OR STEEL POSTS (w6X9 OR w6X8.5) MAY BE USED. DO NOT INTERMIX WOOD AND STEEL POSTS. INSTALL STEEL POSTS WITH HOLES ON APPROACHING TRAFFIC SIDE.
2. USE WOOD OR APPROVED PLASTIC BLOCKOUTS. WOOD BLOCKOUTS MAY BE CONSTRUCTED OUT OF TWO OR MORE WOOD BLOCKOUTS. SEE ALTERNATE WOOD BLOCKOUT DETAIL. DIMENSIONS OF APPROVED PLASTIC BLOCKOUTS MAY VARY.
3. IF ROCK IS ENCOUNTERED DURING EXCAVATION, PROVIDE A HOLE 12 INCHES IN DIAMETER EXTENDING 20 INCHES DEEP INTO THE ROCK. PLACE APPROXIMATELY 2 1/2" INCHES OF GRANULAR MATERIAL IN THE BOTTOM OF THE HOLE. CUT THE POSTS THE TO LENGTH AMD INSTALL. BACKFILL WITH EXCAVATED MATERIAL AND COMPACT. BACKFILL IS TO BE FREE OF LARGE ROCKS.
4. WHEN THE DISTANCE FROM BACK OF POST TO SHOULDER HINGE POINT IS LESS THAN 2 FEET INSTALL LONGER POST AT HALF POST SPACING (K).
5. FOR NEW MGS INSTALLATION TOP OF W-BEAM RAIL TOLERANCE IS ±1". FOR EXISTING MGS INSTALLATION TOP OF W-BEAM IS BETWEEN 27 ¾" TO 32".
6. WHEN USING STEEL POST AND WOOD BLOCKOUTS INSTALL FOUR 16D GALVANIZED NAILS. INSTALL NAILS AT THE BACK CORNERS OF THE BLOCK AND BEND THE NAILS OVER THE FLANGE OF THE STEEL POST.
7. TOTAL POST LENGTH FOR TYPE K IS 7' - 0". TOTAL POST LENGTH FOR OTHER MGS TYPES IS 6' - 0".

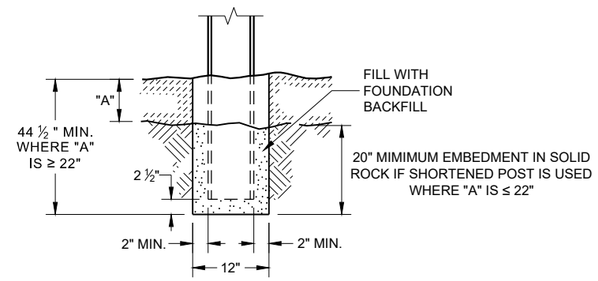

END VIEW
SETTING STEEL OR WOOD POST IN ROCK (3)

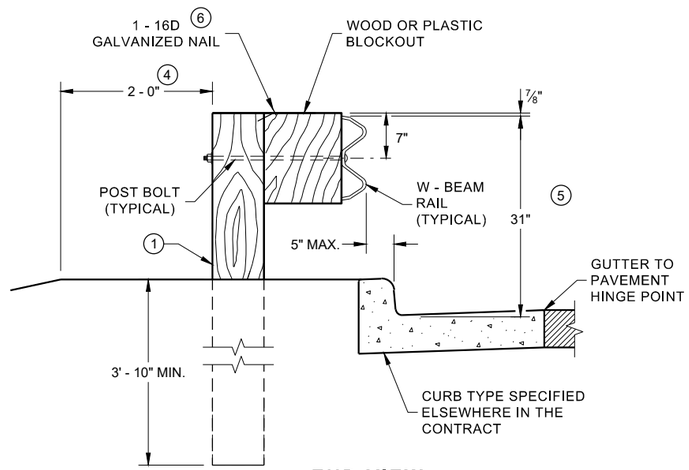

END VIEW
LOCATED ALONG A CURBED ROADWAY

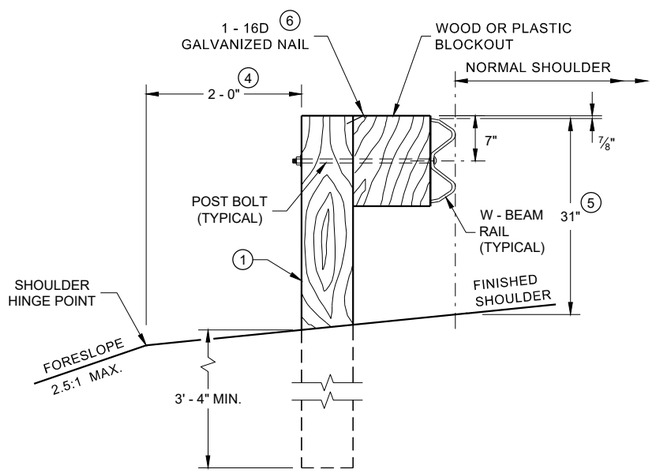

END VIEW
LOCATED ALONG A ROADWAY SHOULDER STANDARD INSTALLATION

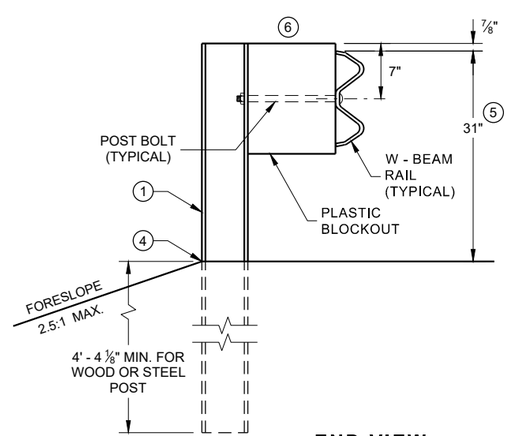

END VIEW
MGS LONGER POST AT HALFPOST SPACING W BEAM (K)

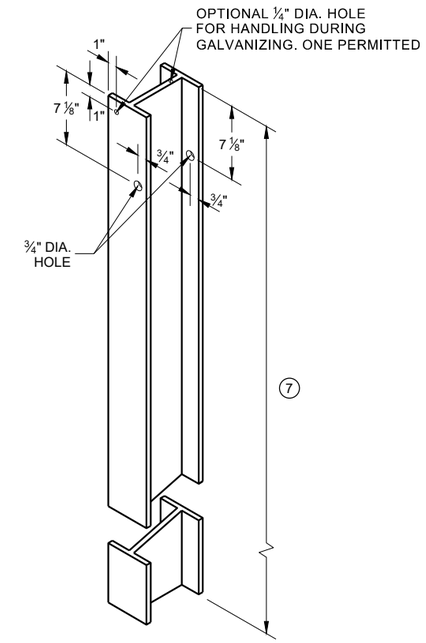

STEEL POST & HOLE PUNCHING DETAIL (W 6 X 9) (1)

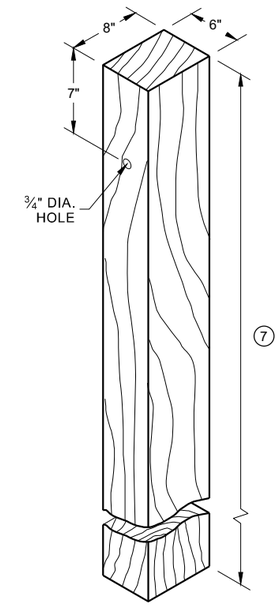

WOOD POST (6" X 8") NOMINAL (1)

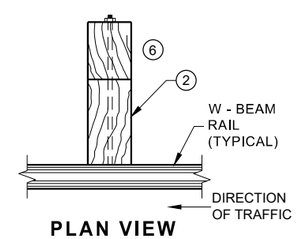

PLAN VIEW WOOD POST, BLOCKOUT & BEAM

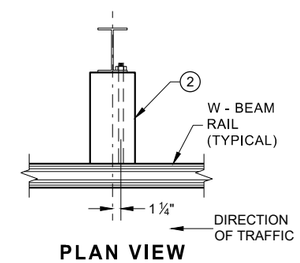

PLAN VIEW STEEL POST, PLASTIC BLOCKOUT & BEAM

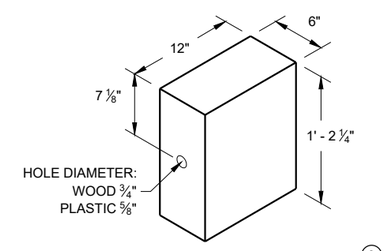

WOOD OR PLASTIC BLOCKOUT (2)

MIDWEST GUARDRAIL SYSTEM (MGS) GUARDRAIL

STATE OF WISCONSIN
DEPARTMENT OF TRANSPORTA

6

SDD 14B42 - 07a

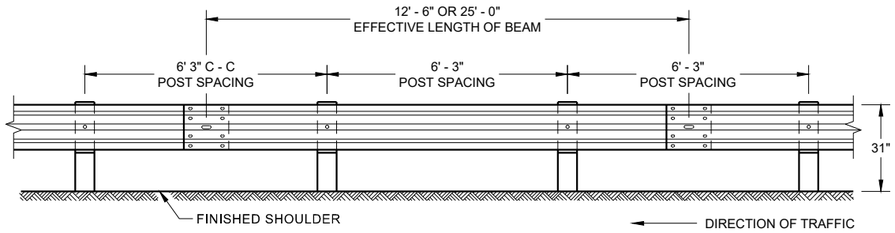

FRONT VIEW
POST SPACING STANDARD INSTALLATION

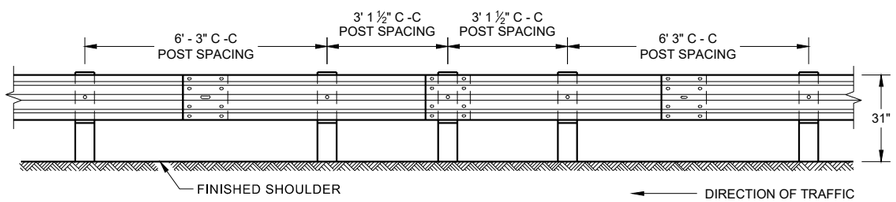

FRONT VIEW
HALF POST SPACING (HS) AND HALF POST SPACING WITH LONGER POSTS (K)

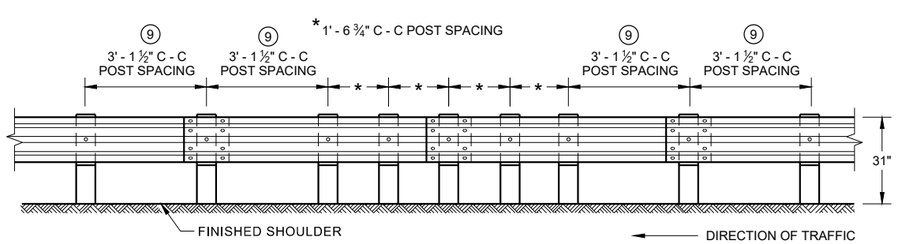

FRONT VIEW
QUARTER POST SPACING (QS)

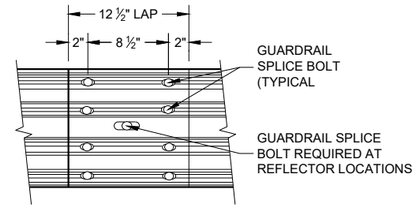

FRONT VIEW
MID-SPAN BEAM SPLICE

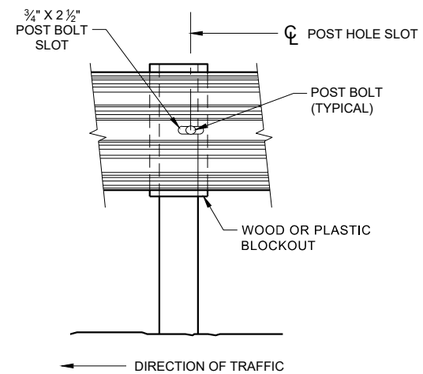

FRONT VIEW AT STEEL POST

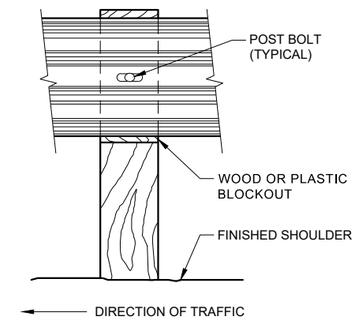

FRONT VIEW AT WOOD POST

GENERAL NOTES

8. DO NOT INSTALL REFLECTORS ON THE FIRST 50 FEET OF THE APPROACH END OF THE ENERGY ABSORBING TERMINAL.

9. 25 FEET OF HALF POST SPACING IS REQUIRED ON APPROACH AND DEPARTURE ENDS OF QUARTER POST SPACING.

POST BOLTS ARE A ⅝" DIAMETER ASTM A307 GUARDRAIL BOLT. A POST BOLT REQUIRES ⅝" DIAMETER A563A DOUBLE RECESSED (DR) HEAVY HEX NUT AND ⅝" DIAMETER F844 FLAT WASHER. POST BOLTS MAY BE LONGER IF MULTIPLE BLOCKOUTS ARE BEING USED.

GUARD RAIL SPLICE BOLTS ARE A ⅝" DIAMETER ASTM A307 GUARDRAIL HEAD BOLT. A GUARDRAIL SPLICE BOLT REQUIRES ⅝" DIAMETER A563A DOUBLE RECESSED (DR) HEAVY HEX NUT.

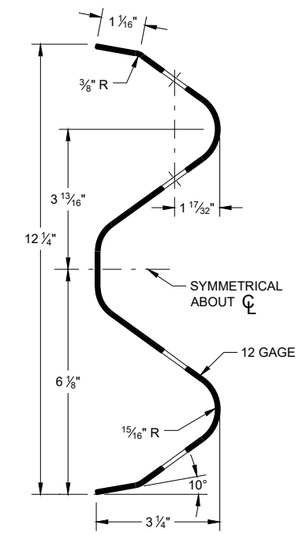

SECTION THRU W-BEAM RAIL

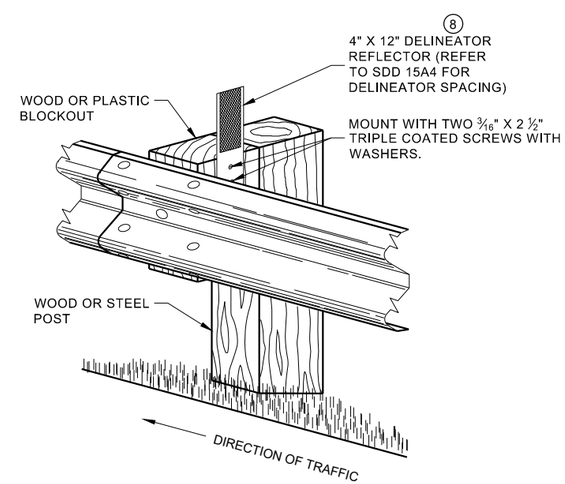

ONE SIDED REFLECTOR DETAIL AND TYPICAL INSTALLATION

MIDWEST GUARDRAIL SYSTEM (MGS) GUARDRAIL

STATE OF WISCONSIN
DEPARTMENT OF TRANSPORTAT

6

SDD 14B42 - 07b

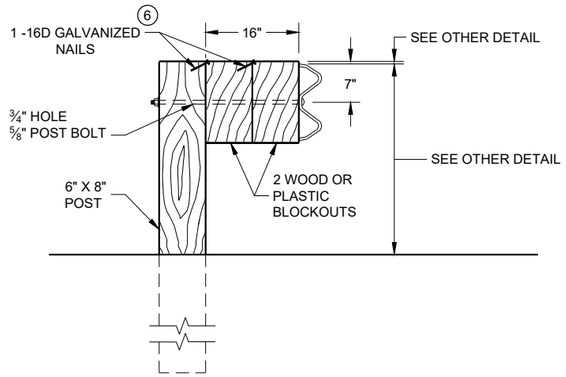

DETAIL FOR 16" BLOCKOUT DEPTH

IT IS ACCEPTABLE TO USE BLOCKOUTS UP TO 16" DEEP TO INCREASE THE POST OFFSET TO AVOID UNDERGROUND OBSTACLES. THERE IS NO LIMIT TO THE NUMBER OF POSTS THAT CAN HAVE ADDITIONAL BLOCKOUTS UP TO 16" DEEP.

NOTE:

1. ALL FILLETS SHALL HAVE A MINIMUM RADIUS OF 3/16".
2. IF THE BOLT EXTENDS MORE THAN ¼" FROM THE NUT THE BOLT SHOULD BE TRIMMED BACK.

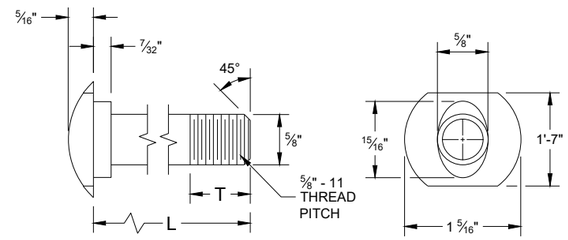

POST BOLT TABLE

L	T (MIN.)
1 ¼"	1 ⅛"
2"	1 ¾"
10"	4"
14"	4 1/16"
18"	4"
21"	4 1/16"
25"	4"

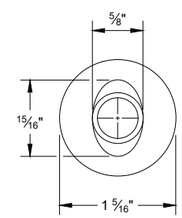

ALTERNATE BOLT HEAD

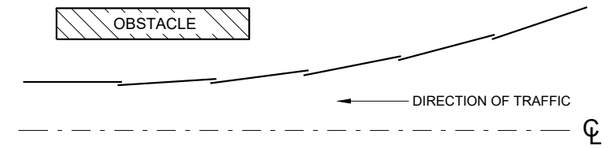

PLAN VIEW
BEAM LAPPING DETAIL

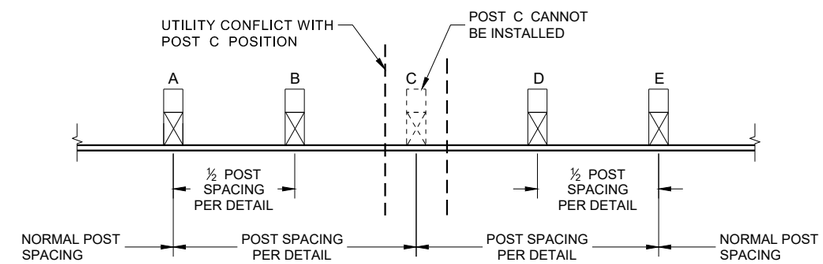

POST DRIVING FOR CONTINUOUS UNDERGROUND OBSTRUCTION

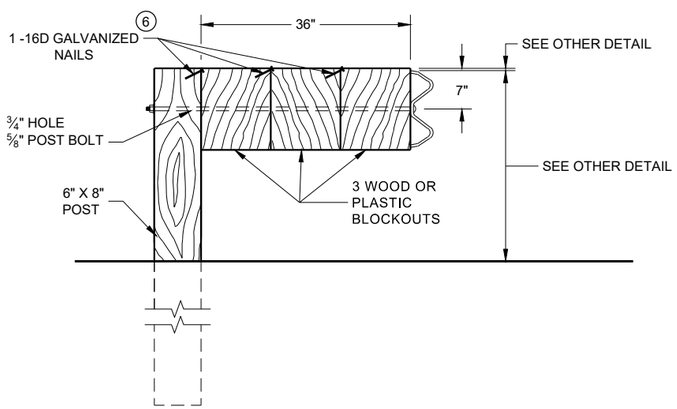

DETAIL FOR 36" BLOCKOUT DEPTH

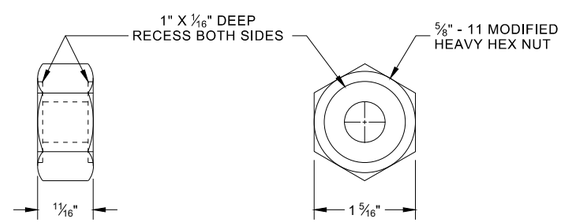

POST BOLT, SPLICE BOLT AND RECESS NUT

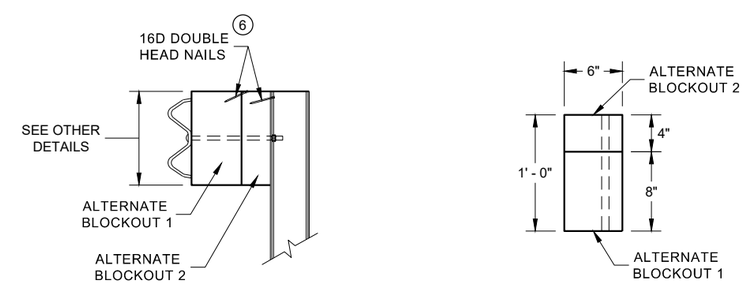

SIDE VIEW

PLAN VIEW

ALTERNATE WOOD BLOCKOUT DETAIL

NOTES: UNDER SPECIAL CIRCUMSTANCES, SUCH AS AVOIDING OBSTACLES THAT ARE NOT RELOCATED, IT IS ACCEPTABLE TO INSTALL ADDITIONAL BLOCKOUTS TO OBTAIN UP TO 36" DEPTH FOR ONE OR TWO POSTS IN A SECTION OF GUARDRAIL.

DO NOT USE 16" OR 36" BLOCKOUTS IF IT CAUSES THE POST TO BE DRIVEN BEYOND SHOULDER HINGE POINT OR CAUSES A FIXED OBJECT TO BE WITHIN THE DEFLECTION DISTANCE OF THE BARRIER.

(6) WHEN USING STEEL POST AD WOOD BLOCKOUTS, INSTALL FOUR 16D GALVANIZED NAILS. INSTALL NAILS AT THE BACK CORNERS OF THE BLOCK AND BEND THE NAILS OVER THE FLANGE OF THE STEEL POST.

MIDWEST GUARDRAIL SYSTEM (MGS) GUARDRAIL

STATE OF WISCONSIN
DEPARTMENT OF TRANSPORTA

6

SDD 14B42 - 07c

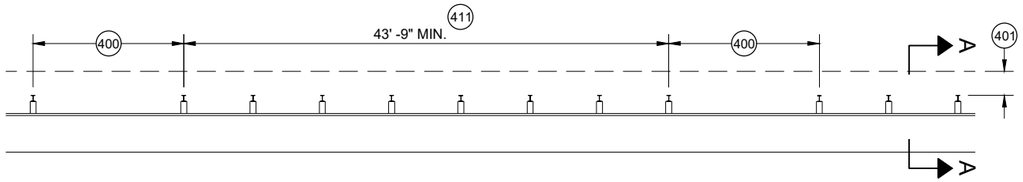

MISSING POST IN MGS GUARDRAIL

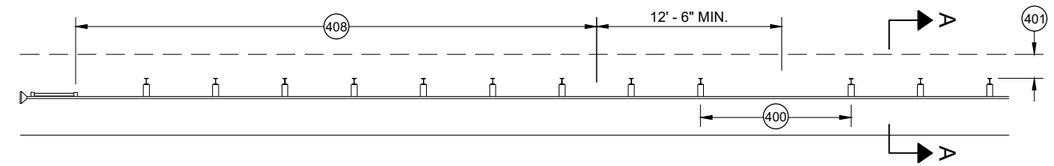

MISSING POST IN MGS GUARDRAIL NEAR EAT

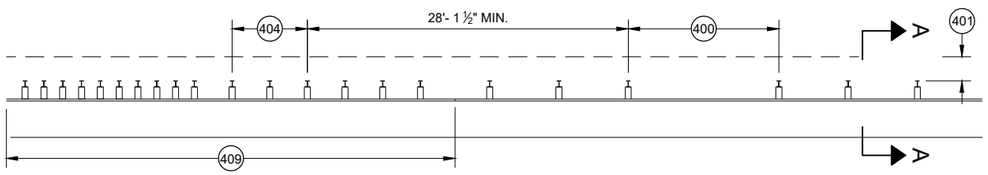

MISSING POST IN MGS GUARDRAIL NEAR AN APPROACH TRANSITION

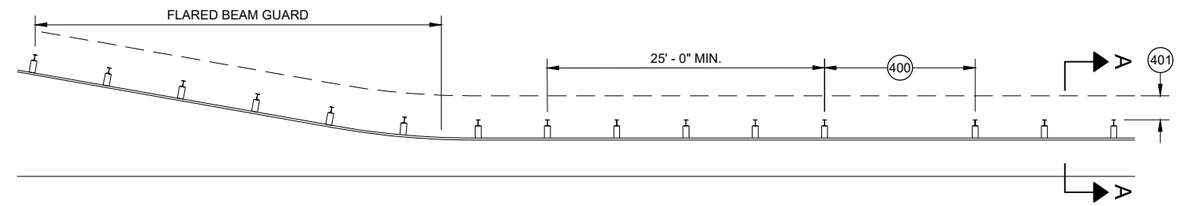

MISSING POST IN MGS GUARDRAIL NEAR FLARED BEAM GUARD

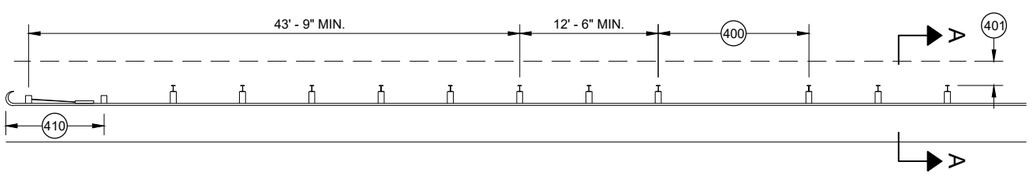

MISSING POST IN MGS GUARDRAIL NEAR A TYPE 2 END TERMINAL

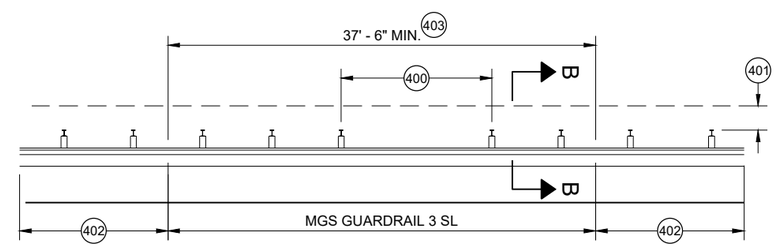

MISSING POST IN SHORT SPAN MGS GUARDRAIL NEAR CURB (SL) 407

400 MAX SPAN 12' - 6"
401 2' MIN.
402 MGS GUARDRAIL 3
403 NESTING BEAM GUARD
404 ASYMMETRIC TRANSITION
405 SOIL WELL DRAINED AND COMPACTED
406 SEE OTHER DRAWINGS IN THIS SDD
407 SEE OTHER DRAWINGS FOR MIN. SPACING BETWEEN SPANS
408 SEE SDD 14B44
409 SEE SDD 14B45
410 SEE SDD 14B47
411 MINIMUM DISTANCE BETWEEN MISSING POST SPANS.

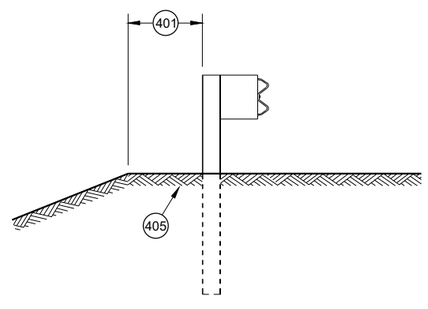

SECTION A - A 406

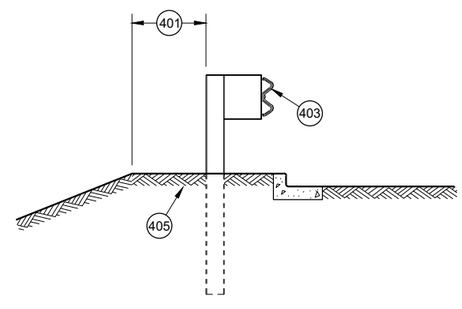

SECTION B - B 406

MIDWEST GUARDRAIL SYSTEM (MGS) GUARDRAIL

STATE OF WISCONSIN
DEPARTMENT OF TRANSPORTATION

APPROVED
May 2021 — DATE
/S/ Rodney Taylor — ROADWAY STANDARDS DEVE UNIT SUPERVISOR
FHWA

6

SDD 14B42 - 07d

GENERAL NOTES

(A) THE SLOPE IN THE AREA BOUNDED BY THE GRADELINE, THE HINGE POINT LINE (HPL) AND THE CLEAR ZONE LIMITS (CZL) SHALL BE 4:1 OR FLATTER.

(B) AFTER FINAL ASSEMBLY, RECHECK CABLE TO BE SURE IT IS TAUT AND HAS NOT RELAXED

(C) DIFFERENT MANUFACTURERS REQUIRE DIFFERENT PERFORATED W - BEAM RAIL END PANELS. SEE MANUFACTURER'S INFORMATION.

(D) ATTACH ALUMINUM SHEET TO E.A.T. HEAD USING 4 STAINLESS STEEL SELF - TAPPING SCREWS. ONE SCREW PER CORNER.

(E) HARDWARE MAY VARY BETWEEN MANUFACTURER. SEE MANUFACTURER'S DRAWING FOR INFORMATION.

DIMENSIONS MAY VARY, MANUFACTURER'S INFORMATION.

SEE SDD 14B42 FOR MORE INFORMATION.

* DO NOT ATTACH BLOCKOUTS TO POST 1 AND 2.

DO NOT INSTALL REFLECTORS ON THE FIRST 50 FEET OF THE APPROACH END OF THE ENERGY ABSORBING TERMINAL.

SEE MANUFACTURER'S DRAWING FOR SPLICE LOCATION, HARDWARE DIMENSIONS AND INSTALLATION INSTRUCTIONS.

THE CENTER OF THE UPPER 3 ½" DIAMETER HOLE ON POST NUMBER 3 THROUGH POST 9 IS TO BE FLUSH WITH THE GROUND LINE UP TO A MAXIMUM OF 2" ABOVE GROUND LINE. WOOD BLOCKS ON POSTS NUMBERED 3 THROUGH 9 MAY BE ADJUSTED UP TO 3" ABOVE THE TOP OF POST.

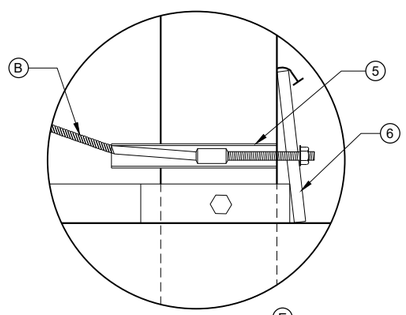

DETAIL "A" (E)

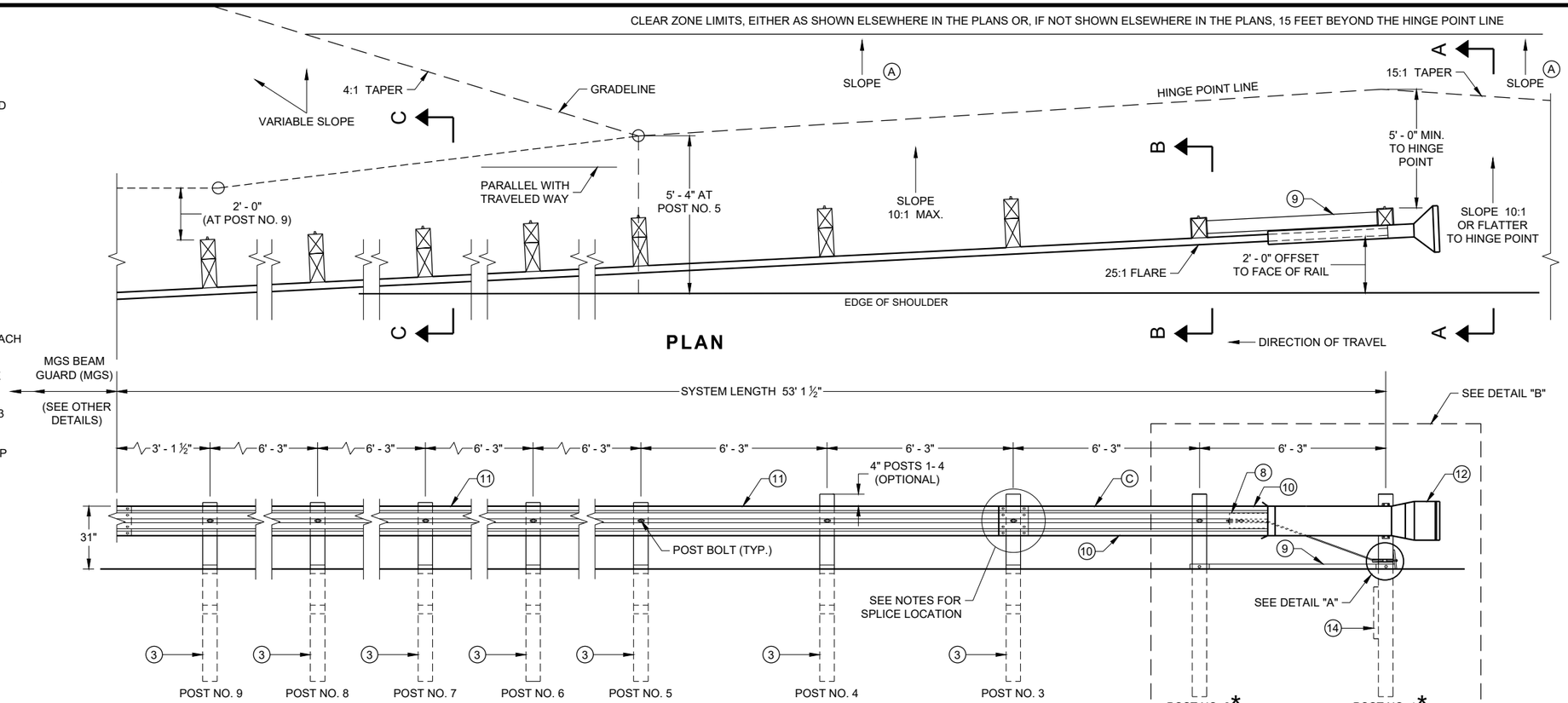

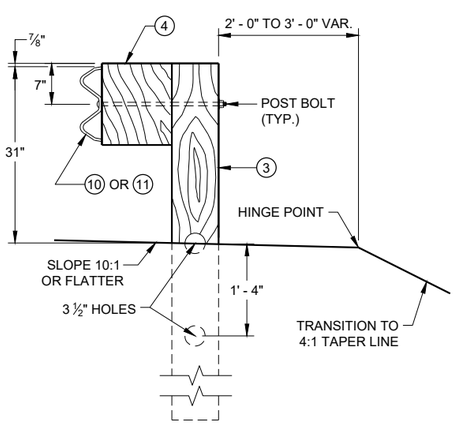

SECTION C - C
TYPICAL AT POST NOS. 3 - 9

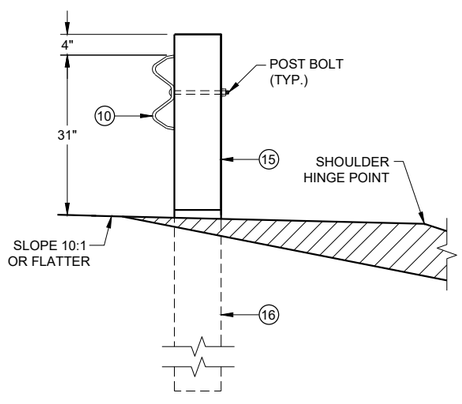

SECTION B - B
TYPICAL AT POST NO. 2*

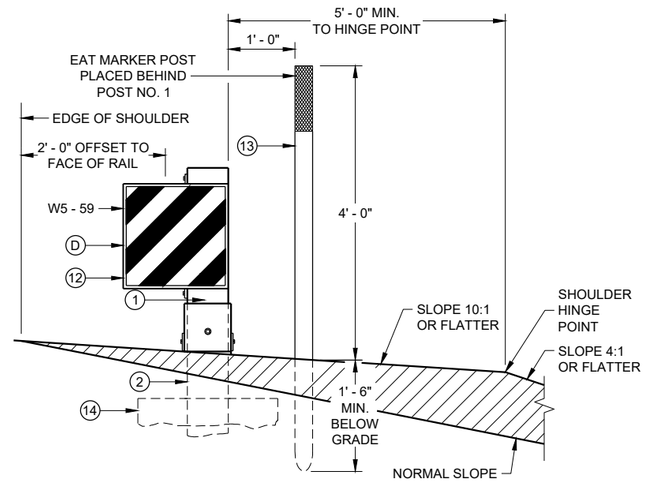

SECTION A - A
TYPICAL AT POST NO. 1*

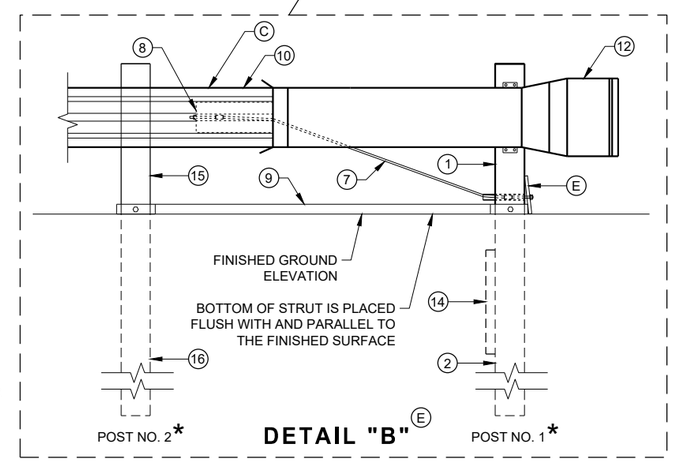

DETAIL "B" (E)

MIDWEST GUARDRAIL SYSTEM ENERGY ABSORBING TERMINAL (MGS)

STATE OF WISCONSIN
DEPARTMENT OF TRANSPORTAT

6

SDD 14B44 - 04a

BILL OF MATERIALS

PART NO.	DESCRIPTION MATERIALS PROVIDED BY MGS EAT MANUFACTURER. SEE MANUGACTURER'S DETAILS FOR MORE INFORMATION.
1	UPPER POST NO. 1 6" X 6" TUBE
2	LOWER POST NO. 1
3	WOOD CRT
4	WOOD BLOCKOUT
5	PIPE SLEEVE
6	BEARING PLATE
7	BCT CABLE ASSEMBLY
8	ANCHOR CABLE BOX
9	GROUND STRUT
10	PERFORATED W-BEAM RAIL END PANEL, 12'-6" LONG.
11	STANDARD W-BEAM RAIL. MULTIPLE SECTIONS REQUIRED. SECTIONS VARY IN LENGTH.
12	IMPACT HEAD
13	EAT MARKER POST - YELLOW (SEE APPROVED PRODUCTS LIST)
14	SOIL PLATE
15	UPPER POST NO. 2
16	LOWER POST NO. 2

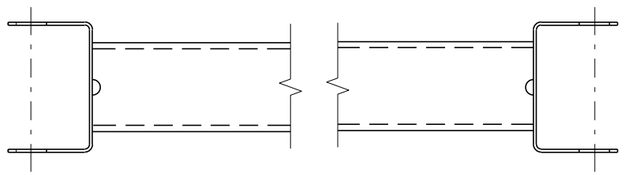

GENERIC GROUND STRUT 9 E

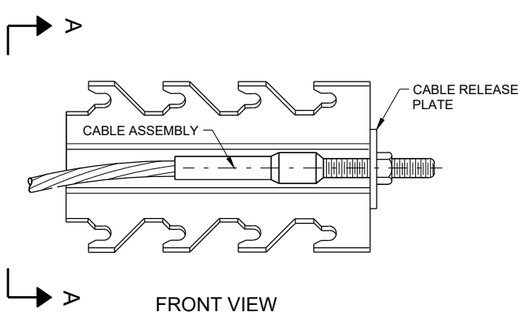

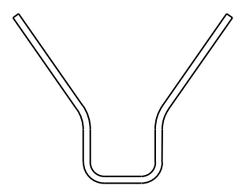

SECTION A - A

GENERIC ANCHOR CABLE BOX 9 E

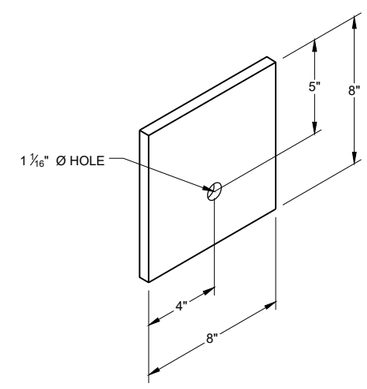

BEARING PLATE 6 E

6

6

SDD 14B44 - 04b

SDD 14B44 - 04b

MIDWEST GUARDRAIL SYSTEM ENERGY ABSORBING TERMINAL (MGS)

STATE OF WISCONSIN
DEPARTMENT OF TRANSPORTAT

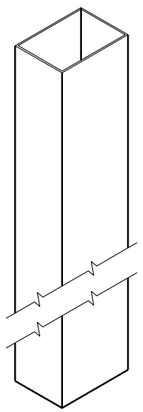

UPPER POST NO. 1 (1) (E)

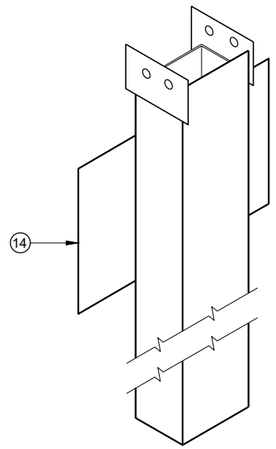

LOWER POST NO. 1 (2) (E)

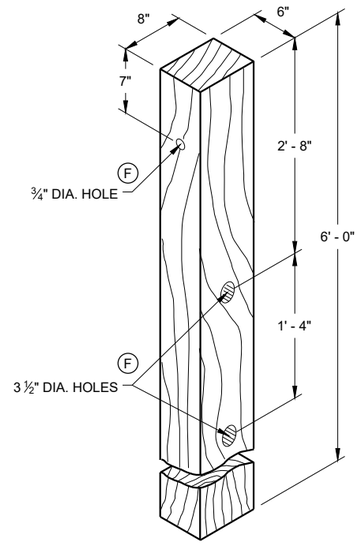

WOOD CRT POST (3) (E)

POSTS NUMBER 3-9

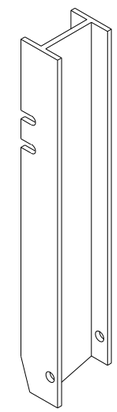

UPPER POST NO. 2 (15) (E)

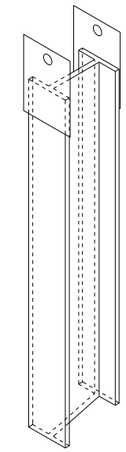

LOWER POST NO. 2 (16) (E)

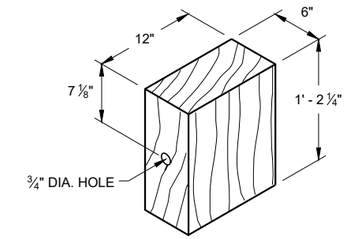

WOOD BLOCKOUT (4)

REQ'D. AT ALL POSTS EXCEPT POST NO'S 1 & 2

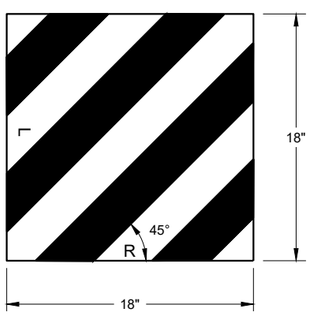

W5 - 59

REFLECTIVE SHEETING DETAIL (E)

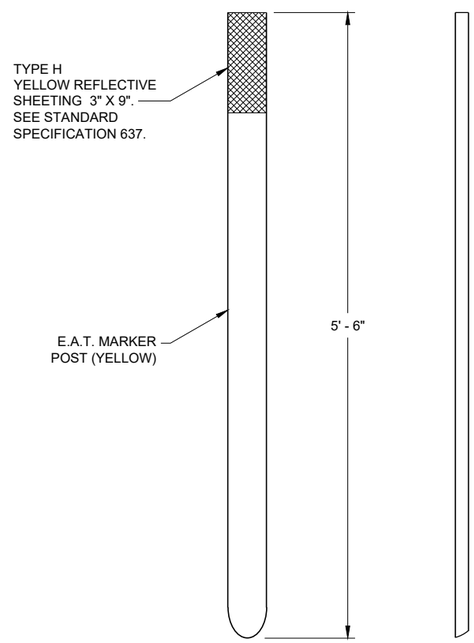

FRONT VIEW SIDE VIEW

E.A.T. MARKER POST (13)

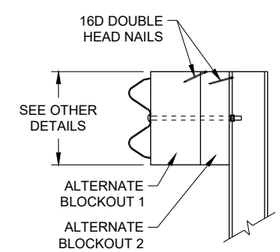

SIDE VIEW

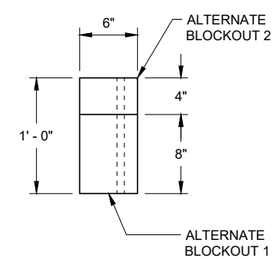

TOP VIEW

ALTERNATE WOOD BLOCKOUT DETAIL

MIDWEST GUARDRAIL SYSTEM ENERGY ABSORBING TERMINAL (MGS)

STATE OF WISCONSIN
DEPARTMENT OF TRANSPORTATION

APPROVED
7/2018 — DATE
/S/ Rodney Taylor — ROADWAY STANDARDS DEVE UNIT SUPERVISOR
FHWA

6

SDD 14B44 - 04c

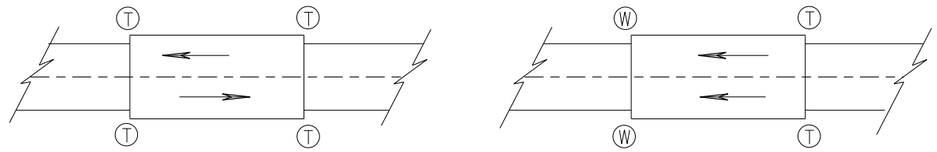

TWO WAY TRAFFIC **ONE WAY TRAFFIC**

(T) THRIE BEAM CONNECTION

(W) W-BEAM CONNECTION WHEN REQUIRED

TYPICAL LOCATIONS OF THRIE BEAM AND W-BEAM CONNECTIONS TO BRIDGE

GENERAL NOTES

IF ROCK IS ENCOUNTERED, REMOVE ROCK TO FULL DEPTH OF POST PLUS 2½", AND 12" DIAMETER AROUND POST. SEE 14B42 FOR MORE DETAILS.

TRANSITION USES STEEL POSTS ONLY.

SEE STANDARD DETAIL DRAWING 14 B 42 FOR MORE INFORMATION.

POST 2 THROUGH 17 USES STEEL POST ONLY

(1) BRIDGE RAILING TYPE "W" DOES NOT REQUIRE A TERMINAL CONNECTOR.

(2) OPTIONAL CURB AND GUTTER OR DRAINAGE FEATURE SEE PLAN FOR INFORMATION.

(13) STEEL OR WOOD POST IS ACCEPTABLE AT POST 1. SEE SDD14B42

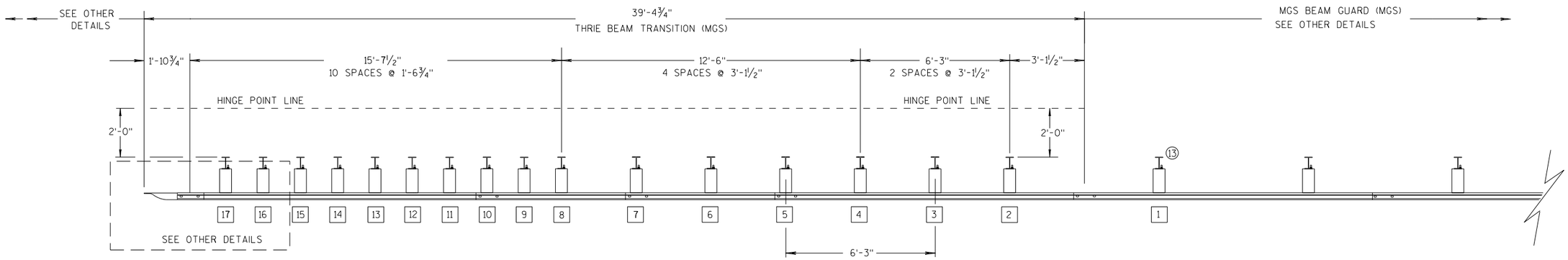

PLAN VIEW

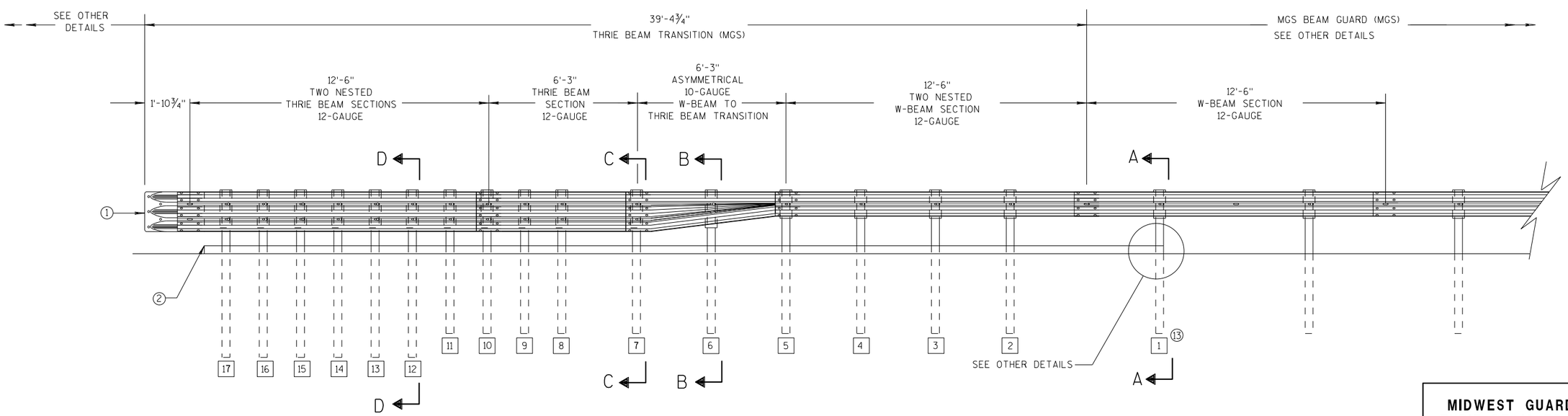

ELEVATION VIEW

MIDWEST GUARDRAIL SYSTEM THRIE BEAM TRANSITION

MIDWEST GUARDRAIL SYSTEM THRIE BEAM TRANSITION (MGS)

STATE OF WISCONSIN
DEPARTMENT OF TRANSPOR

6

S.D.D. 14 B 45-5a

GENERAL NOTES

(2) OPTIONAL CURB AND GUTTER OR DRAINAGE FEATURE SEE PLAN FOR INFORMATION.

(3) WHEN USING STEEL POSTS AND WOOD BLOCKOUTS INSTALL FOUR 10D GALVANIZED NAILS. INSTALL NAILS AT THE BACK CORNERS OF THE BLOCK AND BEND THE NAILS OVER THE FLANGE OF THE STEEL POST.

(4) TOLERANCE FOR TOP OF W-BEAM RAIL IS ± 1".

(13) STEEL OR WOOD POST IS ACCEPTABLE AT POST 1. SEE SDD 14B42

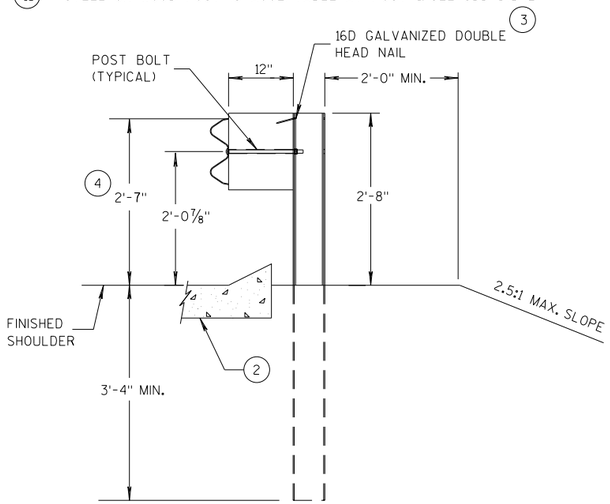

SECTION A-A (13)

POSTS 1-5

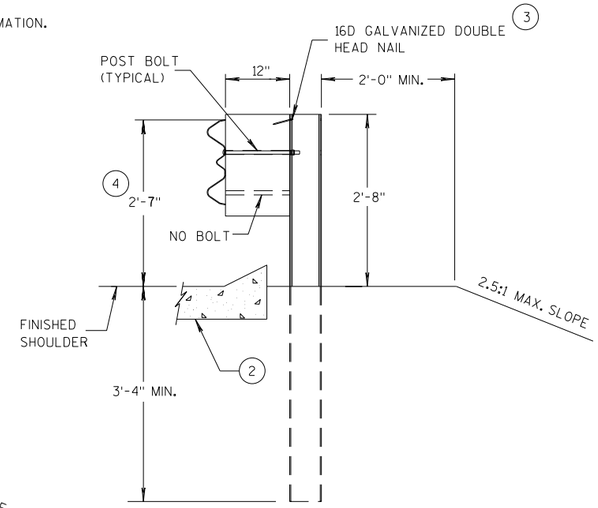

SECTION B-B

POST 6

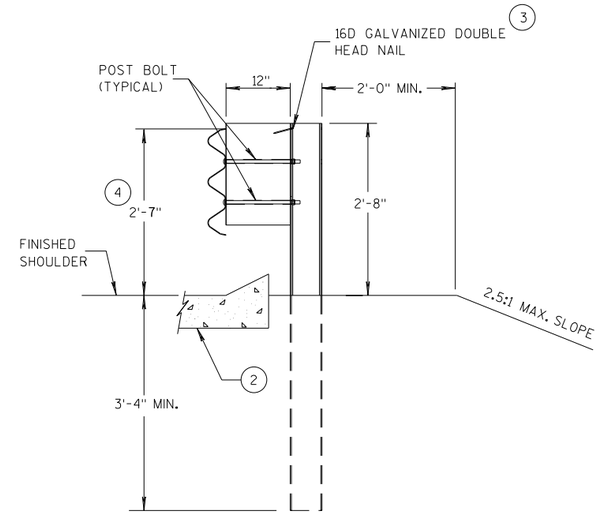

SECTION C-C

POSTS 7-11

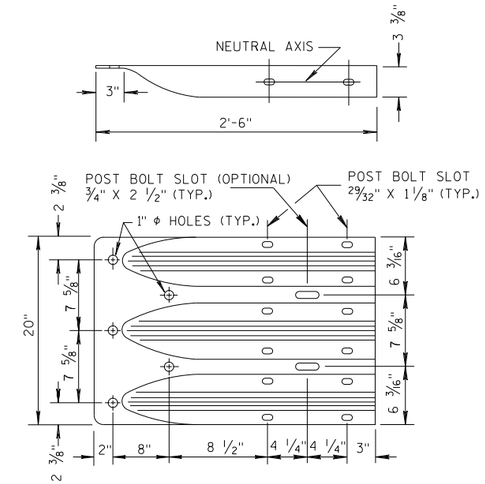

THRIE BEAM TERMINAL CONNECTOR

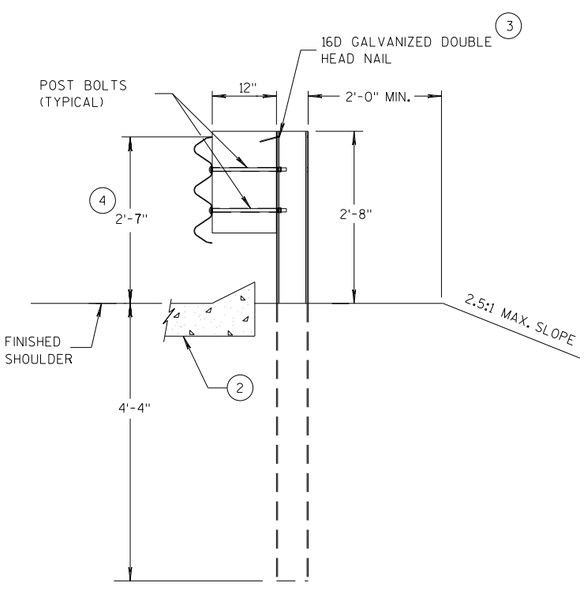

SECTION D-D

POSTS 12-17

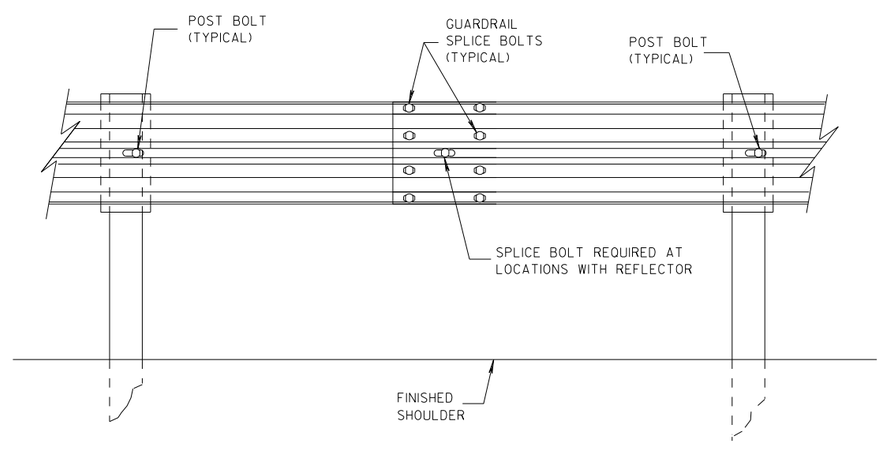

SPLICE DETAIL

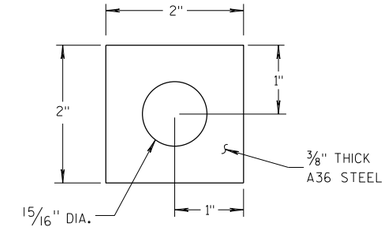

PLATE WASHER DETAIL

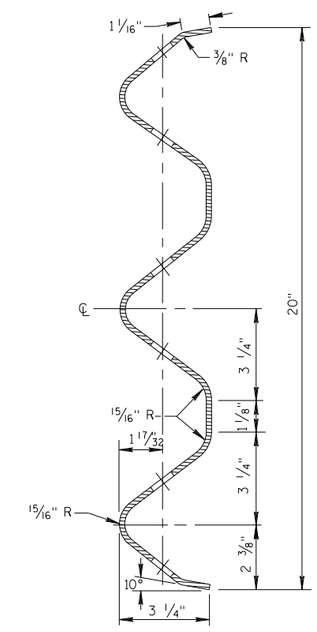

SECTION THRU THRIE BEAM RAIL ELEMENT

MIDWEST GUARDRAIL SYSTEM
THRIE BEAM TRANSITION (MGS)

STATE OF WISCONSIN
DEPARTMENT OF TRANSPOR

6

S.D.D. 14 B 45-5b

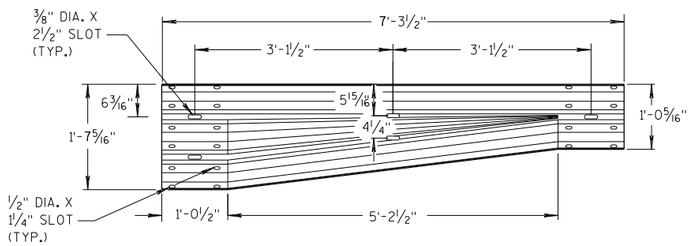

W-BEAM TO THRIE BEAM TRANSITION SECTION

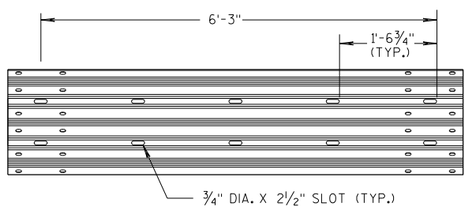

6'-3" THRIE BEAM SECTION

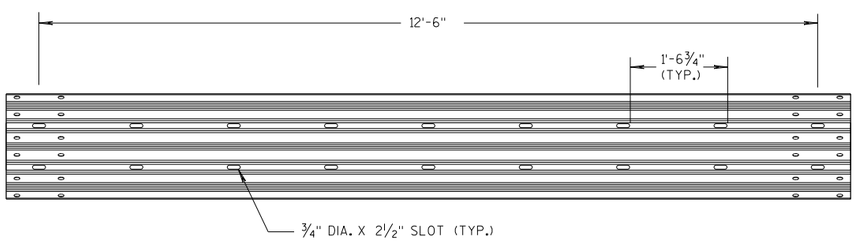

12'-6" THRIE BEAM SECTION

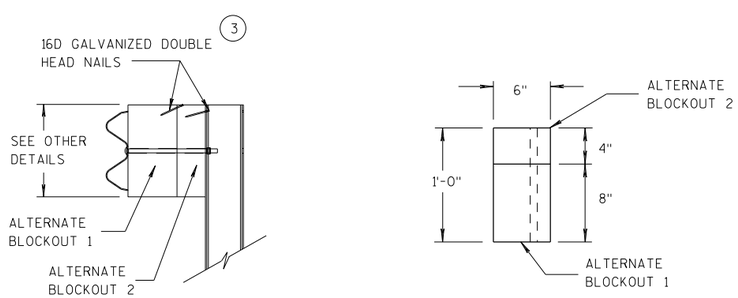

ALTERNATE WOOD BLOCKOUT DETAIL

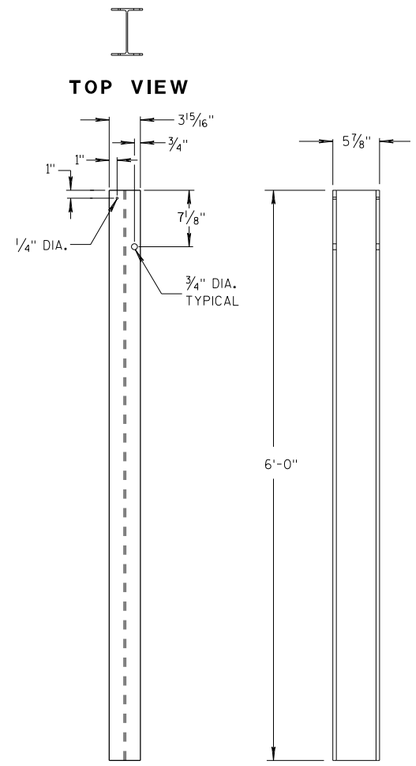

STEEL POSTS 1-5 (13)

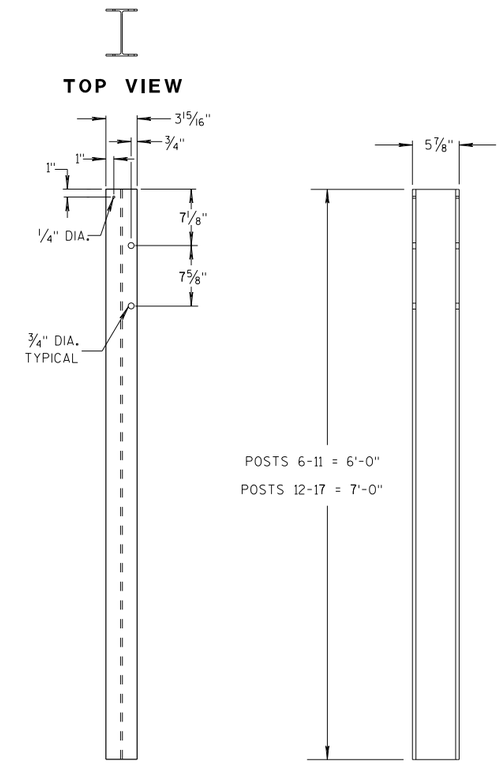

STEEL POSTS 6-17

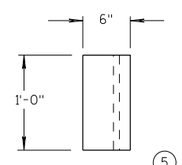

TOP VIEW (5)

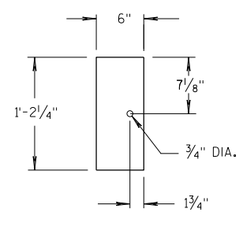

FRONT VIEW

BLOCKOUT POSTS 1-5

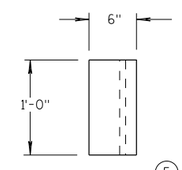

TOP VIEW (5)

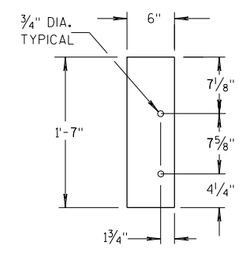

FRONT VIEW

BLOCKOUT POSTS 6-17

GENERAL NOTES

STEEL POSTS ARE W6X9 OR W6X8.5.

BOLT HOLES FOR POST ARE ON FRONT AND OF SIDE OF POST.

(3) WHEN USING STEEL POSTS AND WOOD BLOCKOUTS INSTALL FOUR 16D GALVANIZED NAILS. INSTALL NAILS AT THE BACK CORNERS OF THE BLOCK AND BEND THE NAILS OVER THE FLANGE OF THE STEEL POST.

(5) WOOD BLOCKS MAY BE CONSTRUCTED OUT OF 2 WOOD BLOCKS. SEE ALTERNATE WOOD BLOCK DETAIL.

(13) STEEL OR WOOD POST IS ACCEPTABLE AT POST 1. SEE SDD 14B42.

MIDWEST GUARDRAIL SYSTEM THRIE BEAM TRANSITION (MGS)

STATE OF WISCONSIN
DEPARTMENT OF TRANSPOR

6

S.D.D. 14 B 45-5c

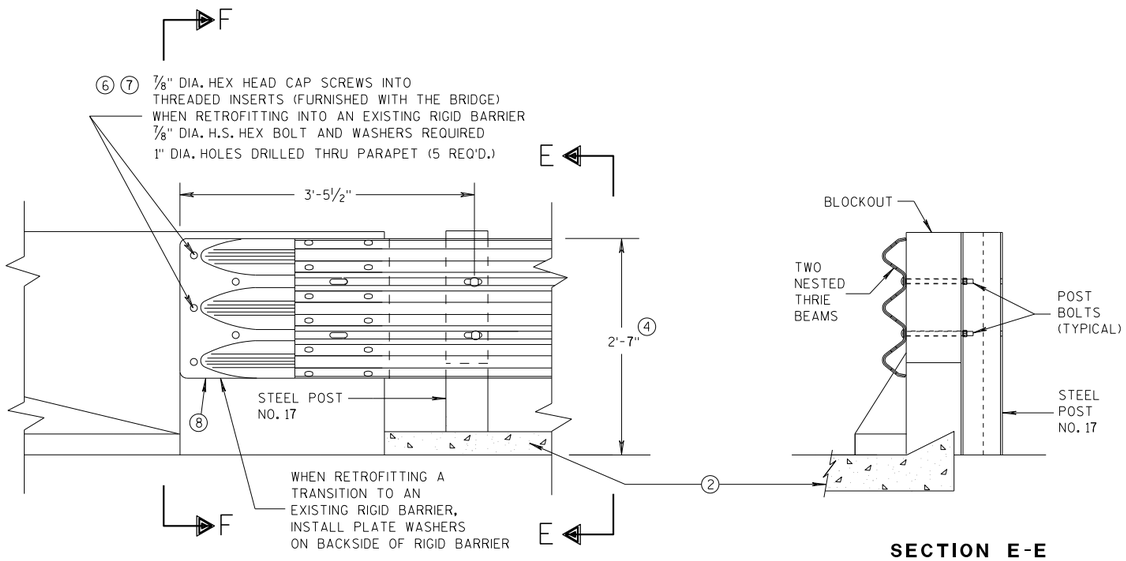

FRONT VIEW

SECTION E-E

THRIE BEAM CONNECTION TO BRIDGE PARAPET WITH SQUARE ENDS

GENERAL NOTES

THESE ARE TYPICAL CONNECTION DETAILS. ADJUST THE POSTION OF CONNECTIONS TO EXISTING BRIDGES TO FIT THE ACTUAL BRIDGE AND SITE DIMENSIONS.

② OPTIONAL CURB AND GUTTER OR DRAINAGE FEATURE SEE PLAN FOR INFORMATION.

④ TOLERANCE FOR TOP OF BEAM IS ± 1".

⑥ DRILLING BOLT HOLES THROUGH THE PARAPET, BOLTS, NUTS, WASHERS AND REPAIRING DAMAGED CONCRETE ARE INCIDENTAL TO THE CONTRACT.

⑦ BOLTS MAY BE A325 BOLTS OR A449 BOLTS. BOLT LENGTH AND THREADING LENGTH ARE TO ALLOW FOR A TIGHT CONNECTION BETWEEN RIGID BARRIER AND THRIE BEAM CONNECTION PLATE. CONTRACTOR IS TO FIELD VERIFY BOLT LENGTH AND THREAD LENGTH. ONE ROUND WASHER REQUIRED BETWEEN BOLT HEAD AND THRIE BEAM CONNECTOR PLATE. BOLTS THAT EXTEND THROUGH THE PARAPET AND OUT THE BACK FACE REQUIRE A HARDENED ROUND STEEL WASHER THAT IS 2" O.D. X 5/32" THICK AND ONE PLATE WASHER. REPAIR ANY DAMAGED CONCRETE FROM BOLT INSTALLATION.

⑧ THE RECESS FOR A W-BEAM CONNECTION, WHICH EXISTS ON SOME PARAPETS OF THIS TYPE, SHALL BE FILLED WITH A TREATED TIMBER BLOCKOUT. BLOCKOUT SIZE IS 1'-6" X 2'-0" X 3 1/2".

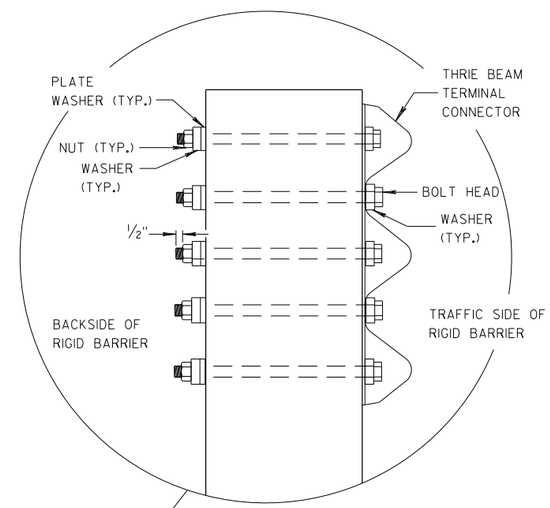

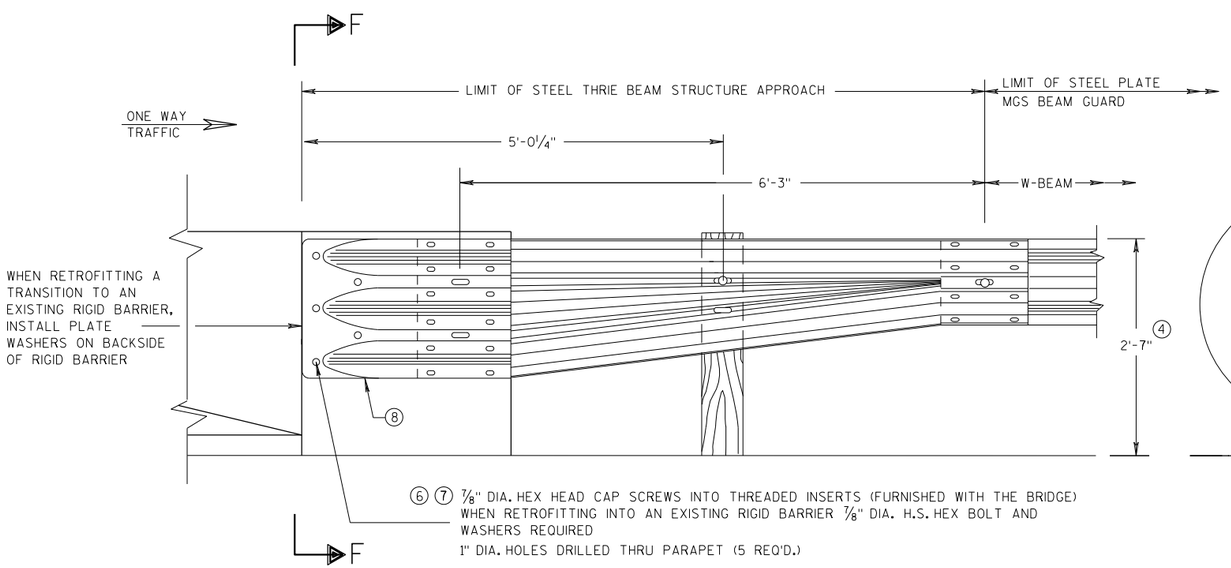

FRONT VIEW

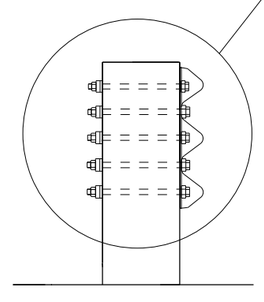

SECTION F-F

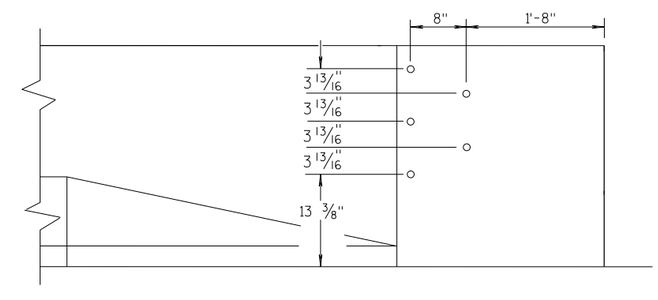

DRILL HOLE LOCATION

W BEAM TRANSITION AND CONNECTION TO BRIDGE PARAPETS WITH SQUARE ENDS

(USE ONLY ON THE TRAFFIC EXIT END OF ONE WAY BRIDGES)

MIDWEST GUARDRAIL SYSTEM THRIE BEAM TRANSITION (MGS)

STATE OF WISCONSIN
DEPARTMENT OF TRANSPORTATION

APPROVED
07/2018 — DATE
/S/ Rodney Taylor — ROADWAY STANDARDS DEVELOPMENT UNIT SUPERVISOR
FHWA

6

S.D.D. 14 B 45-5d

GENERAL NOTES

COVER PLATE PANELS ARE 3/16" THICK.

ALL STIFFENERS ARE 1/4" THICK.

CONNECTOR PLATE SHALL BE FABRICATED FROM ASTM GRADE A36 STEEL AND GALVANIZED.

FOR GALVANIZED REQUIREMENTS, SEE SECTION 614 OF THE STANDARD SPECIFICATIONS.

ALL HOLE DIAMETERS SHALL BE 1".

FOR OPPOSITE SIDE INSTALLATION MIRROR DRAWINGS.

(10) STIFFENERS LOCATED AT THE OUTSIDE EDGES OF THE COVER PLATES SHALL BE WELDED AS FOLLOWS:
SINGLE BEVEL GROOVE WELD ON EXTERNAL SIDES AND 3/16" FILLET WELD BY 1" LONG SPACED AT 2" ON INTERNAL SIDES.

(11) STIFFENERS LOCATED ON THE INSIDE OF THE COVER PLATE SHALL BE WELDED AS FOLLOWS:
3/16" FILLET WELD BY 1" LONG SPACED AT 2".

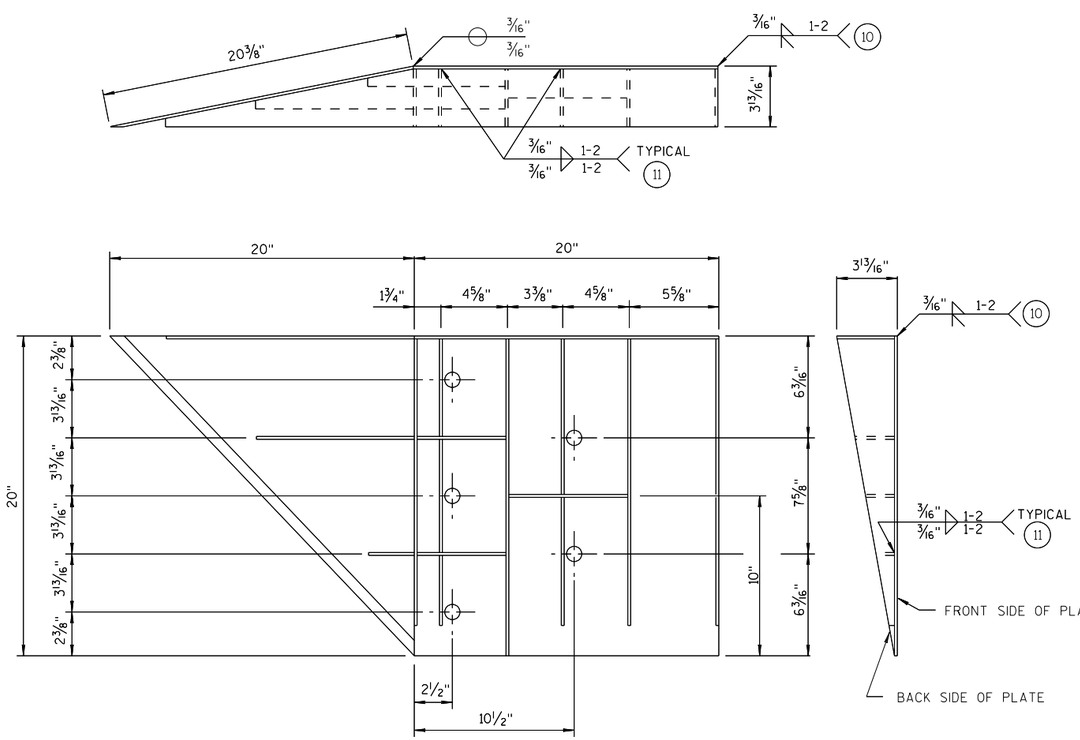

WELDING INSTRUCTION

(VIEWED FROM BACK SIDE OF PLATE)

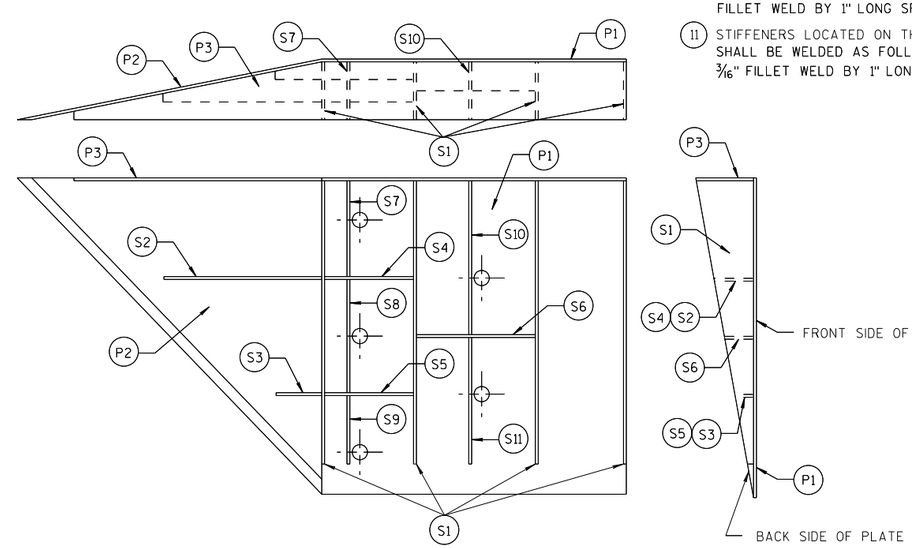

PLATE AND STIFFENER IDENTIFICATION

(VIEWED FROM BACK SIDE OF PLATE)

CONNECTOR PLATE DIMENSION (PER ASSEMBLY)

PLATE	QUANTITY	SHAPE	SIZE (A x B x C x D)	THICKNESS
P1	1		20" x 20"	3/16"
P2	1		20" x 20" x 28 9/16"	3/16"
P3	1		39" x 3 5/8" x 20" x 19 5/16"	3/16"
S1	4		18 7/16" x 3 5/8" x 18 3/4"	1/4"
S2	1		10 1/4" x 2 7/16" x 10 3/8" x 1/2"	1/4"
S3	1		3" x 1 1/16" x 3 1/8" x 1/2"	1/4"
S4	1		6 1/8" x 2 7/16"	1/4"
S5	1		6 1/8" x 1 1/16"	1/4"
S6	1		7 3/4" x 1 3/4"	1/4"
S7	1		2 9/16" x 6" x 3 5/8" x 5 7/8"	1/4"
S8	1		1 5/32" x 7 1/2" x 2 1/2" x 7 3/8"	1/4"
S9	1		6 1/16" x 6 3/16" x 1 3/32"	1/4"
S10	1		1 7/8" x 9 7/8" x 3 5/8" x 9 11/16"	1/4"
S11	1		8 1/2" x 8 3/4" x 1 13/16"	1/4"

SINGLE SLOPE CONNECTION PLATE

MIDWEST GUARDRAIL SYSTEM THRIE BEAM TRANSITION (MGS)

STATE OF WISCONSIN
DEPARTMENT OF TRANSPORTATION

APPROVED
7/2018 /S/ Rodney Taylor
DATE ROADWAY STANDARDS DEVELOPMENT UNIT SUPERVISOR
FHWA

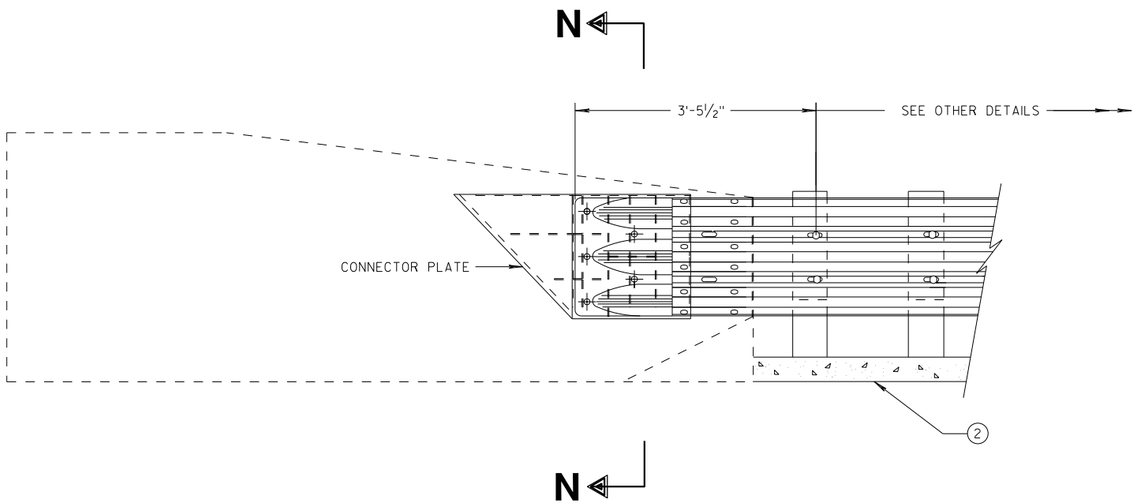

THRIE BEAM CONNECTION TO SINGLE SLOPE BARRIER

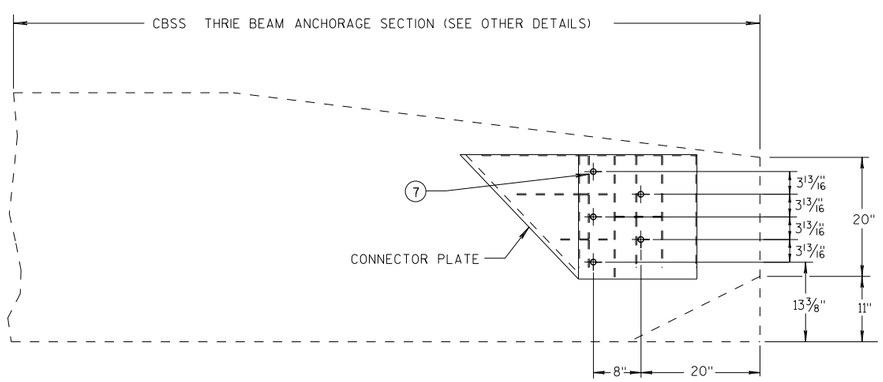

SINGLE SLOPE CONNECTION PLATE PLACEMENT

GENERAL NOTES

CONNECTOR PLATE, DRILLING BOLT HOLES THROUGH THE PARAPET, BOLTS, NUTS, WASHERS AND REPAIRING DAMAGED CONCRETE ARE INCIDENTAL TO THE CONTRACT.

(2) OPTIONAL CURB AND GUTTER OR DRAINAGE FEATURE SEE PLAN FOR INFORMATION.

(7) BOLTS MAY BE A325 BOLTS OR A449 BOLTS. BOLT LENGTH AND THREADING LENGTH ARE TO ALLOW FOR A TIGHT CONNECTION BETWEEN RIGID BARRIER AND THRIE BEAM CONNECTION PLATE. CONTRACTOR IS TO FIELD VERIFY BOLT LENGTH AND THREAD LENGTH. ONE ROUND WASHER REQUIRED BETWEEN BOLT HEAD AND THRIE BEAM CONNECTOR PLATE. BOLTS THAT EXTEND THROUGH THE PARAPET AND OUT THE BACK FACE REQUIRE A HARDENED ROUND STEEL WASHER THAT IS 2" O.D. X 5/32" THICK AND ONE PLATE WASHER. REPAIR ANY DAMAGED CONCRETE FROM BOLT INSTALLATION.

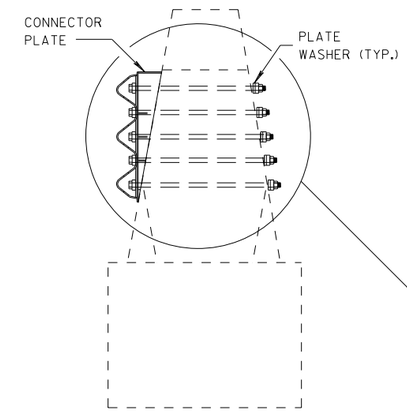

SECTION N-N

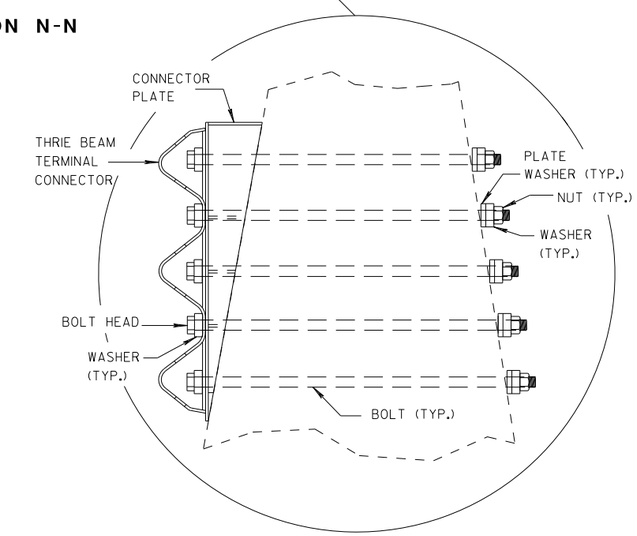

6

6

MIDWEST GUARDRAIL SYSTEM THRIE BEAM TRANSITION (MGS)

STATE OF WISCONSIN
DEPARTMENT OF TRANSPORTATION

APPROVED
7/2018 — DATE
/S/ Rodney Taylor — ROADWAY STANDARDS DEVELOPMENT UNIT SUPERVISOR
FHWA

S.D.D. 14 B 45-5j

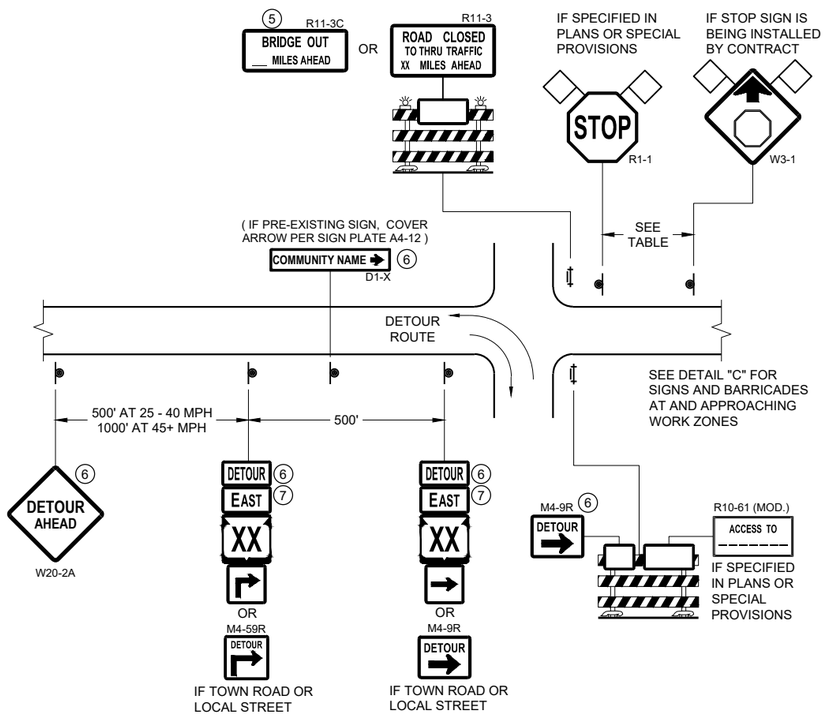

DETAIL A
MAINLINE CLOSURE WITH POSTED DETOUR
WORK ZONE GREATER THAN OR EQUAL TO ½ MILE FROM DETOUR ROUTE (1000 FEET IF URBAN)

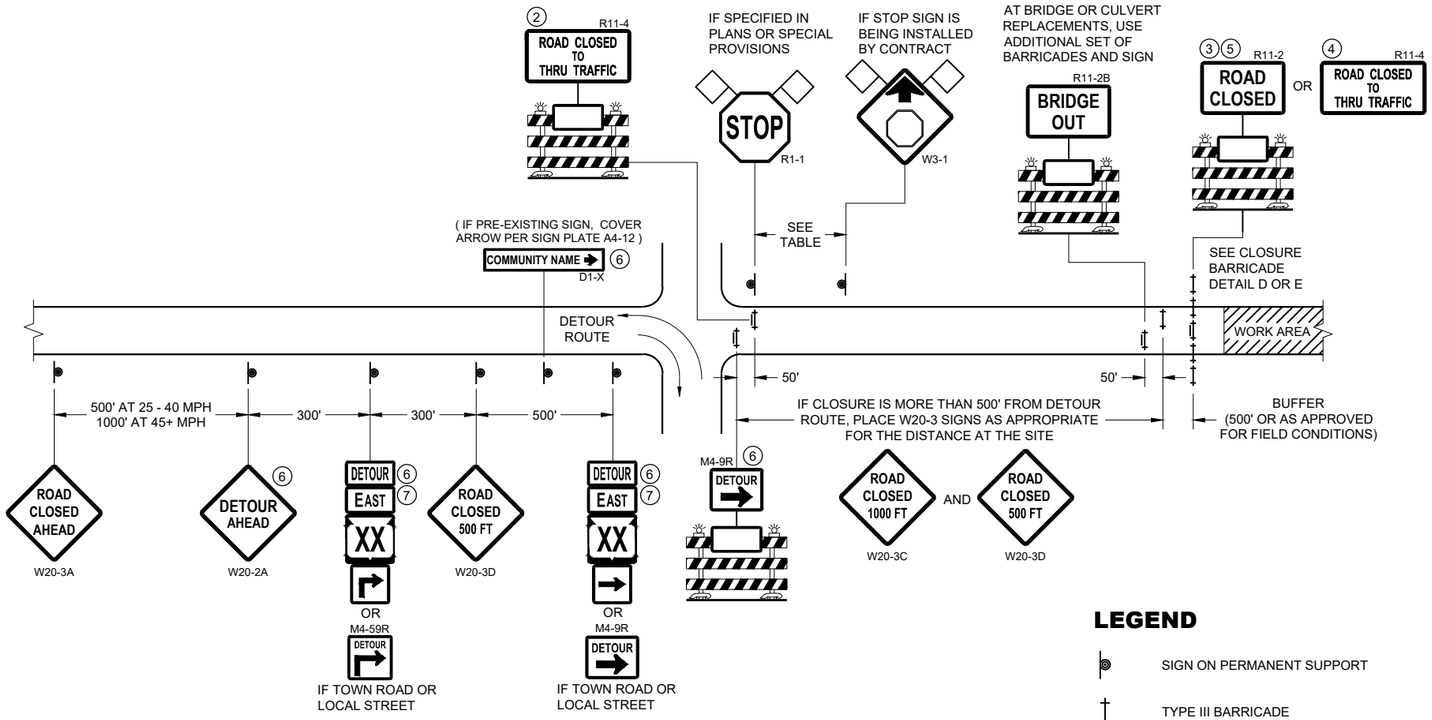

DETAIL B
MAINLINE CLOSURE WITH POSTED DETOUR
WORK ZONE LESS THAN ½ MILE FROM DETOUR ROUTE (1000 FEET IF URBAN)

LEGEND

- SIGN ON PERMANENT SUPPORT
- TYPE III BARRICADE
- TYPE III BARRICADE WITH ATTACHED SIGN
- TYPE "A" WARNING LIGHT (FLASHING)
- WORK AREA
- FLAGS, 16" X 16" MIN. (ORANGE)
- DETOUR M4 - 8
- EAST M3 - X
- XX (M1 - 4) OR XX (M1 - 6) OR COUNTY X (M1 - 5A)
- M05 - 1 OR M06 - 1

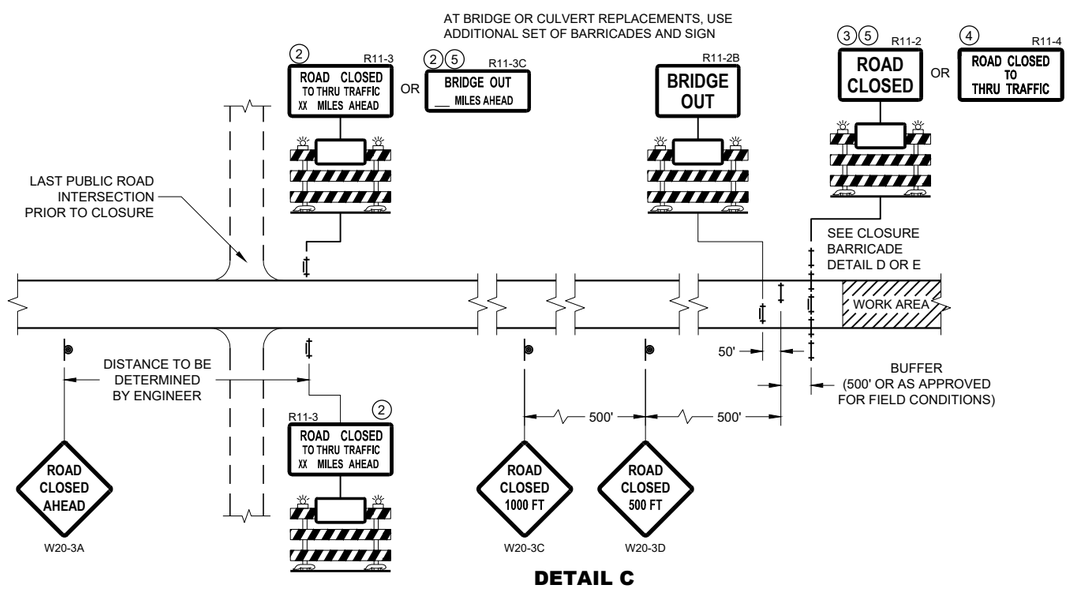

DETAIL C
MAINLINE CLOSURE, NO POSTED DETOUR

SPEED LIMIT (MPH)	"STOP AHEAD" ADVANCE WARNING DISTANCE (FT)
25	200
30	200
35	350
40	350
45	500
50	550
55	750

SEE SDD 15C2-SHEET "b" FOR GENERAL NOTES AND FOOTNOTES 1 THROUGH 7

BARRICADES AND SIGNS FOR MAINLINE CLOSURES

STATE OF WISCONSIN
DEPARTMENT OF TRANSPORTATION

APPROVED
May 2023 — DATE
/S/ Andrew Heidtke — WORK ZONE ENGINEER

FHWA

6

SDD 15C02 - 09a

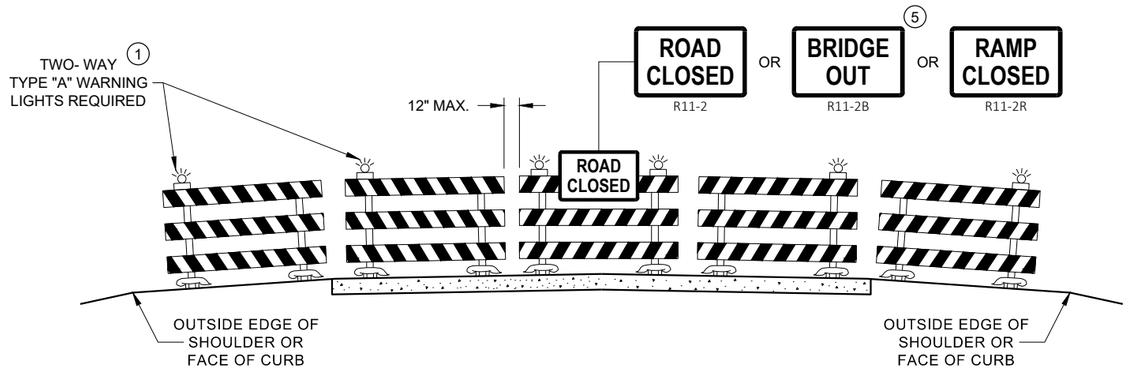

DETAIL D
ROAD CLOSURE BARRICADE DETAIL
APPROACH VIEW

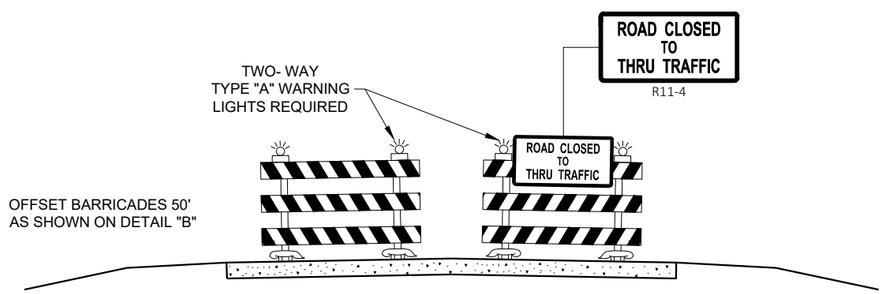

DETAIL E
LANE CLOSURE BARRICADE DETAIL
APPROACH VIEW

SEE SDD 15C2 - SHEET "a" FOR LEGEND

GENERAL NOTES

THE EXACT NUMBER, LOCATION, AND SPACING OF ALL SIGNS AND BARRICADES SHALL BE ADJUSTED TO FIT FIELD CONDITIONS AS APPROVED BY THE ENGINEER.

ANY SIGNS TEMPORARY OR EXISTING, WHICH CONFLICT WITH TRAFFIC CONTROL "IN USE", SHALL BE REMOVED OR COVERED AS NEEDED AND AS APPROVED BY THE ENGINEER.

THE SPACING BETWEEN TRAFFIC CONTROL SIGNS SHOULD BE ADJUSTED TO NOT CONFLICT WITH AND SHOULD PROVIDE A DESIRABLE MINIMUM OF 200 FEET CLEARANCE TO EXISTING SIGNS THAT WILL REMAIN IN PLACE.

BARRICADES THAT MUST BE MOVED FOR A WORK OPERATION SHALL BE IMMEDIATELY RE-ESTABLISHED UPON COMPLETION OF THE OPERATION, OR FOR CONTINUING OPERATIONS, AT THE END OF EACH WORKING DAY.

SIGNS THAT WILL BE IN PLACE LESS THAN 7 CONTINUOUS DAYS AND NIGHTS MAY BE MOUNTED ON PORTABLE SUPPORTS.

ALL TYPE III BARRICADES SHALL HAVE RAILS REFLECTORIZED ON BOTH FACES. STRIPES SHALL BE PROPERLY SLOPED DOWN TOWARD THE TRAFFIC SIDE OR AS SHOWN IN THE ROAD CLOSURE BARRICADE DETAIL "D" FOR FULL ROAD CLOSURES.

TYPE "A" LOW - INTENSITY FLASHING WARNING LIGHTS SHALL BE VISIBLE ON BOTH SIDES OF THE BARRICADE.

THE R11 - 2, R11 - 3, M4 - 9, R11 - 4, AND R10 - 61 SIGNS PLACED ON THE BARRICADES SHALL COVER NO MORE THAN THE TOP RAIL. THE SIGNS SHALL NOT COVER ANY PORTION OF THE MIDDLE RAIL OR BOTTOM RAILS.

"WO" AND "MO" SIGNS ARE THE SAME AS "W" AND "M" SIGNS EXCEPT THE BACKGROUND IS ORANGE.

ALL SIGNS SHALL BE 48" X 48" UNLESS OTHERWISE NOTED BELOW:
- R11 - 2 SHALL BE 48" X 30"
- R11 - 3 SHALL, R11 - 4 AND R10 - 61 SHALL BE 60 " X 30"
- M4 - 9 SHALL BE 30" X 24"
- M3 - X SHALL BE 24" X 12" (36" X 18" IF NEEDED TO MATCH EXISTING SIGNS)
- M4 - 8 SHALL BE 24" X 12" (36" X 18" IF NEEDED TO MATCH EXISTING SIGNS)
- M1 - 4, M1 - 5A AND M1 - 6 SHALL BE 24" X 24" (36" X 36" IF NEEDED TO MATCH EXISTING SIGNS)
- MO5 - 1 AND MO6 - 1 SHALL BE 21" X 21" (30" X 30" IF NEEDED TO MATCH EXISTING SIGNS)
- D1 - X SHALL BE AS SHOWN ON SPECIFIC PROJECT SIGNING DETAIL SHEETS.
- R1 - 1 SHALL BE 36" X 36"

1. TWO WARNING LIGHTS SHALL BE PROVIDED ON THE CENTER BARRICADE AND A MINIMUM OF ONE WARNING LIGHT SHALL BE PROVIDED ON EACH OF THE OTHER BARRICADES WITHIN THE ROADWAY LIMITS. SPACING OF THE WARNING LIGHTS SHALL BE UNIFORM TO THE EDGE OF ROADWAY AS SHOWN (APPROX. 8 FOOT LIGHT SPACING.
2. THESE SIGNS AND BARRICADES ARE NOT REQUIRED IF ROAD CLOSURE BEGINS AT AN INTERSECTION.
3. FOR ROAD CLOSURE WITHOUT LOCAL ACCESS TO PROJECT, SEE ROAD CLOSURE BARRICADE DETAIL "D".
4. FOR ROAD CLOSURE WITH LOCAL ACCESS TO PROJECT, SEE ROAD CLOSURE BARRICADE DETAIL "E".
5. FOR BRIDGE OR CULVERT REPLACEMENTS, SUBSTITUTE "BRIDGE OUT" INSTEAD OF "ROAD CLOSED" ON R11 - 2 AND R11 - 3 SIGNS.
6. INSTALL DETOUR AND COMMUNITY GUIDE SIGNS AND ARROWS ONLY IF SPECIFIED IN THE CONTRACT. IF THERE ARE EXISTING ROUTE MARKER ASSEMBLIES THAT WILL REMAIN IN PLACE, ADJUST THE LOCATION OF THE DETOUR ROUTE SIGNS TO CORRESPOND WITH THE EXISTING ASSEMBLIES. MODIFY EXISTING SIGNS WHERE POSSIBLE. SEE SPECIFIC PROJECT DETOUR SIGNING DETAIL SHEETS. IF DETOUR SIGNS ARE BEING INSTALLED BY OTHERS, PLACE THE CONTRACTED TRAFFIC CONTROL SIGNS TO ALLOW FOR PLACEMENT OF ALL WARNING, DETOUR AND GUIDE SIGNS AS SHOWN.
7. "EAST" CARDINAL DIRECTION MARKERS AND RIGHT TURN ARROWS ARE SHOWN. USE OTHER CARDINAL DIRECTIONS AND ARROWS AS APPROPRIATE.

BARRICADES AND SIGNS FOR VARIOUS CLOSURES

STATE OF WISCONSIN
DEPARTMENT OF TRANSPORTATION

APPROVED
May 2023 — DATE
/S/ Andrew Heidtke — WORK ZONE ENGINEE
FHWA

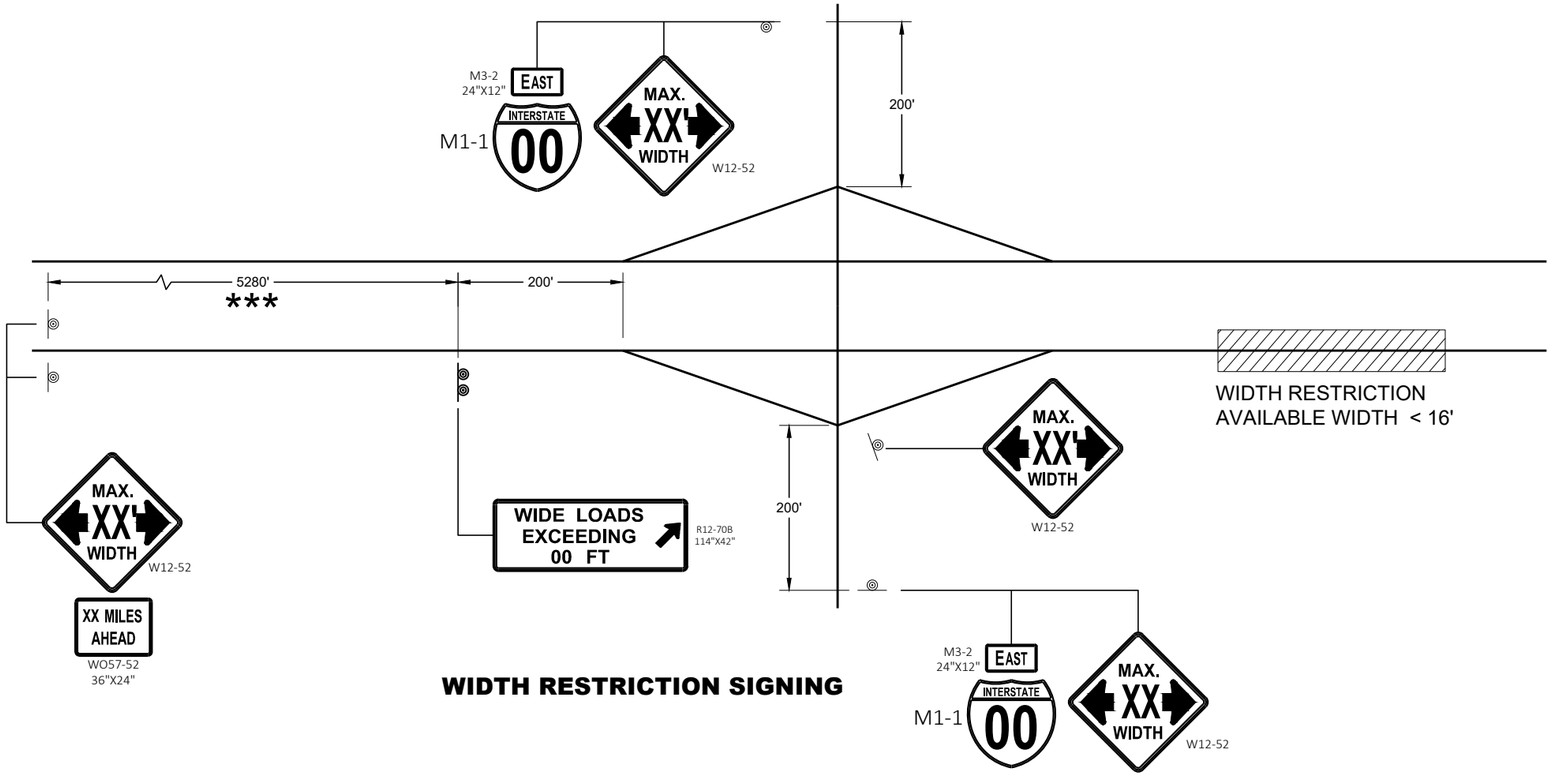

WIDTH RESTRICTION SIGNING

LEGEND

◎ SIGN ON PERMANENT SUPPORT

GENERAL NOTES

THE EXACT NUMBER, LOCATION AND SPACING OF ALL SIGNS SHALL BE ADJUSTED TO FIT FIELD CONDITIONS AS APPROVED BY THE ENGINEER.

THE SPACING BETWEEN SIGNS SHOULD BE ADJUSTED TO NOT CONFLICT WITH AND TO PROVIDE A DESIRABLE MINIMUM OF 200 FEET CLEARANCE TO EXISTING SIGNS THAT WILL REMAIN IN PLACE.

ANY SIGNS TEMPORARY OR EXISTING, WHICH CONFLICT WITH TRAFFIC CONTROL " IN USE" SHALL BE REMOVED OR COVERED AS NEEDED AND AS APPROVED BY THE ENGINEER.

ALL SIGNS ARE 48" X 48" UNLESS OTHERWISE NOTED.

"WO" SIGNS ARE THE SAME AS "W" SIGNS EXCEPT THE BACKGROUND IS ORANGE.

WIDTH ON SIGN TO BE APPROXIMATELY ONE FOOT LESS THAN AVAILABLE WIDTH.

* PLACE 500 FEET AFTER THE W20 - 1A AND 500 FEET BEFORE ADDITIONAL SIGNS FOR ROADWAYS WITH A PRE - CONSTRUCTION SPEED LIMIT OF 45 MPH OR MORE. FOR 35-40 MPH, USE 350 FOOT TYPICAL SPACING. FOR 25-30 MPH, USE 200 FOOT TYPICAL SPACING.

** SIGN SHALL BE VISIBLE FROM ROADWAY.

*** ADDITIONAL SIGNS NEEDED IF THERE IS AN ON RAMP BETWEEN SIGNS.

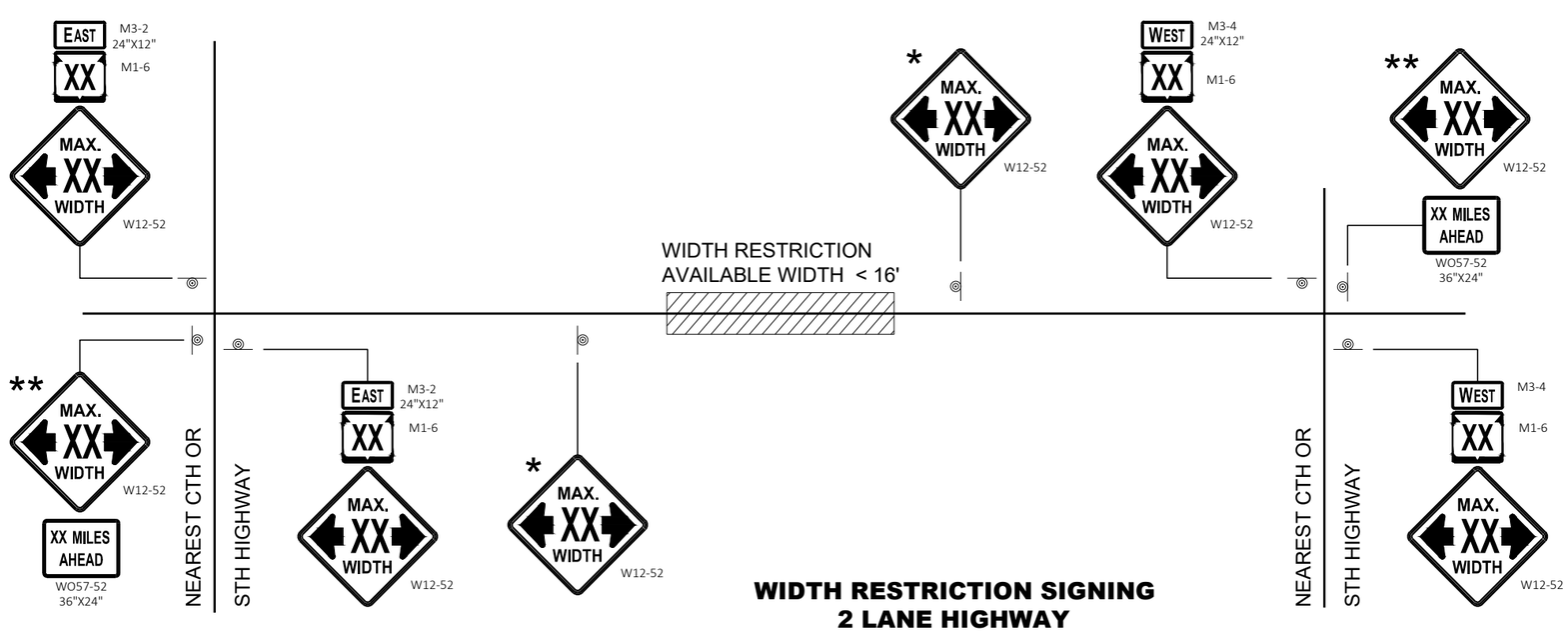

WIDTH RESTRICTION SIGNING
2 LANE HIGHWAY

WIDTH ON SIGN TO BE APPROX. 1 - FOOT LESS THAN AVAILABLE WIDTH

6

6

SDD 15C02 - 09f

SDD 15C02 - 09f

ADVANCED WIDTH RESTRICTION SIGNING

STATE OF WISCONSIN
DEPARTMENT OF TRANSPORTATION

APPROVED
May 2023 — DATE
/S/ Andrew Heidtke — WORK ZONE ENGINEER
FHWA

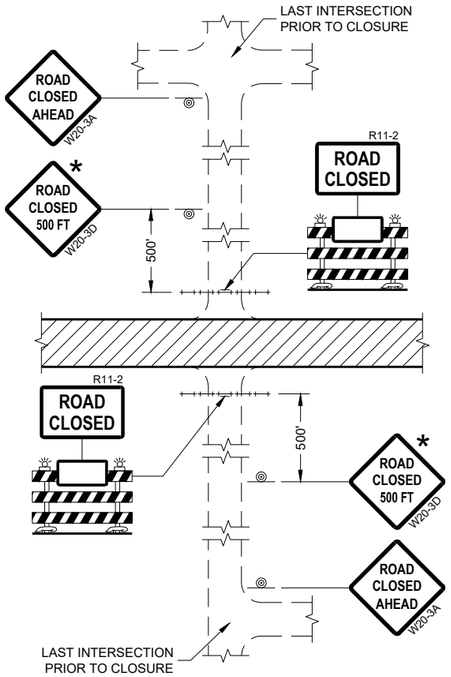

DETAIL 1
(NO ACCESS TO PROJECT)

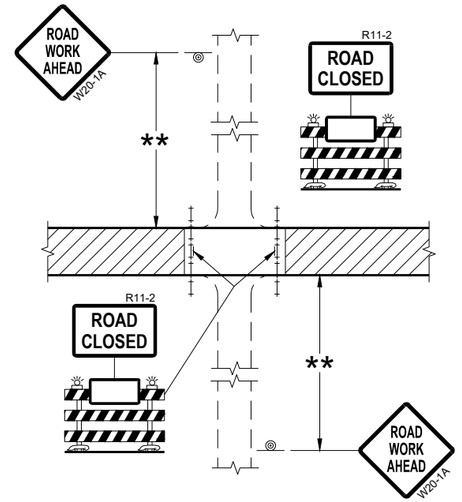

DETAIL 2
(PUBLIC CROSS-TRAFFIC MAINTAINED.
NO ACCESS TO PROJECT)

GENERAL NOTES

THE EXACT NUMBER, LOCATION, AND SPACING OF ALL SIGNS AND BARRICADES SHALL BE ADJUSTED TO FIT FIELD CONDITIONS AS APPROVED BY THE ENGINEER.

ANY SIGNS TEMPORARY OR EXISTING, WHICH CONFLICT WITH TRAFFIC CONTROL "IN USE" SHALL BE REMOVED OR COVERED AS NEEDED AND AS APPROVED BY THE ENGINEER.

THE SPACING BETWEEN TRAFFIC CONTROL SIGNS SHOULD BE ADJUSTED TO NOT CONFLICT WITH AND SHOULD PROVIDE A DESIRABLE MINIMUM OF 200 FEET CLEARANCE (500 FEET DESIRABLE) TO EXISTING SIGNS THAT WILL REMAIN IN PLACE.

IF A "STOP" SIGN MUST BE REMOVED FOR A WORK OPERATION, A TEMPORARY "STOP" SIGN SHALL BE PLACED PRIOR TO THE SIGN REMOVAL, OR A FLAGGER SHALL BE PROVIDED UNTIL THE SIGN IS REESTABLISHED.

BARRICADES THAT MUST BE MOVED FOR A WORK OPERATION SHALL BE IMMEDIATELY REESTABLISHED UPON COMPLETION OF THE OPERATION OR FOR CONTINUING OPERATIONS, AT THE END OF EACH WORKING DAY.

SIGNS THAT WILL BE IN PLACE LESS THAN SEVEN CONTINUOUS DAYS AND NIGHTS MAY BE MOUNTED ON PORTABLE SUPPORTS.

ALL TYPE III BARRICADES SHALL HAVE RAILS REFLECTORIZED ON BOTH FACES. STRIPES SHALL BE PROPERLY SLOPED DOWN TOWARD THE TRAFFIC SIDE OR AS SHOWN IN THE ROAD CLOSURE BARRICADE DETAIL "D" FOR FULL ROAD CLOSURES.

TYPE "A" LOW-INTENSITY FLASHING WARNING LIGHTS SHALL BE VISIBLE ON BOTH SIDES OF THE BARRICADE.

THE R11-2, R11-3, AND R11-4 SIGNS PLACED ON BARRICADES SHALL COVER NO MORE THAN THE TOP RAIL. THE SIGNS SHALL NOT COVER ANY PORTION OF THE MIDDLE OR BOTTOM RAILS.

ALL SIGNS SHALL BE 48" X 48" UNLESS OTHERWISE NOTED BELOW:
R11-2 SHALL BE 48" X 30".
R11-4 AND R11-3 SHALL BE 60" X 30".

* OMIT THE "ROAD CLOSED 500 FT." SIGN IF THE LAST INTERSECTION IS 500 FEET OR LESS FROM THE WORK ZONE.

** 500' MAX. OR AT LAST INTERSECTION, WHICHEVER IS CLOSEST.

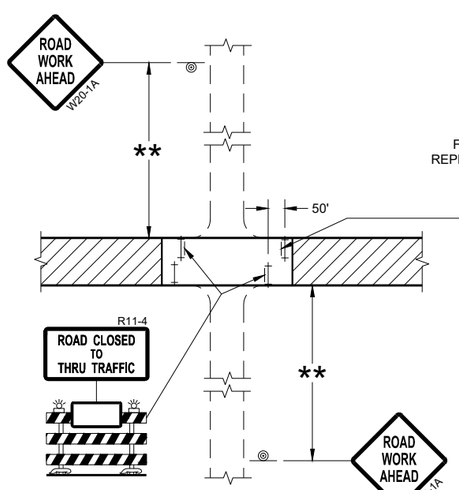

DETAIL 3
(PUBLIC CROSS-TRAFFIC MAINTAINED.
CONTRACTOR, LOCAL BUSINESS AND
RESIDENT ACCESS TO PROJECT)

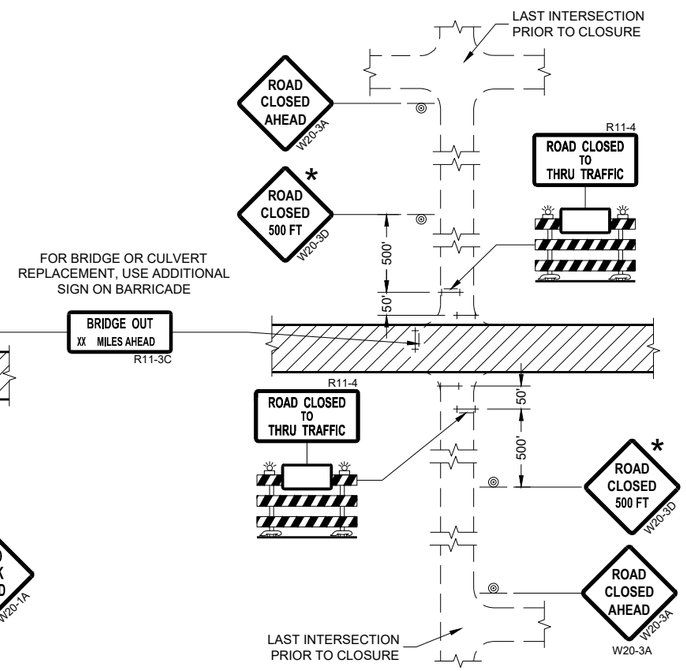

DETAIL 4
(CONTRACTOR, LOCAL BUSINESS AND
RESIDENT ACCESS TO PROJECT)

LEGEND

- SIGN ON PERMANENT SUPPORT
- TYPE III BARRICADE
- TYPE III BARRICADE WITH ATTACHED SIGN
- TYPE "A" WARNING LIGHT (FLASHING)
- WORK AREA

BARRICADES AND SIGNS FOR SIDEROAD CLOSURES

STATE OF WISCONSIN
DEPARTMENT OF TRANSPORTATION

APPROVED
July 2018 — DATE
/S/ Andrew Heidtke — WORK ZONE ENGINEE
FHWA

6

SDD 15C03 - 05

GENERAL NOTES

THE EXACT NUMBER, LOCATION, AND SPACING OF ALL SIGNS AND DEVICES SHALL BE ADJUSTED TO FIT FIELD CONDITIONS.

THE SPACING BETWEEN TRAFFIC CONTROL SIGNS SHOULD BE ADJUSTED TO NOT CONFLICT WITH AND SHOULD PROVIDE A MINIMUM OF 200 FEET (500 FEET DESIRABLE) CLEARANCE TO EXISTING SIGNS THAT WILL REMAIN IN PLACE.

ALL SIGNS ARE 48" X 48" UNLESS OTHERWISE NOTED.

SIGNS THAT WILL BE IN PLACE LESS THAN SEVEN CONTINUOUS DAYS AND NIGHTS MAY BE MOUNTED ON PORTABLE SUPPORTS.

IF A "STOP" SIGN MUST BE REMOVED FOR A WORK OPERATION, A TEMPORARY "STOP" SIGN SHALL BE PLACED PRIOR TO THE SIGN REMOVAL, OR A FLAGGER SHALL BE PROVIDED UNTIL THE SIGN IS REESTABLISHED.

* OMIT G20-1 SIGNS IF LENGTH OF WORK AREA IS 2 MILES OR LESS

** PLACE AN ADDITIONAL W20-1A "ROAD WORK AHEAD" SIGN IF WORK AREA WITHIN THE PROJECT IS SEPARATED BY MORE THAN 2 MILES FROM PREVIOUS WORK AREA.

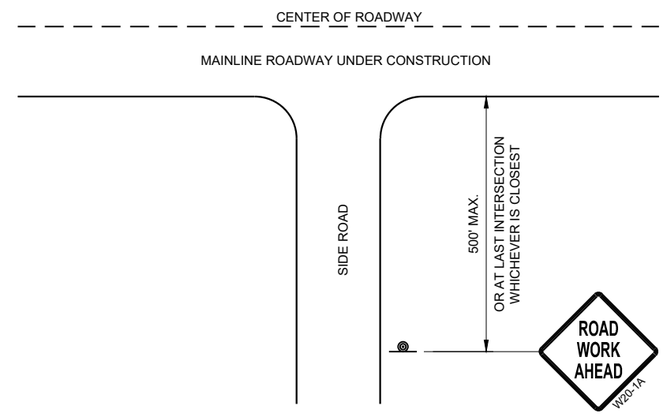

TYPICAL SIDE ROAD APPROACH WARNING SIGN DETAIL

LEGEND

- SIGN ON PERMANENT SUPPORT
- DIRECTION OF TRAFFIC
- WORK AREA

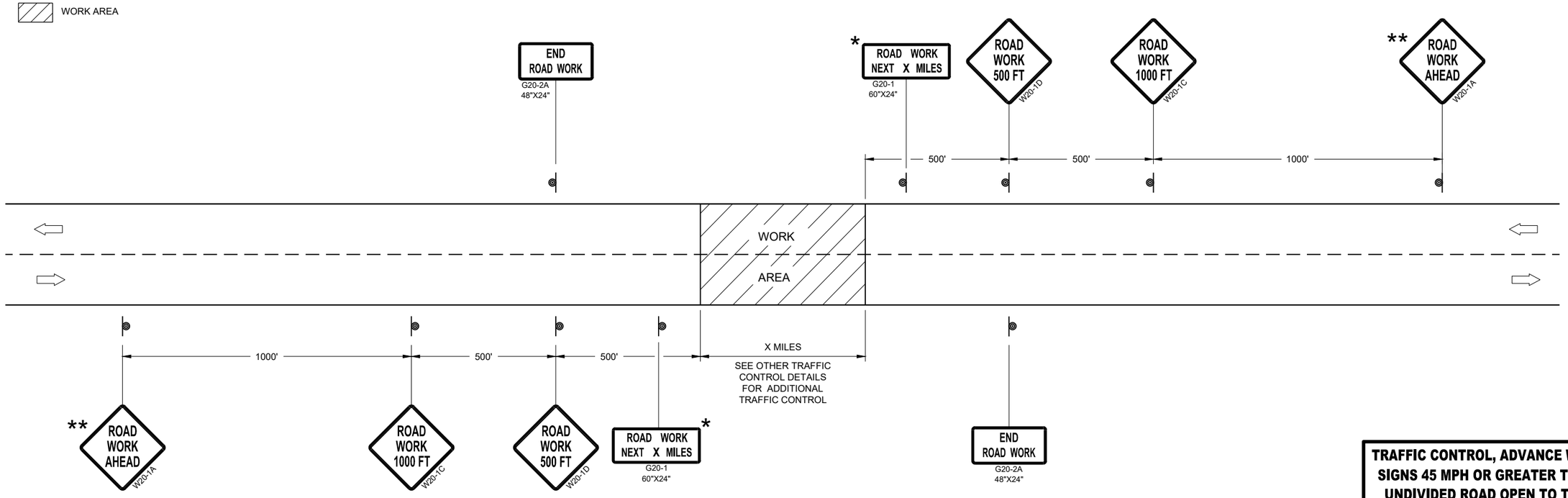

TRAFFIC CONTROL, ADVANCE WARNING SIGNS 45MPH OR GREATER

TRAFFIC CONTROL, ADVANCE WARNING SIGNS 45 MPH OR GREATER TWO-WAY UNDIVIDED ROAD OPEN TO TRAFFIC

STATE OF WISCONSIN
DEPARTMENT OF TRANSPORTATION

APPROVED
July 2018 — DATE
/S/ Andrew Heidtke — WORK ZONE ENGINEE
FHWA

6
SDD 15C04 - 05

GENERAL NOTES

THE EXACT NUMBER, LOCATION, AND SPACING OF ALL SIGNS AND DEVICES SHALL BE ADJUSTED TO FIT FIELD CONDITIONS.

THE SPACING BETWEEN TRAFFIC CONTROL SIGNS SHOULD BE ADJUSTED TO NOT CONFLICT WITH AND SHOULD PROVIDE A MINIMUM OF 200 FEET (500 FEET DESIRABLE) CLEARANCE TO EXISTING SIGNS THAT WILL REMAIN IN PLACE.

ALL SIGNS ARE 48" X 48" UNLESS OTHERWISE NOTED. IF NECESSARY DUE TO SPACE CONSTRAINTS, 36"X36" SIGNS MAY BE USED INSTEAD OF 48" X 48" SIGNS.

SIGNS THAT WILL BE IN PLACE LESS THAN SEVEN CONTINUOUS DAYS AND NIGHTS MAY BE MOUNTED ON PORTABLE SUPPORTS.

IF A "STOP" SIGN MUST BE REMOVED FOR A WORK OPERATION, A TEMPORARY "STOP" SIGN SHALL BE PLACED PRIOR TO THE SIGN REMOVAL, OR A FLAGGER SHALL BE PROVIDED UNTIL THE SIGN IS REESTABLISHED.

* THE THIRD W20-1 SIGN IS REQUIRED ONLY IF THERE IS AN INTERSECTION BETWEEN THE "ROAD WORK 500 FEET" SIGN AND THE WORK ZONE. ADJUST THE PLACEMENT OF THIS SIGN BASED ON INTERSECTION LOCATION AND OTHER FIELD CONDITIONS.

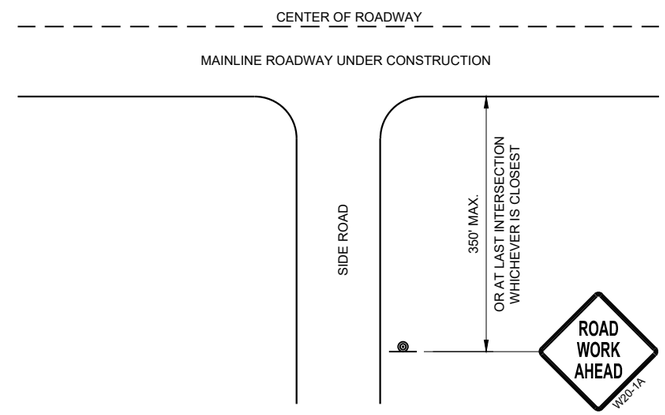

TYPICAL SIDE ROAD APPROACH WARNING SIGN DETAIL

LEGEND

- SIGN ON PERMANENT SUPPORT
- DIRECTION OF TRAFFIC
- WORK AREA

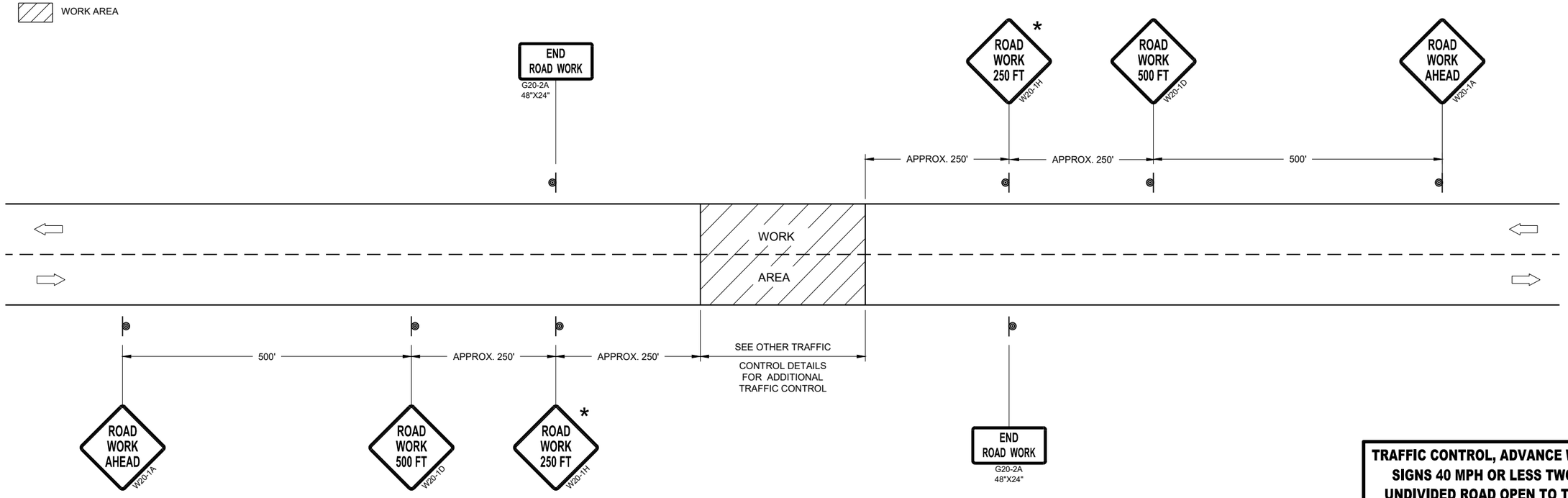

TRAFFIC CONTROL, ADVANCE WARNING SIGNS 40MPH OR LESS

TRAFFIC CONTROL, ADVANCE WARNING SIGNS 40 MPH OR LESS TWO-WAY UNDIVIDED ROAD OPEN TO TRAFFIC

STATE OF WISCONSIN
DEPARTMENT OF TRANSPORTATION

APPROVED
July 2018 — DATE
/S/ Andrew Heidtke — WORK ZONE ENGINEE
FHWA

6
SDD 15C05 - 05

GENERAL NOTES

DETAILS OF INSTALLATION, MATERIALS AND WORKMANSHIP NOT SHOWN ON THIS DRAWING SHALL CONFORM TO THE PERTINENT REQUIREMENTS OF THE STANDARD SPECIFICATIONS AND APPLICABLE SPECIAL PROVISIONS.

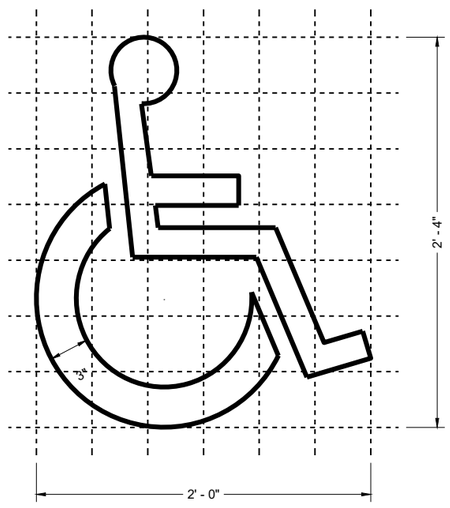

HANDICAP SYMBOL

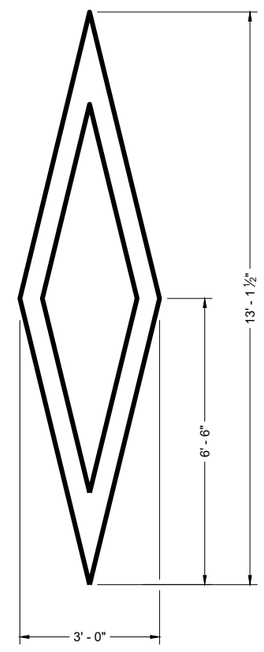

PREFERENTIAL LANE SYMBOL

6

SDD 15C07-16a

PAVEMENT MARKING SYMBOLS

STATE OF WISCONSIN
DEPARTMENT OF TRANSPORTATION

APPROVED
November 2024 — DATE
/S/ Matthew Rauch — STATE SIGNING AND MARKING ENGINEER

FHWA

6

SDD 15C07-16a

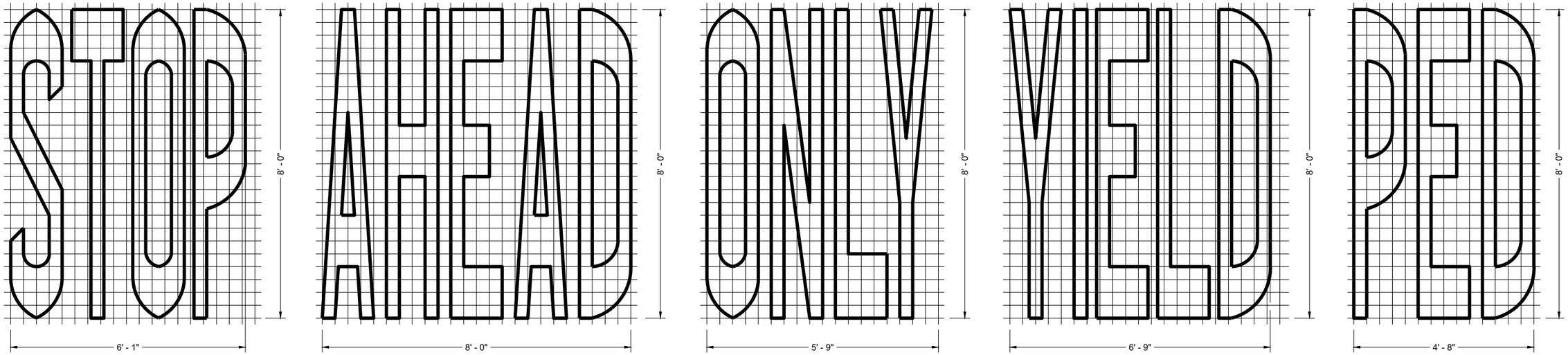

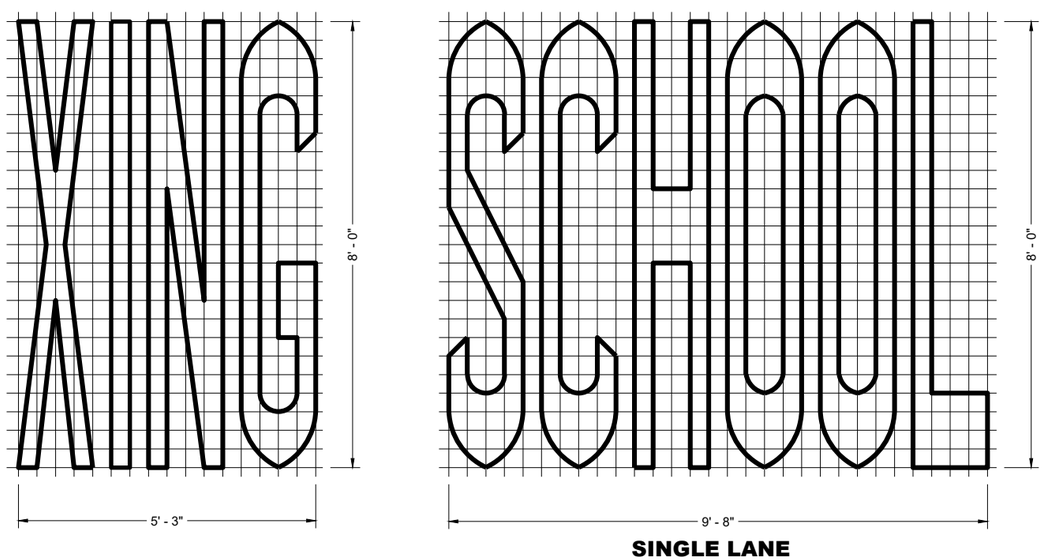

SINGLE LANE

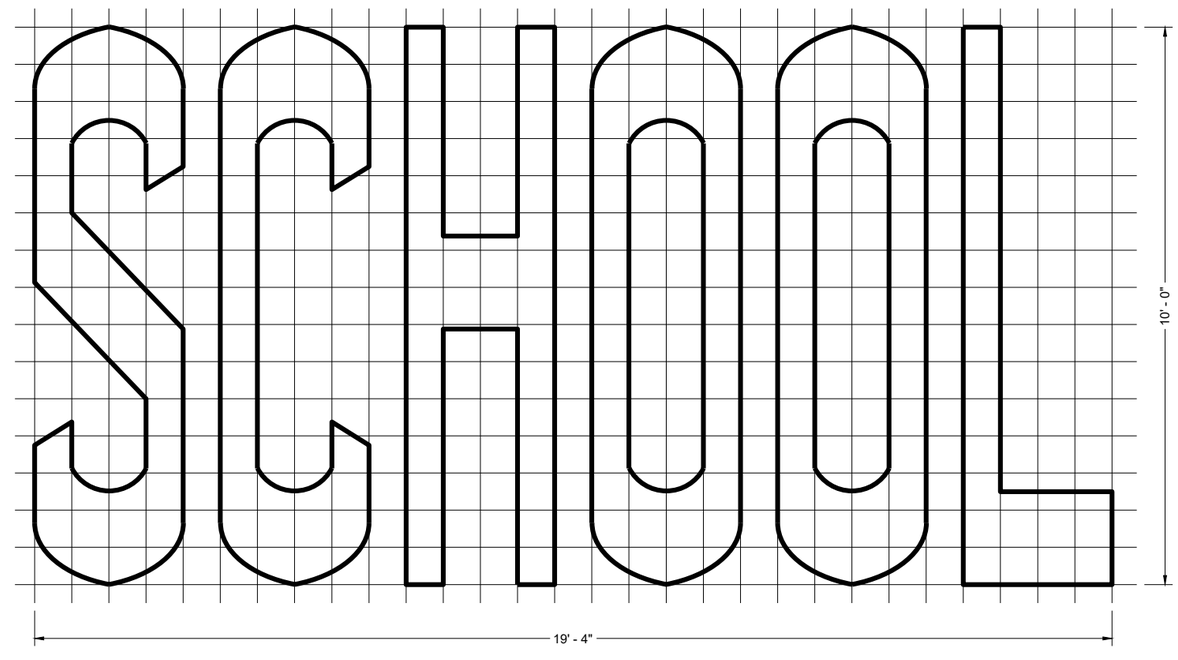

TWO - LANE

6

6

SDD 15C07-16b

SDD 15C07-16b

GENERAL NOTES

DETAILS OF INSTALLATION, MATERIALS AND WORKMANSHIP NOT SHOWN ON THIS DRAWING SHALL CONFORM TO THE PERTINENT REQUIREMENTS OF THE STANDARD SPECIFICATIONS AND APPLICABLE SPECIAL PROVISIONS.

PAVEMENT MARKING WORDS

STATE OF WISCONSIN
DEPARTMENT OF TRANSPORTATION

APPROVED
November 2024 — DATE
/S/ Matthew Rauch — STATE SIGNING AND MARKING ENGINEER

FHWA

GENERAL NOTES

DETAILS OF INSTALLATION, MATERIALS AND WORKMANSHIP NOT SHOWN ON THIS DRAWING SHALL CONFORM TO THE PERTINENT REQUIREMENTS OF THE STANDARD SPECIFICATIONS AND APPLICABLE SPECIAL PROVISIONS.

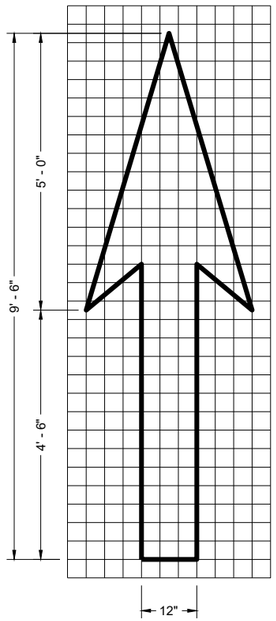

TYPE 1

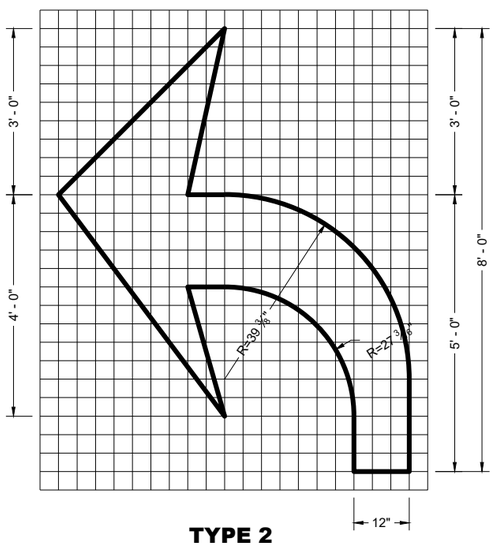

TYPE 2

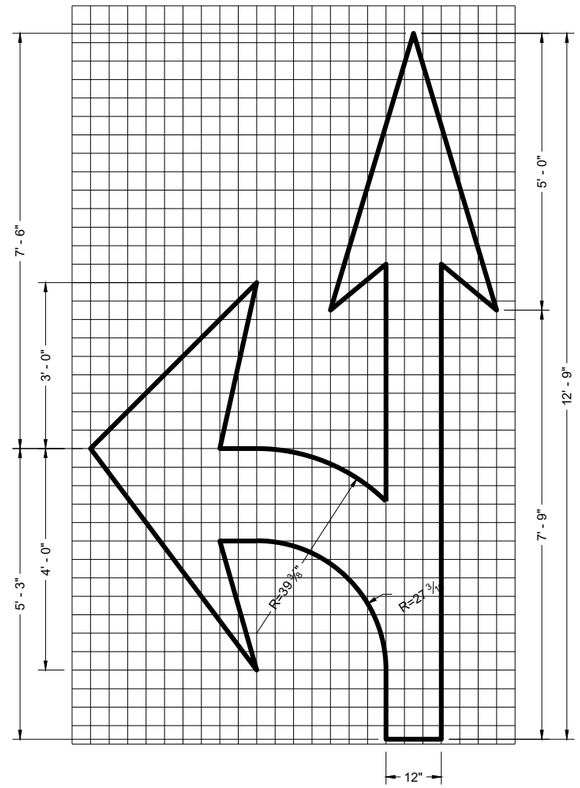

TYPE 3

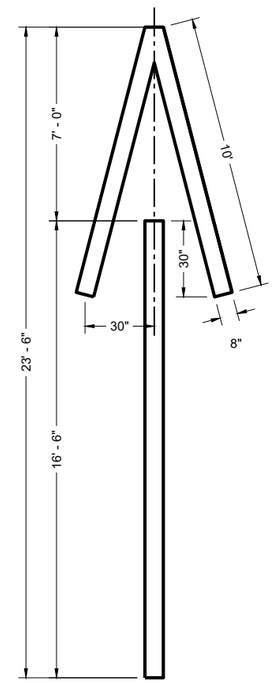

TYPE 4

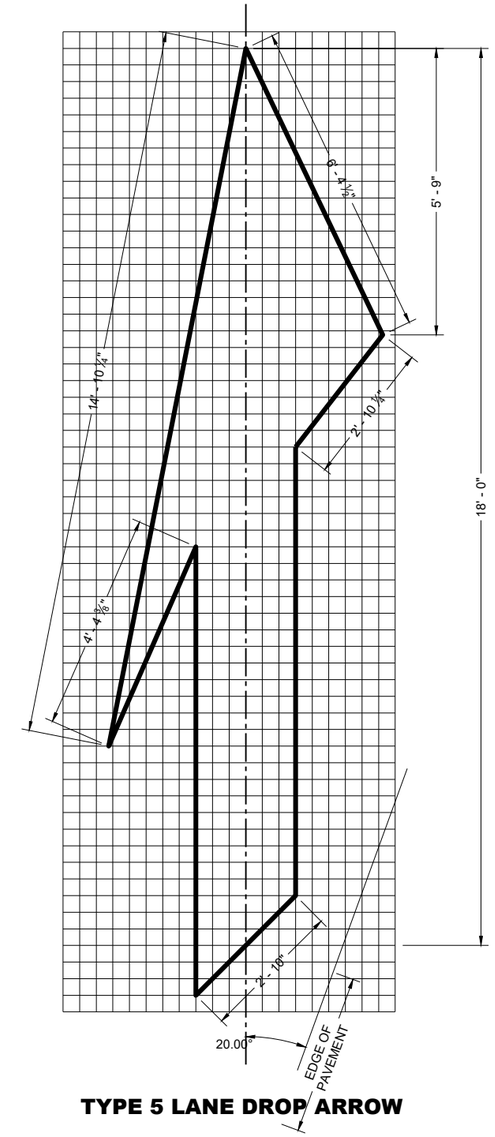

TYPE 5 LANE DROP ARROW

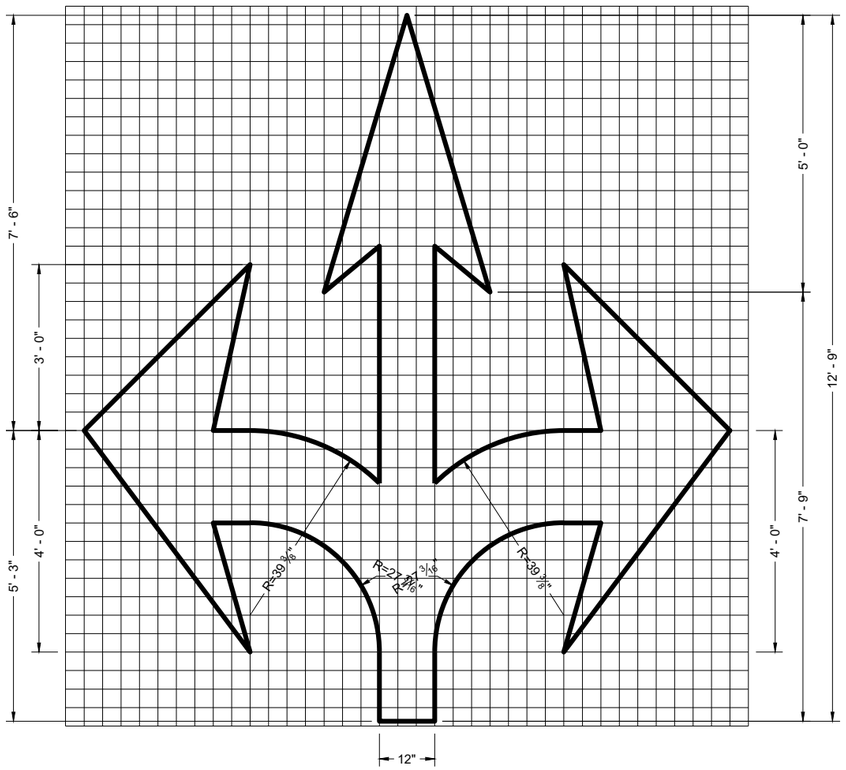

TYPE 6

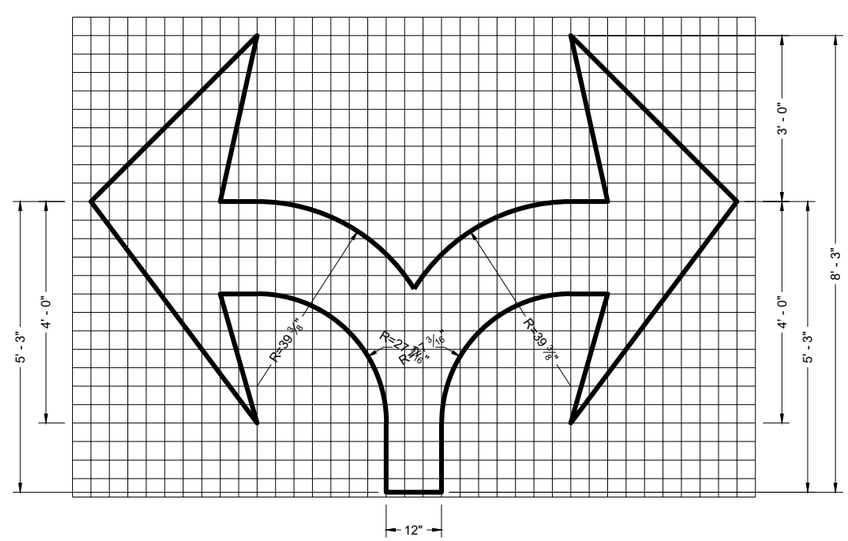

TYPE 7

6

SDD 15C07-16c

PAVEMENT MARKING ARROWS

STATE OF WISCONSIN
DEPARTMENT OF TRANSPORTATION

APPROVED
November 2024 — DATE
/S/ Matthew Rauch — STATE SIGNING AND MARKING ENGINEER

FHWA

6

SDD 15C07-16c

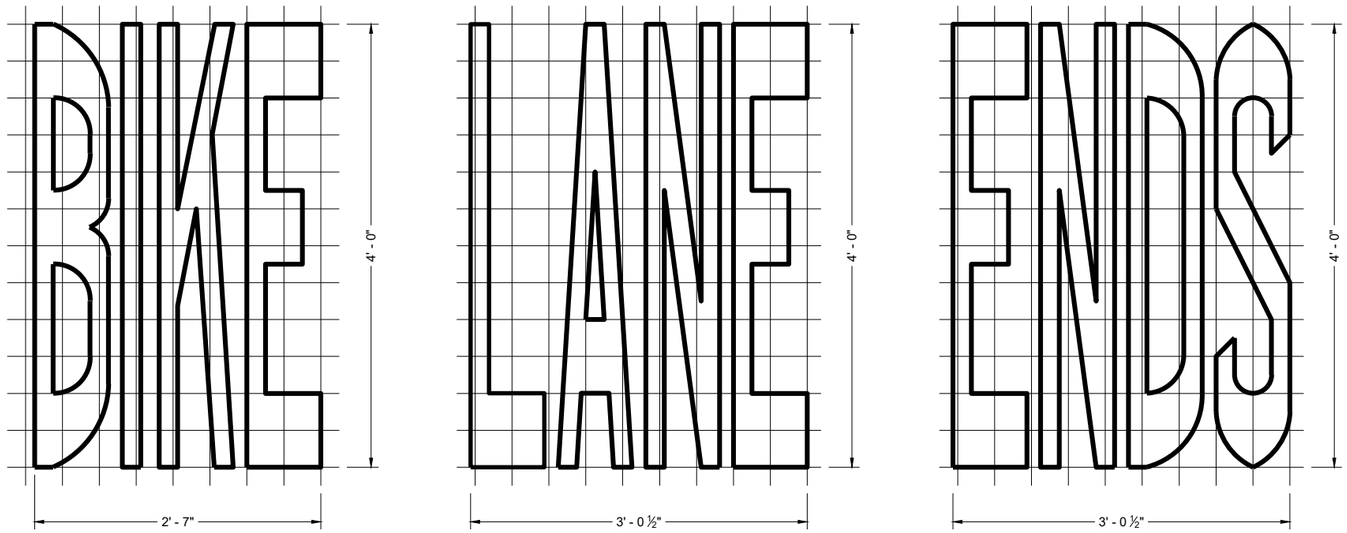

BIKE LANE WORDS

GENERAL NOTES

DETAILS OF INSTALLATION, MATERIALS AND WORKMANSHIP NOT SHOWN ON THIS DRAWING SHALL CONFORM TO THE PERTINENT REQUIREMENTS OF THE STANDARD SPECIFICATIONS AND APPLICABLE SPECIAL PROVISIONS.

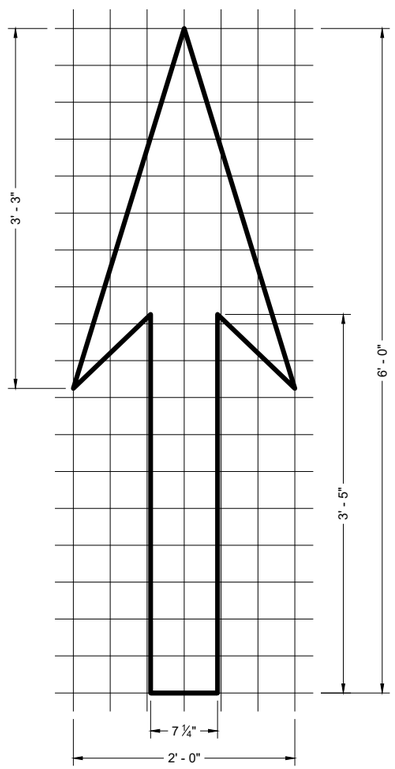

BIKE LANE ARROW

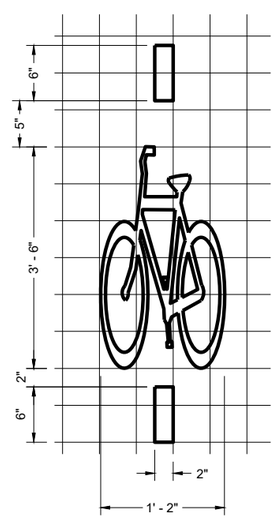

BICYCLE DETECTOR PAVEMENT MARKING

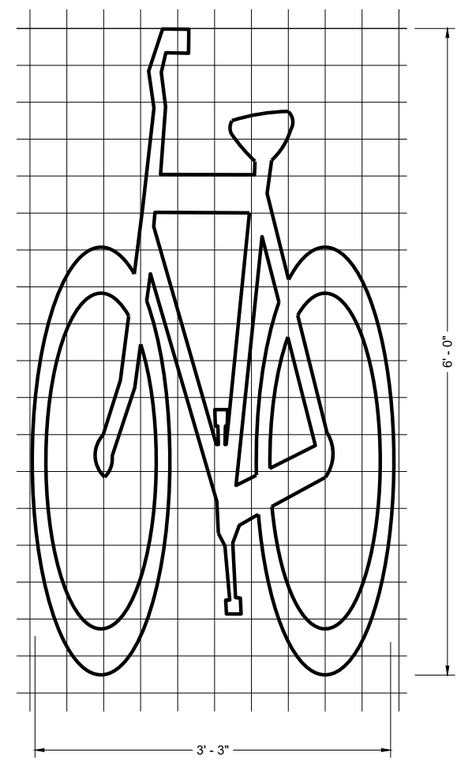

BIKE LANE SYMBOL

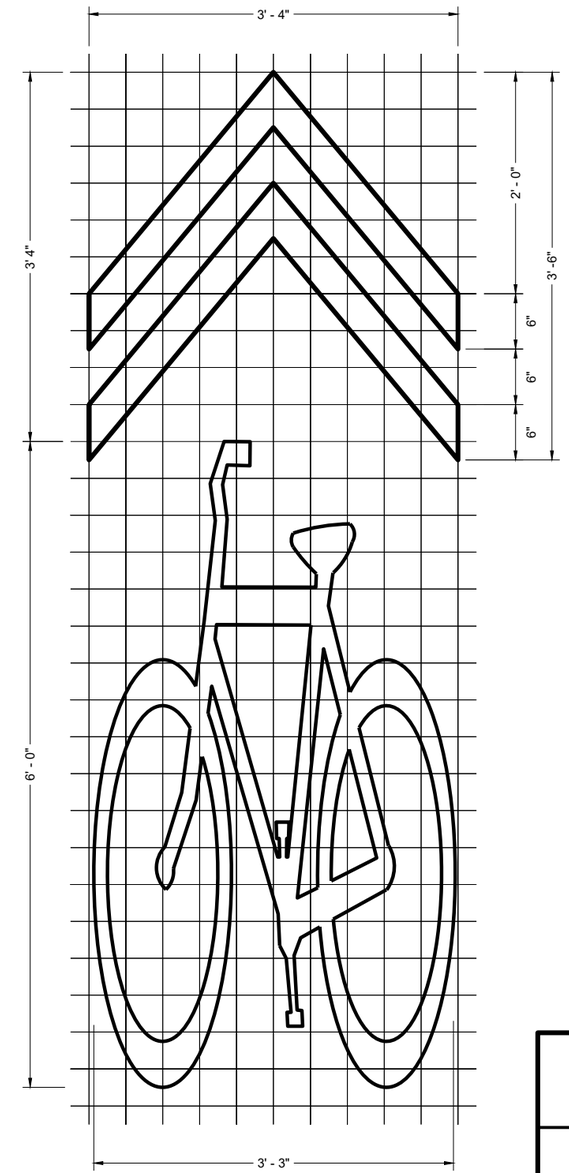

BIKE LANE SYMBOL FOR SHARED LANE

PAVEMENT MARKING FOR BIKE LANES

STATE OF WISCONSIN
DEPARTMENT OF TRANSPORTATION

APPROVED
November 2024 — DATE
/S/ Matthew Rauch — STATE SIGNING AND MARKING ENGINEER

FHWA

6

SDD 15C07-16e

*CONFIRM MARKING LINE WIDTH WITH THE MISCELLANEOUS QUANTITIES

GENERAL NOTES

DETAILS OF CONSTRUCTION NOT SHOWN ON THIS DRAWING SHALL CONFORM TO STANDARD SPECIFICATIONS AND SPECIAL PROVISIONS.

1. LOCATE THE NO PASSING ZONE W14-3 SIGN WITHIN 50 FEET OF THE "T" MARKING
2. MEASURE FROM EDGE OF MARKING TO JOINT LINE. THIS DOES NOT INCLUDE SPACE NEEDED FOR GROOVING OPERATIONS.

LEGEND

"T" MARKING

SIGN ON PERMANENT SUPPORT

DIRECTION OF TRAFFIC

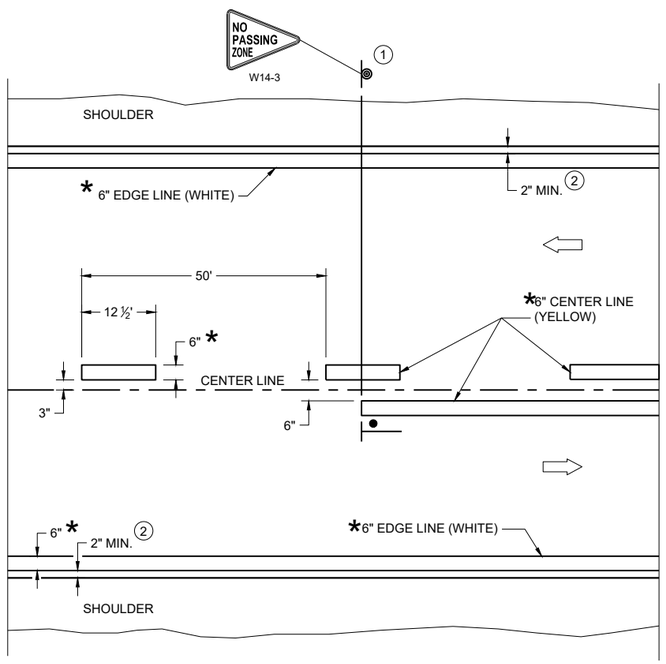

TWO WAY TRAFFIC

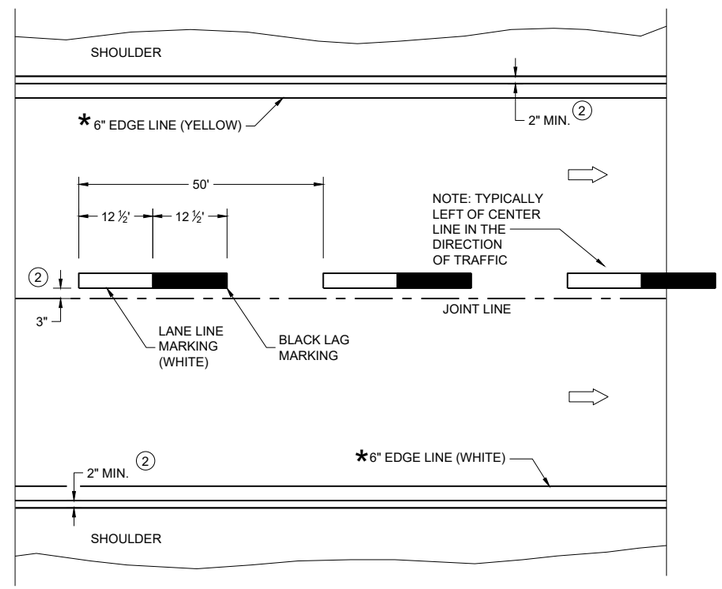

ONE WAY TRAFFIC

PERMANENT PAVEMENT MARKING

6

6

SDD 15C08-23a

SDD 15C08-23a

PERMANENT LONGITUDINAL PAVEMENT MARKINGS

STATE OF WISCONSIN
DEPARTMENT OF TRANSPORTATION

APPROVED

May 2023 — DATE

/S/ Jeannie Silver — Statewide Pavement Marking Engineer

FHWA

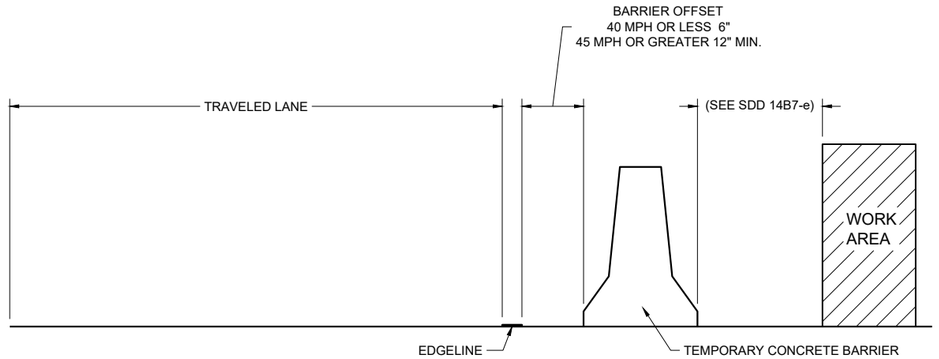

TEMPORARY BARRIER OFFSET FROM EDGELINE

GENERAL NOTES

DETAILS OF CONSTRUCTION NOT SHOWN ON THIS DRAWING SHALL CONFORM TO STANDARD SPECIFICATIONS AND SPECIAL PROVISIONS.

LEGEND

⇨ DIRECTION OF TRAFFIC

*CONFIRM MARKING LINE WIDTH WITH THE MISCELLANEOUS QUANTITIES

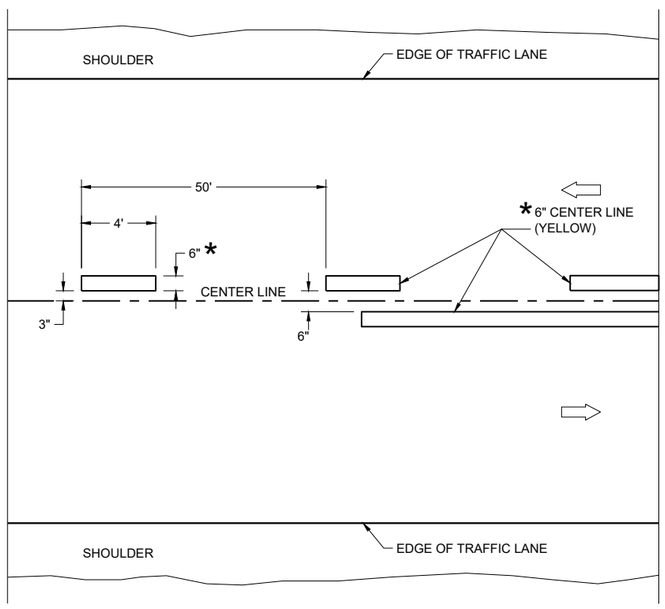

TWO WAY TRAFFIC

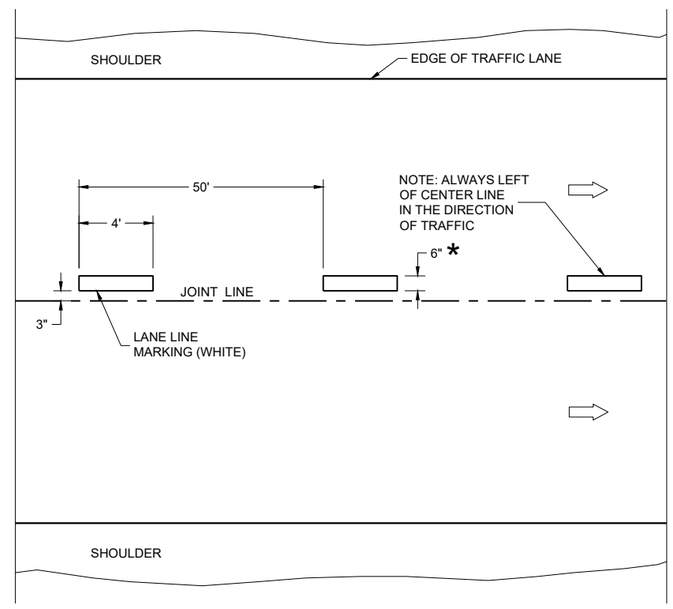

ONE WAY TRAFFIC

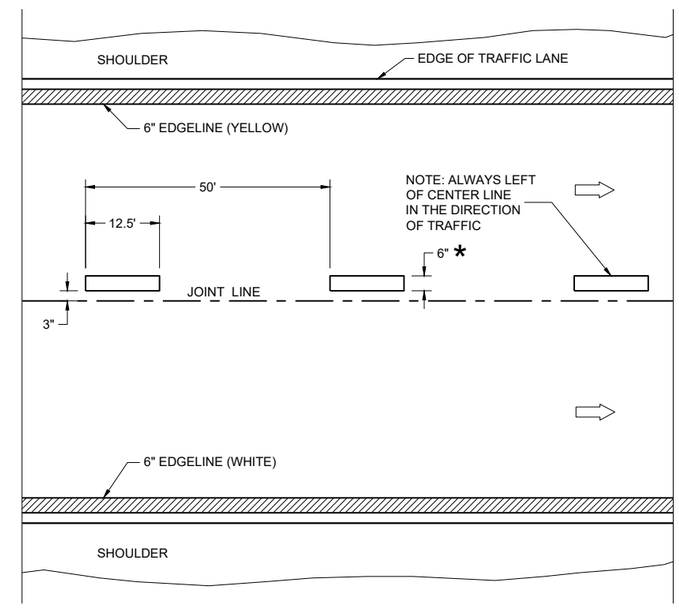

FREEWAYS AND EXPRESSWAYS

TEMPORARY PAVEMENT MARKING

TEMPORARY LONGITUDINAL PAVEMENT MARKING
STATE OF WISCONSIN DEPARTMENT OF TRANSPORTATION
APPROVED May 2023 — DATE /S/ Jeannie Silver — Statewide Pavement Marking Engineer FHWA

6

SDD 15C08-23b

6

SDD 15C08-23b

GENERAL NOTES

1. A SET OF ARROWS IS REQUIRED EVERY 400 FEET OR NEAR INTERSECTIONS OR DRIVEWAYS WITH TURNING TRAFFIC.
2. 10" WHITE
3. TURN BAY LENGTH OF LESS THAN 48' DOES NOT REQUIRE PAVEMENT ARROWS OR TEXT.

⇨ DIRECTION OF TRAFFIC

* CONFIRM MARKING LINE WIDTH WITH THE MISCELLANEOUS QUANTITIES

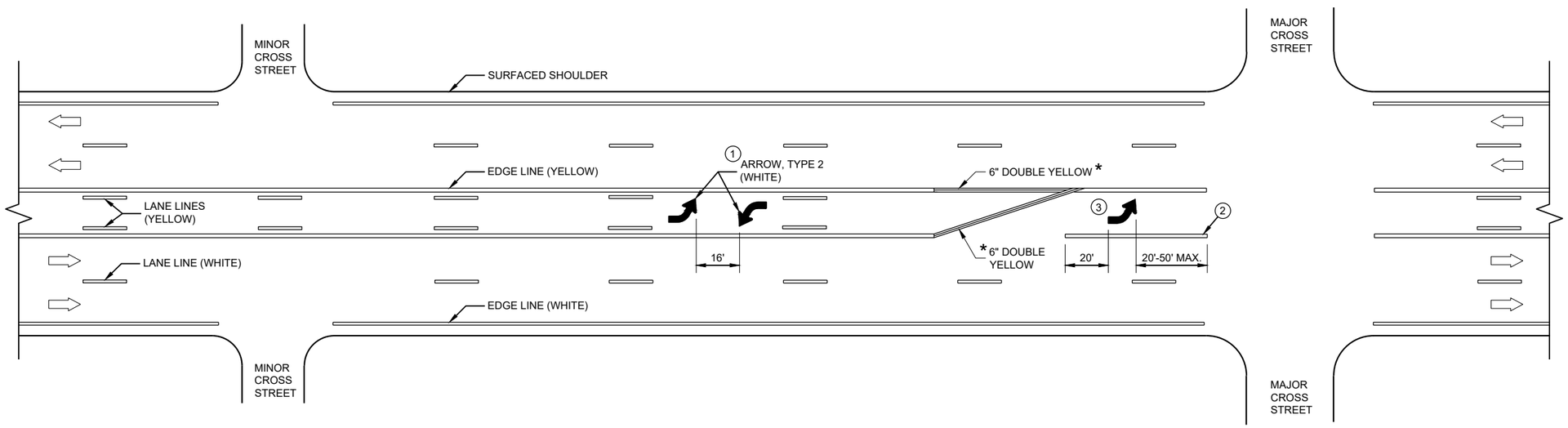

TWO WAY LEFT TURN LANE

PAVEMENT MARKING (TURN LANES)

STATE OF WISCONSIN
DEPARTMENT OF TRANSPORTA

6

SDD 15C08-23c

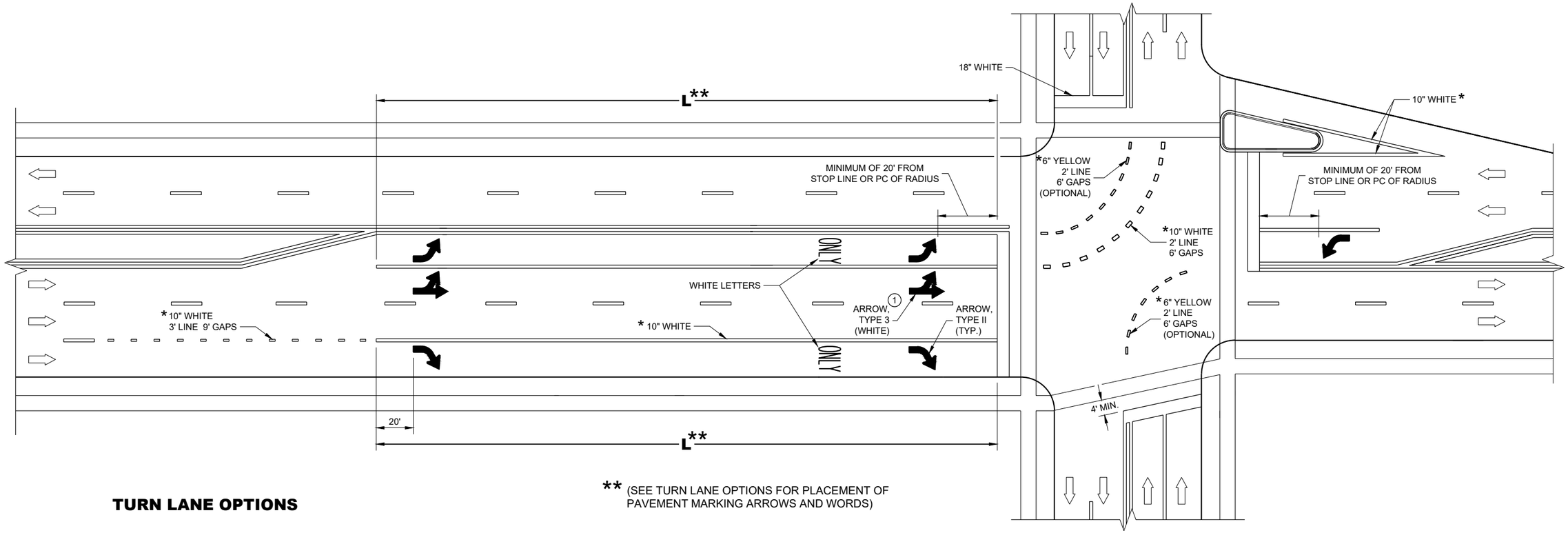

** (SEE TURN LANE OPTIONS FOR PLACEMENT OF PAVEMENT MARKING ARROWS AND WORDS)

TURN LANE OPTIONS

LENGTH OF TURN BAY (L) OF 0 - 47' DOES NOT REQUIRE PAVEMENT MARKING ARROWS OR WORDS

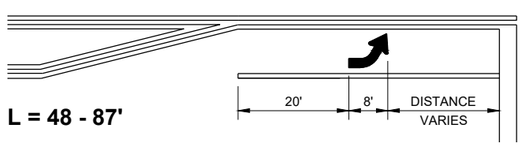

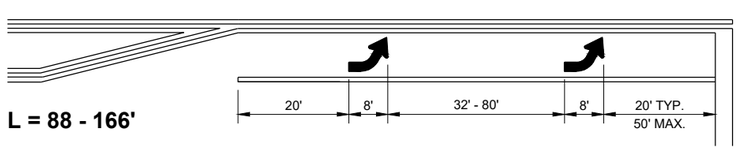

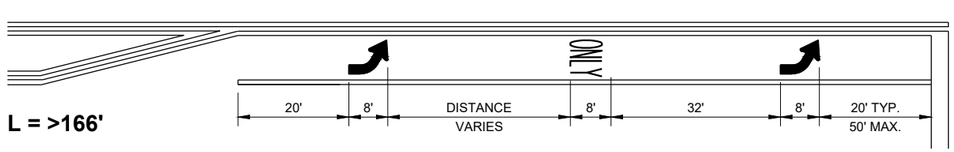

GENERAL NOTES

1. QUANTITY AND LOCATION OF TYPE 3 ARROWS ARE THE SAME AS THE TYPE II ARROWS IN THE ADJACENT TURN LANE. FOR TURN LANES WITH A PHYSICAL SEPARATION IN THE SAME DIRECTION OF TRAVEL, THE ARROWS AND "ONLY" MARKING MAY BE ELIMINATED.

⇨ DIRECTION OF TRAFFIC

L = LENGTH OF TURN BAY

* CONFIRM MARKING LINE WIDTH WITH THE MISCELLANEOUS QUANTITIES

PAVEMENT MARKING (TURN LANES)

STATE OF WISCONSIN
DEPARTMENT OF TRANSPORTAT

6

SDD 15C08-23d

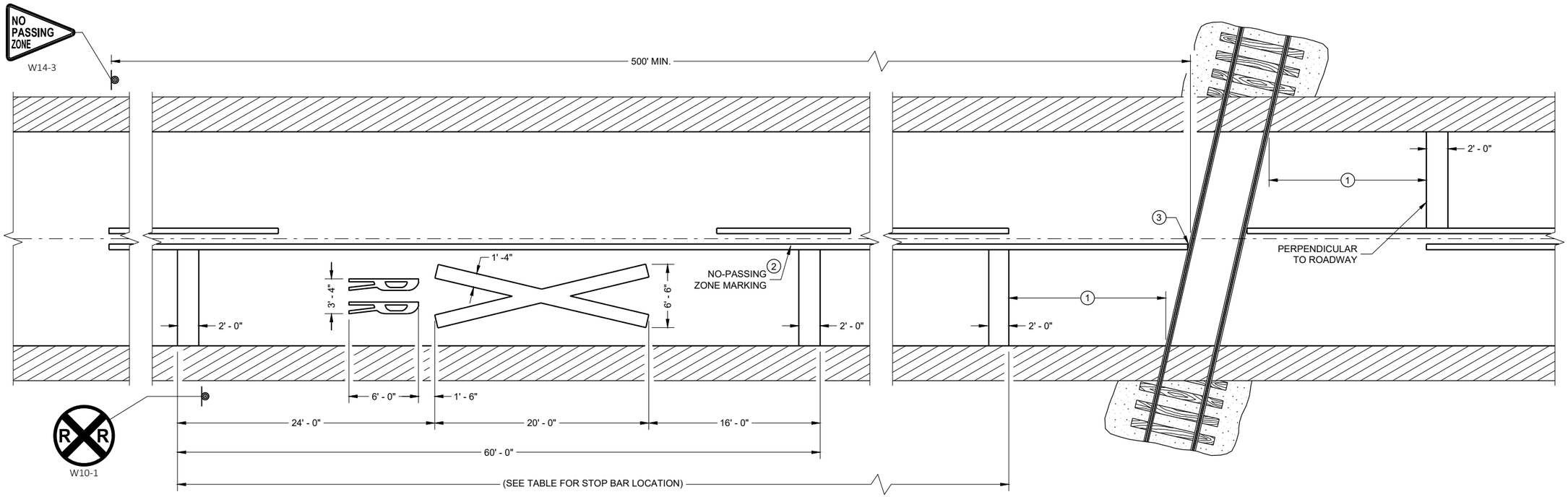

PAVEMENT MARKING

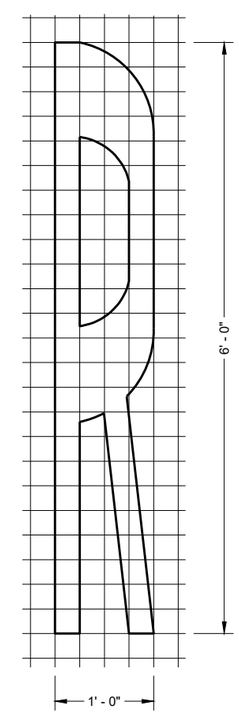

LEGEND

SIGN ON PERMANENT SUPPORT

GENERAL NOTES

DETAILS OF CONSTRUCTION, MATERIALS, AND WORKMANSHIP NOT SHOWN ON THIS DRAWING SHALL CONFORM TO THE PERTINENT REQUIREMENTS OF THE STANDARD SPECIFICATIONS AND THE APPLICABLE SPECIAL PROVISIONS.

ON MULTI-LANE ROADS THE TRANSVERSE BANDS SHOULD EXTEND ACROSS ALL APPROACH LANES, AND INDIVIDUAL R X R SYMBOLS SHOULD BE USED IN EACH APPROACH LANE.

CENTER OR LANE LINES AND NO-PASSING ZONE MARKINGS SHOWN ON THIS DRAWING ARE REQUIRED AND PAID FOR UNDER OTHER ITEMS IN THE CONTRACT.

TRACE EXISTING SYMBOL WHERE EXISTING SYMBOLS ARE PLACED.

1. PLACE STOP BAR APPROXIMATELY 8 FEET IN ADVANCE OF THE GATE (IF PRESENT), BUT NO CLOSER THAN 15 FEET IN ADVANCE OF THE NEAREST RAIL. FIELD-FIT STOP BAR TO MAXIMIZE VIEW OF APPROACHING TRAIN.
2. 500' MINIMUM. MARKING LIMITS MAY BE EXTENDED AS DIRECTED BY THE ENGINEER TO MEET ADJACENT NO-PASSING ZONE MARKINGS.
3. FOR MULTIPLE TRACK CROSSINGS, THE BARRIER LINE SHALL EXTEND TO THE NEAR RAIL OF THE FURTHEST TRACK IN THE DIRECTION OF HIGHWAY TRAVEL.

DISTANCE TABLE

TABLE BASED UPON 2C-4 WISCONSIN SUPPLEMENT OF MANUAL ON UNIFORM TRAFFIC CONTROL DEVICES.

POSTED SPEED (M.P.H.)	DIMENSION RANGE (FEET)
25	150* - 250'
30	200* - 300'
35	250* - 450'
40	300* - 500'
45	400* - 650'
50	550* - 800'
55	750* - 1000'
60	1000* - 1250'
65	1000* - 1250'

* THE MINIMUM DISTANCES IN THE TABLE ARE DESIRABLE AND SHOULD BE USED. THE DISTANCES MAY BE INCREASED UP TO THE MAXIMUM TO ALLOW FOR FIELD CONDITIONS SUCH AS THE CLOSED PROXIMITY OF DRIVEWAYS, BRIDGES, SIDE ROADS OR OTHER FEATURES THAT WOULD PROHIBIT THE MINIMUM DISTANCES FROM BEING USED.

SIGNING AND PAVEMENT MARKING DETAILS FOR RAILROAD - HIGHWAY GRADE CROSSINGS

STATE OF WISCONSIN
DEPARTMENT OF TRANSPORTATION

APPROVED
May 2023 — DATE
/S/ Matthew R. Rauch — STATE SIGNING AND MAR ENGINEER
FHWA

6

SDD 15C09-13a

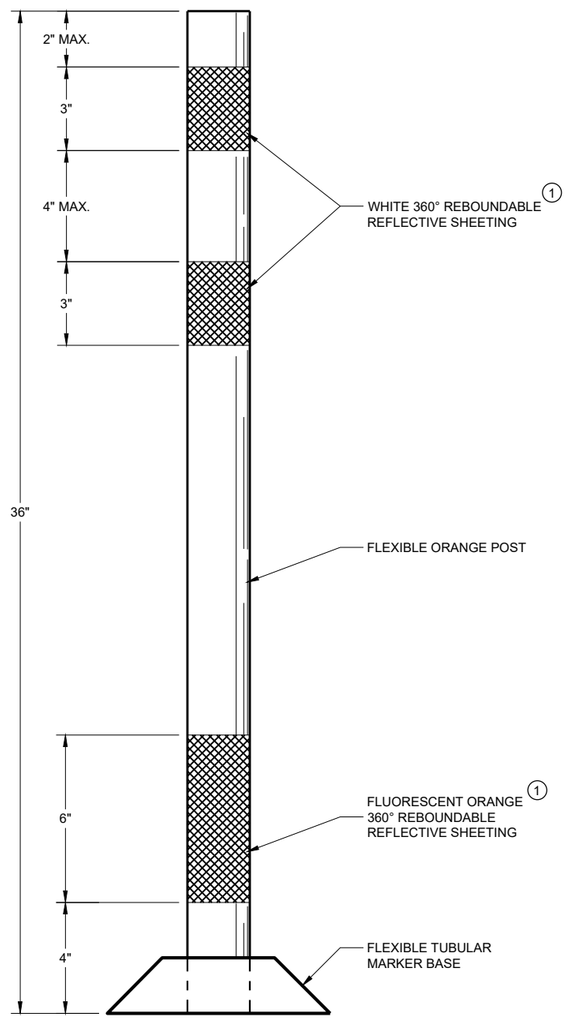

FLEXIBLE TUBULAR MARKER POST WORK ZONE

GENERAL NOTES

DETAILS OF CONSTRUCTION NOT SHOWN ON THIS DRAWING SHALL CONFORM TO THE PERTINENT REQUIREMENTS OF THE STANDARD SPECIFICATIONS AND THE APPLICABLE SPECIAL PROVISIONS.

SURFACE MOUNTED BASES SHALL BE FURNISHED IN ACCORDANCE WITH MANUFACTURERS RECOMMENDATIONS TO BE COMPATIBLE WITH FLEXIBLE TUBULAR MARKER POSTS TO A SIZE AND SHAPE THAT WILL PROVIDE A STABLE POST FOUNDATION WHEN SECURED TO THE PAVEMENT.

THE ASPHALTIC ADHESIVE OR BUTYL PAD FURNISHED SHALL BE IN ACCORDANCE WITH MANUFACTURERS RECOMMENDATIONS, UNLESS DIRECTED BY THE ENGINEER TO USE BOLTS.

(1) REFLECTIVE SHEETING SHALL FOLLOW THE REQUIREMENTS IN THE APPROVED PRODUCTS LISTING FOR SIGN SHEETING.

6

SDD 15C11 - 10a

CHANNELIZING DEVICES FLEXIBLE TUBULAR MARKER POST

STATE OF WISCONSIN
DEPARTMENT OF TRANSPORTATION

APPROVED
November 2022 — DATE
/S/ Andrew Heidtke — WORK ZONE ENGINEE
FHWA

6

SDD 15C11 - 10a

GENERAL NOTES

1. REFLECTIVE SHEETING SHALL FOLLOW THE REQUIREMENTS IN THE APPROVED PRODUCTS LISTING FOR SIGN SHEETING.
2. LOCATION OF WARNING LIGHTS WHEN SHOWN ON THE PLAN.

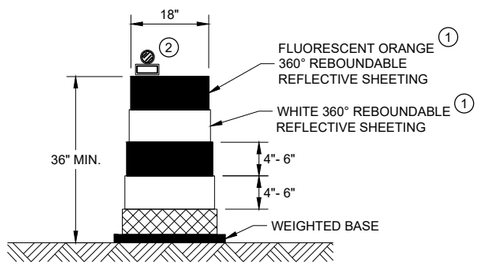

DRUM

BALLAST WIDTHS
RANGE FROM 24"-36"

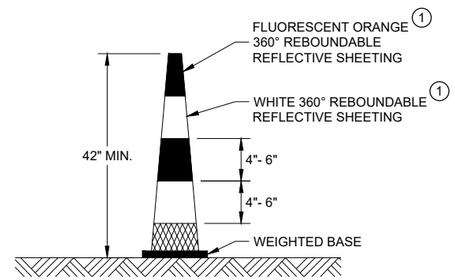

42" CONE

DO NOT USE IN TAPERS
½ SPACING OF DRUMS

BALLAST WIDTHS
RANGE FROM 14"-20"

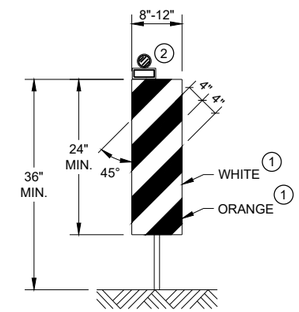

VERTICAL PANEL

THE STRIPES SHALL SLOPE DOWNWARD TO
THE TRAFFIC SIDE FOR CHANNELIZATION.

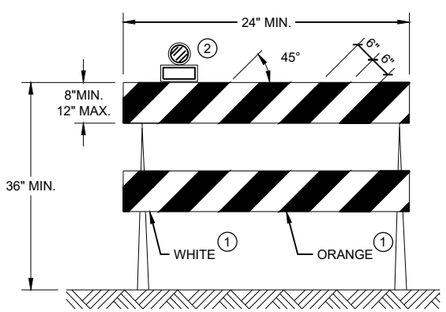

TYPE II BARRICADE

FOR RAILS LESS THAN 36" LONG, 4" WIDE STRIPES
MAY BE USED. ALL STRIPES SHALL SLOPE DOWNWARD
TO THE TRAFFIC SIDE FOR CHANNELIZATION.

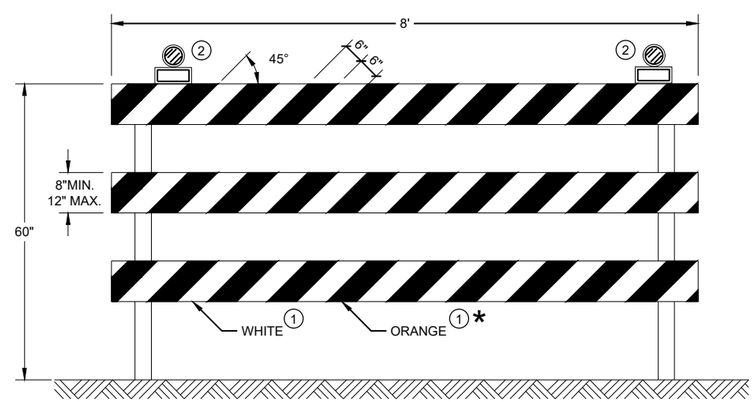

TYPE III BARRICADE

IF SIGN MOUNTED, DO NOT COVER MORE THAN 50% OF THE TOP
TWO RAILS OR 33% OF THE TOTAL AREA OF THE THREE RAILS.

* IF USED FOR A PERMANENT APPLICATION USE RED SHEETING.

CHANNELIZING DEVICES
DRUMS, CONES, BARRICADES
AND VERTICAL PANELS

STATE OF WISCONSIN
DEPARTMENT OF TRANSPORTATION

APPROVED
November 2022 — /S/ Andrew Heidtke
DATE — WORK ZONE ENGINEE
FHWA

6

6

SDD 15C11 - 10b

SDD 15C11 - 10b

LEGEND

SIGN ON PORTABLE OR PERMANENT SUPPORT

TEMPORARY PORTABLE RUMBLE STRIP ARRAY

DIRECTION OF TRAFFIC

WORK AREA

FLAGGER, EQUIPPED WITH STOP/SLOW PADDLE FASTENED ON SUPPORT STAFF

GENERAL NOTES

DETAILS OF TRAFFIC CONTROL DEVICES AND INSTALLATION NOT SHOWN ON THIS DRAWING SHALL CONFORM TO THE PERTINENT REQUIREMENTS OF THE STANDARD SPECIFICATIONS, THE SPECIAL PROVISIONS, AND THE MANUAL ON UNIFORM TRAFFIC CONTROL DEVICES.

ALL SIGNS ARE 48" X 48" UNLESS OTHERWISE NOTED.

"WO" SIGNS ARE THE SAME AS "W" SIGNS EXCEPT THE BACKGROUND IS ORANGE.

THE EXACT NUMBER, LOCATION AND SPACING OF ALL SIGNS, DEVICES, AND LOCATION OF ALL FLAGGERS SHALL BE ADJUSTED TO FIT FIELD CONDITIONS AS APPROVED BY THE ENGINEER.

THE FIRST ADVANCE WARNING SIGN SHOULD TYPICALLY BE LOCATED IN ADVANCE OF THE ANTICIPATED TRAFFIC BACKUP OR QUEUE.

WHEN A SIDE ROAD OR RAMP INTERSECTS THE FACILITY ON WHICH THE WORK IS BEING PERFORMED, ADDITIONAL TRAFFIC CONTROLS SHALL BE PROVIDED AS SPECIFIED IN THE PLANS AND/OR THE SPECIAL PROVISIONS OR AS APPROVED BY THE ENGINEER.

FLAGGING

FLAGGERS SHALL BE IN SIGHT OF EACH OTHER OR IN DIRECT COMMUNICATION AT ALL TIMES. THEY SHALL BE EQUIPPED WITH STOP/SLOW PADDLES FASTENED ON SUPPORT STAFFS. WHEN THE FLAGGING OPERATION IS NOT IN EFFECT REMOVE TEMPORARY PORTABLE RUMBLE STRIPS PRIOR TO COVERING OR REMOVING ALL ADVANCE SIGNING.

(1) FOR MOVING WORK OPERATIONS, POST ADDITIONAL W20-7A FLAGGER SIGNS AT APPROXIMATELY 3,500' INTERVALS IN THE MOVING WORK OPERATION OR AS APPROVED BY THE ENGINEER.

(2) SIGN NOT REQUIRED IF FLAGGING OPERATION OCCURS WITHIN A SIGNED ROAD WORK ZONE AREA.

WHEN THE DISTANCE BETWEEN FLAGGERS EXCEEDS 2 MILES, A PILOT CAR IS REQUIRED. WHEN CURVES REDUCE SIGHT DISTANCE BELOW 400', A PILOT CAR IS REQUIRED.

TEMPORARY PORTABLE RUMBLE STRIPS

UTILIZE TEMPORARY PORTABLE RUMBLE STRIPS ON ALL FLAGGING OPERATIONS.

(3) EACH TEMPORARY PORTABLE RUMBLE STRIP ARRAY CONSISTS OF THREE RUMBLE STRIPS PLACED TRANSVERSE ACROSS THE LANE AT THE LOCATIONS SHOWN. WITHIN EACH ARRAY, SPACING BETWEEN RUMBLE STRIPS SHALL BE 15 FEET ON CENTER

ONLY USE TEMPORARY PORTABLE RUMBLE STRIPS FROM THE APPROVED PRODUCTS LIST.

INSTALL TEMPORARY RUMBLE STRIPS PER MANUFACTURER'S RECOMMENDATIONS.

PLACE ADVANCE SIGNING PRIOR TO INSTALLING TEMPORARY RUMBLE STRIPS.

DO NOT INSTALL TEMPORARY PORTABLE RUMBLE STRIPS ON GRAVEL, MILLED SURFACES, OR ASPHALT THAT HAS BEEN PAVED LESS THAN 12 HOURS.

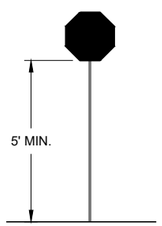

STOP/SLOW PADDLE ON SUPPORT STAFF

SIGN AND TEMPORARY RUMBLE STRIP ARRAY SPACING TABLE

SPEED LIMIT	SPACING "A"
25-30 MPH	200'
35-40 MPH	350'
45-55 MPH	500'

WO3-4

USE OF WO3-4 SIGN IS OPTIONAL. WHEN USED, THIS SIGN SHALL BE LOCATED BETWEEN THE W20-7A AND W20-4A SIGNS, USING SPACING "A".

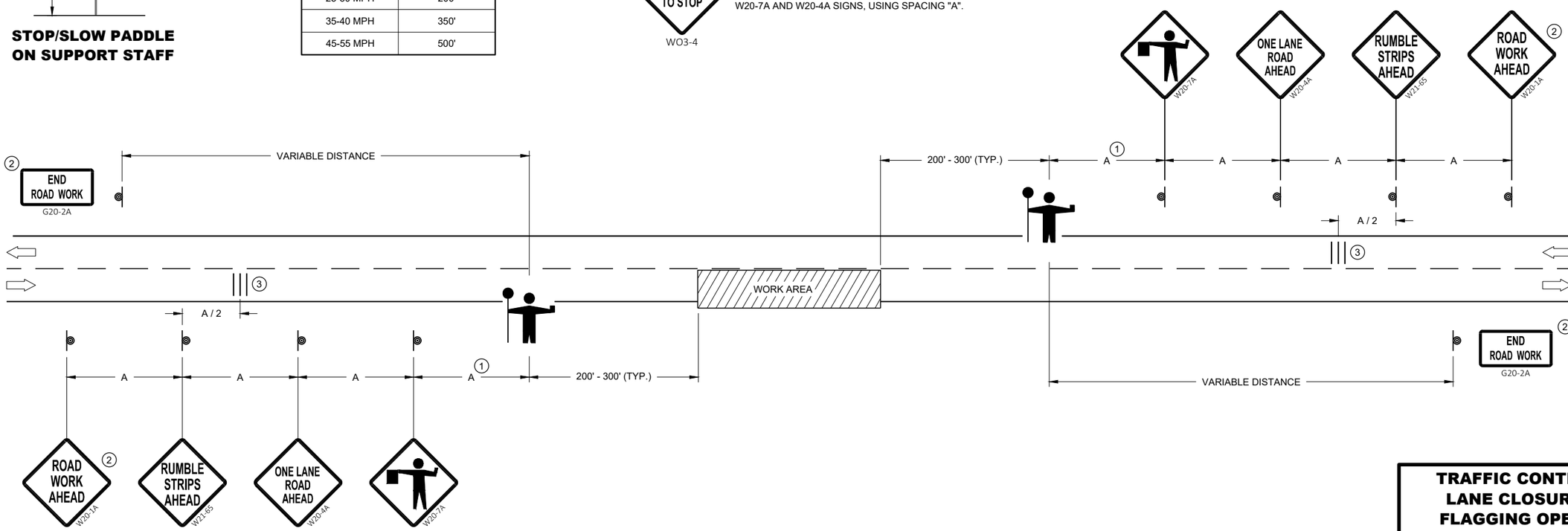

TRAFFIC CONTROL FOR LANE CLOSURE WITH FLAGGING OPERATION

STATE OF WISCONSIN
DEPARTMENT OF TRANSPORTATION

APPROVED
May 2022 — DATE
/S/ Andrew Heidtke — WORK ZONE ENGINEE
FHWA

6

SDD 15C12 - 09a

GENERAL NOTES

- SIGN ON PERMANENT SUPPORT
- TRAFFIC CONTROL CONE 42-INCH
- TRAFFIC CONTROL DRUM
- TEMPORARY PORTABLE RUMBLE STRIP ARRAY
- DIRECTION OF TRAFFIC
- WORK AREA
- AFAD — AUTOMATED FLAGGER ASSISTANCE DEVICE (AFAD)

GENERAL NOTES

DETAILS OF TRAFFIC CONTROL DEVICES AND INSTALLATION NOT SHOWN ON THIS DRAWING SHALL CONFORM TO THE PERTINENT REQUIREMENTS OF THE STANDARD SPECIFICATIONS, THE SPECIAL PROVISIONS, AND THE MANUAL ON UNIFORM TRAFFIC CONTROL DEVICES.

ALL SIGNS ARE 48" X 48" UNLESS OTHERWISE NOTED.

"WO" SIGNS ARE THE SAME AS "W" SIGNS EXCEPT THE BACKGROUND IS ORANGE.

THE EXACT NUMBER, LOCATION AND SPACING OF ALL SIGNS, DEVICES, AND LOCATION OF ALL FLAGGERS SHALL BE ADJUSTED TO FIT FIELD CONDITIONS AS APPROVED BY THE ENGINEER.

THE FIRST ADVANCE WARNING SIGN SHOULD TYPICALLY BE LOCATED IN ADVANCE OF THE ANTICIPATED TRAFFIC BACKUP OR QUEUE.

WHEN A SIDE ROAD OR RAMP INTERSECTS THE FACILITY ON WHICH THE WORK IS BEING PERFORMED, ADDITIONAL TRAFFIC CONTROLS SHALL BE PROVIDED AS SPECIFIED IN THE PLANS AND/OR THE SPECIAL PROVISIONS OR AS APPROVED BY THE ENGINEER.

FLAGGING

IF THE AUTOMATED FLAGGER ASSISTANCE DEVICE (AFAD) STOPS WORKING, FLAGGERS SHALL BE IN SIGHT OF EACH OTHER OR IN DIRECT COMMUNICATION AT ALL TIMES. THEY SHALL BE EQUIPPED WITH STOP/SLOW PADDLES FASTENED ON SUPPORT STAFFS. WHEN THE FLAGGING OPERATION IS NOT IN EFFECT REMOVE TEMPORARY PORTABLE RUMBLE STRIPS PRIOR TO COVERING OR REMOVING ALL ADVANCE SIGNING.

WHEN THE DISTANCE BETWEEN FLAGGERS EXCEEDS 2 MILES, A PILOT CAR IS REQUIRED. WHEN CURVES REDUCE SIGHT DISTANCE BELOW 400', A PILOT CAR IS REQUIRED.

1. SIGN NOT REQUIRED IF FLAGGING OPERATION OCCURS WITHIN A SIGNED ROAD WORK ZONE AREA.
2. IF FLAGGERS ARE PHYSICALLY NEEDED TO FLAG, REPLACE WO3-4 SIGNS WITH W20-7A SIGNS.

TEMPORARY PORTABLE RUMBLE STRIPS

UTILIZE TEMPORARY PORTABLE RUMBLE STRIPS ON ALL FLAGGING OPERATIONS.

ONLY USE TEMPORARY PORTABLE RUMBLE STRIPS FROM THE APPROVED PRODUCTS LIST.

PLACE ADVANCE SIGNING PRIOR TO INSTALLING TEMPORARY RUMBLE STRIPS.

DO NOT INSTALL TEMPORARY PORTABLE RUMBLE STRIPS ON GRAVEL, MILLED SURFACES, OR ASPHALT THAT HAS BEEN PAVED LESS THAN 12 HOURS.

3. EACH TEMPORARY PORTABLE RUMBLE STRIP ARRAY CONSISTS OF THREE RUMBLE STRIPS PLACED TRANSVERSELY AT THE LOCATIONS SHOWN. WITHIN EACH ARRAY, SPACING BETWEEN RUMBLE STRIPS SHALL BE 15 FEET ON CENTER.

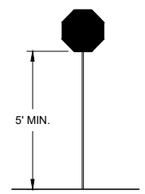

STOP/SLOW PADDLE ON SUPPORT STAFF

SIGN AND TEMPORARY RUMBLE STRIP ARRAY SPACING TABLE

SPEED LIMIT	SPACING "A"
25-30 MPH	200'
35-40 MPH	350'
45-55 MPH	500'

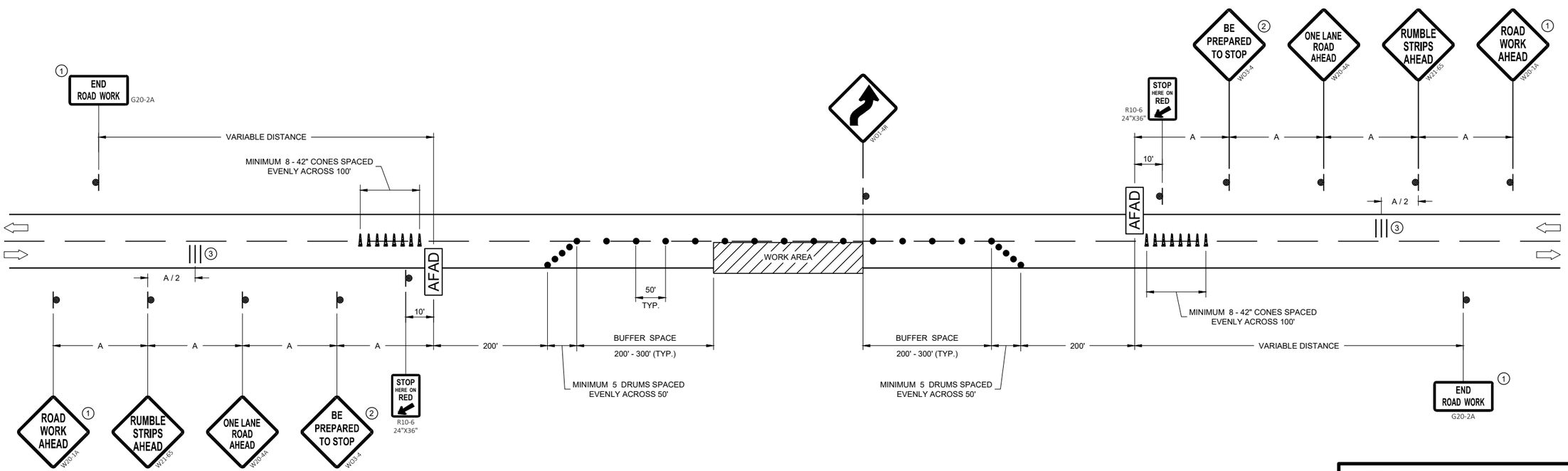

TRAFFIC CONTROL, LANE CLOSURE WITH AUTOMATED FLAGGER ASSISTANCE DEVICE

STATE OF WISCONSIN
DEPARTMENT OF TRANSPORTATION

APPROVED
May 2022 — DATE
/S/ Andrew Heidtke — WORK ZONE ENGINEER
FHWA

6
SDD 15C12 - 09b

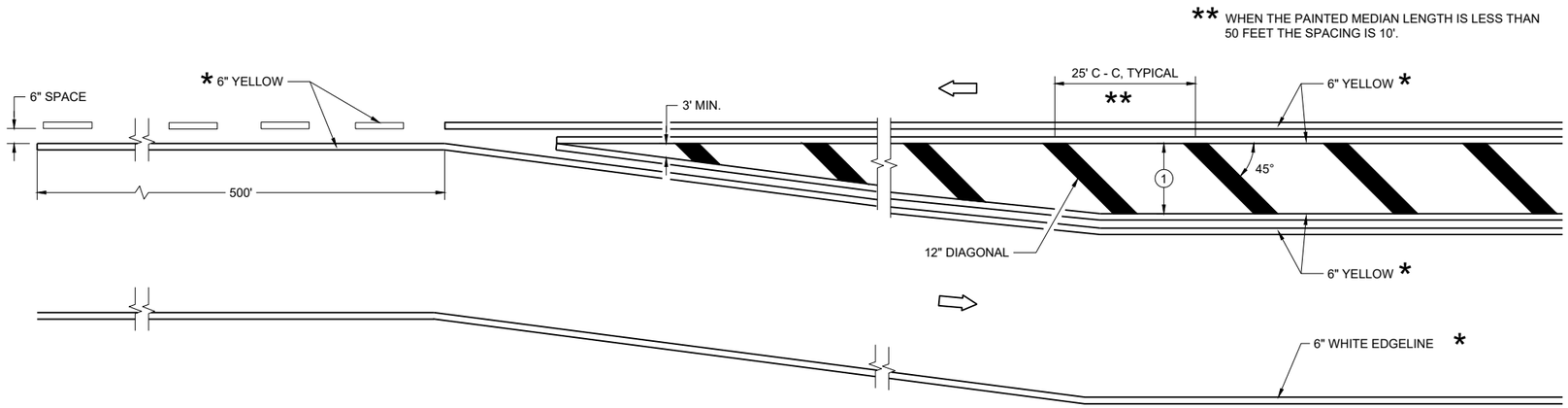

MEDIAN ISLAND DETAIL

GENERAL NOTES

1. DIAGONALS ARE OPTIONAL WHEN PAINTED ISLAND IS LESS THAN 6 FEET AT THE WIDEST POINT. OMIT DIAGONALS IF WIDTH IS LESS THAN 4 FEET.

⇨ DIRECTION OF TRAVEL

*CONFIRM MARKING LINE WIDTH WITH THE MISCELLANEOUS QUANTITIES

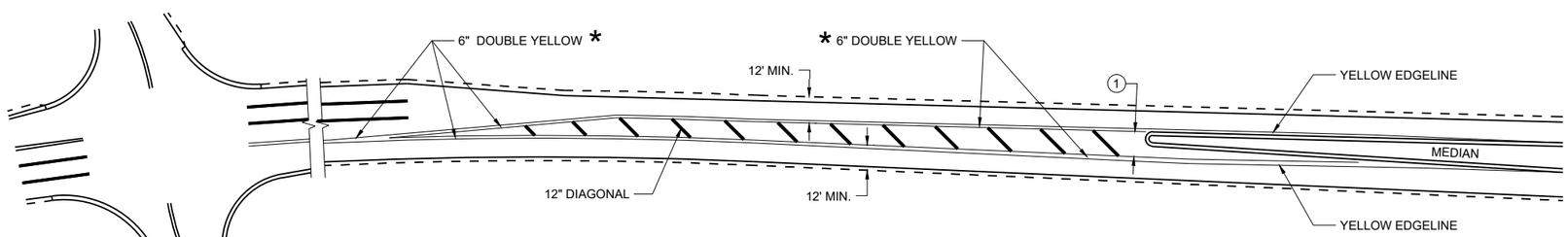

APPROACH MARKINGS FOR OTHER MEDIAN TYPES

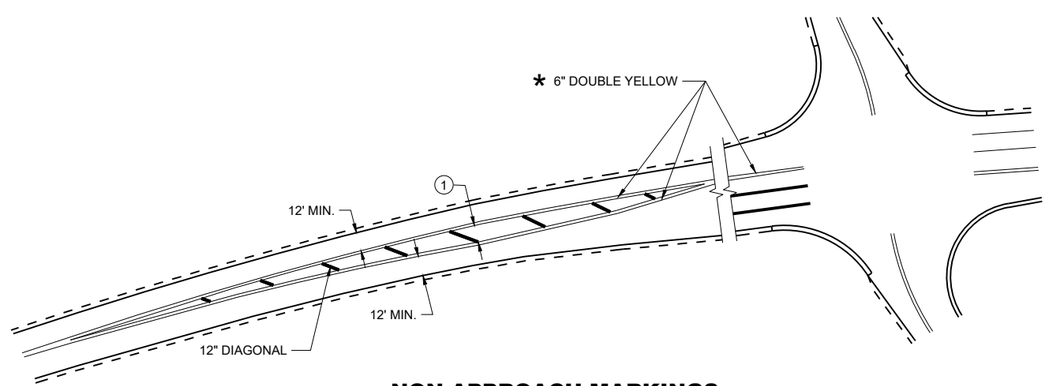

NON-APPROACH MARKINGS

MEDIAN ISLAND PAVEMENT MARKINGS

STATE OF WISCONSIN
DEPARTMENT OF TRANSPORTATION

APPROVED
August 2024 — DATE
/S/ Jeannie Silver — Statewide Pavement Marking Engineer
FHWA

6

SDD 15C18-09a

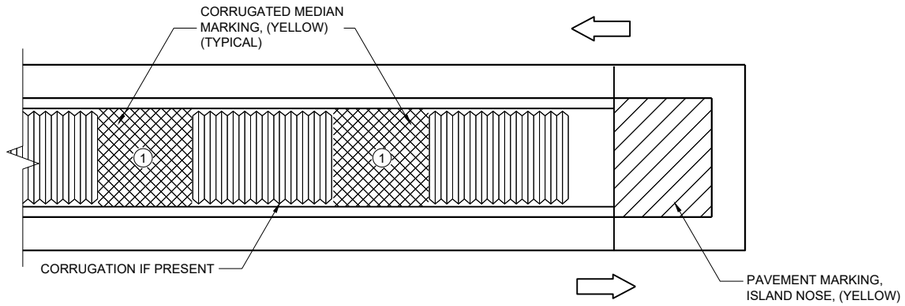

MEDIAN ISLAND WITH SQUARE BLUNT NOSE

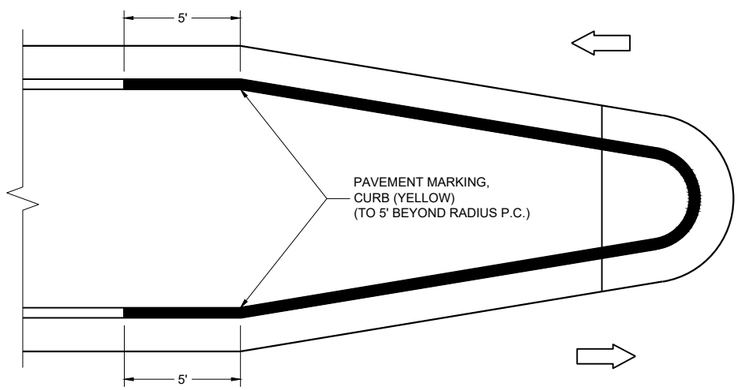

MEDIAN ISLAND WITH ROUND BLUNT NOSE

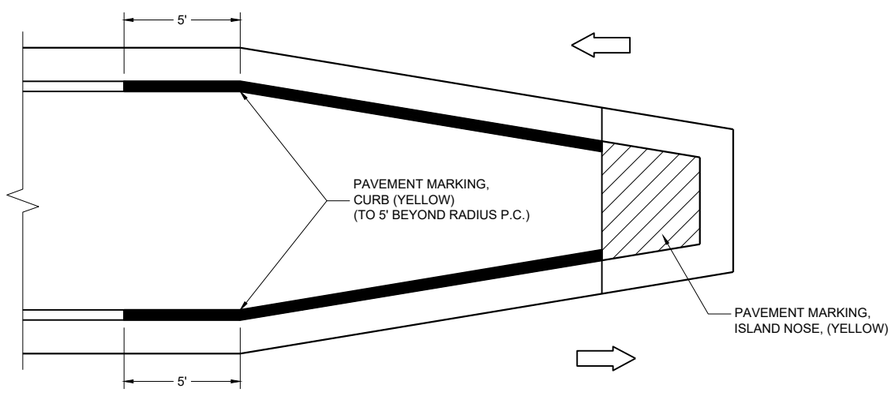

MEDIAN ISLAND WITH SLOPED NOSE

TYPICAL PLACEMENT OF PAVEMENT MARKING ON MEDIAN ISLANDS

GENERAL NOTES

WHEN CONCRETE CORRUGATED MEDIAN IS CONSTRUCTED TO SEPARATE TRAFFIC OPERATING IN THE OPPOSING DIRECTION, YELLOW PAVEMENT MARKING SHALL BE APPLIED TO THE FLAT PORTION OF THE CONCRETE CORRUGATED MEDIAN. THE ITEM OF PAVEMENT MARKING, CONCRETE CORRUGATED MEDIAN, WILL BE MEASURED IN PLACE AND ACCEPTED IN ACCORDANCE WITH THE CONTRACT AND PAID FOR AT THE CONTRACT UNIT PRICE PER SQUARE FOOT.

(1) APPLY PAVEMENT MARKING TO THE FLAT PORTION OF CORRUGATED MEDIAN.

ISLAND NOSE MARKING

CURB MARKING

CORRUGATED MEDIAN MARKING

DIRECTION OF TRAVEL

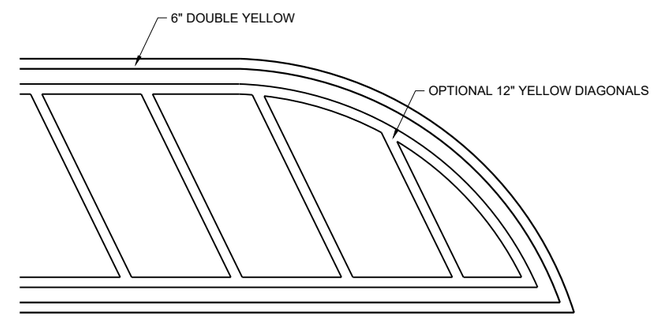

FLUSH MEDIAN ISLAND NOSE

PAVEMENT MARKINGS, MEDIAN ISLAND NOSE

STATE OF WISCONSIN
DEPARTMENT OF TRANSPORTATION

APPROVED
August 2024 — DATE
/S/ Jeannie Silver — Statewide Pavement Marking Engineer
FHWA

LEGEND

V1 LEAD VEHICLE

V2 MARKING VEHICLE

V3 SHADOW VEHICLE

TRUCK MOUNTED ATTENUATOR (TMA)

SIGN ON TEMPORARY SUPPORT

DIRECTION OF TRAFFIC

GENERAL NOTES

ALL VEHICLES SHALL BE EQUIPPED WITH TWO 360 DEGREE HIGH INTENSITY YELLOW FLASHING LIGHTS OR STROBE LIGHTS AND OPERATED WITH HEADLIGHTS TURNED ON.

ALL VEHICLES SHALL BE EQUIPPED WITH REAR FACING TYPE B OR C FLASHING ARROW PANEL OPERATING IN CAUTION MODE. SIGNS PLACED ON VEHICLES MUST NOT OBSCURE THE ARROW PANEL.

ALL SIGNS ARE 48" X 48" UNLESS OTHERWISE SPECIFIED.

DISTANCE BETWEEN VEHICLES MAY VARY ACCORDING TO TERRAIN, SIGHT DISTANCE, PAINT DRYING TIME, AND OTHER FACTORS. WHENEVER ADEQUATE STOPPING SIGHT DISTANCE EXISTS TO THE REAR, SHADOW VEHICLES SHOULD MAINTAIN THE MINIMUM DISTANCE FROM THE WORK VEHICLE AND PROCEED AT THE SAME SPEED AS THE WORK VEHICLE. SHADOW VEHICLES SHOULD SLOW DOWN IN ADVANCE OF VERTICAL AND HORIZONTAL CURVES THAT RESTRICT SIGHT DISTANCE.

THE WORK AND SHADOW VEHICLES SHOULD PULL OVER PERIODICALLY TO ALLOW TRAFFIC TO PASS.

WHEN NO WORK ACTIVITY IS TAKING PLACE, REMOVE OR LAY STATIONARY SIGNS AND SUPPORTS FLAT ON THE GRADE WITH UPRIGHTS ORIENTED PARALLEL TO AND DOWNSTREAM FROM TRAFFIC.

CONES SHOULD BE USED BETWEEN THE MARKING AND SHADOW VEHICLE AT 100 FOOT SPACING. CONES MAY BE OMITTED ON PAINTED LINE IF APPROVED BY THE ENGINEER. CONSIDER PAVEMENT MARKING DRY OR CURE TIMES AND TRAFFIC VOLUME.

CONES SHALL BE A MINIMUM OF 28" FOR WET PAVEMENT MARKING .

1. SIGNS SHALL BE REPEATED APPROXIMATELY EVERY THREE MILES AND AFTER EVERY MAJOR INTERSECTION.
2. IF CONSTRUCTION WORK ZONE SIGNS ARE IN PLACE, W20-1A OR W21-63 ARE NOT REQUIRED.
3. V1 AND V2 CAN BE SWITCHED SO THAT THE MARKER IS THE LEAD VEHICLE.

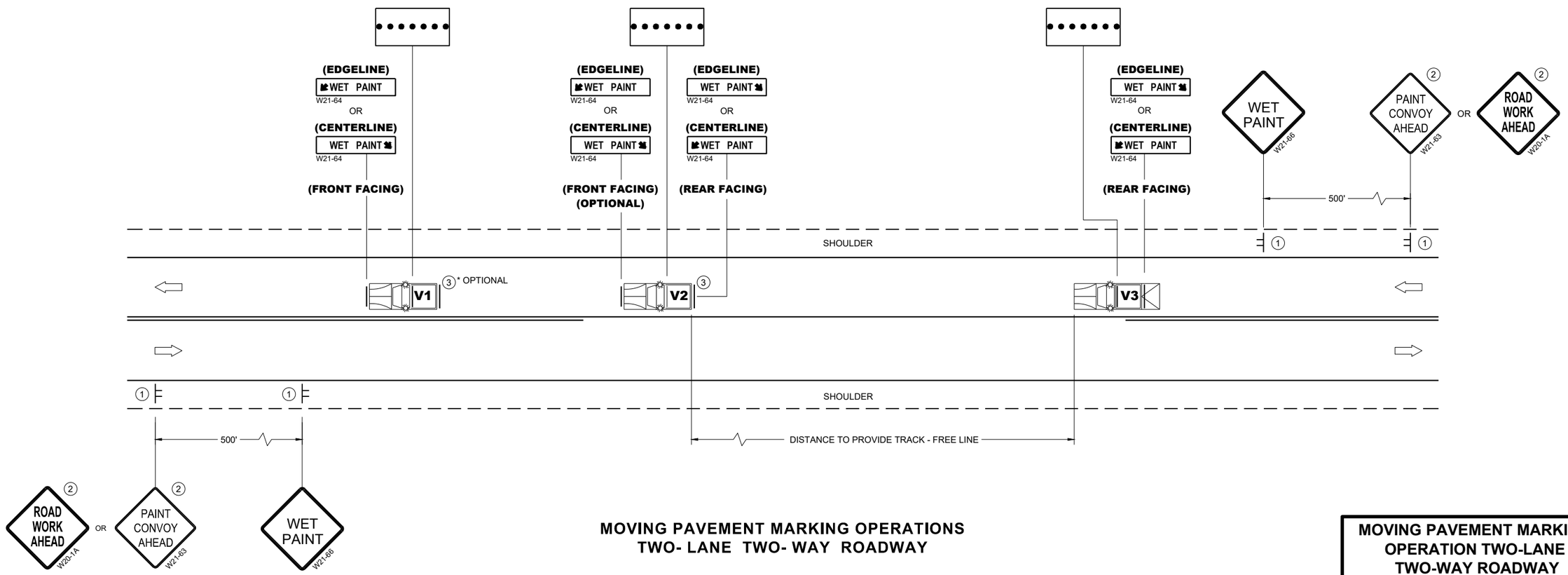

MOVING PAVEMENT MARKING OPERATIONS
TWO- LANE TWO- WAY ROADWAY

MOVING PAVEMENT MARKING OPERATION TWO-LANE TWO-WAY ROADWAY

STATE OF WISCONSIN
DEPARTMENT OF TRANSPORTATION

APPROVED
March 2024 — DATE
/S/ Andrew Heidtke — WORK ZONE ENGINEER
FHWA

6

SDD 15C19-9a

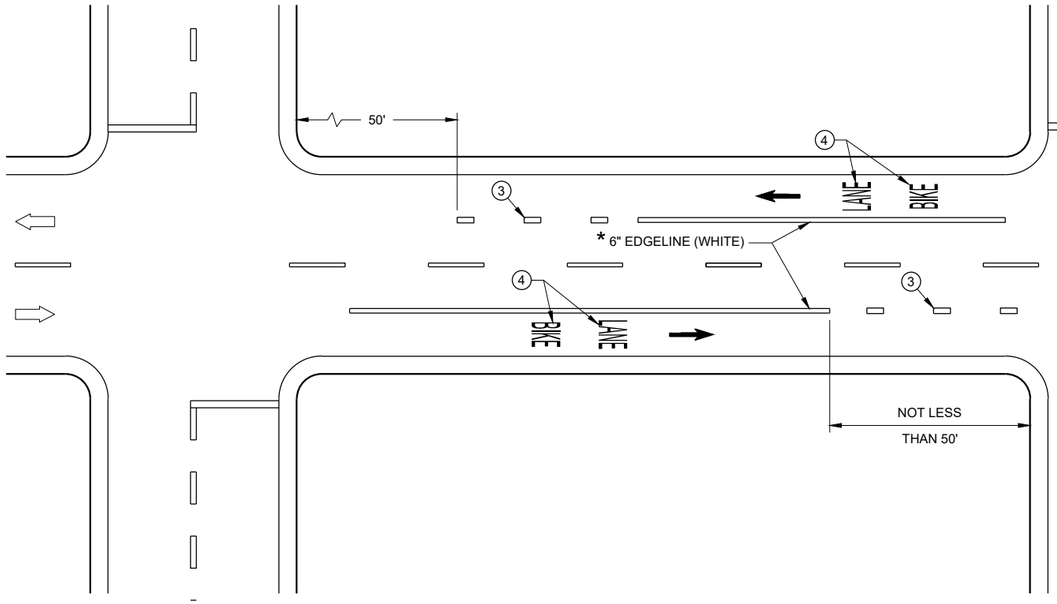

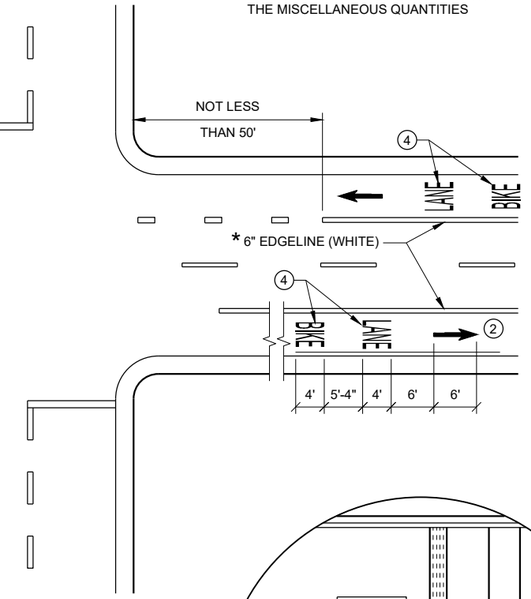

* CONFIRM MARKING LINE WIDTH WITH THE MISCELLANEOUS QUANTITIES

DIRECTION OF TRAVEL

GENERAL NOTES

1. DETAILS OF CONSTRUCTION NOT SHOWN ON THIS DRAWING SHALL CONFORM TO STANDARD SPECIFICATIONS AND SPECIAL PROVISIONS.
2. MINIMUM OF ONE PER BLOCK. MAXIMUM OF 250 FEET.
3. DOTTED LINES (3' LINE, 9' GAP) SHOULD BE USED 50 FEET TO 200 FEET IN ADVANCE OF AN INTERSECTION WHERE THERE IS NO RIGHT TURN ONLY LANE AND THERE IS HEAVY RIGHT TURN TRAFFIC OR THERE IS A NEAR-SIDE BUS STOP. AT OTHER INTERSECTIONS WHERE RIGHT TURN TRAFFIC IS LIGHT TO MODERATE, A SOLID LINE CAN BE USED UP TO THE INTERSECTION.
4. BIKE SYMBOLS OR WORDS MAY BE USED.
5. BIKE ACCOMMODATION IS TYPICAL 5 FEET WIDE AND MINIMUM OF 4 FEET FROM A LONGITUDINAL JOINT. USE 5 FEET AT ≥ 45 MPH.
6. OMIT THESE MARKINGS FOR WIDER TURN LANE APPLICATIONS (MINIMUM OF 15 FOOT WIDE TURN LANE).
7. REFER TO CONTRACT PLANS FOR LANE WIDTH.

DESIGNATED BIKE LANE - NO PARKING

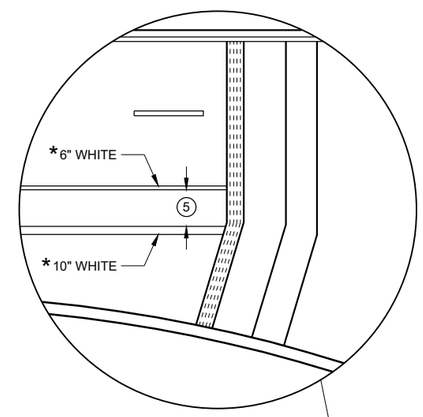

4 LANE DIVIDED WITHOUT ISLAND

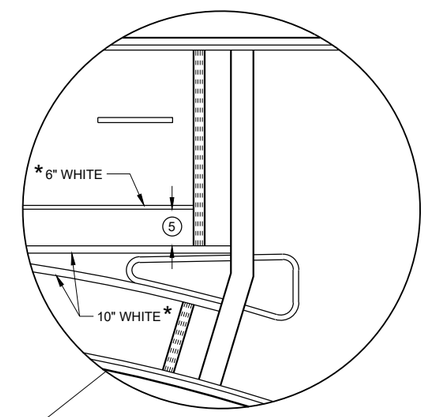

4 LANE DIVIDED WITH ISLAND

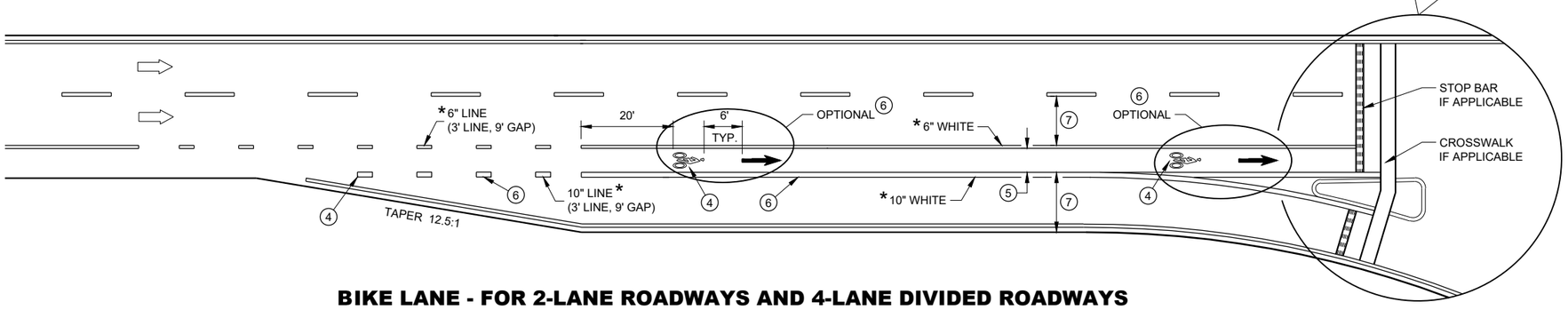

BIKE LANE - FOR 2-LANE ROADWAYS AND 4-LANE DIVIDED ROADWAYS (4-LANE DIVIDED WITH RIGHT TURN LANE SHOWN)

BIKE LANE MARKING

STATE OF WISCONSIN
DEPARTMENT OF TRANSPORTATION

APPROVED
May 2023 — DATE
/S/ Matthew Rauch — STATE SIGNING AND MAR ENGINEER
FHWA

6

SDD 15C29-08a

GENERAL NOTES

STOP SIGN SHALL BE PLACED A MINIMUM OF 6 FEET TO A MAXIMUM OF 50 FEET FROM THE EDGELINE LOCATION.

1. 18-INCH STOP LINES MAY BE DELETED OR ADDED BY THE REGION MARKING ENGINEER BASED ON VISIBILITY AND SIGHT LINES.
2. NO STOP LINE IS REQUIRED IF STOP SIGN IS LESS THAN OR EQUAL TO 40 FEET FROM THE EDGELINE.
3. NO STOP LINE IS REQUIRED IF STOP SIGN IS LESS THAN OR EQUAL TO 30 FEET FROM THE FLANGE LINE EXTENSION.
4. MOVE CLOSER TO THE EDGE OF TRAVEL LINE AS NEEDED FOR VISIBILITY AND SIGHT LINES (NO CLOSER THAN 4 FEET).
5. LADDER BAR CROSSWALKS SHOULD ONLY BE USED FOR MID BLOCK CROSSINGS. USE 2 - 6" TRANSVERSE LINES.
6. POSTED SPEED LIMITS OF 40 MPH OR GREATER USE A MINIMUM WIDTH OF 8' FOR MIDBLOCK CROSSWALKS

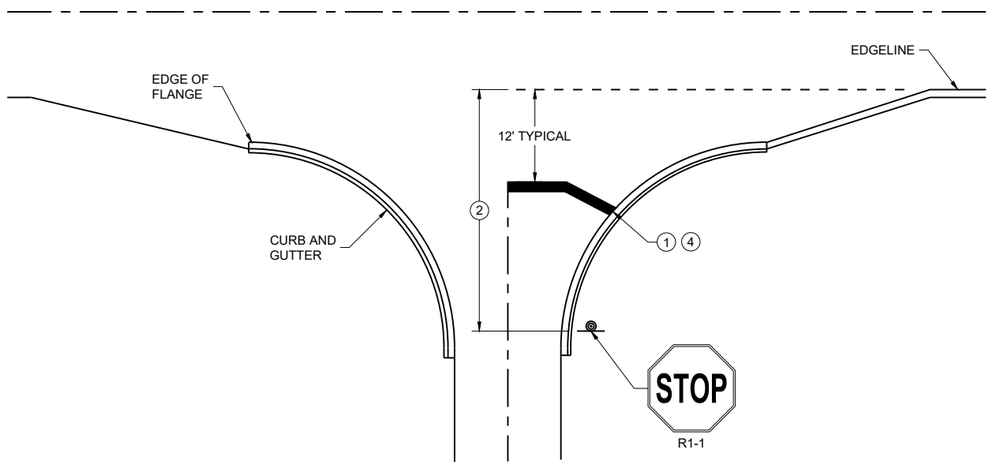

TYPICAL STOP LINE PAVEMENT MARKING WITH CURB AND GUTTER

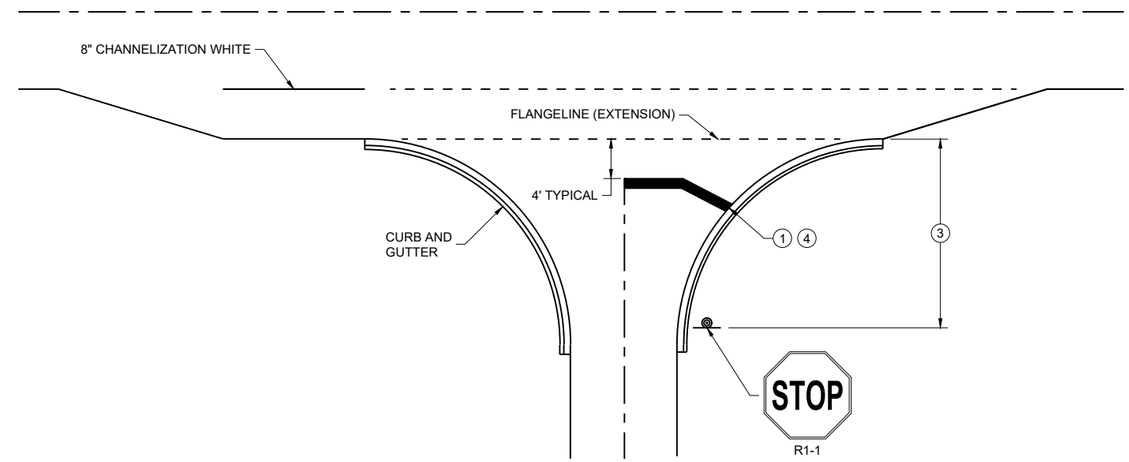

TYPICAL STOP LINE PAVEMENT MARKING FOR SIDE ROADS WITH RIGHT TURN LANE

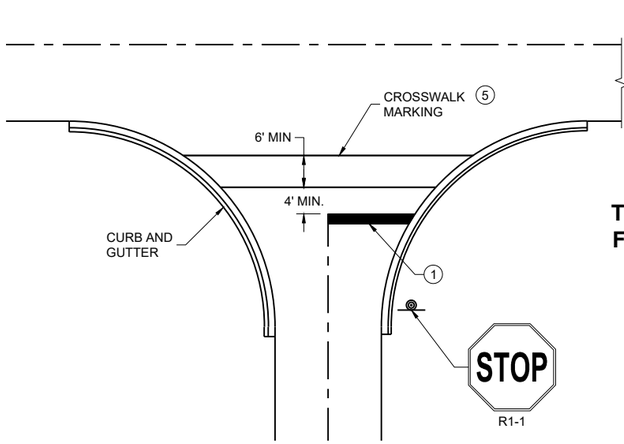

TYPICAL STOP LINE PAVEMENT MARKING FOR SIDE ROADS WITH CROSSWALK MARKING

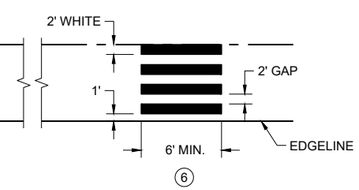

TYPICAL PAVEMENT MARKING FOR MID-BLOCK CROSSWALK 5

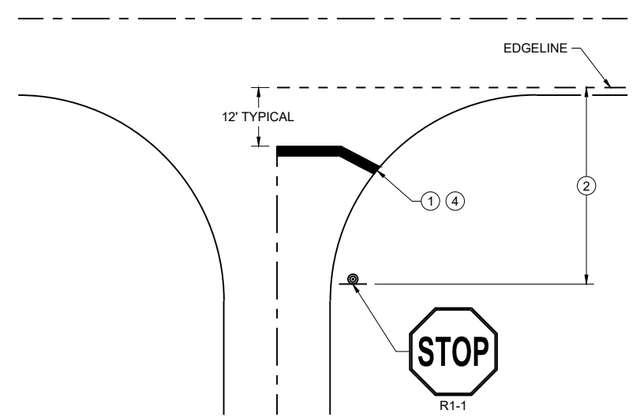

TYPICAL STOP LINE PAVEMENT MARKING WITHOUT CURB AND GUTTER

STOP LINE AND CROSSWALK PAVEMENT MARKING

STATE OF WISCONSIN
DEPARTMENT OF TRANSPORTATION

APPROVED
March 2024 — DATE
/S/ Matthew Rauch — STATE SIGNING AND MARKING ENGINEER

FHWA

6
SDD 15C33-05

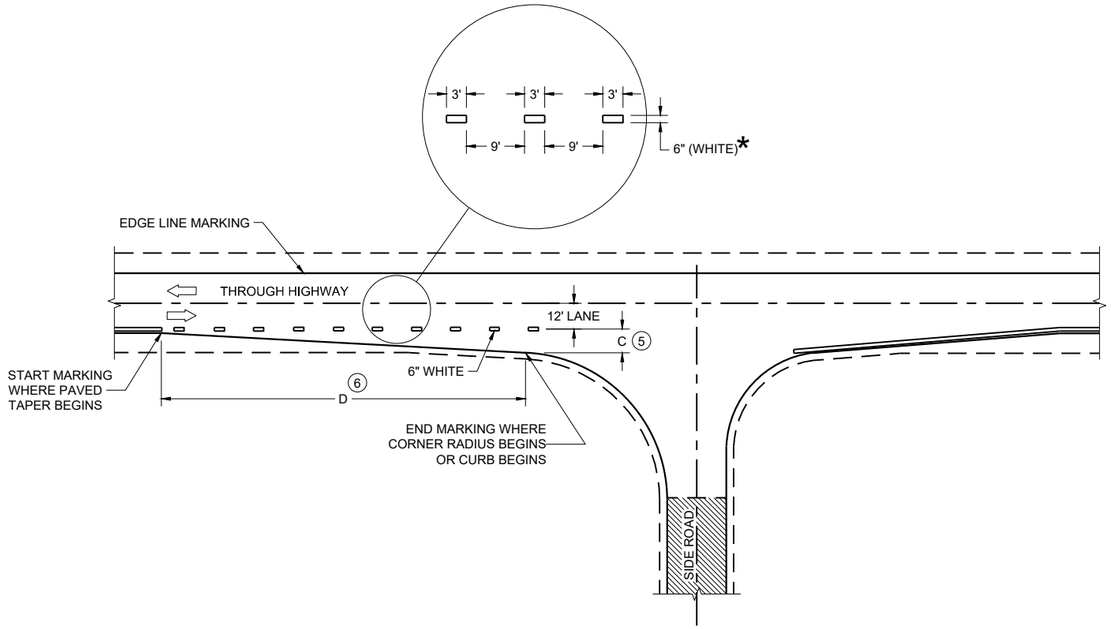

MINOR INTERSECTION

*CONFIRM MARKING LINE WIDTH WITH THE MISCELLANEOUS QUANTITIES

GENERAL NOTES

OMIT EDGE LINES THROUGH INTERSECTIONS. CONTINUE EDGE LINES THROUGH DRIVEWAYS.

1. WHEN DISTANCE "A" IS LESS THAN 250 FEET, OMIT LANE LINE.
2. WHEN DISTANCE "B" IS LESS THAN 100 FEET, OMIT CHANNELIZING LANE LINE.
3. BARRIER LINE ENDS AT SIDE ROAD PAVEMENT / SURFACE EDGE EXTENSION.
4. BARRIER LINE STARTS 500 FEET PRIOR TO THE BYPASS TAPER.
5. WHEN DISTANCE "C" IS LESS THAN 4 FEET, OMIT DOTTED EXTENSION.
6. WHEN DISTANCE "D" IS LESS THAN 50 FEET, OMIT DOTTED EXTENSION.

LEGEND

DIRECTION OF TRAVEL

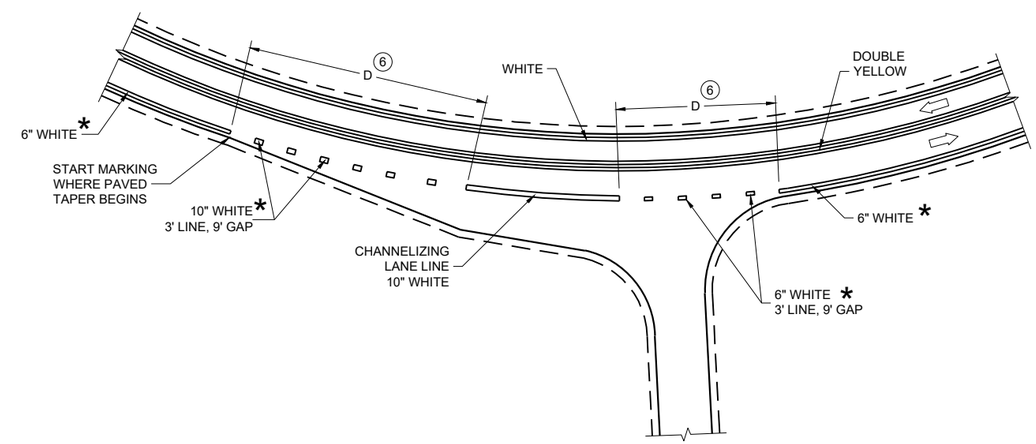

INTERSECTION ON OUTSIDE OF CURVE

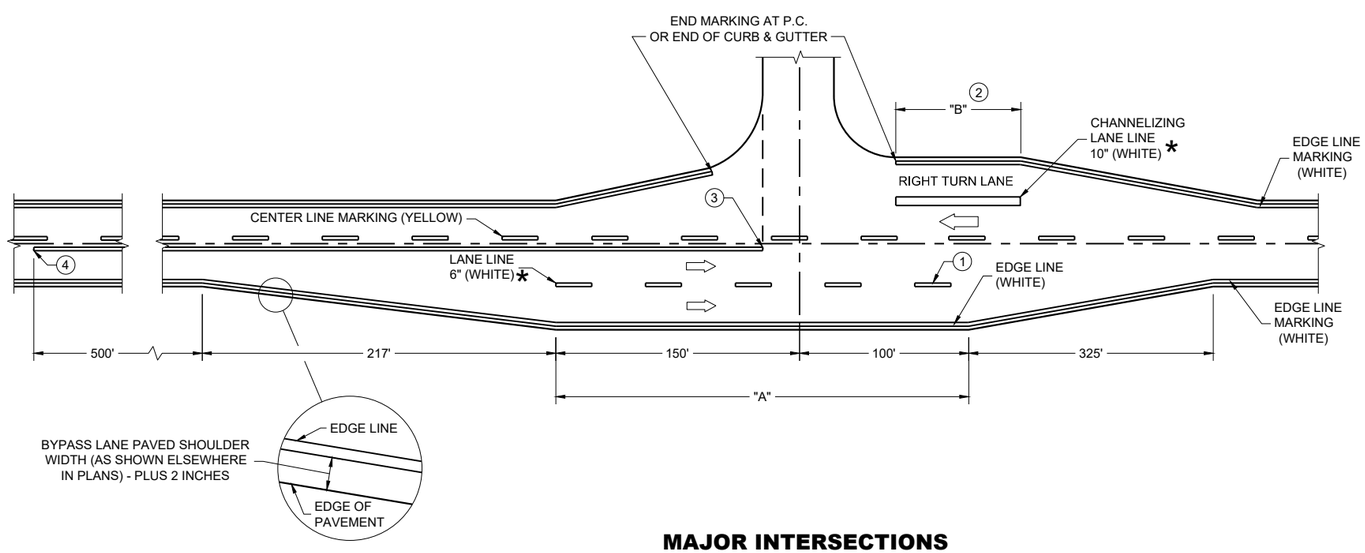

MAJOR INTERSECTIONS

(INTERSECTION WITH FULL RIGHT TURN LANE OR BYPASS LANE)

PAVEMENT MARKING (INTERSECTIONS)

STATE OF WISCONSIN
DEPARTMENT OF TRANSPORTATION

6
SDD 15C35-06a

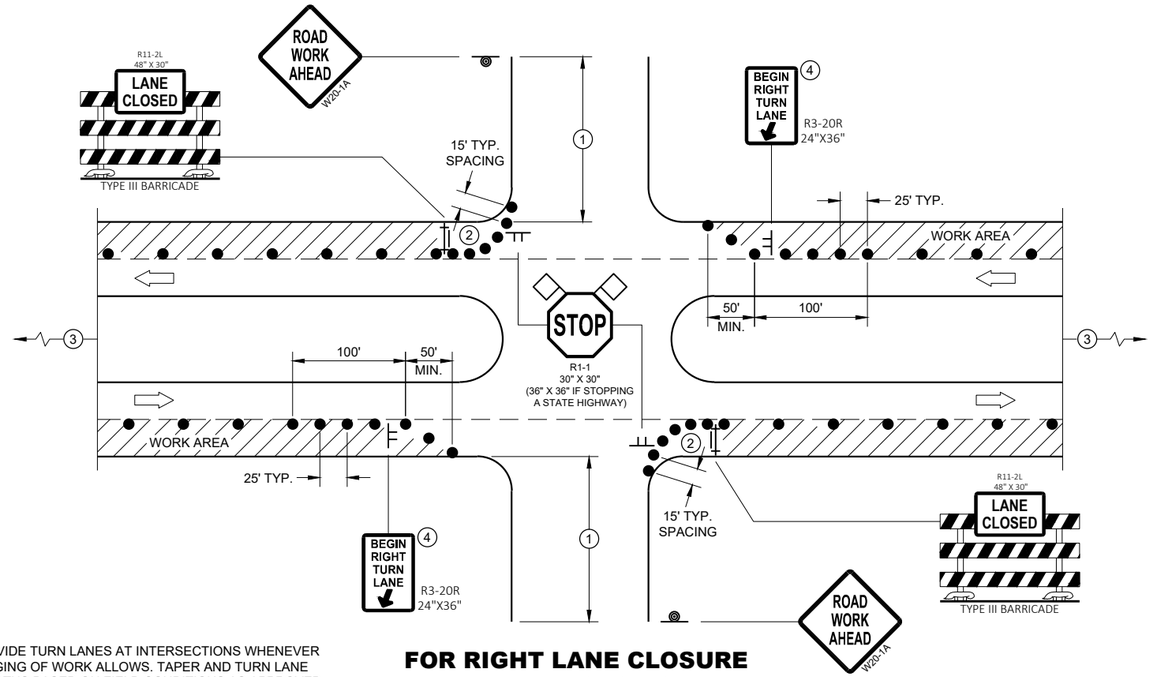

PROVIDE TURN LANES AT INTERSECTIONS WHENEVER STAGING OF WORK ALLOWS. TAPER AND TURN LANE LENGTHS BASED ON FIELD CONDITIONS AS APPROVED BY THE ENGINEER.

FOR RIGHT LANE CLOSURE AT INTERSECTION

GENERAL NOTES

ALL SIGNS ARE 48"X48" UNLESS OTHERWISE NOTED. IF NECESSARY DUE TO SPACE CONSTRAINTS IN URBAN AREAS, 36" X 36" MAY BE USED IF APPROVED BY THE DISTRICT TRAFFIC UNIT.

"WO" SIGN IS THE SAME AS "W" SIGN EXCEPT THE BACKGROUND IS ORANGE.

ANY SIGNS TEMPORARY OR EXISTING, WHICH CONFLICT WITH THE TRAFFIC CONTROL "IN USE" SHALL BE REMOVED OR COVERED AS NEEDED AND AS APPROVED BY THE ENGINEER. NO WARNING LIGHTS SHALL BE WORKING ON COVERED OR "DOWNED" SIGNS.

THE EXACT NUMBER, LOCATION, AND SPACING OF ALL SIGNS AND DEVICES SHALL BE ADJUSTED TO FIT FIELD CONDITIONS AS APPROVED BY THE ENGINEER.

THE SPACING BETWEEN TRAFFIC CONTROL SIGNS SHOULD BE ADJUSTED TO NOT CONFLICT WITH AND TO PROVIDE A MINIMUM OF 200 FEET (500' DESIRABLE) DISTANCE TO EXISTING SIGNS THAT WILL REMAIN IN PLACE

SIGN LAYOUTS SHALL BE IN ACCORDANCE WITH THE FHWA'S MANUAL OF STANDARD HIGHWAY SIGNS OR THE WISCONSIN STANDARD SIGN PLATES.

SIGNS THAT WILL REMAIN IN PLACE LESS THAN 7 CONTINUOUS DAYS AND NIGHTS OR THAT WILL BE PLACED IN A CLOSED LANE MAY BE MOUNTED ON PORTABLE SUPPORTS.

BARRICADES IN A CLOSED LANE THAT MUST BE MOVED FOR A WORK OPERATION SHALL BE IMMEDIATELY REESTABLISHED UPON COMPLETION OF THE OPERATION, OR FOR CONTINUING OPERATIONS, AT THE END OF EACH WORKING DAY.

CHANNELIZING DEVICES PLACED ADJACENT TO WORK AREA SHALL BE PULLED BACK FROM THE TRAVEL LANE WHEN WORK IS NOT IN PROGRESS.

1. 500' TYPICAL OR AT LAST INTERSECTION, WHICHEVER IS CLOSER.
   350' IF 35 - 40 MPH.
   200' IF 25 - 30 MPH.
2. ALSO USE BARRICADE AND 15 FOOT TYPICAL DRUM SPACING AT COMMERCIAL DRIVEWAYS
3. SEE SEPARATE LANE CLOSURE DETAIL FOR ADDITIONAL TRAFFIC CONTROL.
4. MINIMUM MOUNTING HEIGHT OF 5 FEET FROM EDGE OF PAVEMENT (AT EDGE LINE LOCATION) TO BOTTOM OF SIGN.

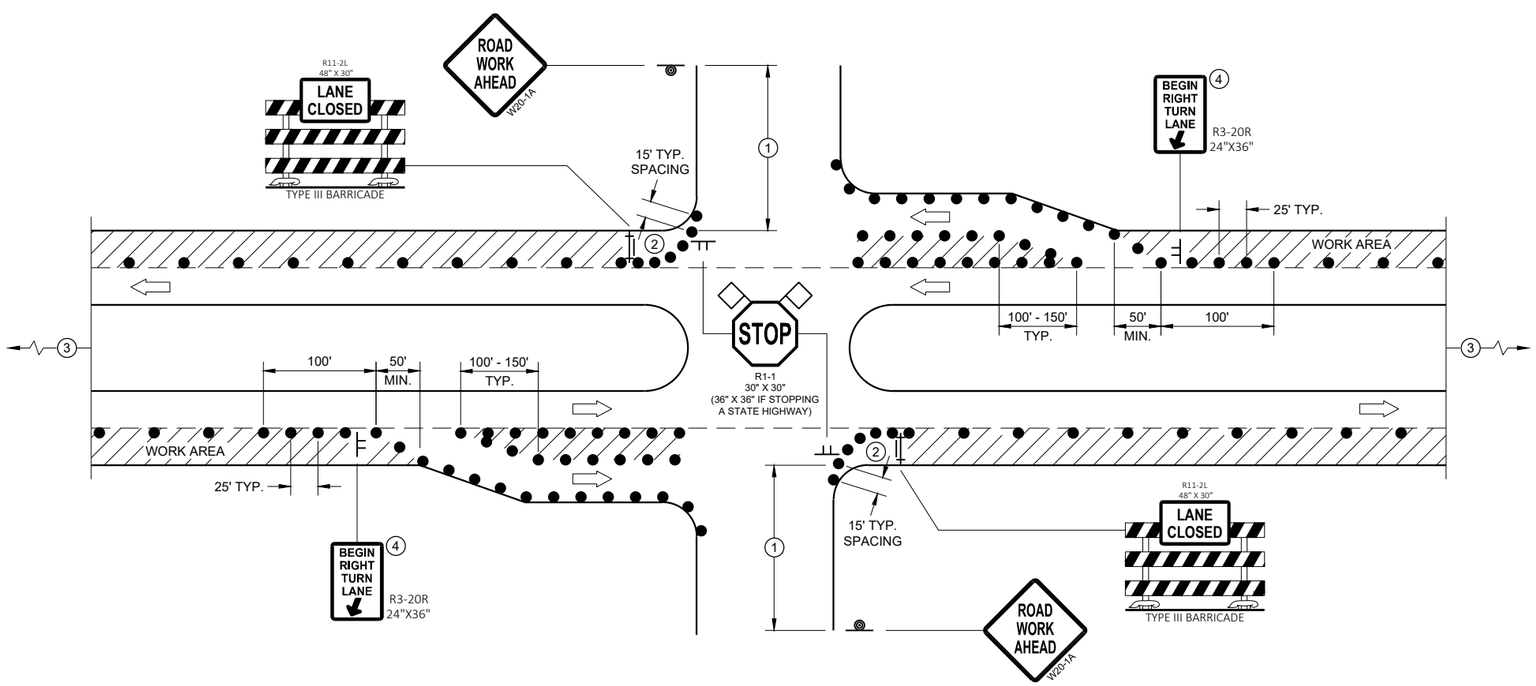

FOR RIGHT LANE CLOSURE AT INTERSECTION (WITH RIGHT TURN BAY OPEN)

LEGEND

- SIGN ON TEMPORARY SUPPORT
- SIGN ON PERMANENT SUPPORT
- TRAFFIC CONTROL DRUM
- TYPE III BARRICADE WITH ATTACHED SIGN
- DIRECTION OF TRAFFIC
- FLAGS, 16" X 16" MIN., ORANGE
- WORK AREA

TRAFFIC CONTROL, INTERSECTION WITHIN SINGLE RIGHT LANE CLOSURE

STATE OF WISCONSIN
DEPARTMENT OF TRANSPORTAT

6

SDD 15D21 - 07a

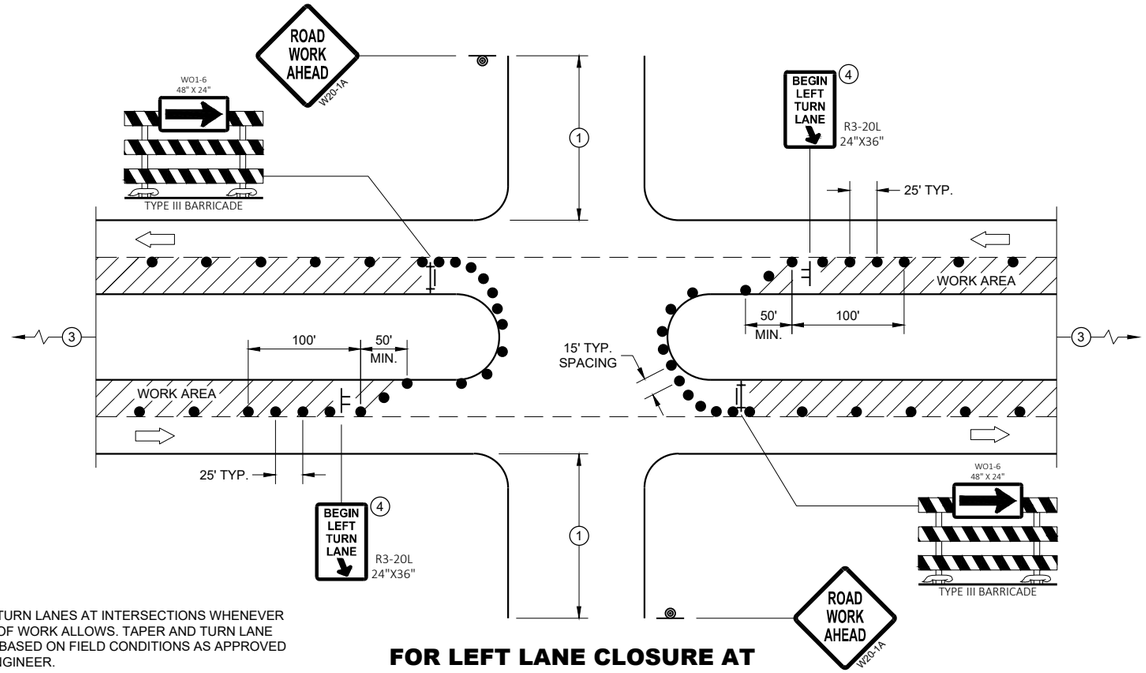

PROVIDE TURN LANES AT INTERSECTIONS WHENEVER STAGING OF WORK ALLOWS. TAPER AND TURN LANE LENGTHS BASED ON FIELD CONDITIONS AS APPROVED BY THE ENGINEER.

FOR LEFT LANE CLOSURE AT INTERSECTION OR MEDIAN OPENING

GENERAL NOTES

ALL SIGNS ARE 48"X48" UNLESS OTHERWISE NOTED. IF NECESSARY DUE TO SPACE CONSTRAINTS IN URBAN AREAS, 36" X 36" MAY BE USED IF APPROVED BY THE DISTRICT TRAFFIC UNIT.

"WO" SIGN IS THE SAME AS "W" SIGN EXCEPT THE BACKGROUND IS ORANGE.

ANY SIGNS TEMPORARY OR EXISTING, WHICH CONFLICT WITH THE TRAFFIC CONTROL "IN USE" SHALL BE REMOVED OR COVERED AS NEEDED AND AS APPROVED BY THE ENGINEER. NO WARNING LIGHTS SHALL BE WORKING ON COVERED OR "DOWNED" SIGNS.

THE EXACT NUMBER, LOCATION, AND SPACING OF ALL SIGNS AND DEVICES SHALL BE ADJUSTED TO FIT FIELD CONDITIONS AS APPROVED BY THE ENGINEER.

THE SPACING BETWEEN TRAFFIC CONTROL SIGNS SHOULD BE ADJUSTED TO NOT CONFLICT WITH AND TO PROVIDE A MINIMUM OF 200 FEET (500' DESIRABLE) DISTANCE TO EXISTING SIGNS THAT WILL REMAIN IN PLACE

SIGN LAYOUTS SHALL BE IN ACCORDANCE WITH THE FHWA'S MANUAL OF STANDARD HIGHWAY SIGNS OR THE WISCONSIN STANDARD SIGN PLATES.

SIGNS THAT WILL REMAIN IN PLACE LESS THAN 7 CONTINUOUS DAYS AND NIGHTS OR THAT WILL BE PLACED IN A CLOSED LANE MAY BE MOUNTED ON PORTABLE SUPPORTS.

BARRICADES IN A CLOSED LANE THAT MUST BE MOVED FOR A WORK OPERATION SHALL BE IMMEDIATELY REESTABLISHED UPON COMPLETION OF THE OPERATION, OR FOR CONTINUING OPERATIONS, AT THE END OF EACH WORKING DAY.

CHANNELIZING DEVICES PLACED ADJACENT TO WORK AREA SHALL BE PULLED BACK FROM THE TRAVEL LANE WHEN WORK IS NOT IN PROGRESS.

1. 500' TYPICAL OR AT LAST INTERSECTION, WHICHEVER IS CLOSER.
   350' IF 35 - 40 MPH.
   200' IF 25 - 30 MPH.
2. ALSO USE BARRICADE AND 15 FOOT TYPICAL DRUM SPACING AT COMMERCIAL DRIVEWAYS
3. SEE SEPARATE LANE CLOSURE DETAIL FOR ADDITIONAL TRAFFIC CONTROL.
4. MINIMUM MOUNTING HEIGHT OF 5 FEET FROM EDGE OF PAVEMENT (AT EDGE LINE LOCATION) TO BOTTOM OF SIGN.

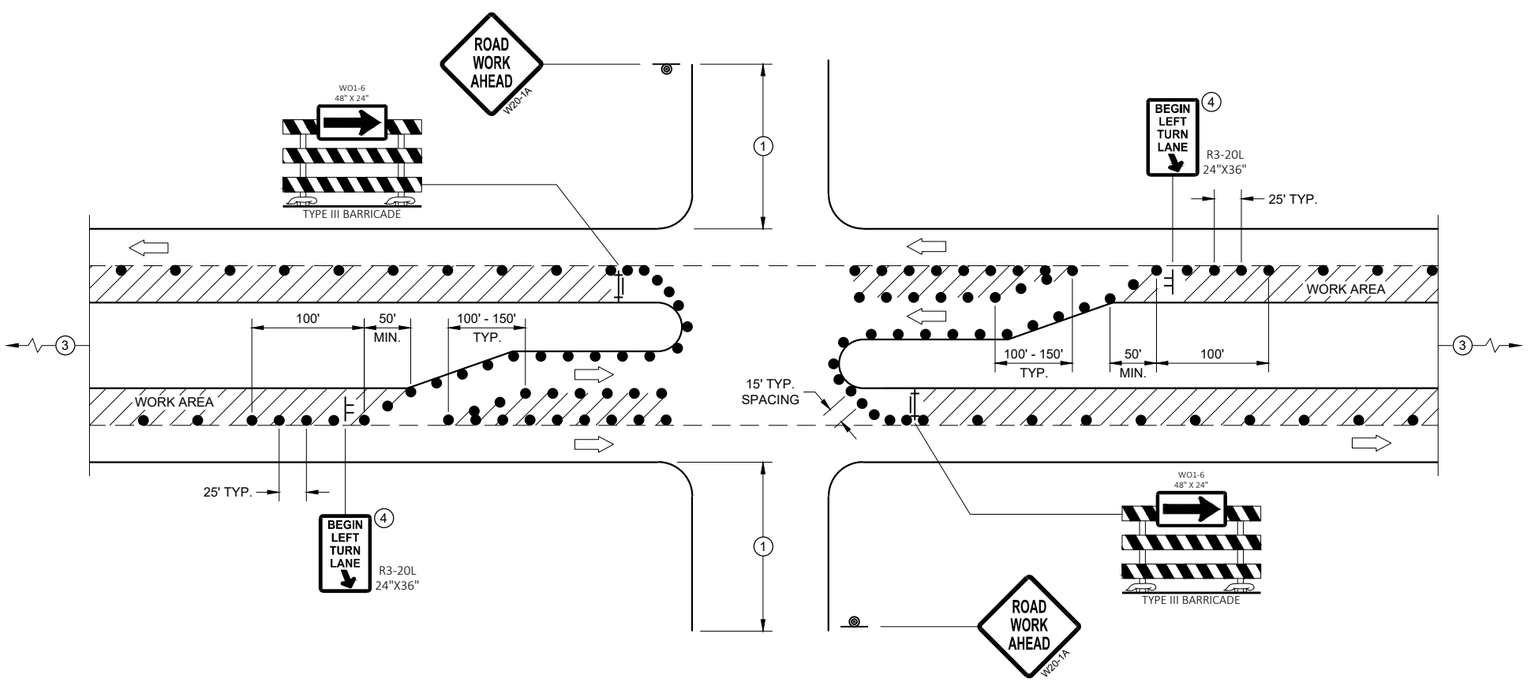

FOR LEFT LANE CLOSURE AT INTERSECTION OR MEDIAN OPENING (WITH LEFT TURN BAY OPEN)

LEGEND

- SIGN ON TEMPORARY SUPPORT
- SIGN ON PERMANENT SUPPORT
- TRAFFIC CONTROL DRUM
- TYPE III BARRICADE WITH ATTACHED SIGN
- DIRECTION OF TRAFFIC
- FLAGS, 16" X 16" MIN., ORANGE
- WORK AREA

TRAFFIC CONTROL, INTERSECTION WITHIN SINGLE LEFT LANE CLOSURE

STATE OF WISCONSIN
DEPARTMENT OF TRANSPORTATION

APPROVED
August 2020 — DATE
/S/ Andrew Heidtke — WORK ZONE ENGINEER
FHWA

LEGEND

SIGN ON PERMANENT SUPPORT

TRAFFIC CONTROL DRUM

DIRECTION OF TRAFFIC

WORK ZONE

GENERAL NOTES

ALL SIGNS ARE 48"X48" UNLESS OTHERWISE NOTED. IF NECESSARY DUE TO SPACE CONSTRAINTS IN URBAN AREAS, 36" X 36" SIGNS MAY BE USED IF APPROVED BY THE REGIONAL TRAFFIC UNIT.

"WO" SIGN IS THE SAME AS "W" SIGN EXCEPT THE BACKGROUND IS ORANGE.

ANY SIGNS TEMPORARY OR EXISTING, WHICH CONFLICT WITH THE TRAFFIC CONTROL "IN USE" SHALL BE REMOVED OR COVERED AS NEEDED AND AS APPROVED BY THE ENGINEER.

THE EXACT NUMBER, LOCATION, AND SPACING OF ALL SIGNS AND DEVICES SHALL BE ADJUSTED TO FIT FIELD CONDITIONS AS APPROVED BY THE ENGINEER.

CHANNELIZING DEVICES PLACED ADJACENT TO WORK AREA SHALL BE PULLED BACK FROM THE TRAVEL LANE WHEN WORK IS NOT IN PROGRESS.

SIGNS THAT WILL BE IN PLACE LESS THAN 7 CONTINUOUS DAYS AND NIGHTS MAY BE MOUNTED ON PORTABLE SUPPORTS.

W20-1A AND G20-2A SIGNS ARE NOT REQUIRED IF THE WORK AREA IS WITHIN A LARGER WORK ZONE WHERE THESE SIGNS ARE ALREADY PRESENT. G20-2A SIGNS MAY ALSO BE OMITTED IF DURATION OF WORK IS LESS THAN 7 CONTINUOUS DAYS AND NIGHTS.

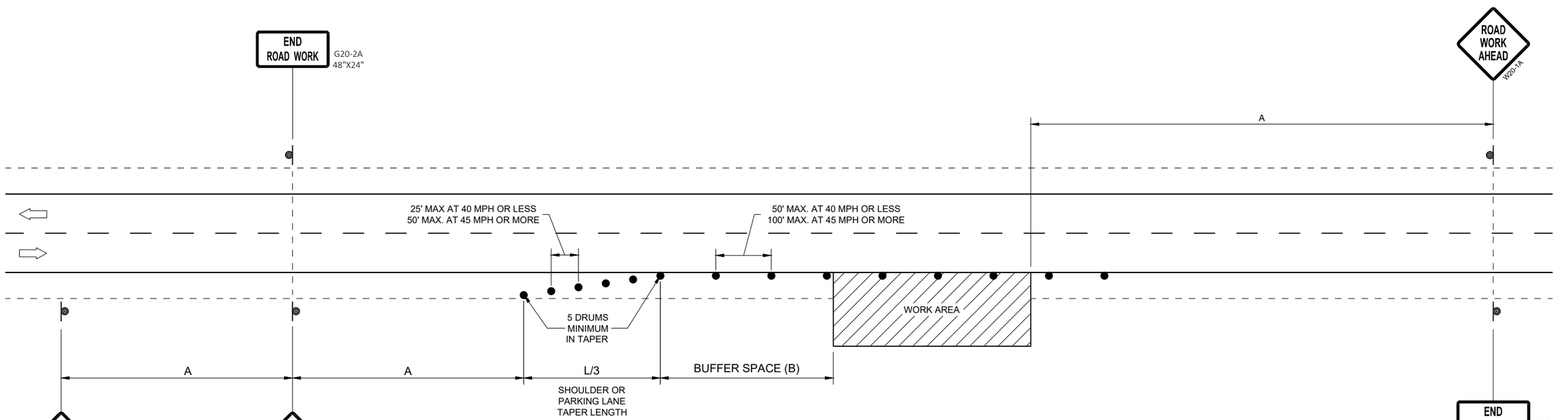

OR
IF TRAFFIC CONTROL DEVICES
ENCROACH ONTO TRAVELED WAY, USE

POSTED SPEED LIMIT PRIOR TO WORK STARTING (MPH)	ADVANCE WARNING SIGN SPACING (A) FEET	SHOULDER TAPER L / 3 W, LATERAL OFFSET (FT)						BUFFER SPACE (B) FEET
		3	4	5	6	7	8	
25	200'	10	14	17	21	24	28	55
30	200'	15	20	25	30	35	40	85
35	350'	20	27	34	40	47	54	120
40	350'	26	35	44	53	62	70	170
45	500'	45	59	74	89	104	119	220
50	500'	50	66	83	99	116	132	280
55	500'	54	73	91	109	127	145	335'

TRAFFIC CONTROL, WORK ON SHOULDER OR PARKING LANE, UNDIVIDED ROADWAY

STATE OF WISCONSIN
DEPARTMENT OF TRANSPORTATION

APPROVED
May 2020
DATE

/S/ Andrew Heidtke
STATEWIDE WORK ZONE T
SAFETY ENGINEER

FHWA

6

SDD 15D28 - 04

LEGEND

- SIGN ON TEMPORARY SUPPORT
- SIGN ON PERMANENT SUPPORT
- TYPE III BARRICADE
- TYPE III BARRICADE WITH ATTACHED SIGN
- TYPE "A" WARNING LIGHT (FLASHING)
- DIRECTION OF TRAFFIC
- FLAGGER, EQUIPPED WITH STOP/SLOW PADDLE FASTENED ON SUPPORT STAFF

POSTED SPEED LIMIT PRIOR TO WORK STARTING (MPH)	ADVANCE WARNING SIGN SPACING (A) FEET
0-30	200'
35-40	350'
45-55	500'

GENERAL NOTES

ALL SIGNS ARE 48"X48" UNLESS OTHERWISE NOTED.

"WO" SIGN IS THE SAME AS "W" SIGN EXCEPT THE BACKGROUND IS ORANGE.

THE EXACT NUMBER, LOCATION, AND SPACING OF ALL SIGNS AND DEVICES SHALL BE ADJUSTED TO FIT FIELD CONDITIONS AS APPROVED BY THE ENGINEER.

WARNING SIGNS THAT WILL BE IN PLACE LESS THAN 7 CONTINUOUS DAYS AND NIGHTS MAY BE MOUNTED ON PORTABLE SUPPORTS.

WHEN ACTIVITY REFLECTED BY THE SIGN IS NOT CURRENTLY TAKING PLACE, THE HIGHWAY SHALL BE RESTORED TO NORMAL CONDITION AND THE SIGNS SHALL BE REMOVED, COVERED OR TURNED AWAY FROM TRAFFIC.

WHEN A SIDE ROAD OR RAMP INTERSECTS WITHIN THE ADVANCE SIGNING AREA, ADDITIONAL TRAFFIC CONTROLS SHALL BE PROVIDED AS SPECIFIED IN THE PLANS AND / OR THE SPECIAL PROVISIONS OR AS APPROVED BY THE ENGINEER.

PLACE SIGNS ON BOTH SIDES IF USED ON DIVIDED HIGHWAY.

(1) THESE SIGNS ARE TO BE USED ONLY WHEN VEHICLE ENTRANCE / EXIT CONDITIONS ARE SEPARATED BY MORE THAN TWO MILES FROM PREVIOUS WORK AREA OR SIGNING OR AS DIRECTED BY THE ENGINEER.

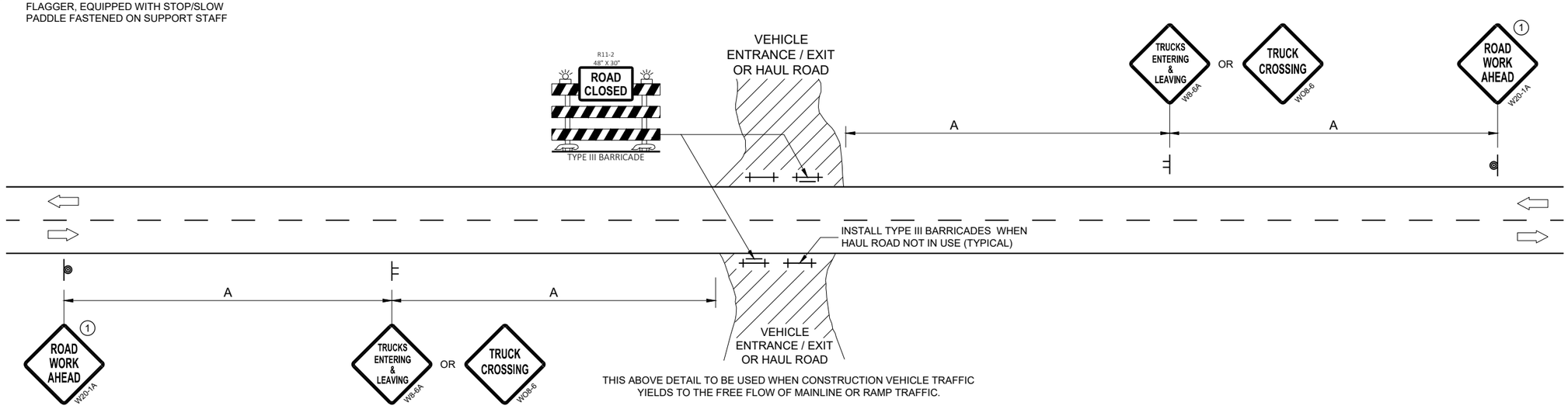

THIS ABOVE DETAIL TO BE USED WHEN CONSTRUCTION VEHICLE TRAFFIC YIELDS TO THE FREE FLOW OF MAINLINE OR RAMP TRAFFIC.

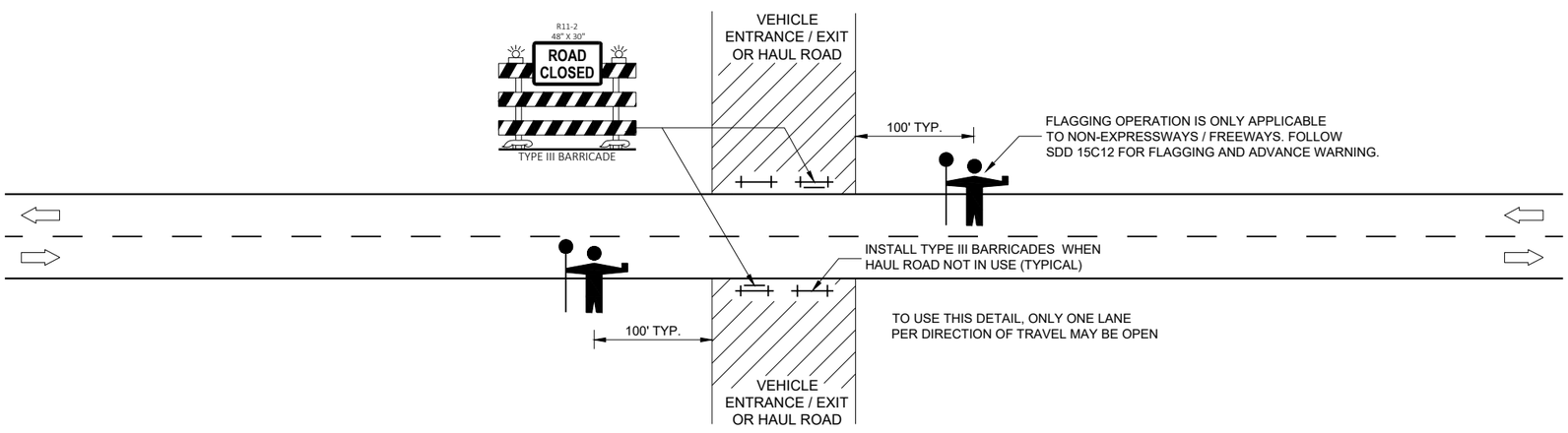

THIS DETAIL TO BE USED WHEN CONSTRUCTION WORK INCLUDING TRUCKING ACTIVITY REQUIRES MAINLINE TRAFFIC TO BE TEMPORARILY STOPPED IN ONE OR BOTH DIRECTIONS. DELAY TO HIGHWAY TRAFFIC SHALL BE MINIMIZED.

TRAFFIC CONTROL, VEHICLE ENTRANCE/EXIT OR HAUL ROAD

STATE OF WISCONSIN
DEPARTMENT OF TRANSPORTATION

APPROVED
May 2020 — DATE
/S/ Andrew Heidtke — WORK ZONE ENGINEE
FHWA

6

SDD 15D29 - 06

LEGEND

- TYPE III BARRICADE WITH ATTACHED SIGN
- SIGN ON PERMANENT SUPPORT
- TRAFFIC CONTROL DRUM WITH TYPE "C" STEADY BURN LIGHT
- TRAFFIC CONTROL DRUM
- FLAGS, 16" X 16" MIN. (ORANGE)
- REMOVING PAVEMENT MARKING
- DIRECTION OF TRAFFIC
- ASPHALTIC PAVEMENT WIDENING
- CONCRETE BARRIER TEMPORARY PRECAST
- TEMPORARY SIGNAL. SEE SDD 09G02 FOR EXACT PLACEMENT

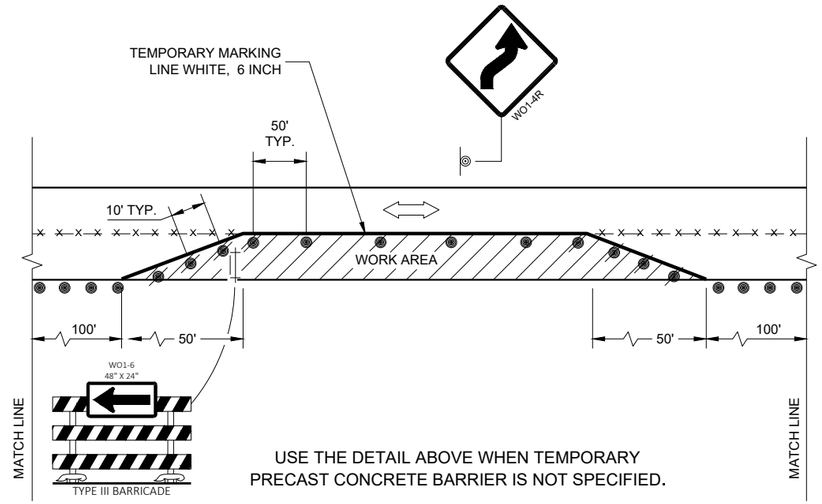

USE THE DETAIL ABOVE WHEN TEMPORARY PRECAST CONCRETE BARRIER IS NOT SPECIFIED.

GENERAL NOTES

THE EXACT NUMBER, LOCATION, AND SPACING OF ALL SIGNS AND DEVICES SHALL BE ADJUSTED TO FIT FIELD CONDITIONS AS APPROVED BY THE ENGINEER.

THE SPACING BETWEEN TRAFFIC CONTROL SIGNS SHOULD BE ADJUSTED TO NOT CONFLICT WITH AND TO PROVIDE A MINIMUM OF 200 FEET (500 FEET DESIRABLE) CLEARANCE TO EXISTING SIGNS THAT WILL REMAIN IN PLACE..

THIS LANE CLOSURE IS TYPICAL FOR CLOSING RIGHT LANE - REVERSE FOR CLOSING LEFT LANE.

ALL SIGNS ARE 48" x 48" UNLESS OTHERWISE NOTED.

"WO" IS THE SAME AS "W" EXCEPT THE BACKGROUND IS ORANGE.

ANY SIGNS TEMPORARY OR EXISTING, WHICH CONFLICT WITH TRAFFIC CONTROL "IN USE" SHALL BE REMOVED OR COVERED AS NEEDED OR AS APPROVED BY THE ENGINEER.

REMOVE PAVEMENT MARKING AND PLACE TEMPORARY PAVEMENT MARKING LINES IF THE CLOSURE IS TO BE IN PLACE FOR 4 OR MORE CONTINUOUS DAYS AND NIGHTS.

INSTALL OVERHEAD TEMPORARY SIGNAL HEADS ABOVE THE MIDDLE OF THE TRAVEL LANE THEY ARE CONTROLLING.

1. 500 FOOT SPACING SHOWN IS FOR ROADWAYS WITH A PRE-CONSTRUCTION REGULATORY SPEED LIMIT OF 45 MPH OR MORE. FOR 35 - 40 MPH, USE 350 FOOT TYPICAL SPACING. FOR 25 - 30 MPH, USE 200 FOOT TYPICAL SPACING.
2. USE 300 FOOT SPACING IF THE PRE - CONSTRUCTION REGULATORY SPEED IS 35 MPH OR LESS.
3. DIMENSION DETERMINED BY CBTP TAPER FROM EDGE LINE TO TANGENT SECTION OF THE ROAD.
4. TEMPORARY PAVEMENT MARKING LINE, 18 INCH WHITE STOP LINE.
5. 700 FOOT TEMPORARY PAVEMENT MARKING LINE, 6 INCH DOUBLE YELLOW . WHEN THE DISTANCE FOR THE PRECEDING NO - PASSING ZONE IS LESS THAN THE MINIMUM DISTANCE BETWEEN ZONES AS INDICATED IN THE SPECIFICATIONS, THE TWO ZONES SHALL BE CONNECTED.
6. SEE SDD 15C02 - SHEET "F" FOR ADVANCED WIDTH RESTRICTION SIGNING.

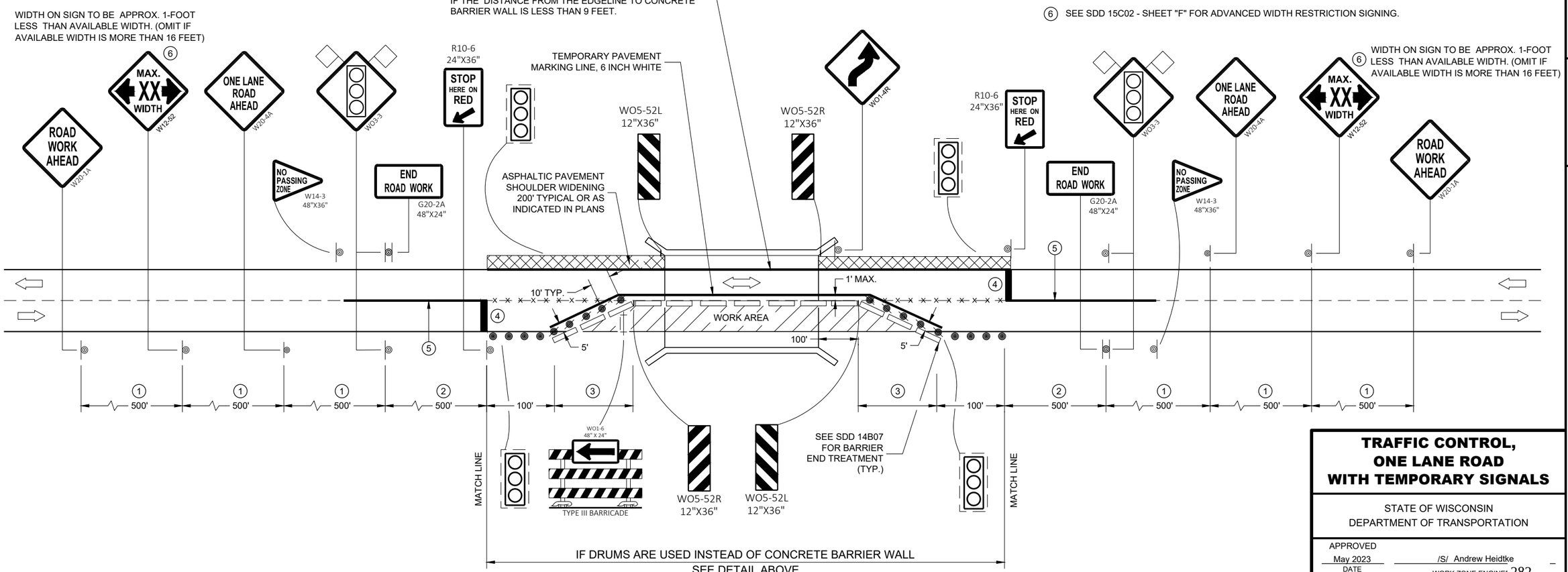

TRAFFIC CONTROL, ONE LANE ROAD WITH TEMPORARY SIGNALS

STATE OF WISCONSIN
DEPARTMENT OF TRANSPORTATION

APPROVED
May 2023 — DATE
/S/ Andrew Heidtke — WORK ZONE ENGINEE
FHWA

6

SDD 15D33-09

LEGEND

- SIGN ON PERMANENT SUPPORT
- TRAFFIC CONTROL DRUM
- TYPE III BARRICADE WITH ATTACHED SIGN
- DIRECTION OF TRAFFIC
- WORK AREA
- FLAGGER, EQUIPPED WITH STOP/SLOW PADDLE FASTENED ON SUPPORT STAFF

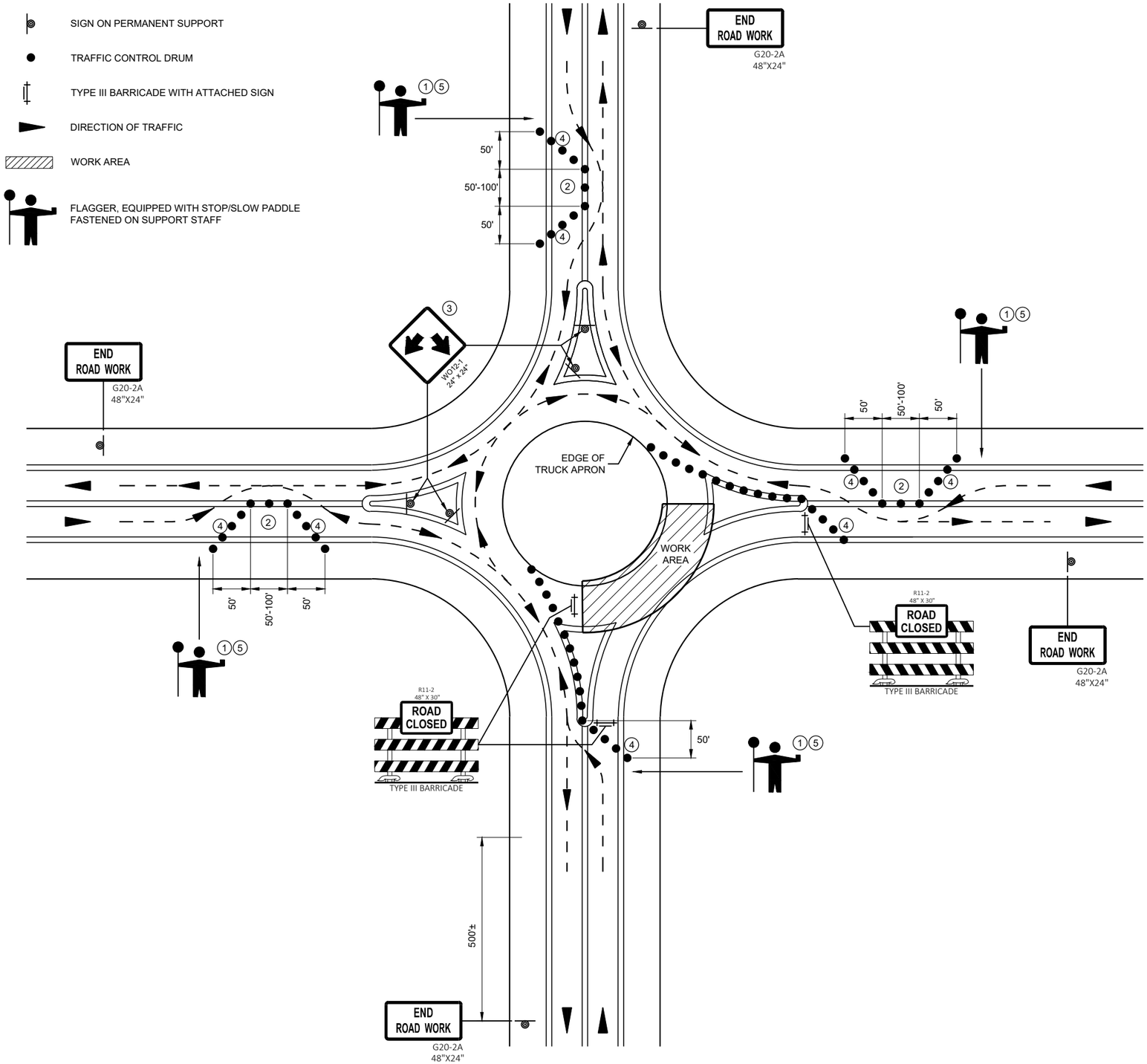

GENERAL NOTES

ALL SIGNS ARE 48"X48" BLACK ON ORANGE UNLESS OTHERWISE NOTED. IF NECESSARY DUE TO SPACE CONSTRAINTS, 36" X 36" SIGNS MAY BE USED IF APPROVED BY THE REGIONAL TRAFFIC UNIT.

"WO" SIGN IS THE SAME AS "W" SIGN EXCEPT THE BACKGROUND IS ORANGE

ANY SIGNS TEMPORARY OR EXISTING, WHICH CONFLICT WITH THE TRAFFIC CONTROL "IN USE" SHALL BE REMOVED OR COVERED AS NEEDED AND AS APPROVED BY THE ENGINEER.

THE EXACT NUMBER, LOCATION, AND SPACING OF ALL SIGNS AND DEVICES SHALL BE ADJUSTED TO FIT FIELD CONDITIONS AS APPROVED BY THE ENGINEER.

ONLY ONE QUADRANT OF TRAFFIC SHALL BE RELEASED AT A TIME.

FLAGGERS SHALL CONTROL TRAFFIC ON ALL APPROACHES OF THE ONE-LANE ROUNDABOUT. ONE FLAGGER SHALL BE DESIGNATED LEAD FLAGGER.

NIGHT TIME WORK REQUIRES ADDITIONAL LIGHTING AT FLAGGER STATION(S).

1. FLAGGERS SHALL BE IN DIRECT RADIO CONTACT AT ALL TIMES. THEY SHALL BE EQUIPPED WITH STOP/SLOW PADDLES FASTENED ON SUPPORT STAFFS. WHEN THE FLAGGING IS NOT IN EFFECT, COVER OR REMOVE ALL TEMPORARY TRAFFIC CONTROL SIGNS.
2. ADJUST CHANNELIZING DEVICES TO ACCOMMODATE FOR TURNING RADIUS OF LARGE VEHICLES AS DIRECTED BY THE ENGINEER.
3. GUIDE SIGN WITH ROAD NAMES MAY BE USED IN LIEU OF THE DOUBLE ARROW (WO12-1) SIGN.
4. THE TWO- WAY TAPER SHOULD BE 50 FEET USING 5 EQUALLY SPACED DRUMS.
5. FOLLOW SDD 15C12 FOR FLAGGING AND ADVANCE WARNING.

RECOMMENDED REDUCED DRUM SPACING WITHIN ROUNDABOUT

MPH	DRUM SPACING (FT)
0-40	25
45-55	50

TRAFFIC CONTROL, FLAGGING OPERATION, ROUNDABOUT

STATE OF WISCONSIN
DEPARTMENT OF TRANSPORTATION

APPROVED
May 2020 — DATE
/S/ Andrew Heidtke — STATEWIDE WORK ZONE T SAFETY ENGINEER
FHWA

6

SDD 15D37 - 03

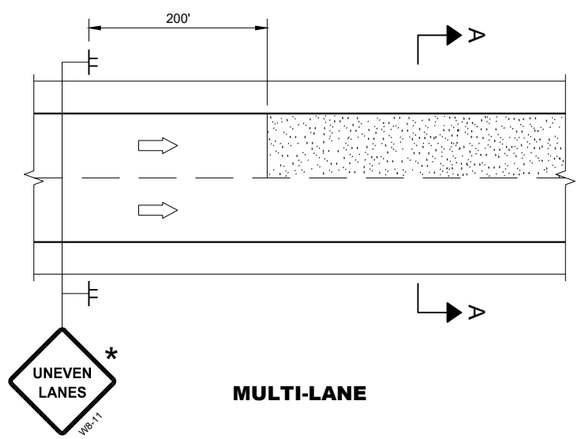

MULTI-LANE

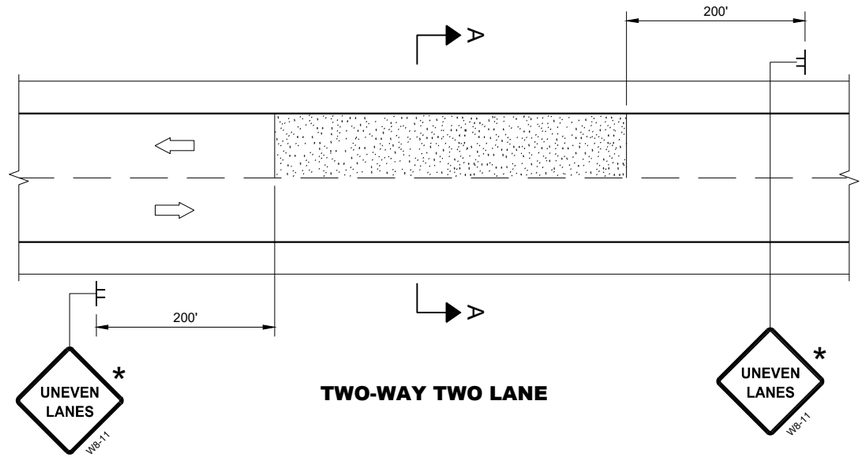

TWO-WAY TWO LANE

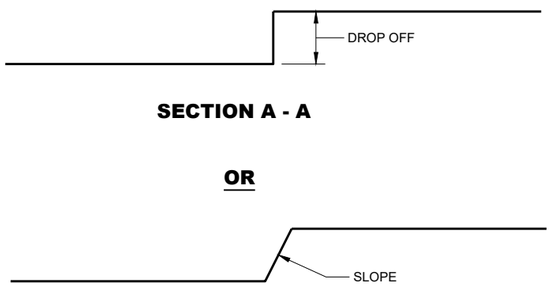

SECTION A - A

OR

SECTION A - A

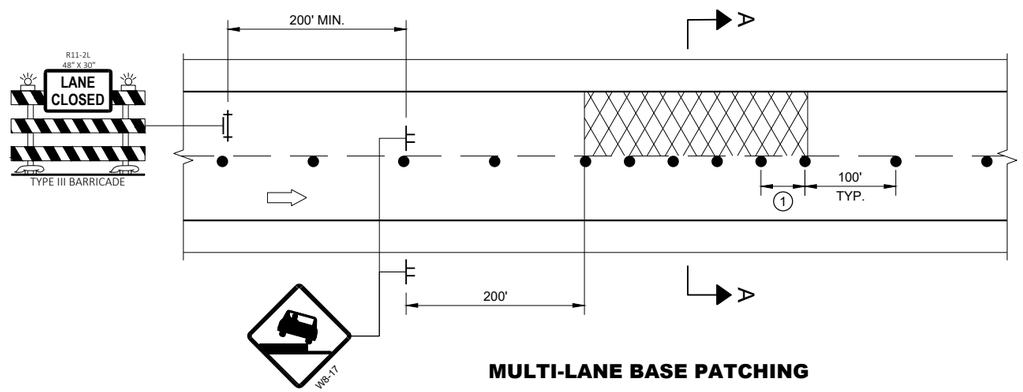

MULTI-LANE BASE PATCHING

ADJACENT LANE DROP-OFFS

GENERAL NOTES

FOR SPOT LOCATIONS USE ENGINEERING JUDGEMENT WHEN PLACING ADDITIONAL SIGNS.

ALL SIGNS ARE 48" X 48" UNLESS OTHERWISE NOTED.

"WO" SIGNS ARE THE SAME AS "W" SIGNS EXCEPT THE BACKGROUND IS ORANGE.

WARNING LIGHTS ARE NOT REQUIRED IF THE LANE CLOSURE IS A DAYTIME ONLY OPERATION.

* IF THE DROP-OFF IS CONTINUOUS ALONG THE PROJECT, PLACE ADDITIONAL SIGNS EVERY 1 MILE AND AFTER EVERY ENTRANCE RAMP.

(1) USE CLOSER SPACING WHEN DELINEATING DROP-OFF.

LEGEND

- SIGN ON TEMPORARY SUPPORT
- TRAFFIC CONTROL DRUM
- TYPE III BARRICADE WITH ATTACHED SIGN
- TYPE "A" WARNING LIGHT (FLASHING)
- DIRECTION OF TRAFFIC
- WORK AREA WITH DROP-OFF
- MILLED SURFACE

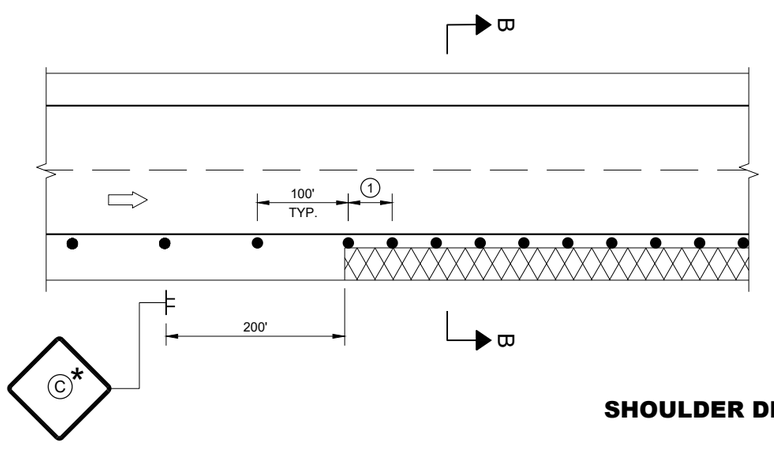

SHOULDER DROP-OFFS

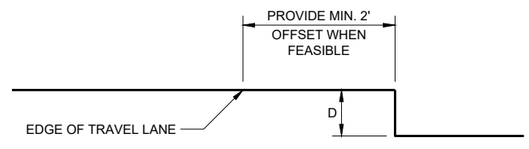

SECTION B - B

D	SIGN (C)
< 2" WITH A SLOPE STEEPER THAN 3:1	LOW SHOULDER WO8-9
2" < 6" WITH A SLOPE STEEPER THAN 3:1	SHOULDER DROP - OFF W8-9A PROVIDE A 3:1 OR FLATTER SLOPE OF MATERIAL ADJACENT TO THE PAVEMENT

TRAFFIC CONTROL, DROP-OFF SIGNING

STATE OF WISCONSIN
DEPARTMENT OF TRANSPORTATION

APPROVED
March 2018 — DATE
/S/ Andrew Heidtke — WORK ZONE ENGINEE
FHWA

6

SDD 15D39 - 02

GENERAL NOTES

DRAWING NOT TO SCALE. ALL SIGNS AND POSTS ON THIS SHEET SHALL BE PAID FOR WITH 'TRAFFIC CONTROL SIGNS' BID ITEM. ALL SIDE ROADS WHICH ARE UNDER CONSTRUCTION OF CURB AND GUTTER AND/OR GRADING SHALL BE ADEQUATELY SIGNED.

ALL SIGNS AND DEVICES SHALL BE IN CONFORMANCE WITH THE WISCONSIN MANUAL OF UNIFORM TRAFFIC CONTROL DEVICES (WMUTCD). SIGN LAYOUTS SHALL BE IN ACCORDANCE WITH THE WISDOT STANDARD SIGN PLATES.

"WO" SIGNS ARE THE SAME AS "W" SIGNS EXCEPT THAT THE BACKGROUND IS ORANGE.

ALL SIGNS ARE 48" X 48" UNLESS OTHERWISE NOTED.

THE EXACT NUMBER, LOCATION AND SPACING OF ALL SIGNS AND DEVICES SHALL BE ADJUSTED TO FIT FIELD CONDITIONS AS DIRECTED BY THE ENGINEER.

ALL SIGNS INAPPROPRIATE TO THE STATUS OF THE CONTROL ZONE, INCLUDING PRE-EXISTING SIGNS IN THE VICINITY, SHALL BE COVERED OR REMOVED AS DIRECTED BY THE ENGINEER.

SEE 15C34 FOR ADDITIONAL TRAFFIC CONTROL SIGNING WHEN CENTERLINE PAVEMENT MAKINGS ARE MISSING. 'DO NOT PASS' SIGNS MUST BE INSTALLED ON THE SAME DAY AS MILLING OPERATIONS.

(1) PLACE SIGNS 350' IN ADVANCE OF MILLED SURFACES AND AT 1 MILE INTERVALS, OR AS DIRECTED BY THE ENGINEER.

(2) PLACE SIGN 200' MIN. FROM INTERSECTION AND 200' MIN. AFTER ADVANCE WARNING SIGN SHOWN IN SDD 15C04.

LEGEND

SIGN ON TEMPORARY SUPPORT

DIRECTION OF TRAFFIC

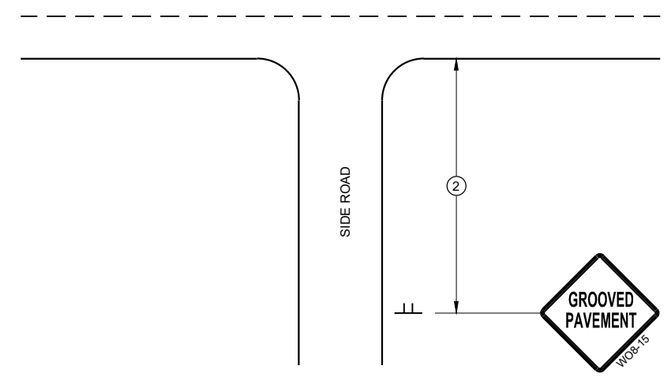

TYPICAL SIDE ROAD APPROACH SIGN DETAIL

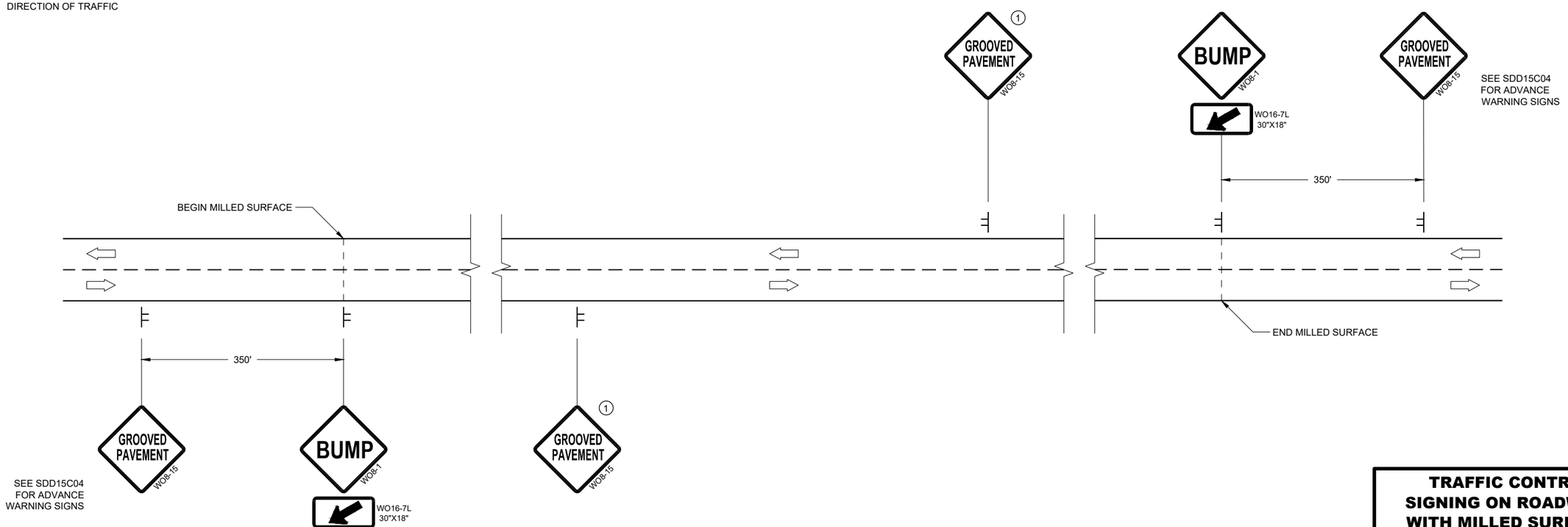

DETAIL FOR SIGNING ON MILLED SURFACES

TRAFFIC CONTROL, SIGNING ON ROADWAYS WITH MILLED SURFACES

STATE OF WISCONSIN
DEPARTMENT OF TRANSPORTATION

APPROVED
February 2020 /S/ Andrew Heidtke
DATE WORK ZONE ENGINEE
FHWA

6

6

SDD 15D44 - 02

SDD 15D44 - 02

GENERAL NOTES

DRAWING NOT TO SCALE. ALL SIGNS AND POSTS ON THIS SHEET SHALL BE PAID FOR WITH 'TRAFFIC CONTROL SIGNS' BID ITEM. ALL SIDE ROADS WHICH ARE UNDER CONSTRUCTION OF CURB AND GUTTER AND/OR GRADING SHALL BE ADEQUATELY SIGNED.

ALL SIGNS AND DEVICES SHALL BE IN CONFORMANCE WITH THE WISCONSIN MANUAL OF UNIFORM TRAFFIC CONTROL DEVICES (WMUTCD). SIGN LAYOUTS SHALL BE IN ACCORDANCE WITH THE WISDOT STANDARD SIGN PLATES.

"WO" SIGNS ARE THE SAME AS "W" SIGNS EXCEPT THAT THE BACKGROUND IS ORANGE.

ALL SIGNS ARE 48" X 48" UNLESS OTHERWISE NOTED.

THE EXACT NUMBER, LOCATION AND SPACING OF ALL SIGNS AND DEVICES SHALL BE ADJUSTED TO FIT FIELD CONDITIONS AS DIRECTED BY THE ENGINEER.

ALL SIGNS INAPPROPRIATE TO THE STATUS OF THE CONTROL ZONE, INCLUDING PRE-EXISTING SIGNS IN THE VICINITY, SHALL BE COVERED OR REMOVED AS DIRECTED BY THE ENGINEER.

SEE 15C34 FOR ADDITIONAL TRAFFIC CONTROL SIGNING WHEN CENTERLINE PAVEMENT MAKINGS ARE MISSING. 'DO NOT PASS' SIGNS MUST BE INSTALLED ON THE SAME DAY AS MILLING OPERATIONS.

1. PLACE SIGNS 350' IN ADVANCE OF CHIP SEALED OR LOOSE GRAVEL SURFACES AND AT 1 MILE INTERVALS, OR AS DIRECTED BY THE ENGINEER.
2. PLACE SIGN 200' MIN. FROM INTERSECTION AND 200' MIN. AFTER ADVANCE WARNING SIGN SHOWN IN SDD 15C04.
3. ADD WO8-1 OR WO8-2 SIGN WHEN THE CONDITION IS PRESENT.

LEGEND

SIGN ON TEMPORARY SUPPORT

DIRECTION OF TRAFFIC

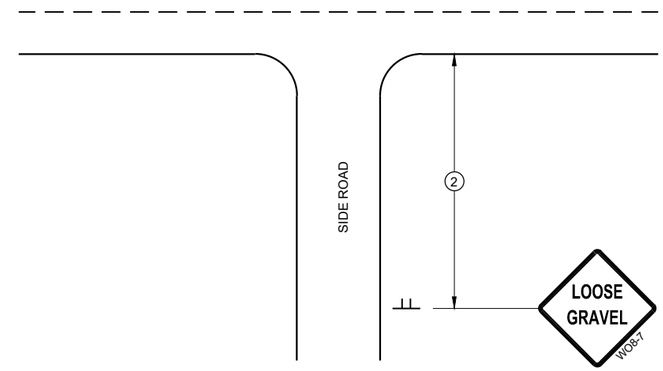

TYPICAL SIDE ROAD APPROACH SIGN DETAIL

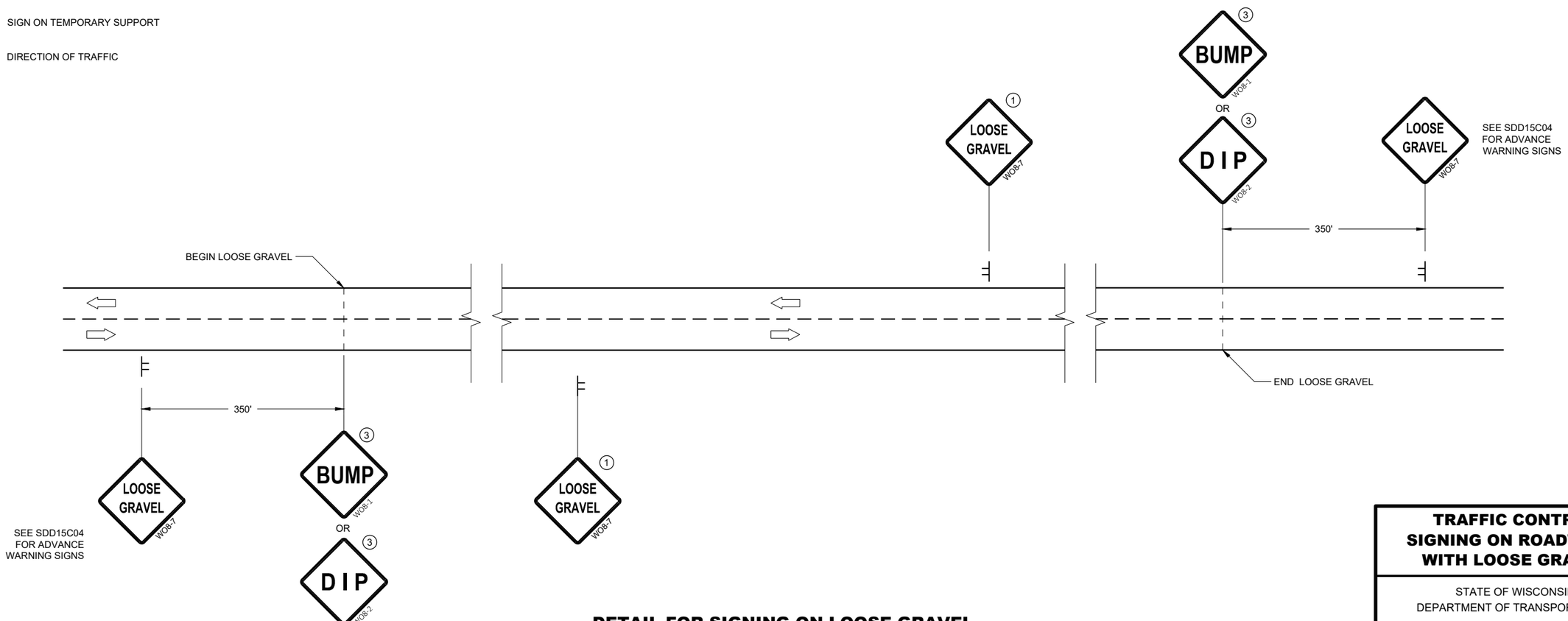

DETAIL FOR SIGNING ON LOOSE GRAVEL OR CHIP SEALED SURFACES

TRAFFIC CONTROL SIGNING ON ROADWAYS WITH LOOSE GRAVEL

STATE OF WISCONSIN
DEPARTMENT OF TRANSPORTATION

APPROVED
February 2021 — DATE
/S/ Andrew Heidtke — WORK ZONE ENGINEE
FHWA

6

SDD 15D45 - 03

LEGEND

- EXISTING SIGN ON PERMANENT SUPPORT
- NEW SIGN ON PERMANENT SUPPORT
- TRAFFIC CONTROL DRUM
- TYPE III BARRICADE WITH ATTACHED SIGN
- TYPE "A" WARNING LIGHT (FLASHING)
- DIRECTION OF TRAFFIC
- WORK ZONE

GENERAL NOTES

THE EXACT NUMBER, LOCATION AND SPACING OF ALL SIGNS AND DEVICES SHALL BE ADJUSTED TO FIT FIELD CONDITIONS AS DIRECTED BY THE ENGINEER.

ALL SIGNS AND DEVICES SHALL BE IN CONFORMANCE WITH THE WISCONSIN MANUAL OF UNIFORM TRAFFIC CONTROL DEVICES (WMUTCD). SIGN LAYOUTS SHALL BE IN ACCORDANCE WITH THE WISDOT STANDARD SIGN PLATES.

ANY SIGNS TEMPORARY OR EXISTING, WHICH CONFLICT WITH THE TRAFFIC CONTROL "IN USE" SHALL BE REMOVED OR COVERED AS NEEDED AND AS APPROVED BY THE ENGINEER. NO WARNING LIGHTS SHALL BE WORKING ON COVERED OR "DOWNED" SIGNS.

BARRICADES IN A CLOSED LANE THAT MUST BE MOVED FOR A WORK OPERATION SHALL BE IMMEDIATELY REESTABLISHED UPON COMPLETION OF THE OPERATION, OR FOR CONTINUING OPERATIONS, AT THE END OF EACH WORKING DAY.

WARNING LIGHTS ARE NOT REQUIRED IF THE LANE CLOSURE IS A DAYTIME ONLY OPERATION.

(1) IF WORK OPERATIONS ALLOWS, MOVE R1-1, R6-1R, AND R3-2 CLOSER TO INTERSECTION.

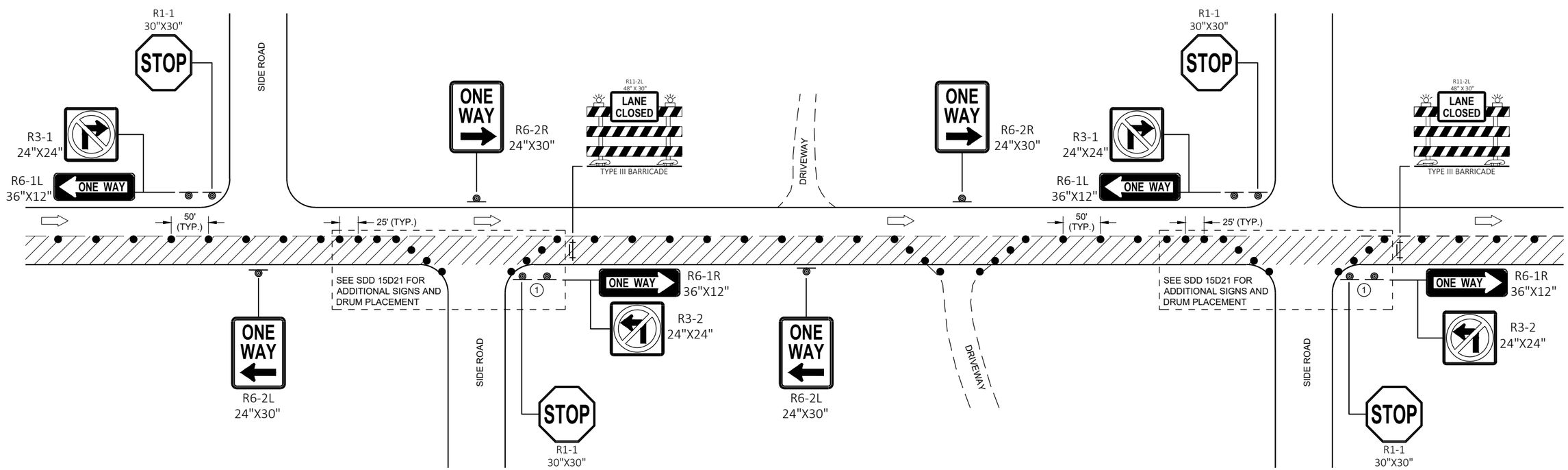

TRAFFIC CONTROL
ONE - WAY SIGNING

TRAFFIC CONTROL
ONE-WAY SIGNING

STATE OF WISCONSIN
DEPARTMENT OF TRANSPORTATION

APPROVED
May 2020 — DATE
/S/ Andrew Heidtke — WORK ZONE ENGINEE
FHWA

6

SDD 15D46 - 01

LEGEND

V1 WORK VEHICLE

V2 SHADOW VEHICLE

TRUCK MOUNTED ATTENUATOR (TMA)

FLASHING ARROW PANEL (CAUTION)

WORK AREA

DIRECTION OF TRAFFIC

POSTED SPEED PRIOR TO WORK STARTING (MPH)	DECISION SIGHT DISTANCE (D)
0 - 25	550'
30	550'
35	700'
40	700'
45	900'
50	900'
55	1200'

GENERAL NOTES

ALL SIGNS ARE 48"X48" UNLESS OTHERWISE NOTED.

MOBILE IS WORK THAT MOVES CONTINUOUSLY OR MOVES AT LEAST THE DECISION SIGHT DISTANCE EVERY 15 MINUTES.

ALL VEHICLES SHALL BE EQUIPPED WITH TWO 360 DEGREE HIGH INTENSITY YELLOW FLASHING LIGHTS OR STROBE LIGHTS AND OPERATED WITH HEADLIGHTS TURNED ON.

ALL ARROW PANELS SHALL BE REAR FACING, TYPE "B" OR "C", AND DISPLAYING THE FLASHING CAUTION MODE. SIGNS PLACED ON VEHICLES MUST NOT OBSCURE THE ARROW PANEL.

USE AN ATTENUATOR ON THE REARMOST VEHICLE THAT BLOCKS ALL OR PART OF THE TRAFFIC LANE.

1 DISTANCE BETWEEN VEHICLES MAY INCREASE FROM THE ATTENUATOR'S ROLL AHEAD BASED ON TERRAIN, SIGHT DISTANCE, AND OTHER FACTORS. WHENEVER ADEQUATE STOPPING SIGHT DISTANCE EXISTS TO THE REAR, SHADOW VEHICLES SHOULD MAINTAIN THE MINIMUM DISTANCE FROM THE WORK VEHICLE AND PROCEED AT THE SAME SPEED AS THE WORK VEHICLE. SHADOW VEHICLES SHOULD SLOW DOWN IN ADVANCE OF VERTICAL OR HORIZONTAL CURVES THAT RESTRICT SIGHT DISTANCE.

2 ALIGN LEFT SIDE OF SHADOW VEHICLE WITH EDGE OF WORK AREA.

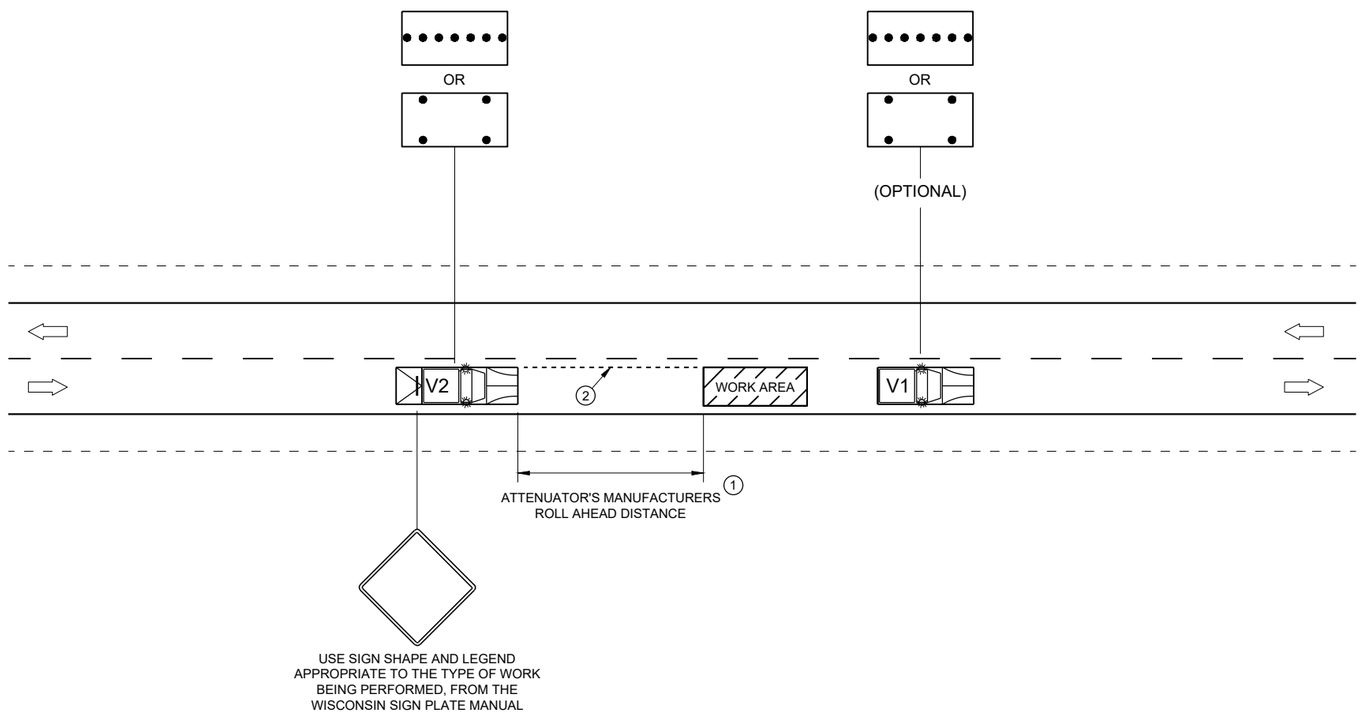

TRAFFIC CONTROL, MOBILE OPERATIONS ON AN UNDIVIDED ROADWAY

STATE OF WISCONSIN
DEPARTMENT OF TRANSPORTATION

APPROVED
February 2021 — DATE
/S/ Andrew Heidtke — STATEWIDE WORK ZONE T SAFETY ENGINEER
FHWA

6

SDD 15D51 - 01

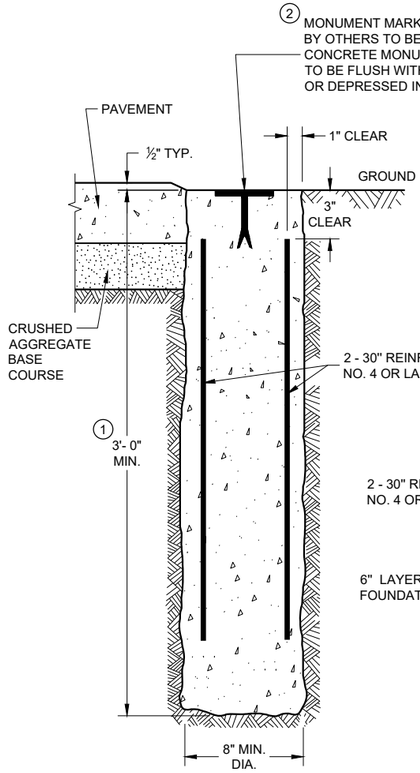

CAST-IN-PLACE

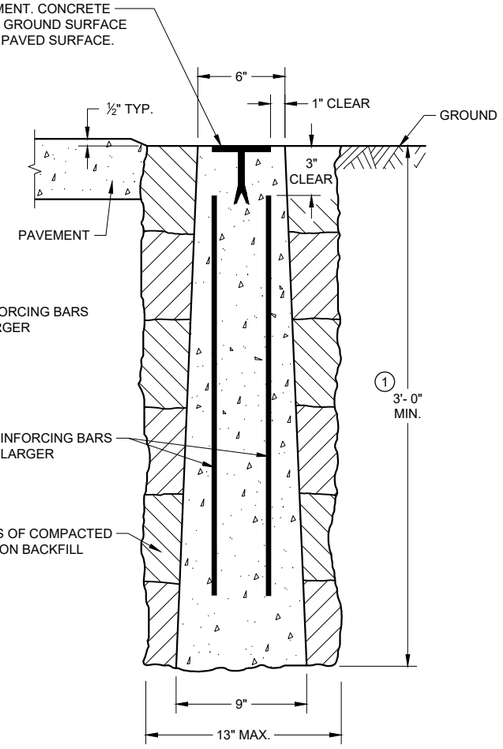

PRECAST

CONCRETE MONUMENTS
TYPE A

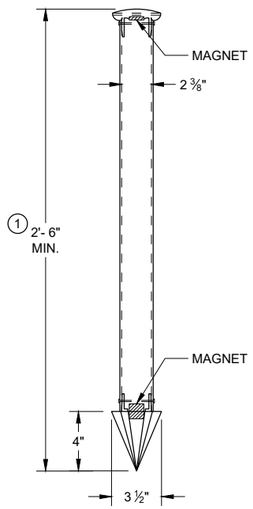

TYPE C
DRIVEN MONUMENT

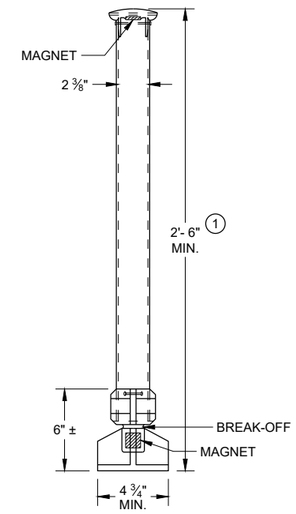

TYPE D
NON-DRIVEN
BREAK-OFF MONUMENT

ALUMINUM MONUMENTS
(INCLUDES MARKER)

GENERAL NOTES

DETAILS OF CONSTRUCTION, MATERIALS AND WORKMANSHIP NOT SHOWN ON THIS DRAWING SHALL CONFORM TO THE PERTINENT REQUIREMENTS OF THE STANDARD SPECIFICATIONS AND THE APPLICABLE SPECIAL PROVISIONS.

DETAILED DRAWINGS OF PROPOSED ALTERNATE DESIGNS FOR METAL MONUMENTS OR MONUMENT COVERS SHALL BE SUBMITTED TO THE ENGINEER FOR APPROVAL.

PERMANENT MAGNETS SHALL BE INSERTED NEAR THE TOP AND BOTTOM OF ALL ALUMINUM MONUMENTS SO THE MONUMENT CAN EASILY BE DETECTED BY A METAL DETECTOR.

THE CAST IRON MONUMENT COVER SHALL BE A "NON-ROCKING" TYPE. ADJUSTMENT OF THE COVER TO GRADE MAY BE ACCOMPLISHED BY THE USE OF MORTAR AND BRICK, OR BY EITHER PRECAST OR CAST-IN-PLACE REINFORCED CONCRETE GRADE RINGS.

MONUMENTS SHALL BE LOCATED AND PLACED AT THE DIRECTION OF THE ENGINEER.

ALUMINUM MONUMENTS AND MONUMENT COVERS SHALL BE MADE FROM AN ALUMINUM AND MAGNESIUM ALLOY AS DETERMINED BY THE MANUFACTURER.

THE MONUMENT COVERS DETAILED ON THIS DRAWING ARE NOT EQUAL ALTERNATES. MONUMENT COVERS SHALL BE CAST IRON UNLESS ALUMINUM IS SPECIFIED ELSEWHERE IN THE CONTRACT.

MONUMENT SHALL BE CAST-IN-PLACE CONCRETE UNLESS PRECAST CONCRETE OR ALUMINUM MONUMENTS ARE SPECIFIED IN THE CONTRACT OR PERMITTED BY THE ENGINEER.

① MINIMUM LENGTH SHALL BE 4'-0" FOR MONUMENTS INSTALLED IN PAVED AREAS.

② AN OFFICIAL COUNTY MONUMENT MARKER SUPPLIED BY A COUNTY MAY BE REQUIRED FOR SOME SECTION CORNERS AND WITNESS MONUMENTS INSTEAD OF THIS WISDOT MARKER.

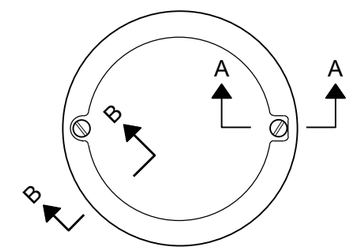

TOP VIEW

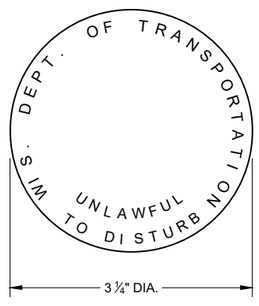

② **WIS DOT MONUMENT MARKER LOGO**

FOR TYPES "A", "C" & "D"

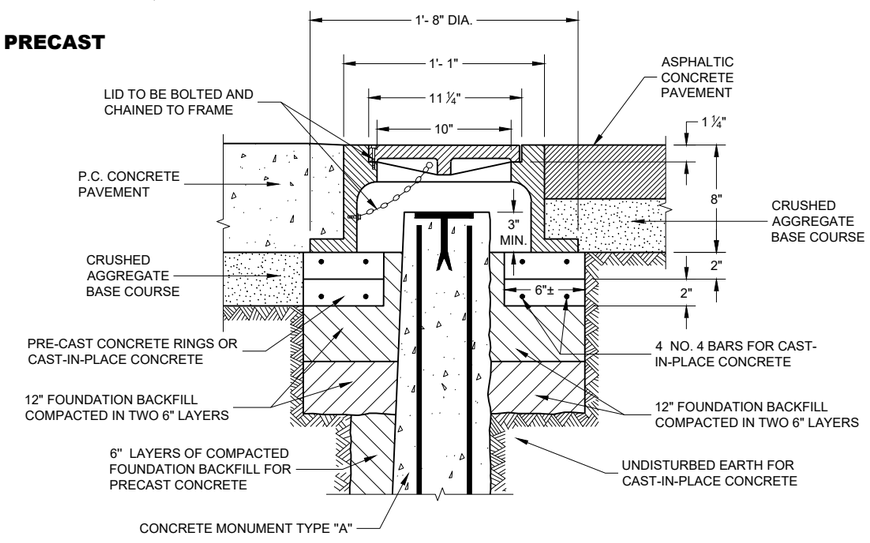

CAST IRON MONUMENT COVER
(APPROXIMATE WEIGHT 95 LBS)

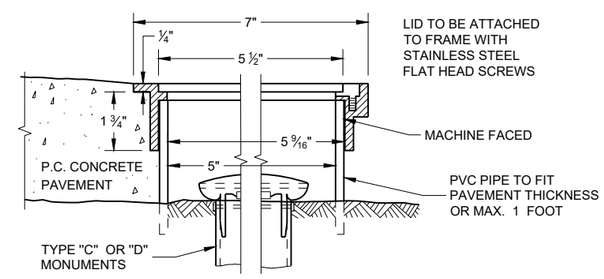

SECTION B-B **SECTION A-A**

ALUMINUM MONUMENT COVER
(APPROXIMATE WEIGHT 2 LBS)
(FOR CONCRETE PAVEMENT ONLY)

LANDMARK REFERENCE MONUMENTS AND COVERS

STATE OF WISCONSIN
DEPARTMENT OF TRANSPORTATION

APPROVED
March 2018 — DATE
/S/ Raymond A. Kumapavii — CHIEF SURVEYING AND MAPPING ENGINEER

FHWA

6

SDD 16A01 - 07

TYPICAL ASSEMBLIES

J1-1

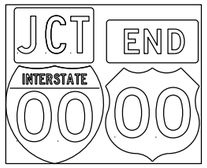

J1-2

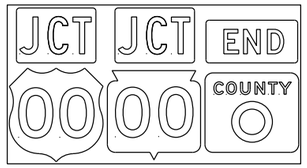

J1-3

JR1-1

J2-1

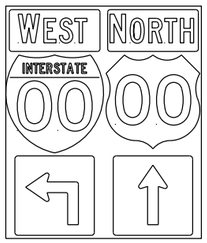

J2-2

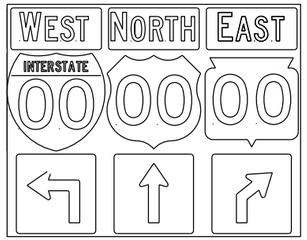

J2-3

JV

(Typical Vertical J-Assembly
See Note 10 and 11)

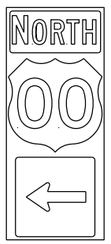

J3-1

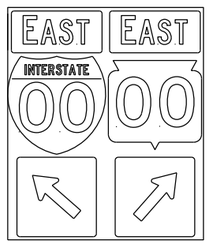

J3-2

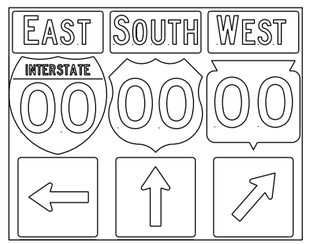

J3-3

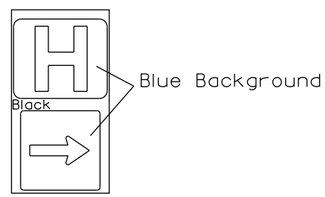

JH-1

J4-1

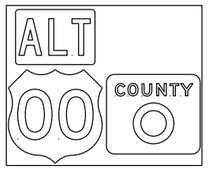

J4-2

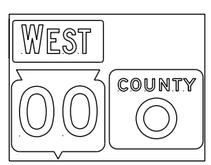

J4-2

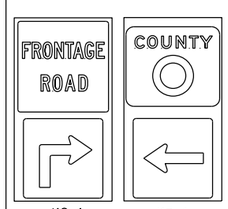

J12-1 J13-1

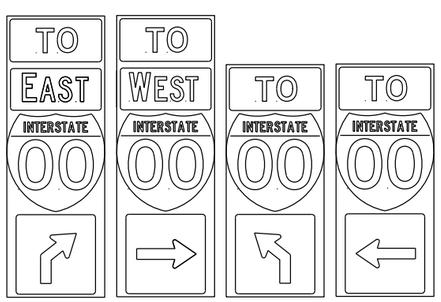

J32-1 J33-1 J22-1 J23-1 JR13-1 JR23-1 JR99-1

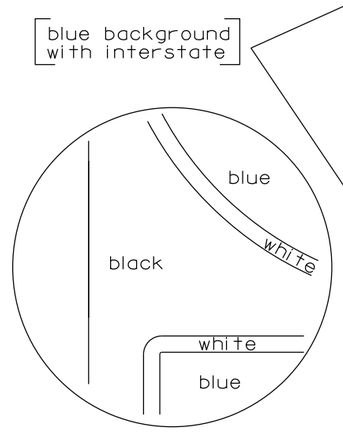

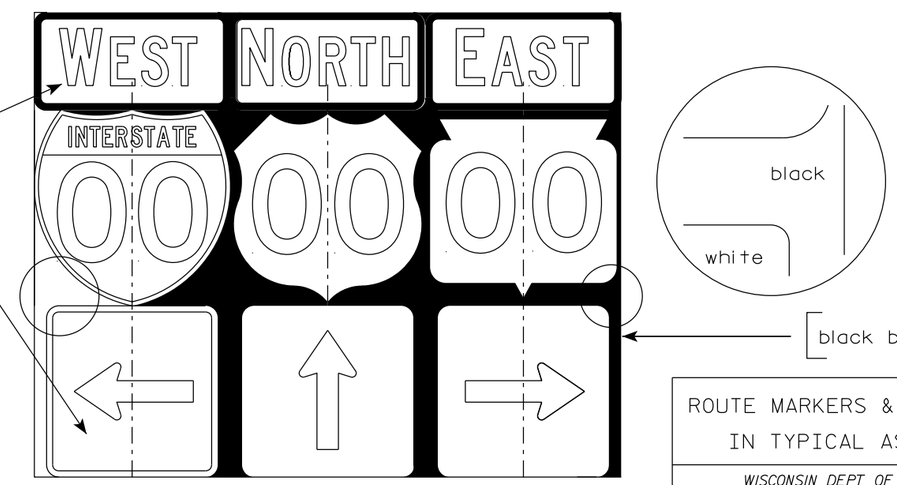

NOTES

1. Signs are Type II - Type H Reflective
2. Color:
   Background - Black Non-reflective
   Message - see Note 4
3. Message Series - See Note 4
4. The colors and message spacing on each marker shall be according to the applicable route marker panel specifications.
5. Certain marker heads require the component pieces to be the same color. As an example, all the components used with an M1-1 Interstate marker shall be blue.
6. Single panel j-assemblies shall only be used with route marker shields that are same size. If the route marker shields are different size use multiple piece component.
7. Route assemblies that have 24 inch route shields and have dimensions greater than 48 inches (both vertical and horizontal) shall have one horizontal splice between the arrows and route shields. Vertical splices shall not be used on route assemblies with a horizontal dimension of 144 inches or less. The contractor shall not use more than one vertical joint per sign and the joint shall be between route shields.
8. Route assemblies that have 36 inch shields and have dimensions greater than 48 inchs (both vertical and horizontal) shall have two horizontal splices. One horizontal splice shall be between the cardinal direction and route shields and the other horizontal splice shall be between the arrows and route shields. Vertical splices shall not be used on route assemblies with a horizontal dimension of 144 or less. The contractor shall not use more than one vertical joint per sign and the joint shall be between route shields.
9. All Vertical J Assemblies are given a Sign Code of JV
10. For JV Assemblies that have a mixture of Interstate and Non-Interstate shields, arrows and cardinals shall be white on blue.
11. For JV Assemblies that have a mixture of Non-Interstate and Auto-Tour shields, arrows and cardinals shall be black on white.

ROUTE MARKERS & COMPONENTS
IN TYPICAL ASSEMBLIES

WISCONSIN DEPT OF TRANSPORTATION

APPROVED Matthew R Rauch
for State Traffic Engineer

DATE 6/7/23 PLATE NO. A2-1S.10

PROJECT NO:

SHEET NO: 290 E

URBAN AREA

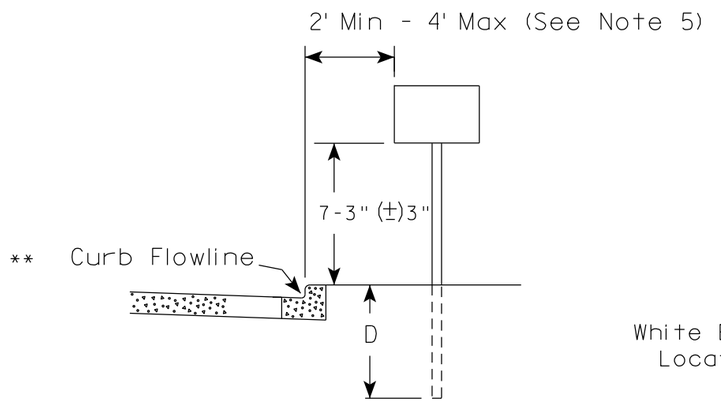

RURAL AREA (See Note 2)

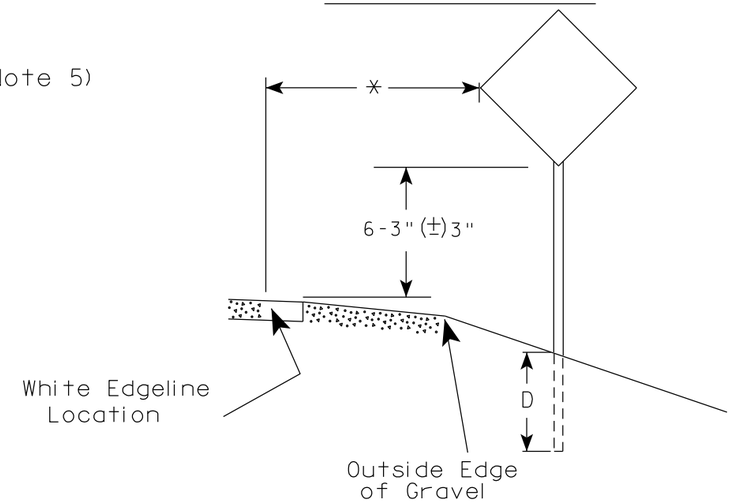

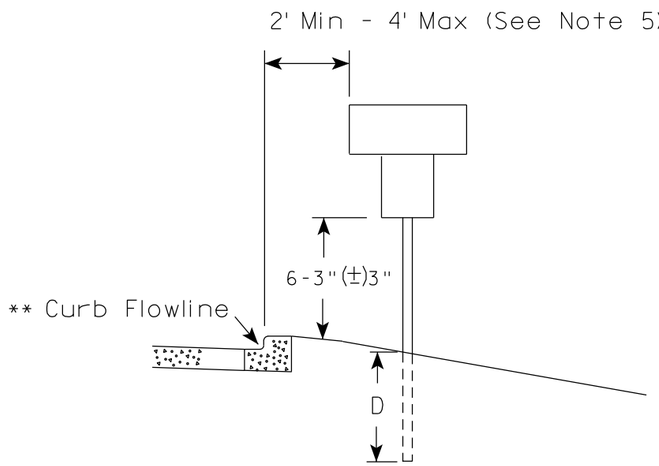

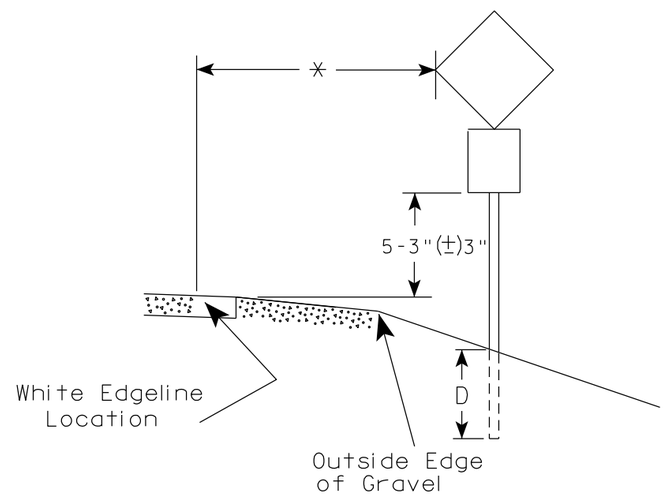

** The existence of curb and gutter does not in itself mandate the vertical clearance illustrated. That height is typically measured where there is sidewalk adjacent to the roadway or parking is permitted. In the absence of sidewalk vertical clearance is measured from the top of the curb. Offset of signs is measured from the flow line.

* 6 feet from edge of a paved shoulder or 12 feet from the edge of pavement (edge line location) or 2 feet from outside edge of gravel, whichever is greater unless directed by project engineer.

GENERAL NOTES

1. Signs wider than 4 feet or 20 sq.ft or larger, shall be mounted on multiple posts. Refer to plate A4-4.
2. If signs are mounted on or behind barrier wall, see A4-10 sign plate.
   The Double Arrow sign (W12-1D) shall be mounted at a height of 2'-3" (±) 3". The Chevron sign (W1-8), Roundabout Chevron panel (R6-4B), Enhanced Reference Markers, Clearance Markers (W5-52), Mile Markers (D10 series), In Road Object Markers (W5-54) & End of Road Markers (W5-56) shall be mounted at a height of 4'-3" (±) 3".
3. For expressways and freeways, mounting height is 7'- 3" (±) 3" or 6'-3" (±) 3" depending upon existence of a sub-sign.
4. Minimum mounting height for signs mounted on traffic signal poles is 5'- 3" (±) 3".
5. Offset distance shall be consistent with existing signs or consistent throughout length of project.
6. Folding signs shall be mounted at a height of 5'-3" (±) 3" or as directd by the Engineer.

POST EMBEDMENT DEPTH

Area of Sign Installation (Sq. Ft.)	D (Min)
20 or Less	4'
Greater than 20	5'

TYPICAL INSTALLATION OF PERMANENT TYPE II SIGNS ON SINGLE POSTS

WISCONSIN DEPT OF TRANSPORTATION

APPROVED Matthew R Rauch
for State Traffic Engineer

DATE 12/6/23 PLATE NO. A4-3.23

7 7

PROJECT NO:	HWY:	COUNTY:		SHEET NO: 291	E

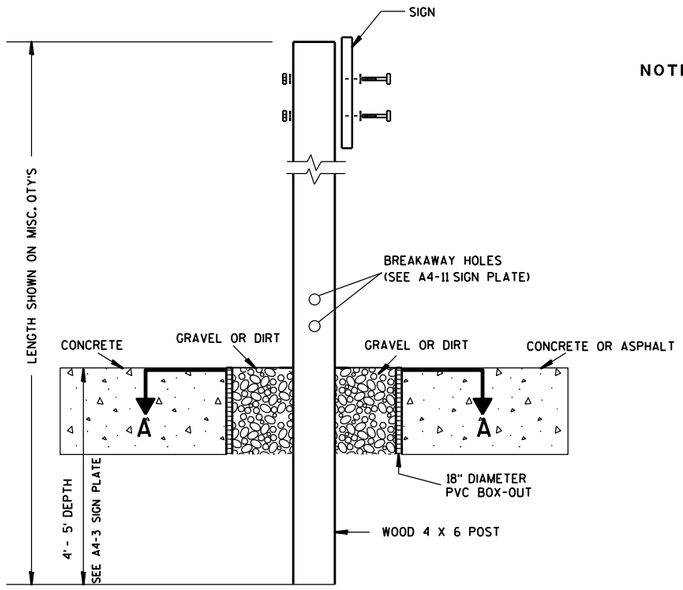

ELEVATION VIEW

DETAIL OF WOOD 4 X 6 SIGN POST IN BOX-OUT

NOTES:
1. ALL MATERIAL TO BE APPROVED BY ENGINEER PRIOR TO INSTALLATION
2. SEE SIGN PLATE A4-8 FOR SIGN HARDWARE REQUIREMENTS
3. 18 INCH X 18 INCH SQUARE BOX-OUTS MAY BE USED FOR INSTALLATIONS IN EXISTING CONCRETE OR ASPHALT LOCATIONS.

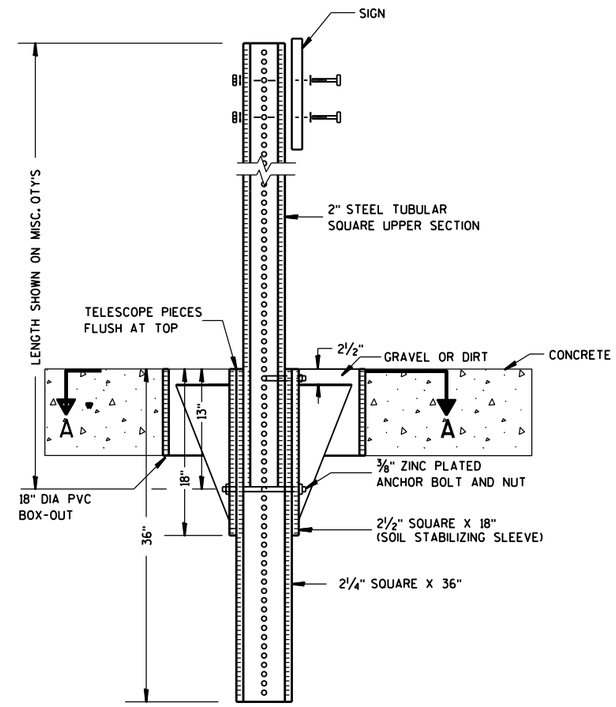

ELEVATION VIEW

DETAIL OF STEEL 2 X 2 SIGN POST IN BOX-OUT

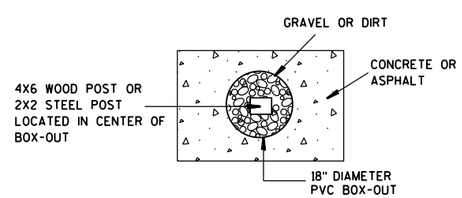

PLAN VIEW

FOR NEW CONCRETE/ASPHALT INSTALLATIONS

SIGN POST
BOX-OUTS
A4-3B

WISCONSIN DEPT OF TRANSPORTATION

APPROVED Matthew R Rauch
for State Traffic Engineer

DATE 1/27/14 PLATE NO. A4-3B.1

PROJECT NO:	HWY:	COUNTY:		SHEET NO:	E

URBAN AREA

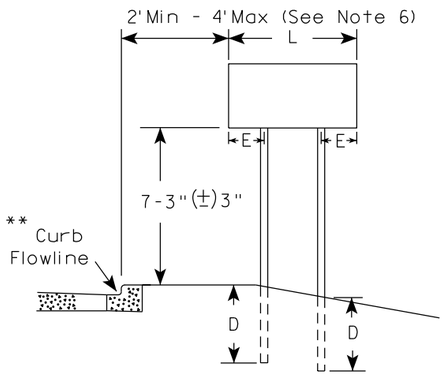

RURAL AREA (See Note 3)

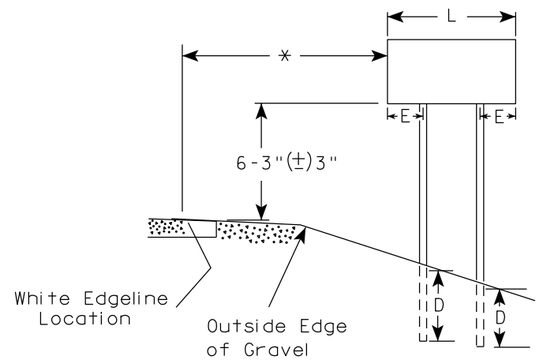

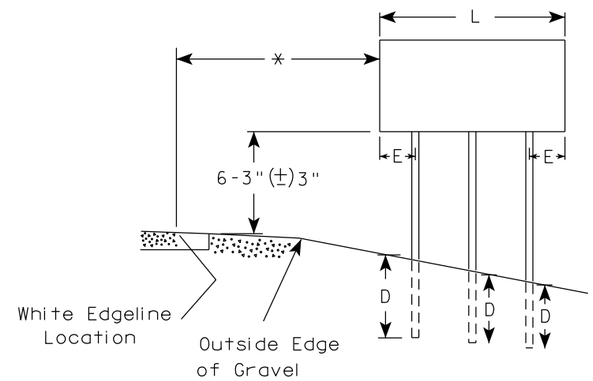

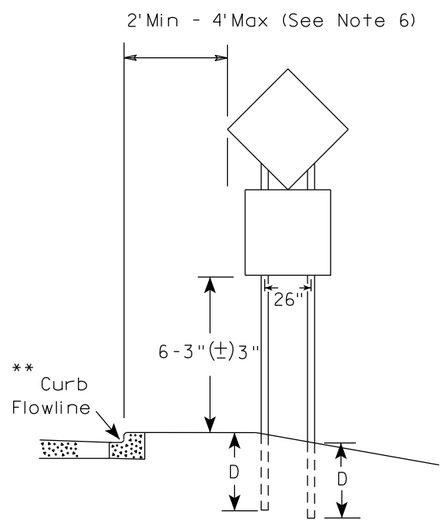

48" DIAMOND WARNING SIGN

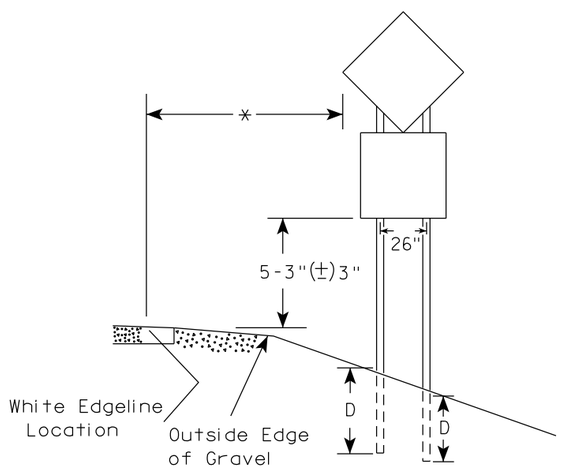

48" DIAMOND WARNING SIGN

GENERAL NOTES

1. For 3 or 4 post installations, individual post spacing shall be greater than 3'-6".
2. See tables below for required number of posts.
3. For expressways and freeways, mounting height is 7'-3" (±) 3" or 6'-3" (±) 3" depending upon existence of sub-sign.
4. The (±) tolerance for mounting height is 3 inches.
5. J-Assemblies are considered to be one sign for mounting height.
6. Offset distance shall be consistent with existing signs or consistent throughout length of project.
7. Folding signs shall be mounted at a height of 5'-3" (±) 3" or as directed by the engineer.
8. The Double Arrow sign (W12-1) shall be mounted at a height of 2'-3" (±) 3". The Chevron sign (W1-8), Roundabout Chevron panel (R6-4B), Clearance Markers (W5-52), Mile Markers (D10 series), In Road Object Markers (W5-54) & End of Road Markers (W5-56) shall be mounted at a height of 4"-3" (±) 3".

* 6 feet from edge of a paved shoulder or 12 feet from the edge of pavement (edge line location) or 2 feet from outside edge of gravel, whichever is greater unless directed by project engineer.

** The existence of curb and gutter does not in itself mandate the vertical clearance illustrated. That height is typically measured where there is sidewalk adjacent to the roadway or parking is permitted. In the absence of sidewalk vertical clearance is measured from the top of the curb. Offset of signs is measured from the flow line.

*** See A4-3 sign plate for signs 4' or less in width and less than 20 S.F. in area.

SIGN SHAPE OTHER THAN DIAMOND (TWO POSTS REQUIRED)	
L	E
*** Greater than 48" Less than 60"	12"
60" to 108"	L/5

SIGN SHAPE OTHER THAN DIAMOND (THREE POSTS REQUIRED)	
L	E
Greater than 108" to 144"	12"

POST EMBEDMENT DEPTH

Area of Sign Installation (Sq. Ft.)	D (Min)
20 or Less	4'
Greater than 20	5'

TYPICAL INSTALLATION OF TYPE II SIGNS ON MULTIPLE POSTS

WISCONSIN DEPT OF TRANSPORTATION

APPROVED Matthew R Rauch
for State Traffic Engineer

DATE 12/6/23 PLATE NO. A4-4.16

PROJECT NO:	HWY:	COUNTY:		SHEET NO: 293	E

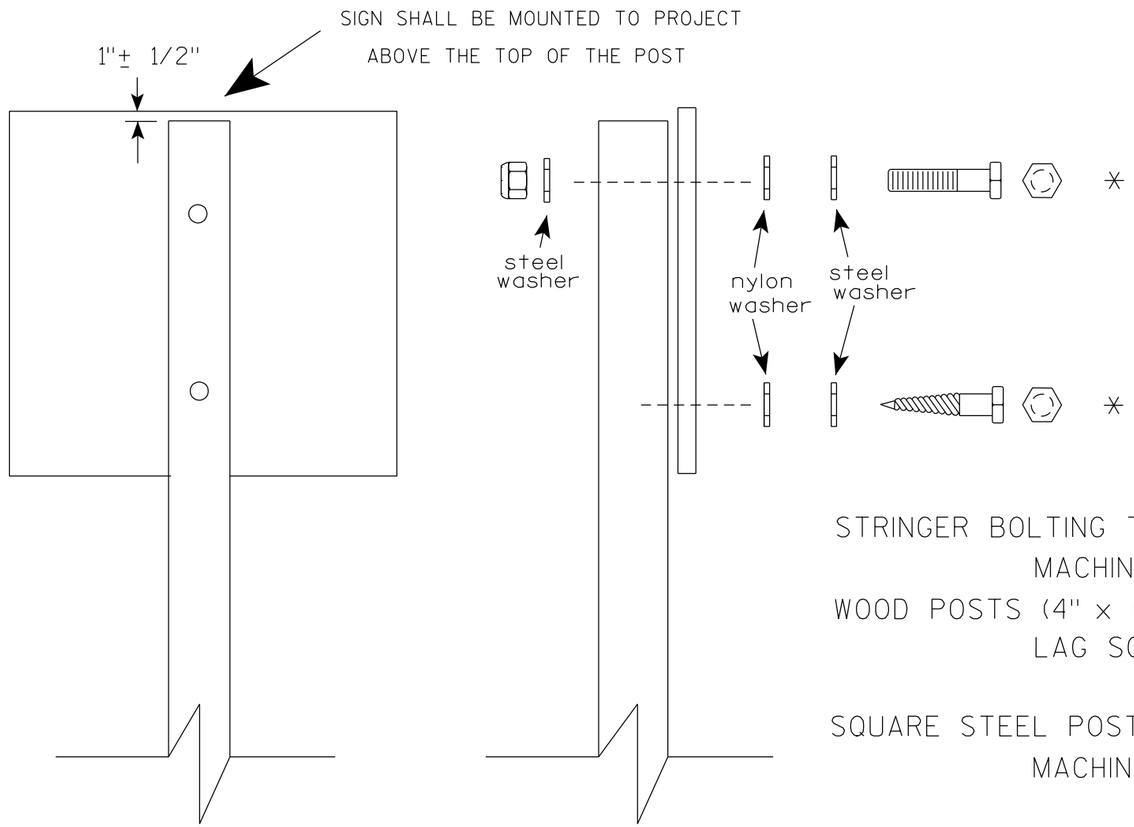

Nuts, bolts and lags used for mounting signs shall have hexagonal heads and shall be either :

a. Hot dip galvanized in accordance with ASTM Designation: A 153, Class D, or SC 3

b. Electro-galvanized in accordance with ASTM Designation : B 633, TYPE III, SC 3.

Threads on bolts and nuts shall be manufactured with sufficient allowance for the cadmium plate or galvanized coating to permit the nuts to run freely on the bolts.

STRINGER BOLTING TO ALUMINUM SIGNS (SEE SIGN PLATE A4-18)

MACHINE BOLTS - 5/16" X 1-3/4" Length w/ lock nuts

WOOD POSTS (4" x 6")

LAG SCREWS - 3/8" X 3" (NO STRINGERS ON BACK OF SIGN)
3/8" X 4" (STRINGERS ON BACK OF SIGN)

SQUARE STEEL POSTS (2" x 2")

MACHINE BOLTS - 3/8" X 3-1/4" Length w/ nuts (NO STRINGER ON BACK OF SIGN)
3/8" X 5" Length w/ nuts (STRINGERS ON BACK OF SIGN)

RIVETS - 9/32" (6605-9-6) BULB-TITE, TRI-FOLD, ALUMINUM BODY/MANDREL
O.D. FLANGE .720-.765 INCH, GRIP RANGE .042-.375 INCH

WASHERS (ALL POSTS) -

1-1/4" O.D. X 3/8" I.D. X 1/16" STEEL
1-1/4" O.D. X 3/8" I.D. X .080 NYLON

* Two different fastening systems are shown for illustration purposes. On any individual sign, either one or the other system shall be used. Actual number of fasteners per sign varies with the sign area, but normally there are two. For a single post installation, all signs greater than 9 sq. ft. require the use of 3 fasteners.

ATTACHMENT OF SIGNS TO POSTS

WISCONSIN DEPT OF TRANSPORTATION

APPROVED Matthew R Rauch
for State Traffic Engineer

DATE 4/1/2020 PLATE NO. A4-8.9

TELESCOPIC TUBING ANCHORS
TWO PIECE SYSTEM

2 1/4" SQUARE
12 GAUGE
PERFORATED
GALVANIZED FINISH

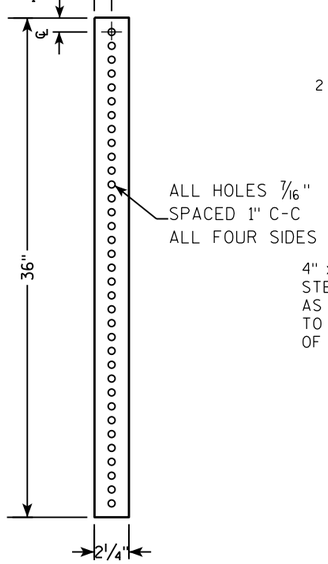

2 1/2" SQUARE
12 GAUGE
OMNI-DIRECTIONAL
PERFORATED
SOIL STABILIZING SLEEVE
GALVANIZED FINISH

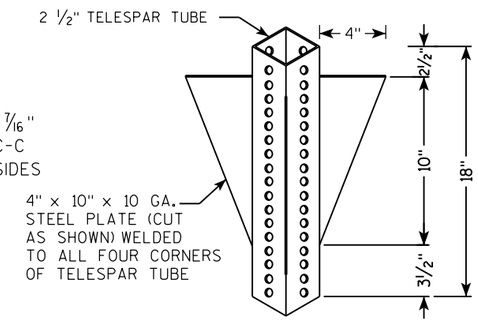

DETAIL OF TUBULAR STEEL SIGN POST
(IN POURED CONCRETE OR ASPHALT)

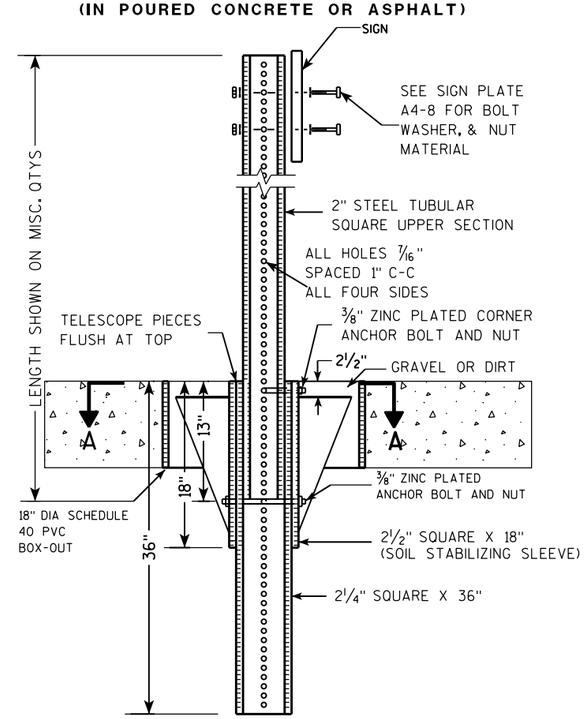

DETAIL OF TUBULAR STEEL SIGN POST
(IN LOCATIONS OTHER THAN POURED CONCRETE OR ASPHALT)

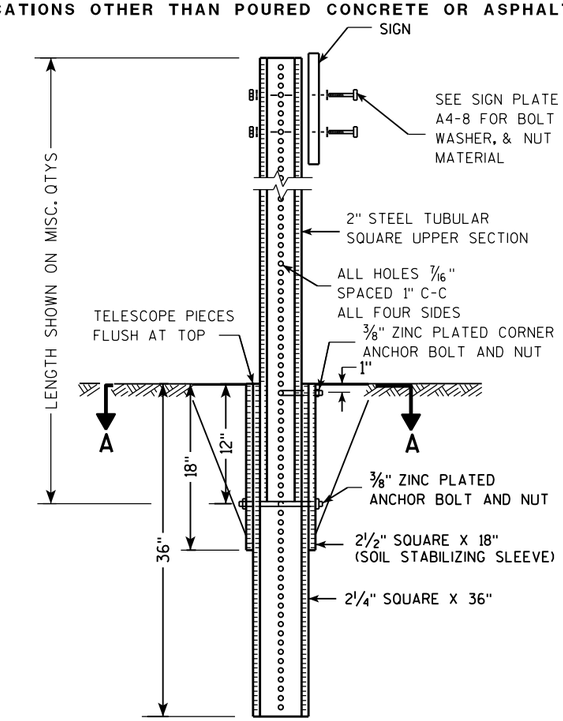

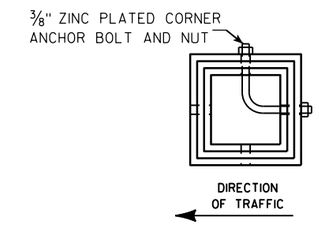

SECTION A-A

Area of Sign Installation (Sq. Ft.)	Number of Required Posts
9 or less	1
Greater than 9 less than or equal to 18	2
Greater than 18 less than or equal to 27	3

Signs wider than 3 feet or larger than 9 sq. ft shall be mounted on multiple posts (see above table).

TUBULAR STEEL
SIGN POST
A4-9

WISCONSIN DEPT OF TRANSPORTATION

APPROVED Matthew R Rauch
for State Traffic Engineer

DATE 2/05/15 PLATE A4-9.9

7 7

PROJECT NO:	HWY:	COUNTY:		SHEET NO:	E

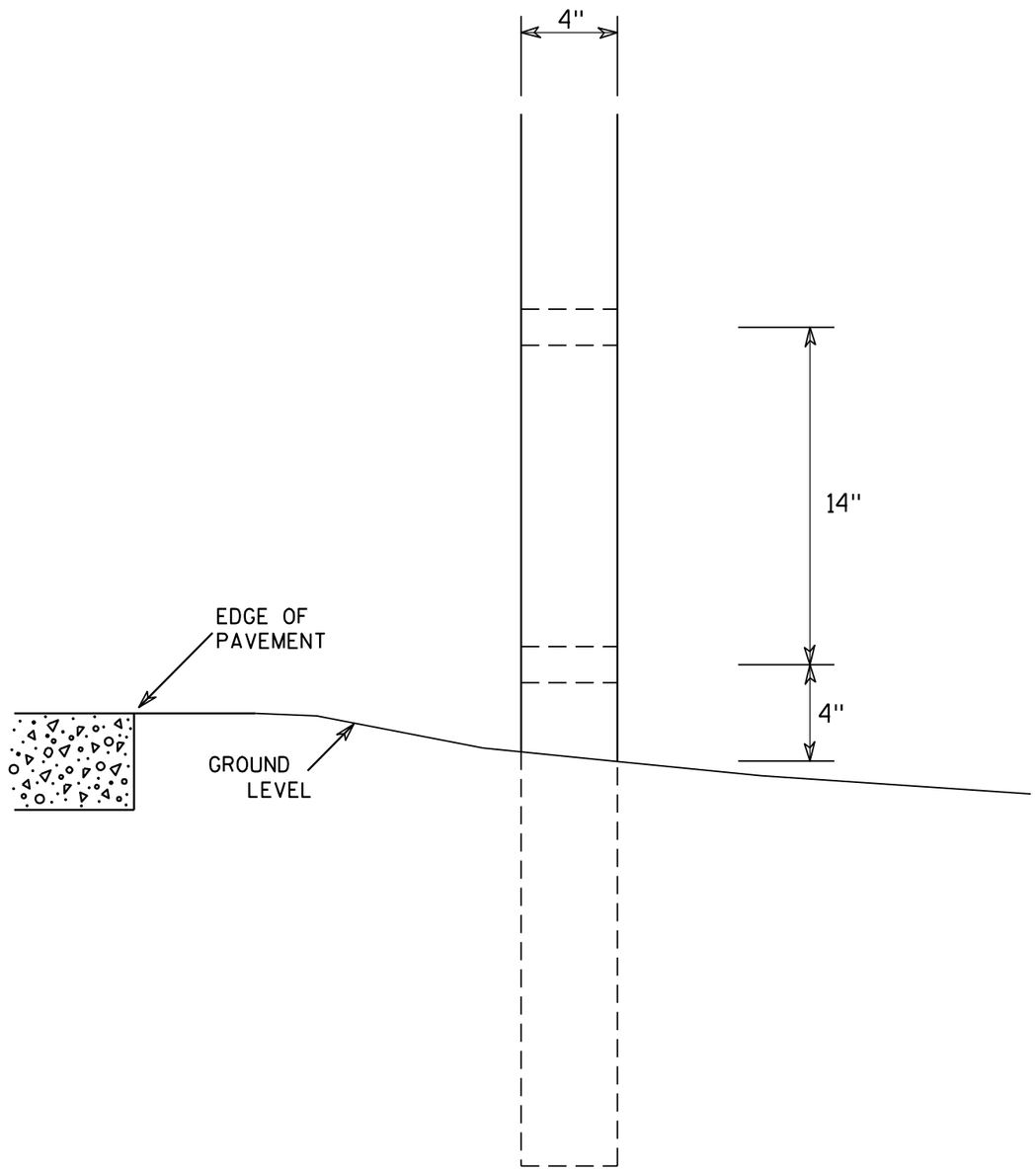

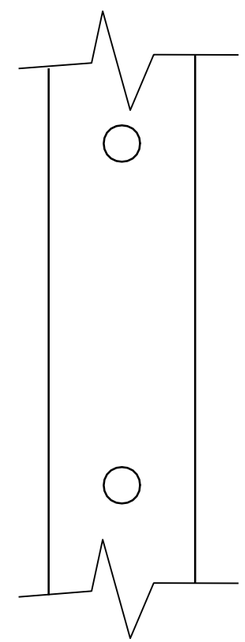

SIDE VIEW

GENERAL NOTES

1. All 4 x 6 Wood Posts shall be modified by having two 1½" diameter holes drilled perpendicular to the roadway centerline.

4 X 6 WOOD POST MODIFICATIONS

WISCONSIN DEPT OF TRANSPORTATION

APPROVED Chester J Spang for State Traffic Engineer

DATE 3/27/97 PLATE NO. A4-11.2

PROJECT NO:	HWY:	COUNTY:		SHEET NO: 296	E

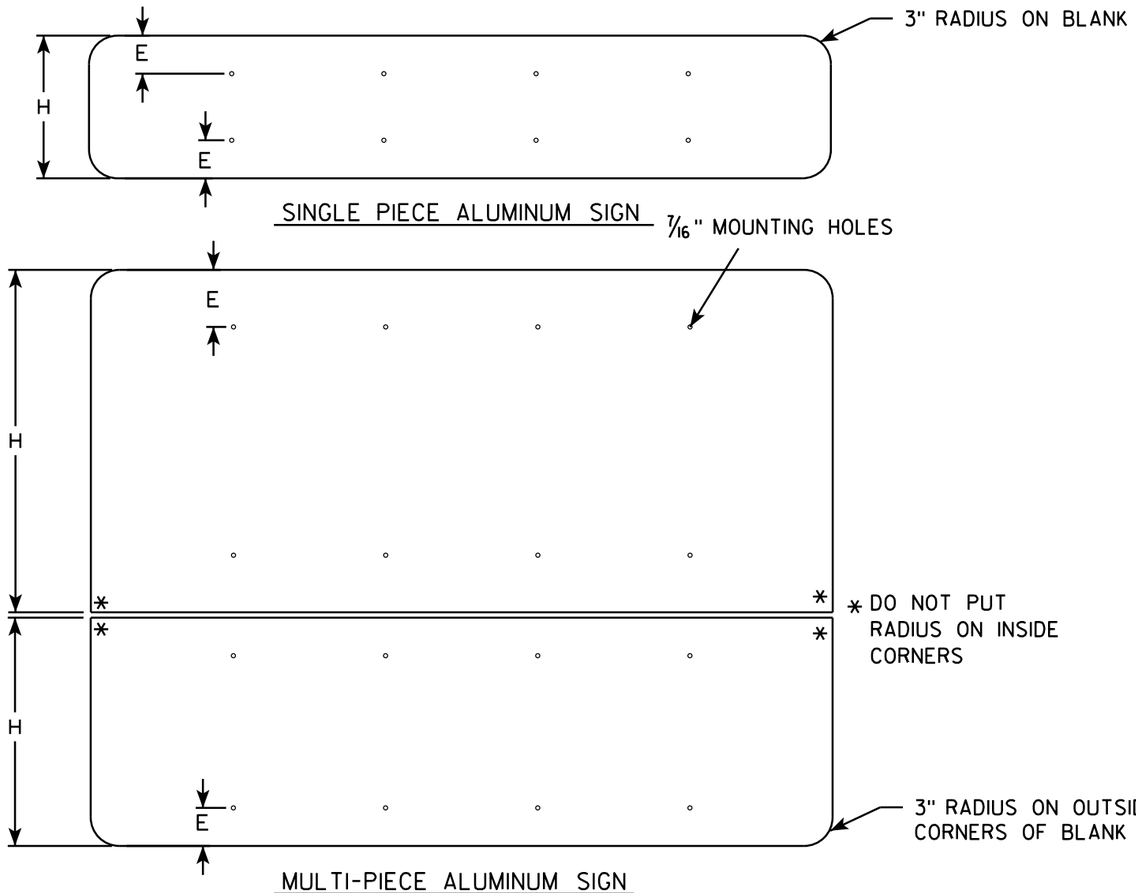

GENERAL NOTES

- ALL SIGNS OVER 60" IN WIDTH SHALL HAVE A 3" RADIUS ON THE OUTSIDE CORNERS OF THE ALUMINUM BLANK.
- MOUNTING HOLES SHALL BE 7/16" DIAMETER.
- SEE CHART FOR HOLE SPACING REQUIREMENTS
- FOR SIGN PANELS WITH DIMENSION (H) 36" AND OVER, DIMENSION E SHALL BE 6"
- FOR SIGN PANELS WITH DIMENSION (H) UNDER 36", DIMENSION E SHALL BE 4"
- SIGN STRINGER MATERIAL SHALL CONSIST OF STEEL CHANNEL POST SECTIONS, WEIGHING 1.12 LBS/FT IN ACCORDANCE WITH SECTION 633.2.1 OF THE STANDARD SPECIFICATIONS FOR HIGHWAY AND STRUCTURE CONSTRUCTION.
- SEE SIGN PLATE A4-8 FOR SIGN STRINGER BOLTING REQUIREMENTS.

SIGN WIDTH	STRINGER WIDTH	POSTS	HOLE SPACING	MOUNTING HOLES						
78"	72"	2	16"	15"	31"	47"	63"			
84"	72"	2	17"	16 1/2"	33 1/2"	50 1/2"	67 1/2"			
90"	72"	2	18"	18"	36"	54"	72"			
96"	90"	2	19"	19 1/2"	38 1/2"	57 1/2"	76 1/2"			
102"	90"	2	20"	21"	41"	61"	81"			
108"	90"	2	21"	22 1/2"	43 1/2"	64 1/2"	85 1/2"			
114"	108"	3	15"	12"	27"	42"	57"	72"	87"	102"
120"	108"	3	16"	12"	28"	44"	60"	76"	92"	108"
126"	108"	3	17"	12"	29"	46"	63"	80"	97"	114"
132"	126"	3	18"	12"	30"	48"	66"	84"	102"	120"
138"	126"	3	19"	12"	31"	50"	69"	88"	107"	126"
144"	126"	3	20"	12"	32"	52"	72"	92"	112"	132"

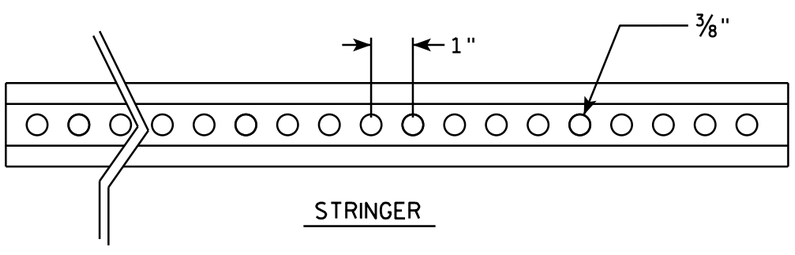

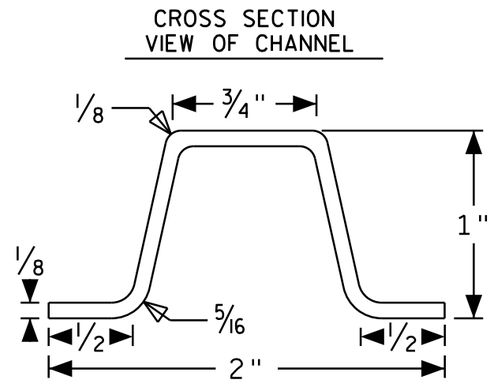

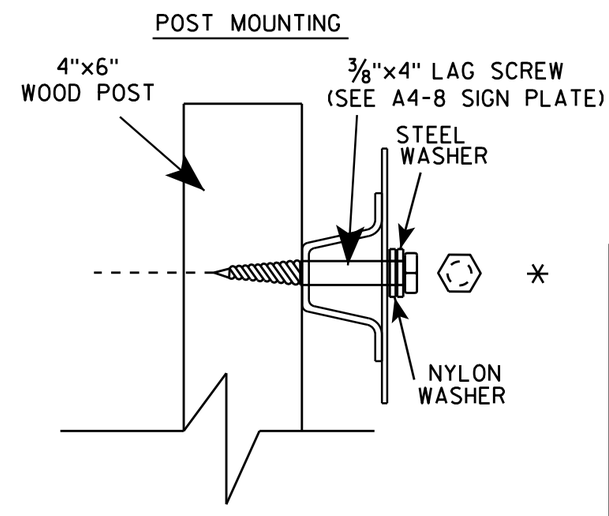

SIGN STRINGER MOUNTING REQUIREMENTS

WISCONSIN DEPT OF TRANSPORTATION

APPROVED Matthew R Rauch
for State Traffic Engineer

DATE 4/26/16 PLATE NO A4-18.1

PROJECT NO:	HWY:	COUNTY:		SHEET NO:	E

BANDING

SINGLE SIGN

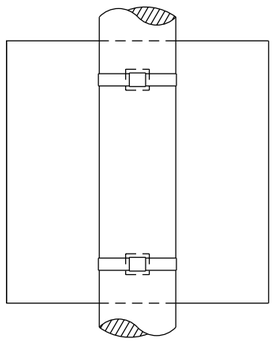

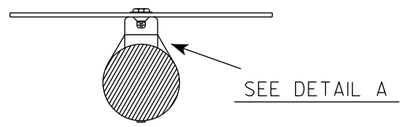

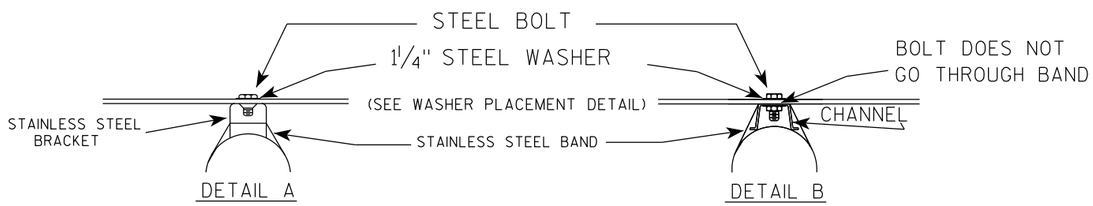

WASHER PLACEMENT

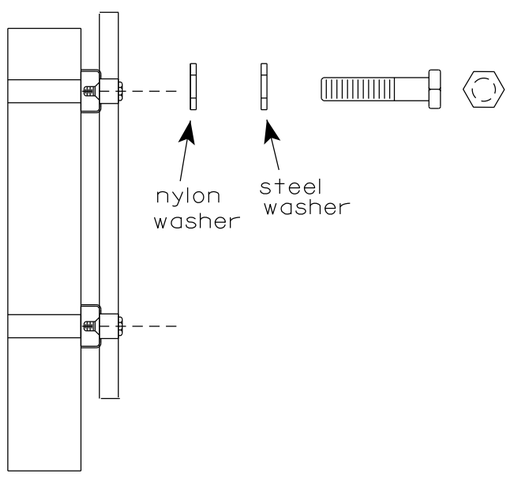

WASHERS (ALL POSTS) -
1-1/4" O.D. X 3/8" I.D. X 1/16" STEEL
1-1/4" O.D. X 3/8" I.D. X .080 NYLON
FOR ALL TYPE H SIGNS

GENERAL NOTES

1. Any sign over 3 feet in width shall use the V-Block banding method. See A5-10 standard plate.
2. Signs 3 feet or greater in height shall have three bracket bands installed. Signs less than 3 feet in height shall have two bracket bands installed.
3. Banding and assembly bracket shall be stainless steel. All bands shall be ¾" in width and 0.025" thickness.
4. ALL SIGN MOUNTING BOLTS AND WASHERS SHALL BE EITHER:
   a. Hot dip or mechanically galvanized in accordance with ASTM Designation: A 153, Class D
   b. Electro-galvanized in accordance with ASTM designation: B 633, Type III, SC 3

"J" ASSEMBLY

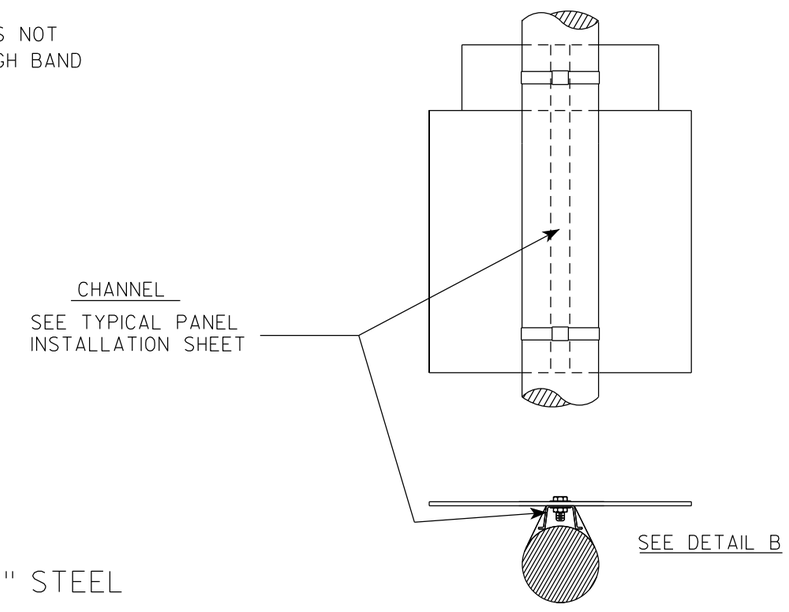

STANDARD SIGN
SIGN BANDING DETAILS

WISCONSIN DEPT OF TRANSPORTATION

APPROVED Matthew R Rauch for State Traffic Engineer

DATE 6/10/19 PLATE NO. A5-9.4

PROJECT NO:	HWY:	COUNTY:		SHEET NO: 298	E

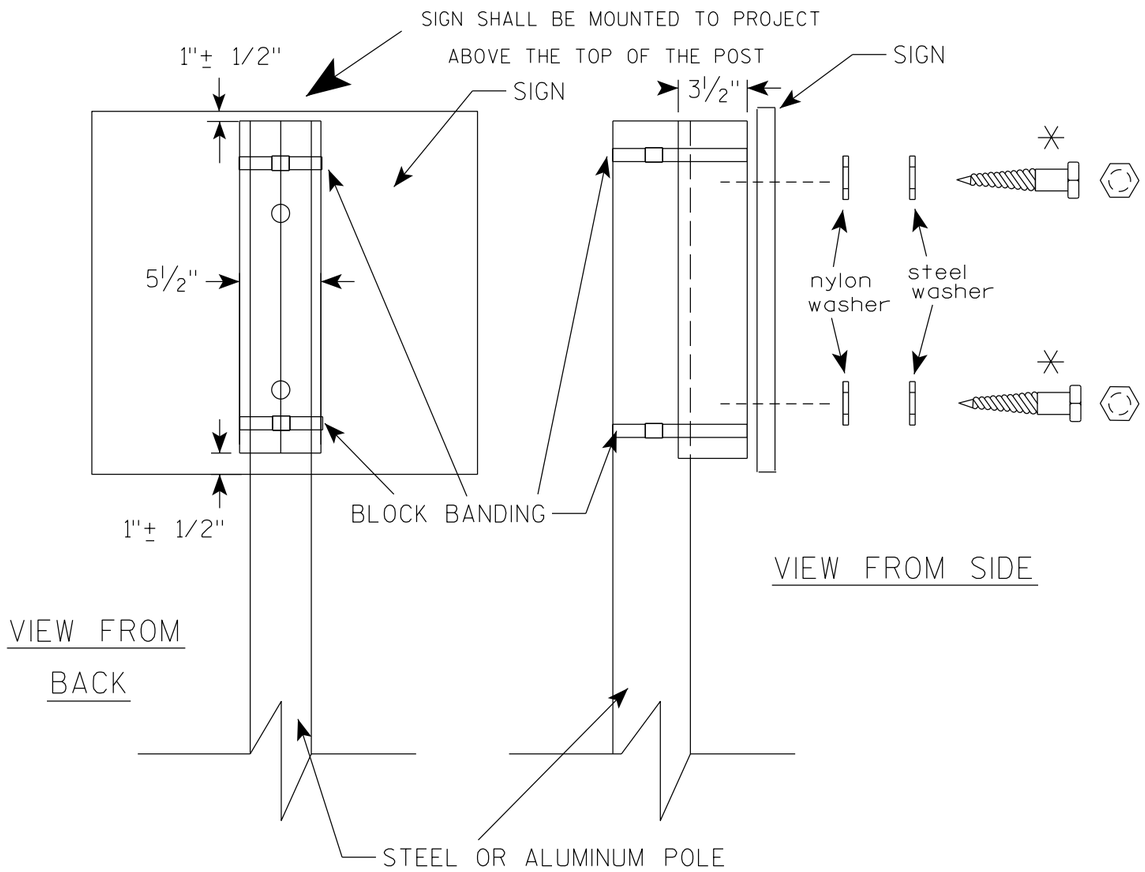

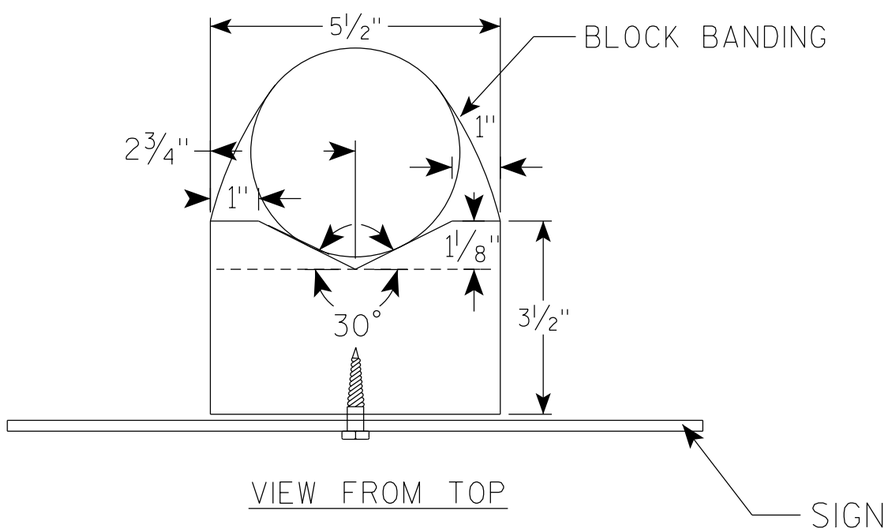

GENERAL NOTES

1. WOOD 4"X6" POST MATERIAL SHALL CONFORM TO 507.2.2 OF THE WisDOT STANDARD SPECIFICATIONS
2. BLOCK BANDING AND CLIPS SHALL BE STAINLESS STEEL, 3/4" WIDTH AND 0.025" THICKNESS
3. SIGNS 3' OR GREATER IN HEIGHT SHALL UTILIZE 3 BLOCK BANDS. SIGNS UNDER 3' IN HEIGHT SHALL UTILIZE 2 BLOCK BANDS
4. ACTUAL NUMBER OF FASTENERS PER SIGN VARIES WITH THE SIGN AREA, BUT NORNALLY THERE ARE TWO. FOR SIGNS GREATER THAN 9 S.F. 3 FASTENERS SHALL BE USED.
5. ALL SIGN MOUNTING BOLTS AND WASHERS SHALL BE EITHER:
   a. Hot dip or mechanically galvanized in accordance with ASTM Designation: A 153, Class D
   b. Electro-galvanized in accordance with ASTM Designation : B 633, TYPE III, SC 3
6. ALL BOLTS SHALL HAVE HEXAGONAL HEADS.
7. STEEL WASHERS SHALL BE 1 1/4" O.D. X 3/8" I.D. X 1/16"
8. NYLON WASHERS SHALL BE 1 1/4" O.D. X 3/8" I.D. X .080 FOR TYPE H OR TYPE F FACE SIGN

✳ LAG BOLTS SHALL BE 3/8" X 2 1/2"

7

7

BLOCK BANDING DETAIL
(V-BLOCK OPTION)

WISCONSIN DEPT OF TRANSPORTATION

APPROVED Matthew R Rauch
for State Traffic Engineer

DATE 4/19/2022 PLATE NO. A5-10.3

PROJECT NO:				SHEET NO: 299	E

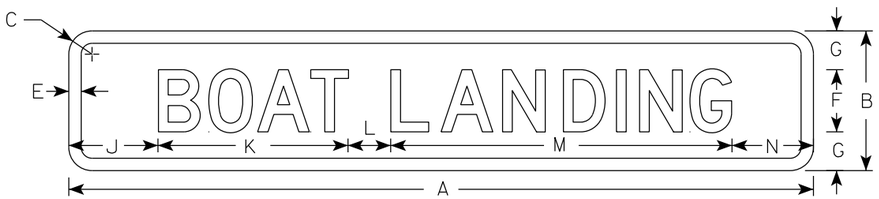

DB5-69B
DG5-69B
DN5-69B

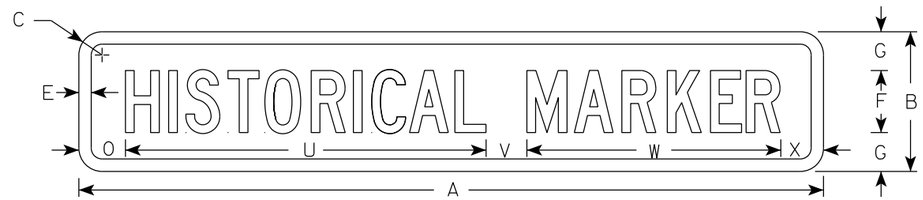

DB5-69E

DB5-69G
DG5-69G
DN5-69G

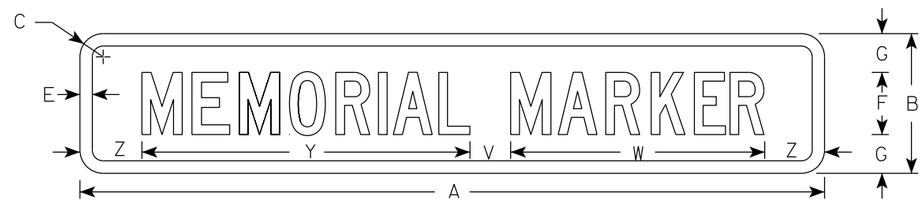

DB5-69F

NOTES

1. Signs are Type II - Type H Reflective
2. Color:
   Background - See Note 4
   Message - White - Type H Reflective
3. DB5-69B, DB5-69E, DB5-69F, DB5-69G — Background BLUE
   DG5-69B, DG5-69G — Background GREEN
   DN5-69B, DN5-69G — Background BROWN
4. Message Series - All signs are Series D except for DB5-69E & DB5-69F which are Series C.

SIZE	A	B	C	D	E	F	G	H	I	J	K	L	M	N	O	P	Q	R	S	T	U	V	W	X	Y	Z	Area sq. ft.
1	48	9	1 1/2		1/2	4	2 1/2	12	24	5 3/4	12 1/4	2 3/4	22	5 1/4	3			4 1/2	19 1/2	4 1/4	23 1/4	2 5/8	16 3/8	2 7/8	21	2	3.0
2S	48	9	1 1/2		1/2	4	2 1/2	12	24	5 3/4	12 1/4	2 3/4	22	5 1/4	3			4 1/2	19 1/2	4 1/4	23 1/4	2 5/8	16 3/8	2 7/8	21	2	3.0
2M	48	9	1 1/2		1/2	4	2 1/2	12	24	5 3/4	12 1/4	2 3/4	22	5 1/4	3			4 1/2	19 1/2	4 1/4	23 1/4	2 5/8	16 3/8	2 7/8	21	2	3.0
3																											
4																											
5																											

STANDARD SIGN
DB5-69 & DG5-69
& DN5-69 Series

WISCONSIN DEPT OF TRANSPORTATION

APPROVED Matthew R Rauch
for State Traffic Engineer

DATE 3/27/2024 PLATE NO. DB5-69.7

PROJECT NO: | HWY: | COUNTY: | SHEET NO: 300 | E

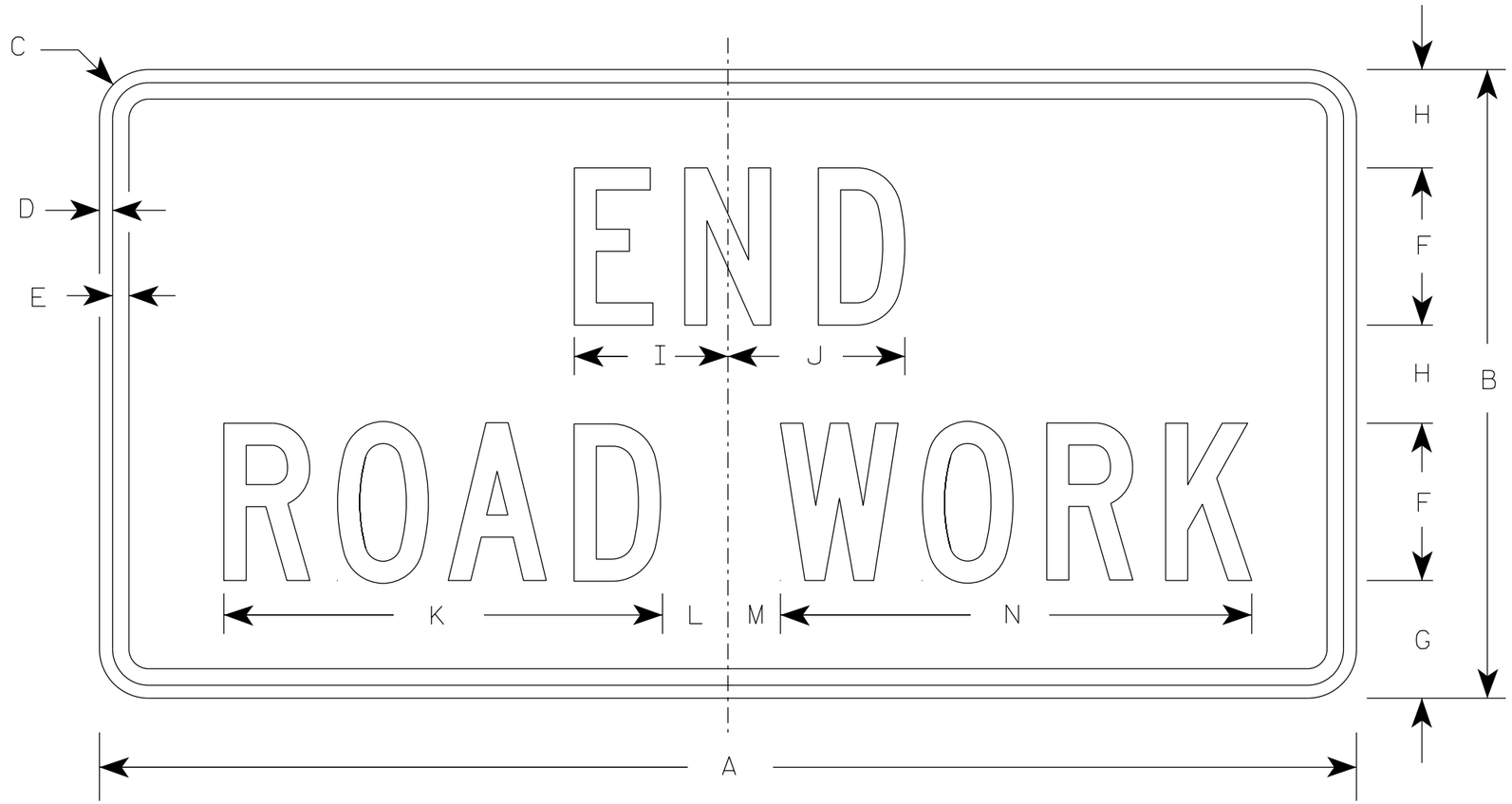

G20-2A

NOTES

1. Sign is Type II - Type F Reflective
2. Color:
   Background - Orange
   Message - Black
3. Message Series - C
4. Corners may be square or rounded when base material is plywood but borders shall be rounded as shown. When base material is metal, the corners and borders shall be rounded.

SIZE	A	B	C	D	E	F	G	H	I	J	K	L	M	N	O	P	Q	R	S	T	U	V	W	X	Y	Z	Area sq. ft.
1	36	18	1 1/2	3/8	1/2	4	3 3/4	2 1/2	4 1/8	4 1/8	11 1/8	2	1	12 1/8													4.5
2	48	24	1 7/8	1/2	5/8	6	4 1/2	3 3/4	5 7/8	6 3/4	16 3/4	2 1/2	1 3/4	18 1/2													8.0
2M	48	24	1 7/8	1/2	5/8	6	4 1/2	3 3/4	5 7/8	6 3/4	16 3/4	2 1/2	1 3/4	18 1/2													8.0
3	48	24	1 7/8	1/2	5/8	6	4 1/2	3 3/4	5 7/8	6 3/4	16 3/4	2 1/2	1 3/4	18 1/2													8.0
4	48	24	1 7/8	1/2	5/8	6	4 1/2	3 3/4	5 7/8	6 3/4	16 3/4	2 1/2	1 3/4	18 1/2													8.0
5	48	24	1 7/8	1/2	5/8	6	4 1/2	3 3/4	5 7/8	6 3/4	16 3/4	2 1/2	1 3/4	18 1/2													8.0

STANDARD SIGN

G20-2A

WISCONSIN DEPT OF TRANSPORTATION

APPROVED Matthew R Rauch
for State Traffic Engineer

DATE 1/26/2023 PLATE NO. G20-2A.10

PROJECT NO: HWY: COUNTY: SHEET NO: 301 E

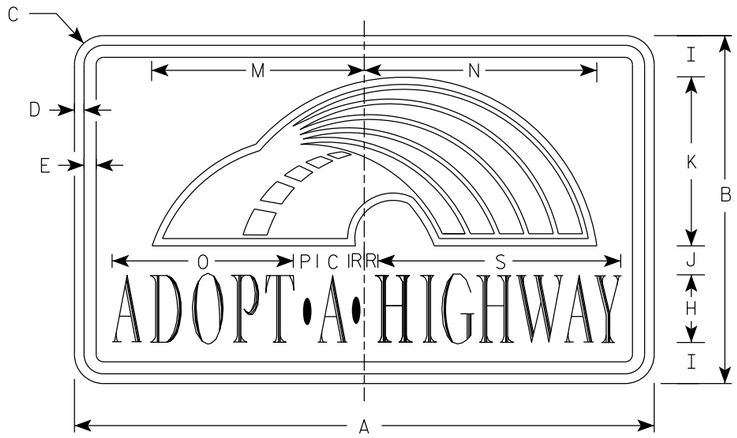

I55-56

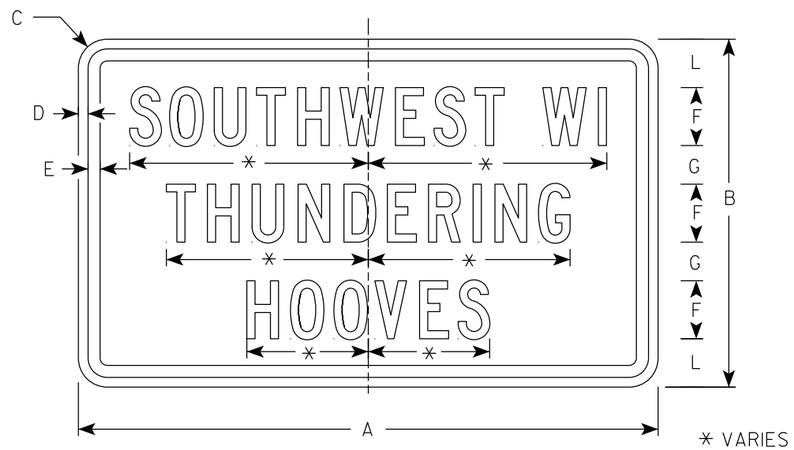

I55-56P

NOTES

1. Sign is Type II - Type H Reflective
2. Color:
   Background - Blue
   Message - White
   Rainbow detail - See Below
3. Message Series - Adopt a Highway - Dutch 8011L
   All other Text - Series C
4. Contractor shall provide and install a new post bracket in accordance with the I55-56B sign detail.

Background Colors of Symbol*

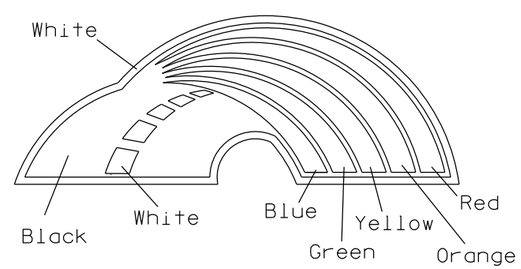

*1/4" Black Border between each color of rainbow and border of rainbow

*3/8" White Border surrounds the whole image of the rainbow

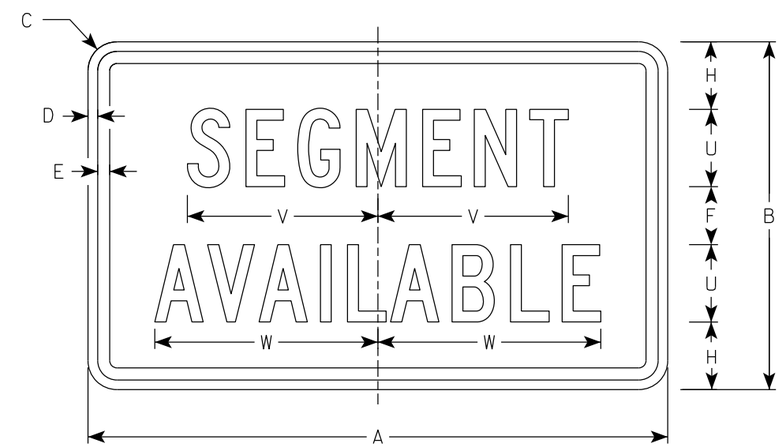

I55-56S

SIZE	A	B	C	D	E	F	G	H	I	J	K	L	M	N	O	P	Q	R	S	T	U	V	W	X	Y	Z	Area sq. ft.
1																											
2	30	18	1 1/2	1/2	5/8	3	2	3 1/2	2 1/4	1 1/2	8 1/2	2 1/2	11	12	9 3/8	1 1/4		3/4	12 5/8	7 1/2	4	9 7/8	11 1/2				3.75
3																											
4																											
5																											

STANDARD SIGN
I55-56

WISCONSIN DEPT OF TRANSPORTATION

APPROVED Matthew R Rauch
for State Traffic Engineer

DATE 3/13/2025 PLATE NO. 155-56.5

PROJECT NO: | HWY: | COUNTY: | SHEET NO: 302 | E

ISOMETRIC VIEW

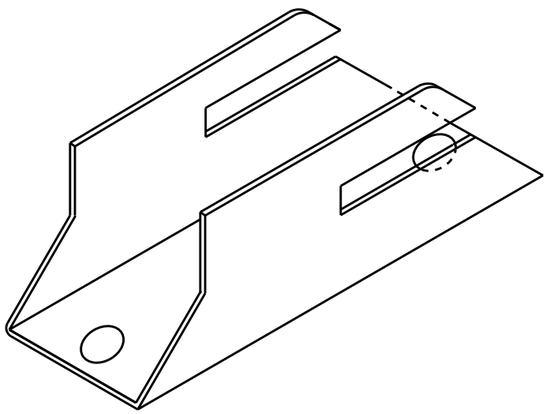

TOP VIEW

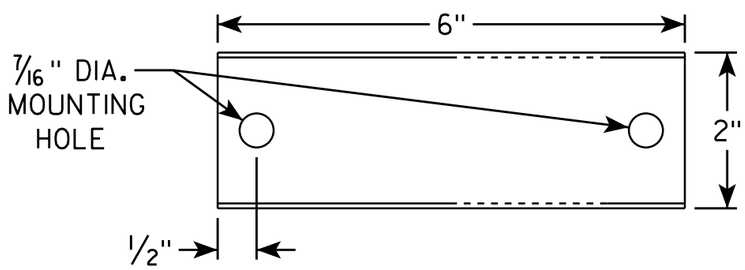

SIDE VIEW

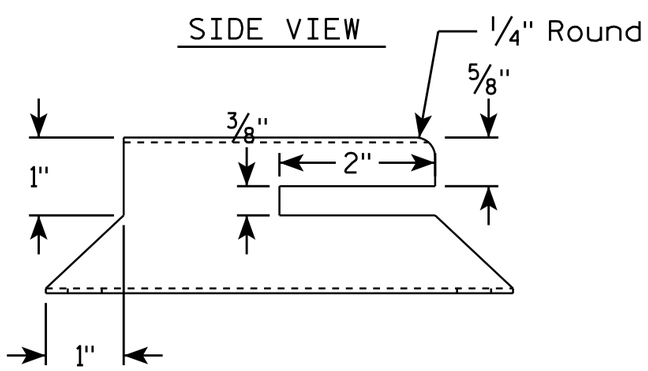

END VIEW

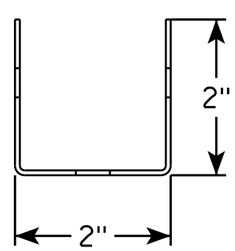

NOTES

1. Must be capable of permanent attachment to a wood or steel channel sign post utilizing the fastening hardware specified on the A4-8 sign plate.
2. Shall be entirely primed and painted with two coats of a black powder coated enamel paint.
3. Shall be made with 12 gauge steel, and incorporate no welds, no hinged components, no threaded lock-type components, and no parts which are loose or can be separated from the main body.
4. Shall have rounded edges with at least 1/8" radii.
5. Shall not have unrounded and uncoated metal edges which can contact the back surface of the roll-up sign.
6. Top of bracket shall be mounted 2' below the bottom of the I55-56 sign.
7. Cost of bracket and fastening hardware shall be incidental to the I55-56 sign.

SIDE VIEW

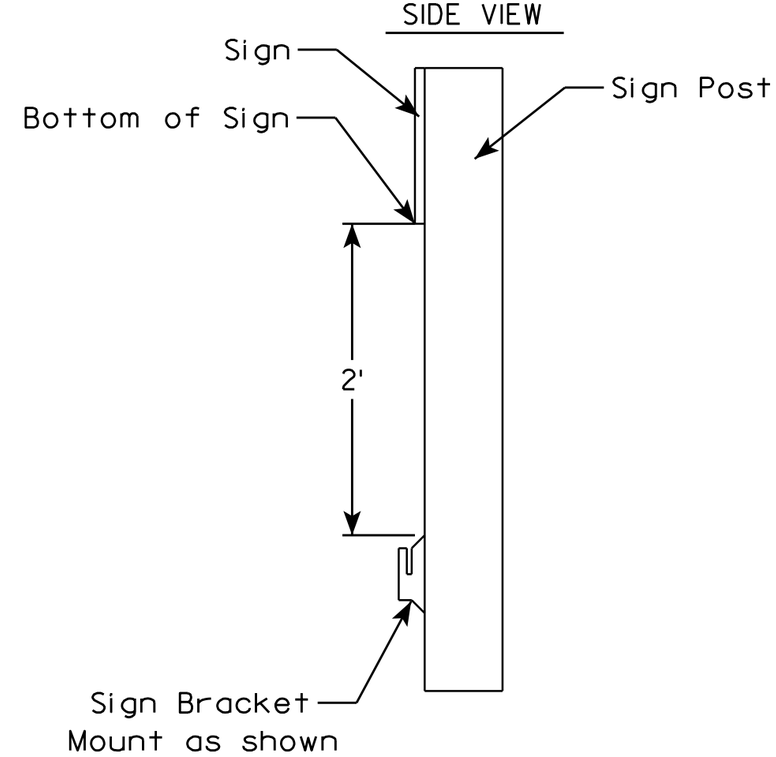

ROLLUP SIGN BRACKET
I55-56B

WISCONSIN DEPT OF TRANSPORTATION

APPROVED Matthew R Rauch
for State Traffic Engineer

DATE 4/26/16 PLATE I55-56B.2

PROJECT NO:	HWY:	COUNTY:		SHEET NO:	E

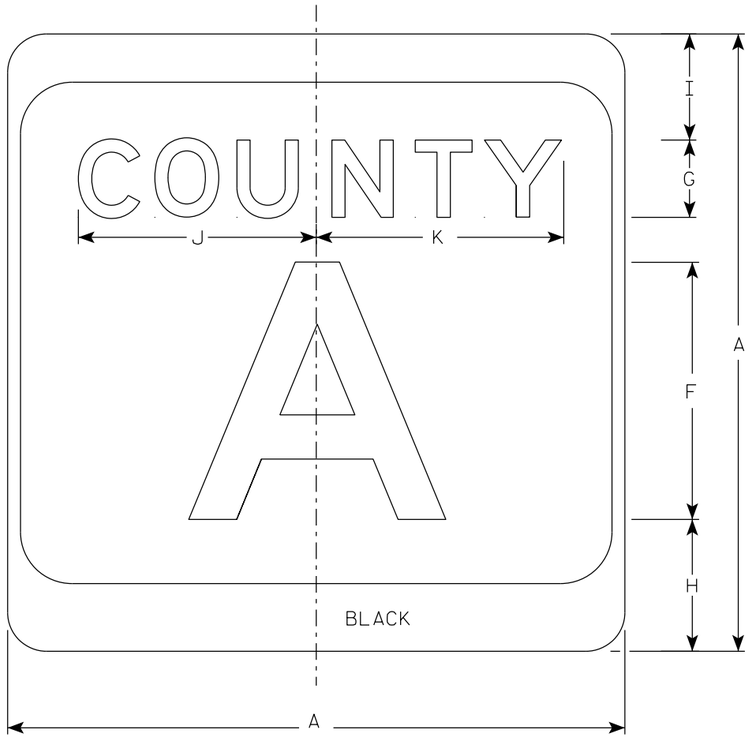

M1-5A

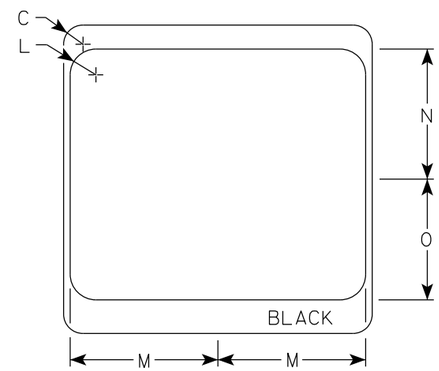

NOTES

1. Sign is Type II - Type H Reflective
2. Color:
   Background - White & Black
   Message - Black
3. Message Series - see Note 4
4. Message Series E for 1 letter.
   Message Series D for 2 letters unless message is too big then Series C.
   Message Series C for 3 letters unless message is too big then Series B.
5. Substitute appropriate letters & optically center to achieve proper balance.

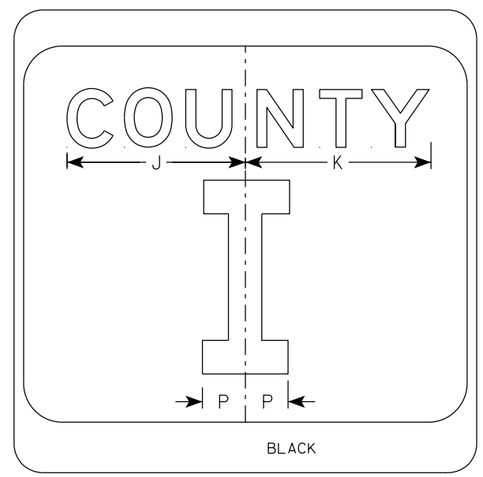

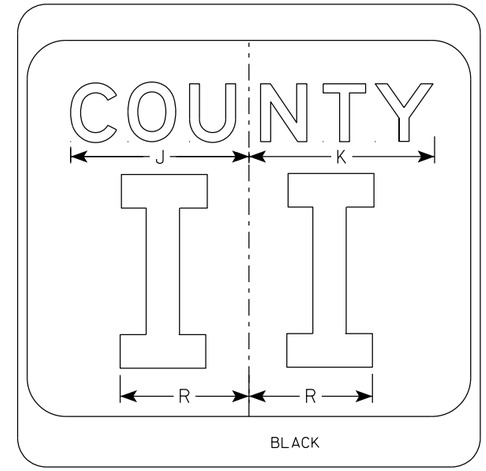

SIZE	A	B	C	D	E	F	G	H	I	J	K	L	M	N	O	P	Q	R	S	T	U	V	W	X	Y	Z	Area sq. ft.
1																											
2	24		1 1/2			10	3	5 1/8	4 1/8	9 1/4	9 5/8	2	11 1/2	10 1/8	9 3/8	2 1/4		6 5/8									4.0
2M	24		1 1/2			10	3	5 1/8	4 1/8	9 1/4	9 5/8	2	11 1/2	10 1/8	9 3/8	2 1/4		6 5/8									4.0
3	36		2 1/4			16	4	7 5/8	5 5/8	12 1/4	12 7/8	3	17 1/8	15 1/4	14	3 3/8		10									9.0
4	36		2 1/4			16	4	7 5/8	5 5/8	12 1/4	12 7/8	3	17 1/8	15 1/4	14	3 3/8		10									9.0
5	36		2 1/4			16	4	7 5/8	5 5/8	12 1/4	12 7/8	3	17 1/8	15 1/4	14	3 3/8		10									9.0

CTH MARKER
M1-5A FOR ASSEMBLIES

WISCONSIN DEPT OF TRANSPORTATION

APPROVED Matthew R Rauch
for State Traffic Engineer

DATE 11/8/2022 PLATE NO. M1-5A.9

PROJECT NO: | HWY: | COUNTY: | SHEET NO: | E

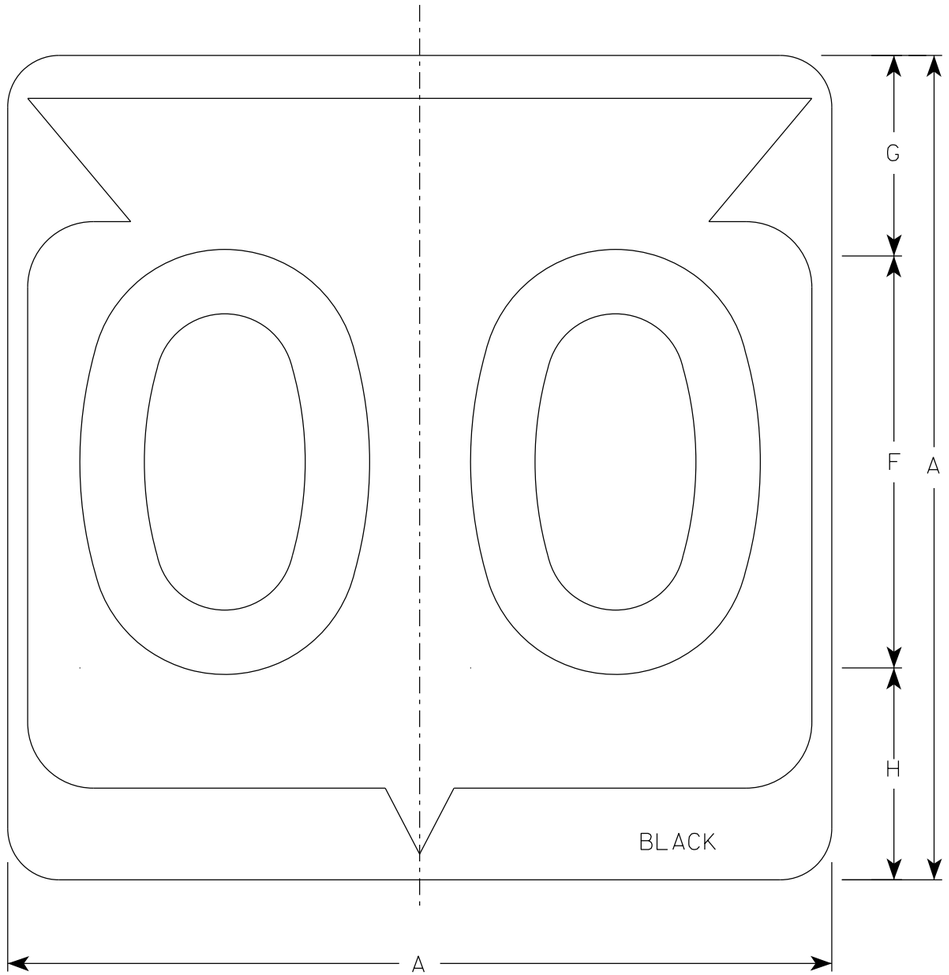

M1-6

NOTES

1. Sign is Type II - Type H Reflective
2. Color:
   Background - White
   Message - Black
3. Message Series - D except 3 number signs Series C

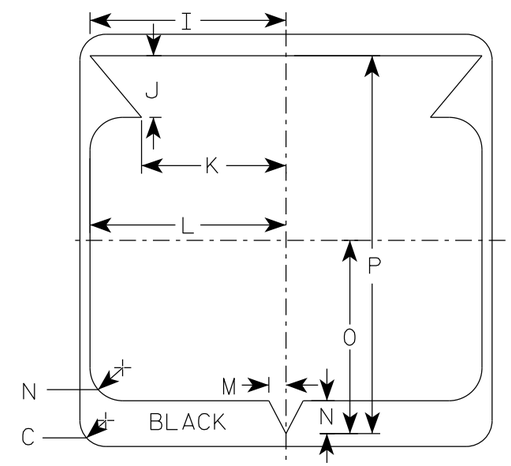

SIZE	A	B	C	D	E	F	G	H	I	J	K	L	M	N	O	P	Q	R	S	T	U	V	W	X	Y	Z	Area sq. ft.
1																											
2	24		1 1/2			12	5 1/2	6 1/2	10 1/4	2 1/2	8 7/8	11 1/2	1	1 7/8	11 1/4	21 7/8											4.0
2M	24		1 1/2			12	5 1/2	6 1/2	10 1/4	2 1/2	8 7/8	11 1/2	1	1 7/8	11 1/4	21 7/8											4.0
3	36		2 1/4			18	8 3/4	9 1/4	15 3/8	5 3/8	12 5/8	17 1/8	1 1/2	2 7/8	16 7/8	33											9.0
4	36		2 1/4			18	8 3/4	9 1/4	15 3/8	5 3/8	12 5/8	17 1/8	1 1/2	2 7/8	16 7/8	33											9.0
5	36		2 1/4			18	8 3/4	9 1/4	15 3/8	5 3/8	12 5/8	17 1/8	1 1/2	2 7/8	16 7/8	33											9.0

STATE ROUTE MARKER
M1-6 FOR ASSEMBLIES

WISCONSIN DEPT OF TRANSPORTATION

APPROVED Matthew R Rauch
for State Traffic Engineer

DATE 11/8/2022 PLATE NO. M1-6.11

PROJECT NO:	HWY:	COUNTY:		SHEET NO: 305	E

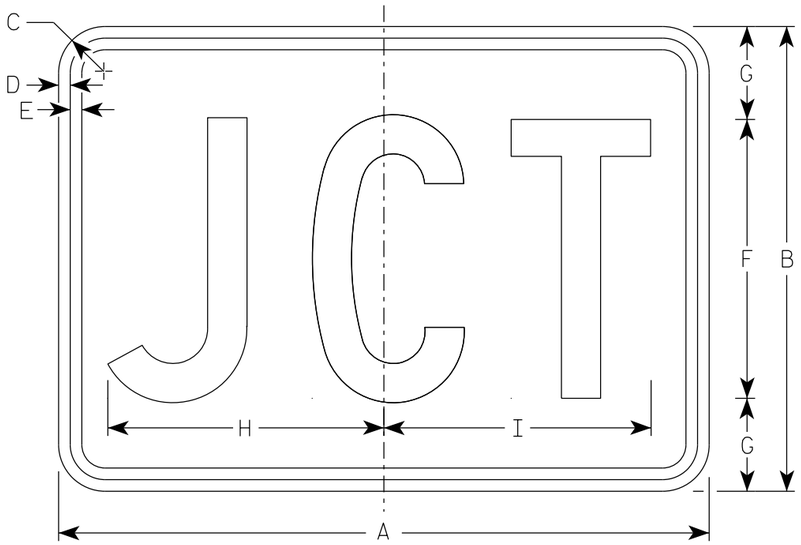

M2-1
MM2-1
MP2-1

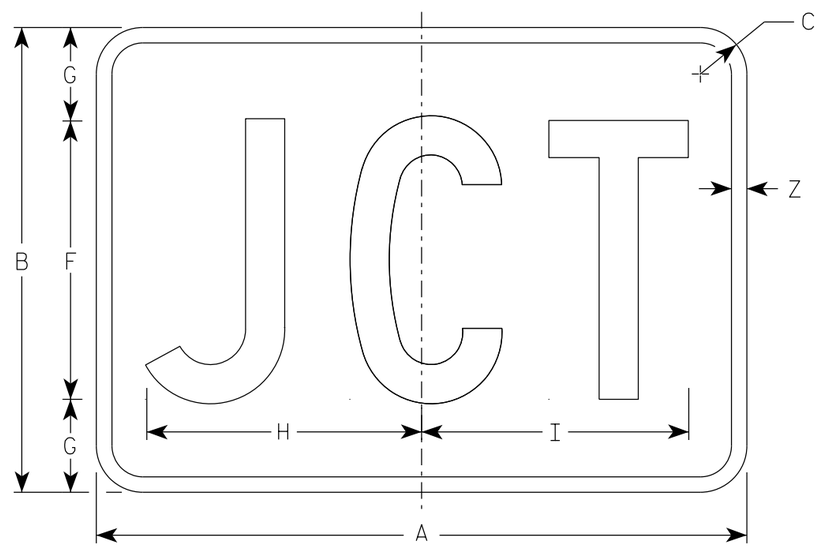

MB2-1
MK2-1
MN2-1
MR2-1

NOTES

1. Sign is Type II - Type H Reflective
2. Color:
   Background - See note 5
   Message - See note 5
3. Message Series - C
4. M2-1 Background - White
   Message - Black
   MB2-1 Background - Blue
   Message - White
   MK2-1 Background - Green
   Message - White
   MM2-1 Background - White
   Message - Green
   MN2-1 Background - Brown
   Message - White
   MP2-1 Background - White
   Message - Blue
   MR2-1 Background - Brown
   Message - Yellow

SIZE	A	B	C	D	E	F	G	H	I	J	K	L	M	N	O	P	Q	R	S	T	U	V	W	X	Y	Z	Area sq. ft.
1																											
2S	21	15	1 1/2	3/8	3/8	9	3	8 7/8	8 5/8																	1/2	2.20
2M	21	15	1 1/2	3/8	3/8	9	3	8 7/8	8 5/8																	1/2	2.20
3	30	21	1 1/2	3/8	3/8	13	4	12 7/8	12 3/8																	1/2	4.40
4	30	21	1 1/2	3/8	3/8	13	4	12 7/8	12 3/8																	1/2	4.40
5	30	21	1 1/2	3/8	3/8	13	4	12 7/8	12 3/8																	1/2	4.40

STANDARD SIGN
M2-1

WISCONSIN DEPT OF TRANSPORTATION

APPROVED Matthew R Rauch
For State Traffic Engineer

DATE 2/8/2023 PLATE NO. M2-1.14

PROJECT NO: | HWY: | COUNTY: | SHEET NO: 306 | E

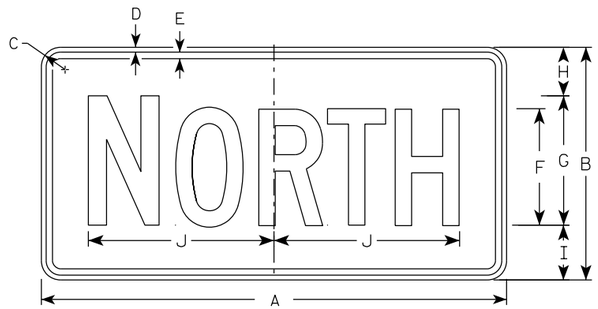

M3-1
MM3-1
MP3-1

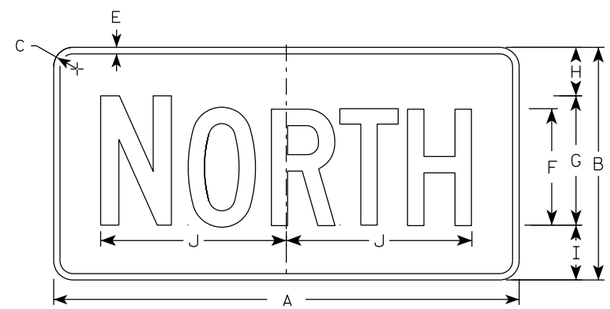

MB3-1
MK3-1
MN3-1

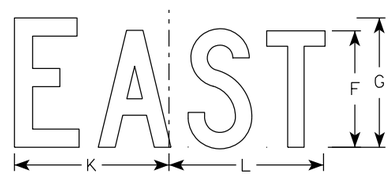

M3-2
MM3-2
MP3-2

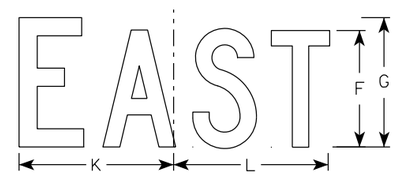

MB3-2
MK3-2
MN3-2

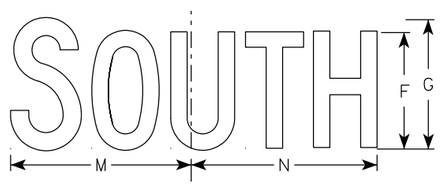

M3-3
MM3-3
MP3-3

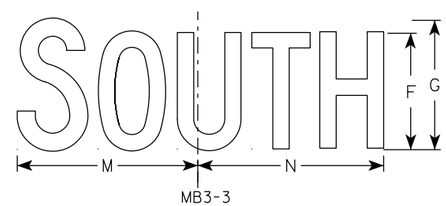

MB3-3
MK3-3
MN3-3

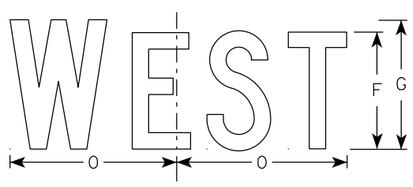

M3-4
MM3-4
MP3-4

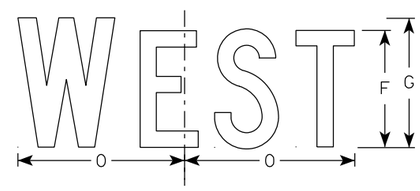

MB3-4
MK3-4
MN3-4

NOTES

1. All Signs Type II - Type H Reflective
2. Color:
   Background - See note 5
   Message - See note 5
3. Message Series - C
4. Corners may be square or rounded when base material is plywood but borders shall be rounded as shown. When base material is metal, the corners and borders shall be rounded.
5. M3-1 thru M3-4 Background - White
   Message - Black
   MB3-1 thru MB3-4 Background - Blue
   Message - White
   MK3-1 thru MK3-4 Background - Green
   Message - White
   MM3-1 thru MM3-4 Background - White
   Message - Green
   MN3-1 thru MN3-4 Background - Brown
   Message - White
   MP3-1 thru MP3-4 Background - White
   Message - Blue
6. Note the first letter of each direction is larger than the remainder of the message.

SIZE	A	B	C	D	E	F	G	H	I	J	K	L	M	N	O	P	Q	R	S	T	U	V	W	X	Y	Z	Area sq. ft.
1																											
2S	24	12	1 1/2	3/8	3/8	6	7	2 1/4	2 3/4	10 1/4	7 7/8	8 3/8	10 1/4	9 3/4	8 3/4												2.00
2M	24	12	1 1/2	3/8	3/8	6	7	2 1/4	2 3/4	10 1/4	7 7/8	8 3/8	10 1/4	9 3/4	8 3/4												2.00
3	36	18	1 1/2	3/8	1/2	9	10	3 3/4	4 1/4	14 3/8	12	12 1/8	14	14 1/8	13												4.5
4	36	18	1 1/2	3/8	1/2	9	10	3 3/4	4 1/4	14 3/8	12	12 1/8	14	14 1/8	13												4.5
5	36	18	1 1/2	3/8	1/2	9	10	3 3/4	4 1/4	14 3/8	12	12 1/8	14	14 1/8	13												4.5

STANDARD SIGNS
M3-1 THRU M3-4
SERIES

WISCONSIN DEPT OF TRANSPORTATION

APPROVED Matthew R Rauch
For State Traffic Engineer

DATE 2/8/2023 PLATE NO. M3-1.15

PROJECT NO: | HWY: | COUNTY: | SHEET NO: 307 | E

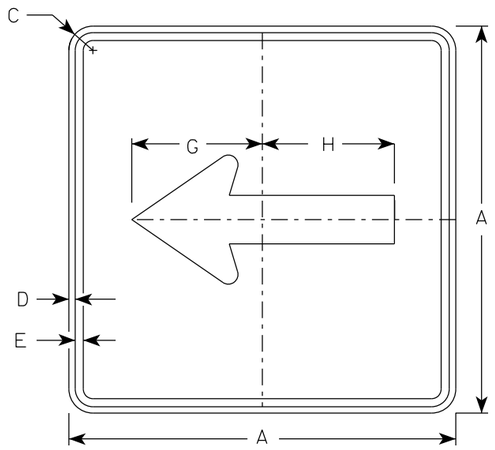

M6-1
MM6-1
MO6-1
MP6-1

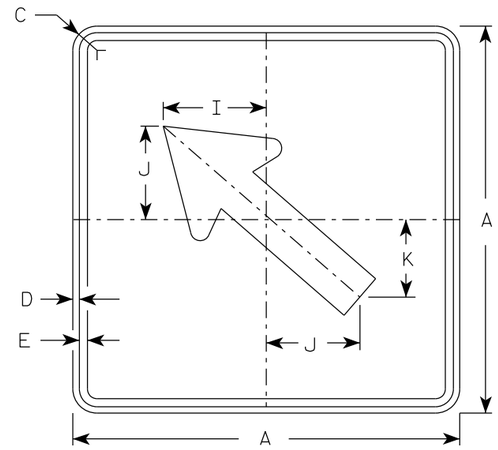

M6-2
MM6-2
MO6-2
MP6-2

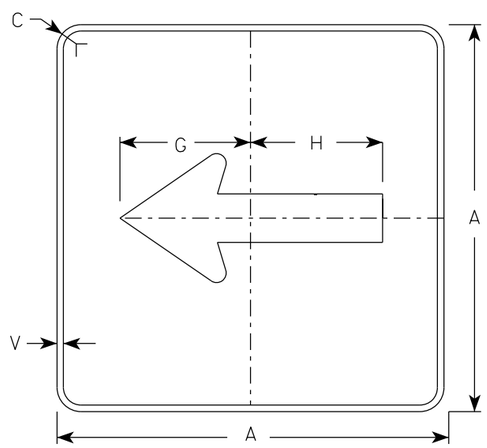

MB6-1
MK6-1
MN6-1
MR6-1

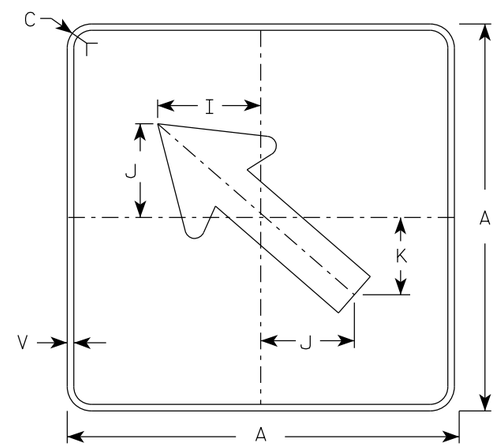

MB6-2
MK6-2
MN6-2
MR6-2

NOTES

1. Signs are Type II - Type H Reflective except as Shown
2. Color:
   Background - See note 4
   Message - See note 4
3. Corners may be square or rounded when base material is plywood but borders shall be rounded as shown. When base material is metal, the corners and borders shall be rounded.
4. M6-1 and M6-2 Background - White
   Message - Black
   MB6-1 and MB6-2 Background - Blue
   Message - White
   MK6-1 and MK6-2 Background - Green
   Message - White
   MM6-1 and MM6-2 Background - White
   Message - Green
   MN6-1 and MN6-2 Background - Brown
   Message - White
   MO6-1 and MO6-2 Background - Orange - Type F Reflective
   Message - Black
   MP6-1 and MP6-2 Background - White
   Message - Blue
   MR6-1 and MR6-2 Background - Brown
   Message - Yellow

ARROW DETAIL

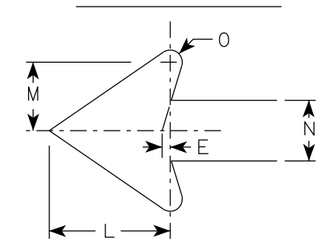

SIZE	A	B	C	D	E	F	G	H	I	J	K	L	M	N	O	P	Q	R	S	T	U	V	W	X	Y	Z	Area sq. ft.
1																											
2S	21		1 1/2	3/8	3/8		7 1/2	7 1/8	5 5/8	5	4 1/4	5 1/4	3	2 5/8	1/2							1/2					3.06
2M	21		1 1/2	3/8	3/8		7 1/2	7 1/8	5 5/8	5	4 1/4	5 1/4	3	2 5/8	1/2							1/2					3.06
3	30		1 7/8	1/2	5/8		10 3/4	10 1/4	8	7 1/4	6	7 1/2	4 1/4	3 3/4	3/4							1/2					6.25
4	30		1 7/8	1/2	5/8		10 3/4	10 1/4	8	7 1/4	6	7 1/2	4 1/4	3 3/4	3/4							1/2					6.25
5	30		1 7/8	1/2	5/8		10 3/4	10 1/4	8	7 1/4	6	7 1/2	4 1/4	3 3/4	3/4							1/2					6.25

STANDARD SIGN
M6-1 & M6-2
SERIES

WISCONSIN DEPT OF TRANSPORTATION

APPROVED Matthew R Rauch
for State Traffic Engineer

DATE 2/13/2023 PLATE NO. M6-1.16

PROJECT NO: | HWY: | COUNTY: | SHEET NO: 308 | E

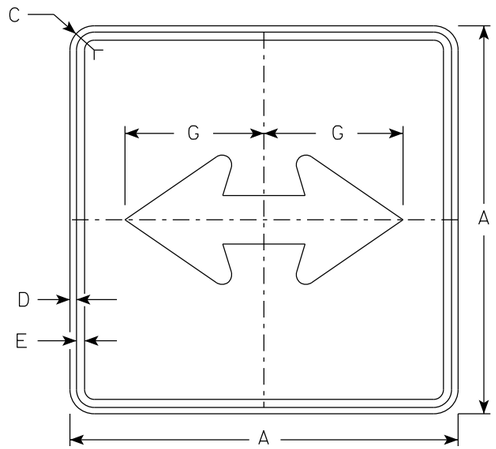

M6-4
MM6-4
MO6-4
MP6-4

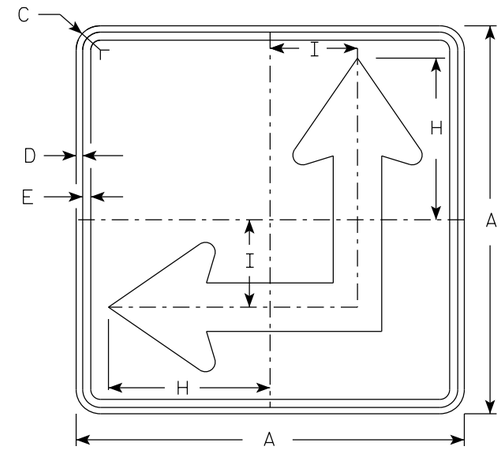

M6-6
MM6-6
MO6-6
MP6-6

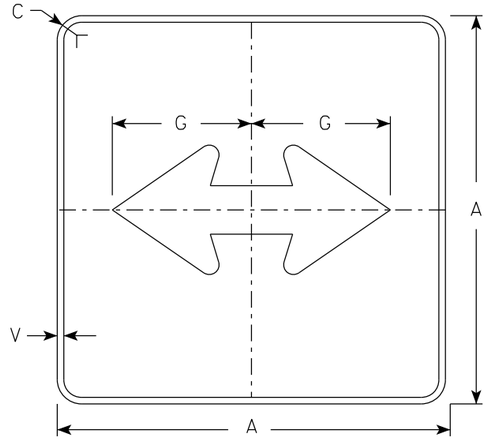

MB6-4
MK6-4
MN6-4
MR6-4

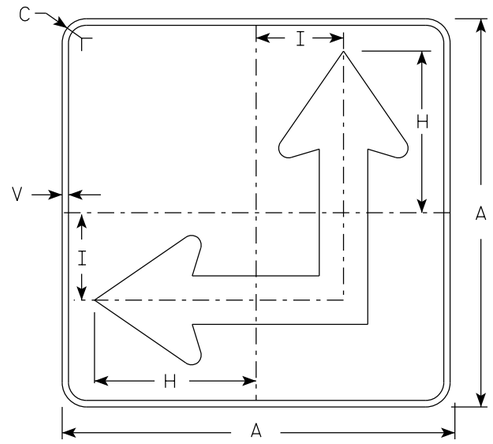

MB6-6
MK6-6
MN6-6
MR6-6

NOTES

1. Signs are Type II - Type H Reflective except as Shown
2. Color:
   Background - See Note 4
   Message - See Note 4
3. Corners may be square or rounded when base material is plywood but borders shall be rounded as shown. When base material is metal, the corners and borders shall be rounded.
4. M6-4 and M6-6 Background - White
   Message - Black
   MB6-4 and MB6-6 Background - Blue
   Message - White
   MK6-4 and MK6-6 Background - Green
   Message - White
   MM6-4 and MM6-6 Background - White
   Message - Green
   MN6-4 and MN6-6 Background - Brown
   Message - White
   MO6-4 and MO6-6 Background - Orange - Type F Reflective
   Message - Black
   MP6-4 and MP6-6 Background - White
   Message - Blue
   MR6-4 and MR6-6 Background - Brown
   Message - Yellow
5. M6-6R same as M6-6L except arrow points ahead and right.

ARROW DETAIL

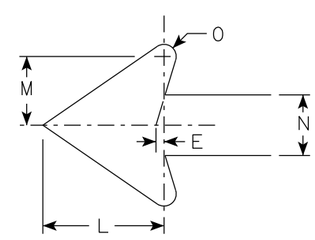

SIZE	A	B	C	D	E	F	G	H	I	J	K	L	M	N	O	P	Q	R	S	T	U	V	W	X	Y	Z	Area sq. ft.
1																											
2S	21		1 1/2	3/8	3/8		7 1/2	8 3/4	4 1/4			5 1/4	3	2 5/8	1/2							1/2					3.06
2M	21		1 1/2	3/8	3/8		7 1/2	8 3/4	4 1/4			5 1/4	3	2 5/8	1/2							1/2					3.06
3	30		1 7/8	1/2	5/8		10 3/4	12 1/2	6 3/4			7 1/2	4 1/4	3 3/4	3/4							1/2					6.25
4	30		1 7/8	1/2	5/8		10 3/4	12 1/2	6 3/4			7 1/2	4 1/4	3 3/4	3/4							1/2					6.25
5	30		1 7/8	1/2	5/8		10 3/4	12 1/2	6 3/4			7 1/2	4 1/4	3 3/4	3/4							1/2					6.25

STANDARD SIGN
M6-4 & M6-6
SERIES

WISCONSIN DEPT OF TRANSPORTATION

APPROVED Matthew R Rauch
for State Traffic Engineer

DATE 2/13/2023 PLATE NO. M6-4.11

PROJECT NO: | HWY: | COUNTY: | SHEET NO: 309 | E

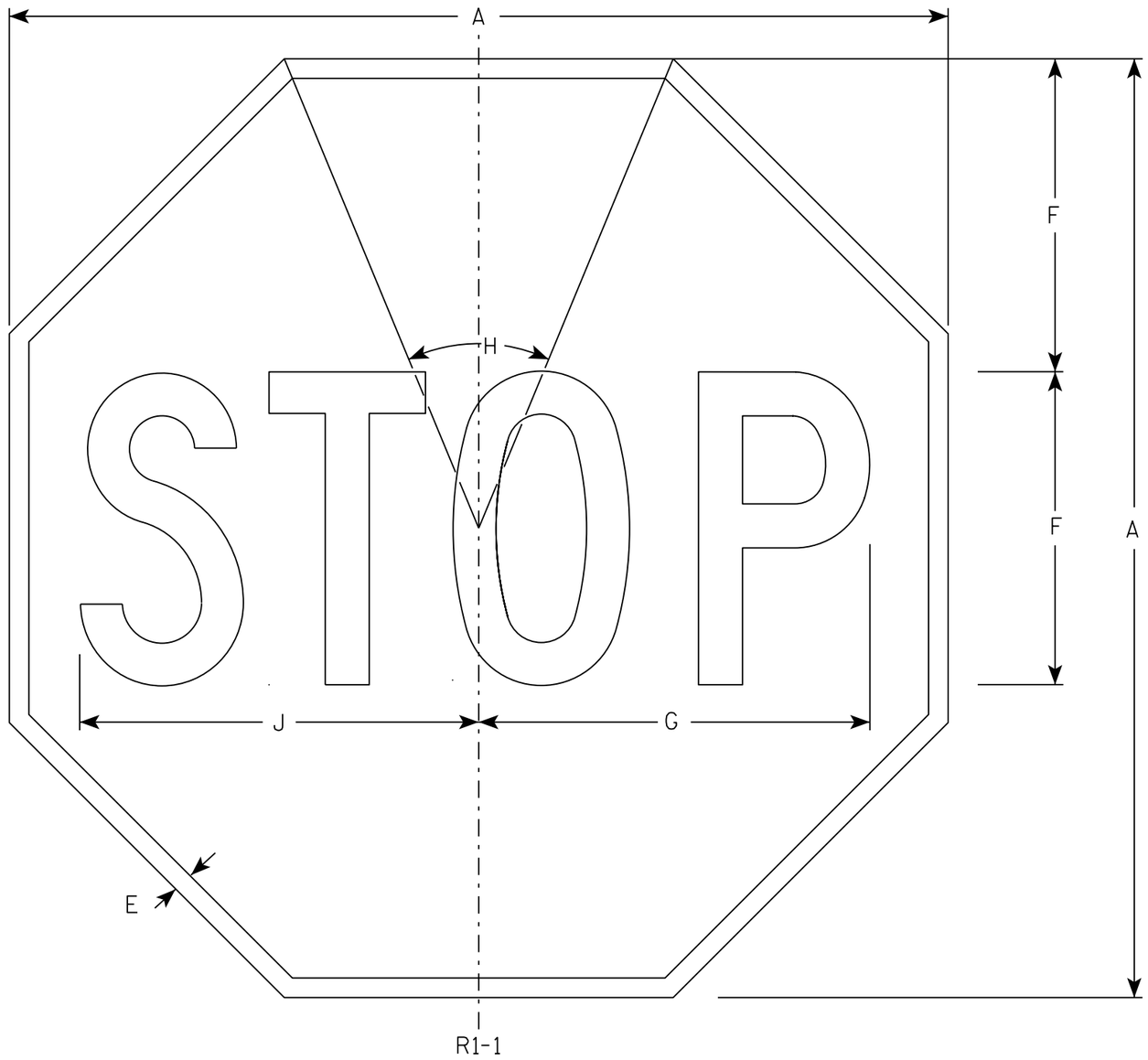

NOTES

1. Sign is Type II - Type H Reflective - reference WIS DOT Standard Specification for HIGHWAY and STRUCTURE CONSTRUCTION latest edition.
2. Color:
   Background - Red
   Message - White
3. Message Series - C

SIZE	A	B	C	D	E	F	G	H	I	J	K	L	M	N	O	P	Q	R	S	T	U	V	W	X	Y	Z	Area sq. ft.
1	30				5/8	10	12 1/2	45°		12 3/4																	5.18
2S	30				5/8	10	12 1/2	45°		12 3/4																	5.18
2M	36				3/4	12	15	45°		15 3/8																	7.46
3	36				3/4	12	15	45°		15 3/8																	7.46
4	48				1	16	20	45°		20 1/2																	13.25
5	48				1	16	20	45°		20 1/2																	13.25
6	18				3/8	6	7 3/4	45°		7 3/4																	1.86
7	12				1/4	4	5	45°		5 1/8																	0.78

STANDARD SIGN
R1-1

WISCONSIN DEPT OF TRANSPORTATION

APPROVED Matthew R Rauch
for State Traffic Engineer

DATE 11/12/15 PLATE NO. R1-1.13

PROJECT NO: | HWY: | COUNTY: | SHEET NO: 310 | E

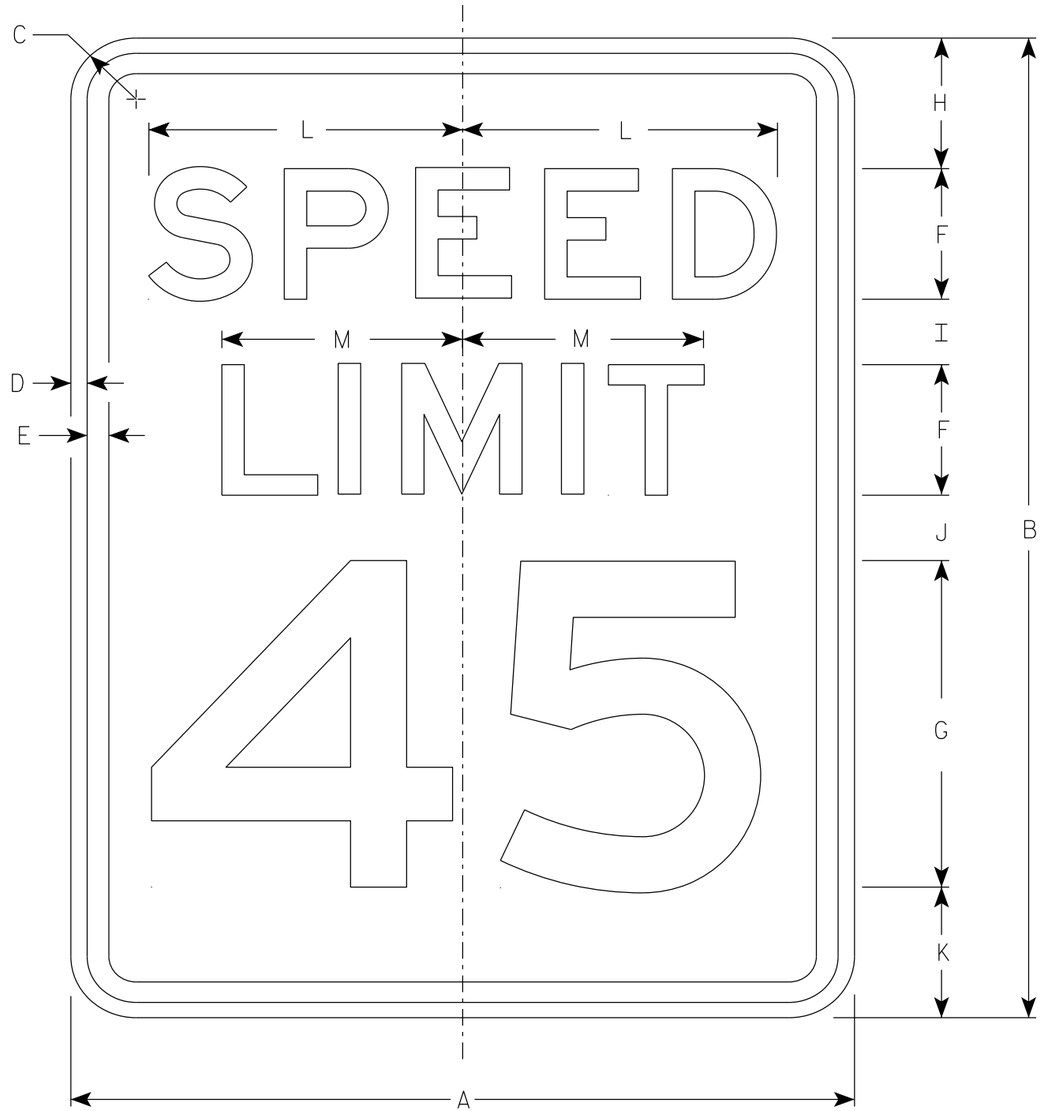

R2-1

NOTES

1. Sign is Type II - Type H Reflective
2. Color:
   Background - White
   Message - Black
3. Message Series - E
4. Substitute appropriate numerals and optically adjust spacing to achieve proper balance.

SIZE	A	B	C	D	E	F	G	H	I	J	K	L	M	N	O	P	Q	R	S	T	U	V	W	X	Y	Z	Area sq. ft.
1	18	24	1 1/2	3/8	1/2	3	8	3	2	2	3	7 1/4	5 1/2														3.0
2S	24	30	1 1/2	3/8	1/2	4	10	3	2 1/4	3 3/8	3 3/8	9 5/8	7 3/8														5.0
2M	30	36	1 7/8	1/2	5/8	5	12	5	2 1/2	2 1/2	4	12	9 1/4														7.5
3	36	48	1 7/8	1/2	5/8	6	14	6	5	5	6	14 3/8	11														12.0
4	36	48	1 7/8	1/2	5/8	6	14	6	5	5	6	14 3/8	11														12.0
5	48	60	3	3/4	1	8	20	6	4 1/2	6 3/4	6 3/4	19 1/4	14 5/8														20.0

STANDARD SIGN
R2-1

WISCONSIN DEPT OF TRANSPORTATION

APPROVED Matthew R Rauch
for State Traffic Engineer

DATE 2/1/23 PLATE NO. R2-1.14

PROJECT NO: | HWY: | COUNTY: | SHEET NO: 311 | E

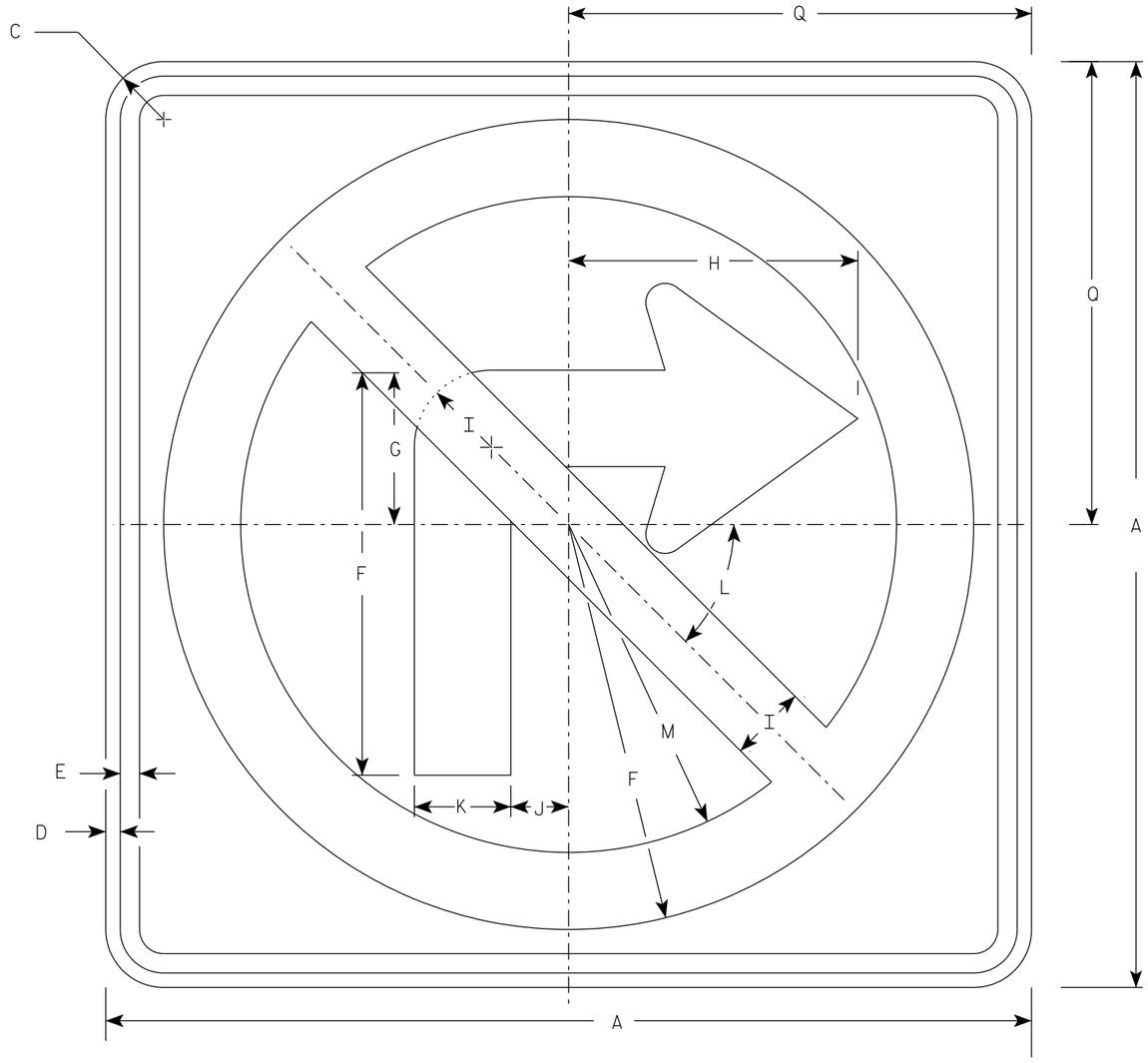

R3-1

NOTES

1. Sign is Type II - Type H Reflective
2. Color:
   Background - White
   Message - See note 3
3. Border & Arrow are non reflective black, the circle with diagonal bar is reflective red.

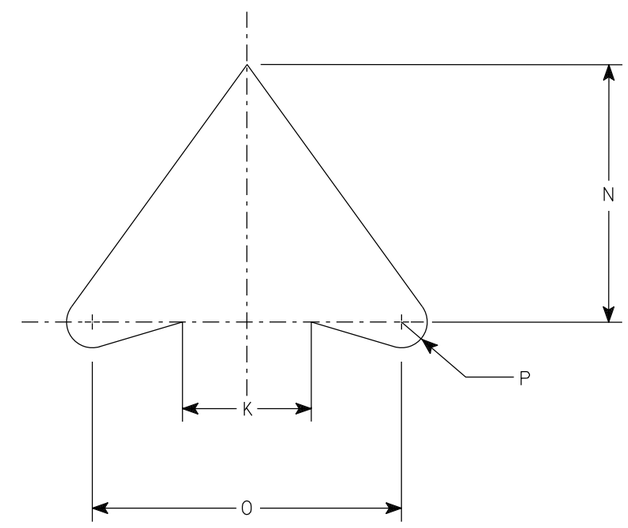

ARROW DETAIL

SIZE	A	B	C	D	E	F	G	H	I	J	K	L	M	N	O	P	Q	R	S	T	U	V	W	X	Y	Z	Area sq. ft.
1	24		1 1/2	3/8	1/2	10 1/2	4	7 1/2	2	1 1/2	2 1/2	45	8 1/2	5	6	1/2	12										4.0
2S	24		1 1/2	3/8	1/2	10 1/2	4	7 1/2	2	1 1/2	2 1/2	45°	8 1/2	5	6	1/2	12										4.0
2M	36		2 1/4	5/8	3/4	15 3/4	6	11 1/4	3	2 1/4	3 3/4	45	12 3/4	7 1/2	9	3/4	18										9.0
3	36		2 1/4	5/8	3/4	15 3/4	6	11 1/4	3	2 1/4	3 3/4	45	12 3/4	7 1/2	9	3/4	18										9.0
4	36		2 1/4	5/8	3/4	15 3/4	6	11 1/4	3	2 1/4	3 3/4	45°	12 3/4	7 1/2	9	3/4	18										9.0
5	48		2 1/4	3/4	1	21	8	15	4	3	5	45°	17	10	12	1	24										16.0

STANDARD SIGN

R3-1

WISCONSIN DEPT OF TRANSPORTATION

APPROVED Matthew R Rauch
for State Traffic Engineer

DATE 2/2/23 PLATE NO. R3-1.6

PROJECT NO: | HWY: | COUNTY: | SHEET NO: 312 | E

NOTES

1. Sign is Type II - Type H Reflective
2. Color:
   Background - White
   Message - See note 3
3. Border & Arrow are non reflective black, the circle with diagonal bar is reflective red.

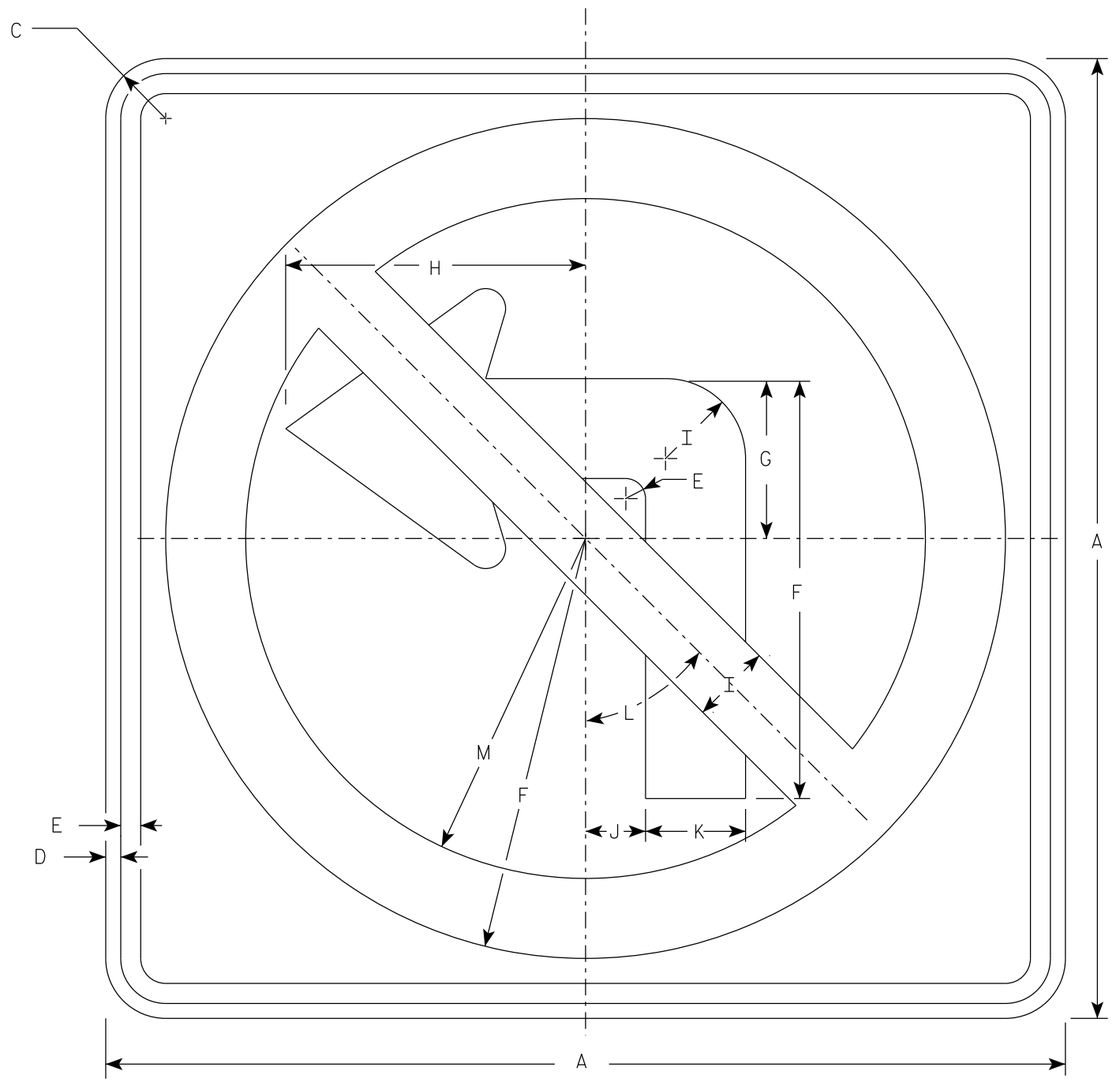

R3-2

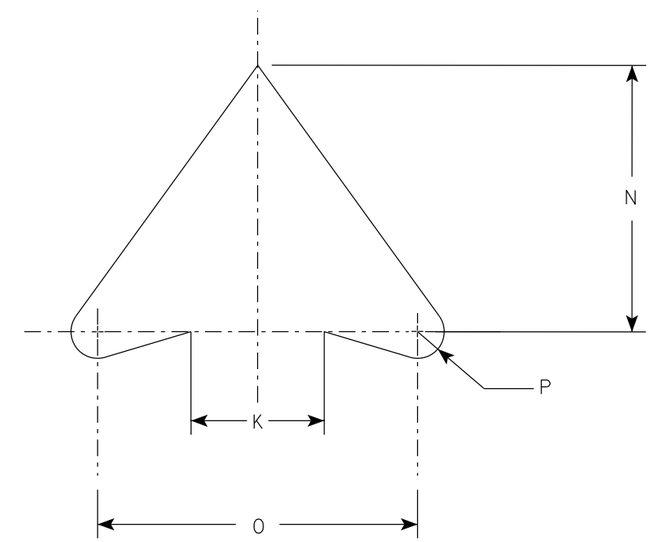

ARROW DETAIL

SIZE	A	B	C	D	E	F	G	H	I	J	K	L	M	N	O	P	Q	R	S	T	U	V	W	X	Y	Z	Area sq. ft.
1	24		1 1/2	3/8	1/2	10 1/2	4	7 1/2	2	1 1/2	2 1/2	45°	8 1/2	5	6	1/2											4.0
2S	24		1 1/2	3/8	1/2	10 1/2	4	7 1/2	2	1 1/2	2 1/2	45°	8 1/2	5	6	1/2											4.0
2M	36		2 1/4	5/8	3/4	15 3/4	6	11 1/4	3	2 1/4	3 3/4	45°	12 3/4	7 1/2	9	3/4											9.0
3	36		2 1/4	5/8	3/4	15 3/4	6	11 1/4	3	2 1/4	3 3/4	45°	12 3/4	7 1/2	9	3/4											9.0
4	36		2 1/4	5/8	3/4	15 3/4	6	11 1/4	3	2 1/4	3 3/4	45°	12 3/4	7 1/2	9	3/4											9.0
5	48		2 1/4	3/4	1	21	8	15	4	3	5	45°	17	10	12	1											16.0

STANDARD SIGN
R3-2

WISCONSIN DEPT OF TRANSPORTATION

APPROVED Matthew R Rauch
For State Traffic Engineer

DATE 2/2/23 PLATE NO. R3-2.11

PROJECT NO: | HWY: | COUNTY: | SHEET NO: 313 | E

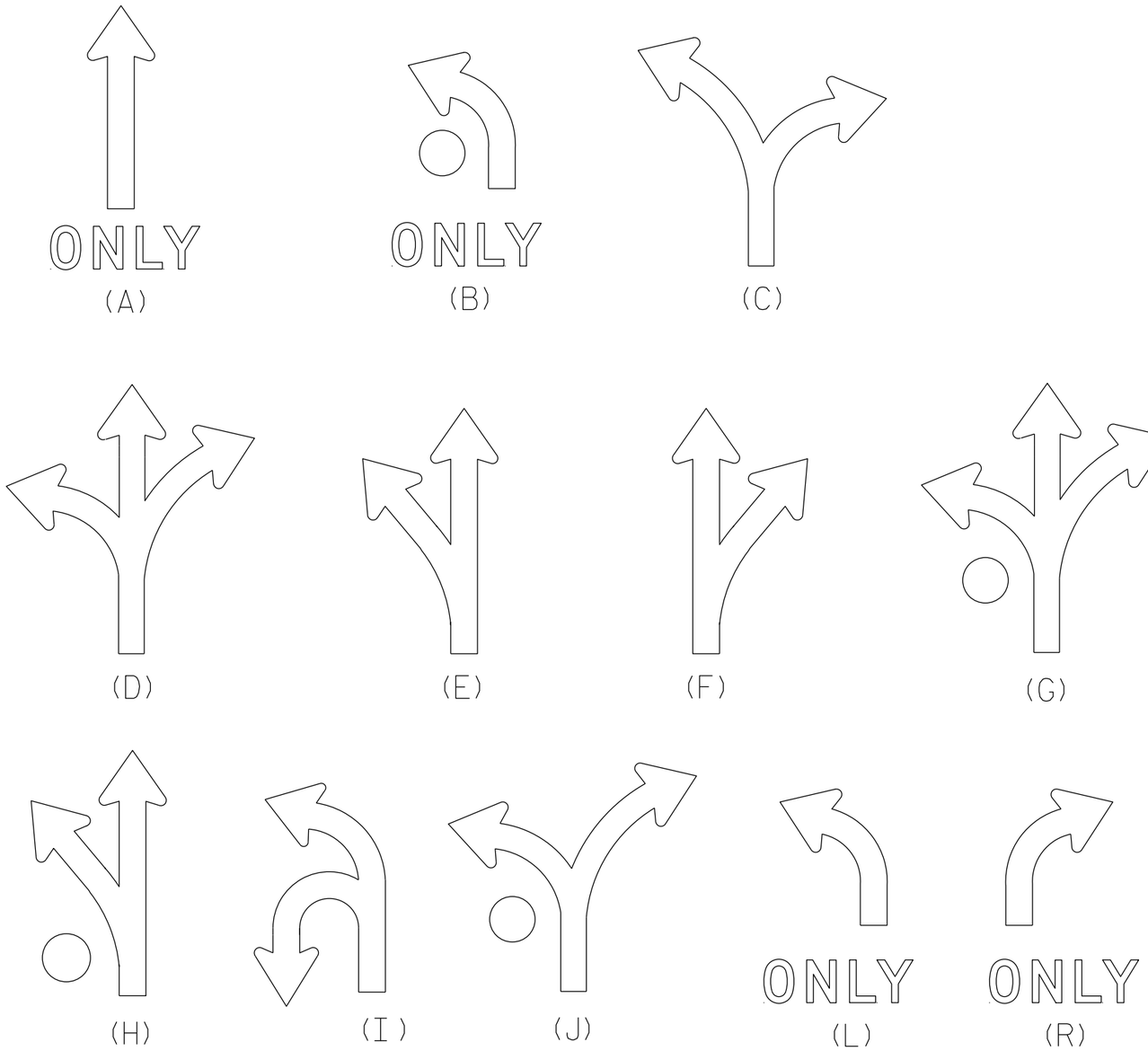

NOTES

1. Sigs are Type II - Type H Reflective
2. Color:
   Background - White
   Message - Black
3. Message Series - D
4. Use appropriate Letter for Sign Code
   Each letter added makes sign wider. Example R3-8EAR
5. Square footage of sign varies by letters

1 Letter =	3.75 sq ft for Size 2	
	6.0 sq ft for Size 3	
	10.0 sq ft for Size 4 or 5	
2 Letters =	7.5 sq ft for Size 2	
	12.0 sq ft for Size 3	
	20.0 sq ft for Size 4 or 5	
3 Letters =	11.25 sq ft for Size 2	
	18.0 sq ft for Size 3	
	30.0 sq ft for Size 4 or 5	
4 Letters =	15.0 sq ft for Size 2	
	24.0 sq ft for Size 3	
	40.0 sq ft for Size 4 or 5	
5 Letters =	18.75 sq ft for Size 2	
	30.0 sq ft for Size 3	
	50.0 sq ft for Size 4 or 5	
6 Letters =	22.5 sq ft for Size 2	
	36.0 sq ft for Size 3	
	60.0 sq ft for Size 4 or 5	

6. When letters C,D,G,J are used on the Left or Right end of the sign the Sq. Ft. changes.
   Add the amounts when these letters are used:
   1.25 sq ft for Size 2
   1.5 sq ft for Size 3
   2.0 sq ft for Size 4 or 5

STANDARD SIGN
R3-8 Series

WISCONSIN DEPT OF TRANSPORTATION

APPROVED Matthew R Rauch
for State Traffic Engineer

DATE 2/14/23 PLATE NO. R3-8.2

7

7

PROJECT NO:

SHEET NO: 314 E

NOTES

1. Sign is Type II - Type H Reflective
2. Color:
   Background - White
   Message - Black
3. Message Series - D

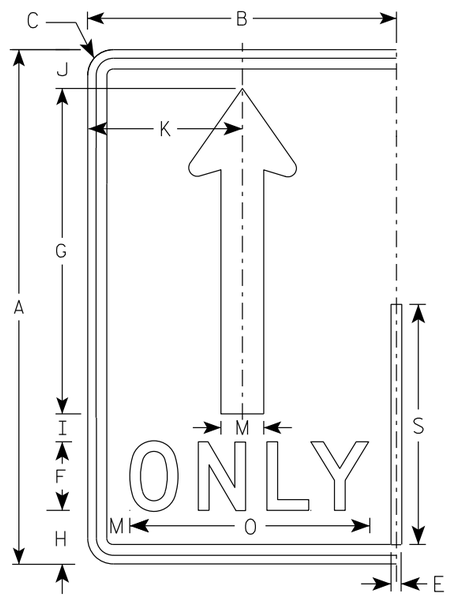

(A)

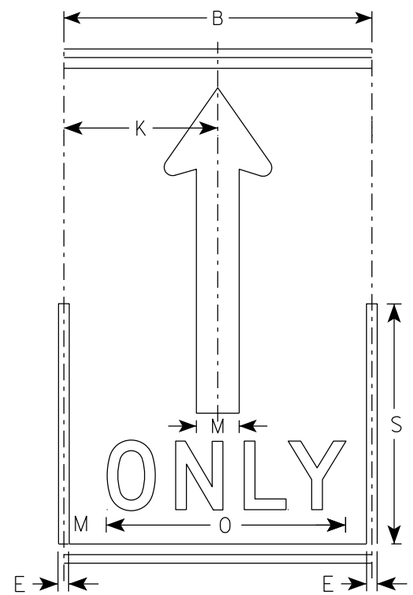

(A)

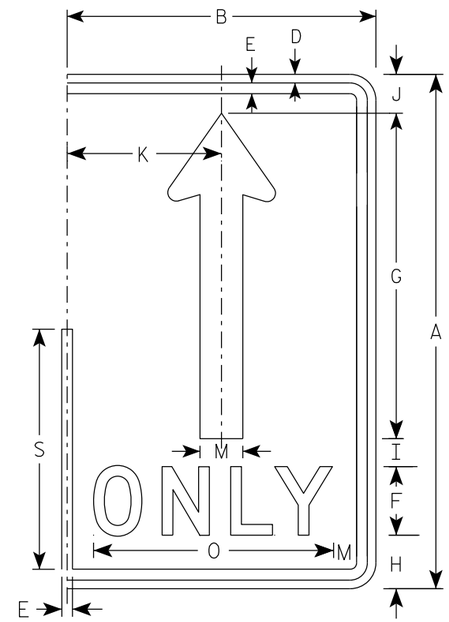

(A)

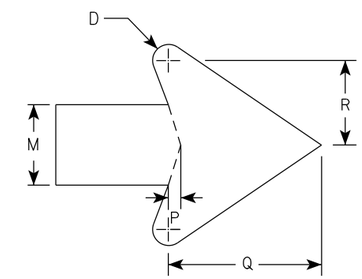

ARROW DETAIL

SIZE	A	B	C	D	E	F	G	H	I	J	K	L	M	N	O	P	Q	R	S	T	U	V	W	X	Y	Z	Area sq. ft.
1																											
2S	30	18	1 1/2	1/2	5/8	4	19	3 1/8	1 5/8	2 1/4	9		2 1/2		14	3/8	4 3/4	2 5/8	14								3.75
2M	30	18	1 1/2	1/2	5/8	4	19	3 1/8	1 5/8	2 1/4	9		2 1/2		14	3/8	4 3/4	2 5/8	14								3.75
3	36	24	1 1/2	1/2	5/8	5	22 3/4	3 3/4	1 3/4	2 3/4	12		3		17 5/8	1/2	5 3/4	3 1/8	16 3/4								6.0
4	48	30	2 1/4	3/4	1	6	30 3/8	5 1/8	2 7/8	3 5/8	15		4		21 3/4	5/8	7 5/8	4 1/4	22 3/8								10.0
5	48	30	2 1/4	3/4	1	6	30 3/8	5 1/8	2 7/8	3 5/8	15		4		21 3/4	5/8	7 5/8	4 1/4	22 3/8								10.0

STANDARD SIGN
R3-8 (A) Arrow

WISCONSIN DEPT OF TRANSPORTATION

APPROVED Matthew R Rauch
for State Traffic Engineer

DATE 2/14/23 PLATE NO. R3-8.2

PROJECT NO: | HWY: | COUNTY: | SHEET NO: 315 | E

NOTES

1. Sign is Type II - Type H Reflective
2. Color:
   Background - White
   Message - Black
   Message Series - D

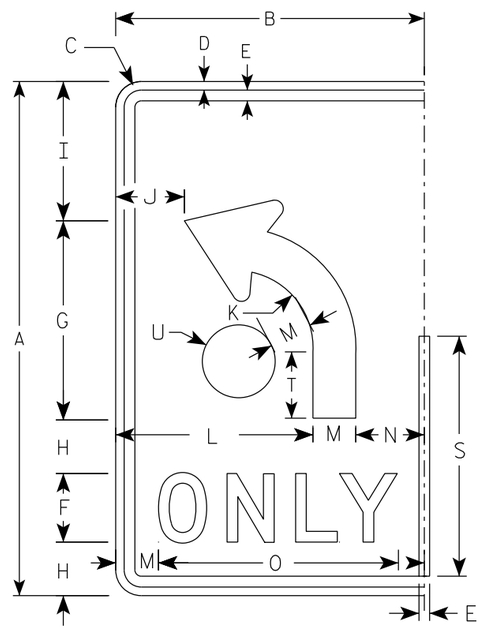

(B)

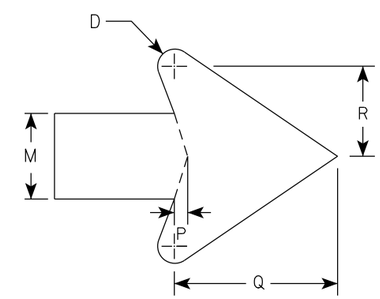

ARROW DETAIL

SIZE	A	B	C	D	E	F	G	H	I	J	K	L	M	N	O	P	Q	R	S	T	U	V	W	X	Y	Z	Area sq. ft.
1																											
2S	30	18	1 1/2	1/2	5/8	4	11 5/8	3 1/8	8 1/8	4	4 1/2	11 1/2	2 1/2	4	14	3/8	4 3/4	2 5/8	14	3 7/8	2 1/8						3.75
2M	30	18	1 1/2	1/2	5/8	4	11 5/8	3 1/8	8 1/8	4	4 1/2	11 1/2	2 1/2	4	14	3/8	4 3/4	2 5/8	14	3 7/8	2 1/8						3.75
3	36	24	1 1/2	1/2	5/8	5	14	3 1/2	9 3/4	6	5 3/8	15	3	6	17 5/8	1/2	5 3/4	3 1/8	16 3/4	4 5/8	2 1/2						6.0
4	48	30	2 1/4	3/4	1	6	18 5/8	5 1/8	13 1/8	6 1/8	7 1/4	18	4	8	21 3/4	5/8	7 5/8	4 1/4	22 3/8	6 1/4	3 3/8						10.0
5	48	30	2 1/4	3/4	1	6	18 5/8	5 1/8	13 1/8	6 1/8	7 1/4	18	4	8	21 3/4	5/8	7 5/8	4 1/4	22 3/8	6 1/4	3 3/8						10.0

STANDARD SIGN

R3-8 (B) Arrow

WISCONSIN DEPT OF TRANSPORTATION

APPROVED Matthew R Rauch
for State Traffic Engineer

DATE 2/14/23 PLATE NO. R3-8.2

PROJECT NO:

SHEET NO: 316 E

NOTES

1. Sign is Type II - Type H Reflective
2. Color:
   Background - White
   Message - Black
3. Message Series - None

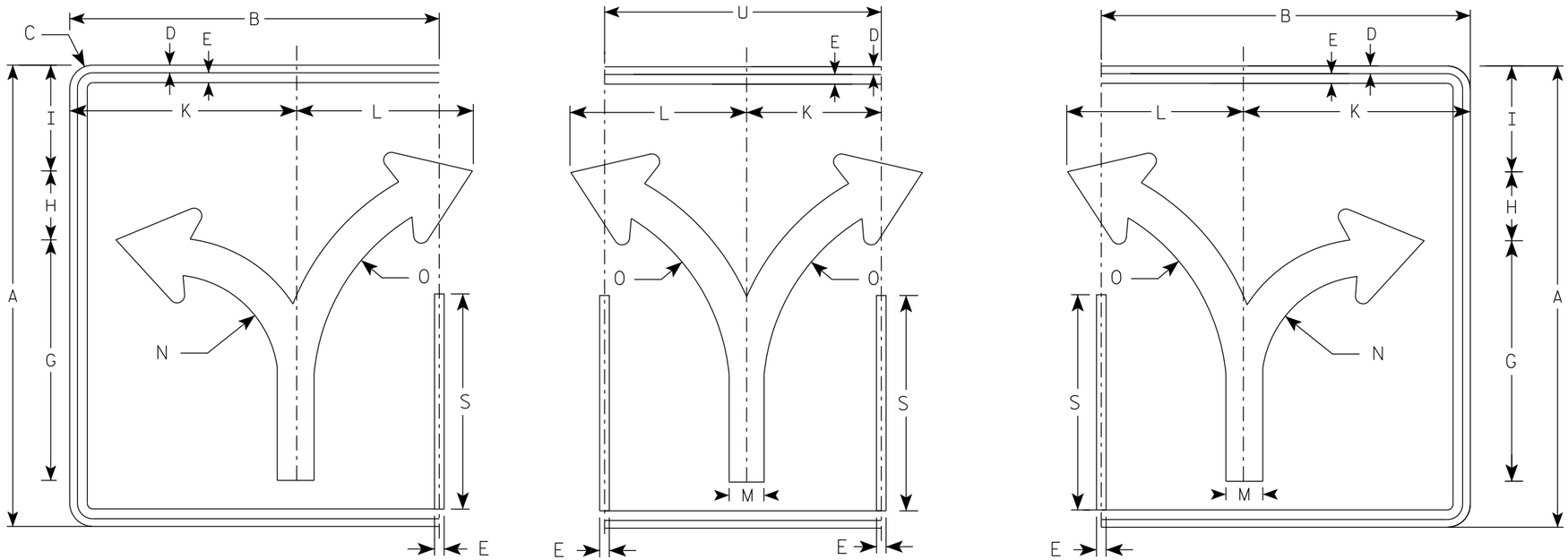

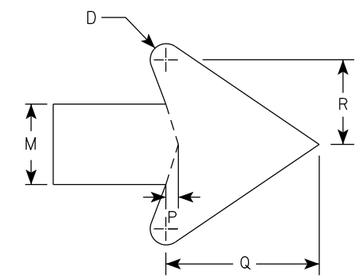

ARROW DETAIL

SIZE	A	B	C	D	E	F	G	H	I	J	K	L	M	N	O	P	Q	R	S	T	U	V	W	X	Y	Z	ENDS Area sq. ft.	MIDDLE Area sq. ft.
1																												
2S	30	24	1 1/2	1/2	5/8		15 5/8	4 1/2	6 7/8		14 3/4	11 1/2	2 3/8	7	13 1/4	3/8	4 1/2	2 1/2	14		18						5.0	3.75
2M	30	24	1 1/2	1/2	5/8		15 5/8	4 1/2	6 7/8		14 3/4	11 1/2	2 3/8	7	13 1/4	3/8	4 1/2	2 1/2	14		18						5.0	3.75
3	36	30	1 1/2	1/2	5/8		18 3/4	5 1/2	8 1/4		17 1/4	17 1/4	2 7/8	8 3/8	16	1/2	5 1/2	3	16 3/4		24						7.5	6.0
4	48	36	2 1/4	3/4	1		24 7/8	7 1/4	11		23 1/8	18	3 3/4	11 1/8	21 1/4	5/8	7 1/8	4	22 3/8		30						12.0	10.0
5	48	36	2 1/4	3/4	1		24 7/8	7 1/4	11		23 1/8	18	3 3/4	11 1/8	21 1/4	5/8	7 1/8	4	22 3/8		30						12.0	10.0

STANDARD SIGN
R3-8 (C) Arrow

WISCONSIN DEPT OF TRANSPORTATION

APPROVED Matthew R Rauch
for State Traffic Engineer

DATE 2/14/23 PLATE NO. R3-8.2

PROJECT NO: | HWY: | COUNTY: | SHEET NO: 317 | E

NOTES

1. Sign is Type II - Type H Reflective
2. Color:
   Background - White
   Message - Black
3. Message Series - None

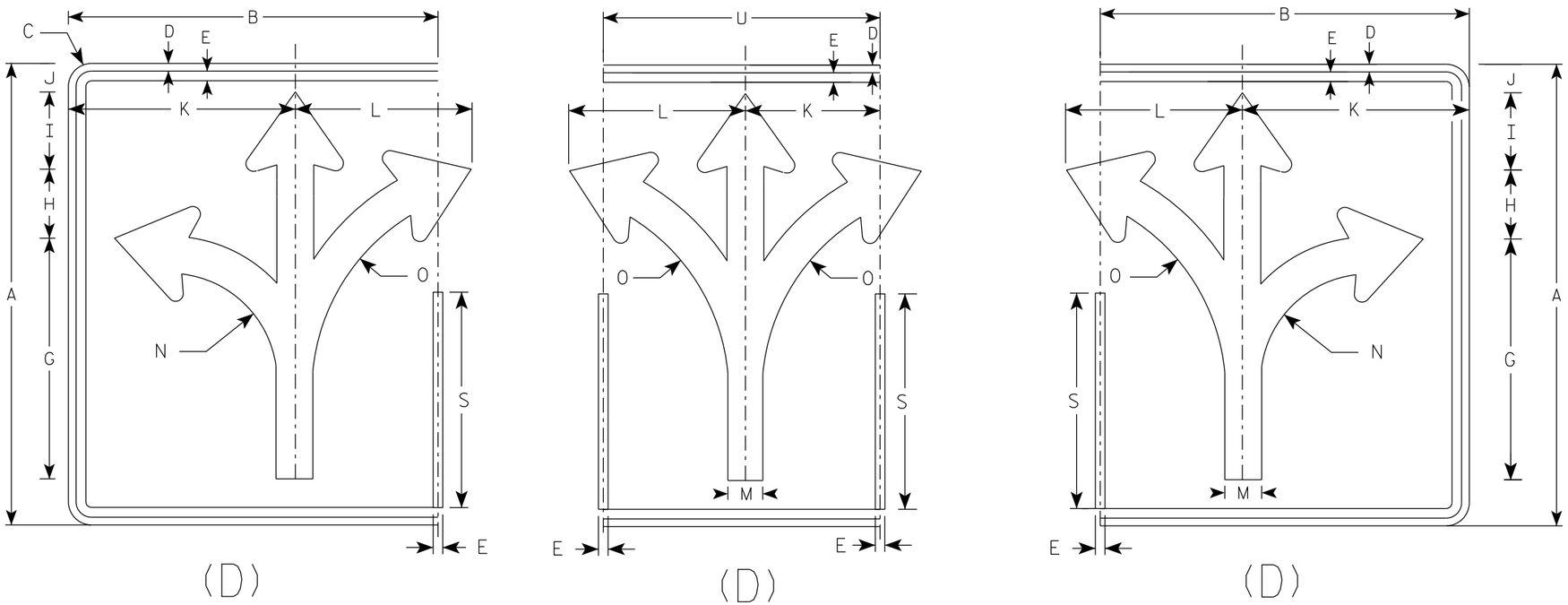

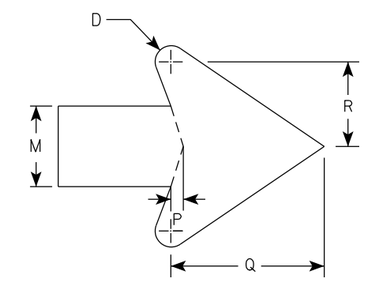

ARROW DETAIL

SIZE	A	B	C	D	E	F	G	H	I	J	K	L	M	N	O	P	Q	R	S	T	U	V	W	X	Y	Z	ENDS Area sq. ft.	MIDDLE Area sq. ft.
1																												
2S	30	24	1 1/2	1/2	5/8		15 5/8	4 1/2	5	1 7/8	14 3/4	11 1/2	2 3/8	7	13 1/4	3/8	4 1/2	2 1/2	14		18						5.0	3.75
2M	30	24	1 1/2	1/2	5/8		15 5/8	4 1/2	5	1 7/8	14 3/4	11 1/2	2 3/8	7	13 1/4	3/8	4 1/2	2 1/2	14		18						5.0	3.75
3	36	30	1 1/2	1/2	5/8		18 3/4	5 1/2	6	2 1/4	17 1/4	17 1/4	2 7/8	8 3/8	16	1/2	5 1/2	3	16 3/4		24						7.5	6.0
4	48	36	2 1/4	3/4	1		24 7/8	7 1/4	7 7/8	3 1/8	23 1/8	18	3 3/4	11 1/8	21 1/4	5/8	7 1/8	4	22 3/8		30						12.0	10.0
5	48	36	2 1/4	3/4	1		24 7/8	7 1/4	7 7/8	3 1/8	23 1/8	18	3 3/4	11 1/8	21 1/4	5/8	7 1/8	4	22 3/8		30						12.0	10.0

STANDARD SIGN
R3-8 (D) Arrow

WISCONSIN DEPT OF TRANSPORTATION

APPROVED Matthew R Rauch
for State Traffic Engineer

DATE 2/14/23 PLATE NO. R3-8.2

PROJECT NO: | HWY: | COUNTY: | SHEET NO: 318 | E

NOTES

1. Sign is Type II - Type H Reflective
2. Color:
   Background - White
   Message - Black
3. Message Series - None

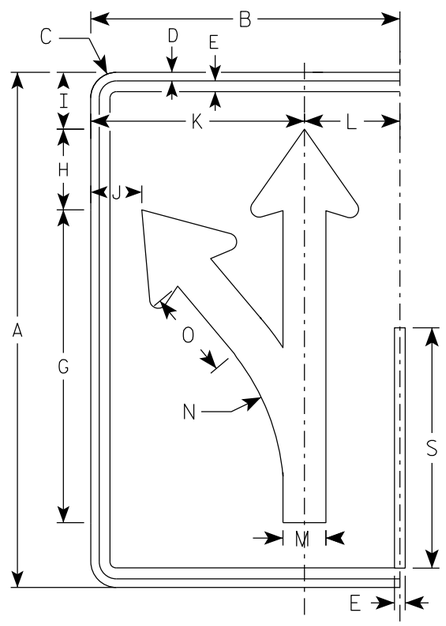

(E)

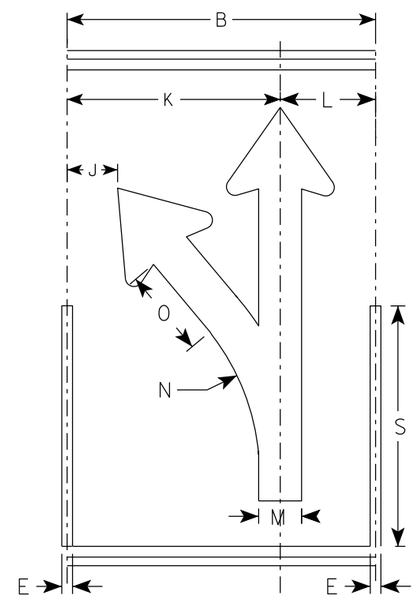

(E)

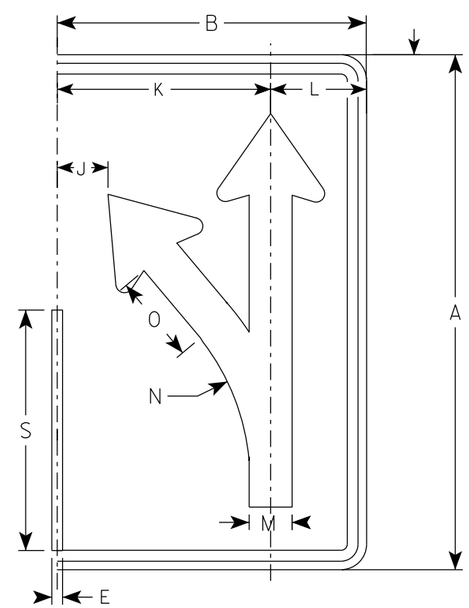

(E)

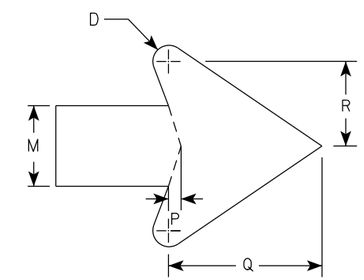

ARROW DETAIL

SIZE	A	B	C	D	E	F	G	H	I	J	K	L	M	N	O	P	Q	R	S	T	U	V	W	X	Y	Z	Area sq. ft.
1																											
2S	30	18	1 1/2	1/2	5/8		18 1/4	4 3/4	3 1/4	3	12 1/2	5 1/2	2 1/2	13 1/4	5 1/8	3/8	4 3/4	2 5/8	14								3.75
2M	30	18	1 1/2	1/2	5/8		18 1/4	4 3/4	3 1/4	3	12 1/2	5 1/2	2 1/2	13 1/4	5 1/8	3/8	4 3/4	2 5/8	14								3.75
3	36	24	1 1/2	1/2	5/8		21 7/8	5 5/8	4	4 7/8	16 1/8	7 3/4	3	15 7/8	6 1/8	1/2	5 3/4	3 1/8	16 3/4								6.0
4	48	30	2 1/4	3/4	1		29 1/8	7 1/2	5 1/4	5 3/8	20 1/2	9 1/2	4	21 1/4	8 1/4	5/8	7 5/8	4 1/4	22 3/8								10.0
5	48	30	2 1/4	3/4	1		29 1/8	7 1/2	5 1/4	5 3/8	20 1/2	9 1/2	4	21 1/4	8 1/4	5/8	7 5/8	4 1/4	22 3/8								10.0

STANDARD SIGN
R3-8 (E) Arrow

WISCONSIN DEPT OF TRANSPORTATION

APPROVED Matthew R Rauch
for State Traffic Engineer

DATE 2/14/23 PLATE NO. R3-8.2

PROJECT NO: | HWY: | COUNTY: | SHEET NO: 319 | E

NOTES

1. Sign is Type II - Type H Reflective
2. Color:
   Background - White
   Message - Black
3. Message Series - None

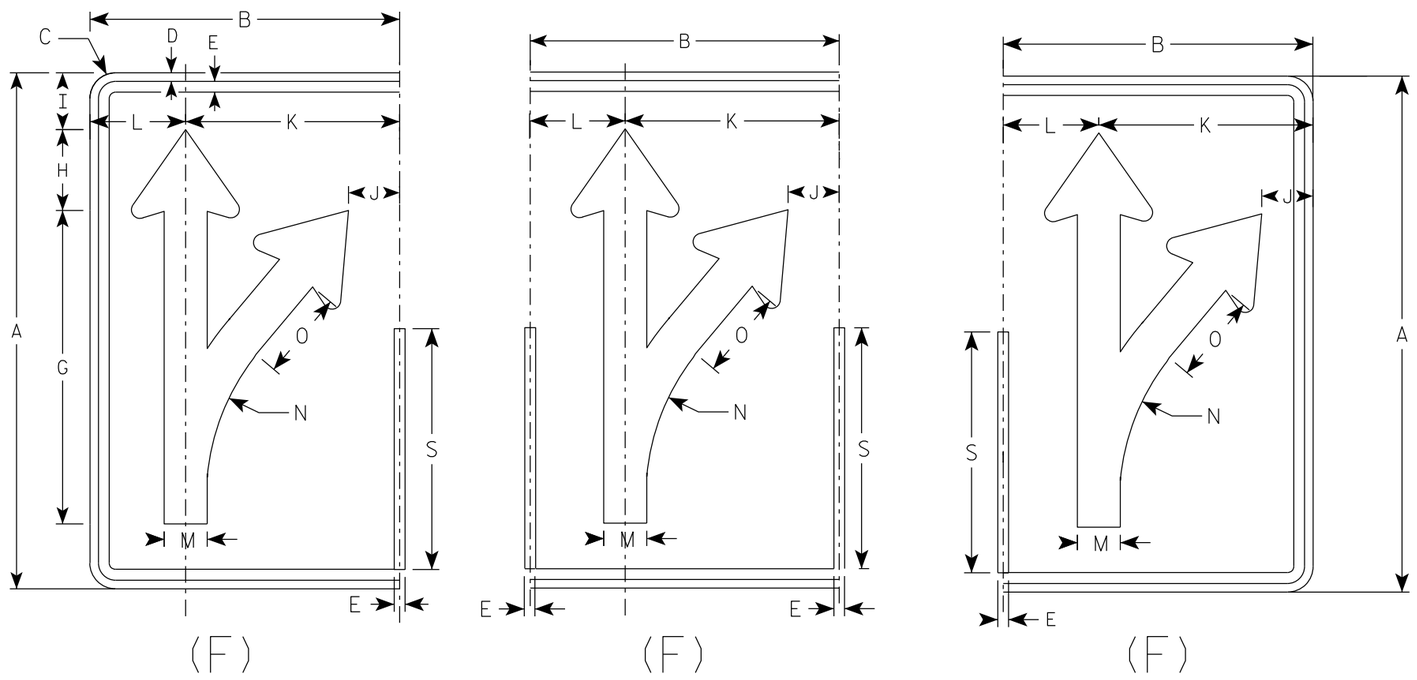

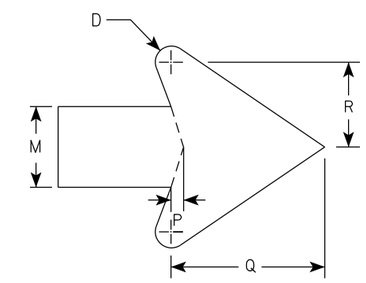

ARROW DETAIL

SIZE	A	B	C	D	E	F	G	H	I	J	K	L	M	N	O	P	Q	R	S	T	U	V	W	X	Y	Z	Area sq. ft.
1																											
2S	30	18	1 1/2	1/2	5/8		18 1/4	4 3/4	3 1/4	3	12 1/2	5 1/2	2 1/2	13 1/4	5 1/8	3/8	4 3/4	2 5/8	14								3.75
2M	30	18	1 1/2	1/2	5/8		18 1/4	4 3/4	3 1/4	3	12 1/2	5 1/2	2 1/2	13 1/4	5 1/8	3/8	4 3/4	2 5/8	14								3.75
3	36	24	1 1/2	1/2	5/8		21 7/8	5 5/8	4	4 7/8	16 1/8	7 3/4	3	15 7/8	6 1/8	1/2	5 3/4	3 1/8	16 3/4								6.0
4	48	30	2 1/4	3/4	1		29 1/8	7 1/2	5 1/4	5 3/8	20 1/2	9 1/2	4	21 1/4	8 1/4	5/8	7 5/8	4 1/4	22 3/8								10.0
5	48	30	2 1/4	3/4	1		29 1/8	7 1/2	5 1/4	5 3/8	20 1/2	9 1/2	4	21 1/4	8 1/4	5/8	7 5/8	4 1/4	22 3/8								10.0

STANDARD SIGN
R3-8 (F) Arrow

WISCONSIN DEPT OF TRANSPORTATION

APPROVED Matthew R Rauch
For State Traffic Engineer

DATE 2/14/23 PLATE NO. R3-8.2

PROJECT NO: | HWY: | COUNTY: | SHEET NO: 320 | E

NOTES

1. Sign is Type II - Type H Reflective
2. Color:
   Background - White
   Message - Black
3. Message Series - None

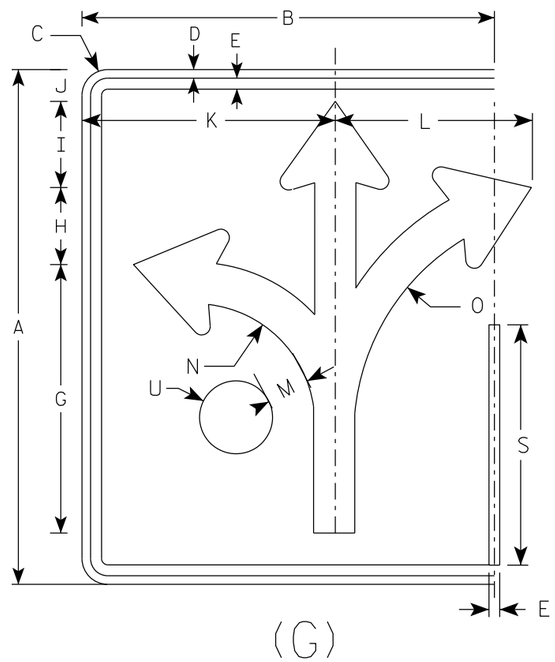

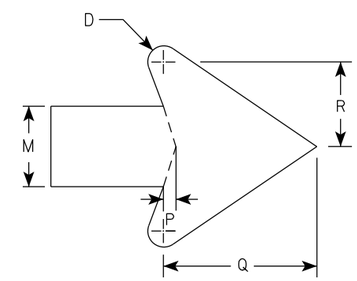

ARROW DETAIL

SIZE	A	B	C	D	E	F	G	H	I	J	K	L	M	N	O	P	Q	R	S	T	U	V	W	X	Y	Z	Area sq. ft.
1																											
2S	30	24	1 1/2	1/2	5/8		15 5/8	4 1/2	5	1 7/8	14 3/4	11 1/2	2 3/8	7	13 1/4	3/8	4 1/2	2 1/2	14		2 1/8						5.0
2M	30	24	1 1/2	1/2	5/8		15 5/8	4 1/2	5	1 7/8	14 3/4	11 1/2	2 3/8	7	13 1/4	3/8	4 1/2	2 1/2	14		2 1/8						5.0
3	36	30	1 1/2	1/2	5/8		18 3/4	5 1/2	6	3 1/8	17 1/4	17 1/4	2 7/8	8 3/8	16	1/2	5 1/2	3	16 3/4		2 1/2						7.5
4	48	36	2 1/4	3/4	1		24 7/8	7 1/4	7 7/8	3 1/8	23 1/8	18	3 3/4	11 1/8	21 1/4	5/8	7 1/8	4	22 3/8		3 3/8						12.0
5	48	36	2 1/4	3/4	1		24 7/8	7 1/4	7 7/8	3 1/8	23 1/8	18	3 3/4	11 1/8	21 1/4	5/8	7 1/8	4	22 3/8		3 3/8						12.0

STANDARD SIGN
R3-8 (G) Arrow

WISCONSIN DEPT OF TRANSPORTATION

APPROVED Matthew R Rauch
for State Traffic Engineer

DATE 2/14/23 PLATE NO. R3-8.2

PROJECT NO: | HWY: | COUNTY: | SHEET NO: 321 | E

NOTES

1. Sign is Type II - Type H Reflective
2. Color:
   Background - White
   Message - Black
3. Message Series - None

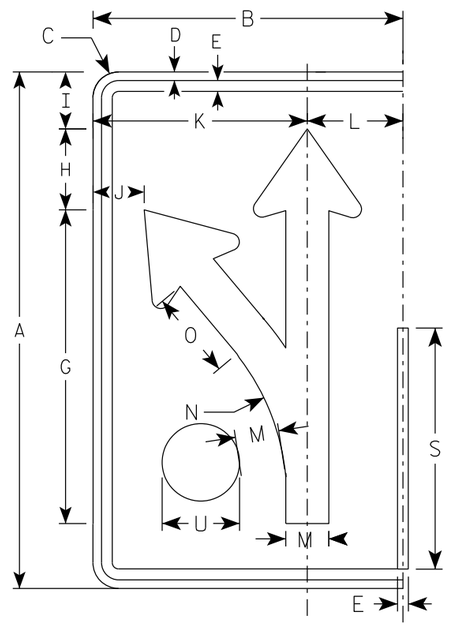

(H)

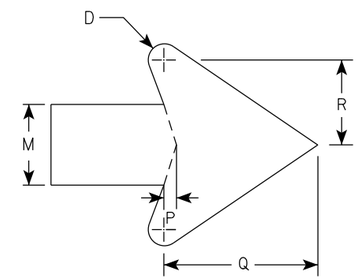

ARROW DETAIL

SIZE	A	B	C	D	E	F	G	H	I	J	K	L	M	N	O	P	Q	R	S	T	U	V	W	X	Y	Z	Area sq. ft.
1																											
2S	30	18	1 1/2	1/2	5/8		18 1/4	4 3/4	3 1/4	3	12 1/2	5 1/2	2 1/2	13 1/4	5 1/8	3/8	4 3/4	2 5/8	14		2 1/8						3.75
2M	30	18	1 1/2	1/2	5/8		18 1/4	4 3/4	3 1/4	3	12 1/2	5 1/2	2 1/2	13 1/4	5 1/8	3/8	4 3/4	2 5/8	14		2 1/8						3.75
3	36	24	1 1/2	1/2	5/8		21 7/8	5 5/8	4	4 7/8	16 1/8	7 3/4	3	15 7/8	6 1/8	1/2	5 3/4	3 1/8	16 3/4		2 1/2						6.0
4	48	30	2 1/4	3/4	1		29 1/8	7 1/2	5 1/4	5 3/8	20 1/2	9 1/2	4	21 1/4	8 1/4	5/8	7 5/8	4 1/4	22 3/8		3 3/8						10.0
5	48	30	2 1/4	3/4	1		29 1/8	7 1/2	5 1/4	5 3/8	20 1/2	9 1/2	4	21 1/4	8 1/4	5/8	7 5/8	4 1/4	22 3/8		3 3/8						10.0

STANDARD SIGN
R3-8 (H) Arrow

WISCONSIN DEPT OF TRANSPORTATION

APPROVED Matthew R Rauch
for State Traffic Engineer

DATE 2/14/23 PLATE NO. R3-8.2

PROJECT NO: | HWY: | COUNTY: | SHEET NO: 322 | E

7

NOTES

1. Sign is Type II - Type H Reflective
2. Color:
   Background - White
   Message - Black
3. Message Series - None

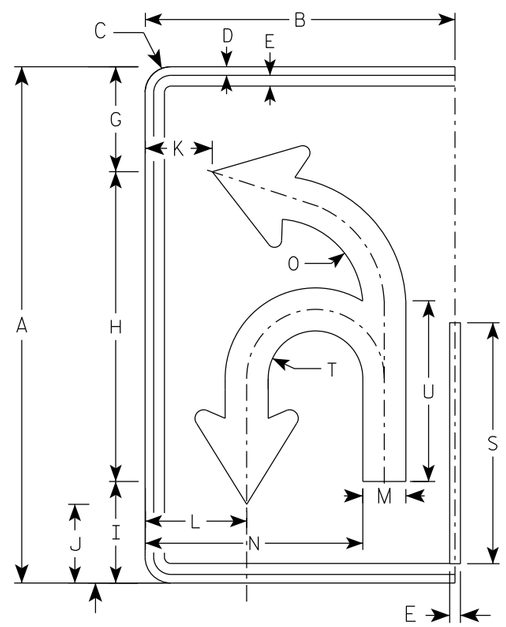

(I)

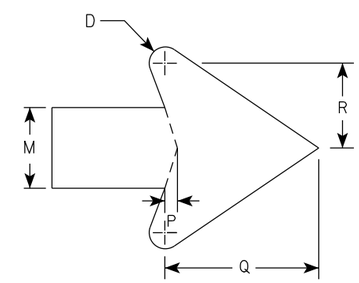

ARROW DETAIL

SIZE	A	B	C	D	E	F	G	H	I	J	K	L	M	N	O	P	Q	R	S	T	U	V	W	X	Y	Z	Area sq. ft.
1																											
2S	30	18	1 1/2	1/2	5/8		6 1/8	18	5 7/8	4 5/8	3 7/8	5 7/8	2 1/2	12 5/8	5 1/8	3/8	4 3/4	2 5/8	14	2 3/4	10 1/2						3.75
2M	30	18	1 1/2	1/2	5/8		6 1/8	18	5 7/8	4 5/8	3 7/8	5 7/8	2 1/2	12 5/8	5 1/8	3/8	4 3/4	2 5/8	14	2 3/4	10 1/2						3.75
3	36	24	1 1/2	1/2	5/8		21 7/8	21 5/8	7 1/8	5 1/2	5 7/8	8 1/4	3	16 3/8	6 1/8	1/2	5 3/4	3 1/8	16 3/4	3 1/4	12 5/8						6.0
4	48	30	2 1/4	3/4	1		29 1/8	28 3/4	9 3/8	7 1/4	6 7/8	10	4	20 7/8	8 1/8	5/8	7 5/8	4 1/4	22 3/8	4 3/8	16 3/4						10.0
5	48	30	2 1/4	3/4	1		29 1/8	28 3/4	9 3/8	7 1/4	6 7/8	10	4	20 7/8	8 1/8	5/8	7 5/8	4 1/4	22 3/8	4 3/8	16 3/4						10.0

STANDARD SIGN
R3-8 (I) Arrow

WISCONSIN DEPT OF TRANSPORTATION

APPROVED Matthew R Rauch
For State Traffic Engineer

DATE 2/14/23 PLATE NO. R3-8.2

PROJECT NO: | HWY: | COUNTY: | SHEET NO: 323 | E

NOTES

1. Sign is Type II - Type H Reflective
2. Color:
   Background - White
   Message - Black
3. Message Series - None

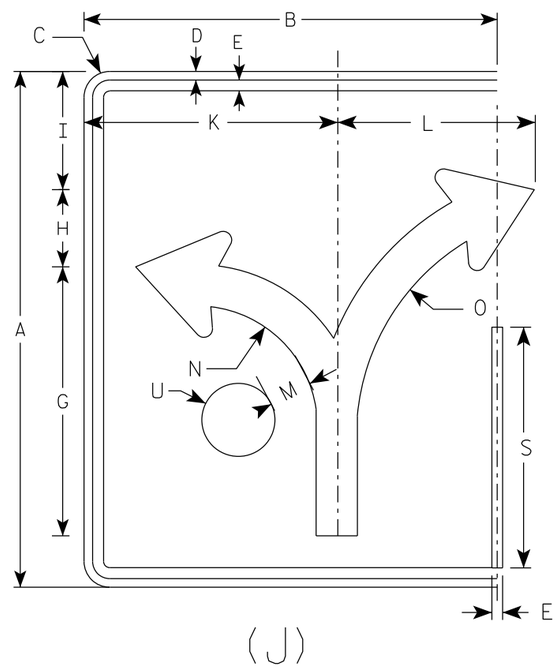

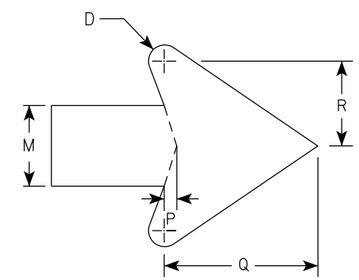

ARROW DETAIL

SIZE	A	B	C	D	E	F	G	H	I	J	K	L	M	N	O	P	Q	R	S	T	U	V	W	X	Y	Z	Area sq. ft.
1																											
2S	30	24	1 1/2	1/2	5/8		15 5/8	4 1/2	6 7/8		14 3/4	11 1/2	2 3/8	7	13 1/4	3/8	4 1/2	2 1/2	14		2 1/8						5.0
2M	30	24	1 1/2	1/2	5/8		15 5/8	4 1/2	6 7/8		14 3/4	11 1/2	2 3/8	7	13 1/4	3/8	4 1/2	2 1/2	14		2 1/8						5.0
3	36	30	1 1/2	1/2	5/8		18 3/4	5 1/2	8 1/4		17 1/4	17 1/4	2 7/8	8 3/8	16	1/2	5 1/2	3	16 3/4		2 1/2						7.5
4	48	36	2 1/4	3/4	1		24 7/8	7 1/4	11		23 1/8	18	3 3/4	11 1/8	21 1/4	5/8	7 1/8	4	22 3/8		3 3/8						12.0
5	48	36	2 1/4	3/4	1		24 7/8	7 1/4	11		23 1/8	18	3 3/4	11 1/8	21 1/4	5/8	7 1/8	4	22 3/8		3 3/8						12.0

STANDARD SIGN
R3-8 (J) Arrow

WISCONSIN DEPT OF TRANSPORTATION

APPROVED Matthew R Rauch
for State Traffic Engineer

DATE 2/14/23 PLATE NO. R3-8.2

PROJECT NO: | HWY: | COUNTY: | SHEET NO: 324 | E

NOTES

1. Sign is Type II - Type H Reflective
2. Color:
   Background - White
   Message - Black
3. Message Series - D

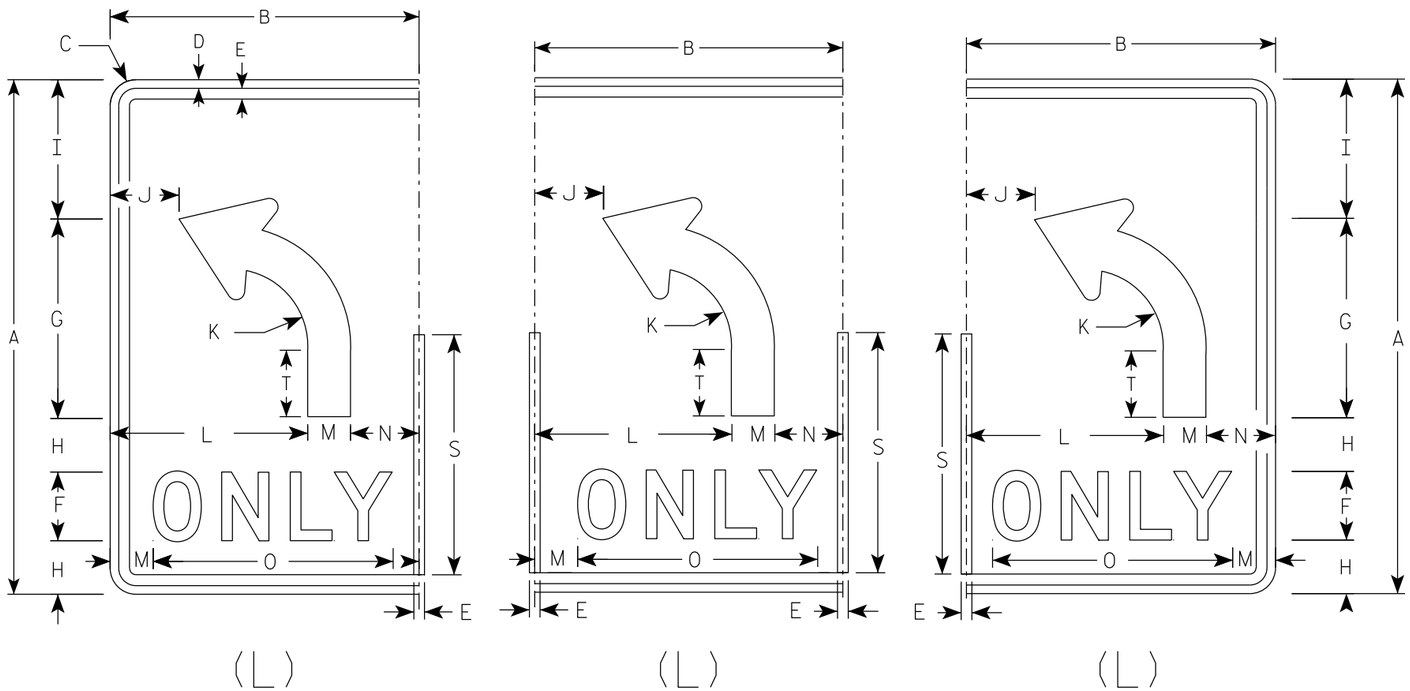

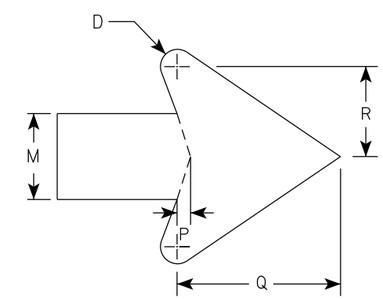

ARROW DETAIL

SIZE	A	B	C	D	E	F	G	H	I	J	K	L	M	N	O	P	Q	R	S	T	U	V	W	X	Y	Z	Area sq. ft.
1																											
2S	30	18	1 1/2	1/2	5/8	4	11 5/8	3 1/8	8 1/8	4	4 1/2	11 1/2	2 1/2	4	14	3/8	4 3/4	2 5/8	14	3 7/8							3.75
2M	30	18	1 1/2	1/2	5/8	4	11 5/8	3 1/8	8 1/8	4	4 1/2	11 1/2	2 1/2	4	14	3/8	4 3/4	2 5/8	14	3 7/8							3.75
3	36	24	1 1/2	1/2	5/8	5	14	3 1/2	9 3/4	6	5 3/8	15	3	6	17 5/8	1/2	5 3/4	3 1/8	16 3/4	4 5/8							6.0
4	48	30	2 1/4	3/4	1	6	18 5/8	5 1/8	13 1/8	6 1/8	7 1/4	18	4	8	21 3/4	5/8	7 5/8	4 1/4	22 3/8	6 1/4							10.0
5	48	30	2 1/4	3/4	1	6	18 5/8	5 1/8	13 1/8	6 1/8	7 1/4	18	4	8	21 3/4	5/8	7 5/8	4 1/4	22 3/8	6 1/4							10.0

STANDARD SIGN
R3-8 (L) Arrow

WISCONSIN DEPT OF TRANSPORTATION

APPROVED Matthew R Rauch
for State Traffic Engineer

DATE 2/14/23 PLATE NO. R3-8.2

PROJECT NO:

SHEET NO: 325 E

NOTES

1. Sign is Type II - Type H Reflective
2. Color:
   Background - White
   Message - Black
3. Message Series - D

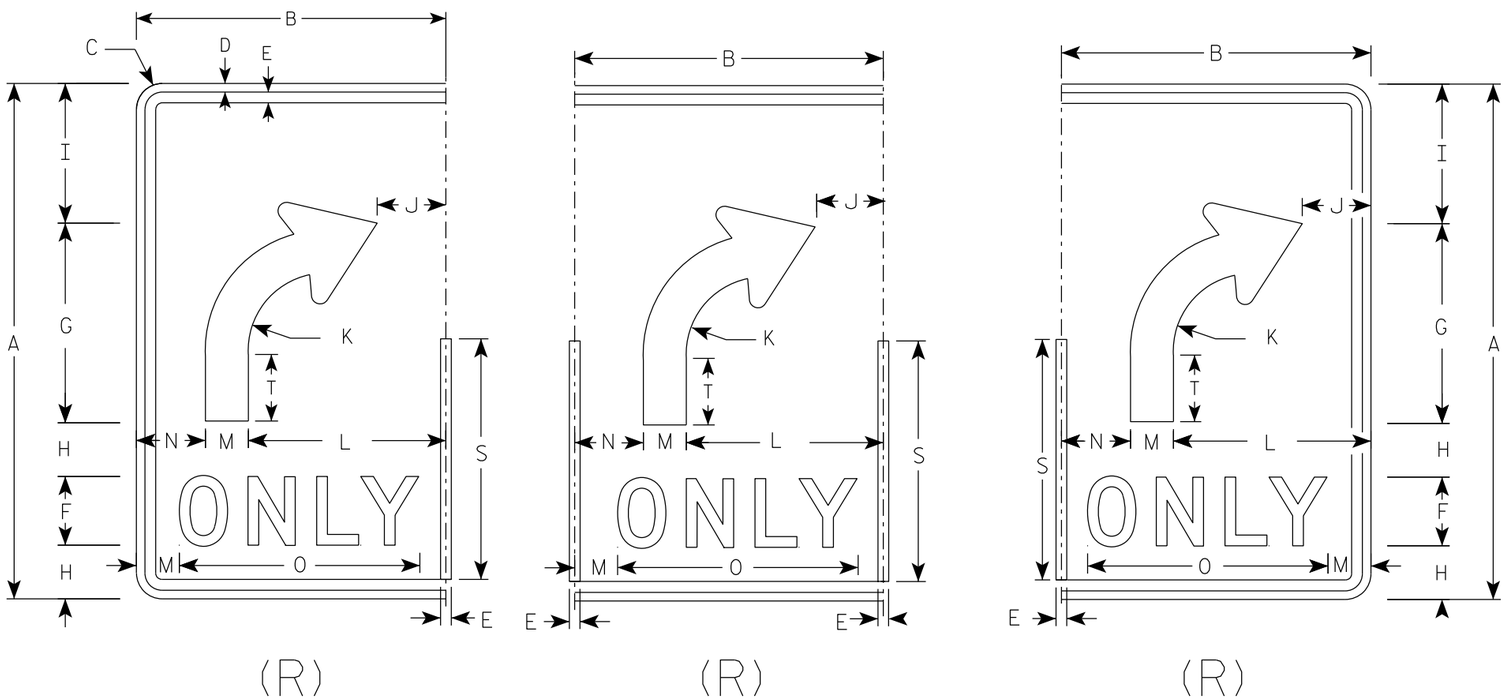

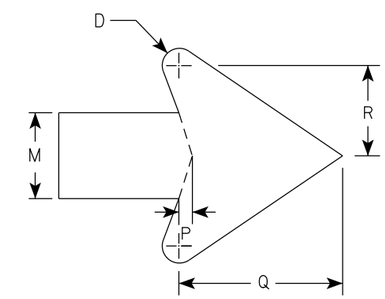

ARROW DETAIL

SIZE	A	B	C	D	E	F	G	H	I	J	K	L	M	N	O	P	Q	R	S	T	U	V	W	X	Y	Z	Area sq. ft.
1																											
2S	30	18	1 1/2	1/2	5/8	4	11 5/8	3 1/8	8 1/8	4	4 1/2	11 1/2	2 1/2	4	14	3/8	4 3/4	2 5/8	14	3 7/8							3.75
2M	30	18	1 1/2	1/2	5/8	4	11 5/8	3 1/8	8 1/8	4	4 1/2	11 1/2	2 1/2	4	14	3/8	4 3/4	2 5/8	14	3 7/8							3.75
3	36	24	1 1/2	1/2	5/8	5	14	3 1/2	9 3/4	6	5 3/8	15	3	6	17 5/8	1/2	5 3/4	3 1/8	16 3/4	4 5/8							6.0
4	48	30	2 1/4	3/4	1	6	18 5/8	5 1/8	13 1/8	6 1/8	7 1/4	18	4	8	21 3/4	5/8	7 5/8	4 1/4	22 3/8	6 1/4							10.0
5	48	30	2 1/4	3/4	1	6	18 5/8	5 1/8	13 1/8	6 1/8	7 1/4	18	4	8	21 3/4	5/8	7 5/8	4 1/4	22 3/8	6 1/4							10.0

STANDARD SIGN

R3-8 (R) Arrow

WISCONSIN DEPT OF TRANSPORTATION

APPROVED Matthew R Rauch
for State Traffic Engineer

DATE 2/14/23 PLATE NO. R3-8.2

PROJECT NO:

SHEET NO: 326 E

NOTES

1. Sign is Type II - Type H Reflective
2. Color:
   Background - White
   Message - Black
3. Message Series - E

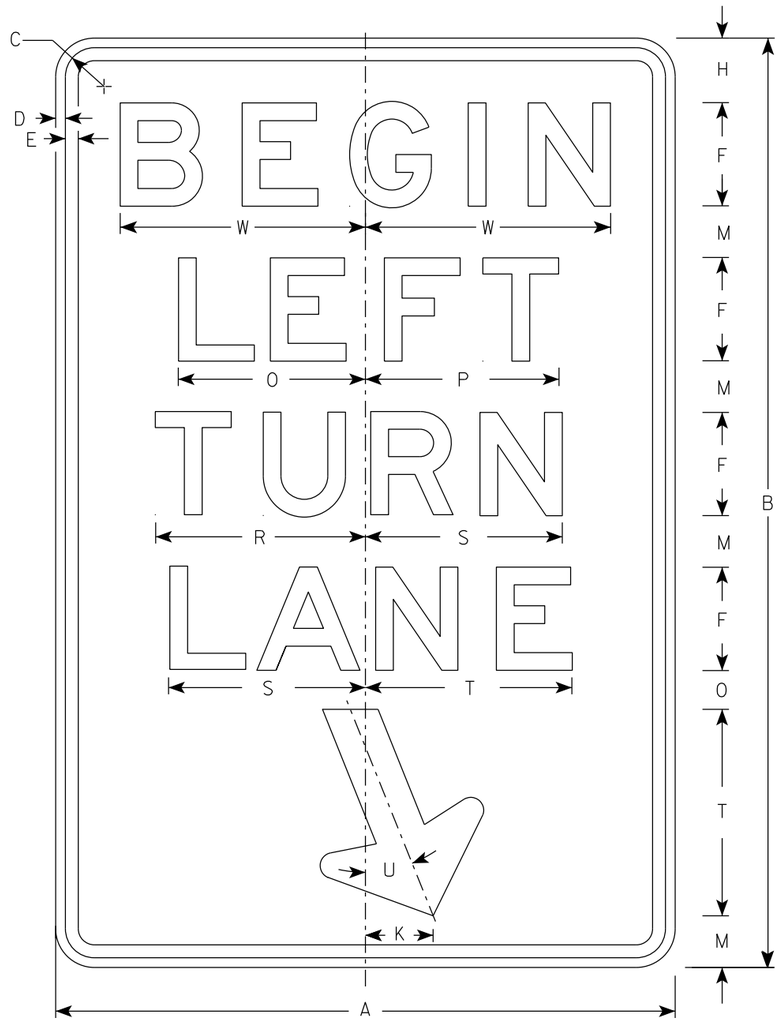

R3-20L

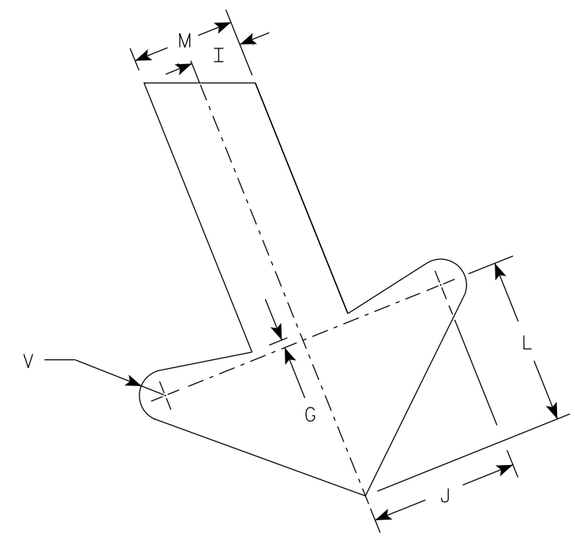

ARROW DETAIL

SIZE	A	B	C	D	E	F	G	H	I	J	K	L	M	N	O	P	Q	R	S	T	U	V	W	X	Y	Z	Area sq. ft.
1																											
2S	24	36	1 1/2	3/8	1/2	4	1/4	2 1/2	1	2 7/8	2 5/8	3 1/4	2	1 1/2	7 1/4	7 1/2		8 1/8	7 5/8	8	22°	1/2	9 1/2				6.0
2M	24	36	1 1/2	3/8	1/2	4	1/4	2 1/2	1	2 7/8	2 5/8	3 1/4	2	1 1/2	7 1/4	7 1/2		8 1/8	7 5/8	8	22°	1/2	9 1/2				6.0
3	36	54	1 7/8	1/2	5/8	6	3/8	3 3/4	1 1/2	4 1/4	4	4 7/8	3	2 1/4	10 7/8	11 1/4		12 1/4	11 1/2	12	22°	3/4	13 1/4				13.5
4																											
5																											

STANDARD SIGN
R3-20L

WISCONSIN DEPT OF TRANSPORTATION

APPROVED Matthew R Rauch
for State Traffic Engineer

DATE 2/23/23 PLATE NO. R3-20L.8

PROJECT NO: | HWY: | COUNTY: | SHEET NO: 327 | E

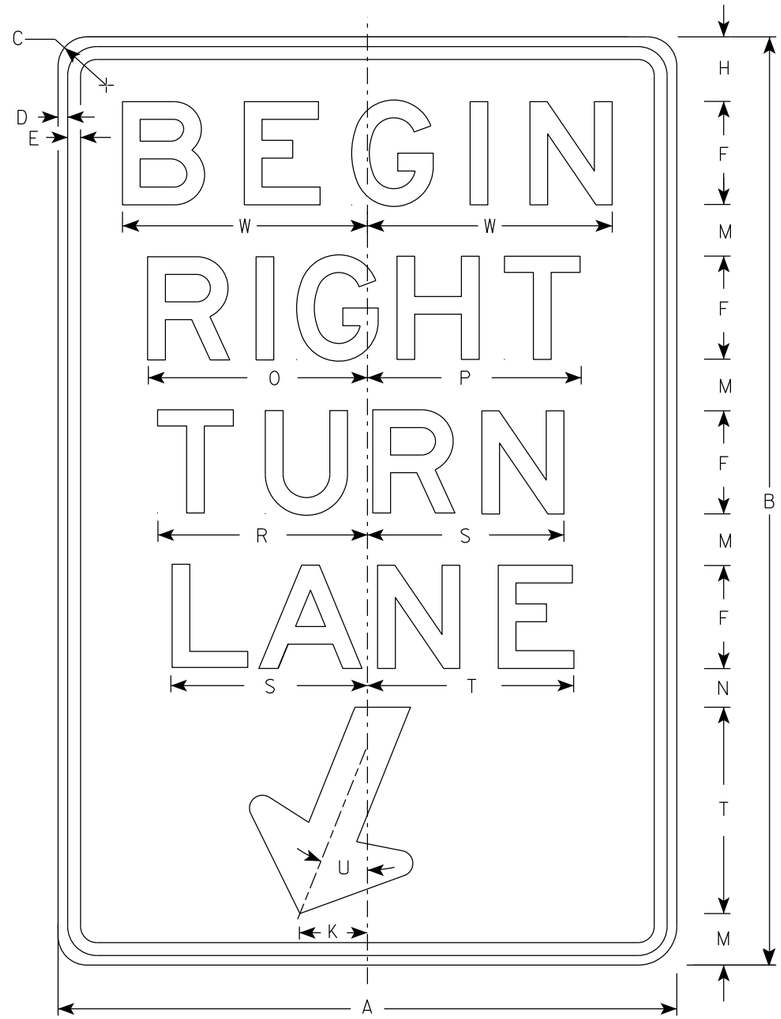

R3-20R

NOTES

1. Sign is Type II - Type H Reflective
2. Color:
   Background - White
   Message - Black
3. Message Series - E

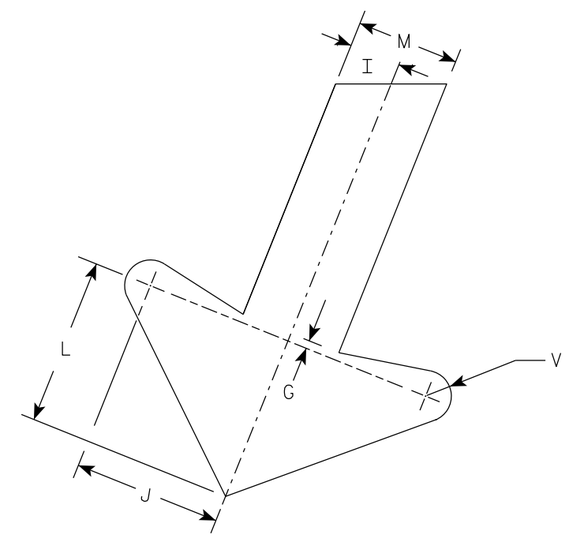

ARROW DETAIL

SIZE	A	B	C	D	E	F	G	H	I	J	K	L	M	N	O	P	Q	R	S	T	U	V	W	X	Y	Z	Area sq. ft.
1																											
2S	24	36	1 1/2	3/8	1/2	4	1/4	2 1/2	1	2 7/8	2 5/8	3 1/4	2	1 1/2	8 1/2	8 1/4		8 1/8	7 5/8	8	22°	1/2	9 1/2				6.0
2M	24	36	1 1/2	3/8	1/2	4	1/4	2 1/2	1	2 7/8	2 5/8	3 1/4	2	1 1/2	8 1/2	8 1/4		8 1/8	7 5/8	8	22°	1/2	9 1/2				6.0
3	36	54	1 7/8	1/2	5/8	6	3/8	3 3/4	1 1/2	4 1/4	4	4 7/8	3	2 1/4	12 3/4	12 1/2		12 1/4	11 1/2	12	22°	3/4	13 1/4				13.5
4																											
5																											

STANDARD SIGN
R3-20R

WISCONSIN DEPT OF TRANSPORTATION

APPROVED Matthew R Rauch
for State Traffic Engineer

DATE 2/23/23 PLATE NO. R3-20R.7

PROJECT NO: | HWY: | COUNTY: | SHEET NO: 328 | E

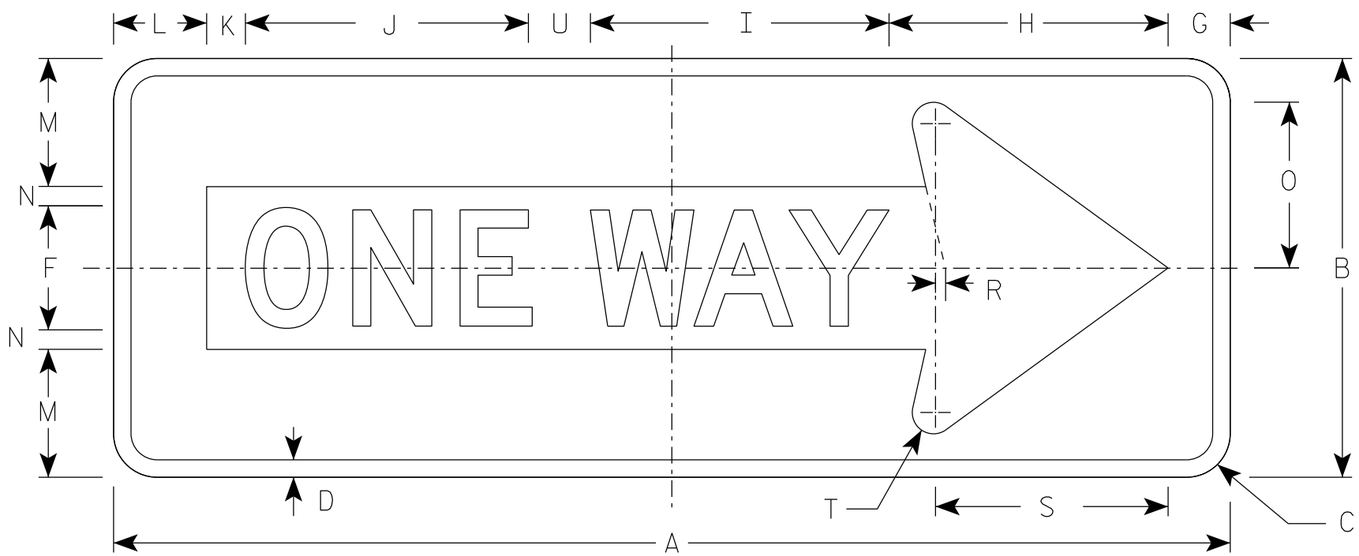

R6-1 R

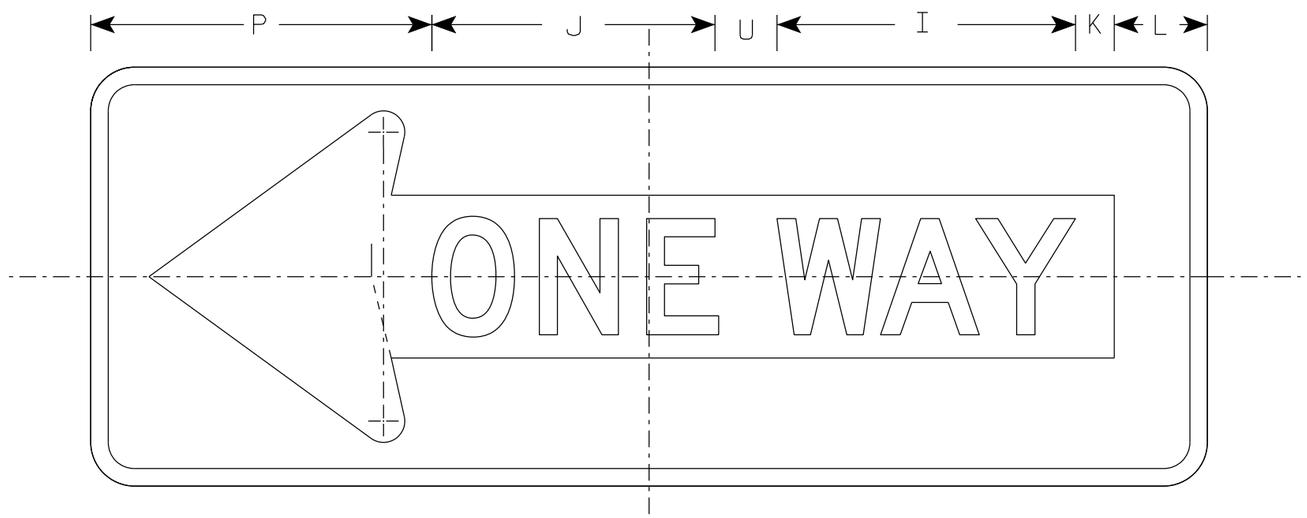

R6-1 L

NOTES

1. Sign is Type II - Type H Reflective
2. Color:
   Background - Black
   Message - Black Legend & White Arrow & Border
3. Message Series - D

SIZE	A	B	C	D	E	F	G	H	I	J	K	L	M	N	O	P	Q	R	S	T	U	V	W	X	Y	Z	Area sq. ft.
1																											
2S	36	12	1 1/2	1/2		4	2	7 1/2	9 5/8	9 1/8	1 1/4	3	3 3/8	5/8	4 3/8	11		3/8	7 1/2	3/4	2						3.0
2M	48	18	1 7/8	3/4		5	2 1/2	11	13	12 1/4	2 3/4	3 1/2	5 1/2	1	7 1/8	13 1/2		1/2	10 1/8	7/8	3						6.0
3	48	18	1 7/8	3/4		5	2 1/2	11	13	12 1/4	2 3/4	3 1/2	5 1/2	1	7 1/8	13 1/2		1/2	10 1/8	7/8	3						6.0
4	48	18	1 7/8	3/4		5	2 1/2	11	13	12 1/4	2 3/4	3 1/2	5 1/2	1	7 1/8	13 1/2		1/2	10 1/8	7/8	3						6.0
5																											

STANDARD SIGN
R6-1 L&R

WISCONSIN DEPT OF TRANSPORTATION

APPROVED Matthew R Rauch
for State Traffic Engineer

DATE 4/7/2025 PLATE NO. R6-1.5

PROJECT NO:

SHEET NO: 329 E

NOTES

1. Sign is Type II - Type H Reflective
2. Color:
   Background - White
   Message - Black
3. Message Series - D
4. R6-2L same as R6-2R except arrow points to the left.

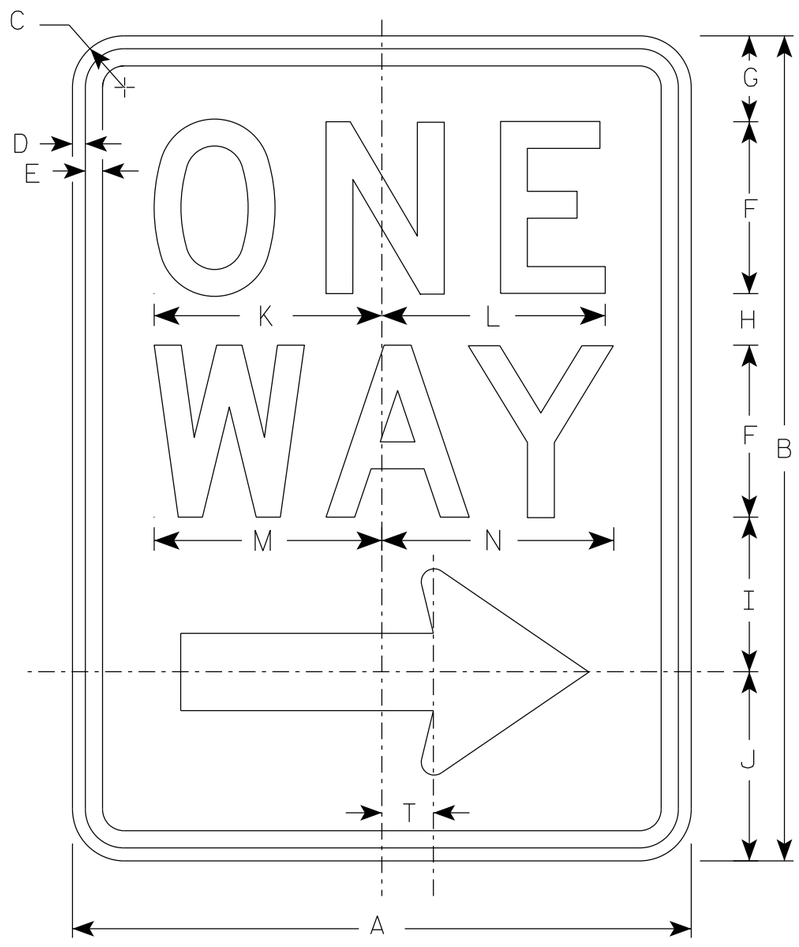

R6-2R

Arrow Detail

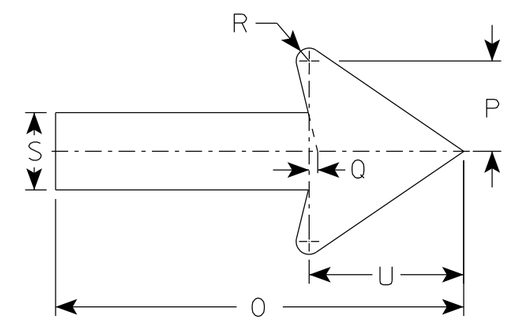

SIZE	A	B	C	D	E	F	G	H	I	J	K	L	M	N	O	P	Q	R	S	T	U	V	W	X	Y	Z
1	18	24	1 1/2	3/8	1/2	5	2 1/2	1 1/2	4 1/2	5 1/2	6 5/8	6 1/2	6 5/8	6 3/4	11 7/8	2 5/8	1/4	3/8	2 1/4	1 1/2	4 1/2					
2S	24	1 1/2	1 1/2	3/8	1/2	6	3	2 1/2	5 1/2	7	8 1/8	8 1/8	8 1/2	8 5/8	16	3 1/2	3/8	1/2	3	2	6					
2M	30	36	1 7/8	1/2	5/8	8	2 1/2	2 5/8	6 7/8	8	10 1/2	10 1/2	11 1/4	11 1/4	20	4 3/8	1/2	5/8	3 3/4	2 1/2	7 1/2					
3	36	48	1 7/8	1/2	5/8	10	5 1/4	3 1/4	9	10 1/2	12 3/4	12 3/4	13 1/4	13 1/2	24	5 5/8	1/2	3/4	4 3/4	3	9					
4	36	48	1 7/8	1/2	5/8	10	5 1/4	3 1/4	9	10 1/2	12 3/4	12 3/4	13 1/4	13 1/2	24	5 5/8	1/2	3/4	4 3/4	3	9					
5																										

STANDARD SIGN
R6-2 R&L

WISCONSIN DEPT OF TRANSPORTATION

APPROVED Matthew R Rauch
for State Traffic Engineer

DATE 11/2/10 PLATE NO. R6-2.8

PROJECT NO: | HWY: | COUNTY: | SHEET NO: 330 | E

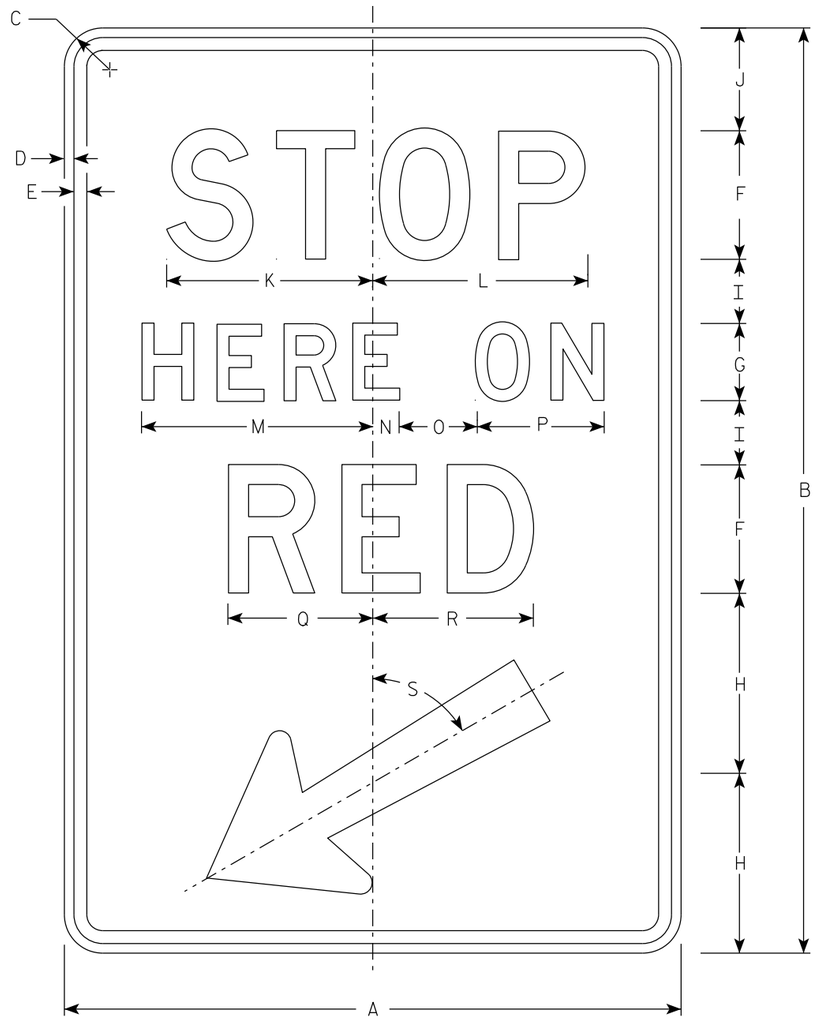

R10-6

NOTES

1. Sign is Type II - Type H Reflective
2. Color:
   Background - White
   Message - Black
3. Message Series - D

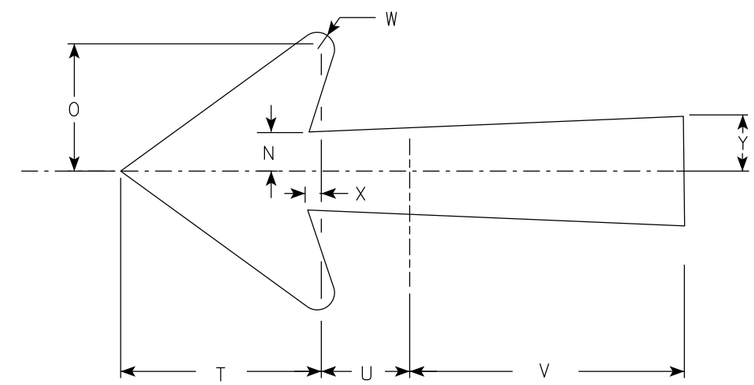

Arrow Detail

SIZE	A	B	C	D	E	F	G	H	I	J	K	L	M	N	O	P	Q	R	S	T	U	V	W	X	Y	Z	Area sq. ft.
1																											
2S	24	36	1 1/2	3/8	1/2	5	3	7	2 1/2	4	8	8 3/8	9	1	3	5	5 5/8	6 1/4	60°	5 1/4	2 1/4	7 1/8	1/2	3/8	1 3/8		6.0
2M	24	36	1 1/2	3/8	1/2	5	3	7	2 1/2	4	8	8 3/8	9	1	3	5	5 5/8	6 1/4	60°	5 1/4	2 1/4	7 1/8	1/2	3/8	1 3/8		6.0
3																											
4																											
5																											

STANDARD SIGN
R10-6

WISCONSIN DEPT OF TRANSPORTATION

APPROVED Matthew R Rauch
for State Traffic Engineer

DATE 1/25/24 PLATE NO. R10-6.7

PROJECT NO: | HWY: | COUNTY: | SHEET NO: 331 | E

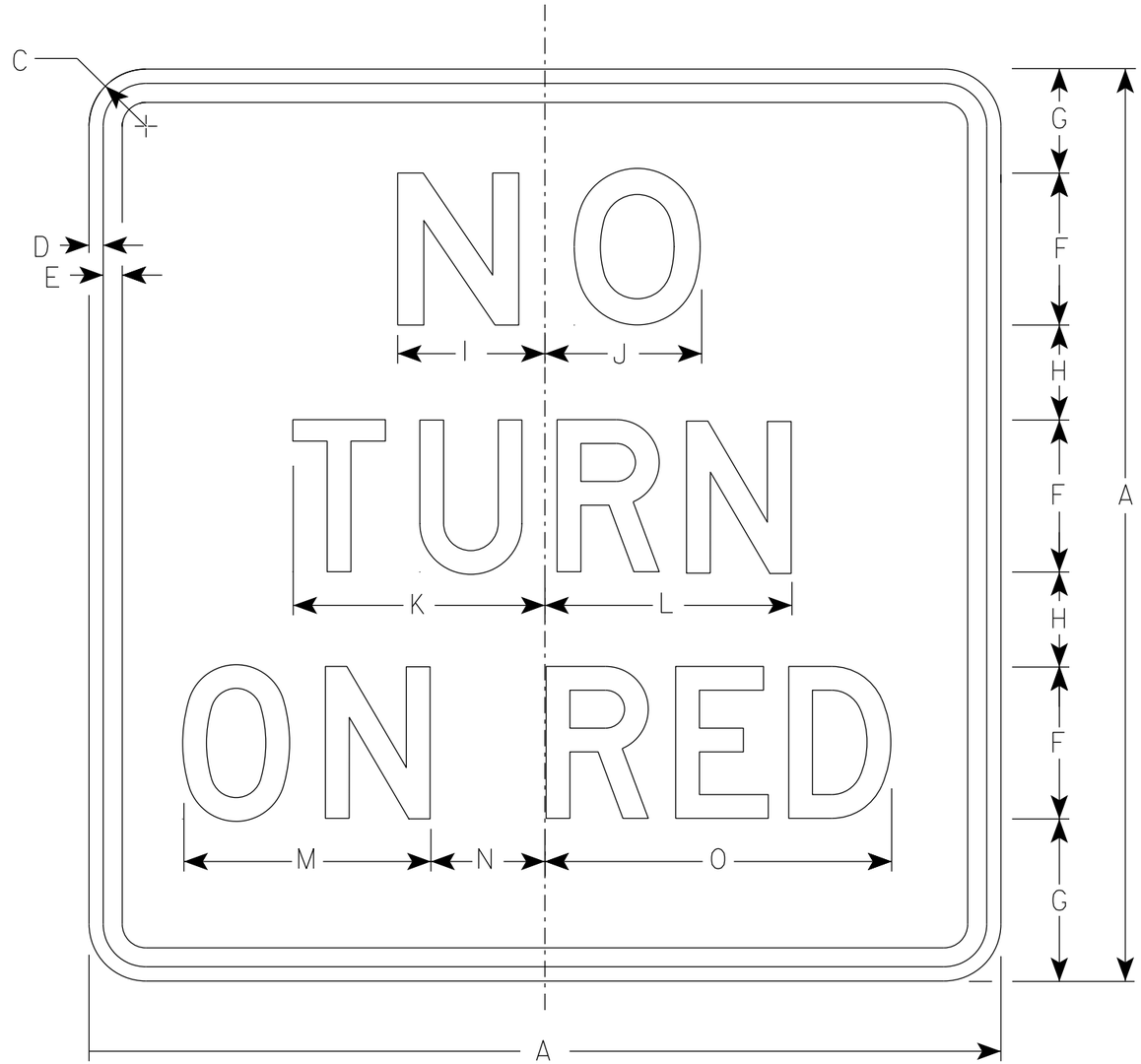

R10-11B

NOTES

1. Sign is Type II - Type H Reflective
2. Color:
   Background - White
   Message - Black
3. Message Series - Line 1 is Series E.
   Lines 2 and 3 are Series D.

SIZE	A	B	C	D	E	F	G	H	I	J	K	L	M	N	O	P	Q	R	S	T	U	V	W	X	Y	Z	Areq sq. ft.
1	18		1 1/2	3/8	3/8	3	2 3/4	1 3/4	3	3 1/8	5	4 7/8	5 1/4	1 7/8	7 1/8												2.25
2S	24		1 1/2	3/8	1/2	4	3 1/2	2 1/2	3 7/8	4 1/8	6 5/8	6 1/2	6 1/2	3	9 1/8												4.0
2M	24		1 1/2	3/8	1/2	4	3 1/2	2 1/2	3 7/8	4 1/8	6 5/8	6 1/2	6 1/2	3	9 1/8												4.0
3	30		1 7/8	1/2	5/8	5	4 1/2	3	4 7/8	5 1/4	8 1/4	8 1/8	7 3/4	4 1/8	11 7/8												6.25
4																											
5																											

STANDARD SIGN
R10-11B

WISCONSIN DEPT OF TRANSPORTATION

APPROVED Matthew R Rauch
for State Traffic Engineer

DATE 1/31/24 PLATE NO. R10-11B.5

PROJECT NO: | HWY: | COUNTY: | SHEET NO: 332 | E

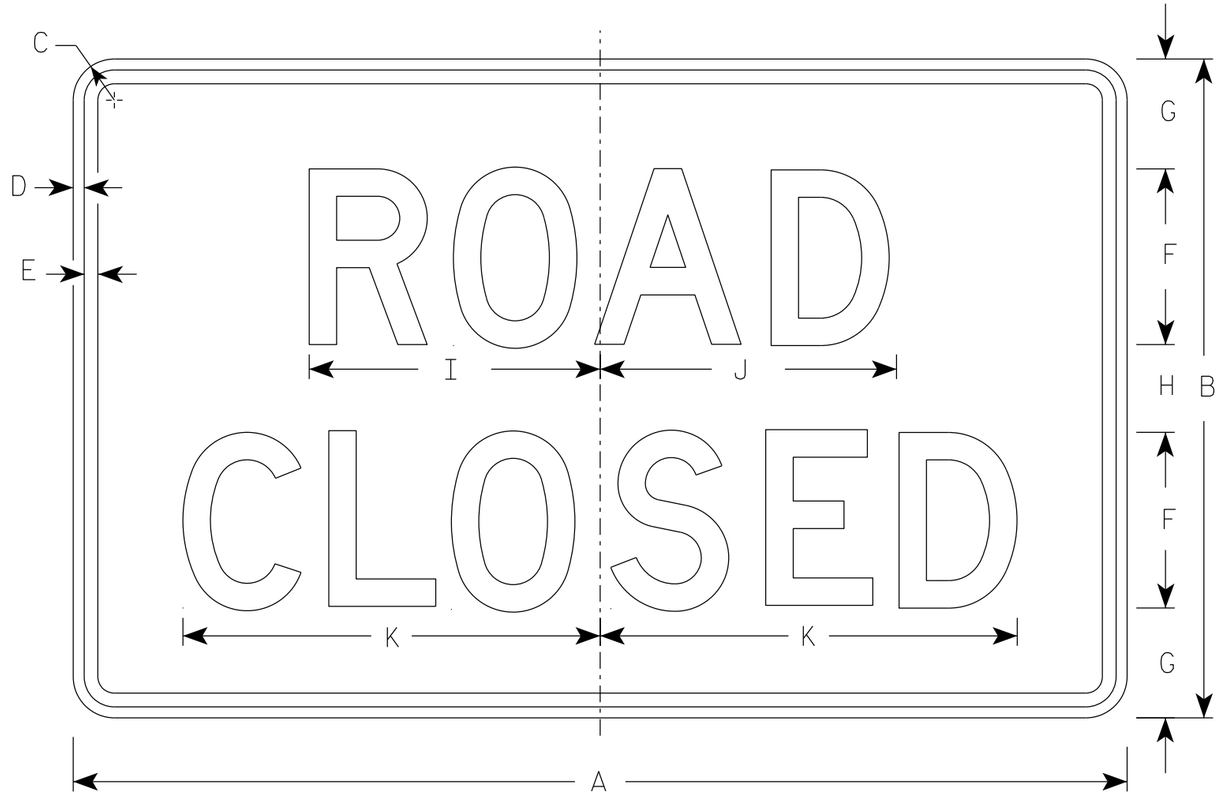

R11-2

NOTES

1. Sign is Type II - Type H Reflective
2. Color:
   Background - White
   Message - Black
3. Message Series - D
4. Corners may be square or rounded when base material is plywood but borders shall be rounded as shown. When base material is metal, the corners and borders shall be rounded.
5. Modify the message as required.

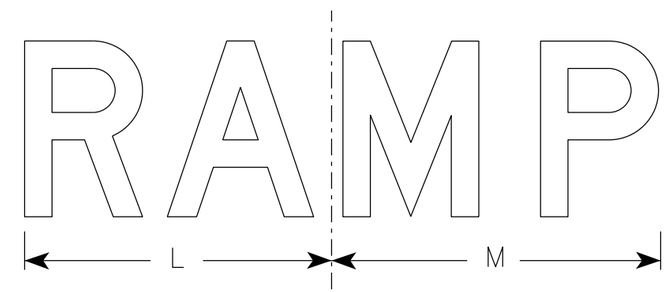

R11-2R

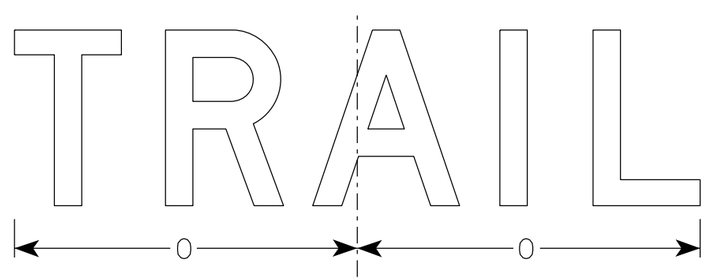

R11-2T

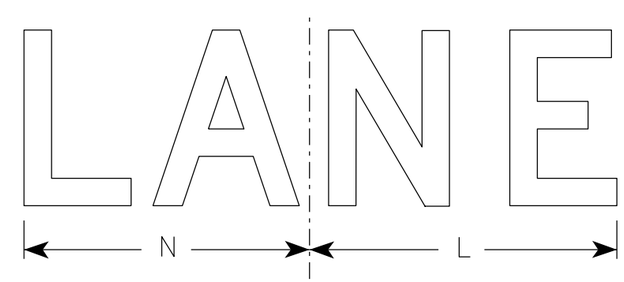

R11-2L

SIZE	A	B	C	D	E	F	G	H	I	J	K	L	M	N	O	P	Q	R	S	T	U	V	W	X	Y	Z	Area sq. ft.
1																											
2S	48	30	1 7/8	1/2	5/8	8	5	4	13 1/4	13 1/2	19	14	15	13	15 5/8												10.0
2M	48	30	1 7/8	1/2	5/8	8	5	4	13 1/4	13 1/2	19	14	15	13	15 5/8												10.0
3	48	30	1 7/8	1/2	5/8	8	5	4	13 1/4	13 1/2	19	14	15	13	15 5/8												10.0
4	48	30	1 7/8	1/2	5/8	8	5	4	13 1/4	13 1/2	19	14	15	13	15 5/8												10.0
5	48	30	1 7/8	1/2	5/8	8	5	4	13 1/4	13 1/2	19	14	15	13	15 5/8												10.0

STANDARD SIGN
R11-2

WISCONSIN DEPT OF TRANSPORTATION

APPROVED Matthew R Rauch
for State Traffic Engineer

DATE 2/5/24 PLATE NO. R11-2.12

PROJECT NO: | HWY: | COUNTY: | SHEET NO: 333 | E

7

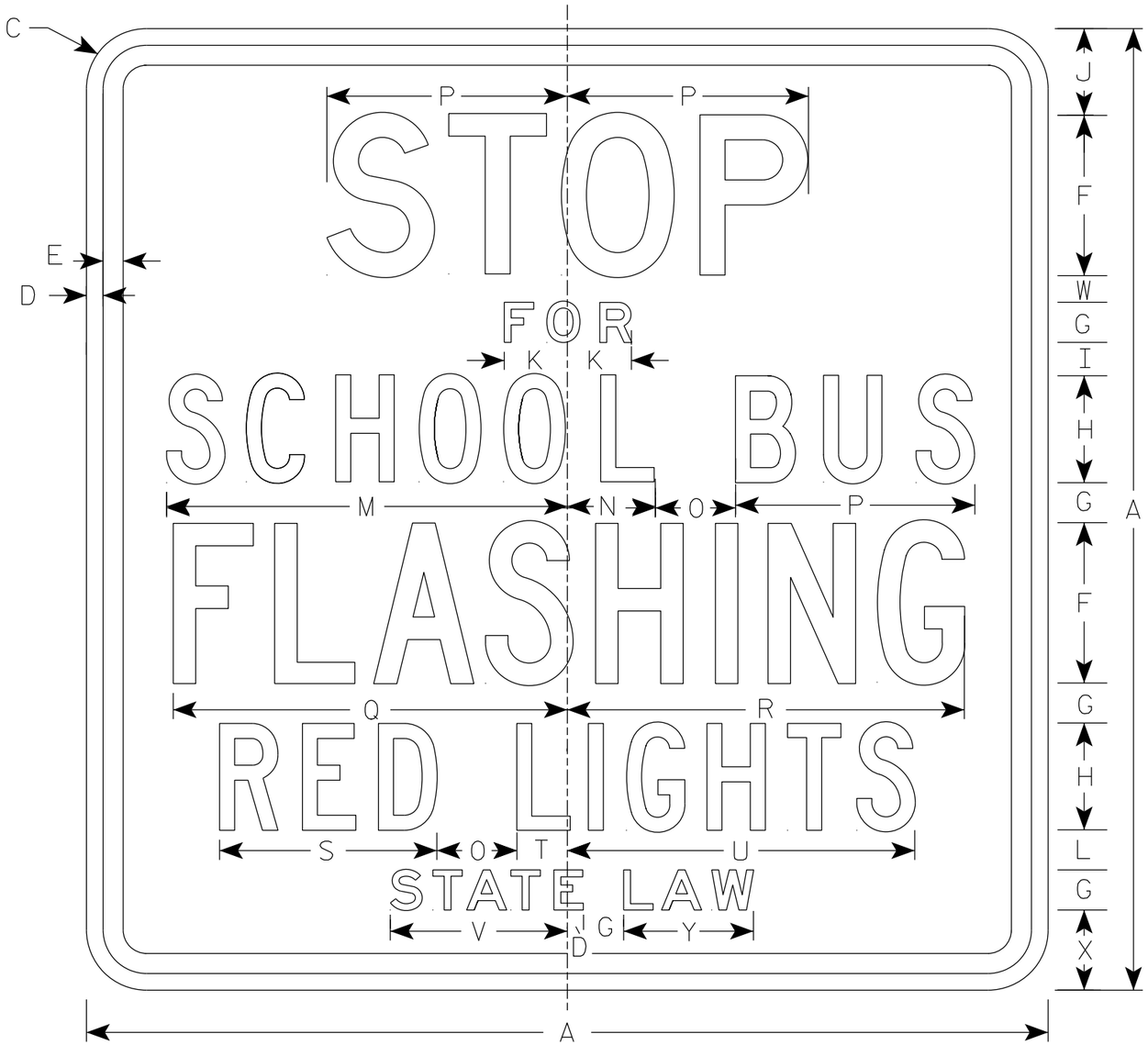

R59-51

NOTES

1. Sign is Type II - Type H Reflective
2. Color:
   Background - White
   Message - Black
3. Message Series - Line 1 is Series D
   Lines 2 & 6 are Series E
   Line 3, 4 & 5 are Series C

SIZE	A	B	C	D	E	F	G	H	I	J	K	L	M	N	O	P	Q	R	S	T	U	V	W	X	Y	Z	Area sq. ft.
1																											
2S	36		2 1/4	5/8	3/4	6	1 1/2	4	1 1/4	3 1/4	2 3/8	1 1/2	15	3 1/4	3	9	14 3/4	14 7/8	8 1/8	1 7/8	13	6 5/8	1	3	4 7/8		9.0
2M	36		2 1/4	5/8	3/4	6	1 1/2	4	1 1/4	3 1/4	2 3/8	1 1/2	15	3 1/4	3	9	14 3/4	14 7/8	8 1/8	1 7/8	13	6 5/8	1	3	4 7/8		9.0
3	48		1 7/8	3/4	1	8	2	6	1 1/4	4 3/4	3 1/4	1 1/2	20 1/4	5	3 5/8	12	19 1/2	20	11 5/8	3 3/4	19	9 1/2	1	3 1/2	6 3/4		16.0
4	48		1 7/8	3/4	1	8	2	6	1 1/4	4 3/4	3 1/4	1 1/2	20 1/4	5	3 5/8	12	19 1/2	20	11 5/8	3 3/4	19	9 1/2	1	3 1/2	6 3/4		16.0
5																											

STANDARD SIGN
R59-51

WISCONSIN DEPT OF TRANSPORTATION

APPROVED Matthew R Rauch
for State Traffic Engineer

DATE 2/28/24 PLATE NO. R59-51.11

PROJECT NO:	HWY:	COUNTY:		SHEET NO: 334	E

NOTES

1. Sign is Type II - Type H Reflective
2. Color:
   Background - White
   Message - Black
3. Message Series - D

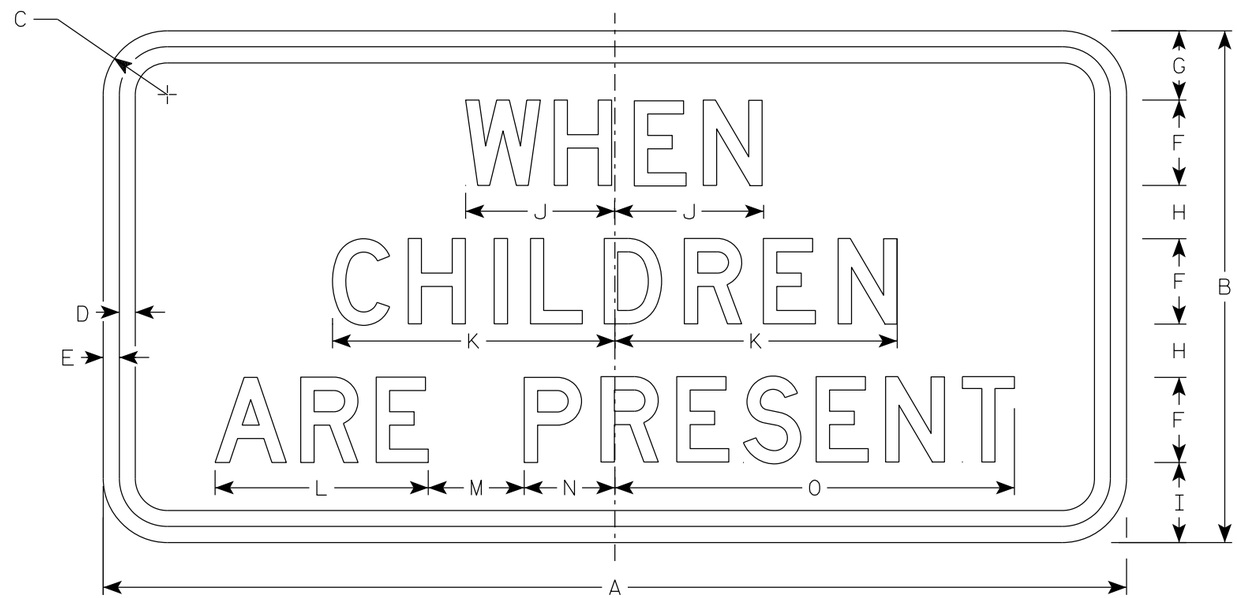

S4-2

SIZE	A	B	C	D	E	F	G	H	I	J	K	L	M	N	O	P	Q	R	S	T	U	V	W	X	Y	Z	Area sq. ft.
1																											
2S	24	12	1 1/2	3/8	3/8	2	1 5/8	1 1/4	1 7/8	3 1/2	6 5/8	5	2 1/4	2 1/8	9 3/8												2.0
2M	24	12	1 1/2	3/8	3/8	2	1 5/8	1 1/4	1 7/8	3 1/2	6 5/8	5	2 1/4	2 1/8	9 3/8												2.0
3	36	18	1 1/2	1/2	3/8	3	2 1/2	1 7/8	2 7/8	5 7/8	10 5/8	8	3	4	14 3/4												4.5
4																											
5																											

STANDARD SIGN

S4-2

WISCONSIN DEPT OF TRANSPORTATION

APPROVED Matthew R Rauch
For State Traffic Engineer

DATE 2/22/2023 PLATE NO. S4-2.5

PROJECT NO: | HWY: | COUNTY: | SHEET NO: 335 | E

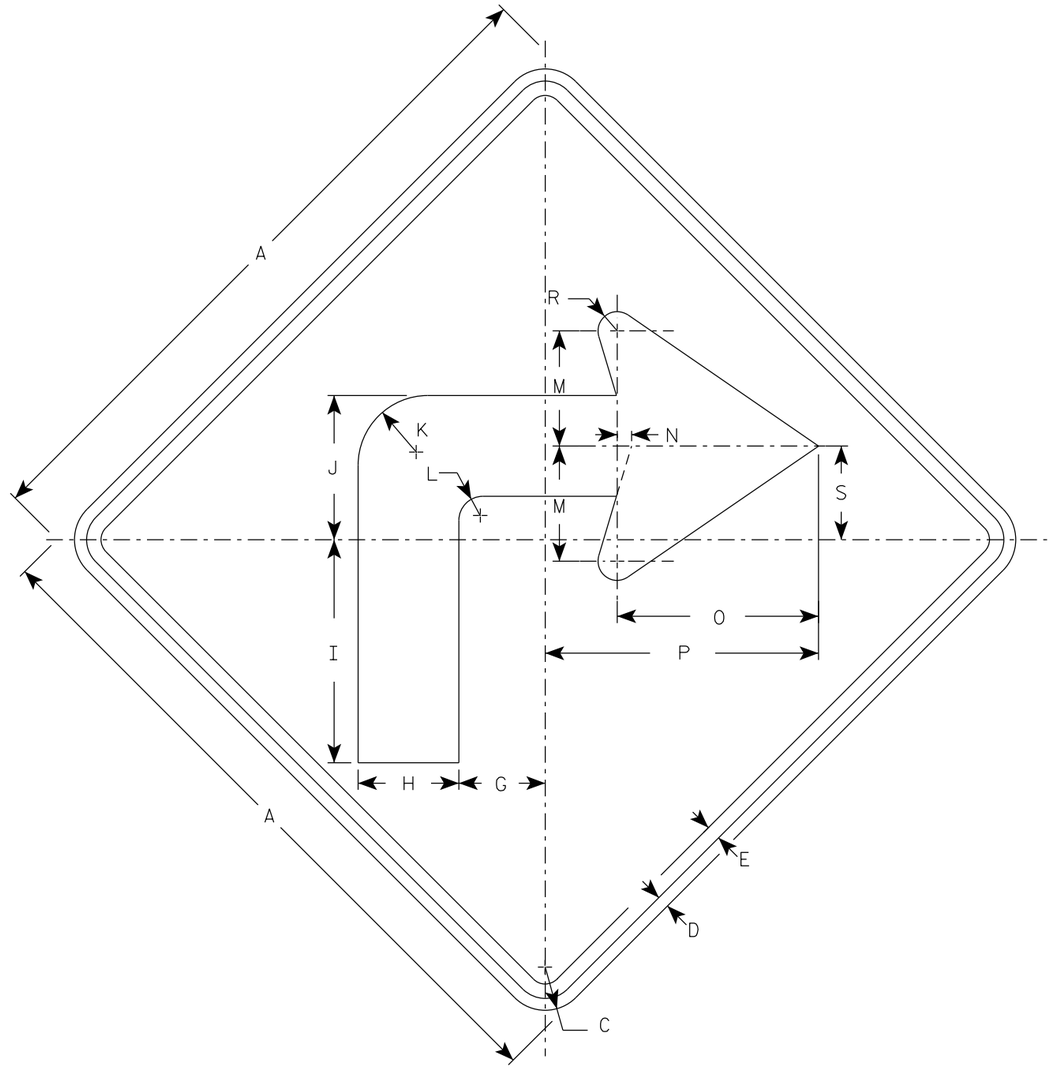

W1-1R

NOTES

1. Sign is Type II - Type F Reflective
2. Color:
   Background - Yellow
   Message - Black
3. W1-1L is the same as W1-1R except the arrow is reversed along the vertical centerline.

SIZE	A	B	C	D	E	F	G	H	I	J	K	L	M	N	O	P	Q	R	S	T	U	V	W	X	Y	Z	Area sq. ft.
1	24		1 1/2	3/8	1/2		3	3 1/2	7 3/4	5	2 1/2	7/8	4	1/2	7	9 1/2		5/8	3 1/4								4.0
2S	36		2 1/4	5/8	3/4		4 1/2	5 1/4	11 5/8	7 1/2	3 5/8	1 1/4	6	3/4	10 1/2	14 1/4		1	4 7/8								9.0
2M	36		2 1/4	5/8	3/4		4 1/2	5 1/4	11 5/8	7 1/2	3 5/8	1 1/4	6	3/4	10 1/2	14 1/4		1	4 7/8								9.0
3	36		2 1/4	5/8	3/4		4 1/2	5 1/4	11 5/8	7 1/2	3 5/8	1 1/4	6	3/4	10 1/2	14 1/4		1	4 7/8								9.0
4	48		3	3/4	1		6	7	15 1/2	10	4 7/8	1 5/8	8	1	14	19		1 1/4	6 1/2								16.0
5	48		3	3/4	1		6	7	15 1/2	10	4 7/8	1 5/8	8	1	14	19		1 1/4	6 1/2								16.0

STANDARD SIGN
W1-1

WISCONSIN DEPT OF TRANSPORTATION

APPROVED Matthew R Rauch
for State Traffic Engineer

DATE 3/22/2023 PLATE NO. W1-1.12

PROJECT NO: | HWY: | COUNTY: | SHEET NO: E

NOTES

1. Sign is Type II - Type F Reflective
2. Color:
   Background - Yellow
   Message - Black

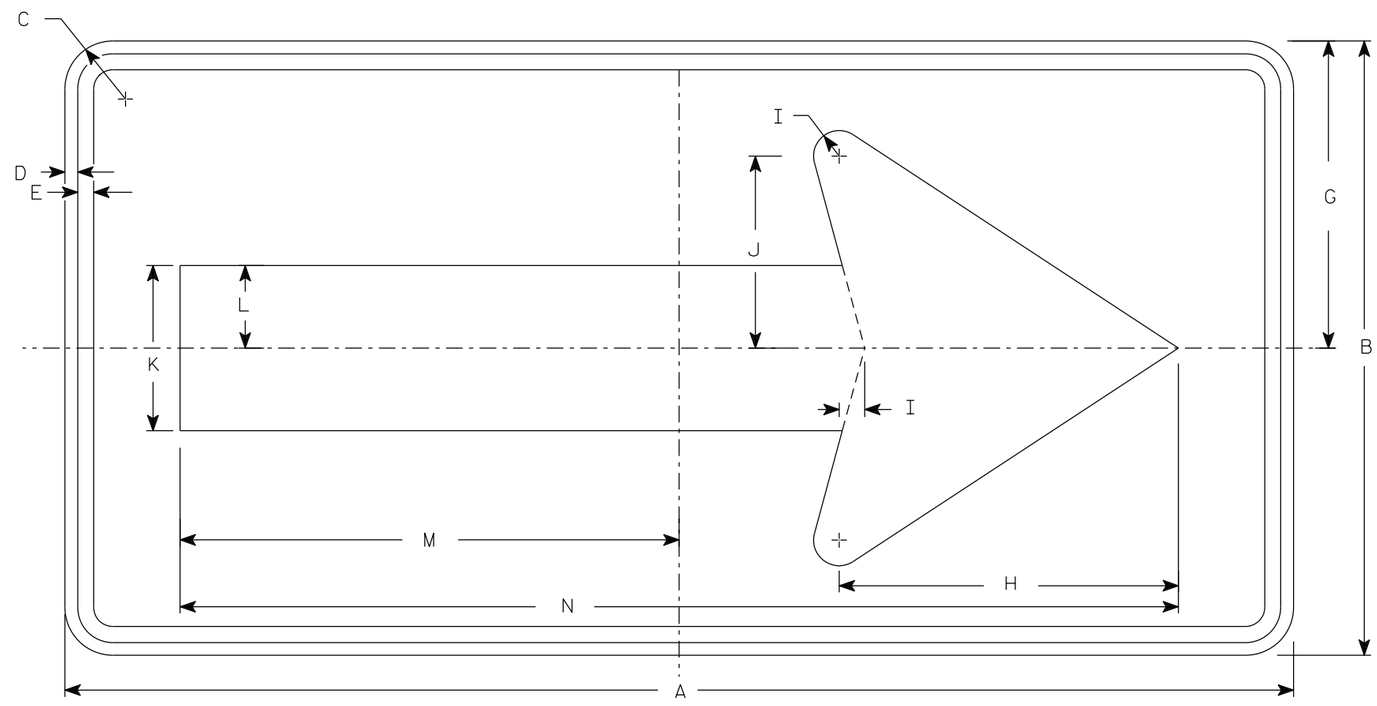

W1-6

SIZE	A	B	C	D	E	F	G	H	I	J	K	L	M	N	O	P	Q	R	S	T	U	V	W	X	Y	Z	Area sq. ft.
1	36	18	1 1/2	3/8	3/8		9	10	3/4	5 5/8	4 3/4	2 3/8	14 5/8	29 1/4													4.5
2S	48	24	1 7/8	1/2	5/8		12	13 1/4	1	7 1/2	6 1/2	3 1/4	19 1/2	39													8.0
2M	48	24	1 7/8	1/2	5/8		12	13 1/4	1	7 1/2	6 1/2	3 1/4	19 1/2	39													8.0
3	60	30	1 7/8	1/2	5/8		15	16 1/4	1 1/4	9 1/4	8	4	24 3/8	48 3/4													12.5
4	60	30	1 7/8	1/2	5/8		15	16 1/4	1 1/4	9 1/4	8	4	24 3/8	48 3/4													12.5
5	96	48	3	3/4	1		24	26 1/2	2	15	13	6 1/2	39	78													32.0

STANDARD SIGN

W1-6

WISCONSIN DEPT OF TRANSPORTATION

APPROVED Matthew R Rauch
for State Traffic Engineer

DATE 4/13/2023 PLATE NO. W1-6.9

PROJECT NO: | HWY: | COUNTY: | SHEET NO: E

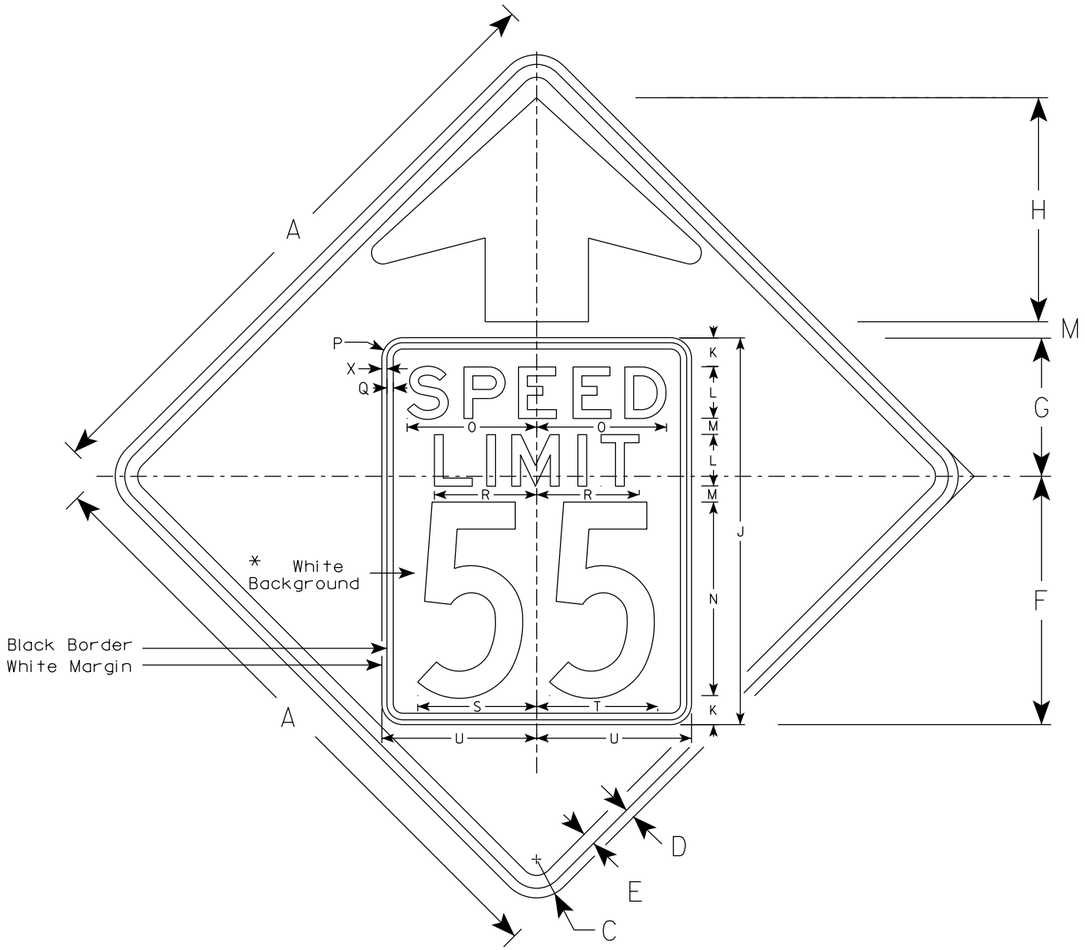

W3-5

NOTES

1. Sign is Type II - See Note 2 for Sheeting Type
2. Color: *
   Background - Yellow* (Type F Reflective)
   Message - Black
3. Message Series - C for numbers Series E for wording
4. Substitute appropriate numerals and optically adjust spacing to achieve proper balance

*Speed Limit Sign shall have a White Background with black message (Type SH Reflective)

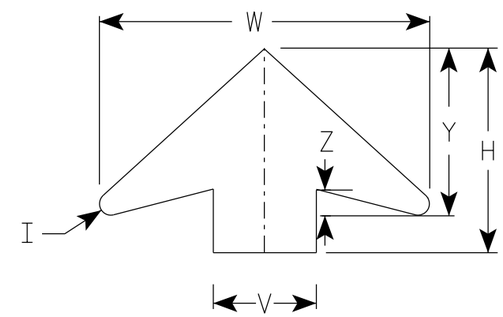

ARROW DETAIL

SIZE	A	B	C	D	E	F	G	H	I	J	K	L	M	N	O	P	Q	R	S	T	U	V	W	X	Y	Z	Area sq. ft.
1																											
2S	36		2 1/4	5/8	3/4	14 1/2	9 1/2	11 1/2	5/8	24	2	3	1	12	7 1/8	1 1/2	3/8	5 3/4	7 1/4	7 1/8	9	6	19 1/4	3/8	9 3/4	1 5/8	9.0
2M	36		2 1/4	5/8	3/4	14 1/2	9 1/2	11 1/2	5/8	24	2	3	1	12	7 1/8	1 1/2	3/8	5 3/4	7 1/4	7 1/8	9	6	19 1/4	3/8	9 3/4	1 5/8	9.0
3	36		2 1/4	5/8	3/4	14 1/2	9 1/2	11 1/2	5/8	24	2	3	1	12	7 1/8	1 1/2	3/8	5 3/4	7 1/4	7 1/8	9	6	19 1/4	3/8	9 3/4	1 5/8	9.0
4	48		3	3/4	1	19 1/4	10 3/4	17 3/8	7/8	30	2 1/4	4	1 1/4	15	10	1 5/8	1/2	8	9 1/4	9 3/8	12	8	25 5/8	3/8	13	2	16.0
5	48		3	3/4	1	19 1/4	10 3/4	17 3/8	7/8	30	2 1/4	4	1 1/4	15	10	1 5/8	1/2	8	9 1/4	9 3/8	12	8	25 5/8	3/8	13	2	16.0

STANDARD SIGN
W3-5

WISCONSIN DEPT OF TRANSPORTATION

APPROVED Matthew R Rauch
for State Traffic Engineer

DATE 8/30/2023 PLATE NO. W3-5.7

PROJECT NO:

SHEET NO: 338 E

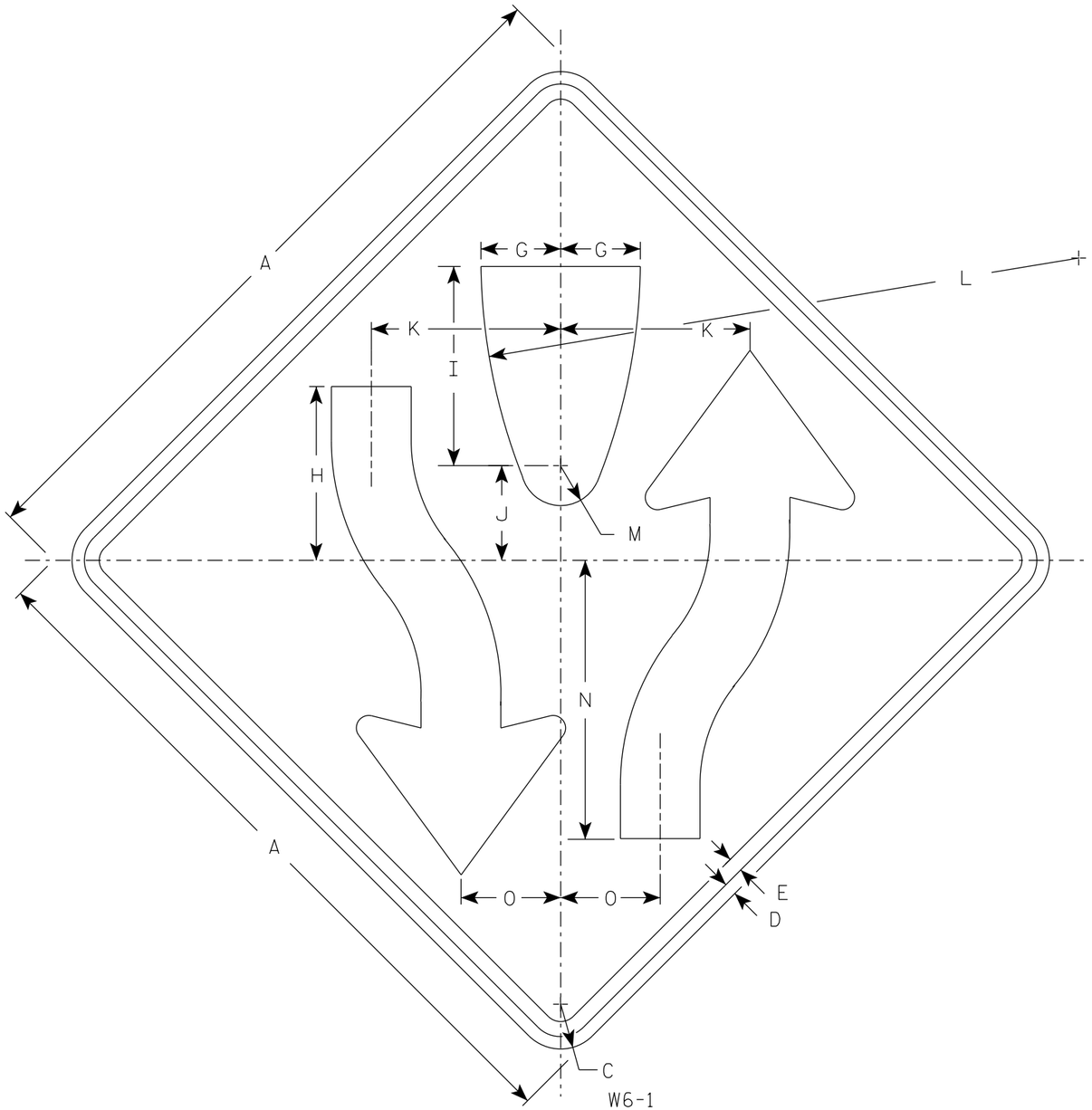

W6-1

NOTES

1. Sign is Type II - Type F Reflective
2. Color:
   Background - Yellow
   Message - Black
3. W6-2 same as W6-1 but is rotated 180° when mounted.

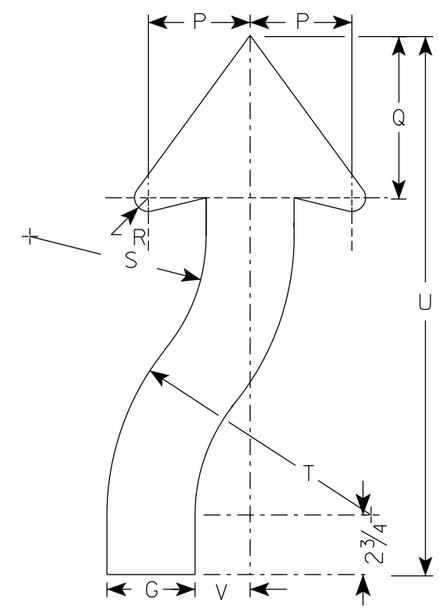

ARROW DETAIL

SIZE	A	B	C	D	E	F	G	H	I	J	K	L	M	N	O	P	Q	R	S	T	U	V	W	X	Y	Z	Area sq. ft.
1	30		1 7/8	1/2	5/8		3 1/4	8	8 1/4	4 1/8	7 7/8	25	1 3/4	11 5/8	4 1/8	3 7/8	6 3/4	5/8	6 5/8	9 7/8	21 5/8	2					6.25
2S	36		2 1/4	5/8	3/4		4	8 3/4	10	4 3/4	9 1/2	30	2	14	5	4 5/8	7 3/8	7/8	8	12	24 1/2	2 1/2					9.0
2M	36		2 1/4	5/8	3/4		4	8 3/4	10	4 3/4	9 1/2	30	2	14	5	4 5/8	7 3/8	7/8	8	12	24 1/2	2 1/2					9.0
3	36		2 1/4	5/8	3/4		4	8 3/4	10	4 3/4	9 1/2	30	2	14	5	4 5/8	7 3/8	7/8	8	12	24 1/2	2 1/2					9.0
4	48		3	3/4	1		5 3/8	11 5/8	13 3/8	6 3/8	12 5/8	40	2 5/8	18 5/8	6 5/8	6 1/4	9 7/8	1 1/4	10 5/8	16	32 5/8	3 3/8					16.0
5	48		3	3/4	1		5 3/8	11 5/8	13 3/8	6 3/8	12 5/8	40	2 5/8	18 5/8	6 5/8	6 1/4	9 7/8	1 1/4	10 5/8	16	32 5/8	3 3/8					16.0

STANDARD SIGN
W6-1 & W6-2

WISCONSIN DEPT OF TRANSPORTATION

APPROVED Matthew R Rauch
for State Traffic Engineer

DATE 9/6/2023 PLATE NO. W6-1.15

PROJECT NO: | HWY: | COUNTY: | SHEET NO: 339 | E

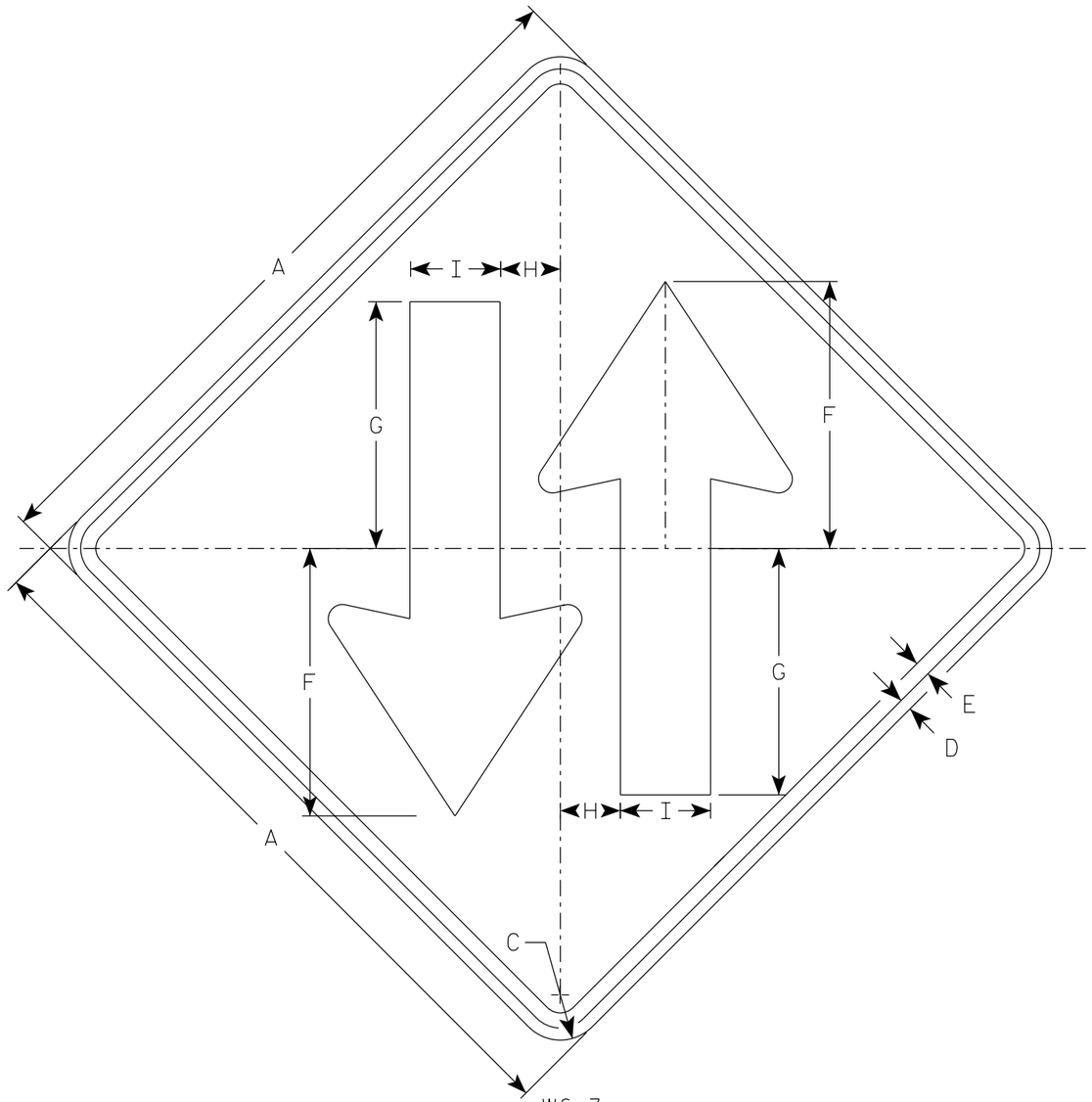

W6-3

NOTES

1. Sign is Type II - Type F Reflective
2. Color:
   Background - Yellow
   Message - Black

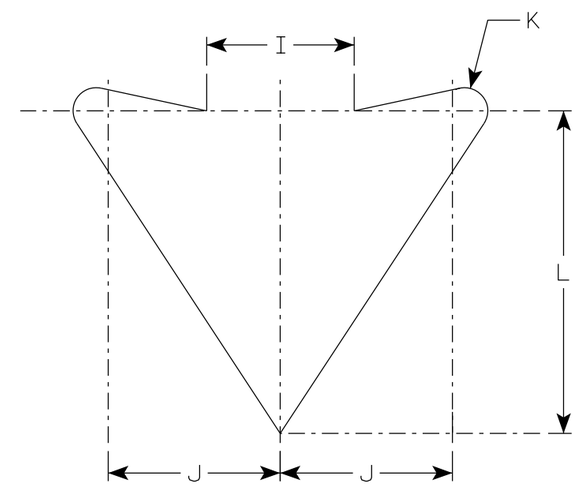

ARROW DETAIL

SIZE	A	B	C	D	E	F	G	H	I	J	K	L	M	N	O	P	Q	R	S	T	U	V	W	X	Y	Z	Area sq. ft.
1	30		1 7/8	1/2	5/8	11 1/8	10 1/4	2 1/2	3 3/4	4 3/8	5/8	8 1/4															6.25
2S	36		2 1/4	5/8	3/4	13 3/8	12 1/4	3	4 1/2	5 1/4	3/4	9 7/8															9.0
2M	36		2 1/4	5/8	3/4	13 3/8	12 1/4	3	4 1/2	5 1/4	3/4	9 7/8															9.0
3	36		2 1/4	5/8	3/4	13 3/8	12 1/4	3	4 1/2	5 1/4	3/4	9 7/8															9.0
4	48		3	3/4	1	17 3/4	16 3/8	4	6	7	1	13 1/8															16.0
5	48		3	3/4	1	17 3/4	16 3/8	4	6	7	1	13 1/8															16.0

STANDARD SIGN

W6-3

WISCONSIN DEPT OF TRANSPORTATION

APPROVED Matthew R Rauch
for State Traffic Engineer

DATE 9/6/2023 PLATE NO. W6-3.12

PROJECT NO: | HWY: | COUNTY: | SHEET NO: E

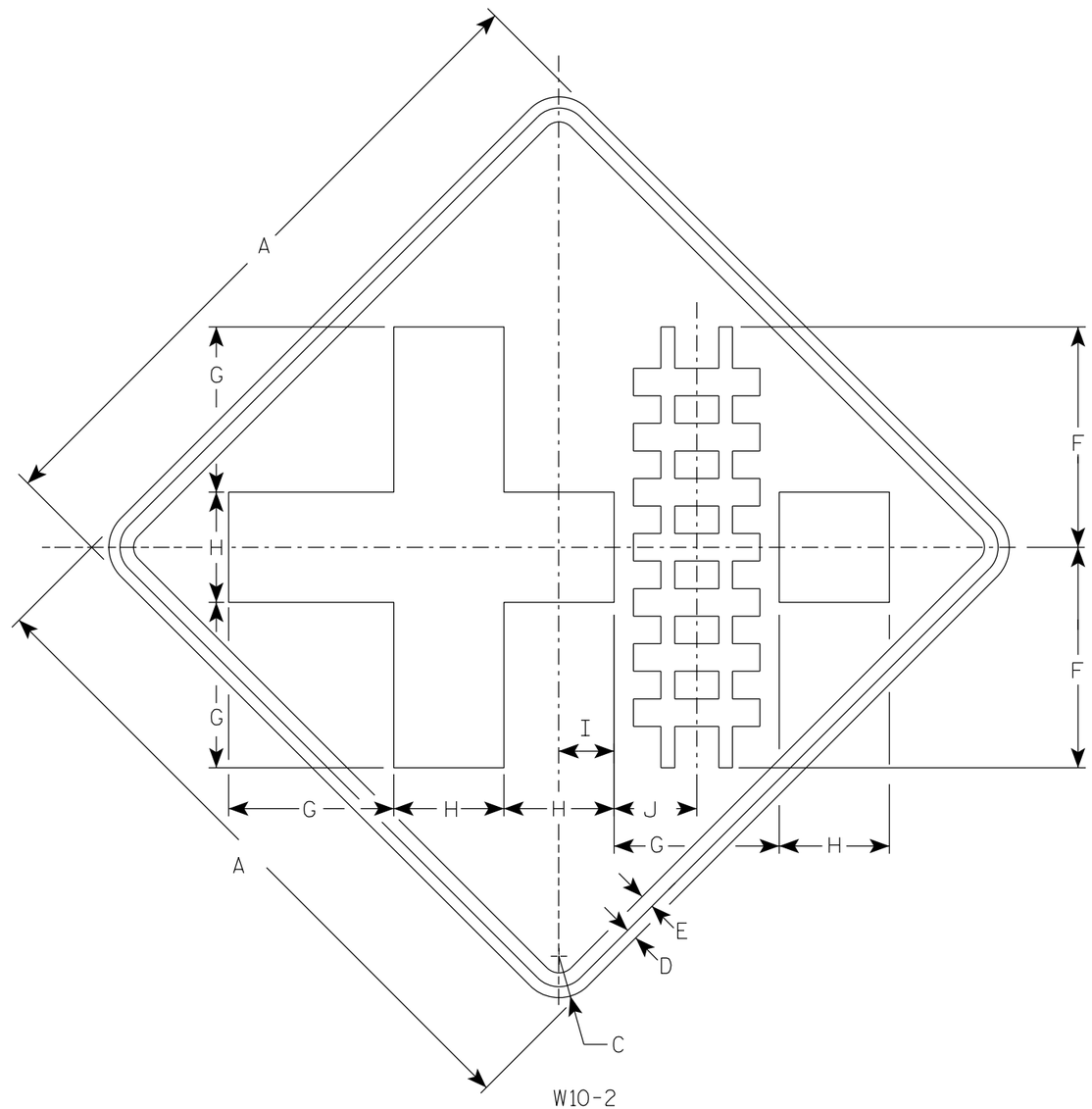

W10-2

NOTES

1. Sign is Type II - Type F Reflective
2. Color:
   Background - Yellow
   Message - Black

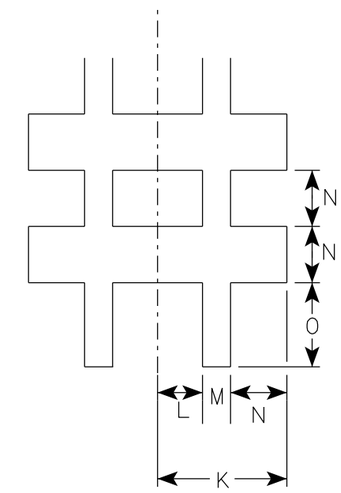

SIZE	A	B	C	D	E	F	G	H	I	J	K	L	M	N	O	P	Q	R	S	T	U	V	W	X	Y	Z	Area sq. ft.
1	30		1 7/8	1/2	5/8	10	7 1/2	5	2 1/2	3 3/4	2 7/8	1	5/8	1 1/4	1 7/8												6.25
2S	36		2 1/4	5/8	3/4	12	9	6	3	4 1/2	3 3/8	1 1/8	3/4	1 1/2	2 1/4												9.0
2M	36		2 1/4	5/8	3/4	12	9	6	3	4 1/2	3 3/8	1 1/8	3/4	1 1/2	2 1/4												9.0
3	36		2 1/4	5/8	3/4	12	9	6	3	4 1/2	3 3/8	1 1/8	3/4	1 1/2	2 1/4												9.0
4	48		3	3/4	1	16	12	8	4	6	4 1/2	1 1/2	1	2	3												16.0
5																											

STANDARD SIGN
W10-2

WISCONSIN DEPT OF TRANSPORTATION

APPROVED Matthew R Rauch
for State Traffic Engineer

DATE 11/13/2023 PLATE NO. W10-2.9

PROJECT NO: | HWY: | COUNTY: | SHEET NO: 341 | E

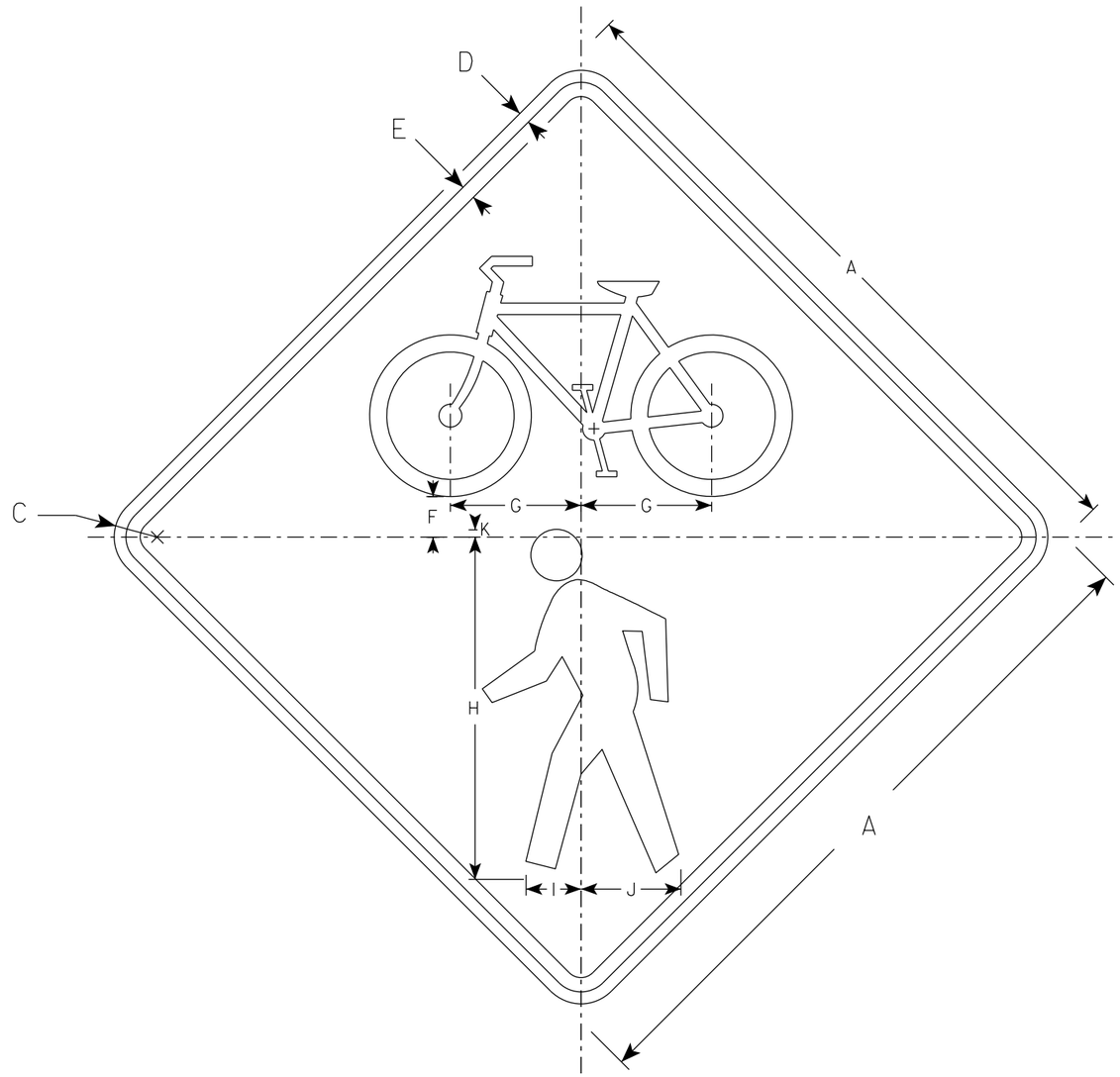

W11-15

NOTES

1. Sign is Type II - Type F Reflective
2. Color:
   Background - Yellow
   Message - Black

SIZE	A	B	C	D	E	F	G	H	I	J	K	L	M	N	O	P	Q	R	S	T	U	V	W	X	Y	Z	Area sq. ft.
1	24		1 1/2	3/8	1/2	1 3/8	4 5/8	12	1 7/8	3 1/2	1/4																4.0
2S	30		1 7/8	1/2	5/8	1 3/4	5 3/4	15	2 3/8	4 3/8	3/8																6.25
2M	36		2 1/4	5/8	3/4	2 1/8	6 7/8	18	2 7/8	5 1/4	3/8																9.0
3	36		2 1/4	5/8	3/4	2 1/8	6 7/8	18	2 7/8	5 1/4	3/8																9.0
4	48		3	3/4	1	2 7/8	9 1/8	24	3 7/8	7	1/2																16.0
5																											

STANDARD SIGN
W11-15

WISCONSIN DEPT OF TRANSPORTATION

APPROVED Matthew R Rauch
for State Traffic Engineer

DATE 11/21/2023 PLATE NO. W11-15.5

PROJECT NO:	HWY:	COUNTY:		SHEET NO: 342	E

7

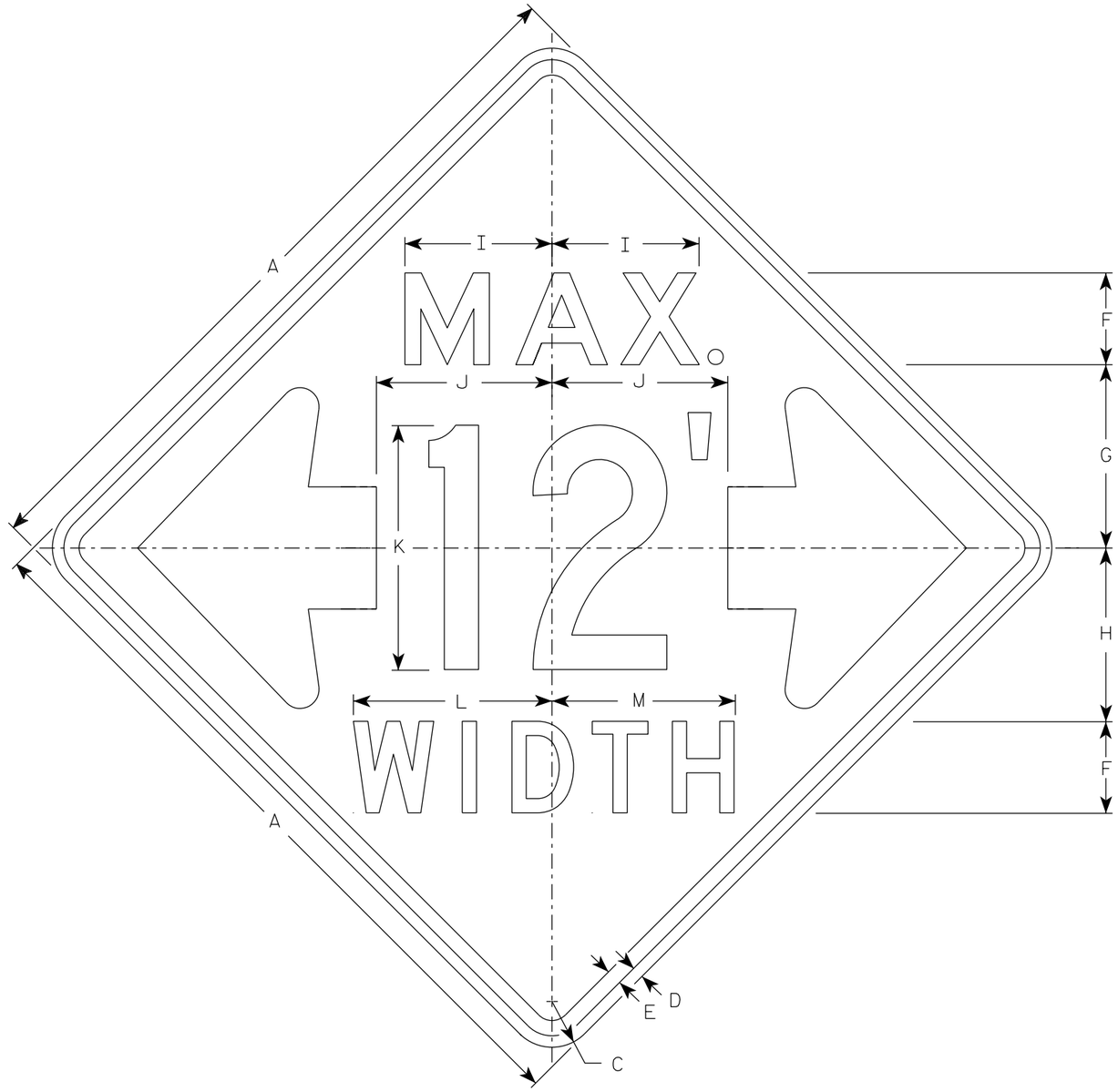

W12-52

NOTES

1. Sign is Type II - Type F Reflective
2. Color:
   Background - Orange
   Message - Black
3. Message Series - See note 5
4. The top line is series E, the numerals are series C, and the bottom line is series D.
5. Substitute appropriate numerals and adjust spacing as required.

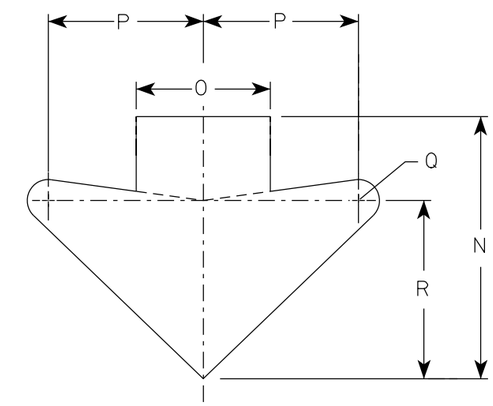

ARROW DETAIL

SIZE	A	B	C	D	E	F	G	H	I	J	K	L	M	N	O	P	Q	R	S	T	U	V	W	X	Y	Z	Area sq. ft.
1																											
2S	48		3	¾	1	6	12	11 ⅜	9 ⅝	11 ½	16	13	12	15 ⅝	8	9 ¼	1 ¼	10 ⅝									16.0
2M	48		3	¾	1	6	12	11 ⅜	9 ⅝	11 ½	16	13	12	15 ⅝	8	9 ¼	1 ¼	10 ⅝									16.0
3																											
4																											
5																											

STANDARD SIGN
W12-52

WISCONSIN DEPT OF TRANSPORTATION

APPROVED Matthew R Rauch
for State Traffic Engineer

DATE 3/10/2024 PLATE NO. W12-52.8

PROJECT NO: | HWY: | COUNTY: | SHEET NO: 343 | E

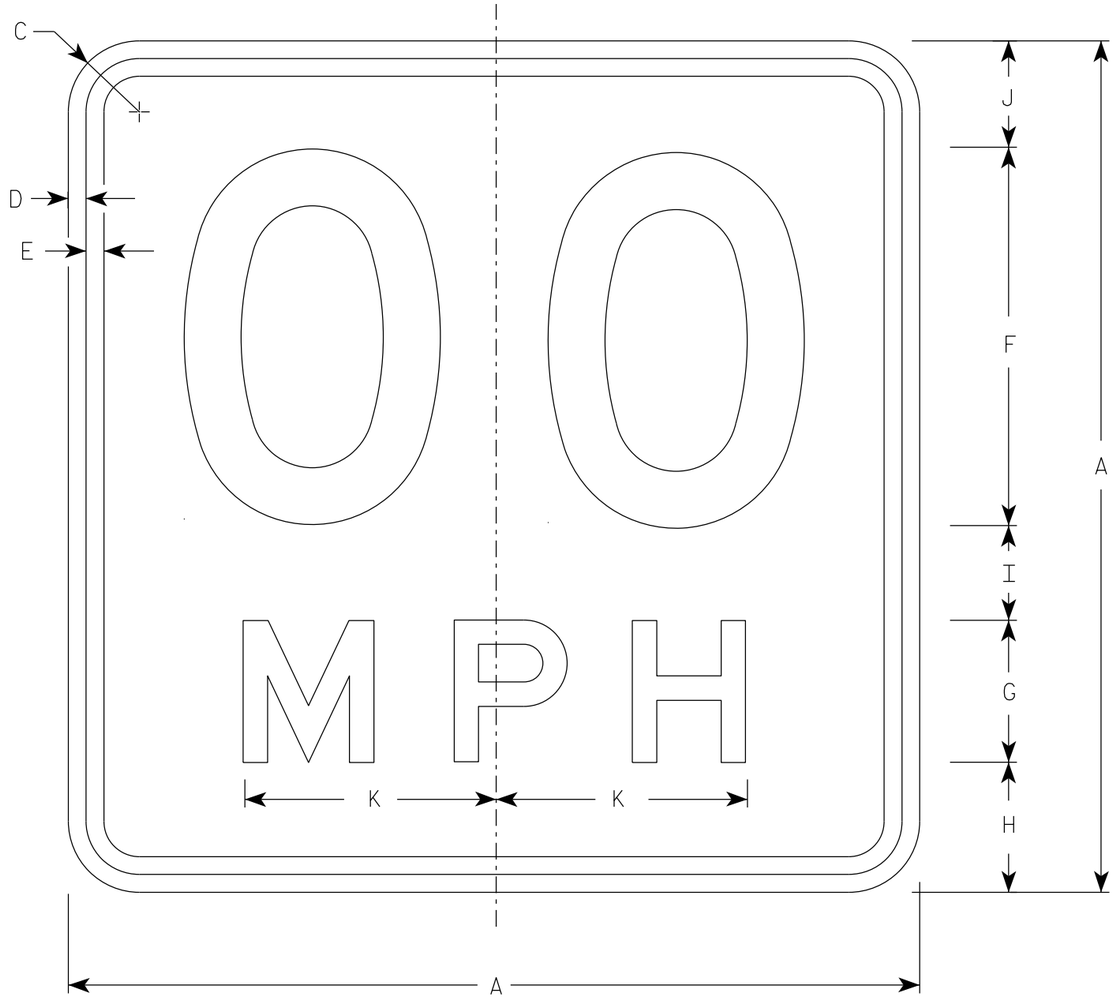

W13-1

* For 30" x 30" Warning Signs, use 18" x 18" W13-1 signs.
For 36" x 36" Warning Signs, use 24" x 24" W13-1 signs.

NOTES

1. Sign is Type II - Type F Reflective
2. Color:
   Background - Yellow
   Message - Black
3. Message Series - See Note 5
4. Substitute appropriate numerals and optically space about centerline to achieve proper balance.
5. Line 1 is Series D
   Line 2 is Series E

	SIZE	A	B	C	D	E	F	G	H	I	J	K	L	M	N	O	P	Q	R	S	T	U	V	W	X	Y	Z	Area sq. ft.
	1	18		1 1/2	3/8	3/8	8	3	2 3/4	2	2 1/4	5 3/8																2.25
*	2S	18		1 1/2	3/8	3/8	8	3	2 3/4	2	2 1/4	5 3/8																2.25
*	2M	18		1 1/2	3/8	3/8	8	3	2 3/4	2	2 1/4	5 3/8																2.25
	3	24		1 1/2	3/8	1/2	10	4	4	2 3/4	3 1/4	6 5/8																4.00
	4	36		2 1/4	5/8	3/4	16	6	5 1/2	4	4 1/2	10 5/8																9.00
	5	36		2 1/4	5/8	3/4	16	6	5 1/2	4	4 1/2	10 5/8																9.00

STANDARD SIGN
W13-1

WISCONSIN DEPT OF TRANSPORTATION

APPROVED Matthew R Rauch
For State Traffic Engineer

DATE 1/8/2024 PLATE NO. W13-1.17

PROJECT NO: | HWY: | COUNTY: | SHEET NO: E

NOTES

1. Sign is Type II- Type F Reflective
2. Color:
   Background - Yellow
   Message - Black
3. Message Series - Lines 1 and 2 are Series D.
   Line 3 is series C.
4. Corners and borders shall be rounded on all base materials for this sign.

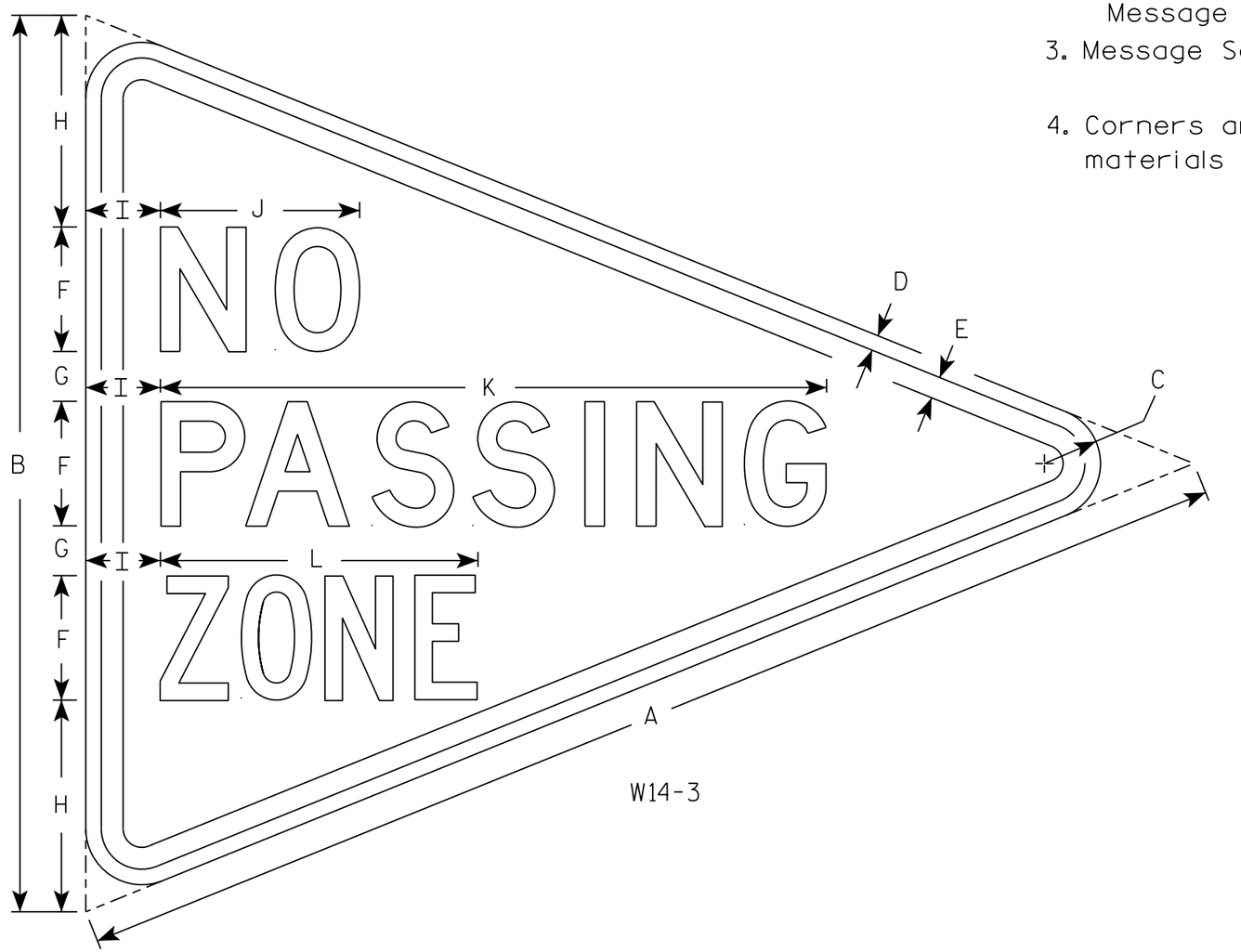

W14-3

SIZE	A	B	C	D	E	F	G	H	I	J	K	L	M	N	O	P	Q	R	S	T	U	V	W	X	Y	Z	Area sq. ft.
1																											
2S	48	36	2 1/4	5/8	7/8	5	2	8 1/2	3	8	26 3/4	12 3/4															5.56
2M																											
3																											
4																											
5																											

STANDARD SIGN
W14-3

WISCONSIN DEPT OF TRANSPORTATION

APPROVED Matthew R Rauch
for State Traffic Engineer
DATE 3/21/17 PLATE NO. W14-3.10

PROJECT NO: | HWY: | COUNTY: | SHEET NO: 345 | E

NOTES

1. Sign is Type II - Type F Reflective
2. Color:
   Background - Orange
   Message - Black
3. Message Series - C
4. Corners may be square or rounded when base material is plywood but borders shall be rounded as shown. When base material is metal, the corners and borders shall be rounded.

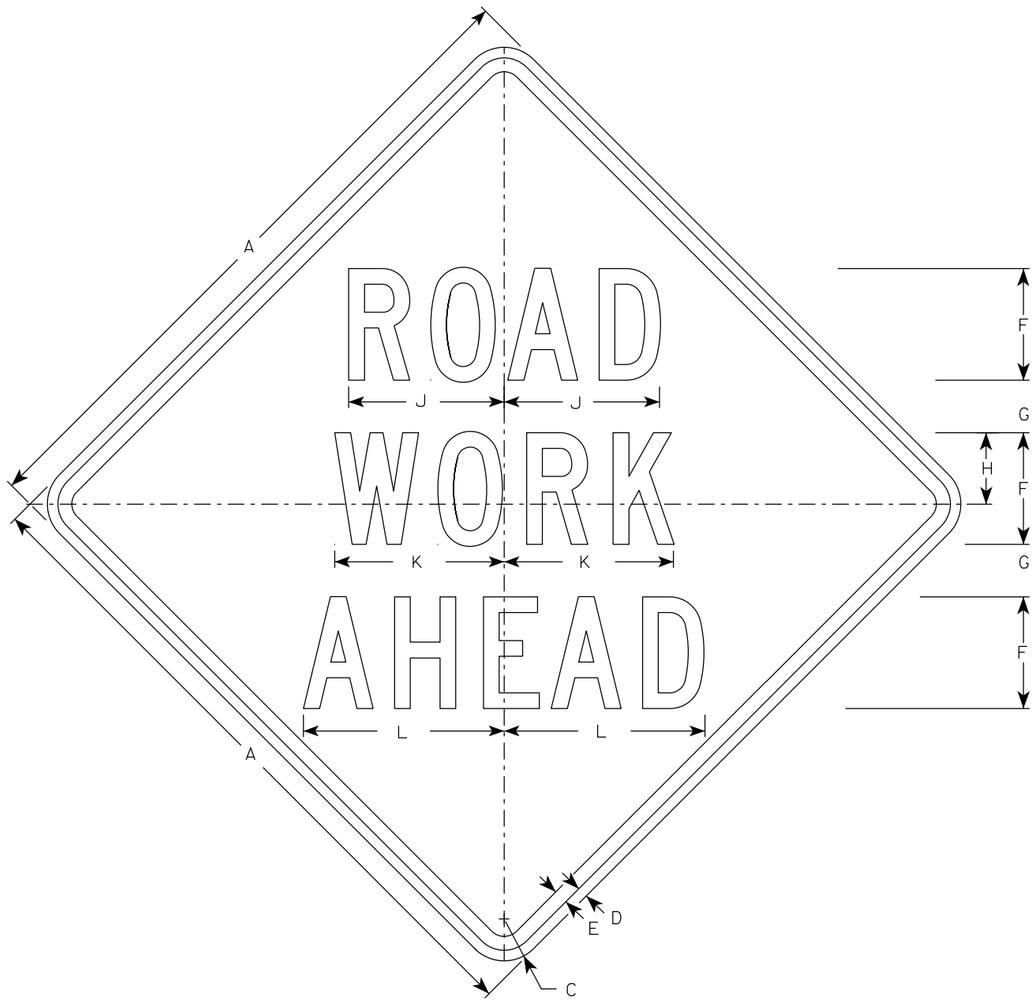

W20-1A

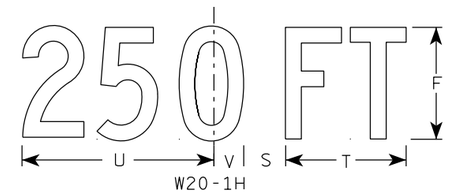

W20-1H

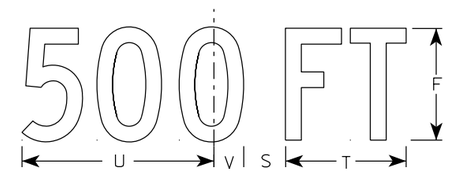

W20-1D

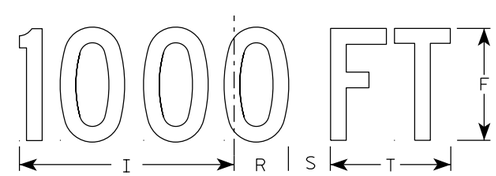

W20-1C

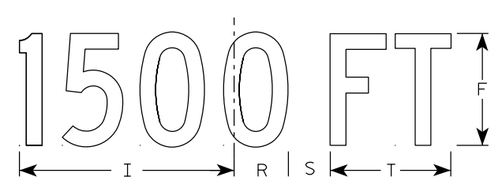

W20-1B

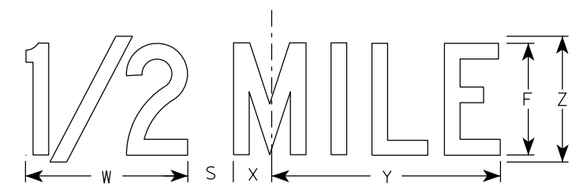

W20-1G

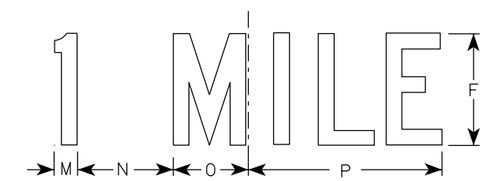

W20-1F

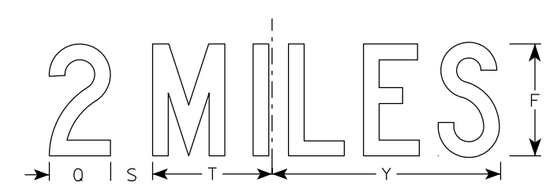

W20-1E

SIZE	A	B	C	D	E	F	G	H	I	J	K	L	M	N	O	P	Q	R	S	T	U	V	W	X	Y	Z	Area sq. ft.
1	36		2 1/4	5/8	3/4	5	2 5/8	3 1/4	10 1/8	7	7 5/8	8 7/8	1 1/8	4 1/2	3 1/2	9	3 1/4	2 1/2	2 1/4	5 5/8	9	1 3/8	8	1 3/4	10 3/4	6	9.0
2S	48		3	3/4	1	8	3 3/4	5 1/8	15 3/8	11 1/8	12 1/8	14 3/8	1 5/8	6 7/8	5 3/8	13 7/8	4 3/8	3 7/8	3	8 5/8	13 3/4	2 1/8	11 7/8	2 3/4	16 3/8	9	16.0
2M	48		3	3/4	1	8	3 3/4	5 1/8	15 3/8	11 1/8	12 1/8	14 3/8	1 5/8	6 7/8	5 3/8	13 7/8	4 3/8	3 7/8	3	8 5/8	13 3/4	2 1/8	11 7/8	2 3/4	16 3/8	9	16.0
3	48		3	3/4	1	8	3 3/4	5 1/8	15 3/8	11 1/8	12 1/8	14 3/8	1 5/8	6 7/8	5 3/8	13 7/8	4 3/8	3 7/8	3	8 5/8	13 3/4	2 1/8	11 7/8	2 3/4	16 3/8	9	16.0
4	48		3	3/4	1	8	3 3/4	5 1/8	15 3/8	11 1/8	12 1/8	14 3/8	1 5/8	6 7/8	5 3/8	13 7/8	4 3/8	3 7/8	3	8 5/8	13 3/4	2 1/8	11 7/8	2 3/4	16 3/8	9	16.0
5	48		3	3/4	1	8	3 3/4	5 1/8	15 3/8	11 1/8	12 1/8	14 3/8	1 5/8	6 7/8	5 3/8	13 7/8	4 3/8	3 7/8	3	8 5/8	13 3/4	2 1/8	11 7/8	2 3/4	16 3/8	9	16.0

STANDARD SIGN
W20-1A, B, C, D, E, F, G & H

WISCONSIN DEPT OF TRANSPORTATION

APPROVED Matthew R Rauch
for State Traffic Engineer

DATE 1/10/2024 PLATE NO. W20-1.12

PROJECT NO:

SHEET NO: 346 E

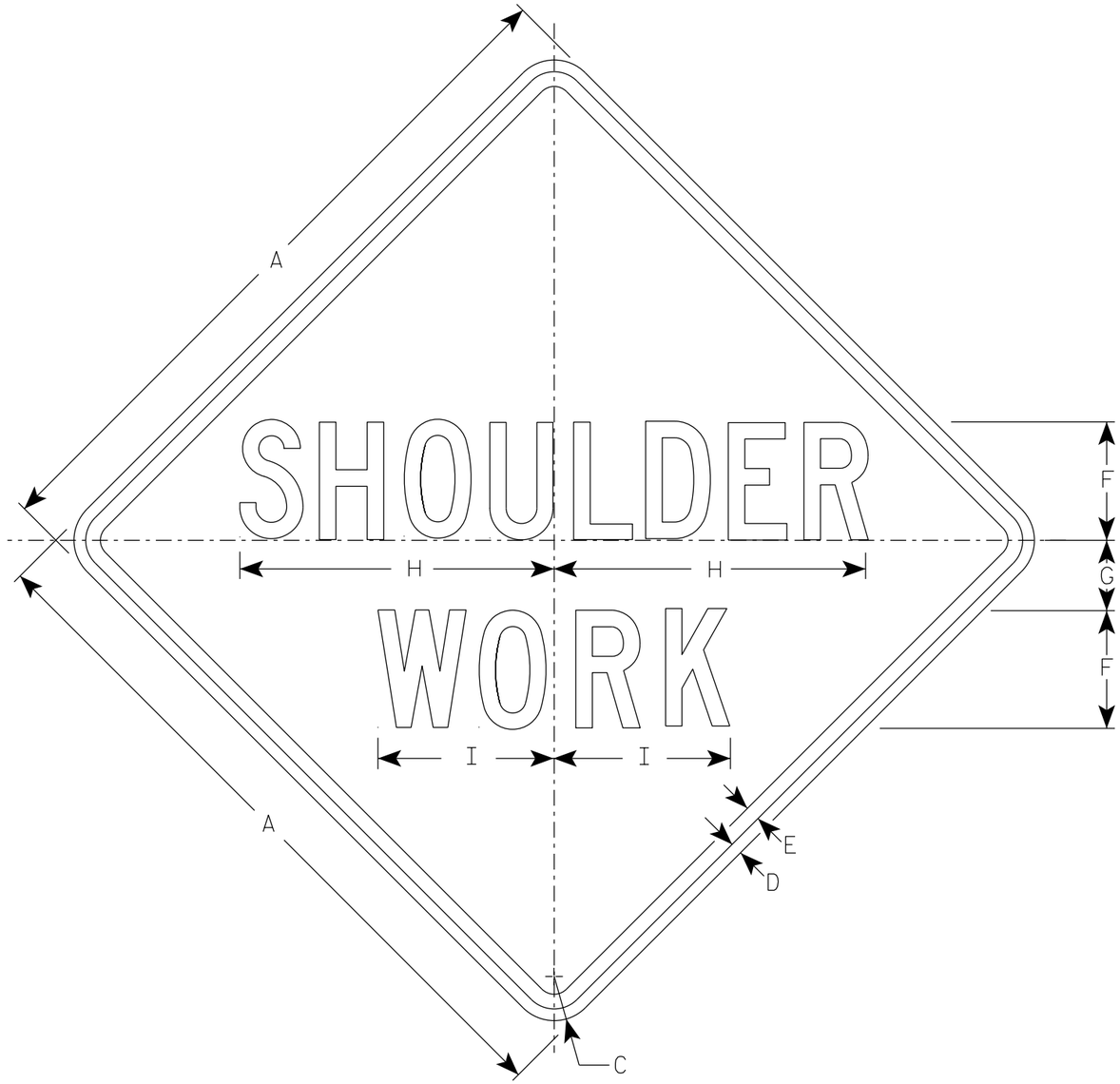

W21-5

NOTES

1. Sign is Type II - Type F Reflective
2. Color:
   Background - Orange
   Message - Black
3. Message Series - C

SIZE	A	B	C	D	E	F	G	H	I	J	K	L	M	N	O	P	Q	R	S	T	U	V	W	X	Y	Z	Area sq. ft.
1	36		2 1/4	5/8	3/4	6	3 1/2	16	9																		9.0
2S	48		3	3/4	1	8	5	21 3/8	11 1/4																		16.0
2M	48		3	3/4	1	8	5	21 3/8	11 1/4																		16.0
3	48		3	3/4	1	8	5	21 3/8	11 1/4																		16.0
4	48		3	3/4	1	8	5	21 3/8	11 1/4																		16.0
5	48		3	3/4	1	8	5	21 3/8	11 1/4																		16.0

STANDARD SIGN
W21-5

WISCONSIN DEPT OF TRANSPORTATION

APPROVED Matthew R Rauch
for State Traffic Engineer

DATE 1/11/2024 PLATE NO. W21-5.7

PROJECT NO: | HWY: | COUNTY: | SHEET NO: 347 | E

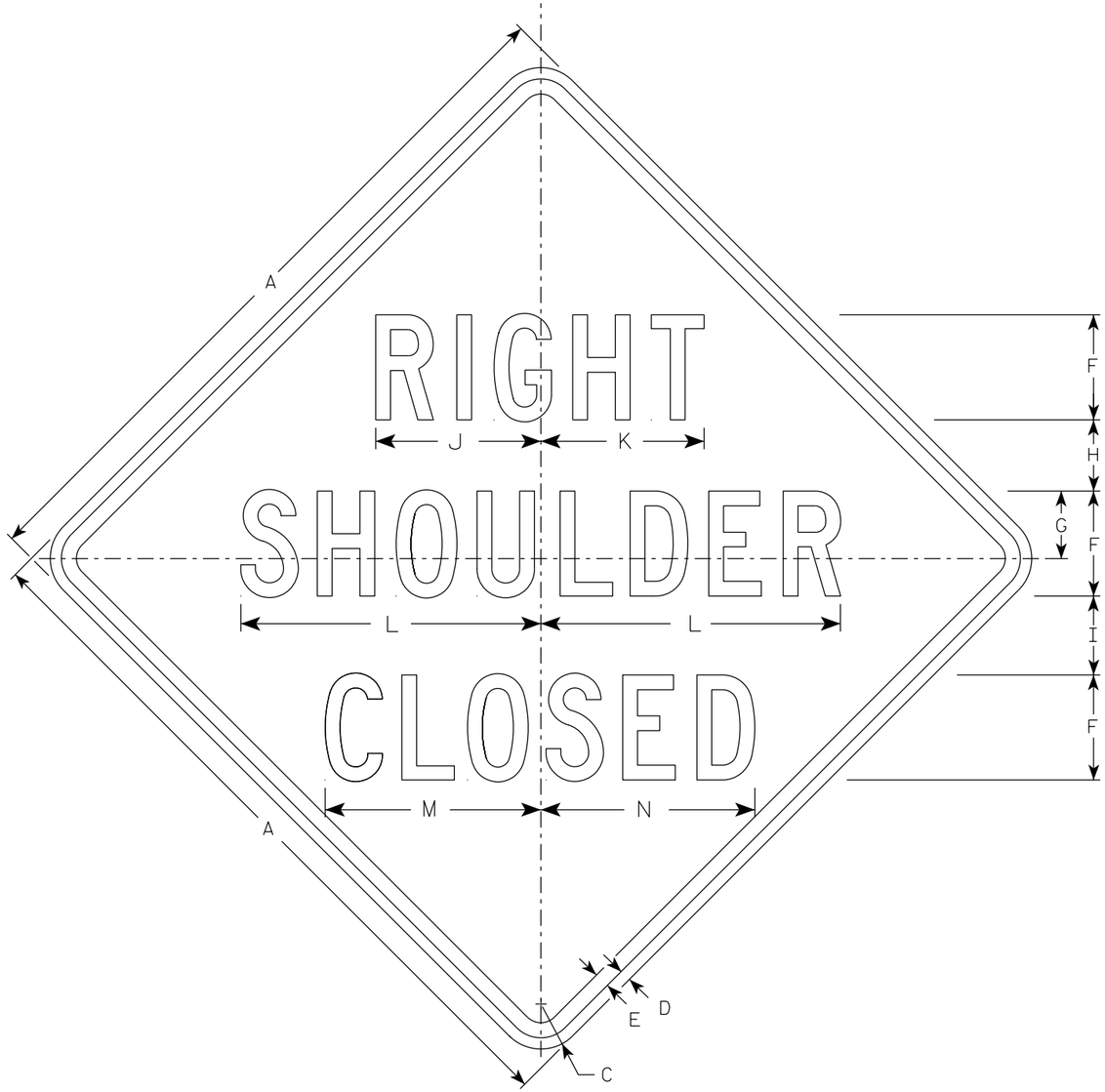

W21-5A

NOTES

1. Sign is Type II - Type F Reflective
2. Color:
   Background - Orange
   Message - Black
3. Message Series - D

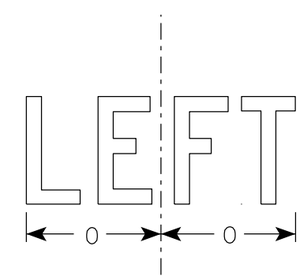

W21-5AL

SIZE	A	B	C	D	E	F	G	H	I	J	K	L	M	N	O	P	Q	R	S	T	U	V	W	X	Y	Z	Area sq. ft.
1	36		2 1/4	5/8	3/4	5	3 3/8	3 1/2	4	7 7/8	7 3/4	14 1/4	10 1/4	10 1/8	6 1/4												9.0
2S	48		3	3/4	1	7	4 1/2	4 3/4	5 1/4	11	10 7/8	20	14 3/8	14 1/4	8 3/4												16.0
2M	48		3	3/4	1	7	4 1/2	4 3/4	5 1/4	11	10 7/8	20	14 3/8	14 1/4	8 3/4												16.0
3	48		3	3/4	1	7	4 1/2	4 3/4	5 1/4	11	10 7/8	20	14 3/8	14 1/4	8 3/4												16.0
4	48		3	3/4	1	7	4 1/2	4 3/4	5 1/4	11	10 7/8	20	14 3/8	14 1/4	8 3/4												16.0
5	48		3	3/4	1	7	4 1/2	4 3/4	5 1/4	11	10 7/8	20	14 3/8	14 1/4	8 3/4												16.0

STANDARD SIGN
W21-5A

WISCONSIN DEPT OF TRANSPORTATION

APPROVED Matthew R Rauch
for State Traffic Engineer

DATE 1/11/2024 PLATE NO. W21-5A.4

PROJECT NO:	HWY:	COUNTY:		SHEET NO: 348	E

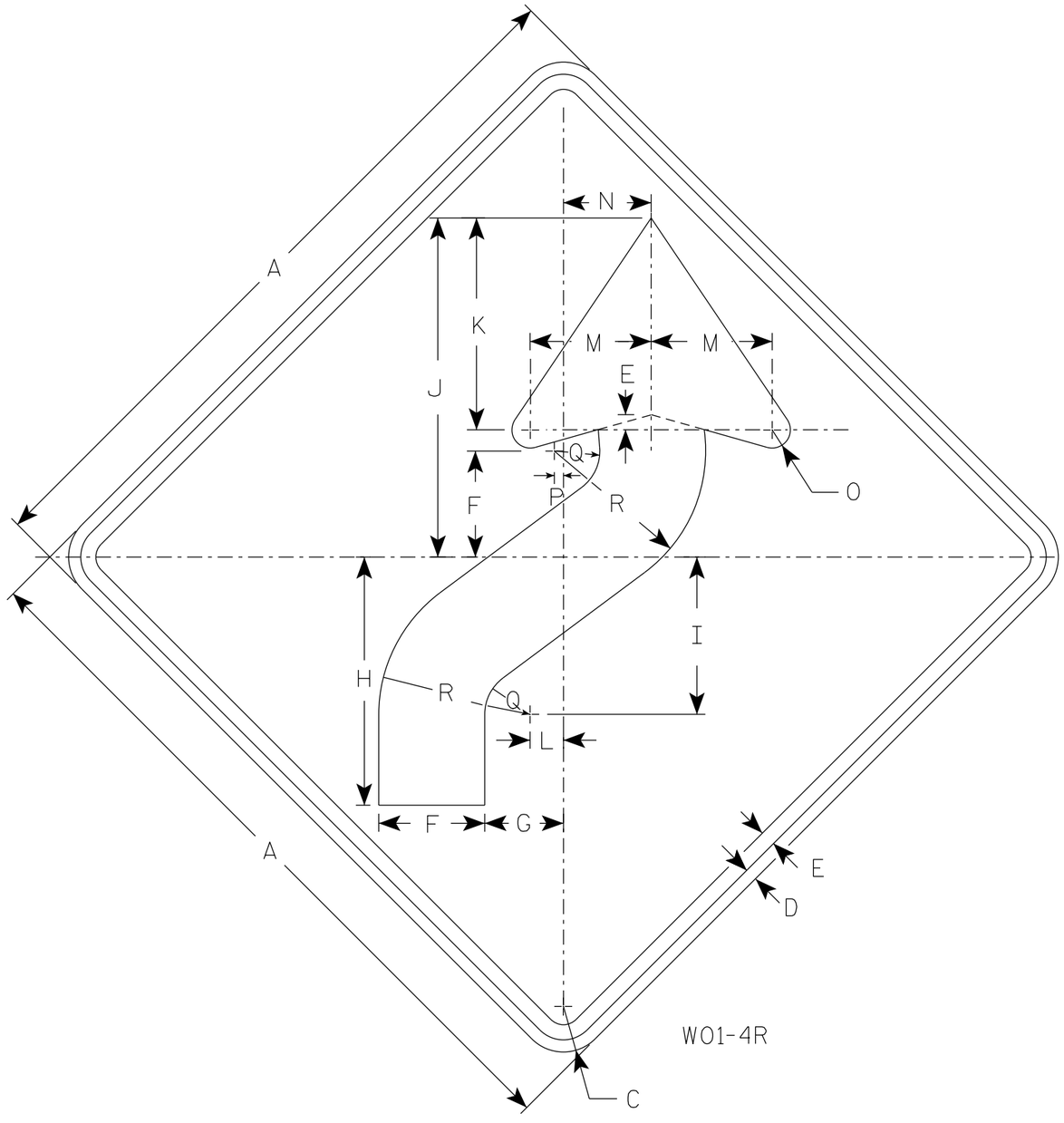

W01-4R

NOTES

1. Sign is Type II - Type F Reflective
2. Color:
   Background - Orange
   Message - Black
3. Corners may be square or rounded when base material is plywood but borders shall be rounded as shown. When base material is metal, the corners and borders shall be rounded.
4. W01-4L is the same as W01-4R except the arrow is reversed along the vertical centerline.

SIZE	A	B	C	D	E	F	G	H	I	J	K	L	M	N	O	P	Q	R	S	T	U	V	W	X	Y	Z	Area sq. ft.
1	36		2 1/4	5/8	3/4	5 1/4	4	12 3/8	7 7/8	16 7/8	10 1/2	1 5/8	6	4 1/2	1	1/2	2 1/4	7 1/2									9.0
2S	48		3	3/4	1	7	5 1/4	16 1/2	10 1/2	22 1/2	14	2 1/4	8	6	1 1/4	5/8	3	10									16.0
2M	48		3	3/4	1	7	5 1/4	16 1/2	10 1/2	22 1/2	14	2 1/4	8	6	1 1/4	5/8	3	10									16.0
3	48		3	3/4	1	7	5 1/4	16 1/2	10 1/2	22 1/2	14	2 1/4	8	6	1 1/4	5/8	3	10									16.0
4	48		3	3/4	1	7	5 1/4	16 1/2	10 1/2	22 1/2	14	2 1/4	8	6	1 1/4	5/8	3	10									16.0
5	48		3	3/4	1	7	5 1/4	16 1/2	10 1/2	22 1/2	14	2 1/4	8	6	1 1/4	5/8	3	10									16.0

STANDARD SIGN
W01-4

WISCONSIN DEPT OF TRANSPORTATION

APPROVED Matthew R Rauch
For State Traffic Engineer

DATE 1/24/2024 PLATE NO. W01-4.2

PROJECT NO: | HWY: | COUNTY: | SHEET NO: 349 | E

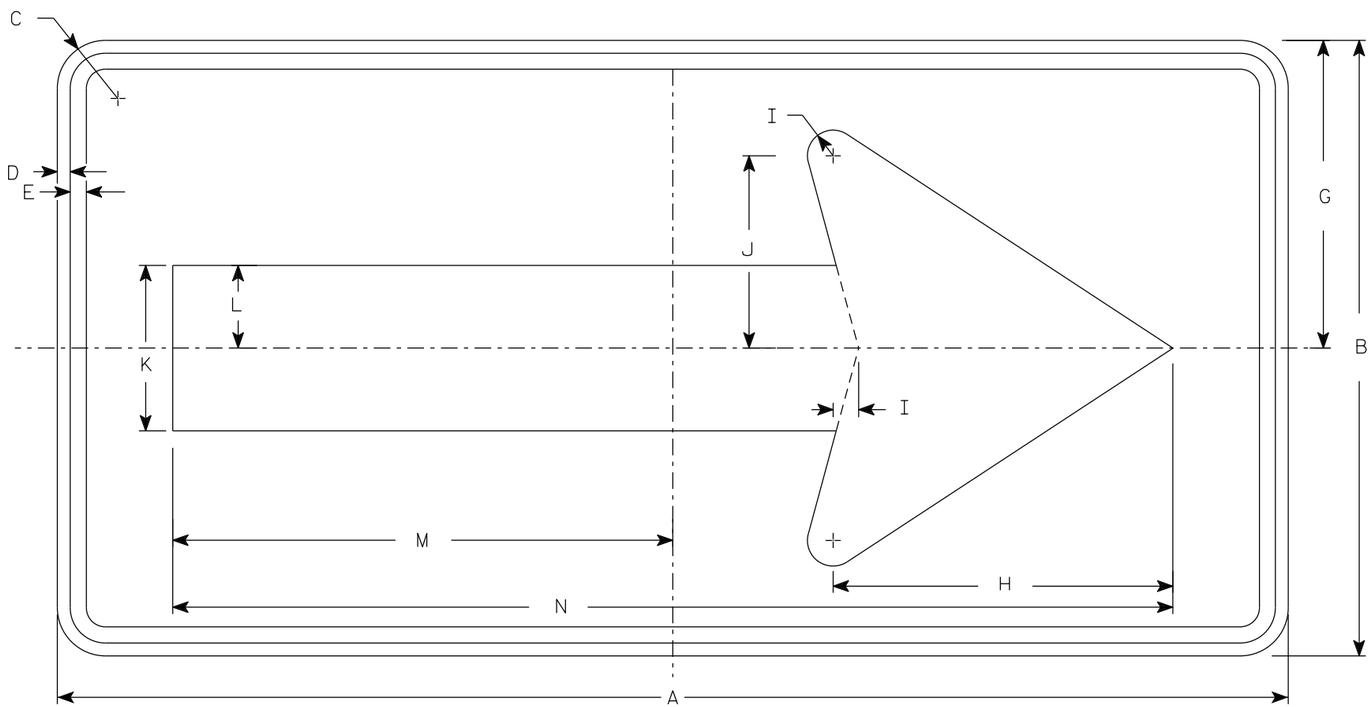

W01-6

NOTES

1. Sign is Type II - Type F Reflective
2. Color:
   Background - Orange
   Message - Black
3. Corners may be square or rounded when base material is plywood but borders shall be rounded as shown. When base material is metal, the corners and borders shall be rounded.

SIZE	A	B	C	D	E	F	G	H	I	J	K	L	M	N	O	P	Q	R	S	T	U	V	W	X	Y	Z	Area sq. ft.
1																											
2S	48	24	1 7/8	1/2	5/8		12	13 1/4	1	7 1/2	6 1/2	3 1/4	19 1/2	39													8.0
2M	48	24	1 7/8	1/2	5/8		12	13 1/4	1	7 1/2	6 1/2	3 1/4	19 1/2	39													8.0
3	60	30	1 7/8	1/2	5/8		15	16 1/4	1 1/4	9 1/4	8	4	24 3/8	48 3/4													12.5
4	60	30	1 7/8	1/2	5/8		15	16 1/4	1 1/4	9 1/4	8	4	24 3/8	48 3/4													12.5
5	60	30	1 7/8	1/2	5/8		15	16 1/4	1 1/4	9 1/4	8	4	24 3/8	48 3/4													12.5

STANDARD SIGN
W01-6

WISCONSIN DEPT OF TRANSPORTATION

APPROVED Matthew R Rauch
for State Traffic Engineer

DATE 1/24/2024 PLATE NO. W01-6.2

PROJECT NO: | HWY: | COUNTY: | SHEET NO: E

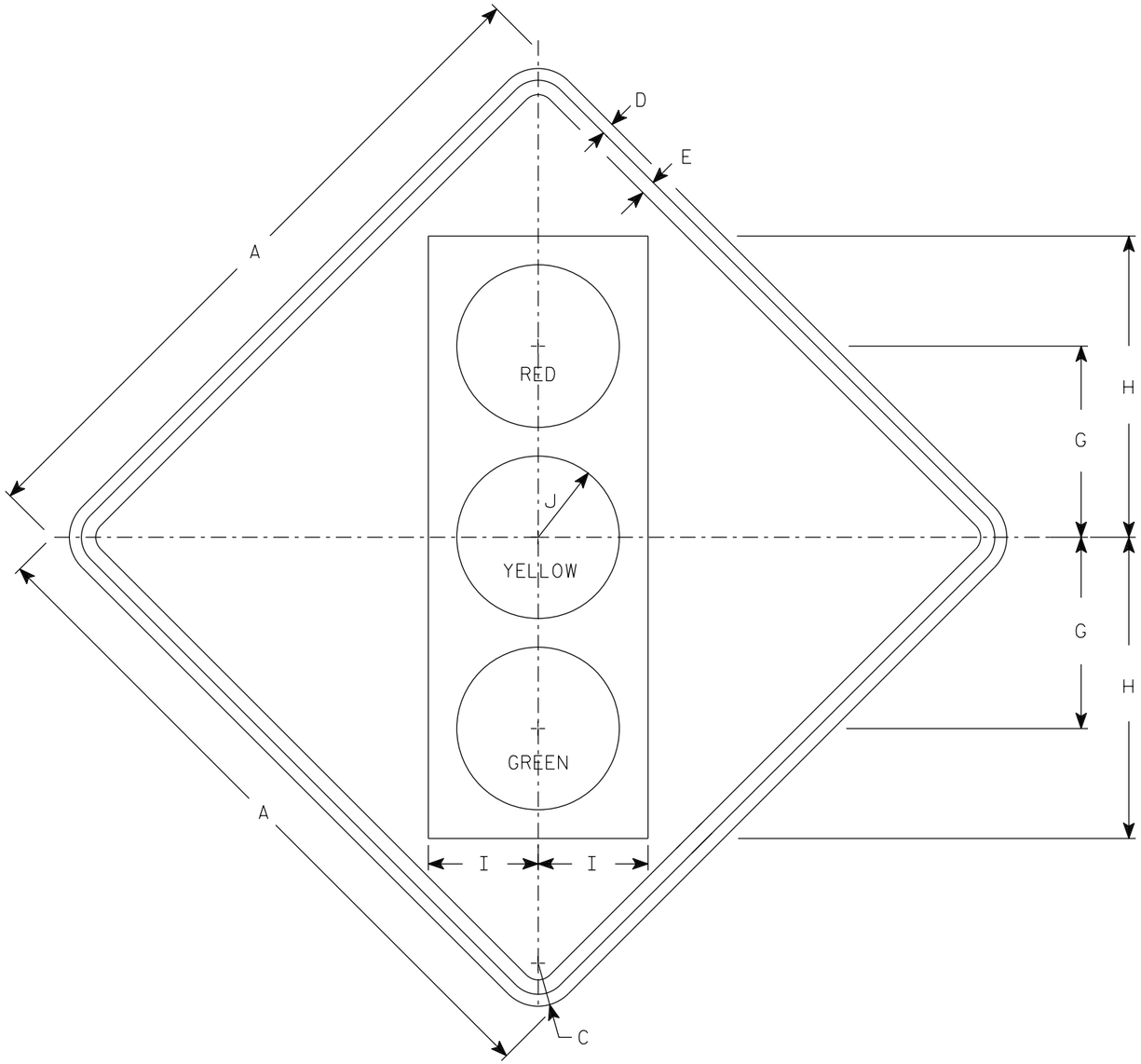

W03-3

NOTES

1. Sign is Type II - Type F Reflective
2. Color:
   Background - Orange
   Message - See Note 4
3. Corners may be square or rounded when base material is plywood but borders shall be rounded as shown. When base material is metal, the corners and borders shall be rounded.
4. Symbol and border are non-reflective black.
   Top circle - Type H Reflectorized Red
   Center circle - Same as background
   Bottom circle - Type H Reflectorized Green

SIZE	A	B	C	D	E	F	G	H	I	J	K	L	M	N	O	P	Q	R	S	T	U	V	W	X	Y	Z	Area sq. ft.
1	36		2 1/4	5/8	3/4		10	15 3/4	5 3/4	4 1/4																	9.0
2S	48		3	3/4	1		12 1/2	20	7 1/2	5																	16.0
2M	48		3	3/4	1		12 1/2	20	7 1/2	5																	16.0
3	48		3	3/4	1		12 1/2	20	7 1/2	5																	16.0
4	48		3	3/4	1		12 1/2	20	7 1/2	5																	16.0
5	48		3	3/4	1		12 1/2	20	7 1/2	5																	16.0

STANDARD SIGN
W03-3

WISCONSIN DEPT OF TRANSPORTATION

APPROVED Matthew R Rauch
for State Traffic Engineer

DATE 1/24/2024 PLATE NO. W03-3.2

PROJECT NO: | HWY: | COUNTY: | SHEET NO: E

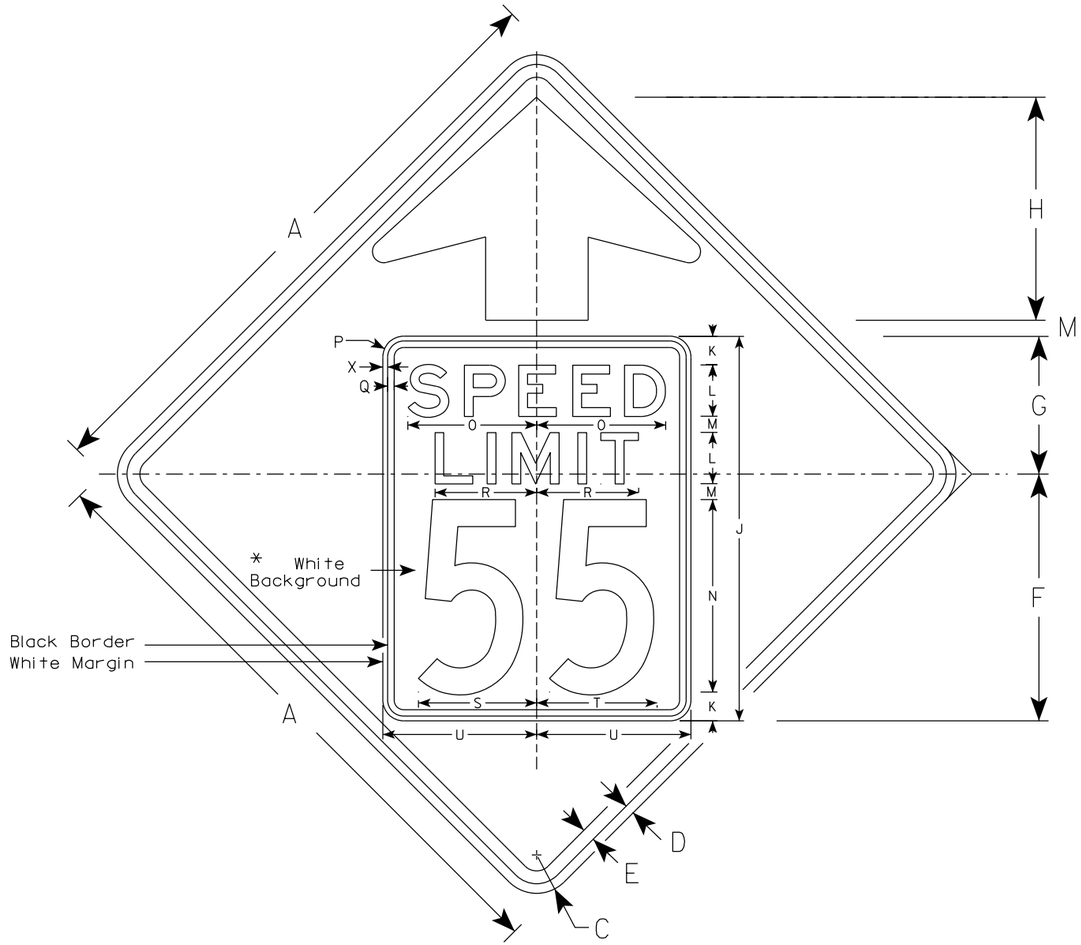

W03-5

NOTES

1. Sign is Type II - Type F Reflective
2. Color: *
   Background - ORANGE*
   Message - BLACK
3. Message Series - C for numbers Series E for wording
4. Substitute appropriate numerals and optically adjust spacing to achieve proper balance

*Speed Limit Sign shall have a White Background

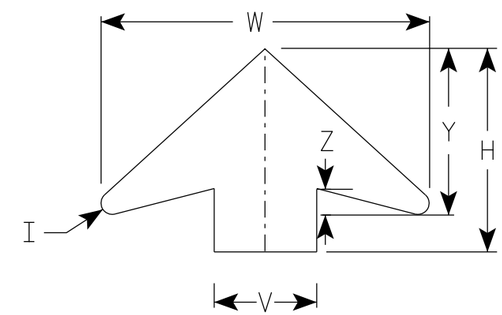

ARROW DETAIL

SIZE	A	B	C	D	E	F	G	H	I	J	K	L	M	N	O	P	Q	R	S	T	U	V	W	X	Y	Z	Area sq. ft.
1	36		2 1/4	5/8	3/4	14 1/2	9 1/2	11 1/2	5/8	24	2	3	1	12	7 1/8	1 1/2	3/8	5 3/4	7 1/4	7 1/8	9	6	19 1/4	3/8	9 3/4	1 5/8	9.0
2S	48		3	3/4	1	19 1/4	10 3/4	17 3/8	7/8	30	2 1/4	4	1 1/4	15	10	1 5/8	1/2	8	9 1/4	9 3/8	12	8	25 5/8	3/8	13	2	16.0
2M	48		3	3/4	1	19 1/4	10 3/4	17 3/8	7/8	30	2 1/4	4	1 1/4	15	10	1 5/8	1/2	8	9 1/4	9 3/8	12	8	25 5/8	3/8	13	2	16.0
3	48		3	3/4	1	19 1/4	10 3/4	17 3/8	7/8	30	2 1/4	4	1 1/4	15	10	1 5/8	1/2	8	9 1/4	9 3/8	12	8	25 5/8	3/8	13	2	16.0
4	48		3	3/4	1	19 1/4	10 3/4	17 3/8	7/8	30	2 1/4	4	1 1/4	15	10	1 5/8	1/2	8	9 1/4	9 3/8	12	8	25 5/8	3/8	13	2	16.0
5	48		3	3/4	1	19 1/4	10 3/4	17 3/8	7/8	30	2 1/4	4	1 1/4	15	10	1 5/8	1/2	8	9 1/4	9 3/8	12	8	25 5/8	3/8	13	2	16.0

STANDARD SIGN
W03-5

WISCONSIN DEPT OF TRANSPORTATION

APPROVED Matthew R Rauch
for State Traffic Engineer

DATE 1/24/2024 PLATE NO. W03-5.2

PROJECT NO:

SHEET NO: 352 E

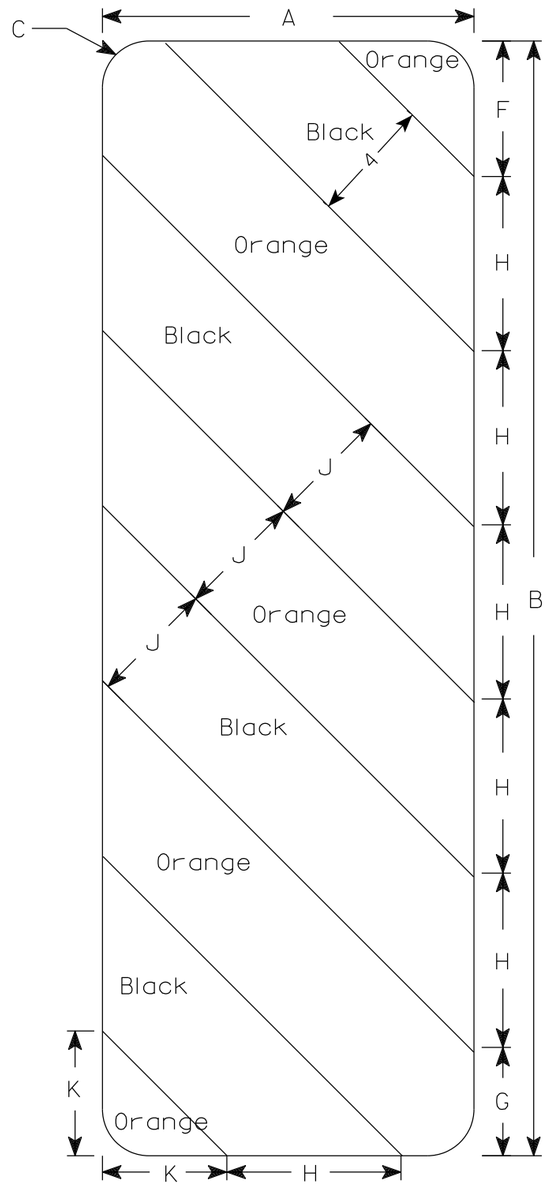

W05-52L

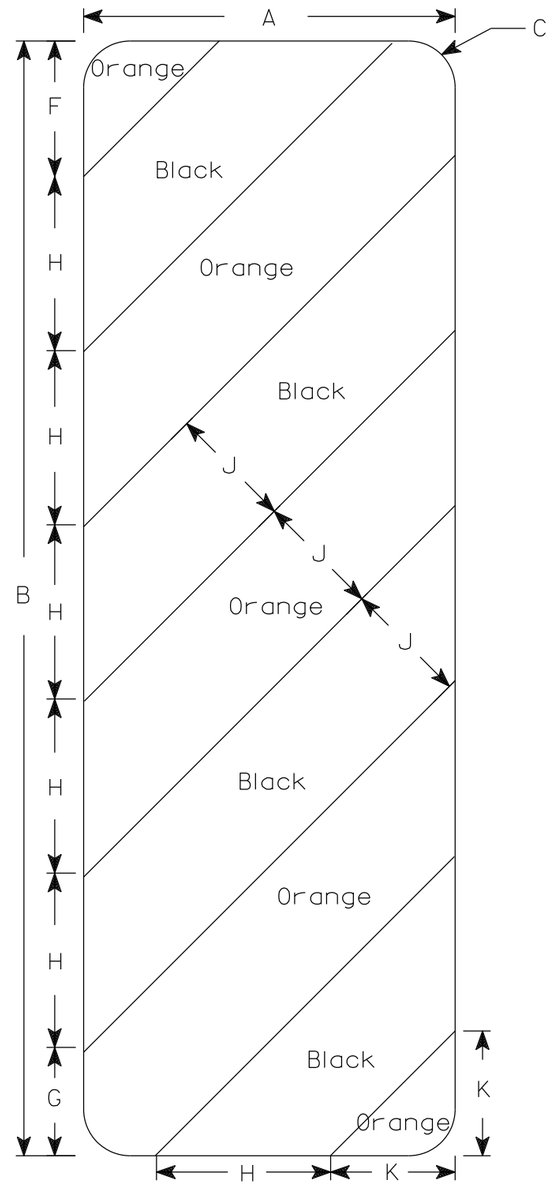

W05-52R

NOTES

1. Sign is Type II - Type F Reflective
2. Color:
   Background - Orange
   Message - Black
4. Alternate colors of stripes as shown.

SIZE	A	B	C	D	E	F	G	H	I	J	K	L	M	N	O	P	Q	R	S	T	U	V	W	X	Y	Z	Area sq. ft.
1																											
2S	12	36	1 1/2			4 3/8	3 1/2	5 5/8	45°	4	4																3.0
2M	12	36	1 1/2			4 3/8	3 1/2	5 5/8	45°	4	4																3.0
3	18	54	1 1/2			6	5 1/2	8 1/2	45°	6	6 9/16																6.75
4																											
5																											

STANDARD SIGN

W05-52L & W05-52R

WISCONSIN DEPT OF TRANSPORTATION

APPROVED Matthew R Rauch
for State Traffic Engineer

DATE 3/13/2024 PLATE NO. W05-52.2

PROJECT NO: | HWY: | COUNTY: | SHEET NO: 353 | E

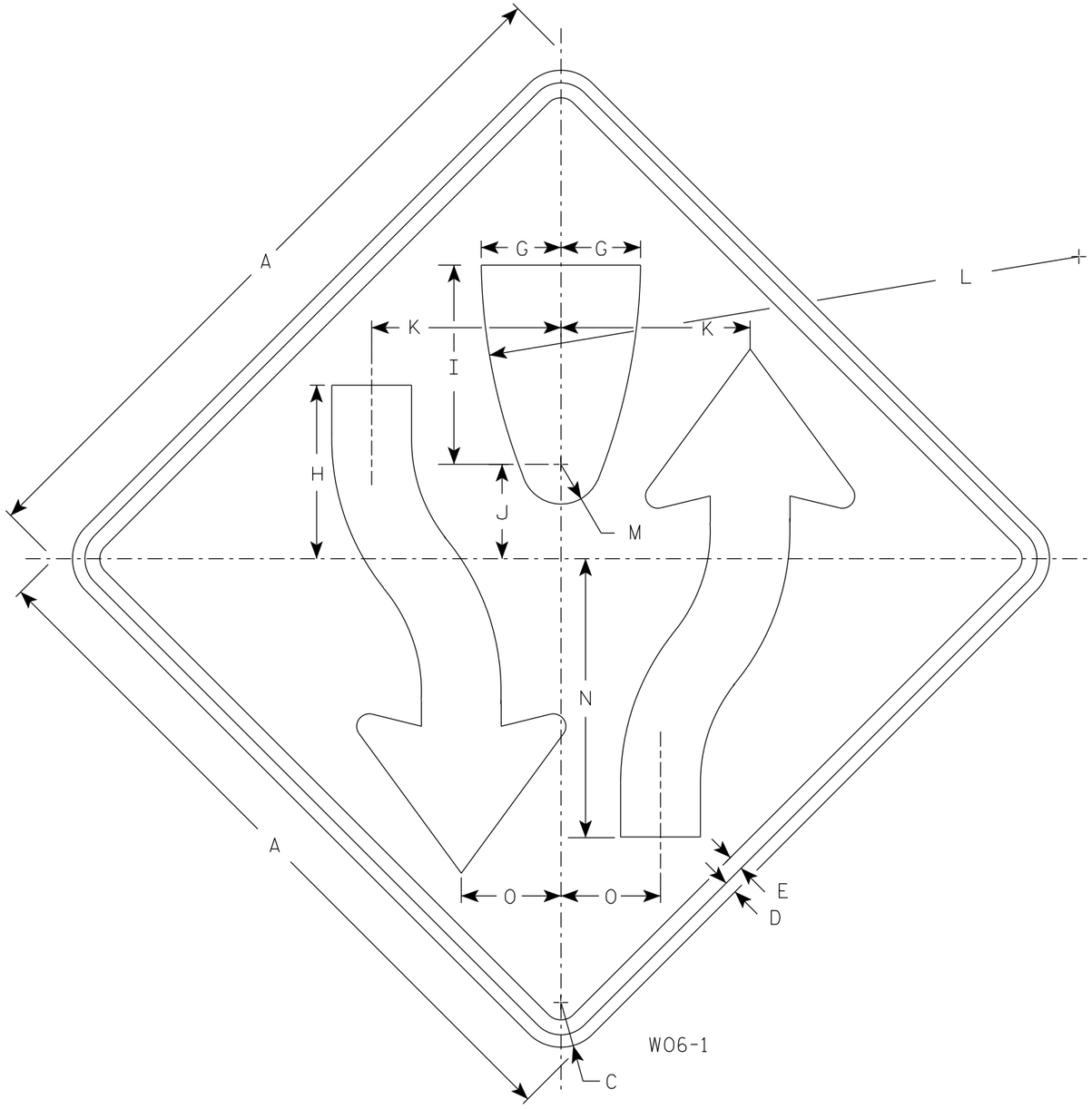

NOTES

1. Sign is Type II - Type F Reflective
2. Color:
   Background - Orange
   Message - Black
3. Corners may be square or rounded when base material is plywood but borders shall be rounded as shown. When base material is metal, the corners and borders shall be rounded.
4. W06-2 same as W06-1 but is rotated 180° when mounted.

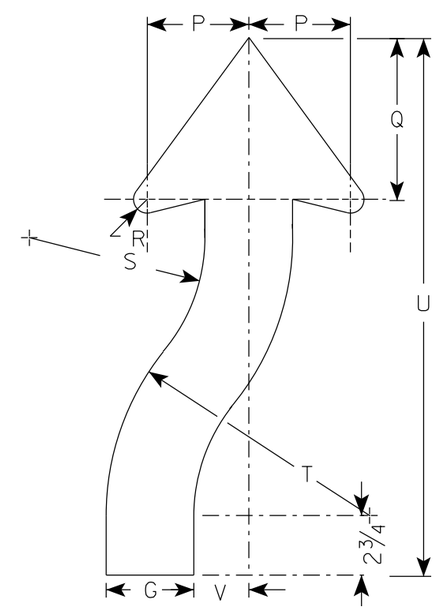

ARROW DETAIL

SIZE	A	B	C	D	E	F	G	H	I	J	K	L	M	N	O	P	Q	R	S	T	U	V	W	X	Y	Z	Area sq. ft.
1	36		2 1/4	5/8	3/4		4	8 3/4	10	4 3/4	9 1/2	30	2	14	5	4 5/8	7 3/8	7/8	8	12	24 1/2	2 1/2					9.0
2S	48		3	3/4	1		5 3/8	11 5/8	13 3/8	6 3/8	12 5/8	40	2 5/8	18 5/8	6 5/8	6 1/4	9 7/8	1 1/4	10 5/8	16	32 5/8	3 3/8					16.0
2M	48		3	3/4	1		5 3/8	11 5/8	13 3/8	6 3/8	12 5/8	40	2 5/8	18 5/8	6 5/8	6 1/4	9 7/8	1 1/4	10 5/8	16	32 5/8	3 3/8					16.0
3	48		3	3/4	1		5 3/8	11 5/8	13 3/8	6 3/8	12 5/8	40	2 5/8	18 5/8	6 5/8	6 1/4	9 7/8	1 1/4	10 5/8	16	32 5/8	3 3/8					16.0
4	48		3	3/4	1		5 3/8	11 5/8	13 3/8	6 3/8	12 5/8	40	2 5/8	18 5/8	6 5/8	6 1/4	9 7/8	1 1/4	10 5/8	16	32 5/8	3 3/8					16.0
5	48		3	3/4	1		5 3/8	11 5/8	13 3/8	6 3/8	12 5/8	40	2 5/8	18 5/8	6 5/8	6 1/4	9 7/8	1 1/4	10 5/8	16	32 5/8	3 3/8					16.0

STANDARD SIGN
W06-1 & W06-2

WISCONSIN DEPT OF TRANSPORTATION

APPROVED Matthew R Rauch
for State Traffic Engineer

DATE 1/30/2024 PLATE NO. W06-1.2

PROJECT NO: | HWY: | COUNTY: | SHEET NO: 354 | E

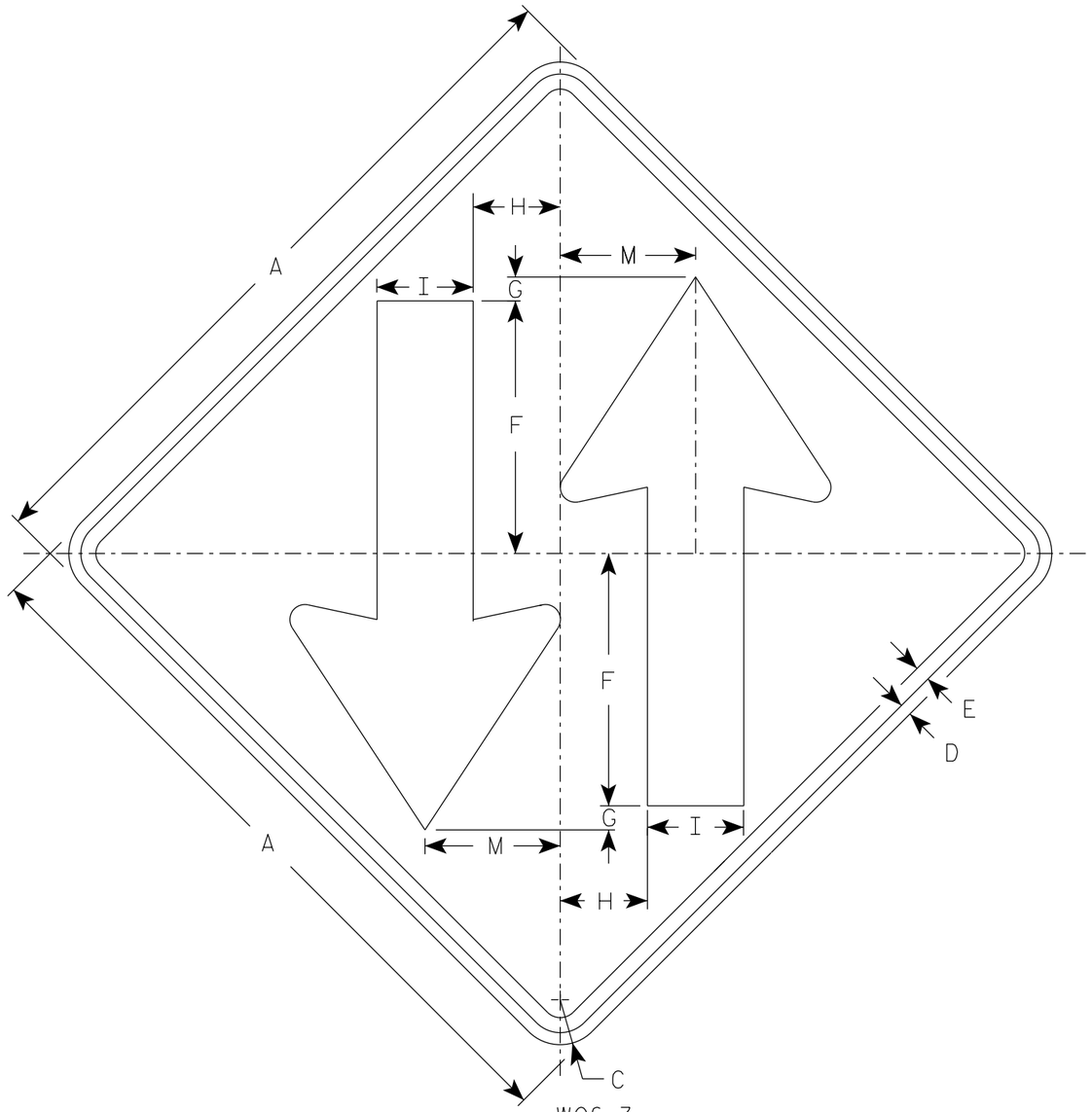

W06-3

NOTES

1. Sign is Type II - Type F Reflective
2. Color:
   Background - Orange
   Message - Black
3. Corners may be square or rounded when base material is plywood but borders shall be rounded as shown. When base material is metal, the corners and borders shall be rounded.

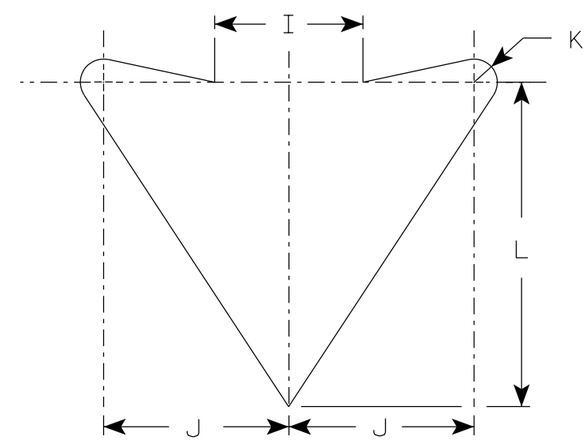

ARROW DETAIL

SIZE	A	B	C	D	E	F	G	H	I	J	K	L	M	N	O	P	Q	R	S	T	U	V	W	X	Y	Z	Area sq. ft.
1	36		2 1/4	5/8	3/4	12	1	4 1/4	5	6	3/4	10 1/2	6 3/4														9.0
2S	48		3	3/4	1	15 1/2	1	6	6	8	1	14	9														16.0
2M	48		3	3/4	1	15 1/2	1	6	6	8	1	14	9														16.0
3	48		3	3/4	1	15 1/2	1	6	6	8	1	14	9														16.0
4	48		3	3/4	1	15 1/2	1	6	6	8	1	14	9														16.0
5	48		3	3/4	1	15 1/2	1	6	6	8	1	14	9														16.0

STANDARD SIGN
W06-3

WISCONSIN DEPT OF TRANSPORTATION

APPROVED Matthew R Rauch
for State Traffic Engineer

DATE 1/30/2024 PLATE NO. W06-3.2

PROJECT NO:	HWY:	COUNTY:		SHEET NO: 355	E

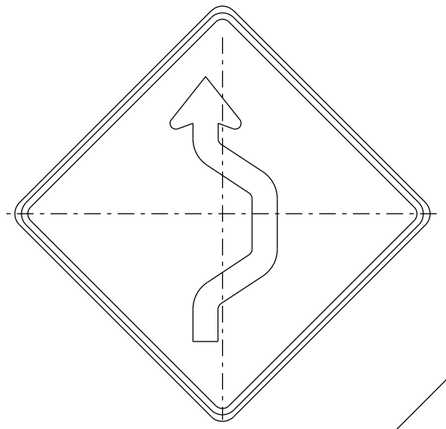

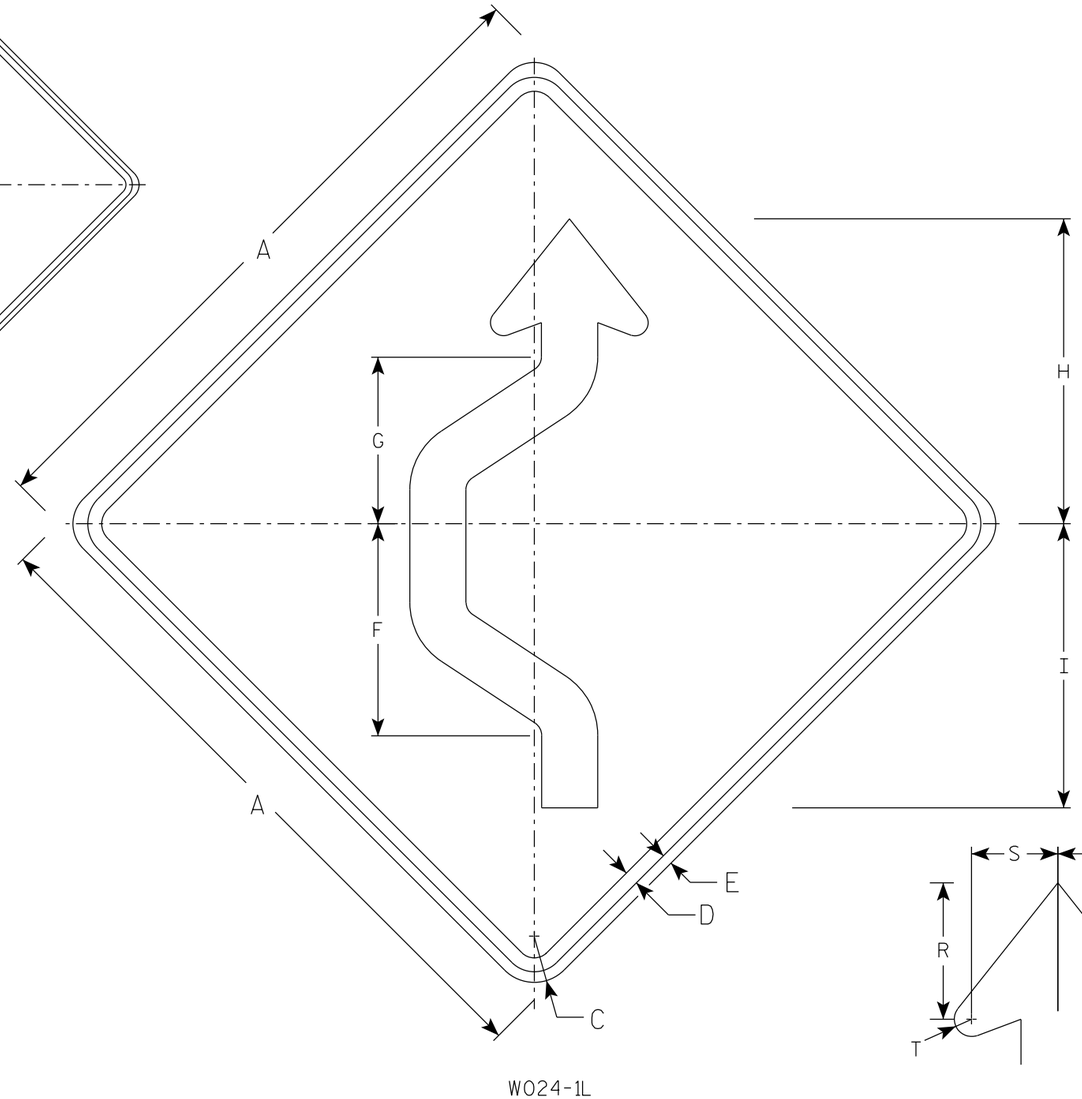

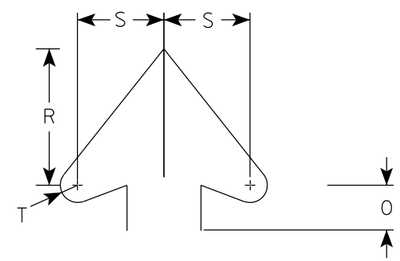

Arrowhead Detail

NOTES

1. Sign is Type II - Type F Reflective
2. Color:
   Background - Orange
   Message - Black
3. Corners may be square or rounded when base material is plywood but borders shall be rounded as shown. When base material is metal, the corners and borders shall be rounded.
4. W024-1R is the same as W024-1L except reversed along the vertical centerline.

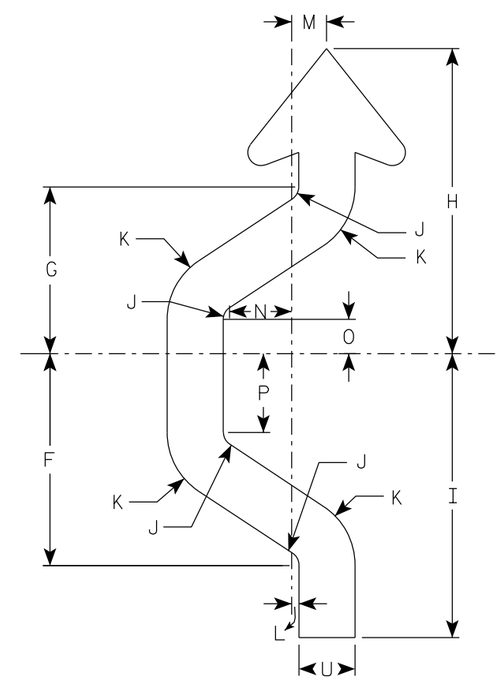

Arrow Detail

SIZE	A	B	C	D	E	F	G	H	I	J	K	L	M	N	O	P	Q	R	S	T	U	V	W	X	Y	Z	Area sq. ft.
1	36		2 1/4	5/8	1/2	11 3/8	8 7/8	16 3/8	15 1/4	3/4	3 3/4	3/8	2	3 3/8	1 7/8	4 1/4		5 1/2	3 1/2	5/8	3						9.0
2S	48		3	1	3/4	15 1/8	11 7/8	21 3/4	20 1/4	1	5	1/2	2 1/2	4 3/8	2 3/8	5 5/8		7 3/8	4 3/4	7/8	4						16.0
2M	48		3	1	3/4	15 1/8	11 7/8	21 3/4	20 1/4	1	5	1/2	2 1/2	4 3/8	2 3/8	5 5/8		7 3/8	4 3/4	7/8	4						16.0
3	48		3	1	3/4	15 1/8	11 7/8	21 3/4	20 1/4	1	5	1/2	2 1/2	4 3/8	2 3/8	5 5/8		7 3/8	4 3/4	7/8	4						16.0
4	48		3	1	3/4	15 1/8	11 7/8	21 3/4	20 1/4	1	5	1/2	2 1/2	4 3/8	2 3/8	5 5/8		7 3/8	4 3/4	7/8	4						16.0
5	48		3	1	3/4	15 1/8	11 7/8	21 3/4	20 1/4	1	5	1/2	2 1/2	4 3/8	2 3/8	5 5/8		7 3/8	4 3/4	7/8	4						16.0

STANDARD SIGN
W024-1 L & R

WISCONSIN DEPT OF TRANSPORTATION

APPROVED Matthew R Rauch
for State Traffic Engineer

DATE 2/1/2024 PLATE NO. W024-1.2

PROJECT NO: | HWY: | COUNTY: | SHEET NO: 356 | E

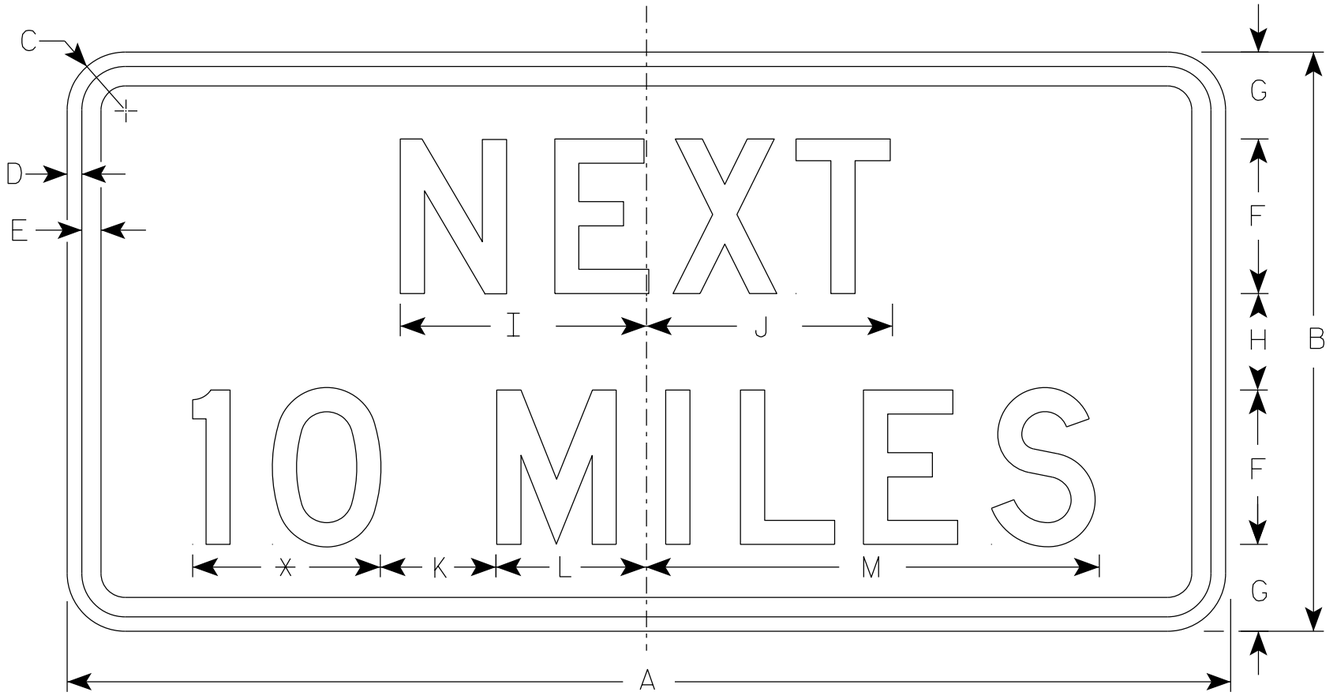

W057-51

* See note 5

NOTES

1. Sign is Type II - Type F Reflective
2. Color:
   Background - Orange
   Message - Black
3. Message Series - D
4. Corners may be square or rounded when base material is plywood but borders shall be rounded as shown. When base material is metal, the corners and borders shall be rounded.
5. Round distance to the nearest whole Mile and substitute appropriate numerals and optically adjust spacing to achieve proper balance.

SIZE	A	B	C	D	E	F	G	H	I	J	K	L	M	N	O	P	Q	R	S	T	U	V	W	X	Y	Z	Area sq. ft.
1	36	18	1 1/2	3/8	1/2	5	2 3/4	2 1/2	7 7/8	8	5	4 1/8	15 3/8														4.5
2S	48	24	1 7/8	1/2	5/8	6	4	4	10	10 1/8	6	5 5/8	19														8.0
2M	48	24	1 7/8	1/2	5/8	6	4	4	10	10 1/8	6	5 5/8	19														8.0
3	48	24	1 7/8	1/2	5/8	6	4	4	10	10 1/8	6	5 5/8	19														8.0
4	48	24	1 7/8	1/2	5/8	6	4	4	10	10 1/8	6	5 5/8	19														8.0
5	48	24	1 7/8	1/2	5/8	6	4	4	10	10 1/8	6	5 5/8	19														8.0

STANDARD SIGN
W057-51

WISCONSIN DEPT OF TRANSPORTATION

APPROVED Matthew R Rauch
for State Traffic Engineer

DATE 2/1/2024 PLATE NO. W057-51.4

PROJECT NO: | HWY: | COUNTY: | SHEET NO: 357 | E

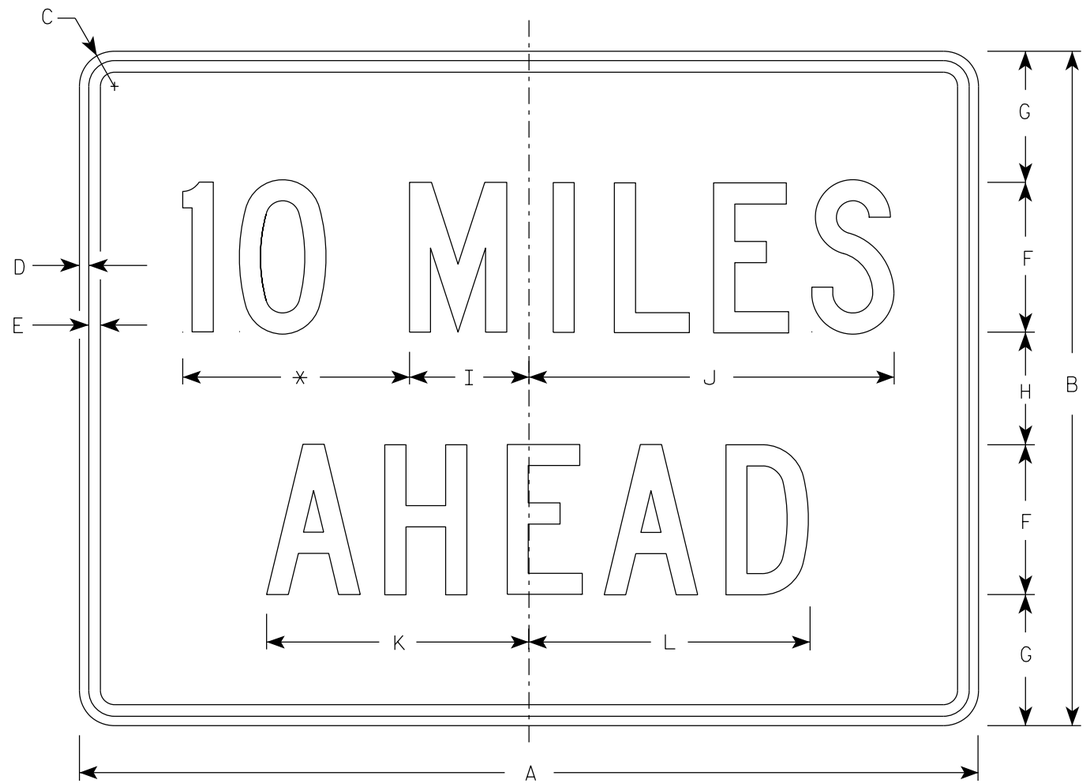

W057-52

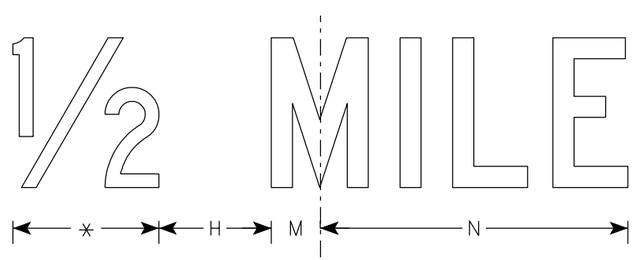

* See note 5

NOTES

1. Sign is Type II - Type F Reflective
2. Color:
   Background - Orange
   Message - Black
3. Message Series - C
4. Corners may be square or rounded when base material is plywood but borders shall be rounded as shown. When base material is metal, the corners and borders shall be rounded.
5. Substitute appropriate numerals to the nearest quarter mile and optically adjust spacing to achieve proper balance.

SIZE	A	B	C	D	E	F	G	H	I	J	K	L	M	N	O	P	Q	R	S	T	U	V	W	X	Y	Z	Area sq. ft.
1	36	24	1 1/2	3/8	1/2	6	4 1/2	3	4 3/4	14 5/8	10 5/8	11 3/8	2	12													6.0
2S	48	36	2 1/4	1/2	5/8	8	7	6	6 3/8	19 1/2	14	15	2 3/4	16 3/8													12.0
2M	48	36	2 1/4	1/2	5/8	8	7	6	6 3/8	19 1/2	14	15	2 3/4	16 3/8													12.0
3	48	36	2 1/4	1/2	5/8	8	7	6	6 3/8	19 1/2	14	15	2 3/4	16 3/8													12.0
4	48	36	2 1/4	1/2	5/8	8	7	6	6 3/8	19 1/2	14	15	2 3/4	16 3/8													12.0
5	48	36	2 1/4	1/2	5/8	8	7	6	6 3/8	19 1/2	14	15	2 3/4	16 3/8													12.0

STANDARD SIGN
W057-52

WISCONSIN DEPT OF TRANSPORTATION

APPROVED Matthew R Rauch
for State Traffic Engineer

DATE 2/1/2024 PLATE NO. W057-52.3

PROJECT NO: | HWY: | COUNTY: | SHEET NO: 358 | E

NOTES

1. All Signs Type II - Type H Reflective
2. Color:
   Background - Green
   Message - White
3. Message Series - E or as noted

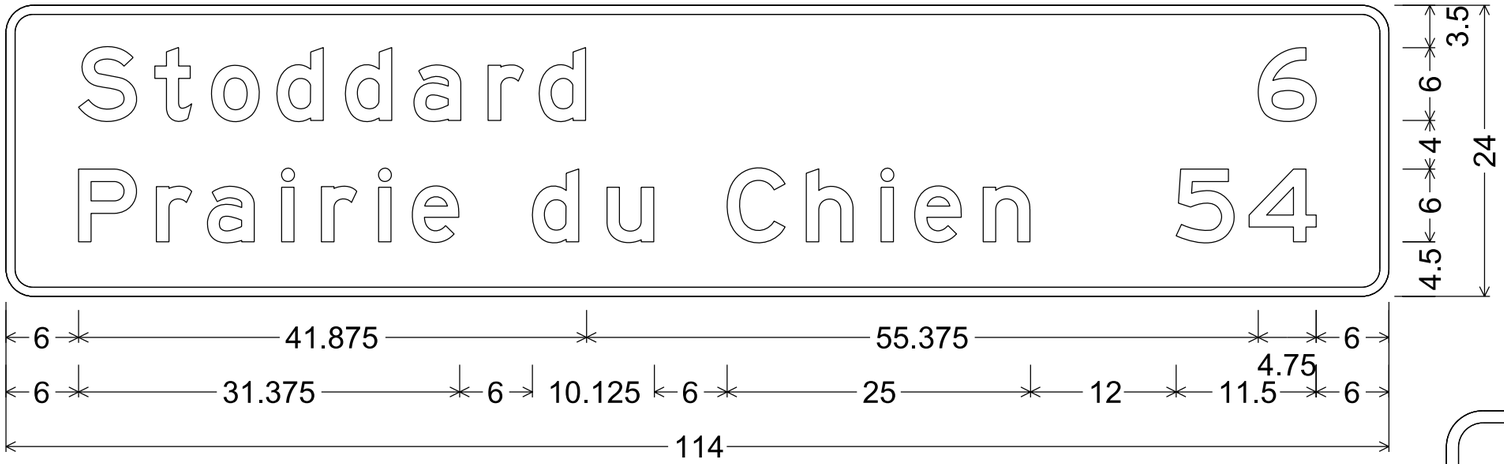

D2-2; 2.250" Radius, 0.750" Border

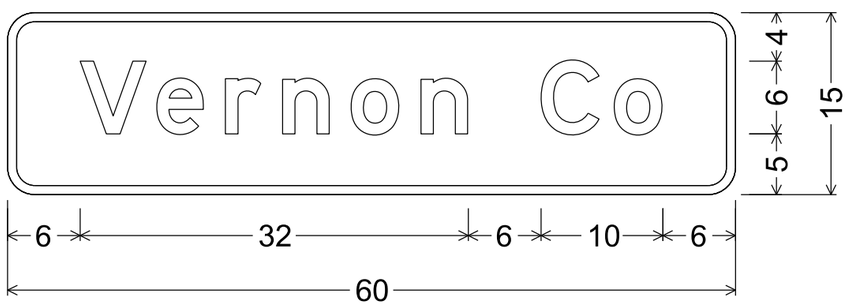

I2-2; 2.250" Radius, 0.750" Border

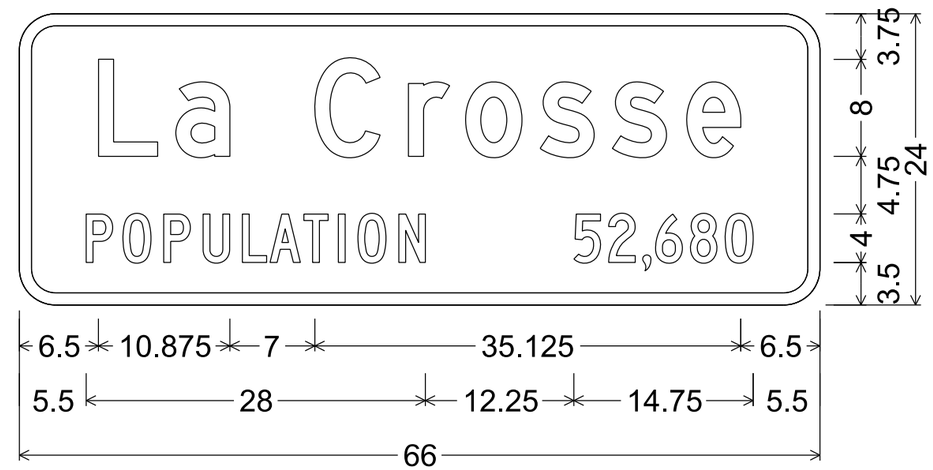

I2-3 ; 3.000" Radius, 1.000" Border
"La", D; "Crosse", D; POPULATION", C

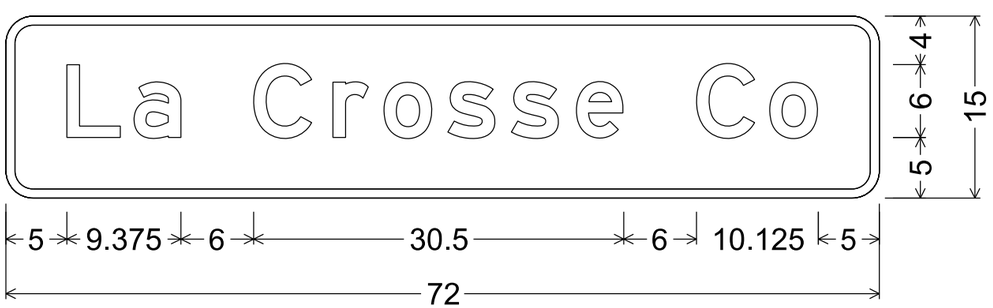

I2-2; 2.250" Radius, 0.750" Border

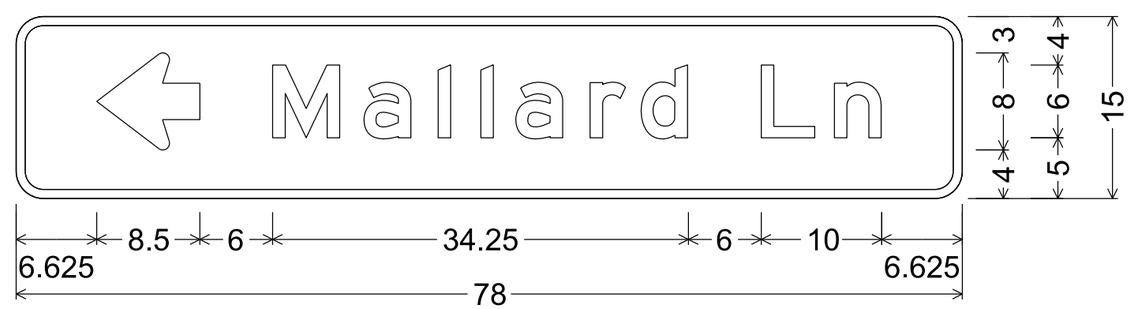

D1-1; 2.250" Radius, 0.750" Border

7

7

PROJECT NO:5163-07-72	HWY:STH 35	COUNTY:LA CROSSE/VERNON	PERMANENT SIGNING	SHEET NO: 359	E

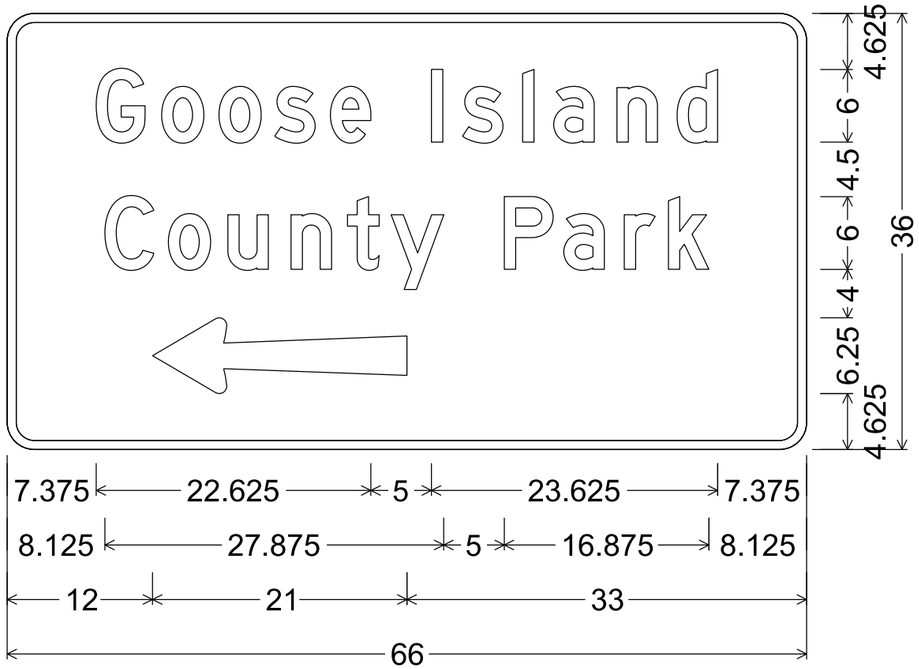

D7-68L; 2.250" Radius, 0.750" Border

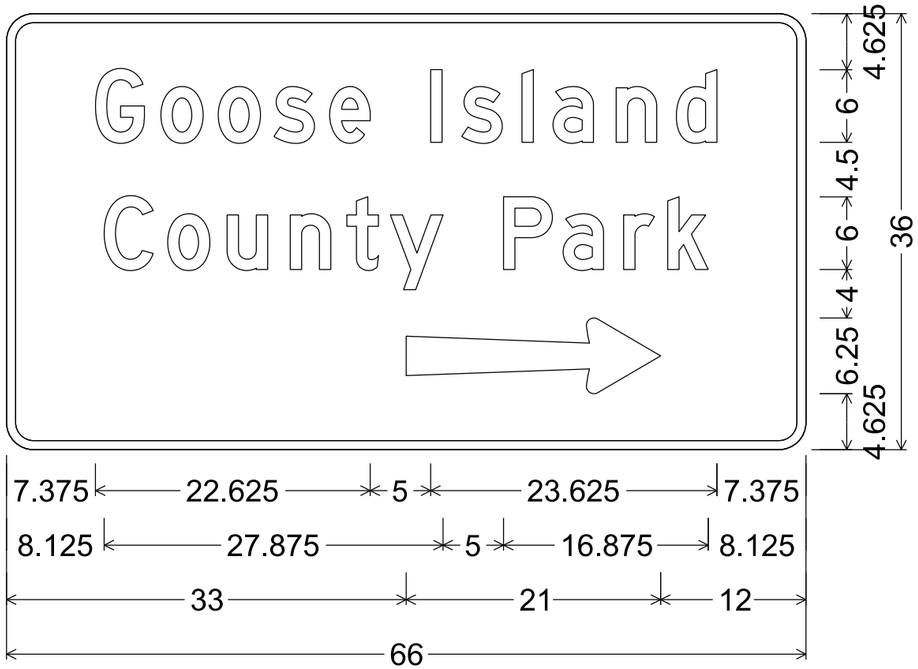

D7-68R; 2.250" Radius, 0.750" Border

NOTES

1. All Signs Type II - Type H Reflective
2. Color:
   Background - Brown
   Message - White
3. Message Series - D

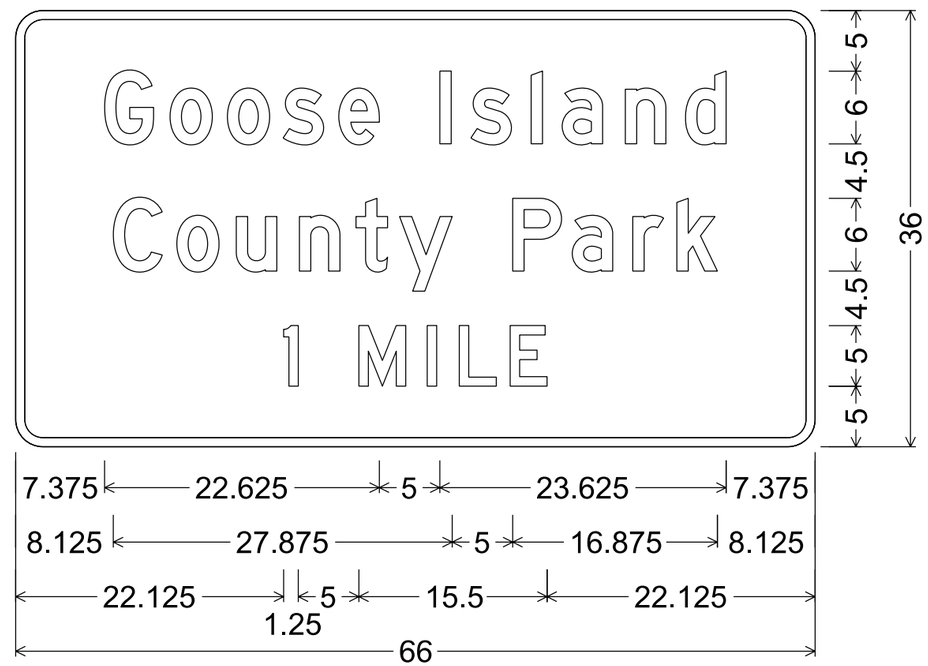

D7-67; 2.250" Radius, 0.750" Border

7

7

PROJECT NO:5163-07-72	HWY:STH 35	COUNTY:LA CROSSE/VERNON	PERMANENT SIGNING	SHEET NO: 360	E

STATE PROJECT NUMBER

5163-07-72

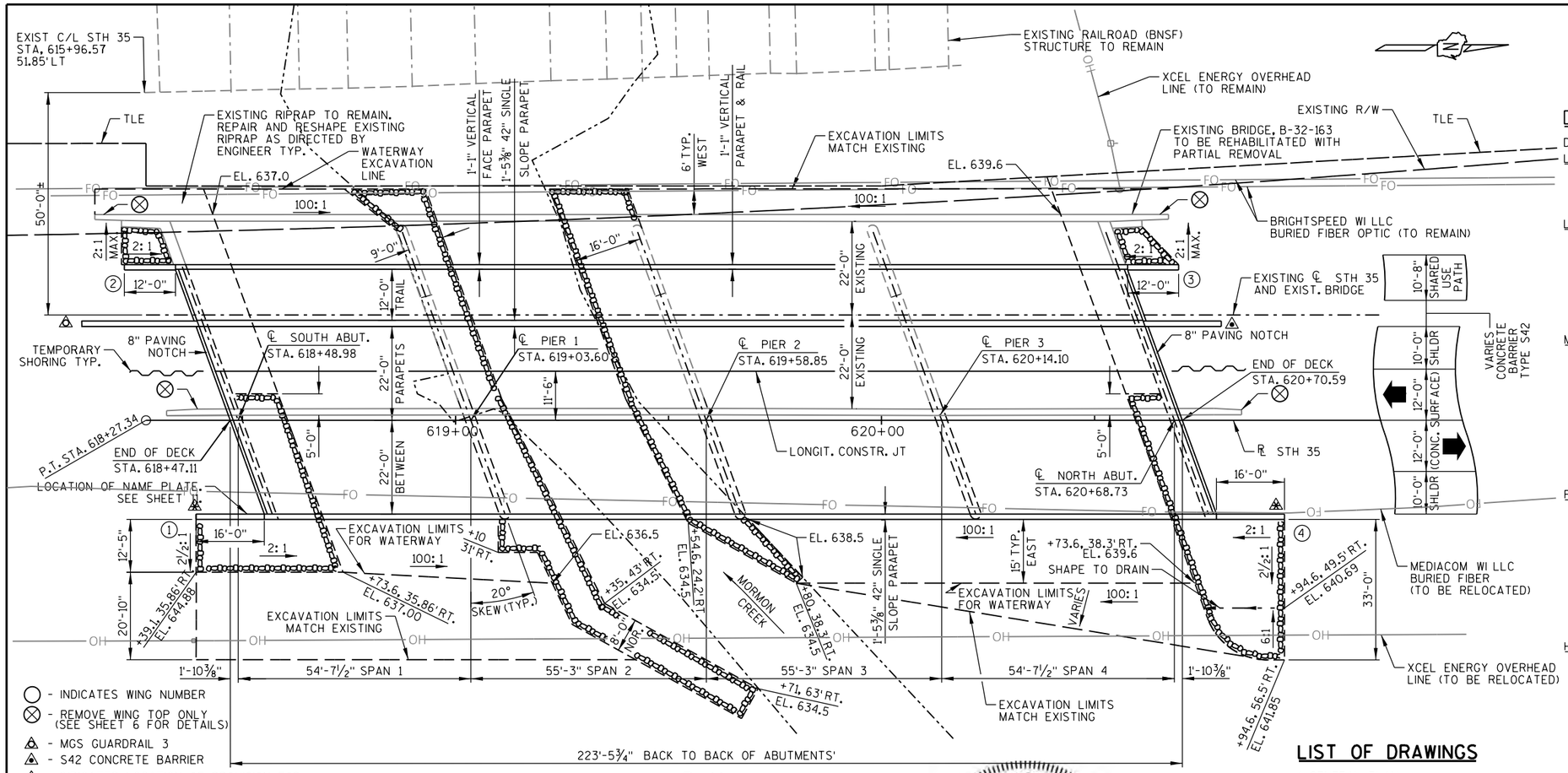

○ - INDICATES WING NUMBER

⊗ - REMOVE WING TOP ONLY (SEE SHEET 6 FOR DETAILS)

△ - MGS GUARDRAIL 3

△ - S42 CONCRETE BARRIER

△ - INDICATES LOCATION OF PROVISION FOR THRIE BEAM GUARD ATTACHMENT AT WINGS

▨ - EXCAVATION INCLUDED IN "EXCAVATION FOR STRUCTURES BRIDGES B-32-163". REMOVE SEDIMENT NECESSARY TO PROVIDE MINIMUM WATERWAY THRU BRIDGE TO LIMITS SHOWN IN PLAN.

- DELINEATES LIMITS OF PROPOSED RIPRAP HEAVY AND GEOTEXTILE TYPE HR

PLAN

(FOUR SPAN 36-INCH PRESTRESSED CONCRETE GIRDER STRUCTURE)

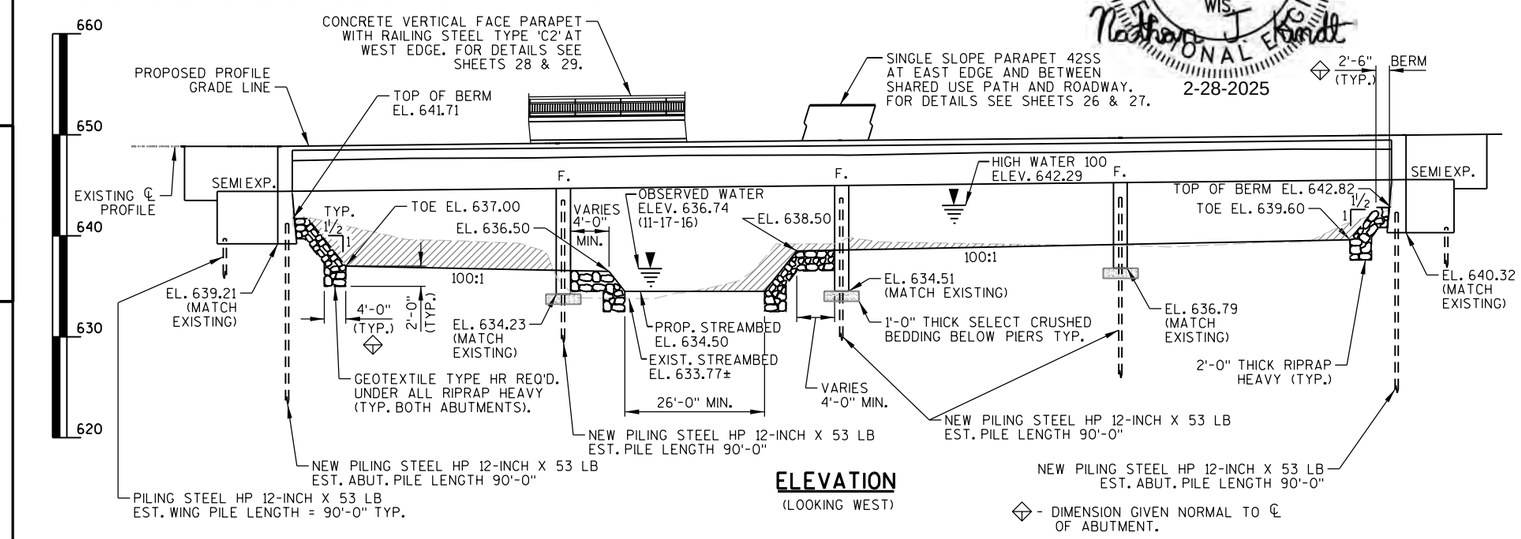

ELEVATION

(LOOKING WEST)

◇ - DIMENSION GIVEN NORMAL TO ℄ OF ABUTMENT.

WISCONSIN PROFESSIONAL ENGINEER NATHAN J KINDT E-48663 SUAMICO WIS.

Nathan J. Kindt

2-28-2025

DESIGN DATA

DESIGN LOADING: HL-93 AND HS-20

LIVE LOAD: NEW GIRDERS (HL-93)

INVENTORY RATING FACTOR: RF = 1.17

OPERATIONAL RATING FACTOR: RF = 1.85

WISCONSIN STANDARD PERMIT VEHICLE (WIS-SPV) = 250 KIPS

LIVE LOAD: EXISTING GIRDERS (HS-20)

INVENTORY RATING: HS-21

OPERATIONAL RATING: HS-35

WISCONSIN STANDARD PERMIT VEHICLE (WIS-SPV) = 200 KIPS

STRUCTURE IS DESIGNED FOR A FUTURE WEARING SURFACE OF 20 POUNDS PER SQUARE FOOT.

TRAFFIC DATA:

A.A.D.T. (2025) = 10,820

A.A.D.T. (2045) = 13,460

R.D.S. = 60 MPH

MATERIAL PROPERTIES (NEW ELEMENTS ONLY):

CONCRETE MASONRY, SUPERSTRUCTURE — $f'c$ = 4,000 P.S.I.

ALL OTHER — $f'c$ = 3,500 P.S.I.

HIGH-STRENGTH BAR STEEL REINFORCEMENT, GRADE 60 — fy = 60,000 P.S.I.

36-INCH PRESTRESSED GIRDERS CONCRETE MASONRY — $f'c$ = 8,000 P.S.I.

STRANDS - 0.60" Φ WITH AN ULTIMATE TENSILE STRENGTH OF — fy = 270,000 P.S.I.

FOUNDATION DATA:

ABUTMENTS AND PIERS TO BE SUPPORTED ON PILING STEEL HP 12-INCH X 53 LB. DRIVEN TO A REQUIRED DRIVING RESISTANCE OF 220 TONS ✳ PER PILE AS DETERMINED BY THE MODIFIED GATES DYNAMIC FORMULA. ESTIMATED ABUTMENT PILE LENGTHS ARE PIER PILE LENGTHS ARE 90'-0".

✳ THE FACTORED AXIAL RESISTANCE OF PILES IN COMPRESSION USED FOR DESIGN IS THE REQUIRED DRIVING RESISTANCE MULTIPLIED BY A RESISTANCE FACTOR OF 0.5 USING MODIFIED GATES TO DETERMINE DRIVEN PILE CAPACITY.

HYDRAULIC DATA:

100 YEAR FREQUENCY

Q_{100}	7,050 C.F.S.
V_{100}	10.46 F.P.S.
HW_{100}	EL. 642.29
WATERWAY AREA	636 SQ. FT.
DRAINAGE AREA	35.9 SQ. MI.
ROADWAY OVERTOPPING	N/A
SCOUR CRITICAL CODE	5

100 YEAR FREQUENCY

Q_2	1,420 C.F.S.
V_2	3.58 F.P.S.
HW_2	EL. 638.97

ROADWAY OVERFLOW DESIGN FREQUENCY

OVERTOPPING FREQUENCY — > 100 YEARS

LIST OF DRAWINGS

CONSULTANT DESIGN CONTACT:
NATHAN KINDT
(920) 392-5155

BRIDGE OFFICE CONTACT:
AARON BONK
(608) 261-0261

NO.	DATE	REVISION	BY

MSA
ENGINEERING | ARCHITECTURE | SURVEYING
FUNDING | PLANNING | ENVIRONMENTAL
1230 SOUTH BLVD., BARABOO WI 53913
(608) 356-2771 www.msa-ps.com

STATE OF WISCONSIN
DEPARTMENT OF TRANSPORTATION

ACCEPTED 05/02/25
CHIEF STRUCTURES DESIGN ENGINEER — DATE

STRUCTURE B-32-163

STH 35 OVER MORMON CREEK

COUNTY: LA CROSSE — TOWN/~~CITY/VILLAGE~~: SHELBY

DESIGN SPEC. ORIGINAL PRESTRESSED GIRDERS : AASHTO 1989
NEW SLAB/GIRDERS : AASHTO LRFD DESIGN SPEC. 9TH EDITION

DESIGNED BY	DESIGN CK'D.	DRAWN BY	PLANS CK'D.
NJK	JDH	RLR	NJK

GENERAL PLAN

SHEET 1 OF 29

361

8

FILE= 13544010_01.DGN

13544010_B-32-163_01.dgn 2/6/2025 2:29:46 PM ekazadi

STATE PROJECT NUMBER

5163-07-72

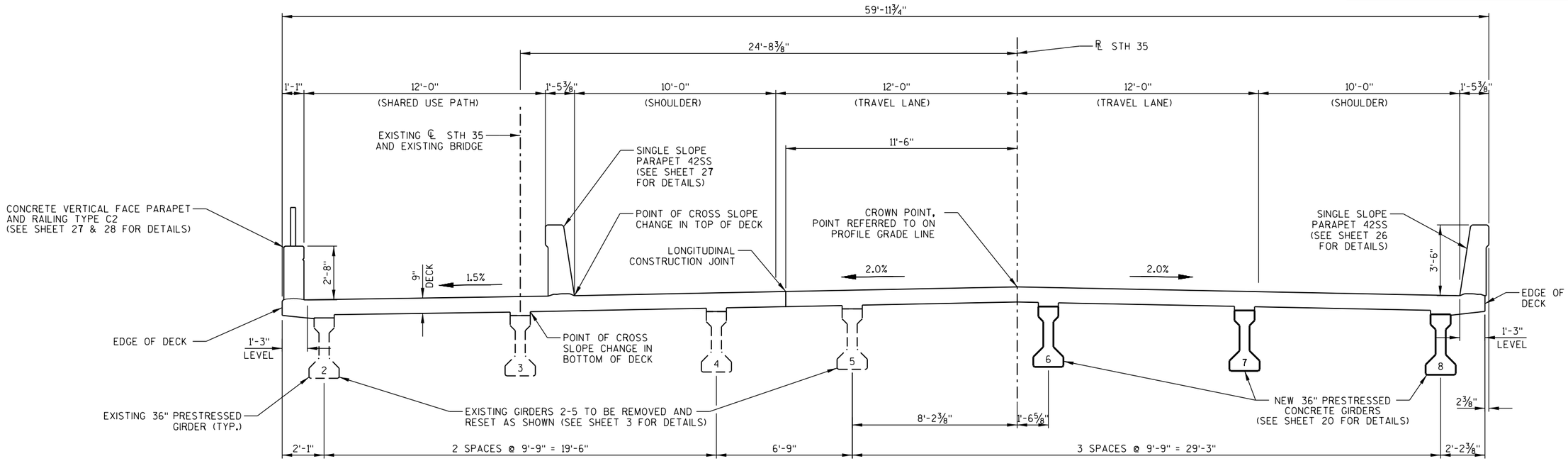

NOTE: EXISTING IN-SPAN INTERMEDIATE STEEL DIAPHRAGMS BETWEEN RETAINED GIRDERS ARE TO REMAIN.

FINISHED CROSS SECTION THRU BRIDGE

(LOOKING NORTH)

ALIGNMENT NOTE

AT BRIDGE, ℞ STH 35 IS 24.70' RIGHT OF EXISTING ℄ STH 35. EQUATION FROM EXISTING PLAN STATIONING TO ℞ STH 35 STATIONING IS 218.88' INCREASE.
STA. 616+00 ON EXISTING ℄ STH 35 = STA. 618+18.88, 24.70' LT OF ℞ STH 35.

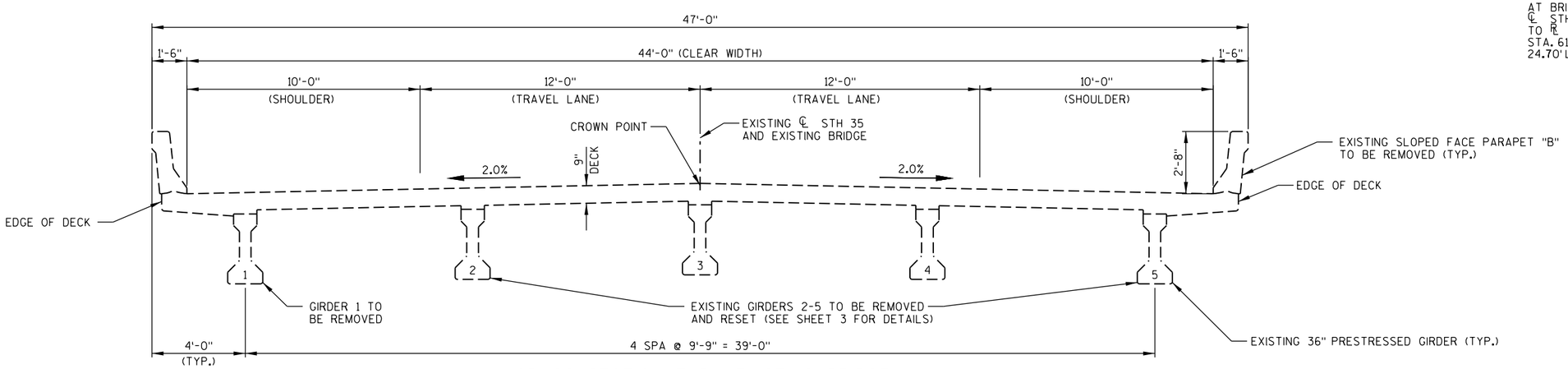

CROSS SECTION THRU EXISTING BRIDGE

(LOOKING NORTH)

8

8

NO.	DATE	REVISION	BY

STATE OF WISCONSIN
DEPARTMENT OF TRANSPORTATION

STRUCTURE B-32-163

DRAWN BY RLR | PLANS CK'D. NJK

CROSS SECTIONS

SHEET 2
362

FILE= 13544010_02.DGN
DATE=#DATE#

13544010_B-32-163_02.dgn 2/11/2025 2:27:28 PM ekazadi

STATE PROJECT NUMBER
5163-07-72

T — BAR COUPLERS NO. 6. SEE SHEET 24 FOR DETAILS.

▽ — TEMPORARY SUPPORT REQUIRED. WORK TO BE PAID UNDER ITEM "TEMPORARY SUPPORT B-32-163".

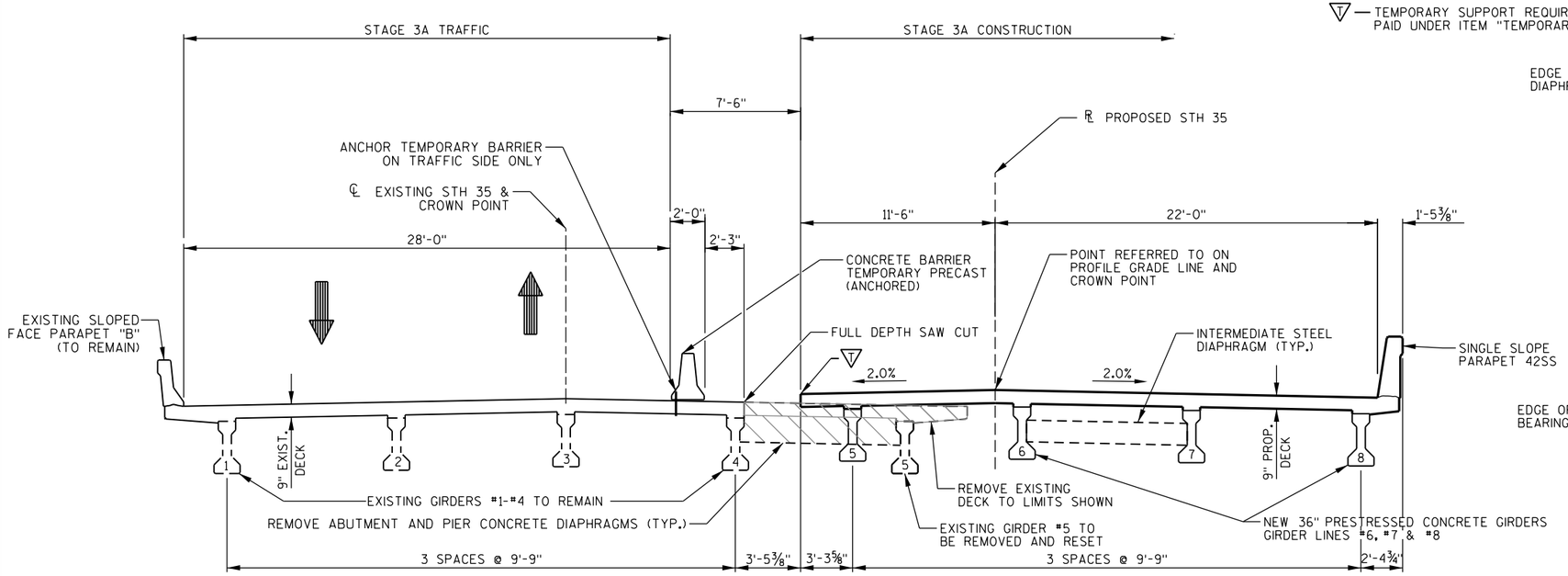

CROSS SECTION THRU BRIDGE - DECK REPLACEMENT & WIDENING
STAGE 3A
LOOKING NORTH

STAGE 3A REMOVAL

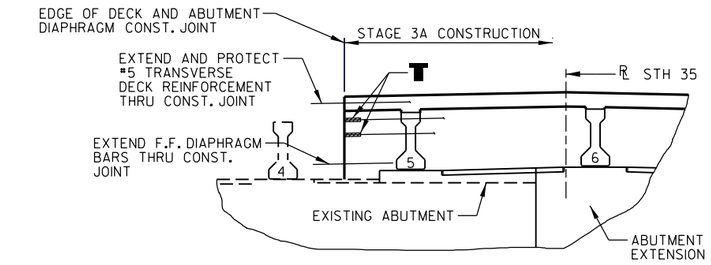

ABUTMENT TOP DETAIL
STAGE 3A
LOOKING NORTH

SEE SHEET 24 FOR CONST. JOINT DETAILS

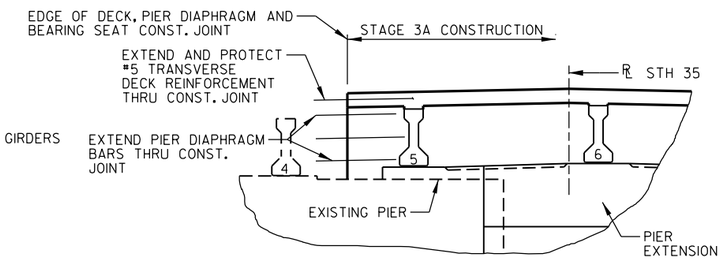

PIER TOP DETAIL
STAGE 3A
LOOKING NORTH

SEE SHEET 24 FOR CONST. JOINT DETAILS

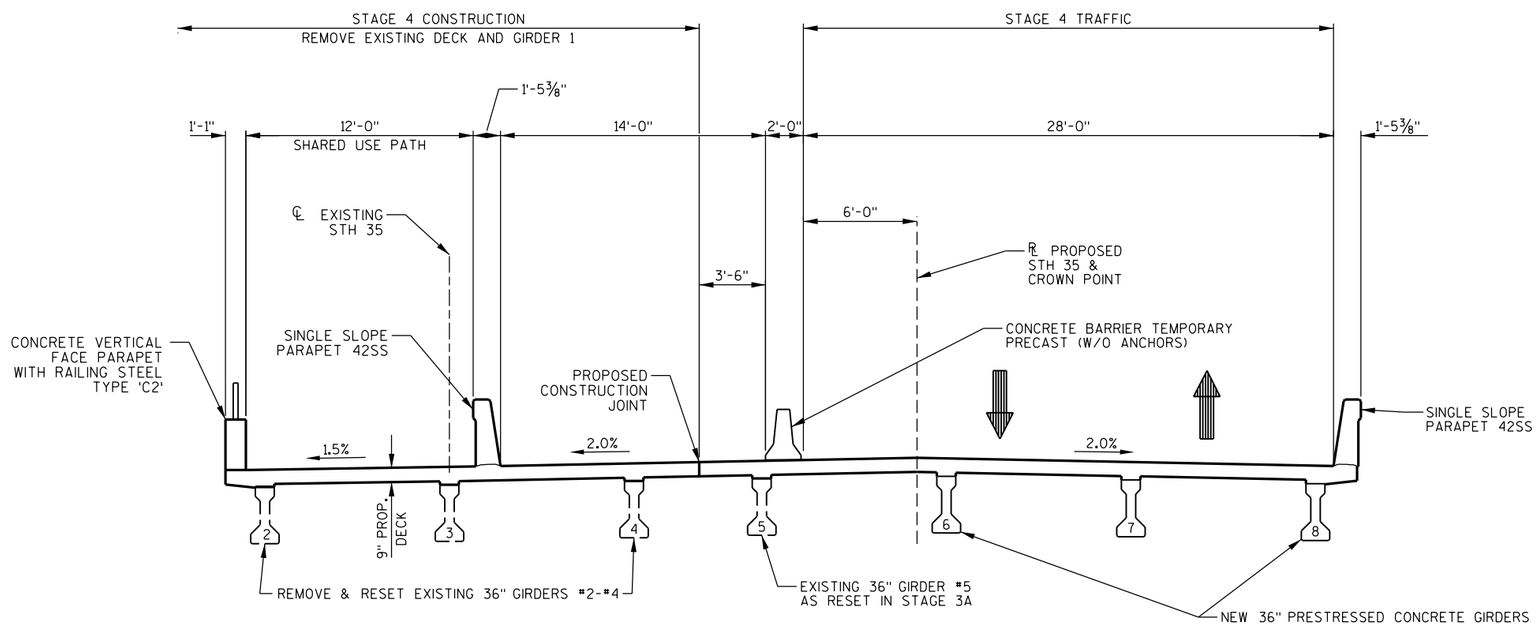

CROSS SECTION THRU BRIDGE - DECK REPLACEMENT & WIDENING
STAGE 4
LOOKING NORTH

STAGING NOTES:

SEE ROAD PLANS FOR STAGING NOTES AND DETAILS.

SEE SHEET 6 FOR REMOVAL DETAILS AND NOTES.

SEE SHEET 20 FOR NEW 36" PRESTRESSED GIRDER DETAILS.

SEE SHEETS 22-25 FOR PROPOSED DECK DETAILS.

SEE SHEETS 7-13 FOR EXISTING ABUTMENT MODIFICATION AND ABUTMENT EXTENSION DETAILS.

SEE SHEETS 14-19 FOR EXISTING PIER MODIFICATION AND PIER EXTENSION DETAILS.

PROVIDE A SUITABLE LIFTING DEVICE FOR REMOVING AND REINSTALLING THE EXISTING PRESTRESSED CONCRETE GIRDERS IN ACCORDANCE WITH BID ITEM "REMOVING AND RESETTING PRESTRESSED GIRDERS B-32-163".

INSTALL CONCRETE BARRIER TEMPORARY PRECAST ACCORDING TO SECTION 603.8125 OF THE STANDARD SPECIFICATIONS.

ANCHOR CONCRETE BARRIER TEMPORARY PRECAST TO EXISTING BRIDGE DECK ACCORDING TO SECTION 603.8505 OF THE STANDARD SPECIFICATIONS.

SAFELY HANDLE AND STORE EXISTING PRESTRESSED CONCRETE GIRDERS DURING CONSTRUCTION IN ACCORDANCE WITH BID ITEM "REMOVING AND RESETTING PRESTRESSED GIRDERS B-32-163".

CARE SHALL BE TAKEN NOT TO IMPACT OR DAMAGE PROPOSED REINFORCEMENT PROTRUDING THROUGH THE CONSTRUCTION JOINT IN THE DECK AND DIAPHRAGM BETWEEN GIRDERS 4 & 5 WHEN REMOVING AND RESETTING GIRDER 4.

NO.	DATE	REVISION	BY

STATE OF WISCONSIN
DEPARTMENT OF TRANSPORTATION

STRUCTURE B-32-163

DRAWN BY RLR | PLANS CK'D. NJK

CROSS SECTIONS & STAGING DETAILS

SHEET 363

8

8

FILE= 13544010_03.DGN

13544010_B-32-163_03.dgn 2/6/2025 2:35:04 PM ekazadi

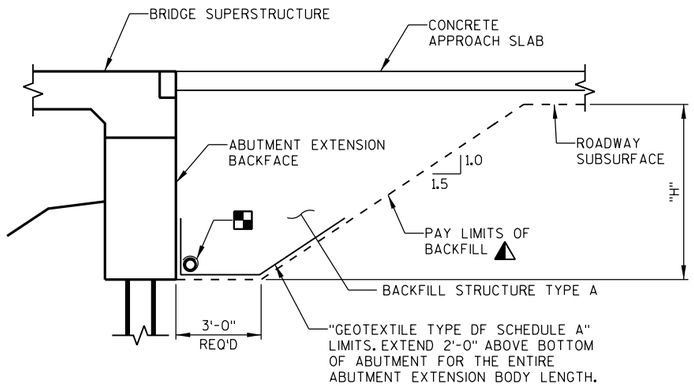

TYPICAL SECTION THRU ABUTMENT EXTENSION

▲ BACKFILL PAY LIMITS. BACKFILL BEYOND PAY LIMITS SHALL BE INCIDENTAL TO EXCAVATION FOR STRUCTURES. LIMITS OF EXCAVATION SHALL BE DETERMINED BY THE CONTRACTOR.

■ PIPE UNDERDRAIN WRAPPED (6-INCH). SLOPE 0.5% MIN. TO SUITABLE DRAINAGE. ATTACH RODENT SHIELD AT ENDS OF PIPE UNDERDRAIN.

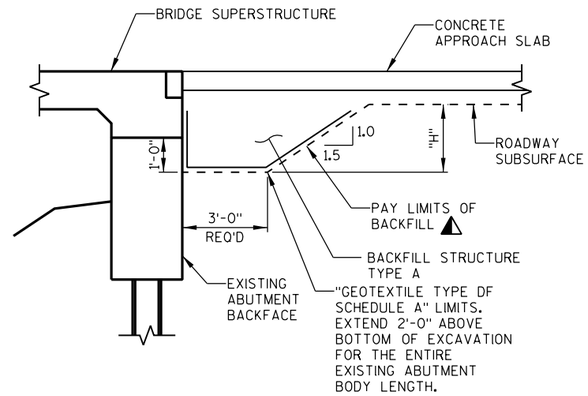

TYPICAL SECTION THRU EXISTING ABUTMENT

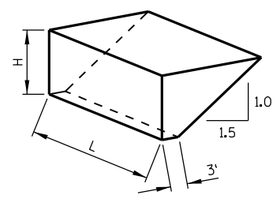

L = OUT TO OUT OF ABUTMENT BODY INCLUDING WINGS (FT)
H = AVERAGE ABUTMENT FILL HEIGHT (FT)
EF = EXPANSION FACTOR (1.20 FOR CY BID ITEMS AND 1.00 FOR TON BID ITEMS)
V_{CF} = (L)(3.0')(H) + (L)(0.5)(1.5H)(H)
V_{CY} = V_{CF}(EF)/27
V_{TON} = V_{CY}(2.0)

ABUTMENT BACKFILL DIAGRAM

TOTAL ESTIMATED QUANTITIES

ITEM NUMBER	BID ITEM	UNIT	SOUTH ABUT.	PIER 1	PIER 2	PIER 3	NORTH ABUT.	SUPER	TOTAL
203.0260.01	REMOVING STRUCTURE OVER WATERWAY MINIMAL DEBRIS B-32-163	EACH	--	--	--	--	--	--	1
206.1001.01	EXCAVATION FOR STRUCTURES BRIDGES B-32-163	EACH	--	--	--	--	--	--	1
210.1500	BACKFILL STRUCTURE TYPE A	TON	360	--	--	--	410	--	770
312.0110	SELECT CRUSHED MATERIAL	TON	--	16	16	16	--	--	48
502.0100	CONCRETE MASONRY BRIDGES	CY	39.9	33.2	33.2	27.7	39.9	560.4	735
502.3200	PROTECTIVE SURFACE TREATMENT	SY	--	--	--	--	--	1,410	1,410
502.3210	PIGMENTED SURFACE SEALER	SY	--	--	--	--	--	430	430
502.4205	ADHESIVE ANCHORS NO. 5	EACH	45	61	61	57	45	--	269
502.4206	ADHESIVE ANCHORS NO. 6	EACH	16	--	--	--	16	--	32
503.0136	PRESTRESSED GIRDER TYPE I 36-INCH	LF	--	--	--	--	--	660	660
503.1006.S.01	REMOVING AND RESETTING PRESTRESSED GIRDERS B-32-163	EACH	--	--	--	--	--	16	16
505.0400	BAR STEEL REINFORCEMENT HS STRUCTURES	LB	2,040	1,930	1,930	1,690	2,040	--	9,630
505.0600	BAR STEEL REINFORCEMENT HS COATED STRUCTURES	LB	1,990	100	100	100	2,020	125,820	130,130
505.0906	BAR COUPLERS NO. 6	EACH	--	--	--	--	--	12	12
506.2605	BEARING PADS ELASTOMERIC NON-LAMINATED	EACH	--	--	--	--	--	56	56
506.4000.01	STEEL DIAPHRAGMS B-32-163	EACH	--	--	--	--	--	24	24
511.1200.01	TEMPORARY SHORING B-32-163	SF	340	--	--	--	340	--	680
513.7011	RAILING STEEL TYPE C2	LF	--	--	--	--	--	248	248
516.0500	RUBBERIZED MEMBRANE WATERPROOFING	SY	21	--	--	--	--	21	42
550.0500	PILE POINTS	EACH	6	5	5	5	6	--	27
550.1120	PILING STEEL HP 12-INCH X 53 LB	LF	540	450	450	450	540	--	2,430
606.0300	RIPRAP HEAVY	CY	80	120	120	--	85	--	405
612.0406	PIPE UNDERDRAIN WRAPPED 6-INCH	LF	50	--	--	--	50	--	100
614.0150	ANCHOR ASSEMBLIES FOR STEEL PLATE BEAM GUARD	EACH	--	--	--	--	--	2	2
645.0111	GEOTEXTILE TYPE DF SCHEDULE A	SY	26	--	--	--	26	--	52
645.0120	GEOTEXTILE TYPE HR	SY	155	260	230	--	165	--	810
SPV.0060.05	TEMPORARY SUPPORT B-32-163	EACH	--	--	--	--	--	--	1
	NON-BID ITEMS								
	PREFORMED FILLER	SIZE							1/2" & 3/4"
	POLYETHYLENE SHEETS								

GENERAL NOTES

DRAWINGS SHALL NOT BE SCALED.

DIMENSIONS SHOWN ARE BASED ON THE ORIGINAL STRUCTURE PLANS. ORIGINAL PLANS ARE AVAILABLE FROM THE WISCONSIN DEPARTMENT OF TRANSPORTATION.

BAR STEEL REINFORCEMENT SHALL BE EMBEDDED 2" CLEAR UNLESS SHOWN OR NOTED OTHERWISE.

THE FIRST OR FIRST TWO DIGITS OF THE BAR MARK SIGNIFIES THE BAR SIZE.

BEVEL EXPOSED EDGES OF CONCRETE ¾" UNLESS NOTED OTHERWISE.

THE SLOPE IN FRONT OF THE ABUTMENTS AND AT THE PIERS SHALL BE COVERED WITH RIPRAP HEAVY AND GEOTEXTILE TYPE HR TO THE LIMITS SHOWN ON SHEET 1 AND IN THE ABUTMENT DETAILS.

THE UPPER LIMITS OF "EXCAVATION FOR STRUCTURES BRIDGES B-32-163" SHALL BE THE EXISTING GROUNDLINE.

THE EXISTING GROUNDLINE SHALL BE USED AS THE UPPER LIMITS OF EXCAVATION AT THE PIERS.

THIS STRUCTURE WILL REHABILITATE THE EXISTING STRUCTURE, B-32-163, A 223.5 FT. LONG, FOUR SPAN PRESTRESSED GIRDER BRIDGE ON RETAINING CONCRETE ABUTMENTS AND ON PILE ENCASED CONCRETE PIERS. THE STRUCTURE HAS A 44.0 FT. EXISTING CLEAR ROAD WIDTH.

AT BACK FACE OF ABUTMENT, ALL VOLUME WHICH CAN NOT BE PLACED BEFORE ABUTMENT EXTENSION CONSTRUCTION AND IS NOT OCCUPIED BY THE NEW STRUCTURE SHALL BE BACKFILLED WITH BACKFILL STRUCTURE TYPE A.

THE QUANTITY FOR BACKFILL STRUCTURES IS CALCULATED BASED ON THE DETAIL SHOWN IN THE PLANS. BACKFILL BEYOND PAY LIMITS SHALL BE INCIDENTAL TO "EXCAVATION FOR STRUCTURES BRIDGES B-32-163".

EXCAVATION BELOW THE ABUTMENT AND ABUTMENT BEDDING MATERIALS REQUIRES ENGINEER APPROVAL. GEOTEXTILE SHALL BE SET AT THE BOTTOM OF EXCAVATION AND EXTEND 2'-0" ABOVE BOTTOM OF ABUTMENT.

PROTECTIVE SURFACE TREATMENT SHALL BE APPLIED TO THE TOP OF DECK, AND TO THE FACE AND TOP OF PAVING NOTCH.

PIGMENTED SURFACE SEALER SHALL BE APPLIED TO THE INSIDE FACES, TOP FACES, AND THE VERTICAL ENDS OF THE OUTSIDE PARAPETS AND TO ALL FACES OF THE INTERMEDIATE PARAPET.

THE CONTRACTOR SHALL SUPPLY A NEW NAME PLATE IN ACCORDANCE WITH SECTION 502.3.11 OF THE STANDARD SPECIFICATIONS AND STANDARD DETAIL DRAWINGS. NAME PLATE TO SHOW ORIGINAL CONSTRUCTION YEAR.

ELEVATIONS SHOWN ON THIS PLAN ARE REFERENCED TO USGS NAVD 88 (2012 ADJUSTED). BENCHMARK REFERENCES AT THE PROJECT SITE WERE SET BY THE CONSULTANT USING GPS TECHNOLOGY. SEE ROAD PLANS FOR DETAILS.

THE MINIMUM CONCRETE HAUNCH AT THE EDGE OF THE EXISTING & NEW GIRDER FLANGES SHALL BE 1¼" AND THE HAUNCH QUANTITY IS BASED ON THE AVERAGE HAUNCH DEPTH SHOWN ON SHEETS 20 & 22.

AT PIER EXTENSIONS, CONCRETE POURED UNDER WATER WILL BE ALLOWED AND SHALL BE DONE IN ACCORDANCE WITH SECTION 502.3.5.3 OF THE STANDARD SPECIFICATIONS.

VARIATIONS TO THE NEW GRADE LINE OVER ¼" MUST BE SUBMITTED BY THE ENGINEER TO THE STRUCTURES DESIGN SECTION FOR REVIEW.

SHAPING, GRADING, AND REPAIR OF EXISTING RIPRAP IN FRONT OF BOTH ABUTMENTS IS REQUIRED UNDER THE BRIDGE TO THE LIMITS SHOWN ON SHEET 1 AND IN FRONT OF THE EXISTING ABUTMENTS AS DIRECTED BY THE ENGINEER. WORK TO BE INCLUDED IN "EXCAVATION FOR STRUCTURES BRIDGES B-32-163".

THE CONTRACTOR IS RESPONSIBLE FOR TEMPORARILY SUPPORTING THE TEMPORARY BRIDGE DECK OVERHANGS BETWEEN GIRDERS 4 & 5 DURING STAGED CONSTRUCTION UNTIL THE DECK IS FULLY CONSTRUCTED.

THE LOCATIONS OF EXISTING UTILITY INSTALLATIONS AS SHOWN ON PLANS ARE APPROXIMATE.

BROOM FINISH TOP SURFACE OF SHARED USE PATH FOR FULL LENGTH OF BRIDGE IN ACCORDANCE WITH SECTION 502.3.7 OF THE STANDARD SPECIFICATIONS.

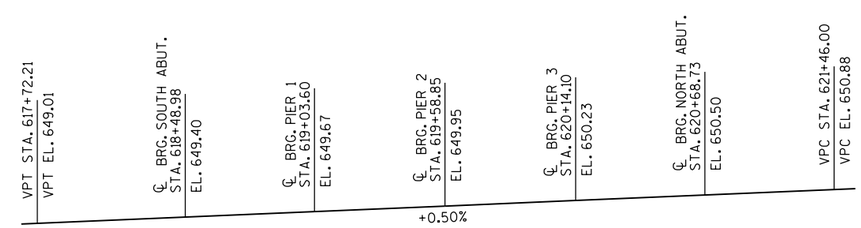

PROFILE GRADE LINE - ℞ STH 35

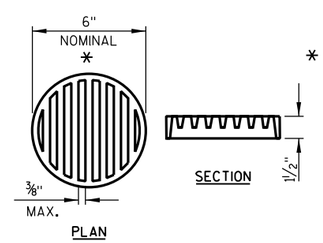

RODENT SHIELD DETAIL

* DIMENSIONS ARE APPROXIMATE. THE GRATE IS SIZED TO FIT INTO A PIPE COUPLING. ORIENT SO SLOTS ARE VERTICAL.

THE RODENT SHIELD, PIPE COUPLING AND SCREWS SHALL BE CONSIDERED INCIDENTAL TO THE BID ITEM "PIPE UNDERDRAIN WRAPPED 6-INCH".

THE RODENT SHIELD SHALL BE A PVC GRATE SIMILAR TO THIS DETAIL. THE GRATE IS COMMERCIALLY AVAILABLE AS A FLOOR STRAINER. A PIPE COUPLING IS REQUIRED FOR THE ATTACHMENT OF THIS SHIELD TO THE EXPOSED END OF THE PIPE UNDERDRAIN. THE SHIELD SHALL BE FASTENED TO THE PIPE COUPLING WITH TWO OR MORE NO. 10 X 1-INCH STAINLESS STEEL SHEET METAL SCREWS.

STATE PROJECT NUMBER
5163-07-72

NO.	DATE	REVISION	BY

STATE OF WISCONSIN
DEPARTMENT OF TRANSPORTATION

STRUCTURE B-32-163

DRAWN BY RLR | PLANS CK'D. NJK

QUANTITIES, DETAILS & NOTES

SHEET 4
364

8

FILE= 13544010_04.DGN

NOTES:

SUBSURFACE EXPLORATION DATA SHOWN IS BASED ON ORIGINAL PLANS.

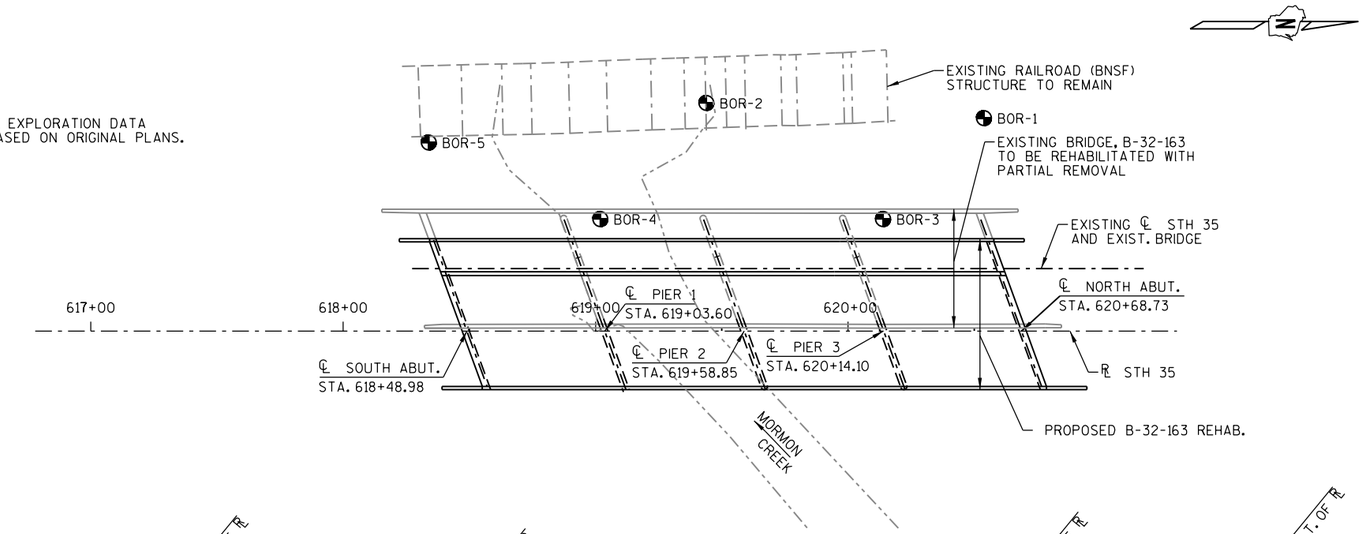

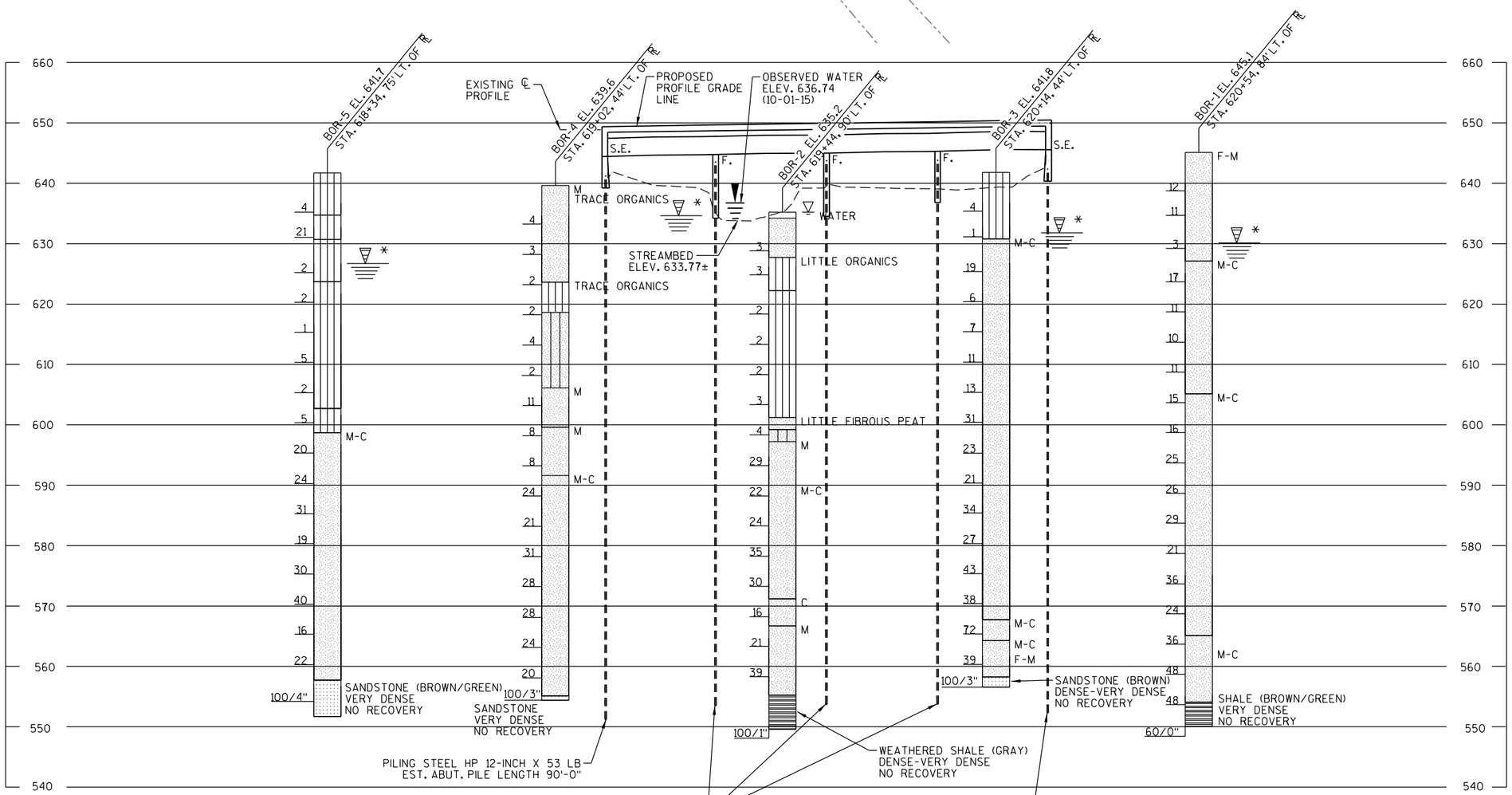

BORINGS OFFSET FOR CLARITY. SEE PLAN VIEW FOR BORING LOCATION.

* THE GROUND WATER ELEVATION WAS DETERMINED FROM WHERE THE SOIL SAMPLE WAS DESCRIBED AS WET.

STATE PROJECT NUMBER

5163-07-72

MATERIAL SYMBOLS

ASPHALT	TOPSOIL	PEAT
CONCRETE	FILL	GRAVEL
SAND	CLAY	SILT
BOULDERS OR COBBLES	LIMESTONE	BEDROCK (UNKNOWN)
SHALE	SANDSTONE	IGNEOUS/ META

LEGEND OF BORING

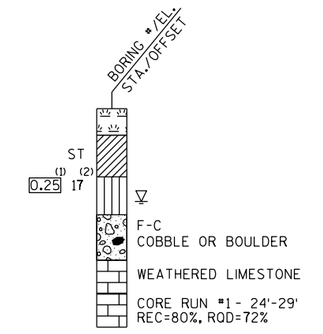

(1) UNCONFINED STRENGTH, AS DETERMINED BY A POCKET PENETROMETER (TSF)

(2) UNLESS OTHERWISE, SPECIFIED THE SPT 'N' VALUE IS BASED ON AASHTO T-206, STANDARD PENETRATION TEST. THE SPT 'N' VALUE PRESENTED HAS NOT BEEN CORRECTED FOR OVERBURDEN PRESSURE OR HAMMER EFFICIENCY.

GROUND WATER ELEVATION

- AT TIME OF DRILLING
- END OF DRILLING
- AFTER DRILLING

ABBREVIATIONS

F-FINE M-MEDIUM C-COARSE ST-SHELBY TUBE

SUBSURFACE EXPLORATION FOR FOUNDATION DESIGN AND BIDDERS INFORMATION

BORINGS WERE COMPLETED AT POINTS APPROXIMATELY AS INDICATED ON THIS DRAWING TO OBTAIN INFORMATION CONCERNING THE CHARACTER OF SUBSURFACE MATERIALS FOUND AT THE SITE. BECAUSE THE INVESTIGATED DEPTHS ARE LIMITED AND THE AREA OF THE BORINGS IS VERY SMALL IN RELATION TO THE ENTIRE SITE, THE WISCONSIN DEPARTMENT OF TRANSPORTATION DOES NOT WARRANT SIMILAR SUBSURFACE CONDITIONS BELOW, BETWEEN, OR BEYOND THESE BORINGS. VARIATIONS IN SOIL CONDITIONS SHOULD BE EXPECTED AND FLUCTUATIONS IN GROUNDWATER LEVELS MAY OCCUR.

NO.	DATE	REVISION	BY

STATE OF WISCONSIN
DEPARTMENT OF TRANSPORTATION

STRUCTURE B-32-163

DRAWN BY TLP/RLR PLANS CK'D. NJK

SUBSURFACE EXPLORATION

SHEET 5
365

8

8

FILE= 13544010_05.DGN

STATE PROJECT NUMBER

5163-07-72

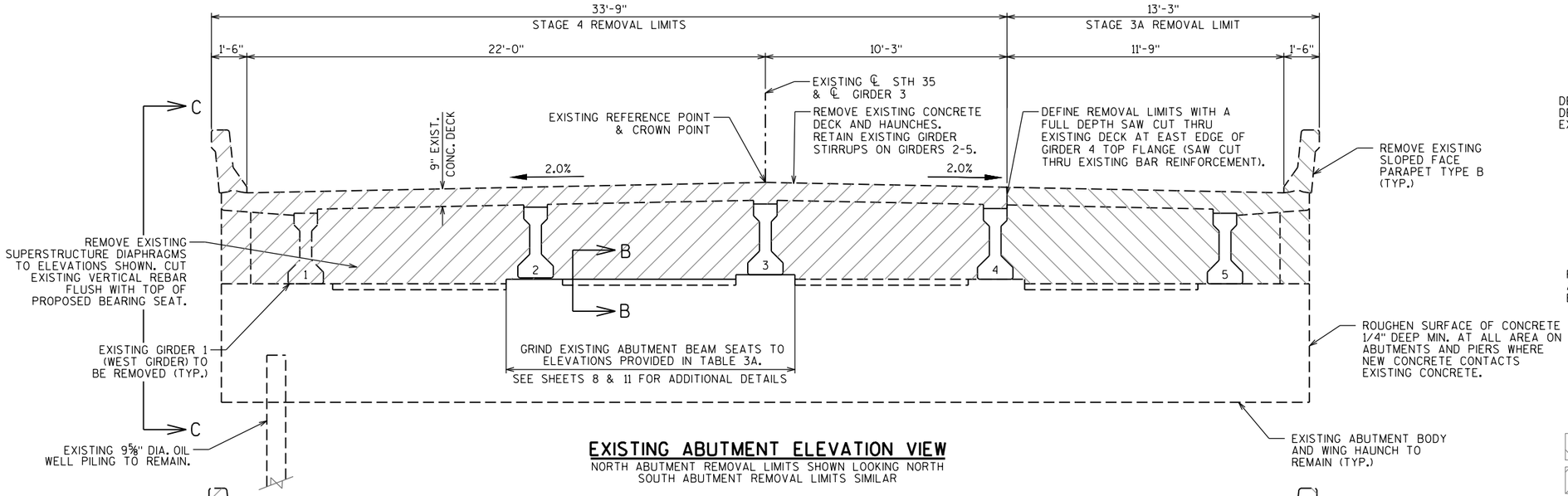

EXISTING ABUTMENT ELEVATION VIEW

NORTH ABUTMENT REMOVAL LIMITS SHOWN LOOKING NORTH
SOUTH ABUTMENT REMOVAL LIMITS SIMILAR

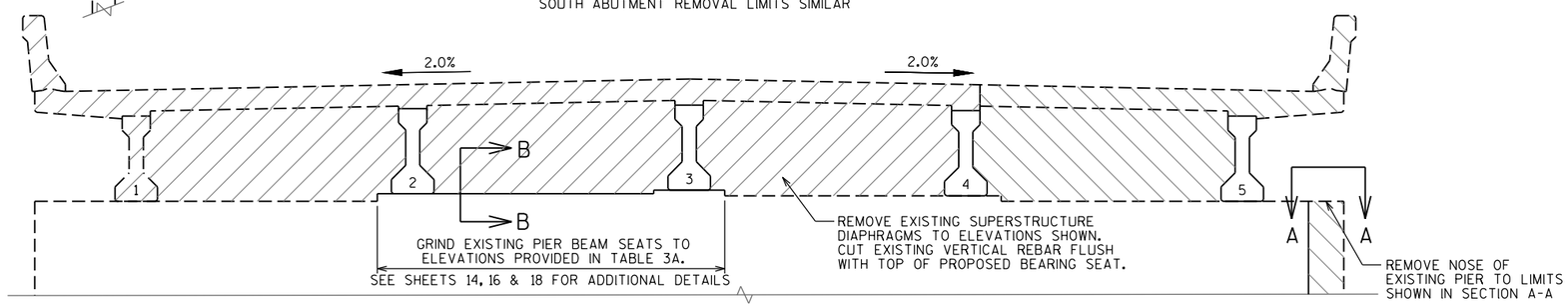

EXISTING PIER ELEVATION VIEW

SHOWING PIER REMOVAL LIMITS LOOKING NORTH

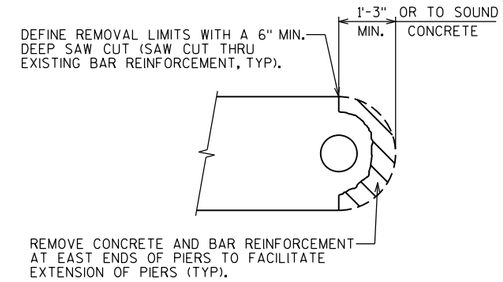

SECTION A-A

(TYPICAL AT EAST END OF ALL PIERS)

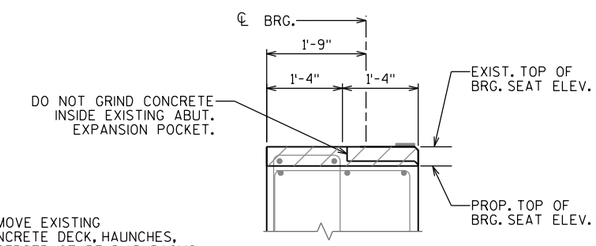

SECTION B-B

STAGE 3A REMOVAL

STAGE 4 REMOVAL

REMOVAL NOTES:

REMOVE EXISTING CONCRETE DECK, BEARING PADS, CONCRETE DIAPHRAGMS, IN SPAN STEEL DIAPHRAGMS, PARAPETS, AND WING TOPS TO LIMITS AND ELEVATIONS SHOWN DURING THE RESPECTIVE TRAFFIC STAGE. REMOVAL OF THIS MATERIAL SHALL BE INCLUDED IN BID ITEM "REMOVING STRUCTURE OVER WATERWAY MINIMAL DEBRIS".

SEE ROAD PLANS FOR STAGING NOTES AND DETAILS.

SAWCUT EXISTING DECK, WINGWALL, AND PIER. WORK TO BE PAID UNDER ITEM "REMOVING STRUCTURE OVER WATERWAY MINIMAL DEBRIS B-32-163".

CARE SHALL BE TAKEN TO AVOID DAMAGE TO THE EXISTING GIRDERS, INCLUDING SHEAR STIRRUPS. SAWCUTTING OF THE EXISTING SHEAR STIRRUPS IS NOT ALLOWED.

CLEAN AND REALIGN EXISTING REINFORCEMENT TO THE SATISFACTION OF THE ENGINEER PRIOR TO PLACEMENT OF NEW CONCRETE.

PROVIDE A SUITABLE LIFTING DEVICE FOR REMOVING AND REINSTALLING THE EXISTING PRESTRESSED CONCRETE GIRDERS ACCORDING TO BID ITEM "REMOVING AND RESETTING PRESTRESSED GIRDERS B-32-163".

SAFELY HANDLE AND STORE EXISTING PRESTRESSED CONCRETE GIRDERS DURING CONSTRUCTION ACCORDING TO BID ITEM "REMOVING AND RESETTING PRESTRESSED GIRDERS B-32-163".

REMOVAL OF EXISTING BEARINGS SHALL BE INCIDENTAL TO BID ITEM "REMOVING STRUCTURE OVER WATERWAY MINIMAL DEBRIS B-32-163".

GRIND EXISTING BEARING SEATS AT EXISTING GIRDERS 2 & 3 TO ELEVATIONS SHOWN IN TABLE 3A. FINISHED BEARING SEATS SHALL BE SMOOTH AND LEVEL. WORK INCIDENTAL TO "REMOVING STRUCTURE OVER WATERWAY MINIMAL DEBRIS B-32-163".

ANY EXISTING ABUTMENT, WINGWALL, PIER, OR PRESTRESSED GIRDERS DAMAGED DURING CONSTRUCTION SHALL BE REPLACED/REPAIRED BY THE CONTRACTOR, INCIDENTAL TO BID ITEM "REMOVING STRUCTURE OVER WATERWAY MINIMAL DEBRIS B-32-163".

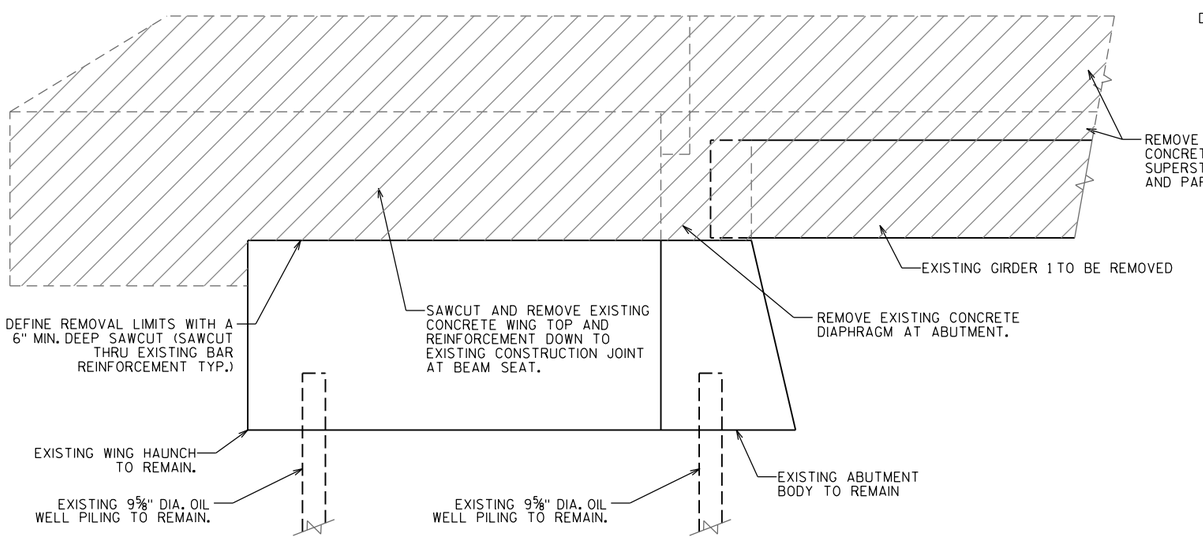

SECTION C-C WING REMOVAL DETAIL

EXISTING NORTHWEST WING SHOWN. OTHER EXISTING WINGS SIMILAR

TABLE 3A: B-32-163 Abutment & Pier Concrete

LOCATION	BEARING SEAT ELEVATION (FT)	SPAN 1-4 GIRDER 2	SPAN 1-4 GIRDER 3
SOUTH ABUTMENT	EXISTING	644.67	644.89
	PROPOSED	644.65	644.84
PIER 1	EXISTING	644.96	645.18
	PROPOSED	644.93	645.11
PIER 2	EXISTING	645.24	645.46
	PROPOSED	645.20	645.39
PIER 3	EXISTING	645.51	645.73
	PROPOSED	645.48	645.66
NORTH ABUTMENT	EXISTING	645.78	646.00
	PROPOSED	645.75	645.94

NO.	DATE	REVISION	BY

STATE OF WISCONSIN
DEPARTMENT OF TRANSPORTATION

STRUCTURE B-32-163

DRAWN BY RLR | PLANS CK'D. NJK

REMOVAL DETAILS

SHEET 8
366

8

8

13544010_B-32-163_06.DGN

13544010_B-32-163_06 removal.dgn 3/6/2024 11:56:52 AM frabska

STATE PROJECT NUMBER

5163-07-72

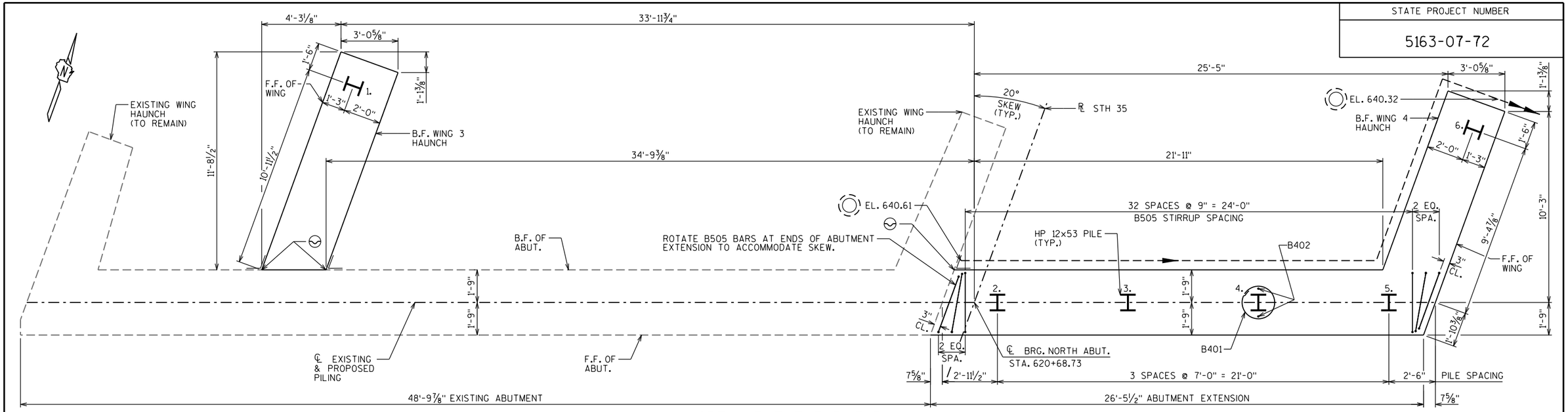

NORTH ABUTMENT PILE PLAN

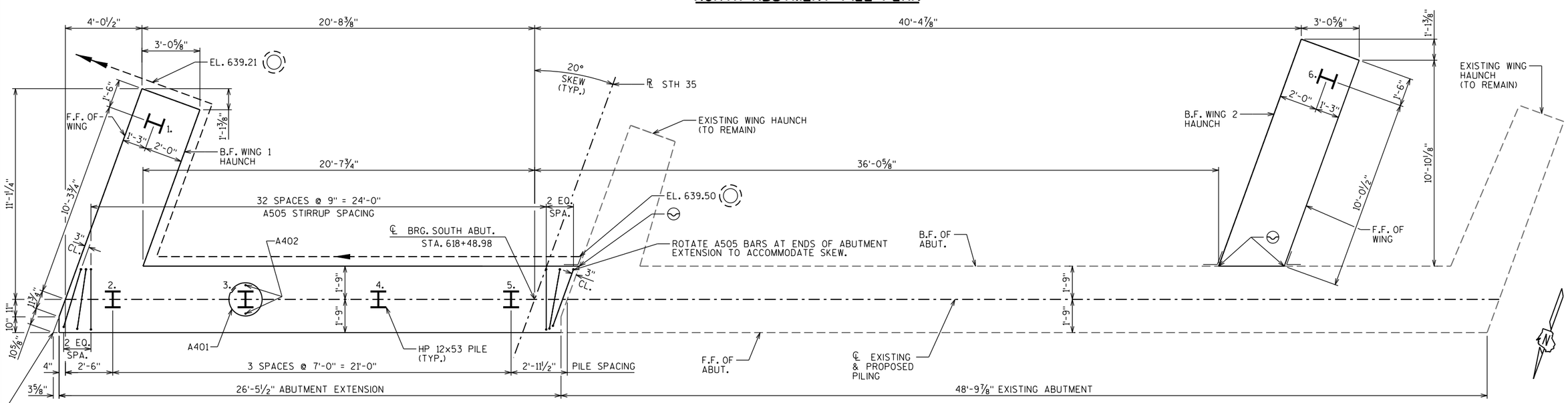

SOUTH ABUTMENT PILE PLAN

LEGEND

- ◑ — STEEL TROWEL TOP SURFACE OF NEW ABUTMENT CONCRETE. BEARING SEATS TO BE LEVEL.
- Ⓖ — GRIND EXISTING SEMI-EXPANSION SEAT TO ELEVATION SHOWN. REMOVE EXISTING GIRDER BEARINGS. GRIND OR UTILIZE CONCRETE SURFACE REPAIR TO ATTAIN SMOOTH AND LEVEL TOP SURFACE OF SEMI-EXPANSION POCKET AND BEAM SEATS. BEARING SEATS TO BE LEVEL.
- PLACE MULTIPLE LAYERS OF POLYETHYLENE SHEETS OVER ENTIRE ABUTMENT TOP BEFORE PLACING BEARING PADS AND/OR SUPERSTRUCTURE. TOTAL THICKNESS OF SHEETS SHALL BE AT LEAST 0.03 INCHES. BEARING SEATS TO BE LEVEL.
- ▲ — ½" FILLER EXTEND AS SHOWN. SEAL ALL EXPOSED HORIZONTAL & VERTICAL SURFACES OF FILLER WITH NON-STAINING GRAY, NON-BITUMINOUS JOINT SEALER. (1" DEEP & HOLD ⅛" BELOW SURFACE OF CONCRETE).
- ○ — INDICATES WING NUMBER
- ⬡ — INDICATES GIRDER NUMBER
- ◥ — ¾" "V" GROOVE ON FRONT FACE OF KEYED CONSTRUCTION JOINT.
- ⬒ — KEYED CONSTRUCTION JOINT FORMED BY BEVELED 2x6. POUR CONCRETE ABOVE THIS JOINT AFTER DECK IS IN PLACE AND PLACE ⬢ ON B.F. OF WING.
- ▽F — 4"x ½" FILLER, EXTEND FULL LENGTH ALONG F.F. OF ABUTMENT BETWEEN OUTSIDE EDGES OF DECK.
- ⌔ — CONSTRUCTION JOINT BETWEEN OLD AND NEW CONCRETE. PLACE 1'-6" WIDE RUBBERIZED MEMBRANE WATERPROOFING ON B.F. AT JOINT FROM BOTTOM OF ABUT. TO BEARING SEAT.
- (E) — SEMI-EXPANSION POCKET BETWEEN NEW CONCRETE BEAM SEATS 5 THRU 8. CONSTRUCT 3" DEEPER THAN BEAM SEATS AND ABUTMENT BACKWALL. SLOPE BETWEEN LEVEL BEAM SEATS ALONG ℄ OF BEARING.
- [5] — ADHESIVE ANCHORS NO. 5 BAR. EMBED 12½" IN CONCRETE.
- ⟨6⟩ — ADHESIVE ANCHORS NO. 6 BAR. EMBED 1'-3" IN CONCRETE.
- ⟨5⟩ — ADHESIVE ANCHORS NO. 5 BAR. EMBED 6" IN CONCRETE.
- ANCHORS SHALL BE APPROVED FOR USE IN CRACKED CONCRETE. HOLD 5" MIN. FROM EDGE OF EXISTING CONCRETE.
- △ — ¾" CORK FILLER (SIDE VERTICAL FACES ONLY IN SEMI-EXPANSION POCKETS).
- ★ — VERTICAL 18" WIDE RUBBERIZED MEMBRANE WATERPROOFING. EXTEND FROM BRIDGE SEAT TO PAVING NOTCH.
- ⬢ — 18" WIDE RUBBERIZED MEMBRANE WATERPROOFING. EXTEND BETWEEN WINGS AND ALONG B.F. OF WINGS.
- ◯ — PIPE UNDERDRAIN WRAPPED 6-INCH. EXTEND THRU GEOTEXTILE FABRIC AND DISCHARGE ON RIPRAP HEAVY. SLOPE 0.5% MIN. TO SUITABLE DRAINAGE. PROVIDE RODENT PROTECTION AT ENDS OF PIPE (SEE DETAIL SHEET 4).

F.F. — FRONT FACE B.F. — BACK FACE CL. — CLEAR

NO.	DATE	REVISION	BY

STATE OF WISCONSIN
DEPARTMENT OF TRANSPORTATION

STRUCTURE B-32-163

DRAWN BY RLR PLANS CK'D. NJK

ABUTMENT PILE PLAN & LEGEND

SHEET 7 — 367

13544010_B-32-163_07.DGN

8

STATE PROJECT NUMBER

5163-07-72

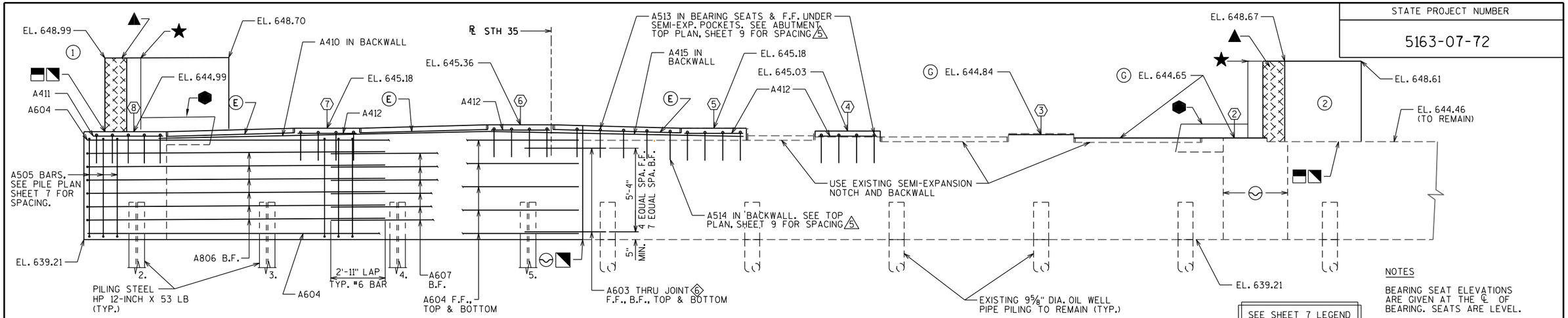

ELEVATION

(LOOKING SOUTH)

SEE SHEET 7 LEGEND FOR DESCRIPTION OF

— GRIND TO ELEVATION SHOWN.

NOTES

BEARING SEAT ELEVATIONS ARE GIVEN AT THE ℄ OF BEARING. SEATS ARE LEVEL.

FOR WING DETAILS AND ADDITIONAL ABUTMENT DETAILS, SEE SHEETS 9 & 10.

FOR PILE PLAN SEE SHEET 7.

ROUGHEN SURFACE OF CONCRETE ¼" DEEP MINIMUM AT ALL AREAS WHERE NEW CONCRETE CONTACTS EXISTING CONCRETE.

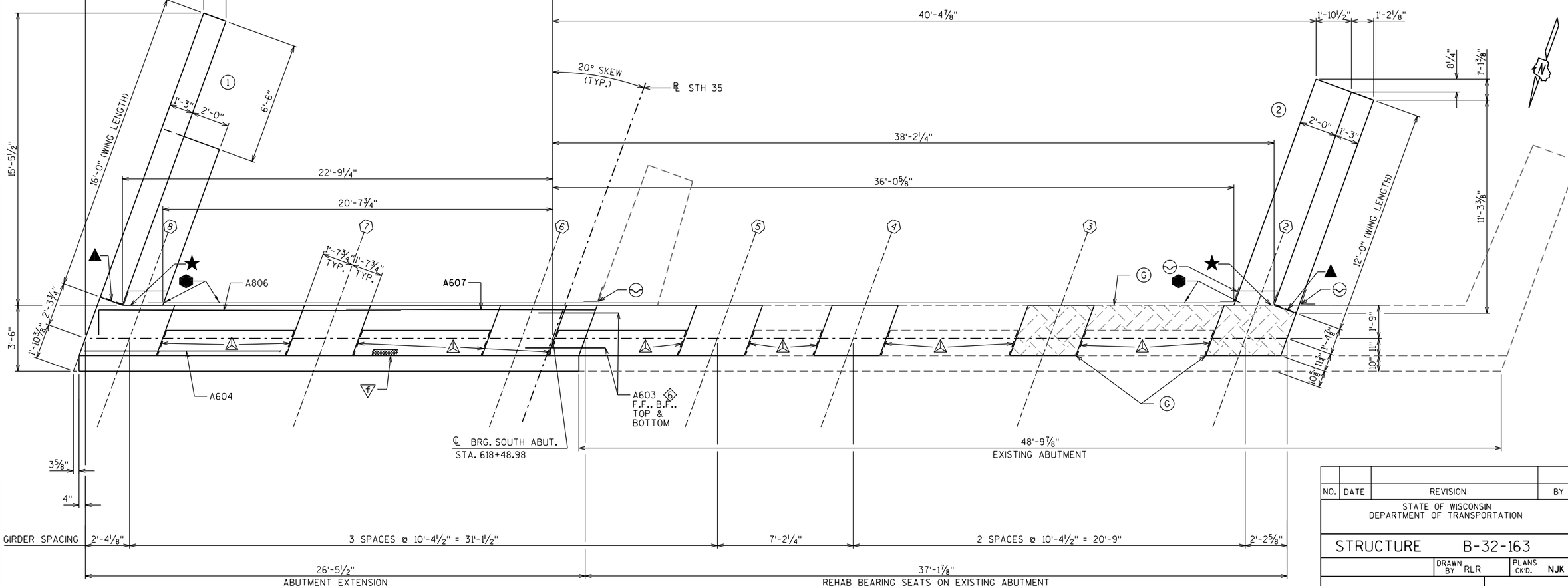

PLAN

NO.	DATE	REVISION	BY

STATE OF WISCONSIN
DEPARTMENT OF TRANSPORTATION

STRUCTURE B-32-163

DRAWN BY RLR | PLANS CK'D. NJK

SOUTH ABUTMENT

SHEET 8 368

8

8

13544010_B-32-163_08.DGN

13544010_B-32-163_08 S ABUT.dgn 12/15/2023 11:37:11 AM frabska

STATE PROJECT NUMBER

5163-07-72

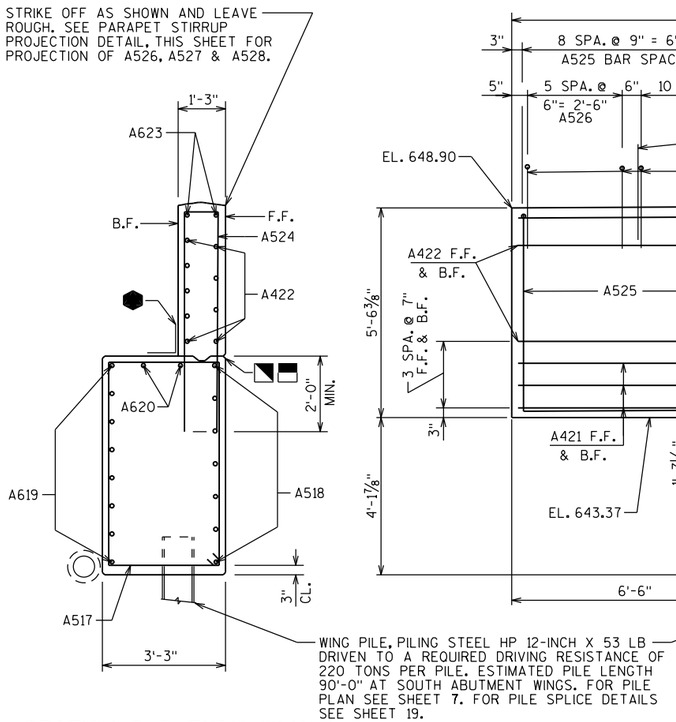

SECTION D-D THRU WING 1

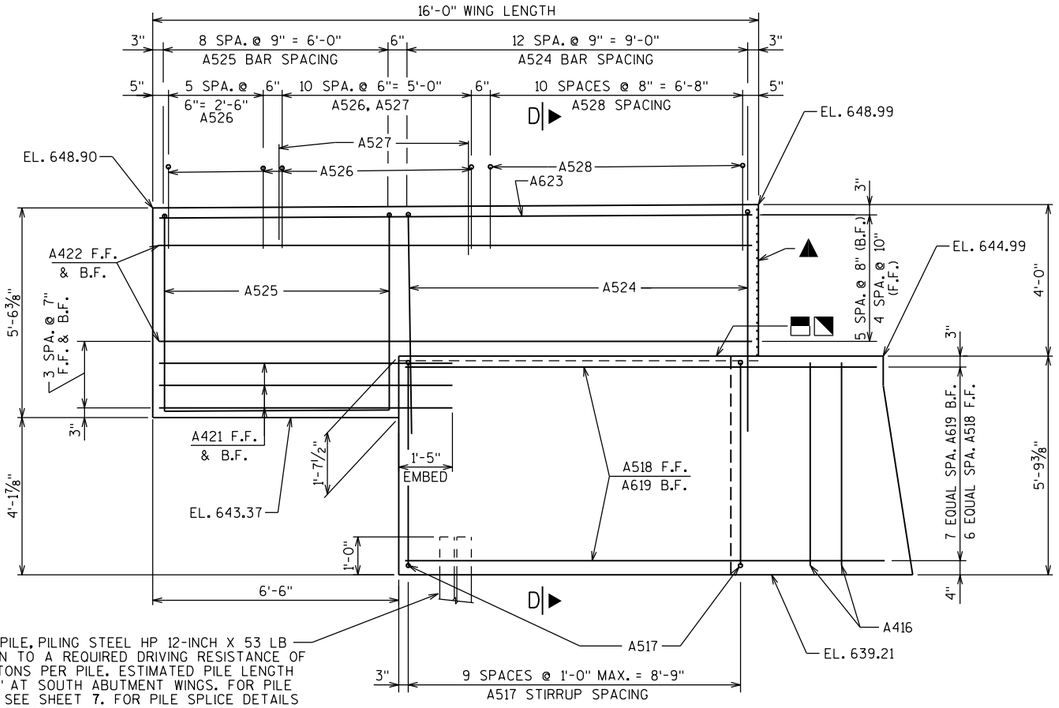

ELEVATION - WING 1
(LOOKING AT F.F. OF WING)

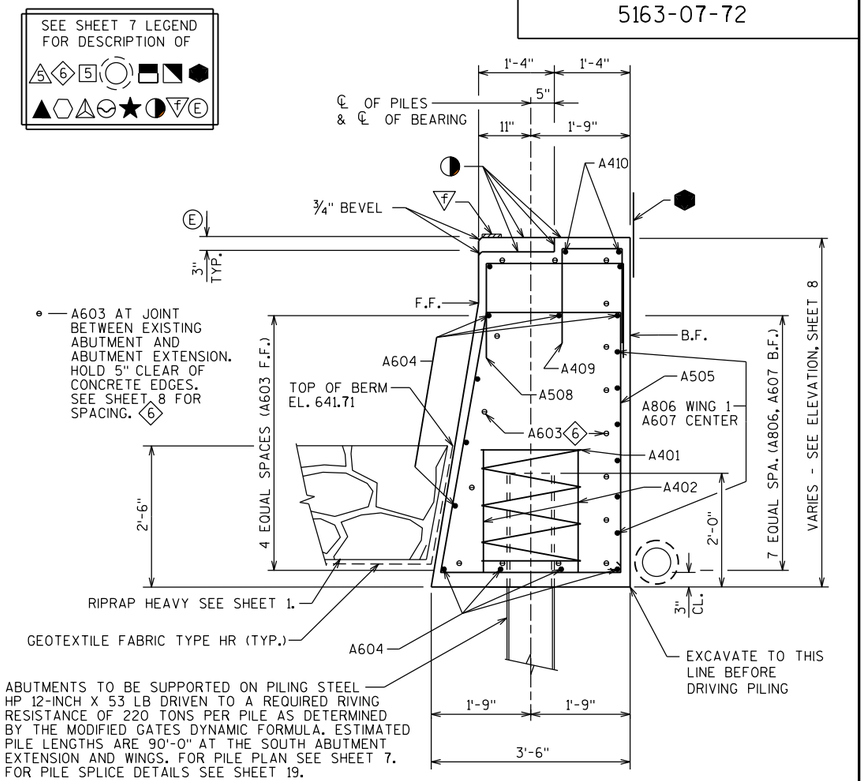

TYPICAL SECTION THRU ABUTMENT EXTENSION

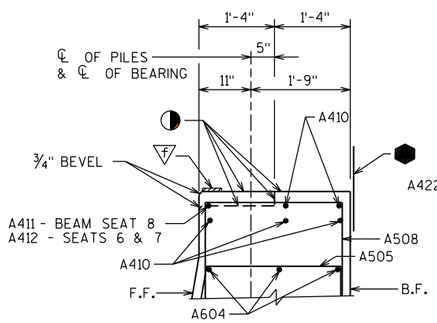

TYPICAL SECTION THRU ABUTMENT EXTENSION AT GIRDER SEATS 6, 7 & 8

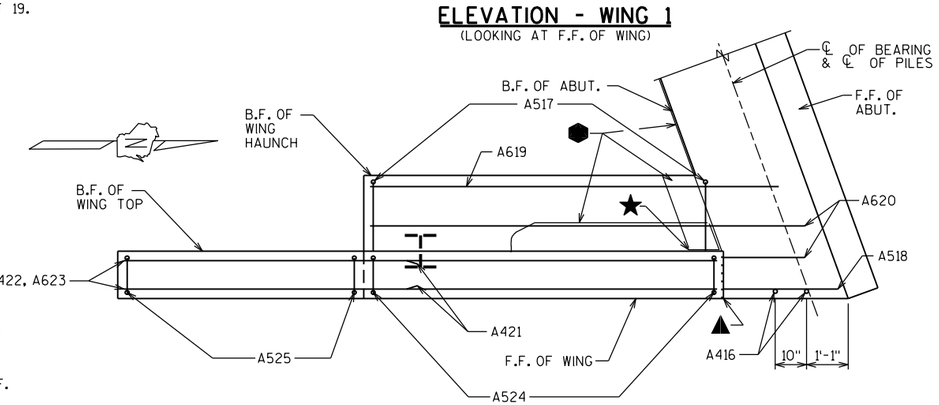

PLAN - WING 1

T A527 BARS MAY BE PLACED AFTER CONCRETE IS POURED BUT BEFORE INITIAL SET HAS TAKEN PLACE. USE CARE TO PLACE A527 BARS CORRECTLY ALONG TRANSITION OF PARAPET.

▽ A526 AND A528 BARS TO BE TIED TO WING STEEL BEFORE WING IS POURED.

SEE SHEET 26 FOR ADDITIONAL PLACEMENT DETAILS OF A526, A527, AND A528 BARS.

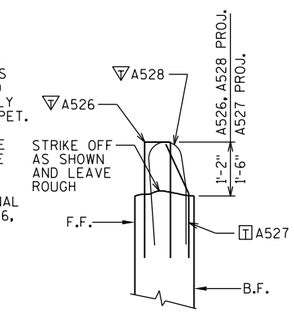

PARAPET STIRRUP PROJECTION DETAIL

8

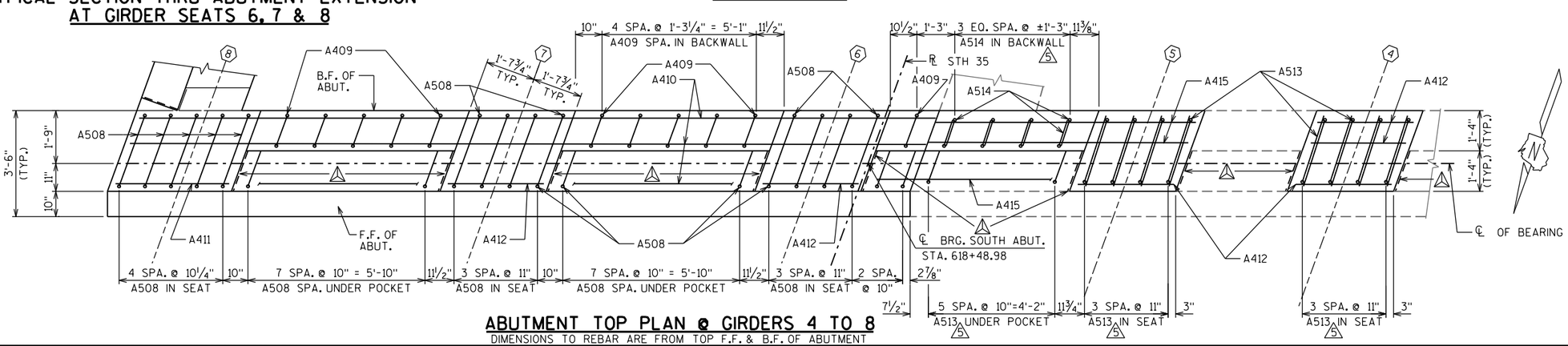

ABUTMENT TOP PLAN @ GIRDERS 4 TO 8
DIMENSIONS TO REBAR ARE FROM TOP F.F. & B.F. OF ABUTMENT

NO.	DATE	REVISION	BY

STATE OF WISCONSIN
DEPARTMENT OF TRANSPORTATION

STRUCTURE B-32-163

DRAWN BY RLR | PLANS CK'D. NJK

SOUTH ABUTMENT DETAILS 1

SHEET 9
369

13544010_B-32-163_09.DGN

13544010_B-32-163_09 WING1.dgn 12/15/2023 11:38:52 AM rrabska

STATE PROJECT NUMBER

5163-07-72

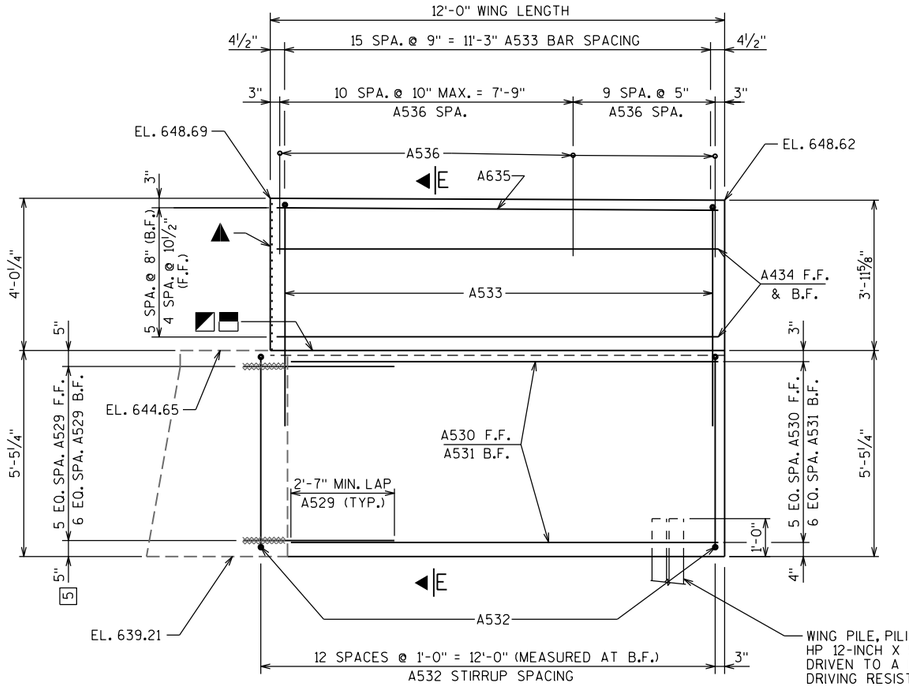

ELEVATION - WING 2

(LOOKING AT F.F. OF WING)

WING PILE, PILING STEEL HP 12-INCH X 53 LB DRIVEN TO A REQUIRED DRIVING RESISTANCE OF 220 TONS PER PILE. ESTIMATED PILE LENGTH 85'-0" AT SOUTH ABUT. WINGS. FOR PILE PLAN SEE SHEET 7. FOR PILE SPLICE DETAILS SEE SHEET 19.

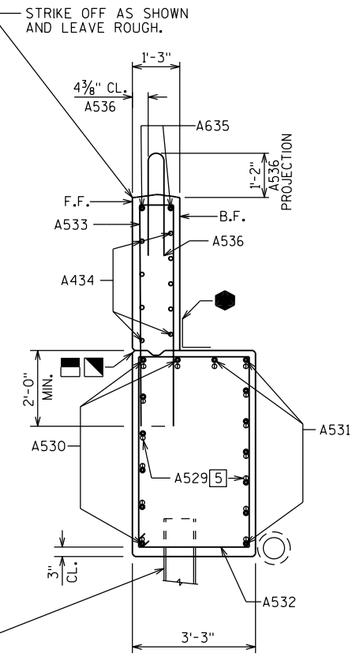

SECTION E-E THRU WING 2

⊛ — A529 AT JOINT BETWEEN NEW WING & OLD ABUTMENT. HOLD 5" CLEAR OF BOTTOM & TOP CONCRETE EDGES. 5

BILL OF BARS (SOUTH ABUTMENT)

UNCOATED 2040 LBS.
COATED 1990 LBS.

MARK	NUMBER REQUIRED COATED	NUMBER REQUIRED UNCOATED	LENGTH	BENT	LOCATION
A401	-	4	28'-0"	X	ABUT. BODY - 1 SPIRAL WRAP PER PILE
A402	-	8	2'-3"		ABUT. BODY - 2 PER PILE - VERT.
6 A603	-	16	4'-4"		ABUT. BODY - F.F., TOP & BOTTOM - ADHESIVE ANCHOR - HORIZ.
A604	-	10	26'-2"		ABUT. BODY - F.F., B.F., TOP & BOTTOM - HORIZ.
A505	-	37	15'-4"	X	ABUT. BODY - STIRRUPS - VERT.
A806	-	6	17'-2"	X	ABUT. BODY - B.F. @ WING 1 - HORIZ.
A607	-	6	13'-2"		ABUT. BODY - B.F. - CENTER - HORIZ.
A508	-	31	6'-7"	X	ABUT. TOP - TIES - VERT.
A409	-	11	5'-3"	X	ABUT. TOP - TIES - SEMI-EXP. POCKET BACKWALL - VERT.
A410	-	5	26'-2"		ABUT. END - TOP & SEMI-EXP. POCKET BACKWALL - HORIZ.
A411	-	1	3'-9"		ABUT. TOP - F.F. - GIRDER SEAT 8 - HORIZ.
A412	-	6	3'-2"		ABUT. TOP - F.F. - GIRDER SEATS 4, 5, 6 & 7 - HORIZ.
5 A513	-	22	3'-4"	X	ABUT. TOP OVER EXISTING - TIES - VERT.
5 A514	-	8	1'-11"	X	ABUT. TOP OVER EXISTING - TIES - SEMI-EXP. POCKET BACKWALL - VERT.
A415	-	3	8'-6"		ABUT. TOP OVER EXISTING - HORIZ.
A416	-	2	5'-3"		ABUT. BODY END AT WING 1 - VERT.
A517	10	-	17'-2"	X	WING 1 - HAUNCH - STIRRUP - VERT.
A518	7	-	12'-4"		WING 1 - HAUNCH - F.F. - HORIZ.
A619	8	-	10'-10"		WING 1 - HAUNCH - B.F. - HORIZ.
A620	2	-	11'-6"		WING 1 - HAUNCH - TOP - HORIZ.
A421	6	-	7'-9"		WING 1 - TOP @ TIP - HORIZ.
A422	9	-	15'-7"		WING 1 - TOP - F.F. & B.F. - HORIZ.
A623	2	-	15'-7"		WING 1 - TOP - F.F. & B.F. - HORIZ.
A524	13	-	12'-4"	X	WING 1 - TOP - TIES - VERT.
A525	9	-	11'-0"	X	WING 1 - TOP @ TIP - TIES - VERT.
A526	17	-	5'-7"	X	WING 1 - TOP - PARAPET STIRRUP - VERT.
A527	11	-	3'-0"	X	WING 1 - TOP - PARAPET STIRRUP - VERT.
A528	11	-	5'-10"	X	WING 1 - TOP - PARAPET STIRRUP - VERT.
5 A529	15	-	4'-3"		WING 2 - HAUNCH - F.F. & B.F. - ADHESIVE ANCHOR - HORIZ.
A530	7	-	11'-4"		WING 2 - HAUNCH - F.F. - HORIZ.
A531	8	-	11'-11"		WING 2 - HAUNCH - B.F. - HORIZ.
A532	13	-	16'-6"	X	WING 2 - HAUNCH - STIRRUP - VERT.
A533	16	-	12'-6"	X	WING 2 - TOP - TIES - VERT.
A434	9	-	11'-7"		WING 2 - TOP - F.F. & B.F. - HORIZ.
A635	2	-	11'-7"		WING 2 - TOP - F.F. & B.F. - HORIZ.
A536	20	-	6'-3"	X	WING 2 - TOP - PARAPET STIRRUP - VERT.

DIMENSIONS IN BENDING DETAILS ARE OUT TO OUT OF BAR.

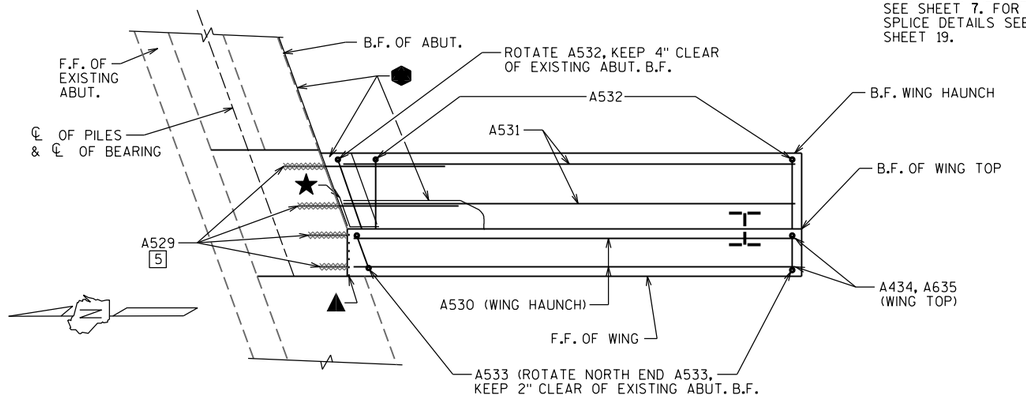

PLAN - WING 2

SEE SHEET 7 LEGEND FOR DESCRIPTION OF

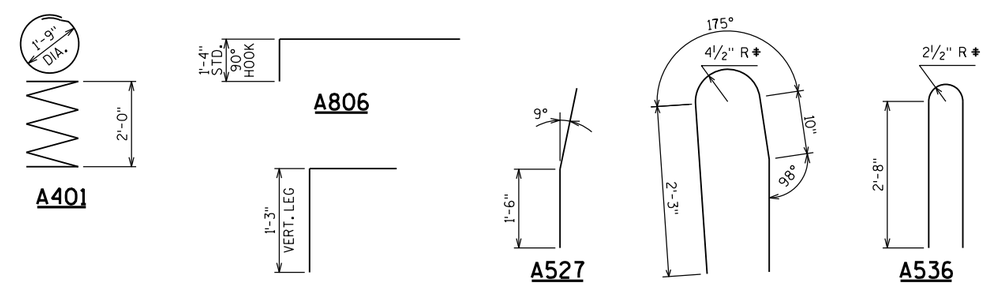

‡ - MEASURED TO INSIDE OF BAR.

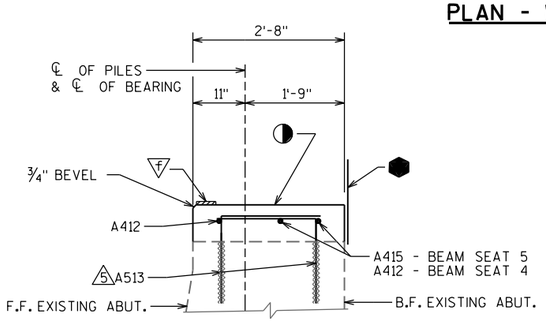

TYPICAL SECTION THRU ABUTMENT AT GIRDER SEATS 4 & 5

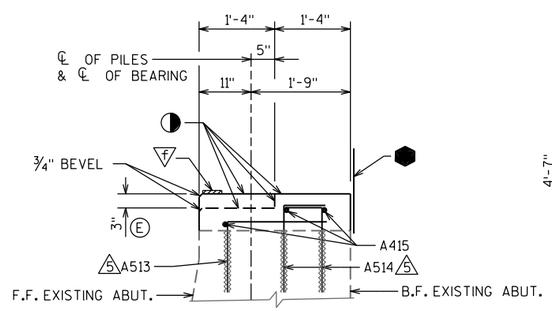

TYPICAL SECTION THRU ABUTMENT BACKWALL BETWEEN GIRDER SEATS 5 & 6

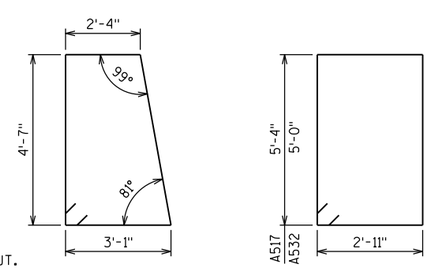

MARK	C	D
A508	2'-6"	2'-2"
A409	1'-1"	2'-2"
A524	11"	5'-10"
A525	11"	5'-2"
A526	6"	2'-8"
A533	11"	5'-11"

NO.	DATE	REVISION	BY

STATE OF WISCONSIN
DEPARTMENT OF TRANSPORTATION

STRUCTURE B-32-163

DRAWN BY RLR PLANS CK'D. NJK

SOUTH ABUTMENT DETAILS 2

SHEET 370

8

8

13544010_B-32-163_10.DGN

13544010_B-32-163_10 WING2.dgn 12/15/2023 11:40:17 AM rfrabska

STATE PROJECT NUMBER

5163-07-72

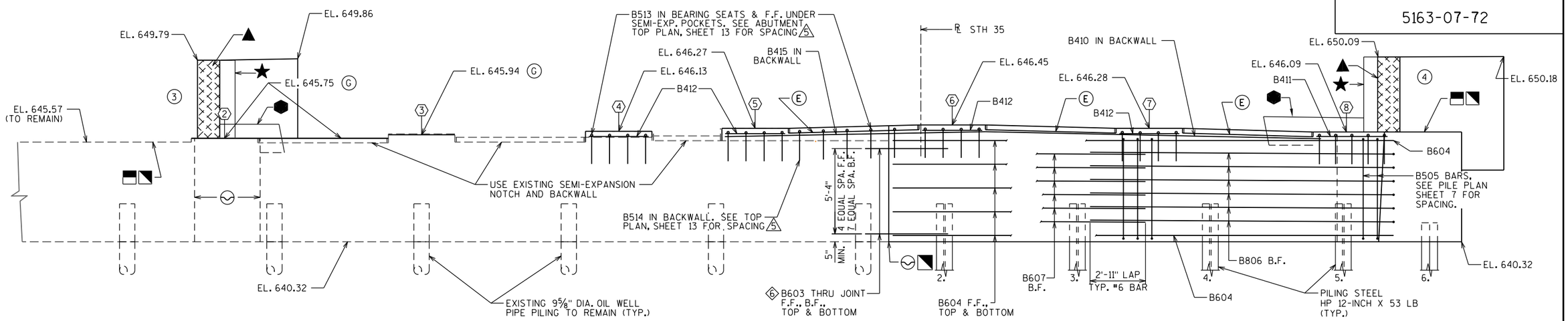

ELEVATION

(LOOKING NORTH)

— GRIND TO ELEVATION SHOWN.

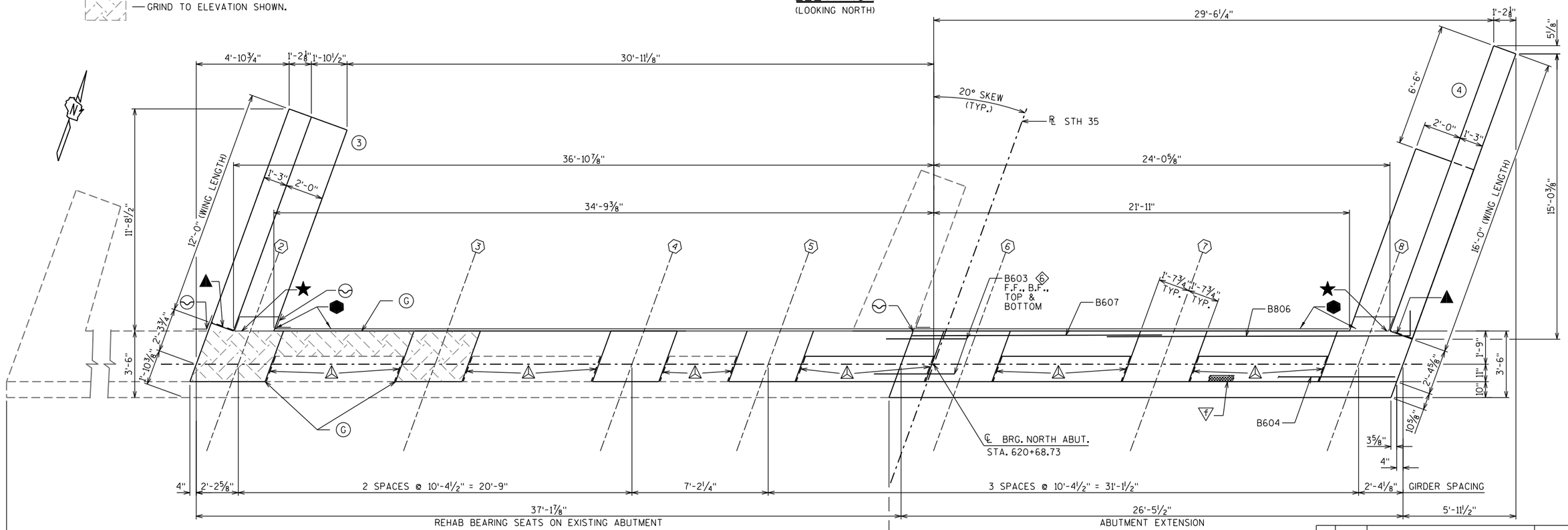

PLAN

NOTES

BEARING SEAT ELEVATIONS ARE GIVEN AT THE ℄ OF BEARING. SEATS ARE LEVEL.

FOR WING DETAILS AND ADDITIONAL ABUTMENT DETAILS, SEE SHEETS 12 & 13.

FOR PILE PLAN SEE SHEET 7.

ROUGHEN SURFACE OF CONCRETE ¼" DEEP MINIMUM AT ALL AREAS WHERE NEW CONCRETE CONTACTS EXISTING CONCRETE.

SEE SHEET 7 LEGEND FOR DESCRIPTION OF

NO.	DATE	REVISION	BY

STATE OF WISCONSIN
DEPARTMENT OF TRANSPORTATION

STRUCTURE B-32-163

DRAWN BY RLR | PLANS CK'D. NJK

NORTH ABUTMENT

SHEET 11
371

8

8

13544010_B-32-163_11.DGN

13544010_B-32-163_11 N ABUT.dgn 12/15/2023 11:41:35 AM rrabska

STATE PROJECT NUMBER
5163-07-72

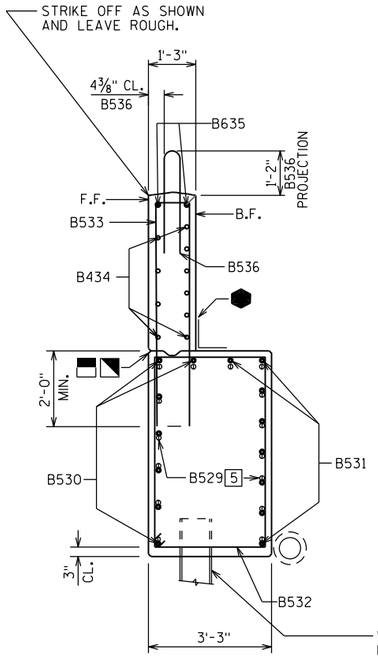

SECTION F-F THRU WING 3

⊕ — B529 AT JOINT BETWEEN NEW WING & OLD ABUTMENT. HOLD 5" CLEAR OF BOTTOM & TOP CONCRETE EDGES. 5

WING PILE, PILING STEEL HP 12-INCH X 53 LB DRIVEN TO A REQUIRED DRIVING RESISTANCE OF 220 TONS PER PILE. ESTIMATED PILE LENGTH 90'-0" AT NORTH ABUT. WINGS. FOR PILE PLAN SEE SHEET 7. FOR PILE SPLICE DETAILS SEE SHEET 19.

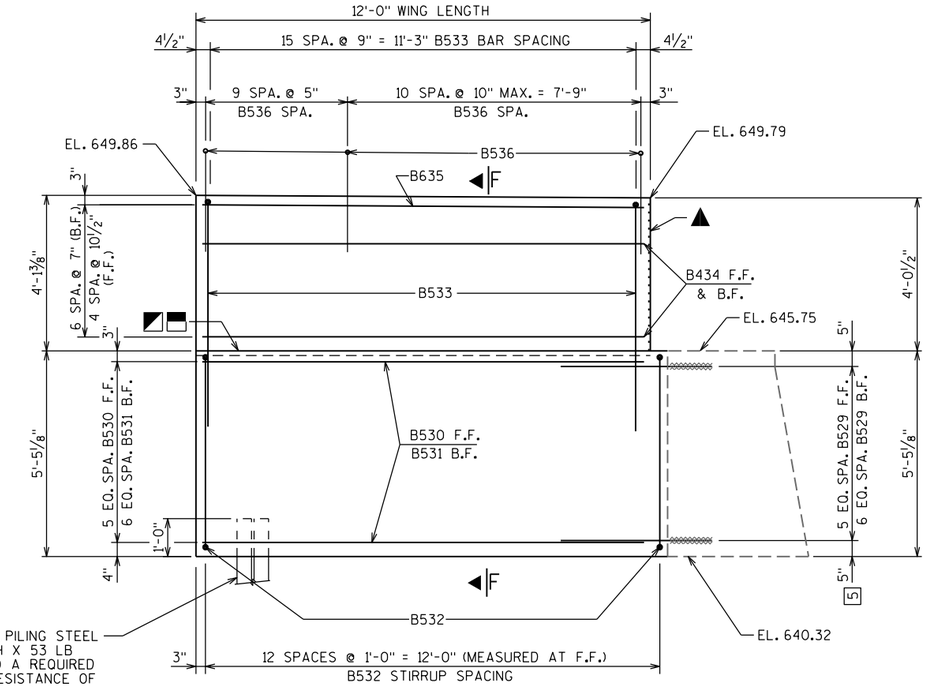

ELEVATION - WING 3

(LOOKING AT F.F. OF WING)

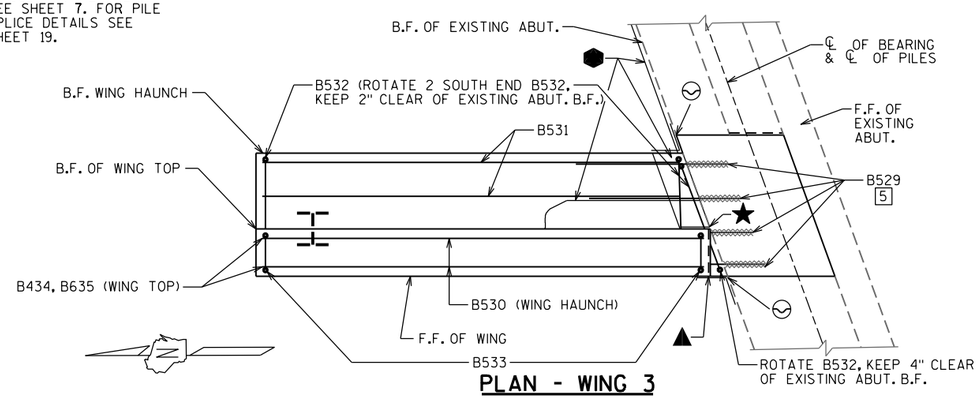

PLAN - WING 3

SEE SHEET 7 LEGEND FOR DESCRIPTION OF

BILL OF BARS (NORTH ABUTMENT)

UNCOATED 2040 LBS.
COATED 2020 LBS.

	MARK	NUMBER REQUIRED COATED	NUMBER REQUIRED UNCOATED	LENGTH	BENT	LOCATION
	B401	-	4	28'-0"	X	ABUT. BODY - 1 SPIRAL WRAP PER PILE
	B402	-	8	2'-3"		ABUT. BODY - 2 PER PILE - VERT.
6	B603	-	16	4'-4"		ABUT. BODY - F.F., B.F., TOP & BOTTOM ADHESIVE ANCHOR - HORIZ.
	B604	-	10	26'-2"		ABUT. BODY - F.F., TOP & BOTTOM - HORIZ.
	B505	-	37	15'-4"	X	ABUT. BODY - STIRRUPS - VERT.
	B806	-	6	17'-2"	X	ABUT. BODY - B.F. @ WING 4 - HORIZ.
	B607	-	6	13'-2"		ABUT. BODY - B.F. - CENTER - HORIZ.
	B508	-	31	6'-7"	X	ABUT. TOP - TIES - VERT.
	B409	-	11	5'-3"	X	ABUT. TOP - TIES - SEMI-EXP. POCKET BACKWALL - VERT.
	B410	-	5	26'-2"		ABUT. END - TOP & SEMI-EXP. POCKET BACKWALL - HORIZ.
	B411	-	1	3'-9"		ABUT. TOP - F.F. - GIRDER SEAT 8 - HORIZ.
	B412	-	6	3'-2"		ABUT. TOP - F.F. - GIRDER SEATS 4, 5, 6 & 7 - HORIZ.
5	B513	-	22	3'-4"	X	ABUT. TOP OVER EXISTING - TIES - VERT.
5	B514	-	8	1'-11"	X	ABUT. TOP OVER EXISTING - TIES - SEMI-EXP. POCKET BACKWALL - VERT.
	B415	-	2	8'-6"		ABUT. TOP OVER EXISTING - HORIZ.
	B416	-	2	5'-3"		ABUT. BODY END AT WING 4 - VERT.
	B517	10	-	17'-2"	X	WING 4 - HAUNCH - STIRRUP - VERT.
	B518	7	-	11'-6"		WING 4 - HAUNCH - F.F. - HORIZ.
	B619	8	-	12'-1"		WING 4 - HAUNCH - B.F. - HORIZ.
	B620	2	-	11'-8"		WING 4 - HAUNCH - TOP - HORIZ.
	B421	6	-	7'-9"		WING 4 - TOP @ TIP - HORIZ.
	B422	10	-	15'-7"		WING 4 - TOP - F.F. & B.F. - HORIZ.
	B623	2	-	15'-7"		WING 4 - TOP - F.F. & B.F. - HORIZ.
	B524	13	-	12'-6"	X	WING 4 - TOP - TIES - VERT.
	B525	9	-	10'-10"	X	WING 4 - TOP @ TIP - TIES - VERT.
	B526	17	-	5'-7"	X	WING 4 - TOP - PARAPET STIRRUP - VERT.
	B527	11	-	3'-0"	X	WING 4 - TOP - PARAPET STIRRUP - VERT.
	B528	11	-	5'-10"	X	WING 4 - TOP - PARAPET STIRRUP - VERT.
5	B529	15	-	4'-3"		WING 3 - HAUNCH - ADHESIVE ANCHOR - HORIZ.
	B530	7	-	11'-8"		WING 3 - HAUNCH - F.F. - HORIZ.
	B531	8	-	11'-0"		WING 3 - HAUNCH - B.F. - HORIZ.
	B532	13	-	16'-6"	X	WING 3 - HAUNCH - STIRRUP - VERT.
	B533	16	-	12'-8"	X	WING 3 - TOP - TIES - VERT.
	B434	10	-	11'-7"		WING 3 - TOP - F.F. & B.F. - HORIZ.
	B635	2	-	11'-7"		WING 3 - TOP - F.F. & B.F. - HORIZ.
	B536	20	-	6'-3"	X	WING 3 - TOP - PARAPET STIRRUP - VERT.

DIMENSIONS IN BENDING DETAILS ARE OUT TO OUT OF BAR.

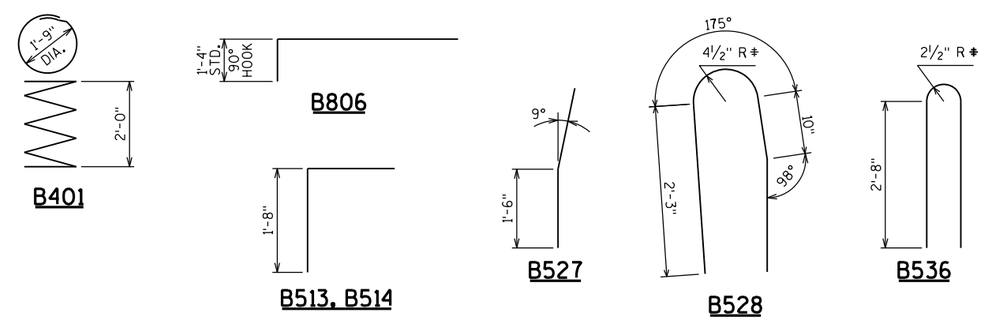

‡ - MEASURED TO INSIDE OF BAR.

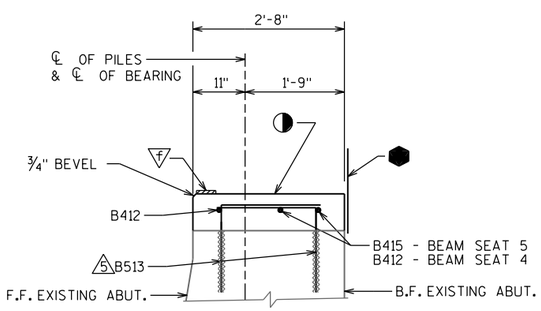

TYPICAL SECTION THRU ABUTMENT AT GIRDER SEATS 4 & 5

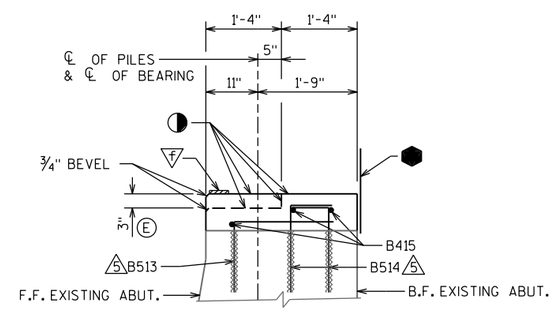

TYPICAL SECTION THRU ABUTMENT BACKWALL BETWEEN GIRDER SEATS 5 & 6

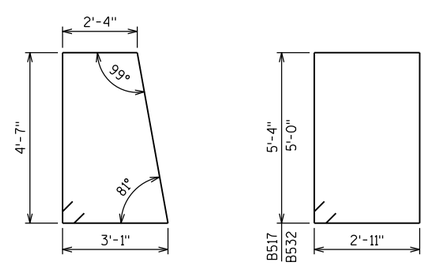

MARK	C	D
B508	2'-6"	2'-2"
B409	1'-1"	2'-2"
B524	11"	5'-11"
B525	11"	5'-1"
B526	6"	2'-8"
B533	11"	6'-0"

NO.	DATE	REVISION	BY

STATE OF WISCONSIN
DEPARTMENT OF TRANSPORTATION

STRUCTURE B-32-163

DRAWN BY RLR | PLANS CK'D. NJK

NORTH ABUTMENT DETAILS 1

SHEET 12
372

8

8

13544010_B-32-163_12.DGN

13544010_B-32-163_12 WING3.dgn 12/15/2023 11:43:02 AM rfrabska

STATE PROJECT NUMBER

5163-07-72

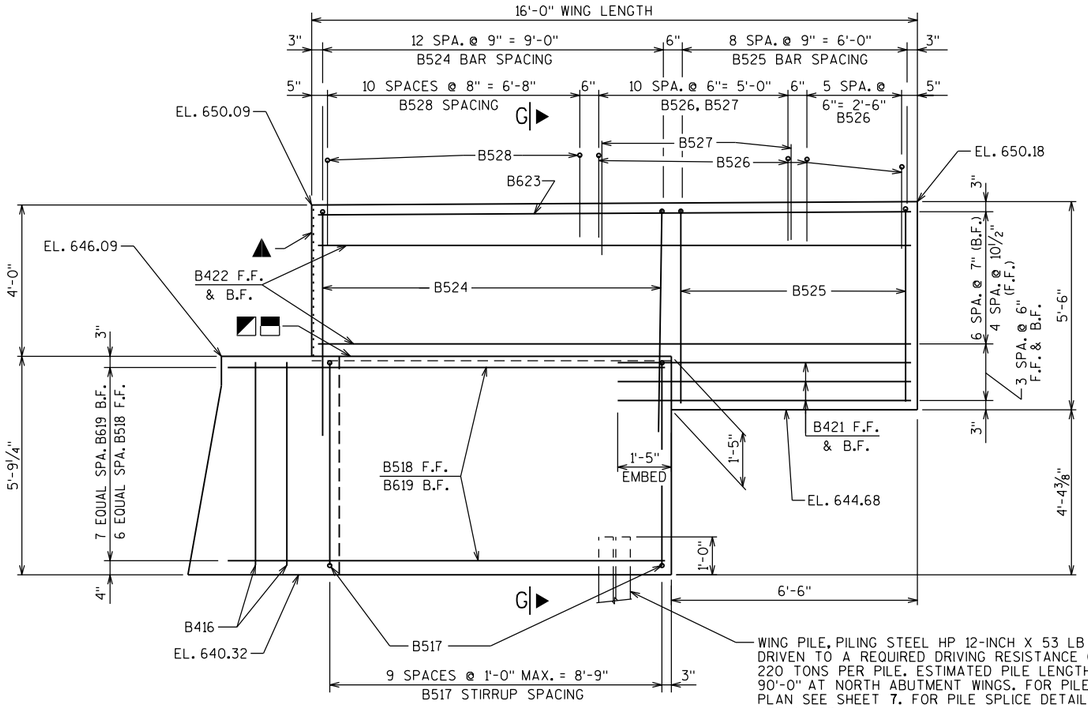

ELEVATION - WING 4

(LOOKING AT F.F. OF WING)

WING PILE, PILING STEEL HP 12-INCH X 53 LB DRIVEN TO A REQUIRED DRIVING RESISTANCE OF 220 TONS PER PILE. ESTIMATED PILE LENGTH 90'-0" AT NORTH ABUTMENT WINGS. FOR PILE PLAN SEE SHEET 7. FOR PILE SPLICE DETAILS SEE SHEET 19.

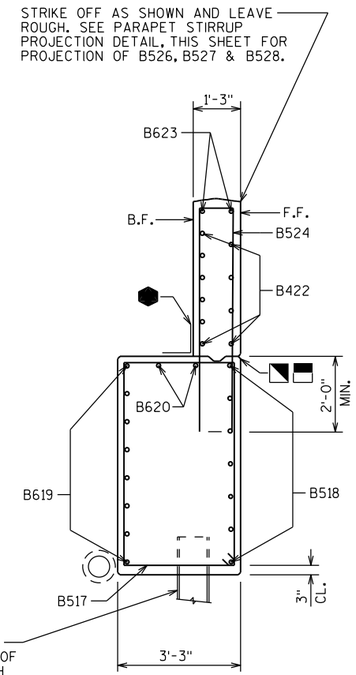

SECTION D-D THRU WING 4

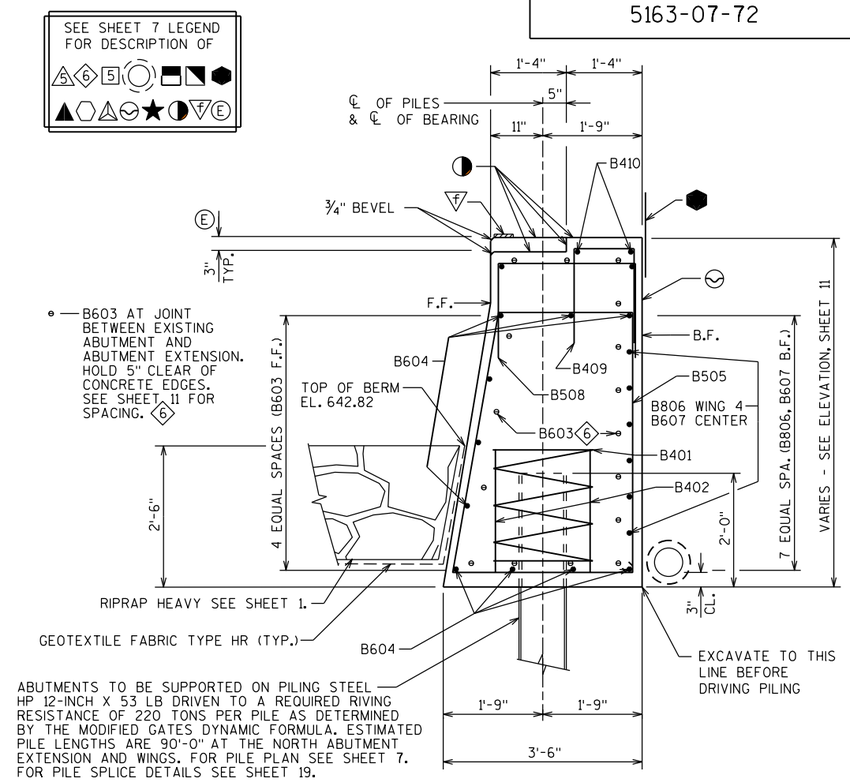

ABUTMENTS TO BE SUPPORTED ON PILING STEEL HP 12-INCH X 53 LB DRIVEN TO A REQUIRED RIVING RESISTANCE OF 220 TONS PER PILE AS DETERMINED BY THE MODIFIED GATES DYNAMIC FORMULA. ESTIMATED PILE LENGTHS ARE 90'-0" AT THE NORTH ABUTMENT EXTENSION AND WINGS. FOR PILE PLAN SEE SHEET 7. FOR PILE SPLICE DETAILS SEE SHEET 19.

TYPICAL SECTION THRU ABUTMENT EXTENSION

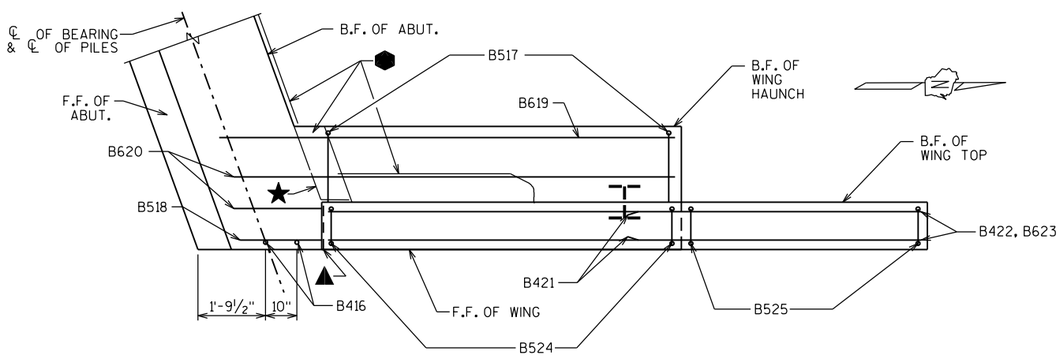

PLAN - WING 4

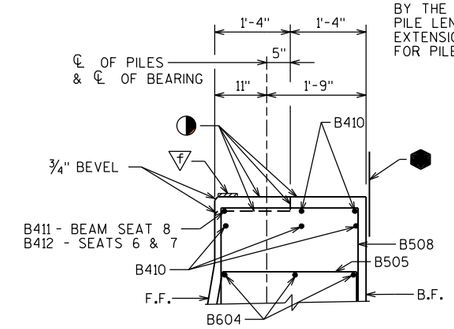

TYPICAL SECTION THRU ABUTMENT EXTENSION AT GIRDER SEATS 6, 7 & 8

T B527 BARS MAY BE PLACED AFTER CONCRETE IS POURED BUT BEFORE INITIAL SET HAS TAKEN PLACE. USE CARE TO PLACE B527 BARS CORRECTLY ALONG TRANSITION OF PARAPET.

▽ B526 AND B528 BARS TO BE TIED TO WING STEEL BEFORE WING IS POURED.

SEE SHEET 26 FOR ADDITIONAL PLACEMENT DETAILS OF B526, B527, AND B528 BARS.

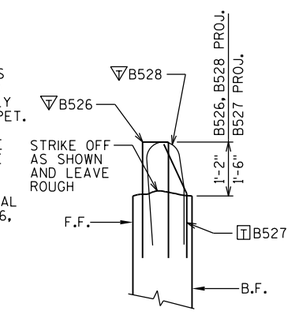

PARAPET STIRRUP PROJECTION DETAIL

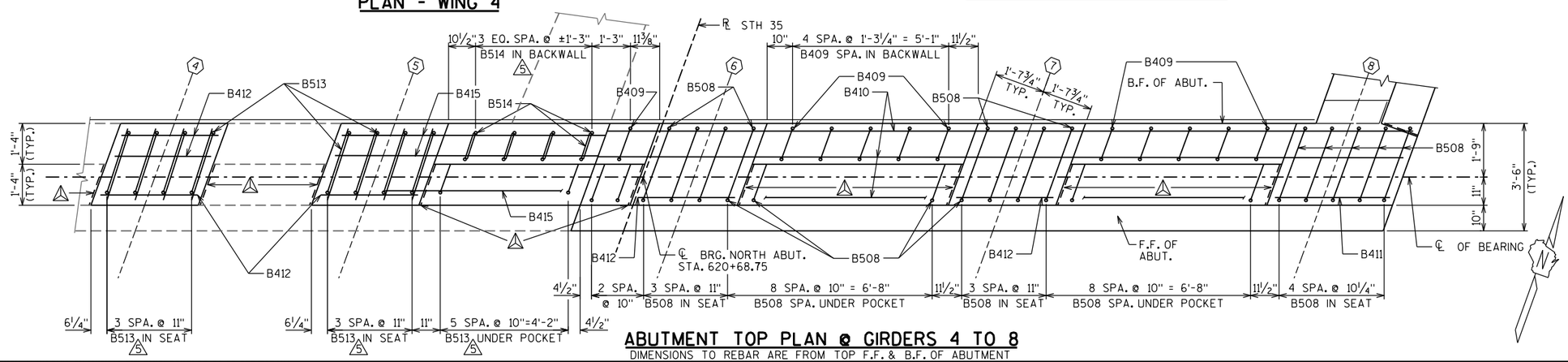

ABUTMENT TOP PLAN @ GIRDERS 4 TO 8

DIMENSIONS TO REBAR ARE FROM TOP F.F. & B.F. OF ABUTMENT

NO.	DATE	REVISION	BY

STATE OF WISCONSIN
DEPARTMENT OF TRANSPORTATION

STRUCTURE B-32-163

DRAWN BY RLR | PLANS CK'D. NJK

NORTH ABUTMENT DETAILS 2

SHEET 13 — 373

13544010_B-32-163_13.DGN

8

8

13544010_B-32-163_13 WING4.dgn 12/15/2023 11:44:41 AM frabska

STATE PROJECT NUMBER

5163-07-72

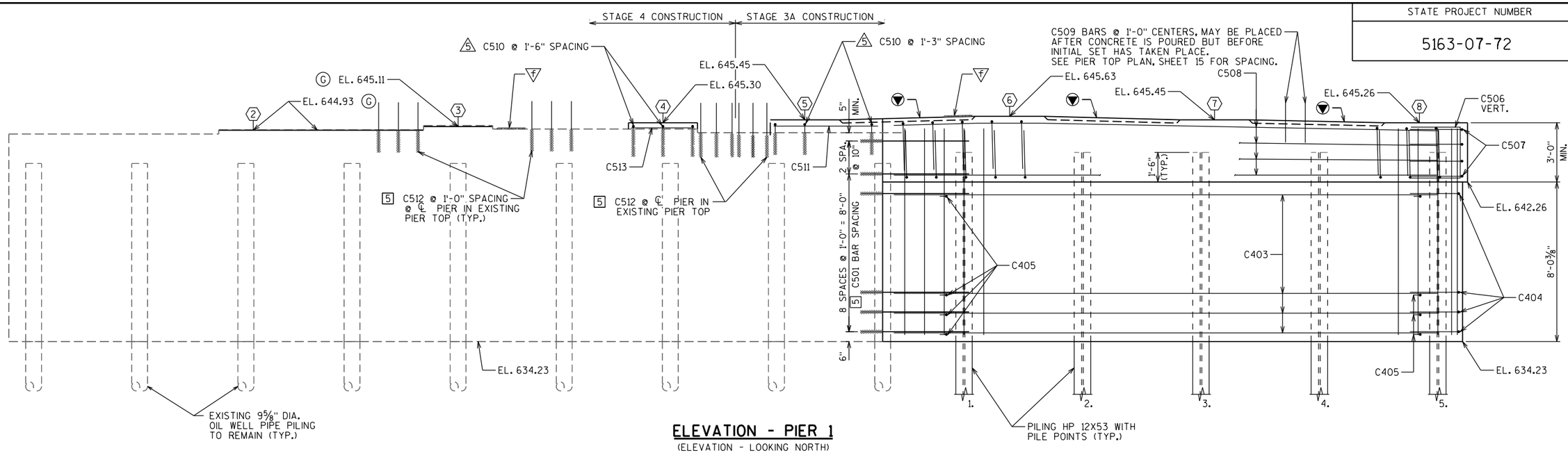

ELEVATION - PIER 1

(ELEVATION - LOOKING NORTH)

GRIND TO ELEVATION SHOWN.

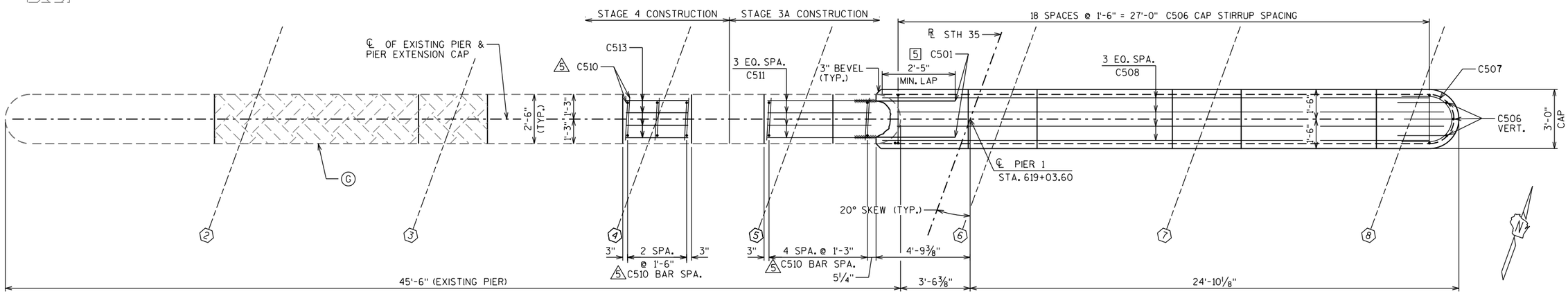

CAP REINFORCEMENT PLAN - PIER 1

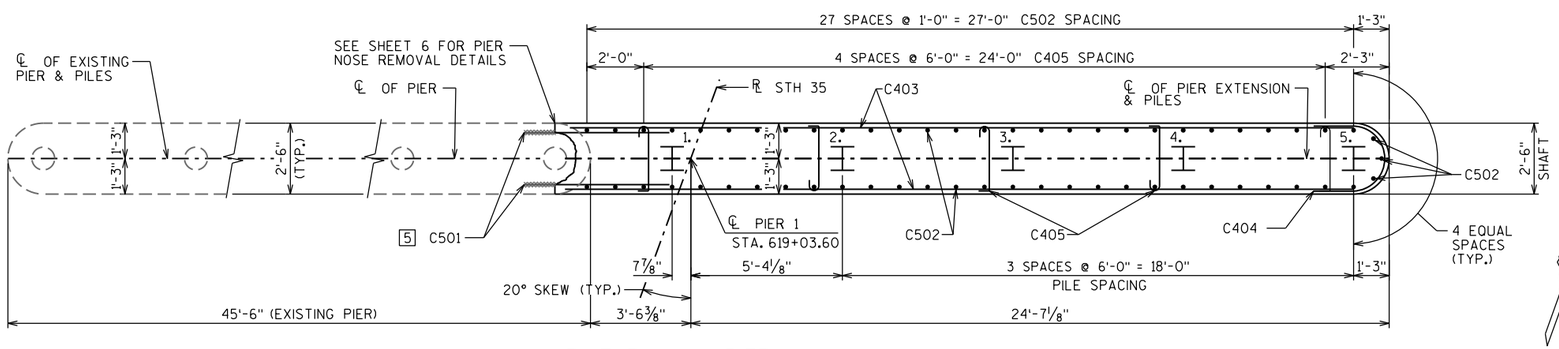

PILE PLAN - PIER 1

NOTES:

SEE SHEET 4 FOR GENERAL NOTES.

SEE SHEET 3 FOR ADDITIONAL STAGED CONSTRUCTION DETAILS.

ALTERNATE THE POSITION OF THE C405 BARS AT EACH VERTICAL LAYER OF TIES.

AT PIER 1, CONCRETE POURED UNDERWATER WILL BE ALLOWED AND SHALL BE DONE IN ACCORDANCE WITH STANDARD SPEC 502.3.5.3. CONCRETE POURED UNDERWATER SHALL NOT EXCEED 5 FEET IN DEPTH, UNLESS APPROVED OTHERWISE.

SEE SHEET 15 FOR LEGEND OF

NO.	DATE	REVISION	BY

STATE OF WISCONSIN
DEPARTMENT OF TRANSPORTATION

STRUCTURE B-32-163

DRAWN BY RLR | PLANS CK'D. NJK

PIER 1

SHEET 14
374

8

8

13544010_B-32-163_14.DGN

13544010_B-32-163_14 pier1.dgn 2/11/2025 2:42:25 PM ekazadi

STATE PROJECT NUMBER
5163-07-72

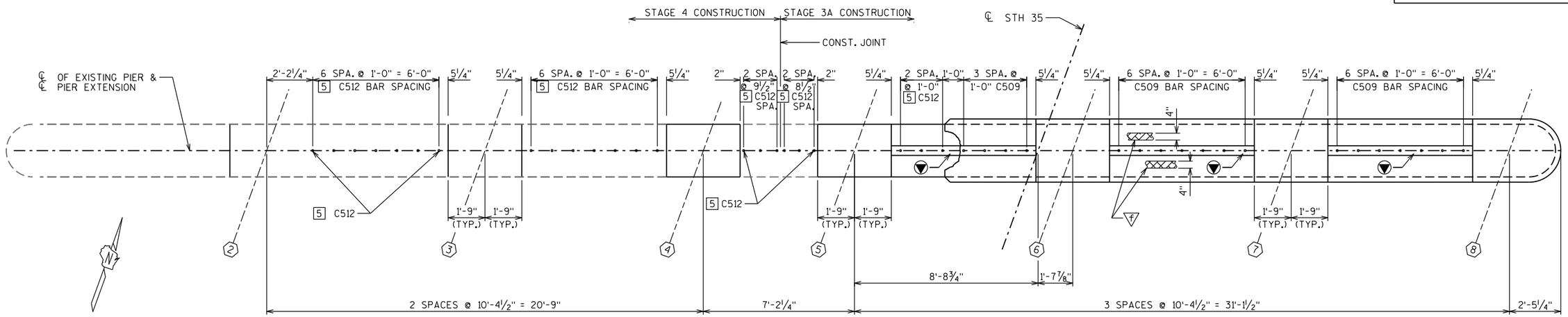

PIER 1 - TOP PLAN

BILL OF BARS - PIER 1

COATED 100 LBS.
UNCOATED 1930 LBS.

	MARK	NUMBER REQUIRED COATED	NUMBER REQUIRED UNCOATED	LENGTH	BENT	LOCATION
5	C501	-	22	5'-0"		PIER EXTENSION - ADHESIVE ANCHOR - HORIZ.
	C502	-	59	10'-4"		PIER EXTENSION - VERT.
	C403	-	16	27'-10"		PIER EXTENSION - SHAFT - HORIZ.
	C404	-	8	6'-1"	X	PIER EXTENSION - SHAFT END - HORIZ.
	C405	-	40	2'-11"	X	PIER EXTENSION - SHAFT - TIES - HORIZ.
	C506	-	41	7'-4"		PIER EXTENSION - CAP - STIRRUPS - VERT.
	C507	-	4	7'-0"		PIER EXTENSION - CAP - END - HORIZ.
	C508	-	12	27'-10"		PIER EXTENSION - CAP - HORIZ.
	C509	18	-	2'-0"		PIER EXTENSION - DOWELS @ TOP - VERT.
5	C510	-	16	2'-9"	X	EXISTING PIER - TIES - TOP - VERT.
	C511	-	4	5'-5"		EXISTING PIER - TOP - BEAM SEAT 5 - HORIZ.
5	C512	23	-	2'-9"		EXISTING PIER - DOWELS @ TOP - VERT.
	C513	-	4	3'-2"		EXISTING PIER - TOP - BEAM SEAT 4 - HORIZ.

DIMENSIONS IN BENDING DETAILS ARE OUT TO OUT OF BAR EXCEPT AS NOTED.

LEGEND

- ⬡ - INDICATES GIRDER NUMBER
- F - 4"x ¾" FILLER, TYPICAL ALL AROUND TOP EDGES OF PIER.
- ▼ - 2"x 6" BEVELED KEYWAY.
- 5 - ADHESIVE ANCHORS NO. 5 BAR. EMBED 12½" IN CONCRETE.
- 5 - ADHESIVE ANCHORS NO. 5 BAR. EMBED MIN. 6" IN CONCRETE.
- ANCHORS SHALL BE APPROVED FOR USE IN CRACKED CONCRETE. HOLD 5" MIN. FROM EDGE OF EXISTING CONCRETE.
- G - GRIND EXISTING BEAM SEAT TO ELEVATION SHOWN. REMOVE EXISTING GIRDER BEARINGS. GRIND OR UTILIZE CONCRETE SURFACE REPAIR TO ATTAIN SMOOTH AND LEVEL TOP SURFACE OF BEAM SEATS. BEARING SEATS TO BE LEVEL.

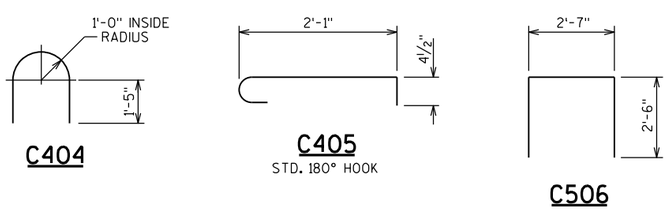

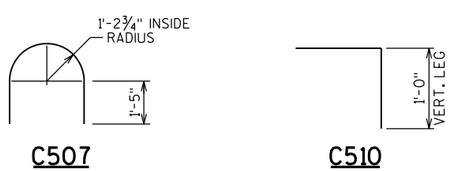

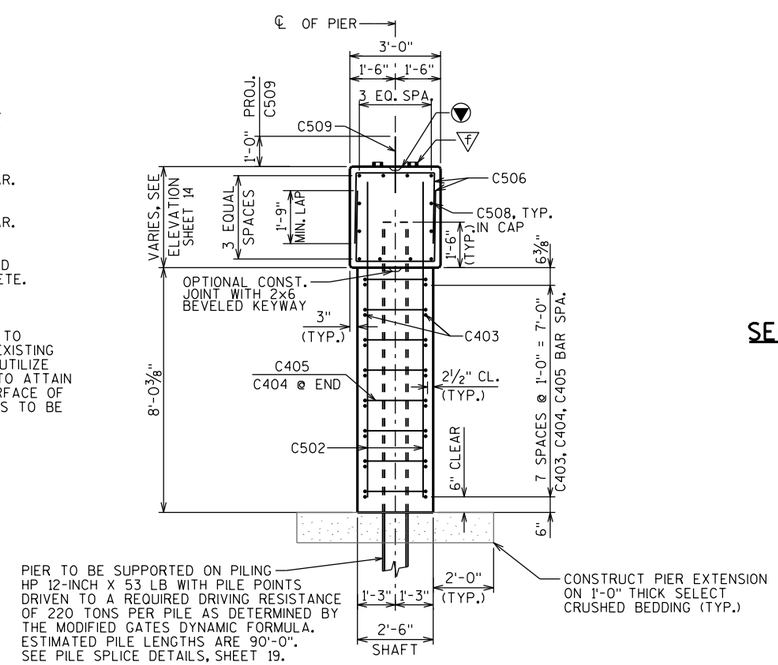

TYPICAL SECTION THRU PIER 1 EXTENSION

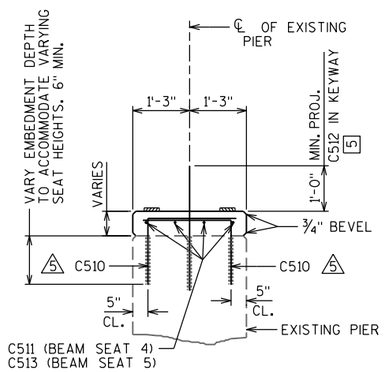

SECTION THRU RAISED GIRDER SEATS ON EXISTING PIER

NO.	DATE	REVISION	BY

STATE OF WISCONSIN
DEPARTMENT OF TRANSPORTATION

STRUCTURE B-32-163

DRAWN BY RLR | PLANS CK'D. NJK

PIER 1 DETAILS

SHEET 15
375

13544010_B-32-163_15.DGN

8

8

13544010_B-32-163_15 pier1det.dgn 1/30/2025 10:01:58 AM ekazadi

STATE PROJECT NUMBER

5163-07-72

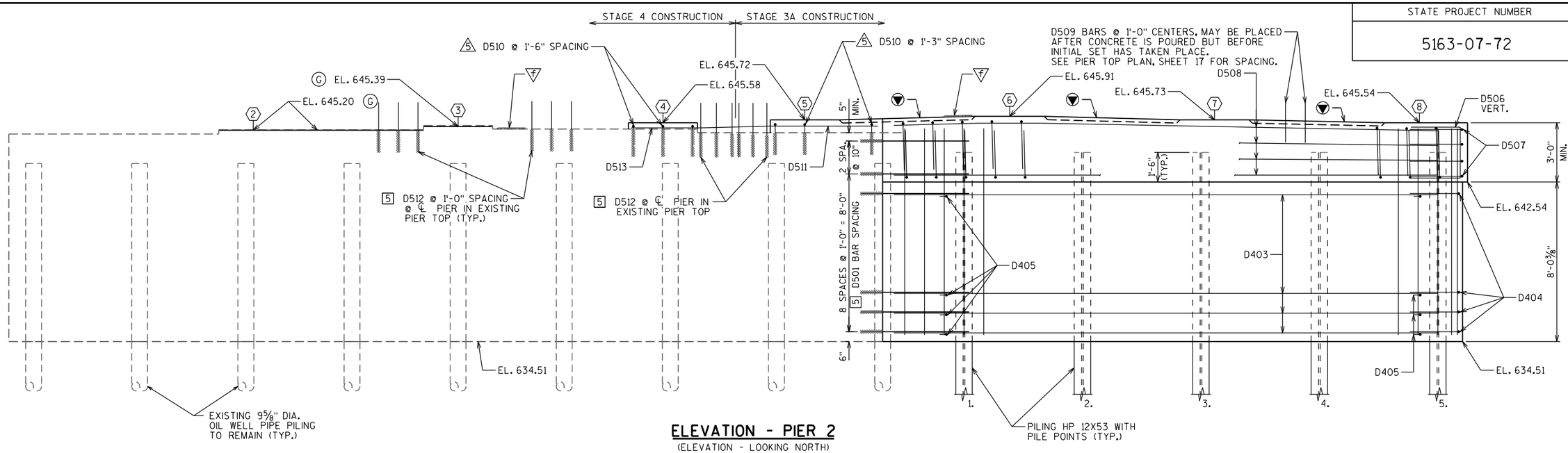

ELEVATION - PIER 2

(ELEVATION - LOOKING NORTH)

GRIND TO ELEVATION SHOWN.

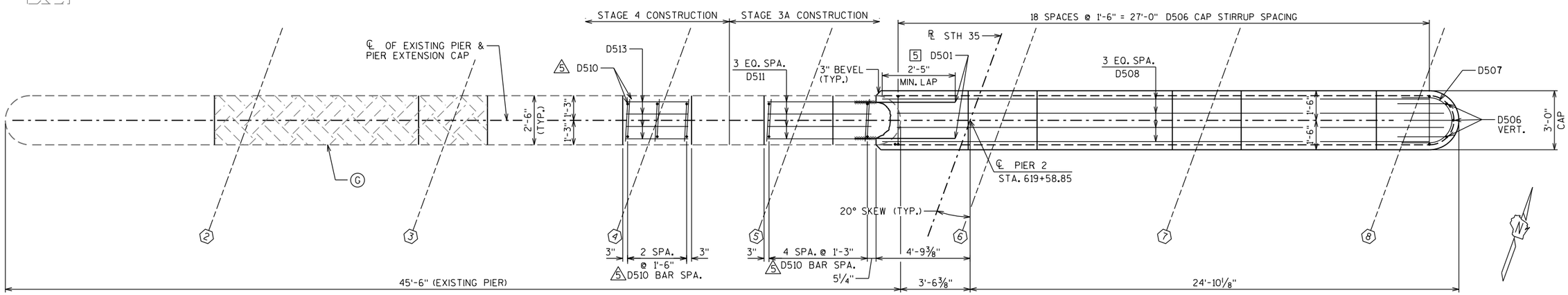

CAP REINFORCEMENT PLAN - PIER 2

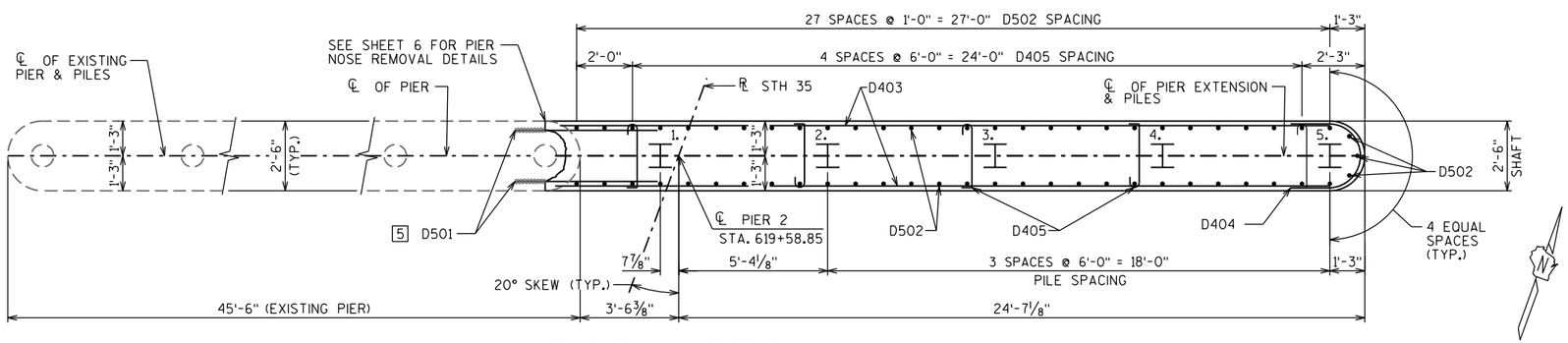

PILE PLAN - PIER 2

NOTES:

SEE SHEET 4 FOR GENERAL NOTES.

SEE SHEET 3 FOR ADDITIONAL STAGED CONSTRUCTION DETAILS.

ALTERNATE THE POSITION OF THE D405 BARS AT EACH VERTICAL LAYER OF TIES.

AT PIER 2, CONCRETE POURED UNDERWATER WILL BE ALLOWED AND SHALL BE DONE IN ACCORDANCE WITH STANDARD SPEC 502.3.5.3. CONCRETE POURED UNDERWATER SHALL NOT EXCEED 5 FEET IN DEPTH, UNLESS APPROVED OTHERWISE.

SEE SHEET 15 FOR LEGEND OF

NO.	DATE	REVISION	BY

STATE OF WISCONSIN
DEPARTMENT OF TRANSPORTATION

STRUCTURE B-32-163

DRAWN BY RLR | PLANS CK'D. NJK

PIER 2

SHEET 16 — 376

8

8

13544010_B-32-163_16.DGN

13544010_B-32-163_16 pier2.dgn 2/11/2025 8:57:38 PM ekazadi

STATE PROJECT NUMBER
5163-07-72

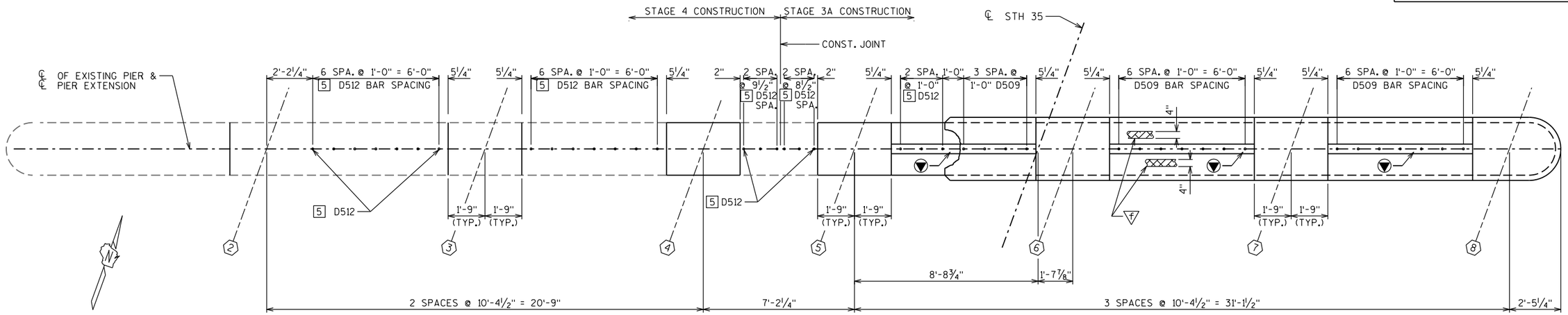

PIER 2 - TOP PLAN

BILL OF BARS - PIER 2

COATED 100 LBS.
UNCOATED 1930 LBS.

	MARK	NUMBER REQUIRED COATED	NUMBER REQUIRED UNCOATED	LENGTH	BENT	LOCATION
5	D501	-	22	5'-0"		PIER EXTENSION - ADHESIVE ANCHOR - HORIZ.
	D502	-	59	10'-4"		PIER EXTENSION - VERT.
	D403	-	16	27'-10"		PIER EXTENSION - SHAFT - HORIZ.
	D404	-	8	6'-1"	X	PIER EXTENSION - SHAFT END - HORIZ.
	D405	-	40	2'-11"	X	PIER EXTENSION - SHAFT - TIES - HORIZ.
	D506	-	41	7'-4"		PIER EXTENSION - CAP - STIRRUPS - VERT.
	D507	-	4	7'-0"		PIER EXTENSION - CAP - END - HORIZ.
	D508	-	12	27'-10"		PIER EXTENSION - CAP - HORIZ.
	D509	18	-	2'-0"		PIER EXTENSION - DOWELS @ TOP - VERT.
5	D510	-	16	2'-9"	X	EXISTING PIER - TIES - TOP - VERT.
	D511	-	4	5'-5"		EXISTING PIER - TOP - BEAM SEAT 5 - HORIZ.
5	D512	23	-	2'-9"		EXISTING PIER - DOWELS @ TOP - VERT.
	D513	-	4	3'-2"		EXISTING PIER - TOP - BEAM SEAT 4 - HORIZ.

DIMENSIONS IN BENDING DETAILS ARE OUT TO OUT OF BAR EXCEPT AS NOTED.

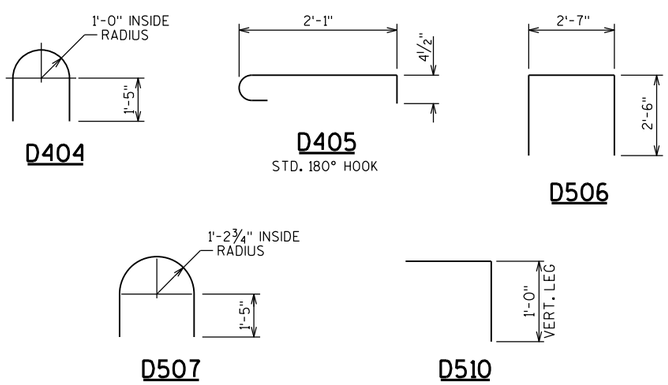

SEE SHEET 15 FOR LEGEND OF 5 G 5 F

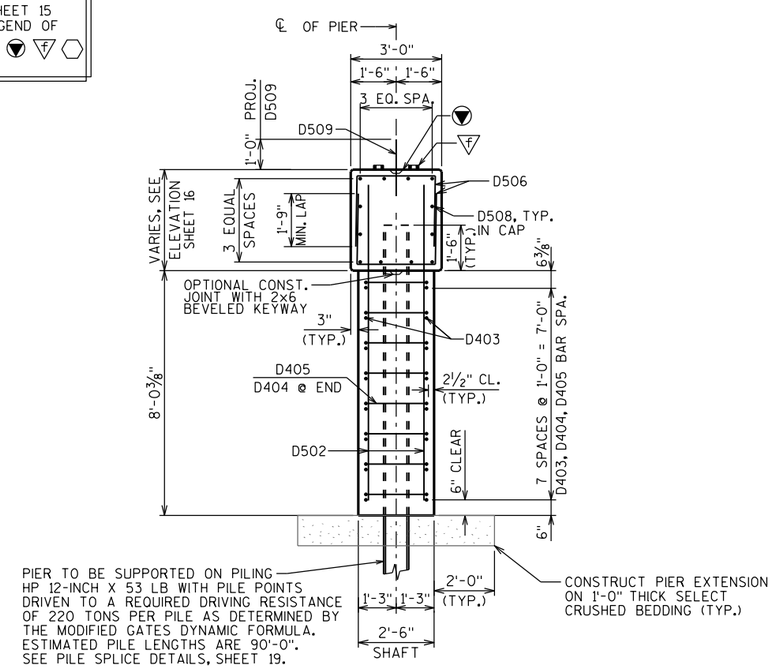

TYPICAL SECTION THRU PIER 2 EXTENSION

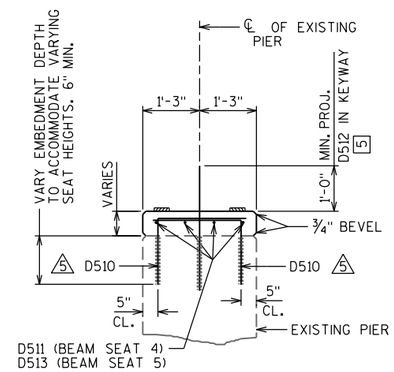

SECTION THRU RAISED GIRDER SEATS ON EXISTING PIER

NO.	DATE	REVISION	BY

STATE OF WISCONSIN
DEPARTMENT OF TRANSPORTATION

STRUCTURE B-32-163

DRAWN BY RLR | PLANS CK'D. NJK

PIER 2 DETAILS

SHEET 17
377

13544010_B-32-163_17.DGN

8

8

13544010_B-32-163_17 pier2det.dgn 2/6/2025 3:14:58 PM ekazadi

STATE PROJECT NUMBER

5163-07-72

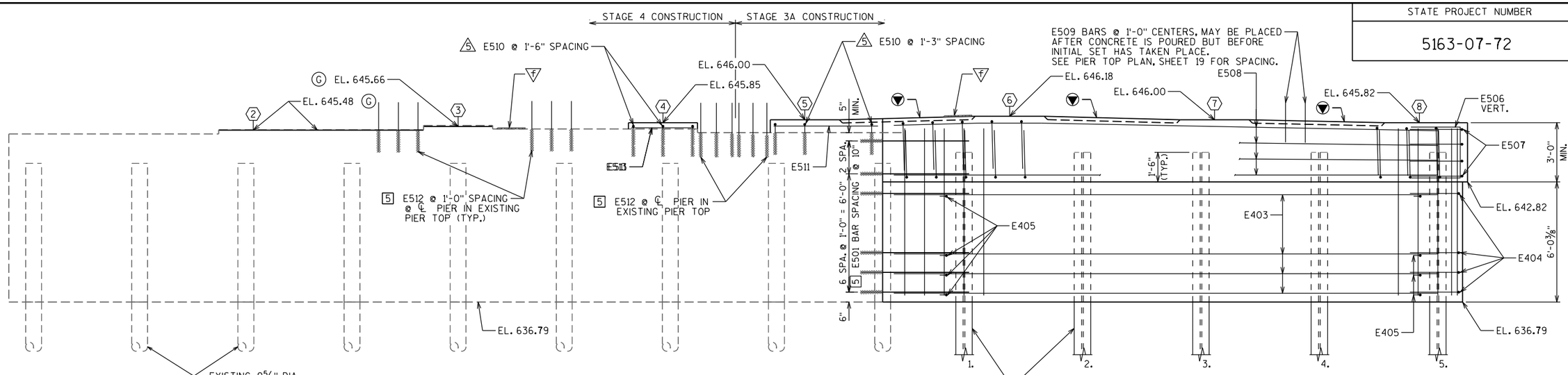

ELEVATION - PIER 3

(ELEVATION - LOOKING NORTH)

GRIND TO ELEVATION SHOWN.

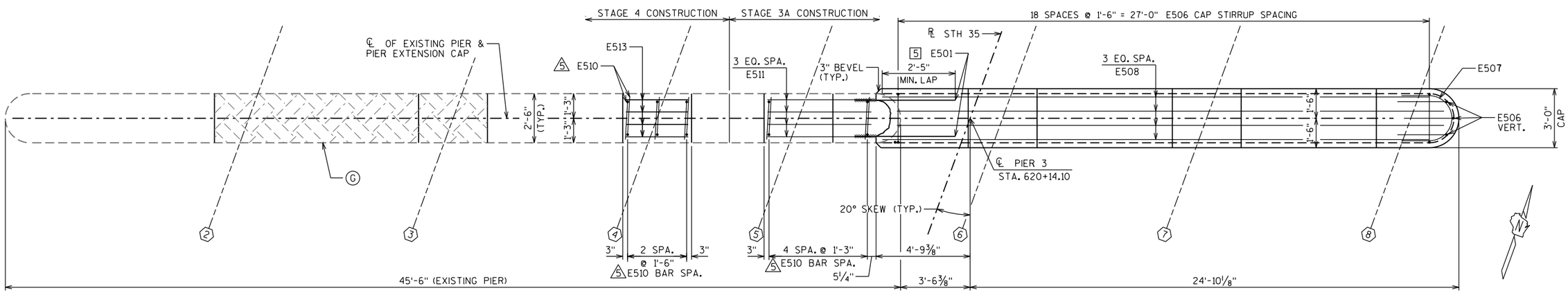

CAP REINFORCEMENT PLAN - PIER 3

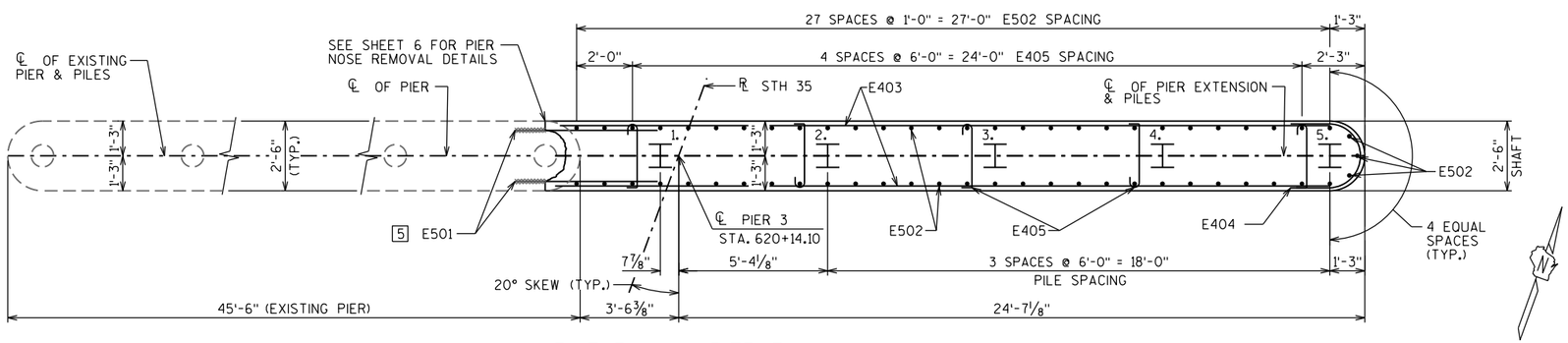

PILE PLAN - PIER 3

NOTES:

SEE SHEET 4 FOR GENERAL NOTES.

SEE SHEET 3 FOR ADDITIONAL STAGED CONSTRUCTION DETAILS.

ALTERNATE THE POSITION OF THE E405 BARS AT EACH VERTICAL LAYER OF TIES.

AT PIER 3, CONCRETE POURED UNDERWATER WILL BE ALLOWED AND SHALL BE DONE IN ACCORDANCE WITH STANDARD SPEC 502.3.5.3. CONCRETE POURED UNDERWATER SHALL NOT EXCEED 5 FEET IN DEPTH, UNLESS APPROVED OTHERWISE.

SEE SHEET 15 FOR LEGEND OF

NO.	DATE	REVISION	BY

STATE OF WISCONSIN
DEPARTMENT OF TRANSPORTATION

STRUCTURE B-32-163

DRAWN BY RLR | PLANS CK'D. NJK

PIER 3

SHEET 1R 378

8

8

13544010_B-32-163_18 pier3.dgn 2/11/2025 9:04:56 PM ekazadi

13544010_B-32-163_18.DGN

STATE PROJECT NUMBER
5163-07-72

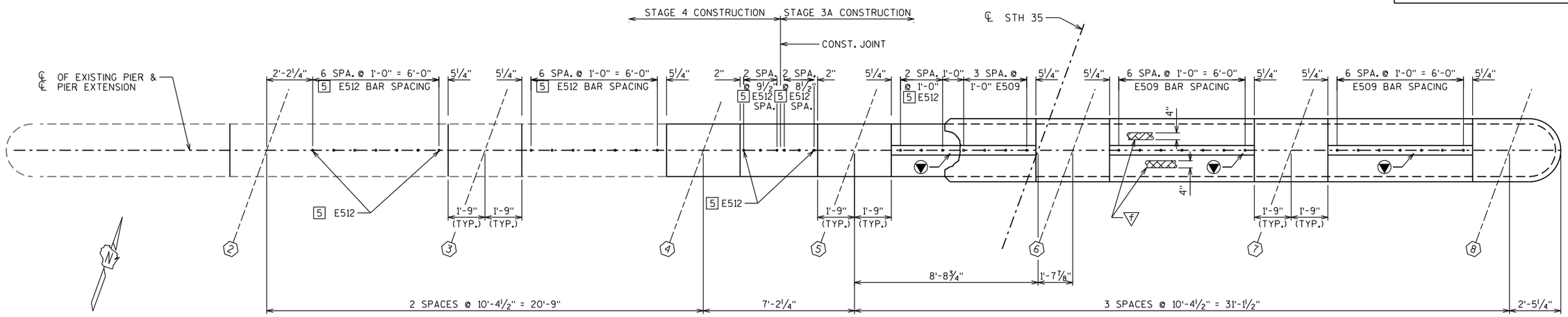

PIER 3 - TOP PLAN

BILL OF BARS - PIER 3

COATED 100 LBS.
UNCOATED 1690 LBS.

	MARK	NUMBER REQUIRED COATED	NUMBER REQUIRED UNCOATED	LENGTH	BENT	LOCATION
5	E501	-	18	5'-0"		PIER EXTENSION - ADHESIVE ANCHOR - HORIZ.
	E502	-	59	8'-4"		PIER EXTENSION - VERT.
	E403	-	12	27'-10"		PIER EXTENSION - SHAFT - HORIZ.
	E404	-	6	6'-1"	X	PIER EXTENSION - SHAFT END - HORIZ.
	E405	-	30	2'-11"	X	PIER EXTENSION - SHAFT - TIES - HORIZ.
	E506	-	41	7'-4"		PIER EXTENSION - CAP - STIRRUPS - VERT.
	E507	-	4	7'-0"		PIER EXTENSION - CAP - END - HORIZ.
	E508	-	12	27'-10"		PIER EXTENSION - CAP - HORIZ.
	E509	18	-	2'-0"		PIER EXTENSION - DOWELS @ TOP - VERT.
5	E510	-	16	2'-9"	X	EXISTING PIER - TIES - TOP - VERT.
	E511	-	4	5'-5"		EXISTING PIER - TOP - BEAM SEAT 5 - HORIZ.
5	E512	23	-	2'-9"		EXISTING PIER - DOWELS @ TOP - VERT.
	E513	-	4	3'-2"		EXISTING PIER - TOP - BEAM SEAT 4 - HORIZ.

DIMENSIONS IN BENDING DETAILS ARE OUT TO OUT OF BAR EXCEPT AS NOTED.

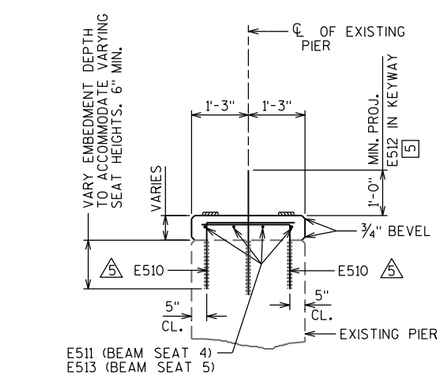

SECTION THRU RAISED GIRDER SEATS ON EXISTING PIER

SEE SHEET 15 FOR LEGEND OF
5 G 5 F

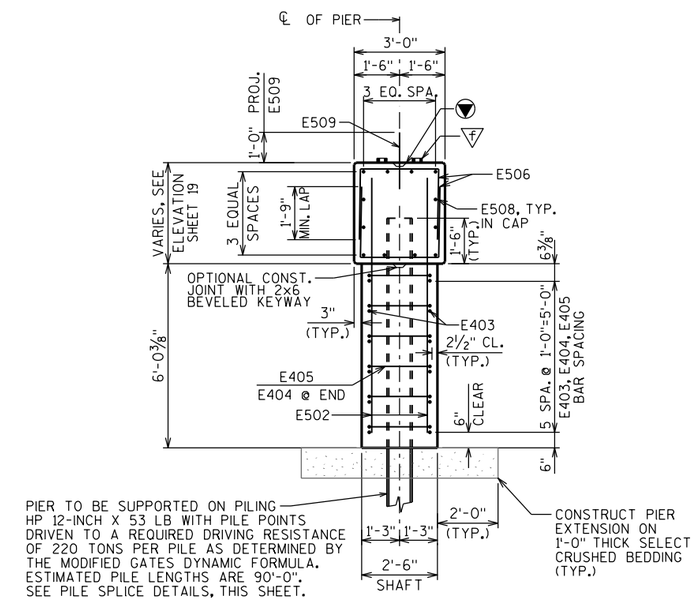

TYPICAL SECTION THRU PIER 3 EXTENSION

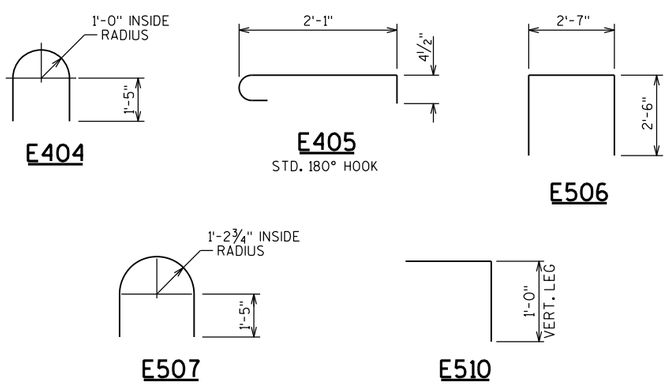

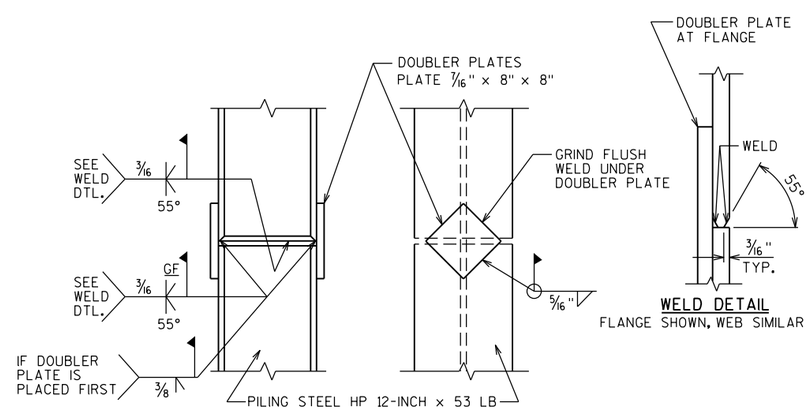

WELD DETAIL
FLANGE SHOWN, WEB SIMILAR

PILE SPLICE DETAILS

NO.	DATE	REVISION	BY

STATE OF WISCONSIN
DEPARTMENT OF TRANSPORTATION

STRUCTURE B-32-163

DRAWN BY RLR | PLANS CK'D. NJK

PIER 3 DETAILS

SHEET 19
379

13544010_B-32-163_19.DGN

13544010_B-32-163_19 pier3det.dgn 2/6/2025 3:24:53 PM ekazadi

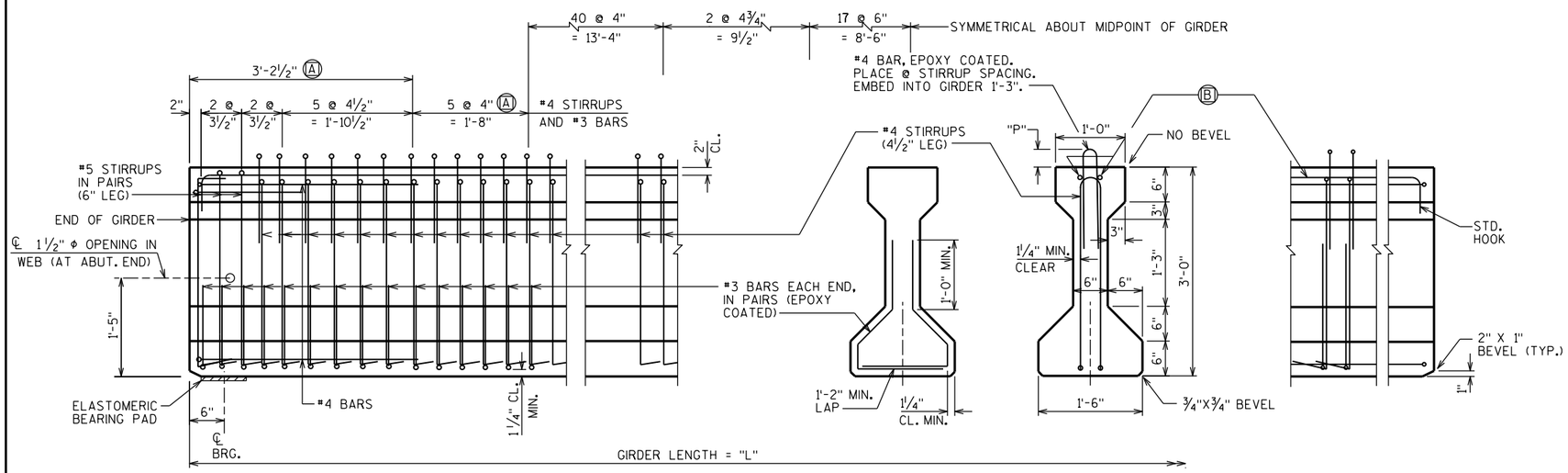

SIDE VIEW & TYPICAL SECTION IN SPAN

Ⓐ DETAIL TYP. AT EACH END

Ⓑ 2 #6 BARS, FULL LENGTH, MIN. LAP = 2'-11", STD. HOOK AT ENDS

NOTES

TOP OF GIRDERS TO BE ROUGH FLOATED AND BROOMED TRANSVERSELY, EXCEPT THE OUTSIDE 2" OF GIRDER, WHICH SHALL RECEIVE A SMOOTH FINISH. AN APPROVED CONCRETE SEALER SHALL BE APPLIED TO ALL SMOOTH SURFACES INCLUDING THE OUTSIDE 2" OF THE TOP FLANGE.

DO NOT APPLY CONCRETE SEALER OR EPOXY TO SURFACES RECEIVING APPLICATION OF CONCRETE STAINING.

THE GIRDERS SHALL BE PROVIDED WITH A SUITABLE LIFTING DEVICE FOR HANDLING AND ERECTING THE GIRDERS. THE LIFTING DEVICE SHALL BE INSTALLED WITHIN 3 FT OF EACH END OF THE PROPOSED GIRDER. SEE SECTION 503.3.3 OF STANDARD SPECIFICATIONS FOR GUIDANCE.

STRANDS SHALL BE FLUSH WITH END OF GIRDER. FOR GIRDER ENDS EMBEDDED COMPLETELY IN CONCRETE, ENDS OF STRANDS SHALL BE COATED WITH NON-BITUMINOUS JOINT SEALER. FOR GIRDER ENDS THAT ARE FINALLY EXPOSED, COAT THE GIRDER ENDS, EXPOSED STRAND ENDS AND ALL NON-BONDING SURFACES WITHIN 2 FEET OF THE GIRDER ENDS WITH A NON-PIGMENTED EPOXY CONFORMING TO AASHTO M-235 TYPE III, GRADE 2, CLASS B OR C. THE EPOXY SHALL BE APPLIED AT LEAST 3 DAYS AFTER MOIST CURING HAS CEASED AND PRIOR TO THE APPLICATION OF THE SEALER.

ALL GIRDERS SHALL BE CAST FULL LENGTH AS SHOWN.

SPACING SHOWN FOR #4 STIRRUPS IS FOR GRADE 60 REINFORCEMENT.

AN EQUIVALENT OF WELDED WIRE FABRIC (WWF) ASTM A1064 MAY BE SUBSTITUTED FOR THE STIRRUP REINFORCEMENT SHOWN, UPON APPROVAL OF THE STRUCTURES DESIGN SECTION. IF USED, WWF SUSTITUTION DETAILS SHALL BE SUBMITTED ELECTRONICALLY TO THE WISDOT FABRICATION LIBRARY AND ACCEPTED PRIOR TO SHOP DRAWING SUBMITTAL.

PRESTRESSING STRANDS SHALL BE 0.6" DIA. - 7 WIRE LOW RELAXATION STRANDS WITH AN ULTIMATE STRENGTH OF 270,000 PSI.

CONCRETE STRENGTH AT RELEASE (f'ci = 6,800 P.S.I.)
FINAL CONCRETE STRENGTH (f'c)= 8,000 P.S.I.

SEE SHEET 22 FOR GIRDER HAUNCH DETAILS.

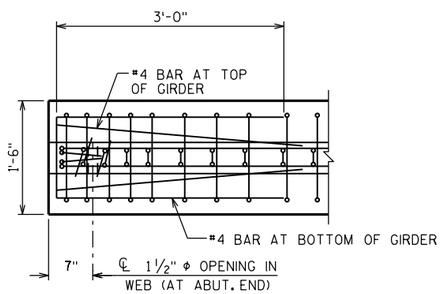

TOP VIEW OF GIRDER ENDS

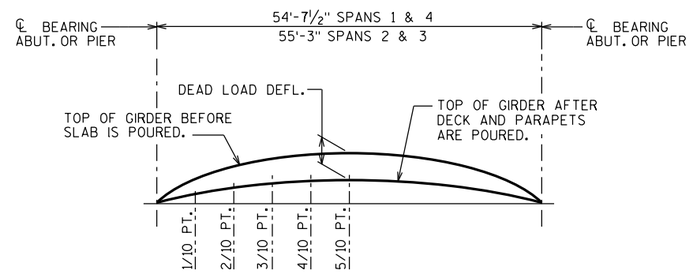

DEAD LOAD DEFLECTION DIAGRAM

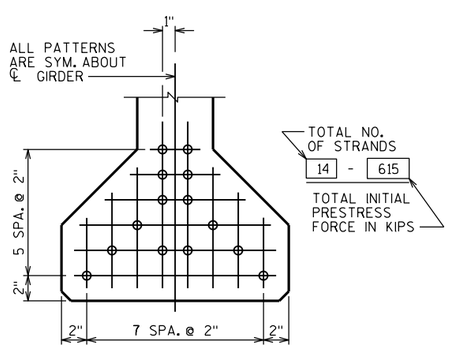

TYP. STRAND PATTERN

0.6" DIA. STRANDS

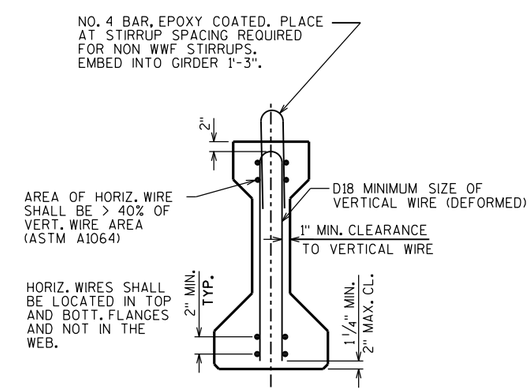

SECTION THRU GIRDER

SHOWING WELDED WIRE FABRIC (WWF) STIRRUPS ASTM A1064 (FY = 70 KSI)

* THE THEORETICAL INITIAL CAMBER VALUE AT THE TIME OF STRAND RELEASE AT MIDSPAN MULTIPLIED BY A FACTOR OF 1.4 TO ACCOUNT FOR CAMBER GROWTH FROM THE TIME OF STRAND RELEASE TO JOBSITE PLACEMENT.

SPAN	GIRDER #	CAMBER (IN.) *
1 & 4	8	1.125
2 & 3	8	1.125
1 & 4	6 & 7	1.125
2 & 3	6 & 7	1.125

THESE VALUES ARE NOT TO BE USED IN DETERMINING 'T', USE ACTUAL GIRDER SHOTS.

THESE VALUES ARE FOR INFORMATIONAL PURPOSES ONLY.

* MINIMUM CYLINDER STRENGTH OF CONCRETE @ TIME OF TRANSFER OF PRESTRESS FORCE.

PROPOSED GIRDER DATA

SPAN	GIRDER	GIRDER LENGTH "L"	DEAD LOAD DEFL. (IN.)									CONC. STRGTH. f'c (p.s.i.)	"P" IST 1/3 OF GIRDER	"P" MID 1/3 OF GIRDER	"P" END 1/3 OF GIRDER	DIA. OF STRAND (IN.)	DRAPED PATTERN						UNDRAPED PATTERN	
			1/10	2/10	3/10	4/10	5/10	6/10	7/10	8/10	9/10						TOTAL NO. OF STRANDS	f'ci (P.S.I.) *	(IN.) "A"	"B" MIN.	"B" MAX.	"C"	TOTAL NO. OF STRANDS	f'ci (P.S.I.) *
1, 2, 3, 4	8	55'-0"	0.2	0.3	0.4	0.5	0.5	0.5	0.4	0.3	0.2	8000	7.5"	6.5"	7.5"	0.6	-	-	-	-	-	-	14	6800
1, 2, 3, 4	6&7	55'-0"	0.2	0.4	0.6	0.7	0.7	0.7	0.6	0.4	0.2	8000	7.5"	6.5"	7.5"	0.6	-	-	-	-	-	-	14	6800

"P" - STIRRUP PROJECTION, SEE SHEET 22 FOR ADDITIONAL NOTES

NO.	DATE	REVISION	BY

STATE OF WISCONSIN
DEPARTMENT OF TRANSPORTATION

STRUCTURE B-32-163

DRAWN BY RLR | PLANS CK'D. NJK

36" PRESTRESSED GIRDER DETAILS

8

8

13544010_B-32-163_20.DGN

STATE PROJECT NUMBER
5163-07-72

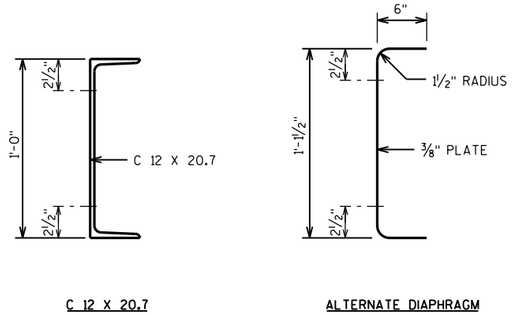

SECTION THRU DIAPHRAGM

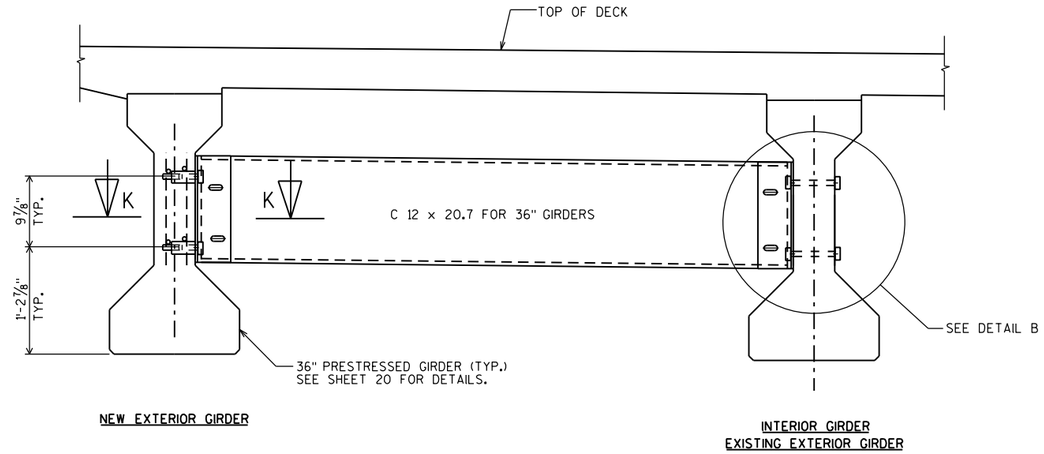

PART TRANSVERSE SECTION AT DIAPHRAGM

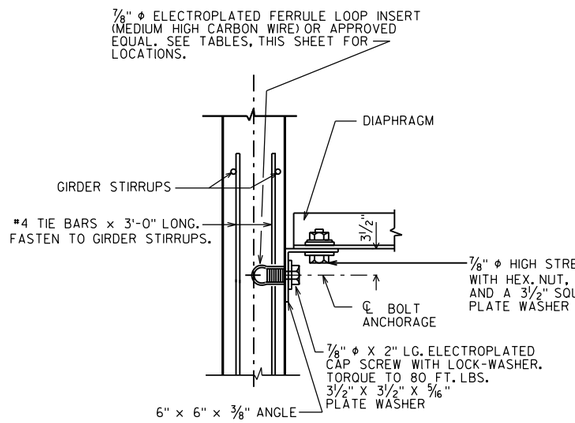

SECTION K-K

(FOR ATTACHMENT ON NEW EXTERIOR GIRDERS)

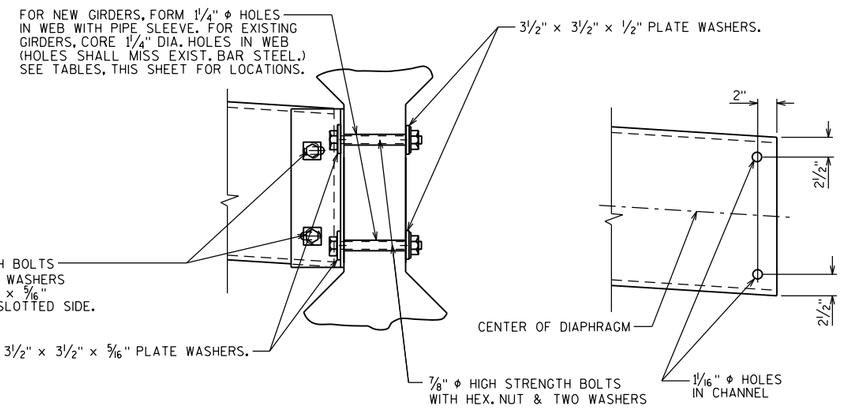

DETAIL B

(FOR ATTACHMENT ON EXISTING EXTERIOR GIRDERS AND ATTACHMENT TO ALL INTERIOR GIRDERS)

NOTES

ALL DIAPHRAGM MATERIAL NOT EMBEDDED IN THE CONCRETE GIRDER SHALL BE PAID FOR AT THE UNIT PRICE BID FOR "STEEL DIAPHRAGMS B-32-163", EACH.

EACH DIAPHRAGM BETWEEN GIRDERS SHALL CONSTITUTE ONE UNIT.

ALL DIAPHRAGM STRUCTURAL STEEL SHALL BE ASTM A709 GRADE 36.

ALL DIAPHRAGM MATERIAL INCLUDING BOLTS, NUTS AND WASHERS SHALL BE GALVANIZED AFTER FABRICATION.

STEEL DIAPHRAGM TO CONCRETE WEB CONNECTION SHALL BE SNUG-TIGHT PLUS ¼ TURN, UNLESS NOTED OTHERWISE. HIGH STRENGTH BOLTS FOR WEB CONNECTION SHALL MEET THE REQUIREMENTS FOR ASTM A325 OR ASTM A449.

REMOVE EXISTING CONCRETE AND IN SPAN STEEL DIAPHRAGMS. FILL HOLES IN EXISTING GIRDERS WITH NON-SHRINK GROUT, UNLESS THE HOLES ARE SUITABLE FOR REUSE. REMOVAL OF DIAPHRAGMS AND FILLING HOLES SHALL BE INCLUDED IN BID ITEM "REMOVING STRUCTURE OVER WATERWAY MINIMAL DEBRIS".

DIAPHRAGM INSERT LOCATION TABLE

*–INDICATES NEW GIRDER

SPAN 1

	GIRDER NUMBER	A	B	C	D	INSERT TYPE
	2	-	-	29'-3¼"	25'-8¾"	CORED HOLE
	3	25'-8¾"	29'-3¼"	29'-3¼"	25'-8¾"	CORED HOLE
	4	25'-8¾"	29'-3¼"	28'-8¾"	26'-3¼"	CORED HOLE
	5	26'-3¼"	28'-8¾"	29'-3¼"	25'-8¾"	CORED HOLE
*	6	25'-8¾"	29'-3¼"	29'-3¼"	25'-8¾"	PIPE SLEEVES
*	7	25'-8¾"	29'-3¼"	29'-3¼"	25'-8¾"	PIPE SLEEVES
*	8	25'-8¾"	29'-3¼"	-	-	FERRULE LOOPS

SPAN 2

	GIRDER NUMBER	A	B	C	D	INSERT TYPE
	2	-	-	29'-3¼"	25'-8¾"	CORED HOLE
	3	25'-8¾"	29'-3¼"	29'-3¼"	25'-8¾"	CORED HOLE
	4	25'-8¾"	29'-3¼"	28'-8¾"	26'-3¼"	CORED HOLE
	5	26'-3¼"	28'-8¾"	29'-3¼"	25'-8¾"	CORED HOLE
*	6	25'-8¾"	29'-3¼"	29'-3¼"	25'-8¾"	PIPE SLEEVES
*	7	25'-8¾"	29'-3¼"	29'-3¼"	25'-8¾"	PIPE SLEEVES
*	8	25'-8¾"	29'-3¼"	-	-	FERRULE LOOPS

SPAN 3

	GIRDER NUMBER	A	B	C	D	INSERT TYPE
	2	-	-	29'-3¼"	25'-8¾"	CORED HOLE
	3	25'-8¾"	29'-3¼"	29'-3¼"	25'-8¾"	CORED HOLE
	4	25'-8¾"	29'-3¼"	28'-8¾"	26'-3¼"	CORED HOLE
	5	26'-3¼"	28'-8¾"	29'-3¼"	25'-8¾"	CORED HOLE
*	6	25'-8¾"	29'-3¼"	29'-3¼"	25'-8¾"	PIPE SLEEVES
*	7	25'-8¾"	29'-3¼"	29'-3¼"	25'-8¾"	PIPE SLEEVES
*	8	25'-8¾"	29'-3¼"	-	-	FERRULE LOOPS

SPAN 4

	GIRDER NUMBER	A	B	C	D	INSERT TYPE
	2	-	-	29'-3¼"	25'-8¾"	CORED HOLE
	3	25'-8¾"	29'-3¼"	29'-3¼"	25'-8¾"	CORED HOLE
	4	25'-8¾"	29'-3¼"	28'-8¾"	26'-3¼"	CORED HOLE
	5	26'-3¼"	28'-8¾"	29'-3¼"	25'-8¾"	CORED HOLE
*	6	25'-8¾"	29'-3¼"	29'-3¼"	25'-8¾"	PIPE SLEEVES
*	7	25'-8¾"	29'-3¼"	29'-3¼"	25'-8¾"	PIPE SLEEVES
*	8	25'-8¾"	29'-3¼"	-	-	FERRULE LOOPS

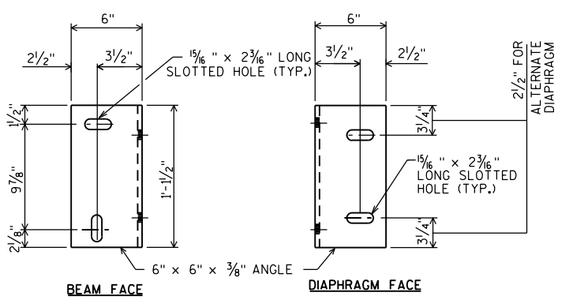

DIAPHRAGM SUPPORT

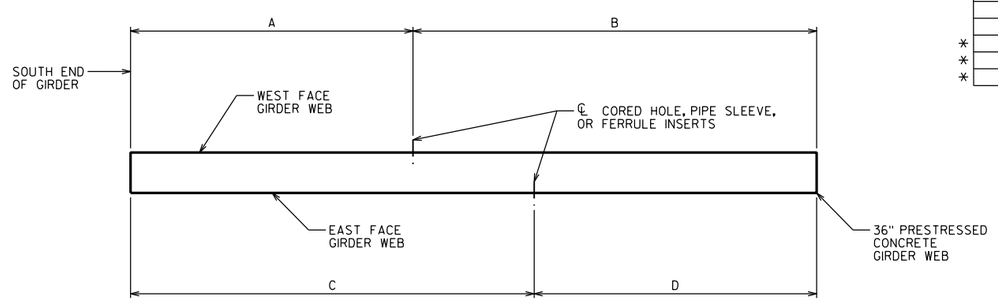

DIAPHRAGM INSERT LOCATION PLAN

SEE PLAN, SHEET 23

NO.	DATE	REVISION	BY

STATE OF WISCONSIN
DEPARTMENT OF TRANSPORTATION

STRUCTURE B-32-163

DRAWN BY RLR | PLANS CK'D. NJK

STEEL DIAPHRAGM
36" GIRDER

SHEET 21
381

8

8

STATE PROJECT NUMBER
5163-07-72

TOP OF DECK ELEVATIONS ** - EDGE OF DECK ELEVATION IS THE SAME AS THE INSIDE FACE OF THE PARAPET

LOCATION	SPAN POINT	** EAST PARAPET FACE	GIRDER 8	GIRDER 7	GIRDER 6	C/L STH 35	GIRDER 5	LONGIT. CONST. JOINT	GIRDER 4	TRAFFIC FACE INTERMEDIATE BARRIER	GIRDER 3	GIRDER 2	** WEST PARAPET FACE
S. ABUT.	1	648.99	649.01	649.19	649.37	649.39	649.22	649.14	649.07	648.91	648.87	648.70	648.69
	1.1	649.02	649.04	649.22	649.39	649.42	649.24	649.17	649.10	648.94	648.90	648.73	648.72
	1.2	649.05	649.07	649.24	649.42	649.45	649.27	649.20	649.12	648.97	648.92	648.76	648.74
	1.3	649.08	649.09	649.27	649.45	649.48	649.30	649.23	649.15	649.00	648.95	648.79	648.77
	1.4	649.10	649.12	649.30	649.48	649.50	649.32	649.25	649.18	649.02	648.98	648.81	648.80
	1.5	649.13	649.15	649.33	649.50	649.53	649.35	649.28	649.20	649.05	649.01	648.84	648.82
	1.6	649.16	649.18	649.35	649.53	649.56	649.38	649.31	649.23	649.08	649.03	648.87	648.85
	1.7	649.19	649.20	649.38	649.56	649.59	649.41	649.33	649.26	649.11	649.06	648.90	648.88
	1.8	649.21	649.23	649.41	649.58	649.61	649.43	649.36	649.29	649.13	649.09	648.92	648.91
	1.9	649.24	649.26	649.43	649.61	649.64	649.46	649.39	649.31	649.16	649.11	648.95	648.93
PIER 1	2	649.27	649.28	649.46	649.64	649.67	649.49	649.42	649.34	649.19	649.14	648.98	648.96
	2.1	649.30	649.31	649.49	649.67	649.70	649.52	649.44	649.37	649.22	649.17	649.01	648.99
	2.2	649.32	649.34	649.52	649.69	649.72	649.54	649.47	649.40	649.24	649.20	649.03	649.02
	2.3	649.35	649.37	649.54	649.72	649.75	649.57	649.50	649.42	649.27	649.22	649.06	649.04
	2.4	649.38	649.40	649.57	649.75	649.78	649.60	649.53	649.45	649.30	649.25	649.09	649.07
	2.5	649.41	649.42	649.60	649.78	649.81	649.63	649.55	649.48	649.33	649.28	649.12	649.10
	2.6	649.43	649.45	649.63	649.81	649.83	649.65	649.58	649.51	649.35	649.31	649.14	649.13
	2.7	649.46	649.48	649.66	649.83	649.86	649.68	649.61	649.53	649.38	649.34	649.17	649.15
	2.8	649.49	649.51	649.68	649.86	649.89	649.71	649.64	649.56	649.41	649.36	649.20	649.18
	2.9	649.52	649.53	649.71	649.89	649.92	649.74	649.67	649.59	649.44	649.39	649.23	649.21
PIER 2	3	649.54	649.56	649.74	649.92	649.94	649.76	649.69	649.62	649.46	649.42	649.25	649.24
	3.1	649.57	649.59	649.77	649.94	649.97	649.79	649.72	649.65	649.49	649.45	649.28	649.27
	3.2	649.60	649.62	649.79	649.97	650.00	649.82	649.75	649.67	649.52	649.47	649.31	649.29
	3.3	649.63	649.64	649.82	650.00	650.03	649.85	649.78	649.70	649.55	649.50	649.34	649.32
	3.4	649.65	649.67	649.85	650.03	650.05	649.88	649.80	649.73	649.57	649.53	649.36	649.35
	3.5	649.68	649.70	649.88	650.05	650.08	649.90	649.83	649.76	649.60	649.56	649.39	649.38
	3.6	649.71	649.73	649.90	650.08	650.11	649.93	649.86	649.78	649.63	649.58	649.42	649.40
	3.7	649.74	649.75	649.93	650.11	650.14	649.96	649.89	649.81	649.66	649.61	649.45	649.43
	3.8	649.76	649.78	649.96	650.14	650.16	649.99	649.91	649.84	649.68	649.64	649.48	649.46
	3.9	649.79	649.81	649.99	650.16	650.19	650.01	649.94	649.87	649.71	649.67	649.50	649.49
PIER 3	4	649.82	649.84	650.01	650.19	650.22	650.04	649.97	649.89	649.74	649.69	649.53	649.51
	4.1	649.85	649.86	650.04	650.22	650.25	650.07	650.00	649.92	649.77	649.72	649.56	649.54
	4.2	649.87	649.89	650.07	650.25	650.27	650.10	650.02	649.95	649.79	649.75	649.59	649.57
	4.3	649.90	649.92	650.10	650.27	650.30	650.12	650.05	649.98	649.82	649.78	649.61	649.60
	4.4	649.93	649.95	650.12	650.30	650.33	650.15	650.08	650.00	649.85	649.80	649.64	649.62
	4.5	649.96	649.97	650.15	650.33	650.36	650.18	650.11	650.03	649.88	649.83	649.67	649.65
	4.6	649.98	650.00	650.18	650.36	650.38	650.20	650.13	650.06	649.90	649.86	649.69	649.68
	4.7	650.01	650.03	650.21	650.38	650.41	650.23	650.16	650.09	649.93	649.89	649.72	649.70
	4.8	650.04	650.06	650.23	650.41	650.44	650.26	650.19	650.11	649.96	649.91	649.75	649.73
	4.9	650.07	650.08	650.26	650.44	650.47	650.29	650.21	650.14	649.99	649.94	649.78	649.76
N. ABUT	5	650.09	650.11	650.29	650.46	650.49	650.31	650.24	650.17	650.01	649.97	649.80	649.79

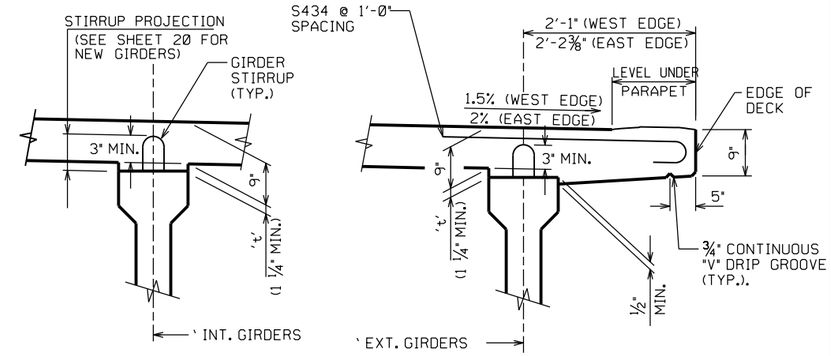

DECK HAUNCH DETAIL

TO DETERMINE 't', ELEV. OF TOP OF GIRDERS AT ` OF SUBSTRUCTURE UNITS & AT 1/10 POINTS OF EACH SPAN SHALL BE TAKEN. TO DETERMINE THE TOP OF DECK ELEVATION FOR POINT REFERRED USE TABLE ON THIS SHEET AND ADJUST FOR CROSS SLOPE OVER GIRDER. THEN FOLLOW THIS PROCESS:

TOP OF DECK ELEV. AT FINAL GRADE
- TOP OF GIRDER ELEVATION
+ DEADLOAD DEFLECTION (SEE SHEET 20 FOR NEW GIRDERS, FOR EXISTING GIRDERS, SEE TABLE THIS SHEET)
- DECK THICKNESS

= HAUNCH HEIGHT 't'

IF 1 1/4" MINIMUM HAUNCH HEIGHT 't' AT THE EDGE OF GIRDER CANNOT BE MAINTAINED, THE GRADE LINE MAY BE REVISED BY THE ENGINEER AT THE OPTION OF THE CONTRACTOR. THE PLAN DECK THICKNESS SHALL BE HELD. NOTIFY THE STRUCTURES SECTION IF THE GRADE LINE IS RAISED FROM THE PLAN AND PROFILE BY MORE THAN 1/2" OR IF 3" MINIMUM DECK EMBEDMENT OF TIE BAR CANNOT BE OBTAINED.

NOTE: AN AVERAGE HAUNCH ("t") OF 2 1/2" FOR SPANS 1, 2, 3 & 4 WAS USED IN THE QUANTITY "CONCRETE MASONRY STRUCTURES."

GENERAL NOTES

SEE SHEET 24 & 25 FOR TRANSVERSE AND LONGITUDINAL BAR SPACING.

PLACE TRANSVERSE BAR STEEL ON THE SKEW.

SEE SHEET 21 FOR LOCATION OF DIAPHRAGM INSERTS ON GIRDERS.

EXISTING GIRDER 2-5 ESTIMATED DEFLECTION

EXISTING GIRDERS 2-5 DATA											
SPAN	GIRDER	GIRDER LENGTH "L"	DEAD LOAD DEFLECTION (IN)								
			1/10	2/10	3/10	4/10	5/10	6/10	7/10	8/10	9/10
1,2,3,4	2	55'-0"	0.20	0.40	0.50	0.60	0.60	0.60	0.50	0.40	0.20
1,2,3,4	3	55'-0"	0.20	0.50	0.70	0.70	0.80	0.80	0.60	0.50	0.20
1,2,3,4	4 & 5	55'-0"	0.20	0.40	0.60	0.70	0.70	0.70	0.60	0.40	0.20

EXISTING GIRDER CAMBER BASED ON ORIGINAL GIRDER DESIGN. FIELD VERIFY CAMBER IN EXISTING GIRDERS BEFORE PLACING NEW CONCRETE DECK.

NO.	DATE	REVISION	BY

STATE OF WISCONSIN
DEPARTMENT OF TRANSPORTATION

STRUCTURE B-32-163

DRAWN BY RLR | PLANS CK'D. NJK

DECK FORMING DETAILS

SHEET 22
382

FILE= 13544010_22.DGN

STATE PROJECT NUMBER

5163-07-72

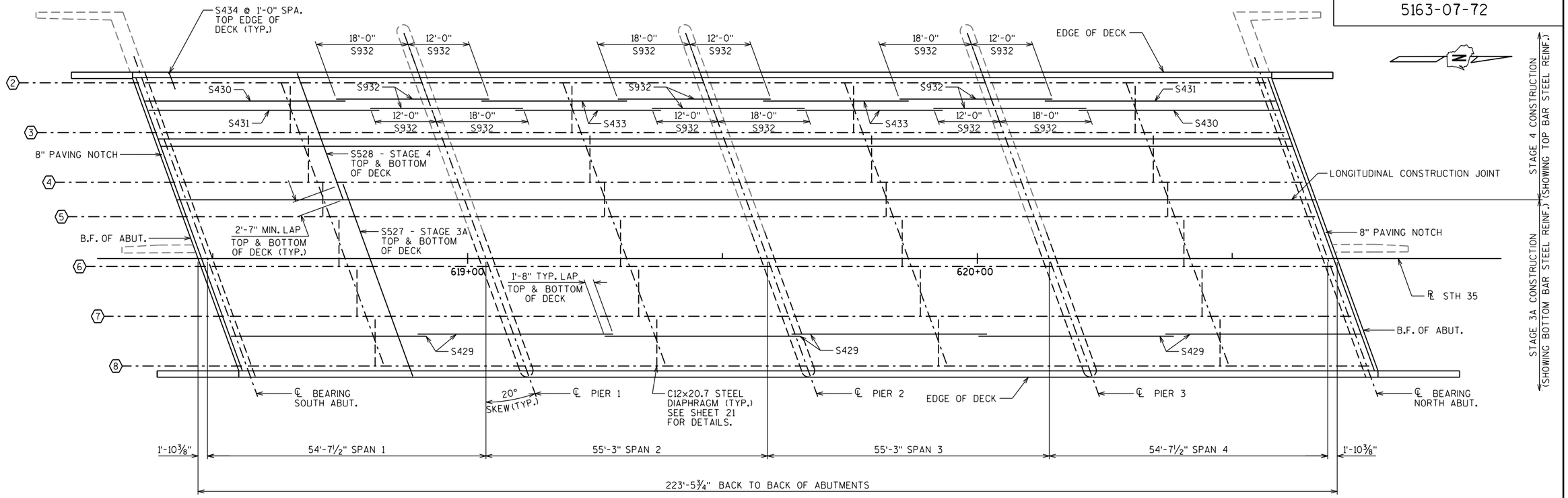

PLAN

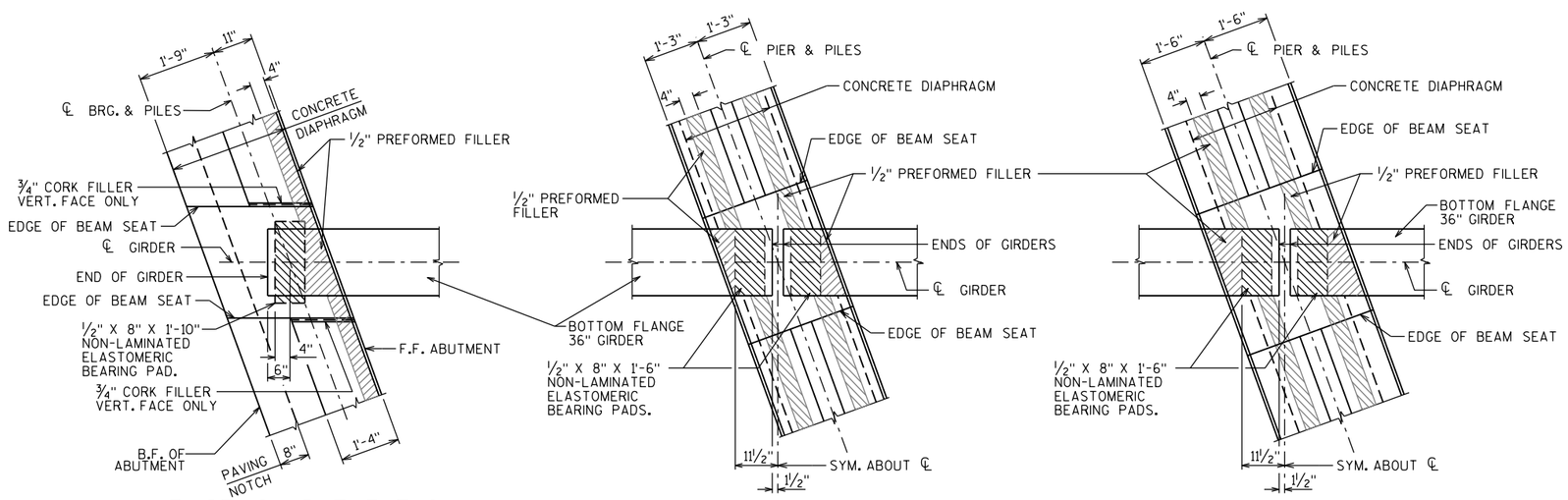

EXISTING ABUTMENT & ABUTMENT EXTENSION

EXISTING PIER TOP

PIER EXTENSION CAP

BEARING PAD DETAILS

8

8

NO.	DATE	REVISION	BY

STATE OF WISCONSIN
DEPARTMENT OF TRANSPORTATION

STRUCTURE B-32-163

DRAWN BY RLR | PLANS CK'D. NJK

SUPERSTRUCTURE PLAN

SHEET 23
383

13544010_B-32-163_23.dgn

13544010_B-32-163_23_super plan.dgn 1/30/2025 12:21:47 PM ekazadi

STATE PROJECT NUMBER
5163-07-72

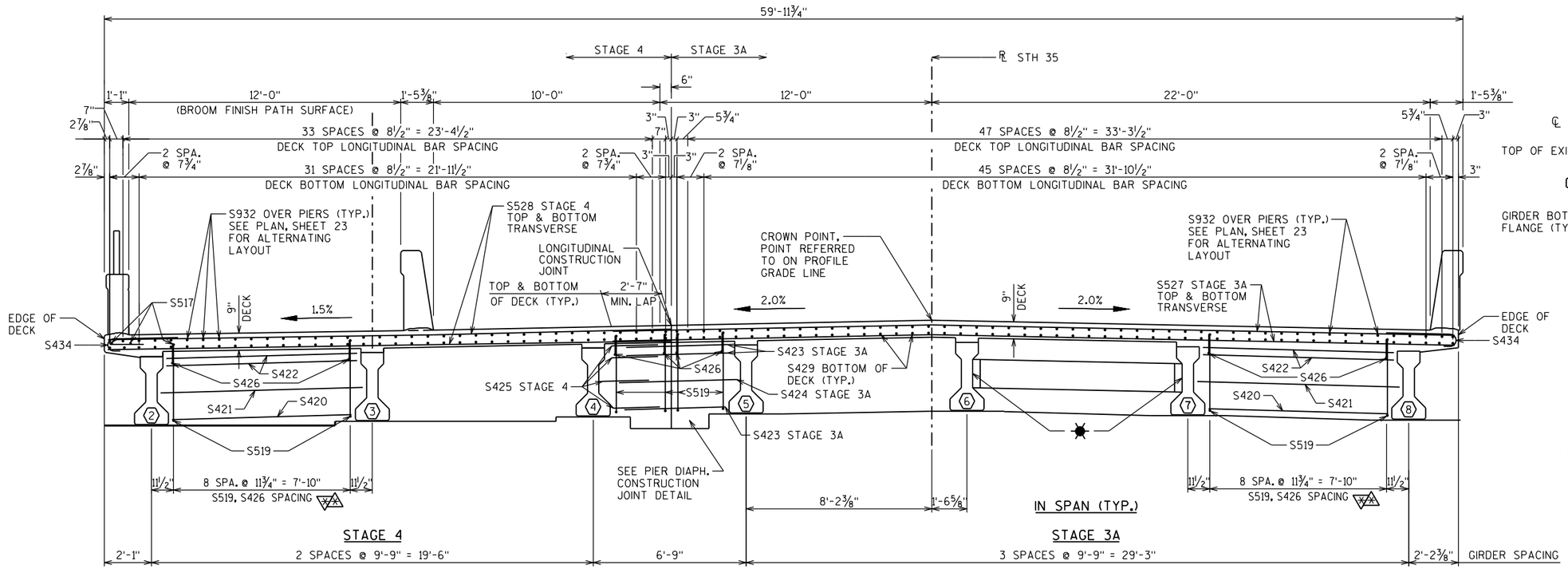

FINISHED CROSS SECTION THRU BRIDGE AT PIERS

(LOOKING NORTH)

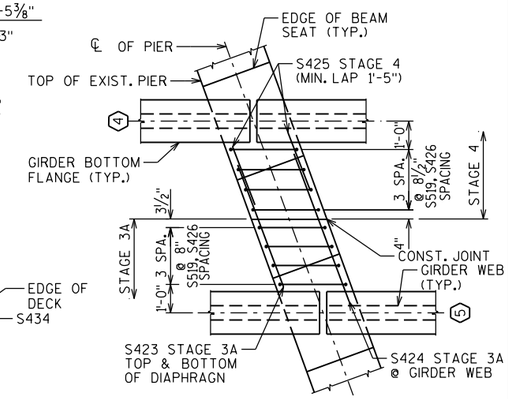

PIER DIAPHRAGM AT CONSTRUCTION JOINT DETAIL

TYPICAL ALL PIERS

SEE SHEET 25 LEGEND FOR DESCRIPTION OF

F.F.
B.F.
STG

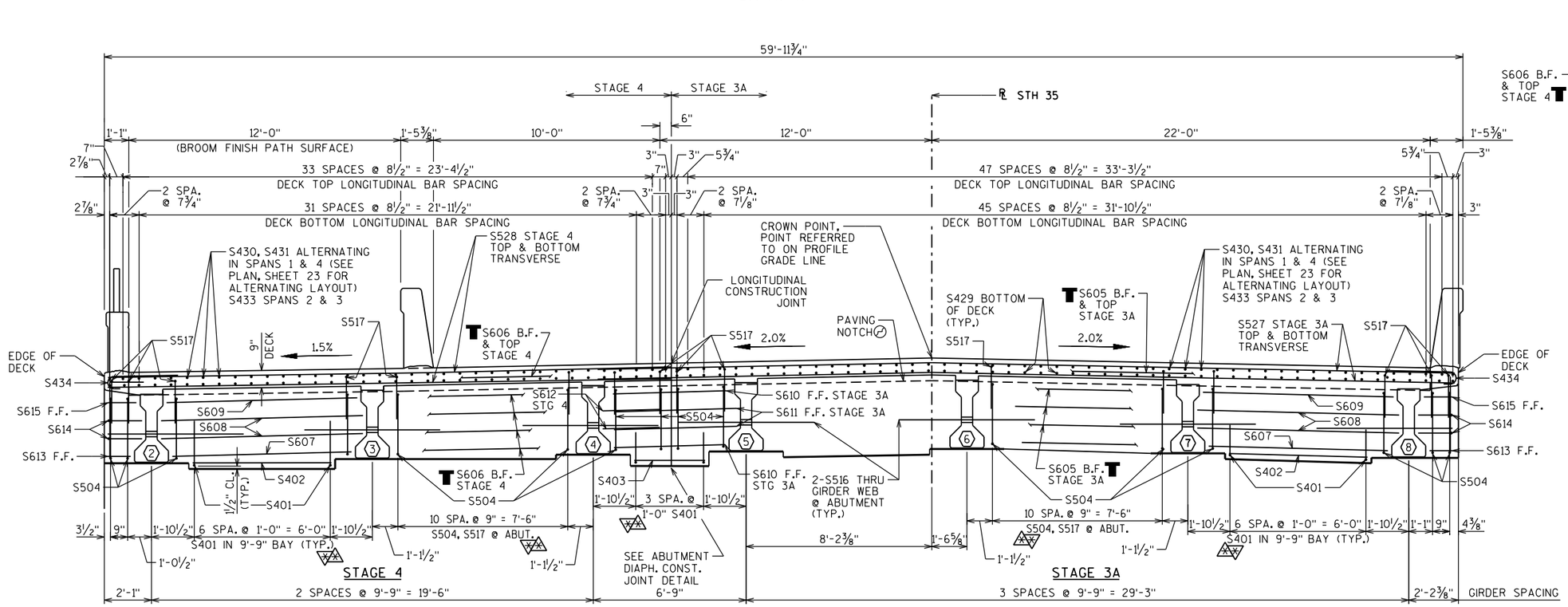

FINISHED CROSS SECTION THRU BRIDGE AT ABUTMENTS

(LOOKING NORTH)

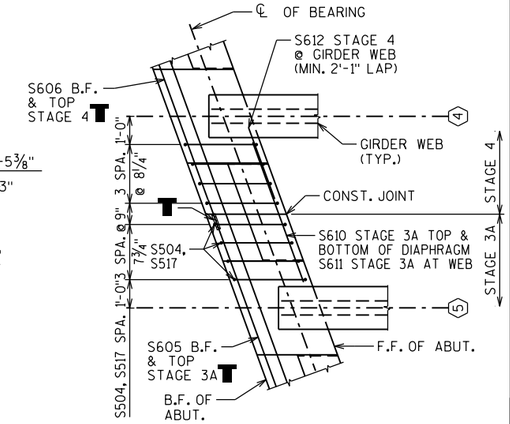

ABUTMENT DIAPHRAGM AT CONSTRUCTION JOINT DETAIL

SOUTH ABUTMENT SHOWN
NORTH ABUTMENT SIMILAR

NO.	DATE	REVISION	BY

STATE OF WISCONSIN
DEPARTMENT OF TRANSPORTATION

STRUCTURE B-32-163

DRAWN BY RLR | PLANS CK'D. NJK

SUPERSTRUCTURE SECTIONS & DETAILS

SHEET 24
384

8

8

13544010_B-32-163_24.pdf

13544010_B-32-163_24_superX.dgn 2/12/2025 9:10:04 AM ekazadi

STATE PROJECT NUMBER
5163-07-72

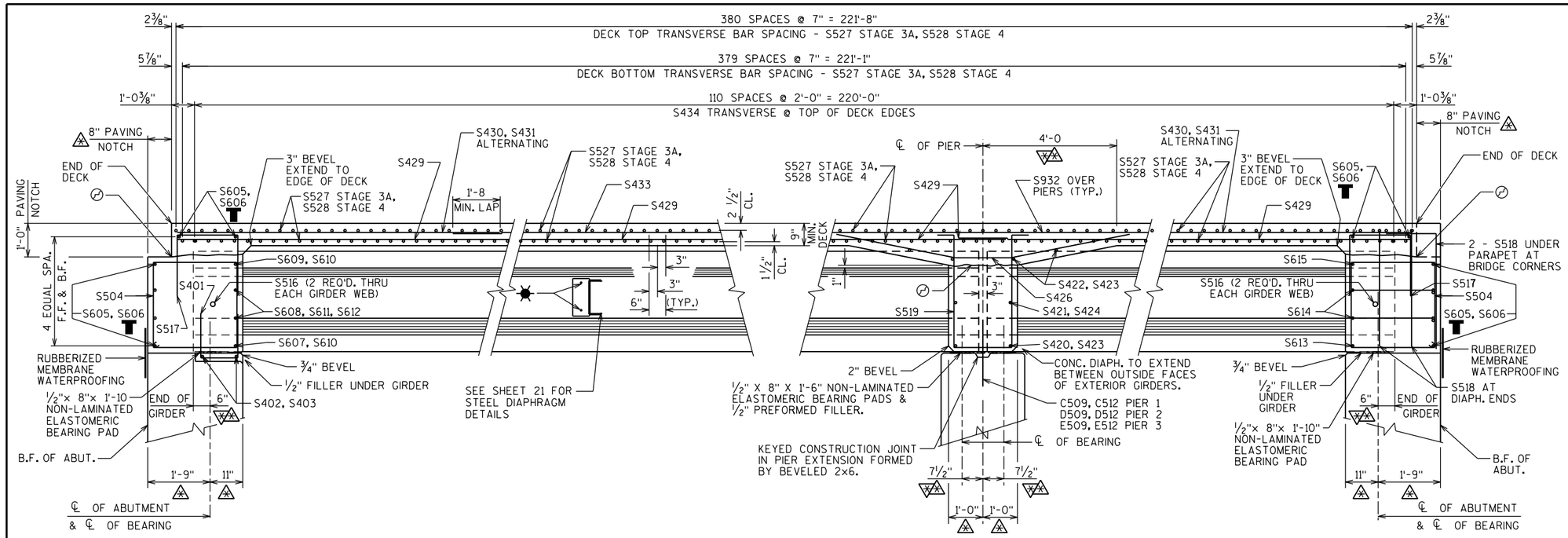

SECTION @ INTERIOR GIRDER BAY

SECTION @ PIER

SECTION - END OF ABUT. DIAPH.

LEGEND

- ⬡ — INDICATES GIRDER NUMBER
- ✸ — FOR DETAILS OF STEEL DIAPHRAGMS AND DIAPHRAGM INSERTS, SEE SHEET 21.
- ⊘ — OPTIONAL CONSTRUCTION JOINT (TYP. ALL BAYS).
- ⚠ — DIMENSION IS TAKEN NORMAL TO ℄ SUBSTRUCTURE UNITS.
- ⚠⚠ — DIMENSION IS TAKEN NORMAL TO ℄ GIRDER.
- T — BAR COUPLERS NO. 6 ARE REQUIRED AT DIAPHRAGM CONSTRUCTION JOINT BETWEEN BARS S605 AND S606. IF BAR LAPS ARE REQUIRED AT BAR COUPLERS, PROVIDE A MINIMUM LAP LENGTH OF 3'-6". BAR LENGTHS SHOWN FOR S605 AND S606 ARE MEASURED TO THE CONST. JOINT. ADJUST LENGTH OF BARS S605 AND S606 IF REQUIRED TO ACCOMMODATE COUPLER SYSTEM.

F.F. — FRONT FACE

B.F. — BACK FACE

STG — STAGE

BILL OF BARS (COATED) 124,800 LBS.

MARK	NUMBER REQ'D.	LENGTH	BENT	DESCRIPTION
S401	78	4'-11"	X	DIAPH. @ ABUT. - SEMI-EXP. NOTCH - STIRRUP - VERT.
S402	20	6'-6"		DIAPH. @ ABUT. - SEMI-EXP. NOTCH 9'-9" BAY - HORIZ.
S403	4	3'-4"		DIAPH. @ ABUT. - SEMI-EXP. NOTCH 6'-9" BAY - HORIZ.
S504	134	10'-10"	X	DIAPH. @ ABUT. - STIRRUP - VERT.
S605	12	39'-6"		DIAPH. @ ABUT. - B.F. & TOP - STAGE 3A - HORIZ.
S606	12	26'-5"		DIAPH. @ ABUT. - B.F. & TOP - STAGE 4 - HORIZ.
S607	10	8'-5"		DIAPH. @ ABUT. - F.F. - 9'-9" BAYS - HORIZ. - BOTTOM
S608	20	9'-5"		DIAPH. @ ABUT. - F.F. - 9'-9" BAYS - HORIZ. - WEB
S609	10	8'-11"		DIAPH. @ ABUT. - F.F. - 9'-9" BAYS - HORIZ. - TOP
S610	4	5'-3"		DIAPH. @ ABUT. - F.F. - STAGE 3A 6'-9" BAYS - HORIZ.
S611	4	5'-9"		DIAPH. @ ABUT. - F.F. - STAGE 3A 6'-9" BAYS - HORIZ.
S612	4	2'-8"		DIAPH. @ ABUT. - F.F. - STAGE 4 6'-9" BAYS - HORIZ.
S613	4	1'-1"		DIAPH. @ ABUT. - F.F. @ ENDS - HORIZ.
S614	8	5'-4"	X	DIAPH. @ ABUT. - ACROSS ENDS - HORIZ.
S615	4	1'-4"		DIAPH. @ ABUT. - F.F. @ ENDS - HORIZ.
S516	28	6'-0"	X	DIAPH. @ ABUT. - 2 THRU GIRDER WEB - HORIZ.
S517	134	6'-2"	X	DIAPH. @ ABUT. - TOP STIRRUP - VERT.
S518	16	5'-0"	X	DIAPH. @ ABUT. - TOP TIE - VERT. @ END
S519	159	8'-11"	X	DIAPH. @ PIER - STIRRUP - VERT.
S420	30	8'-5"		DIAPH. @ PIERS - 9'-9" BAYS - HORIZ. - BOTTOM
S421	30	9'-5"		DIAPH. @ PIERS - 9'-9" BAYS - HORIZ. - WEB
S422	60	8'-11"		DIAPH. @ PIERS - 9'-9" BAYS - HORIZ. - TOP
S423	18	4'-9"		DIAPH. @ PIERS - 6'-9" BAYS - HORIZ.
S424	6	5'-6"		DIAPH. @ PIERS - 6'-9" BAYS - HORIZ.
S425	24	2'-2"		DIAPH. @ PIERS - 6'-9" BAYS - HORIZ.
S426	159	9'-1"	X	DIAPH. @ PIER - LONGIT.
S527	761	39'-6"		DECK - TOP & BOTTOM - STAGE 3A - TRANS.
S528	761	26'-5"		DECK - TOP & BOTTOM - STAGE 4 - TRANS.
S429	516	38'-5"		DECK - BOTTOM - LONGIT.
S430	86	39'-4"		DECK - TOP @ ABUTS. & IN SPANS 1 & 4 - LONGIT.
S431	86	45'-4"		DECK - TOP @ ABUTS. & IN SPANS 1 & 4 - LONGIT.
S932	258	30'-0"		DECK - TOP - OVER PIERS - LONGIT.
S433	172	28'-7"		DECK - IN SPANS 2 & 3 - LONGIT.
S434	222	3'-9"	X	DECK - TOP EDGE - TRANS.
S535	666	4'-5"	X	PARAPET, 42SS - INTO DECK - STIRRUP - VERT.
S536	4	5'-10"	X	PARAPET, 42SS - OVER ABUT. - STIRRUP - VERT.
S537	670	6'-8"	X	PARAPET, 42SS - TOP - STIRRUP - VERT.
S538	80	46'-0"		PARAPET, 42SS - LONGIT.
S539	265	4'-4"	X	PARAPET, VERTICAL FACE - INTO DECK - STIRRUP - VERT.
S540	4	6'-3"	X	PARAPET, VERTICAL FACE - OVER ABUT. - STIRRUP - VERT.
S541	269	4'-9"	X	PARAPET, VERTICAL FACE - TOP - STIRRUP - VERT.
S542	40	46'-2"		PARAPET, VERTICAL FACE - LONGIT.

PART LONGITUDINAL SECTION

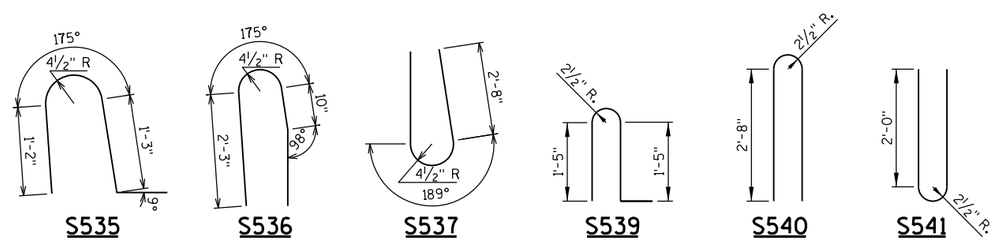

S535 S536 S537 S539 S540 S541

STIRRUP RADII SHOWN ARE MEASURED TO THE INSIDE OF THE BAR BEND.

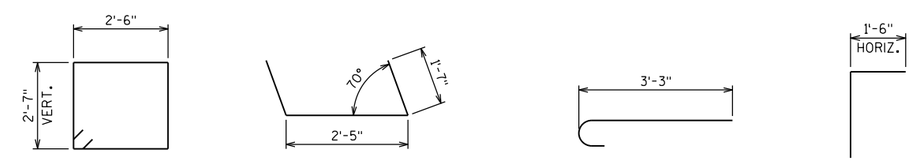

S504 (STIRRUP) S614 (STIRRUP) S434 STD. 180° HOOK S518 (TIE)

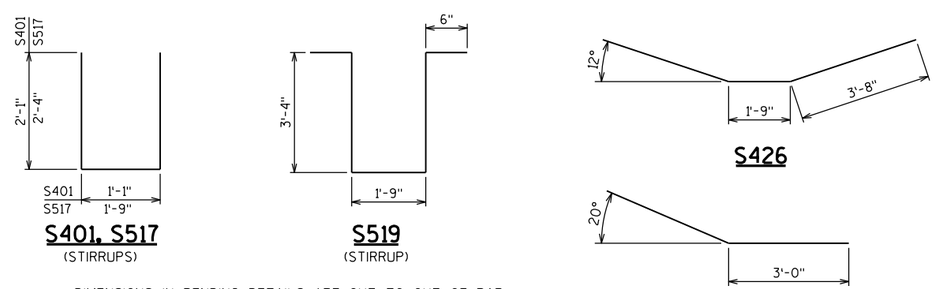

S401, S517 (STIRRUPS) S519 (STIRRUP) S426 S516

DIMENSIONS IN BENDING DETAILS ARE OUT TO OUT OF BAR.
EPOXY COAT ALL SUPERSTRUCTURE BAR REINFORCEMENT.

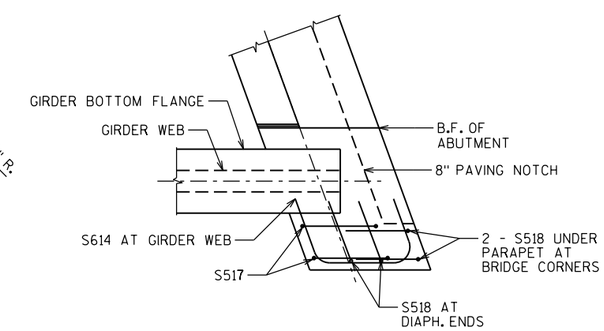

ABUTMENT DIAPHRAGM @ BRIDGE CORNER

BRIDGE CORNER @ WING 4 SHOWN
OTHER BRIDGE CORNERS SIMILAR

NO.	DATE	REVISION	BY

STATE OF WISCONSIN
DEPARTMENT OF TRANSPORTATION

STRUCTURE B-32-163

DRAWN BY RLR | PLANS CK'D. NJK

SUPERSTRUCTURE LONGIT. SECTION & DETAILS

SHEET 25
385

13544010_B-32-163_25.pdf

13544010_B-32-163_25_superLbars.dgn 2/11/2025 9:30:09 PM ekazadi

STATE PROJECT NUMBER

5163-07-72

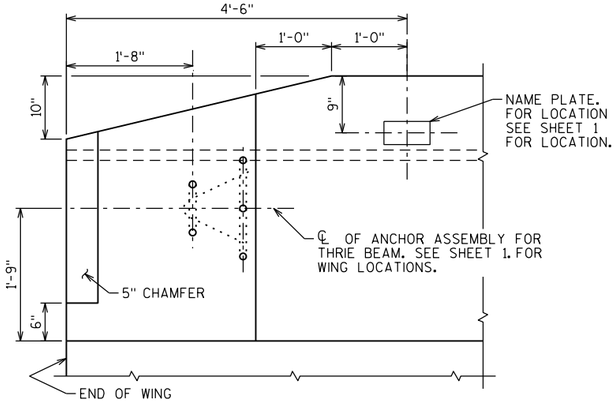

PARAPET END TREATMENT DETAIL

LOOKING AT INSIDE FACE OF PARAPET

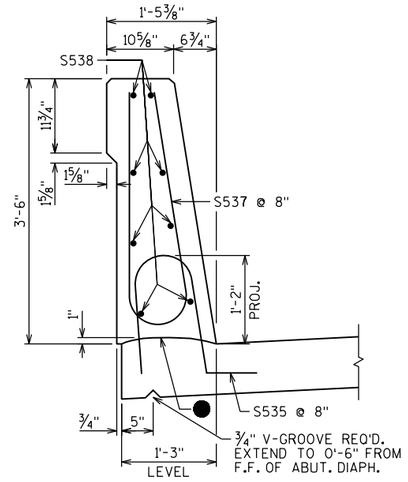

SECTION THRU PARAPET ON DECK

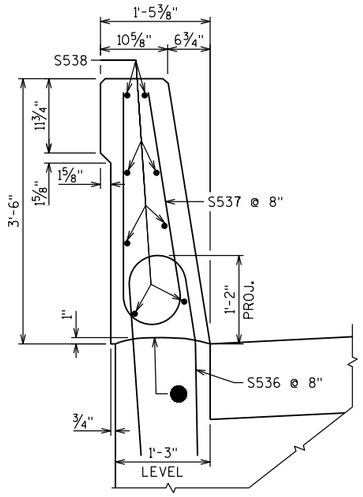

SECTION THRU PARAPET AT END OF DECK

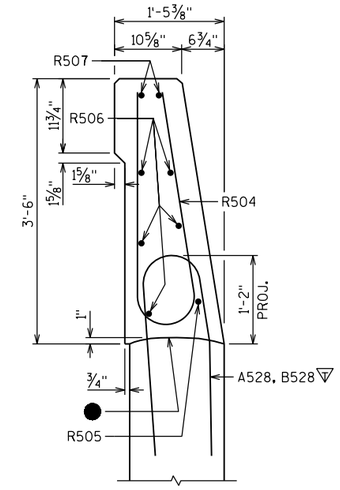

SECTION P.3

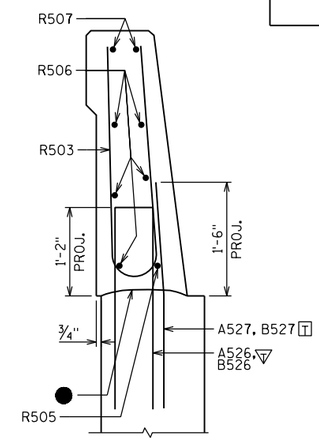

SECTION P.2

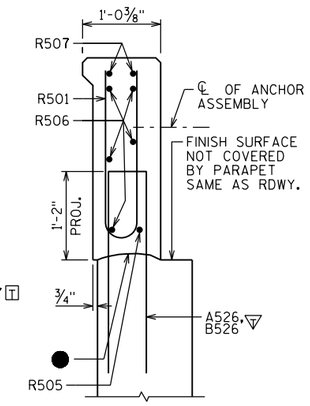

SECTION P.1

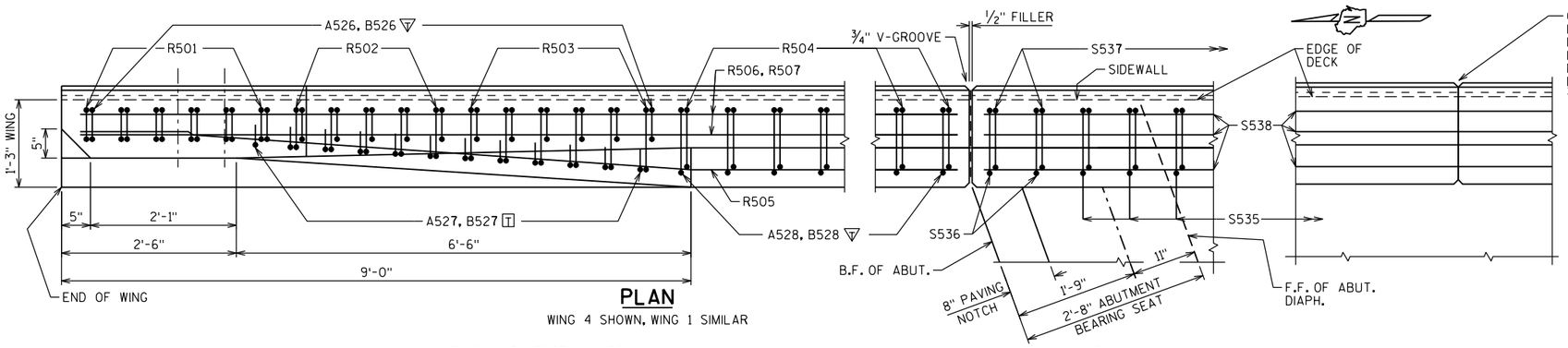

PLAN

WING 4 SHOWN, WING 1 SIMILAR

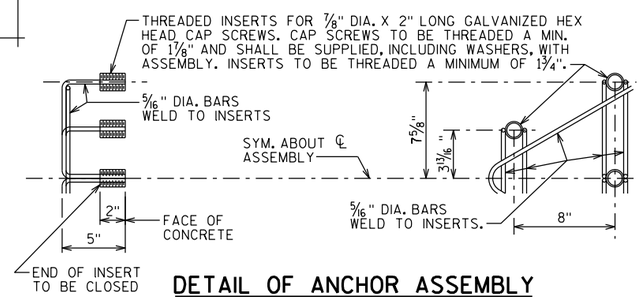

DETAIL OF ANCHOR ASSEMBLY

NOTE: HEX HEAD CAP SCREWS & WASHERS TO BE GALVANIZED IN ACCORDANCE WITH ASTM F2329.

ASSEMBLY SHALL BE BID ITEM "ANCHOR ASSEMBLIES FOR STEEL PLATE BEAM GUARD", EACH.

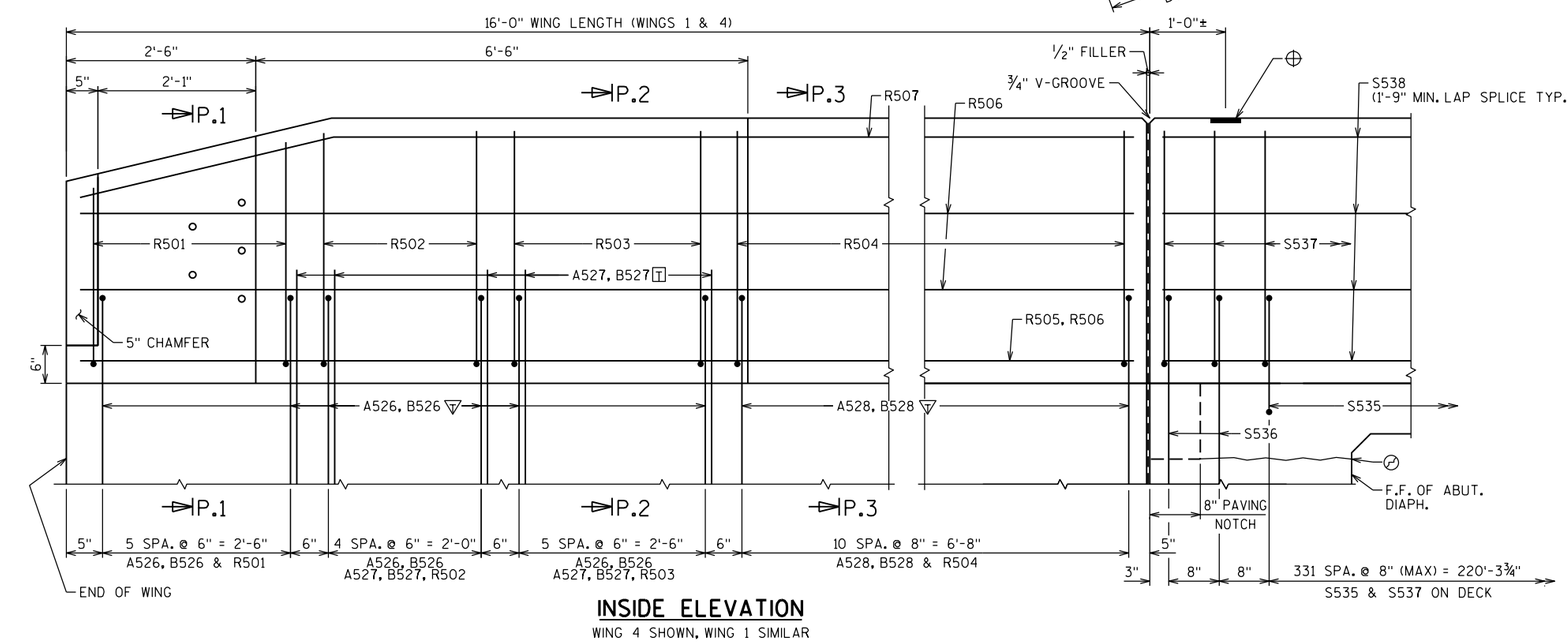

INSIDE ELEVATION

WING 4 SHOWN, WING 1 SIMILAR

LEGEND

SEE SHEET 27 FOR ADDITIONAL 42SS PARAPET DETAILS, BILL OF BARS AND BAR STEEL REINFORCEMENT DETAILS.

- ● CONSTRUCTION JOINT. STRIKE OFF AS SHOWN
- ⊘ OPTIONAL CONSTRUCTION JOINT.
- ▽ A526, B526 AND A528, B528 BARS TO BE TIED TO WING STEEL BEFORE WING IS POURED.
- T A527, B527 BARS MAY BE PLACED AFTER CONCRETE IS POURED BUT BEFORE INITIAL SET HAS TAKEN PLACE. USE CARE TO PLACE A527, B527 BARS CORRECTLY ALONG TRANSITION OF PARAPET.
- ⊕ BENCH MARK CAP (WHEN SUPPLIED).

NO.	DATE	REVISION	BY

STATE OF WISCONSIN
DEPARTMENT OF TRANSPORTATION

STRUCTURE B-32-163

DRAWN BY RLR | PLANS CK'D. NJK

EAST EDGE OF DECK SINGLE SLOPE PARAPET 42SS

SHEET 26
386

8

8

STATE PROJECT NUMBER
5163-07-72

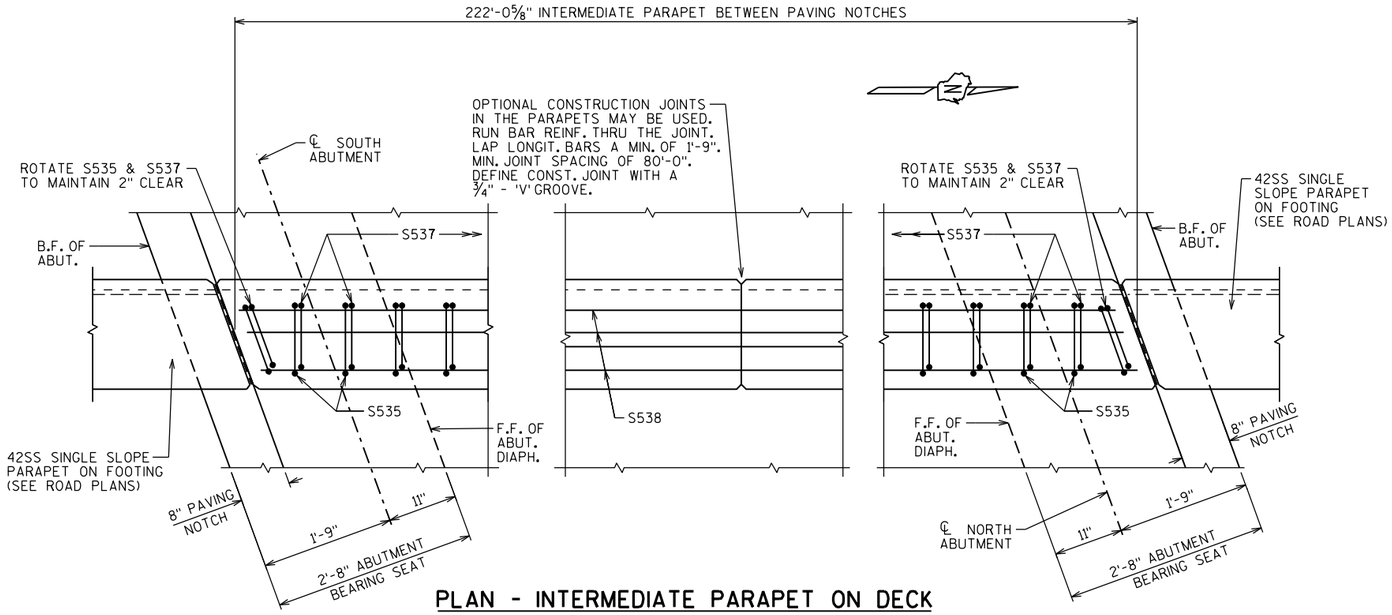

PLAN - INTERMEDIATE PARAPET ON DECK

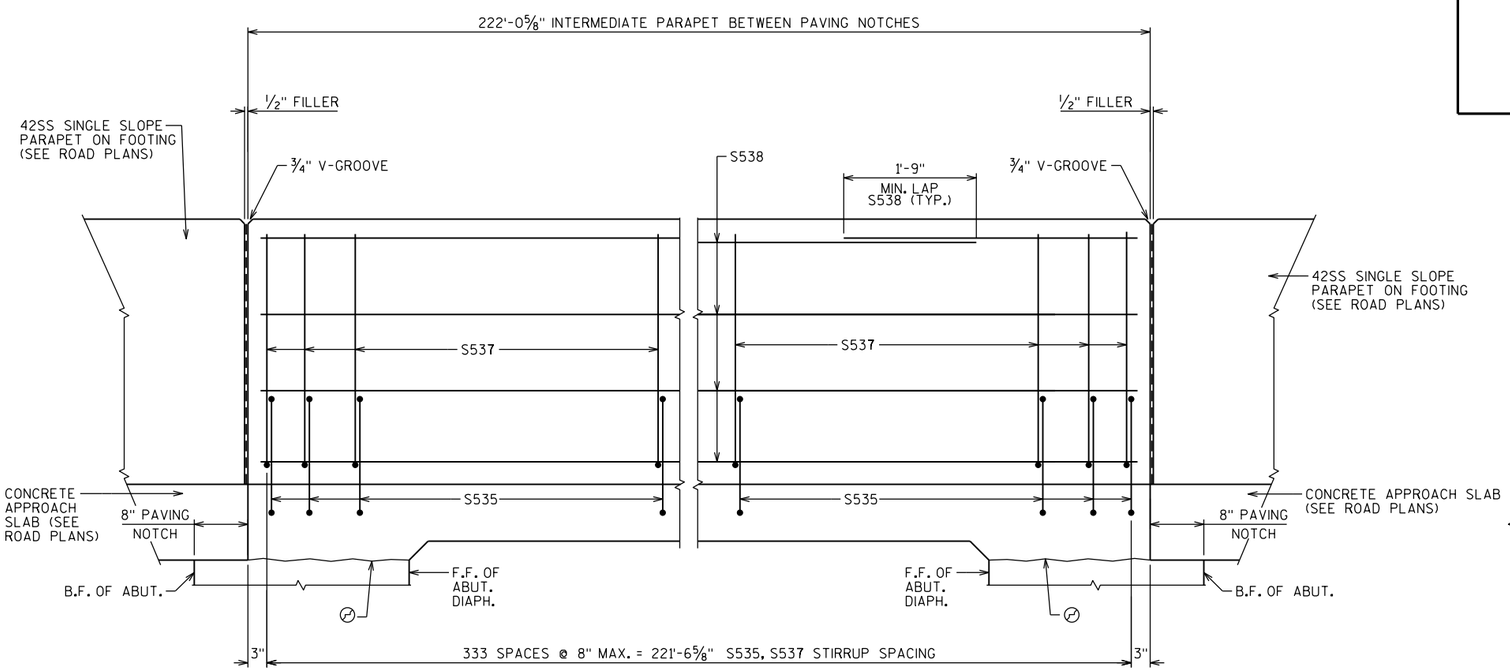

INSIDE ELEVATION

(LOOKING WEST)

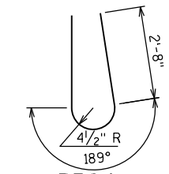

R504

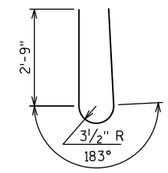

R503

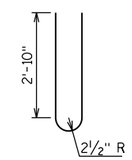

R502

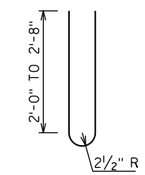

R501

BILL OF BARS (COATED) 630 LBS.

MARK	NO. REQ'D.	LENGTH	BENT	BAR SERIES	LOCATION
R501	12	5'-5"	X	Ⓢ	PARAPET ON WINGS 1 & 4 - END - STIRRUP - VERT.
R502	10	6'-5"	X		PARAPET ON WINGS 1 & 4 - STIRRUP - VERT.
R503	12	6'-6"	X		PARAPET ON WINGS 1 & 4 - STIRRUP - VERT.
R504	22	6'-8"	X		PARAPET ON WINGS 1 & 4 - TOP - STIRRUP - VERT.
R505	2	15'-7"	X		PARAPET ON WINGS 1 & 4 - BOTTOM - LONGIT.
R506	10	15'-7"			PARAPET ON WINGS 1 & 4 - LONGIT.
R507	4	15'-8"	X		PARAPET ON WINGS 1 & 4 - TOP - LONGIT.

DIMENSIONS IN BENDING DETAILS ARE OUT TO OUT OF BAR.
EPOXY COAT ALL SUPERSTRUCTURE BAR STEEL REINFORCEMENT.

BAR SERIES TABLE

BAR MARK	NO. REQ'D	LENGTH
R501	2 SERIES OF 6	4'-9" TO 6'-1"

BUNDLE AND TAG EACH SERIES SEPARATELY.

Ⓢ LENGTH SHOWN FOR BAR IS AN AVERAGE LENGTH AND SHOULD ONLY BE USED FOR BAR WEIGHT CALCULATIONS. SEE BAR SERIES TABLE FOR ACTUAL LENGTHS.

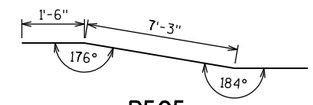

R505

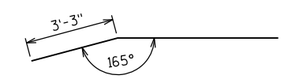

R507

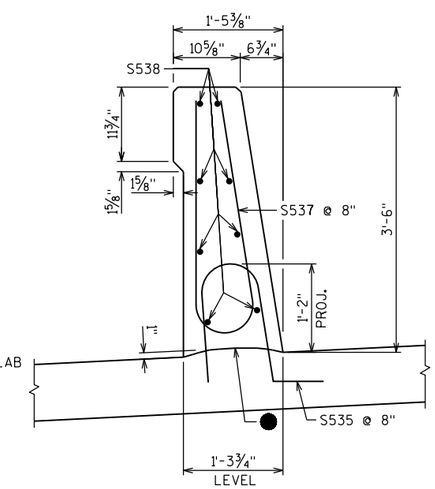

SECTION THRU INTERMEDIATE PARAPET ON DECK

SEE SHEET 26 LEGEND FOR DESCRIPTION OF ● ⊘

NO.	DATE	REVISION	BY

STATE OF WISCONSIN
DEPARTMENT OF TRANSPORTATION

STRUCTURE B-32-163

DRAWN BY RLR | PLANS CK'D. NJK

INTERMEDIATE SINGLE SLOPE PARAPET 42SS & DETAILS

SHEET 27
387

8

STATE PROJECT NUMBER
5163-07-72

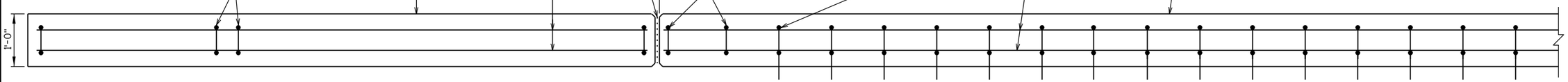

PLAN
(RAILING NOT SHOWN FOR CLARITY)

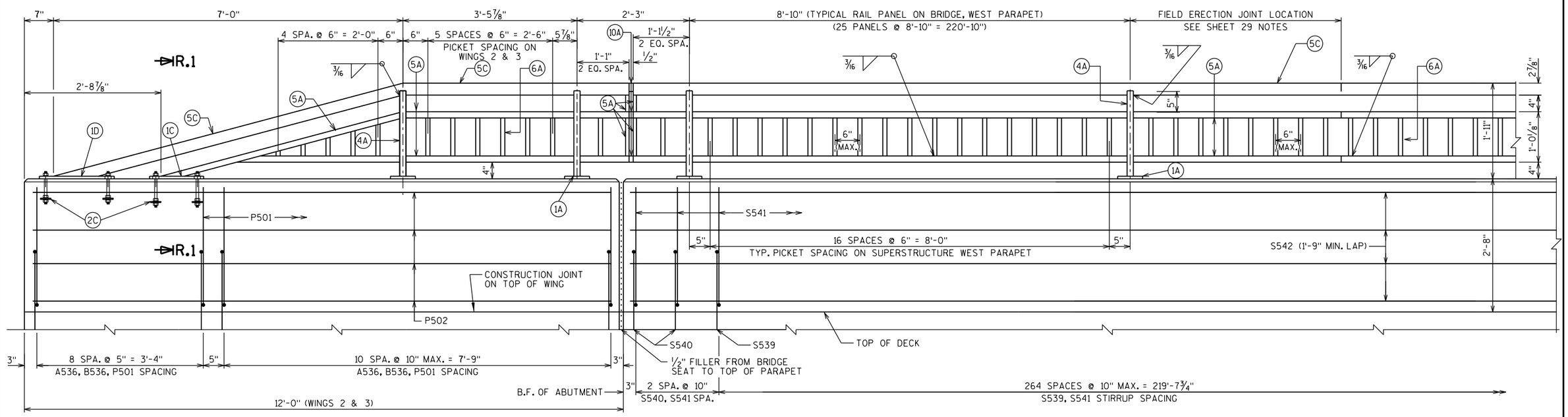

PART ELEVATION OF WEST PARAPET
LOOKING AT TRAFFIC FACE

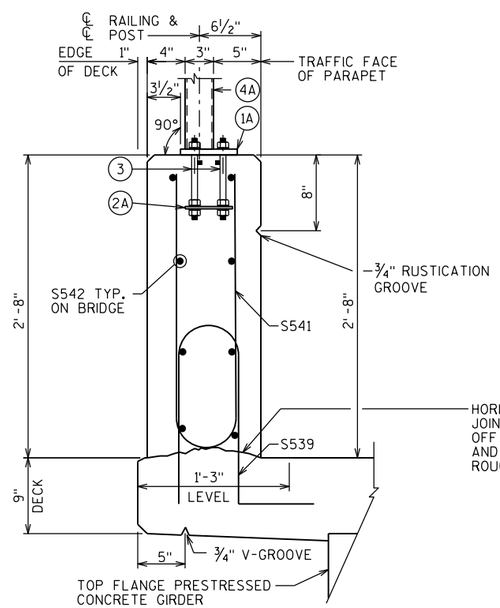

SECTION THRU PARAPET ON BRIDGE
(LOOKING NORTH)

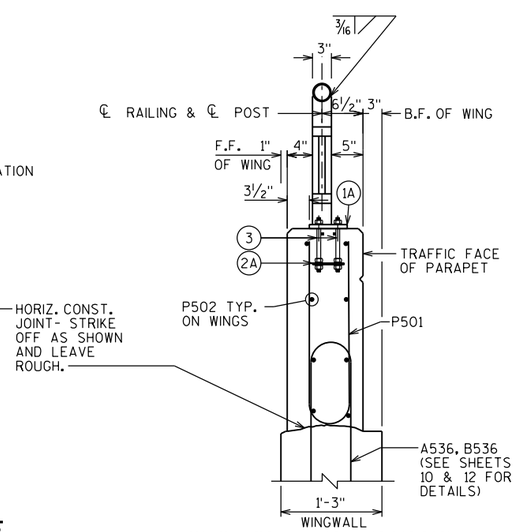

SECTION THRU PARAPET ON WINGS 2 & 3
(LOOKING NORTH)

BILL OF BARS (COATED) 390 LBS.

MARK	NUMBER REQUIRED	LENGTH	BENT	DESCRIPTION
P501	40	4'-9"	X	PARAPET ON WINGS - STIRRUP - TOP - VERT.
P502	16	11'-7"		PARAPET ON WINGS - LONGIT.

DIMENSIONS IN BENDING DETAILS ARE OUT TO OUT OF BAR.
EPOXY COAT ALL SUPERSTRUCTURE BAR REINFORCEMENT.

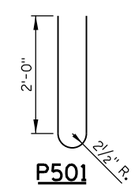

P501

STIRRUP RADII SHOWN IS MEASURED TO THE INSIDE OF THE BAR BEND.

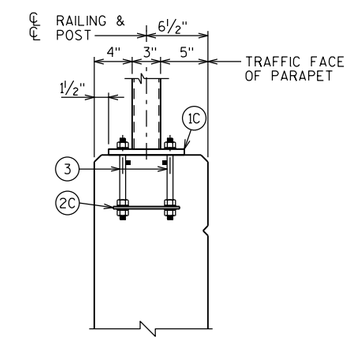

SECTION R.1-R.1 THRU PARAPET

NO.	DATE	REVISION	BY

STATE OF WISCONSIN
DEPARTMENT OF TRANSPORTATION

STRUCTURE B-32-163

DRAWN BY RLR | PLANS CK'D. NJK

WEST EDGE OF DECK VERTICAL FACE PARAPET & RAILING

SHEET 28
388

8

8

STATE PROJECT NUMBER

5163-07-72

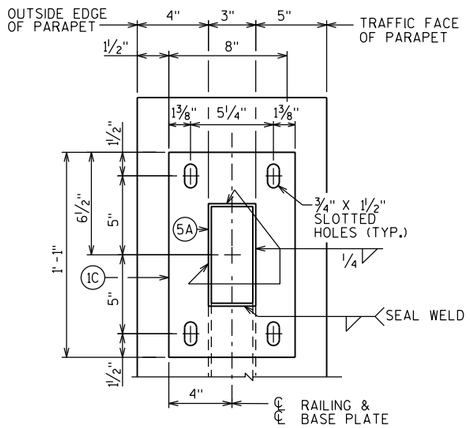

END RAIL BASE PLATE

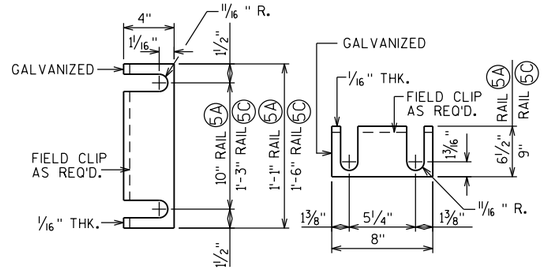

END RAIL SHIM DETAIL

(2 SETS PER POST)

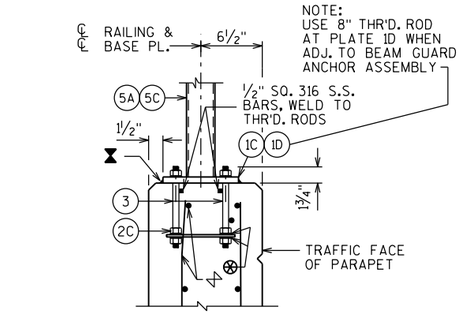

ANCHORAGE FOR END RAIL

NOTE: ANCHOR PLATES NOT REQ'D. WHEN ADHESIVE ANCHORS ARE USED.

⁂ WHEN ADHESIVE ANCHORS ARE USED, FIELD BEND AND/OR DISPLACE TO AVOID HITTING LONGITUDINAL BAR WHEN DRILLING FOR ADHESIVE ANCHORS.

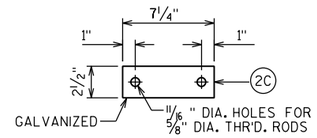

END RAIL ANCHOR PLATE

2 REQ'D. PER END RAIL BASE PLATE

LEGEND

(1A) PLATE ⅝" X 6" X 8" WITH ¾" X 1½" SLOTTED HOLES.

(1C) PLATE ⅝" X 8" X 1'-1" WITH ¾" X 1½" SLOTTED HOLES.

(1D) PLATE ⅝" X 8" X 1'-6" WITH ¾" X 1½" SLOTTED HOLES.

(2A) ¼" X 5" X 7" ANCHOR PLATE WITH 11/16" DIA. HOLES FOR THR'D. RODS NO. 3.

(2C) ¼" X 2½" X 7¼" ANCHOR PLATE WITH 11/16" DIA. HOLES FOR THR'D. RODS NO. 3.

(3) ⅝" DIA. X 9" LONG, TYPE 316 STAINLESS STEEL THREADED RODS (MIN. TENSILE STRENGTH = 70 KSI) WITH NUT AND WASHERS OF SAME ALLOY GROUP. ALTERNATIVE ANCHORAGE: CONCRETE ADHESIVE ANCHORS ⅝-INCH. EMBED 7" IN CONCRETE FOR RAIL POSTS. EMBED 5" IN CONCRETE FOR END RAILS. ADHESIVE ANCHORS SHALL CONFORM TO SECTION 502.2.12 OF THE STANDARD SPECIFICATIONS.

(4A) STRUCTURAL TUBING 3" X 1½" X 3/16". PLACE VERTICAL. WELD TO NO. 1 & 5.

(5A) STRUCTURAL TUBING 3" X 1½" X 3/16" RAILS. WELD TO NO. 1 & NO. 4. INSIDE OF TUBE TO BE PAINTED AT ALL FIELD ERECTION & EXPANSION JOINTS.

(5C) STRUCTURAL TUBING 2½" DIA. (STANDARD SIZE) (2.875" O.D.). WELD TO NO. 1 & NO. 4. INSIDE OF TUBE TO BE PAINTED AT ALL FIELD ERECTION & EXPANSION JOINTS.

(6A) BAR 1" X 1" PICKETS. WELD TO NO. 5. PLACE VERTICAL.

(6C) BAR 1" X 1½" PICKETS. WELD TO NO. 11. PLACE VERTICAL.

(9A) RECTANGULAR SLEEVE FABRICATED FROM 3/16" PLATES. PROVIDE "SLIDING FIT".

(9B) CIRCULAR SLEEVE FABRICATED FROM STRUCTURAL TUBING 2" DIA. (STANDARD SIZE) (2.375" O.D.)

(10A) RECTANGULAR SLEEVE FABRICATED FROM 3/16" PLATES. (1'-4" @ FIELD ERECTION JOINTS.)

(10B) CIRCULAR SLEEVE FABRICATED FROM STRUCTURAL TUBING 2" DIA. (STANDARD SIZE) (2.375" O.D.) (1'-4" @ FIELD ERECTION JOINTS.)

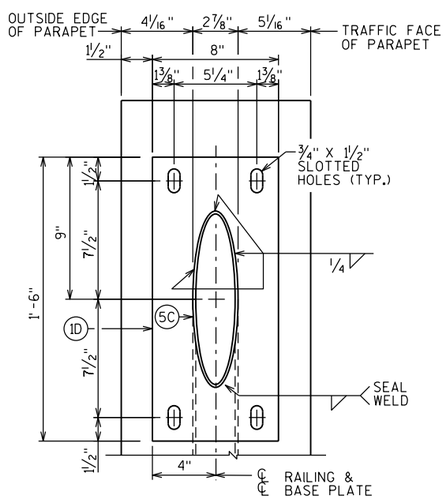

END RAIL BASE PLATE

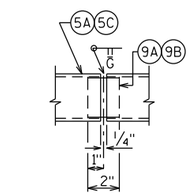

SHOP RAIL SPLICE DETAIL

(LOCATION MUST BE SHOWN ON SHOP DRAWINGS)

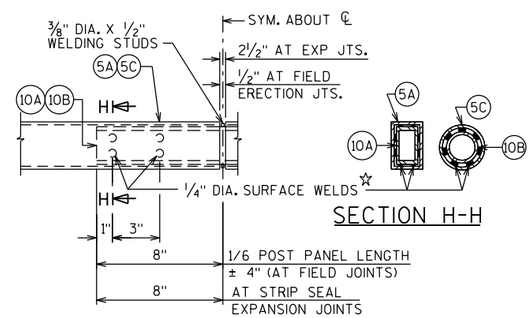

SECTION H-H

FIELD ERECTION JOINT DETAIL

☆ MIN. ⅝" FLAT SURFACE DIA. PUNCHINGS OR STUDS MAY BE USED AS AN ALTERNATE.

RAILING NOTES

BID ITEM SHALL BE "RAILING STEEL TYPE C2", WHICH SHALL INCLUDE ALL STEEL ITEMS SHOWN.

POST BASE PLATES SHALL BE FLAT WITH ALL SURFACES SMOOTH AND FREE FROM WARP AND ALL EDGES SMOOTH, STRAIGHT AND VERTICAL. ALL PLATE CUTS SHALL BE MACHINE OR MACHINE FLAME CUTS.

ALL PLATES, BARS, AND RECTANGULAR SLEEVES SHALL CONFORM TO ASTM A709 GRADE 36. ALL STRUCTURAL TUBING SHALL CONFORM TO ASTM A500 GRADE B.

ANCHORAGES SHALL BE ACCURATELY PLACED TO PROVIDE CORRECT ALIGNMENT OF RAILING. SET NORMAL TO GRADE.

CUT BOTTOM OF POST TO MAKE POST VERTICAL IN BOTH TRANSVERSE AND LONGITUDINAL DIRECTION.

STEEL SHIMS SHALL BE PROVIDED & USED UNDER BASE PLATES WHERE REQUIRED FOR ALIGNMENT, AND SHALL BE GALVANIZED.

⧗ CAULK AROUND PERIMETER OF BASE PLATES, NO. 1, AND FILL BOLT SLOT OPENINGS IN SHIMS AND BASE PLATES WITH NON-STAINING GRAY NON-BITUMINOUS JOINT SEALER.

ALL JOINTS AND RECESSES IN CONCRETE PARAPET ARE TO BE VERTICAL.

ALL MATERIAL (EXCEPT NO. 3 & 12) SHALL BE GALVANIZED AFTER FABRICATION. PRIOR TO GALVANIZING, THE STEEL RAILING SHALL BE GIVEN A NO. 6 BLAST CLEANING PER SSPC SPECIFICATIONS. PAINT OVER GALVANIZING WITH AN APPROVED TIE COAT AND TOP COAT AS SPECIFIED IN THE CONTRACT DOCUMENTS. THE RAILING SHALL BE PAINTED AMS STD. NO. 595A, COLOR NO. 27038 (BLACK).

VENT HOLES SHALL BE DRILLED IN POST AND RAIL MEMBERS AS REQUIRED TO FACILITATE GALVANIZING AND DRAINAGE.

RAILING SHALL BE FABRICATED IN LENGTHS THAT INCLUDE 3 OR 4 POSTS.

TOUCH-UP PAINTING TO BE DONE AT COMPLETION OF STEEL RAILING INSTALLATION TO THE SATISFACTION OF THE ENGINEER AT NO EXTRA COST.

8

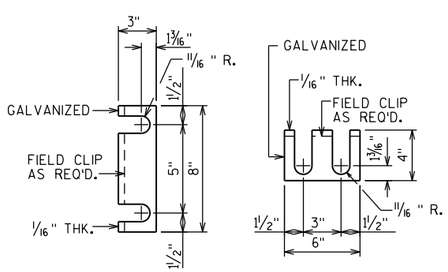

RAIL POST SHIM DETAIL

(2 SETS PER POST)

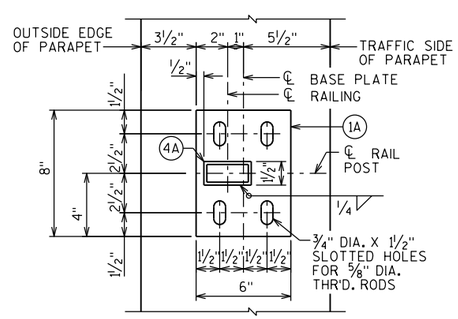

TYPICAL RAIL POST BASE PLATE

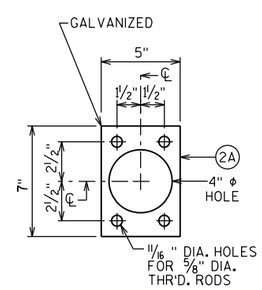

ANCHOR PLATE

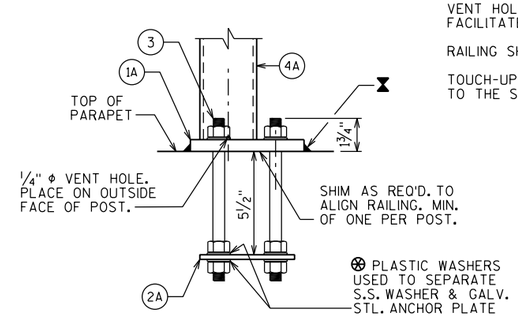

ANCHORAGE FOR RAIL POSTS

NOTE: ANCHOR PLATE NOT REQUIRED WHEN ADHESIVE ANCHORS ARE USED.

8

NO.	DATE	REVISION	BY

STATE OF WISCONSIN
DEPARTMENT OF TRANSPORTATION

STRUCTURE B-32-163

DRAWN BY RLR | PLANS CK'D. NJK

RAILING STEEL TYPE C2 DETAILS

SHEET 29
389

STATE PROJECT NUMBER
5163-07-72

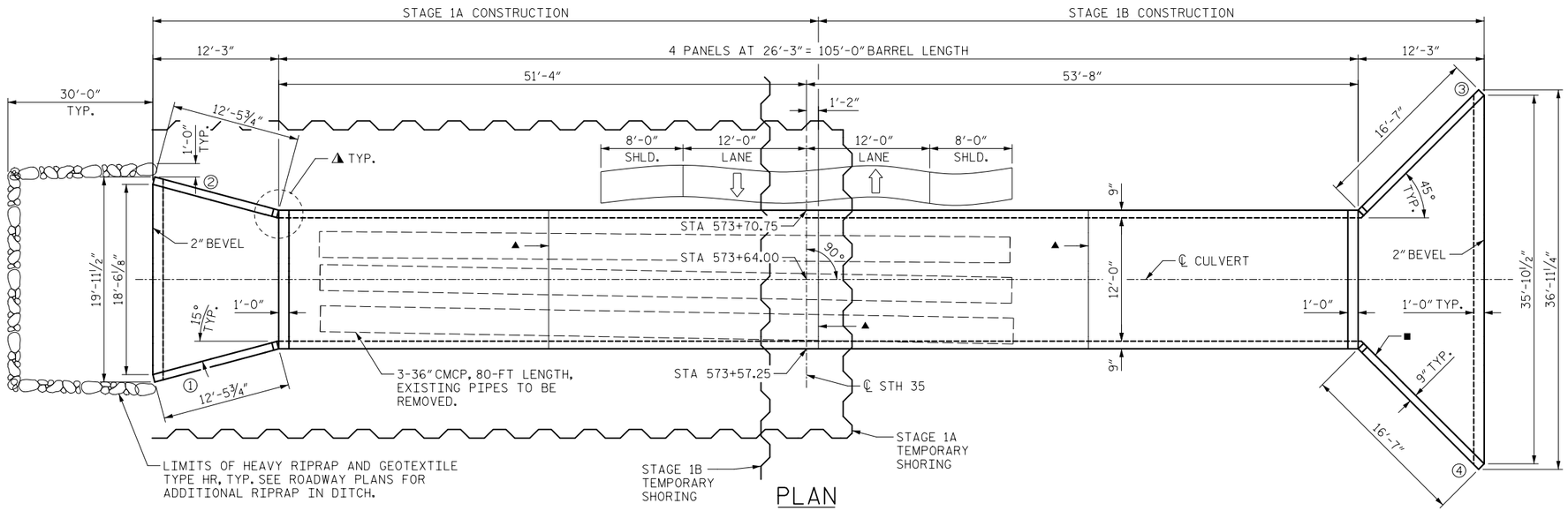

PLAN

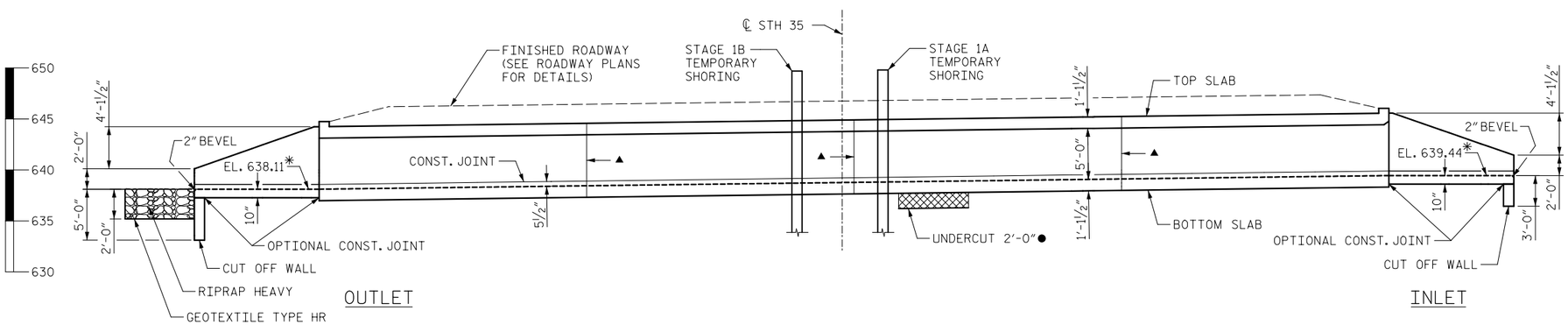

ELEVATION

DESIGN DATA

LIVE LOAD:

DESIGN LOADING: HL-93
INVENTORY RATING FACTOR: RF = 1.23
OPERATING RATING FACTOR: RF = 1.59
WISCONSIN STANDARD PERMIT VEHICLE (WIS.-SPV): 250 KIPS

EARTHLOAD:

DESIGNED FOR FILL HEIGHT RANGE OF 1.0 TO 1.5 FEET.

MATERIAL PROPERTIES:

CONCRETE MASONRY: f'c = 3,500 P.S.I.
BAR STEEL REINFORCEMENT:
GRADE 60 fy = 60,000 P.S.I.

TRAFFIC VOLUME

STH 35

ADT = 10,820 (2025)
ADT = 13,460 (2045)
R.D.S. = 60 M.P.H.

HYDRAULIC DATA

100 YEAR FREQUENCY

$Q100_{TOTAL}$ = 3500 C.F.S.
$Q100_{BOX}$ = 250 C.F.S.
$Q100_{SUPPLEMENTAL\ STRUCTURES}$ = 3250 C.F.S.
V100 = 8.8 F.P.S.
$HW100_{BOX}$ = EL. 643.0
WATERWAY AREA = 60 SQ. FT.
DRAINAGE AREA = 15.3 SQ. MI.
SCOUR CRITICAL CODE = 8

STRUCTURE DESIGN CONTACTS

CONSULTANT: MATT BUCKLI - (608) 443-0441
BRIDGE OFFICE: AARON BONK - (608) 261-0261

LIST OF DRAWINGS

LEGEND

● UNDERCUT 2'-0" (INCLUDED IN "EXCAVATION FOR STRUCTURES CULVERT C-32-104"), PLACE GEOTEXTILE, TYPE 'C', A LAYER OF GEOGRID TYPE SR, A 1'-0" LAYER OF SELECT CRUSHED MATERIAL, ANOTHER LAYER OF GEOGRID TYPE SR AND A LAYER OF SELECT CRUSHED MATERIAL TO REACH FINISHED SUBGRADE ELEVATION. THE TOP FEW INCHES CAN BE TOPPED WITH 1¼" BASE AGGREGATE TO EASE FINAL GRADING. EXTEND 3'-0" BEYOND THE FOOTPRINT OF THE CULVERT.

◭ SEE CORNER DETAILS ON "APRON DETAILS" SHEET

■ NAME PLATE LOCATION (SEE "WINGWALL DETAILS" SHEET)

✳ BUILD APRON AND END OF BOX LEVEL

① INDICATES WING NUMBER

▲ VERT. CONST. JOINT (TYP.)

WISCONSIN MATTHEW J. BUCKLI E-39849 MADISON WI 3/28/25 PROFESSIONAL ENGINEER

NO.	DATE	REVISION	BY

Mead & Hunt
2440 Deming Way
Middleton, WI 53562
Phone: 608-273-6380
meadhunt.com

STATE OF WISCONSIN
DEPARTMENT OF TRANSPORTATION

ACCEPTED SDR 03/03/25
CHIEF STRUCTURES DESIGN ENGINEER DATE

STRUCTURE C-32-104

STH 35 OVER CHIPMUNK COULEE CREEK FLOODPLAIN

COUNTY	TOWN/~~CITY/VILLAGE~~
LA CROSSE	SHELBY

DESIGN SPEC.
AASHTO LRFD BRIDGE DESIGN SPECIFICATIONS

DESIGNED BY	DESIGN CK'D.	DRAWN BY	PLANS CK'D.
RCP	JSH	JSH	RCP

GENERAL PLAN

SHEET 1 OF 7

TOTAL ESTIMATED QUANTITIES

BID ITEM NUMBER	BID ITEMS	UNIT	TOTALS
203.0100	REMOVING SMALL PIPE CULVERTS	EA	3
206.1001	EXCAVATION FOR STRUCTURES CULVERTS C-32-104	EA	1
210.2500	BACKFILL STRUCTURE TYPE B	TON	1,348
305.0120	BASE AGGREGATE DENSE 1¼"	TON	34
312.0110	SELECT CRUSHED MATERIAL	TON	345
504.0100	CONCRETE MASONRY CULVERTS	CY	177
505.0400	BAR STEEL REINFORCEMENT HS STRUCTURES	LB	10,920
505.0600	BAR STEEL REINFORCEMENT HS COATED STRUCTURES	LB	10,760
511.1200	TEMPORARY SHORING C-32-104	SF	2,153
516.0500	RUBBERIZED MEMBRANE WATERPROOFING	SY	27
606.0300	RIPRAP HEAVY	CY	49
645.0105	GEOTEXTILE TYPE C	SY	298
645.0120	GEOTEXTILE TYPE HR	SY	92
645.0220	GEOGRID TYPE SR	SY	595
	NON-BID ITEMS		
	FILLER	SIZE	¾"

GENERAL NOTES

DRAWINGS SHALL NOT BE SCALED.

BAR STEEL REINFORCEMENT SHALL BE EMBEDDED 2" CLEAR UNLESS OTHERWISE SHOWN OR NOTED.

THE FIRST OR FIRST TWO DIGITS OF THE BAR MARK SIGNIFIES THE BAR SIZE.

BEVEL EXPOSED EDGES OF CONCRETE ¾" UNLESS OTHERWISE NOTED.

THE UPPER LIMITS OF "EXCAVATION FOR STRUCTURES CULVERTS C-32-104" SHALL BE THE EXISTING GROUNDLINE.

THE BACKFILL QUANTITIES ARE BASED ON THE PAY LIMITS SHOWN ON THE PLANS AND MAY NOT REFLECT ACTUAL PLACED QUANTITIES. "BACKFILL STRUCTURE TYPE B" REQUIRED ON THE BOX CULVERT SIDES AND BEHIND APRON WINGS FOR 3 FEET. BACKFILL PLACED BEYOND PAY LIMITS OR EXCEEDING PLAN QUANTITIES SHALL BE INCIDENTAL TO EXCAVATION FOR STRUCTURES.

THE QUANTITY FOR BACKFILL STRUCTURE TYPE B IS CALCULATED BASED ON THE DETAIL SHOWN ON THIS PLAN SHEET.

THE CONCRETE IN THE CUTOFF WALLS MAY BE PLACED UNDERWATER IF THE EXCAVATION CANNOT BE DEWATERED.

PLACE 18" MIN. WIDTH RUBBERIZED MEMBRANE WATERPROOFING UP WALLS AND ACROSS TOP SLAB AT VERTICAL CONST. JOINTS. EXTEND 6" MIN. BELOW TOP OF BOTTOM SLAB.

IN LIEU OF CONSTRUCTION JOINTS IN THE BOTTOM SLAB, THE CONTRACTOR MAY PROVIDE 2" DEEP SAW CUTS WITHIN 12 HOURS AFTER POURING.

THE "ALTERNATE CUT OFF WALL" DETAIL SHOWN ON SHEET 5 MAY BE USED IN LIEU OF CAST-IN-PLACE CONCRETE CUT OFF WALLS. PAYMENT SHALL BE BASED ON CONCRETE CUT OFF WALLS.

PRECAST ALTERNATIVES ARE NOT ALLOWED.

THIS LOCATION IS AN OVERFLOW AREA FOR CHIPMUNK COULEE AND IS TYPICALLY DRY WITH NO CONSISTENT ACTIVE FLOW. DURING RAIN EVENTS, THIS AREA IS EXPECTED TO SEE SOME DRAINAGE FLOW FOR A SHORT PERIOD.

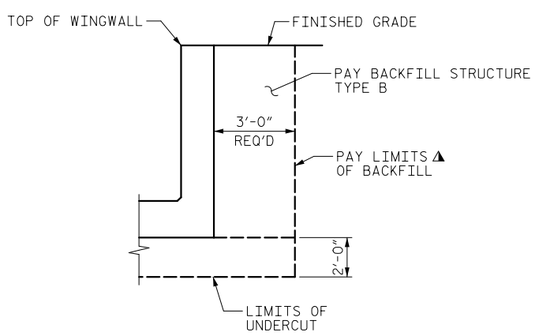

TYPICAL SECTION
THRU BOX CULVERT WINGWALL

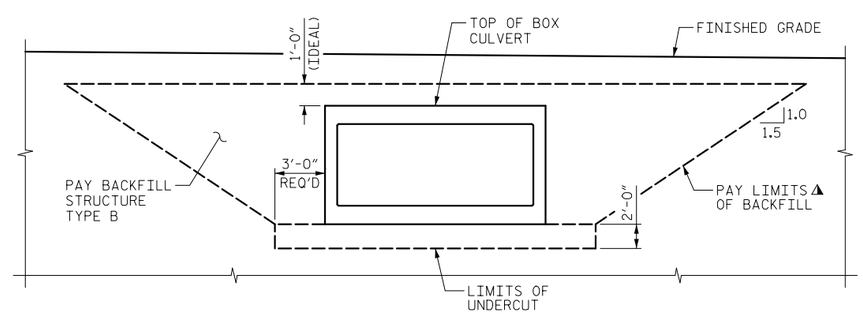

TYPICAL SECTION
THRU BOX CULVERT

LEGEND

◭ BACKFILL PAY LIMITS. BACKFILL BEYOND BACKFILL PAY LIMITS SHALL BE INCIDENTAL TO EXCAVATION FOR STRUCTURES. LIMITS OF EXCAVATION SHALL BE DETERMINED BY THE CONTRACTOR.

8

8

NO.	DATE	REVISION	BY

STATE OF WISCONSIN
DEPARTMENT OF TRANSPORTATION

STRUCTURE C-32-104

DRAWN BY JSH | PLANS CK'D. RCP

GENERAL NOTES & QUANTITIES

SHEET 2

BORING #	DATE COMPLETED	LATITUDE	LONGITUDE
3	10/15/2021	43.7265°	-91.2005°
4	07/23/2021	43.7265°	-91.2006°
5	07/23/2021	43.7265°	-91.2004°
BORINGS COMPLETED BY: TERRACON CONSULTANTS, INC.			
REPORT COMPLETED BY: TERRACON CONSULTANTS, INC.			

STATE PROJECT NUMBER

5163-07-72

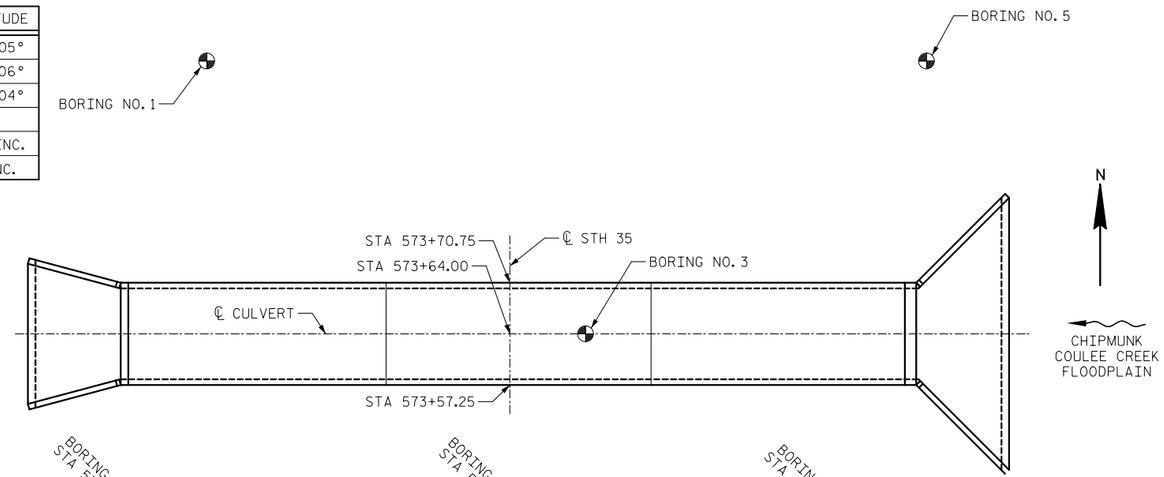

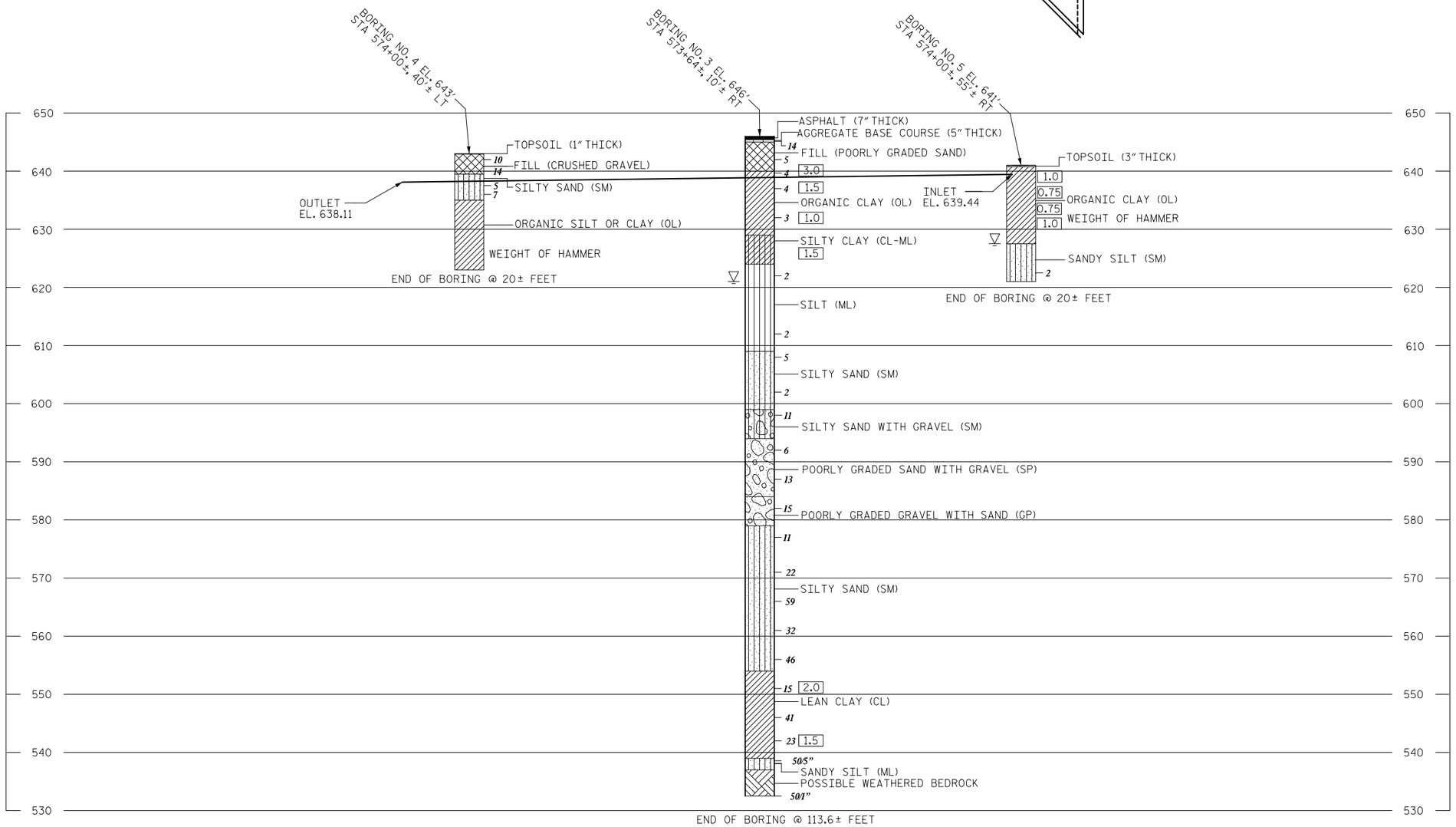

MATERIAL SYMBOLS

ASPHALT, TOPSOIL, PEAT, CONCRETE, FILL, GRAVEL, SAND, CLAY, SILT, BOULDERS OR COBBLES, LIMESTONE, BEDROCK (UNKNOWN), SHALE, SANDSTONE, IGNEOUS/META

LEGEND OF BORING

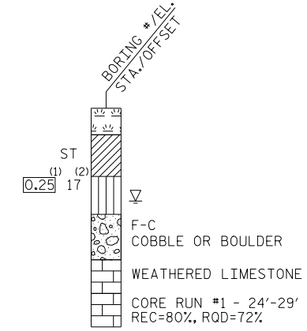

(1) UNCONFINED STRENGTH, AS DETERMINED BY A POCKET PENETROMETER (TSF)

(2) UNLESS OTHERWISE, SPECIFIED THE SPT 'N' VALUE IS BASED ON AASHTO T-206, STANDARD PENETRATION TEST. THE SPT 'N' VALUE PRESENTED HAS NOT BEEN CORRECTED FOR OVERBURDEN PRESSURE OR HAMMER EFFICIENCY.

GROUND WATER ELEVATION

AT TIME OF DRILLING

END OF DRILLING

AFTER DRILLING

ABBREVIATIONS

F-FINE M-MEDIUM C-COARSE ST-SHELBY TUBE

SUBSURFACE EXPLORATION FOR FOUNDATION DESIGN AND BIDDERS INFORMATION

BORINGS WERE COMPLETED AT POINTS APPROXIMATELY AS INDICATED ON THIS DRAWING TO OBTAIN INFORMATION CONCERNING THE CHARACTER OF SUBSURFACE MATERIALS FOUND AT THE SITE. BECAUSE THE INVESTIGATED DEPTHS ARE LIMITED AND THE AREA OF THE BORINGS IS VERY SMALL IN RELATION TO THE ENTIRE SITE, THE WISCONSIN DEPARTMENT OF TRANSPORTATION DOES NOT WARRANT SIMILAR SUBSURFACE CONDITIONS BELOW, BETWEEN, OR BEYOND THESE BORINGS. VARIATIONS IN SOIL CONDITIONS SHOULD BE EXPECTED AND FLUCTUATIONS IN GROUNDWATER LEVELS MAY OCCUR.

NO.	DATE	REVISION	BY

STATE OF WISCONSIN
DEPARTMENT OF TRANSPORTATION

STRUCTURE C-32-104

DRAWN BY JSH PLANS CK'D. RCP

SUBSURFACE EXPLORATION

SHEET 3

8

8

STATE PROJECT NUMBER

5163-07-72

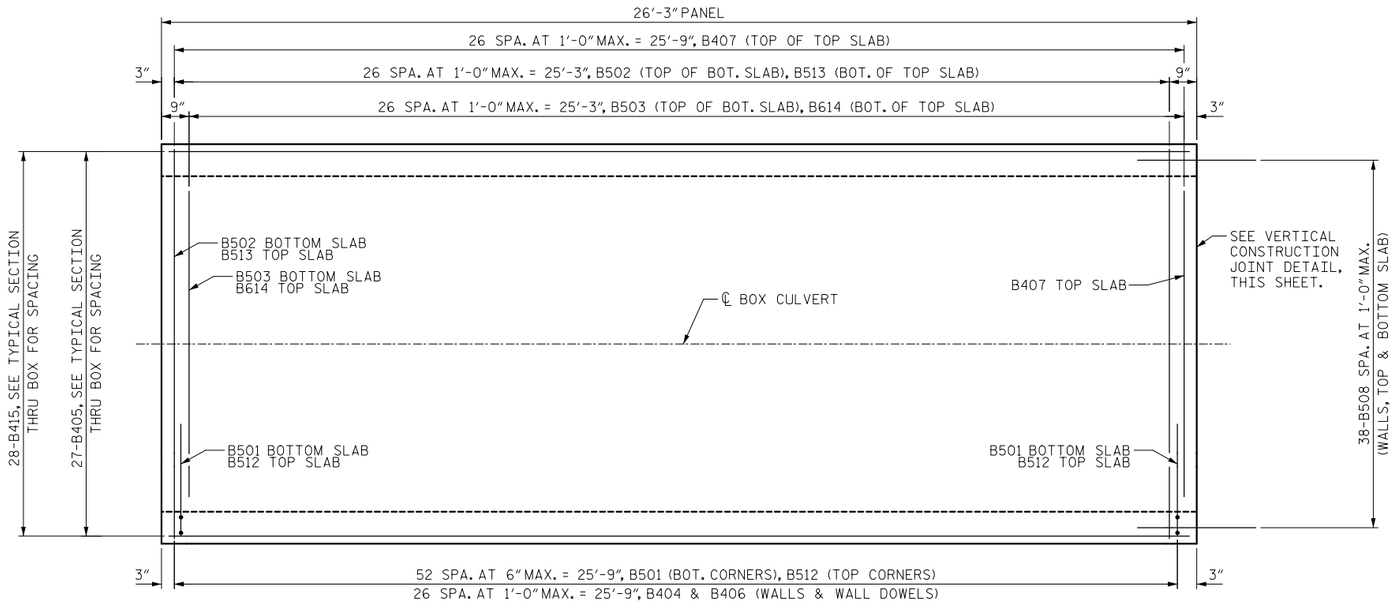

PLAN VIEW TYPICAL PANEL

USE IDENTICAL STEEL IN OTHER PANELS.
APRON AND HEADER ARE NOT SHOWN

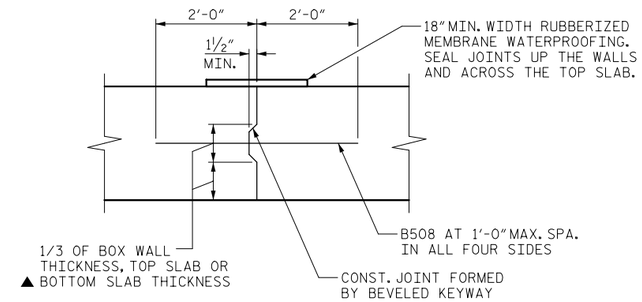

VERTICAL CONSTRUCTION JOINT

▲ IN LIEU OF CONSTRUCTION JOINTS IN THE BOTTOM SLAB, THE CONTRACTOR MAY USE 2" DEEP SAW CUTS WITHIN 12 HOURS AFTER POURING.

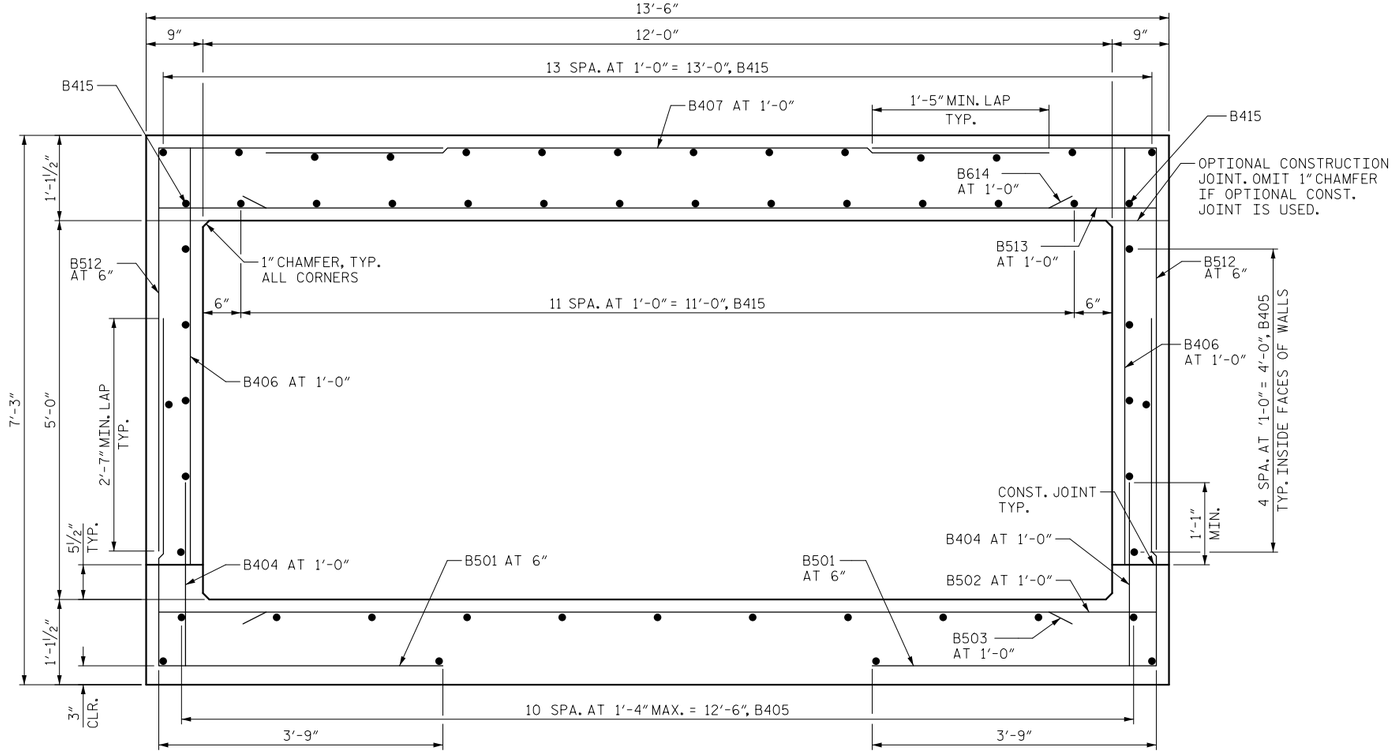

TYPICAL SECTION THRU BOX

ALL BARS NOT LABELED ARE B405 BARS.

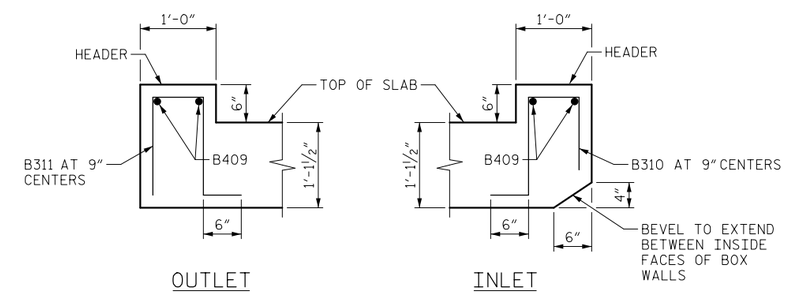

SECTION THRU TOP HEADER

8

8

NO.	DATE	REVISION	BY

STATE OF WISCONSIN
DEPARTMENT OF TRANSPORTATION

STRUCTURE C-32-104

DRAWN BY JSH | PLANS CK'D. RCP

BOX DETAILS

SHEET 4

STATE PROJECT NUMBER

5163-07-72

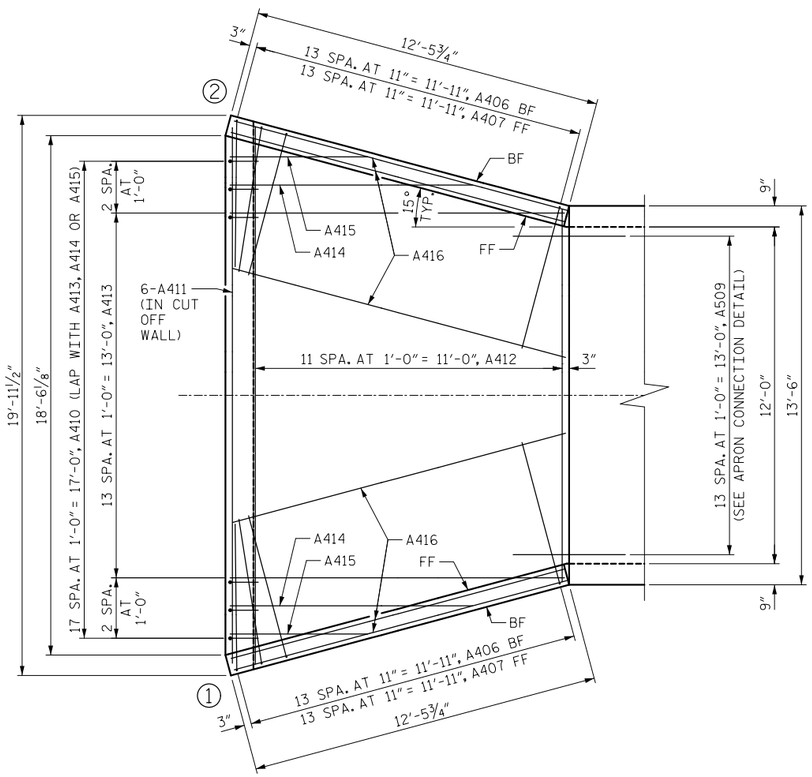

OUTLET APRON

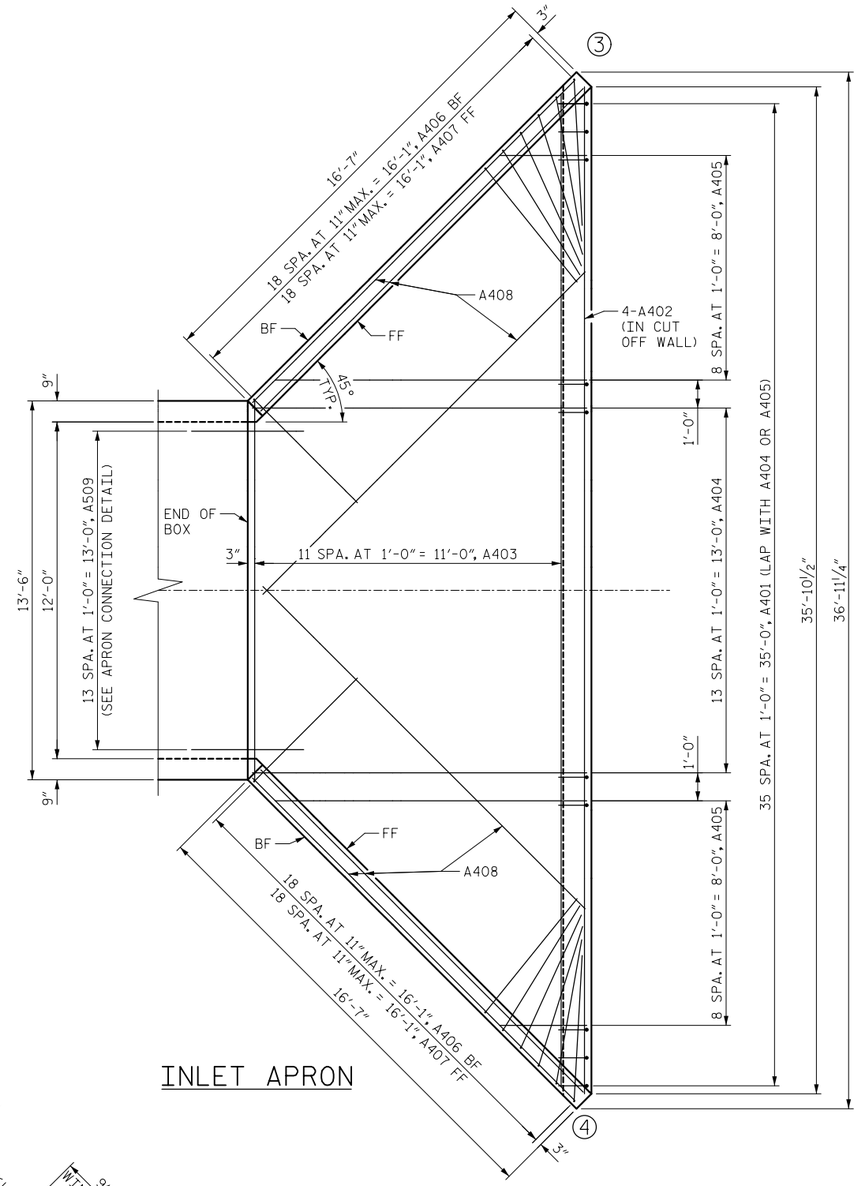

INLET APRON

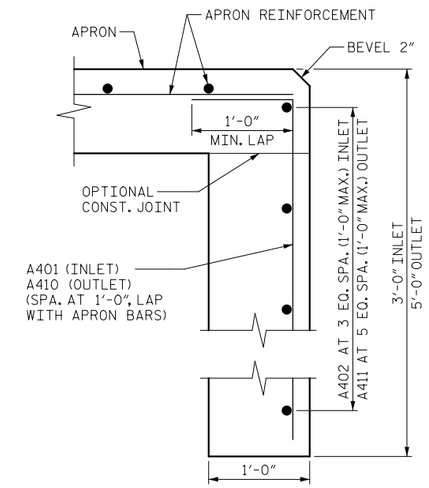

CUT OFF WALL

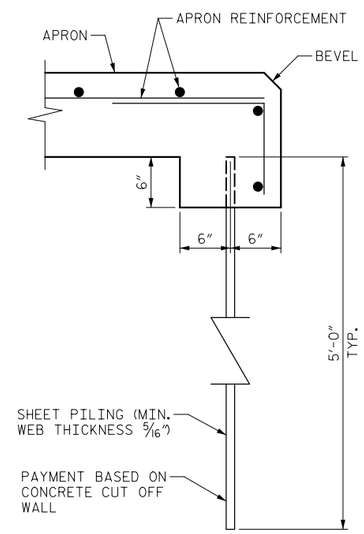

ALTERNATE CUT OFF WALL

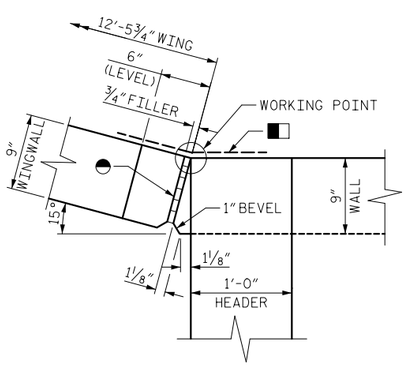

CORNER LAYOUT
WING 2 SHOWN
(WING 1 SIMILAR)

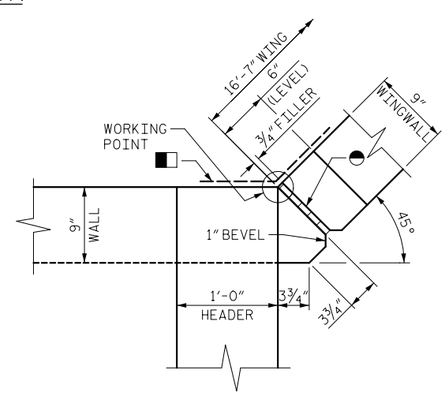

CORNER LAYOUT
WING 3 SHOWN
(WING 4 SIMILAR)

■ 18" MINIMUM WIDTH RUBBERIZED MEMBRANE WATERPROOFING TO EXTEND FROM HORIZONTAL CONSTRUCTION JOINT TO TOP OF WING. (FLUSH WITH FACE OF CONCRETE)

◓ ¾" FILLER TO EXTEND FROM HORIZONTAL CONSTRUCTION JOINT TO TOP OF WING.

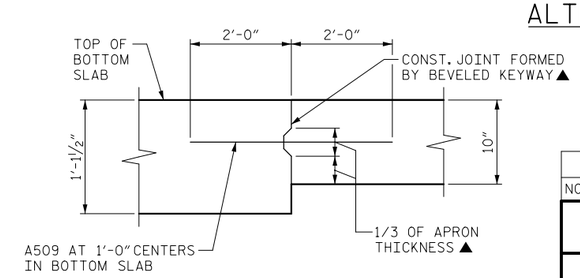

APRON CONNECTION DETAIL

▲ IN LIEU OF CONSTRUCTION JOINTS IN THE BOTTOM SLAB, THE CONTRACTOR MAY USE 2" DEEP SAW CUTS WITHIN 12 HOURS AFTER POURING.

NO.	DATE	REVISION	BY

STATE OF WISCONSIN
DEPARTMENT OF TRANSPORTATION

STRUCTURE C-32-104

DRAWN BY JSH PLANS CK'D. RCP

APRON DETAILS

SHEET 5

8

8

STATE PROJECT NUMBER

5163-07-72

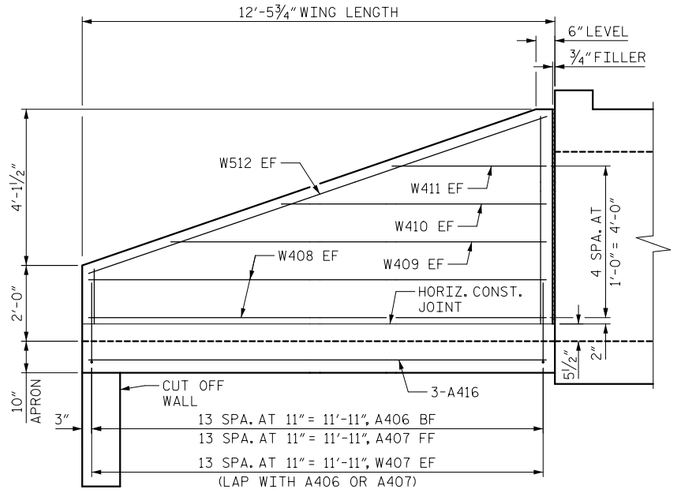

WINGS 1 & 2
(OUTLET WINGS)

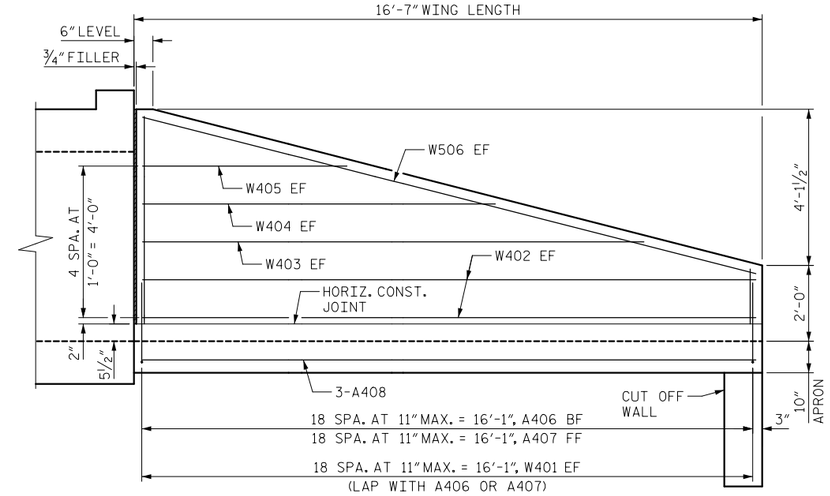

WINGS 3 & 4
(INLET WINGS)

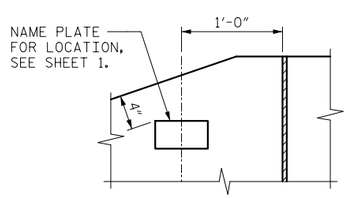

NAME PLATE LOCATION
(WING 4)

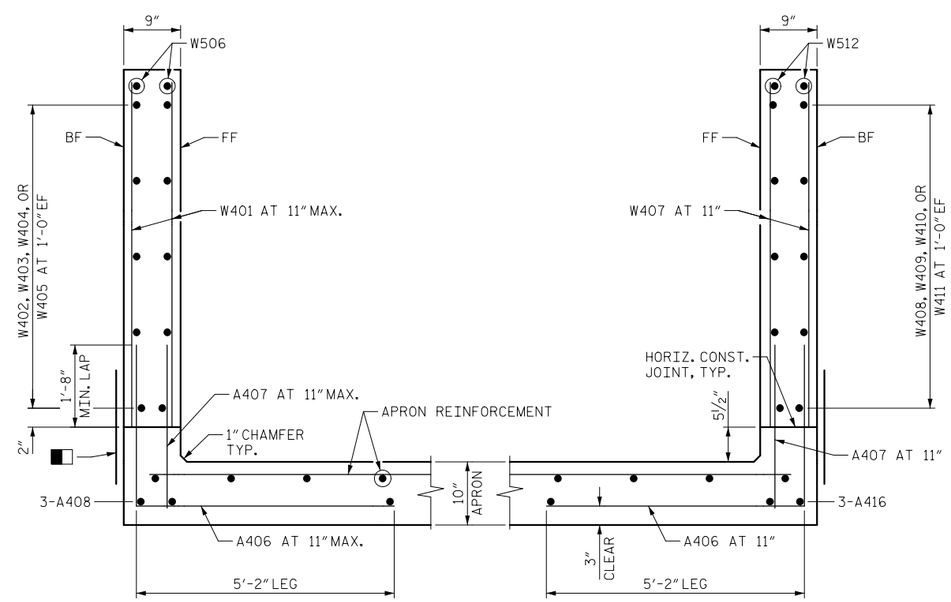

WING 3 & 4

WING 1 & 2

SECTION THRU WINGWALLS

■ 18" MINIMUM WIDTH RUBBERIZED MEMBRANE WATERPROOFING ALONG FULL LENGTH OF WINGWALL.

FF - FRONT FACE
BF - BACK FACE
EF - EACH FACE

8

8

NO.	DATE	REVISION	BY

STATE OF WISCONSIN
DEPARTMENT OF TRANSPORTATION

STRUCTURE C-32-104

DRAWN BY JSH | PLANS CK'D. RCP

WINGWALL DETAILS

SHEET 6

BILL OF BARS — **COATED= 10760 LBS.**
BOX (B), APRON (A) & WINGS (W) — **UNCOATED= 10920 LBS.**

MARK	NUMBER COATED	NUMBER UNCOATED	LENGTH FT. - IN.	BENT	BAR SERIES	LOCATION	
B 5 01		424	7 - 11	X		BOX - BOTTOM CORNERS	CORNER
B 5 02		108	13 - 2			BOX - BOTTOM SLAB	TRANS.
B 5 03		108	10 - 4			BOX - BOTTOM SLAB	TRANS.
B 4 04		216	2 - 5			BOX - WALL DOWELS	VERT.
B 4 05		108	25 - 11			BOX - WALLS & BOTTOM SLAB	LONG.
B 4 06		216	5 - 6			BOX - WALLS	VERT.
B 4 07	108		8 - 6			BOX - TOP SLAB	TRANS.
B 5 08		114	4 - 0			BOX DOWELS - AT VERTICAL CONST. JOINT	HORIZ.
B 4 09		4	13 - 2			BOX - HEADER	TRANS.
B 3 10		19	3 - 1	X		BOX - HEADER INLET	STIRRUP
B 3 11		19	3 - 5	X		BOX - HEADER OUTLET	STIRRUP
B 5 12	424		8 - 9	X		BOX - TOP CORNERS	CORNER
B 5 13	108		13 - 2			BOX - TOP SLAB	TRANS.
B 6 14	108		10 - 4			BOX - TOP SLAB	TRANS.
B 4 15	112		25 - 11			BOX - TOP SLAB	LONG.
A 4 01		36	3 - 5	X		INLET CUT OFF WALL	VERT.
A 4 02		4	35 - 10			INLET CUT OFF WALL	HORIZ.
◭ A 4 03		12	24 - 5		X	INLET APRON	HORIZ.
A 4 04		14	11 - 11			INLET APRON	HORIZ.
◭ A 4 05		18	7 - 1		X	INLET APRON	HORIZ.
A 4 06	66		7 - 10	X		INLET & OUTLET APRON - WINGWALL TIE-IN BF	VERT.
A 4 07	66		2 - 9			INLET & OUTLET APRON - WINGWALL TIE-IN FF	VERT.
A 4 08		6	16 - 2			INLET APRON	HORIZ.
A 5 09		28	4 - 0			INLET & OUTLET - DOWELS AT APRON CONST. JT.	HORIZ.
A 4 10		18	5 - 5	X		OUTLET CUT OFF WALL	VERT.
A 4 11		6	18 - 6			OUTLET CUT OFF WALL	HORIZ.
◭ A 4 12		12	16 - 3		X	OUTLET APRON	HORIZ.
A 4 13		14	11 - 11			OUTLET APRON	HORIZ.
A 4 14		2	8 - 7			OUTLET APRON	HORIZ.
A 4 15		2	4 - 11			OUTLET APRON	HORIZ.
A 4 16		6	12 - 1			OUTLET APRON	HORIZ.
◭ W 4 01	76		3 - 6		X	WINGWALL 3 & 4	VERT.
W 4 02	8		16 - 2			WINGWALL 3 & 4	HORIZ.
W 4 03	4		13 - 2			WINGWALL 3 & 4	HORIZ.
W 4 04	4		9 - 4			WINGWALL 3 & 4	HORIZ.
W 4 05	4		5 - 5			WINGWALL 3 & 4	HORIZ.
W 5 06	4		16 - 8			WINGWALL 3 & 4 - SLOPED TOP OF WING	HORIZ.
◭ W 4 07	56		3 - 6		X	WINGWALL 1 & 2	VERT.
W 4 08	8		12 - 1			WINGWALL 1 & 2	HORIZ.
W 4 09	4		9 - 11			WINGWALL 1 & 2	HORIZ.
W 4 10	4		7 - 0			WINGWALL 1 & 2	HORIZ.
W 4 11	4		4 - 1			WINGWALL 1 & 2	HORIZ.
W 5 12	4		12 - 9			WINGWALL 1 & 2 - SLOPED TOP OF WING	HORIZ.

THE FIRST DIGIT OF THE MARK SIGNIFIES THE BAR SIZE.

◭ LENGTH SHOWN IS AN AVERAGE LENGTH FOR USE OF CALCULATING BAR WEIGHT ONLY. SEE BAR SERIES TABLE FOR ACTUAL LENGTHS.

◭ **BAR SERIES TABLE - APRON**

MARK	NO. REQ'D	LENGTHS FOR EACH SERIES
A403	1 SERIES OF 12	13'-6" TO 35'-4"
A405	2 SERIES OF 9	3'-1" TO 11'-1"
A412	1 SERIES OF 12	13'-3" TO 19'-2"

TAG AND BUNDLE EACH SERIES SEPARATELY

◭ **BAR SERIES TABLE - WINGWALLS**

MARK	NO. REQ'D	LENGTHS FOR EACH SERIES
W401	4 SERIES OF 19	1'-5" TO 5'-6"
W407	4 SERIES OF 14	1'-5" TO 5'-6"

TAG AND BUNDLE EACH SERIES SEPARATELY

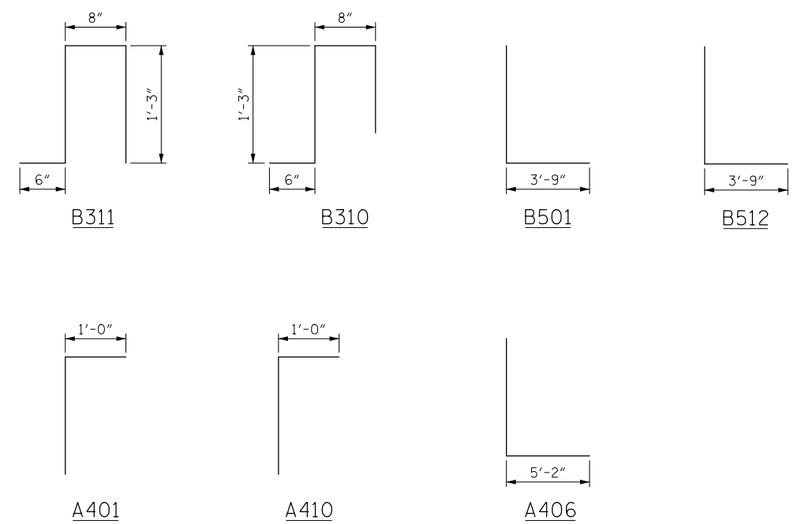

8

8

NO.	DATE	REVISION	BY

STATE OF WISCONSIN
DEPARTMENT OF TRANSPORTATION

STRUCTURE C-32-104

DRAWN BY JSH | PLANS CK'D. RCP

BILL OF BARS — SHEET 7

CTH GI - STAGE 1											
			AREA (SF)			INCREMENTAL VOL (CY) (UNADJUSTED)			CUMULATIVE VOL (CY)		
STATION	REAL STATION	DISTANCE	CUT	SALVAGED/UNUSABLE PAVEMENT MATERIAL	FILL	CUT	SALVAGED/UNUSABLE PAVEMENT MATERIAL	FILL	CUT 1.00	EXPANDED FILL 1.30	MASS ORDINATE
						NOTE 1	NOTE 2	NOTE 3	NOTE 1		NOTE 4
16+25.00	1625.00	0.00	90.4	0.0	0.0	0	0	0	0	0	0
16+50.00	1650.00	25.00	80.2	0.0	0.0	79	0	0	79	0	79
17+00.00	1700.00	50.00	85.7	8.8	0.0	154	8	0	233	0	225
17+50.00	1750.00	50.00	114.9	8.9	0.0	186	16	0	419	0	395
18+00.00	1800.00	50.00	122.5	9.6	17.7	220	17	16	639	21	577
18+25.00	1825.00	25.00	134.0	10.4	6.7	119	9	11	758	35	673
18+50.00	1850.00	25.00	95.6	10.9	0.0	106	10	3	864	39	765
19+00.00	1900.00	50.00	82.5	12.1	47.0	165	21	44	1,029	96	852
				TOTALS		1,029	81	74			

BOX CULVERT DITCHING - STAGE 1											
			AREA (SF)			INCREMENTAL VOL (CY) (UNADJUSTED)			CUMULATIVE VOL (CY)		
STATION	REAL STATION	DISTANCE	CUT	SALVAGED/UNUSABLE PAVEMENT MATERIAL	FILL	CUT	SALVAGED/UNUSABLE PAVEMENT MATERIAL	FILL	CUT 1.00	EXPANDED FILL 1.30	MASS ORDINATE
						NOTE 1	NOTE 2	NOTE 3	NOTE 1		NOTE 4
28+36.96	2836.96	0.00	2.0	0.0	0.1	0	0	0	0	0	0
28+50.00	2850.00	13.04	11.0	0.0	0.0	3	0	0	3	0	3
29+00.00	2900.00	50.00	0.0	0.0	12.4	10	0	12	13	16	-3
29+25.00	2925.00	25.00	17.1	0.0	6.7	8	0	9	21	27	-6
29+30.00	2930.00	5.00	28.5	0.0	6.5	4	0	1	25	29	-4
					TOTALS	25	0	22			

NOTES:	
1 - CUT	CUT INCLUDES SALVAGED/UNUSABLE PAVEMENT MATERIAL
2 - SALVAGED/UNUSABLE PAVEMENT MATERIAL	THIS DOES NOT SHOW UP IN CROSS SECTIONS
3 - FILL	DOES NOT INCLUDE UNUSABLE PAVEMENT EXC VOLUME
4 - MASS ORDINATE	[CUT - SALVAGED PAVT - (FILL * FILL FACTOR)]

STH 35 TEMP WIDENING - STAGE 2A											
			AREA (SF)			INCREMENTAL VOL (CY) (UNADJUSTED)			CUMULATIVE VOL (CY)		
STATION	REAL STATION	DISTANCE	CUT	SALVAGED/UNUSABLE PAVEMENT MATERIAL	FILL	CUT	SALVAGED/UNUSABLE PAVEMENT MATERIAL	FILL	CUT	EXPANDED FILL	MASS ORDINATE
						NOTE 1	NOTE 2	NOTE 3	1.00 NOTE 1	1.30	NOTE 4
560+51.18	56051.18	0.00	2.6	0.0	1.7	0	0	0	0	0	0
561+00.00	56100.00	48.82	2.5	0.0	6.8	5	0	8	5	10	-5
561+50.00	56150.00	50.00	3.5	0.0	6.4	6	0	12	11	26	-15
562+00.00	56200.00	50.00	3.5	0.0	9.7	6	0	15	17	46	-29
562+50.00	56250.00	50.00	4.3	0.0	10.6	7	0	19	24	70	-46
563+00.00	56300.00	50.00	5.1	0.0	7.1	9	0	16	33	91	-58
563+50.00	56350.00	50.00	5.6	0.0	5.1	10	0	11	43	105	-62
564+00.00	56400.00	50.00	5.0	0.0	5.5	10	0	10	53	118	-65
564+50.00	56450.00	50.00	4.3	0.0	10.5	9	0	15	62	138	-76
565+00.00	56500.00	50.00	4.6	0.0	9.0	8	0	18	70	161	-91
565+50.00	56550.00	50.00	4.8	0.0	18.2	9	0	25	79	194	-115
566+00.00	56600.00	50.00	3.6	0.0	23.0	8	0	38	87	243	-156
566+50.00	56650.00	50.00	4.2	0.0	16.4	7	0	36	94	290	-196
567+00.00	56700.00	50.00	11.0	0.0	0.0	14	0	15	108	309	-201
567+50.00	56750.00	50.00	2.2	0.0	9.5	12	0	9	120	321	-201
568+00.00	56800.00	50.00	3.5	0.0	11.6	5	0	20	125	347	-222
568+50.00	56850.00	50.00	3.6	0.0	9.4	7	0	19	132	372	-240
569+00.00	56900.00	50.00	3.8	0.0	7.8	7	0	16	139	393	-254
569+50.00	56950.00	50.00	2.9	0.0	1.6	6	0	9	145	404	-259
570+00.00	57000.00	50.00	9.1	0.0	0.0	11	0	1	156	406	-250
570+50.00	57050.00	50.00	5.4	0.0	6.5	13	0	6	169	413	-244
571+00.00	57100.00	50.00	7.6	0.0	4.1	12	0	10	181	426	-245
571+50.00	57150.00	50.00	15.0	0.0	0.0	21	0	4	202	432	-230
572+00.00	57200.00	50.00	8.6	0.0	0.0	22	0	0	224	432	-208
572+50.00	57250.00	50.00	5.7	0.0	0.0	13	0	0	237	432	-195
573+00.00	57300.00	50.00	5.1	0.0	0.0	10	0	0	247	432	-185
573+24.06	57324.06	24.06	2.2	0.0	0.0	3	0	0	250	432	-182
581+00.92	58100.92	0.00	13.0	0.0	0.0	0	0	0	250	432	-182
581+50.00	58150.00	49.08	12.0	0.0	0.0	23	0	0	273	432	-159
582+00.00	58200.00	50.00	8.2	0.0	0.0	19	0	0	292	432	-140
582+50.00	58250.00	50.00	7.0	0.0	0.0	14	0	0	306	432	-126
583+00.00	58300.00	50.00	5.1	0.0	2.4	11	0	2	317	434	-117
583+50.00	58350.00	50.00	5.7	0.0	7.2	10	0	9	327	446	-119
584+00.00	58400.00	50.00	5.1	0.0	12.2	10	0	18	337	469	-132
584+50.00	58450.00	50.00	4.5	0.0	14.9	9	0	25	346	502	-156
585+00.00	58500.00	50.00	4.7	0.0	12.0	8	0	25	354	534	-180
585+50.00	58550.00	50.00	4.4	0.0	14.0	8	0	24	362	566	-204
586+00.00	58600.00	50.00	3.9	0.0	14.7	8	0	27	370	601	-231
586+02.16	58602.16	2.16	4.8	0.0	12.8	0	0	1	370	602	-232
586+50.00	58650.00	47.84	4.1	0.0	14.1	8	0	24	378	633	-255
587+00.00	58700.00	50.00	4.8	0.0	13.6	8	0	26	386	667	-281
587+50.00	58750.00	50.00	3.7	0.0	11.4	8	0	23	394	697	-303
588+00.00	58800.00	50.00	3.0	0.0	17.5	6	0	27	400	732	-332
588+50.00	58850.00	50.00	3.2	0.0	14.7	6	0	30	406	771	-365
589+00.00	58900.00	50.00	3.4	0.0	19.6	6	0	32	412	813	-401

CONTINUED ON NEXT SHEET

CONTINUED FROM PREVIOUS SHEET

STH 35 TEMP WIDENING - STAGE 2A											
			AREA (SF)			INCREMENTAL VOL (CY) (UNADJUSTED)			CUMULATIVE VOL (CY)		
STATION	REAL STATION	DISTANCE	CUT	SALVAGED/UNUSABLE PAVEMENT MATERIAL	FILL	CUT	SALVAGED/UNUSABLE PAVEMENT MATERIAL	FILL	CUT 1.00	EXPANDED FILL 1.30	MASS ORDINATE
						NOTE 1	NOTE 2	NOTE 3	NOTE 1		NOTE 4
589+50.00	58950.00	50.00	5.0	0.0	10.7	8	0	28	420	849	-429
590+00.00	59000.00	50.00	3.8	0.0	10.6	8	0	20	428	875	-447
590+50.00	59050.00	50.00	3.0	0.0	18.4	6	0	27	434	910	-476
591+00.00	59100.00	50.00	3.5	0.0	16.4	6	0	32	440	952	-512
591+50.00	59150.00	50.00	4.5	0.0	18.4	7	0	32	447	993	-546
592+00.00	59200.00	50.00	4.4	0.0	23.4	8	0	39	455	1,044	-589
592+50.00	59250.00	50.00	4.3	0.0	21.0	8	0	41	463	1,097	-634
593+00.00	59300.00	50.00	5.1	0.0	18.2	9	0	36	472	1,144	-672
593+50.00	59350.00	50.00	5.5	0.0	11.6	10	0	28	482	1,180	-698
594+00.00	59400.00	50.00	3.7	0.0	10.0	8	0	20	490	1,206	-716
594+50.00	59450.00	50.00	3.6	0.0	3.7	7	0	13	497	1,223	-726
595+00.00	59500.00	50.00	4.2	0.0	0.0	7	0	3	504	1,227	-723
595+21.52	59521.52	21.52	3.1	0.0	0.0	3	0	0	507	1,227	-720
623+54.45	62354.45	0.00	3.7	0.0	0.0	0	0	0	507	1,227	-720
624+00.00	62400.00	45.55	5.9	0.0	0.0	8	0	0	515	1,227	-712
624+50.00	62450.00	50.00	9.2	0.0	0.0	14	0	0	529	1,227	-698
625+00.00	62500.00	50.00	7.3	0.0	3.5	15	0	3	544	1,231	-687
625+50.00	62550.00	50.00	17.0	0.0	1.7	22	0	5	566	1,238	-672
626+00.00	62600.00	50.00	24.8	0.0	0.0	39	0	2	605	1,240	-635
626+50.00	62650.00	50.00	34.3	0.0	0.0	55	0	0	660	1,240	-580
627+00.00	62700.00	50.00	51.4	0.0	0.0	79	0	0	739	1,240	-501
627+50.00	62750.00	50.00	51.8	0.0	0.0	96	0	0	835	1,240	-405
628+00.00	62800.00	50.00	29.2	0.0	0.0	75	0	0	910	1,240	-330
628+50.00	62850.00	50.00	12.1	0.0	0.1	38	0	0	948	1,240	-292
629+00.00	62900.00	50.00	10.8	0.0	0.4	21	0	0	969	1,240	-271
629+50.00	62950.00	50.00	28.2	0.0	0.0	36	0	0	1,005	1,240	-235
630+00.00	63000.00	50.00	40.5	0.0	0.0	64	0	0	1,069	1,240	-171
630+50.00	63050.00	50.00	43.7	0.0	0.0	78	0	0	1,147	1,240	-93
631+00.00	63100.00	50.00	33.8	0.0	0.0	72	0	0	1,219	1,240	-21
631+50.00	63150.00	50.00	28.1	0.0	0.0	57	0	0	1,276	1,240	36
632+00.00	63200.00	50.00	17.8	0.0	0.0	42	0	0	1,318	1,240	78
632+50.00	63250.00	50.00	8.3	0.0	0.0	24	0	0	1,342	1,240	102
633+00.00	63300.00	50.00	7.3	0.0	0.0	14	0	0	1,356	1,240	116
633+50.00	63350.00	50.00	5.2	0.0	0.0	12	0	0	1,368	1,240	128
634+00.00	63400.00	50.00	7.6	0.0	0.0	12	0	0	1,380	1,240	140
634+12.09	63412.09	12.09	7.3	0.0	0.0	3	0	0	1,383	1,240	143
					TOTALS	1,383	0	954			

9

9

CTH K TEMP WIDENING - STAGE 2A

STATION	REAL STATION	DISTANCE	AREA (SF)			INCREMENTAL VOL (CY) (UNADJUSTED)			CUMULATIVE VOL (CY)		
			CUT	SALVAGED/UNUSABLE PAVEMENT MATERIAL	FILL	CUT	SALVAGED/UNUSABLE PAVEMENT MATERIAL	FILL	CUT	EXPANDED FILL	MASS ORDINATE
									1.00	1.30	
						NOTE 1	NOTE 2	NOTE 3	NOTE 1		NOTE 4
32+24.47	3224.47	0.00	1.0	0.0	1.4	0	0	0	0	0	0
32+50.00	3250.00	25.53	2.9	0.0	1.9	2	0	2	2	3	-1
33+00.00	3300.00	50.00	5.8	0.0	1.1	8	0	3	10	7	4
33+50.00	3350.00	50.00	7.3	0.0	0.1	12	0	1	22	8	14
34+00.00	3400.00	50.00	4.9	0.0	0.8	11	0	1	33	9	24
34+50.00	3450.00	50.00	4.2	0.0	1.9	8	0	2	41	12	29
35+00.00	3500.00	50.00	3.9	0.0	6.6	8	0	8	49	22	27
35+50.00	3550.00	50.00	3.7	0.0	10.3	7	0	16	56	43	13
36+00.00	3600.00	50.00	2.5	0.0	6.4	6	0	15	62	62	0
36+21.38	3621.38	21.38	1.0	0.0	2.4	1	0	3	63	66	-3
				TOTALS		63	0	51			

STH 35 TEMP WIDENING - STAGE 3A

STATION	REAL STATION	DISTANCE	AREA (SF)			INCREMENTAL VOL (CY) (UNADJUSTED)			CUMULATIVE VOL (CY)		
			CUT	SALVAGED/UNUSABLE PAVEMENT MATERIAL	FILL	CUT	SALVAGED/UNUSABLE PAVEMENT MATERIAL	FILL	CUT	EXPANDED FILL	MASS ORDINATE
									1.00	1.30	
						NOTE 1	NOTE 2	NOTE 3	NOTE 1		NOTE 4
563+60.04	56360.04	0.00	4.8	0.0	0.0	0	0	0	0	0	0
564+00.00	56400.00	39.96	5.1	0.0	0.0	7	0	0	7	0	7
564+50.00	56450.00	50.00	5.1	0.0	0.6	9	0	1	16	1	15
565+00.00	56500.00	50.00	5.3	0.0	7.1	10	0	7	26	10	16
565+50.00	56550.00	50.00	5.6	0.0	13.1	10	0	19	36	35	1
565+91.61	56591.61	41.61	10.9	0.0	0.0	13	0	10	49	48	1
566+88.33	56688.33	0.00	10.5	0.0	3.2	0	0	0	49	48	1
567+00.00	56700.00	11.67	6.9	0.0	4.8	4	0	2	53	51	2
567+50.00	56750.00	50.00	6.6	0.0	8.7	13	0	13	66	68	-2
568+00.00	56800.00	50.00	4.4	0.0	9.8	10	0	17	76	90	-14
568+50.00	56850.00	50.00	4.1	0.0	8.7	8	0	17	84	112	-28
569+00.00	56900.00	50.00	5.0	0.0	0.2	8	0	8	92	122	-30
569+50.00	56950.00	50.00	3.6	0.0	4.1	8	0	4	100	127	-27
570+00.00	57000.00	50.00	10.0	0.0	0.0	13	0	4	113	133	-20
570+50.00	57050.00	50.00	1.9	0.0	5.4	11	0	5	124	139	-15
571+00.00	57100.00	50.00	2.0	0.0	3.2	4	0	8	128	150	-22
571+50.00	57150.00	50.00	1.7	0.0	1.1	3	0	4	131	155	-24
571+97.81	57197.81	47.81	0.1	0.0	1.3	2	0	2	133	157	-24
				TOTALS		133	0	121			

CONTINUED FROM PREVIOUS SHEET

STH 35 -STAGE 3A											
			AREA (SF)			INCREMENTAL VOL (CY) (UNADJUSTED)			CUMULATIVE VOL (CY)		
STATION	REAL STATION	DISTANCE	CUT	SALVAGED/UNUSABLE PAVEMENT MATERIAL	FILL	CUT	SALVAGED/UNUSABLE PAVEMENT MATERIAL	FILL	CUT 1.00	EXPANDED FILL 1.30	MASS ORDINATE
						NOTE 1	NOTE 2	NOTE 3	NOTE 1		NOTE 4
567+07.76	56707.76	0.00	0.0	0.0	0.0	0	0	0	0	0	0
567+50.00	56750.00	42.24	0.0	0.0	0.0	0	0	0	0	0	0
568+00.00	56800.00	50.00	0.0	0.0	0.0	0	0	0	0	0	0
568+50.00	56850.00	50.00	0.0	0.0	0.0	0	0	0	0	0	0
568+75.01	56875.01	25.01	69.2	12.4	9.0	32	6	4	32	5	21
569+00.00	56900.00	24.99	66.0	12.3	5.1	63	11	7	95	14	64
569+21.08	56921.08	21.08	61.1	12.4	11.3	50	10	6	145	22	96
569+50.00	56950.00	28.92	58.6	12.5	14.0	64	13	14	209	40	129
570+00.00	57000.00	50.00	61.3	12.7	0.0	111	23	13	320	57	200
570+07.56	57007.56	7.56	95.0	12.8	0.0	22	4	0	342	57	218
570+50.00	57050.00	42.44	62.0	12.4	4.2	123	20	3	465	61	317
571+00.00	57100.00	50.00	86.1	12.4	4.6	137	23	8	602	72	421
571+50.00	57150.00	50.00	79.0	12.2	5.9	153	23	10	755	85	538
572+00.00	57200.00	50.00	67.8	12.1	13.4	136	23	18	891	108	627
572+15.22	57215.22	15.22	83.4	12.2	14.9	43	7	8	934	118	653
572+50.00	57250.00	34.78	152.9	12.1	0.0	152	16	10	1,086	131	776
573+00.00	57300.00	50.00	108.9	12.1	34.3	242	22	32	1,328	173	954
573+38.28	57338.28	38.28	154.3	12.1	48.9	187	17	59	1,515	250	1,047
573+50.00	57350.00	11.72	169.6	12.1	61.1	70	5	24	1,585	281	1,081
573+63.95	57363.95	13.95	119.4	12.0	80.0	75	6	36	1,660	328	1,103
573+90.13	57390.13	26.18	82.8	12.0	75.4	98	12	75	1,758	425	1,092
574+50.00	57450.00	59.87	66.7	11.8	79.6	166	26	172	1,924	649	1,008
575+00.00	57500.00	50.00	61.1	11.5	85.2	118	22	153	2,042	848	905
575+50.00	57550.00	50.00	54.4	11.1	85.5	107	21	158	2,149	1,053	786
576+00.00	57600.00	50.00	64.8	10.5	69.9	110	20	144	2,259	1,240	689
576+50.00	57650.00	50.00	84.0	9.9	9.7	138	19	74	2,397	1,336	712
576+66.75	57666.75	16.75	118.5	9.7	0.0	63	6	3	2,460	1,340	765
577+00.00	57700.00	33.25	71.4	9.2	21.0	117	12	13	2,577	1,357	853
577+50.00	57750.00	50.00	57.3	8.7	39.0	119	17	56	2,696	1,430	882
578+00.00	57800.00	50.00	56.0	8.2	34.5	105	16	68	2,801	1,518	883
578+50.00	57850.00	50.00	54.7	7.7	29.3	102	15	59	2,903	1,595	893
579+00.00	57900.00	50.00	53.4	7.3	24.4	100	14	50	3,003	1,660	914
579+29.86	57929.86	29.86	113.3	6.8	1.9	92	8	15	3,095	1,680	978
579+50.00	57950.00	20.14	72.1	6.5	7.5	69	5	4	3,164	1,685	1,037
580+00.00	58000.00	50.00	40.9	6.1	29.8	105	12	35	3,269	1,730	1,085
580+50.00	58050.00	50.00	36.0	5.6	21.6	71	11	48	3,340	1,793	1,082
581+00.00	58100.00	50.00	100.7	5.4	0.0	127	10	20	3,467	1,819	1,173
581+15.85	58115.85	15.85	164.7	5.6	0.0	78	3	0	3,545	1,819	1,248
581+50.00	58150.00	34.15	152.8	5.2	3.8	201	7	2	3,746	1,821	1,440
582+00.00	58200.00	50.00	45.0	5.3	0.0	183	10	4	3,929	1,827	1,608
582+50.00	58250.00	50.00	53.9	5.5	0.0	92	10	0	4,021	1,827	1,690
583+00.00	58300.00	50.00	40.5	6.2	0.0	87	11	0	4,108	1,827	1,766
583+50.00	58350.00	50.00	190.9	8.6	7.3	214	14	7	4,322	1,836	1,956
583+77.50	58377.50	27.50	87.8	8.9	25.2	142	9	17	4,464	1,858	2,067
584+00.00	58400.00	22.50	34.8	9.1	28.2	51	7	22	4,515	1,886	2,083

CONTINUED ON NEXT SHEET

CONTINUED FROM PREVIOUS SHEET

STH 35 -STAGE 3A											
			AREA (SF)			INCREMENTAL VOL (CY) (UNADJUSTED)			CUMULATIVE VOL (CY)		
STATION	REAL STATION	DISTANCE	CUT	SALVAGED/UNUSABLE PAVEMENT MATERIAL	FILL	CUT	SALVAGED/UNUSABLE PAVEMENT MATERIAL	FILL	CUT 1.00	EXPANDED FILL 1.30	MASS ORDINATE
						NOTE 1	NOTE 2	NOTE 3	NOTE 1		NOTE 4
584+02.32	58402.32	2.32	27.9	9.1	33.7	3	1	3	4,518	1,890	2,081
584+27.11	58427.11	24.79	13.7	9.3	93.5	19	8	58	4,537	1,966	2,016
584+50.00	58450.00	22.89	7.9	9.2	95.3	9	8	80	4,546	2,070	1,913
585+00.00	58500.00	50.00	4.9	7.9	41.6	12	16	127	4,558	2,235	1,744
585+50.00	58550.00	50.00	41.4	8.8	15.2	43	16	53	4,601	2,304	1,702
586+00.00	58600.00	50.00	35.6	10.0	18.5	71	17	31	4,672	2,344	1,716
586+50.00	58650.00	50.00	8.7	12.7	14.6	41	21	31	4,713	2,384	1,696
587+00.00	58700.00	50.00	13.5	15.4	6.7	21	26	20	4,734	2,410	1,665
587+50.00	58750.00	50.00	15.5	18.9	1.7	27	32	8	4,761	2,421	1,649
587+93.01	58793.01	43.01	27.5	23.0	2.3	34	33	3	4,795	2,425	1,647
588+00.00	58800.00	6.99	29.4	23.6	2.6	7	6	1	4,802	2,426	1,646
588+18.06	58818.06	18.06	33.4	25.3	2.1	21	16	2	4,823	2,428	1,649
588+43.23	58843.23	25.17	37.0	27.0	2.8	33	24	2	4,856	2,431	1,655
588+50.00	58850.00	6.77	35.6	27.2	3.4	9	7	1	4,865	2,432	1,656
589+00.00	58900.00	50.00	39.1	28.3	8.8	69	51	11	4,934	2,447	1,659
589+50.00	58950.00	50.00	42.4	29.2	12.8	75	53	20	5,009	2,473	1,655
590+00.00	59000.00	50.00	45.2	29.7	17.8	81	55	28	5,090	2,509	1,645
590+50.00	59050.00	50.00	45.9	29.7	21.6	84	55	36	5,174	2,556	1,627
591+00.00	59100.00	50.00	53.7	29.2	20.8	92	55	39	5,266	2,607	1,614
591+50.00	59150.00	50.00	65.7	28.4	18.2	110	53	36	5,376	2,653	1,624
592+00.00	59200.00	50.00	70.4	27.4	3.9	126	52	20	5,502	2,679	1,672
592+50.00	59250.00	50.00	77.0	26.2	4.2	137	50	7	5,639	2,688	1,750
593+00.00	59300.00	50.00	73.8	24.9	7.1	140	47	10	5,779	2,701	1,830
593+50.00	59350.00	50.00	71.0	21.8	10.6	134	43	16	5,913	2,722	1,900
594+00.00	59400.00	50.00	73.1	20.7	16.5	133	39	25	6,046	2,755	1,961
594+50.00	59450.00	50.00	70.7	19.6	1.7	133	37	17	6,179	2,777	2,035
595+00.00	59500.00	50.00	68.7	18.3	5.3	129	35	6	6,308	2,785	2,121
595+50.00	59550.00	50.00	68.5	16.8	9.6	127	32	14	6,435	2,803	2,198
596+00.00	59600.00	50.00	65.9	15.4	13.9	124	30	22	6,559	2,831	2,264
596+50.00	59650.00	50.00	61.4	13.5	14.7	118	27	26	6,677	2,865	2,321
597+00.00	59700.00	50.00	56.6	11.5	16.3	109	23	29	6,786	2,903	2,369
597+50.00	59750.00	50.00	54.8	9.6	13.5	103	20	28	6,889	2,939	2,416
598+00.00	59800.00	50.00	55.0	7.6	13.2	102	16	25	6,991	2,972	2,469
598+50.00	59850.00	50.00	128.7	5.4	0.0	170	12	12	7,161	2,987	2,612
599+00.00	59900.00	50.00	24.0	3.6	14.5	141	8	13	7,302	3,004	2,728
599+50.00	59950.00	50.00	19.4	2.3	21.7	40	5	33	7,342	3,047	2,720
600+00.00	60000.00	50.00	25.7	1.1	14.8	42	3	34	7,384	3,091	2,715
600+50.00	60050.00	50.00	34.5	0.0	8.2	56	1	21	7,440	3,119	2,742
601+00.00	60100.00	50.00	29.9	0.0	12.2	60	0	19	7,500	3,143	2,778
601+50.00	60150.00	50.00	34.8	0.0	17.7	60	0	28	7,560	3,180	2,801
602+00.00	60200.00	50.00	26.0	0.0	13.0	56	0	28	7,616	3,216	2,821
602+50.00	60250.00	50.00	21.5	0.0	14.0	44	0	25	7,660	3,249	2,832
603+00.00	60300.00	50.00	22.0	0.0	11.1	40	0	23	7,700	3,279	2,842
603+50.00	60350.00	50.00	19.9	0.0	22.2	39	0	31	7,739	3,319	2,841
604+00.00	60400.00	50.00	18.4	0.0	116.0	35	0	128	7,774	3,485	2,710

CONTINUED ON NEXT SHEET

CONTINUED FROM PREVIOUS SHEET

STH 35 -STAGE 3A											
			AREA (SF)			INCREMENTAL VOL (CY) (UNADJUSTED)			CUMULATIVE VOL (CY)		
STATION	REAL STATION	DISTANCE	CUT	SALVAGED/UNUSABLE PAVEMENT MATERIAL	FILL	CUT	SALVAGED/UNUSABLE PAVEMENT MATERIAL	FILL	CUT	EXPANDED FILL	MASS ORDINATE
									1.00	1.30	
						NOTE 1	NOTE 2	NOTE 3	NOTE 1		NOTE 4
604+50.00	60450.00	50.00	20.1	0.0	120.3	36	0	219	7,810	3,770	2,461
605+00.00	60500.00	50.00	21.2	0.0	117.4	38	0	220	7,848	4,056	2,213
605+50.00	60550.00	50.00	15.7	0.0	128.8	34	0	228	7,882	4,352	1,951
606+00.00	60600.00	50.00	18.3	0.0	132.9	31	0	242	7,913	4,667	1,667
606+50.00	60650.00	50.00	17.4	0.0	122.6	33	0	237	7,946	4,975	1,392
607+00.00	60700.00	50.00	20.9	0.0	109.3	35	0	215	7,981	5,255	1,147
607+50.00	60750.00	50.00	21.4	0.0	105.7	39	0	199	8,020	5,513	928
608+00.00	60800.00	50.00	23.1	0.0	97.2	41	0	188	8,061	5,758	724
608+50.00	60850.00	50.00	23.6	0.0	93.1	43	0	176	8,104	5,987	539
609+00.00	60900.00	50.00	22.9	0.0	68.4	43	0	149	8,147	6,180	388
609+19.02	60919.02	19.02	23.0	0.0	68.8	16	0	48	8,163	6,243	341
609+50.00	60950.00	30.98	18.3	0.0	61.2	24	0	75	8,187	6,340	268
610+00.00	61000.00	50.00	15.1	0.0	73.7	31	0	125	8,218	6,503	136
610+50.00	61050.00	50.00	24.1	0.0	70.7	36	0	134	8,254	6,677	-2
611+00.00	61100.00	50.00	32.5	0.0	41.2	52	0	104	8,306	6,812	-85
611+50.00	61150.00	50.00	37.9	0.0	25.9	65	0	62	8,371	6,893	-101
611+57.09	61157.09	7.09	38.8	0.0	25.1	10	0	7	8,381	6,902	-100
612+00.00	61200.00	42.91	40.1	0.0	19.8	63	0	36	8,444	6,949	-83
612+50.00	61250.00	50.00	44.8	0.0	11.4	79	0	29	8,523	6,986	-42
612+77.00	61277.00	27.00	47.6	0.0	12.5	46	0	12	8,569	7,002	-12
613+00.00	61300.00	23.00	50.2	0.0	12.5	42	0	11	8,611	7,016	16
613+02.09	61302.09	2.09	50.6	0.0	12.7	4	0	1	8,615	7,017	19
613+27.13	61327.13	25.04	57.5	0.0	7.6	50	0	9	8,665	7,029	57
613+50.00	61350.00	22.87	61.4	0.0	5.3	50	0	5	8,715	7,036	100
614+00.00	61400.00	50.00	63.4	0.2	0.0	116	0	5	8,831	7,042	210
614+50.00	61450.00	50.00	59.6	1.4	0.7	114	2	1	8,945	7,043	321
615+00.00	61500.00	50.00	46.9	2.2	6.4	99	3	7	9,044	7,053	408
615+50.00	61550.00	50.00	35.7	3.1	12.5	76	5	17	9,120	7,075	456
616+00.00	61600.00	50.00	45.9	3.6	7.4	76	6	18	9,196	7,098	503
616+08.50	61608.50	8.50	41.4	3.7	11.4	14	1	3	9,210	7,102	512
616+50.00	61650.00	41.50	16.1	4.0	18.9	44	6	23	9,254	7,132	520
617+00.00	61700.00	50.00	14.7	4.5	44.2	29	8	58	9,283	7,207	466
617+39.30	61739.30	39.30	17.9	4.9	51.1	24	7	69	9,307	7,297	393
617+50.00	61750.00	10.70	18.7	5.1	45.1	7	2	19	9,314	7,322	373
617+66.94	61766.94	16.94	19.6	5.3	37.0	12	3	26	9,326	7,355	349
617+91.98	61791.98	25.04	21.3	5.4	20.5	19	5	27	9,345	7,391	328
618+00.00	61800.00	8.02	21.0	5.4	20.1	6	2	6	9,351	7,398	324
618+39.12	61839.12	39.12	24.7	5.8	16.0	33	8	26	9,384	7,432	315
620+94.59	62094.59	0.00	17.0	5.8	149.8	0	0	0	9,384	7,432	315
621+00.00	62100.00	5.41	21.1	5.7	150.4	4	1	30	9,388	7,471	279
621+35.62	62135.62	35.62	34.3	5.2	148.1	37	7	197	9,425	7,727	53
621+50.00	62150.00	14.38	43.6	5.1	155.5	21	3	81	9,446	7,833	-34
621+69.28	62169.28	19.28	28.2	5.2	177.0	26	4	119	9,472	7,987	-167
621+84.58	62184.58	15.30	13.6	5.3	201.5	12	3	107	9,484	8,126	-297
622+00.00	62200.00	15.42	12.9	5.3	205.3	8	3	116	9,492	8,277	-443

CONTINUED ON NEXT SHEET

CONTINUED FROM PREVIOUS SHEET

STH 35 -STAGE 3A											
			AREA (SF)			INCREMENTAL VOL (CY) (UNADJUSTED)			CUMULATIVE VOL (CY)		
STATION	REAL STATION	DISTANCE	CUT	SALVAGED/UNUSABLE PAVEMENT MATERIAL	FILL	CUT	SALVAGED/UNUSABLE PAVEMENT MATERIAL	FILL	CUT	EXPANDED FILL	MASS ORDINATE
						NOTE 1	NOTE 2	NOTE 3	1.00 NOTE 1	1.30	NOTE 4
622+50.00	62250.00	50.00	30.5	5.5	168.7	40	10	346	9,532	8,727	-863
623+00.00	62300.00	50.00	49.5	5.5	142.6	74	10	288	9,606	9,101	-1,173
623+50.00	62350.00	50.00	37.2	5.7	143.0	80	10	264	9,686	9,445	-1,447
623+55.40	62355.40	5.40	33.8	5.8	143.7	7	1	29	9,693	9,482	-1,478
623+80.38	62380.38	24.98	24.9	5.8	144.6	27	5	133	9,720	9,655	-1,629
624+00.00	62400.00	19.62	21.7	5.9	140.3	17	4	104	9,737	9,790	-1,751
624+05.36	62405.36	5.36	21.9	5.9	137.9	4	1	28	9,741	9,827	-1,785
624+50.00	62450.00	44.64	28.0	6.3	115.9	41	10	210	9,782	10,100	-2,027
625+00.00	62500.00	50.00	60.7	7.2	4.8	82	12	112	9,864	10,245	-2,102
625+50.00	62550.00	50.00	37.0	8.2	64.5	90	14	64	9,954	10,329	-2,110
626+00.00	62600.00	50.00	33.7	9.4	45.3	66	16	102	10,020	10,461	-2,192
626+50.00	62650.00	50.00	35.2	10.7	26.9	64	19	67	10,084	10,548	-2,234
627+00.00	62700.00	50.00	59.6	12.1	14.1	88	21	38	10,172	10,598	-2,217
627+50.00	62750.00	50.00	70.5	13.3	9.4	120	24	22	10,292	10,626	-2,149
628+00.00	62800.00	50.00	68.8	14.4	5.1	129	26	13	10,421	10,643	-2,063
628+50.00	62850.00	50.00	85.6	15.6	1.5	143	28	6	10,564	10,651	-1,956
629+00.00	62900.00	50.00	87.7	17.0	0.6	161	30	2	10,725	10,654	-1,828
629+50.00	62950.00	50.00	89.6	17.8	0.1	164	32	1	10,889	10,655	-1,697
630+00.00	63000.00	50.00	87.7	18.9	0.0	164	34	0	11,053	10,655	-1,567
630+50.00	63050.00	50.00	83.8	19.3	0.1	159	35	0	11,212	10,655	-1,443
631+00.00	63100.00	50.00	85.3	19.8	0.0	157	36	0	11,369	10,655	-1,322
631+50.00	63150.00	50.00	103.2	20.1	0.0	174	37	0	11,543	10,655	-1,185
632+00.00	63200.00	50.00	107.4	20.2	0.0	195	37	0	11,738	10,655	-1,027
632+50.00	63250.00	50.00	124.2	19.9	0.0	256	18	0	11,994	10,655	-789
633+00.00	63300.00	50.00	114.4	19.1	0.0	221	36	0	12,215	10,655	-604
633+50.00	63350.00	50.00	97.8	18.4	0.0	197	35	0	12,412	10,655	-442
634+00.00	63400.00	50.00	103.8	17.2	0.0	187	33	0	12,599	10,655	-288
634+50.00	63450.00	50.00	91.9	16.0	0.6	181	31	1	12,780	10,656	-139
635+00.00	63500.00	50.00	57.9	14.8	3.7	139	28	4	12,919	10,661	-33
635+50.00	63550.00	50.00	36.4	13.7	9.4	87	26	12	13,006	10,677	12
636+00.00	63600.00	50.00	18.1	12.8	20.9	51	25	28	13,057	10,713	2
636+50.00	63650.00	50.00	14.3	11.7	0.0	30	23	19	13,087	10,738	-16
636+86.03	63686.03	36.03	10.4	10.6	54.7	17	15	37	13,104	10,786	-62
637+00.00	63700.00	13.97	10.5	10.1	43.6	5	5	25	13,109	10,819	-95
637+50.00	63750.00	50.00	7.7	8.7	36.2	17	17	74	13,126	10,915	-191
638+00.00	63800.00	50.00	7.0	8.1	34.1	14	16	65	13,140	10,999	-277
638+50.00	63850.00	50.00	7.2	7.8	30.7	13	15	60	13,153	11,077	-357
639+00.00	63900.00	50.00	3.2	7.4	47.9	10	14	73	13,163	11,172	-456
639+50.00	63950.00	50.00	2.2	7.1	72.2	5	13	111	13,168	11,317	-609

CONTINUED ON NEXT SHEET

CONTINUED FROM PREVIOUS SHEET

STH 35 -STAGE 3A											
			AREA (SF)			INCREMENTAL VOL (CY) (UNADJUSTED)			CUMULATIVE VOL (CY)		
STATION	REAL STATION	DISTANCE	CUT	SALVAGED/UNUSABLE PAVEMENT MATERIAL	FILL	CUT	SALVAGED/UNUSABLE PAVEMENT MATERIAL	FILL	CUT 1.00	EXPANDED FILL 1.30	MASS ORDINATE
						NOTE 1	NOTE 2	NOTE 3	NOTE 1		NOTE 4
640+00.00	64000.00	50.00	1.4	6.7	71.9	3	13	133	13,171	11,489	-791
640+50.00	64050.00	50.00	1.9	6.5	58.0	3	12	120	13,174	11,645	-956
641+00.00	64100.00	50.00	3.4	6.5	32.1	5	12	83	13,179	11,753	-1,071
641+50.00	64150.00	50.00	7.5	6.9	14.4	10	12	43	13,189	11,809	-1,129
641+76.14	64176.14	26.14	4.3	7.4	12.0	6	7	13	13,195	11,826	-1,147
642+00.00	64200.00	23.86	4.9	7.8	21.5	4	7	15	13,199	11,846	-1,170
642+50.00	64250.00	50.00	4.8	8.4	48.0	9	15	64	13,208	11,929	-1,259
642+85.84	64285.84	35.84	5.5	8.8	98.7	7	11	97	13,215	12,055	-1,389
643+00.00	64300.00	14.16	6.1	8.8	111.6	3	5	55	13,218	12,126	-1,462
643+50.00	64350.00	50.00	7.0	9.2	131.3	12	17	225	13,230	12,419	-1,760
644+00.00	64400.00	50.00	8.7	9.9	97.0	15	18	211	13,245	12,693	-2,037
644+50.00	64450.00	50.00	9.8	10.8	40.4	17	19	127	13,262	12,858	-2,204
645+00.00	64500.00	50.00	21.0	11.8	11.0	29	21	48	13,291	12,921	-2,259
645+50.00	64550.00	50.00	38.9	13.0	5.5	55	23	15	13,346	12,940	-2,246
646+00.00	64600.00	50.00	105.4	13.7	0.0	134	25	5	13,480	12,947	-2,144
646+50.00	64650.00	50.00	71.2	14.8	0.0	163	26	0	13,643	12,947	-2,007
647+00.00	64700.00	50.00	88.5	15.8	0.0	148	28	0	13,791	12,947	-1,887
647+50.00	64750.00	50.00	99.6	16.9	0.0	174	30	0	13,965	12,947	-1,743
648+00.00	64800.00	50.00	103.5	18.5	0.0	188	33	0	14,153	12,947	-1,588
648+49.88	64849.88	49.88	79.7	0.0	0.0	169	17	0	14,322	12,947	-1,436
649+00.00	64900.00	50.12	0.0	0.0	0.0	74	0	0	14,396	12,947	-1,362
649+21.31	64921.31	21.31	0.0	0.0	0.0	0	0	0	14,396	12,947	-1,362
				TOTALS		14,396	2,811	9,959			

COTTONWOOD DR DITCHING - STAGE 3A											
			AREA (SF)			INCREMENTAL VOL (CY) (UNADJUSTED)			CUMULATIVE VOL (CY)		
STATION	REAL STATION	DISTANCE	CUT	SALVAGED/UNUSABLE PAVEMENT MATERIAL	FILL	CUT	SALVAGED/UNUSABLE PAVEMENT MATERIAL	FILL	CUT 1.00	EXPANDED FILL 1.30	MASS ORDINATE
						NOTE 1	NOTE 2	NOTE 3	NOTE 1		NOTE 4
5+81.19	581.19	0.00	33.0	0.0	0.2	0	0	0	0	0	0
6+00.00	600.00	18.81	6.1	0.0	1.2	14	0	1	14	1	13
6+25.00	625.00	25.00	1.7	0.0	1.1	4	0	1	18	3	15
6+50.00	650.00	25.00	3.0	0.0	0.2	2	0	1	20	4	16
6+75.00	675.00	25.00	2.9	0.0	0.0	3	0	0	23	4	19
6+82.68	682.68	7.68	3.2	0.0	0.0	1	0	0	24	4	20
				TOTALS		24	0	3			

CTH K - STAGE 3A											
			AREA (SF)			INCREMENTAL VOL (CY) (UNADJUSTED)			CUMULATIVE VOL (CY)		
STATION	REAL STATION	DISTANCE	CUT	SALVAGED/UNUSABLE PAVEMENT MATERIAL	FILL	CUT	SALVAGED/UNUSABLE PAVEMENT MATERIAL	FILL	CUT 1.00	EXPANDED FILL 1.30	MASS ORDINATE
						NOTE 1	NOTE 2	NOTE 3	NOTE 1		NOTE 4
30+38.33	3038.33	0.00	285.7	0.0	0.0	0	0	0	0	0	0
30+50.00	3050.00	11.67	261.3	0.0	0.0	118	0	0	118	0	118
31+00.00	3100.00	50.00	137.9	0.0	2.6	370	0	2	488	3	485
31+50.00	3150.00	50.00	29.8	0.0	44.8	155	0	44	643	60	583
32+00.00	3200.00	50.00	79.4	0.0	4.4	101	0	46	744	120	624
32+40.27	3240.27	40.27	38.4	0.0	0.0	88	0	3	832	124	709
32+50.00	3250.00	9.73	29.9	0.2	0.0	12	0	0	844	124	721
33+00.00	3300.00	50.00	21.6	2.5	0.0	48	2	0	892	124	767
33+50.00	3350.00	50.00	25.1	3.1	0.0	43	5	0	935	124	805
33+68.57	3368.57	18.57	38.7	3.2	0.0	22	2	0	957	124	825
34+00.00	3400.00	31.43	31.8	2.9	0.0	41	4	0	998	124	862
34+50.00	3450.00	50.00	30.1	3.0	1.0	57	5	1	1,055	125	912
				TOTALS		1,055	18	96			

CTH K - STAGE 3B											
			AREA (SF)			INCREMENTAL VOL (CY) (UNADJUSTED)			CUMULATIVE VOL (CY)		
STATION	REAL STATION	DISTANCE	CUT	SALVAGED/UNUSABLE PAVEMENT MATERIAL	FILL	CUT	SALVAGED/UNUSABLE PAVEMENT MATERIAL	FILL	CUT	EXPANDED FILL	MASS ORDINATE
									1.00	1.30	
						NOTE 1	NOTE 2	NOTE 3	NOTE 1		NOTE 4
30+38.33	3038.33	0.00	0.0	0.0	0.0	0	0	0	0	0	0
30+50.00	3050.00	11.67	0.0	0.0	0.0	0	0	0	0	0	0
31+00.00	3100.00	50.00	95.8	8.5	0.0	89	8	0	89	0	81
31+50.00	3150.00	50.00	43.7	7.6	0.0	129	15	0	218	0	195
32+00.00	3200.00	50.00	22.0	6.6	4.1	61	13	4	279	5	238
32+40.27	3240.27	40.27	14.7	7.4	4.0	27	10	6	306	13	247
32+50.00	3250.00	9.73	15.6	7.4	3.5	5	3	1	311	14	248
33+00.00	3300.00	50.00	12.3	5.7	4.3	26	12	7	337	23	253
33+50.00	3350.00	50.00	20.1	5.2	0.1	30	10	4	367	29	267
33+68.57	3368.57	18.57	28.4	4.8	0.0	17	3	0	384	29	281
34+00.00	3400.00	31.43	37.4	5.2	0.0	38	6	0	422	29	313
34+50.00	3450.00	50.00	38.8	5.3	0.0	71	10	0	493	29	374
				TOTALS		493	90	22			

9

9

STH 35 -STAGE 4											
			AREA (SF)			INCREMENTAL VOL (CY) (UNADJUSTED)			CUMULATIVE VOL (CY)		
STATION	REAL STATION	DISTANCE	CUT	SALVAGED/UNUSABLE PAVEMENT MATERIAL	FILL	CUT	SALVAGED/UNUSABLE PAVEMENT MATERIAL	FILL	CUT 1.00	EXPANDED FILL 1.30	MASS ORDINATE
						NOTE 1	NOTE 2	NOTE 3	NOTE 1		NOTE 4
568+75.00	56875.00	0.00	74.9	16.9	0.0	0	0	0	0	0	0
569+00.00	56900.00	25.00	64.9	16.9	0.0	65	16	0	65	0	49
569+21.08	56921.08	21.08	61.3	16.9	0.4	49	13	0	114	0	85
569+50.00	56950.00	28.92	67.5	16.8	0.0	69	18	0	183	0	136
570+00.00	57000.00	50.00	70.7	16.5	0.0	128	31	0	311	0	233
570+07.56	57007.56	7.56	71.4	16.5	0.0	20	5	0	331	0	248
570+50.00	57050.00	42.44	75.3	16.3	0.0	115	26	0	446	0	337
571+00.00	57100.00	50.00	81.8	16.0	0.0	145	30	0	591	0	452
571+50.00	57150.00	50.00	74.4	15.7	0.0	145	29	0	736	0	568
572+00.00	57200.00	50.00	60.6	15.6	0.0	125	29	0	861	0	664
572+15.22	57215.22	15.22	67.1	16.9	0.0	36	9	0	897	0	691
572+50.00	57250.00	34.78	64.7	16.9	0.0	85	22	0	982	0	754
573+00.00	57300.00	50.00	78.9	16.9	0.0	133	31	0	1,115	0	856
573+38.28	57338.28	38.28	65.0	16.9	0.0	102	24	0	1,217	0	934
573+50.00	57350.00	11.72	82.8	16.9	0.0	32	7	0	1,249	0	959
573+63.95	57363.95	13.95	85.6	16.9	0.0	44	9	0	1,293	0	994
573+90.13	57390.13	26.18	119.6	16.9	0.0	99	16	0	1,392	0	1,077
574+50.00	57450.00	59.87	84.9	16.9	0.0	227	38	0	1,619	0	1,266
575+00.00	57500.00	50.00	83.4	16.9	0.0	156	31	0	1,775	0	1,391
575+50.00	57550.00	50.00	81.5	16.9	0.0	153	31	0	1,928	0	1,513
576+00.00	57600.00	50.00	91.3	17.3	0.0	160	32	0	2,088	0	1,641
576+50.00	57650.00	50.00	66.5	15.6	0.0	146	30	0	2,234	0	1,757
576+66.75	57666.75	16.75	88.4	18.8	0.0	48	11	0	2,282	0	1,794
577+00.00	57700.00	33.25	96.7	19.6	0.0	114	24	0	2,396	0	1,884
577+50.00	57750.00	50.00	98.9	20.5	0.0	181	37	0	2,577	0	2,028
578+00.00	57800.00	50.00	105.1	21.5	0.0	189	39	0	2,766	0	2,178
578+50.00	57850.00	50.00	111.4	22.6	0.0	200	41	0	2,966	0	2,337
579+00.00	57900.00	50.00	114.0	23.7	0.0	209	43	0	3,175	0	2,503
579+29.86	57929.86	29.86	118.1	24.4	0.0	128	27	0	3,303	0	2,604
579+50.00	57950.00	20.14	122.1	24.8	0.0	90	18	0	3,393	0	2,676
580+00.00	58000.00	50.00	114.1	25.8	0.0	219	47	0	3,612	0	2,848
580+50.00	58050.00	50.00	116.0	26.6	0.0	213	49	0	3,825	0	3,012
581+00.00	58100.00	50.00	118.0	27.9	0.0	217	50	0	4,042	0	3,179
581+15.85	58115.85	15.85	122.7	29.2	0.0	71	17	0	4,113	0	3,233
581+50.00	58150.00	34.15	120.9	29.8	0.0	154	37	0	4,267	0	3,350
582+00.00	58200.00	50.00	31.7	7.0	0.0	141	34	0	4,408	0	3,457
582+50.00	58250.00	50.00	30.0	7.0	0.0	57	13	0	4,465	0	3,501
583+00.00	58300.00	50.00	26.1	7.2	0.0	52	13	0	4,517	0	3,540
583+50.00	58350.00	50.00	58.0	29.6	28.1	78	34	26	4,595	34	3,550
583+77.50	58377.50	27.50	50.0	29.9	37.6	55	30	33	4,650	77	3,532
584+00.00	58400.00	22.50	44.1	30.1	38.7	39	25	32	4,689	118	3,505
584+02.32	58402.32	2.32	43.4	30.1	39.2	4	3	3	4,693	122	3,502
584+27.11	58427.11	24.79	36.0	30.3	44.7	36	28	39	4,729	173	3,459
584+50.00	58450.00	22.89	32.6	30.5	50.2	29	26	40	4,758	225	3,410
585+00.00	58500.00	50.00	21.6	30.2	66.8	50	56	108	4,808	365	3,264

CONTINUED ON NEXT SHEET

CONTINUED FROM PREVIOUS SHEET

STH 35 -STAGE 4											
			AREA (SF)			INCREMENTAL VOL (CY) (UNADJUSTED)			CUMULATIVE VOL (CY)		
STATION	REAL STATION	DISTANCE	CUT	SALVAGED/UNUSABLE PAVEMENT MATERIAL	FILL	CUT NOTE 1	SALVAGED/UNUSABLE PAVEMENT MATERIAL NOTE 2	FILL NOTE 3	CUT 1.00 NOTE 1	EXPANDED FILL 1.30	MASS ORDINATE NOTE 4
585+50.00	58550.00	50.00	14.1	30.0	97.9	33	56	153	4,841	564	3,042
586+00.00	58600.00	50.00	9.8	29.7	103.5	22	55	186	4,863	806	2,767
586+50.00	58650.00	50.00	7.5	29.5	91.9	16	55	181	4,879	1,041	2,493
587+00.00	58700.00	50.00	5.1	29.2	90.5	12	54	169	4,891	1,261	2,231
587+50.00	58750.00	50.00	0.1	26.7	98.3	5	52	175	4,896	1,489	1,957
587+93.01	58793.01	43.01	0.0	23.4	108.5	0	40	165	4,896	1,703	1,702
588+00.00	58800.00	6.99	0.0	22.9	109.6	0	6	28	4,896	1,739	1,660
588+18.06	58818.06	18.06	0.0	21.4	115.6	0	15	75	4,896	1,837	1,547
588+43.23	58843.23	25.17	0.0	19.9	126.8	0	19	113	4,896	1,984	1,381
588+50.00	58850.00	6.77	0.0	19.8	128.3	0	5	32	4,896	2,025	1,335
589+00.00	58900.00	50.00	0.0	19.2	129.5	0	36	239	4,896	2,336	988
589+50.00	58950.00	50.00	0.0	18.6	121.4	0	35	232	4,896	2,638	651
590+00.00	59000.00	50.00	0.2	18.0	111.7	0	34	216	4,896	2,919	336
590+50.00	59050.00	50.00	0.4	17.4	106.5	1	33	202	4,897	3,181	42
591+00.00	59100.00	50.00	1.1	16.9	92.4	1	32	184	4,898	3,420	-228
591+50.00	59150.00	50.00	8.4	16.9	67.9	9	31	148	4,907	3,613	-443
592+00.00	59200.00	50.00	15.9	16.9	52.8	23	31	112	4,930	3,758	-596
592+50.00	59250.00	50.00	18.2	16.9	50.0	32	31	95	4,962	3,882	-719
593+00.00	59300.00	50.00	19.6	16.9	46.8	35	31	90	4,997	3,999	-832
593+50.00	59350.00	50.00	21.6	16.9	44.4	38	31	84	5,035	4,108	-934
594+00.00	59400.00	50.00	24.1	16.9	41.4	42	31	79	5,077	4,211	-1,026
594+50.00	59450.00	50.00	26.9	16.9	36.2	47	31	72	5,124	4,304	-1,103
595+00.00	59500.00	50.00	30.0	16.9	32.5	53	31	64	5,177	4,388	-1,165
595+50.00	59550.00	50.00	32.8	16.9	31.5	58	31	59	5,235	4,464	-1,214
596+00.00	59600.00	50.00	36.4	16.9	19.5	64	31	47	5,299	4,525	-1,242
596+50.00	59650.00	50.00	41.7	16.9	4.1	72	31	22	5,371	4,554	-1,230
597+00.00	59700.00	50.00	45.6	16.9	1.2	81	31	5	5,452	4,560	-1,186
597+50.00	59750.00	50.00	56.5	16.9	0.1	94	31	1	5,546	4,562	-1,125
598+00.00	59800.00	50.00	68.2	19.3	0.0	115	34	0	5,661	4,562	-1,044
598+50.00	59850.00	50.00	77.9	21.7	0.0	135	38	0	5,796	4,562	-947
599+00.00	59900.00	50.00	92.7	23.6	0.0	158	42	0	5,954	4,562	-831
599+50.00	59950.00	50.00	125.1	25.3	0.0	202	45	0	6,156	4,562	-674
600+00.00	60000.00	50.00	128.9	26.2	0.0	235	48	0	6,391	4,562	-487
600+50.00	60050.00	50.00	128.9	26.8	0.0	239	49	0	6,630	4,562	-297
601+00.00	60100.00	50.00	128.8	26.7	0.0	239	50	0	6,869	4,562	-108
601+50.00	60150.00	50.00	118.0	26.8	0.0	228	50	0	7,097	4,562	70
602+00.00	60200.00	50.00	105.5	26.9	0.0	207	50	0	7,304	4,562	227
602+50.00	60250.00	50.00	94.1	26.7	0.0	185	50	0	7,489	4,562	362
603+00.00	60300.00	50.00	90.1	26.5	0.0	171	49	0	7,660	4,562	484
603+50.00	60350.00	50.00	97.0	26.5	0.0	173	49	0	7,833	4,562	608
604+00.00	60400.00	50.00	100.8	26.5	0.0	183	49	0	8,016	4,562	742
604+50.00	60450.00	50.00	105.9	26.6	0.0	191	49	0	8,207	4,562	884
605+00.00	60500.00	50.00	104.5	26.3	0.0	195	49	0	8,402	4,562	1,030
605+50.00	60550.00	50.00	97.7	26.3	0.0	187	49	0	8,589	4,562	1,168
606+00.00	60600.00	50.00	94.7	26.3	0.0	178	49	0	8,767	4,562	1,297

CONTINUED ON NEXT SHEET

CONTINUED FROM PREVIOUS SHEET

STH 35 -STAGE 4											
			AREA (SF)			INCREMENTAL VOL (CY) (UNADJUSTED)			CUMULATIVE VOL (CY)		
STATION	REAL STATION	DISTANCE	CUT	SALVAGED/UNUSABLE PAVEMENT MATERIAL	FILL	CUT	SALVAGED/UNUSABLE PAVEMENT MATERIAL	FILL	CUT 1.00	EXPANDED FILL 1.30	MASS ORDINATE
						NOTE 1	NOTE 2	NOTE 3	NOTE 1		NOTE 4
606+50.00	60650.00	50.00	91.5	26.2	0.0	172	49	0	8,939	4,562	1,420
607+00.00	60700.00	50.00	94.5	26.1	0.0	172	48	0	9,111	4,562	1,544
607+50.00	60750.00	50.00	103.7	26.2	0.0	184	48	0	9,295	4,562	1,680
608+00.00	60800.00	50.00	108.0	26.2	0.0	196	48	0	9,491	4,562	1,828
608+50.00	60850.00	50.00	120.1	26.0	0.0	211	48	0	9,702	4,562	1,991
609+00.00	60900.00	50.00	134.7	26.0	0.0	236	48	0	9,938	4,562	2,179
609+19.02	60919.02	19.02	141.5	26.0	0.0	97	18	0	10,035	4,562	2,258
609+50.00	60950.00	30.98	148.8	26.1	0.0	167	30	0	10,202	4,562	2,395
610+00.00	61000.00	50.00	153.5	26.2	0.0	280	48	0	10,482	4,562	2,627
610+50.00	61050.00	50.00	165.9	26.1	0.0	296	48	0	10,778	4,562	2,875
611+00.00	61100.00	50.00	178.0	26.1	0.0	318	48	0	11,096	4,562	3,145
611+50.00	61150.00	50.00	177.9	26.2	0.0	330	48	0	11,426	4,562	3,427
611+57.09	61157.09	7.09	177.4	26.2	0.0	47	7	0	11,473	4,562	3,467
612+00.00	61200.00	42.91	167.1	26.0	0.0	274	41	0	11,747	4,562	3,700
612+50.00	61250.00	50.00	146.9	26.0	0.0	291	48	0	12,038	4,562	3,943
612+77.00	61277.00	27.00	137.1	26.0	0.0	142	26	0	12,180	4,562	4,059
613+00.00	61300.00	23.00	124.8	26.0	0.0	112	22	0	12,292	4,562	4,149
613+02.09	61302.09	2.09	123.1	26.0	0.0	10	2	0	12,302	4,562	4,157
613+27.13	61327.13	25.04	108.4	26.0	0.0	107	24	0	12,409	4,562	4,240
613+50.00	61350.00	22.87	98.5	26.1	0.0	88	22	0	12,497	4,562	4,306
614+00.00	61400.00	50.00	86.1	26.1	0.0	171	48	0	12,668	4,562	4,429
614+50.00	61450.00	50.00	74.9	25.2	0.0	149	48	0	12,817	4,562	4,530
615+00.00	61500.00	50.00	60.4	24.3	0.0	125	46	0	12,942	4,562	4,609
615+50.00	61550.00	50.00	59.7	23.4	0.0	111	44	0	13,053	4,562	4,676
616+00.00	61600.00	50.00	48.2	22.6	0.0	100	43	0	13,153	4,562	4,733
616+08.50	61608.50	8.50	46.7	22.5	0.0	15	7	0	13,168	4,562	4,741
616+50.00	61650.00	41.50	38.8	21.8	0.4	66	34	0	13,234	4,562	4,773
617+00.00	61700.00	50.00	30.0	21.3	2.3	64	40	2	13,298	4,564	4,795
617+39.30	61739.30	39.30	29.2	21.2	2.7	43	31	4	13,341	4,570	4,802
617+50.00	61750.00	10.70	30.2	21.2	2.6	12	8	1	13,353	4,571	4,804
617+66.94	61766.94	16.94	30.5	21.1	2.9	19	13	2	13,372	4,573	4,808
617+91.98	61791.98	25.04	32.5	21.1	3.1	29	20	3	13,401	4,577	4,813
618+00.00	61800.00	8.02	33.3	21.1	2.3	10	6	1	13,411	4,579	4,815
618+39.12	61839.12	39.12	26.2	6.6	52.3	43	20	40	13,454	4,631	4,786
620+94.59	62094.59	0.00	16.2	21.7	0.8	0	0	0	13,454	4,631	4,786
621+00.00	62100.00	5.41	16.0	22.0	0.6	3	4	0	13,457	4,631	4,785
621+35.62	62135.62	35.62	17.8	21.9	0.2	22	29	1	13,479	4,632	4,777
621+50.00	62150.00	14.38	20.1	21.1	0.1	10	11	0	13,489	4,632	4,776
621+69.28	62169.28	19.28	18.8	21.2	0.8	14	15	0	13,503	4,632	4,775
621+84.58	62184.58	15.30	19.2	21.3	0.8	11	12	0	13,514	4,632	4,774
622+00.00	62200.00	15.42	19.2	21.3	0.7	11	12	0	13,525	4,632	4,773
622+50.00	62250.00	50.00	20.1	21.4	1.6	36	39	2	13,561	4,635	4,768
623+00.00	62300.00	50.00	17.8	21.5	4.6	35	40	6	13,596	4,642	4,755
623+50.00	62350.00	50.00	18.8	21.2	14.8	34	40	18	13,630	4,666	4,725
623+55.40	62355.40	5.40	20.5	21.2	16.0	4	4	3	13,634	4,670	4,721

CONTINUED ON NEXT SHEET

CONTINUED FROM PREVIOUS SHEET

STH 35 -STAGE 4											
			AREA (SF)			INCREMENTAL VOL (CY) (UNADJUSTED)			CUMULATIVE VOL (CY)		
STATION	REAL STATION	DISTANCE	CUT	SALVAGED/UNUSABLE PAVEMENT MATERIAL	FILL	CUT	SALVAGED/UNUSABLE PAVEMENT MATERIAL	FILL	CUT 1.00	EXPANDED FILL 1.30	MASS ORDINATE
						NOTE 1	NOTE 2	NOTE 3	NOTE 1		NOTE 4
623+80.38	62380.38	24.98	29.2	21.1	20.4	23	20	17	13,657	4,692	4,702
624+00.00	62400.00	19.62	35.7	21.1	20.4	24	15	15	13,681	4,711	4,692
624+05.36	62405.36	5.36	35.9	21.1	20.2	7	4	4	13,688	4,716	4,690
624+50.00	62450.00	44.64	46.7	20.4	17.4	68	34	31	13,756	4,757	4,683
625+00.00	62500.00	50.00	75.3	19.7	0.0	113	37	16	13,869	4,778	4,739
625+50.00	62550.00	50.00	69.0	18.8	20.5	134	36	19	14,003	4,802	4,812
626+00.00	62600.00	50.00	64.0	18.7	20.1	123	35	38	14,126	4,852	4,850
626+50.00	62650.00	50.00	53.5	18.7	27.4	109	35	44	14,235	4,909	4,867
627+00.00	62700.00	50.00	57.3	18.7	24.9	103	35	48	14,338	4,971	4,873
627+25.00	62725.00	25.00	0.0	18.7	0.0	27	17	12	14,365	4,987	4,867
635+50	63550.00	0.00	15.7	9.0	0.0	0	0	0	14,365	4,987	4,867
636+00	63600.00	50.00	16.8	9.0	0.0	30	17	0	14,395	4,987	4,880
636+50	63650.00	50.00	16.7	9.0	0.0	31	17	0	14,426	4,987	4,894
636+50	63650.00	0.00	0.0	9.0	0.0	0	0	0	14,426	4,987	4,894
636+86.03	63686.03	36.03	16.3	9.0	0.0	11	12	0	14,437	4,987	4,893
637+00	63700.00	13.97	16.3	9.0	0.0	8	5	0	14,445	4,987	4,896
637+50	63750.00	50.00	15.7	9.0	0.0	30	17	0	14,475	4,987	4,909
638+00	63800.00	50.00	15.4	9.0	0.0	29	17	0	14,504	4,987	4,921
638+50	63850.00	50.00	14.7	9.0	0.0	28	17	0	14,532	4,987	4,932
639+00	63900.00	50.00	13.5	9.0	0.0	26	17	0	14,558	4,987	4,941
639+50	63950.00	50.00	11.6	9.0	0.0	23	17	0	14,581	4,987	4,947
640+00	64000.00	50.00	11.6	9.0	0.0	22	17	0	14,603	4,987	4,952
640+50	64050.00	50.00	12.1	9.0	0.0	22	17	0	14,625	4,987	4,957
641+00	64100.00	50.00	12.7	9.0	0.0	23	17	0	14,648	4,987	4,963
641+50	64150.00	50.00	14.0	9.0	0.0	25	17	0	14,673	4,987	4,971
641+76.14	64176.14	26.14	14.6	9.0	0.0	14	9	0	14,687	4,987	4,976
642+00	64200.00	23.86	14.4	9.0	0.0	13	8	0	14,700	4,987	4,981
642+50	64250.00	50.00	14.2	9.0	0.0	27	17	0	14,727	4,987	4,991
642+85.84	64285.84	35.84	13.9	9.0	0.0	19	12	0	14,746	4,987	4,998
643+00	64300.00	14.16	14.2	9.0	0.0	7	5	0	14,753	4,987	5,000
643+50	64350.00	50.00	14.8	9.0	0.0	27	17	0	14,780	4,987	5,010
644+00	64400.00	50.00	14.6	9.0	0.0	27	17	0	14,807	4,987	5,020
644+50	64450.00	50.00	15.7	9.0	0.0	28	17	0	14,835	4,987	5,031
645+00	64500.00	50.00	17.7	9.0	0.0	31	17	0	14,866	4,987	5,045
645+50	64550.00	50.00	19.6	9.0	0.0	35	17	0	14,901	4,987	5,063
646+00	64600.00	50.00	21.5	9.0	0.0	38	17	0	14,939	4,987	5,084
646+50	64650.00	50.00	22.9	9.0	0.0	41	17	0	14,980	4,987	5,108
647+00	64700.00	50.00	25.3	9.0	0.0	45	17	0	15,025	4,987	5,136
647+50	64750.00	50.00	0.0	9.0	0.0	23	17	0	15,048	4,987	5,142
648+00	64800.00	50.00	0.0	9.0	0.0	0	17	0	15,048	4,987	5,125
648+49.883	64849.88	49.88	0.0	9.0	0.0	0	17	0	15,048	4,987	5,108
649+00	64900.00	50.12	0.0	9.0	0.0	0	17	0	15,048	4,987	5,091
649+21.314	64921.31	21.31	0.0	9.0	0.0	0	7	0	15,048	4,987	5,084
				TOTALS		15,048	4,977	3,836			

9

9

PROJECT NO: 5163-07-72	HWY: STH 35	COUNTY: LA CROSSE	EARTHWORK	SHEET	E

FILE NAME : PLOT DATE : _____ PLOT BY : _____ PLOT NAME : _____ ORG DATE : _____ ORIGINATOR : DIST _ PLOT SCALE : 1:1

CP C100-C102 DITCHING - STAGE 4											
			AREA (SF)			INCREMENTAL VOL (CY) (UNADJUSTED)			CUMULATIVE VOL (CY)		
STATION	REAL STATION	DISTANCE	CUT	SALVAGED/UNUSABLE PAVEMENT MATERIAL	FILL	CUT	SALVAGED/UNUSABLE PAVEMENT MATERIAL	FILL	CUT	EXPANDED FILL	MASS ORDINATE
									1.00	1.30	
						NOTE 1	NOTE 2	NOTE 3	NOTE 1		NOTE 4
7+94.45	794.45	0.00	10.8	0.0	0.0	0	0	0	0	0	0
8+00.00	800.00	5.55	8.9	0.0	0.0	2	0	0	2	0	2
8+25.00	825.00	25.00	7.7	0.0	0.0	8	0	0	10	0	10
8+50.00	850.00	25.00	9.8	0.0	0.0	8	0	0	18	0	18
9+00.00	900.00	50.00	4.7	0.0	0.0	13	0	0	31	0	31
9+05.00	905.00	5.00	7.9	0.0	0.0	1	0	0	32	0	32
				TOTALS		32	0	0			

CTH GI - STAGE 4											
			AREA (SF)			INCREMENTAL VOL (CY) (UNADJUSTED)			CUMULATIVE VOL (CY)		
STATION	REAL STATION	DISTANCE	CUT	SALVAGED/UNUSABLE PAVEMENT MATERIAL	FILL	CUT	SALVAGED/UNUSABLE PAVEMENT MATERIAL	FILL	CUT	EXPANDED FILL	MASS ORDINATE
									1.00	1.30	
						NOTE 1	NOTE 2	NOTE 3	NOTE 1		NOTE 4
19+00.00	1900.00	0.00	82.5	12.1	47.0	0	0	0	0	0	0
19+50.00	1950.00	50.00	177.4	19.6	5.3	241	29	48	0	62	150
19+80.60	1980.60	30.60	333.2	0.0	0.0	289	11	3	289	66	424
				TOTALS		530	40	51			

STH 35 - STAGE 5											
STATION	REAL STATION	DISTANCE	AREA (SF)			INCREMENTAL VOL (CY) (UNADJUSTED)			CUMULATIVE VOL (CY)		
			CUT	SALVAGED/UNUSABLE PAVEMENT MATERIAL	FILL	CUT	SALVAGED/UNUSABLE PAVEMENT MATERIAL	FILL	CUT	EXPANDED FILL	MASS ORDINATE
									1.00	1.30	
						NOTE 1	NOTE 2	NOTE 3	NOTE 1		NOTE 4
627+25.00	62725.00	0.00	60.6	18.8	26.2	0	0	0	0	0	0
628+00.00	62800.00	75.00	56.9	18.9	21.8	163	52	67	163	87	24
628+50.00	62850.00	50.00	53.9	19.0	21.4	103	35	40	266	139	40
629+00.00	62900.00	50.00	57.9	19.1	23.6	104	35	42	370	194	54
629+50.00	62950.00	50.00	51.8	18.8	27.1	102	35	47	472	255	60
630+00.00	63000.00	50.00	48.0	18.2	27.0	92	34	50	564	320	53
630+50.00	63050.00	50.00	40.0	18.3	30.5	81	34	53	645	389	31
631+00.00	63100.00	50.00	35.8	18.5	46.7	70	34	72	715	482	-26
631+50.00	63150.00	50.00	33.9	18.6	39.2	65	34	80	780	586	-99
632+00.00	63200.00	50.00	33.5	18.7	25.9	62	34	60	842	664	-149
632+50.00	63250.00	50.00	35.3	18.4	26.0	65	17	24	907	696	-133
633+00.00	63300.00	50.00	32.6	18.0	26.4	63	34	49	970	759	-167
633+50.00	63350.00	50.00	35.3	17.6	28.9	63	33	51	1,033	826	-204
634+00.00	63400.00	50.00	37.1	17.2	32.0	67	32	56	1,100	898	-241
634+50.00	63450.00	50.00	43.5	16.8	39.1	75	31	66	1,175	984	-283
635+00.00	63500.00	50.00	48.9	16.4	54.7	86	31	87	1,261	1,097	-341
635+50.00	63550.00	50.00	54.7	15.8	59.5	96	30	106	1,357	1,235	-413
636+00.00	63600.00	50.00	70.5	14.9	47.4	116	28	99	1,473	1,364	-454
636+50.00	63650.00	50.00	77.5	14.0	46.0	137	27	86	1,610	1,476	-456
636+50.00	63650.00	0.00	0.0	0.0	0.0	0	0	0	1,610	1,476	-456
636+86.03	63686.03	36.03	76.7	14.4	50.5	51	10	34	1,661	1,520	-459
637+00.00	63700.00	13.97	79.2	14.5	43.8	40	7	24	1,701	1,551	-457
637+50.00	63750.00	50.00	78.5	15.2	58.0	146	28	94	1,847	1,673	-461
638+00.00	63800.00	50.00	79.0	16.1	71.9	146	29	120	1,993	1,829	-500
638+50.00	63850.00	50.00	64.9	16.7	49.0	133	30	112	2,126	1,975	-543
639+00.00	63900.00	50.00	64.1	16.6	41.7	120	31	84	2,246	2,084	-563
639+50.00	63950.00	50.00	60.2	16.7	51.9	115	31	87	2,361	2,197	-592
640+00.00	64000.00	50.00	54.8	16.9	60.8	106	31	104	2,467	2,332	-652
640+50.00	64050.00	50.00	52.9	17.1	76.3	100	31	127	2,567	2,497	-748
641+00.00	64100.00	50.00	55.4	17.1	73.4	100	32	139	2,667	2,678	-861
641+50.00	64150.00	50.00	59.2	16.7	63.2	106	31	126	2,773	2,842	-950
641+76.14	64176.14	26.14	61.5	16.5	13.4	58	16	37	2,831	2,890	-956
642+00.00	64200.00	23.86	62.7	16.3	56.8	55	14	31	2,886	2,930	-955
642+50.00	64250.00	50.00	61.6	15.7	72.0	115	30	119	3,001	3,085	-1,025
642+85.84	64285.84	35.84	60.4	15.3	69.7	81	21	94	3,082	3,207	-1,087
643+00.00	64300.00	14.16	60.1	15.1	70.0	32	8	37	3,114	3,255	-1,111
643+50.00	64350.00	50.00	56.7	14.4	75.0	108	27	134	3,222	3,429	-1,204
644+00.00	64400.00	50.00	52.8	13.7	87.1	101	26	150	3,323	3,624	-1,324
644+50.00	64450.00	50.00	50.6	12.7	97.4	96	24	171	3,419	3,847	-1,475

CONTINUED ON NEXT SHEET

9

CONTINUED FROM PREVIOUS SHEET

STH 35 - STAGE 5											
			AREA (SF)			INCREMENTAL VOL (CY) (UNADJUSTED)			CUMULATIVE VOL (CY)		
STATION	REAL STATION	DISTANCE	CUT	SALVAGED/UNUSABLE PAVEMENT MATERIAL	FILL	CUT	SALVAGED/UNUSABLE PAVEMENT MATERIAL	FILL	CUT	EXPANDED FILL	MASS ORDINATE
									1.00	1.30	
						NOTE 1	NOTE 2	NOTE 3	NOTE 1		NOTE 4
645+00.00	64500.00	50.00	50.0	11.7	92.7	93	23	176	3,512	4,076	-1,634
645+50.00	64550.00	50.00	49.4	10.9	65.3	92	21	146	3,604	4,265	-1,752
646+00.00	64600.00	50.00	48.2	10.3	58.7	90	20	115	3,694	4,415	-1,832
646+50.00	64650.00	50.00	46.5	10.3	62.6	88	19	112	3,782	4,560	-1,908
647+00.00	64700.00	50.00	42.1	9.7	54.5	82	19	108	3,864	4,701	-1,986
647+50.00	64750.00	50.00	37.5	9.7	52.8	74	18	99	3,938	4,830	-2,059
648+00.00	64800.00	50.00	32.2	9.7	59.4	65	18	104	4,003	4,965	-2,147
648+49.88	64849.88	49.88	8.9	2.4	75.5	38	11	125	4,041	5,127	-2,282
649+00.00	64900.00	50.12	8.9	2.5	80.0	17	5	144	4,058	5,314	-2,457
649+21.31	64921.31	21.31	10.0	0.0	50.9	7	1	52	4,065	5,382	-2,519
				TOTALS		4,065	1,202	4,140			

9

9

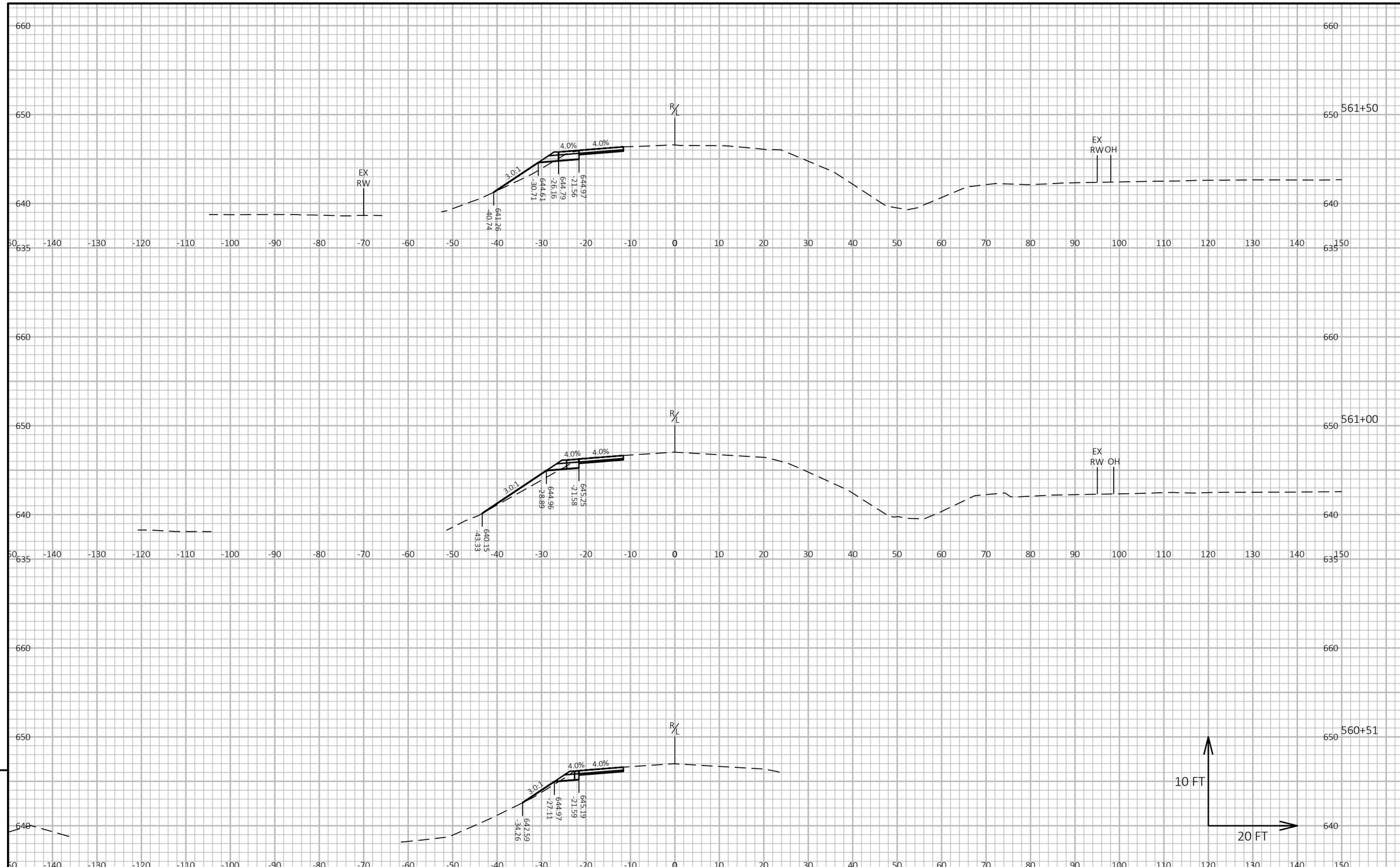

PROJECT NO: 5163-07-72	HWY: STH 35	COUNTY: LA CROSSE/VERNON	CROSS SECTIONS: STH 35 STAGE 2A TEMPORARY WIDENING	SHEET 415	E

FILE NAME : O:\PDS\C3D\51630702\SHEETSPLAN\090201A-XS-35-ST2A.DWG
LAYOUT NAME - 01
PLOT DATE : 4/23/2025 12:03 PM
PLOT BY : CORY IHDE
PLOT NAME :
PLOT SCALE : 1 IN:20 FT HORZ. / 1 IN:10 FT VERT.
WISDOT/CADDS SHEET 49

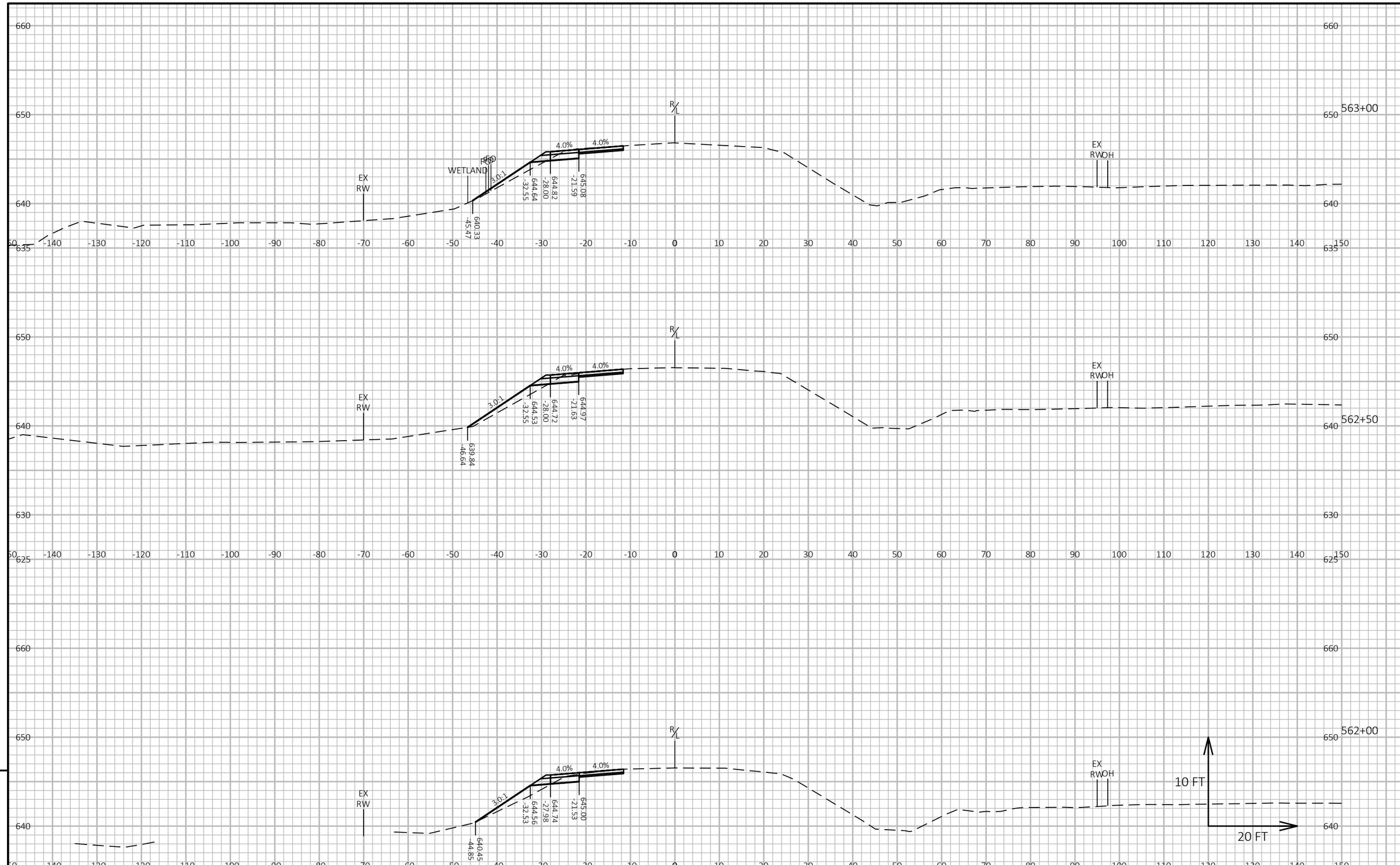

PROJECT NO: 5163-07-72	HWY: STH 35	COUNTY: LA CROSSE/VERNON	CROSS SECTIONS: STH 35 STAGE 2A TEMPORARY WIDENING	SHEET 416	E

FILE NAME : O:\PDS\C3D\51630702\SHEETSPLAN\090201A-XS-35-ST2A.DWG
LAYOUT NAME - 02
PLOT DATE : 4/23/2025 12:03 PM
PLOT BY : CORY IHDE
PLOT NAME :
PLOT SCALE : 1 IN:20 FT HORZ. / 1 IN:10 FT VERT.
WISDOT/CADDS SHEET 49

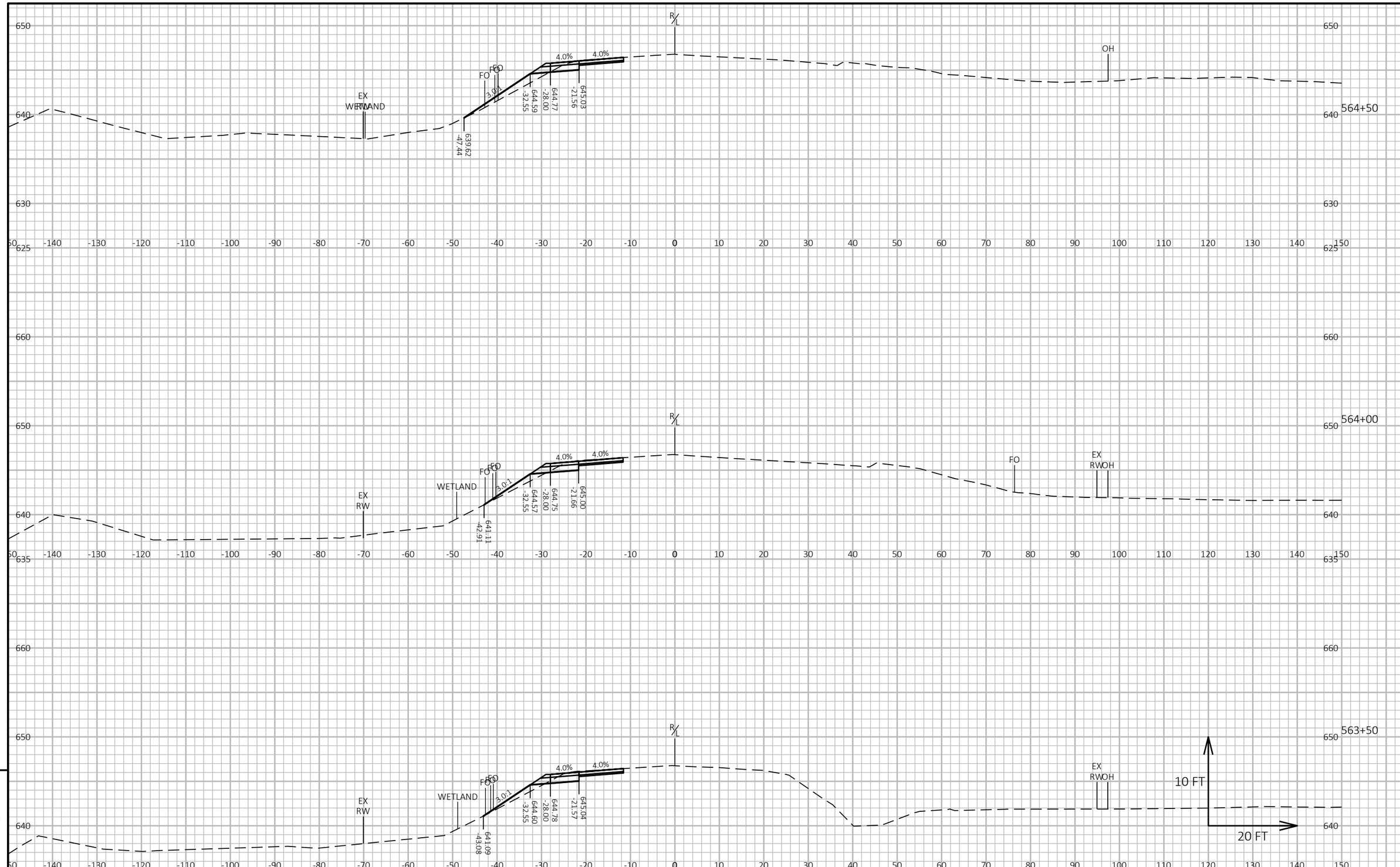

9

9

PROJECT NO: 5163-07-72	HWY: STH 35	COUNTY: LA CROSSE/VERNON	CROSS SECTIONS: STH 35 STAGE 2A TEMPORARY WIDENING	SHEET 417	E

FILE NAME : O:\PDS\C3D\51630702\SHEETSPLAN\090201A-XS-35-ST2A.DWG
LAYOUT NAME - 03

PLOT DATE : 4/23/2025 12:03 PM PLOT BY : CORY IHDE PLOT NAME : PLOT SCALE : 1 IN:20 FT HORZ. / 1 IN:10 FT VERT.

WISDOT/CADDS SHEET 49

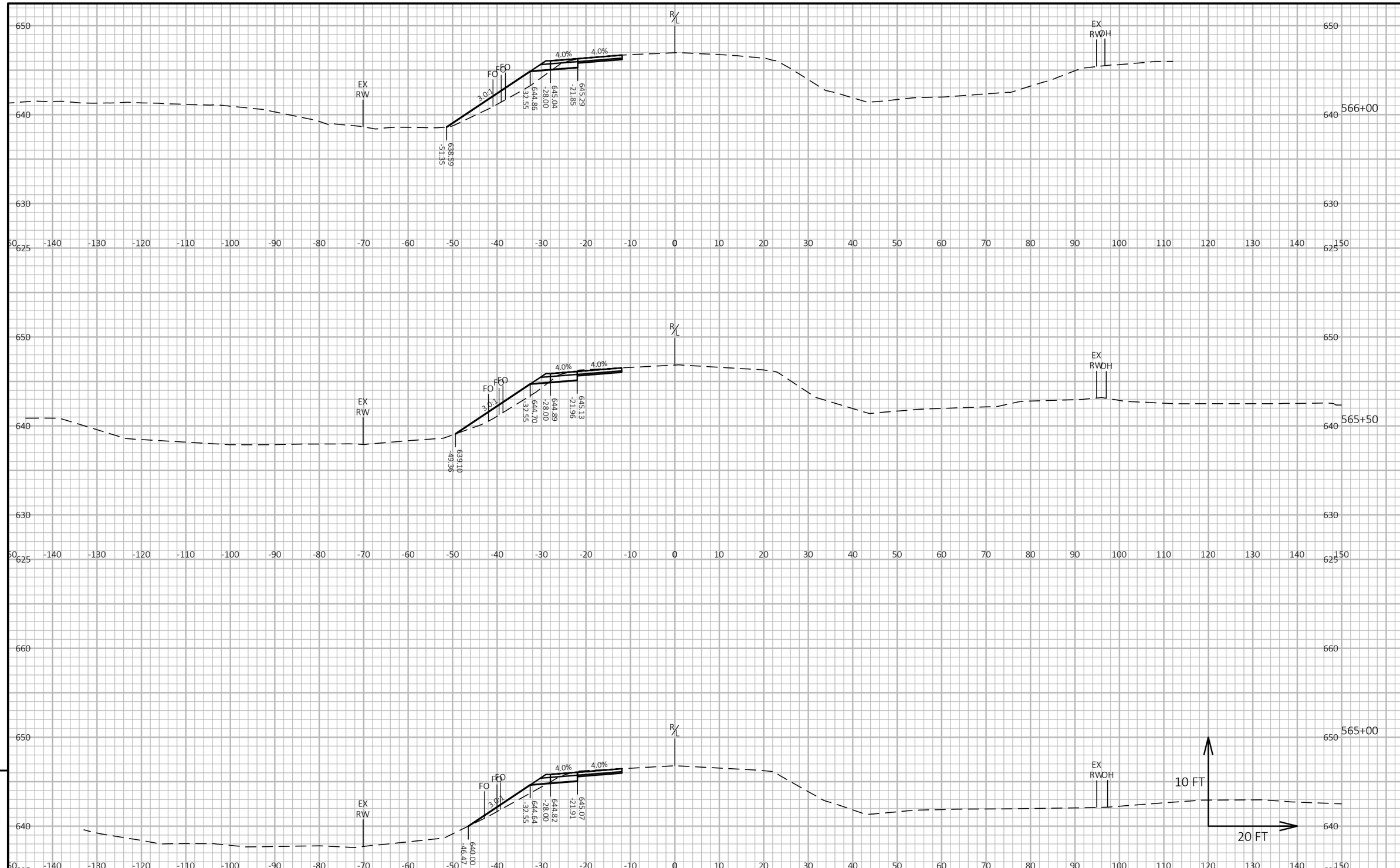

PROJECT NO: 5163-07-72	HWY: STH 35	COUNTY: LA CROSSE/VERNON	CROSS SECTIONS: STH 35 STAGE 2A TEMPORARY WIDENING	SHEET 418	E

FILE NAME : O:\PDS\C3D\51630702\SHEETSPLAN\090201A-XS-35-ST2A.DWG
LAYOUT NAME - 04
PLOT DATE : 4/23/2025 12:03 PM
PLOT BY : CORY IHDE
PLOT NAME :
PLOT SCALE : 1 IN:20 FT HORZ. / 1 IN:10 FT VERT.
WISDOT/CADDS SHEET 49

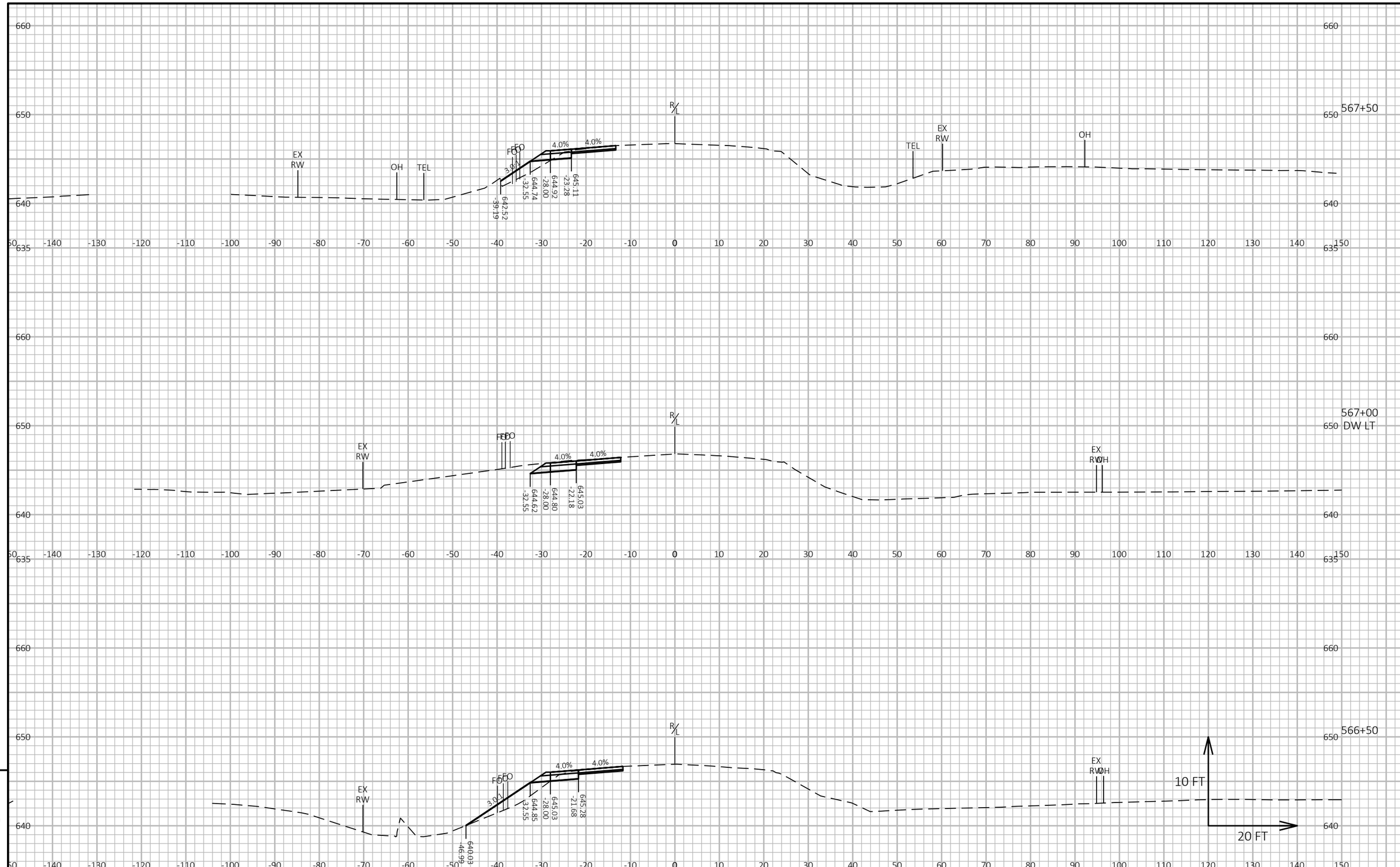

PROJECT NO: 5163-07-72	HWY: STH 35	COUNTY: LA CROSSE/VERNON	CROSS SECTIONS: STH 35 STAGE 2A TEMPORARY WIDENING	SHEET 419	E

FILE NAME : O:\PDS\C3D\51630702\SHEETSPLAN\090201A-XS-35-ST2A.DWG
LAYOUT NAME - 05
PLOT DATE : 4/23/2025 12:03 PM
PLOT BY : CORY IHDE
PLOT NAME :
PLOT SCALE : 1 IN:20 FT HORZ. / 1 IN:10 FT VERT.
WISDOT/CADDS SHEET 49

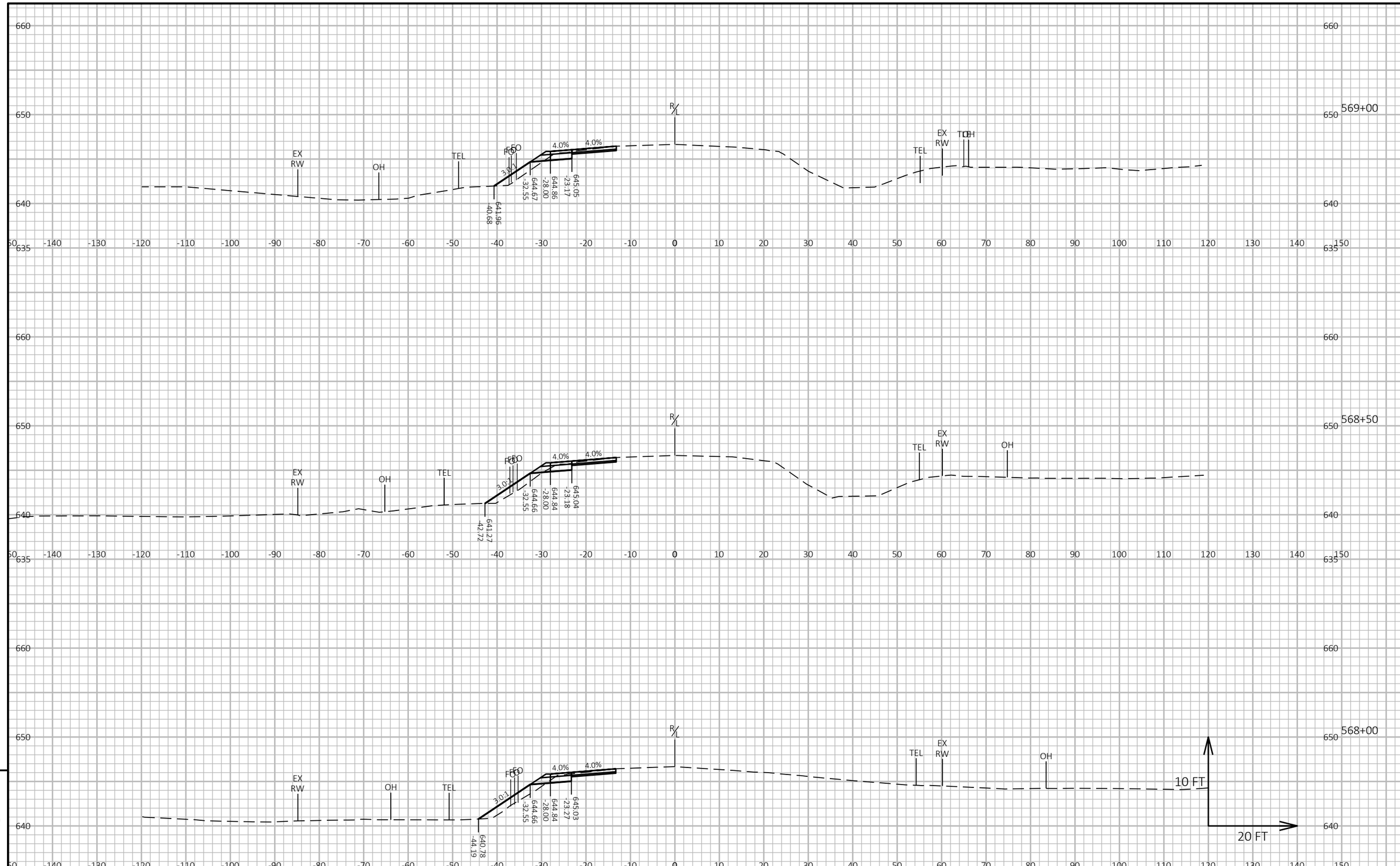

PROJECT NO: 5163-07-72	HWY: STH 35	COUNTY: LA CROSSE/VERNON	CROSS SECTIONS: STH 35 STAGE 2A TEMPORARY WIDENING	SHEET 420	E

FILE NAME : O:\PDS\C3D\51630702\SHEETSPLAN\090201A-XS-35-ST2A.DWG
LAYOUT NAME - 06
PLOT DATE : 4/23/2025 12:03 PM
PLOT BY : CORY IHDE
PLOT NAME :
PLOT SCALE : 1 IN:20 FT HORZ. / 1 IN:10 FT VERT.

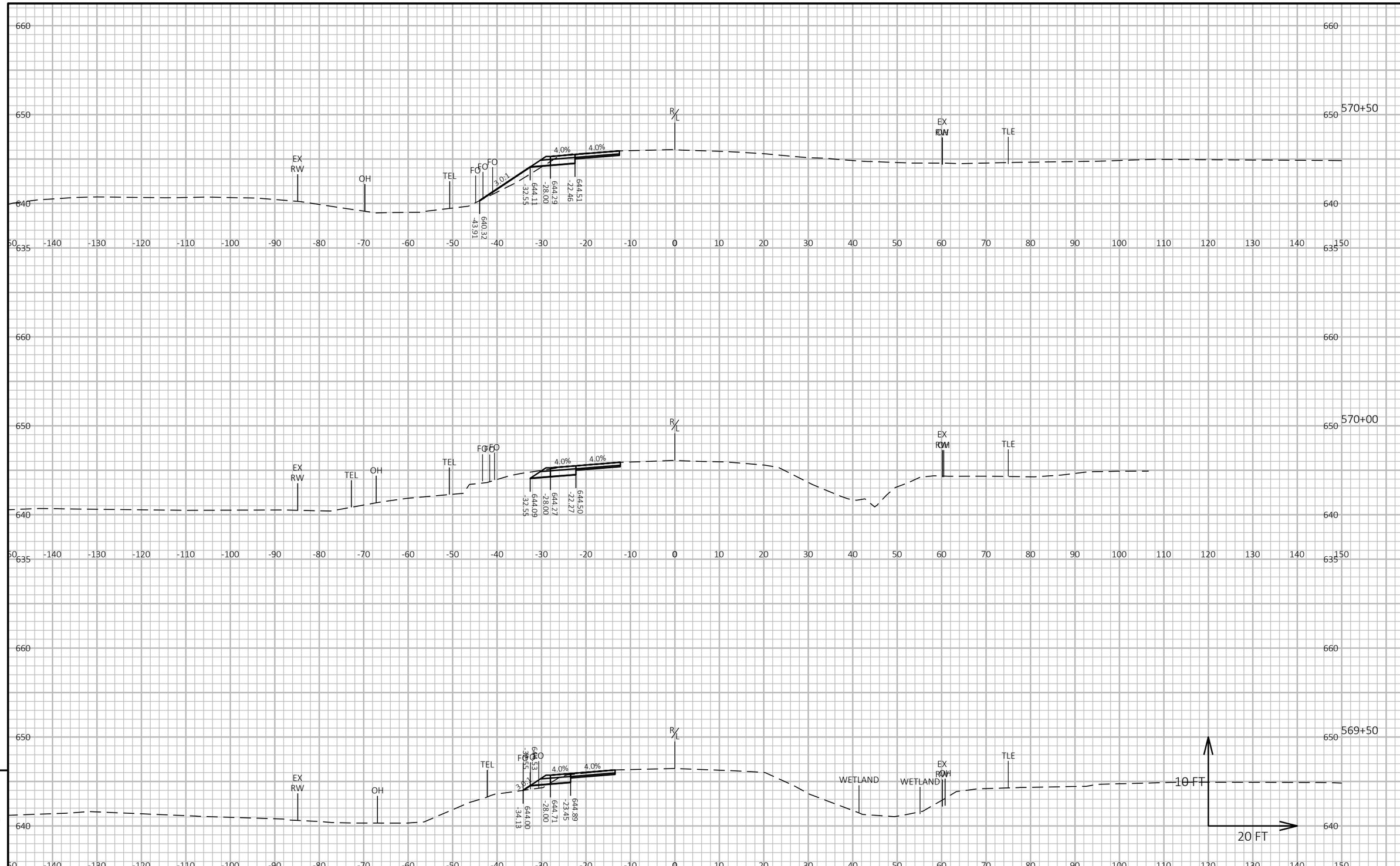

9

9

PROJECT NO: 5163-07-72	HWY: STH 35	COUNTY: LA CROSSE/VERNON	CROSS SECTIONS: STH 35 STAGE 2A TEMPORARY WIDENING	SHEET 421	E

FILE NAME : O:\PDS\C3D\51630702\SHEETSPLAN\090201A-XS-35-ST2A.DWG
LAYOUT NAME - 07
PLOT DATE : 4/23/2025 12:04 PM
PLOT BY : CORY IHDE
PLOT NAME :
PLOT SCALE : 1 IN:20 FT HORZ. / 1 IN:10 FT VERT.

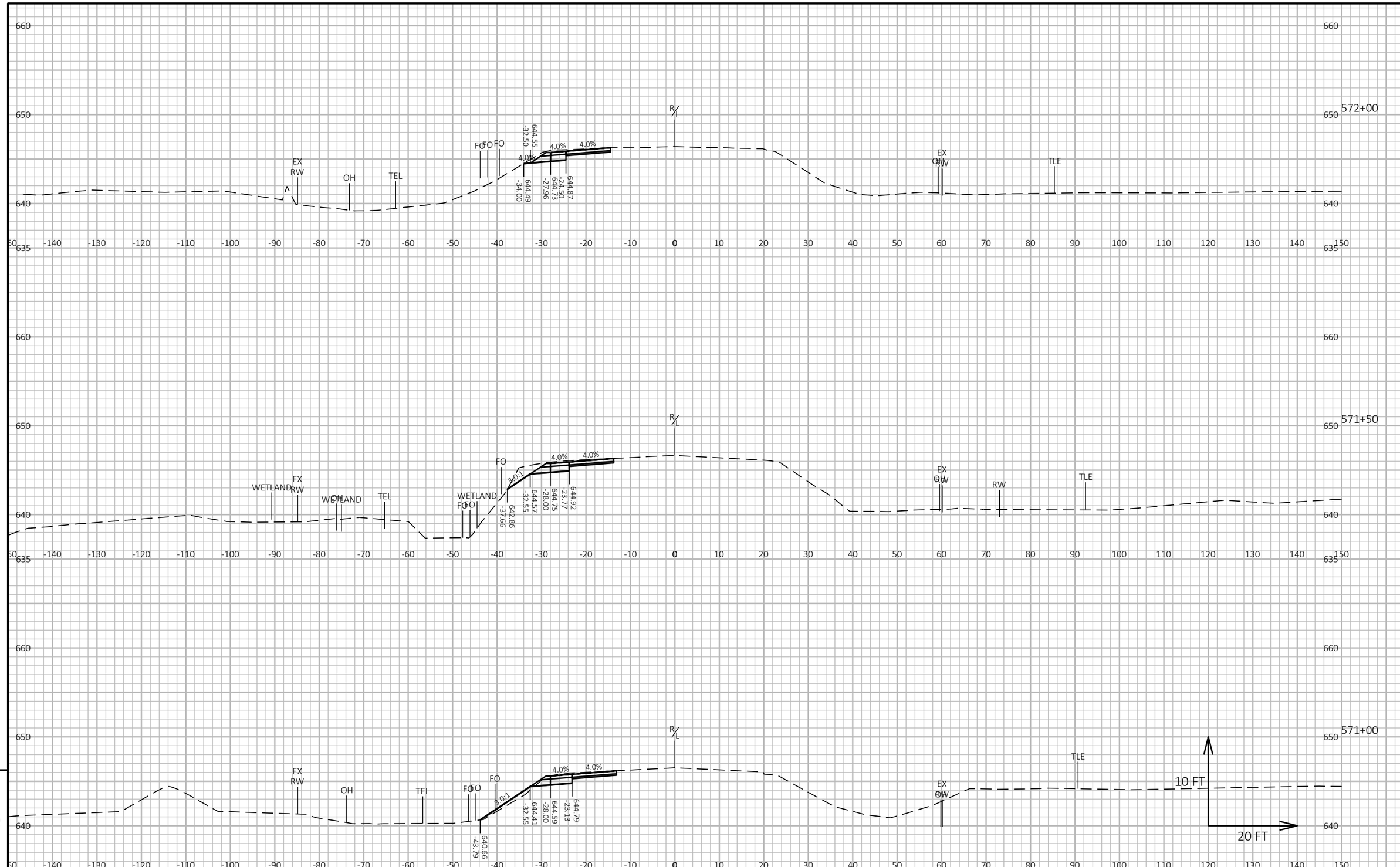

9

9

PROJECT NO: 5163-07-72	HWY: STH 35	COUNTY: LA CROSSE/VERNON	CROSS SECTIONS: STH 35 STAGE 2A TEMPORARY WIDENING	SHEET 422	E

FILE NAME : O:\PDS\C3D\51630702\SHEETSPLAN\090201A-XS-35-ST2A.DWG
LAYOUT NAME - 08

PLOT DATE : 4/23/2025 12:04 PM PLOT BY : CORY IHDE PLOT NAME : PLOT SCALE : 1 IN:20 FT HORZ. / 1 IN:10 FT VERT.

WISDOT/CADDS SHEET 49

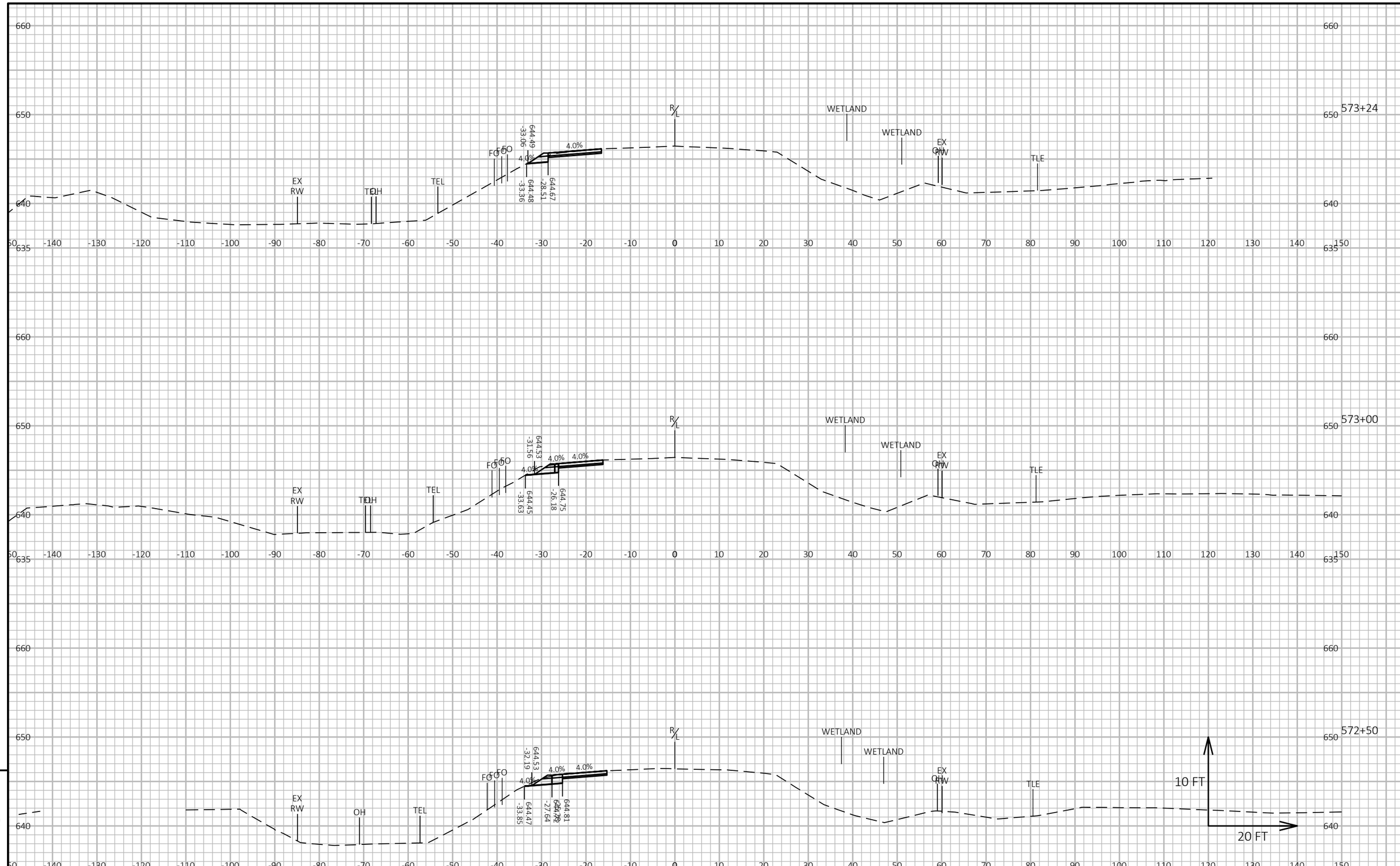

9

9

PROJECT NO: 5163-07-72	HWY: STH 35	COUNTY: LA CROSSE/VERNON	CROSS SECTIONS: STH 35 STAGE 2A TEMPORARY WIDENING	SHEET 423	E

FILE NAME : O:\PDS\C3D\51630702\SHEETSPLAN\090201A-XS-35-ST2A.DWG
LAYOUT NAME - 09
PLOT DATE : 4/23/2025 12:04 PM
PLOT BY : CORY IHDE
PLOT NAME :
PLOT SCALE : 1 IN:20 FT HORZ. / 1 IN:10 FT VERT.

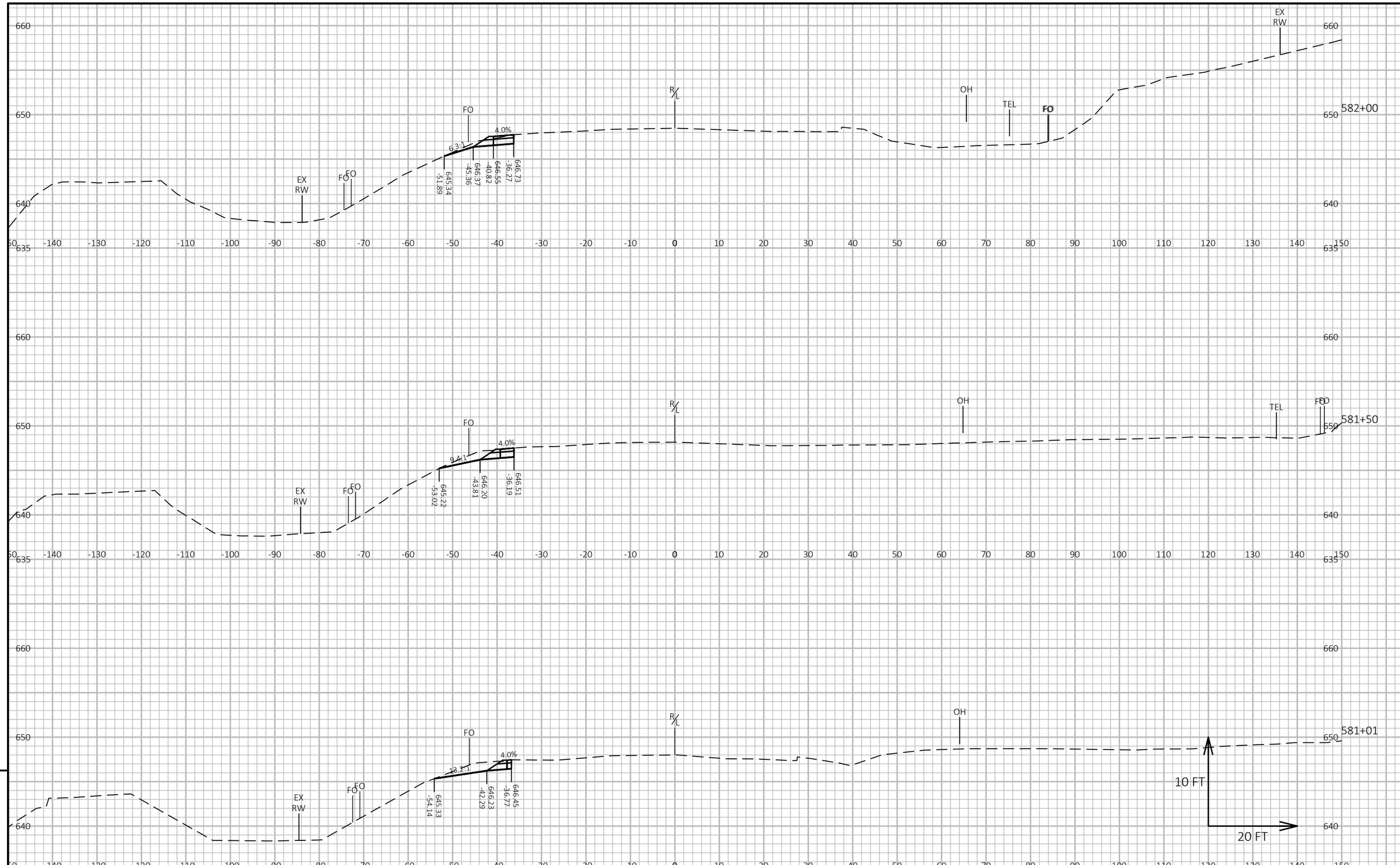

9

9

PROJECT NO: 5163-07-72	HWY: STH 35	COUNTY: LA CROSSE/VERNON	CROSS SECTIONS: STH 35 STAGE 2A TEMPORARY WIDENING	SHEET 424	E

FILE NAME : O:\PDS\C3D\51630702\SHEETSPLAN\090201A-XS-35-ST2A.DWG
LAYOUT NAME - 10

PLOT DATE : 4/23/2025 12:04 PM PLOT BY : CORY IHDE PLOT NAME : PLOT SCALE : 1 IN:20 FT HORZ. / 1 IN:10 FT VERT.

WISDOT/CADDS SHEET 49

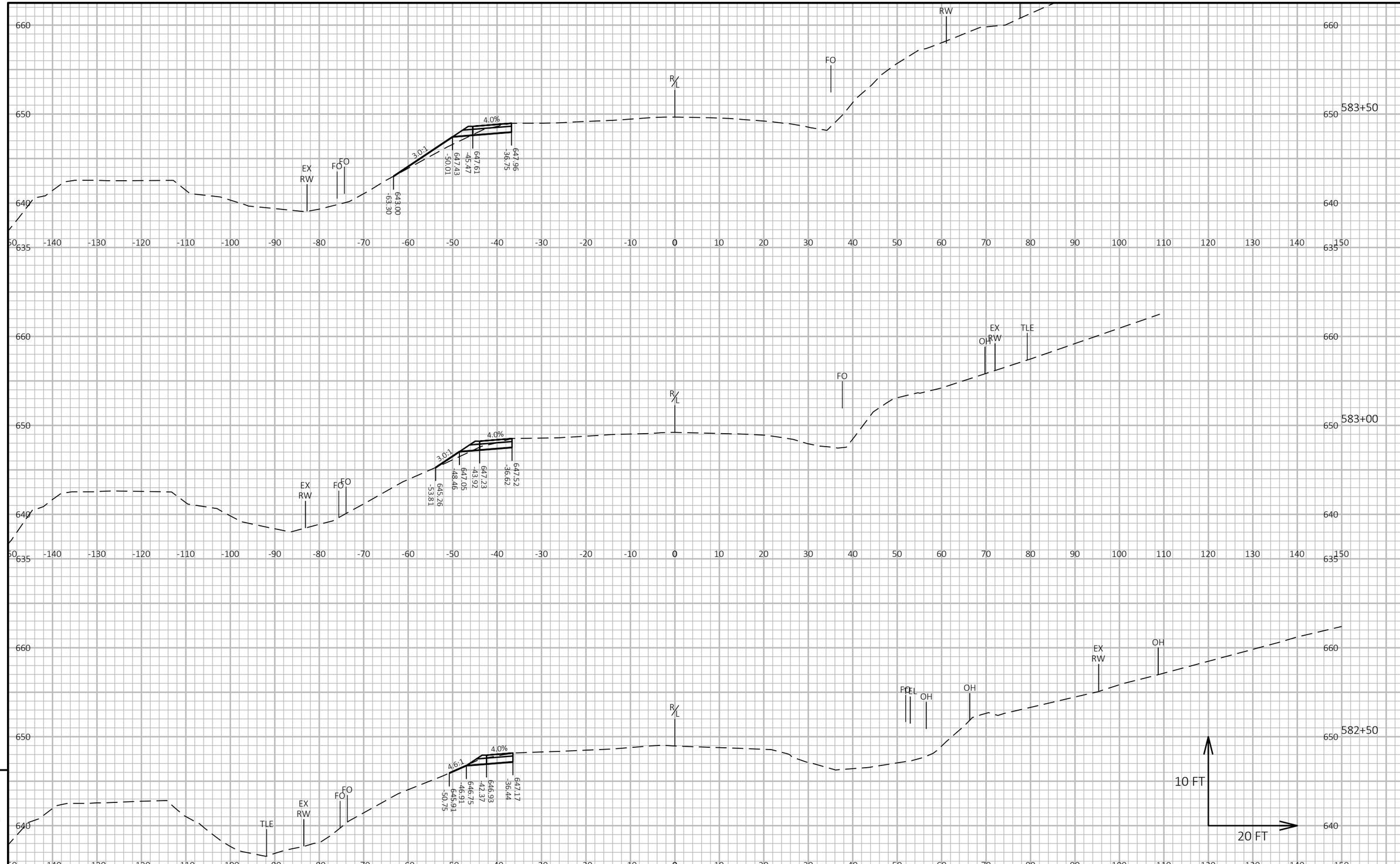

9

9

PROJECT NO: 5163-07-72	HWY: STH 35	COUNTY: LA CROSSE/VERNON	CROSS SECTIONS: STH 35 STAGE 2A TEMPORARY WIDENING	SHEET 425	E

FILE NAME : O:\PDS\C3D\51630702\SHEETSPLAN\090201A-XS-35-ST2A.DWG
LAYOUT NAME - 11
PLOT DATE : 4/23/2025 12:04 PM
PLOT BY : CORY IHDE
PLOT NAME :
PLOT SCALE : 1 IN:20 FT HORZ. / 1 IN:10 FT VERT.
WISDOT/CADDS SHEET 49

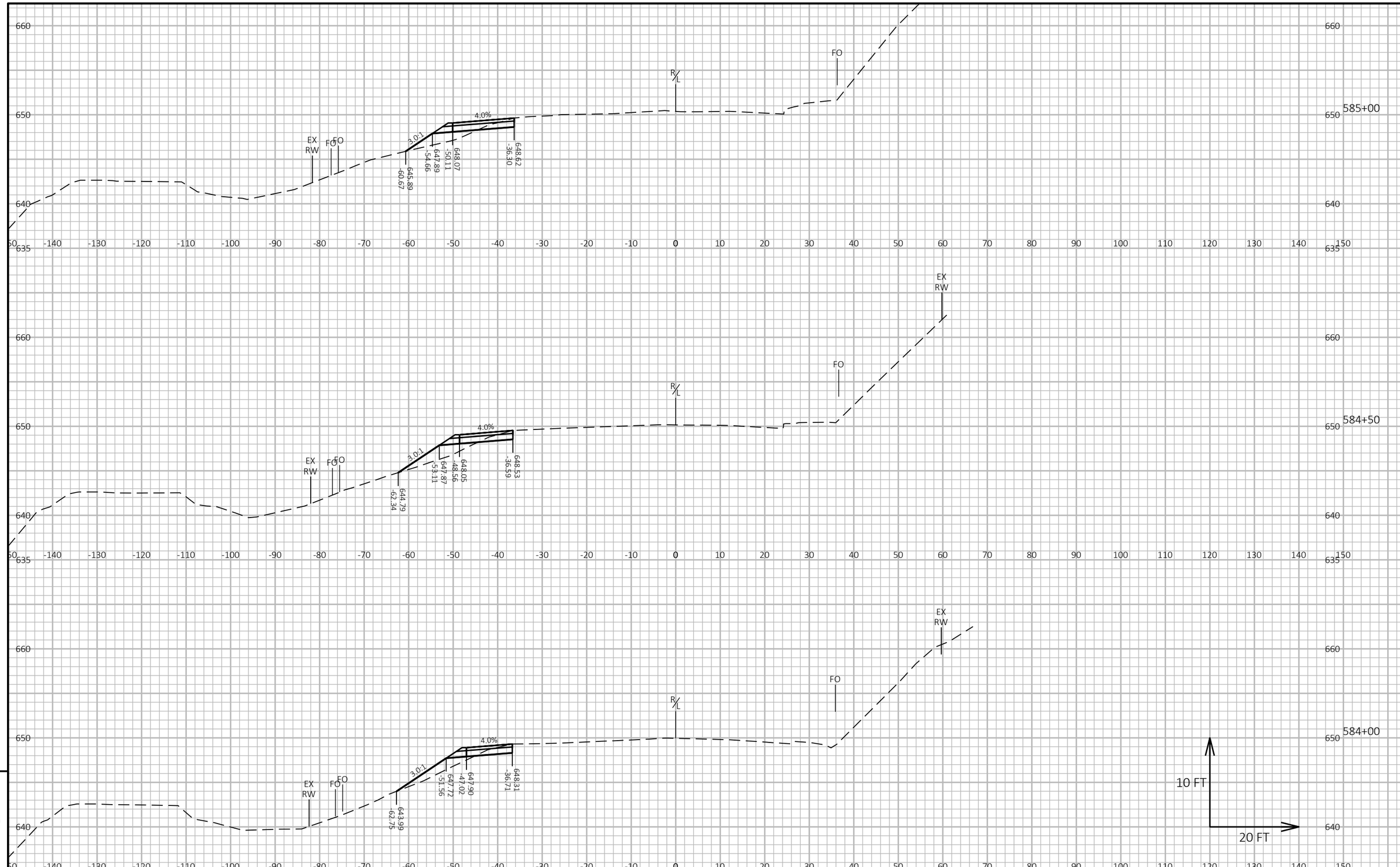

9

9

PROJECT NO: 5163-07-72	HWY: STH 35	COUNTY: LA CROSSE/VERNON	CROSS SECTIONS: STH 35 STAGE 2A TEMPORARY WIDENING	SHEET 426	E

FILE NAME : O:\PDS\C3D\51630702\SHEETSPLAN\090201A-XS-35-ST2A.DWG
LAYOUT NAME - 12

PLOT DATE : 4/23/2025 12:04 PM PLOT BY : CORY IHDE PLOT NAME : PLOT SCALE : 1 IN:20 FT HORZ. / 1 IN:10 FT VERT.

WISDOT/CADDS SHEET 49

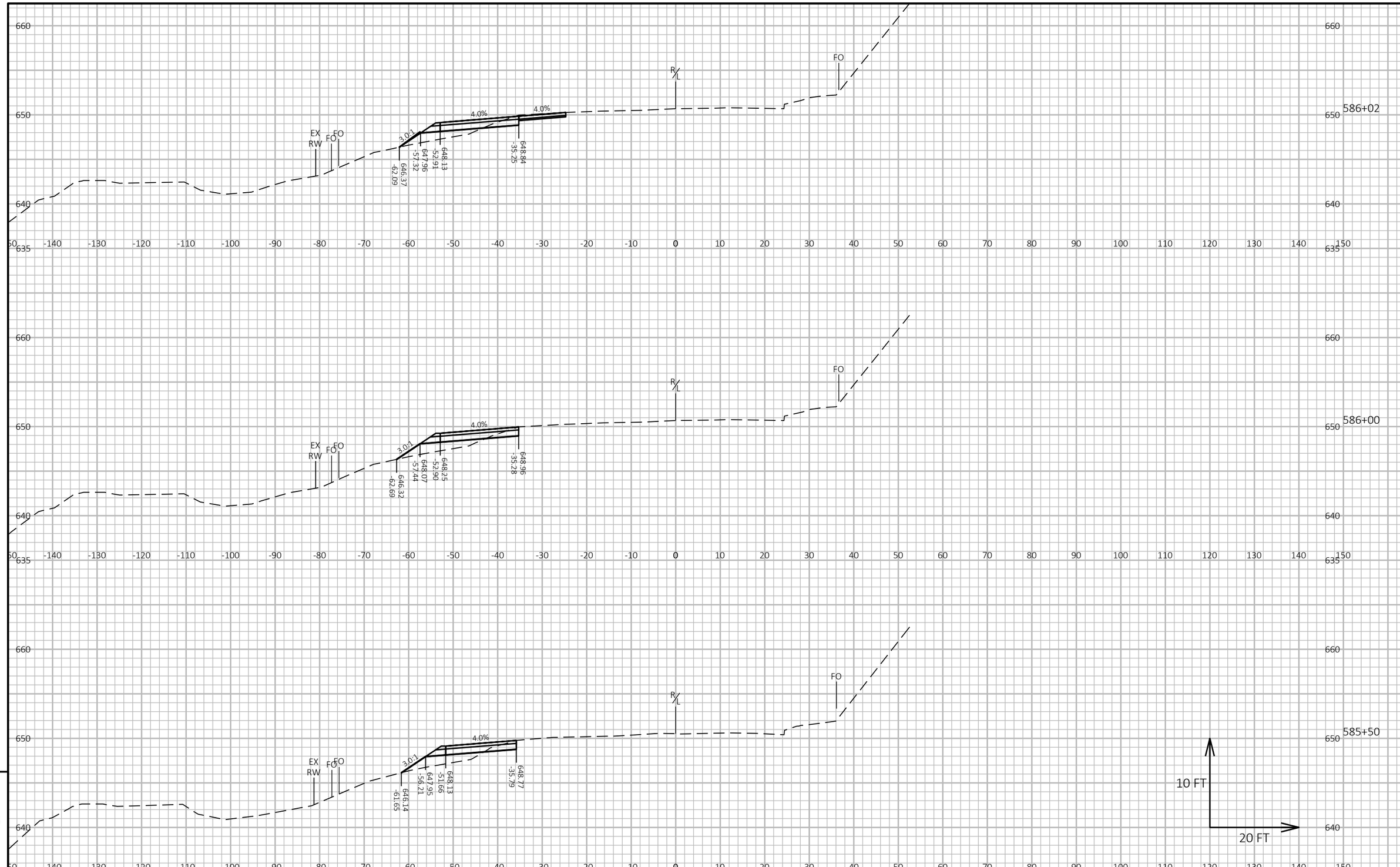

PROJECT NO: 5163-07-72	HWY: STH 35	COUNTY: LA CROSSE/VERNON	CROSS SECTIONS: STH 35 STAGE 2A TEMPORARY WIDENING	SHEET 427	E

FILE NAME : O:\PDS\C3D\51630702\SHEETSPLAN\090201A-XS-35-ST2A.DWG
LAYOUT NAME - 13
PLOT DATE : 4/23/2025 12:04 PM
PLOT BY : CORY IHDE
PLOT NAME :
PLOT SCALE : 1 IN:20 FT HORZ. / 1 IN:10 FT VERT.
WISDOT/CADDS SHEET 49

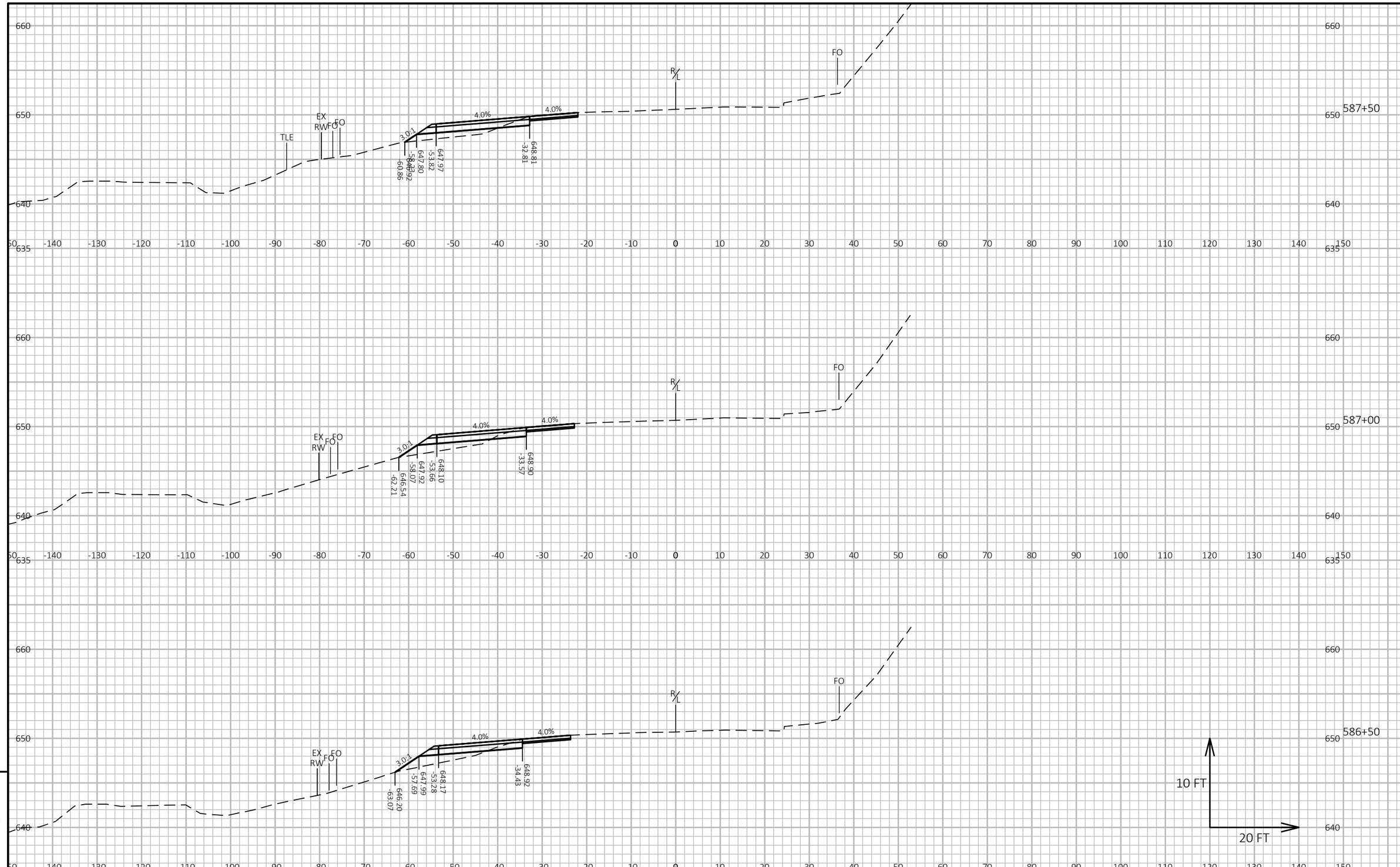

PROJECT NO: 5163-07-72	HWY: STH 35	COUNTY: LA CROSSE/VERNON	CROSS SECTIONS: STH 35 STAGE 2A TEMPORARY WIDENING	SHEET 428	E

FILE NAME : O:\PDS\C3D\51630702\SHEETSPLAN\090201A-XS-35-ST2A.DWG
LAYOUT NAME - 14
PLOT DATE : 4/23/2025 12:04 PM
PLOT BY : CORY IHDE
PLOT NAME :
PLOT SCALE : 1 IN:20 FT HORZ. / 1 IN:10 FT VERT.
WISDOT/CADDS SHEET 49

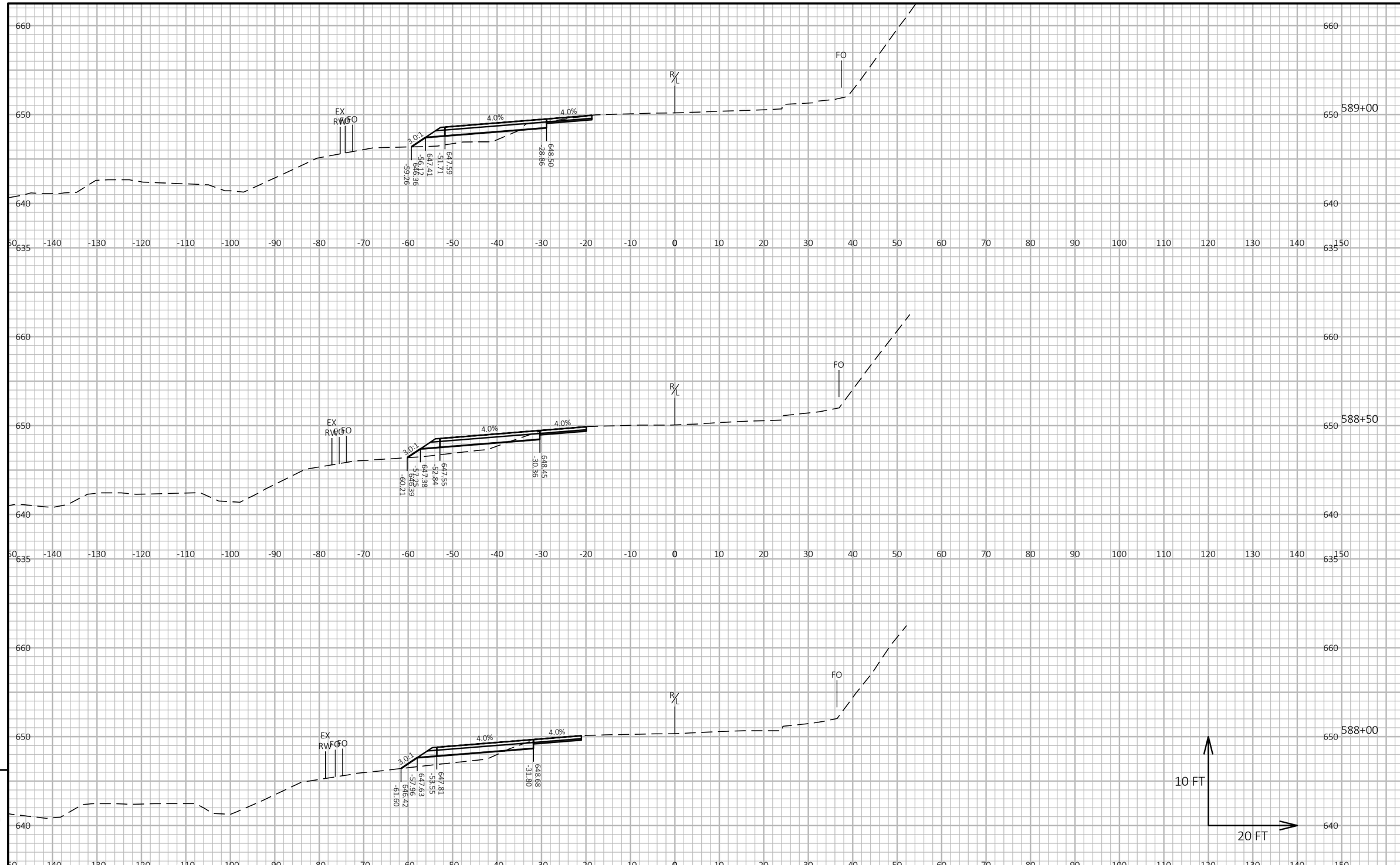

PROJECT NO: 5163-07-72	HWY: STH 35	COUNTY: LA CROSSE/VERNON	CROSS SECTIONS: STH 35 STAGE 2A TEMPORARY WIDENING	SHEET 429	E

FILE NAME : O:\PDS\C3D\51630702\SHEETSPLAN\090201A-XS-35-ST2A.DWG
LAYOUT NAME - 15
PLOT DATE : 4/23/2025 12:04 PM
PLOT BY : CORY IHDE
PLOT NAME :
PLOT SCALE : 1 IN:20 FT HORZ. / 1 IN:10 FT VERT.
WISDOT/CADDS SHEET 49

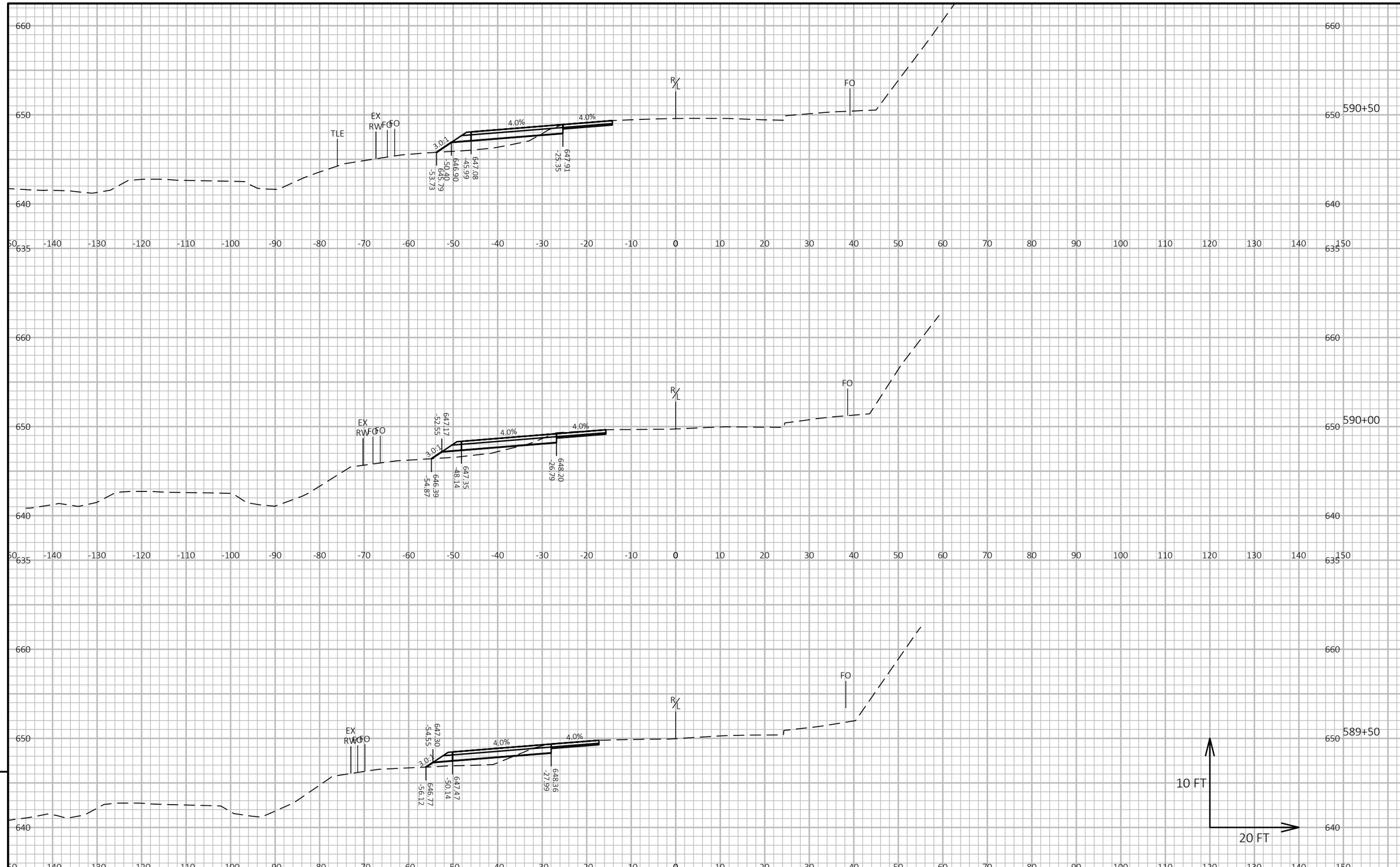

PROJECT NO: 5163-07-72	HWY: STH 35	COUNTY: LA CROSSE/VERNON	CROSS SECTIONS: STH 35 STAGE 2A TEMPORARY WIDENING	SHEET 430	E

FILE NAME : O:\PDS\C3D\51630702\SHEETSPLAN\090201A-XS-35-ST2A.DWG
LAYOUT NAME - 16
PLOT DATE : 4/23/2025 12:04 PM
PLOT BY : CORY IHDE
PLOT NAME :
PLOT SCALE : 1 IN:20 FT HORZ. / 1 IN:10 FT VERT.
WISDOT/CADDS SHEET 49

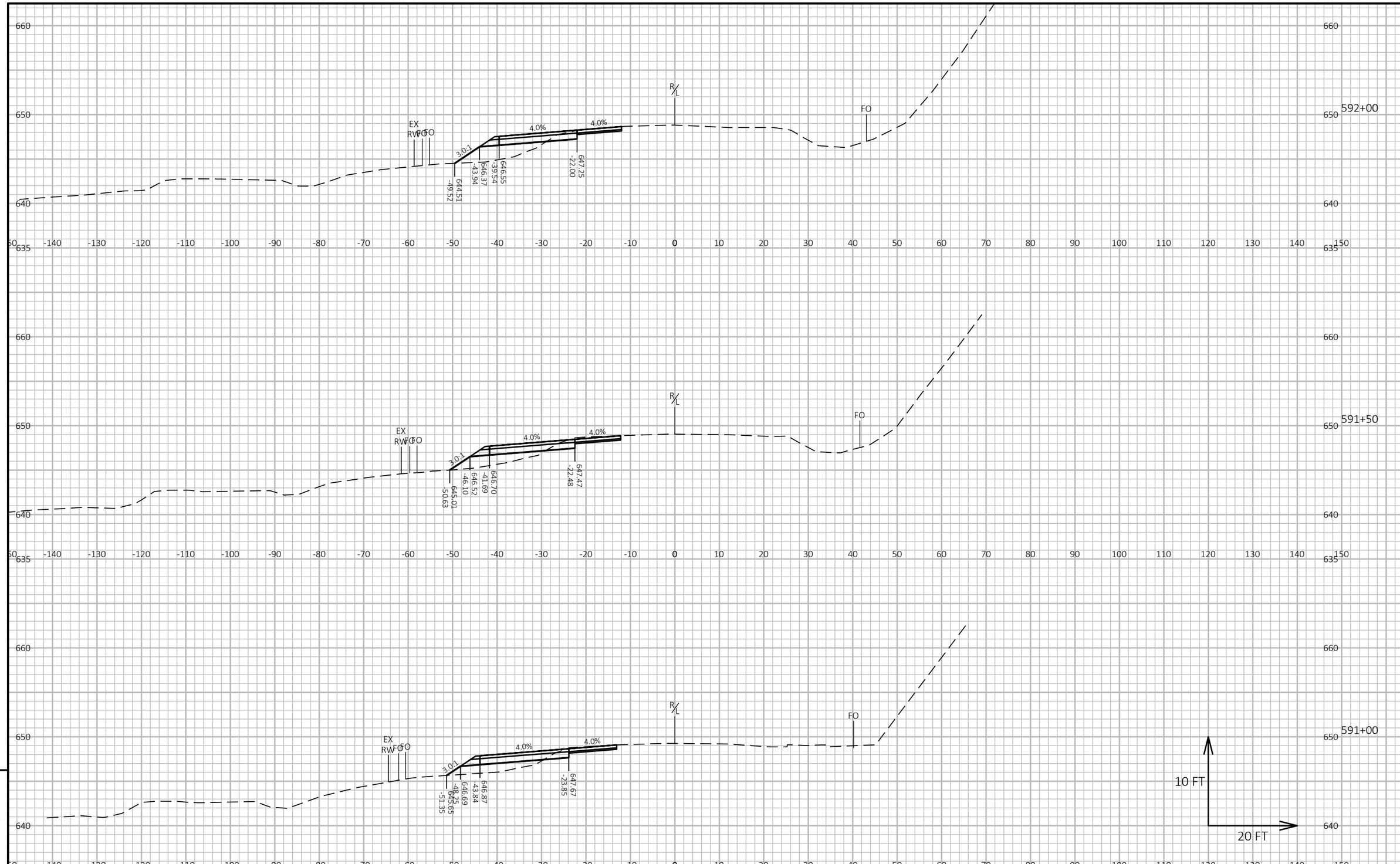

9

9

PROJECT NO: 5163-07-72	HWY: STH 35	COUNTY: LA CROSSE/VERNON	CROSS SECTIONS: STH 35 STAGE 2A TEMPORARY WIDENING	SHEET 431	E

FILE NAME : O:\PDS\C3D\51630702\SHEETSPLAN\090201A-XS-35-ST2A.DWG
LAYOUT NAME - 17
PLOT DATE : 4/23/2025 12:04 PM
PLOT BY : CORY IHDE
PLOT NAME :
PLOT SCALE : 1 IN:20 FT HORZ. / 1 IN:10 FT VERT.
WISDOT/CADDS SHEET 49

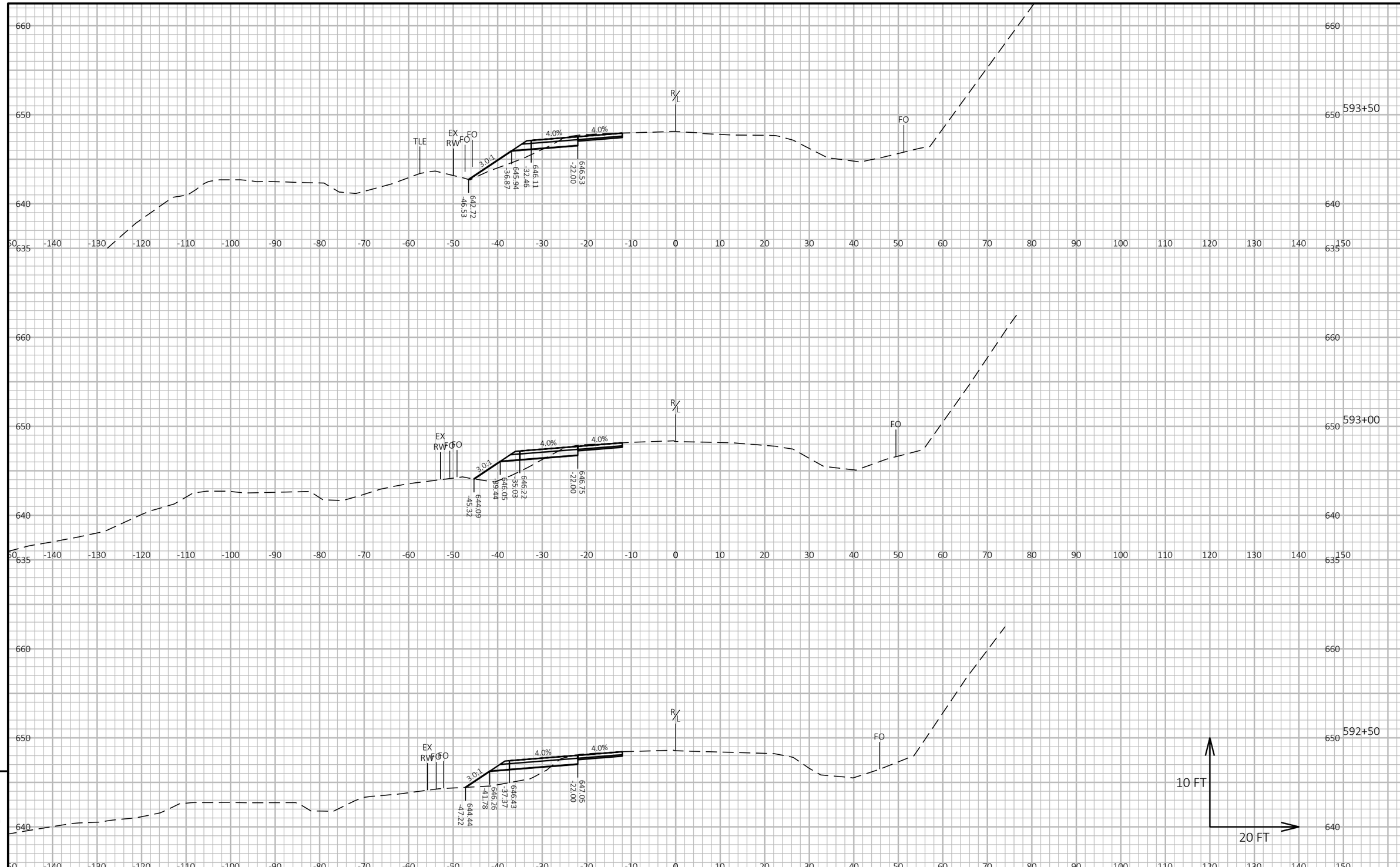

PROJECT NO: 5163-07-72	HWY: STH 35	COUNTY: LA CROSSE/VERNON	CROSS SECTIONS: STH 35 STAGE 2A TEMPORARY WIDENING	SHEET 432	E

FILE NAME : O:\PDS\C3D\51630702\SHEETSPLAN\090201A-XS-35-ST2A.DWG
LAYOUT NAME - 18
PLOT DATE : 4/23/2025 12:04 PM
PLOT BY : CORY IHDE
PLOT NAME :
PLOT SCALE : 1 IN:20 FT HORZ. / 1 IN:10 FT VERT.
WISDOT/CADDS SHEET 49

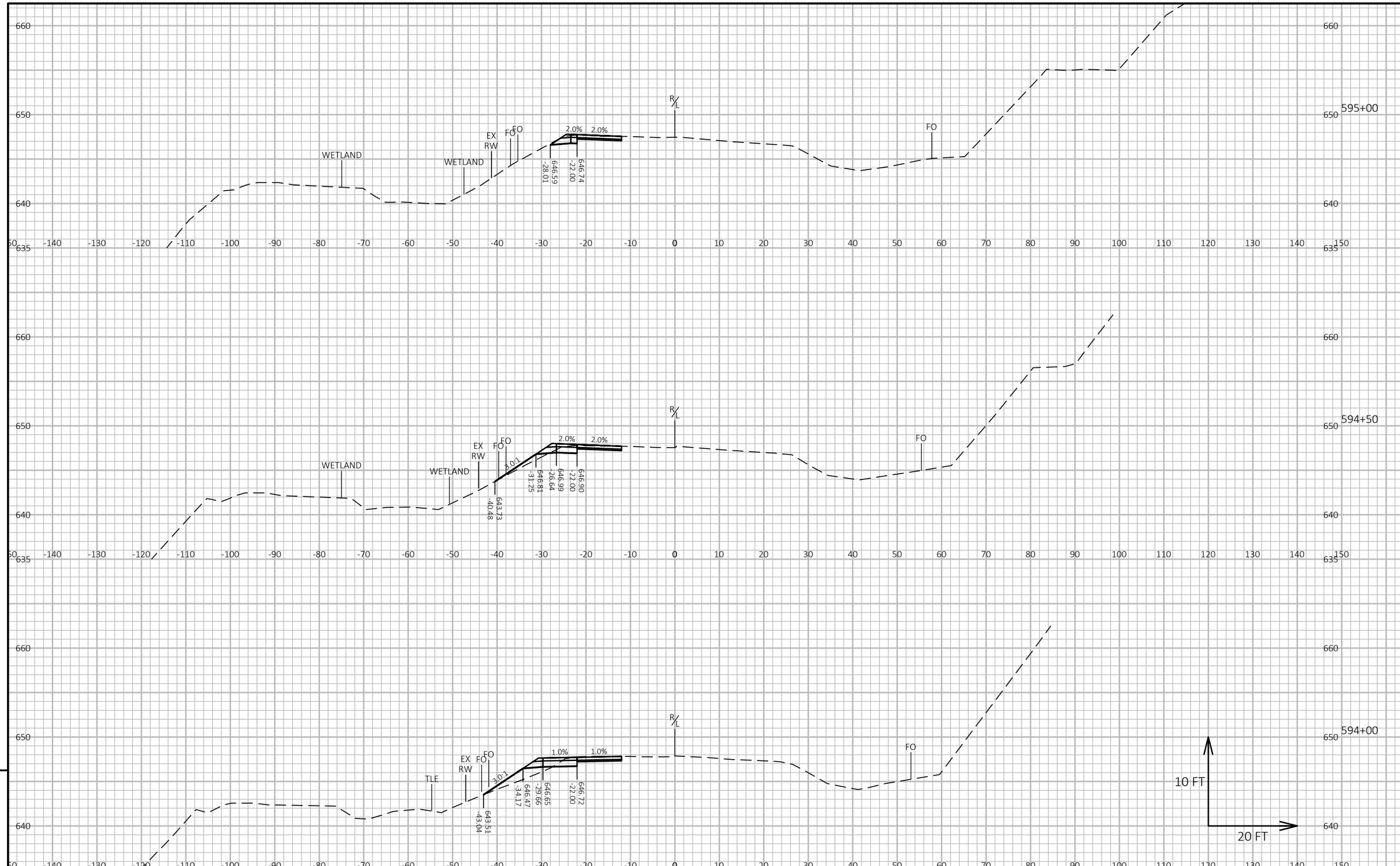

PROJECT NO: 5163-07-72	HWY: STH 35	COUNTY: LA CROSSE/VERNON	CROSS SECTIONS: STH 35 STAGE 2A TEMPORARY WIDENING	SHEET 433	E

FILE NAME : O:\PDS\C3D\51630702\SHEETSPLAN\090201A-XS-35-ST2A.DWG
LAYOUT NAME - 19
PLOT DATE : 4/23/2025 12:04 PM
PLOT BY : CORY IHDE
PLOT NAME :
PLOT SCALE : 1 IN:20 FT HORZ. / 1 IN:10 FT VERT.
WISDOT/CADDS SHEET 49

PROJECT NO: 5163-07-72	HWY: STH 35	COUNTY: LA CROSSE/VERNON	CROSS SECTIONS: STH 35 STAGE 2A TEMPORARY WIDENING	SHEET 434	E

FILE NAME : O:\PDS\C3D\51630702\SHEETSPLAN\090201A-XS-35-ST2A.DWG
LAYOUT NAME - 20
PLOT DATE : 4/23/2025 12:05 PM
PLOT BY : CORY IHDE
PLOT NAME :
PLOT SCALE : 1 IN:20 FT HORZ. / 1 IN:10 FT VERT.
WISDOT/CADDS SHEET 49

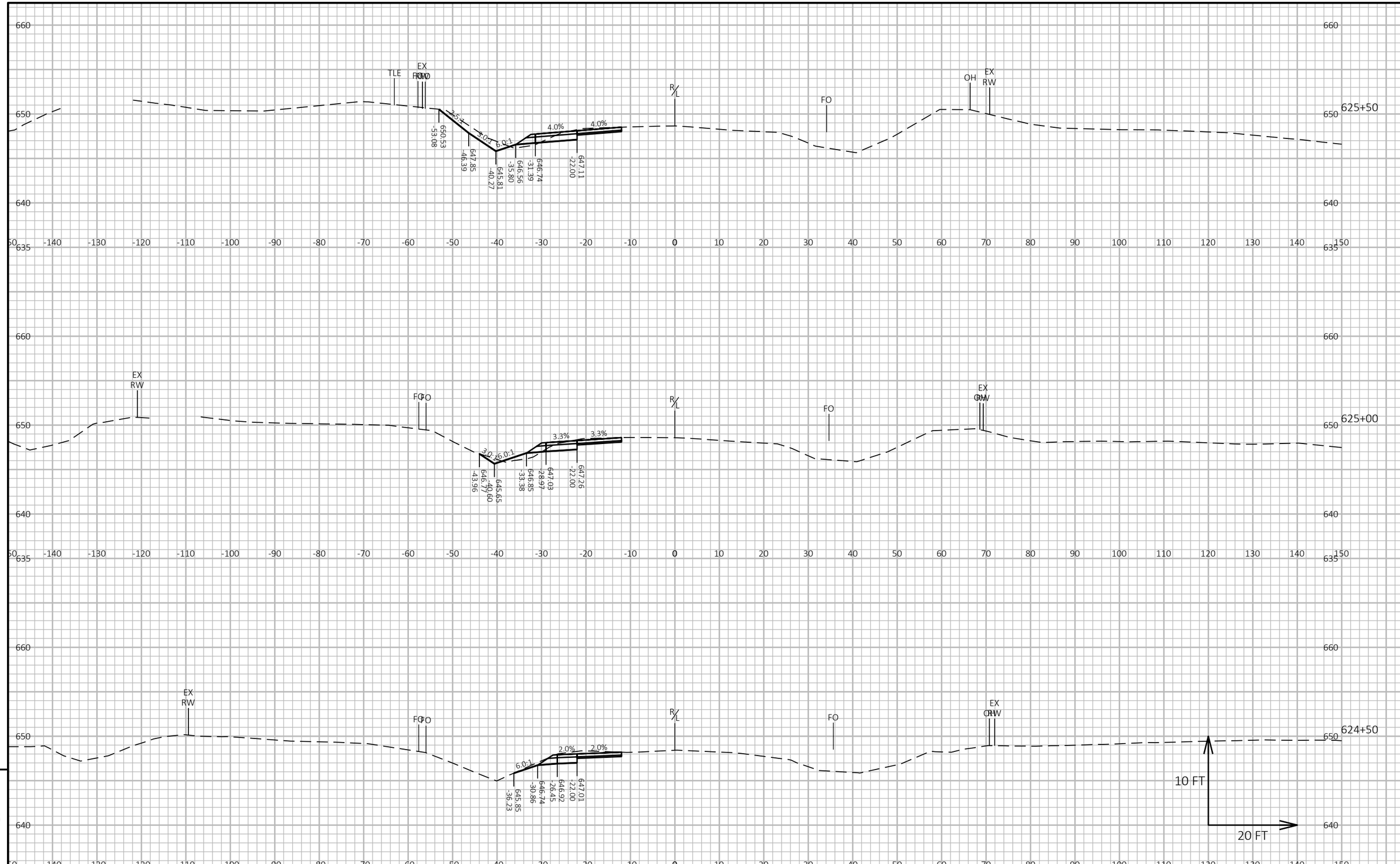

9

9

PROJECT NO: 5163-07-72	HWY: STH 35	COUNTY: LA CROSSE/VERNON	CROSS SECTIONS: STH 35 STAGE 2A TEMPORARY WIDENING	SHEET 435	E

FILE NAME : O:\PDS\C3D\51630702\SHEETSPLAN\090201A-XS-35-ST2A.DWG
LAYOUT NAME - 21
PLOT DATE : 4/23/2025 12:05 PM
PLOT BY : CORY IHDE
PLOT NAME :
PLOT SCALE : 1 IN:20 FT HORZ. / 1 IN:10 FT VERT.
WISDOT/CADDS SHEET 49

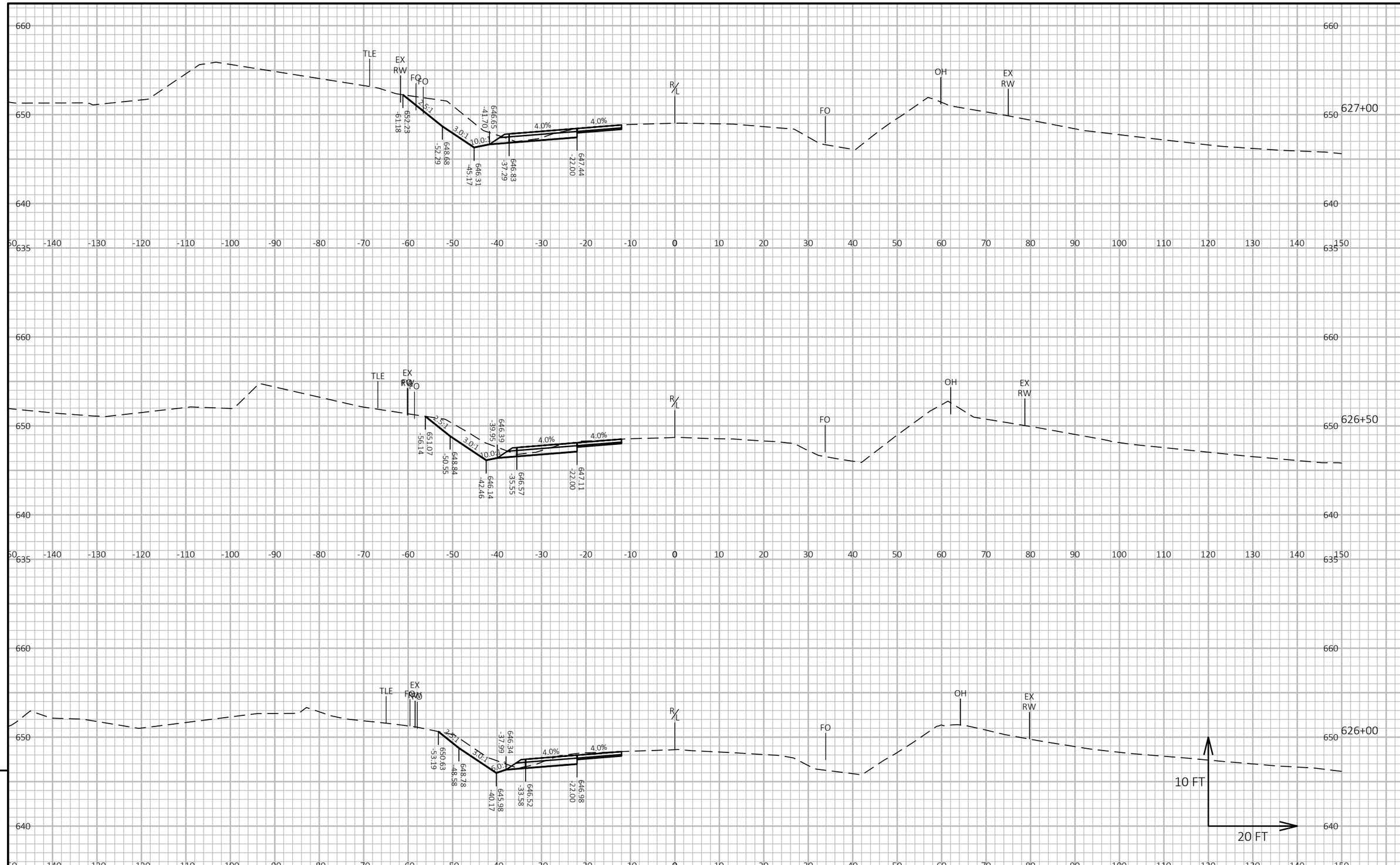

9

9

PROJECT NO: 5163-07-72	HWY: STH 35	COUNTY: LA CROSSE/VERNON	CROSS SECTIONS: STH 35 STAGE 2A TEMPORARY WIDENING	SHEET 436	E

FILE NAME : O:\PDS\C3D\51630702\SHEETSPLAN\090201A-XS-35-ST2A.DWG
LAYOUT NAME - 22
PLOT DATE : 4/23/2025 12:05 PM
PLOT BY : CORY IHDE
PLOT NAME :
PLOT SCALE : 1 IN:20 FT HORZ. / 1 IN:10 FT VERT.
WISDOT/CADDS SHEET 49

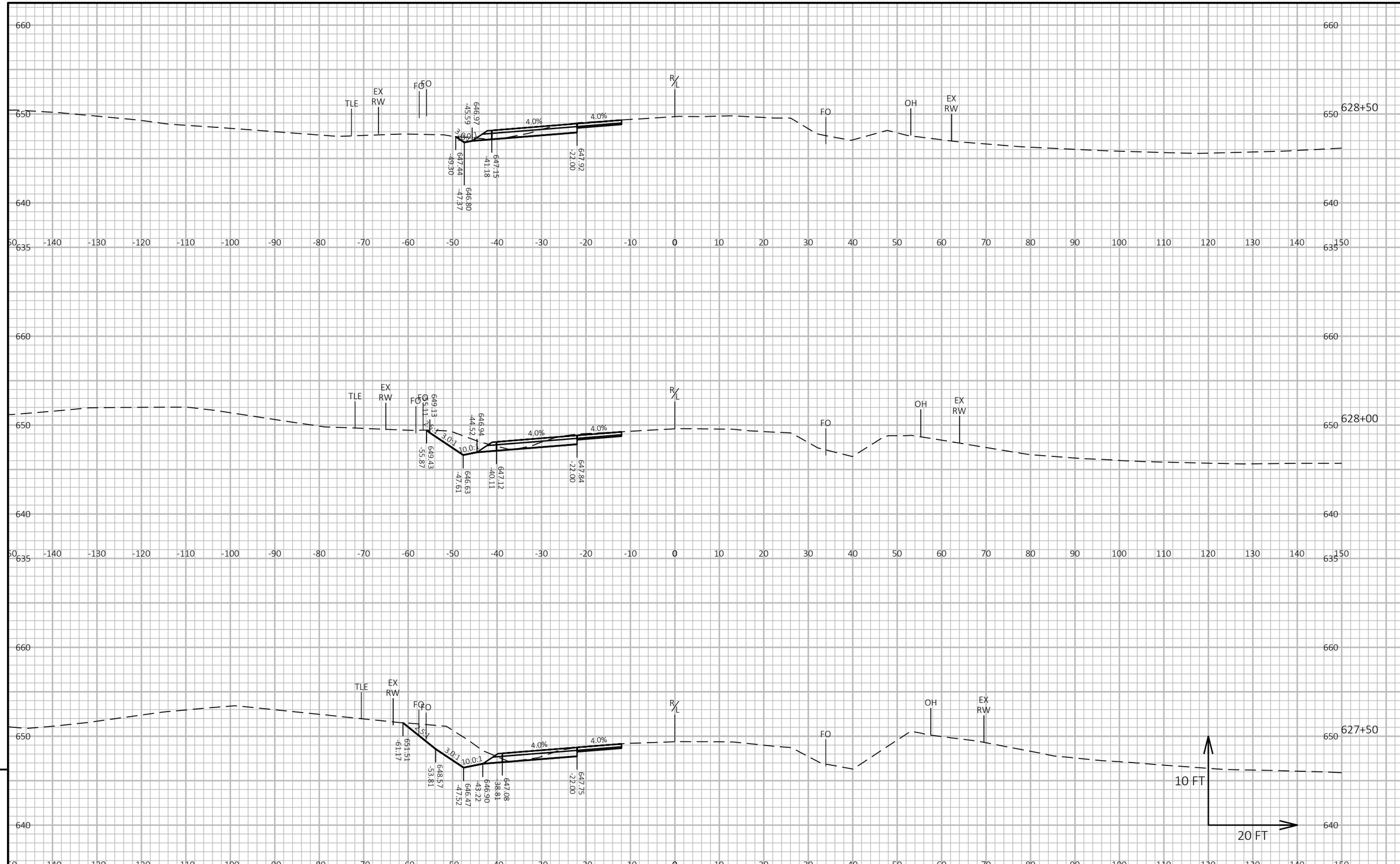

9

9

PROJECT NO: 5163-07-72	HWY: STH 35	COUNTY: LA CROSSE/VERNON	CROSS SECTIONS: STH 35 STAGE 2A TEMPORARY WIDENING	SHEET 437	E

FILE NAME : O:\PDS\C3D\51630702\SHEETSPLAN\090201A-XS-35-ST2A.DWG
LAYOUT NAME - 23
PLOT DATE : 4/23/2025 12:05 PM
PLOT BY : CORY IHDE
PLOT NAME :
PLOT SCALE : 1 IN:20 FT HORZ. / 1 IN:10 FT VERT.
WISDOT/CADDS SHEET 49

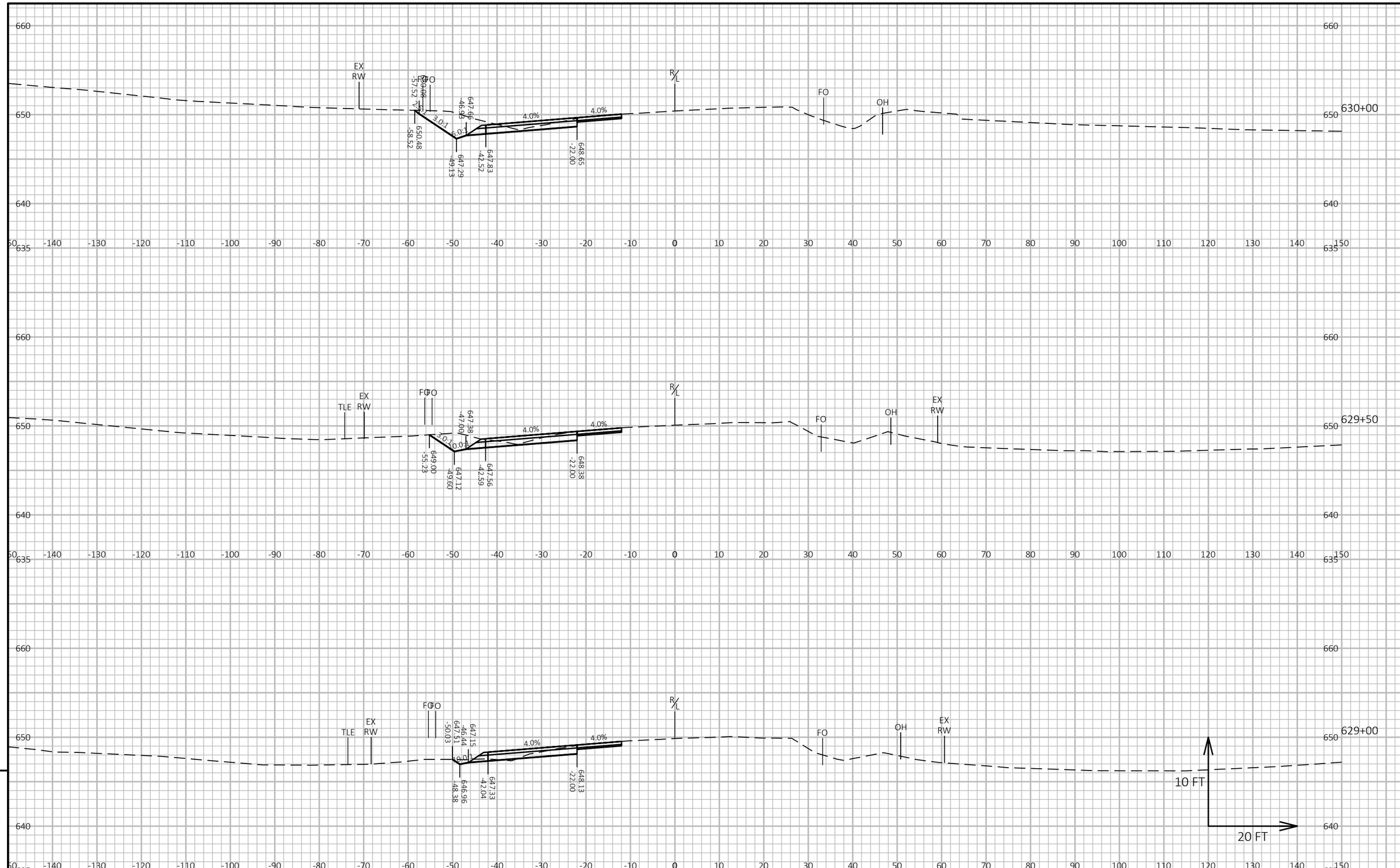

9

9

PROJECT NO: 5163-07-72	HWY: STH 35	COUNTY: LA CROSSE/VERNON	CROSS SECTIONS: STH 35 STAGE 2A TEMPORARY WIDENING	SHEET 438	E

FILE NAME : O:\PDS\C3D\51630702\SHEETSPLAN\090201A-XS-35-ST2A.DWG
LAYOUT NAME - 24

PLOT DATE : 4/23/2025 12:05 PM PLOT BY : CORY IHDE PLOT NAME : PLOT SCALE : 1 IN:20 FT HORZ. / 1 IN:10 FT VERT.

WISDOT/CADDS SHEET 49

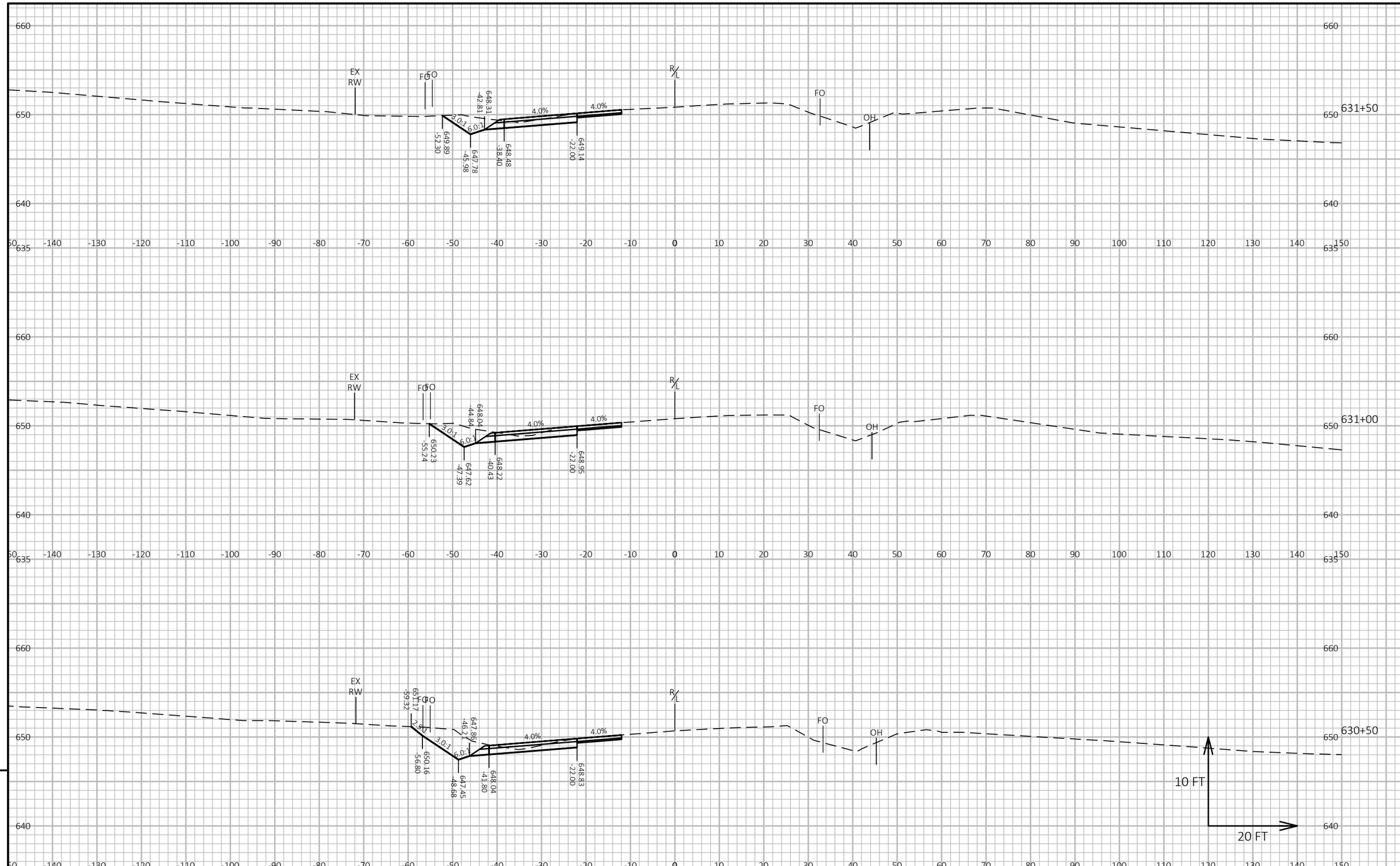

9

9

PROJECT NO: 5163-07-72	HWY: STH 35	COUNTY: LA CROSSE/VERNON	CROSS SECTIONS: STH 35 STAGE 2A TEMPORARY WIDENING	SHEET 439	E

FILE NAME : O:\PDS\C3D\51630702\SHEETSPLAN\090201A-XS-35-ST2A.DWG
LAYOUT NAME - 25

PLOT DATE : 4/23/2025 12:05 PM PLOT BY : CORY IHDE PLOT NAME : PLOT SCALE : 1 IN:20 FT HORZ. / 1 IN:10 FT VERT.

WISDOT/CADDS SHEET 49

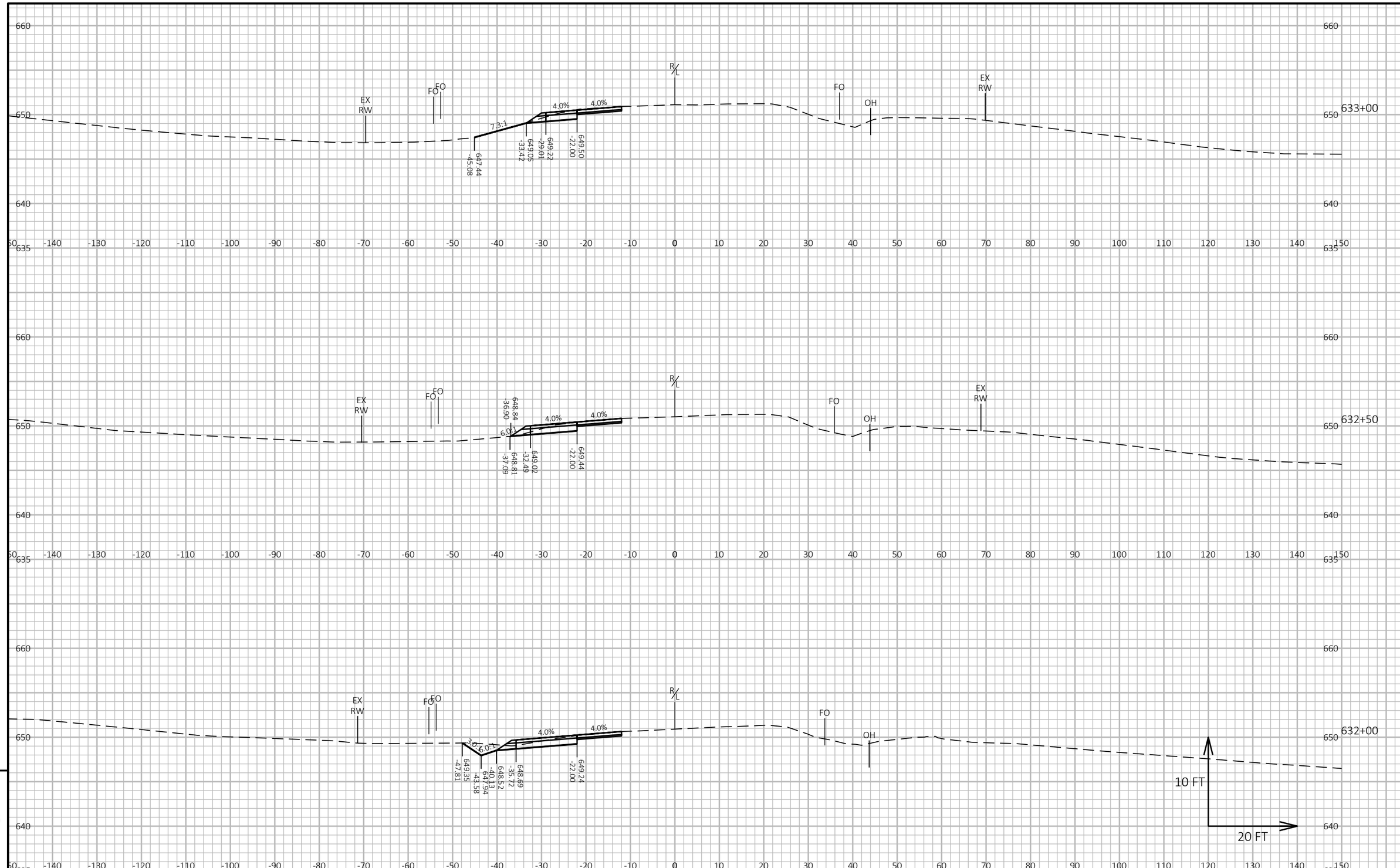

PROJECT NO: 5163-07-72	HWY: STH 35	COUNTY: LA CROSSE/VERNON	CROSS SECTIONS: STH 35 STAGE 2A TEMPORARY WIDENING	SHEET 440	E

FILE NAME : O:\PDS\C3D\51630702\SHEETSPLAN\090201A-XS-35-ST2A.DWG
LAYOUT NAME - 26
PLOT DATE : 4/23/2025 12:05 PM
PLOT BY : CORY IHDE
PLOT NAME :
PLOT SCALE : 1 IN:20 FT HORZ. / 1 IN:10 FT VERT.
WISDOT/CADDS SHEET 49

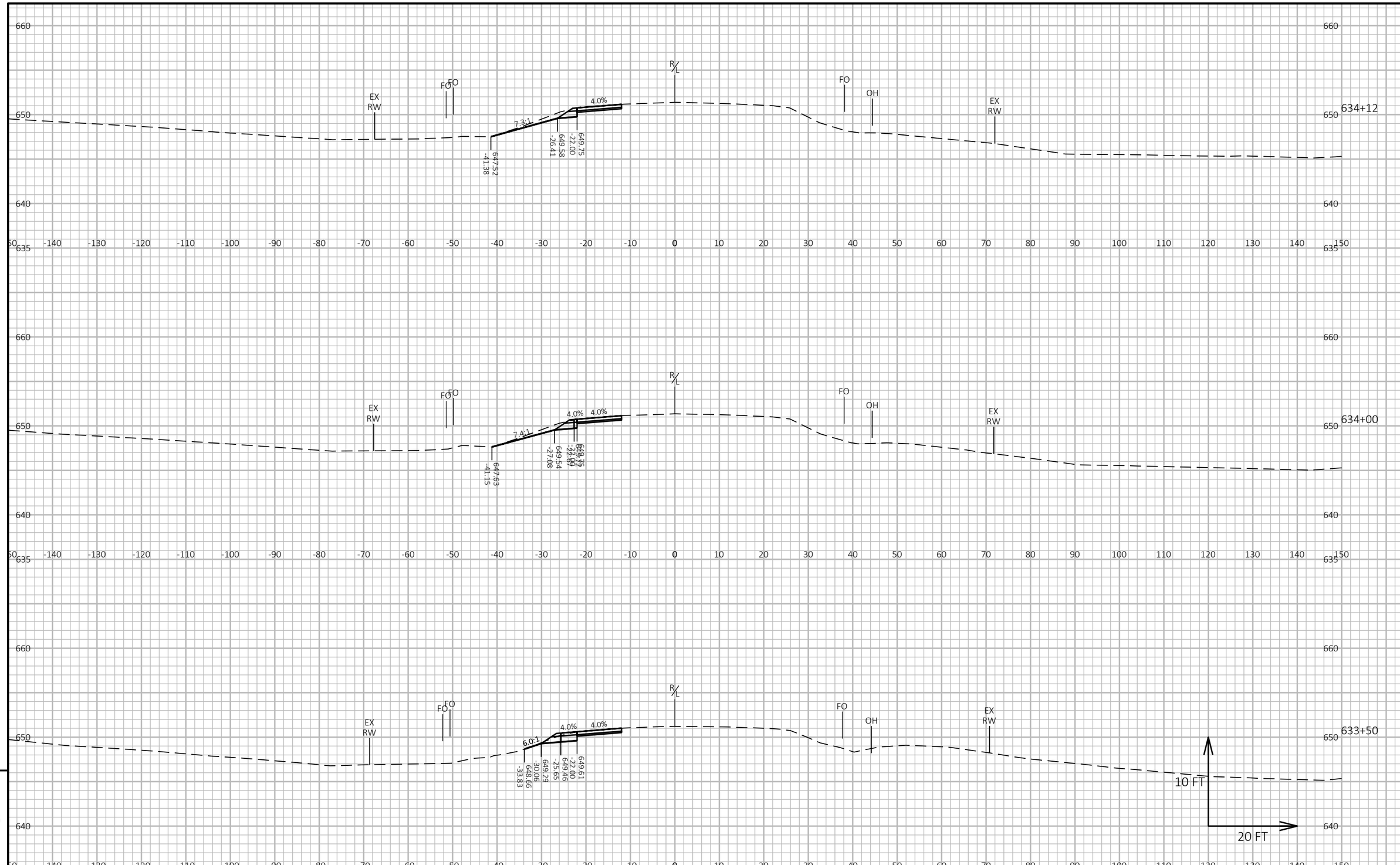

9

9

PROJECT NO: 5163-07-72	HWY: STH 35	COUNTY: LA CROSSE/VERNON	CROSS SECTIONS: STH 35 STAGE 2A TEMPORARY WIDENING	SHEET 441	E

FILE NAME : O:\PDS\C3D\51630702\SHEETSPLAN\090201A-XS-35-ST2A.DWG
LAYOUT NAME - 27
PLOT DATE : 4/23/2025 12:05 PM
PLOT BY : CORY IHDE
PLOT NAME :
PLOT SCALE : 1 IN:20 FT HORZ. / 1 IN:10 FT VERT.
WISDOT/CADDS SHEET 49

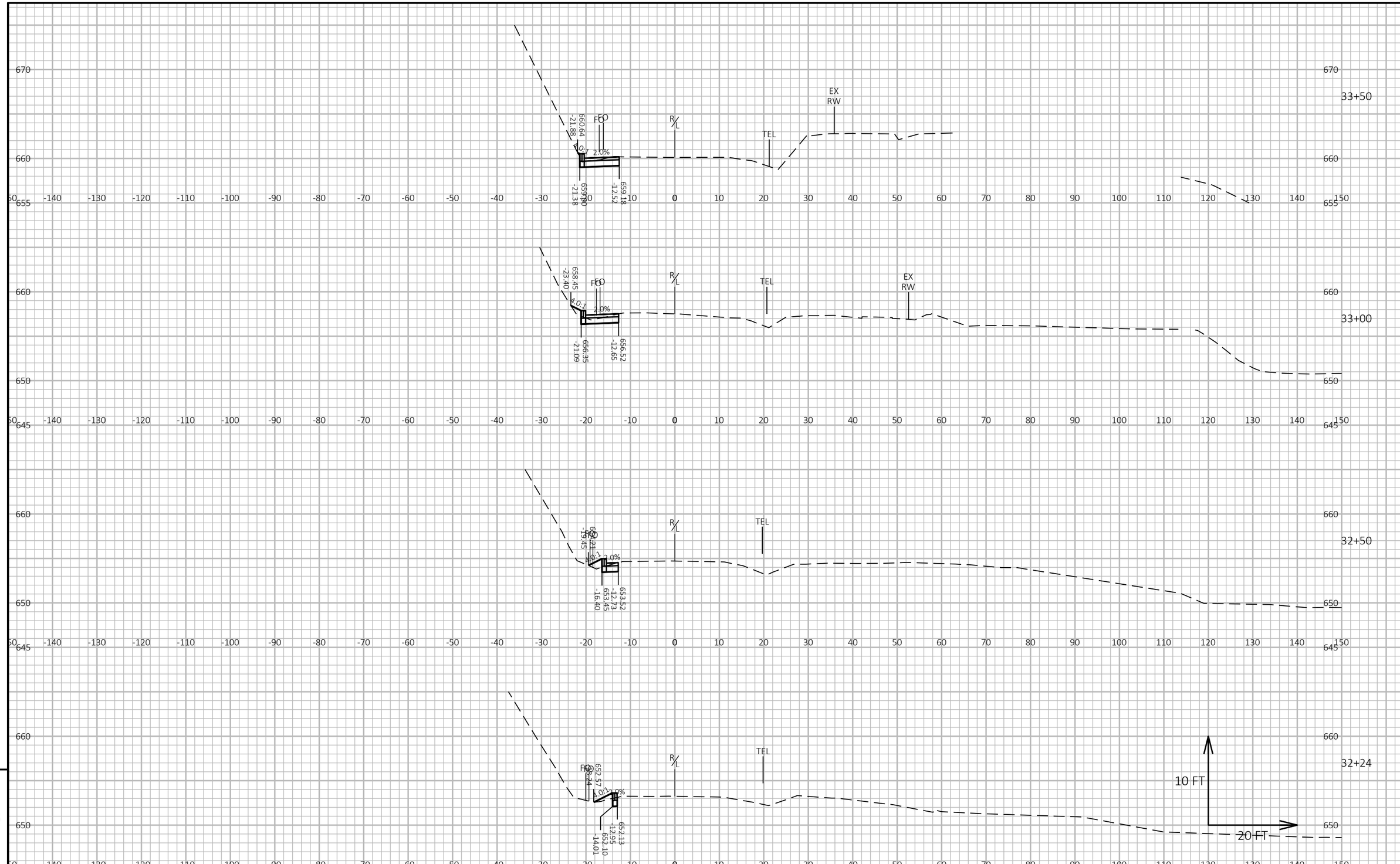

PROJECT NO: 5163-07-72	HWY: STH 35	COUNTY: LA CROSSE/VERNON	CROSS SECTIONS: CTH K STAGE 2A TEMPORARY WIDENING	SHEET 442	E

FILE NAME : O:\PDS\C3D\51630702\SHEETSPLAN\090201A-XS-K-ST2A.DWG
LAYOUT NAME - 01
PLOT DATE : 4/29/2025 3:31 PM
PLOT BY : CORY IHDE
PLOT NAME :
PLOT SCALE : 1 IN:20 FT HORZ. / 1 IN:10 FT VERT.
WISDOT/CADDS SHEET 49

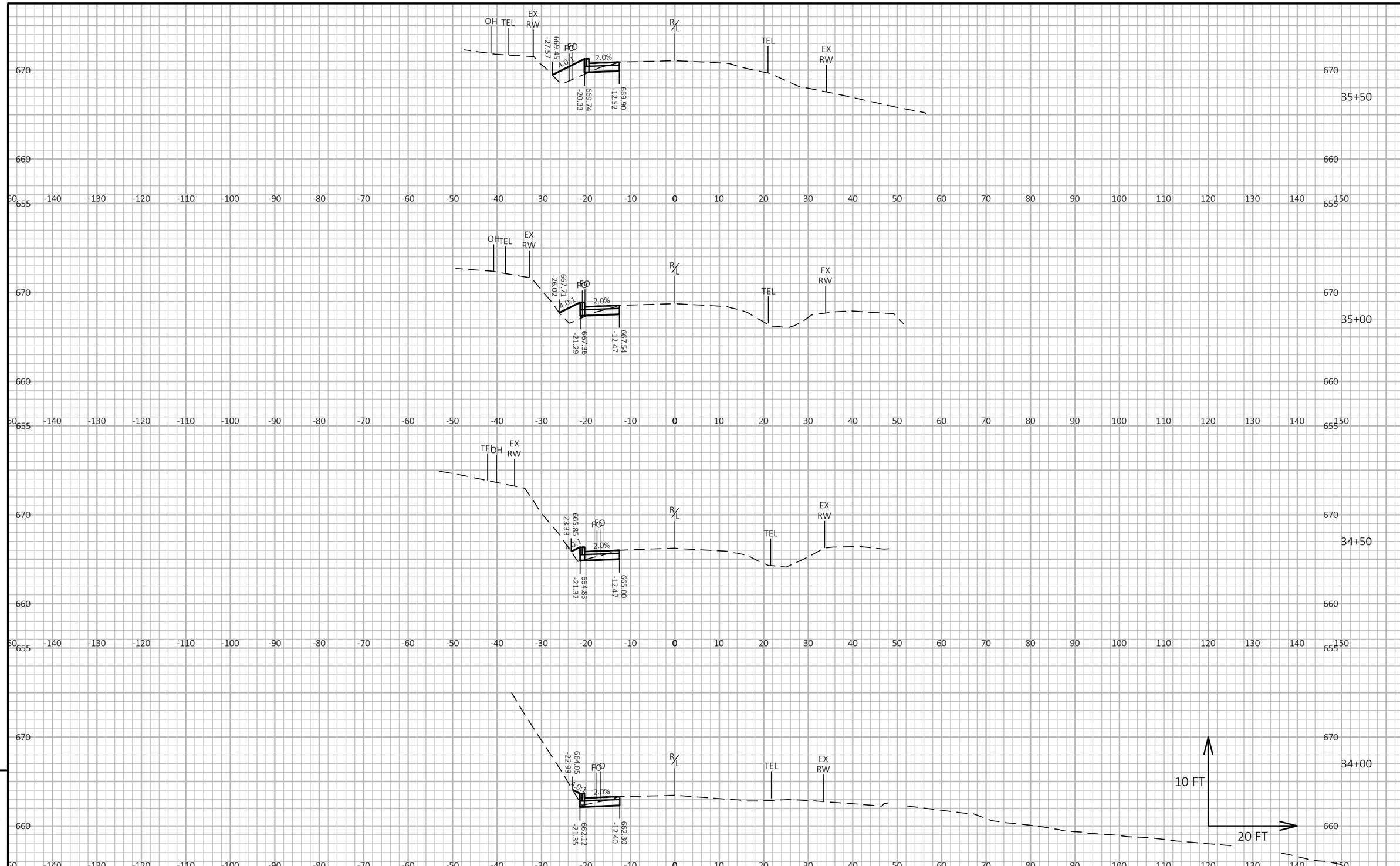

9

9

PROJECT NO: 5163-07-72	HWY: STH 35	COUNTY: LA CROSSE/VERNON	CROSS SECTIONS: CTH K STAGE 2A TEMPORARY WIDENING	SHEET 443	E

FILE NAME : O:\PDS\C3D\51630702\SHEETSPLAN\090201A-XS-K-ST2A.DWG
LAYOUT NAME - 02
PLOT DATE : 4/29/2025 3:31 PM
PLOT BY : CORY IHDE
PLOT NAME :
PLOT SCALE : 1 IN:20 FT HORZ. / 1 IN:10 FT VERT.
WISDOT/CADDS SHEET 49

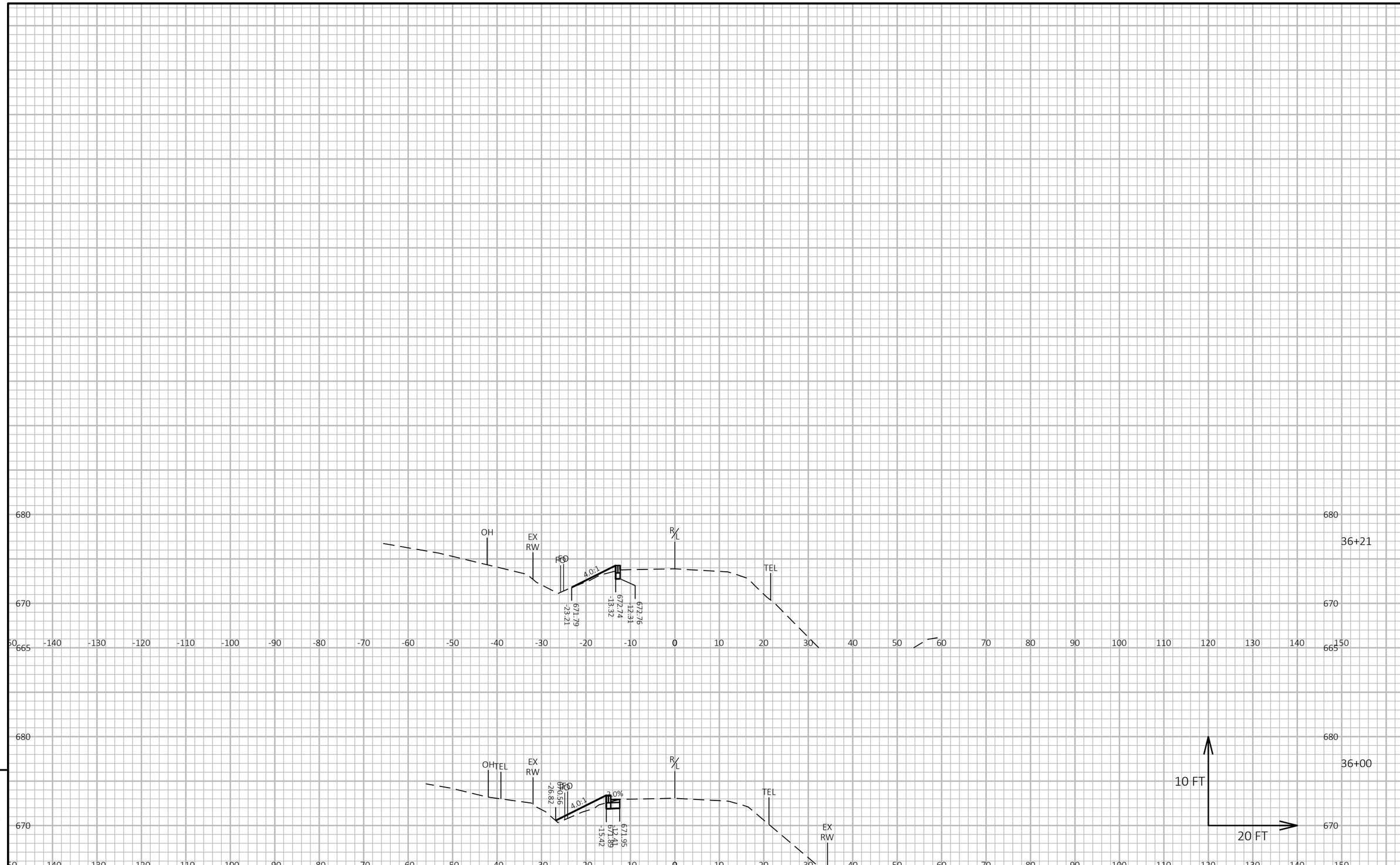

9

9

PROJECT NO: 5163-07-72	HWY: STH 35	COUNTY: LA CROSSE/VERNON	CROSS SECTIONS: CTH K STAGE 2A TEMPORARY WIDENING	SHEET 444	E

FILE NAME : O:\PDS\C3D\51630702\SHEETSPLAN\090201A-XS-K-ST2A.DWG
LAYOUT NAME - 03
PLOT DATE : 4/29/2025 3:31 PM
PLOT BY : CORY IHDE
PLOT NAME :
PLOT SCALE : 1 IN:20 FT HORZ. / 1 IN:10 FT VERT.
WISDOT/CADDS SHEET 49

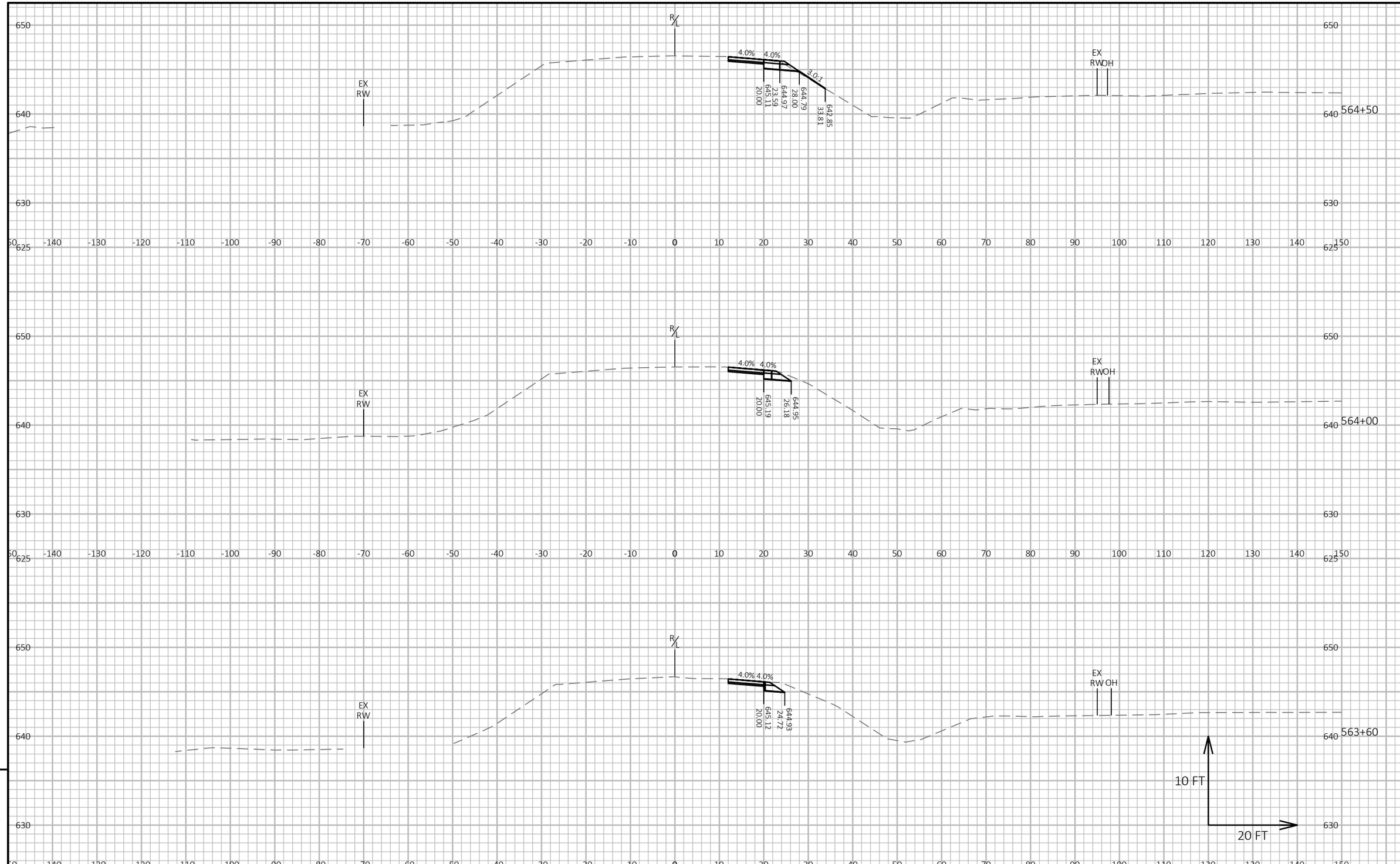

PROJECT NO: 5163-07-72	HWY: STH 35	COUNTY: LA CROSSE/VERNON	CROSS SECTIONS: STH 35 STAGE 3 TEMPORARY WIDENING	SHEET 445	E

FILE NAME : O:\PDS\C3D\51630702\SHEETSPLAN\090201B-XS-35-ST3.DWG
LAYOUT NAME - 01
PLOT DATE : 4/29/2025 3:33 PM
PLOT BY : CORY IHDE
PLOT NAME :
PLOT SCALE : 1 IN:20 FT HORZ. / 1 IN:10 FT VERT.
WISDOT/CADDS SHEET 49

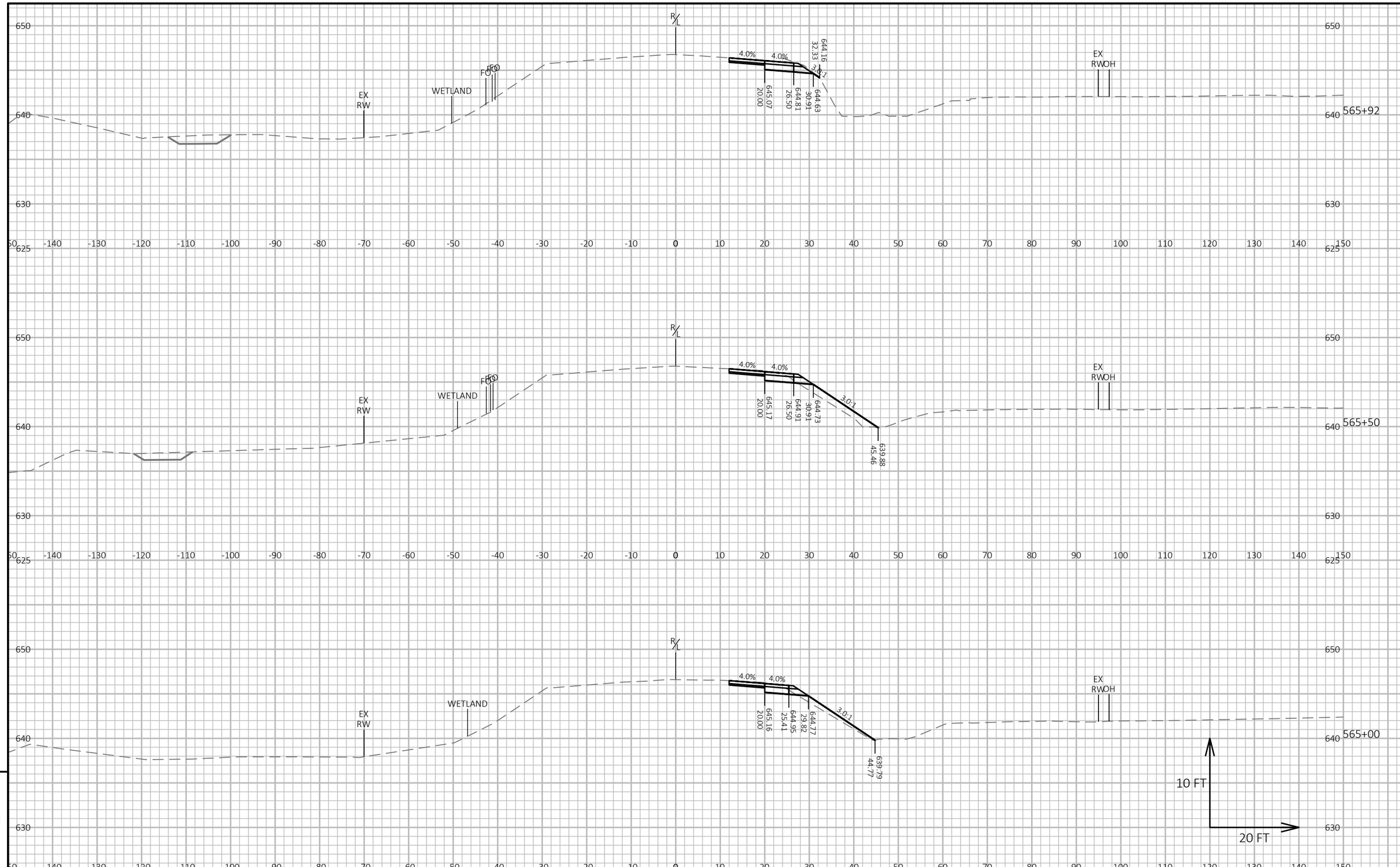

9

9

PROJECT NO: 5163-07-72	HWY: STH 35	COUNTY: LA CROSSE/VERNON	CROSS SECTIONS: STH 35 STAGE 3 TEMPORARY WIDENING	SHEET 446	E

FILE NAME : O:\PDS\C3D\51630702\SHEETSPLAN\090201B-XS-35-ST3.DWG
LAYOUT NAME - 02

PLOT DATE : 4/29/2025 3:33 PM PLOT BY : CORY IHDE PLOT NAME : PLOT SCALE : 1 IN:20 FT HORZ. / 1 IN:10 FT VERT.

WISDOT/CADDS SHEET 49

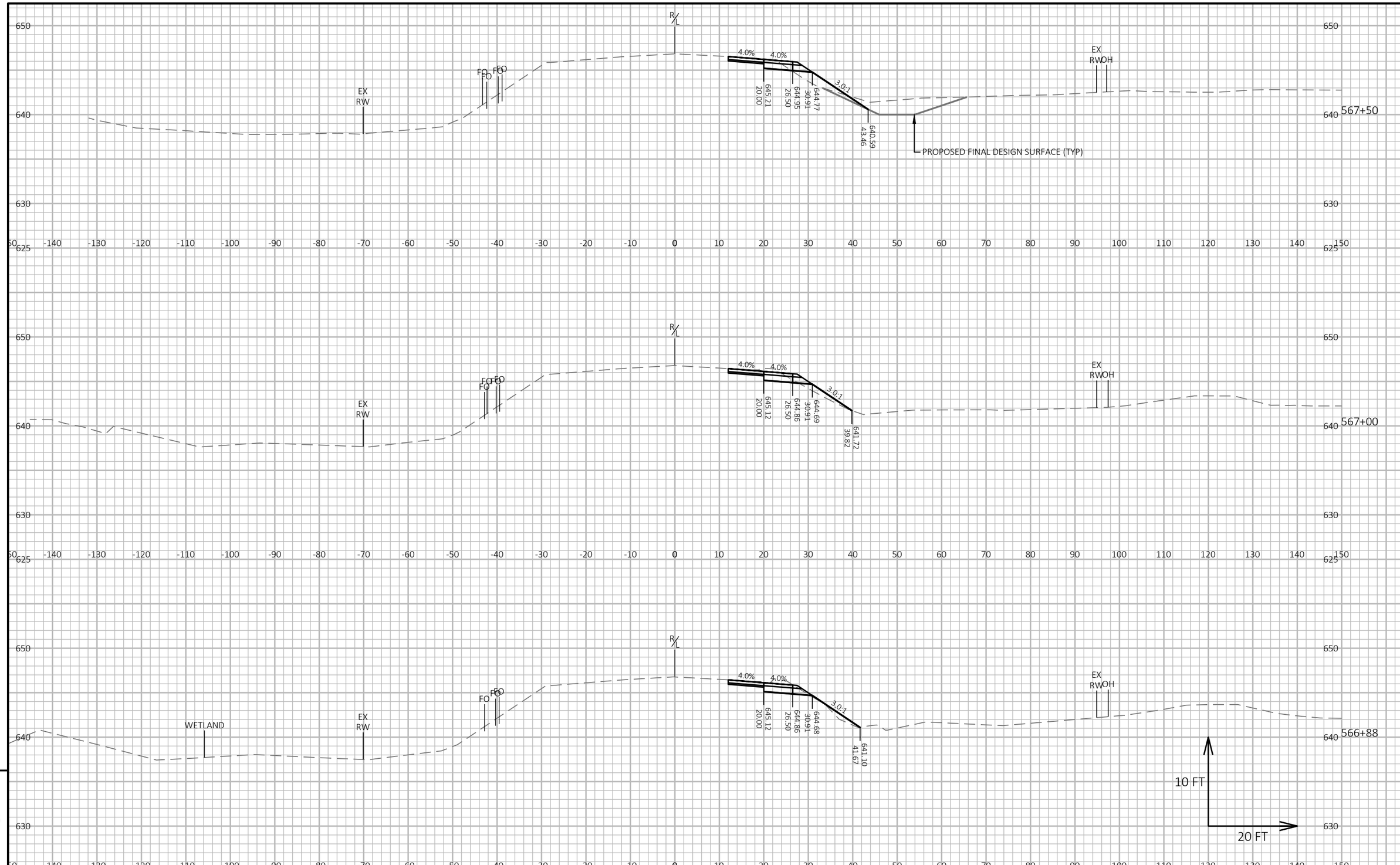

9

9

PROJECT NO: 5163-07-72	HWY: STH 35	COUNTY: LA CROSSE/VERNON	CROSS SECTIONS: STH 35 STAGE 3 TEMPORARY WIDENING	SHEET 447	E

FILE NAME : O:\PDS\C3D\51630702\SHEETSPLAN\090201B-XS-35-ST3.DWG
LAYOUT NAME - 03
PLOT DATE : 4/29/2025 3:33 PM
PLOT BY : CORY IHDE
PLOT NAME :
PLOT SCALE : 1 IN:20 FT HORZ. / 1 IN:10 FT VERT.
WISDOT/CADDS SHEET 49

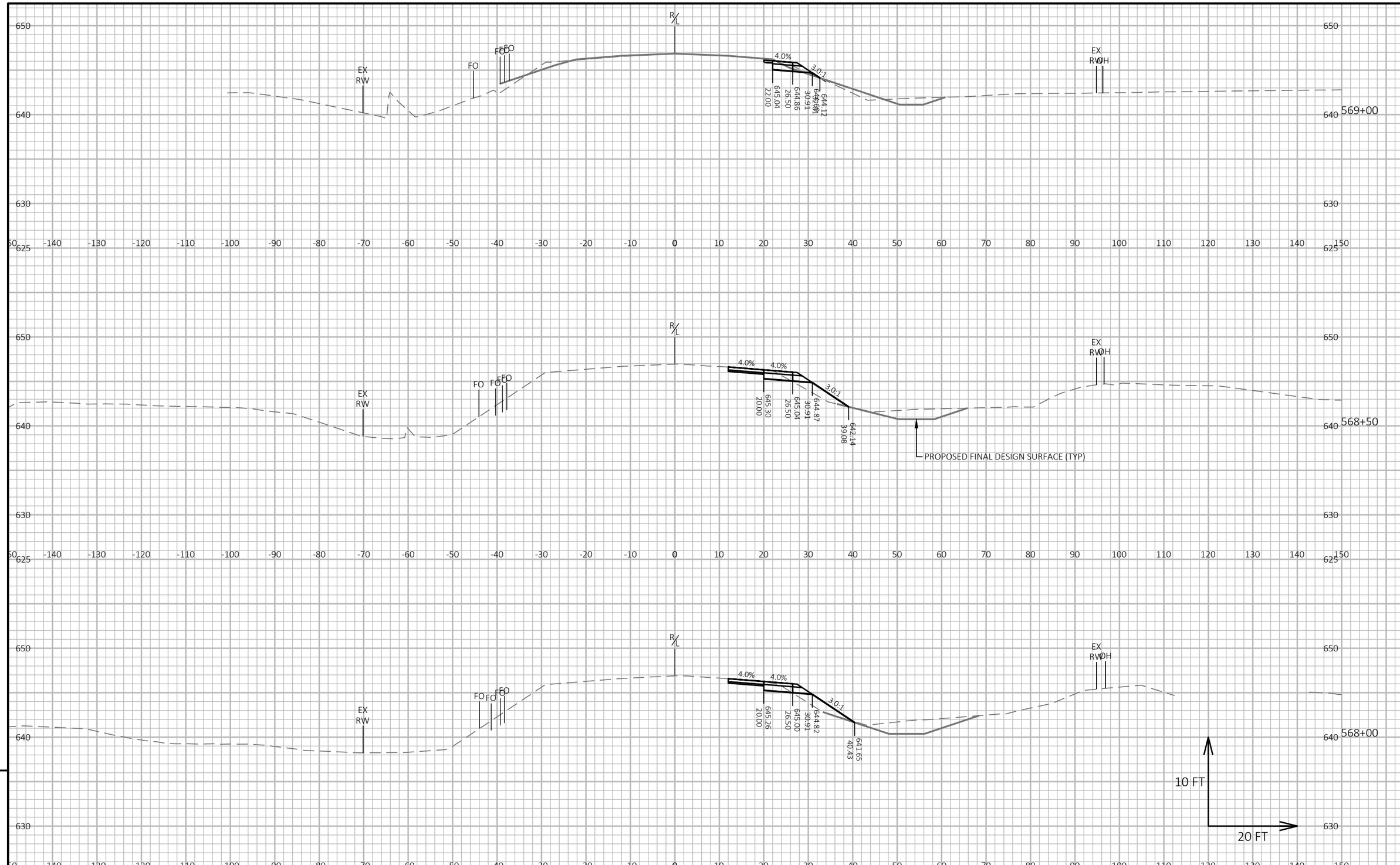

PROJECT NO: 5163-07-72	HWY: STH 35	COUNTY: LA CROSSE/VERNON	CROSS SECTIONS: STH 35 STAGE 3 TEMPORARY WIDENING	SHEET 448	E

FILE NAME : O:\PDS\C3D\51630702\SHEETSPLAN\090201B-XS-35-ST3.DWG
LAYOUT NAME - 04
PLOT DATE : 4/29/2025 3:33 PM
PLOT BY : CORY IHDE
PLOT NAME :
PLOT SCALE : 1 IN:20 FT HORZ. / 1 IN:10 FT VERT.
WISDOT/CADDS SHEET 49

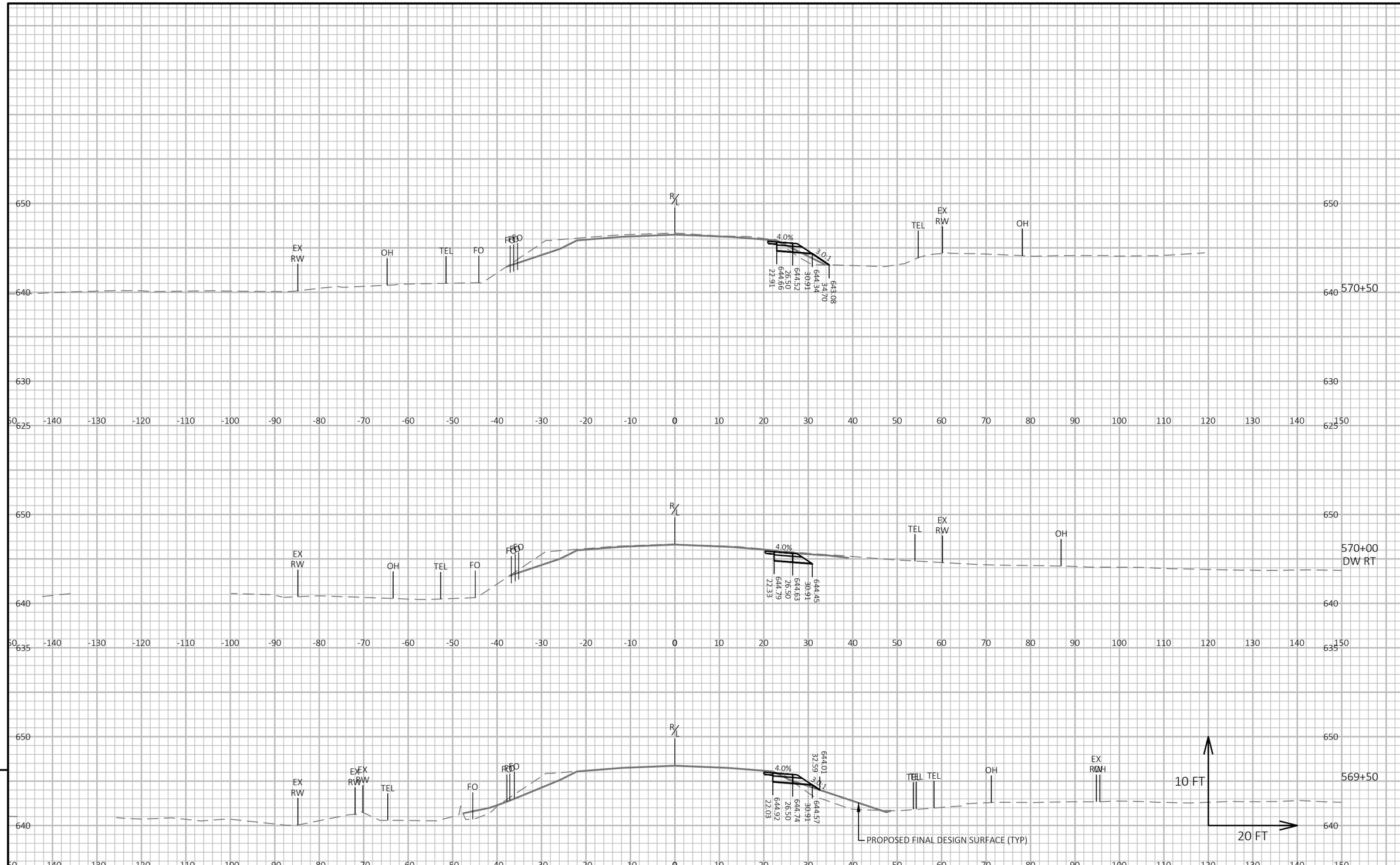

9

9

PROJECT NO: 5163-07-72	HWY: STH 35	COUNTY: LA CROSSE/VERNON	CROSS SECTIONS: STH 35 STAGE 3 TEMPORARY WIDENING	SHEET 449	E

FILE NAME : O:\PDS\C3D\51630702\SHEETSPLAN\090201B-XS-35-ST3.DWG
LAYOUT NAME - 05
PLOT DATE : 4/29/2025 3:33 PM
PLOT BY : CORY IHDE
PLOT NAME :
PLOT SCALE : 1 IN:20 FT HORZ. / 1 IN:10 FT VERT.

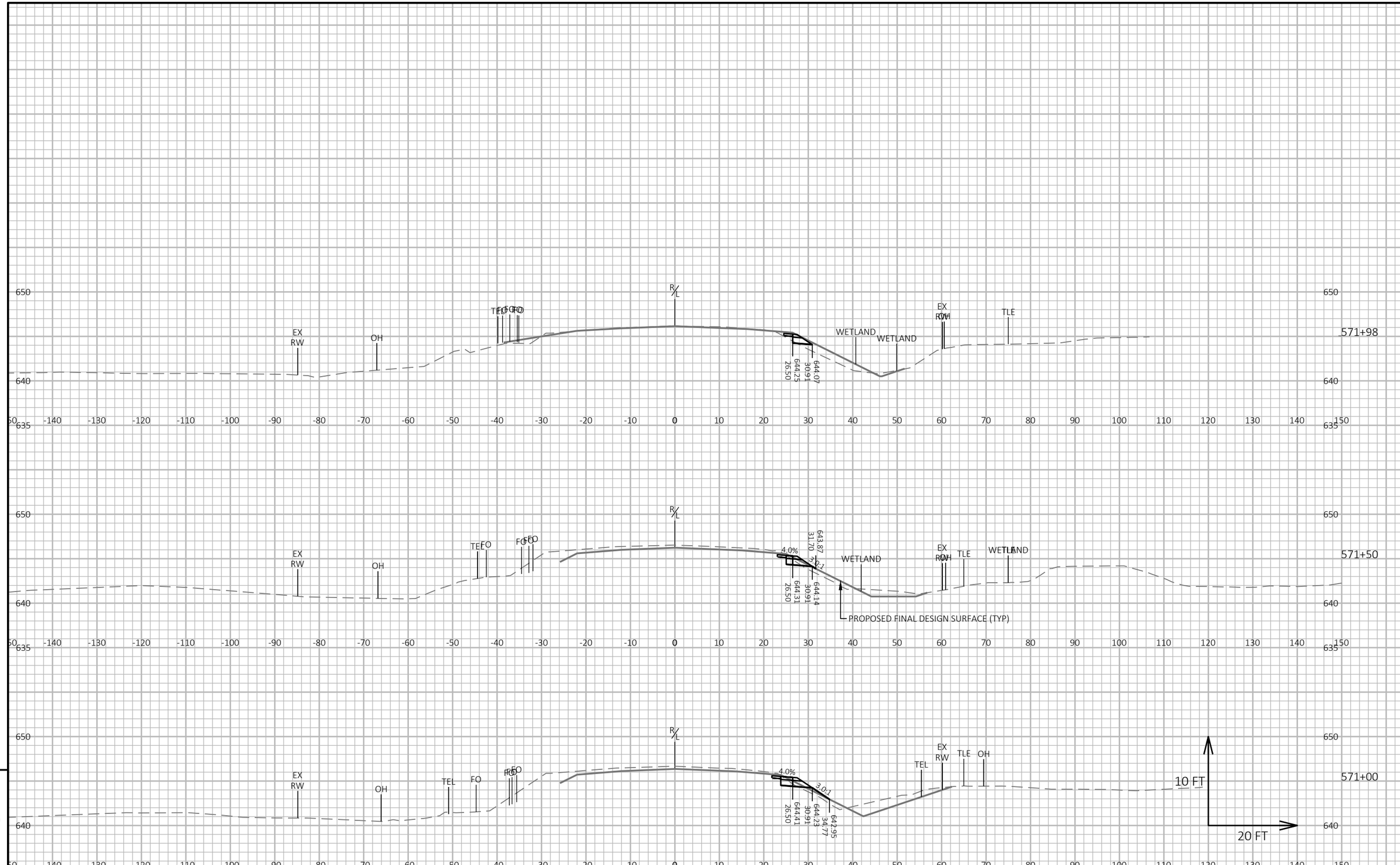

PROJECT NO: 5163-07-72	HWY: STH 35	COUNTY: LA CROSSE/VERNON	CROSS SECTIONS: STH 35 STAGE 3 TEMPORARY WIDENING	SHEET 450	E

FILE NAME : O:\PDS\C3D\51630702\SHEETSPLAN\090201B-XS-35-ST3.DWG
LAYOUT NAME - 06
PLOT DATE : 4/29/2025 3:33 PM
PLOT BY : CORY IHDE
PLOT NAME :
PLOT SCALE : 1 IN:20 FT HORZ. / 1 IN:10 FT VERT.
WISDOT/CADDS SHEET 49

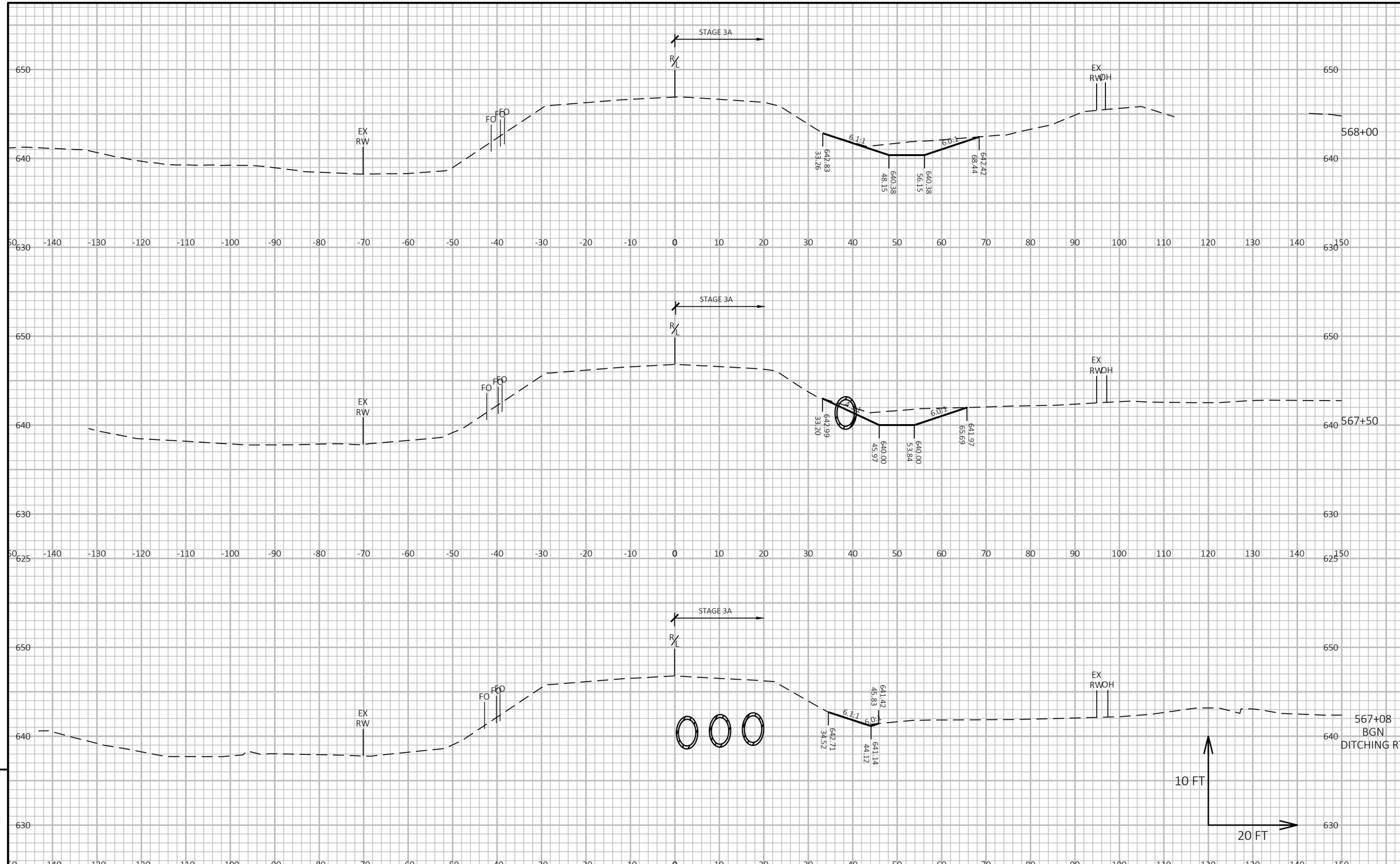

9

9

PROJECT NO: 5163-07-72	HWY: STH 35	COUNTY: LA CROSSE/VERNON	CROSS SECTIONS: STH 35	SHEET 451	E

FILE NAME : O:\PDS\C3D\51630702\SHEETSPLAN\090201-XS.DWG
LAYOUT NAME - 01
PLOT DATE : 7/1/2025 1:37 PM
PLOT BY : ED OCHS
PLOT NAME :
PLOT SCALE : 1 IN:20 FT HORZ. / 1 IN:10 FT VERT.
WISDOT/CADDS SHEET 49

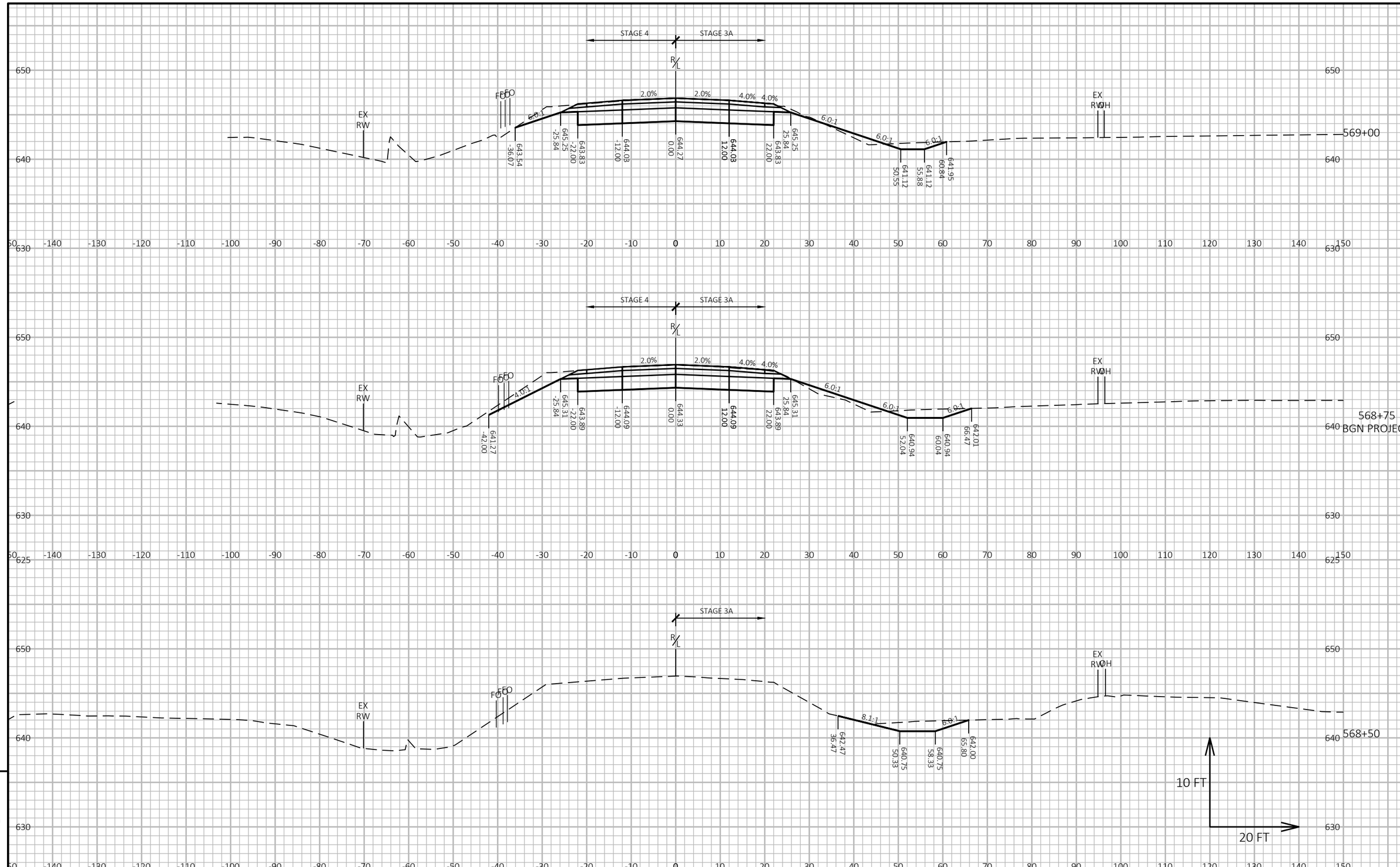

PROJECT NO: 5163-07-72	HWY: STH 35	COUNTY: LA CROSSE/VERNON	CROSS SECTIONS: STH 35	SHEET 452	E

FILE NAME : O:\PDS\C3D\51630702\SHEETSPLAN\090201-XS.DWG
LAYOUT NAME - 02
PLOT DATE : 7/1/2025 1:37 PM
PLOT BY : ED OCHS
PLOT NAME :
PLOT SCALE : 1 IN:20 FT HORZ. / 1 IN:10 FT VERT.

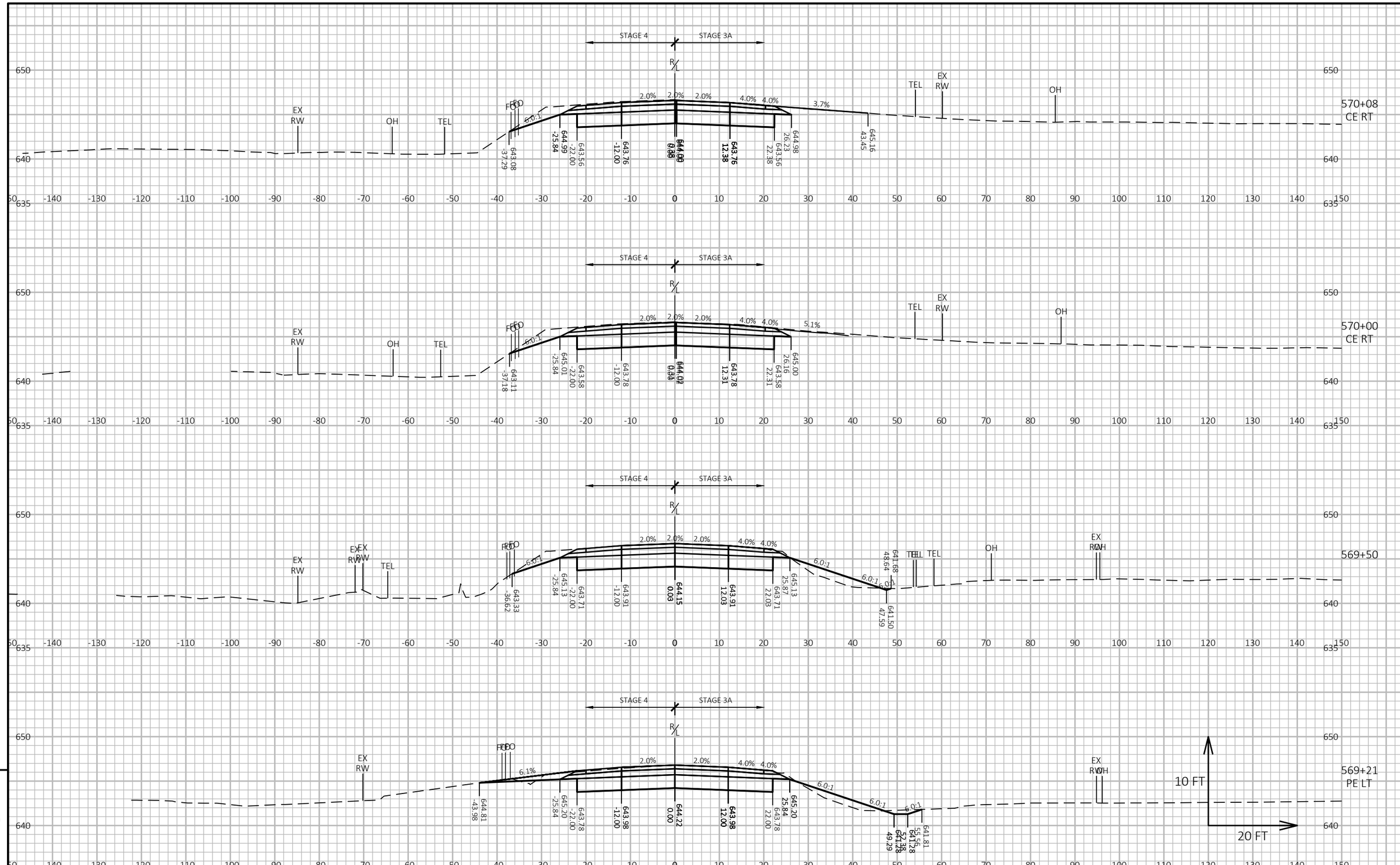

9

9

PROJECT NO: 5163-07-72	HWY: STH 35	COUNTY: LA CROSSE/VERNON	CROSS SECTIONS: STH 35	SHEET 453	E

FILE NAME : O:\PDS\C3D\51630702\SHEETSPLAN\090201-XS.DWG
LAYOUT NAME - 03
PLOT DATE : 7/1/2025 1:37 PM
PLOT BY : ED OCHS
PLOT NAME :
PLOT SCALE : 1 IN:20 FT HORZ. / 1 IN:10 FT VERT.

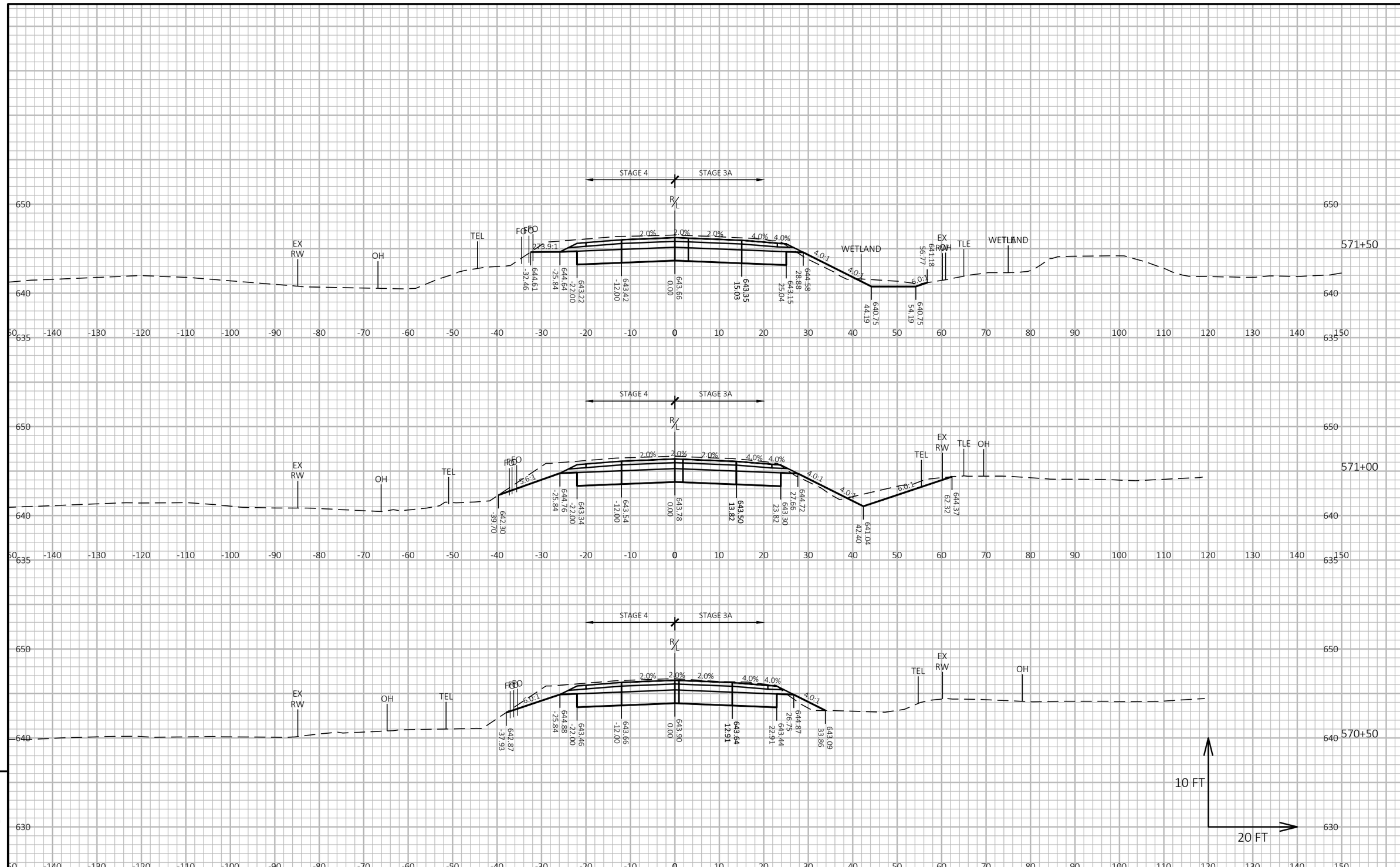

9

9

PROJECT NO: 5163-07-72	HWY: STH 35	COUNTY: LA CROSSE/VERNON	CROSS SECTIONS: STH 35	SHEET 454	E

FILE NAME : O:\PDS\C3D\51630702\SHEETSPLAN\090201-XS.DWG
LAYOUT NAME - 04
PLOT DATE : 7/1/2025 1:38 PM
PLOT BY : ED OCHS
PLOT NAME :
PLOT SCALE : 1 IN:20 FT HORZ. / 1 IN:10 FT VERT.
WISDOT/CADDS SHEET 49

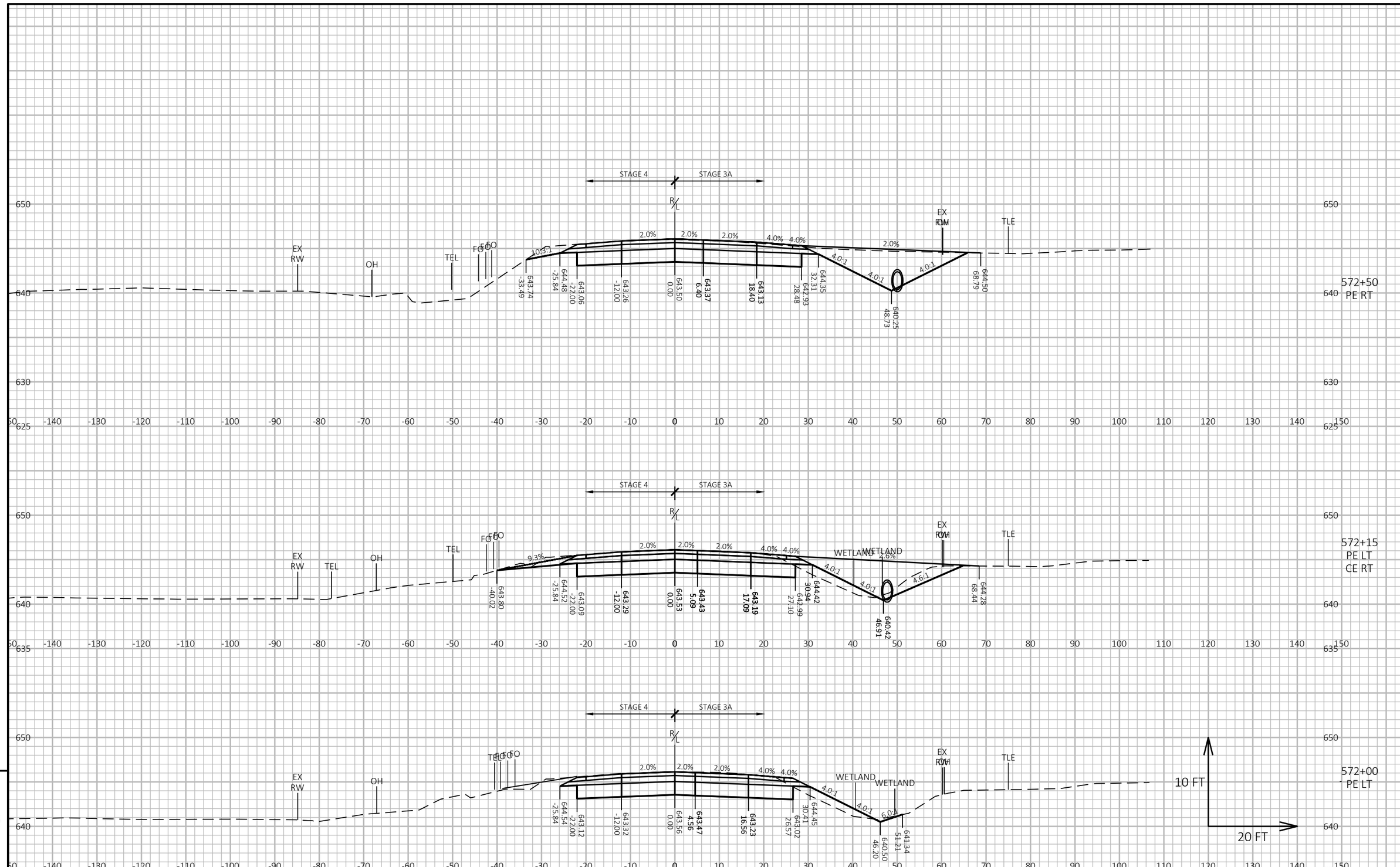

9

PROJECT NO: 5163-07-72	HWY: STH 35	COUNTY: LA CROSSE/VERNON	CROSS SECTIONS: STH 35	SHEET 455	E

FILE NAME : O:\PDS\C3D\51630702\SHEETSPLAN\090201-XS.DWG
LAYOUT NAME - 05
PLOT DATE : 7/1/2025 1:38 PM
PLOT BY : ED OCHS
PLOT NAME :
PLOT SCALE : 1 IN:20 FT HORZ. / 1 IN:10 FT VERT.

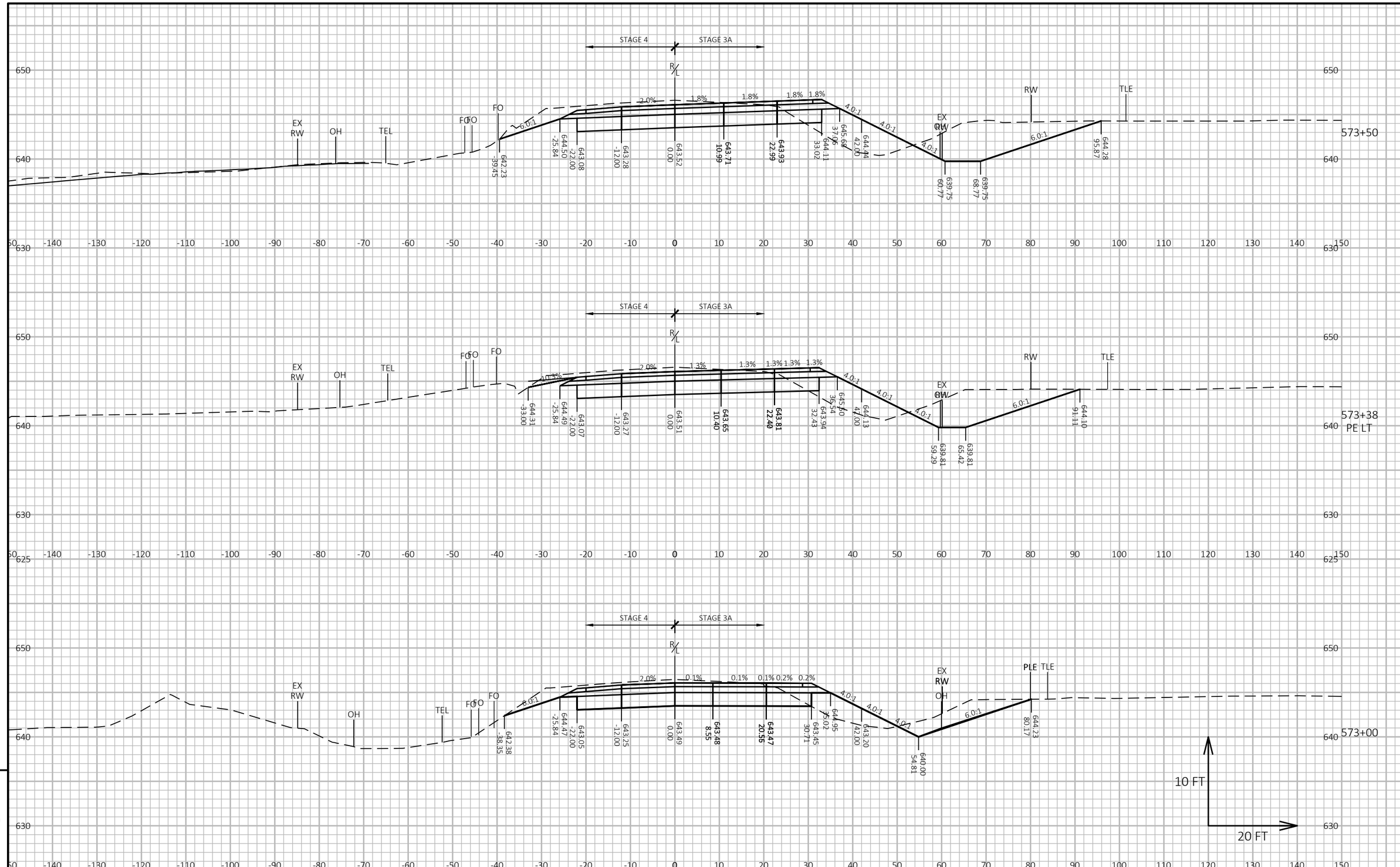

9

9

PROJECT NO: 5163-07-72	HWY: STH 35	COUNTY: LA CROSSE/VERNON	CROSS SECTIONS: STH 35	SHEET 456	E

FILE NAME : O:\PDS\C3D\51630702\SHEETSPLAN\090201-XS.DWG
LAYOUT NAME - 06
PLOT DATE : 7/1/2025 1:38 PM
PLOT BY : ED OCHS
PLOT NAME :
PLOT SCALE : 1 IN:20 FT HORZ. / 1 IN:10 FT VERT.
WISDOT/CADDS SHEET 49

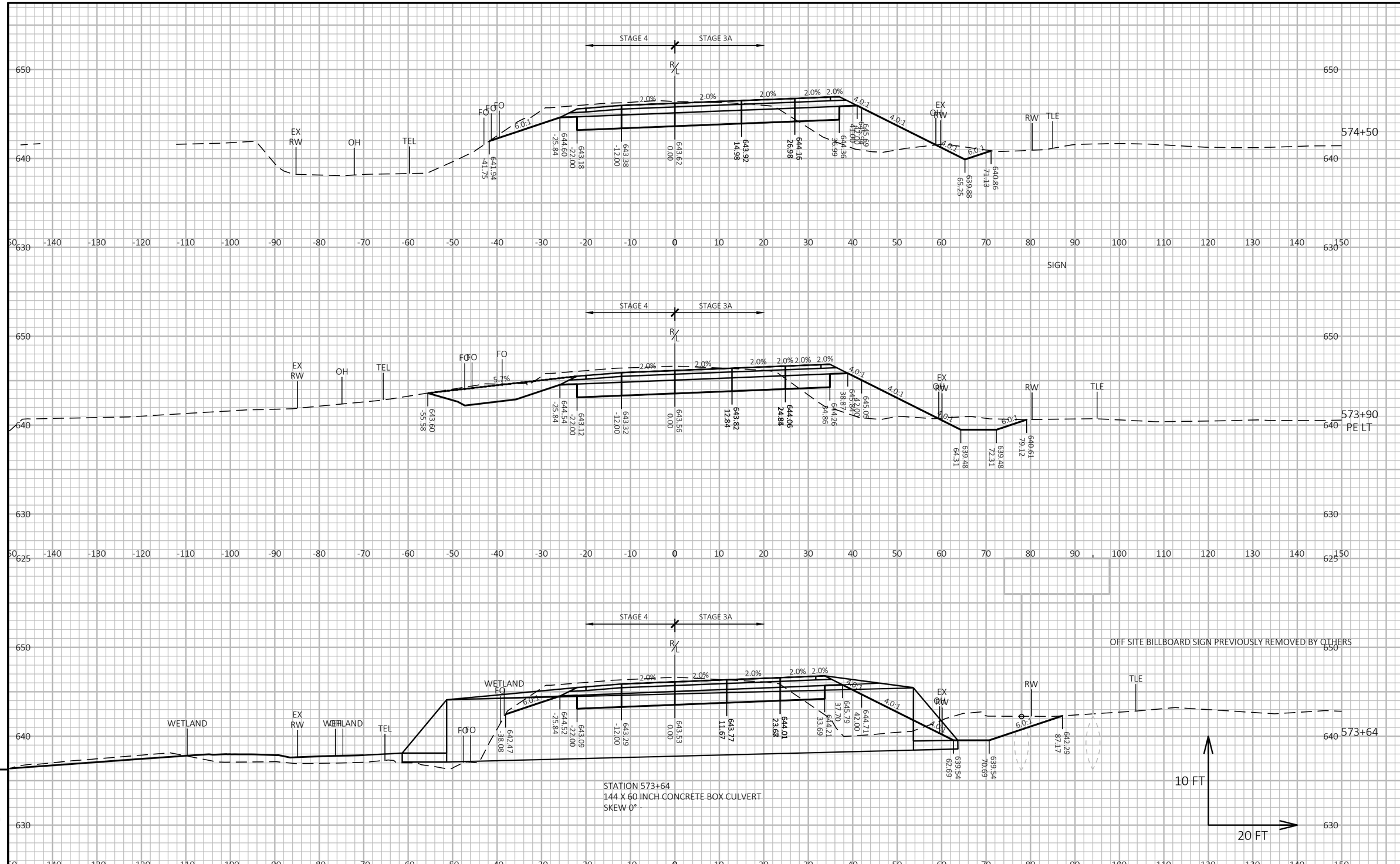

PROJECT NO: 5163-07-72	HWY: STH 35	COUNTY: LA CROSSE/VERNON	CROSS SECTIONS: STH 35	SHEET 457	E

FILE NAME : O:\PDS\C3D\51630702\SHEETSPLAN\090201-XS.DWG
LAYOUT NAME - 07
PLOT DATE : 7/1/2025 1:39 PM
PLOT BY : ED OCHS
PLOT NAME :
PLOT SCALE : 1 IN:20 FT HORZ. / 1 IN:10 FT VERT.
WISDOT/CADDS SHEET 49

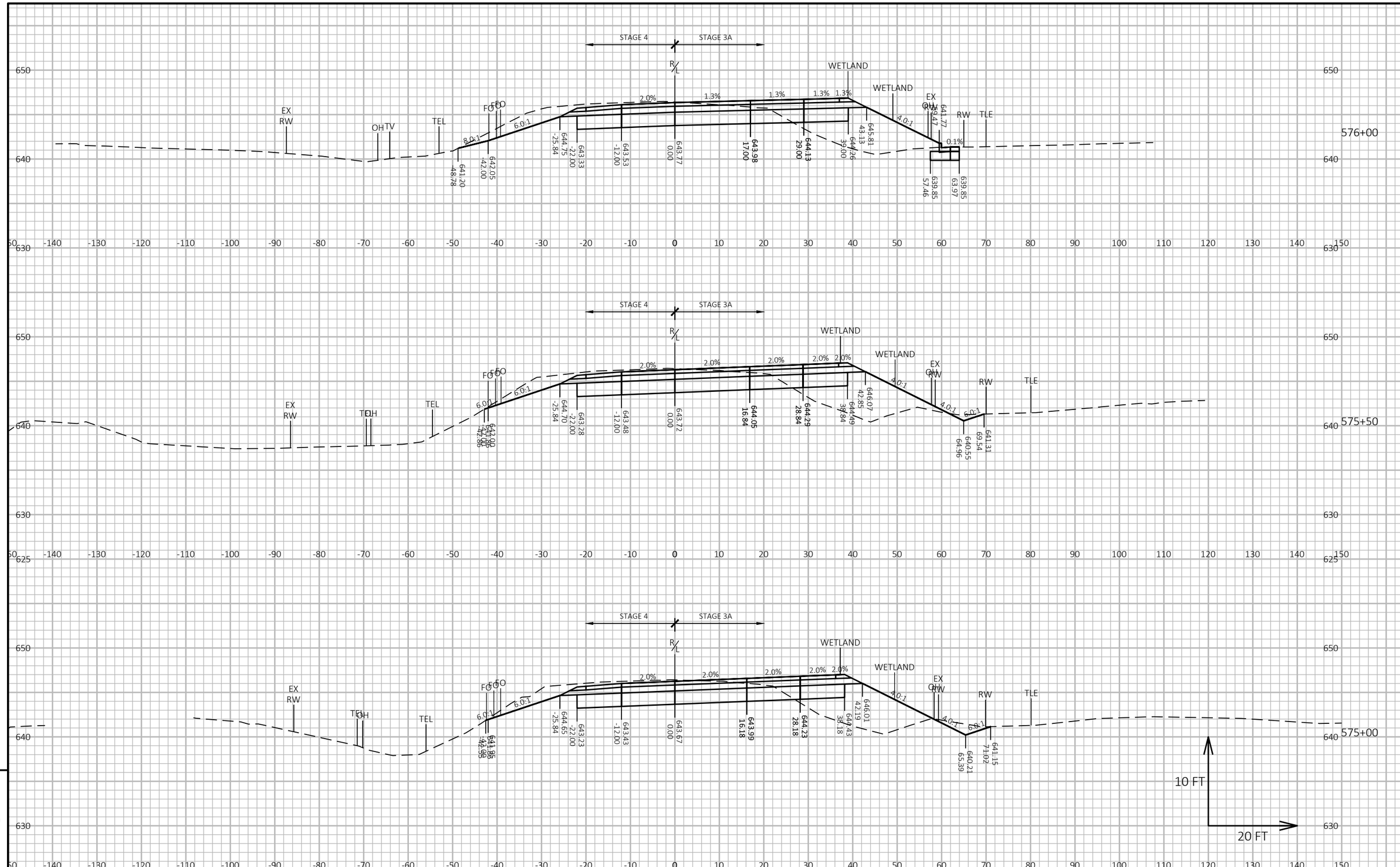

9

9

PROJECT NO: 5163-07-72	HWY: STH 35	COUNTY: LA CROSSE/VERNON	CROSS SECTIONS: STH 35	SHEET 458	E

FILE NAME : O:\PDS\C3D\51630702\SHEETSPLAN\090201-XS.DWG
LAYOUT NAME - 08
PLOT DATE : 7/1/2025 1:39 PM
PLOT BY : ED OCHS
PLOT NAME :
PLOT SCALE : 1 IN:20 FT HORZ. / 1 IN:10 FT VERT.
WISDOT/CADDS SHEET 49

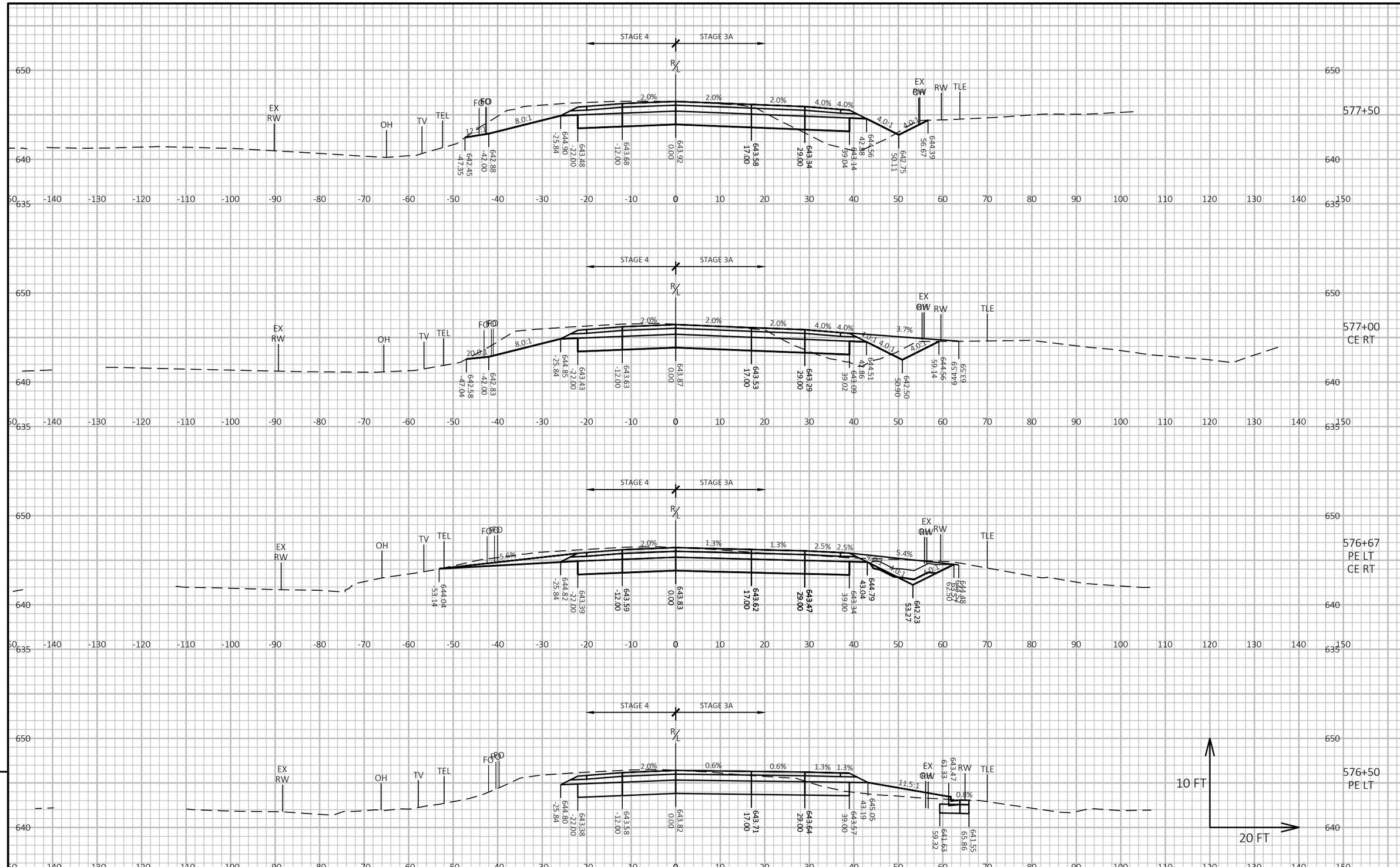

PROJECT NO: 5163-07-72	HWY: STH 35	COUNTY: LA CROSSE/VERNON	CROSS SECTIONS: STH 35	SHEET 459	E

FILE NAME : O:\PDS\C3D\51630702\SHEETSPLAN\090201-XS.DWG
LAYOUT NAME - 09
PLOT DATE : 7/1/2025 1:39 PM
PLOT BY : ED OCHS
PLOT NAME :
PLOT SCALE : 1 IN:20 FT HORZ. / 1 IN:10 FT VERT.

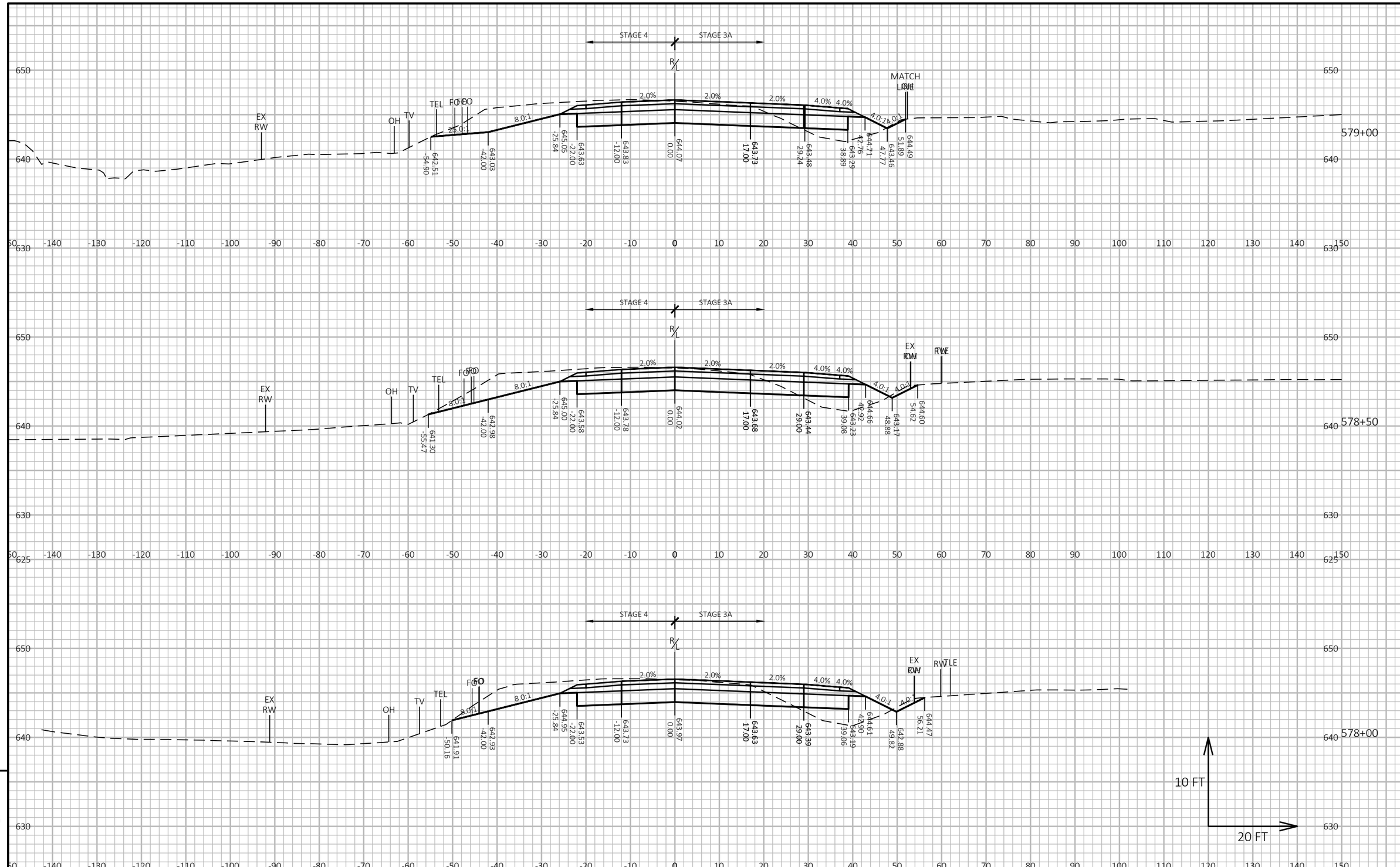

9

9

PROJECT NO: 5163-07-72	HWY: STH 35	COUNTY: LA CROSSE/VERNON	CROSS SECTIONS: STH 35	SHEET 460	E

FILE NAME : O:\PDS\C3D\51630702\SHEETSPLAN\090201-XS.DWG
LAYOUT NAME - 10
PLOT DATE : 7/1/2025 1:40 PM
PLOT BY : ED OCHS
PLOT NAME :
PLOT SCALE : 1 IN:20 FT HORZ. / 1 IN:10 FT VERT.
WISDOT/CADDS SHEET 49

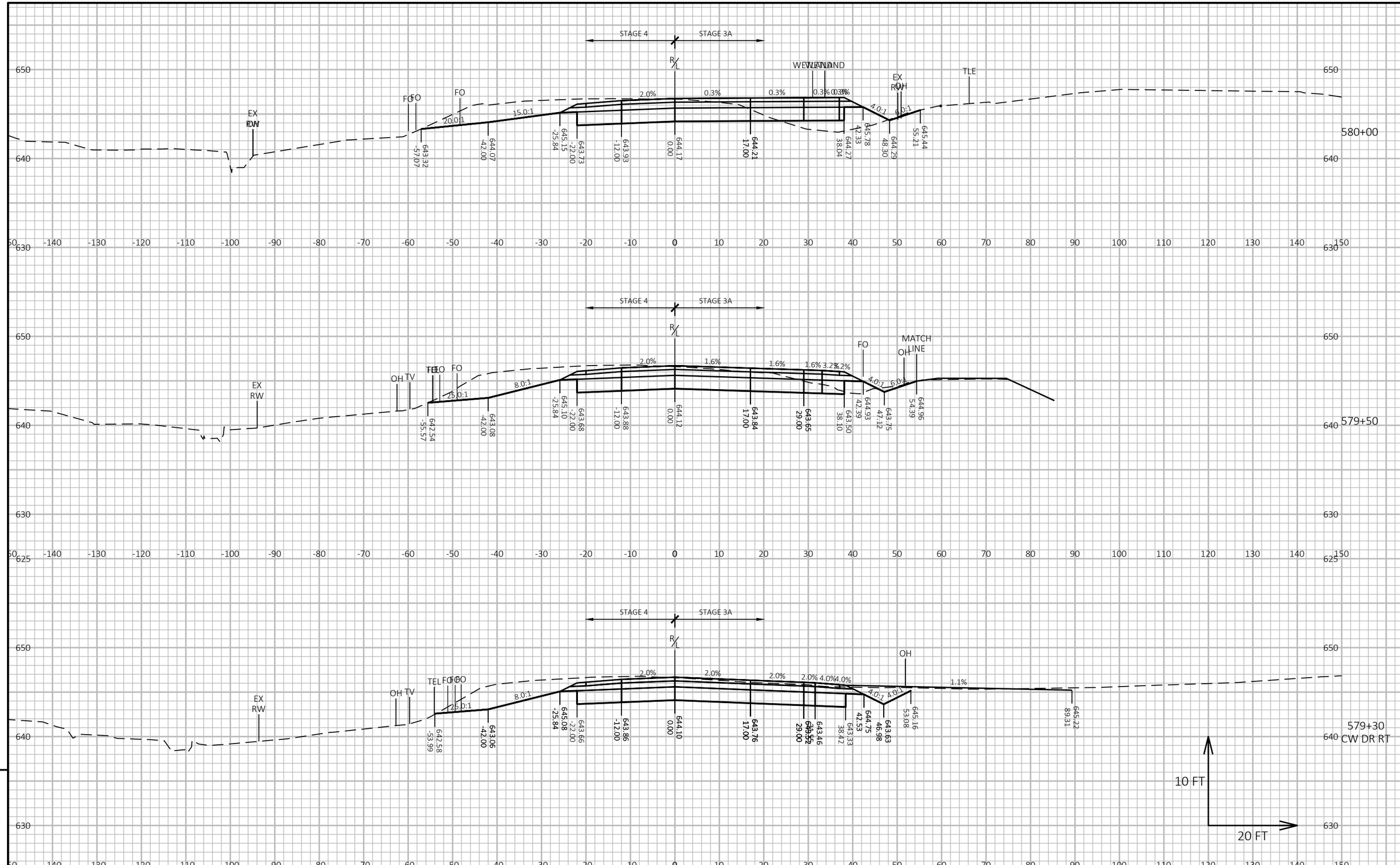

PROJECT NO: 5163-07-72	HWY: STH 35	COUNTY: LA CROSSE/VERNON	CROSS SECTIONS: STH 35	SHEET 461	E

FILE NAME : O:\PDS\C3D\51630702\SHEETSPLAN\090201-XS.DWG
LAYOUT NAME - 11
PLOT DATE : 7/1/2025 1:40 PM
PLOT BY : ED OCHS
PLOT NAME :
PLOT SCALE : 1 IN:20 FT HORZ. / 1 IN:10 FT VERT.
WISDOT/CADDS SHEET 49

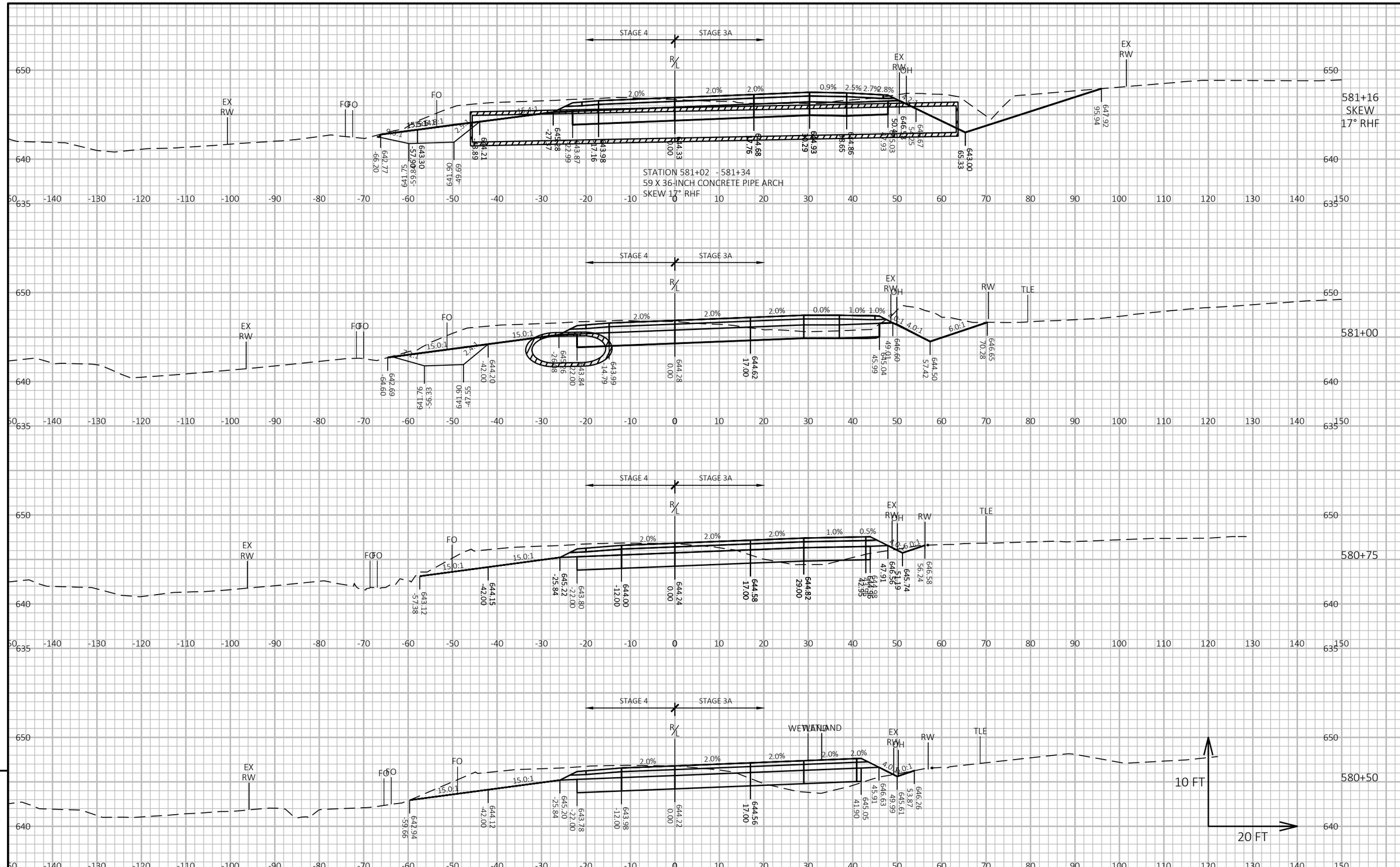

PROJECT NO: 5163-07-72	HWY: STH 35	COUNTY: LA CROSSE/VERNON	CROSS SECTIONS: STH 35	SHEET 462	E

FILE NAME : O:\PDS\C3D\51630702\SHEETSPLAN\090201-XS.DWG
LAYOUT NAME - 12
PLOT DATE : 7/1/2025 1:40 PM
PLOT BY : ED OCHS
PLOT NAME :
PLOT SCALE : 1 IN:20 FT HORZ. / 1 IN:10 FT VERT.
WISDOT/CADDS SHEET 49

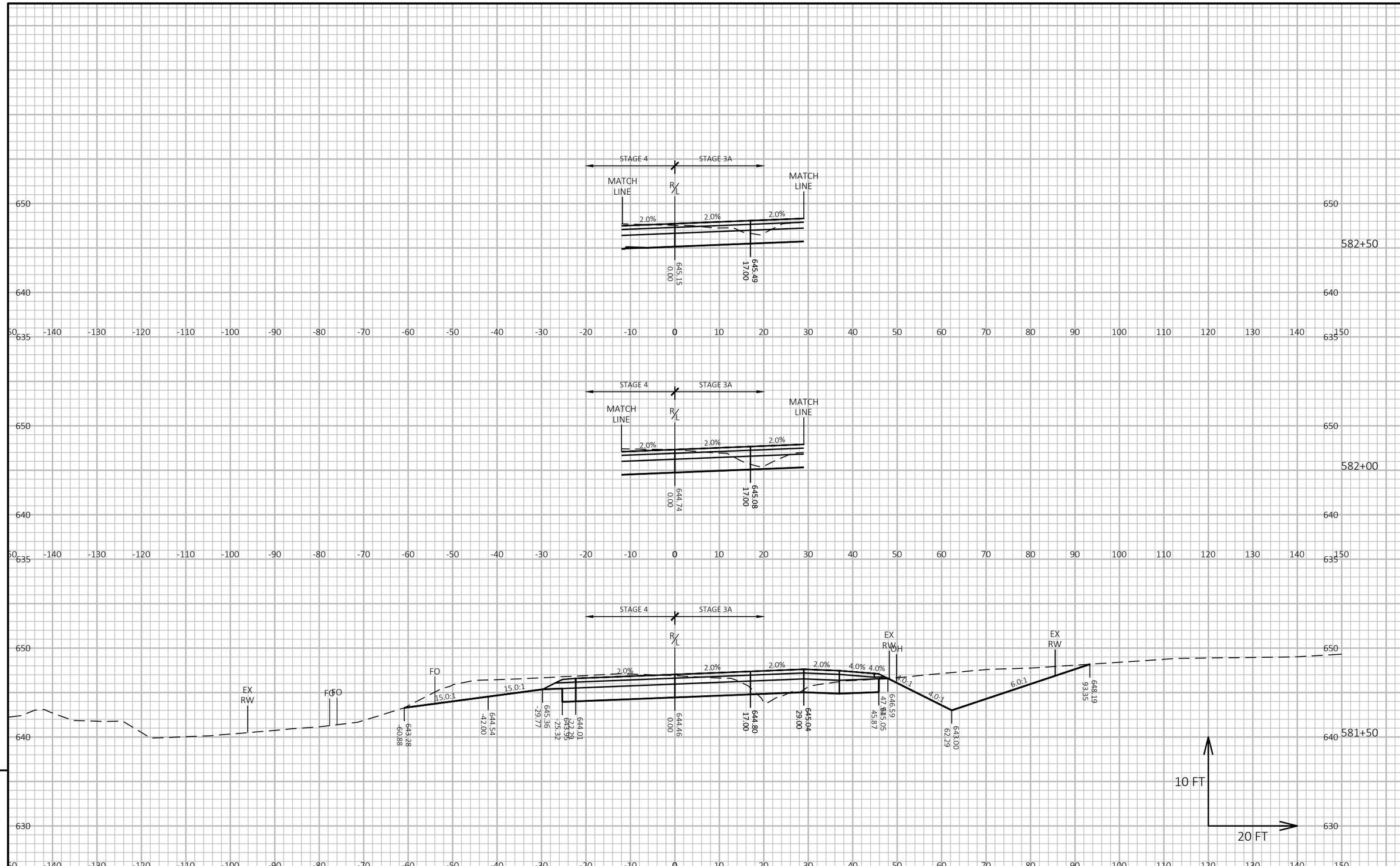

9

9

PROJECT NO: 5163-07-72	HWY: STH 35	COUNTY: LA CROSSE/VERNON	CROSS SECTIONS: STH 35	SHEET 463	E

FILE NAME : O:\PDS\C3D\51630702\SHEETSPLAN\090201-XS.DWG
LAYOUT NAME - 13
PLOT DATE : 7/1/2025 1:41 PM
PLOT BY : ED OCHS
PLOT NAME :
PLOT SCALE : 1 IN:20 FT HORZ. / 1 IN:10 FT VERT.

WISDOT/CADDS SHEET 49

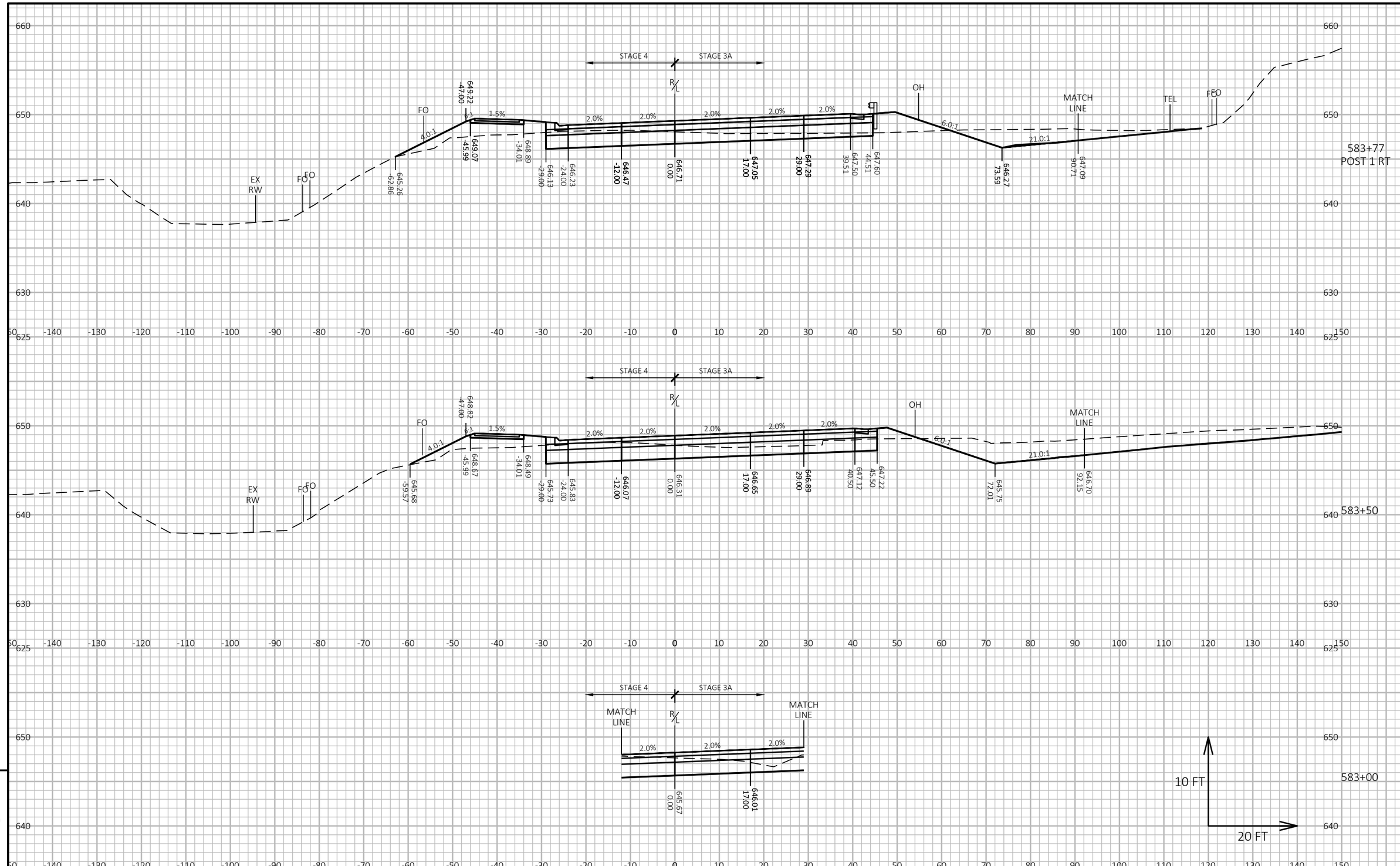

9

9

PROJECT NO: 5163-07-72	HWY: STH 35	COUNTY: LA CROSSE/VERNON	CROSS SECTIONS: STH 35	SHEET 464	E

FILE NAME : O:\PDS\C3D\51630702\SHEETSPLAN\090201-XS.DWG
LAYOUT NAME - 14
PLOT DATE : 7/1/2025 1:41 PM
PLOT BY : ED OCHS
PLOT NAME :
PLOT SCALE : 1 IN:20 FT HORZ. / 1 IN:10 FT VERT.

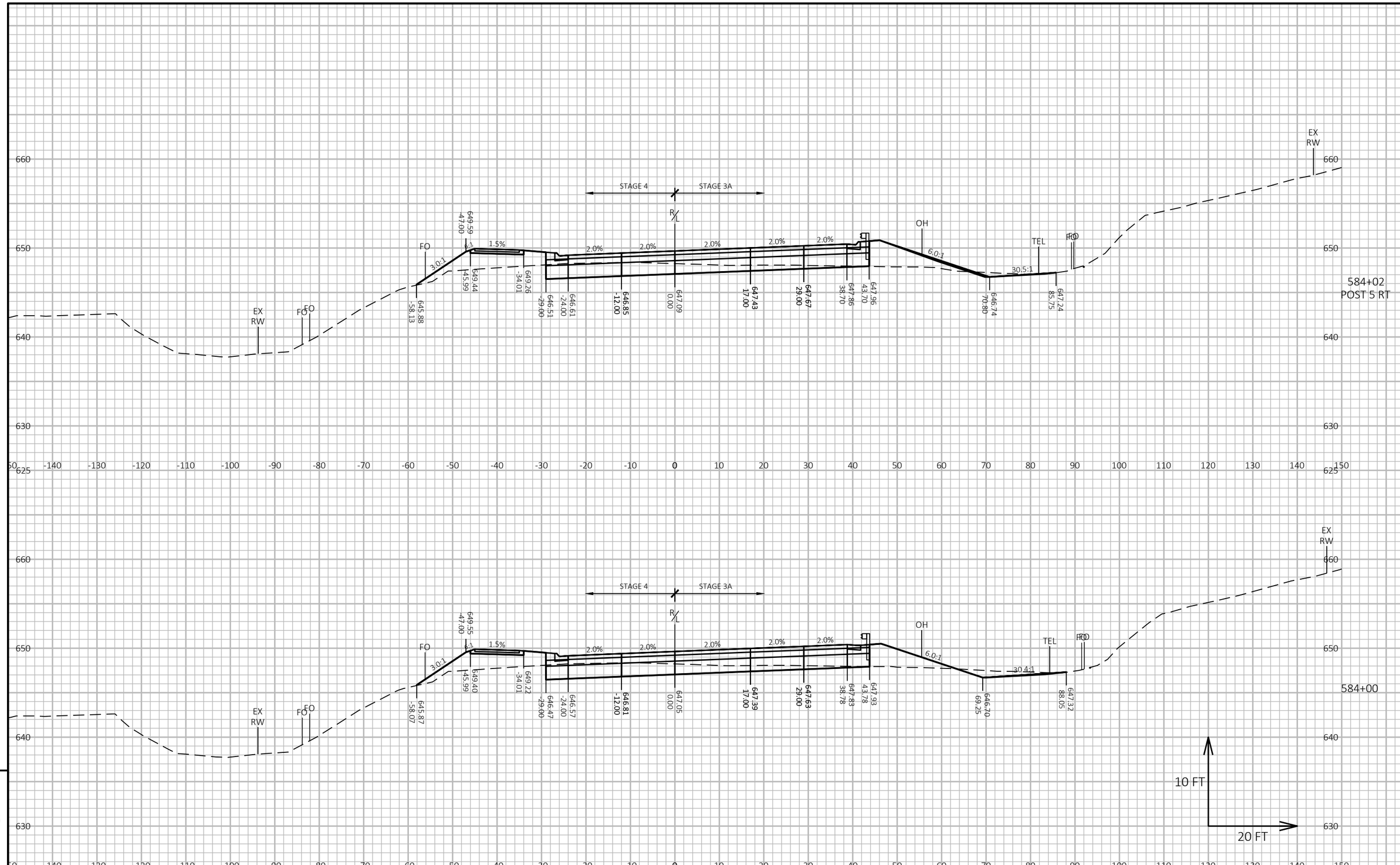

PROJECT NO: 5163-07-72	HWY: STH 35	COUNTY: LA CROSSE/VERNON	CROSS SECTIONS: STH 35	SHEET 465	E

FILE NAME : O:\PDS\C3D\51630702\SHEETSPLAN\090201-XS.DWG
LAYOUT NAME - 15
PLOT DATE : 7/1/2025 1:41 PM
PLOT BY : ED OCHS
PLOT NAME :
PLOT SCALE : 1 IN:20 FT HORZ. / 1 IN:10 FT VERT.
WISDOT/CADDS SHEET 49

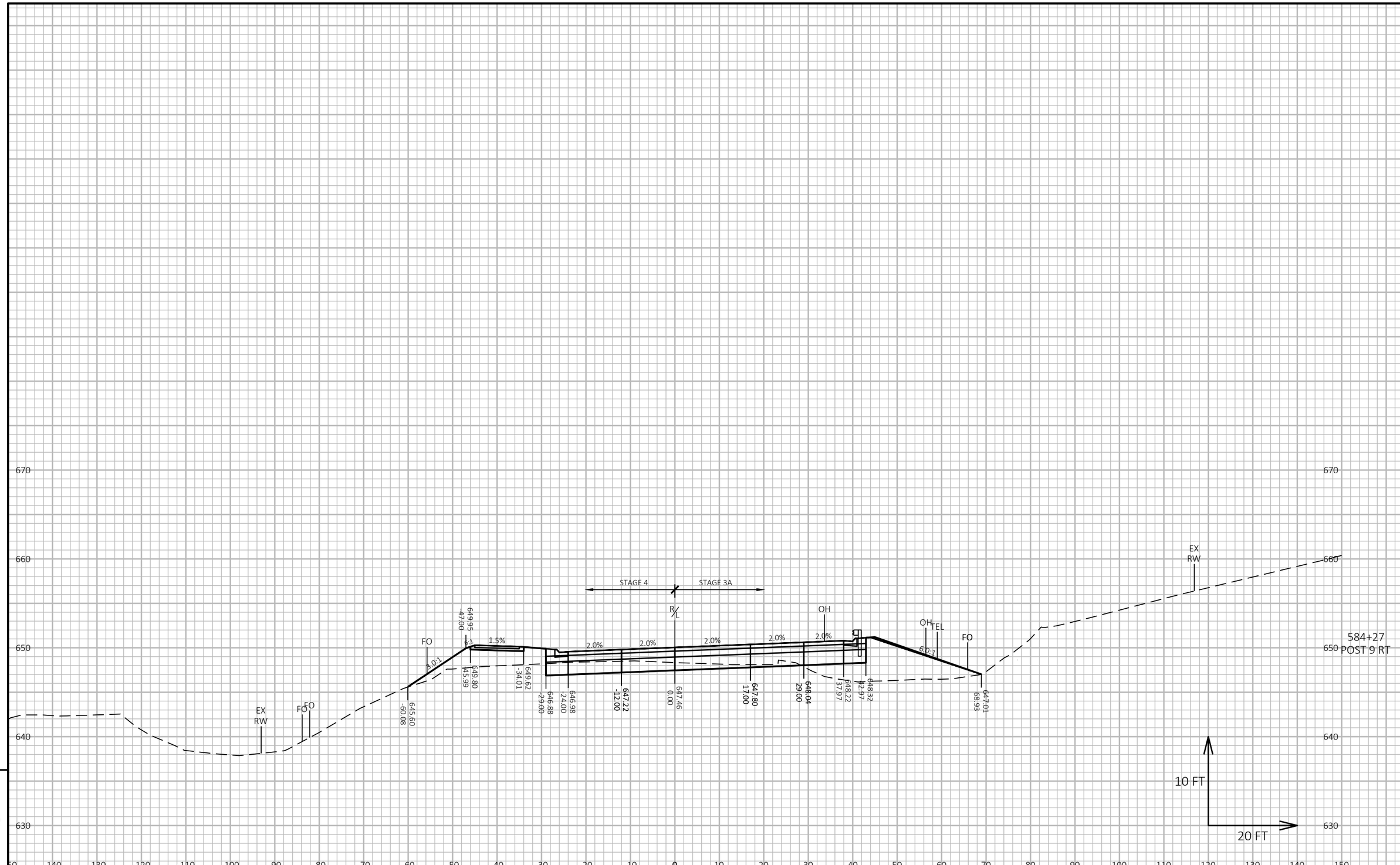

9

9

PROJECT NO: 5163-07-72	HWY: STH 35	COUNTY: LA CROSSE/VERNON	CROSS SECTIONS: STH 35	SHEET 466	E

FILE NAME : O:\PDS\C3D\51630702\SHEETSPLAN\090201-XS.DWG
LAYOUT NAME - 16

PLOT DATE : 7/1/2025 1:42 PM PLOT BY : ED OCHS PLOT NAME : PLOT SCALE : 1 IN:20 FT HORZ. / 1 IN:10 FT VERT.

WISDOT/CADDS SHEET 49

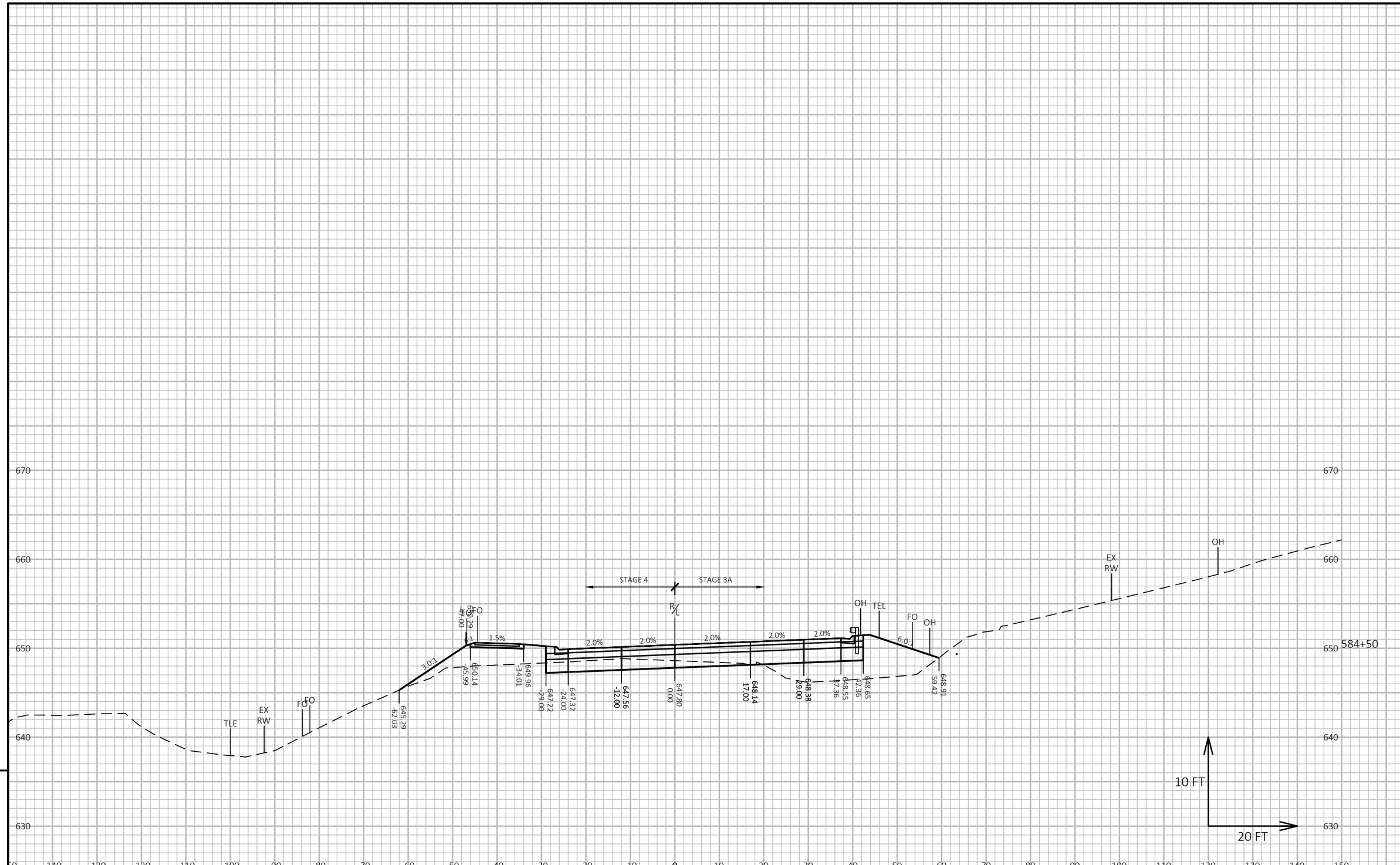

9

9

PROJECT NO: 5163-07-72	HWY: STH 35	COUNTY: LA CROSSE/VERNON	CROSS SECTIONS: STH 35	SHEET 467	E

FILE NAME : O:\PDS\C3D\51630702\SHEETSPLAN\090201-XS.DWG
LAYOUT NAME - 17
PLOT DATE : 7/1/2025 1:42 PM
PLOT BY : ED OCHS
PLOT NAME :
PLOT SCALE : 1 IN:20 FT HORZ. / 1 IN:10 FT VERT.
WISDOT/CADDS SHEET 49

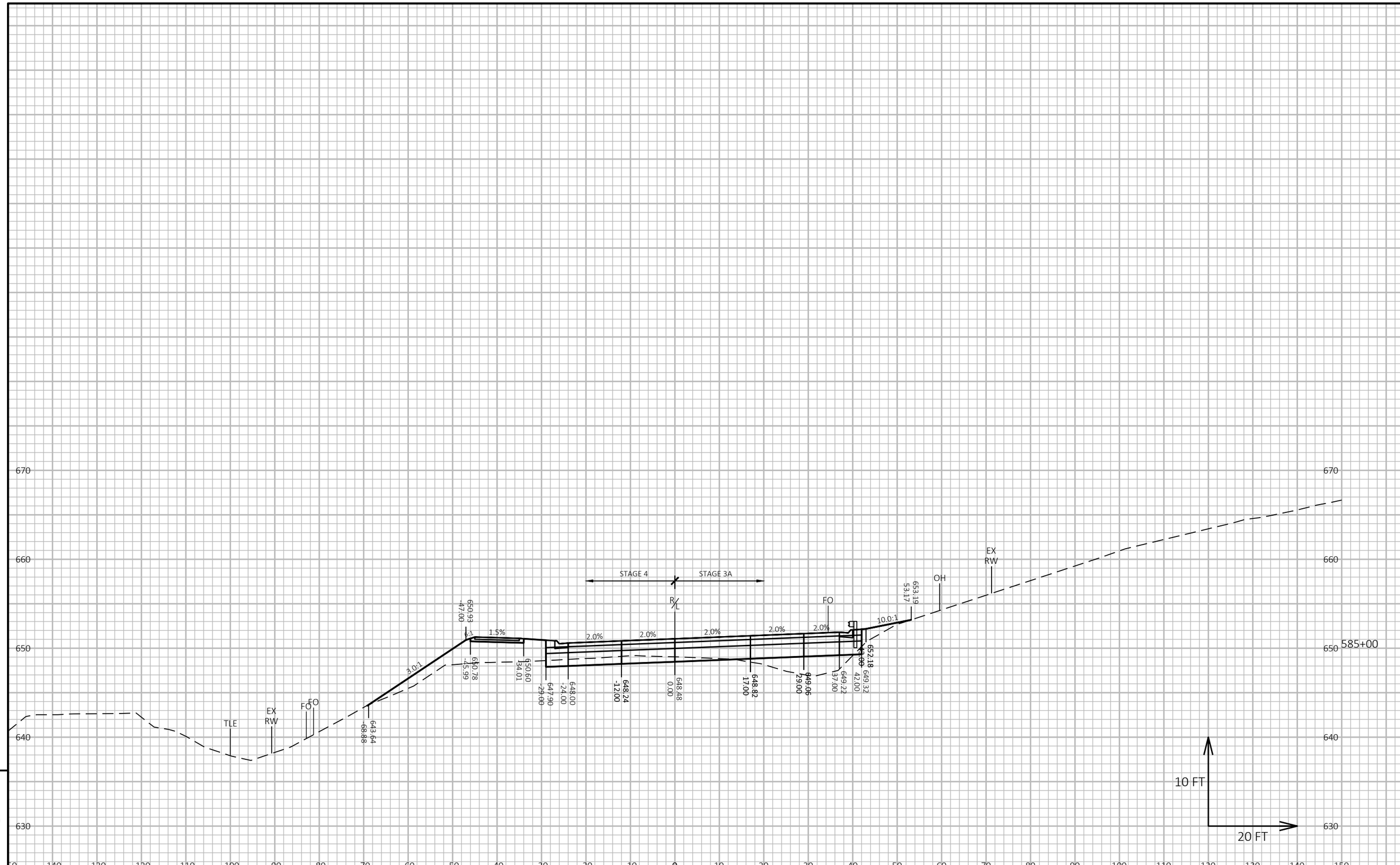

9

9

PROJECT NO: 5163-07-72	HWY: STH 35	COUNTY: LA CROSSE/VERNON	CROSS SECTIONS: STH 35	SHEET 468	E

FILE NAME : O:\PDS\C3D\51630702\SHEETSPLAN\090201-XS.DWG
LAYOUT NAME - 18
PLOT DATE : 7/1/2025 1:42 PM
PLOT BY : ED OCHS
PLOT NAME :
PLOT SCALE : 1 IN:20 FT HORZ. / 1 IN:10 FT VERT.
WISDOT/CADDS SHEET 49

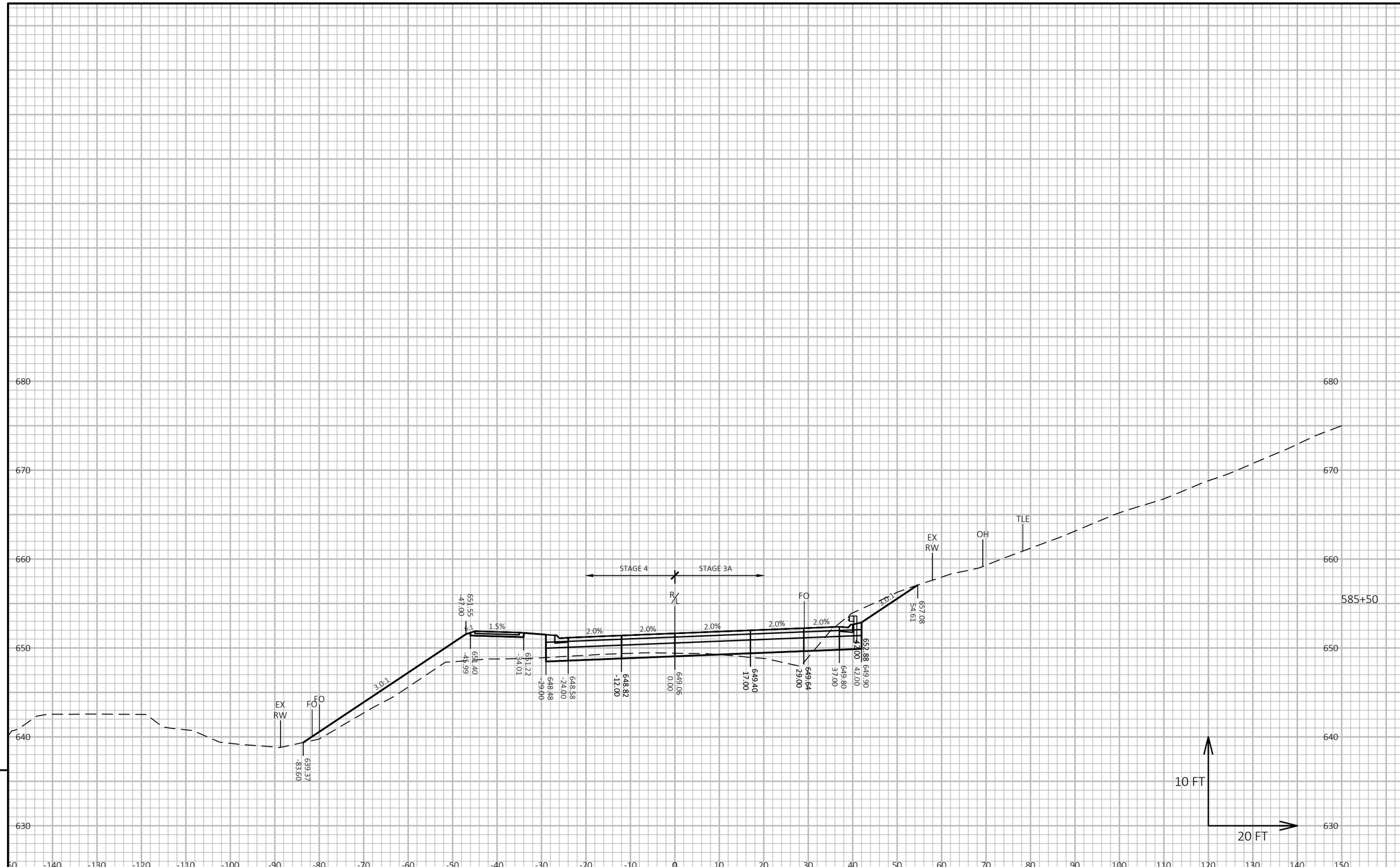

9

9

PROJECT NO: 5163-07-72	HWY: STH 35	COUNTY: LA CROSSE/VERNON	CROSS SECTIONS: STH 35	SHEET 469	E

FILE NAME : O:\PDS\C3D\51630702\SHEETSPLAN\090201-XS.DWG
LAYOUT NAME - 19
PLOT DATE : 7/1/2025 1:43 PM
PLOT BY : ED OCHS
PLOT NAME :
PLOT SCALE : 1 IN:20 FT HORZ. / 1 IN:10 FT VERT.

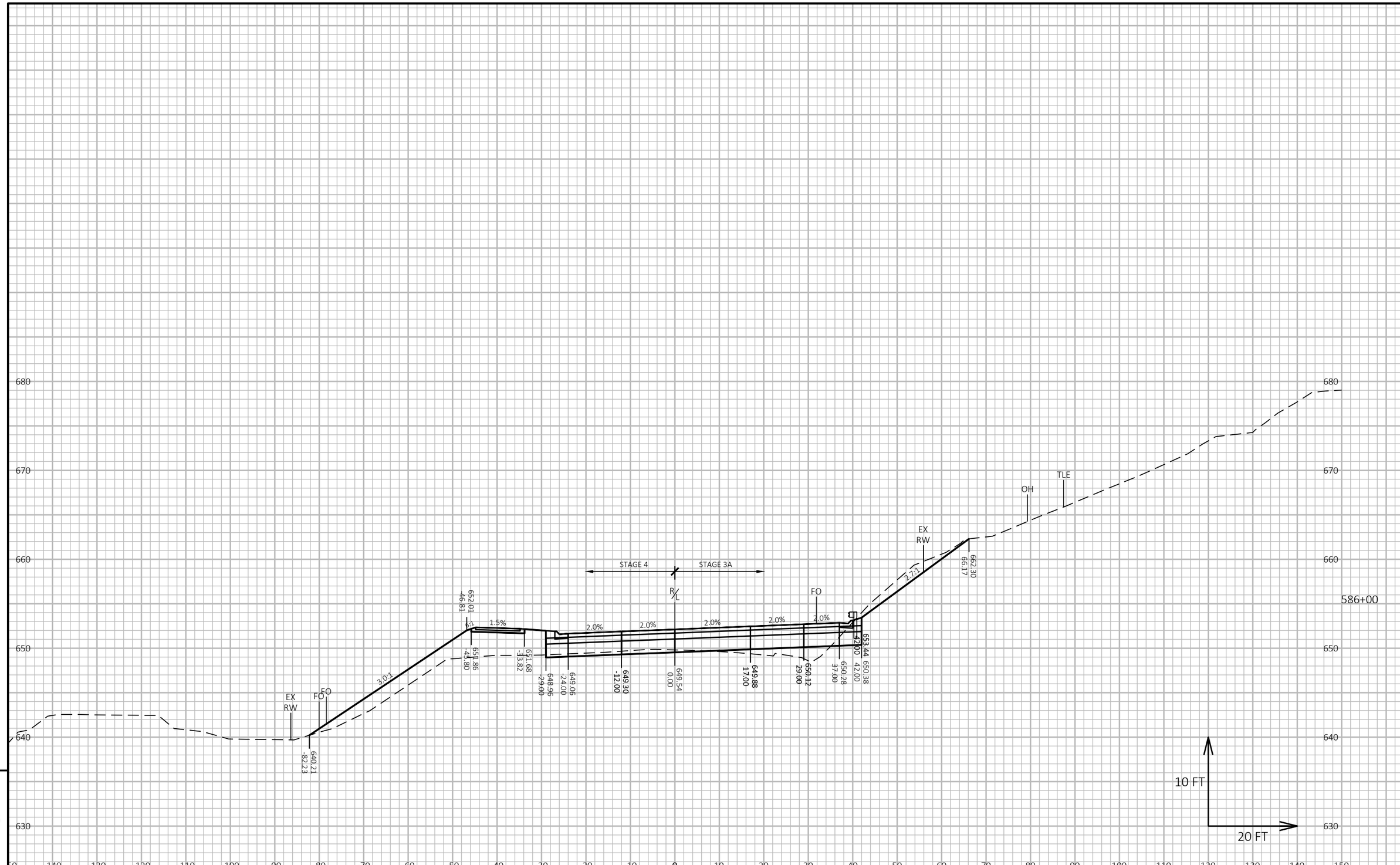

9

9

PROJECT NO: 5163-07-72	HWY: STH 35	COUNTY: LA CROSSE/VERNON	CROSS SECTIONS: STH 35	SHEET 470	E

FILE NAME : O:\PDS\C3D\51630702\SHEETSPLAN\090201-XS.DWG
LAYOUT NAME - 20
PLOT DATE : 7/1/2025 1:43 PM
PLOT BY : ED OCHS
PLOT NAME :
PLOT SCALE : 1 IN:20 FT HORZ. / 1 IN:10 FT VERT.

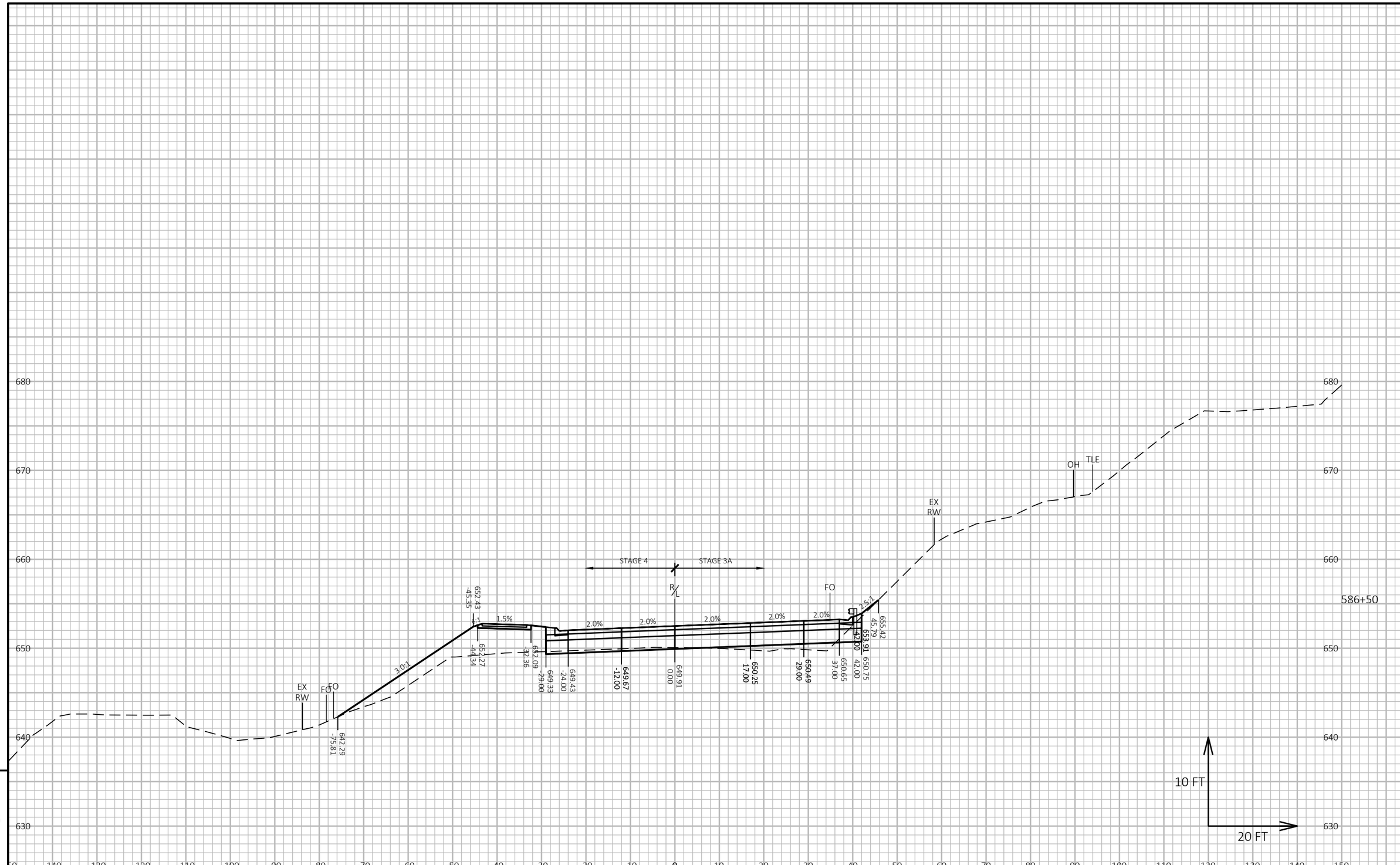

9

9

PROJECT NO: 5163-07-72	HWY: STH 35	COUNTY: LA CROSSE/VERNON	CROSS SECTIONS: STH 35	SHEET 471	E

FILE NAME : O:\PDS\C3D\51630702\SHEETSPLAN\090201-XS.DWG
LAYOUT NAME - 21
PLOT DATE : 7/1/2025 1:43 PM
PLOT BY : ED OCHS
PLOT NAME :
PLOT SCALE : 1 IN:20 FT HORZ. / 1 IN:10 FT VERT.
WISDOT/CADDS SHEET 49

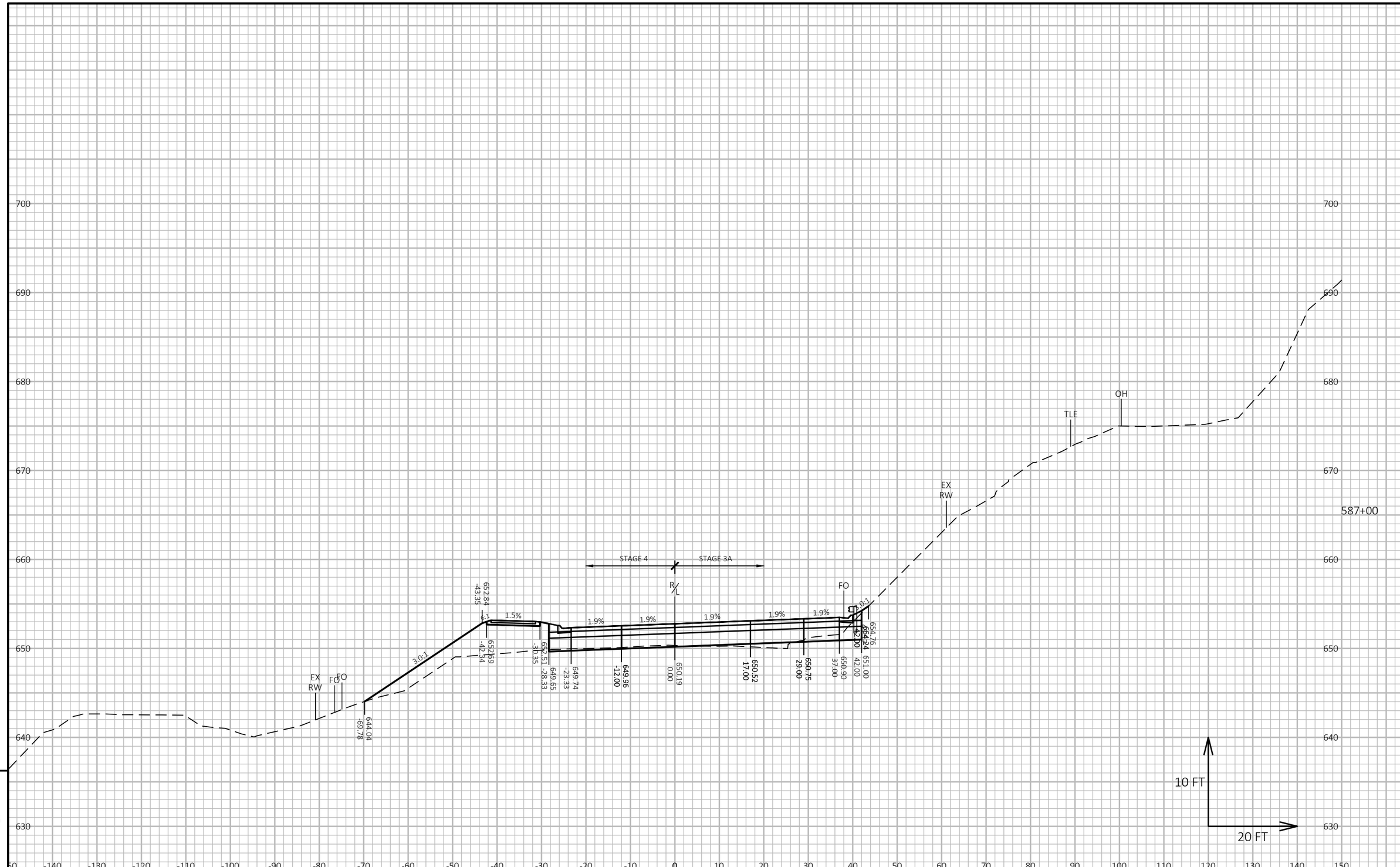

9

9

PROJECT NO: 5163-07-72	HWY: STH 35	COUNTY: LA CROSSE/VERNON	CROSS SECTIONS: STH 35	SHEET 472	E

FILE NAME : O:\PDS\C3D\51630702\SHEETSPLAN\090201-XS.DWG
LAYOUT NAME - 22

PLOT DATE : 7/1/2025 1:44 PM PLOT BY : ED OCHS PLOT NAME : PLOT SCALE : 1 IN:20 FT HORZ. / 1 IN:10 FT VERT.

WISDOT/CADDS SHEET 49

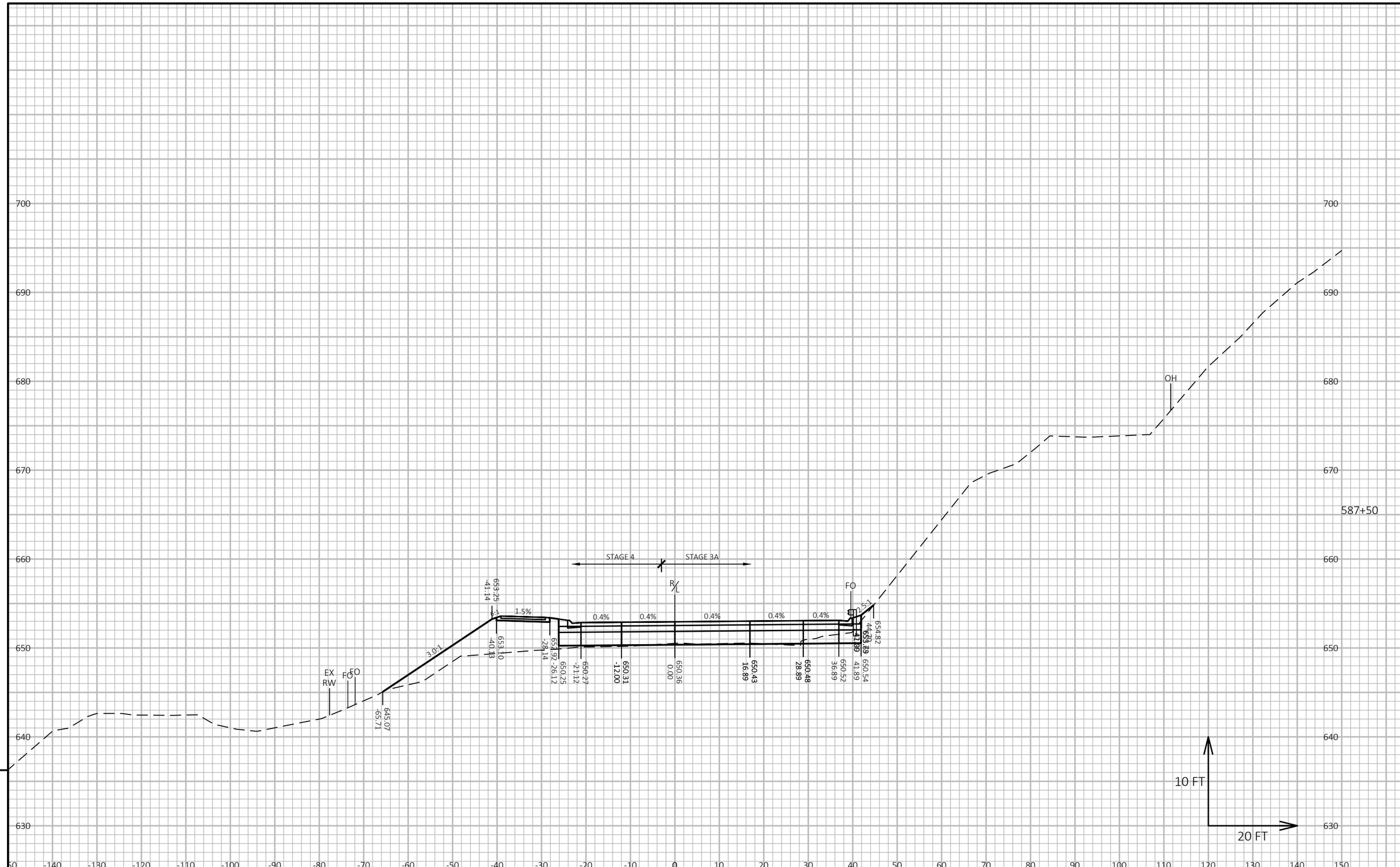

9

9

PROJECT NO: 5163-07-72	HWY: STH 35	COUNTY: LA CROSSE/VERNON	CROSS SECTIONS: STH 35	SHEET 473	E

FILE NAME : O:\PDS\C3D\51630702\SHEETSPLAN\090201-XS.DWG
LAYOUT NAME - 23

PLOT DATE : 7/1/2025 1:44 PM PLOT BY : ED OCHS PLOT NAME : PLOT SCALE : 1 IN:20 FT HORZ. / 1 IN:10 FT VERT.

WISDOT/CADDS SHEET 49

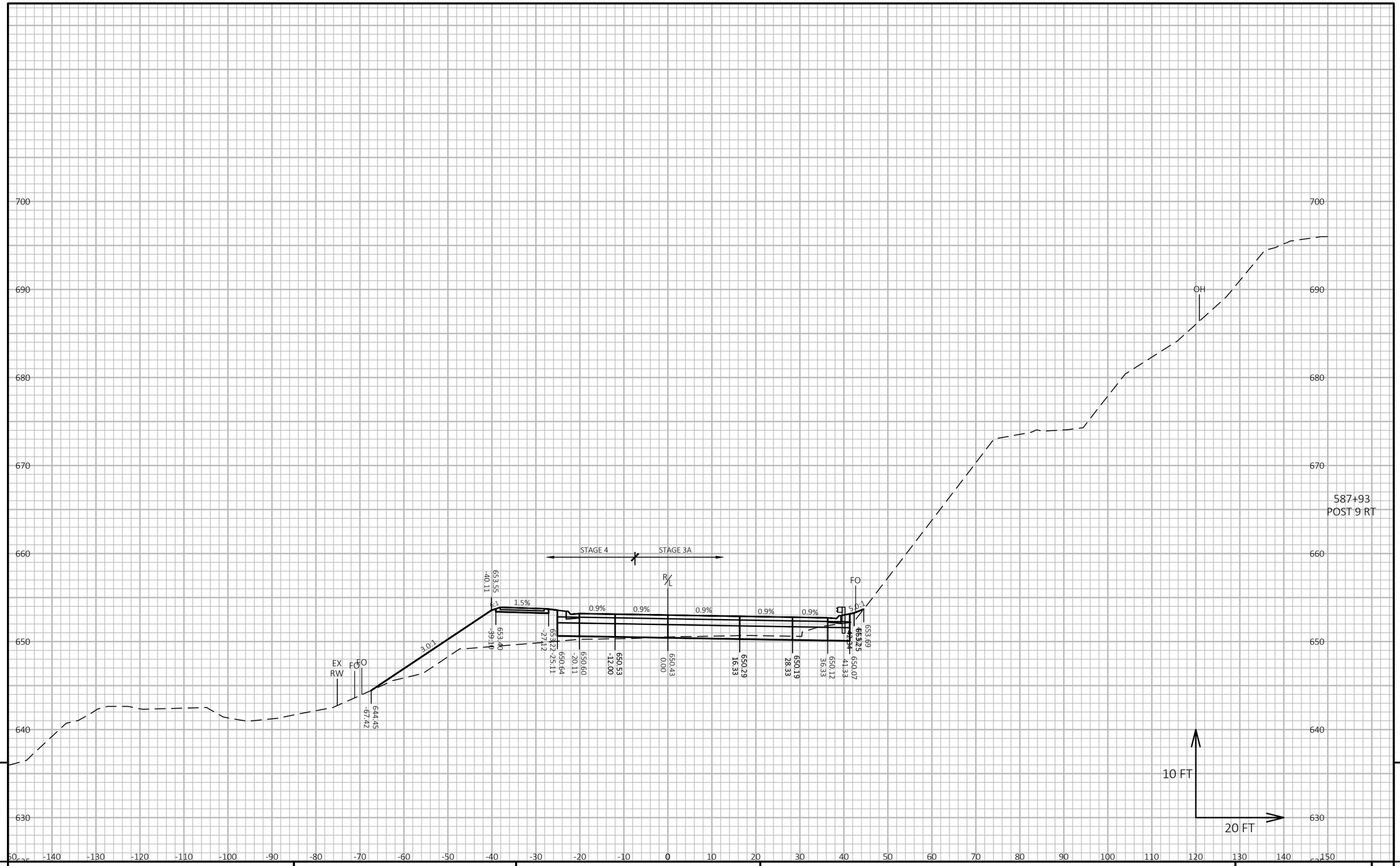

9

9

PROJECT NO: 5163-07-72	HWY: STH 35	COUNTY: LA CROSSE/VERNON	CROSS SECTIONS: STH 35	SHEET 474	E

FILE NAME : O:\PDS\C3D\51630702\SHEETSPLAN\090201-XS.DWG
LAYOUT NAME - 24

PLOT DATE : 7/1/2025 1:44 PM PLOT BY : ED OCHS PLOT NAME : PLOT SCALE : 1 IN:20 FT HORZ. / 1 IN:10 FT VERT.

WISDOT/CADDS SHEET 49

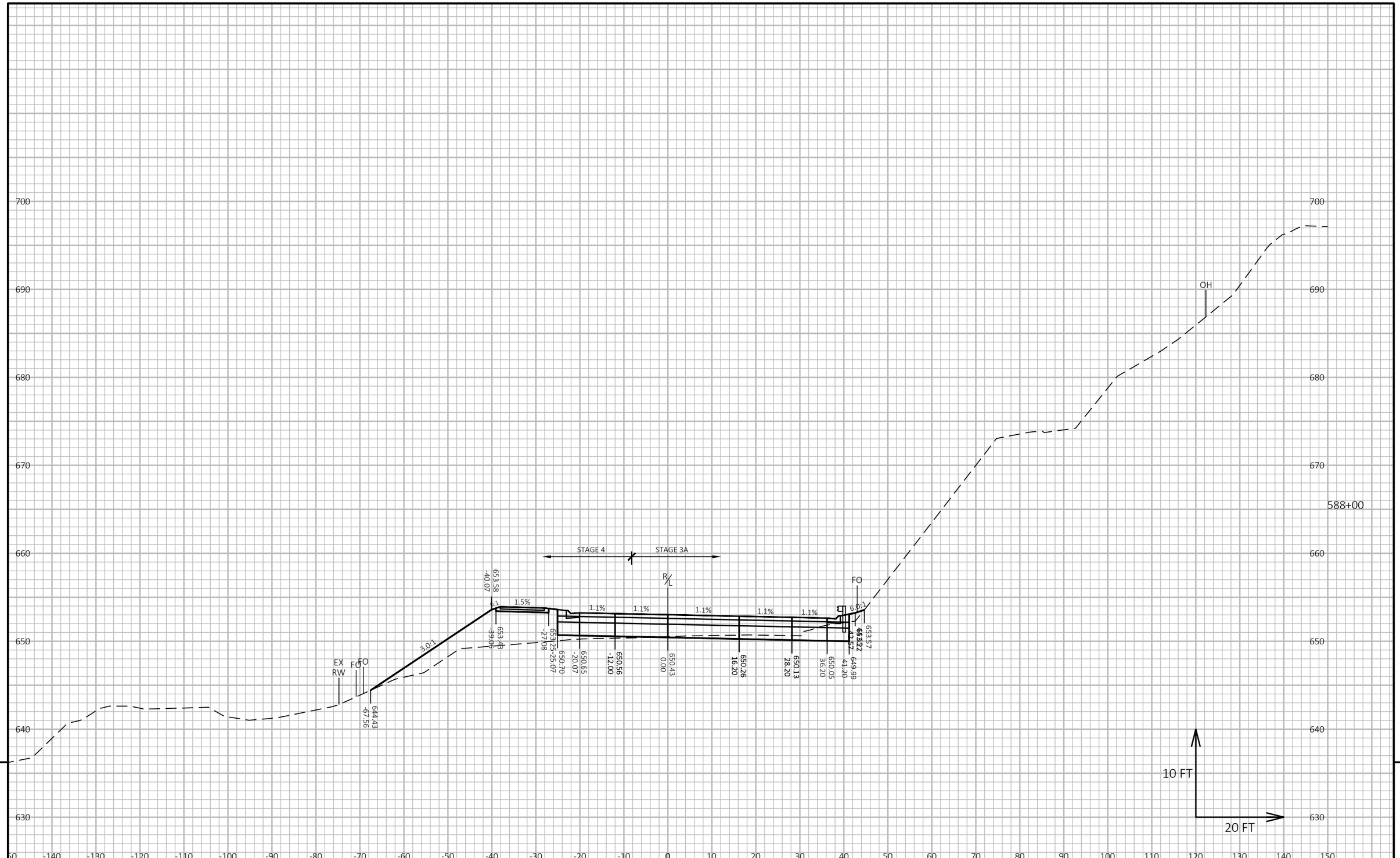

9

9

PROJECT NO: 5163-07-72	HWY: STH 35	COUNTY: LA CROSSE/VERNON	CROSS SECTIONS: STH 35	SHEET 475	E

FILE NAME : O:\PDS\C3D\51630702\SHEETSPLAN\090201-XS.DWG
LAYOUT NAME - 25

PLOT DATE : 7/1/2025 1:45 PM PLOT BY : ED OCHS PLOT NAME : PLOT SCALE : 1 IN:20 FT HORZ. / 1 IN:10 FT VERT.

WISDOT/CADDS SHEET 49

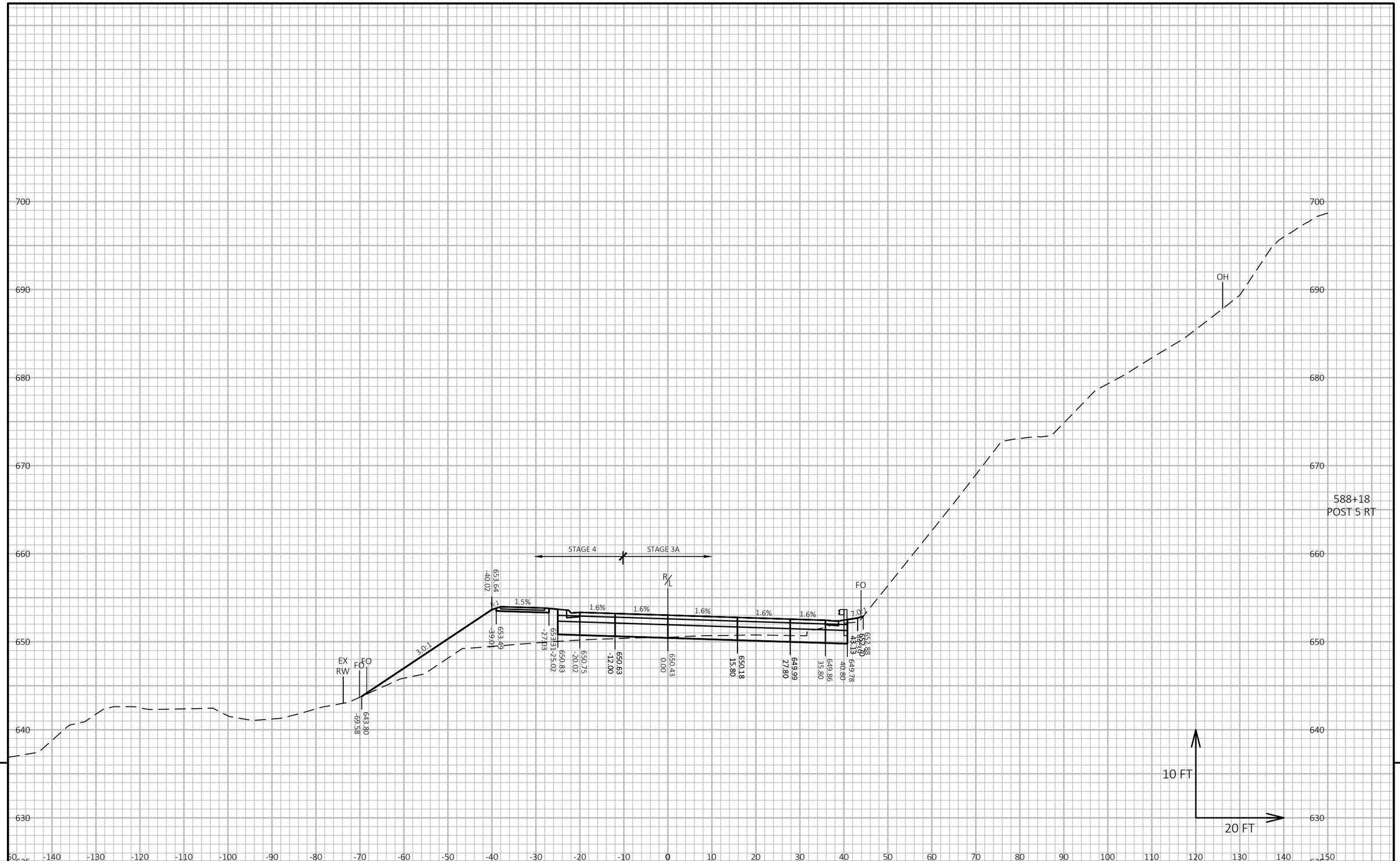

9

9

PROJECT NO: 5163-07-72	HWY: STH 35	COUNTY: LA CROSSE/VERNON	CROSS SECTIONS: STH 35	SHEET 476	E

FILE NAME : O:\PDS\C3D\51630702\SHEETSPLAN\090201-XS.DWG
LAYOUT NAME - 26

PLOT DATE : 7/1/2025 1:45 PM PLOT BY : ED OCHS PLOT NAME : PLOT SCALE : 1 IN:20 FT HORZ. / 1 IN:10 FT VERT.

WISDOT/CADDS SHEET 49

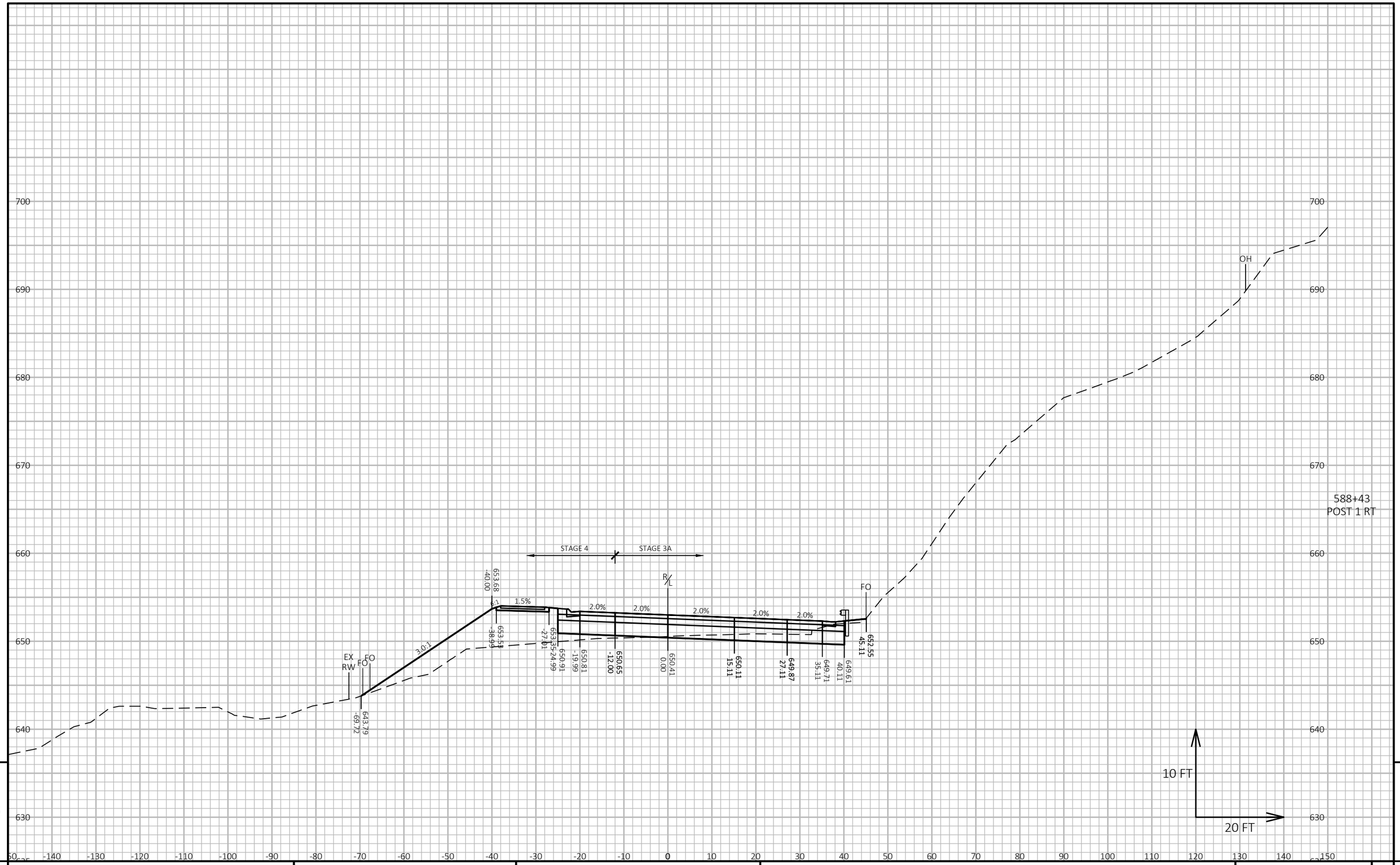

9

9

PROJECT NO: 5163-07-72	HWY: STH 35	COUNTY: LA CROSSE/VERNON	CROSS SECTIONS: STH 35	SHEET 477	E

FILE NAME : O:\PDS\C3D\51630702\SHEETSPLAN\090201-XS.DWG
LAYOUT NAME - 27

PLOT DATE : 7/1/2025 1:45 PM PLOT BY : ED OCHS PLOT NAME : PLOT SCALE : 1 IN:20 FT HORZ. / 1 IN:10 FT VERT.

WISDOT/CADDS SHEET 49

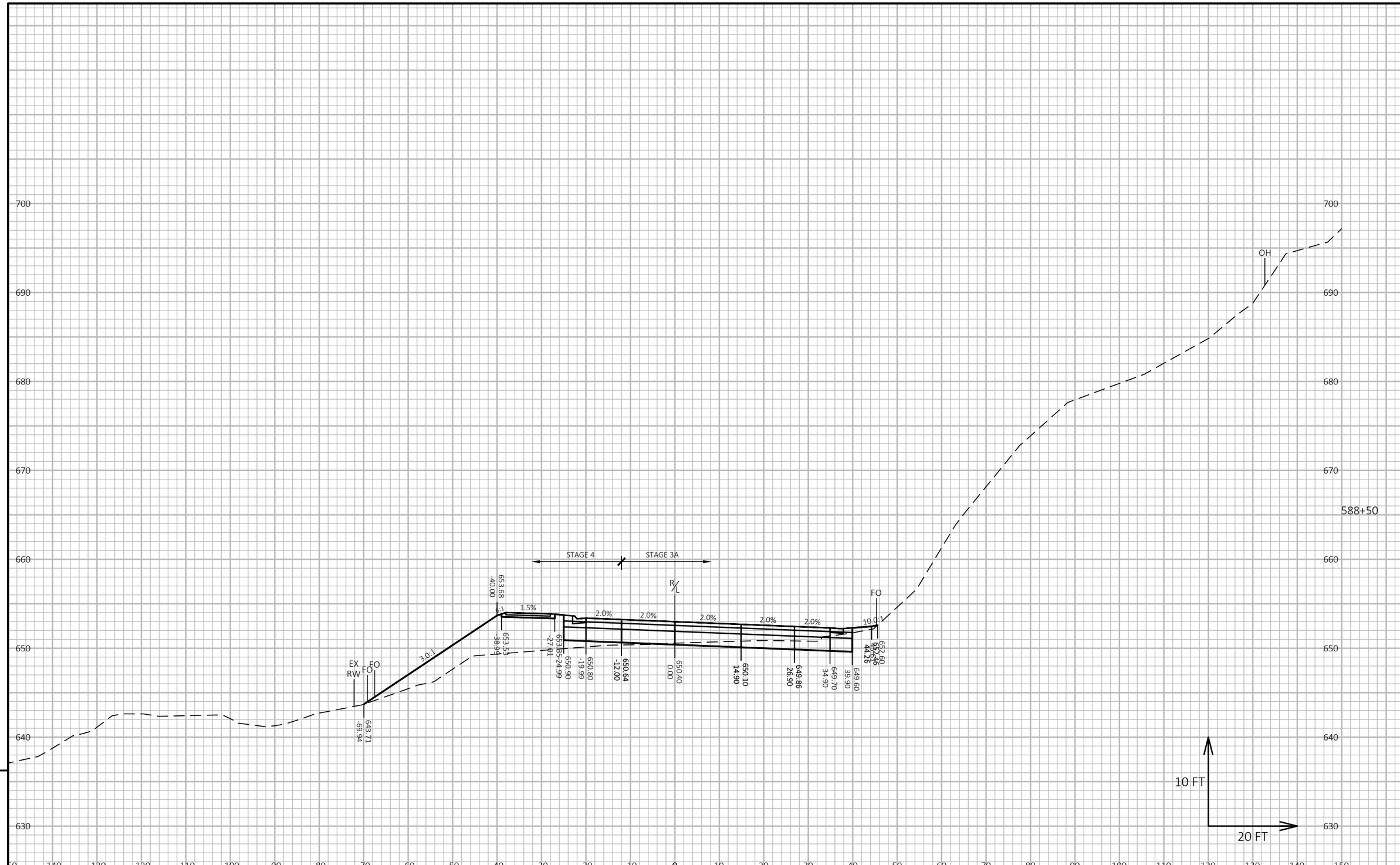

9

9

PROJECT NO: 5163-07-72	HWY: STH 35	COUNTY: LA CROSSE/VERNON	CROSS SECTIONS: STH 35	SHEET 478	E

FILE NAME : O:\PDS\C3D\51630702\SHEETSPLAN\090201-XS.DWG
LAYOUT NAME - 28

PLOT DATE : 7/1/2025 1:46 PM PLOT BY : ED OCHS PLOT NAME : PLOT SCALE : 1 IN:20 FT HORZ. / 1 IN:10 FT VERT.

WISDOT/CADDS SHEET 49

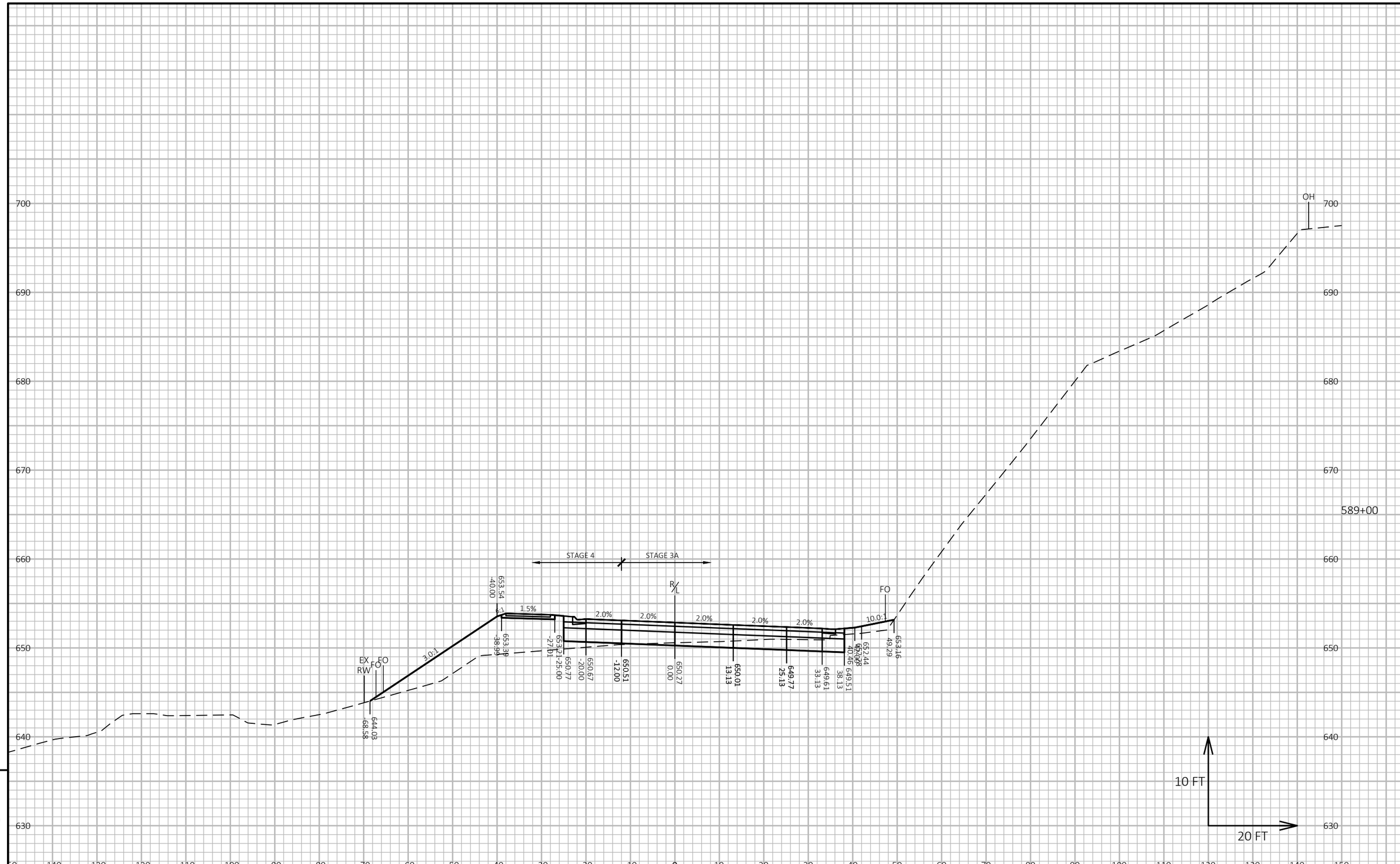

9

9

PROJECT NO: 5163-07-72	HWY: STH 35	COUNTY: LA CROSSE/VERNON	CROSS SECTIONS: STH 35	SHEET 479	E

FILE NAME : O:\PDS\C3D\51630702\SHEETSPLAN\090201-XS.DWG
LAYOUT NAME - 29
PLOT DATE : 7/1/2025 1:46 PM
PLOT BY : ED OCHS
PLOT NAME :
PLOT SCALE : 1 IN:20 FT HORZ. / 1 IN:10 FT VERT.

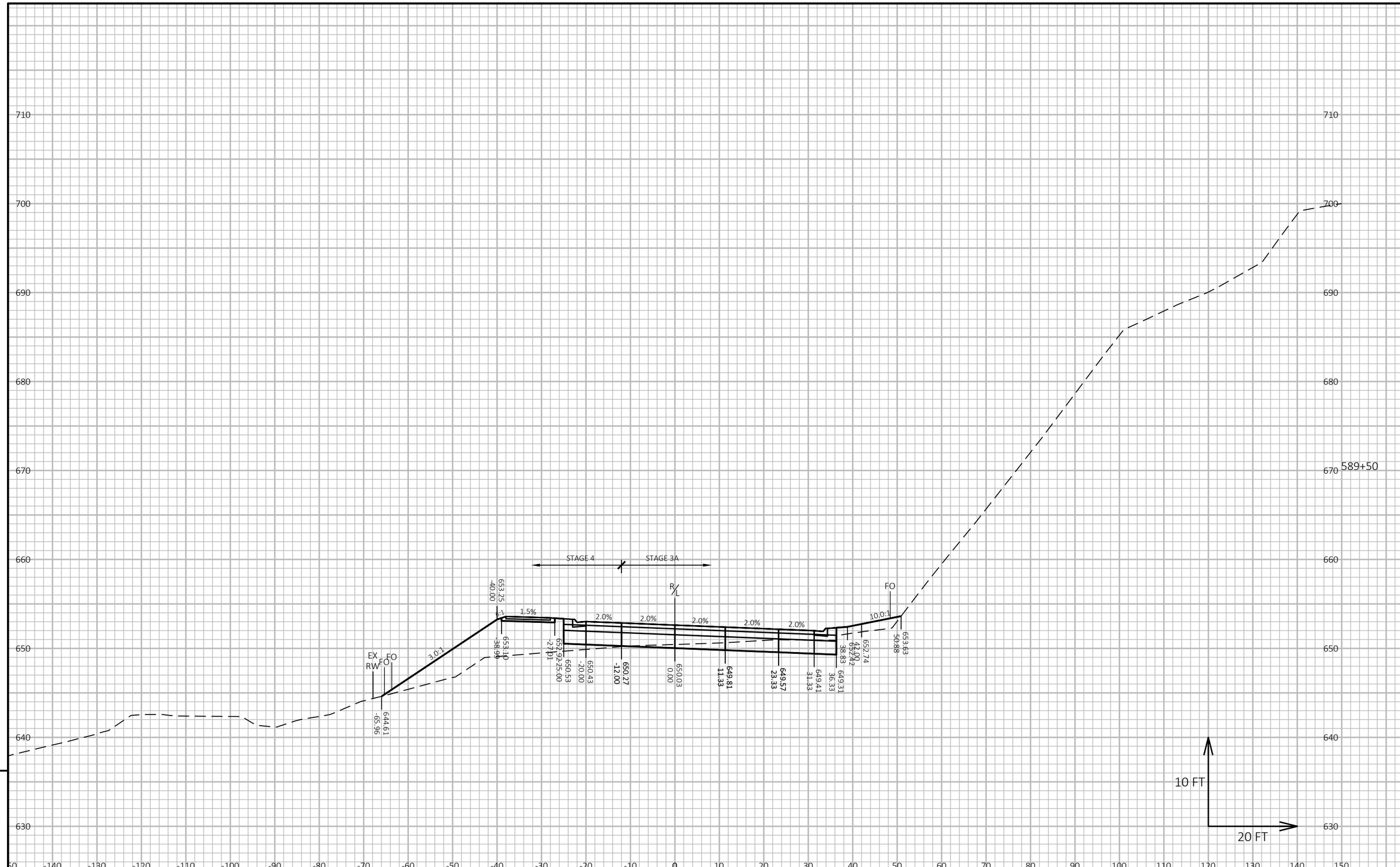

9

9

PROJECT NO: 5163-07-72	HWY: STH 35	COUNTY: LA CROSSE/VERNON	CROSS SECTIONS: STH 35	SHEET 480	E

FILE NAME : O:\PDS\C3D\51630702\SHEETSPLAN\090201-XS.DWG
LAYOUT NAME - 30

PLOT DATE : 7/1/2025 1:46 PM PLOT BY : ED OCHS PLOT NAME : PLOT SCALE : 1 IN:20 FT HORZ. / 1 IN:10 FT VERT.

WISDOT/CADDS SHEET 49

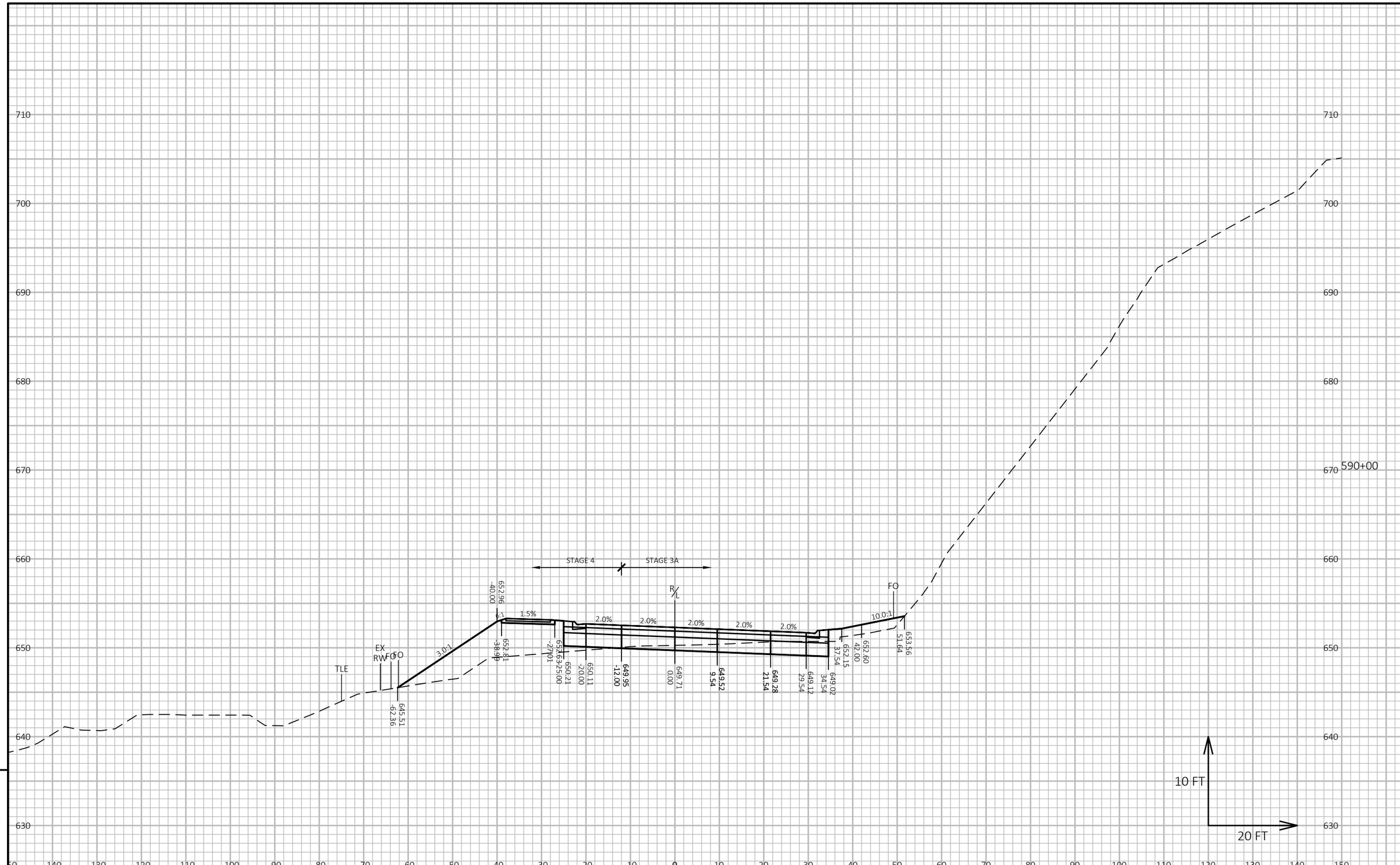

9

9

PROJECT NO: 5163-07-72	HWY: STH 35	COUNTY: LA CROSSE/VERNON	CROSS SECTIONS: STH 35	SHEET 481	E

FILE NAME : O:\PDS\C3D\51630702\SHEETSPLAN\090201-XS.DWG
LAYOUT NAME - 31
PLOT DATE : 7/1/2025 1:47 PM
PLOT BY : ED OCHS
PLOT NAME :
PLOT SCALE : 1 IN:20 FT HORZ. / 1 IN:10 FT VERT.

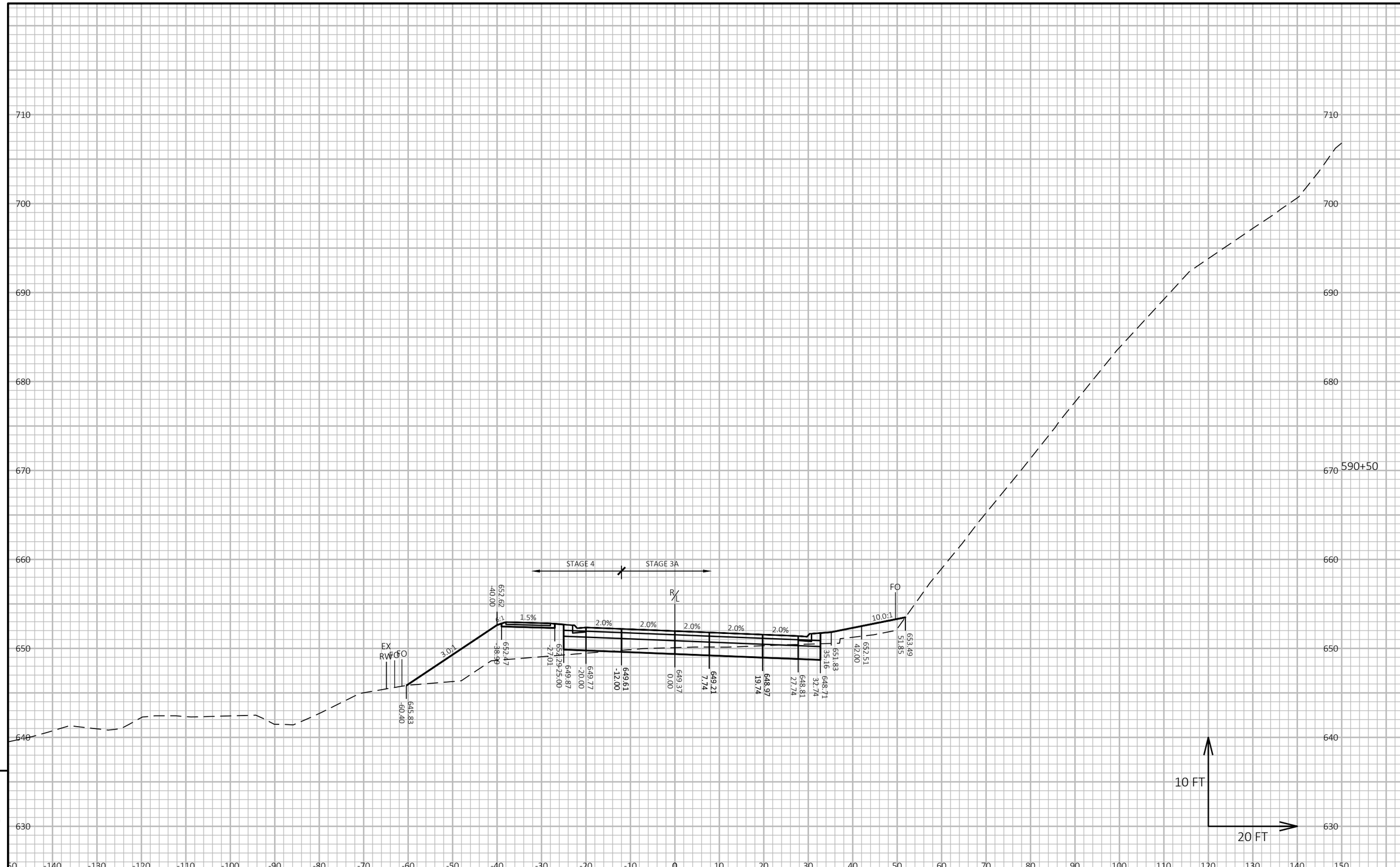

9

9

PROJECT NO: 5163-07-72	HWY: STH 35	COUNTY: LA CROSSE/VERNON	CROSS SECTIONS: STH 35	SHEET 482	E

FILE NAME : O:\PDS\C3D\51630702\SHEETSPLAN\090201-XS.DWG
LAYOUT NAME - 32

PLOT DATE : 7/1/2025 1:47 PM PLOT BY : ED OCHS PLOT NAME : PLOT SCALE : 1 IN:20 FT HORZ. / 1 IN:10 FT VERT.

WISDOT/CADDS SHEET 49

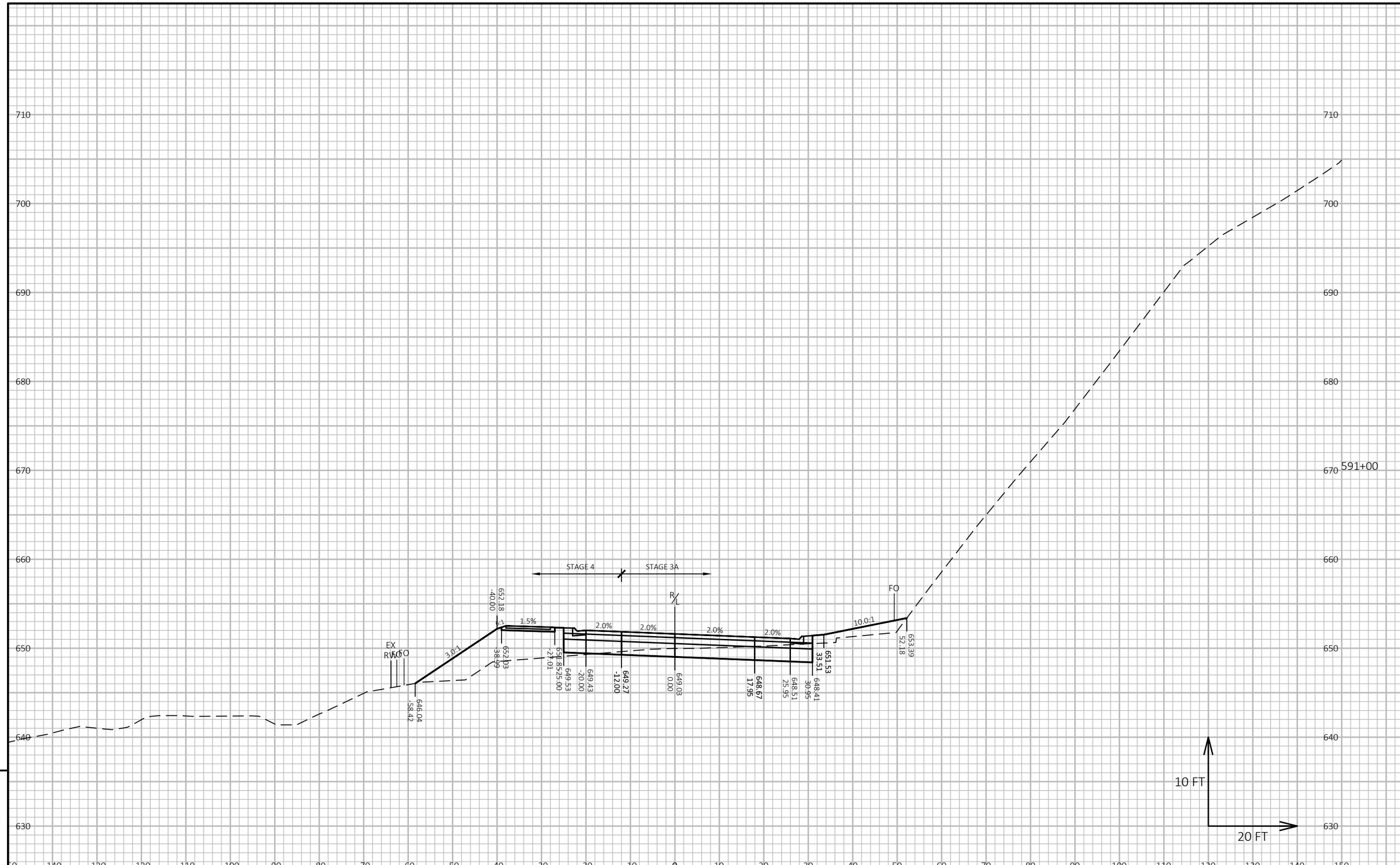

9

9

PROJECT NO: 5163-07-72	HWY: STH 35	COUNTY: LA CROSSE/VERNON	CROSS SECTIONS: STH 35	SHEET 483	E

FILE NAME : O:\PDS\C3D\51630702\SHEETSPLAN\090201-XS.DWG
LAYOUT NAME - 33

PLOT DATE : 7/1/2025 1:47 PM PLOT BY : ED OCHS PLOT NAME : PLOT SCALE : 1 IN:20 FT HORZ. / 1 IN:10 FT VERT.

WISDOT/CADDS SHEET 49

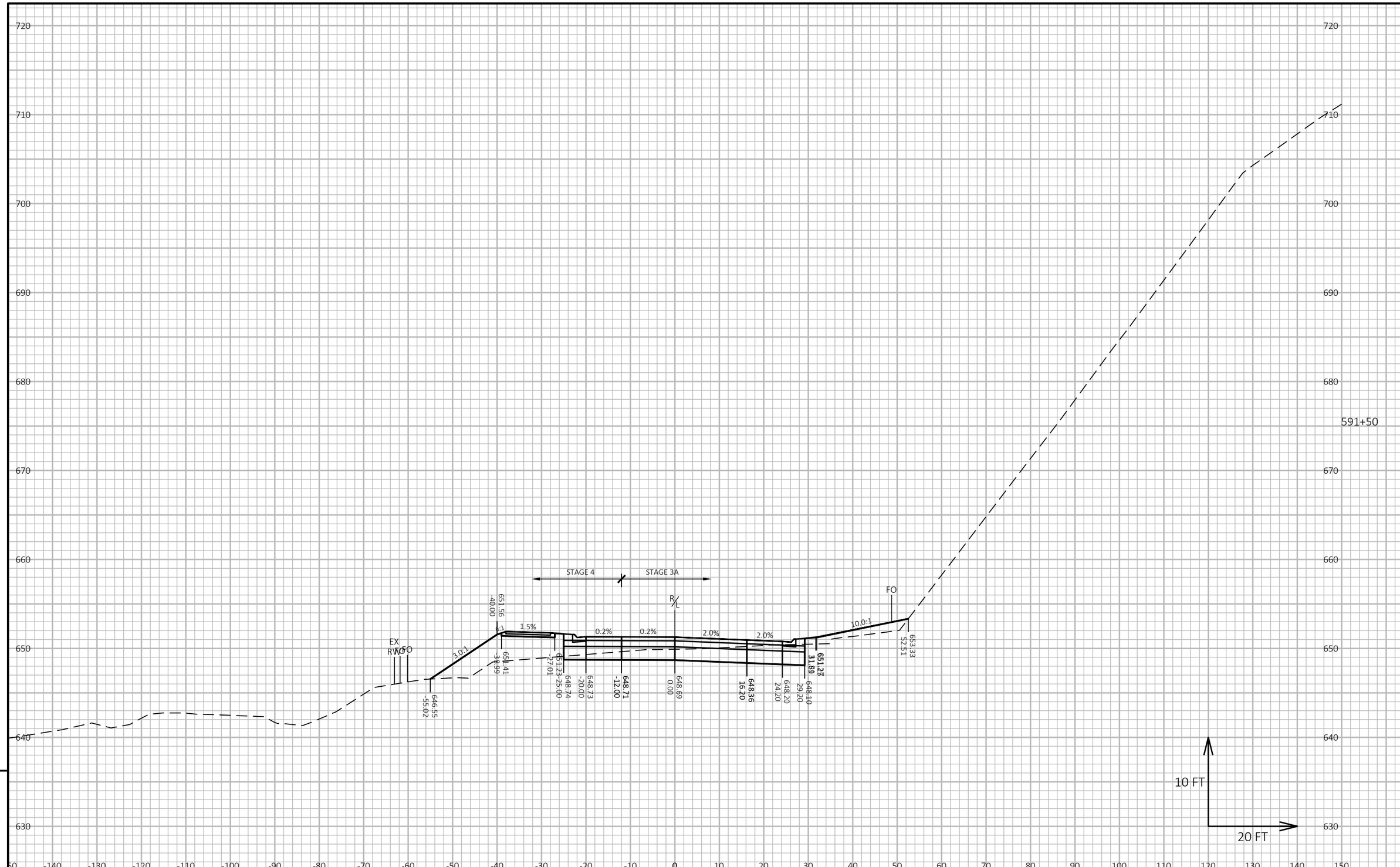

9

9

PROJECT NO: 5163-07-72	HWY: STH 35	COUNTY: LA CROSSE/VERNON	CROSS SECTIONS: STH 35	SHEET 484	E

FILE NAME : O:\PDS\C3D\51630702\SHEETSPLAN\090201-XS.DWG
LAYOUT NAME - 34

PLOT DATE : 7/1/2025 1:48 PM PLOT BY : ED OCHS PLOT NAME : PLOT SCALE : 1 IN:20 FT HORZ. / 1 IN:10 FT VERT.

WISDOT/CADDS SHEET 49

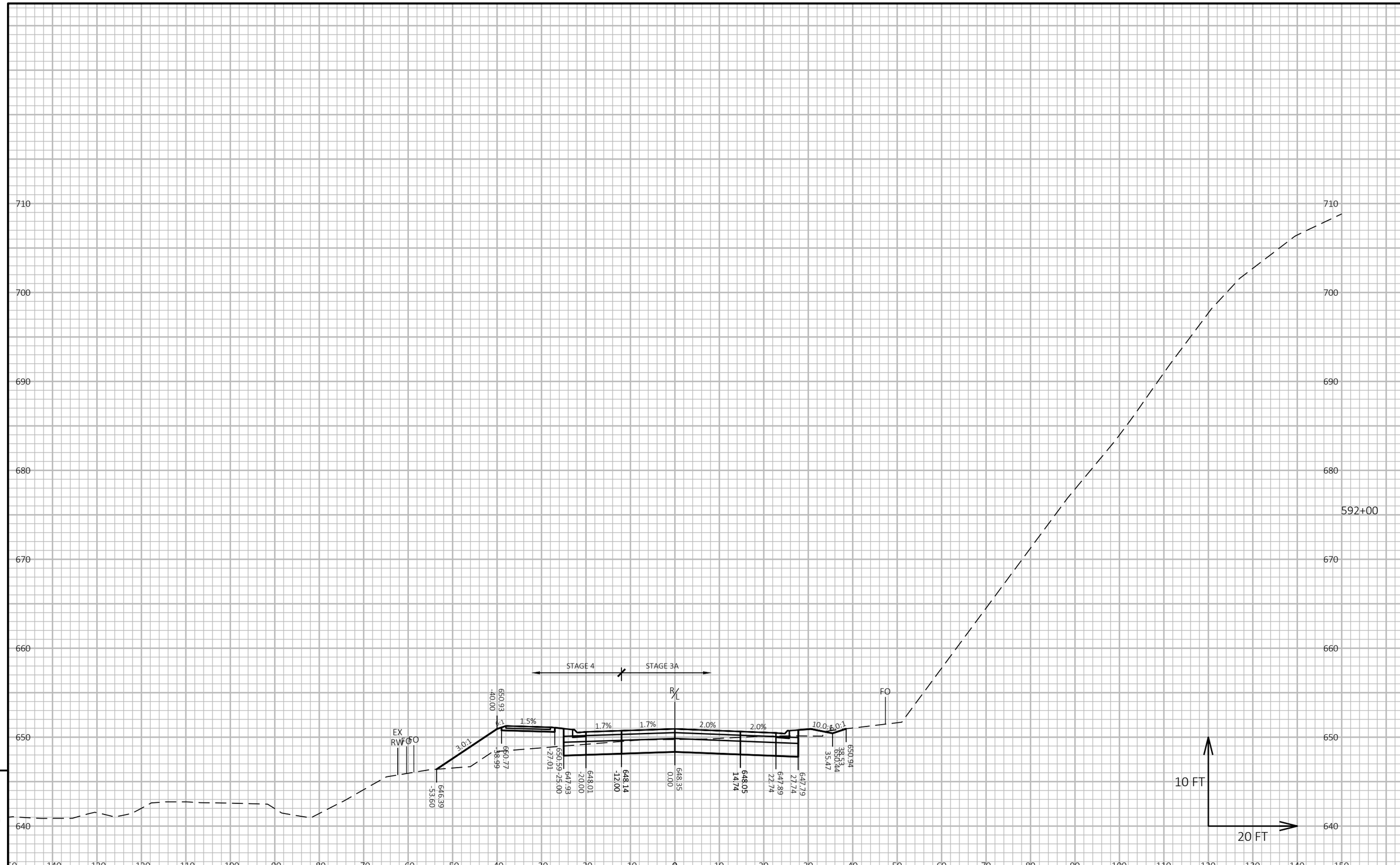

9

9

PROJECT NO: 5163-07-72	HWY: STH 35	COUNTY: LA CROSSE/VERNON	CROSS SECTIONS: STH 35	SHEET 485	E

FILE NAME : O:\PDS\C3D\51630702\SHEETSPLAN\090201-XS.DWG
LAYOUT NAME - 35
PLOT DATE : 7/1/2025 1:48 PM
PLOT BY : ED OCHS
PLOT NAME :
PLOT SCALE : 1 IN:20 FT HORZ. / 1 IN:10 FT VERT.
WISDOT/CADDS SHEET 49

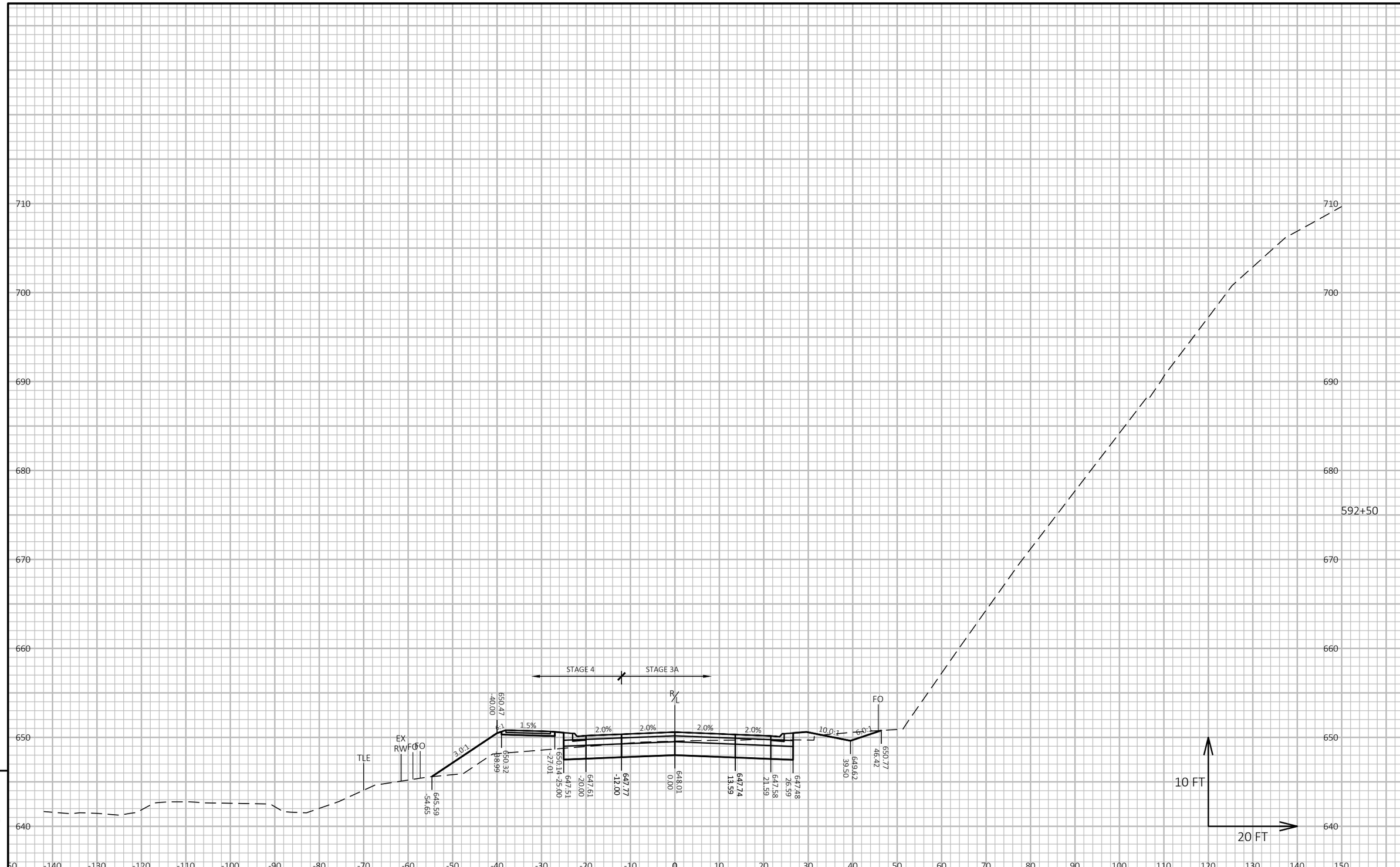

9

9

PROJECT NO: 5163-07-72	HWY: STH 35	COUNTY: LA CROSSE/VERNON	CROSS SECTIONS: STH 35	SHEET 486	E

FILE NAME : O:\PDS\C3D\51630702\SHEETSPLAN\090201-XS.DWG
LAYOUT NAME - 36

PLOT DATE : 7/1/2025 1:48 PM PLOT BY : ED OCHS PLOT NAME : PLOT SCALE : 1 IN:20 FT HORZ. / 1 IN:10 FT VERT.

WISDOT/CADDS SHEET 49

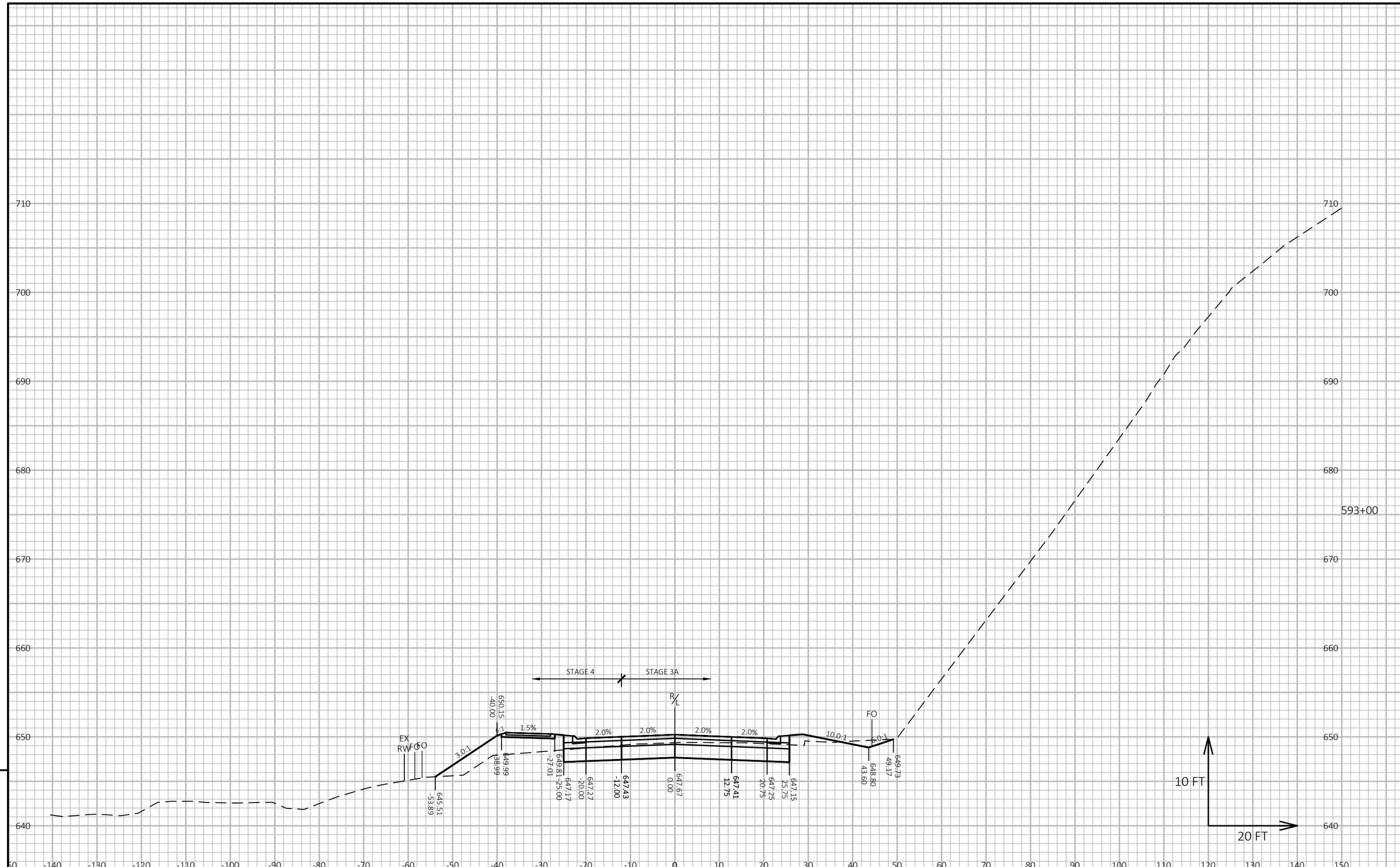

9

9

PROJECT NO: 5163-07-72	HWY: STH 35	COUNTY: LA CROSSE/VERNON	CROSS SECTIONS: STH 35	SHEET 487	E

FILE NAME : O:\PDS\C3D\51630702\SHEETSPLAN\090201-XS.DWG
LAYOUT NAME - 37

PLOT DATE : 7/1/2025 1:49 PM PLOT BY : ED OCHS PLOT NAME : PLOT SCALE : 1 IN:20 FT HORZ. / 1 IN:10 FT VERT.

WISDOT/CADDS SHEET 49

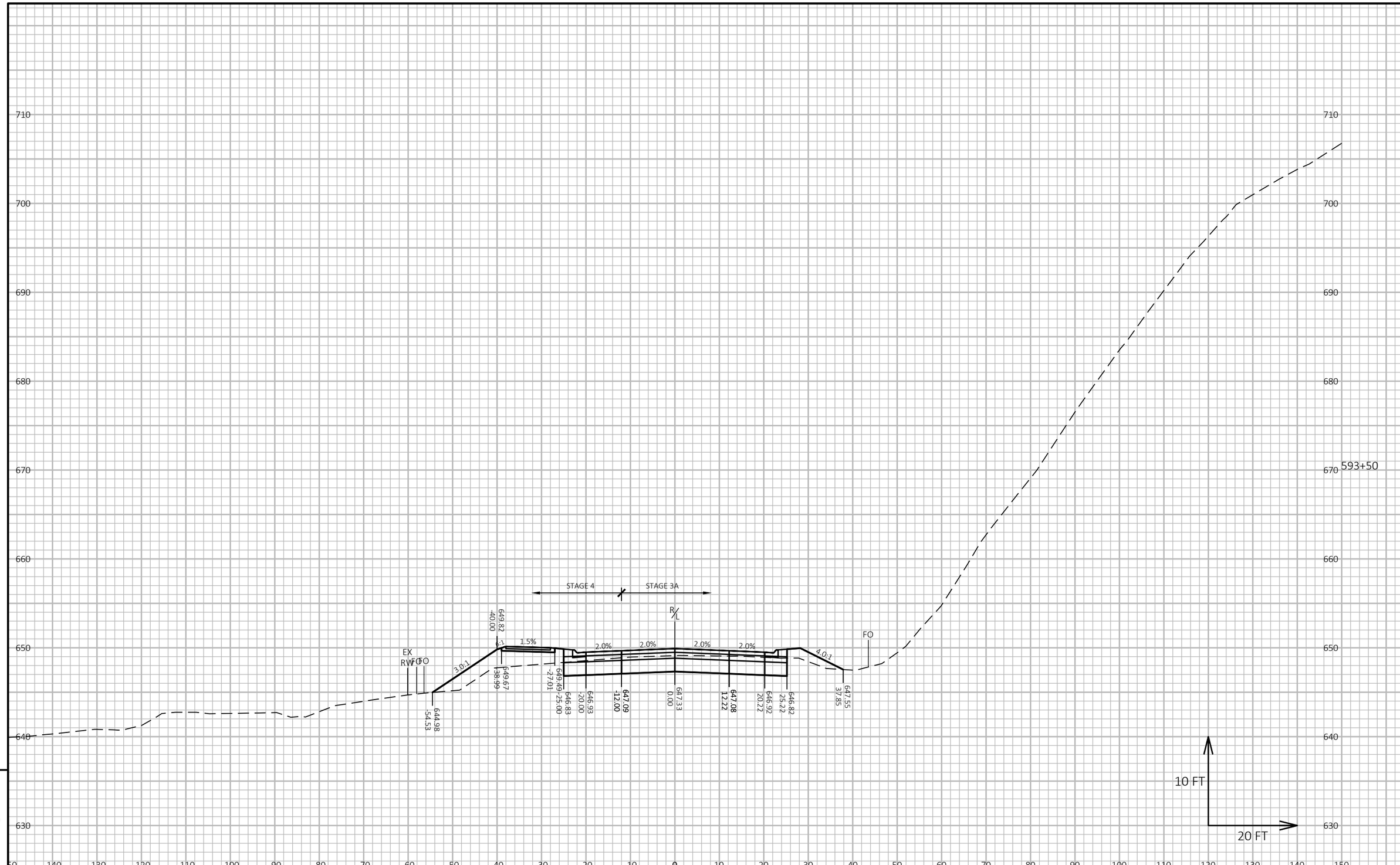

9

9

PROJECT NO: 5163-07-72	HWY: STH 35	COUNTY: LA CROSSE/VERNON	CROSS SECTIONS: STH 35	SHEET 488	E

FILE NAME : O:\PDS\C3D\51630702\SHEETSPLAN\090201-XS.DWG
LAYOUT NAME - 38

PLOT DATE : 7/1/2025 1:49 PM

PLOT BY : ED OCHS

PLOT NAME :

PLOT SCALE : 1 IN:20 FT HORZ. / 1 IN:10 FT VERT.

WISDOT/CADDS SHEET 49

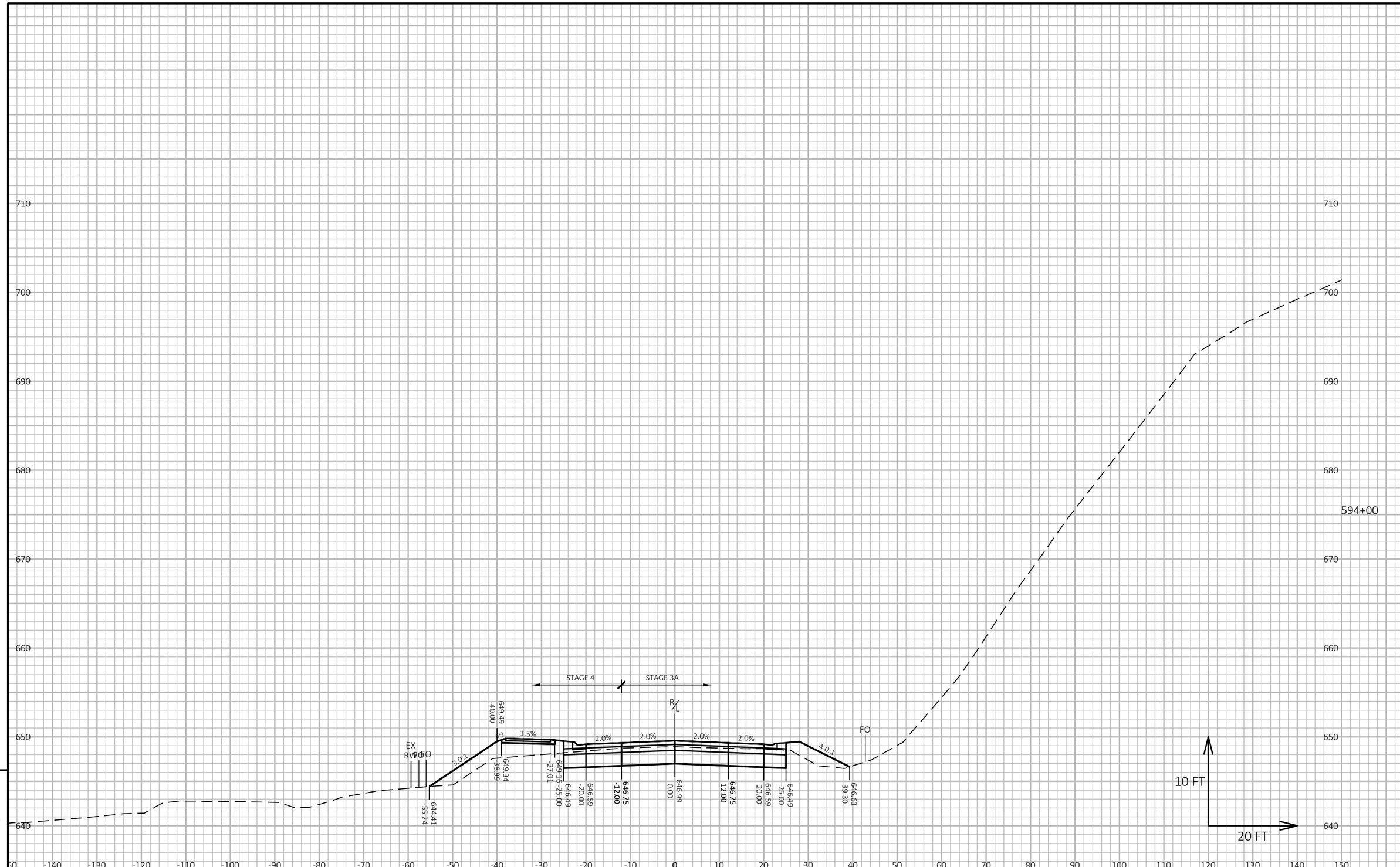

9

9

PROJECT NO: 5163-07-72	HWY: STH 35	COUNTY: LA CROSSE/VERNON	CROSS SECTIONS: STH 35	SHEET 489	E

FILE NAME : O:\PDS\C3D\51630702\SHEETSPLAN\090201-XS.DWG
LAYOUT NAME - 39
PLOT DATE : 7/1/2025 1:49 PM
PLOT BY : ED OCHS
PLOT NAME :
PLOT SCALE : 1 IN:20 FT HORZ. / 1 IN:10 FT VERT.

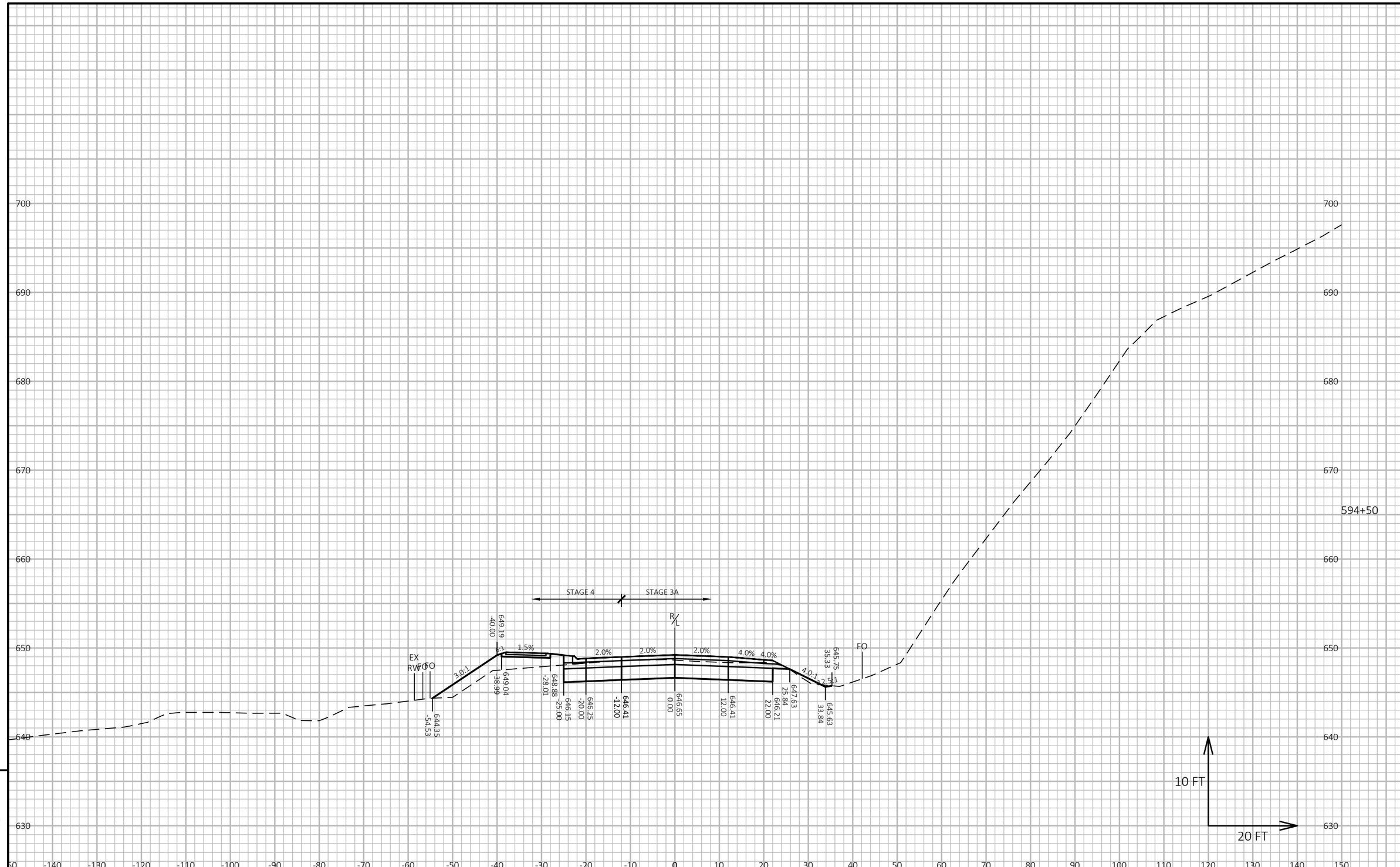

9

9

PROJECT NO: 5163-07-72	HWY: STH 35	COUNTY: LA CROSSE/VERNON	CROSS SECTIONS: STH 35	SHEET 490	E

FILE NAME : O:\PDS\C3D\51630702\SHEETSPLAN\090201-XS.DWG
LAYOUT NAME - 40
PLOT DATE : 7/1/2025 1:50 PM
PLOT BY : ED OCHS
PLOT NAME :
PLOT SCALE : 1 IN:20 FT HORZ. / 1 IN:10 FT VERT.

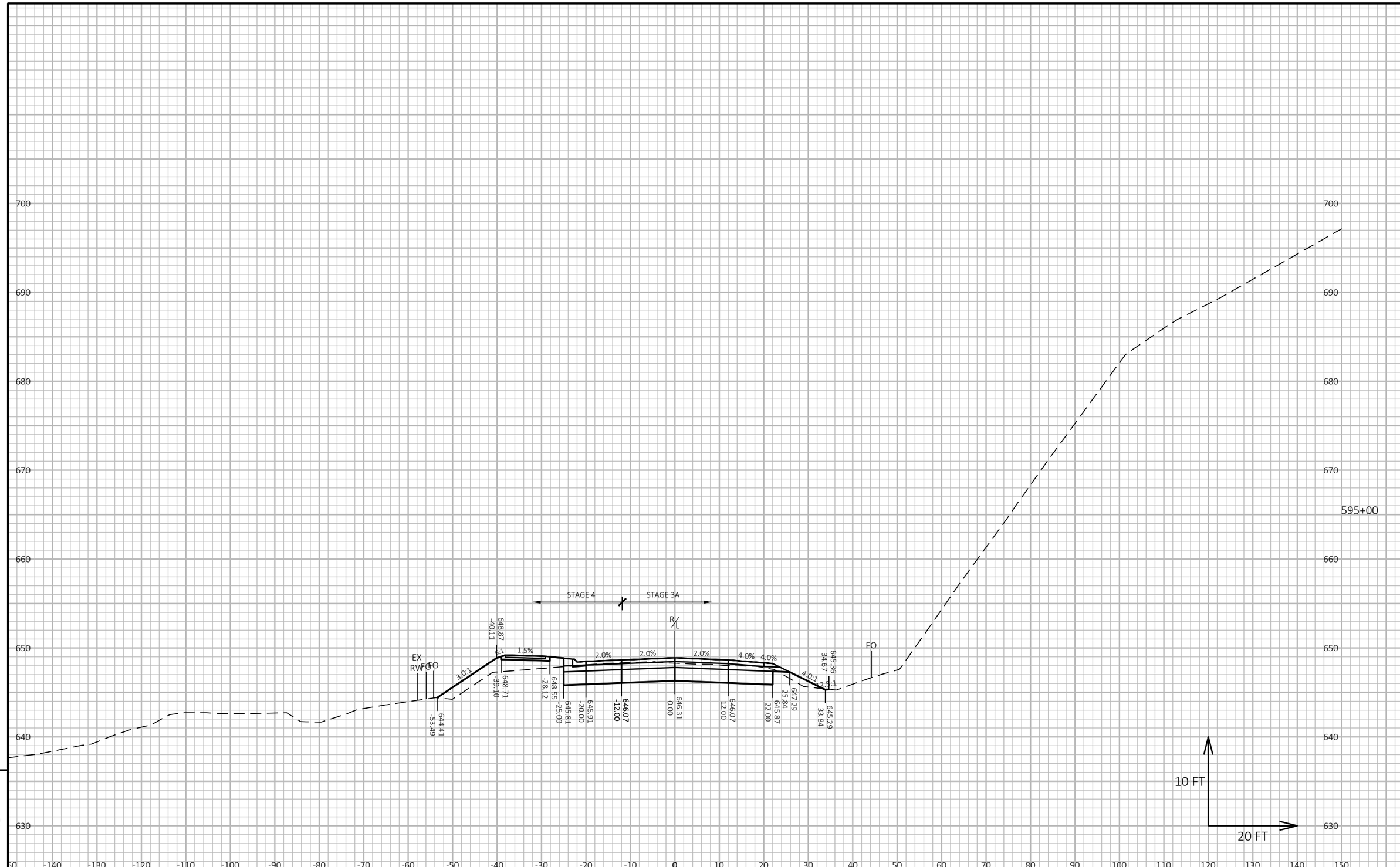

9

9

PROJECT NO: 5163-07-72	HWY: STH 35	COUNTY: LA CROSSE/VERNON	CROSS SECTIONS: STH 35	SHEET 491	E

FILE NAME : O:\PDS\C3D\51630702\SHEETSPLAN\090201-XS.DWG
LAYOUT NAME - 41

PLOT DATE : 7/1/2025 1:50 PM PLOT BY : ED OCHS PLOT NAME : PLOT SCALE : 1 IN:20 FT HORZ. / 1 IN:10 FT VERT.

WISDOT/CADDS SHEET 49

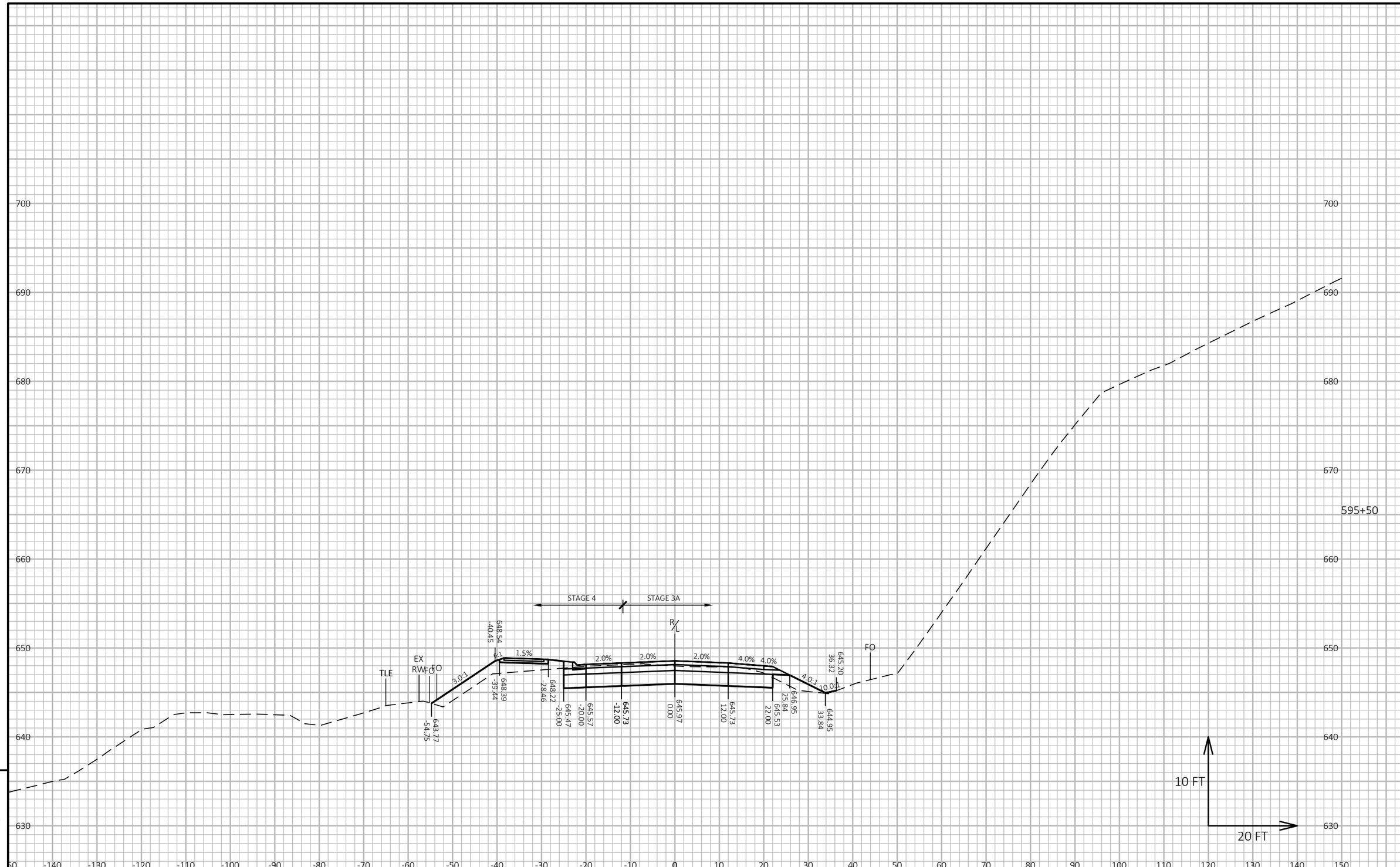

9

9

PROJECT NO: 5163-07-72	HWY: STH 35	COUNTY: LA CROSSE/VERNON	CROSS SECTIONS: STH 35	SHEET 492	E

FILE NAME : O:\PDS\C3D\51630702\SHEETSPLAN\090201-XS.DWG
LAYOUT NAME - 42
PLOT DATE : 7/1/2025 1:50 PM
PLOT BY : ED OCHS
PLOT NAME :
PLOT SCALE : 1 IN:20 FT HORZ. / 1 IN:10 FT VERT.

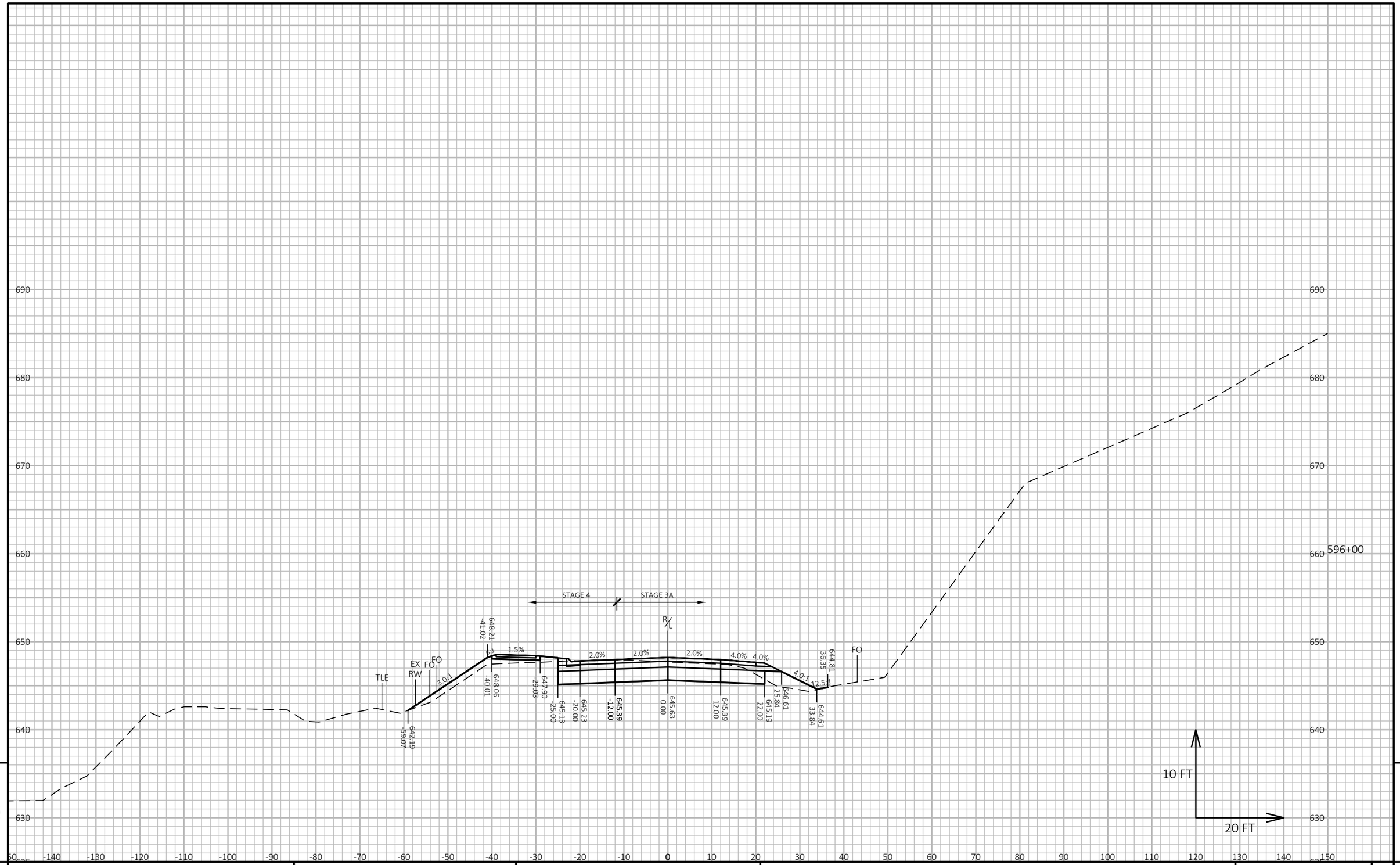

9

9

PROJECT NO: 5163-07-72	HWY: STH 35	COUNTY: LA CROSSE/VERNON	CROSS SECTIONS: STH 35	SHEET 493	E

FILE NAME : O:\PDS\C3D\51630702\SHEETSPLAN\090201-XS.DWG
LAYOUT NAME - 43

PLOT DATE : 7/1/2025 1:51 PM PLOT BY : ED OCHS PLOT NAME : PLOT SCALE : 1 IN:20 FT HORZ. / 1 IN:10 FT VERT.

WISDOT/CADDS SHEET 49

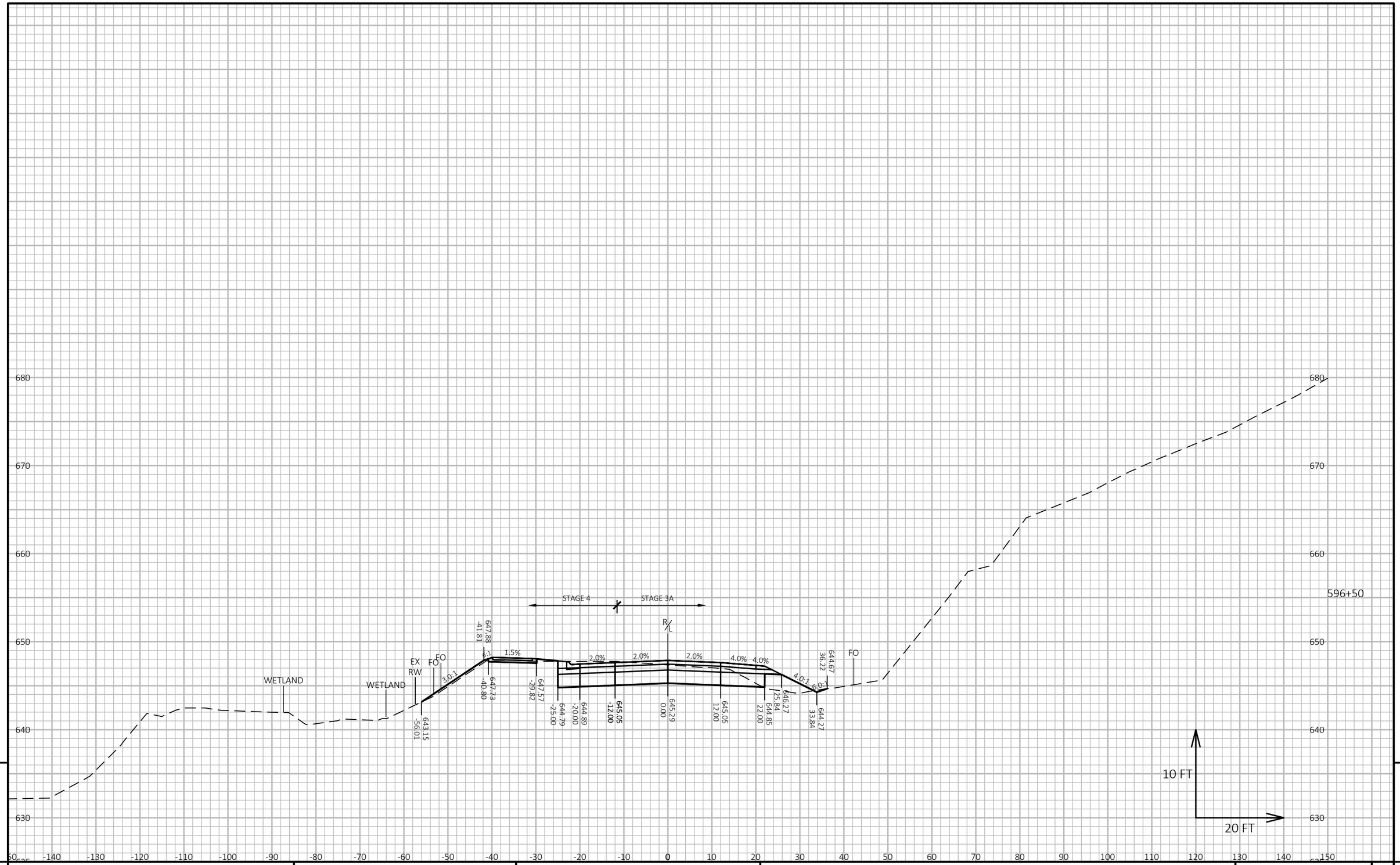

9

9

PROJECT NO: 5163-07-72	HWY: STH 35	COUNTY: LA CROSSE/VERNON	CROSS SECTIONS: STH 35	SHEET 494	E

FILE NAME : O:\PDS\C3D\51630702\SHEETSPLAN\090201-XS.DWG
LAYOUT NAME - 44

PLOT DATE : 7/1/2025 1:51 PM PLOT BY : ED OCHS PLOT NAME : PLOT SCALE : 1 IN:20 FT HORZ. / 1 IN:10 FT VERT.

WISDOT/CADDS SHEET 49

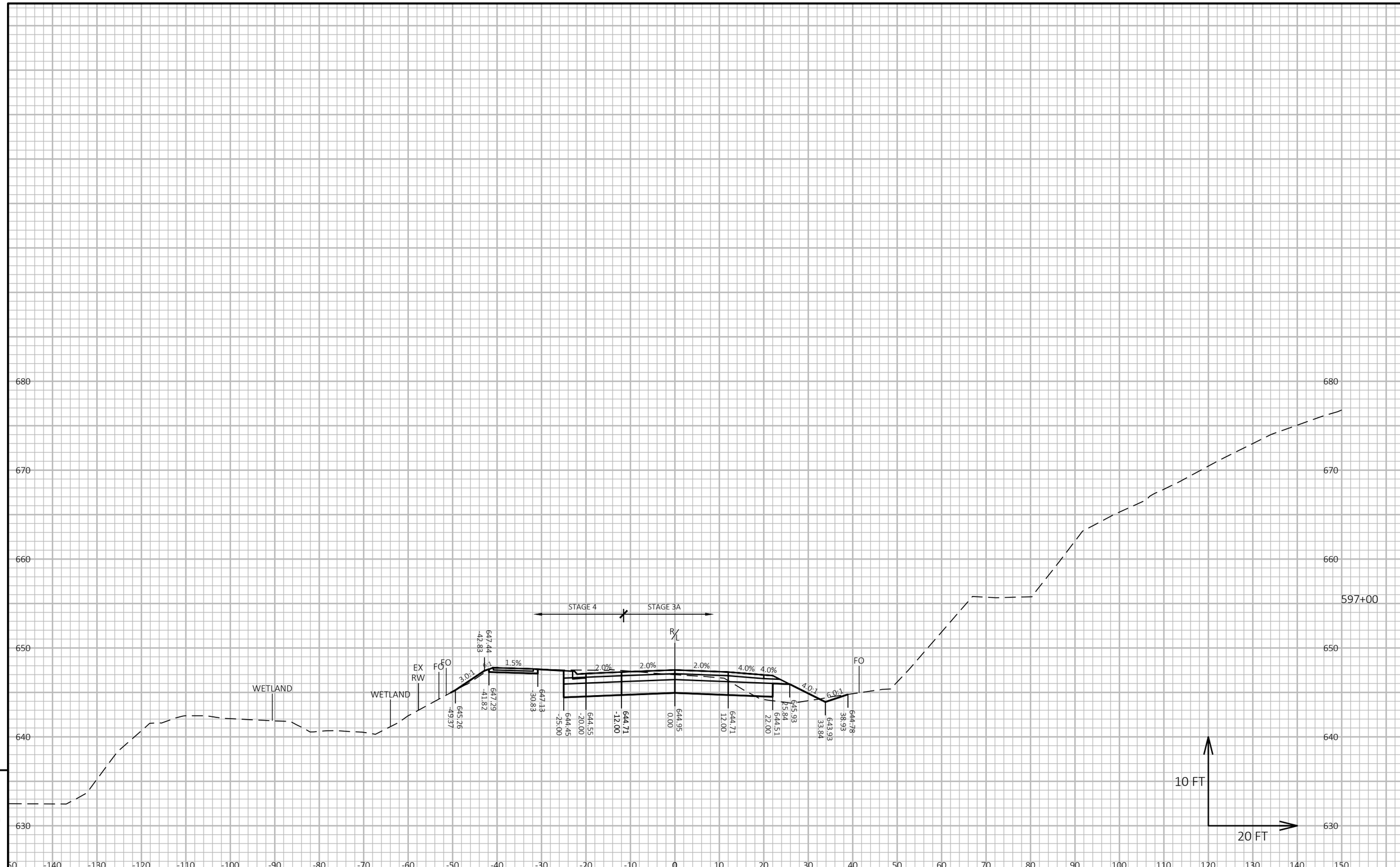

9

9

PROJECT NO: 5163-07-72	HWY: STH 35	COUNTY: LA CROSSE/VERNON	CROSS SECTIONS: STH 35	SHEET 495	E

FILE NAME : O:\PDS\C3D\51630702\SHEETSPLAN\090201-XS.DWG
LAYOUT NAME - 45

PLOT DATE : 7/1/2025 1:51 PM PLOT BY : ED OCHS PLOT NAME : PLOT SCALE : 1 IN:20 FT HORZ. / 1 IN:10 FT VERT.

WISDOT/CADDS SHEET 49

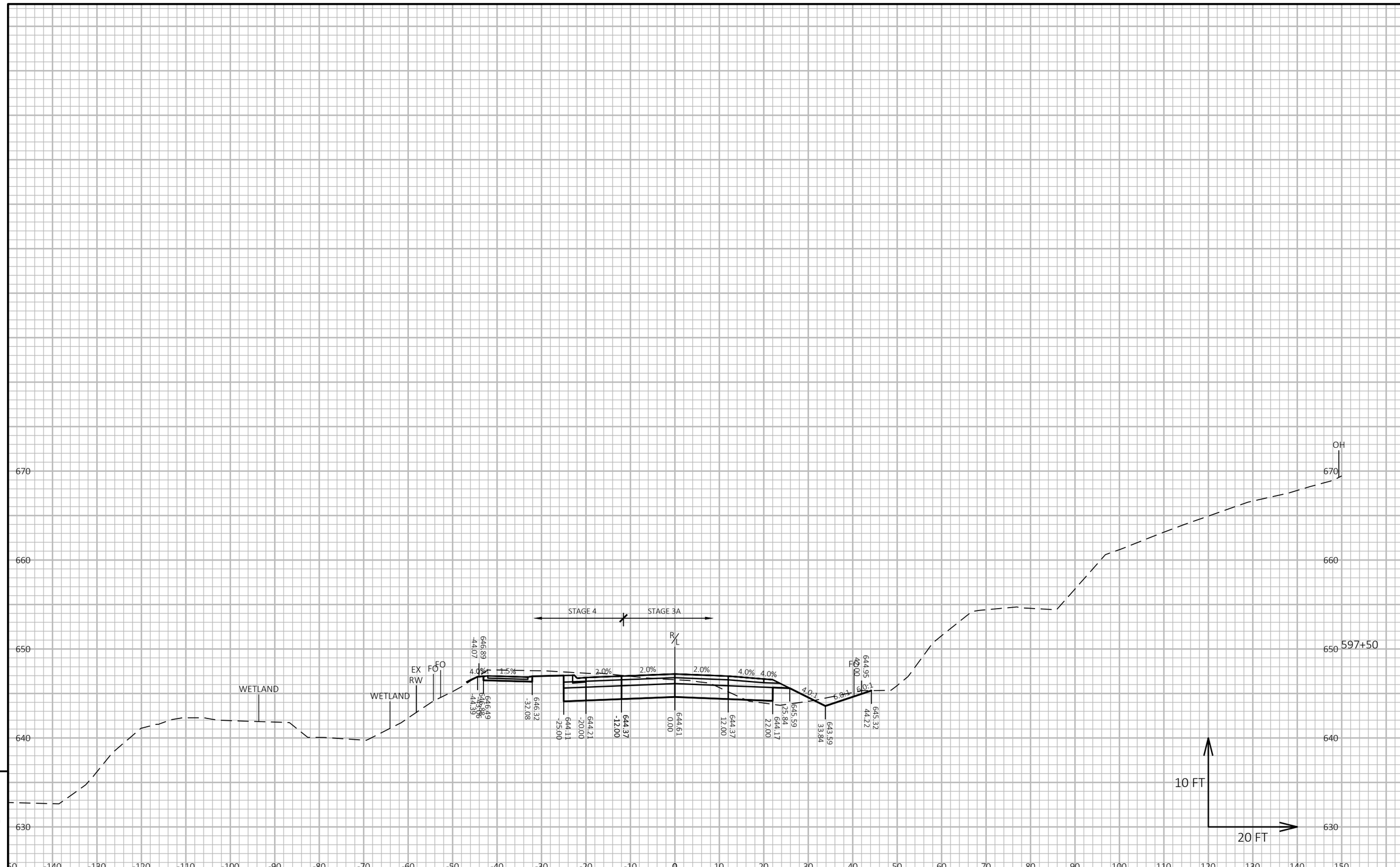

9

9

PROJECT NO: 5163-07-72	HWY: STH 35	COUNTY: LA CROSSE/VERNON	CROSS SECTIONS: STH 35	SHEET 496	E

FILE NAME : O:\PDS\C3D\51630702\SHEETSPLAN\090201-XS.DWG
LAYOUT NAME - 46

PLOT DATE : 7/1/2025 1:52 PM PLOT BY : ED OCHS PLOT NAME : PLOT SCALE : 1 IN:20 FT HORZ. / 1 IN:10 FT VERT.

WISDOT/CADDS SHEET 49

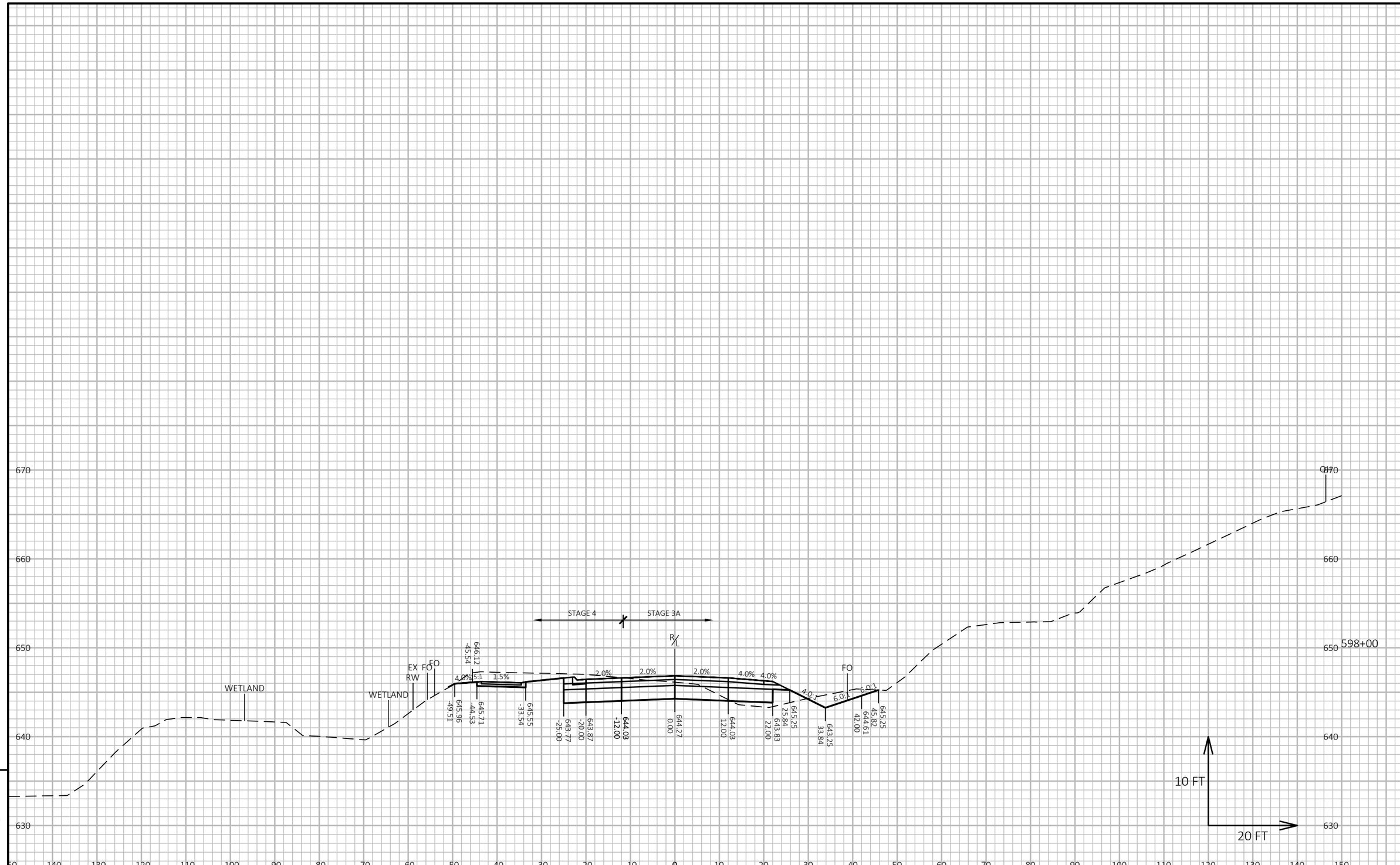

9

9

PROJECT NO: 5163-07-72	HWY: STH 35	COUNTY: LA CROSSE/VERNON	CROSS SECTIONS: STH 35	SHEET 497	E

FILE NAME : O:\PDS\C3D\51630702\SHEETSPLAN\090201-XS.DWG
LAYOUT NAME - 47
PLOT DATE : 7/1/2025 1:52 PM
PLOT BY : ED OCHS
PLOT NAME :
PLOT SCALE : 1 IN:20 FT HORZ. / 1 IN:10 FT VERT.
WISDOT/CADDS SHEET 49

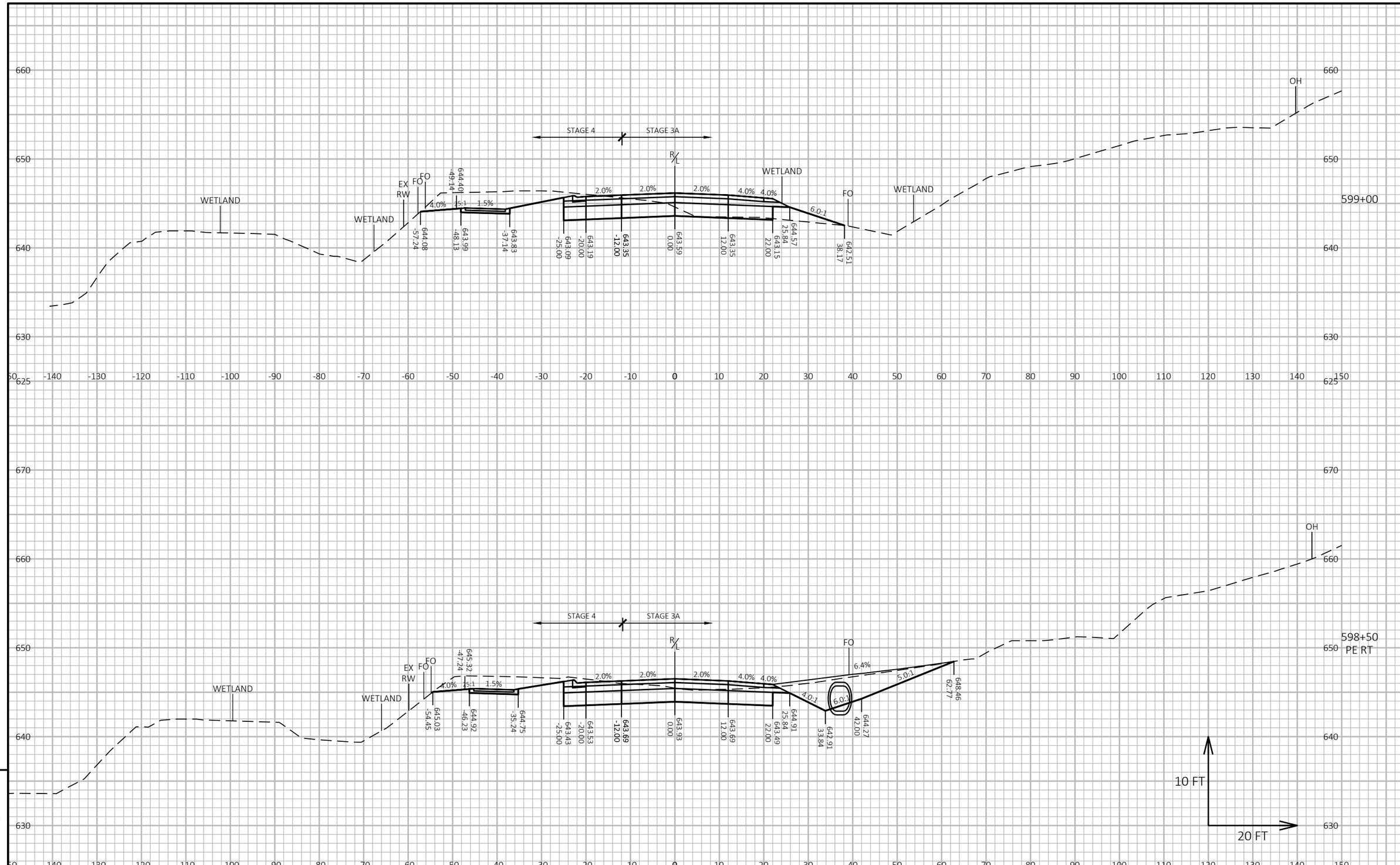

PROJECT NO: 5163-07-72	HWY: STH 35	COUNTY: LA CROSSE/VERNON	CROSS SECTIONS: STH 35	SHEET 498	E

FILE NAME : O:\PDS\C3D\51630702\SHEETSPLAN\090201-XS.DWG
LAYOUT NAME - 48
PLOT DATE : 7/1/2025 1:52 PM
PLOT BY : ED OCHS
PLOT NAME :
PLOT SCALE : 1 IN:20 FT HORZ. / 1 IN:10 FT VERT.

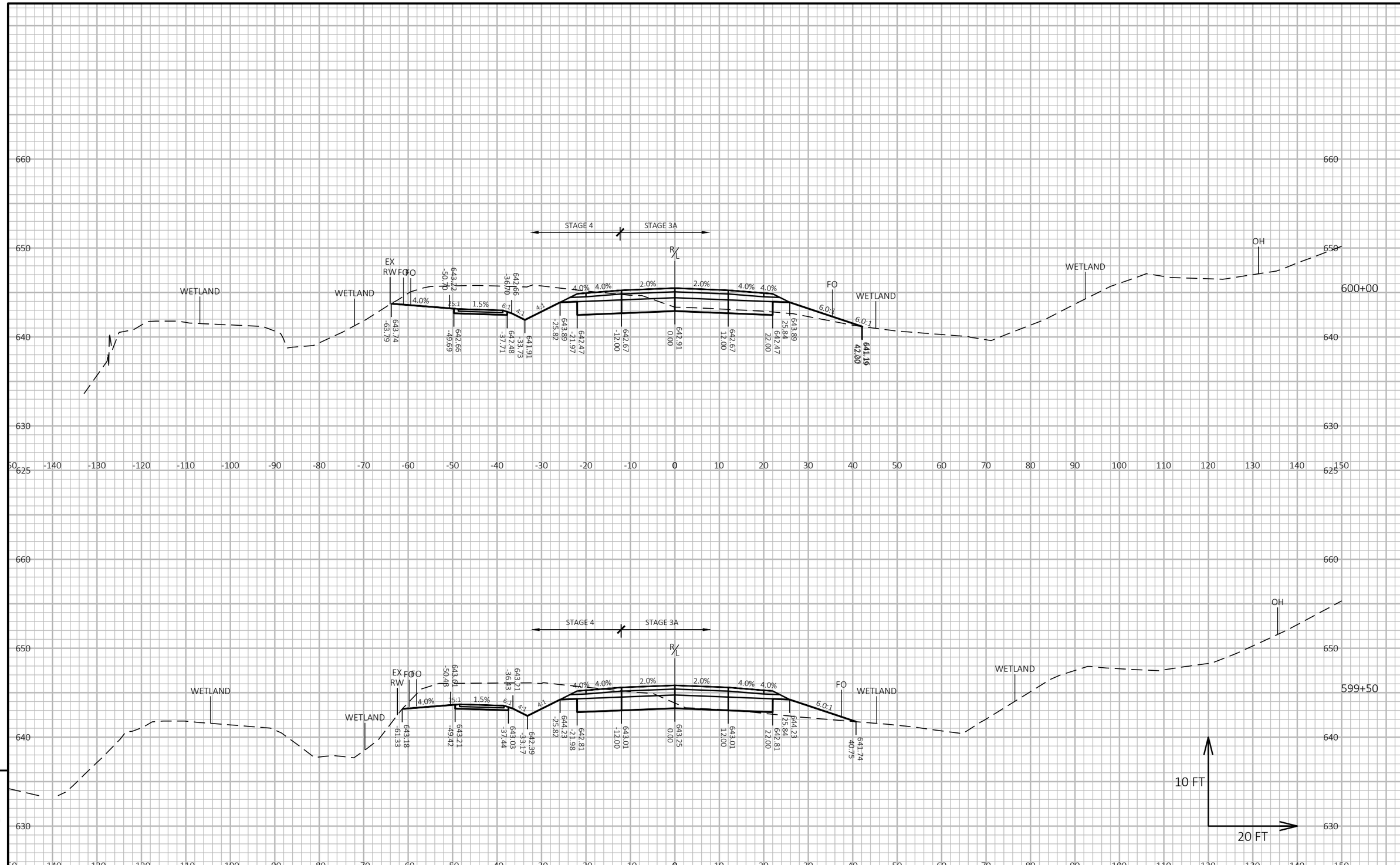

PROJECT NO: 5163-07-72	HWY: STH 35	COUNTY: LA CROSSE/VERNON	CROSS SECTIONS: STH 35	SHEET 499	E

FILE NAME : O:\PDS\C3D\51630702\SHEETSPLAN\090201-XS.DWG
LAYOUT NAME - 49
PLOT DATE : 7/1/2025 1:53 PM
PLOT BY : ED OCHS
PLOT NAME :
PLOT SCALE : 1 IN:20 FT HORZ. / 1 IN:10 FT VERT.

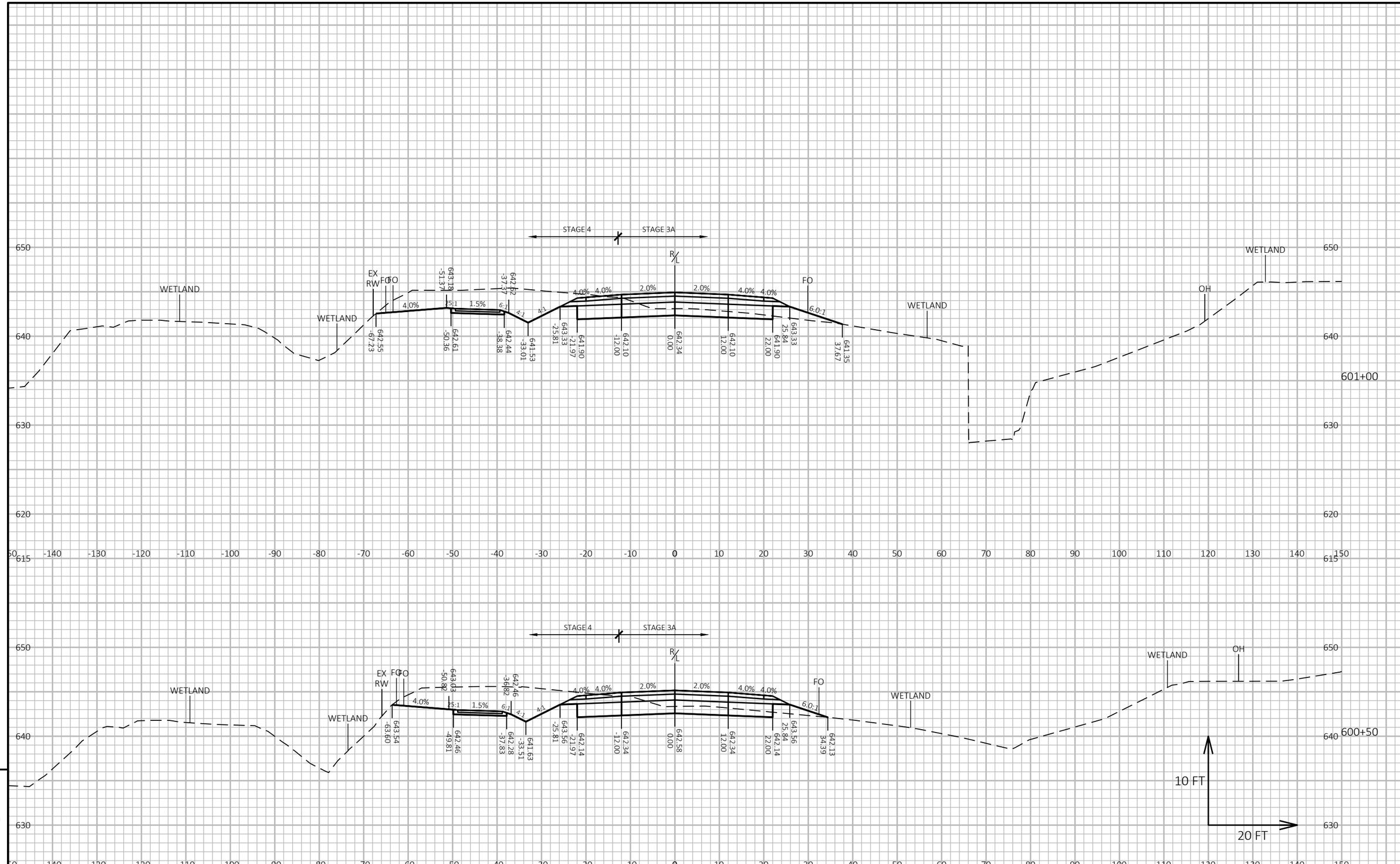

PROJECT NO: 5163-07-72	HWY: STH 35	COUNTY: LA CROSSE/VERNON	CROSS SECTIONS: STH 35	SHEET 500	E

FILE NAME : O:\PDS\C3D\51630702\SHEETSPLAN\090201-XS.DWG
LAYOUT NAME - 50
PLOT DATE : 7/1/2025 1:53 PM
PLOT BY : ED OCHS
PLOT NAME :
PLOT SCALE : 1 IN:20 FT HORZ. / 1 IN:10 FT VERT.
WISDOT/CADDS SHEET 49

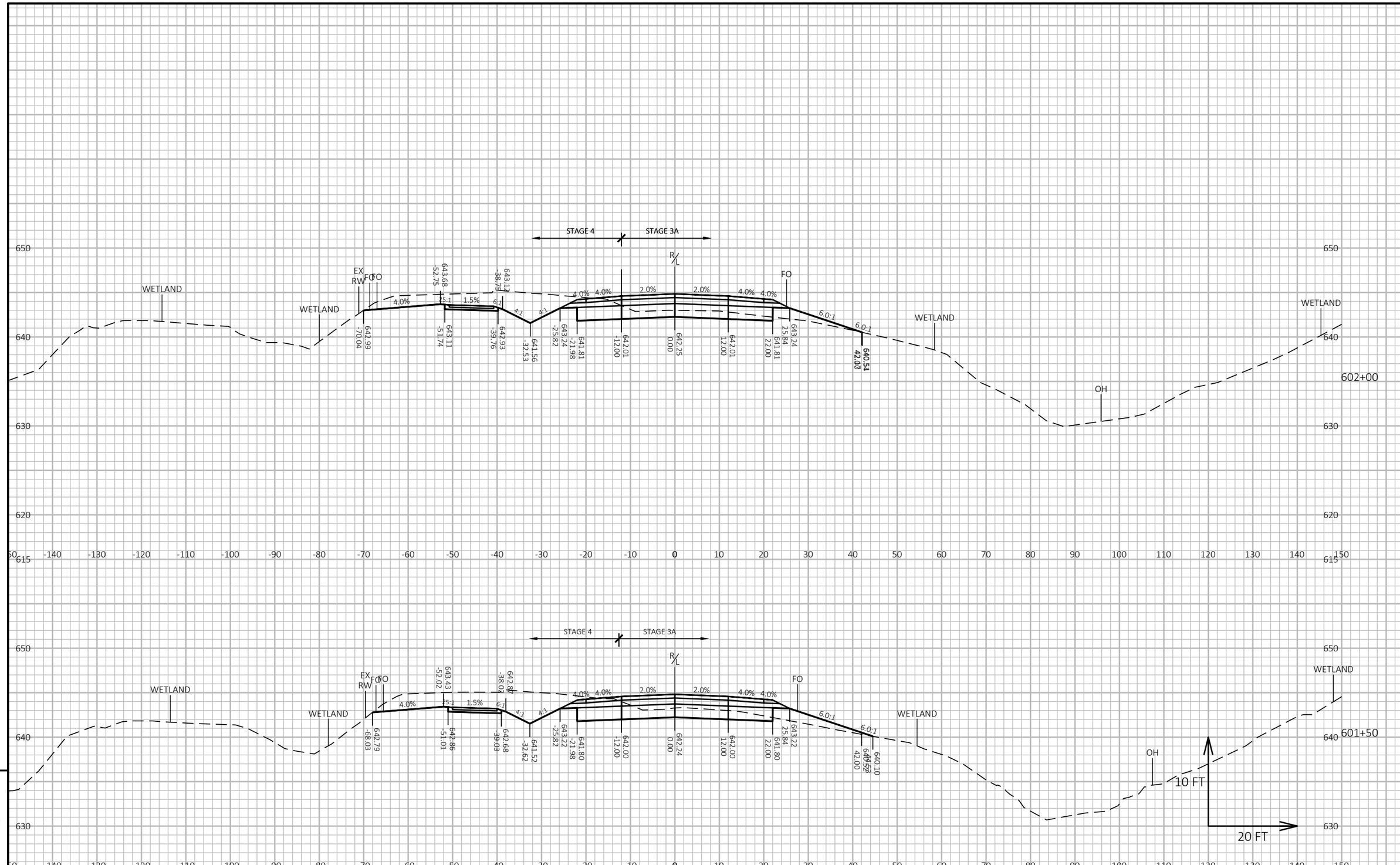

PROJECT NO: 5163-07-72	HWY: STH 35	COUNTY: LA CROSSE/VERNON	CROSS SECTIONS: STH 35	SHEET 501	E

FILE NAME : O:\PDS\C3D\51630702\SHEETSPLAN\090201-XS.DWG
LAYOUT NAME - 51
PLOT DATE : 7/1/2025 1:53 PM
PLOT BY : ED OCHS
PLOT NAME :
PLOT SCALE : 1 IN:20 FT HORZ. / 1 IN:10 FT VERT.

WISDOT/CADDS SHEET 49

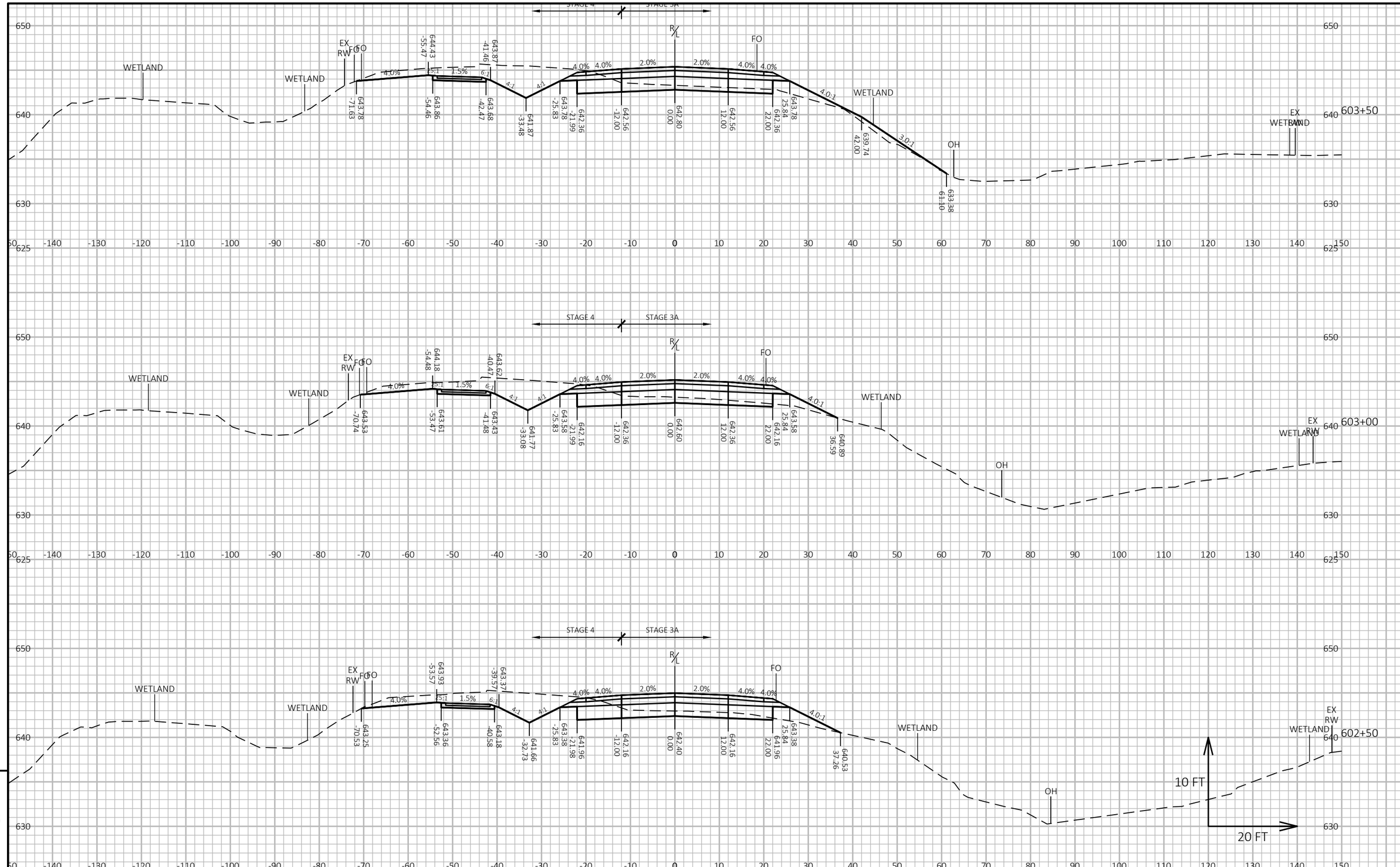

9

9

PROJECT NO: 5163-07-72	HWY: STH 35	COUNTY: LA CROSSE/VERNON	CROSS SECTIONS: STH 35	SHEET 502	E

FILE NAME : O:\PDS\C3D\51630702\SHEETSPLAN\090201-XS.DWG
LAYOUT NAME - 52
PLOT DATE : 7/1/2025 1:54 PM
PLOT BY : ED OCHS
PLOT NAME :
PLOT SCALE : 1 IN:20 FT HORZ. / 1 IN:10 FT VERT.
WISDOT/CADDS SHEET 49

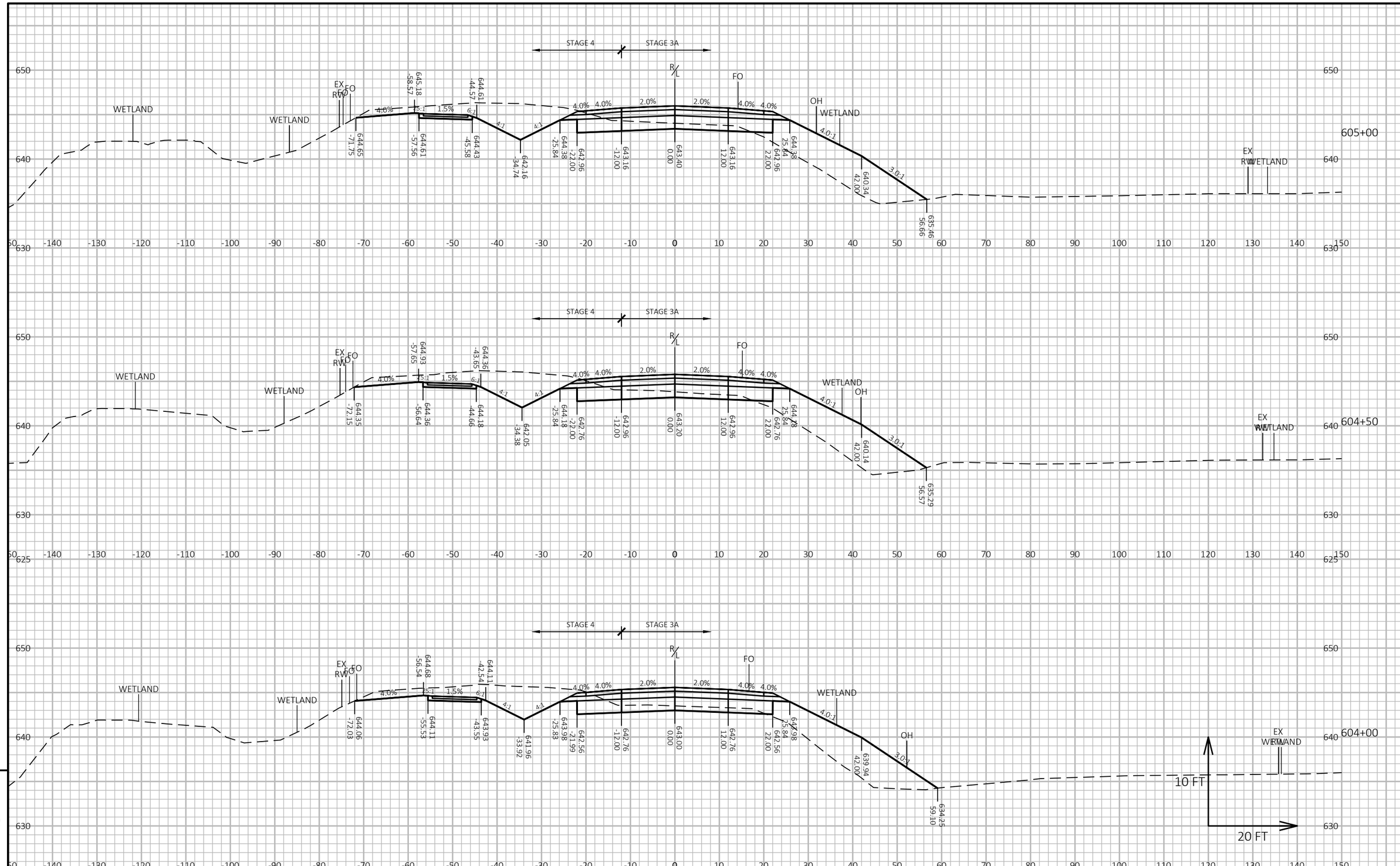

9

9

PROJECT NO: 5163-07-72	HWY: STH 35	COUNTY: LA CROSSE/VERNON	CROSS SECTIONS: STH 35	SHEET 503	E

FILE NAME : O:\PDS\C3D\51630702\SHEETSPLAN\090201-XS.DWG
LAYOUT NAME - 53
PLOT DATE : 7/1/2025 1:54 PM
PLOT BY : ED OCHS
PLOT NAME :
PLOT SCALE : 1 IN:20 FT HORZ. / 1 IN:10 FT VERT.
WISDOT/CADDS SHEET 49

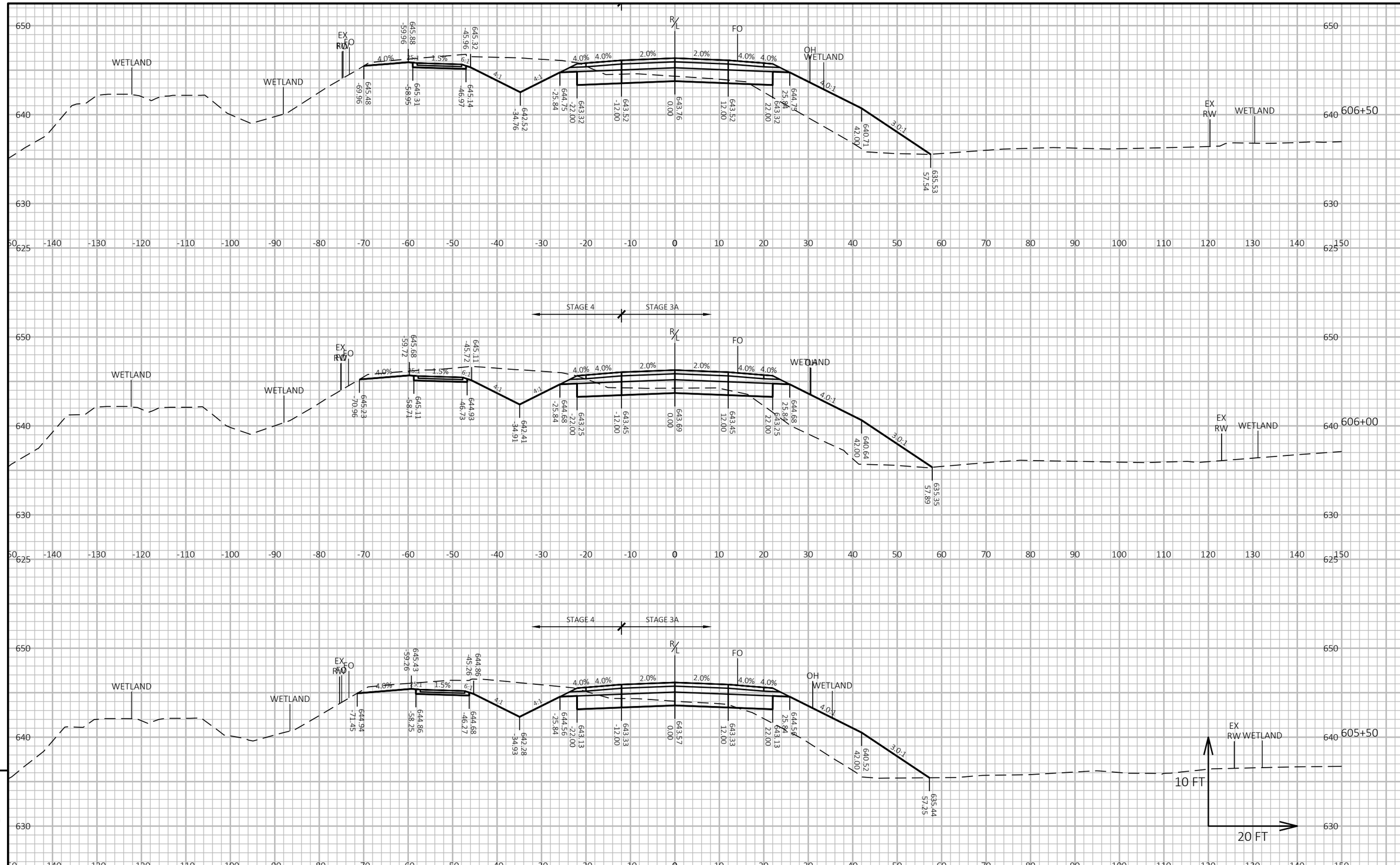

9

9

PROJECT NO: 5163-07-72	HWY: STH 35	COUNTY: LA CROSSE/VERNON	CROSS SECTIONS: STH 35	SHEET 504	E

FILE NAME : O:\PDS\C3D\51630702\SHEETSPLAN\090201-XS.DWG
LAYOUT NAME - 54
PLOT DATE : 7/1/2025 1:54 PM
PLOT BY : ED OCHS
PLOT NAME :
PLOT SCALE : 1 IN:20 FT HORZ. / 1 IN:10 FT VERT.
WISDOT/CADDS SHEET 49

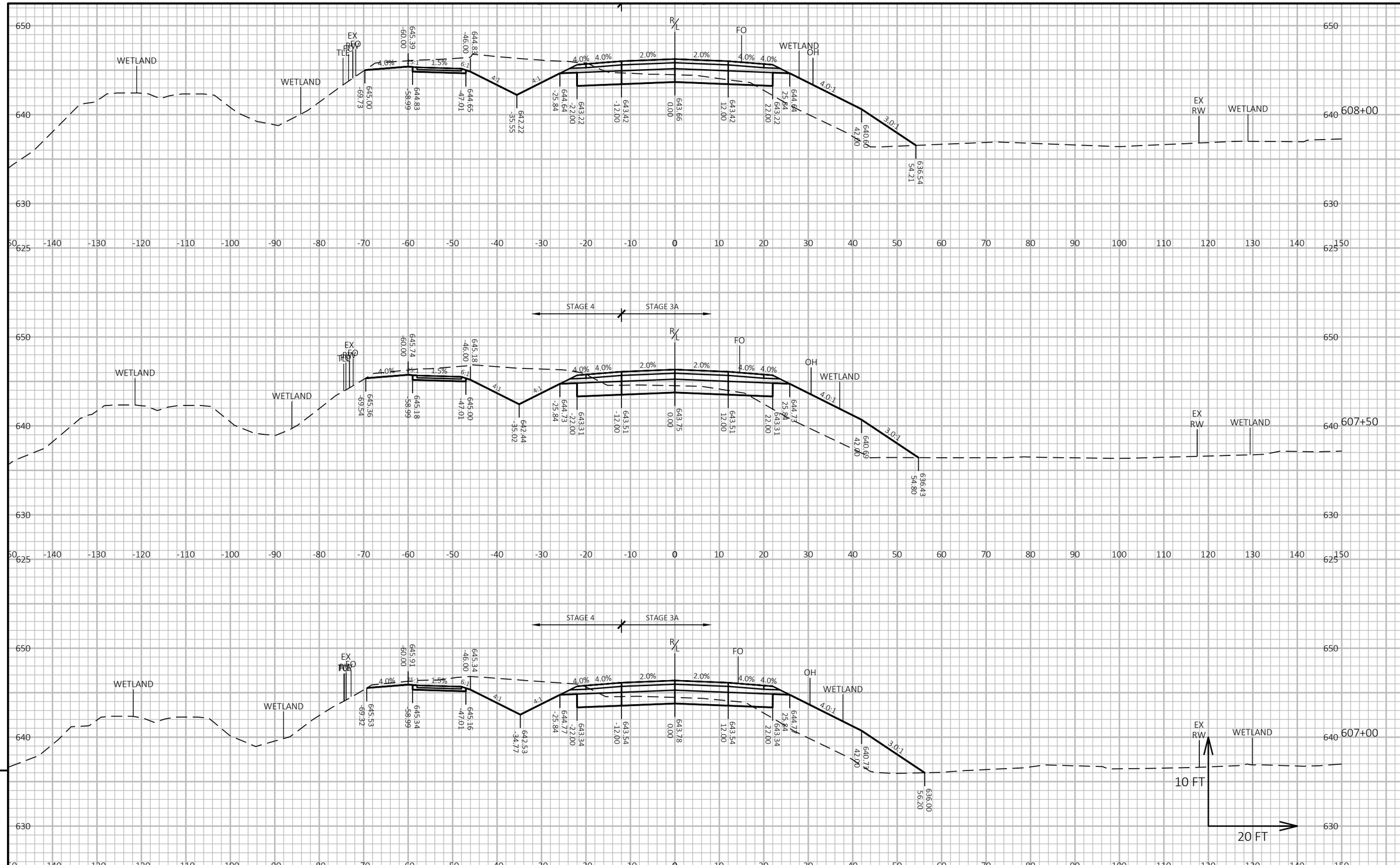

PROJECT NO: 5163-07-72	HWY: STH 35	COUNTY: LA CROSSE/VERNON	CROSS SECTIONS: STH 35	SHEET 505	E

FILE NAME : O:\PDS\C3D\51630702\SHEETSPLAN\090201-XS.DWG
LAYOUT NAME - 55
PLOT DATE : 7/1/2025 1:55 PM
PLOT BY : ED OCHS
PLOT NAME :
PLOT SCALE : 1 IN:20 FT HORZ. / 1 IN:10 FT VERT.
WISDOT/CADDS SHEET 49

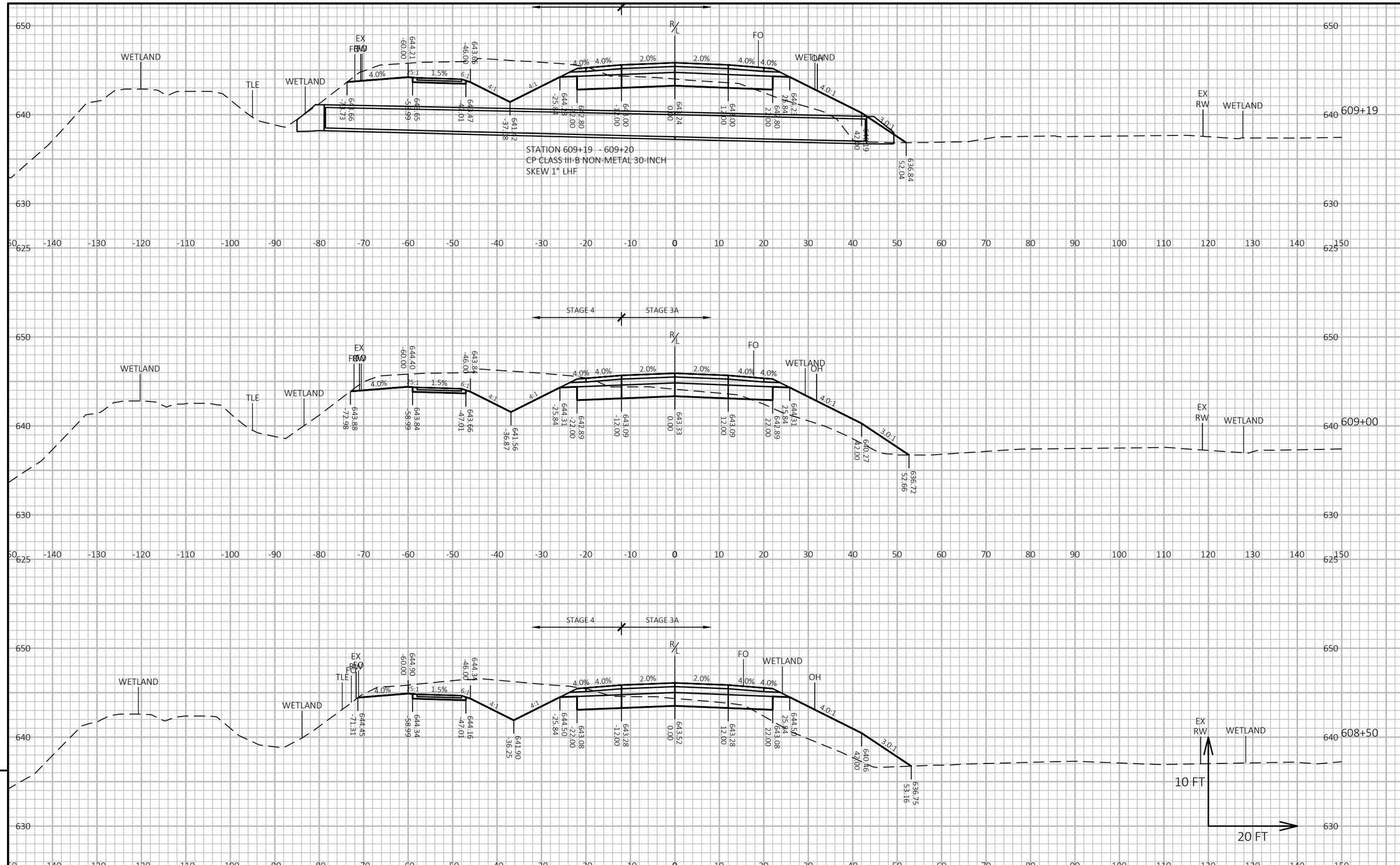

PROJECT NO: 5163-07-72	HWY: STH 35	COUNTY: LA CROSSE/VERNON	CROSS SECTIONS: STH 35	SHEET 506	E

FILE NAME : O:\PDS\C3D\51630702\SHEETSPLAN\090201-XS.DWG
LAYOUT NAME - 56
PLOT DATE : 7/1/2025 1:55 PM
PLOT BY : ED OCHS
PLOT NAME :
PLOT SCALE : 1 IN:20 FT HORZ. / 1 IN:10 FT VERT.
WISDOT/CADDS SHEET 49

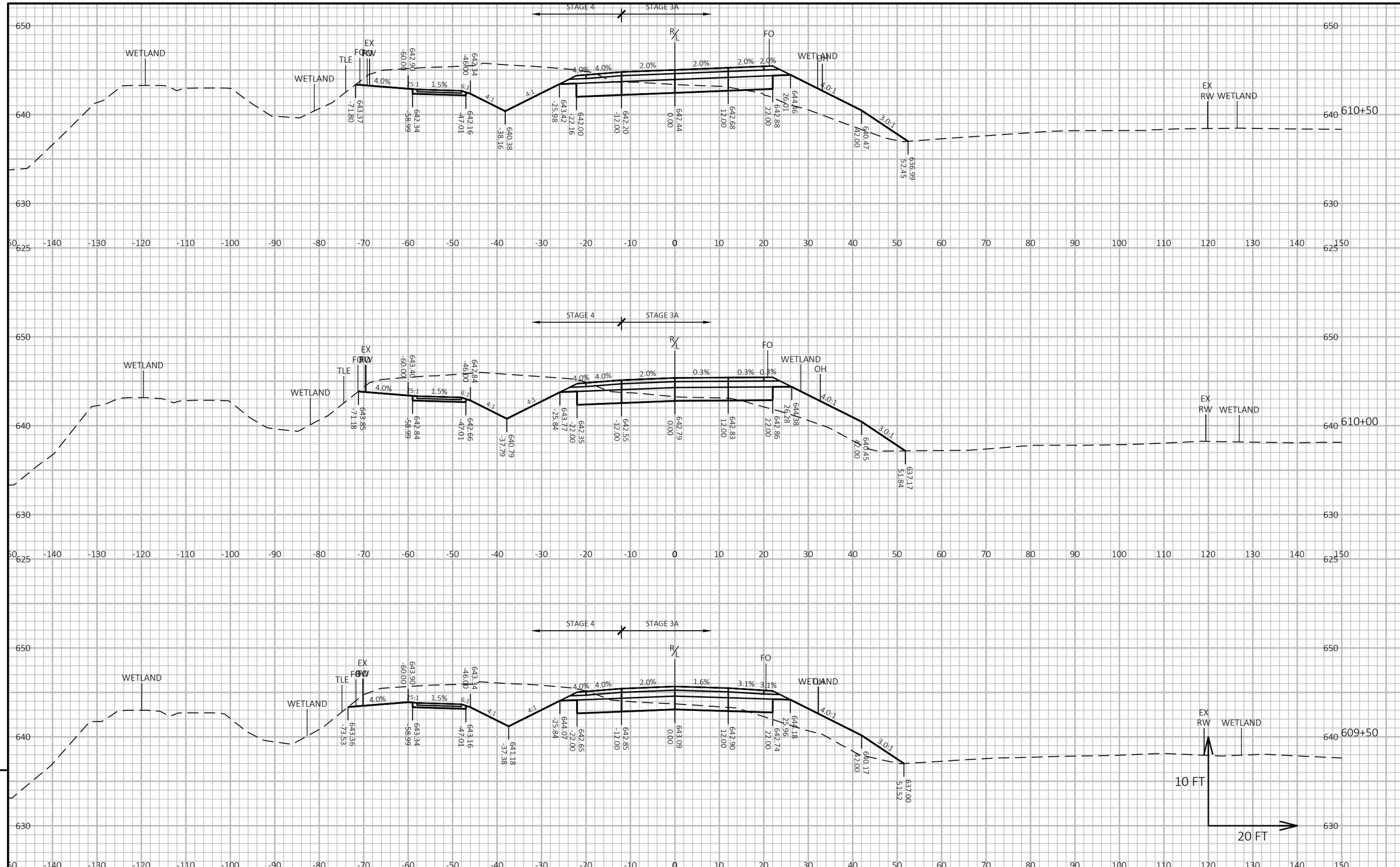

PROJECT NO: 5163-07-72	HWY: STH 35	COUNTY: LA CROSSE/VERNON	CROSS SECTIONS: STH 35	SHEET 507	E

FILE NAME : O:\PDS\C3D\51630702\SHEETSPLAN\090201-XS.DWG
LAYOUT NAME - 57
PLOT DATE : 7/1/2025 1:55 PM
PLOT BY : ED OCHS
PLOT NAME :
PLOT SCALE : 1 IN:20 FT HORZ. / 1 IN:10 FT VERT.
WISDOT/CADDS SHEET 49

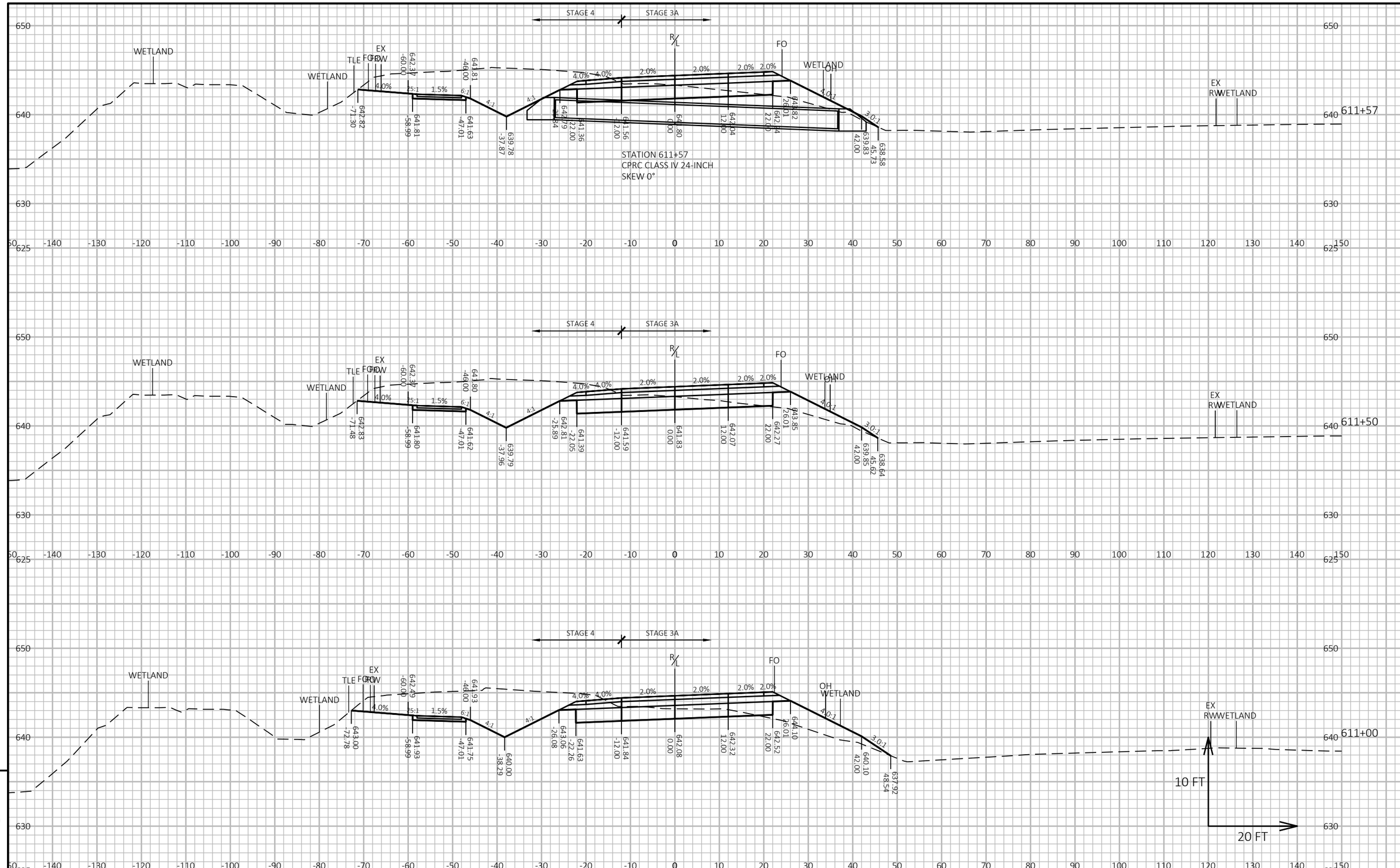

9

9

PROJECT NO: 5163-07-72	HWY: STH 35	COUNTY: LA CROSSE/VERNON	CROSS SECTIONS: STH 35	SHEET 508	E

FILE NAME : O:\PDS\C3D\51630702\SHEETSPLAN\090201-XS.DWG
LAYOUT NAME - 58
PLOT DATE : 7/1/2025 1:56 PM
PLOT BY : ED OCHS
PLOT NAME :
PLOT SCALE : 1 IN:20 FT HORZ. / 1 IN:10 FT VERT.
WISDOT/CADDS SHEET 49

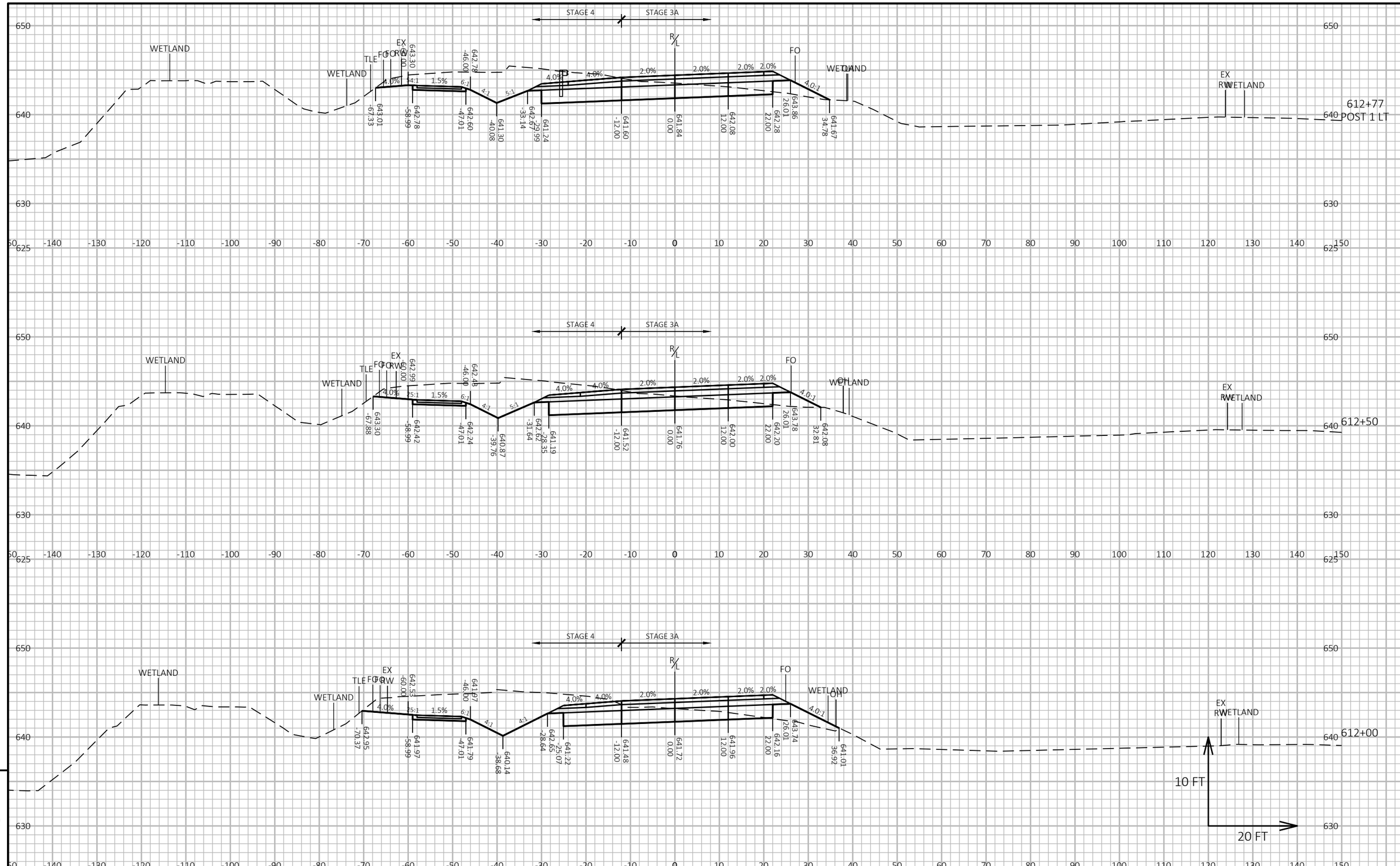

PROJECT NO: 5163-07-72	HWY: STH 35	COUNTY: LA CROSSE/VERNON	CROSS SECTIONS: STH 35	SHEET 509	E

FILE NAME : O:\PDS\C3D\51630702\SHEETSPLAN\090201-XS.DWG
LAYOUT NAME - 59
PLOT DATE : 7/1/2025 1:56 PM
PLOT BY : ED OCHS
PLOT NAME :
PLOT SCALE : 1 IN:20 FT HORZ. / 1 IN:10 FT VERT.
WISDOT/CADDS SHEET 49

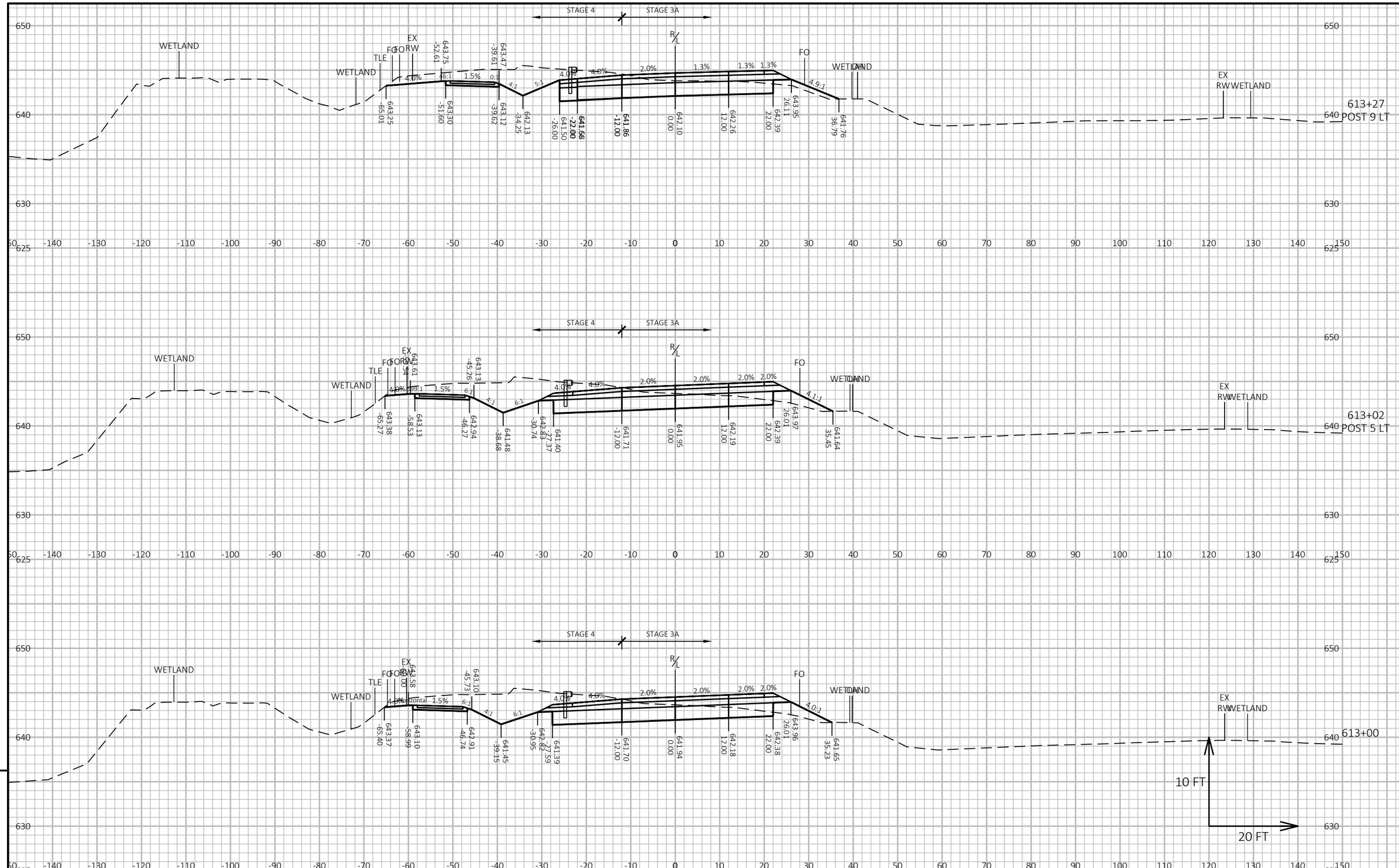

9

9

PROJECT NO: 5163-07-72	HWY: STH 35	COUNTY: LA CROSSE/VERNON	CROSS SECTIONS: STH 35	SHEET 510	E

FILE NAME : O:\PDS\C3D\51630702\SHEETSPLAN\090201-XS.DWG
LAYOUT NAME - 60
PLOT DATE : 7/1/2025 1:56 PM
PLOT BY : ED OCHS
PLOT NAME :
PLOT SCALE : 1 IN:20 FT HORZ. / 1 IN:10 FT VERT.
WISDOT/CADDS SHEET 49

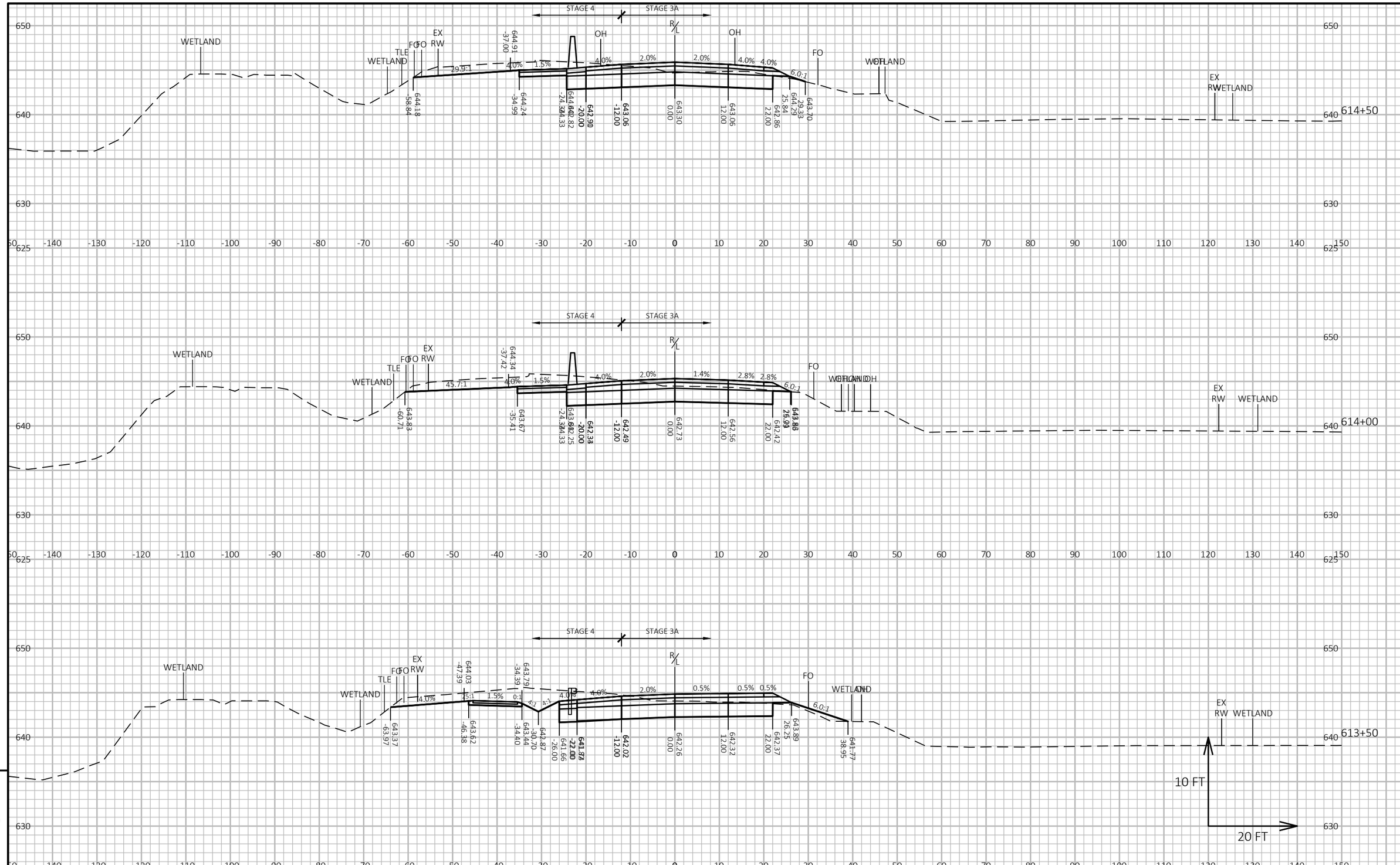

PROJECT NO: 5163-07-72	HWY: STH 35	COUNTY: LA CROSSE/VERNON	CROSS SECTIONS: STH 35	SHEET 511	E

FILE NAME : O:\PDS\C3D\51630702\SHEETSPLAN\090201-XS.DWG
LAYOUT NAME - 61
PLOT DATE : 7/1/2025 1:57 PM
PLOT BY : ED OCHS
PLOT NAME :
PLOT SCALE : 1 IN:20 FT HORZ. / 1 IN:10 FT VERT.
WISDOT/CADDS SHEET 49

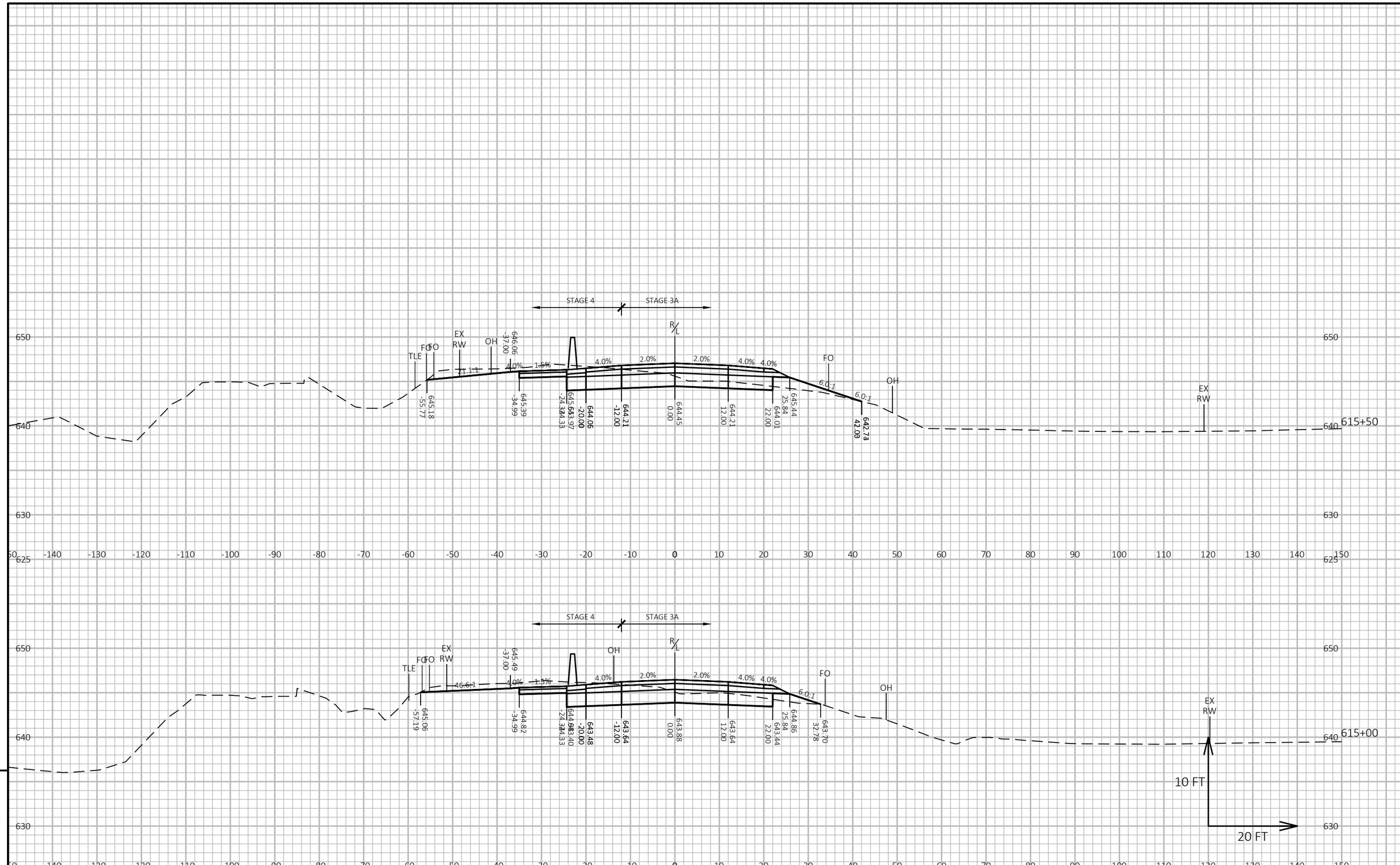

PROJECT NO: 5163-07-72	HWY: STH 35	COUNTY: LA CROSSE/VERNON	CROSS SECTIONS: STH 35	SHEET 512	E

FILE NAME : O:\PDS\C3D\51630702\SHEETSPLAN\090201-XS.DWG
LAYOUT NAME - 62
PLOT DATE : 7/1/2025 1:57 PM
PLOT BY : ED OCHS
PLOT NAME :
PLOT SCALE : 1 IN:20 FT HORZ. / 1 IN:10 FT VERT.
WISDOT/CADDS SHEET 49

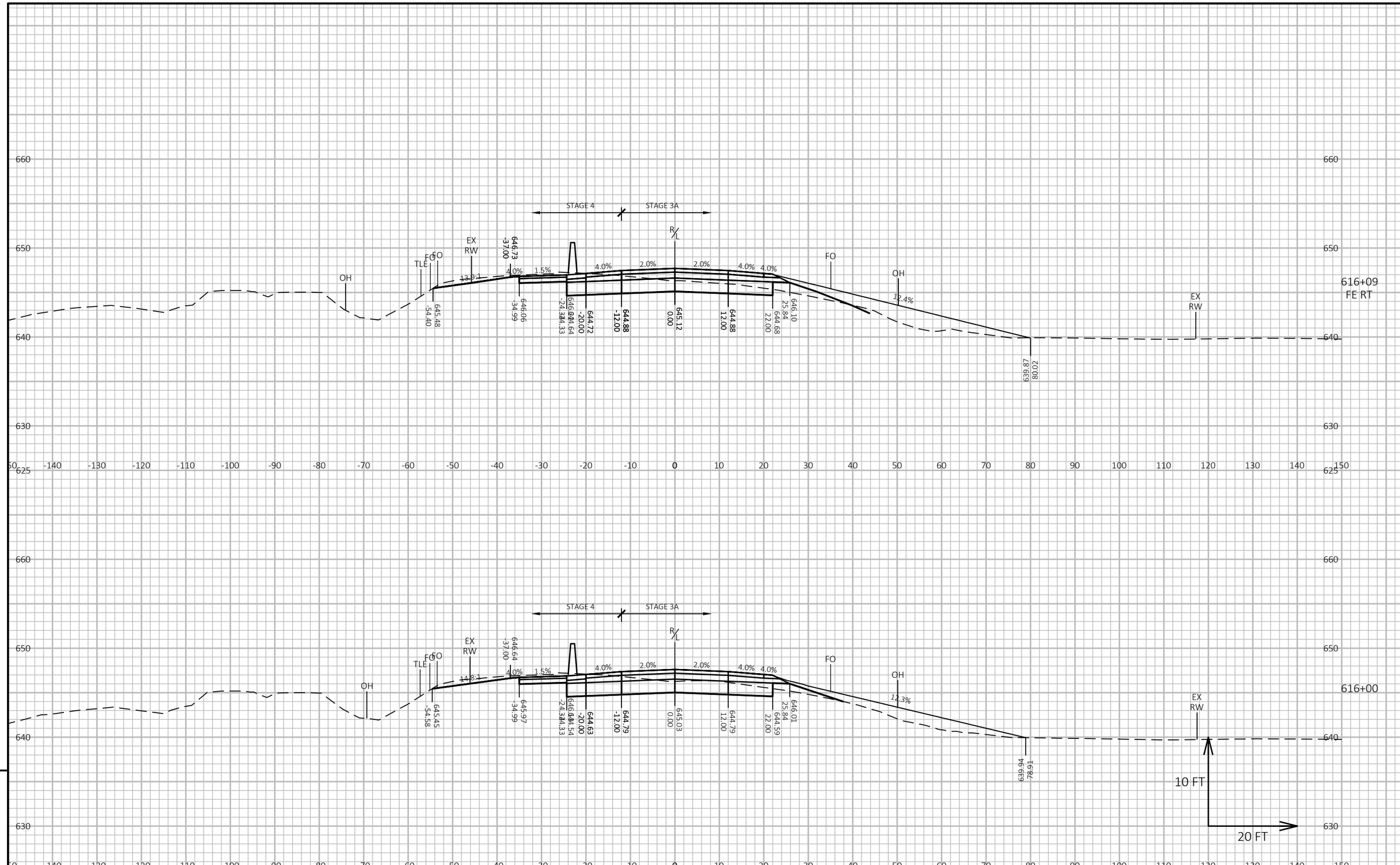

PROJECT NO: 5163-07-72	HWY: STH 35	COUNTY: LA CROSSE/VERNON	CROSS SECTIONS: STH 35	SHEET 513	E

FILE NAME : O:\PDS\C3D\51630702\SHEETSPLAN\090201-XS.DWG
LAYOUT NAME - 63
PLOT DATE : 7/1/2025 1:57 PM
PLOT BY : ED OCHS
PLOT NAME :
PLOT SCALE : 1 IN:20 FT HORZ. / 1 IN:10 FT VERT.
WISDOT/CADDS SHEET 49

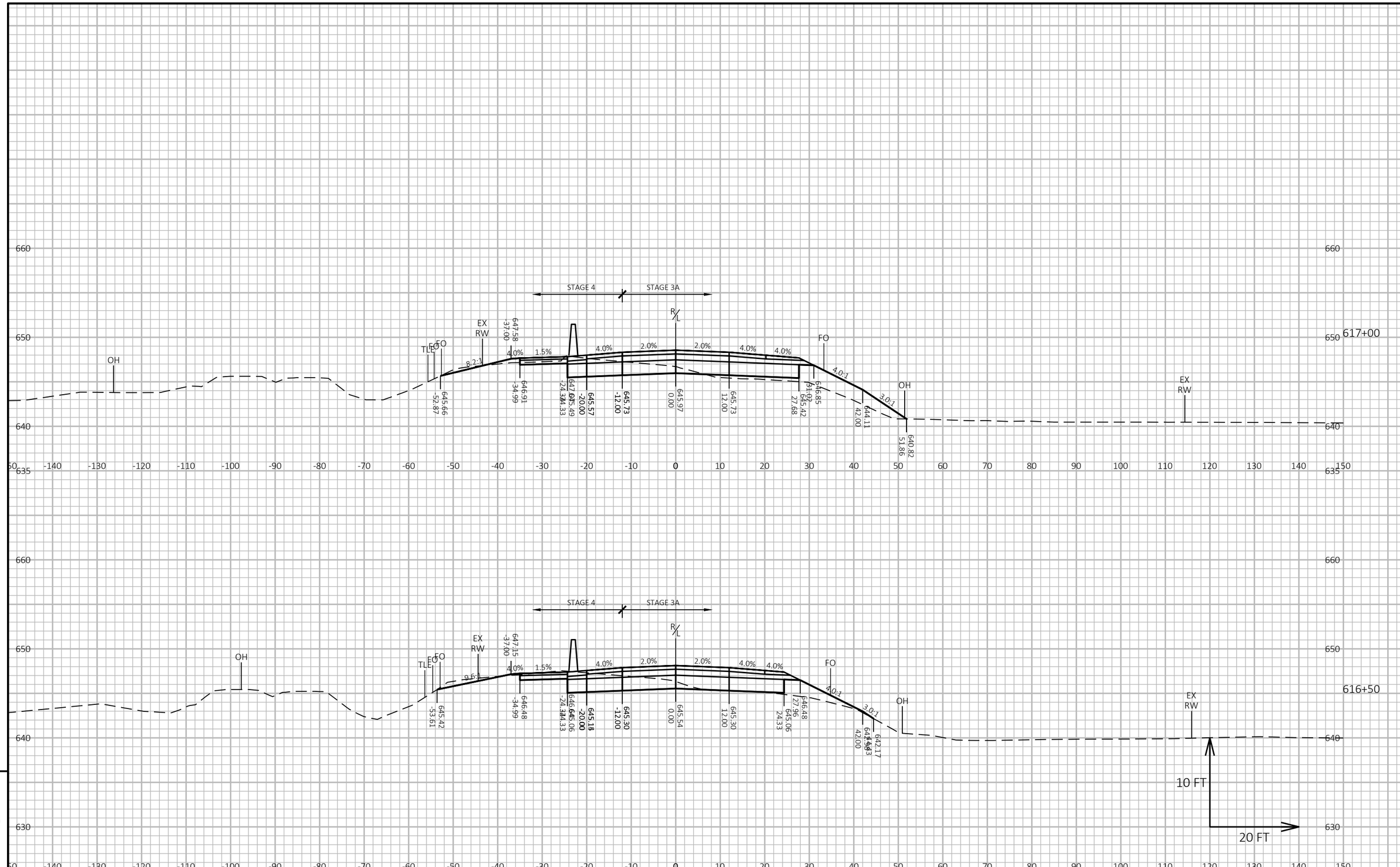

PROJECT NO: 5163-07-72	HWY: STH 35	COUNTY: LA CROSSE/VERNON	CROSS SECTIONS: STH 35	SHEET 514	E

FILE NAME : O:\PDS\C3D\51630702\SHEETSPLAN\090201-XS.DWG
LAYOUT NAME - 64
PLOT DATE : 7/1/2025 1:58 PM
PLOT BY : ED OCHS
PLOT NAME :
PLOT SCALE : 1 IN:20 FT HORZ. / 1 IN:10 FT VERT.
WISDOT/CADDS SHEET 49

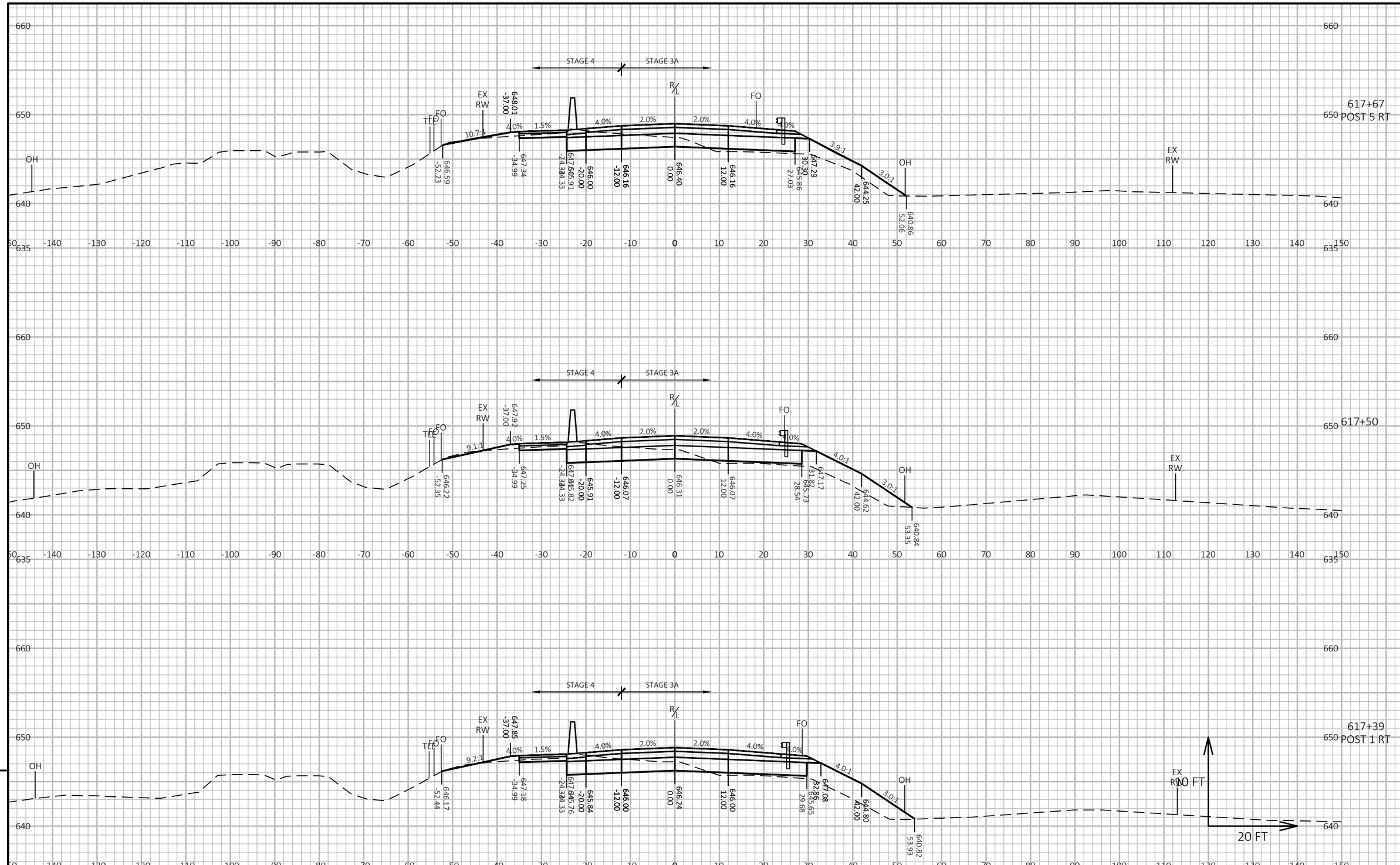

PROJECT NO: 5163-07-72	HWY: STH 35	COUNTY: LA CROSSE/VERNON	CROSS SECTIONS: STH 35	SHEET 515	E

FILE NAME : O:\PDS\C3D\51630702\SHEETSPLAN\090201-XS.DWG
LAYOUT NAME - 65
PLOT DATE : 7/1/2025 1:58 PM
PLOT BY : ED OCHS
PLOT NAME :
PLOT SCALE : 1 IN:20 FT HORZ. / 1 IN:10 FT VERT.
WISDOT/CADDS SHEET 49

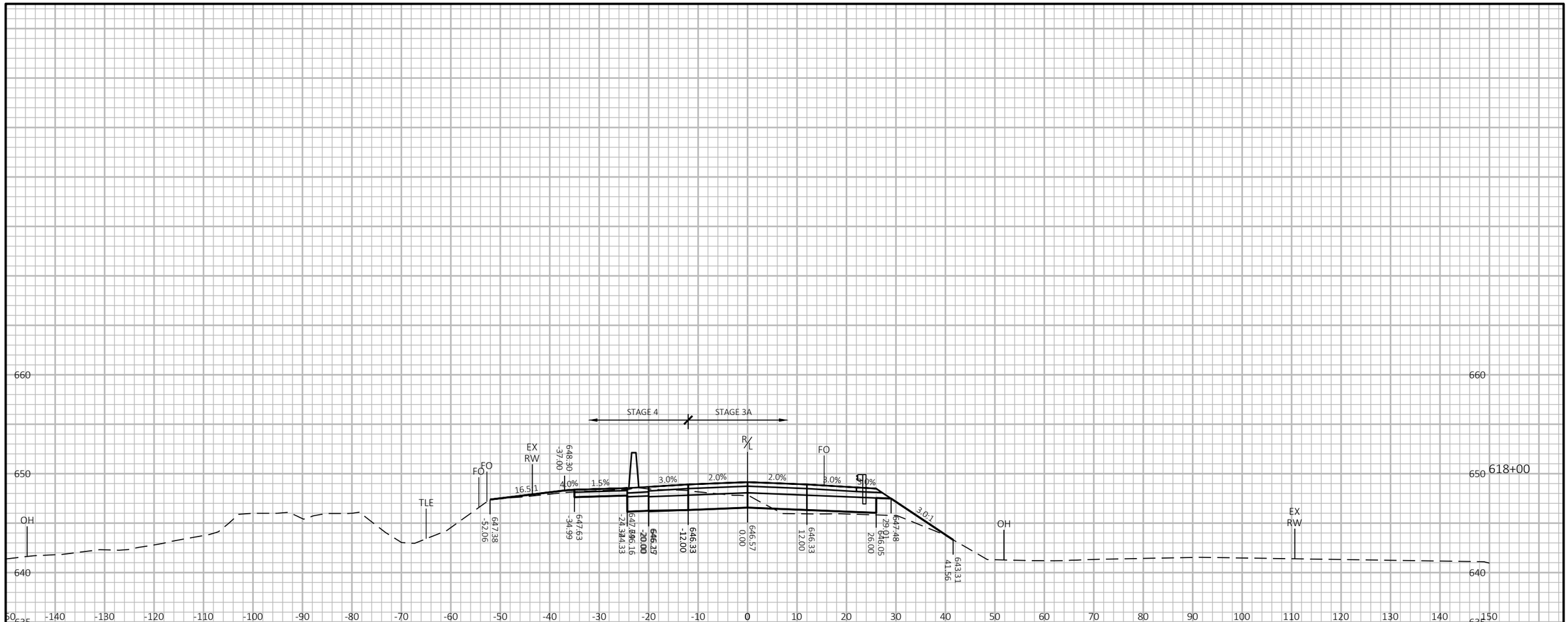

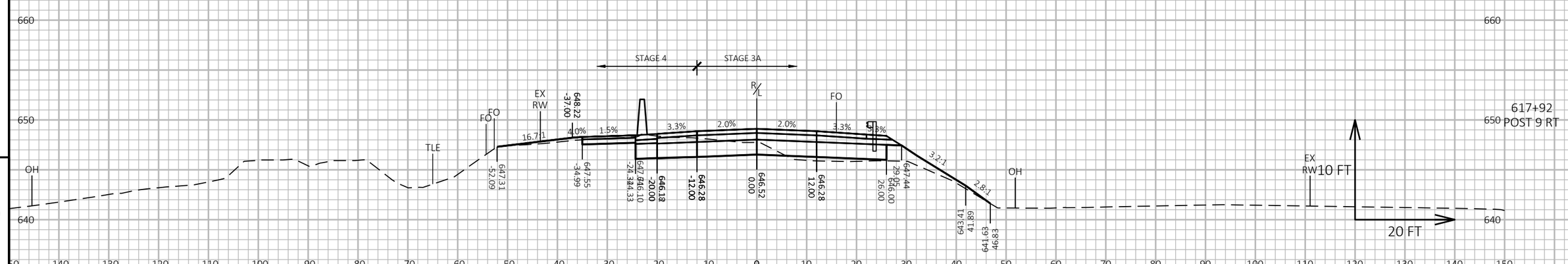

9

9

PROJECT NO: 5163-07-72	HWY: STH 35	COUNTY: LA CROSSE/VERNON	CROSS SECTIONS: STH 35	SHEET 516	E

FILE NAME : O:\PDS\C3D\51630702\SHEETSPLAN\090201-XS.DWG
LAYOUT NAME - 66
PLOT DATE : 7/1/2025 1:58 PM
PLOT BY : ED OCHS
PLOT NAME :
PLOT SCALE : 1 IN:20 FT HORZ. / 1 IN:10 FT VERT.
WISDOT/CADDS SHEET 49

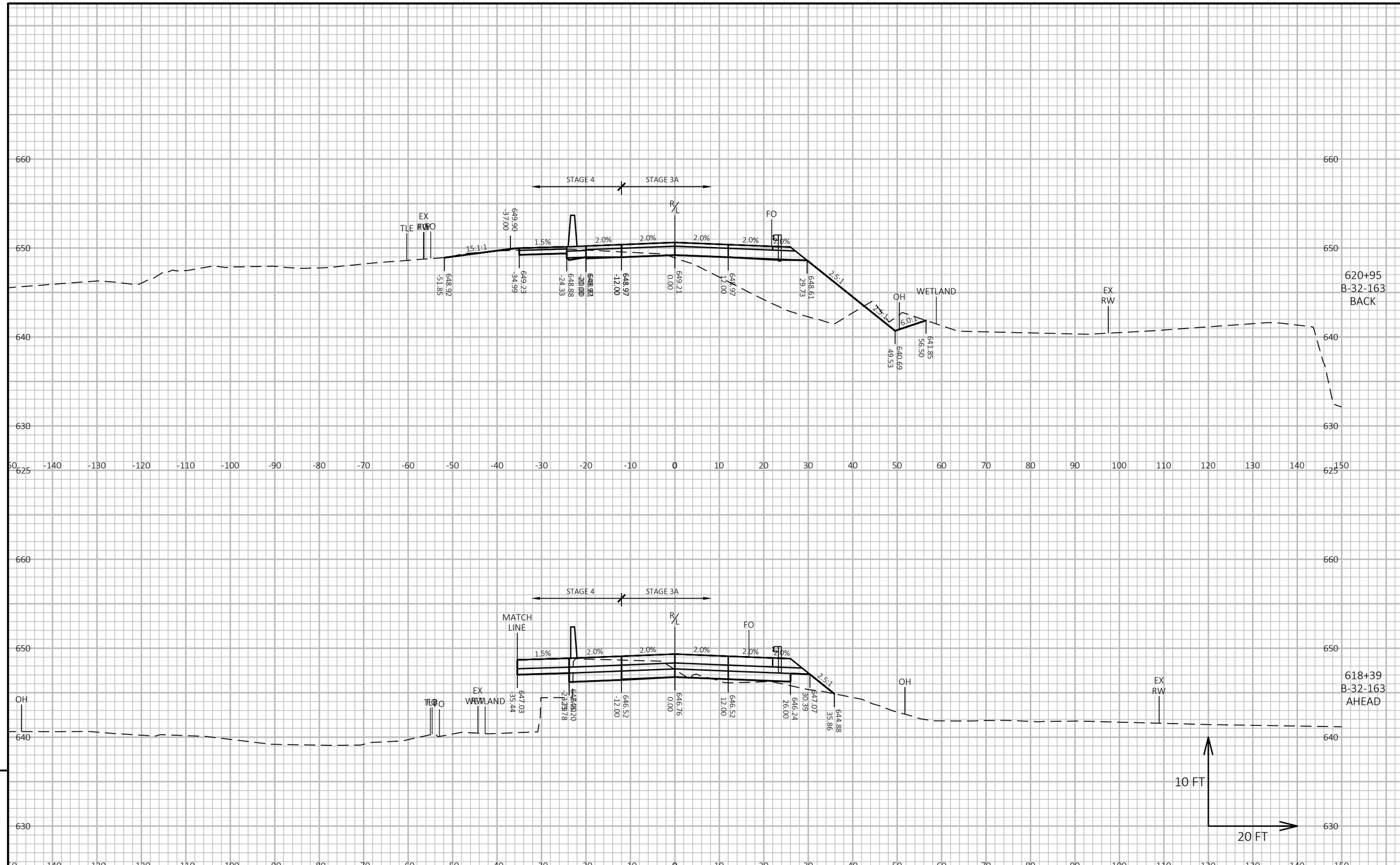

9

9

PROJECT NO: 5163-07-72	HWY: STH 35	COUNTY: LA CROSSE/VERNON	CROSS SECTIONS: STH 35	SHEET 517	E

FILE NAME : O:\PDS\C3D\51630702\SHEETSPLAN\090201-XS.DWG
LAYOUT NAME - 67
PLOT DATE : 7/1/2025 1:59 PM
PLOT BY : ED OCHS
PLOT NAME :
PLOT SCALE : 1 IN:20 FT HORZ. / 1 IN:10 FT VERT.
WISDOT/CADDS SHEET 49

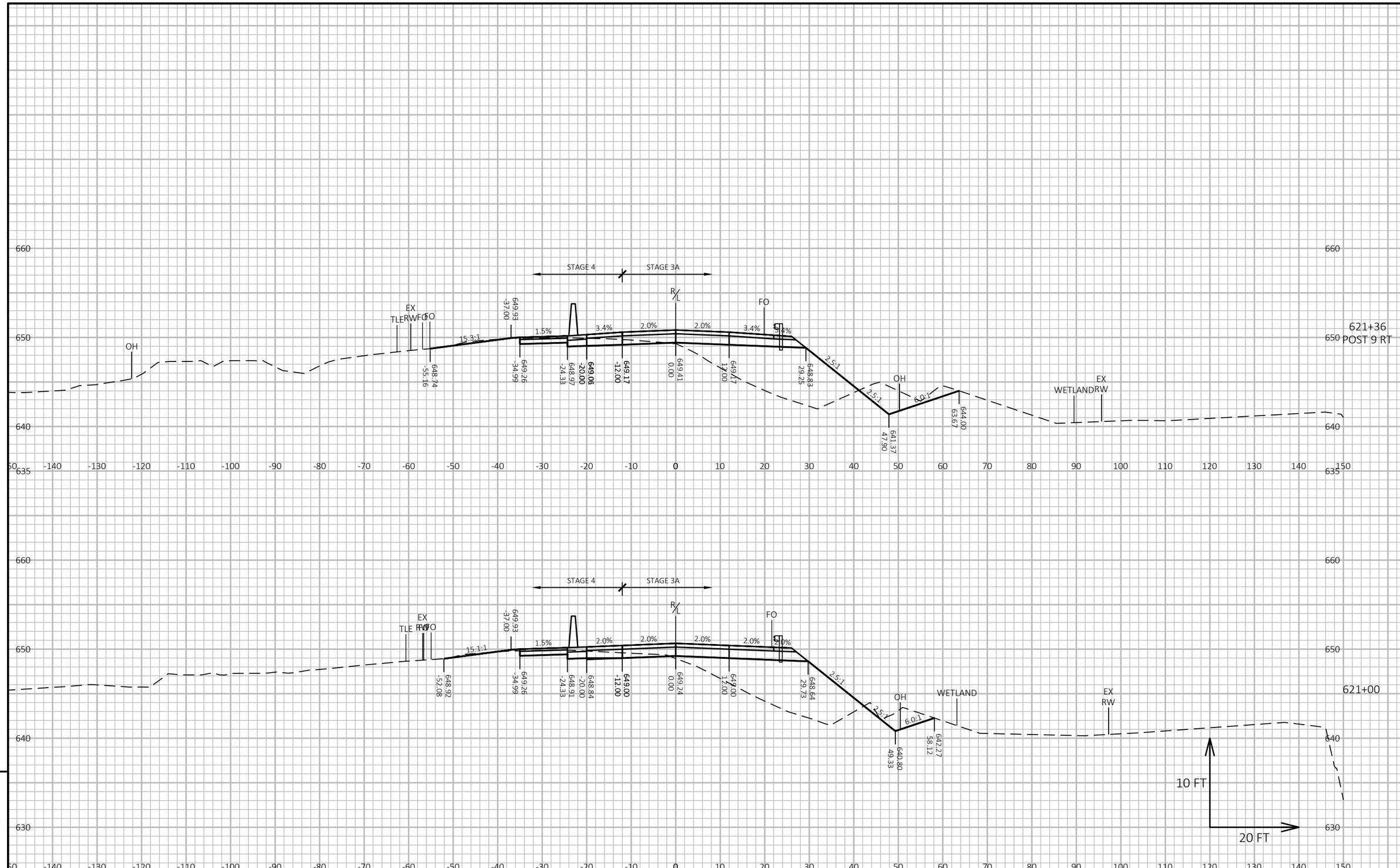

PROJECT NO: 5163-07-72	HWY: STH 35	COUNTY: LA CROSSE/VERNON	CROSS SECTIONS: STH 35	SHEET 518	E

FILE NAME : O:\PDS\C3D\51630702\SHEETSPLAN\090201-XS.DWG
LAYOUT NAME - 68
PLOT DATE : 7/1/2025 1:59 PM
PLOT BY : ED OCHS
PLOT NAME :
PLOT SCALE : 1 IN:20 FT HORZ. / 1 IN:10 FT VERT.
WISDOT/CADDS SHEET 49

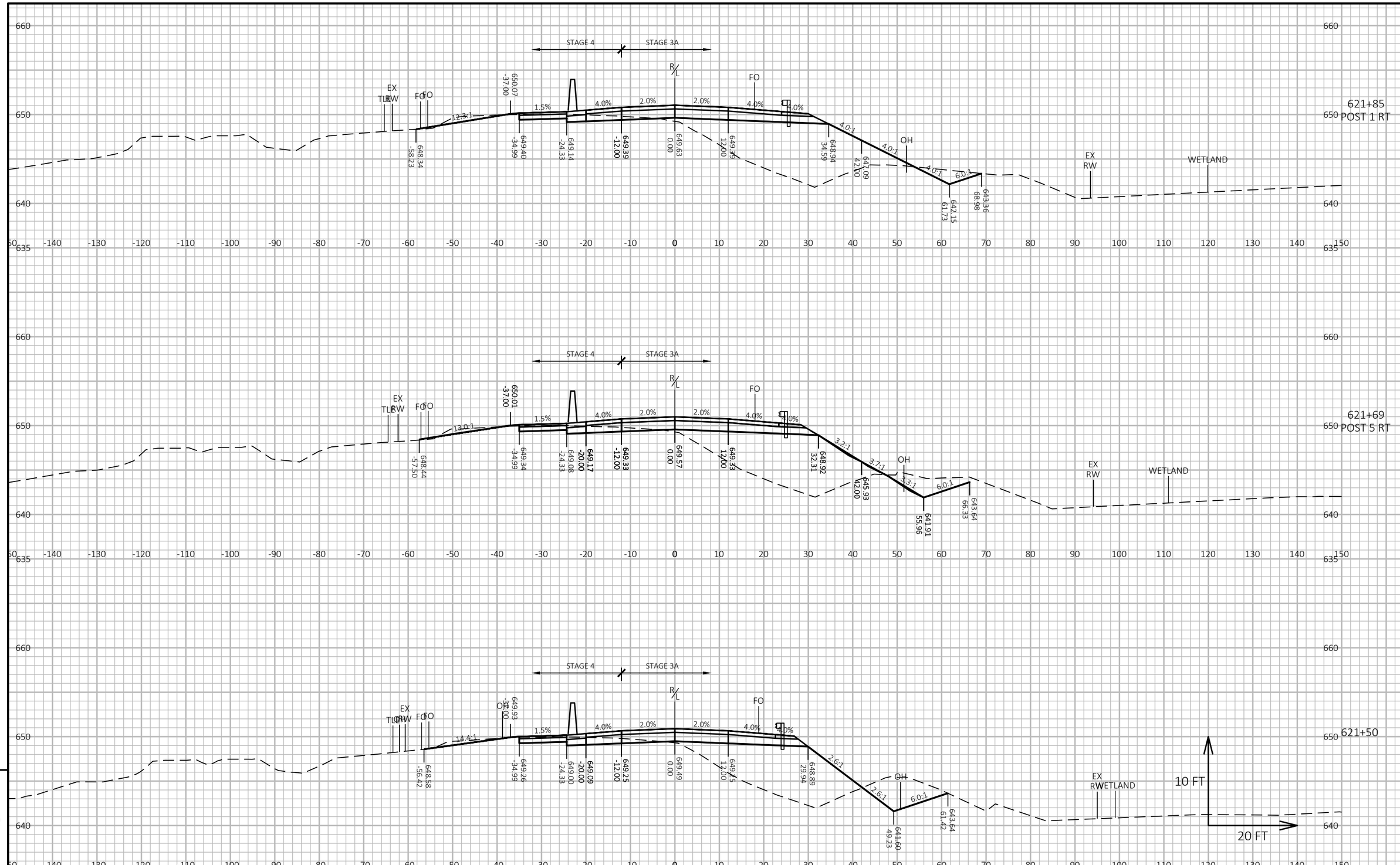

PROJECT NO: 5163-07-72	HWY: STH 35	COUNTY: LA CROSSE/VERNON	CROSS SECTIONS: STH 35	SHEET 519	E

FILE NAME : O:\PDS\C3D\51630702\SHEETSPLAN\090201-XS.DWG
LAYOUT NAME - 69
PLOT DATE : 7/1/2025 1:59 PM
PLOT BY : ED OCHS
PLOT NAME :
PLOT SCALE : 1 IN:20 FT HORZ. / 1 IN:10 FT VERT.
WISDOT/CADDS SHEET 49

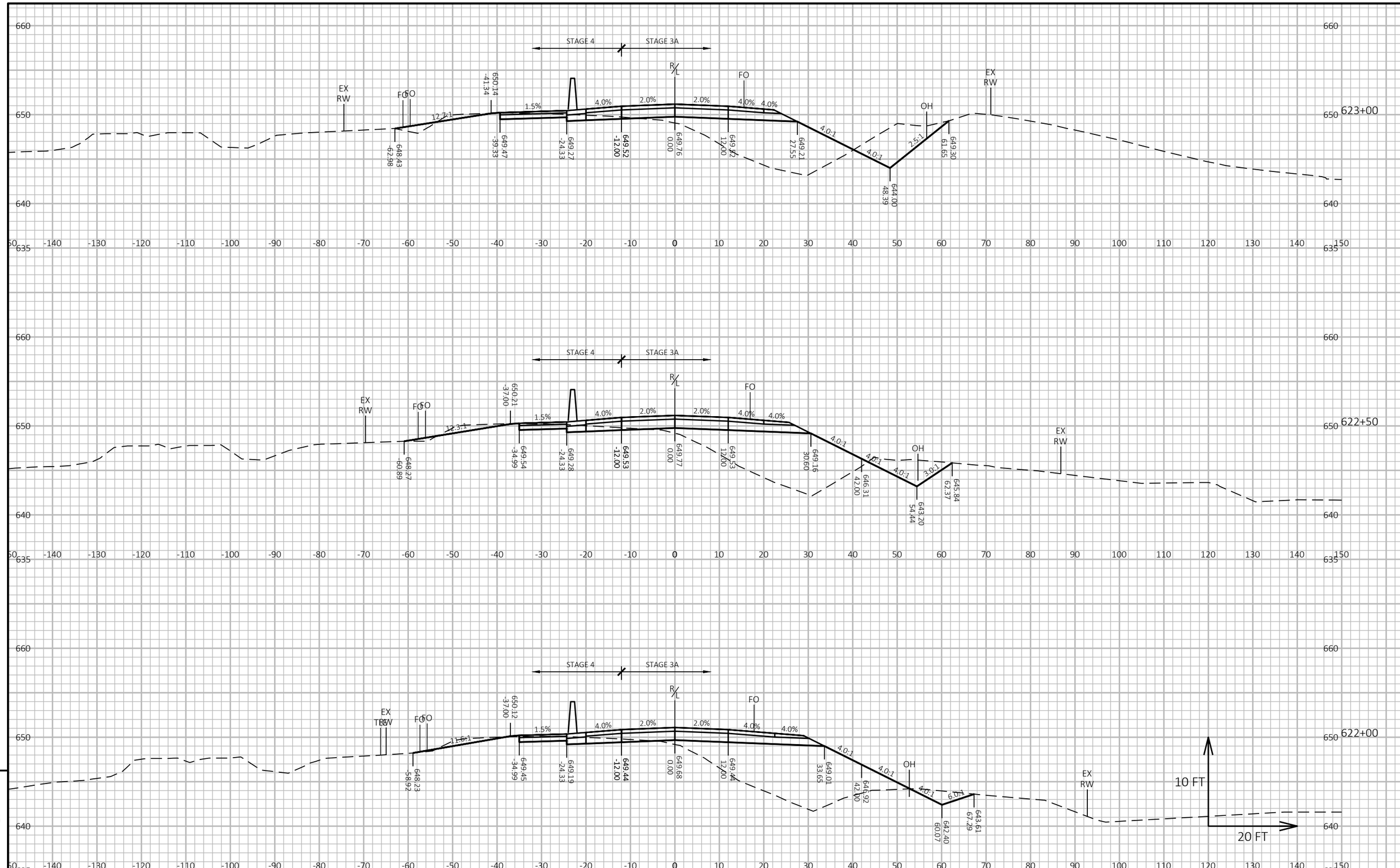

PROJECT NO: 5163-07-72	HWY: STH 35	COUNTY: LA CROSSE/VERNON	CROSS SECTIONS: STH 35	SHEET 520	E

FILE NAME : O:\PDS\C3D\51630702\SHEETSPLAN\090201-XS.DWG
LAYOUT NAME - 70
PLOT DATE : 7/1/2025 2:00 PM
PLOT BY : ED OCHS
PLOT NAME :
PLOT SCALE : 1 IN:20 FT HORZ. / 1 IN:10 FT VERT.
WISDOT/CADDS SHEET 49

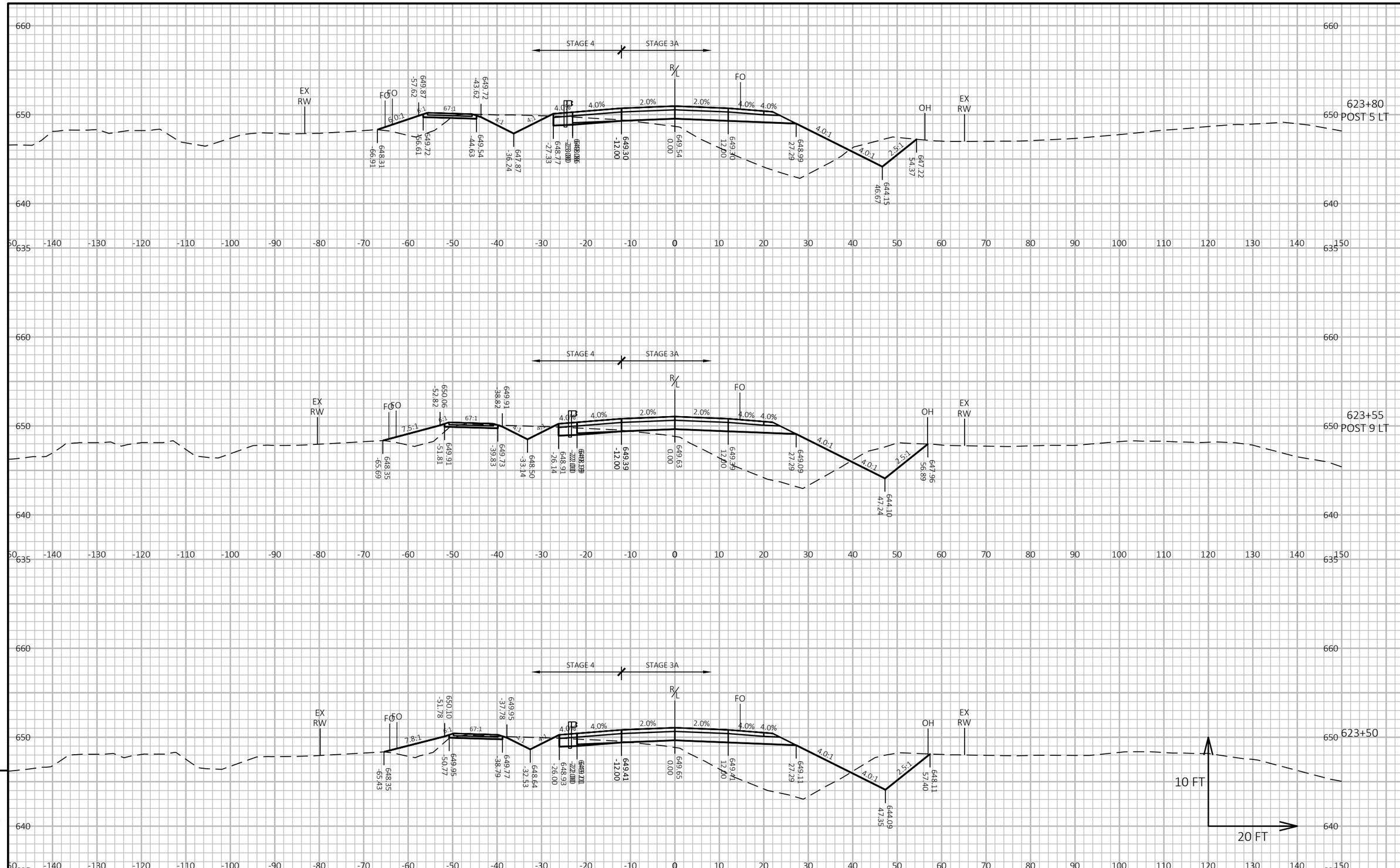

9

PROJECT NO: 5163-07-72	HWY: STH 35	COUNTY: LA CROSSE/VERNON	CROSS SECTIONS: STH 35	SHEET 521	E

FILE NAME : O:\PDS\C3D\51630702\SHEETSPLAN\090201-XS.DWG
LAYOUT NAME - 71
PLOT DATE : 7/1/2025 2:00 PM
PLOT BY : ED OCHS
PLOT NAME :
PLOT SCALE : 1 IN:20 FT HORZ. / 1 IN:10 FT VERT.
WISDOT/CADDS SHEET 49

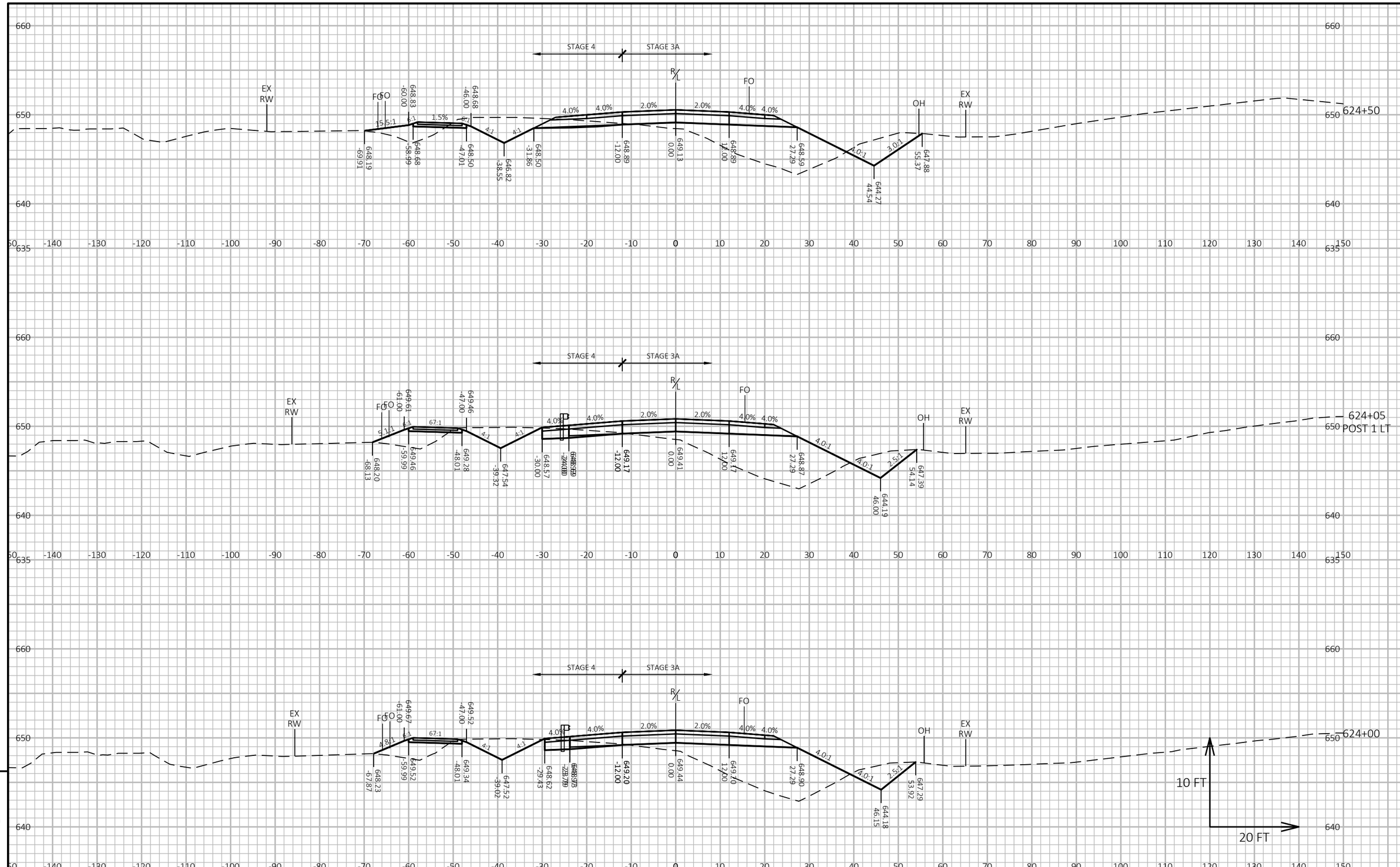

PROJECT NO: 5163-07-72	HWY: STH 35	COUNTY: LA CROSSE/VERNON	CROSS SECTIONS: STH 35	SHEET 522	E

FILE NAME : O:\PDS\C3D\51630702\SHEETSPLAN\090201-XS.DWG
LAYOUT NAME - 72
PLOT DATE : 7/1/2025 2:00 PM
PLOT BY : ED OCHS
PLOT NAME :
PLOT SCALE : 1 IN:20 FT HORZ. / 1 IN:10 FT VERT.
WISDOT/CADDS SHEET 49

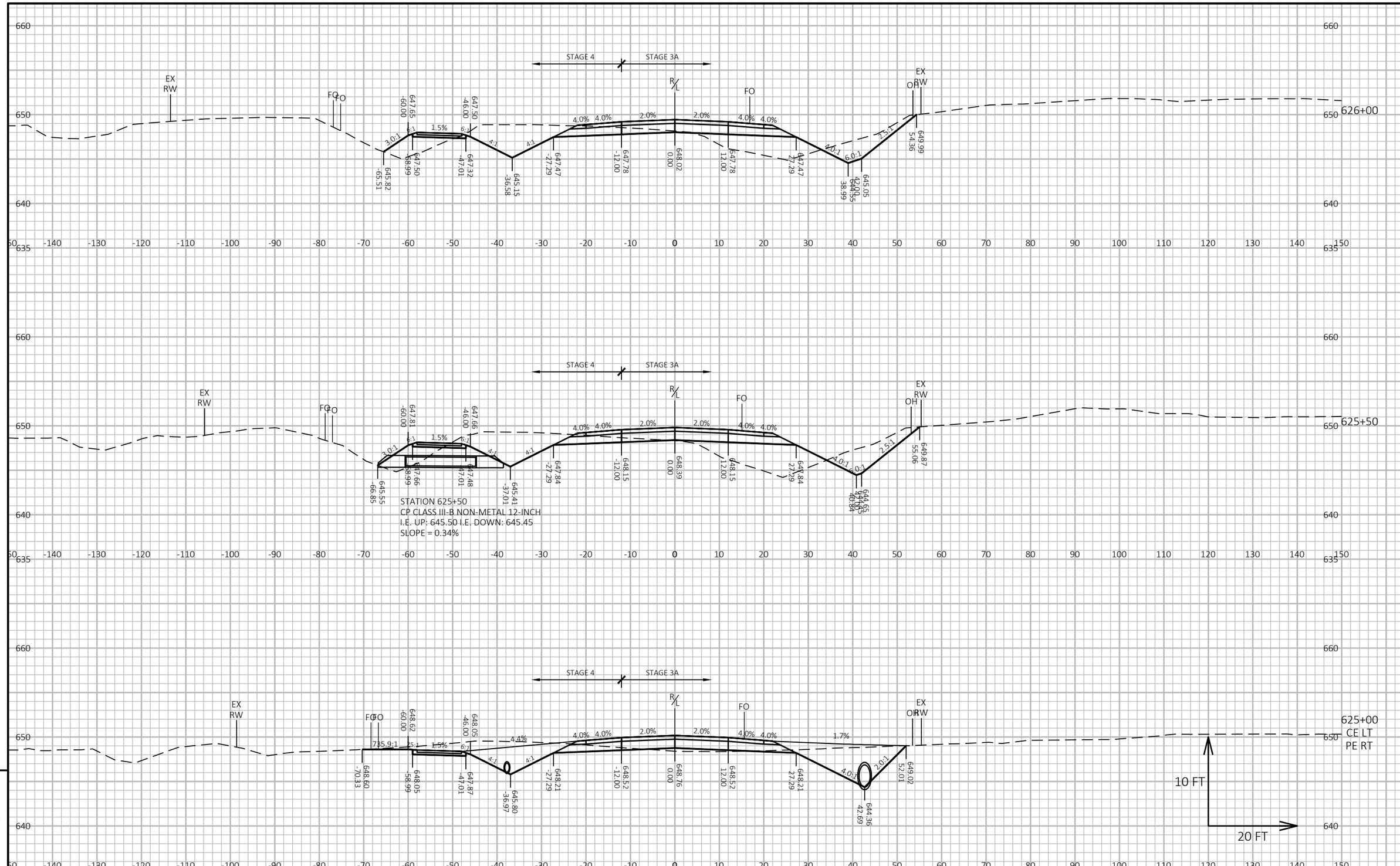

9

9

PROJECT NO: 5163-07-72	HWY: STH 35	COUNTY: LA CROSSE/VERNON	CROSS SECTIONS: STH 35	SHEET 523	E

FILE NAME : O:\PDS\C3D\51630702\SHEETSPLAN\090201-XS.DWG
LAYOUT NAME - 73
PLOT DATE : 7/1/2025 2:00 PM
PLOT BY : ED OCHS
PLOT NAME :
PLOT SCALE : 1 IN:20 FT HORZ. / 1 IN:10 FT VERT.
WISDOT/CADDS SHEET 49

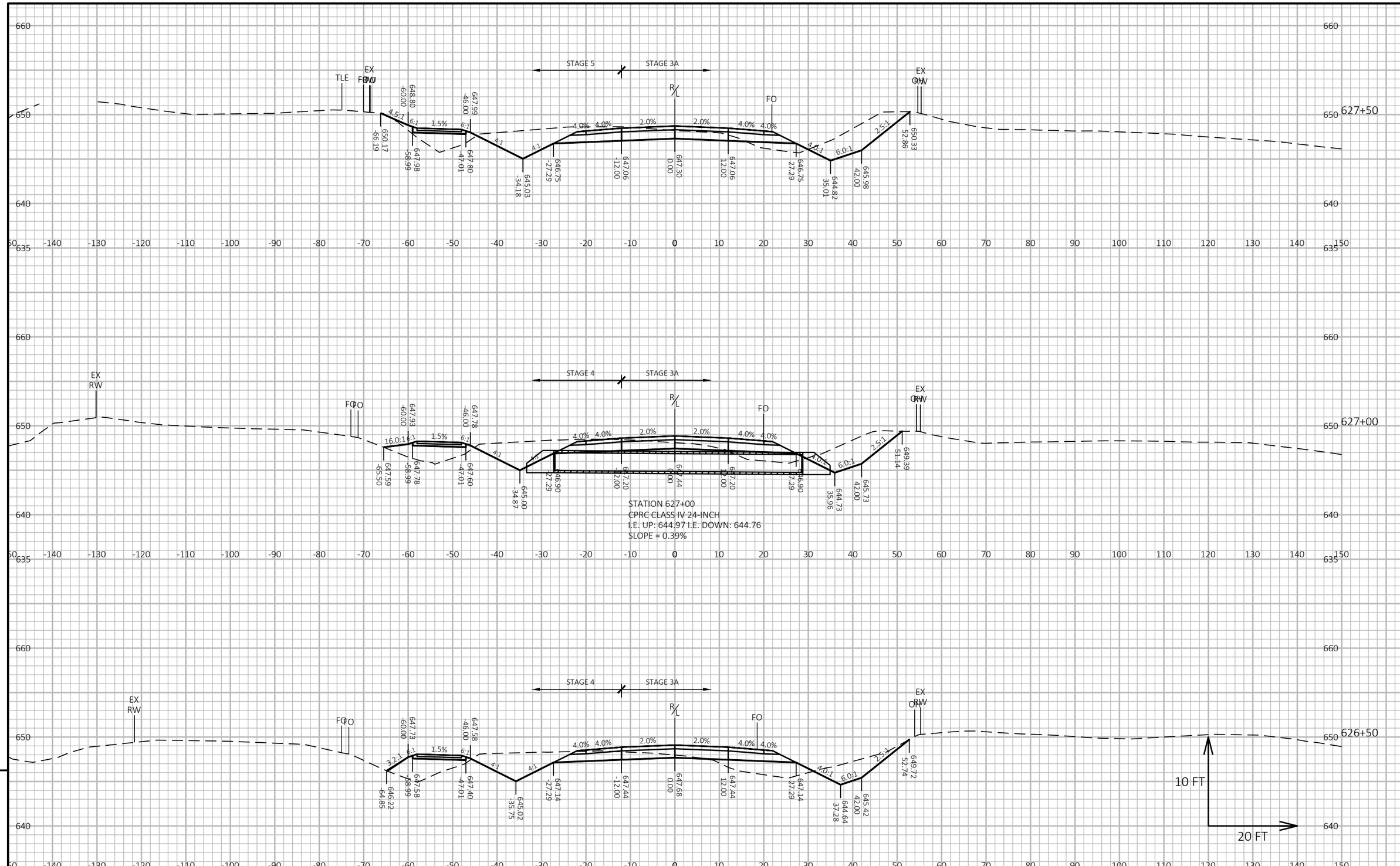

9

PROJECT NO: 5163-07-72	HWY: STH 35	COUNTY: LA CROSSE/VERNON	CROSS SECTIONS: STH 35	SHEET 524	E

FILE NAME : O:\PDS\C3D\51630702\SHEETSPLAN\090201-XS.DWG
LAYOUT NAME - 74
PLOT DATE : 7/1/2025 2:01 PM
PLOT BY : ED OCHS
PLOT NAME :
PLOT SCALE : 1 IN:20 FT HORZ. / 1 IN:10 FT VERT.
WISDOT/CADDS SHEET 49

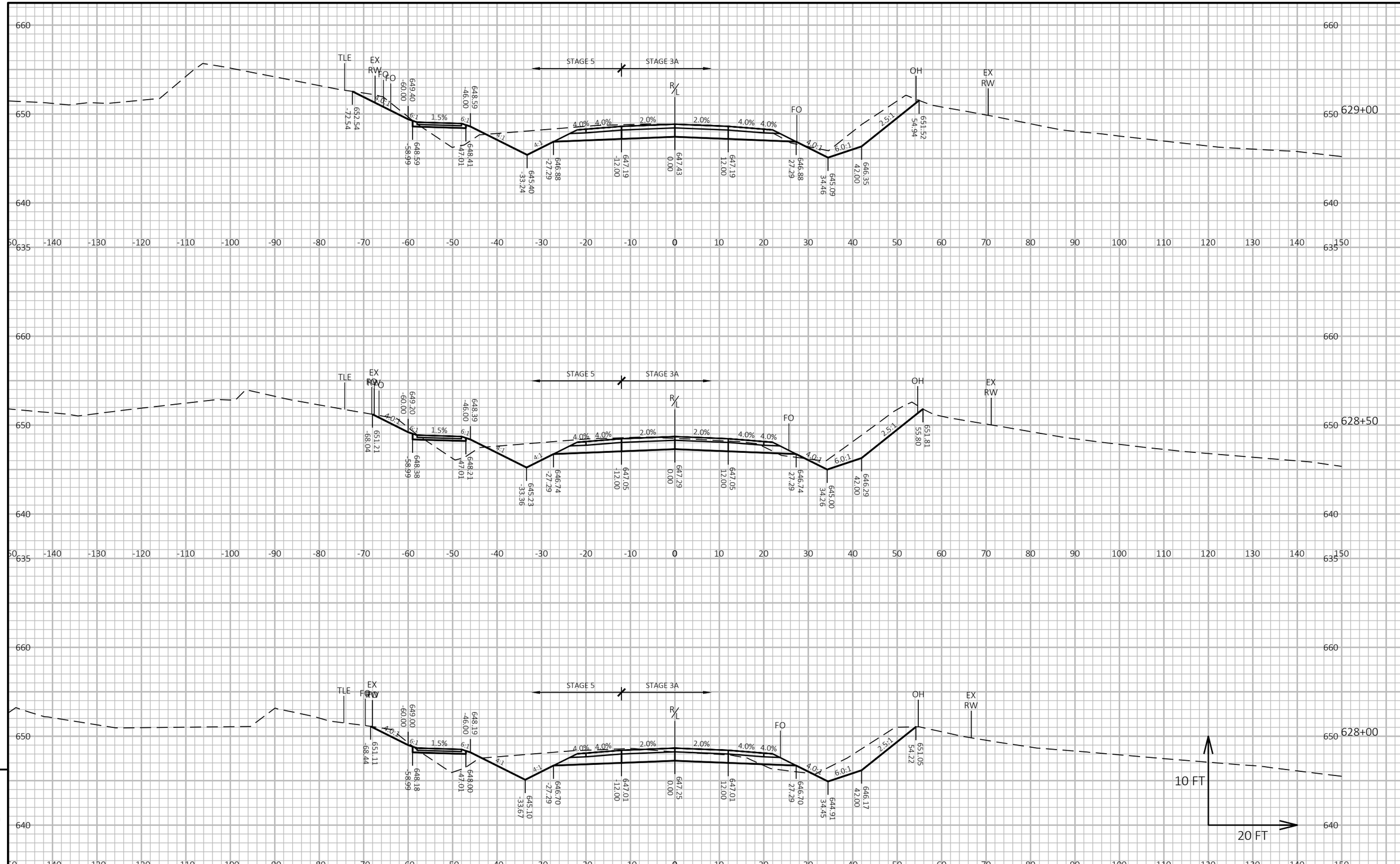

PROJECT NO: 5163-07-72	HWY: STH 35	COUNTY: LA CROSSE/VERNON	CROSS SECTIONS: STH 35	SHEET 525	E

FILE NAME : O:\PDS\C3D\51630702\SHEETSPLAN\090201-XS.DWG
LAYOUT NAME - 75
PLOT DATE : 7/1/2025 2:01 PM
PLOT BY : ED OCHS
PLOT NAME :
PLOT SCALE : 1 IN:20 FT HORZ. / 1 IN:10 FT VERT.
WISDOT/CADDS SHEET 49

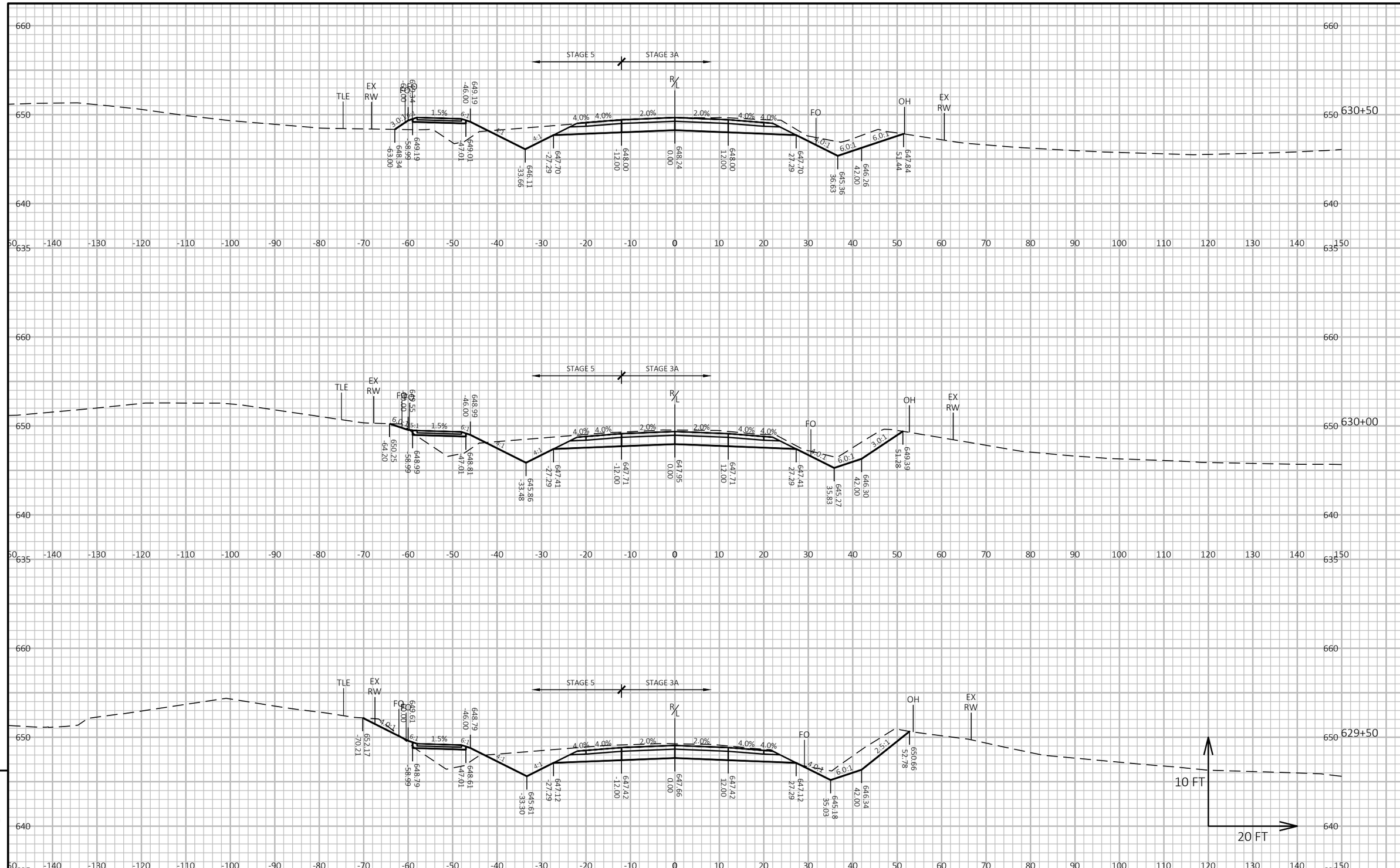

9

9

PROJECT NO: 5163-07-72	HWY: STH 35	COUNTY: LA CROSSE/VERNON	CROSS SECTIONS: STH 35	SHEET 526	E

FILE NAME : O:\PDS\C3D\51630702\SHEETSPLAN\090201-XS.DWG
LAYOUT NAME - 76

PLOT DATE : 7/1/2025 2:01 PM PLOT BY : ED OCHS PLOT NAME : PLOT SCALE : 1 IN:20 FT HORZ. / 1 IN:10 FT VERT.

WISDOT/CADDS SHEET 49

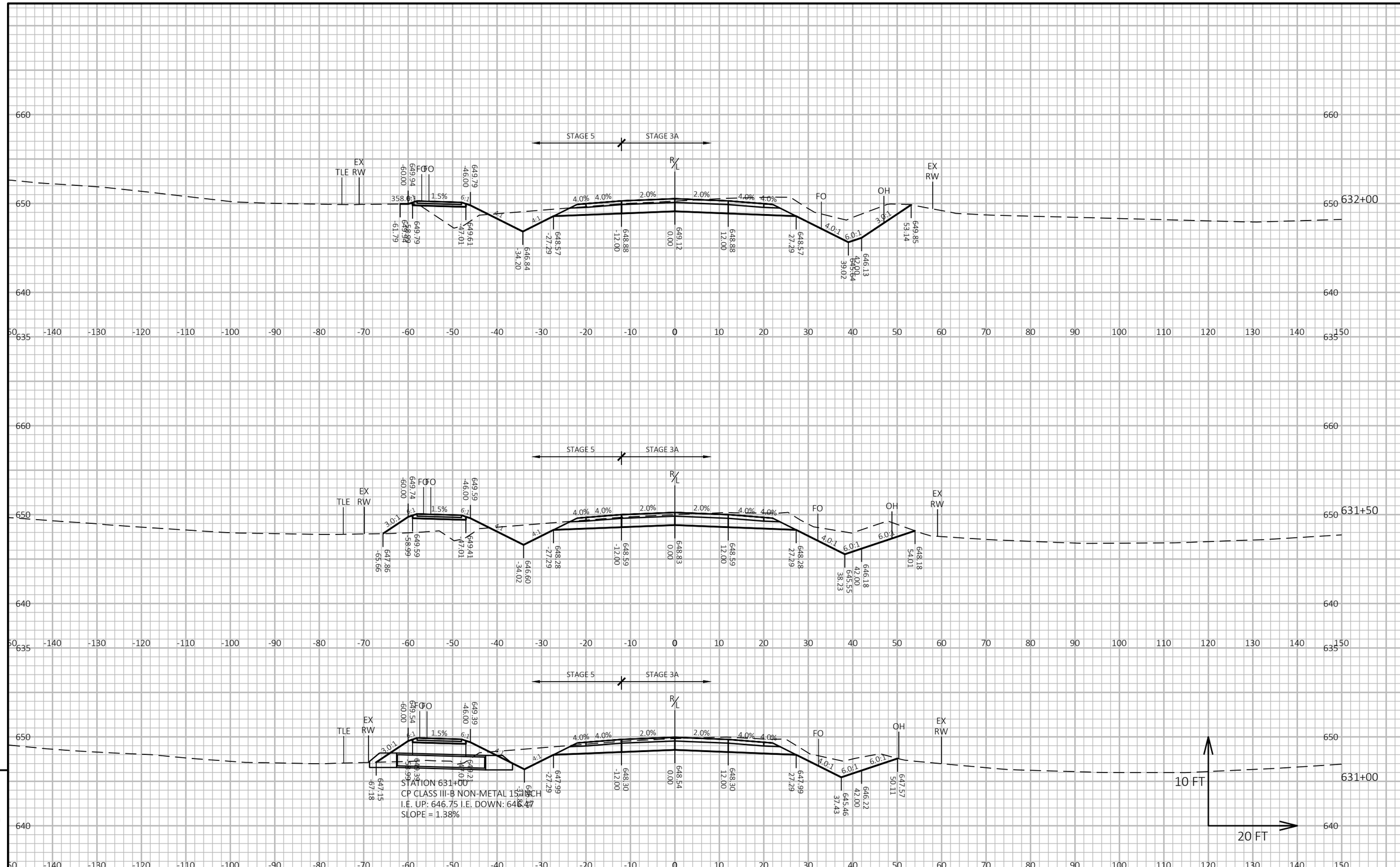

PROJECT NO: 5163-07-72	HWY: STH 35	COUNTY: LA CROSSE/VERNON	CROSS SECTIONS: STH 35	SHEET 527	E

FILE NAME : O:\PDS\C3D\51630702\SHEETSPLAN\090201-XS.DWG
LAYOUT NAME - 77
PLOT DATE : 7/1/2025 2:01 PM
PLOT BY : ED OCHS
PLOT NAME :
PLOT SCALE : 1 IN:20 FT HORZ. / 1 IN:10 FT VERT.
WISDOT/CADDS SHEET 49

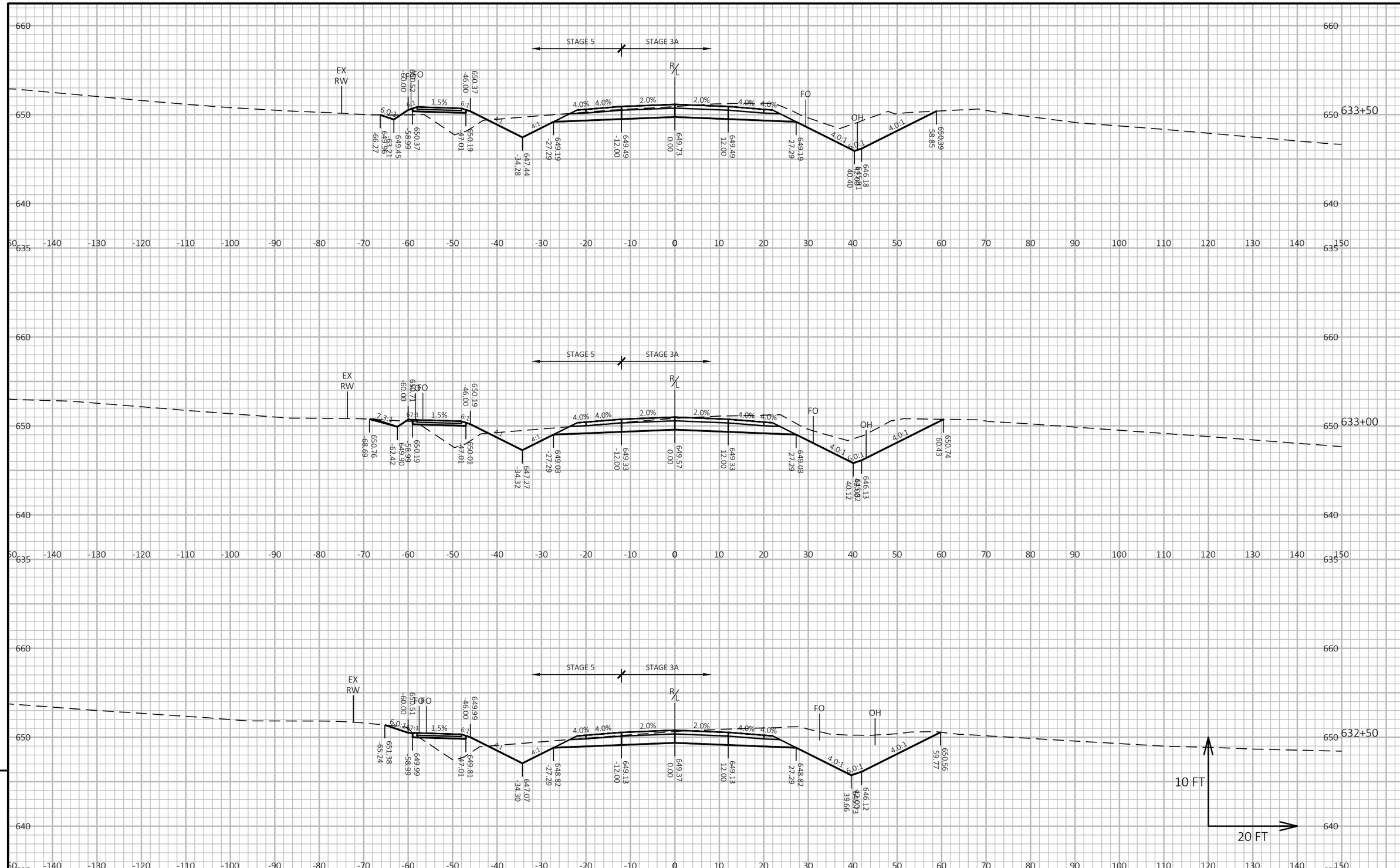

9

9

PROJECT NO: 5163-07-72	HWY: STH 35	COUNTY: LA CROSSE/VERNON	CROSS SECTIONS: STH 35	SHEET 528	E

FILE NAME : O:\PDS\C3D\51630702\SHEETSPLAN\090201-XS.DWG
LAYOUT NAME - 78
PLOT DATE : 7/1/2025 2:02 PM
PLOT BY : ED OCHS
PLOT NAME :
PLOT SCALE : 1 IN:20 FT HORZ. / 1 IN:10 FT VERT.
WISDOT/CADDS SHEET 49

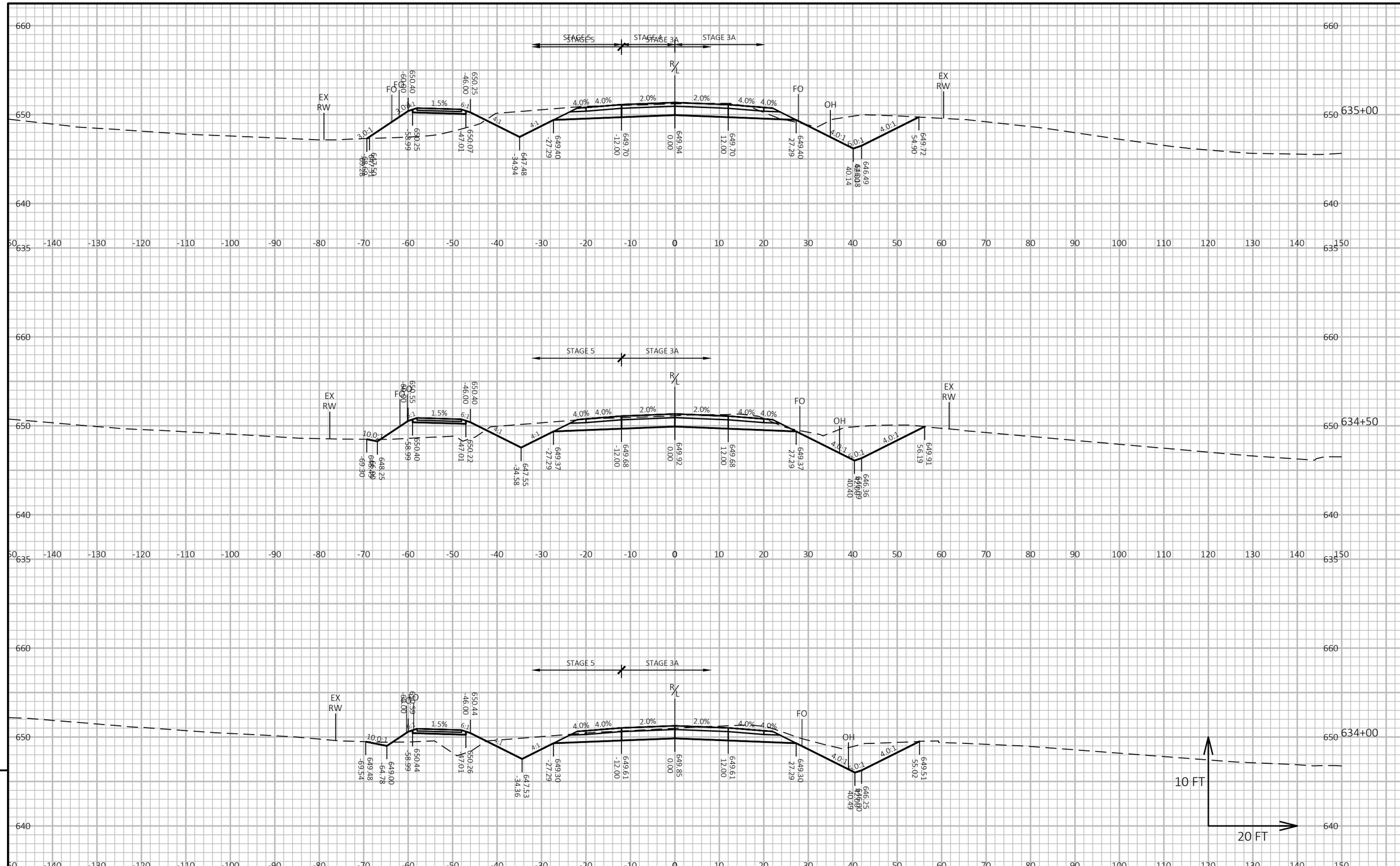

PROJECT NO: 5163-07-72	HWY: STH 35	COUNTY: LA CROSSE/VERNON	CROSS SECTIONS: STH 35	SHEET 529	E

FILE NAME : O:\PDS\C3D\51630702\SHEETSPLAN\090201-XS.DWG
LAYOUT NAME - 79
PLOT DATE : 7/1/2025 2:02 PM
PLOT BY : ED OCHS
PLOT NAME :
PLOT SCALE : 1 IN:20 FT HORZ. / 1 IN:10 FT VERT.
WISDOT/CADDS SHEET 49

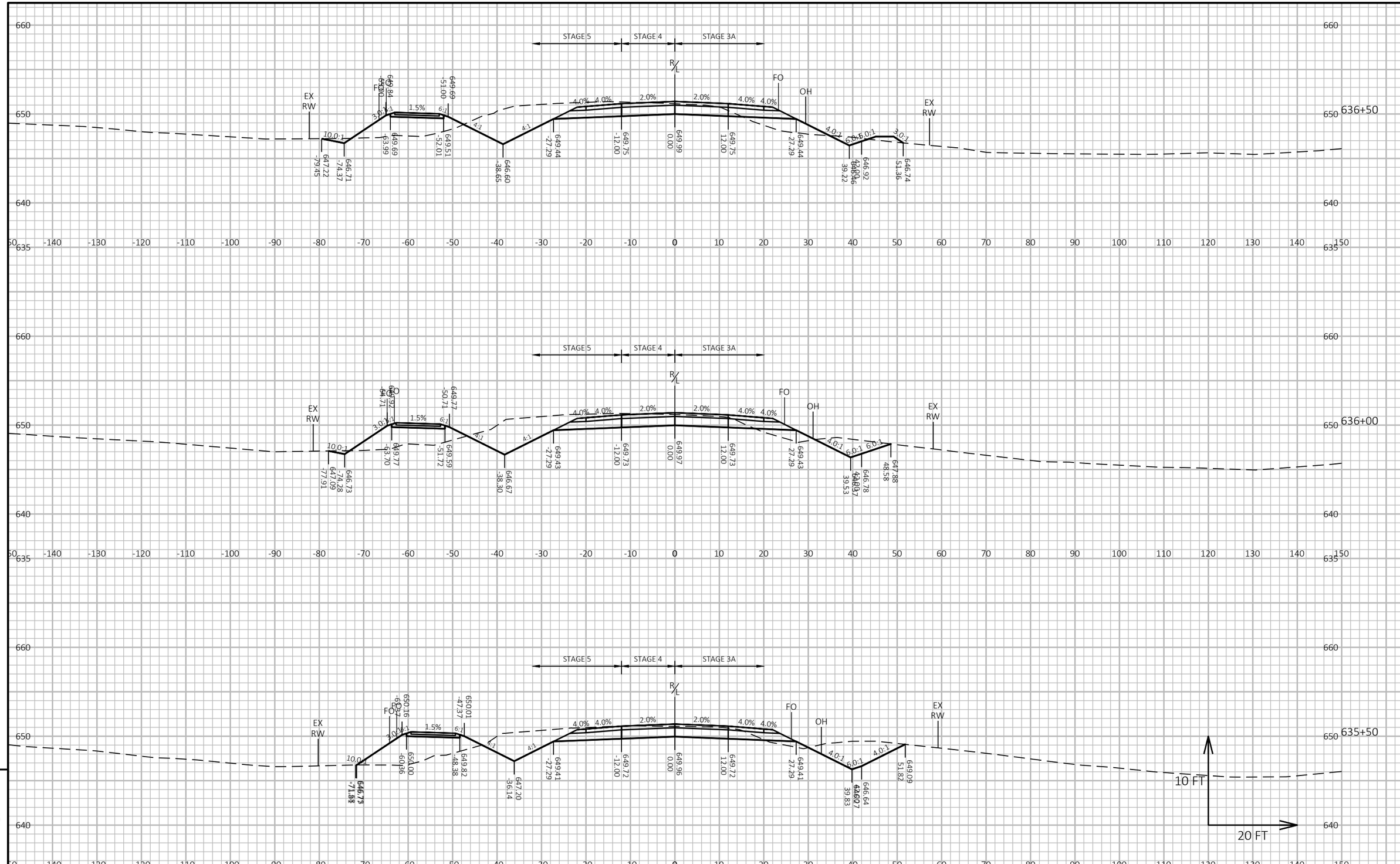

PROJECT NO: 5163-07-72	HWY: STH 35	COUNTY: LA CROSSE/VERNON	CROSS SECTIONS: STH 35	SHEET 530	E

FILE NAME : O:\PDS\C3D\51630702\SHEETSPLAN\090201-XS.DWG
LAYOUT NAME - 80
PLOT DATE : 7/1/2025 2:02 PM
PLOT BY : ED OCHS
PLOT NAME :
PLOT SCALE : 1 IN:20 FT HORZ. / 1 IN:10 FT VERT.
WISDOT/CADDS SHEET 49

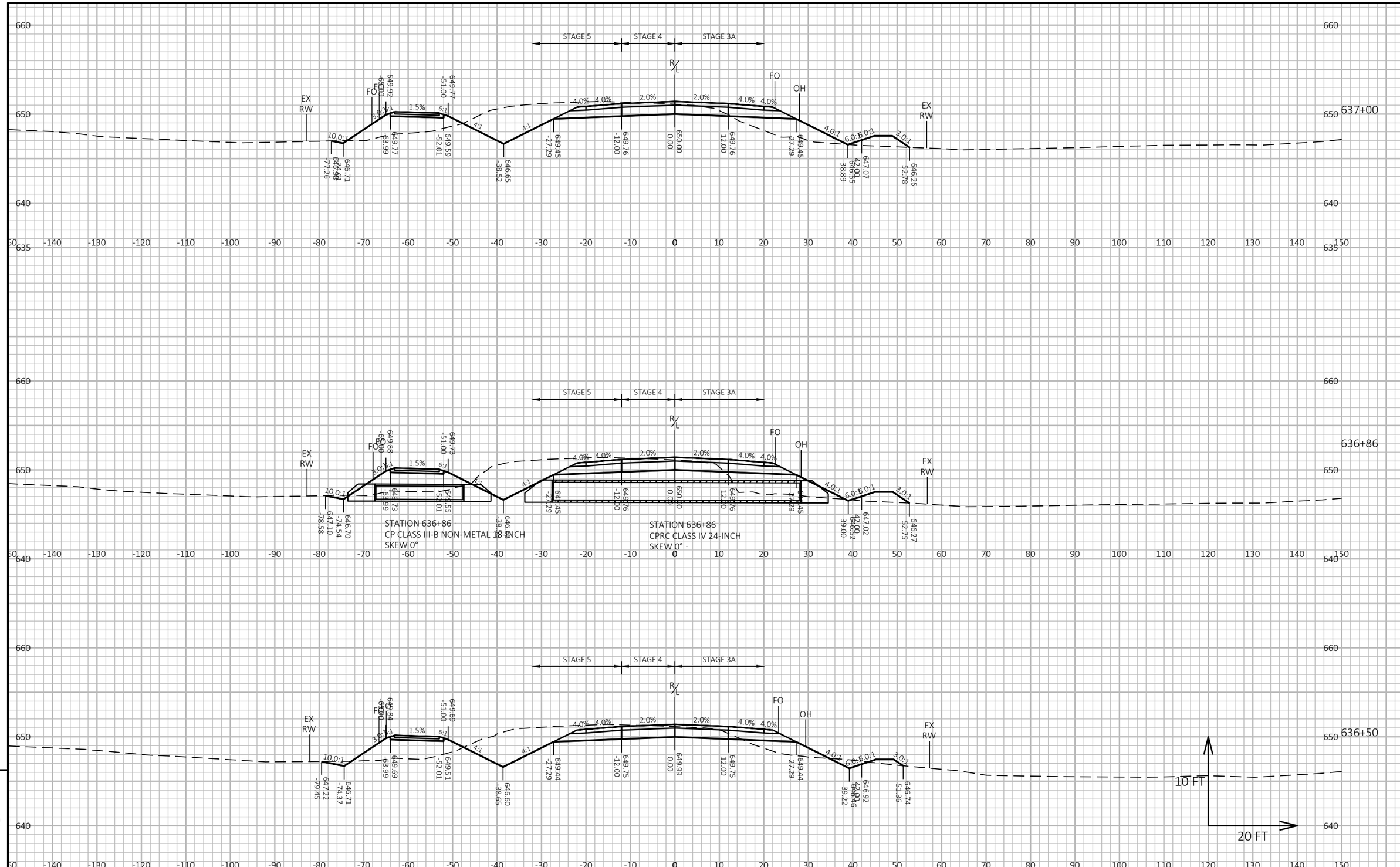

PROJECT NO: 5163-07-72	HWY: STH 35	COUNTY: LA CROSSE/VERNON	CROSS SECTIONS: STH 35	SHEET 531	E

FILE NAME : O:\PDS\C3D\51630702\SHEETSPLAN\090201-XS.DWG
LAYOUT NAME - 81
PLOT DATE : 7/1/2025 2:02 PM
PLOT BY : ED OCHS
PLOT NAME :
PLOT SCALE : 1 IN:20 FT HORZ. / 1 IN:10 FT VERT.
WISDOT/CADDS SHEET 49

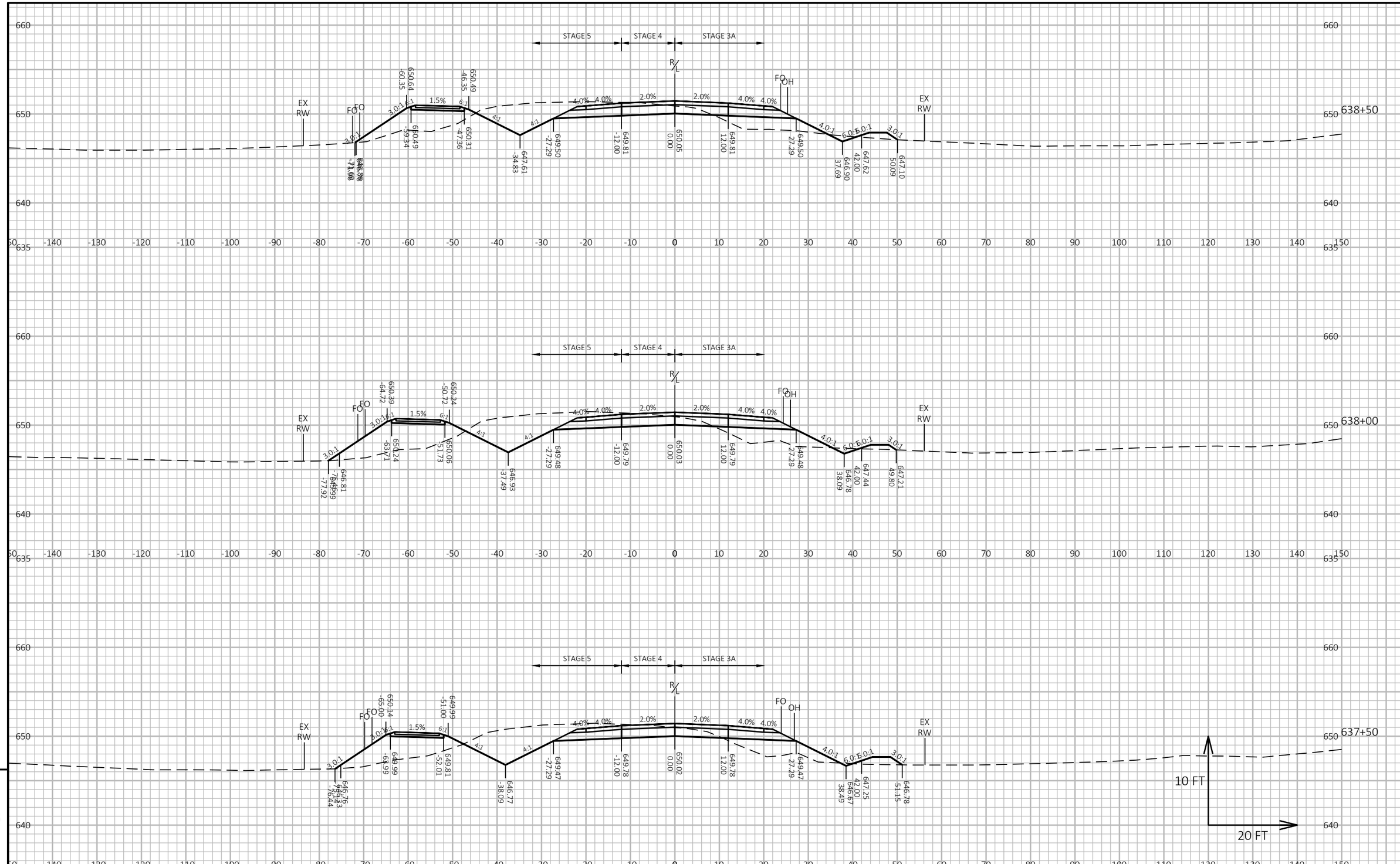

9

9

PROJECT NO: 5163-07-72	HWY: STH 35	COUNTY: LA CROSSE/VERNON	CROSS SECTIONS: STH 35	SHEET 532	E

FILE NAME : O:\PDS\C3D\51630702\SHEETSPLAN\090201-XS.DWG
LAYOUT NAME - 82
PLOT DATE : 7/1/2025 2:03 PM
PLOT BY : ED OCHS
PLOT NAME :
PLOT SCALE : 1 IN:20 FT HORZ. / 1 IN:10 FT VERT.
WISDOT/CADDS SHEET 49

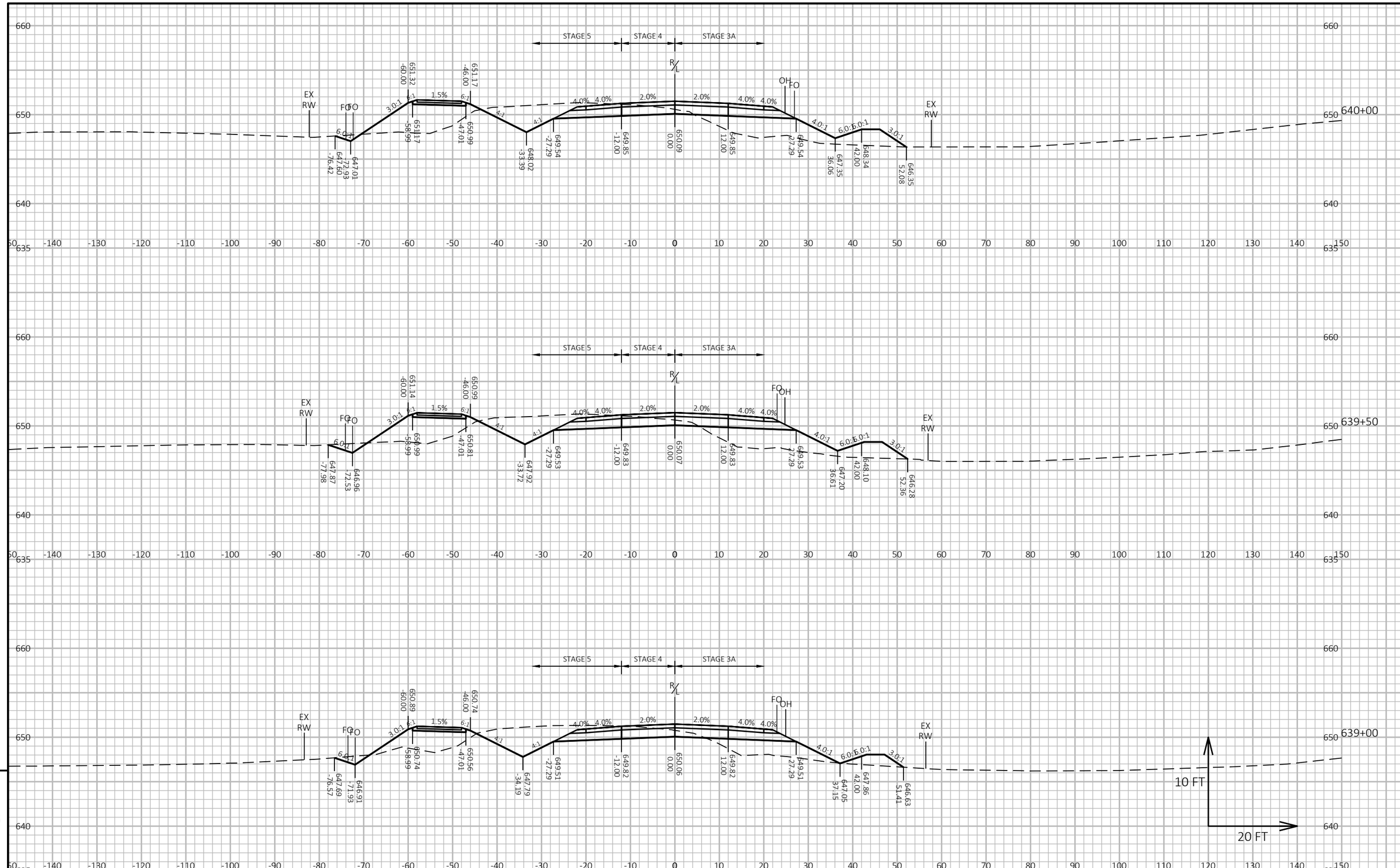

PROJECT NO: 5163-07-72	HWY: STH 35	COUNTY: LA CROSSE/VERNON	CROSS SECTIONS: STH 35	SHEET 533	E

FILE NAME : O:\PDS\C3D\51630702\SHEETSPLAN\090201-XS.DWG
LAYOUT NAME - 83
PLOT DATE : 7/1/2025 2:03 PM
PLOT BY : ED OCHS
PLOT NAME :
PLOT SCALE : 1 IN:20 FT HORZ. / 1 IN:10 FT VERT.
WISDOT/CADDS SHEET 49

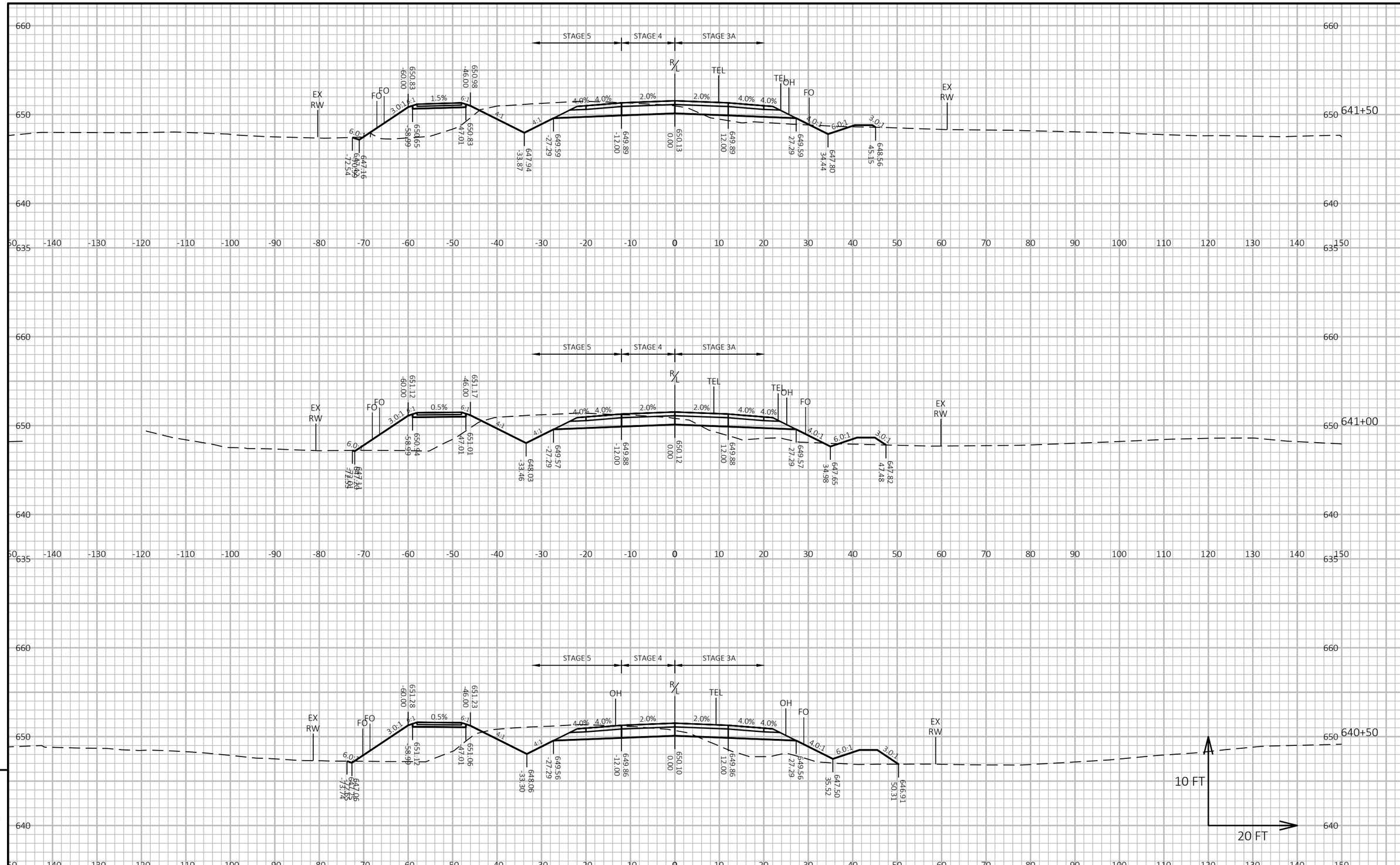

PROJECT NO: 5163-07-72	HWY: STH 35	COUNTY: LA CROSSE/VERNON	CROSS SECTIONS: STH 35	SHEET 534	E

FILE NAME : O:\PDS\C3D\51630702\SHEETSPLAN\090201-XS.DWG
LAYOUT NAME - 84
PLOT DATE : 7/1/2025 2:03 PM
PLOT BY : ED OCHS
PLOT NAME :
PLOT SCALE : 1 IN:20 FT HORZ. / 1 IN:10 FT VERT.
WISDOT/CADDS SHEET 49

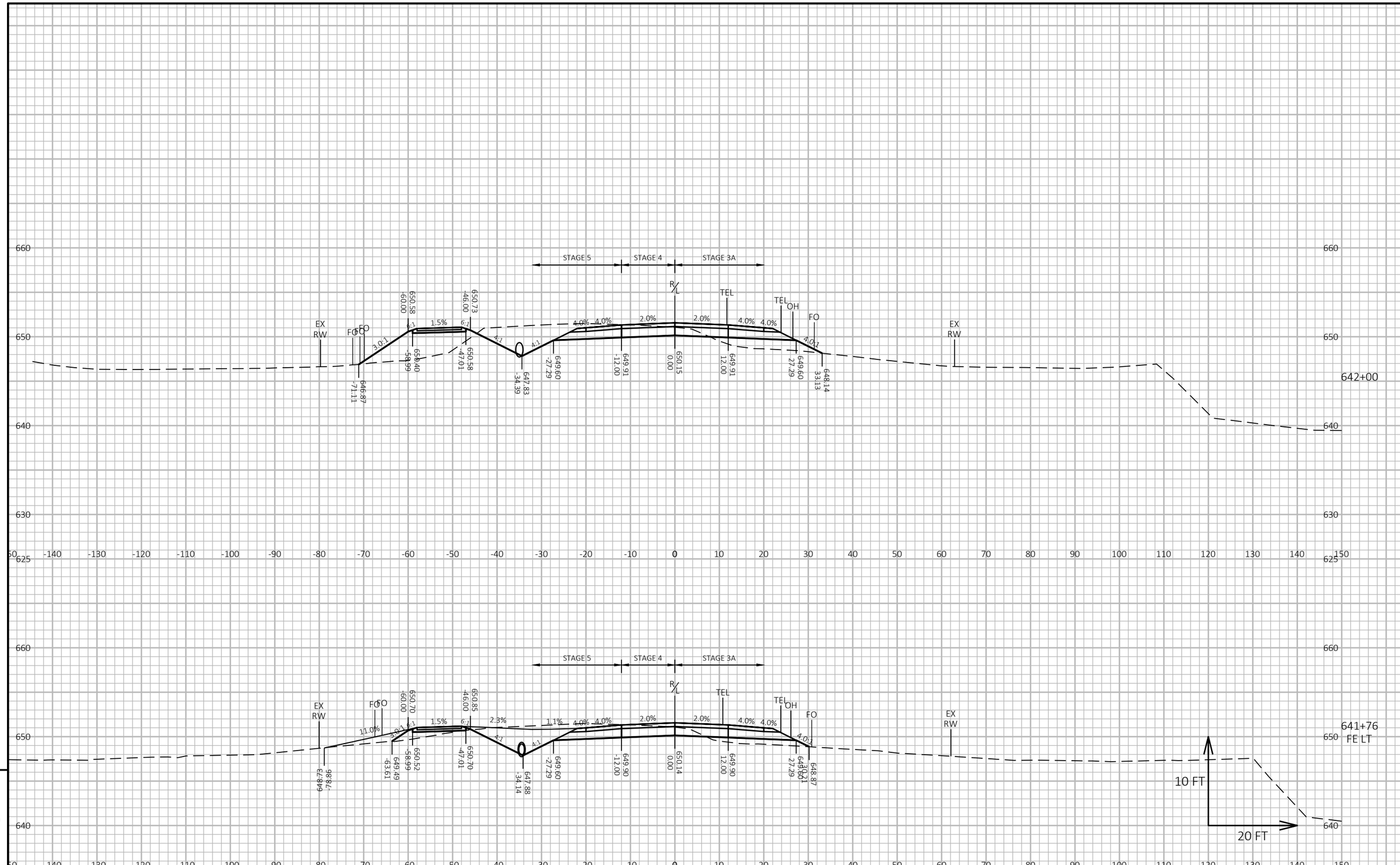

PROJECT NO: 5163-07-72	HWY: STH 35	COUNTY: LA CROSSE/VERNON	CROSS SECTIONS: STH 35	SHEET 535	E

FILE NAME : O:\PDS\C3D\51630702\SHEETSPLAN\090201-XS.DWG
LAYOUT NAME - 85
PLOT DATE : 7/1/2025 2:03 PM
PLOT BY : ED OCHS
PLOT NAME :
PLOT SCALE : 1 IN:20 FT HORZ. / 1 IN:10 FT VERT.
WISDOT/CADDS SHEET 49

9

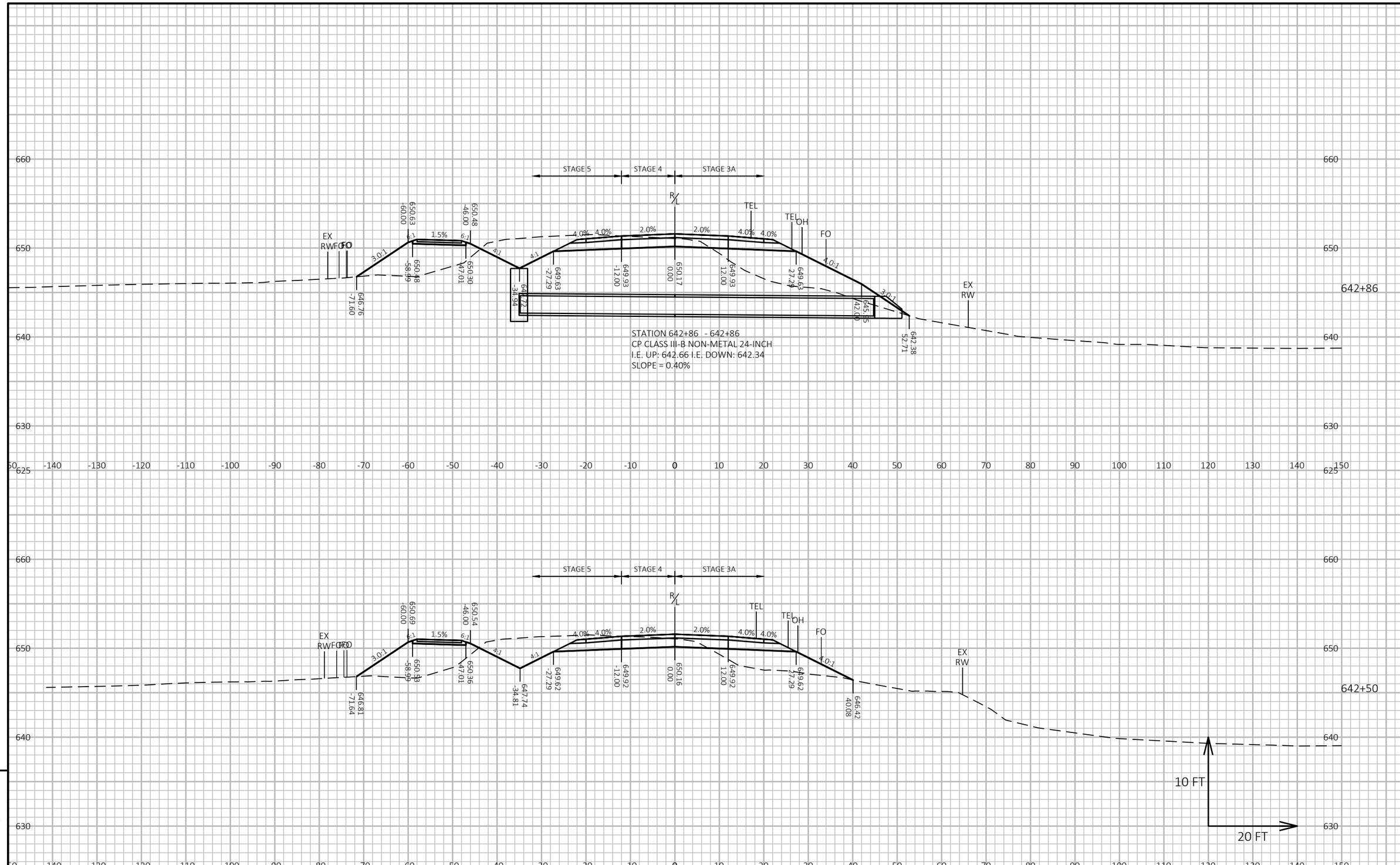

PROJECT NO: 5163-07-72	HWY: STH 35	COUNTY: LA CROSSE/VERNON	CROSS SECTIONS: STH 35	SHEET 536	E

FILE NAME : O:\PDS\C3D\51630702\SHEETSPLAN\090201-XS.DWG
LAYOUT NAME - 86
PLOT DATE : 7/1/2025 2:04 PM
PLOT BY : ED OCHS
PLOT NAME :
PLOT SCALE : 1 IN:20 FT HORZ. / 1 IN:10 FT VERT.
WISDOT/CADDS SHEET 49

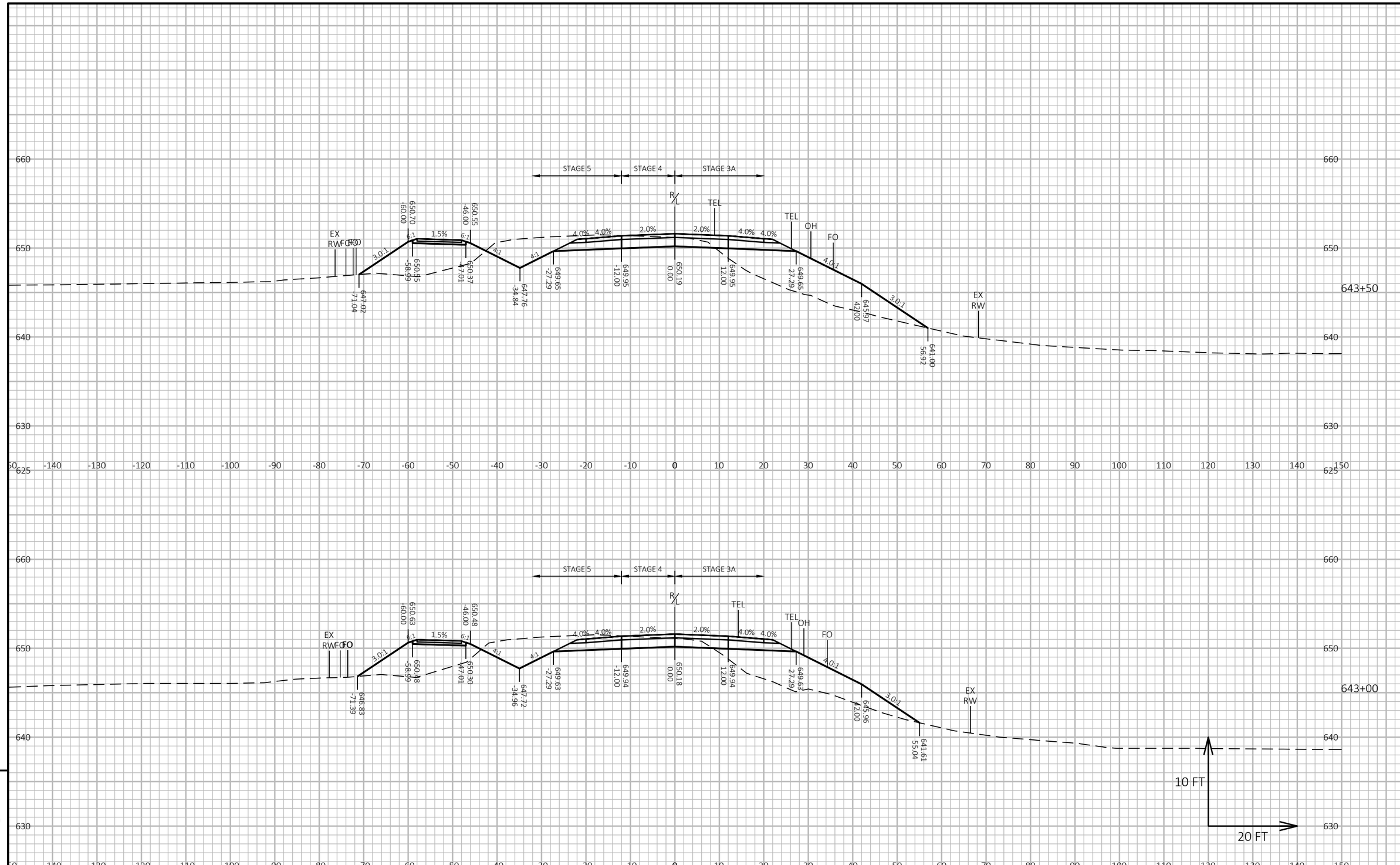

PROJECT NO: 5163-07-72	HWY: STH 35	COUNTY: LA CROSSE/VERNON	CROSS SECTIONS: STH 35	SHEET 537	E

FILE NAME : O:\PDS\C3D\51630702\SHEETSPLAN\090201-XS.DWG
LAYOUT NAME - 87
PLOT DATE : 7/1/2025 2:04 PM
PLOT BY : ED OCHS
PLOT NAME :
PLOT SCALE : 1 IN:20 FT HORZ. / 1 IN:10 FT VERT.
WISDOT/CADDS SHEET 49

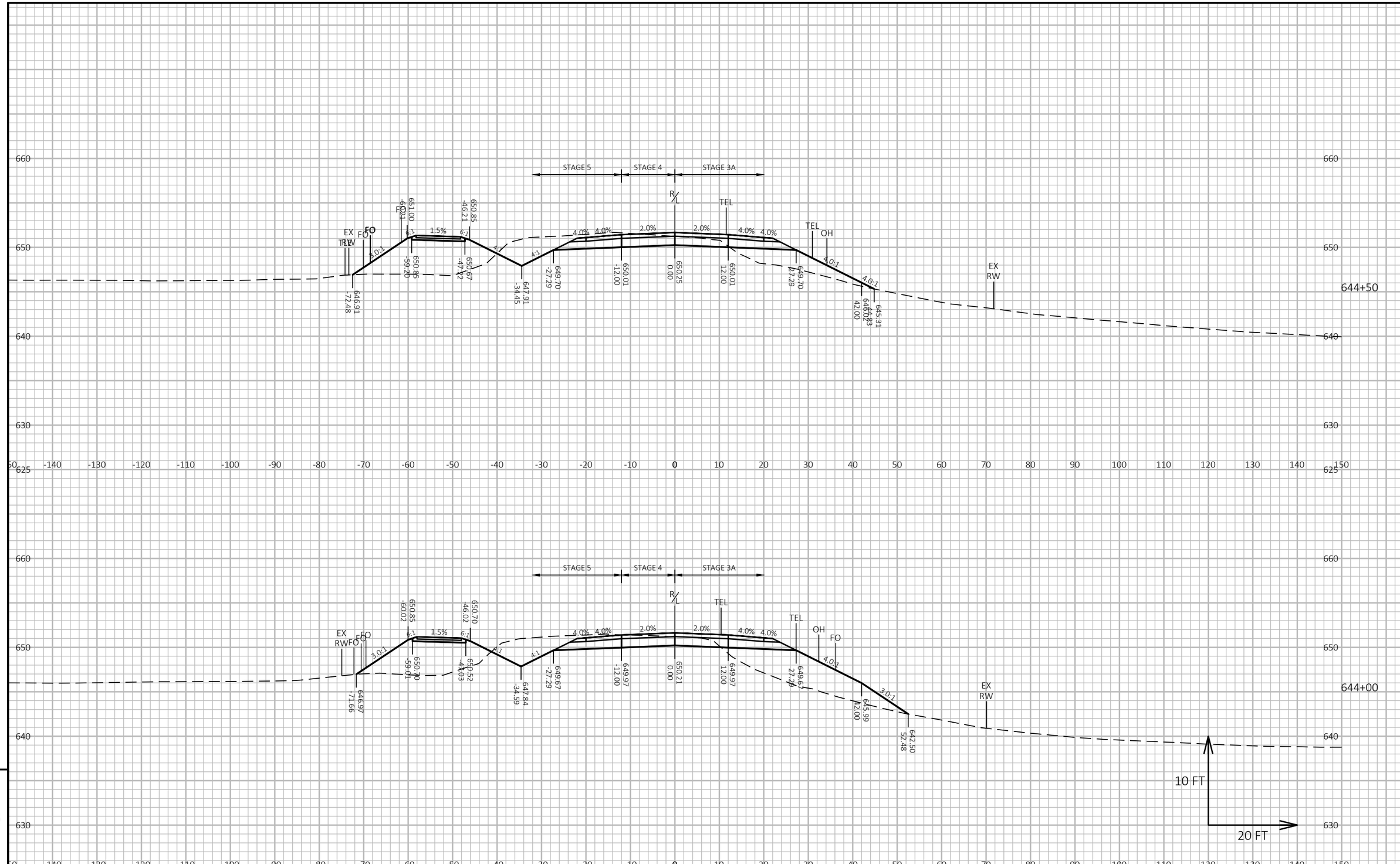

PROJECT NO: 5163-07-72	HWY: STH 35	COUNTY: LA CROSSE/VERNON	CROSS SECTIONS: STH 35	SHEET 538	E

FILE NAME : O:\PDS\C3D\51630702\SHEETSPLAN\090201-XS.DWG
LAYOUT NAME - 88
PLOT DATE : 7/1/2025 2:04 PM
PLOT BY : ED OCHS
PLOT NAME :
PLOT SCALE : 1 IN:20 FT HORZ. / 1 IN:10 FT VERT.
WISDOT/CADDS SHEET 49

9

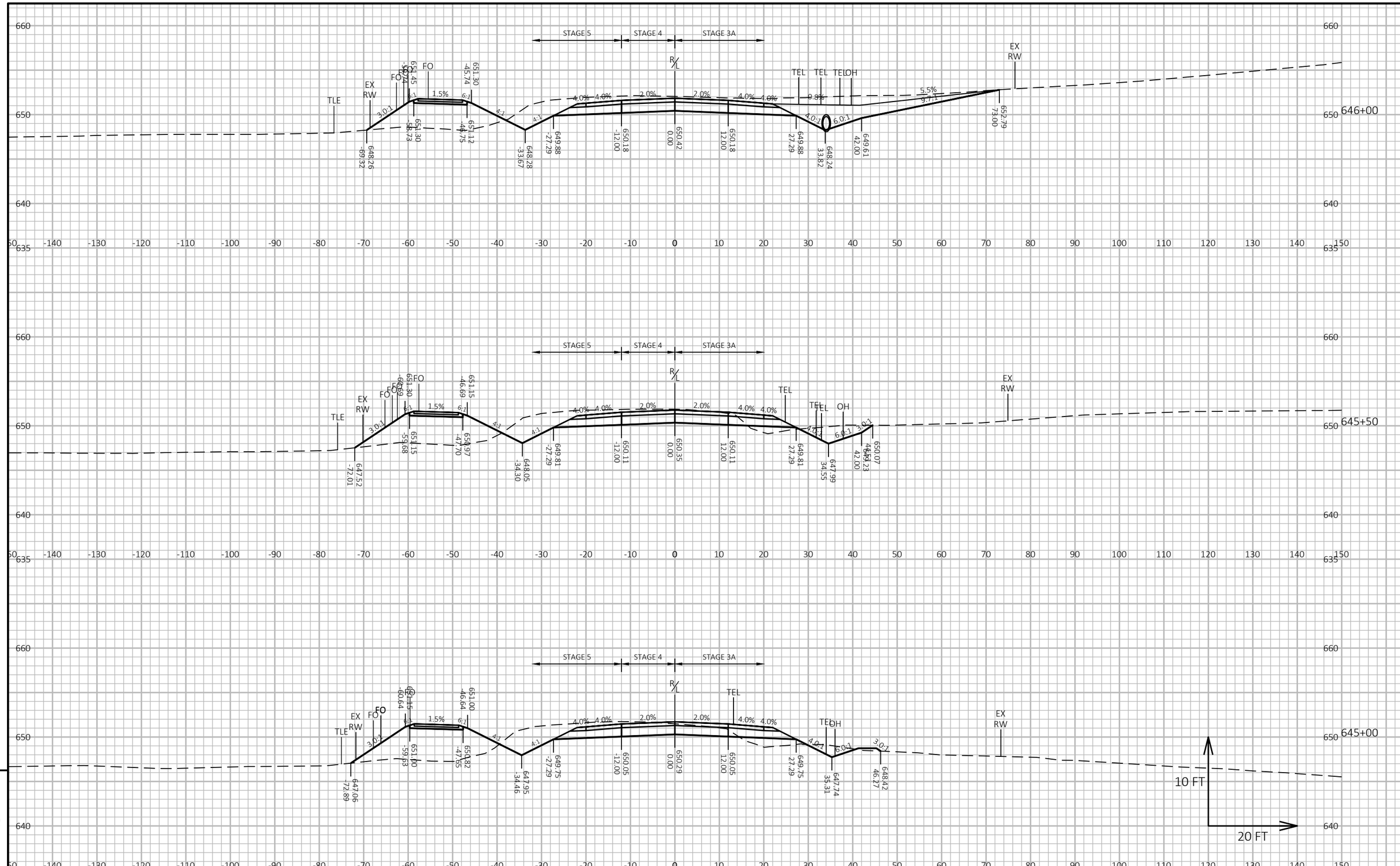

PROJECT NO: 5163-07-72	HWY: STH 35	COUNTY: LA CROSSE/VERNON	CROSS SECTIONS: STH 35	SHEET 539	E

FILE NAME : O:\PDS\C3D\51630702\SHEETSPLAN\090201-XS.DWG
LAYOUT NAME - 89
PLOT DATE : 7/1/2025 2:04 PM
PLOT BY : ED OCHS
PLOT NAME :
PLOT SCALE : 1 IN:20 FT HORZ. / 1 IN:10 FT VERT.
WISDOT/CADDS SHEET 49

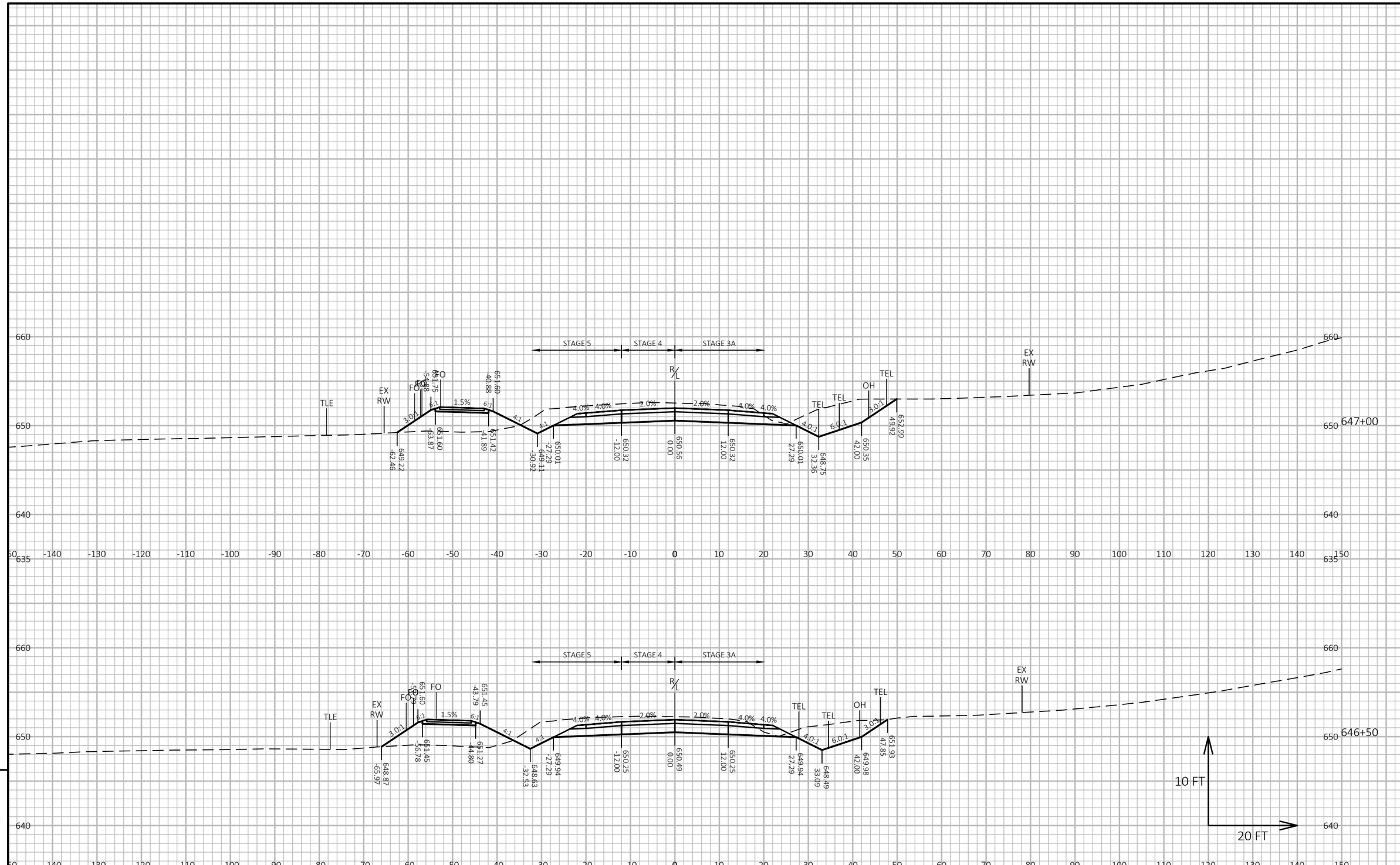

PROJECT NO: 5163-07-72	HWY: STH 35	COUNTY: LA CROSSE/VERNON	CROSS SECTIONS: STH 35	SHEET 540	E

FILE NAME : O:\PDS\C3D\51630702\SHEETSPLAN\090201-XS.DWG
LAYOUT NAME - 90
PLOT DATE : 7/1/2025 2:05 PM
PLOT BY : ED OCHS
PLOT NAME :
PLOT SCALE : 1 IN:20 FT HORZ. / 1 IN:10 FT VERT.
WISDOT/CADDS SHEET 49

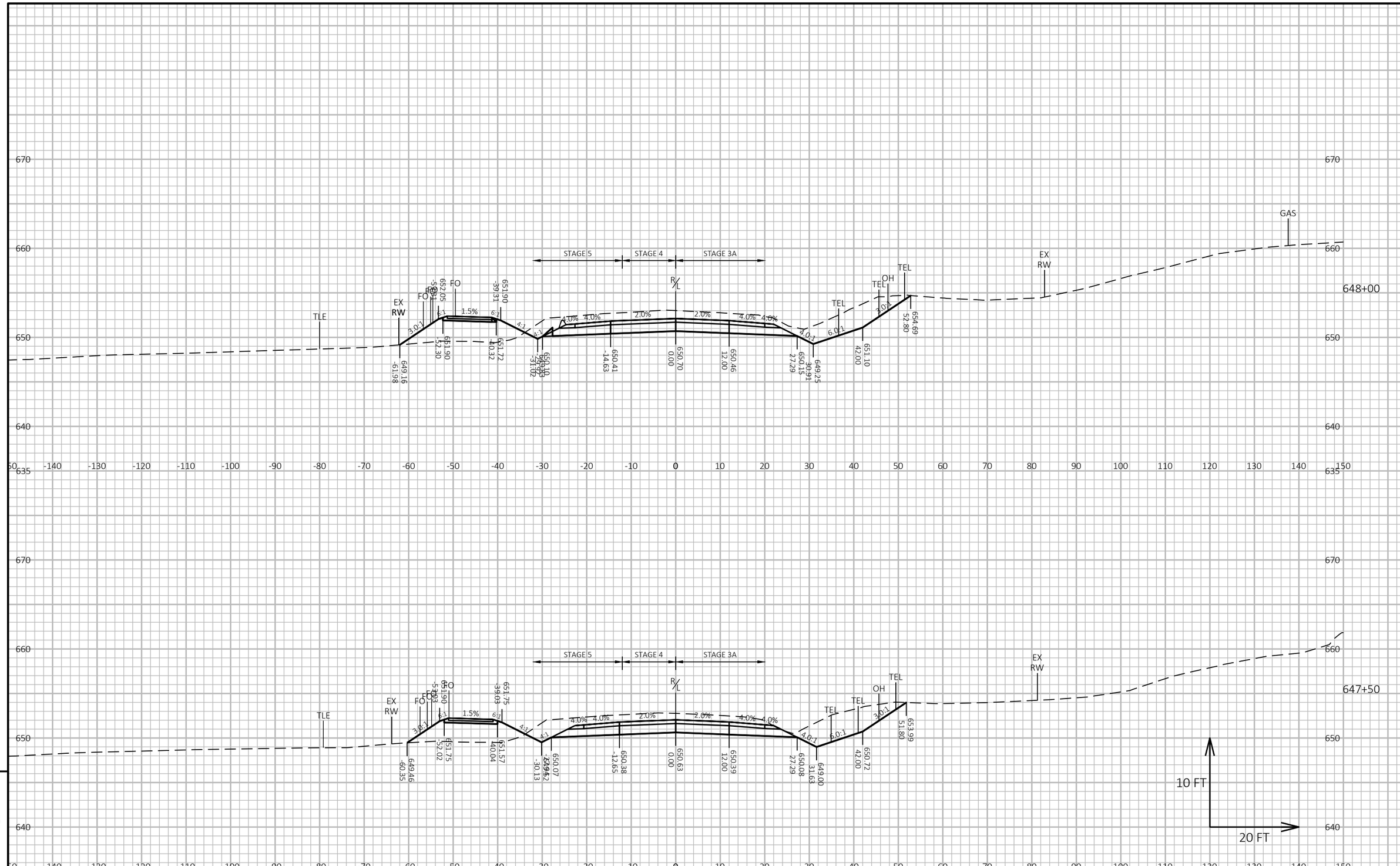

PROJECT NO: 5163-07-72	HWY: STH 35	COUNTY: LA CROSSE/VERNON	CROSS SECTIONS: STH 35	SHEET 541	E

FILE NAME : O:\PDS\C3D\51630702\SHEETSPLAN\090201-XS.DWG
LAYOUT NAME - 91
PLOT DATE : 7/1/2025 2:05 PM
PLOT BY : ED OCHS
PLOT NAME :
PLOT SCALE : 1 IN:20 FT HORZ. / 1 IN:10 FT VERT.
WISDOT/CADDS SHEET 49

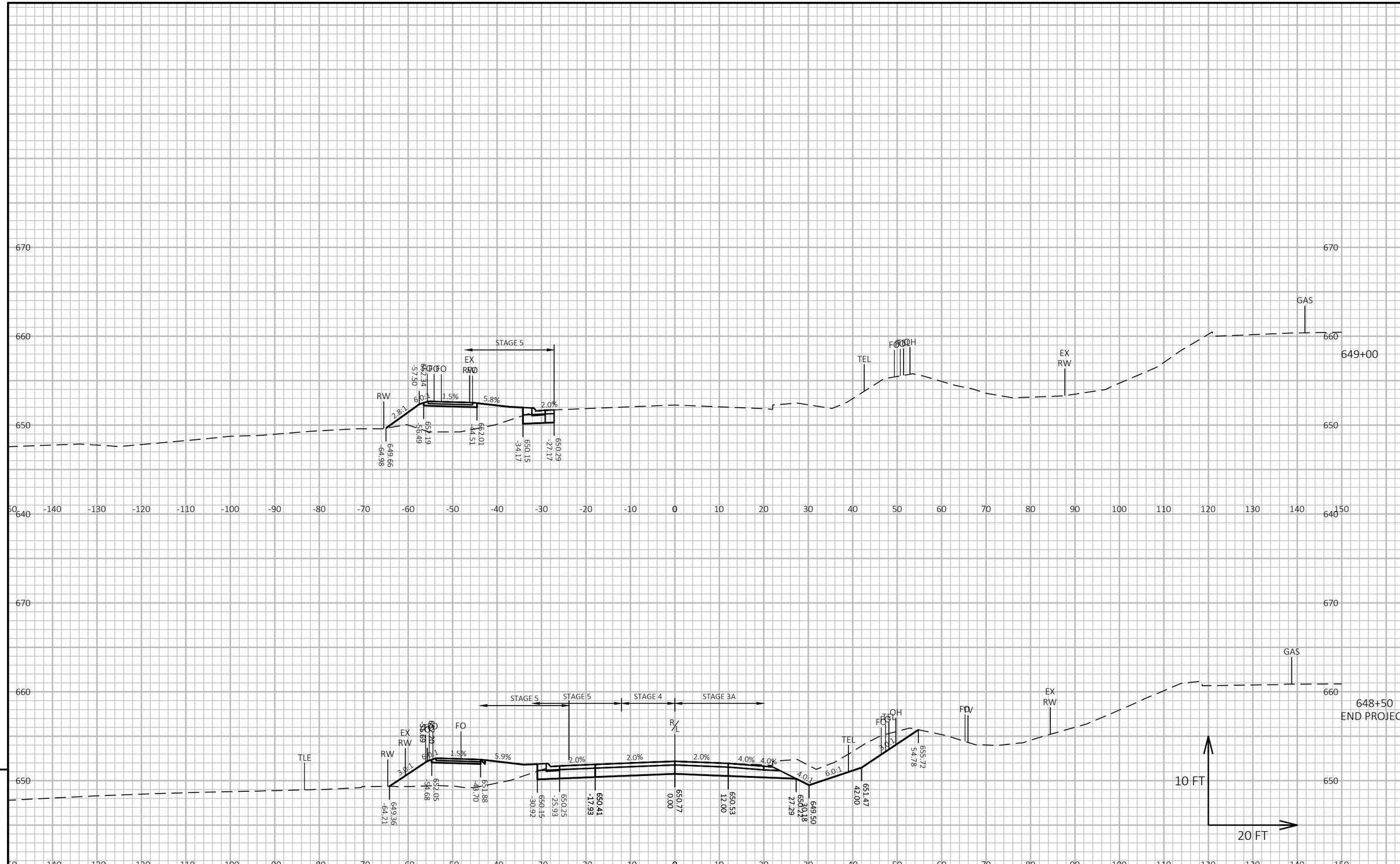

PROJECT NO: 5163-07-72	HWY: STH 35	COUNTY: LA CROSSE/VERNON	CROSS SECTIONS: STH 35	SHEET 542	E

FILE NAME : O:\PDS\C3D\51630702\SHEETSPLAN\090201-XS.DWG
LAYOUT NAME - 92
PLOT DATE : 7/1/2025 2:05 PM
PLOT BY : ED OCHS
PLOT NAME :
PLOT SCALE : 1 IN:20 FT HORZ. / 1 IN:10 FT VERT.
WISDOT/CADDS SHEET 49

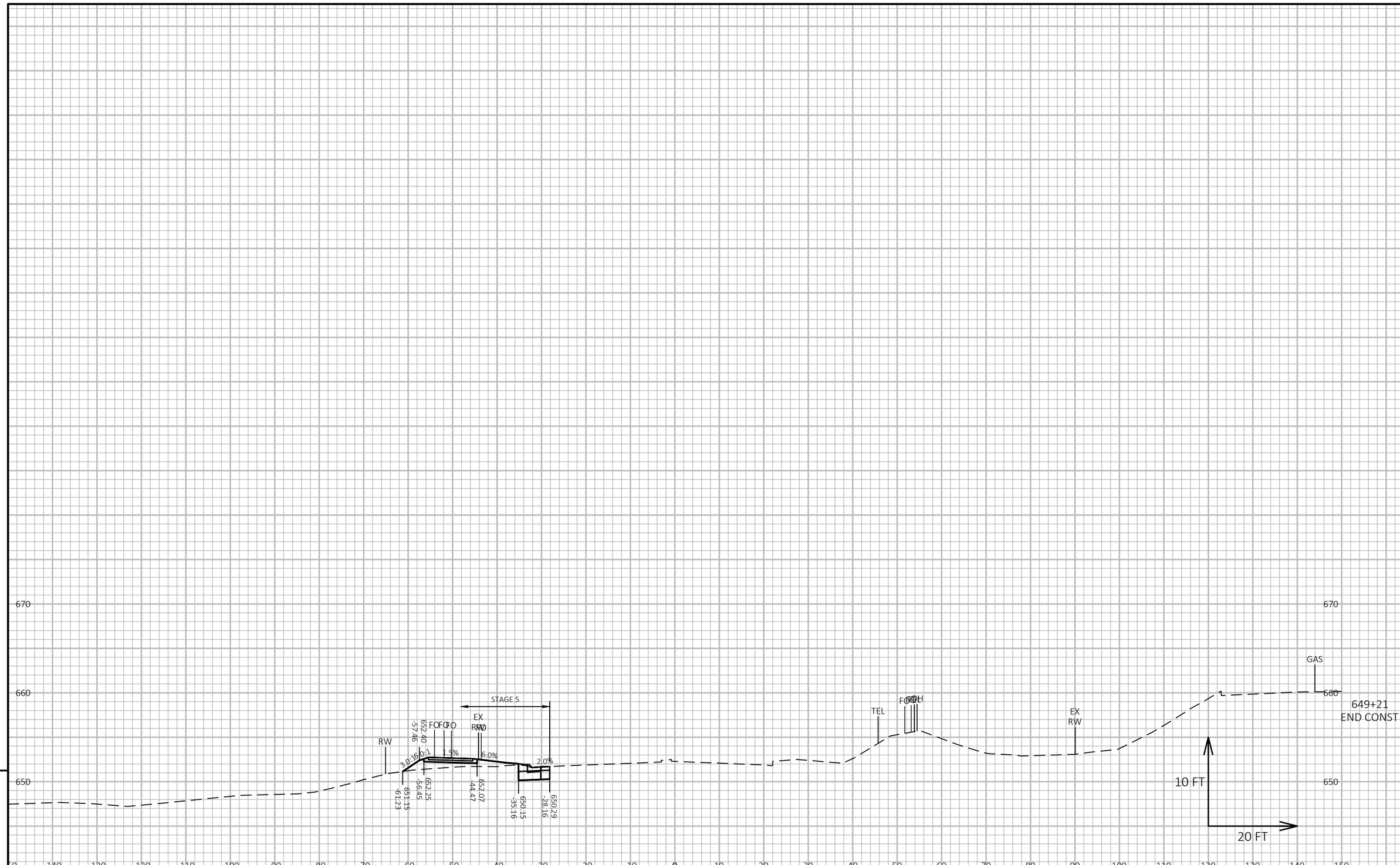

9

9

PROJECT NO: 5163-07-72	HWY: STH 35	COUNTY: LA CROSSE/VERNON	CROSS SECTIONS: STH 35	SHEET 543	E

FILE NAME : O:\PDS\C3D\51630702\SHEETSPLAN\090201-XS.DWG
LAYOUT NAME - 93

PLOT DATE : 7/1/2025 2:05 PM

PLOT BY : ED OCHS

PLOT NAME :

PLOT SCALE : 1 IN:20 FT HORZ. / 1 IN:10 FT VERT.

WISDOT/CADDS SHEET 49

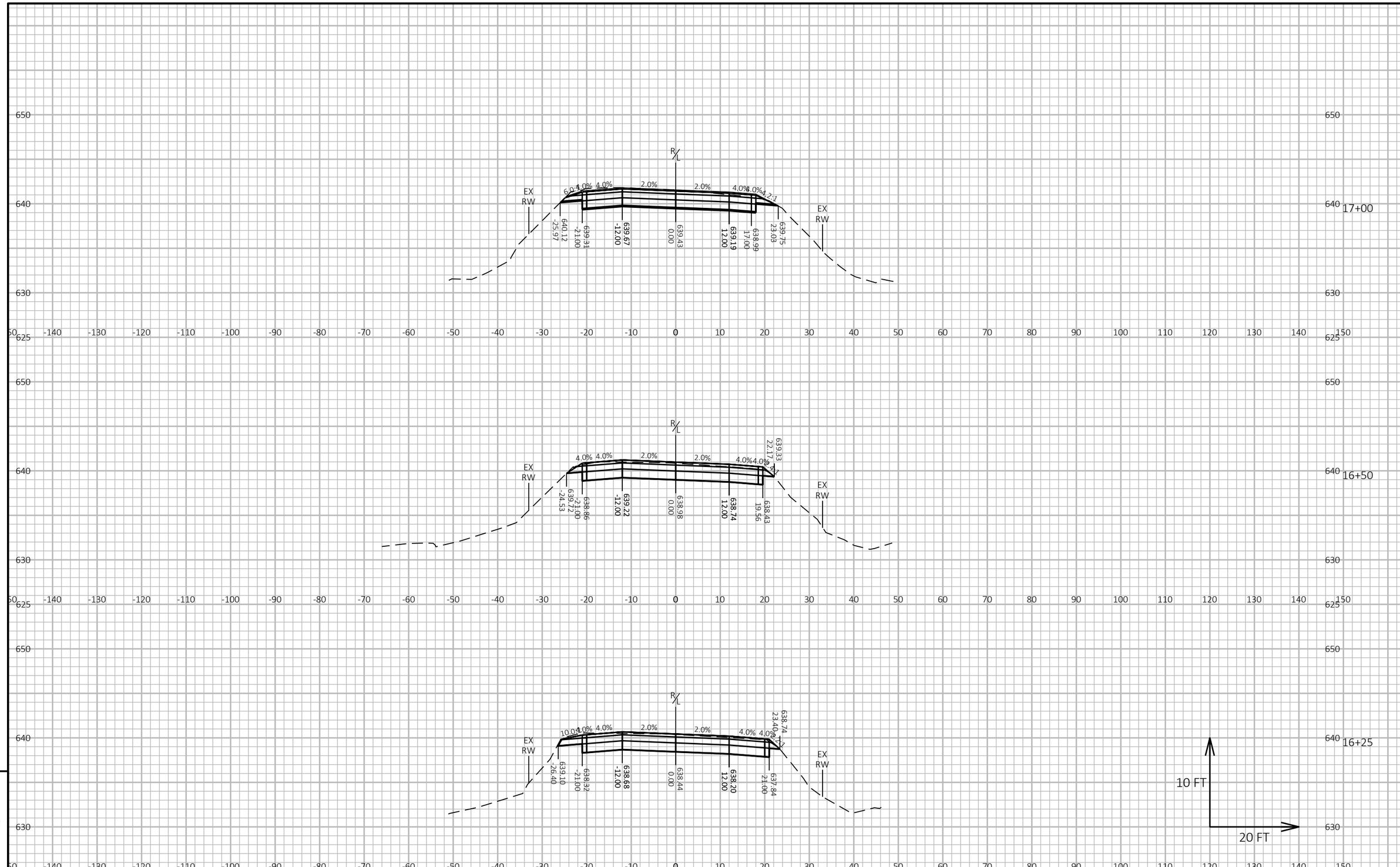

PROJECT NO: 5163-07-72	HWY: STH 35	COUNTY: LA CROSSE/VERNON	CROSS SECTIONS: CTH GI	SHEET 544	E

FILE NAME : O:\PDS\C3D\51630702\SHEETSPLAN\090202-XS.DWG
LAYOUT NAME - 01
PLOT DATE : 6/23/2025 1:35 PM
PLOT BY : CORY IHDE
PLOT NAME :
PLOT SCALE : 1 IN:20 FT HORZ. / 1 IN:10 FT VERT.
WISDOT/CADDS SHEET 49

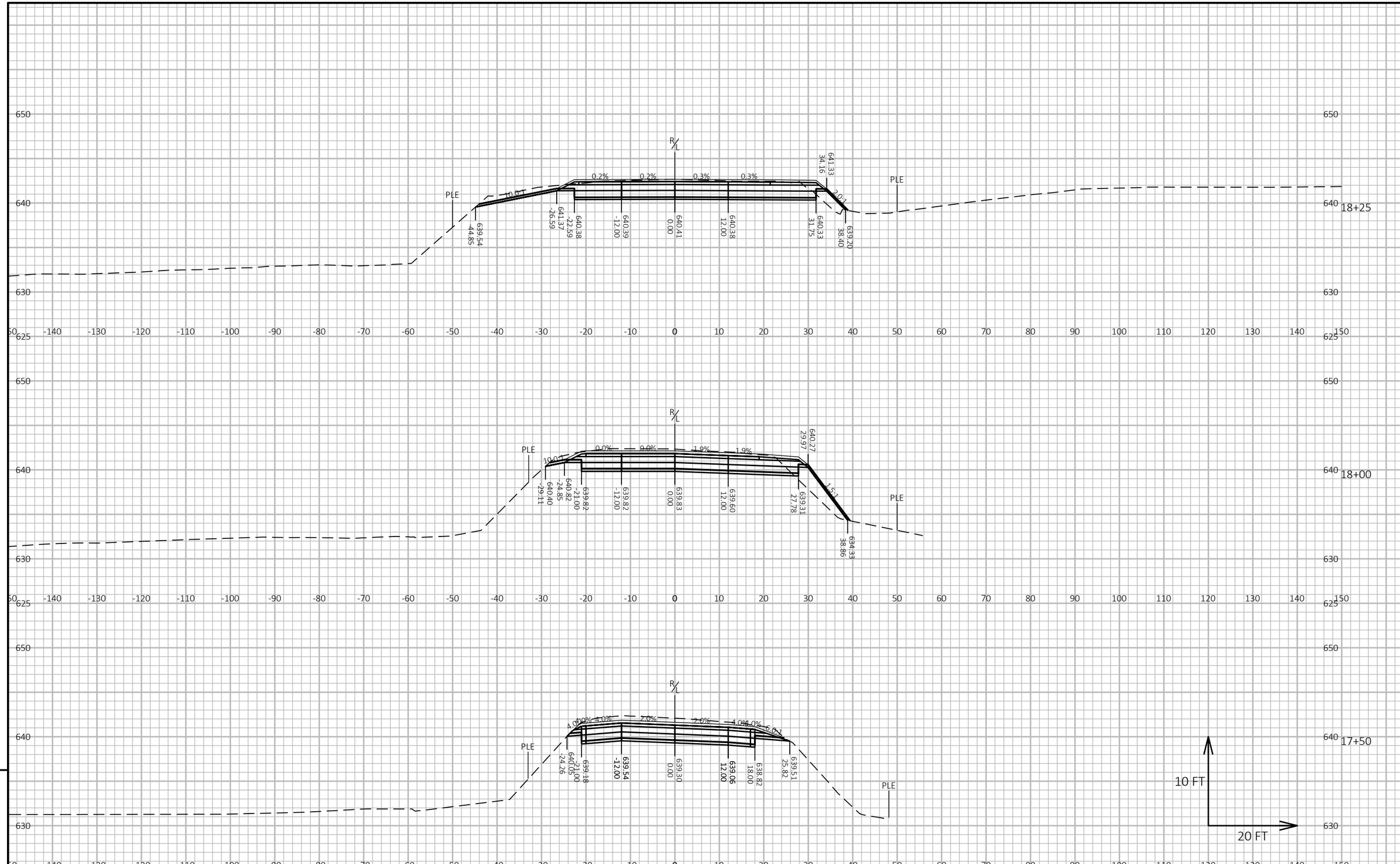

PROJECT NO: 5163-07-72	HWY: STH 35	COUNTY: LA CROSSE/VERNON	CROSS SECTIONS: CTH GI	SHEET 545	E

FILE NAME : O:\PDS\C3D\51630702\SHEETSPLAN\090202-XS.DWG
LAYOUT NAME - 02
PLOT DATE : 6/23/2025 1:35 PM
PLOT BY : CORY IHDE
PLOT NAME :
PLOT SCALE : 1 IN:20 FT HORZ. / 1 IN:10 FT VERT.

WISDOT/CADDS SHEET 49

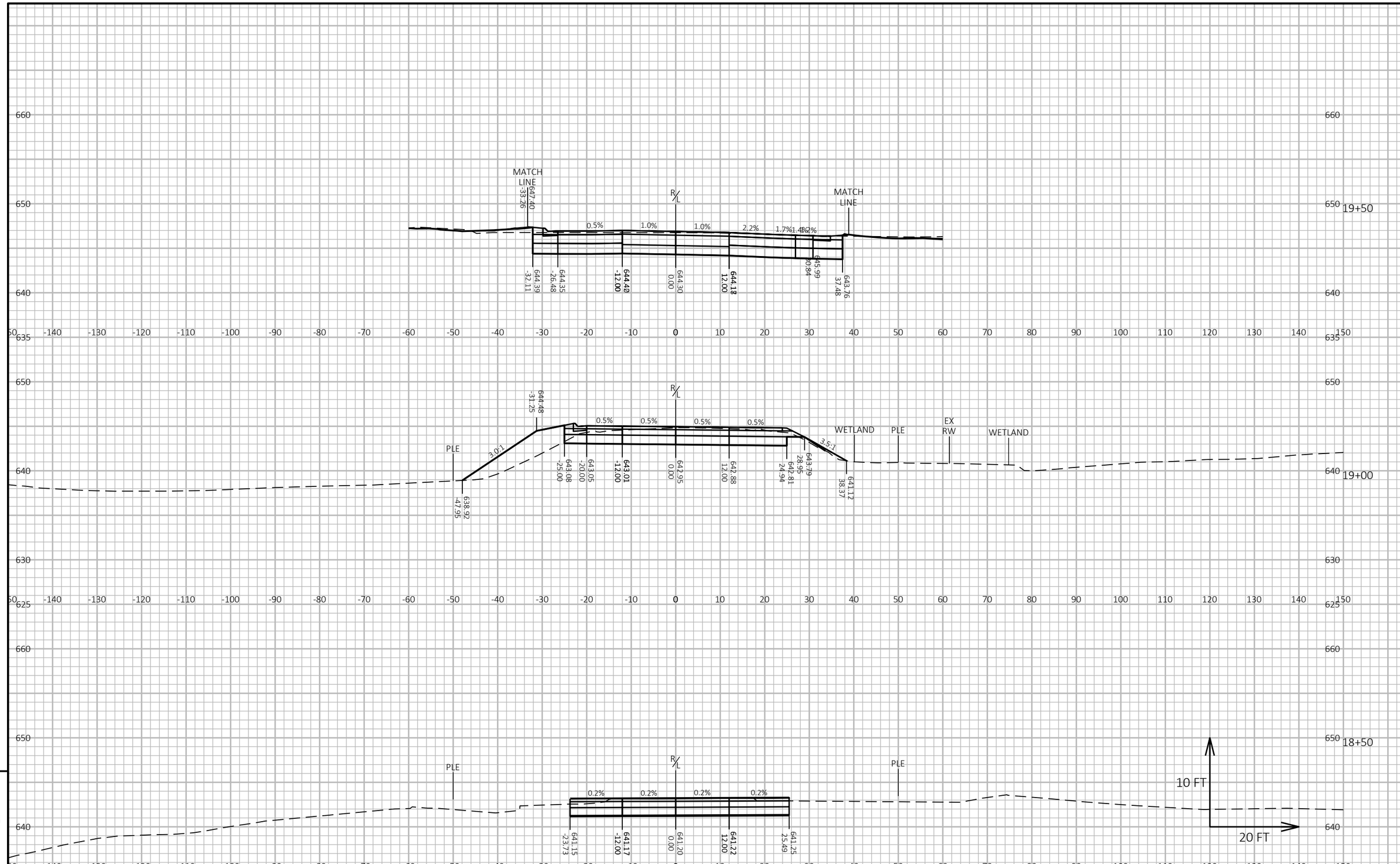

PROJECT NO: 5163-07-72	HWY: STH 35	COUNTY: LA CROSSE/VERNON	CROSS SECTIONS: CTH GI	SHEET 546	E

FILE NAME : O:\PDS\C3D\51630702\SHEETSPLAN\090202-XS.DWG
LAYOUT NAME - 03
PLOT DATE : 6/23/2025 1:35 PM
PLOT BY : CORY IHDE
PLOT NAME :
PLOT SCALE : 1 IN:20 FT HORZ. / 1 IN:10 FT VERT.

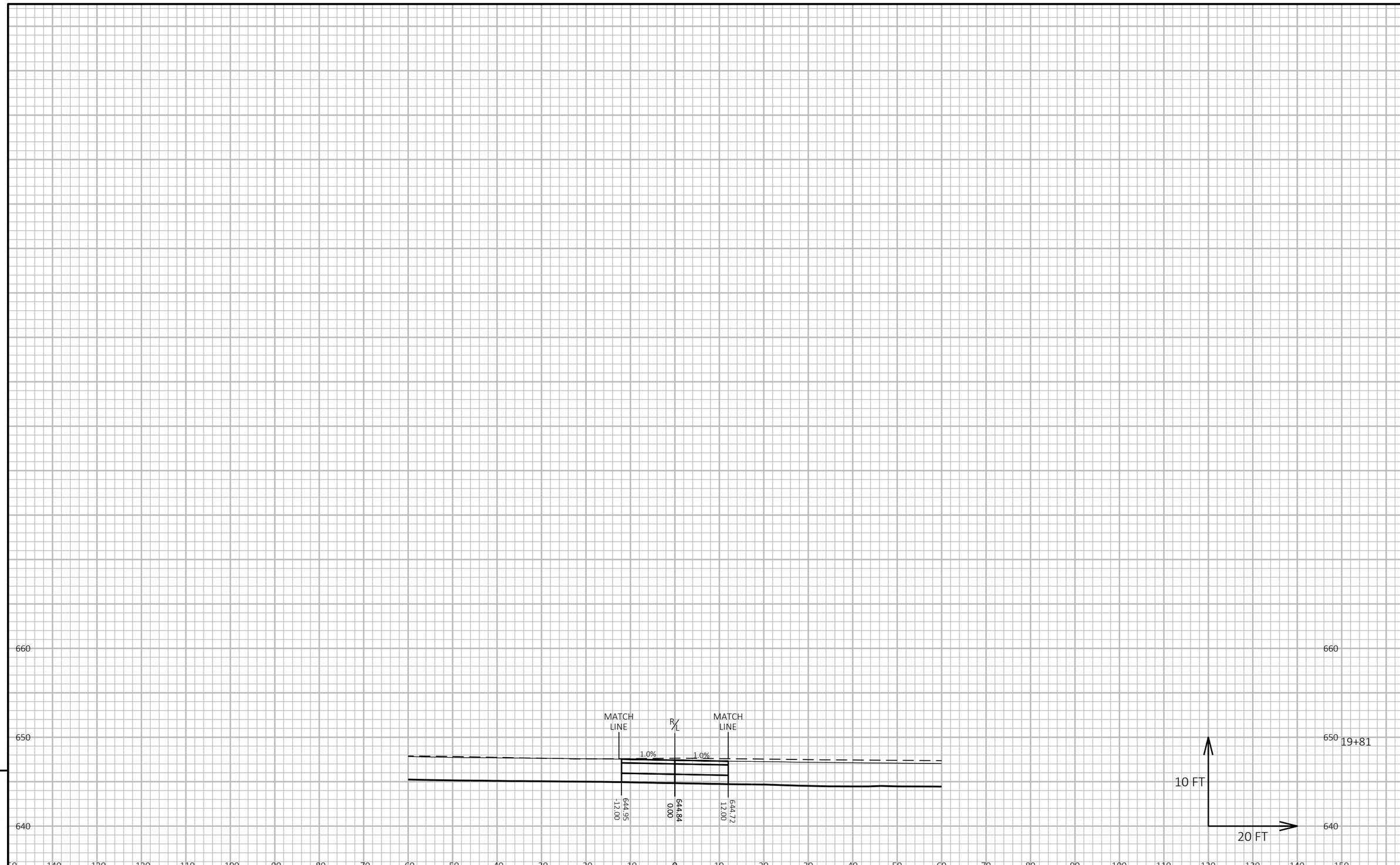

9

9

PROJECT NO: 5163-07-72	HWY: STH 35	COUNTY: LA CROSSE/VERNON	CROSS SECTIONS: CTH GI	SHEET 547	E

FILE NAME : O:\PDS\C3D\51630702\SHEETSPLAN\090202-XS.DWG
LAYOUT NAME - 04
PLOT DATE : 6/23/2025 1:35 PM
PLOT BY : CORY IHDE
PLOT NAME :
PLOT SCALE : 1 IN:20 FT HORZ. / 1 IN:10 FT VERT.
WISDOT/CADDS SHEET 49

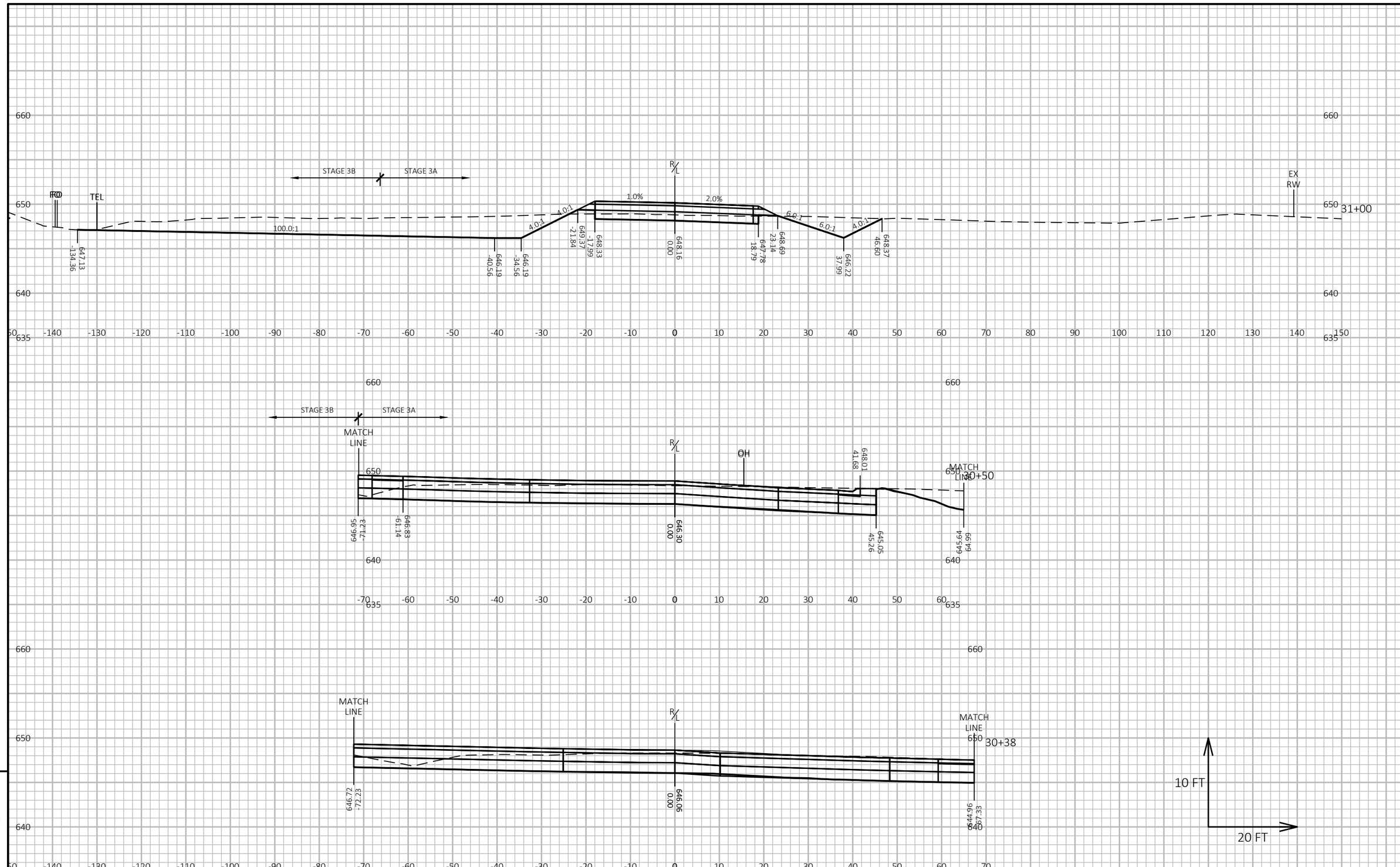

9

9

PROJECT NO: 5163-07-72	HWY: STH 35	COUNTY: LA CROSSE/VERNON	CROSS SECTIONS: CTH K	SHEET 548	E

FILE NAME : O:\PDS\C3D\51630702\SHEETSPLAN\090203-XS.DWG
LAYOUT NAME - 01
PLOT DATE : 5/1/2025 9:24 AM
PLOT BY : CORY IHDE
PLOT NAME :
PLOT SCALE : 1 IN:20 FT HORZ. / 1 IN:10 FT VERT.
WISDOT/CADDS SHEET 49

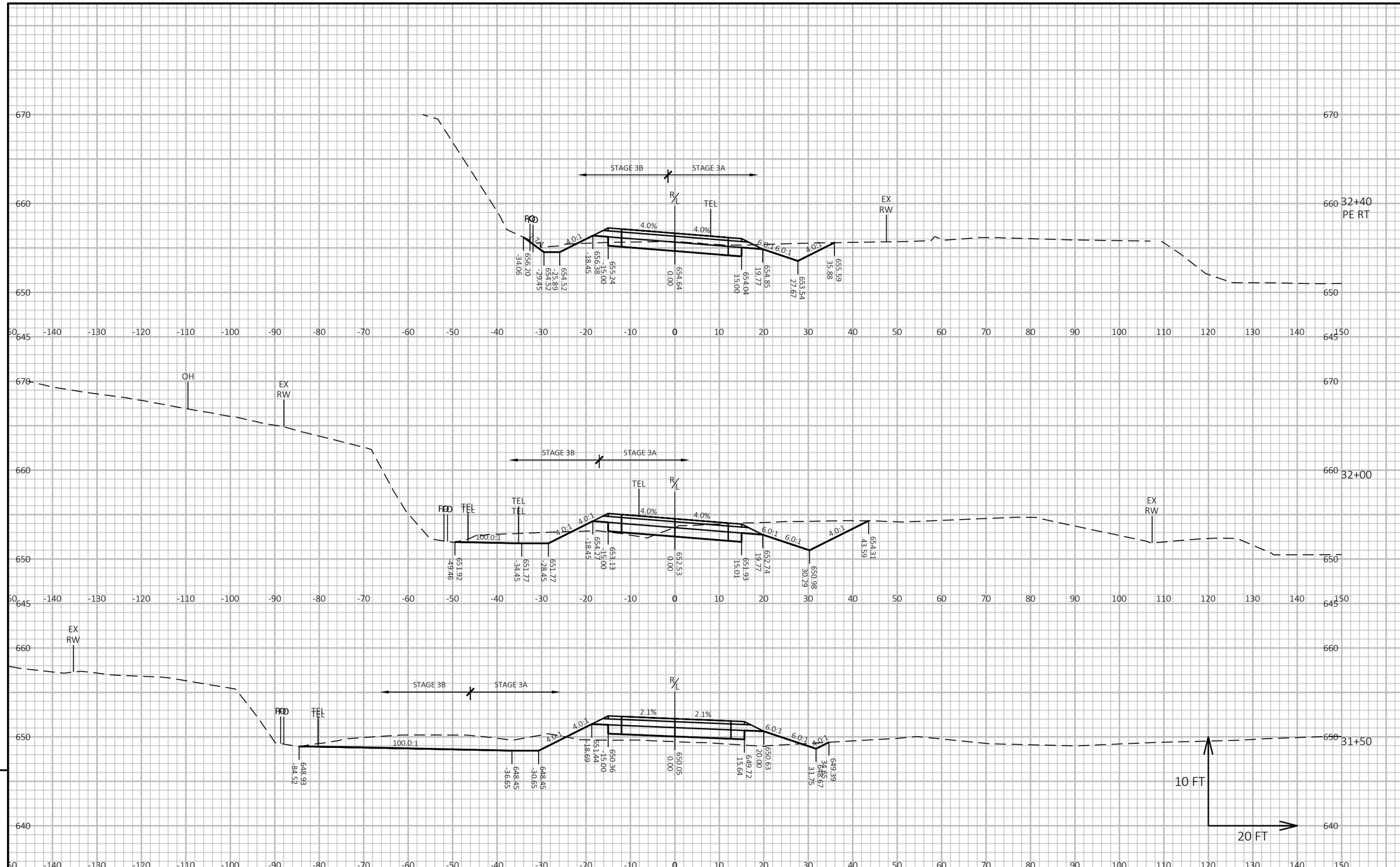

PROJECT NO: 5163-07-72	HWY: STH 35	COUNTY: LA CROSSE/VERNON	CROSS SECTIONS: CTH K	SHEET 549	E

FILE NAME : O:\PDS\C3D\51630702\SHEETSPLAN\090203-XS.DWG
LAYOUT NAME - 02
PLOT DATE : 5/1/2025 9:24 AM
PLOT BY : CORY IHDE
PLOT NAME :
PLOT SCALE : 1 IN:20 FT HORZ. / 1 IN:10 FT VERT.

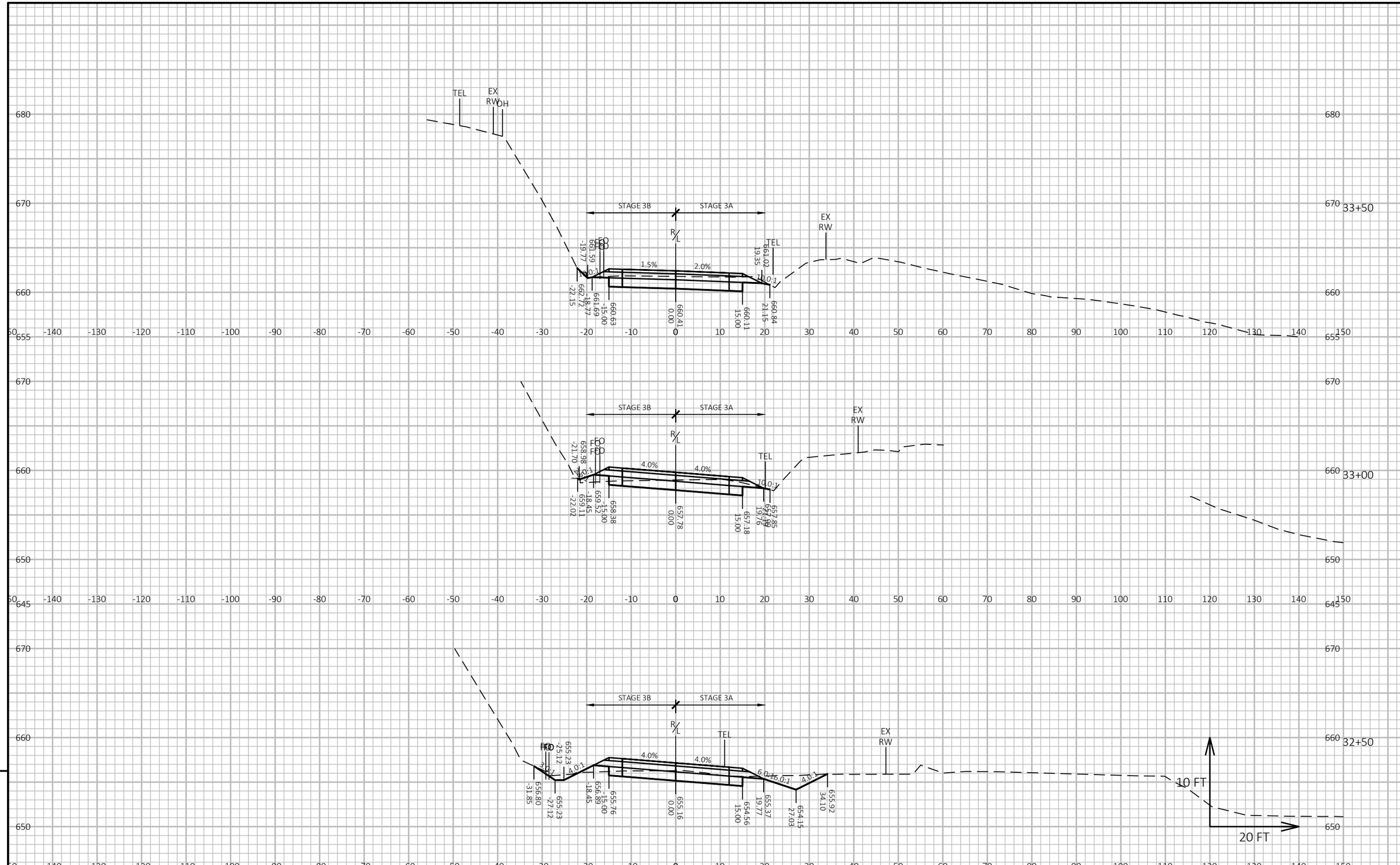

PROJECT NO: 5163-07-72	HWY: STH 35	COUNTY: LA CROSSE/VERNON	CROSS SECTIONS: CTH K	SHEET 550

FILE NAME : O:\PDS\C3D\51630702\SHEETSPLAN\090203-XS.DWG
LAYOUT NAME - 03
PLOT DATE : 5/1/2025 9:24 AM
PLOT BY : CORY IHDE
PLOT NAME :
PLOT SCALE : 1 IN:20 FT HORZ. / 1 IN:10 FT VERT.

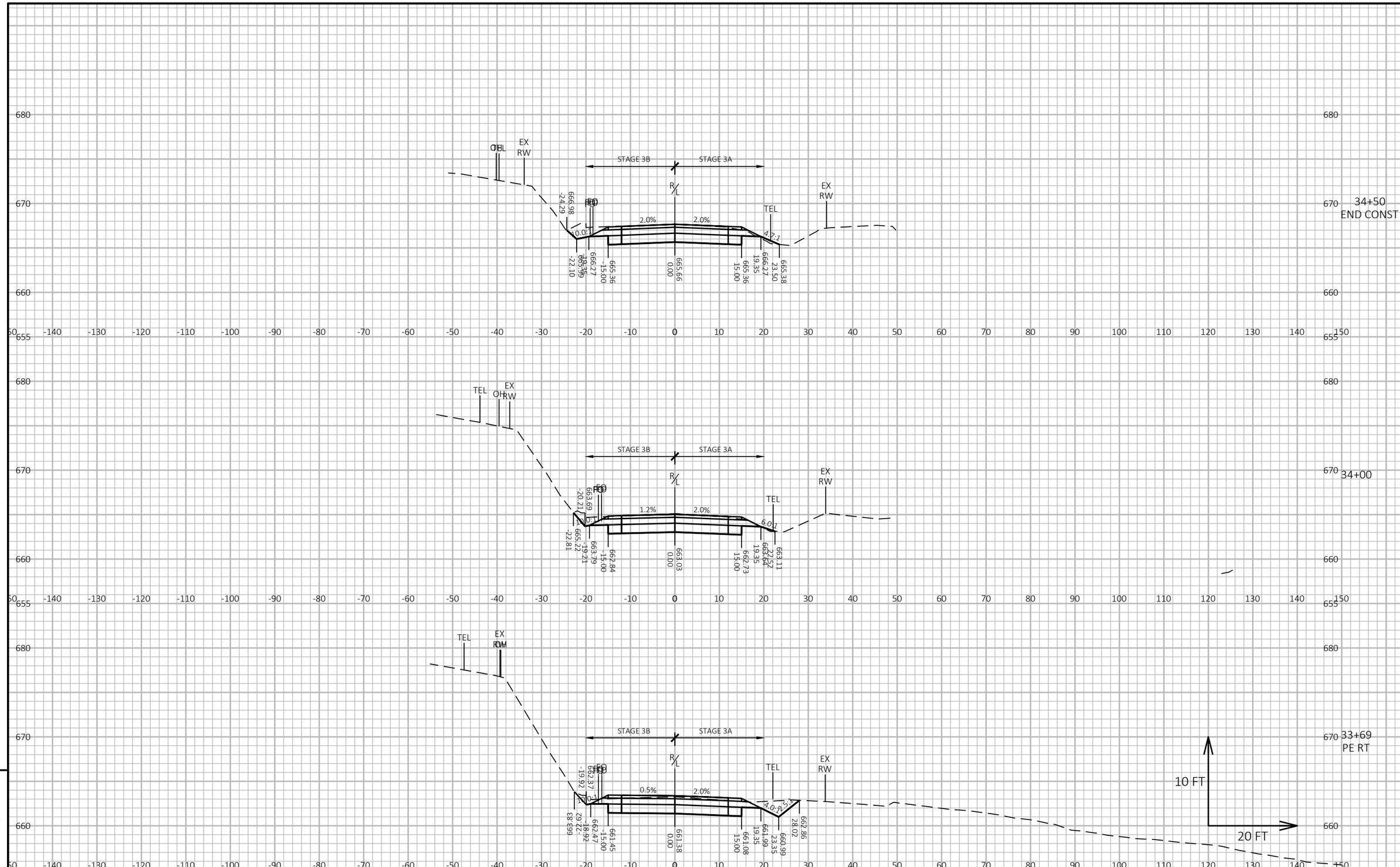

PROJECT NO: 5163-07-72	HWY: STH 35	COUNTY: LA CROSSE/VERNON	CROSS SECTIONS: CTH K	SHEET 551	E

FILE NAME : O:\PDS\C3D\51630702\SHEETSPLAN\090203-XS.DWG
LAYOUT NAME - 04
PLOT DATE : 5/1/2025 9:24 AM
PLOT BY : CORY IHDE
PLOT NAME :
PLOT SCALE : 1 IN:20 FT HORZ. / 1 IN:10 FT VERT.
WISDOT/CADDS SHEET 49

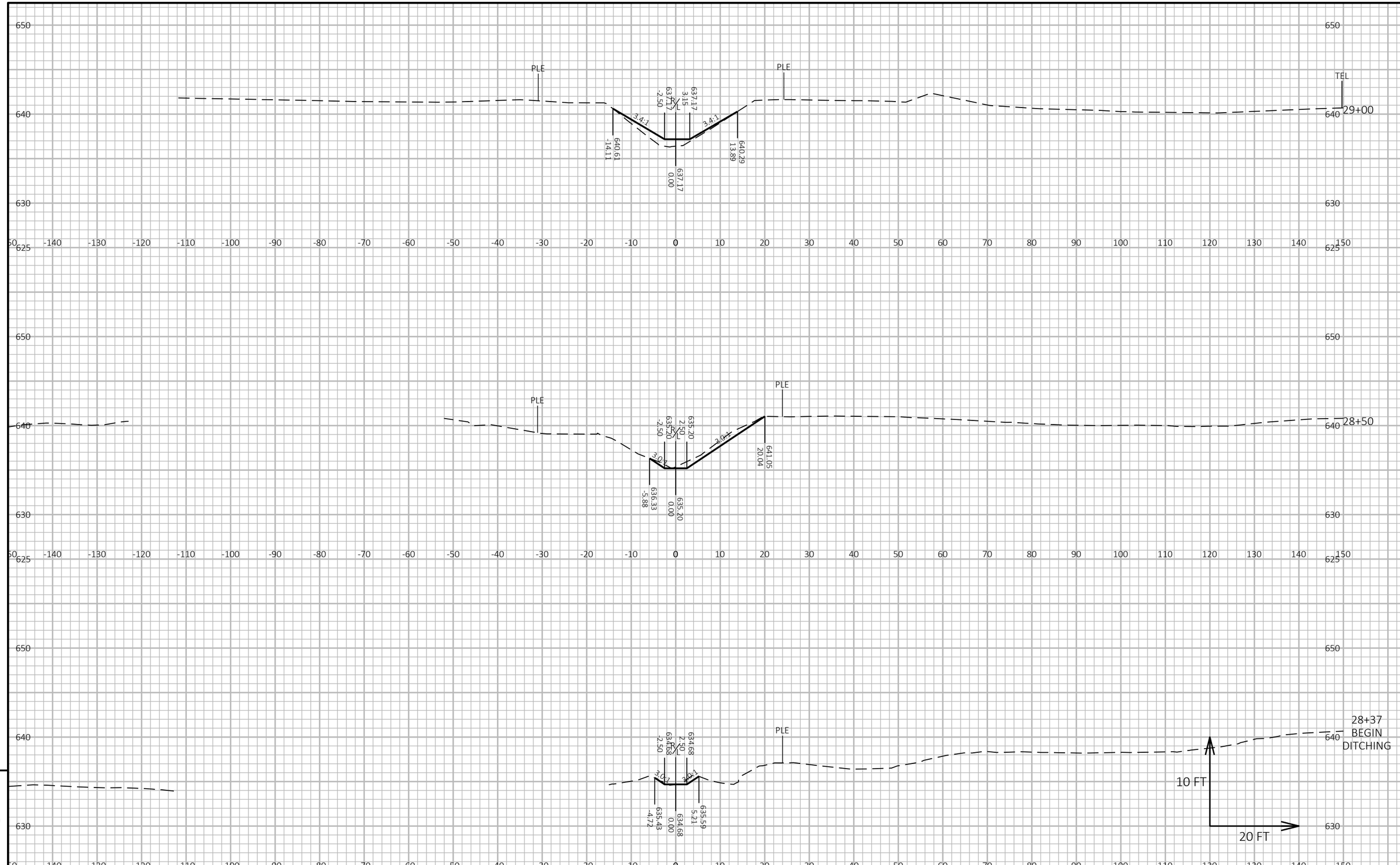

PROJECT NO: 5163-07-72	HWY: STH 35	COUNTY: LA CROSSE/VERNON	CROSS SECTIONS: BOX CULVERT DITCHING	SHEET 552	E

FILE NAME : O:\PDS\C3D\51630702\SHEETSPLAN\090204-XS-BOX CULVERT DITCHING.DWG
LAYOUT NAME - 01
PLOT DATE : 4/29/2025 3:37 PM
PLOT BY : CORY IHDE
PLOT NAME :
PLOT SCALE : 1 IN:20 FT HORZ. / 1 IN:10 FT VERT.
WISDOT/CADDS SHEET 49

9

9

PROJECT NO: 5163-07-72	HWY: STH 35	COUNTY: LA CROSSE/VERNON	CROSS SECTIONS: BOX CULVERT DITCHING	SHEET 553	E

FILE NAME : O:\PDS\C3D\51630702\SHEETSPLAN\090204-XS-BOX CULVERT DITCHING.DWG
LAYOUT NAME - 02
PLOT DATE : 4/29/2025 3:37 PM
PLOT BY : CORY IHDE
PLOT NAME :
PLOT SCALE : 1 IN:20 FT HORZ. / 1 IN:10 FT VERT.
WISDOT/CADDS SHEET 49

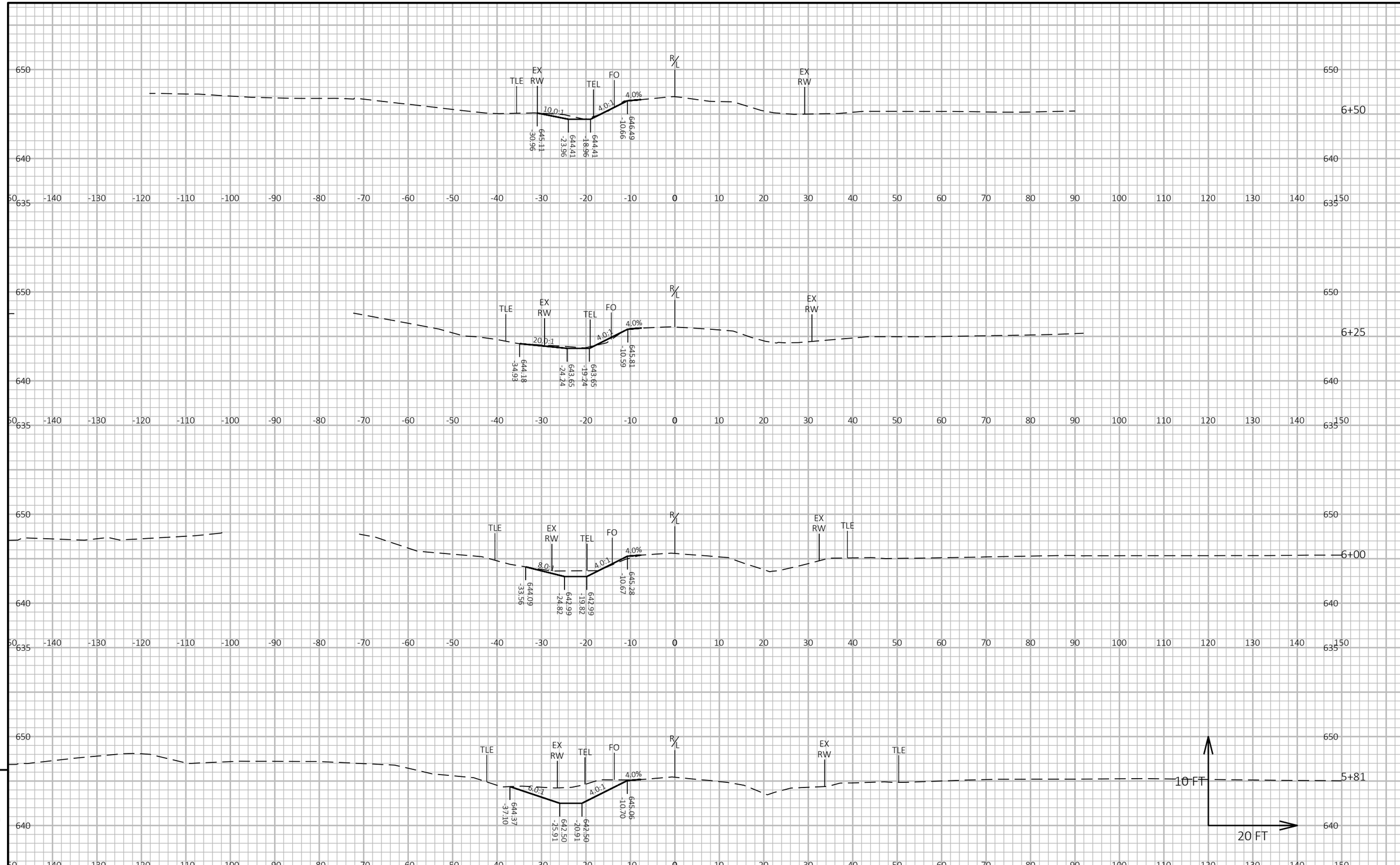

9

9

PROJECT NO: 5163-07-72	HWY: STH 35	COUNTY: LA CROSSE/VERNON	CROSS SECTIONS: COTTONWOOD DR	SHEET 554	E

FILE NAME : O:\PDS\C3D\51630702\SHEETSPLAN\090205-XS-COTTONWOOD.DWG
LAYOUT NAME - 01
PLOT DATE : 4/29/2025 3:46 PM
PLOT BY : CORY IHDE
PLOT NAME :
PLOT SCALE : 1 IN:20 FT HORZ. / 1 IN:10 FT VERT.
WISDOT/CADDS SHEET 49

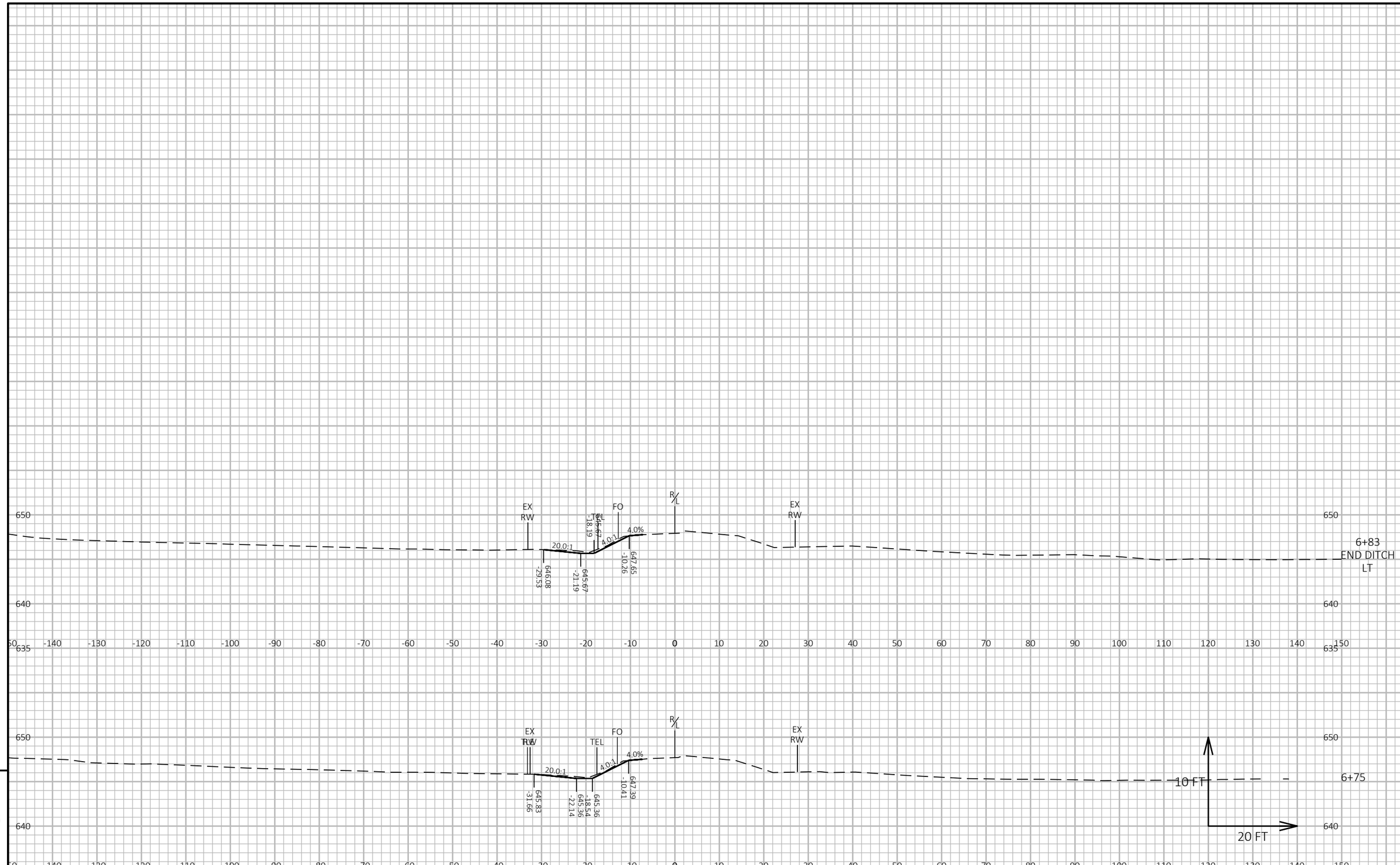

9

9

PROJECT NO: 5163-07-72	HWY: STH 35	COUNTY: LA CROSSE/VERNON	CROSS SECTIONS: COTTONWOOD DR	SHEET 555	E

FILE NAME : O:\PDS\C3D\51630702\SHEETSPLAN\090205-XS-COTTONWOOD.DWG
LAYOUT NAME - 02
PLOT DATE : 4/29/2025 3:46 PM
PLOT BY : CORY IHDE
PLOT NAME :
PLOT SCALE : 1 IN:20 FT HORZ. / 1 IN:10 FT VERT.
WISDOT/CADDS SHEET 49

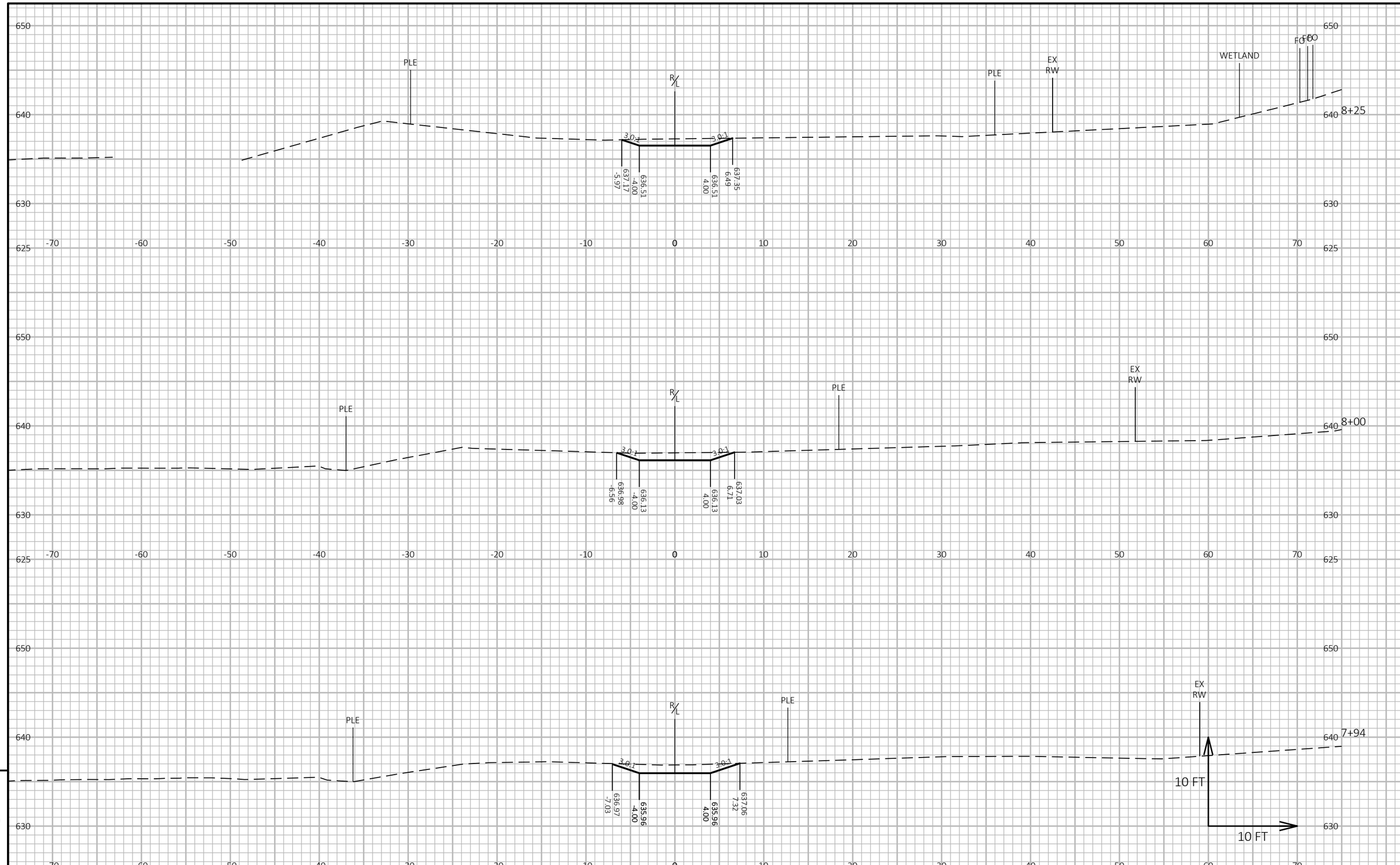

9

9

PROJECT NO: 5163-07-72	HWY: STH 35	COUNTY: LA CROSSE/VERNON	CROSS SECTIONS: CULVERT PIPE 567 DITCH SHAPING (USFWS PROPERTY)	SHEET 556	E

FILE NAME : O:\PDS\C3D\51630702\SHEETSPLAN\090206-XS-CP 567 DITCHING.DWG
LAYOUT NAME - 01
PLOT DATE : 4/29/2025 3:51 PM
PLOT BY : CORY IHDE
PLOT NAME :
PLOT SCALE : 1 IN:10 FT HORZ. / 1 IN:10 FT VERT.
WISDOT/CADDS SHEET 49

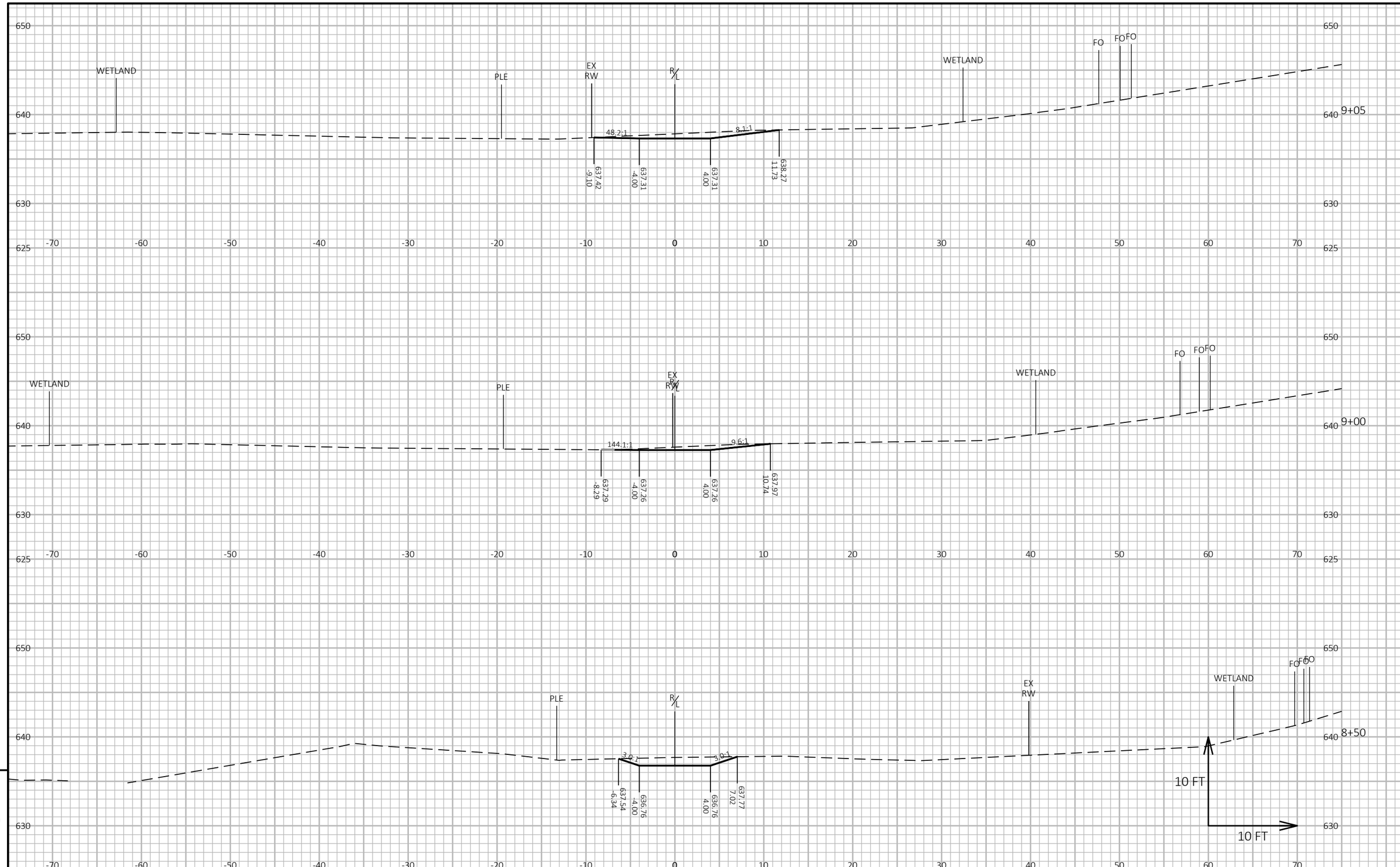

PROJECT NO: 5163-07-72	HWY: STH 35	COUNTY: LA CROSSE/VERNON	CROSS SECTIONS: CULVERT PIPE 567 DITCH SHAPING (USFWS PROPERTY)	SHEET 557	E

FILE NAME : O:\PDS\C3D\51630702\SHEETSPLAN\090206-XS-CP 567 DITCHING.DWG
LAYOUT NAME - 02
PLOT DATE : 4/29/2025 3:51 PM
PLOT BY : CORY IHDE
PLOT NAME :
PLOT SCALE : 1 IN:10 FT HORZ. / 1 IN:10 FT VERT.
WISDOT/CADDS SHEET 49

Wisconsin Department of Transportation

Dedicated people creating transportation solutions through innovation and exceptional service.

http://www.dot.wisconsin.gov

LAX | AUGUST 2025

PROJECT ID: 5991-06-73
WITH: 5163-07-72

COUNTY: LA CROSSE

ORDER OF SHEETS

TOTAL SHEETS = 34

STATE OF WISCONSIN
DEPARTMENT OF TRANSPORTATION

PLAN OF PROPOSED IMPROVEMENT

T SHELBY, GOOSE ISLAND TRAIL

CTH GI TO SUNNYSIDE DRIVE

NON HWY

LA CROSSE COUNTY

STATE PROJECT	FEDERAL PROJECT	
	PROJECT	CONTRACT
5991-06-73	WISC 2025570	1

STATE PROJECT NUMBER
5991-06-73

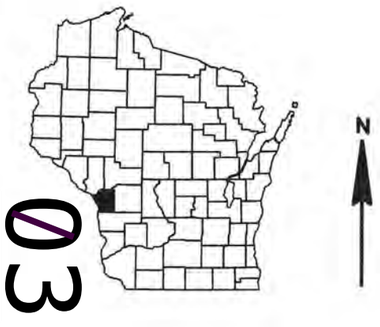

N

DESIGN DESIGNATION 5991-06-73

A.A.D.T.	=	N/A
A.A.D.T.	=	N/A
D.H.V.	=	N/A
D.D.	=	N/A
T	=	N/A
DESIGN SPEED	=	N/A
ESALS	=	N/A

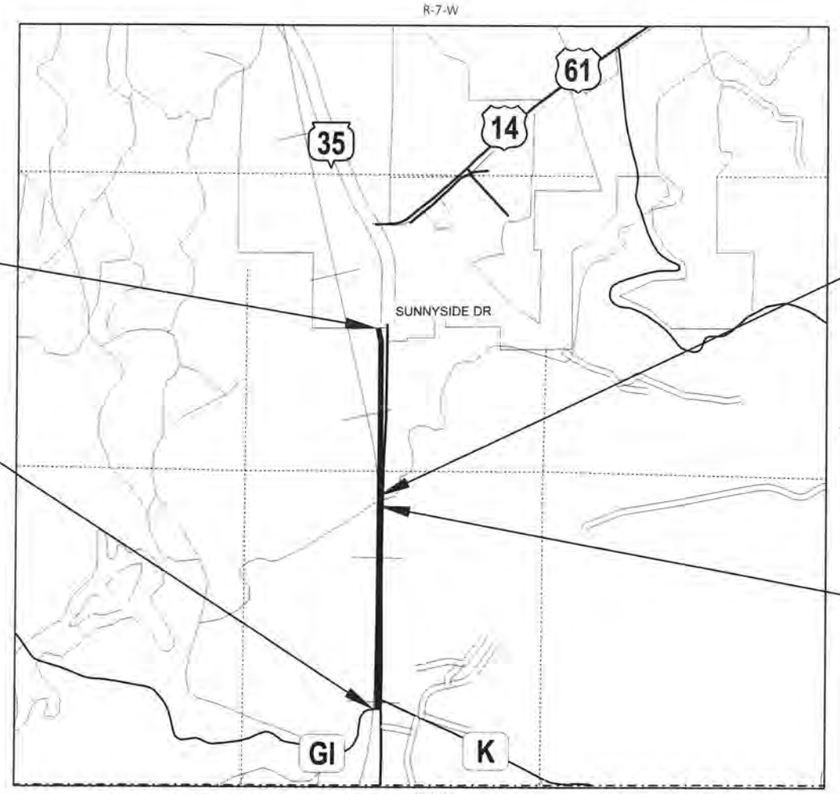

END PROJECT
STA 650+71.61 PN

BEGIN CONSTRUCTION
STA 620+79.77 PN

BEGIN PROJECT
STA 582+90.85 PS
Y = 101,355.911
X = 458,685.119

END CONSTRUCTION
STA 618+13.00 PS

LAYOUT

SCALE 0 0.5 MI

TOTAL NET LENGTH OF CENTERLINE = N/A

HORIZONTAL POSITIONS SHOWN ON THIS PLAN ARE WISCONSIN COORDINATE REFERENCE SYSTEM (WISCRS), LA CROSSE COUNTY, NAD83 (2011), IN U.S. SURVEY FEET. POSITIONS SHOWN ARE GRID COORDINATES, GRID BEARINGS, AND GRID DISTANCES. GRID DISTANCES ARE THE SAME AS GROUND DISTANCES.

ELEVATIONS ARE REFERENCED TO NAVD 88 (2012).

CONVENTIONAL SYMBOLS

PLAN
- CORPORATE LIMITS
- PROPERTY LINE
- LOT LINE
- LIMITED HIGHWAY EASEMENT
- EXISTING RIGHT OF WAY
- PROPOSED OR NEW R/W LINE
- SLOPE INTERCEPT
- REFERENCE LINE (SCOPE)
- EXISTING CULVERT
- PROPOSED CULVERT (Box or Pipe)
- COMBUSTIBLE FLUIDS (CAUTION)
- MARSH AREA
- WOODED OR SHRUB AREA

PROFILE
- GRADE LINE
- ORIGINAL GROUND
- MARSH OR ROCK PROFILE (To be noted as such) (ROCK)
- SPECIAL DITCH (LABEL)
- GRADE ELEVATION (95.36)
- CULVERT (Profile View)

UTILITIES
- ELECTRIC (E)
- FIBER OPTIC (FO)
- GAS (G)
- SANITARY SEWER (SAN)
- STORM SEWER (SS)
- TELEPHONE (T)
- WATER (W)
- UTILITY PEDESTAL
- POWER POLE
- TELEPHONE POLE

APPROVED BY

TOWN of SHELBY

4-15-2025 Christina Peterson
(Date) (Administrator)

ORIGINAL PLANS PREPARED BY

cbs²

WISCONSIN
TAMMY S. TUCKER
E-40780
WAUKESHA, WI
PROFESSIONAL ENGINEER

DATE: 4/9/2025 Tammy Tucker
(Professional Engineer Signature)

STATE OF WISCONSIN
DEPARTMENT OF TRANSPORTATION

PREPARED BY

Surveyor	CBS SQUARED INC.
Designer	CBS SQUARED, INC.
Project Manager	LORRAINE BETZEL
Regional Examiner	SW REGION
Regional Supervisor	KYLE HEMP

APPROVED FOR THE DEPARTMENT

DATE: 4/16/25 Lorraine Betzel
(Signature)

E

GENERAL NOTES

THERE ARE UTILITY FACILITIES WITHIN THE PROJECT AREA THAT ARE NOT SHOWN ON THE PLANS. THE CONTRACTOR SHALL COORDINATE THEIR CONSTRUCTION ACTIVITIES WITH A CALL TO DIGGER'S HOTLINE AND/OR A DIRECT CALL TO THE UTILITIES THAT HAVE FACILITIES IN THE AREA.

THE LOCATION OF EXISTING OR PROPOSED UTILITIES, AS NOTED ON THE PLANS, IS APPROXIMATE. THERE MAY BE OTHER UTILITY INSTALLATIONS WITHIN THE PROJECT AREA THAT ARE NOT SHOWN.

ALL DISTURBED AREAS WITHIN THE RIGHT OF WAY THAT ARE NOT INCIDENTAL TO CONTRACT WORK ITEMS SHALL BE FERTILIZED SEEDED AND MULCHED AT THE CONTRACTORS EXPENSE.

WHEN THE QUANTITY OF BASE COURSE IS MEASURED FOR PAYMENT BY THE TON, THE DEPTH OR THICKNESS OF THE COURSE SHOWN ON THE PLAN IS APPROXIMATE AND THE ACTUAL THICKNESS WILL DEPEND ON THE DISTRIBUTION OF THE MATERIAL AS DIRECTED BY THE ENGINEER.

STANDARD ABBREVIATIONS

AC	ACRE
AGG	AGGREGATE
AH	AHEAD
AADT	ANNUAL AVERAGE DAILY TRAFFIC
ASPH	ASPHALTIC
AVG	AVERAGE
BK	BACK
BAD	BASE AGGREGATE DENSE
BM	BENCH MARK
BR	BRIDGE
CL OR C/L	CENTER LINE
CE	COMMERCIAL ENTRANCE
CONC	CONCRETE
CO	COUNTY
CTH	COUNTY TRUNK HIGHWAY
CR	CREEK
CABC	CRUSHED AGGREGATE BASE COURSE
CY OR CUYD	CUBIC YARD
CULV	CULVERT
CP	CULVERT PIPE
C&G	CURB AND GUTTER
D	DEGREE OF CURVE
DIA	DIAMETER
DISCH	DISCHARGE
E	EAST
EB	EASTBOUND
EL OR ELEV	ELEVATION
EW	END WALL
ENT	ENTRANCE
EXC	EXCAVATION
EX	EXISTING
FERT	FERTILIZER
FE	FIELD ENTRANCE
FL OR F/L	FLOW LINE
FT	FOOT
HMA	HOT MIX ASPHALT
CWT	HUNDREDWEIGHT
INL	INLET
INV	INVERT
JCT	JUNCTION
LT	LEFT
L	LENGTH OF CURVE
LIN FT OR LF	LINEAR FOOT
LS	LUMP SUM
NC	NORMAL CROWN
N	NORTH
NB	NORTHBOUND
NO	NUMBER
PT	POINT
PC	POINT OF CURVATURE
PCC	POINT OF COMPOUND CURVATURE
PI	POINT OF INTERSECTION
PT	POINT OF TANGENCY
LB	POUND
PE	PRIVATE ENTRANCE
R	RADIUS
RL OR R/L	REFERENCE LINE
RT	RIGHT
R/W	RIGHT-OF-WAY
RD	ROAD
SHLDR	SHOULDER
SB	SOUTHBOUND
SF OR SQ FT	SQUARE FEET
SY OR SQ YD	SQUARE YARD
SDD	STANDARD DETAIL DRAWINGS
STH	STATE TRUNK HIGHWAY
SE	SUPERELEVATION
T	TANGENT
TEMP	TEMPORARY
USH	UNITED STATES HIGHWAY
V	VELOCITY OR DESIGN SPEED
VC	VERTICAL CURVE
WB	WESTBOUND
YD	YARD

UTILITY CONTACTS

COMMUNICATION LINE

THOMAS MURRAY
BRIGHTSPEED - COMMUNICATION LINE
1905 WARD AVENUE
LA CROSSE, WI 54601
(608) 780-0895
TOM.L.MURRAY@BRIGHTSPEED.COM

BRANDON SEELY
COON VLY TELECOM INC - COMMUNICATION LINE
105 CENTRAL AVE
COON VALLEY, WI 54623
(608) 452-3101
CVTCLOCATES@GMAIL.COM

CRAIG EGGERT
MEDIACOM WI LLC - COMMUNICATION LINE
12340 HIGHWAY 52
CHATFIELD, MN 55923
(563) 419-5160
CEGGERT@MEDIACOMCC.COM

MITCHELL DIENGER
XCEL ENERGY - ELECTRICITY - TRANSMISSION
414 NICOLLET MALL 5TH FLOOR
MINNEAPOLIS, MN 55401
(612) 321-3109
MITCHELL.DIENGER@XCELENERGY.COM

JASON MCROBERTS
XCEL ENERGY - ELECTRICITY - DISTRIBUTION
3215 COMMERCE STREET
LA CROSSE, WI 54601
(715) 577-1132 (CELL)
(608) 789-3689 (OFFICE)
JASON.L.MCROBERTS@XCELENERGY.COM

RUNOFF COEFFICIENT TABLE

	HYDROLOGIC SOIL GROUP											
	A			B			C			D		
	SLOPE RANGE (PERCENT)			SLOPE RANGE (PERCENT)			SLOPE RANGE (PERCENT)			SLOPE RANGE (PERCENT)		
LAND USE:	0-2	2-6	6 & OVER	0-2	2-6	6 & OVER	0-2	2-6	6 & OVER	0-2	2-6	6 & OVER
ROW CROPS	.08 .22	.16 .30	.22 .38	.12 .26	.20 .34	.27 .44	.15 .30	.24 .37	.33 .50	.19 .34	.28 .41	.38 .56
MEDIAN STRIP-TURF	.19 .24	.20 .26	.24 .30	.19 .25	.22 .28	.26 .33	.20 .26	.23 .30	.30 .37	.20 .27	.25 .32	.30 .40
SIDE SLOPE-TURF			.25 .32			.27 .34			.28 .36			.30 .38
PAVEMENT:												
ASPHALT	.70 - .95											
CONCRETE	.80 - .95											
BRICK	.70 - .80											
DRIVES, WALKS	.75 - .85											
ROOFS	.75 - .95											
GRAVEL ROADS, SHOULDERS	.40 - .60											

TOTAL PROJECT AREA = 37 ACRES (ID 5163-07-72)
TOTAL AREA EXPECTED TO BE DISTURBED BY CONSTRUCTION ACTIVITIES = 1.80 ACRES

ORDER OF DETAIL SHEETS

GENERAL NOTES
PROJECT OVERVIEW
TYPICAL SECTIONS
PLAN DETAILS

WISCONSIN DNR LIAISON

KAREN KALVELAGE
DNR SERVICE CENTER
3550 MORMON COULEE RD
LA CROSSE, WI 54650
(608) 785-9115
KAREN.KALVELAGE@WISCONSIN.GOV

WISDOT CONTACT

LORRAINE BETZEL
WISDOT LOCAL PROGRAM PROJECT MANAGER
2101 WRIGHT STREET
MADISON, WI 53704
(608) 246-3279
LORRAINE.BETZEL@DOT.WI.GOV

TOWN OF SHELBY

CHRISTINA PETERSON
ADMINISTRATOR
2800 WARD AVE
LA CROSSE, WI 54601
(608) 788-1032 EXT. 4

DESIGN CONSULTANT

TAMMY TUCKER
CBS SQUARED, INC.
2500 E. ENTERPRISE AVE. SUITE A
APPLETON, WI 54913
(920) 257-5021 OFFICE
(262) 613-8999 MOBILE
TTUCKER@CBSSQUAREDINC.COM

DIGGERS HOTLINE
Dial 811 or (800) 242-8511
www.DiggersHotline.com

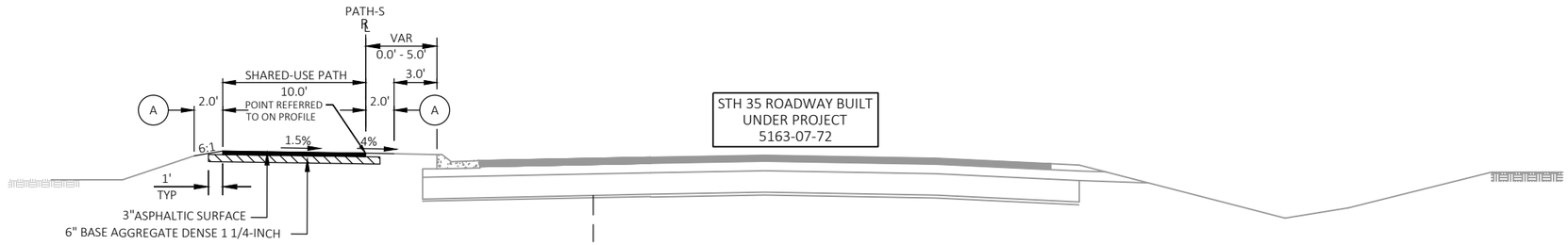

TYPICAL FINISHED SECTION
GOOSE ISLAND TRAIL
STA 582+90.85 PS TO STA 599+01.25 PS

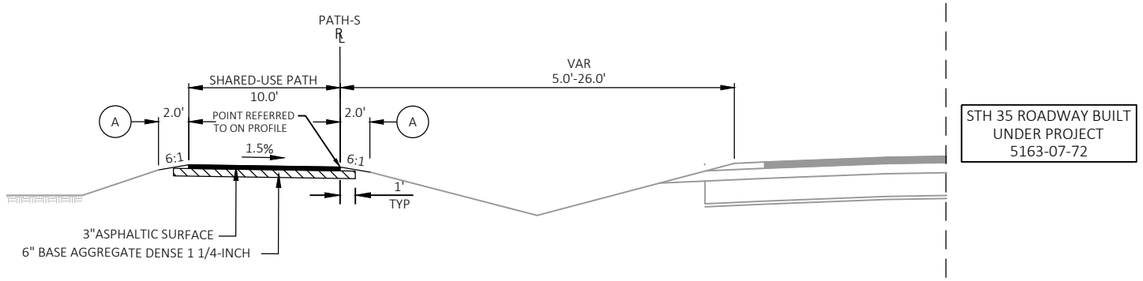

TYPICAL FINISHED SECTION
GOOSE ISLAND TRAIL
STA 599+01.25 PS TO STA 612+75.43 PS

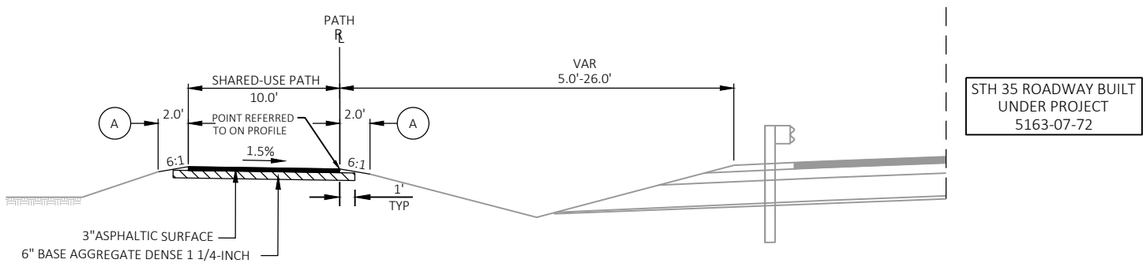

TYPICAL FINISHED PARTIAL SECTION - MGS GUARDRAIL
GOOSE ISLAND TRAIL
STA 612+75.43 PS TO STA 613+69.05 PS
STA 623+14.78 PN TO STA 624+07.64 PN

LEGEND:

(A) 4" SALVAGED TOPSOIL & EROSION MAT.

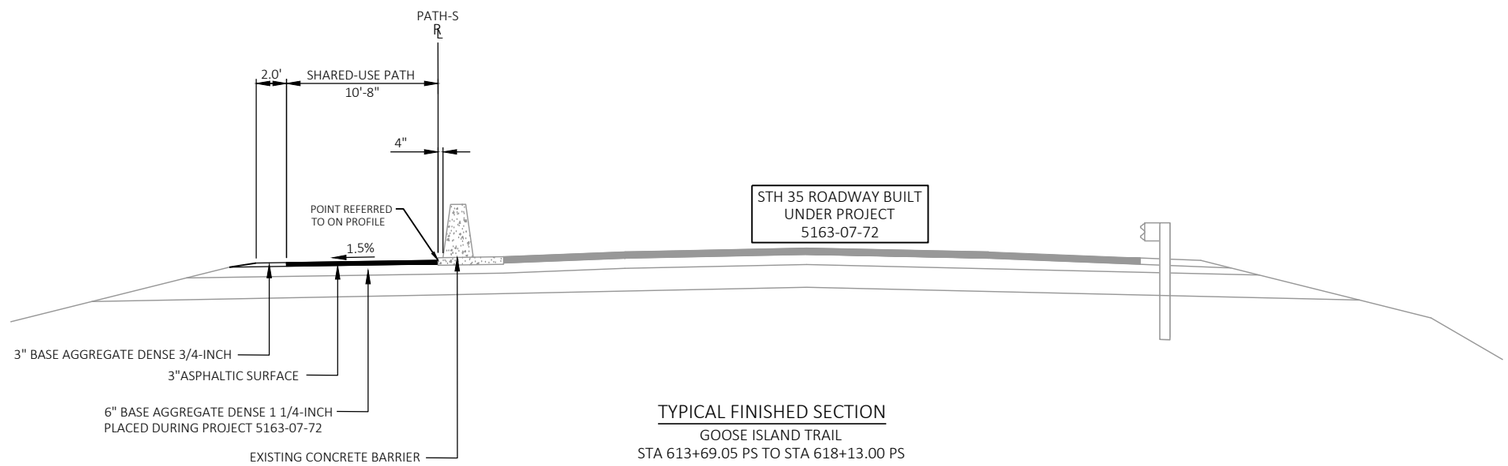

TYPICAL FINISHED SECTION

GOOSE ISLAND TRAIL

STA 613+69.05 PS TO STA 618+13.00 PS

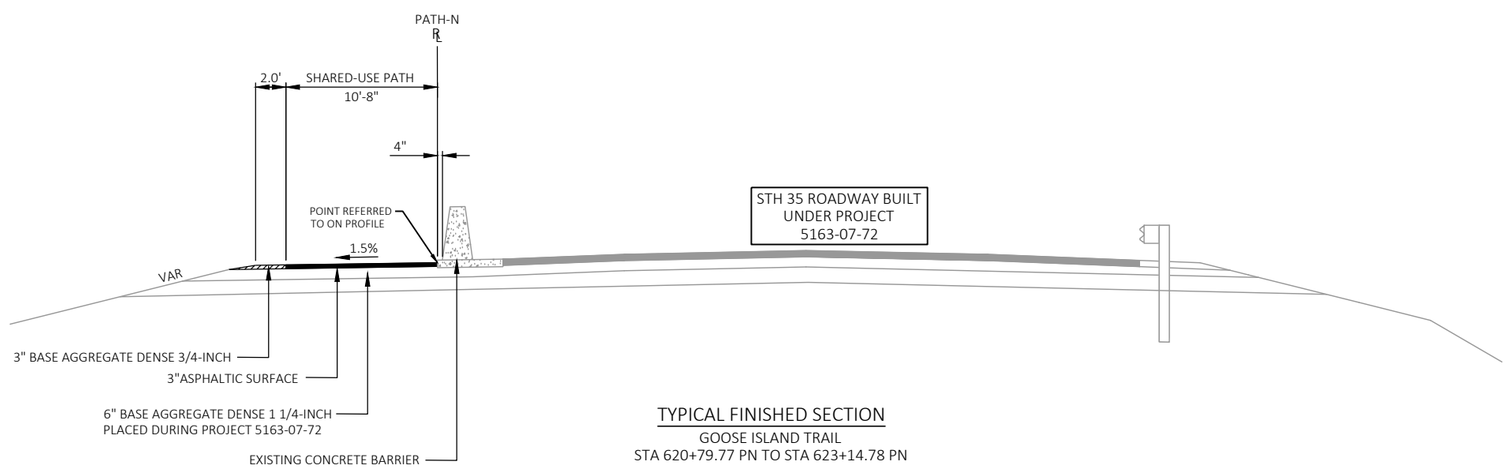

TYPICAL FINISHED SECTION

GOOSE ISLAND TRAIL

STA 620+79.77 PN TO STA 623+14.78 PN

LEGEND:

(A) 4" SALVAGED TOPSOIL & EROSION MAT.

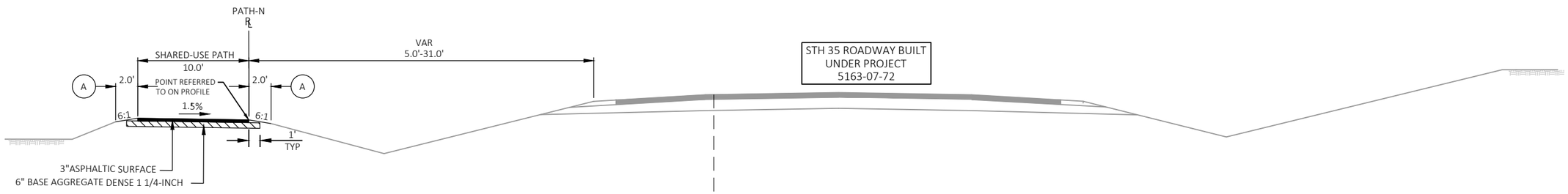

TYPICAL FINISHED SECTION
GOOSE ISLAND TRAIL
STA 623+14.78 PN TO STA 648+00.66 PN

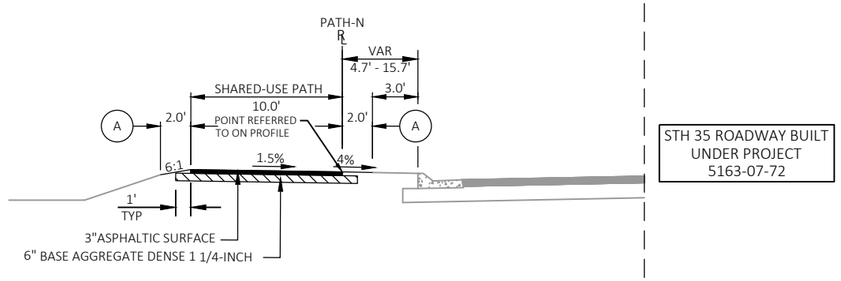

TYPICAL FINISHED SECTION
GOOSE ISLAND TRAIL
STA 648+00.66 PN TO STA 649+19 PN

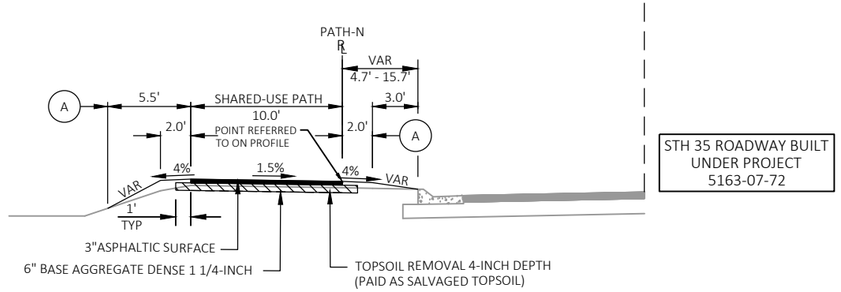

TYPICAL FINISHED SECTION
GOOSE ISLAND TRAIL
STA 649+19 PN TO STA 650+71.61 PN

LEGEND:

(A) 4" SALVAGED TOPSOIL & EROSION MAT.

2

END CONSTRUCTION
STA 618+13.00
MATCH EXISTING

PATH-S R/L

EXISTING R/W (TYP)

13+50 CROSS SLOPE TRANSITION 14+00

AP01

+00.72
10.00' LT

+97.29
0.00'

+67.17
0.00'

+06.45
0.00'

616

618

614

STH 35

STH 35

WETLAND BOUNDARY

STRUCTURE B-32-163

LEGEND

AP01 3" ASPHALTIC SURFACE

2

CURB RAMP DETAILS
SHOWN ESLEWHERE

BRIGHTSPEED
(FIBER OPTIC)

BEGIN CONSTRUCTION
STA 620+79.77
MATCH EXISTING

EXISTING R/W (TYP)

+79.77
10.95' LT

+89.77
10.67' LT

AP01

23+00 CROSS SLOPE TRANSITION 23+50

PATH-N R/L

+76.99
10.47' LT

+00.22
0.00'

+74.97
0.00'

+16.32
0.00'

622

624

STH 35

END CONSTRUCTION
STA 624+93.15
MATCH EXISTING

BEGIN CONSTRUCTION
STA 625+13.56
MATCH EXISTING

STRUCTURE B-32-163

WETLAND BOUNDARY

XCEL ENERGY
(OH ELECTRIC)

MEDIACOM WI
(FIBER OPTIC)

EXISTING R/W (TYP)

PROJECT NO: 5991-06-73	HWY: GOOSE ISLAND TRAIL	COUNTY: LA CROSSE	PLAN DETAILS	SHEET 6	E

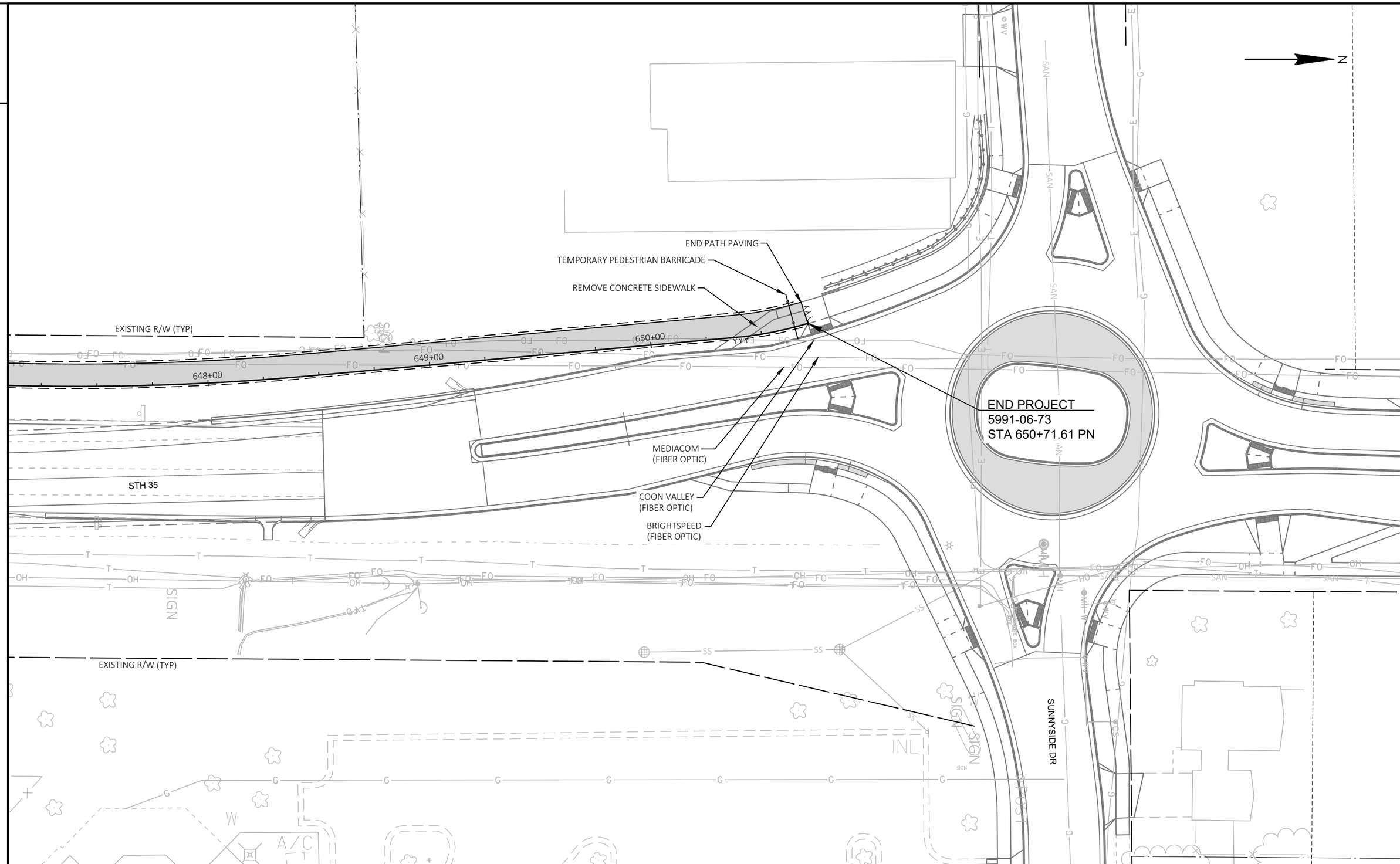
END PATH PAVING
TEMPORARY PEDESTRIAN BARRICADE
REMOVE CONCRETE SIDEWALK
EXISTING R/W (TYP)
650+00
649+00
648+00
END PROJECT
5991-06-73
STA 650+71.61 PN
MEDIACOM
(FIBER OPTIC)
COON VALLEY
(FIBER OPTIC)
BRIGHTSPEED
(FIBER OPTIC)
STH 35
EXISTING R/W (TYP)
SUNNYSIDE DR
N

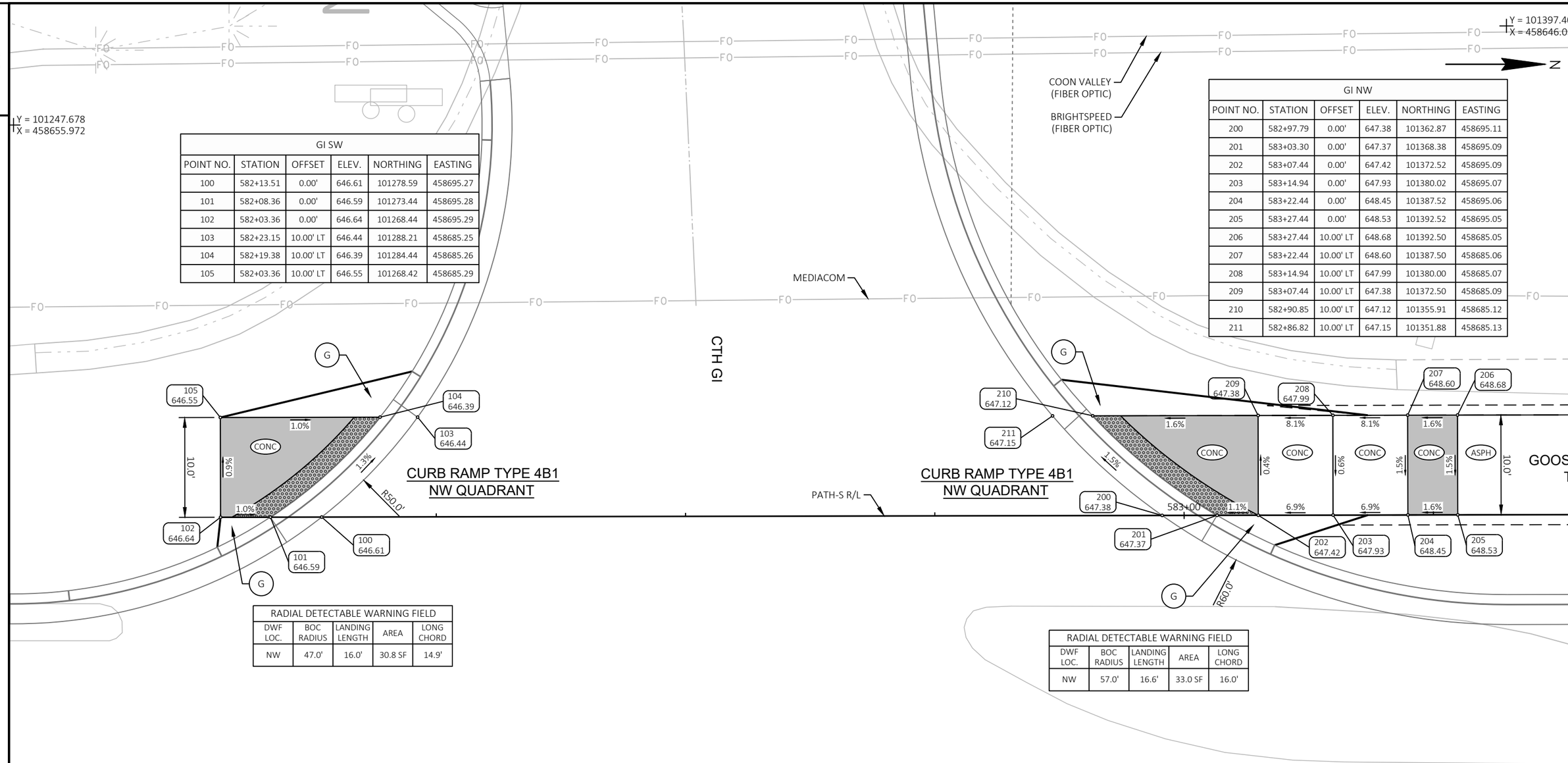

GI SW					
POINT NO.	STATION	OFFSET	ELEV.	NORTHING	EASTING
100	582+13.51	0.00'	646.61	101278.59	458695.27
101	582+08.36	0.00'	646.59	101273.44	458695.28
102	582+03.36	0.00'	646.64	101268.44	458695.29
103	582+23.15	10.00' LT	646.44	101288.21	458685.25
104	582+19.38	10.00' LT	646.39	101284.44	458685.26
105	582+03.36	10.00' LT	646.55	101268.42	458685.29

GI NW					
POINT NO.	STATION	OFFSET	ELEV.	NORTHING	EASTING
200	582+97.79	0.00'	647.38	101362.87	458695.11
201	583+03.30	0.00'	647.37	101368.38	458695.09
202	583+07.44	0.00'	647.42	101372.52	458695.09
203	583+14.94	0.00'	647.93	101380.02	458695.07
204	583+22.44	0.00'	648.45	101387.52	458695.06
205	583+27.44	0.00'	648.53	101392.52	458695.05
206	583+27.44	10.00' LT	648.68	101392.50	458685.05
207	583+22.44	10.00' LT	648.60	101387.50	458685.06
208	583+14.94	10.00' LT	647.99	101380.00	458685.07
209	583+07.44	10.00' LT	647.38	101372.50	458685.09
210	582+90.85	10.00' LT	647.12	101355.91	458685.12
211	582+86.82	10.00' LT	647.15	101351.88	458685.13

RADIAL DETECTABLE WARNING FIELD				
DWF LOC.	BOC RADIUS	LANDING LENGTH	AREA	LONG CHORD
NW	47.0'	16.0'	30.8 SF	14.9'

RADIAL DETECTABLE WARNING FIELD				
DWF LOC.	BOC RADIUS	LANDING LENGTH	AREA	LONG CHORD
NW	57.0'	16.6'	33.0 SF	16.0'

NOTES:

1. CONTRACTOR TO FIELD VERIFY ELEVATION, GRADES, SLOPES, LENGTHS AND MATCH POINTS PRIOR TO CURB RAMP AND SIDEWALK CONSTRUCTION.
2. THE ENGINEER MAY ADJUST ELEVATIONS TO FIT FIELD CONDITIONS.
3. DASHED LINES SHOWN FOR PROPOSED SIDEWALK ARE FOR INFORMATION ONLY AND DO NOT INDICATE JOINT LOCATIONS.
4. SEE THE STANDARD DETAIL DRAWINGS FOR COMPLETE CURB RAMP REQUIREMENTS.
5. ALL STATION AND OFFSET INFORMATION REFERENCE PATH-S & PATH-N ALIGNMENTS, UNLESS OTHERWISE NOTED.
6. SEE STORM SEWER AND EROSION CONTROL SHEETS FOR INLET AND MANHOLE ADJUSTMENTS.
7. DETECTABLE WARNING FIELDS SHOWN IN PLANS ARE STANDARD RECTANGULAR PLATES UNLESS OTHERWISE NOTED.

LEGEND:

- DETECTABLE WARNING FIELD
- G — 6:1 GRADED FLARE
- CONC — CONCRETE SIDEWALK 4-INCH
- ASPH — ASPHALTIC SURFACE
- XXXX YYY.YY — POINT NUMBER & ELEVATION
- LEVEL LANDING

PROJECT NO: 5991-06-73	HWY: GOOSE ISLAND TRAIL	COUNTY: LA CROSSE	CURB RAMP DETAILS	SHEET 8	E

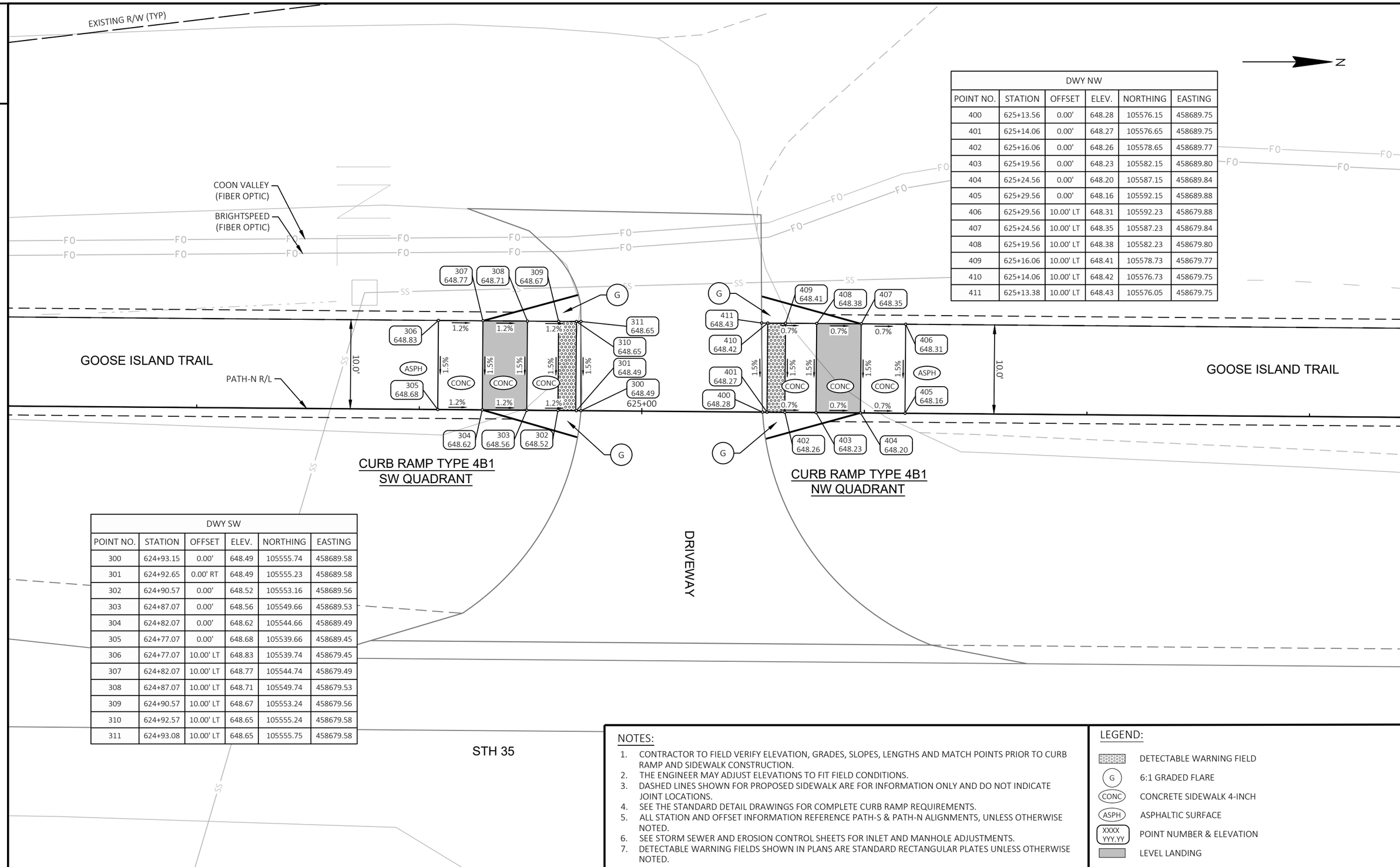

DWY NW					
POINT NO.	STATION	OFFSET	ELEV.	NORTHING	EASTING
400	625+13.56	0.00'	648.28	105576.15	458689.75
401	625+14.06	0.00'	648.27	105576.65	458689.75
402	625+16.06	0.00'	648.26	105578.65	458689.77
403	625+19.56	0.00'	648.23	105582.15	458689.80
404	625+24.56	0.00'	648.20	105587.15	458689.84
405	625+29.56	0.00'	648.16	105592.15	458689.88
406	625+29.56	10.00' LT	648.31	105592.23	458679.88
407	625+24.56	10.00' LT	648.35	105587.23	458679.84
408	625+19.56	10.00' LT	648.38	105582.23	458679.80
409	625+16.06	10.00' LT	648.41	105578.73	458679.77
410	625+14.06	10.00' LT	648.42	105576.73	458679.75
411	625+13.38	10.00' LT	648.43	105576.05	458679.75

DWY SW					
POINT NO.	STATION	OFFSET	ELEV.	NORTHING	EASTING
300	624+93.15	0.00'	648.49	105555.74	458689.58
301	624+92.65	0.00' RT	648.49	105555.23	458689.58
302	624+90.57	0.00'	648.52	105553.16	458689.56
303	624+87.07	0.00'	648.56	105549.66	458689.53
304	624+82.07	0.00'	648.62	105544.66	458689.49
305	624+77.07	0.00'	648.68	105539.66	458689.45
306	624+77.07	10.00' LT	648.83	105539.74	458679.45
307	624+82.07	10.00' LT	648.77	105544.74	458679.49
308	624+87.07	10.00' LT	648.71	105549.74	458679.53
309	624+90.57	10.00' LT	648.67	105553.24	458679.56
310	624+92.57	10.00' LT	648.65	105555.24	458679.58
311	624+93.08	10.00' LT	648.65	105555.75	458679.58

NOTES:

1. CONTRACTOR TO FIELD VERIFY ELEVATION, GRADES, SLOPES, LENGTHS AND MATCH POINTS PRIOR TO CURB RAMP AND SIDEWALK CONSTRUCTION.
2. THE ENGINEER MAY ADJUST ELEVATIONS TO FIT FIELD CONDITIONS.
3. DASHED LINES SHOWN FOR PROPOSED SIDEWALK ARE FOR INFORMATION ONLY AND DO NOT INDICATE JOINT LOCATIONS.
4. SEE THE STANDARD DETAIL DRAWINGS FOR COMPLETE CURB RAMP REQUIREMENTS.
5. ALL STATION AND OFFSET INFORMATION REFERENCE PATH-S & PATH-N ALIGNMENTS, UNLESS OTHERWISE NOTED.
6. SEE STORM SEWER AND EROSION CONTROL SHEETS FOR INLET AND MANHOLE ADJUSTMENTS.
7. DETECTABLE WARNING FIELDS SHOWN IN PLANS ARE STANDARD RECTANGULAR PLATES UNLESS OTHERWISE NOTED.

LEGEND:

- DETECTABLE WARNING FIELD
- G — 6:1 GRADED FLARE
- CONC — CONCRETE SIDEWALK 4-INCH
- ASPH — ASPHALTIC SURFACE
- XXXX YYY.YY — POINT NUMBER & ELEVATION
- LEVEL LANDING

PROJECT NO: 5991-06-73	HWY: GOOSE ISLAND TRAIL	COUNTY: LA CROSSE	CURB RAMP DETAILS	SHEET 9	E

5991-06-73

Line	Item	Item Description	Unit	Total	Qty
0020	204.0155	Removing Concrete Sidewalk	SY	14.000	14.000
0036	205.0100	Excavation Common	CY	34.000	34.000
0054	305.0120	Base Aggregate Dense 1 1/4-Inch	TON	2,585.000	2,585.000
0074	465.0105	Asphaltic Surface	TON	1,220.000	1,220.000
0192	602.0410	Concrete Sidewalk 5-Inch	SF	743.000	743.000
0194	602.0505	Curb Ramp Detectable Warning Field Yellow	SF	40.000	40.000
0196	602.0605	Curb Ramp Detectable Warning Field Radial Yellow	SF	64.000	64.000
0266	619.1000	Mobilization	EACH	0.050	0.050
0272	624.0100	Water	MGAL	41.000	41.000
0274	625.0500	Salvaged Topsoil	SY	1,253.000	1,253.000
0288	628.2008	Erosion Mat Urban Class I Type B	SY	1,253.000	1,253.000
0300	629.0210	Fertilizer Type B	CWT	0.900	0.900
0304	630.0175	Seeding Mixture No. 75	LB	8.000	8.000
0306	630.0200	Seeding Temporary	LB	2.000	2.000
0308	630.0400	Seeding Nurse Crop	LB	9.000	9.000
0310	630.0500	Seed Water	MGAL	21.000	21.000
0314	634.0616	Posts Wood 4x6-Inch X 16-FT	EACH	8.000	8.000
0318	637.2210	Signs Type II Reflective H	SF	3.720	3.720
0320	637.2230	Signs Type II Reflective F	SF	3.760	3.760
0322	638.2102	Moving Signs Type II	EACH	2.000	2.000
0362	644.1810	Temporary Pedestrian Barricade	LF	15.000	15.000
0408	650.4500	Construction Staking Subgrade	LF	5,956.000	5,956.000
0410	650.5000	Construction Staking Base	LF	5,956.000	5,956.000
0422	650.9000	Construction Staking Curb Ramps	EACH	4.000	4.000
0426	650.9500	Construction Staking Sidewalk (project) 01. 5991-06-73	EACH	1.000	1.000
0430	650.9911	Construction Staking Supplemental Control (project) 01. 5991-06-73	EACH	1.000	1.000
0436	690.0250	Sawing Concrete	LF	19.000	19.000
0474	SPV.0060	Special 09. Installing City Furnished Signs	EACH	4.000	4.000

3

204 - REMOVING SIDEWALK

CATEGORY	STATION	TO	STATION	LOCATION	204.0155 REMOVING CONCRETE SIDEWALK SY	690.0250 SAWING CONCRETE LF
0010	650+37 PN	-	650+72 PN	GOOSE ISLAND TRAIL	14	19
				TOTAL 0010	14	19

305 - BASE AGG

CATEGORY	STATION	TO	STATION	LOCATION	205.0100 EXCAVATION COMMON CY	305.0120 BASE AGGREGATE DENSE 1 1/4-INCH TON	624.0100 WATER MGAL
0010	582+03 PS	-	613+67 PS	GOOSE ISLAND TRAIL	--	1,373	21
0010	623+16 PN	-	624+93 PN	GOOSE ISLAND TRAIL	--	79	2
0010	625+14 PN	-	641+74 PN	GOOSE ISLAND TRAIL	--	739	12
0010	641+85 PN	-	650+72 PN	GOOSE ISLAND TRAIL	--	394	6
0010	649+21 PN	-	650+67 PN	GOOSE ISLAND TRAIL	34	--	--
				TOTAL 0010	34	2,585	41

3

465 - ASPHALT

CATEGORY	STATION	TO	STATION	LOCATION	465.0105 ASPHALTIC SURFACE TON
0010	582+88 PS	-	618+13 PS	GOOSE ISLAND TRAIL	664
0010	620+80 PN	-	624+93 PN	GOOSE ISLAND TRAIL	80
0010	625+14 PN	-	641+74 PN	GOOSE ISLAND TRAIL	309
0010	641+85 PN	-	650+72 PN	GOOSE ISLAND TRAIL	167
				TOTAL 0010	1,220

602 - CURB RAMPS

CATEGORY	STATION	TO	STATION	LOCATION	602.0410 CONCRETE SIDEWALK 5-INCH SF	602.0505 CURB RAMP DETECTABLE WARNING FIELD YELLOW SF	602.0605 CURB RAMP DETECTABLE WARNING FIELD RADIAL YELLOW SF
0010	582+03 PS	-	582+20 PS	GOOSE ISLAND TRAIL	111	--	31
0010	582+88 PS	-	583+28 PS	GOOSE ISLAND TRAIL	310	--	33
0010	624+77 PN	-	624+94 PN	GOOSE ISLAND TRAIL	161	20	--
0010	625+13 PN	-	625+30 PN	GOOSE ISLAND TRAIL	161	20	--
				TOTAL 0010	743	40	64

3

630 - RESTORATION

CATEGORY	STATION	TO	STATION	LOCATION	625.0500 SALVAGED TOPSOIL SY	628.2008 EROSION MAT URBAN CLASS I TYPE B SY	629.0210 FERTILIZER TYPE B CWT	630.0175 SEEDING MIXTURE NO. 75 LB	630.0200 SEEDING TEMPORARY LB	630.0400 SEEDING NURSE CROP LB	630.0500 SEED WATER MGAL
0010	582+03 PS	-	618+13 PS	GOOSE ISLAND TRAIL	744	744	0.5	4.6	1.1	5.2	12.3
0010	620+80 PN	-	624+93 PN	GOOSE ISLAND TRAIL	42	42	0.1	0.3	0.1	0.4	0.8
0010	625+14 PN	-	641+74 PN	GOOSE ISLAND TRAIL	319	319	0.2	2.1	0.5	2.3	5.4
0010	641+85 PN	-	650+72 PN	GOOSE ISLAND TRAIL	148	148	0.1	1.0	0.3	1.1	2.5
				TOTAL 0010	1,253	1,253	0.9	8.0	2.0	9.0	21.0

644 - TEMP PED BARRICADE

CATEGORY	STATION	LOCATION	644.1810 TEMPORARY PEDESTRIAN BARRICADE LF
0010	650+68	GOOSE ISLAND TRAIL	15
		TOTAL 0010	15

3

637 - SIGNING

CATEGORY	SIGN NO	SIGN CODE	SIGN SIZE W (IN) X H (IN)	634.0616 POSTS WOOD 4X6-INCH X 16-FT EACH	637.2210 SIGNS TYPE II REFLECTIVE H SF	637.2230 SIGNS TYPE II REFLECTIVE F SF	638.2102 MOVING SIGNS TYPE II EACH	SPV.0060.09 SPECIAL (09. INSTALLING CITY FURNISHED SIGNS) EACH
0010	1-01	R1-1	18" X 18"	1	1.86	--	--	--
0010	1-02	D1-2C	36" X 12"	1	--	--	--	1
0010	1-02	M4-14	--	--	--	--	1	--
0010	1-02	M1-8A	18" X 24"	--	--	--	--	1
0010	1-03	D1-1B	36" X 6"	1	--	--	--	1
0010	1-03	M4-6	--	--	--	--	1	--
0010	1-03	M1-8A	18" X 24"	--	--	--	--	1
0010	3-01	W5-4A	18" X 18"	1	--	1.13	--	--
0010	3-02	OM3-R	6" X 18"	1	--	0.75	--	--
0010	4-01	OM3-L	6" X 18"	1	--	0.75	--	--
0010	4-02	W5-4A	18" X 18"	1	--	1.13	--	--
0010	4-03	R1-1	18" X 18"	1	1.86	--	--	--
0010	4-04	R1-1	18" X 18"	1	1.86	--	--	--
			TOTAL 0010	8	3.72	3.76	2	4

650 - STAKING

CATEGORY	STATION	TO	STATION	650.4500 CONSTRUCTION STAKING SUBGRADE LF	650.5000 CONSTRUCTION STAKING BASE LF	650.9000 CONSTRUCTION STAKING CURB RAMPS EACH
0010	582+03 PS	-	613+67 PS	3,086	3,086	4
0010	623+16 PN	-	624+93 PN	177	177	---
0010	625+14 PN	-	641+74 PN	1,660	1,660	---
0010	641+85 PN	-	650+72 PN	887	887	---
0010	649+21 PN	-	650+67 PN	146	146	---
				5,956	5,956	4

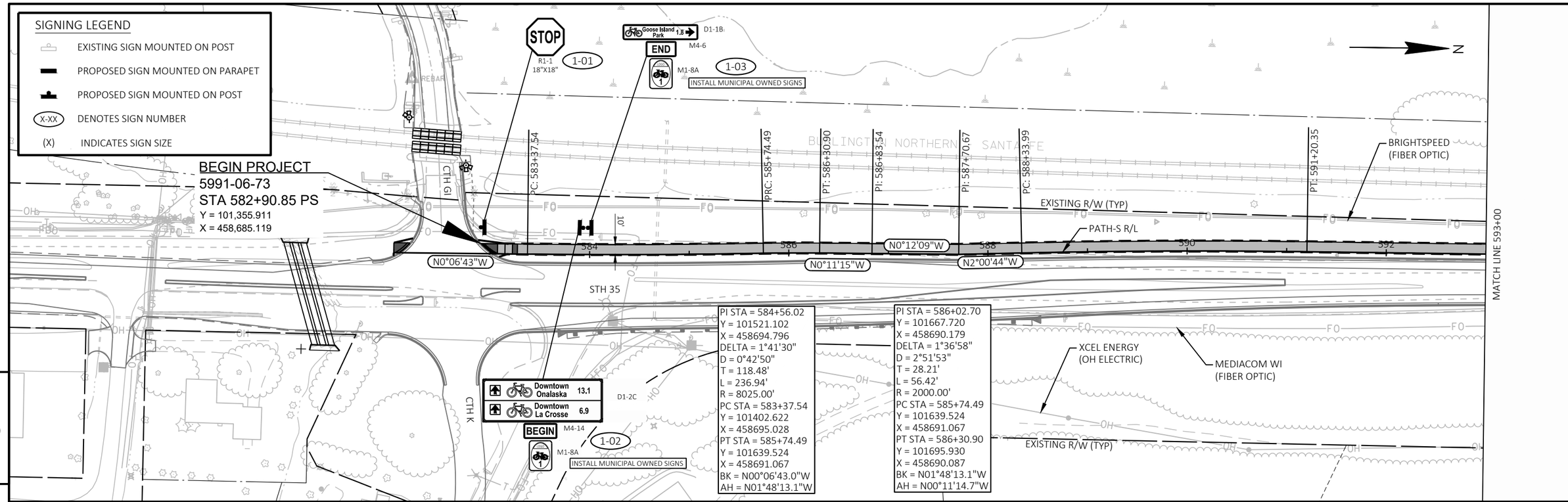

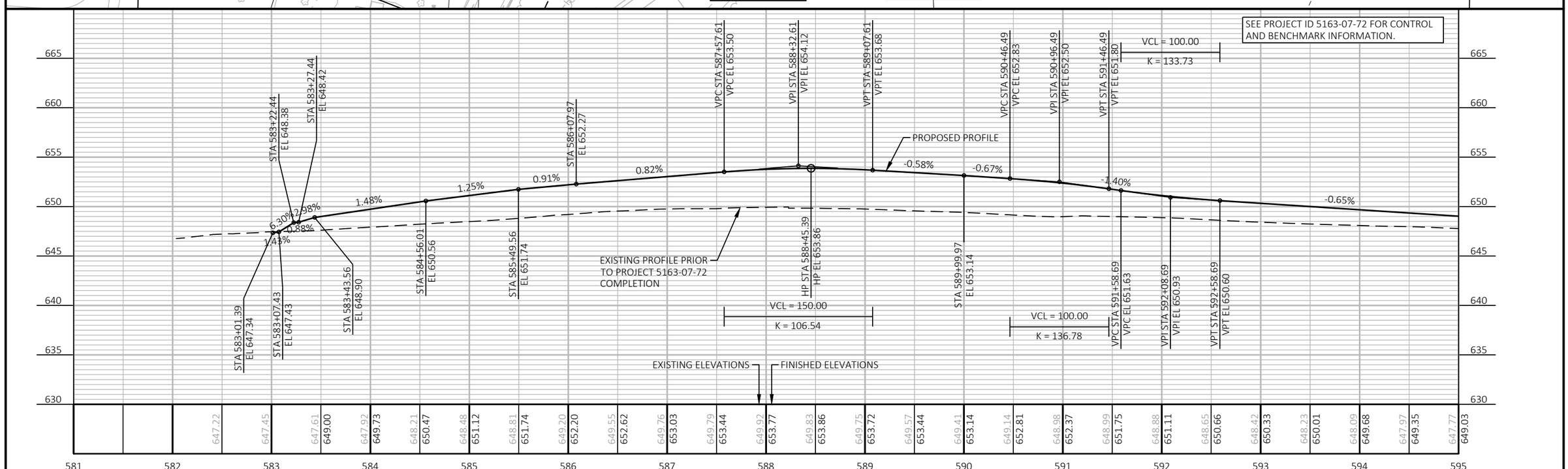

PROJECT NO: 5991-06-73	HWY: GOOSE ISLAND TRAIL	COUNTY: LA CROSSE	PLAN AND PROFILE: GOOSE ISLAND TRAIL	SHEET 13	E

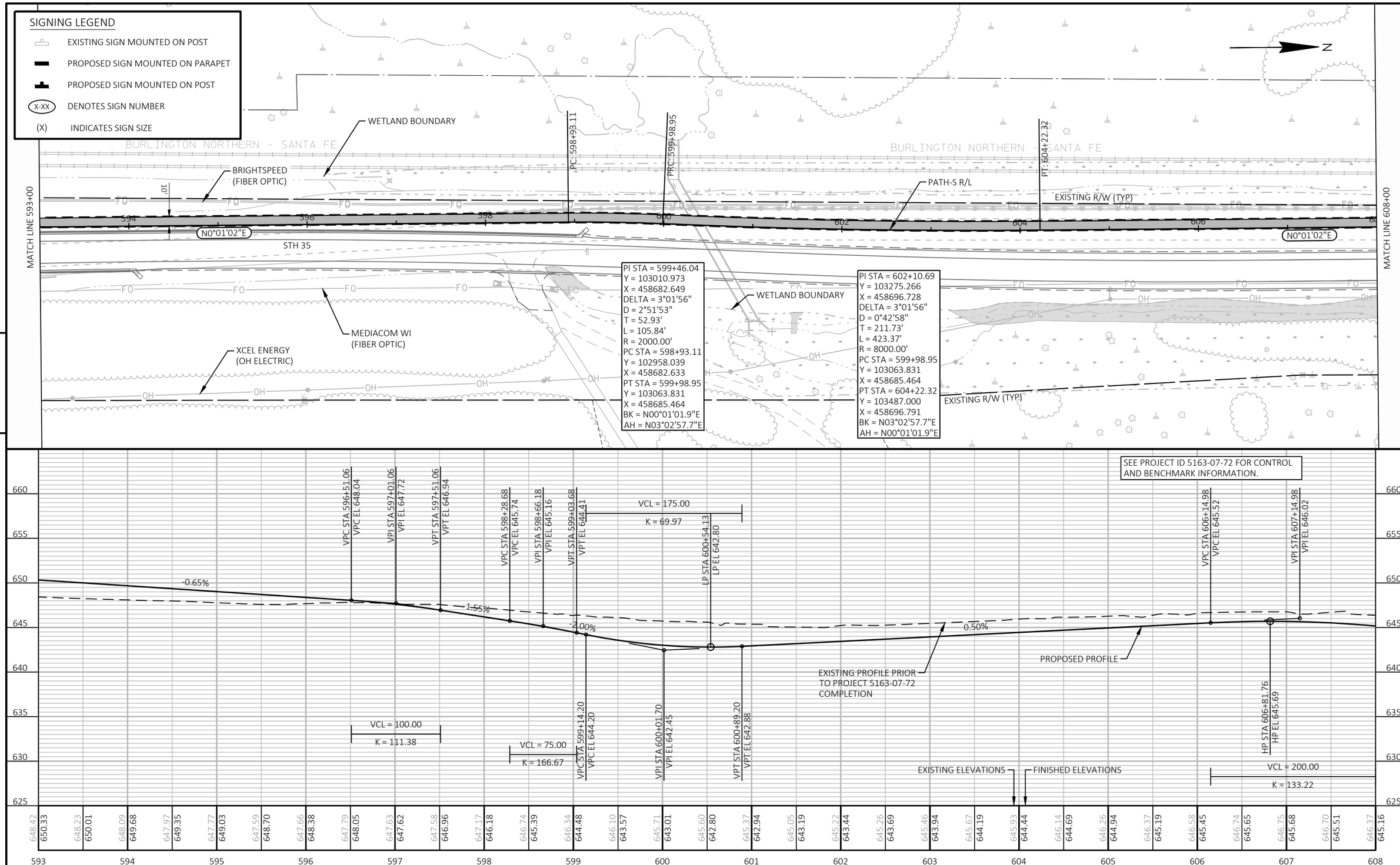

PROJECT NO: 5991-06-73	HWY: GOOSE ISLAND TRAIL	COUNTY: LA CROSSE	PLAN AND PROFILE: GOOSE ISLAND TRAIL	SHEET 14	E

FILE NAME : O:\PDS\C3D\59910673\SHEETS\050101-PP.DWG
LAYOUT NAME - 02
PLOT DATE : 5/1/2025 10:25 AM
PLOT BY : CORY IHDE
PLOT NAME :
PLOT SCALE : 1 IN:100 FT
WISDOT/CADDS SHEET 44

SIGNING LEGEND

- EXISTING SIGN MOUNTED ON POST
- PROPOSED SIGN MOUNTED ON PARAPET
- PROPOSED SIGN MOUNTED ON POST
- X-XX DENOTES SIGN NUMBER
- (X) INDICATES SIGN SIZE

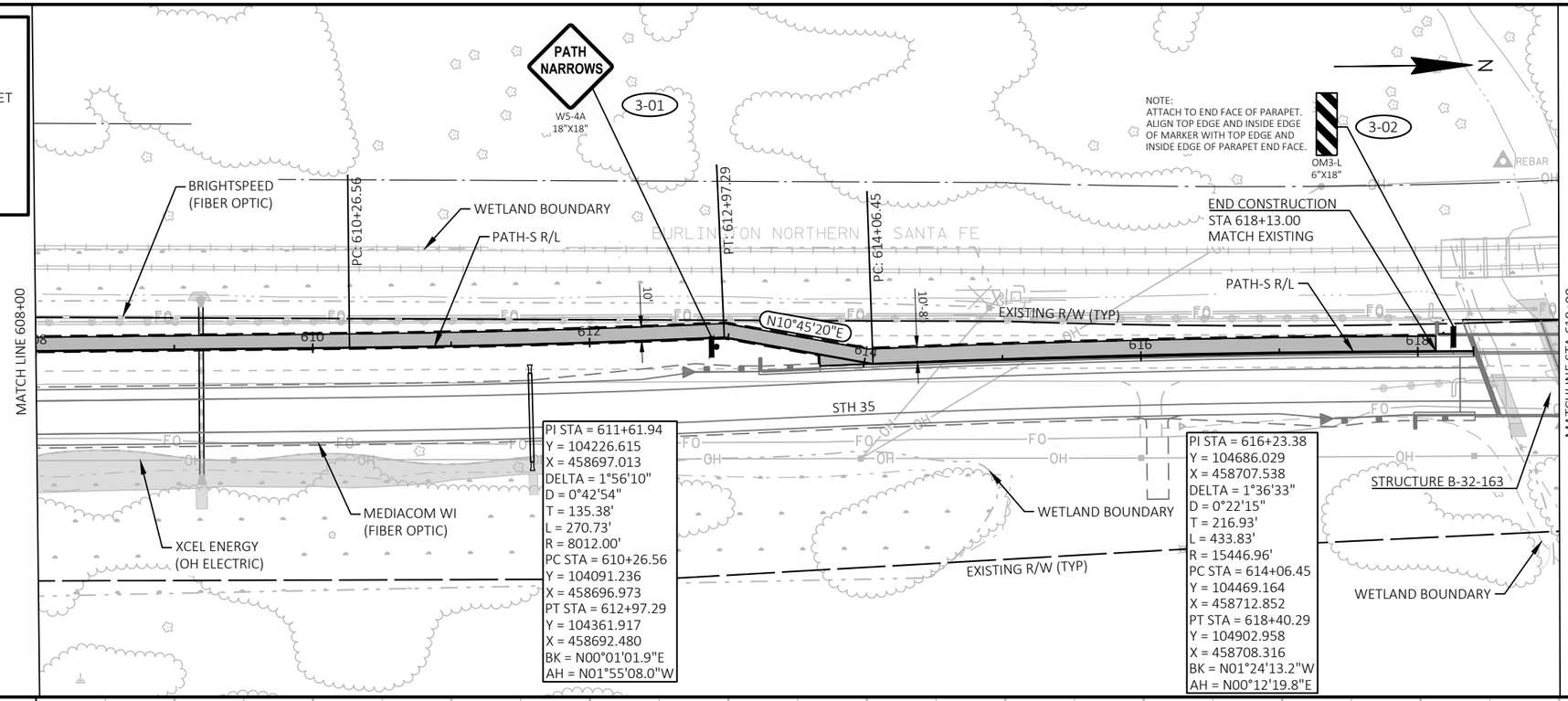

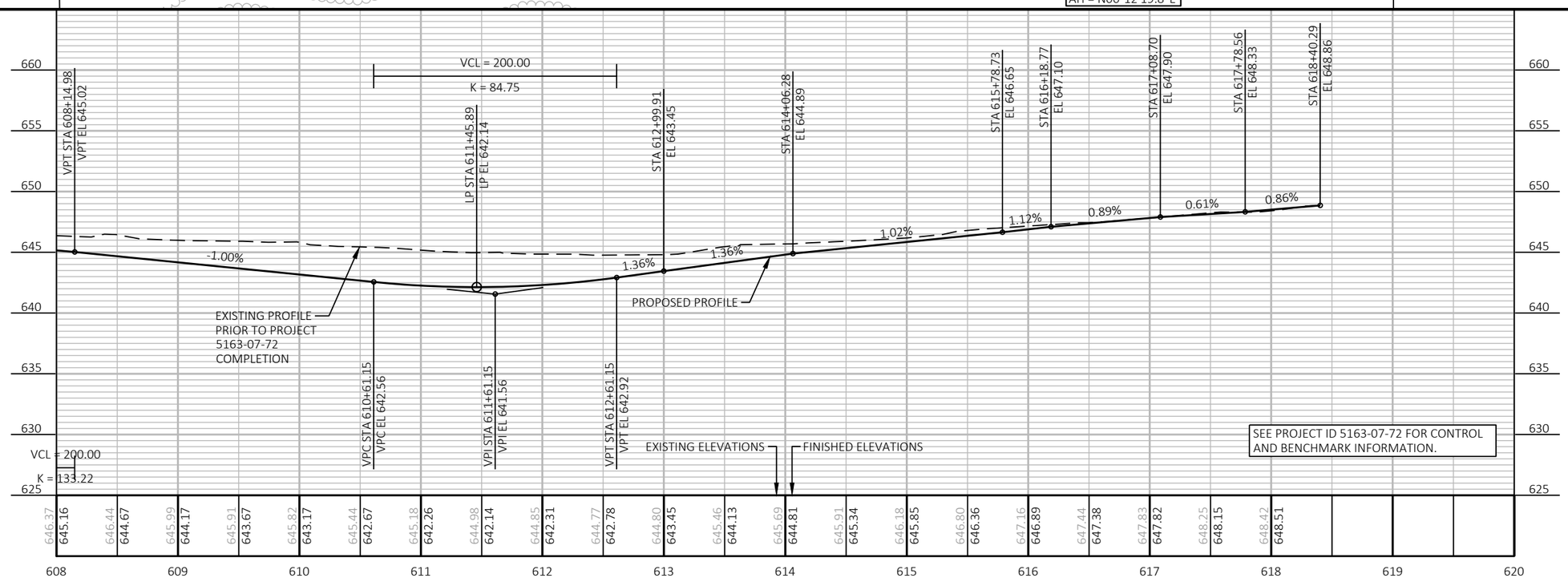

PROJECT NO: 5991-06-73	HWY: GOOSE ISLAND TRAIL	COUNTY: LA CROSSE	PLAN AND PROFILE: GOOSE ISLAND TRAIL	SHEET 15	E

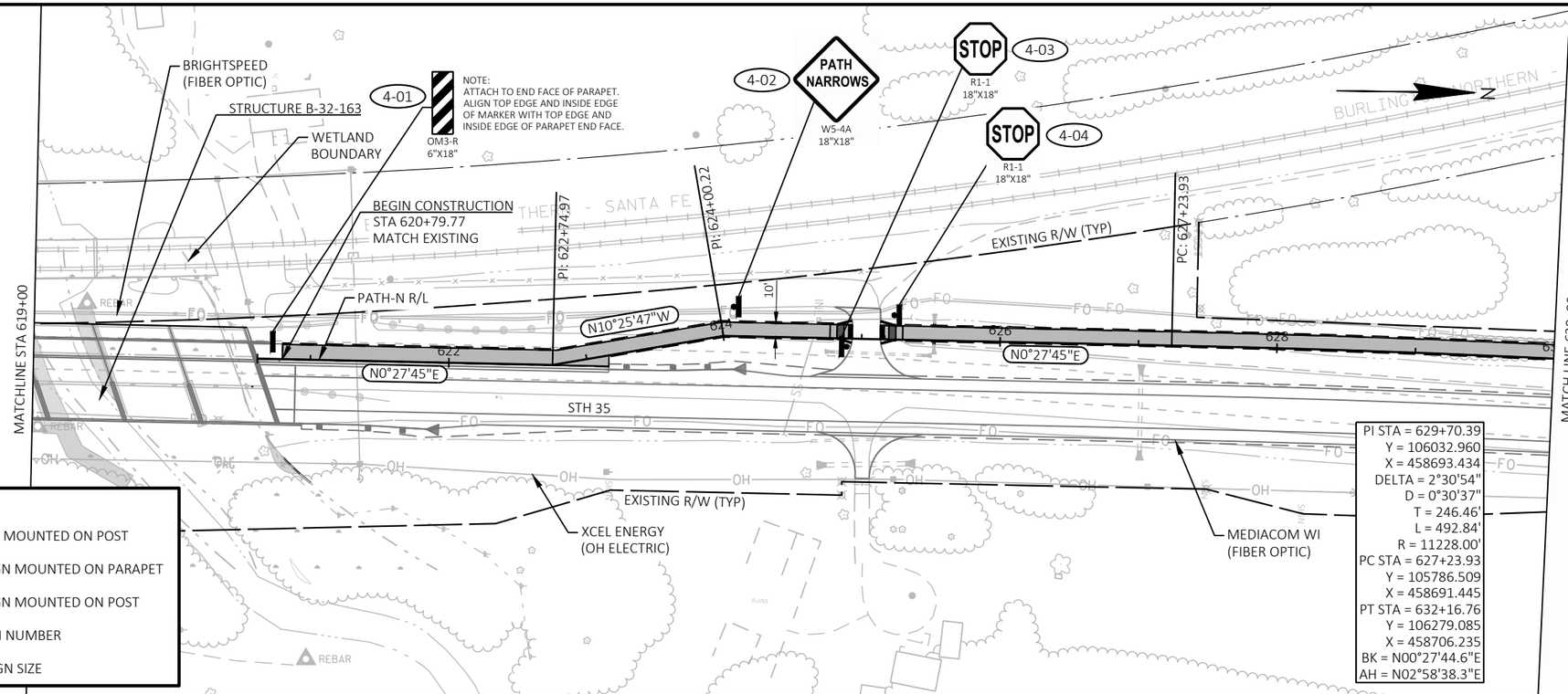

SIGNING LEGEND

- EXISTING SIGN MOUNTED ON POST
- PROPOSED SIGN MOUNTED ON PARAPET
- PROPOSED SIGN MOUNTED ON POST
- X-XX DENOTES SIGN NUMBER
- (X) INDICATES SIGN SIZE

5

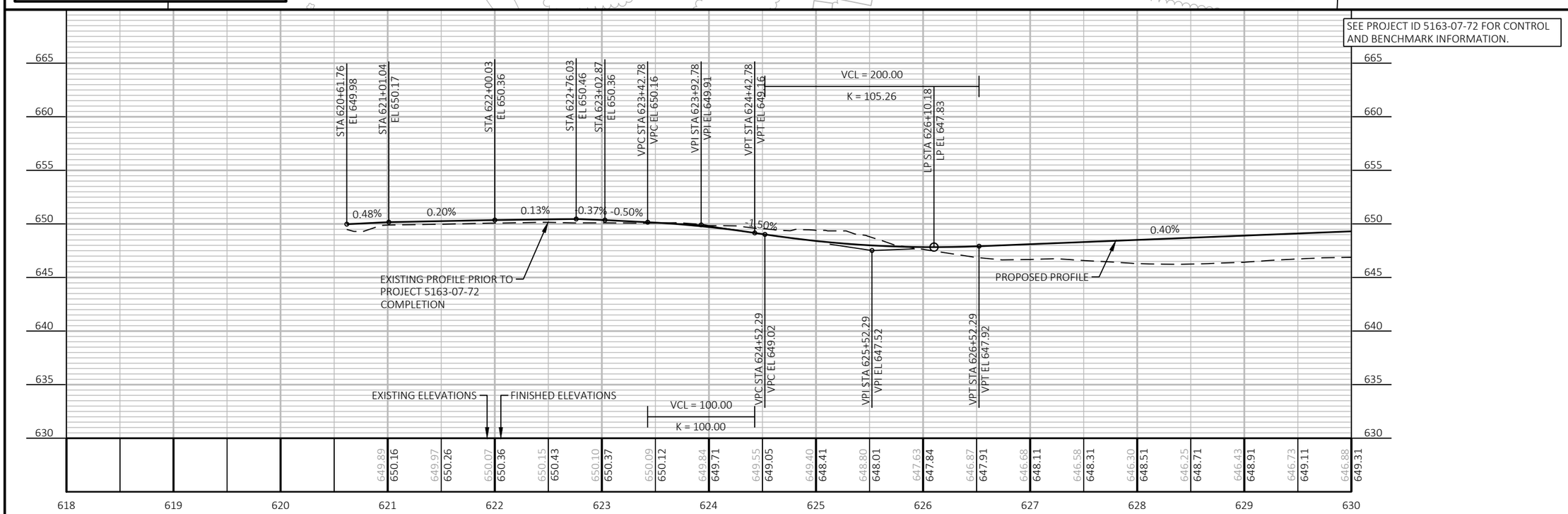

5

PROJECT NO: 5991-06-73	HWY: GOOSE ISLAND TRAIL	COUNTY: LA CROSSE	PLAN AND PROFILE: GOOSE ISLAND TRAIL	SHEET 16	E

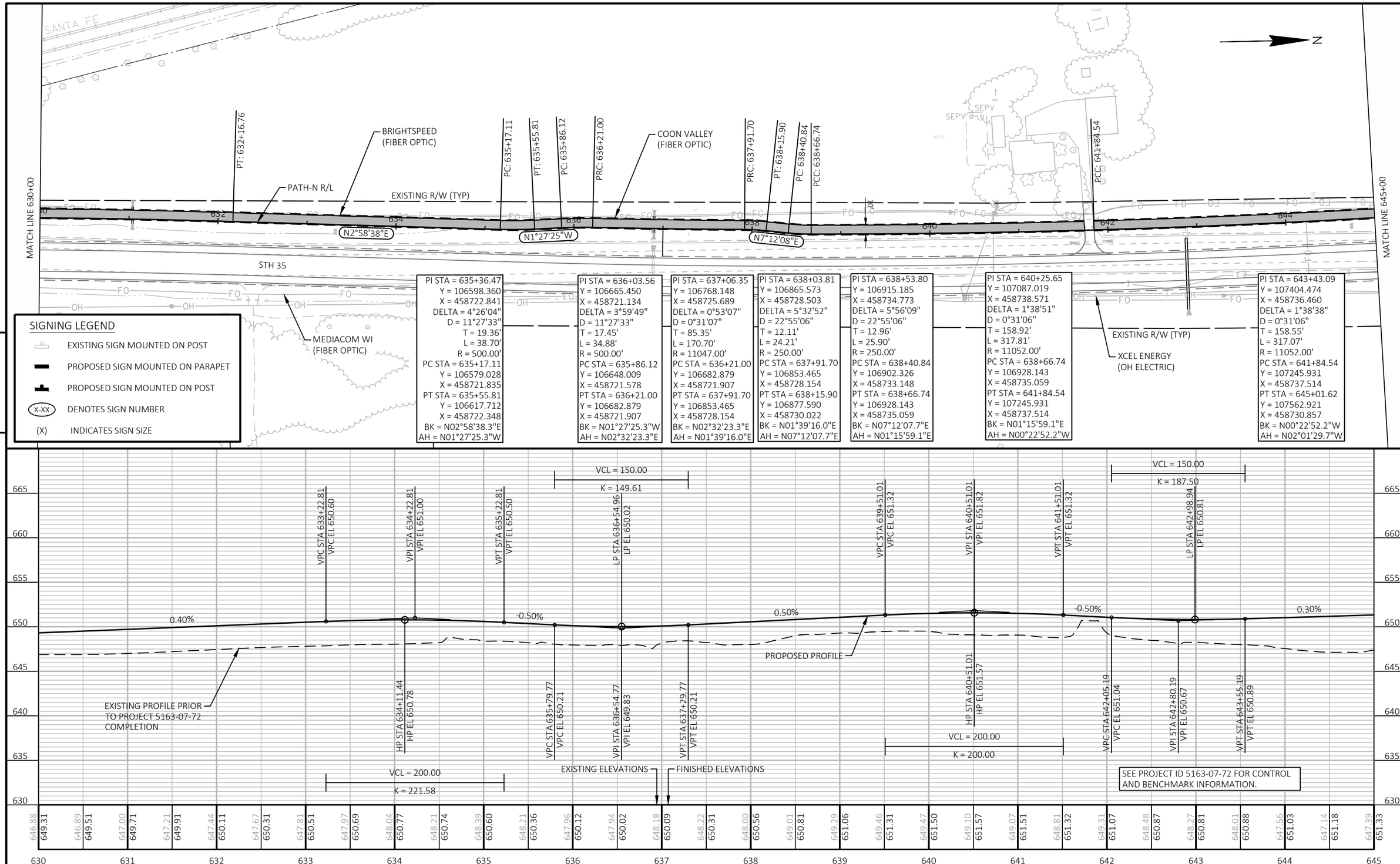

PROJECT NO: 5991-06-73	HWY: GOOSE ISLAND TRAIL	COUNTY: LA CROSSE	PLAN AND PROFILE: GOOSE ISLAND TRAIL	SHEET 17	E

FILE NAME : O:\PDS\C3D\59910673\SHEETS\050101-PP.DWG
LAYOUT NAME - 05
PLOT DATE : 5/1/2025 10:25 AM
PLOT BY : CORY IHDE
PLOT NAME :
PLOT SCALE : 1 IN:100 FT
WISDOT/CADDS SHEET 44

SIGNING LEGEND

- EXISTING SIGN MOUNTED ON POST
- PROPOSED SIGN MOUNTED ON PARAPET
- PROPOSED SIGN MOUNTED ON POST
- X-XX DENOTES SIGN NUMBER
- (X) INDICATES SIGN SIZE

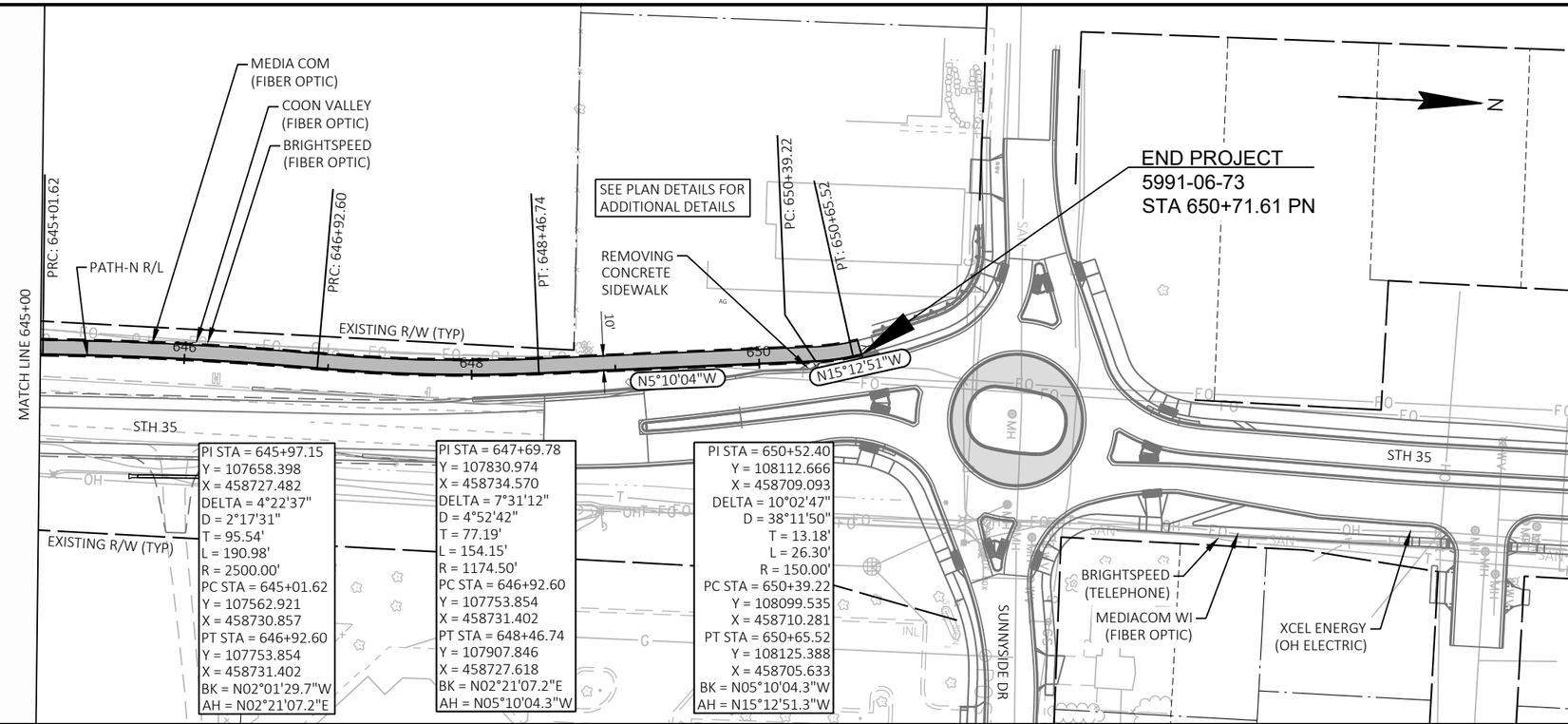

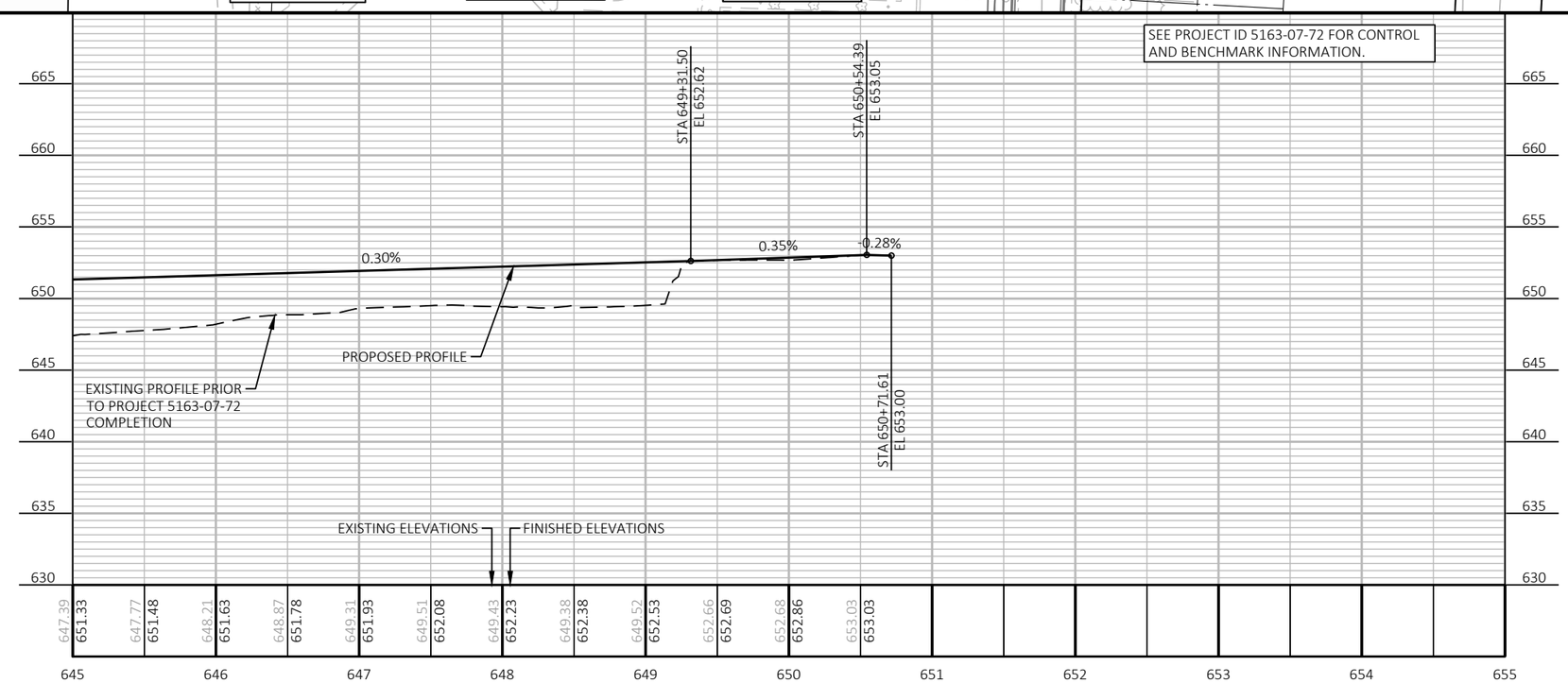

PROJECT NO: 5991-06-73	HWY: GOOSE ISLAND TRAIL	COUNTY: LA CROSSE	PLAN AND PROFILE: GOOSE ISLAND TRAIL	SHEET 18	E

Standard Detail Drawing List

08D05-21B	CURB RAMPS TYPES 2 AND 3
08D05-21C	CURB RAMPS TYPES 4A AND 4A1
08D05-21D	CURB RAMPS TYPE 4B AND 4B1
08D05-21E	CURB RAMPS TYPES 5, 6, 7A, 7B & 8
08D05-21F	CURB RAMPS RADIAL DETECTABLE WARNING FIELD APPLICATIONS
08D05-21G	CURB RAMPS RECTANGULAR AND RADIAL DETECTABLE WARNING PLATES
15D30-10A	TRAFFIC CONTROL, PEDESTRIAN ACCOMMODATION

6

6

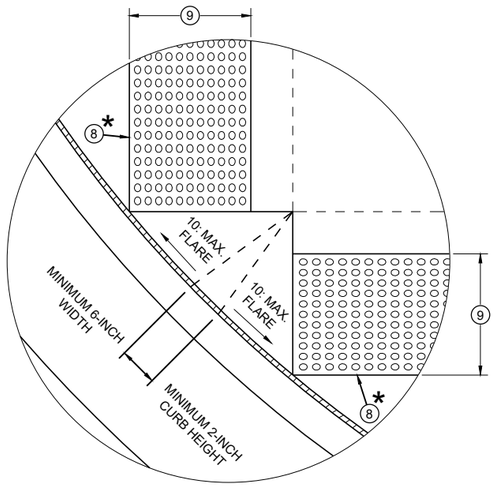

DETAIL A

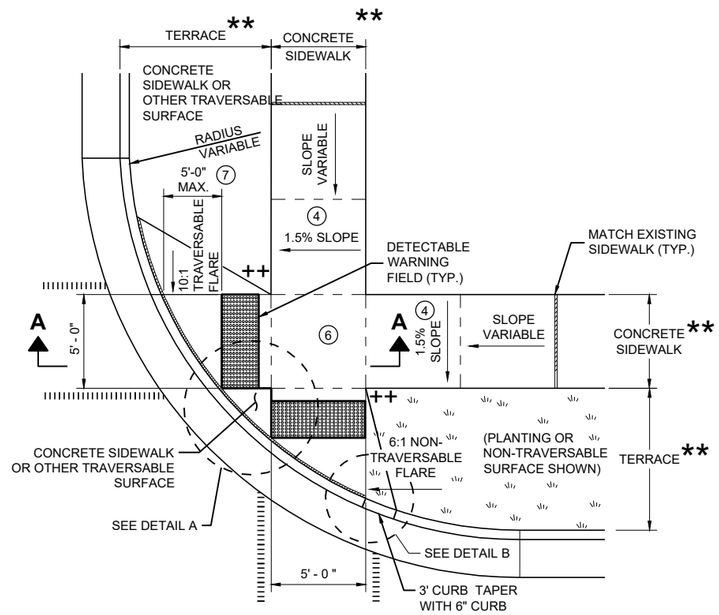

PLAN VIEW
CURB RAMP TYPE 2
(CENTER OF CORNER RADIUS)

GENERAL NOTES

AVOID PLACING DRAINAGE STRUCTURES, JUNCTION BOXES OR OTHER OBSTRUCTIONS IN FRONT OF RAMP ACCESS AREAS.

DETAILS OF CONSTRUCTION, MATERIALS AND WORKMANSHIP NOT SHOWN ON THIS DRAWING SHALL CONFORM TO THE PERTINENT REQUIREMENTS OF THE STANDARD SPECIFICATIONS AND THE APPLICABLE SPECIAL PROVISIONS.

DETECTABLE WARNING FIELDS THAT ARE INSTALLED AS A GROUP OR SIDE BY SIDE SHALL BE FROM THE SAME MANUFACTURER.

(2) GRADE CHANGE BETWEEN GUTTER FLAG SLOPE AND THE CURB RAMP SLOPE SHALL NOT EXCEED 11%. MAXIMUM GUTTER FLAG SLOPE IS 4%. PROVIDE LONGITUDINAL DRAINAGE AROUND CURB AND AWAY FROM CURB RAMP. NO VERTICAL LIPS OR DISCONTINUITIES GREATER THAN ¼ - INCH ARE ALLOWED. SLOPE OF CURB HEAD OPENING SHALL MATCH THE RAMP SLOPE, MINIMALLY 1.5% AND NOT TO EXCEED 7%. WHEN ADJACENT TO 1.5% LANDING, CONSTRUCT CURB HEAD OPENING AT 1.5% IN THE DIRECTION OF PEDESTRIAN TRAVEL.

(3) AN 8.33% CURB RAMP SLOPE IS ALLOWABLE WITH FLATTENED GUTTER FLAG SLOPE (2.67% OR LESS) AND NOT TO EXCEED 11% GRADE CHANGE.

(4) ±0.5% CONSTRUCTION TOLERANCE IN SIDEWALK CROSS SLOPE. THE SIDEWALK CROSS SLOPE SHALL NOT EXCEED 2% WITHOUT PRIOR APPROVAL FROM THE ENGINEER.

(6) PROVIDE A LEVEL LANDING (MAXIMUM 2% SLOPE) IN ANY DIRECTION OF PEDESTRIAN TRAVEL. STANDARD LEVEL LANDING SIZE IS 5 FEET X 5 FEET.

(7) WHEN GRADE BREAK DISTANCE EXCEEDS 5 FEET, USE RADIAL DETECTABLE WARNING FIELD PER SDD 8D5-f.

(8) PROVIDE GRADE BREAK PERPENDICULAR TO DIRECTION OF WHEELCHAIR TRAVEL.

(9) WHEN DISTANCE IS LESS THAN 6' - 0", IT MAY BE DIFFICULT TO ACHIEVE A 7% SLOPE OR FLATTER ALONG THE RAMP. REDUCE CURB HEIGHT IN TRIANGLE AREA TO ACHIEVE 7% SLOPE OR FLATTER ON RAMP. CONSTRUCT 2-INCH MINIMUM CURB HEIGHT BETWEEN 10:1 FLARES.

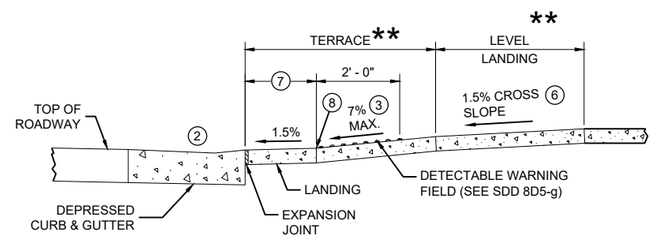

SECTION A - A FOR TYPE 2

* MAXIMUM 2.0% SLOPE IN ALL DIRECTIONS IN FRONT OF GRADE BREAK

** WIDTH SHOWN ELSEWHERE IN THE PLANS

++ CONSTRUCT 6" WEDGE TO AVOID CONCRETE BREAKAGE

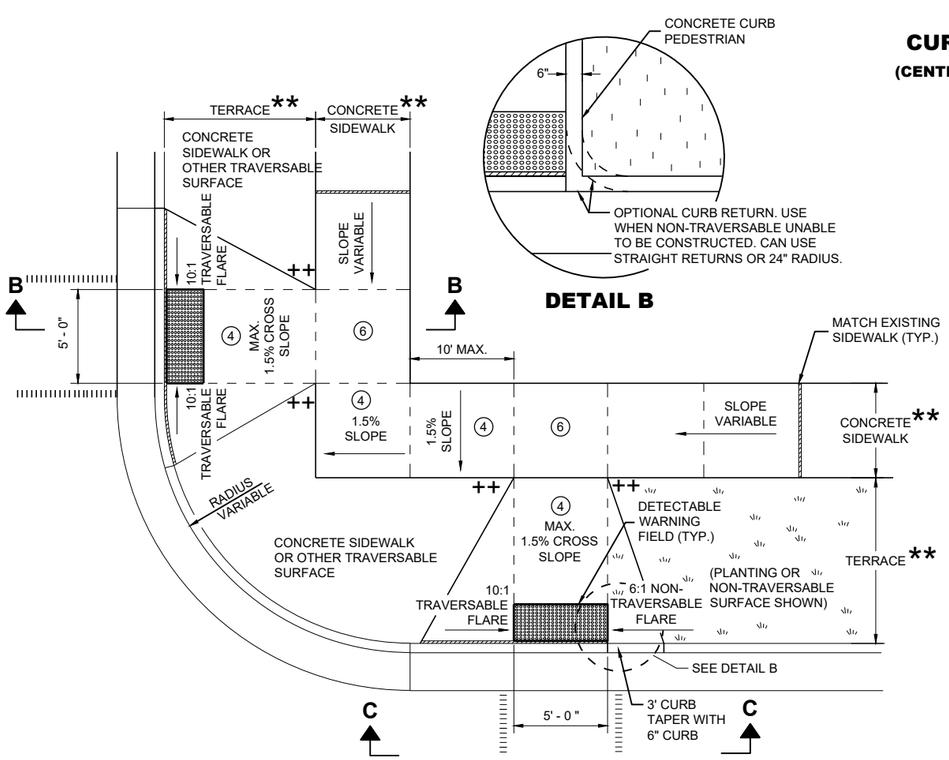

DETAIL B

PLAN VIEW
CURB RAMP TYPE 3
(OUTSIDE OF CROSSWALK AREA)

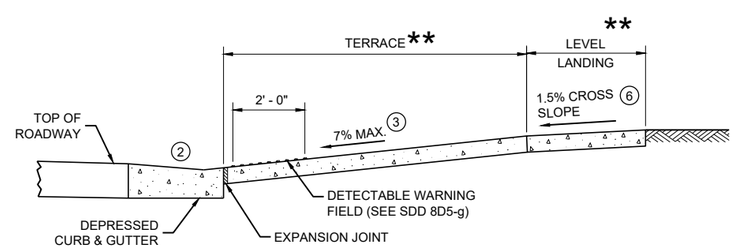

SECTION B - B FOR TYPE 3

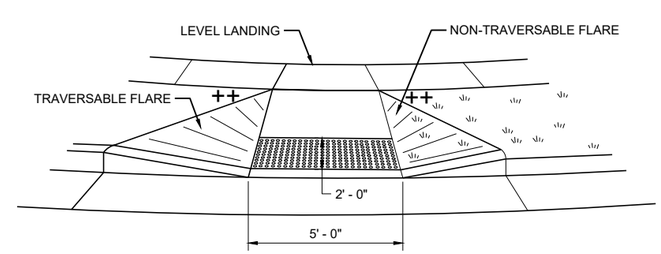

VIEW C - C FOR TYPE 3

LEGEND

- ½" EXPANSION JOINT SIDEWALK
- CONTRACTION JOINT SIDEWALK
- PAVEMENT MARKING CROSSWALK (WHITE)

CURB RAMPS TYPE 2 AND 3

STATE OF WISCONSIN
DEPARTMENT OF TRANSPORTATION

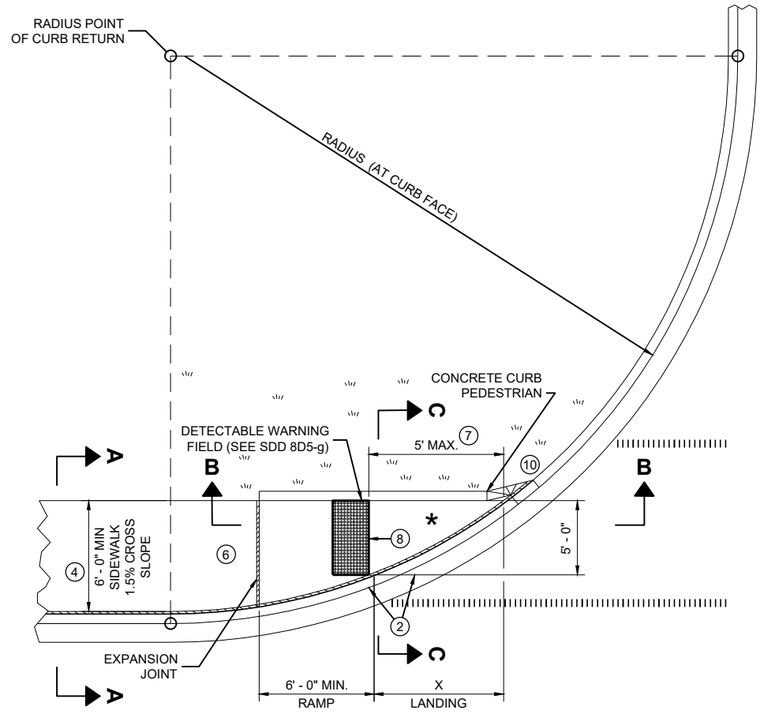

PLAN VIEW

CURB RAMP TYPE 4A

RADIUS (AT CURB FACE)	X
10 FEET	4' - 7"

INTERMEDIATE RADII CAN BE INTERPOLATED

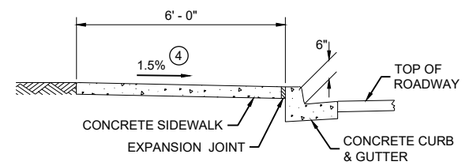

SECTION A - A FOR TYPE 4A

GENERAL NOTES

AVOID PLACING DRAINAGE STRUCTURES, JUNCTION BOXES OR OTHER OBSTRUCTIONS IN FRONT OF RAMP ACCESS AREAS.

DETAILS OF CONSTRUCTION, MATERIALS AND WORKMANSHIP NOT SHOWN ON THIS DRAWING SHALL CONFORM TO THE PERTINENT REQUIREMENTS OF THE STANDARD SPECIFICATIONS AND THE APPLICABLE SPECIAL PROVISIONS.

DETECTABLE WARNING FIELDS THAT ARE INSTALLED AS A GROUP OR SIDE BY SIDE, SHALL BE FROM THE SAME MANUFACTURER.

(2) GRADE CHANGE BETWEEN GUTTER FLAG SLOPE AND THE CURB RAMP SLOPE SHALL NOT EXCEED 11%. MAXIMUM GUTTER FLAG SLOPE IS 4%. PROVIDE LONGITUDINAL DRAINAGE AROUND CURB AND AWAY FROM CURB RAMP. NO VERTICAL LIPS OR DISCONTINUITIES GREATER THAN ¼ - INCH ARE ALLOWED. SLOPE OF CURB HEAD OPENING SHALL MATCH THE RAMP SLOPE, MINIMALLY 1.5% AND NOT TO EXCEED 7%. WHEN ADJACENT TO 1.5% LANDING, CONSTRUCT CURB HEAD OPENING AT 1.5% IN THE DIRECTION OF PEDESTRIAN TRAVEL.

(3) AN 8.33% CURB RAMP SLOPE IS ALLOWABLE WITH FLATTENED GUTTER FLAG SLOPE AND NOT TO EXCEED 11% GRADE CHANGE.

(4) ±0.5% CONSTRUCTION TOLERANCE IN SIDEWALK CROSS SLOPE. THE SIDEWALK CROSS SLOPE SHALL NOT EXCEED 2% WITHOUT PRIOR APPROVAL FROM THE ENGINEER.

(6) PROVIDE A LEVEL LANDING (MAXIMUM 2% SLOPE) IN ANY DIRECTION OF PEDESTRIAN TRAVEL. STANDARD LEVEL LANDING SIZE IS 5 FEET BY 5 FEET.

(7) WHEN THIS GRADE BREAK DISTANCE EXCEEDS 5 FEET, USE RADIAL DETECTABLE WARNING FIELD PER SDD 8D5-f.

(8) PROVIDE GRADE BREAK PERPENDICULAR TO DIRECTION OF WHEELCHAIR TRAVEL.

(10) INSTALL TRANSITION NOSE (INCIDENTAL TO OTHER PAY ITEMS). DO NOT MARK TRANSITION NOSE.

LEGEND

- ½" EXPANSION JOINT SIDEWALK
- CONTRACTION JOINT SIDEWALK
- PAVEMENT MARKING CROSSWALK (WHITE)

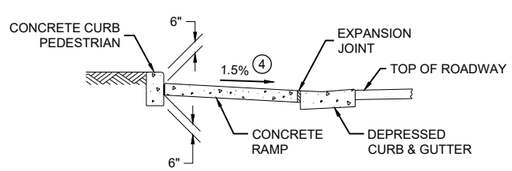

SECTION C - C FOR TYPE 4A

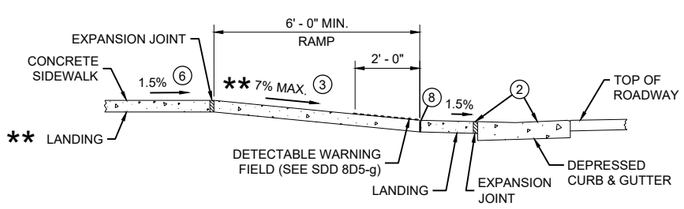

** IF RAMP SLOPE IS LESS THAN 5.0%, THEN NO ADJACENT UPHILL LANDING IS REQUIRED

SECTION B - B FOR TYPE 4A AND TYPE 4A1

* MAXIMUM 2.0% SLOPE IN ALL DIRECTIONS IF FRONT OF GRADE BREAK

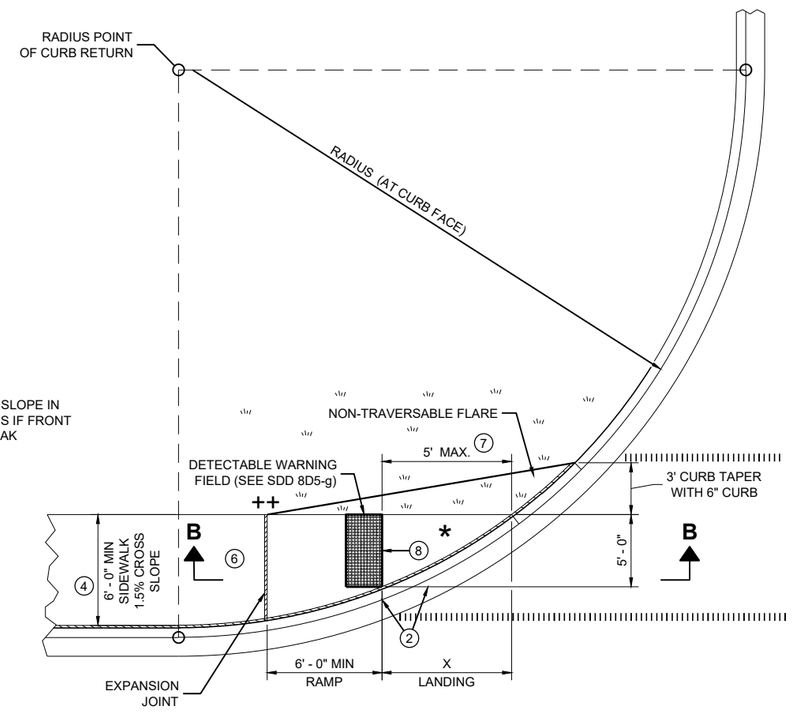

PLAN VIEW

CURB RAMP TYPE 4A1

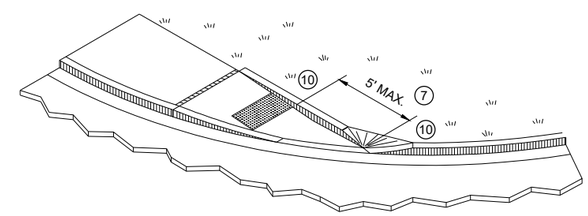

ISOMETRIC VIEW FOR TYPE 4A

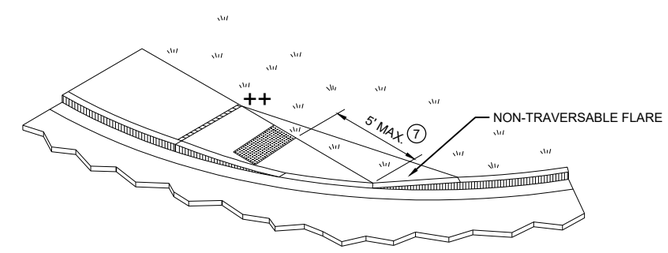

ISOMETRIC VIEW FOR TYPE 4A1

++ CONSTRUCT 6" WEDGE TO AVOID CONCRETE BREAKAGE

CURB RAMPS TYPE 4A AND 4A1

STATE OF WISCONSIN
DEPARTMENT OF TRANSPORTATION

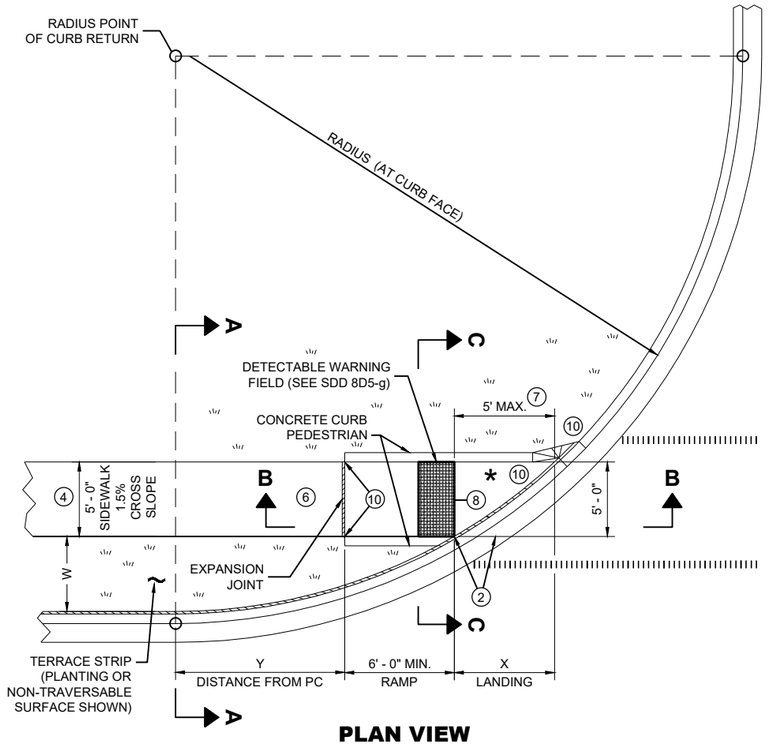

PLAN VIEW
CURB RAMP TYPE 4B

RADIUS (AT CURB FACE)	W = 3' - 0"		W = 4' - 0"		W = 5' - 0"		W = 6' - 0"		W = 7' - 0"		W = 8' - 0"		W = 9' - 0"		W = 10' - 0"	
	X	Y	X	Y	X	Y	X	Y	X	Y	X	Y	X	Y	X	Y
10 FEET	2' - 10 ¼"	0' - 5"	2' - 1"	1' - 4 ½"	1' - 5"	2' - 1"	0' - 10"	2' - 7 ½"	0' - 3 ¼"	3' - 0 ¼"						
15 FEET	4' - 6 ¾"	2' - 1 ¾"	3' - 9"	3' - 5 ¾"	3' - 1 ¼"	4' - 6"	2' - 6 ¾"	5' - 4 ½"	2' - 1"	6' - 1"	1' - 8"	6' - 8 ½"	1' - 3 ¼"	7' - 2 ½"	0' - 10 ¾"	7' - 7 ¼"
20 FEET			4' - 11 ½"	5' - 1 ¾"	4' - 3 ¼"	6' - 5 ½"	3' - 8 ¾"	7' - 7"	3' - 3"	8' - 6 ½"	2' - 10"	9' - 4 ½"	2' - 5 ½"	10' - 1 ¼"	2' - 1 ¼"	10' - 9"
30 FEET									4' - 10 ¾"	12' - 5 ¾"	4' - 5 ½"	13' - 7 ¾"	4' - 0 ¾"	14' - 8 ½"	3' - 8 ½"	15' - 8 ¼"
40 FEET															4' - 10 ¾"	19' - 8 ¼"

INTERMEDIATE RADII CAN BE INTERPOLATED
DIMENSION "Y" IS CALCULATED BASED ON 6'-0" RAMP LENGTH
DIMENSION "X" IS CALCULATED BASED ON 5'-0" SIDEWALK WIDTH

LEGEND

- ½" EXPANSION JOINT SIDEWALK
- CONTRACTION JOINT SIDEWALK
- PAVEMENT MARKING CROSSWALK (WHITE)

GENERAL NOTES

AVOID PLACING DRAINAGE STRUCTURES, JUNCTION BOXES OR OTHER OBSTRUCTIONS IN FRONT OF RAMP ACCESS AREAS.

DETAILS OF CONSTRUCTION, MATERIALS AND WORKMANSHIP NOT SHOWN ON THIS DRAWING SHALL CONFORM TO THE PERTINENT REQUIREMENTS OF THE STANDARD SPECIFICATIONS AND THE APPLICABLE SPECIAL PROVISIONS.

DETECTABLE WARNING FIELDS THAT ARE INSTALLED AS A GROUP OR SIDE BY SIDE, SHALL BE FROM THE SAME MANUFACTURER.

2. GRADE CHANGE BETWEEN GUTTER FLAG SLOPE AND THE CURB RAMP SLOPE SHALL NOT EXCEED 11%. MAXIMUM GUTTER FLAG SLOPE IS 4%. PROVIDE LONGITUDINAL DRAINAGE AROUND CURB AND AWAY FROM CURB RAMP. NO VERTICAL LIPS OR DISCONTINUITIES GREATER THAN ¼ - INCH ARE ALLOWED. SLOPE OF CURB HEAD OPENING SHALL MATCH THE RAMP SLOPE, MINIMALLY 1.5% AND NOT TO EXCEED 7%. WHEN ADJACENT TO 1.5% LANDING, CONSTRUCT CURB HEAD OPENING AT 1.5% IN THE DIRECTION OF PEDESTRIAN TRAVEL.

3. AN 8.33% CURB RAMP SLOPE IS ALLOWABLE WITH FLATTENED GUTTER FLAG SLOPE AND NOT TO EXCEED 11% GRADE CHANGE.

4. ±0.5% CONSTRUCTION TOLERANCE IN SIDEWALK CROSS SLOPE. THE SIDEWALK CROSS SLOPE SHALL NOT EXCEED 2% WITHOUT PRIOR APPROVAL FROM THE ENGINEER.

6. PROVIDE A LEVEL LANDING (MAXIMUM 2% SLOPE) IN ANY DIRECTION OF PEDESTRIAN TRAVEL. STANDARD LEVEL LANDING SIZE IS 5 FEET BY 5 FEET.

7. WHEN THIS GRADE BREAK DISTANCE EXCEEDS 5 FEET, USE RADIAL DETECTABLE WARNING FIELD PER SDD 8D5-f.

8. PROVIDE GRADE BREAK PERPENDICULAR TO DIRECTION OF WHEELCHAIR TRAVEL.

10. INSTALL TRANSITION NOSE (INCIDENTAL TO OTHER PAY ITEMS). DO NOT MARK TRANSITION NOSE.

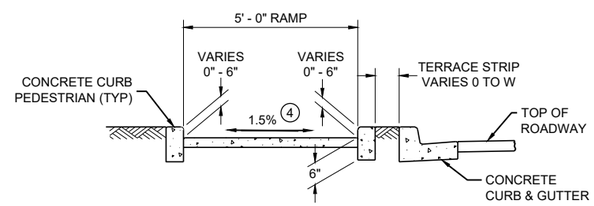

SECTION C - C FOR TYPE 4B

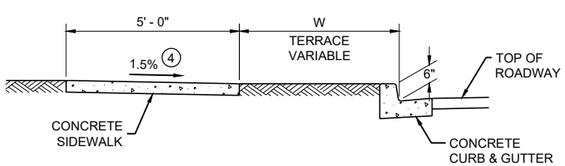

SECTION A - A FOR TYPE 4B

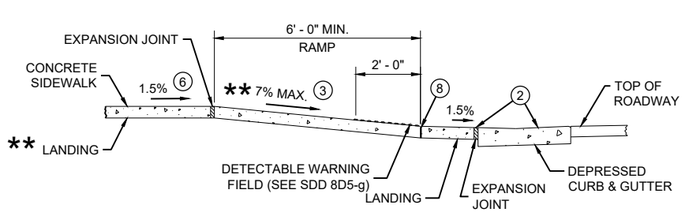

** IF RAMP SLOPE IS LESS THAN 5.0%, THEN NO ADJACENT UPHILL LANDING IS REQUIRED

SECTION B - B FOR TYPE 4B AND TYPE 4B1

* MAXIMUM 2.0% SLOPE IN ALL DIRECTIONS IF FRONT OF GRADE BREAK

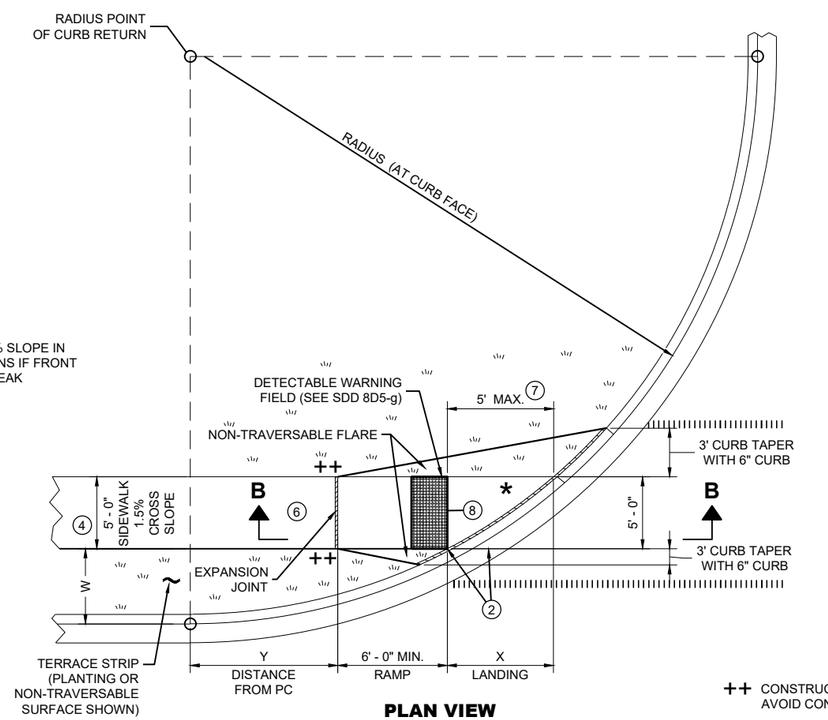

PLAN VIEW
CURB RAMP TYPE 4B1

++ CONSTRUCT 6" WEDGE TO AVOID CONCRETE BREAKAGE

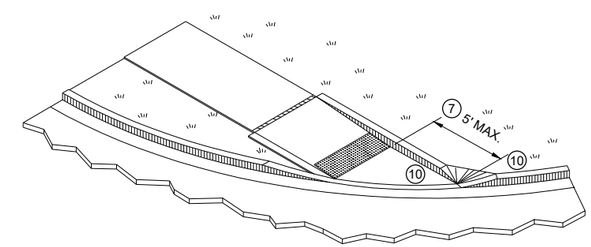

ISOMETRIC VIEW FOR TYPE 4B

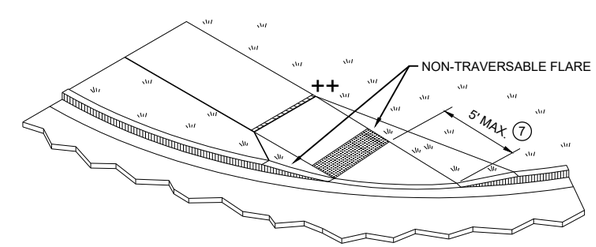

ISOMETRIC VIEW FOR TYPE 4B1

CURB RAMPS TYPE 4B AND 4B1

STATE OF WISCONSIN
DEPARTMENT OF TRANSPORTATION

6

SDD 08D05-21d

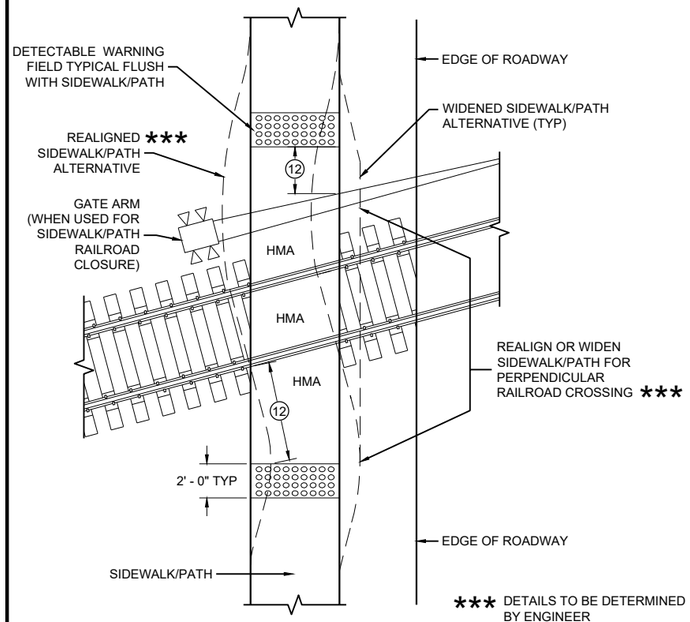

CURB RAMP TYPE 8

DETECTABLE WARNINGS FOR SIDEWALKS OR SHARED USE PATHS AT RAILROAD CROSSINGS

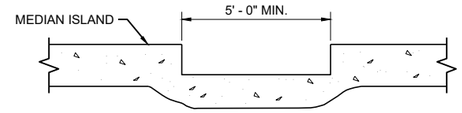

SECTION A - A FOR TYPE 5

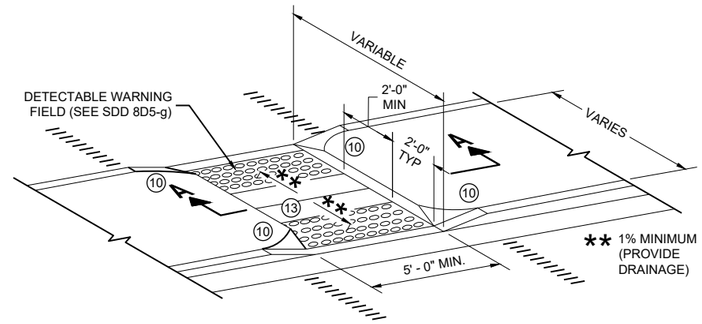

CURB RAMP TYPE 5

MEDIAN ISLAND NON-ELEVATED PEDESTRIAN CROSSING

GENERAL NOTES

AVOID PLACING DRAINAGE STRUCTURES, JUNCTION BOXES OR OTHER OBSTRUCTIONS IN FRONT OF RAMP ACCESS AREAS.

DETAILS OF CONSTRUCTION, MATERIALS AND WORKMANSHIP NOT SHOWN ON THIS DRAWING SHALL CONFORM TO THE PERTINENT REQUIREMENTS OF THE STANDARD SPECIFICATIONS AND THE APPLICABLE SPECIAL PROVISIONS.

SIDEWALK CROSS SLOPE SHALL NOT EXCEED 2%.

DETECTABLE WARNING FIELDS THAT ARE INSTALLED AS A GROUP OR SIDE BY SIDE, SHALL BE FROM THE SAME MANUFACTURER.

(2) GRADE CHANGE BETWEEN GUTTER FLAG SLOPE AND THE CURB RAMP SLOPE SHALL NOT EXCEED 11%. MAXIMUM GUTTER FLAG SLOPE IS 4%. PROVIDE LONGITUDINAL DRAINAGE AROUND CURB AND AWAY FROM CURB RAMP. NO VERTICAL LIPS OR DISCONTINUITIES GREATER THAN ¼ - INCH ARE ALLOWED. SLOPE OF CURB HEAD OPENING SHALL MATCH THE RAMP SLOPE, MINIMALLY 1.5% AND NOT TO EXCEED 7%. WHEN ADJACENT TO 1.5% LANDING, CONSTRUCT CURB HEAD OPENING AT 1.5% IN THE DIRECTION OF PEDESTRIAN TRAVEL.

(3) AN 8.33% CURB RAMP SLOPE IS ALLOWABLE WITH FLATTENED GUTTER FLAG SLOPE AND NOT TO EXCEED 11% GRADE CHANGE.

(4) ±0.5% CONSTRUCTION TOLERANCE IN SIDEWALK CROSS SLOPE. THE SIDEWALK CROSS SLOPE SHALL NOT EXCEED 2% WITHOUT PRIOR APPROVAL FROM THE ENGINEER.

(6) PROVIDE A LEVEL LANDING (MAXIMUM 2% SLOPE) IN ANY DIRECTION OF PEDESTRIAN TRAVEL. STANDARD LEVEL LANDING SIZE IS 5 FEET BY 5 FEET.

(10) INSTALL TRANSITION NOSE (INCIDENTAL TO OTHER PAY ITEMS). DO NOT MARK TRANSITION NOSE.

(11) SLOPE SIDEWALK TOWARD LANDING AS SHOWN WHERE THERE IS NO TERRACE OR WHERE THE TERRACE WIDTH IS LESS THAN 6 FEET WIDE.

(12) THE EDGE OF THE DETECTABLE WARNING FIELD NEAREST TO A RAILROAD CROSSING SHALL BE 1.5 FEET ±0.1' FROM THE FACE OF THE GATE ARM IF THE GATE ARM EXTENDS ACROSS THE SIDEWALK/PATH. WHERE THERE IS NO PEDESTRIAN GATE, THE EDGE OF THE DETECTABLE WARNING FIELD NEAREST TO THE RAILROAD TRACK IS 15 FEET MAXIMUM AND 12 FEET MINIMUM, 15 FEET TYPICAL FROM THE NEAREST RAIL.

(13) DO NOT INSTALL DETECTABLE WARNING FIELDS AT THE EDGES OF STEET-LEVEL PEDESTRIAN REFUGE ISLANDS IF A MINIMUM 2 FOOT CONCRETE SURFACE WITHOUT DETECTABLE WARNINGS (MEASURED IN THE DIRECTION OF PEDESTRIAN TRAVEL) CANNOT BE ACHIEVED.

LEGEND

- ½" EXPANSION JOINT SIDEWALK
- CONTRACTION JOINT FIELD LOCATED
- PAVEMENT MARKING CROSSWALK (WHITE)

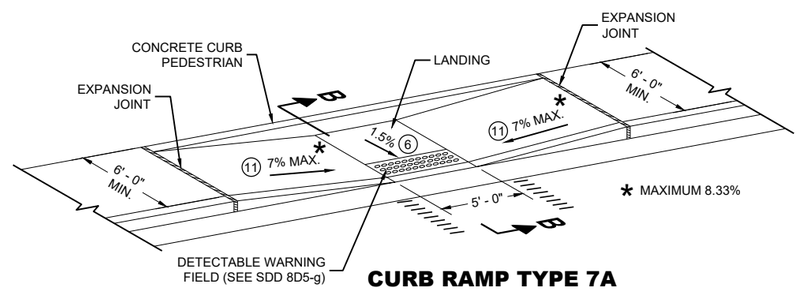

CURB RAMP TYPE 7A

FOR INTERSECTIONS AND MID BLOCK CROSSINGS

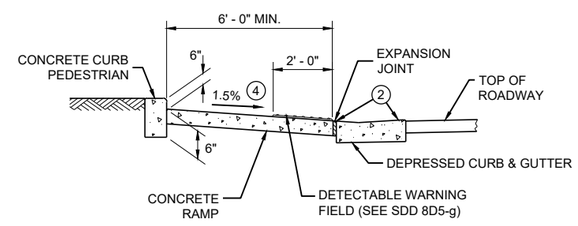

SECTION B - B FOR TYPE 7A

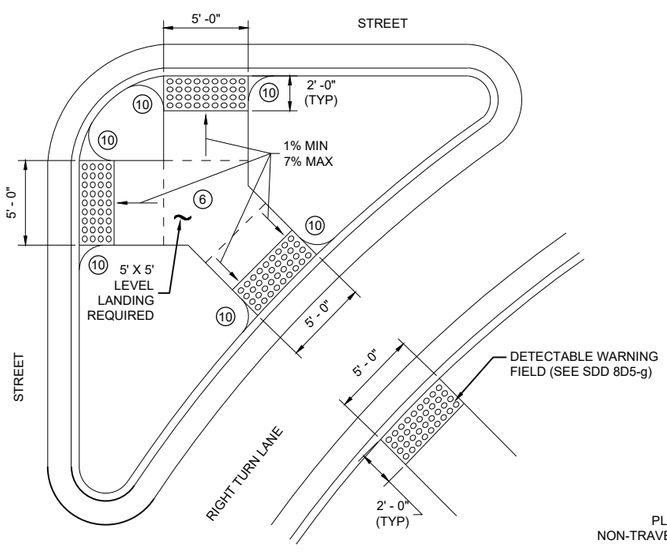

CURB RAMP TYPE 6

DETECTABLE WARNING AT ISLANDS

REFER TO GENERAL NOTES (2) AND (3) FOR ALL ISLAND CURB RAMPS

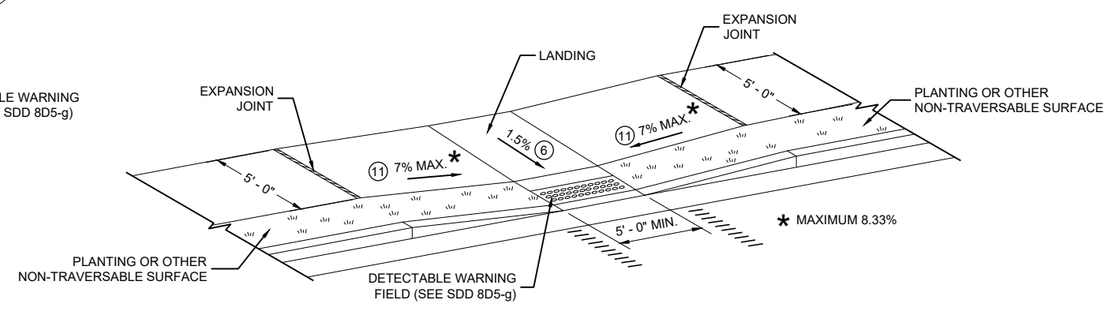

CURB RAMP TYPE 7B

FOR INTERSECTIONS AND MID BLOCK CROSSINGS

CURB RAMPS TYPE 5, 6, 7A, 7B & 8

STATE OF WISCONSIN
DEPARTMENT OF TRANSPORTATION

6

6

SDD 08D05-21e

SDD 08D05-21e

RADIAL DETECTABLE WARNING FIELD PLACEMENT WHEN 5 FOOT GRADE BREAK DISTANCE PER SDD 8D5-c IS EXCEEDED

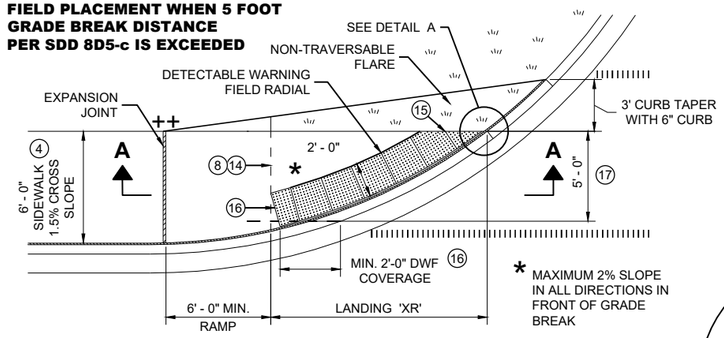

PLAN VIEW

CURB RAMP TYPE 4A1

(GRADE BREAK DISTANCE GREATER THAN 5 FEET)

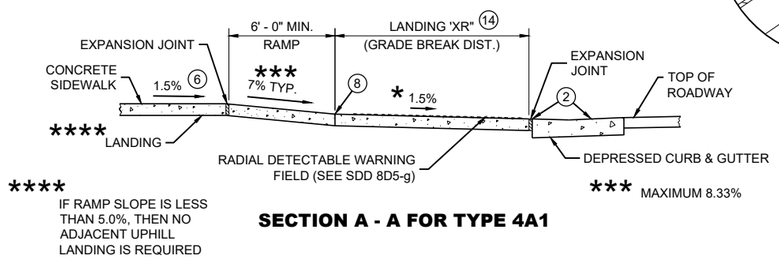

SECTION A - A FOR TYPE 4A1

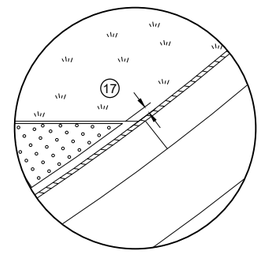

DETAIL A

LEGEND

- ½" EXPANSION JOINT SIDEWALK
- CONTRACTION JOINT SIDEWALK
- PAVEMENT MARKING CROSSWALK (WHITE)

GENERAL NOTES

AVOID PLACING DRAINAGE STRUCTURES, JUNCTION BOXES OR OTHER OBSTRUCTIONS IN FRONT OF RAMP ACCESS AREAS.

DETAILS OF CONSTRUCTION, MATERIALS AND WORKMANSHIP NOT SHOWN ON THIS DRAWING SHALL CONFORM TO THE PERTINENT REQUIREMENTS OF THE STANDARD SPECIFICATIONS AND THE APPLICABLE SPECIAL PROVISIONS.

DETECTABLE WARNING FIELDS THAT ARE INSTALLED AS A GROUP OR SIDE BY SIDE, SHALL BE FROM THE SAME MANUFACTURER.

APPLY RADIAL DETECTABLE WARNING PLACEMENT SIMILARLY FOR TYPE 4A AND 4A1 CURB RAMPS AND SIMILARLY FOR TYPE 4B AND 4B1 CURB RAMPS. TYPE 4A AND 4B CURB RAMPS ARE NOT SHOWN.

REFER TO SDD 8D5-g FOR ADDITIONAL RADIAL PLATE REQUIREMENTS.

FIELD CUTS AT INTERMEDIATE JOINTS WITHIN THE RADIAL DETECTABLE WARNING FILED ARE PROHIBITED.

DETERMINE FINAL RADIAL WARNING FIELD CONFIGURATION AD ITS INDIVIDUAL PLATE LOCATIONS. PERFORM PRE-LAYOUT PRIOR TO PLACEMENT IN PLASTIC CONCRETE. FOLLOW MANUFACTURER'S PRODUCT LIST AND INSTALLATION RECOMMENDATIONS.

(2) GRADE CHANGE BETWEEN GUTTER FLAG SLOPE AND THE CURB RAMP SLOPE SHALL NOT EXCEED 11%. MAXIMUM GUTTER FLAG SLOPE IS 4%. PROVIDE LONGITUDINAL DRAINAGE AROUND CURB AND AWAY FROM CURB RAMP. NO VERTICAL LIPS OR DISCONTINUITIES GREATER THAN ¼ - INCH ARE ALLOWED. SLOPE OF CURB HEAD OPENING SHALL MATCH THE RAMP SLOPE, MINIMALLY 1.5% AND NOT TO EXCEED 7%. WHEN ADJACENT TO 1.5% LANDING, CONSTRUCT CURB HEAD OPENING AT 1.5% IN THE DIRECTION OF PEDESTRIAN TRAVEL.

(3) AN 8.33% CURB RAMP SLOPE IS ALLOWABLE WITH FLATTENED GUTTER FLAG SLOPE AND NOT TO EXCEED 11% GRADE CHANGE.

(4) ±0.5% CONSTRUCTION TOLERANCE IN SIDEWALK CROSS SLOPE. THE SIDEWALK CROSS SLOPE SHALL NOT EXCEED 2% WITHOUT PRIOR APPROVAL FROM THE ENGINEER.

(6) PROVIDE A LEVEL LANDING (MAXIMUM 2% SLOPE) IN ANY DIRECTION OF PEDESTRIAN TRAVEL. STANDARD LANDING SIZE IS 5 FEET BY 5 FEET.

(8) PROVIDE GRADE BREAK PERPENDICULAR TO DIRECTION OF WHEELCHAIR TRAVEL.

(14) CONSULT ENGINEER IF GRADE BREAK LOCATION (END OF LANDING DIMENSION "XR") REQUIRES FIELD ADJUSTMENT WHEN ESTABLISHING FINAL RADIAL DETECTABLE WARNING FIELD LOCATION.

(15) FIELD SAW CUTS ALONG RADIAL DETECTABLE WARNING PLATES WILL BE NECESSARY TO MATCH EACH CURB RAMP EDGE. AVOID CUTTING THROUGH DOMES WHENEVER POSSIBLE. MAKE FIELD CUTS TRUE TO LINE AND WITHIN ⅛" DEVIATION. SMOOTH EDGES OF FIELD CUT PLATES.

(16) USE 1' X 2" RECTANGULAR END PLATE AT END OF TYPE 4A1 RAMP AND PROVIDE MINIMUM 2' - 0" DETECTABLE WARNING FIELD COVERAGE (IN DIRECTION OF PEDESTRIAN TRAVEL) ALONG THE ENTIRE CURB RAMP WIDTH.

(17) A MAXIMUM 3 INCH CONCRETE BORDER WIDTH IS ALLOWABLE IN FRONT OF RADIAL DETECTABLE WARNING FIELD FOR CONSTRUCTABILITY PURPOSES. CONCRETE BORDER WIDTH MAY VARY UP TO 1 INCH.

RADIAL DETECTABLE WARNING FIELD PLACEMENT WHEN 5 FOOT GRADE BREAK DISTANCE PER SDD 8D5-d IS EXCEEDED

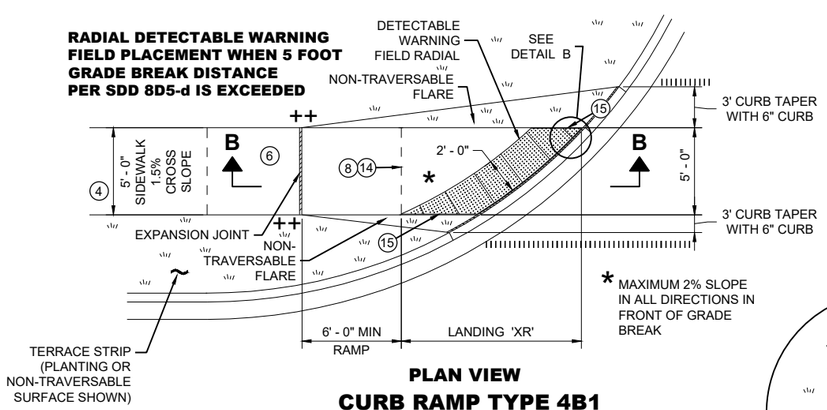

PLAN VIEW

CURB RAMP TYPE 4B1

(GRADE BREAK DISTANCE GREATER THAN 5 FEET)

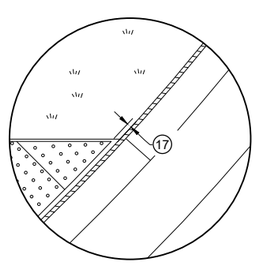

DETAIL B

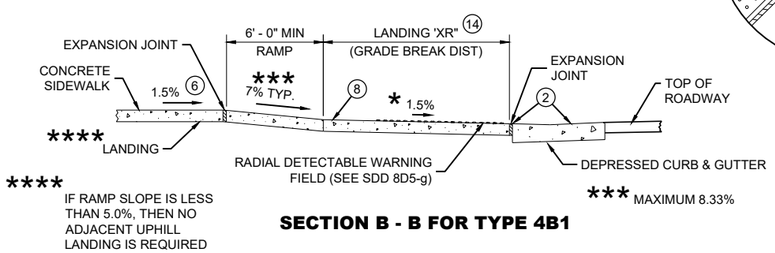

SECTION B - B FOR TYPE 4B1

RADIAL DETECTABLE WARNING FIELD PLACEMENT WHEN 5 FOOT GRADE BREAK DISTANCE PER SDD 8D5-b IS EXCEEDED

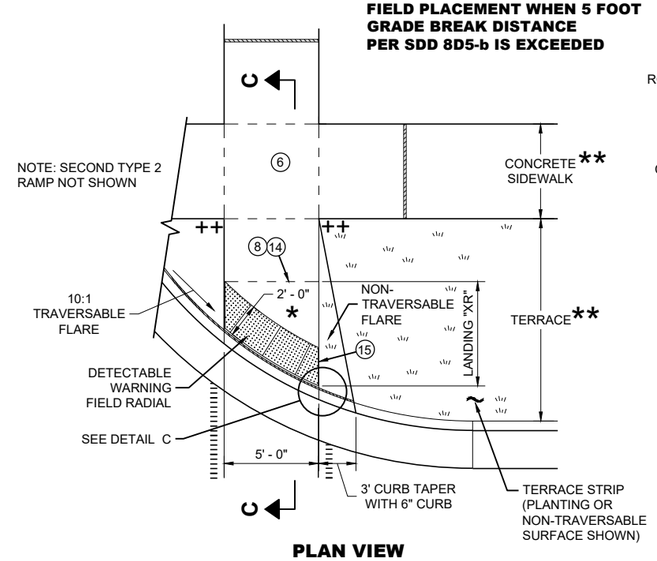

PLAN VIEW

CURB RAMP TYPE 2

(GRADE BREAK DISTANCE GREATER THAN 5 FEET)

(ON LINE WITH SIDEWALK)

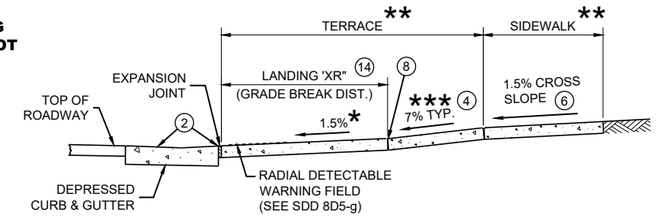

SECTION C - C FOR TYPE 2

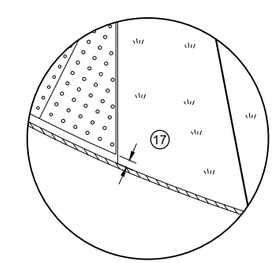

DETAIL C

* MAXIMUM 2% SLOPE IN ALL DIRECTIONS IN FRONT OF GRADE BREAK

** WIDTH SHOWN ELSEWHERE IN THE PLANS

*** MAXIMUM 8.33%

++ CONSTRUCT 6" WEDGE TO AVOID CONCRETE BREAKAGE

CURB RAMPS
RADIAL DETECTABLE WARNING

STATE OF WISCONSIN
DEPARTMENT OF TRANSPORTATION

6

6

SDD 08D05-21f

SDD 08D05-21f

	MIN.	MAX.
A	1.6"	2.4"
B	0.65"	1.5"
C	*	*
D	0.9"	1.4"

* THE C DIMENSION IS 50% TO 65% OF THE D DIMENSION.

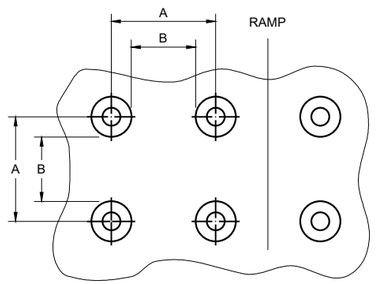

PLAN VIEW

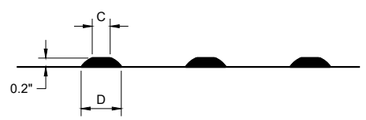

ELEVATION VIEW

TRUNCATED DOMES
DETECTABLE WARNING PATTERN DETAIL

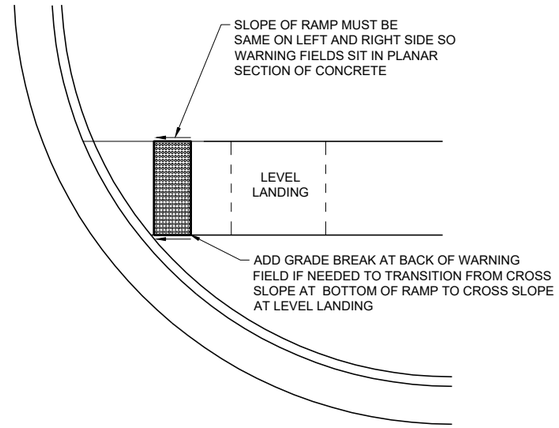

DETECTABLE WARNING FIELD
PLANAR INSTALLATION

GENERAL NOTES

DETECTABLE WARNING FIELDS THAT ARE INSTALLED AT A CURB RAMP SHALL BE FROM THE SAME MANUFACTURER.

PLACE ALL DETECTABLE WARNING FIELD SYSTEMS IN ACCORDANCE TO THE MANUFACTURER'S RECOMMENDATION.

FIELD CUTS AT INTERMEDIATE JOINTS WITHIN THE RADIAL DETECTABLE WARNING FILED ARE PROHIBITED.

DETERMINE FINAL RADIAL WARNING FIELD CONFIGURATION AND ITS INDIVIDUAL PLATE LOCATIONS. PERFORM PRE-LAYOUT PRIOR TO PLACEMENT IN PLASTIC CONCRETE. FOLLOW MANUFACTURER'S PRODUCT LIST AND INSTALLATION RECOMMENDATIONS.

FOR RADIAL DETECTABLE WARNING FIELD APPLICATIONS WHERE STANDARD RADIAL PLATES ARE NOT AVAILABLE AT AN INTERSECTION CURB RADIUS, A COMBINATION OF SQUARE OR RECTANGULAR PLATES AND RADIAL PLATES MAY BE USED TO FORM RADIAL CONFIGURATION. RADIAL WEDGE PLATES IN COMBINATION WITH SQUARE PLATES ARE ALSO ACCEPTABLE. FOLLOW MANUFACTURER'S RECOMMENDATIONS.

REFER TO CONTRACT AND STANDARD SPECIFICATIONS FOR FIELD CUTTING REQUIREMENTS.

DO NOT EMBED IN CONCRETE ANY FIELD-CUT PLATES WITH CUT EDGES SHORTER THAN 6 INCHES. CONSULT WITH MANUFACTURER FOR RE-DRILLING AND ANCHORING REQUIREMENTS OF FIELD-CUT PLATES.

(15) FIELD SAW CUTS ALONG RADIAL DETECTABLE WARNING PLATES WILL BE NECESSARY TO MATCH EACH CURB RAMP EDGE. AVOID CUTTING THROUGH DOMES WHENEVER POSSIBLE. MAKE FIELD CUTS TRUE TO LINE AND WITHIN ⅛" DEVIATION. SMOOTH EDGES OF FIELD CUT PLATES.

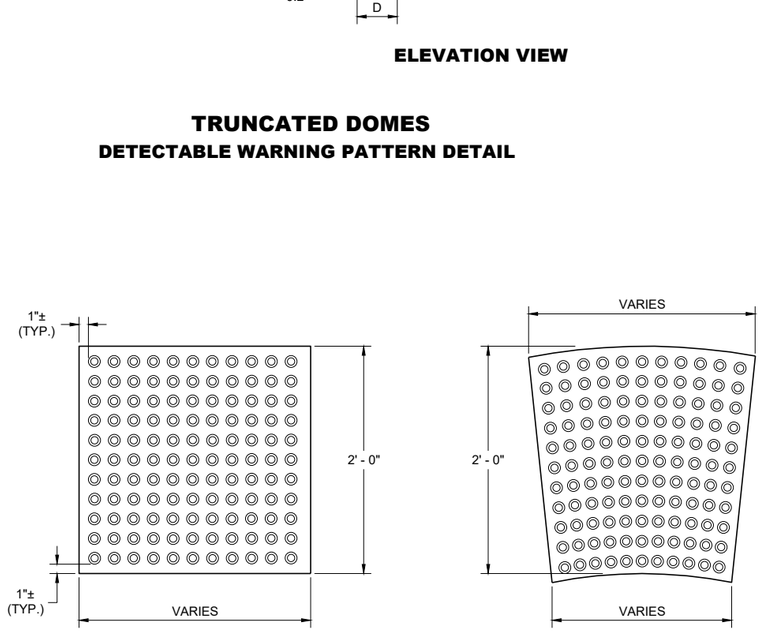

RECTANGULAR PLATES **RADIAL PLATES**

PLAN VIEW
DETECTABLE WARNING FIELDS (TYPICAL)

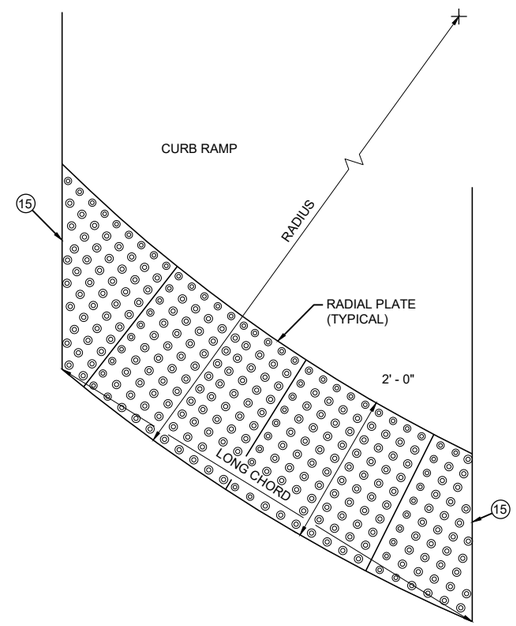

PLAN VIEW
RADIAL DETECTABLE WARNING FIELD ATTRIBUTES

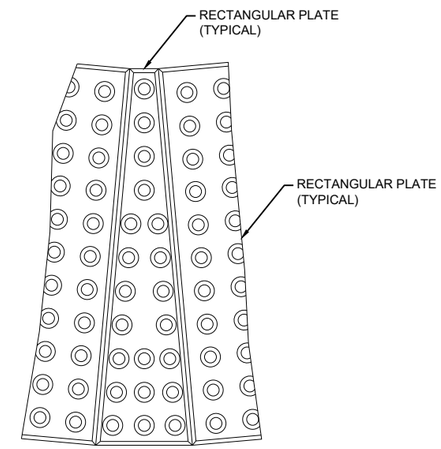

PLAN VIEW
RADIAL WEDGE PLATE CONNECTION DETAIL

6

SDD 08D05-21g

CURB RAMPS
RECTANGULAR AND RADIAL DETECTABLE WARNING PLATES

STATE OF WISCONSIN
DEPARTMENT OF TRANSPORTATION

APPROVED
July 2023 — DATE
/S/ Rodney Taylor — ROADWAY STANDARDS DEVELOPMENT UNIT SUPERVISOR
FHWA

6

SDD 08D05-21g

GENERAL NOTES

BARRICADE DEVICE SELECTED FROM APPROVED PRODUCT LIST

1. REFLECTIVE SHEETING SHALL FOLLOW THE REQUIREMENTS IN THE APPROVED PRODUCTS LISTING FOR SIGN SHEETING.
2. SHEETING REQUIRED ON MORE THAN 50% OF BARRICADE WIDTH.
3. PLACE SHEETING ON BOTH SIDES OF THE BARRICADE.

* USE THIS DETAIL FOR SHEETING PLACEMENT REFERENCE.

4. WHEN THE TEMPORARY PEDESTRIAN ACCESS ROUTE RUNS PARALLEL ON THE ROADWAY SURFACE, THE MAXIMUM CROSS SLOPE WILL MATCH THE EXISTING ROADWAY CROSS SLOPE.

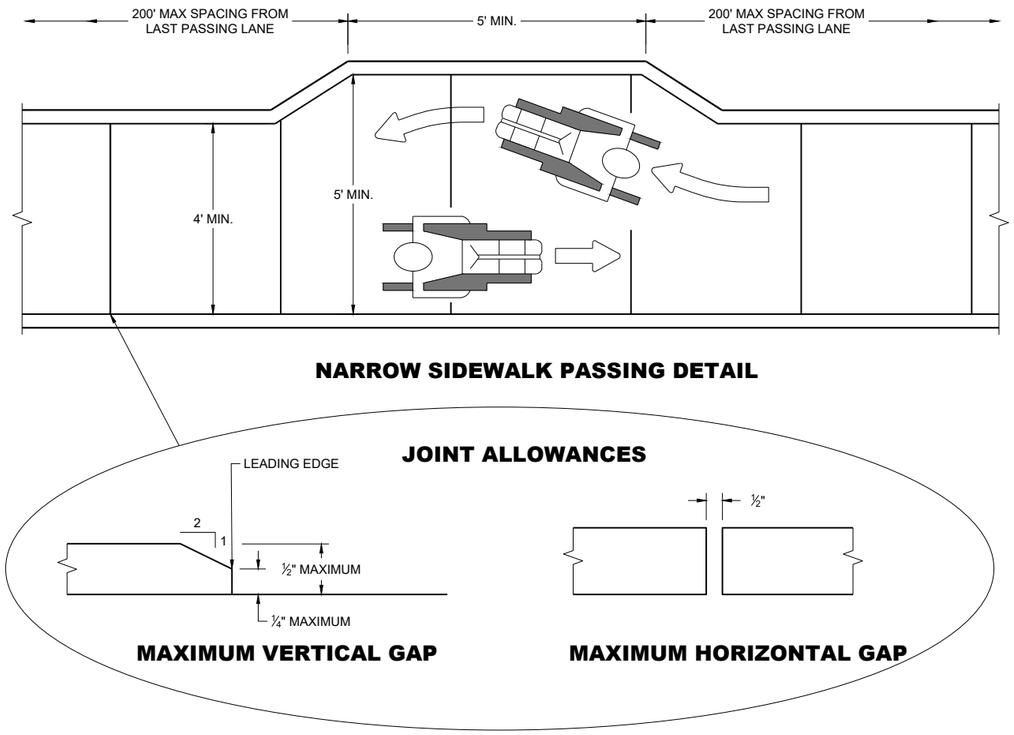

NARROW SIDEWALK PASSING DETAIL

JOINT ALLOWANCES

MAXIMUM VERTICAL GAP

MAXIMUM HORIZONTAL GAP

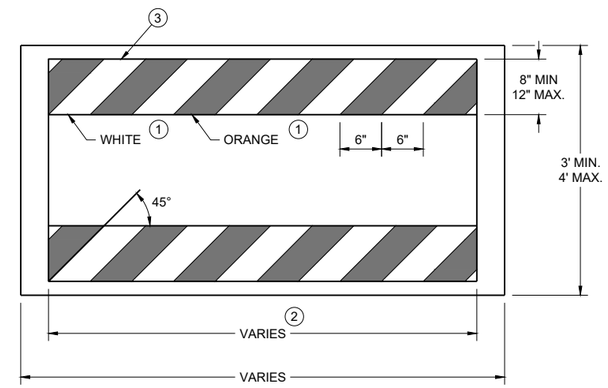

TEMPORARY PEDESTRIAN BARRICADE *

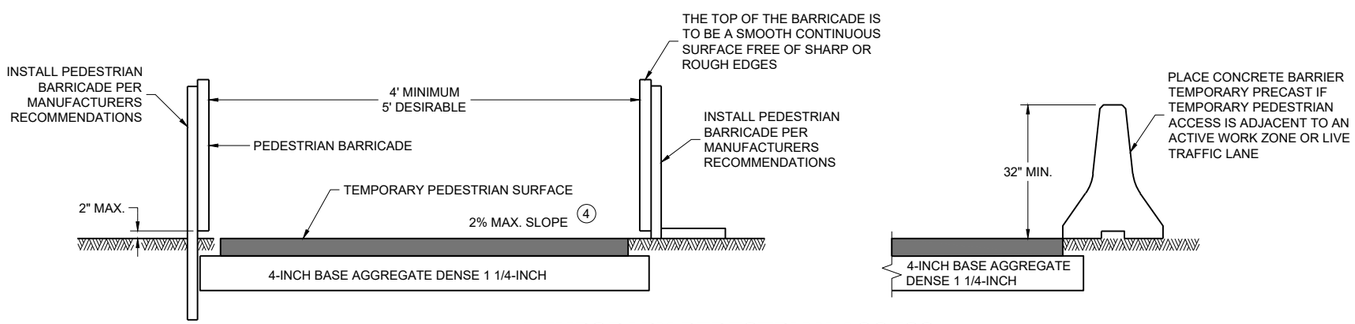

TEMPORARY PEDESTRIAN ACCESS

6

6

SDD 15D30-10a

SDD 15D30-10a

TRAFFIC CONTROL, PEDESTRIAN ACCOMMODATION

STATE OF WISCONSIN
DEPARTMENT OF TRANSPORTATION

URBAN AREA

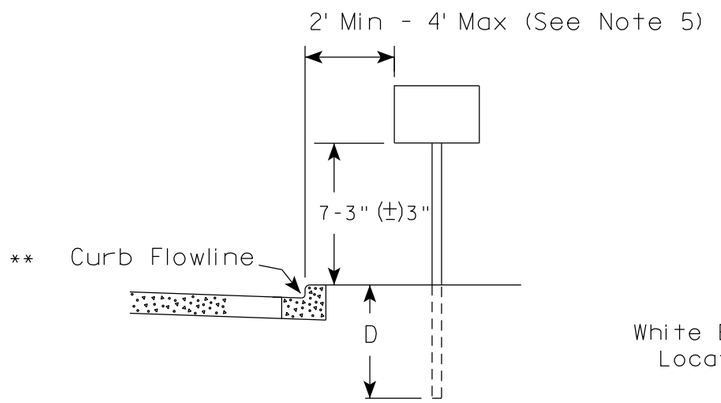

RURAL AREA (See Note 2)

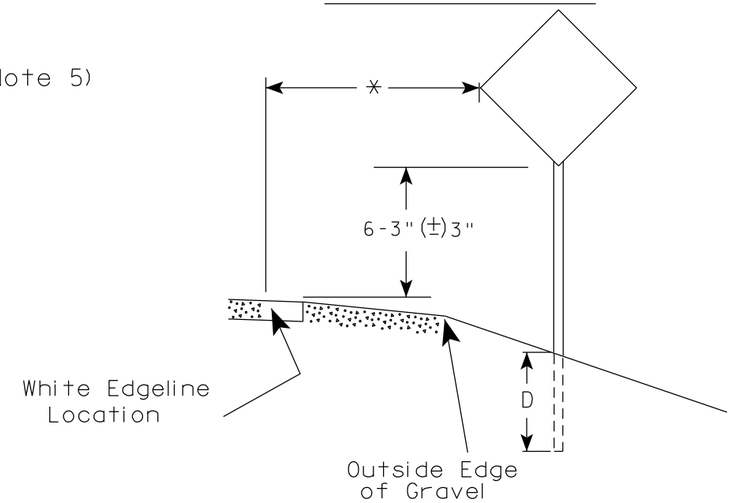

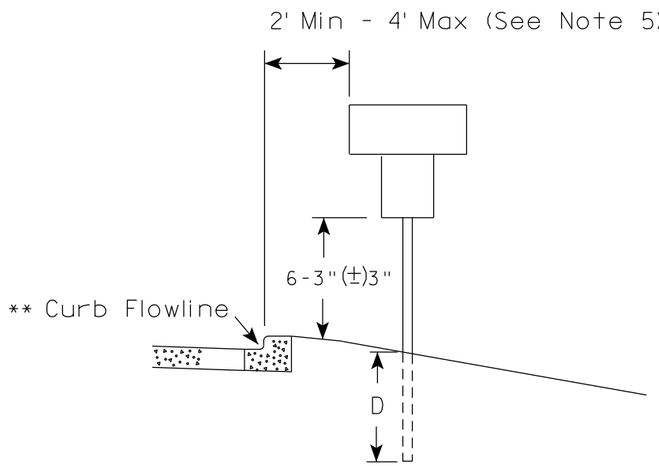

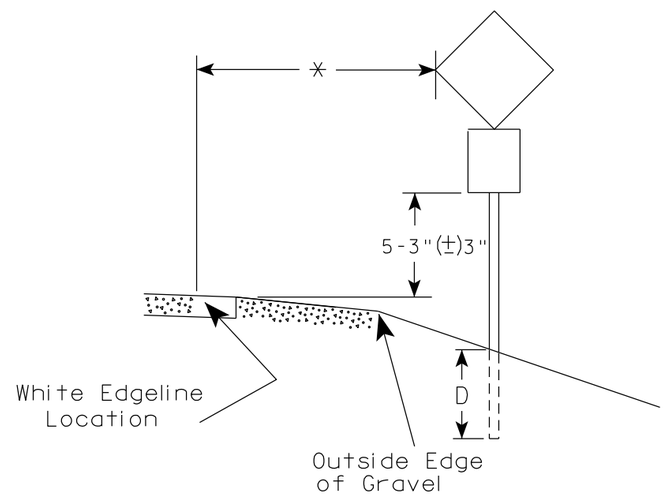

** The existence of curb and gutter does not in itself mandate the vertical clearance illustrated. That height is typically measured where there is sidewalk adjacent to the roadway or parking is permitted. In the absence of sidewalk vertical clearance is measured from the top of the curb. Offset of signs is measured from the flow line.

* 6 feet from edge of a paved shoulder or 12 feet from the edge of pavement (edge line location) or 2 feet from outside edge of gravel, whichever is greater unless directed by project engineer.

GENERAL NOTES

1. Signs wider than 4 feet or 20 sq.ft or larger, shall be mounted on multiple posts. Refer to plate A4-4.
2. If signs are mounted on or behind barrier wall, see A4-10 sign plate.
   The Double Arrow sign (W12-1D) shall be mounted at a height of 2'-3" (±) 3". The Chevron sign (W1-8), Roundabout Chevron panel (R6-4B), Enhanced Reference Markers, Clearance Markers (W5-52), Mile Markers (D10 series), In Road Object Markers (W5-54) & End of Road Markers (W5-56) shall be mounted at a height of 4'-3" (±) 3".
3. For expressways and freeways, mounting height is 7'- 3" (±) 3" or 6'-3" (±) 3" depending upon existence of a sub-sign.
4. Minimum mounting height for signs mounted on traffic signal poles is 5'- 3" (±) 3".
5. Offset distance shall be consistent with existing signs or consistent throughout length of project.
6. Folding signs shall be mounted at a height of 5'-3" (±) 3" or as directd by the Engineer.

POST EMBEDMENT DEPTH

Area of Sign Installation (Sq. Ft.)	D (Min)
20 or Less	4'
Greater than 20	5'

TYPICAL INSTALLATION OF PERMANENT TYPE II SIGNS ON SINGLE POSTS

WISCONSIN DEPT OF TRANSPORTATION

APPROVED Matthew R Rauch
for State Traffic Engineer

DATE 12/6/23 PLATE NO. A4-3.23

PROJECT NO:	HWY:	COUNTY:		SHEET NO: 27	E

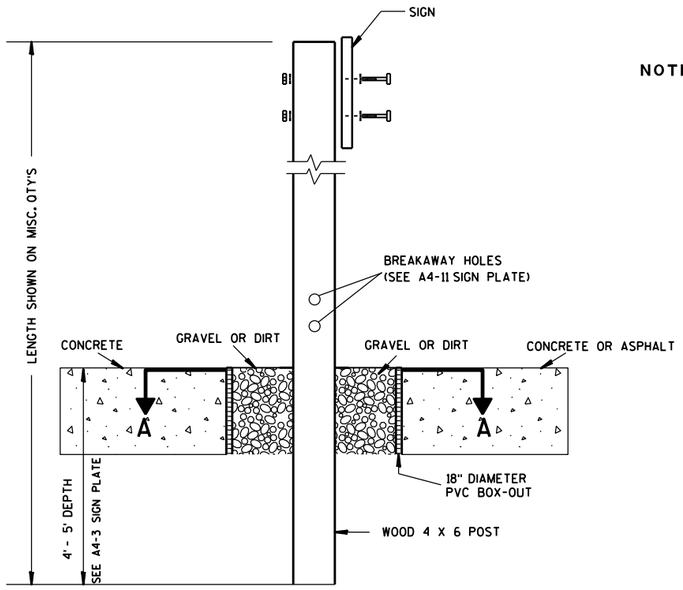

ELEVATION VIEW

DETAIL OF WOOD 4 X 6 SIGN POST IN BOX-OUT

NOTES:
1. ALL MATERIAL TO BE APPROVED BY ENGINEER PRIOR TO INSTALLATION
2. SEE SIGN PLATE A4-8 FOR SIGN HARDWARE REQUIREMENTS
3. 18 INCH X 18 INCH SQUARE BOX-OUTS MAY BE USED FOR INSTALLATIONS IN EXISTING CONCRETE OR ASPHALT LOCATIONS.

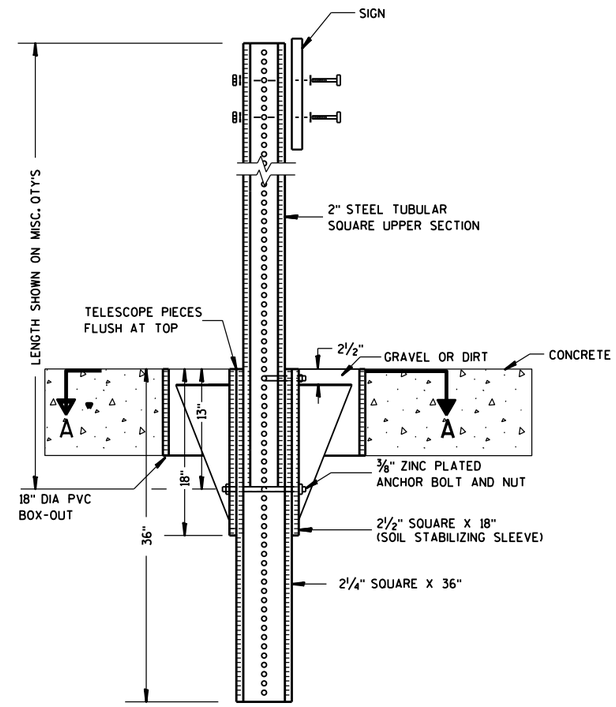

ELEVATION VIEW

DETAIL OF STEEL 2 X 2 SIGN POST IN BOX-OUT

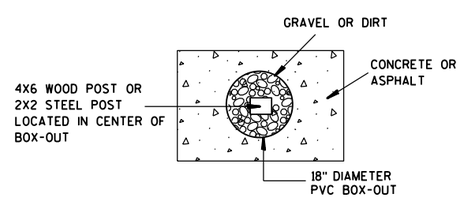

PLAN VIEW

FOR NEW CONCRETE/ASPHALT INSTALLATIONS

SIGN POST
BOX-OUTS
A4-3B

WISCONSIN DEPT OF TRANSPORTATION

APPROVED Matthew R Rauch
for State Traffic Engineer

DATE 1/27/14 PLATE NO. A4-3B.1

PROJECT NO:	HWY:	COUNTY:		SHEET NO:	E

URBAN AREA

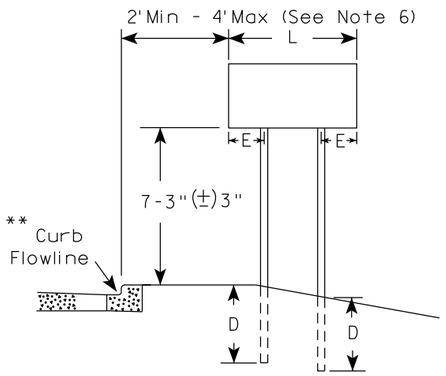

RURAL AREA (See Note 3)

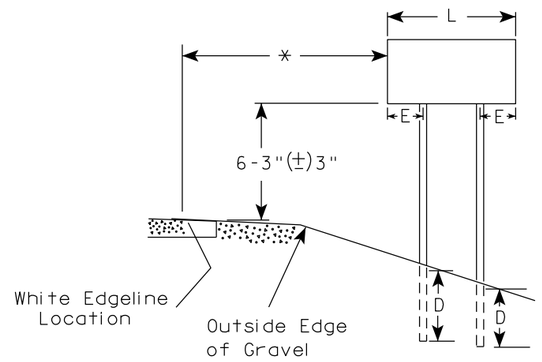

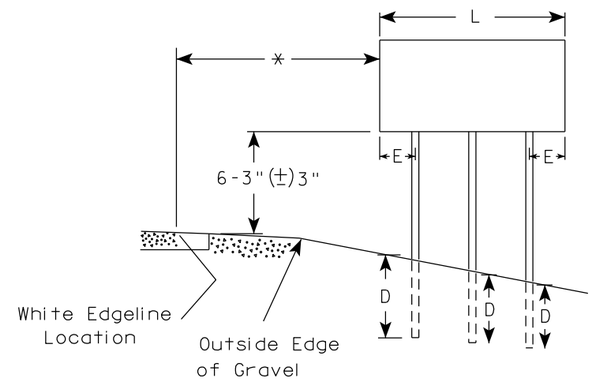

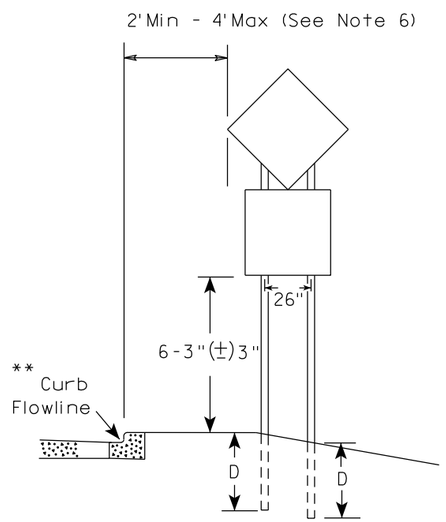

48" DIAMOND WARNING SIGN

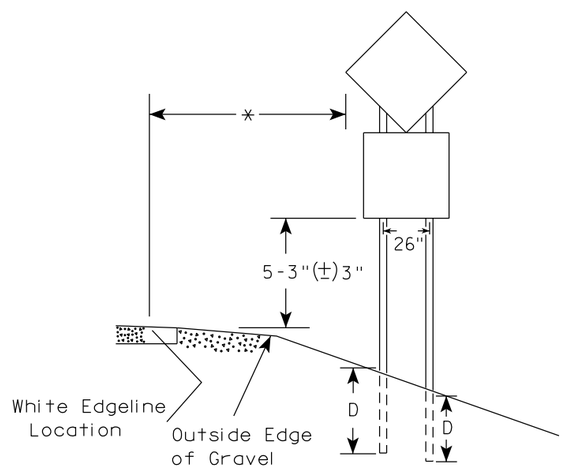

48" DIAMOND WARNING SIGN

GENERAL NOTES

1. For 3 or 4 post installations, individual post spacing shall be greater than 3'-6".
2. See tables below for required number of posts.
3. For expressways and freeways, mounting height is 7'-3" (±) 3" or 6'-3" (±) 3" depending upon existence of sub-sign.
4. The (±) tolerance for mounting height is 3 inches.
5. J-Assemblies are considered to be one sign for mounting height.
6. Offset distance shall be consistent with existing signs or consistent throughout length of project.
7. Folding signs shall be mounted at a height of 5'-3" (±) 3" or as directed by the engineer.
8. The Double Arrow sign (W12-1) shall be mounted at a height of 2'-3" (±) 3". The Chevron sign (W1-8), Roundabout Chevron panel (R6-4B), Clearance Markers (W5-52), Mile Markers (D10 series), In Road Object Markers (W5-54) & End of Road Markers (W5-56) shall be mounted at a height of 4"-3" (±) 3".

* 6 feet from edge of a paved shoulder or 12 feet from the edge of pavement (edge line location) or 2 feet from outside edge of gravel, whichever is greater unless directed by project engineer.

** The existence of curb and gutter does not in itself mandate the vertical clearance illustrated. That height is typically measured where there is sidewalk adjacent to the roadway or parking is permitted. In the absence of sidewalk vertical clearance is measured from the top of the curb. Offset of signs is measured from the flow line.

*** See A4-3 sign plate for signs 4' or less in width and less than 20 S.F. in area.

SIGN SHAPE OTHER THAN DIAMOND (TWO POSTS REQUIRED)	
L	E
*** Greater than 48" Less than 60"	12"
60" to 108"	L/5

SIGN SHAPE OTHER THAN DIAMOND (THREE POSTS REQUIRED)	
L	E
Greater than 108" to 144"	12"

POST EMBEDMENT DEPTH

Area of Sign Installation (Sq. Ft.)	D (Min)
20 or Less	4'
Greater than 20	5'

TYPICAL INSTALLATION OF TYPE II SIGNS ON MULTIPLE POSTS

WISCONSIN DEPT OF TRANSPORTATION

APPROVED Matthew R Rauch
for State Traffic Engineer

DATE 12/6/23 PLATE NO. A4-4.16

PROJECT NO:	HWY:	COUNTY:		SHEET NO: 29	E

TELESCOPIC TUBING ANCHORS
TWO PIECE SYSTEM

2 1/4" SQUARE
12 GAUGE
PERFORATED
GALVANIZED FINISH

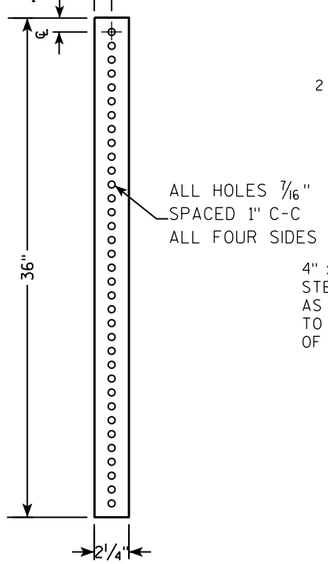

2 1/2" SQUARE
12 GAUGE
OMNI-DIRECTIONAL
PERFORATED
SOIL STABILIZING SLEEVE
GALVANIZED FINISH

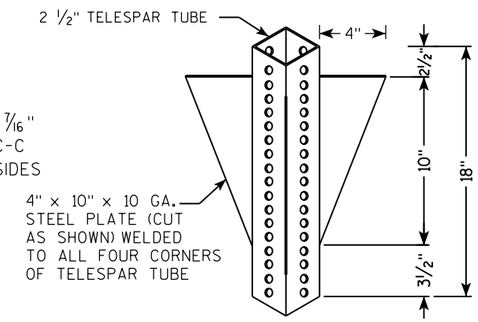

DETAIL OF TUBULAR STEEL SIGN POST
(IN POURED CONCRETE OR ASPHALT)

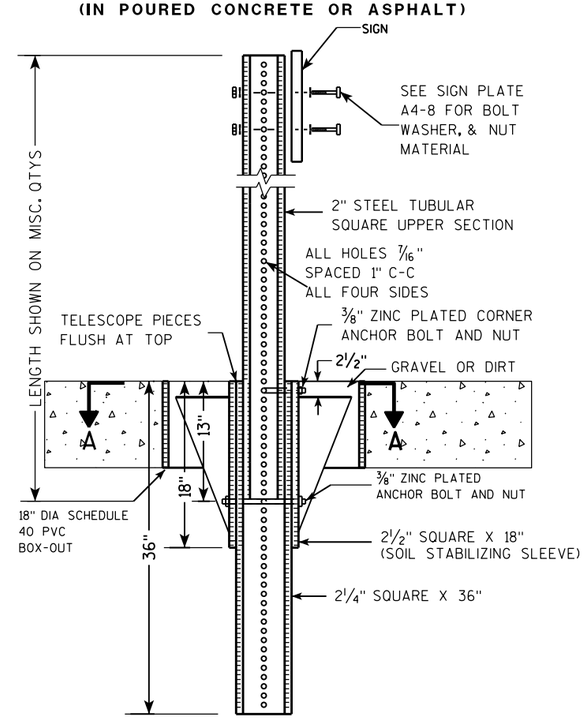

DETAIL OF TUBULAR STEEL SIGN POST
(IN LOCATIONS OTHER THAN POURED CONCRETE OR ASPHALT)

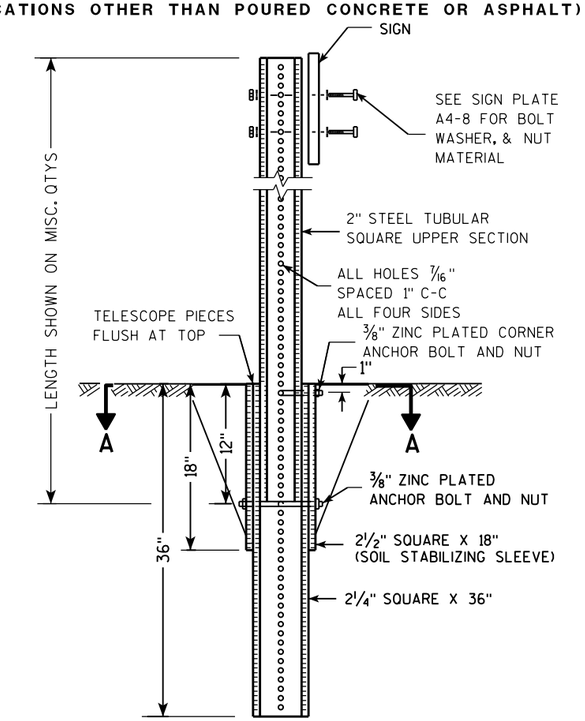

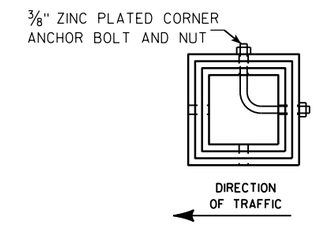

SECTION A-A

Area of Sign Installation (Sq. Ft.)	Number of Required Posts
9 or less	1
Greater than 9 less than or equal to 18	2
Greater than 18 less than or equal to 27	3

Signs wider than 3 feet or larger than 9 sq. ft shall be mounted on multiple posts (see above table).

TUBULAR STEEL
SIGN POST
A4-9

WISCONSIN DEPT OF TRANSPORTATION

APPROVED *Matthew R Rauch*
for State Traffic Engineer

DATE 2/05/15 PLATE A4-9.9

7 7

PROJECT NO:	HWY:	COUNTY:		SHEET NO:	E

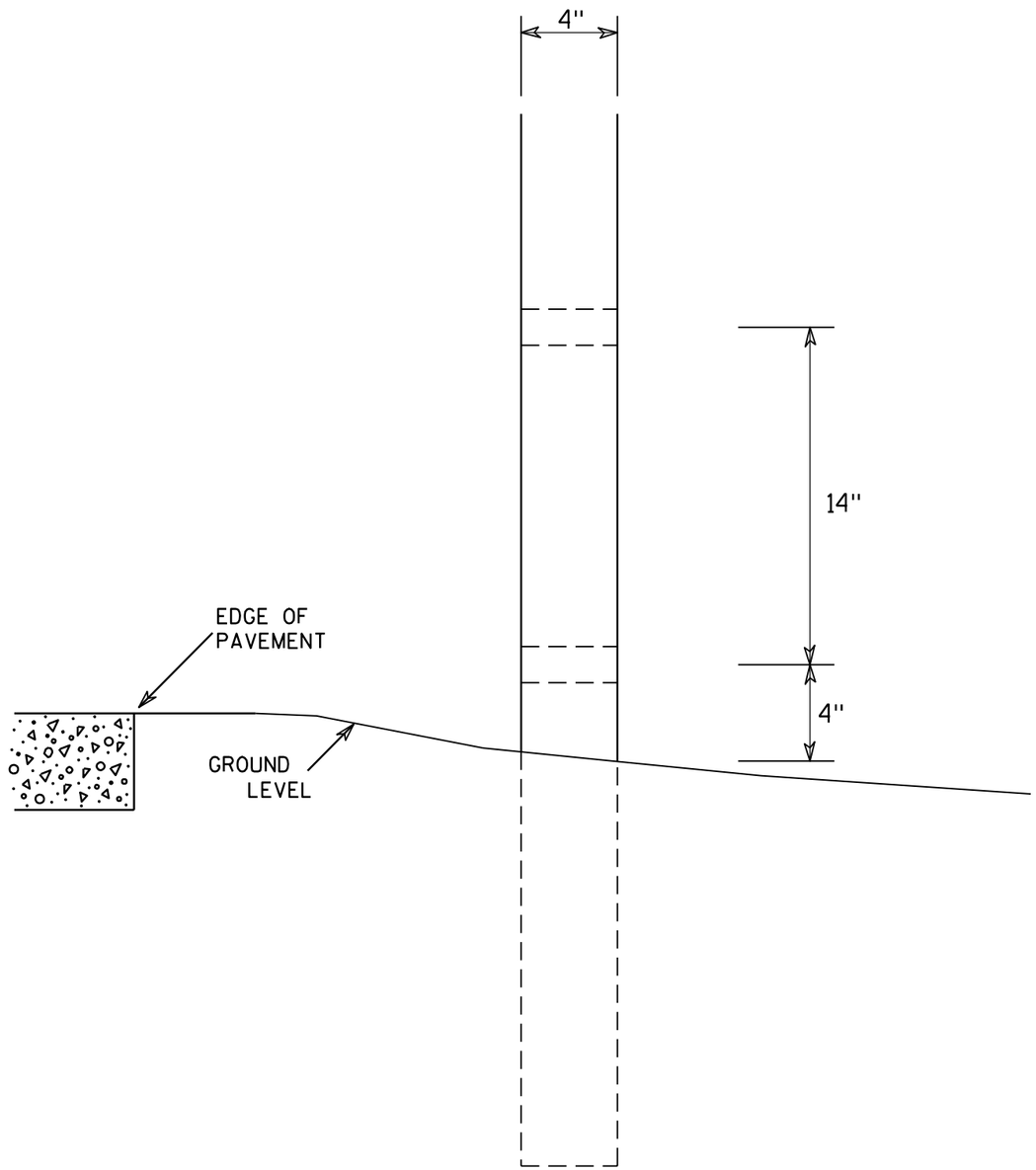

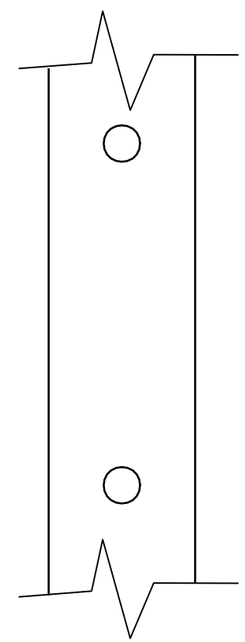

SIDE VIEW

GENERAL NOTES

1. All 4 x 6 Wood Posts shall be modified by having two 1½" diameter holes drilled perpendicular to the roadway centerline.

7

7

4 X 6 WOOD POST MODIFICATIONS

WISCONSIN DEPT OF TRANSPORTATION

APPROVED Chester J Spang for State Traffic Engineer

DATE 3/27/97 PLATE NO. A4-11.2

PROJECT NO:	HWY:	COUNTY:		SHEET NO: 31	E

BANDING

SINGLE SIGN

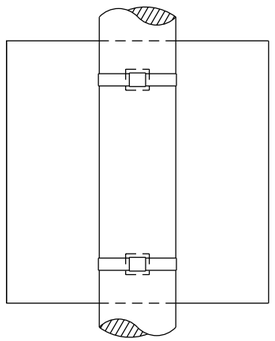

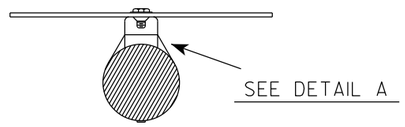

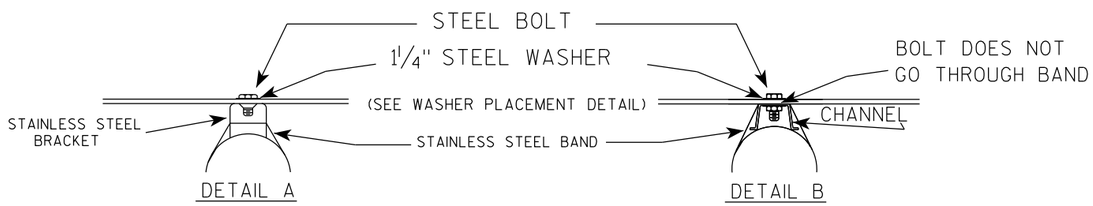

WASHER PLACEMENT

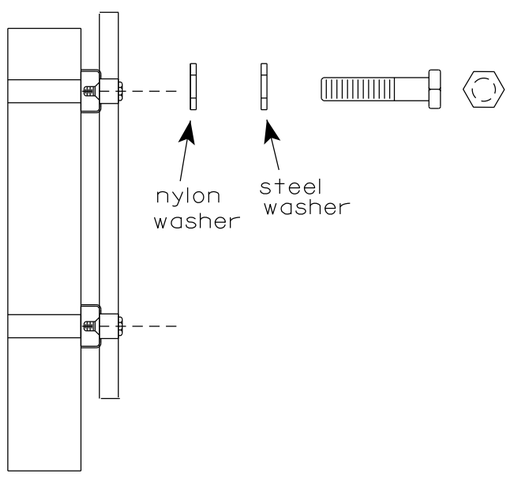

WASHERS (ALL POSTS) -
1-1/4" O.D. X 3/8" I.D. X 1/16" STEEL
1-1/4" O.D. X 3/8" I.D. X .080 NYLON
FOR ALL TYPE H SIGNS

GENERAL NOTES

1. Any sign over 3 feet in width shall use the V-Block banding method. See A5-10 standard plate.
2. Signs 3 feet or greater in height shall have three bracket bands installed. Signs less than 3 feet in height shall have two bracket bands installed.
3. Banding and assembly bracket shall be stainless steel. All bands shall be 3/4" in width and 0.025" thickness.
4. ALL SIGN MOUNTING BOLTS AND WASHERS SHALL BE EITHER:
   a. Hot dip or mechanically galvanized in accordance with ASTM Designation: A 153, Class D
   b. Electro-galvanized in accordance with ASTM designation: B 633, Type III, SC 3

"J" ASSEMBLY

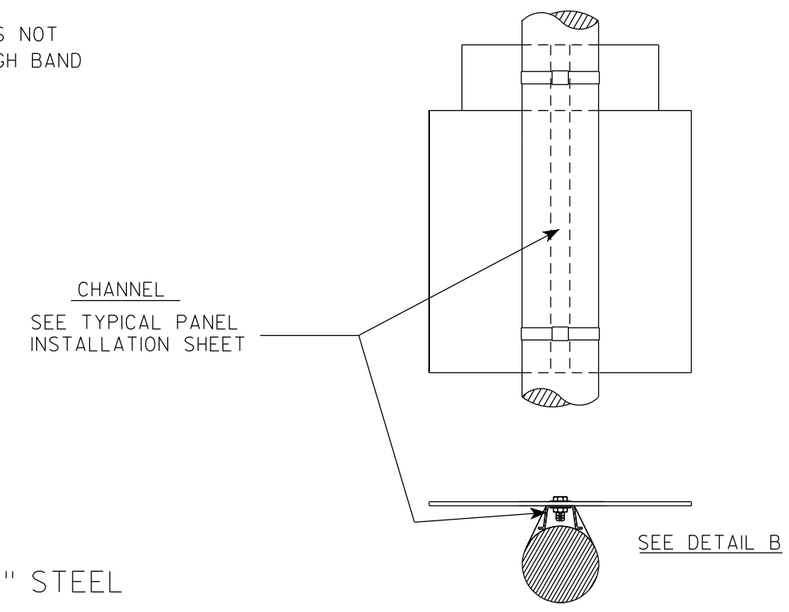

STANDARD SIGN
SIGN BANDING DETAILS

WISCONSIN DEPT OF TRANSPORTATION

APPROVED Matthew R Rauch for State Traffic Engineer

DATE 6/10/19 PLATE NO. A5-9.4

PROJECT NO:	HWY:	COUNTY:		SHEET NO: 32	E

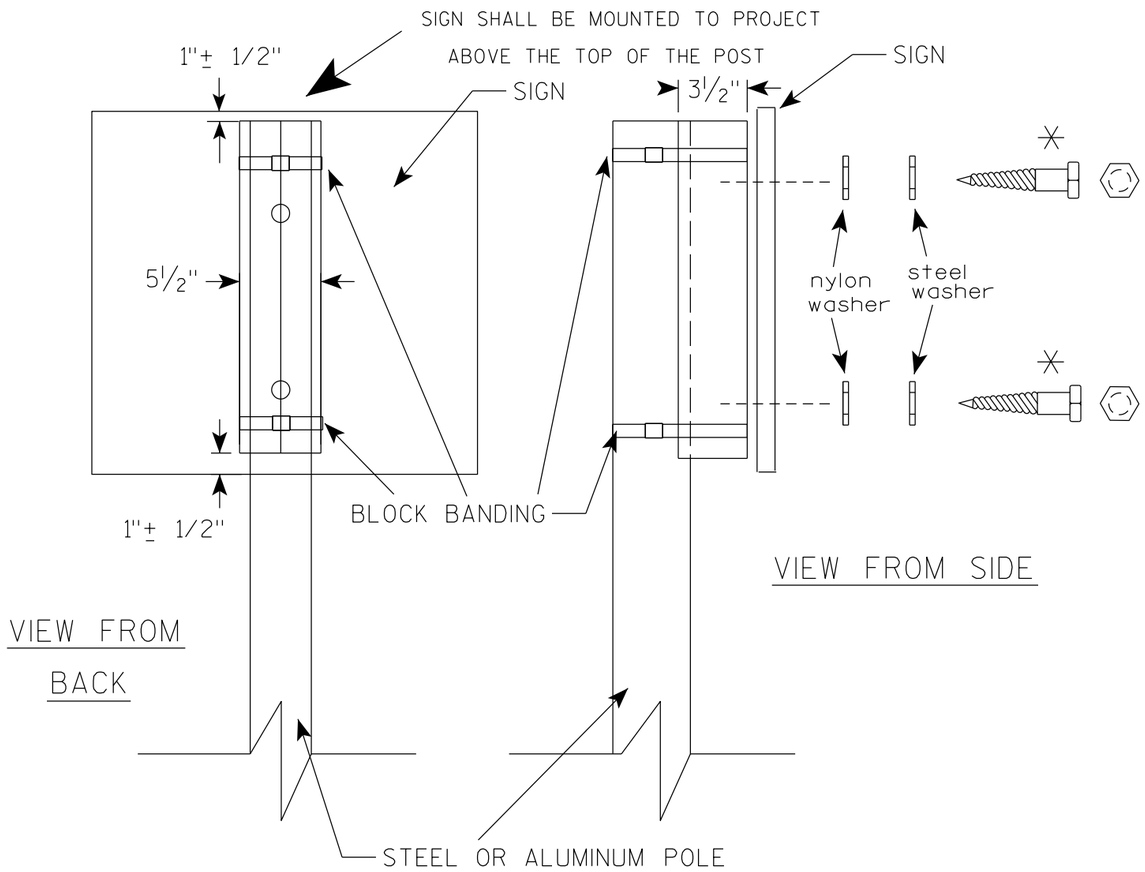

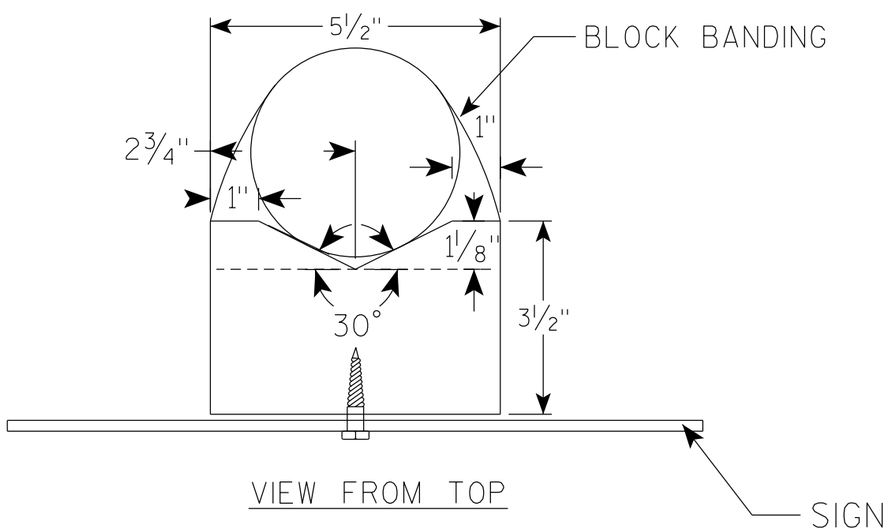

GENERAL NOTES

1. WOOD 4"X6" POST MATERIAL SHALL CONFORM TO 507.2.2 OF THE WisDOT STANDARD SPECIFICATIONS
2. BLOCK BANDING AND CLIPS SHALL BE STAINLESS STEEL, 3/4" WIDTH AND 0.025" THICKNESS
3. SIGNS 3' OR GREATER IN HEIGHT SHALL UTILIZE 3 BLOCK BANDS. SIGNS UNDER 3' IN HEIGHT SHALL UTILIZE 2 BLOCK BANDS
4. ACTUAL NUMBER OF FASTENERS PER SIGN VARIES WITH THE SIGN AREA, BUT NORNALLY THERE ARE TWO. FOR SIGNS GREATER THAN 9 S.F. 3 FASTENERS SHALL BE USED.
5. ALL SIGN MOUNTING BOLTS AND WASHERS SHALL BE EITHER:
   a. Hot dip or mechanically galvanized in accordance with ASTM Designation: A 153, Class D
   b. Electro-galvanized in accordance with ASTM Designation : B 633, TYPE III, SC 3
6. ALL BOLTS SHALL HAVE HEXAGONAL HEADS.
7. STEEL WASHERS SHALL BE 1 1/4" O.D. X 3/8" I.D. X 1/16"
8. NYLON WASHERS SHALL BE 1 1/4" O.D. X 3/8" I.D. X .080 FOR TYPE H OR TYPE F FACE SIGN

✳ LAG BOLTS SHALL BE 3/8" X 2 1/2"

7

7

BLOCK BANDING DETAIL
(V-BLOCK OPTION)

WISCONSIN DEPT OF TRANSPORTATION

APPROVED Matthew R Rauch
for State Traffic Engineer

DATE 4/19/2022 PLATE NO. A5-10.3

PROJECT NO:				SHEET NO: 33	E

Wisconsin Department of Transportation

Dedicated people creating transportation solutions through innovation and exceptional service.

http://www.dot.wisconsin.gov