GRE

PROJECT ID: 6240-31-71

WITH: N/A

COUNTY: OUTAGAMIE

23

MAY 2025

ORDER OF SHEETS

TOTAL SHEETS = 126

STATE PROJECT	FEDERAL PROJECT	
	PROJECT	CONTRACT
6240-31-71		

STATE OF WISCONSIN
DEPARTMENT OF TRANSPORTATION

PLAN OF PROPOSED IMPROVEMENT

V BLACK CREEK, STH 47

STORM SEWER IMPROVEMENT

STH 47

OUTAGAMIE COUNTY

STATE PROJECT NUMBER
6240-31-71

N

DESIGN DESIGNATION

A.A.D.T.	=	N/A
A.A.D.T.	=	N/A
D.H.V.	=	N/A
D.D.	=	N/A
T.	=	N/A
DESIGN SPEED	=	N/A
ESALS	=	N/A

CONVENTIONAL SYMBOLS

PLAN

CORPORATE LIMITS
PROPERTY LINE
LOT LINE
LIMITED HIGHWAY EASEMENT
EXISTING RIGHT OF WAY
PROPOSED OR NEW R/W LINE
SLOPE INTERCEPT
REFERENCE LINE (300'E9')
EXISTING CULVERT
PROPOSED CULVERT (Box or Pipe)
COMBUSTIBLE FLUIDS (CAUTION)
MARSH AREA
WOODED OR SHRUB AREA

PROFILE

GRADE LINE
ORIGINAL GROUND
MARSH OR ROCK PROFILE (To be noted as such) (ROCK)
SPECIAL DITCH (LABEL)
GRADE ELEVATION (95.36)
CULVERT (Profile View)

UTILITIES

ELECTRIC (E)
FIBER OPTIC (FO)
GAS (G)
SANITARY SEWER (SAN)
STORM SEWER (SS)
TELEPHONE (T)
WATER (W)
UTILITY PEDESTAL
POWER POLE
TELEPHONE POLE

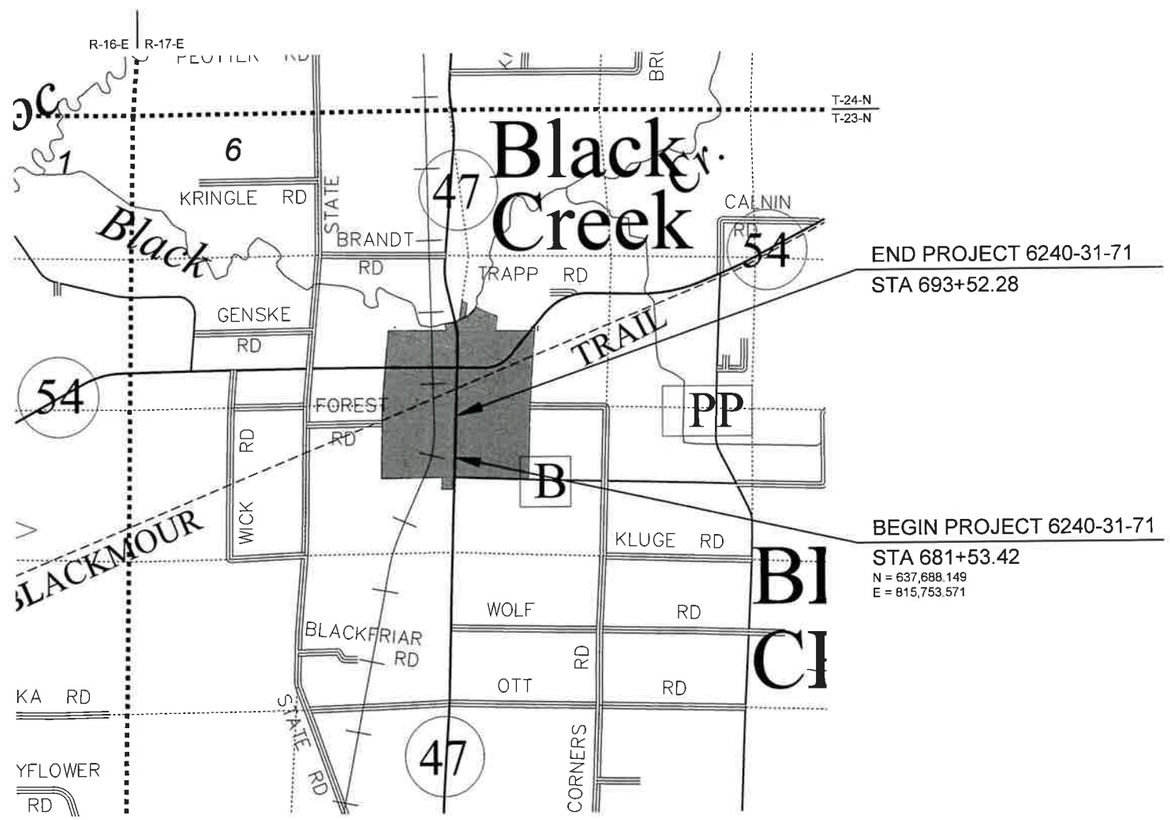

LAYOUT

SCALE 0 — 1 MI

TOTAL NET LENGTH OF CENTERLINE = 0.000 MI

HORIZONTAL POSITIONS SHOWN ON THIS PLAN ARE WISCONSIN COORDINATE REFERENCE SYSTEM (WISCRS), OUTAGAMIE COUNTY, NAD83 (2011), IN U.S. SURVEY FEET. POSITIONS SHOWN ARE GRID COORDINATES, GRID BEARINGS, AND GRID DISTANCES. GRID DISTANCES ARE THE SAME AS GROUND DISTANCES. ELEVATIONS ARE REFERENCED TO NAVD 88 (2012). GPS DERIVED ELEVATIONS ARE BASED ON GEOID 12A.

ORIGINAL PLANS PREPARED BY

Westwood

WISCONSIN MICHAEL A. MALCOLM E-30025 Appleton PROFESSIONAL ENGINEER

DATE: 12-2-2024 (Professional Engineer Signature)

STATE OF WISCONSIN
DEPARTMENT OF TRANSPORTATION

PREPARED BY

Surveyor	Westwood
Designer	Westwood
Project Manager	Jesse Hansen
Regional Examiner	REGIONAL EXAMINER
Regional Supervisor	Tammy Rabe

APPROVED FOR THE DEPARTMENT

DATE: 12/2/2024 (Signature)

E

GENERAL NOTES

LOCATIONS OF EXISTING AND PROPOSED UTILITY FACILITIES AS SHOWN ON THE PLANS ARE APPROXIMATE. THERE MAY BE OTHER UTILITY FACILITIES WITHIN THE PROJECT AREA THAT ARE NOT SHOWN.

ORDER OF "SECTION 2" SHEETS

SHEET TITLE
GENERAL NOTES
PROJECT OVERVIEW
TYPICAL SECTIONS
CONSTRUCTION DETAILS
PAVING DETAILS
CURB RAMP DETAILS
STORM SEWER DETAILS
EROSION CONTROL
TRAFFIC CONTROL OVERVIEW
CURB RAMP STAGING
DETOUR PLAN

UTILITIES

BRIGHTSPEED OF CENTRAL WISCONSIN LLC - COMMUNICATION LINE
SCOTT HEINZELMAN
144 N. PEARL STREET
BERLIN, WI 54923
TELEPHONE: 980-376-1563
EMAIL: SCOTT.HEINZELMAN@BRIGHTSPEED.COM

SPECTRUM - COMMUNICATION LINE
BILL PARMENTER
853 MCINTOSCH STREET
WAUSAU, WI 54401
TELEPHONE: 608-301-6189
EMAIL: BILL.PARMENTER@CHARTER.COM

VILLAGE OF BLACK CREEK - SEWER
STEVE HACKL
301 N. MAPLE STREET
BLACK CREEK, WI 54106
TELEPHONE: 920-984-3295
EMAIL: DPW@BLACKCREEKWI.NET

VILLAGE OF BLACK CREEK - WATER
STEVE HACKL
301 N. MAPLE STREET
BLACK CREEK, WI 54106
TELEPHONE: 920-984-3295
EMAIL: DPW@BLACKCREEKWI.NET

WE ENERGIES - ELETRIC
SHANE BRUHNKE
800 S. LYNNDALE DRIVE
APPELTON, WI 54914
TELEPHONE: 920-380-3450
EMAIL: SHANE.BRUHNKE@WE-ENERGIES.COM

WE ENERGIES - ELETRIC
CODY JACOBSON
800 S. LYNNDALE DRIVE
APPELTON, WI 54914
TELEPHONE: 920-380-3565
EMAIL: CODY.JACOBSON@WE-ENERGIES.COM

OTHER CONTACTS

DNR LIAISON	MATT SCHAEVE WDNR 2984 SHAWANO AVE. GREEN BAY, WI 54307 TELEPHONE: 920-366-1544 EMAIL: MATTHEW.SCHAEVE@WISCONSIN.GOV
DESIGN CONTACT	MIKE MALCOLM WESTWOOD ONE SYSTEMS DRIVE APPLETON, WI 54914 TELEPHONE: 920-830-6175 EMAIL: MIKE.MALCOLM@WESTWOODPS.COM
PROJECT MANAGER	JESSE HANSEN WISDOT - NORTHEAST REGION 944 VANDER PERREN WAY GREEN BAY, WI 54304 TELEPHONE: 920-492-5630 EMAIL: JESSE.HANSEN@DOT.WI.GOV
SURVEYOR	MICHAEL ANDRASCHKO WISDOT - NORTHEAST REGION 944 VANDER PERREN WAY GREEN BAY, WI 54304 TELEPHONE: 920-492-4166 EMAIL: MICHAEL.ANDRASCHKO@DOT.WI.GOV

DIGGERS HOTLINE
Dial 811 or (800) 242-8511
www.DiggersHotline.com

PROJECT NO: 6240-31-71	HWY: STH 47	COUNTY: OUTAGAMIE	PROJECT OVERVIEW	SHEET 3	E

FILE NAME : N:\3001114.00\CIVIL 3D\SHEETSPLAN\624031-020201-PO.DWG
LAYOUT NAME - 624031-020201-po
PLOT DATE : 8/6/2024 8:41 AM
PLOT BY : MATT TOMSOVIC
PLOT NAME :
PLOT SCALE : 1 IN: 150 FT

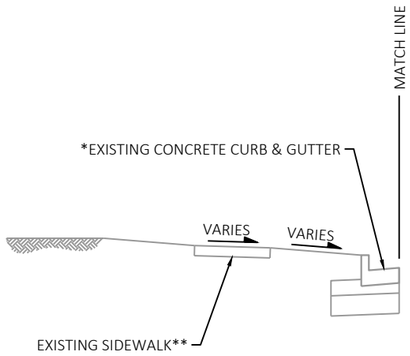

** PINE STREET STA 12+65 - 14+00
W FOREST ST STA 35+60 - 38+60

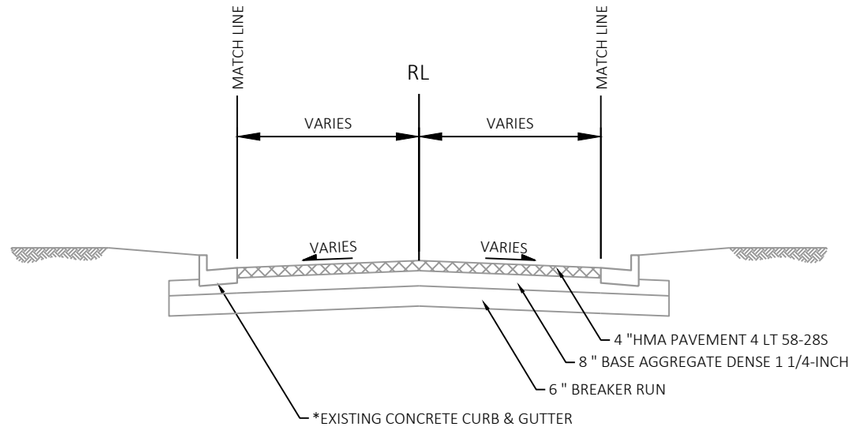

EXISTING TYPICAL SECTION

PINE STREET
CLARK STREET
W FOREST STREET

*30-INCH, PINE ST & W FOREST ST
24-INCH, CLARK ST

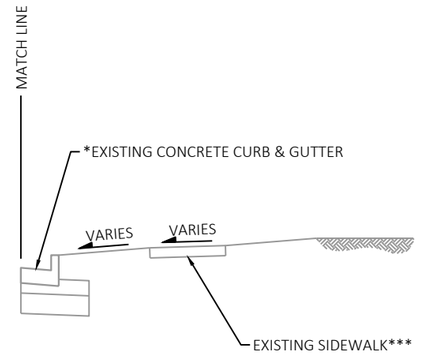

***W FOREST ST 35+60 - 38+60

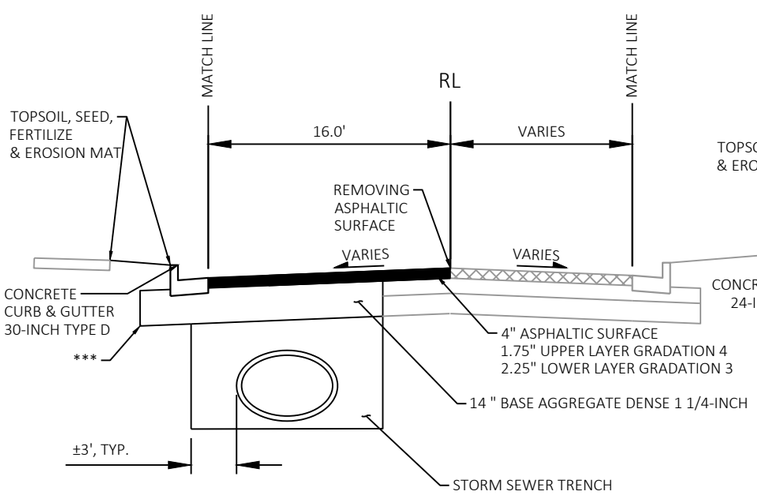

*** PAY LIMITS OF EXCAVATION COMMON

PROPOSED TYPICAL SECTION

STA 10+'P'63.00 - STA 14+'P'03.00

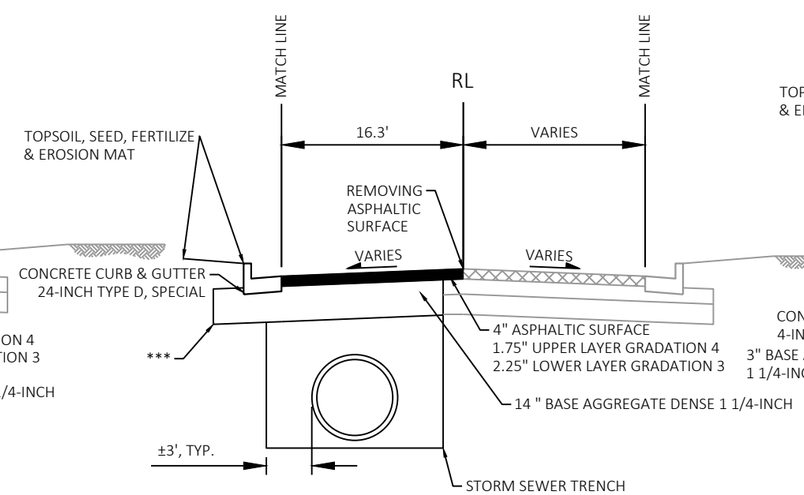

PROPOSED TYPICAL SECTION

STA 20+'C'00.00 - STA 22+'C'+24.63

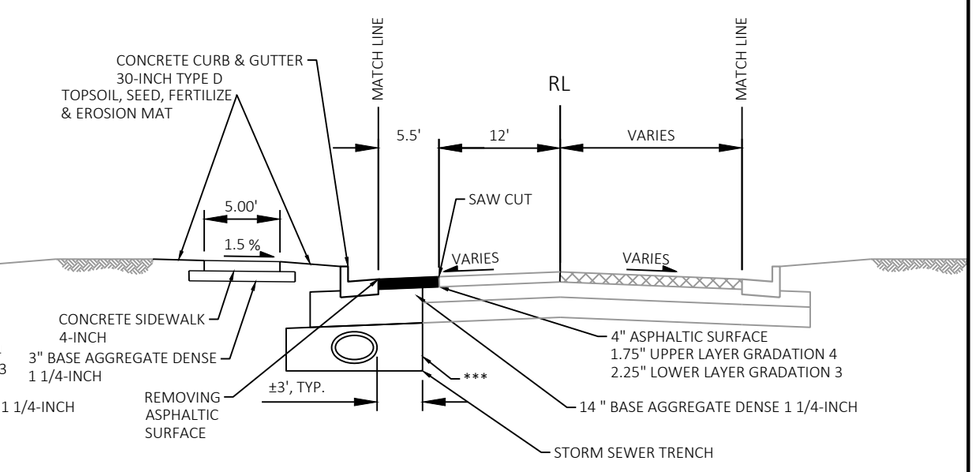

PROPOSED TYPICAL SECTION

STA 35+'F'07.18 - STA 38+'F'54.89

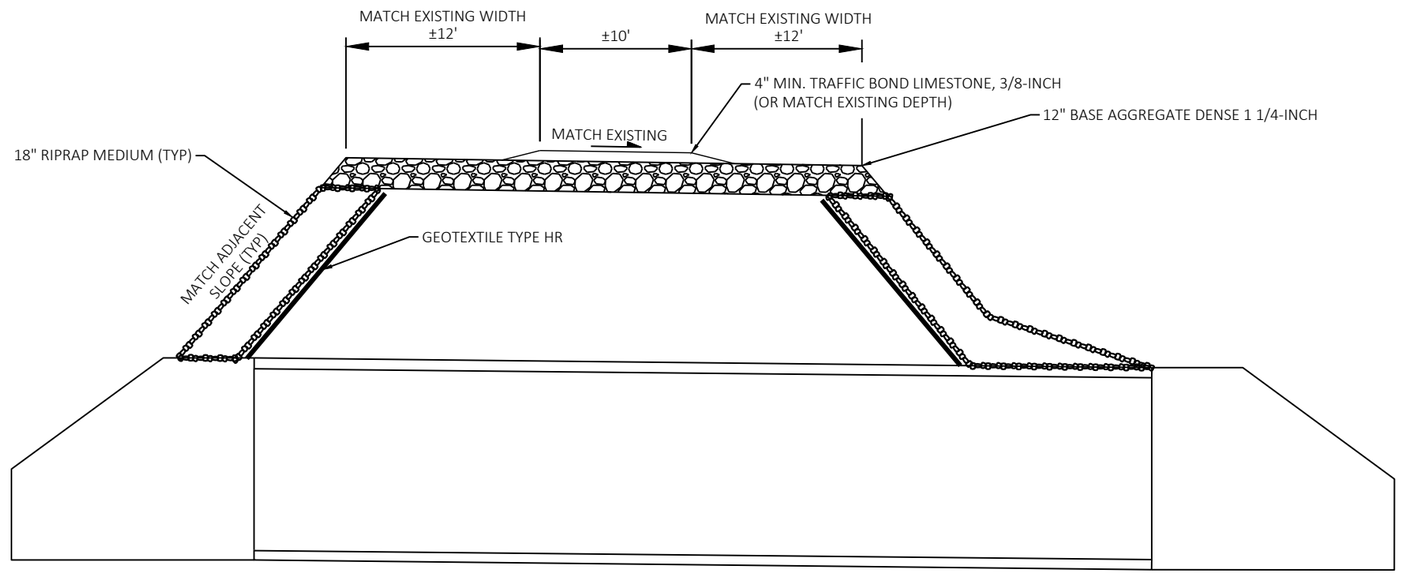

PROPOSED TYPICAL SECTION

NEWTON BLACKMOUR STATE TRAIL

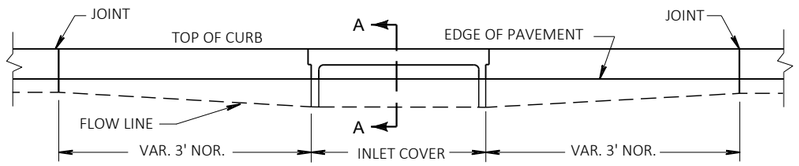

ELEVATION

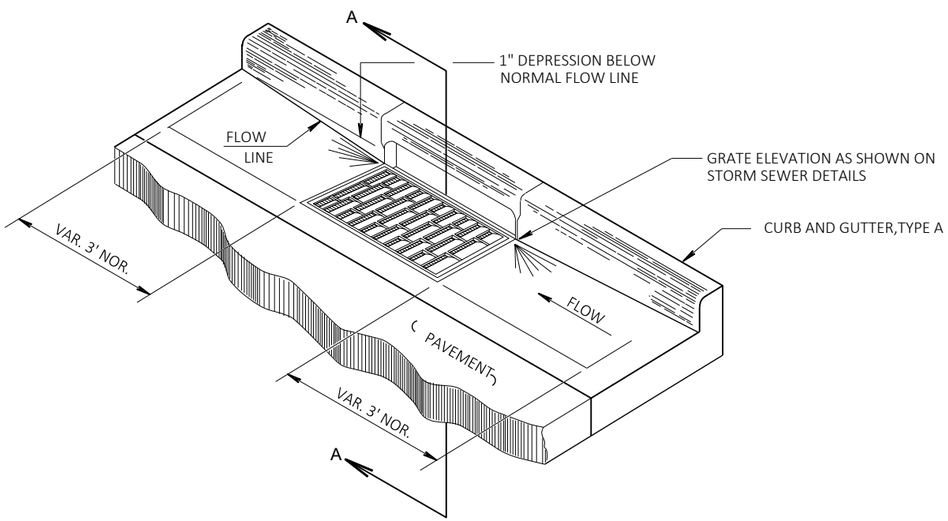

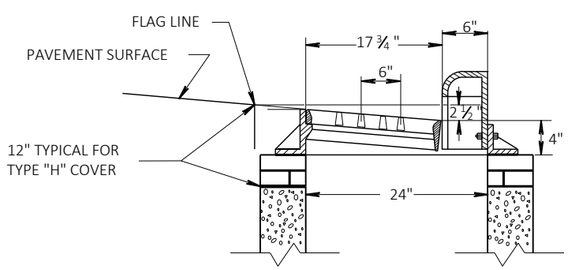

SECTION A-A

DETAIL OF CURB AND GUTTER AT INLETS

(TYPE 3-H INLET SHOWN)

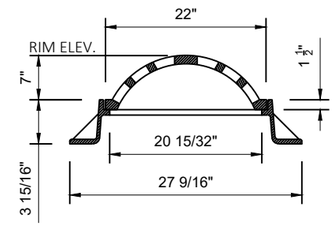

NOTE:
NEENAH R-2560-D1 OR EQUAL

BEEHIVE COVER

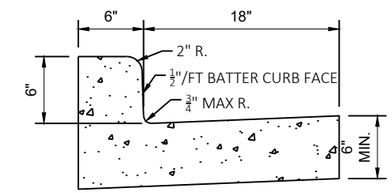

CONCRETE CURB & GUTTER
24-INCH TYPE D, SPECIAL

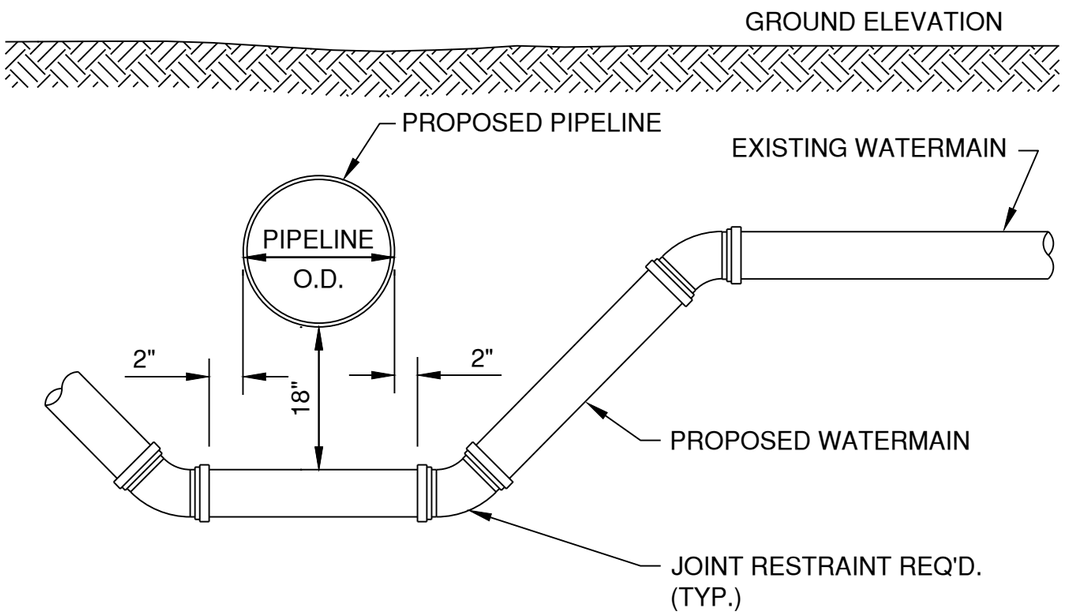

DETAIL FOR WATERMAIN OFFSET

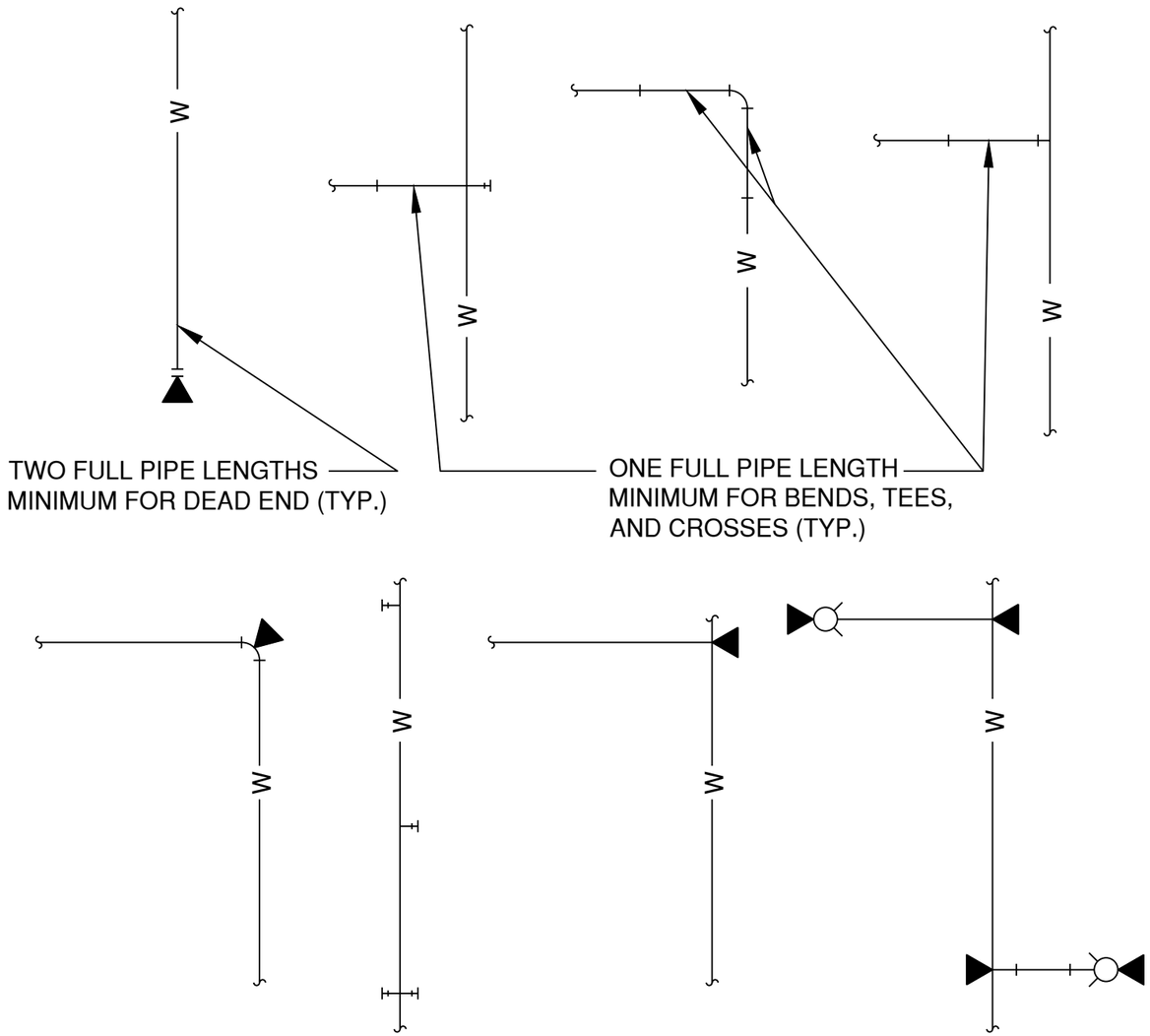

TYPICAL WATERMAIN RESTRAINT REQUIREMENTS

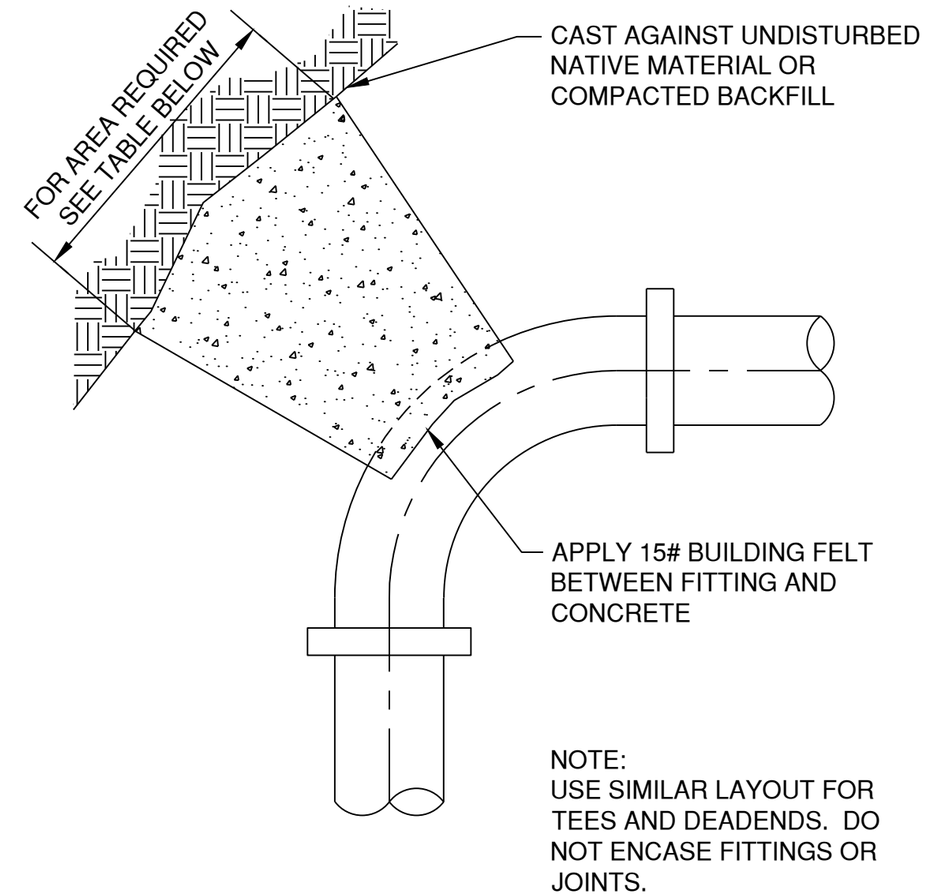

THRUST BLOCK AREA REQUIREMENTS, S.F.					
DEGREE OF BEND	4" PIPE	6" PIPE	8" PIPE	10" PIPE	12" PIPE
5° TO 22.5°	1.0	1.0	2.0	3.0	4.0
23° TO 45°	1.0	2.0	4.0	6.0	8.0
46° TO 90°	2.0	4.0	7.0	11.0	15.0
TEE OR DEAD END	2.0	3.0	5.0	8.0	10.0

TYPICAL THRUST BLOCK

2

2

NOTES:
GRUB ALL AREAS WITHIN ROAD RIGHT-OF-WAY, STORM SEWER EASEMENT, AND PERMANENT LIMITED EASEMENTS

LEGEND
X GRUBBING
REMOVE BRUSH (INCIDENTAL TO GRUBBING)

N

PROJECT NO: 6240-31-71	HWY: STH 47	COUNTY: OUTAGAMIE	REMOVAL PLAN	SHEET 9	E

FILE NAME : N:\3001114.00\CIVIL 3D\SHEETSPLAN\624031-021101-RM.DWG
LAYOUT NAME - 624031-021101-rm
PLOT DATE : 3/7/2025 12:02 PM
PLOT BY : MATT TOMSOVIC
PLOT NAME :
PLOT SCALE : 1 IN:100 FT
WISDOT/CADDS SHEET 42

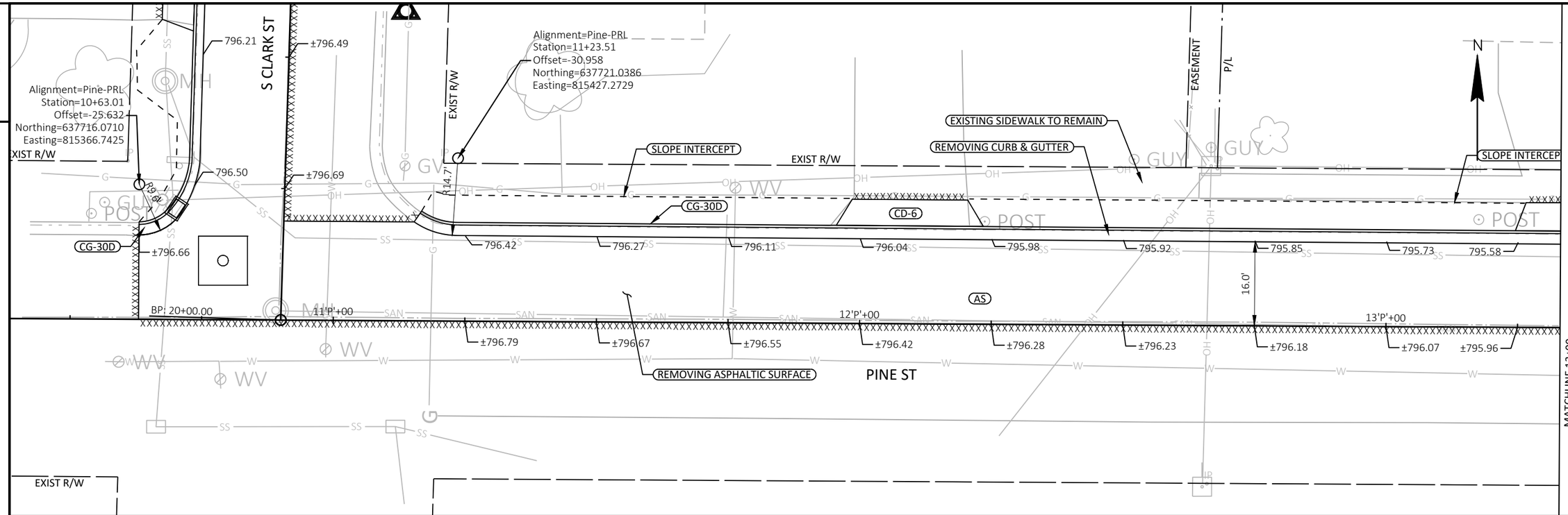

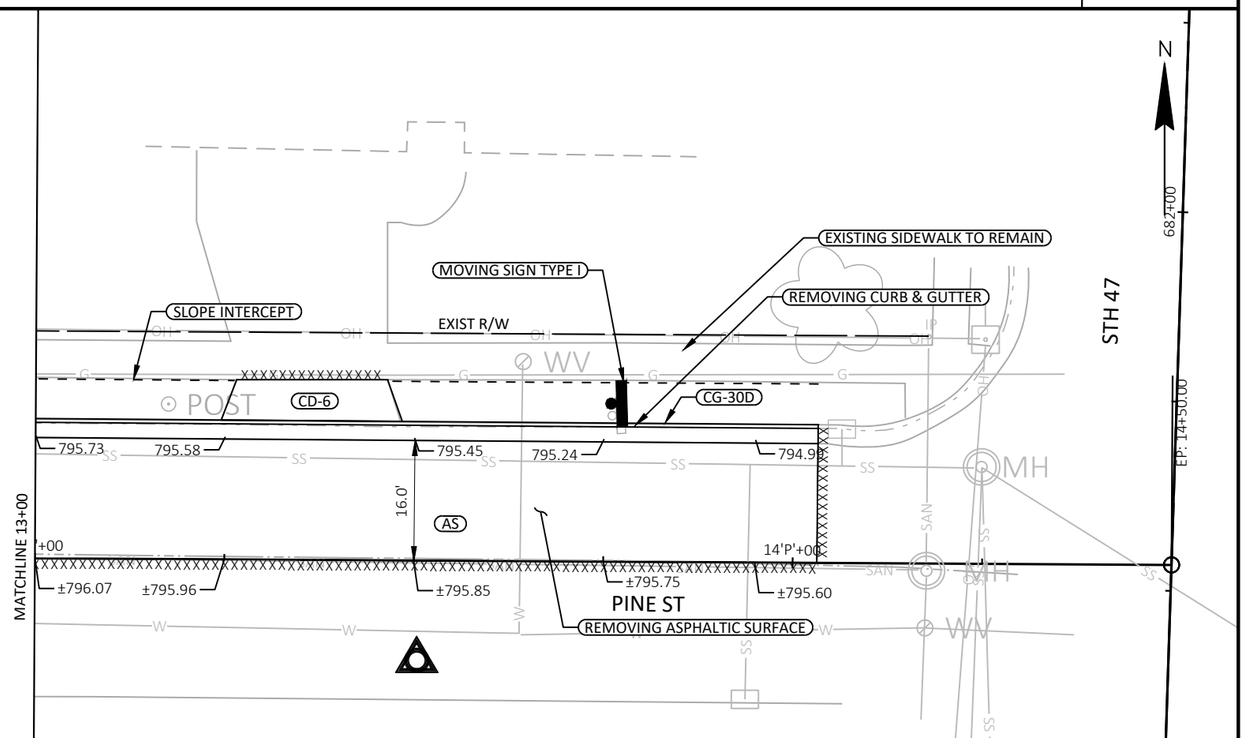

KEY MAP

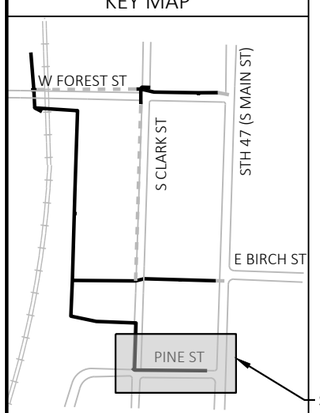

LEGEND

ASDF	ASPHALTIC SURFACE DRIVEWAYS AND FIELD ENTRANCES, 2" MIN (OR MATCH EXISTING) 6" BASE AGGREGATE DENSE 3/4-INCH OVER STORM SEWER TRENCHES
CG-30D	CONCRETE CURB AND GUTTER 30-INCH TYPE D
CG-24D	CONCRETE CURB AND GUTTER 24-INCH TYPE D SPECIAL
CD-6	CONCRETE DRIVEWAY 6-INCH, 4" BASE AGGREGATE DENSE 3/4-INCH OVER STORM SEWER TRENCHES
CS-6	CONCRETE SIDEWALK 6-INCH
CS-4	CONCRETE SIDEWALK 4-INCH
AS	ASPHALTIC SURFACE
XXXXXXX	SAWCUT

PROJECT NO: 6240-31-71	HWY: STH 47	COUNTY: OUTAGAMIE	PLAN DETAILS	SHEET 10	E

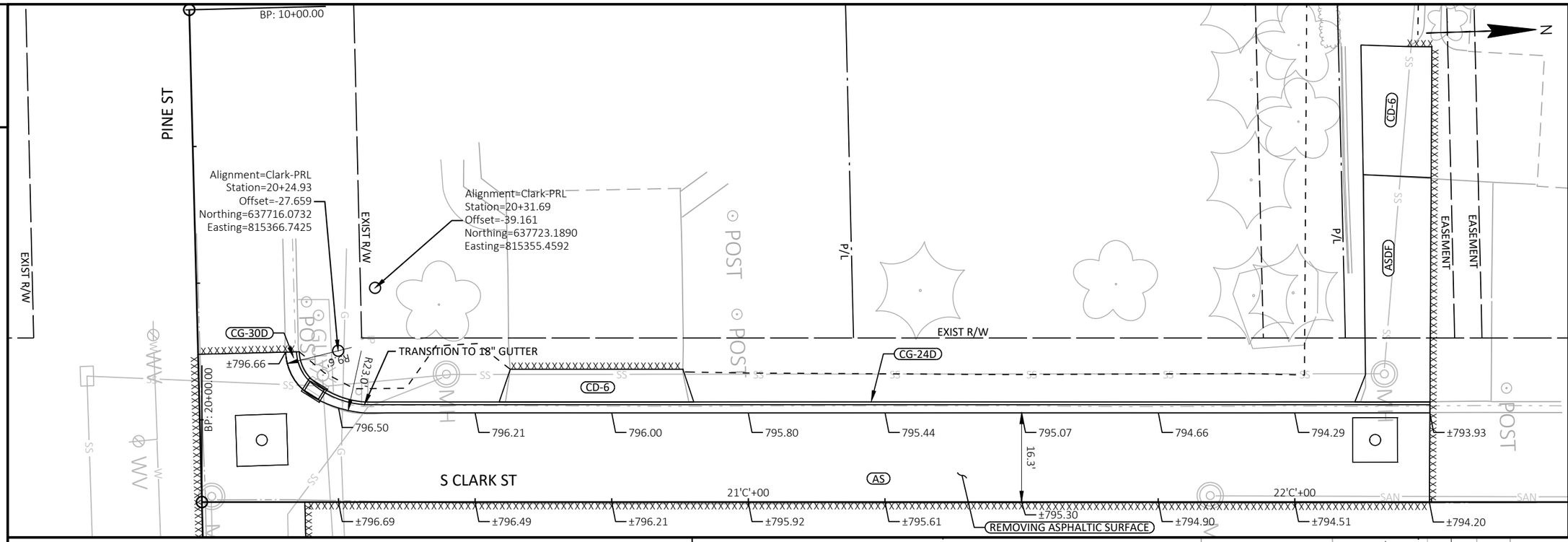

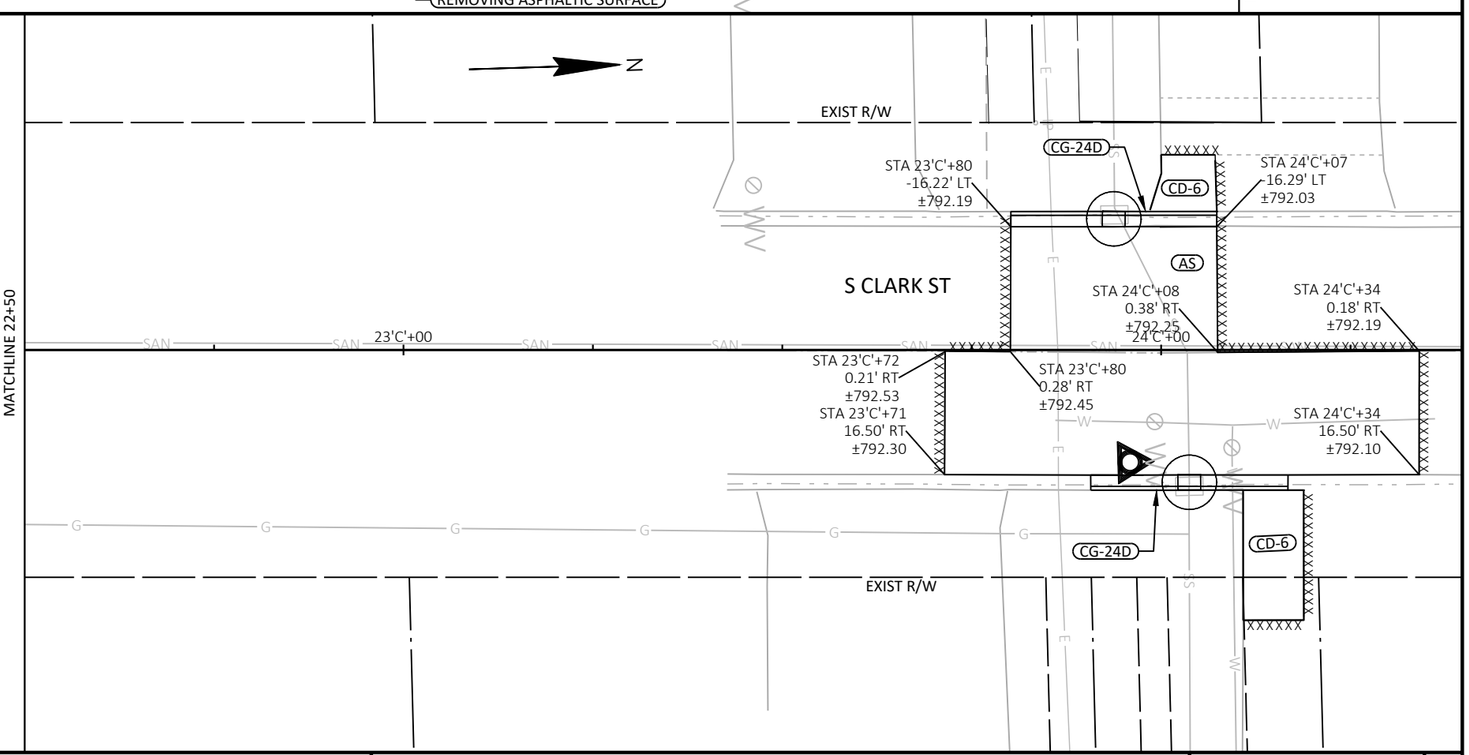

KEY MAP

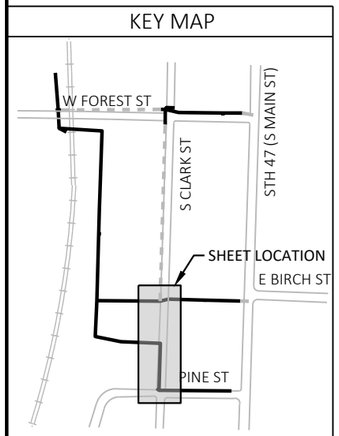

LEGEND

ASDF	ASPHALTIC SURFACE DRIVEWAYS AND FIELD ENTRANCES, 2" MIN (OR MATCH EXISTING) 6" BASE AGGREGATE DENSE 3/4-INCH OVER STORM SEWER TRENCHES
CG-30D	CONCRETE CURB AND GUTTER 30-INCH TYPE D
CG-24D	CONCRETE CURB AND GUTTER 24-INCH TYPE D SPECIAL
CD-6	CONCRETE DRIVEWAY 6-INCH, 4" BASE AGGREGATE DENSE 3/4-INCH OVER STORM SEWER TRENCHES
CS-6	CONCRETE SIDEWALK 6-INCH
CS-4	CONCRETE SIDEWALK 4-INCH
AS	ASPHALTIC SURFACE
XXXXXXX	SAWCUT

PROJECT NO: 6240-31-71	HWY: STH 47	COUNTY: OUTAGAMIE	PLAN DETAILS	SHEET 11	E

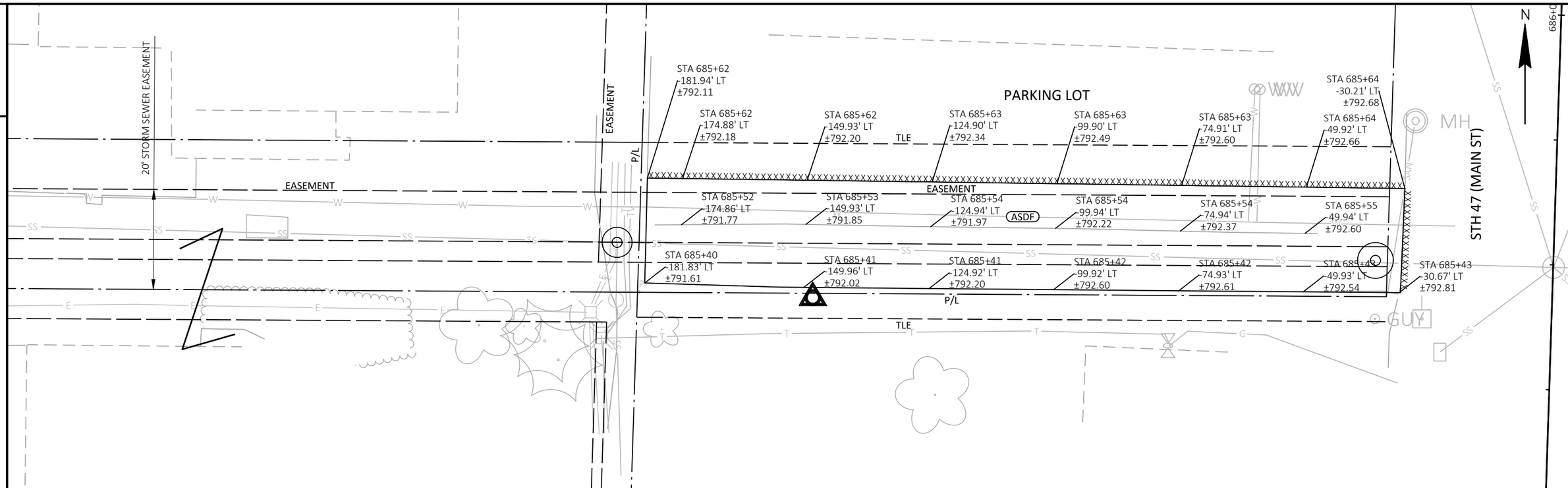

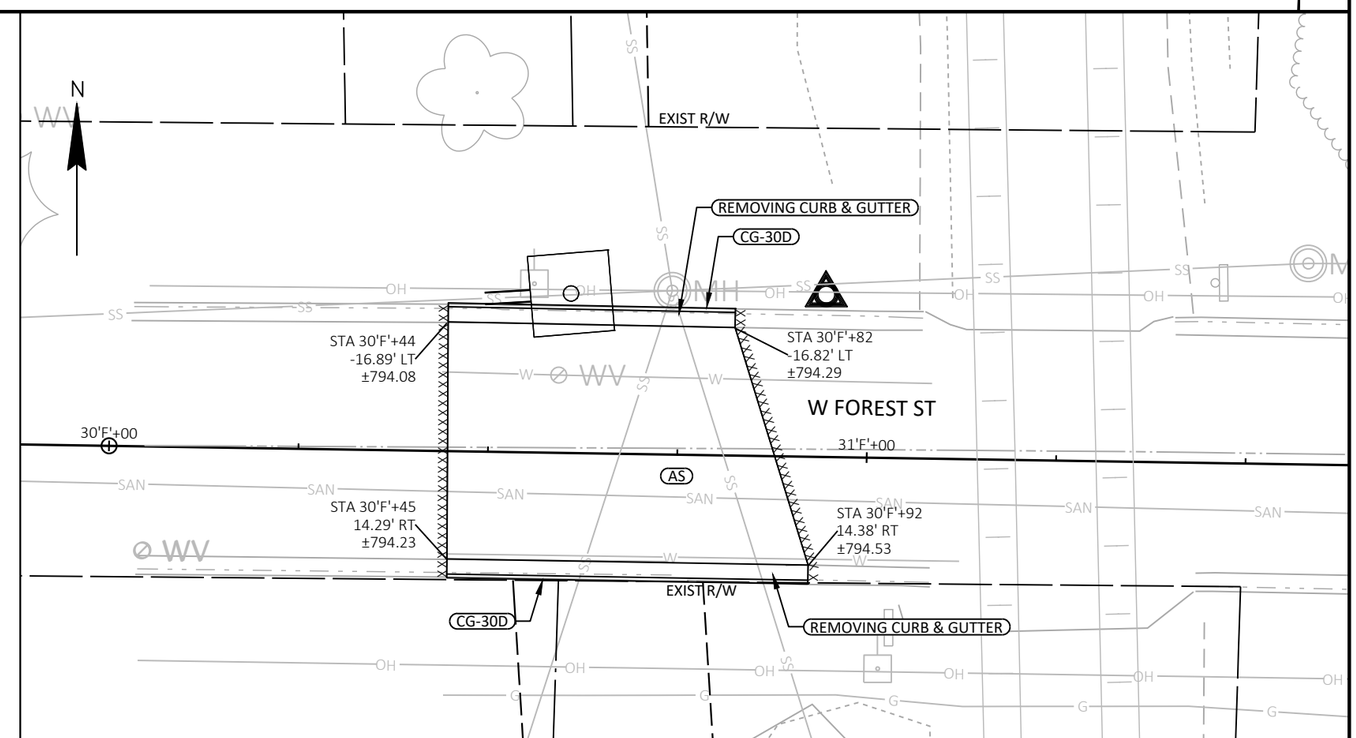

KEY MAP

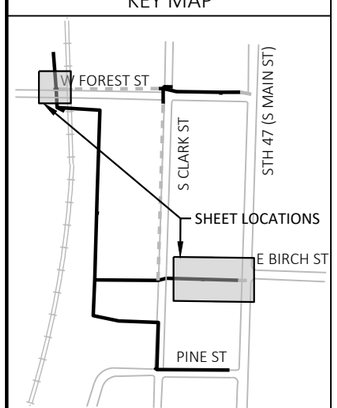

LEGEND

ASDF	ASPHALTIC SURFACE DRIVEWAYS AND FIELD ENTRANCES, 2" MIN (OR MATCH EXISTING) 6" BASE AGGREGATE DENSE 3/4-INCH OVER STORM SEWER TRENCHES
CG-30D	CONCRETE CURB AND GUTTER 30-INCH TYPE D
CG-24D	CONCRETE CURB AND GUTTER 24-INCH TYPE D SPECIAL
CD-6	CONCRETE DRIVEWAY 6-INCH, 4" BASE AGGREGATE DENSE 3/4-INCH OVER STORM SEWER TRENCHES
CS-6	CONCRETE SIDEWALK 6-INCH
CS-4	CONCRETE SIDEWALK 4-INCH
AS	ASPHALTIC SURFACE
XXXXXXX	SAWCUT

PROJECT NO: 6240-31-71	HWY: STH 47	COUNTY: OUTAGAMIE	PLAN DETAILS	SHEET 12	E

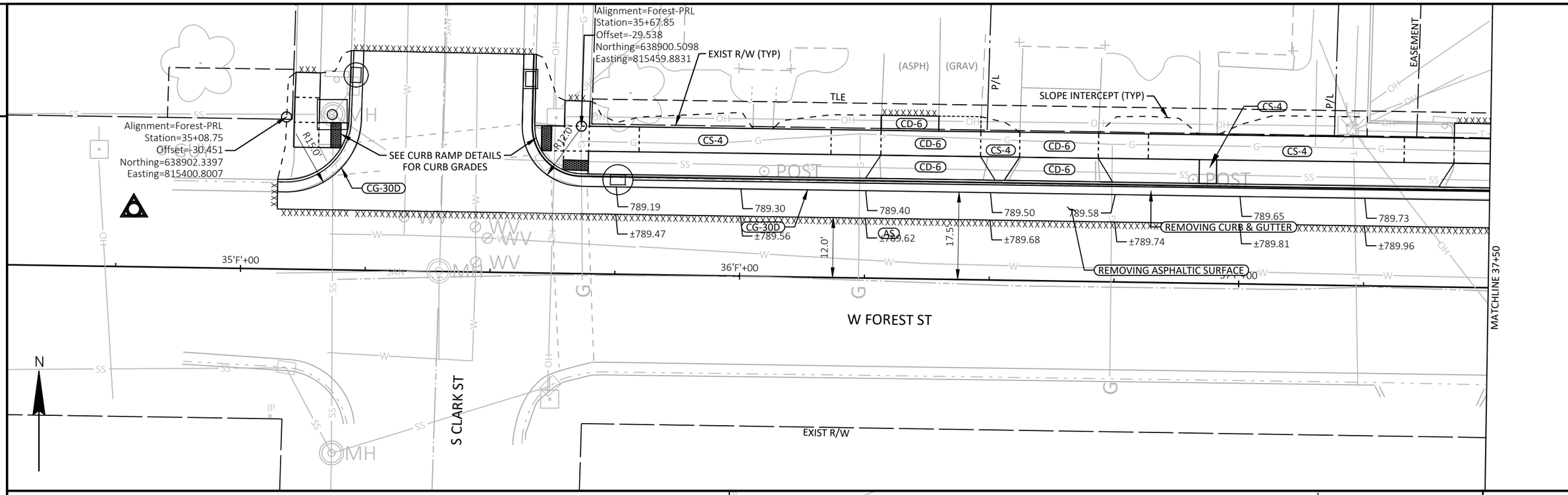

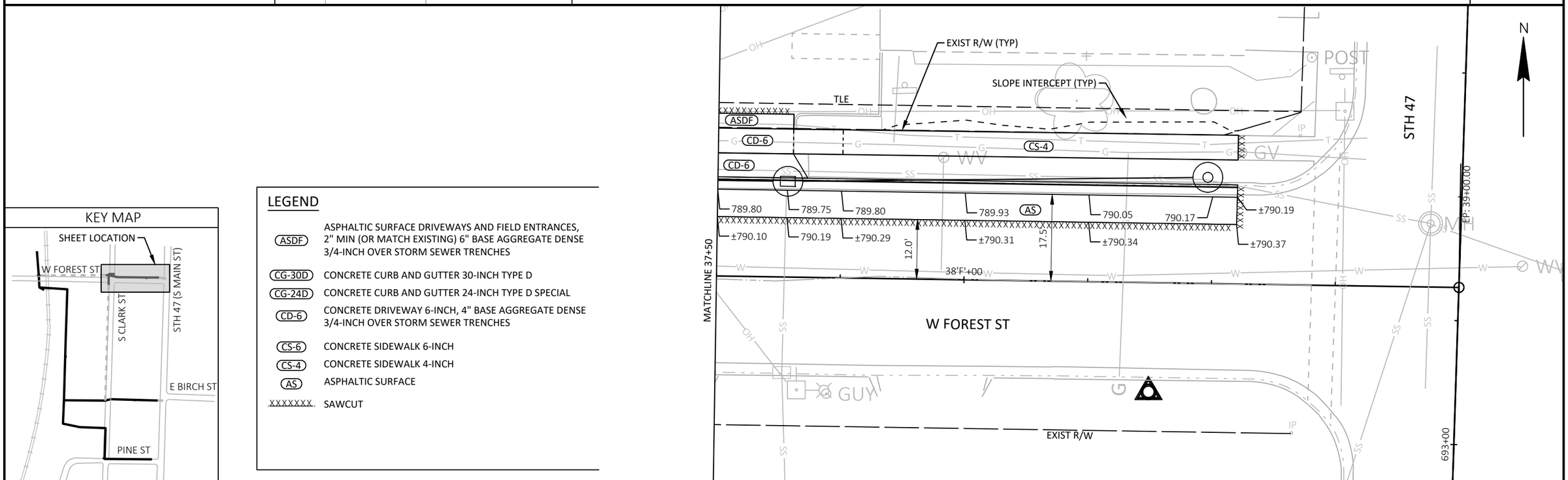

KEY MAP

LEGEND

ASDF	ASPHALTIC SURFACE DRIVEWAYS AND FIELD ENTRANCES, 2" MIN (OR MATCH EXISTING) 6" BASE AGGREGATE DENSE 3/4-INCH OVER STORM SEWER TRENCHES
CG-30D	CONCRETE CURB AND GUTTER 30-INCH TYPE D
CG-24D	CONCRETE CURB AND GUTTER 24-INCH TYPE D SPECIAL
CD-6	CONCRETE DRIVEWAY 6-INCH, 4" BASE AGGREGATE DENSE 3/4-INCH OVER STORM SEWER TRENCHES
CS-6	CONCRETE SIDEWALK 6-INCH
CS-4	CONCRETE SIDEWALK 4-INCH
AS	ASPHALTIC SURFACE
XXXXXXX	SAWCUT

PROJECT NO: 6240-31-71	HWY: STH 47	COUNTY: OUTAGAMIE	PLAN DETAILS	SHEET 13	E

FILE NAME : N:\3001114.00\CIVIL 3D\SHEETSPLAN\624031-021201-PD.DWG
LAYOUT NAME - 624031-021204-pd
PLOT DATE : 8/6/2024 8:48 AM PLOT BY : MATT TOMSOVIC PLOT NAME : PLOT SCALE : ##########

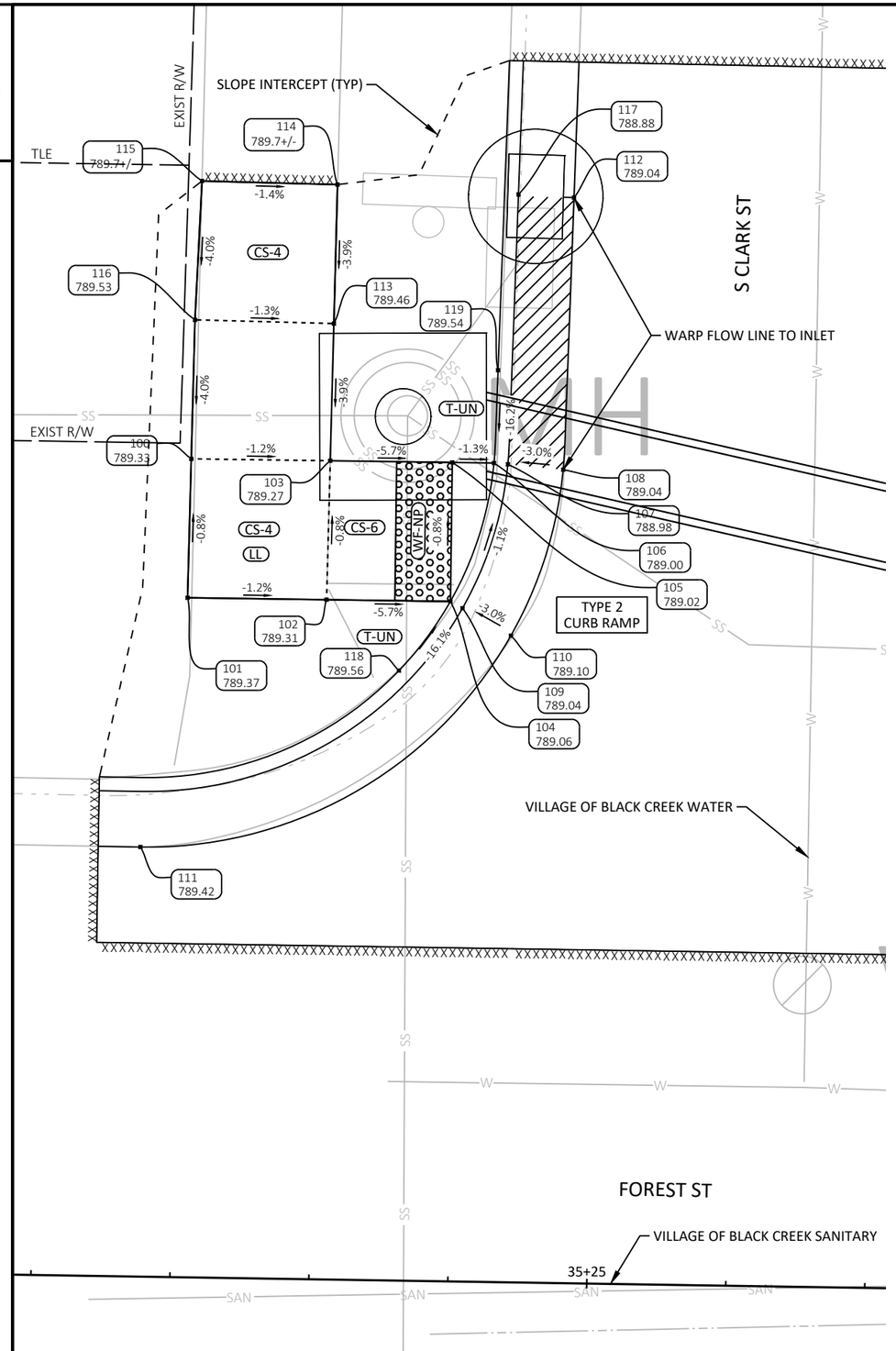

NW QUAD						
POINT	ELEVATION	NORTHING	EASTING	DESCR.	STATION	OFFSET
100	789.33	638,901.31	815,402.35	BOW	35+10.31	29.44' LT
101	789.37	638,896.31	815,402.22	BOW	35+10.26	24.44' LT
102	789.31	638,896.24	815,407.22	SW	35+15.26	24.45' LT
103	789.27	638,901.24	815,407.35	SW	35+15.31	29.45' LT
104	789.06	638,896.18	815,411.68	DWF	35+19.72	24.46' LT
105	789.02	638,901.18	815,411.74	DWF	35+19.71	29.46' LT
106	789.00	638,901.16	815,413.24	BOC	35+21.21	29.46' LT
107	788.98	638,901.11	815,413.74	FL	35+21.71	29.42' LT
108	789.04	638,900.92	815,415.73	FLAG	35+23.70	29.26' LT
109	789.04	638,895.93	815,412.11	FL	35+20.15	24.22' LT
110	789.10	638,894.94	815,413.85	FLAG	35+21.91	23.26' LT
111	789.42	638,887.34	815,400.52	FLAG	35+08.70	15.45' LT
112	789.04	638,910.70	815,416.12	FLAG	35+23.94	39.05' LT
113	789.46	638,906.17	815,407.48	SW	35+15.37	34.39' LT
114	789.66	638,911.17	815,407.62	SW	35+15.42	39.39' LT
115	789.73	638,911.30	815,402.74	SW	35+10.55	39.44' LT
116	789.53	638,906.30	815,402.49	SW	35+10.37	34.44' LT
117	788.88	638,910.81	815,414.12	FL	35+21.94	39.13' LT
118	789.56	638,893.69	815,409.82	BOC	35+17.90	21.94' LT
119	789.54	638,904.49	815,413.39	BOC	35+21.30	32.80' LT

LEGEND

- CS-6 — CONCRETE SIDEWALK 6-INCH
- CS-4 — CONCRETE SIDEWALK 4-INCH
- WF-NP — DETECTABLE WARNING FIELD NATURAL PATINA
- LL — LEVEL LANDING
- T-PT — TAPER-PAVED TRAVERSABLE
- T-UN — TAPER-UNPAVED NONTRAVERSABLE
- XXXXXXX — SAWCUT

N

PROJECT NO: 6240-31-71	HWY: STH 47	COUNTY: OUTAGAMIE	CURB RAMP DETAILS	SHEET 14	E

NE QUAD						
POINT	ELEVATION	NORTHING	EASTING	DESCR.	STATION	OFFSET
150	789.39	638,900.49	815,461.50	BOW	35+69.47	29.54' LT
151	789.37	638,895.49	815,461.34	SW	35+69.38	24.54' LT
152	789.39	638,895.56	815,456.34	SW	35+64.38	24.53' LT
153	789.32	638,900.56	815,456.50	SW	35+64.47	29.53' LT
154	789.17	638,891.61	815,461.21	DWF	35+69.32	20.66' LT
155	789.19	638,891.77	815,456.21	DWF	35+64.32	20.74' LT
156	789.16	638,895.62	815,451.87	DWF	35+59.91	24.52' LT
157	789.09	638,900.62	815,451.87	DWF	35+59.84	29.52' LT
158	789.14	638,890.45	815,461.18	FL	35+69.30	19.50' LT
159	789.22	638,888.45	815,461.15	FLAG	35+69.30	17.50' LT
160	789.17	638,891.31	815,456.01	FL	35+64.12	20.28' LT
161	789.25	638,889.48	815,455.21	FLAG	35+63.35	18.44' LT
162	789.36	638,893.35	815,453.74	BOC	35+61.82	22.29' LT
163	789.19	638,892.98	815,453.41	FL	35+61.50	21.91' LT
164	789.27	638,891.49	815,452.07	FLAG	35+60.18	20.40' LT
165	789.14	638,895.37	815,451.44	FL	35+59.48	24.26' LT
166	789.22	638,894.34	815,449.72	FLAG	35+57.78	23.22' LT
167	789.07	638,900.64	815,450.54	BOC	35+58.50	29.52' LT
168	789.05	638,900.65	815,450.04	FL	35+58.00	29.53' LT
169	789.12	638,900.70	815,448.04	FLAG	35+56.00	29.54' LT
170	789.19	638,888.36	815,467.14	FLAG	35+75.30	17.50' LT
171	789.01	638,909.93	815,448.25	FLAG	35+56.07	38.78' LT
172	789.16	638,890.95	815,461.19	BOC	35+69.30	20.00' LT
173	789.72	638,895.35	815,471.43	SW	35+79.48	24.56' LT
174	789.80	638,900.35	815,471.50	SW	35+79.47	29.56' LT
175	789.57	638,905.49	815,461.66	SW	35+69.55	34.54' LT
176	789.47	638,905.65	815,456.62	SW	35+64.50	34.63' LT
177	789.55	638,903.64	815,450.61	BOC	35+58.53	32.52' LT
178	789.65	638,890.90	815,464.19	BOC	35+72.30	20.00' LT

LEGEND

- CS-6 — CONCRETE SIDEWALK 6-INCH
- CS-4 — CONCRETE SIDEWALK 4-INCH
- WF-NP — DETECTABLE WARNING FIELD NATURAL PATINA
- LL — LEVEL LANDING
- T-PT — TAPER-PAVED TRAVERSABLE
- T-UN — TAPER-UNPAVED NONTRAVERSABLE
- XXXXXXX — SAWCUT

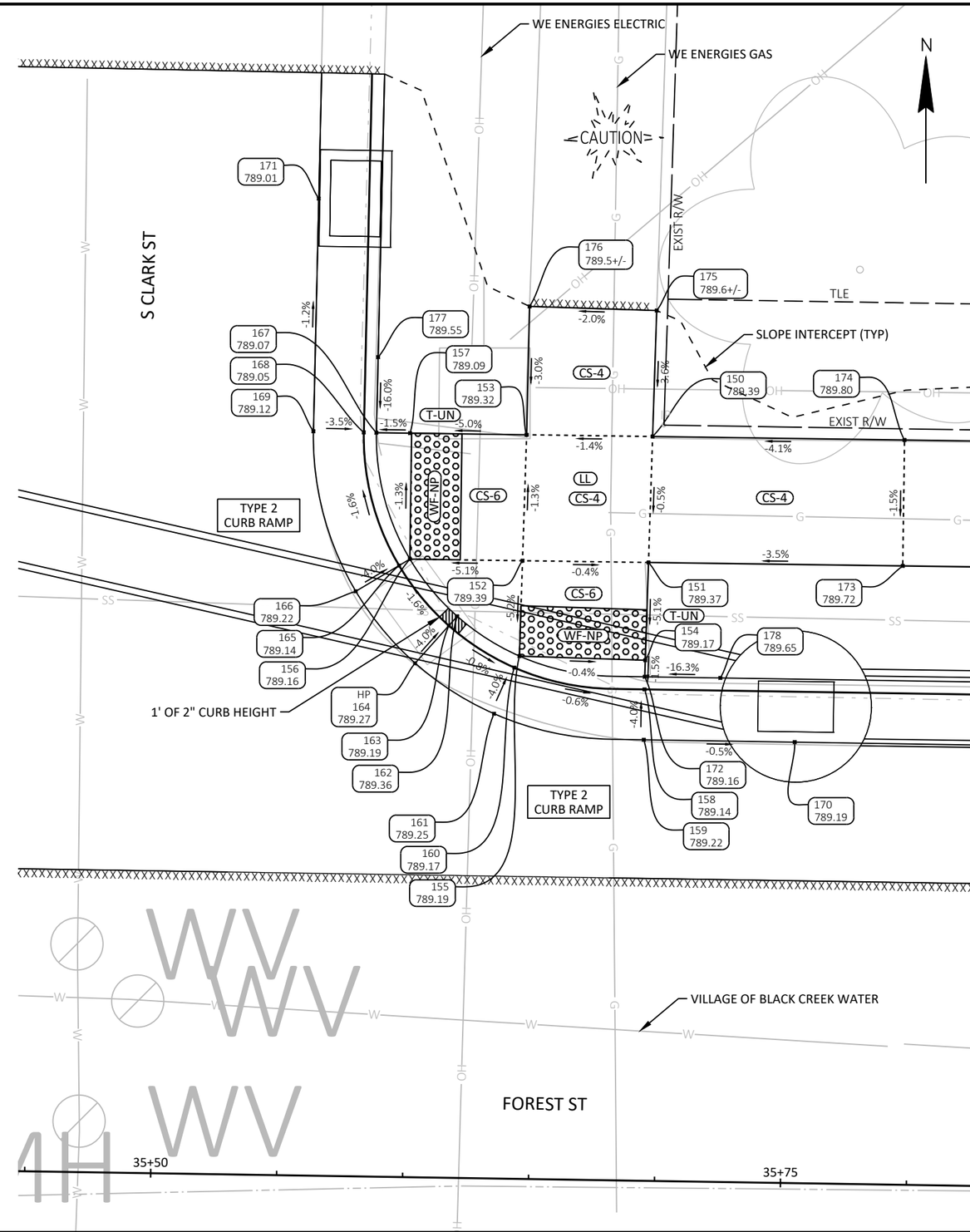

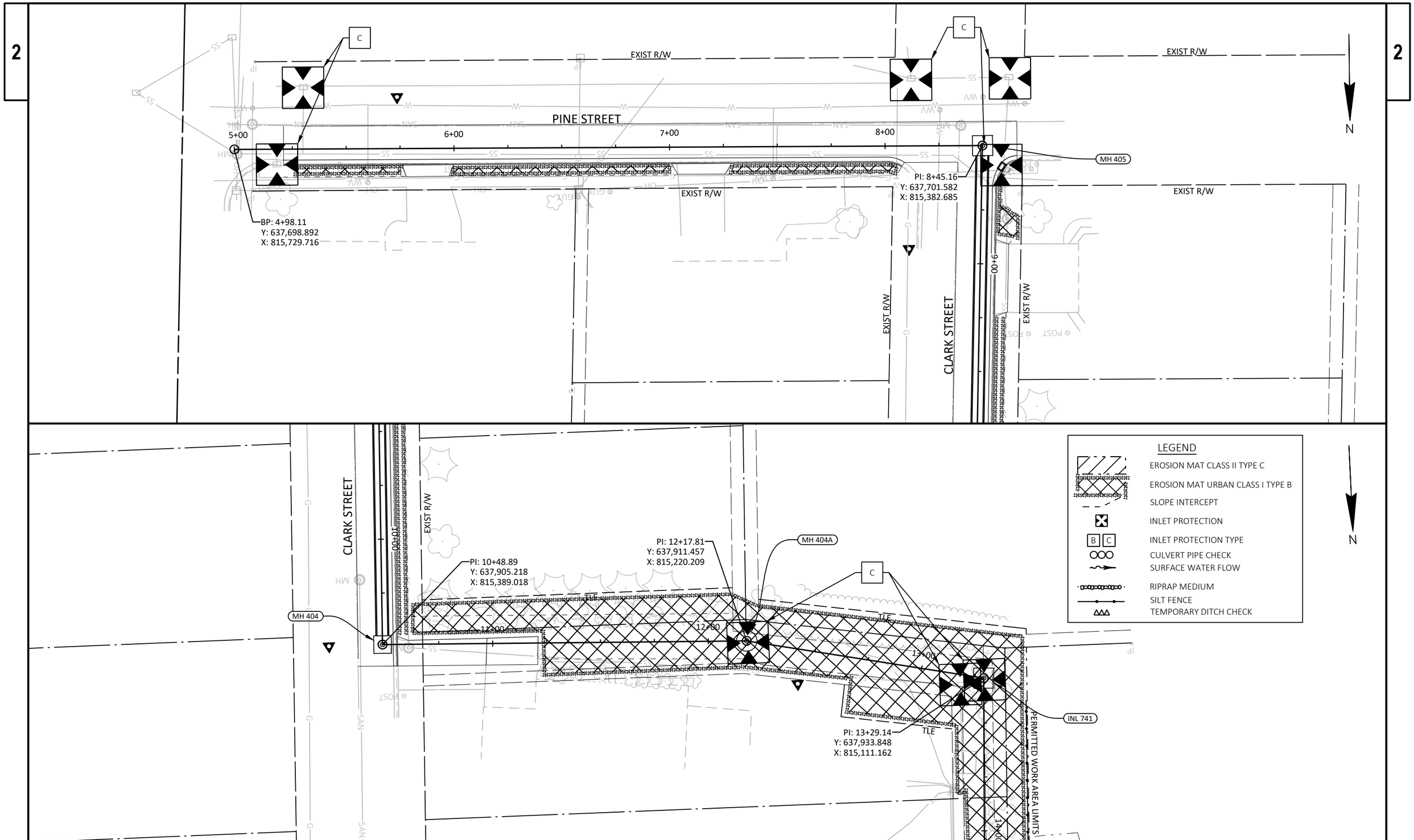

PROJECT NO: 6240-31-71	HWY: STH 47	COUNTY: OUTAGAMIE	EROSION CONTROL	SHEET 16	E

FILE NAME : N:\3001114.00\CIVIL 3D\SHEETSPLAN\624031-022001-EC.DWG
LAYOUT NAME - 624031-022001-ec
PLOT DATE : 3/12/2025 10:12 AM
PLOT BY : MATT TOMSOVIC
PLOT NAME :
PLOT SCALE : 1 IN:40 FT

WISDOT/CADDS SHEET 44

2

DELINEATED WETLANDS (TYP)

PI: 14+82.14
Y: 638,086.706
X: 815,117.720

B

PERMITTED WORK AREA LIMITS (TYP)

MITS

14+00

15+00

16+00

17+00

18+00

19+00

20+00

PLE

TLE

INL 402

Y: 638,464.248
X: 815,128.392

MH 432

PERMITTED WORK AREA LIMITS (TYP)

EXIST R/W

DELINEATED WETLANDS (TYP)

PERMITTED WORK AREA LIMITS (TYP)

N

2

DELINEATED WETLANDS (TYP)

EXIST R/W

22+00

FOX VALLEY & LAKE SUPERIOR RAIL SYSTEM, LLC

EXIST R/W

EXIST R/W

PERMITTED WORK AREA LIMITS (TYP)

PI: 22+06.16
Y: 638,810.393
X: 815,139.636

20+00

21+00

22+00

PLE

MH 860

EXIST R/W

WEST FOREST STREET

6+00

7+00

N

LEGEND

EROSION MAT CLASS II TYPE C

EROSION MAT URBAN CLASS I TYPE B

SLOPE INTERCEPT

INLET PROTECTION

B C INLET PROTECTION TYPE

CULVERT PIPE CHECK

SURFACE WATER FLOW

RIPRAP MEDIUM

SILT FENCE

TEMPORARY DITCH CHECK

PROJECT NO: 6240-31-71	HWY: STH 47	COUNTY: OUTAGAMIE	EROSION CONTROL	SHEET 17	E

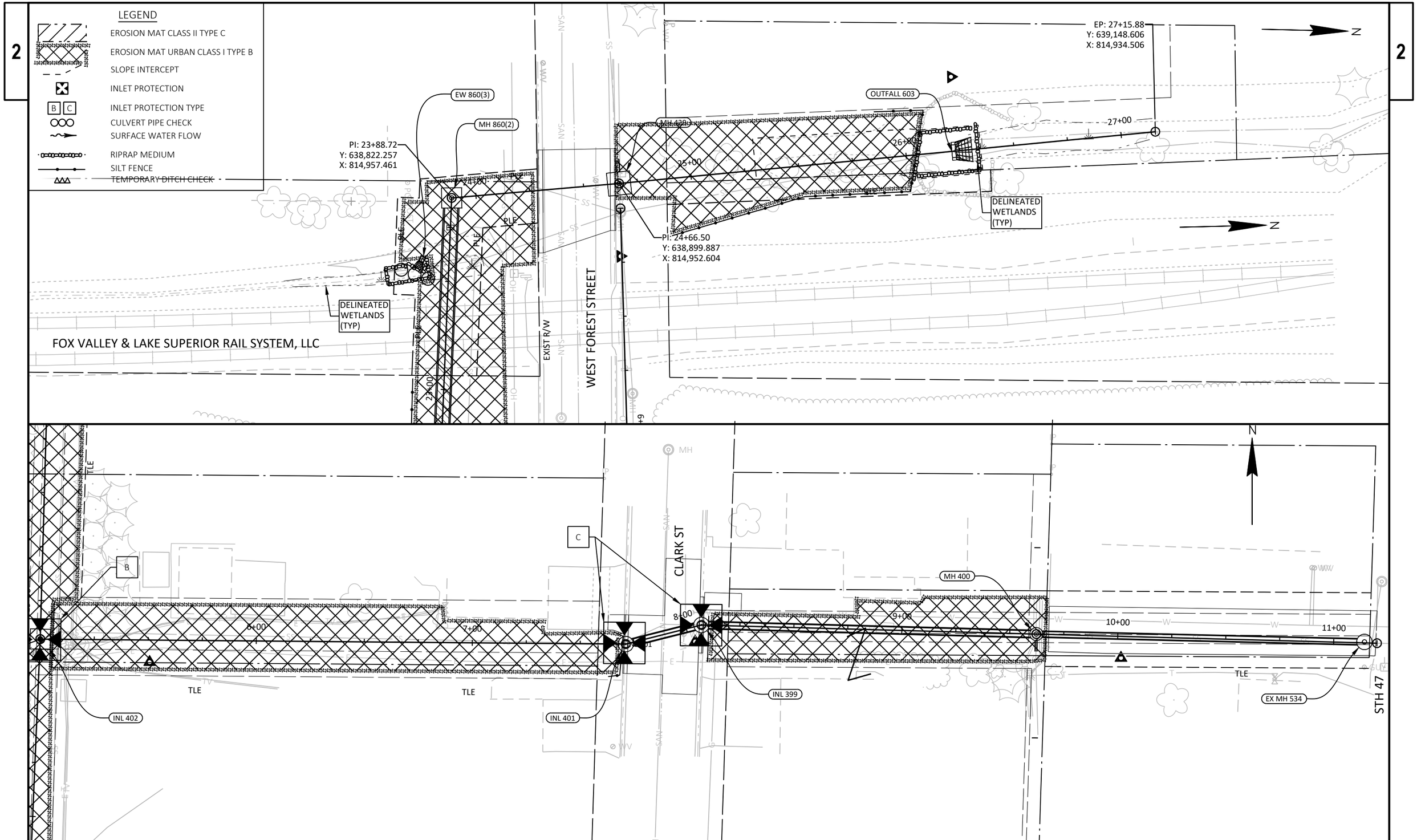

PROJECT NO: 6240-31-71	HWY: STH 47	COUNTY: OUTAGAMIE	EROSION CONTROL	SHEET 18	E

FILE NAME : N:\3001114.00\CIVIL 3D\SHEETSPLAN\624031-022001-EC.DWG
LAYOUT NAME - 624031-022003-ec
PLOT DATE : 3/12/2025 10:12 AM PLOT BY : MATT TOMSOVIC PLOT NAME : PLOT SCALE : ##########

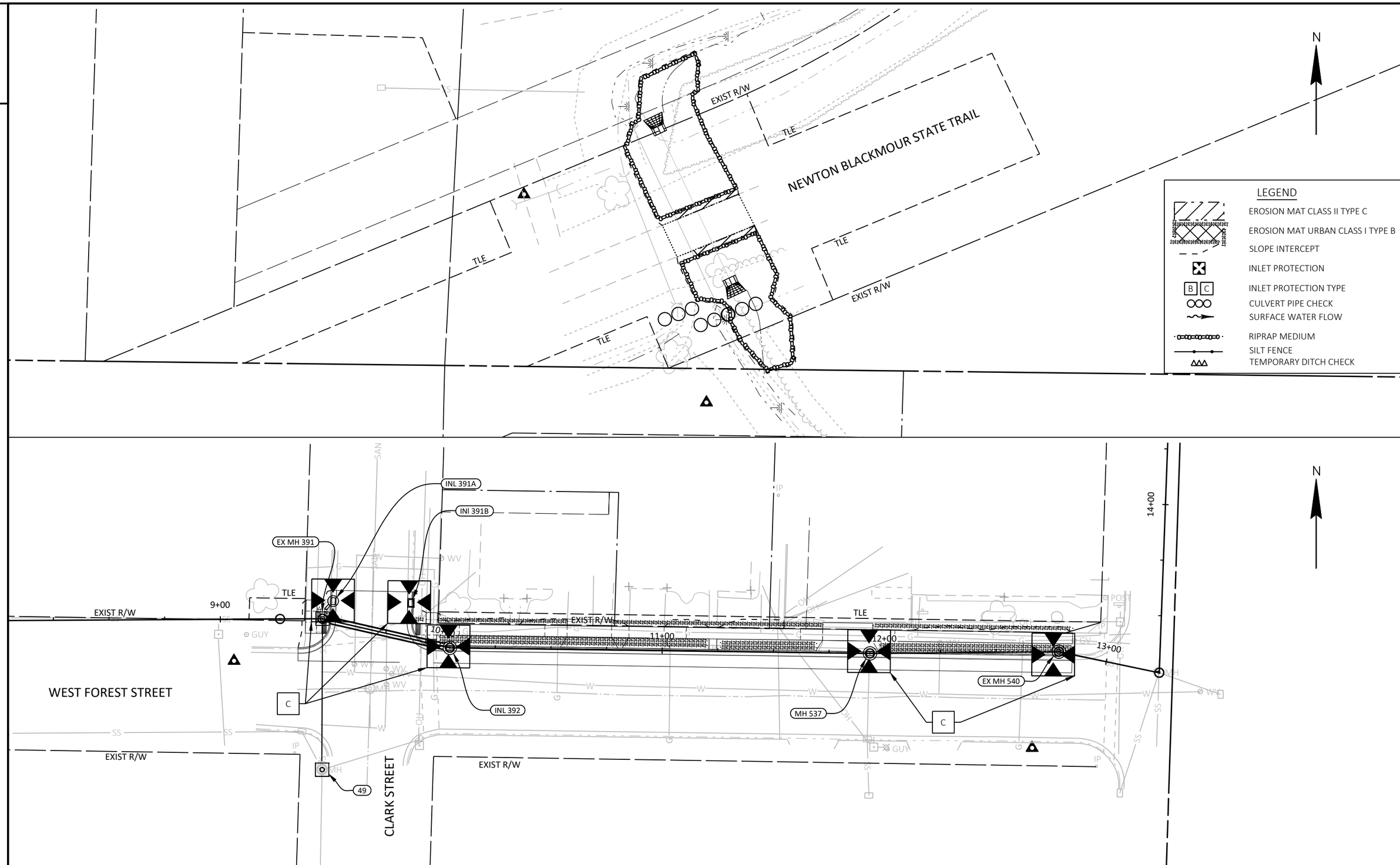

PROJECT NO: 6240-31-71	HWY: STH 47	COUNTY: OUTAGAMIE	EROSION CONTROL	SHEET 19	E

FILE NAME : N:\3001114.00\CIVIL 3D\SHEETSPLAN\624031-022001-EC.DWG
LAYOUT NAME - 624031-022004-ec
PLOT DATE : 3/12/2025 10:12 AM PLOT BY : MATT TOMSOVIC PLOT NAME : PLOT SCALE : ##########

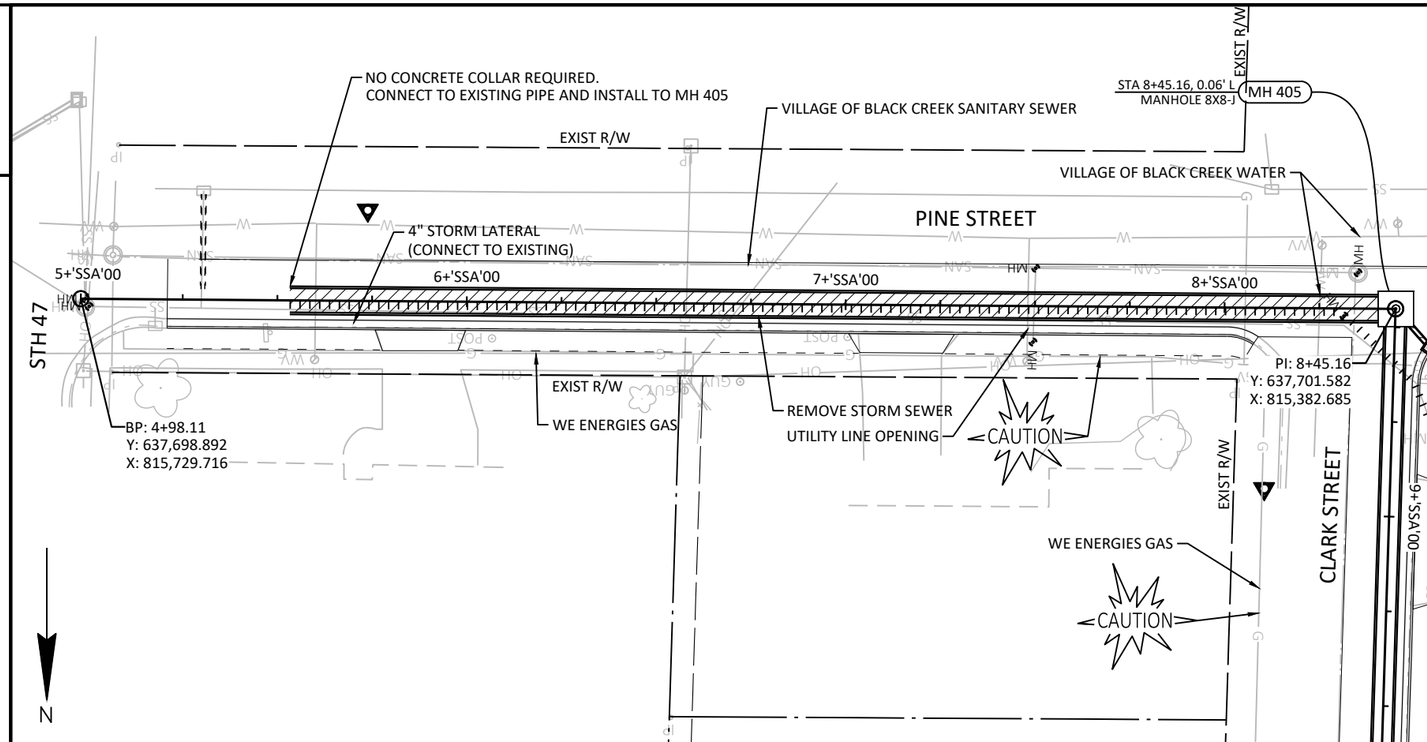

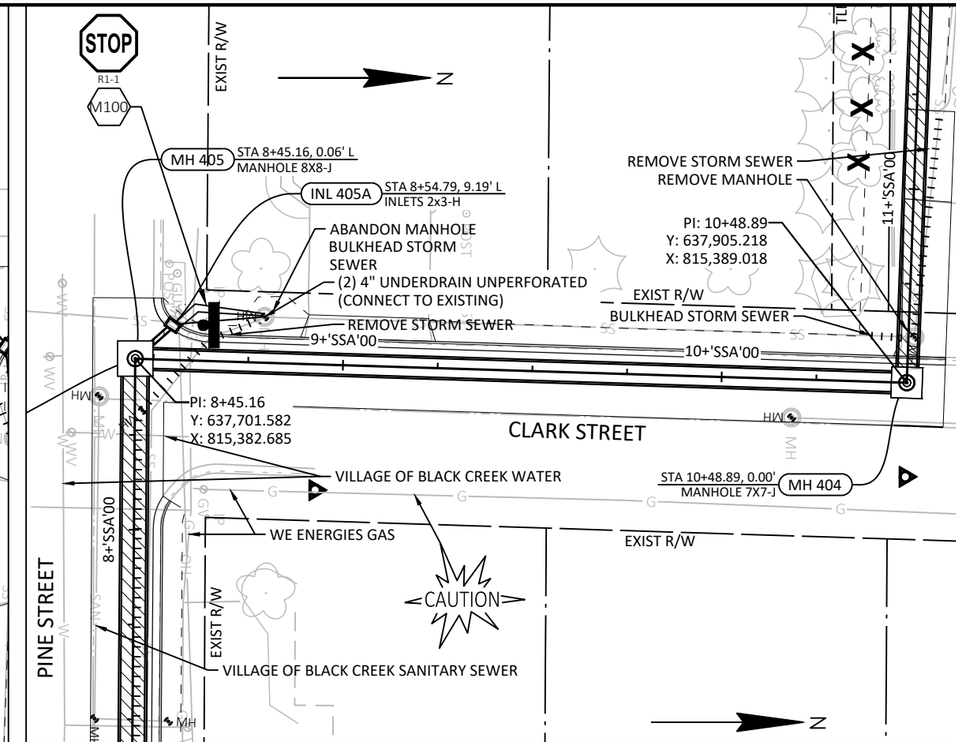

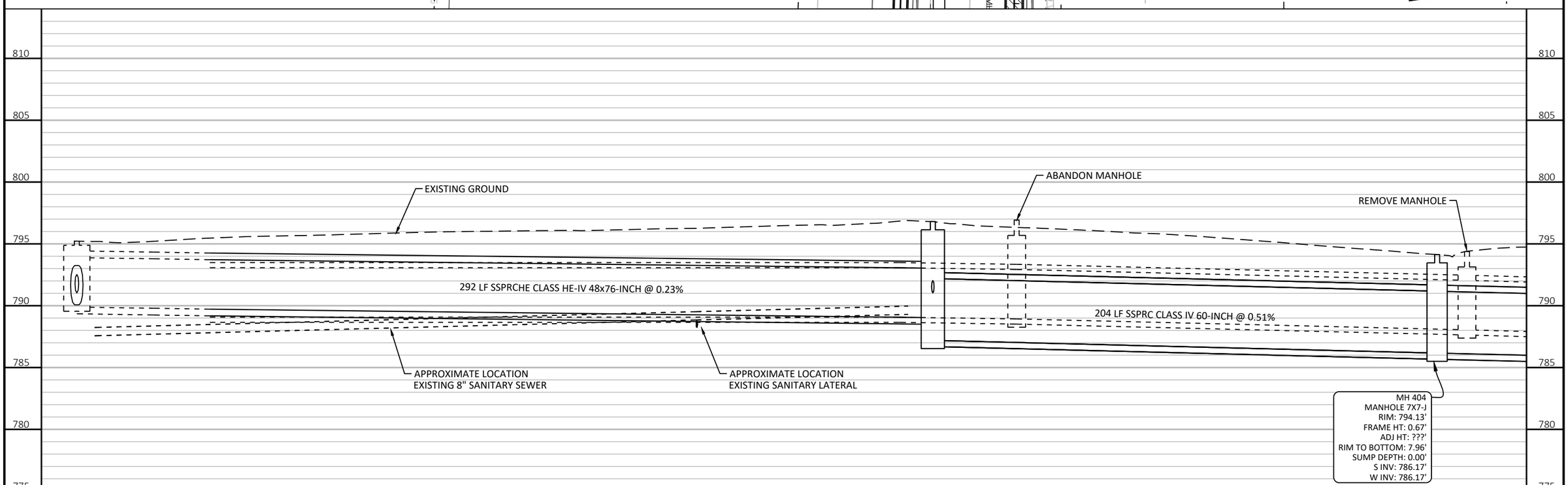

PROJECT NO: 6240-31-71	HWY: STH 47	COUNTY: OUTAGAMIE	STORM SEWER	SHEET 20	E

2

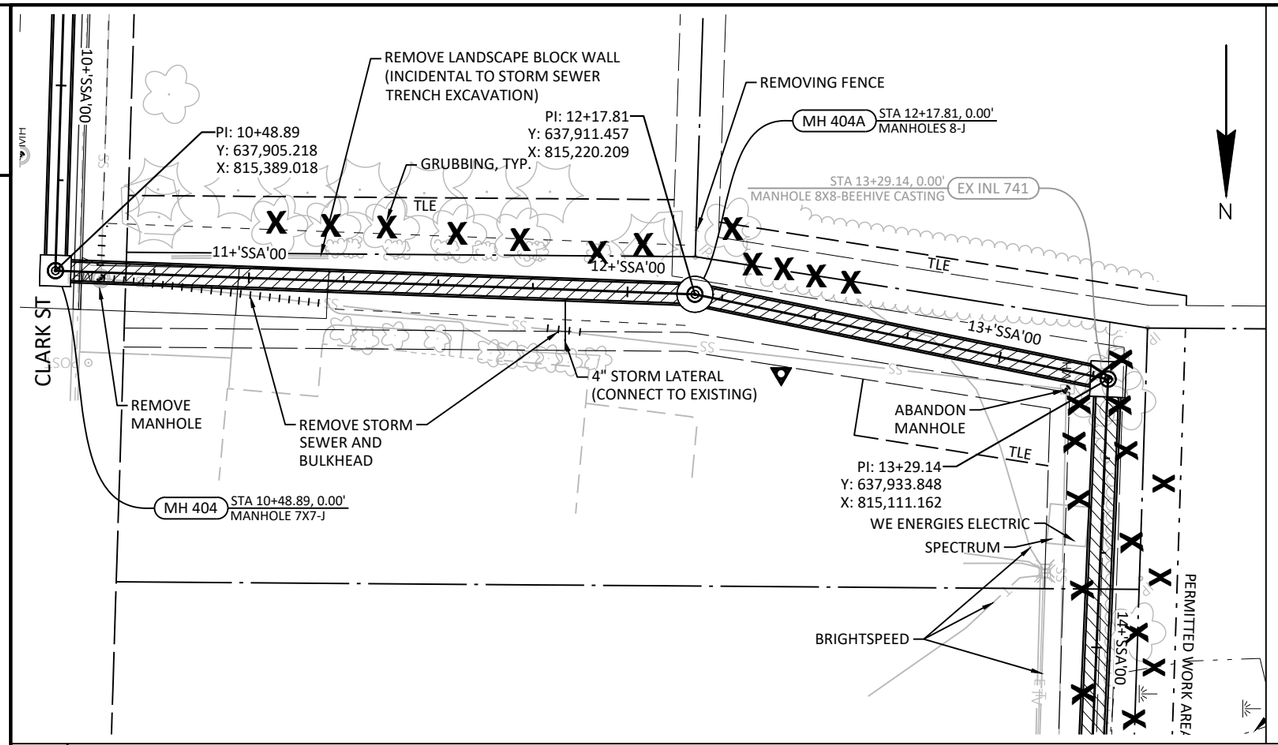

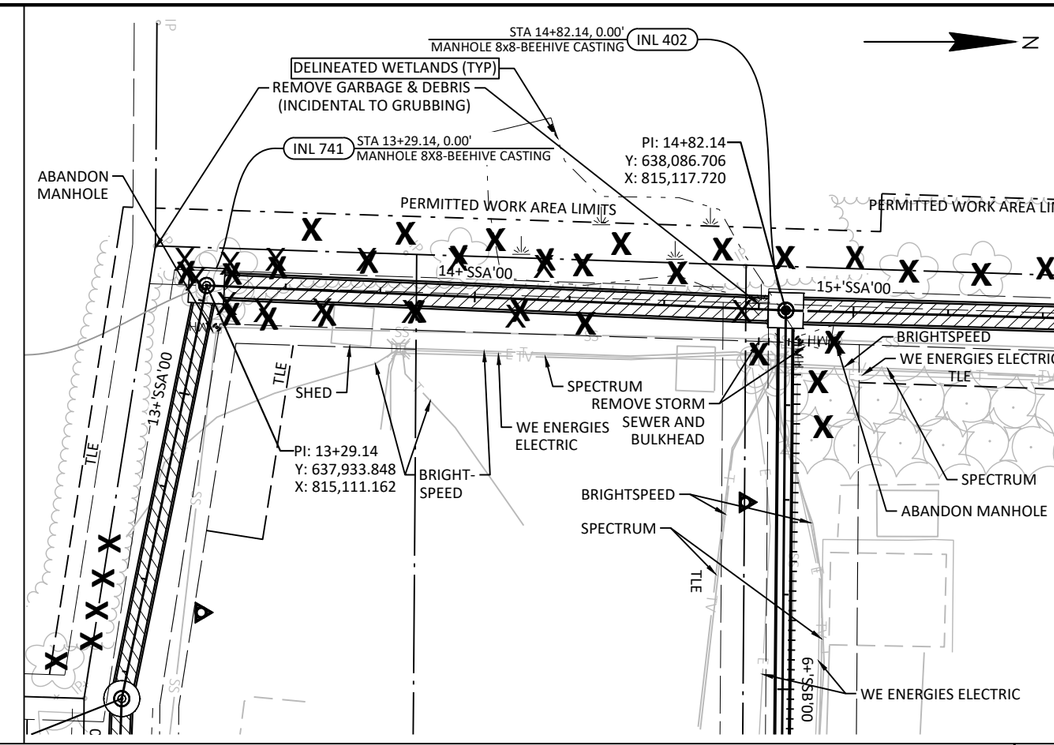

2

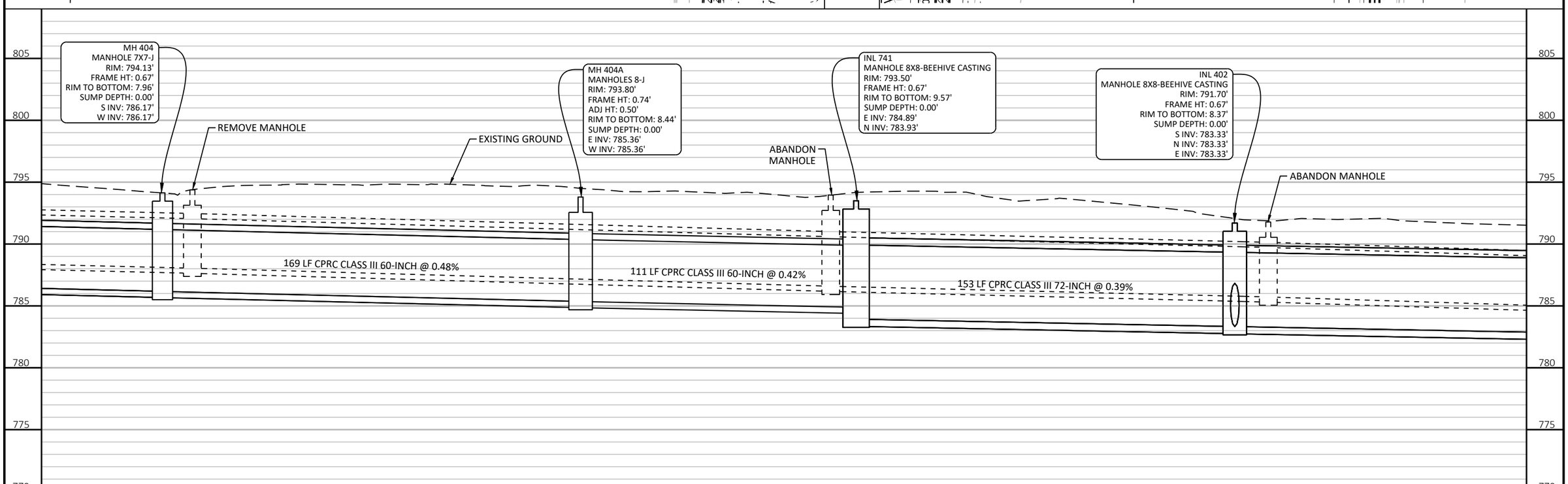

PROJECT NO: 6240-31-71	HWY: STH 47	COUNTY: OUTAGAMIE	STORM SEWER	SHEET 21	E

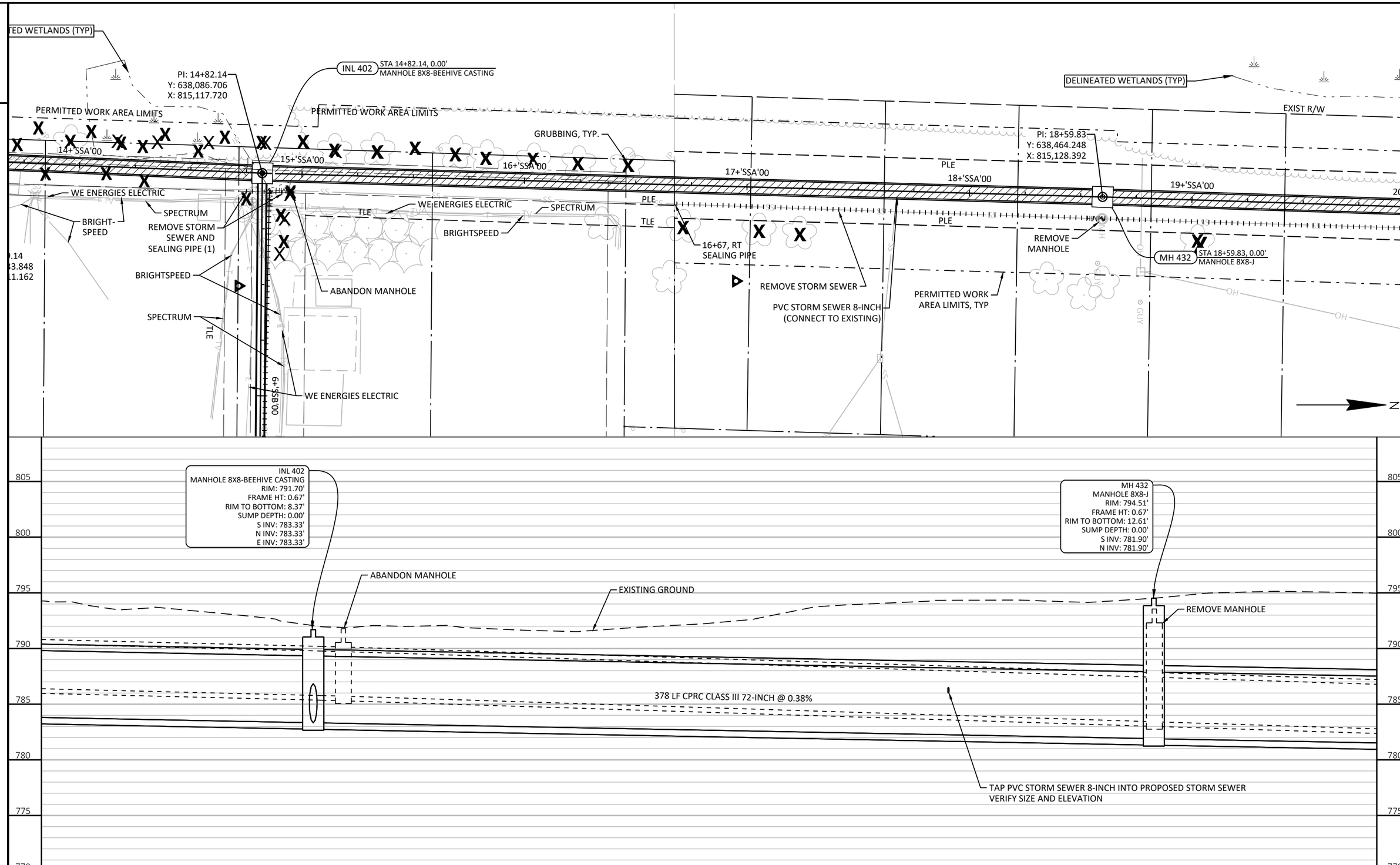

PROJECT NO: 6240-31-71	HWY: STH 47	COUNTY: OUTAGAMIE	STORM SEWER	SHEET 22	E

FILE NAME : N:\3001114.00\CIVIL 3D\SHEETSPLAN\624031-022501-SS.DWG
LAYOUT NAME - 624031-022503-ss
PLOT DATE : 3/14/2025 7:35 AM PLOT BY : MATT TOMSOVIC PLOT NAME : PLOT SCALE : ##########

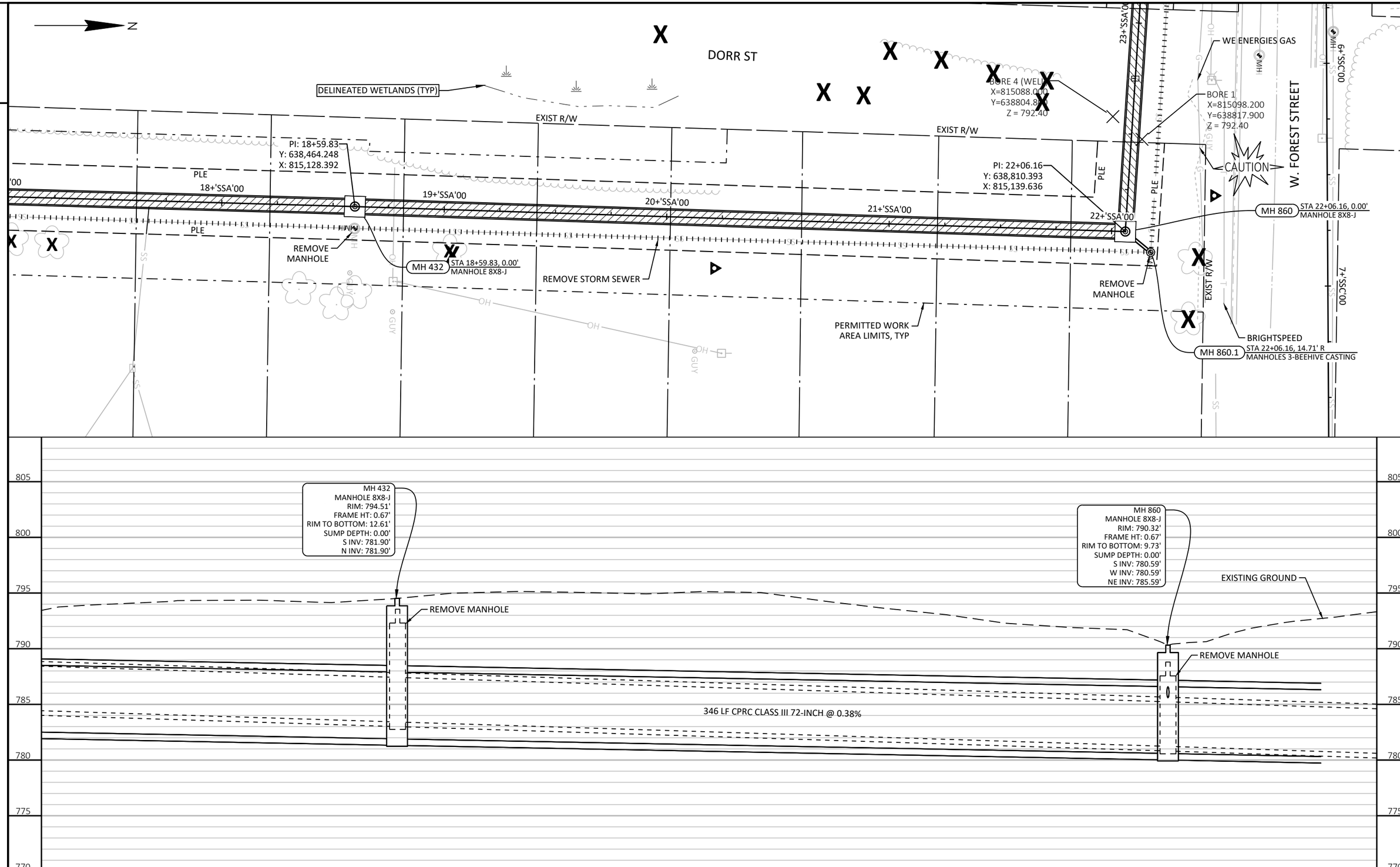

PROJECT NO: 6240-31-71	HWY: STH 47	COUNTY: OUTAGAMIE	STORM SEWER	SHEET 23	E

FILE NAME : N:\3001114.00\CIVIL 3D\SHEETSPLAN\624031-022501-SS.DWG
LAYOUT NAME - 624031-022504-ss
PLOT DATE : 2/3/2025 7:09 AM PLOT BY : MATT TOMSOVIC PLOT NAME : PLOT SCALE : ##########

2

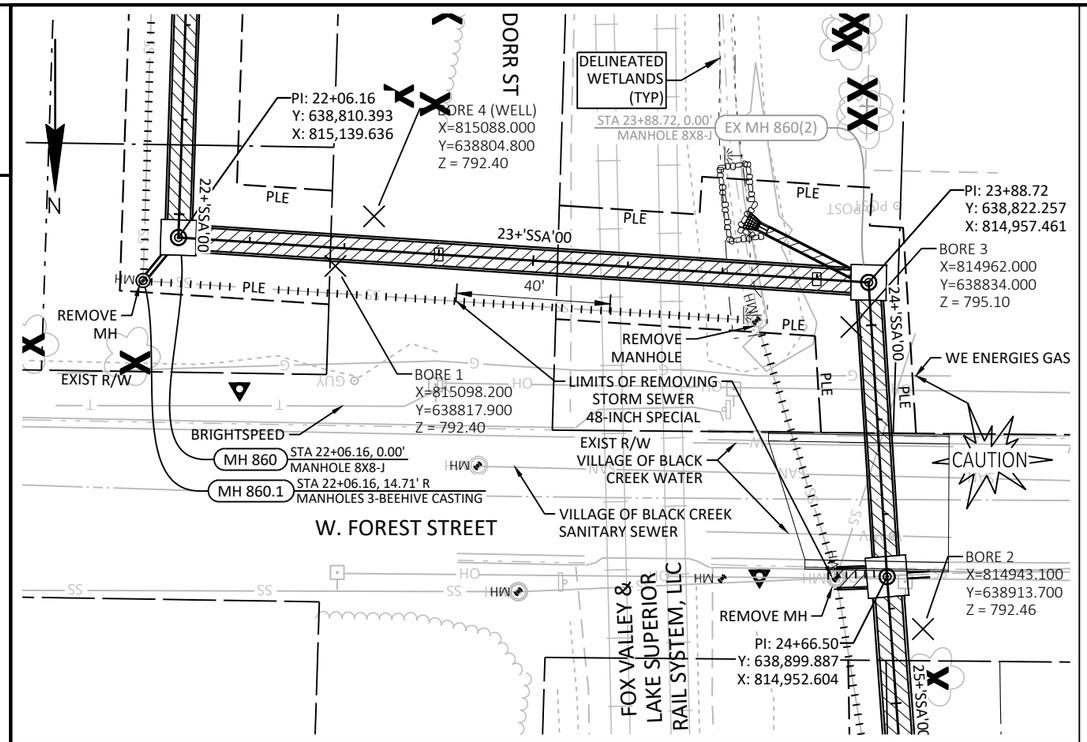

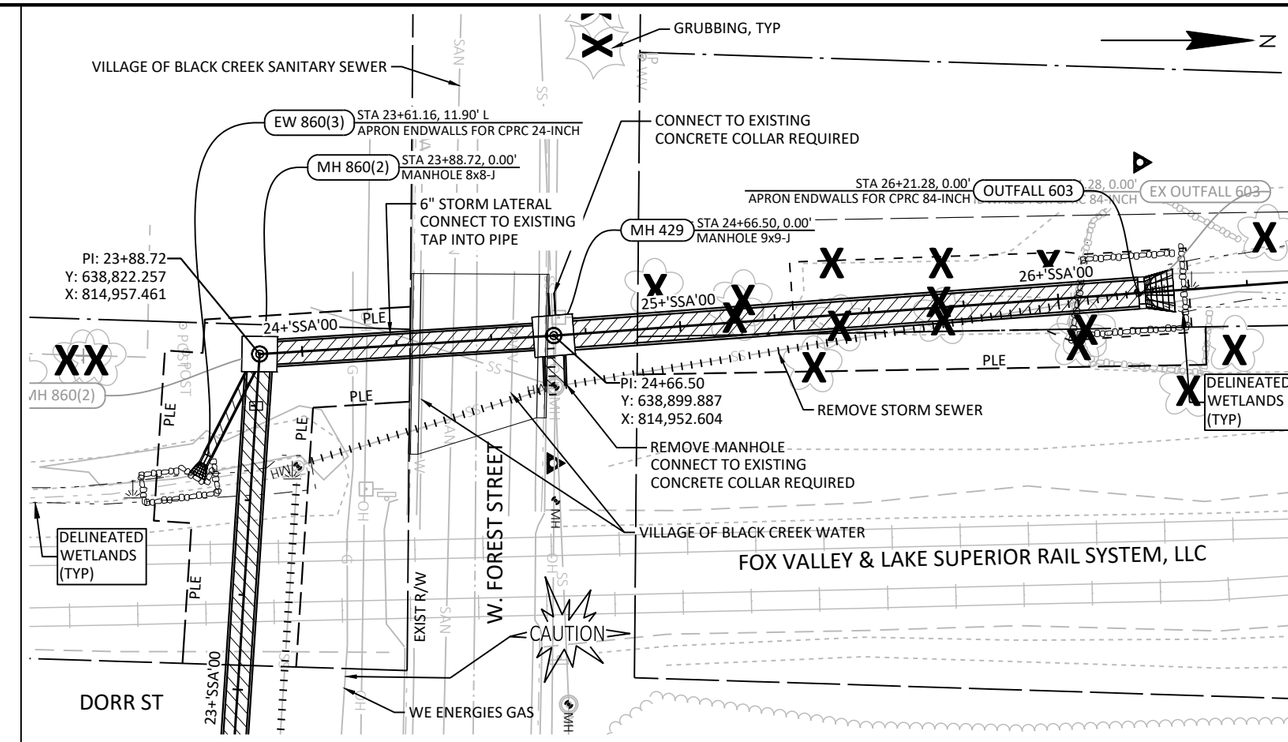

2

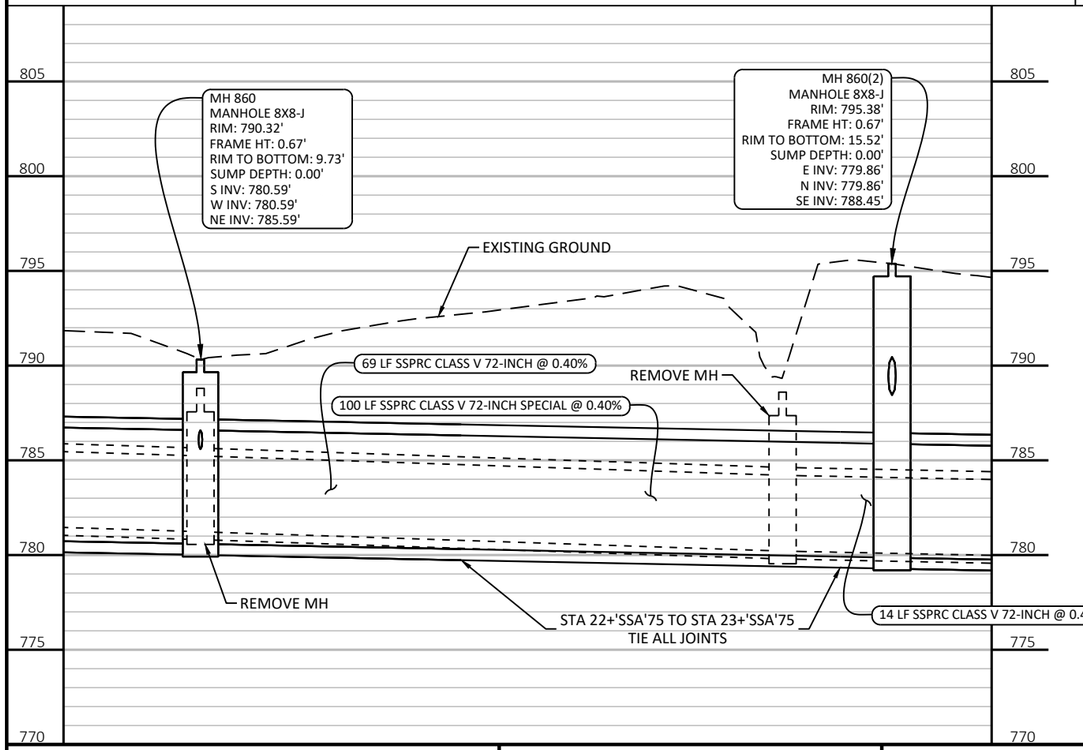

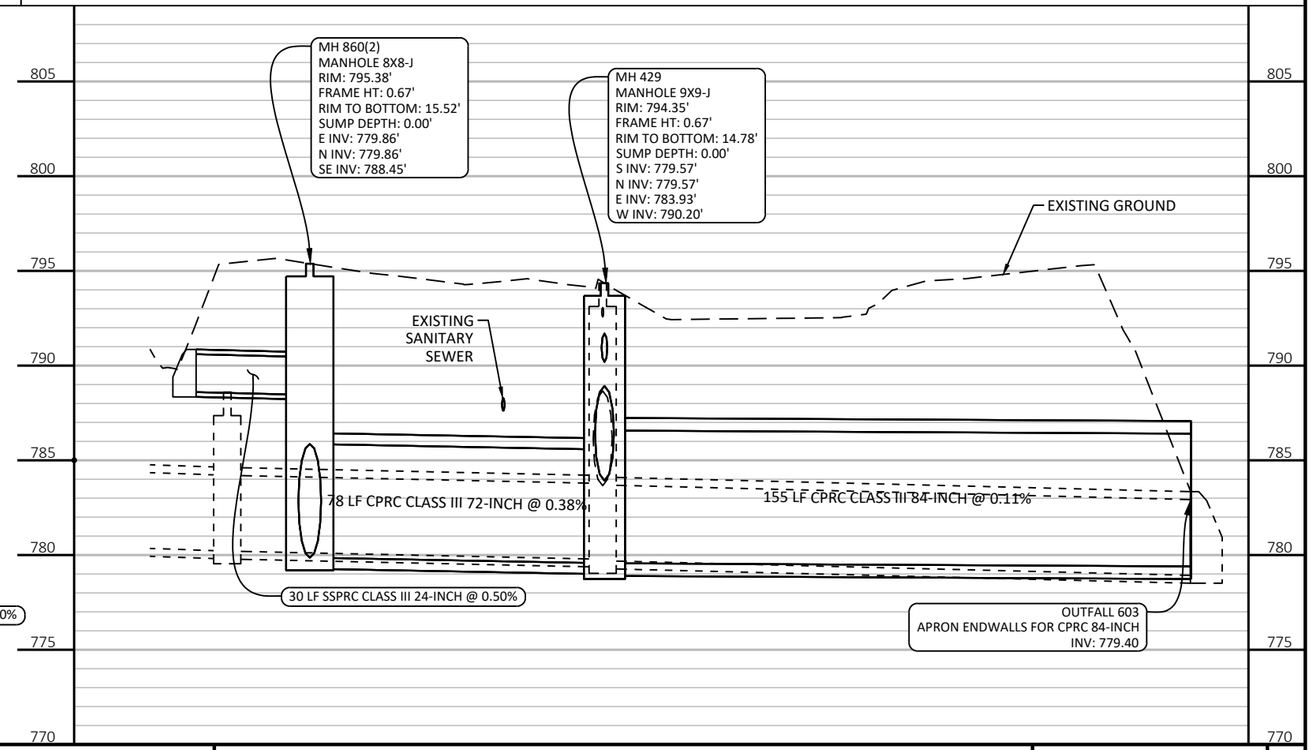

PROJECT NO: 6240-31-71	HWY: STH 47	COUNTY: OUTAGAMIE	STORM SEWER	SHEET 24	E

2

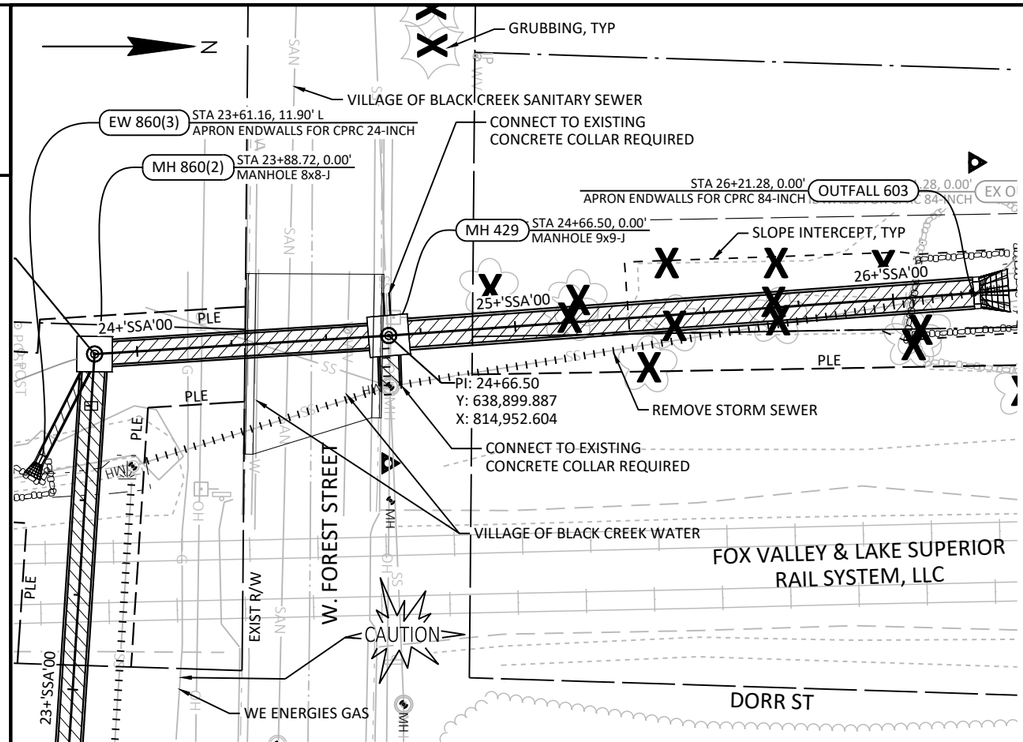

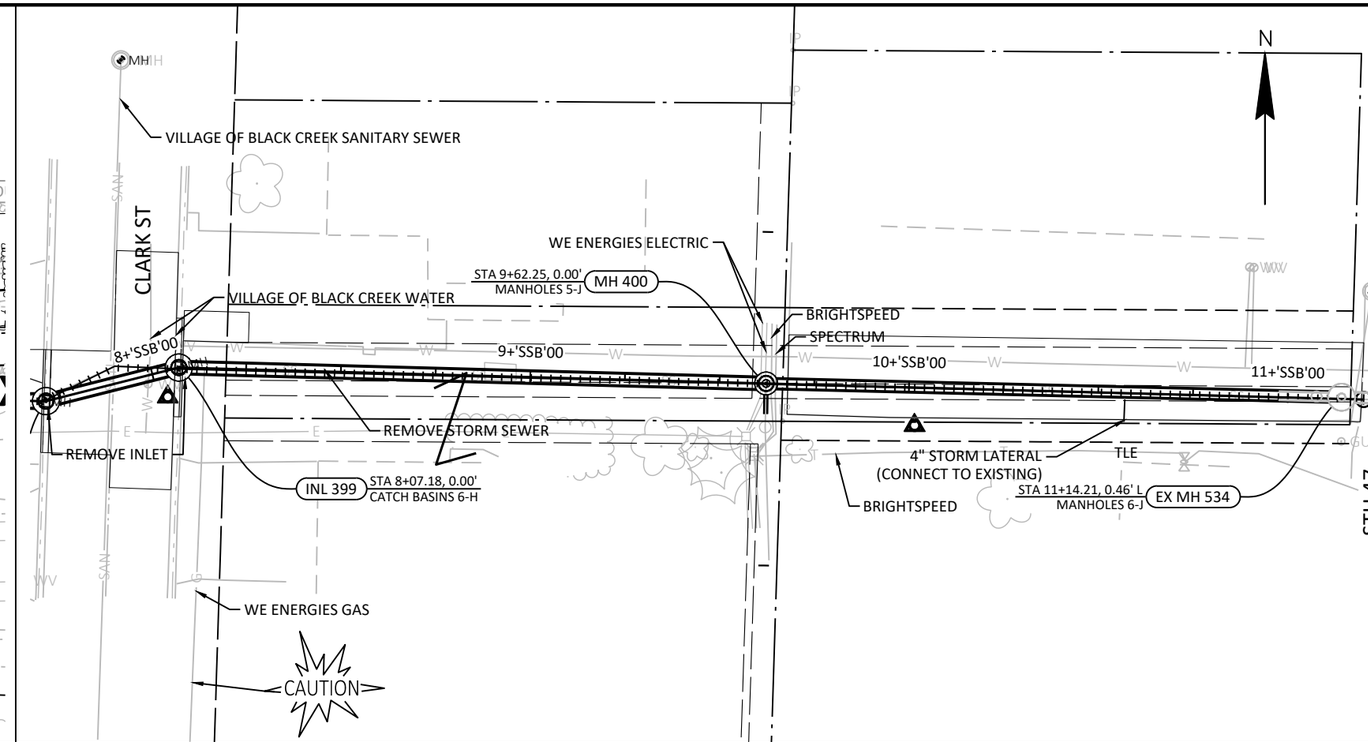

2

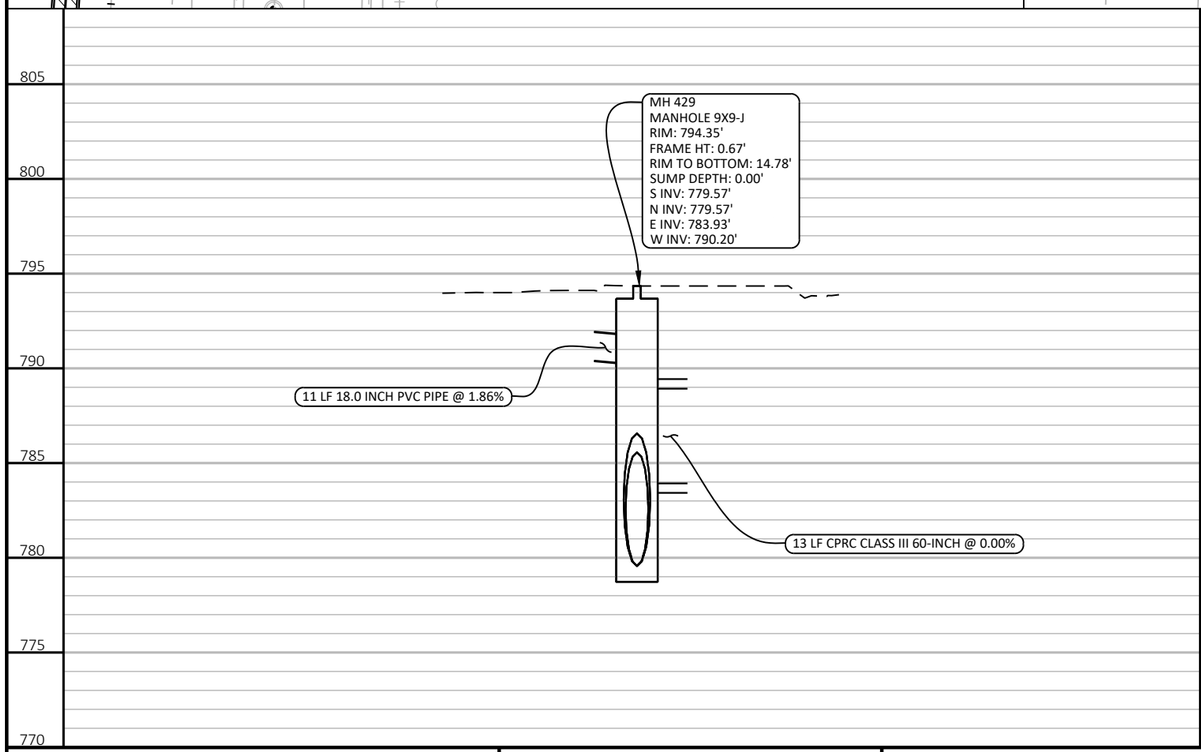

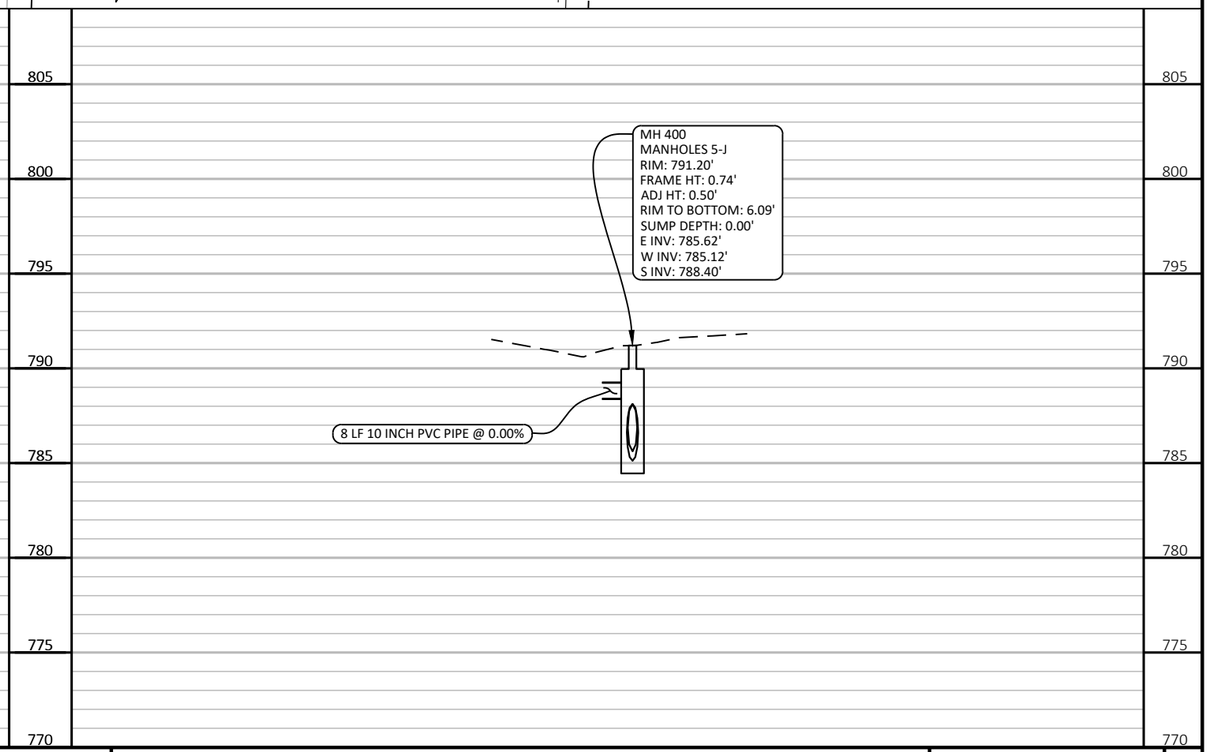

PROJECT NO: 6240-31-71	HWY: STH 47	COUNTY: OUTAGAMIE	STORM SEWER	SHEET 25	E

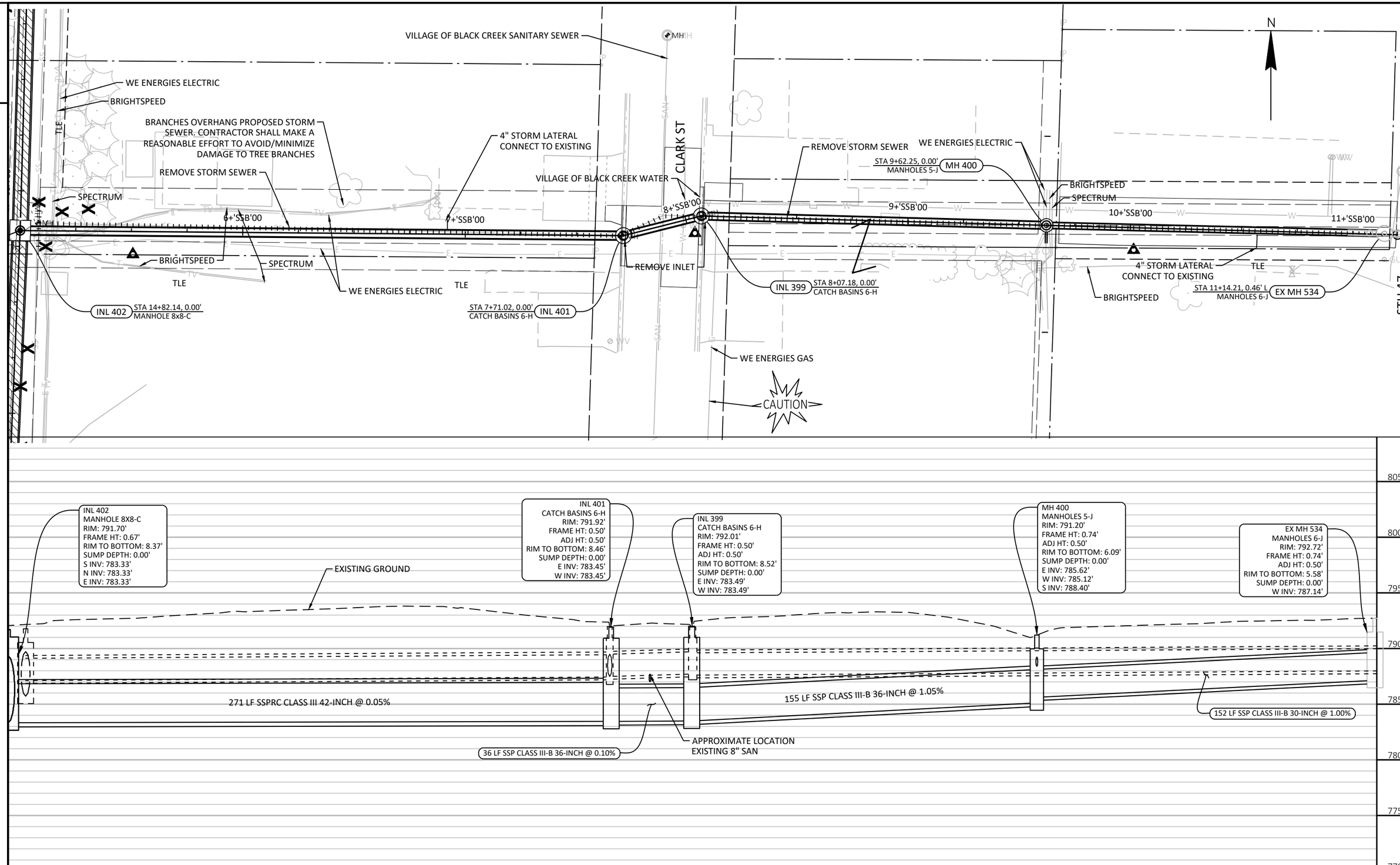

PROJECT NO: 6240-31-71	HWY: STH 47	COUNTY: OUTAGAMIE	STORM SEWER	SHEET 26	E

FILE NAME : N:\3001114.00\CIVIL 3D\SHEETSPLAN\624031-022501-SS.DWG
LAYOUT NAME - 624031-022510-ss
PLOT DATE : 2/3/2025 7:10 AM PLOT BY : MATT TOMSOVIC PLOT NAME : PLOT SCALE : 1 IN:40 FT
WISDOT/CADDS SHEET 41

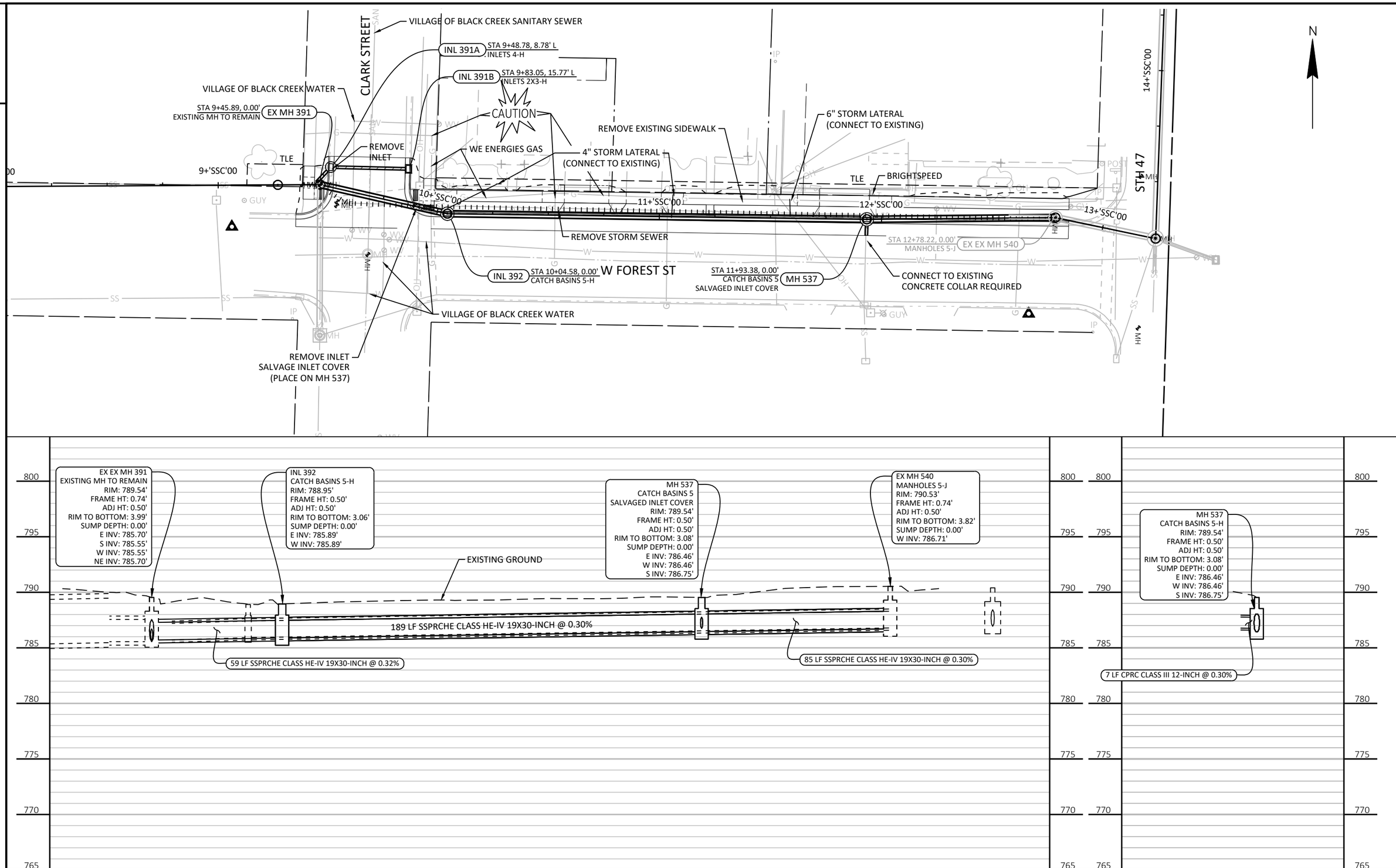

PROJECT NO: 6240-31-71	HWY: STH 47	COUNTY: OUTAGAMIE	STORM SEWER	SHEET 27	E

FILE NAME : N:\3001114.00\CIVIL 3D\SHEETSPLAN\624031-022501-SS.DWG
LAYOUT NAME - 624031-022515-ss
PLOT DATE : 2/3/2025 7:10 AM
PLOT BY : MATT TOMSOVIC
PLOT NAME :
PLOT SCALE : 1 IN:40 FT
WISDOT/CADDS SHEET 41

2

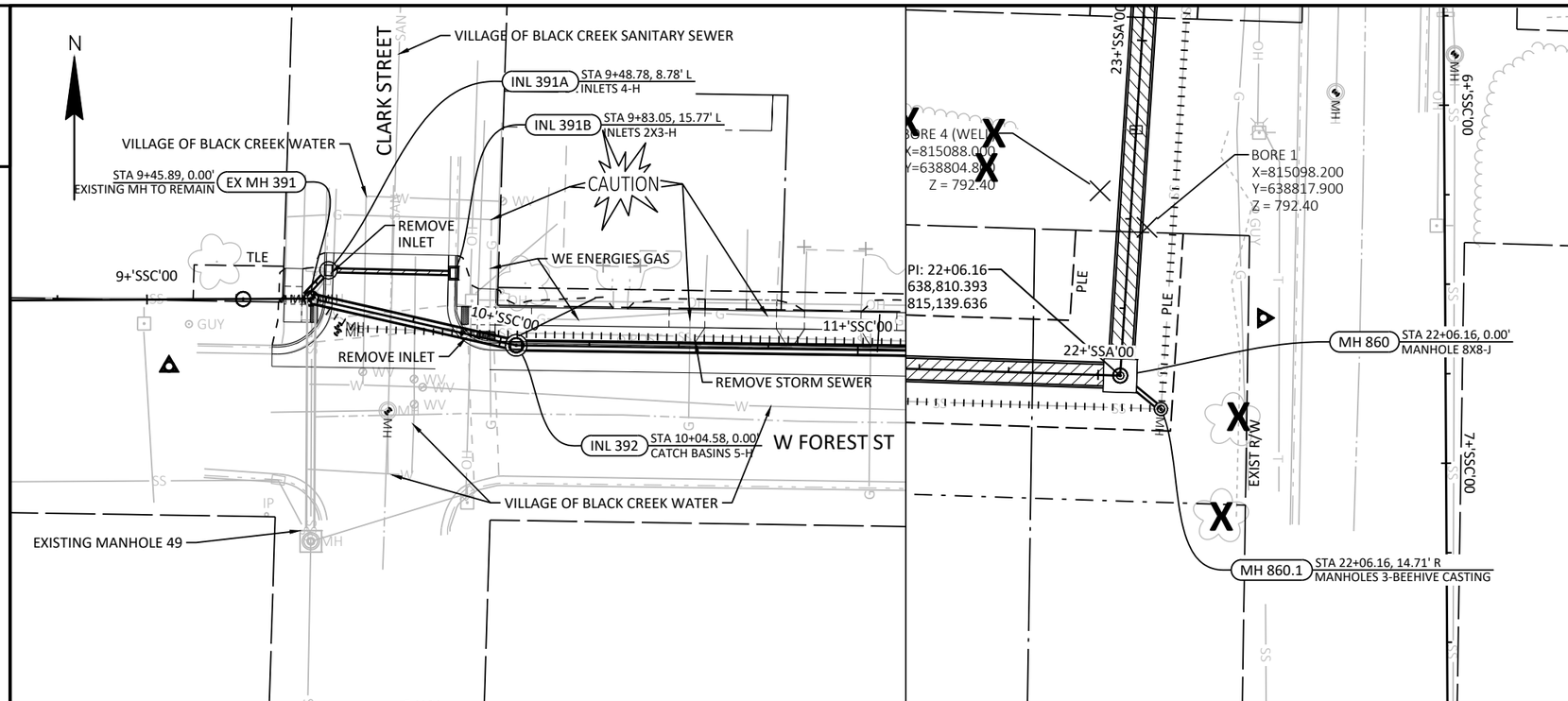

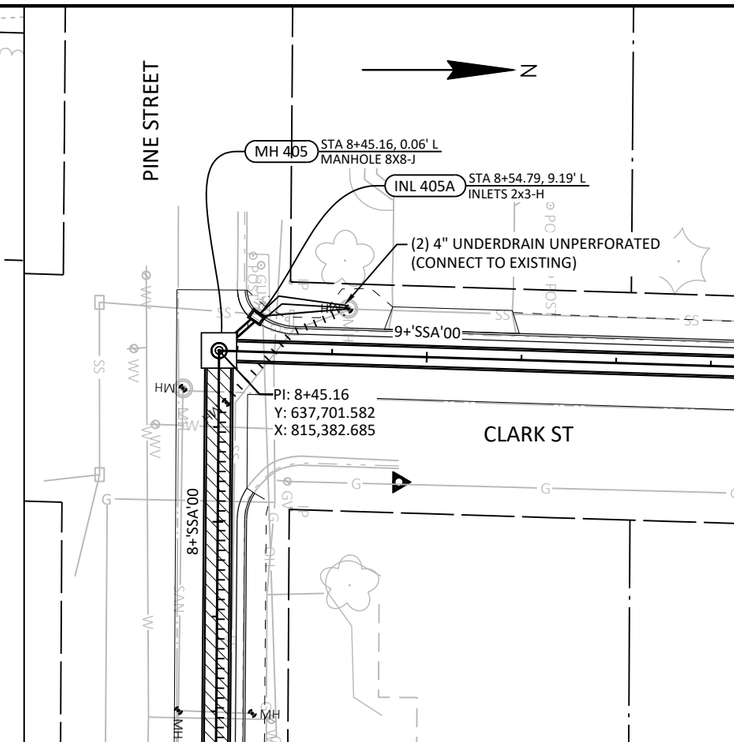

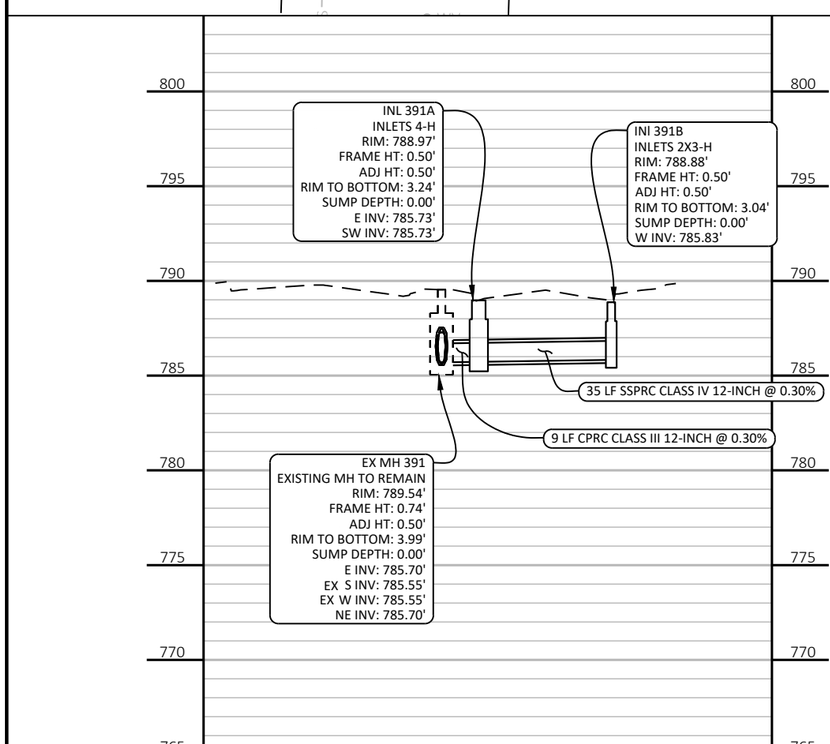

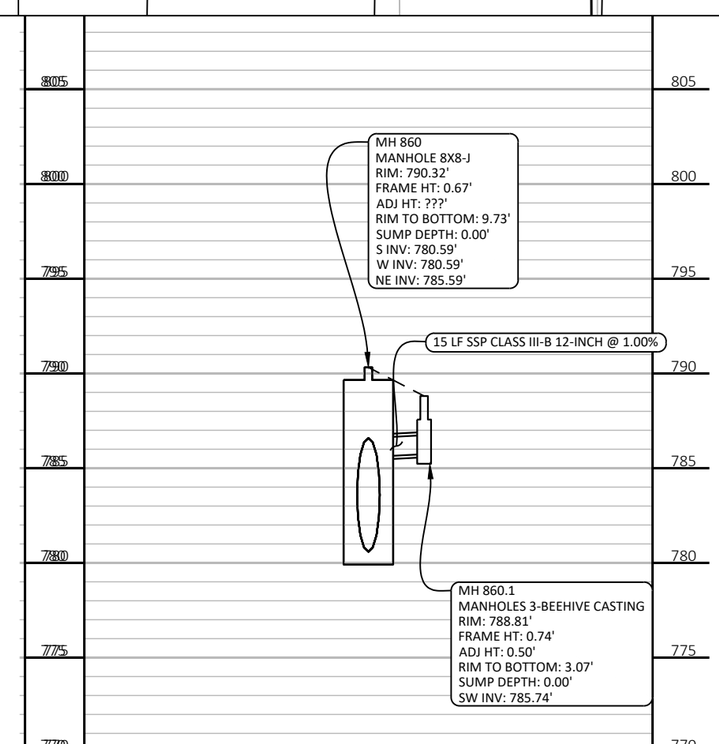

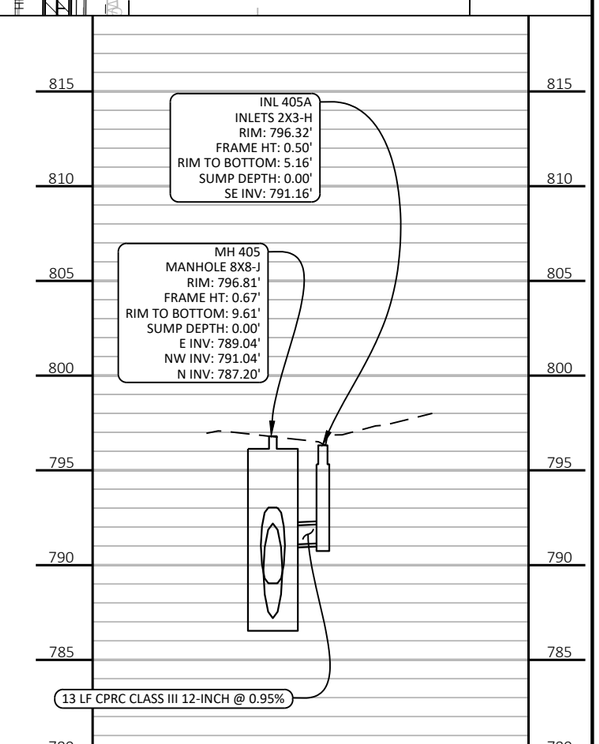

2

PROJECT NO: 6240-31-71	HWY: STH 47	COUNTY: OUTAGAMIE	STORM SEWER	SHEET 28	E

2

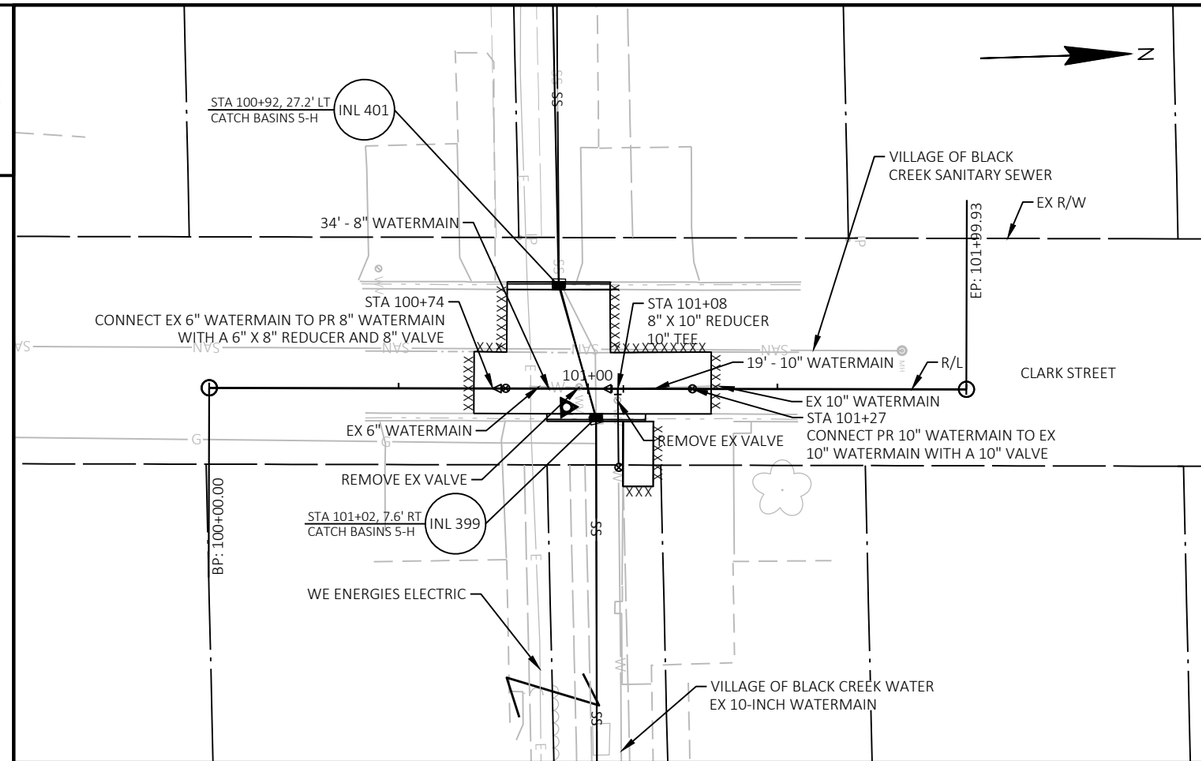

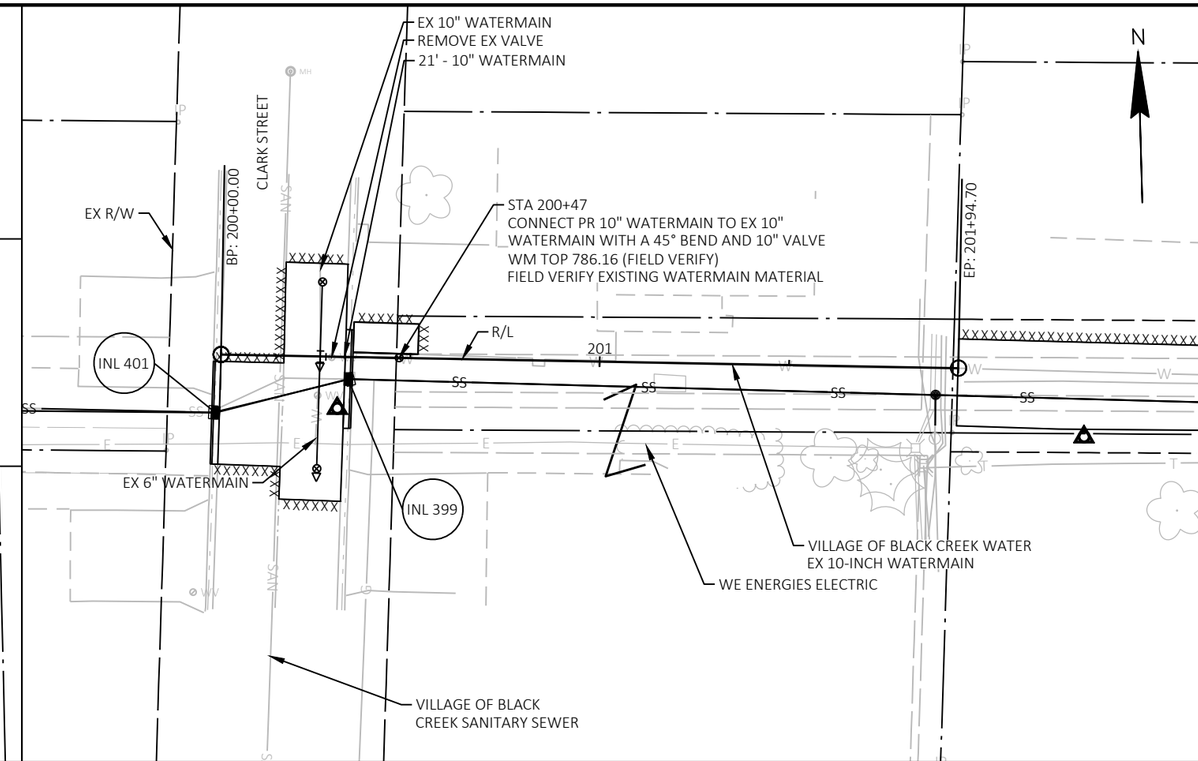

2

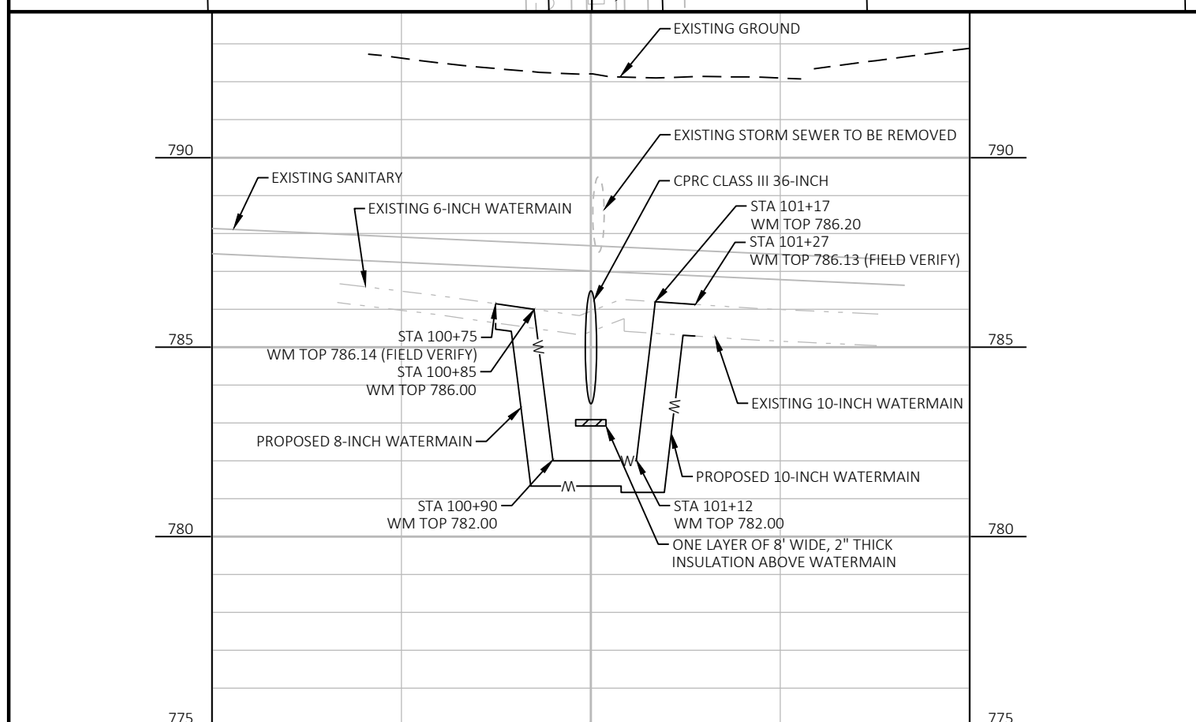

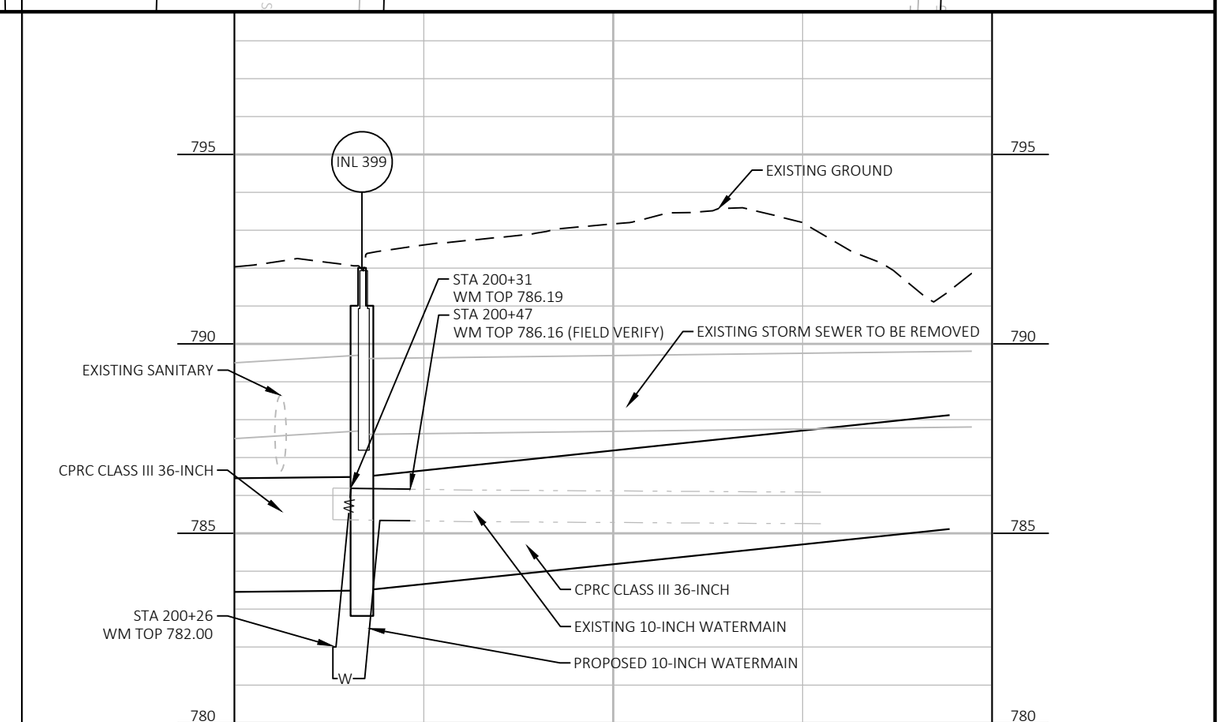

PROJECT NO: 6240-31-71	HWY: STH 47	COUNTY: OUTAGAMIE COUNTY	WATERMAIN: CLARK STREET	SHEET 29	E

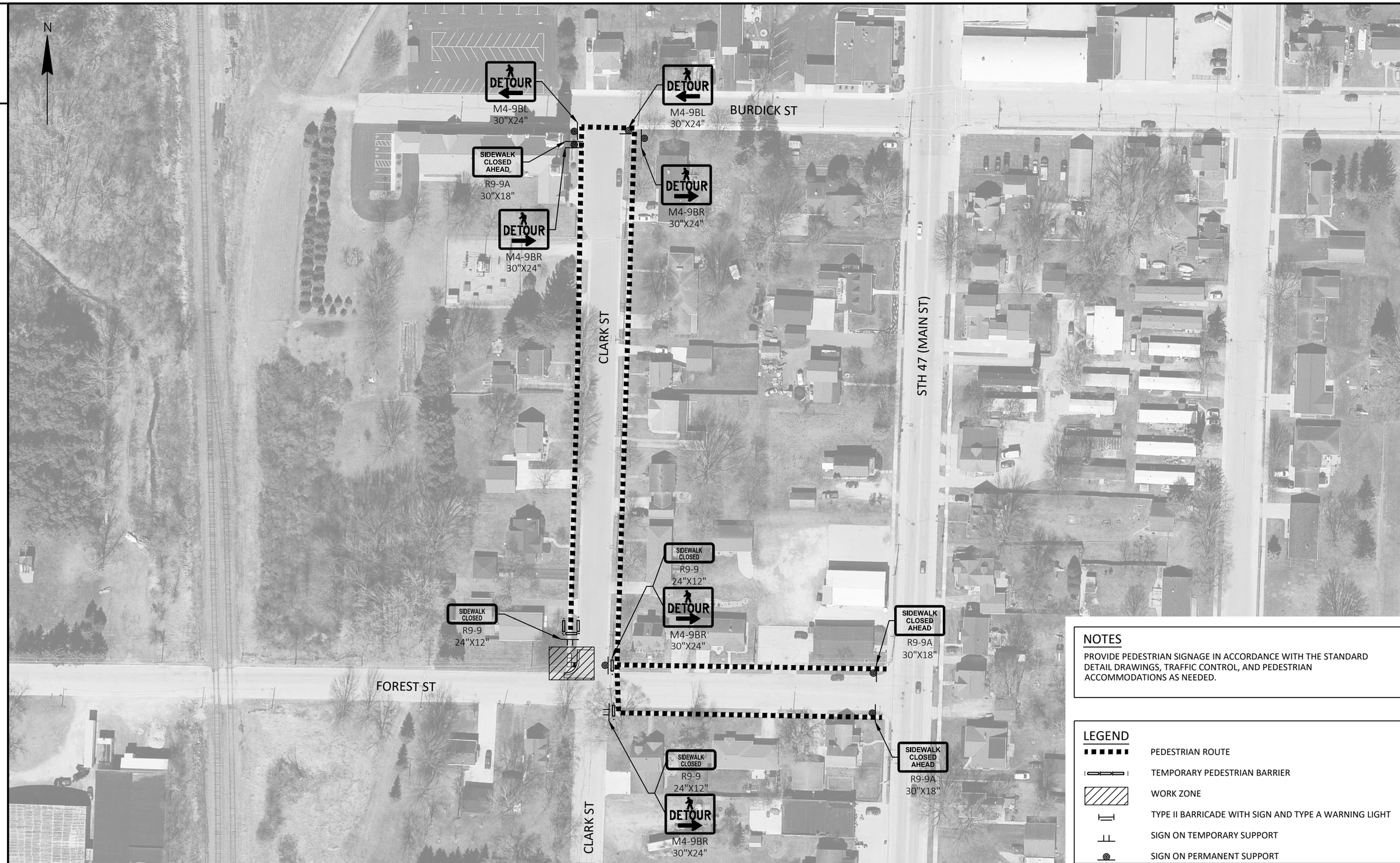

NOTES

PROVIDE PEDESTRIAN SIGNAGE IN ACCORDANCE WITH THE STANDARD DETAIL DRAWINGS, TRAFFIC CONTROL, AND PEDESTRIAN ACCOMMODATIONS AS NEEDED.

LEGEND

- PEDESTRIAN ROUTE
- TEMPORARY PEDESTRIAN BARRIER
- WORK ZONE
- TYPE II BARRICADE WITH SIGN AND TYPE A WARNING LIGHT
- SIGN ON TEMPORARY SUPPORT
- SIGN ON PERMANENT SUPPORT

PROJECT NO: 6240-31-71	HWY: STH 47	COUNTY: OUTAGAMIE	PEDESTRIAN TRAFFIC CONTROL - STAGE 1	SHEET 30	E

FILE NAME : N:\3001114.00\CIVIL 3D\SHEETSPLAN\624031-026101-PEDS1.DWG
LAYOUT NAME - 624031-026101-peds1
PLOT DATE : 1/14/2025 4:04 PM PLOT BY : BRANDI SWANSON PLOT NAME : PLOT SCALE : 1 IN:100 FT

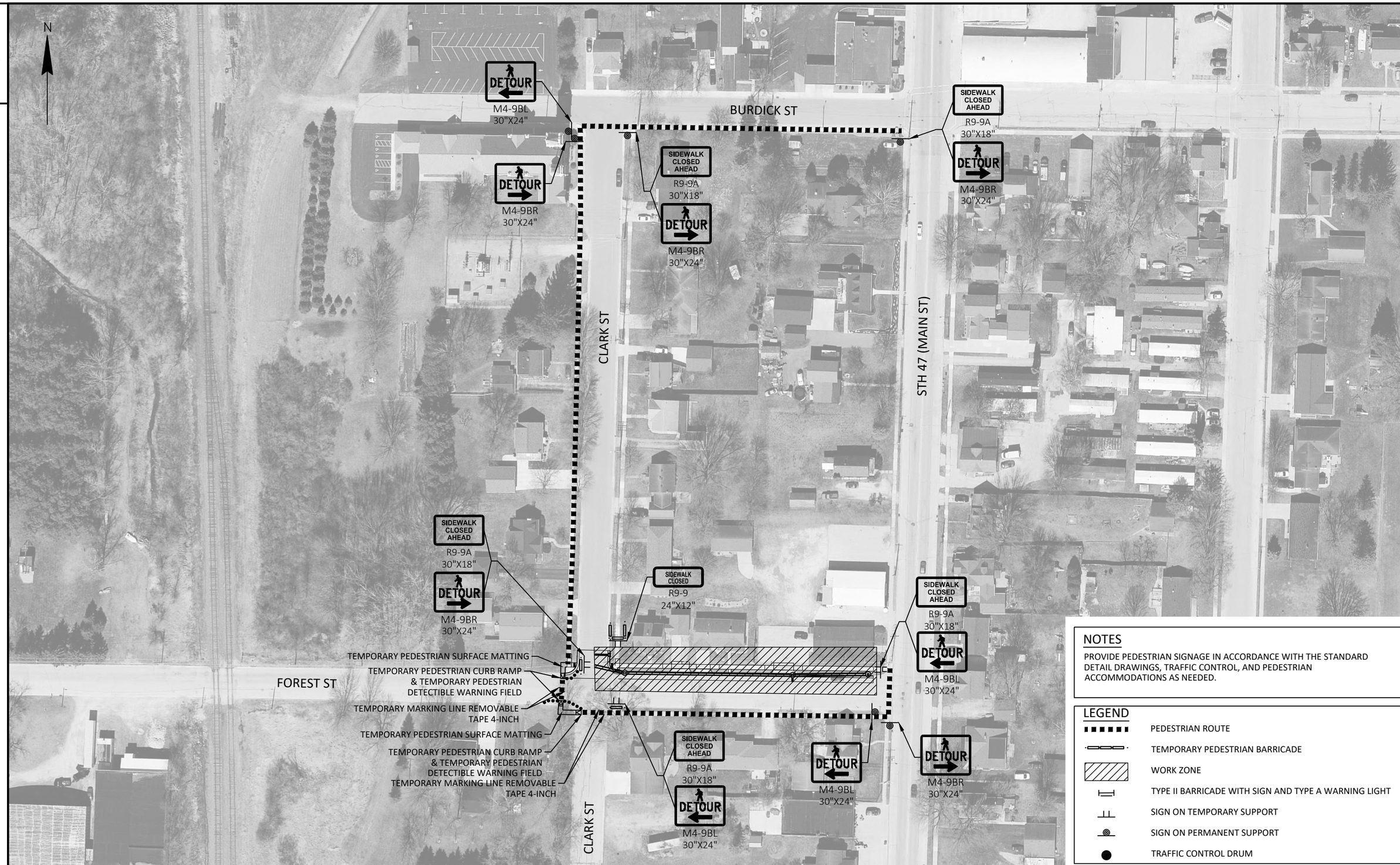

NOTES

PROVIDE PEDESTRIAN SIGNAGE IN ACCORDANCE WITH THE STANDARD DETAIL DRAWINGS, TRAFFIC CONTROL, AND PEDESTRIAN ACCOMMODATIONS AS NEEDED.

LEGEND

- PEDESTRIAN ROUTE
- TEMPORARY PEDESTRIAN BARRICADE
- WORK ZONE
- TYPE II BARRICADE WITH SIGN AND TYPE A WARNING LIGHT
- SIGN ON TEMPORARY SUPPORT
- SIGN ON PERMANENT SUPPORT
- TRAFFIC CONTROL DRUM

PROJECT NO: 6240-31-71	HWY: STH 47	COUNTY: OUTAGAMIE	PEDESTRIAN TRAFFIC CONTROL - STAGE 2	SHEET 31	E

FILE NAME : N:\3001114.00\CIVIL 3D\SHEETSPLAN\624031-026201-PEDS2.DWG
LAYOUT NAME - 624031-026201-peds2
PLOT DATE : 1/14/2025 4:04 PM PLOT BY : BRANDI SWANSON PLOT NAME : PLOT SCALE : 1 IN:100 FT

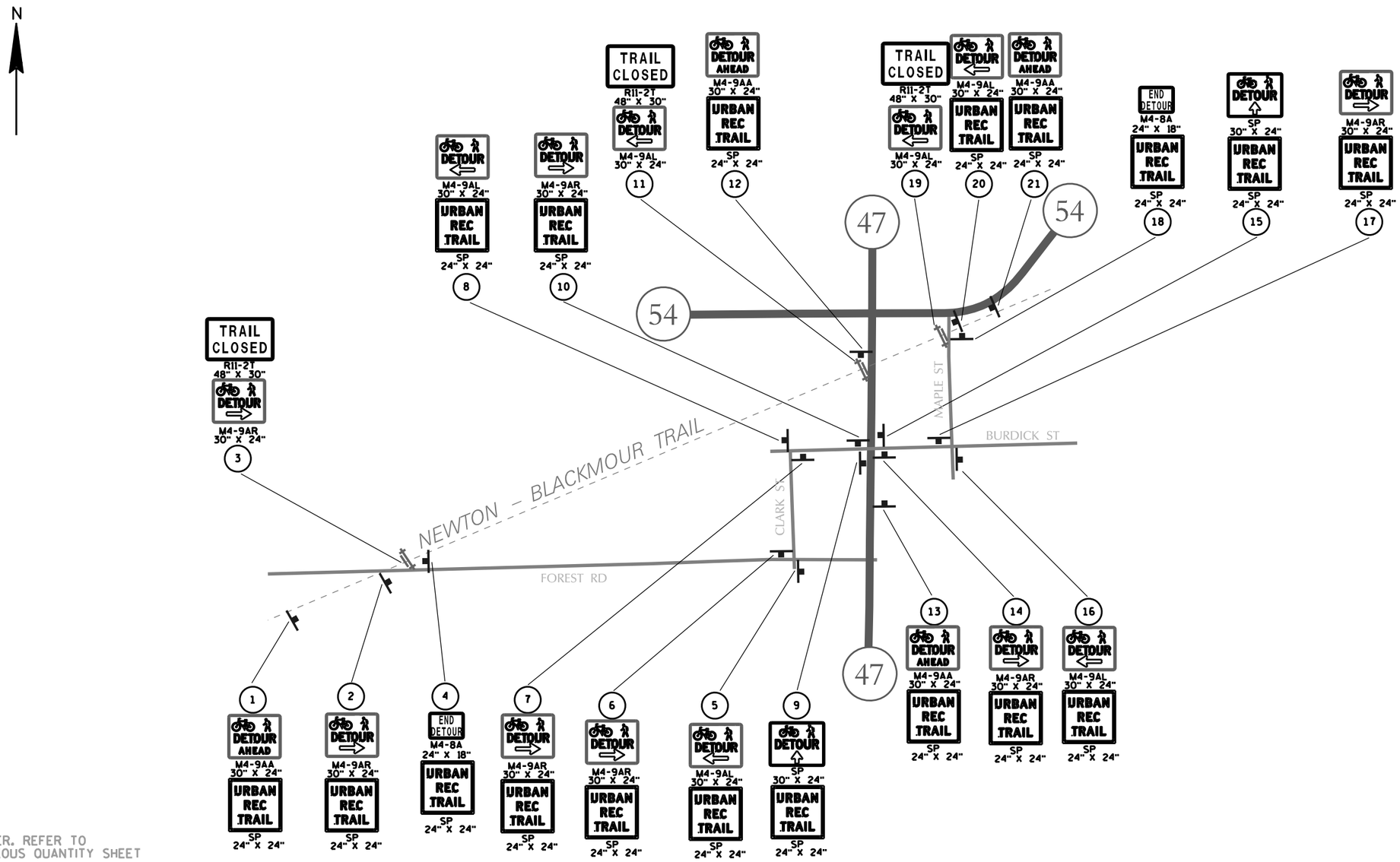

LEGEND

- (X) SIGN NUMBER. REFER TO MISCELLANEOUS QUANTITY SHEET
- PCMS ▲ (X) PORTABLE CHANGEABLE MESSAGE SIGN
- SIGN MOUNTED ON TYPE III BARRICADE
- POST MOUNTED SIGN

PLAN SHEET PRODUCED BY WisDOT-NE REGION

PROJECT NO:6240-31-71	HWY:STH 47	COUNTY:OUTAGAMIE	NEWTON-BLACKMOUR TRAIL DETOUR PLAN	SHEET 32	E

Estimate Of Quantities

6240-31-71

Line	Item	Item Description	Unit	Total	Qty
0002	201.0205	Grubbing	STA	12.000	12.000
0004	201.0215	Grubbing	ACRE	1.200	1.200
0006	204.0100	Removing Concrete Pavement	SY	148.000	148.000
0008	204.0110	Removing Asphaltic Surface	SY	1,880.000	1,880.000
0010	204.0150	Removing Curb & Gutter	LF	990.000	990.000
0012	204.0155	Removing Concrete Sidewalk	SY	170.000	170.000
0014	204.0170	Removing Fence	LF	22.000	22.000
0016	204.0210	Removing Manholes	EACH	8.000	8.000
0018	204.0220	Removing Inlets	EACH	3.000	3.000
0020	204.0245	Removing Storm Sewer (size) 01. 18-Inch	LF	333.000	333.000
0022	204.0245	Removing Storm Sewer (size) 02. 24-Inch	LF	670.000	670.000
0024	204.0245	Removing Storm Sewer (size) 03. 48-Inch	LF	1,176.000	1,176.000
0026	204.0245	Removing Storm Sewer (size) 05. 60-Inch	LF	8.000	8.000
0028	204.0245	Removing Storm Sewer (size) 06. 38x60-Inch	LF	24.000	24.000
0030	204.0250	Abandoning Manholes	EACH	3.000	3.000
0032	205.0100	Excavation Common	CY	1,000.000	1,000.000
0034	209.2100	Backfill Granular Grade 2	CY	64.000	64.000
0036	211.0101	Prepare Foundation for Asphaltic Paving (project) 01. 6240-31-71	EACH	1.000	1.000
0038	213.0100	Finishing Roadway (project) 01. 6240-31-71	EACH	1.000	1.000
0040	305.0110	Base Aggregate Dense 3/4-Inch	TON	42.000	42.000
0042	305.0120	Base Aggregate Dense 1 1/4-Inch	TON	1,560.000	1,560.000
0044	416.0610	Drilled Tie Bars	EACH	34.000	34.000
0046	455.0605	Tack Coat	GAL	120.000	120.000
0048	465.0105	Asphaltic Surface	TON	362.000	362.000
0050	465.0120	Asphaltic Surface Driveways and Field Entrances	TON	100.000	100.000
0052	520.8000	Concrete Collars for Pipe	EACH	2.000	2.000
0054	522.1024	Apron Endwalls for Culvert Pipe Reinforced Concrete 24-Inch	EACH	1.000	1.000
0056	522.1060	Apron Endwalls for Culvert Pipe Reinforced Concrete 60-Inch	EACH	2.000	2.000
0058	522.1084	Apron Endwalls for Culvert Pipe Reinforced Concrete 84-Inch	EACH	1.000	1.000
0060	601.0411	Concrete Curb & Gutter 30-Inch Type D	LF	770.000	770.000
0062	602.0405	Concrete Sidewalk 4-Inch	SF	1,570.000	1,570.000
0064	602.0415	Concrete Sidewalk 6-Inch	SF	85.000	85.000
0066	602.0505	Curb Ramp Detectable Warning Field Yellow	SF	30.000	30.000
0068	602.0810	Concrete Driveway 6-Inch	SY	141.000	141.000
0070	606.0200	Riprap Medium	CY	257.000	257.000
0072	608.0312	Storm Sewer Pipe Reinforced Concrete Class III 12-Inch	LF	32.000	32.000
0074	608.0324	Storm Sewer Pipe Reinforced Concrete Class III 24-Inch	LF	30.000	30.000
0076	608.0342	Storm Sewer Pipe Reinforced Concrete Class III 42-Inch	LF	271.000	271.000
0078	608.0360	Storm Sewer Pipe Reinforced Concrete Class III 60-Inch	LF	293.000	293.000
0080	608.0372	Storm Sewer Pipe Reinforced Concrete Class III 72-Inch	LF	955.000	955.000
0082	608.0384	Storm Sewer Pipe Reinforced Concrete Class III 84-Inch	LF	155.000	155.000
0084	608.0412	Storm Sewer Pipe Reinforced Concrete Class IV 12-Inch	LF	35.000	35.000
0086	608.0460	Storm Sewer Pipe Reinforced Concrete Class IV 60-Inch	LF	202.000	202.000
0088	608.0572	Storm Sewer Pipe Reinforced Concrete Class V 72-Inch	LF	83.000	83.000
0090	608.2419	Storm Sewer Pipe Reinforced Concrete Horizontal Elliptical Class HE-IV 19x30-Inch	LF	331.000	331.000
0092	608.3612	Storm Sewer Pipe Class III-B 12-Inch	LF	15.000	15.000
0094	608.3630	Storm Sewer Pipe Class III-B 30-Inch	LF	152.000	152.000
0096	608.3636	Storm Sewer Pipe Class III-B 36-Inch	LF	191.000	191.000
0098	611.0420	Reconstructing Manholes	EACH	1.000	1.000

Estimate Of Quantities

6240-31-71

Line	Item	Item Description	Unit	Total	Qty
0100	611.0530	Manhole Covers Type J	EACH	8.000	8.000
0102	611.0624	Inlet Covers Type H	EACH	6.000	6.000
0104	611.1005	Catch Basins 5-FT Diameter	EACH	3.000	3.000
0106	611.1006	Catch Basins 6-FT Diameter	EACH	1.000	1.000
0108	611.2003	Manholes 3-FT Diameter	EACH	1.000	1.000
0110	611.2005	Manholes 5-FT Diameter	EACH	1.000	1.000
0112	611.2008	Manholes 8-FT Diameter	EACH	1.000	1.000
0114	611.3004	Inlets 4-FT Diameter	EACH	1.000	1.000
0116	611.3230	Inlets 2x3-FT	EACH	2.000	2.000
0118	611.9710	Salvaged Inlet Covers	EACH	1.000	1.000
0120	612.0204	Pipe Underdrain Unperforated 4-Inch	LF	25.000	25.000
0122	612.0902.S	Insulation Board Polystyrene (inch) 01. 2-Inch	SY	7.000	7.000
0124	618.0100	Maintenance and Repair of Haul Roads (project) 01. 6240-31-71	EACH	1.000	1.000
0126	619.1000	Mobilization	EACH	1.000	1.000
0128	624.0100	Water	MGAL	16.000	16.000
0130	625.0100	Topsoil	SY	6,730.000	6,730.000
0132	628.1504	Silt Fence	LF	1,200.000	1,200.000
0134	628.1520	Silt Fence Maintenance	LF	1,200.000	1,200.000
0136	628.1905	Mobilizations Erosion Control	EACH	2.000	2.000
0138	628.1910	Mobilizations Emergency Erosion Control	EACH	2.000	2.000
0140	628.2006	Erosion Mat Urban Class I Type A	SY	6,710.000	6,710.000
0142	628.2027	Erosion Mat Class II Type C	SY	25.000	25.000
0144	628.7010	Inlet Protection Type B	EACH	4.000	4.000
0146	628.7015	Inlet Protection Type C	EACH	16.000	16.000
0148	628.7504	Temporary Ditch Checks	LF	35.000	35.000
0150	628.7555	Culvert Pipe Checks	EACH	66.000	66.000
0152	628.7570	Rock Bags	EACH	25.000	25.000
0154	629.0210	Fertilizer Type B	CWT	5.000	5.000
0156	630.0110	Seeding Mixture No. 10	LB	2.000	2.000
0158	630.0140	Seeding Mixture No. 40	LB	270.000	270.000
0160	630.0500	Seed Water	MGAL	3.000	3.000
0162	638.2102	Moving Signs Type II	EACH	2.000	2.000
0164	638.4000	Moving Small Sign Supports	EACH	2.000	2.000
0166	642.5001	Field Office Type B	EACH	1.000	1.000
0168	643.0300	Traffic Control Drums	DAY	1,140.000	1,140.000
0170	643.0420	Traffic Control Barricades Type III	DAY	274.000	274.000
0172	643.0705	Traffic Control Warning Lights Type A	DAY	1,490.000	1,490.000
0174	643.0715	Traffic Control Warning Lights Type C	DAY	96.000	96.000
0176	643.0900	Traffic Control Signs	DAY	457.000	457.000
0178	643.1000	Traffic Control Signs Fixed Message	SF	78.000	78.000
0180	643.3150	Temporary Marking Line Removable Tape 4-Inch	LF	108.000	108.000
0182	643.5000	Traffic Control	EACH	1.000	1.000
0184	644.1440	Temporary Pedestrian Surface Matting	SF	220.000	220.000
0186	644.1601	Temporary Pedestrian Curb Ramp	DAY	21.000	21.000
0188	644.1605	Temporary Pedestrian Detectable Warning Field	SF	30.000	30.000
0190	644.1810	Temporary Pedestrian Barricade	LF	80.000	80.000
0192	645.0120	Geotextile Type HR	SY	513.000	513.000
0194	646.7405	Marking Crosswalk Paint Transverse Line 6-Inch	LF	73.000	73.000
0196	646.9000	Marking Removal Line 4-Inch	LF	60.000	60.000

6240-31-71

Line	Item	Item Description	Unit	Total	Qty
0198	650.4000	Construction Staking Storm Sewer	EACH	18.000	18.000
0200	650.5500	Construction Staking Curb Gutter and Curb & Gutter	LF	990.000	990.000
0202	650.6000	Construction Staking Pipe Culverts	EACH	1.000	1.000
0204	650.9000	Construction Staking Curb Ramps	EACH	3.000	3.000
0206	650.9911	Construction Staking Supplemental Control (project) 01. 6240-31-71	EACH	1.000	1.000
0208	690.0150	Sawing Asphalt	LF	1,435.000	1,435.000
0210	690.0250	Sawing Concrete	LF	222.000	222.000
0212	SPV.0035	Special 01. Trench Backfill	CY	250.000	250.000
0214	SPV.0060	Special 01. Manholes 7x7-FT	EACH	1.000	1.000
0216	SPV.0060	Special 02. Manholes 8x8-FT	EACH	6.000	6.000
0218	SPV.0060	Special 03. Manholes 9x9-FT	EACH	1.000	1.000
0220	SPV.0060	Special 04. 8" Gate Valve & Box	EACH	1.000	1.000
0222	SPV.0060	Special 05. 10" Gate Valve & Box	EACH	2.000	2.000
0224	SPV.0060	Special 06. Watermain Offset PVC C-900	EACH	1.000	1.000
0226	SPV.0060	Special 07. 8" Watermain Tie In, Station 100+74	EACH	1.000	1.000
0228	SPV.0060	Special 08. 10" Watermain Tie In, Station 101+27	EACH	1.000	1.000
0230	SPV.0060	Special 09. 10" Watermain Tie In, Station 200+47	EACH	1.000	1.000
0232	SPV.0060	Special 11. Beehive Casting	EACH	3.000	3.000
0234	SPV.0060	Special 12. Utility Line Opening	EACH	1.000	1.000
0236	SPV.0090	Special 01. Concrete Curb and Gutter 24-Inch Type D Special	LF	220.000	220.000
0238	SPV.0090	Special 02. PVC Storm Lateral 4-Inch	LF	67.000	67.000
0240	SPV.0090	Special 03. PVC Storm Lateral 6-Inch	LF	18.000	18.000
0242	SPV.0090	Special 04. 8" Watermain PVC C-900	LF	34.000	34.000
0244	SPV.0090	Special 05. 10" Watermain PVC C-900	LF	40.000	40.000
0246	SPV.0090	Special 07. Storm Sewer Pipe Reinforced Concrete Class HE-IV 48x76-Inch	LF	292.000	292.000
0248	SPV.0090	Special 08. Storm Sewer Pipe Reinforced Concrete Class V 72-Inch Special	LF	100.000	100.000
0250	SPV.0090	Special 09. Culvert Pipe Reinforced Concrete Class V 60-Inch Special	LF	72.000	72.000
0252	SPV.0090	Special 10. Removing Storm Sewer 48-Inch Special	LF	145.000	145.000
0254	SPV.0090	Special 11. PVC Storm Sewer 8-Inch	LF	15.000	15.000
0256	SPV.0090	Special 12. PVC Storm Sewer 10-Inch	LF	12.000	12.000
0258	SPV.0090	Special 13. PVC Storm Sewer 18-Inch	LF	11.000	11.000
0260	SPV.0195	Special 01. Traffic Bond Limestone 3/8-Inch	TON	13.000	13.000
0262	SPV.0195	Special 02. Excavating, Hauling, Disposal of Contaminated Soil	TON	50.000	50.000

3

GRUBBING

STATION	TO	STATION	ALIGNMENT	201.0205 GRUBBING STA	201.0215 GRUBBING ACRE	COMMENTS
PROJECT 6240-31-71						
CATEGORY 0010						
11+00	-	18+00	'SSA'	7	---	
19+00	-	23+00	'SSA'	---	0.67	INCLUDES DORR ST R/W & RAILROAD PROPERTY SOUTH OF FOREST ST WITHIN RAILROAD STATUTORY CLEARING LIMITS
24+00	-	27+00	'SSA'	---	0.52	INCLUDES STORM SEWER EASEMENT & RAILROAD PROPERTY NORTH OF FOREST ST WITHIN RAILROAD STAUTORY CLEARING LIMITS
5+00	-	6+00	'SSB'	1	---	
4+00	-	6+00	TRAIL	2	---	
			CATEGORY 0010 TOTALS	10	1.20	
CATEGORY 0020						
28+00	-	30+00	FOREST ST	2	---	
			CATEGORY 0020 TOTALS	2	0.00	
			PROJECT TOTALS	12	1.20	

REMOVING CONCRETE PAVEMENT

ROADWAY	204.0100 REMOVING CONCRETE PAVEMENT SY	COMMENTS
PROJECT 6240-31-71		
CATEGORY 0010		
PINE STREET	27	DRIVEWAY
CLARK STREET	54	DRIVEWAYS
FOREST STREET	51	DRIVEWAYS
CATEGORY 0010 TOTALS	132	
CATEGORY 0020		
WATERMAIN	16	DRIVEWAY
PROJECT TOTALS	148	

REMOVING ASPHALTIC SURFACE

ROADWAY	204.0110 REMOVING ASPHALTIC SURFACE SY	COMMENTS
PROJECT 6240-31-71		
CATEGORY 0010		
PINE STREET	630	
CLARK STREET	480	
FOREST STREET	350	
PARKING LOT	370	
CATEGORY 0010 TOTALS	1,830	
CATEGORY 0020		
WATERMAIN	50	
PROJECT TOTALS	1,880	

REMOVING FENCE

STATION	ALIGNMENT	ROADWAY	204.0170 REMOVING FENCE LF
PROJECT 6240-31-71			
CATEGORY 0010			
12+17	'SSA'	STORM SEWER	22
		PROJECT TOTALS	22

REMOVING CURB AND GUTTER

ROADWAY	204.0150 REMOVING CURB AND GUTTER LF	COMMENTS
PROJECT 6240-31-71		
CATEGORY 0010		
PINE STREET	300	
CLARK STREET	240	
FOREST STREET	450	
PROJECT TOTALS	990	

REMOVING CONCRETE SIDEWALK

ROADWAY	204.0155 REMOVING CONCRETE SIDEWALK SY	COMMENTS
PROJECT 6240-31-71		
CATEGORY 0010		
FORSEST STREET	170	
PROJECT TOTALS	170	

BACKFILL GRANULAR GRADE 2

STATION	TO	STATION	ALIGNMENT	209.2100 BACKFILL GRANULAR GRADE 2 CY	COMMENT
PROJECT 6240-31-71					
CATEGORY 0010					
7+71	-	8+07	'SSB'	33	STORM SEWER REMOVAL UNDER S CLARK ST
9+46	-	10+05	'SSC'	31	STORM SEWER REMOVAL UNDER S CLARK ST
			PROJECT TOTAL	64	

3

EARTHWORK SUMMARY

FROM/TO STATION	LOCATION	205.0100 COMMON EXCAVATION	AVAILABLE MATERIAL	UNEXPANDED FILL	EXPANDED FILL FACTOR 1.25	MASS ORDINATE +/-	WASTE	COMMENT
	PINE STREET	245	245	0	0	245	245	
25+'SSA'30/26+'SSA'03	SS BERM REMOVAL	64	64	0	0	64	64	
	CLARK STREET	250	250	0	0	250	250	
35+69.47/38+55.00	FOREST STREET	126	126	1	1	125	125	
	FOREST ST RR CROSSING	46	46	0	0	46	46	
	PARKING LOT	93	93	0	0	93	93	
4+25 / 6+00	TRAIL DITCH	176	176	0	0	176	176	
	PROJECT TOTALS	1,000						

NOTES:
(1) COMMON EXCAVATION IS THE SUM OF THE CUT AND EBS EXCAVATION COLUMNS. ITEM NUMBER 205.0100
(2) SALVAGED/UNSUABLE PAVEMENT MATERIAL IS INCLUDED IN CUT.
(3) EBS EXCAVATION TO BE BACKFILLED WITH SELECT BORROW MATERIAL. NOTE: THIS IS DESIGNERS CHOICE, CAN BE BACKFILLED WITH BORROW, OR CUT AS WELL.
5) AVAILABLE MATERIAL = CUT - SALVAGED/UNUSUABLE PAVEMENT MATERIAL
(13) EXPANDED FILL FACTOR = 1.25
(14) THE MASS ORDINATE + OR - QTY CALCULATED FOR THE DIVISION. PLUS QUANTITY INDICATES AN EXCESS OF MATERIAL WITHIN THE DIVISION. MINUS INDICATES A SHORTAGE OF MATERIAL WITHIN THE DIVISION.

EXCAVATING, HAULING, AND DISPOSAL OF PETROLEUM CONTAMINATED SOIL

ROADWAY	SPV.0195.02 TON	COMMENTS
PROJECT 6240-31-71		
CATEGORY 0010		
PARKING LOT	50	
CATEGORY 0010 TOTALS	50	

REMOVING STORM SEWER

STATION	TO	STATION	ALIGNMENT	ROADWAY	204.0210 REMOVING MANHOLES EA	204.0220 REMOVING INLETS EA	204.0245.01 REMOVING STORM SEWER 18-INCH LF	204.0245.02 REMOVING STORM SEWER 24-INCH LF	204.0245.03 REMOVING STORM SEWER 48-INCH LF	SPV.0090.10 REMOVING STORM SEWER 48-INCH SPECIAL LF	204.0245.05 REMOVING STORM SEWER 60-INCH LF	204.0245.06 REMOVING STORM SEWER 38X60-INCH LF	204.0250 ABANDONING MANHOLES EA	COMMENTS
PROJECT 6240-31-71														
CATEGORY 0010														
5+53	-	8+80	'SSA'	STORM SEWER	---	---	---	---	319	---	---	---	1	
10+40	-	11+20	'SSA'	STORM SEWER	1	---	---	---	70	---	---	---	1	
14+75	-	14+95	'SSA'	STORM SEWER	---	---	---	---	20	---	---	---	1	
16+67	-	22+80	'SSA'	STORM SEWER	5	---	---	---	613	---	---	---	---	
22+80	-	24+67	'SSA'	STORM SEWER	---	---	---	---	---	145	---	---	---	
24+67	-	26+21	'SSA'	STORM SEWER	---	---	---	---	154	---	---	---	---	
5+08	-	11+14	'SSB'	STORM SEWER	---	2	---	606	---	---	---	---	---	
5+00	-	5+08	'SSC'	STORM SEWER	1	---	---	---	---	---	8	---	---	
9+45	-	12+78	'SSC'	STORM SEWER	1	1	333	64	---	---	---	24	---	
				PROJECT TOTALS	8	3	333	670	1,176	145	8	24	3	

3

3

BASE AGGREGATE

STRUCTURE	305.0110 BASE AGGREGATE DENSE 3/4-INCH TON	305.0120 BASE AGGREGATE DENSE 1 1/4-INCH TON	624.0100 WATER MGAL	COMMENT
PROJECT 6240-31-71				
CATEGORY 0010				
PINE STREET	---	397	4.0	PAVEMENT RESTORATION OVER TRENCH
CLARK STREET	---	444	4.4	PAVEMENT RESTORATION OVER TRENCH
FOREST STREET	---	388	3.9	DRIVEWAY RESTORATION OVER TRENCH
PARKING LOT	---	259	2.6	PAVEMENT RESTORATION OVER TRENCH
SIDEWALK	39	---	0.4	
DRIVEWAYS	---	12	0.1	
CURB RAMP REPLACEMENTS	3	---	0.0	
CATEGORY 0010 TOTALS	42	1,500	15.4	
CATEGORY 0020				
WATERMAIN	---	60	0.6	
PROJECT TOTALS	42	1,560	16.0	

ASPHALTIC ITEMS

ROADWAY	455.0605 TACK COAT GAL	465.0110 ASPHALTIC SURFACE TON	465.0120 ASPHALTIC SURFACE DRIVEWAYS AND FIELD ENTRANCES TON
PROJECT 6240-31-71			
CATEGORY 0010			
PINE STREET	40	145	0
CLARK STREET	30	100	10
FOREST STREET	30	115	0
PARKING LOT	20	---	90
CATEGORY 0010 TOTALS	120	360	100
CATEGORY 0020			
PINE STREET	---	2	---
PROJECT TOTALS	120	362	100

CONCRETE DRIVEWAY

ROADWAY	602.0810 6-INCH SY
PROJECT 6240-31-71	
CATEGORY 0010	
PINE STREET	31
CLARK STREET	61
FOREST STREET	33
CATEGORY 0010 TOTALS	125
CATEGORY 0020	
WATERMAIN	16
PROJECT TOTALS	141

STORM SEWER PIPE

STR	TO	STR	520.8000 CONC. COLLAR FOR PIPE EACH	608.0312 STORM SEWER PIPE REINFORCED CONCRETE CLASS III 12-INCH LF	608.0324 24-INCH LF	608.0342 42-INCH LF	608.0360 60-INCH LF	608.0372 72-INCH LF	608.0384 84-INCH LF	608.0412 CLASS IV 12-INCH LF	608.0460 60-INCH LF	608.0572 CLASS V 72-INCH LF	608.2419 CLASS HE-IV 19X30-INCH LF	608.3612 STORM SEWER PIPE CLASS III-B 12-INCH LF	608.3630 30-INCH LF	608.3636 36-INCH LF	SPV .0090.07 SSPRC CLASS HE-IV 48X76-INCH LF	SPV .0090.08 SSPRC CLASS V 72-INCH SPECIAL LF	COMMENT
PROJECT 6240-31-71																			
CATEGORY 0010																			
EX MH 514	-	MH 405	---	---	---	---	---	---	---	---	---	---	---	---	---	---	292	---	
MH 405	-	MH 404	---	---	---	---	---	---	---	---	202	---	---	---	---	---	---	---	
MH 404	-	MH 404A	---	---	---	---	169	---	---	---	---	---	---	---	---	---	---	---	
MH 404A	-	INL 741	---	---	---	---	111	---	---	---	---	---	---	---	---	---	---	---	
INL 741	-	INL 402	---	---	---	---	---	153	---	---	---	---	---	---	---	---	---	---	
INL 402	-	MH 432	---	---	---	---	---	378	---	---	---	---	---	---	---	---	---	---	
MH 432	-	MH 860	---	---	---	---	---	346	---	---	---	---	---	---	---	---	---	---	
MH 860	-	22+'22A'75	---	---	---	---	---	---	---	---	---	69	---	---	---	---	---	---	
MH 860	-	MH 860.1	---	---	---	---	---	---	---	---	---	---	---	15	---	---	---	---	
22+'22A'75		23+'SSA'75	---	---	---	---	---	---	---	---	---	---	---	---	---	---	---	100	TIE ALL JOINS
23+'SSA'75		MH 860(2)	---	---	---	---	---	---	---	---	---	14	---	---	---	---	---	---	
MH 860(2)	-	MH 429	---	---	---	---	---	78	---	---	---	---	---	---	---	---	---	---	
MH 429	-	OF 603	---	---	---	---	---	---	155	---	---	---	---	---	---	---	---	---	
INL 405A	-	MH 405	---	12	---	---	---	---	---	---	---	---	---	---	---	---	---	---	
EW 860(3)	-	MH 860(2)	---	---	30	---	---	---	---	---	---	---	---	---	---	---	---	---	
EX PIPE	-	MH 429	---	---	---	---	13	---	---	---	---	---	---	---	---	---	---	---	
EX MH 534	-	MH 400	---	---	---	---	---	---	---	---	---	---	---	---	152	---	---	---	
MH 400	-	INL 399	---	---	---	---	---	---	---	---	---	---	---	---	---	155	---	---	
INL 399	-	INL 401	---	---	---	---	---	---	---	---	---	---	---	---	---	36	---	---	
INL 401	-	INL 402	---	---	---	271	---	---	---	---	---	---	---	---	---	---	---	---	
EX MH 540	-	MH 537	---	---	---	---	---	---	---	---	---	---	83	---	---	---	---	---	
MH 537	-	INL 392	---	---	---	---	---	---	---	---	---	---	189	---	---	---	---	---	
INL 392	-	MH 391	---	---	---	---	---	---	---	---	---	---	59	---	---	---	---	---	
INL 391A	-	INL 391B	---	---	---	---	---	---	---	35	---	---	---	---	---	---	---	---	
INL 392B	-	MH 392	---	9	---	---	---	---	---	---	---	---	---	---	---	---	---	---	
EX PIPE	-	MH 537	---	11	---	---	---	---	---	---	---	---	---	---	---	---	---	---	
EX PIPE	-	MH 429	1	---	---	---	---	---	---	---	---	---	---	---	---	---	---	---	
EX PIPE	-	MH 429	1	---	---	---	---	---	---	---	---	---	---	---	---	---	---	---	
PROJECT TOTALS			2	32	30	271	293	955	155	35	202	83	331	15	152	191	292	100	

3

STORM SEWER LATERALS

			612.0902.S * INSULATION BOARD POLYSTYRENE 2-INCH SY	SPV.0090.02 PVC STORM LATERAL 4-INCH LF	SPV.0090.03 PVC STORM LATERAL 6-INCH LF	SPV.0090.11 PVC STORM SEWER 8-INCH LF	SPV.0090.12 PVC STORM SEWER 10-INCH LF	SPV.0090.13 PVC STORM SEWER 18-INCH LF	
PROJECT 6240-31-71									
CATEGORY 0010									
EX PIPE	-	MH 429	---	---	---	---	---	11	
EX PIPE	-	MH 429	---	---	6	---	---	---	
EX PIPE	-	MH 400	---	---	---	---	12	---	
EX PIPE	-	PR PIPE	---	6	---	---	---	---	TAP EXIST 4" SS INTO PROP SS STA 5+70 'SSA'
EX PIPE	-	PR PIPE	---	6	---	---	---	---	TAP EXIST 4" SS INTO PROP SS STA 11+85 'SSA'
EX PIPE	-	PR PIPE	---	---	6	---	---	---	TAP EXIST 4" SS INTO PROP SS STA 24+20 'SSA'
EX PIPE	-	PR PIPE	---	6	---	---	---	---	TAP EXIST 4" SS INTO PROP SS STA 10+55 'SSB'
EX PIPE	-	PR PIPE	---	6	---	---	---	---	TAP EXIST 4" SS INTO PROP SS STA 6+92 'SSB'
EX PIPE	-	PR PIPE	1	6	---	---	---	---	TAP EXIST 4" SS INTO PROP SS STA 11+05 'SSC'
EX PIPE	-	PR PIPE	1	6	--	---	---	---	TAP EXIST 6" SS INTO PROP SS STA 10+05 'SSC'
EX PIPE	-	PR PIPE	1	--	6	---	---	---	TAP EXIST 6" SS INTO PROP SS STA 11+58 'SSC'
EX PIPE	-	MH 537	---	---	---	---	---	---	
EX LATERAL	-	MH 405	---	25	---	---	---	---	
EX PIPE	-	PR PIPE	---	---	---	15	---	---	TAP EXIST 8" SS INTO PROP SS STA 17+68
EX PIPE	-	INL 392	---	6	---	---	---	---	
PROJECT TOTALS			3	67	18	15	12	11	

* ADDITIONAL QUANTITY SHOWN IN WATERMAIN TABLE

3

STORM SEWER STRUCTURES

STRUCTURE	611.0420 RECONSTRUCT MANHOLE EA	611.0530 MANHOLE COVERS TYPE J EA	SPV.0060.11 BEEHIVE CASTING EA	611.0624 INLET COVERS TYPE H EA	611.3004 INLETS 4-FT DIA EA	611.3230 INLETS 2X3-FT EA	611.1005 CATCH BASINS 5-FT DIAMETER EA	611.1006 CATCH BASINS 6-FT DIAMETER EA	611.2003 MANHOLES 3-FT DIAMETER EA	611.2005 MANHOLES 5-FT DIAMETER EA	611.2008 MANHOLES 8-FT DIAMETER EA	611.9710 SALAVAGED INLET COVER EA	SPV.0060.01 MANHOLES 7X7-FT EA	SPV.0060.02 MANHOLES 8X8-FT EA	SPV.0060.03 MANHOLES 9X9-FT EA	650.4000 CONSTRUCTION STAKING STORM SEWER EA	COMMENT
PROJECT 6240-31-71																	
CATEGORY 0010																	
MH 405	---	1	---	---	---	---	---	---	---	---	---	---	---	1	---	1	
MH 404	---	1	---	---	---	---	---	---	---	---	---	---	1	---	---	1	
MH 404A	---	1	---	---	---	---	---	---	---	---	1	---	---	---	---	1	
INL 741	---	---	1	---	---	---	---	---	---	---	---	---	---	1	---	1	
INL 402	---	---	1	---	---	---	---	---	---	---	---	---	---	1	---	1	
MH 432	---	1	---	---	---	---	---	---	---	---	---	---	---	1	---	1	
MH 860	---	1	---	---	---	---	---	---	---	---	---	---	---	1	---	1	
INL 860.1	---	---	1	---	---	---	---	---	1	---	---	---	---	---	---	1	
MH 860(2)	---	1	---	---	---	---	---	---	---	---	---	---	---	1	---	1	
MH 429	---	1	---	---	---	---	---	---	---	---	---	---	---	---	1	1	
INL 405A	---	---	---	1	---	1	---	---	---	---	---	---	---	---	---	1	
MH 400	---	1	---	---	---	---	---	---	---	1	---	---	---	---	---	1	
INL 399	---	---	---	1	---	---	---	1	---	---	---	---	---	---	---	1	NO SUMP
INL 401	---	---	---	1	---	---	1	---	---	---	---	---	---	---	---	1	NO SUMP
MH 537	---	---	---	---	---	---	1	---	---	---	---	1	---	---	---	1	
INL 392	---	---	---	1	---	---	1	---	---	---	---	---	---	---	---	1	
MH 391	1	---	---	---	---	---	---	---	---	---	---	---	---	---	---	---	
RM 49	---	---	---	---	---	---	---	---	---	---	---	---	---	---	---	---	
CC 51	---	---	---	---	---	---	---	---	---	---	---	---	---	---	---	---	
INL 391A	---	---	---	1	1	---	---	---	---	---	---	---	---	---	---	1	
INL 391B	---	---	---	1	---	1	---	---	---	---	---	---	---	---	---	1	
PROJECT TOTALS	1	8	3	6	1	2	3	1	1	1	1	1	1	6	1	18	

STORM SEWER ENDWALLS

STRUCTURE	522.1024 APRON ENDWALLS FOR CULVERT PIPE REINFORCED CONCRETE 24-INCH EA	522.1084 APRON ENDWALLS FOR CULVERT PIPE REINFORCED CONCRETE 84-INCH EA
PROJECT 6240-31-71		
CATEGORY 0010		
EW 603	---	1
EW 860(3)	1	---
PROJECT TOTALS	1	1

3

3

CULVERTS

LOCATION	SPV.0090.09 CULVERT PIPE REINFORCED CONCRETE CLASS V 60-INCH SPECIAL LF	522.1060 APRON ENDWALLS FOR CULVERT PIPE REINFORCED CONCRETE 60-INCH EA	650.6000 CONSTRUCTION STAKING PIPE CULVERTS EA	COMMENT
PROJECT 6240-31-71				
CATEGORY 0010				
NEWTON BLACKMORE TRAIL	72	2	1	TIE ALL JOINTS
PROJECT TOTALS	72	2	1	

CONCRETE CURB AND GUTTER

ROADWAY	416.0610 DRILLED TIE BARS EACH	601.0411 30-INCH TYPE D LF	SPV.0090.01 24-INCH TYPE D SPECIAL LF	650.5500 CONSTRUCTION STAKING CURB AND GUTTER LF
PROJECT 6240-31-71				
CATEGORY 0010				
PINE STREET	6	300	0	300
CLARK STREET	12	30	220	250
FOREST STREET	16	440	0	440
PROJECT TOTALS	34	770	220	990

CONCRETE SIDEWALK

ROADWAY	602.0405 4-INCH SF	602.0415 6-INCH SF	602.0505 CURB RAMP DETECTABLE WARNING FIELD YELLOW SF	650.9000 CONSTRUCTION STAKING CURB RAMPS EA
PROJECT 6240-31-71				
CATEGORY 0010				
FOREST STREET	1,570	85	30	3
PROJECT TOTALS	1,570	85	30	3

SAWING

ROADWAY	690.0150 ASPHALT LF	690.0250 CONCRETE LF	COMMENT
PROJECT 6240-31-71			
CATEGORY 0010			
PINE STREET	363	47	
CLARK STREET	374	104	
FOREST STREET	525	72	
PARKING LOT	173	---	
PROJECT TOTAL	1,435	222	

MARKING LINE

STATION	DIR	LOCATION	643.3150 TEMPORARY MARKING LINE REMOVABLE TAPE 4-INCH (WHITE) LF	646.7405 MARKING CROSSWALK PAINT TRANSVERSE LINE 6-INCH LF	646.9000 MARKING REMOVAL LINE 4-INCH LF
PROJECT 6240-31-71					
CATEGORY 0010					
35+15	R/L	FOREST ST.	24	---	---
35+21	R/L	FOREST ST.	24	---	---
35+40	RT	FOREST ST.	30	---	---
35+40	RT	FOREST ST.	30	---	---
35+64	R/L	FOREST ST.	---	38	30
35+70	R/L	FOREST ST.	---	35	30
PROJECT TOTAL			108	73	60

UNDERDRAIN

STR	TO	STR	612.0204 PIPE UNDERDRAIN UPERFORATED 4-INCH LF
PROJECT 6240-31-71			
CATEGORY 0010			
EXISTING	-	405A	25
PROJECT TOTALS			25

MOVING SIGNS TYPE II AND MOVING SMALL SIGN SUPPORTS

SIGN NO.	FROM STATION	TO STATION	LOCATION	DESCRIPTION	638.2102 MOVING SIGNS TYPE II EACH	638.4000 MOVING SMALL SIGN SUPPORTS EACH
CATEGORY 0010						
M100	8+64 LT	8+64 LT	CLARK ST	STOP	1	1
M101	5+50 LT	5+50 LT	PINE ST	NO TRUCKS	1	1
				PROJECT TOTALS	2	2

3

3

LANDSCAPING ITEMS

LOCATION	625.0100 TOPSOIL SY	628.2006 EROSION MAT URBAN CLASS I TYPE A SY	628.2027 EROSION MAT CLASS II TYPE C SY	629.0210 FERTILIZER TYPE B CWT	630.0110 SEEDING MIX NO. 10 LB	630.0140 SEEDING MIX NO. 40 LB	630.0500 SEED WATER MGAL
CATEGORY 0010							
PINE STREET	130	130	---	0.2	0	6	0.10
CLARK STREET	110	110	---	0.2	0	5	0.10
BIRCH STREET	1,390	1,390	---	1.0	0	62	0.70
STORM SEWER	3,740	3,740	---	2.4	0	168	1.70
FOREST STREET	220	220	---	0.2	0	10	0.10
TRAIL	20	---	20	0.2	1	---	0.10
UNDISTRIBUTED	1,120	1,120	5	0.8	1	19	0.20
PROJECT TOTALS	6,730	6,710	25	5.0	2	270	3.0

EROSION CONTROL ITEMS

LOCATION	628.1504 SILT FENCE LF	628.1520 SILT FENCE MAINT LF	628.1905 MOB. EROSION CONTROL EACH	628.1910 MOB. EROSION CONTROL EMERGENCY EACH	628.7010 INLET PROTECT. TYPE B EACH	628.7504 INLET PROTECT. TYPE C EACH	628.7504 TEMP. DITCH CHECKS LF	628.7555 CULVERT PIPE CHECKS EACH	628.7570 ROCK BAGS EACH
CATEGORY 0010									
PINE STREET	---	---	---	---	---	5	---	---	---
CLARK STREET	60	60	---	---	---	2	---	---	---
FOREST STREET	---	---	---	---	---	5	---	27	---
TRAIL	---	---	---	---	---		---	39	---
STORM SEWER TRENCH	900	900	---	---	3	1	10	---	---
UNDISTRIBUTED	240	240	2	2	1	3	25	---	25
PROJECT TOTALS	1,200	1,200	2	2	4	16	35	66	25

3

TRAFFIC CONTROL

LOCATION	APPROX. SERVICE PERIOD DAYS	643.0300 DRUMS NO.	DAYS	643.0420 BARRICADES TYPE III * NO.	DAYS	643.0705 WARNING LIGHTS TYPE A * NO.	DAYS	643.0715 WARNING LIGHTS TYPE C NO.	DAYS	643.0900 SIGNS * NO.	DAYS	643.5000 TRAFFIC CONTROL 6240-31-71 EACH	644.1440 TEMPORARY PEDESTRIAN SURFACE MATTING SF	644.1601 TEMPORARY CURB RAMPS NO.	DAYS	644.1605 TEMPORARY PEDESTRIAN DETECTIBLE WARNING FIELD SF	644.1810 TEMPORARY PEDESTRIAN BARRICADE LF
PROJECT 6240-31-71																	
CATEGORY 0010																	
STH 47	90	0	--	6	540	0	--	0	--	4	360	--	--	--		--	--
PINE STREET	14	0	--	2	28	10	140	0	--	2	28	--	--	--		--	--
CLARK STREET	12	12	140	6	72	4	48	8	96	6	72	--				--	--
FOREST STREET	21	0	--	8	168	8	170	0	--	2	42	--	--	--		--	--
FOREST STREET (RAILROAD CLOSURE)	10	0	--	0	--	12	120	0	--	8	80	--	--	--		--	--
PEDESTRIAN STAGE 1	7	0	--	0	--	0	--	0	--	12	84	--	--	--		--	30
PEDESTRIAN STAGE 2	7	0	--	0	--	0	--	0	--	15	105	--	220	3	21	30	50
UNDISTRIBUTED	50	20	1,000	0	--	20	1,000	0	--	0	--	1	--	--		--	--
PROJECT TOTALS			1,140		268		1,478		96		411	1	220		21	30	80

* ADDITIONAL QUANTITIES SHOWN IN DETOUR TABLE

RIPRAP & GEOTEXTILE

	606.0200 MEDIUM RIPRAP CY	645.0120 GEOTEXTILE TYPE HR SY
PROJECT 6240-31-71		
CATEGORY 0010		
TRAIL	217	433
OUTFALL 603	32	64
WE 860(3)	8	16
PROJECT TOTAL	257	513

UTILITY LINE OPENING

	SPV.0060.12 UTILITY LINE OPENING EACH
PROJECT 6240-31-71	
CATEGORY 0010	
7+'SSA'50	1
PROJECT TOTAL	1

TRAFFIC BOND LIMESTONE

	SPV.0195.01 TRAFFIC BOND LIMESTONE 3/8-INCH TON
PROJECT 6240-31-71	
CATEGORY 0010	
TRAIL	13
PROJECT TOTAL	13

WATERMAIN

	SPV.0035.01 Trench Backfill CY	SPV.0060.04 8" Gate Valve & Box EACH	SPV.0060.05 10" Gate Valve & Box EACH	SPV.0060.06 Watermain Offset PVC C-900 EACH	SPV.0060.07 8" Watermain Tie In, Station 100+74 EACH	SPV.0060.08 10" Watermain Tie In, Station 101+27 EACH	SPV.0060.09 10" Watermain Tie In, STA 200+47 EACH	SPV.0090.04 8" Watermain PVC C-900 LF	SPV.0090.05 10" Watermain PVC C-900 LF	612.0902.S * INSULATION BOARD POLYSTYRENE 2-INCH SY
PROJECT 6240-31-71										
CATEGORY 0020										
PROJECT	250	1	2	1	1	1	1	34	40	4

* ADDITIONAL QUANTITY SHOWN IN STORM LATERAL TABLE

3

TRAFFIC CONTROL DETOUR SIGN SUMMARY (NEWTON-BLACKMOUR TRAIL)

SIGN NO.	LOCATION	SIGN CODE	SIZE W X H	NUMBER IN SERVICE	APPROX. SERVICE PERIOD 2 DAYS	643.0900 SIGNS * DAYS	643.0420 BARRICADES TYPE III * DAYS	643.0705 WARNING LIGHTS TYPE A * DAYS	643.1000 SIGNS FIXED MESSAGE SF	REMARKS
1	NEWTON-BLACKMOUR TRAIL, PLACE 500' PRIOR TO FOREST RD	M 4-9AA	30"X24"	1	2	2				
	"	SP	24"X24"	1					4	"URBAN REC TRAIL"
2	NEWTON-BLACKMOUR TRAIL, PLACE AT FOREST RD INTERSECTION	M 4-9AR	30"X24"	1	2	2				
	"	SP	24"X24"	1					4	"URBAN REC TRAIL"
3	NEWTON-BLACKMOUR TRAIL, PLACE AT FOREST RD INTERSECTION	R 11-2T	48"X30"	1	2	2	2	4		"TRAIL CLOSED"
	"	M 4-9AR	30"X24"	1	2	2				
4	FOREST RD, PLACE AT NEWTON-BLACKMOUR TRAIL INTERSECTION	M 4-8A	24"X18"	1	2	2				
	"	SP	24"X24"	1					4	"URBAN REC TRAIL"
5	FOREST RD, PLACE AT CLARK ST INTERSECTION	M 4-9AL	30"X24"	1	2	2				
	"	SP	24"X24"	1					4	"URBAN REC TRAIL"
6	CLARK ST, PLACE AT FOREST RD INTERSECTION	M 4-9AR	30"X24"	1	2	2				
	"	SP	24"X24"	1					4	"URBAN REC TRAIL"
7	CLARK ST, PLACE AT BURDICK ST INTERSECTION	M 4-9AR	30"X24"	1	2	2				
	"	SP	24"X24"	1					4	"URBAN REC TRAIL"
8	BURDICK ST, PLACE AT CLARK ST INTERSECTION	M 4-9AL	30"X24"	1	2	2				
	"	SP	24"X24"	1					4	"URBAN REC TRAIL"
9	BURDICK ST, PLACE AT STH 47 INTERSECTION	SP	30"X24"	1					5	
	"	SP	24"X24"	1					4	"URBAN REC TRAIL"
10	STH 47, PLACE AT BURDICK ST INTERSECTION	M 4-9AR	30"X24"	1	2	2				
	"	SP	24"X24"	1	2	2			4	"URBAN REC TRAIL"
11	NEWTON-BLACKMOUR TRAIL, PLACE AT FOREST RD INTERSECTION	R 11-2T	48"X30"	1	2	2	2	4		"TRAIL CLOSED"
	"	M 4-9AL	30"X24"	1	2	2				
12	STH 47, PLACE AT NEWTON-BLACKMOUR TRAIL INTERSECTION	M 4-9AR	30"X24"	1	2	2				
	"	SP	24"X24"	1					4	"URBAN REC TRAIL"
13	STH 47, PLACE 500' PRIOR TO NEWTON-BLACKMOUR TRAIL	M 4-9AA	30"X24"	1	2	2				
	"	SP	24"X24"	1					4	"URBAN REC TRAIL"
14	STH 47, PLACE AT NEWTON-BLACKMOUR TRAIL INTERSECTION	M 4-9AR	30"X24"	1	2	2				
	"	SP	24"X24"	1					4	"URBAN REC TRAIL"
15	BURDICK ST, PLACE AT STH 47 INTERSECTION	SP	30"X24"	1					5	
	"	SP	24"X24"	1					4	"URBAN REC TRAIL"
16	BURDICK ST, PLACE AT MAPLE ST INTERSECTION	M 4-9AL	30"X24"	1	2	2				
	"	SP	24"X24"	1					4	"URBAN REC TRAIL"
17	MAPLE ST, PLACE AT BURDICK ST INTERSECTION	M 4-9AR	30"X24"	1	2	2				
	"	SP	24"X24"	1					4	"URBAN REC TRAIL"
18	MAPLE ST, PLACE AT NEWTON-BLACKMOUR TRAIL INTERSECTION	M 4-8A	24"X18"	1	2	2				
	"	SP	24"X24"	1						
19	NEWTON-BLACKMOUR TRAIL, PLACE AT MAPLE ST INTERSECTION	R 11-2T	48"X30"	1	2	2	2	4		"TRAIL CLOSED"
	"	M 4-9AL	30"X24"	1	2	2				
20	NEWTON-BLACKMOUR TRAIL, PLACE AT MAPLE ST INTERSECTION	M 4-9AL	30"X24"	1	2	2				
	"	SP	24"X24"	1					4	"URBAN REC TRAIL"
21	NEWTON-BLACKMOUR TRAIL, PLACE 500' PRIOR TO FOREST RD	M 4-9AA	30"X24"	1	2	2				
	"	SP	24"X24"	1					4	"URBAN REC TRAIL"
	NEWTON-BLACKMOUR TRAIL DETOUR TOTALS			**42**		**46**	**6**	**12**	**78**	

* ADDITIONAL QUANTITITES SHOWN IN TRAFFIC CONTROL TABLE

3

R/W PROJECT NUMBER 6240-31-21	SHEET NUMBER	TOTAL SHEETS
CONSTRUCTION PROJECT NUMBER 6240-31-71	4.01	10

PLAT OF RIGHT OF WAY REQUIRED FOR

VILLAGE OF BLACK CREEK, STH 47 STORM SEWER IMPROVEMENT

STH 47 | OUTAGAMIE COUNTY

CONVENTIONAL SYMBOLS

SECTION LINE
QUARTER LINE
SIXTEENTH LINE
NEW REFERENCE LINE
NEW R/W LINE
EXISTING R/W OR HE LINE
PROPERTY LINE (P.L.)
LOT, TIE & OTHER MINOR LINES
SLOPE INTERCEPT
CORPORATE LIMITS
UNDERGROUND FACILITY (COMMUNICATIONS, ELECTRIC, ETC) (W (TYPE))
NEW R/W (FEE OR HE) (HATCHING VARIES BY OWNER)
TEMPORARY LIMITED EASEMENT AREA
EASEMENT AREA (PERMANENT LIMITED OR RESTRICTED DEVELOPMENT)
TRANSMISSION STRUCTURES
BUILDING
TO BE REMOVED
BRIDGE
CULVERT
LINE CONTINUED

SECTION CORNER SYMBOL (18, 23, 24, 26, 25, 36)
SECTION CORNER MONUMENT
GEODETIC SURVEY MONUMENT
RIGHT OF WAY IRON FOUND
SIGN (SIGN)
OFF-PREMISE SIGN (#1-25) (SIGN)

R/W MONUMENT (TO BE SET)
NON-MONUMENTED R/W POINT
FOUND IRON PIN (1-INCH UNLESS NOTED) (IP)

	COMPENSABLE	NON-COMPENSABLE
ELECTRIC POLE		
TELEPHONE POLE		
PEDESTAL (LABEL TYPE) (TV, TEL, ELEC, ETC.)		

ACCESS RESTRICTED BY ACQUISITION
NO ACCESS (BY STATUTORY AUTHORITY)
ACCESS RESTRICTED (BY PREVIOUS PROJECT OR CONTROL)
NO ACCESS (NEW HIGHWAY)

PARCEL NUMBER (25)
UTILITY NUMBER (40)
PARALLEL OFFSETS

CONVENTIONAL ABBREVIATIONS

ACCESS RIGHTS	AR	PAGE	P
ACRES	AC	POINT OF TANGENCY	PT
AHEAD	AH	PERMANENT LIMITED EASEMENT	PLE
ALUMINUM	ALUM		
AND OTHERS	ET AL	POINT OF BEGINNING	POB
BACK	BK	POINT OF CURVATURE	PC
BLOCK	BLK	POINT OF COMPOUND CURVE	PCC
CENTERLINE	C/L	POINT OF INTERSECTION	PI
CERTIFIED SURVEY MAP	CSM	PROPERTY LINE	PL
CONCRETE	CONC	RECORDED AS	(100')
COUNTY	CO	REEL / IMAGE	R/I
COUNTY TRUNK HIGHWAY	CTH	REFERENCE LINE	R/L
DISTANCE	DIST	REMAINING	REM
CORNER	COR	RESTRICTIVE DEVELOPMENT EASEMENT	RDE
DOCUMENT NUMBER	DOC		
EASEMENT	EASE	RIGHT	RT
EXISTING	EX	RIGHT OF WAY	RW
GAS VALVE	GV	SECTION	SEC
GRID NORTH	GN	SEPTIC VENT	SEPV
HIGHWAY EASEMENT	HE	SQUARE FEET	SF
IDENTIFICATION	ID	STATE TRUNK HIGHWAY	STH
LAND CONTRACT	LC	STATION	STA
LEFT	LT	TELEPHONE PEDESTAL	TP
MONUMENT	MON	TEMPORARY LIMITED EASEMENT	TLE
NATIONAL GEODETIC SURVEY	NGS		
NUMBER	NO	TRANSPORTATION PROJECT PLAT	TPP
OUTLOT	OL	UNITED STATES HIGHWAY	USH
		VOLUME	V

NOTES:

POSITIONS SHOWN ON THIS PLAT ARE WISCONSIN COORDINATE REFERENCE SYSTEM COORDINATES (WISCRS), OUTAGAMIE COUNTY, NAD83 (2011)IN US SURVEY FEET. VALUES SHOWN ARE GRID COORDINATES, GRID BEARINGS, AND GRID DISTANCES. GRID DISTANCES MAY BE USED AS GROUND DISTANCES.

ALL NEW RIGHT-OF-WAY MONUMENTS WILL BE TYPE 2 (TYPICALLY ¾" X 24" IRON REBARS), UNLESS OTHERWISE NOTED, AND WILL BE PLACED PRIOR TO THE COMPLETION OF THE PROJECT.

DIMENSIONING FOR THE NEW RIGHT-OF-WAY IS MEASURED ALONG AND PERPENDICULAR TO THE NEW REFERENCE LINES.

RIGHT-OF-WAY BOUNDARIES ARE DEFINED WITH COURSES OF THE PERIMETER OF THE HIGHWAY LANDS REFERENCED TO THE U.S. PUBLIC LAND SURVEY SYSTEM OR OTHER "SURVEYS" OF PUBLIC RECORD.

FOR THE CURRENT ACCESS/DRIVEWAY INFORMATION, THE PLANNING UNIT OF THE WISCONSIN DEPARTMENT OF TRANSPORTATION OFFICE IN THE NE REGION.

PARCEL AND UTILITY IDENTIFICATION NUMBERS MAY NOT POINT TO ALL AREAS OF ACQUISITION, AS NOTED ON THE DETAIL PAGES.

INFORMATION FOR THE BASIS OF EXISTING HIGHWAY RIGHT-OF-WAY POINTS OF REFERENCE AND ACCESS CONTROL ARE LISTED ON THE DETAIL PAGES.

CONVENTIONAL UTILITY SYMBOLS

WATER	W
GAS	G
TELEPHONE	T
OVERHEAD TRANSMISSION LINES	OH
ELECTRIC	E
CABLE TELEVISION	TV
FIBER OPTIC	FO
SANITARY SEWER	SAN
STORM SEWER	SS
ELECTRIC TOWER	

(161) = R/W POINT
[171] = TLE POINT

CURVE DATA ABBREVIATIONS

LONG CHORD	LCH
LONG CHORD BEARING	LCB
RADIUS	R
DEGREE OF CURVE	D
CENTRAL ANGLE	Δ/DELTA
LENGTH OF CURVE	L
TANGENT	T
DIRECTION AHEAD	DA
DIRECTION BACK	DB

BEGIN RELOCATION ORDER "A"
STATION 10+00.00
885.58 FEET NORTH OF AND 343.00 FEET WEST OF THE EAST QUARTER CORNER OF SEC. 17, T23N, R17E, TOWN OF BLACK CREEK, OUTAGAMIE COUNTY, WISCONSIN
Y: 637905.218
X: 815389.018

END RELOCATION ORDER "A"
STATION 34+34.45
254.44 FEET NORTH OF AND 1269.61 FEET WEST OF THE NORTHEAST CORNER OF SEC. 17, T23N, R17E, TOWN OF BLACK CREEK, OUTAGAMIE COUNTY, WISCONSIN
Y: 639779.915
X: 814543.193

BEGIN RELOCATION ORDER "B"
STATION 50+00.00
1438.76 FEET SOUTH OF AND 695.08 FEET WEST OF THE NORTHEAST CORNER OF SEC. 17, T23N, R17E, TOWN OF BLACK CREEK, OUTAGAMIE COUNTY, WISCONSIN
Y: 638086.706
X: 815117.720

END RELOCATION ORDER "B"
STATION 56+48.61
1447.51 FEET SOUTH OF AND 46.66 FEET WEST OF THE NORTHEAST CORNER OF SEC. 17, T23N, R17E, TOWN OF BLACK CREEK, OUTAGAMIE COUNTY, WISCONSIN
Y: 638077.964
X: 815766.137

BEGIN RELOCATION ORDER "C"
STATION 30+00.00
645.68 FEET SOUTH OF AND 921.16 FEET WEST OF THE NORTHEAST CORNER OF SEC. 17, T23N, R17E, TOWN OF BLACK CREEK, OUTAGAMIE COUNTY, WISCONSIN
Y: 638879.787
X: 814891.643

END RELOCATION ORDER "C"
STATION 39+00.00
659.85 FEET SOUTH OF AND 21.27 FEET WEST OF THE NORTHEAST CORNER OF SEC. 17, T23N, R17E, TOWN OF BLACK CREEK, OUTAGAMIE COUNTY, WISCONSIN
Y: 638865.823
X: 815791.535

A TEMPORARY LIMITED EASEMENT (TLE) IS A RIGHT FOR CONSTRUCTION PURPOSES, AS DEFINED HEREIN, INCLUDING THE RIGHT TO OPERATE NECESSARY EQUIPMENT THEREON, THE RIGHT OF INGRESS AND EGRESS, AS LONG AS REQUIRED FOR SUCH PUBLIC PURPOSE, INCLUDING THE RIGHT TO PRESERVE, PROTECT, REMOVE, OR PLANT THEREON ANY VEGETATION THAT THE HIGHWAY AUTHORITIES MAY DEEM DESIRABLE. ALL (TLEs) ON THIS PLAT EXPIRE AT THE COMPLETION OF THE CONSTRUCTION PROJECT FOR WHICH THIS INSTRUMENT IS GIVEN.

A PERMANENT LIMITED EASEMENT (PLE) IS A RIGHT FOR CONSTRUCTION AND MAINTENANCE PURPOSES, AS DEFINED HEREIN, INCLUDING THE RIGHT TO OPERATE NECESSARY EQUIPMENT THEREON AND THE RIGHT OF INGRESS AND EGRESS, AS LONG AS REQUIRED FOR SUCH PUBLIC PURPOSE, INCLUDING THE RIGHT TO PRESERVE, PROTECT, REMOVE, OR PLANT THEREON ANY VEGETATION THAT THE HIGHWAY AUTHORITIES MAY DEEM DESIRABLE, BUT WITHOUT PREJUDICE TO THE OWNER'S RIGHTS TO MAKE OR CONSTRUCT IMPROVEMENTS ON SAID LANDS OR TO FLATTEN THE SLOPES, PROVIDING SAID ACTIVITIES WILL NOT IMPAIR OR OTHERWISE ADVERSELY AFFECT THE HIGHWAY FACILITIES.

PROPERTY LINES SHOWN ON THIS PLAT FOR PROPERTIES BEING IMPACTED ARE DRAWN FROM DATA DERIVED FROM FILED/RECORDED MAPS AND DOCUMENTS OF PUBLIC RECORD. THIS PLAT MAY NOT BE A TRUE REPRESENTATION OF EXISTING PROPERTY LINES, EXCLUDING RIGHT-OF-WAY, AND SHOULD NOT BE USED AS A SUBSTITUTE FOR AN ACCURATE FIELD SURVEY.

ALL RIGHT-OF-WAY LINES DEPICTED IN THE NON-ACQUISITION AREAS ARE INTENDED TO RE-ESTABLISH EXISTING RIGHT-OF WAY LINES AS DETERMINED FROM PREVIOUS PROJECTS, OTHER RECORDED DOCUMENTS, CENTERLINE OF EXISTING PAVEMENTS AND/OR EXISTING OCCUPATIONAL LINES.

LAYOUT
SCALE 0 — 2500'

TOTAL NET LENGTH OF CENTERLINE = 3,983.06' (0.75 MILES)

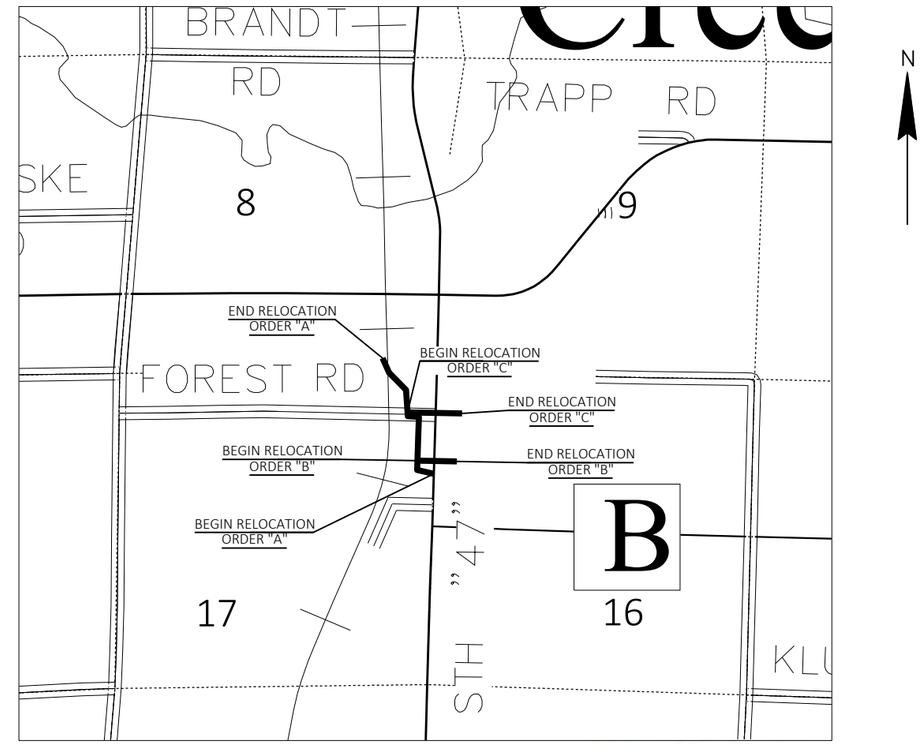

DATED THIS MARCH 29, 2023
REVISED THIS APRIL 18, 2023
REVISED THIS MAY 22, 2023
REVISED THIS JANUARY 8, 2024

WISCONSIN TERRY L. VAN HOUT S-2526 GREEN BAY, WI LAND SURVEYOR

THIS PLAT IS A GRAPHIC REPRESENTATION AND IS FOR REFERENCE PURPOSES ONLY. DEEDS MUST BE CHECKED TO DETERMINE PROPERTY BOUNDARIES AND ACCESS RIGHTS.

Westwood
Phone (920) 735-6900 One Systems Drive
Fax (920) 830-6100 Appleton, WI 54914-1654
Toll Free (800) 571-6677 westwoodps.com
Westwood Professional Services

REVISION DATE :
4-18-2023
5-22-2023
1-08-2024

STATE OF WISCONSIN
DEPARTMENT OF TRANSPORTATION

APPROVED FOR THE DEPARTMENT

DATE: _____ _____ (Signatur

SCHEDULE OF LANDS AND INTERESTS REQUIRED

AREAS SHOWN IN THE TOTAL ACRES COLUMN MAY BE APPROXIMATE AND ARE DERIVED FROM TAX ROLL OR OTHER AVAILABLE SOURCES AND MAY NOT INCLUDE LANDS OF THE OWNER WHICH ARE NOT CONTIGUOUS TO THE AREA TO BE ACQUIRED. OWNER'S NAMES ARE SHOWN FOR REFERENCE PURPOSES ONLY AND ARE SUBJECT TO CHANGE PRIOR TO THE TRANSFER OF LAND INTERESTS TO THE COUNTY.

4

PARCEL NUMBER	SHEET NUMBER(S)	OWNER(S)	INTEREST REQUIRED	FEE R/W AREA REQUIRED - SF			TLE SF REQUIRED	PLE SF REQUIRED
				NEW	EXISTING	TOTAL		
1	4.05	SARA STROBEL AS TRUSTEE OF BRAUN TRUST	TLE	0	0	0	2,162	0
2	4.05	JOSHUA M. & JULIE K. BURMEISTER	TLE	0	0	0	493	0
3	4.05	CHARLES H. & ERIKA T. FIESTEDT	TLE	0	0	0	764	0
4	4.05	WILLIAM G. OSKEY & ROCHELLE L. HOLTZ	TLE	0	0	0	570	0
6	4.05	BRUCE & MELISSA BATES	PLE, TLE	0	0	0	1,089	435
9	4.07	RYAN P. & AMANDA M. ROHAN	PLE	0	0	0	0	187
10	4.06, 4.07	FOX VALLEY & LAKE SUPERIOR RAIL SYSTEM, LLC	PLE	0	0	0	0	22,527
11	4.08	STATE OF WISCONSIN DEPARTMENT OF NATURAL RESOURCES	TLE	0	0	0	20,460	0
12	4.08	VILLAGE OF BLACK CREEK	TLE	0	0	0	10,085	0
20	4.09	BLACK CREEK EYECARE, LLC (UNIT1) & DR. DARREL KLEMP AND TONI M. KLEMP (UNIT 2)	TLE	0	0	0	1,500	0
21	4.09	SCOTT A. & ERICA A. PEARSON	TLE	0	0	0	2,318	0
22	4.09	MARCO CHAPA	TLE	0	0	0	750	0
23	4.10	RANDY R. & LAURA A. LANE	TLE	0	0	0	250	0
24	4.10	MCHUGH RENTALS & INVESTMENTS 32 LLC	TLE	0	0	0	396	0
26	4.10	DANIEL J. BRINCKS	TLE	0	0	0	348	0
27	4.10	HARBOR STATION LLC	TLE	0	0	0	706	0

4

UTILITY INTERESTS REQUIRED

UTILITY NUMBER	UTILITY OWNER	INTERESTS REQUIRED	EASEMENTS
92	BRIGHT SPEED	RELEASE OF RIGHTS	
93	SPECTRUM	RELEASE OF RIGHTS	
94	WE ENERGIES (ELECTRIC)	RELEASE OF RIGHTS	
95	WE ENERGIES (GAS)	RELEASE OF RIGHTS	

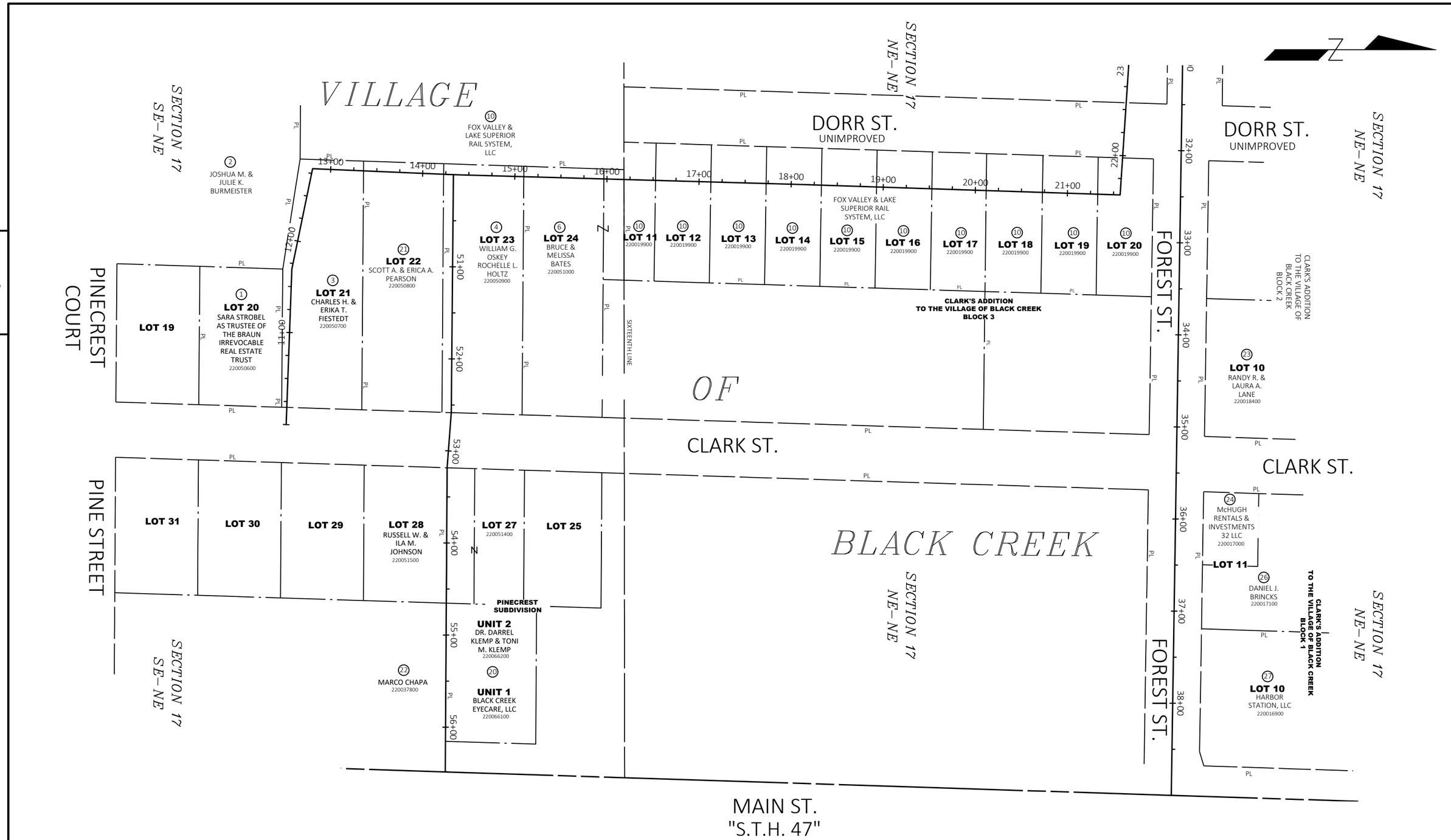

REVISION DATE	DATE 3-29-2023	SCALE, FEET 0 50 100	HWY: STH 47	STATE R/W PROJECT NUMBER 6240-31-21	PLAT SHEET 4.03	
4-18-2023 NC 5-22-2023 1-08-2024 NC	GRID FACTOR		COUNTY: OUTAGAMIE	CONSTRUCTION PROJECT NUMBER 6240-31-71	PS&E SHEET 47	E

FILE NAME : RWPLAT-LAYOUT-62403171.DWG
LAYOUT NAME - RW 4.03
PLOT DATE : 1/8/2024 10:51 AM PLOT BY : ETHAN KARLS PLOT NAME : PLOT SCALE :

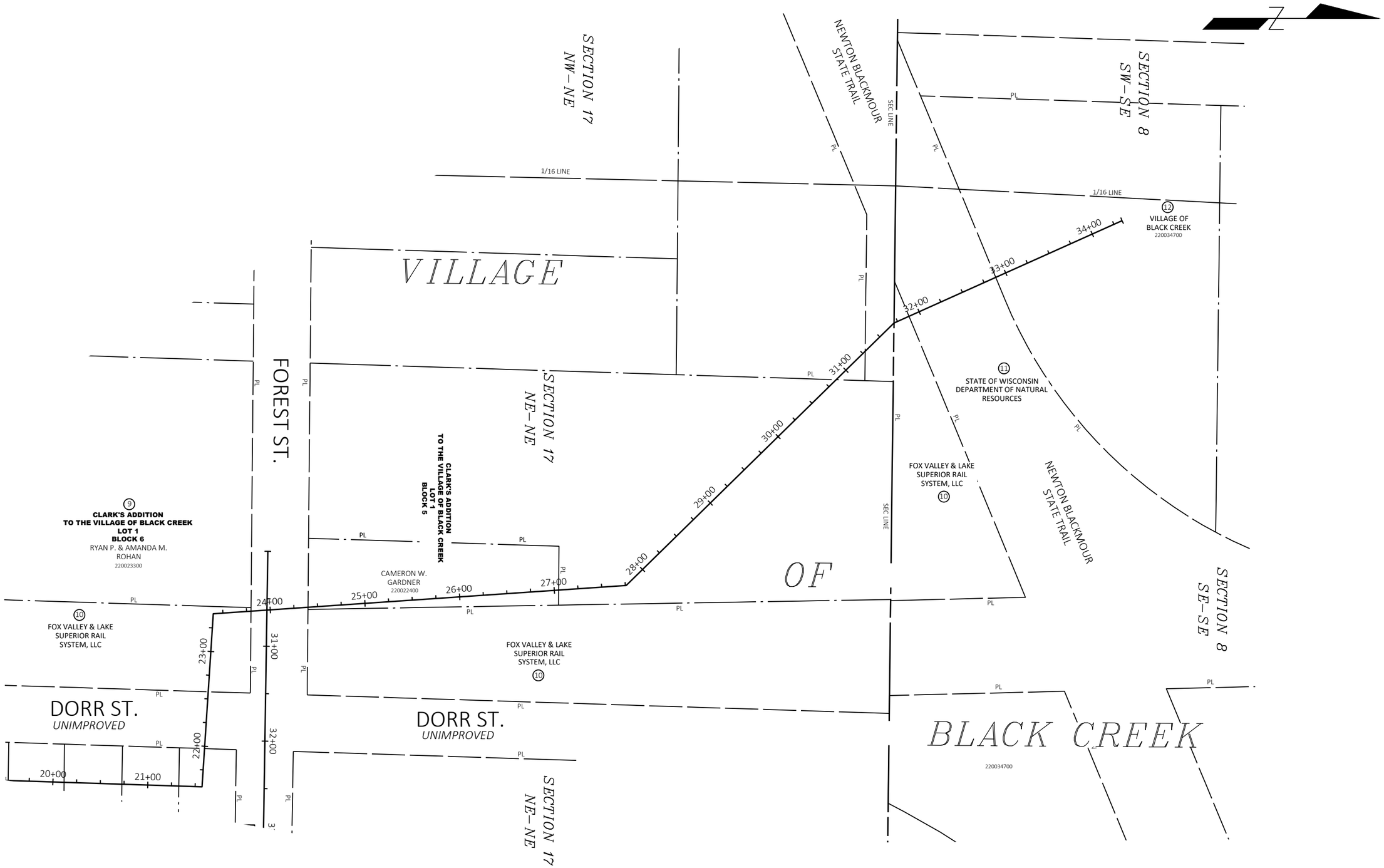

REVISION DATE	DATE 3-29-2023	SCALE, FEET	HWY: STH 47	STATE R/W PROJECT NUMBER 6240-31-21	PLAT SHEET 4.04	
4-18-2023 5-22-2023 1-08-2024 NC	GRID FACTOR	0 50 100	COUNTY: OUTAGAMIE	CONSTRUCTION PROJECT NUMBER 6240-31-71	PS&E SHEET 48	E

FILE NAME : RWPLAT-LAYOUT-62403171.DWG
LAYOUT NAME - RW 4.04
PLOT DATE : 1/8/2024 10:52 AM PLOT BY : ETHAN KARLS PLOT NAME : PLOT SCALE :
WISDOT/CADDS SHEET 75

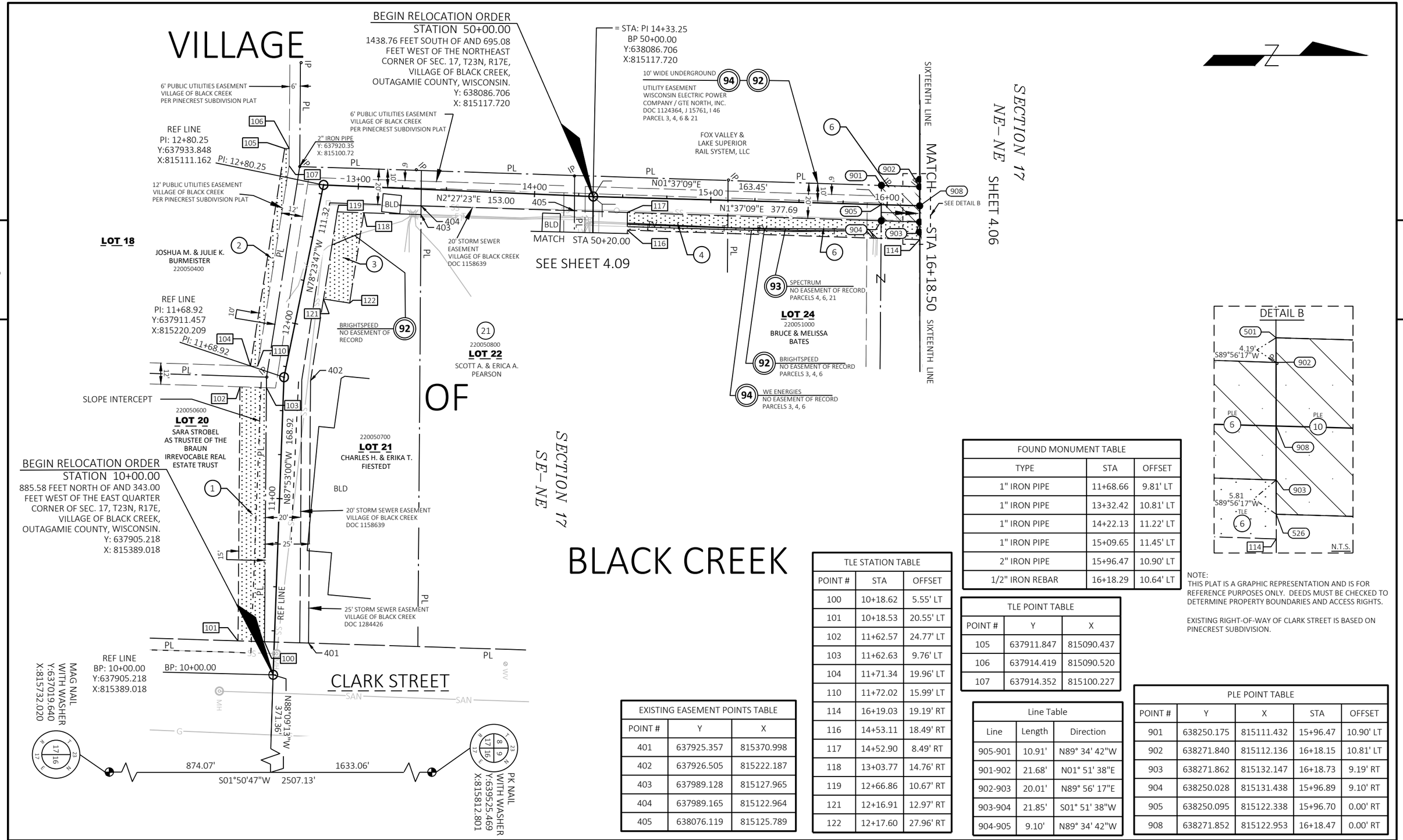

NOTE:
THIS PLAT IS A GRAPHIC REPRESENTATION AND IS FOR REFERENCE PURPOSES ONLY. DEEDS MUST BE CHECKED TO DETERMINE PROPERTY BOUNDARIES AND ACCESS RIGHTS.

EXISTING RIGHT-OF-WAY OF CLARK STREET IS BASED ON PINECREST SUBDIVISION.

FOUND MONUMENT TABLE		
TYPE	STA	OFFSET
1" IRON PIPE	11+68.66	9.81' LT
1" IRON PIPE	13+32.42	10.81' LT
1" IRON PIPE	14+22.13	11.22' LT
1" IRON PIPE	15+09.65	11.45' LT
2" IRON PIPE	15+96.47	10.90' LT
1/2" IRON REBAR	16+18.29	10.64' LT

TLE STATION TABLE		
POINT #	STA	OFFSET
100	10+18.62	5.55' LT
101	10+18.53	20.55' LT
102	11+62.57	24.77' LT
103	11+62.63	9.76' LT
104	11+71.34	19.96' LT
110	11+72.02	15.99' LT
114	16+19.03	19.19' RT
116	14+53.11	18.49' RT
117	14+52.90	8.49' RT
118	13+03.77	14.76' RT
119	12+66.86	10.67' RT
121	12+16.91	12.97' RT
122	12+17.60	27.96' RT

TLE POINT TABLE		
POINT #	Y	X
105	637911.847	815090.437
106	637914.419	815090.520
107	637914.352	815100.227

EXISTING EASEMENT POINTS TABLE		
POINT #	Y	X
401	637925.357	815370.998
402	637926.505	815222.187
403	637989.128	815127.965
404	637989.165	815122.964
405	638076.119	815125.789

Line Table		
Line	Length	Direction
905-901	10.91'	N89° 34' 42"W
901-902	21.68'	N01° 51' 38"E
902-903	20.01'	N89° 56' 17"E
903-904	21.85'	S01° 51' 38"W
904-905	9.10'	N89° 34' 42"W

PLE POINT TABLE				
POINT #	Y	X	STA	OFFSET
901	638250.175	815111.432	15+96.47	10.90' LT
902	638271.840	815112.136	16+18.15	10.81' LT
903	638271.862	815132.147	16+18.73	9.19' RT
904	638250.028	815131.438	15+96.89	9.10' RT
905	638250.095	815122.338	15+96.70	0.00' RT
908	638271.852	815122.953	16+18.47	0.00' RT

REVISION DATE 4-18-2023 5-22-2023 1-08-2024	DATE 3-29-2023	SCALE, FEET 0 25 50	HWY: STH 47	STATE R/W PROJECT NUMBER 6240-31-21	PLAT SHEET 4.05
	GRID FACTOR		COUNTY: OUTAGAMIE	CONSTRUCTION PROJECT NUMBER 6240-31-71	PS&E SHEET — 49 E

FILE NAME : RWPLAT-62403171.DWG
LAYOUT NAME - RW 4.05
PLOT DATE : 1/8/2024 10:59 AM PLOT BY : ETHAN KARLS PLOT NAME : PLOT SCALE :
WISDOT/CADDS SHEET 75

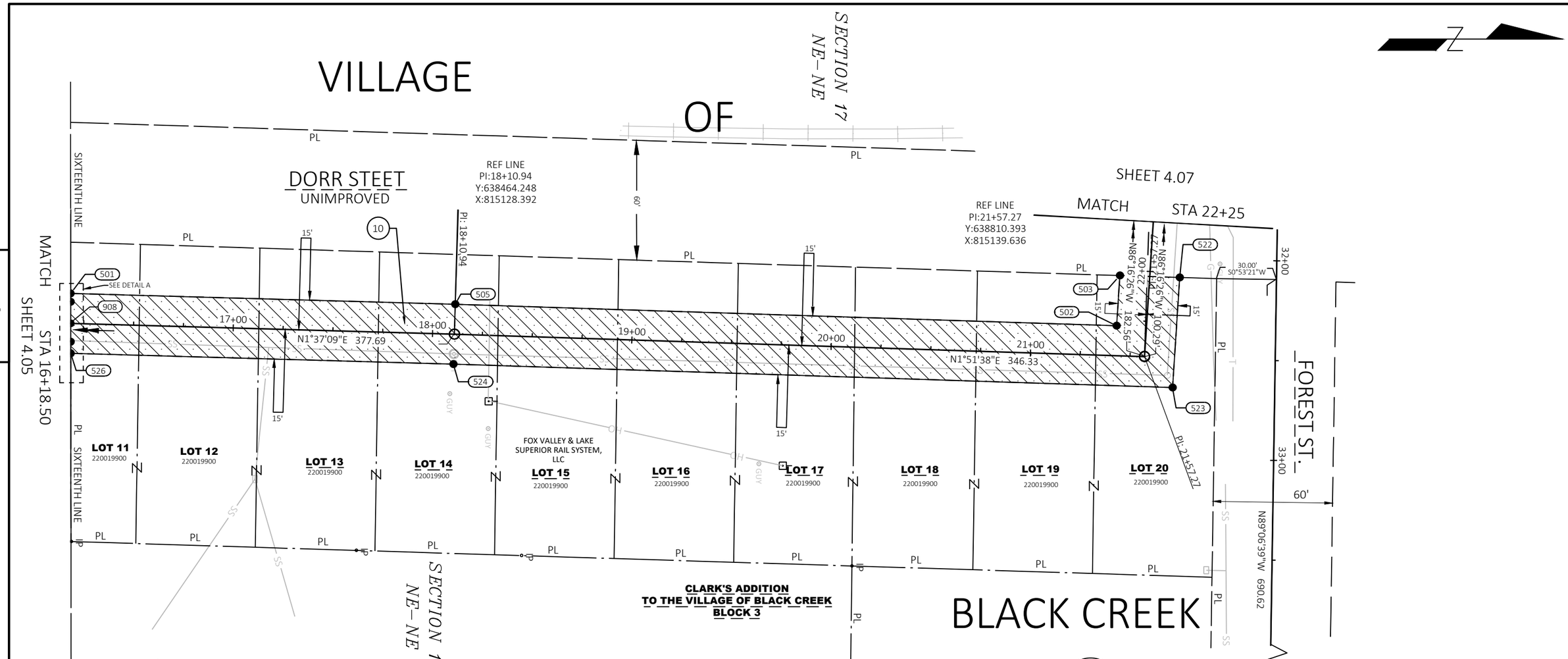

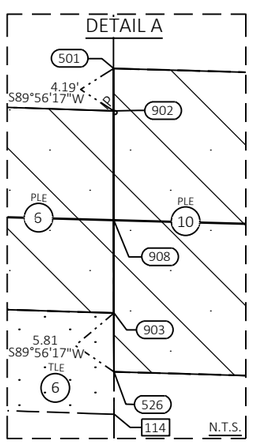

PLE POINT TABLE				
POINT #	Y	X	STA	OFFSET
501	638271.835	815107.947	16+18.02	15.00' LT
502	638796.368	815124.173	21+71.79	15.00' LT
503	638798.008	815098.992	21+97.02	15.00' LT
505	638464.703	815113.399		
522	638828.010	815099.944	21+98.02	15.00' RT
523	638824.418	815155.100		
524	638463.793	815143.385	18+10.97	15.00' RT
526	638271.868	815137.960	16+18.91	15.00' RT
908	638271.852	815122.953	16+18.47	0.00' RT

Line Table		
Line	Length	Direction
501-505	192.95'	N01° 37' 09"E
505-502	331.84'	N01° 51' 38"E
502-503	25.23'	N86° 16' 26"W
503-522	30.02'	N01° 49' 09"E
522-523	55.27'	S86° 16' 26"E
523-524	360.82'	S01° 51' 38"W
524-526	192.00'	S01° 37' 09"W
526-501	30.01'	S89° 56' 17"W
128-522	18.54'	S01° 49' 09"W

FOUND MONUMENT TABLE		
TYPE	STA	OFFSET
3/4" IRON REBAR	16+21.87	109.25' RT
3/4" IRON REBAR	17+64.85	109.68' RT
3/4" IRON REBAR	18+48.22	109.76' RT
3/4" IRON REBAR	20+13.95	109.58' RT

NOTE:
THIS PLAT IS A GRAPHIC REPRESENTATION AND IS FOR REFERENCE PURPOSES ONLY. DEEDS MUST BE CHECKED TO DETERMINE PROPERTY BOUNDARIES AND ACCESS RIGHTS.

EXISTING RIGHT-OF-WAY FOR DORR STREET (UNIMPROVED) IS BASED ON CLARK'S ADDITION TO THE VILLAGE OF BLACK CREEK.

REVISION DATE
4-18-2023
5-22-2023
1-08-2024

DATE 3-29-2023	SCALE, FEET 0 25 50	HWY: STH 47	STATE R/W PROJECT NUMBER 6240-31-21	PLAT SHEET 4.06
GRID FACTOR		COUNTY: OUTAGAMIE	CONSTRUCTION PROJECT NUMBER 6240-31-71	PS&E SHEET 50

E

FILE NAME : RWPLAT-62403171.DWG
LAYOUT NAME - RW 4.06
PLOT DATE : 1/8/2024 11:52 AM
PLOT BY : ETHAN KARLS
PLOT NAME :
PLOT SCALE :
WISDOT/CADDS SHEET 75

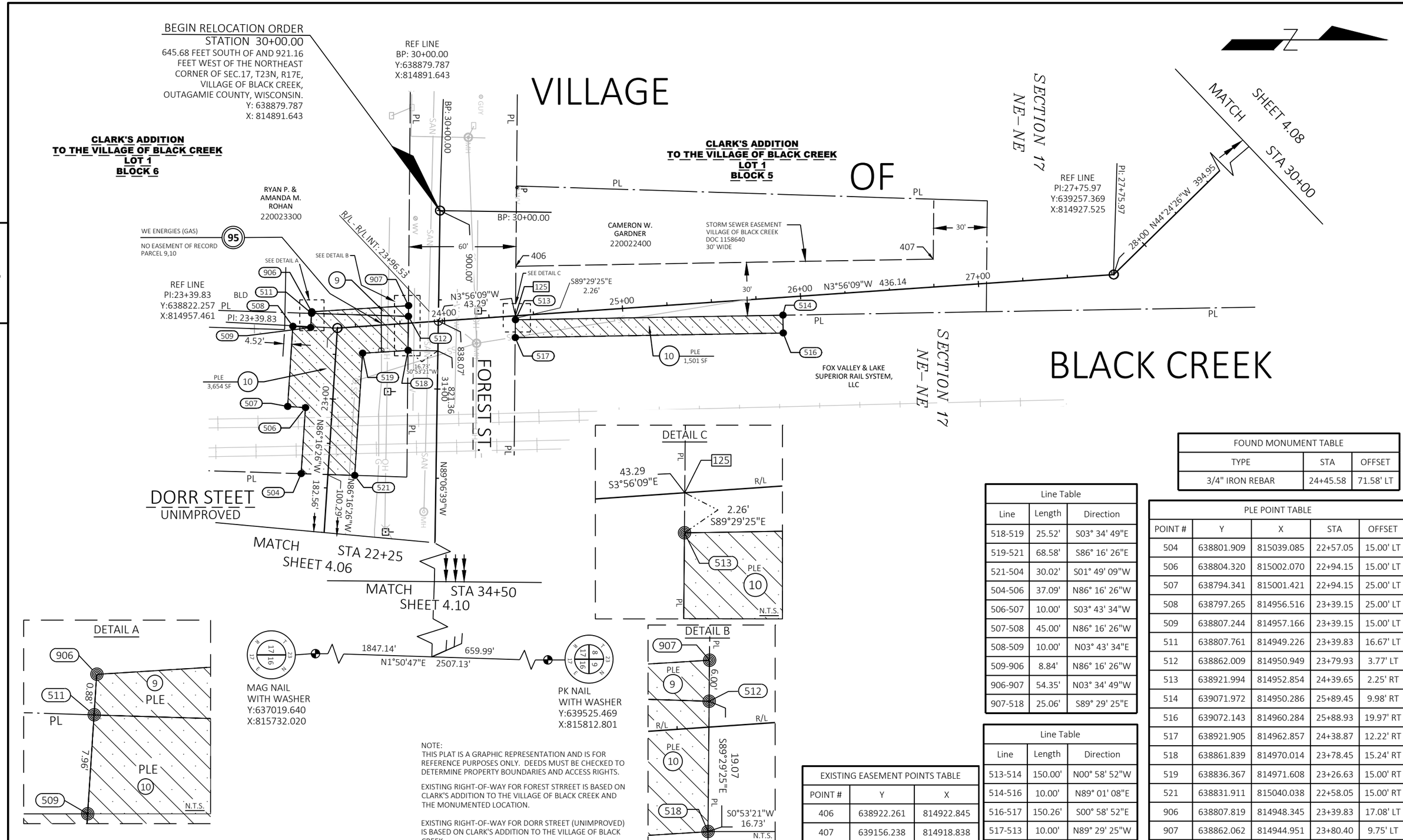

NOTE:
THIS PLAT IS A GRAPHIC REPRESENTATION AND IS FOR REFERENCE PURPOSES ONLY. DEEDS MUST BE CHECKED TO DETERMINE PROPERTY BOUNDARIES AND ACCESS RIGHTS.

EXISTING RIGHT-OF-WAY FOR FOREST STRREET IS BASED ON CLARK'S ADDITION TO THE VILLAGE OF BLACK CREEK AND THE MONUMENTED LOCATION.

EXISTING RIGHT-OF-WAY FOR DORR STREET (UNIMPROVED) IS BASED ON CLARK'S ADDITION TO THE VILLAGE OF BLACK CREEK.

FOUND MONUMENT TABLE		
TYPE	STA	OFFSET
3/4" IRON REBAR	24+45.58	71.58' LT

Line Table		
Line	Length	Direction
518-519	25.52'	S03° 34' 49"E
519-521	68.58'	S86° 16' 26"E
521-504	30.02'	S01° 49' 09"W
504-506	37.09'	N86° 16' 26"W
506-507	10.00'	S03° 43' 34"W
507-508	45.00'	N86° 16' 26"W
508-509	10.00'	N03° 43' 34"E
509-906	8.84'	N86° 16' 26"W
906-907	54.35'	N03° 34' 49"W
907-518	25.06'	S89° 29' 25"E

Line Table		
Line	Length	Direction
513-514	150.00'	N00° 58' 52"W
514-516	10.00'	N89° 01' 08"E
516-517	150.26'	S00° 58' 52"E
517-513	10.00'	N89° 29' 25"W

PLE POINT TABLE				
POINT #	Y	X	STA	OFFSET
504	638801.909	815039.085	22+57.05	15.00' LT
506	638804.320	815002.070	22+94.15	15.00' LT
507	638794.341	815001.421	22+94.15	25.00' LT
508	638797.265	814956.516	23+39.15	25.00' LT
509	638807.244	814957.166	23+39.15	15.00' LT
511	638807.761	814949.226	23+39.83	16.67' LT
512	638862.009	814950.949	23+79.93	3.77' LT
513	638921.994	814952.854	24+39.65	2.25' RT
514	639071.972	814950.286	25+89.45	9.98' RT
516	639072.143	814960.284	25+88.93	19.97' RT
517	638921.905	814962.857	24+38.87	12.22' RT
518	638861.839	814970.014	23+78.45	15.24' RT
519	638836.367	814971.608	23+26.63	15.00' RT
521	638831.911	815040.038	22+58.05	15.00' RT
906	638807.819	814948.345	23+39.83	17.08' LT
907	638862.062	814944.951	23+80.40	9.75' LT

EXISTING EASEMENT POINTS TABLE		
POINT #	Y	X
406	638922.261	814922.845
407	639156.238	814918.838

REVISION DATE 4-18-2023 5-22-2023 1-08-2024	DATE 3-29-2023	SCALE, FEET 0 25 50	HWY: STH 47
	GRID FACTOR		COUNTY: OUTAGAMIE

STATE R/W PROJECT NUMBER 6240-31-21	PLAT SHEET 4.07	
CONSTRUCTION PROJECT NUMBER 6240-31-71	PS&E SHEET	E

FILE NAME : RWPLAT-62403171.DWG
LAYOUT NAME - RW 4.07
PLOT DATE : 1/8/2024 11:52 AM PLOT BY : ETHAN KARLS PLOT NAME : PLOT SCALE :
WISDOT/CADDS SHEET 75

VILLAGE OF BLACK CREEK

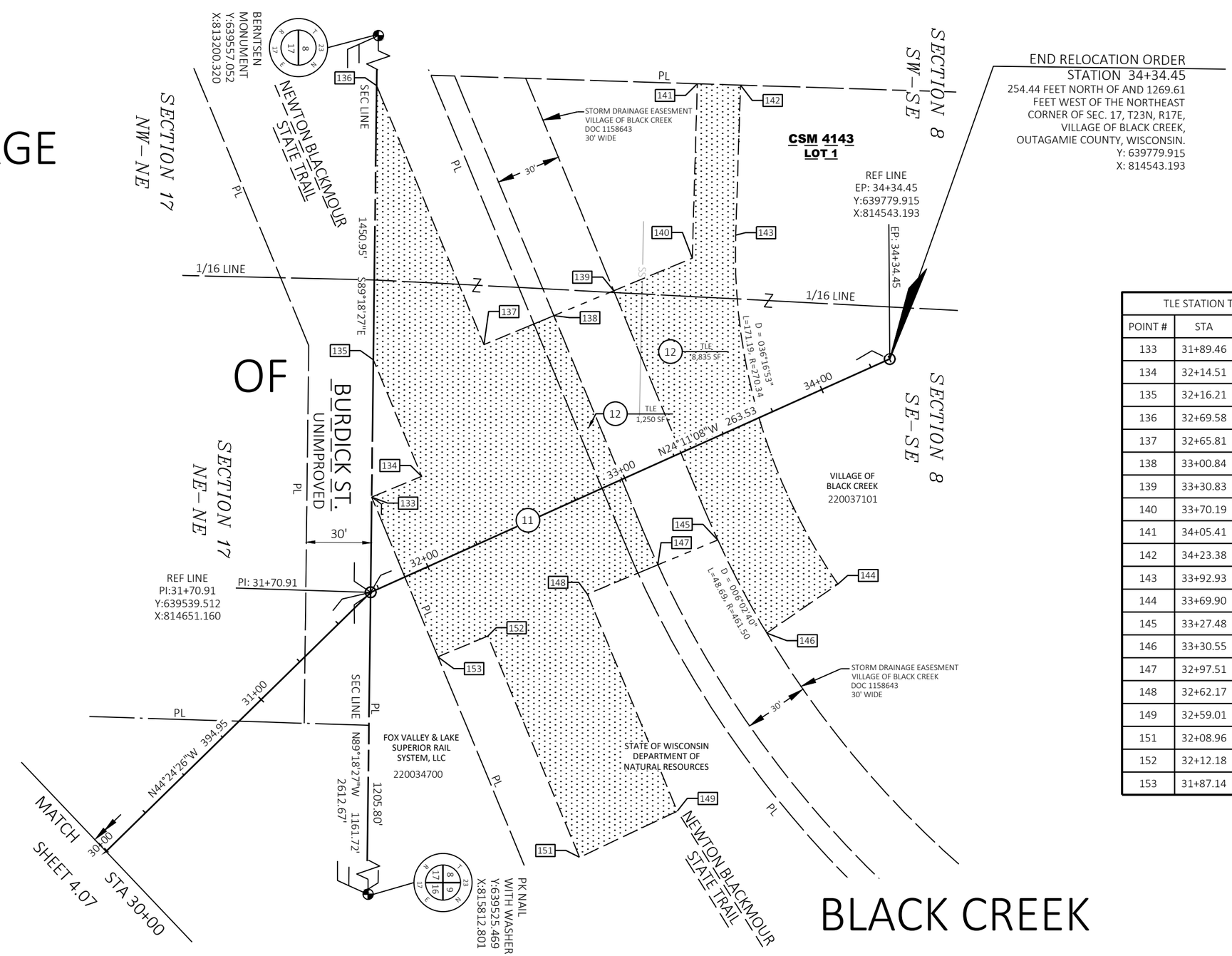

END RELOCATION ORDER
STATION 34+34.45
254.44 FEET NORTH OF AND 1269.61
FEET WEST OF THE NORTHEAST
CORNER OF SEC. 17, T23N, R17E,
VILLAGE OF BLACK CREEK,
OUTAGAMIE COUNTY, WISCONSIN.
Y: 639779.915
X: 814543.193

TLE STATION TABLE		
POINT #	STA	OFFSET
133	31+89.46	39.98' LT
134	32+14.51	39.25' LT
135	32+16.21	97.68' LT
136	32+69.58	212.77' LT
137	32+65.81	83.06' LT
138	33+00.84	82.04' LT
139	33+30.83	81.17' LT
140	33+70.19	80.03' LT
141	34+05.41	152.73' LT
142	34+23.38	143.96' LT
143	33+92.93	81.54' LT
144	33+69.90	85.22' RT
145	33+27.48	43.78' RT
146	33+30.55	92.35' RT
147	32+97.51	42.91' RT
148	32+62.17	41.89' RT
149	32+59.01	150.61' RT
151	32+08.96	151.54' RT
152	32+12.18	40.71' RT
153	31+87.14	39.98' RT

Line Table		
Line	Length	Direction
133-134	25.06'	N22° 31' 06"W
134-135	58.45'	S67° 28' 54"W
135-136	126.87'	N89° 18' 27"W
136-137	129.77'	N67° 28' 54"E
137-140	104.43'	N22° 31' 22"W
140-141	80.78'	N88° 20' 15"W
141-142	20.00'	N01° 49' 09"E
142-143	69.45'	S88° 10' 51"E
143-144	168.34'	N73° 40' 43"E
144-146	39.99'	S34° 27' 44"E
146-145	48.66'	S62° 12' 03"W
145-148	65.34'	S22° 31' 22"E
148-149	108.77'	N67° 28' 54"E
149-151	50.06'	S25° 14' 31"E
151-152	110.87'	S67° 28' 54"W
152-153	25.06'	S22° 31' 06"E
153-133	80.00'	S67° 28' 54"W

NOTE:
THIS PLAT IS A GRAPHIC REPRESENTATION AND IS FOR REFERENCE PURPOSES ONLY. DEEDS MUST BE CHECKED TO DETERMINE PROPERTY BOUNDARIES AND ACCESS RIGHTS.

EXISTING RIGHT-OF-WAY FOR BURDICK STREET (UNIMPROVED) IS BASED ON CLARK'S ADDITION TO THE VILLAGE OF BLACK CREEK.

REVISION DATE 4-18-2023 5-22-2023 1-08-2024	DATE 3-29-2023	SCALE, FEET 0 25 50	HWY: STH 47
	GRID FACTOR		COUNTY: OUTAGAMIE

STATE R/W PROJECT NUMBER	6240-31-21	PLAT SHEET 4.08
CONSTRUCTION PROJECT NUMBER	6240-31-71	PS&E SHEET — 52

E

FILE NAME : RWPLAT-62403171.DWG
LAYOUT NAME - RW 4.08
PLOT DATE : 1/8/2024 11:53 AM PLOT BY : ETHAN KARLS PLOT NAME : PLOT SCALE :
WISDOT/CADDS SHEET 75

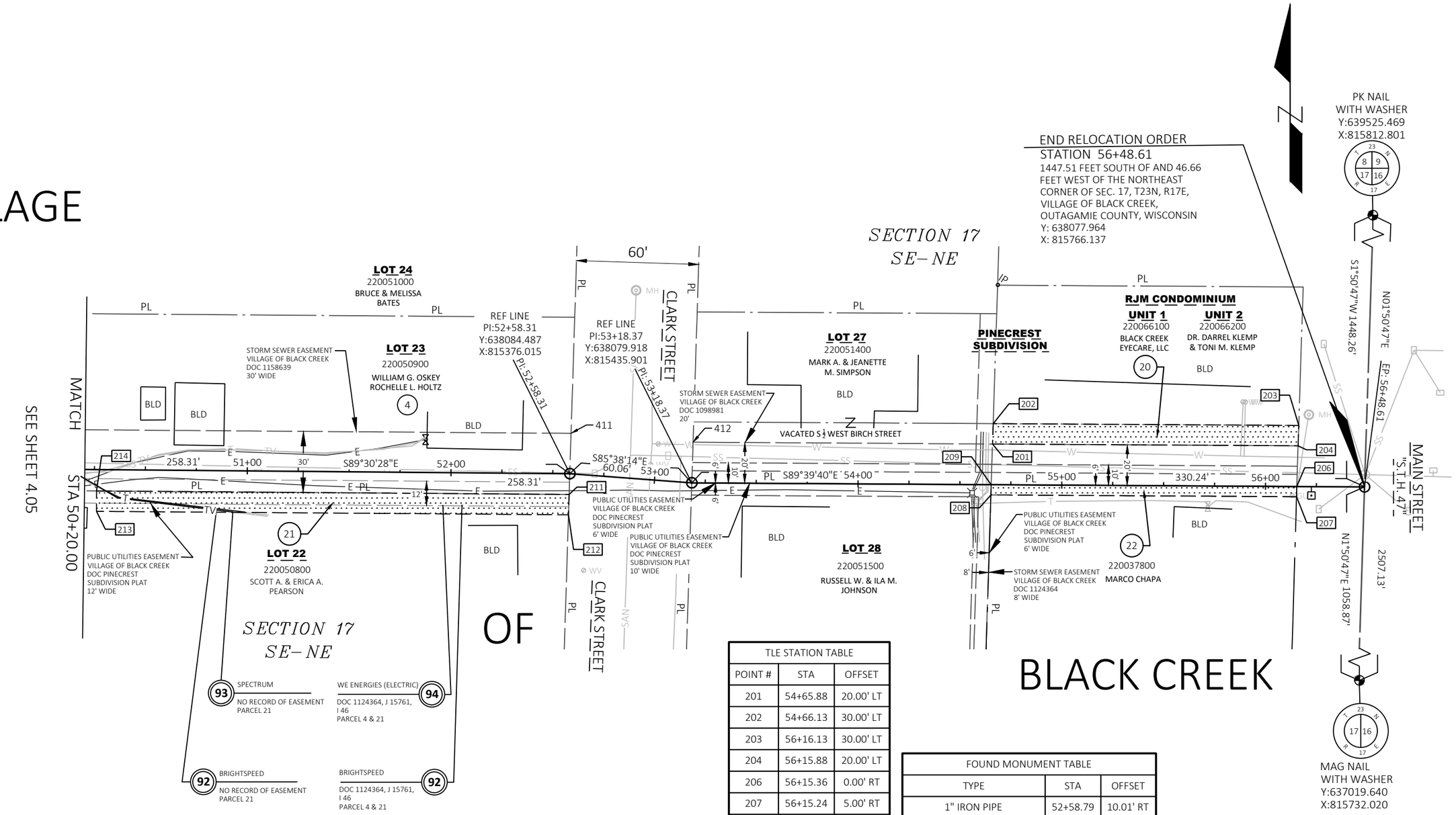

NOTE:
THIS PLAT IS A GRAPHIC REPRESENTATION AND IS FOR REFERENCE PURPOSES ONLY. DEEDS MUST BE CHECKED TO DETERMINE PROPERTY BOUNDARIES AND ACCESS RIGHTS.

EXISTING RIGHT-OF-WAY FOR CLARK STREET IS BASED ON PINECREST SUBDIVISION.

EXISTING RIGHT-OF-WAY FOR MAIN STREET IS BASED ON PINECREST SUBDIVISION.

TLE STATION TABLE

POINT #	STA	OFFSET
201	54+65.88	20.00' LT
202	54+66.13	30.00' LT
203	56+16.13	30.00' LT
204	56+15.88	20.00' LT
206	56+15.36	0.00' RT
207	56+15.24	5.00' RT
208	54+65.24	5.00' RT
209	54+65.36	0.00' RT
211	52+58.76	10.21' RT
212	52+59.21	20.20' RT
213	50+26.11	20.50' RT
214	50+26.10	10.50' RT

FOUND MONUMENT TABLE

TYPE	STA	OFFSET
1" IRON PIPE	52+58.79	10.01' RT
2" IRON PIPE	54+65.60	0.05' LT

EXISTING EASEMENT POINT TABLE

POINT #	Y	X
411	638104.270	815376.639
412	638099.915	815436.531

REVISION DATE 4-18-2023 NC, 5-22-2023 NC, 1-08-2024	DATE 3-29-2023	SCALE, FEET 0 50 100	HWY: STH 47
	GRID FACTOR		COUNTY: OUTAGAMIE

STATE R/W PROJECT NUMBER	6240-31-21
CONSTRUCTION PROJECT NUMBER	6240-31-71
PLAT SHEET	4.09
PS&E SHEET	53

E

FILE NAME : RWPLAT-62403171-SEPERATE ALLIGNMENTS.DWG
LAYOUT NAME - RW 4.09
PLOT DATE : 1/8/2024 11:54 AM PLOT BY : ETHAN KARLS PLOT NAME : PLOT SCALE :
WISDOT/CADDS SHEET 75

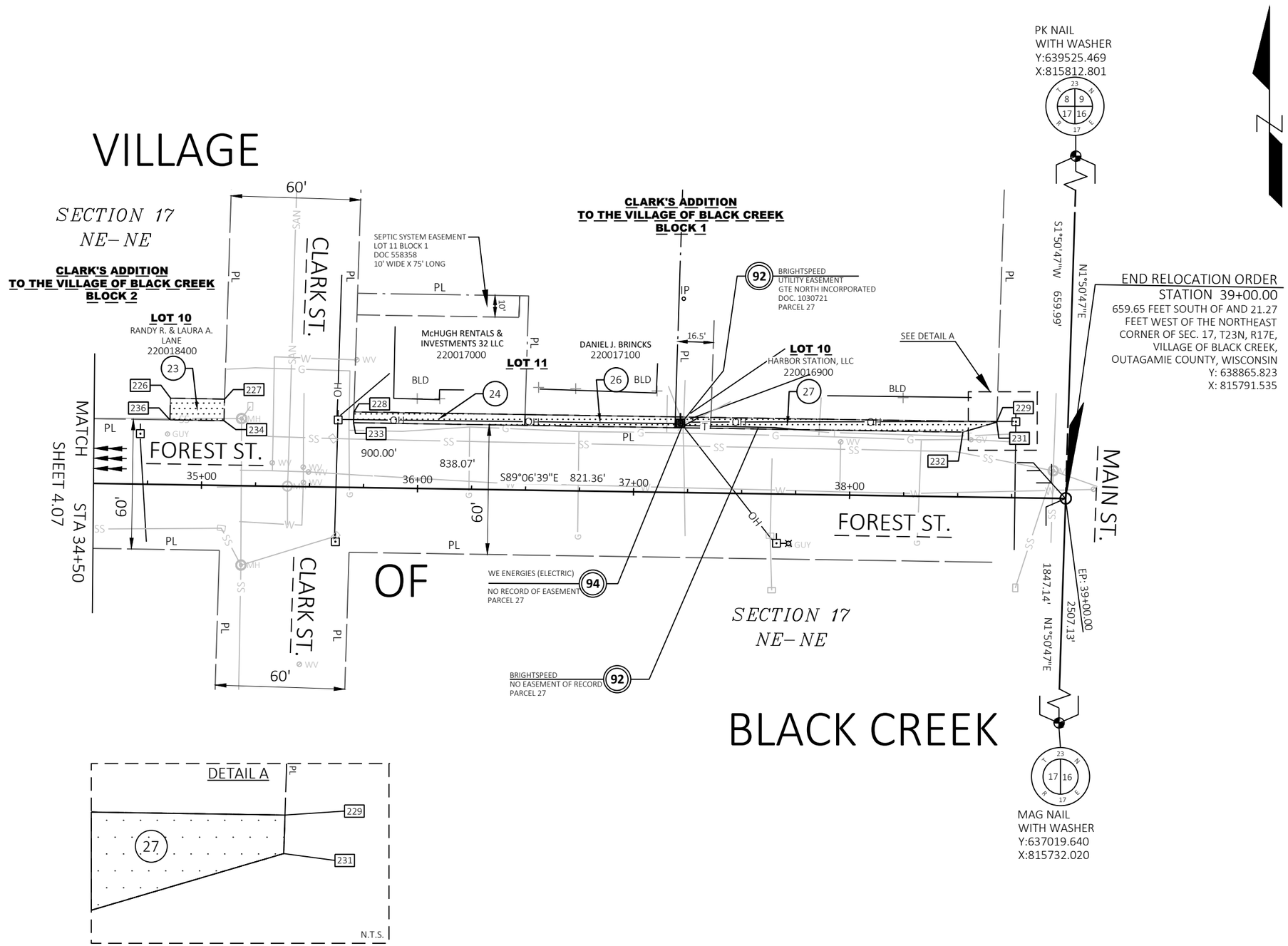

TLE POINT TABLE		
POINT #	STA	OFFSET
226	34+85.07	40.00' LT
227	35+10.07	40.00' LT
228	35+70.00	35.00' LT
229	38+67.58	35.00' LT
231	38+67.58	34.84' LT
232	38+51.99	30.00' LT
233	35+69.91	30.00' LT
234	35+09.90	30.00' LT
236	34+84.90	30.00' LT

FOUND MONUMENT TABLE		
TYPE	STA	OFFSET
IRON ROD SQUARE	35+06.34	29.45' RT
1" IRON PIPE	35+69.91	30.00' LT
1/2" IRON PIPE	37+21.84	89.70' LT
WI D.O.T. R.O.W. MONUMENT	38+67.49	30.08' LT
WI D.O.T. R.O.W. MONUMENT	38+66.58	29.89' RT

NOTE:
THIS PLAT IS A GRAPHIC REPRESENTATION AND IS FOR REFERENCE PURPOSES ONLY. DEEDS MUST BE CHECKED TO DETERMINE PROPERTY BOUNDARIES AND ACCESS RIGHTS.

EXISTING RIGHT-OF-WAY FOR FOREST STREET IS BASED ON CLARK'S ADDITIONS TO THE VILLAGE OF BLACK CREEK.

EXISTING RIGHT-OF-WAY FOR MAIN STREET IS BASED ON CLARK'S ADDITIONS TO THE VILLAGE OF BLACK CREEK.

REVISION DATE 4-18-2023 5-22-2023 NC 1-08-2024	DATE 3-29-2023 GRID FACTOR	SCALE, FEET 0 50 100	HWY: STH 47 COUNTY: OUTAGAMIE
STATE R/W PROJECT NUMBER 6240-31-21 CONSTRUCTION PROJECT NUMBER 6240-31-71	PLAT SHEET 4.10 PS&E SHEET	E	

FILE NAME : RWPLAT-62403171-SEPERATE ALLIGNMENTS.DWG
LAYOUT NAME - RW 4.10
PLOT DATE : 1/8/2024 11:54 AM PLOT BY : ETHAN KARLS PLOT NAME : PLOT SCALE :

WISDOT/CADDS SHEET 75

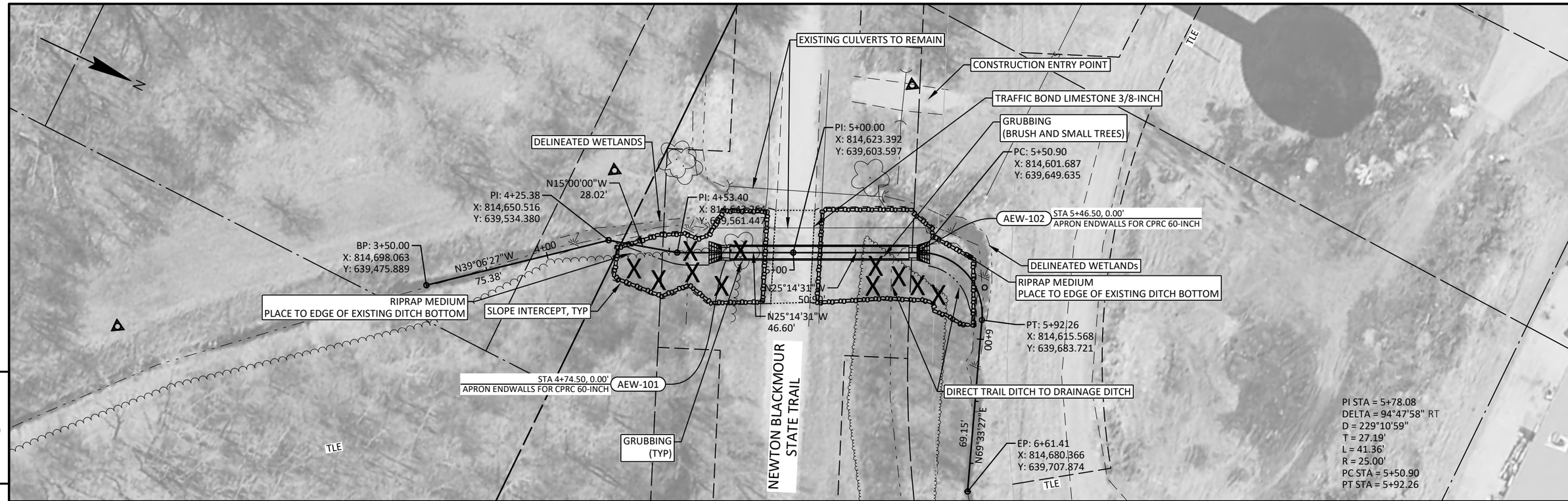

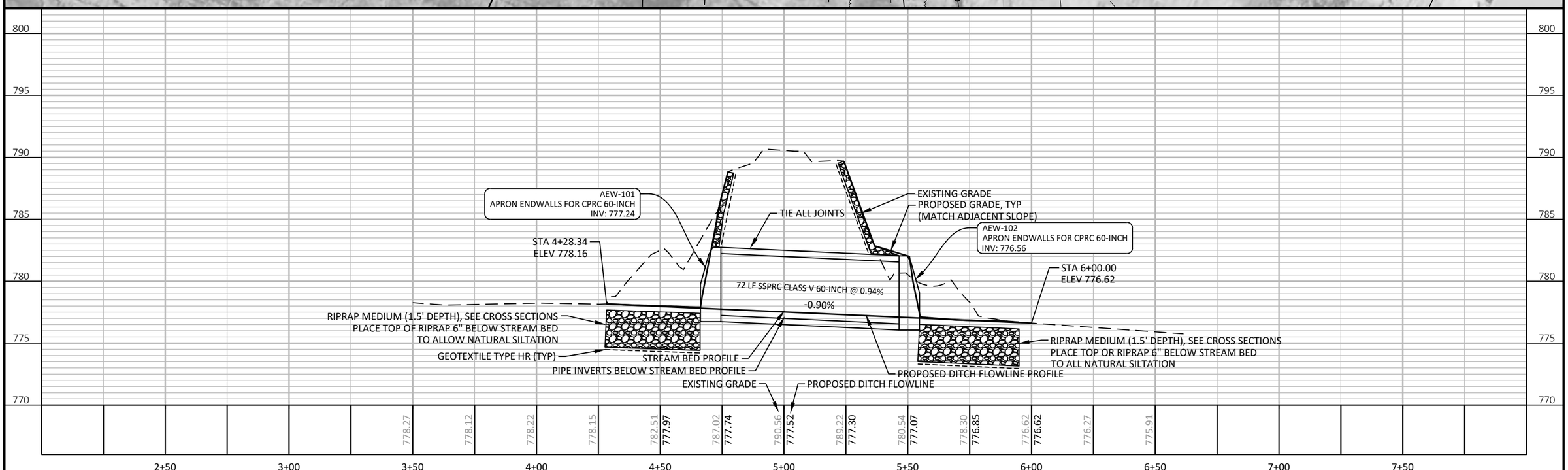

PROJECT NO: 6240-31-71	HWY: STH 47	COUNTY: OUTAGAMIE	PLAN AND PROFILE: NEWTON BLACKMOUR STATE TRAIL CROSSING	SHEET 55	E

FILE NAME : N:\3001114.00\CIVIL 3D\SHEETSPLAN\624031-050101-PP.DWG
LAYOUT NAME - 624031-050101-pp
PLOT DATE : 7/18/2024 11:49 AM
PLOT BY : MATT TOMSOVIC
PLOT NAME :
PLOT SCALE : 1 IN:40 FT

Standard Detail Drawing List

08A05-21A	INLET COVERS TYPE A, H, A-S, H-S & Z
08A05-21E	INLET COVER TYPE BW, MANHOLE COVERS, TYPE K, J, J-S, L & M
08B09-04	MANHOLES 3-FT, 4-FT, 5-FT, 6-FT, 7-FT, 8-FT, 9-FT, 10-FT DIAMETER
08B10-03	MANHOLES 3X3-FT, 4X4-FT, 5X5-FT AND 6X6-FT
08C06-03	INLETS 3-FT AND 4-FT DIAMETER
08C07-03	INLETS 2X2-FT, 2X2.5-FT, 2X3-FT, 2.5X3-FT & 2X3.5-FT
08D01-23A	CONCRETE CURB & GUTTER
08D01-23B	CONCRETE CURB, TIES AND CURB AND GUTTER APPLICATIONS
08D05-21A	CURB RAMPS TYPES 1 AND 1-A
08D05-21B	CURB RAMPS TYPES 2 AND 3
08D05-21C	CURB RAMPS TYPES 4A AND 4A1
08D05-21D	CURB RAMPS TYPE 4B AND 4B1
08D05-21E	CURB RAMPS TYPES 5, 6, 7A, 7B & 8
08D05-21F	CURB RAMPS RADIAL DETECTABLE WARNING FIELD APPLICATIONS
08D05-21G	CURB RAMPS RECTANGULAR AND RADIAL DETECTABLE WARNING PLATES
08E08-03	TYPICAL INSTALLATIONS OF EROSION BALES / TEMPORARY DITCH CHECKS
08E09-06	SILT FENCE
08E10-02	INLET PROTECTION TYPE A, B, C AND D
08E15-01	CULVERT PIPE CHECK
08F01-11	APRON ENDWALLS FOR CULVERT PIPE
08F04-08	JOINT TIES FOR CONCRETE PIPE AND CONCRETE COLLAR DETAIL
15C02-09A	BARRICADES AND SIGNS FOR MAINLINE CLOSURES
15C02-09B	BARRICADES AND SIGNS FOR VARIOUS CLOSURES
15C03-05	BARRICADES AND SIGNS FOR SIDEROAD CLOSURES
15C05-05	TRAFFIC CONTROL, ADVANCE WARNING SIGNS 40 M.P.H. OR LESS
15C11-10B	CHANNELIZING DEVICES DRUMS, CONES, BARRICADES AND VERTICAL PANELS
15C12-09A	TRAFFIC CONTROL FOR LANE CLOSURE WITH FLAGGING OPERATION
15C33-05	STOP LINE AND CROSSWALK PAVEMENT MARKING
15D28-04	TRAFFIC CONTROL, WORK ON SHOULDER OR PARKING LANE, UNDIVIDED ROADWAY
15D30-10A	TRAFFIC CONTROL, PEDESTRIAN ACCOMMODATION
15D30-10B	TRAFFIC CONTROL, PEDESTRIAN ACCOMMODATION
15D30-10C	TRAFFIC CONTROL, PEDESTRIAN ACCOMMODATION
15D30-10D	TRAFFIC CONTROL, PEDESTRIAN ACCOMMODATION
15D30-10E	TRAFFIC CONTROL, PEDESTRIAN ACCOMMODATION
15D30-10F	TRAFFIC CONTROL, PEDESTRIAN ACCOMMODATION
15D30-10G	TRAFFIC CONTROL, PEDESTRIAN ACCOMMODATION
15D30-10H	TRAFFIC CONTROL, PEDESTRIAN ACCOMMODATION
15D30-10I	TRAFFIC CONTROL, PEDESTRIAN ACCOMMODATION
15D30-10J	TRAFFIC CONTROL, PEDESTRIAN ACCOMMODATION
15D30-10K	TRAFFIC CONTROL, PEDESTRIAN ACCOMMODATION
15D30-10L	TRAFFIC CONTROL, PEDESTRIAN ACCOMMODATION
15D32-07	TRAFFIC CONTROL, ONE LANE ROAD STOP CONDITION

6

6

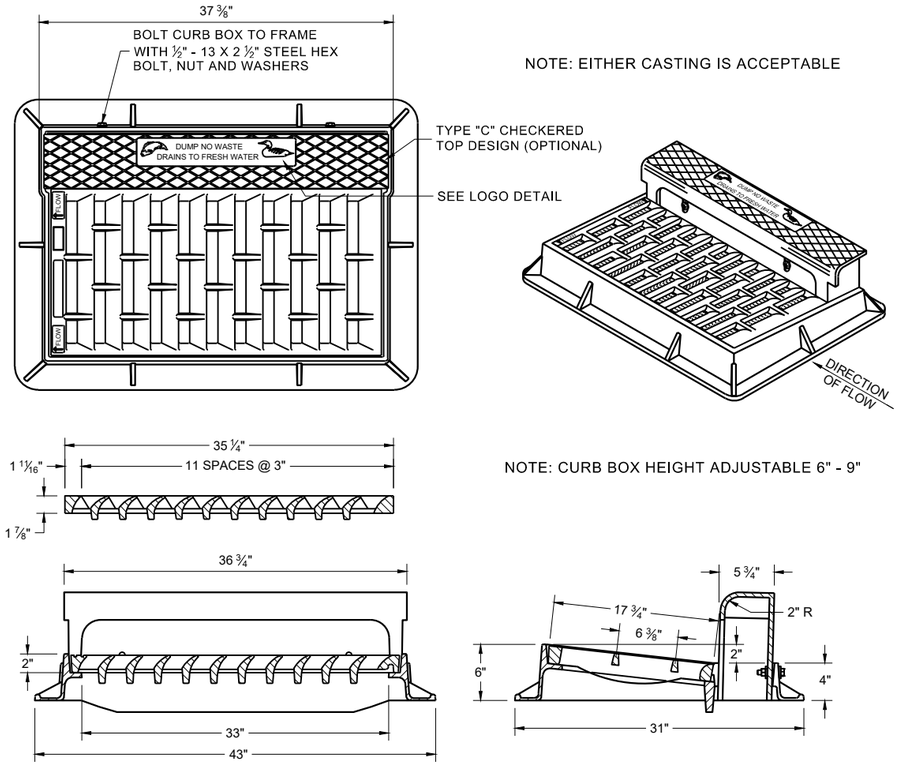

NOTE: EITHER CASTING IS ACCEPTABLE

NOTE: CURB BOX HEIGHT ADJUSTABLE 6" - 9"

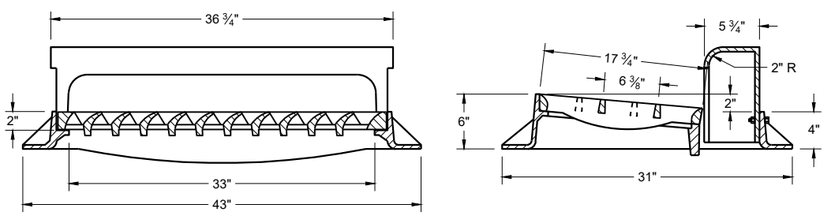

TYPE "H"

NOTE: EITHER CASTING IS ACCEPTABLE

1 ⅛" DIAGONAL BARS WITH 1 ⅝" OPENINGS

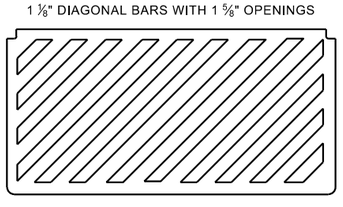

SPECIAL GRATE FOR TYPE "H" COVER

(MEASURES 35" X 17 ¾" X 2")

(NOTED AS TYPE H-S ON DRAINAGE TABLE)

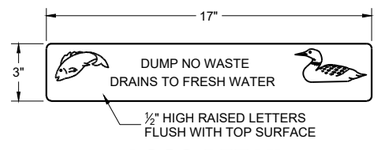

LOGO DETAIL

GENERAL NOTES

DETAILS OF CONSTRUCTION, MATERIALS AND WORKMANSHIP NOT SHOWN ON THIS DRAWING SHALL CONFORM TO THE PERTINENT REQUIREMENTS OF THE STANDARD SPECIFICATIONS AND THE APPLICABLE SPECIAL PROVISIONS.

DETAIL DRAWINGS FOR PROPOSED ALTERNATE DESIGNS FOR CATCH BASIN, MANHOLE AND INLET COVERS SHALL BE SUBMITTED TO THE ENGINEER FOR APPROVAL PROVIDING THAT SUCH ALTERNATE DESIGNS MAKE PROVISION FOR EQUIVALENT CAPACITY AND STRENGTH.

ROUND FRAMES AND COVERS SHALL HAVE CONTINUOUSLY MACHINED BEARING SURFACES TO PREVENT ROCKING AND RATTLING.

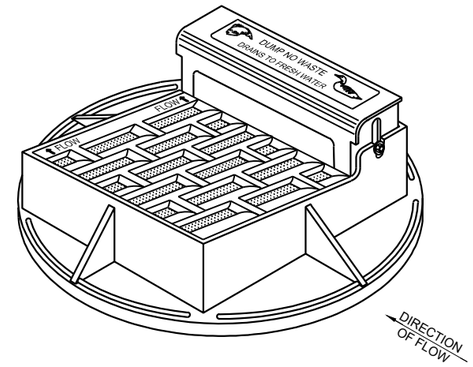

NOTE: CURB BOX HEIGHT ADJUSTABLE 6" - 9"

NOTE: EITHER CASTING IS ACCEPTABLE

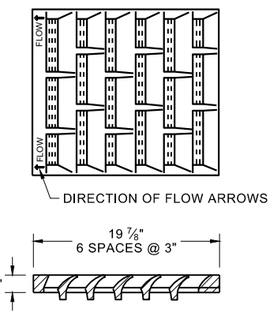

1" DIAGONAL BARS WITH 1 ½" OPENINGS

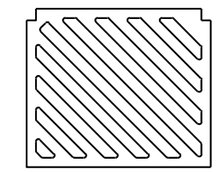

SPECIAL GRATE FOR TYPE "A" COVER

(MEASURES 19 ¾" X 17" X 1 ⅞")

(NOTED AS TYPE A-S ON DRAINAGE TABLE)

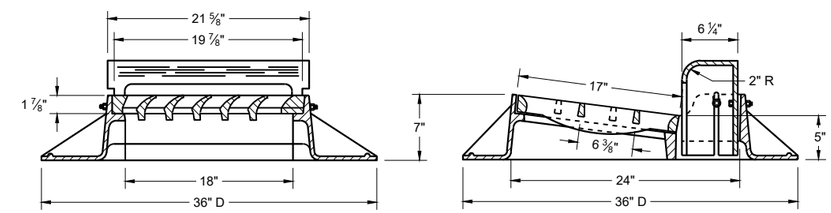

TYPE "A"

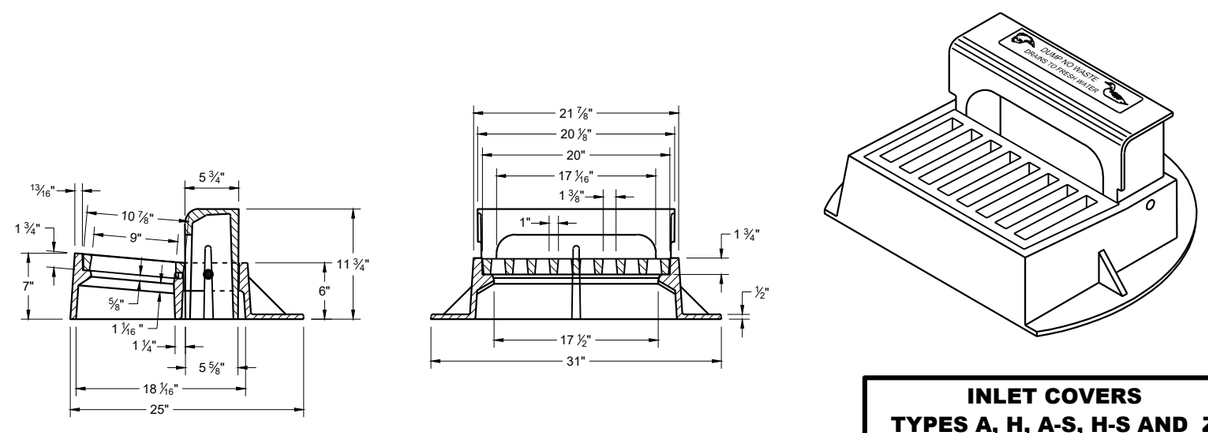

TYPE "Z"

INLET COVERS
TYPES A, H, A-S, H-S AND Z

STATE OF WISCONSIN
DEPARTMENT OF TRANSPORTATION

APPROVED
December 2023 — DATE
/S/ Rodney Taylor — ROADWAY STANDARDS DEVELOPMENT UNIT SUPERVISOR

FHWA

GENERAL NOTES

DETAILS OF CONSTRUCTION, MATERIALS AND WORKMANSHIP NOT SHOWN ON THIS DRAWING SHALL CONFORM TO THE PERTINENT REQUIREMENTS OF THE STANDARD SPECIFICATIONS AND THE APPLICABLE SPECIAL PROVISIONS.

DETAIL DRAWINGS FOR PROPOSED ALTERNATE DESIGNS FOR MANHOLE COVERS SHALL BE SUBMITTED TO THE ENGINEER FOR APPROVAL PROVIDING THAT SUCH ALTERNATE DESIGNS MAKE PROVISION FOR EQUIVALENT CAPACITY AND STRENGTH.

ROUND FRAMES AND COVERS SHALL HAVE CONTINUOUSLY MACHINED BEARING SURFACES TO PREVENT ROCKING AND RATTLING.

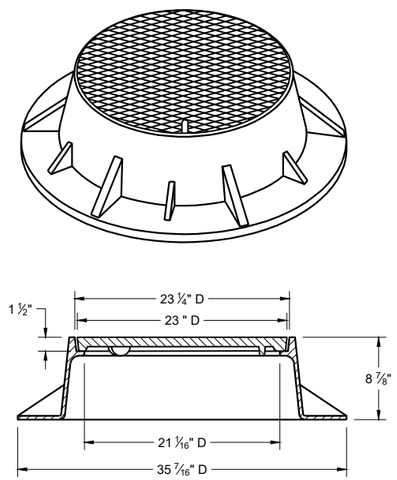

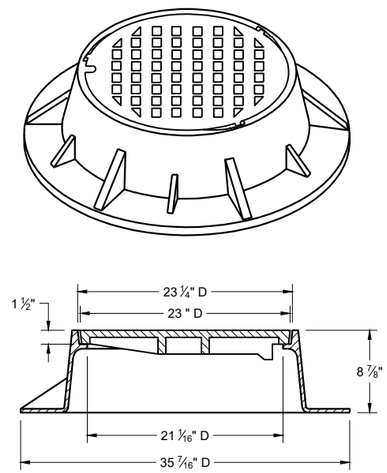

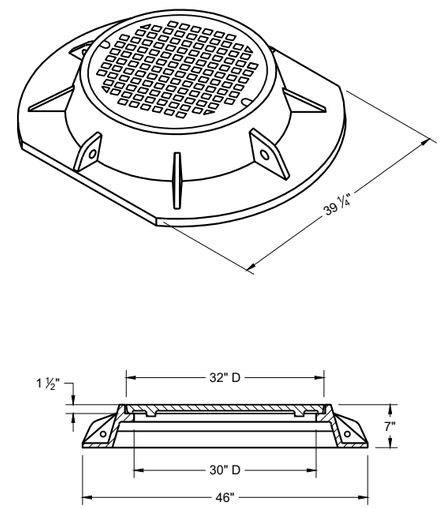

TYPE "K"

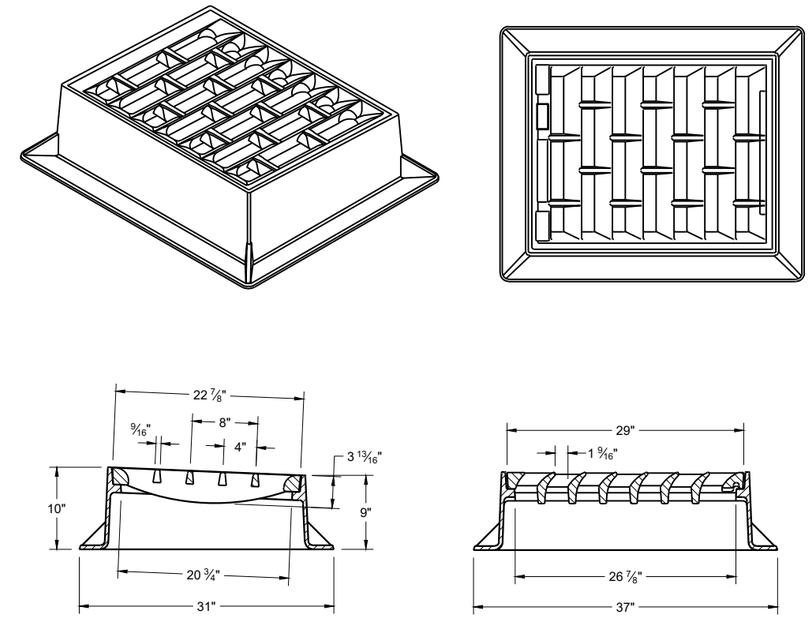

INLET COVER TYPE "BW"

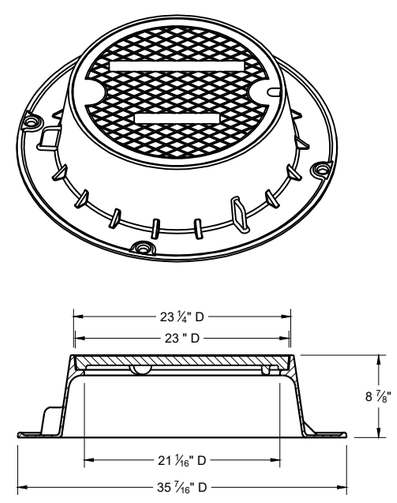

TYPE "J"

NOTE: EITHER CASTING IS ACCEPTABLE

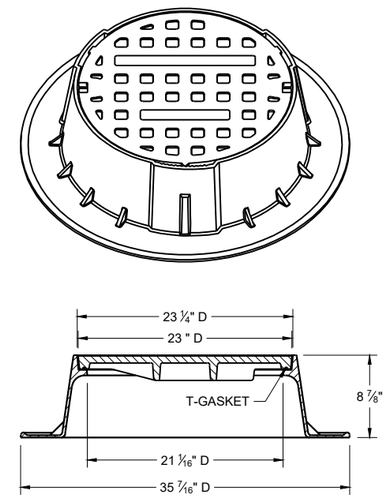

TYPE "J" SPECIAL

TYPE "B" NON-ROCKING SELF-SEAL LID
(NOTED AS TYPE J-S ON THE DRAINAGE TABLE)

NOTE: EITHER CASTING IS ACCEPTABLE

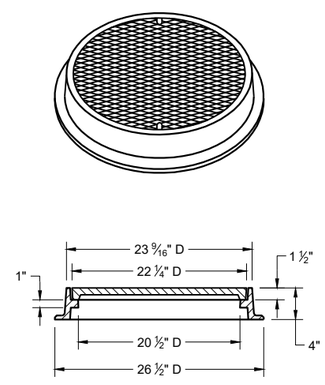

TYPE "L"

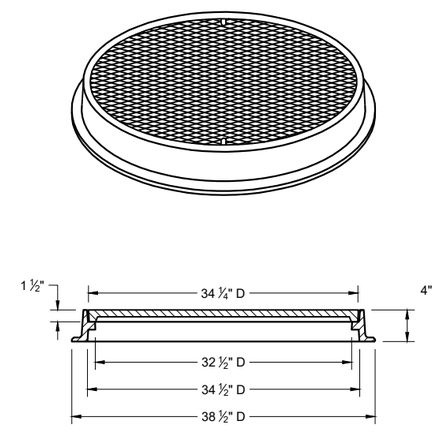

TYPE "M"

INLET COVERS TYPES BW
MANHOLE COVERS TYPES K, J, J-S, L, AND M

STATE OF WISCONSIN
DEPARTMENT OF TRANSPORTATION

APPROVED
December 2023 — DATE
/S/ Rodney Taylor — ROADWAY STANDARDS DEVELOPMENT UNIT SUPERVISOR

FHWA

6

SDD 08A05-21e

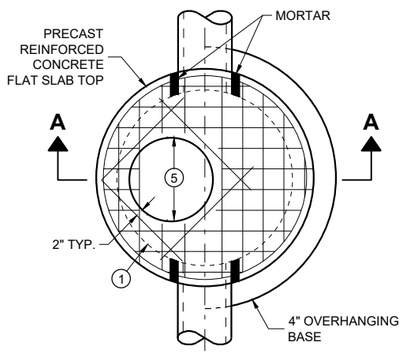

PLAN VIEW
CIRCULAR OPENING

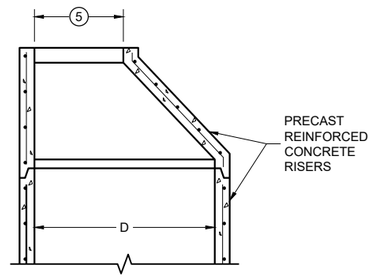

OPTIONAL PRECAST REINFORCED CONCRETE ECCENTRIC TOP

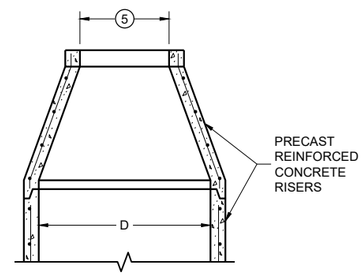

OPTIONAL PRECAST REINFORCED CONCRETE CONCENTRIC TOP

MANHOLE COVER OPENING MATRIX

OPENING SIZE (FT.) (5) \ MANHOLE COVER TYPE	C	ALL J'S	K	L	M
2 DIA.	X	X		X	
3 DIA.			X		X

PIPE MATRIX

MANHOLE SIZE (DIA.)	MAXIMUM INSIDE PIPE DIAMETER FOR TWO PIPES		MINIMUM WALL THICKNESS (IN)	MINIMUM PRECAST FLAT SLAB TOP AND BASE THICKNESS
	180° SEPARATION (IN)	90° SEPARATION (IN)		
3-FT	15	12	4	6
4-FT	24	18	4	6
5-FT	36	24	5	8
6-FT	42	36	6	8
7-FT	48	36/42 *	7	8
8-FT	60	42	8	8
9-FT	66	54	9	10
10-FT	72	60	10	10

*A 36" PIPE AND A 42" PIPE CAN BE PLACED WITHIN 90 DEGREES. SEE MINIMUM HORIZONTAL PIPE SEPARATION DETAIL.

GENERAL NOTES

DETAILS OF CONSTRUCTION, MATERIALS AND WORKMANSHIP NOT SHOWN ON THIS DRAWING SHALL CONFORM TO THE PERTINENT REQUIREMENTS OF THE STANDARD SPECIFICATIONS AND THE APPLICABLE SPECIAL PROVISIONS.

UNLESS OTHERWISE AUTHORIZED IN WRITING BY THE ENGINEER, THE CONTRACTOR SHALL NOT ORDER AND DELIVER PRECAST MANHOLE UNITS REQUIRED FOR THE PROJECT UNTIL A LIST OF SIZES IS FURNISHED BY THE ENGINEER.

DETAILED DRAWINGS FOR PROPOSED ALTERNATE DESIGNS FOR UNDERGROUND DRAINAGE STRUCTURES SHALL BE SUBMITTED TO THE ENGINEER FOR APPROVAL PROVIDING THAT SUCH ALTERNATE DESIGNS MAKE PROVISION FOR EQUIVALENT CAPACITY AND STRENGTH.

ALL DRAINAGE STRUCTURES ARE DESIGNATED ON THE PLANS AS "MANHOLES 3X3-L", "CATCH BASINS 4-B", "INLETS 2X3-H", ETC. THE FIRST NUMBERS DESIGNATE THE SIZE OF THE STRUCTURE, AND THE FOLLOWING LETTER DESIGNATES THE TYPE OF COVER TO BE USED TO COMPRISE THE COMPLETE UNIT.

BASES SHALL BE PLACED ON A BED OF MATERIAL AT LEAST 6 INCHES IN DEPTH, WHICH MEETS THE REQUIREMENTS OF FOUNDATION BACKFILL. THIS BEDDING SHALL BE COMPACTED AND PROVIDE UNIFORM SUPPORT FOR THE ENTIRE AREA OF THE BASE.

PRECAST REINFORCED CONCRETE CONE TOPS (ECCENTRIC OR CONCENTRIC) OR PRECAST REINFORCED CONCRETE FLAT SLAB TOPS MAY BE USED ON CONCRETE BLOCK STRUCTURES.

ECCENTRIC CONE TOPS MAY BE USED ON ALL STRUCTURES. CONCENTRIC CONE TOPS SHALL BE USED ONLY ON STRUCTURES 5 FEET OR LESS IN DEPTH UNLESS OTHERWISE DIRECTED BY THE ENGINEER.

STEPS MEETING AASHTO M199 AND THE FOLLOWING REQUIREMENTS SHALL BE INSTALLED IN ALL STRUCTURES OVER 5 FEET IN DEPTH: 16 INCH C-C MAXIMUM SPACING; PROJECT A MINIMUM CLEAR DISTANCE OF 4 INCHES FROM THE WALL AT THE POINT OF EMBEDMENT; MINIMUM LENGTH OF 10 INCHES; MINIMUM WALL EMBEDMENT OF 3 INCHES. FERROUS METAL STEPS NOT PAINTED OR TREATED TO RESIST CORROSION SHALL HAVE A MINIMUM CROSS SECTIONAL IMENSION OF 1 INCH.

STEPS OF APPROVED POLYPROPYLENE PLASTIC COATED REINFORCEMENT BAR ARE ACCEPTABLE. REINFORCING BAR MUST BE A MINIMUM OF ½ INCH AND MEET THE REQUIREMENTS OF ASTM A615.

CERTIFICATION SHALL BE PROVIDED THAT INSTALLED STEPS WHEN TESTED IN ACCORDANCE WITH SECTION 10 OF AASHTO T280 CAN WITHSTAND A VERTICAL LOAD OF 800 LBS. AND A HORIZONTAL LOAD OF 400 LBS.

ALL BAR STEEL REINFORCEMENT SHALL BE EMBEDDED 2 INCHES CLEAR UNLESS OTHERWISE SHOWN OR NOTED.

ALL PRECAST MANHOLE UNITS SHALL CONFORM TO THE PERTINENT REQUIREMENTS OF AASHTO DESIGNATION M199.

PRECAST REINFORCED RISERS SHALL HAVE A TONGUE AND GROOVE JOINT WITH TONGUE UP OR DOWN.

CONCRETE BLOCK WILL NOT BE PERMITTED FOR STRUCTURES GREATER THAN 4 FEET IN DIAMETER.

4" OVERHANGING BASES ARE REQUIRED FOR ALL CONCRETE BLOCK INSTALLATIONS. 4" OVERHANG IS REQUIRED WHEN SEPARATE PRECAST BASE IS PROVIDED. OVERHANG IS NOT REQUIRED ON PRECAST STRUCTURES WITH AN INTEGRAL OR MONOLITHIC BASE.

FOR ADDITIONAL CONFIGURATIONS, MAINTAIN A MINIMUM OF 12 INCHES AS MEASURED FROM THE INSIDE OF THE STRUCTURE WALL BETWEEN THE OUTSIDE PIPE WALLS OF ADJACENT PIPES. SEE DETAIL "D".

(1) FOR PRECAST MANHOLES AND REINFORCED CONCRETE BASES PROVIDE REINFORCING STEEL IN ACCORDANCE TO AASHTO M199.

(2) SEE PIPE MATRIX TABLE FOR MINIMUM WALL THICKNESS FOR PRECAST MANHOLES

(3) SEE PIPE MATRIX TABLE FOR MINIMUM THICKNESS OF PRECAST FLAT SLAB TOPS AND BASES.

(4) JOINTS TO BE SEALED WITH A BUTYL RUBBER SEAL PER SEALANT MANUFACTURERS RECOMMENDATIONS CONFORMING TO ASTM C 990 OR RUBBER GASKETS CONFORMING TO ASTM C443.

(5) SEE MANHOLE COVER OPENING MATRIX.

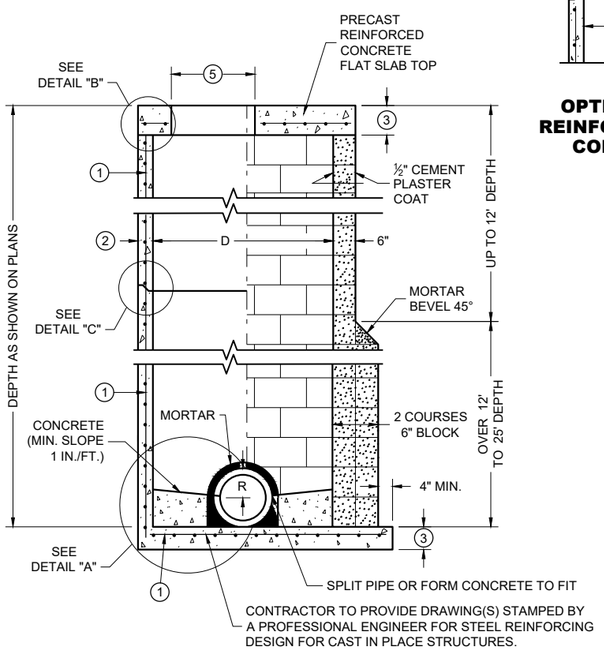

SECTION A - A

PRECAST REINFORCED CONCRETE WITH MONOLITHIC BASE

CONCRETE BLOCK WITH CAST IN PLACE OR PRECAST REINFORCED CONCRETE BASE (1)

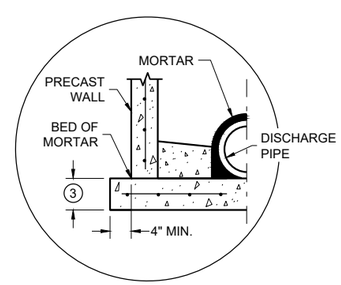

SEPARATE PRECAST REINFORCED CONCRETE BASE OPTION

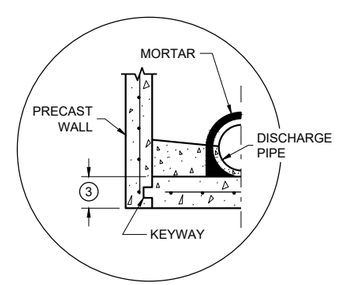

PRECAST REINFORCED CONCRETE WITH INTEGRAL BASE OPTION

DETAIL "A"

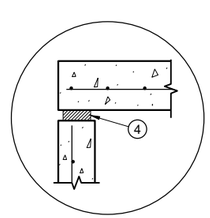

TOP WITH PLAIN END JOINT

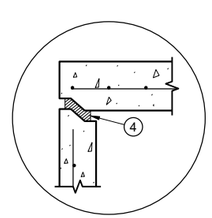

TOP WITH TONGUE AND GROOVE JOINT

DETAIL "B"

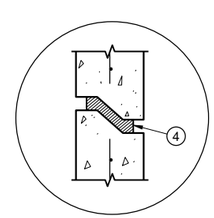

RISER WITH TONGUE AND GROOVE JOINT

DETAIL "C"

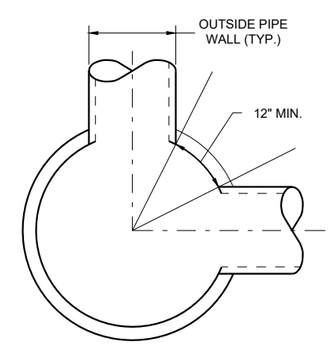

MINIMUM HORIZONTAL PIPE SEPARATION

DETAIL "D"

MANHOLES 3-FT, 4-FT, 5-FT, 6-FT, 7-FT, 8-FT, 9-FT AND 10-FT DIAMETER

MANHOLES, 3-FT, 4-FT 5-FT, 6-FT, 7-FT, 8-FT, 9-FT AND 10-FT DIAMETER

STATE OF WISCONSIN
DEPARTMENT OF TRANSPORTATION

APPROVED
December 2023 — DATE
/S/ Rodney Taylor — ROADWAY STANDARDS DEVELOPMENT UNIT SUPERVISOR
FHWA

6

SDD 08B09-04

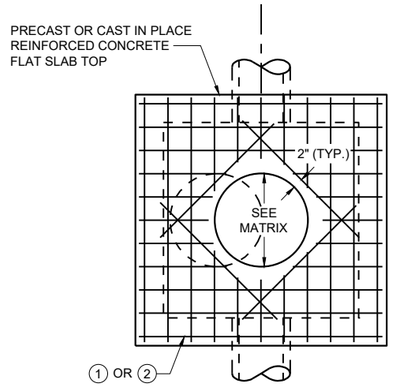

PLAN VIEW
CIRCULAR OPENING

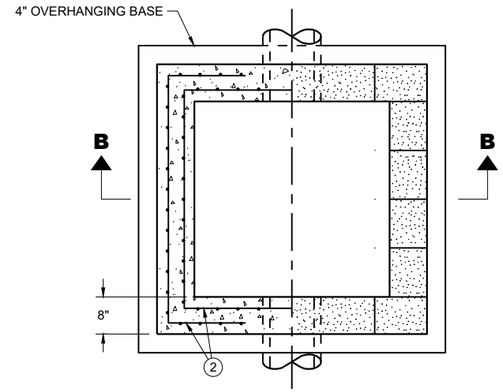

SECTION A - A
PLAN VIEW

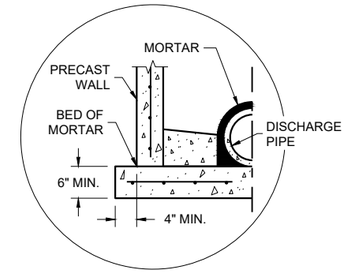

SEPARATE PRECAST REINFORCED CONCRETE BASE OPTION

DETAIL "A"

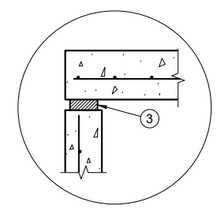

TOP WITH PLAIN END JOINT

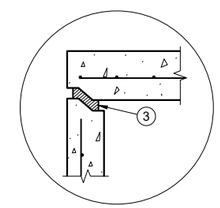

TOP WITH TONGUE AND GROOVE JOINT

DETAIL "B"

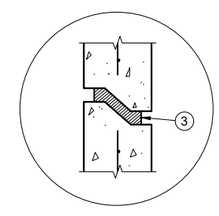

RISER WITH TONGUE AND GROOVE JOINT

DETAIL "C"

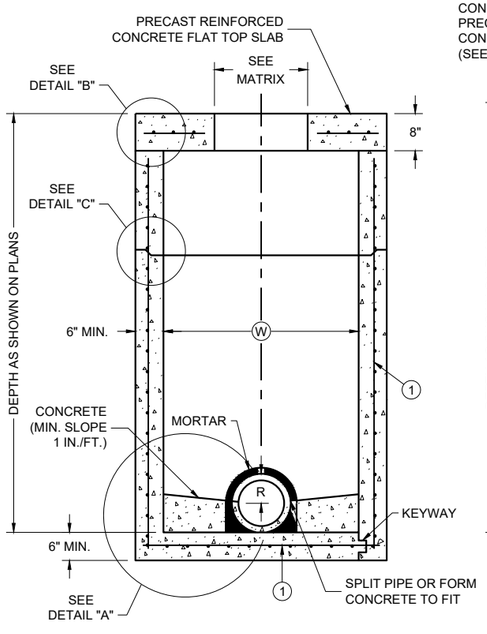

PRECAST REINFORCED CONCRETE WITH MONOLITHIC BASE

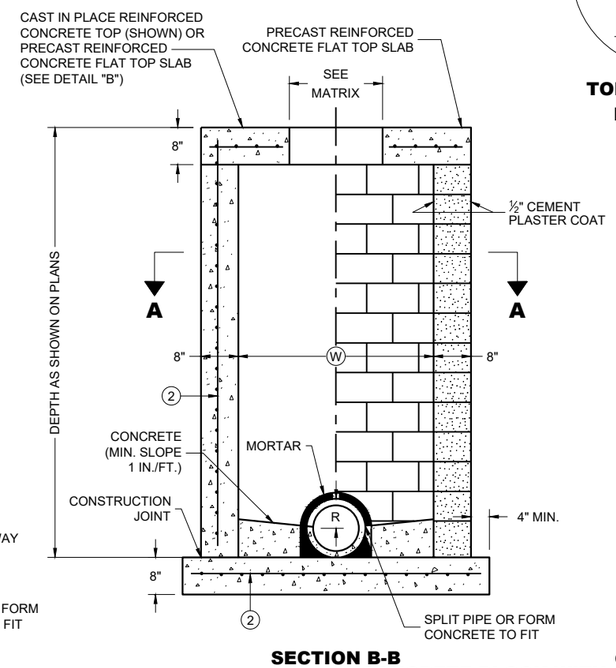

PRECAST REINFORCED CONCRETE WITH INTEGRAL BASE

CAST IN PLACE REINFORCED CONCRETE

SECTION B-B

CONCRETE BLOCK WITH CAST IN PLACE OR PRECAST REINFORCED CONCRETE BASE 1

SQUARE MANHOLES WITH FLAT TOP

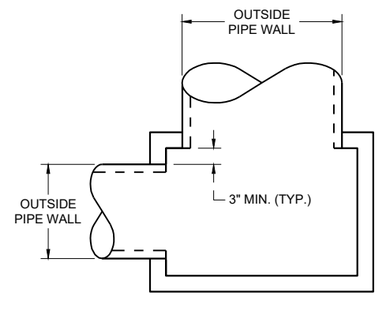

DETAIL "D"

GENERAL NOTES

DETAILS OF CONSTRUCTION, MATERIALS AND WORKMANSHIP NOT SHOWN ON THIS DRAWING SHALL CONFORM TO THE PERTINENT REQUIREMENTS OF THE STANDARD SPECIFICATIONS AND THE APPLICABLE SPECIAL PROVISIONS.

UNLESS OTHERWISE AUTHORIZED IN WRITING BY THE ENGINEER, THE CONTRACTOR SHALL NOT ORDER AND DELIVER PRECAST MANHOLE UNITS REQUIRED FOR THE PROJECT UNTIL A LIST OF SIZES IS FURNISHED BY THE ENGINEER.

DETAILED DRAWINGS FOR PROPOSED ALTERNATE DESIGNS FOR UNDERGROUND DRAINAGE STRUCTURES SHALL BE SUBMITTED TO THE ENGINEER FOR APPROVAL PROVIDING THAT SUCH ALTERNATE DESIGNS MAKE PROVISION FOR EQUIVALENT CAPACITY AND STRENGTH.

ALL DRAINAGE STRUCTURES ARE DESIGNATED ON THE PLANS AS "MANHOLES 3X3-L", "CATCH BASINS 4-B", "INLETS 2X3-H", ETC. THE FIRST NUMBERS DESIGNATE THE SIZE OF THE STRUCTURE, AND THE FOLLOWING LETTER DESIGNATES THE TYPE OF COVER TO BE USED TO COMPRISE THE COMPLETE UNIT.

BASES SHALL BE PLACED ON A BED OF MATERIAL AT LEAST 6 INCHES IN DEPTH, WHICH MEETS THE REQUIREMENTS OF FOUNDATION BACKFILL. THIS BEDDING SHALL BE COMPACTED AND PROVIDE UNIFORM SUPPORT FOR THE ENTIRE AREA OF THE BASE.

PRECAST REINFORCED FLAT SLAB TOPS MAY BE USED ON CONCRETE BLOCK STRUCTURES.

STEPS MEETING AASHTO M199 AND THE FOLLOWING REQUIREMENTS SHALL BE INSTALLED IN ALL STRUCTURES OVER 5 FEET IN DEPTH: 16 INCH C-C MAXIMUM SPACING; PROJECT A MINIMUM CLEAR DISTANCE OF 4 INCHES FROM THE WALL AT THE POINT OF EMBEDMENT; MINIMUM LENGTH OF 10 INCHES; MINIMUM WALL EMBEDMENT OF 3 INCHES. FERROUS METAL STEPS NOT PAINTED OR TREATED TO RESIST CORROSION SHALL HAVE A MINIMUM CROSS SECTIONAL DIMENSION OF 1 INCH.

STEPS OF APPROVED POLYPROPYLENE PLASTIC COATED REINFORCEMENT BAR ARE ACCEPTABLE. REINFORCING BAR MUST BE A MINIMUM OF ½ INCH AND MEET THE REQUIREMENTS OF ASTM A615.

CERTIFICATION SHALL BE PROVIDED THAT INSTALLED STEPS WHEN TESTED IN ACCORDANCE WITH SECTION 10 OF AASHTO T280 CAN WITHSTAND A VERTICAL LOAD OF 800 LBS. AND A HORIZONTAL LOAD OF 400 LBS.

ALL BAR STEEL REINFORCEMENT SHALL BE EMBEDDED 2 INCHES CLEAR UNLESS OTHERWISE SHOWN OR NOTED.

ALL PRECAST MANHOLE UNITS SHALL CONFORM TO THE PERTINENT REQUIREMENTS OF ASTM C913.

PRECAST REINFORCED RISERS SHALL HAVE A TONGUE AND GROOVE JOINT WITH TONGUE UP OR DOWN.

CONCRETE BLOCK WILL NOT BE PERMITTED FOR STRUCTURES GREATER THAN 4 FEET IN WIDTH.

4" OVERHANGING BASES ARE REQUIRED FOR ALL CONCRETE BLOCK INSTALLATIONS. 4" OVERHANG IS REQUIRED WHEN SEPARATE PRECAST BASE IS PROVIDED. OVERHANG IS NOT REQUIRED ON PRECAST STRUCTURES WITH AN INTEGRAL OR MONOLITHIC BASE.

MAXIMUM PIPE DIAMETER DETERMINED BY 3 INCH CLEARANCE ON EACH SIDE OF THE OUTSIDE WALL OF THE PIPE. SEE DETAIL "D". ASSUMES PIPE ENTERS PERPENDICULAR TO THE STRUCTURE.

1. FOR PRECAST MANHOLES AND REINFORCED CONCRETE BASES PROVIDE REINFORCING STEEL IN ACCORDANCE TO ASTM C 913.
2. CONTRACTOR TO PROVIDE DRAWING(S) STAMPED BY A PROFESSIONAL ENGINEER FOR STEEL REINFORCING DESIGNFOR CAST-IN-PLACE STRUCTURES.
3. JOINTS TO BE SEALED WITH A BUTYL RUBBER SEAL PER SEALANT MANUFACTURERS RECOMMENDATIONS CONFORMING TO ASTM C 990 (TYP.)

MANHOLE COVER OPENING MATRIX

MANHOLE COVER TYPE	C	ALL J'S	K	L	M
OPENING SIZE (FT.)					
2 DIA.	X	X		X	
3 DIA.			X		X

PIPE MATRIX

MANHOLE SIZE WxW-FT	MAXIMUM INSIDE PIPE DIAMETER (IN)
3 X 3 FT	24
4 X 4 FT	30
5 X 5 FT	42
6 X 6 FT	54

MANHOLES 3 X 3-FT, 4 X 4 -FT, 5 X 5-FT AND 6 X 6-FT

MANHOLES
3 X 3 -FT, 4 X 4-FT
5 X 5-FT AND 6 X 6-FT

STATE OF WISCONSIN
DEPARTMENT OF TRANSPORTATION

APPROVED
December 2023 — DATE
/S/ Rodney Taylor — ROADWAY STANDARDS DEVELOPMENT UNIT SUPERVISOR
FHWA

6

SDD 08B10-03

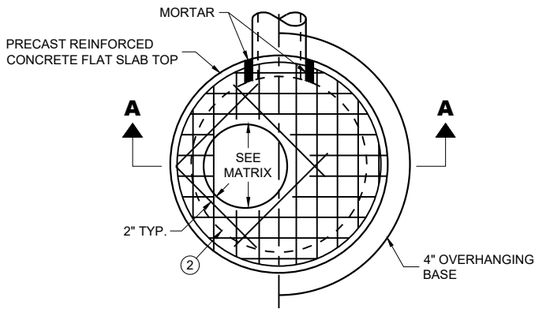

PLAN VIEW CIRCULAR OPENING

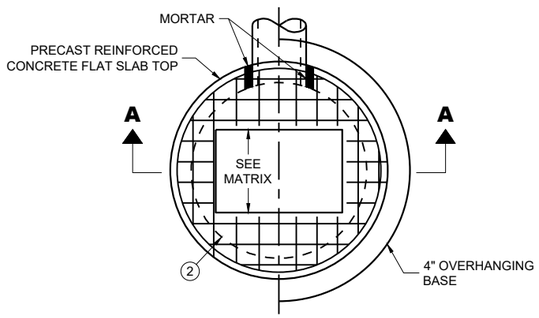

PLAN VIEW RECTANGULAR OPENING

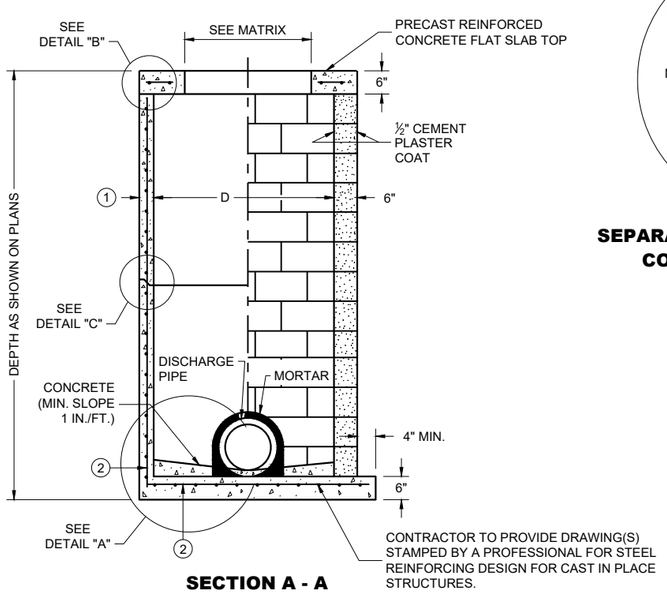

SECTION A - A

PRECAST REINFORCED CONCRETE WITH MONOLITHIC BASE

CONCRETE BLOCK WITH CAST IN PLACE OR PRECAST REINFORCED CONCRETE BASE (2)

CIRCULAR INLETS WITH FLAT TOP

CATCH BASIN COVER OPENING MATRIX

INLET SIZE	INLET COVER TYPE	ALL A'S	ALL B'S	BW	C	F	ALL H'S	S	T	V	WM	Z
	OPENING SIZE (FT.)											
3-FT	2 DIA.				X							X
	2 X 2	X	X					X		X		
4-FT	2 DIA.				X							X
	2 X 2	X	X					X		X		
	2 X 2.5			X				X	X	X	X	
	2 X 3						X					
	2.5 X 3					X						

PIPE MATRIX

INLET SIZE	MAXIMUM INSIDE PIPE DIAMETER FOR TWO PIPES	
	180° SEPARATION (IN)	90° SEPARATION (IN)
3-FT	15	12
4-FT	24	18

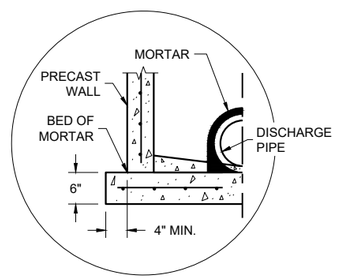

SEPARATE PRECAST REINFORCED CONCRETE BASE OPTION

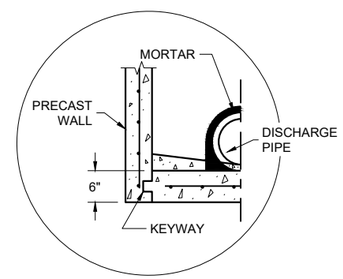

PRECAST REINFORCED CONCRETE WITH INTEGRAL BASE OPTION

DETAIL "A"

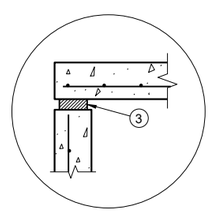

TOP WITH PLAIN END JOINT

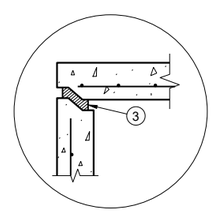

TOP WITH TONGUE AND GROOVE JOINT

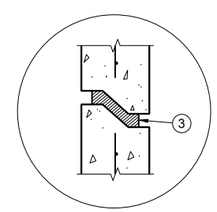

RISER WITH TONGUE AND GROOVE JOINT

DETAIL "B"

DETAIL "C"

INLETS 3-FT AND 4-FT DIAMETER

GENERAL NOTES

DETAILS OF CONSTRUCTION, MATERIALS AND WORKMANSHIP NOT SHOWN ON THIS DRAWING SHALL CONFORM TO THE PERTINENT REQUIREMENTS OF THE STANDARD SPECIFICATIONS AND THE APPLICABLE SPECIAL PROVISIONS.

UNLESS OTHERWISE AUTHORIZED IN WRITING BY THE ENGINEER, THE CONTRACTOR SHALL NOT ORDER AND DELIVER PRECAST INLET UNITS REQUIRED FOR THE PROJECT UNTIL A LIST OF SIZES IS FURNISHED BY THE ENGINEER.

DETAILED DRAWINGS FOR PROPOSED ALTERNATE DESIGNS FOR UNDERGROUND DRAINAGE STRUCTURES SHALL BE SUBMITTED TO THE ENGINEER FOR APPROVAL PROVIDING THAT SUCH ALTERNATE DESIGNS MAKE PROVISION FOR EQUIVALENT CAPACITY AND STRENGTH.

ALL DRAINAGE STRUCTURES ARE DESIGNATED ON THE PLANS AS "MANHOLES 3X3-L", "CATCH BASINS 4-B", "INLETS 2X3-H", ETC. THE FIRST NUMBERS DESIGNATE THE SIZE OF THE STRUCTURE, AND THE FOLLOWING LETTER DESIGNATES THE TYPE OF COVER TO BE USED TO COMPRISE THE COMPLETE UNIT.

BASES SHALL BE PLACED ON A BED OF MATERIAL AT LEAST 6 INCHES IN DEPTH, WHICH MEETS THE REQUIREMENTS OF FOUNDATION BACKFILL. THIS BEDDING SHALL BE COMPACTED AND PROVIDE UNIFORM SUPPORT FOR THE ENTIRE AREA OF THE BASE.

ALL BAR STEEL REINFORCEMENT SHALL BE EMBEDDED 2 INCHES CLEAR UNLESS OTHERWISE SHOWN OR NOTED.

ALL PRECAST INLET UNITS SHALL CONFORM TO THE PERTINENT REQUIREMENTS OF AASHTO DESIGNATION M199.

PRECAST REINFORCED RISERS SHALL HAVE A TONGUE AND GROOVE JOINT WITH TONGUE UP OR DOWN.

4" OVERHANGING BASES ARE REQUIRED FOR ALL CONCRETE BLOCK INSTALLATIONS. 4" OVERHANG IS REQUIRED WHEN SEPARATE PRECAST BASE IS PROVIDED. OVERHANG IS NOT REQUIRED ON PRECAST STRUCTURES WITH AN INTEGRAL OR MONOLITHIC BASE.

FOR ADDITIONAL CONFIGURATIONS, MAINTAIN A MINIMUM OF 12 INCHES AS MEASURED FROM THE INSIDE OF THE STRUCTURE WALL BETWEEN THE OUTSIDE PIPE WALLS OF ADJACENT PIPES. SEE DETAIL "D".

(1) MINIMUM WALL THICKNESS SHALL BE 4 INCHES FOR 3-FT DIAMETER AND 5 INCHES FOR 4-FT DIAMTER PRECAST INLETS.

(2) FOR PRECAST INLETS AND REINFORCED CONCRETE BASES PROVIDE REINFORCING STEEL IN ACCORDANCE TO AASHTO M199.

(3) JOINTS TO BE SEALED WITH A BUTYL RUBBER SEAL PER SEALANT MANUFACTURERS RECOMMENDATIONS CONFORMING TO ASTM C 990 OR RUBBER GASKETS CONFORMING TO ASTM C443.

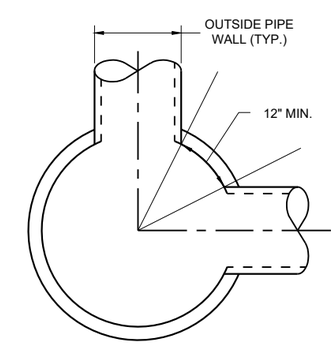

MINIMUM HORIZONTAL PIPE SEPARATION

DETAIL "D"

INLETS 3-FT AND 4-FT DIAMETER

STATE OF WISCONSIN
DEPARTMENT OF TRANSPORTATION

APPROVED
December 2023 — DATE
/S/ Rodney Taylor — ROADWAY STANDARDS DEVELOPMENT UNIT SUPERVISOR
FHWA

6

SDD 08C06-03

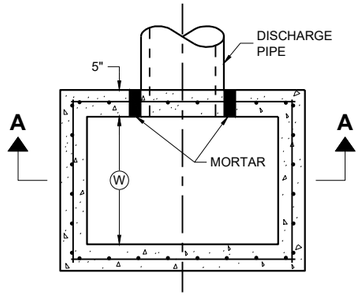

PLAN VIEW

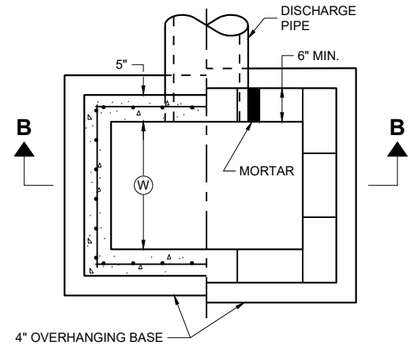

PLAN VIEW

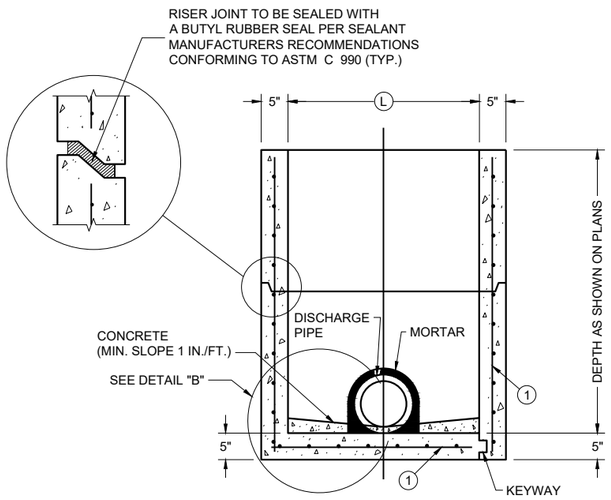

PRECAST REINFORCED CONCRETE WITH MONOLITHIC BASE

PRECAST REINFORCED CONCRETE WITH INTEGRAL BASE

SECTION A - A

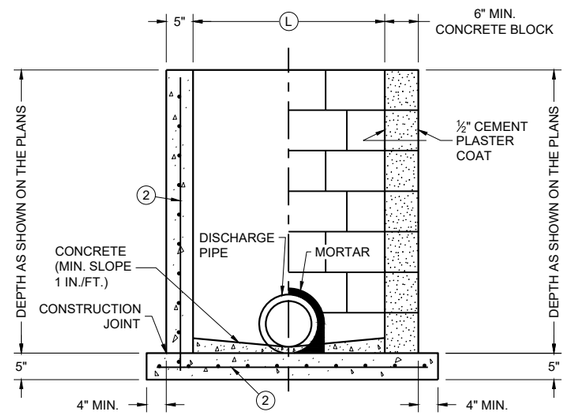

CAST IN PLACE REINFORCED CONCRETE

CONCRETE BLOCK WITH CAST IN PLACE OR PRECAST REINFORCED CONCRETE BASE (1)

SECTION B - B

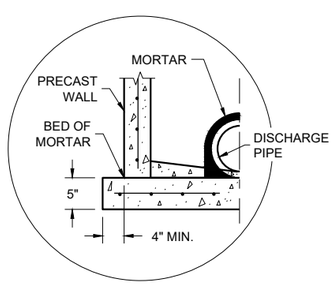

SEPARATE PRECAST REINFORCED CONCRETE BASE OPTION

DETAIL "B"

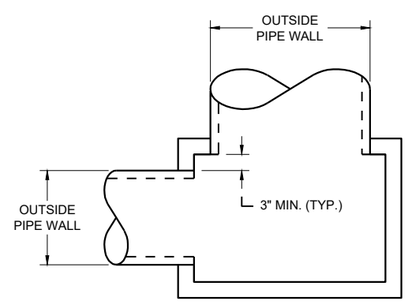

DETAIL "A"

GENERAL NOTES

DETAILS OF CONSTRUCTION, MATERIALS AND WORKMANSHIP N0T SHOWN ON THIS DRAWING SHALL CONFORM TO THE PERTINENT REQUIREMENTS OF THE STANDARD SPECIFICATIONS AND THE APPLICABLE SPECIAL PROVISIONS.

UNLESS OTHERWISE AUTHORIZED IN WRITING BY THE ENGINEER, THE CONTRACTOR SHALL NOT ORDER AND DELIVER PRECAST INLET UNITS REQUIRED FOR THE PROJECT UNTIL A LIST OF SIZES IS FURNISHED BY THE ENGINEER.

DETAILED DRAWINGS FOR PROPOSED ALTERNATE DESIGNS FOR UNDERGROUND DRAINAGE STRUCTURES SHALL BE SUBMITTED TO THE ENGINEER FOR APPROVAL PROVIDING THAT SUCH ALTERNATE DESIGNS MAKE PROVISION FOR EQUIVALENT CAPACITY AND STRENGTH.

ALL PRECAST INLET UNITS SHALL CONFORM TO THE PERTINENT REQUIREMENTS OF ASTM C 913.

ALL DRAINAGE STRUCTURES ARE DESIGNATED ON THE PLANS AS "MANHOLES 3X3-L", "CATCH BASINS 4-B", "INLETS 2X3-H", ETC. THE FIRST NUMBERS DESIGNATES THE SIZE OF THE STRUCTURE, AND THE FOLLOWING LETTER DESIGNATES THE TYPE OF COVER TO BE USED TO COMPRISE THE COMPLETE UNIT.

BASES SHALL BE PLACED ON A BED OF MATERIAL AT LEAST 6 INCHES IN DEPTH, WHICH MEETS THE REQUIREMENTS OF FOUNDATION BACKFILL. THIS BEDDING SHALL BE COMPACTED AND PROVIDE UNIFORM SUPPORT FOR THE ENTIRE AREA OF THE BASE.

ALL BAR STEEL REINFORCEMENT SHALL BE EMBEDDED 2 INCHES CLEAR UNLESS OTHERWISE SHOWN OR NOTED.

PRECAST REINFORCED RISERS SHALL HAVE A TONGUE AND GROOVE JOINT WITH TONGUE UP OR DOWN.

4" OVERHANGING BASES ARE REQUIRED FOR CAST-IN-PLACE REINFORCED CONCRETE AND CONCRETE BLOCK INSTALLATIONS. 4" OVERHANG IS REQUIRED WHEN SEPARATE PRECAST BASE IS PROVIDED. OVERHANG IS NOT REQUIRED ON PRECAST STRUCTURES WITH AN INTEGRAL OR MONOLITHIC BASE.

MAXIMUM INSIDE PIPE DIAMETER DETERMINED BY 3" CLEARANCE ON EACH SIDE OF THE OUTSIDE WALL OF THE PIPE. SEE DETAIL "A". ASSUMES PIPE ENTERS PERPENDICULAR TO THE STRUCTURE.

(1) FOR PRECAST INLETS AND REINFORCED CONCRETE BASES PROVIDE REINFORCING STEEL IN ACCORDANCE TO ASTM C 913

(2) CONTRACTOR TO PROVIDE DRAWING(S) STAMPED BY A PROFESSIONAL ENGINEER FOR STEEL REINFORCING DESIGN FOR CAST-IN-PLACE STRUCTURES.

CATCH BASIN COVER MATRIX

INLET SIZE	WIDTH (W) (FT.)	LENGTH (L) (FT.)	INLET COVER TYPE									
			ALL A'S	ALL B'S	BW	F	ALL H'S	S	T	V	WM	V V-B
2 X 2-FT	2	2	X	X				X				
2 X 2.5-FT	2	2.5			X			X	X	X	X	
2 X 3-FT	2	3					X					
2.5 X 3-FT	2.5	3				X						
2 X 3.5-FT	2	3.5										X

PIPE MATRIX

CATCH BASIN SIZE	MAXIMUM INSIDE PIPE DIAMETER FOR TWO PIPES	
	WIDTH (IN)	LENGTH (IN)
2 X 2-FT	12	12
2 X 2.5-FT	12	18
2 X 3-FT	12	24
2.5 X 3-FT	18	24
2 X 3.5-FT	12	30

INLETS 2 X 2-FT, 2 X 2.5-FT, 2 X 3-FT, 2.5 X 3-FT AND 2X3.5-FT

INLETS 2 X 2-FT, 2 X 2.5-FT, 2 X 3-FT, 2.5 X 3-FT AND 2 X 3.5-FT

STATE OF WISCONSIN
DEPARTMENT OF TRANSPORTATION

APPROVED
December 2023 — DATE
/S/ Rodney Taylor — ROADWAY STANDARDS DEVELOPMENT UNIT SUPERVISOR
FHWA

6

SDD 08C07-03

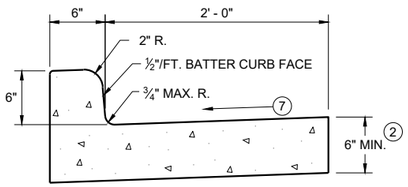

TYPES A (1) & D

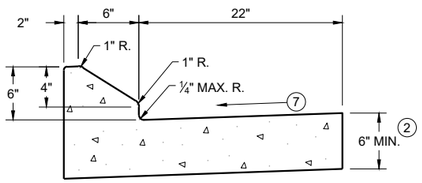

6" SLOPED CURB TYPES G (1) & J

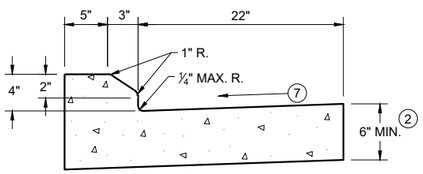

4" SLOPED CURB TYPES G (1) & J

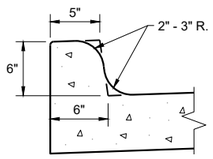

TYPES K (1) & L
(OPTIONAL CURB SHAPE)

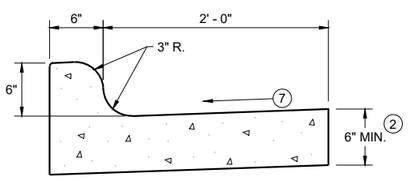

TYPES K (1) & L

CONCRETE CURB AND GUTTER 30"

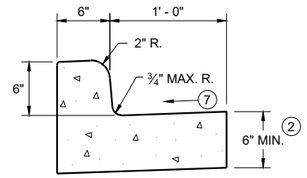

TYPES A (1) & D

CONCRETE CURB AND GUTTER 18"

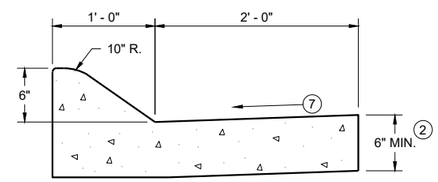

6" SLOPED CURB TYPES A (1) & D

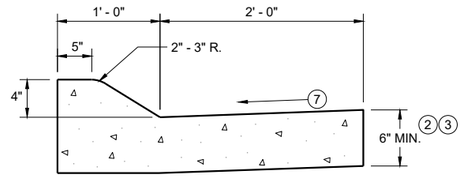

4" SLOPED CURB TYPES A (1) & D

CONCRETE CURB AND GUTTER 36"

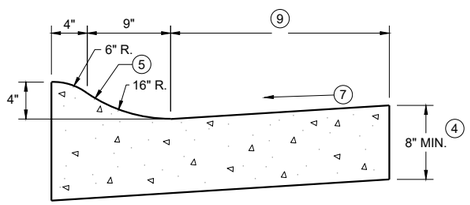

4" SLOPED CURB TYPES R (1) & T

TBT & TBTT	X
30"	22"
36"	28"

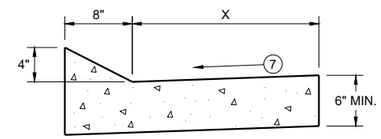

TYPES TBT & TBTT (1)

CONCRETE CURB AND GUTTER

PAVEMENT THICKNESS AND MAXIMUM CONCRETE PANEL WIDTH TABLE

PAVEMENT THICKNESS	MAXIMUM PANEL WIDTH
LESS THAN 10"	12'
10" & ABOVE	15'

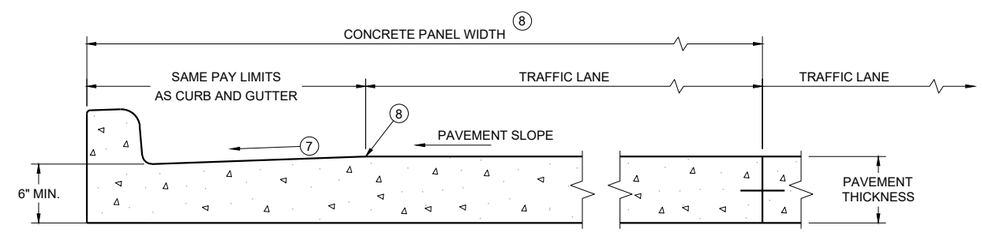

PARTIAL SECTION OF PAVEMENT * WITH INTEGRAL CURB AND GUTTER

* BIKE LANE IS NOT SHOWN

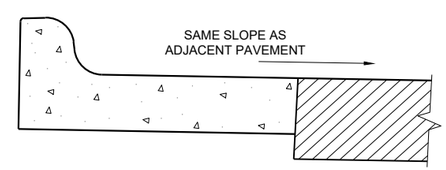

REVERSE SLOPE GUTTER (6)
(TYPICAL FOR ALL CURB & GUTTER TYPES)

GENERAL NOTES

DETAILS OF CONSTRUCTION AND WORKMANSHIP NOT SHOWN ON THIS DRAWING SHALL CONFORM TO THE PERTINENT REQUIREMENTS OF THE CONTRACT.

PAVEMENT TIES AND TIE BARS SHALL BE EPOXY COATED IN CONFORMANCE WITH SUBSECTION 505.2.6.2 OF THE STANDARD SPECIFICATIONS.

INTEGRAL CURB AND GUTTER SHALL CONFORM TO THE DETAILS SHOWN FOR CONCRETE CURB AND GUTTER INCLUDING THE TRANSVERSE GUTTER SLOPE.

UNLESS OTHERWISE SHOWN ON THE TYPICAL CROSS SECTIONS, THE BASE AGGREGATE AND COMMON EXCAVATION LIMITS ARE 2' - 0" BEHIND THE BACK OF CURBS.

(1) TIE BARS ARE REQUIRED FOR CURB AND GUTTERS TYPES A, G, K, R, AND TBTT.

(2) THE BOTTOM OF CURB AND GUTTER MAY BE CONSTRUCTED EITHER LEVEL OR PARALLEL TO THE SLOPE OF THE SUBGRADE OR BASE AGGREGATE PROVIDED A 6" MINIMUM GUTTER THICKNESS IS MAINTAINED.

(3) USE 8" MINIMUM GUTTER THICKNESS WHEN USED WITH AN ADJACENT CONCRETE TRUCK APRON PLACED BEHIND BACK OF CURB.

(4) THE BOTTOM OF CURB AND GUTTER MAY BE CONSTRUCTED EITHER LEVEL OR PARALLEL TO THE SLOPE OF THE SUBGRADE OR BASE AGGREGATE PROVIDED A 8" MINIMUM GUTTER THICKNESS IS MAINTAINED.

(5) UNLESS OTHERWISE NOTED, FOR STAKING PURPOSES THE FACE OF CURB IS 6" FROM THE BACK OF CURB.

(6) WHEN REVERSE SLOPE GUTTER IS REQUIRED, THE LOCATION(S) WILL BE SHOWN ELSEWHERE IN THE PLAN.

(7) USE 4% GUTTER CROSS SLOPE UNLESS OTHERWISE NOTED IN THE PLANS.

(8) INCLUDE LONGITUDINAL JOINT AND TIE BARS ALONG LANE EDGE WHEN CONCRETE PANEL WIDTH EXCEEDS THE MAXIMUM WIDTH PER TABLE BELOW. LONGITUDINAL JOINT(S) ARE NOT ALLOWED WITHIN TRAFFIC LANES AND BIKE LANES. LONGITUDINAL JOINT MAY BE SAWED.

(9) CONCRETE CURB AND GUTTER 4-INCH SLOPED 30-INCH TYPE "R" AND "T" = 17 INCHES
CONCRETE CURB AND GUTTER 4-INCH SLOPED 36-INCH TYPE "R" AND "T" = 23 INCHES

CONCRETE CURB AND GUTTER

STATE OF WISCONSIN
DEPARTMENT OF TRANSPORTATION

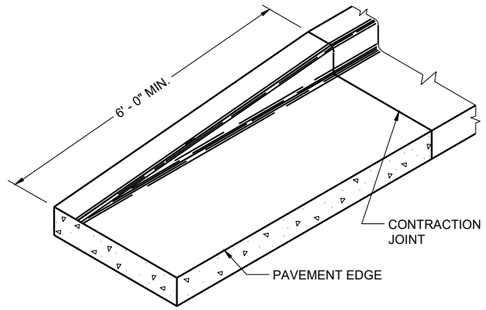

END SECTION CURB AND GUTTER

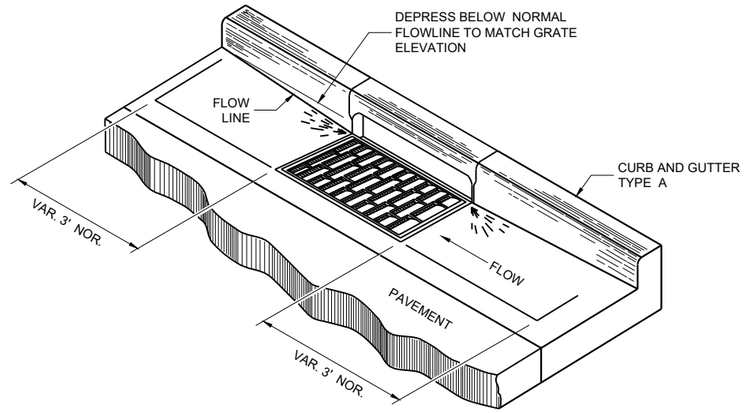

DETAIL OF CURB AND GUTTER AT INLETS

(TYPICAL H INLET COVER SHOWN)

GENERAL NOTES

DETAILS OF CONSTRUCTION AND WORKMANSHIP NOT SHOWN ON THIS DRAWING SHALL CONFORM TO THE PERTINENT REQUIREMENTS OF THE CONTRACT.

PAVEMENT TIES AND TIE BARS SHALL BE EPOXY COATED IN CONFORMANCE WITH SUBSECTION 505.2.6.2 OF THE STANDARD SPECIFICATIONS.

UNLESS OTHERWISE SHOWN ON THE TYPICAL CROSS SECTIONS, THE BASE AGGREGATE AND COMMON EXCAVATION LIMITS ARE 2' - 0" BEHIND THE BACK OF CURBS.

(1) TIE BARS ARE REQUIRED FOR CURB AND GUTTERS TYPES A, G, K, R, AND TBTT.

(2) THE BOTTOM OF CURB AND GUTTER MAY BE CONSTRUCTED EITHER LEVEL OR PARALLEL TO THE SLOPE OF THE SUBGRADE OR BASE AGGREGATE PROVIDED A 6" MINIMUM GUTTER THICKNESS IS MAINTAINED.

(10) REFER TO SDD 08D18 AND 08D19 FOR ADDITIONAL DRIVEWAY ENTRANCE CURB DETAILS.

(11) PLACE 1" THICK EXPANSION JOINT MATERIAL BETWEEN VERTICAL FACE CURB TYPES EXTENDING FROM THE TOP OF CURB TO 1 INCH BELOW THE ADJOINING CONCRETE SURFACE. RIGID CONCRETE STRUCTURES INCLUDE RAISED CONCRETE MEDIANS, CONCRETE SAFETY ISLANDS, SPLITTER ISLANDS, OR LOCATIONS IDENTIFIED ON THE PLANS.

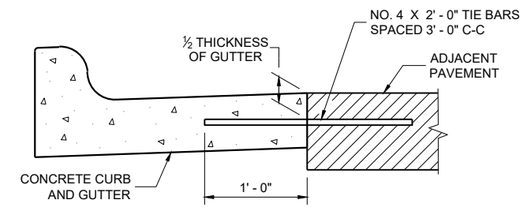

TYPICAL TIE BAR LOCATION (1)

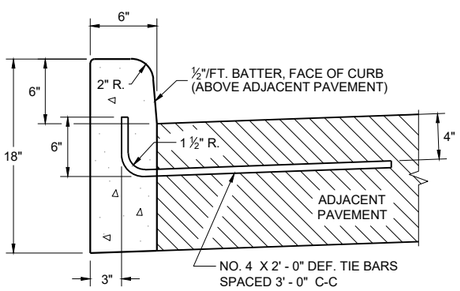

TYPES A (1) & D

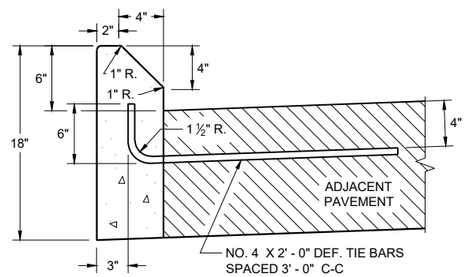

TYPES G (1) & J

CONCRETE CURB

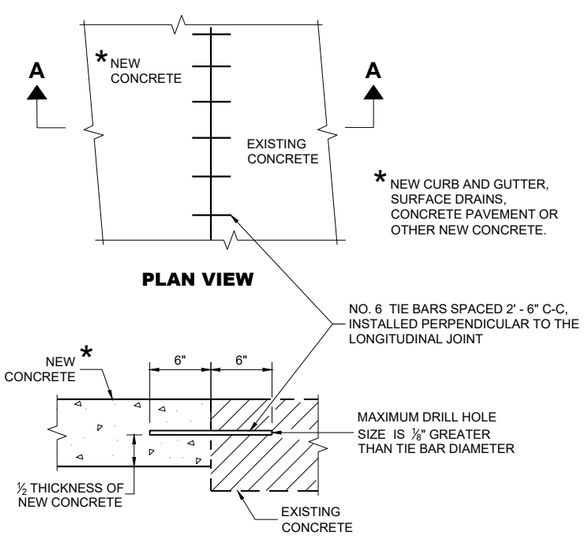

PLAN VIEW

SECTION A - A

TIE BARS DRILLED INTO EXISTING PAVEMENT

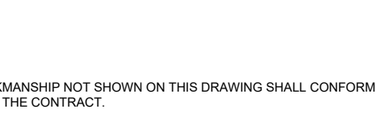

DRIVEWAY ENTRANCE CURB (10)

(WHEN DIRECTED BY THE ENGINEER)

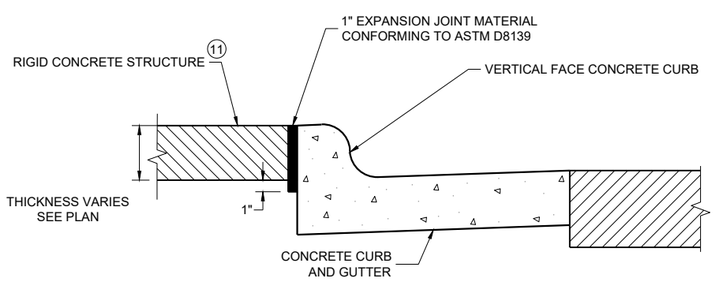

EXPANSION JOINT DETAIL FOR VERTICAL CURB ABUTTING A RIGID STRUCTURE (11)

CONCRETE CURB, TIES AND CURB AND GUTTER APPLICATIONS

STATE OF WISCONSIN
DEPARTMENT OF TRANSPORTATION

APPROVED
May 2023 — DATE
/S/ Rodnery Taylor — ROADWAY STANDARDS DEVELOPMENT UNIT SUPERVISOR

FHWA

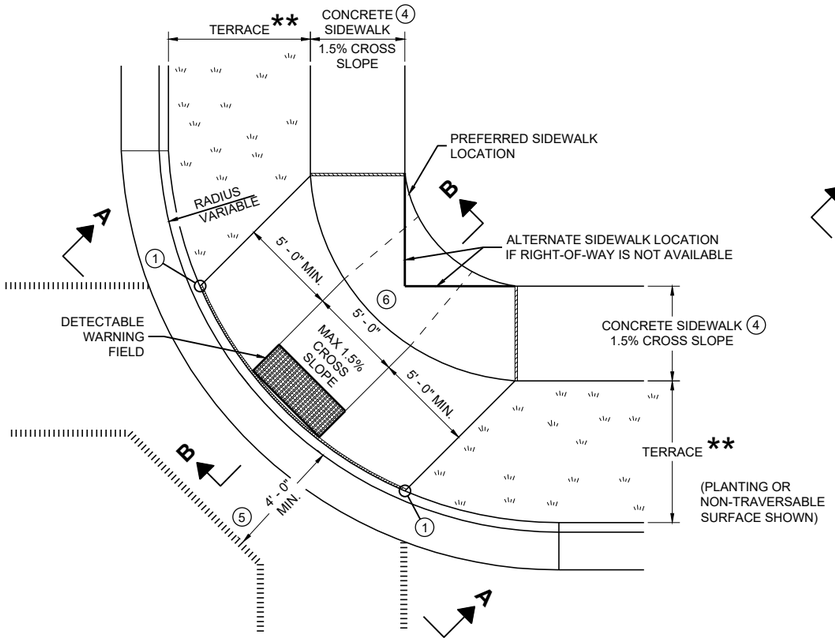

PLAN VIEW

CURB RAMP TYPE 1

(CENTER OF CORNER RADIUS)

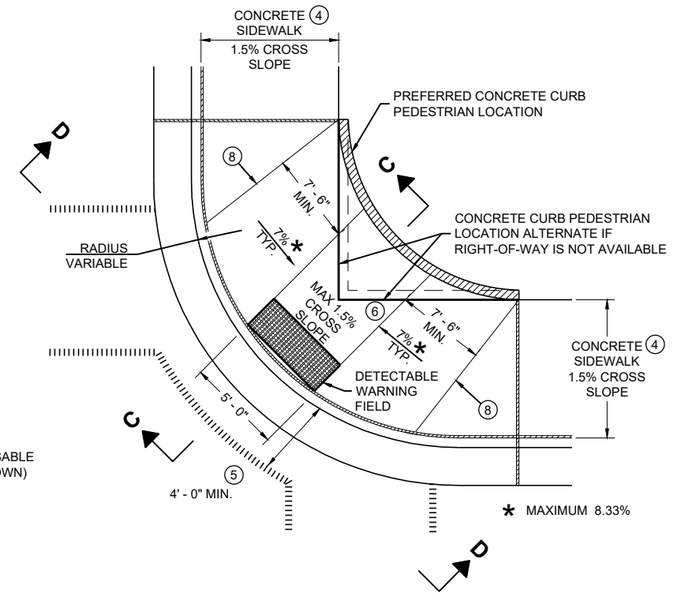

PLAN VIEW

CURB RAMP TYPE 1 - A

(NO TERRACE)

GENERAL NOTES

AVOID PLACING DRAINAGE STRUCTURES, JUNCTION BOXES OR OTHER OBSTRUCTIONS IN FRONT OF RAMP ACCESS AREAS.

DETAILS OF CONSTRUCTION, MATERIALS AND WORKMANSHIP NOT SHOWN ON THIS DRAWING SHALL CONFORM TO THE PERTINENT REQUIREMENTS OF THE STANDARD SPECIFICATIONS AND THE APPLICABLE SPECIAL PROVISIONS.

WHEN NECESSARY, THE SIDEWALK ELEVATION MAY BE LOWERED TO MEET THE HIGH POINT ON THE RAMP.

TYPE 1 CURB RAMPS SHALL HAVE A NORMAL SIDEWALK APRON AND CURB ON BOTH SIDES OF RAMP.

DETECTABLE WARNING FILED SHALL BE MEASURED AND PAID BY THE SQUARE FOOT AS "CURB RAMP DETECTABLE WARNING FIELD". THE CONCRETE PEDESTRIAN CURB, IF NEEDED, SHALL BE MEASURED AND PAID BY THE LINEAR FOOT AS "CONCRETE CURB PEDESTRIAN". CONCRETE SIDEWALK IN THE CURB RAMP AREA SHALL BE MEASURED AND PAID BY THE SQUARE FOOT AS CONCRETE SIDEWALK, INCLUDING THE AREA UNDER THE DETECTABLE WARNING FIELD.

SELECT CURB RAMP DETECTABLE WARNING FIELD MATERIALS AND DEVICES FROM THE DEPARTMENT'S APPROVED MATERIALS LIST. THE COLOR OF THE DETECTABLE WARNING FIELD IS SPECIFIED ELSEWHERE AND IS INCIDENTAL TO THE BID ITEM OF "CURB RAMP DETECTABLE WARNING FIELD"

DETECTABLE WARNING FIELDS THAT ARE INSTALLED AS A GROUP OR SIDE BY SIDE, SHALL BE FROM THE SAME MANUFACTURER.

SURFACE TEXTURE OF THE RAMP SHALL BE OBTAINED BY COARSE BROOMING TRANSVERSE TO THE SLOPE OF THE RAMP.

1. THIS POINT IS AN EXTENSION OF OUTSIDE EDGE OF APPROACHING SIDEWALK WHERE IT MEETS THE BACK OF CONCRETE CURB. POINT LOCATION MAY BE ADJUSTED TO ALIGN WITH BEGINNING OF FULL-HEIGHT CURB IF THIS DISTANCE IS SHORT.
2. GRADE CHANGE BETWEEN GUTTER FLAG SLOPE AND THE CURB RAMP SLOPE SHALL NOT EXCEED 11%. MAXIMUM GUTTER FLAG SLOPE IS 4%. PROVIDE LONGITUDINAL DRAINAGE AROUND CURB AND AWAY FROM CURB RAMP. NO VERTICAL LIPS OR DISCONTINUITIES GREATER THAN ¼ - INCH ARE ALLOWED. SLOPE OF CURB HEAD OPENING SHALL MATCH THE RAMP SLOPE, MINIMALLY 1.5% AND NOT TO EXCEED 7%. WHEN ADJACENT TO 1.5% LANDING, CONSTRUCT CURB HEAD OPENING AT 1.5% IN THE DIRECTION OF PEDESTRIAN TRAVEL.
3. MAXIMUM 8.33% CURB RAMP SLOPE IS ALLOWABLE WITH FLATTENED GUTTER FLAG SLOPE AND NOT TO EXCEED 11% GRADE CHANGE.
4. ±0.5% CONSTRUCTION TOLERANCE IN SIDEWALK CROSS SLOPE. THE SIDEWALK CROSS SLOPE SHALL NOT EXCEED 2% WITHOUT PRIOR APPROVAL FROM THE ENGINEER.
5. PROVIDE A LEVEL LANDING IN THE STREET AND GUTTER AREA (2% MAXIMUM SLOPE IN ANY DIRECTION). WHEN THE GUTTER SLOPE EXCEEDS 2%, CONSTRUCT THE LEVEL LANDING IN THE STREET AREA. 4 FOOT WIDTH IS MEASURED FROM THE FLANGE LINE
6. PROVIDE A LEVEL LANDING (MAXIMUM 2% SLOPE) IN ANY DIRECTION OF PEDESTRIAN TRAVEL. STANDARD LEVEL LANDING SIZE IS 5 FEET BY 5 FEET.
8. PROVIDE GRADE BREAK PERPENDICULAR TO DIRECTION OF WHEELCHAIR TRAVEL.

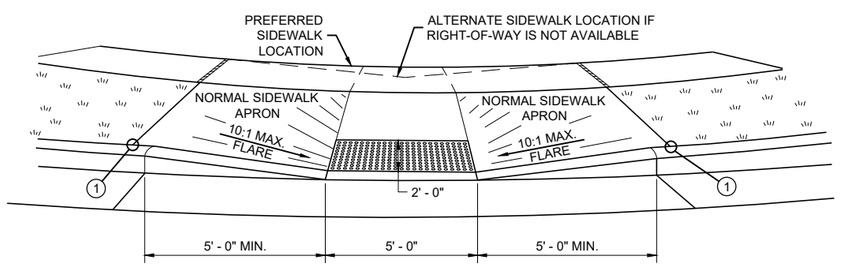

VIEW A - A FOR TYPE 1

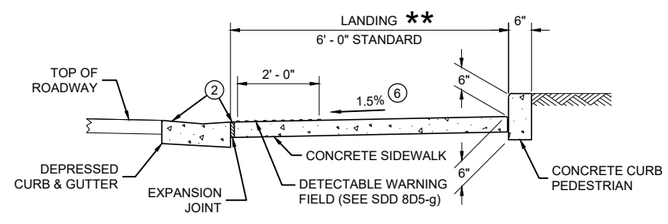

SECTION C - C FOR TYPE 1 - A

LEGEND

- ½" EXPANSION JOINT SIDEWALK
- CONTRACTION JOINT FIELD LOCATED
- PAVEMENT MARKING CROSSWALK (WHITE)

** WIDTH SHOWN ELSEWHERE IN THE PLANS

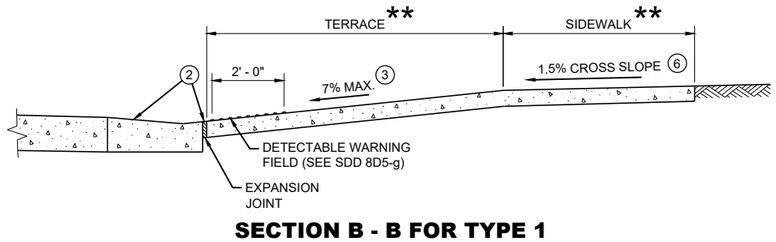

SECTION B - B FOR TYPE 1

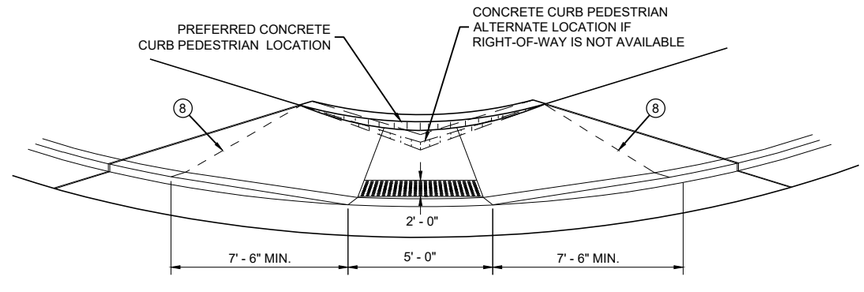

VIEW D - D FOR TYPE 1 - A

CURB RAMPS TYPE 1 AND 1-A

STATE OF WISCONSIN
DEPARTMENT OF TRANSPORTATION

6

SDD 08D05-21a

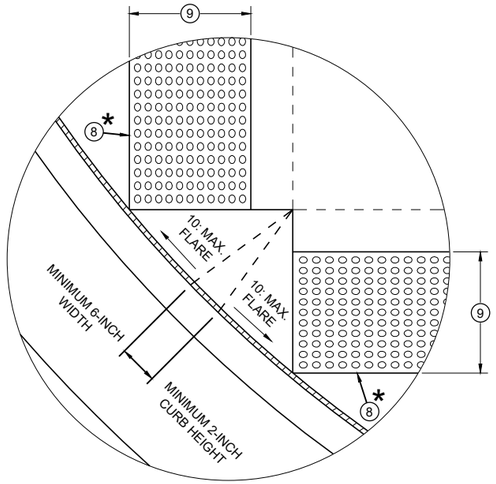

DETAIL A

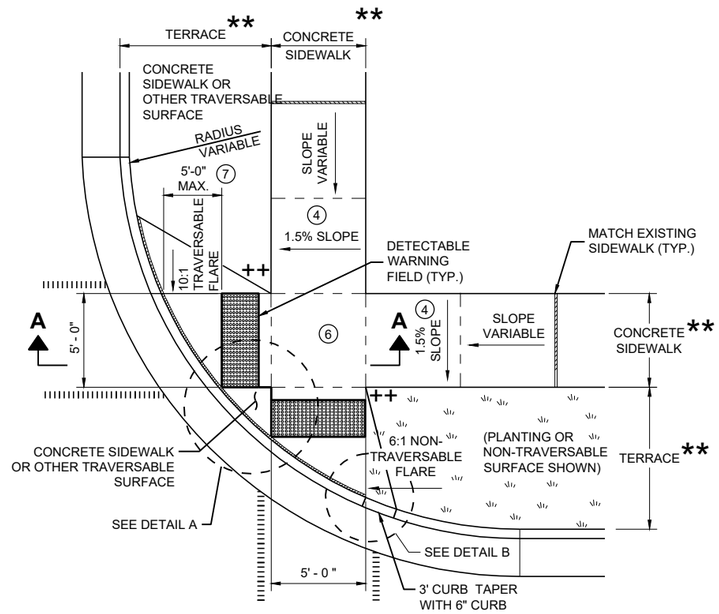

PLAN VIEW

CURB RAMP TYPE 2

(CENTER OF CORNER RADIUS)

GENERAL NOTES

AVOID PLACING DRAINAGE STRUCTURES, JUNCTION BOXES OR OTHER OBSTRUCTIONS IN FRONT OF RAMP ACCESS AREAS.

DETAILS OF CONSTRUCTION, MATERIALS AND WORKMANSHIP NOT SHOWN ON THIS DRAWING SHALL CONFORM TO THE PERTINENT REQUIREMENTS OF THE STANDARD SPECIFICATIONS AND THE APPLICABLE SPECIAL PROVISIONS.

DETECTABLE WARNING FIELDS THAT ARE INSTALLED AS A GROUP OR SIDE BY SIDE SHALL BE FROM THE SAME MANUFACTURER.

(2) GRADE CHANGE BETWEEN GUTTER FLAG SLOPE AND THE CURB RAMP SLOPE SHALL NOT EXCEED 11%. MAXIMUM GUTTER FLAG SLOPE IS 4%. PROVIDE LONGITUDINAL DRAINAGE AROUND CURB AND AWAY FROM CURB RAMP. NO VERTICAL LIPS OR DISCONTINUITIES GREATER THAN ¼ - INCH ARE ALLOWED. SLOPE OF CURB HEAD OPENING SHALL MATCH THE RAMP SLOPE, MINIMALLY 1.5% AND NOT TO EXCEED 7%. WHEN ADJACENT TO 1.5% LANDING, CONSTRUCT CURB HEAD OPENING AT 1.5% IN THE DIRECTION OF PEDESTRIAN TRAVEL.

(3) AN 8.33% CURB RAMP SLOPE IS ALLOWABLE WITH FLATTENED GUTTER FLAG SLOPE (2.67% OR LESS) AND NOT TO EXCEED 11% GRADE CHANGE.

(4) ±0.5% CONSTRUCTION TOLERANCE IN SIDEWALK CROSS SLOPE. THE SIDEWALK CROSS SLOPE SHALL NOT EXCEED 2% WITHOUT PRIOR APPROVAL FROM THE ENGINEER.

(6) PROVIDE A LEVEL LANDING (MAXIMUM 2% SLOPE) IN ANY DIRECTION OF PEDESTRIAN TRAVEL. STANDARD LEVEL LANDING SIZE IS 5 FEET X 5 FEET.

(7) WHEN GRADE BREAK DISTANCE EXCEEDS 5 FEET, USE RADIAL DETECTABLE WARNING FIELD PER SDD 8D5-f.

(8) PROVIDE GRADE BREAK PERPENDICULAR TO DIRECTION OF WHEELCHAIR TRAVEL.

(9) WHEN DISTANCE IS LESS THAN 6' - 0", IT MAY BE DIFFICULT TO ACHIEVE A 7% SLOPE OR FLATTER ALONG THE RAMP. REDUCE CURB HEIGHT IN TRIANGLE AREA TO ACHIEVE 7% SLOPE OR FLATTER ON RAMP. CONSTRUCT 2-INCH MINIMUM CURB HEIGHT BETWEEN 10:1 FLARES.

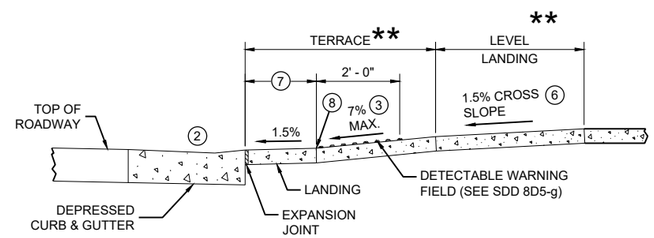

SECTION A - A FOR TYPE 2

* MAXIMUM 2.0% SLOPE IN ALL DIRECTIONS IN FRONT OF GRADE BREAK

** WIDTH SHOWN ELSEWHERE IN THE PLANS

++ CONSTRUCT 6" WEDGE TO AVOID CONCRETE BREAKAGE

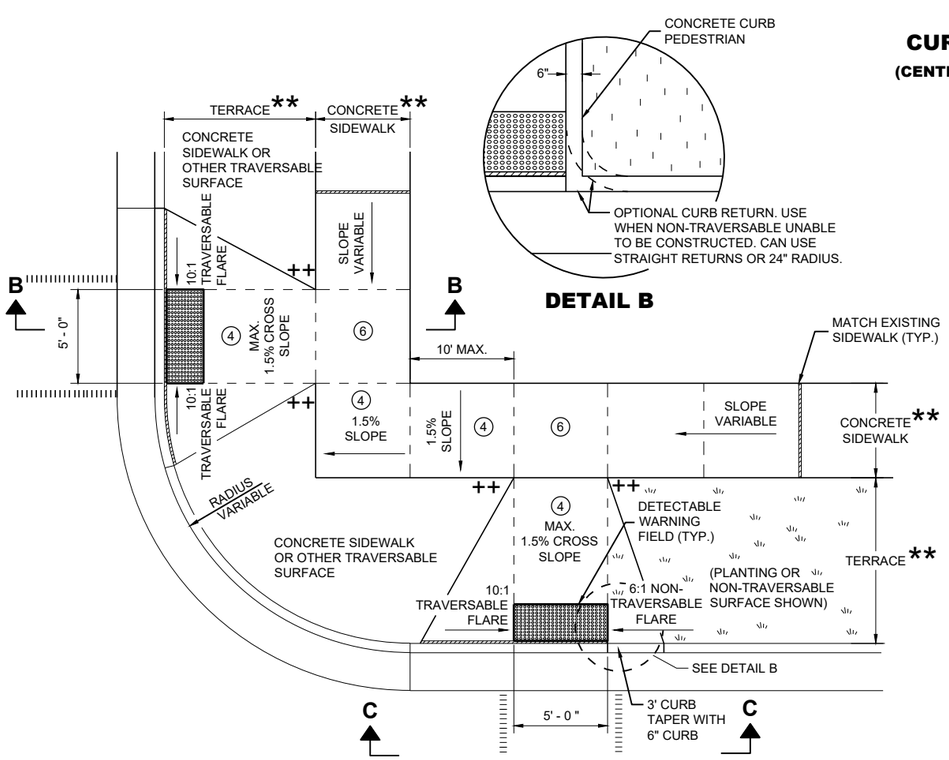

DETAIL B

PLAN VIEW

CURB RAMP TYPE 3

(OUTSIDE OF CROSSWALK AREA)

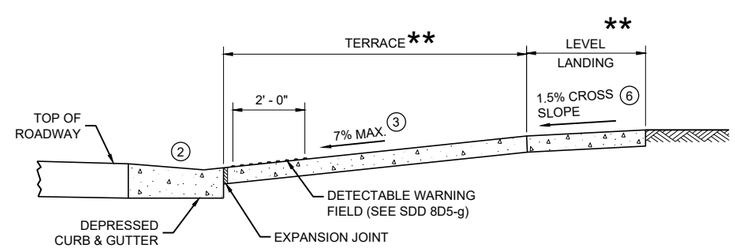

SECTION B - B FOR TYPE 3

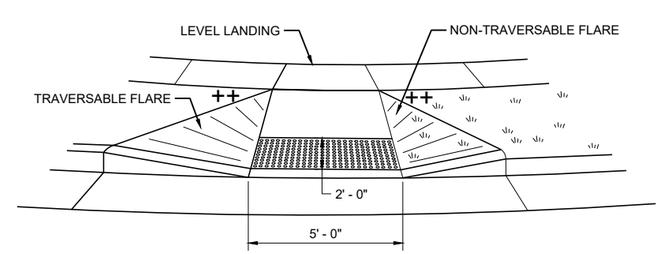

VIEW C - C FOR TYPE 3

LEGEND

½" EXPANSION JOINT SIDEWALK

CONTRACTION JOINT SIDEWALK

PAVEMENT MARKING CROSSWALK (WHITE)

CURB RAMPS TYPE 2 AND 3

STATE OF WISCONSIN
DEPARTMENT OF TRANSPORTATION

6

6

SDD 08D05-21b

SDD 08D05-21b

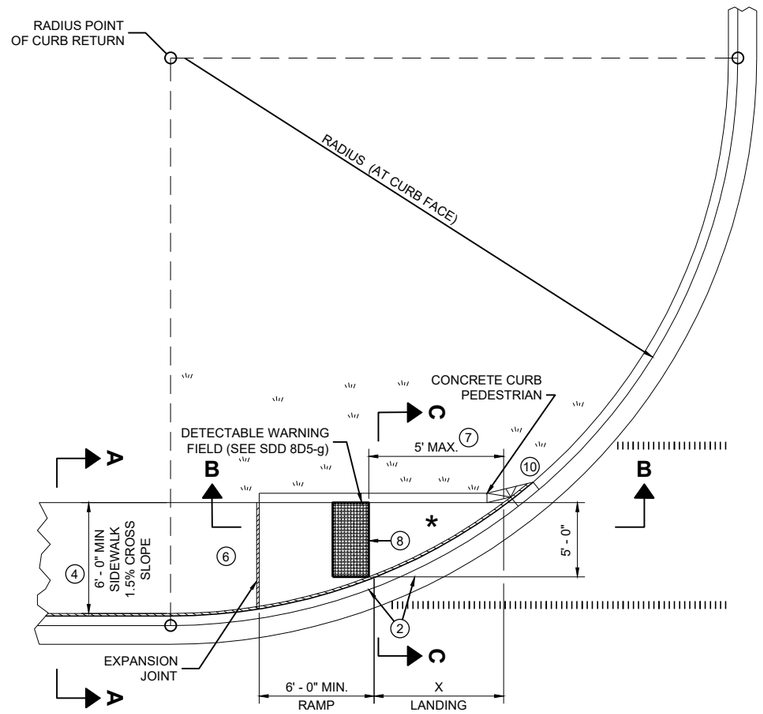

PLAN VIEW

CURB RAMP TYPE 4A

RADIUS (AT CURB FACE)	X
10 FEET	4' - 7"

INTERMEDIATE RADII CAN BE INTERPOLATED

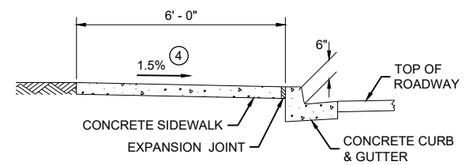

SECTION A - A FOR TYPE 4A

GENERAL NOTES

AVOID PLACING DRAINAGE STRUCTURES, JUNCTION BOXES OR OTHER OBSTRUCTIONS IN FRONT OF RAMP ACCESS AREAS.

DETAILS OF CONSTRUCTION, MATERIALS AND WORKMANSHIP NOT SHOWN ON THIS DRAWING SHALL CONFORM TO THE PERTINENT REQUIREMENTS OF THE STANDARD SPECIFICATIONS AND THE APPLICABLE SPECIAL PROVISIONS.

DETECTABLE WARNING FIELDS THAT ARE INSTALLED AS A GROUP OR SIDE BY SIDE, SHALL BE FROM THE SAME MANUFACTURER.

(2) GRADE CHANGE BETWEEN GUTTER FLAG SLOPE AND THE CURB RAMP SLOPE SHALL NOT EXCEED 11%. MAXIMUM GUTTER FLAG SLOPE IS 4%. PROVIDE LONGITUDINAL DRAINAGE AROUND CURB AND AWAY FROM CURB RAMP. NO VERTICAL LIPS OR DISCONTINUITIES GREATER THAN ¼ - INCH ARE ALLOWED. SLOPE OF CURB HEAD OPENING SHALL MATCH THE RAMP SLOPE, MINIMALLY 1.5% AND NOT TO EXCEED 7%. WHEN ADJACENT TO 1.5% LANDING, CONSTRUCT CURB HEAD OPENING AT 1.5% IN THE DIRECTION OF PEDESTRIAN TRAVEL.

(3) AN 8.33% CURB RAMP SLOPE IS ALLOWABLE WITH FLATTENED GUTTER FLAG SLOPE AND NOT TO EXCEED 11% GRADE CHANGE.

(4) ±0.5% CONSTRUCTION TOLERANCE IN SIDEWALK CROSS SLOPE. THE SIDEWALK CROSS SLOPE SHALL NOT EXCEED 2% WITHOUT PRIOR APPROVAL FROM THE ENGINEER.

(6) PROVIDE A LEVEL LANDING (MAXIMUM 2% SLOPE) IN ANY DIRECTION OF PEDESTRIAN TRAVEL. STANDARD LEVEL LANDING SIZE IS 5 FEET BY 5 FEET.

(7) WHEN THIS GRADE BREAK DISTANCE EXCEEDS 5 FEET, USE RADIAL DETECTABLE WARNING FIELD PER SDD 8D5-f.

(8) PROVIDE GRADE BREAK PERPENDICULAR TO DIRECTION OF WHEELCHAIR TRAVEL.

(10) INSTALL TRANSITION NOSE (INCIDENTAL TO OTHER PAY ITEMS). DO NOT MARK TRANSITION NOSE.

LEGEND

½" EXPANSION JOINT SIDEWALK

CONTRACTION JOINT SIDEWALK

PAVEMENT MARKING CROSSWALK (WHITE)

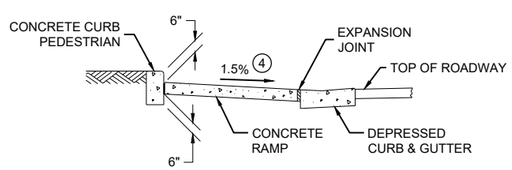

SECTION C - C FOR TYPE 4A

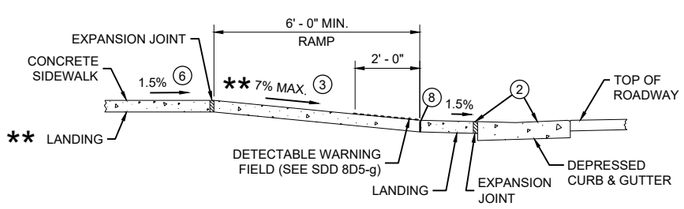

** IF RAMP SLOPE IS LESS THAN 5.0%, THEN NO ADJACENT UPHILL LANDING IS REQUIRED

SECTION B - B FOR TYPE 4A AND TYPE 4A1

* MAXIMUM 2.0% SLOPE IN ALL DIRECTIONS IF FRONT OF GRADE BREAK

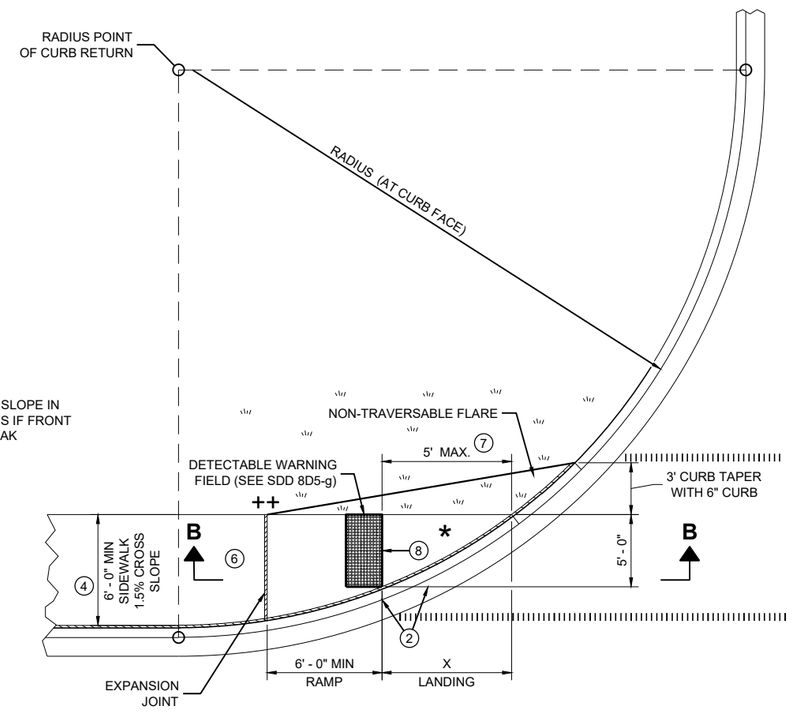

PLAN VIEW

CURB RAMP TYPE 4A1

++ CONSTRUCT 6" WEDGE TO AVOID CONCRETE BREAKAGE

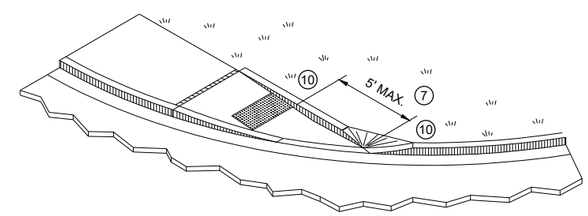

ISOMETRIC VIEW FOR TYPE 4A

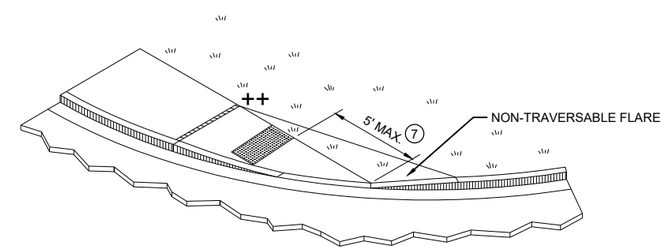

ISOMETRIC VIEW FOR TYPE 4A1

CURB RAMPS TYPE 4A AND 4A1

STATE OF WISCONSIN
DEPARTMENT OF TRANSPORTATION

6

6

SDD 08D05-21c

SDD 08D05-21c

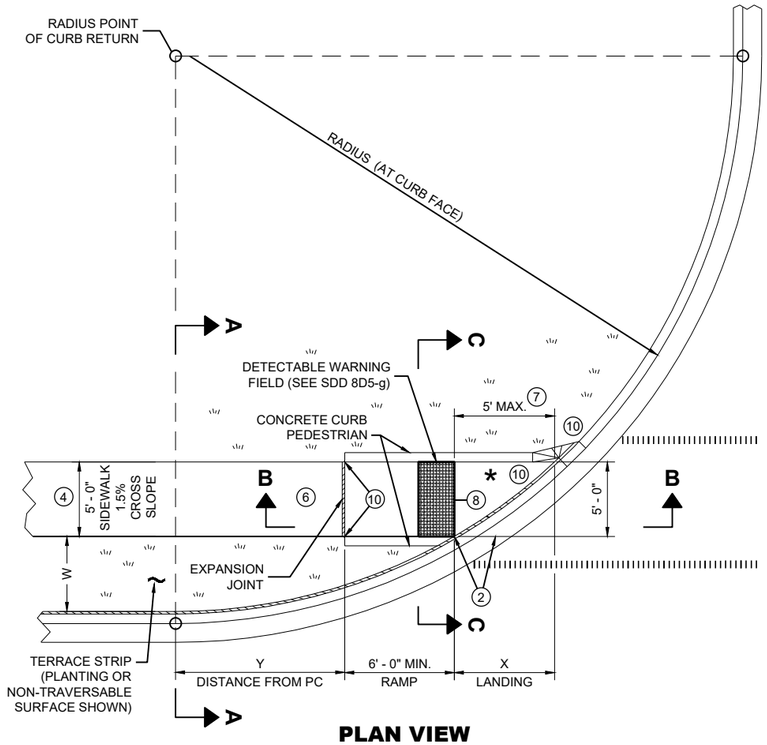

PLAN VIEW
CURB RAMP TYPE 4B

RADIUS (AT CURB FACE)	W = 3' - 0"		W = 4' - 0"		W = 5' - 0"		W = 6' - 0"		W = 7' - 0"		W = 8' - 0"		W = 9' - 0"		W = 10' - 0"	
	X	Y	X	Y	X	Y	X	Y	X	Y	X	Y	X	Y	X	Y
10 FEET	2' - 10 ¼"	0' - 5"	2' - 1"	1' - 4 ½"	1' - 5"	2' - 1"	0' - 10"	2' - 7 ½"	0' - 3 ¼"	3' - 0 ¼"						
15 FEET	4' - 6 ¾"	2' - 1 ¾"	3' - 9"	3' - 5 ¾"	3' - 1 ¼"	4' - 6"	2' - 6 ¾"	5' - 4 ½"	2' - 1"	6' - 1"	1' - 8"	6' - 8 ½"	1' - 3 ¼"	7' - 2 ½"	0' - 10 ¾"	7' - 7 ¼"
20 FEET			4' - 11 ½"	5' - 1 ¾"	4' - 3 ¼"	6' - 5 ½"	3' - 8 ¾"	7' - 7"	3' - 3"	8' - 6 ½"	2' - 10"	9' - 4 ½"	2' - 5 ½"	10' - 1 ¼"	2' - 1 ¼"	10' - 9"
30 FEET									4' - 10 ¾"	12' - 5 ¾"	4' - 5 ½"	13' - 7 ¾"	4' - 0 ¾"	14' - 8 ½"	3' - 8 ½"	15' - 8 ¼"
40 FEET															4' - 10 ¾"	19' - 8 ¼"

INTERMEDIATE RADII CAN BE INTERPOLATED
DIMENSION "Y" IS CALCULATED BASED ON 6'-0" RAMP LENGTH
DIMENSION "X" IS CALCULATED BASED ON 5'-0" SIDEWALK WIDTH

LEGEND

- ½" EXPANSION JOINT SIDEWALK
- CONTRACTION JOINT SIDEWALK
- PAVEMENT MARKING CROSSWALK (WHITE)

GENERAL NOTES

AVOID PLACING DRAINAGE STRUCTURES, JUNCTION BOXES OR OTHER OBSTRUCTIONS IN FRONT OF RAMP ACCESS AREAS.

DETAILS OF CONSTRUCTION, MATERIALS AND WORKMANSHIP NOT SHOWN ON THIS DRAWING SHALL CONFORM TO THE PERTINENT REQUIREMENTS OF THE STANDARD SPECIFICATIONS AND THE APPLICABLE SPECIAL PROVISIONS.

DETECTABLE WARNING FIELDS THAT ARE INSTALLED AS A GROUP OR SIDE BY SIDE, SHALL BE FROM THE SAME MANUFACTURER.

2. GRADE CHANGE BETWEEN GUTTER FLAG SLOPE AND THE CURB RAMP SLOPE SHALL NOT EXCEED 11%. MAXIMUM GUTTER FLAG SLOPE IS 4%. PROVIDE LONGITUDINAL DRAINAGE AROUND CURB AND AWAY FROM CURB RAMP. NO VERTICAL LIPS OR DISCONTINUITIES GREATER THAN ¼ - INCH ARE ALLOWED. SLOPE OF CURB HEAD OPENING SHALL MATCH THE RAMP SLOPE, MINIMALLY 1.5% AND NOT TO EXCEED 7%. WHEN ADJACENT TO 1.5% LANDING, CONSTRUCT CURB HEAD OPENING AT 1.5% IN THE DIRECTION OF PEDESTRIAN TRAVEL.
3. AN 8.33% CURB RAMP SLOPE IS ALLOWABLE WITH FLATTENED GUTTER FLAG SLOPE AND NOT TO EXCEED 11% GRADE CHANGE.
4. ±0.5% CONSTRUCTION TOLERANCE IN SIDEWALK CROSS SLOPE. THE SIDEWALK CROSS SLOPE SHALL NOT EXCEED 2% WITHOUT PRIOR APPROVAL FROM THE ENGINEER.
6. PROVIDE A LEVEL LANDING (MAXIMUM 2% SLOPE) IN ANY DIRECTION OF PEDESTRIAN TRAVEL. STANDARD LEVEL LANDING SIZE IS 5 FEET BY 5 FEET.
7. WHEN THIS GRADE BREAK DISTANCE EXCEEDS 5 FEET, USE RADIAL DETECTABLE WARNING FIELD PER SDD 8D5-f.
8. PROVIDE GRADE BREAK PERPENDICULAR TO DIRECTION OF WHEELCHAIR TRAVEL.
10. INSTALL TRANSITION NOSE (INCIDENTAL TO OTHER PAY ITEMS). DO NOT MARK TRANSITION NOSE.

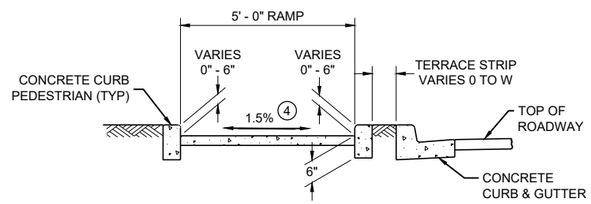

SECTION C - C FOR TYPE 4B

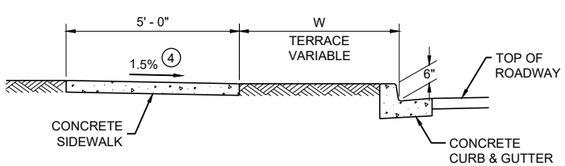

SECTION A - A FOR TYPE 4B

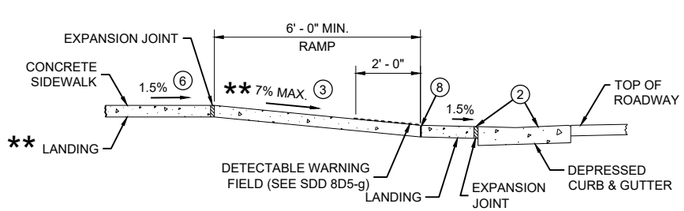

** IF RAMP SLOPE IS LESS THAN 5.0%, THEN NO ADJACENT UPHILL LANDING IS REQUIRED

SECTION B - B FOR TYPE 4B AND TYPE 4B1

* MAXIMUM 2.0% SLOPE IN ALL DIRECTIONS IF FRONT OF GRADE BREAK

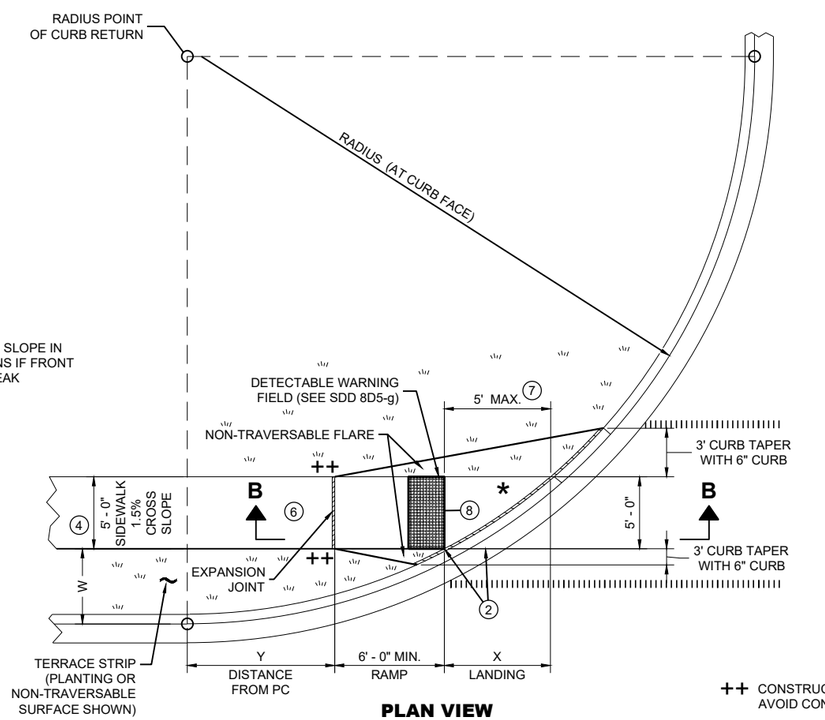

PLAN VIEW
CURB RAMP TYPE 4B1

++ CONSTRUCT 6" WEDGE TO AVOID CONCRETE BREAKAGE

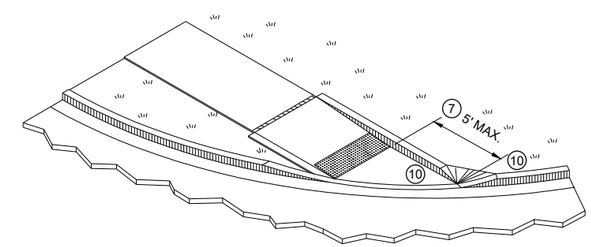

ISOMETRIC VIEW FOR TYPE 4B

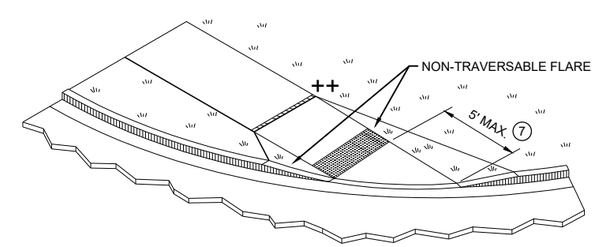

ISOMETRIC VIEW FOR TYPE 4B1

CURB RAMPS TYPE 4B AND 4B1

STATE OF WISCONSIN
DEPARTMENT OF TRANSPORTATION

6

SDD 08D05-21d

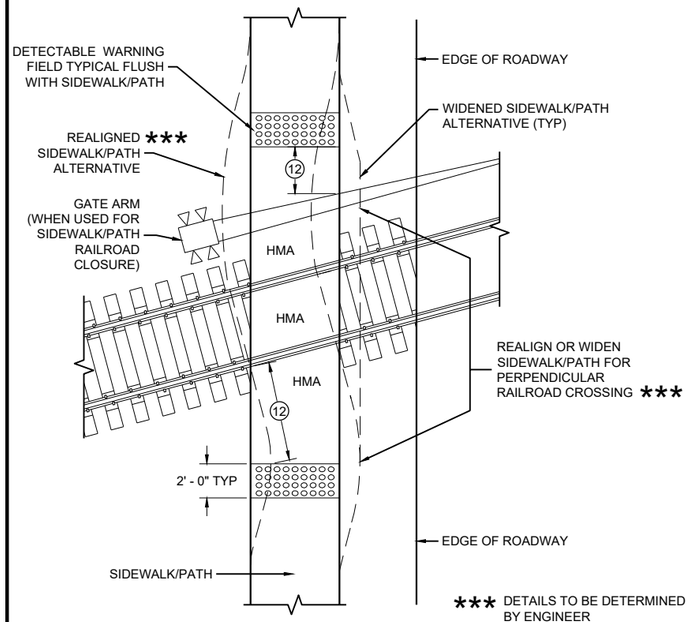

CURB RAMP TYPE 8

DETECTABLE WARNINGS FOR SIDEWALKS OR SHARED USE PATHS AT RAILROAD CROSSINGS

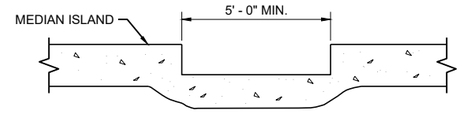

SECTION A - A FOR TYPE 5

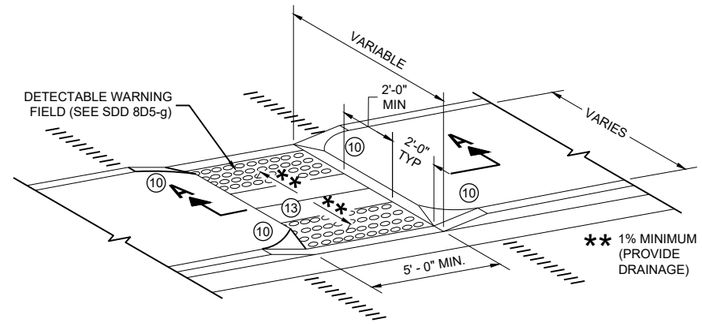

CURB RAMP TYPE 5

MEDIAN ISLAND NON-ELEVATED PEDESTRIAN CROSSING

GENERAL NOTES

AVOID PLACING DRAINAGE STRUCTURES, JUNCTION BOXES OR OTHER OBSTRUCTIONS IN FRONT OF RAMP ACCESS AREAS.

DETAILS OF CONSTRUCTION, MATERIALS AND WORKMANSHIP NOT SHOWN ON THIS DRAWING SHALL CONFORM TO THE PERTINENT REQUIREMENTS OF THE STANDARD SPECIFICATIONS AND THE APPLICABLE SPECIAL PROVISIONS.

SIDEWALK CROSS SLOPE SHALL NOT EXCEED 2%.

DETECTABLE WARNING FIELDS THAT ARE INSTALLED AS A GROUP OR SIDE BY SIDE, SHALL BE FROM THE SAME MANUFACTURER.

(2) GRADE CHANGE BETWEEN GUTTER FLAG SLOPE AND THE CURB RAMP SLOPE SHALL NOT EXCEED 11%. MAXIMUM GUTTER FLAG SLOPE IS 4%. PROVIDE LONGITUDINAL DRAINAGE AROUND CURB AND AWAY FROM CURB RAMP. NO VERTICAL LIPS OR DISCONTINUITIES GREATER THAN ¼ - INCH ARE ALLOWED. SLOPE OF CURB HEAD OPENING SHALL MATCH THE RAMP SLOPE, MINIMALLY 1.5% AND NOT TO EXCEED 7%. WHEN ADJACENT TO 1.5% LANDING, CONSTRUCT CURB HEAD OPENING AT 1.5% IN THE DIRECTION OF PEDESTRIAN TRAVEL.

(3) AN 8.33% CURB RAMP SLOPE IS ALLOWABLE WITH FLATTENED GUTTER FLAG SLOPE AND NOT TO EXCEED 11% GRADE CHANGE.

(4) ±0.5% CONSTRUCTION TOLERANCE IN SIDEWALK CROSS SLOPE. THE SIDEWALK CROSS SLOPE SHALL NOT EXCEED 2% WITHOUT PRIOR APPROVAL FROM THE ENGINEER.

(6) PROVIDE A LEVEL LANDING (MAXIMUM 2% SLOPE) IN ANY DIRECTION OF PEDESTRIAN TRAVEL. STANDARD LEVEL LANDING SIZE IS 5 FEET BY 5 FEET.

(10) INSTALL TRANSITION NOSE (INCIDENTAL TO OTHER PAY ITEMS). DO NOT MARK TRANSITION NOSE.

(11) SLOPE SIDEWALK TOWARD LANDING AS SHOWN WHERE THERE IS NO TERRACE OR WHERE THE TERRACE WIDTH IS LESS THAN 6 FEET WIDE.

(12) THE EDGE OF THE DETECTABLE WARNING FIELD NEAREST TO A RAILROAD CROSSING SHALL BE 1.5 FEET ±0.1' FROM THE FACE OF THE GATE ARM IF THE GATE ARM EXTENDS ACROSS THE SIDEWALK/PATH. WHERE THERE IS NO PEDESTRIAN GATE, THE EDGE OF THE DETECTABLE WARNING FIELD NEAREST TO THE RAILROAD TRACK IS 15 FEET MAXIMUM AND 12 FEET MINIMUM, 15 FEET TYPICAL FROM THE NEAREST RAIL.

(13) DO NOT INSTALL DETECTABLE WARNING FIELDS AT THE EDGES OF STEET-LEVEL PEDESTRIAN REFUGE ISLANDS IF A MINIMUM 2 FOOT CONCRETE SURFACE WITHOUT DETECTABLE WARNINGS (MEASURED IN THE DIRECTION OF PEDESTRIAN TRAVEL) CANNOT BE ACHIEVED.

LEGEND

- ½" EXPANSION JOINT SIDEWALK
- CONTRACTION JOINT FIELD LOCATED
- PAVEMENT MARKING CROSSWALK (WHITE)

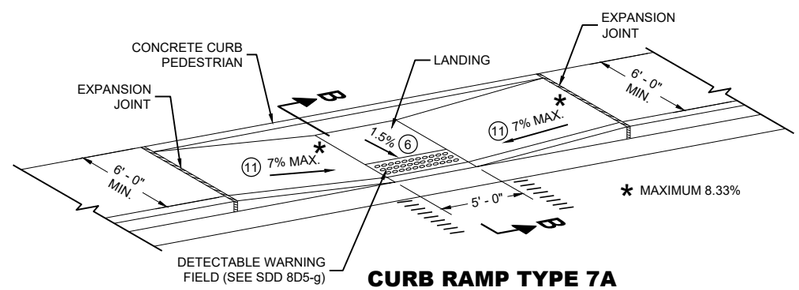

CURB RAMP TYPE 7A

FOR INTERSECTIONS AND MID BLOCK CROSSINGS

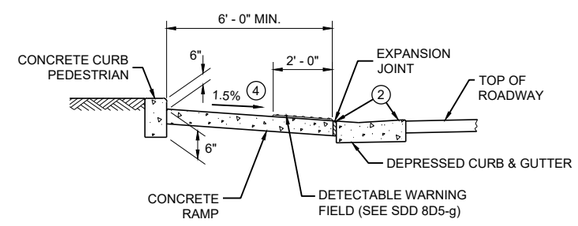

SECTION B - B FOR TYPE 7A

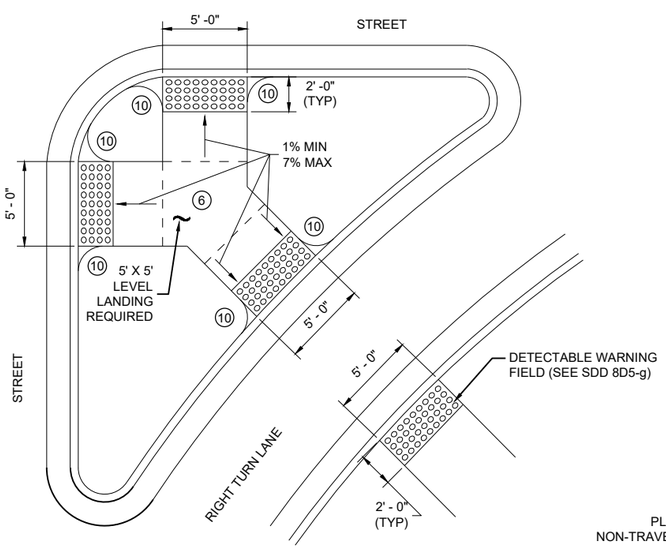

CURB RAMP TYPE 6

DETECTABLE WARNING AT ISLANDS

REFER TO GENERAL NOTES (2) AND (3) FOR ALL ISLAND CURB RAMPS

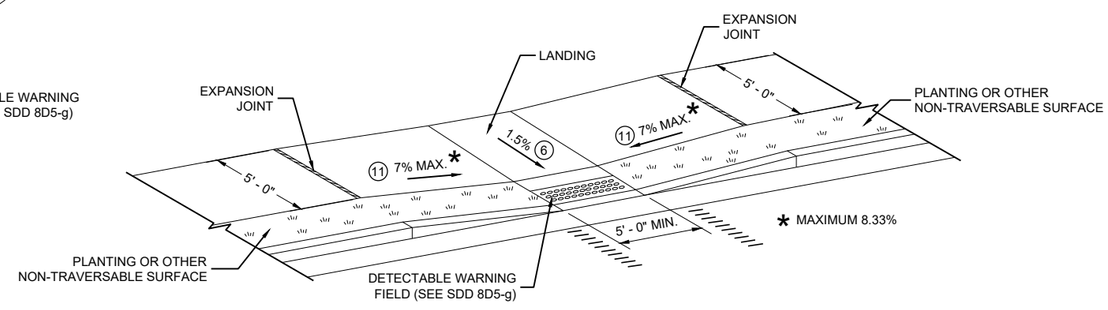

CURB RAMP TYPE 7B

FOR INTERSECTIONS AND MID BLOCK CROSSINGS

CURB RAMPS TYPE 5, 6, 7A, 7B & 8

STATE OF WISCONSIN
DEPARTMENT OF TRANSPORTATION

6

SDD 08D05-21e

RADIAL DETECTABLE WARNING FIELD PLACEMENT WHEN 5 FOOT GRADE BREAK DISTANCE PER SDD 8D5-c IS EXCEEDED

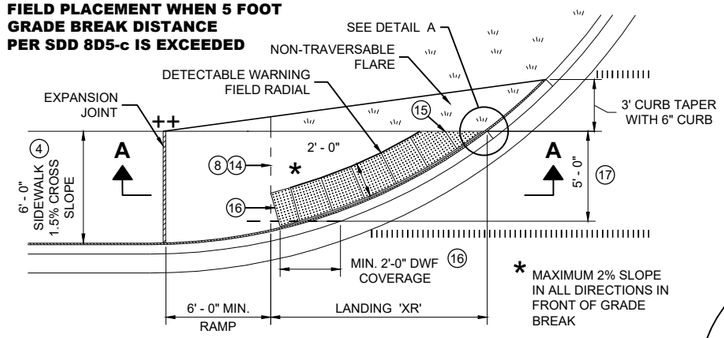

PLAN VIEW

CURB RAMP TYPE 4A1

(GRADE BREAK DISTANCE GREATER THAN 5 FEET)

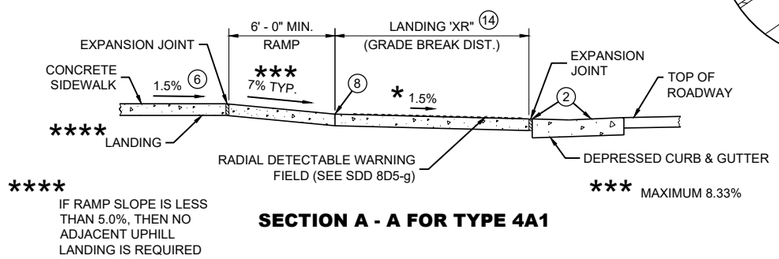

SECTION A - A FOR TYPE 4A1

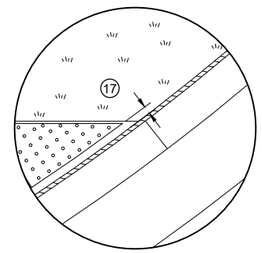

DETAIL A

LEGEND

- ½" EXPANSION JOINT SIDEWALK
- CONTRACTION JOINT SIDEWALK
- PAVEMENT MARKING CROSSWALK (WHITE)

GENERAL NOTES

AVOID PLACING DRAINAGE STRUCTURES, JUNCTION BOXES OR OTHER OBSTRUCTIONS IN FRONT OF RAMP ACCESS AREAS.

DETAILS OF CONSTRUCTION, MATERIALS AND WORKMANSHIP NOT SHOWN ON THIS DRAWING SHALL CONFORM TO THE PERTINENT REQUIREMENTS OF THE STANDARD SPECIFICATIONS AND THE APPLICABLE SPECIAL PROVISIONS.

DETECTABLE WARNING FIELDS THAT ARE INSTALLED AS A GROUP OR SIDE BY SIDE, SHALL BE FROM THE SAME MANUFACTURER.

APPLY RADIAL DETECTABLE WARNING PLACEMENT SIMILARLY FOR TYPE 4A AND 4A1 CURB RAMPS AND SIMILARLY FOR TYPE 4B AND 4B1 CURB RAMPS. TYPE 4A AND 4B CURB RAMPS ARE NOT SHOWN.

REFER TO SDD 8D5-g FOR ADDITIONAL RADIAL PLATE REQUIREMENTS.

FIELD CUTS AT INTERMEDIATE JOINTS WITHIN THE RADIAL DETECTABLE WARNING FILED ARE PROHIBITED.

DETERMINE FINAL RADIAL WARNING FIELD CONFIGURATION AD ITS INDIVIDUAL PLATE LOCATIONS. PERFORM PRE-LAYOUT PRIOR TO PLACEMENT IN PLASTIC CONCRETE. FOLLOW MANUFACTURER'S PRODUCT LIST AND INSTALLATION RECOMMENDATIONS.

(2) GRADE CHANGE BETWEEN GUTTER FLAG SLOPE AND THE CURB RAMP SLOPE SHALL NOT EXCEED 11%. MAXIMUM GUTTER FLAG SLOPE IS 4%. PROVIDE LONGITUDINAL DRAINAGE AROUND CURB AND AWAY FROM CURB RAMP. NO VERTICAL LIPS OR DISCONTINUITIES GREATER THAN ¼ - INCH ARE ALLOWED. SLOPE OF CURB HEAD OPENING SHALL MATCH THE RAMP SLOPE, MINIMALLY 1.5% AND NOT TO EXCEED 7%. WHEN ADJACENT TO 1.5% LANDING, CONSTRUCT CURB HEAD OPENING AT 1.5% IN THE DIRECTION OF PEDESTRIAN TRAVEL.

(3) AN 8.33% CURB RAMP SLOPE IS ALLOWABLE WITH FLATTENED GUTTER FLAG SLOPE AND NOT TO EXCEED 11% GRADE CHANGE.

(4) ±0.5% CONSTRUCTION TOLERANCE IN SIDEWALK CROSS SLOPE. THE SIDEWALK CROSS SLOPE SHALL NOT EXCEED 2% WITHOUT PRIOR APPROVAL FROM THE ENGINEER.

(6) PROVIDE A LEVEL LANDING (MAXIMUM 2% SLOPE) IN ANY DIRECTION OF PEDESTRIAN TRAVEL. STANDARD LANDING SIZE IS 5 FEET BY 5 FEET.

(8) PROVIDE GRADE BREAK PERPENDICULAR TO DIRECTION OF WHEELCHAIR TRAVEL.

(14) CONSULT ENGINEER IF GRADE BREAK LOCATION (END OF LANDING DIMENSION "XR") REQUIRES FIELD ADJUSTMENT WHEN ESTABLISHING FINAL RADIAL DETECTABLE WARNING FIELD LOCATION.

(15) FIELD SAW CUTS ALONG RADIAL DETECTABLE WARNING PLATES WILL BE NECESSARY TO MATCH EACH CURB RAMP EDGE. AVOID CUTTING THROUGH DOMES WHENEVER POSSIBLE. MAKE FIELD CUTS TRUE TO LINE AND WITHIN ⅛" DEVIATION. SMOOTH EDGES OF FIELD CUT PLATES.

(16) USE 1' X 2" RECTANGULAR END PLATE AT END OF TYPE 4A1 RAMP AND PROVIDE MINIMUM 2' - 0" DETECTABLE WARNING FIELD COVERAGE (IN DIRECTION OF PEDESTRIAN TRAVEL) ALONG THE ENTIRE CURB RAMP WIDTH.

(17) A MAXIMUM 3 INCH CONCRETE BORDER WIDTH IS ALLOWABLE IN FRONT OF RADIAL DETECTABLE WARNING FIELD FOR CONSTRUCTABILITY PURPOSES. CONCRETE BORDER WIDTH MAY VARY UP TO 1 INCH.

RADIAL DETECTABLE WARNING FIELD PLACEMENT WHEN 5 FOOT GRADE BREAK DISTANCE PER SDD 8D5-d IS EXCEEDED

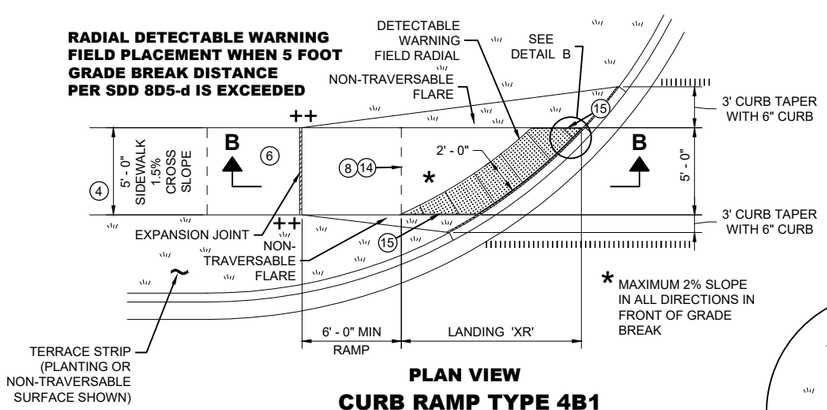

PLAN VIEW

CURB RAMP TYPE 4B1

(GRADE BREAK DISTANCE GREATER THAN 5 FEET)

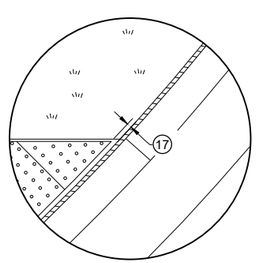

DETAIL B

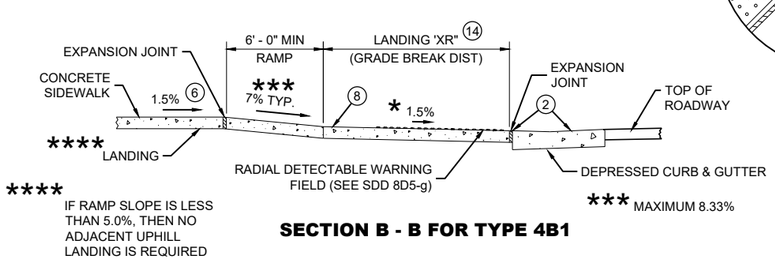

SECTION B - B FOR TYPE 4B1

RADIAL DETECTABLE WARNING FIELD PLACEMENT WHEN 5 FOOT GRADE BREAK DISTANCE PER SDD 8D5-b IS EXCEEDED

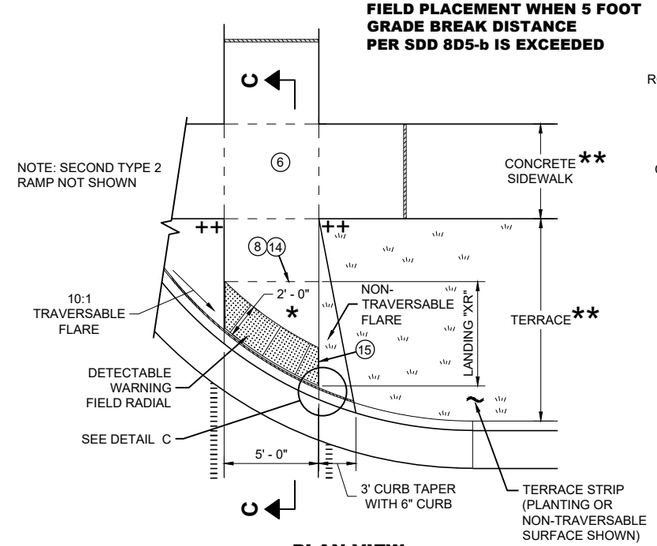

PLAN VIEW

CURB RAMP TYPE 2

(GRADE BREAK DISTANCE GREATER THAN 5 FEET)

(ON LINE WITH SIDEWALK)

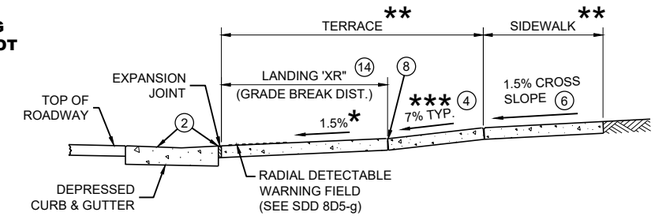

SECTION C - C FOR TYPE 2

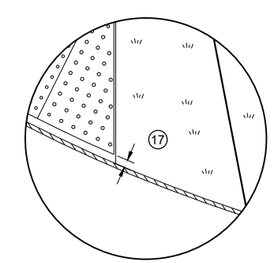

DETAIL C

* MAXIMUM 2% SLOPE IN ALL DIRECTIONS IN FRONT OF GRADE BREAK

** WIDTH SHOWN ELSEWHERE IN THE PLANS

*** MAXIMUM 8.33%

++ CONSTRUCT 6" WEDGE TO AVOID CONCRETE BREAKAGE

CURB RAMPS
RADIAL DETECTABLE WARNING

STATE OF WISCONSIN
DEPARTMENT OF TRANSPORTATION

	MIN.	MAX.
A	1.6"	2.4"
B	0.65"	1.5"
C	*	*
D	0.9"	1.4"

* THE C DIMENSION IS 50% TO 65% OF THE D DIMENSION.

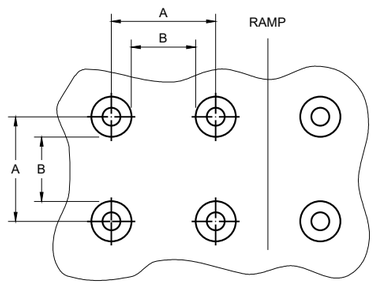

PLAN VIEW

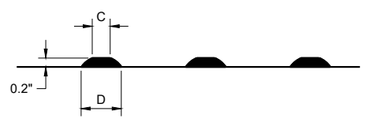

ELEVATION VIEW

TRUNCATED DOMES
DETECTABLE WARNING PATTERN DETAIL

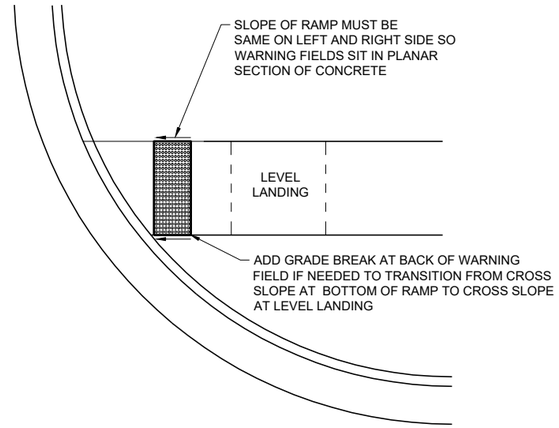

DETECTABLE WARNING FIELD
PLANAR INSTALLATION

GENERAL NOTES

DETECTABLE WARNING FIELDS THAT ARE INSTALLED AT A CURB RAMP SHALL BE FROM THE SAME MANUFACTURER.

PLACE ALL DETECTABLE WARNING FIELD SYSTEMS IN ACCORDANCE TO THE MANUFACTURER'S RECOMMENDATION.

FIELD CUTS AT INTERMEDIATE JOINTS WITHIN THE RADIAL DETECTABLE WARNING FILED ARE PROHIBITED.

DETERMINE FINAL RADIAL WARNING FIELD CONFIGURATION AND ITS INDIVIDUAL PLATE LOCATIONS. PERFORM PRE-LAYOUT PRIOR TO PLACEMENT IN PLASTIC CONCRETE. FOLLOW MANUFACTURER'S PRODUCT LIST AND INSTALLATION RECOMMENDATIONS.

FOR RADIAL DETECTABLE WARNING FIELD APPLICATIONS WHERE STANDARD RADIAL PLATES ARE NOT AVAILABLE AT AN INTERSECTION CURB RADIUS, A COMBINATION OF SQUARE OR RECTANGULAR PLATES AND RADIAL PLATES MAY BE USED TO FORM RADIAL CONFIGURATION. RADIAL WEDGE PLATES IN COMBINATION WITH SQUARE PLATES ARE ALSO ACCEPTABLE. FOLLOW MANUFACTURER'S RECOMMENDATIONS.

REFER TO CONTRACT AND STANDARD SPECIFICATIONS FOR FIELD CUTTING REQUIREMENTS.

DO NOT EMBED IN CONCRETE ANY FIELD-CUT PLATES WITH CUT EDGES SHORTER THAN 6 INCHES. CONSULT WITH MANUFACTURER FOR RE-DRILLING AND ANCHORING REQUIREMENTS OF FIELD-CUT PLATES.

(15) FIELD SAW CUTS ALONG RADIAL DETECTABLE WARNING PLATES WILL BE NECESSARY TO MATCH EACH CURB RAMP EDGE. AVOID CUTTING THROUGH DOMES WHENEVER POSSIBLE. MAKE FIELD CUTS TRUE TO LINE AND WITHIN ⅛" DEVIATION. SMOOTH EDGES OF FIELD CUT PLATES.

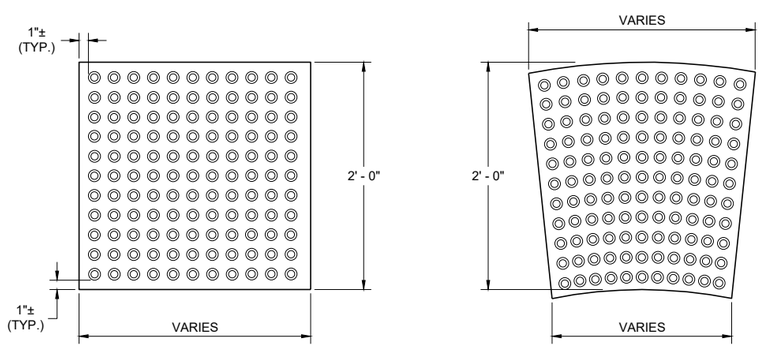

RECTANGULAR PLATES **RADIAL PLATES**

PLAN VIEW
DETECTABLE WARNING FIELDS (TYPICAL)

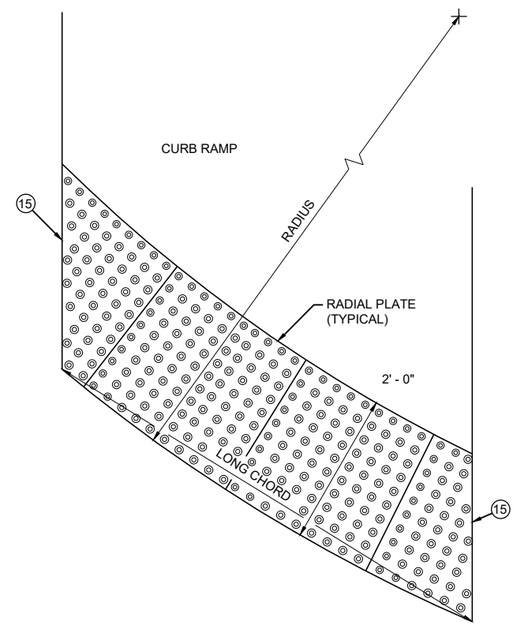

PLAN VIEW
RADIAL DETECTABLE WARNING FIELD ATTRIBUTES

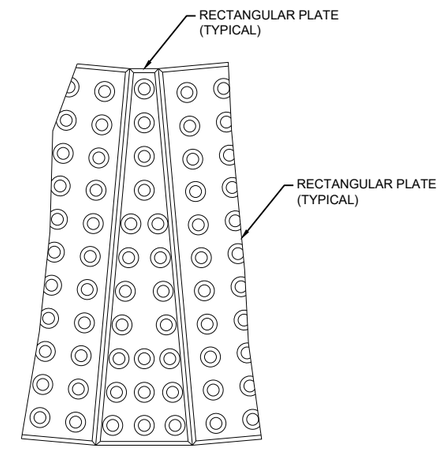

PLAN VIEW
RADIAL WEDGE PLATE CONNECTION DETAIL

6

6

SDD 08D05-21g

SDD 08D05-21g

CURB RAMPS
RECTANGULAR AND RADIAL DETECTABLE WARNING PLATES

STATE OF WISCONSIN
DEPARTMENT OF TRANSPORTATION

APPROVED
July 2023 — DATE
/S/ Rodney Taylor — ROADWAY STANDARDS DEVELOPMENT UNIT SUPERVISOR

FHWA

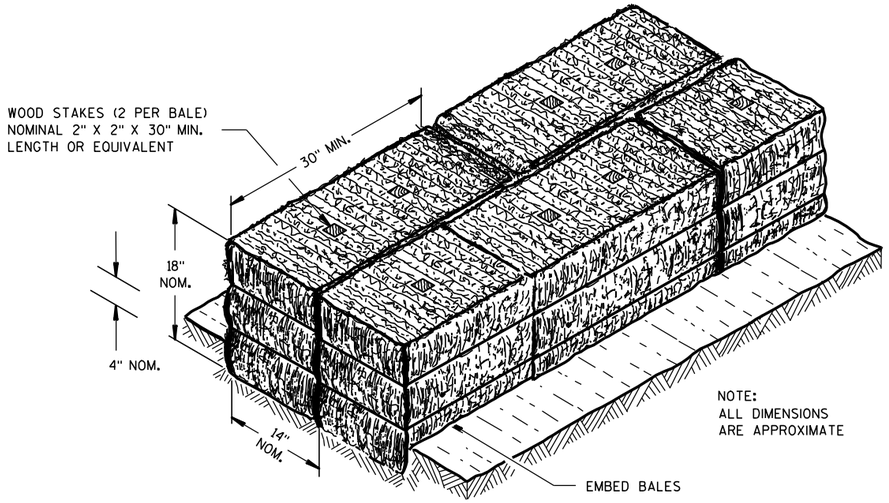

SECTION A-A

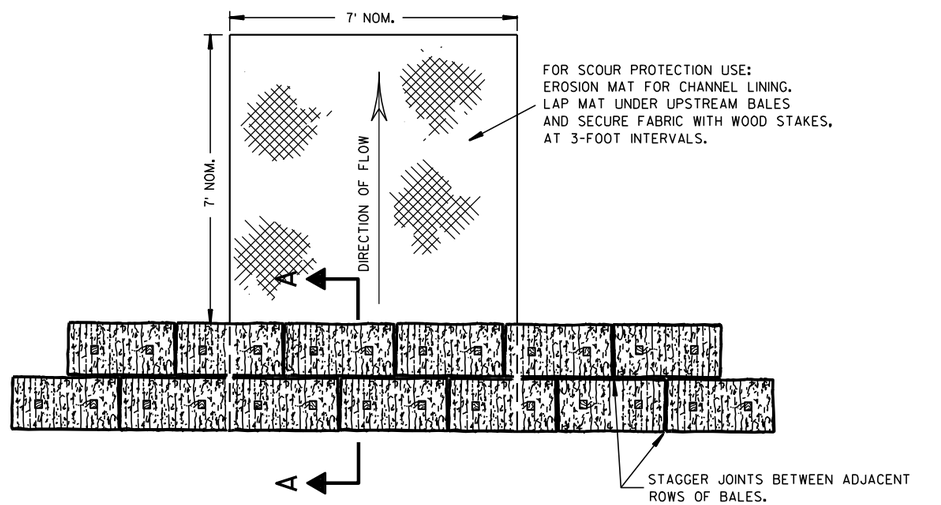

PLAN VIEW

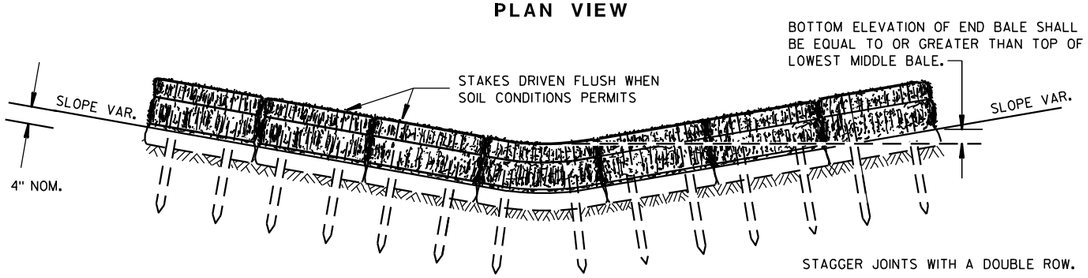

FRONT ELEVATION

TEMPORARY DITCH CHECK USING EROSION BALES ①

GENERAL NOTES

DETAILS OF CONSTRUCTION, MATERIALS AND WORKMANSHIP NOT SHOWN ON THIS DRAWING SHALL CONFORM TO THE PERTINENT REQUIREMENTS OF THE STANDARD SPECIFICATIONS AND THE APPLICABLE SPECIAL PROVISIONS.

① TEMPORARY DITCH CHECKS EITHER EROSION BALES OR MANUFACTURED SHALL BE PAID FOR UNDER THE BID ITEM OF TEMPORARY DITCH CHECK. THE DEPARTMENT WILL NOT PAY FOR TEMPORARY DITCH CHECKS CONSTRUCTED OF A SINGLE ROW OF EROSION BALES.

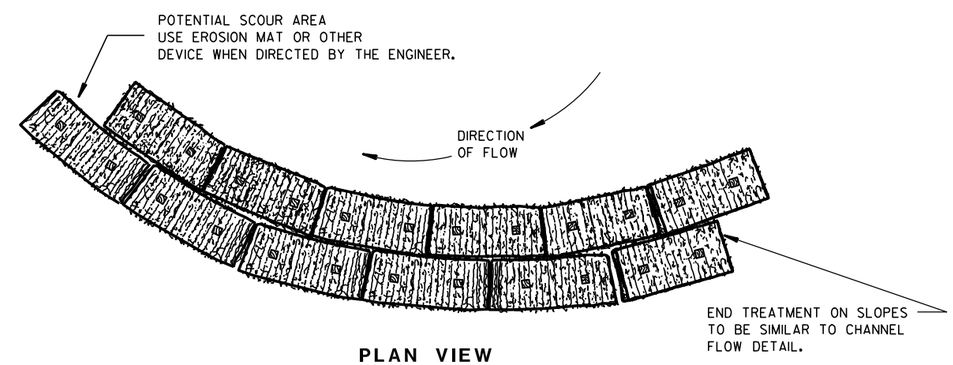

PLAN VIEW

WHEN ALTERING THE DIRECTION OF FLOW

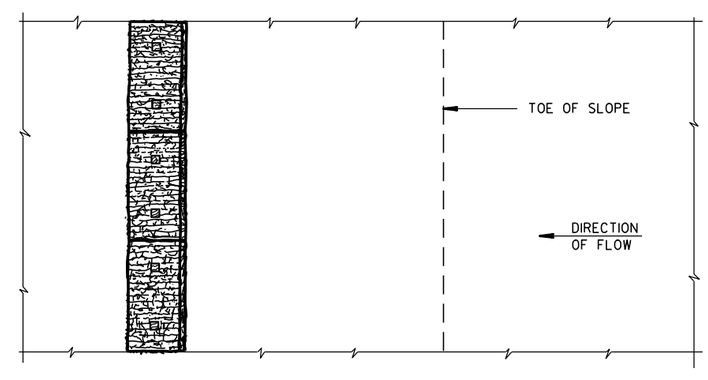

PLAN VIEW

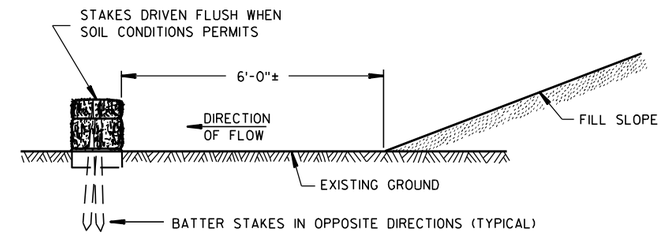

FRONT ELEVATION

WHEN EXISTING GROUND SLOPES AWAY FROM FILL SLOPE

EROSION BALES FOR SHEET FLOW

TYPICAL INSTALLATIONS OF EROSION BALES / TEMPORARY DITCH CHECKS

STATE OF WISCONSIN
DEPARTMENT OF TRANSPORTATION

APPROVED

6/04/02 — DATE

/S/ Beth Cann — CHIEF ROADWAY DEVELOPMENT ENGINEER

FHWA

6

6

S.D.D. 8 E 8-3

S.D.D. 8 E 8-3

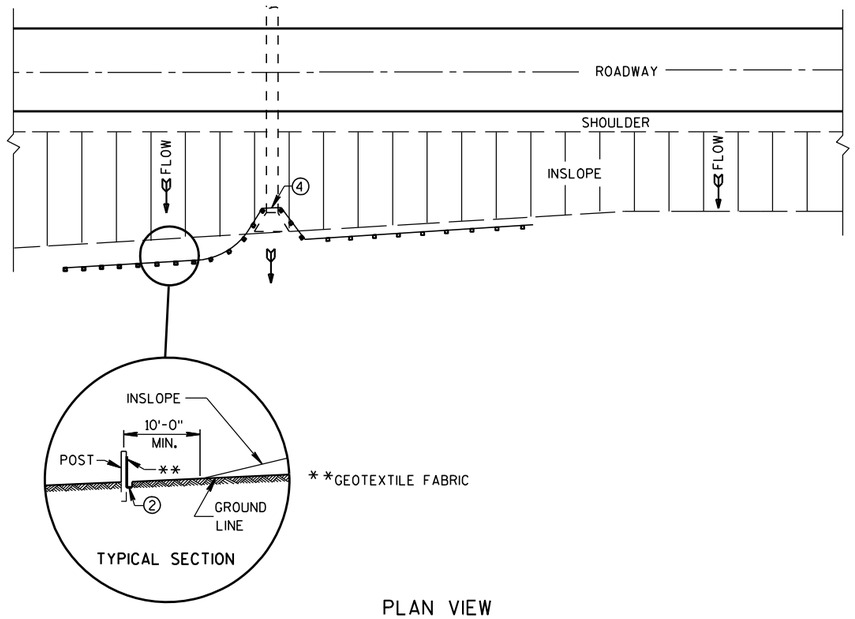

PLAN VIEW

TYPICAL APPLICATION OF SILT FENCE

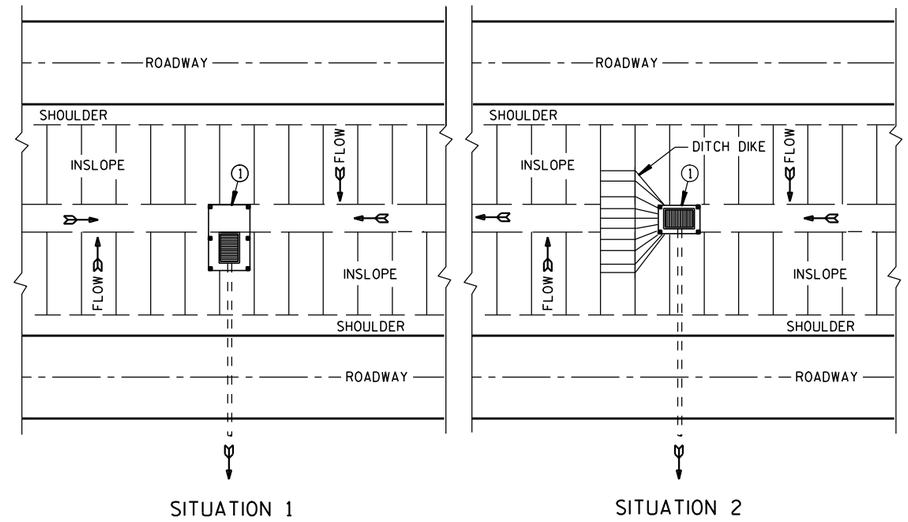

PLAN VIEW

SILT FENCE AT MEDIAN SURFACE DRAINS

GENERAL NOTES

DETAILS OF CONSTRUCTION NOT SHOWN ON THIS DRAWING SHALL CONFORM TO THE PERTINENT REQUIREMENTS OF THE STANDARD SPECIFICATIONS AND APPLICABLE SPECIAL PROVISIONS.

① HORIZONTAL BRACE REQUIRED WITH 2" X 4" WOODEN FRAME OR EQUIVALENT AT TOP OF POSTS.

② FOR MANUAL INSTALLATIONS THE TRENCH SHALL BE A MINIMUM OF 4" WIDE & 6" DEEP TO BURY AND ANCHOR THE GEOTEXTILE FABRIC. FOLD MATERIAL TO FIT TRENCH AND BACKFILL & COMPACT TRENCH WITH EXCAVATED SOIL.

③ WOOD POSTS SHALL BE A MINIMUM SIZE OF 1⅛" X 1⅛" OF OAK OR HICKORY.

④ SILT FENCE TO EXTEND ACROSS THE TOP OF THE PIPE.

⑤ CONSTRUCT SILT FENCE FROM A CONTINUOUS ROLL IF POSSIBLE BY CUTTING LENGTHS TO AVOID JOINTS. IF A JOINT IS NECESSARY USE ONE OF THE FOLLOWING TWO METHODS; A) OVERLAP THE END POSTS AND TWIST, OR ROTATE, AT LEAST 180 DEGREES. B) HOOK THE END OF EACH SILT FENCE LENGTH.

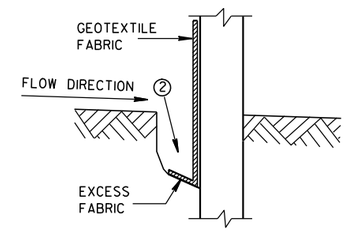

TRENCH DETAIL

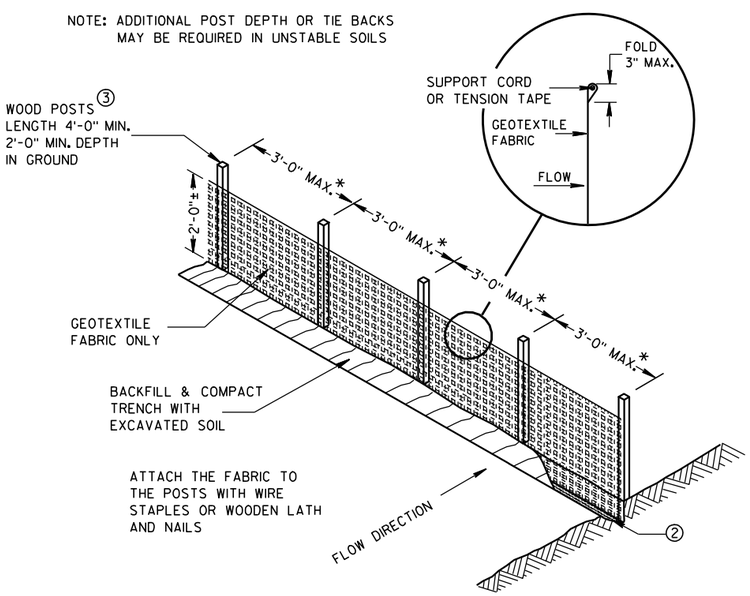

*NOTE: 8'-0" POST SPACING ALLOWED IF A WOVEN GEOTEXTILE FABRIC IS USED.

SILT FENCE

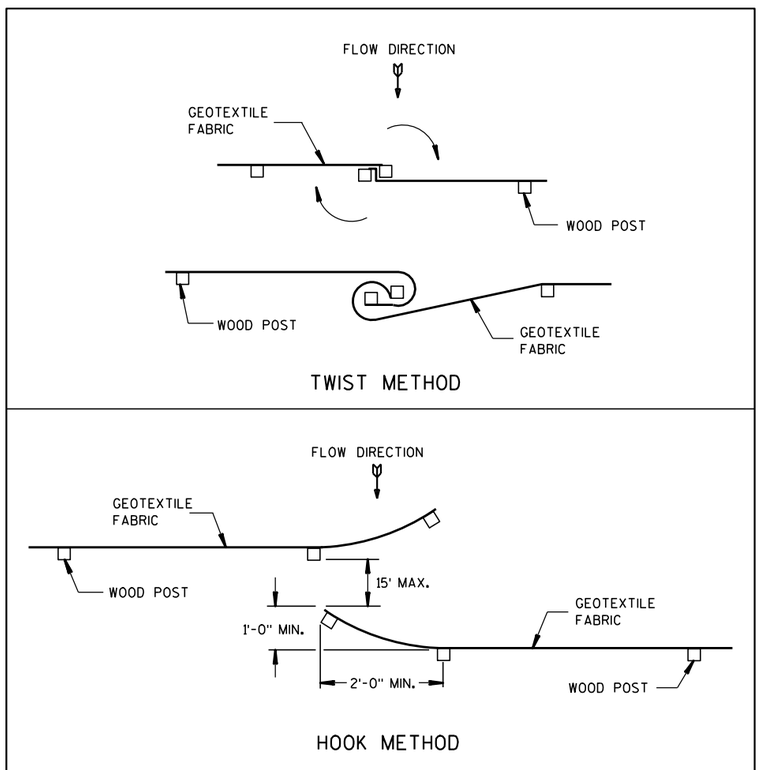

JOINING TWO LENGTHS OF SILT FENCE ⑤

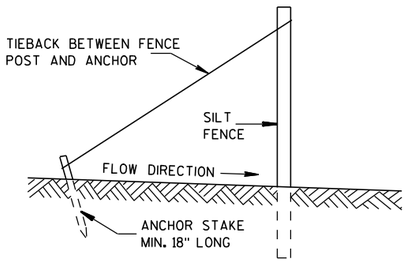

SILT FENCE TIE BACK

(WHEN REQUIRED BY THE ENGINEER)

SILT FENCE
STATE OF WISCONSIN DEPARTMENT OF TRANSPORTATION
APPROVED 4-29-05 /S/ Beth Cann----- DATE CHIEF ROADWAY DEVELOP ENGINEER FHWA

6

6

S.D.D. 8 E 9-6

S.D.D. 8 E 9-6

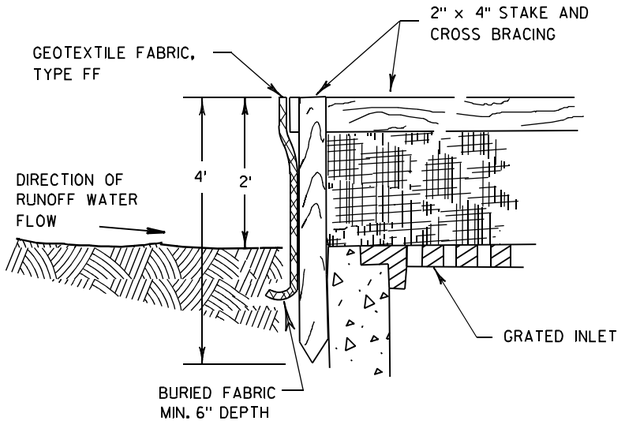

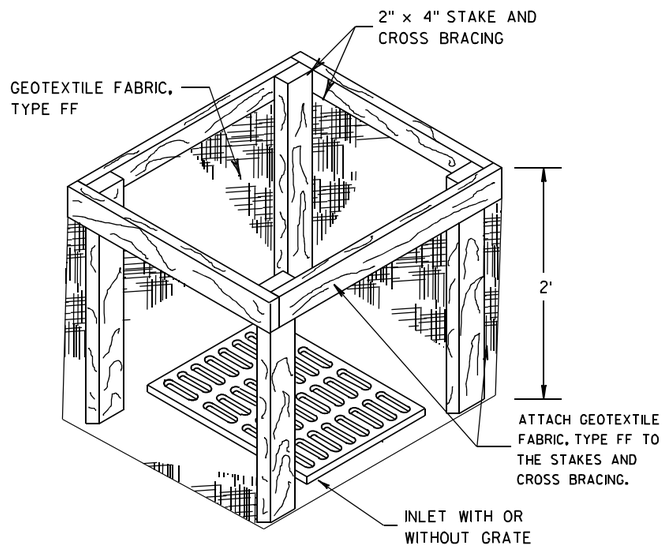

INLET PROTECTION, TYPE A

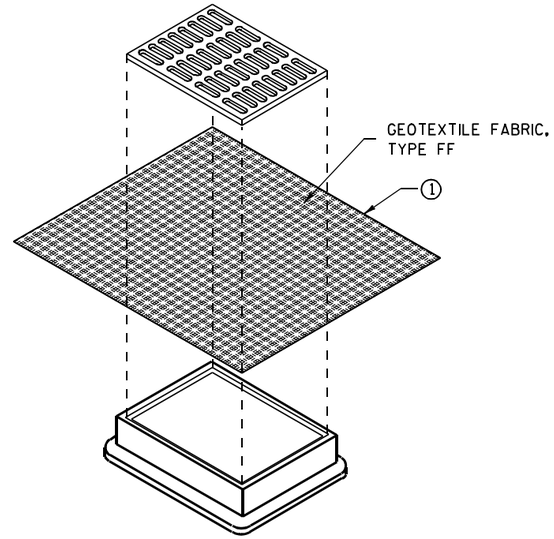

INLET PROTECTION, TYPE B (WITHOUT CURB BOX)

(CAN BE INSTALLED IN ANY INLET WITHOUT A CURB BOX)

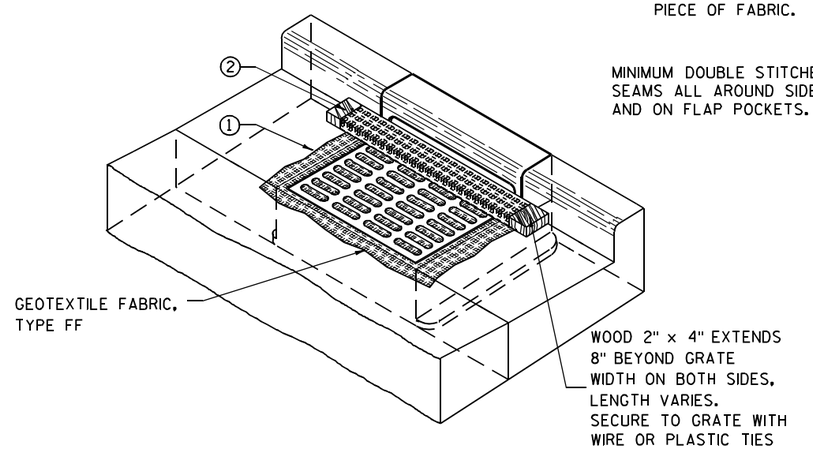

INLET PROTECTION, TYPE C (WITH CURB BOX)

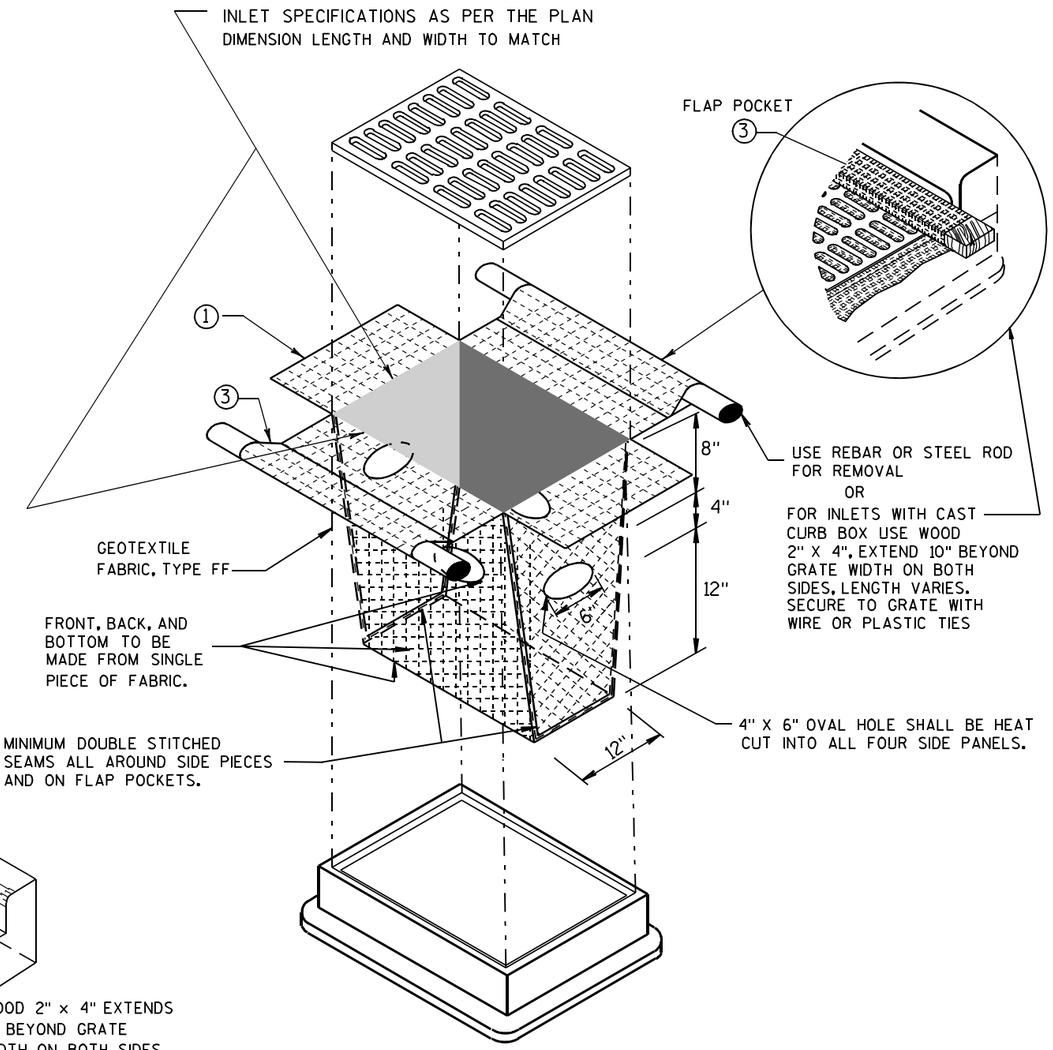

INLET PROTECTION, TYPE D

(CAN BE INSTALLED IN ANY INLET TYPE WITH OR WITHOUT A CURB BOX AS PER NOTE 2)

GENERAL NOTES

INLET PROTECTION DEVICES SHALL BE MAINTAINED OR REPLACED AT THE DIRECTION OF THE ENGINEER.

MANUFACTURED ALTERNATIVES APPROVED AND LISTED ON THE DEPARTMENT'S EROSION CONTROL PRODUCT ACCEPTABILITY LIST MAY BE SUBSTITUTED.

WHEN REMOVING OR MAINTAINING INLET PROTECTION, CARE SHALL BE TAKEN SO THAT THE SEDIMENT TRAPPED ON THE GEOTEXTILE FABRIC DOES NOT FALL INTO THE INLET. ANY MATERIAL FALLING INTO THE INLET SHALL BE REMOVED IMMEDIATELY.

1. FINISHED SIZE, INCLUDING FLAP POCKETS WHERE REQUIRED, SHALL EXTEND A MINIMUM OF 10" AROUND THE PERIMETER TO FACILITATE MAINTENANCE OR REMOVAL.
2. FOR INLET PROTECTION, TYPE C (WITH CURB BOX), AN ADDITIONAL 18" OF FABRIC IS WRAPPED AROUND THE WOOD AND SECURED WITH STAPLES. THE WOOD SHALL NOT BLOCK THE ENTIRE HEIGHT OF THE CURB BOX OPENING.
3. FLAP POCKETS SHALL BE LARGE ENOUGH TO ACCEPT WOOD 2X4.

INSTALLATION NOTES

TYPE B & C

TRIM EXCESS FABRIC IN THE FLOW LINE TO WITHIN 3" OF THE GRATE.

THE CONTRACTOR SHALL DEMONSTRATE A METHOD OF MAINTENANCE, USING A SEWN FLAP, HAND HOLDS OR OTHER METHOD TO PREVENT ACCUMULATED SEDIMENT FROM ENTERING THE INLET.

TYPE D

DO NOT INSTALL INLET PROTECTION TYPE D IN INLETS SHALLOWER THAN 30", MEASURED FROM THE BOTTOM OF THE INLET TO THE TOP OF THE GRATE.

TRIM EXCESS FABRIC IN THE FLOW LINE TO WITHIN 3" OF THE GRATE.

THE INSTALLED BAG SHALL HAVE A MINIMUM SIDE CLEARANCE, BETWEEN THE INLET WALLS AND THE BAG, MEASURED AT THE BOTTOM OF THE OVERFLOW HOLES, OF 3". WHERE NECESSARY THE CONTRACTOR SHALL CINCH THE BAG, USING PLASTIC ZIP TIES, TO ACHIEVE THE 3" CLEARANCE. THE TIES SHALL BE PLACED AT A MAXIMUM OF 4" FROM THE BOTTOM OF THE BAG.

INLET PROTECTION TYPE A, B, C, AND D

STATE OF WISCONSIN
DEPARTMENT OF TRANSPORTATION

APPROVED
10/16/02 — DATE
/S/ Beth Cannestra — CHIEF ROADWAY DEVELOPMENT ENGINEER
FHWA

6

S.D.D. 8 E 10-2

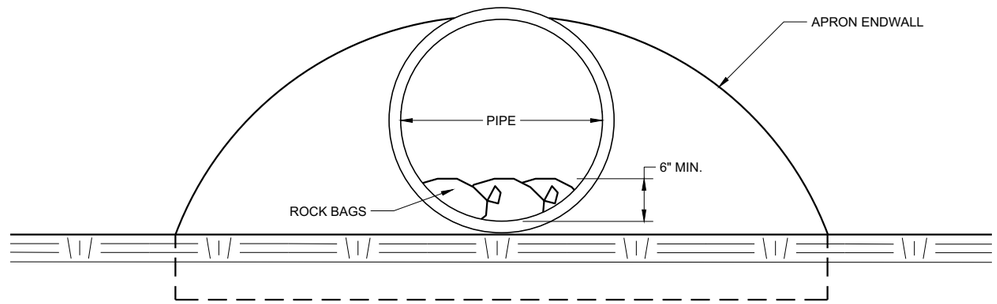

END VIEW

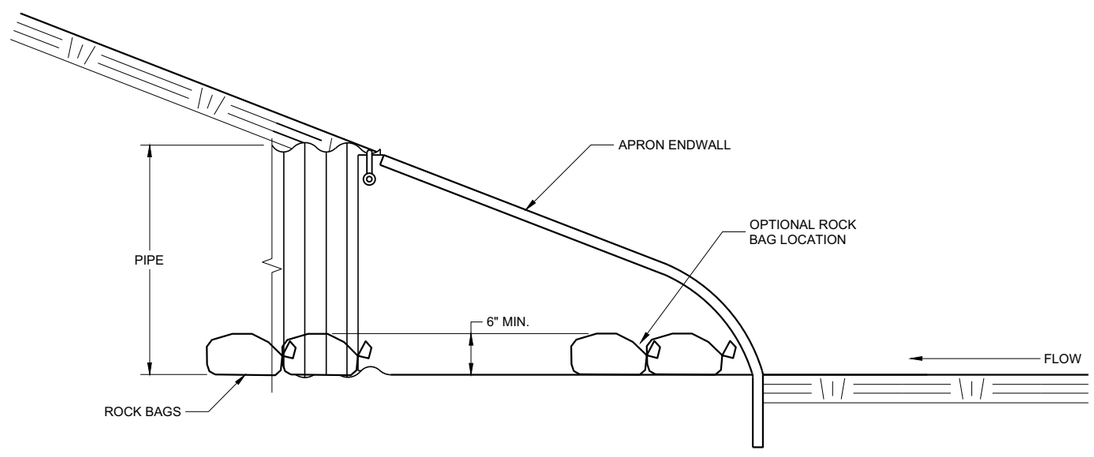

SIDE VIEW

CULVERT PIPE CHECK

(INSTALL ON INLET END ONLY)

CULVERT PIPE CHECK

STATE OF WISCONSIN
DEPARTMENT OF TRANSPORTATION

APPROVED
May 2019 — DATE
/S/ Daniel Schave — EROSION CONTROL ENGI
FHWA

6

6

SDD 08E15 - 01

SDD 08E15 - 01

METAL APRON ENDWALLS

PIPE DIA. (IN.)	MIN. THICK. (Inches) STEEL	MIN. THICK. (Inches) ALUM.	DIMENSIONS (Inches) A (±1")	B (MAX.)	H (±1")	L (±1 1/2")	L1 ①	L2 ①	W (±2")	APPROX. SLOPE	BODY
12	.064	.060	6	6	6	21	12	17 1/2	24	2 1/2 to 1	1 Pc.
15	.064	.060	7	8	6	26	14	21 3/4	30	2 1/2 to 1	1 Pc.
18	.064	.060	8	10	6	31	15	28 1/4	36	2 1/2 to 1	1 Pc.
21	.064	.060	9	12	6	36	18	29 5/8	42	2 1/2 to 1	1 Pc.
24	.064	.075	10	13	6	41	18	37 1/4	48	2 1/2 to 1	1 Pc.
30	.079	.075	12	16	8	51	18	52 1/4	60	2 1/2 to 1	1 Pc.
36	.079	.105	14	19	9	60	24	59 3/4	72	2 1/2 to 1	2 Pc.
42	.109	.105	16	22	11	69	24	75 5/8	84	2 1/2 to 1	2 Pc.
48	.109	.105	18	27	12	78	24	81	90	2 1/4 to 1	3 Pc.
54	.109	.105	18	30	12	84	30	85 1/2	102	2 1/4 to 1	3 Pc.
60	.109×	.105×	18	33	12	87	—	—	114	2 to 1	3 Pc.
66	.109×	.105×	18	36	12	87	—	—	120	2 to 1	3 Pc.
72	.109×	.105×	18	39	12	87	—	—	126	2 to 1	3 Pc.
78	.109×	.105×	18	42	12	87	—	—	132	1 1/2 to 1	3 Pc.
84	.109×	.105×	18	45	12	87	—	—	138	1 1/2 to 1	3 Pc.
90	.109×	.105×	18	37	12	87	—	—	144	1 1/2 to 1	3 Pc.
96	.109×	.105×	18	35	12	87	—	—	150	1 1/2 to 1	3 Pc.

× EXCEPT CENTER PANEL
SEE GENERAL NOTES

REINFORCED CONCRETE APRON ENDWALLS

PIPE DIA. (IN.)	DIMENSIONS (Inches) T	A	B	C	D	E	G	APPROX. SLOPE
12	2	4	24	48 7/8	72 7/8	24	2	3 to 1
15	2 1/4	6	27	46	73	30	2 1/4	3 to 1
18	2 1/2	9	27	46	73	36	2 1/2	3 to 1
21	2 3/4	9	36	37 1/2	73 1/2	42	2 3/4	3 to 1
24	3	9 1/2	43 1/2	30	73 1/2	48	3	3 to 1
27	3 1/4	10 1/2	49 1/2	24	73 1/2	54	3 1/4	3 to 1
30	3 1/2	12	54	19 3/4	73 1/2	60	3 1/2	3 to 1
36	4	15	63	34 3/4	97 3/4	72	4	3 to 1
42	4 1/2	21	63	35	98	78	4 1/2	3 to 1
48	5	24	72	26	98	84	5	3 to 1
54	5 1/2	27	65	*33 1/4-**35	*98 1/4-**100	90	5 1/2	2 2/5 to 1
60	6	*30-**35	60	39	99	96	5	2 to 1
66	6 1/2	*24-**30	*72-**78	*21-**27	99	102	5 1/2	2 to 1
72	7	*24-**36	78	21	99	108	6	2 to 1
78	7 1/2	*24-**36	78	21	99	114	6 1/2	2 to 1
84	8	36	90 1/2	21	111 1/2	120	6 1/2	1 1/2 to 1
90	8 1/2	41	87 1/2	24	111 1/2	132	6 1/2	1 1/2 to 1

*MINIMUM
**MAXIMUM

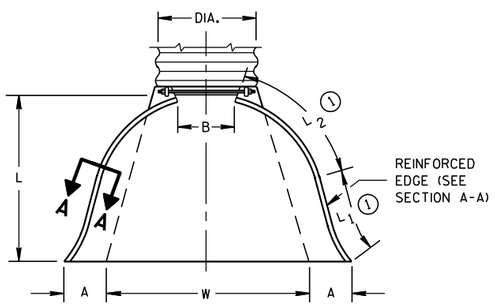

PLAN VIEW

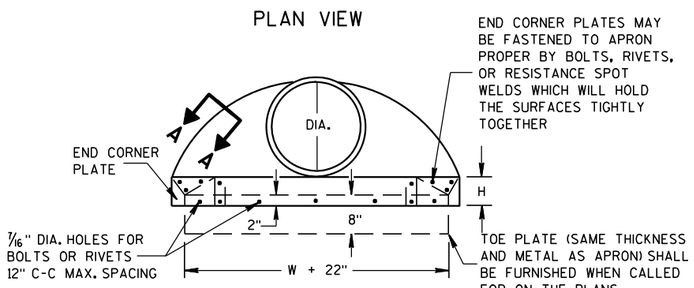

END VIEW

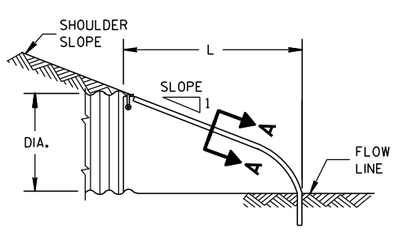

SIDE ELEVATION

METAL ENDWALLS

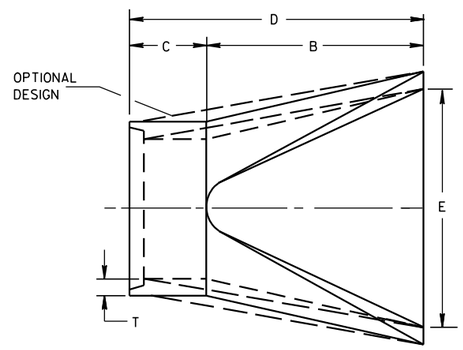

PLAN

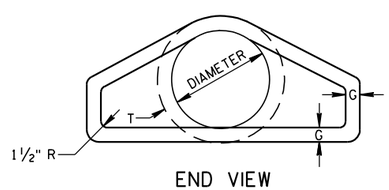

END VIEW

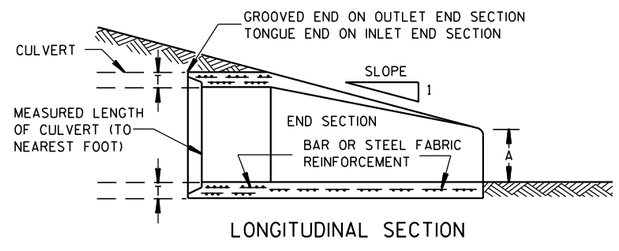

LONGITUDINAL SECTION

CONCRETE ENDWALLS

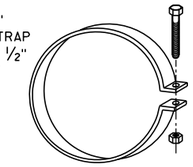

ALTERNATE FOR TYPE 1 CONNECTION

END SECTION CONNECTOR STRAP

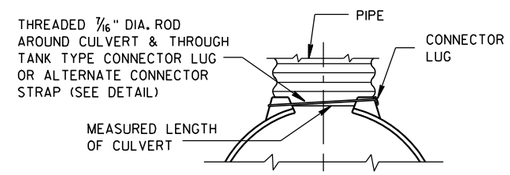

TYPE 1
FOR 12" THRU 24" CORR. PIPE

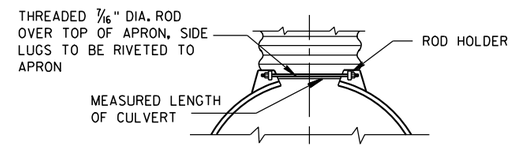

TYPE 2
FOR 30" THRU 96" CORR. PIPE

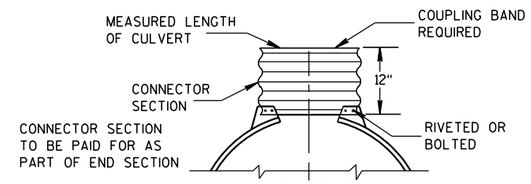

TYPE 3
FOR 42" THRU 96" CORR. PIPE

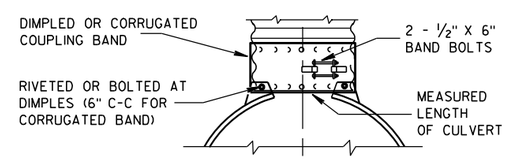

TYPE 5
ALTERNATE FOR:
ALL SIZES CORRUGATED CIRCULAR PIPE

NOTE: DIMPLED BAND FITS OVER OUTSIDE OF ENDWALL, AND CORRUGATED BAND FITS INSIDE ENDWALL. DIMPLED BAND MAY BE USED WITH HELICALLY CORRUGATED PIPE.

FOR CIRCUMFERENTIALLY CORRUGATED PIPE USE ENDWALL CONNECTION DETAILS 1, 2, 3 OR 5 AS APPLICABLE.

FOR HELICALLY CORRUGATED PIPE USE ENDWALL CONNECTION DETAILS 1, 2 OR 5.

FOR HELICALLY CORRUGATED PIPES WITH TWO CIRCUMFERENTIAL CORRUGATIONS AT EACH END USE ENDWALL CONNECTION DETAILS 1, 2 OR 3.

CONNECTION DETAILS

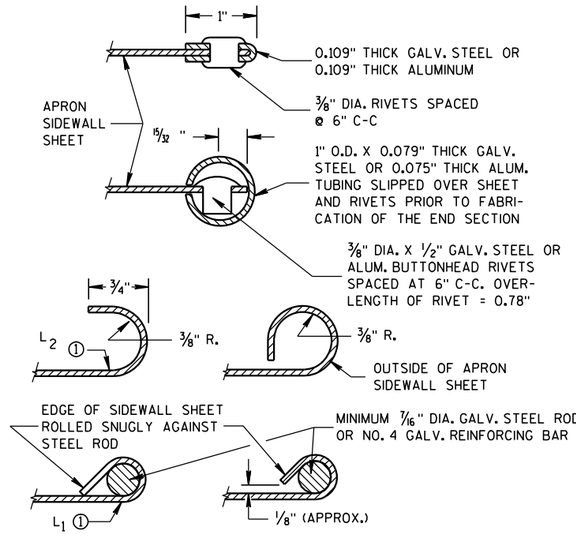

SECTION A-A

GENERAL NOTES

DETAILS OF CONSTRUCTION, MATERIALS AND WORKMANSHIP NOT SHOWN ON THIS DRAWING SHALL CONFORM TO THE PERTINENT REQUIREMENTS OF THE STANDARD SPECIFICATIONS AND THE APPLICABLE SPECIAL PROVISIONS.

CONCRETE CULVERT ENDWALLS MAY NOT BE USED WITH GALVANIZED STEEL OR ALUMINUM CULVERT PIPE OR VISE VERSA. GALVANIZED STEEL OR ALUMINUM ENDWALLS SHALL NORMALLY BE INSTALLED ON CULVERT PIPE OF THE SAME METAL.

ALL THREE PIECE STEEL APRON ENDWALLS FOR 60" DIAMETER PIPE AND LARGER SHALL HAVE 0.109" SIDES AND 0.138" CENTER PANELS. ALL THREE PIECE ALUMINUM APRON ENDWALLS FOR 60" DIAMETER PIPE AND LARGER SHALL HAVE 0.105" SIDES AND 0.134" CENTER PANELS. THE WIDTH OF CENTER PANELS SHALL BE GREATER THAN 20 PERCENT OF THE PIPE PERIMETER.

LAP SEAMS SHALL BE TIGHTLY JOINED BY GALVANIZED RIVETS OR BOLTS FOR STEEL UNITS AND ALUMINUM RIVETS AND BOLTS FOR ALUMINUM UNITS. FOR THE 60" THROUGH 96" DIAMETER APRON ENDWALL SIZES, THE REINFORCED EDGES AND CENTER PANEL SEAMS SHALL BE FURTHER REINFORCED WITH GALVANIZED STEEL OR ALUMINUM STIFFENER ANGLES. THE ANGLES SHALL BE ATTACHED BY GALVANIZED NUTS AND BOLTS FOR STEEL UNITS AND ALUMINUM NUTS AND BOLTS FOR ALUMINUM UNITS.

WHERE TWO OR MORE PIPES WITH APRON ENDWALLS ARE LAID ADJACENT TO EACH OTHER, THEY SHALL BE SEPARATED BY A DISTANCE SUFFICIENT TO PROVIDE A MINIMUM CLEARANCE OF 6 INCHES BETWEEN APRON ENDWALLS.

① FOR PIPE SIZES UP TO 60" DIAMETER, A 180° ROLLED EDGE MAY BE USED INSTEAD OF STEEL ROD REINFORCEMENT. SEE SECTION A-A.

APRON ENDWALLS FOR CULVERT PIPE

STATE OF WISCONSIN
DEPARTMENT OF TRANSPORTATION

APPROVED
11/30/94 — DATE
/S/ Rory L. Rhinesmith — CHIEF ROADWAY DEVELOPMENT ENGINEER
FHWA

6
S.D.D. 8 F 1-11

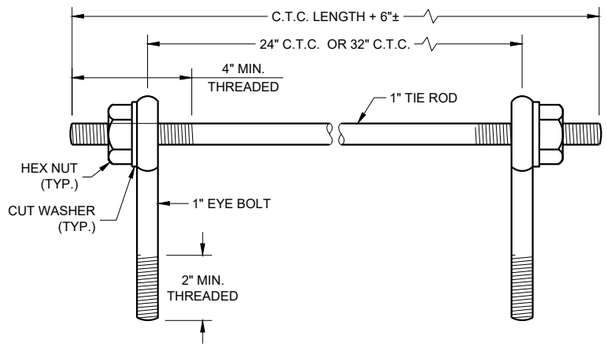

EYE BOLTS AND TIE ROD

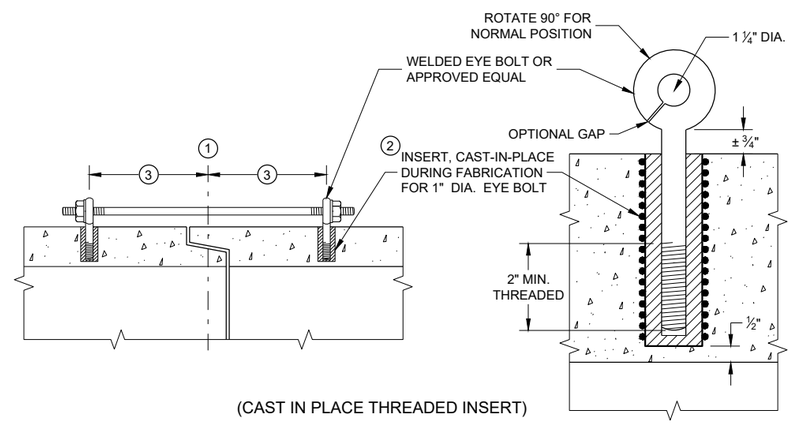

(CAST IN PLACE THREADED INSERT)

LONGITUDINAL SECTIONS

EYE BOLT AND TIE ROD ASSEMBLY (ALTERNATE NO. 1)

GENERAL NOTES

DETAILS OF CONSTRUCTION, MATERIALS, AND WORKMANSHIP NOT SHOWN ON THIS DRAWING SHALL CONFORM TO THE PERTINENT REQUIREMENTS OF THE STANDARD SPECIFICATIONS AND APPLICABLE SPECIAL PROVISIONS.

CONCRETE CULVERT AND STORM SEWER PIPE SHALL BE TIED TOGETHER IN THE MANNER ILLUSTRATED BY THIS DETAIL AT LOCATIONS DESIGNATED IN THE STANDARD SPECIFICATIONS AND THE PLAN. THE CONTRACTOR MAY USE EITHER ALTERNATE 1, 2 OR 3 FOR DRAINAGE STRUCTURES. ONLY ALTERNATE 1 AND 3 MAY BE USED FOR CATTLE PASSES, UNLESS OTHERWISE STATED IN THE CONTRACT. THE MATERIALS, FABRICATION AND WORK NECESSARY TO TIE THE PIPE BY THIS DETAIL WILL BE CONSIDERED INCIDENTAL TO THE PIPE AND APRON ENDWALLS IF REQUIRED.

DETAILED DRAWINGS FOR PROPOSED ALTERNATE DESIGNS FOR JOINT TIES SHALL BE SUBMITTED TO THE ENGINEER FOR APPROVAL.

JOINT TIES TO BE HOT-DIP GALVANIZED PER ASTM A 153.

1. CENTER LINE OF TONGUE AND GROOVE OR BELL AND SPIGOT JOINTS.
2. THE INSIDE OF THE THREADED INSERTS SHALL BE CLEAN TO ALLOW THE INSERTION OF THREADED EYE BOLTS.
3. HOLES SHALL BE CAST-IN-PLACE OR DRILLED PER THE APPLICABLE DETAIL, AND EQUAL DISTANCE FROM THE CENTERLINE OF THE JOINT.
4. BOLT PROJECTION INSIDE OF PIPE SHALL NOT EXCEED 2 INCHES.
5. OPENING TO BE ROD DIAMETER PLUS 1 INCH.
6. LENGTH ADEQUATE TO EXTEND TO WITHIN ½ INCH OF THE INNER SURFACE OF THE PIPE.
7. EYE BOLT LENGTH DETERMINED BY WALL THICKNESS, BELL THICKNESS AND BOLT PROJECTION INSIDE PIPE.

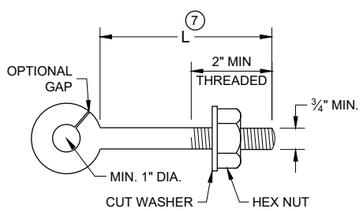

EYE BOLT 7

NOTE: TWO EYE BOLTS MAY BE USED WITH A 30" OR 38" LONG THREADED ROD IN LIEU OF THE 90° BENT TIE ROD.

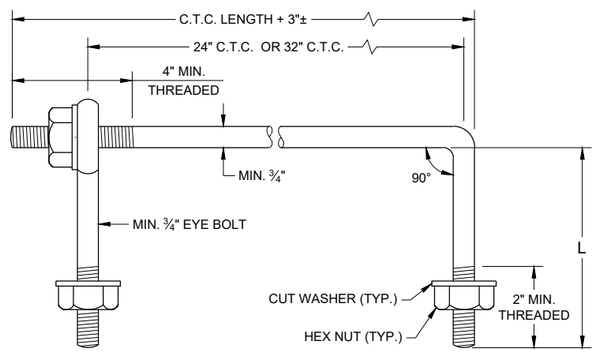

EYE BOLT AND TIE ROD

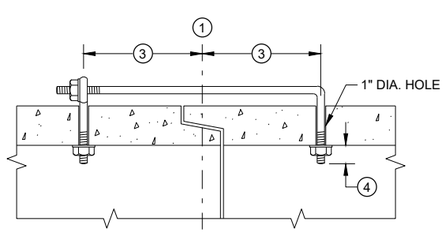

(TONGUE AND GROOVE PIPE)

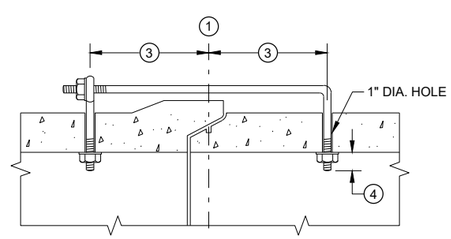

(MODIFIED BELL PIPE)

LONGITUDINAL SECTION

(JOINT TIES FOR 18" TO 66" DIA. CONCRETE PIPE)

EYE BOLT AND TIE ROD ASSEMBLY (ALTERNATE NO. 2)

ADJUSTABLE TIE ROD TABLE

PIPE DIAMETER	TIE ROD DIAMETER	D	L_1	N
12 - 60	⅝	⅝	5	½
66 - 84	¾	¾	5	½
90 - 144	1	1	7	1 7/16

DIMENSIONS SHOWN ARE IN INCHES

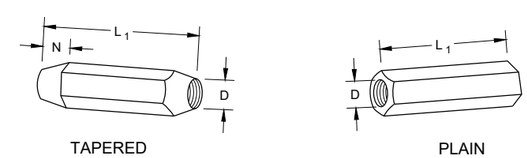

RIGHT AND LEFT THREADS

SLEEVE NUTS

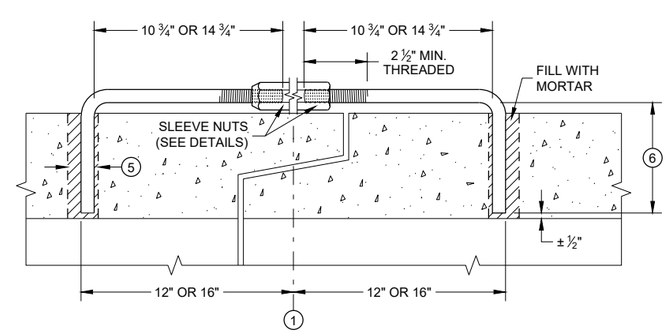

LONGITUDINAL SECTION

ADJUSTABLE TIE ROD (ALTERNATE NO. 3)

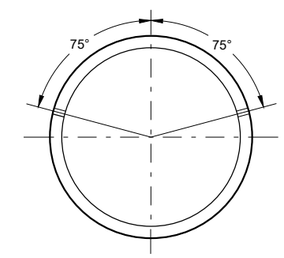

PLACEMENT OF (2) CAST-IN-PLACE INSERTS OR HOLES DURING FABRICATION FOR PIPE SECTIONS REQUIRING TIE RODS

TRANSVERSE SECTION

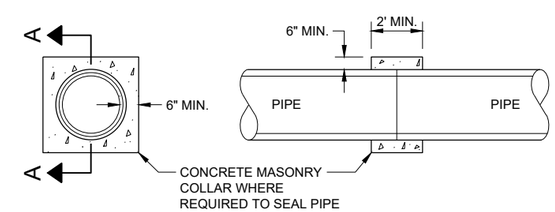

SECTION A - A

CONCRETE COLLAR DETAIL

JOINT TIES FOR CONCRETE PIPE AND CONCRETE COLLAR DETAIL

STATE OF WISCONSIN
DEPARTMENT OF TRANSPORTATION

APPROVED
November 2021 — DATE
/S/ Rodney Taylor — ROADWAY STANDARDS DEVE ENGINEER
FHWA

6

SDD 08F04 - 08

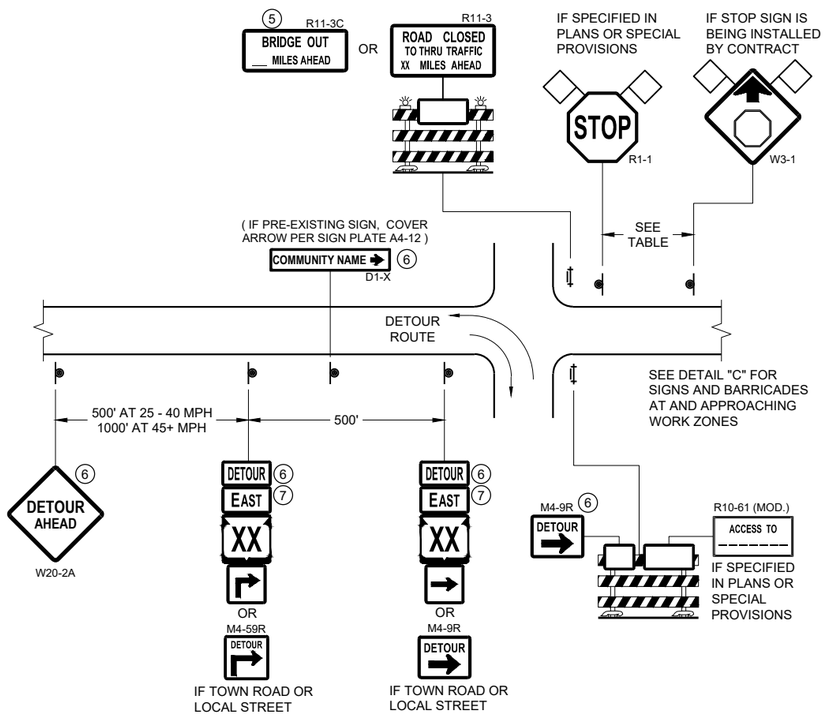

DETAIL A
MAINLINE CLOSURE WITH POSTED DETOUR
WORK ZONE GREATER THAN OR EQUAL TO ½ MILE FROM DETOUR ROUTE (1000 FEET IF URBAN)

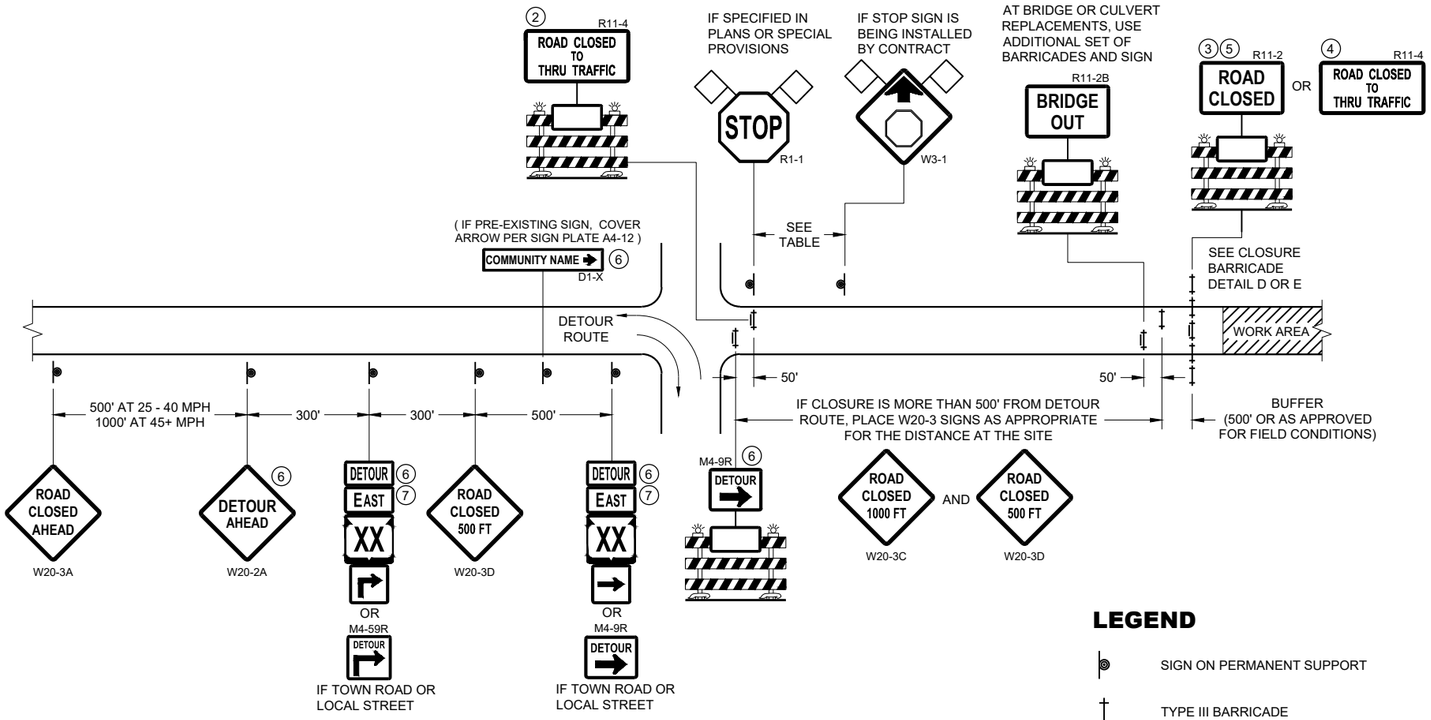

DETAIL B
MAINLINE CLOSURE WITH POSTED DETOUR
WORK ZONE LESS THAN ½ MILE FROM DETOUR ROUTE (1000 FEET IF URBAN)

LEGEND

- SIGN ON PERMANENT SUPPORT
- TYPE III BARRICADE
- TYPE III BARRICADE WITH ATTACHED SIGN
- TYPE "A" WARNING LIGHT (FLASHING)
- WORK AREA
- FLAGS, 16" X 16" MIN. (ORANGE)
- DETOUR — M4 - 8
- EAST — M3 - X
- XX (M1 - 4) OR XX (M1 - 6) OR COUNTY X (M1 - 5A)
- M05 - 1 OR M06 - 1

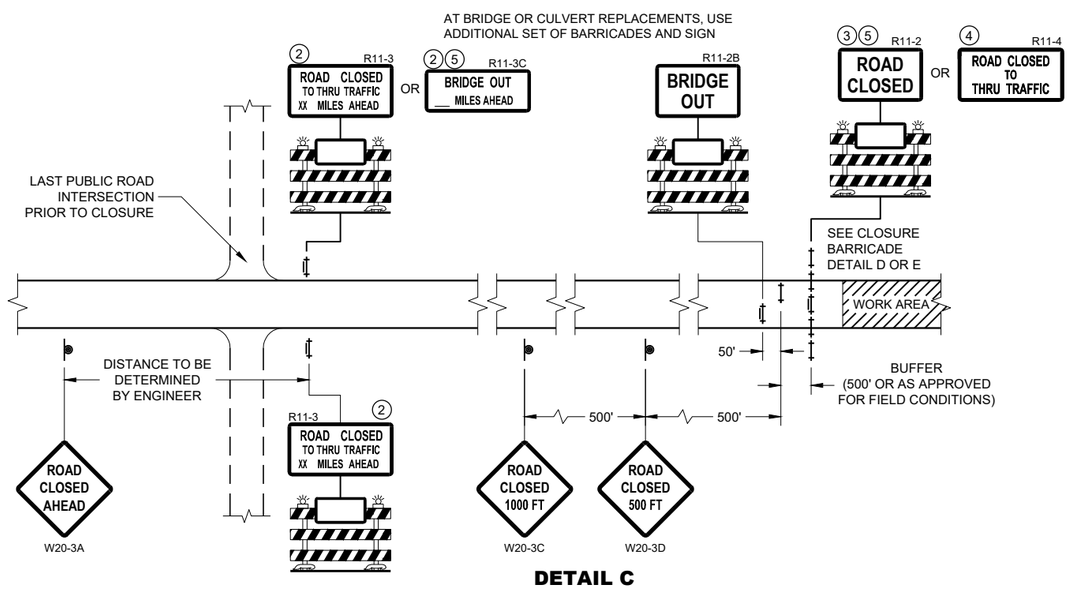

DETAIL C
MAINLINE CLOSURE, NO POSTED DETOUR

SPEED LIMIT (MPH)	"STOP AHEAD" ADVANCE WARNING DISTANCE (FT)
25	200
30	200
35	350
40	350
45	500
50	550
55	750

SEE SDD 15C2-SHEET "b" FOR GENERAL NOTES AND FOOTNOTES 1 THROUGH 7

BARRICADES AND SIGNS FOR MAINLINE CLOSURES

STATE OF WISCONSIN
DEPARTMENT OF TRANSPORTATION

APPROVED
May 2023 — DATE
/S/ Andrew Heidtke — WORK ZONE ENGINEER

FHWA

6

SDD 15C02 - 09a

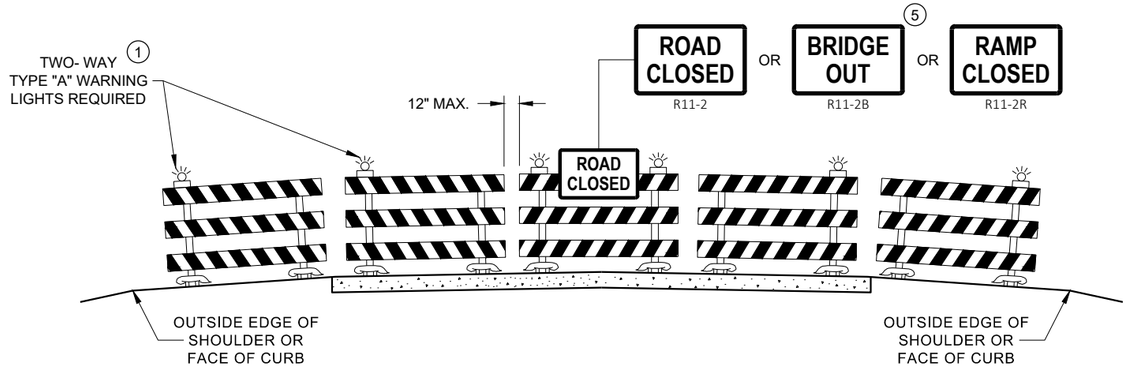

DETAIL D
ROAD CLOSURE BARRICADE DETAIL
APPROACH VIEW

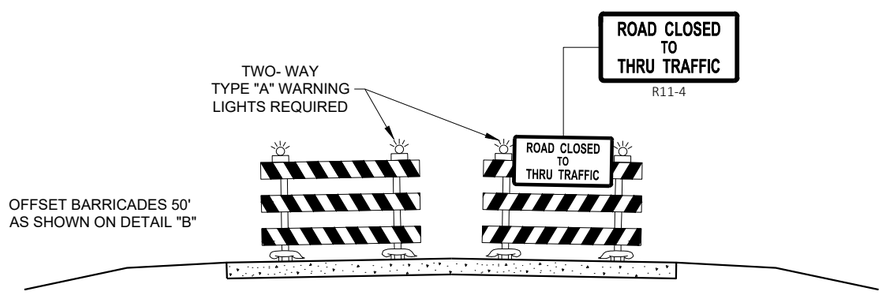

DETAIL E
LANE CLOSURE BARRICADE DETAIL
APPROACH VIEW

SEE SDD 15C2 - SHEET "a" FOR LEGEND

GENERAL NOTES

THE EXACT NUMBER, LOCATION, AND SPACING OF ALL SIGNS AND BARRICADES SHALL BE ADJUSTED TO FIT FIELD CONDITIONS AS APPROVED BY THE ENGINEER.

ANY SIGNS TEMPORARY OR EXISTING, WHICH CONFLICT WITH TRAFFIC CONTROL "IN USE", SHALL BE REMOVED OR COVERED AS NEEDED AND AS APPROVED BY THE ENGINEER.

THE SPACING BETWEEN TRAFFIC CONTROL SIGNS SHOULD BE ADJUSTED TO NOT CONFLICT WITH AND SHOULD PROVIDE A DESIRABLE MINIMUM OF 200 FEET CLEARANCE TO EXISTING SIGNS THAT WILL REMAIN IN PLACE.

BARRICADES THAT MUST BE MOVED FOR A WORK OPERATION SHALL BE IMMEDIATELY RE-ESTABLISHED UPON COMPLETION OF THE OPERATION, OR FOR CONTINUING OPERATIONS, AT THE END OF EACH WORKING DAY.

SIGNS THAT WILL BE IN PLACE LESS THAN 7 CONTINUOUS DAYS AND NIGHTS MAY BE MOUNTED ON PORTABLE SUPPORTS.

ALL TYPE III BARRICADES SHALL HAVE RAILS REFLECTORIZED ON BOTH FACES. STRIPES SHALL BE PROPERLY SLOPED DOWN TOWARD THE TRAFFIC SIDE OR AS SHOWN IN THE ROAD CLOSURE BARRICADE DETAIL "D" FOR FULL ROAD CLOSURES.

TYPE "A" LOW - INTENSITY FLASHING WARNING LIGHTS SHALL BE VISIBLE ON BOTH SIDES OF THE BARRICADE.

THE R11 - 2, R11 - 3, M4 - 9, R11 - 4, AND R10 - 61 SIGNS PLACED ON THE BARRICADES SHALL COVER NO MORE THAN THE TOP RAIL. THE SIGNS SHALL NOT COVER ANY PORTION OF THE MIDDLE RAIL OR BOTTOM RAILS.

"WO" AND "MO" SIGNS ARE THE SAME AS "W" AND "M" SIGNS EXCEPT THE BACKGROUND IS ORANGE.

ALL SIGNS SHALL BE 48" X 48" UNLESS OTHERWISE NOTED BELOW:
- R11 - 2 SHALL BE 48" X 30"
- R11 - 3 SHALL, R11 - 4 AND R10 - 61 SHALL BE 60 " X 30"
- M4 - 9 SHALL BE 30" X 24"
- M3 - X SHALL BE 24" X 12" (36" X 18" IF NEEDED TO MATCH EXISTING SIGNS)
- M4 - 8 SHALL BE 24" X 12" (36" X 18" IF NEEDED TO MATCH EXISTING SIGNS)
- M1 - 4, M1 - 5A AND M1 - 6 SHALL BE 24" X 24" (36" X 36" IF NEEDED TO MATCH EXISTING SIGNS)
- MO5 - 1 AND MO6 - 1 SHALL BE 21" X 21" (30" X 30" IF NEEDED TO MATCH EXISTING SIGNS)
- D1 - X SHALL BE AS SHOWN ON SPECIFIC PROJECT SIGNING DETAIL SHEETS.
- R1 - 1 SHALL BE 36" X 36"

1. TWO WARNING LIGHTS SHALL BE PROVIDED ON THE CENTER BARRICADE AND A MINIMUM OF ONE WARNING LIGHT SHALL BE PROVIDED ON EACH OF THE OTHER BARRICADES WITHIN THE ROADWAY LIMITS. SPACING OF THE WARNING LIGHTS SHALL BE UNIFORM TO THE EDGE OF ROADWAY AS SHOWN (APPROX. 8 FOOT LIGHT SPACING.
2. THESE SIGNS AND BARRICADES ARE NOT REQUIRED IF ROAD CLOSURE BEGINS AT AN INTERSECTION.
3. FOR ROAD CLOSURE WITHOUT LOCAL ACCESS TO PROJECT, SEE ROAD CLOSURE BARRICADE DETAIL "D".
4. FOR ROAD CLOSURE WITH LOCAL ACCESS TO PROJECT, SEE ROAD CLOSURE BARRICADE DETAIL "E".
5. FOR BRIDGE OR CULVERT REPLACEMENTS, SUBSTITUTE "BRIDGE OUT" INSTEAD OF "ROAD CLOSED" ON R11 - 2 AND R11 - 3 SIGNS.
6. INSTALL DETOUR AND COMMUNITY GUIDE SIGNS AND ARROWS ONLY IF SPECIFIED IN THE CONTRACT. IF THERE ARE EXISTING ROUTE MARKER ASSEMBLIES THAT WILL REMAIN IN PLACE, ADJUST THE LOCATION OF THE DETOUR ROUTE SIGNS TO CORRESPOND WITH THE EXISTING ASSEMBLIES. MODIFY EXISTING SIGNS WHERE POSSIBLE. SEE SPECIFIC PROJECT DETOUR SIGNING DETAIL SHEETS. IF DETOUR SIGNS ARE BEING INSTALLED BY OTHERS, PLACE THE CONTRACTED TRAFFIC CONTROL SIGNS TO ALLOW FOR PLACEMENT OF ALL WARNING, DETOUR AND GUIDE SIGNS AS SHOWN.
7. "EAST" CARDINAL DIRECTION MARKERS AND RIGHT TURN ARROWS ARE SHOWN. USE OTHER CARDINAL DIRECTIONS AND ARROWS AS APPROPRIATE.

BARRICADES AND SIGNS FOR VARIOUS CLOSURES

STATE OF WISCONSIN
DEPARTMENT OF TRANSPORTATION

APPROVED
May 2023 — DATE
/S/ Andrew Heidtke — WORK ZONE ENGINEE
FHWA

6
SDD 15C02 - 09b

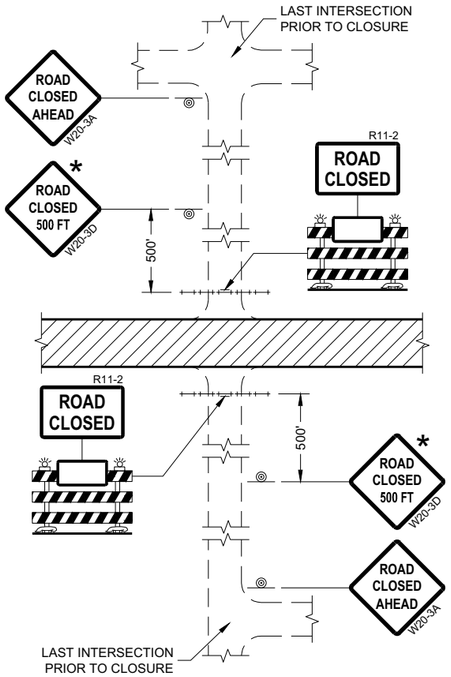

DETAIL 1
(NO ACCESS TO PROJECT)

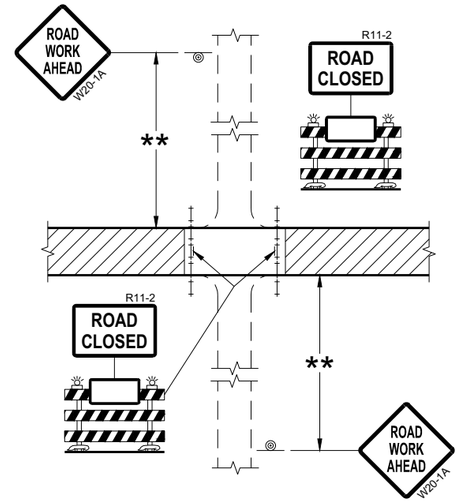

DETAIL 2
(PUBLIC CROSS-TRAFFIC MAINTAINED.
NO ACCESS TO PROJECT)

GENERAL NOTES

THE EXACT NUMBER, LOCATION, AND SPACING OF ALL SIGNS AND BARRICADES SHALL BE ADJUSTED TO FIT FIELD CONDITIONS AS APPROVED BY THE ENGINEER.

ANY SIGNS TEMPORARY OR EXISTING, WHICH CONFLICT WITH TRAFFIC CONTROL "IN USE" SHALL BE REMOVED OR COVERED AS NEEDED AND AS APPROVED BY THE ENGINEER.

THE SPACING BETWEEN TRAFFIC CONTROL SIGNS SHOULD BE ADJUSTED TO NOT CONFLICT WITH AND SHOULD PROVIDE A DESIRABLE MINIMUM OF 200 FEET CLEARANCE (500 FEET DESIRABLE) TO EXISTING SIGNS THAT WILL REMAIN IN PLACE.

IF A "STOP" SIGN MUST BE REMOVED FOR A WORK OPERATION, A TEMPORARY "STOP" SIGN SHALL BE PLACED PRIOR TO THE SIGN REMOVAL, OR A FLAGGER SHALL BE PROVIDED UNTIL THE SIGN IS REESTABLISHED.

BARRICADES THAT MUST BE MOVED FOR A WORK OPERATION SHALL BE IMMEDIATELY REESTABLISHED UPON COMPLETION OF THE OPERATION OR FOR CONTINUING OPERATIONS, AT THE END OF EACH WORKING DAY.

SIGNS THAT WILL BE IN PLACE LESS THAN SEVEN CONTINUOUS DAYS AND NIGHTS MAY BE MOUNTED ON PORTABLE SUPPORTS.

ALL TYPE III BARRICADES SHALL HAVE RAILS REFLECTORIZED ON BOTH FACES. STRIPES SHALL BE PROPERLY SLOPED DOWN TOWARD THE TRAFFIC SIDE OR AS SHOWN IN THE ROAD CLOSURE BARRICADE DETAIL "D" FOR FULL ROAD CLOSURES.

TYPE "A" LOW-INTENSITY FLASHING WARNING LIGHTS SHALL BE VISIBLE ON BOTH SIDES OF THE BARRICADE.

THE R11-2, R11-3, AND R11-4 SIGNS PLACED ON BARRICADES SHALL COVER NO MORE THAN THE TOP RAIL. THE SIGNS SHALL NOT COVER ANY PORTION OF THE MIDDLE OR BOTTOM RAILS.

ALL SIGNS SHALL BE 48" X 48" UNLESS OTHERWISE NOTED BELOW:
R11-2 SHALL BE 48" X 30".
R11-4 AND R11-3 SHALL BE 60" X 30".

* OMIT THE "ROAD CLOSED 500 FT." SIGN IF THE LAST INTERSECTION IS 500 FEET OR LESS FROM THE WORK ZONE.

** 500' MAX. OR AT LAST INTERSECTION, WHICHEVER IS CLOSEST.

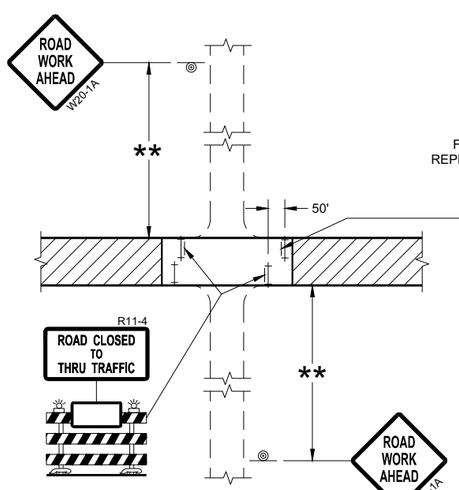

DETAIL 3
(PUBLIC CROSS-TRAFFIC MAINTAINED.
CONTRACTOR, LOCAL BUSINESS AND
RESIDENT ACCESS TO PROJECT)

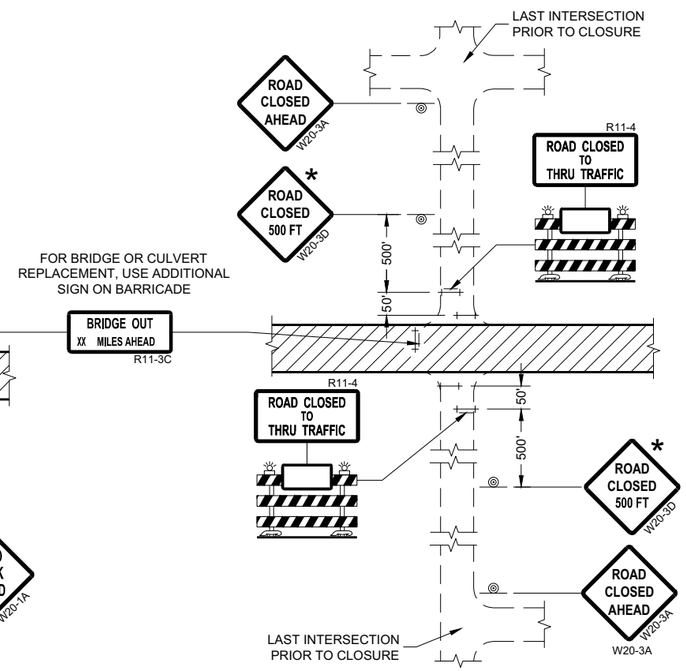

DETAIL 4
(CONTRACTOR, LOCAL BUSINESS AND
RESIDENT ACCESS TO PROJECT)

LEGEND

- SIGN ON PERMANENT SUPPORT
- TYPE III BARRICADE
- TYPE III BARRICADE WITH ATTACHED SIGN
- TYPE "A" WARNING LIGHT (FLASHING)
- WORK AREA

BARRICADES AND SIGNS FOR SIDEROAD CLOSURES

STATE OF WISCONSIN
DEPARTMENT OF TRANSPORTATION

APPROVED
July 2018 — DATE
/S/ Andrew Heidtke — WORK ZONE ENGINEE
FHWA

6
SDD 15C03 - 05

GENERAL NOTES

THE EXACT NUMBER, LOCATION, AND SPACING OF ALL SIGNS AND DEVICES SHALL BE ADJUSTED TO FIT FIELD CONDITIONS.

THE SPACING BETWEEN TRAFFIC CONTROL SIGNS SHOULD BE ADJUSTED TO NOT CONFLICT WITH AND SHOULD PROVIDE A MINIMUM OF 200 FEET (500 FEET DESIRABLE) CLEARANCE TO EXISTING SIGNS THAT WILL REMAIN IN PLACE.

ALL SIGNS ARE 48" X 48" UNLESS OTHERWISE NOTED. IF NECESSARY DUE TO SPACE CONSTRAINTS, 36"X36" SIGNS MAY BE USED INSTEAD OF 48" X 48" SIGNS.

SIGNS THAT WILL BE IN PLACE LESS THAN SEVEN CONTINUOUS DAYS AND NIGHTS MAY BE MOUNTED ON PORTABLE SUPPORTS.

IF A "STOP" SIGN MUST BE REMOVED FOR A WORK OPERATION, A TEMPORARY "STOP" SIGN SHALL BE PLACED PRIOR TO THE SIGN REMOVAL, OR A FLAGGER SHALL BE PROVIDED UNTIL THE SIGN IS REESTABLISHED.

* THE THIRD W20-1 SIGN IS REQUIRED ONLY IF THERE IS AN INTERSECTION BETWEEN THE "ROAD WORK 500 FEET" SIGN AND THE WORK ZONE. ADJUST THE PLACEMENT OF THIS SIGN BASED ON INTERSECTION LOCATION AND OTHER FIELD CONDITIONS.

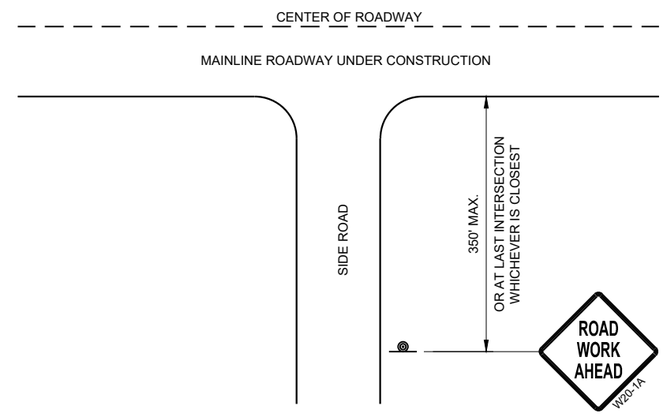

TYPICAL SIDE ROAD APPROACH WARNING SIGN DETAIL

LEGEND

- SIGN ON PERMANENT SUPPORT
- DIRECTION OF TRAFFIC
- WORK AREA

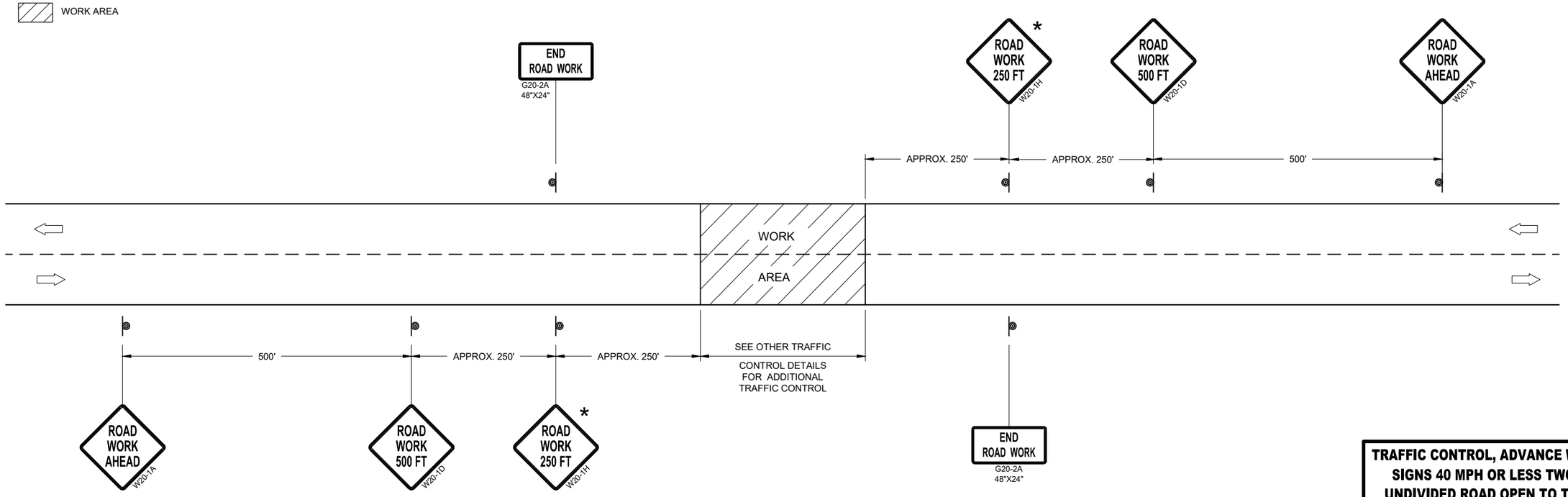

TRAFFIC CONTROL, ADVANCE WARNING SIGNS 40MPH OR LESS

TRAFFIC CONTROL, ADVANCE WARNING SIGNS 40 MPH OR LESS TWO-WAY UNDIVIDED ROAD OPEN TO TRAFFIC

STATE OF WISCONSIN
DEPARTMENT OF TRANSPORTATION

APPROVED
July 2018 — DATE
/S/ Andrew Heidtke — WORK ZONE ENGINEE
FHWA

6
SDD 15C05 - 05

GENERAL NOTES

1. REFLECTIVE SHEETING SHALL FOLLOW THE REQUIREMENTS IN THE APPROVED PRODUCTS LISTING FOR SIGN SHEETING.
2. LOCATION OF WARNING LIGHTS WHEN SHOWN ON THE PLAN.

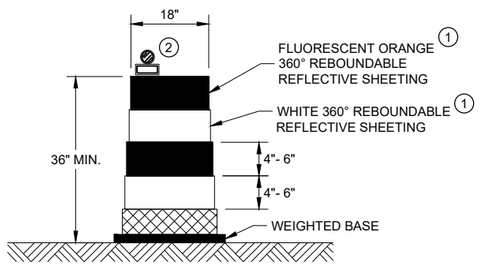

DRUM

BALLAST WIDTHS
RANGE FROM 24"-36"

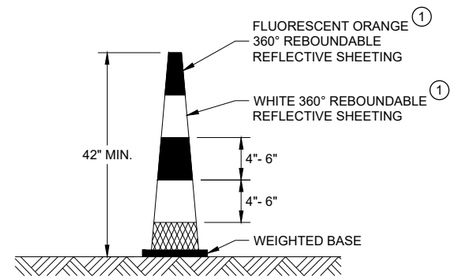

42" CONE

DO NOT USE IN TAPERS
½ SPACING OF DRUMS

BALLAST WIDTHS
RANGE FROM 14"-20"

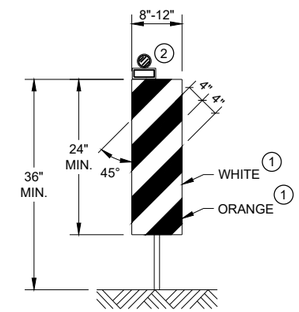

VERTICAL PANEL

THE STRIPES SHALL SLOPE DOWNWARD TO
THE TRAFFIC SIDE FOR CHANNELIZATION.

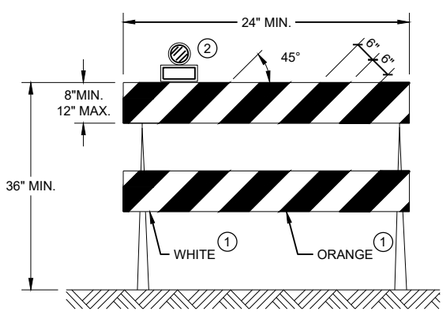

TYPE II BARRICADE

FOR RAILS LESS THAN 36" LONG, 4" WIDE STRIPES
MAY BE USED. ALL STRIPES SHALL SLOPE DOWNWARD
TO THE TRAFFIC SIDE FOR CHANNELIZATION.

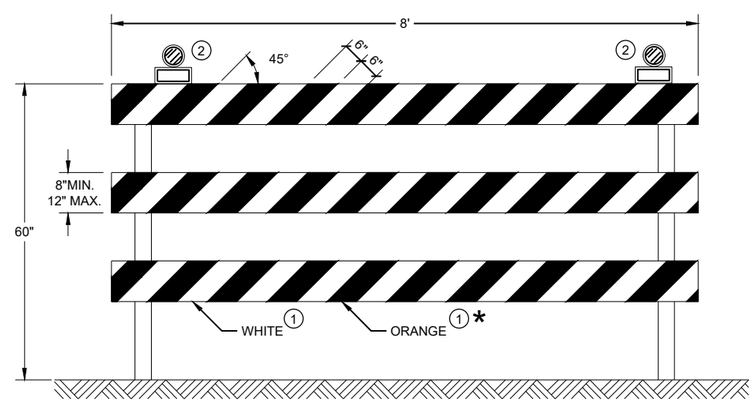

TYPE III BARRICADE

IF SIGN MOUNTED, DO NOT COVER MORE THAN 50% OF THE TOP
TWO RAILS OR 33% OF THE TOTAL AREA OF THE THREE RAILS.

* IF USED FOR A PERMANENT APPLICATION USE RED SHEETING.

CHANNELIZING DEVICES
DRUMS, CONES, BARRICADES
AND VERTICAL PANELS

STATE OF WISCONSIN
DEPARTMENT OF TRANSPORTATION

APPROVED
November 2022 — /S/ Andrew Heidtke
DATE — WORK ZONE ENGINEE
FHWA

6

6

SDD 15C11 - 10b

SDD 15C11 - 10b

LEGEND

SIGN ON PORTABLE OR PERMANENT SUPPORT

TEMPORARY PORTABLE RUMBLE STRIP ARRAY

DIRECTION OF TRAFFIC

WORK AREA

FLAGGER, EQUIPPED WITH STOP/SLOW PADDLE FASTENED ON SUPPORT STAFF

GENERAL NOTES

DETAILS OF TRAFFIC CONTROL DEVICES AND INSTALLATION NOT SHOWN ON THIS DRAWING SHALL CONFORM TO THE PERTINENT REQUIREMENTS OF THE STANDARD SPECIFICATIONS, THE SPECIAL PROVISIONS, AND THE MANUAL ON UNIFORM TRAFFIC CONTROL DEVICES.

ALL SIGNS ARE 48" X 48" UNLESS OTHERWISE NOTED.

"WO" SIGNS ARE THE SAME AS "W" SIGNS EXCEPT THE BACKGROUND IS ORANGE.

THE EXACT NUMBER, LOCATION AND SPACING OF ALL SIGNS, DEVICES, AND LOCATION OF ALL FLAGGERS SHALL BE ADJUSTED TO FIT FIELD CONDITIONS AS APPROVED BY THE ENGINEER.

THE FIRST ADVANCE WARNING SIGN SHOULD TYPICALLY BE LOCATED IN ADVANCE OF THE ANTICIPATED TRAFFIC BACKUP OR QUEUE.

WHEN A SIDE ROAD OR RAMP INTERSECTS THE FACILITY ON WHICH THE WORK IS BEING PERFORMED, ADDITIONAL TRAFFIC CONTROLS SHALL BE PROVIDED AS SPECIFIED IN THE PLANS AND/OR THE SPECIAL PROVISIONS OR AS APPROVED BY THE ENGINEER.

FLAGGING

FLAGGERS SHALL BE IN SIGHT OF EACH OTHER OR IN DIRECT COMMUNICATION AT ALL TIMES. THEY SHALL BE EQUIPPED WITH STOP/SLOW PADDLES FASTENED ON SUPPORT STAFFS. WHEN THE FLAGGING OPERATION IS NOT IN EFFECT REMOVE TEMPORARY PORTABLE RUMBLE STRIPS PRIOR TO COVERING OR REMOVING ALL ADVANCE SIGNING.

(1) FOR MOVING WORK OPERATIONS, POST ADDITIONAL W20-7A FLAGGER SIGNS AT APPROXIMATELY 3,500' INTERVALS IN THE MOVING WORK OPERATION OR AS APPROVED BY THE ENGINEER.

(2) SIGN NOT REQUIRED IF FLAGGING OPERATION OCCURS WITHIN A SIGNED ROAD WORK ZONE AREA.

WHEN THE DISTANCE BETWEEN FLAGGERS EXCEEDS 2 MILES, A PILOT CAR IS REQUIRED. WHEN CURVES REDUCE SIGHT DISTANCE BELOW 400', A PILOT CAR IS REQUIRED.

TEMPORARY PORTABLE RUMBLE STRIPS

UTILIZE TEMPORARY PORTABLE RUMBLE STRIPS ON ALL FLAGGING OPERATIONS.

(3) EACH TEMPORARY PORTABLE RUMBLE STRIP ARRAY CONSISTS OF THREE RUMBLE STRIPS PLACED TRANSVERSE ACROSS THE LANE AT THE LOCATIONS SHOWN. WITHIN EACH ARRAY, SPACING BETWEEN RUMBLE STRIPS SHALL BE 15 FEET ON CENTER

ONLY USE TEMPORARY PORTABLE RUMBLE STRIPS FROM THE APPROVED PRODUCTS LIST.

INSTALL TEMPORARY RUMBLE STRIPS PER MANUFACTURER'S RECOMMENDATIONS.

PLACE ADVANCE SIGNING PRIOR TO INSTALLING TEMPORARY RUMBLE STRIPS.

DO NOT INSTALL TEMPORARY PORTABLE RUMBLE STRIPS ON GRAVEL, MILLED SURFACES, OR ASPHALT THAT HAS BEEN PAVED LESS THAN 12 HOURS.

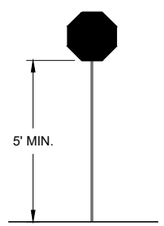

STOP/SLOW PADDLE ON SUPPORT STAFF

SIGN AND TEMPORARY RUMBLE STRIP ARRAY SPACING TABLE

SPEED LIMIT	SPACING "A"
25-30 MPH	200'
35-40 MPH	350'
45-55 MPH	500'

WO3-4

USE OF WO3-4 SIGN IS OPTIONAL. WHEN USED, THIS SIGN SHALL BE LOCATED BETWEEN THE W20-7A AND W20-4A SIGNS, USING SPACING "A".

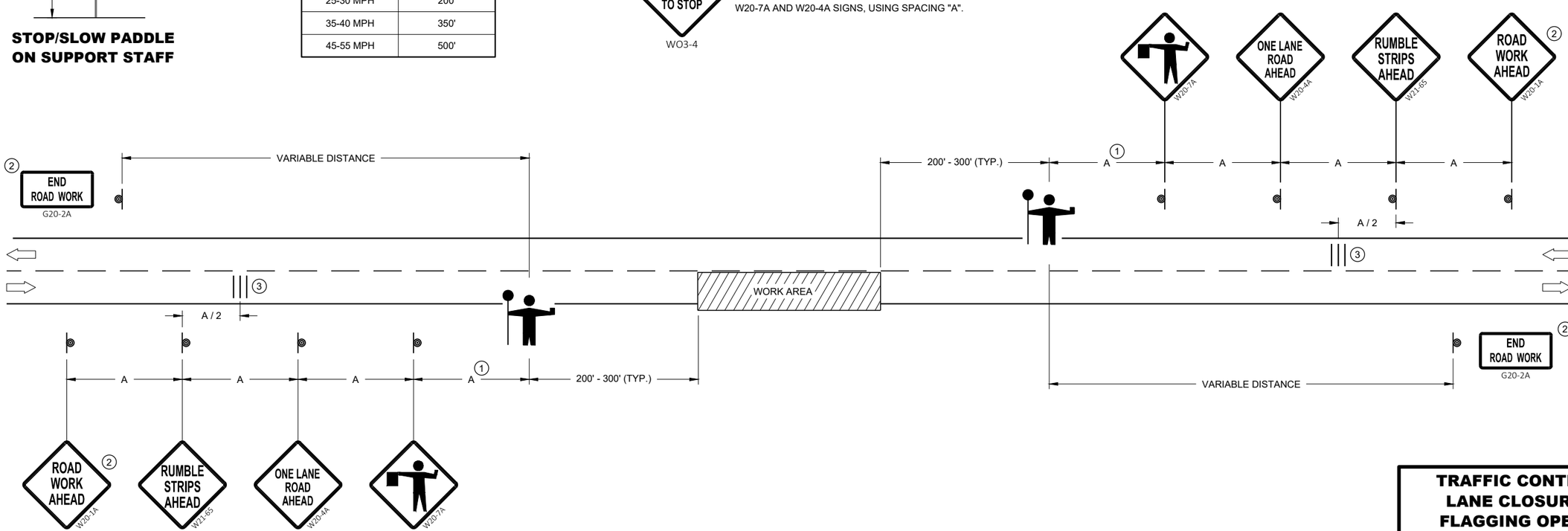

TRAFFIC CONTROL FOR LANE CLOSURE WITH FLAGGING OPERATION

STATE OF WISCONSIN
DEPARTMENT OF TRANSPORTATION

APPROVED
May 2022 — DATE
/S/ Andrew Heidtke — WORK ZONE ENGINEE
FHWA

6
SDD 15C12 - 09a

GENERAL NOTES

STOP SIGN SHALL BE PLACED A MINIMUM OF 6 FEET TO A MAXIMUM OF 50 FEET FROM THE EDGELINE LOCATION.

1. 18-INCH STOP LINES MAY BE DELETED OR ADDED BY THE REGION MARKING ENGINEER BASED ON VISIBILITY AND SIGHT LINES.
2. NO STOP LINE IS REQUIRED IF STOP SIGN IS LESS THAN OR EQUAL TO 40 FEET FROM THE EDGELINE.
3. NO STOP LINE IS REQUIRED IF STOP SIGN IS LESS THAN OR EQUAL TO 30 FEET FROM THE FLANGE LINE EXTENSION.
4. MOVE CLOSER TO THE EDGE OF TRAVEL LINE AS NEEDED FOR VISIBILITY AND SIGHT LINES (NO CLOSER THAN 4 FEET).
5. LADDER BAR CROSSWALKS SHOULD ONLY BE USED FOR MID BLOCK CROSSINGS. USE 2 - 6" TRANSVERSE LINES.
6. POSTED SPEED LIMITS OF 40 MPH OR GREATER USE A MINIMUM WIDTH OF 8' FOR MIDBLOCK CROSSWALKS

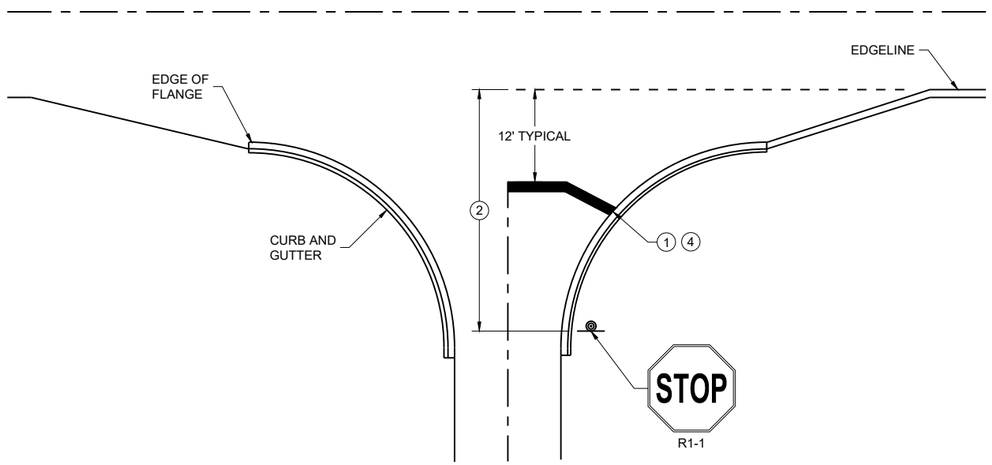

TYPICAL STOP LINE PAVEMENT MARKING WITH CURB AND GUTTER

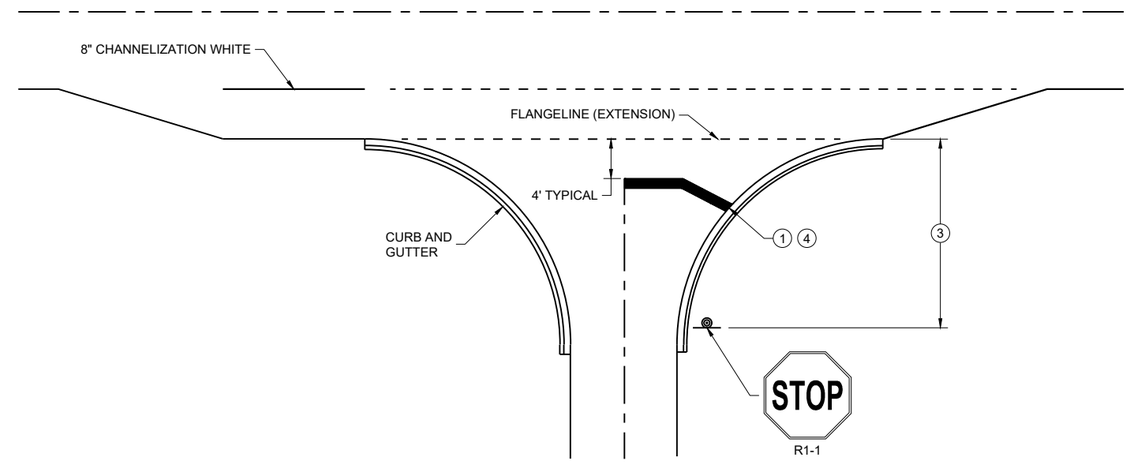

TYPICAL STOP LINE PAVEMENT MARKING FOR SIDE ROADS WITH RIGHT TURN LANE

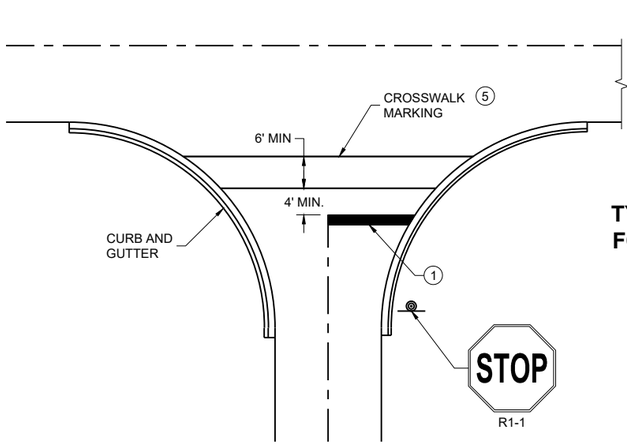

TYPICAL STOP LINE PAVEMENT MARKING FOR SIDE ROADS WITH CROSSWALK MARKING

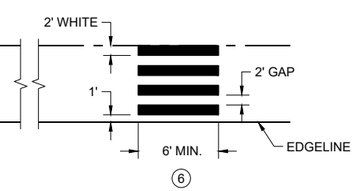

TYPICAL PAVEMENT MARKING FOR MID-BLOCK CROSSWALK 5

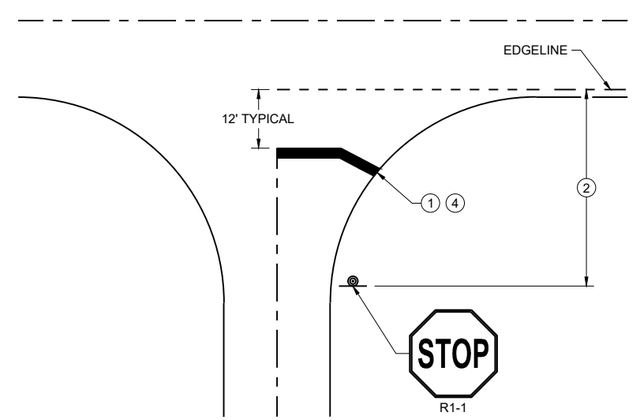

TYPICAL STOP LINE PAVEMENT MARKING WITHOUT CURB AND GUTTER

STOP LINE AND CROSSWALK PAVEMENT MARKING

STATE OF WISCONSIN
DEPARTMENT OF TRANSPORTATION

APPROVED
March 2024 — DATE
/S/ Matthew Rauch — STATE SIGNING AND MARKING ENGINEER

FHWA

6
SDD 15C33-05

LEGEND

- SIGN ON PERMANENT SUPPORT
- TRAFFIC CONTROL DRUM
- DIRECTION OF TRAFFIC
- WORK ZONE

GENERAL NOTES

ALL SIGNS ARE 48"X48" UNLESS OTHERWISE NOTED. IF NECESSARY DUE TO SPACE CONSTRAINTS IN URBAN AREAS, 36" X 36" SIGNS MAY BE USED IF APPROVED BY THE REGIONAL TRAFFIC UNIT.

"WO" SIGN IS THE SAME AS "W" SIGN EXCEPT THE BACKGROUND IS ORANGE.

ANY SIGNS TEMPORARY OR EXISTING, WHICH CONFLICT WITH THE TRAFFIC CONTROL "IN USE" SHALL BE REMOVED OR COVERED AS NEEDED AND AS APPROVED BY THE ENGINEER.

THE EXACT NUMBER, LOCATION, AND SPACING OF ALL SIGNS AND DEVICES SHALL BE ADJUSTED TO FIT FIELD CONDITIONS AS APPROVED BY THE ENGINEER.

CHANNELIZING DEVICES PLACED ADJACENT TO WORK AREA SHALL BE PULLED BACK FROM THE TRAVEL LANE WHEN WORK IS NOT IN PROGRESS.

SIGNS THAT WILL BE IN PLACE LESS THAN 7 CONTINUOUS DAYS AND NIGHTS MAY BE MOUNTED ON PORTABLE SUPPORTS.

W20-1A AND G20-2A SIGNS ARE NOT REQUIRED IF THE WORK AREA IS WITHIN A LARGER WORK ZONE WHERE THESE SIGNS ARE ALREADY PRESENT. G20-2A SIGNS MAY ALSO BE OMITTED IF DURATION OF WORK IS LESS THAN 7 CONTINUOUS DAYS AND NIGHTS.

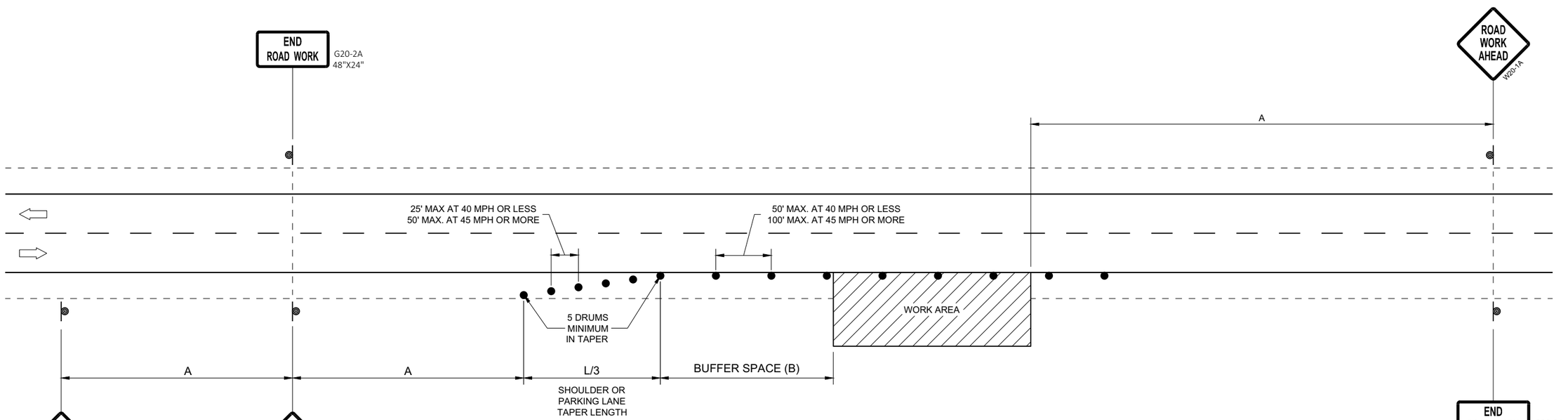

OR
IF TRAFFIC CONTROL DEVICES
ENCROACH ONTO TRAVELED WAY, USE

POSTED SPEED LIMIT PRIOR TO WORK STARTING (MPH)	ADVANCE WARNING SIGN SPACING (A) FEET	SHOULDER TAPER L / 3 W, LATERAL OFFSET (FT)						BUFFER SPACE (B) FEET
		3	4	5	6	7	8	
25	200'	10	14	17	21	24	28	55
30	200'	15	20	25	30	35	40	85
35	350'	20	27	34	40	47	54	120
40	350'	26	35	44	53	62	70	170
45	500'	45	59	74	89	104	119	220
50	500'	50	66	83	99	116	132	280
55	500'	54	73	91	109	127	145	335'

TRAFFIC CONTROL, WORK ON SHOULDER OR PARKING LANE, UNDIVIDED ROADWAY

STATE OF WISCONSIN
DEPARTMENT OF TRANSPORTATION

APPROVED
May 2020 — DATE
/S/ Andrew Heidtke — STATEWIDE WORK ZONE T SAFETY ENGINEER
FHWA

6

SDD 15D28 - 04

GENERAL NOTES

BARRICADE DEVICE SELECTED FROM APPROVED PRODUCT LIST

1. REFLECTIVE SHEETING SHALL FOLLOW THE REQUIREMENTS IN THE APPROVED PRODUCTS LISTING FOR SIGN SHEETING.
2. SHEETING REQUIRED ON MORE THAN 50% OF BARRICADE WIDTH.
3. PLACE SHEETING ON BOTH SIDES OF THE BARRICADE.

* USE THIS DETAIL FOR SHEETING PLACEMENT REFERENCE.

4. WHEN THE TEMPORARY PEDESTRIAN ACCESS ROUTE RUNS PARALLEL ON THE ROADWAY SURFACE, THE MAXIMUM CROSS SLOPE WILL MATCH THE EXISTING ROADWAY CROSS SLOPE.

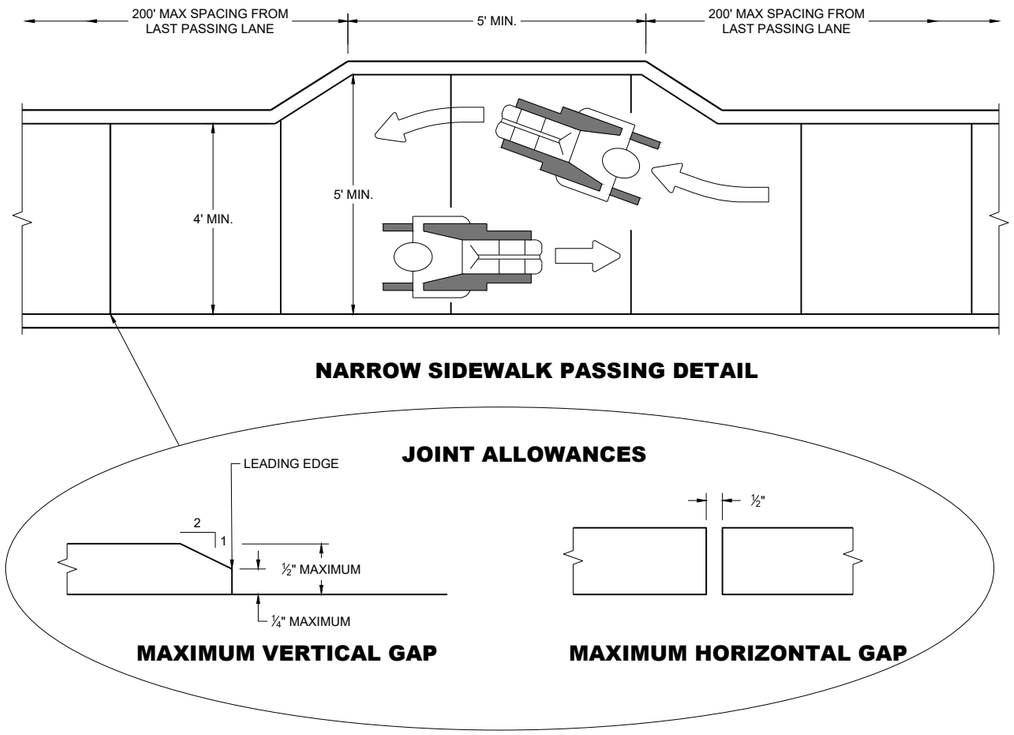

NARROW SIDEWALK PASSING DETAIL

JOINT ALLOWANCES

MAXIMUM VERTICAL GAP

MAXIMUM HORIZONTAL GAP

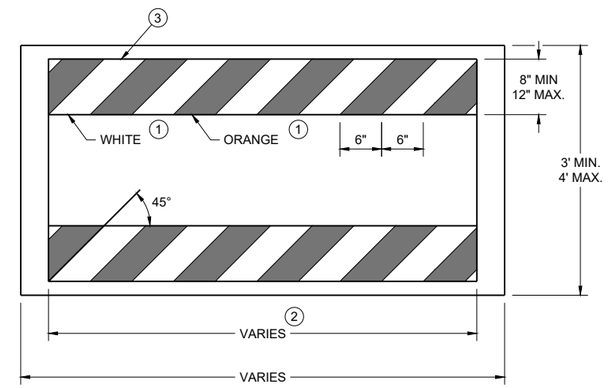

TEMPORARY PEDESTRIAN BARRICADE *

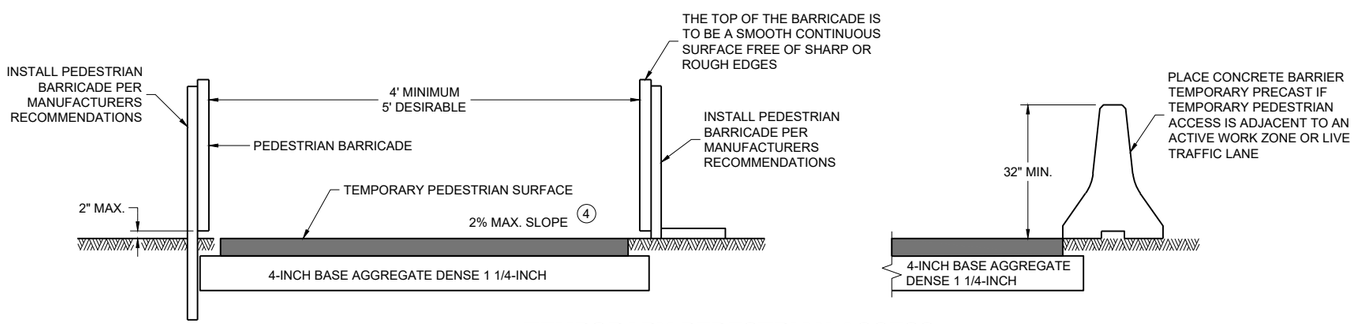

TEMPORARY PEDESTRIAN ACCESS

6

SDD 15D30-10a

TRAFFIC CONTROL, PEDESTRIAN ACCOMMODATION

STATE OF WISCONSIN
DEPARTMENT OF TRANSPORTATION

6

SDD 15D30-10a

GENERAL NOTES

CURB RAMPS SHALL BE 48" MIN. WIDTH WITH A FIRM, STABLE AND SLIP RESISTANT SURFACE.

CURB RAMPS AND LANDINGS SHALL HAVE A 1:50 (2%) MAX. CROSS-SLOPE.

CLEAR SPACE OF 48" X 48" SHALL BE PROVIDED ABOVE AND BELOW THE CURB RAMP.
LATERAL JOINTS OR GAPS BETWEEN SURFACES SHALL BE LESS THAN ½" WIDTH.

CHANGES BETWEEN SURFACE HEIGHTS SHALL NOT EXCEED ½". LATERAL EDGES MAY BE VERTICAL UP TO ¼" HIGH AND SHALL BE BEVELED AT 1:2 BETWEEN ¼" AND ½".

1. INSTALL CONTRASTING TEMPORARY DETECTABLE WARNING FIELD AT PEDESTRIAN STREET CROSSINGS, AS SHOWN IN THE PLANS.
2. PROTECTIVE EDGING WITH A 2" MIN. HEIGHT SHALL BE INSTALLED WHEN A CURB RAMP OR LANDING PLATFORM HAS A VERTICAL DROP OF 6" OR GREATER OR HAS A SIDE APRON SLOPE STEEPER THAN 1:3 (33%). PROTECTIVE EDGING SHOULD BE CONSIDERED WHEN CURB RAMPS OR LANDING PLATFORMS HAVE A VERTICAL DROP OF 3" OR MORE.
3. DETECTABLE EDGING WITH 6" MIN. HEIGHT AND CONTRASTING COLOR SHALL BE INSTALLED ON ALL CURB RAMP LANDINGS WHERE THE WALKWAY CHANGES DIRECTION (TURNS).
4. DO NOT RESTRICT WATER FLOW IN THE GUTTER SYSTEM.
5. ENSURE CURB RAMP IS OUT OF THE GUTTER PAN.
6. IF ONLY PART OF THE END PANEL OF TEMPORARY PEDESTRIAN BARRICADE PANEL IS NEEDED, EXTEND EXCESS PORTION OF TEMPORARY PEDESTRIAN BARRICADE PANEL HERE.

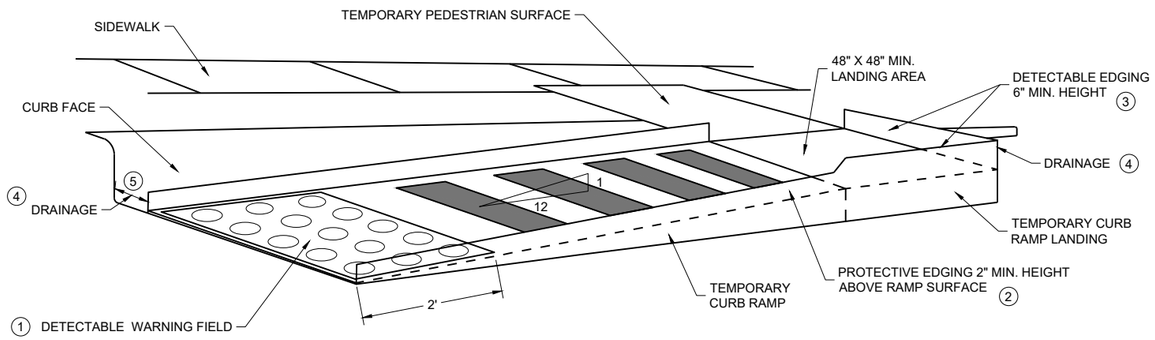

PERSPECTIVE VIEW

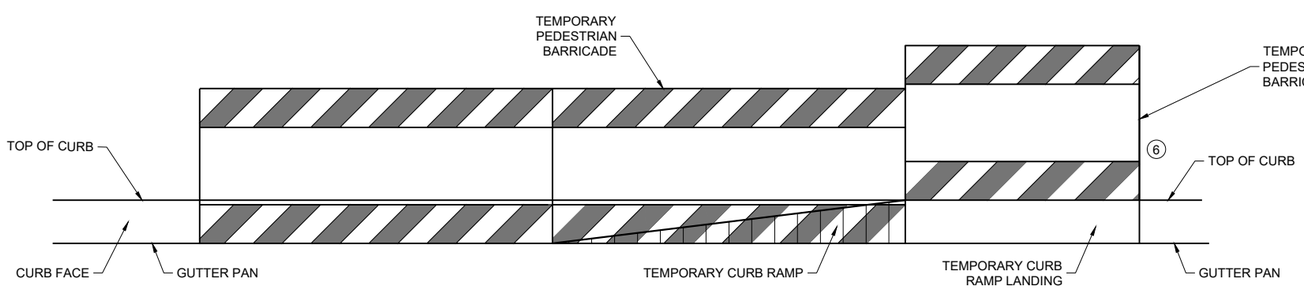

FRONT VIEW

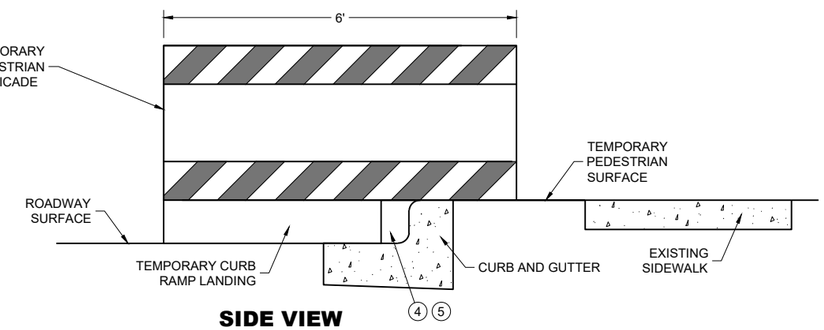

SIDE VIEW

TEMPORARY CURB RAMP PARALLEL TO CURB

6

6

SDD 15D30-10b

SDD 15D30-10b

TRAFFIC CONTROL, PEDESTRIAN ACCOMMODATION

STATE OF WISCONSIN
DEPARTMENT OF TRANSPORTATION

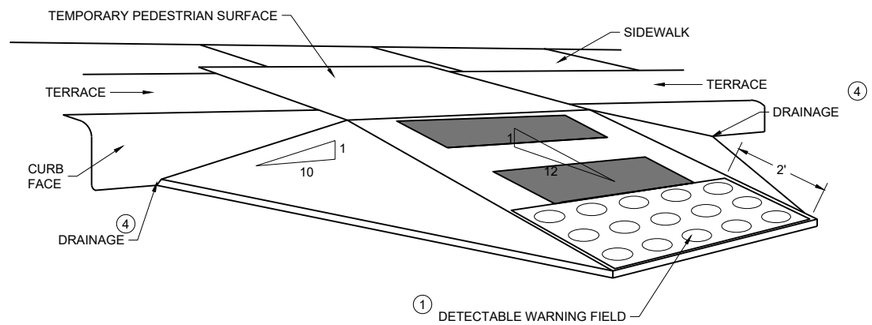

WITH SIDE APRON 5

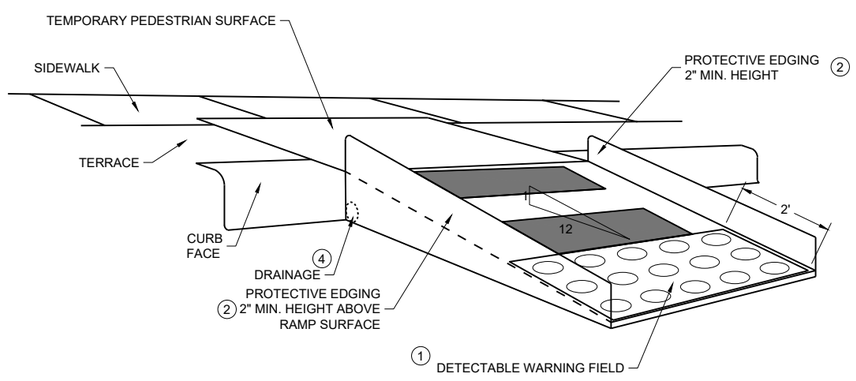

WITH PROTECTIVE EDGE

TEMPORARY CURB RAMP PERPENDICULAR TO CURB

GENERAL NOTES

CURB RAMPS SHALL BE 48" MINIMUM WIDTH WITH A FIRM, STABLE AND SLIP RESISTANT SURFACE.

ALTERNATE SIDEWALK WORK BETWEEN LEFT AND RIGHT SIDE OF ROADWAY TO MAINTAIN PEDESTRIAN ACCESS.

CURB RAMPS AND LANDINGS SHALL HAVE A 1:50 (2%) MAX. CROSS-SLOPE.

CLEAR SPACE OF 48" X 48" SHALL BE PROVIDED ABOVE AND BELOW THE CURB RAMP.

LATERAL JOINTS OR GAPS BETWEEN SURFACES SHALL BE LESS THAN ½" WIDTH.

CHANGES BETWEEN SURFACE HEIGHTS SHALL NOT EXCEED ½". LATERAL EDGES MAY BE VERTICAL UP TO ¼" HIGH AND SHALL BE BEVELED AT 1:2 BETWEEN ¼" AND ½".

1. INSTALL CONTRASTING TEMPORARY DETECTABLE WARNING FIELD AT PEDESTRIAN STREET CROSSINGS, AS SHOWN IN THE PLANS
2. PROTECTIVE EDGING WITH A 2" MIN. HEIGHT SHALL BE INSTALLED WHEN A CURB RAMP OR LANDING PLATFORM HAS A VERTICAL DROP OF 6" OR GREATER OR HAS A SIDE APRON SLOPE STEEPER THAN 1:3 (33%). PROTECTIVE EDGING SHOULD BE CONSIDERED WHEN CURB RAMPS OR LANDING PLATFORMS HAVE A VERTICAL DROP OF 3" OR MORE.
3. DETECTABLE EDGING WITH 6" MIN. HEIGHT AND CONTRASTING COLOR SHALL BE INSTALLED ON ALL CURB RAMP LANDINGS WHERE THE WALKWAY CHANGES DIRECTION (TURNS).
4. DO NOT RESTRICT WATER FLOW IN THE GUTTER SYSTEM.
5. CAN ONLY BE USED FOR RAMPS WITH 6" OR LESS OF VERTICAL CHANGE.

TRAFFIC CONTROL, PEDESTRIAN ACCOMMODATION

STATE OF WISCONSIN
DEPARTMENT OF TRANSPORTATION

GENERAL NOTES

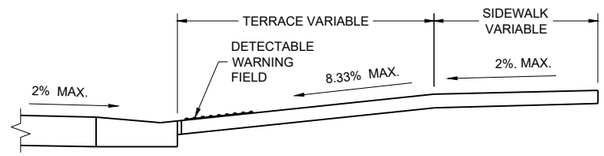

SECTION A - A

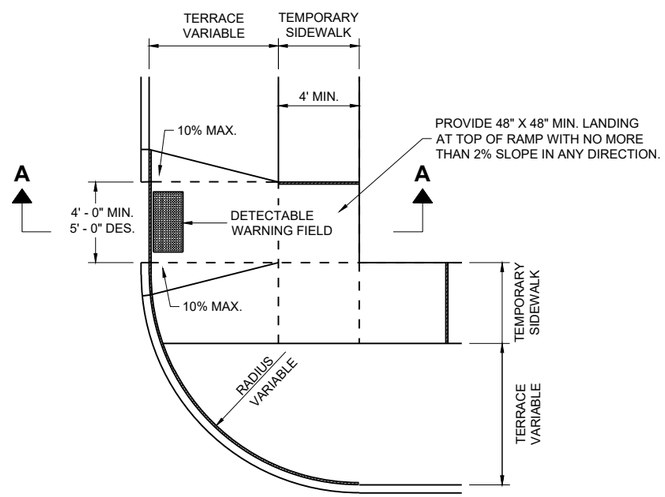

PLAN VIEW
TEMPORARY TYPE 3 RAMP
(OUTSIDE OF CROSSWALK AREA)

6

6

TRAFFIC CONTROL, PEDESTRIAN ACCOMMODATION

STATE OF WISCONSIN
DEPARTMENT OF TRANSPORTATION

APPROVED
May 2023 — DATE
/S/ Andrew Heidtke — <position>
FHWA

SDD 15D30-10d

SDD 15D30-10d

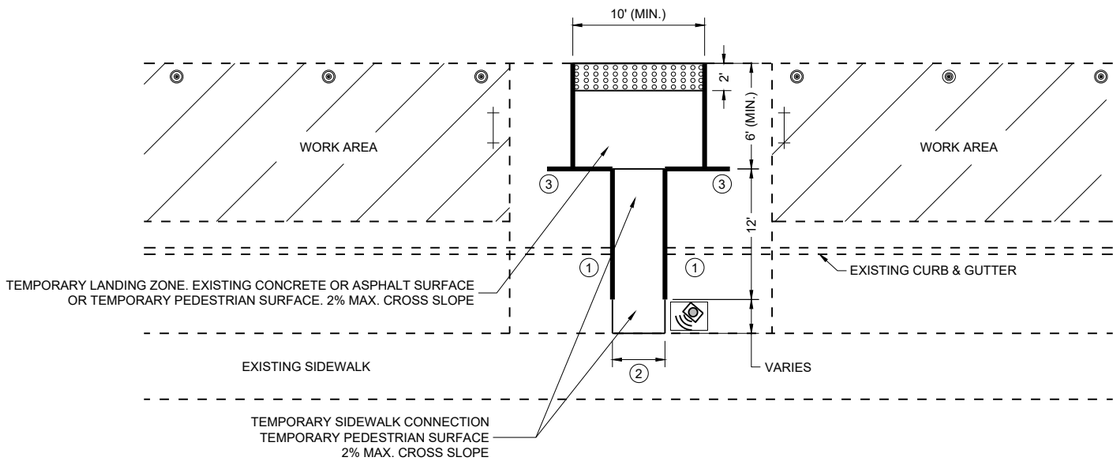

PLAN VIEW

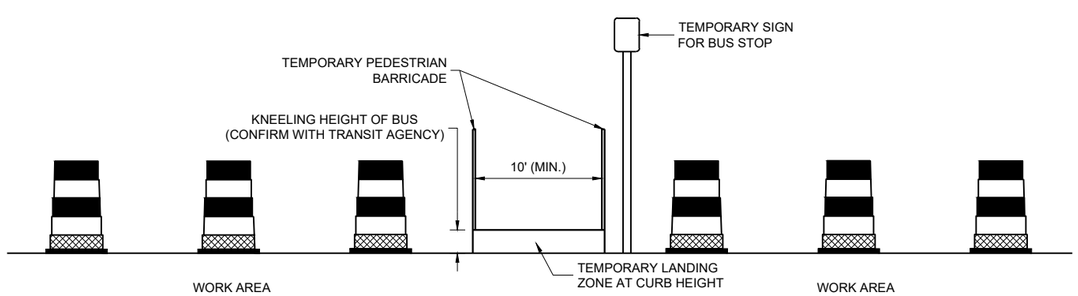

PROFILE VIEW
TEMPORARY BUS STOP PAD

GENERAL NOTES

TYPICAL TEMPORARY PEDESTRIAN BARRICADE PANEL IS 6 FEET LONG.

NOTIFY THE BUS COMPANY 7 DAYS IN ADVANCE OF THE BUS STOP RELOCATION.

PROTECTIVE EDGING WITH A 2" MIN. HEIGHT SHALL BE INSTALLED WHEN A CURB RAMP OR LANDING PLATFORM HAS A VERTICAL DROP OF 6" OR GREATER OR HAS A SIDE APRON SLOPE STEEPER THAN 1:3 (33%). PROTECTIVE EDGING SHOULD BE CONSIDERED WHEN CURB RAMPS OR LANDING PLATFORMS HAVE A VERTICAL DROP OF 3" OR MORE.

DETECTABLE EDGING WITH 6" MIN. HEIGHT AND CONTRASTING COLOR SHALL BE INSTALLED ON ALL CURB RAMP LANDINGS WHERE THE WALKWAY CHANGES DIRECTION (TURNS).

LATERAL JOINTS OR GAPS BETWEEN SURFACES SHALL BE LESS THAN ½" WIDTH.

CHANGES BETWEEN SURFACE HEIGHTS SHALL NOT EXCEED ½". LATERAL EDGES MAY BE VERTICAL UP TO ¼" HIGH AND SHALL BE BEVELED AT 1:2 BETWEEN ¼" AND ½".

CURB RAMPS AND LANDINGS SHALL HAVE A 1:50 (2%) MAX. CROSS-SLOPE.

1. DO NOT RESTRICT WATER FLOW IN THE GUTTER SYSTEM.
2. 5' WIDE MIN. WITH TEMPORARY PEDESTRIAN BARRICADE, 10' WIDE MIN. WITHOUT TEMPORARY PEDESTRIAN BARRICADE.
3. PLACE EXCESS PORTION OF TEMPORARY PEDESTRIAN BARRICADE INTO THIS SPACE.

LEGEND

- TRAFFIC CONTROL DRUM
- TYPE III BARRICADE
- TEMPORARY PEDESTRIAN BARRICADE
- TEMPORARY DETECTABLE WARNING FIELD
- WORK AREA
- TEMPORARY AUDIBLE MESSAGE DEVICE (EXACT PLACEMENT BASED UPON FIELD CONDITIONS)

6

SDD 15D30-10e

TRAFFIC CONTROL, PEDESTRIAN ACCOMMODATION

STATE OF WISCONSIN
DEPARTMENT OF TRANSPORTATION

LEGEND

- SIGN ON PERMANENT SUPPORT
- SIGN ON TEMPORARY SUPPORT
- UNDER PEDESTRIAN TRAFFIC
- WORK AREA
- TEMPORARY PEDESTRIAN BARRICADE
- DIRECTION OF TRAFFIC
- TEMPORARY AUDIBLE MESSAGE DEVICE (EXACT PLACEMENT BASED UPON FIELD CONDITIONS)

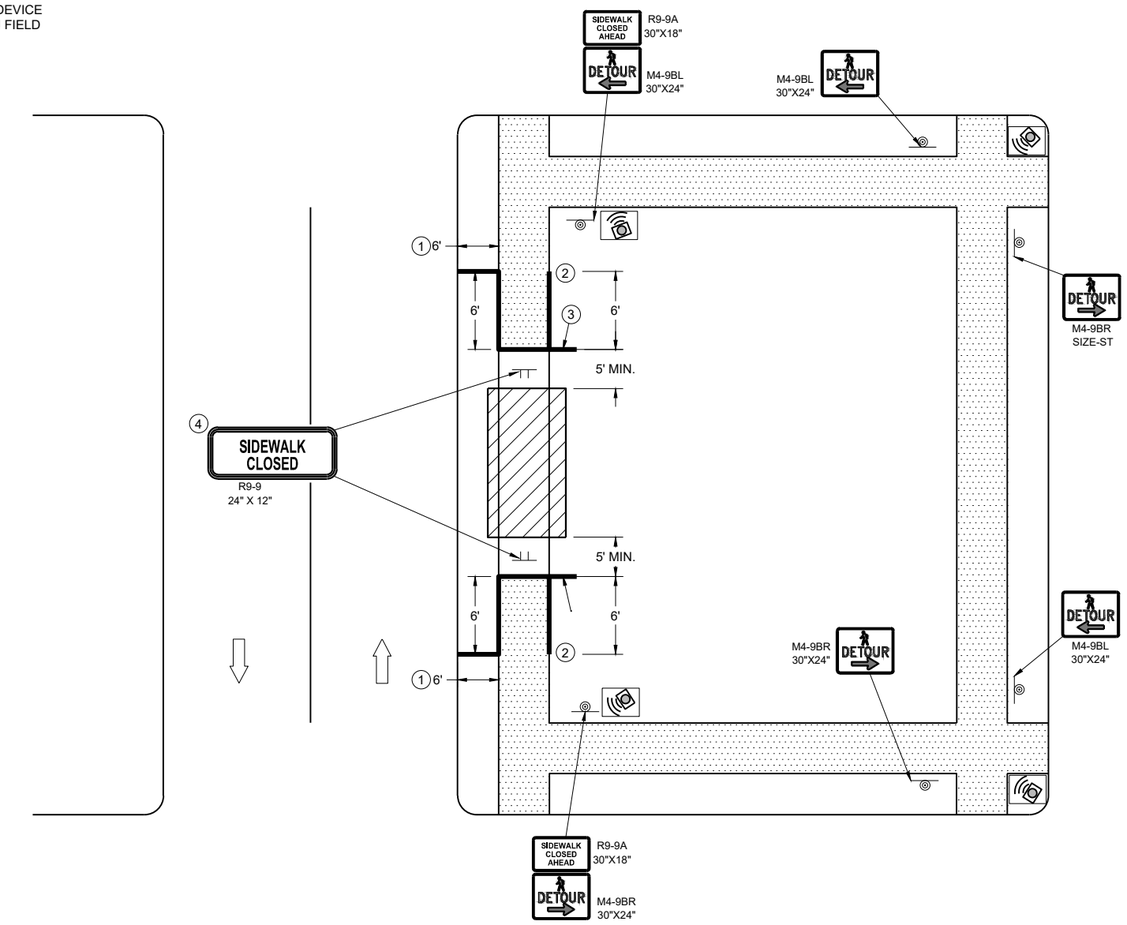

SIDEWALK DETOUR, SIDEWALK ONLY ON ONE SIDE

GENERAL NOTES

WHERE TEMPORARY BARRICADE RUNS PARALLEL ALONG SIDEWALK, PLACE THE FACE OF THE BARRICADE AT THE EDGE OF THE SIDEWALK.

SIGNS THAT REMAIN IN PLACE LESS THAN SEVEN CONTINUOUS DAYS AND NIGHTS MAY BE MOUNTED ON PORTABLE SUPPORTS.

PLACE TEMPORARY PEDESTRIAN BARRICADE TO FIT FIELD CONDITIONS, AVOIDING CONFLICTS WITH DRIVEWAYS AND OTHER EXISTING FEATURES.

1. IF TERRACE IS LESS THAN 6 FEET WIDE, OMIT TEMPORARY PEDESTRIAN BARRICADE FROM THE SIDEWALK TO THE CURB.
2. PLACE BARRICADE CLOSURE SO THAT THE TEMPORARY PEDESTRIAN BARRICADE END IS AT THE LAST OPEN SIDEWALK ACCESS TO RESIDENCES OR BUSINESSES BEFORE THE SIDEWALK CLOSURE.
3. IF TEMPORARY PEDESTRIAN BARRICADE PANEL IS WIDER THAN THE SIDEWALK WIDTH, THE PORTION OF EXCESS PANEL SHOULD EXTEND INTO THE TERRACE.
4. MOUNTING HEIGHT OF 5 FEET FROM THE SURFACE TO THE BOTTOM OF SIGN.

TRAFFIC CONTROL, PEDESTRIAN ACCOMMODATION

STATE OF WISCONSIN
DEPARTMENT OF TRANSPORTATION

6

SDD 15D30-10f

LEGEND

- SIGN ON TEMPORARY SUPPORT
- WORK AREA
- UNDER PEDESTRIAN TRAFFIC
- TEMPORARY PEDESTRIAN SURFACE
- TEMPORARY PEDESTRIAN BARRICADE
- OPTIONAL TEMPORARY PEDESTRIAN BARRICADE
- DIRECTION OF TRAFFIC

GENERAL NOTES

TYPICAL TEMPORARY PEDESTRIAN BARRICADE PANEL IS 6 FEET LONG.

WHERE TEMPORARY BARRICADE RUNS PARALLEL ALONG SIDEWALK, PLACE THE FACE OF THE BARRICADE AT THE EDGE OF THE SIDEWALK.

SIGNS THAT REMAIN IN PLACE LESS THAN SEVEN CONTINUOUS DAYS AND NIGHTS MAY BE MOUNTED ON PORTABLE SUPPORTS.

1. USE TEMPORARY PEDESTRIAN BARRICADE TO SEPARATE PEDESTRIANS FROM DROP OFFS OR FOR ADDITIONAL PEDESTRIAN CHANNELIZATION.
2. IF TEMPORARY PEDESTRIAN BARRICADE PANEL IS WIDER THAN THE SIDEWALK WIDTH, THE PORTION OF EXCESS PANEL SHOULD EXTEND INTO THE TERRACE.
3. MOUNTING HEIGHT OF 5 FEET FROM THE SURFACE TO THE BOTTOM OF SIGN.

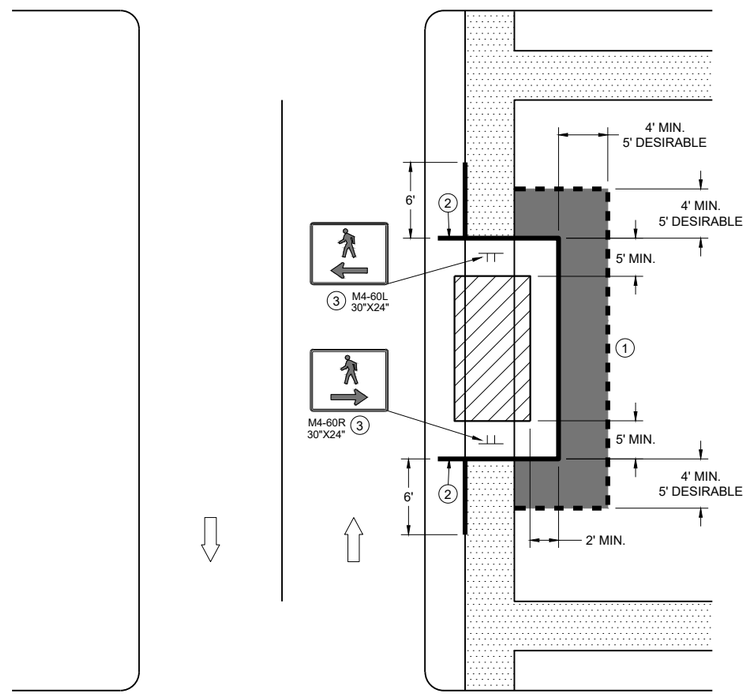

SIDEWALK BYPASS
SINGLE SIDE

TRAFFIC CONTROL, PEDESTRIAN ACCOMMODATION

STATE OF WISCONSIN
DEPARTMENT OF TRANSPORTATION

6
SDD 15D30-10g

LEGEND

- SIGN ON TEMPORARY SUPPORT
- TRAFFIC CONTROL DRUM
- WORK AREA
- UNDER PEDESTRIAN TRAFFIC
- TEMPORARY CURB RAMP
- TEMPORARY PEDESTRIAN SURFACE "A"
- TEMPORARY PEDESTRIAN SURFACE "B"
- TEMPORARY PEDESTRIAN BARRICADE
- DIRECTION OF TRAFFIC

GENERAL NOTES

TYPICAL TEMPORARY PEDESTRIAN BARRICADE PANEL IS 6 FEET LONG.

WHERE TEMPORARY BARRICADE RUNS PARALLEL ALONG SIDEWALK, PLACE THE FACE OF THE BARRICADE AT THE EDGE OF THE SIDEWALK.

1. SHOULDER OR LANE CLOSURE ADVANCE WARNING AND BUFFER SPACE REQUIRED.
2. PLACE EXCESS PORTION OF TEMPORARY PEDESTRIAN BARRICADE PANEL PAST THE SIDEWALK ON THE SIDE AWAY FROM THE ROAD.
3. MOUNTING HEIGHT OF 5 FEET FROM THE SURFACE TO THE BOTTOM OF SIGN.
4. USE EXISTING PAVEMENT SURFACE. IF EXISTING PAVEMENT SURFACE HAS BEEN REMOVED, USE A TEMPORARY PEDESTRIAN SURFACE. WHEN THE TEMPORARY PEDESTRIAN ACCESS ROUTE RUNS PARALLEL ON THE ROADWAY SURFACE, THE MAXIMUM CROSS SLOPE WILL MATCH THE EXISTING ROADWAY CROSS SLOPE.

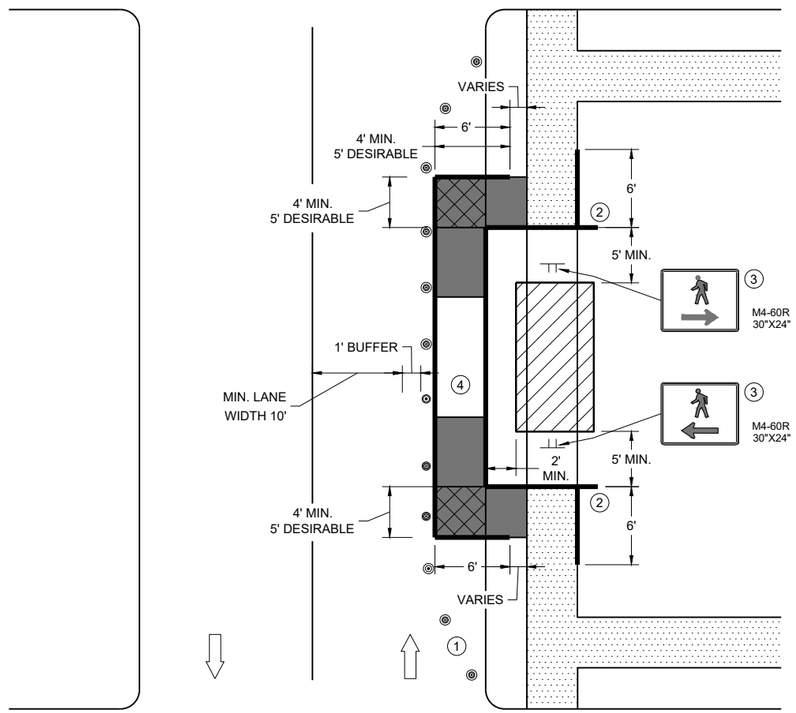

SIDEWALK BYPASS, SINGLE SIDE

TRAFFIC CONTROL, PEDESTRIAN ACCOMMODATION

STATE OF WISCONSIN
DEPARTMENT OF TRANSPORTATION

6
SDD 15D30-10h

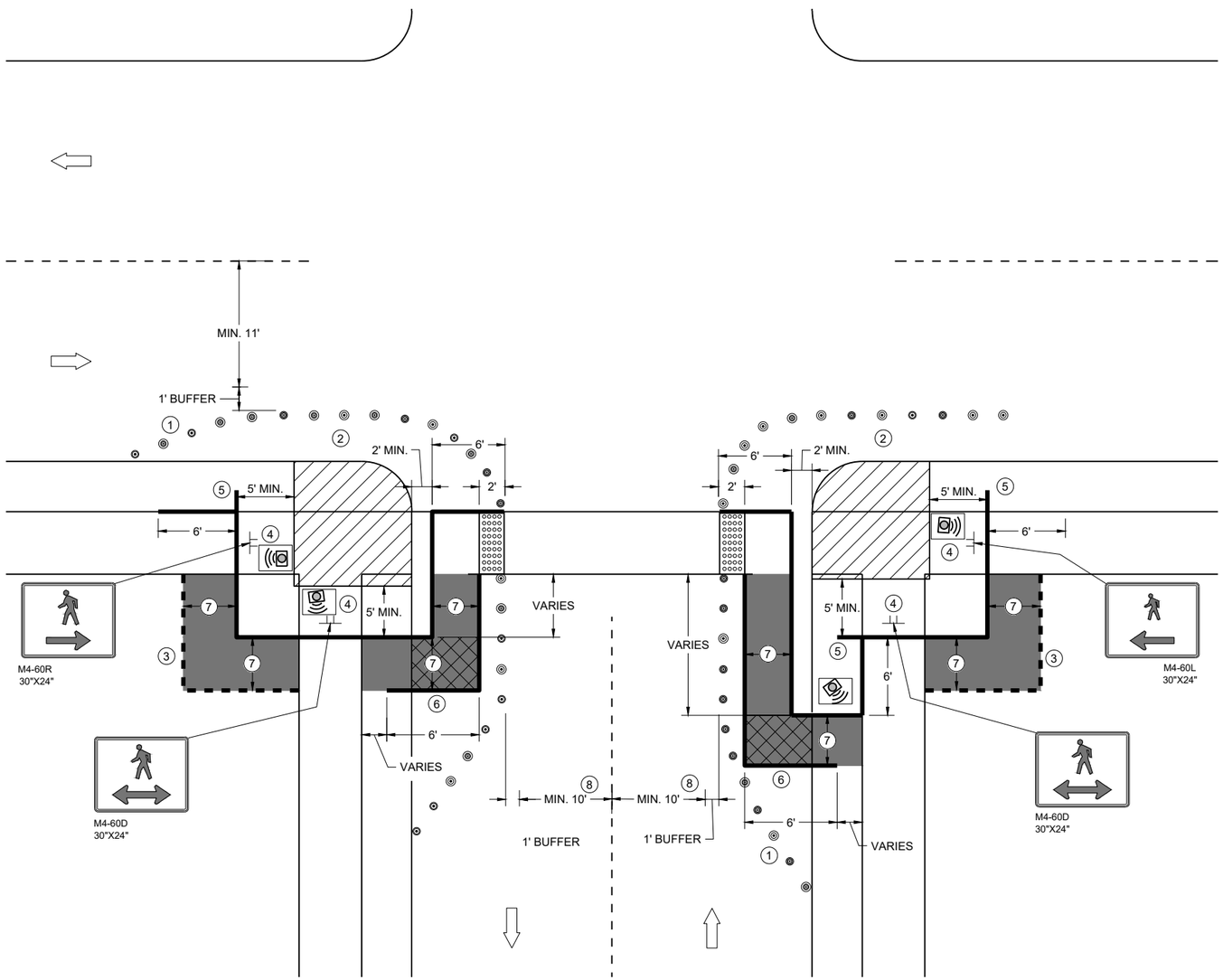

CURB RAMP PEDESTRIAN TRAFFIC CONTROL
SIDEWALK ON SINGLE SIDE

GENERAL NOTES

IF PEDESTRIAN PUSH BUTTONS ARE PRESENT ON THE EXISTING FACILITY, ENSURE THEY ARE MAINTAINED/ACCESSIBLE FOR PEDESTRIAN USE THROUGHOUT THE TEMPORARY PEDESTRIAN ACCOMMODATIONS.

TYPICAL TEMPORARY PEDESTRIAN BARRICADE PANEL IS 6 FEET LONG

WHEN TEMPORARY PEDESTRIAN BARRICADE RUNS PARALLEL ALONG THE SIDEWALK, PLACE THE FACE OF THE BARRICADE AT THE EDGE OF THE SIDEWALK.

WHEN THE TEMPORARY PEDESTRIAN ACCESS ROUTE RUNS PARALLEL ON THE ROADWAY SURFACE, THE MAXIMUM CROSS SLOPE WILL MATCH THE EXISTING ROADWAY CROSS SLOPE.

1. SHOULDER OR LANE CLOSURE ADVANCE WARNING AND PROPER BUFFER SPACE REQUIRED.
2. PROVIDE ADEQUATE SPACE FOR CONTRACTOR OPERATIONS
3. USE TEMPORARY PEDESTRIAN BARRICADE TO SEPARATE PEDESTRIANS FROM DROP OFFS OR FOR ADDITIONAL PEDESTRIAN CHANNELIZATION.
4. MOUNTING HEIGHT OF 5 FEET FROM SIDEWALK SURFACE TO BOTTOM OF SIGN.
5. PLACE EXCESS PORTION OF TEMPORARY PEDESTRIAN BARRICADE PANEL IN THE SIDEWALK TERRACE.
6. IF TEMPORARY PEDESTRIAN BARRICADE DOES NOT REACH THE FACE OF THE CURB, USE AN ADDITIONAL PANEL AND EXTEND INTO THE TERRACE.
7. 4 FEET MINIMUM, 5 FEET DESIRABLE
8. IF MINIMUM LANE WIDTHS CAN'T BE ATTAINED, CURB RAMPS MAY NEED TO BE CONSTRUCTED AT SEPARATE TIMES.

LEGEND

- SIGN ON TEMPORARY SUPPORT
- TRAFFIC CONTROL DRUM
- WORK AREA
- TEMPORARY CURB RAMP
- TEMPORARY PEDESTRIAN SURFACE "A"
- TEMPORARY PEDESTRIAN SURFACE "B"
- TEMPORARY DETECTABLE WARNING FIELD
- TEMPORARY PEDESTRIAN BARRICADE
- OPTIONAL TEMPORARY PEDESTRIAN BARRICADE
- DIRECTION OF TRAFFIC
- TEMPORARY AUDIBLE MESSAGE DEVICE (EXACT PLACEMENT BASED UPON FIELD CONDITIONS)

TRAFFIC CONTROL, PEDESTRIAN ACCOMMODATION

STATE OF WISCONSIN
DEPARTMENT OF TRANSPORTATION

6
SDD 15D30-10i

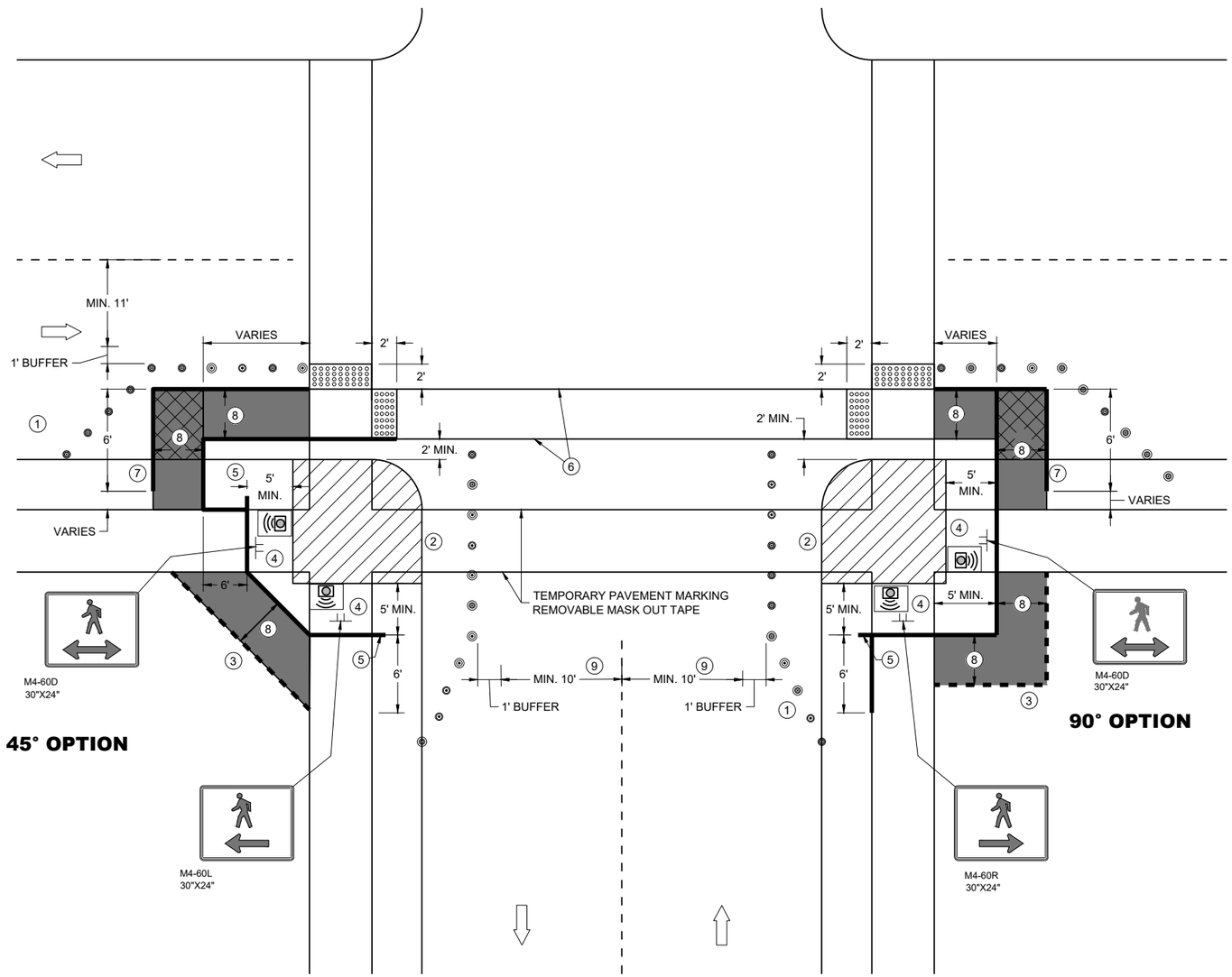

CURB RAMP PEDESTRIAN TRAFFIC CONTROL

GENERAL NOTES

IF PEDESTRIAN PUSH BUTTONS ARE PRESENT ON THE EXISTING FACILITY, ENSURE THEY ARE MAINTAINED/ACCESSIBLE FOR PEDESTRIAN USE THROUGHOUT THE TEMPORARY PEDESTRIAN ACCOMMODATIONS.

TYPICAL TEMPORARY PEDESTRIAN BARRICADE PANEL IS 6 FEET LONG

WHEN TEMPORARY PEDESTRIAN BARRICADE RUNS PARALLEL ALONG THE SIDEWALK, PLACE THE FACE OF THE BARRICADE AT THE EDGE OF THE SIDEWALK.

WHEN THE TEMPORARY PEDESTRIAN ACCESS ROUTE RUNS PARALLEL ON THE ROADWAY SURFACE, THE MAXIMUM CROSS SLOPE WILL MATCH THE EXISTING ROADWAY CROSS SLOPE.

1. SHOULDER OR LANE CLOSURE ADVANCE WARNING AND PROPER BUFFER SPACE REQUIRED.
2. PROVIDE ADEQUATE SPACE FOR CONTRACTOR OPERATIONS
3. USE TEMPORARY PEDESTRIAN BARRICADE TO SEPARATE PEDESTRIANS FROM DROP OFFS OR FOR ADDITIONAL PEDESTRIAN CHANNELIZATION.
4. MOUNTING HEIGHT OF 5 FEET FROM SIDEWALK SURFACE TO BOTTOM OF SIGN.
5. PLACE EXCESS PORTION OF TEMPORARY PEDESTRIAN BARRICADE PANEL IN THE SIDEWALK TERRACE.
6. WHITE 6" TEMPORARY PAVEMENT MARKING
7. IF TEMPORARY PEDESTRIAN BARRICADE DOES NOT REACH THE FACE OF THE CURB, USE AN ADDITIONAL PANEL AND EXTEND INTO THE TERRACE.
8. 4 FEET MINIMUM, 5 FEET DESIRABLE
9. IF MINIMUM LANE WIDTHS CAN'T BE ATTAINED, CURB RAMPS MAY NEED TO BE CONSTRUCTED AT SEPARATE TIMES.

LEGEND

- SIGN ON TEMPORARY SUPPORT
- TRAFFIC CONTROL DRUM
- WORK AREA
- TEMPORARY CURB RAMP
- TEMPORARY PEDESTRIAN SURFACE "A"
- TEMPORARY PEDESTRIAN SURFACE "B"
- TEMPORARY DETECTABLE WARNING FIELD
- TEMPORARY PEDESTRIAN BARRICADE
- OPTIONAL TEMPORARY PEDESTRIAN BARRICADE
- DIRECTION OF TRAFFIC
- TEMPORARY AUDIBLE MESSAGE DEVICE (EXACT PLACEMENT BASED UPON FIELD CONDITIONS)

TRAFFIC CONTROL, PEDESTRIAN ACCOMMODATION

STATE OF WISCONSIN
DEPARTMENT OF TRANSPORTATION

6
SDD 15D30-10j

LEGEND

- SIGN ON PERMANENT SUPPORT
- SIGN ON TEMPORARY SUPPORT
- UNDER PEDESTRIAN TRAFFIC
- WORK AREA
- TEMPORARY PEDESTRIAN BARRICADE
- DIRECTION OF TRAFFIC
- TEMPORARY AUDIBLE MESSAGE DEVICE (EXACT PLACEMENT BASED UPON FIELD CONDITIONS)

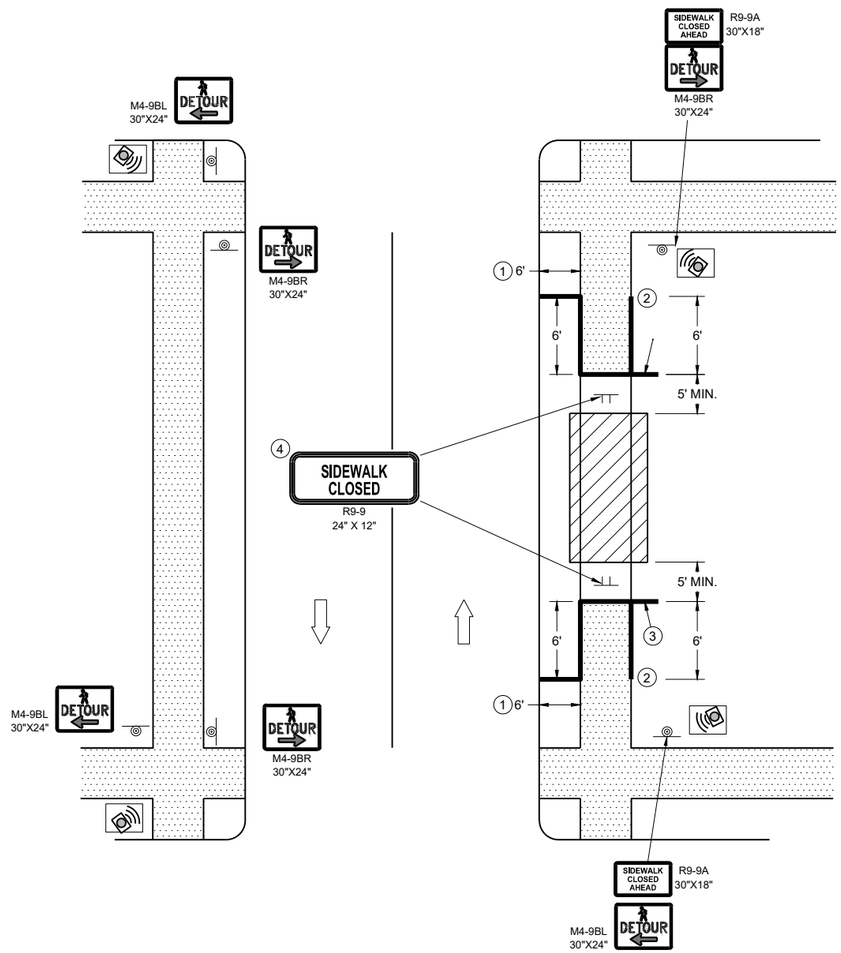

SIDEWALK DETOUR, SIDEWALK ON BOTH SIDES

GENERAL NOTES

WHERE TEMPORARY BARRICADE RUNS PARALLEL ALONG SIDEWALK, PLACE THE FACE OF THE BARRICADE AT THE EDGE OF THE SIDEWALK.

SIGNS THAT REMAIN IN PLACE LESS THAN SEVEN CONTINUOUS DAYS AND NIGHTS MAY BE MOUNTED ON PORTABLE SUPPORTS.

PLACE TEMPORARY PEDESTRIAN BARRICADE TO FIT FIELD CONDITIONS, AVOIDING CONFLICT WITH DRIVEWAYS AND OTHER EXISTING FEATURES.

1. IF TERRACE IS LESS THAN 6 FEET WIDE, OMIT TEMPORARY PEDESTRIAN BARRICADE FROM THE SIDEWALK TO THE CURB.
2. PLACE BARRICADE CLOSURE SO THAT THE TEMPORARY PEDESTRIAN BARRICADE END IS AT THE LAST OPEN SIDEWALK ACCESS TO RESIDENCES OR BUSINESSES BEFORE THE SIDEWALK CLOSURE.
3. IF TEMPORARY PEDESTRIAN BARRICADE PANEL IS WIDER THAN THE SIDEWALK WIDTH, THE PORTION OF EXCESS PANEL SHOULD EXTEND INTO THE TERRACE.
4. MOUNTING HEIGHT OF 5 FEET FROM THE SURFACE TO THE BOTTOM OF SIGN.

TRAFFIC CONTROL, PEDESTRIAN ACCOMMODATION

STATE OF WISCONSIN
DEPARTMENT OF TRANSPORTATION

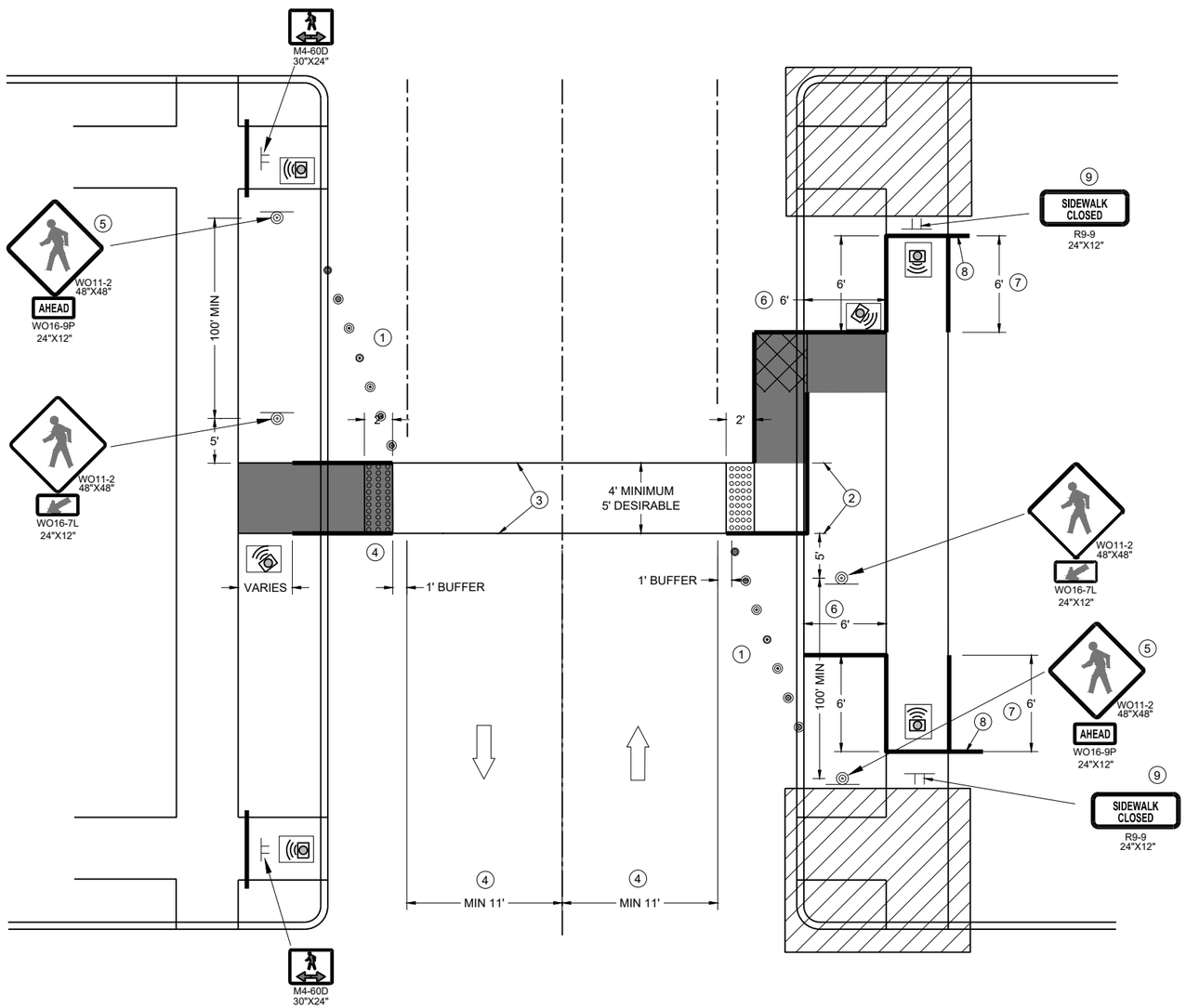

TEMPORARY PEDESTRIAN CROSSING

GENERAL NOTES

TYPICAL TEMPORARY PEDESTRIAN BARRICADE PANEL IS 6 FEET LONG.

SEE OTHER PEDESTRIAN ACCOMMODATION DETAILS FOR SIGNING AND DEVICES FOR DIFFERENT PEDESTRIAN FACILITIES CLOSURES.

WHEN THE TEMPORARY PEDESTRIAN ACCESS ROUTE RUNS PARALLEL ON THE ROADWAY SURFACE, THE MAXIMUM CROSS SLOPE WILL MATCH THE EXISTING ROADWAY CROSS SLOPE.

1. SHOULDER OR LANE CLOSURE ADVANCED WARNING AND PROPER BUFFER SPACE REQUIRED.
2. 4 FEET MINIMUM, 5 FEET DESIRABLE.
3. WHITE 6" TEMPORARY PAVEMENT MARKING.
4. IF MINIMUM LANE WIDTHS CAN'T BE ATTAINED, PERPENDICULAR CURB RAMPS MAY NEED TO BE UTILIZED.
5. IF MINIMUM 100' SPACING FROM THE MID-BLOCK CROSSING CANNOT BE ATTAINED BEFORE THE INTERSECTION, REMOVE THIS SIGN ASSEMBLY.
6. IF TERRACE IS LESS THAN 6 FEET WIDE, OMIT TEMPORARY PEDESTRIAN BARRICADE FROM THE SIDEWALK TO THE CURB.
7. PLACE BARRICADE CLOSURE SO THAT THE TEMPORARY PEDESTRIAN BARRICADE END IS AT THE LAST OPEN SIDEWALK ACCESS TO RESIDENCES OR BUSINESSES BEFORE THE SIDEWALK CLOSURE.
8. IF TEMPORARY PEDESTRIAN BARRICADE PANEL IS WIDER THAN THE SIDEWALK WIDTH, THE PORTION OF THE EXCESS PANEL SHOULD EXTEND INTO THE TERRACE.
9. MOUNTING HEIGHT OF 5 FEET FROM THE SURFACE TO THE BOTTOM OF THE SIGN.

LEGEND

- TRAFFIC CONTROL DRUM
- SIGN ON TEMPORARY SUPPORT
- TEMPORARY CURB RAMP
- TEMPORARY DETECTABLE WARNING FIELD
- TEMPORARY PEDESTRIAN SURFACE "A"
- TEMPORARY PEDESTRIAN SURFACE "B"
- WORK AREA
- TEMPORARY PEDESTRIAN BARRICADE
- DIRECTION OF TRAFFIC
- TEMPORARY AUDIBLE MESSAGE DEVICE (EXACT PLACEMENT BASED UPON FIELD CONDITIONS)

TRAFFIC CONTROL, PEDESTRIAN ACCOMMODATION

STATE OF WISCONSIN
DEPARTMENT OF TRANSPORTATION

6
SDD 15D30-10I

LEGEND

- TYPE III BARRICADE WITH ATTACHED SIGN
- SIGN ON PERMANENT SUPPORT
- TRAFFIC CONTROL DRUM WITH TYPE "C" STEADY BURN LIGHT
- TRAFFIC CONTROL DRUM
- FLAGS, 16" X 16" MIN. (ORANGE)
- REMOVING PAVEMENT MARKING
- DIRECTION OF TRAFFIC
- ASPHALTIC PAVEMENT WIDENING
- CONCRETE BARRIER TEMPORARY PRECAST

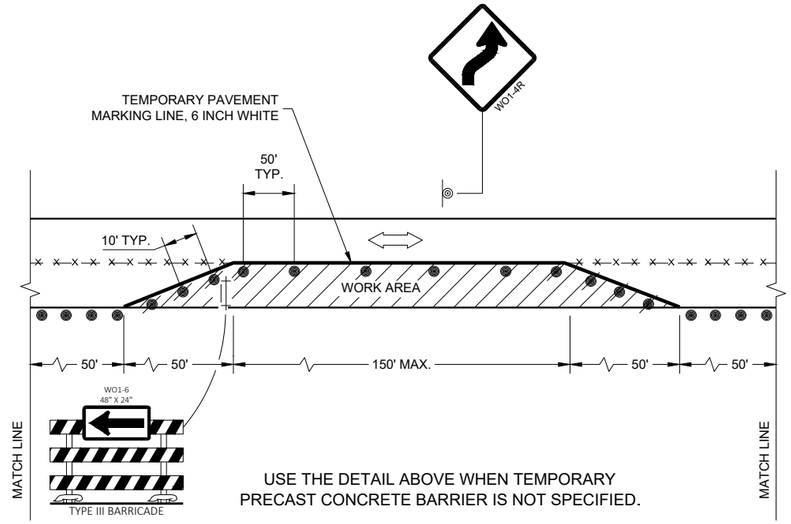

USE THE DETAIL ABOVE WHEN TEMPORARY PRECAST CONCRETE BARRIER IS NOT SPECIFIED.

GENERAL NOTES

THE EXACT NUMBER, LOCATION, AND SPACING OF ALL SIGNS AND DEVICES SHALL BE ADJUSTED TO FIT FIELD CONDITIONS AS APPROVED BY THE ENGINEER.

THE SPACING BETWEEN TRAFFIC CONTROL SIGNS SHOULD BE ADJUSTED TO NOT CONFLICT WITH AND TO PROVIDE A MINIMUM OF 200 FEET (500 FEET DESIRABLE) CLEARANCE TO EXISTING SIGNS THAT WILL REMAIN IN PLACE..

THIS LANE CLOSURE IS TYPICAL FOR CLOSING RIGHT LANE - REVERSE FOR CLOSING LEFT LANE.

ALL SIGNS ARE 48" x 48" UNLESS OTHERWISE NOTED.

"WO" IS THE SAME AS "W" EXCEPT THE BACKGROUND IS ORANGE.

ANY SIGNS TEMPORARY OR EXISTING, WHICH CONFLICT WITH TRAFFIC CONTROL "IN USE" SHALL BE REMOVED OR COVERED AS NEEDED OR AS APPROVED BY THE ENGINEER.

REMOVE PAVEMENT MARKINGS AND PLACE TEMPORARY PAVEMENT MARKING LINES IF LANE CLOSURE IS TO BE IN PLACE FOR 4 OR MORE CONTINUOUS DAYS AND NIGHTS.

1. 500 FOOT SPACING SHOWN IS FOR ROADWAYS WITH A PRE-CONSTRUCTION REGULATORY SPEED LIMIT OF 45 MPH OR MORE. FOR 35 - 40 MPH, USE 350 FOOT TYPICAL SPACING. FOR 25 - 30 MPH, USE 200 FOOT TYPICAL SPACING.
2. DIMENSION DETERMINED BY CBTP TAPER FROM EDGE LINE TO TANGENT SECTION OF THE ROAD.
3. TEMPORARY PAVEMENT MARKING LINE, 18 INCH WHITE STOP LINE.
4. 700 FOOT TEMPORARY PAVEMENT MARKING LINE, 6 INCH DOUBLE YELLOW. WHEN THE DISTANCE FOR THE PRECEDING NO - PASSING ZONE IS LESS THAN THE MINIMUM DISTANCE BETWEEN ZONES AS INDICATED IN THE SPECIFICATIONS, THE TWO ZONES SHALL BE CONNECTED.
5. SEE SDD 15C02 - SHEET "F" FOR ADVANCED WIDTH RESTRICTION SIGNING.

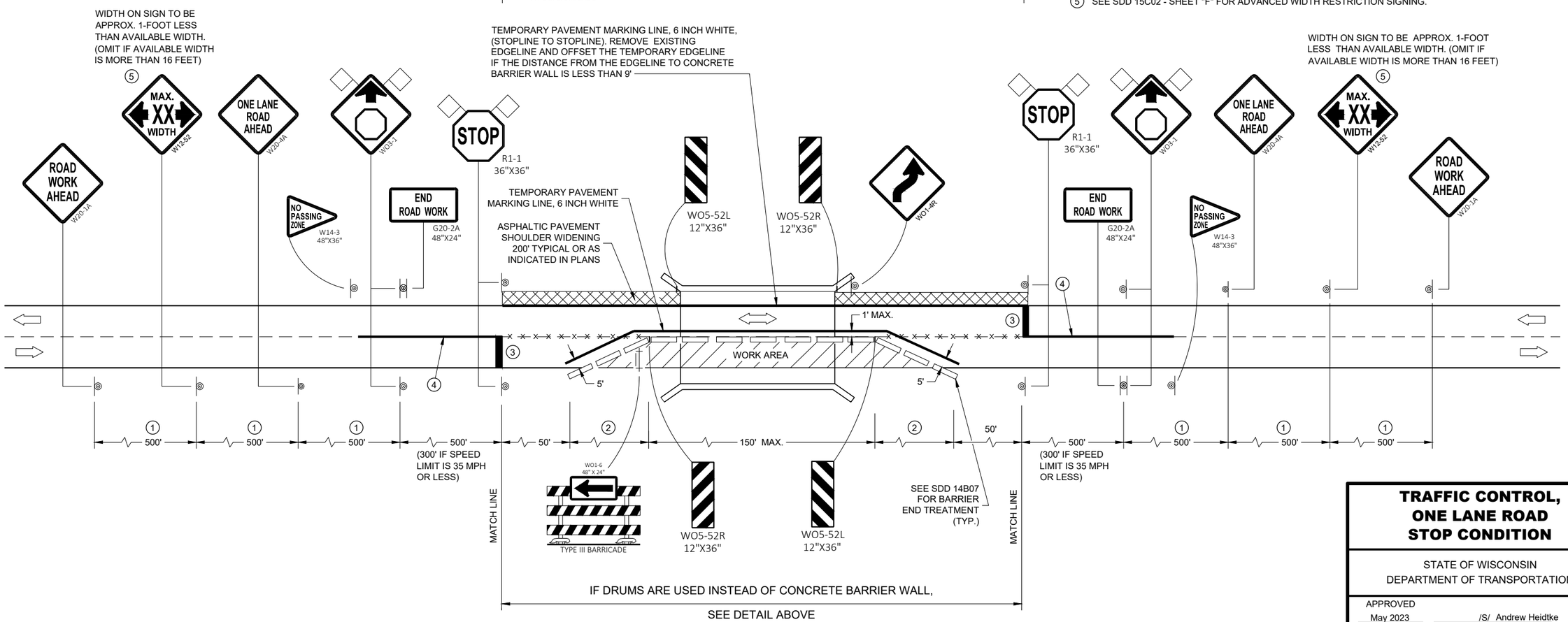

TRAFFIC CONTROL, ONE LANE ROAD STOP CONDITION

STATE OF WISCONSIN
DEPARTMENT OF TRANSPORTATION

APPROVED
May 2023 — DATE
/S/ Andrew Heidtke — WORK ZONE ENGINEER
FHWA

6
SDD 15D32-07

URBAN AREA

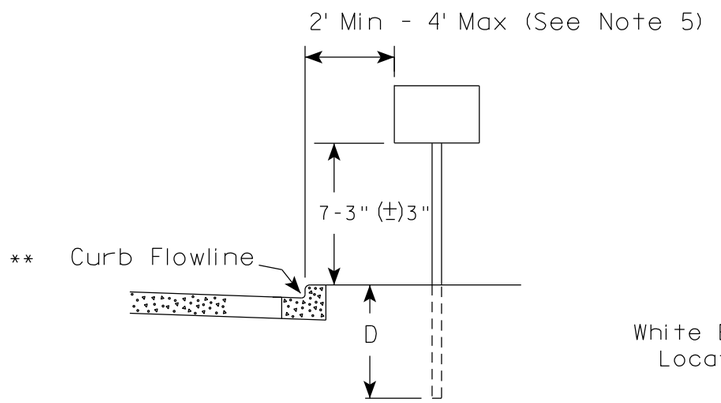

RURAL AREA (See Note 2)

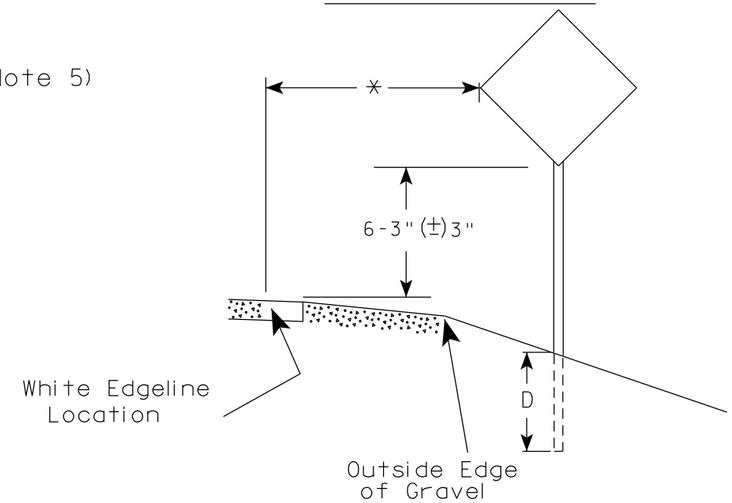

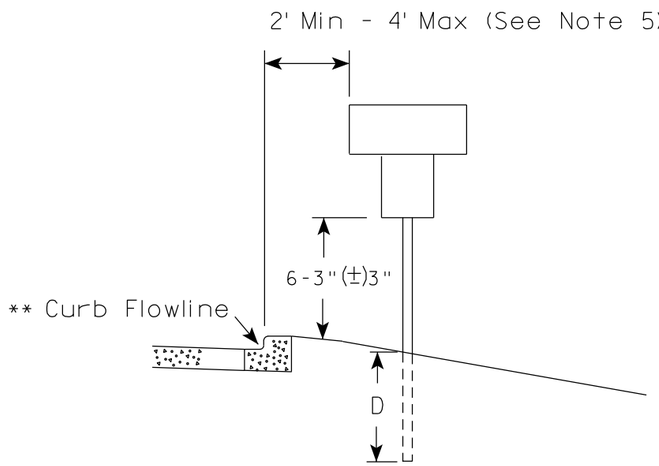

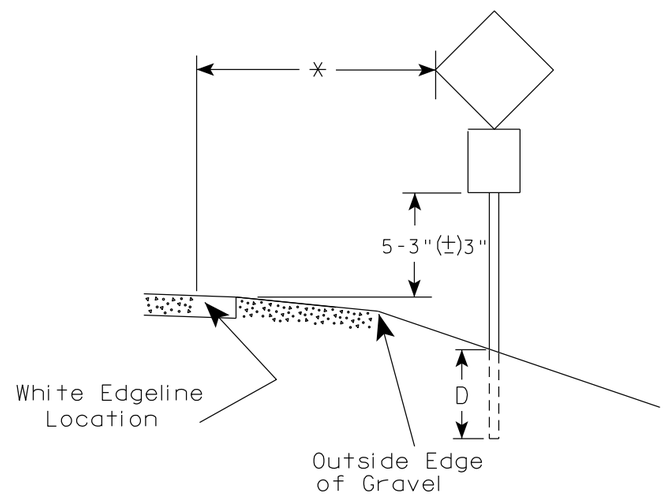

** The existence of curb and gutter does not in itself mandate the vertical clearance illustrated. That height is typically measured where there is sidewalk adjacent to the roadway or parking is permitted. In the absence of sidewalk vertical clearance is measured from the top of the curb. Offset of signs is measured from the flow line.

* 6 feet from edge of a paved shoulder or 12 feet from the edge of pavement (edge line location) or 2 feet from outside edge of gravel, whichever is greater unless directed by project engineer.

GENERAL NOTES

1. Signs wider than 4 feet or 20 sq.ft or larger, shall be mounted on multiple posts. Refer to plate A4-4.
2. If signs are mounted on or behind barrier wall, see A4-10 sign plate.
   The Double Arrow sign (W12-1D) shall be mounted at a height of 2'-3" (±) 3". The Chevron sign (W1-8), Roundabout Chevron panel (R6-4B), Enhanced Reference Markers, Clearance Markers (W5-52), Mile Markers (D10 series), In Road Object Markers (W5-54) & End of Road Markers (W5-56) shall be mounted at a height of 4'-3" (±) 3".
3. For expressways and freeways, mounting height is 7'- 3" (±) 3" or 6'-3" (±) 3" depending upon existence of a sub-sign.
4. Minimum mounting height for signs mounted on traffic signal poles is 5'- 3" (±) 3".
5. Offset distance shall be consistent with existing signs or consistent throughout length of project.
6. Folding signs shall be mounted at a height of 5'-3" (±) 3" or as directd by the Engineer.

POST EMBEDMENT DEPTH

Area of Sign Installation (Sq. Ft.)	D (Min)
20 or Less	4'
Greater than 20	5'

TYPICAL INSTALLATION OF PERMANENT TYPE II SIGNS ON SINGLE POSTS

WISCONSIN DEPT OF TRANSPORTATION

APPROVED Matthew R Rauch
for State Traffic Engineer

DATE 12/6/23 PLATE NO. A4-3.23

7 7

PROJECT NO:	HWY:	COUNTY:		SHEET NO: 99	E

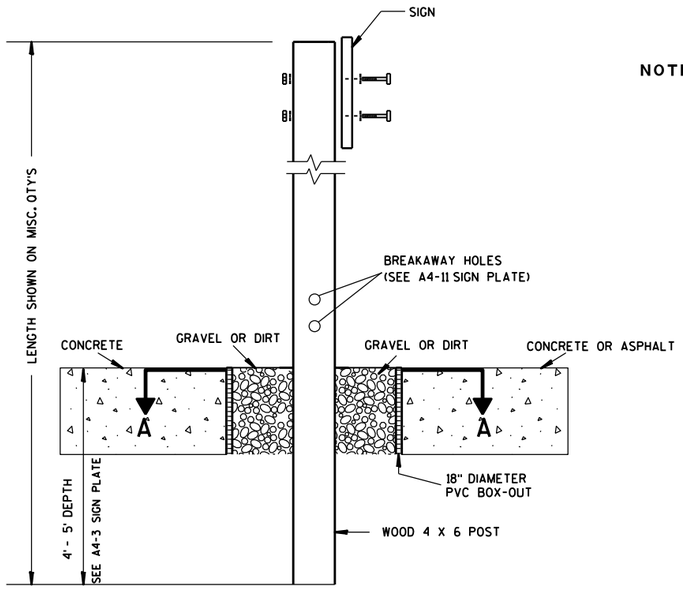

ELEVATION VIEW

DETAIL OF WOOD 4 X 6 SIGN POST IN BOX-OUT

NOTES:
1. ALL MATERIAL TO BE APPROVED BY ENGINEER PRIOR TO INSTALLATION
2. SEE SIGN PLATE A4-8 FOR SIGN HARDWARE REQUIREMENTS
3. 18 INCH X 18 INCH SQUARE BOX-OUTS MAY BE USED FOR INSTALLATIONS IN EXISTING CONCRETE OR ASPHALT LOCATIONS.

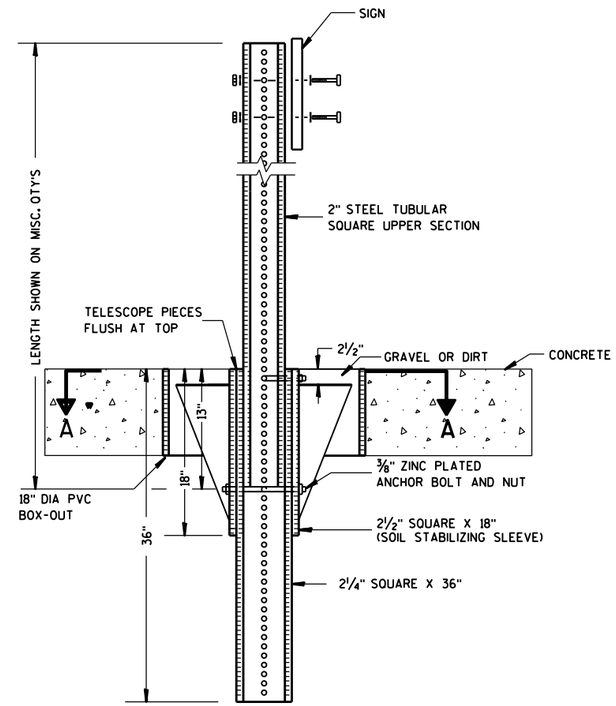

ELEVATION VIEW

DETAIL OF STEEL 2 X 2 SIGN POST IN BOX-OUT

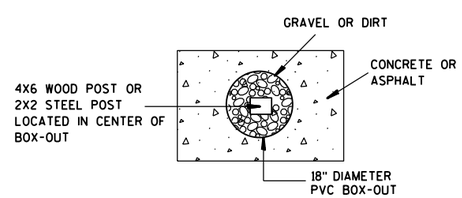

PLAN VIEW

FOR NEW CONCRETE/ASPHALT INSTALLATIONS

SIGN POST
BOX-OUTS
A4-3B

WISCONSIN DEPT OF TRANSPORTATION

APPROVED Matthew R Rauch
for State Traffic Engineer

DATE 1/27/14 PLATE NO. A4-3B.1

PROJECT NO:	HWY:	COUNTY:		SHEET NO:	E

URBAN AREA

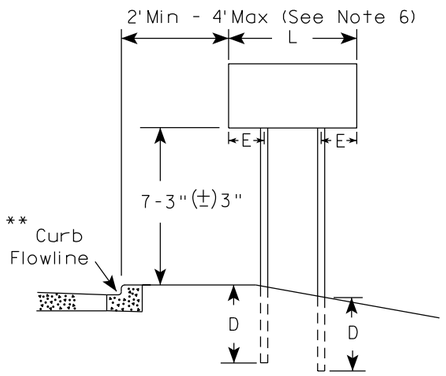

RURAL AREA (See Note 3)

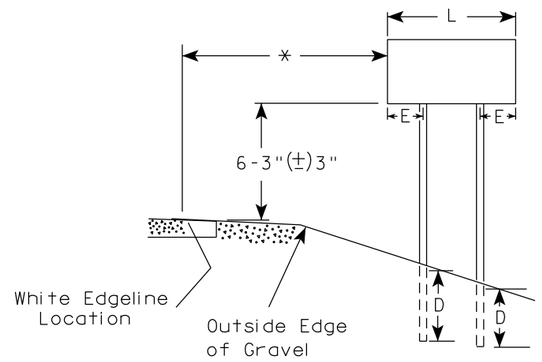

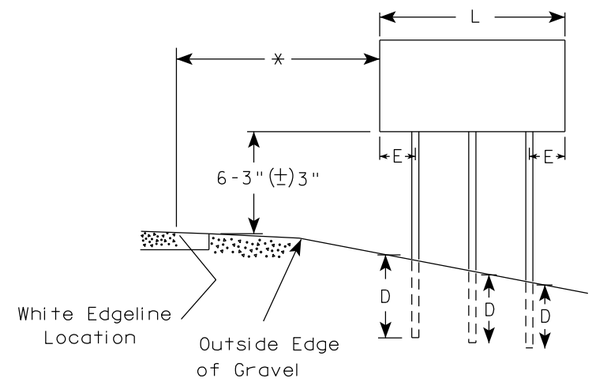

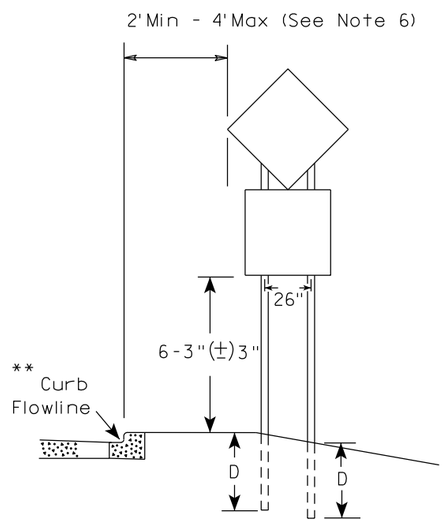

48" DIAMOND WARNING SIGN

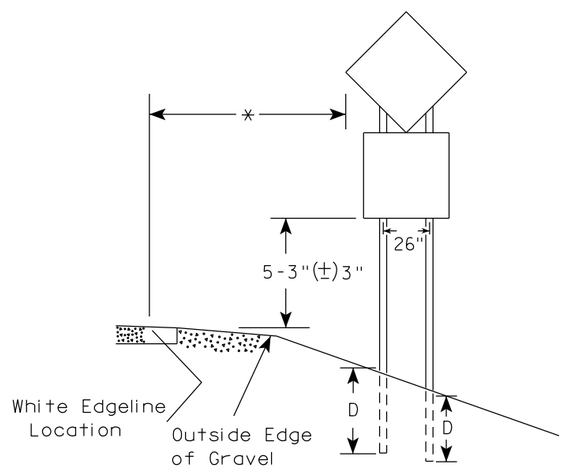

48" DIAMOND WARNING SIGN

GENERAL NOTES

1. For 3 or 4 post installations, individual post spacing shall be greater than 3'-6".
2. See tables below for required number of posts.
3. For expressways and freeways, mounting height is 7'-3" (±) 3" or 6'-3" (±) 3" depending upon existence of sub-sign.
4. The (±) tolerance for mounting height is 3 inches.
5. J-Assemblies are considered to be one sign for mounting height.
6. Offset distance shall be consistent with existing signs or consistent throughout length of project.
7. Folding signs shall be mounted at a height of 5'-3" (±) 3" or as directed by the engineer.
8. The Double Arrow sign (W12-1) shall be mounted at a height of 2'-3" (±) 3". The Chevron sign (W1-8), Roundabout Chevron panel (R6-4B), Clearance Markers (W5-52), Mile Markers (D10 series), In Road Object Markers (W5-54) & End of Road Markers (W5-56) shall be mounted at a height of 4"-3" (±) 3".

* 6 feet from edge of a paved shoulder or 12 feet from the edge of pavement (edge line location) or 2 feet from outside edge of gravel, whichever is greater unless directed by project engineer.

** The existence of curb and gutter does not in itself mandate the vertical clearance illustrated. That height is typically measured where there is sidewalk adjacent to the roadway or parking is permitted. In the absence of sidewalk vertical clearance is measured from the top of the curb. Offset of signs is measured from the flow line.

*** See A4-3 sign plate for signs 4' or less in width and less than 20 S.F. in area.

SIGN SHAPE OTHER THAN DIAMOND (TWO POSTS REQUIRED)	
L	E
*** Greater than 48" Less than 60"	12"
60" to 108"	L/5

SIGN SHAPE OTHER THAN DIAMOND (THREE POSTS REQUIRED)	
L	E
Greater than 108" to 144"	12"

POST EMBEDMENT DEPTH

Area of Sign Installation (Sq. Ft.)	D (Min)
20 or Less	4'
Greater than 20	5'

TYPICAL INSTALLATION OF TYPE II SIGNS ON MULTIPLE POSTS

WISCONSIN DEPT OF TRANSPORTATION

APPROVED Matthew R Rauch
for State Traffic Engineer

DATE 12/6/23 PLATE NO. A4-4.16

PROJECT NO:	HWY:	COUNTY:		SHEET NO: 101	E

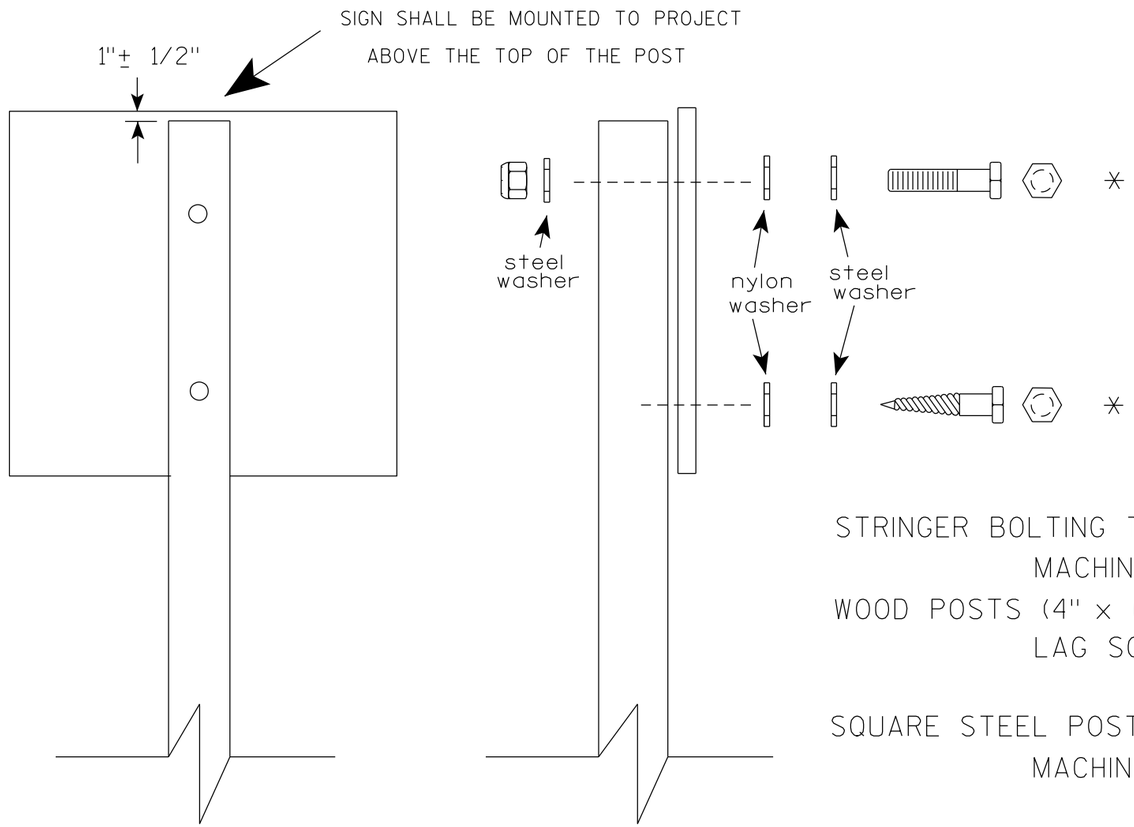

Nuts, bolts and lags used for mounting signs shall have hexagonal heads and shall be either :

a. Hot dip galvanized in accordance with ASTM Designation: A 153, Class D, or SC 3

b. Electro-galvanized in accordance with ASTM Designation : B 633, TYPE III, SC 3.

Threads on bolts and nuts shall be manufactured with sufficient allowance for the cadmium plate or galvanized coating to permit the nuts to run freely on the bolts.

STRINGER BOLTING TO ALUMINUM SIGNS (SEE SIGN PLATE A4-18)

MACHINE BOLTS - 5/16" X 1-3/4" Length w/ lock nuts

WOOD POSTS (4" x 6")

LAG SCREWS - 3/8" X 3" (NO STRINGERS ON BACK OF SIGN)
3/8" X 4" (STRINGERS ON BACK OF SIGN)

SQUARE STEEL POSTS (2" x 2")

MACHINE BOLTS - 3/8" X 3-1/4" Length w/ nuts (NO STRINGER ON BACK OF SIGN)
3/8" X 5" Length w/ nuts (STRINGERS ON BACK OF SIGN)

RIVETS - 9/32" (6605-9-6) BULB-TITE, TRI-FOLD, ALUMINUM BODY/MANDREL
O.D. FLANGE .720-.765 INCH, GRIP RANGE .042-.375 INCH

WASHERS (ALL POSTS) -

1-1/4" O.D. X 3/8" I.D. X 1/16" STEEL
1-1/4" O.D. X 3/8" I.D. X .080 NYLON

* Two different fastening systems are shown for illustration purposes. On any individual sign, either one or the other system shall be used. Actual number of fasteners per sign varies with the sign area, but normally there are two. For a single post installation, all signs greater than 9 sq. ft. require the use of 3 fasteners.

ATTACHMENT OF SIGNS TO POSTS

WISCONSIN DEPT OF TRANSPORTATION

APPROVED Matthew R Rauch
for State Traffic Engineer

DATE 4/1/2020 PLATE NO. A4-8.9

TELESCOPIC TUBING ANCHORS
TWO PIECE SYSTEM

2 1/4" SQUARE
12 GAUGE
PERFORATED
GALVANIZED FINISH

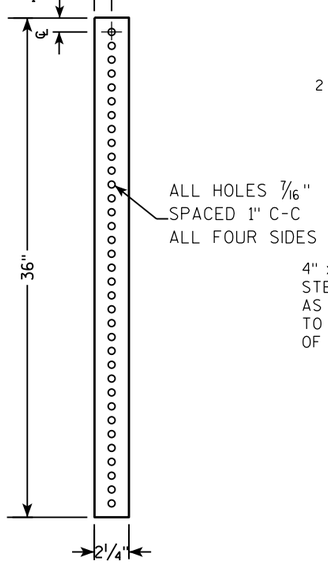

2 1/2" SQUARE
12 GAUGE
OMNI-DIRECTIONAL
PERFORATED
SOIL STABILIZING SLEEVE
GALVANIZED FINISH

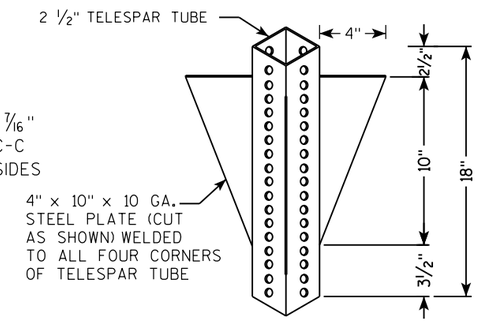

DETAIL OF TUBULAR STEEL SIGN POST
(IN POURED CONCRETE OR ASPHALT)

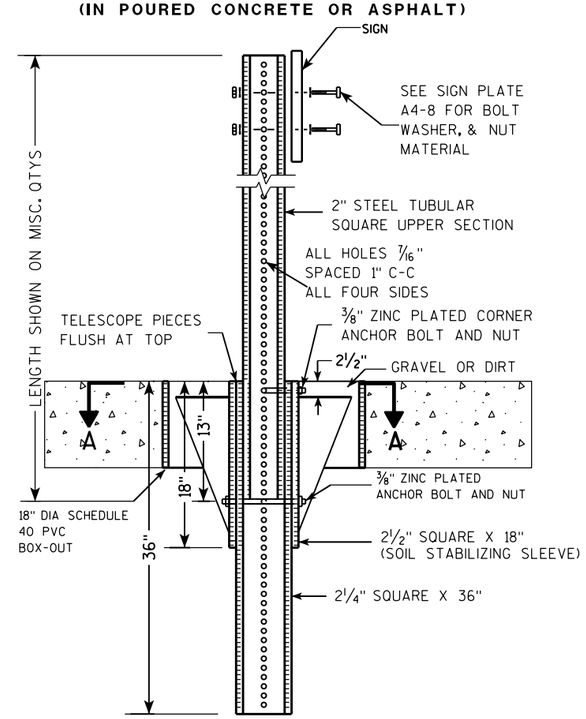

DETAIL OF TUBULAR STEEL SIGN POST
(IN LOCATIONS OTHER THAN POURED CONCRETE OR ASPHALT)

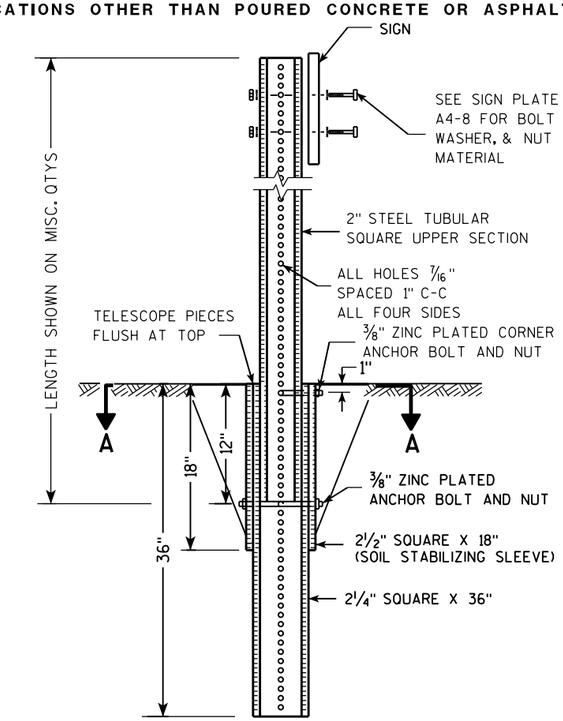

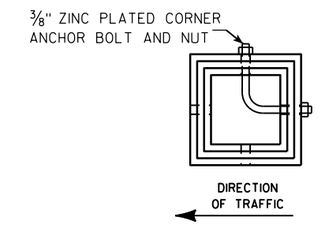

SECTION A-A

Area of Sign Installation (Sq. Ft.)	Number of Required Posts
9 or less	1
Greater than 9 less than or equal to 18	2
Greater than 18 less than or equal to 27	3

Signs wider than 3 feet or larger than 9 sq. ft shall be mounted on multiple posts (see above table).

TUBULAR STEEL
SIGN POST
A4-9

WISCONSIN DEPT OF TRANSPORTATION

APPROVED Matthew R Rauch
for State Traffic Engineer

DATE 2/05/15 PLATE A4-9.9

7

7

PROJECT NO:	HWY:	COUNTY:		SHEET NO:	E

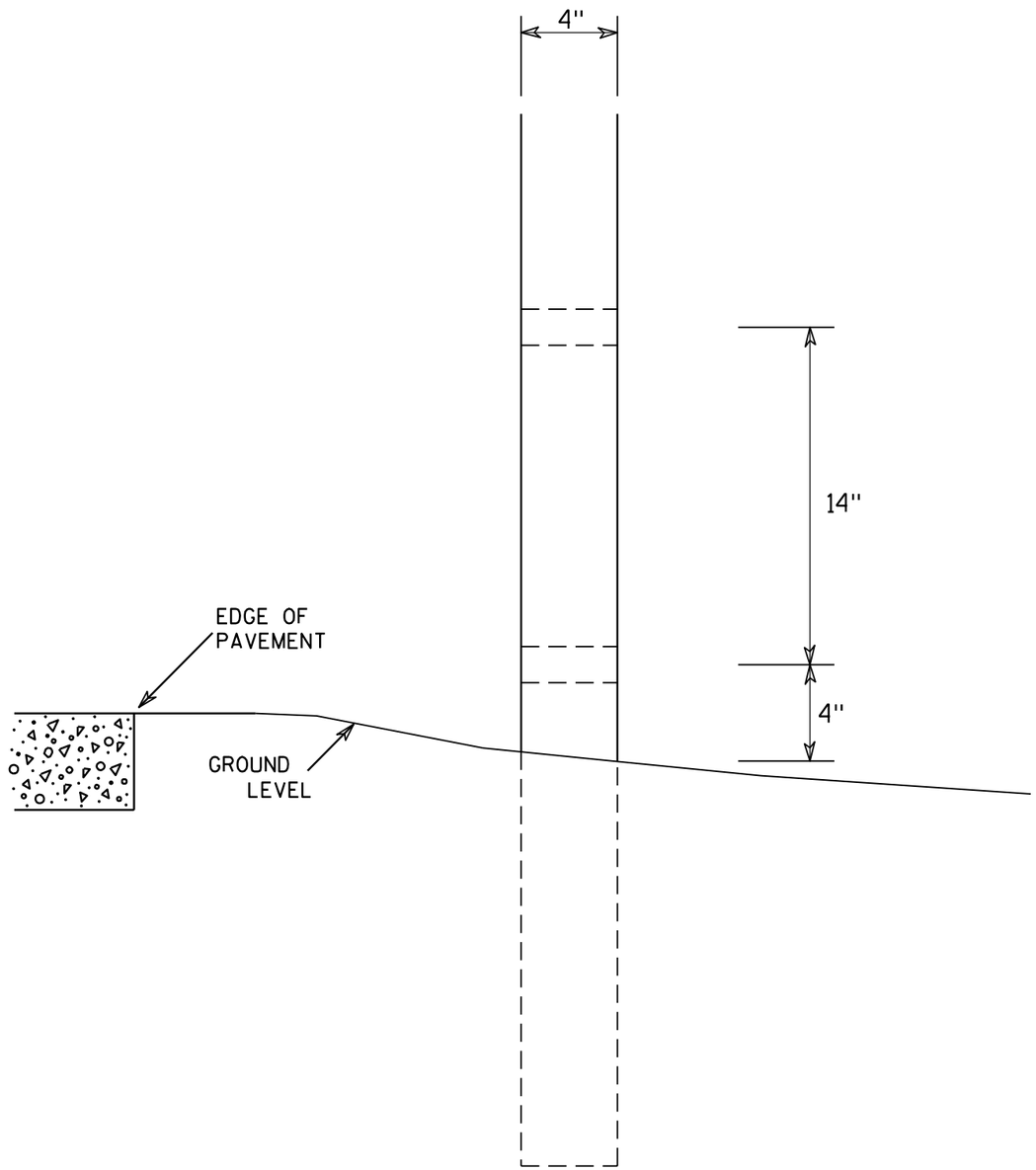

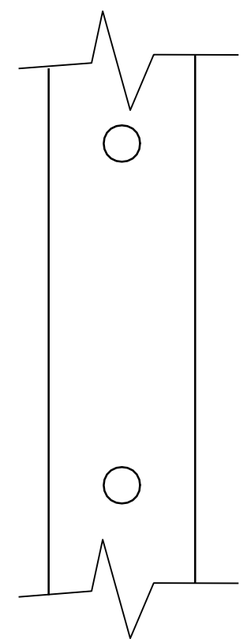

SIDE VIEW

GENERAL NOTES

1. All 4 x 6 Wood Posts shall be modified by having two 1½" diameter holes drilled perpendicular to the roadway centerline.

7

7

4 X 6 WOOD POST MODIFICATIONS

WISCONSIN DEPT OF TRANSPORTATION

APPROVED Chester J Spang for State Traffic Engineer

DATE 3/27/97 PLATE NO. A4-11.2

PROJECT NO:	HWY:	COUNTY:		SHEET NO: 104	E

BANDING

SINGLE SIGN

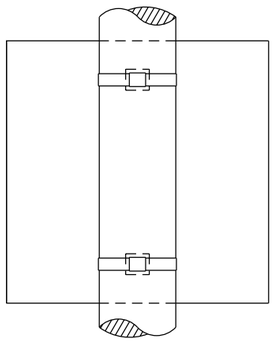

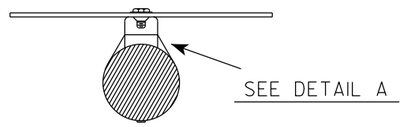

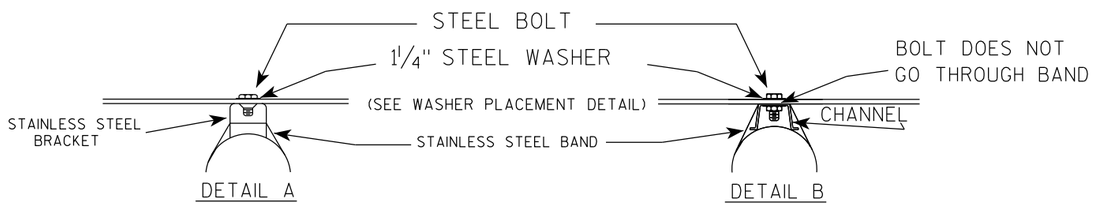

WASHER PLACEMENT

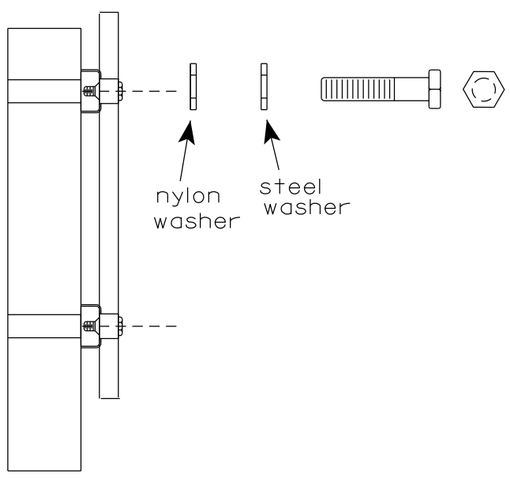

WASHERS (ALL POSTS) -
1-1/4" O.D. X 3/8" I.D. X 1/16" STEEL
1-1/4" O.D. X 3/8" I.D. X .080 NYLON
FOR ALL TYPE H SIGNS

GENERAL NOTES

1. Any sign over 3 feet in width shall use the V-Block banding method. See A5-10 standard plate.
2. Signs 3 feet or greater in height shall have three bracket bands installed. Signs less than 3 feet in height shall have two bracket bands installed.
3. Banding and assembly bracket shall be stainless steel. All bands shall be 3/4" in width and 0.025" thickness.
4. ALL SIGN MOUNTING BOLTS AND WASHERS SHALL BE EITHER:
   a. Hot dip or mechanically galvanized in accordance with ASTM Designation: A 153, Class D
   b. Electro-galvanized in accordance with ASTM designation: B 633, Type III, SC 3

"J" ASSEMBLY

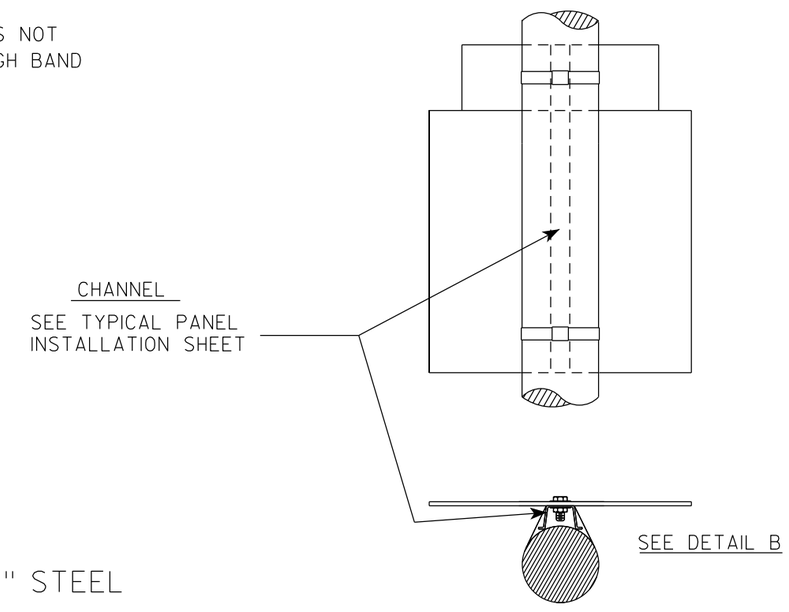

STANDARD SIGN
SIGN BANDING DETAILS

WISCONSIN DEPT OF TRANSPORTATION

APPROVED Matthew R Rauch for State Traffic Engineer

DATE 6/10/19 PLATE NO. A5-9.4

PROJECT NO:	HWY:	COUNTY:		SHEET NO: 105	E

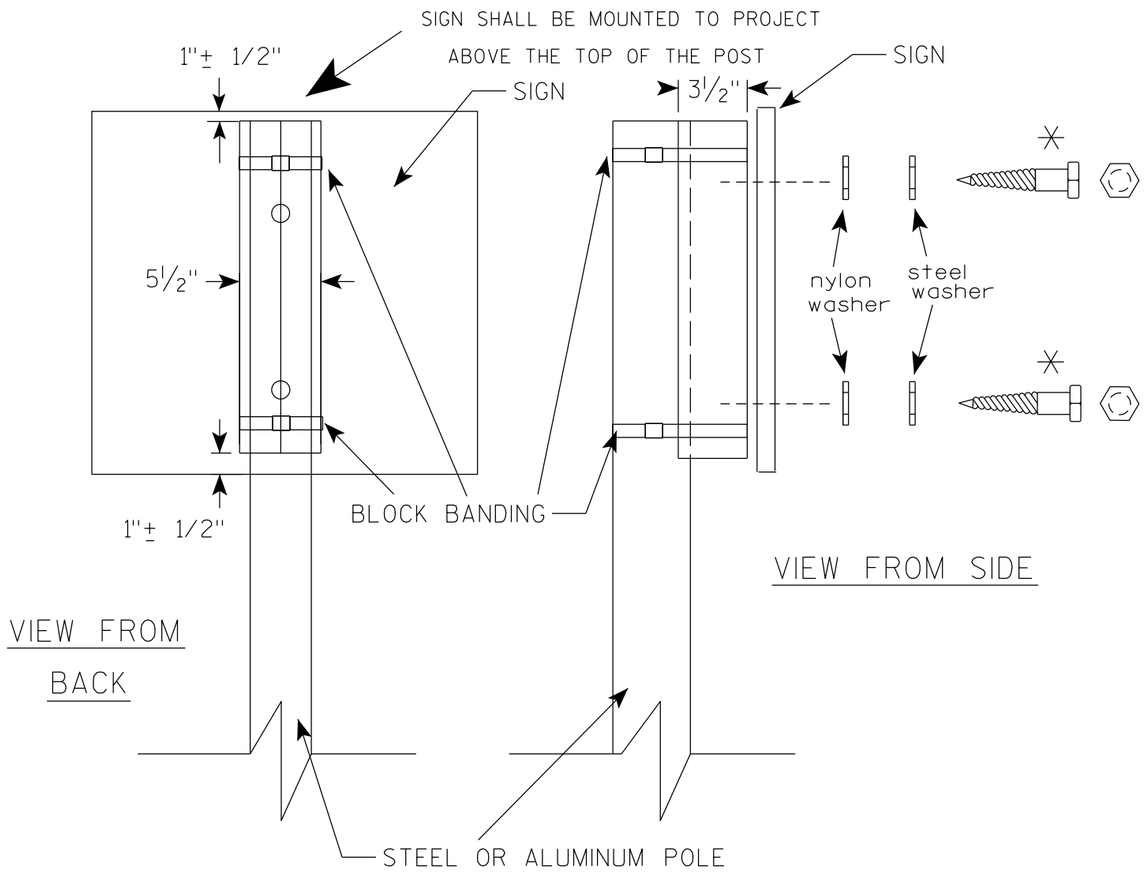

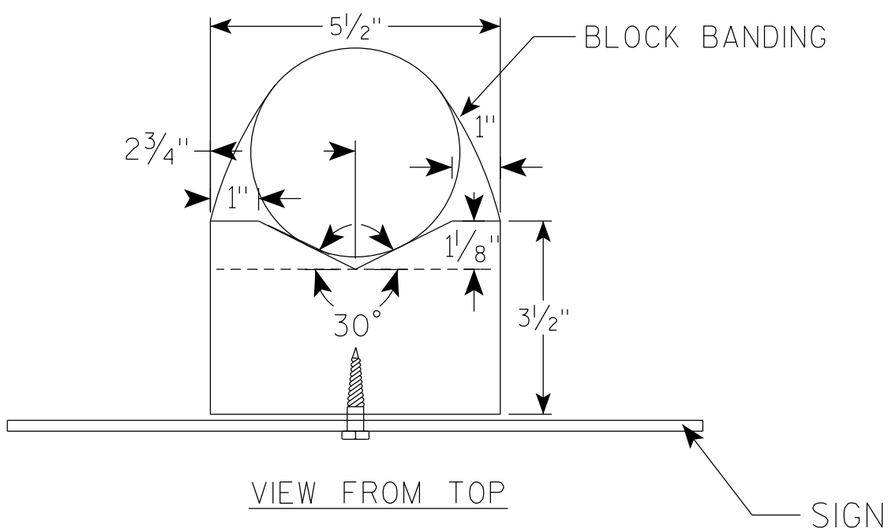

GENERAL NOTES

1. WOOD 4"X6" POST MATERIAL SHALL CONFORM TO 507.2.2 OF THE WisDOT STANDARD SPECIFICATIONS
2. BLOCK BANDING AND CLIPS SHALL BE STAINLESS STEEL, 3/4" WIDTH AND 0.025" THICKNESS
3. SIGNS 3' OR GREATER IN HEIGHT SHALL UTILIZE 3 BLOCK BANDS. SIGNS UNDER 3' IN HEIGHT SHALL UTILIZE 2 BLOCK BANDS
4. ACTUAL NUMBER OF FASTENERS PER SIGN VARIES WITH THE SIGN AREA, BUT NORNALLY THERE ARE TWO. FOR SIGNS GREATER THAN 9 S.F. 3 FASTENERS SHALL BE USED.
5. ALL SIGN MOUNTING BOLTS AND WASHERS SHALL BE EITHER:
   a. Hot dip or mechanically galvanized in accordance with ASTM Designation: A 153, Class D
   b. Electro-galvanized in accordance with ASTM Designation : B 633, TYPE III, SC 3
6. ALL BOLTS SHALL HAVE HEXAGONAL HEADS.
7. STEEL WASHERS SHALL BE 1 1/4" O.D. X 3/8" I.D. X 1/16"
8. NYLON WASHERS SHALL BE 1 1/4" O.D. X 3/8" I.D. X .080 FOR TYPE H OR TYPE F FACE SIGN

✳ LAG BOLTS SHALL BE 3/8" X 2 1/2"

7

7

BLOCK BANDING DETAIL
(V-BLOCK OPTION)

WISCONSIN DEPT OF TRANSPORTATION

APPROVED Matthew R Rauch
for State Traffic Engineer

DATE 4/19/2022 PLATE NO. A5-10.3

PROJECT NO:				SHEET NO: 106	E

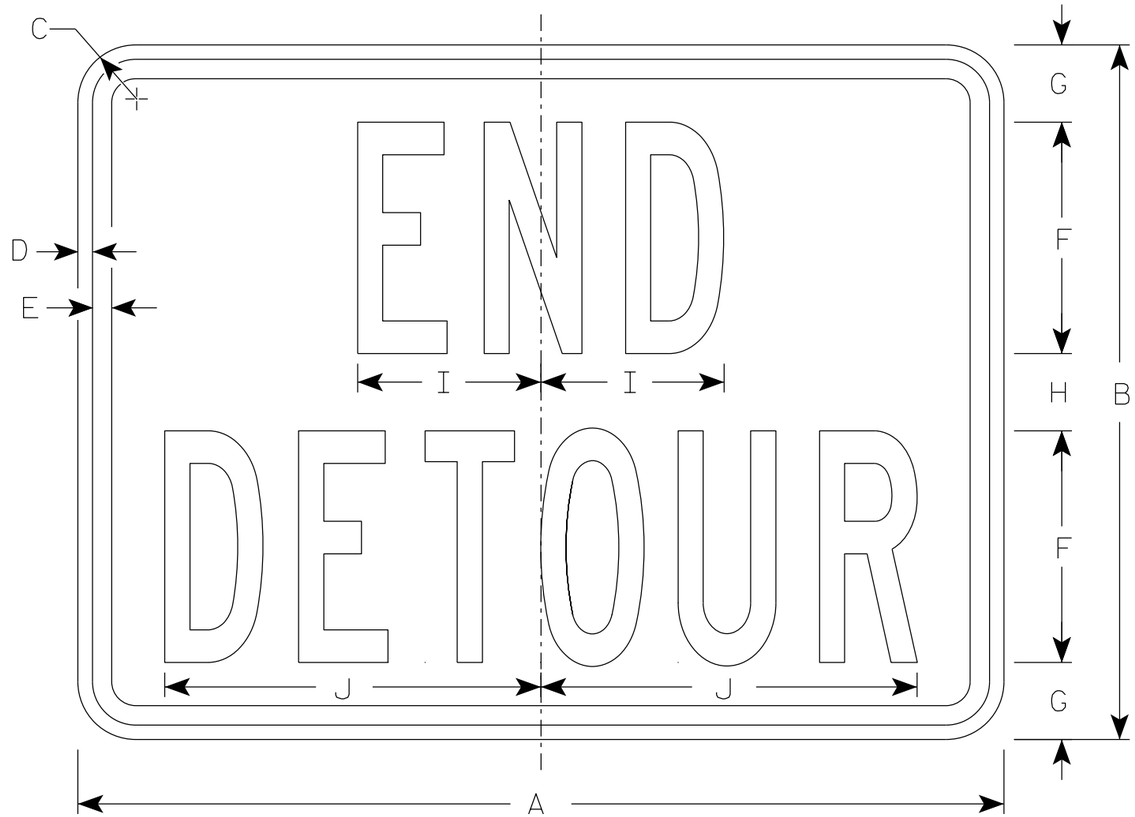

M4-8A

NOTES

1. Sign is Type II - Type F Reflective
2. Color:
   Background - Orange
   Message - Black
3. Message Series - B
4. Corners may be square or rounded when base material is plywood but borders shall be rounded as shown. When base material is metal, the corners and borders shall be rounded.

SIZE	A	B	C	D	E	F	G	H	I	J	K	L	M	N	O	P	Q	R	S	T	U	V	W	X	Y	Z	Area sq. ft.
1																											
2	24	18	1 1/2	3/8	1/2	6	2	2	4 3/4	9 3/4																	3.0
2M	24	18	1 1/2	3/8	1/2	6	2	2	4 3/4	9 3/4																	3.0
3	30	24	1 1/2	3/8	1/2	8	2 1/2	3	6 3/4	13																	5.0
4	30	24	1 1/2	3/8	1/2	8	2 1/2	3	6 3/4	13																	5.0
5	30	24	1 1/2	3/8	1/2	8	2 1/2	3	6 3/4	13																	5.0

STANDARD SIGN
M4-8A

WISCONSIN DEPT OF TRANSPORTATION

APPROVED Matthew R Rauch
for State Traffic Engineer

DATE 2/9/2023 PLATE NO. M4-8A.4

PROJECT NO: | HWY: | COUNTY: | SHEET NO: 107 | E

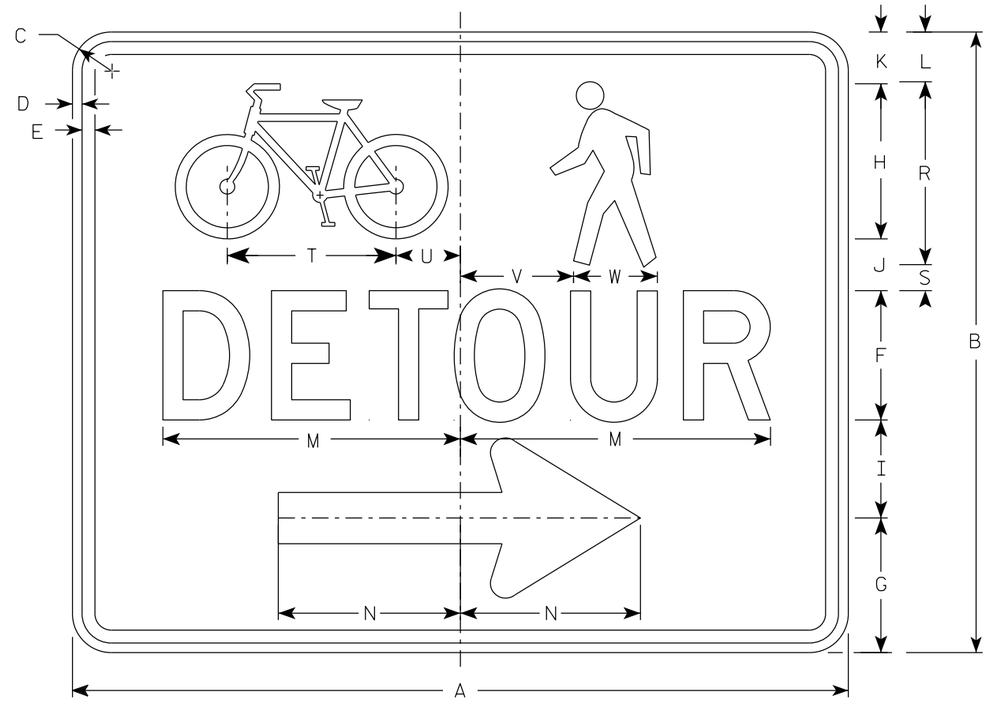

M4-9AR

NOTES

1. Sign is Type II-Type F Reflective
2. Color:
   Background - Orange
   Message - Black
3. Message Series - D
4. Corners may be square or rounded when base material is plywood but borders shall be rounded as shown. When base material is metal, the corners and borders shall be rounded.
5. M4-9AL is the same as M4-9AR except the arrow is reversed.

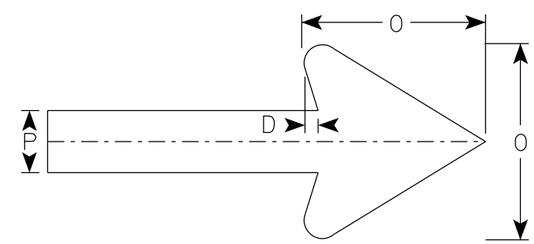

Arrow Detail

SIZE	A	B	C	D	E	F	G	H	I	J	K	L	M	N	O	P	Q	R	S	T	U	V	W	X	Y	Z	Area sq. ft.
1																											
2S	30	24	1 1/2	3/8	1/2	5	5 1/4	6	3 3/4	2	2	1 7/8	11 3/4	7	6	2		7 1/8	1	6 1/2	2 1/2	4 3/8	3 1/4				5.00
2M	30	24	1 1/2	3/8	1/2	5	5 1/4	6	3 3/4	2	2	1 7/8	11 3/4	7	6	2		7 1/8	1	6 1/2	2 1/2	4 3/8	3 1/4				5.00
3																											
4																											
5																											

STANDARD SIGN
M4-9A L&R

WISCONSIN DEPT OF TRANSPORTATION

APPROVED Matthew R Rauch
for State Traffic Engineer

DATE 2/9/2023 PLATE NO. M4-9A.3

PROJECT NO: | HWY: | COUNTY: | SHEET NO: 108 | E

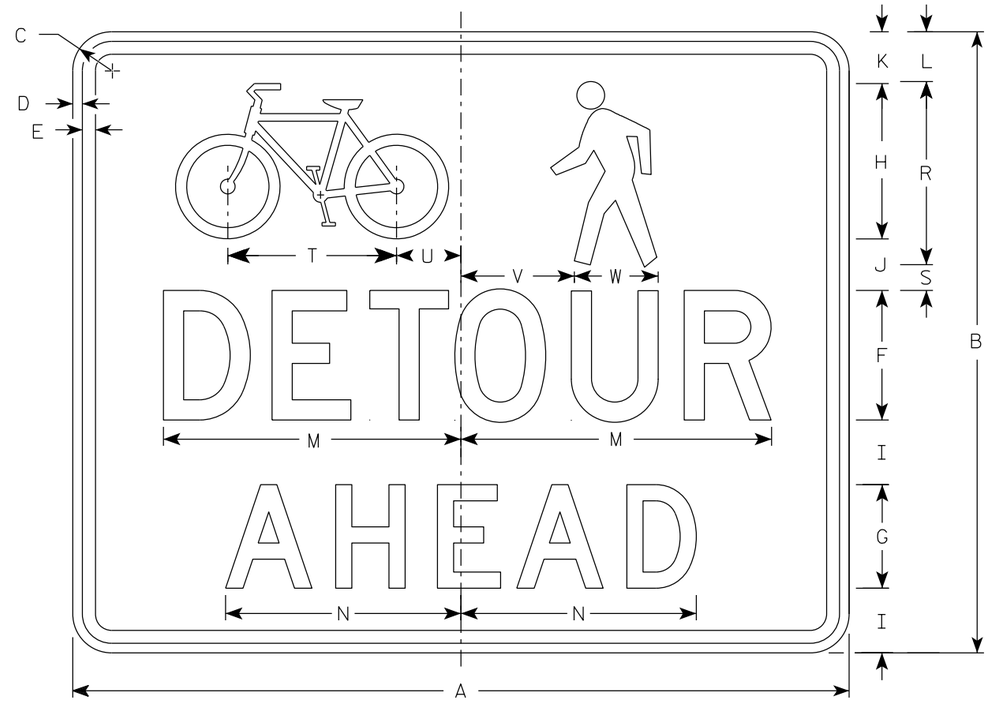

M4-9AA

NOTES

1. Sign is Type II - Type F Reflective
2. Color:
   Background - Orange
   Message - Black
3. Message Series - D
4. Corners may be square or rounded when base material is plywood but borders shall be rounded as shown. When base material is metal, the corners and borders shall be rounded.

SIZE	A	B	C	D	E	F	G	H	I	J	K	L	M	N	O	P	Q	R	S	T	U	V	W	X	Y	Z	Area sq. ft.
1																											
2S	30	24	1 1/2	3/8	1/2	5	4	6	2 1/2	2	2	1 7/8	11 3/4	9 1/8				7 1/8	1	6 1/2	2 1/2	4 3/8	3 1/4				5.00
2M	30	24	1 1/2	3/8	1/2	5	4	6	2 1/2	2	2	1 7/8	11 3/4	9 1/8				7 1/8	1	6 1/2	2 1/2	4 3/8	3 1/4				5.00
3																											
4																											
5																											

STANDARD SIGN
M4-9AA

WISCONSIN DEPT OF TRANSPORTATION

APPROVED Matthew R Rauch
for State Traffic Engineer

DATE 2/9/2023 PLATE NO. M4-9AA.3

PROJECT NO: | HWY: | COUNTY: | SHEET NO: 109 | E

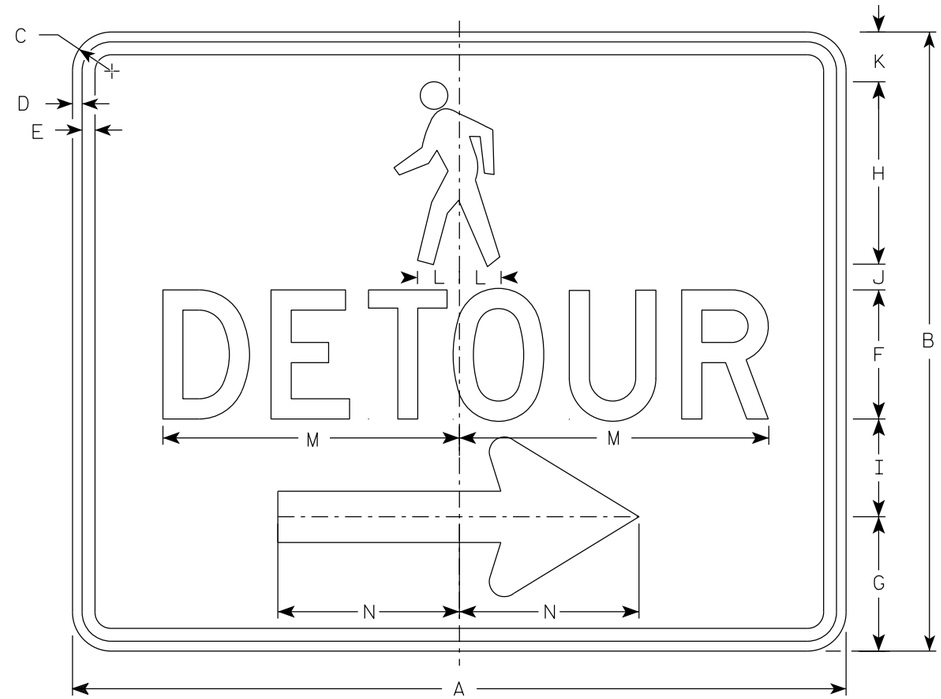

M4-9BR

NOTES

1. Sign is Type II-Type F Reflective
2. Color:
   Background - Orange
   Message - Black
3. Message Series - D
4. Corners may be square or rounded when base material is plywood but borders shall be rounded as shown. When base material is metal, the corners and borders shall be rounded.
5. M4-9BL is the same as M4-9BR except the arrow is reversed.

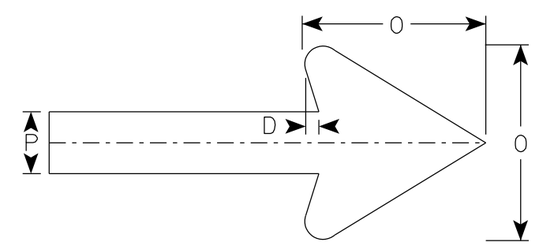

Arrow Detail

SIZE	A	B	C	D	E	F	G	H	I	J	K	L	M	N	O	P	Q	R	S	T	U	V	W	X	Y	Z	Area sq. ft.
1																											
2S	30	24	1 1/2	3/8	1/2	5	5 1/4	7 1/8	3 3/4	1	1 1/8	1 5/8	11 3/4	7	6	2											5.0
2M	30	24	1 1/2	3/8	1/2	5	5 1/4	7 1/8	3 3/4	1	1 1/8	1 5/8	11 3/4	7	6	2											5.0
3																											
4																											
5																											

STANDARD SIGN
M4-9B L&R

WISCONSIN DEPT OF TRANSPORTATION

APPROVED Matthew R Rauch
for State Traffic Engineer

DATE 2/9/2023 PLATE NO. M4-9B.4

PROJECT NO: | HWY: | COUNTY: | SHEET NO: 110 | E

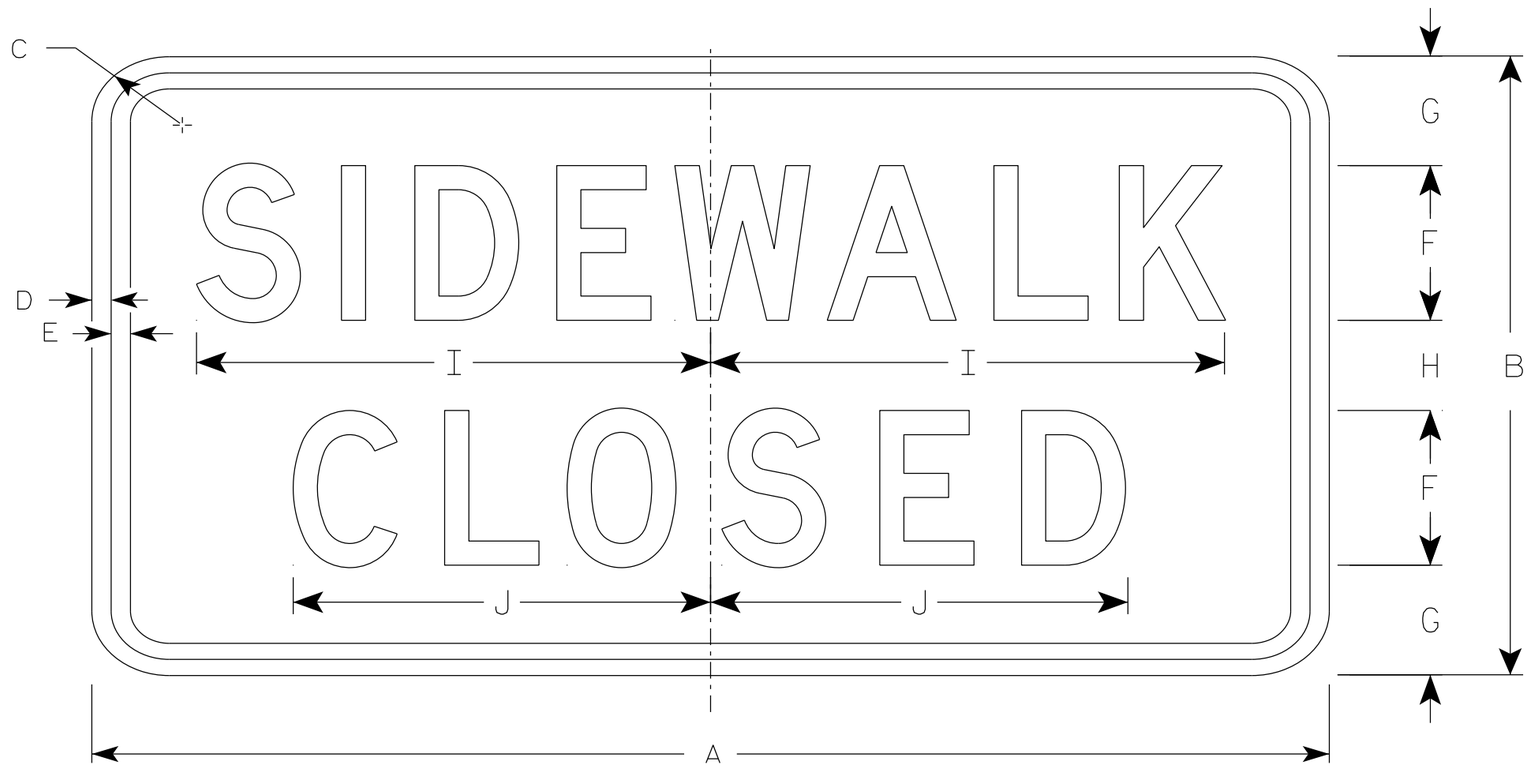

R9-9

NOTES

1. Sign is Type II - Type H Reflective
2. Color:
   Background - White
   Message - Black
3. Message Series - C
4. Use Size 2 for Sidewalks. Use Size 3 for Paths and Trails.

SIZE	A	B	C	D	E	F	G	H	I	J	K	L	M	N	O	P	Q	R	S	T	U	V	W	X	Y	Z	Area sq. ft.
1																											
2S	24	12	1 1/2	1/2	1/2	3	2 1/8	1 3/4	10	8 1/8																	2.0
2M	24	12	1 1/2	1/2	1/2	3	2 1/8	1 3/4	10	8 1/8																	2.0
3	30	18	1 1/2	1/2	1/2	4	3 1/2	3	12 1/2	10 1/4																	3.75
4																											
5																											

STANDARD SIGN
R9-9

WISCONSIN DEPT OF TRANSPORTATION

APPROVED Matthew R Rauch
for State Traffic Engineer

DATE 1/24/24 PLATE NO. R9-9.7

PROJECT NO: | HWY: | COUNTY: | SHEET NO: 111 | E

NOTES

1. Sign is Type II - Type H Reflective
2. Color:
   Background - White
   Message - Black
3. Message Series - D

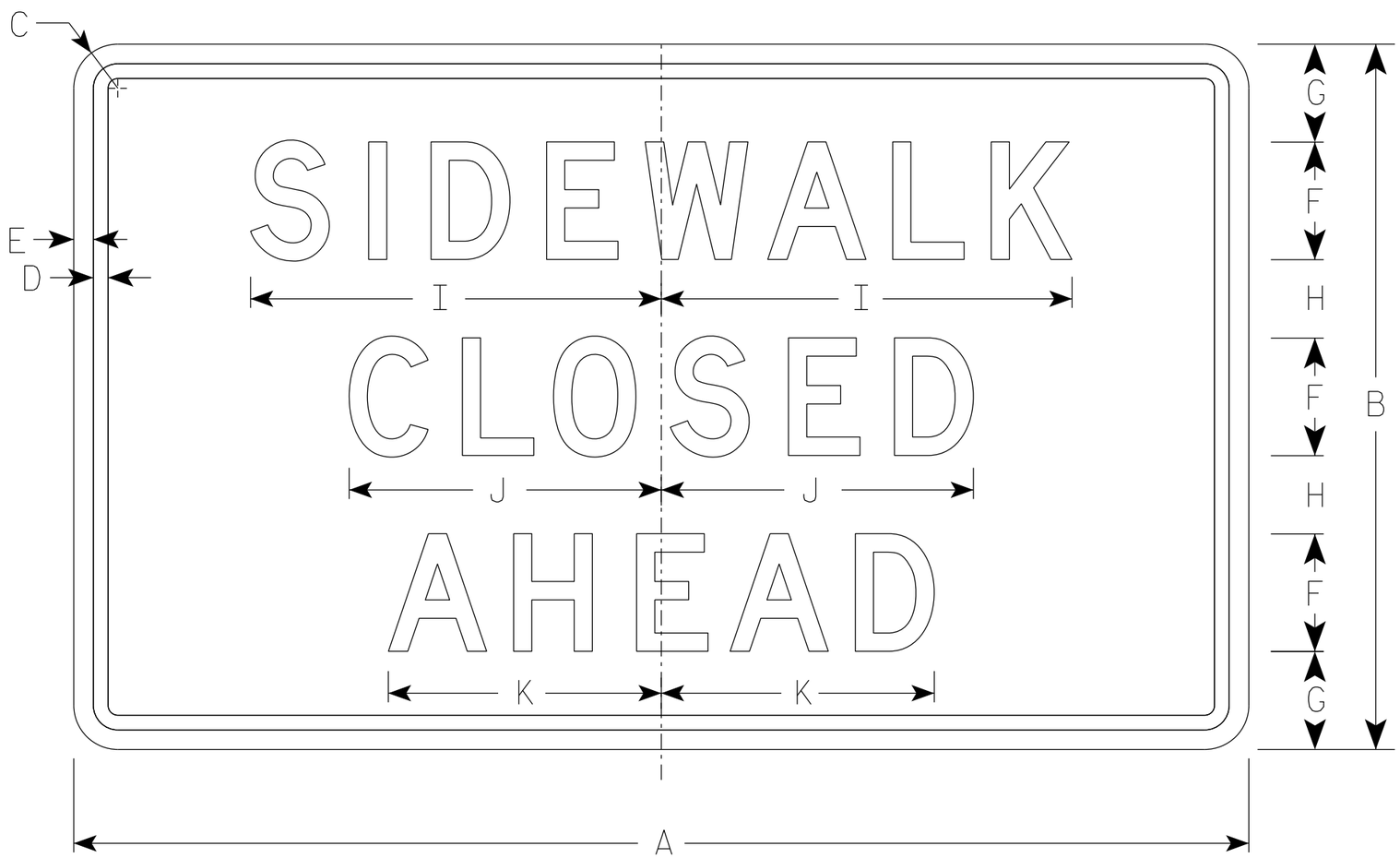

R9-9A

SIZE	A	B	C	D	E	F	G	H	I	J	K	L	M	N	O	P	Q	R	S	T	U	V	W	X	Y	Z	Area sq. ft.
1																											
2S	30	18	1 ½	⅜	½	3	2 ½	2	10 ½	8	7																3.75
2M	30	18	1 ½	⅜	½	3	2 ½	2	10 ½	8	7																3.75
3																											
4																											
5																											

STANDARD SIGN
R9-9A

WISCONSIN DEPT OF TRANSPORTATION

APPROVED Matthew R Rauch
for State Traffic Engineer

DATE 1/24/24 PLATE NO. R9-9A.2

PROJECT NO:	HWY:	COUNTY:		SHEET NO: 112	E

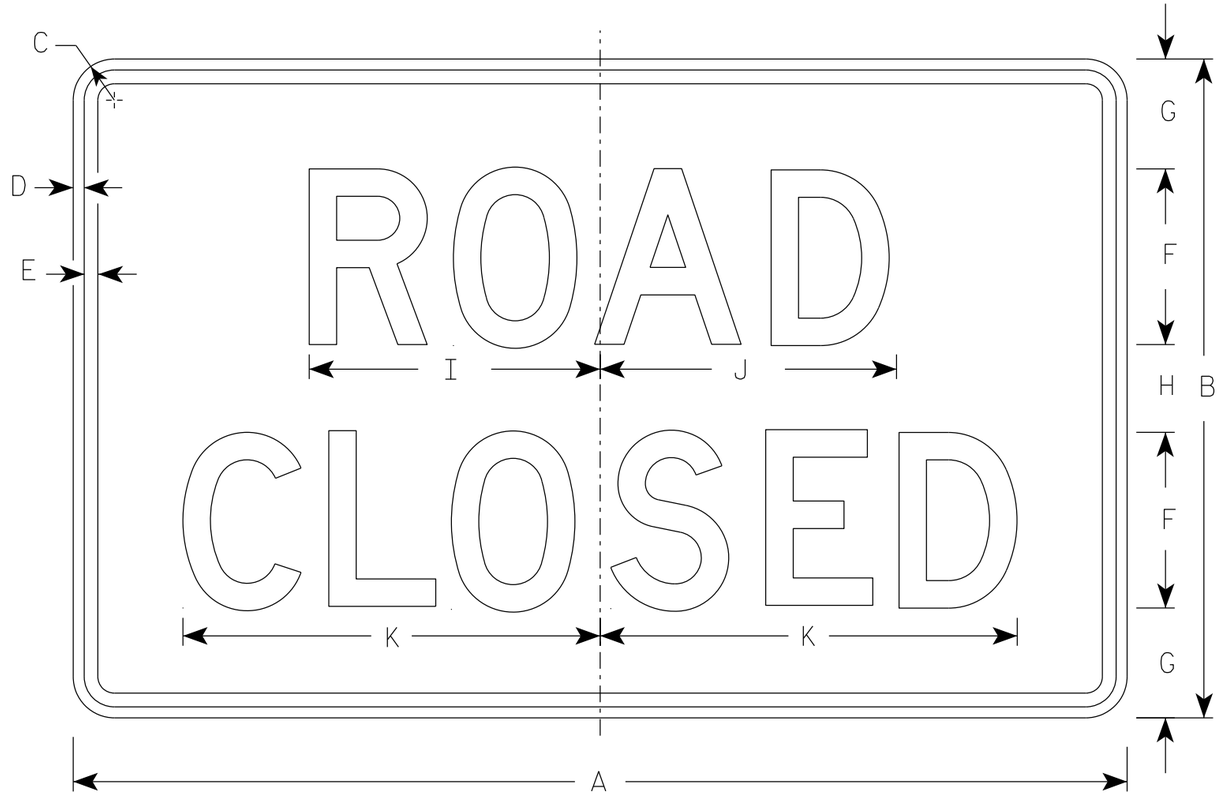

R11-2

NOTES

1. Sign is Type II - Type H Reflective
2. Color:
   Background - White
   Message - Black
3. Message Series - D
4. Corners may be square or rounded when base material is plywood but borders shall be rounded as shown. When base material is metal, the corners and borders shall be rounded.
5. Modify the message as required.

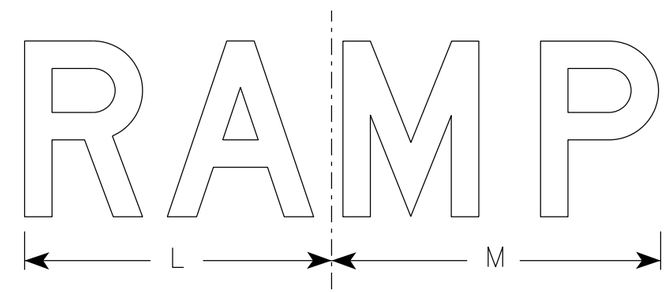

R11-2R

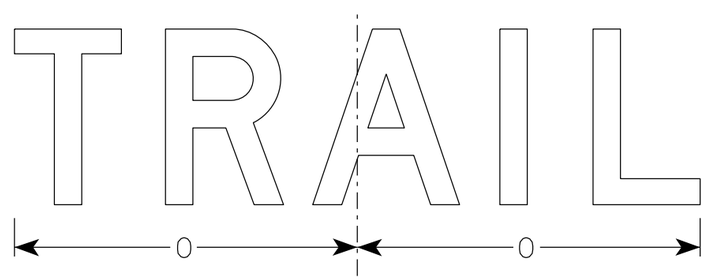

R11-2T

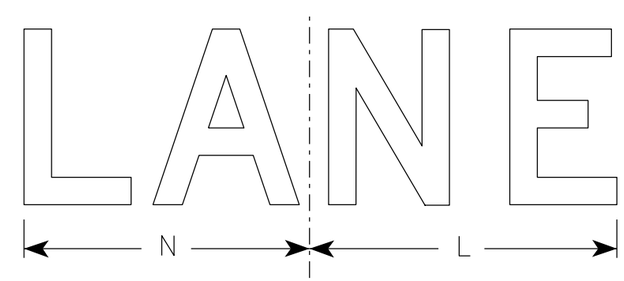

R11-2L

SIZE	A	B	C	D	E	F	G	H	I	J	K	L	M	N	O	P	Q	R	S	T	U	V	W	X	Y	Z	Area sq. ft.
1																											
2S	48	30	1 7/8	1/2	5/8	8	5	4	13 1/4	13 1/2	19	14	15	13	15 5/8												10.0
2M	48	30	1 7/8	1/2	5/8	8	5	4	13 1/4	13 1/2	19	14	15	13	15 5/8												10.0
3	48	30	1 7/8	1/2	5/8	8	5	4	13 1/4	13 1/2	19	14	15	13	15 5/8												10.0
4	48	30	1 7/8	1/2	5/8	8	5	4	13 1/4	13 1/2	19	14	15	13	15 5/8												10.0
5	48	30	1 7/8	1/2	5/8	8	5	4	13 1/4	13 1/2	19	14	15	13	15 5/8												10.0

STANDARD SIGN
R11-2

WISCONSIN DEPT OF TRANSPORTATION

APPROVED Matthew R Rauch
for State Traffic Engineer

DATE 2/5/24 PLATE NO. R11-2.12

PROJECT NO: | HWY: | COUNTY: | SHEET NO: E

NOTES

1. Fixed Message signs are Type II- Type F Reflective
2. Color:
   Background - Orange
   Message - Black
3. Message Series - D

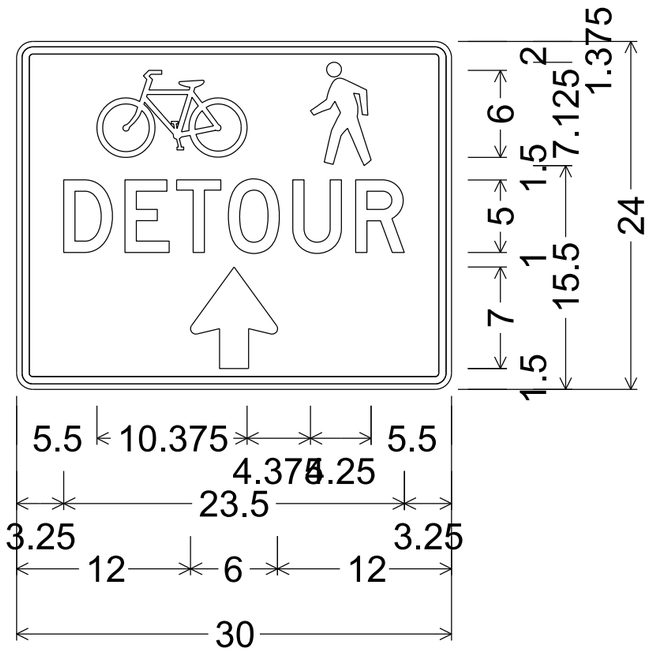

1.125" Radius, 0.500" Border, 0.375" Indent

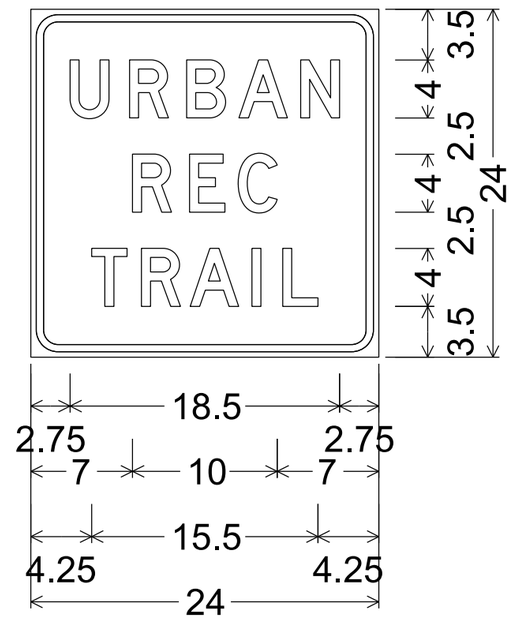

1.875" Radius, 0.500" Border, 0.375" Indent

7

7

EARTHWORK DETAIL - TRAIL DITCH

STATION	AREA (SF)		INCREMENTAL VOL (CY) (UNADJUSTED)		CUMULATIVE VOL (CY)		
	CUT	FILL	CUT	FILL	CUT 1.00	EXPANDED FILL 1.25	MASS ORDINATE
4+25	3.09	0.00	0	0	0	0	0
4+30	8.29	0.00	1	0	1	0	1
4+40	60.77	0.00	13	0	14	0	14
4+50	94.22	0.00	29	0	43	0	43
4+60	64.71	0.00	29	0	72	0	72
4+66	118.28	0.00	20	0	92	0	92
4+70	0.00	0.00	9	0	101	0	101
5+50	0.00	0.00	0	0	101	0	101
5+55	79.41	0.00	7	0	108	0	108
5+60	78.60	0.00	15	0	123	0	123
5+70	64.21	0.00	26	0	149	0	149
5+80	31.68	0.00	18	0	167	0	167
5+90	11.44	0.00	8	0	175	0	175
5+95	2.24	0.00	1	0	176	0	176
6+00	0.00	0.00	0	0	176	0	176

EARTHWORK DETAIL - STORM SEWER BERM

STATION	AREA (SF)		INCREMENTAL VOL (CY) (UNADJUSTED)		CUMULATIVE VOL (CY)		
	CUT	FILL	CUT	FILL	CUT 1.00	EXPANDED FILL 1.25	MASS ORDINATE
25+30	1.00	0.00	0	0	0	0	0
25+50	32.82	0.00	13	0	13	0	13
25+75	30.35	0.00	29	0	42	0	42
26+00	14.46	0.00	21	0	63	0	63
26+03	2.99	0.00	1	0	64	0	64

EARTHWORK DETAIL - FOREST ST

STATION	AREA (SF)		INCREMENTAL VOL (CY)		CUMULATIVE VOL (CY)		
	CUT	FILL	CUT	FILL	CUT 1.00	EXPANDED FILL 1.25	MASS ORDINATE
35+69	11.13	0.38	0	0	0	0	0
35+75	11.45	0.42	2	0	2	0	2
36+00	11.95	0.46	11	0	13	0	13
36+18	12.10	0.44	8	0	21	0	21
36+25	13.12	0.01	3	0	24	0	24
36+28	12.63	0.00	1	0	25	0	25
36+38	11.89	0.00	5	0	30	0	30
36+48	11.18	0.24	4	0	34	0	34
36+50	11.73	0.25	1	0	35	0	35
36+56	10.13	0.33	2	0	37	0	37
36+64	10.34	0.30	3	0	40	0	40
36+71	10.74	0.15	3	0	43	0	43
36+75	11.07	0.66	1	0	44	0	44
36+81	11.06	0.80	3	0	47	0	47
37+00	11.99	0.30	8	0	55	0	55
37+25	11.41	1.14	11	1	66	1	65
37+33	11.31	1.10	3	0	69	1	68
37+43	12.10	0.21	4	0	73	1	72
37+50	10.78	0.49	3	0	76	1	75
37+54	10.92	0.50	2	0	78	1	77
37+65	12.59	0.00	5	0	83	1	82
37+75	13.60	0.04	5	0	88	1	87
38+00	13.32	0.17	12	0	100	1	99
38+25	13.29	0.21	12	0	112	1	111
38+50	12.07	0.69	12	0	124	1	123
38+55	13.16	0.01	2	0	126	1	125

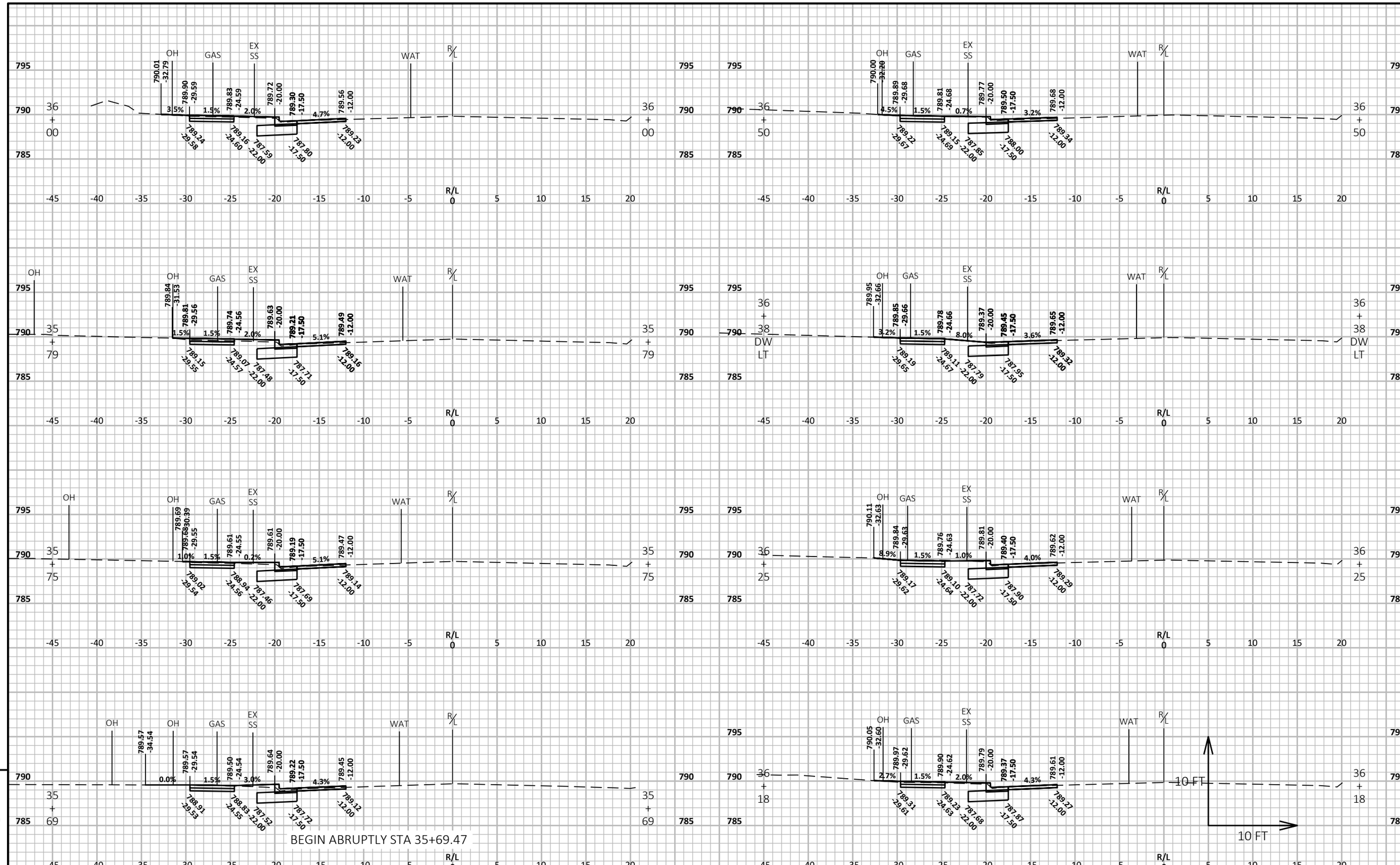

9

PROJECT NO: 6240-31-71	HWY: STH 47	COUNTY: OUTAGAMIE	CROSS SECTIONS: W FOREST ST	SHEET 117	E

FILE NAME : N:\3001114.00\CIVIL 3D\SHEETSPLAN\624031-090201-XS.DWG
LAYOUT NAME - 624031-090201-xs
PLOT DATE : 5/3/2024 7:57 AM
PLOT BY : ANDY WESTBROOK
PLOT NAME :
PLOT SCALE : 1 IN:10 FT HORZ. / 1 IN:10 FT VERT.
WISDOT/CADDS SHEET 49

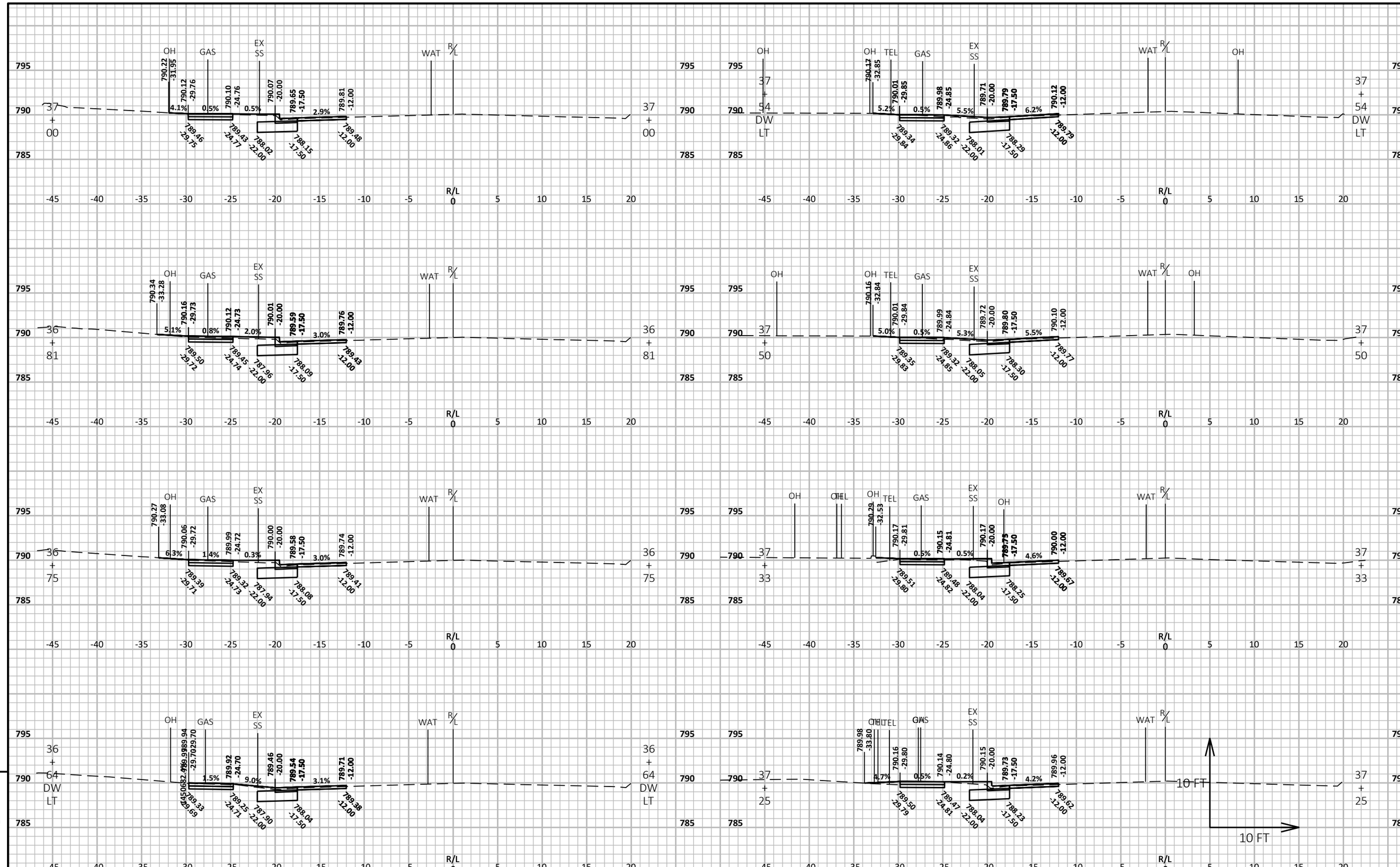

9

PROJECT NO: 6240-31-71	HWY: STH 47	COUNTY: OUTAGAMIE	CROSS SECTIONS: W FOREST ST	SHEET 118	E

FILE NAME : N:\3001114.00\CIVIL 3D\SHEETSPLAN\624031-090201-XS.DWG
LAYOUT NAME - 624031-090202-xs
PLOT DATE : 5/3/2024 7:57 AM
PLOT BY : ANDY WESTBROOK
PLOT NAME :
PLOT SCALE : 1 IN:10 FT HORZ. / 1 IN:10 FT VERT.
WISDOT/CADDS SHEET 49

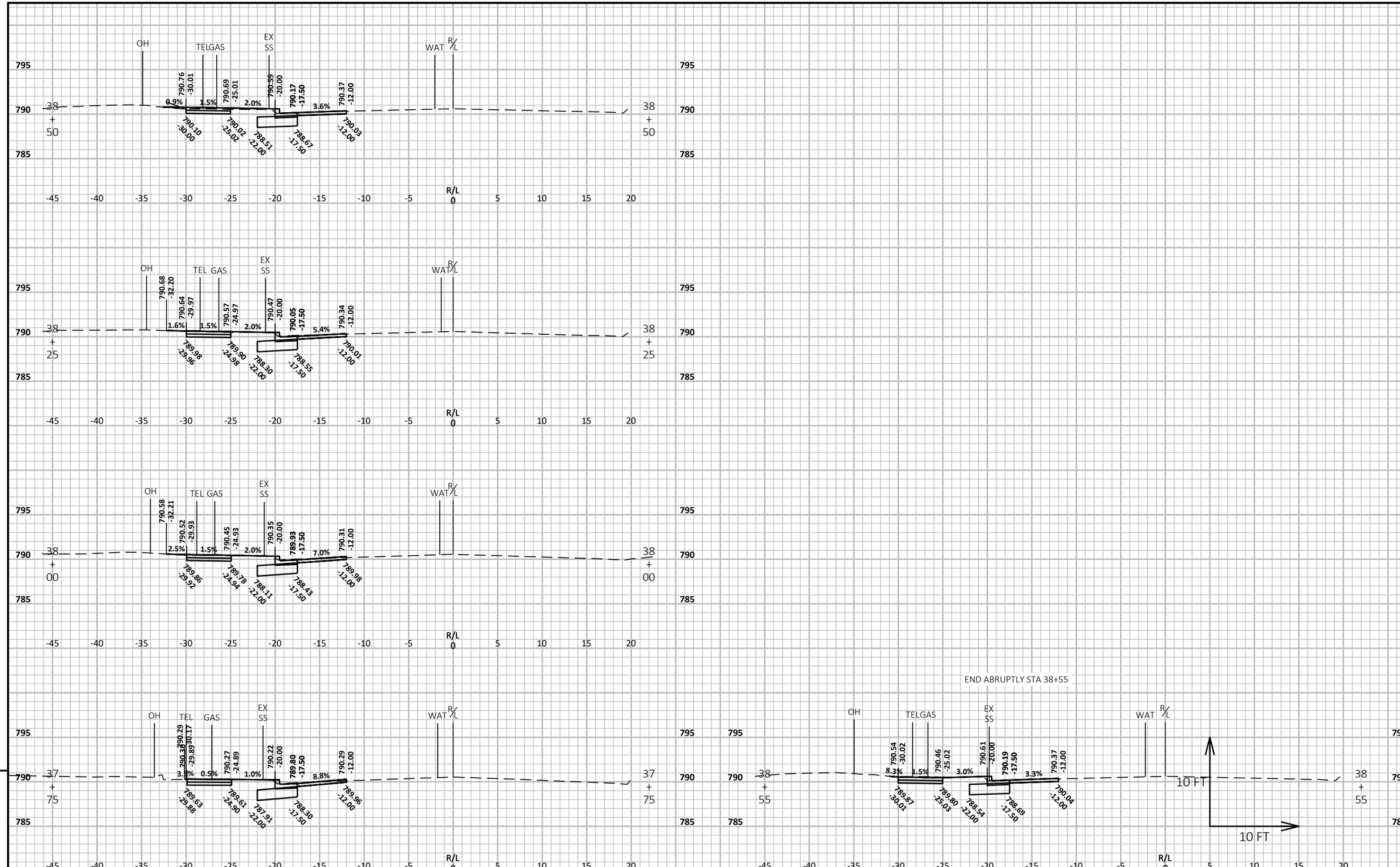

PROJECT NO: 6240-31-71	HWY: STH 47	COUNTY: OUTAGAMIE	CROSS SECTIONS: W FOREST ST	SHEET 119	E

FILE NAME : N:\3001114.00\CIVIL 3D\SHEETSPLAN\624031-090201-XS.DWG
LAYOUT NAME - 624031-090203-xs
PLOT DATE : 5/3/2024 7:57 AM
PLOT BY : ANDY WESTBROOK
PLOT NAME :
PLOT SCALE : 1 IN:10 FT HORZ. / 1 IN:10 FT VERT.
WISDOT/CADDS SHEET 49

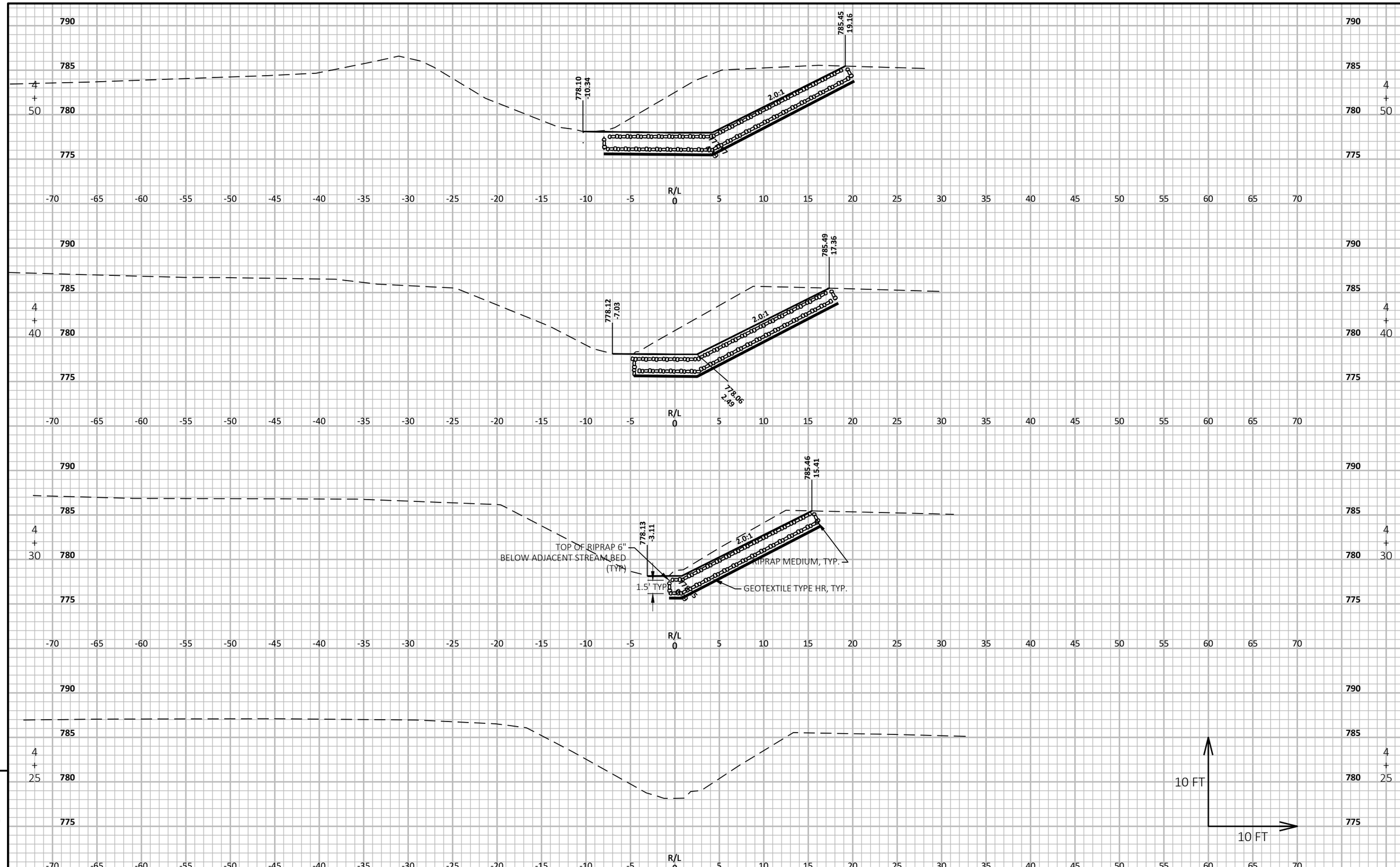

PROJECT NO: 6240-31-71	HWY: STH 47	COUNTY: OUTAGAMIE	CROSS SECTIONS: CULVERT DITCH	SHEET 120	E

FILE NAME : N:\3001114.00\CIVIL 3D\SHEETSPLAN\624031-090201-XS.DWG
LAYOUT NAME - 624031-090210-xs
PLOT DATE : 6/19/2024 2:52 PM
PLOT BY : MATT TOMSOVIC
PLOT NAME :
PLOT SCALE : 1 IN:10 FT HORZ. / 1 IN:10 FT VERT.
WISDOT/CADDS SHEET 49

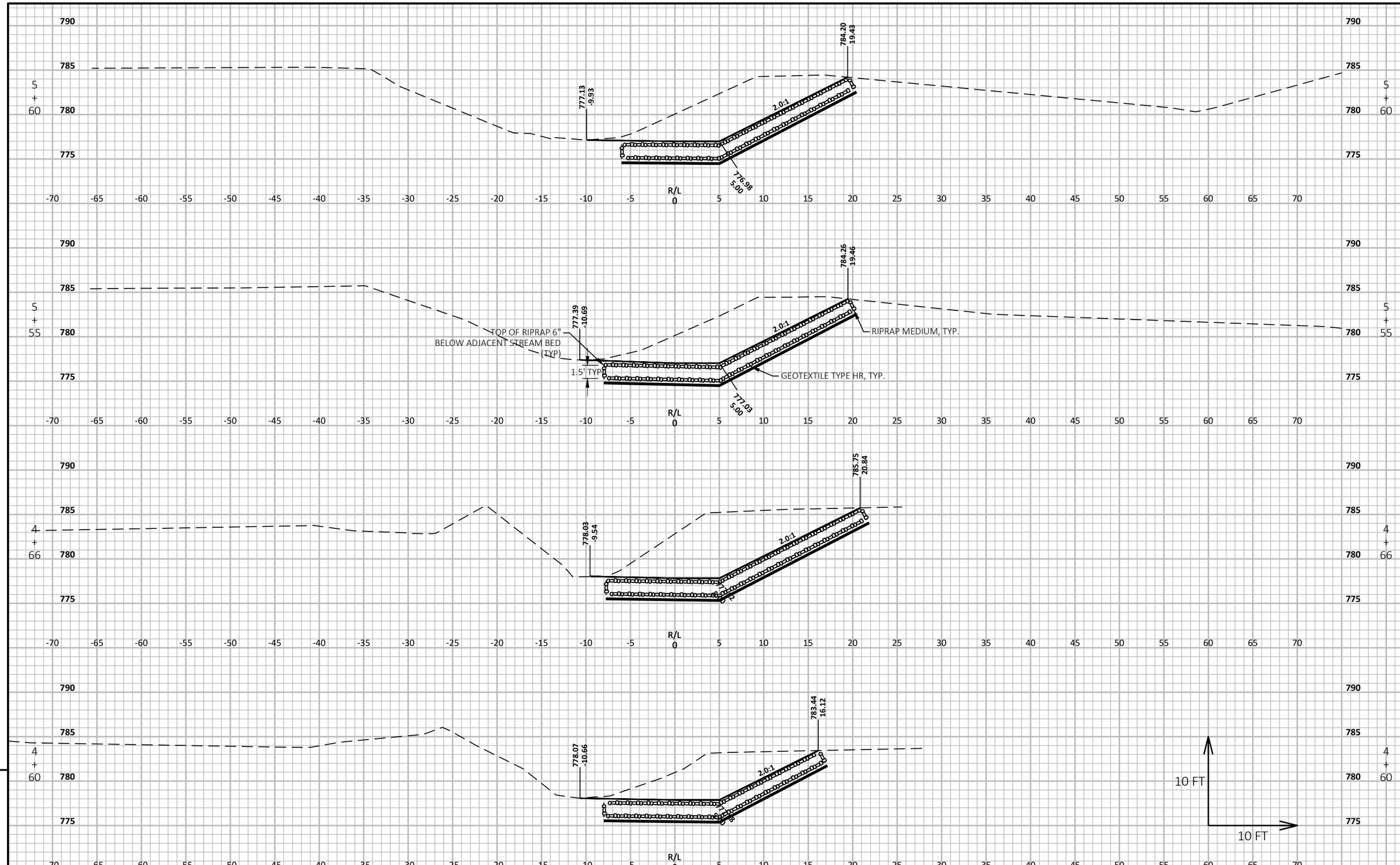

9

PROJECT NO: 6240-31-71	HWY: STH 47	COUNTY: OUTAGAMIE	CROSS SECTIONS: CULVERT DITCH	SHEET 121	E

FILE NAME : N:\3001114.00\CIVIL 3D\SHEETSPLAN\624031-090201-XS.DWG
LAYOUT NAME - 624031-090211-xs
PLOT DATE : 6/19/2024 2:52 PM
PLOT BY : MATT TOMSOVIC
PLOT NAME :
PLOT SCALE : 1 IN:10 FT HORZ. / 1 IN:10 FT VERT.
WISDOT/CADDS SHEET 49

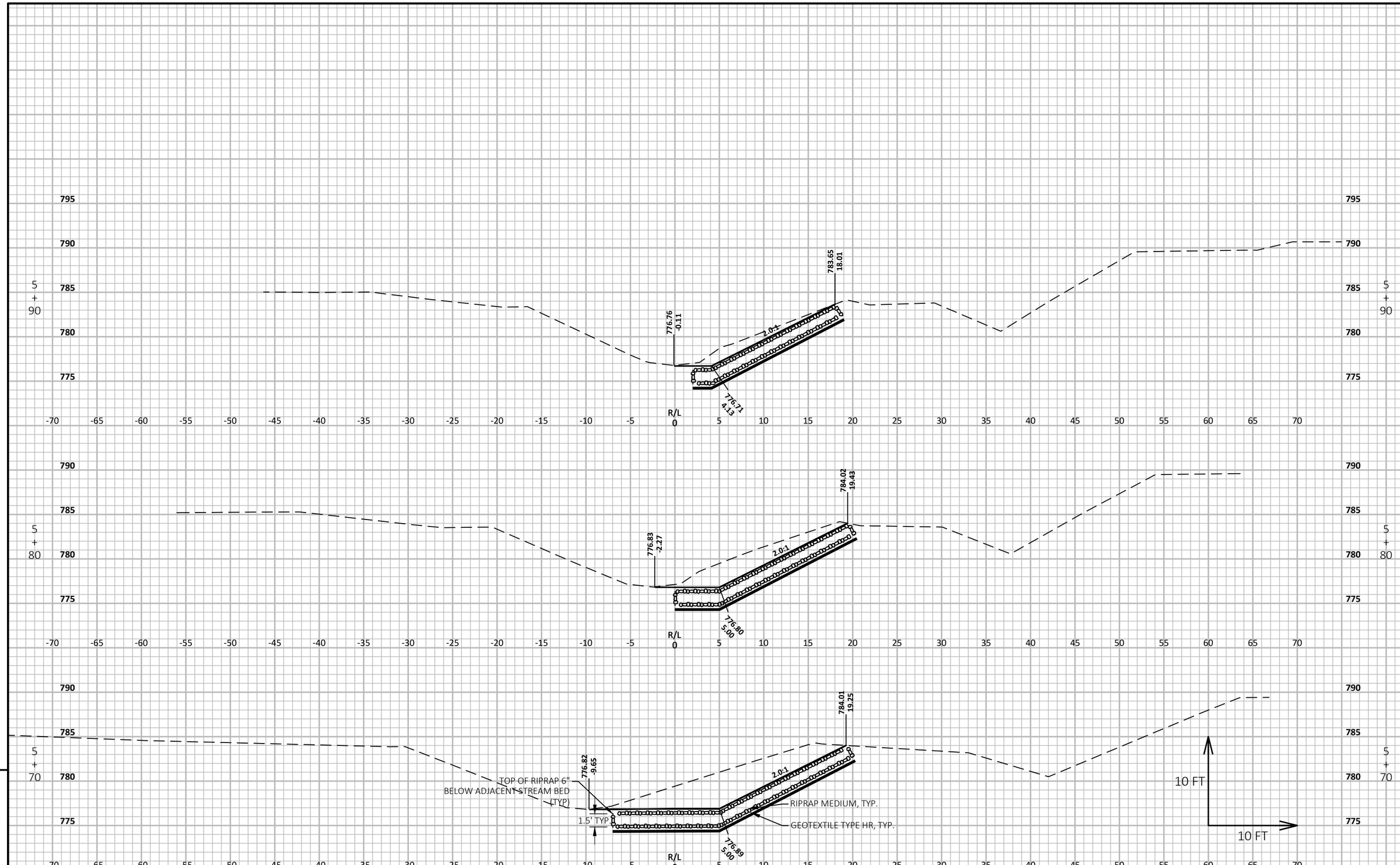

9

PROJECT NO: 6240-31-71	HWY: STH 47	COUNTY: OUTAGAMIE	CROSS SECTIONS: CULVERT DITCH	SHEET 122	E

FILE NAME : N:\3001114.00\CIVIL 3D\SHEETSPLAN\624031-090201-XS.DWG
LAYOUT NAME - 624031-090212-xs
PLOT DATE : 6/19/2024 2:52 PM
PLOT BY : MATT TOMSOVIC
PLOT NAME :
PLOT SCALE : 1 IN:10 FT HORZ. / 1 IN:10 FT VERT.
WISDOT/CADDS SHEET 49

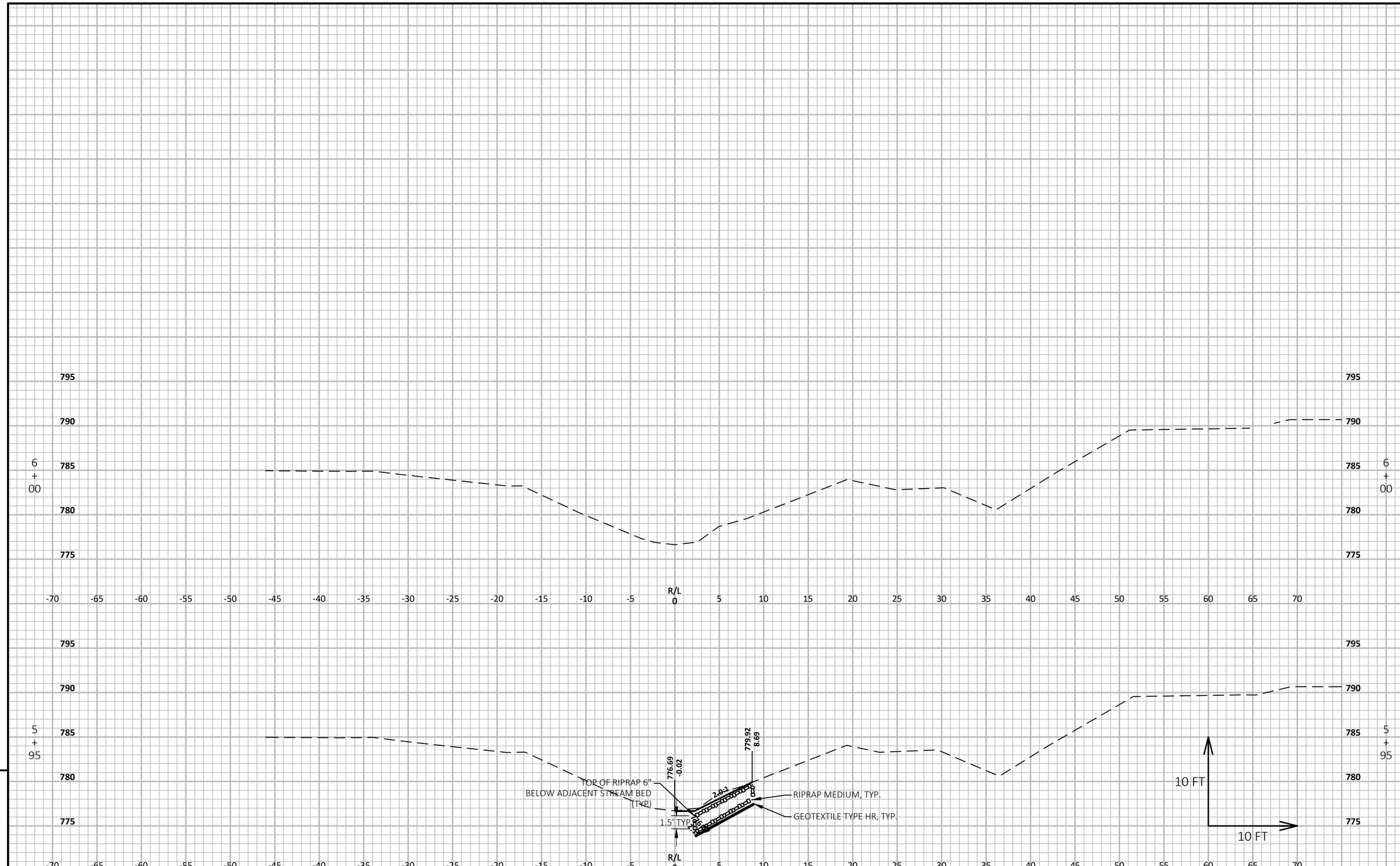

9

9

PROJECT NO: 6240-31-71	HWY: STH 47	COUNTY: OUTAGAMIE	CROSS SECTIONS: CULVERT DITCH	SHEET 123	E

FILE NAME : N:\3001114.00\CIVIL 3D\SHEETSPLAN\624031-090201-XS.DWG
LAYOUT NAME - 624031-090213-xs
PLOT DATE : 6/19/2024 2:52 PM
PLOT BY : MATT TOMSOVIC
PLOT NAME :
PLOT SCALE : 1 IN:10 FT HORZ. / 1 IN:10 FT VERT.
WISDOT/CADDS SHEET 49

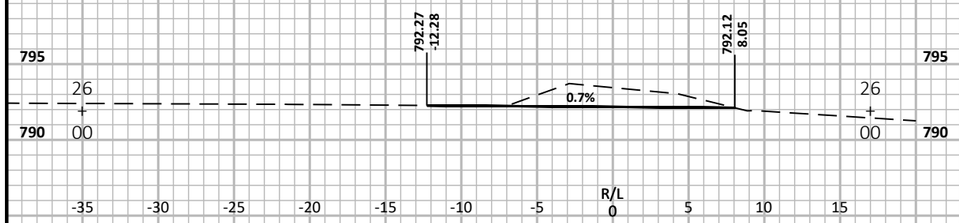

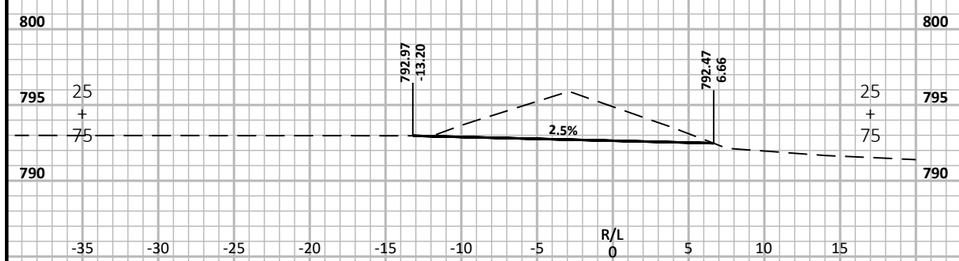

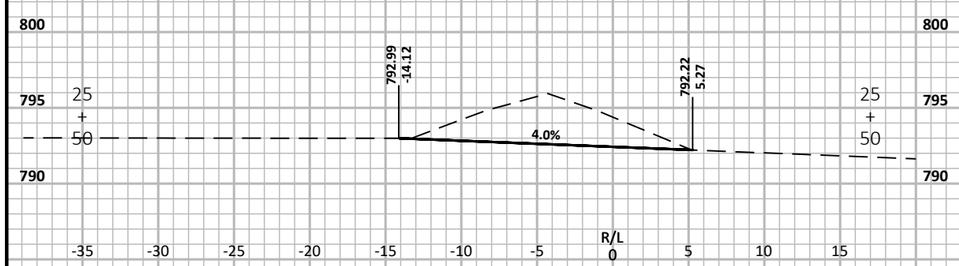

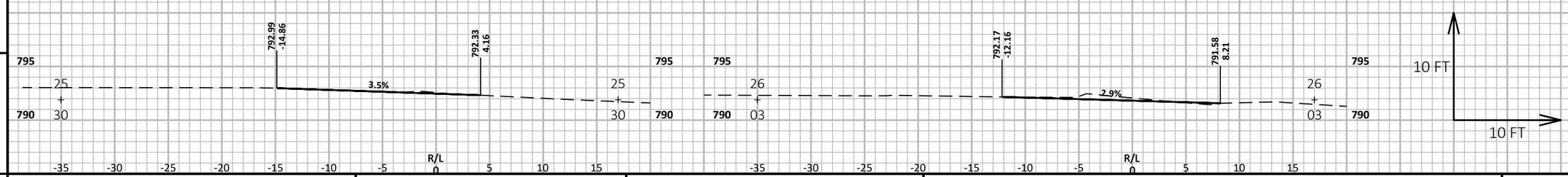

9 9

PROJECT NO: 6240-31-71	HWY: STH 47	COUNTY: OUTAGAMIE	CROSS SECTIONS: BERM REMOVAL	SHEET 124	E

FILE NAME : N:\3001114.00\CIVIL 3D\SHEETSPLAN\624031-090201-XS.DWG
LAYOUT NAME - 624031-090221-xs
PLOT DATE : 7/18/2024 9:50 AM
PLOT BY : MATT TOMSOVIC
PLOT NAME :
PLOT SCALE : 1 IN:10 FT HORZ. / 1 IN:10 FT VERT.
WISDOT/CADDS SHEET 49

Notes

Wisconsin Department of Transportation

Dedicated people creating transportation solutions through innovation and exceptional service.

http://www.dot.wisconsin.gov