Wisconsin Department of Transportation

Division of Transportation Systems Development
Bureau of Project Development
4822 Madison Yards Way, 4th Floor South
Madison, WI 53705

Telephone: (608) 266-1631
Facsimile (FAX): (608) 266-8459

April 28, 2025

NOTICE TO ALL CONTRACTORS:

Proposal #20: 1130-68-77, WISC 2025473
Appleton - De Pere
Sbc Interchange
Loc Str
Brown County

Letting of May 10, 2025

This is Addendum No. 01, which provides for the following:

Special Provisions:

Revised Special Provisions	
Article No.	Description
11.2	Decorative Silhouette, Item SPV.0060.07.

Added Special Provisions	
Article No.	Description
15.2	Blue Specific Service Signs

Schedule of Items:

Revised Bid Item Quantities					
Bid Item	Item Description	Unit	Proposal Total Prior to Addendum	Proposal Quantity Change (-)	Proposal Total After Addendum
210.1500	Backfill Structure Type A	TON	740	476	1216
405.0100	Coloring Concrete WisDOT Red	CY	879	9	888
415.2010	Concrete Truck Apron 12-Inch	SY	1836	27	1863
601.0409	Concrete Curb & Gutter 30-inch Type A	LF	9831	-245	9586
616.0206	Fence Chain Link 6-FT	LF	7595	55	7650
620.0300	Concrete Median Sloped Nose	SF	805	861	1666
SPV.0090.01	Concrete Curb and Gutter 36-Inch Special	LF	3721	-280	3441

Added Bid Item Quantities					
Bid Item	Item Description	Unit	Proposal Total Prior to Addendum	Quantity Added	Proposal Total After Addendum
204.0170	Removing Fence	LF	0	4070	4070
204.0180	Removing Delineators and Markings	Each	0	19	19
601.0551	Concrete Curb & Gutter 4-Inch Sloped 36-Inch Type A	LF	0	525	525
601.0581	Concrete Curb & Gutter 4-Inch Sloped 30-Inch Type R	LF	0	1059	1059
602.0515	Curb Ramp Detectable Warning Field Natural Patina	SF	0	520	520
602.0615	Curb Ramp Detectable Warning Field Radial Natural Patina	SF	0	101	101
633.0100	Delineator Posts Steel	Each	0	18	18
633.0500	Delineator Reflectors	Each	0	18	18
633.1000	Delineators Barrier Wall	Each	0	12	12
638.2601	Removing Signs Type I	Each	0	2	2

Deleted Bid Item Quantities					
Bid Item	Item Description	Unit	Proposal Total Prior to Addendum	Proposal Quantity Change (-)	Proposal Total After Addendum
601.0580	Concrete Curb & Gutter 4-Inch Sloped 36-Inch Type R	LF	1059	-1059	0
602.0505	Curb Ramp Detectable Warning Field Yellow	SF	520	-520	0
602.0605	Curb Ramp Detectable Warning Field Radial Yellow	SF	101	-101	0
620.0200	Concrete Median Blunt Nose	SF	861	-861	0

Plan Sheets:

Revised Plan Sheets	
Plan Sheet	Plan Sheet Title (brief description of changes to sheet)
8	Typical Sections – Replaced “Concrete Curb & Gutter 4-Inch Sloped 36-Inch Type R” to “Concrete Curb & Gutter 4-Inch Sloped 30-Inch Type R” for roundabout circulator
17	Construction Detail – Revised pedestrian curb from 6-inch curb head to 12-inch curb head
45,51,54	Intersection Details – Add missing pavement grades
57	Intersection Details – Revised pavement grades, revised linework at Foth Driveway
64, 67-69	Removals – Add Removing Fence
72	Plan Detail Legend – Added “Concrete Curb & Gutter 4-Inch Sloped 30-Inch Type R”, Replaced “Concrete Curb & Gutter 4-Inch Sloped 36-Inch Type R” with “Concrete Curb & Gutter 4-Inch Sloped 36-Inch Type A”, Revised Curb Ramp Detectable Warning Field and Radial items from “Yellow” to “Natural Patina”, Removed “Concrete Median Blunt Nose” item

75-78,80,88	Plan Details – Replaced “Concrete Curb & Gutter 4-Inch Sloped 36-Inch Type R” to “Concrete Curb & Gutter 4-Inch Sloped 30-Inch Type R” for roundabout circulators, replaced “Concrete Median Blunt Noses” with “Concrete Median Slope Nose”, replaced “Concrete Curb & Gutter 36-Inch Special” with “Concrete Curb & Gutter 4-Inch Sloped 36-Inch Type A” in areas with truck tracking pavement. Replaced “Concrete Curb & Gutter 30-inch Type D” with “Concrete Curb & Gutter 36-Inch Special” in areas with a paved median.
94	Plan Details – Revised Station & Offsets to match into existing Foth Driveway
178	Permanent Signing: Add removal of existing Exit sign at STA 602+37NB, RT
252-253	Traffic Control – Replaced “Flexible Delineator” in Stage 3B Legend with “Delineator Flexible/Tubular Marker”
317	Miscellaneous Quantities – Revised concrete quantities: Truck Apron, Coloring Concrete Red, and Median Sloped Nose
319	Miscellaneous Quantities – Revised Concrete Curb & Gutter quantities: 30-Inch Type A, 36-Inch Special. Added Concrete Curb and Gutter 4-Inch Sloped 30-Inch Type R, Concrete Curb and Gutter 4-Inch Sloped 36-Inch Type A. Removed “Concrete Curb and Gutter 4-Inch Sloped 36-Inch Type R”. Replaced “Yellow” Detectable Warning Field items with “Natural Patina” items.
334	Miscellaneous Quantities – Added “Removing Fence” Quantities
344	Miscellaneous Quantities – Added Delineator bid items. Added “Removing Signs Type I”
652	Structure B-5-696, General Plan – Add Structural Backfill at Footings
654	Structure B-5-696, Quantities & Notes – Add Structure Backfill Quantity
660	Structure B-5-696, Pier – Add Structural Backfill at Footings
667	Structure B-5-696, Superstructure Cross Section – Const. Joint & Symbol Callout
671	Structure B-5-696, Parapet ‘A’ South – Const. Joint & Symbol Callout
681	Structure B-5-696, West Structural Approach Slab Details – Const. Joint & Symbol Callout
683	Structure B-5-696, East Structural Approach Slab Details – Const. Joint & Symbol Callout

Added Plan Sheets	
Plan Sheet	Plan Sheet Title (brief description of why sheet was added)
289A	Fencing Plans – Shows added fence for connection between fence and barrier wall
512A-512E	Standard Detail Drawings – Add 15A04-08a-e for Delineators

The responsibility for notifying potential subcontractors and suppliers of these changes remains with the prime contractor.

Sincerely,

Mike Coleman

Proposal Development Specialist
Proposal Management Section

ADDENDUM NO. 01

1130-68-77

April 28, 2025

Special Provisions

11.2 Decorative Silhouette, Item SPV.0060.07.

Replace entire article language with the following:

A Description

Fabricate, galvanize, paint, deliver, and install decorative silhouette on bridge tubular steel railing screening.

B Materials

B.1 General

All materials shall meet the requirements shown on the plans and applicable provisions of the standard specifications as follows:

- Plate, Bracket, Mounting Hardware: Standard spec 506
- Welding Materials: AWS D 1.5 Bridge Welding Code
- Painting: Standard spec 517.2

Steel preparation includes the chamfering of sharp edges. Flatten all sharp edges by a single pass of a grinder or suitable device along the sharp edge. Condition any thermal cut edges before blast cleaning by shallow grinding or other cleaning to remove any hardened surface layer. Remove all evident steel defects exposed in accordance to AASHTO M 160 prior to blast cleaning.

Complete all welded connections and drill holes to the decorative silhouette as part of the manufacturing process.

Fabricate the decorative silhouette plates as shown in the plans and patterns. Hot dip galvanize the decorative silhouette plates in accordance with ASTM123. After hot dip galvanizing has been completed, perform additional surface conditioning to remove any drips or imperfections to ensure a smooth surface prior to painting.

Electronic files of the decorative silhouette patterns are available from the Wisconsin Department of Transportation, Kyle Treml, 920-360-7029, kyle.treml@dot.wi.gov.

B.2 Painting

Shop coat all steel galvanized surfaces with a department approved paint system. Paint with an approved tie and topcoat. The topcoat shall be AMS color number 27038, Tricorn Black to match the color of the tubular steel railing screening.

Clean galvanizing surfaces to be painted according to SSP-SP1 to remove chlorides, sulfates, zinc salts, oil, dirt, organic matter and other contaminants. Brush-off blast clean the surface per SSPC-SP7 to create a slight angular surface profile (1.0-1.5 mils suggested) for adhesion. Do not fracture the galvanized finish to remove any dry film thickness during these processes.

After cleaning provide a tie coat from an approved coating system that is specifically intended to be used on a galvanized surface. The tie coat shall etch the galvanized rail and prepare the surface for the topcoat. Apply a topcoat matching AMS color number 27038, Tricorn Black. The tie and topcoats should be of contrasting colors. Use a pre-approved topcoat that is resistant to the effects of the sun and is suitable for use in a marine environment. Paint the decorative silhouette with the tie and topcoats before final installation. Exercise care so as not to damage the painted surface of the decorative silhouette or tubular steel railing screening.

Paint all plates, brackets, bolts, nuts, and washers prior to installation. Repair all paint surfaces damaged during installation.

C Construction

Follow procedures in Standard spec 506.3.

Follow procedures in Standard spec 517.3 for painting requirements.

Follow procedures in Standard spec 506.3.19 for welding requirements.

Provide shop drawings in accordance to the requirements of section 506.3.2 of the standard spec. Shop drawings shall contain material sizes and types, weld sizes and locations, and all necessary details, dimensions, and information to allow fabrication of the decorative silhouette in conformance with the requirements of the contract. Do not begin fabrication prior to shop drawing review and acceptance.

Notify the engineer two days prior to the delivery of the decorative silhouette. The engineer shall inspect the silhouette for damage, defects, or non-conformities. Materials that arrive to the site damaged or in unsatisfactory condition will be rejected.

After the product is unloaded, the installation contractor will signify in writing that the decorative silhouette was received in acceptable condition per the engineer's inspection. Any damage to the decorative silhouette after being accepted by the engineer will be the responsibility of the contractor. No field welding, field cutting, or drilling will be permitted without the approval of the engineer.

Take special care while handling and during construction to minimize the number and size of touch-up spots. Follow the manufacturer's recommendations for damaged area repairs. The engineer must approve the field paint appearance prior to final acceptance.

Locate and field drill holes as required through the tubular steel railing screening. Repair damaged paint and galvanized surfaces in the tubular steel railing prior to installation of the decorative silhouette. Follow procedures in Standard spec 513.3.3 (10) to repair railing galvanizing and paint systems damaged by silhouette installation.

Provide the engineer with the name, address, and phone number of a representative of the decorative silhouette for future coordination.

D Measurement

The department will measure Decorative Silhouette as each individual unit, acceptably completed.

E Payment

The department will pay for measured quantities at the contract unit price under the following bid item:

ITEM NUMBER	DESCRIPTION	UNIT
SPV.0060.07	Decorative Silhouette	EACH

Payment is full compensation for supplying shop drawings, furnishing and installation.

ner41-506 (04092025)

15.2 Blue Specific Service Signs.

Add the following to standard spec 638.3.4:

Do not remove or move blue specific service signs or their associated posts. Specific service signs are signs with logos that identify commercial entities providing gas, food, lodging, camping, or attractions. A separate contractor, Interstate Logos - Wisconsin, is responsible for these signs. Contact Interstate Logos - Wisconsin at (844) 496-9163 a minimum of 14 calendar days in advance to coordinate removing, moving, or re-installation of these signs.

The contractor is responsible for damage done to these signs due to contractor operations.

stp-638-010 (20150630)

Schedule of Items
Attached, dated April 28, 2025, are the revised Schedule of Items Pages 1 - 21.

Plan Sheets
The following 8½ x 11-inch sheets are attached and made part of the plans for this proposal:
Revised: 8, 17, 45, 51, 54, 57, 64, 67, 68, 69, 72, 75, 76, 77, 78, 80, 88, 94, 178, 252, 253, 317, 319, 334, 344, 652, 654, 660, 667, 671, 681, and 683.
Added: 289A and 512A-512E.

END OF ADDENDUM

Ⓐ SALVAGED TOPSOIL, SEEDING MIXTURE NO. 30, FERTILIZER TYPE B, AND EROSION MAT CLASS I, TYPE A

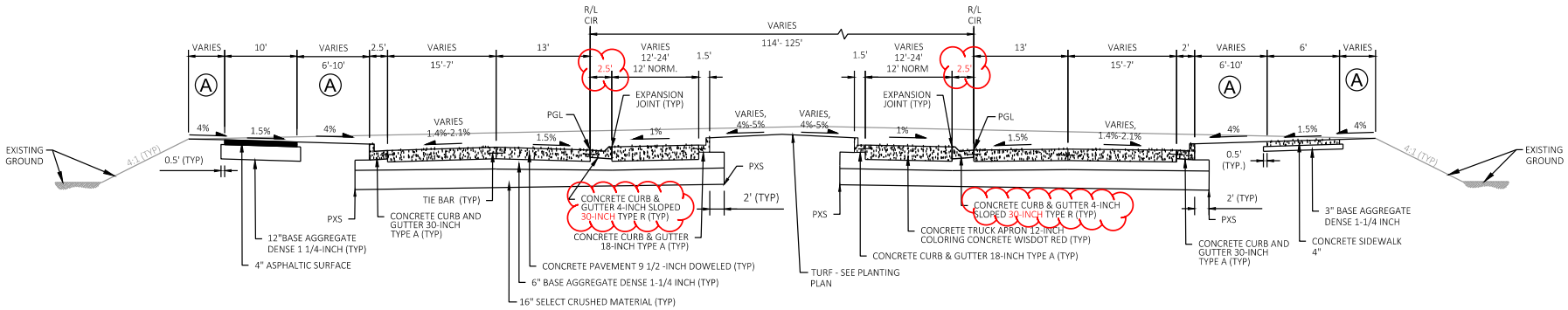

FINISHED TYPICAL SECTION
SOUTHERN ARTERIAL CONNECTOR - ROUNDABOUT

STA 0'GVSC'+00.00 TO STA 3'GVSC'+67.75
STA 0'GVNC'+00.00 TO STA 3'GVNC'+58.14
STA 0'GFVC'+00.00 TO STA 3'GFCV'+73.06

Addendum No. 01
ID 1130-68-77
Revised Sheet 8
April 28, 2025

NOTES:
PGL = POINT REFERRED TO ON PROFILE AND PIVOT POINT FOR SUPERELEVATION
PXS = POINT REFERRED TO ON CROSS SECTIONS

PROJECT NO: 1130-68-77	HWY: IH 41 - SOUTHBRIDGE	COUNTY: BROWN	TYPICAL SECTIONS	SHEET 8	E

FILE NAME : C:\USERS\DITAZK\DC\ACCDOCS\WISDOT\11306301\PROJECT FILES\DSGN\11306870\SHEETS\SHEETSPLAN\68-77\02 TYPICAL SECTION AND DETAILS\020301-TS.DWG
LAYOUT NAME - 020304-ts
PLOT DATE : 3/11/2025 9:45 AM PLOT BY : KLEIN, ANTHONY J PLOT NAME : PLOT SCALE : 1IN:15 FT

2

* DISTANCE TO BE LAID OUT IN THE FIELD BASED ON SIGN SIZE. TWO FOOT MINIMUM CLEARANCE BETWEEN THE EDGE OF SIGN AND THE FACE OF CURB.

** SEE SIGN DETAILS FOR POST SPACING.

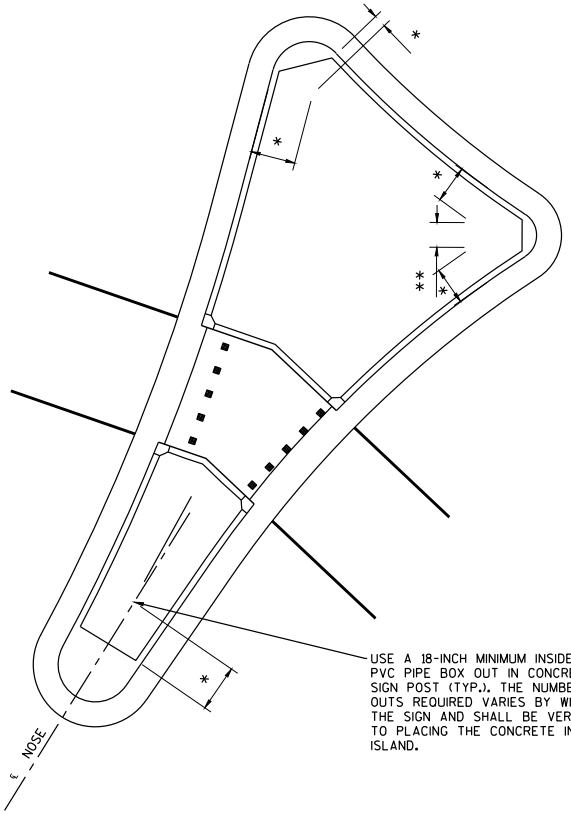

ISLAND SIGN LOCATION DETAIL (TYP.)

2

Addendum No. 01
ID 1130-68-77
Revised Sheet 17
April 28, 2025

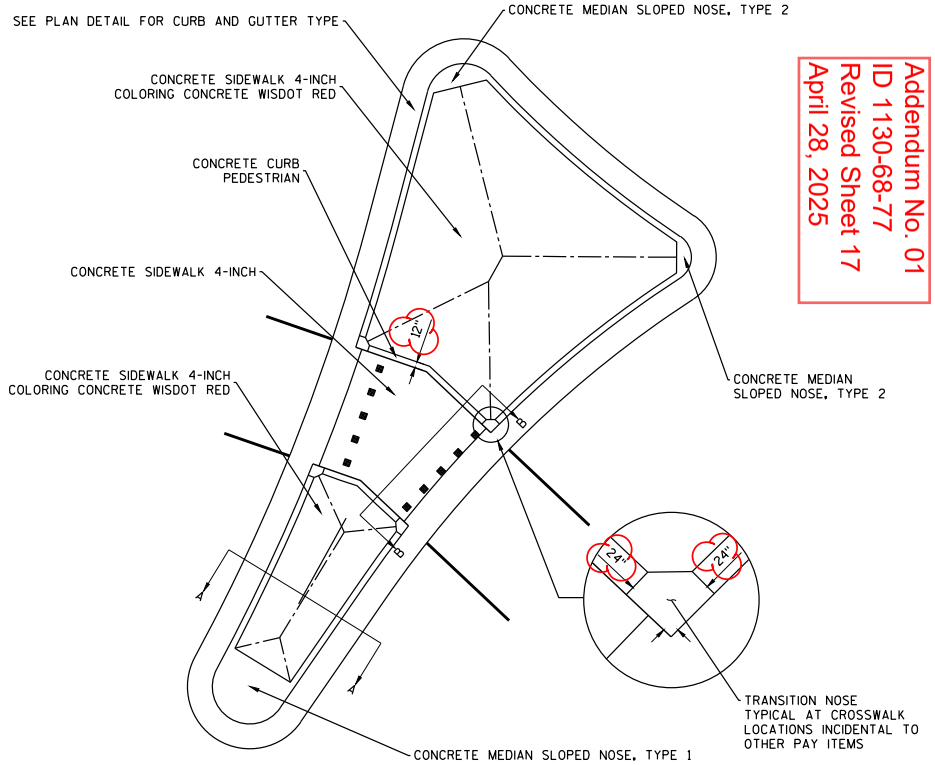

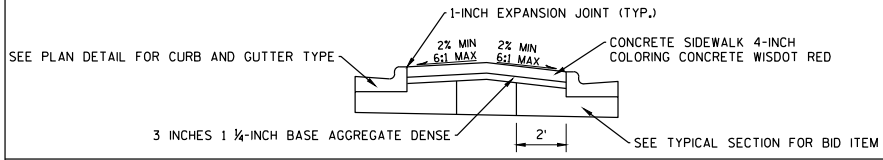

SECTION A–A

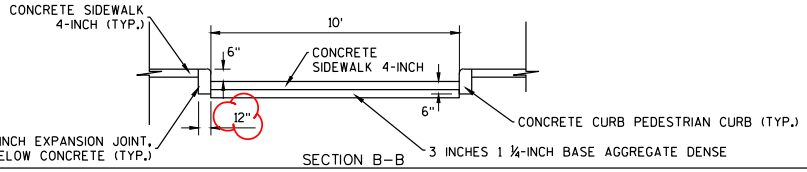

SECTION B–B

SPLITTER ISLAND DETAIL (TYP.)

PROJECT NO: 1130-68-77	HWY: IH 41 - SOUTHBRIDGE	COUNTY: BROWN	CONSTRUCTION DETAILS	SHEET 17	E

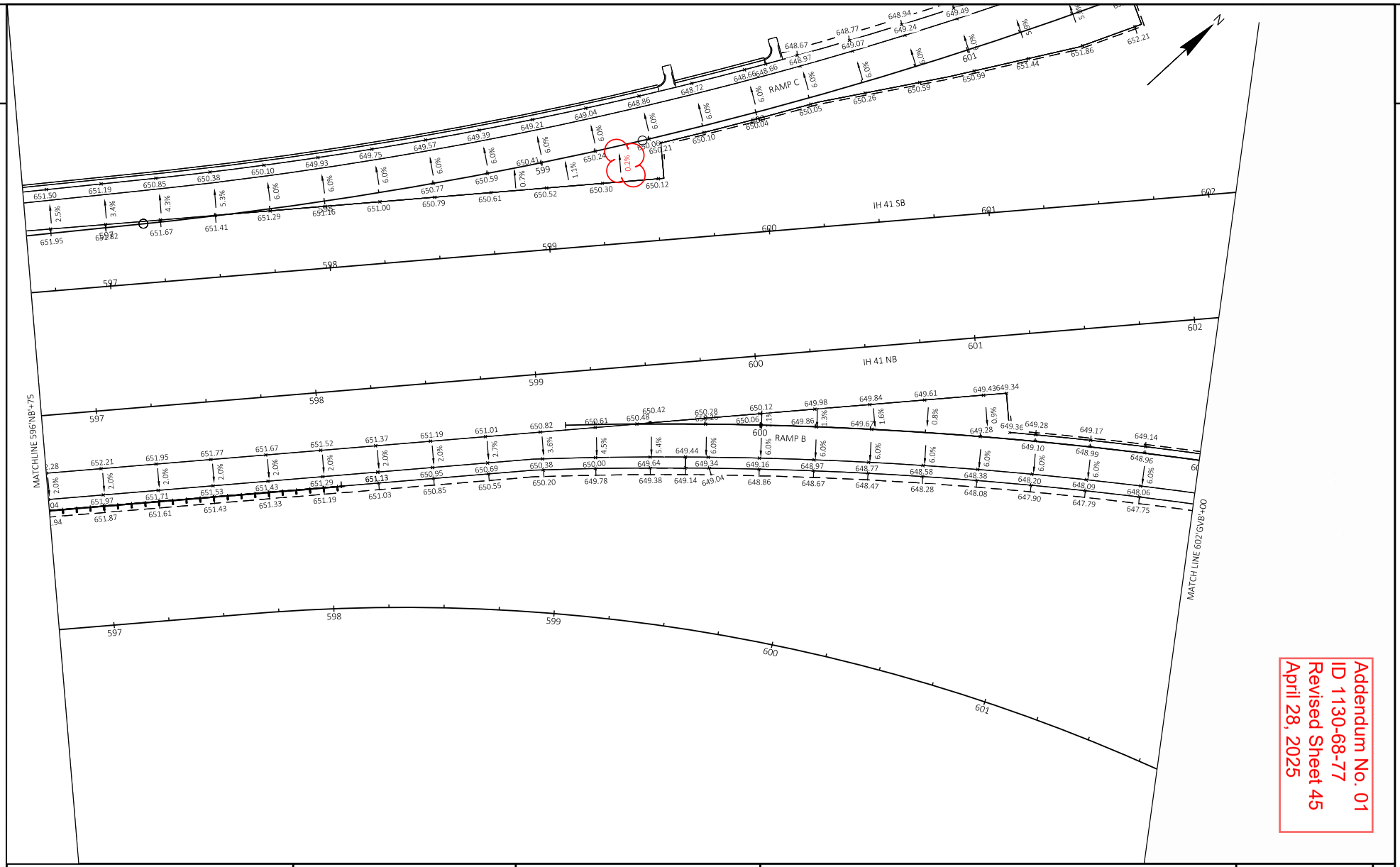

Addendum No. 01
ID 1130-68-77
Revised Sheet 45
April 28, 2025

PROJECT NO: 1130-68-77	HWY: IH 41 - SOUTHBRIDGE	COUNTY: BROWN	INTERSECTION DETAILS - RAMP B	SHEET 45	E

FILE NAME : C:\USERS\DOTK90\DC\ACCDOCS\WISDOT\11306301\PROJECT FILES\DSGN\11306870\SHEETS\SHEETSPLAN\68-77\02 TYPICAL SECTION AND DETAILS\021001-ID.DWG
LAYOUT NAME - 35 - RAMP B
PLOT DATE : 4/10/2025 1:42 PM PLOT BY : DENEYS, KRISTOPHER M PLOT NAME : PLOT SCALE : 1 IN:40 FT

WISDOT/CADDS SHEET 42

2

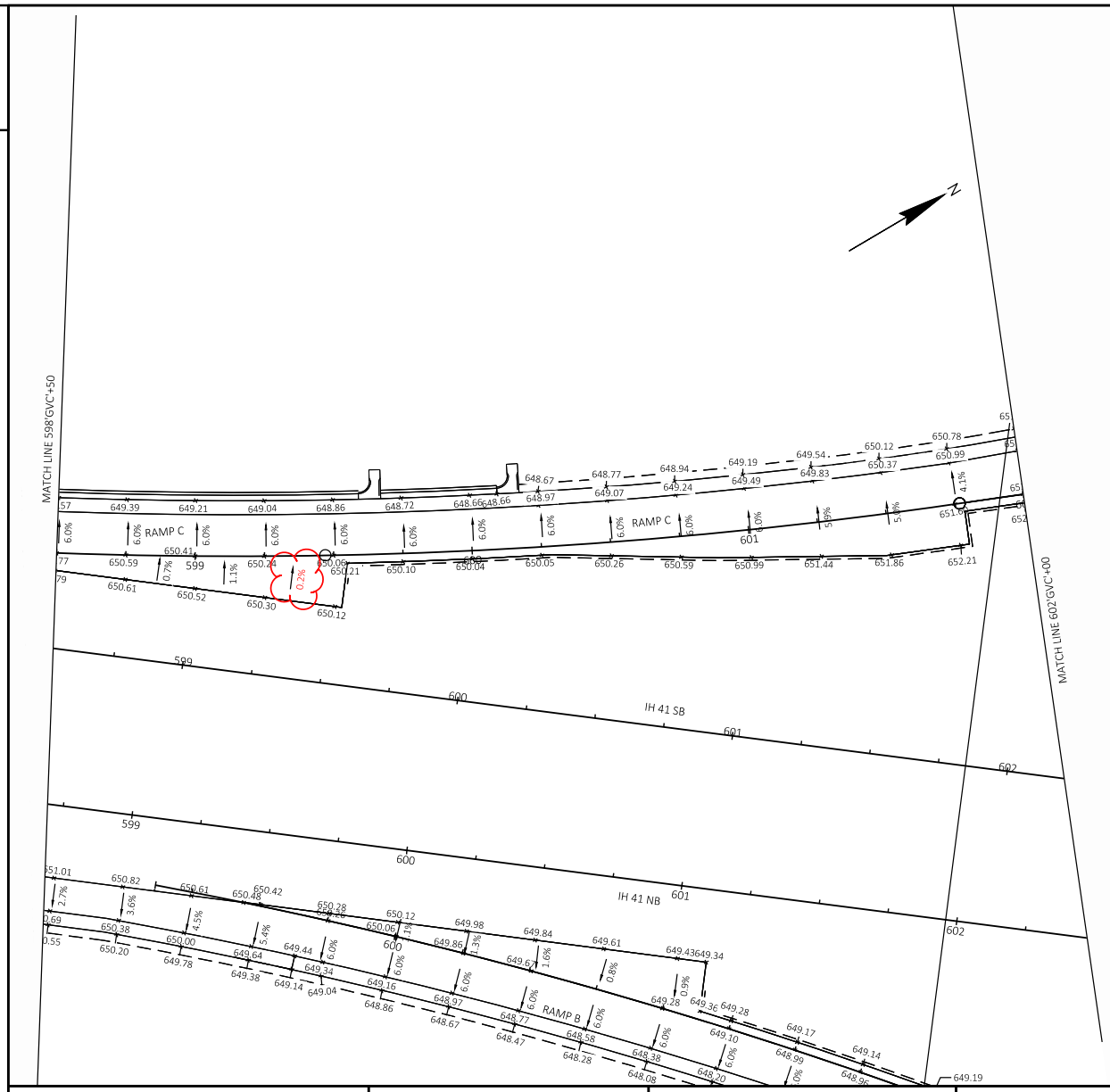

Addendum No. 01
ID 1130-68-77
Revised Sheet 51
April 28, 2025

2

PROJECT NO: 1130-68-77	HWY: IH 41 - SOUTHBRIDGE	COUNTY: BROWN	INTERSECTION DETAILS - RAMP C	SHEET 51	E

FILE NAME : C:\USERS\DOTK90\DC\ACCDOCS\WISDOT\11306301\PROJECT FILES\DSGN\11306870\SHEETS\SHEETSPLAN\68-77\02 TYPICAL SECTION AND DETAILS\021001-ID.DWG
LAYOUT NAME - 2 - RAMP C
PLOT DATE : 4/10/2025 1:43 PM PLOT BY : DENEYS, KRISTOPHER M PLOT NAME : PLOT SCALE : 1 IN:40 FT

WISDOT/CADDS SHEET 42

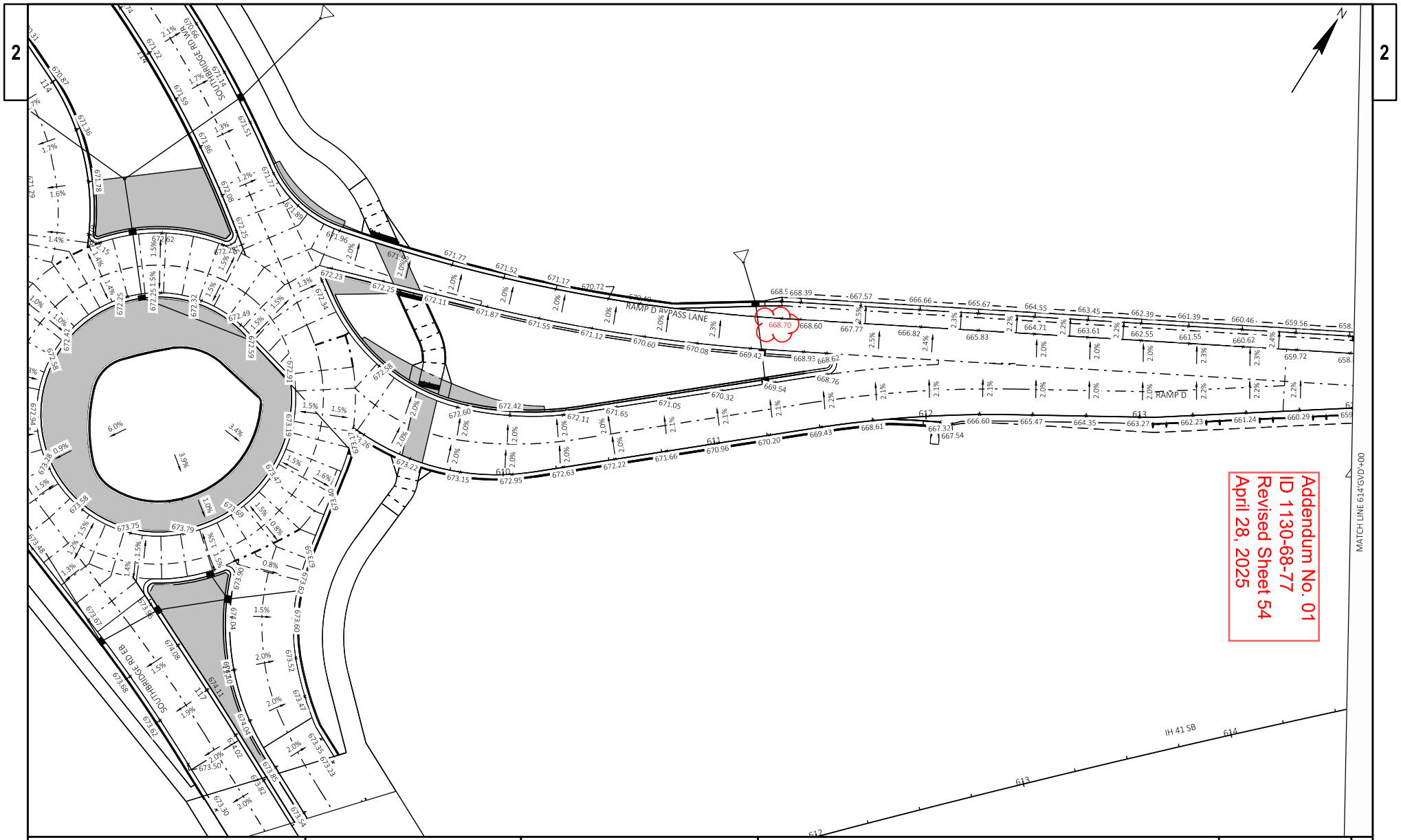

PROJECT NO: 1130-68-77	HWY: IH 41 - SOUTHBRIDGE	COUNTY: BROWN	INTERSECTION DETAILS - RAMP D	SHEET 54	E

FILE NAME : C:\USERS\DOTK90\DC\ACCDOCS\WISDOT\11306301\PROJECT FILES\DSGN\11306870\SHEETS\SHEETSPLAN\68-77\02 TYPICAL SECTION AND DETAILS\021001-ID.DWG
LAYOUT NAME - 15 - RAMP D
PLOT DATE : 4/10/2025 2:25 PM PLOT BY : DENEYS, KRISTOPHER M PLOT NAME : PLOT SCALE : 1 IN:40 FT

WISDOT/CADDS SHEET 42

2

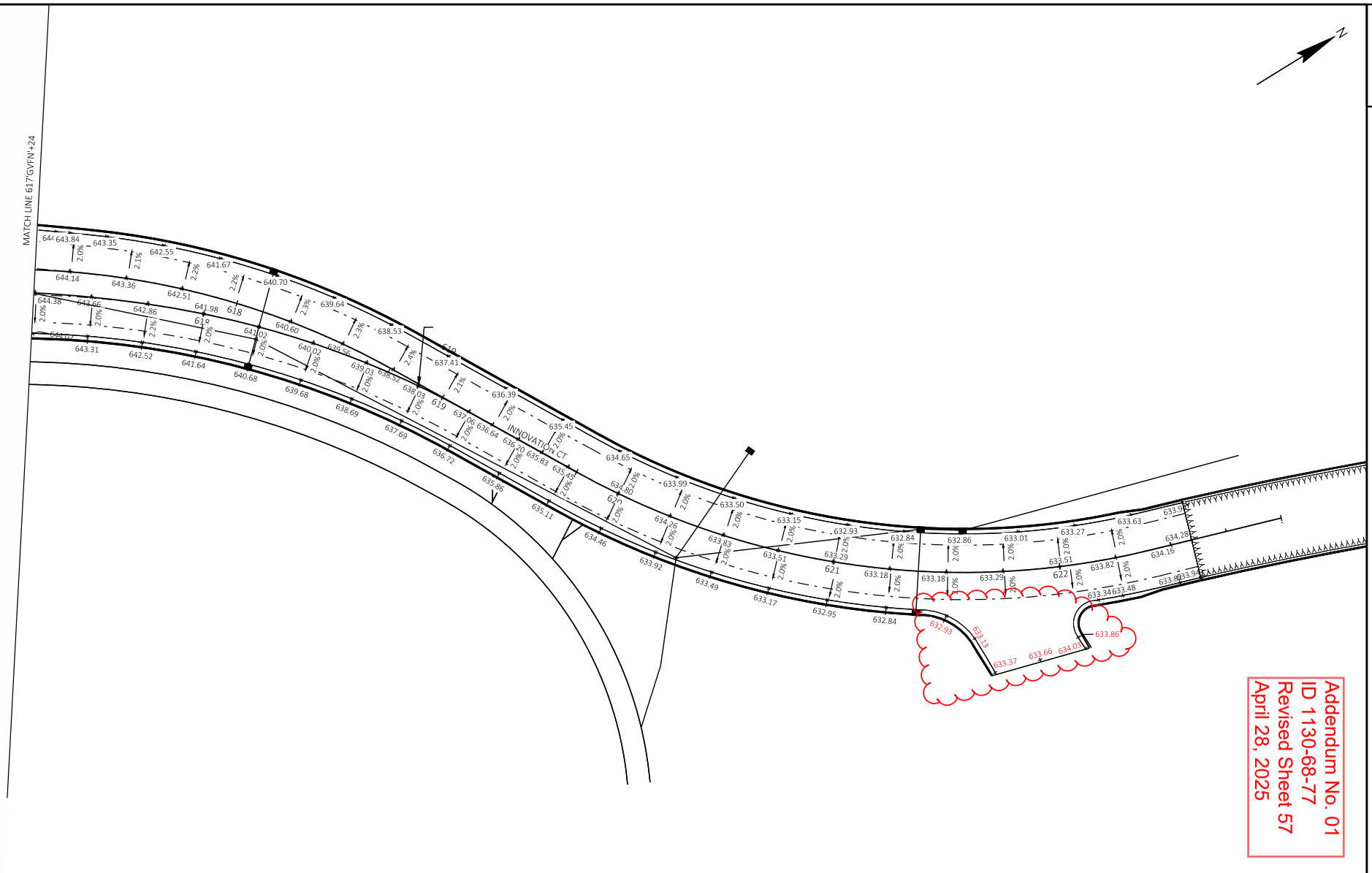

2

PROJECT NO: 1130-68-77	HWY: IH 41 - SOUTHBRIDGE	COUNTY: BROWN	INTERSECTION DETAILS - INNOVATION CT	SHEET 57	E

FILE NAME : C:\USERS\DOTK9D\DC\ACCDOCS\WISDOT\11306301\PROJECT FILES\DSGN\11306870\SHEETS\SHEETSPLAN\68-77\02 TYPICAL SECTION AND DETAILS\021001-ID.DWG
LAYOUT NAME - 18 -INN-N CT
PLOT DATE : 4/10/2025 3:19 PM PLOT BY : DENEYS, KRISTOPHER M PLOT NAME : PLOT SCALE : 1 IN:40 FT

WISDOT/CADDS SHEET 42

5

REMOVALS LEGEND

	REMOVING STRUCTURE
XXXXXX	SAWING ASPHALT
YYYYYY	SAWING CONCRETE
	REMOVING MANHOLES
SS SS	REMOVING SMALL PIPE CULVERTS
	OBLITERATING OLD ROAD
	COMMON EXCAVATION
	PAVEMENT REMOVAL
	REMOVING CABLE BARRIER
x x	REMOVING FENCE

NOTE:

ALL EXISTING ASPHALT REMOVAL WILL BE PAID FOR AS EXCAVATION COMMON.

SEE DRAINAGE, SIGNING, FTMS, AND SIGNAL PLANS FOR OTHER REMOVAL ITEMS.

Addendum No. 01
ID 1130-68-77
Revised Sheet 64
April 28, 2025

5

PROJECT NO: 1130-68-77	HWY: IH 41 - SOUTHBRIDGE	COUNTY: BROWN	REMOVALS PLAN LEGEND	SHEET 64	E

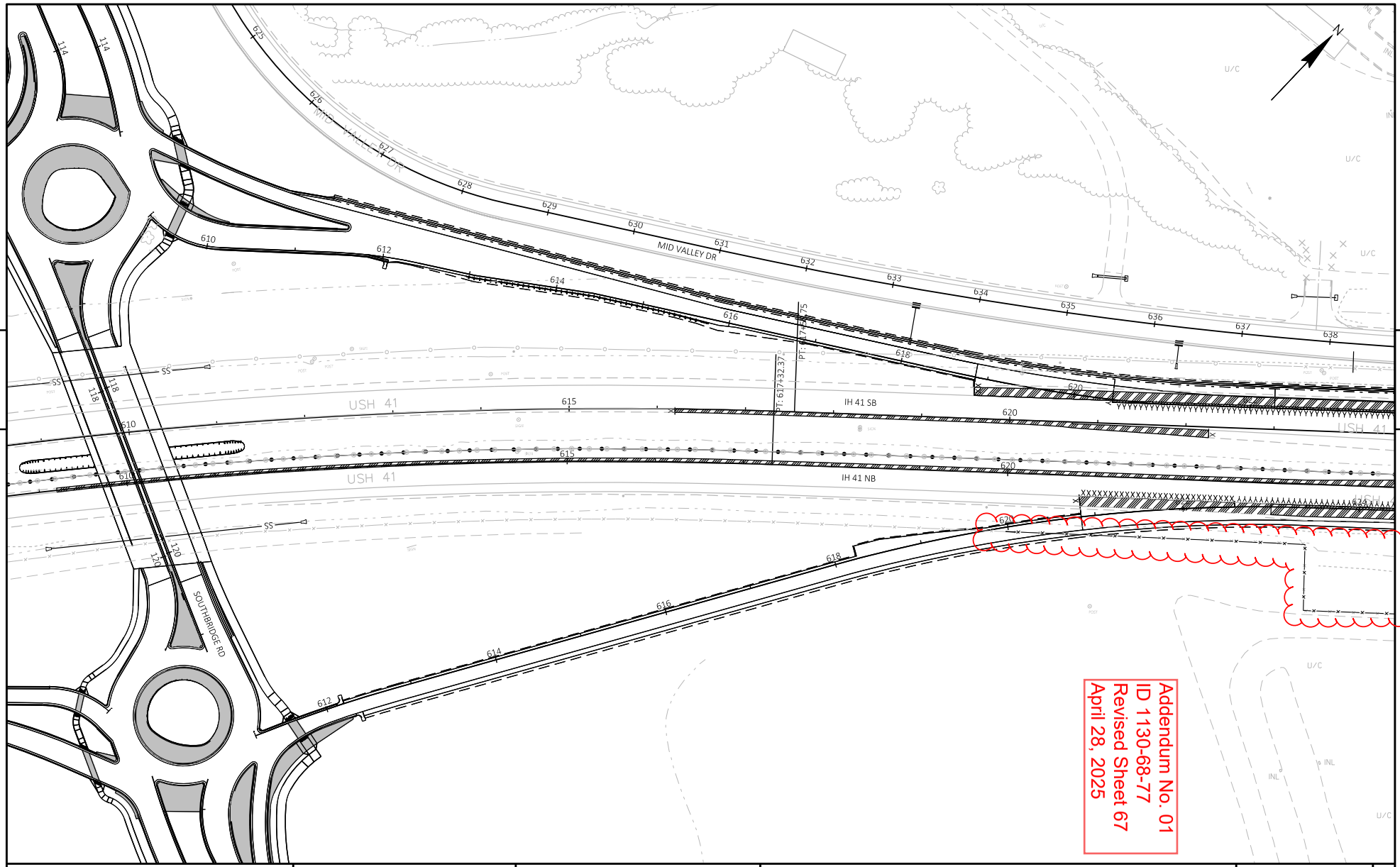

PROJECT NO: 1130-68-81	HWY: IH 41 - SOUTHBRIDGE	COUNTY: BROWN	REMOVALS PLAN	SHEET 67	E

FILE NAME : C:\USERS\DOTK90\DC\ACCDOCS\WISDOT\11306301\PROJECT FILES\DSGN\11306870\SHEETS\SHEETSPLAN\68-77\02 TYPICAL SECTION AND DETAILS\021101-RM.DWG
LAYOUT NAME - 02
PLOT DATE : 4/22/2025 10:38 AM PLOT BY : DENEYS, KRISTOPHER M PLOT NAME : PLOT SCALE : 1 IN:100 FT

WISDOT/CADDS SHEET 44

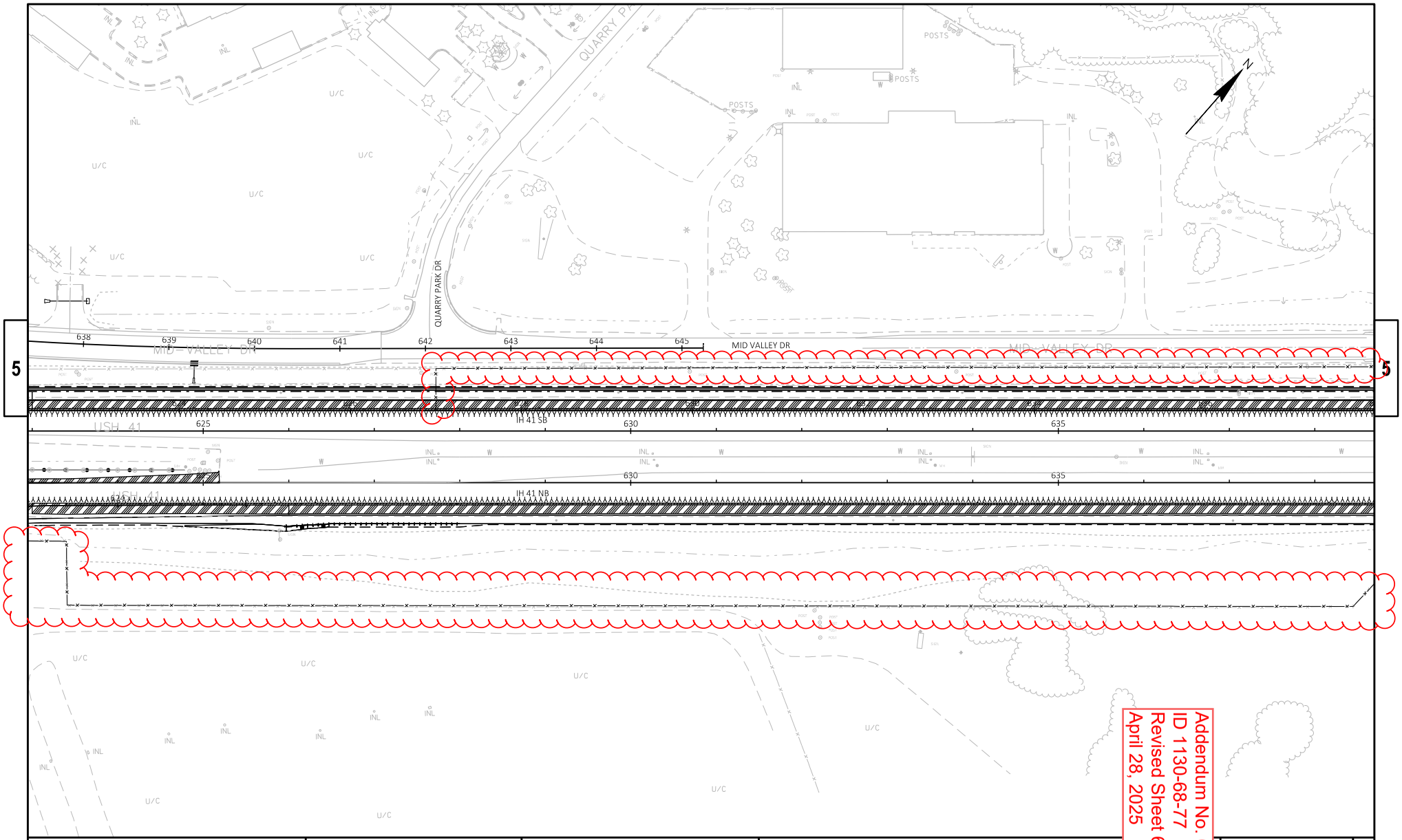

Addendum No. 01
ID 1130-68-77
Revised Sheet 68
April 28, 2025

PROJECT NO: 1130-68-81	HWY: IH 41 - SOUTHBRIDGE	COUNTY: BROWN	REMOVALS PLAN	SHEET 68	E

FILE NAME : C:\USERS\DOTK9D\DC\ACCDOCS\WISDOT\11306301\PROJECT FILES\DSGN\11306870\SHEETS\SHEETSPLAN\68-77\02 TYPICAL SECTION AND DETAILS\021101-RM.DWG
LAYOUT NAME - 03
PLOT DATE : 4/22/2025 10:39 AM PLOT BY : DENEYS, KRISTOPHER M PLOT NAME : PLOT SCA

WISDOT/CADDS SHEET 44

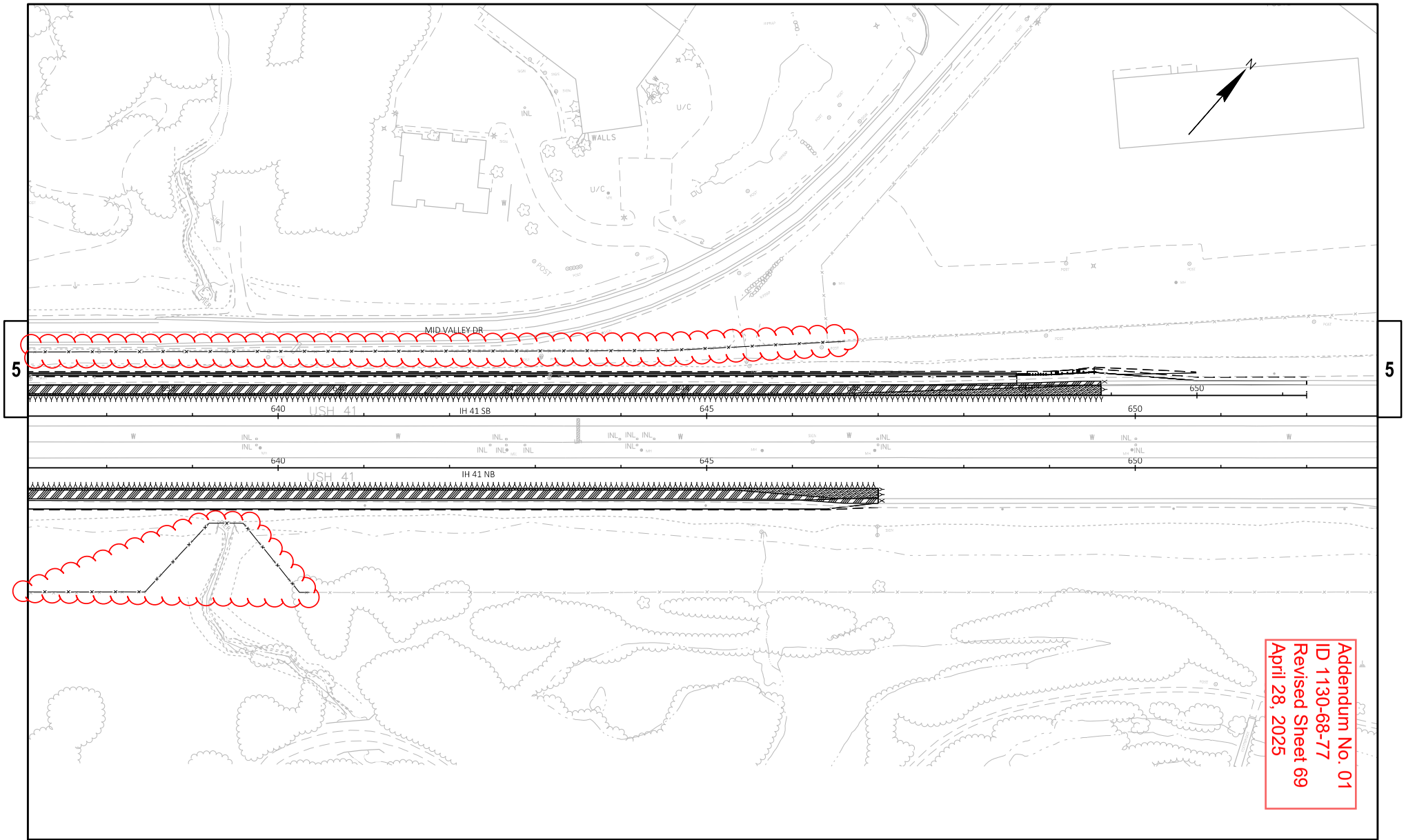

PROJECT NO: 1130-68-81	HWY: IH 41 - SOUTHBRIDGE	COUNTY: BROWN	REMOVALS PLAN	SHEET 69	E

FILE NAME : C:\USERS\DOTK90\DC\ACCDOCS\WISDOT\11306301\PROJECT FILES\DSGN\11306870\SHEETS\SHEETSPLAN\68-77\02 TYPICAL SECTION AND DETAILS\021101-RM.DWG
LAYOUT NAME - 03 (2)
PLOT DATE : 4/22/2025 10:39 AM PLOT BY : DENEYS, KRISTOPHER M PLOT NAME : PLOT SCALE : 1 IN:100 FT

WISDOT/CADDS SHEET 44

2

2

PLAN DETAIL LEGEND

AG01	BASE AGGREGATE DENSE 3/4-INCH
AP02	HMA PAVEMENT 2-INCH
AP3.5	HMA PAVEMENT 3 1/2-INCH
AP04	HMA PAVEMENT 4-INCH
AP05	HMA PAVEMENT 5-INCH
AP07	HMA PAVEMENT 6 3/4-INCH
AS04	ASPHALTIC SURFACE 4-INCH
AS5.5	ASPHALTIC SURFACE 5 1/2-INCH
BG32	MGS GUARDRAIL 3
BG40	MGS GUARDRAIL TERMINAL EAT
BG41	MGS GUARDRAIL TERMINAL TYPE 2
BG42	MGS THRIE BEAM TRANSITION
BG43	STEEL THRIE BEAM
BG44	STEEL THRIE BEAM BULLNOES TERMINAL
CB42	CONCRETE BARRIER TYPE S42 SPECIAL
CG12	CONCRETE CURB & GUTTER 18-INCH TYPE A
CG14	CONCRETE CURB & GUTTER 30-INCH TYPE A
CG15	CONCRETE CURB & GUTTER 30-INCH TYPE D
CG16	CONCRETE CURB & GUTTER 36-INCH SPECIAL
CG33	CONCRETE CURB & GUTTER 4-INCH SLOPED 36-INCH TYPE A
CG36	CONCRETE CURB & GUTTER 4-INCH SLOPED 36-INCH TYPE D
CG30	CONCRETE CURB & GUTTER 4-INCH SLOPED 30-INCH TYPE R
CG42	CONCRETE CURB PEDESTRIAN
CG43	CURB RAMP DETECTABLE WARNING FIELD NATURAL PATINA
CG46	CURB RAMP DETECTABLE WARNING FIELD RADIAL NATURAL PATINA
CM04	CONCRETE SIDEWALK 4-INCH
~~CM11~~	~~CONCRETE MEDIAN BLUNT NOSE~~
CM12	CONCRETE MEDIAN SLOPED NOSE
CP01	COLORING CONCRETE WISDOT RED
CP09	CONCRETE PAVEMENT 9-INCH
CP9.5	CONCRETE PAVEMENT 9 1/2-INCH
CP10.5	CONCRETE PAVEMENT 10 1/2-INCH
LS02	SEE LANDSCAPE PLAN
PV01	CONCRETE APPROACH SLAB
PV05	ASPHALTIC FLUME
PV06	CONCRETE SURFACE DRAIN
TA12	CONCRETE TRUCK APRON 12-INCH
LS02	SALVAGED TOPSOIL, FERTILIZER, SEEDING
SW01	XXXX SAWING ASPHALT
SW02	SAWING CONCRETE

Addendum No. 01
ID 1130-68-77
Revised Sheet 72
April 28, 2025

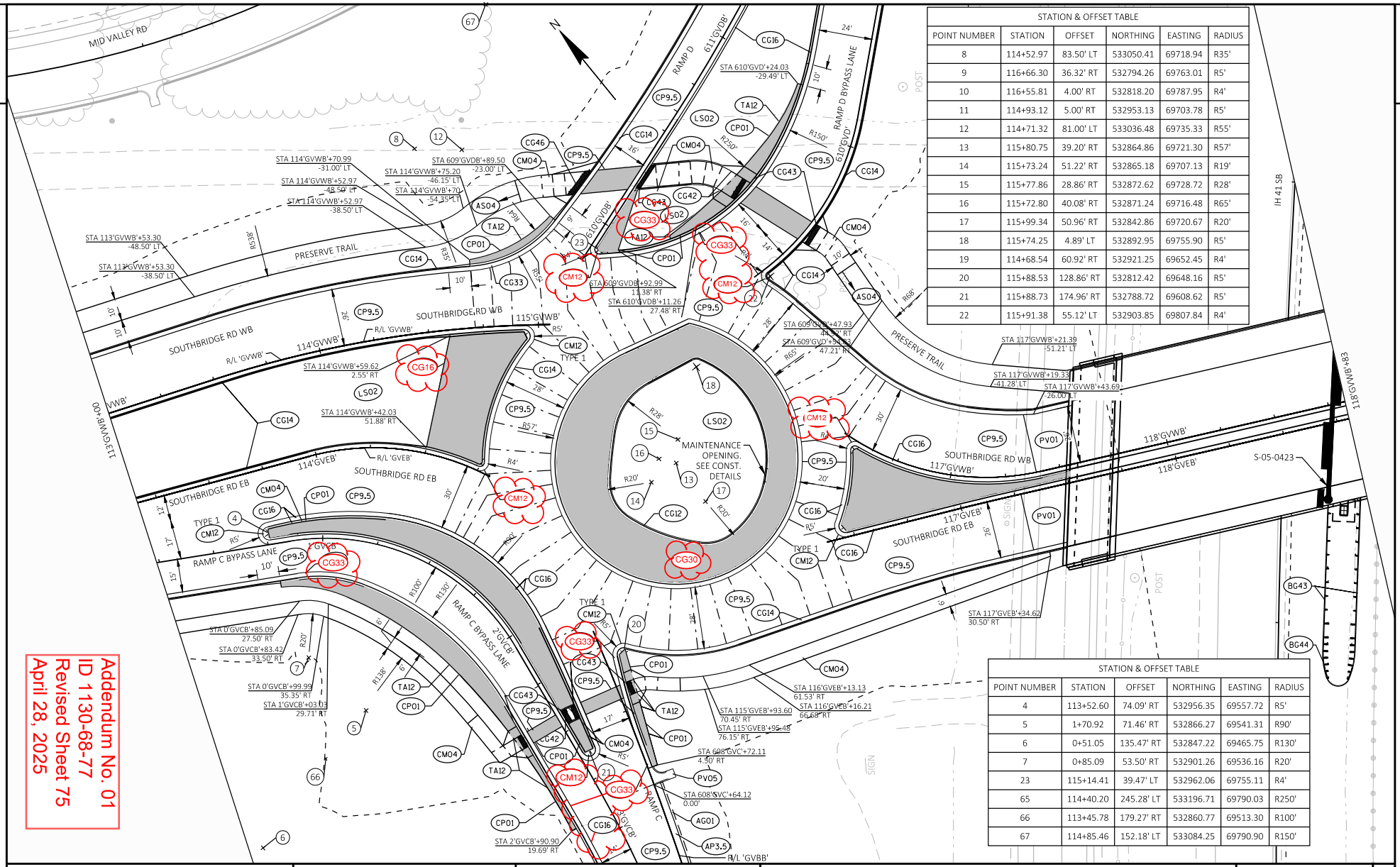

STATION & OFFSET TABLE					
POINT NUMBER	STATION	OFFSET	NORTHING	EASTING	RADIUS
8	114+52.97	83.50' LT	533050.41	69718.94	R35'
9	116+66.30	36.32' RT	532794.26	69763.01	R5'
10	116+55.81	4.00' RT	532818.20	69787.95	R4'
11	114+93.12	5.00' RT	532953.13	69703.78	R5'
12	114+71.32	81.00' LT	533036.48	69735.33	R55'
13	115+80.75	39.20' RT	532864.86	69721.30	R57'
14	115+73.24	51.22' RT	532865.18	69707.13	R19'
15	115+77.86	28.86' RT	532872.62	69728.72	R28'
16	115+72.80	40.08' RT	532871.24	69716.48	R65'
17	115+99.34	50.96' RT	532842.86	69720.67	R20'
18	115+74.25	4.89' LT	532892.95	69755.90	R5'
19	114+68.54	60.92' RT	532921.25	69652.45	R4'
20	115+88.53	128.86' RT	532812.42	69648.16	R5'
21	115+88.73	174.96' RT	532788.72	69608.62	R5'
22	115+91.38	55.12' LT	532903.85	69807.84	R4'

STATION & OFFSET TABLE					
POINT NUMBER	STATION	OFFSET	NORTHING	EASTING	RADIUS
4	113+52.60	74.09' RT	532956.35	69557.72	R5'
5	1+70.92	71.46' RT	532866.27	69541.31	R90'
6	0+51.05	135.47' RT	532847.22	69465.75	R130'
7	0+85.09	53.50' RT	532901.26	69536.16	R20'
23	115+14.41	39.47' LT	532962.06	69755.11	R4'
65	114+40.20	245.28' LT	533196.71	69790.03	R250'
66	113+45.78	179.27' RT	532860.77	69513.30	R100'
67	114+85.46	152.18' LT	533084.25	69790.90	R150'

Addendum No. 01
ID 1130-68-77
Revised Sheet 75
April 28, 2025

PROJECT NO: 1130-68-77	HWY: IH 41 - SOUTHBRIDGE	COUNTY: BROWN	PLAN DETAILS - SOUTHBRIDGE	SHEET 75	E

FILE NAME : C:\USERS\DOTK90\DC\ACCDOCS\WISDOT\11306301\PROJECT FILES\DSGN\11306870\SHEETS\SHEETSPLAN\68-77\02 TYPICAL SECTION AND DETAILS\021201-PD.DWG
LAYOUT NAME - 3 RND
PLOT DATE : 1/31/2025 8:16 AM PLOT BY : DENEYS, KRISTOPHER M PLOT NAME : PLOT SCALE : 1 IN:40 FT

WISDOT/CADDS SHEET 42

Addendum No. 01
ID 1130-68-77
Revised Sheet 76
April 28, 2025

STATION & OFFSET TABLE					
POINT NUMBER	STATION	OFFSET	NORTHING	EASTING	RADIUS
26	122+81.19	52.37' RT	532445.06	70251.28	R5'
27	123+60.31	118.00' LT	532535.71	70397.88	R90'
28	122+49.61	51.69' LT	532533.89	70315.08	R4'
29	122+07.97	61.11' LT	532570.54	70293.18	R5'
30	122+64.77	128.91' LT	532568.64	70388.10	R60'
31	122+72.53	4.00' RT	532478.41	70287.91	R4'
32	123+12.19	118.87' RT	532361.01	70235.61	R50'
33	122+42.21	105.46' RT	532430.84	70196.21	R5'
34	122+90.42	183.59' RT	532355.59	70153.59	R90'
35	121+79.42	115.59' RT	532469.31	70145.56	R4'
36	121+92.90	27.61' RT	532520.24	70218.54	R42' / R57'
37	120+98.95	35.04' RT	532569.15	70153.98	R4'

STATION & OFFSET TABLE					
POINT NUMBER	STATION	OFFSET	NORTHING	EASTING	RADIUS
38	121+10.72	5.00' RT	532591.23	70177.50	R5'
39	122+07.92	11.54' RT	532520.45	70240.54	R20'
40	121+95.92	49.38' RT	532503.04	70204.87	R20'
41	121+58.18	16.62' RT	532552.96	70202.55	R70'
42	120+44.64	127.86' RT	532509.37	70063.76	R50'
43	120+15.69	126.00' RT	532523.78	70038.58	R72'
44	123+96.81	30.91' LT	532441.36	70401.84	R5'
68	122+64.77	132.12' LT	532551.66	70403.48	R40'
69	122+64.77	125.76' LT	532543.14	70400.78	R50'
70	122+23.48	112.26' RT	532439.71	70178.36	R5'

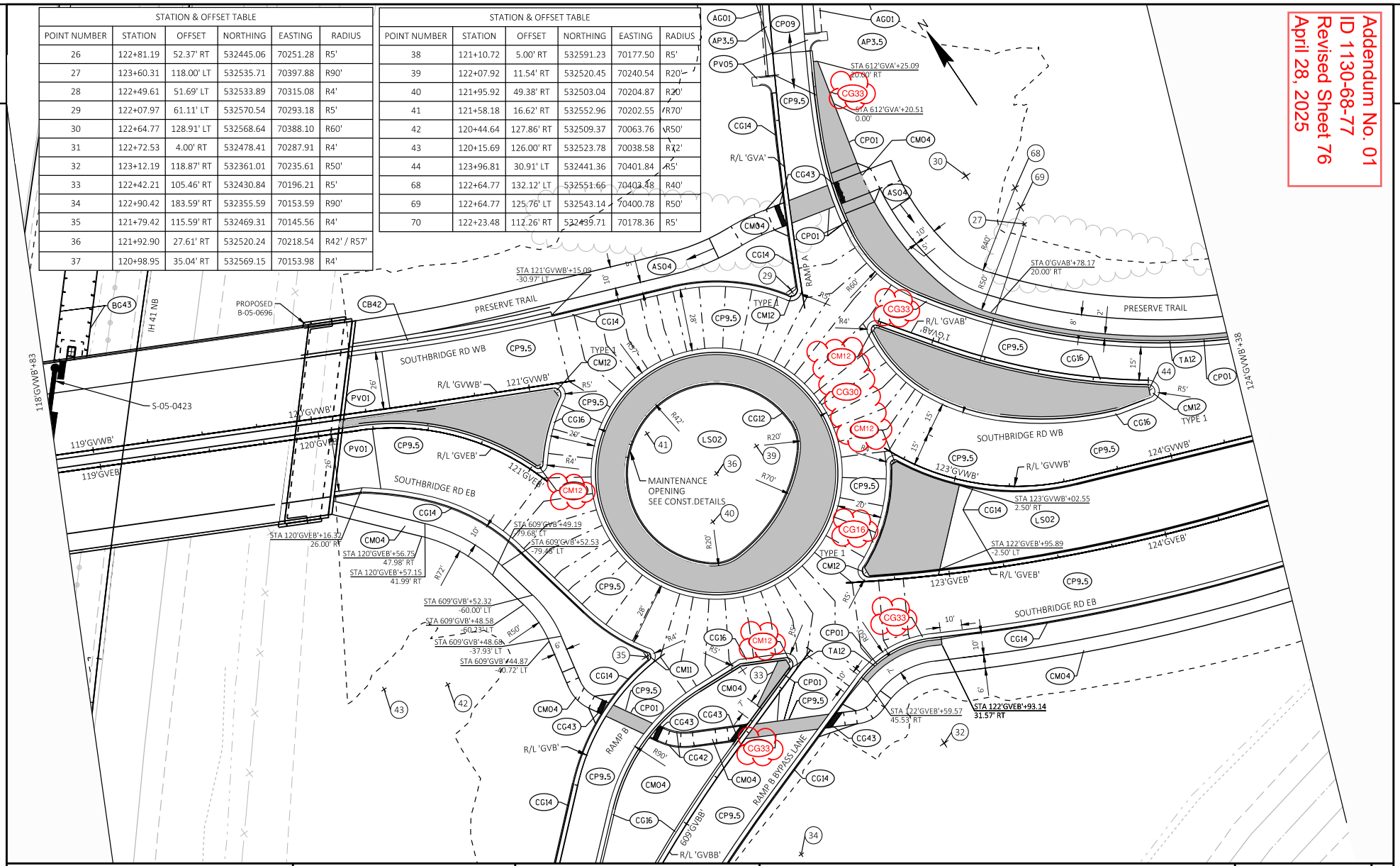

PROJECT NO: 1130-68-77	HWY: IH 41 - SOUTHBRIDGE	COUNTY: BROWN	PLAN DETAILS - SOUTHBRIDGE	SHEET 76	E

FILE NAME : C:\USERS\DOTK90\DC\ACCDOCS\WISDOT\11306301\PROJECT FILES\DSGN\11306870\SHEETS\SHEETSPLAN\68-77\02 TYPICAL SECTION AND DETAILS\021201-PD.DWG
LAYOUT NAME - 4 RND
PLOT DATE : 1/31/2025 8:17 AM PLOT BY : DENEYS, KRISTOPHER M PLOT NAME : PLOT SCALE : 1 IN:40 FT

WISDOT/CADDS SHEET 42

2

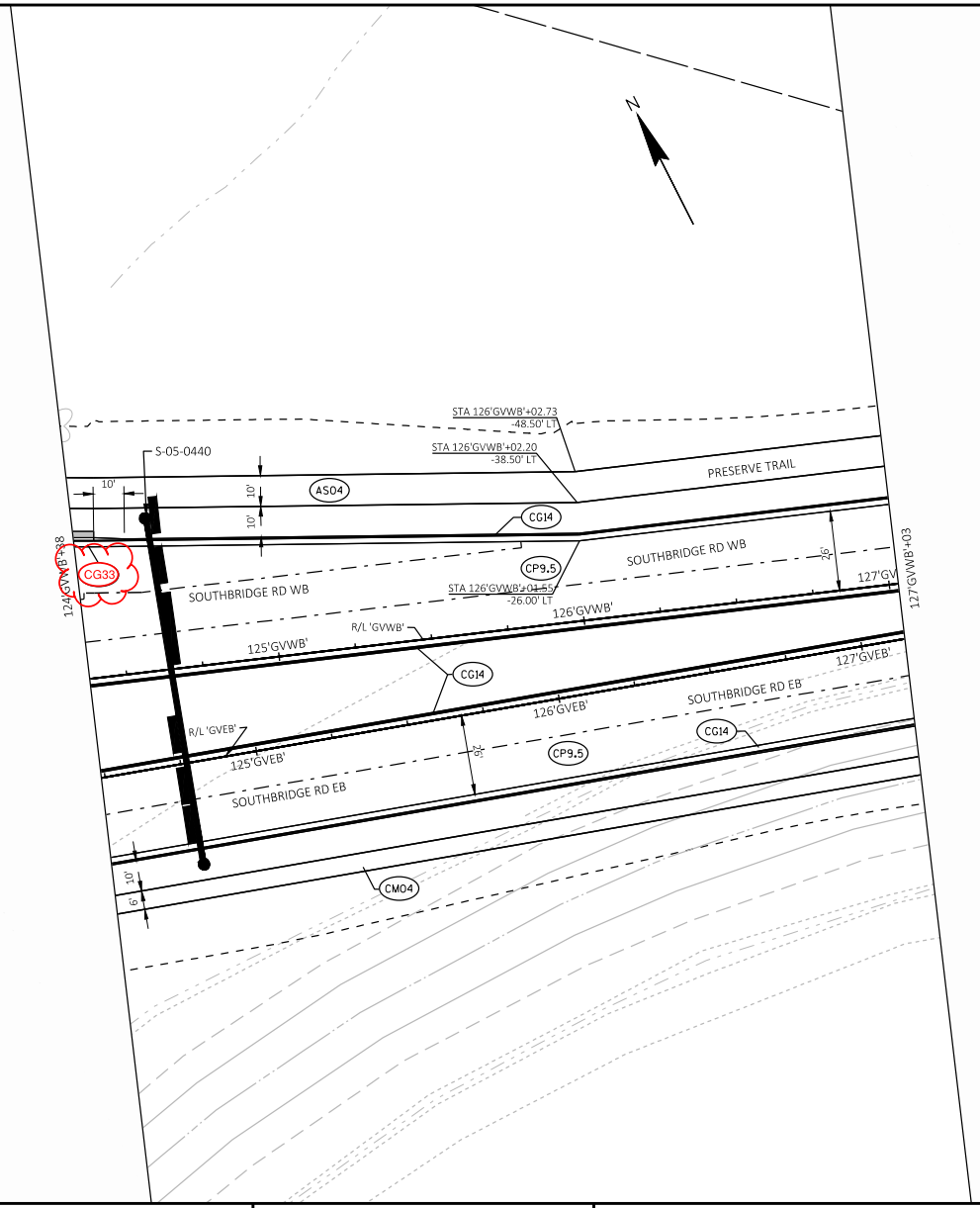

Addendum No. 01
ID 1130-68-77
Revised Sheet 77
April 28, 2025

2

PROJECT NO: 1130-68-77	HWY: IH 41 - SOUTHBRIDGE	COUNTY: BROWN	PLAN DETAILS - SOUTHBRIDGE	SHEET 77	E

FILE NAME : C:\USERS\DOTK90\DC\ACCDOCS\WISDOT\11306301\PROJECT FILES\DSGN\11306870\SHEETS\SHEETSPLAN\68-77\02 TYPICAL SECTION AND DETAILS\021201-PD.DWG
LAYOUT NAME - 5
PLOT DATE : 1/31/2025 8:18 AM PLOT BY : DENEYS, KRISTOPHER M PLOT NAME : PLOT SCALE : 1 IN:40 FT
WISDOT/CADDS SHEET 42

Addendum No. 01
ID 1130-68-77
Revised Sheet 78
April 28, 2025

STATION & OFFSET TABLE					
POINT NUMBER	STATION	OFFSET	NORTHING	EASTING	RADIUS
54	128+41.25	42.88' RT	532217.73	70792.94	R4'
55	127+87.08	107.31' RT	532176.14	70719.76	R50'
56	128+70.18	99.81' LT	532330.17	70891.47	R70'
57	128+58.26	5.00' RT	532247.34	70822.05	R5'
58	129+27.62	66.38' LT	532241.44	70922.52	R4'
59	129+52.69	68.54' LT	532222.63	70939.23	R5'
60	129+10.55	160.27' LT	532311.21	70987.64	R5'

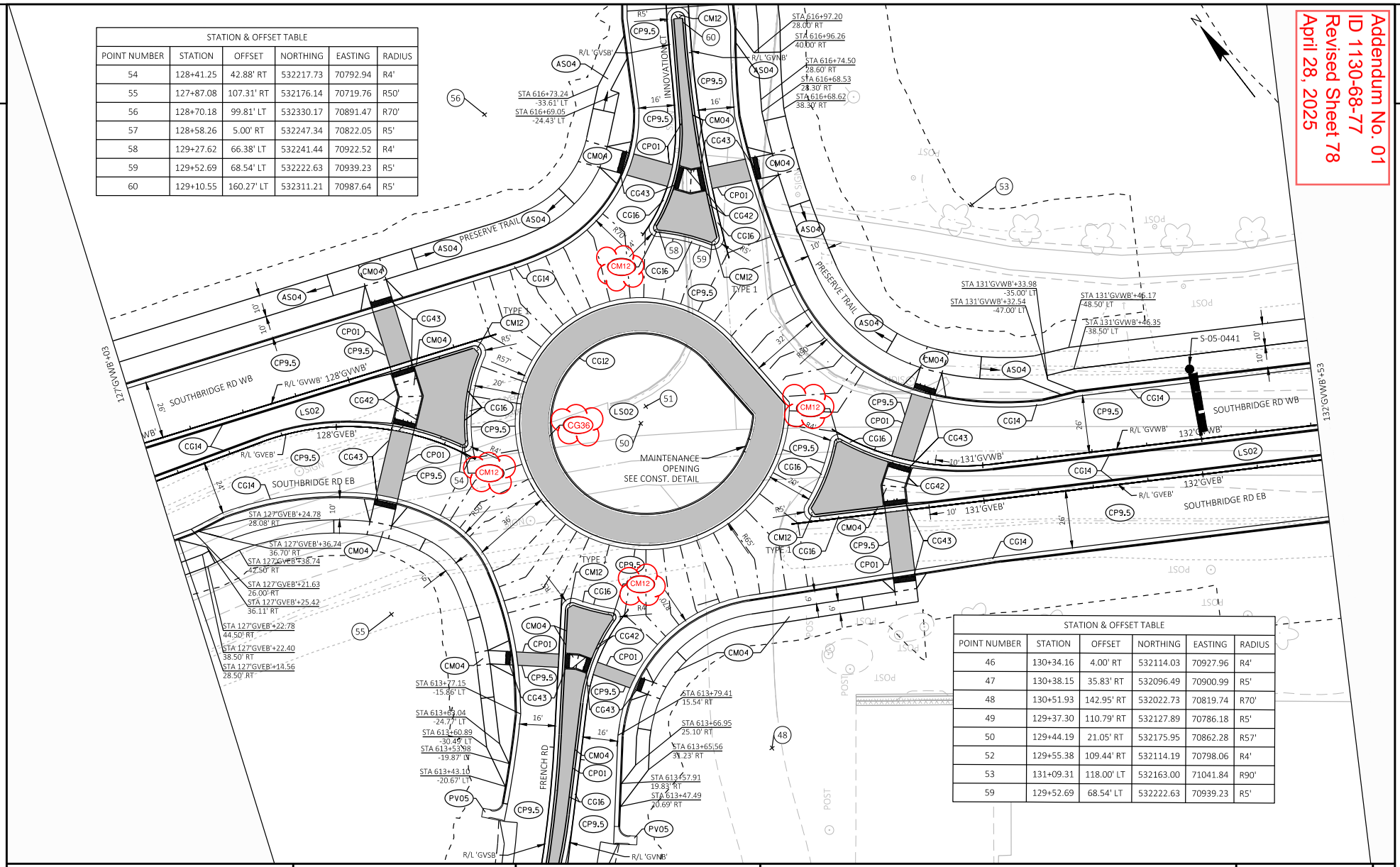

STATION & OFFSET TABLE					
POINT NUMBER	STATION	OFFSET	NORTHING	EASTING	RADIUS
46	130+34.16	4.00' RT	532114.03	70927.96	R4'
47	130+38.15	35.83' RT	532096.49	70900.99	R5'
48	130+51.93	142.95' RT	532022.73	70819.74	R70'
49	129+37.30	110.79' RT	532127.89	70786.18	R5'
50	129+44.19	21.05' RT	532175.95	70862.28	R57'
52	129+55.38	109.44' RT	532114.19	70798.06	R4'
53	131+09.31	118.00' LT	532163.00	71041.84	R90'
59	129+52.69	68.54' LT	532222.63	70939.23	R5'

PROJECT NO: 1130-68-77	HWY: IH 41 - SOUTHBRIDGE	COUNTY: BROWN	PLAN DETAILS - SOUTHBRIDGE	SHEET 78	E

FILE NAME : C:\USERS\DOTK90\DC\ACCDOCS\WISDOT\11306301\PROJECT FILES\DSGN\11306870\SHEETS\SHEETSPLAN\68-77\02 TYPICAL SECTION AND DETAILS\021201-PD.DWG
LAYOUT NAME - 6 RND
PLOT DATE : 1/31/2025 8:19 AM PLOT BY : DENEYS, KRISTOPHER M PLOT NAME : PLOT SCALE : 1 IN:40 FT
WISDOT/CADDS SHEET 42

STATION & OFFSET TABLE					
POINT NUMBER	STATION	OFFSET	NORTHING	EASTING	RADIUS
28	122+49.61	51.69' LT	532533.89	70315.08	R4'
29	122+07.97	61.11' LT	532570.54	70293.18	R5'
30	122+64.77	128.91' LT	532568.64	70388.10	R60'

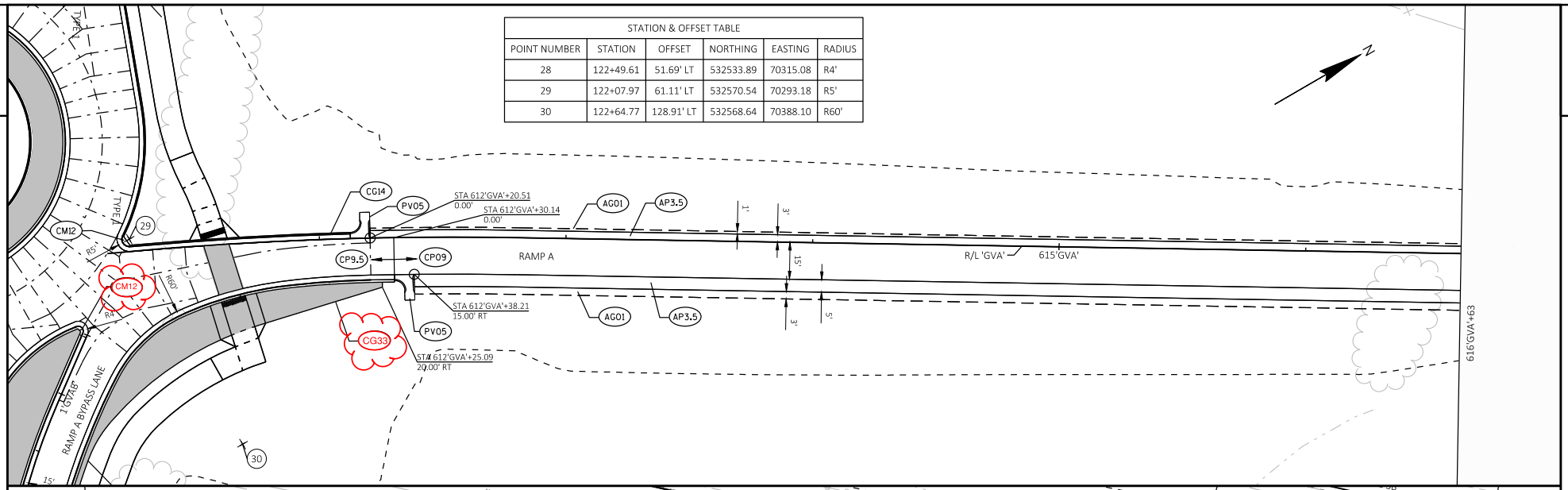

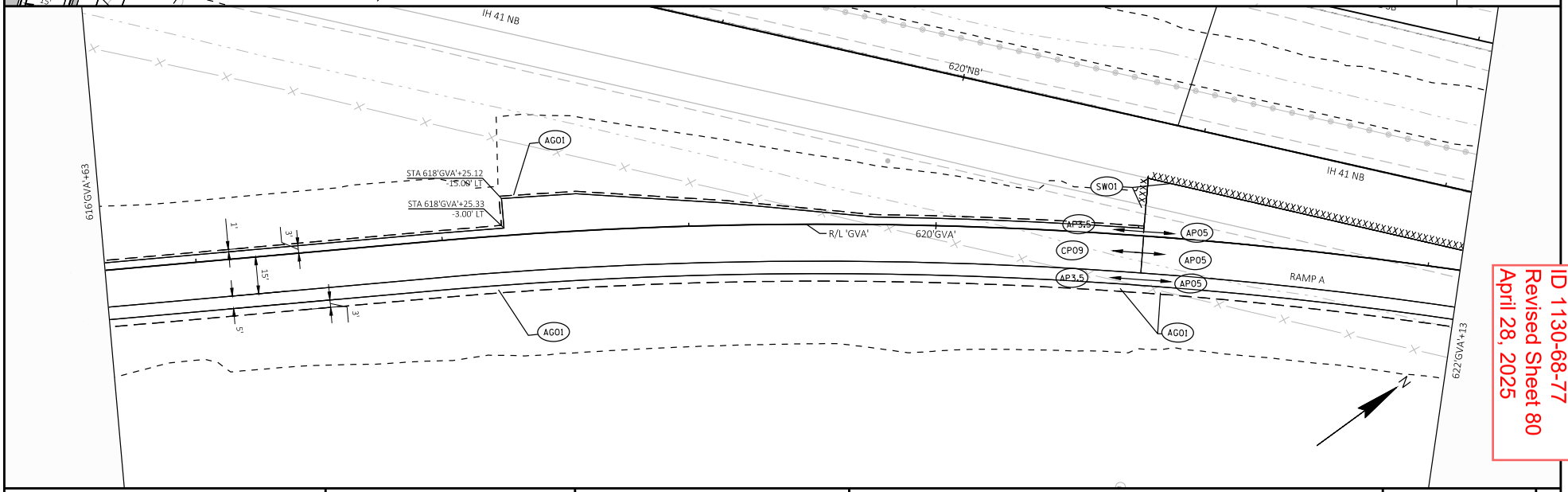

Addendum No. 01
ID 1130-68-77
Revised Sheet 80
April 28, 2025

PROJECT NO: 1130-68-77	HWY: IH 41 - SOUTHBRIDGE	COUNTY: BROWN	PLAN DETAILS - SOUTHBRIDGE	SHEET 80	E

FILE NAME : C:\USERS\DOTK90\DC\ACCDOCS\WISDOT\11306301\PROJECT FILES\DSGN\11306870\SHEETS\SHEETSPLAN\68-77\02 TYPICAL SECTION AND DETAILS\021201-PD.DWG
LAYOUT NAME - 8 RAMP A
PLOT DATE : 1/31/2025 8:21 AM PLOT BY : DENEYS, KRISTOPHER M PLOT NAME : PLOT SCALE : 1 IN:40 FT
WISDOT/CADDS SHEET 44

2

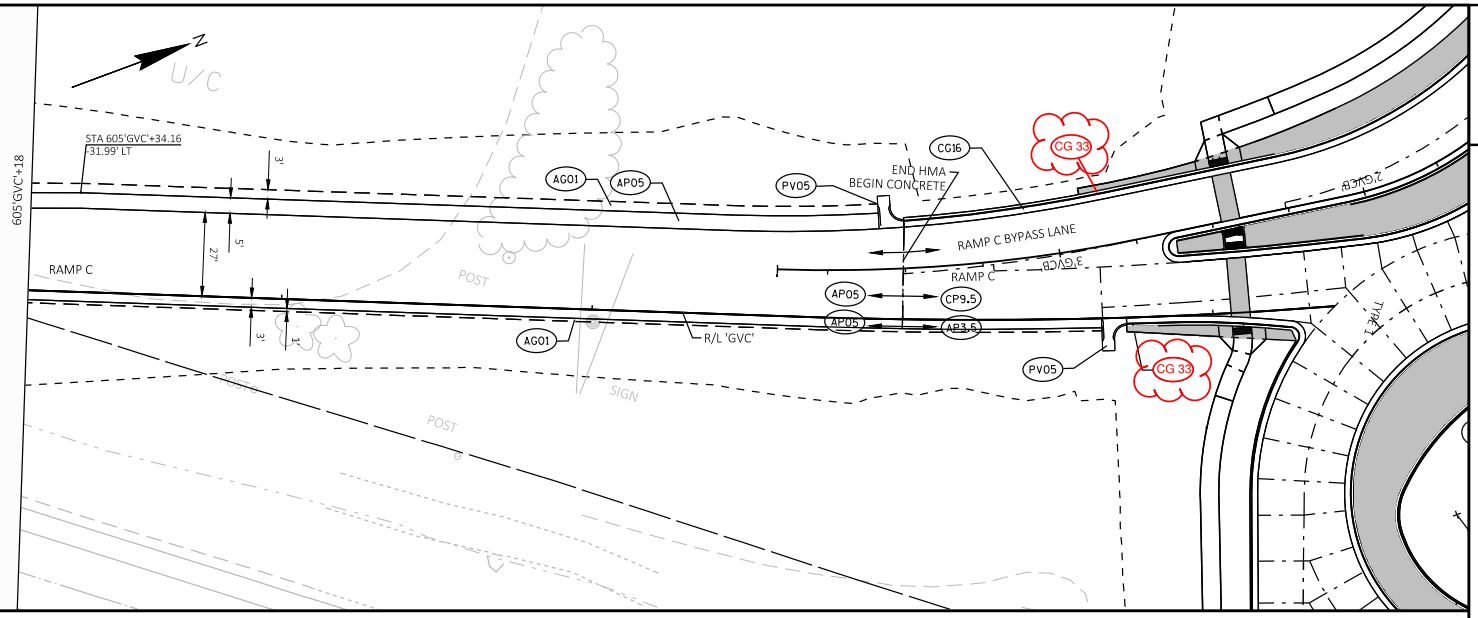

2

Addendum No. 01
ID 1130-68-77
Revised Sheet 88
April 28, 2025

PROJECT NO: 1130-68-77	HWY: IH 41 - SOUTHBRIDGE	COUNTY: BROWN	PLAN DETAILS - SOUTHBRIDGE	SHEET 88	E

FILE NAME : C:\USERS\DOTK9D\DC\ACCDOCS\WISDOT\11306301\PROJECT FILES\DSGN\11306870\SHEETS\SHEETSPLAN\68-77\02 TYPICAL SECTION AND DETAILS\021201-PD.DWG
LAYOUT NAME - 16 RAMP C 3
PLOT DATE : 1/31/2025 8:33 AM PLOT BY : DENEYS, KRISTOPHER M PLOT NAME : PLOT SCALE : ##########

WISDOT/CADDS SHEET 44

Addendum No. 01
ID 1130-68-77
Revised Sheet 94
April 28, 2025

2

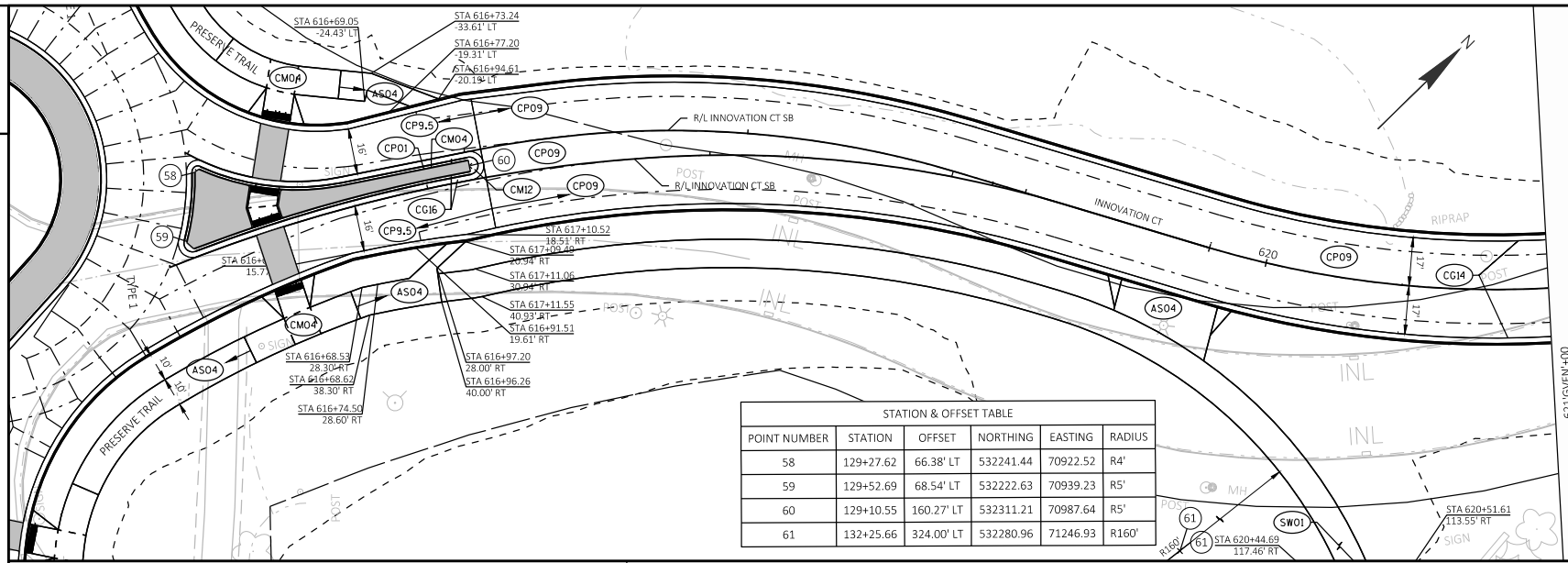

STATION & OFFSET TABLE					
POINT NUMBER	STATION	OFFSET	NORTHING	EASTING	RADIUS
58	129+27.62	66.38' LT	532241.44	70922.52	R4'
59	129+52.69	68.54' LT	532222.63	70939.23	R5'
60	129+10.55	160.27' LT	532311.21	70987.64	R5'
61	132+25.66	324.00' LT	532280.96	71246.93	R160'

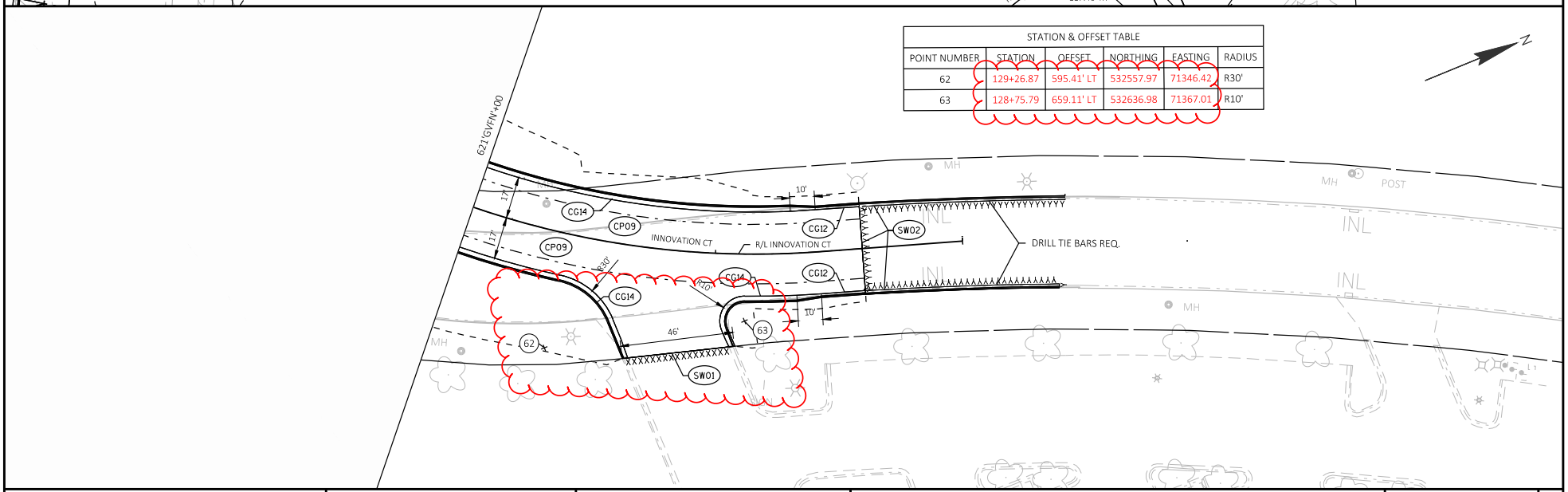

STATION & OFFSET TABLE					
POINT NUMBER	STATION	OFFSET	NORTHING	EASTING	RADIUS
62	129+26.87	595.41' LT	532557.97	71346.42	R30'
63	128+75.79	659.11' LT	532636.98	71367.01	R10'

PROJECT NO: 1130-68-77	HWY: IH 41 - SOUTHBRIDGE	COUNTY: BROWN	PLAN DETAILS - SOUTHBRIDGE	SHEET 94	E

FILE NAME : C:\USERS\DOTK90\DC\ACCDOCS\WISDOT\11306301\PROJECT FILES\DSGN\11306870\SHEETS\SHEETSPLAN\68-77\02 TYPICAL SECTION AND DETAILS\021201-PD.DWG
LAYOUT NAME - 22 - INNOVATION RD
PLOT DATE : 4/10/2025 10:38 AM PLOT BY : DENEYS, KRISTOPHER M PLOT NAME : PLOT SCALE : 1 IN:40 FT
WISDOT/CADDS SHEET 44

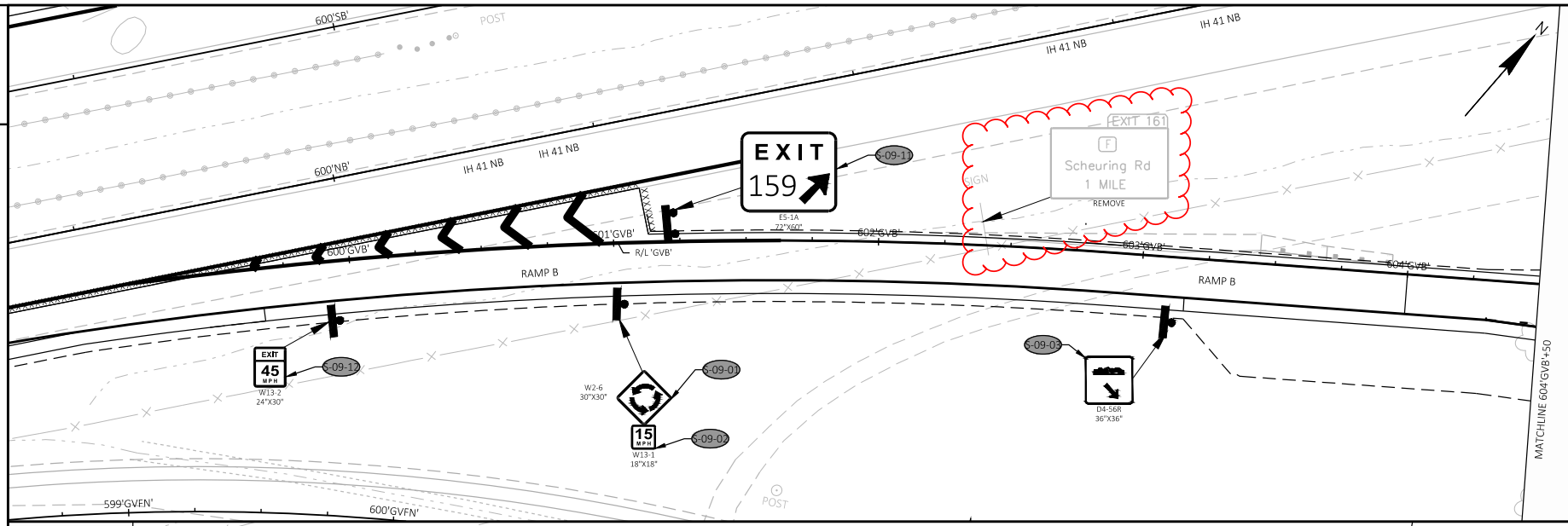

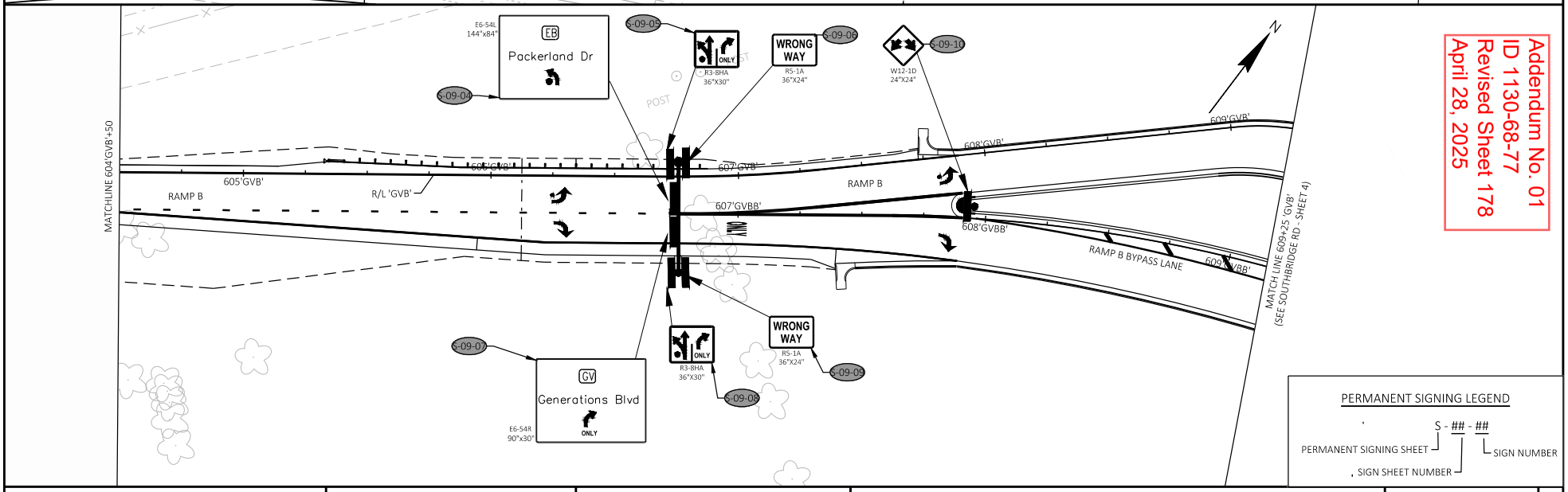

Addendum No. 01
ID 1130-68-77
Revised Sheet 178
April 28, 2025

PERMANENT SIGNING LEGEND

S - ## - ##

PERMANENT SIGNING SHEET

SIGN SHEET NUMBER

SIGN NUMBER

PROJECT NO: 1130-68-77	HWY: IH 41 - SOUTHBRIDGE	COUNTY: BROWN	PERMANENT SIGNING	SHEET 178	E

FILE NAME : C:\USERS\DOTK90\DC\ACCDOCS\WISDOT\11306301\PROJECT FILES\DSGN\11306870\SHEETS\SHEETSPLAN\68-77\02 TYPICAL SECTION AND DETAILS\023201-P5.DWG
LAYOUT NAME - 9 RAMP B
PLOT DATE : 4/22/2025 10:33 AM PLOT BY : DENEYS, KRISTOPHER M PLOT NAME : PLOT SCALE : 1 IN:40 FT

WISDOT/CADDS SHEET 44

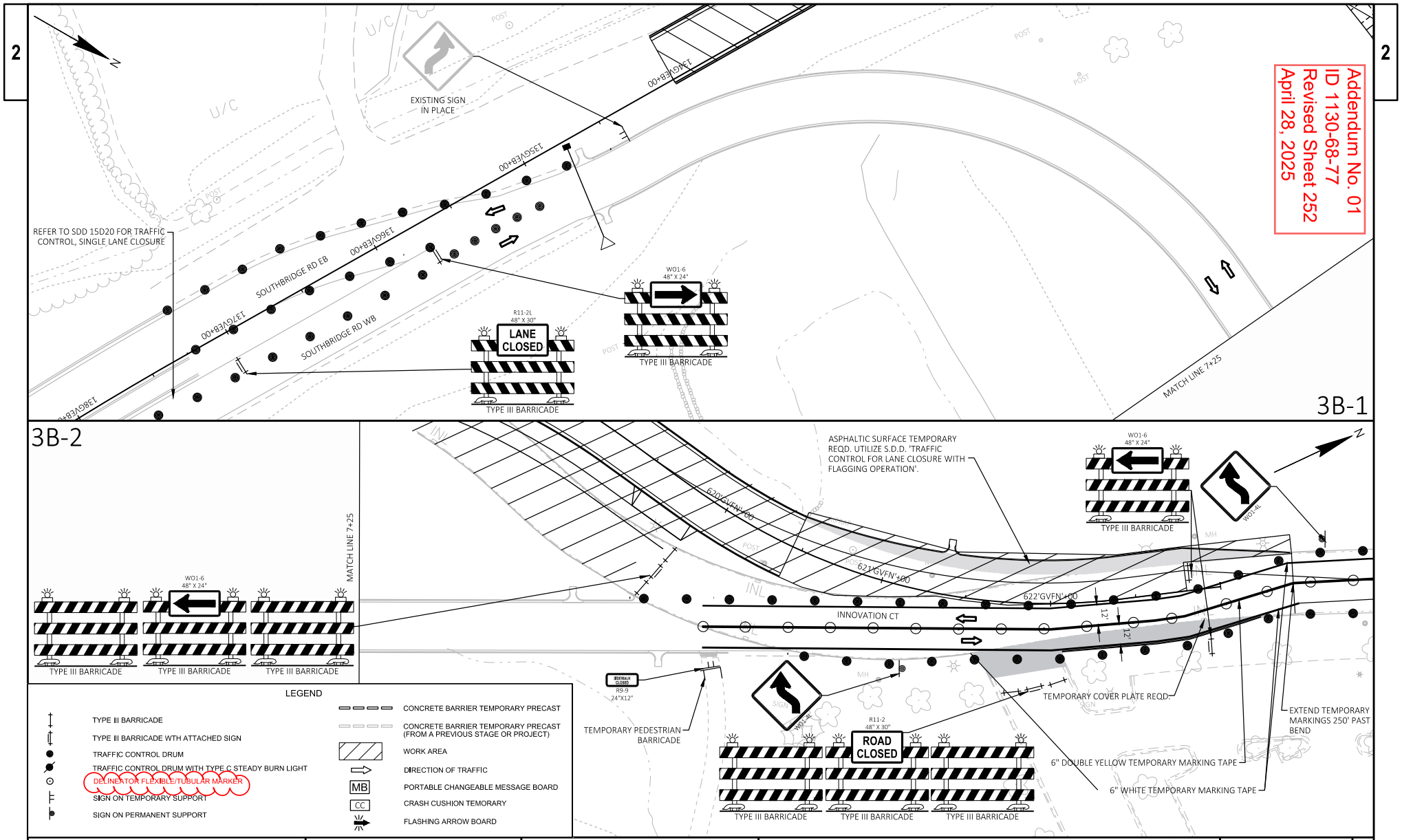

PROJECT NO: 1130-68-77	HWY: IH 41 - SOUTHBRIDGE	COUNTY: BROWN	TRAFFIC CONTROL STAGE 3B	SHEET 252	E

FILE NAME : C:\USERS\GRACEM\DC\ACCDOCS\WISDOT\11306301\PROJECT FILES\DSGN\11306870\SHEETS\SHEETSPLAN\68-77\02 TYPICAL SECTION AND DETAILS\025104-TC STG3B (GENERATIONS WAY).DWG
LAYOUT NAME - Stg3bFrenchTemp
PLOT DATE : 1/16/2025 2:41 PM PLOT BY : GRACE MAYES PLOT NAME : PLOT SCALE : 1 IN:50 FT

2

LEGEND

- TYPE III BARRICADE
- TYPE III BARRICADE WTH ATTACHED SIGN
- TRAFFIC CONTROL DRUM
- TRAFFIC CONTROL DRUM WITH TYPE C STEADY BURN LIGHT
- DELINEATOR FLEXIBLE/TUBULAR MARKER
- SIGN ON TEMPORARY SUPPORT
- SIGN ON PERMANENT SUPPORT
- CONCRETE BARRIER TEMPORARY PRECAST
- CONCRETE BARRIER TEMPORARY PRECAST (FROM A PREVIOUS STAGE OR PROJECT)
- WORK AREA
- DIRECTION OF TRAFFIC
- MB PORTABLE CHANGEABLE MESSAGE BOARD
- CC CRASH CUSHION TEMORARY
- FLASHING ARROW BOARD

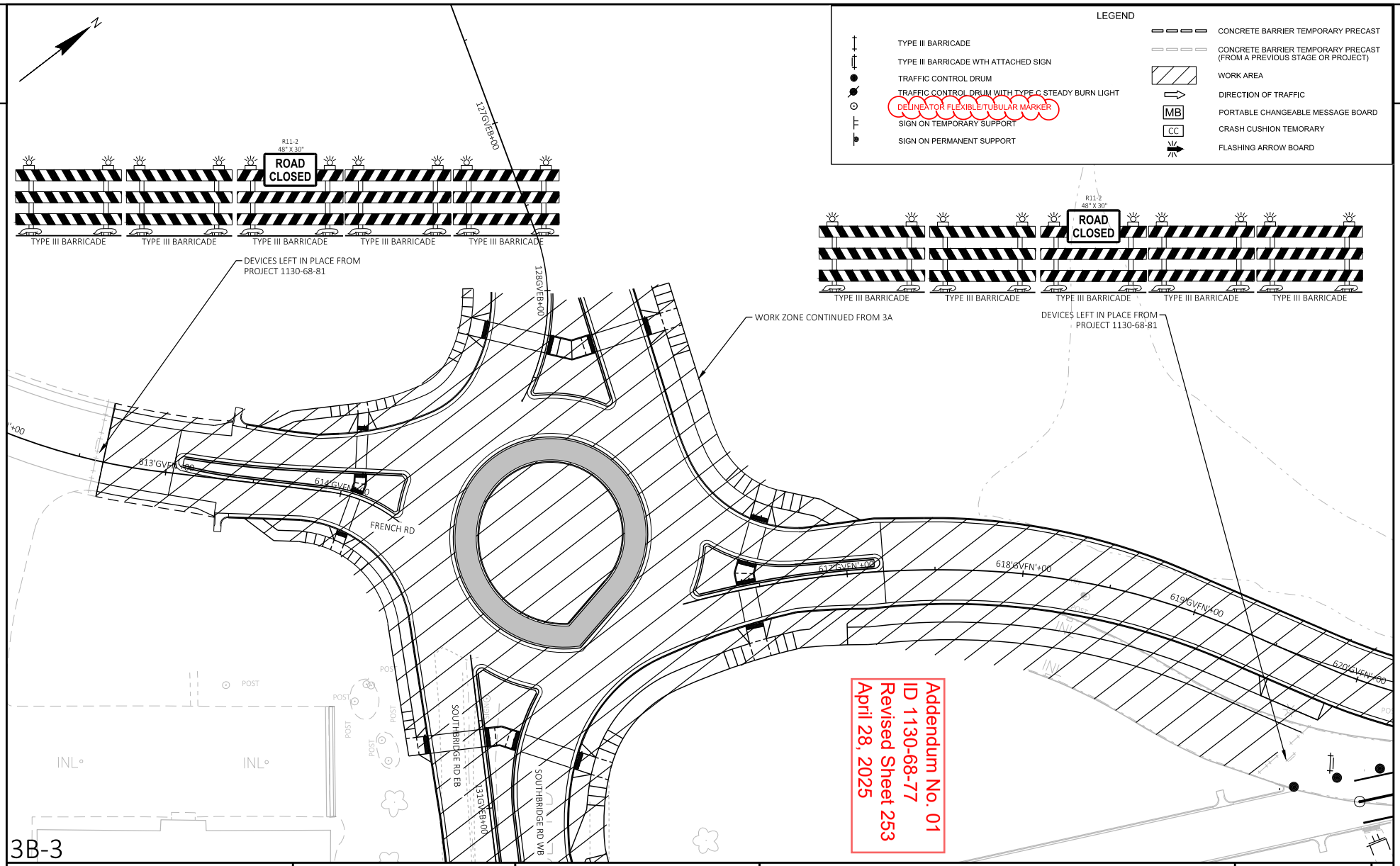

3B-3

PROJECT NO: 1130-68-77	HWY: IH 41 - SOUTHBRIDGE	COUNTY: BROWN	TRAFFIC CONTROL STAGE 3B	SHEET 253	E

FILE NAME : C:\USERS\DOTBSG\DC\ACCDOCS\WISDOT\11306301\PROJECT FILES\DSGN\11306870\SHEETS\SHEETSPLAN\68-77\02 TYPICAL SECTION AND DETAILS\025104-TC STG3B (GENERATIONS WAYFINDING LAYOUT NAME - Stg3bFrenchRAB PLOT DATE : 4/16/2025 8:14 AM PLOT BY : GETLINGER, BRADLEY S PLOT NAME : PLOT SCALE : 1 IN:50 FT

WISDOT/CADDS SHEET 42

NOTE:
1. FENCE IS TYPICALLY 3-FT FROM RIGHT OF WAY, UNLESS SHOWN OTHERWISE.
2. WHERE FENCE IS SHOWN INSTALLED ON CURVES, CHORD FENCE TO MAINTAIN MINIMUM 3-FT OFFSET FROM RIGHT OF WAY.

Addendum No. 01
ID 1130-68-77
Added Sheet 289A
April 28, 2025

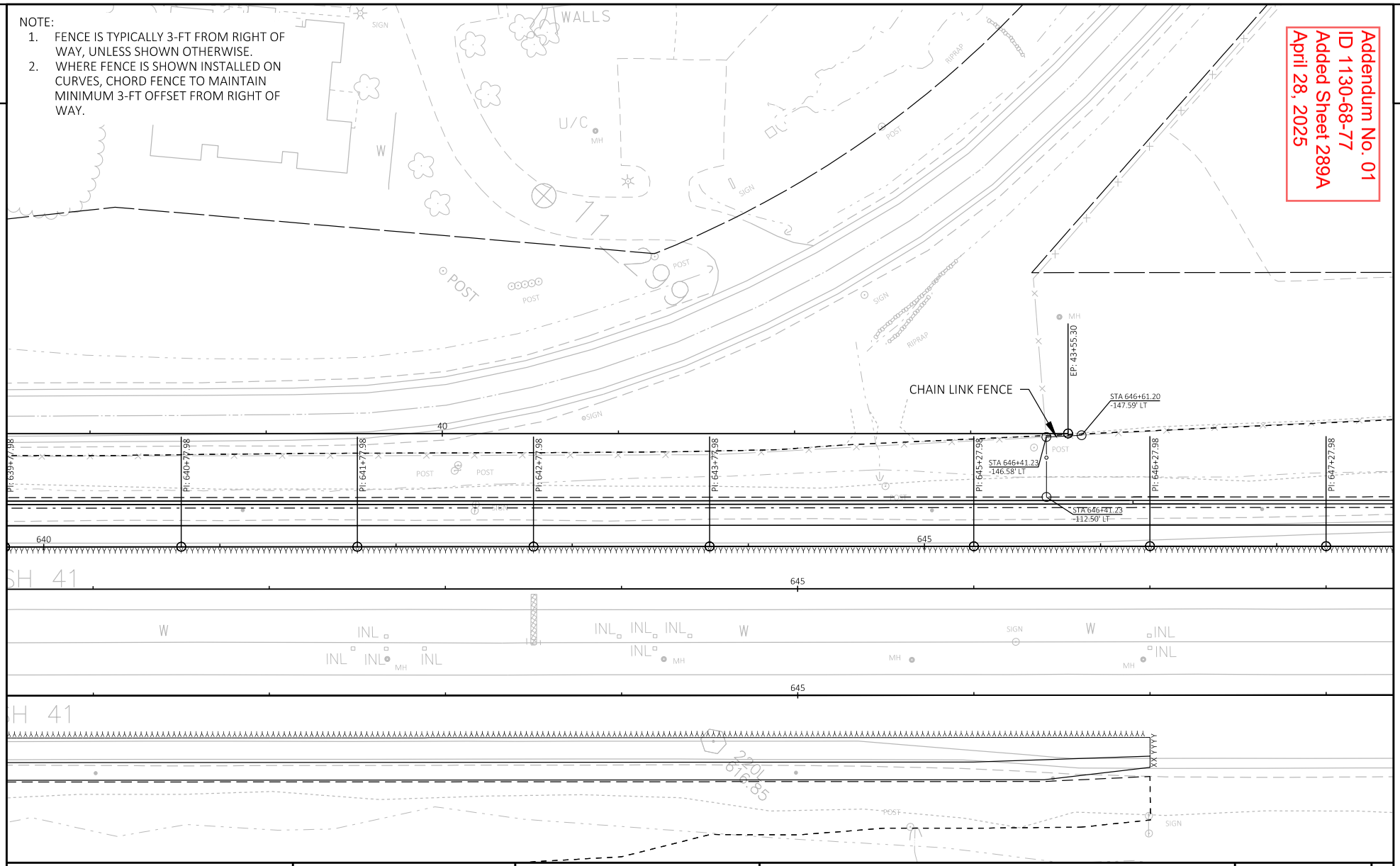

PROJECT NO: 1130-68-77	HWY: IH41	COUNTY: BROWN	FENCING PLANS	SHEET 289A	E

FILE NAME : C:\USERS\DOTBSG\DC\ACCDOCS\WISDOT\11306301\PROJECT FILES\DSGN\11306870\SHEETS\SHEETSPLAN\68-77\02 TYPICAL SECTION AND DETAILS\027101-FN.DWG
LAYOUT NAME - 14
PLOT DATE : 4/22/2025 9:45 AM PLOT BY : GETLINGER, BRADLEY S PLOT NAME : PLOT SCALE : 1 IN:50 FT
WISDOT/CADDS SHEET 42

Addendum No. 01
ID 1130-68-77
Revised Sheet 317
April 28, 2025

3

CONCRETE REMOVAL

STATION	-	STATION	LOCATION	204.0100 REMOVING CONCRETE PAVEMENT SY	204.0150 REMOVING CURB & GUTTER LF	REMARKS
622+58	-	647+00	IH 41 NB	675	--	
621+15	-	649+60	IH 41 SB	840	--	
622'GVFN'+60	-	623'GVFN'+41	Innovation Ct	--	162	
			TOTAL	1515	162	

ASPHALT REMOVAL

STATION	-	STATION	LOCATION	204.0115 REMOVING ASPHALTIC SURFACE BUTT JOINTS SY	REMARKS
609'GVFN'+95	-	612'GVFN'+46	French Rd	15	
			TOTAL	15	

3

CONCRETE PAVEMENT

STATION	TO	STATION	ALI	415.0090 CONCRETE PAVEMENT 9-INCH SY	415.0095 CONCRETE PAVEMENT 9 1/2-INCH SY	SPV.0180.02 CONCRETE PAVEMENT 10 1/2-INCH SPECIAL** SY	416.0610 DRILLED TIE BARS EACH	416.0620 DRILLED DOWEL BARS EACH	415.2010 CONCRETE TRUCK APRON 12-INCH SY	415.0410 CONCRETE PAVEMENT APPROACH SLAB SY	405.0100 COLORING CONCRETE WISDOT RED* CY	415.4100 CONCRETE PAVEMENT JOINT FILLING SY	620.0300 CONCRETE MEDIAN SLOPED NOSE SF	602.3210 CONCRETE RUMBLE STRIPS, SHOULDER DIVIDED ROADWAY LF	REMARKS
623+50	-	647+00	NB	--	--	3,879	815	11	0	--	--	--	--	--	Auxilary Lane
620+43	-	648+88	SB	--	--	7,627	950	11	--	--	--	--	--	2,845	Auxilary Lane
106+81	-	114+75	GVEB	--	5,249	--	--	--	113	--	54.0	--	126	--	
	-		CIR	--	1,763	--	--	--	539	--	180.0	--	--	--	Ramp C & D RAB
116+47	-	121+02	GVEB	--	968	--	--	--	0	211	--	--	249	--	
	-		CIR	--	1,400	--	--	--	461	--	154.0	--	--	--	Ramp A & B RAB
122+53	-	128+58	GVEB	--	4,022	--	--	--	0	--	16.0	--	362	--	
	-		CIR	--	1,598	--	--	--	420	--	140.0	--	--	--	French & Innovation RAB
612+94	-	622+59	GVFN	2,330	1,188	--	63	--	0	--	17.0	--	374	--	Fren & Inno, gap RAB
130+23	-	134+00	GVEB	--	2,141	--	--	--	0	--	17.0	--	128	--	East Project Limits
611+14	-	620+81	GVA	1,411	297	--	--	--	189	--	69.0	--	41	--	Ramp A
606+13	-	609+73	GVB	--	1,478	--	--	--	10	--	13.0	--	149	--	Ramp B
608+00	-	609+39	GVC	--	509	--	--	--	131	--	50.0	--	120	--	Ramp C
609+25	-	622+28	GVD	2,523	1,362	--	--	--	--	--	15.0	--	117	465	Ramp D
106+81	-	117+51	GVEB	--	--	--	--	--	--	--	--	10,837	--	--	West Side
120+10	-	128+58	GVEB	--	--	--	--	--	--	--	--	17,368	--	--	East Side
102+25	-	106+81	GVEB	--	--	--	--	--	--	--	--	6,059	--	--	Mid Valley Rd and RAB built by others
			Total	6,264	21,975	11,506	1,828	22	1,863	211	725	34,264	1,666	3,310	

* ADDITIONAL QUANTITIES LISTED ELSEWHERE

** CATEGORY 1010

NOTE: ALL BID ITEMS LISTED ARE CATEGORY 1000 UNLESS NOTED OTHERWISE

NOTE: ALL BID ITEMS LISTED ARE CATEGORY 1000 UNLESS NOTED OTHERWISE

3

STATION	TO	STATION	OFFSET	601.0405 CONCRETE CURB & GUTTER 18-INCH TYPE A LF	CONCRETE CURB AND GUTTER 601.0409 CONCRETE CURB & GUTTER 30-INCH TYPE A LF	601.0411 CONCRETE CURB & GUTTER 30-INCH TYPE D LF	601.0557 CONCRETE CURB & GUTTER 6-INCH SLOPED 36-INCH TYPE D LF	601.0551 CONCRETE CURB & GUTTER 4-INCH SLOPED 36-INCH TYPE A LF	601.0581 CONCRETE CURB & GUTTER 4-INCH SLOPED 30-INCH TYPE R LF	SPV.0090.01 CONCRETE CURB AND GUTTER 36-INCH SPECIAL LF	REMARKS
106'GVEB'+81	-	114'GVEB'+81	LT/RT	--	2795	--	--	275	--	585	Southbridge Rd
116'GVEB'+37	-	121'GVEB'+10	LT/RT	--	638	--	--	--	--	378	Southbridge Rd
122'GVEB'+53	-	128'GVEB'+65	LT/RT	--	2165	--	--	62	--	550	Southbridge Rd
130'GVEB'+12	-	137'GVEB'+25	LT/RT	--	1525	1300	--	--	--	96	Southbridge Rd
607'GVB'+81	-	609'GVB'+73	LT/RT	--	388	--	--	35	--	410	B Ramp
611'GVA'+14	-	612'GVA'+30	LT/RT	--	89	--	--	--	--	89	A Ramp
596'GVC'+26	-	600'GVC'+10	LT	--	--	--	384	--	--	181	C Ramp
608'GVC'+00	-	609'GVC'+39	LT/RT	--	--	--	--	37	--	144	C Ramp
609'GVD'+25	-	611'GVD'+99	LT/RT	--	469	--	--	116	--	383	D Ramp
613'GVFN'+09	-	614'GVFN'+39	LT/RT	--	176	--	--	--	--	248	French Rd
616'GVFN'+05	-	623'GVFN'+41	LT/RT	198	1232	--	--	--	--	197	Innovation Ct
0'GVSC'+00	-	3'GVSC'+68	LT/RT	243	60	--	--	--	354	34	IH 41 SB Circle
0'GVNC'+00	-	3'GVNC'+58	LT/RT	249	49	--	--	--	346	31	IH 41 NB Circle
0'GVFC'+00	-	3'GVFN'+71	LT/RT	270	--	--	--	--	359	115	French Rd Circle
SHEET TOTAL				960	9586	1300	384	525	1059	3441	

3

STATION	TO	STATION	ALI	OFFSET	DETECTABLE WARNING FIELD 602.0515 CURB RAMP DETECTABLE WARNING FIELD NATURAL PATINA SF	602.0615 CURB RAMP DETECTABLE WARNING FIELD RADIAL NATURAL PATINA SF	REMARKS
106+85	-	137+23	'GVWB'	LT	220	62	North Side of Southbridge
106+93	-	130+66	'GVEB'	LT	120	--	Splitter Island
106+93	-	130+70	'GVEB'	RT	180	39	South Side of Southbridge
				TOTAL	520	101	

Addendum No. 01
ID 1130-68-77
Revised Sheet 319
April 28, 2025

SIDEWALK

STATION	TO	STATION	ALI	OFFSET	305.0120 BASE AGGREGATE DENSE 1 1/4-INCH* TON	601.0600 CONCRETE CURB PEDESTRIAN LF	602.0405 CONCRETE SIDEWALK 4-INCH SF	602.0405 CONCRETE SIDEWALK 4-INCH** SF	465.0105 ASPHALTIC SURFACE TON	405.0100 COLORING CONCRETE WISDOT RED* CY	REMARKS
106+31	-	115+00	'GVWB'	LT	675	--	814	--	211	--	
106+52	-	115+00	'GVEB'	LT & RT	191	54	5,798	3,990	--	49.2	
					11	94	516	--	--	--	Ramp C & D Splitter SW
116+00	-	117+61	'GVWB'	LT	100	--	269	--	31	--	
115+50	-	117+41	'GVEB'	RT	25	--	1,278	--	--	--	
116+45	-	117+51	'GVEB'	LT	24	--	0	1,230	--	15.2	
120+09	-	130+54	'GVEB'	LT	60	90	449	2,630	--	32.4	Center Spliters & SW
120+21	-	137+23	'GVWB'	LT	1,339	--	2,723	1,982	400	--	North Side
120+03	-	130+70	'GVEB'	RT	136	--	6,950	--	--	--	
					113	131	439	5,340	--	65.9	Ramp B, French & Inno Splitter
616+97	-	620+50	'GVFN'	RT	285	--	--	--	92		Innovation
				Total	2,959	369	34,408		734	163	

* ADDITIONAL QUANTITIES LISTED ELSEWHERE
**SPLITTER ISLANDS

NOTE: ALL BID ITEMS LISTED ARE CATEGORY 1000 UNLESS NOTED OTHERWISE

PROJECT NO: 1103-68-77	HWY: IH41	COUNTY: BROWN	MISCELLANEOUS QUANTITIES	SHEET 319	E

Addendum No. 01
ID 1130-68-77
Revised Sheet 334
April 28, 2025

3

CHAIN LINK FENCE

STATION	-	STATION		LOCATION	204.0170 REMOVING FENCE LF	616.0206 FENCE CHAIN LINK 6-FT LF	616.0700.S FENCE SAFETY LF	REMARKS
597+28	-	608+71	LT	AliProf-41NB-BCo-6870	--	1,325	--	
598+08	-	611+02	RT	AliProf-41NB-BCo-6870	--	2,125	--	
608+87	-	646+41	LT	AliProf-41NB-BCo-6870	2320	1,055	--	
613+62	-	640+33	RT	AliProf-41NB-BCo-6870	1750	3,090	--	
				UNDISTRIBUTED	--	--	1,000	
				TOTALS	4,070	7,595	1,000	

WATER SUMMARY

LOCATION	624.0100 WATER MGAL	REMARKS
UNDISTRIBUTED	447	
TOTAL	447	

NOTE: ALL BID ITEMS LISTED ARE CATEGORY 1000 UNLESS NOTED OTHERWISE

TRACKING PAD

LOCATION	628.7560 TRACKING PADS EACH	REMARKS
UNDISTRIBUTED	8	
TOTAL	8	

EROSION CONTROL ITEMS

STATION	TO	STATION	LOCATION	628.1504 SILT FENCE LF	628.1520 SILT FENCE MAINTENANCE LF	628.1905 MOBILIZATIONS EROSION CONTROL EACH	628.1910 MOBILIZATIONS EMERGENCY EROSION CONTROL EACH	628.2002 EROSION MAT CLASS I TYPE A SY	628.7005 INLET PROTECTION TYPE A EACH	628.7010 INLET PROTECTION TYPE B EACH	628.7015 INLET PROTECTION TYPE C EACH	628.7020 INLET PROTECTION TYPE D EACH	628.7504 TEMPORARY DITCH CHECKS LF	628.7570 ROCK BAGS EACH	628.7555 CULVERT PIPE CHECKS EACH	REMARKS
102+25	-	118+00	GENERATIONS	1,201	1,201	--	--	8,595	--	--	24	2	--	12	3	
120+00	-	137+25	GENERATIONS	704	704	--	--	14,458	--	--	42	5	30	12	--	
612+25	-	620+00	RAMP A	709	709	--	--	5,180	--	--	--	--	--	12	--	
602+00	-	607+40	RAMP B	665	665	--	--	4,603	--	--	4	--	20	24	3	
599+50	-	608+60	RAMP C	1,379	1,379	--	--	5,189	--	--	3	--	20	12	6	
612+00	-	622+50	RAMP D	649	649	--	--	3,696	--	2	3	--	30	--	--	
	-		FRENCH RD	347	347	--	--	564	--	--	2	--	--	--	6	
617+00	-	622+60	INNOVATION CT	781	781	--	--	7,020	1	--	5	3	10	--	--	
598+00	-	628+00	IH 41 NB	--	--	--	--	24,355	1	2	--	--	140	--	3	
575+50	-	626+50	IH 41 SB	--	--	--	--	10,630	1	12	--	--	70	--	--	
			Undistributed	1,609	1,609	9	9	21,073	--	--	--		80	18	6	
			TOTAL	8,044	8,044	9	9	105,363	3	16	83	10	400	90	27	

*Additional Quantities Elsewhere

NOTE: ALL BID ITEMS LISTED ARE CATEGORY 1000 UNLESS NOTED OTHERWISE

Addendum No. 01
ID 1130-68-77
Revised Sheet 344
April 28, 2025

3

DELINEATORS

LOCATION	204.0180 REMOVING DELINEATORS AND MARKERS EACH	633.0100 DELINEATOR POSTS STEEL EACH	633.0500 DELINEATOR REFLECTORS EACH	633.1000 DELINEATORS BARRIER WALL EACH	REMARKS
RAMP A	--	12	12	--	
RAMP D	--	--	--	5	
IH 41 NB	7	6	6	--	
IH 41 SB	12	--	--	7	
TOTAL	19	18	18	12	

REMOVING SIGNS

STATION	OFFSET	638.2601 REMOVING SIGNS TYPE I EACH	REMARKS
602+37.42 41NB	56.8 RT	1	
620+12.31 41NB	114.0 LT	1	
	TOTAL	2	

CRITICAL PATH METHOD (CPM) SCHEDULING

LOCATION	SPV.0060.04 BASELINE CPM PROGRESS SCHEDULE EACH	SPV.0060.05 CPM PROGRESS SCHEDULE AND ACCEPTED REVISIONS EACH
UNDISTRIBUTED	1	12
TOTAL	1	12

CONSTRUCTION STAKING

SPV.0060.06

CONSTRUCTION STAKING SURVEY
PROJECT 1130-68-77

STATION	TO	STATION	LOCATION	EACH	REMARKS
	-		Project (Undistributed)	1	
			TOTAL	1	

NOTE: ALL BID ITEMS LISTED ARE CATEGORY 1000 UNLESS NOTED OTHERWISE

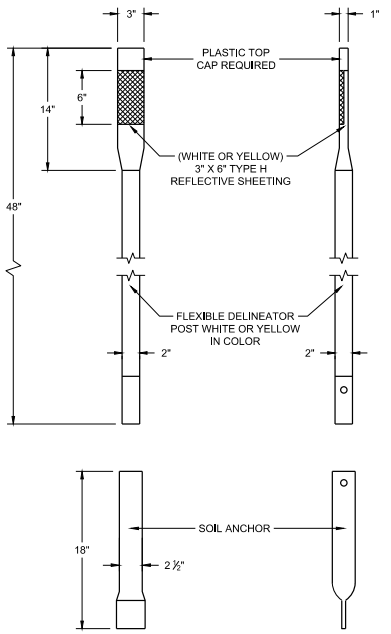

FRONT VIEW SIDE VIEW

ALTERNATE 1

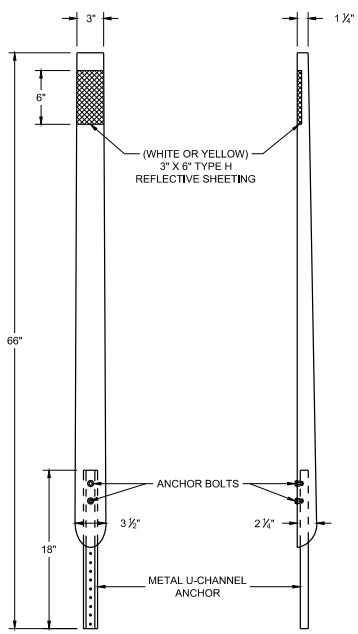

FRONT VIEW SIDE VIEW

ALTERNATE 2

FLEXIBLE DELINEATOR POSTS

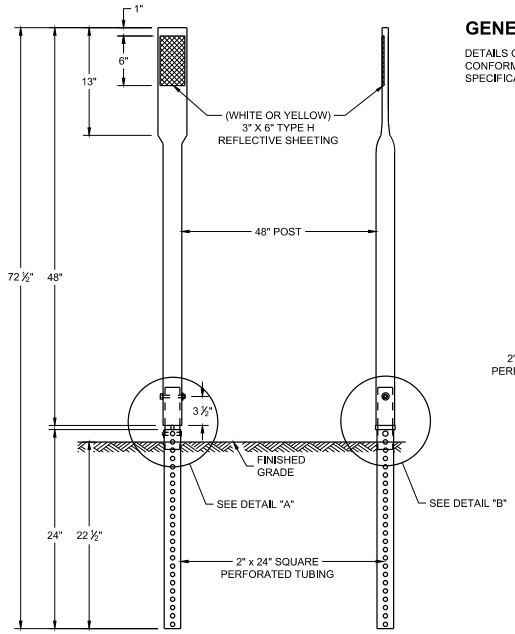

FRONT VIEW SIDE VIEW

ALTERNATE 3

GENERAL NOTES

DETAILS OF CONSTRUCTION NOT SHOWN ON THIS DRAWING SHALL CONFORM TO THE PERTINENT REQUIREMENTS OF THE STANDARD SPECIFICATIONS AND THE APPLICABLE SPECIAL PROVISIONS.

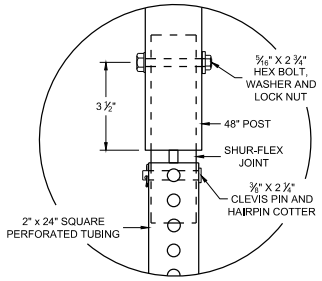

DETAIL A

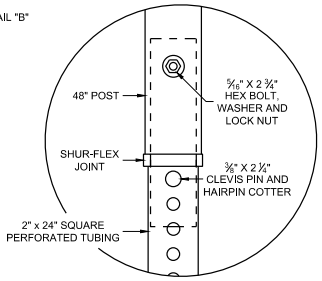

DETAIL B

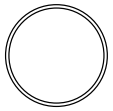

SECTION A - A

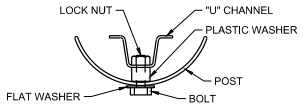

SECTION B - B

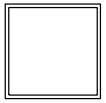

SECTION C - C

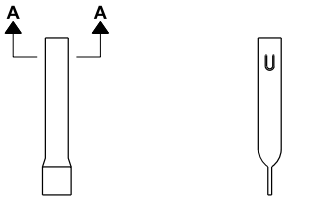

FRONT VIEW SIDE VIEW

ALTERNATE 1

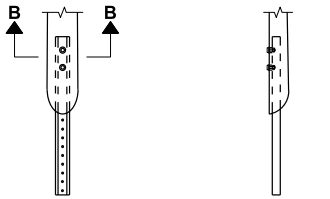

FRONT VIEW SIDE VIEW

ALTERNATE 2

FLEXIBLE MARKER POST ANCHORS

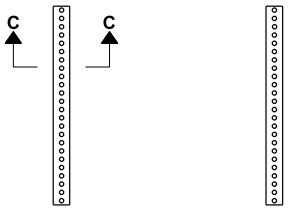

FRONT VIEW SIDE VIEW

ALTERNATE 3

Addendum No. 01
ID 1130-68-77
Added Sheet 512A
April 28, 2025

REFLECTOR SPACING TABLE

REFLECTOR SPACING	LOCATION
* 100' C-C	RAMPS
400' C-C	MAINLINE

* START AT BEGINNING OF RAMP TAPER AND END AT END OF RAMP TAPER

FLEXIBLE DELINEATOR POST

STATE OF WISCONSIN
DEPARTMENT OF TRANSPORTATION

APPROVED
March 2024 /S/ Jeannie Silver
DATE Statewide Pavement Marking Engineer
FHWA

6

SDD 15A04-08a

6

SDD 15A04-08a

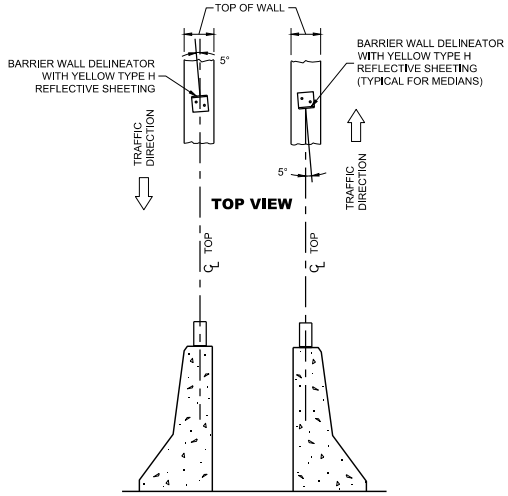

SIDE VIEW
DOUBLE BARRIERS IN MEDIAN

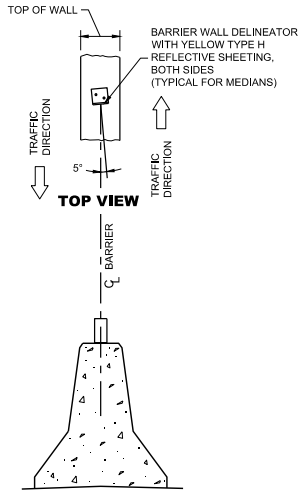

SIDE VIEW
MEDIAN BARRIER

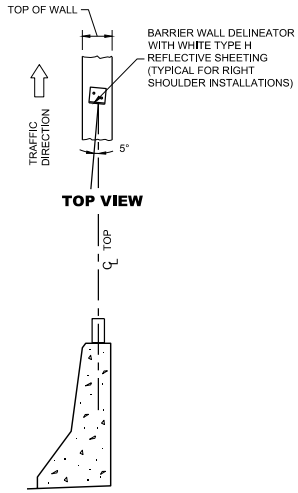

SIDE VIEW
TO RIGHT OF TRAFFIC FLOW

LOCATION AND AIMING DETAILS FOR BARRIER WALL DELINEATOR MOUNTED ON CONCRETE BARRIERS

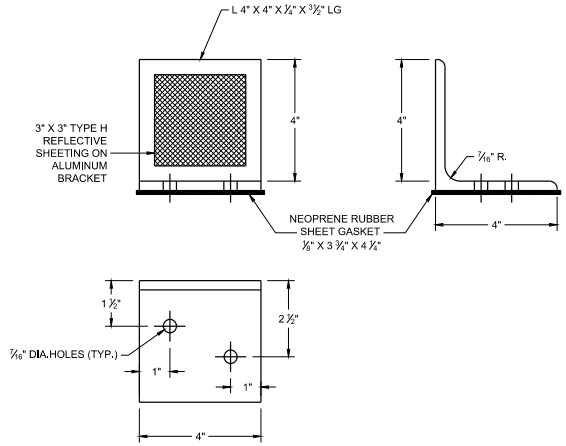

BARRIER WALL DELINEATOR

REFLECTOR SPACING TABLE

REFLECTOR SPACING	MINIMUM NUMBER OF REFLECTORS
100' C-C	3

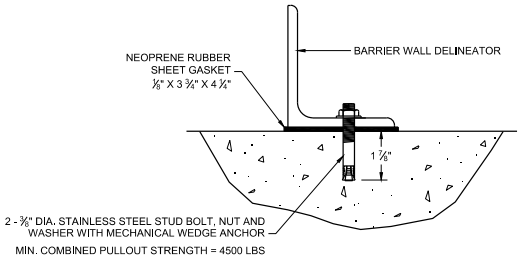

BARRIER WALL DELINEATOR MOUNTING DETAIL

Addendum No. 01
ID 1130-68-77
Added Sheet 512B
April 28, 2025

BARRIER WALL DELINEATOR WITH REFLECTIVE SHEETING

STATE OF WISCONSIN
DEPARTMENT OF TRANSPORTATION

APPROVED
March 2024 — DATE
/S/ Jeannie Silver — Statewide Pavement Marking Engineer

FHWA

6

6

SDD 15A04-08b

SDD 15A04-08b

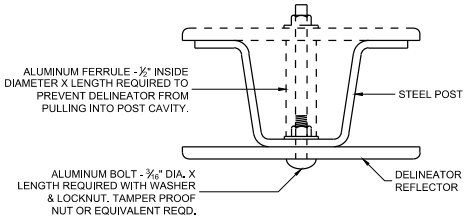

MOUNTING DETAIL FOR DELINEATOR REFLECTOR

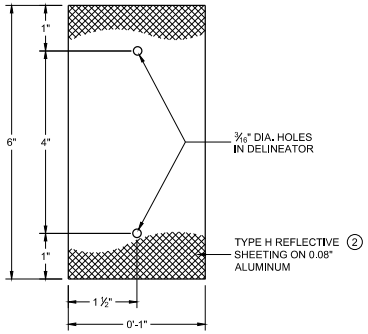

DETAIL "A" 3" X 6" DELINEATOR REFLECTOR

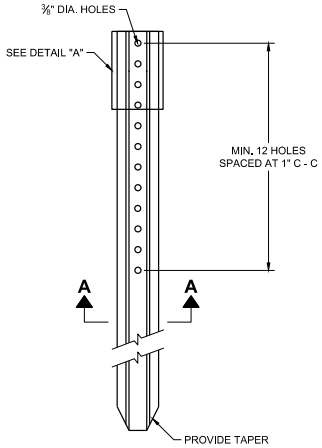

DELINEATOR POST

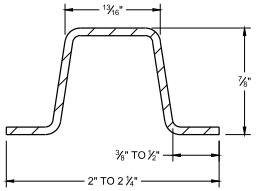

SECTION A - A

WEIGHT 1.12 LBS PER FT. \ 0.1 LB.

REFLECTOR SPACING TABLE

REFLECTOR SPACING	LOCATION
* 100' C-C	RAMPS
400' C-C	MAINLINE

* START AT BEGINNING OF RAMP TAPER AND END AT END OF RAMP TAPER

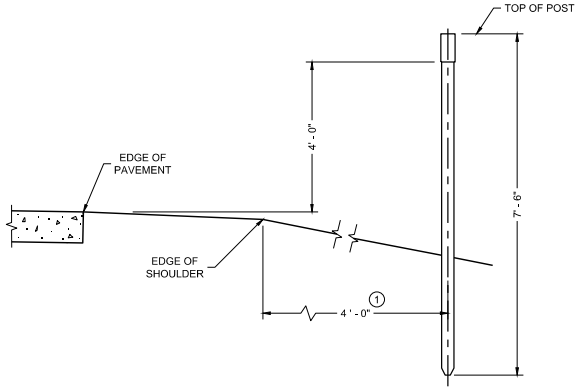

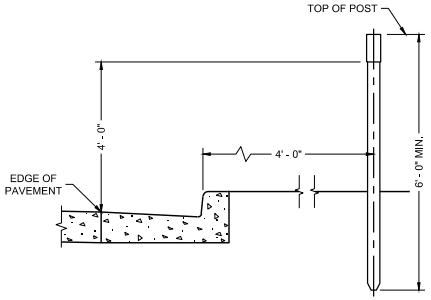

TYPICAL INSTALLATIONS OF DELINEATOR POSTS

GENERAL NOTES

DETAILS OF CONSTRUCTION NOT SHOWN ON THIS DRAWING SHALL CONFORM TO THE PERTINENT REQUIREMENTS OF TEH STANDARD SPECIFICATIONS AND THE APPLICABLE SPECIAL PROVISIONS.

(1) DELINEATORS SHALL BE PLACED AT A CONSTANT DISTANCE FROM THE EDGE OF THE SHOULDER FOR THE LENGTH OF THE INSTALLATION.

(2) FURNISH TYPE H SHEETING FROM THE APPROVED PRODUCTS LIST.

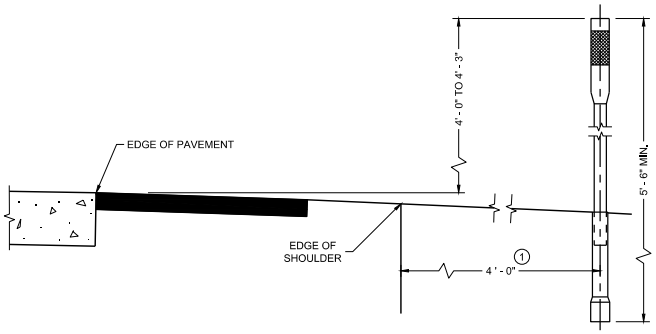

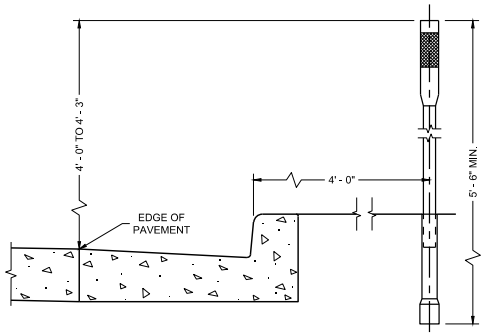

TYPICAL INSTALLATIONS OF FLEXIBLE DELINEATOR POSTS

Addendum No. 01
ID 1130-68-77
Added Sheet 512C
April 28, 2025

DELINEATOR POST WITH REFLECTIVE SHEETING

STATE OF WISCONSIN
DEPARTMENT OF TRANSPORTATION

APPROVED
March 2024 — DATE
/S/ Jeannie Silver — Statewide Pavement Marking Engineer
FHWA

6

6

SDD 15A04-08c

SDD 15A04-08c

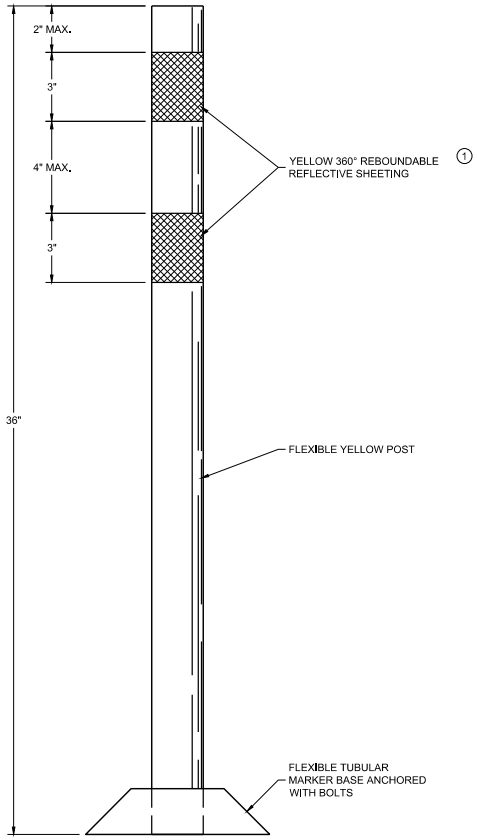

PERMANENT FLEXIBLE TUBULAR MARKER POST

GENERAL NOTES

DETAILS OF CONSTRUCTION NOT SHOWN ON THIS DRAWING SHALL CONFORM TO THE PERTINENT REQUIREMENTS OF THE STANDARD SPECIFICATIONS AND THE APPLICABLE SPECIAL PROVISIONS.

SURFACE MOUNTED BASES SHALL BE FURNISHED IN ACCORDANCE WITH MANUFACTURERS RECOMMENDATIONS TO BE COMPATIBLE WITH FLEXIBLE TUBULAR MARKER POSTS TO A SIZE AND SHAPE THAT WILL PROVIDE A STABLE POST FOUNDATION WHEN SECURED TO THE PAVEMENT.

THE ASPHALTIC ADHESIVE OR BUTYL PAD FURNISHED SHALL BE IN ACCORDANCE WITH MANUFACTURERS RECOMMENDATIONS, UNLESS DIRECTED BY THE ENGINEER TO USE BOLTS.

1 REFLECTIVE SHEETING SHALL FOLLOW THE REQUIREMENTS IN THE APPROVED PRODUCTS LISTING FOR SIGN SHEETING.

Addendum No. 01
ID 1130-68-77
Added Sheet 512D
April 28, 2025

CHANNELIZING DEVICES PERMANENT FLEXIBLE TUBULAR MARKER POST

STATE OF WISCONSIN
DEPARTMENT OF TRANSPORTATION

APPROVED
March 2024 — DATE
/S/ Jeannie Silver — Statewide Pavement Marking Engineer
FHWA

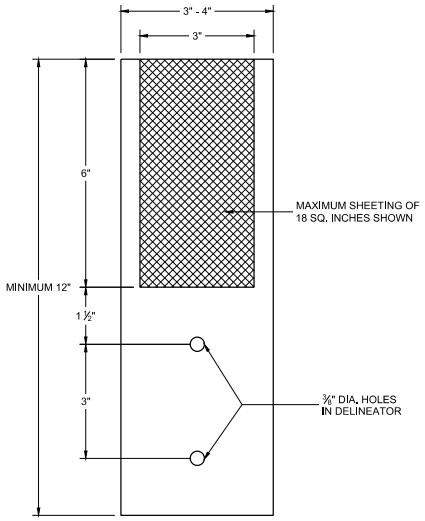

4" x 12" DELINEATOR WITH REFLECTIVE SHEETING

REFLECTOR SPACING TABLE

REFLECTOR SPACING	MINIMUM NUMBER OF REFLECTORS
100' C-C	3

Addendum No. 01
ID 1130-68-77
Added Sheet 512E
April 28, 2025

DELINEATOR POST WITH REFLECTIVE SHEETING

STATE OF WISCONSIN
DEPARTMENT OF TRANSPORTATION

APPROVED
March 2024 — DATE
/S/ Jeannie Silver — Statewide Pavement Marking Engineer
FHWA

6
SDD 15A04-08e

Addendum No. 01
ID 1130-68-77
Revised Sheet 652
April 28, 2025

INDICATES WING NUMBER

✳ SEE ROADWAY PLANS FOR CONTINUATION OF SIDEWALK AND BARRIER.

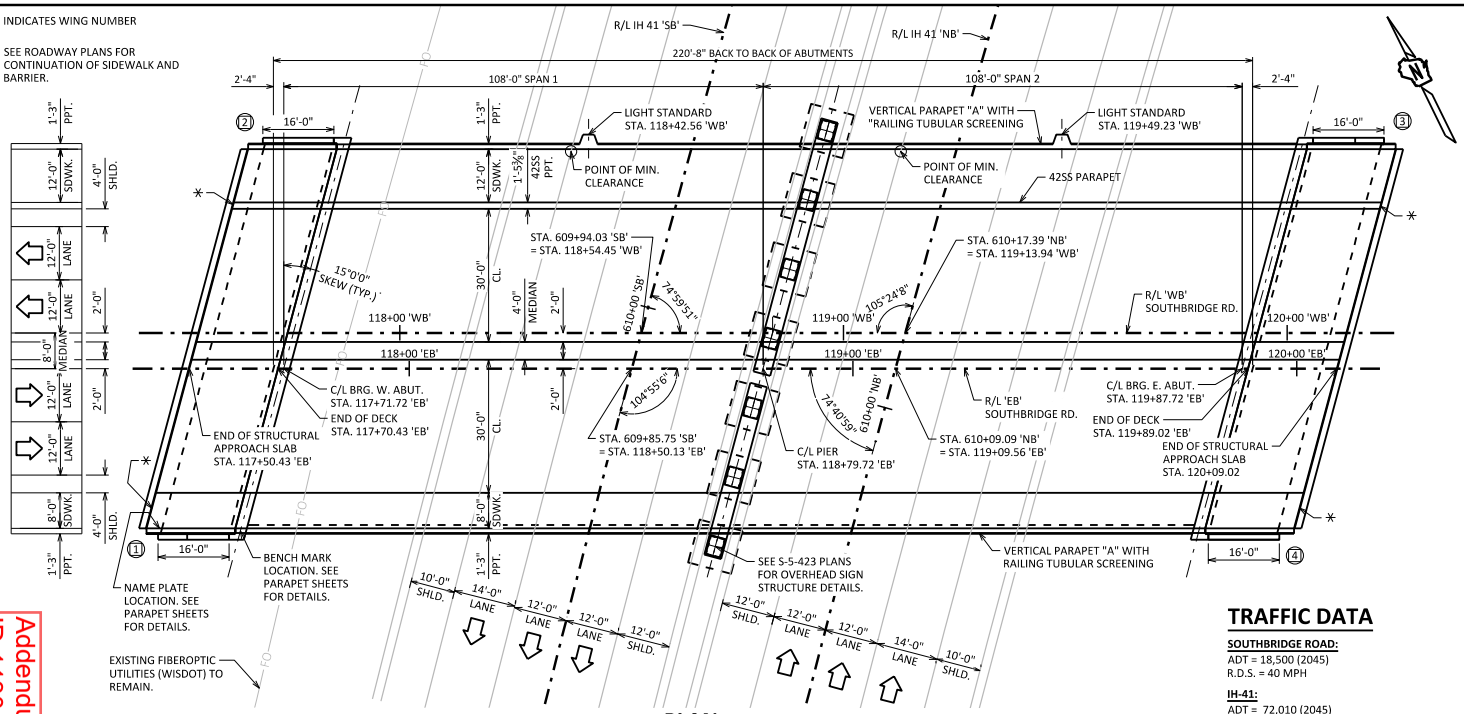

PLAN

TWO-SPAN 45W" PRESTRESSED GIRDER

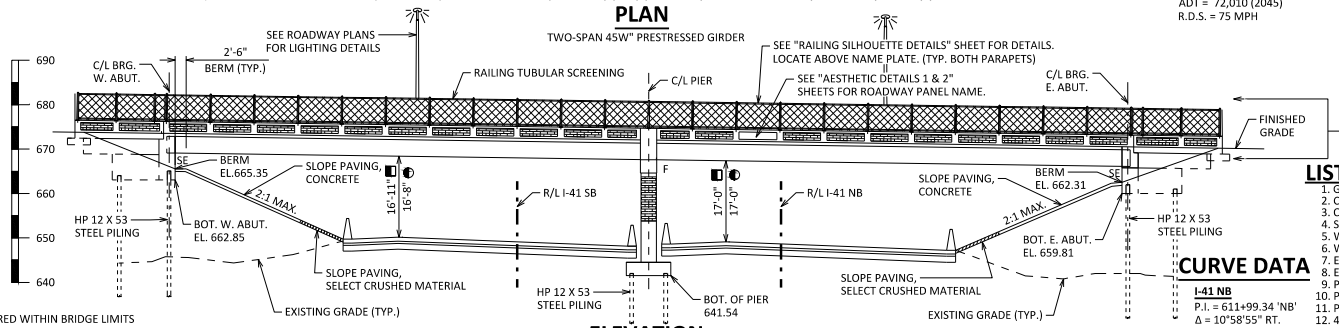

▽ MEASURED WITHIN BRIDGE LIMITS
◧ PROPOSED MIN. VERT. CLR.
◐ INTERIM MIN. VERT. CLR.

ELEVATION

NORMAL TO IH-41

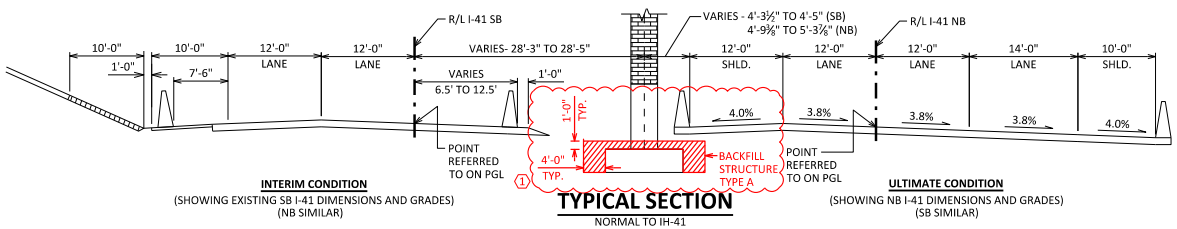

INTERIM CONDITION
(SHOWING EXISTING SB I-41 DIMENSIONS AND GRADES)
(NB SIMILAR)

TYPICAL SECTION

NORMAL TO IH-41

ULTIMATE CONDITION
(SHOWING NB I-41 DIMENSIONS AND GRADES)
(SB SIMILAR)

DESIGN DATA

STATE PROJECT NUMBER
1130-68-77

LIVE LOAD:

DESIGN LOADING: HL-93
INVENTORY RATING: RF = 1.10
OPERATING RATING: RF = 1.43
WISCONSIN STANDARD PERMIT VEHICLE (WIS-SPV): 250 (KIPS)

STRUCTURE IS DESIGNED FOR A FUTURE WEARING SURFACE OF 20 POUNDS PER SQUARE FOOT.

MATERIAL PROPERTIES:

CONCRETE MASONRY:
(HPC) SUPERSTRUCTURE, STRUCTURAL APPROACH SLAB — f'_c = 4,000 PSI
STRUCTURAL APPROACH SLAB FOOTINGS — f'_c = 4,000 PSI
ALL OTHER — f'_c = 3,500 PSI

BAR STEEL REINFORCEMENT
GRADE 60 — f_y = 60,000 PSI
STAINLESS, GRADE 60 — f_y = 60,000 PSI

45-W" PRESTRESSED GIRDERS:
CONCRETE MASONRY — f'_c = 8,000 PSI
STRANDS: 0.6" DIA. WITH ULTIMATE TENSILE STRENGTH OF 270,000 P.S.I.

FOUNDATION DATA

ABUTMENTS TO BE SUPPORTED ON HP 12 X 53 STEEL PILING DRIVEN TO A REQUIRED DRIVING RESISTANCE OF 220 TONS ** PER PILE AS DETERMINED BY THE MODIFIED GATES DYNAMIC FORMULA.
ESTIMATED 70'-0" LONG AT WEST ABUTMENT.
ESTIMATED 70'-0" LONG AT EAST ABUTMENT.

PIER TO BE SUPPORTED ON HP 12 X 53 STEEL PILING DRIVEN TO A REQUIRED DRIVING RESISTANCE OF 220 TONS ** PER PILE AS DETERMINED BY THE MODIFIED GATES DYNAMIC FORMULA.
ESTIMATED 50'-0" LONG.

**THE FACTORED AXIAL RESISTANCE OF PILES IN COMPRESSION USED FOR DESIGN IS THE REQUIRED DRIVING RESISTANCE MULTIPLIED BY A RESISTANCE FACTOR OF 0.5 USING MODIFIED GATES TO DETERMINE PILE CAPACITY.

TRAFFIC DATA

SOUTHBRIDGE ROAD:
ADT = 18,500 (2045)
R.D.S. = 40 MPH

IH-41:
ADT = 72,010 (2045)
R.D.S. = 75 MPH

NOTE: PLACE FILL EVEN WITH TOP OF WING, 2 FEET FROM WING TIP. TRANSITION FILL TO TOP OF SIDEWALK.

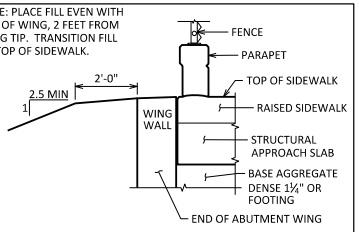

TYPICAL FILL SECTION AT WING TIPS

SOUTH SIDE SHOWN, NORTH SIDE SIMILAR

CURVE DATA

I-41 NB
P.I. = 611+99.34 'NB'
Δ = 10°58'55" RT.
D = 1°01'37"
T = 536.32'
L = 1069.36'
R = 5579.09'
S.E. = 3.80%
P.C. = 606+63.02 'NB'
P.T. = 617+32.37 'NB'

I-41 SB
P.I. = 612+17.17 'SB'
Δ = 10°58'55" RT.
D = 1°00'59"
T = 541.90'
L = 1080.47'
R = 5637.09'
S.E. = 3.80%
P.C. = 606+75.27 'SB'
P.T. = 617+55.75 'SB'

LIST OF DRAWINGS

1. GENERAL PLAN
2. CROSS SECTION
3. QUANTITIES & NOTES
4. SUBSURFACE EXPLORATION
5. WEST ABUTMENT
6. WEST ABUTMENT DETAILS
7. EAST ABUTMENT
8. EAST ABUTMENT DETAILS
9. PIER
10. PIER DETAILS 1
11. PIER DETAILS 2
12. 45W" PRESTRESSED GIRDER DETAILS 1
13. 45W" PRESTRESSED GIRDER DETAILS 2
14. STEEL DIAPHRAGMS
15. SUPERSTRUCTURE PLAN
16. SUPERSTRUCTURE CROSS SECTION
17. SUPERSTRUCTURE DIAPHRAGMS
18. SUPERSTRUCTURE DETAILS 1
19. SUPERSTRUCTURE DETAILS 2
20. PARAPET 'A' SOUTH
21. PARAPET 'A' NORTH
22. SINGLE SLOPE PARAPET 42SS
23. LIGHT STANDARD
24. CONDUIT DETAILS
25. TUBULAR SCREENING
26. LIGHTING ACCESS GATE DETAILS
27. AESTHETIC DETAILS 1
28. AESTHETIC DETAILS 2
29. WEST STRUCTURAL APPROACH SLAB
30. WEST STRUCTURAL APPROACH SLAB DETAILS
31. EAST STRUCTURAL APPROACH SLAB
32. EAST STRUCTURAL APPROACH SLAB DETAILS
33. SLOPE PAVING (CAST-IN-PLACE CONCRETE)
34. ALTERNATE CONSTRUCTION JOINT
35. RAILING SILHOUETTE DETAILS

KHB 4/11/25

STRUCTURE DESIGN CONTACTS:
DAN MONROE 608-266-8490
KYLE BUSCH 608-267-0465

NO.	DATE	REVISION	BY
1	4/11/2025	ADD STRUCTURE BACKFILL AT FOOTINGS	WWR

BUREAU OF STRUCTURES
ACCEPTED KHB 3/3/25
CHIEF STRUCTURES DESIGN ENGINEER — DATE

STRUCTURE B-5-696

SOUTHBRIDGE RD OVER IH 41

COUNTY	TOWN
BROWN	LAWRENCE

DESIGN SPEC.
AASHTO LRFD BRIDGE DESIGN SPECIFICATION

DESIGNED BY	DESIGNED CK'D	DRAWN BY	PLANS CK'D
DLM	RRH	WWR	DLM

GENERAL PLAN

SHEET 1 OF 35
652

I.D. 1130-63-01N
DATE: MARCH 2025
SCALE =

STATE PROJECT NUMBER
1130-68-77

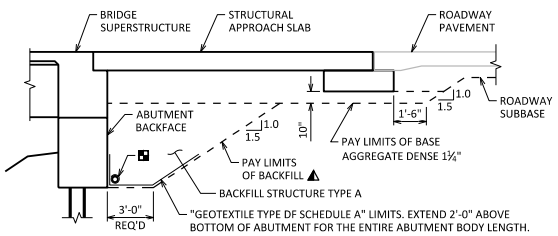

TYPICAL SECTION THRU ABUTMENT

▲ BACKFILL PAY LIMITS. BACKFILL BEYOND PAY LIMITS SHALL BE INCIDENTAL TO EXCAVATION FOR STRUCTURES. LIMITS OF EXCAVATION SHALL BE DETERMINED BY THE CONTRACTOR.

▪ PIPE UNDERDRAIN WRAPPED (6-INCH). SLOPE 0.5% MIN. TO SUITABLE DRAINAGE. ATTACH RODENT SHIELD AT ENDS OF PIPE UNDERDRAIN.

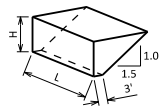

ABUTMENT BACKFILL DIAGRAM

L = OUT TO OUT OF ABUTMENT BODY INCLUDING WINGS (FT)
H = AVERAGE ABUTMENT FILL HEIGHT (FT)
EF = EXPANSION FACTOR (1.20 FOR CY BID ITEMS AND 1.00 FOR TON BID ITEMS)
V_{CF} = (L)(3.0')(H) + (L)(0.5)(1.5H)(H)
V_{CY} = V_{CF}(EF)/27
V_{TON} = V_{CY}(2.0)

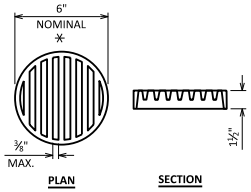

RODENT SHIELD DETAIL

✳ DIMENSIONS ARE APPROXIMATE. THE GRATE IS SIZED TO FIT INTO A PIPE COUPLING. ORIENT SO SLOTS ARE VERTICAL.

THE RODENT SHIELD, PIPE COUPLING AND SCREWS SHALL BE CONSIDERED INCIDENTAL TO THE BID ITEM "PIPE UNDERDRAIN WRAPPED 6-INCH".

THE RODENT SHIELD SHALL BE A PVC GRATE SIMILAR TO THIS DETAIL. THE GRATE IS COMMERCIALLY AVAILABLE AS A FLOOR STRAINER. A PIPE COUPLING IS REQUIRED FOR THE ATTACHMENT OF THIS SHIELD TO THE EXPOSED END OF THE PIPE UNDERDRAIN. THE SHIELD SHALL BE FASTENED TO THE PIPE COUPLING WITH TWO OR MORE NO. 10 X 1-INCH STAINLESS STEEL SHEET METAL SCREWS.

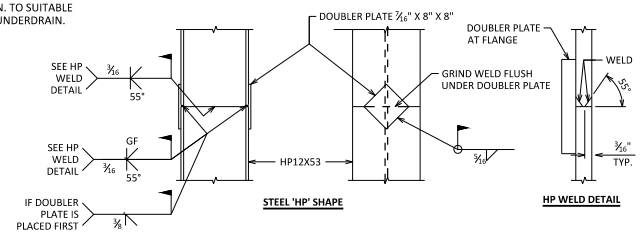

'HP' PILE DETAILS

TOTAL ESTIMATED QUANTITIES

BID ITEM NUMBER	BID ITEMS	UNIT	SUPER.	W. STRUCT. APP. SLAB	W. ABUT.	PIER 1	E. ABUT.	E. STRUCT. APP. SLAB	CAT. 1400*	CAT. 1410*	TOTALS
206.1001	EXCAVATION FOR STRUCTURES BRIDGES B-5-696	EACH	--	--	--	--	--	--	--	--	1
210.1500	BACKFILL STRUCTURE TYPE A	TON	--	--	370	476	370	--	--	--	1216
305.0120	BASE AGGREGATE DENSE 1 1/4-INCH	TON	--	--	290	--	290	--	--	--	580
501.1000.S	ICE HOT WEATHER CONCRETING	LB	5,965	935	655	1,725	660	935	--	--	10,875
502.0100	CONCRETE MASONRY BRIDGES	CY	--	25.3	87.2	230.2	88.0	25.3	--	--	456
502.3200	PROTECTIVE SURFACE TREATMENT	SY	2,124	--	--	--	--	--	--	--	2,124
502.3210	PIGMENTED SURFACE SEALER	SY	370	35	--	--	--	35	--	--	440
503.0146	PRESTRESSED GIRDER TYPE I 45W-INCH	LF	2,818	--	--	--	--	--	--	--	2,818
505.0400	BAR STEEL REINFORCEMENT HS STRUCTURES	LB	--	--	6,480	6,870	6,480	--	--	--	19,830
505.0600	BAR STEEL REINFORCEMENT HS COATED STRUCTURES	LB	159,850	20,340	1,900	32,970	1,890	20,340	--	--	237,290
505.0800.S	BAR STEEL REINFORCEMENT HS STAINLESS STRUCTURES	LB	2,990	--	--	--	--	--	--	--	2,990
506.2605	BEARING PADS ELASTOMERIC NON-LAMINATED	EACH	--	--	13	26	13	--	--	--	52
506.4000	STEEL DIAPHRAGMS B-5-696	EACH	48	--	--	--	--	--	--	--	48
513.4091	RAILING TUBULAR SCREENING	LF	516	--	--	--	--	--	--	--	516
516.0500	RUBBERIZED MEMBRANE WATERPROOFING	SY	--	--	22	--	22	--	--	--	44
517.1010.S	CONCRETE STAINING B-5-696	SF	5,540	64	580	2,280	580	64	9,108	--	--
517.1015.S	CONCRETE STAINING MULTI-COLOR B-5-696	SF	548	53	--	860	--	53	1,514	--	--
517.1050.S	ARCHITECTURAL SURFACE TREATMENT B-5-696	SF	548	53	--	860	--	53	1,514	--	--
531.8990	ANCHOR ASSEMBLIES POLES ON STRUCTURES	EACH	2	--	--	--	--	--	--	--	2
550.1120	PILING STEEL HP 12-INCH X 53	LF	--	--	1,260	2,600	1,260	--	--	--	5,120
604.0400	SLOPE PAVING CONCRETE	SY	--	--	302	--	292	--	--	--	594
604.0600	SLOPE PAVING SELECT CRUSHED MATERIAL	SY	--	--	112	--	112	--	--	--	224
612.0406	PIPE UNDERDRAIN WRAPPED 6-INCH	LF	--	--	236	--	236	--	--	--	472
645.0111	GEOTEXTILE TYPE DF SCHEDULE A	SY	--	--	84	--	84	--	--	--	168
652.0125	CONDUIT RIGID METALLIC 2-INCH	LF	24	--	--	--	--	--	--	--	24
652.0225	CONDUIT RIGID NONMETALLIC SCHEDULE 40 2-INCH	LF	505	--	--	--	--	--	--	--	505
653.0222	JUNCTION BOXES 18X12X6-INCH	EACH	2	--	--	--	--	--	--	--	2
SPV.0035	HPC MASONRY STRUCTURES	CY	795.1	99.4	--	--	--	99.4	--	--	994
SPV.0060	DECORATIVE SILHOUETTE	EACH	--	--	--	--	--	--	--	2	--
SPV.0165	LONGITUDINAL GROOVING BRIDGE DECK	SF	13,115	1,200	--	--	--	1,200	--	--	15,515
	NON-BID ITEMS										
	FILLER	SIZE									½", ¾",1½"

NOTE:
ALL BRIDGE BID ITEMS NOT IDENTIFIED AS CAT. 1400 OR 1410 ARE CAT. 2000

GENERAL NOTES

DRAWINGS SHALL NOT BE SCALED.

BAR STEEL REINFORCEMENT SHALL BE EMBEDDED 2" CLEAR UNLESS OTHERWISE SHOWN OR NOTED.

THE FIRST OR FIRST TWO DIGITS OF THE BAR MARK SIGNIFIES THE BAR SIZE.

BEVEL EXPOSED EDGES OF CONCRETE ¾" UNLESS OTHERWISE NOTED.

THE UPPER LIMITS OF "EXCAVATION FOR STRUCTURES BRIDGES B-5-696" SHALL BE THE EXISTING GROUNDLINE.

AT THE BACK FACE OF ABUTMENT ALL VOLUME WHICH CANNOT BE PLACED BEFORE ABUTMENT CONSTRUCTION AND IS NOT OCCUPIED BY THE NEW STRUCTURE SHALL BE BACKFILLED WITH STRUCTURE BACKFILL TYPE A. ALSO EXCLUDED IS THE "BASE AGGREGATE DENSE 1 1/4-INCH" AS DETAILED ON THE STRUCTURAL APPROACH SLAB SHEETS.

EXCAVATION BELOW THE ABUTMENT AND ABUTMENT BEDDING MATERIALS REQUIRES ENGINEER APPROVAL. GEOTEXTILE SHALL BE SET AT THE BOTTOM OF EXCAVATION AND EXTEND 2'-0" ABOVE BOTTOM OF ABUTMENT.

THE QUANTITY FOR BACKFILL STRUCTURE IS CALCULATED BASED ON THE DETAIL SHOWN IN THE PLANS.

ELASTOMERIC BEARING PADS NEED NOT BE INDIVIDUALLY MOLDED PROVIDED THE CUT EDGES ARE SMOOTH AND TRUE.

PROTECTIVE SURFACE TREATMENT TO BE APPLIED TO THE ENTIRE EXPOSED TOP OF DECK, EXPOSED SIDEWALK, APPROACH SLAB SURFACES, TOP AND SIDES OF MEDIAN, AND TO THE VERTICAL AND HORIZONTAL SURFACES OF THE PAVING NOTCHES AND SIDEWALKS AT ABUTMENT DIAPHRAGMS.

PIGMENTED SURFACE SEALER TO BE APPLIED TO THE FRONT FACE AND THE TOP OF THE OUTER PARAPETS AND TO THE TOP, FRONT, AND BACK FACES OF THE INTERIOR PARAPET. INCLUDES PARAPETS ON APPROACH SLABS.

THE SLOPE OF THE FILL IN FRONT OF THE ABUTMENTS SHALL BE COVERED WITH SLOPE PAVING MATERIAL TO THE EXTENT SHOWN ON SHEET 1 AND THE ABUTMENT DETAILS.

THE HAUNCH CONCRETE QUANTITY IS BASED ON THE AVERAGE HAUNCH SHOWN ON THE "45W PRESTRESSED GIRDER DETAILS 2" SHEET.

CONCRETE IN SUPERSTRUCTURE, INCLUDING DECK, STRUCTURAL APPROACH SLAB, DECK HAUNCHES, DIAPHRAGMS, PARAPETS, RAISED SIDEWALK, AND MEDIAN, IS INCLUDED IN BID ITEM "HIGH PERFORMANCE CONCRETE (HPC) STRUCTURES".

CONCRETE IN SUBSTRUCTURE, INCLUDING ABUTMENTS, WINGS, PIER, AND STRUCTURAL APPROACH SLAB FOOTINGS, SHALL BE INCLUDED IN BID ITEM "CONCRETE MASONRY BRIDGES".

APPLY ARCHITECTURAL SURFACE TREATMENT, CONCRETE STAINING, AND CONCRETE STAINING MULTI-COLOR TO THE PARAPETS AND PIER AS SHOWN ON THE "AESTHETIC DETAILS" SHEETS.

THE COLOR OF THE NON-STAINING NON-BITUMINOUS JOINT SEALER SHALL MATCH THE COLORS OF THE CONCRETE STAINING.

THE EXTENTS OF "LONGITUDINAL GROOVING BRIDGE DECK" SHALL INCLUDE THE LANE SURFACES ON THE DECK AND BOTH STRUCTURAL APPROACH SLABS.

SEE S-5-423 PLANS FOR OTHER REQUIREMENTS. CONTRACTOR SHALL COORDINATE CONSTRUCTION BETWEEN S-5-423 AND B-5-696.

Addendum No. 01
ID 1130-68-77
Revised Sheet 654
April 28, 2025

KHR 4/11/25

NO.	DATE	REVISION	BY
1	4/11/2025	ADD STRUCTURE BACKFILL QUANTITY	WWR

STATE OF WISCONSIN
DEPARTMENT OF TRANSPORTATION
STRUCTURES DESIGN SECTION

STRUCTURE B-5-696

DRAWN BY WWR PLANS CK'D DLM

QUANTITIES & NOTES

SHEET 3

654

8

8

Addendum No. 01
ID 1130-68-77
Revised Sheet 660
April 28, 2025

STATE PROJECT NUMBER
1130-68-77

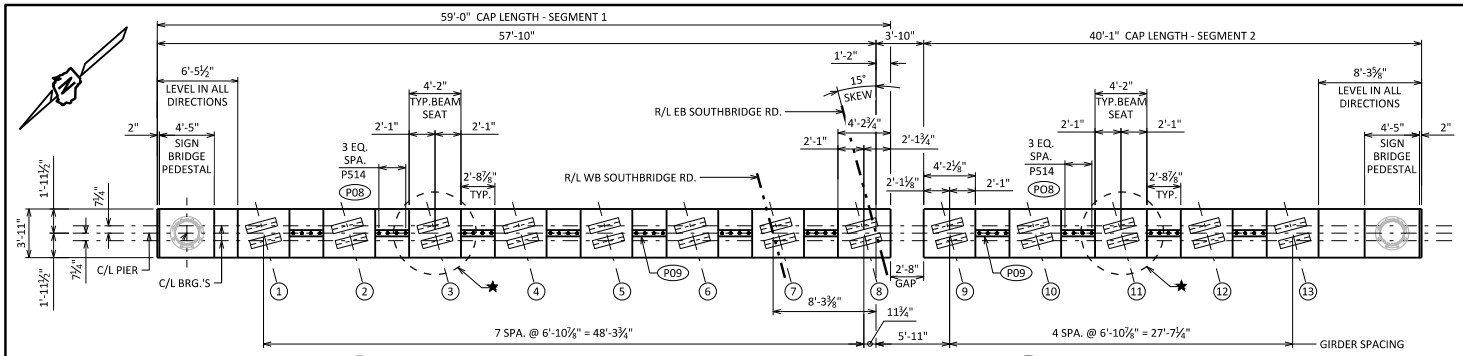

CAP PLAN

INDICATES GIRDER NUMBER

P01 1'-3" x 2'-0" x 4" CONST. JOINT FORMED BY BEVELED KEYWAY.

P03 SUPPORT PIER ON HP 12 x 53 STEEL PILING, ESTIMATED 50'-0" LONG WITH A REQUIRED DRIVING RESISTANCE OF 220 TONS PER PILE.

P08 BARS @ 1'-0" CTRS. BETWEEN BEAM SEATS. MAY BE PLACED AFTER CONCRETE IS POURED BUT BEFORE INITIAL SET HAS TAKEN PLACE. (EMBED 1'-0" INTO CONC.)

P09 KEYED CONST. JOINT-FORMED BY BEVELED 2 x 6 BETWEEN BEAM SEATS.

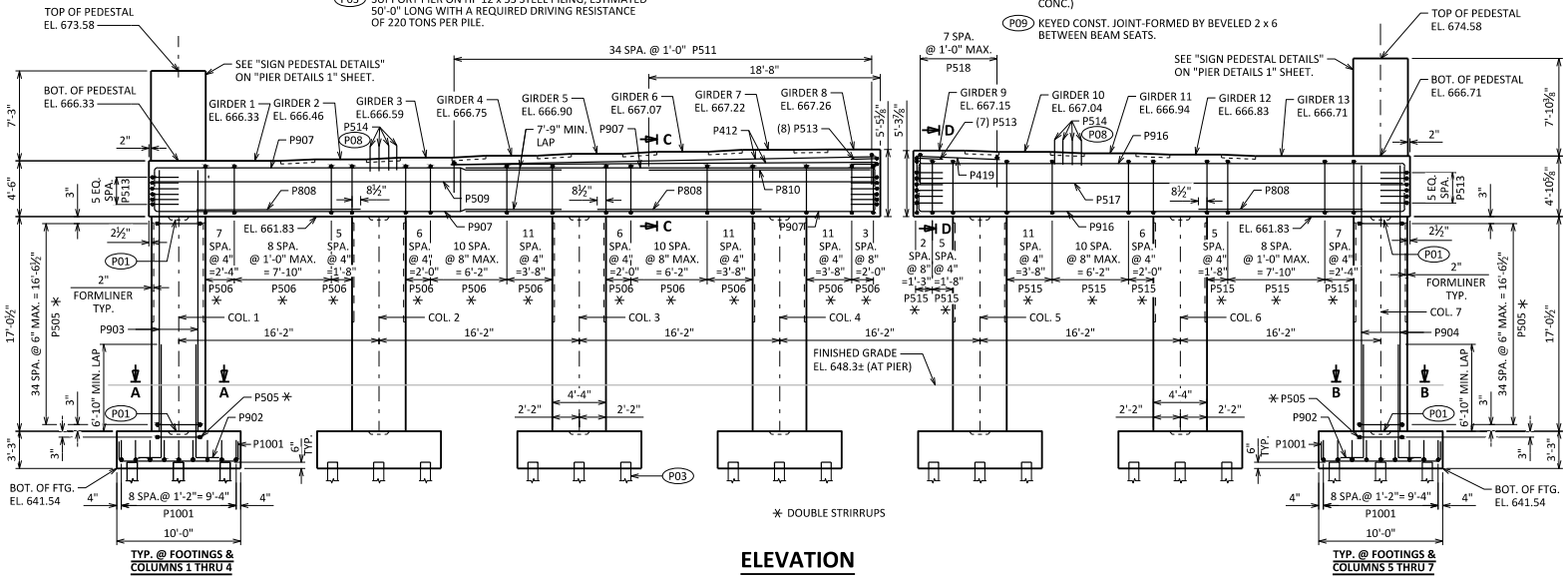

ELEVATION

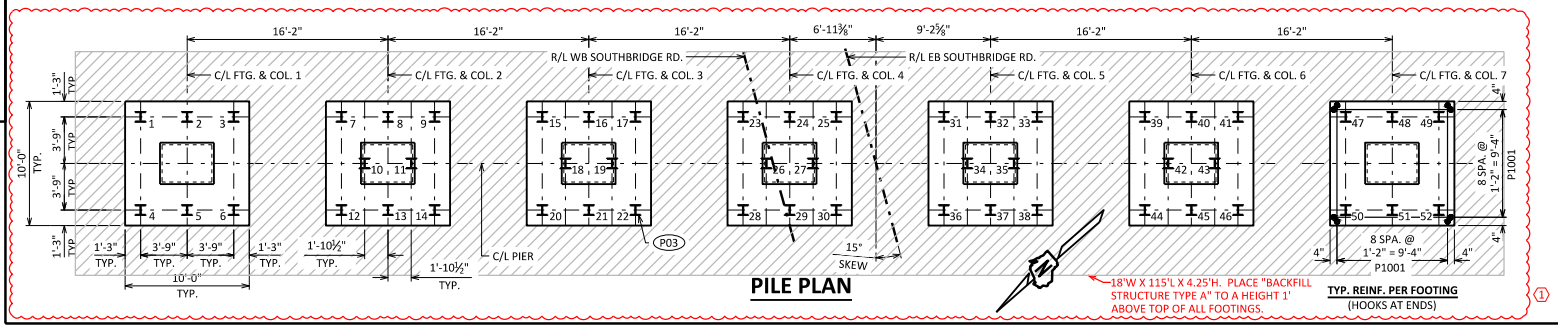

PILE PLAN

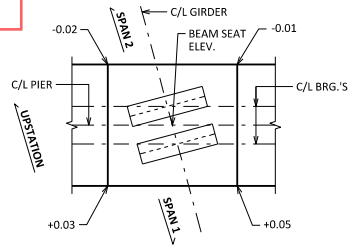

★ SLOPED BEAM SEAT DETAIL

(APPLY AT ALL BEAM SEATS)

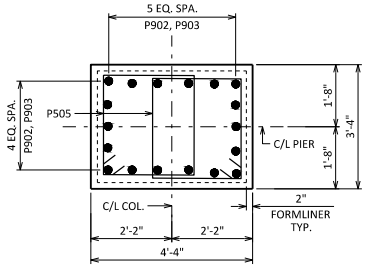

SECTION A-A

(FOR COLUMNS 1 THRU 4)

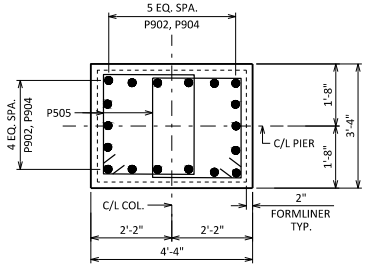

SECTION B-B

(FOR COLUMNS 5 THRU 7)

4/11/25

NO.	DATE	REVISION	BY
1	4/11/2025	ADD STRUCTURE BACKFILL AT FOOTINGS	WWR

STATE OF WISCONSIN
DEPARTMENT OF TRANSPORTATION
STRUCTURES DESIGN SECTION

STRUCTURE B-5-696

DRAWN BY WWR | PLANS CK'D DLM

PIER

SHEET 9

660

STATE PROJECT NUMBER

1130-68-77

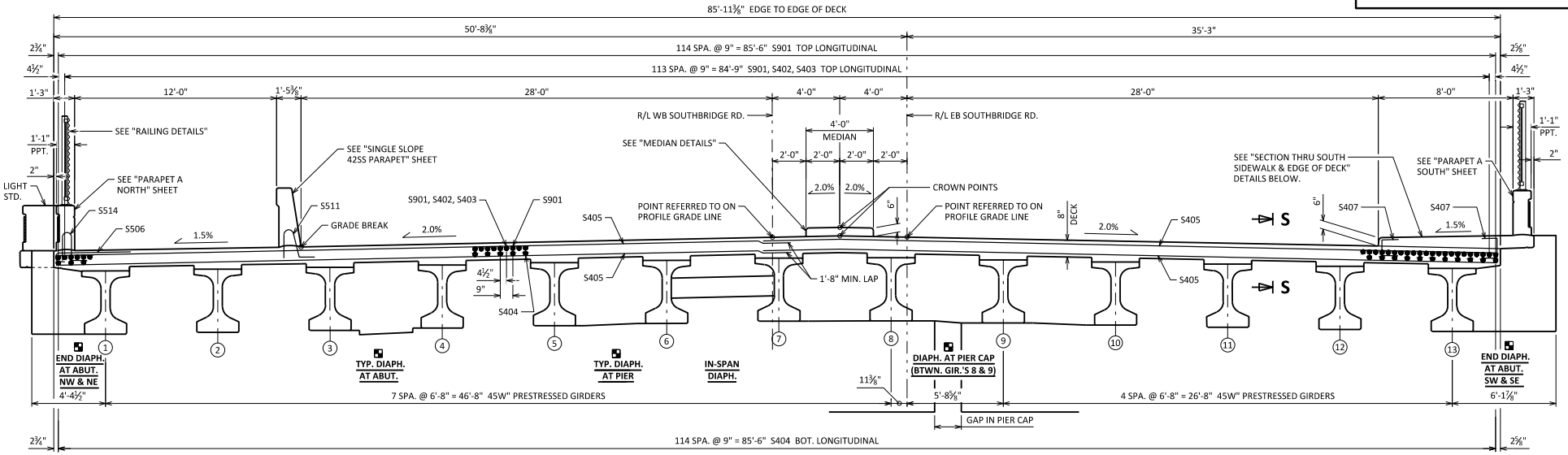

CROSS SECTION THRU SUPERSTRUCTURE

(LOOKING EAST)

SEE "SUPERSTRUCTURE DIAPHRAGMS" SHEET FOR DETAILS.

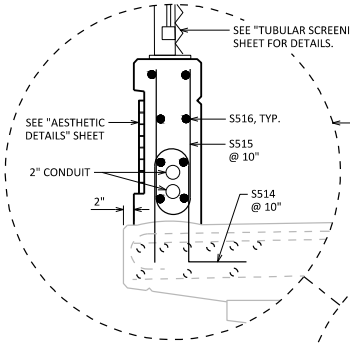

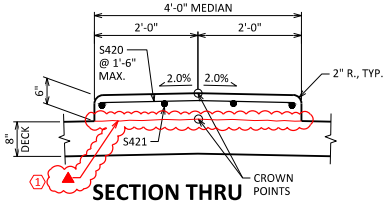

SECTION THRU MEDIAN

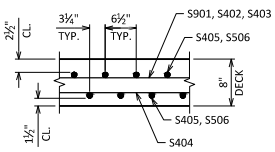

SECTION S-S

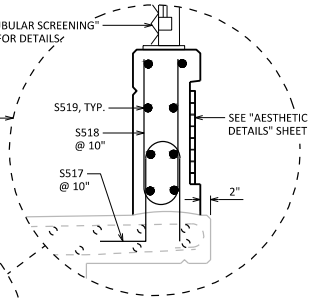

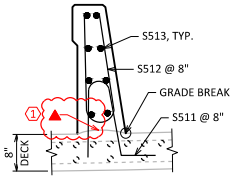

SECTION THRU 42SS PARAPET

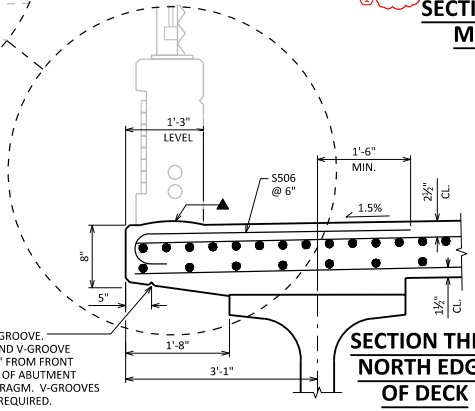

SECTION THRU NORTH EDGE OF DECK

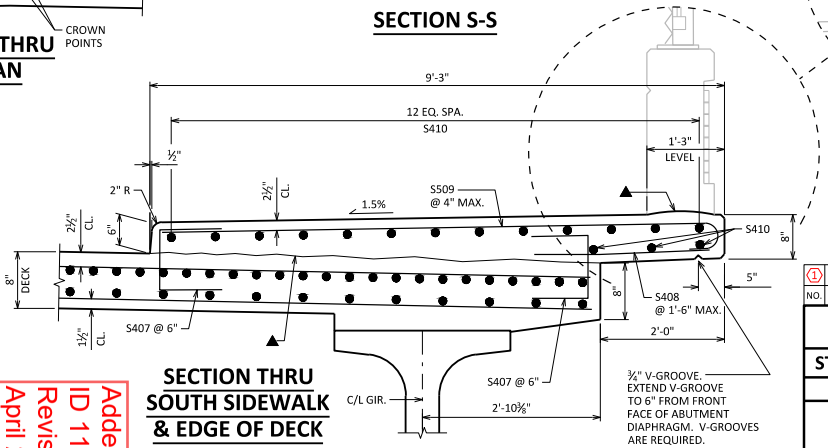

SECTION THRU SOUTH SIDEWALK & EDGE OF DECK

4/11/25

▲ CONST. JOINT-STRIKE OFF AS SHOWN AND LEAVE ROUGH.

◯ INDICATES GIRDER NUMBER

NO.	DATE	REVISION	BY
1	4/11/2025	CONST. JOINT & SYMBOL CALLOUT	WWR

STATE OF WISCONSIN
DEPARTMENT OF TRANSPORTATION
STRUCTURES DESIGN SECTION

STRUCTURE B-5-696

DRAWN BY WWR PLANS CK'D DLM

SUPERSTRUCURE CROSS SECTION

SHEET 16

667

Addendum No. 01
ID 1130-68-77
Revised Sheet 667
April 28, 2025

8

8

STATE PROJECT NUMBER
1130-68-77

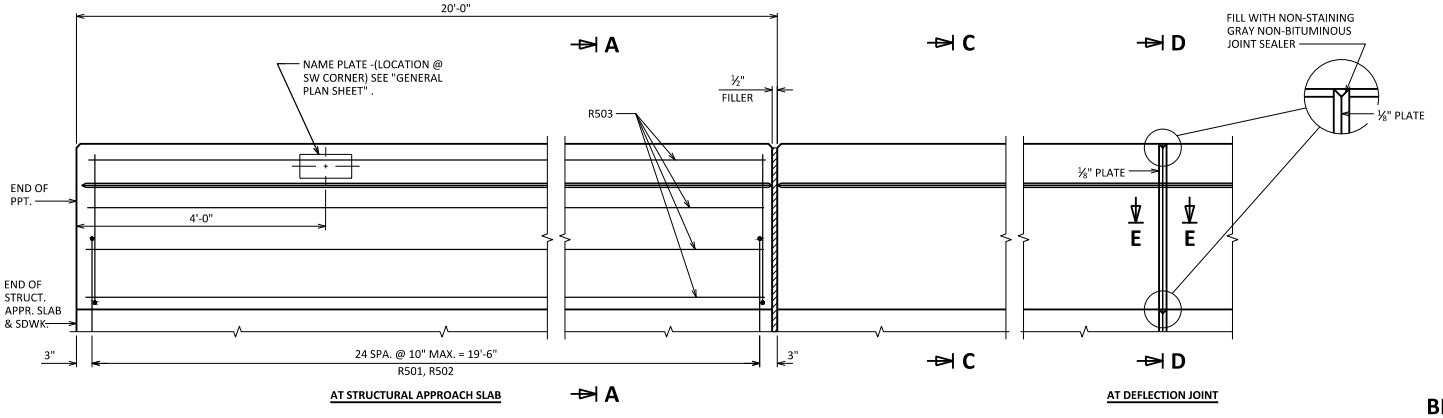

AT STRUCTURAL APPROACH SLAB

AT DEFLECTION JOINT

INSIDE ELEVATION OF PARAPET

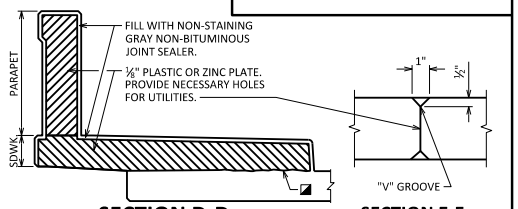

SECTION D-D

(SHOWING DEFLECTION JOINT IN PARAPET AND SIDEWALK.)

SECTION E-E

WHEN PARAPETS ARE POURED CONTINUOUSLY FROM END TO END, THEY SHALL BE SEPARATED AT THE DEFLECTION JOINTS BY A PIECE OF ⅛" ZINC OR PLASTIC PLATE CUT AS SHOWN IN SECTION D-D BY SHADED AREA. IF CONSTRUCTION JOINTS IN PARAPETS ARE USED AT THE DEFLECTION JOINTS, ONE SIDE OF JOINT SHALL BE COATED WITH AN APPROVED LIQUID BOND BREAKER AND PLATE SEPARATORS MAY BE OMITTED.

BILL OF BARS

NOTE: THE FIRST OR FIRST TWO DIGITS OF THE BAR MARK SIGNIFIES THE BAR SIZE.

BAR MARK	COAT	S.E. APPR.	S.W. APPR.	LENGTH	BENT	BAR SERIES	LOCATION
R501	X	25	25	4'-4"	X		PARAPET VERT.
R502	X	25	25	4'-9"	X		PARAPET VERT.
R503	X	8	8	19'-8"			PARAPET HORIZ.

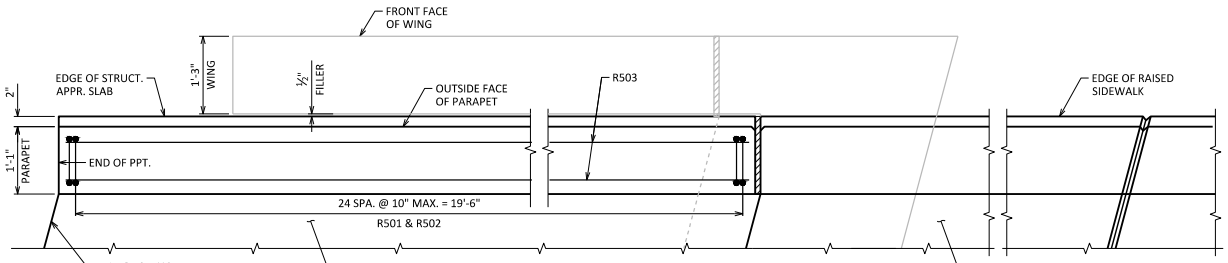

PLAN OF PARAPET

(SE CORNER SHOWN, SW CORNER SIMILAR)

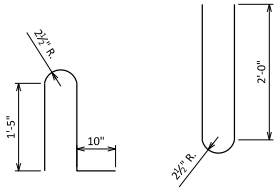

R501 R502

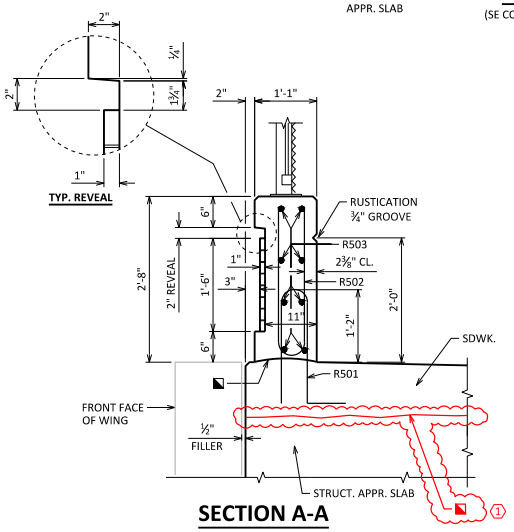

SECTION A-A

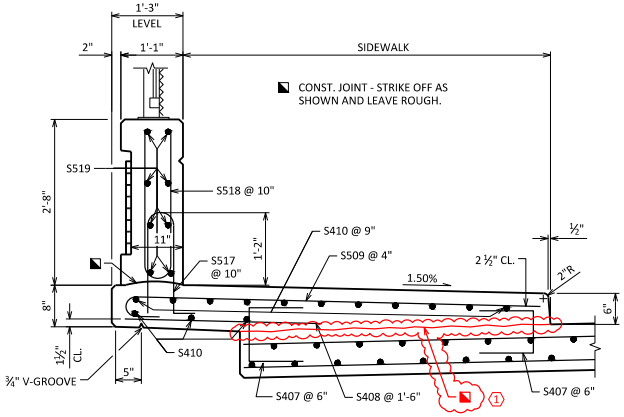

SECTION C-C

Addendum No. 01
ID 1130-68-77
Revised Sheet 671
April 28, 2025

4/11/25

NO.	DATE	REVISION	BY
1	4/11/2025	CONST. JOINT & SYMBOL CALLOUT	WWR

STATE OF WISCONSIN
DEPARTMENT OF TRANSPORTATION
STRUCTURES DESIGN SECTION

STRUCTURE B-5-696

DRAWN BY WWR PLANS CK'D DLM

PARAPET 'A' SOUTH

SHEET 20

671

8

8

STATE PROJECT NUMBER
1130-68-77

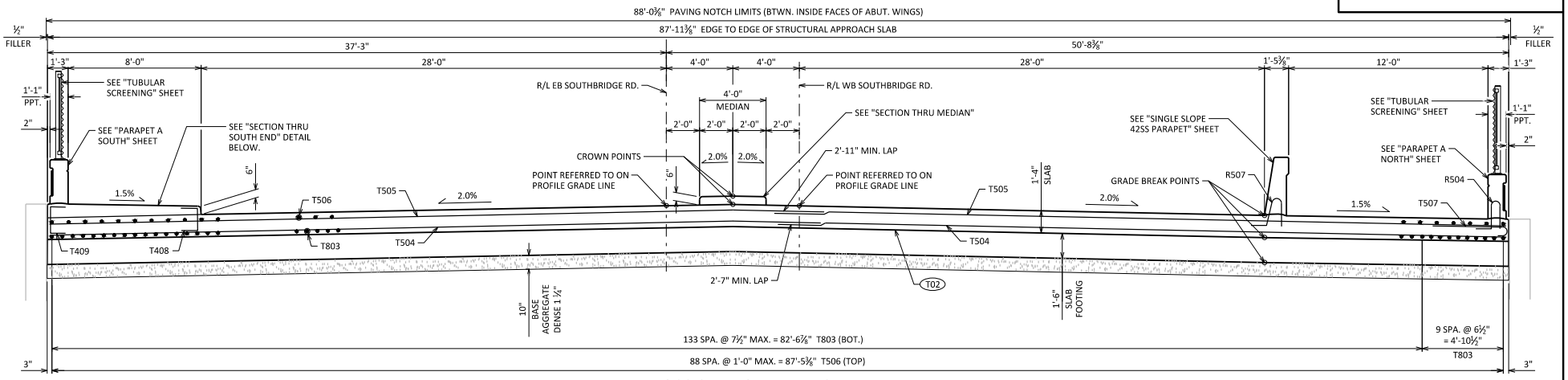

CROSS SECTION THRU STRUCTURAL APPROACH SLAB LOOKING WEST

(FOOTING BARS NOT SHOWN)

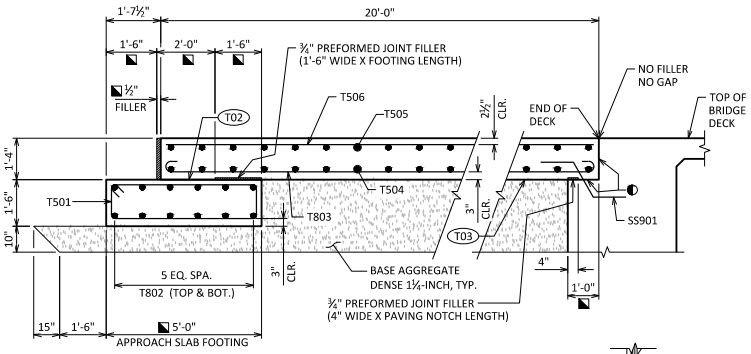

SECTION THRU APPROACH SLAB

- APPLY PROTECTIVE SURFACE TREATMENT TO PAVING NOTCH SURFACES PRIOR TO POURING STRUCTURAL APPROACH SLAB.
- MEASURED NORMAL TO ABUTMENT.
- T02 — STEEL TROWEL TOP SURFACE OF FOOTING AND PLACE MULTIPLE LAYERS (0.03" MIN. TOTAL THK.) OF POLYETHYLENE SHEETS OVER THE ENTIRE LENGTH OF THE FOOTING.
- T03 — PLACE MULTIPLE LAYERS (0.03" MIN. TOTAL THK.) OF POLYETHYLENE SHEETS OVER THE ENTIRE TOP OF SUBGRADE BENEATH SLAB.

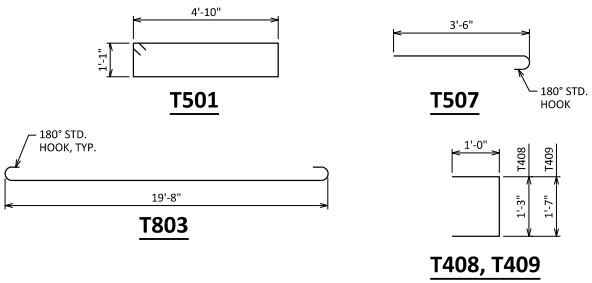

BILL OF BARS

NOTE: THE FIRST OR FIRST TWO DIGITS OF THE BAR MARK SIGNIFIES THE BAR SIZE.

BAR MARK	COAT	NO. REQ'D.	LENGTH	BENT	BAR SERIES	LOCATION
T501	X	89	12'-6"	X		FOOTING-VERT.
T802	X	24	48'-3"			FOOTING-LONGIT.
T803	X	143	21'-6"	X		APPR. SLAB-HORIZ.-BOT.
T504	X	42	46'-8"			APPR. SLAB-HORIZ.-BOT.
T505	X	42	46'-10"			APPR. SLAB-HORIZ.-TOP
T506	X	89	19'-8"			APPR. SLAB-HORIZ.-TOP
T507	X	20	4'-1"	X		APPR. SLAB-HORIZ.-NORTH EDGE BAR
T408	X	20	3'-1"	X		APPR. SLAB/SDWK.-VERT. U-BAR
T409	X	20	3'-5"	X		APPR. SLAB/SDWK.-VERT. U-BAR
T410	X	13	19'-8"			SDWK.-HORIZ.-TOP
T511	X	21	9'-1"			SDWK.-HORIZ.-TOP
T412	X	4	19'-8"			MEDIAN-HORIZ.
T413	X	14	3'-10"			MEDIAN-HORIZ.

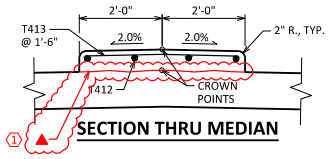

SECTION THRU MEDIAN

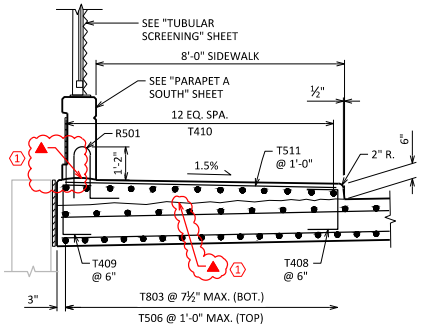

SECTION THRU SOUTH END

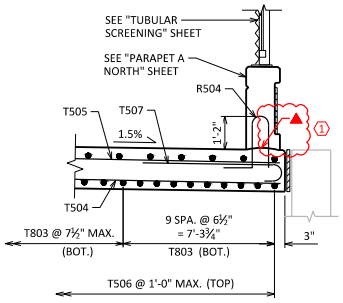

SECTION THRU NORTH END

1 ▲ CONST. JOINT - STRIKE OFF AS SHOWN AND LEAVE ROUGH.

Addendum No. 01
ID 1130-68-77
Revised Sheet 681
April 28, 2025

4/11/25

NO.	DATE	REVISION	BY
1	4/11/2025	CONST. JOINT & SYMBOL CALLOUT	WWR

STATE OF WISCONSIN
DEPARTMENT OF TRANSPORTATION
STRUCTURES DESIGN SECTION

STRUCTURE B-5-696

DRAWN BY WWR PLANS CK'D DLM

WEST STRUCTURAL APPROACH SLAB DETAILS

SHEET 30

681

8

8

STATE PROJECT NUMBER
1130-68-77

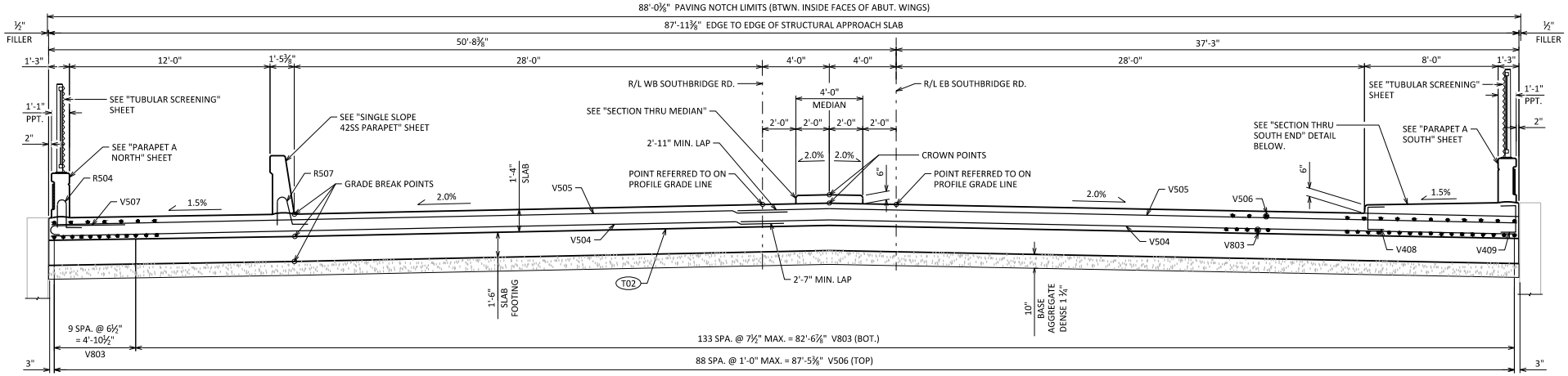

CROSS SECTION THRU STRUCTURAL APPROACH SLAB LOOKING EAST

(FOOTING BARS NOT SHOWN)

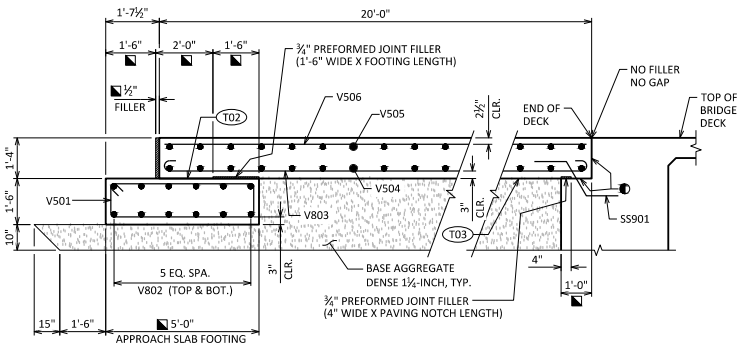

SECTION THRU APPROACH SLAB

- APPLY PROTECTIVE SURFACE TREATMENT TO PAVING NOTCH SURFACES PRIOR TO POURING STRUCTURAL APPROACH SLAB.
- MEASURED NORMAL TO ABUTMENT.
- T02 STEEL TROWEL TOP SURFACE OF FOOTING AND PLACE MULTIPLE LAYERS (0.03" MIN. TOTAL THK.) OF POLYETHYLENE SHEETS OVER THE ENTIRE LENGTH OF THE FOOTING.
- T03 PLACE MULTIPLE LAYERS (0.03" MIN. TOTAL THK.) OF POLYETHYLENE SHEETS OVER THE ENTIRE TOP OF SUBGRADE BENEATH SLAB.

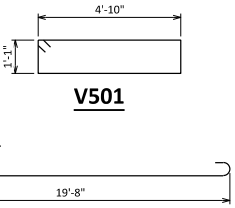

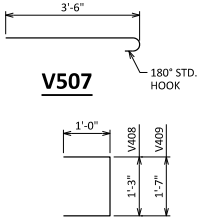

BILL OF BARS

NOTE: THE FIRST OR FIRST TWO DIGITS OF THE BAR MARK SIGNIFIES THE BAR SIZE.

BAR MARK	COAT	NO. REQ'D.	LENGTH	BENT	BAR SERIES	LOCATION
V501	X	89	12'-6"	X		FOOTING-VERT.
V802	X	24	48'-3"			FOOTING-LONGIT.
V803	X	143	21'-6"	X		APPR. SLAB-HORIZ.-BOT.
V504	X	42	46'-8"			APPR. SLAB-HORIZ.-BOT.
V505	X	42	46'-10"			APPR. SLAB-HORIZ.-TOP
V506	X	89	19'-8"			APPR. SLAB-HORIZ.-TOP
V507	X	20	4'-1"	X		APPR. SLAB-HORIZ.-NORTH EDGE BAR
V408	X	20	3'-1"	X		APPR. SLAB/SDWK.-VERT. U-BAR
V409	X	20	3'-5"	X		APPR. SLAB/SDWK.-VERT. U-BAR
V410	X	13	19'-8"			SDWK.-HORIZ.-TOP
V511	X	21	9'-1"			SDWK.-HORIZ.-TOP
V412	X	4	19'-8"			MEDIAN-HORIZ.
V413	X	14	3'-10"			MEDIAN-HORIZ.

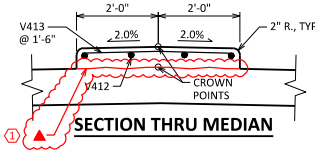

SECTION THRU MEDIAN

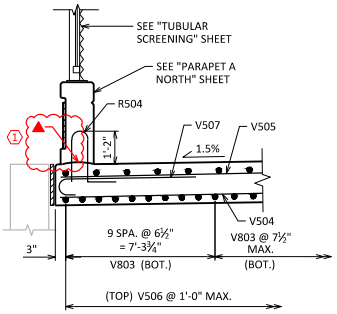

SECTION THRU NORTH END

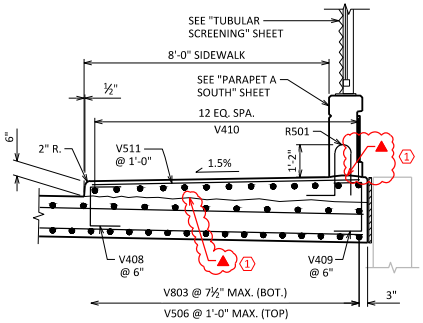

SECTION THRU SOUTH END

1 ▲ CONST. JOINT - STRIKE OFF AS SHOWN AND LEAVE ROUGH.

Addendum No. 01
ID 1130-68-77
Revised Sheet 683
April 28, 2025

4/11/25

NO.	DATE	REVISION	BY
1	4/11/2025	CONST. JOINT & SYMBOL CALLOUT	WWR

STATE OF WISCONSIN
DEPARTMENT OF TRANSPORTATION
STRUCTURES DESIGN SECTION

STRUCTURE B-5-696

DRAWN BY WWR PLANS CK'D DLM

EAST STRUCTURAL APPROACH SLAB DETAILS

SHEET 32

683

8

8

Proposal ID: 20250513020 **Project(s):** 1130-68-77

Federal ID(s): WISC 2025473

SECTION: 0001 Contract Items

Alt Set ID: **Alt Mbr ID:**

Proposal Line Number	Item ID Description	Approximate Quantity and Units	Unit Price	Bid Amount
0002	203.0100 Removing Small Pipe Culverts	7.000 EACH	_____._____	_____._____
0004	203.0220 Removing Structure (structure) 01. C-05-0800	1.000 EACH	_____._____	_____._____
0006	204.0100 Removing Concrete Pavement	1,515.000 SY	_____._____	_____._____
0008	204.0115 Removing Asphaltic Surface Butt Joints	15.000 SY	_____._____	_____._____
0010	204.0150 Removing Curb & Gutter	162.000 LF	_____._____	_____._____
0012	204.0210 Removing Manholes	1.000 EACH	_____._____	_____._____
0014	204.0220 Removing Inlets	1.000 EACH	_____._____	_____._____
0016	204.9060.S Removing (item description) 01. Communication Vault	2.000 EACH	_____._____	_____._____
0018	204.9090.S Removing (item description) 01. Electrical Conductors From Existing Conduit	350.000 LF	_____._____	_____._____
0020	205.0100 Excavation Common	103,815.000 CY	_____._____	_____._____
0022	206.1001 Excavation for Structures Bridges (structure) 01. B-5-696	1.000 EACH	_____._____	_____._____
0024	206.2001 Excavation for Structures Culverts (structure) 01. C-05-0800	1.000 EACH	_____._____	_____._____
0026	210.1500 Backfill Structure Type A	1,216.000 TON	_____._____	_____._____
0028	210.2500 Backfill Structure Type B	256.000 TON	_____._____	_____._____

Proposal ID: 20250513020 **Project(s):** 1130-68-77

Federal ID(s): WISC 2025473

SECTION: 0001 Contract Items

Alt Set ID: **Alt Mbr ID:**

Proposal Line Number	Item ID Description	Approximate Quantity and Units	Unit Price	Bid Amount
0030	213.0100 Finishing Roadway (project) 01. 1130-68-77	1.000 EACH	_____._____	_____._____
0032	214.0100 Obliterating Old Road	6.000 STA	_____._____	_____._____
0034	305.0110 Base Aggregate Dense 3/4-Inch	1,890.000 TON	_____._____	_____._____
0036	305.0120 Base Aggregate Dense 1 1/4-Inch	31,388.000 TON	_____._____	_____._____
0038	311.0115 Breaker Run	331.000 CY	_____._____	_____._____
0040	312.0110 Select Crushed Material	66,280.000 TON	_____._____	_____._____
0042	405.0100 Coloring Concrete WisDOT Red	888.000 CY	_____._____	_____._____
0044	405.0200 Coloring Concrete Custom	117.000 CY	_____._____	_____._____
0046	415.0090 Concrete Pavement 9-Inch	6,264.000 SY	_____._____	_____._____
0048	415.0095 Concrete Pavement 9 1/2-Inch	21,975.000 SY	_____._____	_____._____
0050	415.0410 Concrete Pavement Approach Slab	211.000 SY	_____._____	_____._____
0052	415.2010 Concrete Truck Apron 12-inch	1,863.000 SY	_____._____	_____._____
0054	415.4100 Concrete Pavement Joint Filling	34,264.000 SY	_____._____	_____._____
0056	416.0610 Drilled Tie Bars	1,828.000 EACH	_____._____	_____._____
0058	416.0620 Drilled Dowel Bars	22.000 EACH	_____._____	_____._____
0060	450.4000 HMA Cold Weather Paving	539.000 TON	_____._____	_____._____

Proposal ID: 20250513020 **Project(s):** 1130-68-77

Federal ID(s): WISC 2025473

SECTION: 0001 Contract Items

Alt Set ID: **Alt Mbr ID:**

Proposal Line Number	Item ID Description	Approximate Quantity and Units	Unit Price	Bid Amount
0062	455.0605 Tack Coat	1,828.000 GAL	_____._____	_____._____
0064	460.2000 Incentive Density HMA Pavement	4,390.000 DOL	1.00000	4,390.00
0066	460.5223 HMA Pavement 3 LT 58-28 S	3,823.000 TON	_____._____	_____._____
0068	460.5224 HMA Pavement 4 LT 58-28 S	2,899.000 TON	_____._____	_____._____
0070	465.0105 Asphaltic Surface	734.000 TON	_____._____	_____._____
0072	465.0125 Asphaltic Surface Temporary	77.000 TON	_____._____	_____._____
0074	465.0315 Asphaltic Flumes	66.000 SY	_____._____	_____._____
0076	465.0510 Asphaltic Rumble Strips, Shoulder Divided Roadway	3,240.000 LF	_____._____	_____._____
0078	501.1000.S Ice Hot Weather Concreting	10,875.000 LB	_____._____	_____._____
0080	502.0100 Concrete Masonry Bridges	456.000 CY	_____._____	_____._____
0082	502.3200 Protective Surface Treatment	2,124.000 SY	_____._____	_____._____
0084	502.3210 Pigmented Surface Sealer	440.000 SY	_____._____	_____._____
0086	502.4205 Adhesive Anchors No. 5 Bar	47.000 EACH	_____._____	_____._____
0088	503.0146 Prestressed Girder Type I 45W-Inch	2,818.000 LF	_____._____	_____._____
0090	504.0100 Concrete Masonry Culverts	36.000 CY	_____._____	_____._____
0092	505.0400 Bar Steel Reinforcement HS Structures	23,120.000 LB	_____._____	_____._____

Proposal ID: 20250513020 **Project(s):** 1130-68-77

Federal ID(s): WISC 2025473

SECTION: 0001 Contract Items

Alt Set ID: **Alt Mbr ID:**

Proposal Line Number	Item ID Description	Approximate Quantity and Units	Unit Price	Bid Amount
0094	505.0600 Bar Steel Reinforcement HS Coated Structures	238,000.000 LB	_____._____	_____._____
0096	505.0800.S Bar Steel Reinforcement HS Stainless Structures	2,990.000 LB	_____._____	_____._____
0098	505.0905 Bar Couplers No. 5	19.000 EACH	_____._____	_____._____
0100	506.2605 Bearing Pads Elastomeric Non-Laminated	52.000 EACH	_____._____	_____._____
0102	506.4000 Steel Diaphragms (structure) 01. B-5-696	48.000 EACH	_____._____	_____._____
0104	511.1200 Temporary Shoring (structure) 01. C-05-0800	1,682.000 SF	_____._____	_____._____
0106	513.4091 Railing Tubular Screening	516.000 LF	_____._____	_____._____
0108	516.0500 Rubberized Membrane Waterproofing	67.000 SY	_____._____	_____._____
0110	517.1010.S Concrete Staining (structure) 01. B-5-696	9,108.000 SF	_____._____	_____._____
0112	517.1015.S Concrete Staining Multi-Color (structure) 01. B-5-696	1,514.000 SF	_____._____	_____._____
0114	517.1050.S Architectural Surface Treatment (structure) 01. B-5-696	1,514.000 SF	_____._____	_____._____
0116	520.8000 Concrete Collars for Pipe	1.000 EACH	_____._____	_____._____
0118	522.1018 Apron Endwalls for Culvert Pipe Reinforced Concrete 18-Inch	15.000 EACH	_____._____	_____._____
0120	522.1021 Apron Endwalls for Culvert Pipe Reinforced Concrete 21-Inch	2.000 EACH	_____._____	_____._____

Proposal ID: 20250513020 **Project(s):** 1130-68-77

Federal ID(s): WISC 2025473

SECTION: 0001 Contract Items

Alt Set ID: **Alt Mbr ID:**

Proposal Line Number	Item ID Description	Approximate Quantity and Units	Unit Price	Bid Amount
0122	522.1024 Apron Endwalls for Culvert Pipe Reinforced Concrete 24-Inch	3.000 EACH	_____._____	_____._____
0124	531.1100 Concrete Masonry Ancillary Structures Type NS	36.400 CY	_____._____	_____._____
0126	531.1140 Steel Reinforcement HS Ancillary Structures Type NS	3,480.000 LB	_____._____	_____._____
0128	531.1160 Steel Reinforcement HS Coated Ancillary Structures Type NS	2,280.000 LB	_____._____	_____._____
0130	531.2024 Drilling Shaft 24-Inch	20.000 LF	_____._____	_____._____
0132	531.2036 Drilling Shaft 36-Inch	254.000 LF	_____._____	_____._____
0134	531.2042 Drilling Shaft 42-Inch	151.000 LF	_____._____	_____._____
0136	531.4050 Foundation Camera Pole 50-FT	1.000 EACH	_____._____	_____._____
0138	531.5130 Foundation Single-Shaft Type MC-III (structure) 01. S-05-0438	1.000 EACH	_____._____	_____._____
0140	531.5130 Foundation Single-Shaft Type MC-III (structure) 02. S-05-0446	1.000 EACH	_____._____	_____._____
0142	531.5140 Foundation Single-Shaft Type MC-IV (structure) 01. S-05-0441	1.000 EACH	_____._____	_____._____
0144	531.5420 Foundation Single-Shaft Type TF-II (structure) 01. S-05-0443	2.000 EACH	_____._____	_____._____
0146	531.6020 Foundation Two-Shaft Type FC-II (structure) 01. S-05-0432	1.000 EACH	_____._____	_____._____

Proposal ID: 20250513020 **Project(s):** 1130-68-77

Federal ID(s): WISC 2025473

SECTION: 0001 Contract Items

Alt Set ID: **Alt Mbr ID:**

Proposal Line Number	Item ID Description	Approximate Quantity and Units	Unit Price	Bid Amount
0148	531.6020 Foundation Two-Shaft Type FC-II (structure) 02. S-05-0442	1.000 EACH	_____._____	_____._____
0150	531.6110 Foundation Two-Shaft Type FF-I (structure) 01. S-05-0439	1.000 EACH	_____._____	_____._____
0152	531.6140 Foundation Two-Shaft Type FF-IV (structure) 01. S-05-0440	1.000 EACH	_____._____	_____._____
0154	531.8990 Anchor Assemblies Poles on Structures	2.000 EACH	_____._____	_____._____
0156	532.5130 Monotube Cantilever Type III (structure) 01. S-05-0438	1.000 EACH	_____._____	_____._____
0158	532.5130 Monotube Cantilever Type III (structure) 02. S-05-0446	1.000 EACH	_____._____	_____._____
0160	532.5140 Monotube Cantilever Type IV (structure) 01. S-05-0441	1.000 EACH	_____._____	_____._____
0162	532.5400 Truss Full Span 2-Chord Type NS (structure) 01. S-05-0423	1.000 EACH	_____._____	_____._____
0164	532.5420 Truss Full Span 2-Chord Type II (structure) 01. S-05-0443	1.000 EACH	_____._____	_____._____
0166	532.6000 Truss Cantilever 4-Chord Type NS (structure) 01. S-05-0431	1.000 EACH	_____._____	_____._____
0168	532.6000 Truss Cantilever 4-Chord Type NS (structure) 02. S-05-0433	1.000 EACH	_____._____	_____._____
0170	532.6020 Truss Cantilever 4-Chord Type II (structure) 01. S-05-0432	1.000 EACH	_____._____	_____._____
0172	532.6020 Truss Cantilever 4-Chord Type II (structure) 02. S-05-0442	1.000 EACH	_____._____	_____._____

Proposal ID: 20250513020 **Project(s):** 1130-68-77

Federal ID(s): WISC 2025473

SECTION: 0001 Contract Items

Alt Set ID: **Alt Mbr ID:**

Proposal Line Number	Item ID Description	Approximate Quantity and Units	Unit Price	Bid Amount
0174	532.6110 Truss Full Span 4-Chord Type I (structure) 01. S-05-0439	1.000 EACH	_____._____	_____._____
0176	532.6140 Truss Full Span 4-Chord Type IV (structure) 01. S-05-0440	1.000 EACH	_____._____	_____._____
0178	550.1120 Piling Steel HP 12-Inch X 53 Lb	5,120.000 LF	_____._____	_____._____
0180	601.0405 Concrete Curb & Gutter 18-Inch Type A	960.000 LF	_____._____	_____._____
0182	601.0409 Concrete Curb & Gutter 30-Inch Type A	9,586.000 LF	_____._____	_____._____
0184	601.0411 Concrete Curb & Gutter 30-Inch Type D	1,300.000 LF	_____._____	_____._____
0186	601.0557 Concrete Curb & Gutter 6-Inch Sloped 36-Inch Type D	384.000 LF	_____._____	_____._____
0190	601.0600 Concrete Curb Pedestrian	369.000 LF	_____._____	_____._____
0192	602.0405 Concrete Sidewalk 4-Inch	34,408.000 SF	_____._____	_____._____
0198	602.3210 Concrete Rumble Strips, Shoulder Divided Roadway	3,310.000 LF	_____._____	_____._____
0200	603.8000 Concrete Barrier Temporary Precast Delivered	10,935.000 LF	_____._____	_____._____
0202	603.8125 Concrete Barrier Temporary Precast Installed	12,235.000 LF	_____._____	_____._____
0204	603.8500 Anchoring Concrete Barrier Temporary Precast	500.000 LF	_____._____	_____._____
0206	604.0400 Slope Paving Concrete	594.000 SY	_____._____	_____._____

Proposal ID: 20250513020 **Project(s):** 1130-68-77

Federal ID(s): WISC 2025473

SECTION: 0001 Contract Items

Alt Set ID: **Alt Mbr ID:**

Proposal Line Number	Item ID Description	Approximate Quantity and Units	Unit Price	Bid Amount
0208	604.0600 Slope Paving Select Crushed Material	224.000 SY	_____._____	_____._____
0210	606.0200 Riprap Medium	106.700 CY	_____._____	_____._____
0212	606.0300 Riprap Heavy	14.000 CY	_____._____	_____._____
0214	608.0312 Storm Sewer Pipe Reinforced Concrete Class III 12-Inch	293.000 LF	_____._____	_____._____
0216	608.0315 Storm Sewer Pipe Reinforced Concrete Class III 15-Inch	37.000 LF	_____._____	_____._____
0218	608.0318 Storm Sewer Pipe Reinforced Concrete Class III 18-Inch	3,170.000 LF	_____._____	_____._____
0220	608.0321 Storm Sewer Pipe Reinforced Concrete Class III 21-Inch	185.000 LF	_____._____	_____._____
0222	608.0324 Storm Sewer Pipe Reinforced Concrete Class III 24-Inch	2,289.000 LF	_____._____	_____._____
0224	608.0330 Storm Sewer Pipe Reinforced Concrete Class III 30-Inch	12.000 LF	_____._____	_____._____
0226	608.0424 Storm Sewer Pipe Reinforced Concrete Class IV 24-Inch	508.000 LF	_____._____	_____._____
0228	608.3012 Storm Sewer Pipe Class III-A 12-Inch	25.000 LF	_____._____	_____._____
0230	611.0430 Reconstructing Inlets	2.000 EACH	_____._____	_____._____
0232	611.0530 Manhole Covers Type J	2.000 EACH	_____._____	_____._____
0234	611.0600 Inlet Covers Type A	86.000 EACH	_____._____	_____._____

Proposal ID: 20250513020 **Project(s):** 1130-68-77

Federal ID(s): WISC 2025473

SECTION: 0001 Contract Items

Alt Set ID: **Alt Mbr ID:**

Proposal Line Number	Item ID Description	Approximate Quantity and Units	Unit Price	Bid Amount
0236	611.0610 Inlet Covers Type BW	16.000 EACH	_____._____	_____._____
0238	611.0612 Inlet Covers Type C	4.000 EACH	_____._____	_____._____
0240	611.0642 Inlet Covers Type MS	1.000 EACH	_____._____	_____._____
0242	611.0652 Inlet Covers Type T	6.000 EACH	_____._____	_____._____
0244	611.1005 Catch Basins 5-FT Diameter	20.000 EACH	_____._____	_____._____
0246	611.2004 Manholes 4-FT Diameter	4.000 EACH	_____._____	_____._____
0248	611.2005 Manholes 5-FT Diameter	1.000 EACH	_____._____	_____._____
0250	611.2006 Manholes 6-FT Diameter	1.000 EACH	_____._____	_____._____
0252	611.3004 Inlets 4-FT Diameter	88.000 EACH	_____._____	_____._____
0254	611.3901 Inlets Median 1 Grate	1.000 EACH	_____._____	_____._____
0256	611.8120.S Cover Plates Temporary	2.000 EACH	_____._____	_____._____
0258	612.0406 Pipe Underdrain Wrapped 6-Inch	472.000 LF	_____._____	_____._____
0260	614.0220 Steel Thrie Beam Bullnose Terminal	2.000 EACH	_____._____	_____._____
0262	614.0230 Steel Thrie Beam	300.000 LF	_____._____	_____._____
0264	614.0905 Crash Cushions Temporary	3.000 EACH	_____._____	_____._____
0266	614.2300 MGS Guardrail 3	1,038.000 LF	_____._____	_____._____

Proposal ID: 20250513020 **Project(s):** 1130-68-77

Federal ID(s): WISC 2025473

SECTION: 0001 Contract Items

Alt Set ID: **Alt Mbr ID:**

Proposal Line Number	Item ID Description	Approximate Quantity and Units	Unit Price	Bid Amount
0268	614.2500 MGS Thrie Beam Transition	39.000 LF	_____._____	_____._____
0270	614.2610 MGS Guardrail Terminal EAT	5.000 EACH	_____._____	_____._____
0272	614.2620 MGS Guardrail Terminal Type 2	4.000 EACH	_____._____	_____._____
0274	616.0206 Fence Chain Link 6-FT	7,650.000 LF	_____._____	_____._____
0276	616.0700.S Fence Safety	1,000.000 LF	_____._____	_____._____
0278	618.0100 Maintenance and Repair of Haul Roads (project) 01. 1130-68-77	1.000 EACH	_____._____	_____._____
0280	619.1000 Mobilization	1.000 EACH	_____._____	_____._____
0284	620.0300 Concrete Median Sloped Nose	1,666.000 SF	_____._____	_____._____
0286	624.0100 Water	447.000 MGAL	_____._____	_____._____
0288	625.0500 Salvaged Topsoil	109,165.000 SY	_____._____	_____._____
0290	627.0200 Mulching	3,802.000 SY	_____._____	_____._____
0292	628.1504 Silt Fence	8,044.000 LF	_____._____	_____._____
0294	628.1520 Silt Fence Maintenance	8,044.000 LF	_____._____	_____._____
0296	628.1905 Mobilizations Erosion Control	9.000 EACH	_____._____	_____._____
0298	628.1910 Mobilizations Emergency Erosion Control	9.000 EACH	_____._____	_____._____
0300	628.2002 Erosion Mat Class I Type A	105,363.000 SY	_____._____	_____._____

Proposal ID: 20250513020 **Project(s):** 1130-68-77

Federal ID(s): WISC 2025473

SECTION: 0001 Contract Items

Alt Set ID: **Alt Mbr ID:**

Proposal Line Number	Item ID Description	Approximate Quantity and Units	Unit Price	Bid Amount
0302	628.7005 Inlet Protection Type A	3.000 EACH	_____._____	_____._____
0304	628.7010 Inlet Protection Type B	16.000 EACH	_____._____	_____._____
0306	628.7015 Inlet Protection Type C	83.000 EACH	_____._____	_____._____
0308	628.7020 Inlet Protection Type D	10.000 EACH	_____._____	_____._____
0310	628.7504 Temporary Ditch Checks	400.000 LF	_____._____	_____._____
0312	628.7555 Culvert Pipe Checks	27.000 EACH	_____._____	_____._____
0314	628.7560 Tracking Pads	8.000 EACH	_____._____	_____._____
0316	628.7570 Rock Bags	90.000 EACH	_____._____	_____._____
0318	629.0210 Fertilizer Type B	69.500 CWT	_____._____	_____._____
0320	630.0120 Seeding Mixture No. 20	103.000 LB	_____._____	_____._____
0322	630.0130 Seeding Mixture No. 30	4,742.000 LB	_____._____	_____._____
0324	630.0200 Seeding Temporary	1,748.000 LB	_____._____	_____._____
0326	630.0500 Seed Water	2,371.000 MGAL	_____._____	_____._____
0328	632.0101 Trees (species, root, size) 01. Cole's Select Serviceberry, B&B, 5-FT	9.000 EACH	_____._____	_____._____
0330	632.0201 Shrubs (species, root, size) 01. Hydrangea Limelight, Shrubs Cont, 3-FT	27.000 EACH	_____._____	_____._____

Proposal ID: 20250513020 **Project(s):** 1130-68-77

Federal ID(s): WISC 2025473

SECTION: 0001 Contract Items

Alt Set ID: **Alt Mbr ID:**

Proposal Line Number	Item ID Description	Approximate Quantity and Units	Unit Price	Bid Amount
0332	632.0201 Shrubs (species, root, size) 02. Weigela Florida Verweig, Cont, 1-FT	63.000 EACH	_____._____	_____._____
0334	632.9101 Landscape Planting Surveillance and Care Cycles	72.000 EACH	_____._____	_____._____
0336	633.5200 Markers Culvert End	20.000 EACH	_____._____	_____._____
0338	634.0614 Posts Wood 4x6-Inch X 14-FT	78.000 EACH	_____._____	_____._____
0340	634.0616 Posts Wood 4x6-Inch X 16-FT	2.000 EACH	_____._____	_____._____
0342	634.0808 Posts Tubular Steel 2x2-Inch X 8-FT	4.000 EACH	_____._____	_____._____
0344	634.0814 Posts Tubular Steel 2x2-Inch X 14-FT	8.000 EACH	_____._____	_____._____
0346	635.0200 Sign Supports Structural Steel HS	1,338.000 LB	_____._____	_____._____
0348	637.1220 Signs Type I Reflective SH	2,744.830 SF	_____._____	_____._____
0350	637.2210 Signs Type II Reflective H	1,095.640 SF	_____._____	_____._____
0352	637.2230 Signs Type II Reflective F	88.750 SF	_____._____	_____._____
0354	642.5401 Field Office Type D	1.000 EACH	_____._____	_____._____
0356	643.0300 Traffic Control Drums	29,907.000 DAY	_____._____	_____._____
0358	643.0420 Traffic Control Barricades Type III	11,300.000 DAY	_____._____	_____._____
0360	643.0500 Traffic Control Flexible Tubular Marker Posts	16.000 EACH	_____._____	_____._____

Proposal ID: 20250513020 **Project(s):** 1130-68-77

Federal ID(s): WISC 2025473

SECTION: 0001 Contract Items

Alt Set ID: **Alt Mbr ID:**

Proposal Line Number	Item ID Description	Approximate Quantity and Units	Unit Price	Bid Amount
0362	643.0600 Traffic Control Flexible Tubular Marker Bases	16.000 EACH	_____._____	_____._____
0364	643.0705 Traffic Control Warning Lights Type A	20,950.000 DAY	_____._____	_____._____
0366	643.0715 Traffic Control Warning Lights Type C	6,811.000 DAY	_____._____	_____._____
0368	643.0800 Traffic Control Arrow Boards	84.000 DAY	_____._____	_____._____
0370	643.0810.S Connected Arrow Board	248.000 DAY	_____._____	_____._____
0372	643.0900 Traffic Control Signs	10,139.000 DAY	_____._____	_____._____
0374	643.0910 Traffic Control Covering Signs Type I	5.000 EACH	_____._____	_____._____
0376	643.0920 Traffic Control Covering Signs Type II	29.000 EACH	_____._____	_____._____
0378	643.1050 Traffic Control Signs PCMS	86.000 DAY	_____._____	_____._____
0380	643.1220.S Connected Work Zone Start and End Location Markers	324.000 DAY	_____._____	_____._____
0382	643.3165 Temporary Marking Line Paint 6-Inch	23,005.000 LF	_____._____	_____._____
0384	643.3180 Temporary Marking Line Removable Tape 6-Inch	2,408.000 LF	_____._____	_____._____
0386	643.5000 Traffic Control	1.000 EACH	_____._____	_____._____
0388	644.1810 Temporary Pedestrian Barricade	90.000 LF	_____._____	_____._____
0390	645.0105 Geotextile Type C	392.000 SY	_____._____	_____._____

Proposal ID: 20250513020 **Project(s):** 1130-68-77

Federal ID(s): WISC 2025473

SECTION: 0001 Contract Items

Alt Set ID: **Alt Mbr ID:**

Proposal Line Number	Item ID Description	Approximate Quantity and Units	Unit Price	Bid Amount
0392	645.0111 Geotextile Type DF Schedule A	168.000 SY	_____._____	_____._____
0394	645.0120 Geotextile Type HR	375.200 SY	_____._____	_____._____
0396	646.2020 Marking Line Epoxy 6-Inch	24,592.000 LF	_____._____	_____._____
0398	646.4020 Marking Line Epoxy 10-Inch	6,342.000 LF	_____._____	_____._____
0400	646.5020 Marking Arrow Epoxy	65.000 EACH	_____._____	_____._____
0402	646.5120 Marking Word Epoxy	4.000 EACH	_____._____	_____._____
0404	646.6320 Marking Dotted Extension Epoxy 18-Inch	279.000 LF	_____._____	_____._____
0406	646.7120 Marking Diagonal Epoxy 12-Inch	319.000 LF	_____._____	_____._____
0408	646.7220 Marking Chevron Epoxy 24-Inch	182.000 LF	_____._____	_____._____
0410	646.7320 Marking Chevron Epoxy 12-Inch	223.000 LF	_____._____	_____._____
0412	646.7420 Marking Crosswalk Epoxy Transverse Line 6-Inch	910.000 LF	_____._____	_____._____
0414	646.8120 Marking Curb Epoxy	168.000 LF	_____._____	_____._____
0416	646.8220 Marking Island Nose Epoxy	8.000 EACH	_____._____	_____._____
0418	646.9000 Marking Removal Line 4-Inch	5,406.000 LF	_____._____	_____._____
0420	646.9002 Marking Removal Line 6-Inch	5,406.000 LF	_____._____	_____._____

Proposal ID: 20250513020 **Project(s):** 1130-68-77

Federal ID(s): WISC 2025473

SECTION: 0001 Contract Items

Alt Set ID: **Alt Mbr ID:**

Proposal Line Number	Item ID Description	Approximate Quantity and Units	Unit Price	Bid Amount
0422	646.9310 Marking Removal Special Marking Water Blasting	2.000 EACH	_____._____	_____._____
0424	652.0125 Conduit Rigid Metallic 2-Inch	24.000 LF	_____._____	_____._____
0426	652.0225 Conduit Rigid Nonmetallic Schedule 40 2-Inch	8,273.000 LF	_____._____	_____._____
0428	652.0235 Conduit Rigid Nonmetallic Schedule 40 3-Inch	2,441.000 LF	_____._____	_____._____
0430	652.0335 Conduit Rigid Nonmetallic Schedule 80 3-Inch	1,672.000 LF	_____._____	_____._____
0432	652.0615 Conduit Special 3-Inch	221.000 LF	_____._____	_____._____
0434	652.0700.S Install Conduit into Existing Item	4.000 EACH	_____._____	_____._____
0436	653.0154 Pull Boxes Non-Conductive 24x36-Inch	4.000 EACH	_____._____	_____._____
0438	653.0164 Pull Boxes Non-Conductive 24x42-Inch	42.000 EACH	_____._____	_____._____
0440	653.0222 Junction Boxes 18x12x6-Inch	2.000 EACH	_____._____	_____._____
0442	653.0905 Removing Pull Boxes	1.000 EACH	_____._____	_____._____
0444	654.0105 Concrete Bases Type 5	57.000 EACH	_____._____	_____._____
0446	654.0107 Concrete Bases Type 7	4.000 EACH	_____._____	_____._____
0448	654.0230 Concrete Control Cabinet Bases Type L30	2.000 EACH	_____._____	_____._____
0450	655.0610 Electrical Wire Lighting 12 AWG	16,683.000 LF	_____._____	_____._____

Proposal ID: 20250513020 **Project(s):** 1130-68-77

Federal ID(s): WISC 2025473

SECTION: 0001 Contract Items

Alt Set ID: **Alt Mbr ID:**

Proposal Line Number	Item ID Description	Approximate Quantity and Units	Unit Price	Bid Amount
0452	655.0620 Electrical Wire Lighting 8 AWG	19,880.000 LF	_____._____	_____._____
0454	655.0625 Electrical Wire Lighting 6 AWG	40,532.000 LF	_____._____	_____._____
0456	656.0201 Electrical Service Meter Breaker Pedestal (location) 01. CB2400	1.000 EACH	_____._____	_____._____
0458	656.0201 Electrical Service Meter Breaker Pedestal (location) 02. CB100	1.000 EACH	_____._____	_____._____
0460	656.0501 Electrical Service Breaker Disconnect Box (location) 01. CB12-1	1.000 EACH	_____._____	_____._____
0462	657.0255 Transformer Bases Breakaway 11 1/2-Inch Bolt Circle	57.000 EACH	_____._____	_____._____
0464	657.0322 Poles Type 5-Aluminum	55.000 EACH	_____._____	_____._____
0466	657.0709 Luminaire Arms Truss Type 4-Inch Clamp 12-FT	2.000 EACH	_____._____	_____._____
0468	657.0710 Luminaire Arms Truss Type 4 1/2-Inch Clamp 12-FT	58.000 EACH	_____._____	_____._____
0470	659.1120 Luminaires Utility LED B	60.000 EACH	_____._____	_____._____
0472	659.2130 Lighting Control Cabinets 120/240 30-Inch	2.000 EACH	_____._____	_____._____
0474	662.1026.S Ramp Closure Gates 26-FT	2.000 EACH	_____._____	_____._____
0476	662.1037.S Ramp Closure Gates 37-FT	1.000 EACH	_____._____	_____._____
0478	662.1040.S Ramp Closure Gates 40-FT	1.000 EACH	_____._____	_____._____

Proposal ID: 20250513020 **Project(s):** 1130-68-77

Federal ID(s): WISC 2025473

SECTION: 0001 Contract Items

Alt Set ID: **Alt Mbr ID:**

Proposal Line Number	Item ID Description	Approximate Quantity and Units	Unit Price	Bid Amount
0480	670.0101 Field System Integrator	1.000 EACH	_____._____	_____._____
0482	670.0201 ITS Documentation	1.000 EACH	_____._____	_____._____
0484	671.0132 Conduit HDPE 3-Duct 2-Inch	4,829.000 LF	_____._____	_____._____
0486	671.0232 Conduit HDPE Directional Bore 3-Duct 2-Inch	461.000 LF	_____._____	_____._____
0488	671.0300 Fiber Optic Cable Marker	16.000 EACH	_____._____	_____._____
0490	673.0105 Communication Vault Type 1	5.000 EACH	_____._____	_____._____
0492	673.0200 Tracer Wire Marker Posts	10.000 EACH	_____._____	_____._____
0494	673.1225.S Install Pole Mounted Cabinet	3.000 EACH	_____._____	_____._____
0496	674.0200 Cable Microwave Detector	2,943.000 LF	_____._____	_____._____
0498	674.0300 Remove Cable	4,342.000 LF	_____._____	_____._____
0500	675.0300 Install Mounted Controller Microwave Detector Assembly	2.000 EACH	_____._____	_____._____
0502	677.0150 Install Camera Pole 50-FT	1.000 EACH	_____._____	_____._____
0504	677.0200 Install Camera Assembly	1.000 EACH	_____._____	_____._____
0506	678.0012 Install Fiber Optic Cable Outdoor Plant 12-CT	1,844.000 LF	_____._____	_____._____
0508	678.0072 Install Fiber Optic Cable Outdoor Plant 72-CT	4,716.000 LF	_____._____	_____._____

Proposal ID: 20250513020 **Project(s):** 1130-68-77

Federal ID(s): WISC 2025473

SECTION: 0001 Contract Items

Alt Set ID: **Alt Mbr ID:**

Proposal Line Number	Item ID Description	Approximate Quantity and Units	Unit Price	Bid Amount
0510	678.0200 Fiber Optic Splice Enclosure	3.000 EACH	_____._____	_____._____
0512	678.0300 Fiber Optic Splice	148.000 EACH	_____._____	_____._____
0514	678.0400 Fiber Optic Termination	4.000 EACH	_____._____	_____._____
0516	678.0501 Communication System Testing	1.000 EACH	_____._____	_____._____
0518	678.0600 Install Ethernet Switches	1.000 EACH	_____._____	_____._____
0520	690.0150 Sawing Asphalt	5,073.000 LF	_____._____	_____._____
0522	690.0250 Sawing Concrete	5,889.000 LF	_____._____	_____._____
0524	715.0502 Incentive Strength Concrete Structures	6,180.000 DOL	1.00000	6,180.00
0526	715.0603 Incentive Strength Concrete Barrier	1,874.000 DOL	1.00000	1,874.00
0528	715.0715 Incentive Flexural Strength Concrete Pavement	5,410.000 DOL	1.00000	5,410.00
0530	715.0720 Incentive Compressive Strength Concrete Pavement	18,050.000 DOL	1.00000	18,050.00
0532	740.0440 Incentive IRI Ride	7,150.000 DOL	1.00000	7,150.00
0534	ASP.1T0A On-the-Job Training Apprentice at $5.00/HR	2,100.000 HRS	5.00000	10,500.00
0536	ASP.1T0G On-the-Job Training Graduate at $5.00/HR	5,760.000 HRS	5.00000	28,800.00
0538	SPV.0035 Special 01. HPC Masonry Structures	994.000 CY	_____._____	_____._____

Proposal ID: 20250513020 **Project(s):** 1130-68-77

Federal ID(s): WISC 2025473

SECTION: 0001 Contract Items

Alt Set ID: **Alt Mbr ID:**

Proposal Line Number	Item ID Description	Approximate Quantity and Units	Unit Price	Bid Amount
0540	SPV.0035 Special 02. Planting Mixture	370.000 CY	_____._____	_____._____
0542	SPV.0060 Special 01. Anchor Bolt Cover Shroud	4.000 EACH	_____._____	_____._____
0544	SPV.0060 Special 02. Temporary Street Lighting System	1.000 EACH	_____._____	_____._____
0546	SPV.0060 Special 03. Install Ethernet Extender	4.000 EACH	_____._____	_____._____
0548	SPV.0060 Special 04. Baseline CPM Progress Schedule	1.000 EACH	_____._____	_____._____
0550	SPV.0060 Special 05. CPM Progress Schedule and Accepted Revisions	12.000 EACH	_____._____	_____._____
0552	SPV.0060 Special 06. Construction Staking Survey Project 1130-68-77	1.000 EACH	_____._____	_____._____
0554	SPV.0060 Special 07. Decorative Silhouette	2.000 EACH	_____._____	_____._____
0556	SPV.0060 Special 08. Adjusting Sanitary Manhole Covers	4.000 EACH	_____._____	_____._____
0558	SPV.0060 Special 09. Adjusting Water Valve Boxes	6.000 EACH	_____._____	_____._____
0560	SPV.0060 Special 10. Maintain and Remove Crash Cushions Temporary Left In Place	2.000 EACH	_____._____	_____._____
0562	SPV.0060 Special 11. Emergency Response to Traffic Involving Crash Cushion Temporary	12.000 EACH	_____._____	_____._____
0564	SPV.0060 Special 12. Emergency Response to Traffic Involving Concrete Barrier Temporary	24.000 EACH	_____._____	_____._____

Proposal ID: 20250513020 **Project(s):** 1130-68-77

Federal ID(s): WISC 2025473

SECTION: 0001 Contract Items

Alt Set ID: **Alt Mbr ID:**

Proposal Line Number	Item ID Description	Approximate Quantity and Units	Unit Price	Bid Amount
0566	SPV.0075 Special 01. Street Sweeping	152.000 HRS	_____._____	_____._____
0568	SPV.0090 Special 01. Concrete Curb and Gutter 36-Inch Special	3,441.000 LF	_____._____	_____._____
0570	SPV.0090 Special 02. Removal and Salvage of High Tension Cableguard and Posts	2,642.000 LF	_____._____	_____._____
0572	SPV.0090 Special 03. Maintain and Remove Concrete Barrier Temporary Precast Left in Place	2,063.000 LF	_____._____	_____._____
0574	SPV.0090 Special 04. Concrete Barrier Type S42 Special	3,748.000 LF	_____._____	_____._____
0576	SPV.0165 Special 01. Longitudinal Grooving Bridge Deck	15,515.000 SF	_____._____	_____._____
0578	SPV.0180 Special 01. Double Shredded Hardwood Mulch	555.000 SY	_____._____	_____._____
0580	SPV.0180 Special 02. Concrete Pavement 10 1/2-Inch Special	11,506.000 SY	_____._____	_____._____
0582	SPV.0180 Special 03. Concrete Stamping	1,392.000 SY	_____._____	_____._____
0584	204.0170 Removing Fence	4,070.000 LF	_____._____	_____._____
0586	204.0180 Removing Delineators and Markers	19.000 EACH	_____._____	_____._____
0588	601.0551 Concrete Curb & Gutter 4-Inch Sloped 36-Inch Type A	525.000 LF	_____._____	_____._____
0590	601.0581 Concrete Curb & Gutter 4-Inch Sloped 30-Inch Type R	1,059.000 LF	_____._____	_____._____

Proposal ID: 20250513020 **Project(s):** 1130-68-77

Federal ID(s): WISC 2025473

SECTION: 0001 Contract Items

Alt Set ID: **Alt Mbr ID:**

Proposal Line Number	Item ID Description	Approximate Quantity and Units	Unit Price	Bid Amount
0592	602.0515 Curb Ramp Detectable Warning Field Natural Patina	520.000 SF	_____._____	_____._____
0594	602.0615 Curb Ramp Detectable Warning Field Radial Natural Patina	101.000 SF	_____._____	_____._____
0596	633.0100 Delineator Posts Steel	18.000 EACH	_____._____	_____._____
0598	633.0500 Delineator Reflectors	18.000 EACH	_____._____	_____._____
0600	633.1000 Delineators Barrier Wall	12.000 EACH	_____._____	_____._____
0602	638.2601 Removing Signs Type I	2.000 EACH	_____._____	_____._____

Section: 0001 **Total:** _____._____

Total Bid: _____._____