MAD

PROJECT ID: 3996-00-35

WITH: N/A

COUNTY: DANE

04

APRIL 2025

ORDER OF SHEETS

TOTAL SHEETS = 132

N

STATE OF WISCONSIN
DEPARTMENT OF TRANSPORTATION

PLAN OF PROPOSED IMPROVEMENT

CITY OF SUN PRAIRIE, N BIRD STREET

STH 19 TO USH 151

LOC STR

DANE COUNTY

STATE PROJECT	FEDERAL PROJECT	
	PROJECT	CONTRACT
3996-00-35	WISC 2025411	1

STATE PROJECT NUMBER

3996-00-35

DESIGN DESIGNATION

A.A.D.T.	2025	=	9,800
A.A.D.T.	2045	=	10,600
D.H.V.		=	1,243
D.D.		=	59/41
T.		=	1.7%
DESIGN SPEED		=	30 MPH
ESALS		=	270,000

CONVENTIONAL SYMBOLS

PLAN

CORPORATE LIMITS

PROPERTY LINE

LOT LINE

LIMITED HIGHWAY EASEMENT

EXISTING RIGHT OF WAY

PROPOSED OR NEW R/W LINE

SLOPE INTERCEPT

REFERENCE LINE

EXISTING CULVERT

PROPOSED CULVERT (Box or Pipe)

COMBUSTIBLE FLUIDS — CAUTION

MARSH AREA

WOODED OR SHRUB AREA

PROFILE

GRADE LINE

ORIGINAL GROUND

MARSH OR ROCK PROFILE (To be noted as such) — ROCK

SPECIAL DITCH — LABEL

GRADE ELEVATION — 95.36

CULVERT (Profile View)

UTILITIES

ELECTRIC — E

FIBER OPTIC — FO

GAS — G

SANITARY SEWER — SAN

STORM SEWER — SS

TELEPHONE — T

WATER — W

UTILITY PEDESTAL

POWER POLE

TELEPHONE POLE

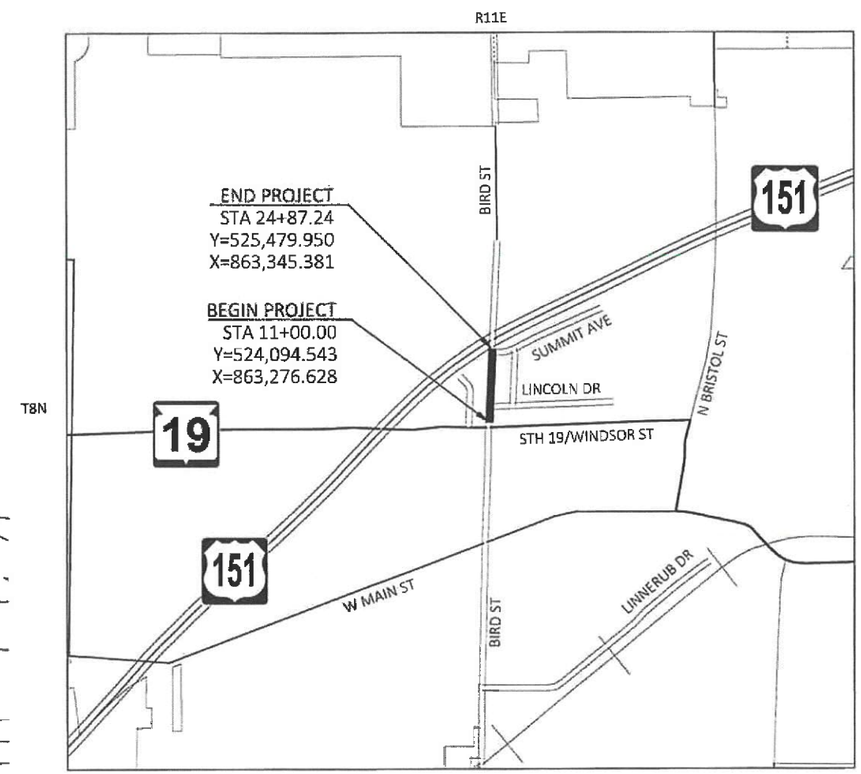

LAYOUT

SCALE 0 — 0.5 MILES

TOTAL NET LENGTH OF CENTERLINE = 0.263 MI

HORIZONTAL POSITIONS SHOWN ON THIS PLAN ARE WISCONSIN COORDINATE REFERENCE SYSTEM (WISCRS), DANE COUNTY, NAD83 (2011), IN U.S. SURVEY FEET. POSITIONS SHOWN ARE GRID COORDINATES, GRID BEARINGS, AND GRID DISTANCES. GRID DISTANCES ARE THE SAME AS GROUND DISTANCES.

ELEVATIONS ARE REFERENCED TO NAVD 88 (2012). GPS DERIVED ELEVATIONS ARE BASED ON GEOID 18.

ACCEPTED FOR

CITY OF SUN PRAIRIE

Date 10/17/24

TOM VEITH, P.E., CITY ENGINEER

ORIGINAL PLANS PREPARED BY

MSA

1702 Pankratz St Madison, WI 53704

608-242-7779 1-800-446-0679 Fax: 608-242-5664

WISCONSIN NATHAN R. COOK 47131-6 MADISON, WI PROFESSIONAL ENGINEER

DATE: 10/17/24 (Professional Engineer Signature)

STATE OF WISCONSIN
DEPARTMENT OF TRANSPORTATION

PREPARED BY

Surveyor	CITY OF SUN PRAIRIE
Designer	MSA PROFESSIONAL SERVICES, INC
Project Manager	DELLA KOENIG, P.E.
Regional Examiner	SW REGION
Regional Supervisor	KYLE HEMP, P.E.

APPROVED FOR THE DEPARTMENT

DATE 10/22/2024 Della Koenig P.E. (Signature)

Digitally signed by Della Koenig P.E.
Date: 2024.10.22 09:36:59-05'00'

E

FILE NAME : G:\00\000036\00036327\CADD\C3D\39960034\SHEETS\010101-TI.DWG PLOT DATE : 8/19/2024 1:10 PM PLOT BY : MEGAN BRINKER PLOT NAME :

UTILITY CONTACTS:

ADAM KROHN – ALLIANT ENERGY
ELEC
CELL: (920) 290-5284
EMAIL: ADAMKROHN@ALLIANTENERGY.COM

BOB WEISHEIM – ATC
TRANSMISSION
PHONE: (262) 722-0289
EMAIL: BWEISHEIM@ATCLLC.COM

TODD ANDERSON - SUN PRAIRIE WASTEWATER
SANITARY
PHONE: (608) 235-6802
EMAIL: TANDERSON@CITYOFSUNPRAIRIE.COM

CHRISTOPHER POLLACK – FRONTIER
COMMUNICATION
PHONE: (715) 847-1240
EMAIL: CHRISTOPHER.POLLACK@FTR.COM

BRAD WAGNER – SPECTRUM
COMMUNICATION
PHONE: (608) 640-9407
EMAIL: BRAD.WAGNER@CHARTER.COM

ANDREW HIRVELA – SUN PRAIRIE UTILITIES (SPU)
ELECTRIC
PHONE: (608) 445-7035
EMAIL: AHIRVELA@MYSPU.ORG

ANDREW HIRVELA – SUN PRAIRIE UTILITIES (SPU)
WATER
PHONE: (608) 445-7035
EMAIL: AHIRVELA@MYSPU.ORG

MICHAEL SCHNEIDER – TDS
COMMUNICATION
PHONE: (608) 828-9451
EMAIL: MICHAEL.SCHNEIDER@TDSTELECOM.COM

SCOTT HOLSTEIN – WE ENERGIES
GAS
PHONE: (262) 763-1084
EMAIL: SCOTT.HOLSTEIN@WE-ENERGIES.COM

DIGGERS HOTLINE
Dial 811 or (800)242-8511
www.DiggersHotline.com

NOTE: NOT ALL UTILITIES ARE PART OF DIGGERS HOTLINE.

DESIGN CONTACTS:

MSA PROFESSIONAL SERVICES, INC.
ATTN: NATHAN COOK, PE
1702 PANKRATZ STREET
MADISON, WI 53704
PHONE: (608) 216-2058
EMAIL: NCOOK@MSA-PS.COM

WISCONSIN DEPARTMENT OF TRANSPORTATION
ATTN: DELLA KOENIG, PE
2101 WRIGHT STREET
MADISON, WI 53704
PHONE: (608) 246-7963
EMAIL: DELLA.KOENIG@DOT.WI.GOV

DNR LIAISON:

WISCONSIN DEPARTMENT OF NATURAL RESOURCES
ATTN: ERIC HEGGELUND
DNR SOUTH CENTRAL REGION HQ
3911 FISH HATCHERY ROAD
FITCHBURG, WI 53711
PHONE: (608) 2228-7927
EMAIL: ERIC.HEGGELUND@WISCONSIN.GOV

CITY OF SUN PRAIRIE CONTACT:

CITY OF SUN PRAIRIE
ATTN: TOM VEITH, PE
300 E MAIN STREET
SUN PRAIRIE, WI 53590
PHONE: (608) 825-1170
EMAIL: TVEITH@CITYOFSUNPRAIRIE.COM

ORDER OF SECTION 2 SHEETS:

GENERAL NOTES
PROJECT OVERVIEW
TYPICAL SECTIONS
CONSTRUCTION DETAILS
INTERSECTION DETAILS
PLAN DETAILS
CURB RAMP DETAILS
EROSION CONTROL
STORM SEWER
PERMANENT SIGNING & MARKING
TRAFFIC CONTROL
DETOUR ROUTE
ALIGNMENT DETAILS

STANDARD ABBREVIATIONS

AC	ACRES
AEW	APRON ENDWALL
AGG	AGGREGATE
AH	AHEAD
ALUM.	ALUMINUM
A.P.	ACCESS POINT
ASPH	ASPHALT
AVE	AVENUE
BAD	BASE AGGREGATE DENSE
BK	BACK
BLK	BLOCK
BOC	BACK OF CURB
BOW	BACK OF SIDEWALK
BM	BENCHMARK
CABC	CRUSHED AGGREGATE BASE COURSE
CL or ℄	CENTERLINE
Δ	CENTRAL ANGLE or DELTA
CMCP	CORRUGATED METAL CULVERT PIPE
CONC	CONCRETE
CP	CONTROL POINT
CPCS	CULVERT PIPE CORRUGATED STEEL
CSM	CERTIFIED SURVEY MAP
CTH	COUNTY TRUNK HIGHWAY
D	DEGREE OF CURVATURE
DES	DESIRABLE
E	EAST
EB	EASTBOUND
EBS	EXCAVATION BELOW SUBGRADE
EOP	EDGE OF PAVEMENT
ET AL	AND OTHERS
EW	ENDWALL
EXIST	EXISTING
FT	FOOT
FT2	SQUARE FEET
GN	GRID NORTH
GV	GAS VALVE
HERCP	HORIZONTAL ELLIPTICAL REINFORCED CONCRETE PIPE
HYD	HYDRANT
IN	INCH
INL	INLET
INV	INVERT
IP	IRON PIPE
L	LENGTH
L	LENGTH OF CURVE
LC	LONG CHORD
LCP	LONG CHORD BEARING
LF	LINEAR FEET
LT	LEFT
MH	MANHOLE
MON	MONUMENT
N	NORTH
NB	NORTHBOUND
N.C.	NORMAL CROWN
NO	NUMBER
PB	PULLBOX
PC	POINT OF CURVATURE
PI	POINT OF INTERSECTION
PL	PROPERTY LINE
PLE	PERMANENT LIMITED EASEMENT
POB	POINT OF BEGINNING
PT	POINT OF TANGENCY
R	RADIUS
R	RANGE
RCP	REINFORCED CONCRETE PIPE
RD	ROAD
REQ'D	REQUIRED
RL or R/L	REFERENCE LINE
RP	RADIUS POINT
RT	RIGHT
R/W	RIGHT OF WAY
S	SOUTH
SAN	SANITARY SEWER
SB	SOUTHBOUND
S.E.	SUPERELEVATION
SEC	SECTION
SSPRC	STORM SEWER PIPE REINFORCED CONCRETE
SSPRCHE	STORM SEWER PIPE REINFORCED CONCRETE HORIZONTAL ELLIPTICAL
SQ	SQUARE
ST	STREET
STA	STATION
STD	STANDARD
STH	STATE TRUNK HIGHWAY
STM	STORM SEWER
STR	STRUCTURE
T	TANGENT
TAN	TANGENT
TEMP	TEMPORARY
TLE	TEMPORARY LIMITED EASEMENT
T or TN	TOWN
TYP.	TYPICAL
WM	WATERMIN
WV	WATER VALVE
W	WEST
WB	WESTBOUND
X	EAST GRID COORDINATE
Y	NORTH GRID COORDINATE

GENERAL NOTES:

THE LOCATIONS OF EXISTING AND PROPOSED UTILITY INSTALLATIONS AS SHOWN ON THE PLANS ARE APPROXIMATE. THERE MAY BE OTHER UTILITY INSTALLATIONS WITHIN THE PROJECT AREA THAT ARE NOT SHOWN.

THE LOCATIONS OF EROSION CONTROL ITEMS SHALL BE DETERMINED BY THE ENGINEER IN THE FIELD. ALL EROSION CONTROL MEASURES SHALL BE MAINTAINED UNTIL SUCH TIME AS THE ENGINEER DETERMINES THE MEASURE IS NO LONGER NECESSARY.

NO TREES OR SHRUBS ARE TO BE REMOVED WITHOUT APPROVAL OF THE ENGINEER.

ALL DISTURBED AREAS WITHIN THE RIGHT OF WAY SHALL BE TOPSOILED, FERTILIZED, AND SEEDED AS DIRECTED BY THE ENGINEER.

EROSION CONTROL MEASURES SHALL BE IN PLACE PRIOR TO ANY GRUBBING OR TOPSOIL STRIPPING OPERATIONS.

A VERTICAL SAWCUT SHALL BE MADE THROUGH EXISTING PAVEMENTS AT REMOVAL LIMITS.

THE LIMITS OF PAVEMENT REMOVAL ON SIDE STREETS ARE APPROXIMATE AND WILL BE VERIFIED IN THE FIELD BY THE ENGINEER.

CURB & GUTTER RADII AND ELEVATIONS ARE MEASURED FROM FACE OF CURB AND CURB FLANGE, RESPECTIVELY.

ADJUST TRAFFIC CONTROL DEVICES TO FIT FIELD CONDITIONS AS DIRECTED BY THE ENGINEER.

THE EXACT NUMBER, LOCATION, AND SPACING OF ALL SIGNS ARE APPROXIMATE AND MAY BE ADJUSTED TO FIT FIELD CONDITIONS.

EXCAVATION BELOW SUBGRADE (EBS) IS NOT USED TO BALANCE YARDAGE AND IS NOT SHOWN ON THE CROSS-SECTIONS BUT IS MEASURED AND PAID FOR AS COMMON EXCAVATION.

CONTRACTOR PAVING OPERATIONS SHALL BE CONSISTENT WITH THE PLAN TYPICAL SECTIONS, AND CONSTRUCTED TO PREVENT HMA LONGITUDINAL JOINTS FROM BEING LOCATED WITHIN A DRIVING LANE OR BIKE LANE.

HMA PAVEMENT WEIGHT CALCULATIONS ARE BASED ON 112 LB/SY/IN.

APPLY TACK COAT AT A MINIMUM RATE OF 0.05 GAL/SY BETWEEN LAYERS OF HMA AND TO VERTICAL FACES.

RUNOFF COEFFICIENT TABLE

	HYDROLOGIC SOIL GROUP											
	A			B			C			D		
	SLOPE RANGE (PERCENT)			SLOPE RANGE (PERCENT)			SLOPE RANGE (PERCENT)			SLOPE RANGE (PERCENT)		
LAND USE:	0-2	2-6	6 & OVER	0-2	2-6	6 & OVER	0-2	2-6	6 & OVER	0-2	2-6	6 & OVER
ROW CROPS	.08 .22	.16 .30	.22 .38	.12 .26	.20 .34	.27 .44	.15 .30	.24 .37	.33 .50	.19 .34	.28 .41	.38 .56
MEDIAN STRIP-TURF	.19 .24	.20 .26	.24 .30	.19 .25	.22 .28	.26 .33	.20 .26	.23 .30	.30 .37	.20 .27	.25 .32	.30 .40
SIDE SLOPE-TURF			.25 .32			.27 .34			.28 .36			.30 .38
PAVEMENT:												
ASPHALT	.70 - .95											
CONCRETE	.80 - .95											
BRICK	.70 - .80											
DRIVES, WALKS	.75 - .85											
ROOFS	.75 - .95											
GRAVEL ROADS, SHOULDERS	.40 - .60											

TOTAL PROJECT AREA = 2.6 ACRES
TOTAL AREA EXPECTED TO BE DISTURBED BY CONSTRUCTION ACTIVITIES = 0.5 ACRES

2

N

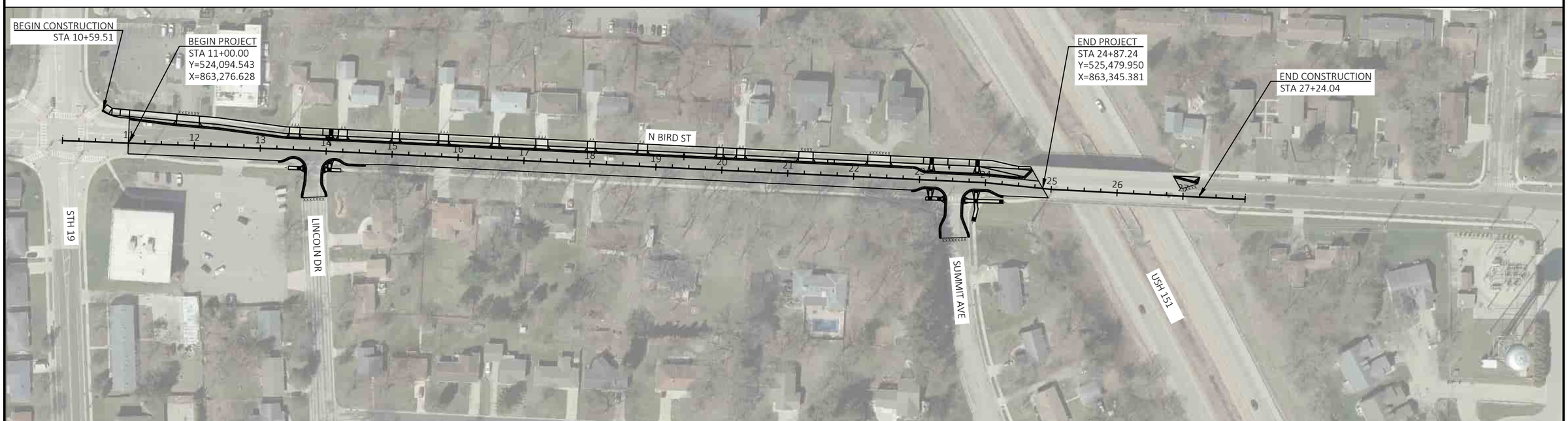

PROJECT NO: 3996-00-35	HWY: N BIRD ST	COUNTY: DANE	PROJECT OVERVIEW	SHEET 3	E

FILE NAME : G:\00\00036\00036327\CADD\C3D\39960034\SHEETS\020201-PO.DWG
LAYOUT NAME - 020201-po

PLOT DATE : 10/9/2024 8:20 AM PLOT BY : NATHAN COOK PLOT NAME : PLOT SCALE : 1 IN:150 FT

WISDOT/CADDS SHEET 42

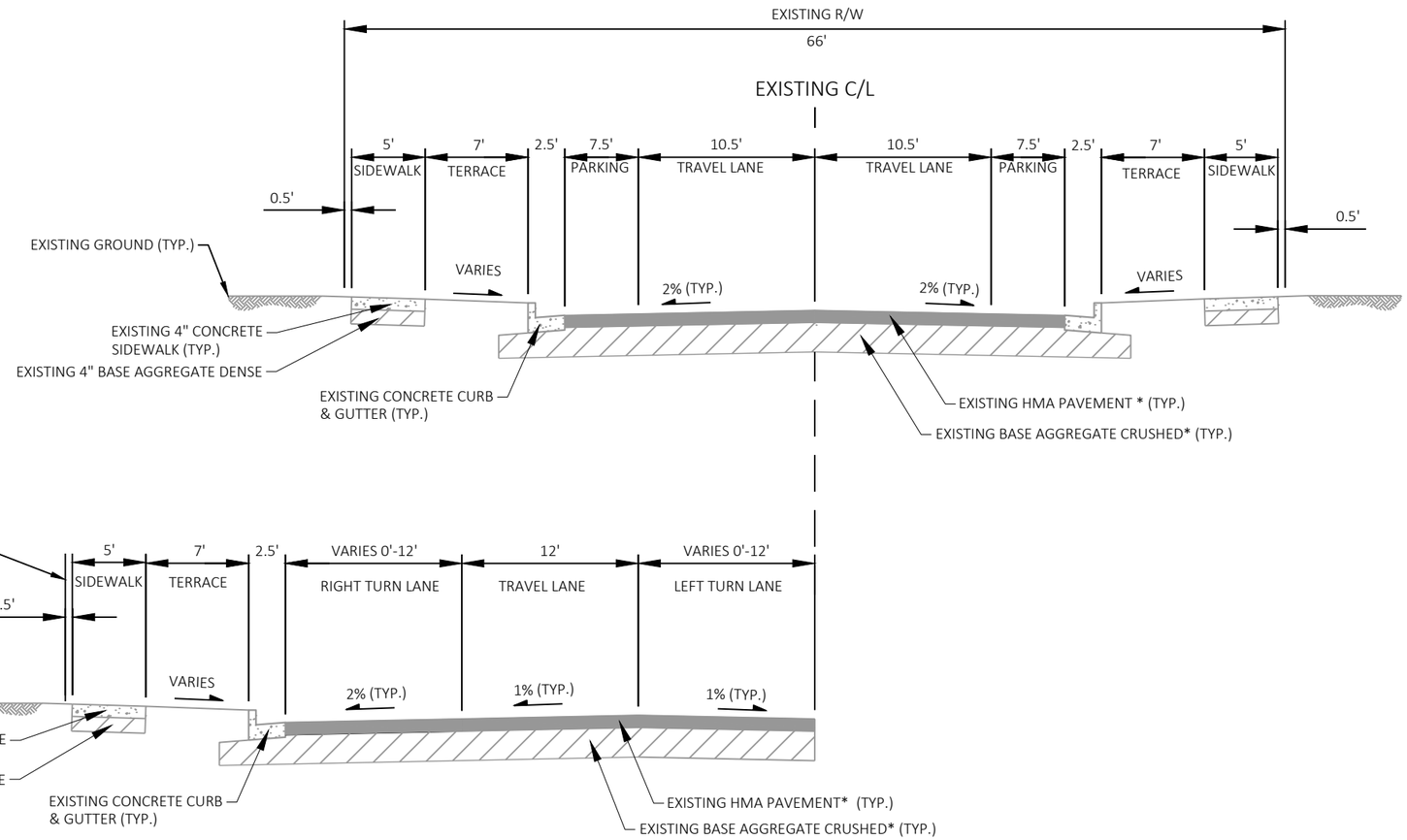

STA 11+00 TO 13+35

EXISTING TYPICAL SECTION N BIRD ST
STA 11+00 TO 24+87

*PAVEMENT THICKNESS AND BASE AGGREGATE VARIES. SEE BORING TABLE BELOW.

BORING SUMMARY TABLE

BORING NUMBER	STA	OFFSET	EXISTING ASPHALT DEPTH (IN)	BASE AGGREGATE DEPTH (IN)
B-1	14+50	16' RT	6±	11±
B-2	19+00	6' LT	9±	9±
B-3	23+00	6' RT	6±	10±

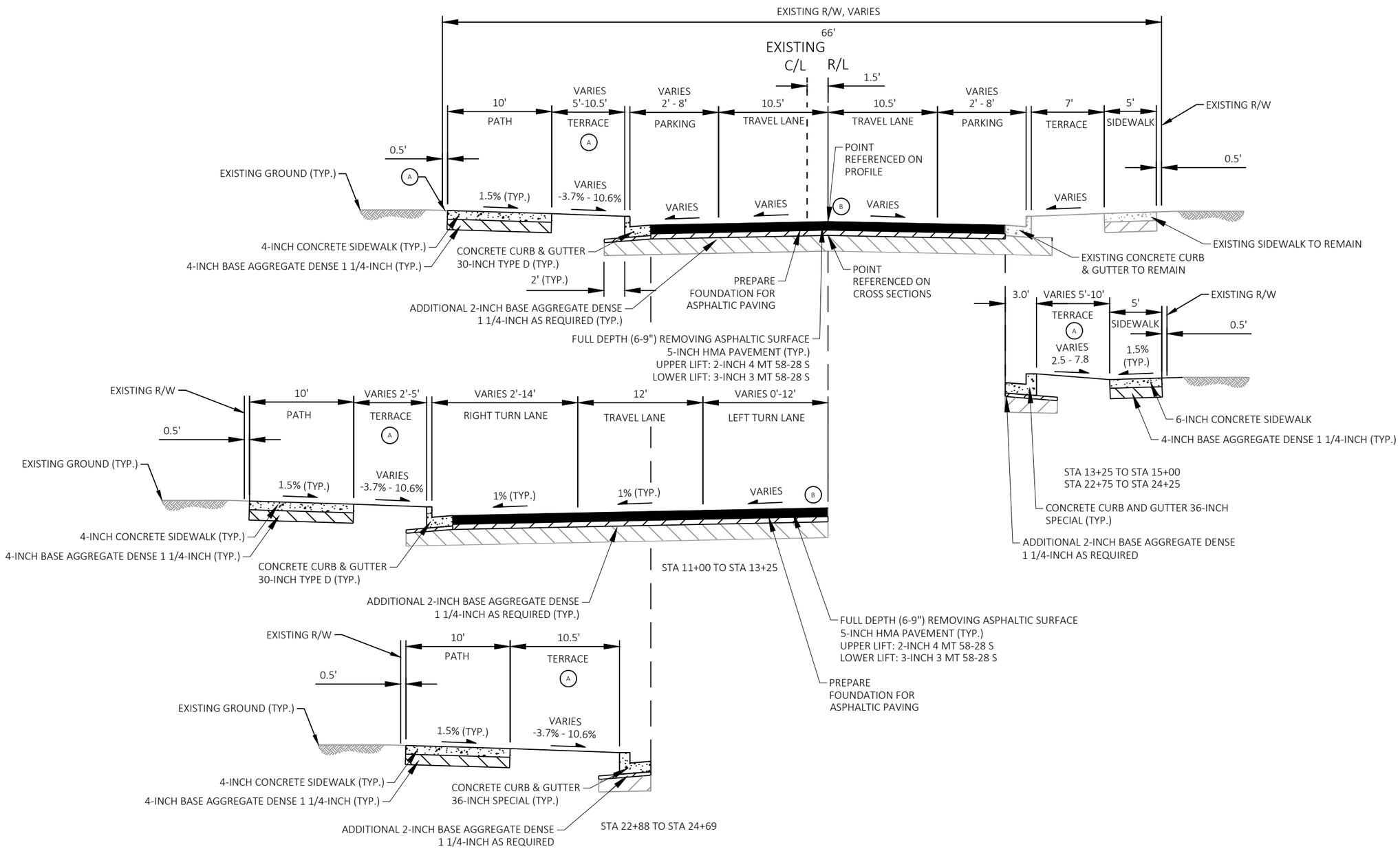

FINISHED TYPICAL SECTION N BIRD ST
STA 11+00 TO STA 24+87

LEGEND

(A) 6" TOPSOIL, SEEDING MIXTURE NO. 40, FERTILIZER TYPE B AND EROSION MAT URBAN CLASS I TYPE A.

(B) REMOVAL OF EXCESS MATERIAL AND/OR GRADING OF MATERIAL TO THE FINISHED R/L LOCATION AND PROFILE SHOWN IN THE PLANS ARE INCLUDED IN THE ITEM "PREPARE FOUNDATION FOR ASPHALTIC PAVING". AN UNDISTRIBUTED QUANTITY OF BASE AGGREGATE 1 1/4-INCH IS INCLUDED FOR LOCATIONS WHERE THE EXISTING ASPHALTIC PAVEMENT IS DEEPER THAN 5".

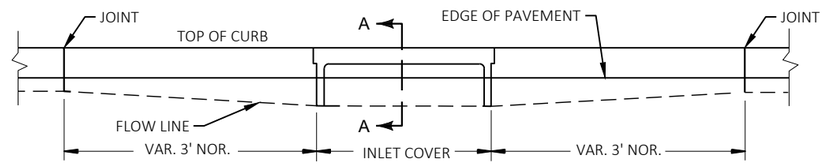

ELEVATION

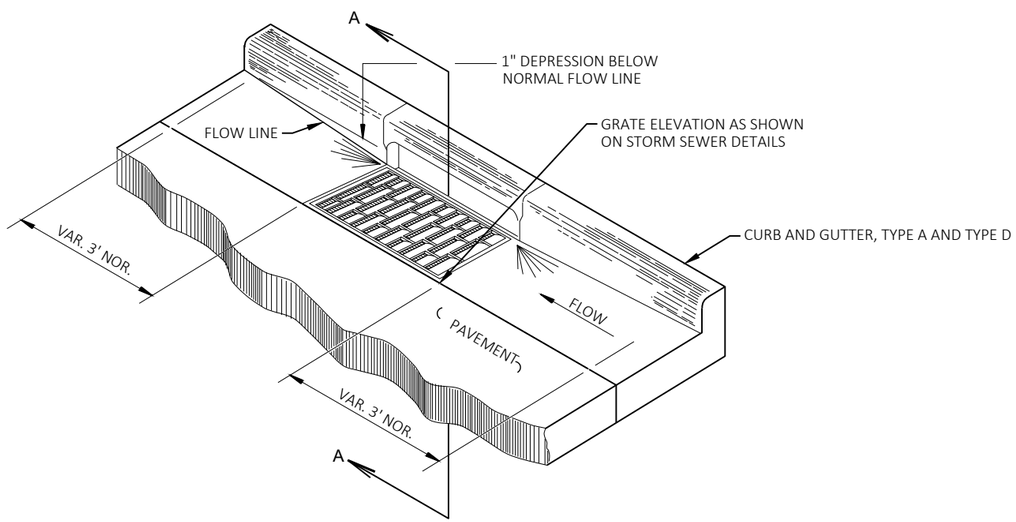

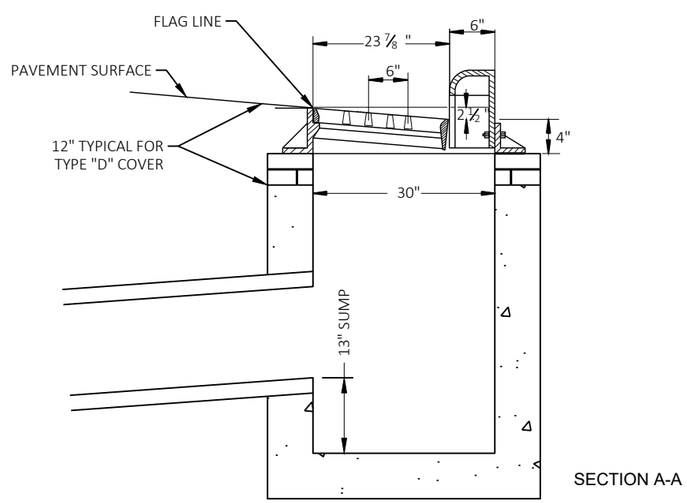

SECTION A-A

DETAIL OF CURB AND GUTTER AT INLETS

(TYPE 2.5X3 FT-D INLET SHOWN)

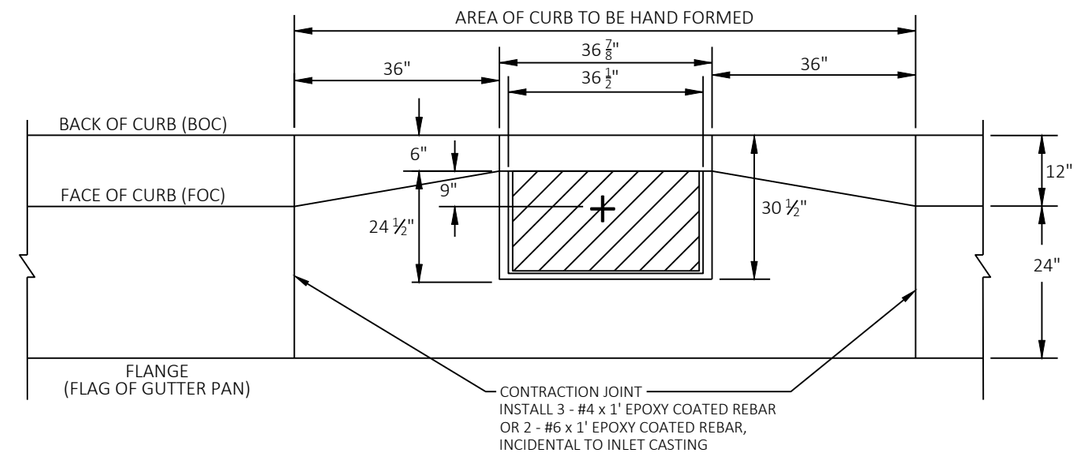

PLAN VIEW

+ = CENTER OF STRUCTURE (STATION AND OFFSET AS INDICATED ON THE STORM SEWER PLANS)

CONCRETE CURB AND GUTTER 36-INCH SPECIAL AT INLET DETAIL

SCALE: NONE

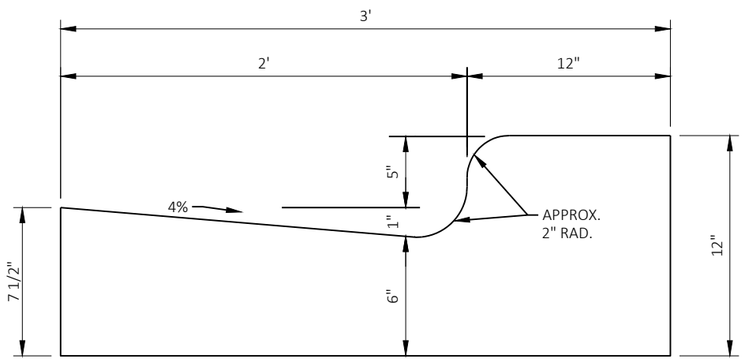

CONCRETE CURB & GUTTER 36-INCH SPECIAL

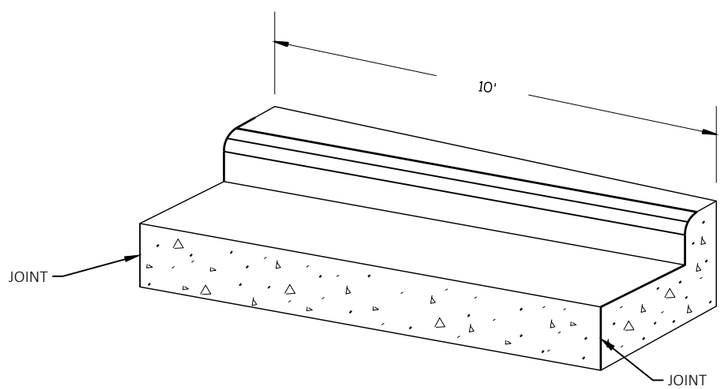

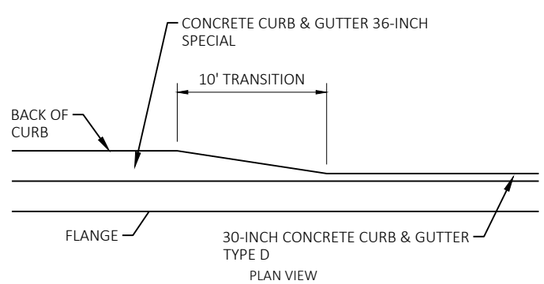

CONCRETE CURB & GUTTER
CURB HEAD WIDTH TRANSITION DETAIL

CONCRETE CURB & GUTTER 36-INCH SPECIAL, TO CONCRETE CURB & GUTTER 30-INCH TYPE D (TO BE MEASURED AND PAID FOR AS CONCRETE CURB & GUTTER, 36-INCH SPECIAL). REFER TO PLAN DETAILS FOR CURB TRANSITION LOCATIONS.

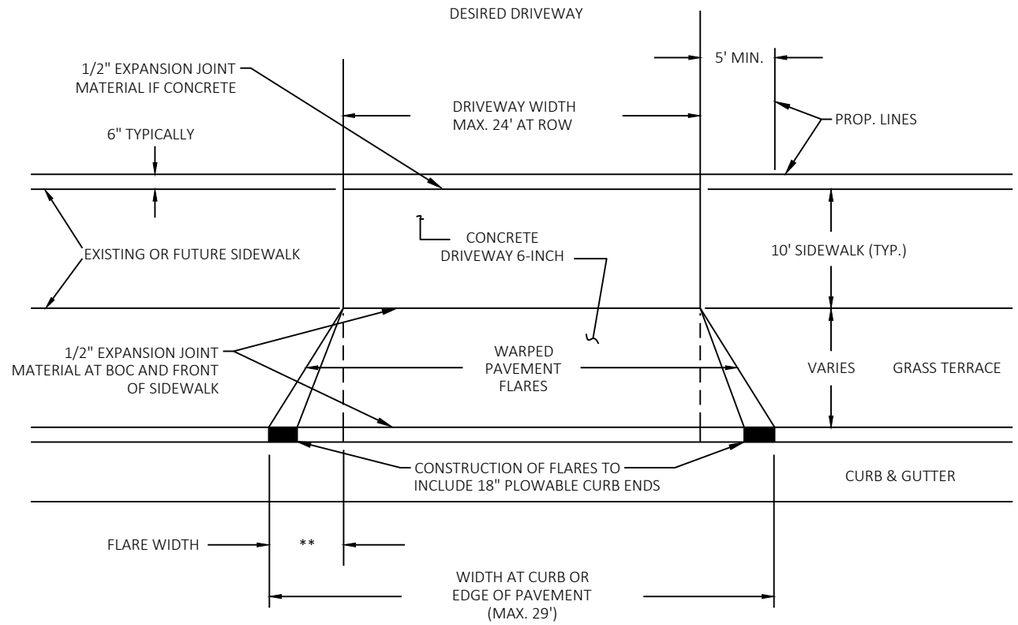

** PERMISSIBLE FLARE IS FROM 0.5 TO 1.0 TIMES THE GRASS TERRACE WITH, NOT TO EXCEED 2.5 FT. ON EITHER SIDE OF DRIVEWAY.

PLAN VIEW
SCALE: NONE

TERR. WIDTH	MAX. ELEV. 6" FROM PROP. LINE. (ABOVE TOC)
10'	0.32' OR 3.75"
11'	0.44' OR 5.25"
13'	0.68' OR 8"
OTHER	CONTACT ENGINEERING DEPT. 825-1170

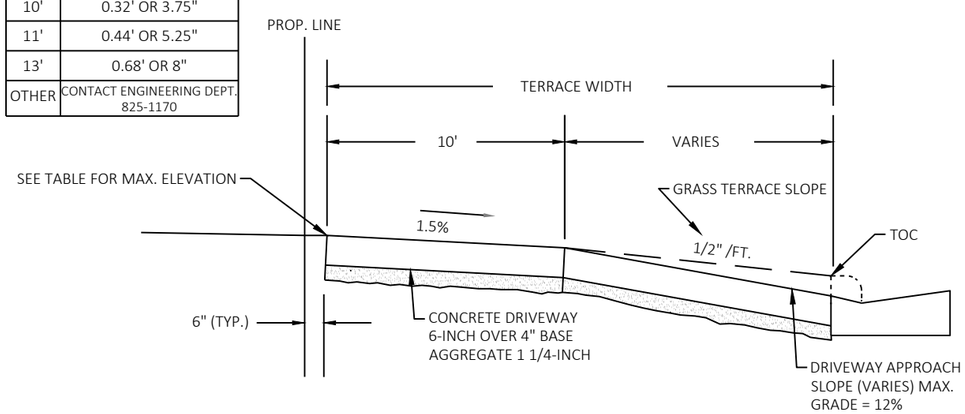

CROSS SECTION
SCALE: NONE

DRIVEWAY DETAIL
CITY OF SUN PRAIRIE STANDARD

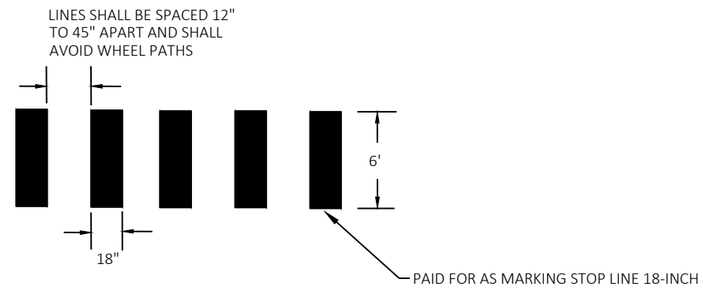

TYPICAL CONTINENTAL CROSSWALK

CITY OF SUN PRAIRIE STANDARD

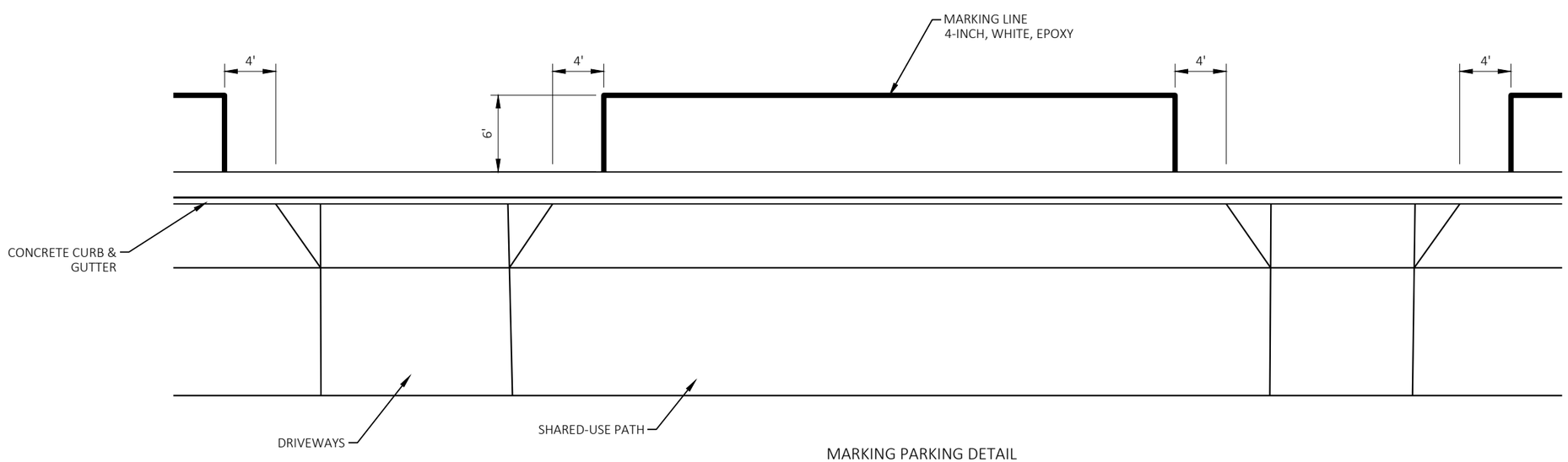

MARKING PARKING DETAIL

INLET COVERS TYPE D

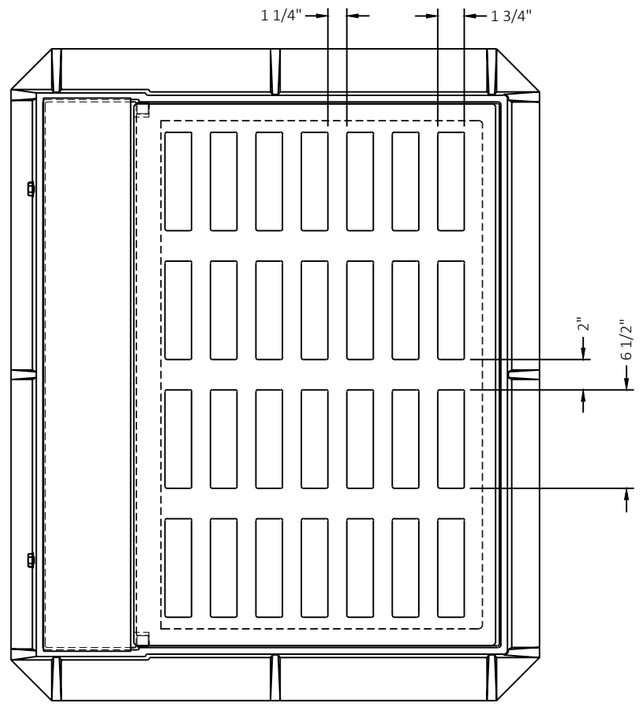

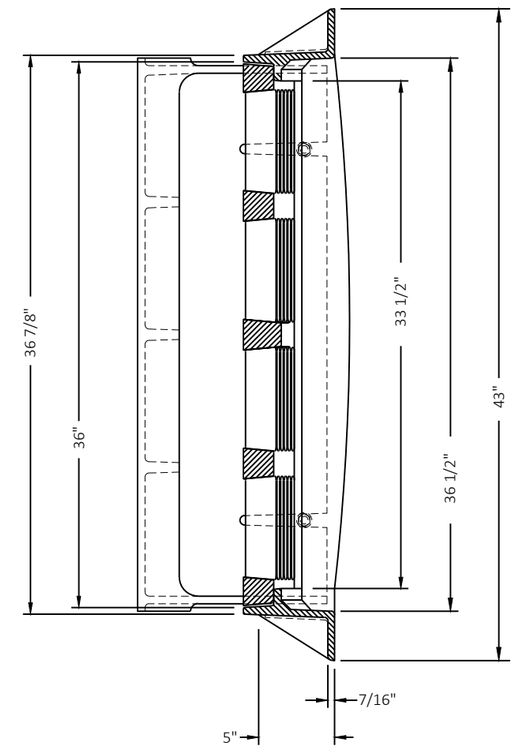

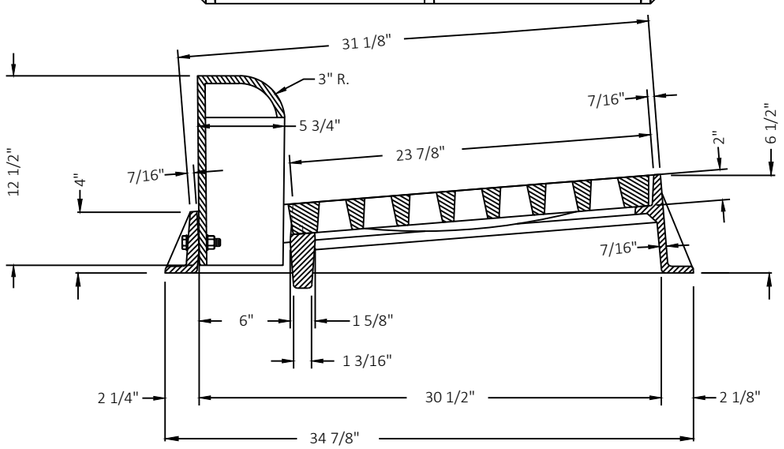

NOTE:

TYPE R-DIAGONAL REVERSIBLE GRATE

SHALL HAVE THE WORDS " DUMP NO WASTE - DRAINS TO FRESH WATER"

MATERIAL: CAST GRAY IRON ASTM A-48, CLASS 35B

FINISH: NO PAINT

WEIGHT: FRAME 200#, GRATE 255#, CURB BOX 140#

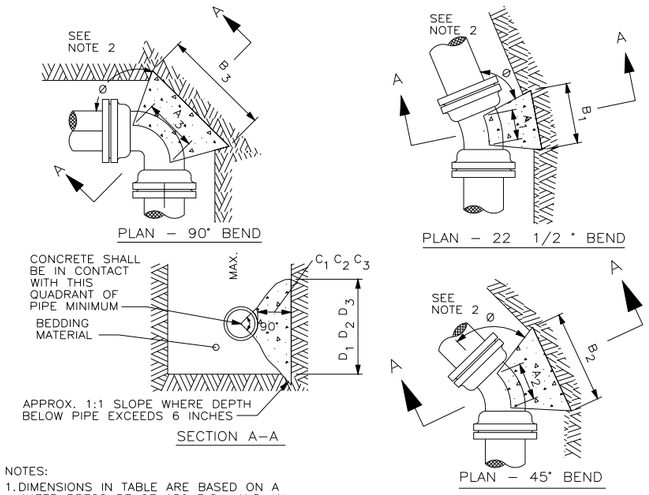

NOTES:

1. DIMENSIONS IN TABLE ARE BASED ON A WATER PRESSURE OF 150 P.S.I. AND AN EARTH RESISTANCE OF 2 TONS PER SQ. FT. INFORM THE ENGINEER IF PRESSURES EXCEED 150 PSI, OR ON–SITE SOIL DOES NOT MEET THIS CONDITION.
2. DIMENSION C_1 C_2 C_3 SHOULD BE LARGE ENOUGH TO MAKE ANGLE Ø EQUAL TO OR LARGER THAN 45°.
3. DIMENSION A_1 A_2 A_3 SHOULD BE AS LARGE AS POSSIBLE WITHOUT INTERFERRING WITH THE MECHANICAL JOINT.
4. BUTTRESS TO BE POURED AGAINST FIRM UNDISTURBED SOIL, OR DISTURBED SOIL COMPACTED TO 95% OF MODIFIED PROCTOR DENSITY, ASTM D1557.
5. ALL BUTTRESSED FITTINGS SHALL BE WRAPPED IN POLYETHYLENE.
6. CONCRETE SHALL HAVE A MINIMUM 7–DAY COMPRESSIVE STRENGTH OF 2000 PSI.

BUTTRESS DIMENSIONS						
PIPE SIZE	22 1/2 ° BENDS		45° BENDS		90° BENDS	
	B_1	D_1	B_2	D_2	B_3	D_3
6"	1'–0"	1'–0"	1'–0"	1'–0"	1'–4"	1'–2"
8"	1'–0"	1'–0"	1'–4"	1'–2"	1'-10"	1'–6"
10"	1'–2"	1'–2"	1'–7"	1'–7"	2'–3"	1'-10"
12"	1'–4"	1'–4"	1'-10"	1'-10"	2'–8"	2'–3"
16"	1'-10"	1'–8"	2'–6"	2'–4"	3'-10"	2'-10"
20"	2'–4"	2'–0"	3'–3"	2'–10"	5'–0"	3'–4"
24"	2'-10"	2'–4"	4'–0"	3'–3"	6'–4"	3'-10"

BUTTRESS FOR BENDS DETAIL

SCALE: NONE

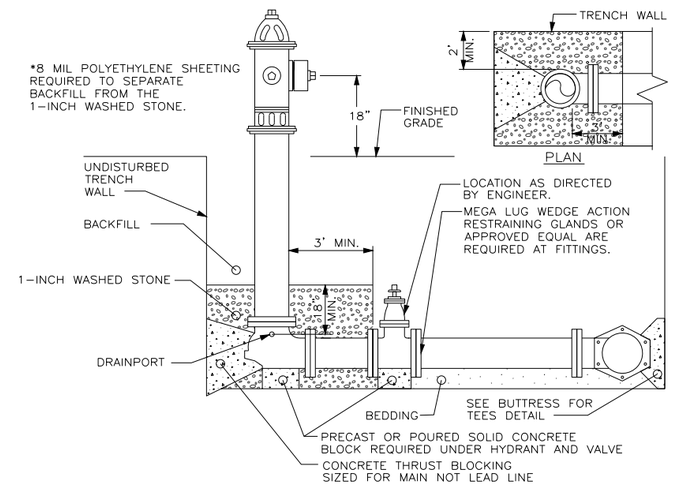

HYDRANT DETAIL

SCALE: NONE

2

Lincoln Bumpouts							
POINT NUMBER	DESCRIPTION	STATION	OFFSET	ELEVATION	NORTHING	EASTING	RADIUS
1	PC	13+27.97	17.75' RT	986.67	524321.65	863303.22	--
2	PT	13+38.62	14.93' RT	986.76	524332.27	863300.83	--
3	PC	13+41.29	13.33' RT	986.78	524335.01	863299.37	--
4	MID PT	13+61.42	13.10' RT	987.01	524355.13	863300.11	--
5	PT	1+30.50	11.00' RT	987.28	524364.41	863317.97	--
6	PC	1+44.60	11.79' RT	987.27	524363.69	863332.95	--
7	PT	1+47.84	12.32' RT	987.26	524363.27	863336.21	--
8	PC	1+65.73	16.75' RT	987.18	524359.38	863354.23	--
9	PT	1+70.70	17.34' RT	987.16	524358.95	863359.21	--
10	PC	1+70.44	16.59' LT	987.14	524392.85	863357.90	--

Lincoln Bumpouts							
POINT NUMBER	DESCRIPTION	STATION	OFFSET	ELEVATION	NORTHING	EASTING	RADIUS
11	PT	1+62.00	14.64' LT	987.18	524390.65	863349.53	--
12	PC	1+56.51	12.03' LT	987.20	524387.86	863344.12	--
13	PT	1+46.33	10.14' LT	987.24	524385.67	863334.01	--
14	PC	1+30.50	11.00' LT	987.30	524386.39	863319.02	--
15	MID PT	14+04.65	12.59' RT	987.45	524398.34	863301.66	--
16	PT	14+25.64	14.57' RT	987.38	524419.20	863304.65	--
17	MID PT	14+35.54	17.82' RT	987.34	524428.93	863308.37	--
18	PT	14+60.33	17.47' RT	987.46	524453.72	863309.21	--
19	CP	13+51.55	30.50' RT	987.21	524344.43	863317.01	18'
20	CP	14+13.55	30.50' RT	987.33	524406.36	863319.98	18'

Lincoln Bumpouts							
POINT NUMBER	DESCRIPTION	STATION	OFFSET	ELEVATION	NORTHING	EASTING	RADIUS
21	CP	13+28.28	2.25' LT	987.15	524322.74	863283.25	20'
22	CP	13+51.55	45.50' RT	0.00	524343.71	863331.99	17'
23	CP	1+70.61	3.41' RT	0.00	524372.87	863358.69	20'
24	CP	1+70.55	2.66' LT	987.32	524378.93	863358.44	20'
25	CP	14+13.55	45.50' RT	0.00	524405.64	863334.97	18'
26	HP	13+71.55	33.65' RT	987.32	524364.26	863321.12	
27	HP	14+08.42	11.17' RT	987.47	524402.17	863300.43	
28	LP	14+33.61	17.73' RT	987.33	524427.01	863308.19	
29	CP	14+35.31	1.82' RT	987.87	524429.47	863292.38	18'

2

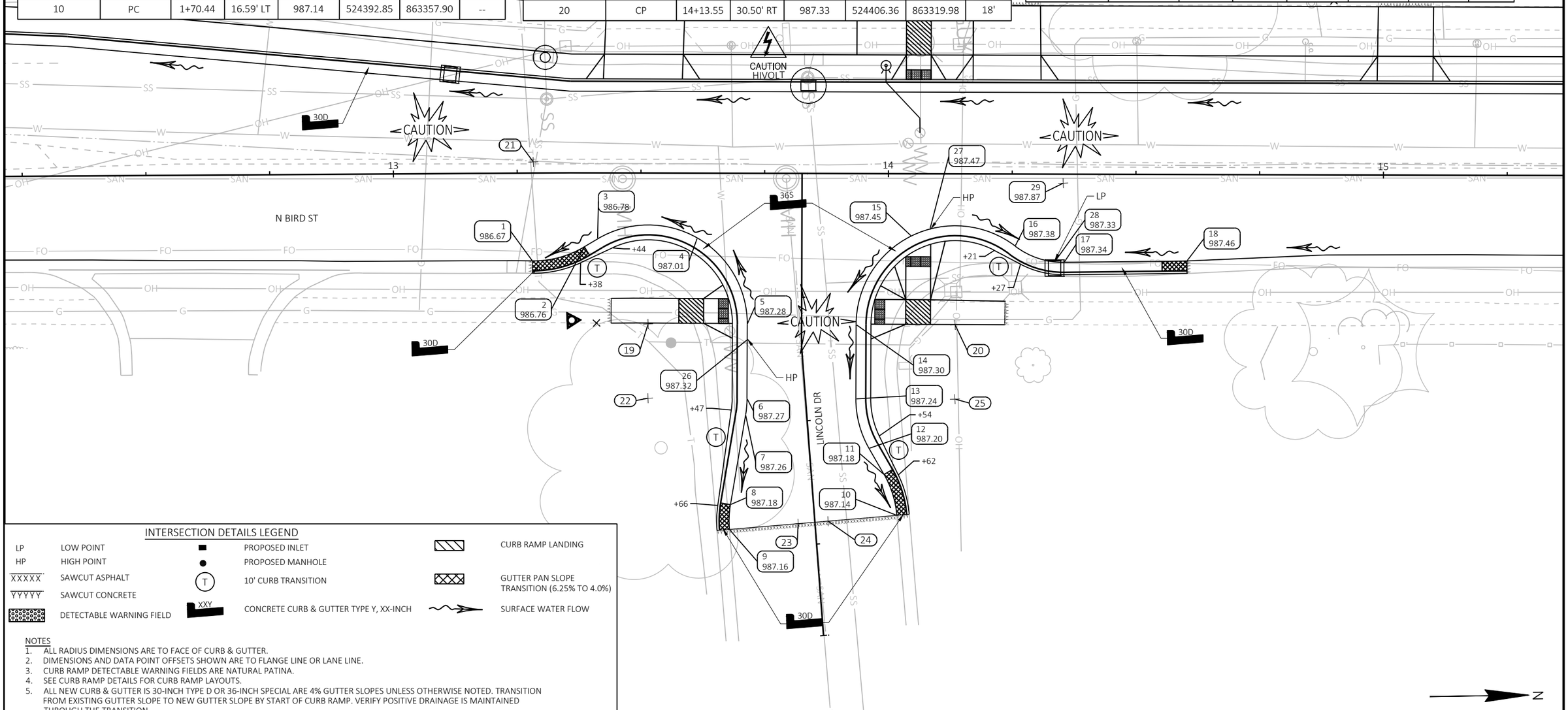

INTERSECTION DETAILS LEGEND

LP	LOW POINT	■	PROPOSED INLET	▨	CURB RAMP LANDING
HP	HIGH POINT	●	PROPOSED MANHOLE		
XXXXX	SAWCUT ASPHALT	(T)	10' CURB TRANSITION	▩	GUTTER PAN SLOPE TRANSITION (6.25% TO 4.0%)
YYYYY	SAWCUT CONCRETE	XXY	CONCRETE CURB & GUTTER TYPE Y, XX-INCH	⟿	SURFACE WATER FLOW
▦	DETECTABLE WARNING FIELD				

NOTES
1. ALL RADIUS DIMENSIONS ARE TO FACE OF CURB & GUTTER.
2. DIMENSIONS AND DATA POINT OFFSETS SHOWN ARE TO FLANGE LINE OR LANE LINE.
3. CURB RAMP DETECTABLE WARNING FIELDS ARE NATURAL PATINA.
4. SEE CURB RAMP DETAILS FOR CURB RAMP LAYOUTS.
5. ALL NEW CURB & GUTTER IS 30-INCH TYPE D OR 36-INCH SPECIAL ARE 4% GUTTER SLOPES UNLESS OTHERWISE NOTED. TRANSITION FROM EXISTING GUTTER SLOPE TO NEW GUTTER SLOPE BY START OF CURB RAMP. VERIFY POSITIVE DRAINAGE IS MAINTAINED THROUGH THE TRANSITION.

2

Summit Ave Bumpouts							
POINT NUMBER	DESCRIPTION	STATION	OFFSET	ELEVATION	NORTHING	EASTING	RADIUS
1	PC	22+88.47	16.46' RT	1011.65	525280.97	863347.78	--
2	PT	22+96.92	14.56' RT	1012.09	525289.49	863346.28	--
3	PC	23+01.51	12.40' RT	1012.34	525294.18	863344.34	--
4	PT	23+10.02	10.50' RT	1012.78	525302.77	863342.84	--
5	PC	23+22.66	10.50' RT	1013.42	525315.40	863343.44	--
6	MID PT	23+36.80	16.36' RT	1014.09	525329.25	863349.96	--
7	PT	2+30.50	11.00' RT	1014.33	525334.43	863364.36	--
8	PC	2+49.18	11.13' RT	1013.98	525333.51	863383.78	--
9	PT	2+57.49	13.58' RT	1013.62	525331.24	863392.13	--
10	PC	2+63.95	17.14' RT	1013.30	525327.81	863398.67	--

Summit Ave Bumpouts							
POINT NUMBER	DESCRIPTION	STATION	OFFSET	ELEVATION	NORTHING	EASTING	RADIUS
11	PT	2+73.92	19.63' RT	1012.84	525325.52	863408.68	--
12	PT	2+86.06	19.45' RT	1012.31	525325.96	863420.82	--
13	PC	2+85.46	20.86' LT	1012.56	525366.24	863419.38	--
14	PT	2+78.42	19.52' LT	1012.85	525364.76	863412.37	--
15	PC	2+59.23	12.11' LT	1013.66	525356.96	863393.35	--
16	PT	2+50.67	10.82' LT	1014.00	525355.49	863384.82	--
17	PC	2+30.50	11.00' LT	1014.75	525356.40	863365.40	--
18	MID PT	23+70.51	16.36' RT	1015.51	525362.92	863351.56	--
19	PT	23+84.66	10.50' RT	1016.47	525377.33	863346.37	--
20	PC	24+02.00	10.48' RT	1017.35	525394.08	863347.17	--

Summit Ave Bumpouts							
POINT NUMBER	DESCRIPTION	STATION	OFFSET	ELEVATION	NORTHING	EASTING	RADIUS
21	PT	24+10.57	11.91' RT	1017.75	525402.46	863349.45	--
22	PC	24+20.09	15.75' RT	1018.15	525411.54	863354.23	--
23	PT	24+28.63	17.17' RT	1018.50	525419.89	863356.52	--
24	PC	22+88.47	16.50' LT	1011.57	525282.52	863314.86	--
25	PT	22+96.92	14.63' LT	1012.05	525290.88	863317.13	--
26	PC	23+01.75	12.37' LT	1012.36	525295.60	863319.60	--
27	PT	23+10.20	10.50' LT	1012.84	525303.95	863321.88	--
28	CP	22+88.47	3.50' RT	1011.98	525281.58	863334.83	22'
29	CP	23+10.20	30.50' LT	1013.54	525304.90	863301.90	19'
30	CP	22+88.41	3.54' LT	1011.95	525281.85	863327.80	22'

2

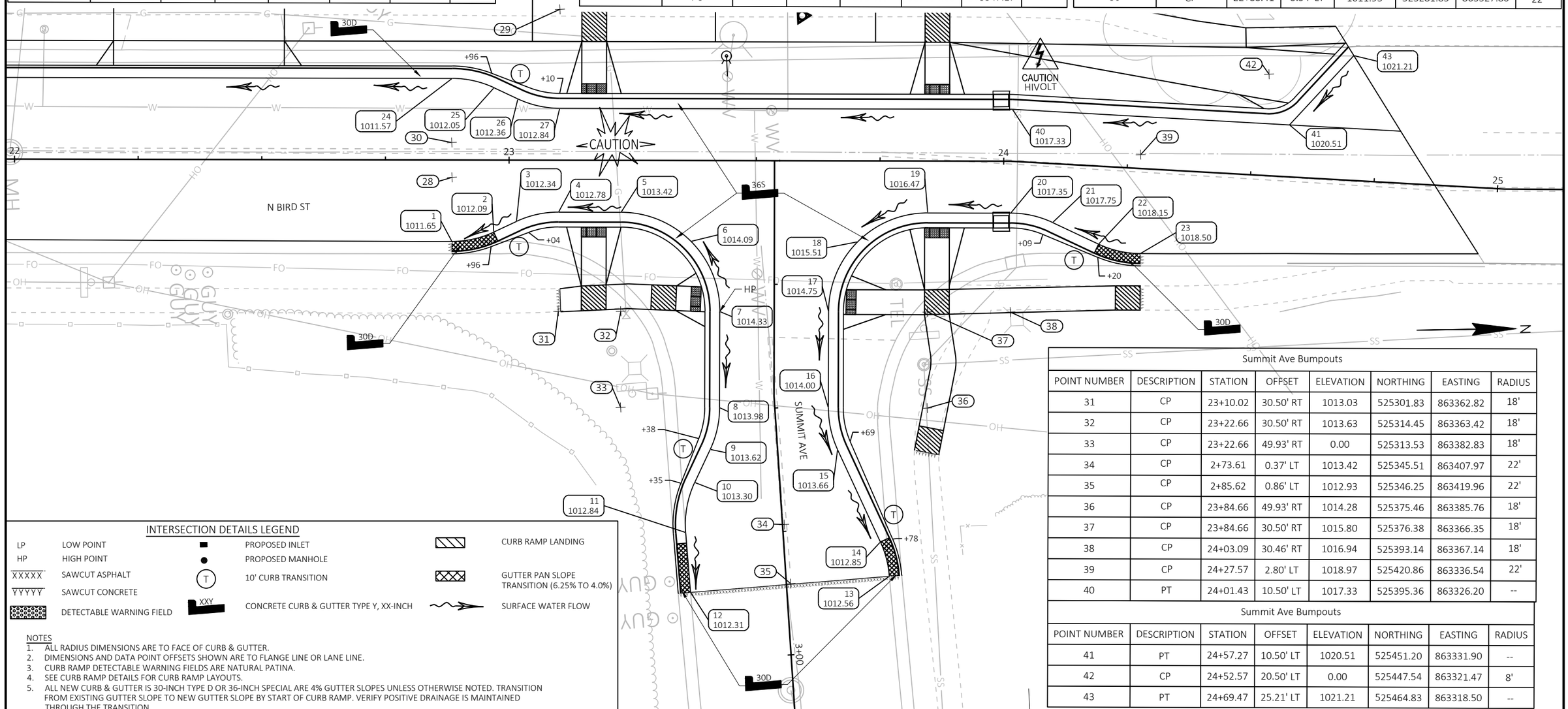

Summit Ave Bumpouts							
POINT NUMBER	DESCRIPTION	STATION	OFFSET	ELEVATION	NORTHING	EASTING	RADIUS
31	CP	23+10.02	30.50' RT	1013.03	525301.83	863362.82	18'
32	CP	23+22.66	30.50' RT	1013.63	525314.45	863363.42	18'
33	CP	23+22.66	49.93' RT	0.00	525313.53	863382.83	18'
34	CP	2+73.61	0.37' LT	1013.42	525345.51	863407.97	22'
35	CP	2+85.62	0.86' LT	1012.93	525346.25	863419.96	22'
36	CP	23+84.66	49.93' RT	1014.28	525375.46	863385.76	18'
37	CP	23+84.66	30.50' RT	1015.80	525376.38	863366.35	18'
38	CP	24+03.09	30.46' RT	1016.94	525393.14	863367.14	18'
39	CP	24+27.57	2.80' LT	1018.97	525420.86	863336.54	22'
40	PT	24+01.43	10.50' LT	1017.33	525395.36	863326.20	--

Summit Ave Bumpouts							
POINT NUMBER	DESCRIPTION	STATION	OFFSET	ELEVATION	NORTHING	EASTING	RADIUS
41	PT	24+57.27	10.50' LT	1020.51	525451.20	863331.90	--
42	CP	24+52.57	20.50' LT	0.00	525447.54	863321.47	8'
43	PT	24+69.47	25.21' LT	1021.21	525464.83	863318.50	--

INTERSECTION DETAILS LEGEND

LP	LOW POINT	■	PROPOSED INLET	▨	CURB RAMP LANDING
HP	HIGH POINT	●	PROPOSED MANHOLE	▩	GUTTER PAN SLOPE TRANSITION (6.25% TO 4.0%)
XXXXX	SAWCUT ASPHALT	(T)	10' CURB TRANSITION	~	SURFACE WATER FLOW
YYYYY	SAWCUT CONCRETE	XXY	CONCRETE CURB & GUTTER TYPE Y, XX-INCH		
▩	DETECTABLE WARNING FIELD				

NOTES
1. ALL RADIUS DIMENSIONS ARE TO FACE OF CURB & GUTTER.
2. DIMENSIONS AND DATA POINT OFFSETS SHOWN ARE TO FLANGE LINE OR LANE LINE.
3. CURB RAMP DETECTABLE WARNING FIELDS ARE NATURAL PATINA.
4. SEE CURB RAMP DETAILS FOR CURB RAMP LAYOUTS.
5. ALL NEW CURB & GUTTER IS 30-INCH TYPE D OR 36-INCH SPECIAL ARE 4% GUTTER SLOPES UNLESS OTHERWISE NOTED. TRANSITION FROM EXISTING GUTTER SLOPE TO NEW GUTTER SLOPE BY START OF CURB RAMP. VERIFY POSITIVE DRAINAGE IS MAINTAINED THROUGH THE TRANSITION.

PROJECT NO: 3996-00-35	HWY: N BIRD ST	COUNTY: DANE	INTERSECTION DETAILS	SHEET 13	E

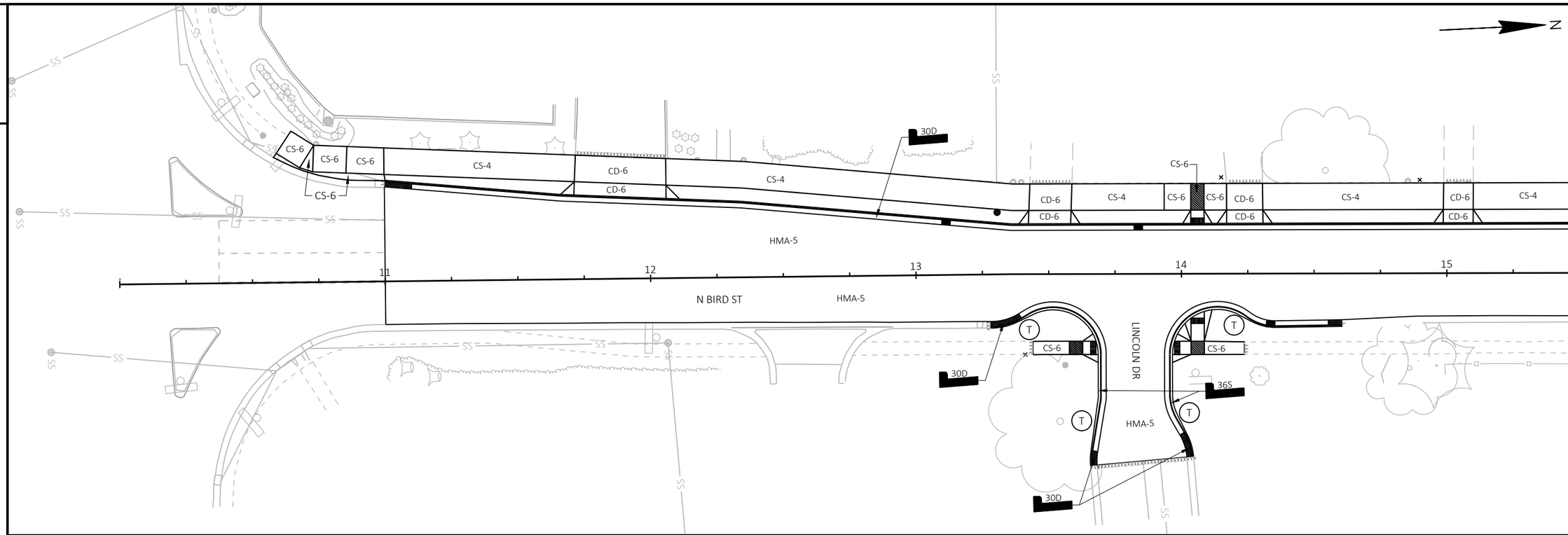

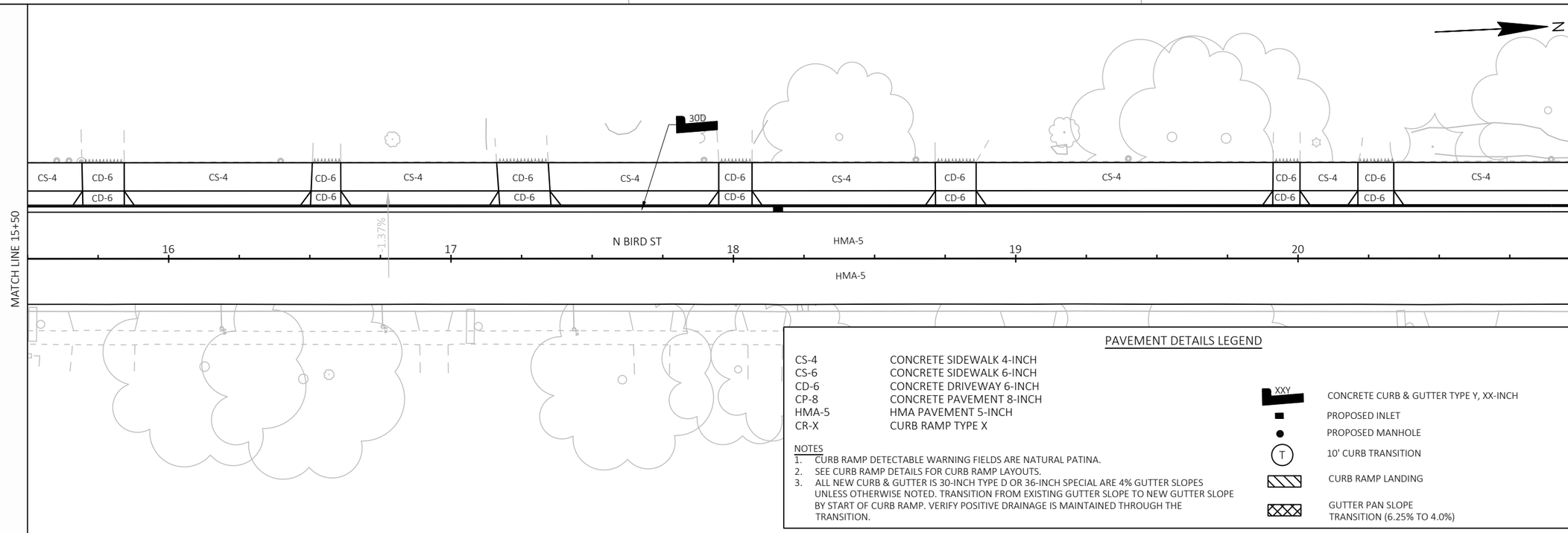

PAVEMENT DETAILS LEGEND

CS-4	CONCRETE SIDEWALK 4-INCH
CS-6	CONCRETE SIDEWALK 6-INCH
CD-6	CONCRETE DRIVEWAY 6-INCH
CP-8	CONCRETE PAVEMENT 8-INCH
HMA-5	HMA PAVEMENT 5-INCH
CR-X	CURB RAMP TYPE X

XXY	CONCRETE CURB & GUTTER TYPE Y, XX-INCH
■	PROPOSED INLET
●	PROPOSED MANHOLE
(T)	10' CURB TRANSITION
▨	CURB RAMP LANDING
▩	GUTTER PAN SLOPE TRANSITION (6.25% TO 4.0%)

NOTES
1. CURB RAMP DETECTABLE WARNING FIELDS ARE NATURAL PATINA.
2. SEE CURB RAMP DETAILS FOR CURB RAMP LAYOUTS.
3. ALL NEW CURB & GUTTER IS 30-INCH TYPE D OR 36-INCH SPECIAL ARE 4% GUTTER SLOPES UNLESS OTHERWISE NOTED. TRANSITION FROM EXISTING GUTTER SLOPE TO NEW GUTTER SLOPE BY START OF CURB RAMP. VERIFY POSITIVE DRAINAGE IS MAINTAINED THROUGH THE TRANSITION.

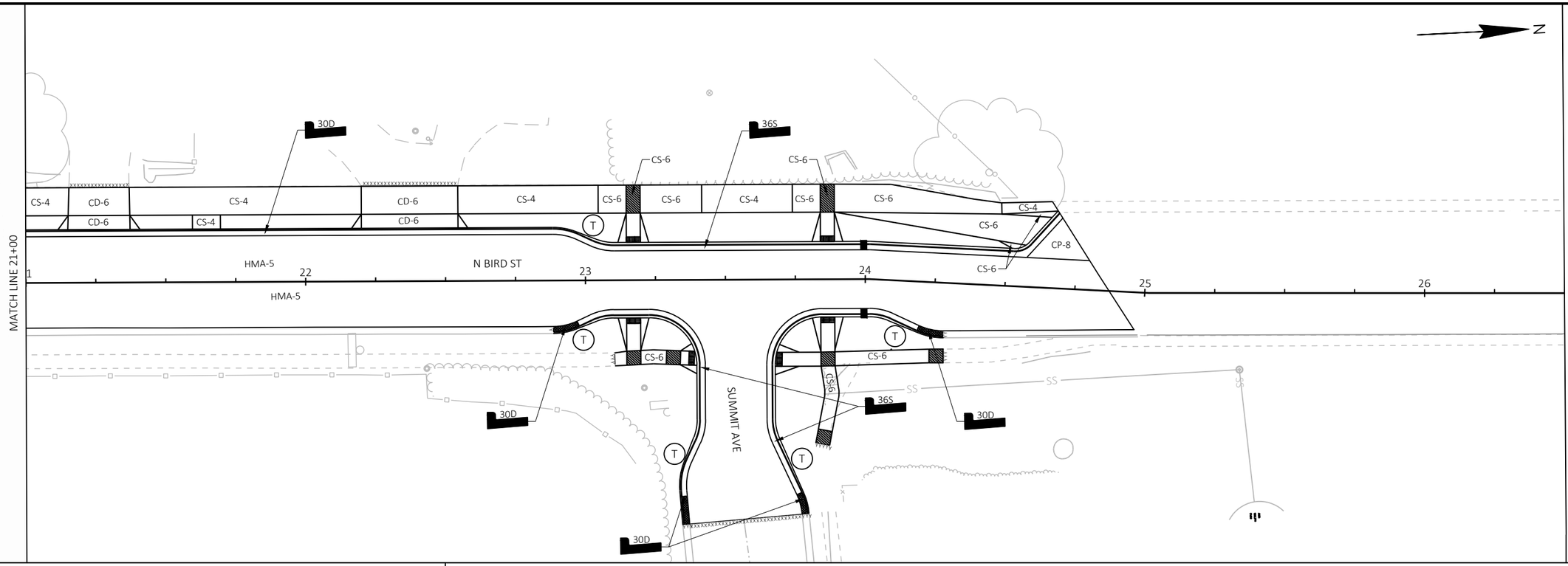

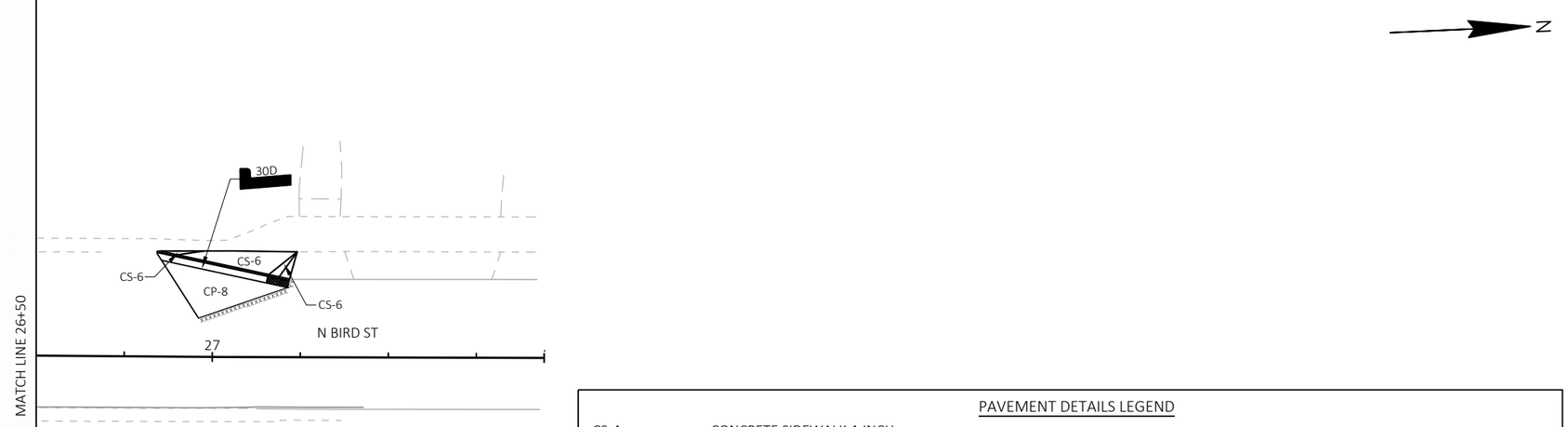

PAVEMENT DETAILS LEGEND

CS-4	CONCRETE SIDEWALK 4-INCH
CS-6	CONCRETE SIDEWALK 6-INCH
CD-6	CONCRETE DRIVEWAY 6-INCH
CP-8	CONCRETE PAVEMENT 8-INCH
HMA-5	HMA PAVEMENT 5-INCH
CR-X	CURB RAMP TYPE X

XXY — CONCRETE CURB & GUTTER TYPE Y, XX-INCH

PROPOSED INLET

PROPOSED MANHOLE

T — 10' CURB TRANSITION

CURB RAMP LANDING

GUTTER PAN SLOPE TRANSITION (6.25% TO 4.0%)

NOTES

1. CURB RAMP DETECTABLE WARNING FIELDS ARE NATURAL PATINA.
2. SEE CURB RAMP DETAILS FOR CURB RAMP LAYOUTS.
3. ALL NEW CURB & GUTTER IS 30-INCH TYPE D OR 36-INCH SPECIAL ARE 4% GUTTER SLOPES UNLESS OTHERWISE NOTED. TRANSITION FROM EXISTING GUTTER SLOPE TO NEW GUTTER SLOPE BY START OF CURB RAMP. VERIFY POSITIVE DRAINAGE IS MAINTAINED THROUGH THE TRANSITION.

Windsor St NW					
POINT NUMBER	STATION	OFFSET	ELEVATION	NORTHING	EASTING
1	10+65.08	57.06' LT	985.33	524061.86	863218.26
2	10+59.51	48.71' LT	985.17	524055.98	863226.38
3	10+73.63	51.61' LT	985.53	524070.20	863224.03
4	10+68.26	43.18' LT	985.33	524064.50	863232.25
5	10+73.14	41.62' LT	985.44	524069.32	863233.99
6	10+86.16	50.99' LT	985.91	524082.70	863225.14
7	10+85.67	41.00' LT	985.76	524081.82	863235.10
8	11+00.00	50.31' LT	986.11	524096.50	863226.36
9	11+00.00	40.30' LT	985.96	524096.11	863236.36

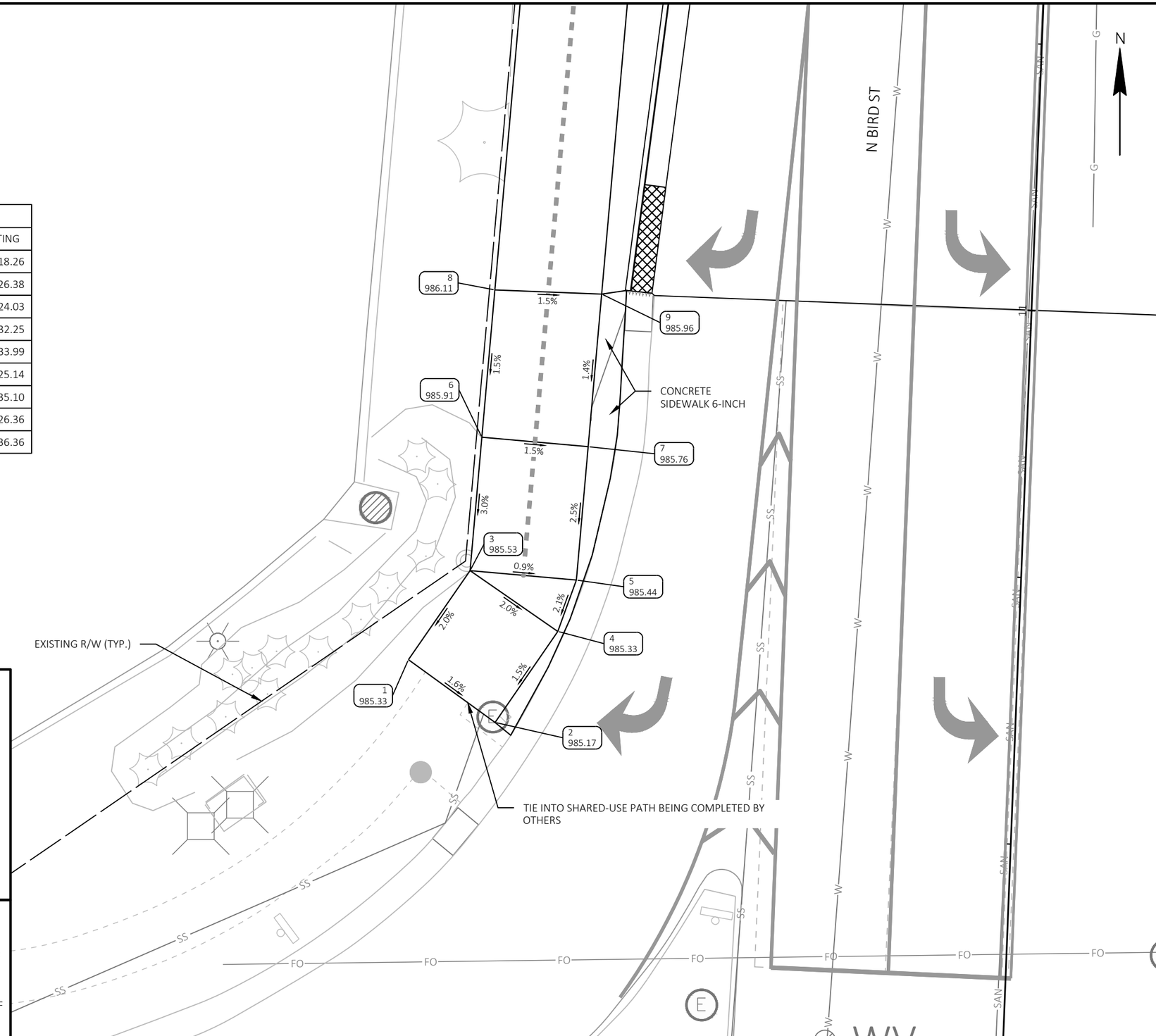

LEGEND:

XXXX	SAW CUT ASPHALT
YYYY	SAW CUT CONCRETE
	LANDING AREA
	GUTTER PAN SLOPE TRANSITION (6.25% TO 4.0%)
	CURB RAMP DETECTABLE WARNING FIELD NATURAL PATINA
G	6:1 CONCRETE FLARE
C	10:1 CONCRETE FLARE
XXXX YYY.YY	POINT NUMBER & ELEVATION
MEF	MAXIMUM EXTENT FEASIBLE

NOTES:

1. CURB RAMPS ARE CONCRETE SIDEWALK 6-INCH. PLACE 4-INCHES BASE AGGREGATE DENSE 1 1/4-INCH BELOW CONCRETE SIDEWALK.
2. FIELD VERIFY ELEVATION GRADES, SLOPES, LENGTHS AND MATCH POINTS, PRIOR TO CURB RAMP AND SIDEWALK CONSTRUCTION.
3. THE ENGINEER MAY ADJUST GRADES TO FIT FIELD CONDITION.
4. ALL NEW CURB & GUTTER IS 30-INCH TYPE D OR 36-INCH SPECIAL ARE 4% GUTTER SLOPES UNLESS OTHERWISE NOTED. TRANSITION FROM EXISTING GUTTER SLOPE TO NEW GUTTER SLOPE BY START OF CURB RAMP. VERIFY POSITIVE DRAINAGE IS MAINTAINED THROUGH THE TRANSITION.
5. SEE THE STANDARD DETAIL DRAWINGS FOR COMPLETE CURB RAMP REQUIREMENTS.

2

LEGEND:

- XXXX — SAW CUT ASPHALT
- YYYY — SAW CUT CONCRETE
- LANDING AREA
- GUTTER PAN SLOPE TRANSITION (6.25% TO 4.0%)
- CURB RAMP DETECTABLE WARNING FIELD NATURAL PATINA
- G — 6:1 CONCRETE FLARE
- C — 10:1 CONCRETE FLARE
- XXXX YYY.YY — POINT NUMBER & ELEVATION
- MEF — MAXIMUM EXTENT FEASIBLE

NOTES:

1. CURB RAMPS ARE CONCRETE SIDEWALK 6-INCH. PLACE 4-INCHES BASE AGGREGATE DENSE 1 1/4-INCH BELOW CONCRETE SIDEWALK.
2. FIELD VERIFY ELEVATION GRADES, SLOPES, LENGTHS AND MATCH POINTS, PRIOR TO CURB RAMP AND SIDEWALK CONSTRUCTION.
3. THE ENGINEER MAY ADJUST GRADES TO FIT FIELD CONDITION.
4. ALL NEW CURB & GUTTER IS 30-INCH TYPE D OR 36-INCH SPECIAL ARE 4% GUTTER SLOPES UNLESS OTHERWISE NOTED. TRANSITION FROM EXISTING GUTTER SLOPE TO NEW GUTTER SLOPE BY START OF CURB RAMP. VERIFY POSITIVE DRAINAGE IS MAINTAINED THROUGH THE TRANSITION.
5. SEE THE STANDARD DETAIL DRAWINGS FOR COMPLETE CURB RAMP REQUIREMENTS.

Lincoln Dr					
POINT NUMBER	STATION	OFFSET	ELEVATION	NORTHING	EASTING
1	14+17.07	34.00' LT	987.42	524412.97	863255.73
2	14+17.07	24.00' LT	987.27	524412.49	863265.71
3	14+08.57	34.00' LT	987.55	524404.48	863255.32
4	14+08.57	24.00' LT	987.40	524404.00	863265.31
5	14+03.57	34.00' LT	987.51	524399.48	863255.08
6	14+03.57	24.00' LT	987.36	524399.01	863265.07
7	13+93.57	34.00' LT	987.70	524389.50	863254.60
8	13+93.57	24.00' LT	987.55	524389.02	863264.59
9	14+08.57	19.00' LT	987.15	524403.76	863270.30
10	14+03.57	19.00' LT	987.12	524398.76	863270.06
11	14+08.57	16.50' LT	987.23	524403.64	863272.80
12	14+03.57	16.50' LT	987.20	524398.65	863272.56
13	14+15.01	10.55' RT	987.43	524408.78	863300.13
14	14+07.69	11.38' RT	987.47	524401.42	863300.60
15	14+01.80	14.32' RT	987.44	524395.40	863303.25
16	13+99.93	15.85' RT	987.42	524393.47	863304.70
17	13+94.47	24.51' RT	987.33	524387.59	863313.09
18	13+93.55	30.41' RT	987.30	524386.39	863318.93
19	14+08.54	14.30' RT	987.39	524402.14	863303.56
20	14+03.57	16.75' RT	987.36	524397.05	863305.77
21	14+01.30	18.71' RT	987.66	524394.70	863307.62
22	13+99.33	25.42' RT	987.26	524392.40	863314.22
23	13+97.33	25.41' RT	987.25	524390.40	863314.12
24	13+96.55	30.41' RT	987.22	524389.39	863319.08
25	14+03.57	25.43' RT	987.29	524396.64	863314.44
26	14+03.57	30.43' RT	987.26	524396.40	863319.43
27	14+08.57	25.44' RT	987.31	524401.63	863314.69

Lincoln Dr					
POINT NUMBER	STATION	OFFSET	ELEVATION	NORTHING	EASTING
28	14+08.57	30.44' RT	987.28	524401.39	863319.68
29	14+23.63	25.71' RT	987.38	524416.66	863315.68
30	14+23.57	30.46' RT	987.39	524416.37	863320.42
31	13+61.42	13.10' RT	987.01	524355.13	863300.11
32	13+70.61	24.43' RT	987.20	524363.76	863311.86
33	13+71.55	30.34' RT	987.28	524364.42	863317.81
34	13+67.75	25.34' RT	987.13	524360.86	863312.63
35	13+68.55	30.34' RT	987.20	524361.42	863317.66
36	13+62.75	25.34' RT	987.25	524355.87	863312.39
37	13+62.73	30.33' RT	987.33	524355.61	863317.37
38	13+57.79	25.37' RT	987.33	524350.92	863312.19
39	13+57.73	30.31' RT	987.40	524350.62	863317.12
40	13+44.08	25.34' RT	987.17	524337.22	863311.50
41	13+44.05	30.35' RT	987.33	524336.95	863316.50
42	13+65.75	25.33' RT	987.16	524358.86	863312.53
43	13+65.73	30.33' RT	987.24	524358.61	863317.52
44	13+99.31	30.42' RT	987.24	524392.15	863319.22
45	14+08.57	18.75' RT	987.37	524401.95	863308.01
46	14+00.57	19.00' LT	987.59	524395.77	863269.92
47	14+11.57	19.00' LT	987.68	524406.76	863270.44
48	14+11.50	13.62' RT	987.87	524405.13	863303.03
49	13+96.55	33.41' RT	987.71	524389.24	863322.07
50	13+68.55	33.34' RT	987.74	524361.28	863320.66
51	13+66.59	22.59' RT	987.57	524359.84	863309.83
52	13+98.48	22.64' RT	987.61	524391.68	863311.41

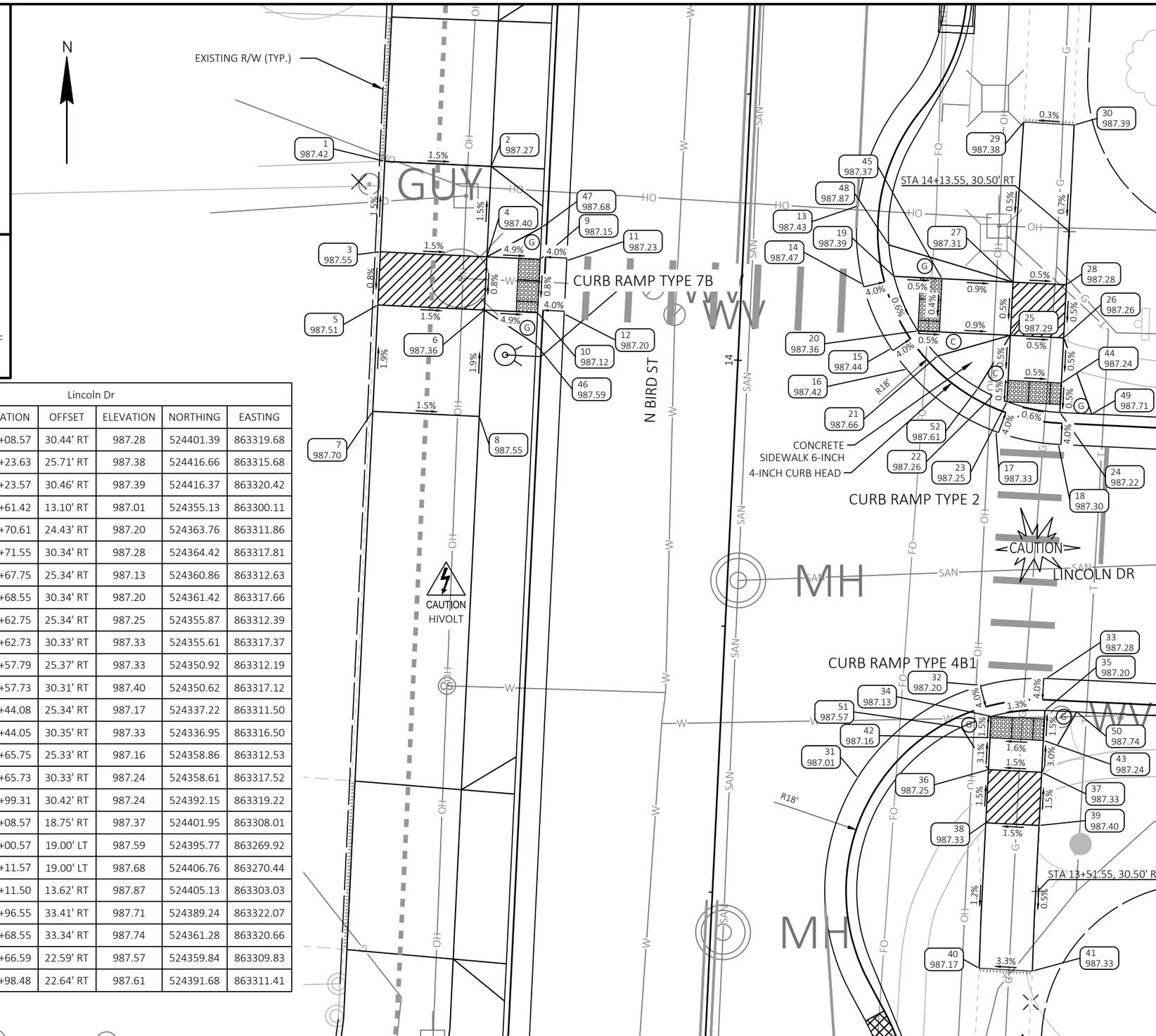

PROJECT NO: 3996-00-35	HWY: N BIRD ST	COUNTY: DANE	CURB RAMP DETAILS	SHEET 17	E

2

LEGEND:

- XXXX — SAW CUT ASPHALT
- YYYY — SAW CUT CONCRETE
- LANDING AREA
- GUTTER PAN SLOPE TRANSITION (6.25% TO 4.0%)
- CURB RAMP DETECTABLE WARNING FIELD NATURAL PATINA
- G — 6:1 CONCRETE FLARE
- C — 10:1 CONCRETE FLARE
- XXXX YYY.YY — POINT NUMBER & ELEVATION
- MEF — MAXIMUM EXTENT FEASIBLE

NOTES:

1. CURB RAMPS ARE CONCRETE SIDEWALK 6-INCH. PLACE 4-INCHES BASE AGGREGATE DENSE 1 1/4-INCH BELOW CONCRETE SIDEWALK.
2. FIELD VERIFY ELEVATION GRADES, SLOPES, LENGTHS AND MATCH POINTS, PRIOR TO CURB RAMP AND SIDEWALK CONSTRUCTION.
3. THE ENGINEER MAY ADJUST GRADES TO FIT FIELD CONDITION.
4. ALL NEW CURB & GUTTER IS 30-INCH TYPE D OR 36-INCH SPECIAL ARE 4% GUTTER SLOPES UNLESS OTHERWISE NOTED. TRANSITION FROM EXISTING GUTTER SLOPE TO NEW GUTTER SLOPE BY START OF CURB RAMP. VERIFY POSITIVE DRAINAGE IS MAINTAINED THROUGH THE TRANSITION.
5. SEE THE STANDARD DETAIL DRAWINGS FOR COMPLETE CURB RAMP REQUIREMENTS.

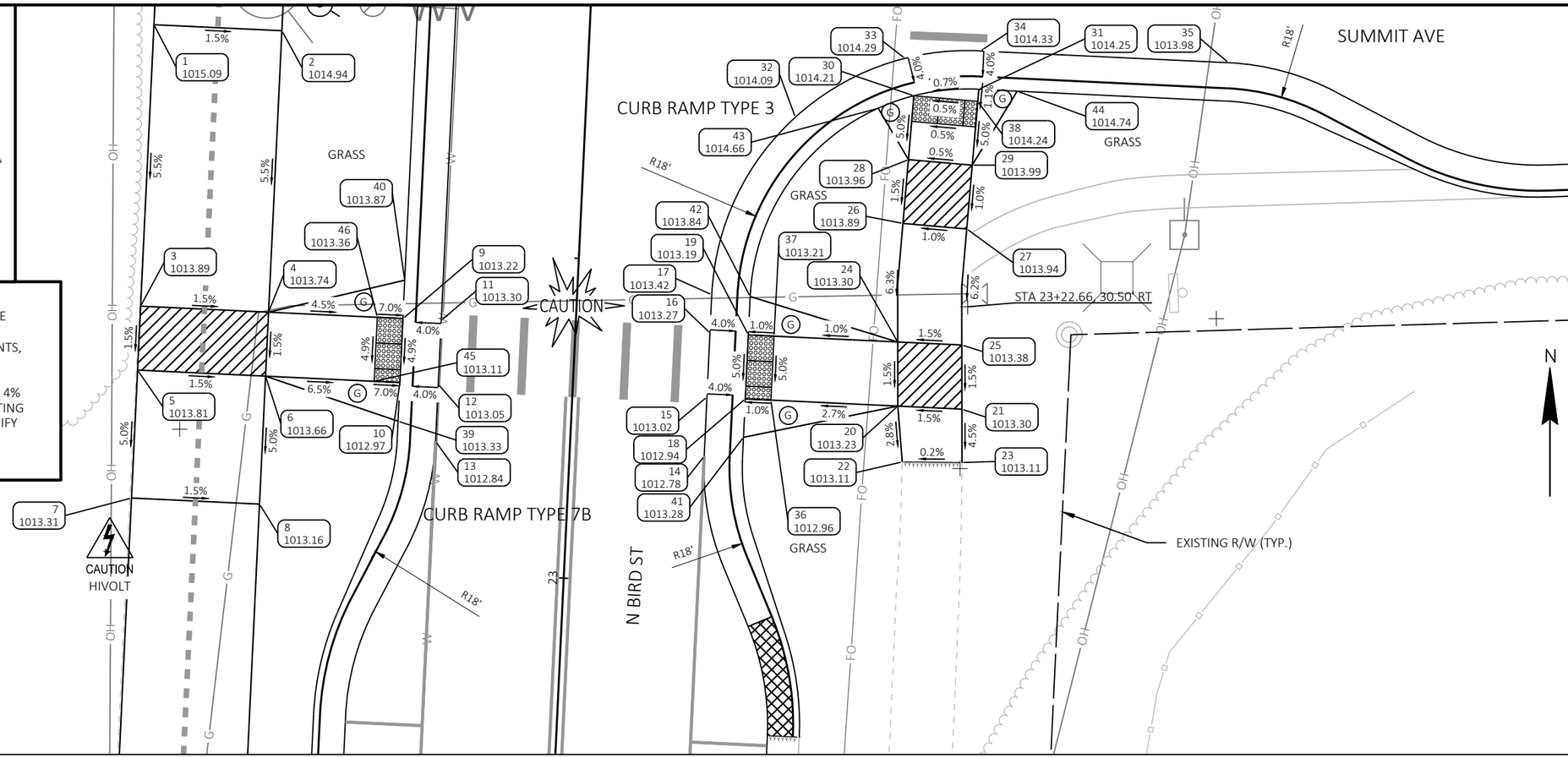

Summit Ave S					
POINT NUMBER	STATION	OFFSET	ELEVATION	NORTHING	EASTING
1	23+41.66	34.00' LT	1015.09	525336.48	863299.89
2	23+41.66	24.00' LT	1014.94	525336.01	863309.88
3	23+19.66	34.00' LT	1013.89	525314.50	863298.85
4	23+19.66	24.00' LT	1013.74	525314.03	863308.84
5	23+14.66	34.00' LT	1013.81	525309.51	863298.61
6	23+14.66	24.00' LT	1013.66	525309.04	863308.60
7	23+04.66	34.00' LT	1013.31	525299.52	863298.14
8	23+04.66	24.00' LT	1013.16	525299.05	863308.13
9	23+19.66	13.50' LT	1013.22	525313.53	863319.33
10	23+14.66	13.50' LT	1012.97	525308.54	863319.09
11	23+19.66	10.50' LT	1013.30	525313.39	863322.32
12	23+14.66	10.50' LT	1013.05	525308.40	863322.09
13	23+10.20	10.50' LT	1012.84	525303.95	863321.88
14	23+10.02	10.50' RT	1012.78	525302.77	863342.84
15	23+14.66	10.50' RT	1013.02	525307.41	863343.06

Summit Ave S					
POINT NUMBER	STATION	OFFSET	ELEVATION	NORTHING	EASTING
16	23+19.66	10.50' RT	1013.27	525312.40	863343.30
17	23+22.66	10.50' RT	1013.42	525315.40	863343.44
18	23+14.66	13.50' RT	1012.94	525307.26	863346.06
19	23+19.66	13.50' RT	1013.19	525312.26	863346.30
20	23+14.66	25.42' RT	1013.23	525306.70	863357.96
21	23+14.66	30.42' RT	1013.30	525306.46	863362.96
22	23+10.32	25.97' RT	1013.11	525302.34	863358.31
23	23+10.49	30.62' RT	1013.11	525302.29	863362.97
24	23+19.66	25.17' RT	1013.30	525311.71	863357.96
25	23+19.66	30.18' RT	1013.38	525311.47	863362.96
26	23+28.92	25.14' RT	1013.89	525320.96	863358.36
27	23+28.73	30.14' RT	1013.94	525320.53	863363.34
28	23+33.92	25.34' RT	1013.96	525325.94	863358.79
29	23+33.72	30.33' RT	1013.99	525325.51	863363.77
30	23+38.91	25.53' RT	1014.21	525330.92	863359.22

Summit Ave S					
POINT NUMBER	STATION	OFFSET	ELEVATION	NORTHING	EASTING
31	23+39.66	30.56' RT	1014.25	525331.43	863364.29
32	23+36.80	16.36' RT	1014.09	525329.25	863349.96
33	23+41.80	24.70' RT	1014.29	525333.84	863358.53
34	23+42.66	30.56' RT	1014.33	525334.43	863364.43
35	23+42.66	49.93' RT	1013.98	525333.51	863383.78
36	23+14.66	15.50' RT	1012.96	525307.17	863348.06
37	23+19.66	15.50' RT	1013.21	525312.16	863348.30
38	23+38.72	30.52' RT	1014.24	525330.49	863364.19
39	23+11.63	13.50' LT	1013.33	525305.52	863318.95
40	23+22.66	13.50' LT	1013.87	525316.53	863319.47
41	23+11.66	13.50' RT	1013.28	525304.27	863345.92
42	23+22.66	13.50' RT	1013.84	525315.25	863346.44
43	23+37.81	22.80' RT	1014.66	525329.95	863356.44
44	23+39.66	33.56' RT	1014.74	525331.29	863367.28
45	23+14.65	15.50' LT	1013.11	525308.63	863317.09

PROJECT NO: 3996-00-35	HWY: N BIRD ST	COUNTY: DANE	CURB RAMP DETAILS	SHEET 18	E

2

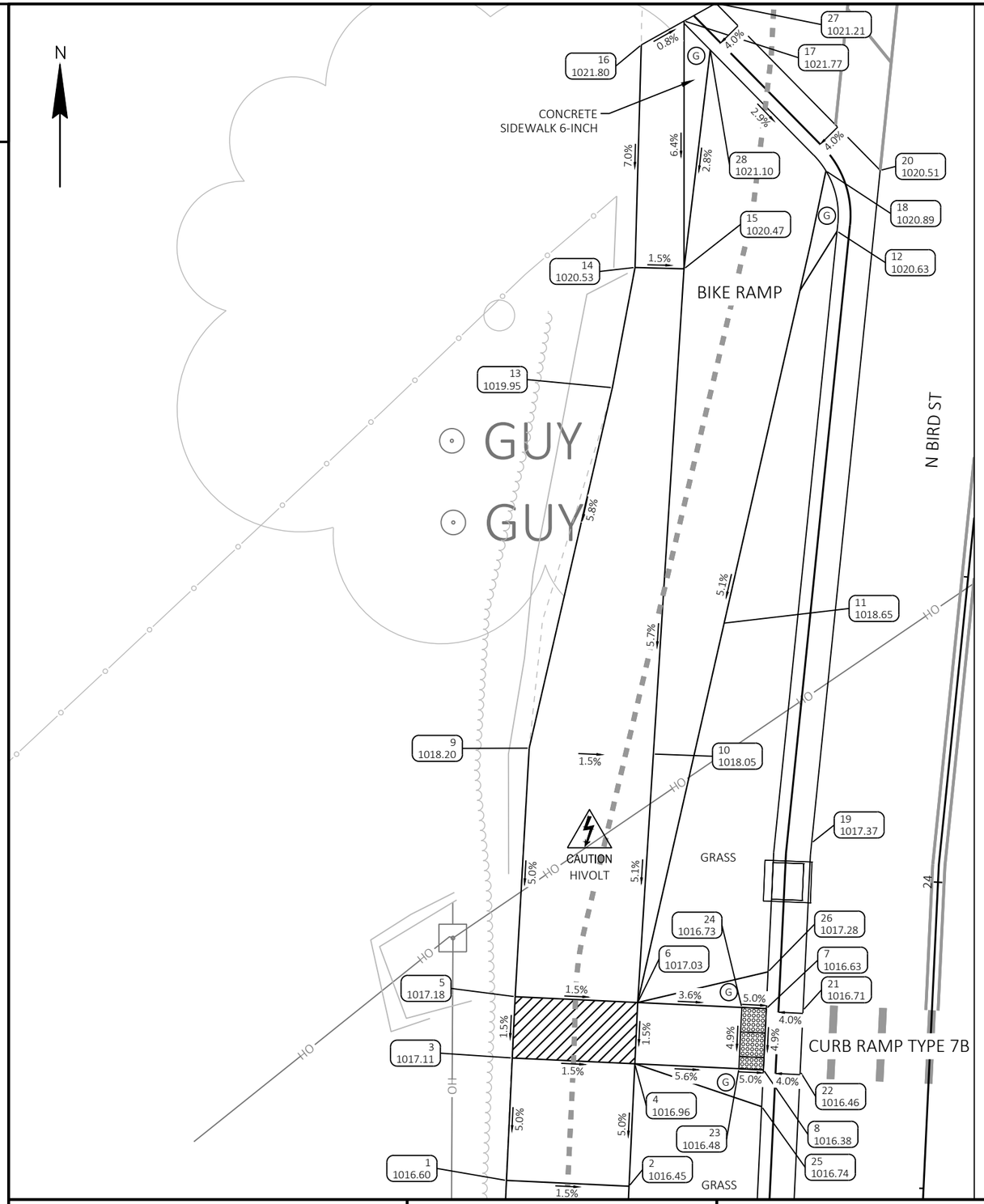

Summit Ave NW					
POINT NUMBER	STATION	OFFSET	ELEVATION	NORTHING	EASTING
1	23+74.04	34.00' LT	1016.60	525368.83	863301.42
2	23+74.04	24.00' LT	1016.45	525368.36	863311.41
3	23+84.04	34.00' LT	1017.11	525378.82	863301.89
4	23+84.04	24.00' LT	1016.96	525378.35	863311.88
5	23+89.04	34.00' LT	1017.18	525383.81	863302.13
6	23+89.04	24.00' LT	1017.03	525383.34	863312.12
7	23+89.04	13.50' LT	1016.63	525382.84	863322.61
8	23+84.04	13.50' LT	1016.38	525377.85	863322.37
9	24+07.49	34.20' LT	1018.20	525404.08	863303.27
10	24+08.04	24.08' LT	1018.05	525403.60	863313.39
11	24+19.23	19.52' LT	1018.65	525414.26	863319.07
12	24+51.98	13.50' LT	1020.63	525446.24	863328.37
13	24+37.42	30.43' LT	1019.95	525433.47	863310.06
14	24+47.37	29.59' LT	1020.53	525443.28	863311.90
15	24+47.66	25.60' LT	1020.47	525443.17	863315.90
16	24+65.47	30.92' LT	1021.80	525461.43	863312.41
17	24+67.77	27.64' LT	1021.77	525463.38	863315.90
18	24+56.78	14.90' LT	1020.89	525451.15	863327.46
19	24+02.15	10.50' LT	1017.37	525396.36	863326.30
20	24+57.27	10.50' LT	1020.51	525451.20	863331.90
21	23+89.04	10.50' LT	1016.71	525382.70	863325.60
22	23+84.04	10.50' LT	1016.46	525377.71	863325.37
23	23+84.04	15.50' LT	1016.48	525377.94	863320.37
24	23+89.04	15.50' LT	1016.73	525382.94	863320.61
25	23+81.04	13.50' LT	1016.74	525374.85	863322.23

Summit Ave NW					
POINT NUMBER	STATION	OFFSET	ELEVATION	NORTHING	EASTING
26	23+92.04	13.50' LT	1017.28	525385.84	863322.75
27	24+69.47	25.21' LT	1021.21	525464.83	863318.50
28	24+65.63	25.28' LT	1021.10	525461.02	863318.04

2

LEGEND:

- .XXXX. SAW CUT ASPHALT
- YYYY SAW CUT CONCRETE
- LANDING AREA
- GUTTER PAN SLOPE TRANSITION (6.25% TO 4.0%)
- CURB RAMP DETECTABLE WARNING FIELD NATURAL PATINA
- (G) 6:1 CONCRETE FLARE
- (C) 10:1 CONCRETE FLARE
- XXXX YYY.YY POINT NUMBER & ELEVATION
- MEF MAXIMUM EXTENT FEASIBLE

NOTES:

1. CURB RAMPS ARE CONCRETE SIDEWALK 6-INCH. PLACE 4-INCHES BASE AGGREGATE DENSE 1 1/4-INCH BELOW CONCRETE SIDEWALK.
2. FIELD VERIFY ELEVATION GRADES, SLOPES, LENGTHS AND MATCH POINTS, PRIOR TO CURB RAMP AND SIDEWALK CONSTRUCTION.
3. THE ENGINEER MAY ADJUST GRADES TO FIT FIELD CONDITION.
4. ALL NEW CURB & GUTTER IS 30-INCH TYPE D OR 36-INCH SPECIAL ARE 4% GUTTER SLOPES UNLESS OTHERWISE NOTED. TRANSITION FROM EXISTING GUTTER SLOPE TO NEW GUTTER SLOPE BY START OF CURB RAMP. VERIFY POSITIVE DRAINAGE IS MAINTAINED THROUGH THE TRANSITION.
5. SEE THE STANDARD DETAIL DRAWINGS FOR COMPLETE CURB RAMP REQUIREMENTS.

2

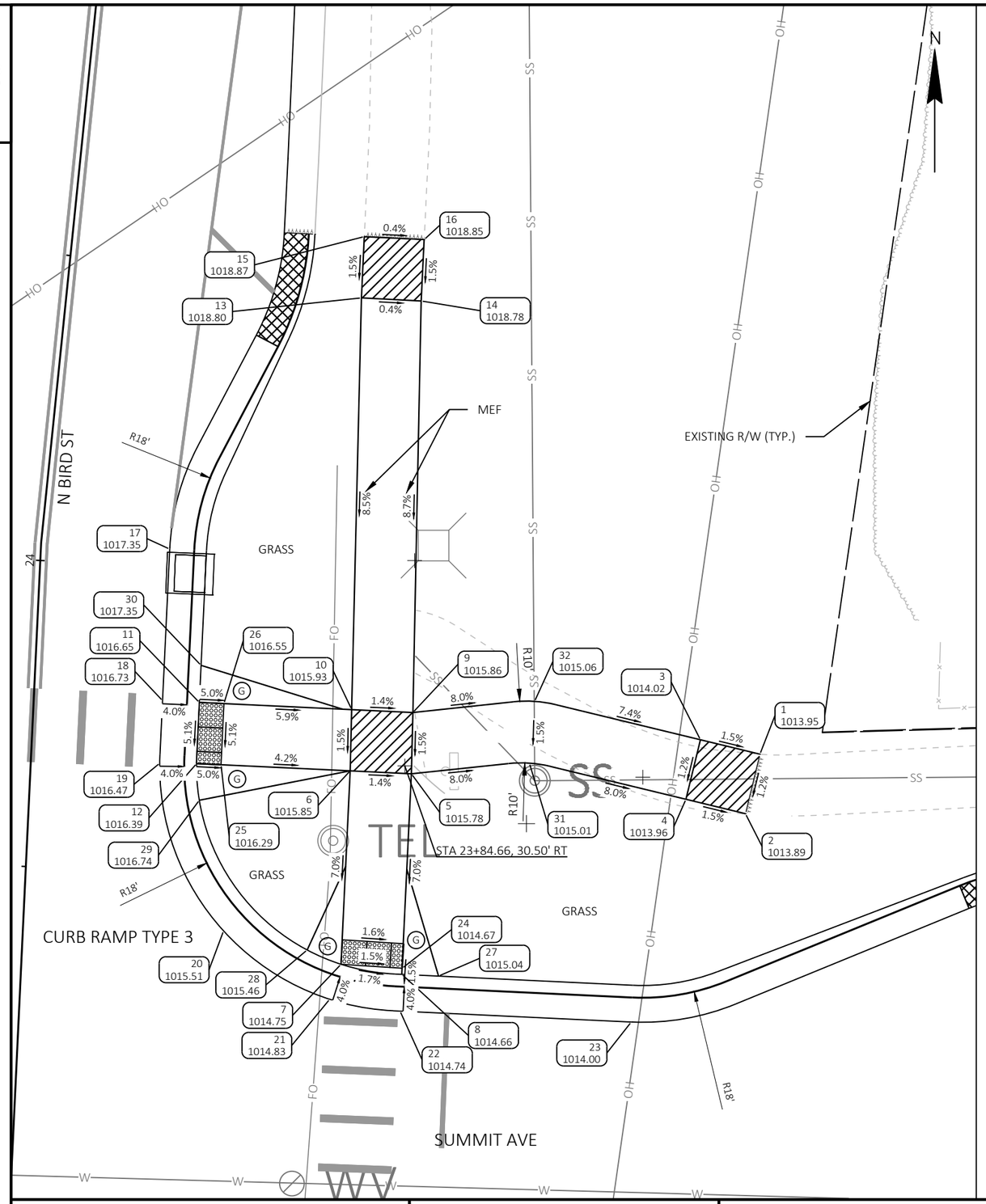

Summit Ave NE					
POINT NUMBER	STATION	OFFSET	ELEVATION	NORTHING	EASTING
1	23+86.98	59.39' RT	1013.95	525377.34	863395.32
2	23+82.07	58.44' RT	1013.89	525372.48	863394.14
3	23+87.93	54.48' RT	1014.02	525378.52	863390.46
4	23+83.02	53.53' RT	1013.96	525373.66	863389.28
5	23+84.04	31.06' RT	1015.78	525375.74	863366.88
6	23+84.04	26.06' RT	1015.85	525375.98	863361.89
7	23+68.25	26.06' RT	1014.75	525360.20	863361.14
8	23+67.67	31.05' RT	1014.66	525359.38	863366.10
9	23+89.04	30.94' RT	1015.86	525380.74	863367.00
10	23+89.06	25.94' RT	1015.93	525381.00	863362.01
11	23+89.04	13.50' RT	1016.65	525381.57	863349.58
12	23+84.04	13.51' RT	1016.39	525376.57	863349.35
13	24+23.97	23.96' RT	1018.80	525414.58	863362.80
14	24+24.22	28.84' RT	1018.78	525414.32	863367.68
15	24+28.97	23.69' RT	1018.87	525419.57	863363.04
16	24+29.23	28.58' RT	1018.85	525419.33	863367.92
17	24+02.00	10.48' RT	1017.35	525394.08	863347.17
18	23+89.04	10.50' RT	1016.73	525381.71	863346.58
19	23+83.93	10.51' RT	1016.47	525376.61	863346.35
20	23+70.51	16.36' RT	1015.51	525362.92	863351.56
21	23+65.35	25.28' RT	1014.83	525357.34	863360.22
22	23+64.66	31.05' RT	1014.74	525356.38	863365.96
23	23+64.66	49.93' RT	1014.00	525355.49	863384.82
24	23+68.16	31.06' RT	1014.67	525359.88	863366.13
25	23+84.04	15.51' RT	1016.29	525376.48	863351.35

Summit Ave NE					
POINT NUMBER	STATION	OFFSET	ELEVATION	NORTHING	EASTING
26	23+89.04	15.51' RT	1016.55	525381.47	863351.59
27	23+67.66	34.05' RT	1015.04	525359.23	863369.09
28	23+69.28	23.25' RT	1015.46	525361.37	863358.38
29	23+81.07	13.88' RT	1016.74	525373.58	863349.58
30	23+92.07	13.50' RT	1017.35	525384.59	863349.72
31	23+85.36	40.64' RT	1015.01	525376.61	863376.51
32	23+90.42	40.81' RT	1015.06	525381.65	863376.92

2

LEGEND:

- XXXX — SAW CUT ASPHALT
- YYYY — SAW CUT CONCRETE
- LANDING AREA
- GUTTER PAN SLOPE TRANSITION (6.25% TO 4.0%)
- CURB RAMP DETECTABLE WARNING FIELD NATURAL PATINA
- G — 6:1 CONCRETE FLARE
- C — 10:1 CONCRETE FLARE
- XXXX YYY.YY — POINT NUMBER & ELEVATION
- MEF — MAXIMUM EXTENT FEASIBLE

NOTES:

1. CURB RAMPS ARE CONCRETE SIDEWALK 6-INCH. PLACE 4-INCHES BASE AGGREGATE DENSE 1 1/4-INCH BELOW CONCRETE SIDEWALK.
2. FIELD VERIFY ELEVATION GRADES, SLOPES, LENGTHS AND MATCH POINTS, PRIOR TO CURB RAMP AND SIDEWALK CONSTRUCTION.
3. THE ENGINEER MAY ADJUST GRADES TO FIT FIELD CONDITION.
4. ALL NEW CURB & GUTTER IS 30-INCH TYPE D OR 36-INCH SPECIAL ARE 4% GUTTER SLOPES UNLESS OTHERWISE NOTED. TRANSITION FROM EXISTING GUTTER SLOPE TO NEW GUTTER SLOPE BY START OF CURB RAMP. VERIFY POSITIVE DRAINAGE IS MAINTAINED THROUGH THE TRANSITION.
5. SEE THE STANDARD DETAIL DRAWINGS FOR COMPLETE CURB RAMP REQUIREMENTS.

2

LEGEND:

XXXX	SAW CUT ASPHALT
YYYY	SAW CUT CONCRETE
	LANDING AREA
	GUTTER PAN SLOPE TRANSITION (6.25% TO 4.0%)
	CURB RAMP DETECTABLE WARNING FIELD NATURAL PATINA
G	6:1 CONCRETE FLARE
C	10:1 CONCRETE FLARE
XXXX YYY.YY	POINT NUMBER & ELEVATION
MEF	MAXIMUM EXTENT FEASIBLE

NOTES:

1. CURB RAMPS ARE CONCRETE SIDEWALK 6-INCH. PLACE 4-INCHES BASE AGGREGATE DENSE 1 1/4-INCH BELOW CONCRETE SIDEWALK.
2. FIELD VERIFY ELEVATION GRADES, SLOPES, LENGTHS AND MATCH POINTS, PRIOR TO CURB RAMP AND SIDEWALK CONSTRUCTION.
3. THE ENGINEER MAY ADJUST GRADES TO FIT FIELD CONDITION.
4. ALL NEW CURB & GUTTER IS 30-INCH TYPE D OR 36-INCH SPECIAL ARE 4% GUTTER SLOPES UNLESS OTHERWISE NOTED. TRANSITION FROM EXISTING GUTTER SLOPE TO NEW GUTTER SLOPE BY START OF CURB RAMP. VERIFY POSITIVE DRAINAGE IS MAINTAINED THROUGH THE TRANSITION.
5. SEE THE STANDARD DETAIL DRAWINGS FOR COMPLETE CURB RAMP REQUIREMENTS.

North Bridge Bike Ramp					
POINT NUMBER	STATION	OFFSET	ELEVATION	NORTHING	EASTING
1	27+24.04	29.89' LT	1027.95	525717.80	863328.50
2	27+10.77	29.98' LT	1028.02	525704.55	863327.78
3	27+16.04	23.46' LT	1027.53	525709.50	863334.54
4	27+00.27	26.77' LT	1027.68	525694.03	863330.48
5	26+89.53	26.45' LT	1027.85	525683.29	863330.24
6	26+99.76	24.33' LT	1027.75	525693.40	863332.89
7	27+15.33	21.07' LT	1027.61	525708.68	863336.90
8	26+97.37	30.04' LT	1028.09	525691.30	863327.06
9	26+90.04	28.90' LT	1027.77	525683.93	863327.82
10	27+18.98	22.85' LT	1028.00	525712.41	863335.30

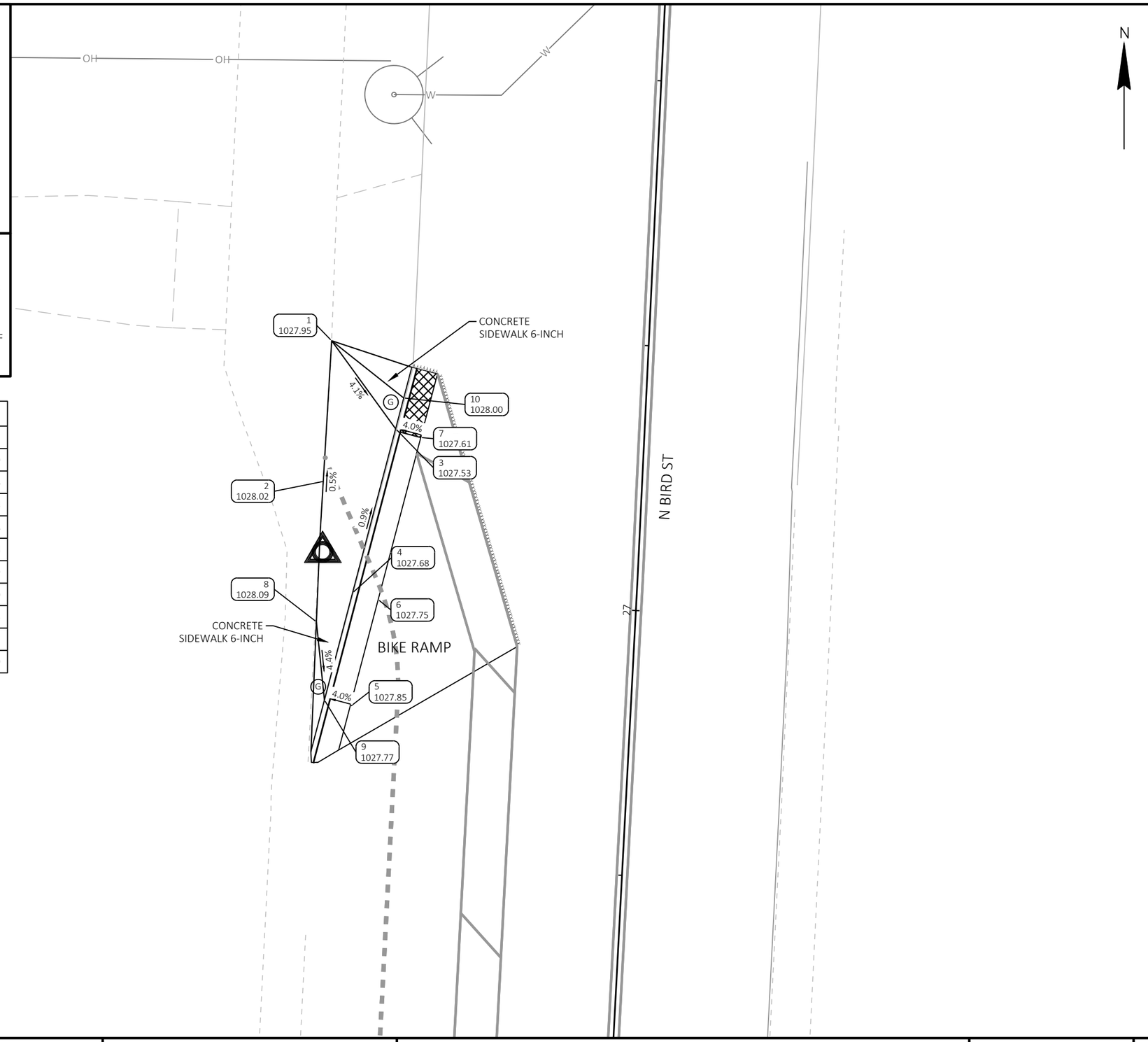

2

PROJECT NO: 3996-00-35	HWY: N BIRD ST	COUNTY: DANE	CURB RAMP DETAILS	SHEET 21	E

2

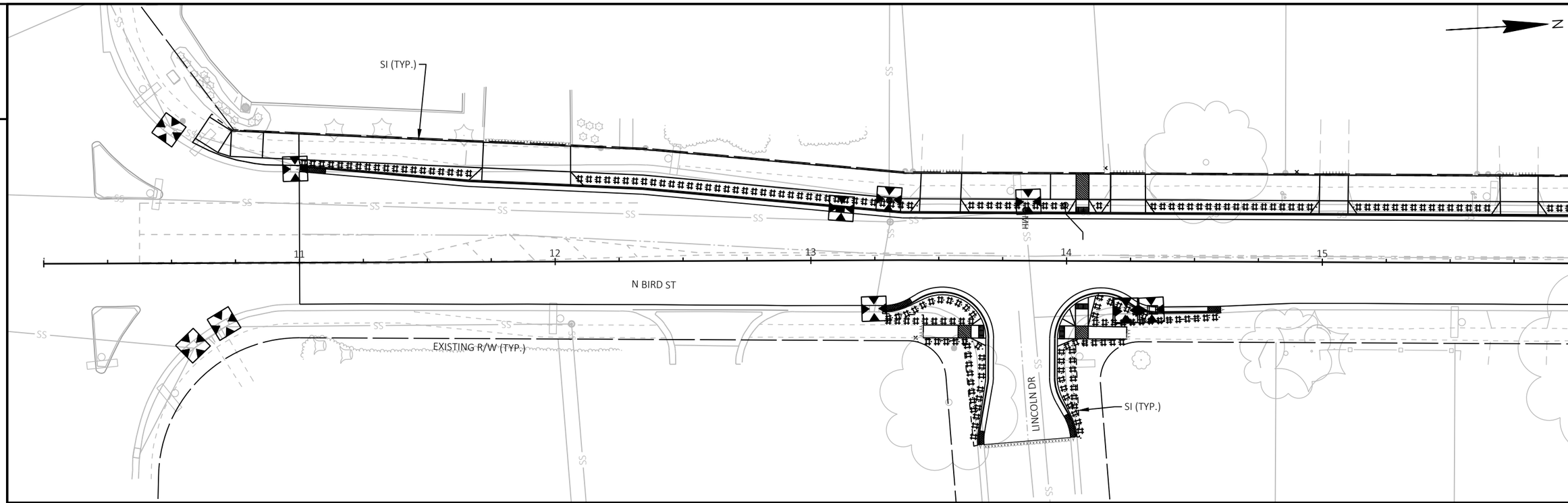

2

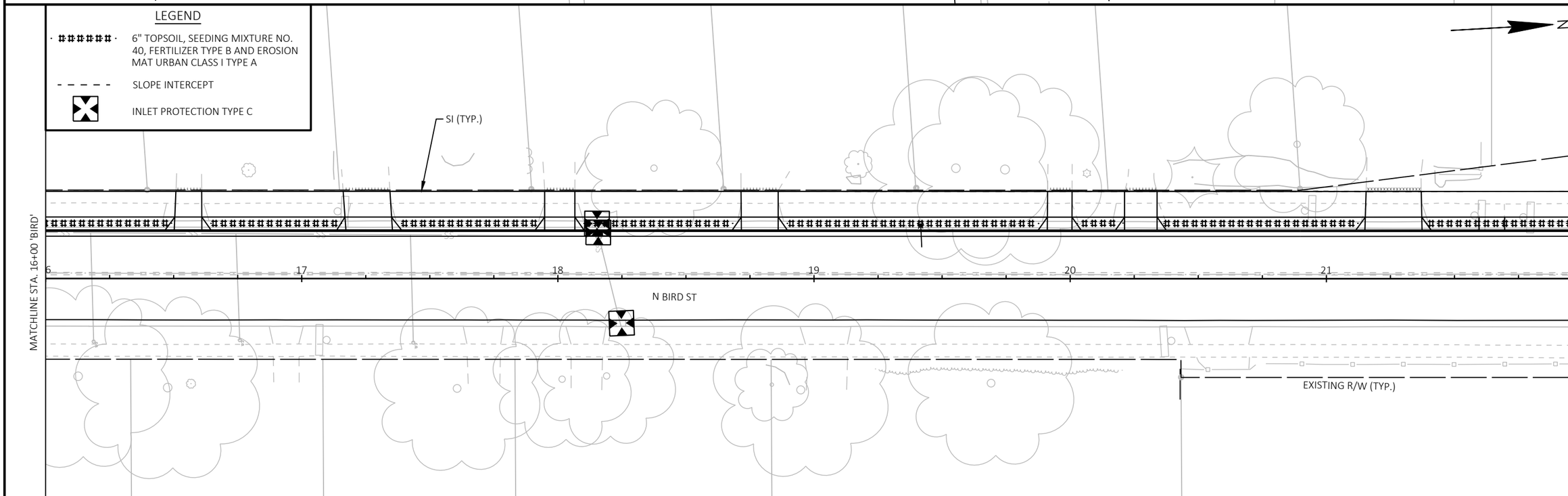

PROJECT NO: 3996-00-35	HWY: N BIRD ST	COUNTY: DANE	EROSION CONTROL	SHEET 22	E

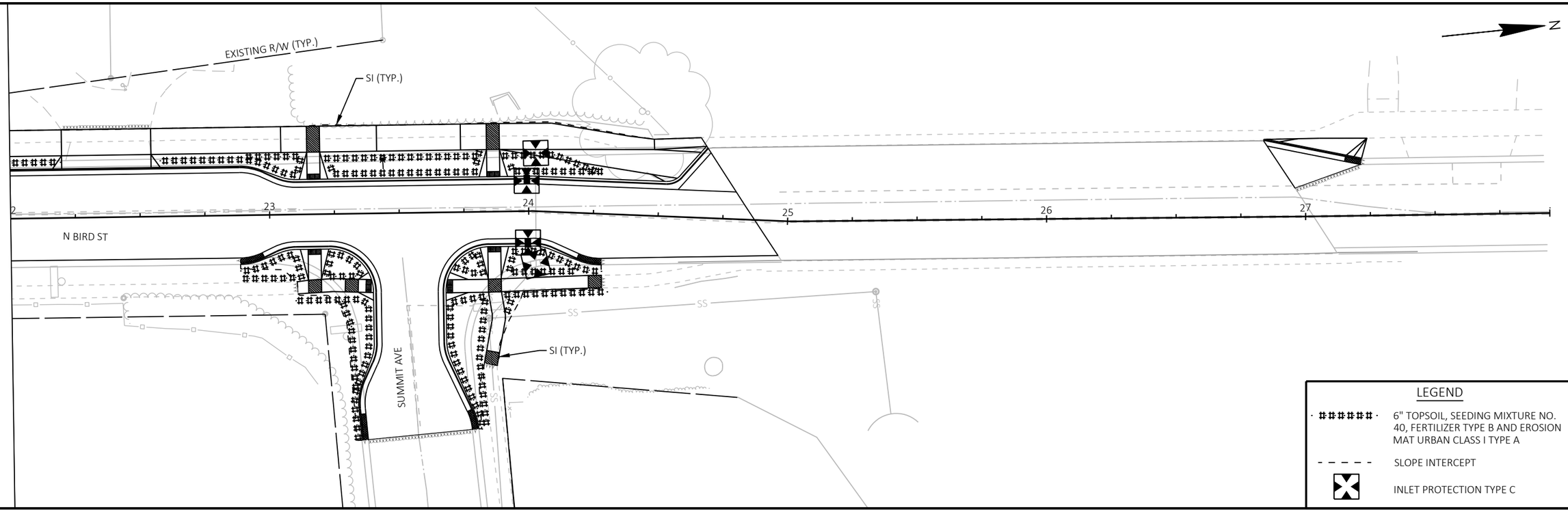

LEGEND

- 6" TOPSOIL, SEEDING MIXTURE NO. 40, FERTILIZER TYPE B AND EROSION MAT URBAN CLASS I TYPE A
- SLOPE INTERCEPT
- INLET PROTECTION TYPE C

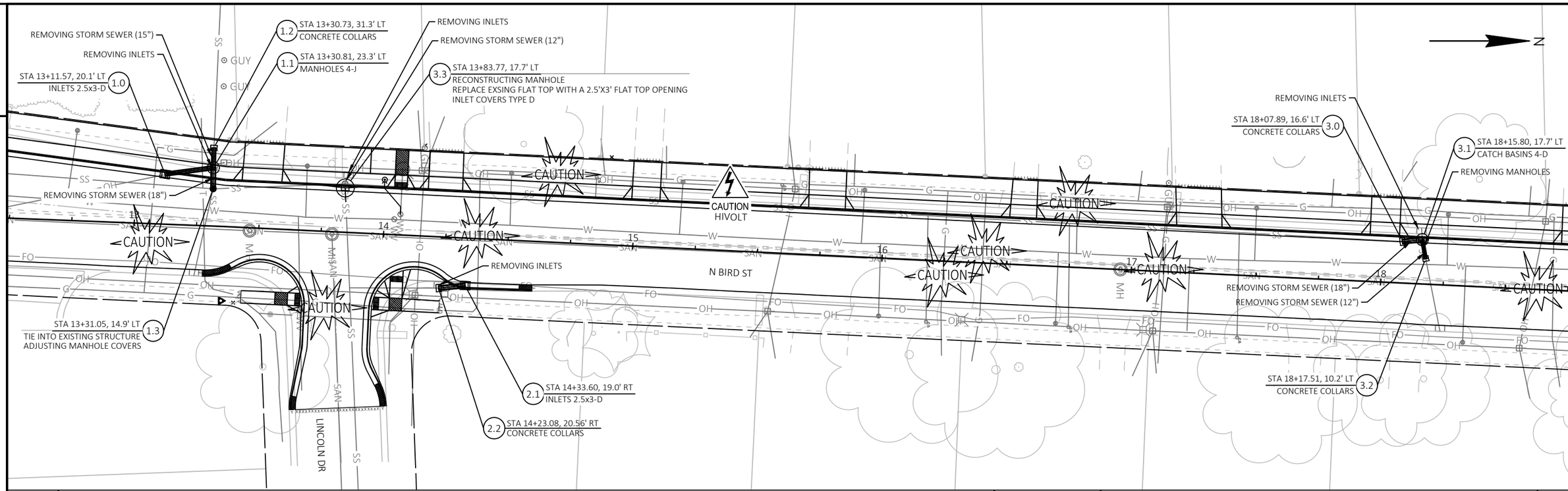

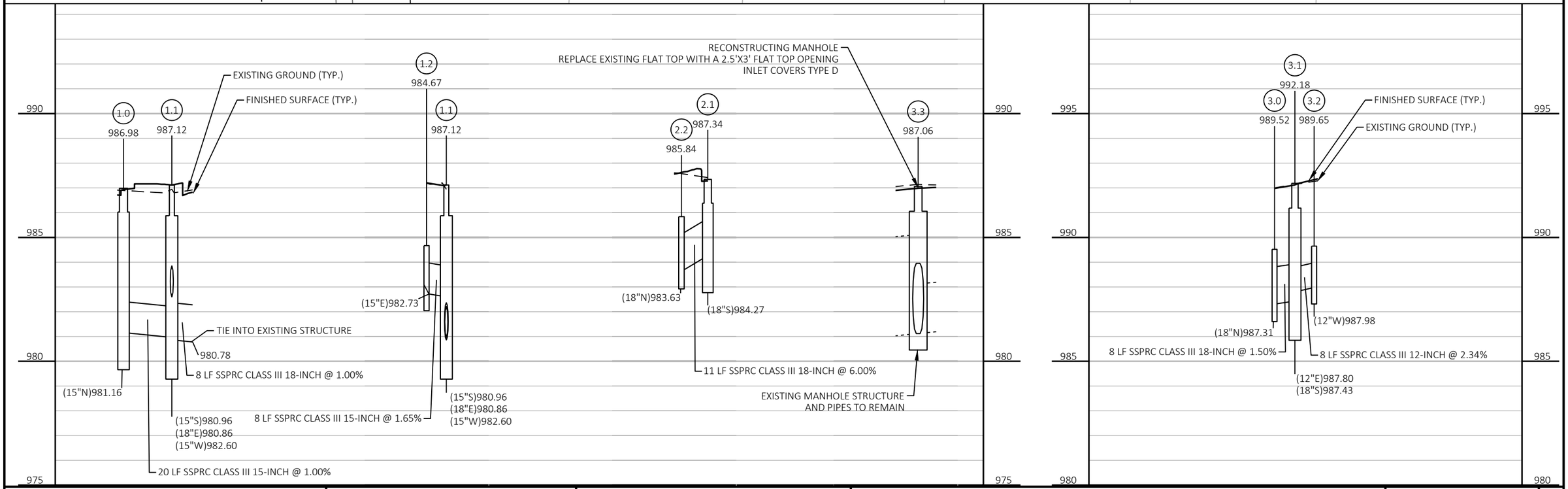

PROJECT NO: 3996-00-35	HWY: N BIRD ST	COUNTY: DANE	STORM SEWER	SHEET 24	E

FILE NAME : G:\00\00036\00036327\CADD\C3D\39960034\SHEETS\022501-SS.DWG
LAYOUT NAME - 022501-ss
PLOT DATE : 10/10/2024 9:49 AM
PLOT BY : NATHAN COOK
PLOT NAME :
PLOT SCALE : 1 IN:40 FT
WISDOT/CADDS SHEET 41

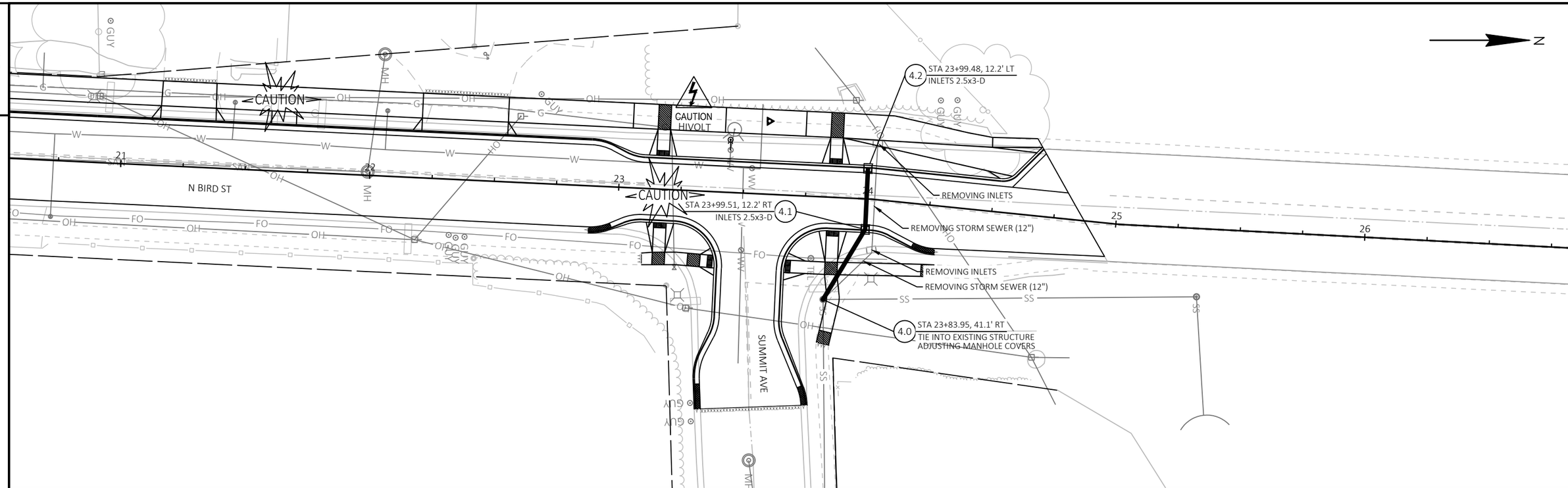

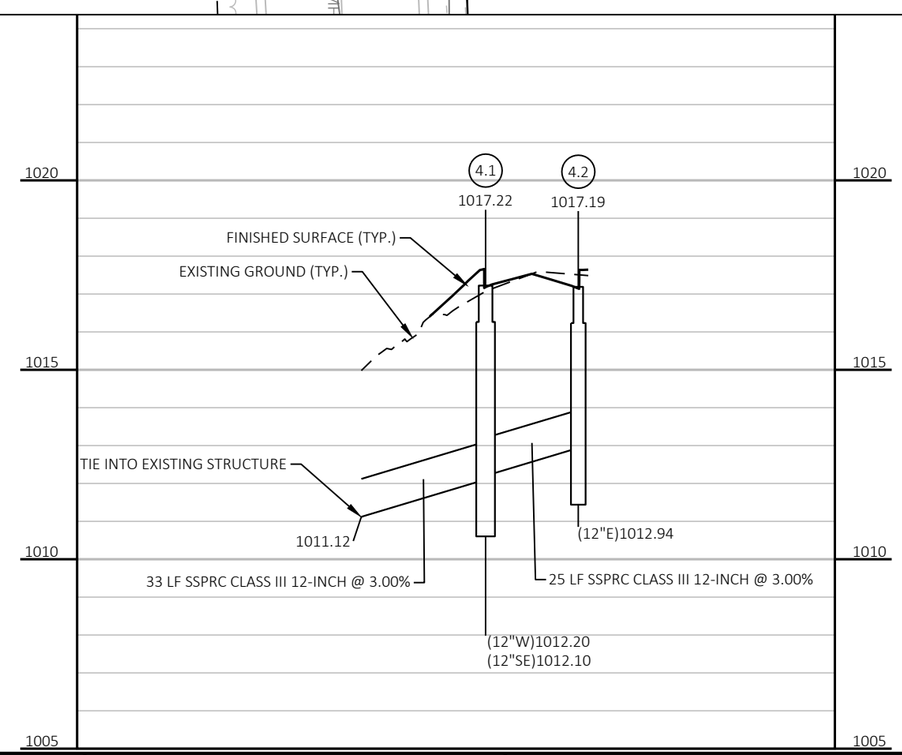

PROJECT NO: 3996-00-35	HWY: N BIRD ST	COUNTY: DANE	STORM SEWER	SHEET 25	E

FILE NAME : G:\00\00036\00036327\CADD\C3D\39960034\SHEETS\022501-SS.DWG
LAYOUT NAME - 022502-ss
PLOT DATE : 10/10/2024 9:49 AM PLOT BY : NATHAN COOK PLOT NAME : PLOT SCALE : 1 IN:40 FT

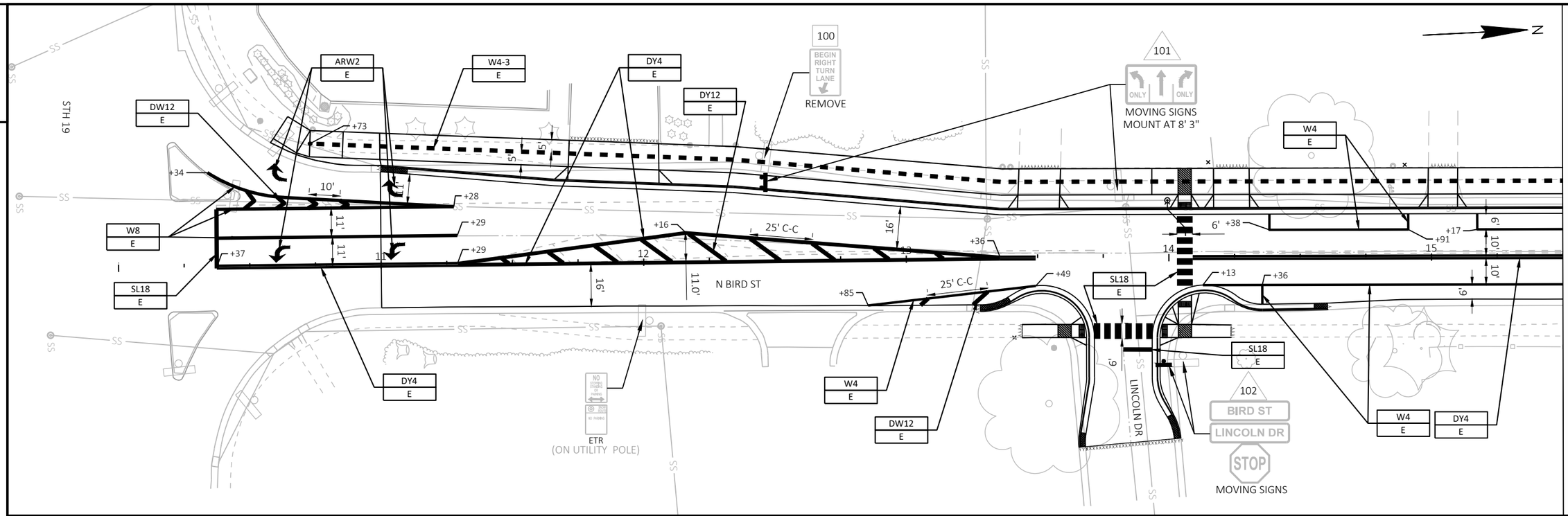

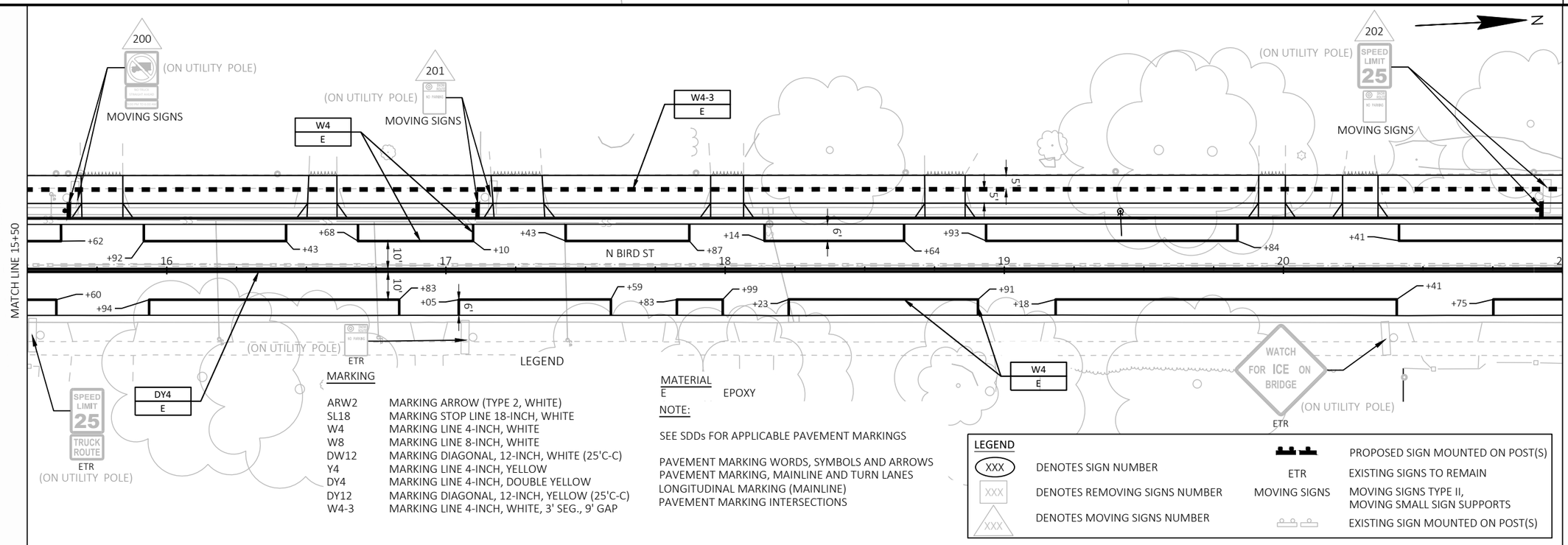

MARKING

ARW2	MARKING ARROW (TYPE 2, WHITE)
SL18	MARKING STOP LINE 18-INCH, WHITE
W4	MARKING LINE 4-INCH, WHITE
W8	MARKING LINE 8-INCH, WHITE
DW12	MARKING DIAGONAL, 12-INCH, WHITE (25'C-C)
Y4	MARKING LINE 4-INCH, YELLOW
DY4	MARKING LINE 4-INCH, DOUBLE YELLOW
DY12	MARKING DIAGONAL, 12-INCH, YELLOW (25'C-C)
W4-3	MARKING LINE 4-INCH, WHITE, 3' SEG., 9' GAP

MATERIAL

E EPOXY

NOTE:

SEE SDDs FOR APPLICABLE PAVEMENT MARKINGS

PAVEMENT MARKING WORDS, SYMBOLS AND ARROWS
PAVEMENT MARKING, MAINLINE AND TURN LANES
LONGITUDINAL MARKING (MAINLINE)
PAVEMENT MARKING INTERSECTIONS

LEGEND

XXX	DENOTES SIGN NUMBER		PROPOSED SIGN MOUNTED ON POST(S)
XXX	DENOTES REMOVING SIGNS NUMBER	ETR	EXISTING SIGNS TO REMAIN
XXX	DENOTES MOVING SIGNS NUMBER	MOVING SIGNS	MOVING SIGNS TYPE II, MOVING SMALL SIGN SUPPORTS
			EXISTING SIGN MOUNTED ON POST(S)

PROJECT NO: 3996-00-35	HWY: N BIRD ST	COUNTY: DANE	SIGNING & MARKING	SHEET 26	E

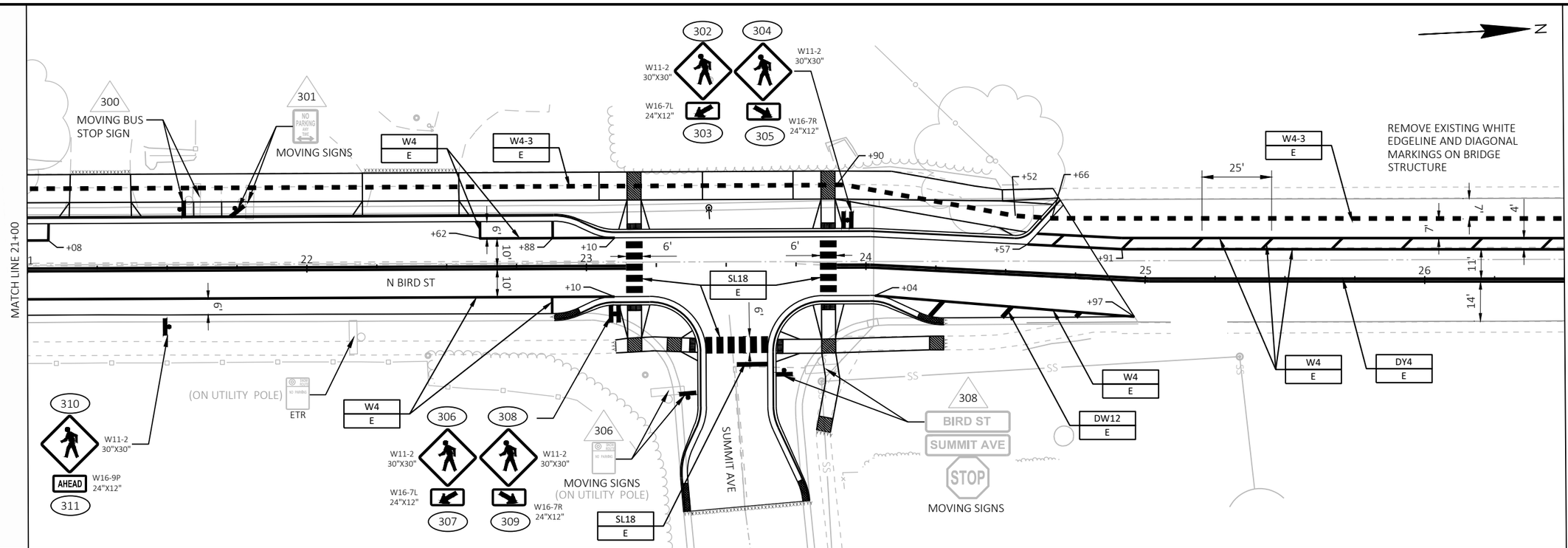

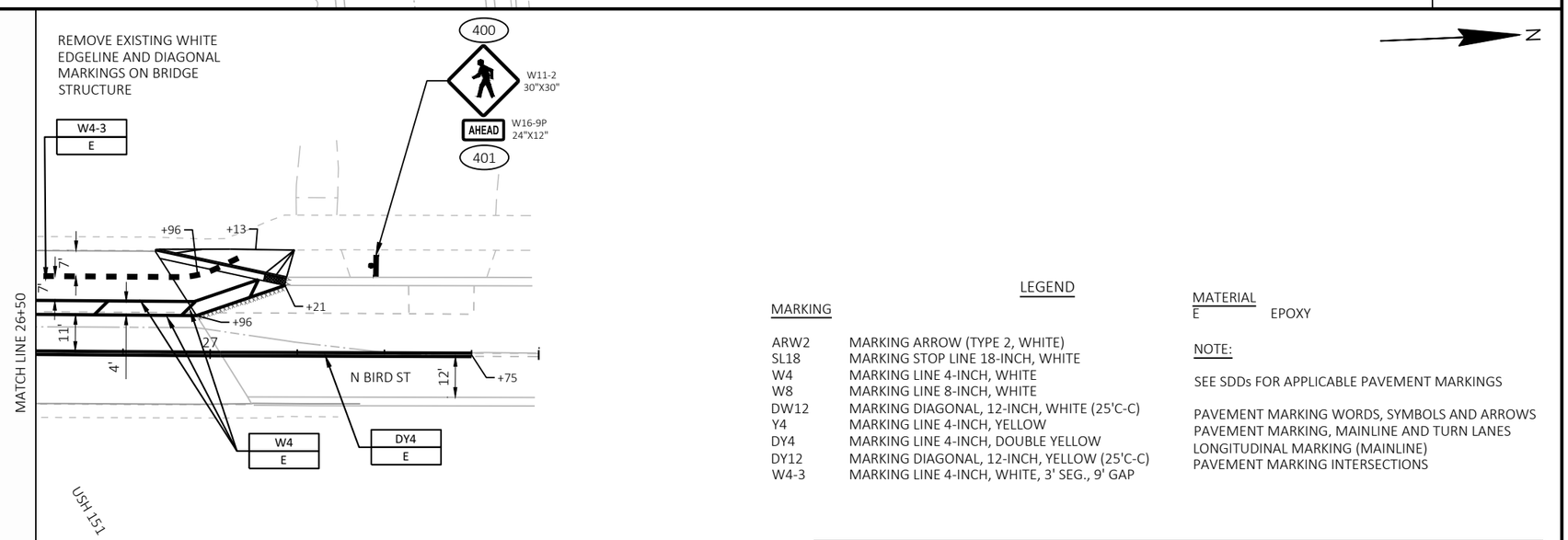

LEGEND

MARKING	
ARW2	MARKING ARROW (TYPE 2, WHITE)
SL18	MARKING STOP LINE 18-INCH, WHITE
W4	MARKING LINE 4-INCH, WHITE
W8	MARKING LINE 8-INCH, WHITE
DW12	MARKING DIAGONAL, 12-INCH, WHITE (25'C-C)
Y4	MARKING LINE 4-INCH, YELLOW
DY4	MARKING LINE 4-INCH, DOUBLE YELLOW
DY12	MARKING DIAGONAL, 12-INCH, YELLOW (25'C-C)
W4-3	MARKING LINE 4-INCH, WHITE, 3' SEG., 9' GAP

MATERIAL	
E	EPOXY

NOTE:

SEE SDDs FOR APPLICABLE PAVEMENT MARKINGS

PAVEMENT MARKING WORDS, SYMBOLS AND ARROWS
PAVEMENT MARKING, MAINLINE AND TURN LANES
LONGITUDINAL MARKING (MAINLINE)
PAVEMENT MARKING INTERSECTIONS

LEGEND

XXX	DENOTES SIGN NUMBER		PROPOSED SIGN MOUNTED ON POST(S)
XXX	DENOTES REMOVING SIGNS NUMBER	ETR	EXISTING SIGNS TO REMAIN
XXX	DENOTES MOVING SIGNS NUMBER	MOVING SIGNS	MOVING SIGNS TYPE II, MOVING SMALL SIGN SUPPORTS
			EXISTING SIGN MOUNTED ON POST(S)

PROJECT NO: 3996-00-35	HWY: N BIRD ST	COUNTY: DANE	SIGNING & MARKING	SHEET 27	E

2

GENERAL NOTES FOR TRAFFIC CONTROL

1) ADJUST THE EXACT NUMBER, LOCATION, AND SPACING OF ALL SIGNS AND DEVICES TO FIT FIELD CONDITIONS AS DIRECTED BY THE ENGINEER.

2) A FLAGGER MAY BE REQUIRED WHERE CONSTRUCTION VEHICLES ENTER OR LEAVE WORK AREAS IF WARRANTED BY CONDITIONS OR AS DIRECTED BY THE ENGINEER.

3) ALL SIGNS ARE 48" X 48" UNLESS OTHERWISE NOTED.

4) ALL TYPE III BARRICADES WITH SIGNS SHALL BE 8' WIDE, UNLESS OTHERWISE NOTED, AND EQUIPPED WITH TWO TYPE "A" (LOW INTENSITY FLASHING) LIGHTS.

5) "WO" SIGNS ARE THE SAME AS "W" SIGNS EXCEPT THE BACKGROUND IS REFLECTIVE ORANGE.

6) BARRICADE STRIPES SHALL BE SLOPED DOWNWARD IN THE DIRECTION OF TRAFFIC FLOW.

7) ALL TRAFFIC CONTROL DRUMS ARE SPACED AT 50 FEET, UNLESS OTHERWISE NOTED.

8) PERMANENT SIGNING AND PAVEMENT MARKING PLACED IN EARLIER STAGES SHALL NOT CONFLICT WITH TRAFFIC CONTROL FOR SUBSEQUENT STAGES.

9) FOR SIGNS MOUNTED ON PORTABLE OR TEMPORARY SIGN SUPPORTS, PROVIDE A MINIMUM OF 5 FEET FROM THE BOTTOM OF THE SIGN TO THE ADJACENT PAVEMENT.

10) ELIMINATE DROP-OFFS OF 2 INCHES OR MORE WITHIN 10 FEET OR LESS FROM THE EDGE OF THE N BIRD ST TRAVELED WAY BEFORE THE END OF OPERATIONS ON THAT DAY. COMPACTED MATERIAL PLACED TO A TEMPORARY 3:1 OR FLATTER SLOPE FROM THE SURFACE OF THE PAVEMENT EDGE IS ACCEPTABLE.

11) MAINTAIN ACCESS TO DRIVEWAYS AT ALL TIMES.

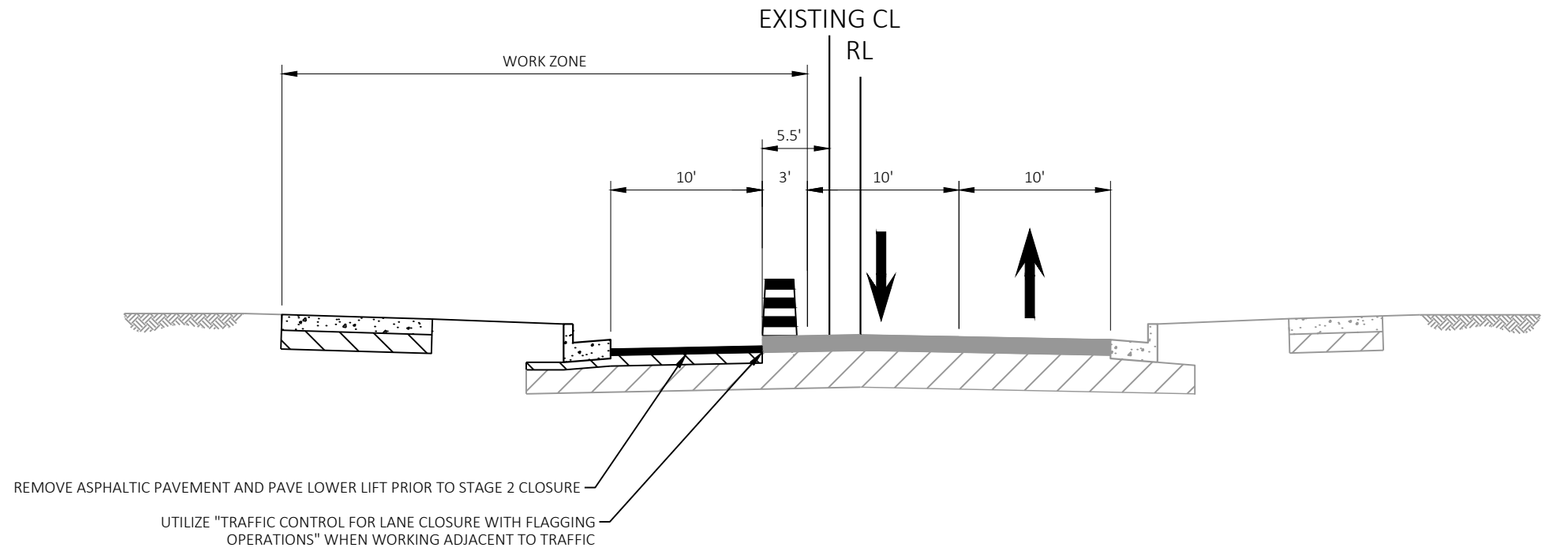

TYPICAL SECTION STAGE 1

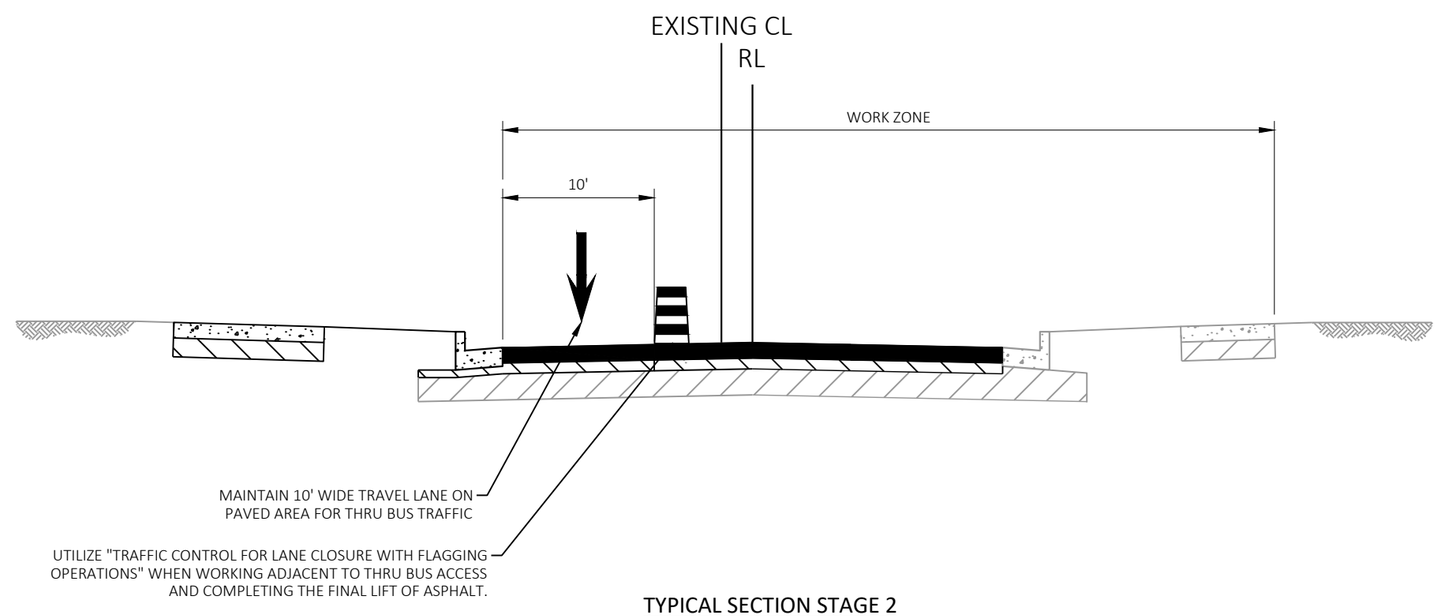

TYPICAL SECTION STAGE 2

2

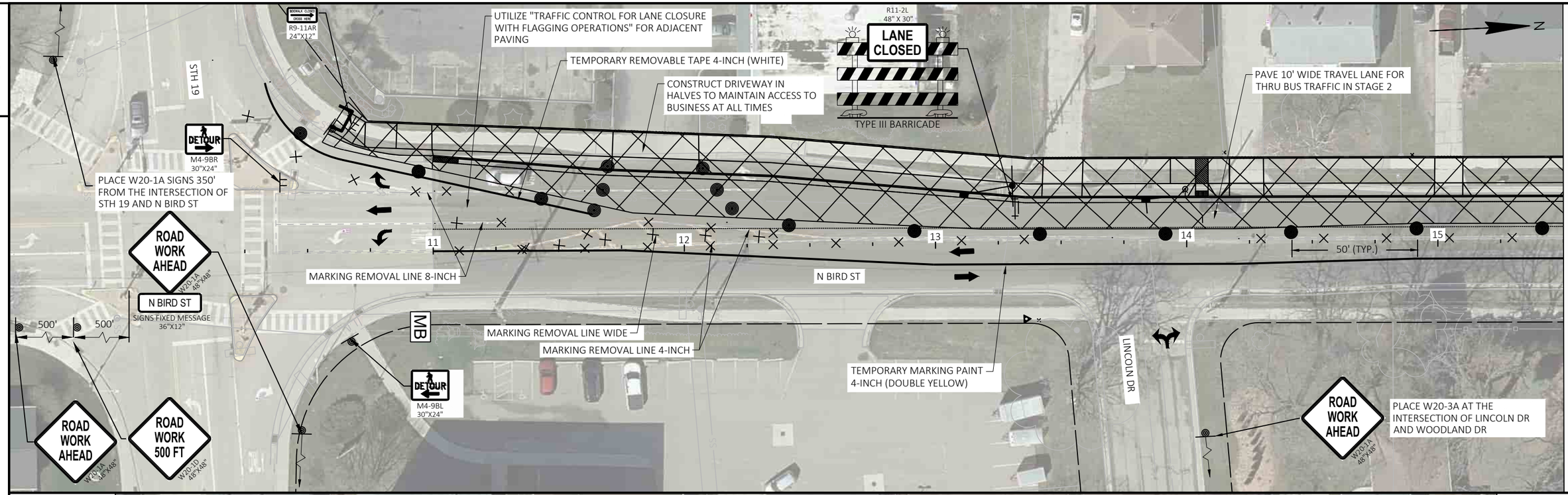

2

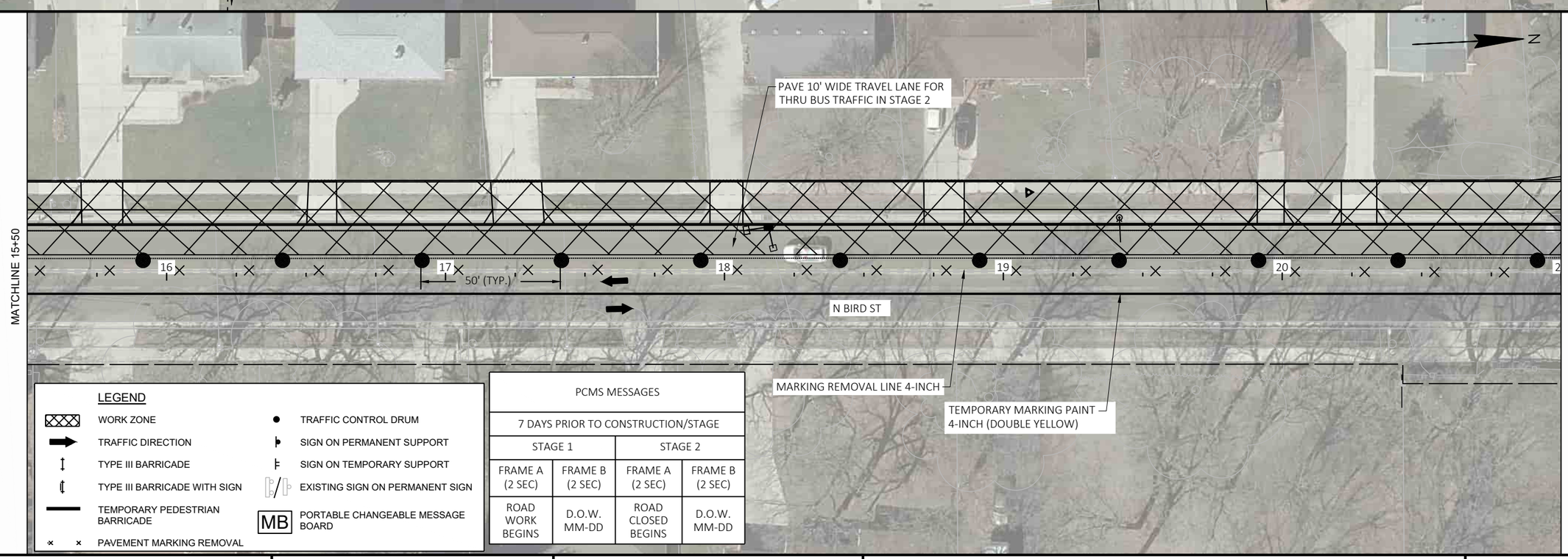

LEGEND

- WORK ZONE
- TRAFFIC DIRECTION
- TYPE III BARRICADE
- TYPE III BARRICADE WITH SIGN
- TEMPORARY PEDESTRIAN BARRICADE
- PAVEMENT MARKING REMOVAL
- TRAFFIC CONTROL DRUM
- SIGN ON PERMANENT SUPPORT
- SIGN ON TEMPORARY SUPPORT
- EXISTING SIGN ON PERMANENT SIGN
- MB PORTABLE CHANGEABLE MESSAGE BOARD

PCMS MESSAGES			
7 DAYS PRIOR TO CONSTRUCTION/STAGE			
STAGE 1		STAGE 2	
FRAME A (2 SEC)	FRAME B (2 SEC)	FRAME A (2 SEC)	FRAME B (2 SEC)
ROAD WORK BEGINS	D.O.W. MM-DD	ROAD CLOSED BEGINS	D.O.W. MM-DD

PROJECT NO: 3996-00-35	HWY: N BIRD ST	COUNTY: DANE	STAGED CONSTRUCTION - STAGE 1	SHEET 29	E

FILE NAME : G:\00\00036\00036327\CADD\C3D\39960034\SHEETS\026001-S1.DWG
LAYOUT NAME - 026001-s1
PLOT DATE : 10/9/2024 3:34 PM
PLOT BY : NATHAN COOK
PLOT NAME :
PLOT SCALE : 1 IN: 40 FT

2

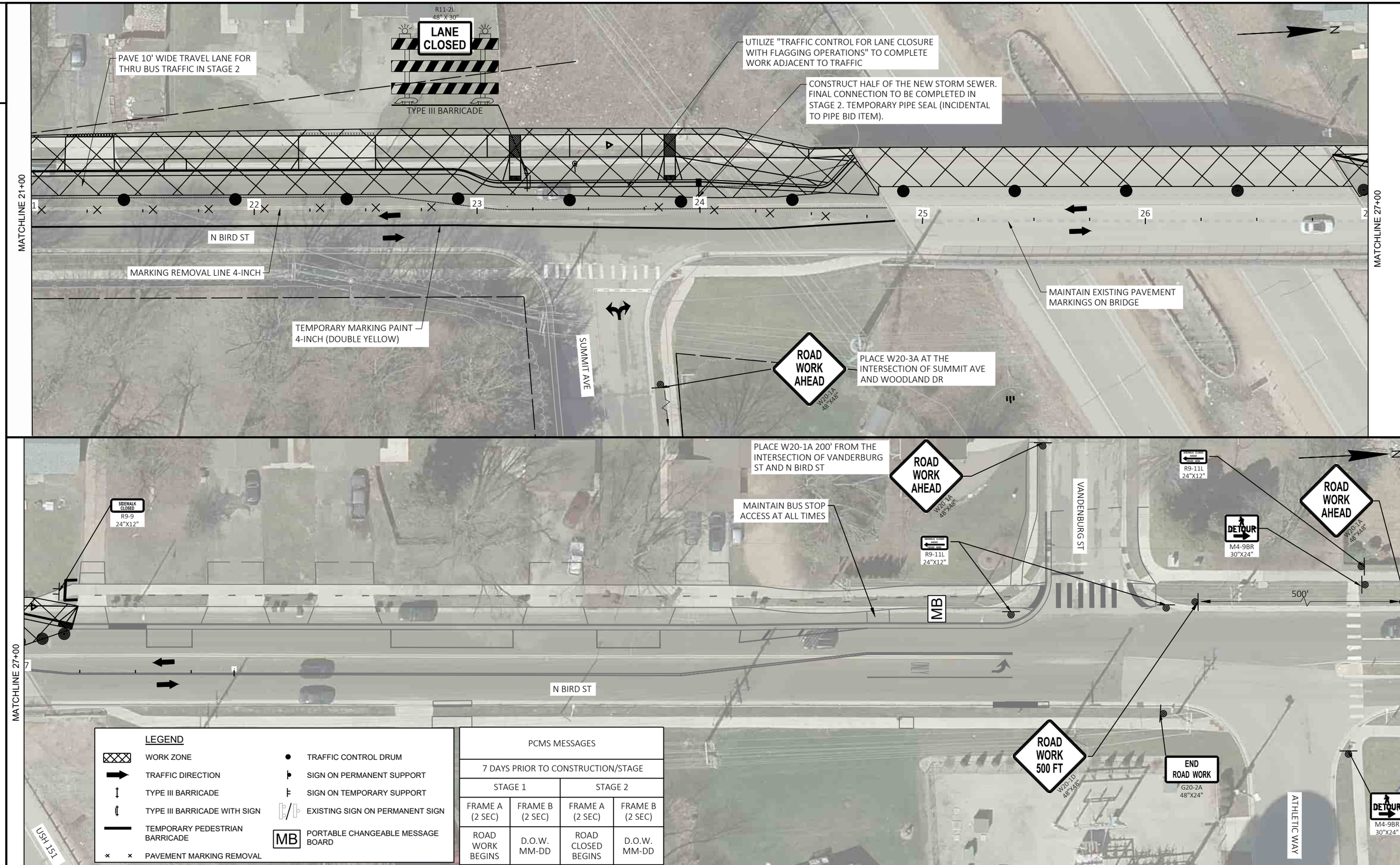

PCMS MESSAGES			
7 DAYS PRIOR TO CONSTRUCTION/STAGE			
STAGE 1		STAGE 2	
FRAME A (2 SEC)	FRAME B (2 SEC)	FRAME A (2 SEC)	FRAME B (2 SEC)
ROAD WORK BEGINS	D.O.W. MM-DD	ROAD CLOSED BEGINS	D.O.W. MM-DD

2

PROJECT NO: 3996-00-35	HWY: N BIRD ST	COUNTY: DANE	STAGED CONSTRUCTION - STAGE 1	SHEET 30	E

FILE NAME : G:\00\00036\00036327\CADD\C3D\39960034\SHEETS\026001-S1.DWG
LAYOUT NAME - 026002-s1
PLOT DATE : 10/9/2024 3:35 PM PLOT BY : NATHAN COOK PLOT NAME : PLOT SCALE : 1 IN: 40 FT

WISDOT/CADDS SHEET 44

2

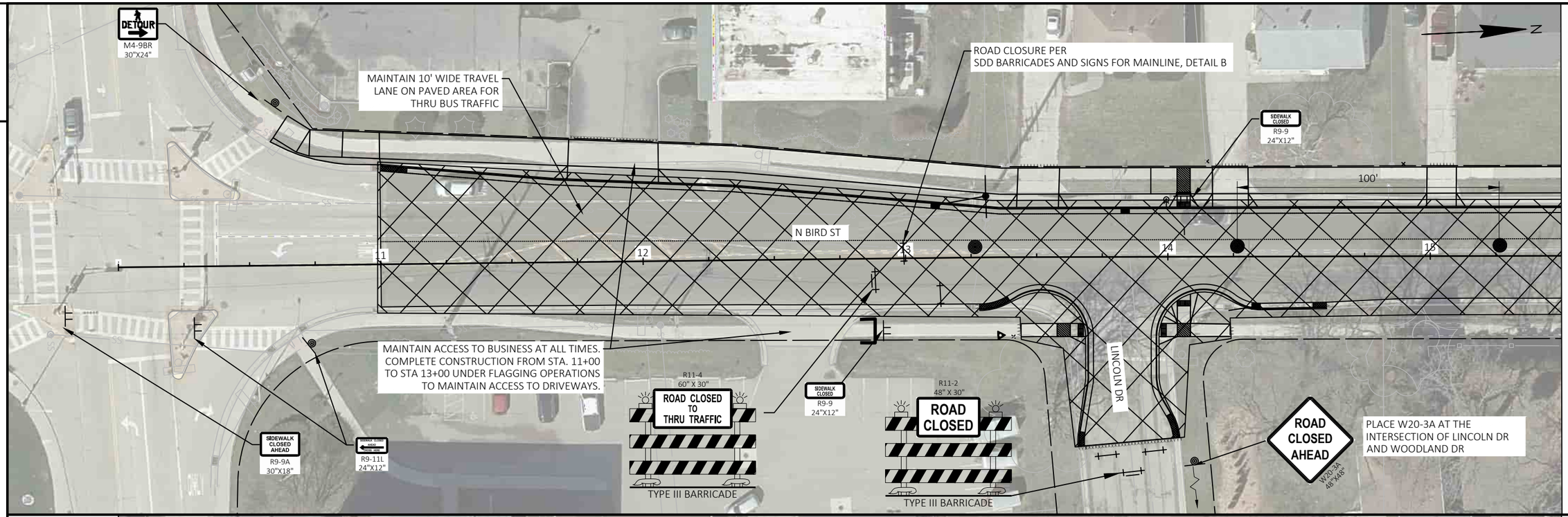

2

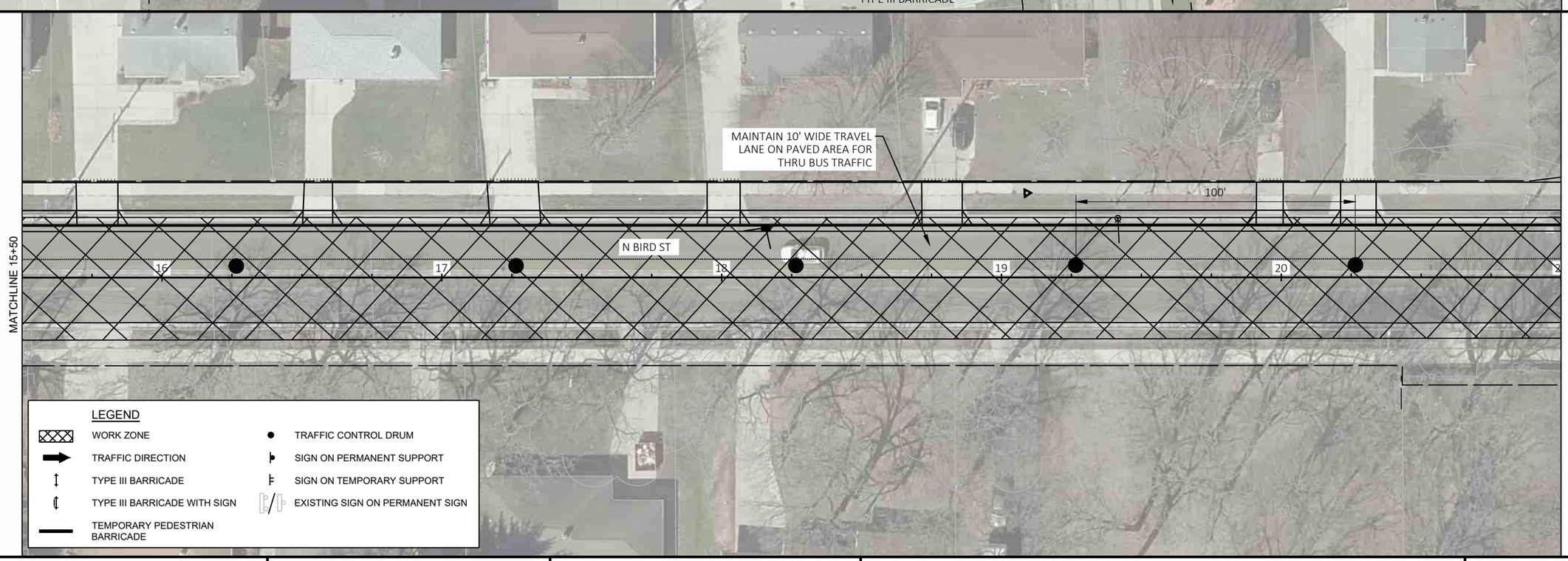

PROJECT NO: 3996-00-35	HWY: N BIRD ST	COUNTY: DANE	STAGED CONSTRUCTION - STAGE 2	SHEET 31	E

FILE NAME : G:\00\00036\00036327\CADD\C3D\39960034\SHEETS\026001-S2.DWG
LAYOUT NAME - 026002-s2
PLOT DATE : 10/9/2024 7:50 AM
PLOT BY : NATHAN COOK
PLOT NAME :
PLOT SCALE : 1 IN: 40 FT

2

MATCHLINE 21+00

MAINTAIN 10' WIDE TRAVEL LANE ON PAVED AREA FOR THRU BUS TRAFFIC

SIDEWALK CLOSED
R9-9
24"X12"

100'

N BIRD ST

21 22 23 24 25 26

SIDEWALK CLOSED CROSS HERE
R9-11AL
24"X12"

DETOUR
M4-9BR
30"X24"

TEMPORARY PEDESTRIAN SURFACE MATTING OVER 4-INCHES BASE AGGREGATE DENSE 1 1/4-INCH

SIDEWALK CLOSED CROSS HERE
R9-11AR
24"X12"

R11-2
48" X 30"
ROAD CLOSED
TYPE III BARRICADE

SUMMIT AVE

ROAD CLOSED AHEAD
W20-3A
48"X48"

PLACE W20-3A AT THE INTERSECTION OF SUMMIT AVE AND WOODLAND DR

LEGEND

- WORK ZONE
- TRAFFIC DIRECTION
- TYPE III BARRICADE
- TYPE III BARRICADE WITH SIGN
- TEMPORARY PEDESTRIAN BARRICADE
- TRAFFIC CONTROL DRUM
- SIGN ON PERMANENT SUPPORT
- SIGN ON TEMPORARY SUPPORT
- EXISTING SIGN ON PERMANENT SIGN

N

2

MATCHLINE 27+00

PLACE W20-1A 200' FROM THE INTERSECTION OF VANDERBURG ST AND N BIRD ST

ROAD WORK AHEAD
W20-1A
48"X48"

R11-4
60"X30"
ROAD CLOSED TO THRU TRAFFIC
EXCEPT BUSES
TYPE III BARRICADE

MAINTAIN BUS STOP ACCESS AT ALL TIMES

R3-1
24"X24"

VANDENBURG ST

DETOUR
M4-9BL
30"X24"

N

MATCHLINE 27+00

7

N BIRD ST

SIDEWALK CLOSED AHEAD
R9-9A
30"X18"

USH 151

SPACE BARRICADES TO MAINTAIN SOUTHBOUND BUS ROUTE

ROAD CLOSURE PER SDD BARRICADES AND SIGNS FOR MAINLINE, DETAIL B

SIDEWALK CLOSED AHEAD CROSS HERE
R9-11R
24"X12"

DETOUR
M4-9BL
30"X24"

ATHLETIC WAY

ROAD WORK AHEAD
W20-1A
48"X48"

PROJECT NO: 3996-00-35	HWY: N BIRD ST	COUNTY: DANE	STAGED CONSTRUCTION - STAGE 2	SHEET 32	E

FILE NAME : G:\00\00036\00036327\CADD\C3D\39960034\SHEETS\026001-S2.DWG
LAYOUT NAME - 026003-s2
PLOT DATE : 10/9/2024 7:50 AM
PLOT BY : NATHAN COOK
PLOT NAME :
PLOT SCALE : 1 IN: 40 FT

WISDOT/CADDS SHEET 44

2

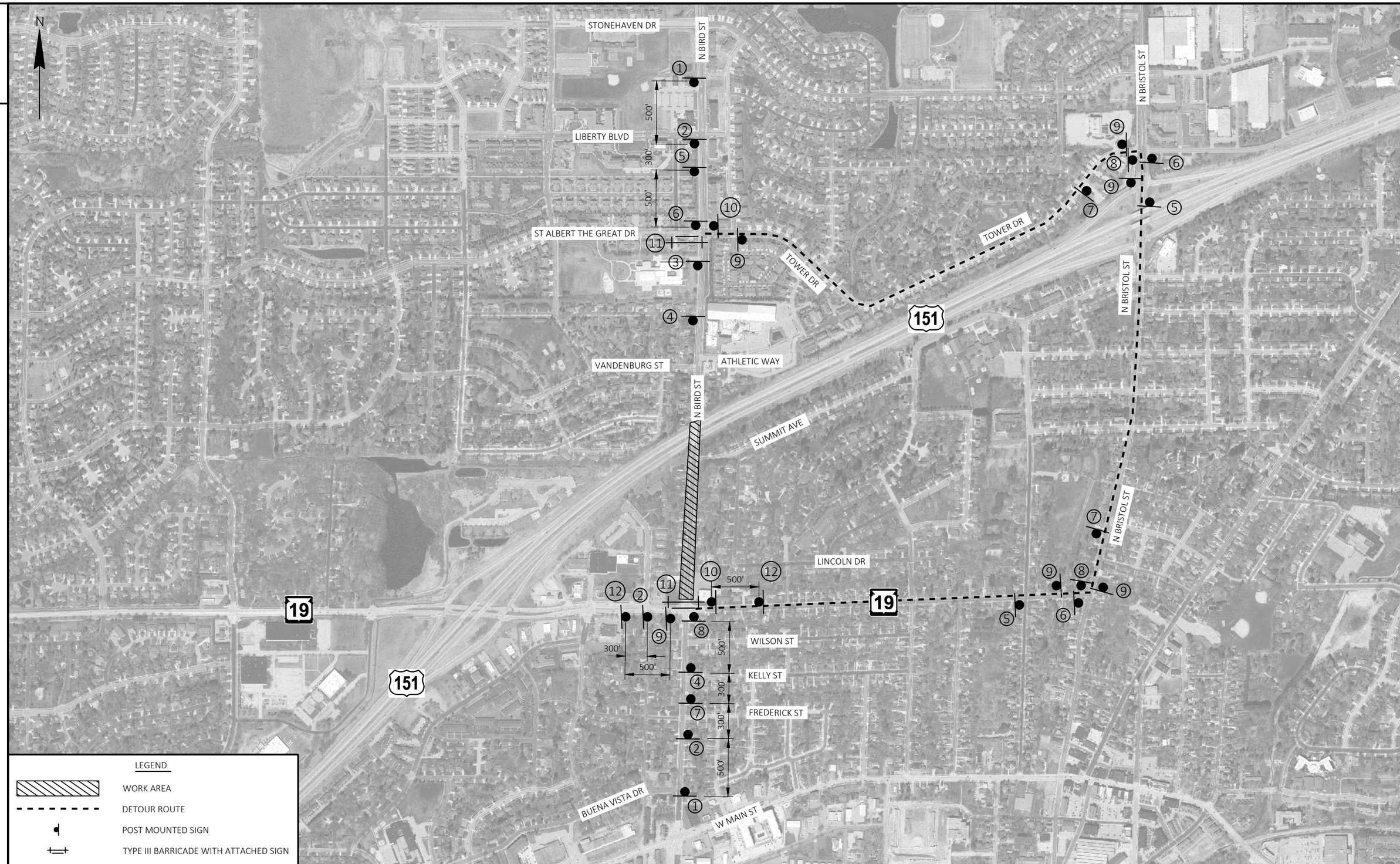

2

PROJECT NO: 3996-00-35	HWY: N BIRD ST	COUNTY: DANE	DETOUR ROUTE	SHEET 33	E

FILE NAME : G:\00\00036\00036327\CADD\C3D\39960034\SHEETS\027001-DT.DWG
LAYOUT NAME - 027001-dt
PLOT DATE : 10/8/2024 3:48 PM PLOT BY : NATHAN COOK PLOT NAME : PLOT SCALE : 1-800
WISDOT/CADDS SHEET 42

2

① 

② 

③ 

④ 

⑤ 

M4-8
24"X12"

TRAFFIC CONTROL
SIGNS FIXED MESSAGE
36"X12" (3 S.F.)

M05-1L
21"X21"

⑥ 

M4-8
24"X12"

TRAFFIC CONTROL
SIGNS FIXED MESSAGE
36"X12" (3 S.F.)

M06-1L
21"X21"

⑦ 

M4-8
24"X12"

TRAFFIC CONTROL
SIGNS FIXED MESSAGE
36"X12" (3 S.F.)

M05-1R
21"X21"

⑧ 

M4-8
24"X12"

TRAFFIC CONTROL
SIGNS FIXED MESSAGE
36"X12" (3 S.F.)

M06-1R
21"X21"

⑨ 

M4-8
24"X12"

TRAFFIC CONTROL
SIGNS FIXED MESSAGE
36"X12" (3 S.F.)

M06-1
21"X21"

⑩ 

M4-8A
24"X18"

⑪ M4-9L OR M4-9R
30"X24"

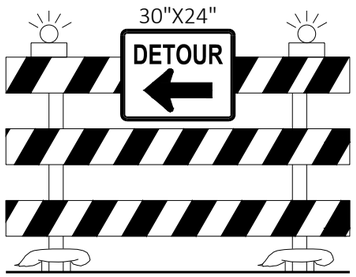

TYPE III BARRICADE

⑫ 

SIGNS FIXED MESSAGE
36"X12"

PROJECT NO: 3996-00-35	HWY: N BIRD ST	COUNTY: DANE	DETOUR ROUTE	SHEET 34	E

FILE NAME : G:\00\00036\00036327\CADD\C3D\39960034\SHEETS\027001-DT.DWG
LAYOUT NAME - 027002-dt
PLOT DATE : 10/8/2024 3:48 PM PLOT BY : NATHAN COOK PLOT NAME : PLOT SCALE : ##########

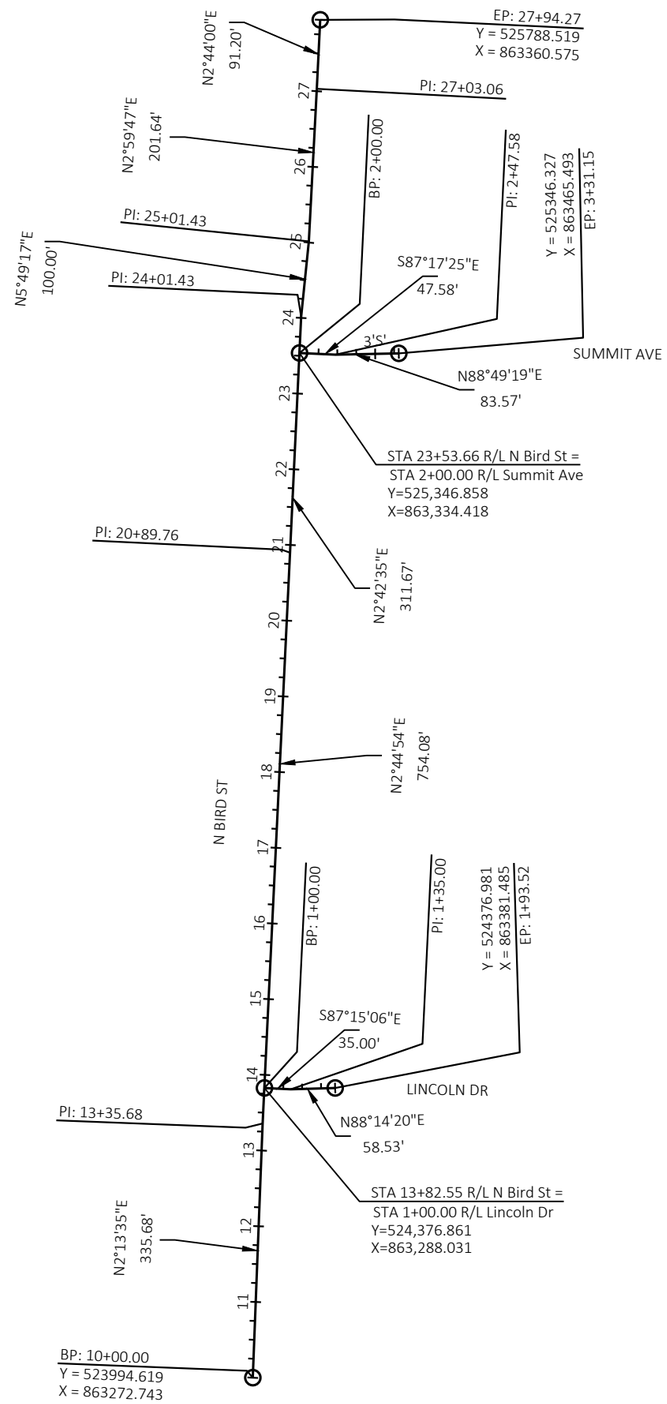
N
N2°44'00"E
91.20'
EP: 27+94.27
Y = 525788.519
X = 863360.575
PI: 27+03.06
N2°59'47"E
201.64'
BP: 2+00.00
PI: 2+47.58
Y = 525346.327
X = 863465.493
EP: 3+31.15
PI: 25+01.43
N5°49'17"E
100.00'
PI: 24+01.43
S87°17'25"E
47.58'
3'S'
SUMMIT AVE
N88°49'19"E
83.57'
STA 23+53.66 R/L N Bird St =
STA 2+00.00 R/L Summit Ave
Y=525,346.858
X=863,334.418
PI: 20+89.76
N2°42'35"E
311.67'
N2°44'54"E
754.08'
N BIRD ST
BP: 1+00.00
PI: 1+35.00
Y = 524376.981
X = 863381.485
EP: 1+93.52
S87°15'06"E
35.00'
LINCOLN DR
PI: 13+35.68
N88°14'20"E
58.53'
STA 13+82.55 R/L N Bird St =
STA 1+00.00 R/L Lincoln Dr
Y=524,376.861
X=863,288.031
N2°13'35"E
335.68'
BP: 10+00.00
Y = 523994.619
X = 863272.743
27
26
25
24
23
22
21
20
19
18
17
16
15
14
13
12
11

Estimate Of Quantities

3996-00-35

Line	Item	Item Description	Unit	Total	Qty
0002	204.0100	Removing Concrete Pavement	SY	300.000	300.000
0004	204.0110	Removing Asphaltic Surface	SY	6,610.000	6,610.000
0006	204.0150	Removing Curb & Gutter	LF	1,789.000	1,789.000
0008	204.0155	Removing Concrete Sidewalk	SY	725.000	725.000
0010	204.0210	Removing Manholes	EACH	1.000	1.000
0012	204.0220	Removing Inlets	EACH	6.000	6.000
0014	204.0245	Removing Storm Sewer (size) 01. 12-Inch	LF	85.000	85.000
0016	204.0245	Removing Storm Sewer (size) 02. 15-Inch	LF	8.000	8.000
0018	204.0245	Removing Storm Sewer (size) 03. 18-Inch	LF	16.000	16.000
0020	205.0100	Excavation Common	CY	520.000	520.000
0022	211.0101	Prepare Foundation for Asphaltic Paving (project) 01. 3996-00-35	EACH	1.000	1.000
0024	213.0100	Finishing Roadway (project) 01. 3996-00-35	EACH	1.000	1.000
0026	305.0120	Base Aggregate Dense 1 1/4-Inch	TON	1,300.000	1,300.000
0028	312.0110	Select Crushed Material	TON	260.000	260.000
0030	415.0080	Concrete Pavement 8-Inch	SY	50.000	50.000
0032	455.0605	Tack Coat	GAL	280.000	280.000
0034	460.2000	Incentive Density HMA Pavement	DOL	1,000.000	1,000.000
0036	460.6223	HMA Pavement 3 MT 58-28 S	TON	930.000	930.000
0038	460.6224	HMA Pavement 4 MT 58-28 S	TON	620.000	620.000
0040	520.8000	Concrete Collars for Pipe	EACH	4.000	4.000
0042	601.0409	Concrete Curb & Gutter 30-Inch Type A	LF	25.000	25.000
0044	601.0411	Concrete Curb & Gutter 30-Inch Type D	LF	1,315.000	1,315.000
0046	602.0405	Concrete Sidewalk 4-Inch	SF	9,975.000	9,975.000
0048	602.0415	Concrete Sidewalk 6-Inch	SF	3,800.000	3,800.000
0050	602.0515	Curb Ramp Detectable Warning Field Natural Patina	SF	100.000	100.000
0052	602.0810	Concrete Driveway 6-Inch	SY	400.000	400.000
0054	608.0312	Storm Sewer Pipe Reinforced Concrete Class III 12-Inch	LF	66.000	66.000
0056	608.0315	Storm Sewer Pipe Reinforced Concrete Class III 15-Inch	LF	28.000	28.000
0058	608.0318	Storm Sewer Pipe Reinforced Concrete Class III 18-Inch	LF	27.000	27.000
0060	611.0420	Reconstructing Manholes	EACH	1.000	1.000
0062	611.0530	Manhole Covers Type J	EACH	1.000	1.000
0064	611.1004	Catch Basins 4-FT Diameter	EACH	1.000	1.000
0066	611.2004	Manholes 4-FT Diameter	EACH	1.000	1.000
0068	611.3253	Inlets 2.5x3-FT	EACH	4.000	4.000
0070	611.8110	Adjusting Manhole Covers	EACH	7.000	7.000
0072	619.1000	Mobilization	EACH	1.000	1.000
0074	624.0100	Water	MGAL	32.000	32.000
0076	625.0100	Topsoil	SY	1,085.000	1,085.000
0078	628.1905	Mobilizations Erosion Control	EACH	6.000	6.000
0080	628.1910	Mobilizations Emergency Erosion Control	EACH	3.000	3.000
0082	628.2006	Erosion Mat Urban Class I Type A	SY	1,085.000	1,085.000
0084	628.7015	Inlet Protection Type C	EACH	17.000	17.000
0086	629.0210	Fertilizer Type B	CWT	0.700	0.700
0088	630.0140	Seeding Mixture No. 40	LB	20.000	20.000
0090	630.0500	Seed Water	MGAL	64.000	64.000
0092	634.0814	Posts Tubular Steel 2x2-Inch X 14-FT	EACH	8.000	8.000
0094	634.0816	Posts Tubular Steel 2x2-Inch X 16-FT	EACH	2.000	2.000
0096	637.2230	Signs Type II Reflective F	SF	49.500	49.500
0098	638.2102	Moving Signs Type II	EACH	16.000	16.000

Estimate Of Quantities

3996-00-35

Line	Item	Item Description	Unit	Total	Qty
0100	638.2602	Removing Signs Type II	EACH	1.000	1.000
0102	638.3000	Removing Small Sign Supports	EACH	1.000	1.000
0104	638.4000	Moving Small Sign Supports	EACH	4.000	4.000
0106	642.5201	Field Office Type C	EACH	1.000	1.000
0108	643.0300	Traffic Control Drums	DAY	3,057.000	3,057.000
0110	643.0420	Traffic Control Barricades Type III	DAY	423.000	423.000
0112	643.0705	Traffic Control Warning Lights Type A	DAY	504.000	504.000
0114	643.0900	Traffic Control Signs	DAY	2,874.000	2,874.000
0116	643.1000	Traffic Control Signs Fixed Message	SF	66.000	66.000
0118	643.1050	Traffic Control Signs PCMS	DAY	28.000	28.000
0120	643.3105	Temporary Marking Line Paint 4-Inch	LF	2,800.000	2,800.000
0122	643.3150	Temporary Marking Line Removable Tape 4-Inch	LF	175.000	175.000
0124	643.5000	Traffic Control	EACH	1.000	1.000
0126	644.1440	Temporary Pedestrian Surface Matting	SF	300.000	300.000
0128	644.1810	Temporary Pedestrian Barricade	LF	250.000	250.000
0130	646.1020	Marking Line Epoxy 4-Inch	LF	6,160.000	6,160.000
0132	646.3020	Marking Line Epoxy 8-Inch	LF	295.000	295.000
0134	646.5020	Marking Arrow Epoxy	EACH	4.000	4.000
0136	646.6120	Marking Stop Line Epoxy 18-Inch	LF	220.000	220.000
0138	646.7120	Marking Diagonal Epoxy 12-Inch	LF	160.000	160.000
0140	646.9000	Marking Removal Line 4-Inch	LF	3,620.000	3,620.000
0142	646.9100	Marking Removal Line 8-Inch	LF	250.000	250.000
0144	646.9200	Marking Removal Line Wide	LF	50.000	50.000
0146	650.4000	Construction Staking Storm Sewer	EACH	6.000	6.000
0148	650.5000	Construction Staking Base	LF	2,774.000	2,774.000
0150	650.5500	Construction Staking Curb Gutter and Curb & Gutter	LF	1,920.000	1,920.000
0152	650.8000	Construction Staking Resurfacing Reference	LF	1,387.000	1,387.000
0154	650.9000	Construction Staking Curb Ramps	EACH	10.000	10.000
0156	650.9500	Construction Staking Sidewalk (project) 01. 3996-00-35	EACH	1.000	1.000
0158	650.9911	Construction Staking Supplemental Control (project) 01. 3996-00-35	EACH	1.000	1.000
0160	690.0150	Sawing Asphalt	LF	1,610.000	1,610.000
0162	690.0250	Sawing Concrete	LF	275.000	275.000
0164	715.0720	Incentive Compressive Strength Concrete Pavement	DOL	500.000	500.000
0166	ASP.1T0A	On-the-Job Training Apprentice at $5.00/HR	HRS	1,200.000	1,200.000
0168	ASP.1T0G	On-the-Job Training Graduate at $5.00/HR	HRS	600.000	600.000
0170	SPV.0035	Special 01. Watermain Granular Backfill Special	CY	26.000	26.000
0172	SPV.0060	Special 01. Inlet Covers Type D	EACH	6.000	6.000
0174	SPV.0060	Special 02. Adjusting Water Valve Boxes	EACH	21.000	21.000
0176	SPV.0060	Special 03. Remove Existing Hydrant	EACH	3.000	3.000
0178	SPV.0060	Special 04. Bend 45-Degree 6-Inch	EACH	2.000	2.000
0180	SPV.0060	Special 05. Fire Hydrant	EACH	3.000	3.000
0182	SPV.0060	Special 06. Connect to Existing Watermain	EACH	3.000	3.000
0184	SPV.0090	Special 01. Remove Existing Watermain	LF	41.000	41.000
0186	SPV.0090	Special 02. Ductile Watermain 6-Inch	LF	29.000	29.000
0188	SPV.0090	Special 03. Concrete Curb & Gutter 36-Inch Special	LF	580.000	580.000

3

REMOVING CONCRETE PAVEMENT

CATEGORY	STATION	TO	STATION	LOCATION	204.0100 REMOVING CONCRETE PAVEMENT SY	REMARKS
STAGE 1						
0010	11+65	-	12+10	LT	33	DRIVEWAY
0010	13+39	-	13+62	LT	19	DRIVEWAY
0010	14+15	-	14+35	LT	16	DRIVEWAY
0010	14+98	-	15+12	LT	16	DRIVEWAY
0010	15+67	-	15+87	LT	21	DRIVEWAY
0010	16+46	-	16+64	LT	19	DRIVEWAY
0010	17+18	-	17+37	LT	23	DRIVEWAY
0010	17+92	-	18+10	LT	19	DRIVEWAY
0010	18+70	-	18+88	LT	21	DRIVEWAY
0010	19+89	-	20+03	LT	15	DRIVEWAY
0010	20+17	-	20+37	LT	23	DRIVEWAY
0010	21+14	-	21+40	LT	31	DRIVEWAY
0010	22+22	-	22+55	LT	44	DRIVEWAY
				STAGE 1 TOTAL	300	
				TOTAL 0010	300	

REMOVING ASPHALTIC SURFACE

CATEGORY	STATION	TO	STATION	LOCATION	204.0110 REMOVING ASPHALTIC SURFACE SY	650.8000 CONSTRUCTION STAKING RESURFACING REFERENCE LF
STAGE 1						
0010	11+00	-	24+87	LT	2,510	1,387
				STAGE 1 TOTAL	2,510	1,387
STAGE 2						
0010	11+00	-	24+87	LT & RT	4,100	-
				STAGE 2 TOTAL	4,100	0
				TOTAL 0010	6,610	1,387

REMOVING STORM SEWER STRUCTURES

CATEGORY	STATION	LOCATION	204.0210 REMOVING MANHOLES EACH	204.0220 REMOVING INLETS EACH
STAGE 1				
0010	13+31	LT	-	1
0010	13+85	LT	-	1
0010	18+15	LT	-	1
0010	18+16	LT	1	-
0010	24+02	LT	-	1
		STAGE 1 TOTALS	1	4
STAGE 2				
0010	14+23	RT	-	1
0010	24+04	RT	-	1
		STAGE 2 TOTALS	0	2
		TOTAL 0010	1	6

REMOVING CURB & GUTTER

CATEGORY	STATION	TO	STATION	LOCATION	204.0150 REMOVING CURB & GUTTER LF
STAGE 1					
0010	11+00	-	24+68	LT	1,373
0010	26+93	-	27+18	LT	37
				STAGE 1 TOTAL	1,410
STAGE 2					
0010	13+28	-	13+66	RT	79
0010	14+04	-	14+600	RT	101
0010	22+89	-	23+34	RT	99
0010	23+79	-	24+29	RT	100
				STAGE 2 TOTAL	379
				TOTAL 0010	1,789

3

3

REMOVING CONCRETE SIDEWALK

CATEGORY	STATION	TO	STATION	LOCATION	204.0155 REMOVING CONCRETE SIDEWALK SY
STAGE 1					
0010	10+60	-	11+72	LT	65
0010	12+06	-	13+43	LT	79
0010	13+59	-	14+17	LT	32
0010	14+31	-	14+99	LT	36
0010	15+10	-	15+69	LT	31
0010	15+84	-	16+51	LT	35
0010	16+61	-	17+16	LT	31
0010	17+34	-	17+95	LT	32
0010	18+07	-	18+72	LT	35
0010	18+86	-	19+91	LT	57
0010	20+01	-	20+21	LT	10
0010	20+34	-	21+16	LT	44
0010	21+37	-	22+20	LT	53
0010	22+55	-	24+68	LT	114
				STAGE 1 TOTAL	654
STAGE 2					
0010	13+44	-	13+61	RT	9
0010	14+03	-	14+24	RT	10
0010	23+10	-	23+25	RT	7
0010	23+83	-	24+29	RT	45
				STAGE 2 TOTAL	71
				TOTAL 0010	725

REMOVING STORM SEWER PIPE

CATEGORY	STATION	LOCATION	TO	STATION	LOCATION	204.0245.01 REMOVING STORM SEWER (SIZE) (01. 12-INCH) LF	204.0245.02 REMOVING STORM SEWER (SIZE) (02. 15-INCH) LF	204.0245.03 REMOVING STORM SEWER (SIZE) (03. 18-INCH) LF
STAGE 1								
0010	13+31	LT	-	13+31	LT	-	-	8
0010	13+31	LT	-	13+31	LT	-	8	-
0010	13+84	LT	-	13+85	LT	5		
0010	18+08	LT	-	18+16	LT	-	-	8
0010	18+16	LT	-	18+18	LT	8	-	-
0010	24+02	LT	-	24+03	LT	16	-	-
					STAGE 1 TOTALS	29	8	16
STAGE 2								
0010	24+03	LT & RT	-	24+04	LT & RT	29	-	-
0010	24+04	RT	-	23+84	RT	27	-	-
					STAGE 2 TOTALS	56	0	0
					TOTAL 0010	85	8	16

BASE AGGREGATE

CATEGORY	STATION	TO	STATION	LOCATION	305.0120 BASE AGGREGATE DENSE 1 1/4-INCH TON	312.0110 SELECT CRUSHED MATERIAL TON	624.0100 WATER MGAL	650.5000 CONSTRUCTION STAKING BASE LF	REMARKS
STAGE 1									
0010	11+00	-	24+87	LT	276	-	5.7	1,387	LANE
0010	11+00	-	24+87	LT	72	-	1.0	-	CURB & GUTTER
0010	10+62	-	24+87	LT	275	-	5.0	-	SIDEWALK
0010	11+72	-	22+55	LT	82	-	2.0	-	DRIVEWAYS
0010	26+93	-	27+24	LT	6	-	0.2	-	SIDEWALK
	EBS (UNDISTRIBUTED)				24	45	2.0	-	EBS VOLUME ASSUMED TO BE 2% OF PAVEMENT AREA
				STAGE 1 TOTALS	735	45	16	1,387	
STAGE 2									
0010	11+00	-	24+87	RT	249	-	4.8	1,387	LANE
0010	13+28	-	13+68	RT	5	-	0.1	-	CURB & GUTTER
0010	13+44	-	14+24	RT	8	-	0.2	-	SIDEWALK
0010	14+02	-	14+91	RT	8	-	0.2	-	CURB & GUTTER
0010	22+88	-	23+37	RT	7	-	0.2	-	CURB & GUTTER
0010	23+10	-	24+29	RT	20	-	1.0	-	SIDEWALK
0010	23+77	-	24+29	RT	7	-	0.2	-	CURB & GUTTER
0010	23+26	-	23+85	RT	76	-	1.5	-	SUMMIT AVE GRADING
0010	23+87	-	24+42	RT	76	-	1.5	-	TEMPORARY PEDESTRIAN SURFACE
	EBS (UNDISTRIBUTED)				109	215	6.0	-	EBS VOLUME ASSUMED TO BE 2% OF PAVEMENT AREA
				STAGE 2 TOTALS	565	215	16	1,387	
				TOTAL 0010	1,300	260	32	2,774	

3

DIVISION	FROM/TO STATION	LOCATION	205.0100 COMMON EXCAVATION (1) CUT (2)	EBS EXCAVATION (3)	AVAILABLE MATERIAL (5)	UNEXPANDED FILL	EXPANDED FILL (13) FACTOR 1.25	MASS ORDINATE +/- (14)	WASTE	BORROW (15)
STAGE 1	11+00.00/24+68.99	LT	326	30	326	31	39	287	287	0
STAGE 2	11+00.00/24+68.99	RT	34	130	34	79	99	-65	0	65
CATEGORY 0010 SUBTOTAL			360	160	326	31	39	287	287	0
GRAND TOTAL			360	160	326	31	39	287	287	0
TOTAL COMMON EXC			520							

NOTES:
(1) COMMON EXCAVATION IS THE SUM OF THE CUT AND EBS EXCAVATION COLUMNS. ITEM NUMBER 205.0100
(2) SALVAGED/UNSUABLE PAVEMENT MATERIAL IS INCLUDED IN CUT.
(3) EBS VOLUME ASSUMED TO BE 2% OF THE PAVEMENT AREA AT A DEPTH OF 2'. EBS EXCAVATION TO BE BACKFILLED WITH SELECT CRUSH MATERIAL. EBS MATERIAL IS ASSUMED TO BE UNUSABLE IN FILLS.
(5) AVAILABLE MATERIAL = CUT - SALVAGED/UNUSUABLE PAVEMENT MATERIAL
(13) EXPANDED FILL FACTOR = 1.25
DEPENDING ON SELECTIONS: EXPANDED FILL = (UNEXPANDED FILL) * FILL FACTOR
(14) THE MASS ORDINATE + OR - QTY CALCULATED FOR THE DIVISION. PLUS QUANTITY INDICATES AN EXCESS OF MATERIAL WITHIN THE DIVISION. MINUS INDICATES A SHORTAGE OF MATERIAL WITHIN THE DIVISION.
(15) BORROW QUATITY PAID FOR AS TOPSOIL UNDER RESTORATION ITEMS
(16) FACTORS USED TO COMPUTE ANTICIPATED WASTE AND THE COMPUTED WASTE VOLUME IDENTIFIED ARE FOR GENERAL INFORMATION ONLY.

HMA PAVEMENT

CATEGORY	STATION	TO	STATION	LOCATION	455.0605 TACK COAT GAL	460.6223 HMA PAVEMENT 3 MT 58-28 S TON	460.6224 HMA PAVEMENT 4 MT 58-28 S TON	REMARKS
STAGE 1		-						
0010	11+00	-	22+88	LT	-	290	-	LOWER LAYER
				STAGE 1 TOTALS	0	290	0	
STAGE 2		-						
0010	11+00	-	24+87	LT & RT	-	640	-	LOWER LAYER
0010	11+00	-	24+87	LT & RT	280	-	620	UPPER LAYER
				STAGE 2 TOTALS	280	640	620	
				TOTAL 0010	280	930	620	

CONCRETE PAVEMENT

CATEGORY	STATION	TO	STATION	LOCATION	415.0080 CONCRETE PAVEMENT 8-INCH SY
STAGE 1		-			
0010	24+57	-	24+80	LT	20
0010	26+85	-	27+21	LT	30
				STAGE 1 TOTALS	50
				TOTAL 0010	50

3

3

CONCRETE CURB & GUTTER

CATEGORY	STATION	TO	STATION	LOCATION	601.0409 CONCRETE CURB & GUTTER 30-INCH TYPE A LF	601.0411 CONCRETE CURB & GUTTER 30-INCH TYPE D LF	650.5500 CONSTRUCTION STAKING CURB GUTTER AND CURB & GUTTER LF	SPV.0090.03 SPECIAL (03. CONCRETE CURB & GUTTER 36-INCH SPECIAL) LF
STAGE 1								
0010	11+00	-	24+68	LT	-	1,200	1,375	175
0010	26+94	-	27+18	LT	25	-	25	-
				STAGE 1 TOTALS	25	1,200	1,400	175
STAGE 2								
0010	13+28	-	13+66	RT	-	50	120	70
0010	14+04	-	14+91	RT	-	10	145	135
0010	22+88	-	23+35	RT	-	35	125	90
0010	23+79	-	24+29	RT	-	20	130	110
				STAGE 2 TOTALS	0	115	520	405
				TOTAL 0010	25	1,315	1,920	580

CONCRETE DRIVEWAY

CATEGORY	DRIVEWAY STATION	LOCATION	602.0810 CONCRETE DRIVEWAY 6-INCH SY
STAGE 1			
0010	11+88.80	LT	61
0010	13+50.34	LT	28
0010	14+23.93	LT	25
0010	15+04.31	LT	21
0010	15+76.94	LT	27
0010	16+55.62	LT	19
0010	17+26.32	LT	32
0010	18+00.73	LT	22
0010	18+78.80	LT	26
0010	19+95.86	LT	18
0010	20+27.56	LT	23
0010	21+26.20	LT	38
0010	22+37.25	LT	60
		STAGE 1 TOTAL	400
		TOTAL 0010	400

3

CONCRETE SIDEWALK

CATEGORY	STATION	TO	STATION	LOCATION	602.0405 CONCRETE SIDEWALK 4-INCH SF	602.0415 CONCRETE SIDEWALK 6-INCH SF	602.0515 CURB RAMP DETECTABLE WARNING FIELD NATURAL PATINA SF	650.9000 CONSTRUCTION STAKING CURB RAMPS EACH	650.9500.01 CONSTRUCTION STAKING SIDEWALK (PROJECT) (01. 3996-00-35) EACH
STAGE 1									
0010	10+60	-	24+68	LT	9,975	2,445	30	3	-
0010	26+99	-	27+24	LT	-	155	-	-	-
0010		PROJECT 3996-00-35			-	-	-	-	1
				STAGE 1 TOTALS	9,975	2,600	30	3	1
STAGE 2									
0010	13+44	-	13+69	RT	-	140	10	1	-
0010	13+97		14+24	RT	-	245	20	2	-
0010	23+10		23+40	RT	-	255	20	2	-
0010	23+68	-	24+29	RT	-	560	20	2	-
				STAGE 2 TOTALS	0	1,200	70	7	0
				TOTAL 0010	9,975	3,800	100	10	1

3

STORM SEWER PIPE

CATEGORY	STRUCTURE NO.	TO	STRUCTURE NO.	608.0312 STORM SEWER PIPE REINFORCED CONCRETE CLASS III 12-INCH LF	608.0315 STORM SEWER PIPE REINFORCED CONCRETE CLASS III 15-INCH LF	608.0318 STORM SEWER PIPE REINFORCED CONCRETE CLASS III 18-INCH LF	REMARKS
STAGE 1							
0010	1.0	-	1.1	-	20	-	
0010	1.1	-	1.2	-	8	-	
0010	1.1	-	1.3	-	-	8	
0010	3.0	-	3.1	-	-	8	
0010	3.1	-	3.2	8	-	-	
0010	4.2	-	4.1	10	-	-	CONSTRUCT HALF OF THE NEW STORM SEWER
			STAGE 1 TOTALS	18	28	16	
STAGE 2							
0010	2.1	-	2.2	-	-	11	
0010	4.0	-	4.1	33	-	-	
0010	4.1	-	4.2	15	-	-	COMPLETE FINAL CONNECTION FROM STAGE 1
			STAGE 2 TOTALS	48	0	11	
			TOTAL 0010	66	28	27	

STORM SEWER STRUCTURES

CATEGORY	STRUCTURE NO.	STATION	* LOCATION	520.8000 CONCRETE COLLARS FOR PIPE EACH	611.0420 RECONSTRUCTING MANHOLES EACH	611.0530 MANHOLE COVERS TYPE J EACH	611.1004 CATCH BASINS 4-FT DIAMETER EACH	611.2004 MANHOLES 4-FT DIAMETER EACH	611.3253 INLETS 2.5X3-FT EACH	** 611.8110 ADJUSTING MANHOLE COVERS EACH	650.4000 CONSTRUCTION STAKING STORM SEWER EACH	SPV.0060.01 SPECIAL (01. INLET COVERS TYPE D) EACH	RIM*** ELEVATION	INVERT**** ELEVATION	DEPTH***** FT
STAGE 1															
0010	1.0	13+11.57	20.1' LT	-	-	-	-	-	1	-	1	1	986.98	981.16	5.86
0010	1.1	13+30.81	23.3' LT	-	-	1	-	1	-	-	1	-	987.12	980.86	6.30
0010	1.2	13+30.73	31.3' LT	1	-	-	-	-	-	-	-	-	-	982.73	-
0010	1.3	13+31.05	14.9' LT	-	-	-	-	-	-	1	-	-	-	-	-
0010	3.3	13+83.77	17.7' LT	-	1	-	-	-	-	-	-	1	987.06	-	-
0010	3.0	18+07.89	16.6' LT	1	-	-	-	-	-	-	-	-	-	987.31	-
0010	3.1	18+15.80	17.7' LT	-	-	-	1	-	-	-	1	1	992.18	987.43	4.79
0010	3.2	18+17.51	10.2' LT	1	-	-	-	-	-	-	-	-	-	987.98	-
0010	4.2	23+99.48	12.2' LT	-	-	-	-	-	1	-	1	1	1017.19	1012.94	4.29
			STAGE 1 TOTALS	3	1	1	1	1	2	1	4	4			
STAGE 2															
0010	2.1	14+33.60	19.0' RT	-	-	-	-	-	1	-	1	1	987.30	981.95	5.39
0010	2.2	14+23.08	20.56' RT	1	-	-	-	-	-	-	-	-	-	983.63	-
0010	4.0	23+83.95	41.1' RT	-	-	-	-	-	-	1	-	-	-	-	-
0010	4.1	23+99.51	12.2' RT	-	-	-	-	-	1	-	1	1	1017.22	1012.10	5.16
			STAGE 2 TOTALS	1	0	0	0	0	2	1	2	2			
			TOTAL 0010	4	1	1	1	1	4	2	6	6			

REMARKS:
*STATIONS AND OFFSETS ARE TO CENTER OF STRUCTURE
**ADDITIONAL QUANTITIES FOUND ELSEWHERE
**RIM ELEV IS AT THE INLET COVER FLANGE LOCATION
***THE INVERT ELEVATION IS THE ELEVATION OF THE LOWEST PIPE FLOW LINE.
**** DEPTH = RIM ELEV - INVERT ELEV - COVER HEIGHT - 6 INCH ADJUSTMENT RING HEIGHT + SUMP (IF APPLICABLE)

3

RESTORATION ITEMS

CATEGORY	STATION	TO	STATION	LOCATION	625.0100 TOPSOIL SY	628.2006 EROSION MAT URBAN CLASS I TYPE A SY	629.0210 FERTILIZER TYPE B CWT	630.0140 SEEDING MIXTURE NO. 40 LB	630.0500 SEED WATER MGAL
STAGE 1									
0010	10+58	-	24+68	LT	695	695	0.44	12.5	41
				STAGE 1 TOTALS	695	695	0.44	12.5	41
STAGE 2									
0010	13+28	-	14+91	RT	110	110	0.07	2.3	7
0010	22+88	-	24+29	RT	280	280	0.19	5.2	16
				STAGE 2 TOTALS	390	390	0.26	7.5	23
				TOTAL 0010	1,085	1,085	0.70	20.0	64

MOBILIZATIONS EROSION CONTROL

CATEGORY	DESCRIPTION	628.1905 MOBILIZATIONS EROSION CONTROL EACH	628.1910 MOBILIZATIONS EMERGENCY EROSION CONTROL EACH
0010	PROJECT 3996-00-35	6	3
	TOTAL 0010	6	3

INLET PROTECTION

CATEGORY	STATION	LOCATION	628.7015 INLET PROTECTION TYPE C EACH	REMARKS
STAGE 1				
0010	10+49	LT	1	EXISTING INLET
0010	10+58	RT	1	EXISTING INLET
0010	10+70	RT	1	EXISTING INLET
0010	10+98	LT	1	EXISTING INLET
0010	13+12	LT	1	PROPOSED INLET
0010	13+25	RT	1	EXISTING INLET
0010	13+30	LT	1	EXISTING INLET
0010	13+84	LT	1	EXISTING INLET
0010	14+23	RT	1	EXISTING INLET
0010	18+16	LT	1	EXISTING INLET
0010	18+16	LT	1	PROPOSED INLET
0010	18+25	RT	1	EXISTING INLET
0010	23+99	LT	1	PROPOSED INLET
0010	24+02	LT	1	EXISTING INLET
0010	24+04	RT	1	EXISTING INLET
		STAGE 1 TOTAL	15	
STAGE 2				
0010	14+34	RT	1	PROPOSED INLET
0010	23+99	RT	1	PROPOSED INLET
		STAGE 2 TOTAL	2	
		TOTAL 0010	17	

3

PERMANENT SIGNING

CATEGORY	SIGN NO.	STATION	LOCATION	SIGN CODE	SIZE IN X IN	* 634.0814 POSTS TUBULAR STEEL 2X2-INCH X 14-FT EACH	637.2230 SIGNS TYPE II REFLECTIVE F SF	REMARKS
STAGE 2								
0010	302	23+93	LT	W11-2	30 X 30	1	6.25	
0010	303	23+93	LT	W16-7L	24 X 12	-	2.00	ON POST WITH SIGN 302
0010	304	23+10	RT	W11-2	30 X 30	-	6.25	ON POST WITH SIGN 302
0010	305	23+10	RT	W16-7R	24 X 12	-	2.00	ON POST WITH SIGN 302
0010	306	23+93	LT	W11-2	30 X 30	1	6.25	
0010	307	23+93	LT	W16-7L	24 X 12	-	2.00	ON POST WITH SIGN 306
0010	308	23+10	RT	W11-2	30 X 30	-	6.25	ON POST WITH SIGN 306
0010	309	23+10	RT	W16-7R	24 X 12	-	2.00	ON POST WITH SIGN 306
0010	310	21+50	RT	W11-2	30 X 30	1	6.25	
0010	311	21+50	RT	W16-9P	24 X 12	-	2.00	ON POST WITH SIGN 310
0010	400	27+45	LT	W11-2	30 X 30	1	6.25	
0010	401	27+45	LT	W16-9P	24 X 12	-	2.00	ON POST WITH SIGN 400
					STAGE 2 TOTALS	4	49.50	
					TOTAL 0010	4	49.50	

*ADDITIONAL QUANTITIES FOUND ELSEWHERE

MOVING SIGNS

CATEGORY	SIGN NO.	FROM STATION	TO STATION	LOCATION	* 634.0814 POSTS TUBULAR STEEL 2X2-INCH X 14-FT EACH	634.0816 POSTS TUBULAR STEEL 2X2-INCH X 16-FT EACH	638.2102 MOVING SIGNS TYPE II EACH	638.4000 MOVING SMALL SIGN SUPPORTS EACH	REMARKS
STAGE 2									
0010	101	13+78	12+45	LT	-	2	1	-	MOUNT AT 8'3"
0010	102	14+05	13+98	RT	-	-	3	1	
0010	200	15+64	15+64	LT	1	-	3	-	ON UTILTY POLE
0010	201	17+14	17+10	LT	1	-	1	-	ON UTILTY POLE
0010	202	20+91	20+91	LT	1	-	2	-	ON UTILTY POLE
0010	300	21+58	21+55	LT	-	-	1	1	
0010	301	21+77	21+73	LT	-	-	1	1	
0010	306	23+29	23+36	RT	1	-	1	-	ON UTILTY POLE
0010	308	23+84	23+70	RT	-	-	3	1	
				STAGE 2 TOTALS	4	2	16	4	
				TOTAL 0010	4	2	16	4	

*ADDITIONAL QUANTITIES FOUND ELSEWHERE

REMOVING SIGNS

CATEGORY	SIGN NO.	STATION	LOCATION	638.2602 REMOVING SIGNS TYPE II EACH	638.3000 REMOVING SMALL SIGN SUPPORTS EACH
STAGE 1					
0010	100	12+45	LT	1	1
			STAGE 1 TOTALS	1	1
			TOTAL 0010	1	1

3

3

TRAFFIC CONTROL

CATEGORY	DESCRIPTION	DRUMS NO. DEVICES	643.0300 TRAFFIC CONTROL DRUMS DAY	BARRICADES TYPE III NO. DEVICES	* 643.0420 TRAFFIC CONTROL BARRICADES TYPE III DAY	LIGHTS TYPE A NO. DEVICES	* 643.0705 TRAFFIC CONTROL WARNING LIGHTS TYPE A DAY	SIGNS NO. DEVICES	* 643.0900 TRAFFIC CONTROL SIGNS DAY	FIXED MESSAGE NO. DEVICES	* 643.1000 TRAFFIC CONTROL SIGNS FIXED MESSAGE SF	643.1050 TRAFFIC CONTROL SIGNS PCMS DAY	643.5000 TRAFFIC CONTROL EACH	DURATION	
STAGE 1															
0010	STAGE 1	41	2,829	2	138	4	276	21	1,449	2	6	14	1	69	DAYS
	STAGE 1 TOTALS		2,829		138		276		1,449		6	14	1		
STAGE 2															
0010	STAGE 2	12	228	13	247	8	152	25	475	0	0	14	-	19	DAYS
	STAGE 2 TOTALS		228		247		152		475		0	14	0		
	TOTAL 0010		3,057		385		428		1,924		6	28	1		

*ADDITIONAL QUANTITIES FOUND ELSEWHERE

DETOUR

CATEGORY	DESCRIPTION	BARRICADES TYPE III NO. DEVICES	* 643.0420 TRAFFIC CONTROL BARRICADES TYPE III DAY	LIGHTS TYPE A NO. DEVICES	* 643.0705 TRAFFIC CONTROL WARNING LIGHTS TYPE A DAY	SIGNS NO. DEVICES	* 643.0900 TRAFFIC CONTROL SIGNS DAY	FIXED MESSAGE NO. DEVICES	* 643.1000 TRAFFIC CONTROL SIGNS FIXED MESSAGE SF	DURATION	
STAGE 2											
0010	STAGE 2	2	38	4	76	50	950	20	60	19	DAYS
	STAGE 2 TOTALS		38		76		950		60		
	TOTAL 0010		38		76		950		60		

*ADDITIONAL QUANTITIES FOUND ELSEWHERE

3

3

PEDESTRIAN ACCESS

CATEGORY	DESCRIPTION	644.1440 TEMPORARY PEDESTRIAN SURFACE MATTING SF	644.1810 TEMPORARY PEDESTRIAN BARRICADE LF
STAGE 1			
0010	STAGE 1	-	36
	STAGE 1 TOTALS	0	36
STAGE 2			
0010	STAGE 2	300	214
	STAGE 2 TOTALS	300	214
	TOTAL 0010	300	250

TEMPORARY PAVEMENT MARKINGS

CATEGORY	DESCRIPTION	643.3105 TEMPORARY MARKING LINE PAINT 4-INCH LF	643.3150 TEMPORARY MARKING LINE REMOVABLE TAPE 4-INCH LF	* 646.9000 MARKING REMOVAL LINE 4-INCH LF	646.9100 MARKING REMOVAL LINE 8-INCH LF	646.9200 MARKING REMOVAL LINE WIDE LF
STAGE 1						
0010	STAGE 1	2,800	175	3,000	250	50
	STAGE 1 TOTALS	2,800	175	3,000	250	50
	TOTAL 0010	2,800	175	3,000	250	50

*ADDITIONAL QUANTITIES FOUND ELSEWHERE

PAVEMENT MARKINGS

CATEGORY	STATION	TO	STATION	LOCATION	646.1020 MARKING LINE EPOXY 4-INCH (WHITE) LF	646.1020 MARKING LINE EPOXY 4-INCH (YELLOW) LF	646.3020 MARKING LINE EPOXY 8-INCH LF	646.5020 MARKING ARROW EPOXY EACH	646.6120 MARKING STOP LINE EPOXY 18-INCH LF	646.7120 MARKING DIAGONAL EPOXY 12-INCH (WHITE) LF	646.7120 MARKING DIAGONAL EPOXY 12-INCH (YELLOW) LF	* 646.9000 MARKING REMOVAL LINE 4-INCH LF
STAGE 2												
0010	10+23	-	27+75	LT & RT	2,540	3,620	295	4	220	70	90	620
				STAGE 2 TOTALS	6,160		295	4	220	160		620
				TOTAL 0010	6,160		295	4	220	160		620

*ADDITIONAL QUANTITIES FOUND ELSEWHERE

3

SAWING

CATEGORY	STATION	TO	STATION	LOCATION	690.0150 SAWING ASPHALT LF	690.0250 SAWING CONCRETE LF	REMARKS
STAGE 1							
0010	10+62	-	10+62	LT	1,535	230	SIDEWALK
				STAGE 1 TOTALS	1,535	230	
STAGE 2							
0010	13+28	-	13+28	RT	75	45	
				STAGE 2 TOTALS	75	45	
				TOTAL 0010	1,610	275	

ADJUSTING SANITARY SEWER MANHOLE COVERS

CATEGORY	STATION	LOCATION	* 611.8110 ADJUSTING MANHOLE COVERS EACH
STAGE 2			
0020	13+46	1' RT	1
0020	13+79	1' RT	1
0020	16+96	ON LINE	1
0020	20+45	ON LINE	1
0020	21+99	1' LT	1
		STAGE 2 TOTAL	5
		TOTAL 0020	5

*ADDITIONAL QUANTITIES FOUND ELSEWHERE

ADJUSTING WATER VALVE BOXES

CATEGORY	STATION	LOCATION	SPV.0060.02 SPECIAL (02. ADJUSTING WATER VALVE BOXES) EACH
STAGE 1			
0020	12+76	36' LT	1
0020	13+68	26' LT	1
0020	14+04	6' LT	1
0020	14+06	8' LT	1
0020	14+50	27' LT	1
0020	15+19	27' LT	1
0020	15+92	27' LT	1
0020	16+77	27' LT	1
0020	17+49	27' LT	1
0020	18+26	28' LT	1
0020	19+00	28' LT	1
0020	19+39	10' LT	1
0020	19+42	12' LT	1
0020	19+69	27' LT	1
0020	20+45	28' LT	1
0020	21+45	27' LT	1
0020	22+06	26' LT	1
0020	23+44	17' LT	1
0020	23+53	10' LT	1
		STAGE 1 TOTALS	19
STAGE 2			
0020	13+68	32' RT	1
0020	23+50	23' RT	1
		STAGE 2 TOTALS	2
		TOTAL 0020	21

WATERMAIN ADJUSTMENTS

CATEGORY	STATION	LOCATION	SPV.0035.01 SPECIAL (01. WATERMAIN GRANULAR BACKFILL SPECIAL) CY	SPV.0060.03 SPECIAL (03. REMOVE EXISTING HYDRANT) EACH	SPV.0060.04 SPECIAL (04. BEND 45-DEGREE 6-INCH) EACH	SPV.0060.05 SPECIAL (05. FIRE HYDRANT) EACH	SPV.0060.06 SPECIAL (06. CONNECT TO EXISTING WATERMAIN) EACH	SPV.0090.01 SPECIAL (01. REMOVE EXISTING WATERMAIN) LF	SPV.0090.02 SPECIAL (02. DUCTILE WATERMAIN 6-INCH) LF
STAGE 1									
0020	14+00	LT	14	1	2	1	1	18	16
0020	19+42	LT	8	1	-	1	1	14	9
0020	23+44	LT	4	1	-	1	1	9	4
		STAGE 1 TOTALS	26	3	2	3	3	41	29
		TOTAL 0020	26	3	2	3	3	41	29

3

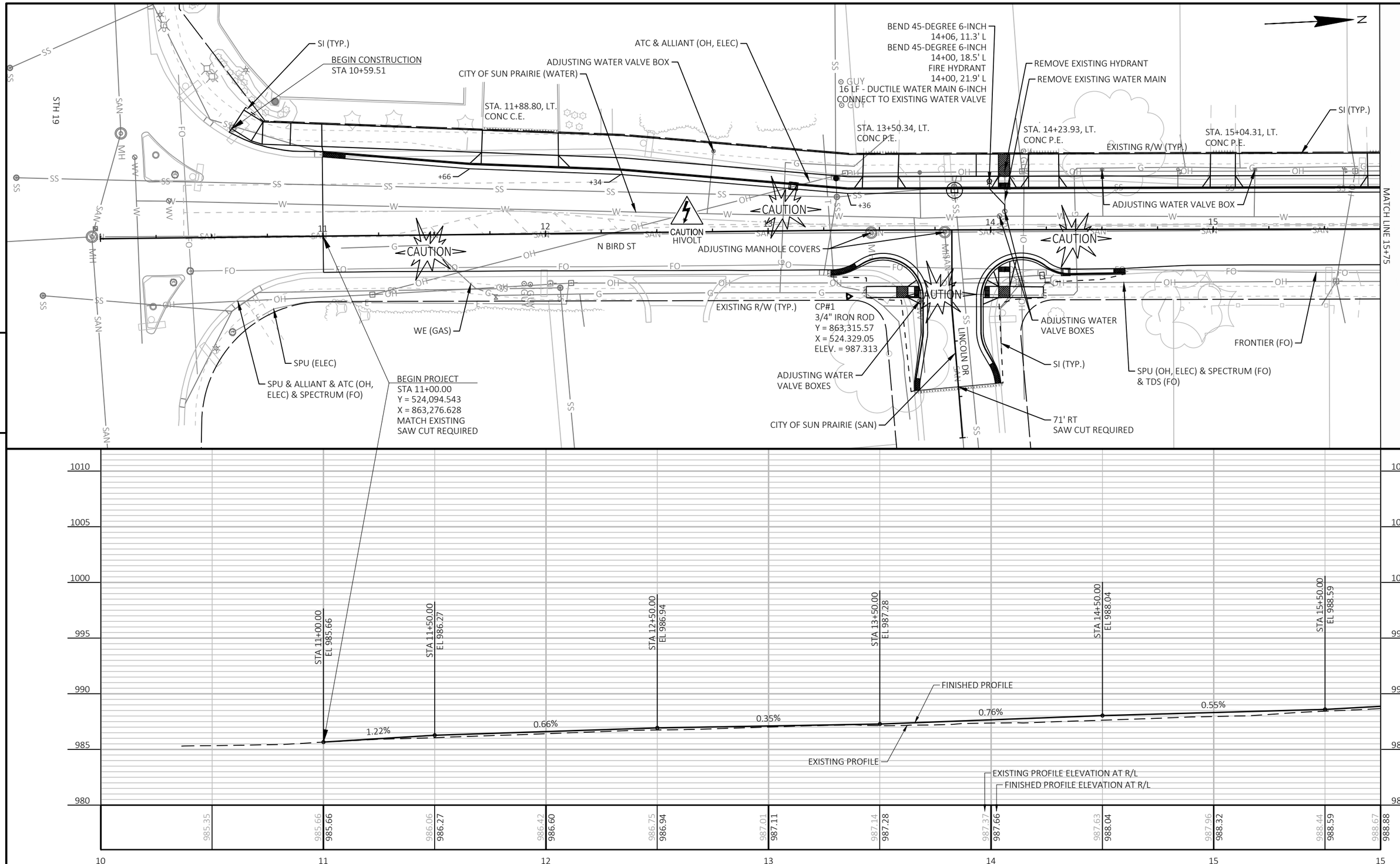

PROJECT NO: 3996-00-35	HWY: N BIRD ST	COUNTY: DANE	PLAN AND PROFILE: N BIRD ST	SHEET 48	E

FILE NAME : G:\00\00036\00036327\CADD\C3D\39960034\SHEETS\050101-PP.DWG
LAYOUT NAME - 050101-pp
PLOT DATE : 10/9/2024 3:52 PM
PLOT BY : NATHAN COOK
PLOT NAME :
PLOT SCALE : 1 IN:40 FT
WISDOT/CADDS SHEET 44

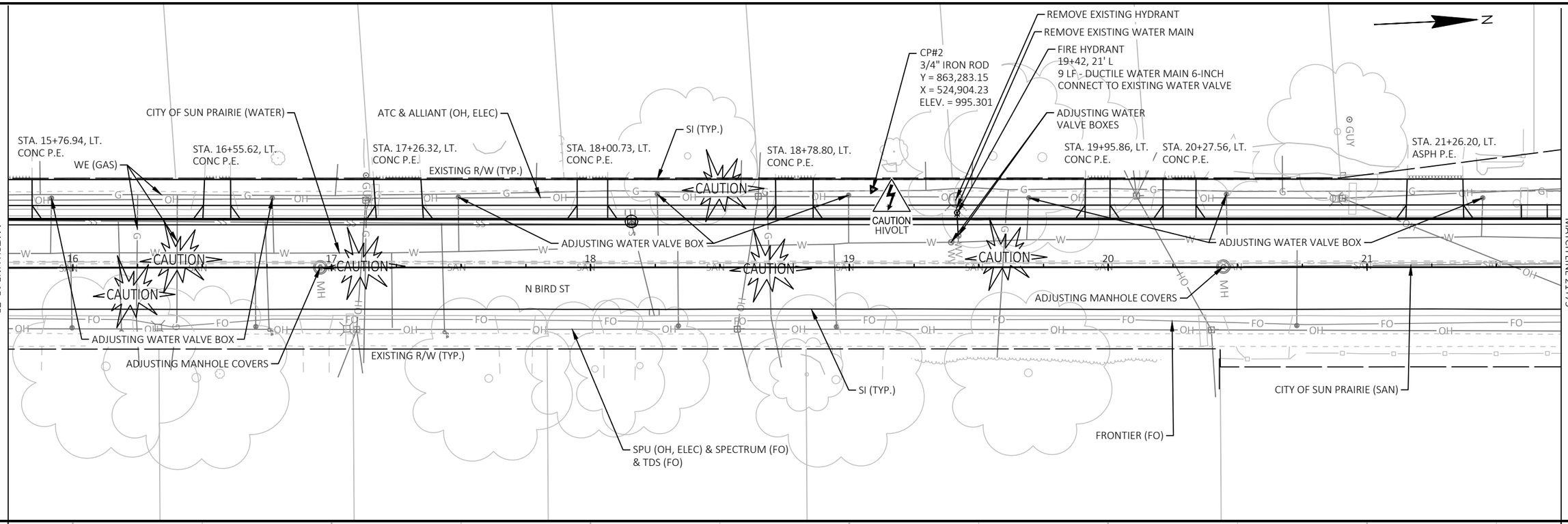

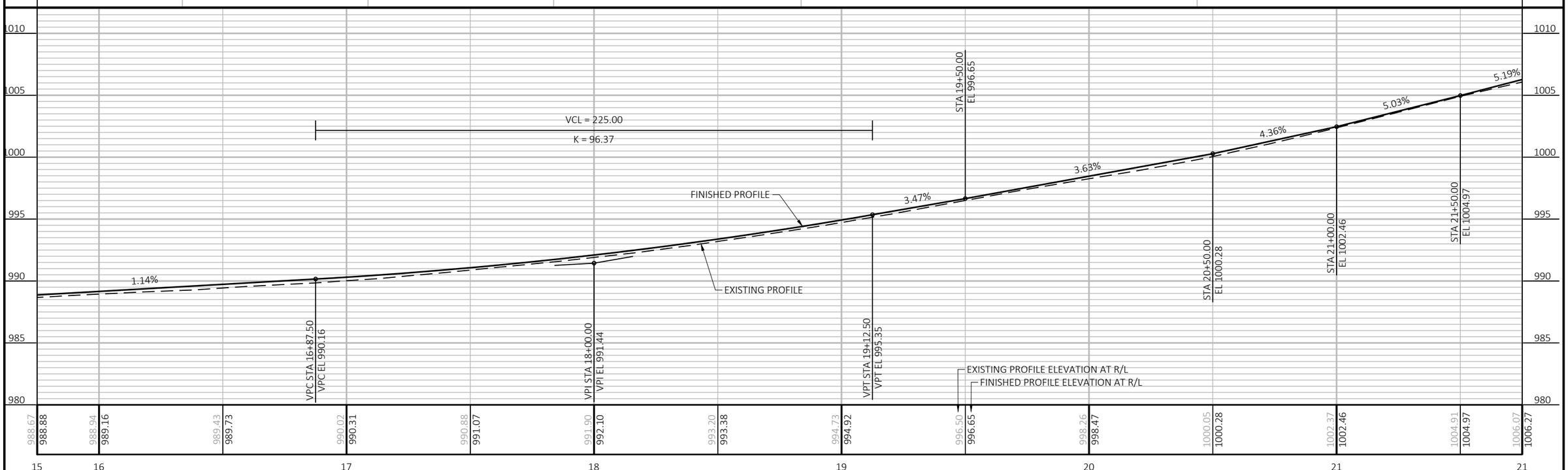

PROJECT NO: 3996-00-35	HWY: N BIRD ST	COUNTY: DANE	PLAN AND PROFILE: N BIRD ST	SHEET 49	E

FILE NAME : G:\00\00036\00036327\CADD\C3D\39960034\SHEETS\050101-PP.DWG
LAYOUT NAME - 050102-pp
PLOT DATE : 10/9/2024 3:52 PM
PLOT BY : NATHAN COOK
PLOT NAME :
PLOT SCALE : 1 IN:40 FT

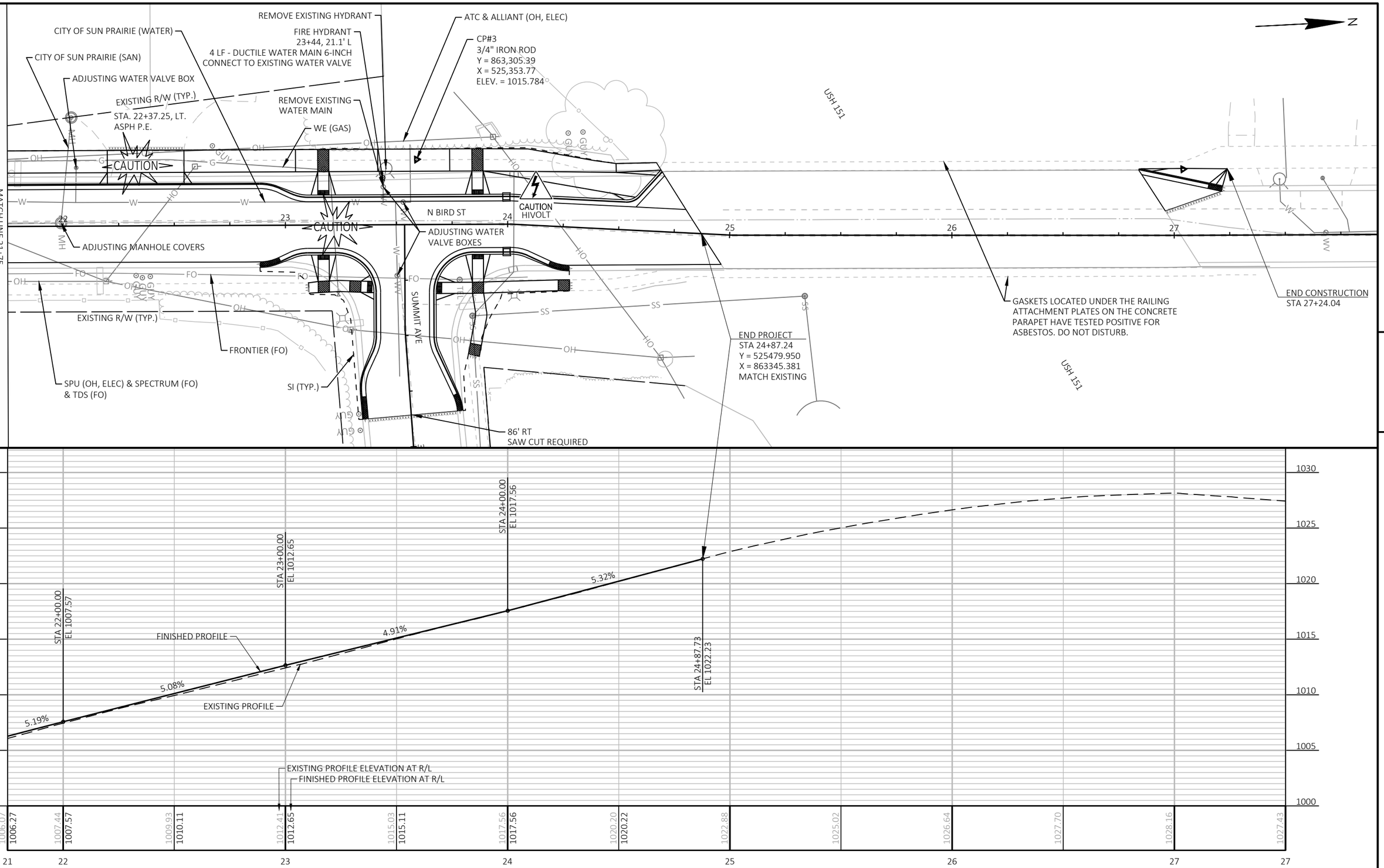

PROJECT NO: 3996-00-35	HWY: N BIRD ST	COUNTY: DANE	PLAN AND PROFILE: N BIRD ST	SHEET 50	E

FILE NAME : G:\00\00036\00036327\CADD\C3D\39960034\SHEETS\050101-PP.DWG
LAYOUT NAME - 050103-pp
PLOT DATE : 10/9/2024 3:52 PM
PLOT BY : NATHAN COOK
PLOT NAME :
PLOT SCALE : 1 IN:40 FT
WISDOT/CADDS SHEET 44

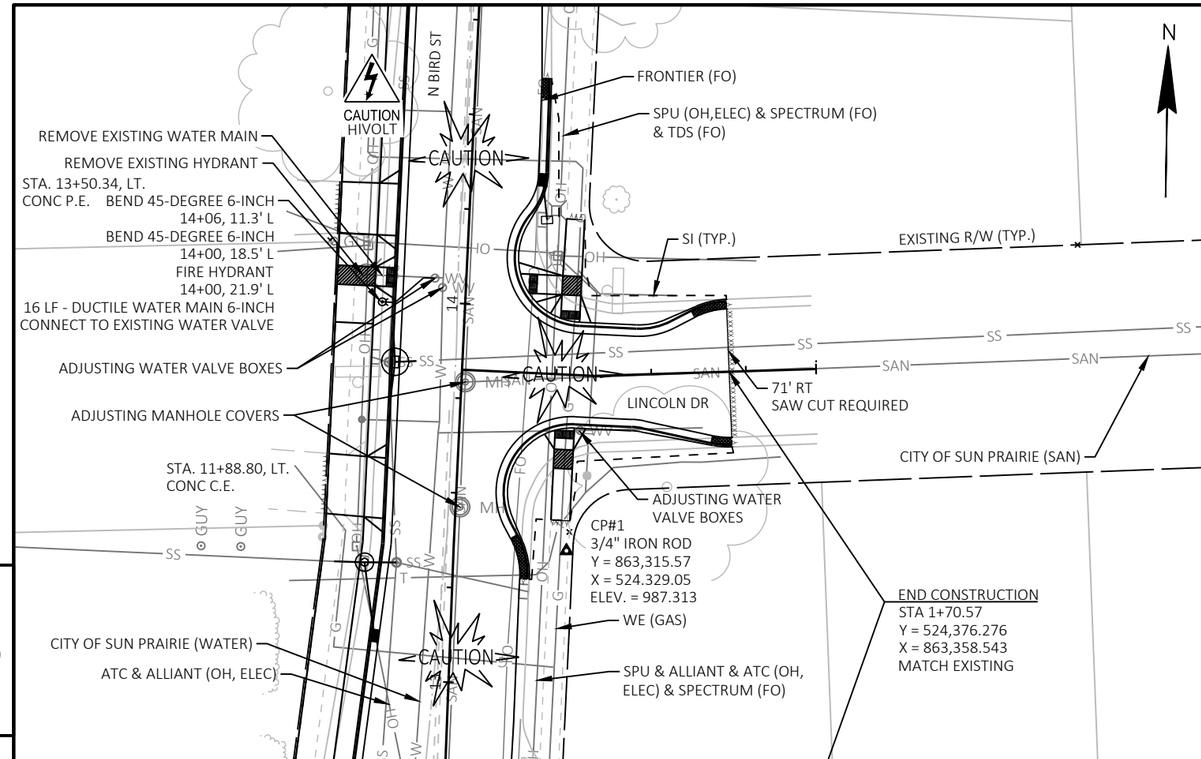

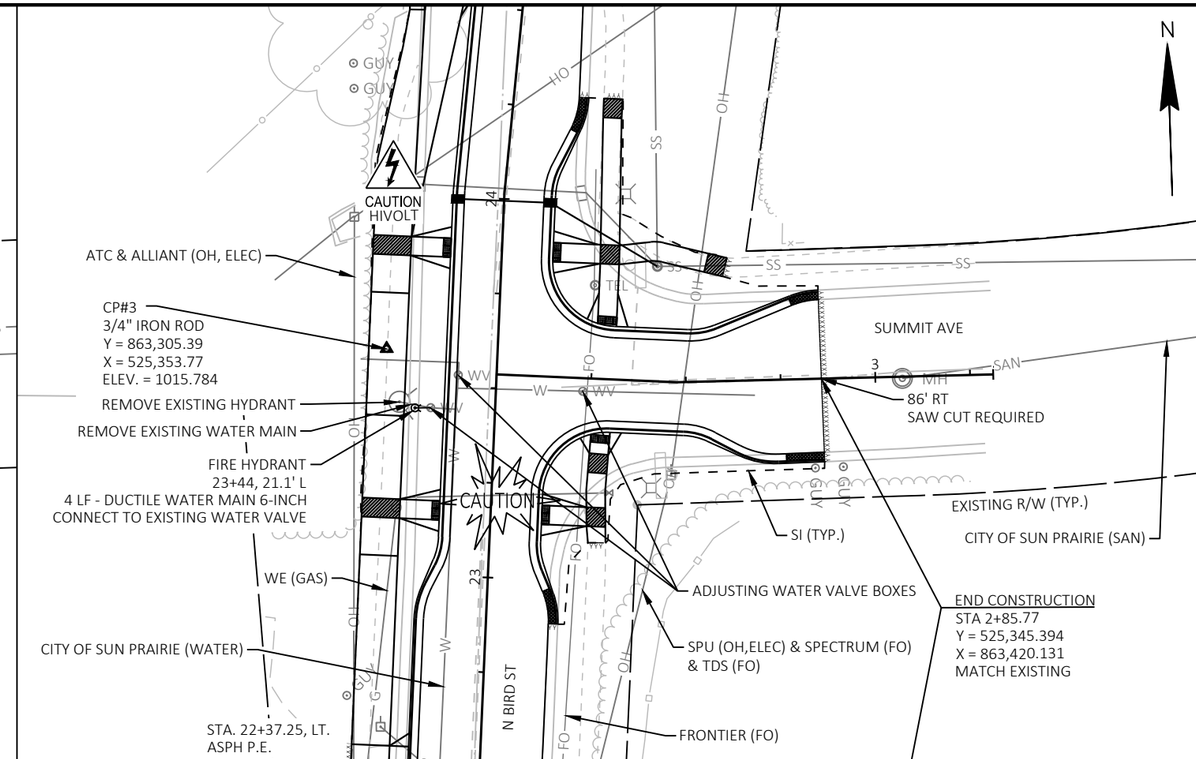

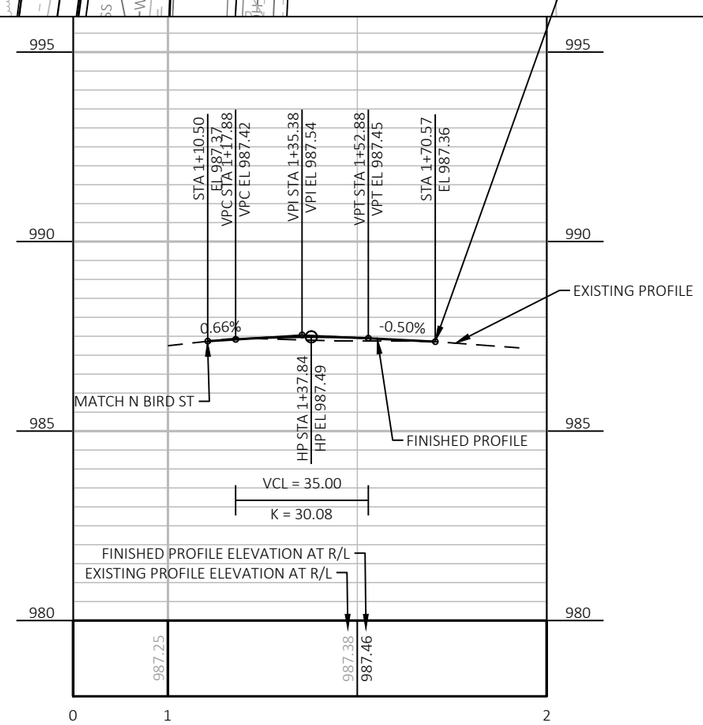

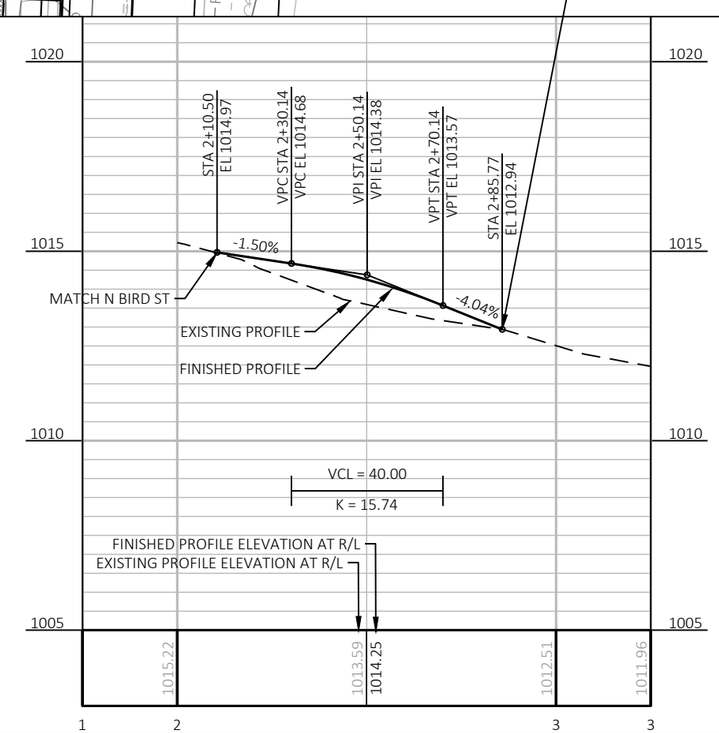

PROJECT NO: 3996-00-35	HWY: N BIRD ST	COUNTY: DANE	N BIRD ST	SHEET 51	E

Standard Detail Drawing List

08A05-21E	INLET COVER TYPE BW, MANHOLE COVERS, TYPE K, J, J-S, L & M
08A08-03	CATCH BASINS 3-FT, 4-FT, 5-FT AND 6-FT DIAMETER
08B09-04	MANHOLES 3-FT, 4-FT, 5-FT, 6-FT, 7-FT, 8-FT, 9-FT, 10-FT DIAMETER
08C07-03	INLETS 2X2-FT, 2X2.5-FT, 2X3-FT, 2.5X3-FT & 2X3.5-FT
08D01-23A	CONCRETE CURB & GUTTER
08D01-23B	CONCRETE CURB, TIES AND CURB AND GUTTER APPLICATIONS
08D05-21A	CURB RAMPS TYPES 1 AND 1-A
08D05-21B	CURB RAMPS TYPES 2 AND 3
08D05-21C	CURB RAMPS TYPES 4A AND 4A1
08D05-21D	CURB RAMPS TYPE 4B AND 4B1
08D05-21E	CURB RAMPS TYPES 5, 6, 7A, 7B & 8
08D05-21F	CURB RAMPS RADIAL DETECTABLE WARNING FIELD APPLICATIONS
08D05-21G	CURB RAMPS RECTANGULAR AND RADIAL DETECTABLE WARNING PLATES
08D16-11	CONCRETE GUTTER, CURB AND GUTTER AND PAVEMENT TIES
08E10-02	INLET PROTECTION TYPE A, B, C AND D
13C19-03	HMA LONGITUDINAL JOINTS
15C02-09A	BARRICADES AND SIGNS FOR MAINLINE CLOSURES
15C02-09B	BARRICADES AND SIGNS FOR VARIOUS CLOSURES
15C03-05	BARRICADES AND SIGNS FOR SIDEROAD CLOSURES
15C05-05	TRAFFIC CONTROL, ADVANCE WARNING SIGNS 40 M.P.H. OR LESS
15C07-15C	PAVEMENT MARKING ARROWS
15C08-23A	PERMANENT LONGITUDINAL PAVEMENT MARKINGS
15C08-23D	PAVEMENT MARKING (TURN LANES)
15C11-10B	CHANNELIZING DEVICES DRUMS, CONES, BARRICADES AND VERTICAL PANELS
15C12-09A	TRAFFIC CONTROL FOR LANE CLOSURE WITH FLAGGING OPERATION
15C18-09A	MEDIAN ISLAND MARKINGS
15C33-05	STOP LINE AND CROSSWALK PAVEMENT MARKING
15D30-09A	TRAFFIC CONTROL, PEDESTRIAN ACCOMMODATION
15D30-09B	TRAFFIC CONTROL, PEDESTRIAN ACCOMMODATION
15D30-09C	TRAFFIC CONTROL, PEDESTRIAN ACCOMMODATION
15D30-09D	TRAFFIC CONTROL, PEDESTRIAN ACCOMMODATION
15D30-09E	TRAFFIC CONTROL, PEDESTRIAN ACCOMMODATION
15D30-09F	TRAFFIC CONTROL, PEDESTRIAN ACCOMMODATION
15D30-09G	TRAFFIC CONTROL, PEDESTRIAN ACCOMMODATION
15D30-09H	TRAFFIC CONTROL, PEDESTRIAN ACCOMMODATION
15D30-09I	TRAFFIC CONTROL, PEDESTRIAN ACCOMMODATION
15D30-09J	TRAFFIC CONTROL, PEDESTRIAN ACCOMMODATION
15D30-09K	TRAFFIC CONTROL, PEDESTRIAN ACCOMMODATION
15D30-09L	TRAFFIC CONTROL, PEDESTRIAN ACCOMMODATION

6

6

GENERAL NOTES

DETAILS OF CONSTRUCTION, MATERIALS AND WORKMANSHIP NOT SHOWN ON THIS DRAWING SHALL CONFORM TO THE PERTINENT REQUIREMENTS OF THE STANDARD SPECIFICATIONS AND THE APPLICABLE SPECIAL PROVISIONS.

DETAIL DRAWINGS FOR PROPOSED ALTERNATE DESIGNS FOR MANHOLE COVERS SHALL BE SUBMITTED TO THE ENGINEER FOR APPROVAL PROVIDING THAT SUCH ALTERNATE DESIGNS MAKE PROVISION FOR EQUIVALENT CAPACITY AND STRENGTH.

ROUND FRAMES AND COVERS SHALL HAVE CONTINUOUSLY MACHINED BEARING SURFACES TO PREVENT ROCKING AND RATTLING.

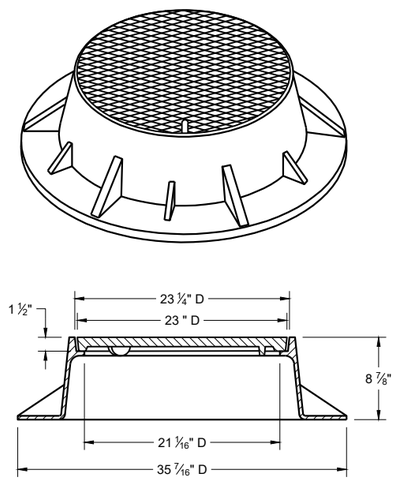

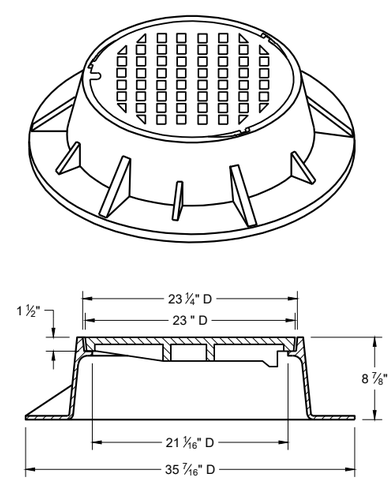

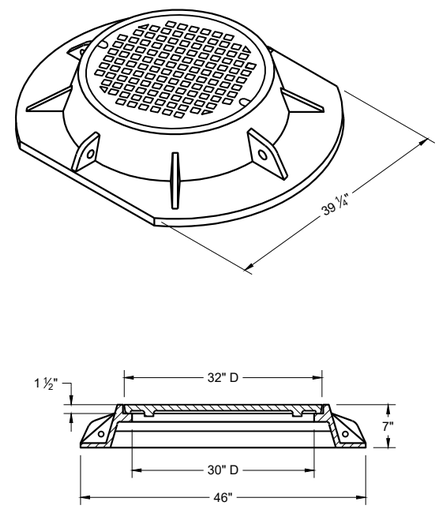

TYPE "K"

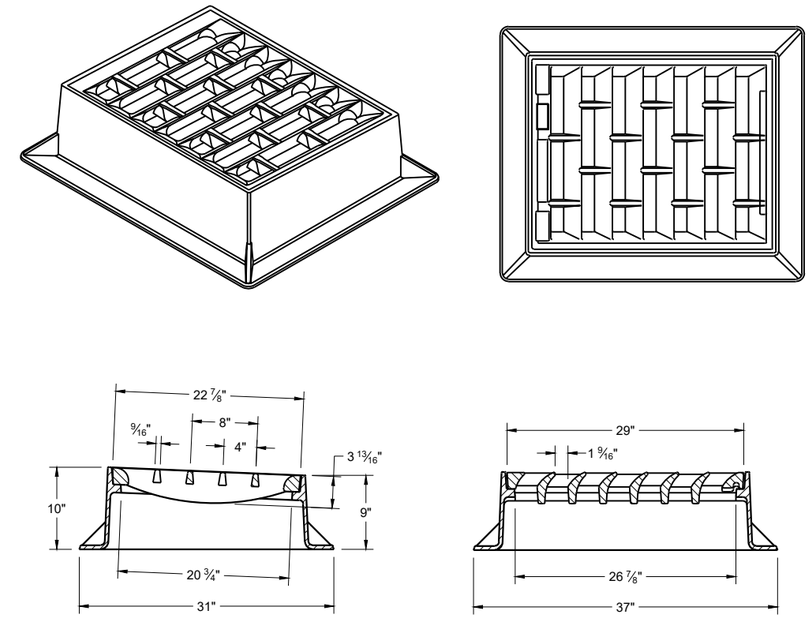

INLET COVER TYPE "BW"

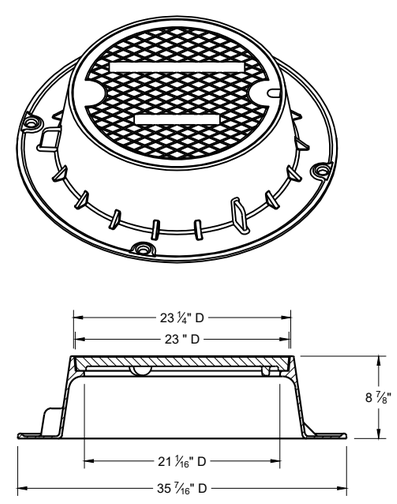

TYPE "J"

NOTE: EITHER CASTING IS ACCEPTABLE

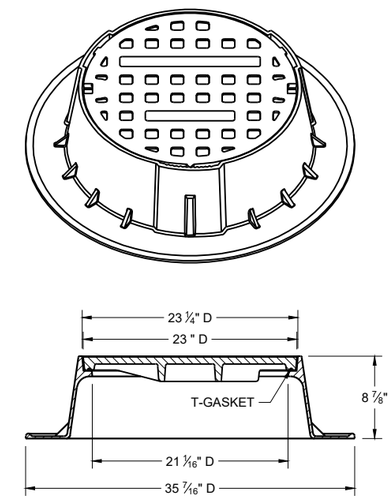

TYPE "J" SPECIAL

TYPE "B" NON-ROCKING SELF-SEAL LID
(NOTED AS TYPE J-S ON THE DRAINAGE TABLE)

NOTE: EITHER CASTING IS ACCEPTABLE

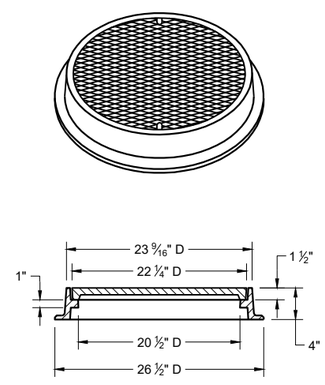

TYPE "L"

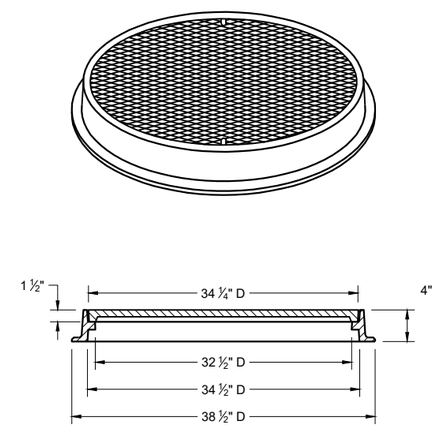

TYPE "M"

INLET COVERS TYPES BW
MANHOLE COVERS TYPES K, J, J-S, L, AND M

STATE OF WISCONSIN
DEPARTMENT OF TRANSPORTATION

APPROVED
December 2023 — DATE
/S/ Rodney Taylor — ROADWAY STANDARDS DEVELOPMENT UNIT SUPERVISOR

FHWA

6

SDD 08A05-21e

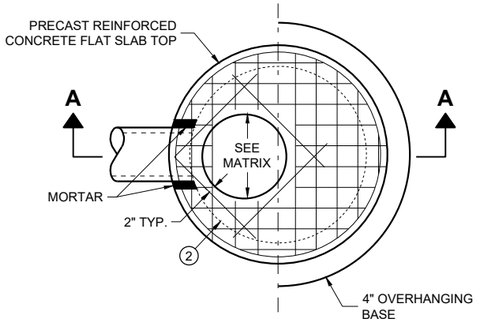

PLAN VIEW CIRCULAR OPENING

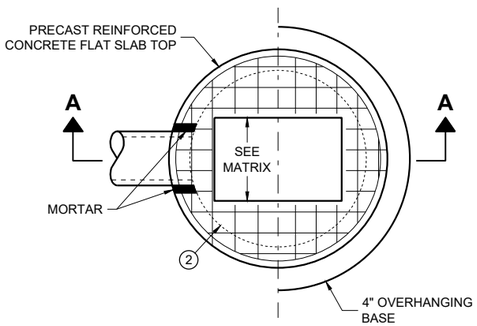

PLAN VIEW RECTANGULAR OPENING

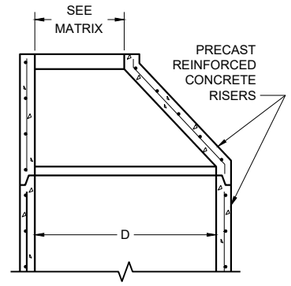

OPTIONAL PRECAST REINFORCED CONCRETE ECCENTRIC TOP

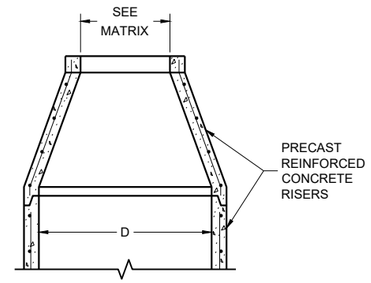

OPTIONAL PRECAST REINFORCED CONCRETE CONCENTRIC TOP

COVER MATRIX

CATCH BASIN SIZE	INLET COVER TYPE / OPENING SIZE (FT.)	ALL A'S	ALL B'S	BW	C	F	ALL H'S	S	T	V V-B	VV-B	WM	Z
3-FT	2 X 2	X	X					X		X			
	2 DIA.				X								X
4-FT TO 6-FT	2 X 2	X	X					X		X			
	2 X 2.5			X				X	X	X		X	
	2 DIA.				X								X
	2 X 3						X						
	2.5 X 3					X							
	2 X 3.5*										X*		

* REQUIRES 5-FT DIAMETER OR LARGER STRUCTURE

PIPE MATRIX

CATCH BASIN SIZE	MAXIMUM INSIDE PIPE DIAMETER FOR TWO PIPES	
	180° SEPARATION (IN)	90° SEPARATION (IN)
3-FT	15	12
4-FT	24	18
5-FT	36	24
6-FT	42	30

CATCH BASINS
3-FT, 4-FT, 5-FT AND 6-FT DIAMETER

GENERAL NOTES

DETAILS OF CONSTRUCTION, MATERIALS AND WORKMANSHIP NOT SHOWN ON THIS DRAWING SHALL CONFORM TO THE PERTINENT REQUIREMENTS OF THE STANDARD SPECIFICATIONS AND THE APPLICABLE SPECIAL PROVISIONS.

UNLESS OTHERWISE AUTHORIZED IN WRITING BY THE ENGINEER, THE CONTRACTOR SHALL NOT ORDER AND DELIVER PRECAST CATCH BASIN UNITS REQUIRED FOR THE PROJECT UNTIL A LIST OF SIZES IS FURNISHED BY THE ENGINEER.

DETAILED DRAWINGS FOR PROPOSED ALTERNATE DESIGNS FOR UNDERGROUND DRAINAGE STRUCTURES SHALL BE SUBMITTED TO THE ENGINEER FOR APPROVAL PROVIDING THAT SUCH ALTERNATE DESIGNS MAKE PROVISION FOR EQUIVALENT CAPACITY AND STRENGTH.

ALL DRAINAGE STRUCTURES ARE DESIGNATED ON THE PLANS AS "MANHOLES 3X3-L", "CATCH BASINS 4-B", "INLETS 2X3-H", ETC. THE FIRST NUMBERS DESIGNATE THE SIZE OF THE STRUCTURE, AND THE FOLLOWING LETTER DESIGNATES THE TYPE OF COVER TO BE USED TO COMPRISE THE COMPLETE UNIT.

BASES SHALL BE PLACED ON A BED OF MATERIAL AT LEAST 6 INCHES IN DEPTH, WHICH MEETS THE REQUIREMENTS OF FOUNDATION BACKFILL. THIS BEDDING SHALL BE COMPACTED AND PROVIDE UNIFORM SUPPORT FOR THE ENTIRE AREA OF THE BASE.

PRECAST REINFORCED CONCRETE CONE TOPS (ECCENTRIC OR CONCENTRIC) OR PRECAST REINFORCED CONCRETE FLAT SLAB TOPS MAY BE USED ON CONCRETE BLOCK STRUCTURES.

ECCENTRIC CONE TOPS MAY BE USED ON ALL STRUCTURES. CONCENTRIC CONE TOPS SHALL BE USE ONLY ON STRUCTURES 5 FEET OR LESS IN DEPTH UNLESS OTHERWISE DIRECTED BY THE ENGINEER.

STEPS MEETING AASHTO M199 AND THE FOLLOWING REQUIREMENTS SHALL BE INSTALLED IN ALL STRUCTURES OVER 5 FEET IN DEPTH: 16 INCH C-C MAXIMUM SPACING; PROJECT A MINIMUM CLEAR DISTANCE OF 4 INCHES FROM THE WALL AT THE POINT OF EMBEDMENT; MINIMUM LENGTH OF 10 INCHES; MINIMUM WALL EMBEDMENT OF 3 INCHES. FERROUS METAL STEPS NOT PAINTED OR TREATED TO RESIST CORROSION SHALL HAVE A MINIMUM CROSS SECTIONAL DIMENSION OF 1 INCH.

STEPS OF APPROVED POLYPROPYLENE PLASTIC COATED REINFORCEMENT BAR ARE ACCEPTABLE. REINFORCING BAR MUST BE A MINIMUM OF ½ INCH AND MEET THE REQUIREMENTS OF ASTM A615.

CERTIFICATION SHALL BE PROVIDED THAT INSTALLED STEPS WHEN TESTED IN ACCORDANCE WITH SECTION 10 OF AASHTO T280 CAN WITHSTAND A VERTICAL LOAD OF 800 LBS. AND A HORIZONTAL LOAD OF 400 LBS.

ALL BAR STEEL REINFORCEMENT SHALL BE EMBEDDED 2 INCHES CLEAR UNLESS OTHERWISE SHOWN OR NOTED.

ALL PRECAST INLET UNITS SHALL CONFORM TO THE PERTINENT REQUIREMENTS OF AASHTO DESIGNATION M199.

PRECAST REINFORCED RISERS SHALL HAVE A TONGUE AND GROOVE JOINT WITH TONGUE UP OR DOWN.

CONCRETE BLOCK WILL NOT BE PERMITTED FOR STRUCTURES GREATER THAN 4 FEET IN DIAMETER.

4" OVERHANGING BASES ARE REQUIRED FOR ALL CONCRETE BLOCK INSTALLATIONS. 4" OVERHANG IS REQUIRED WHEN SEPARATE PRECAST BASE IS PROVIDED. OVERHANG IS NOT REQUIRED ON PRECAST STRUCTURES WITH AN INTEGRAL OR MONOLITHIC BASE.

FOR ADDITIONAL CONFIGURATIONS, MAINTAIN A MINIMUM OF 12 INCHES AS MEASURED FROM THE INSIDE OF THE STRUCTURE WALL BETWEEN THE OUTSIDE PIPE WALLS OF ADJACENT PIPES. SEE DETAIL "D".

1. MINIMUM WALL THICKNESS SHALL BE 4 INCHES FOR 3-FT, 5 INCHES FOR 4-FT, 6 INCHES FOR 5-FT AND 7 INCHES FOR 6-FT DIAMETER PRECAST CATCH BASINS.
2. FOR PRECAST CATCH BASINS AND REINFORCED CONCRETE BASES PROVIDE REINFORCING STEEL IN ACCORDANCE TO AASHTO M199.
3. PRECAST FLAT SLAB TOPS AND BASES WITH A DIAMETER OF 48" AND LESS SHALL HAVE A MINIMUM THICKNESS OF 6". PRECAST FLAT SLAB TOPS AND BASES WITH A DIAMETER LARGER THAN 48" SHALL HAVE A MINIMUM THICKNESS OF 8".
4. 1" CONCRETE KEY POURED AFTER INSTALLATION. 2' SUMP MEASURED FROM TOP OF KEY.
5. JOINTS TO BE SEALED WITH A BUTYL RUBBER SEAL PER SEALANT MANUFACTURERS RECOMMENDATIONS CONFORMING TO ASTM C 990 OR RUBBER GASKETS CONFROMING TO ASTM C443.

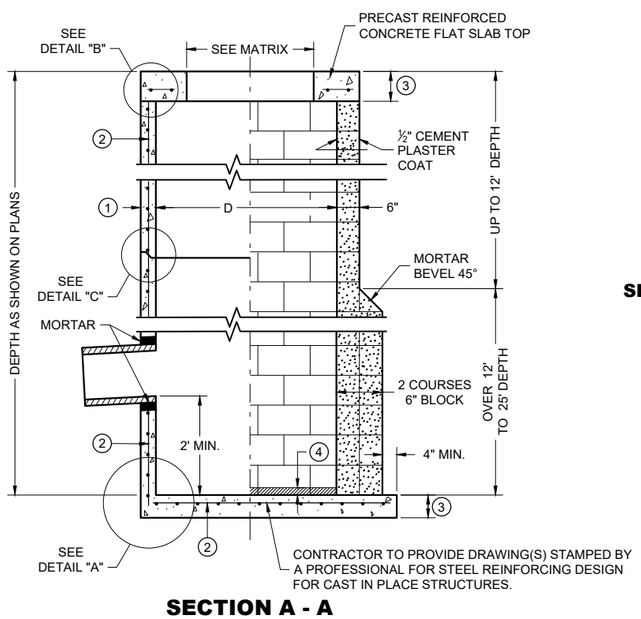

SECTION A - A

PRECAST REINFORCED CONCRETE WITH MONOLITHIC BASE

CONCRETE BLOCK WITH CAST IN PLACE OR PRECAST REINFORCED CONCRETE BASE ②

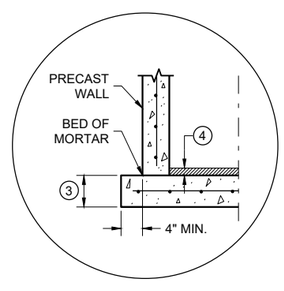

SEPARATE PRECAST REINFORCED CONCRETE BASE OPTION

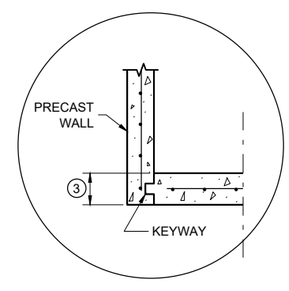

PRECAST REINFORCED CONCRETE WITH INTEGRAL BASE OPTION

DETAIL "A"

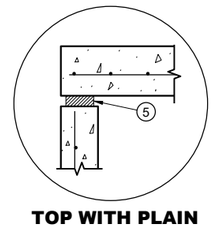

TOP WITH PLAIN END JOINT

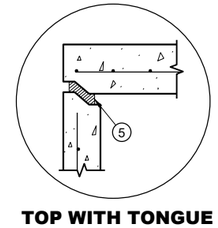

TOP WITH TONGUE AND GROOVE JOINT

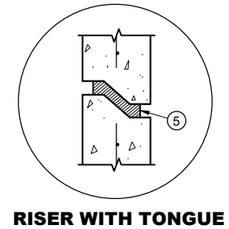

RISER WITH TONGUE AND GROOVE JOINT

DETAIL "B"

DETAIL "C"

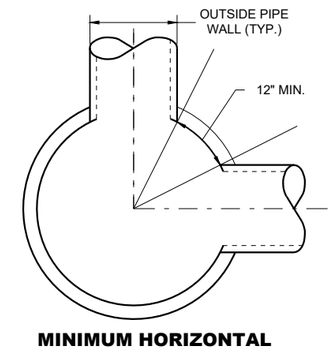

MINIMUM HORIZONTAL PIPE SEPARATION

DETAIL "D"

CATCH BASINS, 3-FT. 4-FT., 5 FT., AND 6-FT. DIAMETER

STATE OF WISCONSIN
DEPARTMENT OF TRANSPORTATION

APPROVED
December 2023 — DATE
/S/ Rodney Taylor — ROADWAY STANDARDS DEVELOPMENT UNIT SUPERVISOR

FHWA

6

6

SDD 08A08-03

SDD 08A08-03

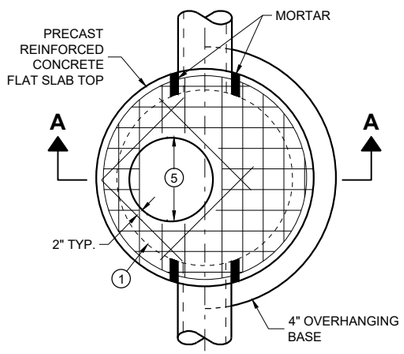

PLAN VIEW
CIRCULAR OPENING

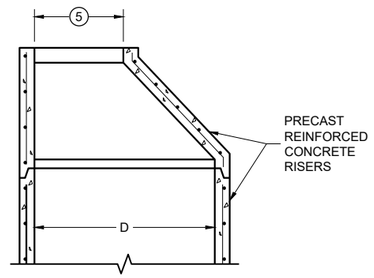

OPTIONAL PRECAST REINFORCED CONCRETE ECCENTRIC TOP

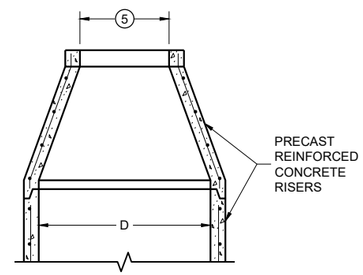

OPTIONAL PRECAST REINFORCED CONCRETE CONCENTRIC TOP

MANHOLE COVER OPENING MATRIX

OPENING SIZE (FT.) (5) \ MANHOLE COVER TYPE	C	ALL J'S	K	L	M
2 DIA.	X	X		X	
3 DIA.			X		X

PIPE MATRIX

MANHOLE SIZE (DIA.)	MAXIMUM INSIDE PIPE DIAMETER FOR TWO PIPES		MINIMUM WALL THICKNESS (IN)	MINIMUM PRECAST FLAT SLAB TOP AND BASE THICKNESS
	180° SEPARATION (IN)	90° SEPARATION (IN)		
3-FT	15	12	4	6
4-FT	24	18	4	6
5-FT	36	24	5	8
6-FT	42	36	6	8
7-FT	48	36/42 *	7	8
8-FT	60	42	8	8
9-FT	66	54	9	10
10-FT	72	60	10	10

*A 36" PIPE AND A 42" PIPE CAN BE PLACED WITHIN 90 DEGREES. SEE MINIMUM HORIZONTAL PIPE SEPARATION DETAIL.

GENERAL NOTES

DETAILS OF CONSTRUCTION, MATERIALS AND WORKMANSHIP NOT SHOWN ON THIS DRAWING SHALL CONFORM TO THE PERTINENT REQUIREMENTS OF THE STANDARD SPECIFICATIONS AND THE APPLICABLE SPECIAL PROVISIONS.

UNLESS OTHERWISE AUTHORIZED IN WRITING BY THE ENGINEER, THE CONTRACTOR SHALL NOT ORDER AND DELIVER PRECAST MANHOLE UNITS REQUIRED FOR THE PROJECT UNTIL A LIST OF SIZES IS FURNISHED BY THE ENGINEER.

DETAILED DRAWINGS FOR PROPOSED ALTERNATE DESIGNS FOR UNDERGROUND DRAINAGE STRUCTURES SHALL BE SUBMITTED TO THE ENGINEER FOR APPROVAL PROVIDING THAT SUCH ALTERNATE DESIGNS MAKE PROVISION FOR EQUIVALENT CAPACITY AND STRENGTH.

ALL DRAINAGE STRUCTURES ARE DESIGNATED ON THE PLANS AS "MANHOLES 3X3-L", "CATCH BASINS 4-B", "INLETS 2X3-H", ETC. THE FIRST NUMBERS DESIGNATE THE SIZE OF THE STRUCTURE, AND THE FOLLOWING LETTER DESIGNATES THE TYPE OF COVER TO BE USED TO COMPRISE THE COMPLETE UNIT.

BASES SHALL BE PLACED ON A BED OF MATERIAL AT LEAST 6 INCHES IN DEPTH, WHICH MEETS THE REQUIREMENTS OF FOUNDATION BACKFILL. THIS BEDDING SHALL BE COMPACTED AND PROVIDE UNIFORM SUPPORT FOR THE ENTIRE AREA OF THE BASE.

PRECAST REINFORCED CONCRETE CONE TOPS (ECCENTRIC OR CONCENTRIC) OR PRECAST REINFORCED CONCRETE FLAT SLAB TOPS MAY BE USED ON CONCRETE BLOCK STRUCTURES.

ECCENTRIC CONE TOPS MAY BE USED ON ALL STRUCTURES. CONCENTRIC CONE TOPS SHALL BE USED ONLY ON STRUCTURES 5 FEET OR LESS IN DEPTH UNLESS OTHERWISE DIRECTED BY THE ENGINEER.

STEPS MEETING AASHTO M199 AND THE FOLLOWING REQUIREMENTS SHALL BE INSTALLED IN ALL STRUCTURES OVER 5 FEET IN DEPTH: 16 INCH C-C MAXIMUM SPACING; PROJECT A MINIMUM CLEAR DISTANCE OF 4 INCHES FROM THE WALL AT THE POINT OF EMBEDMENT; MINIMUM LENGTH OF 10 INCHES; MINIMUM WALL EMBEDMENT OF 3 INCHES. FERROUS METAL STEPS NOT PAINTED OR TREATED TO RESIST CORROSION SHALL HAVE A MINIMUM CROSS SECTIONAL IMENSION OF 1 INCH.

STEPS OF APPROVED POLYPROPYLENE PLASTIC COATED REINFORCEMENT BAR ARE ACCEPTABLE. REINFORCING BAR MUST BE A MINIMUM OF ½ INCH AND MEET THE REQUIREMENTS OF ASTM A615.

CERTIFICATION SHALL BE PROVIDED THAT INSTALLED STEPS WHEN TESTED IN ACCORDANCE WITH SECTION 10 OF AASHTO T280 CAN WITHSTAND A VERTICAL LOAD OF 800 LBS. AND A HORIZONTAL LOAD OF 400 LBS.

ALL BAR STEEL REINFORCEMENT SHALL BE EMBEDDED 2 INCHES CLEAR UNLESS OTHERWISE SHOWN OR NOTED.

ALL PRECAST MANHOLE UNITS SHALL CONFORM TO THE PERTINENT REQUIREMENTS OF AASHTO DESIGNATION M199.

PRECAST REINFORCED RISERS SHALL HAVE A TONGUE AND GROOVE JOINT WITH TONGUE UP OR DOWN.

CONCRETE BLOCK WILL NOT BE PERMITTED FOR STRUCTURES GREATER THAN 4 FEET IN DIAMETER.

4" OVERHANGING BASES ARE REQUIRED FOR ALL CONCRETE BLOCK INSTALLATIONS. 4" OVERHANG IS REQUIRED WHEN SEPARATE PRECAST BASE IS PROVIDED. OVERHANG IS NOT REQUIRED ON PRECAST STRUCTURES WITH AN INTEGRAL OR MONOLITHIC BASE.

FOR ADDITIONAL CONFIGURATIONS, MAINTAIN A MINIMUM OF 12 INCHES AS MEASURED FROM THE INSIDE OF THE STRUCTURE WALL BETWEEN THE OUTSIDE PIPE WALLS OF ADJACENT PIPES. SEE DETAIL "D".

(1) FOR PRECAST MANHOLES AND REINFORCED CONCRETE BASES PROVIDE REINFORCING STEEL IN ACCORDANCE TO AASHTO M199.

(2) SEE PIPE MATRIX TABLE FOR MINIMUM WALL THICKNESS FOR PRECAST MANHOLES

(3) SEE PIPE MATRIX TABLE FOR MINIMUM THICKNESS OF PRECAST FLAT SLAB TOPS AND BASES.

(4) JOINTS TO BE SEALED WITH A BUTYL RUBBER SEAL PER SEALANT MANUFACTURERS RECOMMENDATIONS CONFORMING TO ASTM C 990 OR RUBBER GASKETS CONFORMING TO ASTM C443.

(5) SEE MANHOLE COVER OPENING MATRIX.

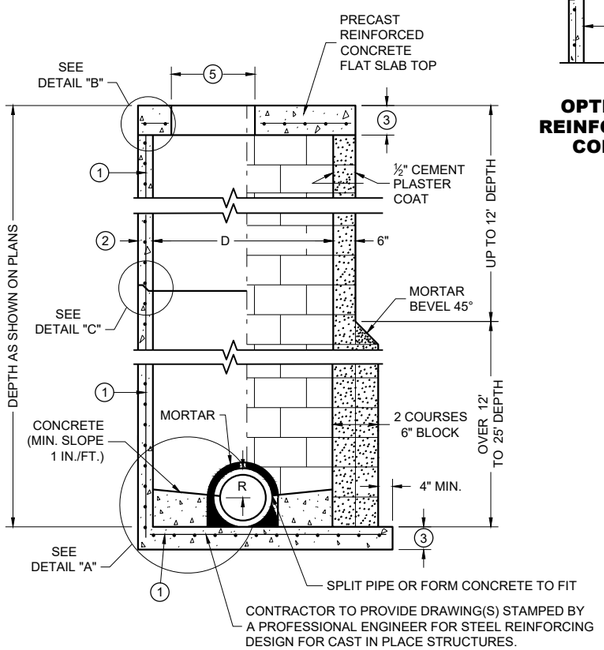

SECTION A - A

PRECAST REINFORCED CONCRETE WITH MONOLITHIC BASE

CONCRETE BLOCK WITH CAST IN PLACE OR PRECAST REINFORCED CONCRETE BASE (1)

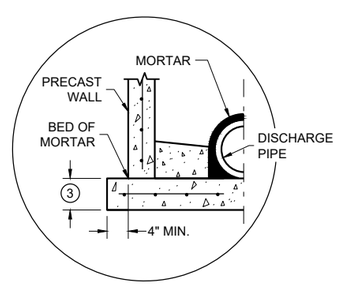

SEPARATE PRECAST REINFORCED CONCRETE BASE OPTION

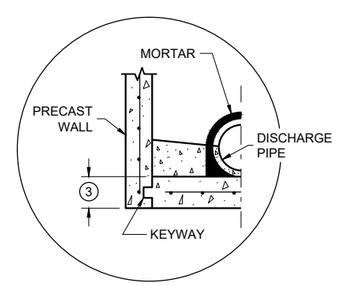

PRECAST REINFORCED CONCRETE WITH INTEGRAL BASE OPTION

DETAIL "A"

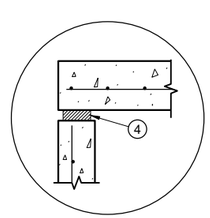

TOP WITH PLAIN END JOINT

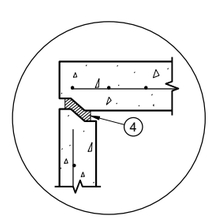

TOP WITH TONGUE AND GROOVE JOINT

DETAIL "B"

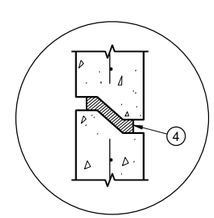

RISER WITH TONGUE AND GROOVE JOINT

DETAIL "C"

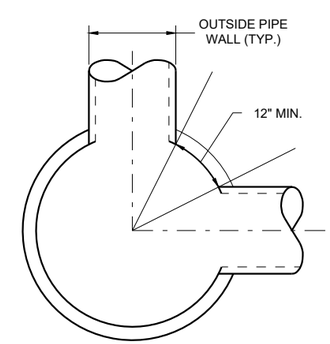

MINIMUM HORIZONTAL PIPE SEPARATION

DETAIL "D"

MANHOLES 3-FT, 4-FT, 5-FT, 6-FT, 7-FT, 8-FT, 9-FT AND 10-FT DIAMETER

MANHOLES, 3-FT, 4-FT 5-FT, 6-FT, 7-FT, 8-FT, 9-FT AND 10-FT DIAMETER

STATE OF WISCONSIN
DEPARTMENT OF TRANSPORTATION

APPROVED
December 2023 — DATE
/S/ Rodney Taylor — ROADWAY STANDARDS DEVELOPMENT UNIT SUPERVISOR
FHWA

6

SDD 08B09-04

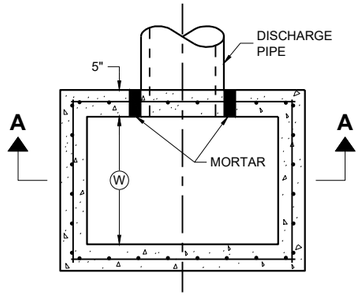

PLAN VIEW

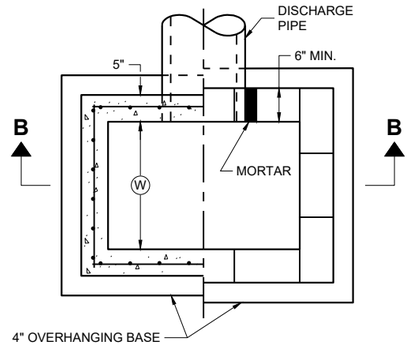

PLAN VIEW

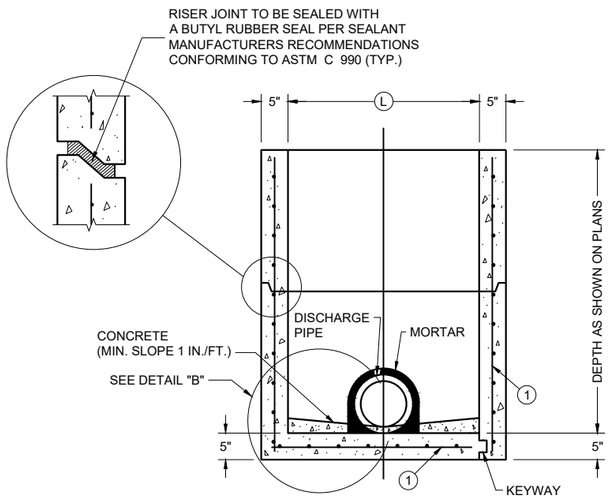

PRECAST REINFORCED CONCRETE WITH MONOLITHIC BASE

PRECAST REINFORCED CONCRETE WITH INTEGRAL BASE

SECTION A - A

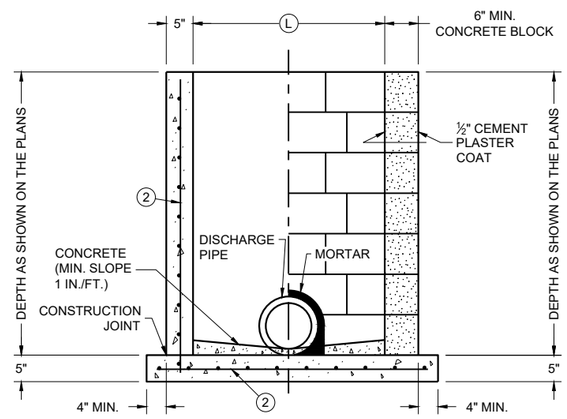

CAST IN PLACE REINFORCED CONCRETE

CONCRETE BLOCK WITH CAST IN PLACE OR PRECAST REINFORCED CONCRETE BASE (1)

SECTION B - B

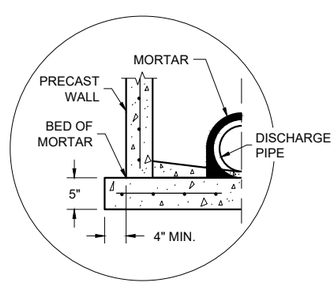

SEPARATE PRECAST REINFORCED CONCRETE BASE OPTION

DETAIL "B"

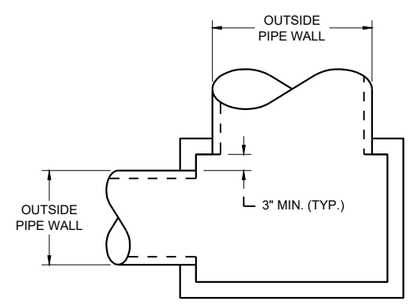

DETAIL "A"

GENERAL NOTES

DETAILS OF CONSTRUCTION, MATERIALS AND WORKMANSHIP N0T SHOWN ON THIS DRAWING SHALL CONFORM TO THE PERTINENT REQUIREMENTS OF THE STANDARD SPECIFICATIONS AND THE APPLICABLE SPECIAL PROVISIONS.

UNLESS OTHERWISE AUTHORIZED IN WRITING BY THE ENGINEER, THE CONTRACTOR SHALL NOT ORDER AND DELIVER PRECAST INLET UNITS REQUIRED FOR THE PROJECT UNTIL A LIST OF SIZES IS FURNISHED BY THE ENGINEER.

DETAILED DRAWINGS FOR PROPOSED ALTERNATE DESIGNS FOR UNDERGROUND DRAINAGE STRUCTURES SHALL BE SUBMITTED TO THE ENGINEER FOR APPROVAL PROVIDING THAT SUCH ALTERNATE DESIGNS MAKE PROVISION FOR EQUIVALENT CAPACITY AND STRENGTH.

ALL PRECAST INLET UNITS SHALL CONFORM TO THE PERTINENT REQUIREMENTS OF ASTM C 913.

ALL DRAINAGE STRUCTURES ARE DESIGNATED ON THE PLANS AS "MANHOLES 3X3-L", "CATCH BASINS 4-B", "INLETS 2X3-H", ETC. THE FIRST NUMBERS DESIGNATES THE SIZE OF THE STRUCTURE, AND THE FOLLOWING LETTER DESIGNATES THE TYPE OF COVER TO BE USED TO COMPRISE THE COMPLETE UNIT.

BASES SHALL BE PLACED ON A BED OF MATERIAL AT LEAST 6 INCHES IN DEPTH, WHICH MEETS THE REQUIREMENTS OF FOUNDATION BACKFILL. THIS BEDDING SHALL BE COMPACTED AND PROVIDE UNIFORM SUPPORT FOR THE ENTIRE AREA OF THE BASE.

ALL BAR STEEL REINFORCEMENT SHALL BE EMBEDDED 2 INCHES CLEAR UNLESS OTHERWISE SHOWN OR NOTED.

PRECAST REINFORCED RISERS SHALL HAVE A TONGUE AND GROOVE JOINT WITH TONGUE UP OR DOWN.

4" OVERHANGING BASES ARE REQUIRED FOR CAST-IN-PLACE REINFORCED CONCRETE AND CONCRETE BLOCK INSTALLATIONS. 4" OVERHANG IS REQUIRED WHEN SEPARATE PRECAST BASE IS PROVIDED. OVERHANG IS NOT REQUIRED ON PRECAST STRUCTURES WITH AN INTEGRAL OR MONOLITHIC BASE.

MAXIMUM INSIDE PIPE DIAMETER DETERMINED BY 3" CLEARANCE ON EACH SIDE OF THE OUTSIDE WALL OF THE PIPE. SEE DETAIL "A". ASSUMES PIPE ENTERS PERPENDICULAR TO THE STRUCTURE.

(1) FOR PRECAST INLETS AND REINFORCED CONCRETE BASES PROVIDE REINFORCING STEEL IN ACCORDANCE TO ASTM C 913
(2) CONTRACTOR TO PROVIDE DRAWING(S) STAMPED BY A PROFESSIONAL ENGINEER FOR STEEL REINFORCING DESIGN FOR CAST-IN-PLACE STRUCTURES.

CATCH BASIN COVER MATRIX

INLET SIZE	WIDTH (W) (FT.)	LENGTH (L) (FT.)	INLET COVER TYPE									
			ALL A'S	ALL B'S	BW	F	ALL H'S	S	T	V	WM	V V-B
2 X 2-FT	2	2	X	X				X				
2 X 2.5-FT	2	2.5			X			X	X	X	X	
2 X 3-FT	2	3					X					
2.5 X 3-FT	2.5	3				X						
2 X 3.5-FT	2	3.5										X

PIPE MATRIX

CATCH BASIN SIZE	MAXIMUM INSIDE PIPE DIAMETER FOR TWO PIPES	
	WIDTH (IN)	LENGTH (IN)
2 X 2-FT	12	12
2 X 2.5-FT	12	18
2 X 3-FT	12	24
2.5 X 3-FT	18	24
2 X 3.5-FT	12	30

INLETS 2 X 2-FT, 2 X 2.5-FT, 2 X 3-FT, 2.5 X 3-FT AND 2X3.5-FT

INLETS 2 X 2-FT, 2 X 2.5-FT, 2 X 3-FT, 2.5 X 3-FT AND 2 X 3.5-FT

STATE OF WISCONSIN
DEPARTMENT OF TRANSPORTATION

APPROVED
December 2023 — DATE
/S/ Rodney Taylor — ROADWAY STANDARDS DEVELOPMENT UNIT SUPERVISOR
FHWA

6

SDD 08C07-03

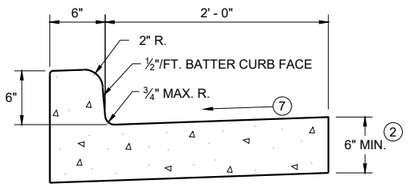

TYPES A (1) & D

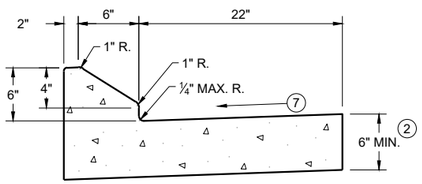

6" SLOPED CURB TYPES G (1) & J

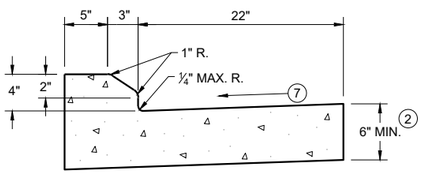

4" SLOPED CURB TYPES G (1) & J

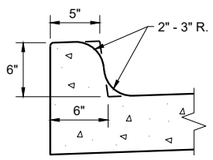

TYPES K (1) & L
(OPTIONAL CURB SHAPE)

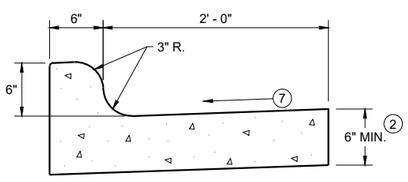

TYPES K (1) & L

CONCRETE CURB AND GUTTER 30"

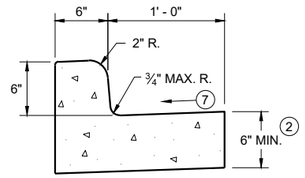

TYPES A (1) & D

CONCRETE CURB AND GUTTER 18"

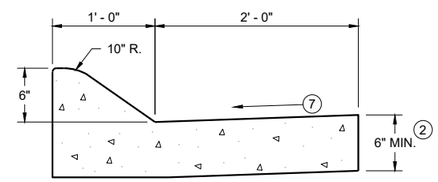

6" SLOPED CURB TYPES A (1) & D

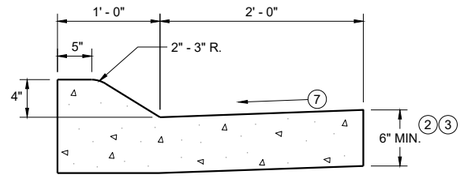

4" SLOPED CURB TYPES A (1) & D

CONCRETE CURB AND GUTTER 36"

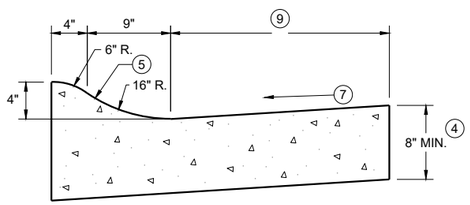

4" SLOPED CURB TYPES R (1) & T

TBT & TBTT	X
30"	22"
36"	28"

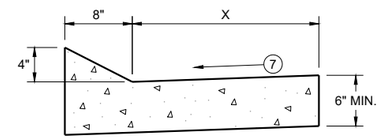

TYPES TBT & TBTT (1)

CONCRETE CURB AND GUTTER

PAVEMENT THICKNESS AND MAXIMUM CONCRETE PANEL WIDTH TABLE

PAVEMENT THICKNESS	MAXIMUM PANEL WIDTH
LESS THAN 10"	12'
10" & ABOVE	15'

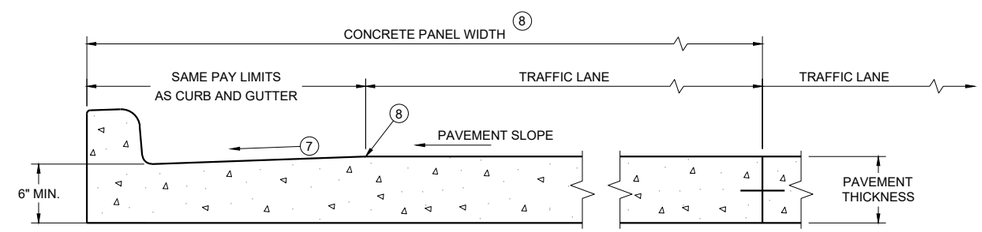

PARTIAL SECTION OF PAVEMENT * WITH INTEGRAL CURB AND GUTTER

* BIKE LANE IS NOT SHOWN

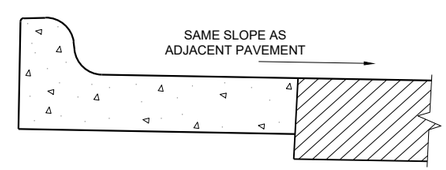

REVERSE SLOPE GUTTER (6)
(TYPICAL FOR ALL CURB & GUTTER TYPES)

GENERAL NOTES

DETAILS OF CONSTRUCTION AND WORKMANSHIP NOT SHOWN ON THIS DRAWING SHALL CONFORM TO THE PERTINENT REQUIREMENTS OF THE CONTRACT.

PAVEMENT TIES AND TIE BARS SHALL BE EPOXY COATED IN CONFORMANCE WITH SUBSECTION 505.2.6.2 OF THE STANDARD SPECIFICATIONS.

INTEGRAL CURB AND GUTTER SHALL CONFORM TO THE DETAILS SHOWN FOR CONCRETE CURB AND GUTTER INCLUDING THE TRANSVERSE GUTTER SLOPE.

UNLESS OTHERWISE SHOWN ON THE TYPICAL CROSS SECTIONS, THE BASE AGGREGATE AND COMMON EXCAVATION LIMITS ARE 2' - 0" BEHIND THE BACK OF CURBS.

(1) TIE BARS ARE REQUIRED FOR CURB AND GUTTERS TYPES A, G, K, R, AND TBTT.

(2) THE BOTTOM OF CURB AND GUTTER MAY BE CONSTRUCTED EITHER LEVEL OR PARALLEL TO THE SLOPE OF THE SUBGRADE OR BASE AGGREGATE PROVIDED A 6" MINIMUM GUTTER THICKNESS IS MAINTAINED.

(3) USE 8" MINIMUM GUTTER THICKNESS WHEN USED WITH AN ADJACENT CONCRETE TRUCK APRON PLACED BEHIND BACK OF CURB.

(4) THE BOTTOM OF CURB AND GUTTER MAY BE CONSTRUCTED EITHER LEVEL OR PARALLEL TO THE SLOPE OF THE SUBGRADE OR BASE AGGREGATE PROVIDED A 8" MINIMUM GUTTER THICKNESS IS MAINTAINED.

(5) UNLESS OTHERWISE NOTED, FOR STAKING PURPOSES THE FACE OF CURB IS 6" FROM THE BACK OF CURB.

(6) WHEN REVERSE SLOPE GUTTER IS REQUIRED, THE LOCATION(S) WILL BE SHOWN ELSEWHERE IN THE PLAN.

(7) USE 4% GUTTER CROSS SLOPE UNLESS OTHERWISE NOTED IN THE PLANS.

(8) INCLUDE LONGITUDINAL JOINT AND TIE BARS ALONG LANE EDGE WHEN CONCRETE PANEL WIDTH EXCEEDS THE MAXIMUM WIDTH PER TABLE BELOW. LONGITUDINAL JOINT(S) ARE NOT ALLOWED WITHIN TRAFFIC LANES AND BIKE LANES. LONGITUDINAL JOINT MAY BE SAWED.

(9) CONCRETE CURB AND GUTTER 4-INCH SLOPED 30-INCH TYPE "R" AND "T" = 17 INCHES
CONCRETE CURB AND GUTTER 4-INCH SLOPED 36-INCH TYPE "R" AND "T" = 23 INCHES

CONCRETE CURB AND GUTTER

STATE OF WISCONSIN
DEPARTMENT OF TRANSPORTATION

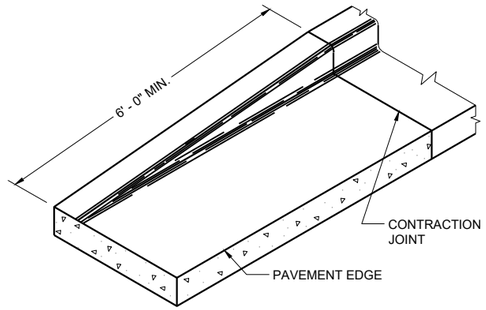

END SECTION CURB AND GUTTER

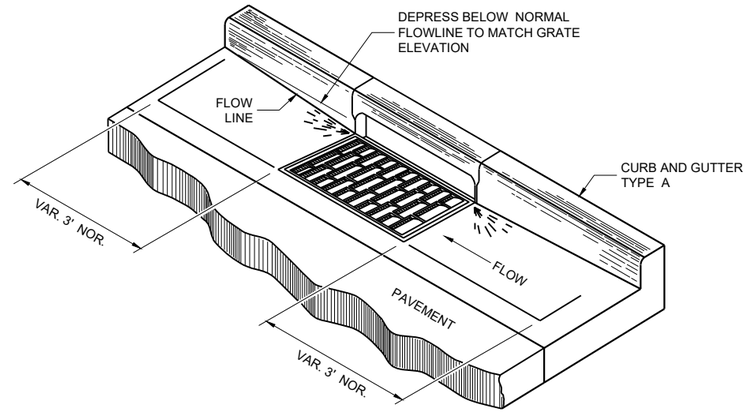

DETAIL OF CURB AND GUTTER AT INLETS

(TYPICAL H INLET COVER SHOWN)

GENERAL NOTES

DETAILS OF CONSTRUCTION AND WORKMANSHIP NOT SHOWN ON THIS DRAWING SHALL CONFORM TO THE PERTINENT REQUIREMENTS OF THE CONTRACT.

PAVEMENT TIES AND TIE BARS SHALL BE EPOXY COATED IN CONFORMANCE WITH SUBSECTION 505.2.6.2 OF THE STANDARD SPECIFICATIONS.

UNLESS OTHERWISE SHOWN ON THE TYPICAL CROSS SECTIONS, THE BASE AGGREGATE AND COMMON EXCAVATION LIMITS ARE 2' - 0" BEHIND THE BACK OF CURBS.

(1) TIE BARS ARE REQUIRED FOR CURB AND GUTTERS TYPES A, G, K, R, AND TBTT.

(2) THE BOTTOM OF CURB AND GUTTER MAY BE CONSTRUCTED EITHER LEVEL OR PARALLEL TO THE SLOPE OF THE SUBGRADE OR BASE AGGREGATE PROVIDED A 6" MINIMUM GUTTER THICKNESS IS MAINTAINED.

(10) REFER TO SDD 08D18 AND 08D19 FOR ADDITIONAL DRIVEWAY ENTRANCE CURB DETAILS.

(11) PLACE 1" THICK EXPANSION JOINT MATERIAL BETWEEN VERTICAL FACE CURB TYPES EXTENDING FROM THE TOP OF CURB TO 1 INCH BELOW THE ADJOINING CONCRETE SURFACE. RIGID CONCRETE STRUCTURES INCLUDE RAISED CONCRETE MEDIANS, CONCRETE SAFETY ISLANDS, SPLITTER ISLANDS, OR LOCATIONS IDENTIFIED ON THE PLANS.

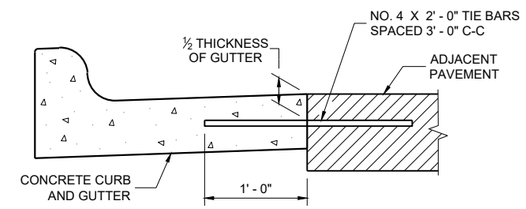

TYPICAL TIE BAR LOCATION (1)

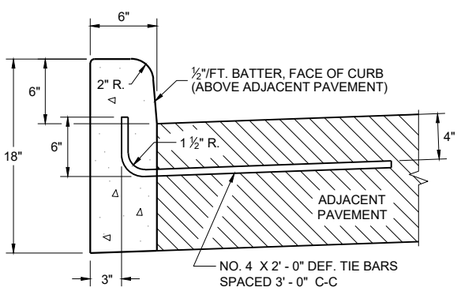

TYPES A (1) & D

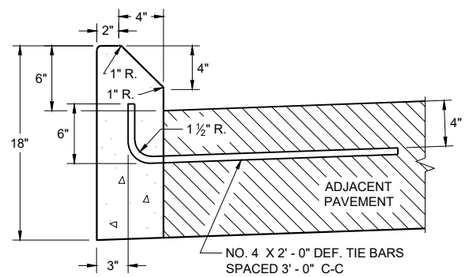

TYPES G (1) & J

CONCRETE CURB

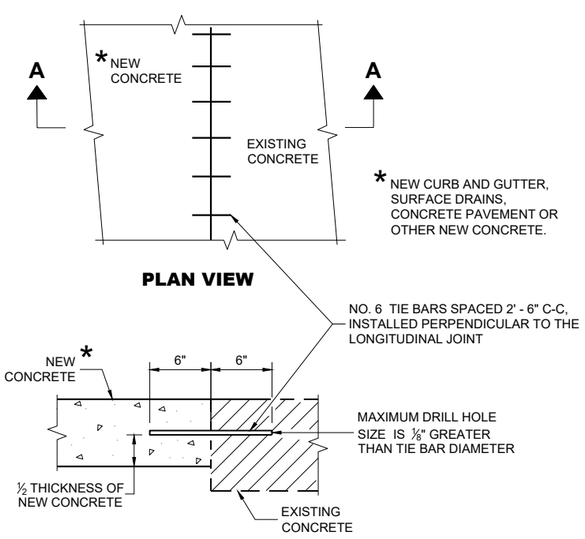

PLAN VIEW

SECTION A - A

TIE BARS DRILLED INTO EXISTING PAVEMENT

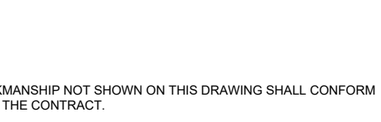

DRIVEWAY ENTRANCE CURB (10)

(WHEN DIRECTED BY THE ENGINEER)

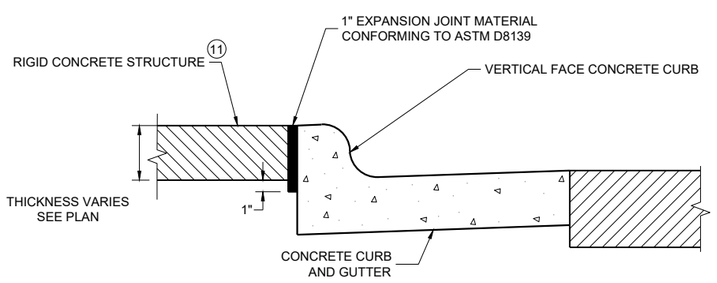

EXPANSION JOINT DETAIL FOR VERTICAL CURB ABUTTING A RIGID STRUCTURE (11)

CONCRETE CURB, TIES AND CURB AND GUTTER APPLICATIONS

STATE OF WISCONSIN
DEPARTMENT OF TRANSPORTATION

APPROVED
May 2023 — DATE
/S/ Rodnery Taylor — ROADWAY STANDARDS DEVELOPMENT UNIT SUPERVISOR

FHWA

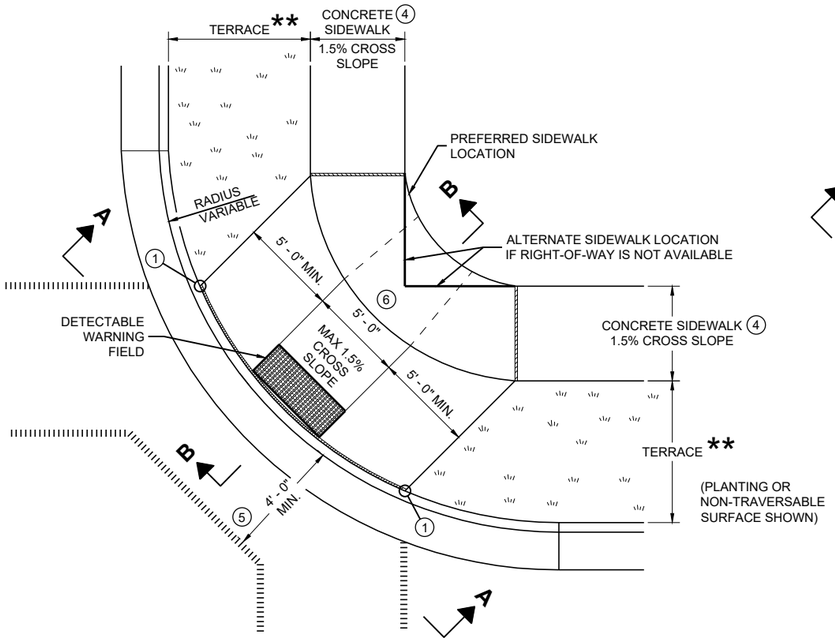

PLAN VIEW

CURB RAMP TYPE 1

(CENTER OF CORNER RADIUS)

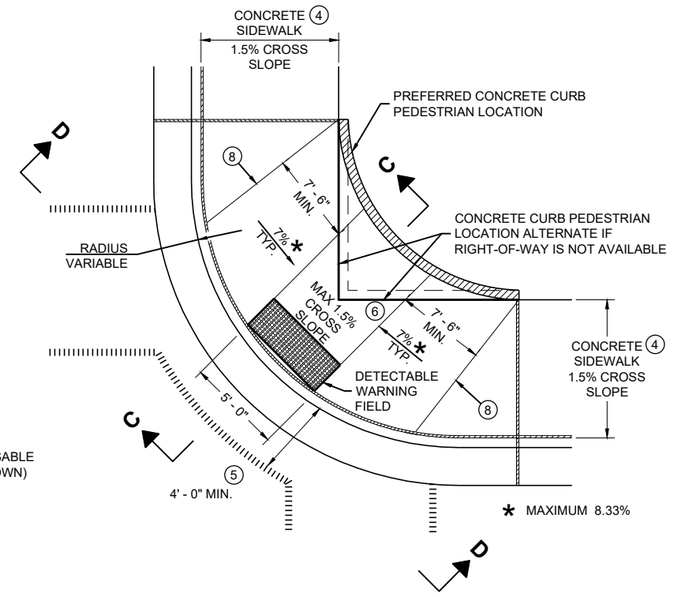

PLAN VIEW

CURB RAMP TYPE 1 - A

(NO TERRACE)

GENERAL NOTES

AVOID PLACING DRAINAGE STRUCTURES, JUNCTION BOXES OR OTHER OBSTRUCTIONS IN FRONT OF RAMP ACCESS AREAS.

DETAILS OF CONSTRUCTION, MATERIALS AND WORKMANSHIP NOT SHOWN ON THIS DRAWING SHALL CONFORM TO THE PERTINENT REQUIREMENTS OF THE STANDARD SPECIFICATIONS AND THE APPLICABLE SPECIAL PROVISIONS.

WHEN NECESSARY, THE SIDEWALK ELEVATION MAY BE LOWERED TO MEET THE HIGH POINT ON THE RAMP.

TYPE 1 CURB RAMPS SHALL HAVE A NORMAL SIDEWALK APRON AND CURB ON BOTH SIDES OF RAMP.

DETECTABLE WARNING FILED SHALL BE MEASURED AND PAID BY THE SQUARE FOOT AS "CURB RAMP DETECTABLE WARNING FIELD". THE CONCRETE PEDESTRIAN CURB, IF NEEDED, SHALL BE MEASURED AND PAID BY THE LINEAR FOOT AS "CONCRETE CURB PEDESTRIAN". CONCRETE SIDEWALK IN THE CURB RAMP AREA SHALL BE MEASURED AND PAID BY THE SQUARE FOOT AS CONCRETE SIDEWALK, INCLUDING THE AREA UNDER THE DETECTABLE WARNING FIELD.

SELECT CURB RAMP DETECTABLE WARNING FIELD MATERIALS AND DEVICES FROM THE DEPARTMENT'S APPROVED MATERIALS LIST. THE COLOR OF THE DETECTABLE WARNING FIELD IS SPECIFIED ELSEWHERE AND IS INCIDENTAL TO THE BID ITEM OF "CURB RAMP DETECTABLE WARNING FIELD"

DETECTABLE WARNING FIELDS THAT ARE INSTALLED AS A GROUP OR SIDE BY SIDE, SHALL BE FROM THE SAME MANUFACTURER.

SURFACE TEXTURE OF THE RAMP SHALL BE OBTAINED BY COARSE BROOMING TRANSVERSE TO THE SLOPE OF THE RAMP.

1. THIS POINT IS AN EXTENSION OF OUTSIDE EDGE OF APPROACHING SIDEWALK WHERE IT MEETS THE BACK OF CONCRETE CURB. POINT LOCATION MAY BE ADJUSTED TO ALIGN WITH BEGINNING OF FULL-HEIGHT CURB IF THIS DISTANCE IS SHORT.
2. GRADE CHANGE BETWEEN GUTTER FLAG SLOPE AND THE CURB RAMP SLOPE SHALL NOT EXCEED 11%. MAXIMUM GUTTER FLAG SLOPE IS 4%. PROVIDE LONGITUDINAL DRAINAGE AROUND CURB AND AWAY FROM CURB RAMP. NO VERTICAL LIPS OR DISCONTINUITIES GREATER THAN ¼ - INCH ARE ALLOWED. SLOPE OF CURB HEAD OPENING SHALL MATCH THE RAMP SLOPE, MINIMALLY 1.5% AND NOT TO EXCEED 7%. WHEN ADJACENT TO 1.5% LANDING, CONSTRUCT CURB HEAD OPENING AT 1.5% IN THE DIRECTION OF PEDESTRIAN TRAVEL.
3. MAXIMUM 8.33% CURB RAMP SLOPE IS ALLOWABLE WITH FLATTENED GUTTER FLAG SLOPE AND NOT TO EXCEED 11% GRADE CHANGE.
4. ±0.5% CONSTRUCTION TOLERANCE IN SIDEWALK CROSS SLOPE. THE SIDEWALK CROSS SLOPE SHALL NOT EXCEED 2% WITHOUT PRIOR APPROVAL FROM THE ENGINEER.
5. PROVIDE A LEVEL LANDING IN THE STREET AND GUTTER AREA (2% MAXIMUM SLOPE IN ANY DIRECTION). WHEN THE GUTTER SLOPE EXCEEDS 2%, CONSTRUCT THE LEVEL LANDING IN THE STREET AREA. 4 FOOT WIDTH IS MEASURED FROM THE FLANGE LINE
6. PROVIDE A LEVEL LANDING (MAXIMUM 2% SLOPE) IN ANY DIRECTION OF PEDESTRIAN TRAVEL. STANDARD LEVEL LANDING SIZE IS 5 FEET BY 5 FEET.
8. PROVIDE GRADE BREAK PERPENDICULAR TO DIRECTION OF WHEELCHAIR TRAVEL.

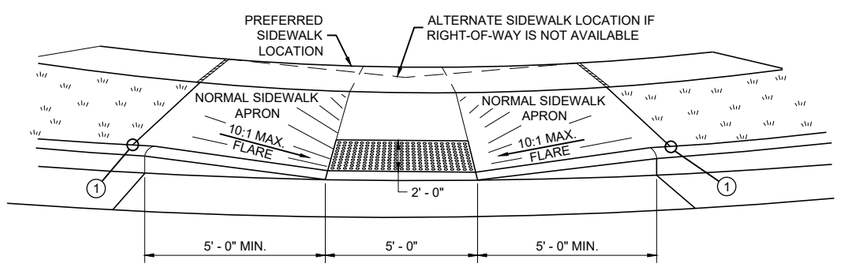

VIEW A - A FOR TYPE 1

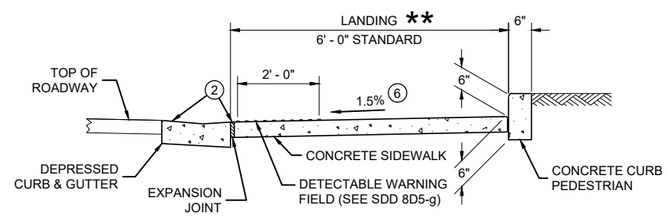

SECTION C - C FOR TYPE 1 - A

LEGEND

- ½" EXPANSION JOINT SIDEWALK
- CONTRACTION JOINT FIELD LOCATED
- PAVEMENT MARKING CROSSWALK (WHITE)

** WIDTH SHOWN ELSEWHERE IN THE PLANS

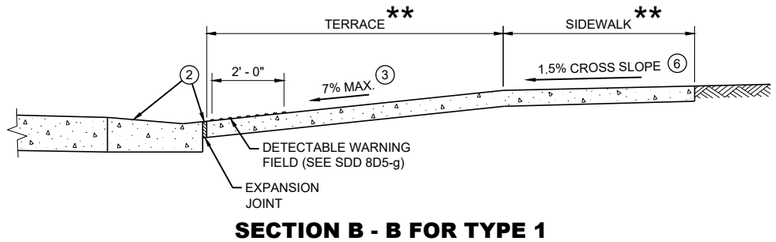

SECTION B - B FOR TYPE 1

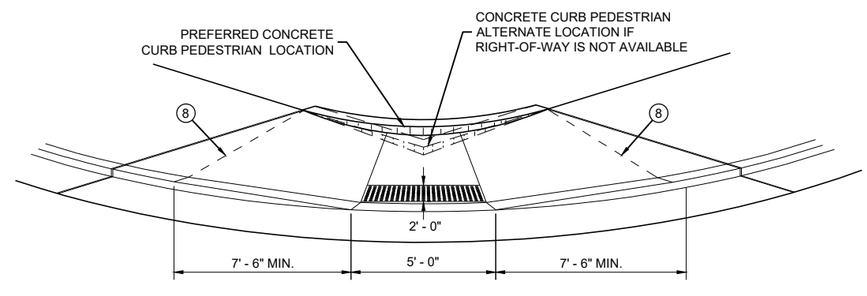

VIEW D - D FOR TYPE 1 - A

CURB RAMPS TYPE 1 AND 1-A

STATE OF WISCONSIN
DEPARTMENT OF TRANSPORTATION

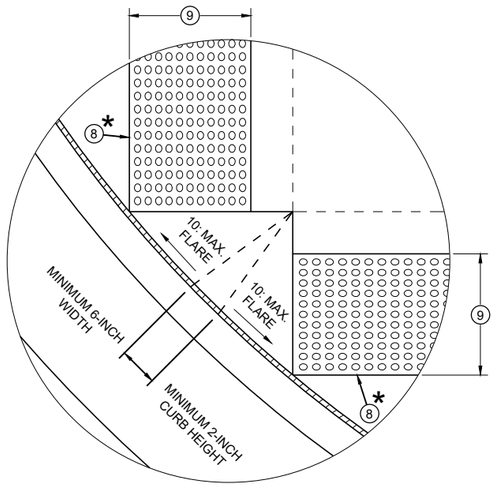

DETAIL A

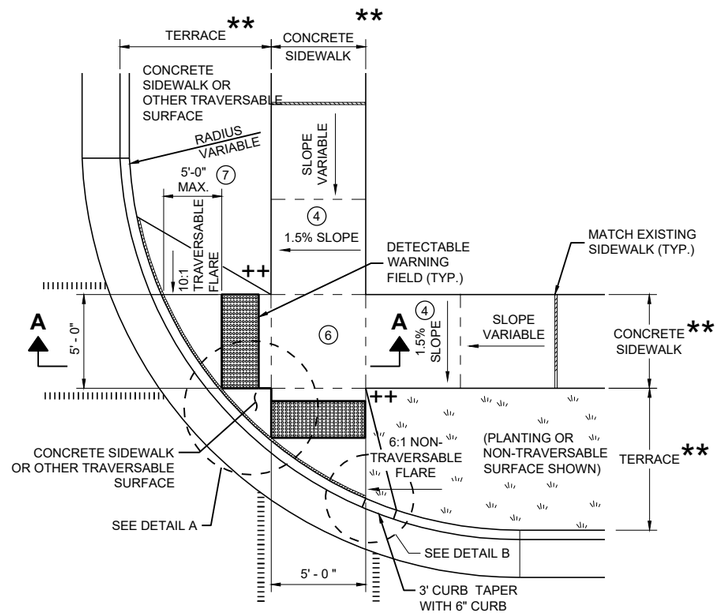

PLAN VIEW

CURB RAMP TYPE 2

(CENTER OF CORNER RADIUS)

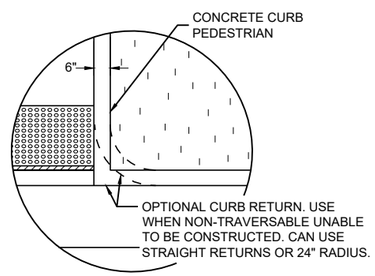

DETAIL B

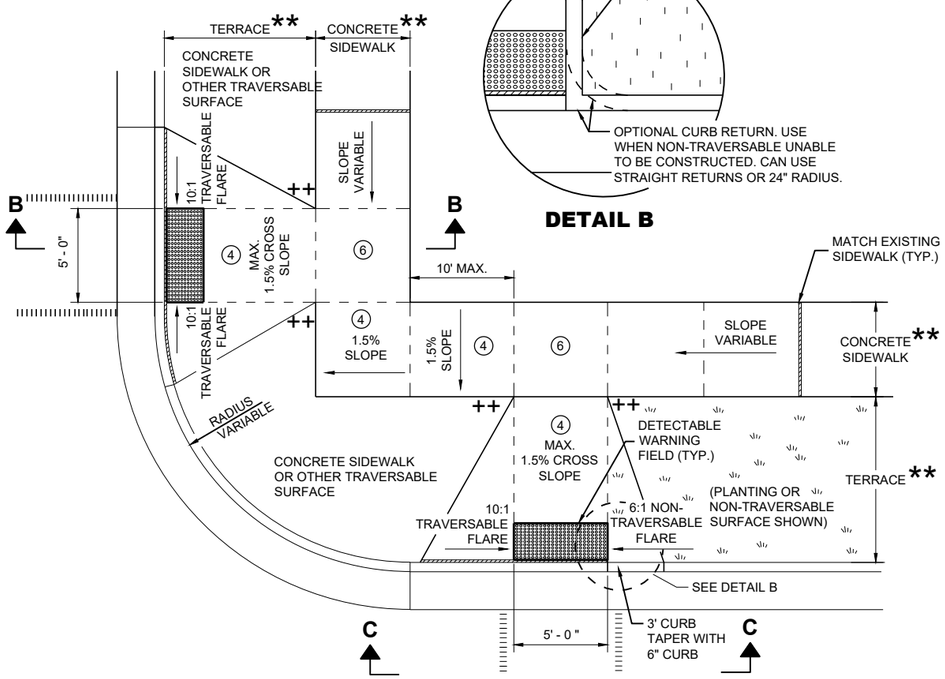

PLAN VIEW

CURB RAMP TYPE 3

(OUTSIDE OF CROSSWALK AREA)

GENERAL NOTES

AVOID PLACING DRAINAGE STRUCTURES, JUNCTION BOXES OR OTHER OBSTRUCTIONS IN FRONT OF RAMP ACCESS AREAS.

DETAILS OF CONSTRUCTION, MATERIALS AND WORKMANSHIP NOT SHOWN ON THIS DRAWING SHALL CONFORM TO THE PERTINENT REQUIREMENTS OF THE STANDARD SPECIFICATIONS AND THE APPLICABLE SPECIAL PROVISIONS.

DETECTABLE WARNING FIELDS THAT ARE INSTALLED AS A GROUP OR SIDE BY SIDE SHALL BE FROM THE SAME MANUFACTURER.

(2) GRADE CHANGE BETWEEN GUTTER FLAG SLOPE AND THE CURB RAMP SLOPE SHALL NOT EXCEED 11%. MAXIMUM GUTTER FLAG SLOPE IS 4%. PROVIDE LONGITUDINAL DRAINAGE AROUND CURB AND AWAY FROM CURB RAMP. NO VERTICAL LIPS OR DISCONTINUITIES GREATER THAN ¼ - INCH ARE ALLOWED. SLOPE OF CURB HEAD OPENING SHALL MATCH THE RAMP SLOPE, MINIMALLY 1.5% AND NOT TO EXCEED 7%. WHEN ADJACENT TO 1.5% LANDING, CONSTRUCT CURB HEAD OPENING AT 1.5% IN THE DIRECTION OF PEDESTRIAN TRAVEL.

(3) AN 8.33% CURB RAMP SLOPE IS ALLOWABLE WITH FLATTENED GUTTER FLAG SLOPE (2.67% OR LESS) AND NOT TO EXCEED 11% GRADE CHANGE.

(4) ±0.5% CONSTRUCTION TOLERANCE IN SIDEWALK CROSS SLOPE. THE SIDEWALK CROSS SLOPE SHALL NOT EXCEED 2% WITHOUT PRIOR APPROVAL FROM THE ENGINEER.

(6) PROVIDE A LEVEL LANDING (MAXIMUM 2% SLOPE) IN ANY DIRECTION OF PEDESTRIAN TRAVEL. STANDARD LEVEL LANDING SIZE IS 5 FEET X 5 FEET.

(7) WHEN GRADE BREAK DISTANCE EXCEEDS 5 FEET, USE RADIAL DETECTABLE WARNING FIELD PER SDD 8D5-f.

(8) PROVIDE GRADE BREAK PERPENDICULAR TO DIRECTION OF WHEELCHAIR TRAVEL.

(9) WHEN DISTANCE IS LESS THAN 6' - 0", IT MAY BE DIFFICULT TO ACHIEVE A 7% SLOPE OR FLATTER ALONG THE RAMP. REDUCE CURB HEIGHT IN TRIANGLE AREA TO ACHIEVE 7% SLOPE OR FLATTER ON RAMP. CONSTRUCT 2-INCH MINIMUM CURB HEIGHT BETWEEN 10:1 FLARES.

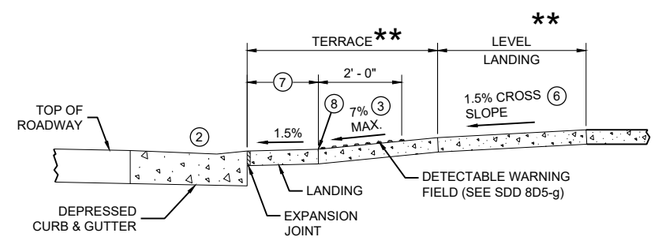

SECTION A - A FOR TYPE 2

* MAXIMUM 2.0% SLOPE IN ALL DIRECTIONS IN FRONT OF GRADE BREAK

** WIDTH SHOWN ELSEWHERE IN THE PLANS

++ CONSTRUCT 6" WEDGE TO AVOID CONCRETE BREAKAGE

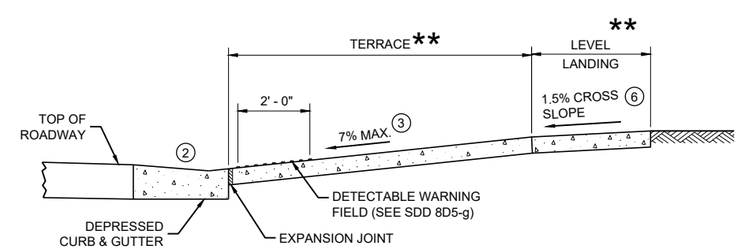

SECTION B - B FOR TYPE 3

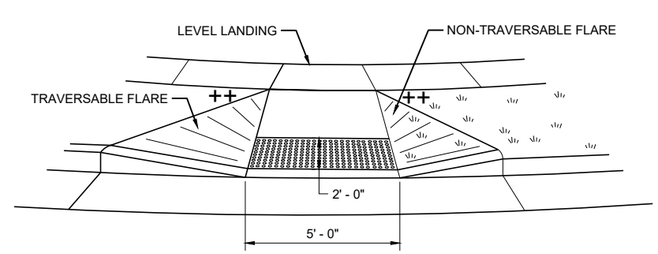

VIEW C - C FOR TYPE 3

LEGEND

- ½" EXPANSION JOINT SIDEWALK
- CONTRACTION JOINT SIDEWALK
- PAVEMENT MARKING CROSSWALK (WHITE)

CURB RAMPS TYPE 2 AND 3

STATE OF WISCONSIN
DEPARTMENT OF TRANSPORTATION

6

6

SDD 08D05-21b

SDD 08D05-21b

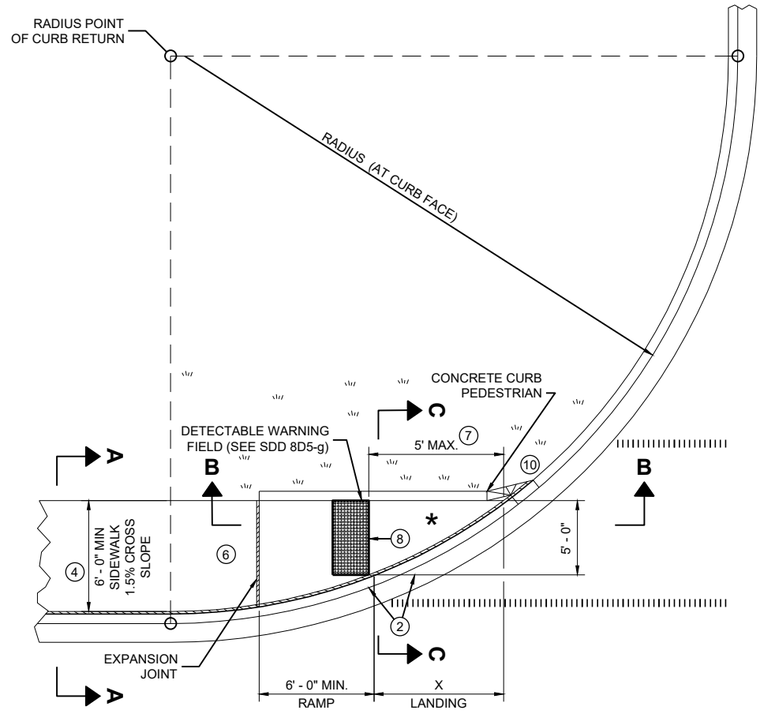

PLAN VIEW

CURB RAMP TYPE 4A

RADIUS (AT CURB FACE)	X
10 FEET	4' - 7"

INTERMEDIATE RADII CAN BE INTERPOLATED

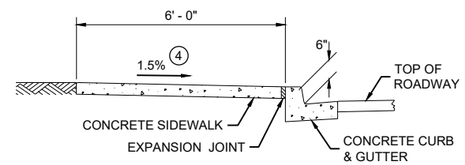

SECTION A - A FOR TYPE 4A

GENERAL NOTES

AVOID PLACING DRAINAGE STRUCTURES, JUNCTION BOXES OR OTHER OBSTRUCTIONS IN FRONT OF RAMP ACCESS AREAS.

DETAILS OF CONSTRUCTION, MATERIALS AND WORKMANSHIP NOT SHOWN ON THIS DRAWING SHALL CONFORM TO THE PERTINENT REQUIREMENTS OF THE STANDARD SPECIFICATIONS AND THE APPLICABLE SPECIAL PROVISIONS.

DETECTABLE WARNING FIELDS THAT ARE INSTALLED AS A GROUP OR SIDE BY SIDE, SHALL BE FROM THE SAME MANUFACTURER.

(2) GRADE CHANGE BETWEEN GUTTER FLAG SLOPE AND THE CURB RAMP SLOPE SHALL NOT EXCEED 11%. MAXIMUM GUTTER FLAG SLOPE IS 4%. PROVIDE LONGITUDINAL DRAINAGE AROUND CURB AND AWAY FROM CURB RAMP. NO VERTICAL LIPS OR DISCONTINUITIES GREATER THAN ¼ - INCH ARE ALLOWED. SLOPE OF CURB HEAD OPENING SHALL MATCH THE RAMP SLOPE, MINIMALLY 1.5% AND NOT TO EXCEED 7%. WHEN ADJACENT TO 1.5% LANDING, CONSTRUCT CURB HEAD OPENING AT 1.5% IN THE DIRECTION OF PEDESTRIAN TRAVEL.

(3) AN 8.33% CURB RAMP SLOPE IS ALLOWABLE WITH FLATTENED GUTTER FLAG SLOPE AND NOT TO EXCEED 11% GRADE CHANGE.

(4) ±0.5% CONSTRUCTION TOLERANCE IN SIDEWALK CROSS SLOPE. THE SIDEWALK CROSS SLOPE SHALL NOT EXCEED 2% WITHOUT PRIOR APPROVAL FROM THE ENGINEER.

(6) PROVIDE A LEVEL LANDING (MAXIMUM 2% SLOPE) IN ANY DIRECTION OF PEDESTRIAN TRAVEL. STANDARD LEVEL LANDING SIZE IS 5 FEET BY 5 FEET.

(7) WHEN THIS GRADE BREAK DISTANCE EXCEEDS 5 FEET, USE RADIAL DETECTABLE WARNING FIELD PER SDD 8D5-f.

(8) PROVIDE GRADE BREAK PERPENDICULAR TO DIRECTION OF WHEELCHAIR TRAVEL.

(10) INSTALL TRANSITION NOSE (INCIDENTAL TO OTHER PAY ITEMS). DO NOT MARK TRANSITION NOSE.

LEGEND

½" EXPANSION JOINT SIDEWALK

CONTRACTION JOINT SIDEWALK

PAVEMENT MARKING CROSSWALK (WHITE)

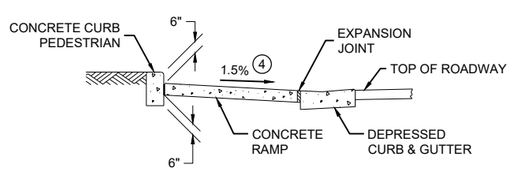

SECTION C - C FOR TYPE 4A

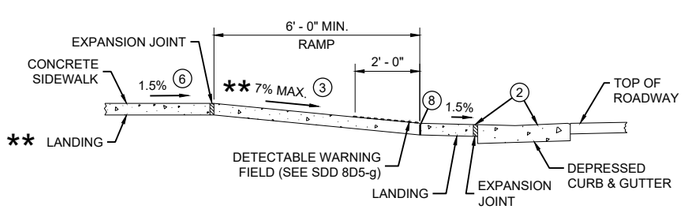

** IF RAMP SLOPE IS LESS THAN 5.0%, THEN NO ADJACENT UPHILL LANDING IS REQUIRED

SECTION B - B FOR TYPE 4A AND TYPE 4A1

* MAXIMUM 2.0% SLOPE IN ALL DIRECTIONS IF FRONT OF GRADE BREAK

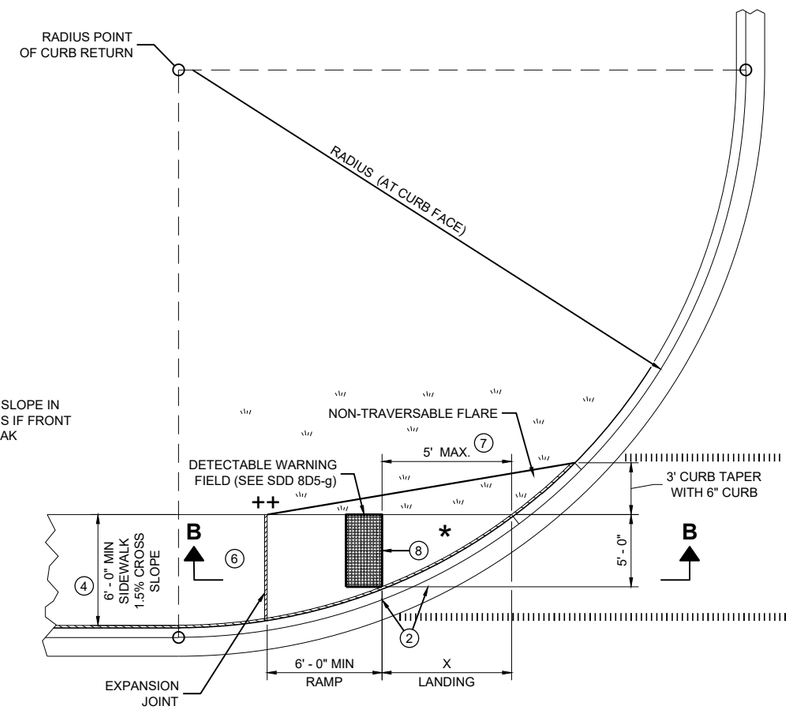

PLAN VIEW

CURB RAMP TYPE 4A1

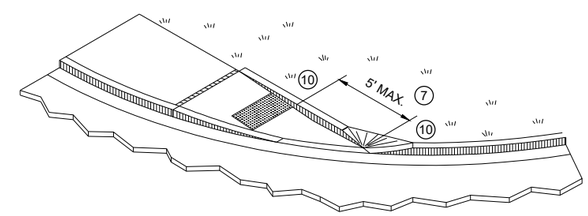

ISOMETRIC VIEW FOR TYPE 4A

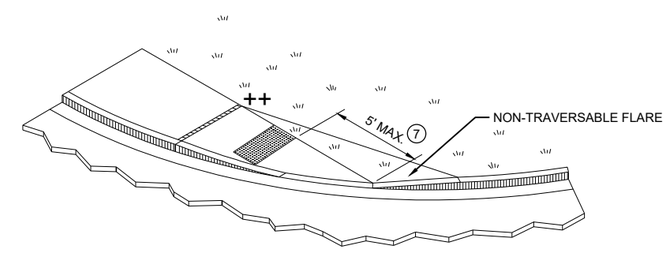

ISOMETRIC VIEW FOR TYPE 4A1

++ CONSTRUCT 6" WEDGE TO AVOID CONCRETE BREAKAGE

CURB RAMPS TYPE 4A AND 4A1

STATE OF WISCONSIN
DEPARTMENT OF TRANSPORTATION

6

6

SDD 08D05-21c

SDD 08D05-21c

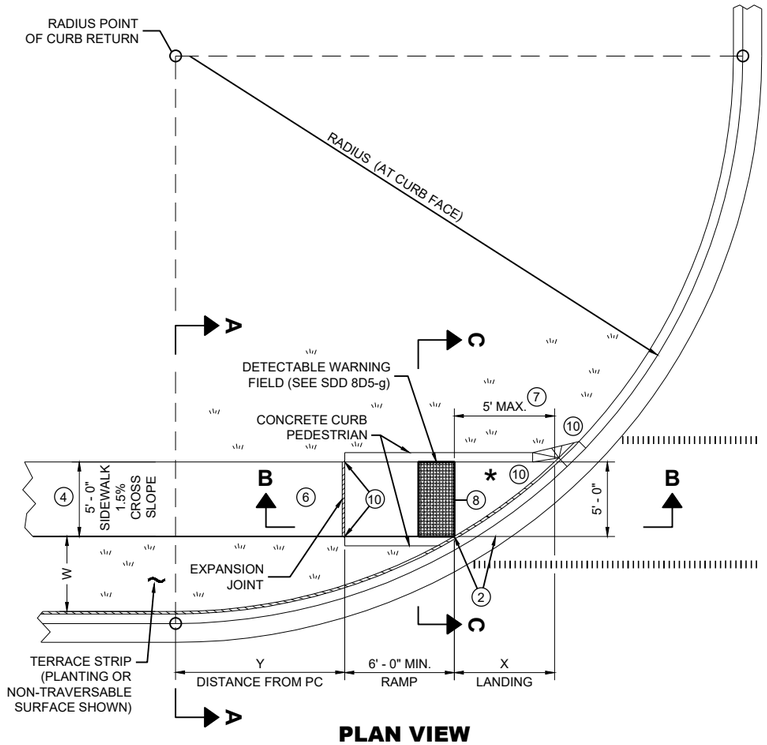

PLAN VIEW
CURB RAMP TYPE 4B

RADIUS (AT CURB FACE)	W = 3' - 0"		W = 4' - 0"		W = 5' - 0"		W = 6' - 0"		W = 7' - 0"		W = 8' - 0"		W = 9' - 0"		W = 10' - 0"	
	X	Y	X	Y	X	Y	X	Y	X	Y	X	Y	X	Y	X	Y
10 FEET	2' - 10 ¼"	0' - 5"	2' - 1"	1' - 4 ½"	1' - 5"	2' - 1"	0' - 10"	2' - 7 ½"	0' - 3 ¼"	3' - 0 ¼"						
15 FEET	4' - 6 ¾"	2' - 1 ¾"	3' - 9"	3' - 5 ¾"	3' - 1 ¼"	4' - 6"	2' - 6 ¾"	5' - 4 ½"	2' - 1"	6' - 1"	1' - 8"	6' - 8 ½"	1' - 3 ¼"	7' - 2 ½"	0' - 10 ¾"	7' - 7 ¼"
20 FEET			4' - 11 ½"	5' - 1 ¾"	4' - 3 ¼"	6' - 5 ½"	3' - 8 ¾"	7' - 7"	3' - 3"	8' - 6 ½"	2' - 10"	9' - 4 ½"	2' - 5 ½"	10' - 1 ¼"	2' - 1 ¼"	10' - 9"
30 FEET									4' - 10 ¾"	12' - 5 ¾"	4' - 5 ½"	13' - 7 ¾"	4' - 0 ¾"	14' - 8 ½"	3' - 8 ½"	15' - 8 ¼"
40 FEET															4' - 10 ¾"	19' - 8 ¼"

INTERMEDIATE RADII CAN BE INTERPOLATED
DIMENSION "Y" IS CALCULATED BASED ON 6'-0" RAMP LENGTH
DIMENSION "X" IS CALCULATED BASED ON 5'-0" SIDEWALK WIDTH

LEGEND

- ½" EXPANSION JOINT SIDEWALK
- CONTRACTION JOINT SIDEWALK
- PAVEMENT MARKING CROSSWALK (WHITE)

GENERAL NOTES

AVOID PLACING DRAINAGE STRUCTURES, JUNCTION BOXES OR OTHER OBSTRUCTIONS IN FRONT OF RAMP ACCESS AREAS.

DETAILS OF CONSTRUCTION, MATERIALS AND WORKMANSHIP NOT SHOWN ON THIS DRAWING SHALL CONFORM TO THE PERTINENT REQUIREMENTS OF THE STANDARD SPECIFICATIONS AND THE APPLICABLE SPECIAL PROVISIONS.

DETECTABLE WARNING FIELDS THAT ARE INSTALLED AS A GROUP OR SIDE BY SIDE, SHALL BE FROM THE SAME MANUFACTURER.

(2) GRADE CHANGE BETWEEN GUTTER FLAG SLOPE AND THE CURB RAMP SLOPE SHALL NOT EXCEED 11%. MAXIMUM GUTTER FLAG SLOPE IS 4%. PROVIDE LONGITUDINAL DRAINAGE AROUND CURB AND AWAY FROM CURB RAMP. NO VERTICAL LIPS OR DISCONTINUITIES GREATER THAN ¼ - INCH ARE ALLOWED. SLOPE OF CURB HEAD OPENING SHALL MATCH THE RAMP SLOPE, MINIMALLY 1.5% AND NOT TO EXCEED 7%. WHEN ADJACENT TO 1.5% LANDING, CONSTRUCT CURB HEAD OPENING AT 1.5% IN THE DIRECTION OF PEDESTRIAN TRAVEL.

(3) AN 8.33% CURB RAMP SLOPE IS ALLOWABLE WITH FLATTENED GUTTER FLAG SLOPE AND NOT TO EXCEED 11% GRADE CHANGE.

(4) ±0.5% CONSTRUCTION TOLERANCE IN SIDEWALK CROSS SLOPE. THE SIDEWALK CROSS SLOPE SHALL NOT EXCEED 2% WITHOUT PRIOR APPROVAL FROM THE ENGINEER.

(6) PROVIDE A LEVEL LANDING (MAXIMUM 2% SLOPE) IN ANY DIRECTION OF PEDESTRIAN TRAVEL. STANDARD LEVEL LANDING SIZE IS 5 FEET BY 5 FEET.

(7) WHEN THIS GRADE BREAK DISTANCE EXCEEDS 5 FEET, USE RADIAL DETECTABLE WARNING FIELD PER SDD 8D5-f.

(8) PROVIDE GRADE BREAK PERPENDICULAR TO DIRECTION OF WHEELCHAIR TRAVEL.

(10) INSTALL TRANSITION NOSE (INCIDENTAL TO OTHER PAY ITEMS). DO NOT MARK TRANSITION NOSE.

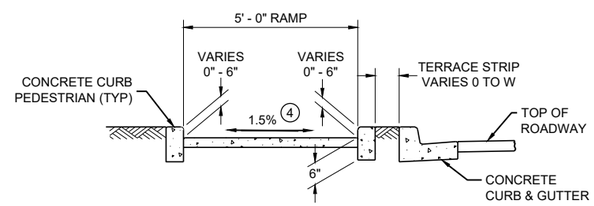

SECTION C - C FOR TYPE 4B

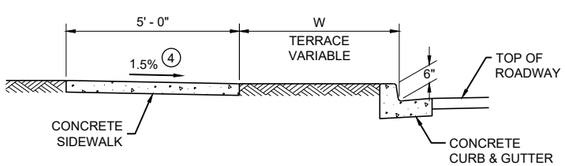

SECTION A - A FOR TYPE 4B

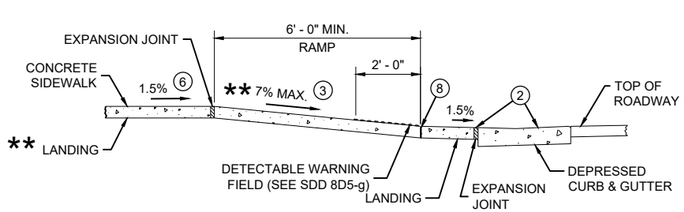

** IF RAMP SLOPE IS LESS THAN 5.0%, THEN NO ADJACENT UPHILL LANDING IS REQUIRED

SECTION B - B FOR TYPE 4B AND TYPE 4B1

* MAXIMUM 2.0% SLOPE IN ALL DIRECTIONS IF FRONT OF GRADE BREAK

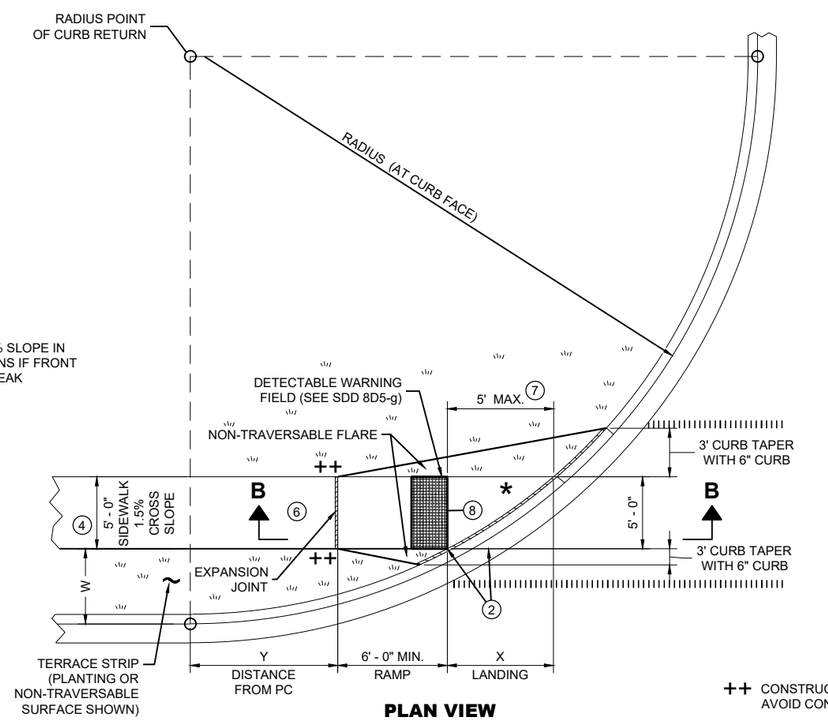

PLAN VIEW
CURB RAMP TYPE 4B1

++ CONSTRUCT 6" WEDGE TO AVOID CONCRETE BREAKAGE

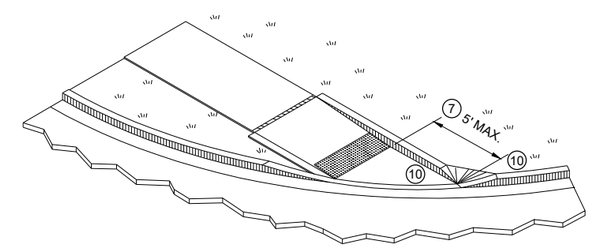

ISOMETRIC VIEW FOR TYPE 4B

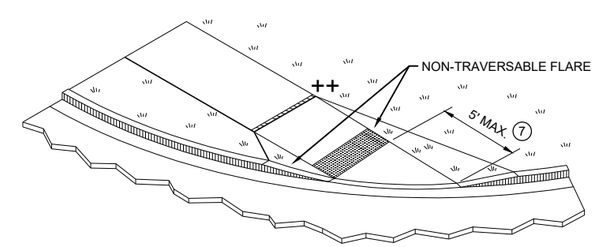

ISOMETRIC VIEW FOR TYPE 4B1

CURB RAMPS TYPE 4B AND 4B1

STATE OF WISCONSIN
DEPARTMENT OF TRANSPORTATION

6

SDD 08D05-21d

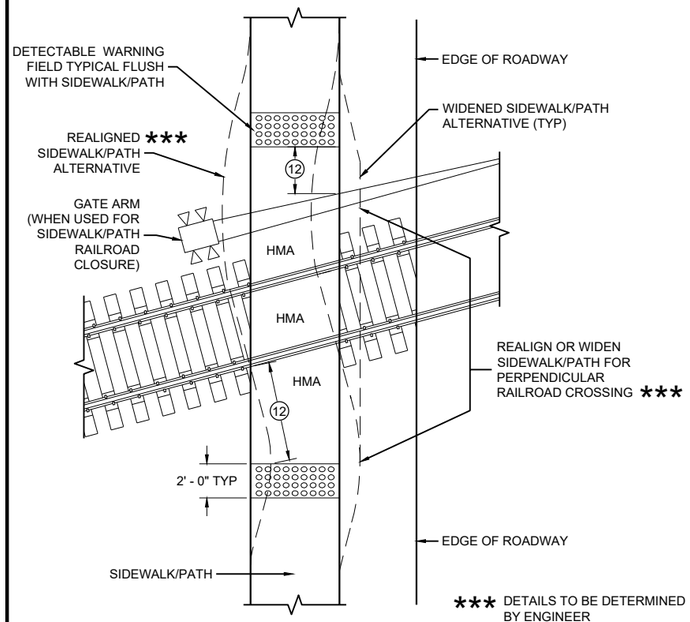

CURB RAMP TYPE 8

DETECTABLE WARNINGS FOR SIDEWALKS OR SHARED USE PATHS AT RAILROAD CROSSINGS

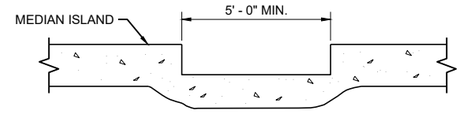

SECTION A - A FOR TYPE 5

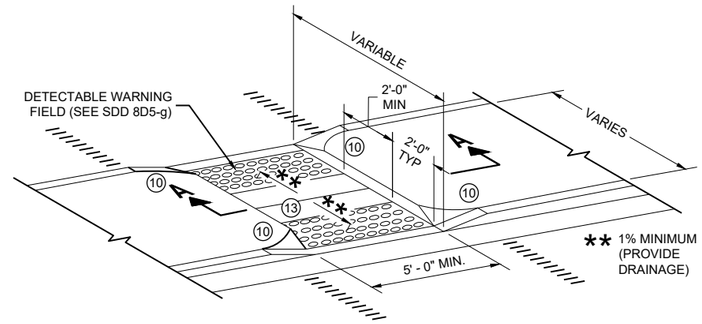

CURB RAMP TYPE 5

MEDIAN ISLAND NON-ELEVATED PEDESTRIAN CROSSING

GENERAL NOTES

AVOID PLACING DRAINAGE STRUCTURES, JUNCTION BOXES OR OTHER OBSTRUCTIONS IN FRONT OF RAMP ACCESS AREAS.

DETAILS OF CONSTRUCTION, MATERIALS AND WORKMANSHIP NOT SHOWN ON THIS DRAWING SHALL CONFORM TO THE PERTINENT REQUIREMENTS OF THE STANDARD SPECIFICATIONS AND THE APPLICABLE SPECIAL PROVISIONS.

SIDEWALK CROSS SLOPE SHALL NOT EXCEED 2%.

DETECTABLE WARNING FIELDS THAT ARE INSTALLED AS A GROUP OR SIDE BY SIDE, SHALL BE FROM THE SAME MANUFACTURER.

(2) GRADE CHANGE BETWEEN GUTTER FLAG SLOPE AND THE CURB RAMP SLOPE SHALL NOT EXCEED 11%. MAXIMUM GUTTER FLAG SLOPE IS 4%. PROVIDE LONGITUDINAL DRAINAGE AROUND CURB AND AWAY FROM CURB RAMP. NO VERTICAL LIPS OR DISCONTINUITIES GREATER THAN ¼ - INCH ARE ALLOWED. SLOPE OF CURB HEAD OPENING SHALL MATCH THE RAMP SLOPE, MINIMALLY 1.5% AND NOT TO EXCEED 7%. WHEN ADJACENT TO 1.5% LANDING, CONSTRUCT CURB HEAD OPENING AT 1.5% IN THE DIRECTION OF PEDESTRIAN TRAVEL.

(3) AN 8.33% CURB RAMP SLOPE IS ALLOWABLE WITH FLATTENED GUTTER FLAG SLOPE AND NOT TO EXCEED 11% GRADE CHANGE.

(4) ±0.5% CONSTRUCTION TOLERANCE IN SIDEWALK CROSS SLOPE. THE SIDEWALK CROSS SLOPE SHALL NOT EXCEED 2% WITHOUT PRIOR APPROVAL FROM THE ENGINEER.

(6) PROVIDE A LEVEL LANDING (MAXIMUM 2% SLOPE) IN ANY DIRECTION OF PEDESTRIAN TRAVEL. STANDARD LEVEL LANDING SIZE IS 5 FEET BY 5 FEET.

(10) INSTALL TRANSITION NOSE (INCIDENTAL TO OTHER PAY ITEMS). DO NOT MARK TRANSITION NOSE.

(11) SLOPE SIDEWALK TOWARD LANDING AS SHOWN WHERE THERE IS NO TERRACE OR WHERE THE TERRACE WIDTH IS LESS THAN 6 FEET WIDE.

(12) THE EDGE OF THE DETECTABLE WARNING FIELD NEAREST TO A RAILROAD CROSSING SHALL BE 1.5 FEET ±0.1' FROM THE FACE OF THE GATE ARM IF THE GATE ARM EXTENDS ACROSS THE SIDEWALK/PATH. WHERE THERE IS NO PEDESTRIAN GATE, THE EDGE OF THE DETECTABLE WARNING FIELD NEAREST TO THE RAILROAD TRACK IS 15 FEET MAXIMUM AND 12 FEET MINIMUM, 15 FEET TYPICAL FROM THE NEAREST RAIL.

(13) DO NOT INSTALL DETECTABLE WARNING FIELDS AT THE EDGES OF STEET-LEVEL PEDESTRIAN REFUGE ISLANDS IF A MINIMUM 2 FOOT CONCRETE SURFACE WITHOUT DETECTABLE WARNINGS (MEASURED IN THE DIRECTION OF PEDESTRIAN TRAVEL) CANNOT BE ACHIEVED.

LEGEND

- ½" EXPANSION JOINT SIDEWALK
- CONTRACTION JOINT FIELD LOCATED
- PAVEMENT MARKING CROSSWALK (WHITE)

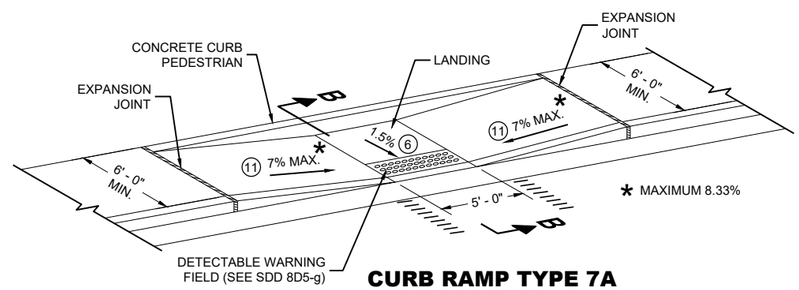

CURB RAMP TYPE 7A

FOR INTERSECTIONS AND MID BLOCK CROSSINGS

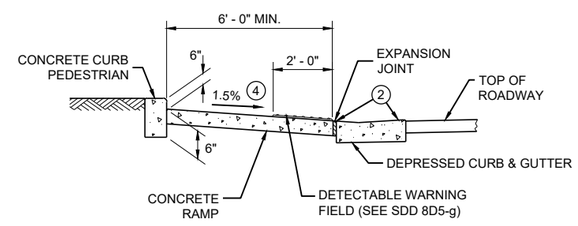

SECTION B - B FOR TYPE 7A

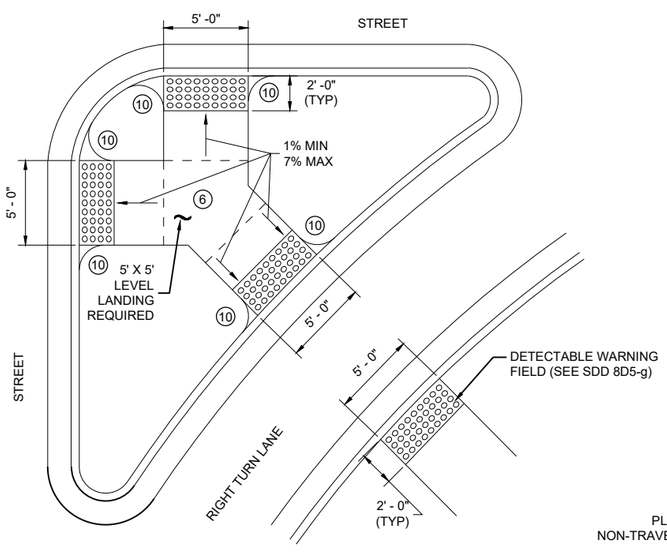

CURB RAMP TYPE 6

DETECTABLE WARNING AT ISLANDS

REFER TO GENERAL NOTES (2) AND (3) FOR ALL ISLAND CURB RAMPS

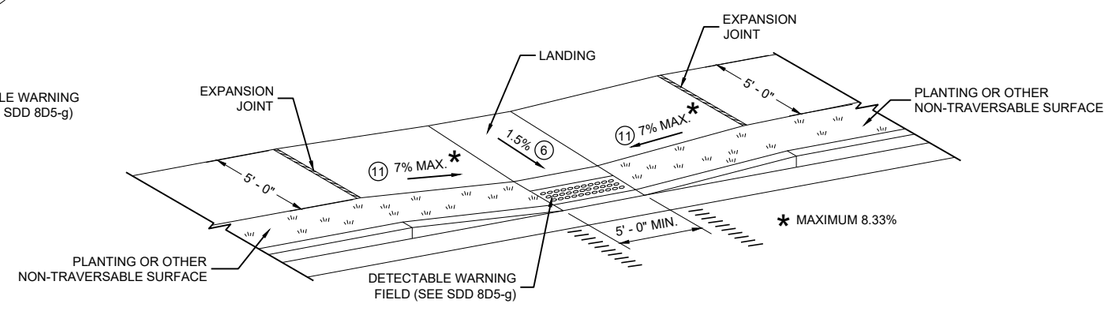

CURB RAMP TYPE 7B

FOR INTERSECTIONS AND MID BLOCK CROSSINGS

CURB RAMPS TYPE 5, 6, 7A, 7B & 8

STATE OF WISCONSIN
DEPARTMENT OF TRANSPORTATION

6

6

SDD 08D05-21e

SDD 08D05-21e

RADIAL DETECTABLE WARNING FIELD PLACEMENT WHEN 5 FOOT GRADE BREAK DISTANCE PER SDD 8D5-c IS EXCEEDED

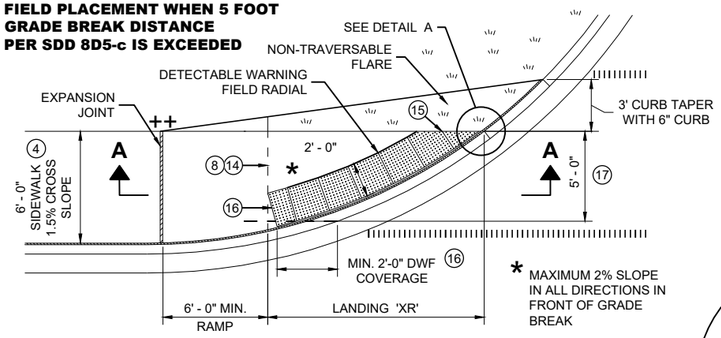

PLAN VIEW

CURB RAMP TYPE 4A1

(GRADE BREAK DISTANCE GREATER THAN 5 FEET)

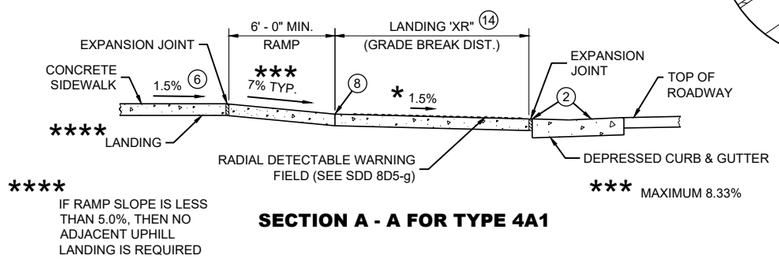

SECTION A - A FOR TYPE 4A1

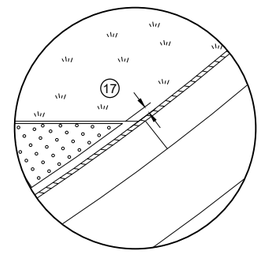

DETAIL A

LEGEND

- ½" EXPANSION JOINT SIDEWALK
- CONTRACTION JOINT SIDEWALK
- PAVEMENT MARKING CROSSWALK (WHITE)

GENERAL NOTES

AVOID PLACING DRAINAGE STRUCTURES, JUNCTION BOXES OR OTHER OBSTRUCTIONS IN FRONT OF RAMP ACCESS AREAS.

DETAILS OF CONSTRUCTION, MATERIALS AND WORKMANSHIP NOT SHOWN ON THIS DRAWING SHALL CONFORM TO THE PERTINENT REQUIREMENTS OF THE STANDARD SPECIFICATIONS AND THE APPLICABLE SPECIAL PROVISIONS.

DETECTABLE WARNING FIELDS THAT ARE INSTALLED AS A GROUP OR SIDE BY SIDE, SHALL BE FROM THE SAME MANUFACTURER.

APPLY RADIAL DETECTABLE WARNING PLACEMENT SIMILARLY FOR TYPE 4A AND 4A1 CURB RAMPS AND SIMILARLY FOR TYPE 4B AND 4B1 CURB RAMPS. TYPE 4A AND 4B CURB RAMPS ARE NOT SHOWN.

REFER TO SDD 8D5-g FOR ADDITIONAL RADIAL PLATE REQUIREMENTS.

FIELD CUTS AT INTERMEDIATE JOINTS WITHIN THE RADIAL DETECTABLE WARNING FILED ARE PROHIBITED.

DETERMINE FINAL RADIAL WARNING FIELD CONFIGURATION AD ITS INDIVIDUAL PLATE LOCATIONS. PERFORM PRE-LAYOUT PRIOR TO PLACEMENT IN PLASTIC CONCRETE. FOLLOW MANUFACTURER'S PRODUCT LIST AND INSTALLATION RECOMMENDATIONS.

(2) GRADE CHANGE BETWEEN GUTTER FLAG SLOPE AND THE CURB RAMP SLOPE SHALL NOT EXCEED 11%. MAXIMUM GUTTER FLAG SLOPE IS 4%. PROVIDE LONGITUDINAL DRAINAGE AROUND CURB AND AWAY FROM CURB RAMP. NO VERTICAL LIPS OR DISCONTINUITIES GREATER THAN ¼ - INCH ARE ALLOWED. SLOPE OF CURB HEAD OPENING SHALL MATCH THE RAMP SLOPE, MINIMALLY 1.5% AND NOT TO EXCEED 7%. WHEN ADJACENT TO 1.5% LANDING, CONSTRUCT CURB HEAD OPENING AT 1.5% IN THE DIRECTION OF PEDESTRIAN TRAVEL.

(3) AN 8.33% CURB RAMP SLOPE IS ALLOWABLE WITH FLATTENED GUTTER FLAG SLOPE AND NOT TO EXCEED 11% GRADE CHANGE.

(4) ±0.5% CONSTRUCTION TOLERANCE IN SIDEWALK CROSS SLOPE. THE SIDEWALK CROSS SLOPE SHALL NOT EXCEED 2% WITHOUT PRIOR APPROVAL FROM THE ENGINEER.

(6) PROVIDE A LEVEL LANDING (MAXIMUM 2% SLOPE) IN ANY DIRECTION OF PEDESTRIAN TRAVEL. STANDARD LANDING SIZE IS 5 FEET BY 5 FEET.

(8) PROVIDE GRADE BREAK PERPENDICULAR TO DIRECTION OF WHEELCHAIR TRAVEL.

(14) CONSULT ENGINEER IF GRADE BREAK LOCATION (END OF LANDING DIMENSION "XR") REQUIRES FIELD ADJUSTMENT WHEN ESTABLISHING FINAL RADIAL DETECTABLE WARNING FIELD LOCATION.

(15) FIELD SAW CUTS ALONG RADIAL DETECTABLE WARNING PLATES WILL BE NECESSARY TO MATCH EACH CURB RAMP EDGE. AVOID CUTTING THROUGH DOMES WHENEVER POSSIBLE. MAKE FIELD CUTS TRUE TO LINE AND WITHIN ⅛" DEVIATION. SMOOTH EDGES OF FIELD CUT PLATES.

(16) USE 1' X 2" RECTANGULAR END PLATE AT END OF TYPE 4A1 RAMP AND PROVIDE MINIMUM 2' - 0" DETECTABLE WARNING FIELD COVERAGE (IN DIRECTION OF PEDESTRIAN TRAVEL) ALONG THE ENTIRE CURB RAMP WIDTH.

(17) A MAXIMUM 3 INCH CONCRETE BORDER WIDTH IS ALLOWABLE IN FRONT OF RADIAL DETECTABLE WARNING FIELD FOR CONSTRUCTABILITY PURPOSES. CONCRETE BORDER WIDTH MAY VARY UP TO 1 INCH.

RADIAL DETECTABLE WARNING FIELD PLACEMENT WHEN 5 FOOT GRADE BREAK DISTANCE PER SDD 8D5-d IS EXCEEDED

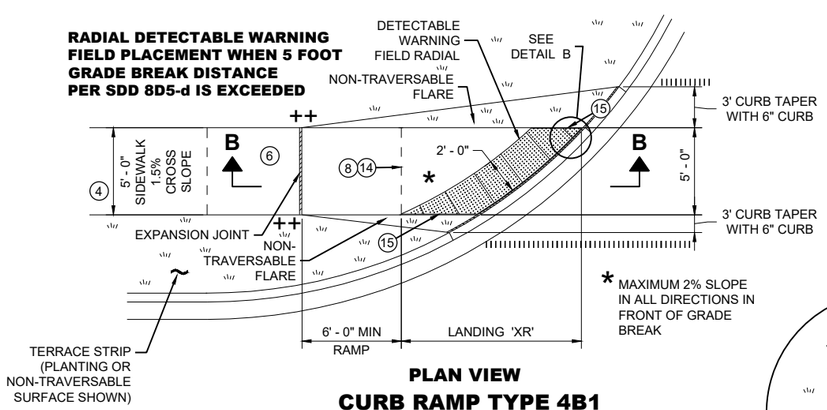

PLAN VIEW

CURB RAMP TYPE 4B1

(GRADE BREAK DISTANCE GREATER THAN 5 FEET)

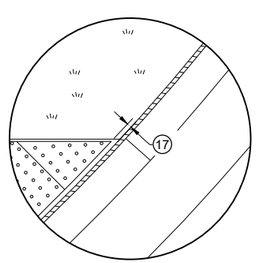

DETAIL B

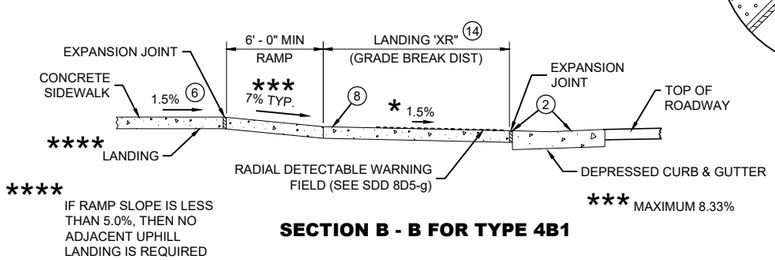

SECTION B - B FOR TYPE 4B1

RADIAL DETECTABLE WARNING FIELD PLACEMENT WHEN 5 FOOT GRADE BREAK DISTANCE PER SDD 8D5-b IS EXCEEDED

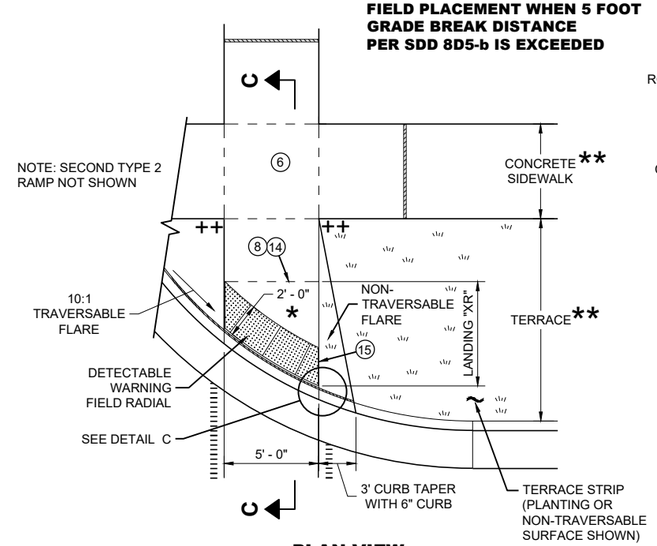

PLAN VIEW

CURB RAMP TYPE 2

(GRADE BREAK DISTANCE GREATER THAN 5 FEET)

(ON LINE WITH SIDEWALK)

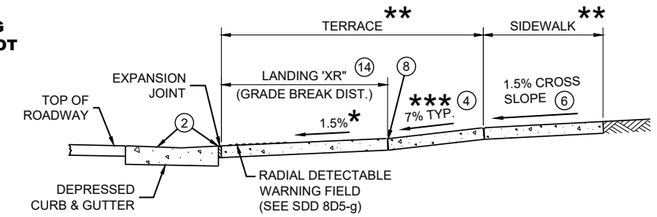

SECTION C - C FOR TYPE 2

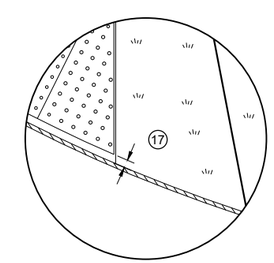

DETAIL C

* MAXIMUM 2% SLOPE IN ALL DIRECTIONS IN FRONT OF GRADE BREAK

** WIDTH SHOWN ELSEWHERE IN THE PLANS

*** MAXIMUM 8.33%

++ CONSTRUCT 6" WEDGE TO AVOID CONCRETE BREAKAGE

CURB RAMPS
RADIAL DETECTABLE WARNING

STATE OF WISCONSIN
DEPARTMENT OF TRANSPORTATION

	MIN.	MAX.
A	1.6"	2.4"
B	0.65"	1.5"
C	*	*
D	0.9"	1.4"

* THE C DIMENSION IS 50% TO 65% OF THE D DIMENSION.

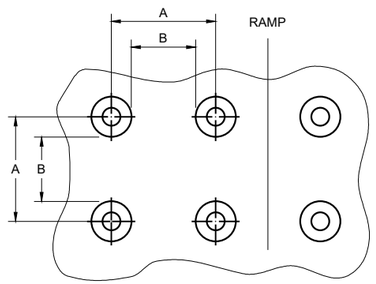

PLAN VIEW

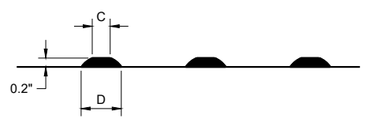

ELEVATION VIEW

TRUNCATED DOMES
DETECTABLE WARNING PATTERN DETAIL

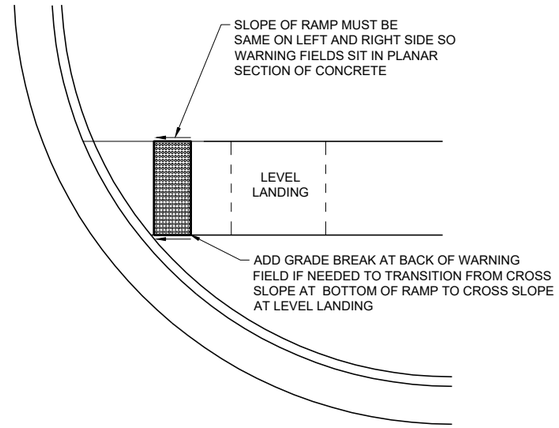

DETECTABLE WARNING FIELD
PLANAR INSTALLATION

GENERAL NOTES

DETECTABLE WARNING FIELDS THAT ARE INSTALLED AT A CURB RAMP SHALL BE FROM THE SAME MANUFACTURER.

PLACE ALL DETECTABLE WARNING FIELD SYSTEMS IN ACCORDANCE TO THE MANUFACTURER'S RECOMMENDATION.

FIELD CUTS AT INTERMEDIATE JOINTS WITHIN THE RADIAL DETECTABLE WARNING FILED ARE PROHIBITED.

DETERMINE FINAL RADIAL WARNING FIELD CONFIGURATION AND ITS INDIVIDUAL PLATE LOCATIONS. PERFORM PRE-LAYOUT PRIOR TO PLACEMENT IN PLASTIC CONCRETE. FOLLOW MANUFACTURER'S PRODUCT LIST AND INSTALLATION RECOMMENDATIONS.

FOR RADIAL DETECTABLE WARNING FIELD APPLICATIONS WHERE STANDARD RADIAL PLATES ARE NOT AVAILABLE AT AN INTERSECTION CURB RADIUS, A COMBINATION OF SQUARE OR RECTANGULAR PLATES AND RADIAL PLATES MAY BE USED TO FORM RADIAL CONFIGURATION. RADIAL WEDGE PLATES IN COMBINATION WITH SQUARE PLATES ARE ALSO ACCEPTABLE. FOLLOW MANUFACTURER'S RECOMMENDATIONS.

REFER TO CONTRACT AND STANDARD SPECIFICATIONS FOR FIELD CUTTING REQUIREMENTS.

DO NOT EMBED IN CONCRETE ANY FIELD-CUT PLATES WITH CUT EDGES SHORTER THAN 6 INCHES. CONSULT WITH MANUFACTURER FOR RE-DRILLING AND ANCHORING REQUIREMENTS OF FIELD-CUT PLATES.

(15) FIELD SAW CUTS ALONG RADIAL DETECTABLE WARNING PLATES WILL BE NECESSARY TO MATCH EACH CURB RAMP EDGE. AVOID CUTTING THROUGH DOMES WHENEVER POSSIBLE. MAKE FIELD CUTS TRUE TO LINE AND WITHIN ⅛" DEVIATION. SMOOTH EDGES OF FIELD CUT PLATES.

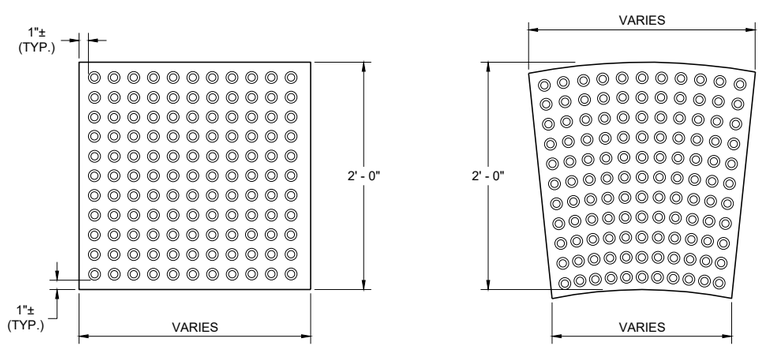

RECTANGULAR PLATES **RADIAL PLATES**

PLAN VIEW
DETECTABLE WARNING FIELDS (TYPICAL)

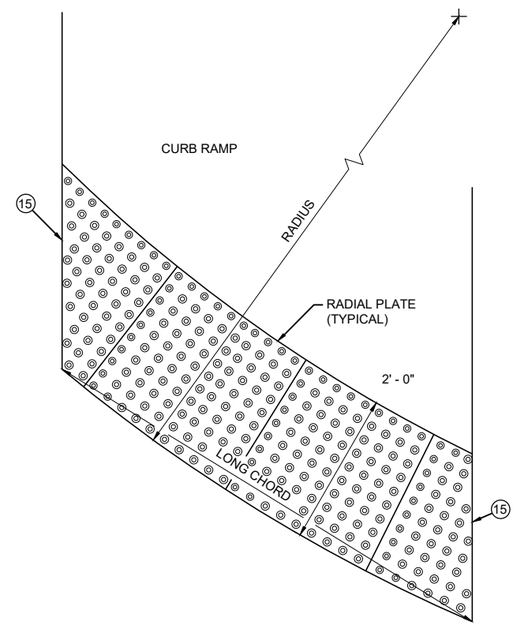

PLAN VIEW
RADIAL DETECTABLE WARNING FIELD ATTRIBUTES

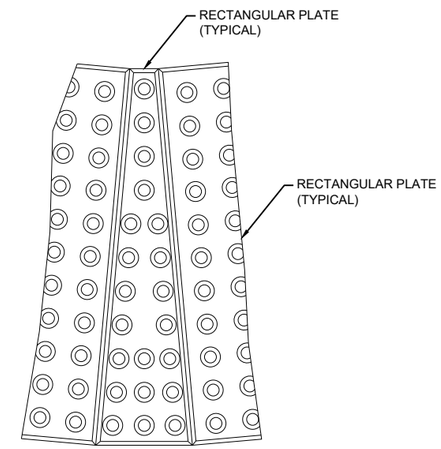

PLAN VIEW
RADIAL WEDGE PLATE CONNECTION DETAIL

6

6

SDD 08D05-21g

SDD 08D05-21g

CURB RAMPS
RECTANGULAR AND RADIAL DETECTABLE WARNING PLATES

STATE OF WISCONSIN
DEPARTMENT OF TRANSPORTATION

APPROVED
July 2023 — DATE
/S/ Rodney Taylor — ROADWAY STANDARDS DEVELOPMENT UNIT SUPERVISOR

FHWA

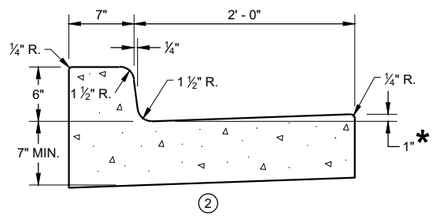

CONCRETE CURB AND GUTTER 31" ①

*TO BE MEASURED TO A MAXIMUM OF 3" WHERE DRAINAGE PROBLEMS EXIST.

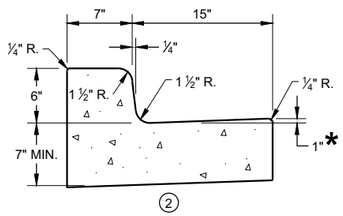

CONCRETE CURB AND GUTTER 22" ①

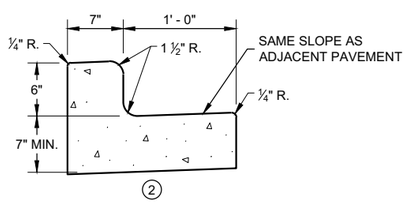

CONCRETE CURB AND GUTTER 19" ①

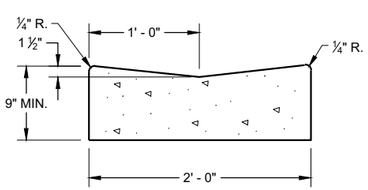

CONCRETE GUTTER 24" ①

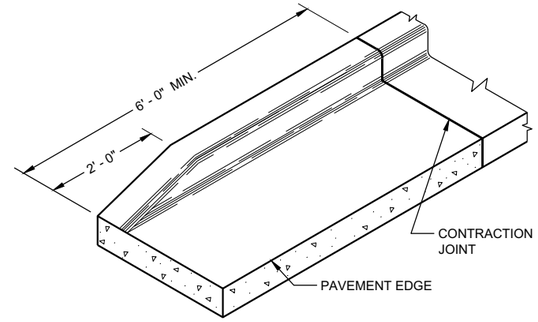

END SECTIONCURB AND GUTTER

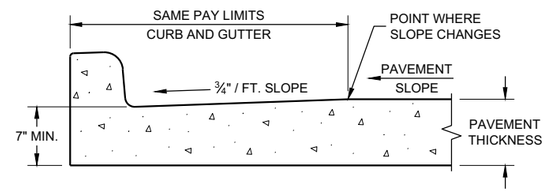

PARTIAL SECTION OF PAVEMENT WITH INTEGRAL CURB AND GUTTER

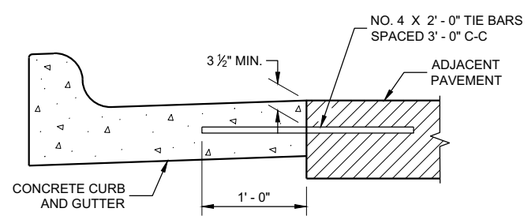

TYPICAL TIE BAR LOCATION ①

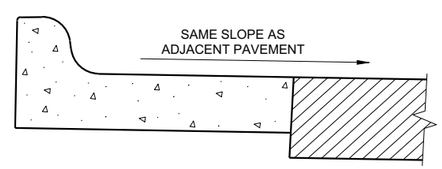

HIGH SIDE SECTION ③

(TYPICAL FOR ALL CURB & GUTTER TYPES)

GENERAL NOTES

DETAILS OF CONSTRUCTION AND WORKMANSHIP NOT SHOWN ON THIS DRAWING SHALL CONFORM TO THE PERTINENT REQUIREMENTS OF THE CONTRACT.

PAVEMENT TIES AND TIE BARS SHALL BE EPOXY COATED IN CONFORMANCE WITH SUBSECTION 505.2.6.2 OF THE STANDARD SPECIFICATIONS.

INTEGRAL CURB AND GUTTER SHALL CONFORM TO THE DETAILS SHOWN FOR CONCRETE CURB AND GUTTER INCLUDING THE TRANSVERSE GUTTER SLOPE. A LONGITUDINAL CONSTRUCTION JOINT IS NOT REQUIRED WITH INTEGRAL CURB AND GUTTER.

UNLESS OTHERWISE SHOWN ON THE TYPICAL CROSS SECTIONS, THE BASE COURSE AND UNCLASSIFIED EXCAVATION LIMITS ARE 2' - 0" BEHIND THE BACK OF CURBS.

① WHEN PLACED ADJACENT TO NEW CONCRETE, TIE BARS ARE REQUITED FOR CURB AND GUTTER 31", 22", 19" AND CONCRETE GUTTER 24".

② THE BOTTOM OF CURB AND GUTTER MAY BE CONSTRUCTED EITHER LEVEL OR PARALLEL TO THE SLOPE OF THE SUBGRADE OR BASE COURSE PROVIDED A 7" MINIMUM GUTTER THICKNESS IS MAINTAINED.

③ WHEN HIGH SIDE CURB SECTION IS REQUIRED, THE LOCATION(S) WILL BE NOTED ON THE PLANS

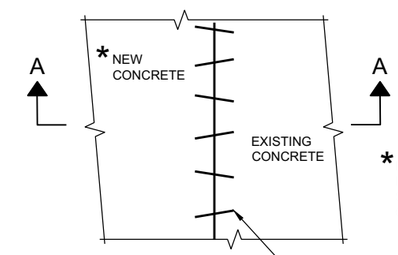

*EXISTING AND NEW CONCRETE MAY BE CURB AND GUTTER, SURFACE DRAINS, PAVEMENT OR OTHER CONCRETE STRUCTURE.

PLAN VIEW

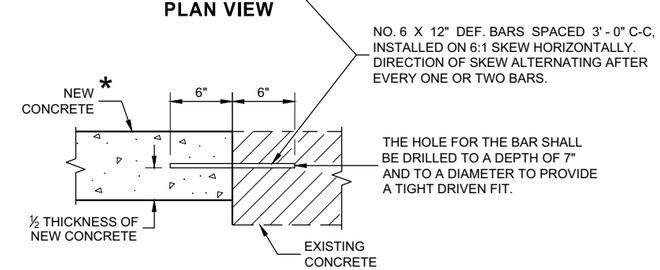

SECTION A - A

PAVEMENT TIES

CONCRETE GUTTER, CURB AND GUTTER AND PAVEMENT TIES

(For Optional use in Milwaukee Co. Only)

STATE OF WISCONSIN
DEPARTMENT OF TRANSPORTATION

APPROVED
February 2020 — DATE
/S/ Rodney Taylor — ROADWAY STANDARDS DEVE ENGINEER
FHWA

6

SDD 08D16 - 11

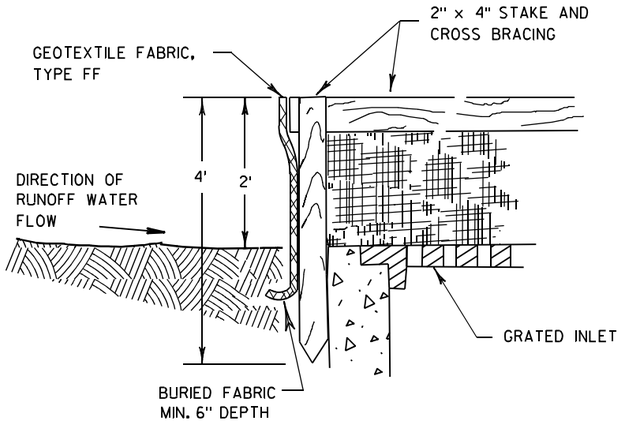

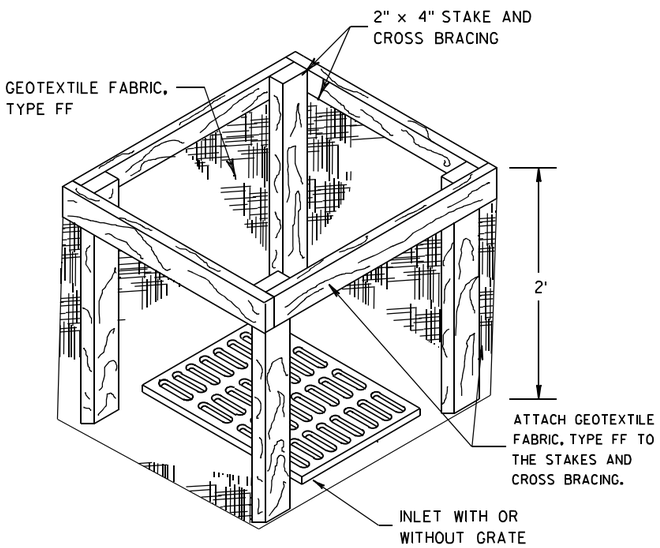

INLET PROTECTION, TYPE A

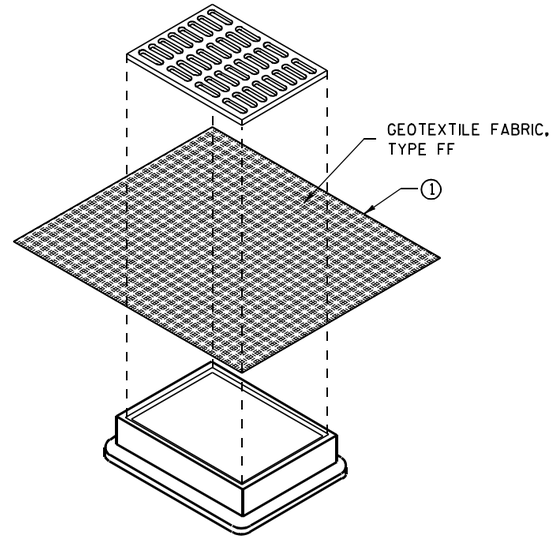

INLET PROTECTION, TYPE B
(WITHOUT CURB BOX)

(CAN BE INSTALLED IN ANY INLET WITHOUT A CURB BOX)

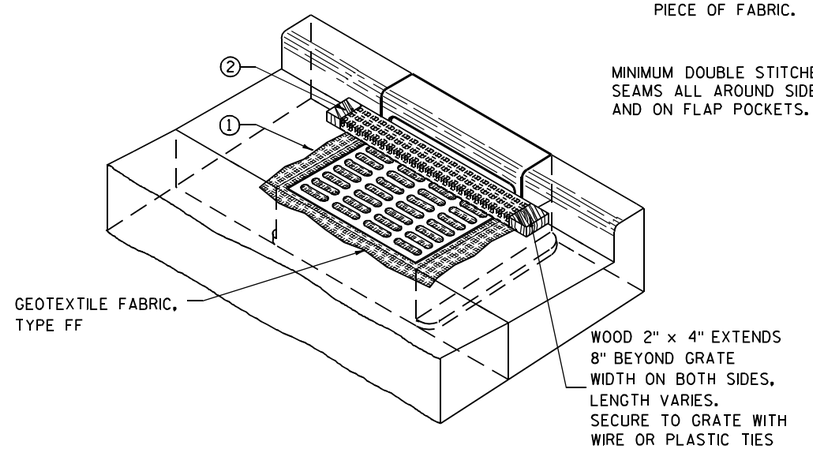

INLET PROTECTION, TYPE C (WITH CURB BOX)

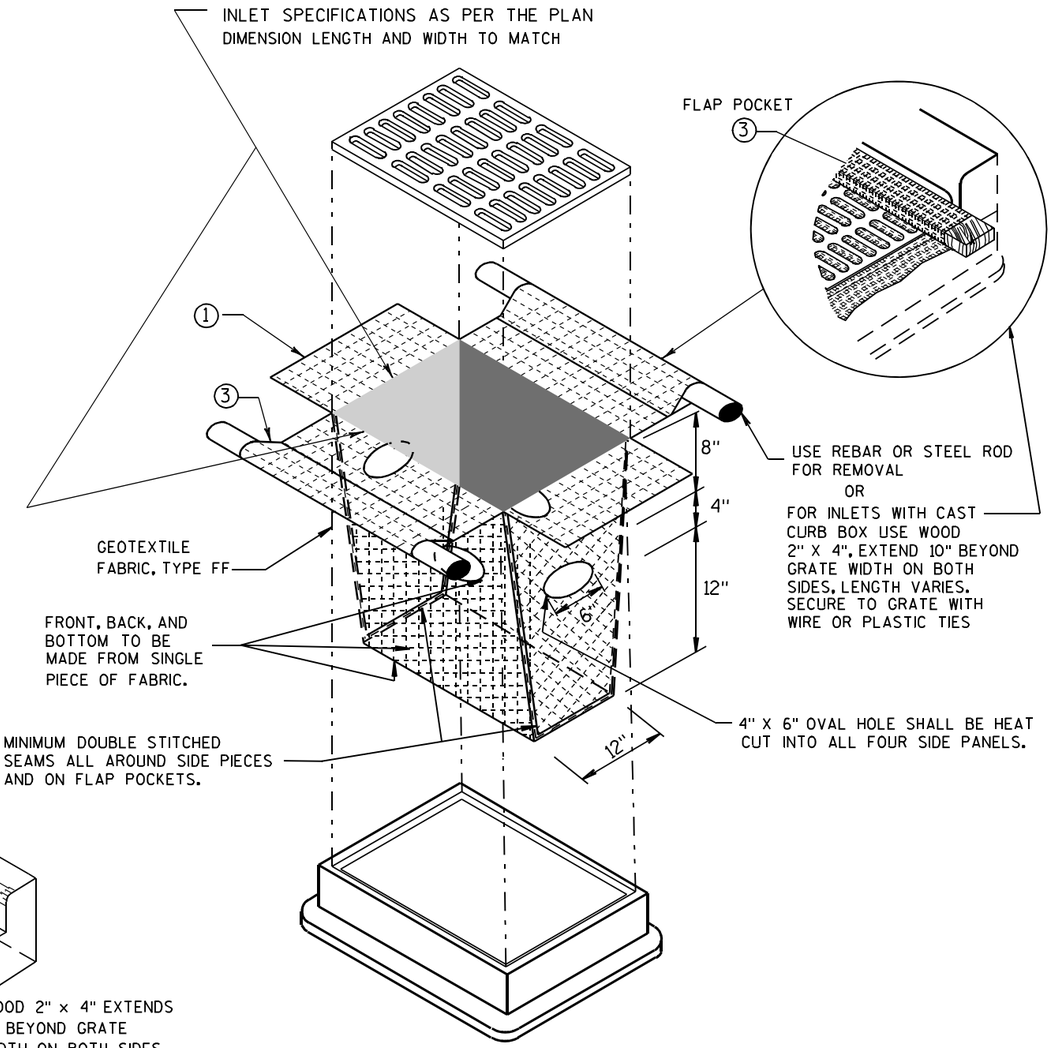

INLET PROTECTION, TYPE D

(CAN BE INSTALLED IN ANY INLET TYPE WITH
OR WITHOUT A CURB BOX AS PER NOTE ②)

GENERAL NOTES

INLET PROTECTION DEVICES SHALL BE MAINTAINED OR REPLACED AT THE DIRECTION OF THE ENGINEER.

MANUFACTURED ALTERNATIVES APPROVED AND LISTED ON THE DEPARTMENT'S EROSION CONTROL PRODUCT ACCEPTABILITY LIST MAY BE SUBSTITUTED.

WHEN REMOVING OR MAINTAINING INLET PROTECTION, CARE SHALL BE TAKEN SO THAT THE SEDIMENT TRAPPED ON THE GEOTEXTILE FABRIC DOES NOT FALL INTO THE INLET. ANY MATERIAL FALLING INTO THE INLET SHALL BE REMOVED IMMEDIATELY.

① FINISHED SIZE, INCLUDING FLAP POCKETS WHERE REQUIRED, SHALL EXTEND A MINIMUM OF 10" AROUND THE PERIMETER TO FACILITATE MAINTENANCE OR REMOVAL.

② FOR INLET PROTECTION, TYPE C (WITH CURB BOX), AN ADDITIONAL 18" OF FABRIC IS WRAPPED AROUND THE WOOD AND SECURED WITH STAPLES. THE WOOD SHALL NOT BLOCK THE ENTIRE HEIGHT OF THE CURB BOX OPENING.

③ FLAP POCKETS SHALL BE LARGE ENOUGH TO ACCEPT WOOD 2X4.

INSTALLATION NOTES

TYPE B & C

TRIM EXCESS FABRIC IN THE FLOW LINE TO WITHIN 3" OF THE GRATE.

THE CONTRACTOR SHALL DEMONSTRATE A METHOD OF MAINTENANCE, USING A SEWN FLAP, HAND HOLDS OR OTHER METHOD TO PREVENT ACCUMULATED SEDIMENT FROM ENTERING THE INLET.

TYPE D

DO NOT INSTALL INLET PROTECTION TYPE D IN INLETS SHALLOWER THAN 30", MEASURED FROM THE BOTTOM OF THE INLET TO THE TOP OF THE GRATE.

TRIM EXCESS FABRIC IN THE FLOW LINE TO WITHIN 3" OF THE GRATE.

THE INSTALLED BAG SHALL HAVE A MINIMUM SIDE CLEARANCE, BETWEEN THE INLET WALLS AND THE BAG, MEASURED AT THE BOTTOM OF THE OVERFLOW HOLES, OF 3". WHERE NECESSARY THE CONTRACTOR SHALL CINCH THE BAG, USING PLASTIC ZIP TIES, TO ACHIEVE THE 3" CLEARANCE. THE TIES SHALL BE PLACED AT A MAXIMUM OF 4" FROM THE BOTTOM OF THE BAG.

INLET PROTECTION
TYPE A, B, C, AND D

STATE OF WISCONSIN
DEPARTMENT OF TRANSPORTATION

APPROVED
10/16/02 — DATE
/S/ Beth Cannon — CHIEF ROADWAY DEVELOPMENT ENGINEER
FHWA

6

S.D.D. 8 E 10-2

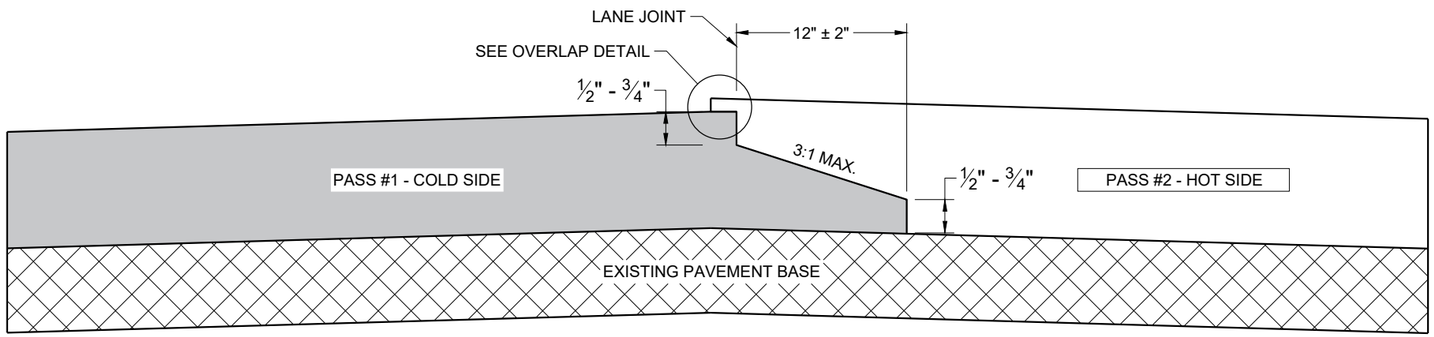

TYPICAL PAVEMENT CROSS SECTION
NOTCHED WEDGE JOINT

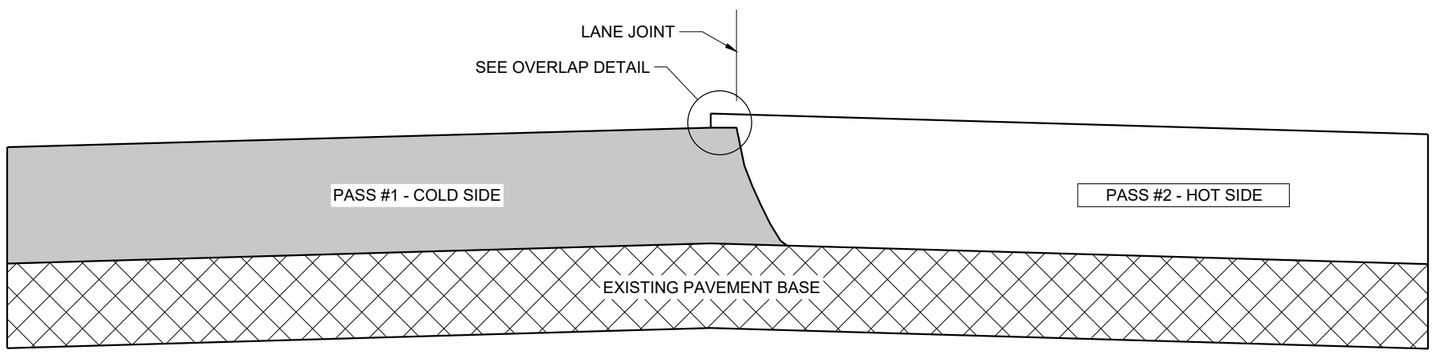

TYPICAL PAVEMENT CROSS SECTION
VERTICAL JOINT

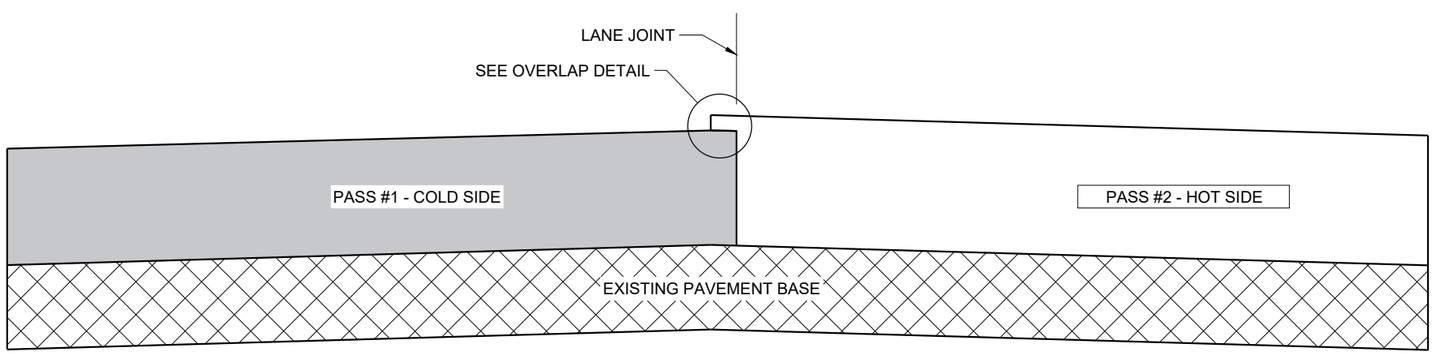

TYPICAL PAVEMENT CROSS SECTION
VERTICAL JOINT (MILLED)

GENERAL NOTES

IN ADDITION TO THE DETAILS PROVIDED IN THIS DRAWING, CONFORM TO STANDARD SPECIFICATION 450.3.2.8 FOR WHEN A NOTCHED WEDGE JOINT IS REQUIRED AND FOR GENERAL JOINT CONSTRUCTION REQUIREMENTS.

FOR ALL LONGITUDINAL JOINTS, ENSURE THE PAVER SCREED OVERLAPS THE PREVIOUSLY PLACED PAVEMENT BY 1" ± 0.5" AND THE HOT SIDE OF THE JOINT REMAINS HIGHER THAN THE COLD SIDE BY APPROXIMATELY 0.1" AFTER FINAL COMPACTION. (IT WILL BE FLUSH WHEN PAVING IN ECHELON.)

ONLY REMOVE THE LONGITUDINAL NOTCHED WEDGE JOINT FOR SMA PAVEMENT OR AS DIRECTED BY THE ENGINEER TO ADDRESS SPECIFIC LENGTHS OF JOINT DAMAGED BY TRAFFIC.

WHEN MILLING BACK OR REMOVING ANY LONGITUDINAL JOINT, LIMIT THE MATERIAL REMOVED TO 2" FROM THE TOP NOTCH OR FROM THE VERTICAL JOINT EDGE ON THE COLD SIDE OF THE JOINT.

USE LONGITUDINAL MILLED JOINT AS PLANS SHOW OR THE AS THE ENGINEER DIRECTS.

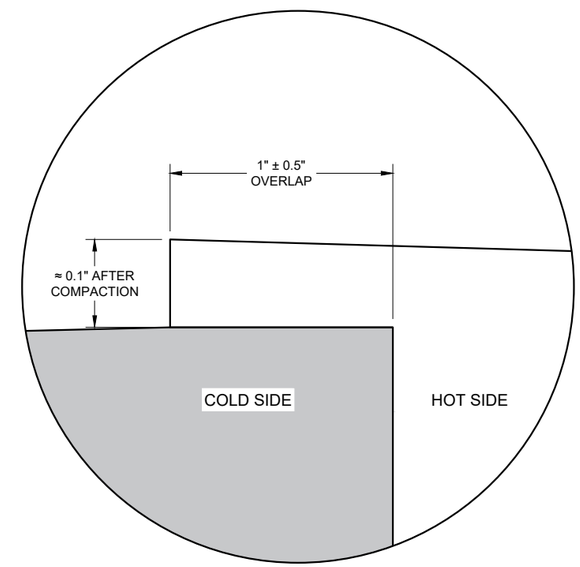

OVERLAP DETAIL (TYPICAL)

6

6

SDD 13C19 - 03

SDD 13C19 - 03

HMA LONGITUDINAL JOINTS

STATE OF WISCONSIN
DEPARTMENT OF TRANSPORTATION

APPROVED
November 2020 /S/ Steven Hefel
DATE HMA PAVEMENT ENGIN

FHWA

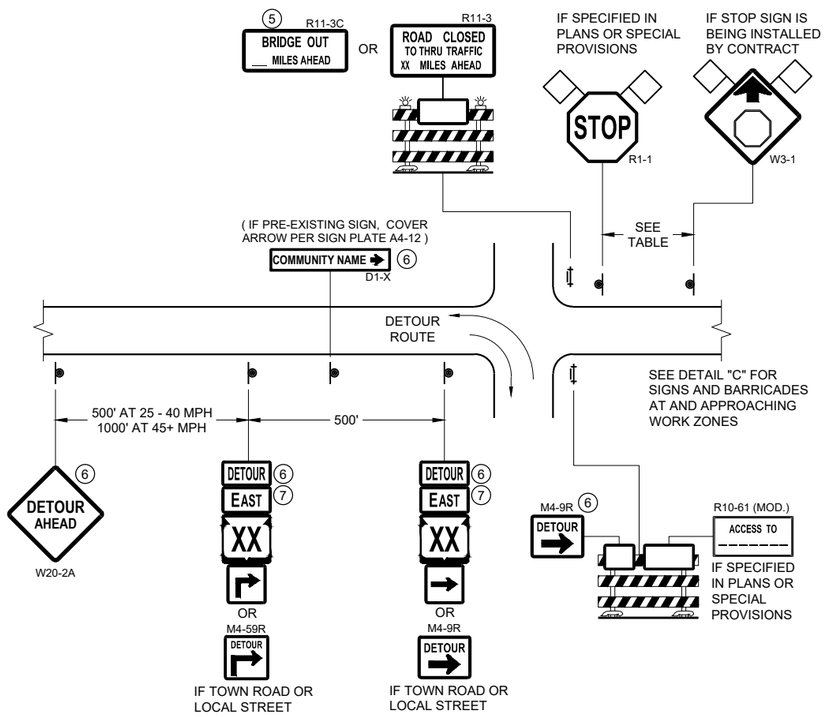

DETAIL A
MAINLINE CLOSURE WITH POSTED DETOUR
WORK ZONE GREATER THAN OR EQUAL TO ½ MILE FROM DETOUR ROUTE (1000 FEET IF URBAN)

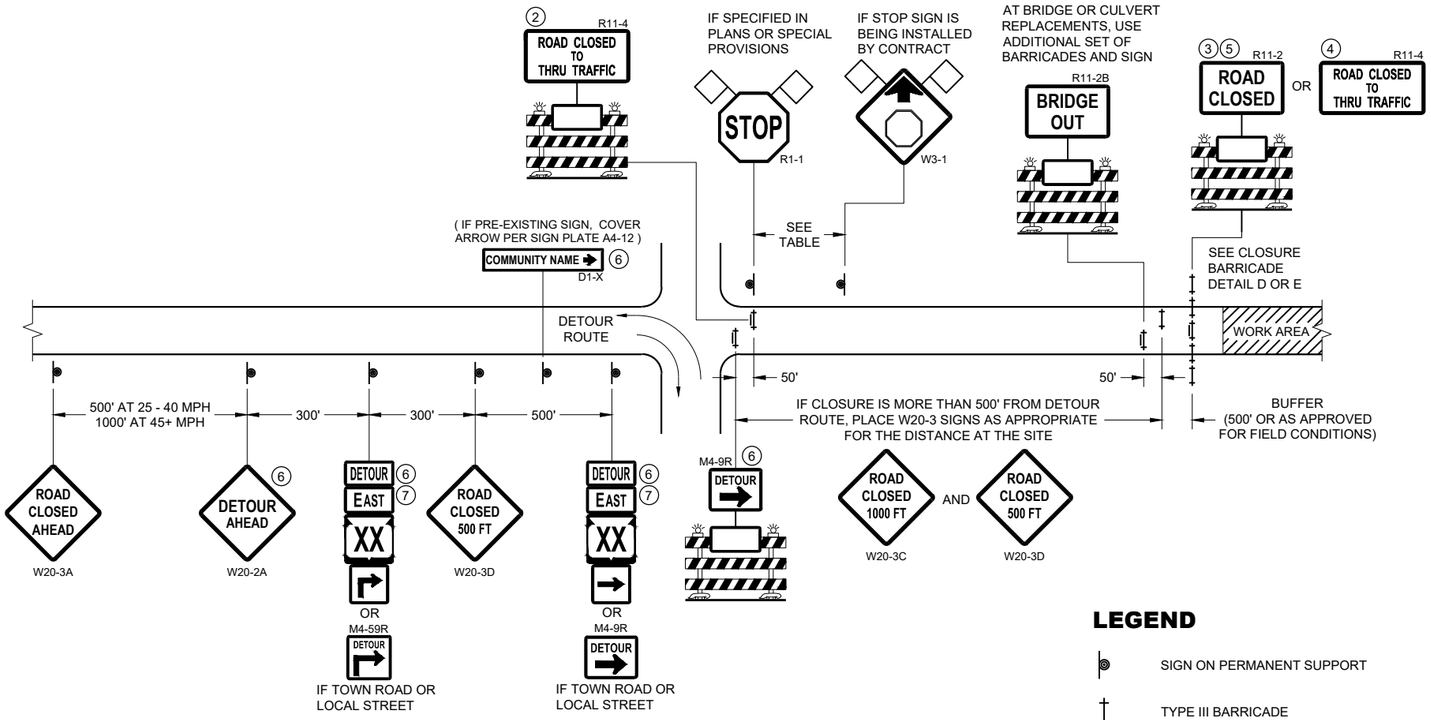

DETAIL B
MAINLINE CLOSURE WITH POSTED DETOUR
WORK ZONE LESS THAN ½ MILE FROM DETOUR ROUTE (1000 FEET IF URBAN)

LEGEND

- SIGN ON PERMANENT SUPPORT
- TYPE III BARRICADE
- TYPE III BARRICADE WITH ATTACHED SIGN
- TYPE "A" WARNING LIGHT (FLASHING)
- WORK AREA
- FLAGS, 16" X 16" MIN. (ORANGE)
- DETOUR M4 - 8
- EAST M3 - X
- XX M1 - 4 OR XX M1 - 6 OR COUNTY X M1 - 5A
- M05 - 1 OR M06 - 1

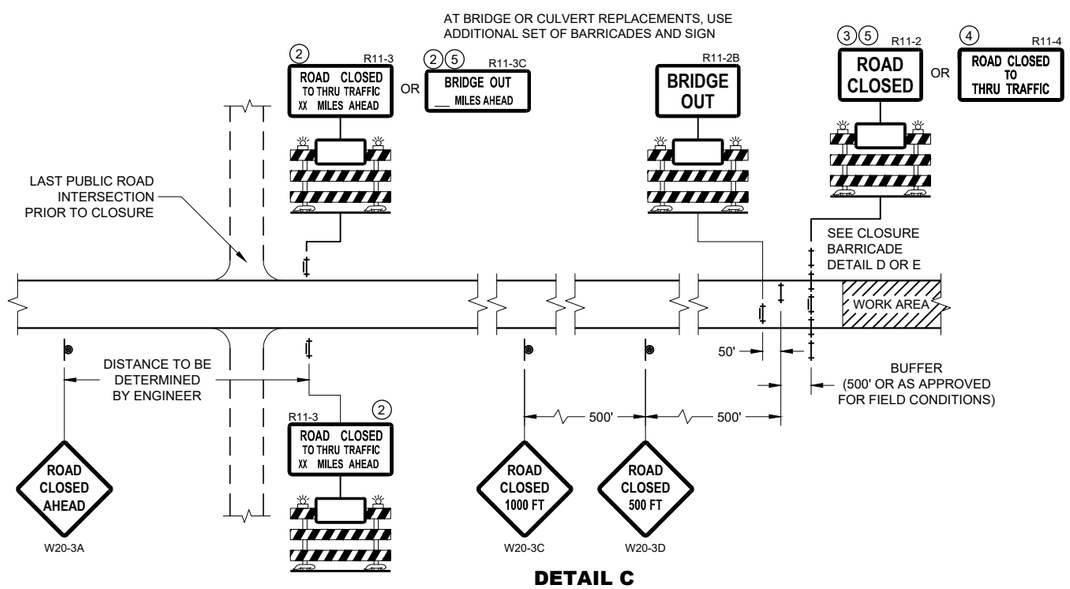

DETAIL C
MAINLINE CLOSURE, NO POSTED DETOUR

SPEED LIMIT (MPH)	"STOP AHEAD" ADVANCE WARNING DISTANCE (FT)
25	200
30	200
35	350
40	350
45	500
50	550
55	750

SEE SDD 15C2-SHEET "b" FOR GENERAL NOTES AND FOOTNOTES 1 THROUGH 7

BARRICADES AND SIGNS FOR MAINLINE CLOSURES

STATE OF WISCONSIN
DEPARTMENT OF TRANSPORTATION

APPROVED
May 2023 — DATE
/S/ Andrew Heidtke — WORK ZONE ENGINEER
FHWA

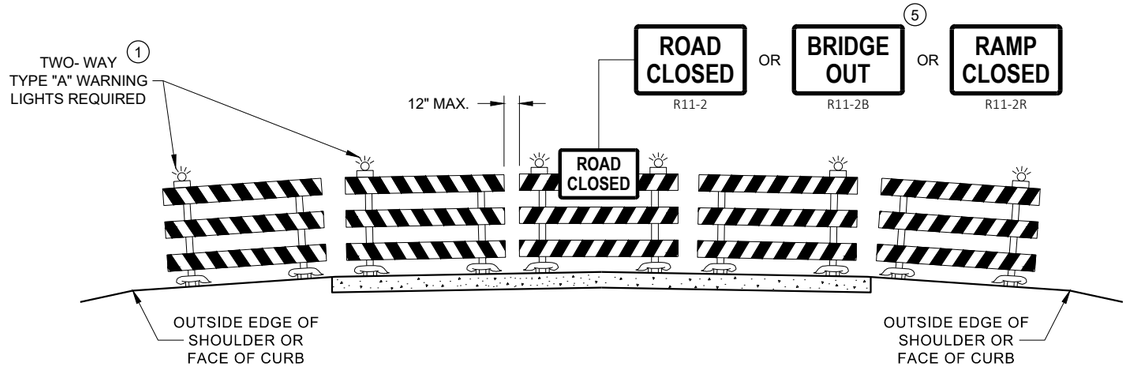

DETAIL D
ROAD CLOSURE BARRICADE DETAIL
APPROACH VIEW

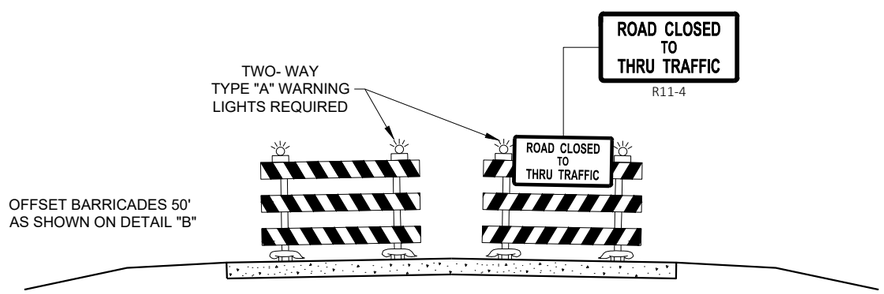

DETAIL E
LANE CLOSURE BARRICADE DETAIL
APPROACH VIEW

SEE SDD 15C2 - SHEET "a" FOR LEGEND

GENERAL NOTES

THE EXACT NUMBER, LOCATION, AND SPACING OF ALL SIGNS AND BARRICADES SHALL BE ADJUSTED TO FIT FIELD CONDITIONS AS APPROVED BY THE ENGINEER.

ANY SIGNS TEMPORARY OR EXISTING, WHICH CONFLICT WITH TRAFFIC CONTROL "IN USE", SHALL BE REMOVED OR COVERED AS NEEDED AND AS APPROVED BY THE ENGINEER.

THE SPACING BETWEEN TRAFFIC CONTROL SIGNS SHOULD BE ADJUSTED TO NOT CONFLICT WITH AND SHOULD PROVIDE A DESIRABLE MINIMUM OF 200 FEET CLEARANCE TO EXISTING SIGNS THAT WILL REMAIN IN PLACE.

BARRICADES THAT MUST BE MOVED FOR A WORK OPERATION SHALL BE IMMEDIATELY RE-ESTABLISHED UPON COMPLETION OF THE OPERATION, OR FOR CONTINUING OPERATIONS, AT THE END OF EACH WORKING DAY.

SIGNS THAT WILL BE IN PLACE LESS THAN 7 CONTINUOUS DAYS AND NIGHTS MAY BE MOUNTED ON PORTABLE SUPPORTS.

ALL TYPE III BARRICADES SHALL HAVE RAILS REFLECTORIZED ON BOTH FACES. STRIPES SHALL BE PROPERLY SLOPED DOWN TOWARD THE TRAFFIC SIDE OR AS SHOWN IN THE ROAD CLOSURE BARRICADE DETAIL "D" FOR FULL ROAD CLOSURES.

TYPE "A" LOW - INTENSITY FLASHING WARNING LIGHTS SHALL BE VISIBLE ON BOTH SIDES OF THE BARRICADE.

THE R11 - 2, R11 - 3, M4 - 9, R11 - 4, AND R10 - 61 SIGNS PLACED ON THE BARRICADES SHALL COVER NO MORE THAN THE TOP RAIL. THE SIGNS SHALL NOT COVER ANY PORTION OF THE MIDDLE RAIL OR BOTTOM RAILS.

"WO" AND "MO" SIGNS ARE THE SAME AS "W" AND "M" SIGNS EXCEPT THE BACKGROUND IS ORANGE.

ALL SIGNS SHALL BE 48" X 48" UNLESS OTHERWISE NOTED BELOW:
- R11 - 2 SHALL BE 48" X 30"
- R11 - 3 SHALL, R11 - 4 AND R10 - 61 SHALL BE 60 " X 30"
- M4 - 9 SHALL BE 30" X 24"
- M3 - X SHALL BE 24" X 12" (36" X 18" IF NEEDED TO MATCH EXISTING SIGNS)
- M4 - 8 SHALL BE 24" X 12" (36" X 18" IF NEEDED TO MATCH EXISTING SIGNS)
- M1 - 4, M1 - 5A AND M1 - 6 SHALL BE 24" X 24" (36" X 36" IF NEEDED TO MATCH EXISTING SIGNS)
- MO5 - 1 AND MO6 - 1 SHALL BE 21" X 21" (30" X 30" IF NEEDED TO MATCH EXISTING SIGNS)
- D1 - X SHALL BE AS SHOWN ON SPECIFIC PROJECT SIGNING DETAIL SHEETS.
- R1 - 1 SHALL BE 36" X 36"

1. TWO WARNING LIGHTS SHALL BE PROVIDED ON THE CENTER BARRICADE AND A MINIMUM OF ONE WARNING LIGHT SHALL BE PROVIDED ON EACH OF THE OTHER BARRICADES WITHIN THE ROADWAY LIMITS. SPACING OF THE WARNING LIGHTS SHALL BE UNIFORM TO THE EDGE OF ROADWAY AS SHOWN (APPROX. 8 FOOT LIGHT SPACING.
2. THESE SIGNS AND BARRICADES ARE NOT REQUIRED IF ROAD CLOSURE BEGINS AT AN INTERSECTION.
3. FOR ROAD CLOSURE WITHOUT LOCAL ACCESS TO PROJECT, SEE ROAD CLOSURE BARRICADE DETAIL "D".
4. FOR ROAD CLOSURE WITH LOCAL ACCESS TO PROJECT, SEE ROAD CLOSURE BARRICADE DETAIL "E".
5. FOR BRIDGE OR CULVERT REPLACEMENTS, SUBSTITUTE "BRIDGE OUT" INSTEAD OF "ROAD CLOSED" ON R11 - 2 AND R11 - 3 SIGNS.
6. INSTALL DETOUR AND COMMUNITY GUIDE SIGNS AND ARROWS ONLY IF SPECIFIED IN THE CONTRACT. IF THERE ARE EXISTING ROUTE MARKER ASSEMBLIES THAT WILL REMAIN IN PLACE, ADJUST THE LOCATION OF THE DETOUR ROUTE SIGNS TO CORRESPOND WITH THE EXISTING ASSEMBLIES. MODIFY EXISTING SIGNS WHERE POSSIBLE. SEE SPECIFIC PROJECT DETOUR SIGNING DETAIL SHEETS. IF DETOUR SIGNS ARE BEING INSTALLED BY OTHERS, PLACE THE CONTRACTED TRAFFIC CONTROL SIGNS TO ALLOW FOR PLACEMENT OF ALL WARNING, DETOUR AND GUIDE SIGNS AS SHOWN.
7. "EAST" CARDINAL DIRECTION MARKERS AND RIGHT TURN ARROWS ARE SHOWN. USE OTHER CARDINAL DIRECTIONS AND ARROWS AS APPROPRIATE.

BARRICADES AND SIGNS FOR VARIOUS CLOSURES

STATE OF WISCONSIN
DEPARTMENT OF TRANSPORTATION

APPROVED
May 2023 — DATE
/S/ Andrew Heidtke — WORK ZONE ENGINEE
FHWA

6
SDD 15C02 - 09b

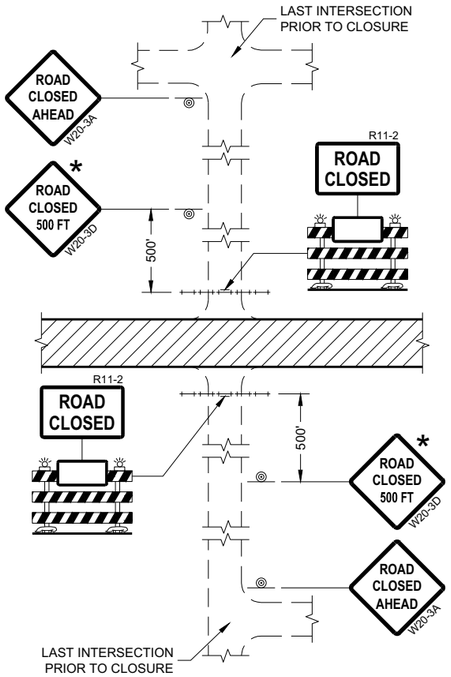

DETAIL 1
(NO ACCESS TO PROJECT)

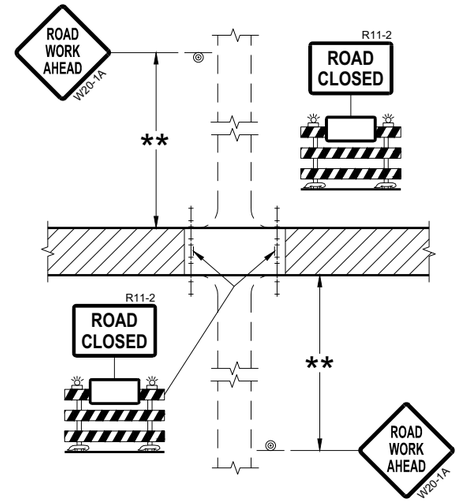

DETAIL 2
(PUBLIC CROSS-TRAFFIC MAINTAINED.
NO ACCESS TO PROJECT)

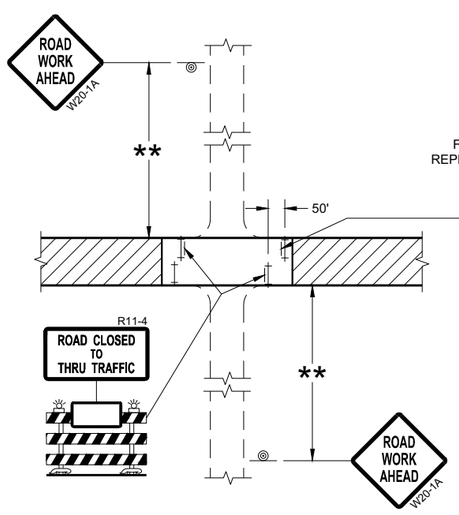

DETAIL 3
(PUBLIC CROSS-TRAFFIC MAINTAINED.
CONTRACTOR, LOCAL BUSINESS AND
RESIDENT ACCESS TO PROJECT)

FOR BRIDGE OR CULVERT
REPLACEMENT, USE ADDITIONAL
SIGN ON BARRICADE

BRIDGE OUT
XX MILES AHEAD
R11-3C

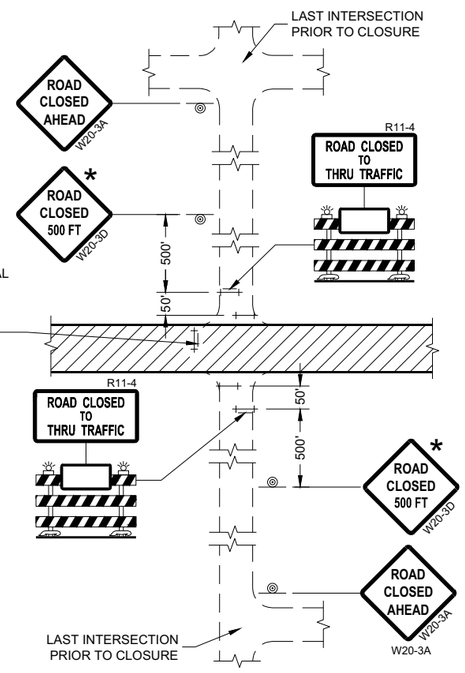

DETAIL 4
(CONTRACTOR, LOCAL BUSINESS AND
RESIDENT ACCESS TO PROJECT)

GENERAL NOTES

THE EXACT NUMBER, LOCATION, AND SPACING OF ALL SIGNS AND BARRICADES SHALL BE ADJUSTED TO FIT FIELD CONDITIONS AS APPROVED BY THE ENGINEER.

ANY SIGNS TEMPORARY OR EXISTING, WHICH CONFLICT WITH TRAFFIC CONTROL "IN USE" SHALL BE REMOVED OR COVERED AS NEEDED AND AS APPROVED BY THE ENGINEER.

THE SPACING BETWEEN TRAFFIC CONTROL SIGNS SHOULD BE ADJUSTED TO NOT CONFLICT WITH AND SHOULD PROVIDE A DESIRABLE MINIMUM OF 200 FEET CLEARANCE (500 FEET DESIRABLE) TO EXISTING SIGNS THAT WILL REMAIN IN PLACE.

IF A "STOP" SIGN MUST BE REMOVED FOR A WORK OPERATION, A TEMPORARY "STOP" SIGN SHALL BE PLACED PRIOR TO THE SIGN REMOVAL, OR A FLAGGER SHALL BE PROVIDED UNTIL THE SIGN IS REESTABLISHED.

BARRICADES THAT MUST BE MOVED FOR A WORK OPERATION SHALL BE IMMEDIATELY REESTABLISHED UPON COMPLETION OF THE OPERATION OR FOR CONTINUING OPERATIONS, AT THE END OF EACH WORKING DAY.

SIGNS THAT WILL BE IN PLACE LESS THAN SEVEN CONTINUOUS DAYS AND NIGHTS MAY BE MOUNTED ON PORTABLE SUPPORTS.

ALL TYPE III BARRICADES SHALL HAVE RAILS REFLECTORIZED ON BOTH FACES. STRIPES SHALL BE PROPERLY SLOPED DOWN TOWARD THE TRAFFIC SIDE OR AS SHOWN IN THE ROAD CLOSURE BARRICADE DETAIL "D" FOR FULL ROAD CLOSURES.

TYPE "A" LOW-INTENSITY FLASHING WARNING LIGHTS SHALL BE VISIBLE ON BOTH SIDES OF THE BARRICADE.

THE R11-2, R11-3, AND R11-4 SIGNS PLACED ON BARRICADES SHALL COVER NO MORE THAN THE TOP RAIL. THE SIGNS SHALL NOT COVER ANY PORTION OF THE MIDDLE OR BOTTOM RAILS.

ALL SIGNS SHALL BE 48" X 48" UNLESS OTHERWISE NOTED BELOW:
R11-2 SHALL BE 48" X 30".
R11-4 AND R11-3 SHALL BE 60" X 30".

* OMIT THE "ROAD CLOSED 500 FT." SIGN IF THE LAST INTERSECTION IS 500 FEET OR LESS FROM THE WORK ZONE.

** 500' MAX. OR AT LAST INTERSECTION, WHICHEVER IS CLOSEST.

LEGEND

- SIGN ON PERMANENT SUPPORT
- TYPE III BARRICADE
- TYPE III BARRICADE WITH ATTACHED SIGN
- TYPE "A" WARNING LIGHT (FLASHING)
- WORK AREA

BARRICADES AND SIGNS FOR SIDEROAD CLOSURES

STATE OF WISCONSIN
DEPARTMENT OF TRANSPORTATION

APPROVED
July 2018 — DATE
/S/ Andrew Heidtke — WORK ZONE ENGINEE
FHWA

6
SDD 15C03 - 05

GENERAL NOTES

THE EXACT NUMBER, LOCATION, AND SPACING OF ALL SIGNS AND DEVICES SHALL BE ADJUSTED TO FIT FIELD CONDITIONS.

THE SPACING BETWEEN TRAFFIC CONTROL SIGNS SHOULD BE ADJUSTED TO NOT CONFLICT WITH AND SHOULD PROVIDE A MINIMUM OF 200 FEET (500 FEET DESIRABLE) CLEARANCE TO EXISTING SIGNS THAT WILL REMAIN IN PLACE.

ALL SIGNS ARE 48" X 48" UNLESS OTHERWISE NOTED. IF NECESSARY DUE TO SPACE CONSTRAINTS, 36"X36" SIGNS MAY BE USED INSTEAD OF 48" X 48" SIGNS.

SIGNS THAT WILL BE IN PLACE LESS THAN SEVEN CONTINUOUS DAYS AND NIGHTS MAY BE MOUNTED ON PORTABLE SUPPORTS.

IF A "STOP" SIGN MUST BE REMOVED FOR A WORK OPERATION, A TEMPORARY "STOP" SIGN SHALL BE PLACED PRIOR TO THE SIGN REMOVAL, OR A FLAGGER SHALL BE PROVIDED UNTIL THE SIGN IS REESTABLISHED.

* THE THIRD W20-1 SIGN IS REQUIRED ONLY IF THERE IS AN INTERSECTION BETWEEN THE "ROAD WORK 500 FEET" SIGN AND THE WORK ZONE. ADJUST THE PLACEMENT OF THIS SIGN BASED ON INTERSECTION LOCATION AND OTHER FIELD CONDITIONS.

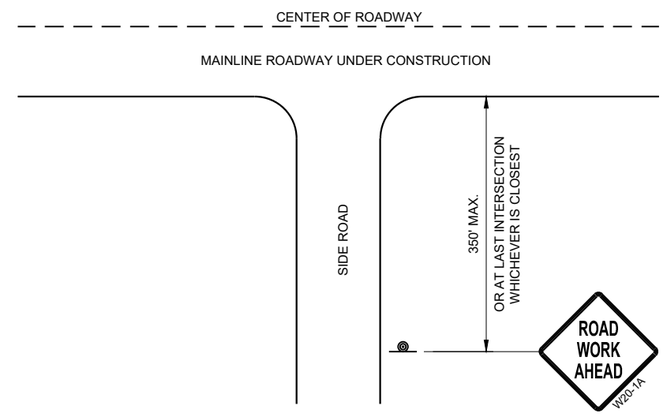

TYPICAL SIDE ROAD APPROACH WARNING SIGN DETAIL

LEGEND

- SIGN ON PERMANENT SUPPORT
- DIRECTION OF TRAFFIC
- WORK AREA

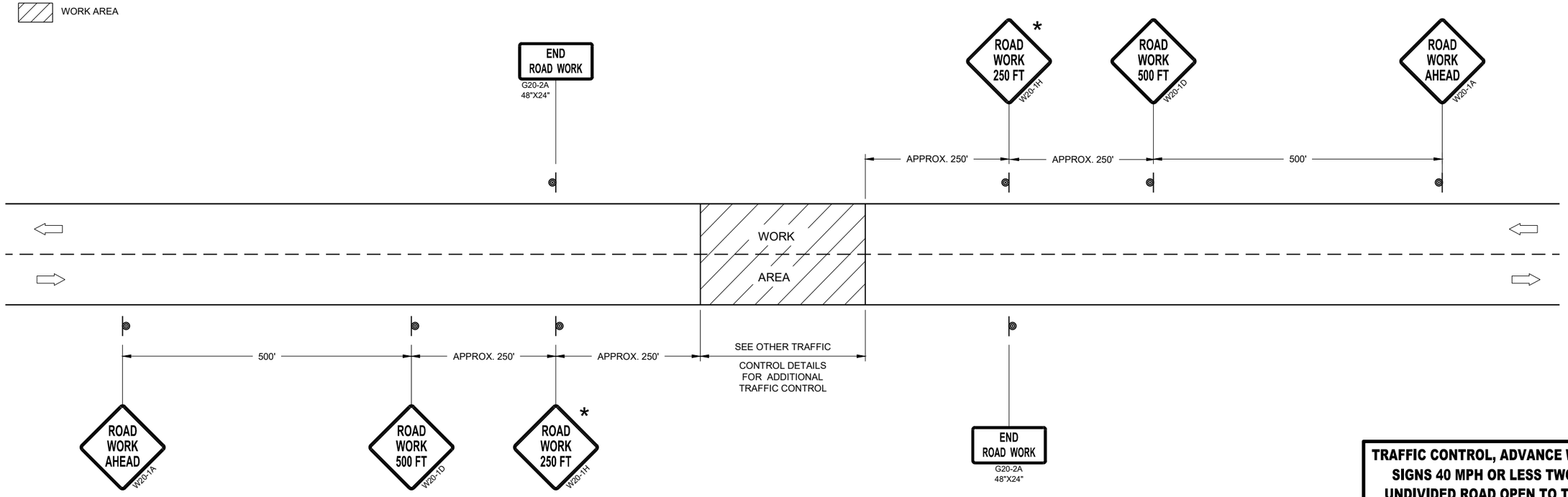

TRAFFIC CONTROL, ADVANCE WARNING SIGNS 40MPH OR LESS

TRAFFIC CONTROL, ADVANCE WARNING SIGNS 40 MPH OR LESS TWO-WAY UNDIVIDED ROAD OPEN TO TRAFFIC

STATE OF WISCONSIN
DEPARTMENT OF TRANSPORTATION

APPROVED
July 2018 — DATE
/S/ Andrew Heidtke — WORK ZONE ENGINEE
FHWA

6
SDD 15C05 - 05

GENERAL NOTES

DETAILS OF INSTALLATION, MATERIALS AND WORKMANSHIP NOT SHOWN ON THIS DRAWING SHALL CONFORM TO THE PERTINENT REQUIREMENTS OF THE STANDARD SPECIFICATIONS AND APPLICABLE SPECIAL PROVISIONS.

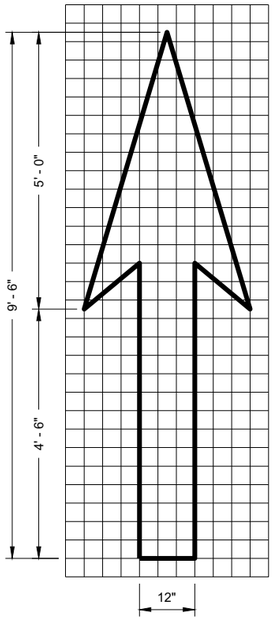

TYPE 1

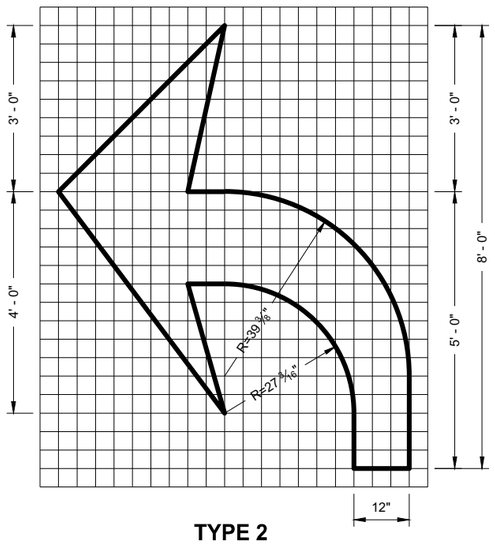

TYPE 2

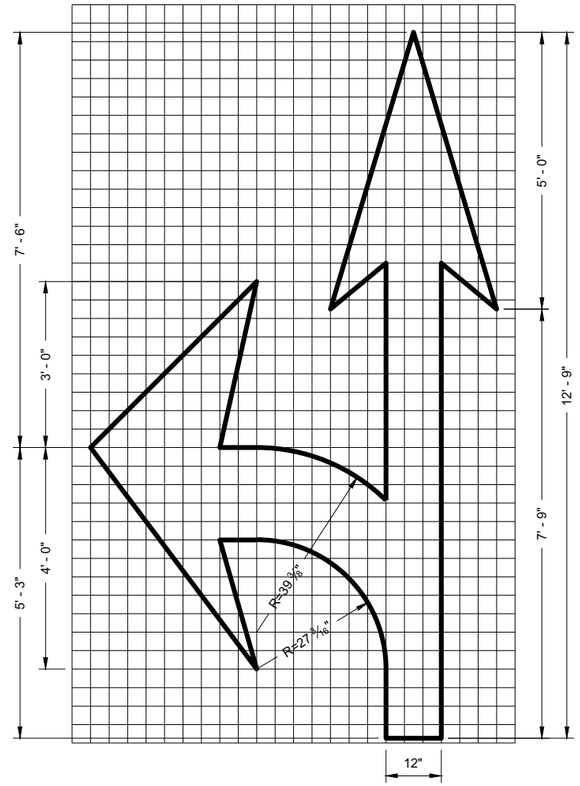

TYPE 3

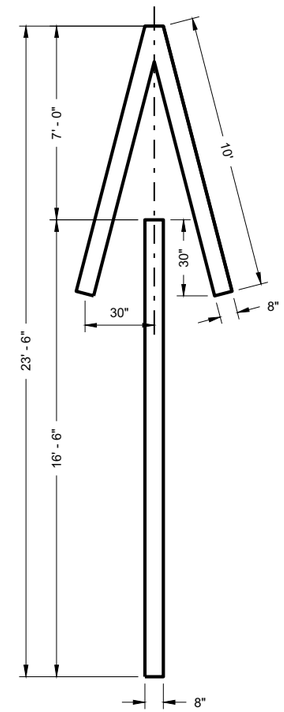

TYPE 4

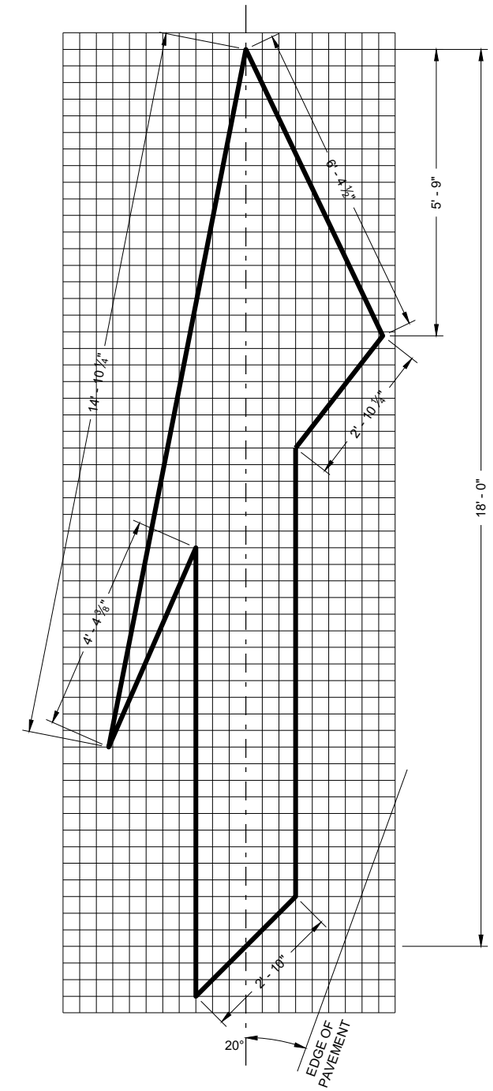

TYPE 5 LANE DROP ARROW

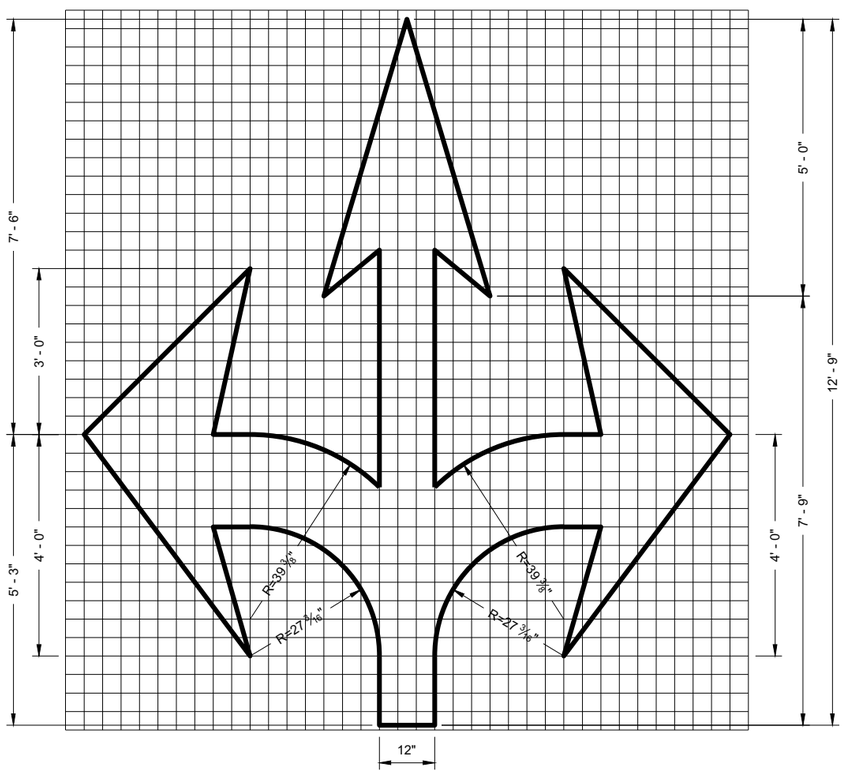

TYPE 6

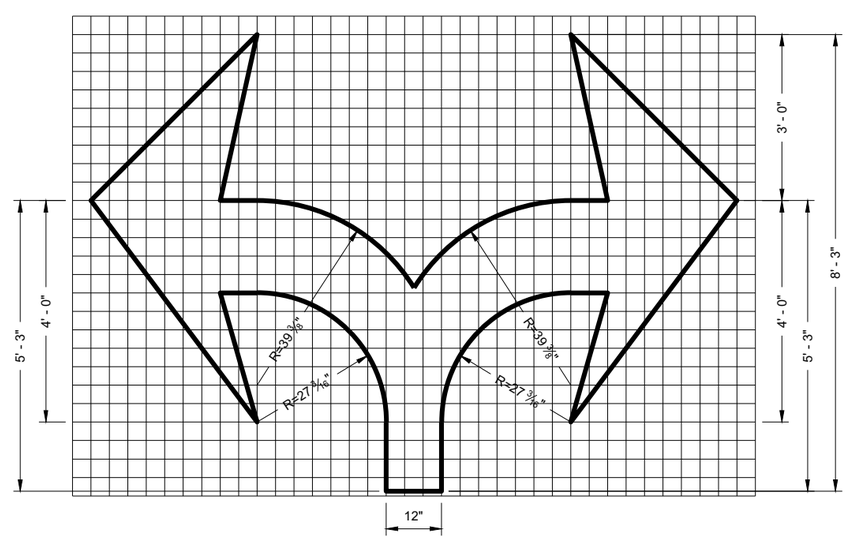

TYPE 7

6

6

PAVEMENT MARKING ARROWS

STATE OF WISCONSIN
DEPARTMENT OF TRANSPORTATION

APPROVED
November 2019 — DATE
/S/ Matthew Rauch — STATE SIGNING AND MAR ENGINEER
FHWA

SDD 15C07 - 15c

SDD 15C07 - 15c

GENERAL NOTES

DETAILS OF CONSTRUCTION NOT SHOWN ON THIS DRAWING SHALL CONFORM TO STANDARD SPECIFICATIONS AND SPECIAL PROVISIONS.

1. LOCATE THE NO PASSING ZONE W14-3 SIGN WITHIN 50 FEET OF THE "T" MARKING
2. MEASURE FROM EDGE OF MARKING TO JOINT LINE. THIS DOES NOT INCLUDE SPACE NEEDED FOR GROOVING OPERATIONS.

*CONFIRM MARKING LINE WIDTH WITH THE MISCELLANEOUS QUANTITIES

LEGEND

"T" MARKING

SIGN ON PERMANENT SUPPORT

DIRECTION OF TRAFFIC

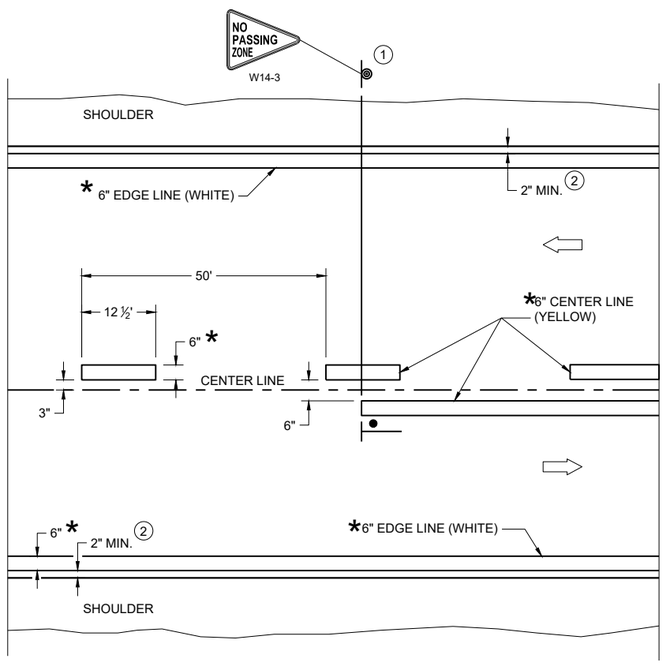

TWO WAY TRAFFIC

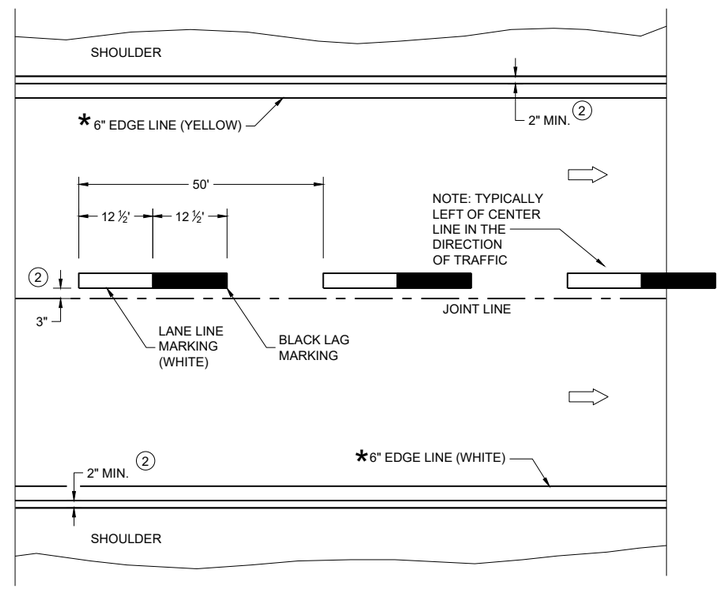

ONE WAY TRAFFIC

PERMANENT PAVEMENT MARKING

6

6

SDD 15C08-23a

SDD 15C08-23a

PERMANENT LONGITUDINAL PAVEMENT MARKINGS

STATE OF WISCONSIN
DEPARTMENT OF TRANSPORTATION

APPROVED

May 2023 — DATE

/S/ Jeannie Silver — Statewide Pavement Marking Engineer

FHWA

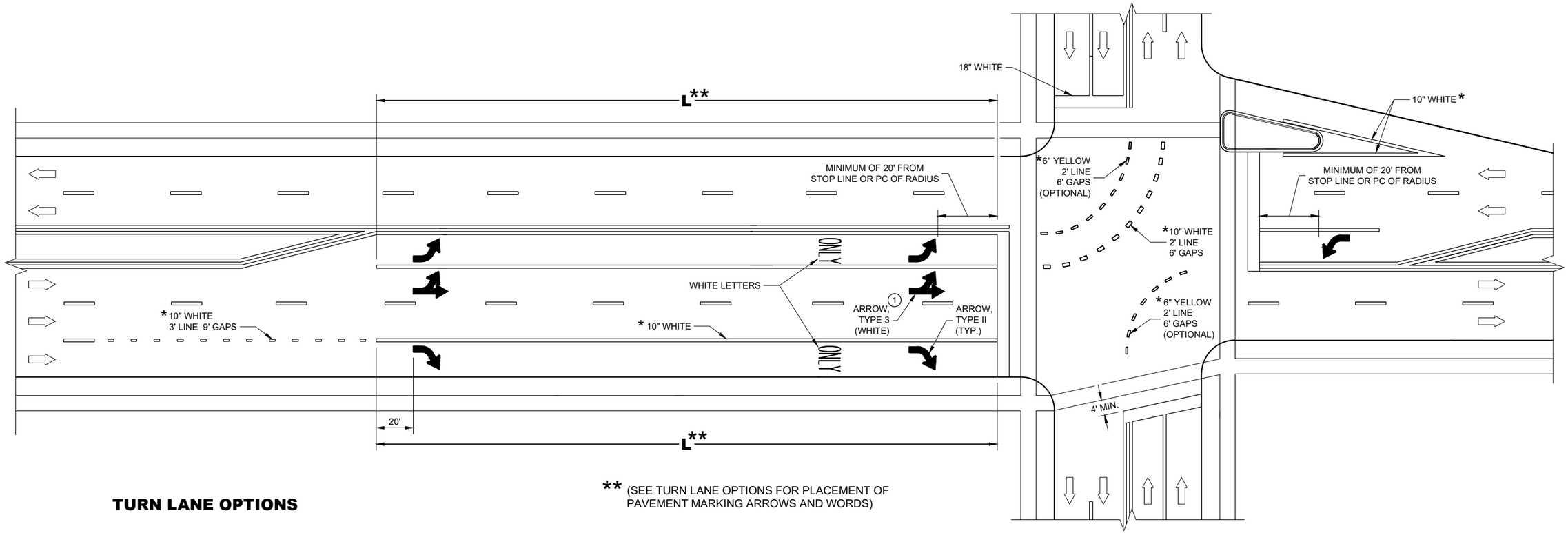

** (SEE TURN LANE OPTIONS FOR PLACEMENT OF PAVEMENT MARKING ARROWS AND WORDS)

TURN LANE OPTIONS

LENGTH OF TURN BAY (L) OF 0 - 47' DOES NOT REQUIRE PAVEMENT MARKING ARROWS OR WORDS

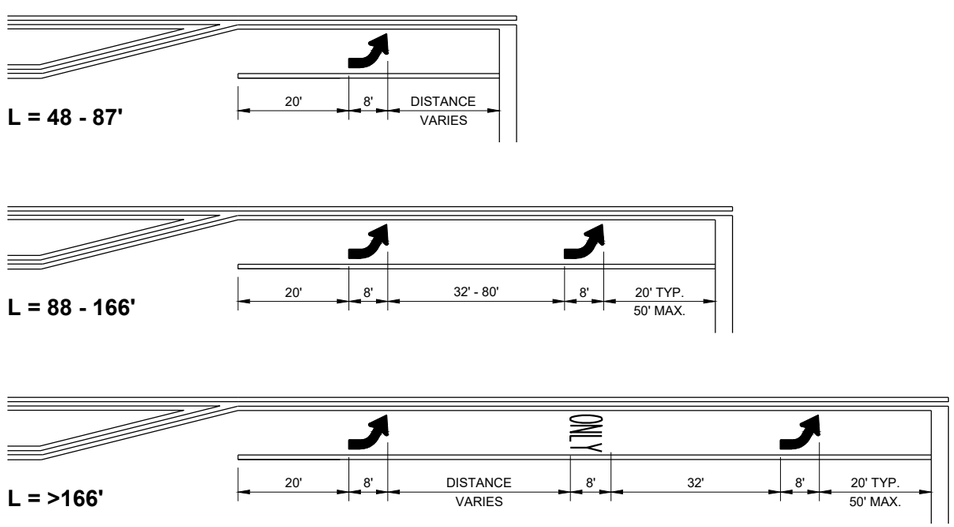

GENERAL NOTES

1. QUANTITY AND LOCATION OF TYPE 3 ARROWS ARE THE SAME AS THE TYPE II ARROWS IN THE ADJACENT TURN LANE. FOR TURN LANES WITH A PHYSICAL SEPARATION IN THE SAME DIRECTION OF TRAVEL, THE ARROWS AND "ONLY" MARKING MAY BE ELIMINATED.

⇨ DIRECTION OF TRAFFIC

L = LENGTH OF TURN BAY

* CONFIRM MARKING LINE WIDTH WITH THE MISCELLANEOUS QUANTITIES

PAVEMENT MARKING (TURN LANES)

STATE OF WISCONSIN
DEPARTMENT OF TRANSPORTA

6

SDD 15C08-23d

6

SDD 15C08-23d

GENERAL NOTES

1. REFLECTIVE SHEETING SHALL FOLLOW THE REQUIREMENTS IN THE APPROVED PRODUCTS LISTING FOR SIGN SHEETING.
2. LOCATION OF WARNING LIGHTS WHEN SHOWN ON THE PLAN.

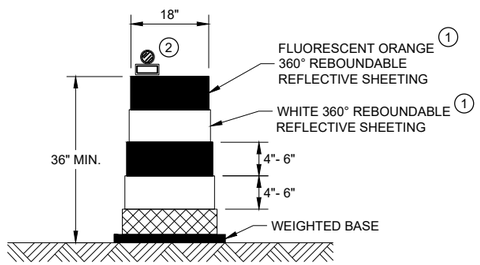

DRUM

BALLAST WIDTHS
RANGE FROM 24"-36"

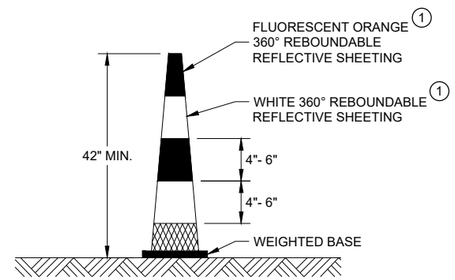

42" CONE

DO NOT USE IN TAPERS
½ SPACING OF DRUMS

BALLAST WIDTHS
RANGE FROM 14"-20"

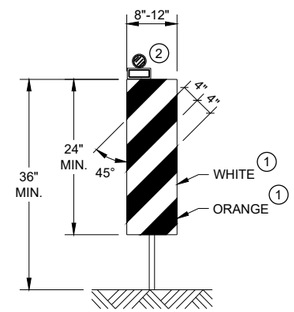

VERTICAL PANEL

THE STRIPES SHALL SLOPE DOWNWARD TO
THE TRAFFIC SIDE FOR CHANNELIZATION.

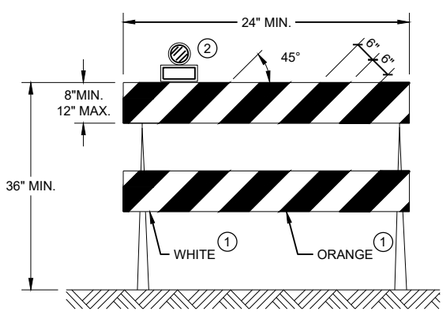

TYPE II BARRICADE

FOR RAILS LESS THAN 36" LONG, 4" WIDE STRIPES
MAY BE USED. ALL STRIPES SHALL SLOPE DOWNWARD
TO THE TRAFFIC SIDE FOR CHANNELIZATION.

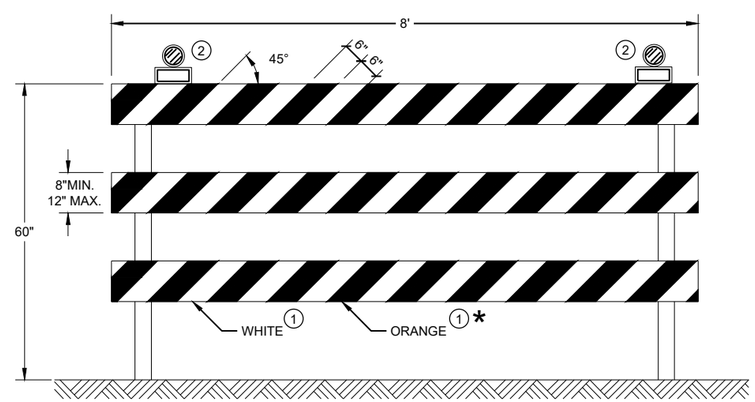

TYPE III BARRICADE

IF SIGN MOUNTED, DO NOT COVER MORE THAN 50% OF THE TOP
TWO RAILS OR 33% OF THE TOTAL AREA OF THE THREE RAILS.

* IF USED FOR A PERMANENT APPLICATION USE RED SHEETING.

CHANNELIZING DEVICES
DRUMS, CONES, BARRICADES
AND VERTICAL PANELS

STATE OF WISCONSIN
DEPARTMENT OF TRANSPORTATION

APPROVED
November 2022 — /S/ Andrew Heidtke
DATE — WORK ZONE ENGINEE
FHWA

6

6

SDD 15C11 - 10b

SDD 15C11 - 10b

LEGEND

SIGN ON PORTABLE OR PERMANENT SUPPORT

TEMPORARY PORTABLE RUMBLE STRIP ARRAY

DIRECTION OF TRAFFIC

WORK AREA

FLAGGER, EQUIPPED WITH STOP/SLOW PADDLE FASTENED ON SUPPORT STAFF

GENERAL NOTES

DETAILS OF TRAFFIC CONTROL DEVICES AND INSTALLATION NOT SHOWN ON THIS DRAWING SHALL CONFORM TO THE PERTINENT REQUIREMENTS OF THE STANDARD SPECIFICATIONS, THE SPECIAL PROVISIONS, AND THE MANUAL ON UNIFORM TRAFFIC CONTROL DEVICES.

ALL SIGNS ARE 48" X 48" UNLESS OTHERWISE NOTED.

"WO" SIGNS ARE THE SAME AS "W" SIGNS EXCEPT THE BACKGROUND IS ORANGE.

THE EXACT NUMBER, LOCATION AND SPACING OF ALL SIGNS, DEVICES, AND LOCATION OF ALL FLAGGERS SHALL BE ADJUSTED TO FIT FIELD CONDITIONS AS APPROVED BY THE ENGINEER.

THE FIRST ADVANCE WARNING SIGN SHOULD TYPICALLY BE LOCATED IN ADVANCE OF THE ANTICIPATED TRAFFIC BACKUP OR QUEUE.

WHEN A SIDE ROAD OR RAMP INTERSECTS THE FACILITY ON WHICH THE WORK IS BEING PERFORMED, ADDITIONAL TRAFFIC CONTROLS SHALL BE PROVIDED AS SPECIFIED IN THE PLANS AND/OR THE SPECIAL PROVISIONS OR AS APPROVED BY THE ENGINEER.

FLAGGING

FLAGGERS SHALL BE IN SIGHT OF EACH OTHER OR IN DIRECT COMMUNICATION AT ALL TIMES. THEY SHALL BE EQUIPPED WITH STOP/SLOW PADDLES FASTENED ON SUPPORT STAFFS. WHEN THE FLAGGING OPERATION IS NOT IN EFFECT REMOVE TEMPORARY PORTABLE RUMBLE STRIPS PRIOR TO COVERING OR REMOVING ALL ADVANCE SIGNING.

(1) FOR MOVING WORK OPERATIONS, POST ADDITIONAL W20-7A FLAGGER SIGNS AT APPROXIMATELY 3,500' INTERVALS IN THE MOVING WORK OPERATION OR AS APPROVED BY THE ENGINEER.

(2) SIGN NOT REQUIRED IF FLAGGING OPERATION OCCURS WITHIN A SIGNED ROAD WORK ZONE AREA.

WHEN THE DISTANCE BETWEEN FLAGGERS EXCEEDS 2 MILES, A PILOT CAR IS REQUIRED. WHEN CURVES REDUCE SIGHT DISTANCE BELOW 400', A PILOT CAR IS REQUIRED.

TEMPORARY PORTABLE RUMBLE STRIPS

UTILIZE TEMPORARY PORTABLE RUMBLE STRIPS ON ALL FLAGGING OPERATIONS.

(3) EACH TEMPORARY PORTABLE RUMBLE STRIP ARRAY CONSISTS OF THREE RUMBLE STRIPS PLACED TRANSVERSE ACROSS THE LANE AT THE LOCATIONS SHOWN. WITHIN EACH ARRAY, SPACING BETWEEN RUMBLE STRIPS SHALL BE 15 FEET ON CENTER

ONLY USE TEMPORARY PORTABLE RUMBLE STRIPS FROM THE APPROVED PRODUCTS LIST.

INSTALL TEMPORARY RUMBLE STRIPS PER MANUFACTURER'S RECOMMENDATIONS.

PLACE ADVANCE SIGNING PRIOR TO INSTALLING TEMPORARY RUMBLE STRIPS.

DO NOT INSTALL TEMPORARY PORTABLE RUMBLE STRIPS ON GRAVEL, MILLED SURFACES, OR ASPHALT THAT HAS BEEN PAVED LESS THAN 12 HOURS.

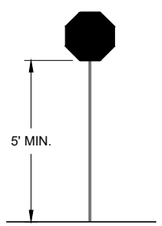

STOP/SLOW PADDLE ON SUPPORT STAFF

SIGN AND TEMPORARY RUMBLE STRIP ARRAY SPACING TABLE

SPEED LIMIT	SPACING "A"
25-30 MPH	200'
35-40 MPH	350'
45-55 MPH	500'

WO3-4

USE OF WO3-4 SIGN IS OPTIONAL. WHEN USED, THIS SIGN SHALL BE LOCATED BETWEEN THE W20-7A AND W20-4A SIGNS, USING SPACING "A".

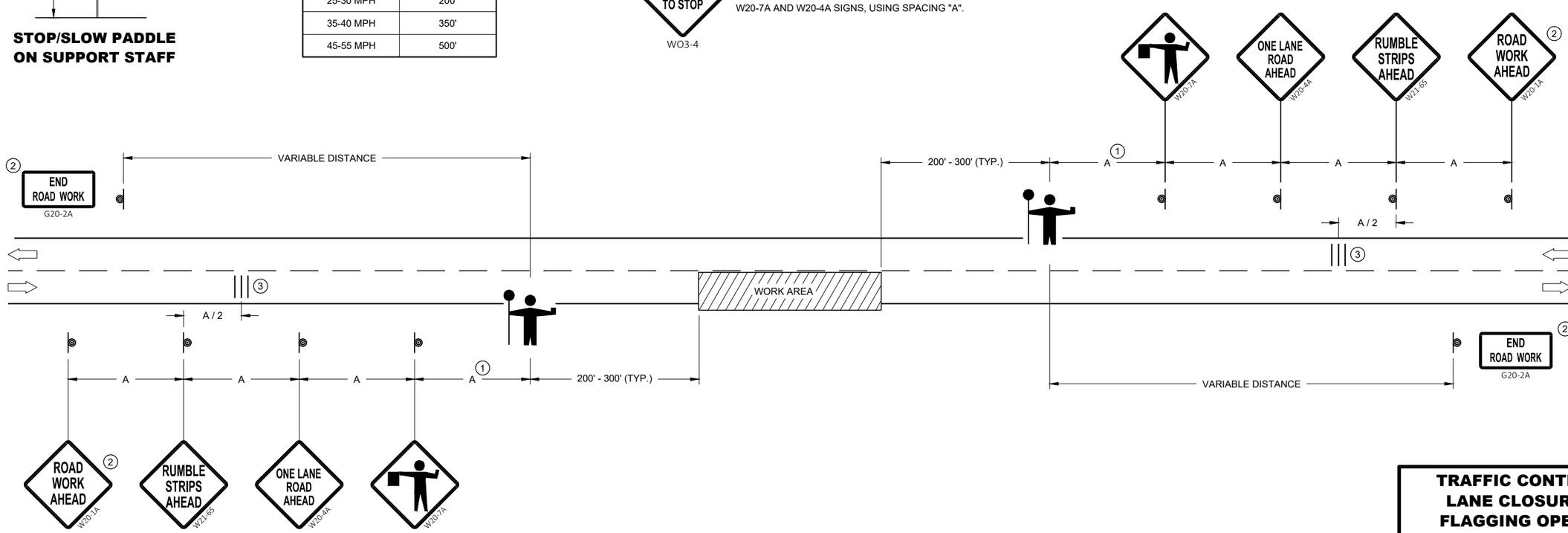

TRAFFIC CONTROL FOR LANE CLOSURE WITH FLAGGING OPERATION

STATE OF WISCONSIN
DEPARTMENT OF TRANSPORTATION

APPROVED
May 2022 — DATE
/S/ Andrew Heidtke — WORK ZONE ENGINEE
FHWA

6
SDD 15C12 - 09a

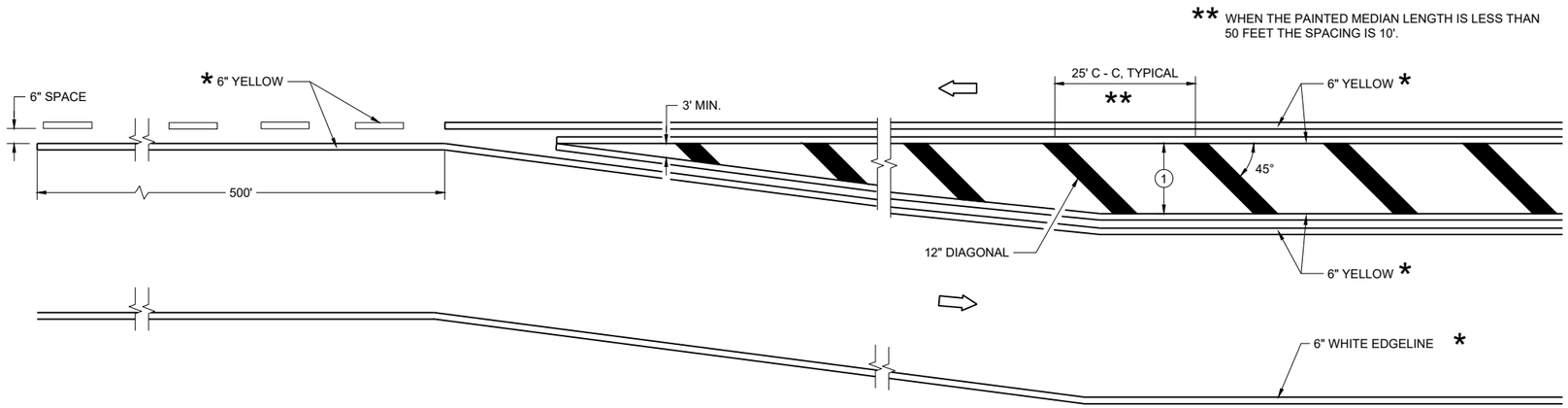

MEDIAN ISLAND DETAIL

GENERAL NOTES

1. DIAGONALS ARE OPTIONAL WHEN PAINTED ISLAND IS LESS THAN 6 FEET AT THE WIDEST POINT. OMIT DIAGONALS IF WIDTH IS LESS THAN 4 FEET.

⇨ DIRECTION OF TRAVEL

*CONFIRM MARKING LINE WIDTH WITH THE MISCELLANEOUS QUANTITIES

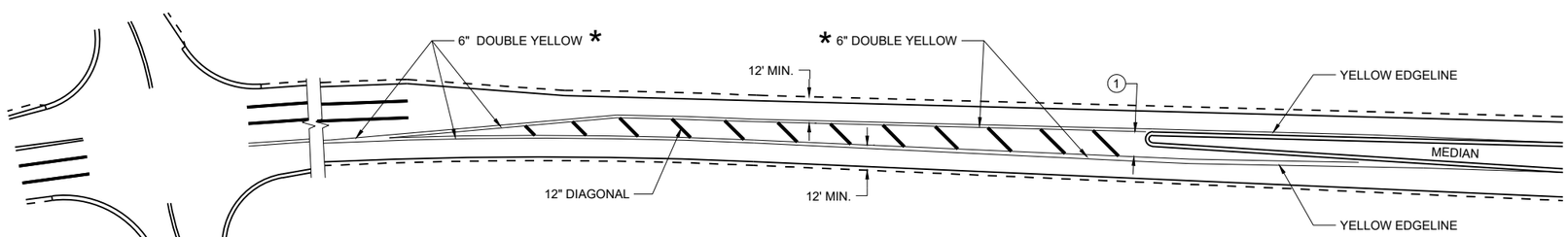

APPROACH MARKINGS FOR OTHER MEDIAN TYPES

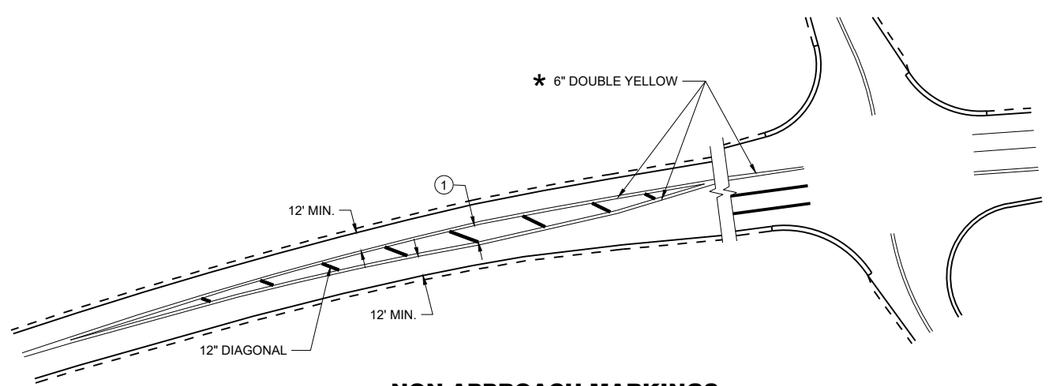

NON-APPROACH MARKINGS

MEDIAN ISLAND PAVEMENT MARKINGS

STATE OF WISCONSIN
DEPARTMENT OF TRANSPORTATION

APPROVED
August 2024 — DATE
/S/ Jeannie Silver — Statewide Pavement Marking Engineer
FHWA

6

SDD 15C18-09a

GENERAL NOTES

STOP SIGN SHALL BE PLACED A MINIMUM OF 6 FEET TO A MAXIMUM OF 50 FEET FROM THE EDGELINE LOCATION.

1. 18-INCH STOP LINES MAY BE DELETED OR ADDED BY THE REGION MARKING ENGINEER BASED ON VISIBILITY AND SIGHT LINES.
2. NO STOP LINE IS REQUIRED IF STOP SIGN IS LESS THAN OR EQUAL TO 40 FEET FROM THE EDGELINE.
3. NO STOP LINE IS REQUIRED IF STOP SIGN IS LESS THAN OR EQUAL TO 30 FEET FROM THE FLANGE LINE EXTENSION.
4. MOVE CLOSER TO THE EDGE OF TRAVEL LINE AS NEEDED FOR VISIBILITY AND SIGHT LINES (NO CLOSER THAN 4 FEET).
5. LADDER BAR CROSSWALKS SHOULD ONLY BE USED FOR MID BLOCK CROSSINGS. USE 2 - 6" TRANSVERSE LINES.
6. POSTED SPEED LIMITS OF 40 MPH OR GREATER USE A MINIMUM WIDTH OF 8' FOR MIDBLOCK CROSSWALKS

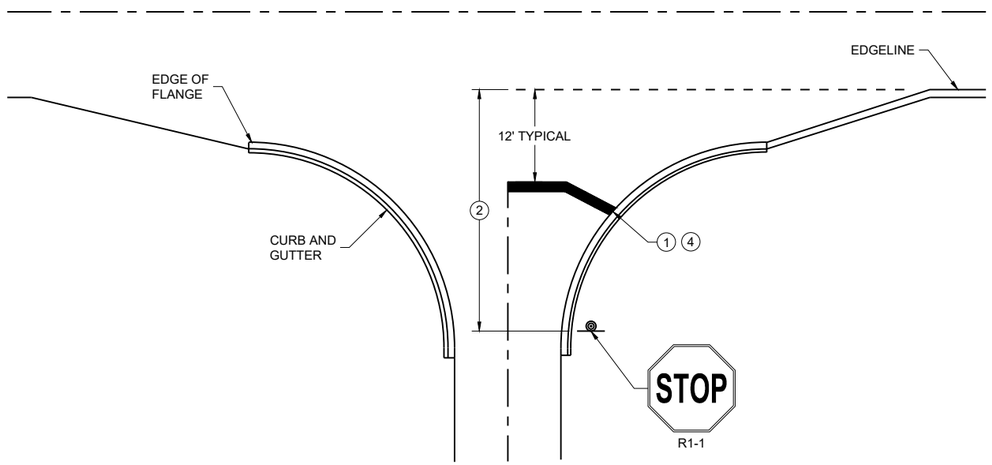

TYPICAL STOP LINE PAVEMENT MARKING WITH CURB AND GUTTER

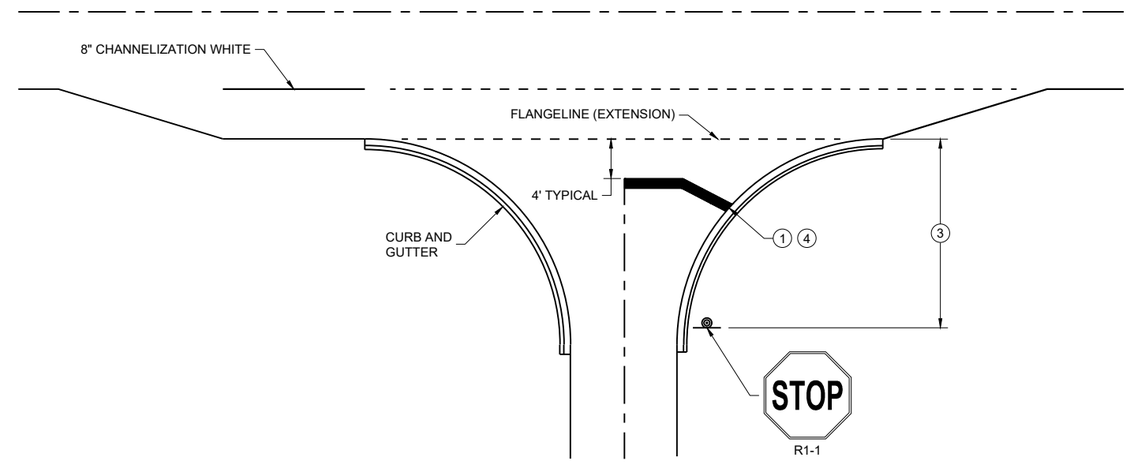

TYPICAL STOP LINE PAVEMENT MARKING FOR SIDE ROADS WITH RIGHT TURN LANE

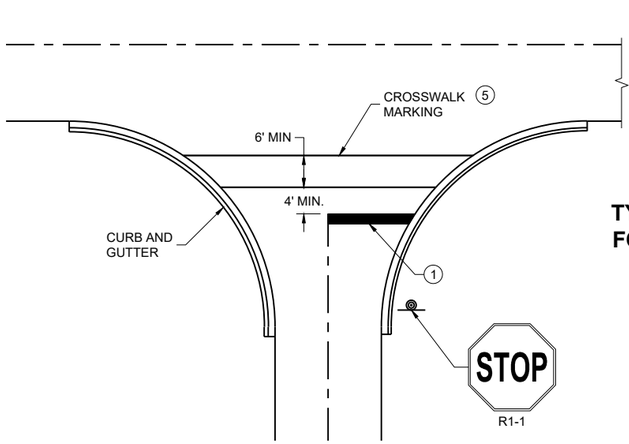

TYPICAL STOP LINE PAVEMENT MARKING FOR SIDE ROADS WITH CROSSWALK MARKING

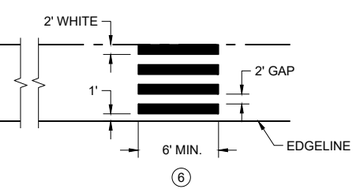

TYPICAL PAVEMENT MARKING FOR MID-BLOCK CROSSWALK 5

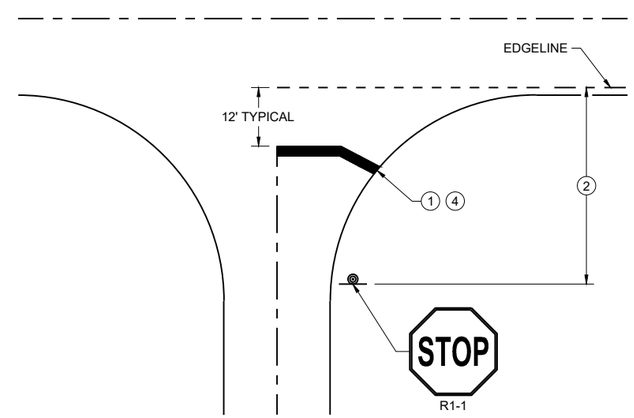

TYPICAL STOP LINE PAVEMENT MARKING WITHOUT CURB AND GUTTER

STOP LINE AND CROSSWALK PAVEMENT MARKING

STATE OF WISCONSIN
DEPARTMENT OF TRANSPORTATION

APPROVED
March 2024 — DATE
/S/ Matthew Rauch — STATE SIGNING AND MARKING ENGINEER

FHWA

6
SDD 15C33-05

GENERAL NOTES

BARRICADE DEVICE SELECTED FROM APPROVED PRODUCT LIST

1. REFLECTIVE SHEETING SHALL FOLLOW THE REQUIREMENTS IN THE APPROVED PRODUCTS LISTING FOR SIGN SHEETING.
2. SHEETING REQUIRED ON MORE THAN 50% OF BARRICADE WIDTH.
3. PLACE SHEETING ON BOTH SIDES OF THE BARRICADE.

* USE THIS DETAIL FOR SHEETING PLACEMENT REFERENCE.

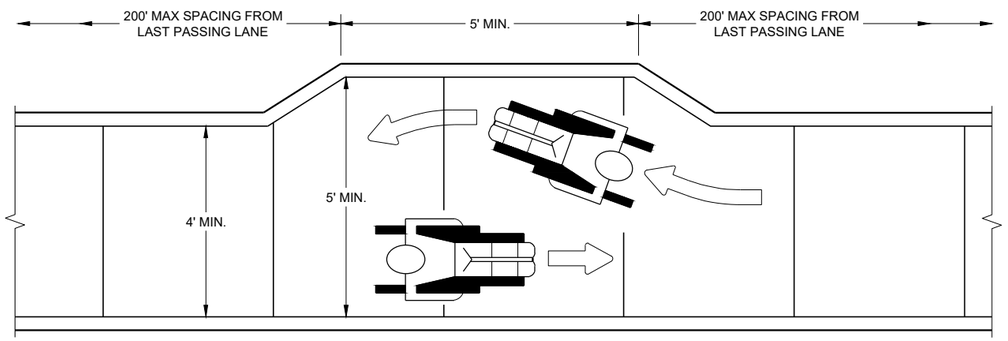

NARROW SIDEWALK PASSING DETAIL

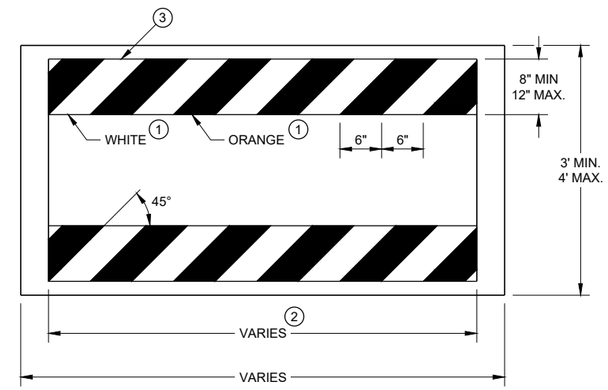

TEMPORARY PEDESTRIAN BARRICADE*

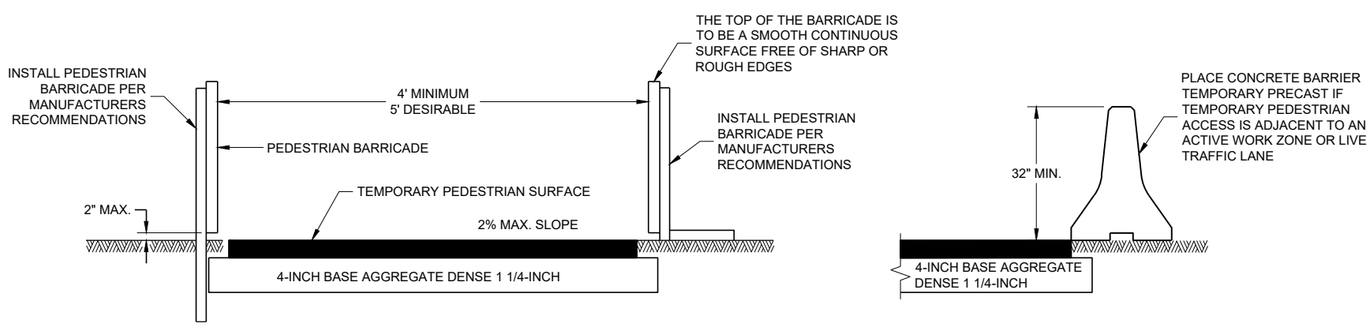

TEMPORARY PEDESTRIAN ACCESS

6

6

SDD 15D30 - 09a

SDD 15D30 - 09a

TRAFFIC CONTROL, PEDESTRIAN ACCOMMODATION

STATE OF WISCONSIN
DEPARTMENT OF TRANSPORTAT

GENERAL NOTES

CURB RAMPS SHALL BE 48" MIN. WIDTH WITH A FIRM, STABLE AND SLIP RESISTANT SURFACE.

CURB RAMPS AND LANDINGS SHALL HAVE A 1:50 (2%) MAX. CROSS-SLOPE.

CLEAR SPACE OF 48" X 48" SHALL BE PROVIDED ABOVE AND BELOW THE CURB RAMP.
LATERAL JOINTS OR GAPS BETWEEN SURFACES SHALL BE LESS THAN ½" WIDTH.

CHANGES BETWEEN SURFACE HEIGHTS SHALL NOT EXCEED ½". LATERAL EDGES MAY BE VERTICAL UP TO ¼" HIGH AND SHALL BE BEVELED AT 1:2 BETWEEN ¼" AND ½".

1. INSTALL CONTRASTING TEMPORARY DETECTABLE WARNING FIELD AT PEDESTRIAN STREET CROSSINGS, AS SHOWN IN THE PLANS.
2. PROTECTIVE EDGING WITH A 2" MIN. HEIGHT SHALL BE INSTALLED WHEN A CURB RAMP OR LANDING PLATFORM HAS A VERTICAL DROP OF 6" OR GREATER OR HAS A SIDE APRON SLOPE STEEPER THAN 1:3 (33%). PROTECTIVE EDGING SHOULD BE CONSIDERED WHEN CURB RAMPS OR LANDING PLATFORMS HAVE A VERTICAL DROP OF 3" OR MORE.
3. DETECTABLE EDGING WITH 6" MIN. HEIGHT AND CONTRASTING COLOR SHALL BE INSTALLED ON ALL CURB RAMP LANDINGS WHERE THE WALKWAY CHANGES DIRECTION (TURNS).
4. DO NOT RESTRICT WATER FLOW IN THE GUTTER SYSTEM.
5. ENSURE CURB RAMP IS OUT OF THE GUTTER PAN.
6. IF ONLY PART OF THE END PANEL OF TEMPORARY PEDESTRIAN BARRICADE PANEL IS NEEDED, EXTEND EXCESS PORTION OF TEMPORARY PEDESTRIAN BARRICADE PANEL HERE.

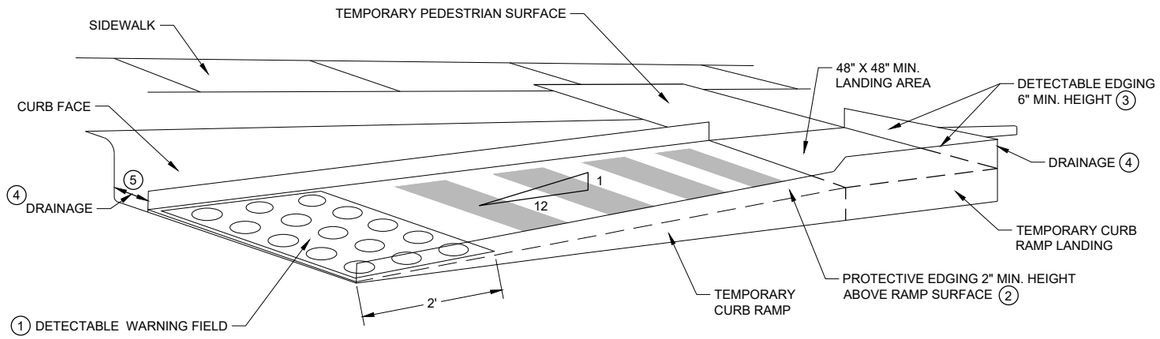

PERSPECTIVE VIEW

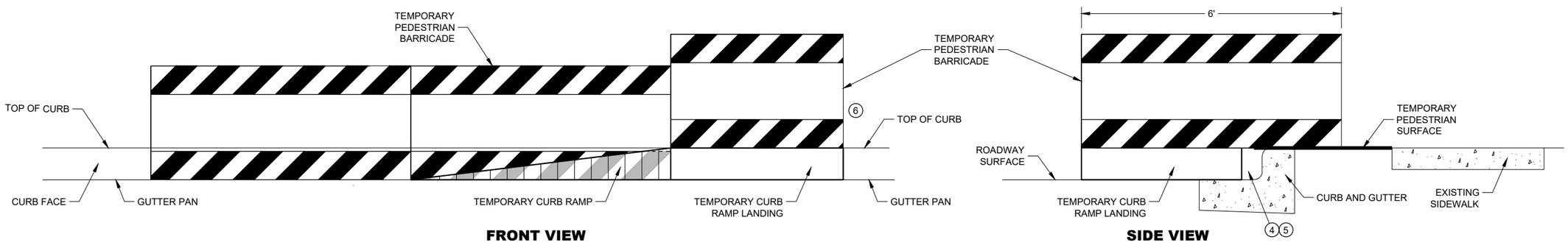

FRONT VIEW **SIDE VIEW**

TEMPORARY CURB RAMP PARALLEL TO CURB

6

6

SDD 15D30 - 09b

SDD 15D30 - 09b

TRAFFIC CONTROL, PEDESTRIAN ACCOMMODATION

STATE OF WISCONSIN
DEPARTMENT OF TRANSPORTAT

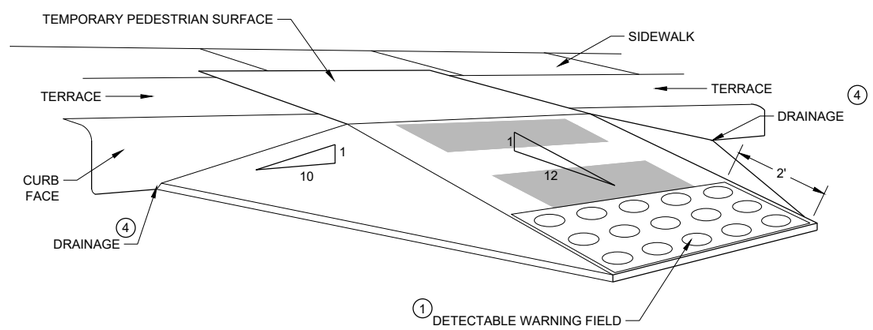

WITH SIDE APRON 5

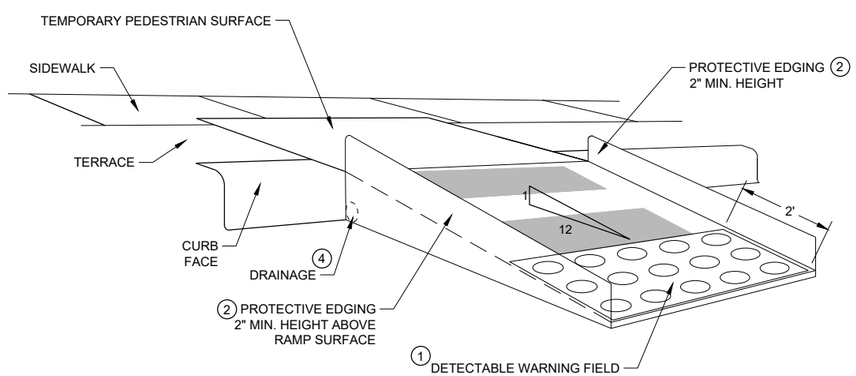

WITH PROTECTIVE EDGE

TEMPORARY CURB RAMP PERPENDICULAR TO CURB

GENERAL NOTES

CURB RAMPS SHALL BE 48" MINIMUM WIDTH WITH A FIRM, STABLE AND SLIP RESISTANT SURFACE.

ALTERNATE SIDEWALK WORK BETWEEN LEFT AND RIGHT SIDE OF ROADWAY TO MAINTAIN PEDESTRIAN ACCESS.

CURB RAMPS AND LANDINGS SHALL HAVE A 1:50 (2%) MAX. CROSS-SLOPE.

CLEAR SPACE OF 48" X 48" SHALL BE PROVIDED ABOVE AND BELOW THE CURB RAMP.

LATERAL JOINTS OR GAPS BETWEEN SURFACES SHALL BE LESS THAN ½" WIDTH.

CHANGES BETWEEN SURFACE HEIGHTS SHALL NOT EXCEED ½". LATERAL EDGES MAY BE VERTICAL UP TO ¼" HIGH AND SHALL BE BEVELED AT 1:2 BETWEEN ¼" AND ½".

1. INSTALL CONTRASTING TEMPORARY DETECTABLE WARNING FIELD AT PEDESTRIAN STREET CROSSINGS, AS SHOWN IN THE PLANS
2. PROTECTIVE EDGING WITH A 2" MIN. HEIGHT SHALL BE INSTALLED WHEN A CURB RAMP OR LANDING PLATFORM HAS A VERTICAL DROP OF 6" OR GREATER OR HAS A SIDE APRON SLOPE STEEPER THAN 1:3 (33%). PROTECTIVE EDGING SHOULD BE CONSIDERED WHEN CURB RAMPS OR LANDING PLATFORMS HAVE A VERTICAL DROP OF 3" OR MORE.
3. DETECTABLE EDGING WITH 6" MIN. HEIGHT AND CONTRASTING COLOR SHALL BE INSTALLED ON ALL CURB RAMP LANDINGS WHERE THE WALKWAY CHANGES DIRECTION (TURNS).
4. DO NOT RESTRICT WATER FLOW IN THE GUTTER SYSTEM.
5. CAN ONLY BE USED FOR RAMPS WITH 6" OR LESS OF VERTICAL CHANGE.

TRAFFIC CONTROL, PEDESTRIAN ACCOMMODATION

STATE OF WISCONSIN
DEPARTMENT OF TRANSPORTAT

6

SDD 15D30 - 09c

GENERAL NOTES

BARRICADE DEVICE SELECTED FROM APPROVED PRODUCT LIST

1. REFLECTIVE SHEETING SHALL FOLLOW THE REQUIREMENTS IN THE APPROVED PRODUCTS LISTING FOR SIGN SHEETING.
2. SHEETING REQUIRED ON MORE THAN 50% OF BARRICADE WIDTH.
3. PLACE SHEETING ON BOTH SIDES OF THE BARRICADE.

* USE THIS DETAIL FOR SHEETING PLACEMENT REFERENCE.

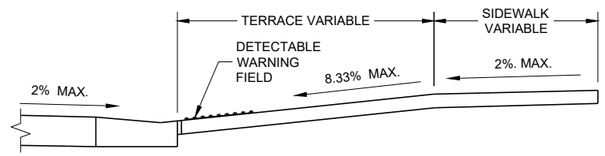

SECTION A - A

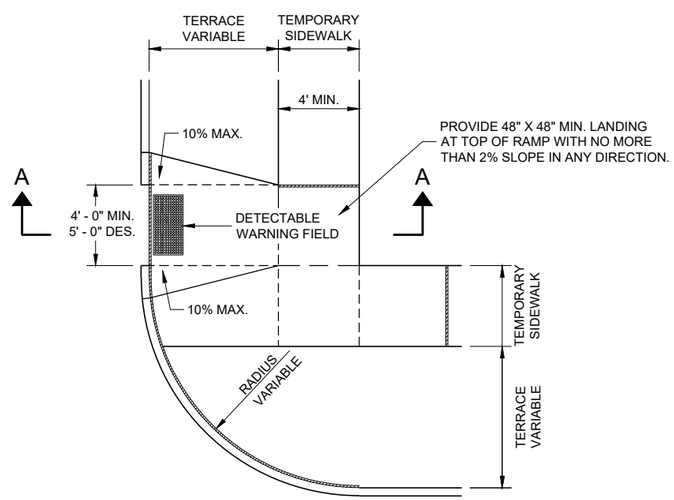

PLAN VIEW

TEMPORARY TYPE 3 RAMP

(OUTSIDE OF CROSSWALK AREA)

6

6

SDD 15D30-09d

SDD 15D30-09d

TRAFFIC CONTROL, PEDESTRIAN ACCOMMODATION

STATE OF WISCONSIN
DEPARTMENT OF TRANSPORTATION

APPROVED

May 2023 — DATE

/S/ Andrew Heidtke — WORK ZONE ENGINEE

FHWA

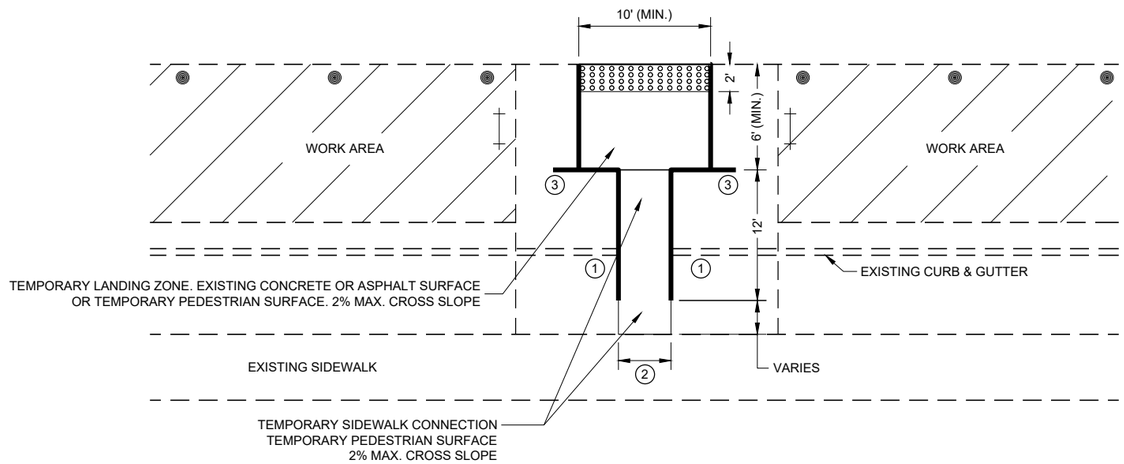

PLAN VIEW

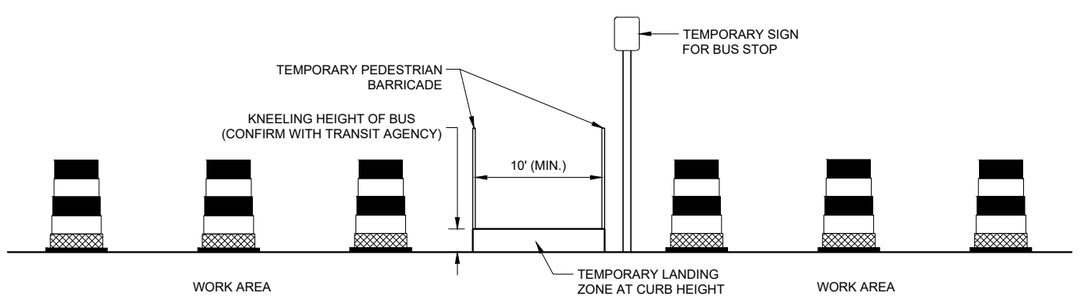

PROFILE VIEW

TEMPORARY BUS STOP PAD

GENERAL NOTES

TYPICAL TEMPORARY PEDESTRIAN BARRICADE PANEL IS 6 FEET LONG.

NOTIFY THE BUS COMPANY 7 DAYS IN ADVANCE OF THE BUS STOP RELOCATION.

PROTECTIVE EDGING WITH A 2" MIN. HEIGHT SHALL BE INSTALLED WHEN A CURB RAMP OR LANDING PLATFORM HAS A VERTICAL DROP OF 6" OR GREATER OR HAS A SIDE APRON SLOPE STEEPER THAN 1:3 (33%). PROTECTIVE EDGING SHOULD BE CONSIDERED WHEN CURB RAMPS OR LANDING PLATFORMS HAVE A VERTICAL DROP OF 3" OR MORE.

DETECTABLE EDGING WITH 6" MIN. HEIGHT AND CONTRASTING COLOR SHALL BE INSTALLED ON ALL CURB RAMP LANDINGS WHERE THE WALKWAY CHANGES DIRECTION (TURNS).

LATERAL JOINTS OR GAPS BETWEEN SURFACES SHALL BE LESS THAN ½" WIDTH.

CHANGES BETWEEN SURFACE HEIGHTS SHALL NOT EXCEED ½". LATERAL EDGES MAY BE VERTICAL UP TO ¼" HIGH AND SHALL BE BEVELED AT 1:2 BETWEEN ¼" AND ½".

CURB RAMPS AND LANDINGS SHALL HAVE A 1:50 (2%) MAX. CROSS-SLOPE.

1. DO NOT RESTRICT WATER FLOW IN THE GUTTER SYSTEM.
2. 5' WIDE MIN. WITH TEMPORARY PEDESTRIAN BARRICADE, 10' WIDE MIN. WITHOUT TEMPORARY PEDESTRIAN BARRICADE.
3. PLACE EXCESS PORTION OF TEMPORARY PEDESTRIAN BARRICADE INTO THIS SPACE.

LEGEND

- TRAFFIC CONTROL DRUM
- TYPE III BARRICADE
- TEMPORARY PEDESTRIAN BARRICADE
- TEMPORARY DETECTABLE WARNING FIELD
- WORK AREA

6

SDD 15D30 - 09e

TRAFFIC CONTROL, PEDESTRIAN ACCOMMODATION

STATE OF WISCONSIN
DEPARTMENT OF TRANSPORTAT

6

SDD 15D30 - 09e

LEGEND

- SIGN ON PERMANENT SUPPORT
- SIGN ON TEMPORARY SUPPORT
- UNDER PEDESTRIAN TRAFFIC
- WORK AREA
- TEMPORARY PEDESTRIAN BARRICADE
- DIRECTION OF TRAFFIC

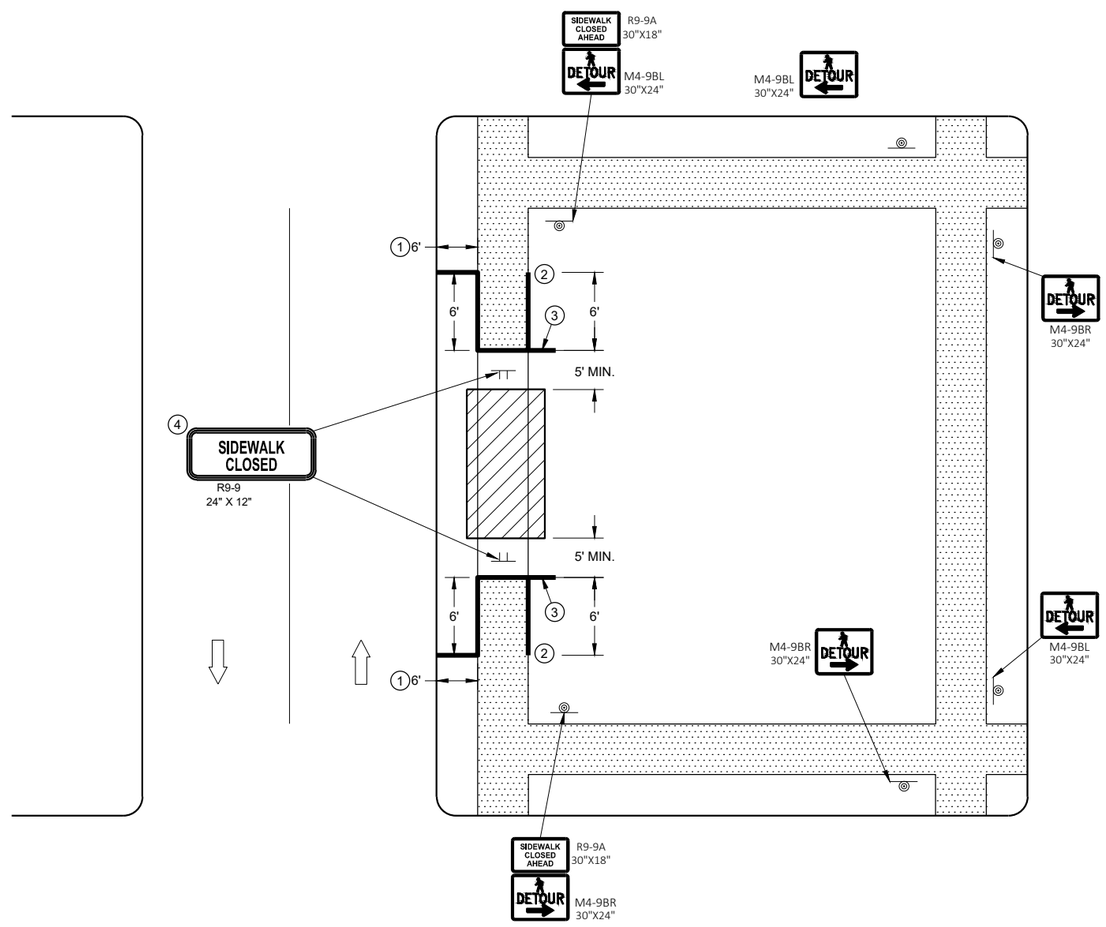

SIDEWALK DETOUR, SIDEWALK ONLY ON ONE SIDE

GENERAL NOTES

SIGN LAYOUTS SHALL BE IN ACCORDANCE WITH THE WISCONSIN STANDARD SIGN PLATES.

WHERE TEMPORARY BARRICADE RUNS PARALLEL ALONG SIDEWALK, PLACE THE FACE OF THE BARRICADE AT THE EDGE OF THE SIDEWALK.

SIGNS THAT REMAIN IN PLACE LESS THAN SEVEN CONTINUOUS DAYS AND NIGHTS MAY BE MOUNTED ON PORTABLE SUPPORTS.

PLACE TEMPORARY PEDESTRIAN BARRICADE TO FIT FIELD CONDITIONS, AVOIDING CONFLICTS WITH DRIVEWAYS AND OTHER EXISTING FEATURES.

1. IF TERRACE IS LESS THAN 6 FEET WIDE, OMIT TEMPORARY PEDESTRIAN BARRICADE FROM THE SIDEWALK TO THE CURB.
2. PLACE BARRICADE CLOSURE SO THAT THE TEMPORARY PEDESTRIAN BARRICADE END IS AT THE LAST OPEN SIDEWALK ACCESS TO RESIDENCES OR BUSINESSES BEFORE THE SIDEWALK CLOSURE.
3. IF TEMPORARY PEDESTRIAN BARRICADE PANEL IS WIDER THAN THE SIDEWALK WIDTH, THE PORTION OF EXCESS PANEL SHOULD EXTEND INTO THE TERRACE.
4. MOUNTING HEIGHT OF 5 FEET FROM THE SURFACE TO THE BOTTOM OF SIGN.

TRAFFIC CONTROL, PEDESTRIAN ACCOMMODATION

STATE OF WISCONSIN
DEPARTMENT OF TRANSPORTAT

6

SDD 15D30 - 09f

LEGEND

- SIGN ON TEMPORARY SUPPORT
- WORK AREA
- UNDER PEDESTRIAN TRAFFIC
- TEMPORARY PEDESTRIAN SURFACE
- TEMPORARY PEDESTRIAN BARRICADE
- OPTIONAL TEMPORARY PEDESTRIAN BARRICADE
- DIRECTION OF TRAFFIC

GENERAL NOTES

TYPICAL TEMPORARY PEDESTRIAN BARRICADE PANEL IS 6 FEET LONG.

SIGN LAYOUTS SHALL BE IN ACCORDANCE WITH THE WISCONSIN STANDARD SIGN PLATES.

WHERE TEMPORARY BARRICADE RUNS PARALLEL ALONG SIDEWALK, PLACE THE FACE OF THE BARRICADE AT THE EDGE OF THE SIDEWALK.

SIGNS THAT REMAIN IN PLACE LESS THAN SEVEN CONTINUOUS DAYS AND NIGHTS MAY BE MOUNTED ON PORTABLE SUPPORTS.

1. USE TEMPORARY PEDESTRIAN BARRICADE TO SEPARATE PEDESTRIANS FROM DROP OFFS OR FOR ADDITIONAL PEDESTRIAN CHANNELIZATION.
2. IF TEMPORARY PEDESTRIAN BARRICADE PANEL IS WIDER THAN THE SIDEWALK WIDTH, THE PORTION OF EXCESS PANEL SHOULD EXTEND INTO THE TERRACE.
3. MOUNTING HEIGHT OF 5 FEET FROM THE SURFACE TO THE BOTTOM OF SIGN.

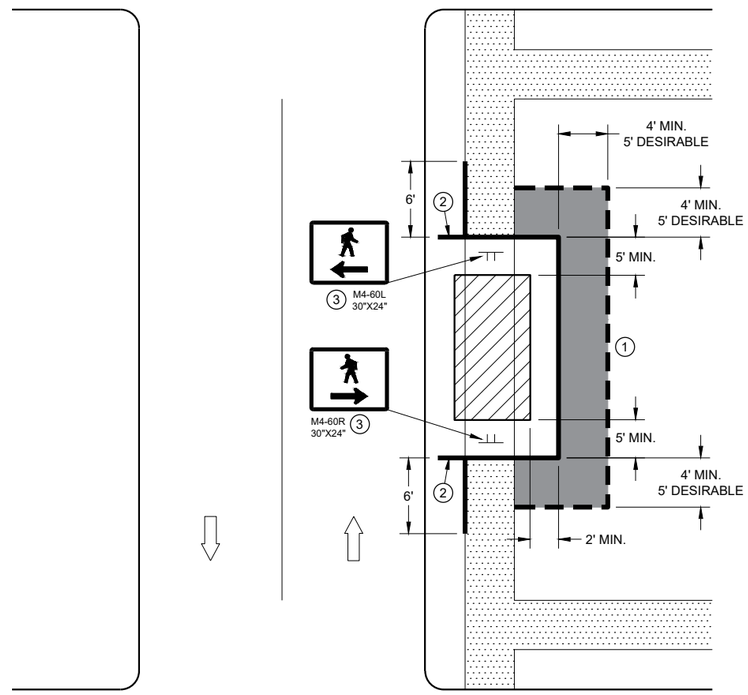

SIDEWALK DIVERSION
SINGLE SIDE

6

SDD 15D30 - 09g

TRAFFIC CONTROL,
PEDESTRIAN ACCOMMODATION

STATE OF WISCONSIN
DEPARTMENT OF TRANSPORTATION

6

SDD 15D30 - 09g

LEGEND

- SIGN ON TEMPORARY SUPPORT
- TRAFFIC CONTROL DRUM
- WORK AREA
- UNDER PEDESTRIAN TRAFFIC
- TEMPORARY CURB RAMP
- TEMPORARY PEDESTRIAN SURFACE "A"
- TEMPORARY PEDESTRIAN SURFACE "B"
- TEMPORARY PEDESTRIAN BARRICADE
- DIRECTION OF TRAFFIC

GENERAL NOTES

TYPICAL TEMPORARY PEDESTRIAN BARRICADE PANEL IS 6 FEET LONG.

SIGN LAYOUTS SHALL BE IN ACCORDANCE WITH THE WISCONSIN STANDARD SIGN PLATES.

WHERE TEMPORARY BARRICADE RUNS PARALLEL ALONG SIDEWALK, PLACE THE FACE OF THE BARRICADE AT THE EDGE OF THE SIDEWALK.

1. SHOULDER OR LANE CLOSURE ADVANCE WARNING AND BUFFER SPACE REQUIRED.
2. PLACE EXCESS PORTION OF TEMPORARY PEDESTRIAN BARRICADE PANEL PAST THE SIDEWALK ON THE SIDE AWAY FROM THE ROAD.
3. MOUNTING HEIGHT OF 5 FEET FROM THE SURFACE TO THE BOTTOM OF SIGN.
4. USE EXISTING PAVEMENT SURFACE. IF EXISTING PAVEMENT SURACE HAS BEEN REMOVED, USE A TEMPORARY PEDESTRIAN SURFACE.

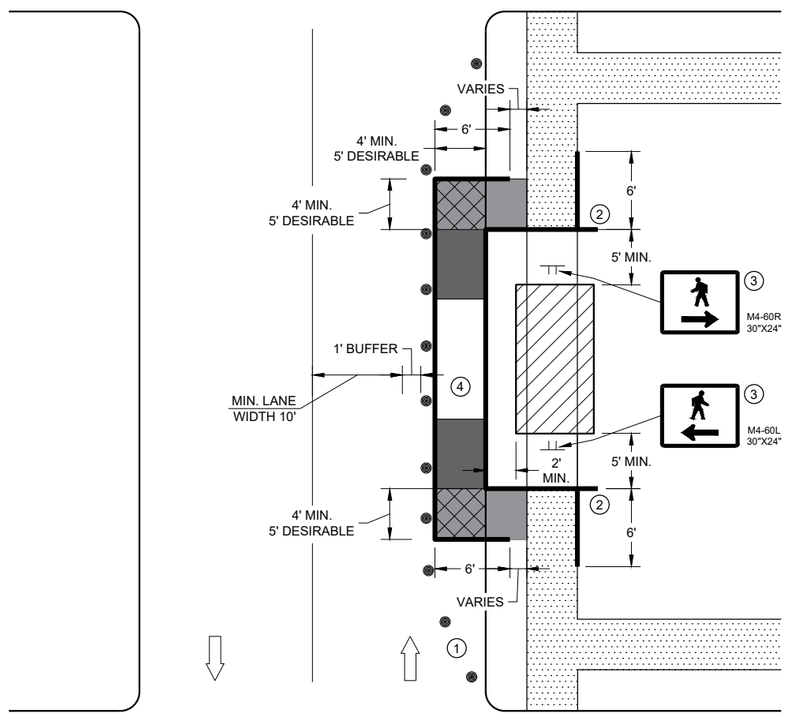

SIDEWALK DIVERSION, SINGLE SIDE

TRAFFIC CONTROL, PEDESTRIAN ACCOMMODATION

STATE OF WISCONSIN
DEPARTMENT OF TRANSPORTAT

6

SDD 15D30 - 09h

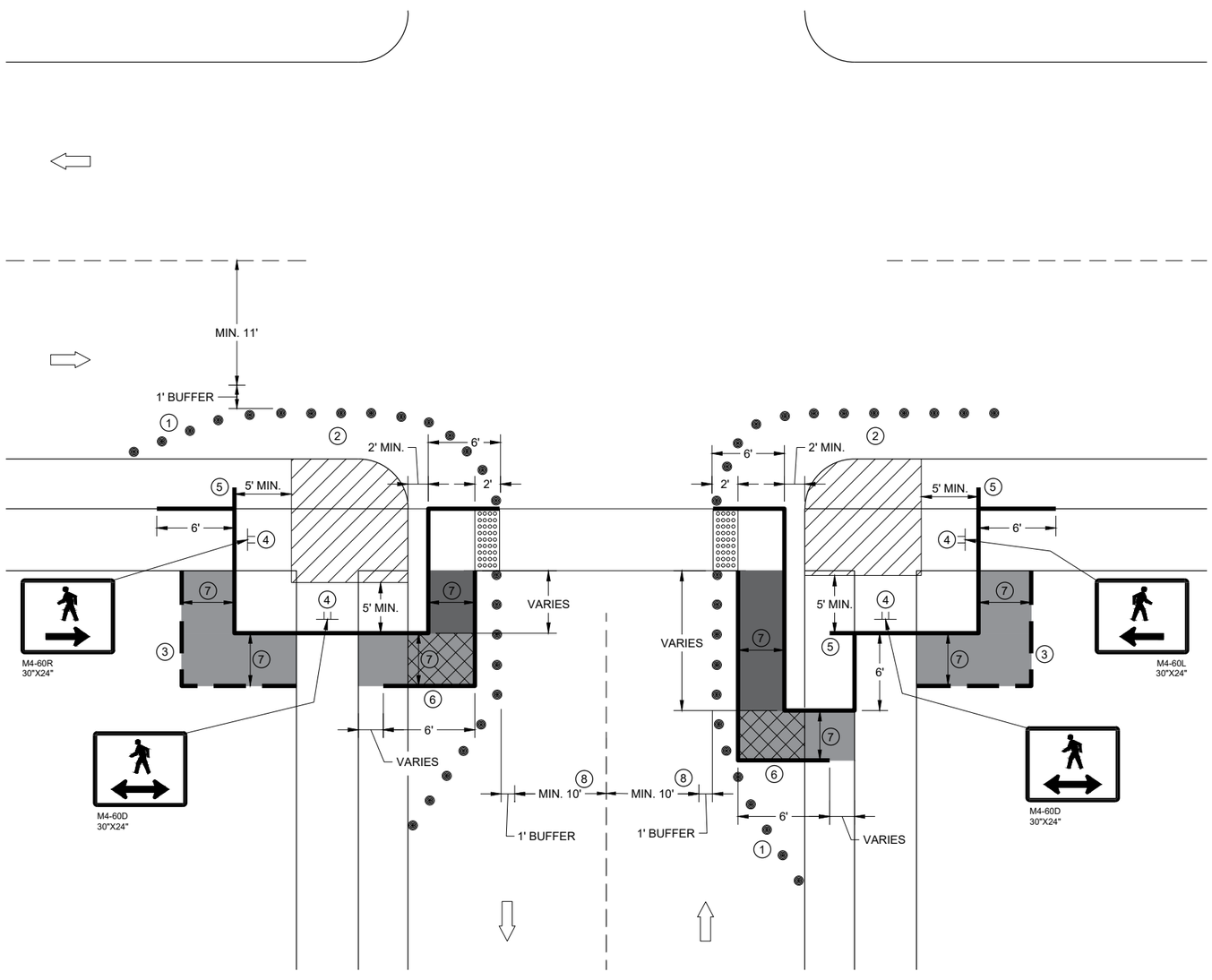

CURB RAMP PEDESTRIAN TRAFFIC CONTROL
SIDEWALK ON SINGLE SIDE

GENERAL NOTES

IF PEDESTRIAN PUSH BUTTONS ARE PRESENT ON THE EXISTING FACILITY, ENSURE THEY ARE MAINTAINED/ACCESSIBLE FOR PEDESTRIAN USE THROUGHOUT THE TEMPORARY PEDESTRIAN ACCOMMODATIONS.

SIGN LAYOUTS SHALL BE IN ACCORDANCE WITH THE WISCONSIN STANDARD SIGN PLATES.

TYPICAL TEMPORARY PEDESTRIAN BARRICADE PANEL IS 6 FEET LONG

WHEN TEMPORARY PEDESTRIAN BARRICADE RUNS PARALLEL ALONG THE SIDEWALK, PLACE THE FACE OF THE BARRICADE AT THE EDGE OF THE SIDEWALK.

1. SHOULDER OR LANE CLOSURE ADVANCE WARNING AND PROPER BUFFER SPACE REQUIRED.
2. PROVIDE ADEQUATE SPACE FOR CONTRACTOR OPERATIONS
3. USE TEMPORARY PEDESTRIAN BARRICADE TO SEPARATE PEDESTRIANS FROM DROP OFFS OR FOR ADDITIONAL PEDESTRIAN CHANNELIZATION.
4. MOUNTING HEIGHT OF 5 FEET FROM SIDEWALK SURFACE TO BOTTOM OF SIGN.
5. PLACE EXCESS PORTION OF TEMPORARY PEDESTRIAN BARRICADE PANEL IN THE SIDEWALK TERRACE.
6. IF TEMPORARY PEDESTRIAN BARRICADE DOES NOT REACH THE FACE OF THE CURB, USE AN ADDITIONAL PANEL AND EXTEND INTO THE TERRACE.
7. 4 FEET MINIMUM, 5 FEET DESIRABLE
8. IF MINIMUM LANE WIDTHS CAN'T BE ATTAINED, CURB RAMPS MAY NEED TO BE CONSTRUCTED AT SEPARATE TIMES.

LEGEND

- SIGN ON TEMPORARY SUPPORT
- TRAFFIC CONTROL DRUM
- WORK AREA
- TEMPORARY CURB RAMP
- TEMPORARY PEDESTRIAN SURFACE "A"
- TEMPORARY PEDESTRIAN SURFACE "B"
- TEMPORARY DETECTABLE WARNING FIELD
- TEMPORARY PEDESTRIAN BARRICADE
- OPTIONAL TEMPORARY PEDESTRIAN BARRICADE
- DIRECTION OF TRAFFIC

TRAFFIC CONTROL, PEDESTRIAN ACCOMMODATION

STATE OF WISCONSIN
DEPARTMENT OF TRANSPORTATION

6
SDD 15D30 - 09i

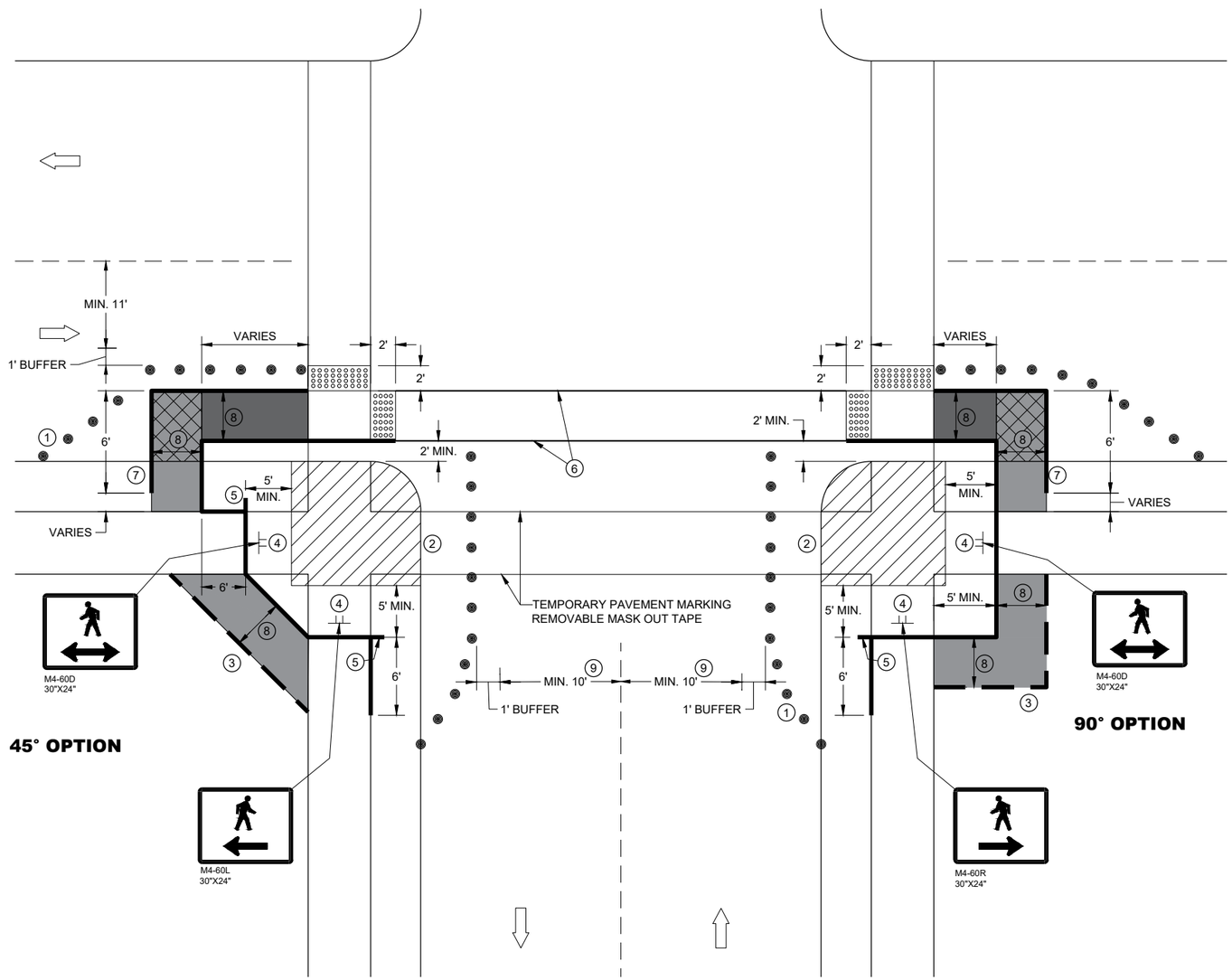

CURB RAMP PEDESTRIAN TRAFFIC CONTROL

GENERAL NOTES

IF PEDESTRIAN PUSH BUTTONS ARE PRESENT ON THE EXISTING FACILITY, ENSURE THEY ARE MAINTAINED/ACCESSIBLE FOR PEDESTRIAN USE THROUGHOUT THE TEMPORARY PEDESTRIAN ACCOMMODATIONS.

SIGN LAYOUTS SHALL BE IN ACCORDANCE WITH THE WISCONSIN STANDARD SIGN PLATES.

TYPICAL TEMPORARY PEDESTRIAN BARRICADE PANEL IS 6 FEET LONG

WHEN TEMPORARY PEDESTRIAN BARRICADE RUNS PARALLEL ALONG THE SIDEWALK, PLACE THE FACE OF THE BARRICADE AT THE EDGE OF THE SIDEWALK.

1. SHOULDER OR LANE CLOSURE ADVANCE WARNING AND PROPER BUFFER SPACE REQUIRED.
2. PROVIDE ADEQUATE SPACE FOR CONTRACTOR OPERATIONS
3. USE TEMPORARY PEDESTRIAN BARRICADE TO SEPARATE PEDESTRIANS FROM DROP OFFS OR FOR ADDITIONAL PEDESTRIAN CHANNELIZATION.
4. MOUNTING HEIGHT OF 5 FEET FROM SIDEWALK SURFACE TO BOTTOM OF SIGN.
5. PLACE EXCESS PORTION OF TEMPORARY PEDESTRIAN BARRICADE PANEL IN THE SIDEWALK TERRACE.
6. WHITE 6" TEMPORARY PAVEMENT MARKING
7. IF TEMPORARY PEDESTRIAN BARRICADE DOES NOT REACH THE FACE OF THE CURB, USE AN ADDITIONAL PANEL AND EXTEND INTO THE TERRACE.
8. 4 FEET MINIMUM, 5 FEET DESIRABLE
9. IF MINIMUM LANE WIDTHS CAN'T BE ATTAINED, CURB RAMPS MAY NEED TO BE CONSTRUCTED AT SEPARATE TIMES.

LEGEND

- SIGN ON TEMPORARY SUPPORT
- TRAFFIC CONTROL DRUM
- WORK AREA
- TEMPORARY CURB RAMP
- TEMPORARY PEDESTRIAN SURFACE "A"
- TEMPORARY PEDESTRIAN SURFACE "B"
- TEMPORARY DETECTABLE WARNING FIELD
- TEMPORARY PEDESTRIAN BARRICADE
- OPTIONAL TEMPORARY PEDESTRIAN BARRICADE
- DIRECTION OF TRAFFIC

TRAFFIC CONTROL, PEDESTRIAN ACCOMMODATION

STATE OF WISCONSIN
DEPARTMENT OF TRANSPORTAT

6
SDD 15D30 - 09j

LEGEND

- SIGN ON PERMANENT SUPPORT
- SIGN ON TEMPORARY SUPPORT
- UNDER PEDESTRIAN TRAFFIC
- WORK AREA
- TEMPORARY PEDESTRIAN BARRICADE
- DIRECTION OF TRAFFIC

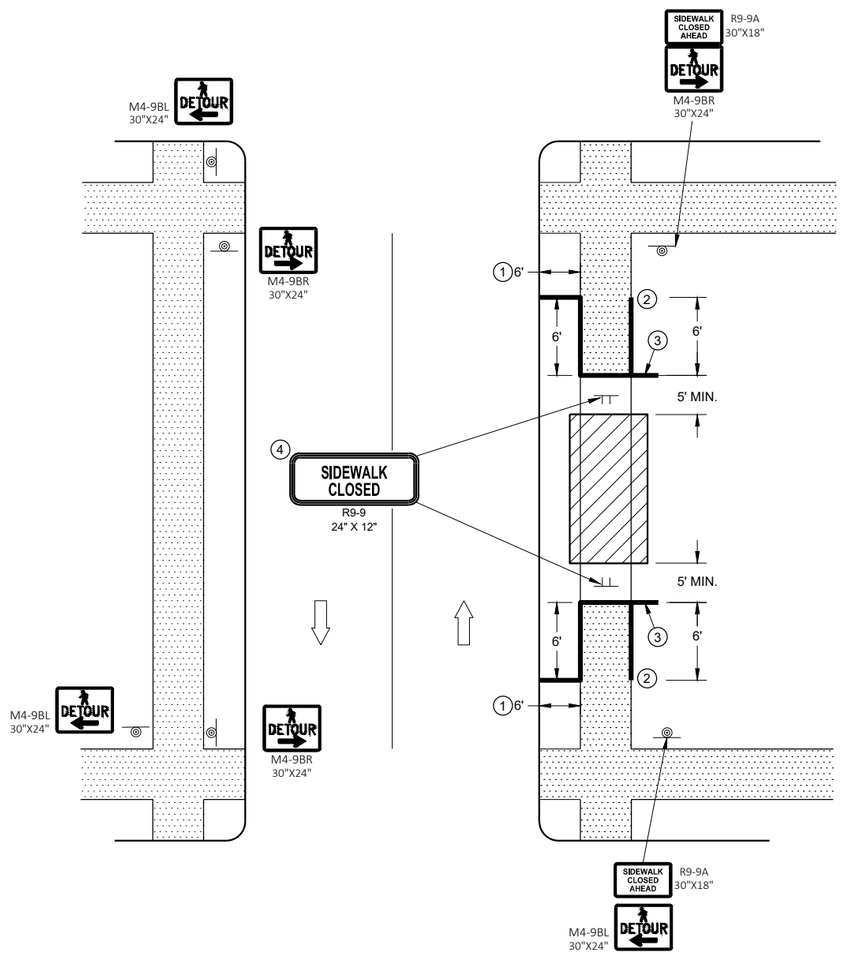

SIDEWALK DETOUR, SIDEWALK ON BOTH SIDES

GENERAL NOTES

SIGN LAYOUTS SHALL BE IN ACCORDANCE WITH THE WISCONSIN STANDARD SIGN PLATES.

WHERE TEMPORARY BARRICADE RUNS PARALLEL ALONG SIDEWALK, PLACE THE FACE OF THE BARRICADE AT THE EDGE OF THE SIDEWALK.

SIGNS THAT REMAIN IN PLACE LESS THAN SEVEN CONTINUOUS DAYS AND NIGHTS MAY BE MOUNTED ON PORTABLE SUPPORTS.

PLACE TEMPORARY PEDESTRIAN BARRICADE TO FIT FIELD CONDITIONS, AVOIDING CONFLICT WITH DRIVEWAYS AND OTHER EXISTING FEATURES.

1. IF TERRACE IS LESS THAN 6 FEET WIDE, OMIT TEMPORARY PEDESTRIAN BARRICADE FROM THE SIDEWALK TO THE CURB.
2. PLACE BARRICADE CLOSURE SO THAT THE TEMPORARY PEDESTRIAN BARRICADE END IS AT THE LAST OPEN SIDEWALK ACCESS TO RESIDENCES OR BUSINESSES BEFORE THE SIDEWALK CLOSURE.
3. IF TEMPORARY PEDESTRIAN BARRICADE PANEL IS WIDER THAN THE SIDEWALK WIDTH, THE PORTION OF EXCESS PANEL SHOULD EXTEND INTO THE TERRACE.
4. MOUNTING HEIGHT OF 5 FEET FROM THE SURFACE TO THE BOTTOM OF SIGN.

TRAFFIC CONTROL, PEDESTRIAN ACCOMMODATION

STATE OF WISCONSIN
DEPARTMENT OF TRANSPORTAT

6

SDD 15D30 - 09k

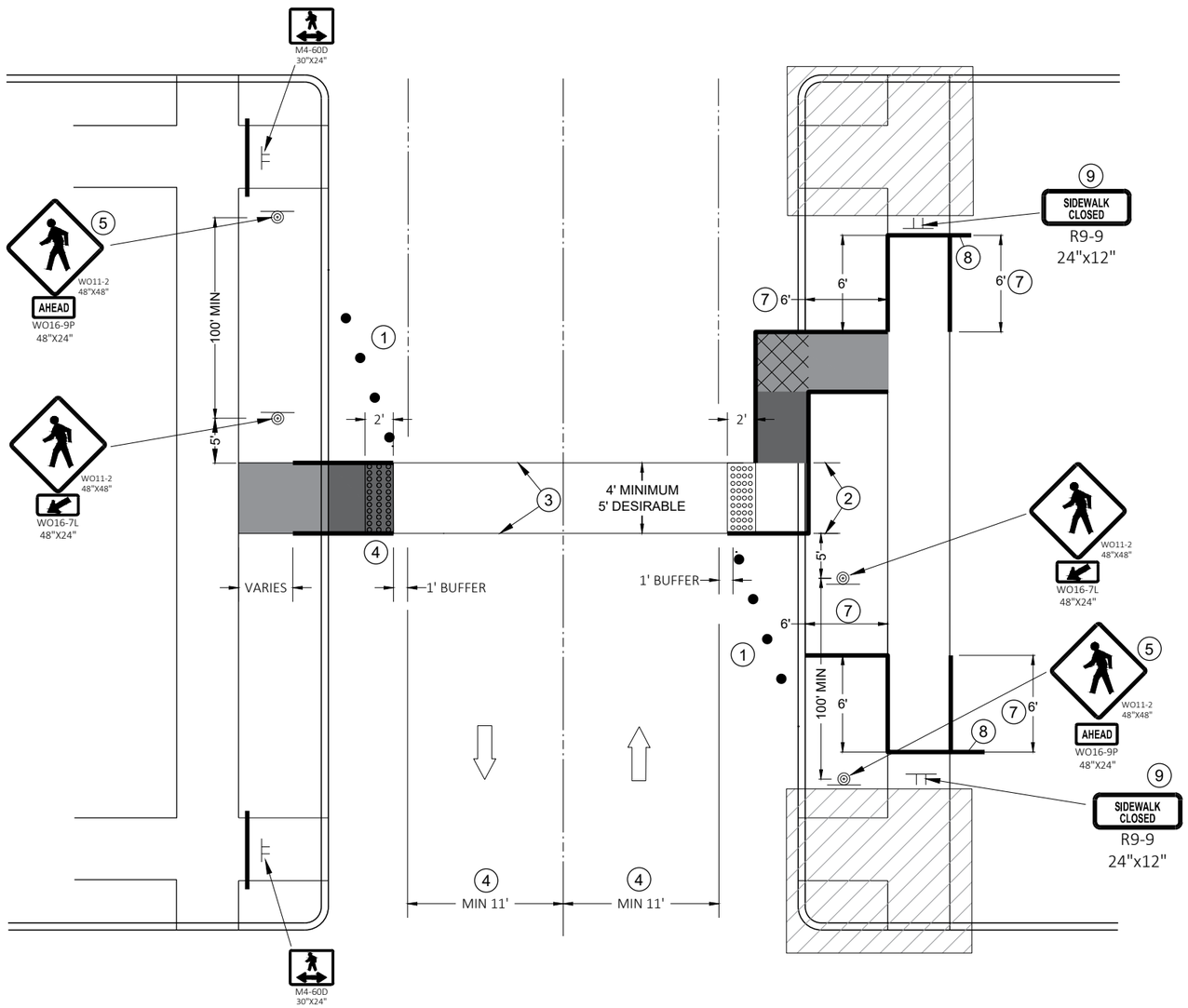

TEMPORARY PEDESTRIAN CROSSING

GENERAL NOTES

TYPICAL TEMPORARY PEDESTRIAN BARRICADE PANEL IS 6 FEET LONG.

SIGN LAYOUTS SHALL BE IN ACCORDANCE WITH THE WISCONSIN STANDARD SIGN PLATES.

SEE OTHER PEDESTRIAN ACCOMMODATION DETAILS FOR SIGNING AND DEVICES FOR DIFFERENT PEDESTRIAN FACILITIES CLOSURES.

1. SHOULDER OR LANE CLOSURE ADVANCED WARNING AND PROPER BUFFER SPACE REQUIRED.
2. 4 FEET MINIMUM, 5 FEET DESIRABLE.
3. WHITE 6" TEMPORARY PAVEMENT MARKING.
4. IF MINIMUM LANE WIDTHS CAN'T BE ATTAINED, PERPENDICULAR CURB RAMPS MAY NEED TO BE UTILIZED.
5. IF MINIMUM 100' SPACING FROM THE MID-BLOCK CROSSING CANNOT BE ATTAINED BEFORE THE INTERSECTION, REMOVE THIS SIGN ASSEMBLY.
6. IF TERRACE IS LESS THAN 6 FEET WIDE, OMIT TEMPORARY PEDESTRIAN BARRICADE FROM THE SIDEWALK TO THE CURB.
7. PLACE BARRICADE CLOSURE SO THAT THE TEMPORARY PEDESTRIAN BARRICADE END IS AT THE LAST OPEN SIDEWALK ACCESS TO RESIDENCES OR BUSINESSES BEFORE THE SIDEWALK CLOSURE.
8. IF TEMPORARY PEDESTRIAN BARRICADE PANEL IS WIDER THAN THE SIDEWALK WIDTH, THE PORTION OF THE EXCESS PANEL SHOULD EXTEND INTO THE TERRACE.
9. MOUNTING HEIGHT OF 5 FEET FROM THE SURFACE TO THE BOTTOM OF THE SIGN.

LEGEND

- TRAFFIC CONTROL DRUM
- SIGN ON TEMPORARY SUPPORT
- TEMPORARY CURB RAMP
- TEMPORARY DETECTABLE WARNING FIELD
- TEMPORARY PEDESTRIAN SURFACE "A"
- TEMPORARY PEDESTRIAN SURFACE "B"
- WORK AREA
- TEMPORARY PEDESTRIAN BARRICADE
- DIRECTION OF TRAFFIC

TRAFFIC CONTROL, PEDESTRIAN ACCOMMODATION

STATE OF WISCONSIN
DEPARTMENT OF TRANSPORTAT

6

SDD 15D30 - 09L

URBAN AREA

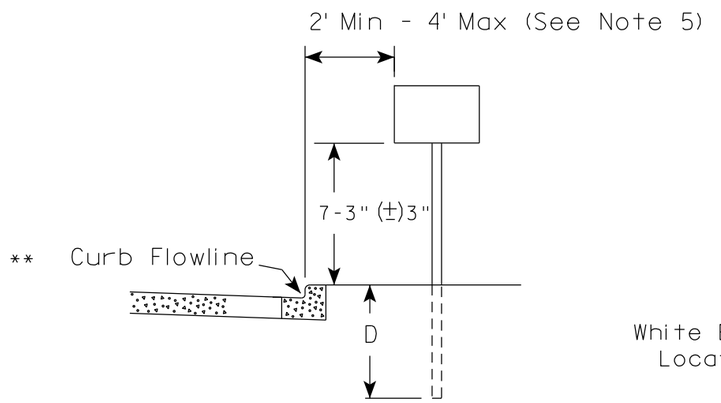

RURAL AREA (See Note 2)

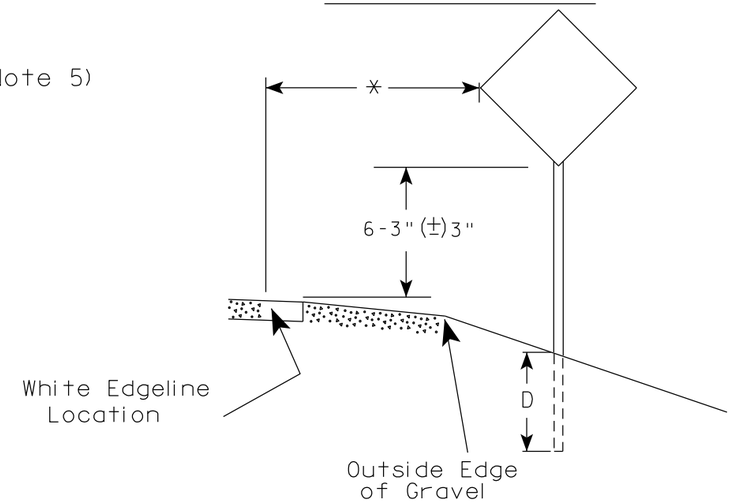

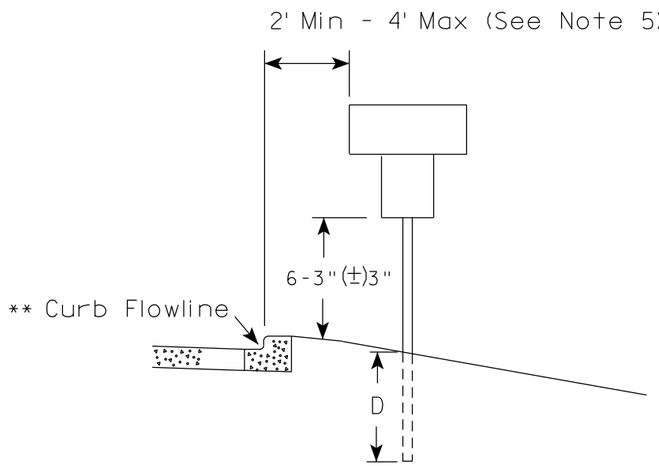

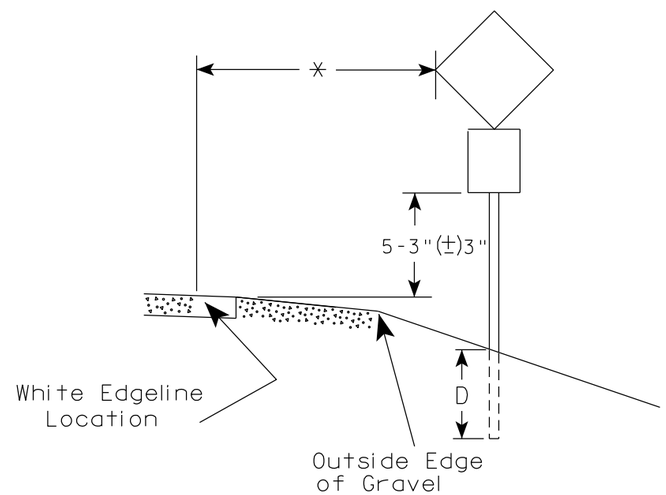

** The existence of curb and gutter does not in itself mandate the vertical clearance illustrated. That height is typically measured where there is sidewalk adjacent to the roadway or parking is permitted. In the absence of sidewalk vertical clearance is measured from the top of the curb. Offset of signs is measured from the flow line.

* 6 feet from edge of a paved shoulder or 12 feet from the edge of pavement (edge line location) or 2 feet from outside edge of gravel, whichever is greater unless directed by project engineer.

GENERAL NOTES

1. Signs wider than 4 feet or 20 sq.ft or larger, shall be mounted on multiple posts. Refer to plate A4-4.
2. If signs are mounted on or behind barrier wall, see A4-10 sign plate.
   The Double Arrow sign (W12-1D) shall be mounted at a height of 2'-3" (±) 3". The Chevron sign (W1-8), Roundabout Chevron panel (R6-4B), Enhanced Reference Markers, Clearance Markers (W5-52), Mile Markers (D10 series), In Road Object Markers (W5-54) & End of Road Markers (W5-56) shall be mounted at a height of 4'-3" (±) 3".
3. For expressways and freeways, mounting height is 7'- 3" (±) 3" or 6'-3" (±) 3" depending upon existence of a sub-sign.
4. Minimum mounting height for signs mounted on traffic signal poles is 5'- 3" (±) 3".
5. Offset distance shall be consistent with existing signs or consistent throughout length of project.
6. Folding signs shall be mounted at a height of 5'-3" (±) 3" or as directd by the Engineer.

POST EMBEDMENT DEPTH

Area of Sign Installation (Sq. Ft.)	D (Min)
20 or Less	4'
Greater than 20	5'

TYPICAL INSTALLATION OF PERMANENT TYPE II SIGNS ON SINGLE POSTS

WISCONSIN DEPT OF TRANSPORTATION

APPROVED Matthew R Rauch
for State Traffic Engineer

DATE 12/6/23 PLATE NO. A4-3.23

7 7

PROJECT NO:	HWY:	COUNTY:		SHEET NO: 92	E

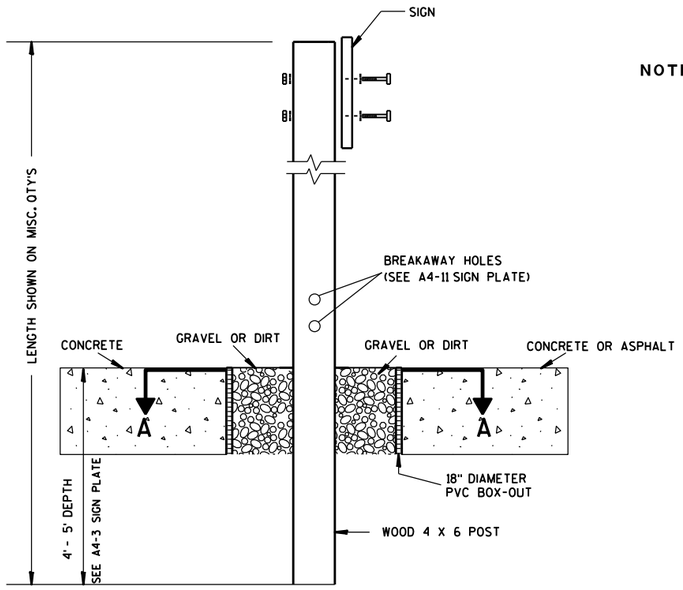

ELEVATION VIEW

DETAIL OF WOOD 4 X 6 SIGN POST IN BOX-OUT

NOTES:
1. ALL MATERIAL TO BE APPROVED BY ENGINEER PRIOR TO INSTALLATION
2. SEE SIGN PLATE A4-8 FOR SIGN HARDWARE REQUIREMENTS
3. 18 INCH X 18 INCH SQUARE BOX-OUTS MAY BE USED FOR INSTALLATIONS IN EXISTING CONCRETE OR ASPHALT LOCATIONS.

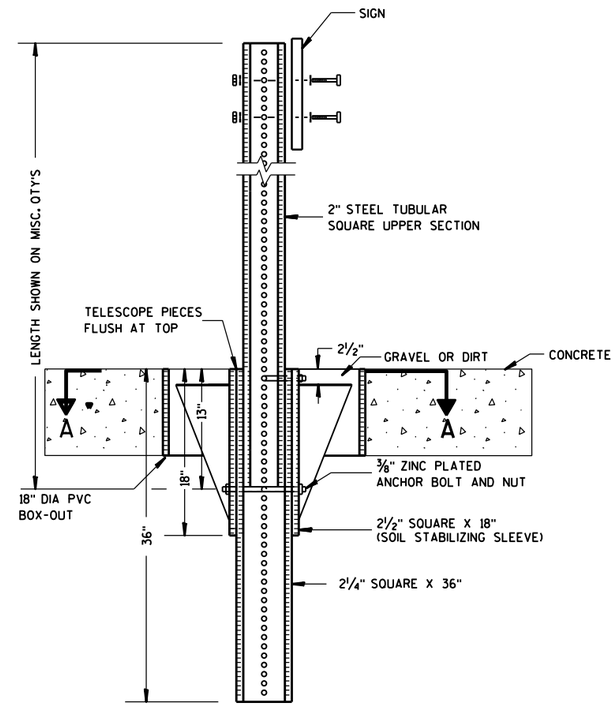

ELEVATION VIEW

DETAIL OF STEEL 2 X 2 SIGN POST IN BOX-OUT

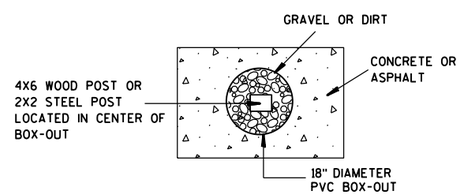

PLAN VIEW

FOR NEW CONCRETE/ASPHALT INSTALLATIONS

SIGN POST
BOX-OUTS
A4-3B

WISCONSIN DEPT OF TRANSPORTATION

APPROVED Matthew R Rauch
for State Traffic Engineer

DATE 1/27/14 PLATE NO. A4-3B.1

PROJECT NO:	HWY:	COUNTY:		SHEET NO:	E

URBAN AREA

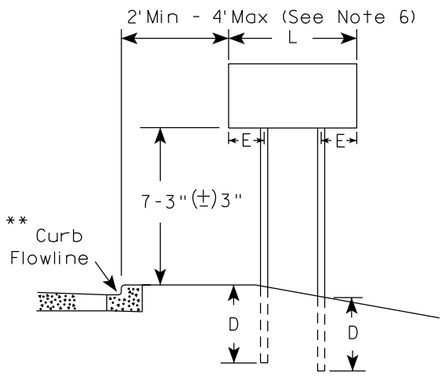

RURAL AREA (See Note 3)

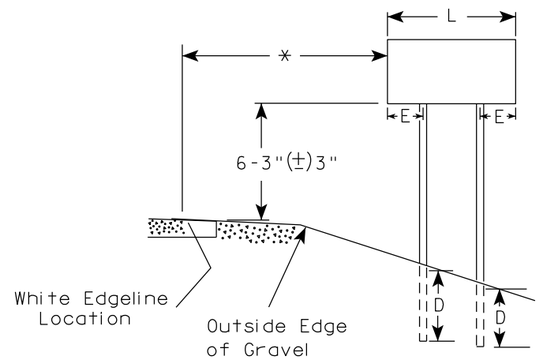

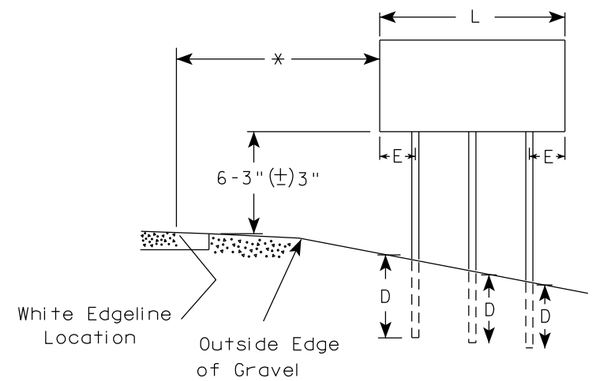

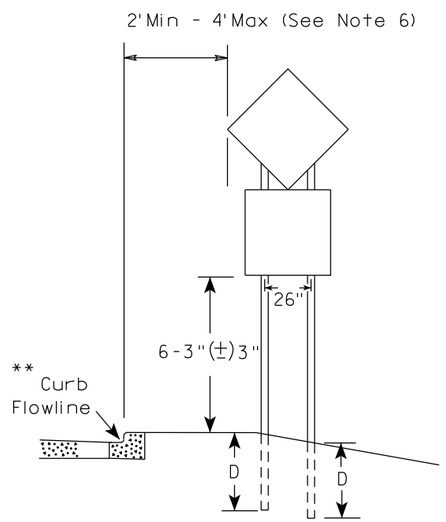

48" DIAMOND WARNING SIGN

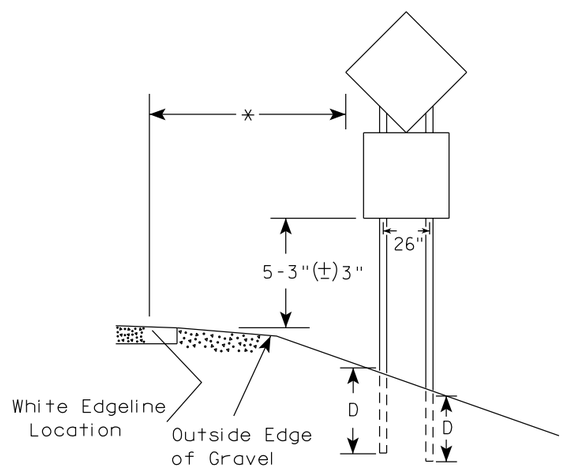

48" DIAMOND WARNING SIGN

GENERAL NOTES

1. For 3 or 4 post installations, individual post spacing shall be greater than 3'-6".
2. See tables below for required number of posts.
3. For expressways and freeways, mounting height is 7'-3" (±) 3" or 6'-3" (±) 3" depending upon existence of sub-sign.
4. The (±) tolerance for mounting height is 3 inches.
5. J-Assemblies are considered to be one sign for mounting height.
6. Offset distance shall be consistent with existing signs or consistent throughout length of project.
7. Folding signs shall be mounted at a height of 5'-3" (±) 3" or as directed by the engineer.
8. The Double Arrow sign (W12-1) shall be mounted at a height of 2'-3" (±) 3". The Chevron sign (W1-8), Roundabout Chevron panel (R6-4B), Clearance Markers (W5-52), Mile Markers (D10 series), In Road Object Markers (W5-54) & End of Road Markers (W5-56) shall be mounted at a height of 4"-3" (±) 3".

* 6 feet from edge of a paved shoulder or 12 feet from the edge of pavement (edge line location) or 2 feet from outside edge of gravel, whichever is greater unless directed by project engineer.

** The existence of curb and gutter does not in itself mandate the vertical clearance illustrated. That height is typically measured where there is sidewalk adjacent to the roadway or parking is permitted. In the absence of sidewalk vertical clearance is measured from the top of the curb. Offset of signs is measured from the flow line.

*** See A4-3 sign plate for signs 4' or less in width and less than 20 S.F. in area.

SIGN SHAPE OTHER THAN DIAMOND (TWO POSTS REQUIRED)	
L	E
*** Greater than 48" Less than 60"	12"
60" to 108"	L/5

SIGN SHAPE OTHER THAN DIAMOND (THREE POSTS REQUIRED)	
L	E
Greater than 108" to 144"	12"

POST EMBEDMENT DEPTH

Area of Sign Installation (Sq. Ft.)	D (Min)
20 or Less	4'
Greater than 20	5'

TYPICAL INSTALLATION OF TYPE II SIGNS ON MULTIPLE POSTS

WISCONSIN DEPT OF TRANSPORTATION

APPROVED Matthew R Rauch
for State Traffic Engineer

DATE 12/6/23 PLATE NO. A4-4.16

PROJECT NO:	HWY:	COUNTY:		SHEET NO: 94	E

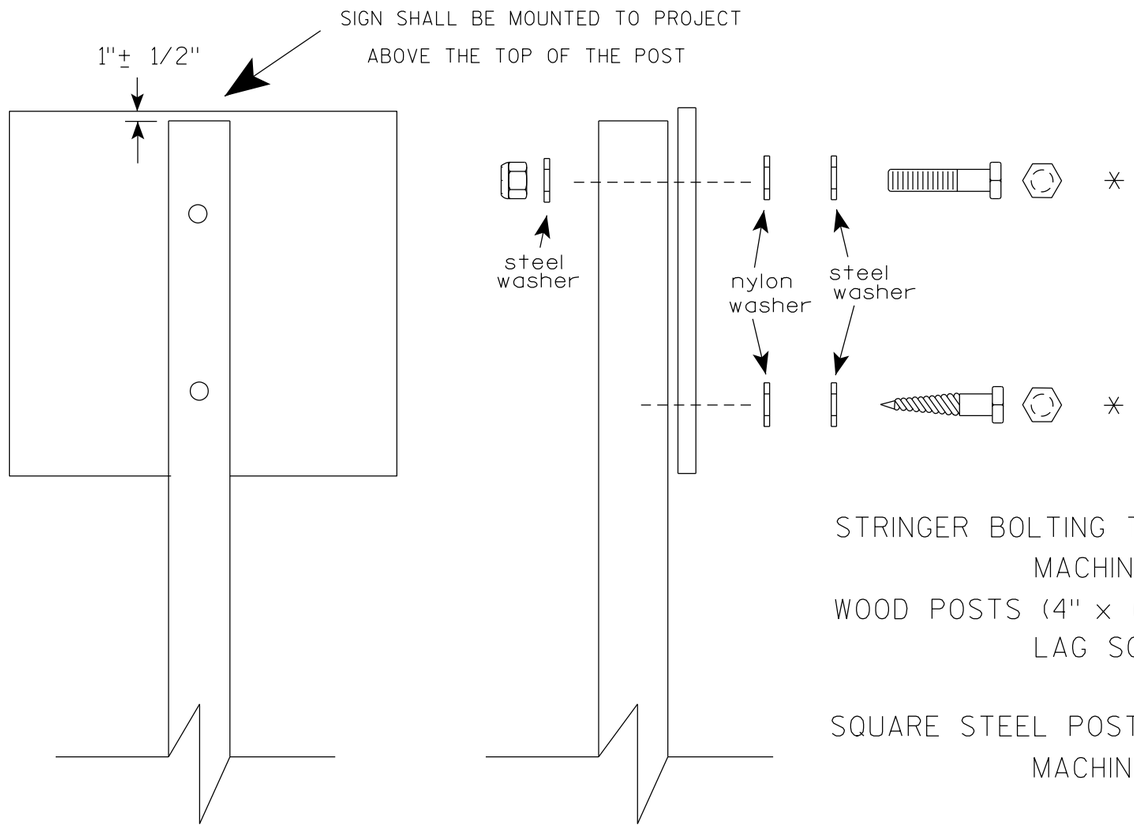

Nuts, bolts and lags used for mounting signs shall have hexagonal heads and shall be either :

a. Hot dip galvanized in accordance with ASTM Designation: A 153, Class D, or SC 3

b. Electro-galvanized in accordance with ASTM Designation : B 633, TYPE III, SC 3.

Threads on bolts and nuts shall be manufactured with sufficient allowance for the cadmium plate or galvanized coating to permit the nuts to run freely on the bolts.

STRINGER BOLTING TO ALUMINUM SIGNS (SEE SIGN PLATE A4-18)

MACHINE BOLTS - 5/16" X 1-3/4" Length w/ lock nuts

WOOD POSTS (4" x 6")

LAG SCREWS - 3/8" X 3" (NO STRINGERS ON BACK OF SIGN)
3/8" X 4" (STRINGERS ON BACK OF SIGN)

SQUARE STEEL POSTS (2" x 2")

MACHINE BOLTS - 3/8" X 3-1/4" Length w/ nuts (NO STRINGER ON BACK OF SIGN)
3/8" X 5" Length w/ nuts (STRINGERS ON BACK OF SIGN)

RIVETS - 9/32 " (6605-9-6) BULB-TITE, TRI-FOLD, ALUMINUM BODY/MANDREL
O.D. FLANGE .720-.765 INCH, GRIP RANGE .042-.375 INCH

WASHERS (ALL POSTS) -

1-1/4" O.D. X 3/8" I.D. X 1/16" STEEL
1-1/4" O.D. X 3/8" I.D. X .080 NYLON

* Two different fastening systems are shown for illustration purposes. On any individual sign, either one or the other system shall be used. Actual number of fasteners per sign varies with the sign area, but normally there are two. For a single post installation, all signs greater than 9 sq. ft. require the use of 3 fasteners.

ATTACHMENT OF SIGNS TO POSTS

WISCONSIN DEPT OF TRANSPORTATION

APPROVED Matthew R Rauch
for State Traffic Engineer

DATE 4/1/2020 PLATE NO. A4-8.9

TELESCOPIC TUBING ANCHORS
TWO PIECE SYSTEM

2 1/4" SQUARE
12 GAUGE
PERFORATED
GALVANIZED FINISH

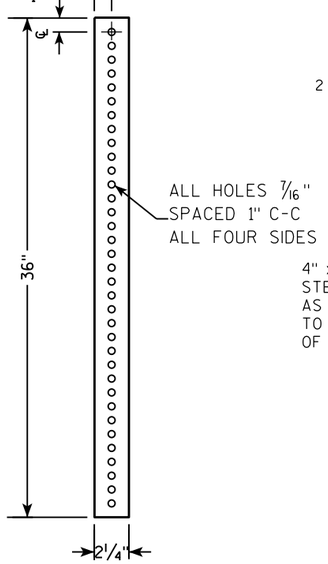

2 1/2" SQUARE
12 GAUGE
OMNI-DIRECTIONAL
PERFORATED
SOIL STABILIZING SLEEVE
GALVANIZED FINISH

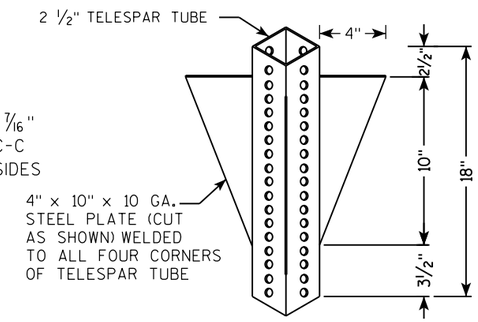

DETAIL OF TUBULAR STEEL SIGN POST
(IN POURED CONCRETE OR ASPHALT)

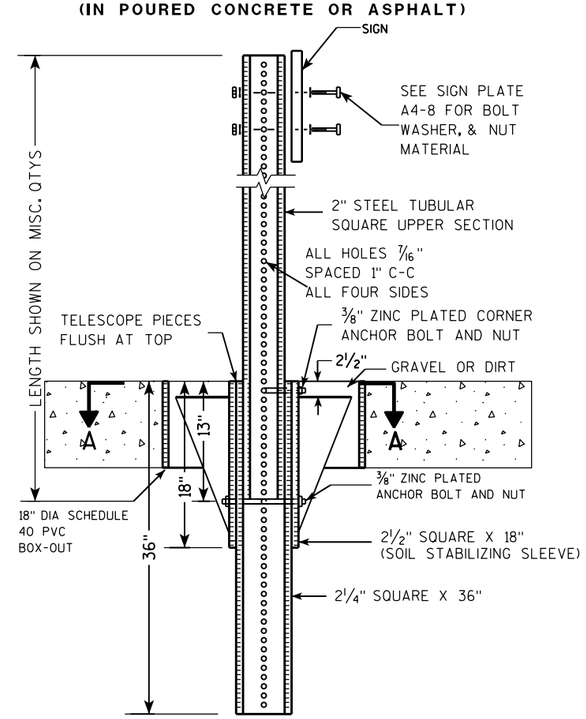

DETAIL OF TUBULAR STEEL SIGN POST
(IN LOCATIONS OTHER THAN POURED CONCRETE OR ASPHALT)

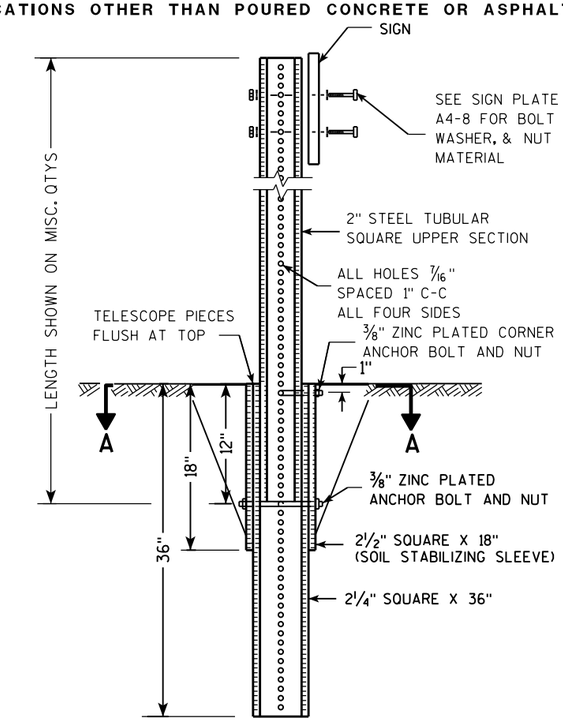

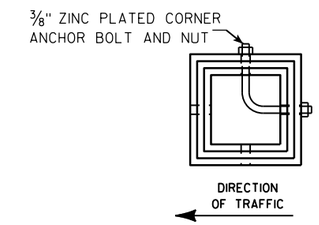

SECTION A-A

Area of Sign Installation (Sq. Ft.)	Number of Required Posts
9 or less	1
Greater than 9 less than or equal to 18	2
Greater than 18 less than or equal to 27	3

Signs wider than 3 feet or larger than 9 sq. ft shall be mounted on multiple posts (see above table).

TUBULAR STEEL
SIGN POST
A4-9

WISCONSIN DEPT OF TRANSPORTATION

APPROVED Matthew R Rauch
for State Traffic Engineer

DATE 2/05/15 PLATE A4-9.9

7 7

PROJECT NO:	HWY:	COUNTY:		SHEET NO:	E

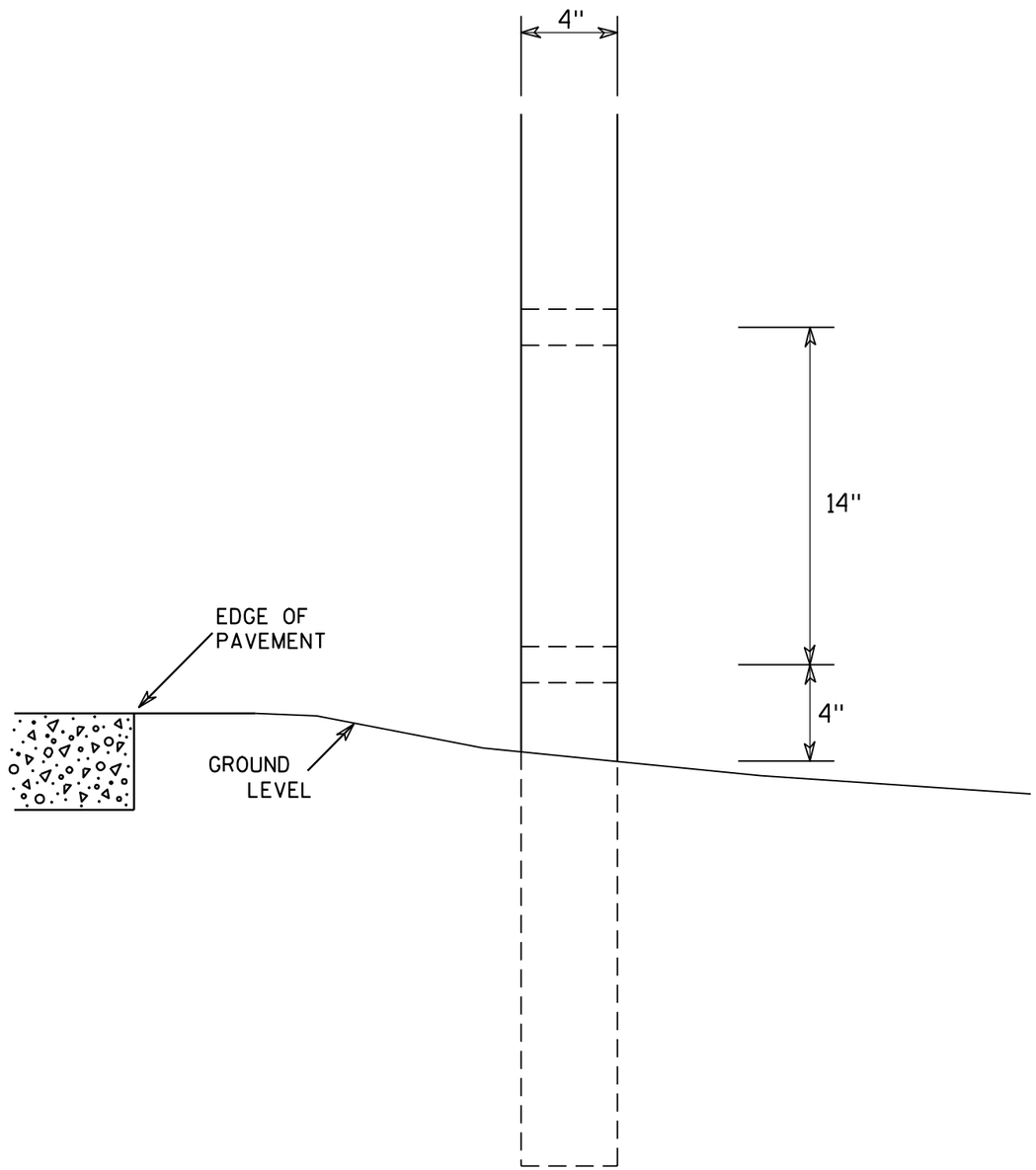

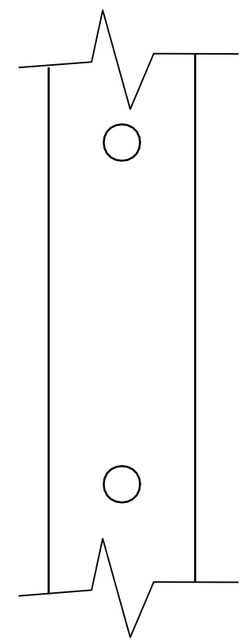

SIDE VIEW

GENERAL NOTES

1. All 4 x 6 Wood Posts shall be modified by having two 1½" diameter holes drilled perpendicular to the roadway centerline.

4 X 6 WOOD POST MODIFICATIONS

WISCONSIN DEPT OF TRANSPORTATION

APPROVED Chester J Spang for State Traffic Engineer

DATE 3/27/97 PLATE NO. A4-11.2

PROJECT NO:	HWY:	COUNTY:		SHEET NO: 97	E

BANDING

SINGLE SIGN

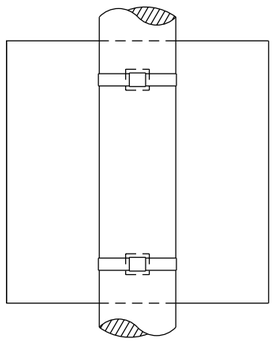

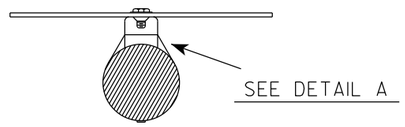

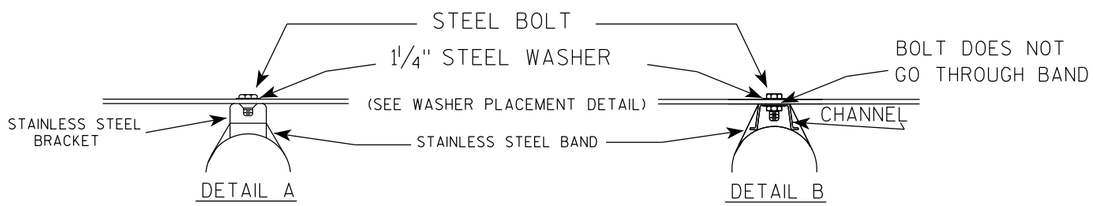

WASHER PLACEMENT

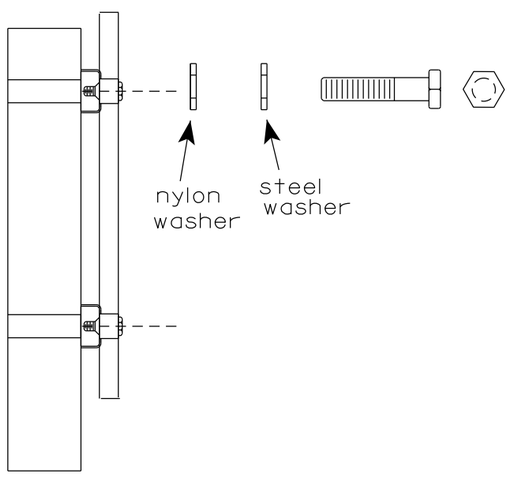

WASHERS (ALL POSTS) -
1-1/4" O.D. X 3/8" I.D. X 1/16" STEEL
1-1/4" O.D. X 3/8" I.D. X .080 NYLON
FOR ALL TYPE H SIGNS

GENERAL NOTES

1. Any sign over 3 feet in width shall use the V-Block banding method. See A5-10 standard plate.
2. Signs 3 feet or greater in height shall have three bracket bands installed. Signs less than 3 feet in height shall have two bracket bands installed.
3. Banding and assembly bracket shall be stainless steel. All bands shall be ¾" in width and 0.025" thickness.
4. ALL SIGN MOUNTING BOLTS AND WASHERS SHALL BE EITHER:
   a. Hot dip or mechanically galvanized in accordance with ASTM Designation: A 153, Class D
   b. Electro-galvanized in accordance with ASTM designation: B 633, Type III, SC 3

"J" ASSEMBLY

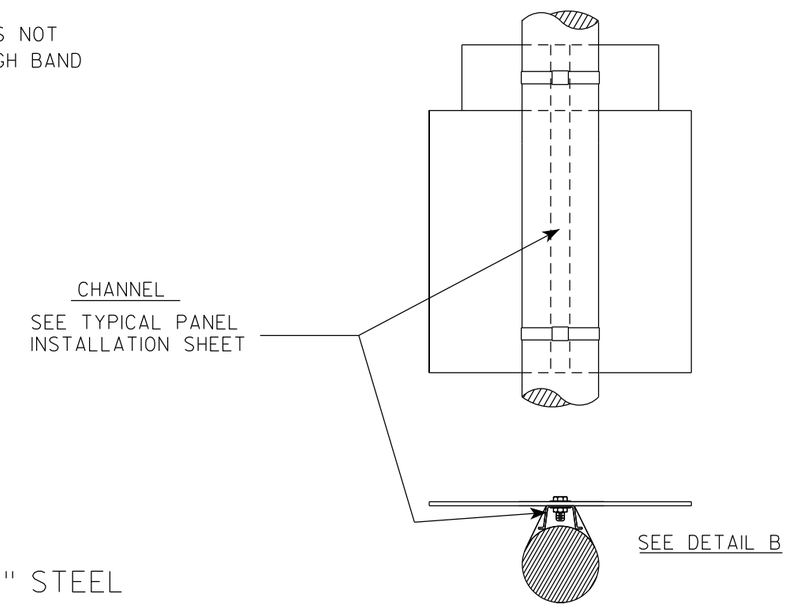

STANDARD SIGN
SIGN BANDING DETAILS

WISCONSIN DEPT OF TRANSPORTATION

APPROVED Matthew R Rauch for State Traffic Engineer

DATE 6/10/19 PLATE NO. A5-9.4

PROJECT NO:	HWY:	COUNTY:		SHEET NO: 98	E

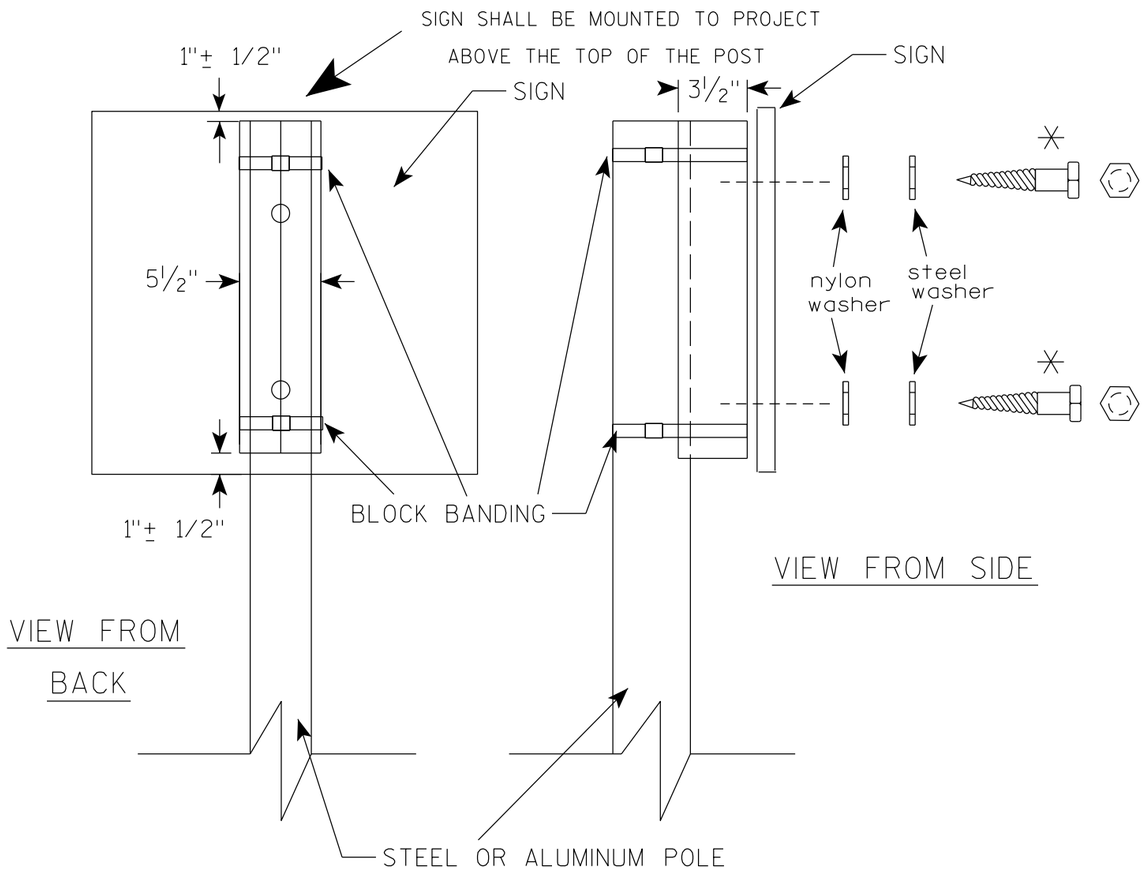

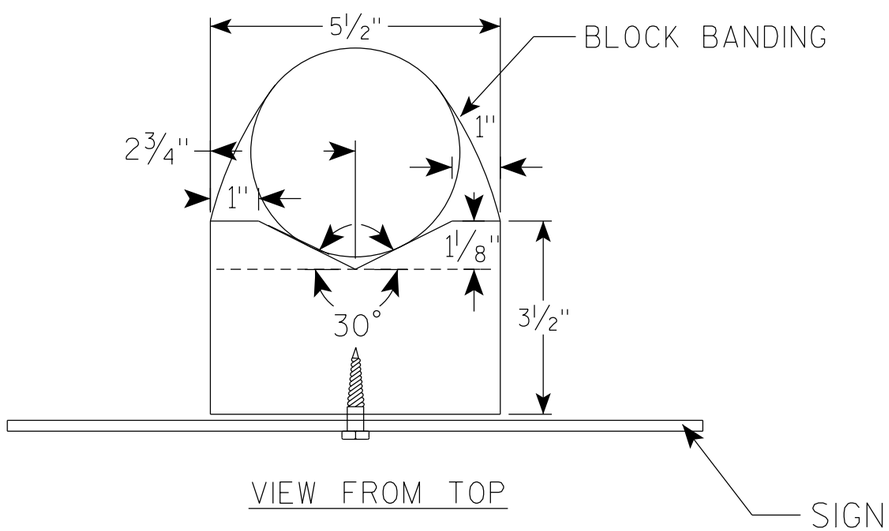

GENERAL NOTES

1. WOOD 4"X6" POST MATERIAL SHALL CONFORM TO 507.2.2 OF THE WisDOT STANDARD SPECIFICATIONS
2. BLOCK BANDING AND CLIPS SHALL BE STAINLESS STEEL, 3/4" WIDTH AND 0.025" THICKNESS
3. SIGNS 3' OR GREATER IN HEIGHT SHALL UTILIZE 3 BLOCK BANDS. SIGNS UNDER 3' IN HEIGHT SHALL UTILIZE 2 BLOCK BANDS
4. ACTUAL NUMBER OF FASTENERS PER SIGN VARIES WITH THE SIGN AREA, BUT NORNALLY THERE ARE TWO. FOR SIGNS GREATER THAN 9 S.F. 3 FASTENERS SHALL BE USED.
5. ALL SIGN MOUNTING BOLTS AND WASHERS SHALL BE EITHER:
   a. Hot dip or mechanically galvanized in accordance with ASTM Designation: A 153, Class D
   b. Electro-galvanized in accordance with ASTM Designation : B 633, TYPE III, SC 3
6. ALL BOLTS SHALL HAVE HEXAGONAL HEADS.
7. STEEL WASHERS SHALL BE 1 1/4" O.D. X 3/8" I.D. X 1/16"
8. NYLON WASHERS SHALL BE 1 1/4" O.D. X 3/8" I.D. X .080 FOR TYPE H OR TYPE F FACE SIGN

✳ LAG BOLTS SHALL BE 3/8" X 2 1/2"

7

7

BLOCK BANDING DETAIL
(V-BLOCK OPTION)

WISCONSIN DEPT OF TRANSPORTATION

APPROVED Matthew R Rauch
for State Traffic Engineer

DATE 4/19/2022 PLATE NO. A5-10.3

PROJECT NO:				SHEET NO: 99	E

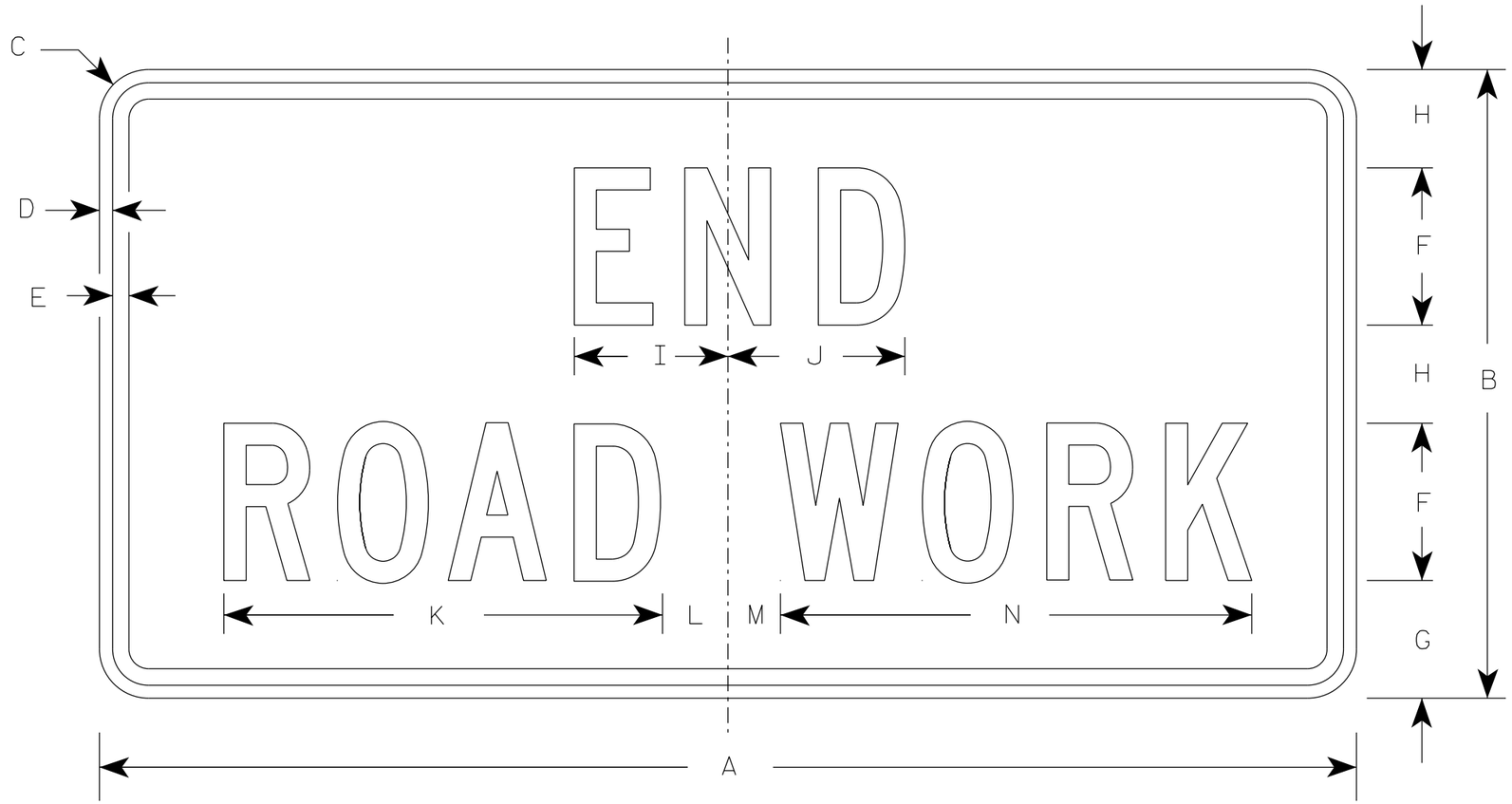

G20-2A

NOTES

1. Sign is Type II - Type F Reflective
2. Color:
   Background - Orange
   Message - Black
3. Message Series - C
4. Corners may be square or rounded when base material is plywood but borders shall be rounded as shown. When base material is metal, the corners and borders shall be rounded.

SIZE	A	B	C	D	E	F	G	H	I	J	K	L	M	N	O	P	Q	R	S	T	U	V	W	X	Y	Z	Area sq. ft.
1	36	18	1 1/2	3/8	1/2	4	3 3/4	2 1/2	4 1/8	4 1/8	11 1/8	2	1	12 1/8													4.5
2	48	24	1 7/8	1/2	5/8	6	4 1/2	3 3/4	5 7/8	6 3/4	16 3/4	2 1/2	1 3/4	18 1/2													8.0
2M	48	24	1 7/8	1/2	5/8	6	4 1/2	3 3/4	5 7/8	6 3/4	16 3/4	2 1/2	1 3/4	18 1/2													8.0
3	48	24	1 7/8	1/2	5/8	6	4 1/2	3 3/4	5 7/8	6 3/4	16 3/4	2 1/2	1 3/4	18 1/2													8.0
4	48	24	1 7/8	1/2	5/8	6	4 1/2	3 3/4	5 7/8	6 3/4	16 3/4	2 1/2	1 3/4	18 1/2													8.0
5	48	24	1 7/8	1/2	5/8	6	4 1/2	3 3/4	5 7/8	6 3/4	16 3/4	2 1/2	1 3/4	18 1/2													8.0

STANDARD SIGN

G20-2A

WISCONSIN DEPT OF TRANSPORTATION

APPROVED Matthew R Rauch
for State Traffic Engineer

DATE 1/26/2023 PLATE NO. G20-2A.10

PROJECT NO: | HWY: | COUNTY: | SHEET NO: 100 | E

NOTES

1. Sign is Type II - Type F Reflective
2. Color:
   Background - Orange
   Message - Black
3. Message Series - B
4. Corners may be square or rounded when base material is plywood but borders shall be rounded as shown. When base material is metal, the corners and borders shall be rounded.

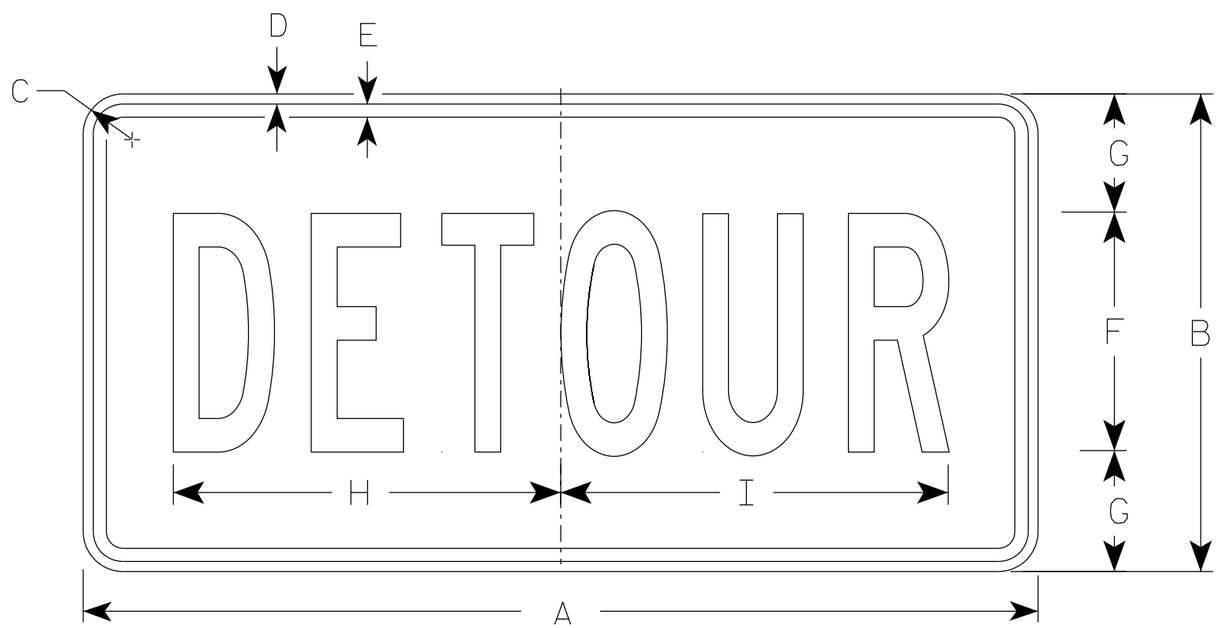

M4-8

SIZE	A	B	C	D	E	F	G	H	I	J	K	L	M	N	O	P	Q	R	S	T	U	V	W	X	Y	Z	Area sq. ft.
1																											
2	24	12	1 1/2	3/8	3/8	6	3	10	10 1/4																		2.0
2M	24	12	1 1/2	3/8	3/8	6	3	10	10 1/4																		2.0
3	36	18	1 1/2	3/8	1/2	9	4 1/2	14 5/8	14 1/2																		4.5
4	36	18	1 1/2	3/8	1/2	9	4 1/2	14 5/8	14 1/2																		4.5
5	36	18	1 1/2	3/8	1/2	9	4 1/2	14 5/8	14 1/2																		4.5

STANDARD SIGN
M4-8

WISCONSIN DEPT OF TRANSPORTATION

APPROVED Matthew R Rauch
for State Traffic Engineer

DATE 2/9/2023 PLATE NO. M4-8.4

PROJECT NO:	HWY:	COUNTY:		SHEET NO:	E

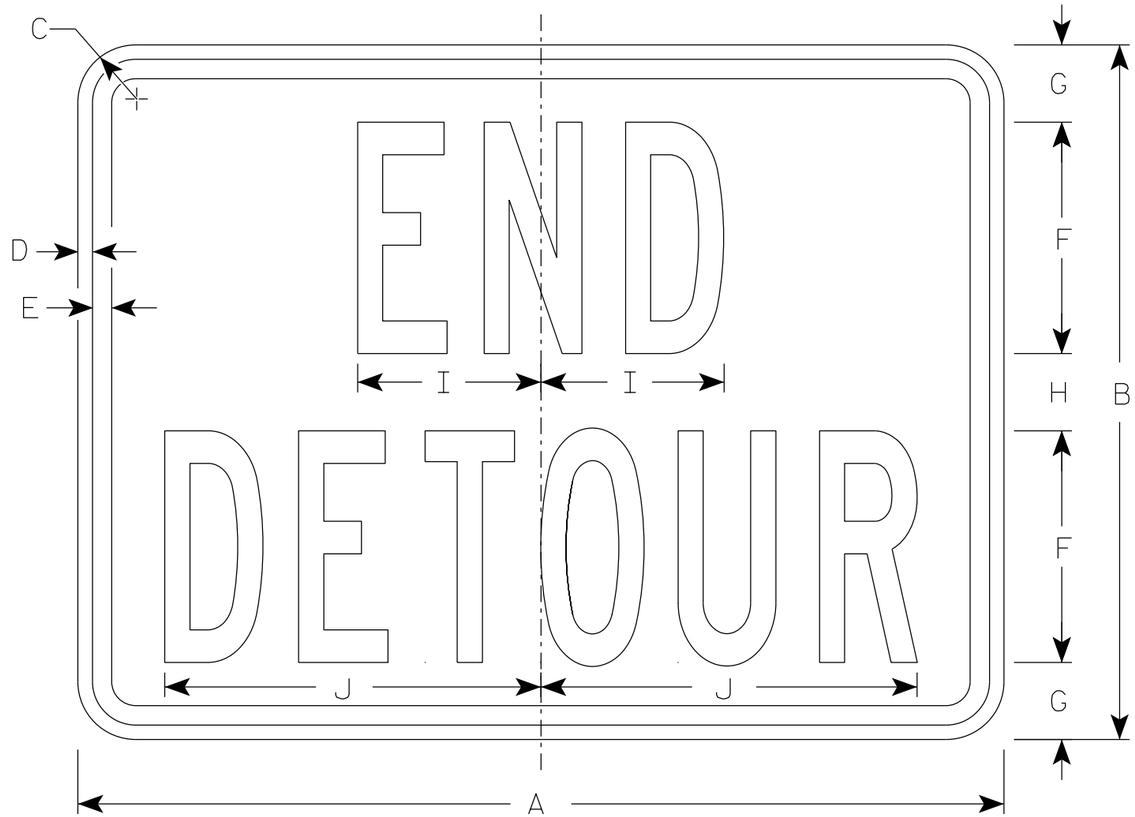

M4-8A

NOTES

1. Sign is Type II - Type F Reflective
2. Color:
   Background - Orange
   Message - Black
3. Message Series - B
4. Corners may be square or rounded when base material is plywood but borders shall be rounded as shown. When base material is metal, the corners and borders shall be rounded.

SIZE	A	B	C	D	E	F	G	H	I	J	K	L	M	N	O	P	Q	R	S	T	U	V	W	X	Y	Z	Area sq. ft.
1																											
2	24	18	1 1/2	3/8	1/2	6	2	2	4 3/4	9 3/4																	3.0
2M	24	18	1 1/2	3/8	1/2	6	2	2	4 3/4	9 3/4																	3.0
3	30	24	1 1/2	3/8	1/2	8	2 1/2	3	6 3/4	13																	5.0
4	30	24	1 1/2	3/8	1/2	8	2 1/2	3	6 3/4	13																	5.0
5	30	24	1 1/2	3/8	1/2	8	2 1/2	3	6 3/4	13																	5.0

STANDARD SIGN
M4-8A

WISCONSIN DEPT OF TRANSPORTATION

APPROVED Matthew R Rauch
for State Traffic Engineer

DATE 2/9/2023 PLATE NO. M4-8A.4

PROJECT NO: | HWY: | COUNTY: | SHEET NO: 102 | E

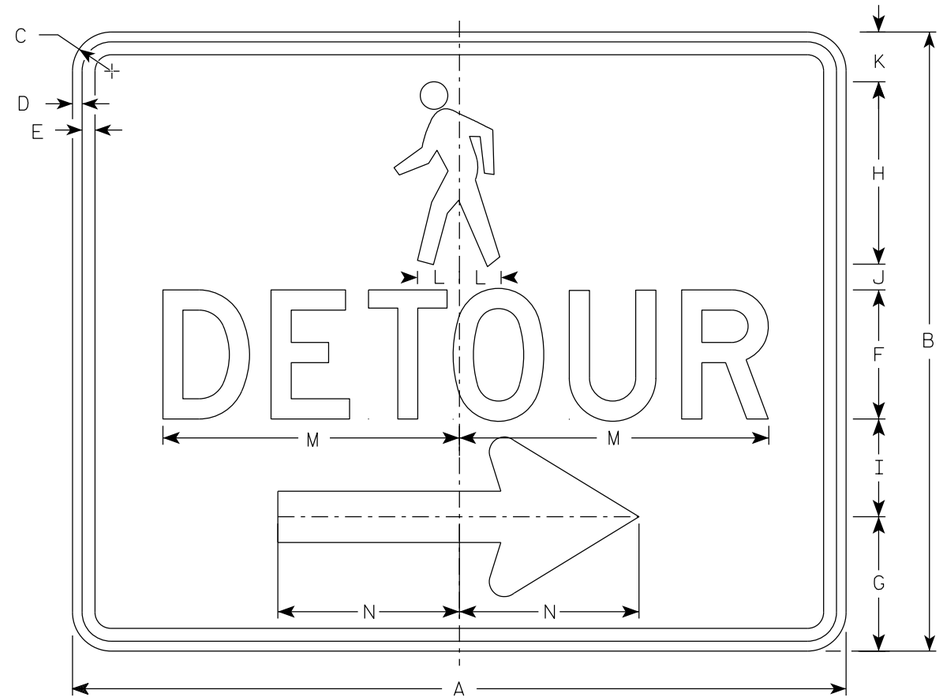

M4-9BR

NOTES

1. Sign is Type II-Type F Reflective
2. Color:
   Background - Orange
   Message - Black
3. Message Series - D
4. Corners may be square or rounded when base material is plywood but borders shall be rounded as shown. When base material is metal, the corners and borders shall be rounded.
5. M4-9BL is the same as M4-9BR except the arrow is reversed.

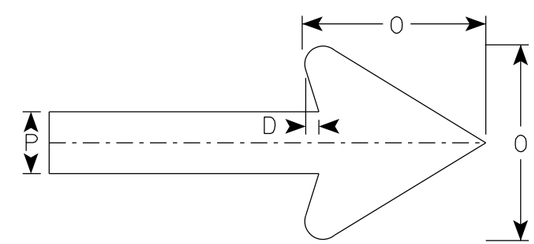

Arrow Detail

SIZE	A	B	C	D	E	F	G	H	I	J	K	L	M	N	O	P	Q	R	S	T	U	V	W	X	Y	Z	Area sq. ft.
1																											
2S	30	24	1 1/2	3/8	1/2	5	5 1/4	7 1/8	3 3/4	1	1 1/8	1 5/8	11 3/4	7	6	2											5.0
2M	30	24	1 1/2	3/8	1/2	5	5 1/4	7 1/8	3 3/4	1	1 1/8	1 5/8	11 3/4	7	6	2											5.0
3																											
4																											
5																											

STANDARD SIGN
M4-9B L&R

WISCONSIN DEPT OF TRANSPORTATION

APPROVED Matthew R Rauch
for State Traffic Engineer

DATE 2/9/2023 PLATE NO. M4-9B.4

PROJECT NO: | HWY: | COUNTY: | SHEET NO: 103 | E

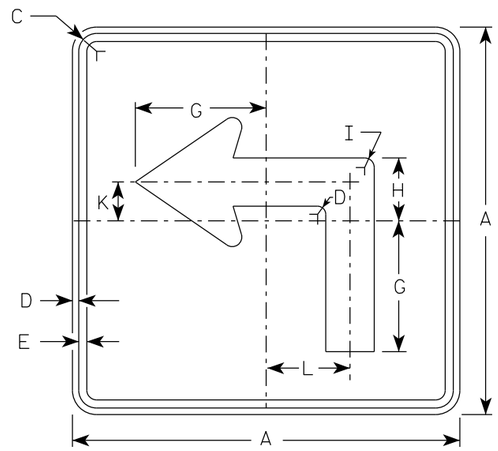

M5-1L
MM5-1L
MO5-1L
MP5-1L

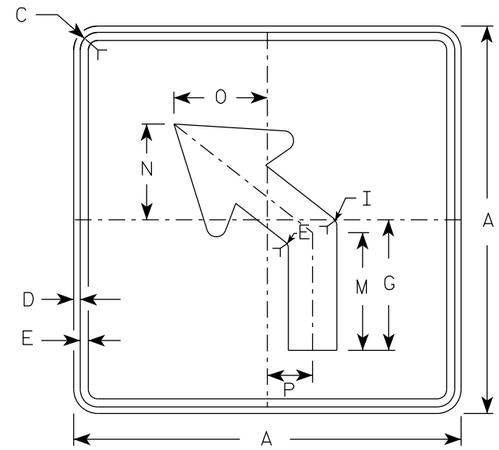

M5-2L
MM5-2L
MO5-2L
MP5-2L

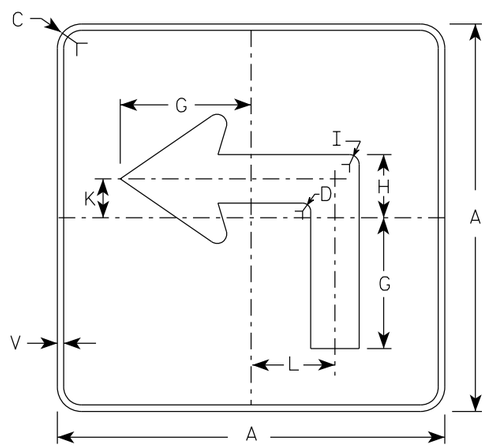

MB5-1L
MK5-1L
MN5-1L
MR5-1L

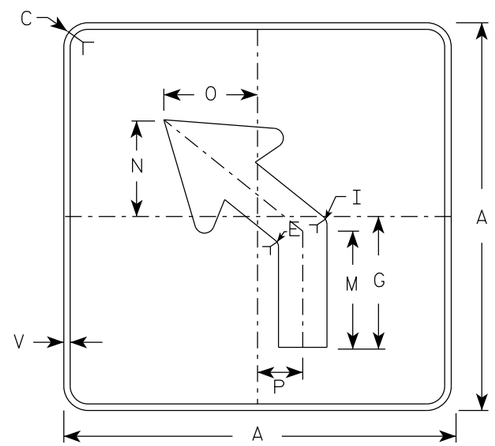

MB5-2L
MK5-2L
MN5-2L
MR5-2L

NOTES

1. Signs are Type II - Type H reflective except as shown
2. Color:
   Background - See note 4
   Message - See note 4
3. Corners may be square or rounded when base material is plywood but borders shall be rounded as shown. When base material is metal, the corners and borders shall be rounded.
4. M5-1 and M5-2 Background - White
   Message - Black
   MB5-1 and MB5-2 Background - Blue
   Message - White
   MK5-1 and MK5-2 Background - Green
   Message - White
   MM5-1 and MM5-2 Background - White
   Message - Green
   MN5-1 and MN5-2 Background - Brown
   Message - White
   MO5-1 and MO5-2 Background - Orange - Type F Reflective
   Message - Black
   MP5-1 and MP5-2 Background - White
   Message - Blue
   MR5-1 and MR5-2 Background - Brown
   Message - Yellow
5. M5-1R same as M5-1L except arrow points right.
6. M5-2R same as M5-2L except arrow tilts right.

ARROW DETAIL

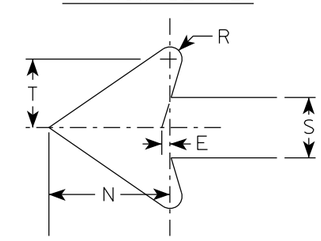

SIZE	A	B	C	D	E	F	G	H	I	J	K	L	M	N	O	P	Q	R	S	T	U	V	W	X	Y	Z	Area sq. ft.
1																											
2S	21		1 1/2	3/8	3/8		7	3 3/8	5/8		2 1/8	4 1/2	6 3/8	5 1/4	5	2 1/2		1/2	2 5/8	3		1/2					3.06
2M	21		1 1/2	3/8	3/8		7	3 3/8	5/8		2 1/8	4 1/2	6 3/8	5 1/4	5	2 1/2		1/2	2 5/8	3		1/2					3.06
3	30		1 7/8	1/2	5/8		10 1/8	4 7/8	7/8		3	6 1/2	9 1/8	7 1/2	7 1/4	3 1/2		3/4	3 3/4	4 1/4		1/2					6.25
4	30		1 7/8	1/2	5/8		10 1/8	4 7/8	7/8		3	6 1/2	9 1/8	7 1/2	7 1/4	3 1/2		3/4	3 3/4	4 1/4		1/2					6.25
5	30		1 7/8	1/2	5/8		10 1/8	4 7/8	7/8		3	6 1/2	9 1/8	7 1/2	7 1/4	3 1/2		3/4	3 3/4	4 1/4		1/2					6.25

STANDARD SIGN
M5-1 & M5-2

WISCONSIN DEPT OF TRANSPORTATION

APPROVED Matthew R Rauch
for State Traffic Engineer

DATE 2/13/2023 PLATE NO. M5-1.15

PROJECT NO: | HWY: | COUNTY: | SHEET NO: 104 | E

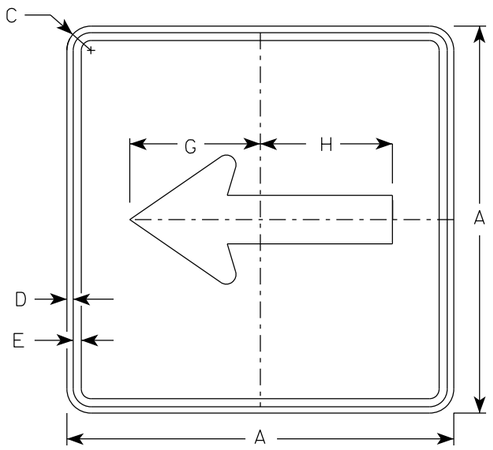

M6-1
MM6-1
MO6-1
MP6-1

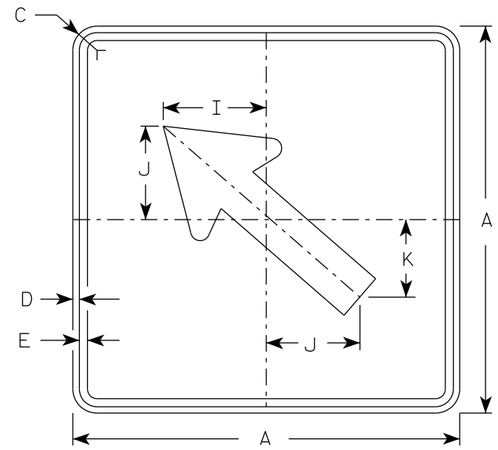

M6-2
MM6-2
MO6-2
MP6-2

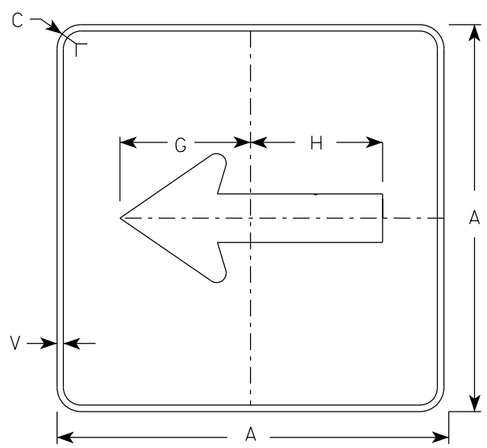

MB6-1
MK6-1
MN6-1
MR6-1

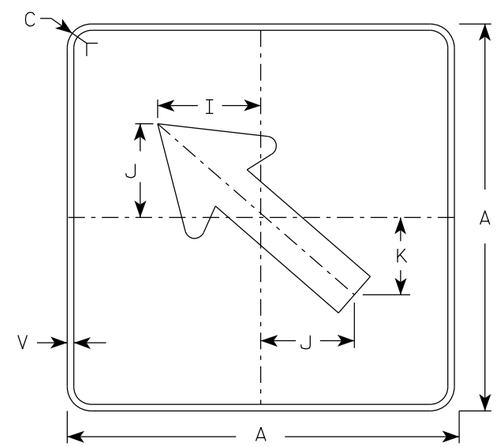

MB6-2
MK6-2
MN6-2
MR6-2

NOTES

1. Signs are Type II - Type H Reflective except as Shown
2. Color:
   Background - See note 4
   Message - See note 4
3. Corners may be square or rounded when base material is plywood but borders shall be rounded as shown. When base material is metal, the corners and borders shall be rounded.
4. M6-1 and M6-2 Background - White
   Message - Black
   MB6-1 and MB6-2 Background - Blue
   Message - White
   MK6-1 and MK6-2 Background - Green
   Message - White
   MM6-1 and MM6-2 Background - White
   Message - Green
   MN6-1 and MN6-2 Background - Brown
   Message - White
   MO6-1 and MO6-2 Background - Orange - Type F Reflective
   Message - Black
   MP6-1 and MP6-2 Background - White
   Message - Blue
   MR6-1 and MR6-2 Background - Brown
   Message - Yellow

ARROW DETAIL

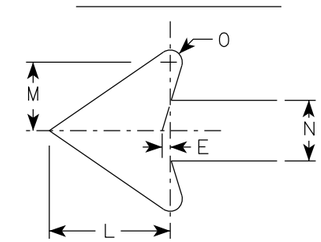

SIZE	A	B	C	D	E	F	G	H	I	J	K	L	M	N	O	P	Q	R	S	T	U	V	W	X	Y	Z	Area sq. ft.
1																											
2S	21		1 1/2	3/8	3/8		7 1/2	7 1/8	5 5/8	5	4 1/4	5 1/4	3	2 5/8	1/2							1/2					3.06
2M	21		1 1/2	3/8	3/8		7 1/2	7 1/8	5 5/8	5	4 1/4	5 1/4	3	2 5/8	1/2							1/2					3.06
3	30		1 7/8	1/2	5/8		10 3/4	10 1/4	8	7 1/4	6	7 1/2	4 1/4	3 3/4	3/4							1/2					6.25
4	30		1 7/8	1/2	5/8		10 3/4	10 1/4	8	7 1/4	6	7 1/2	4 1/4	3 3/4	3/4							1/2					6.25
5	30		1 7/8	1/2	5/8		10 3/4	10 1/4	8	7 1/4	6	7 1/2	4 1/4	3 3/4	3/4							1/2					6.25

STANDARD SIGN
M6-1 & M6-2
SERIES

WISCONSIN DEPT OF TRANSPORTATION

APPROVED Matthew R Rauch
for State Traffic Engineer

DATE 2/13/2023 PLATE NO. M6-1.16

PROJECT NO: | HWY: | COUNTY: | SHEET NO: 105 | E

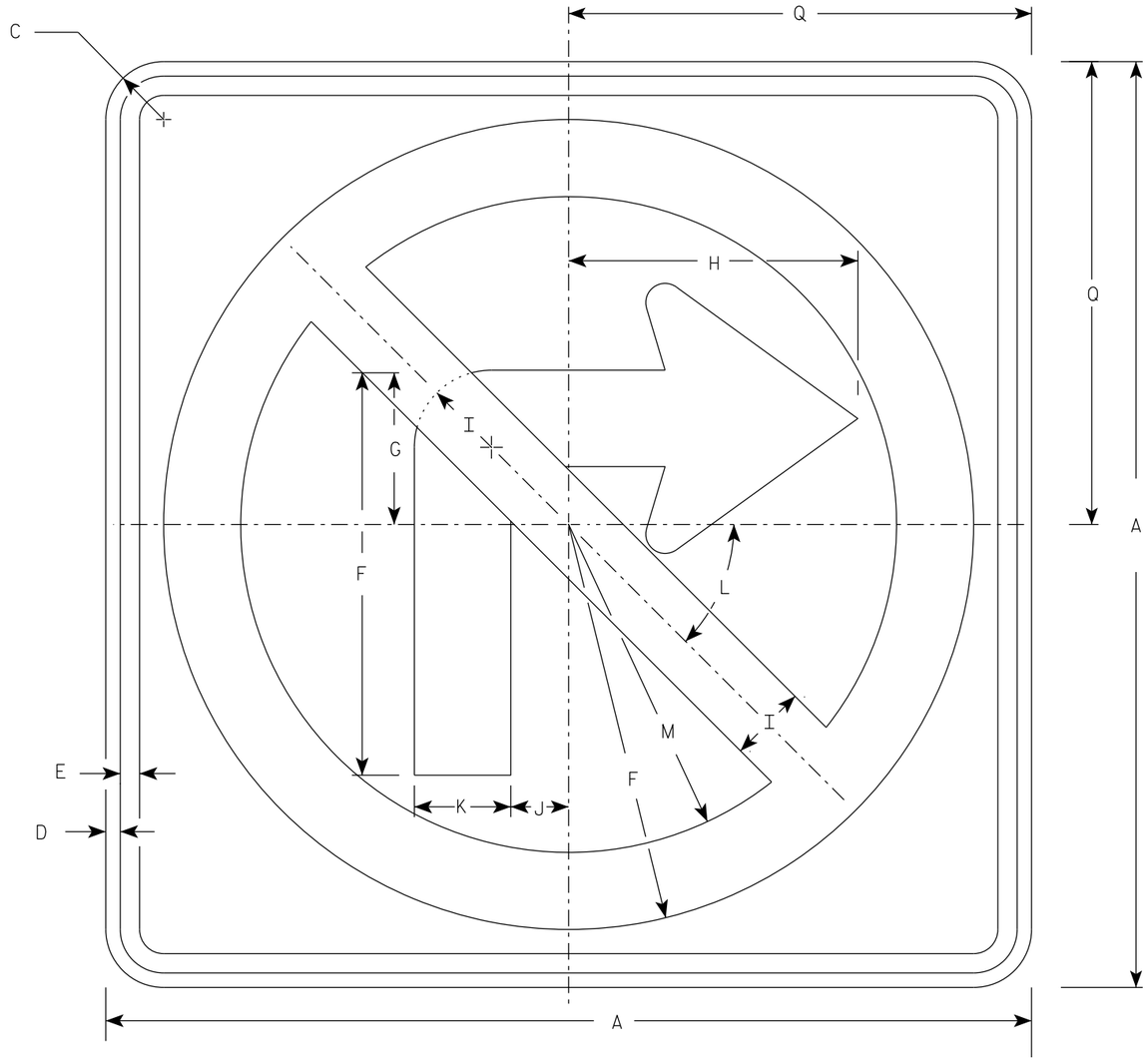

R3-1

NOTES

1. Sign is Type II - Type H Reflective
2. Color:
   Background - White
   Message - See note 3
3. Border & Arrow are non reflective black, the circle with diagonal bar is reflective red.

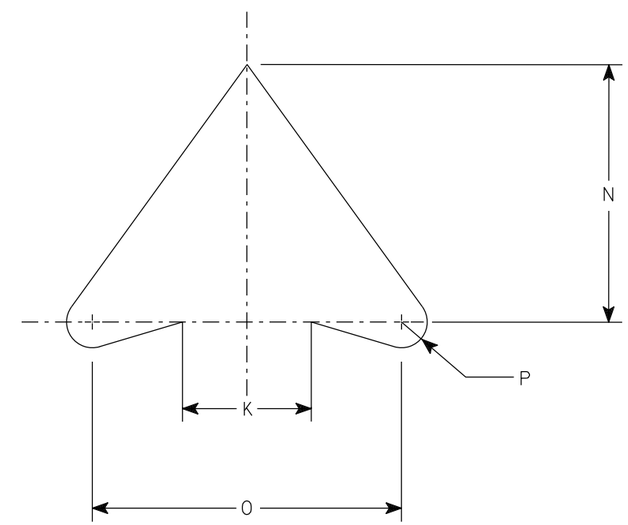

ARROW DETAIL

SIZE	A	B	C	D	E	F	G	H	I	J	K	L	M	N	O	P	Q	R	S	T	U	V	W	X	Y	Z	Area sq. ft.
1	24		1 1/2	3/8	1/2	10 1/2	4	7 1/2	2	1 1/2	2 1/2	45	8 1/2	5	6	1/2	12										4.0
2S	24		1 1/2	3/8	1/2	10 1/2	4	7 1/2	2	1 1/2	2 1/2	45°	8 1/2	5	6	1/2	12										4.0
2M	36		2 1/4	5/8	3/4	15 3/4	6	11 1/4	3	2 1/4	3 3/4	45	12 3/4	7 1/2	9	3/4	18										9.0
3	36		2 1/4	5/8	3/4	15 3/4	6	11 1/4	3	2 1/4	3 3/4	45	12 3/4	7 1/2	9	3/4	18										9.0
4	36		2 1/4	5/8	3/4	15 3/4	6	11 1/4	3	2 1/4	3 3/4	45°	12 3/4	7 1/2	9	3/4	18										9.0
5	48		2 1/4	3/4	1	21	8	15	4	3	5	45°	17	10	12	1	24										16.0

STANDARD SIGN

R3-1

WISCONSIN DEPT OF TRANSPORTATION

APPROVED Matthew R Rauch
for State Traffic Engineer

DATE 2/2/23 PLATE NO. R3-1.6

PROJECT NO: | HWY: | COUNTY: | SHEET NO: 106 | E

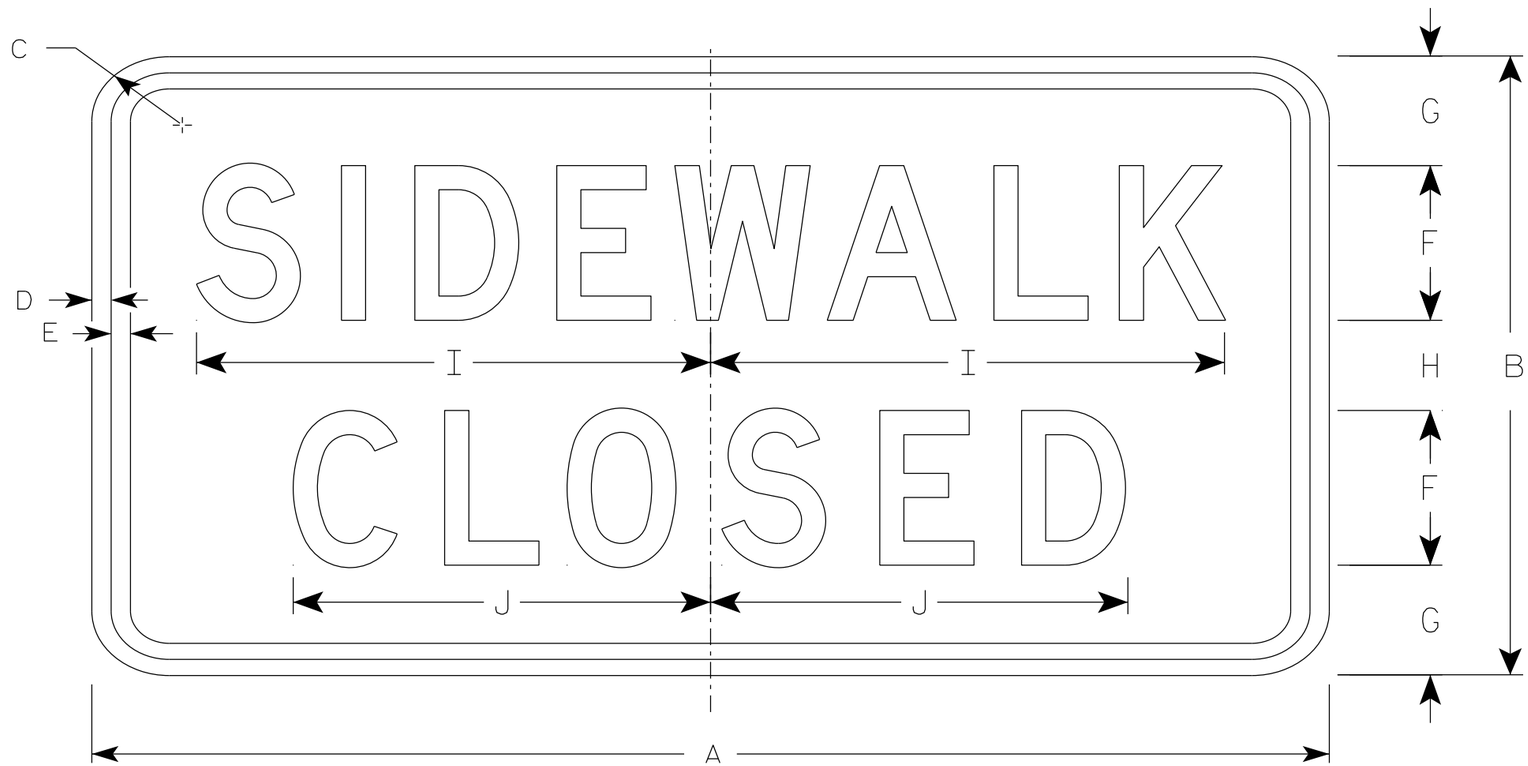

R9-9

NOTES

1. Sign is Type II - Type H Reflective
2. Color:
   Background - White
   Message - Black
3. Message Series - C
4. Use Size 2 for Sidewalks. Use Size 3 for Paths and Trails.

SIZE	A	B	C	D	E	F	G	H	I	J	K	L	M	N	O	P	Q	R	S	T	U	V	W	X	Y	Z	Area sq. ft.
1																											
2S	24	12	1 1/2	1/2	1/2	3	2 1/8	1 3/4	10	8 1/8																	2.0
2M	24	12	1 1/2	1/2	1/2	3	2 1/8	1 3/4	10	8 1/8																	2.0
3	30	18	1 1/2	1/2	1/2	4	3 1/2	3	12 1/2	10 1/4																	3.75
4																											
5																											

STANDARD SIGN
R9-9

WISCONSIN DEPT OF TRANSPORTATION

APPROVED Matthew R Rauch
for State Traffic Engineer

DATE 1/24/24 PLATE NO. R9-9.7

PROJECT NO: | HWY: | COUNTY: | SHEET NO: 107 | E

NOTES

1. Sign is Type II - Type H Reflective
2. Color:
   Background - White
   Message - Black
3. Message Series - D

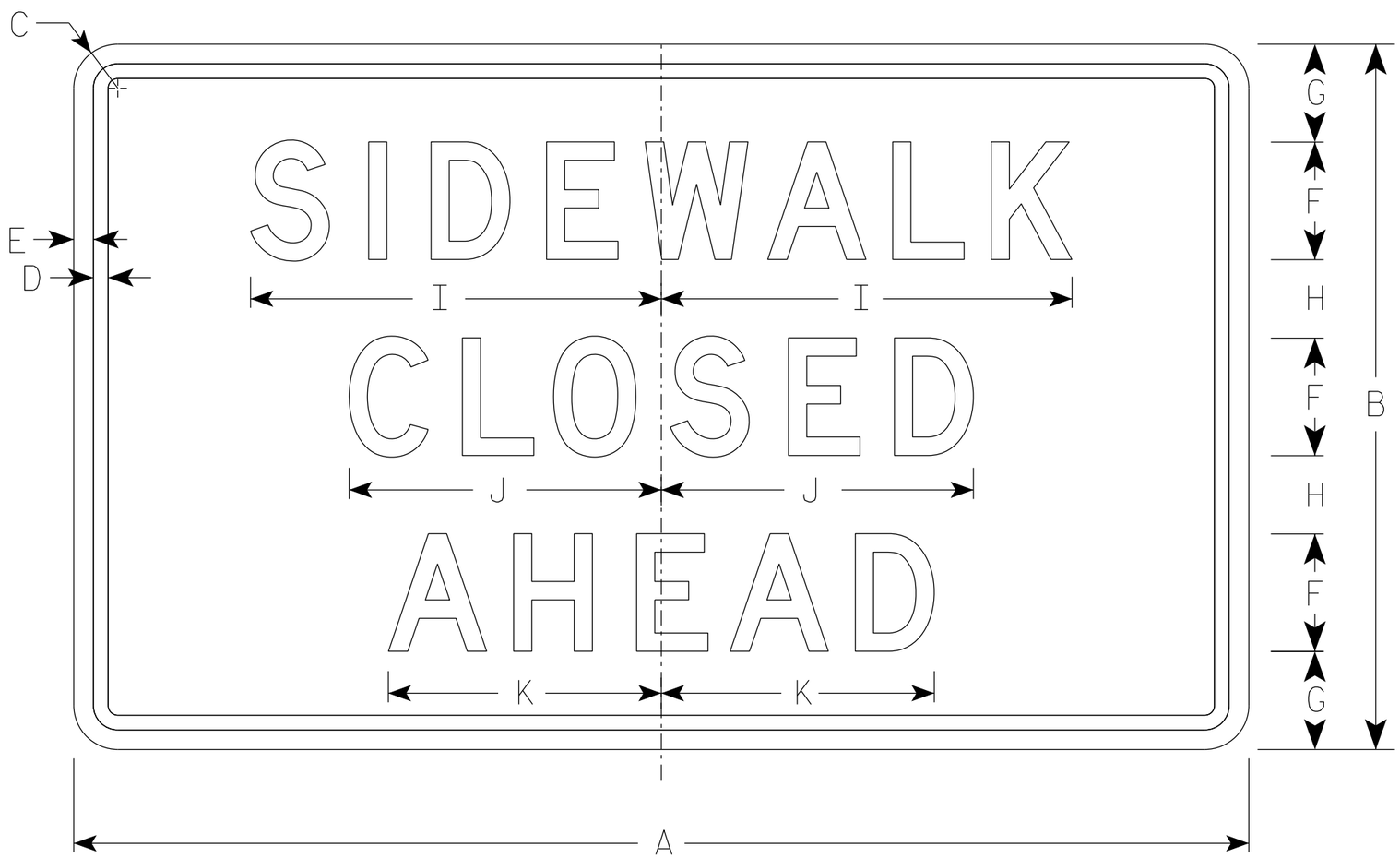

R9-9A

SIZE	A	B	C	D	E	F	G	H	I	J	K	L	M	N	O	P	Q	R	S	T	U	V	W	X	Y	Z	Area sq. ft.
1																											
2S	30	18	1 ½	⅜	½	3	2 ½	2	10 ½	8	7																3.75
2M	30	18	1 ½	⅜	½	3	2 ½	2	10 ½	8	7																3.75
3																											
4																											
5																											

STANDARD SIGN
R9-9A

WISCONSIN DEPT OF TRANSPORTATION

APPROVED Matthew R Rauch
for State Traffic Engineer

DATE 1/24/24 PLATE NO. R9-9A.2

PROJECT NO:	HWY:	COUNTY:		SHEET NO: 108	E

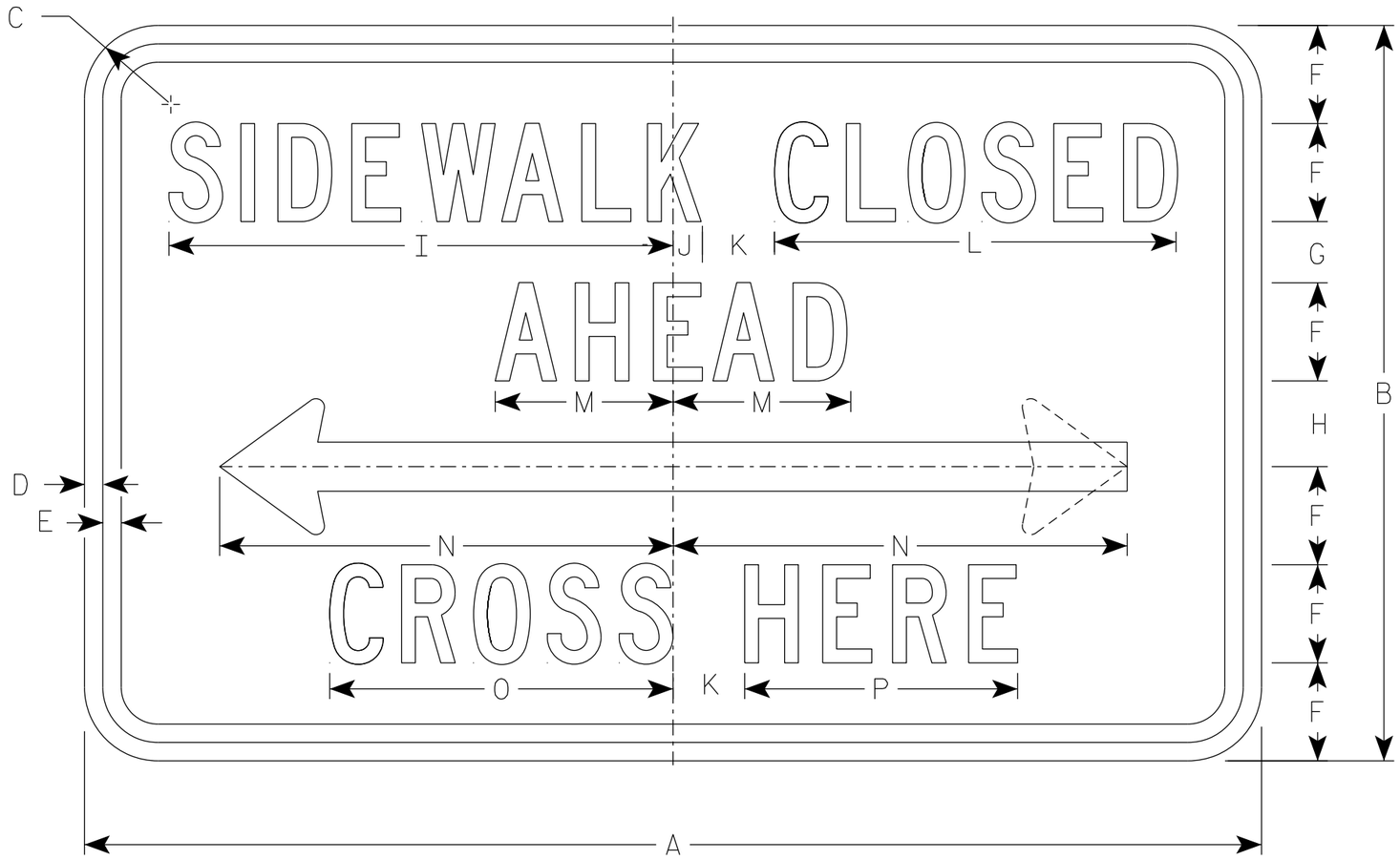

R9-11

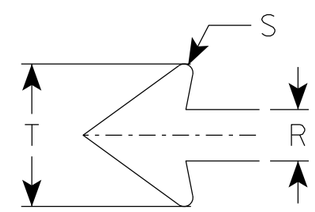

NOTES

1. Sign is Type II - Type H Reflective
2. Color:
   Background - White
   Message - Black
3. Message Series - C except Size 1 is Series D
4. Use Size 2 for Sidewalks. Use Size 3 for Paths and Trails.
5. R9-11 D (double arrow)
   R9-11 L (left arrow)
   R9-11 R (right arrow)

SIZE	A	B	C	D	E	F	G	H	I	J	K	L	M	N	O	P	Q	R	S	T	U	V	W	X	Y	Z	Area sq. ft.
1																											
2S	24	12	1 1/2	3/8	3/8	1 1/2	1 1/2	1 1/2	9 3/4	5/8	1 1/2	7 5/8	3 1/2	9 1/4	6 5/8	5 1/8		1	1/8	2 3/4							2.0
2M	24	12	1 1/2	3/8	3/8	1 1/2	1 1/2	1 1/2	9 3/4	5/8	1 1/2	7 5/8	3 1/2	9 1/4	6 5/8	5 1/8		1	1/8	2 3/4							2.0
3	30	15	1 1/2	3/8	1/2	2	1 1/2	1 1/2	13	3/4	2	10 1/4	4 5/8	12 3/8	8 7/8	6 7/8		1 1/4	1/4	3 5/8							3.125
4																											
5																											

STANDARD SIGN
R9-11

WISCONSIN DEPT OF TRANSPORTATION

APPROVED Matthew R Rauch
for State Traffic Engineer

DATE 1/24/24 PLATE NO. R9-11.5

PROJECT NO: | HWY: | COUNTY: | SHEET NO: 109 | E

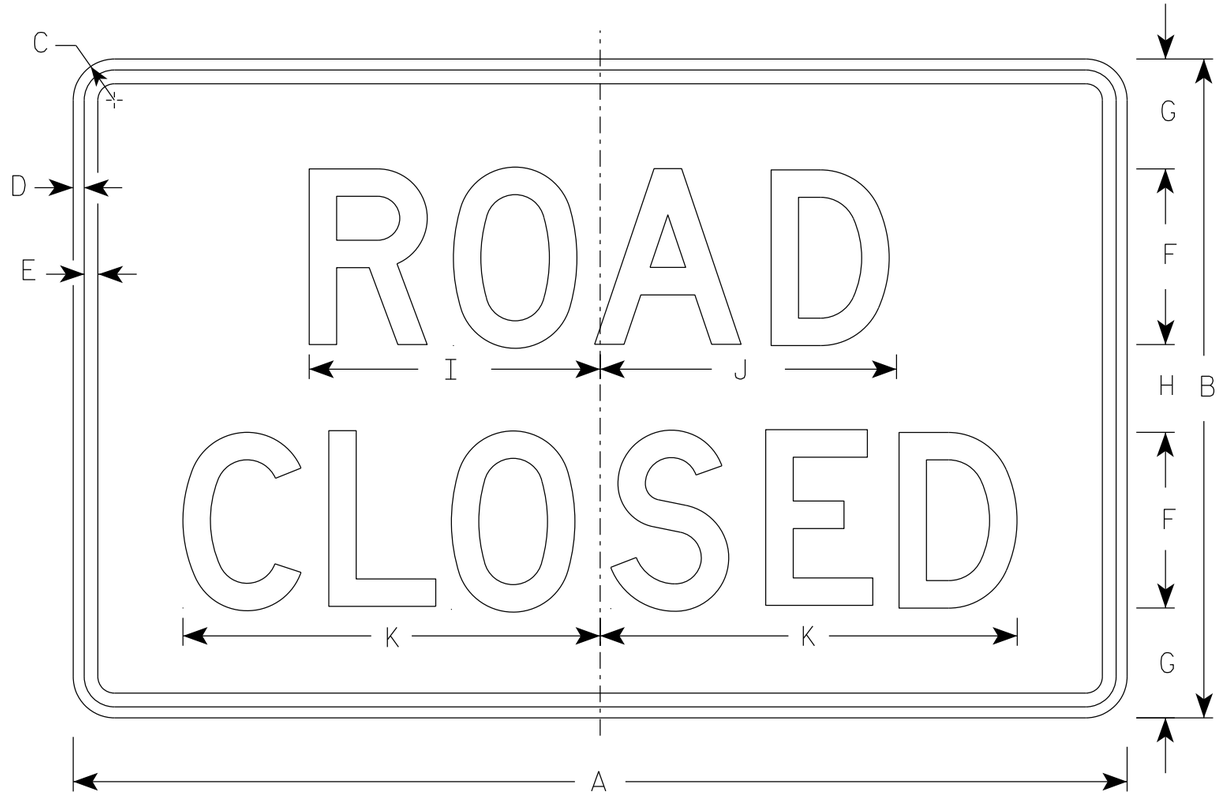

R11-2

NOTES

1. Sign is Type II - Type H Reflective
2. Color:
   Background - White
   Message - Black
3. Message Series - D
4. Corners may be square or rounded when base material is plywood but borders shall be rounded as shown. When base material is metal, the corners and borders shall be rounded.
5. Modify the message as required.

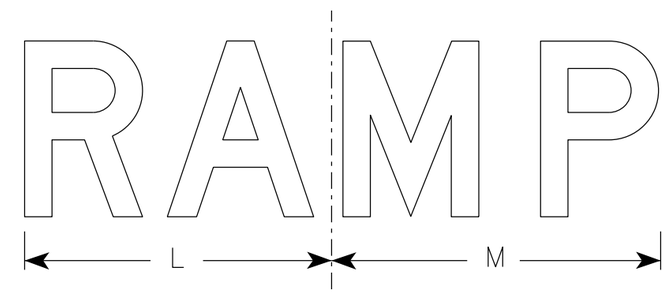

R11-2R

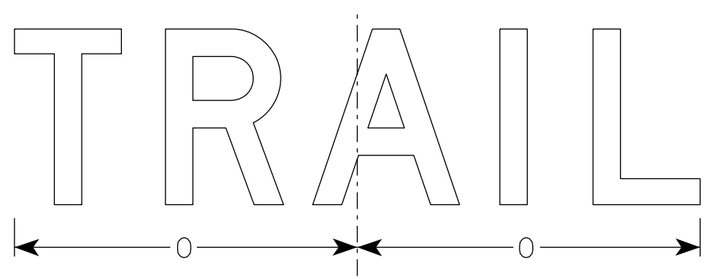

R11-2T

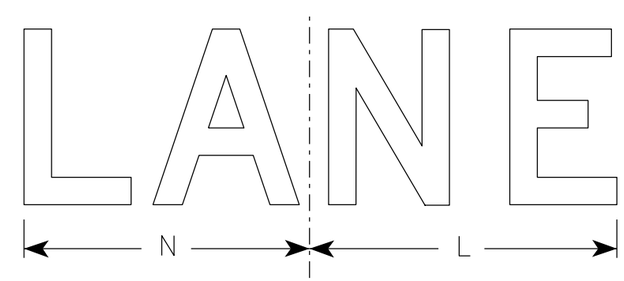

R11-2L

SIZE	A	B	C	D	E	F	G	H	I	J	K	L	M	N	O	P	Q	R	S	T	U	V	W	X	Y	Z	Area sq. ft.
1																											
2S	48	30	1 7/8	1/2	5/8	8	5	4	13 1/4	13 1/2	19	14	15	13	15 5/8												10.0
2M	48	30	1 7/8	1/2	5/8	8	5	4	13 1/4	13 1/2	19	14	15	13	15 5/8												10.0
3	48	30	1 7/8	1/2	5/8	8	5	4	13 1/4	13 1/2	19	14	15	13	15 5/8												10.0
4	48	30	1 7/8	1/2	5/8	8	5	4	13 1/4	13 1/2	19	14	15	13	15 5/8												10.0
5	48	30	1 7/8	1/2	5/8	8	5	4	13 1/4	13 1/2	19	14	15	13	15 5/8												10.0

STANDARD SIGN
R11-2

WISCONSIN DEPT OF TRANSPORTATION

APPROVED Matthew R Rauch
for State Traffic Engineer

DATE 2/5/24 PLATE NO. R11-2.12

PROJECT NO: | HWY: | COUNTY: | SHEET NO: E

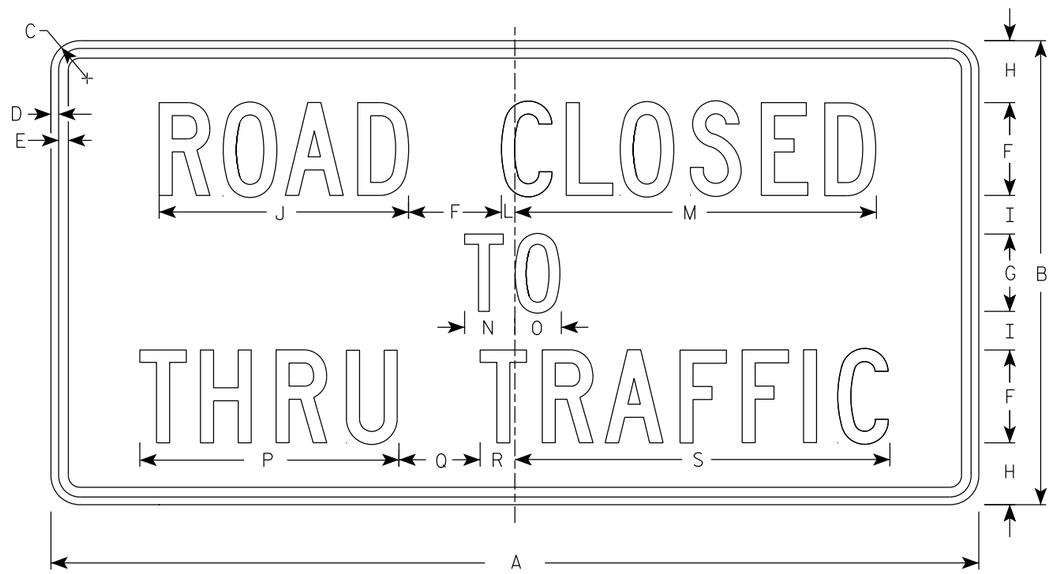

R11-4

NOTES

1. Sign is Type II - Type H Reflective
2. Color:
   Background - White
   Message - Black
3. Message Series - C
4. Corners may be square or rounded when base material is plywood but borders shall be rounded as shown. When base material is metal, the corners and borders shall be rounded.

SIZE	A	B	C	D	E	F	G	H	I	J	K	L	M	N	O	P	Q	R	S	T	U	V	W	X	Y	Z	Area sq. ft.
1																											
2S	60	30	1 7/8	1/2	5/8	6	5	4	2 1/2	16 1/8		7/8	23 3/8	3 1/4	3	16 3/4	5 1/4	2 1/4	24 1/4								12.5
2M	60	30	1 7/8	1/2	5/8	6	5	4	2 1/2	16 1/8		7/8	23 3/8	3 1/4	3	16 3/4	5 1/4	2 1/4	24 1/4								12.5
3																											
4																											
5																											

STANDARD SIGN
R11 - 4

WISCONSIN DEPT OF TRANSPORTATION

APPROVED Matthew R Rauch for State Traffic Engineer

DATE 2/5/24 PLATE NO. R11-4.4

PROJECT NO: | HWY: | COUNTY: | SHEET NO: 111 | E

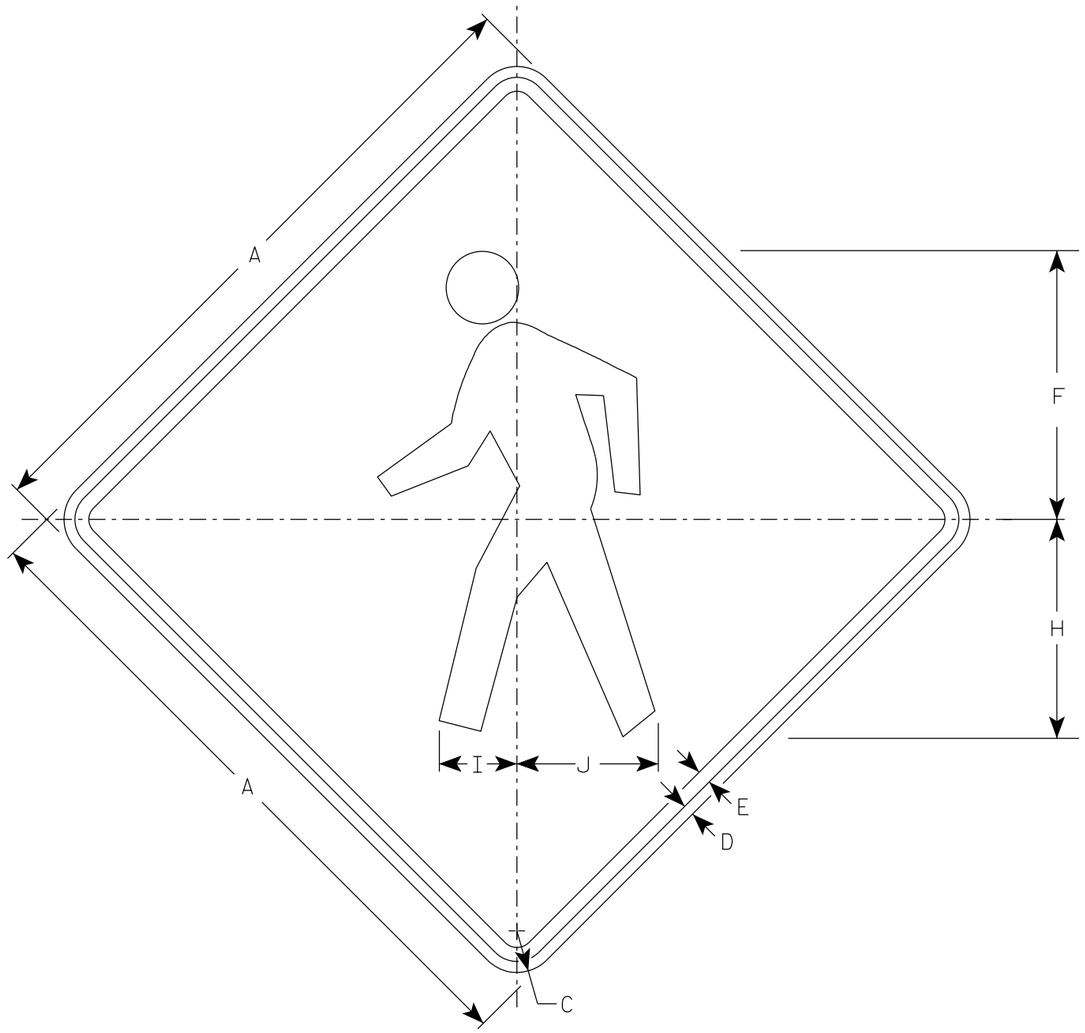

W11-2

NOTES

1. Sign is Type II - Type F Reflective
2. Color:
   Background - Yellow
   Message - Black

SIZE	A	B	C	D	E	F	G	H	I	J	K	L	M	N	O	P	Q	R	S	T	U	V	W	X	Y	Z	Area sq. ft.
1	24		1 1/2	3/8	1/2	9 3/4		7 7/8	2 7/8	5 1/8																	4.0
2S	30		1 7/8	1/2	5/8	12 1/8		9 7/8	3 1/2	6 3/8																	6.25
2M	36		2 1/4	5/8	3/4	14 1/2		11 7/8	4 1/4	7 5/8																	9.0
3	36		2 1/4	5/8	3/4	14 1/2		11 7/8	4 1/4	7 5/8																	9.0
4	48		3	3/4	1	19 3/8		15 3/4	5 5/8	10 1/4																	16.0
5																											

STANDARD SIGN

W11-2

WISCONSIN DEPT OF TRANSPORTATION

APPROVED Matthew R Rauch
for State Traffic Engineer

DATE 6/15/2023 PLATE NO. W11-2.9

PROJECT NO: | HWY: | COUNTY: | SHEET NO: 112 | E

NOTES

1. Sign is Type II - Type F Reflective
2. Color:
   Background - Yellow
   Message - Black
3. W16-7R is the same as W16-7L
   except the arrow is reversed along
   the vertical centerline.

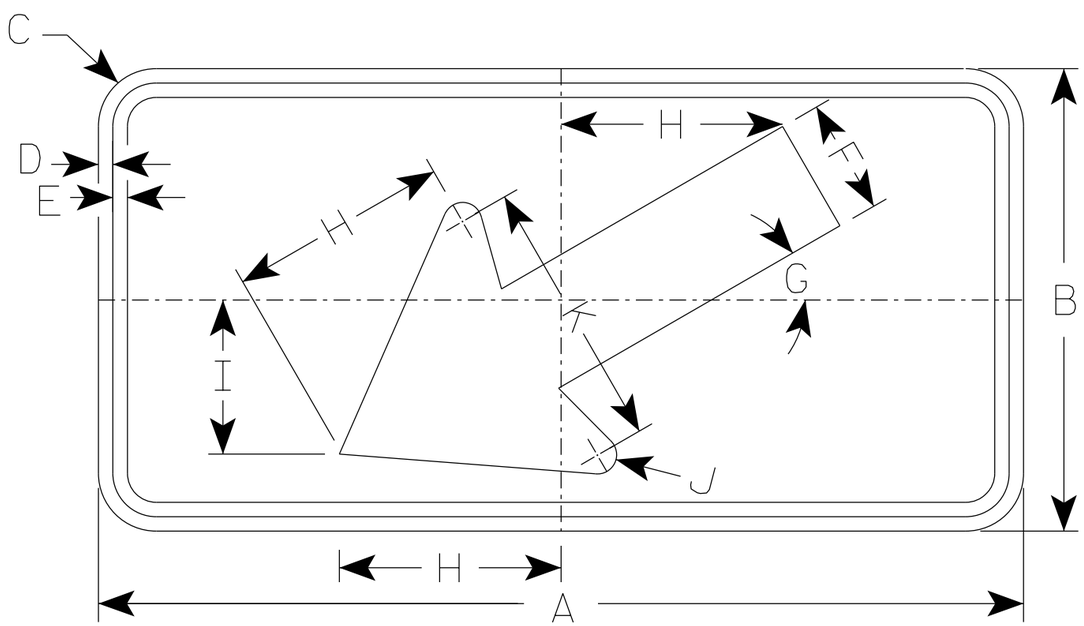

W16-7L

7

* For 36" x 36" Warning Signs, use 30" x 18" W16-7L signs.
* For 48" x 48" Warning Signs, use 48" x 24" W16-7L signs.

7

	SIZE	A	B	C	D	E	F	G	H	I	J	K	L	M	N	O	P	Q	R	S	T	U	V	W	X	Y	Z	Area sq. ft.
	1																											
	2S	24	12	1 1/2	3/8	3/8	3	30°	5 3/4	4	1/2	7																2.0
*	2M	30	18	1 1/2	3/8	1/2	4 1/2	30°	8 1/2	6	5/8	10 1/4																3.75
*	3	30	18	1 1/2	3/8	1/2	4 1/2	30°	8 1/2	6	5/8	10 1/4																3.75
*	4	48	24	1 7/8	1/2	5/8	6	30°	11 1/2	8	1	14																8.0
	5																											

STANDARD SIGN
W16-7

WISCONSIN DEPT OF TRANSPORTATION

APPROVED Matthew R Rauch
for State Traffic Engineer

DATE 1/9/2024 PLATE NO. W16-7.9

PROJECT NO:	HWY:	COUNTY:		SHEET NO: 113	E

NOTES

1. Sign is Type II - Type F Reflective
2. Color:
   Background - Yellow
   Message - Black
3. Message Series - C

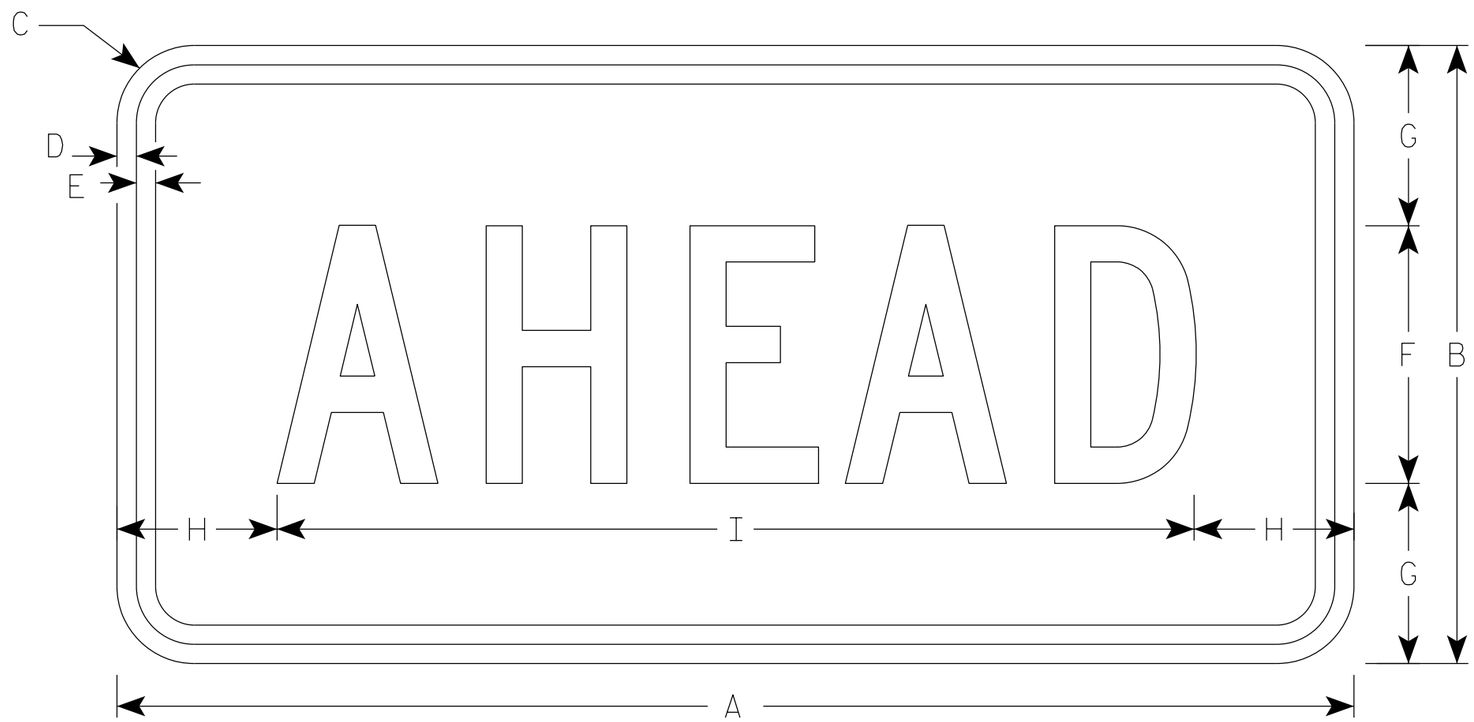

W16-9P

* For 36" x 36" Warning Signs, use 30" x 18" W16-9P signs.
* For 48" x 48" Warning Signs, use 48" x 24" W16-9P signs.

	SIZE	A	B	C	D	E	F	G	H	I	J	K	L	M	N	O	P	Q	R	S	T	U	V	W	X	Y	Z	Area sq. ft.
	1																											
	2S	24	12	1 1/2	3/8	3/8	5	3 1/2	3 1/8	17 3/4																		2.0
*	2M	30	18	1 1/2	3/8	1/2	7	5 1/2	2 3/4	24 1/2																		3.75
*	3	30	18	1 1/2	3/8	1/2	7	3 1/2	2 3/4	24 1/2																		3.75
*	4	48	24	1 7/8	1/2	5/8	10	7	6 1/8	35 3/4																		8.0
	5																											

STANDARD SIGN
W16-9P

WISCONSIN DEPT OF TRANSPORTATION

APPROVED Matthew R Rauch
for State Traffic Engineer

DATE 1/9/2024 PLATE NO. W16-9P.9

PROJECT NO: | HWY: | COUNTY: | SHEET NO: 114 | E

NOTES

1. Sign is Type II - Type F Reflective
2. Color:
   Background - Orange
   Message - Black
3. Message Series - C
4. Corners may be square or rounded when base material is plywood but borders shall be rounded as shown. When base material is metal, the corners and borders shall be rounded.

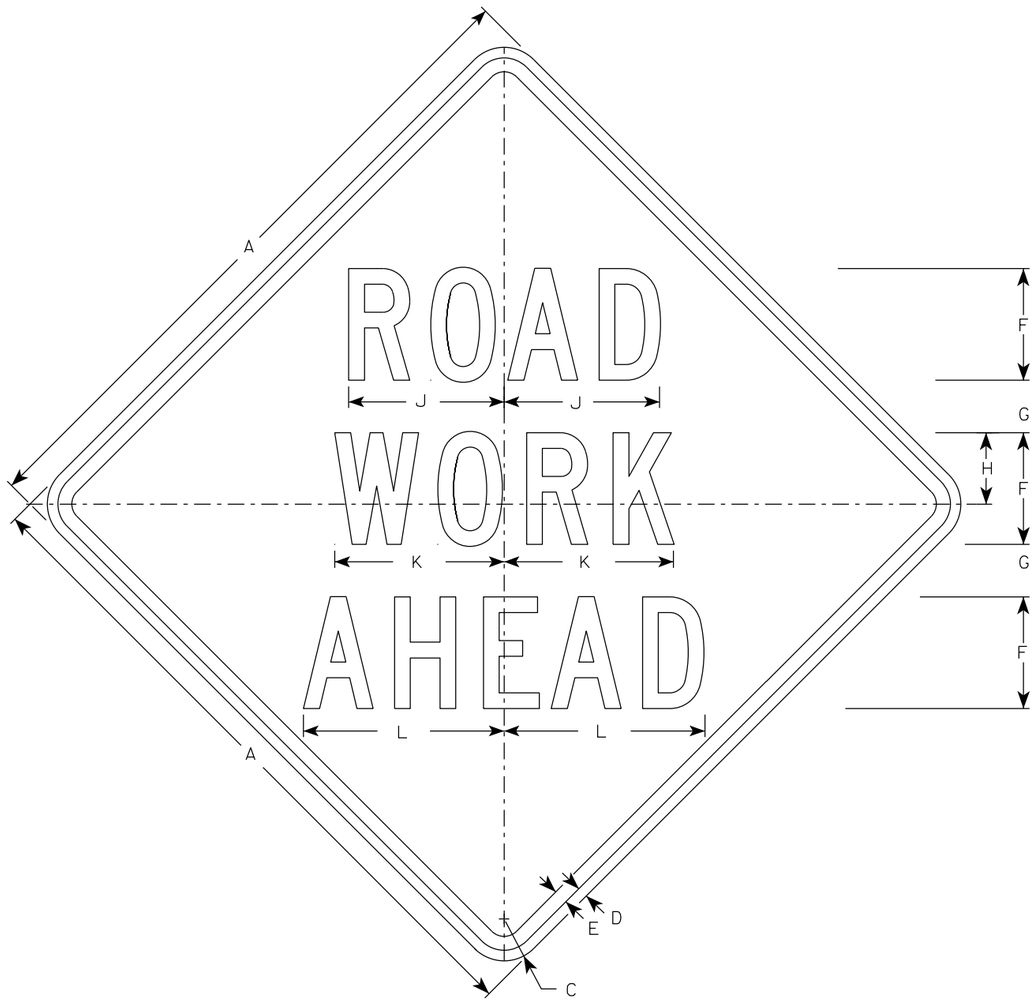

W20-1A

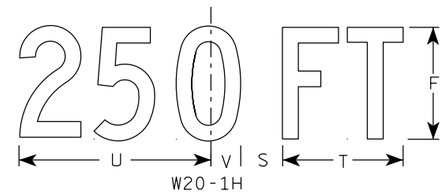

W20-1H

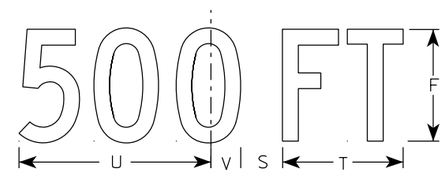

W20-1D

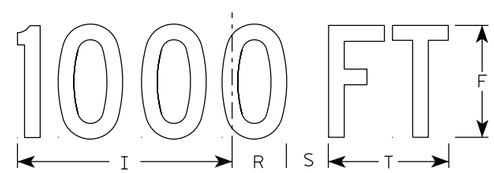

W20-1C

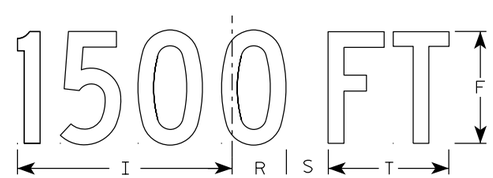

W20-1B

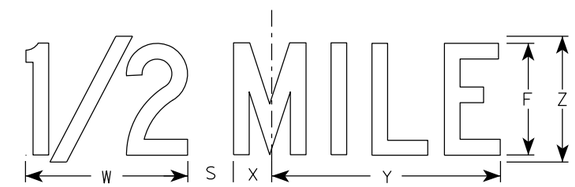

W20-1G

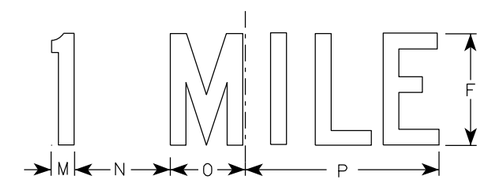

W20-1F

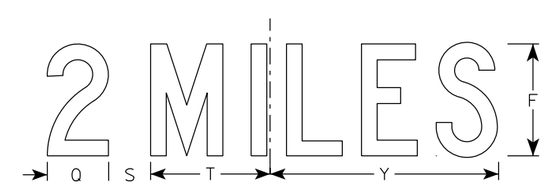

W20-1E

SIZE	A	B	C	D	E	F	G	H	I	J	K	L	M	N	O	P	Q	R	S	T	U	V	W	X	Y	Z	Area sq. ft.
1	36		2 1/4	5/8	3/4	5	2 5/8	3 1/4	10 1/8	7	7 5/8	8 7/8	1 1/8	4 1/2	3 1/2	9	3 1/4	2 1/2	2 1/4	5 5/8	9	1 3/8	8	1 3/4	10 3/4	6	9.0
2S	48		3	3/4	1	8	3 3/4	5 1/8	15 3/8	11 1/8	12 1/8	14 3/8	1 5/8	6 7/8	5 3/8	13 7/8	4 3/8	3 7/8	3	8 5/8	13 3/4	2 1/8	11 7/8	2 3/4	16 3/8	9	16.0
2M	48		3	3/4	1	8	3 3/4	5 1/8	15 3/8	11 1/8	12 1/8	14 3/8	1 5/8	6 7/8	5 3/8	13 7/8	4 3/8	3 7/8	3	8 5/8	13 3/4	2 1/8	11 7/8	2 3/4	16 3/8	9	16.0
3	48		3	3/4	1	8	3 3/4	5 1/8	15 3/8	11 1/8	12 1/8	14 3/8	1 5/8	6 7/8	5 3/8	13 7/8	4 3/8	3 7/8	3	8 5/8	13 3/4	2 1/8	11 7/8	2 3/4	16 3/8	9	16.0
4	48		3	3/4	1	8	3 3/4	5 1/8	15 3/8	11 1/8	12 1/8	14 3/8	1 5/8	6 7/8	5 3/8	13 7/8	4 3/8	3 7/8	3	8 5/8	13 3/4	2 1/8	11 7/8	2 3/4	16 3/8	9	16.0
5	48		3	3/4	1	8	3 3/4	5 1/8	15 3/8	11 1/8	12 1/8	14 3/8	1 5/8	6 7/8	5 3/8	13 7/8	4 3/8	3 7/8	3	8 5/8	13 3/4	2 1/8	11 7/8	2 3/4	16 3/8	9	16.0

STANDARD SIGN
W20-1A, B, C, D, E, F, G & H

WISCONSIN DEPT OF TRANSPORTATION

APPROVED Matthew R Rauch
for State Traffic Engineer

DATE 1/10/2024 PLATE NO. W20-1.12

PROJECT NO:

SHEET NO: 115 E

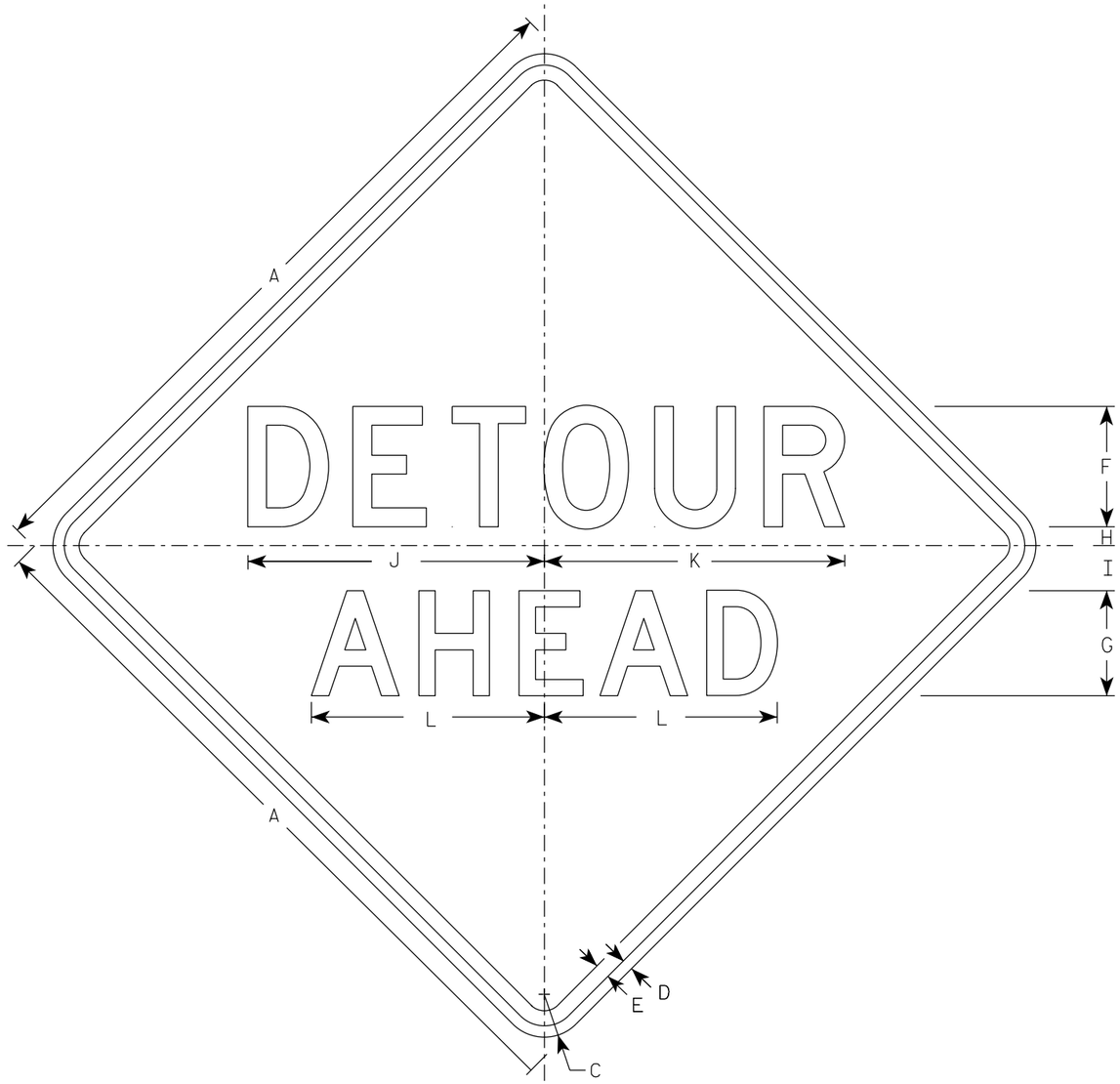

W20-2A

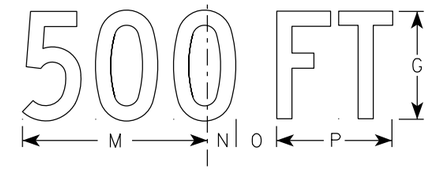

W20-2D

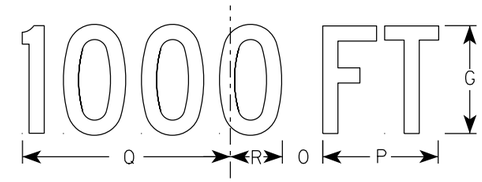

W20-2C

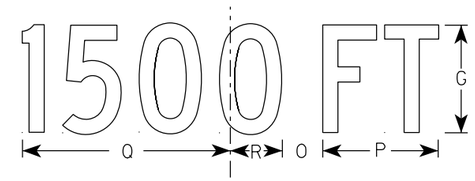

W20-2B

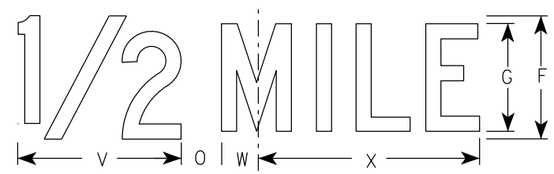

W20-2G

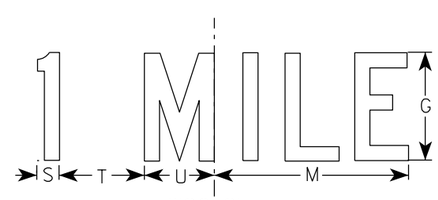

W20-2F

NOTES

1. Sign is Type II - Type F Reflective
2. Color:
   Background - Orange
   Message - Black
3. Message Series - See note 5
4. Corners may be square or rounded when base material is plywood but borders shall be rounded as shown. When base material is metal, the corners and borders shall be rounded.
5. Line 1 is Series D.
   Line 2 is Series D for AHEAD and Series C for all other distances.

SIZE	A	B	C	D	E	F	G	H	I	J	K	L	M	N	O	P	Q	R	S	T	U	V	W	X	Y	Z	Area sq. ft.
1	36		2 1/4	5/8	3/4	6	5	1	2 1/4	14 3/4	15	11 5/8	9	1 3/8	1 7/8	5 5/8	10 1/8	2 1/2	1 1/8	4 1/2	3 1/2	8	1 3/4	10 3/4			9.0
2S	48		3	3/4	1	8	7	1 1/4	3	19 3/4	20	15 1/2	12	1 7/8	2 5/8	7 1/2	13 1/2	3 3/8	1 1/2	6	4 5/8	10 5/8	2 3/8	14 3/8			16.0
2M	48		3	3/4	1	8	7	1 1/4	3	19 3/4	20	15 1/2	12	1 7/8	2 5/8	7 1/2	13 1/2	3 3/8	1 1/2	6	4 5/8	10 5/8	2 3/8	14 3/8			16.0
3	48		3	3/4	1	8	7	1 1/4	3	19 3/4	20	15 1/2	12	1 7/8	2 5/8	7 1/2	13 1/2	3 3/8	1 1/2	6	4 5/8	10 5/8	2 3/8	14 3/8			16.0
4	48		3	3/4	1	8	7	1 1/4	3	19 3/4	20	15 1/2	12	1 7/8	2 5/8	7 1/2	13 1/2	3 3/8	1 1/2	6	4 5/8	10 5/8	2 3/8	14 3/8			16.0
5	48		3	3/4	1	8	7	1 1/4	3	19 3/4	20	15 1/2	12	1 7/8	2 5/8	7 1/2	13 1/2	3 3/8	1 1/2	6	4 5/8	10 5/8	2 3/8	14 3/8			16.0

STANDARD SIGN
W20-2A,B,C,D,F & G

WISCONSIN DEPT OF TRANSPORTATION

APPROVED Matthew R Rauch
For State Traffic Engineer

DATE 1/10/2024 PLATE NO. W20-2.7

PROJECT NO: | HWY: | COUNTY: | SHEET NO: E

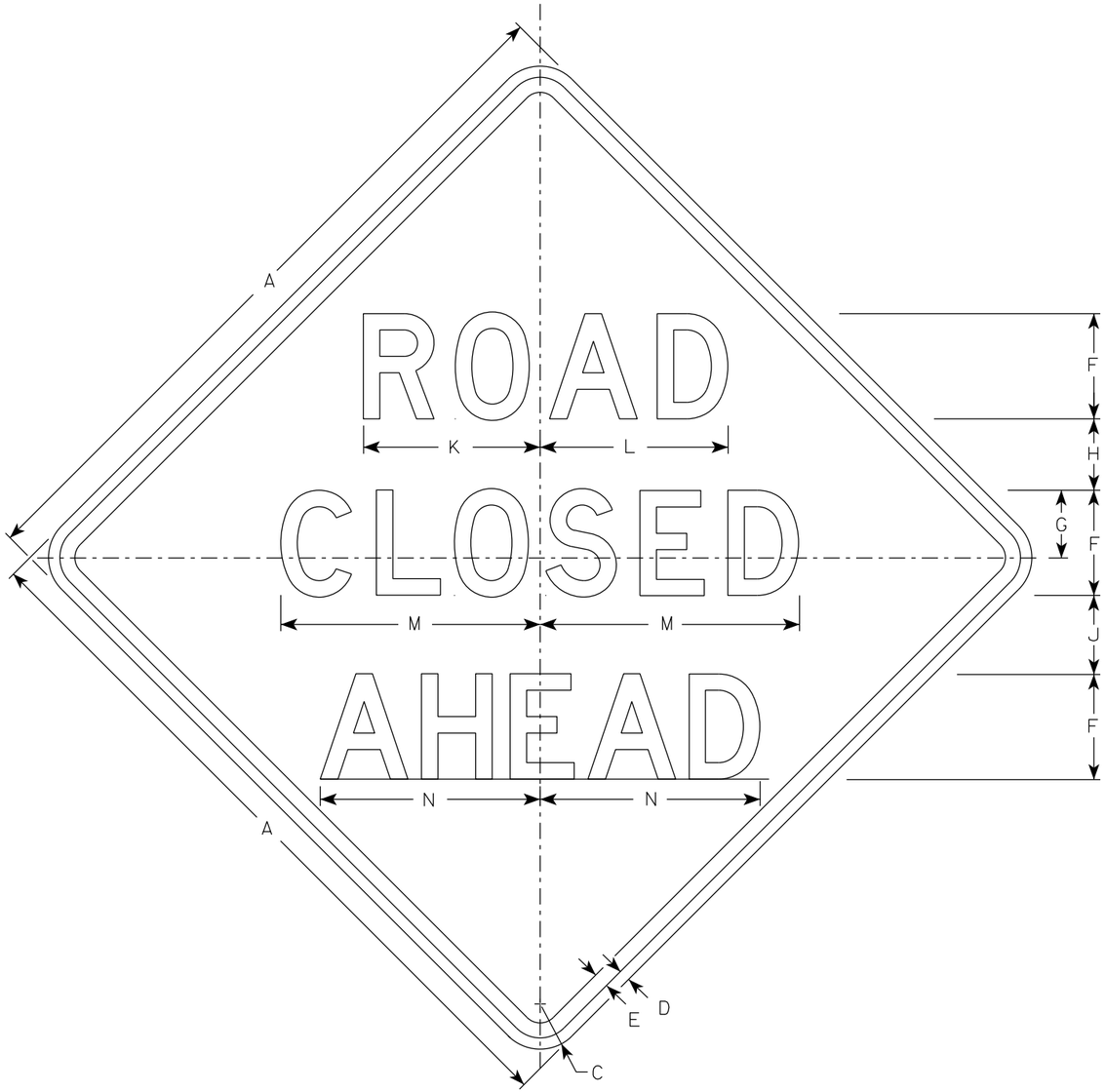

W20-3A

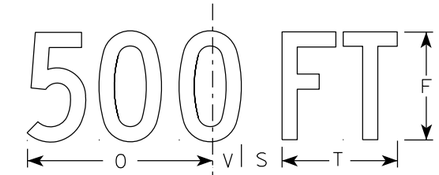

W20-3D

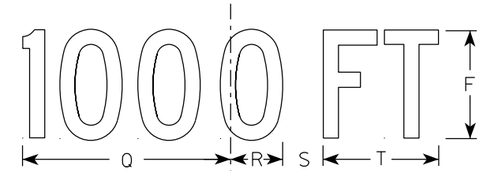

W20-3C

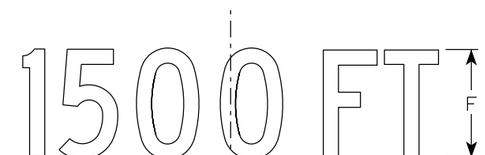

W20-3B

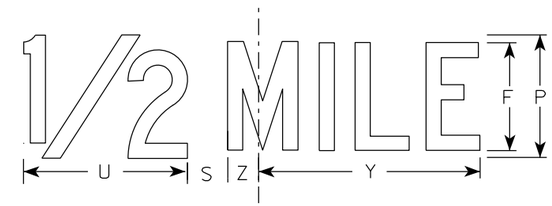

W20-3G

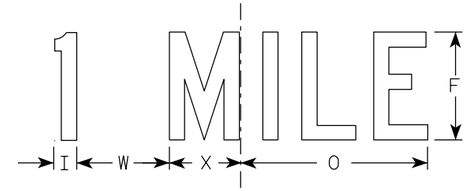

W20-3F

NOTES

1. Sign is Type II - Type F Reflective
2. Color:
   Background - Orange
   Message - Black
3. Message Series - see note 5
4. Corners may be square or rounded when base material is plywood but borders shall be rounded as shown. When base material is metal, the corners and borders shall be rounded.
5. Lines 1 and 2 are Series D.
   Line 3 is Series D for AHEAD and Series C for all other distances.

SIZE	A	B	C	D	E	F	G	H	I	J	K	L	M	N	O	P	Q	R	S	T	U	V	W	X	Y	Z	Area sq. ft.
1	36		2 1/4	5/8	3/4	5	3 3/8	3 1/2	1 1/8	4	8 3/8	8 7/8	12 1/2	11	9	6	10 1/8	2 1/2	1 7/8	5 5/8	8	1 3/8	4 1/2	3 1/2	10 3/4	1 3/4	9.0
2S	48		3	3/4	1	7	4 1/2	4 3/4	1 1/2	5 1/4	11 3/4	12 1/2	17 1/4	14 5/8	12	8	13 1/2	3 3/8	2 5/8	7 1/2	10 5/8	1 7/8	6	4 5/8	14 3/8	2 3/8	16.0
2M	48		3	3/4	1	7	4 1/2	4 3/4	1 1/2	5 1/4	11 3/4	12 1/2	17 1/4	14 5/8	12	8	13 1/2	3 3/8	2 5/8	7 1/2	10 5/8	1 7/8	6	4 5/8	14 3/8	2 3/8	16.0
3	48		3	3/4	1	7	4 1/2	4 3/4	1 1/2	5 1/4	11 3/4	12 1/2	17 1/4	14 5/8	12	8	13 1/2	3 3/8	2 5/8	7 1/2	10 5/8	1 7/8	6	4 5/8	14 3/8	2 3/8	16.0
4	48		3	3/4	1	7	4 1/2	4 3/4	1 1/2	5 1/4	11 3/4	12 1/2	17 1/4	14 5/8	12	8	13 1/2	3 3/8	2 5/8	7 1/2	10 5/8	1 7/8	6	4 5/8	14 3/8	2 3/8	16.0
5	48		3	3/4	1	7	4 1/2	4 3/4	1 1/2	5 1/4	11 3/4	12 1/2	17 1/4	14 5/8	12	8	13 1/2	3 3/8	2 5/8	7 1/2	10 5/8	1 7/8	6	4 5/8	14 3/8	2 3/8	16.0

STANDARD SIGN
W20-3A, B, C, D, F & G

WISCONSIN DEPT OF TRANSPORTATION

APPROVED Matthew R Rauch
for State Traffic Engineer

DATE 1/10/2024 PLATE NO. W20-3.8

PROJECT NO: | HWY: | COUNTY: | SHEET NO: E

NOTES:

1. SIGN IS TYPE II - TYPE F REFLECTIVE - REFERENCE "WISDOT STANDARD SPECIFICATIONS FOR HIGHWAY AND STRUCTURE CONSTRUCTION" LATEST EDITION.
2. COLOR
   BACKGROUND - ORANGE
   MESSAGE - BLACK
3. MESSAGE SERIES - C

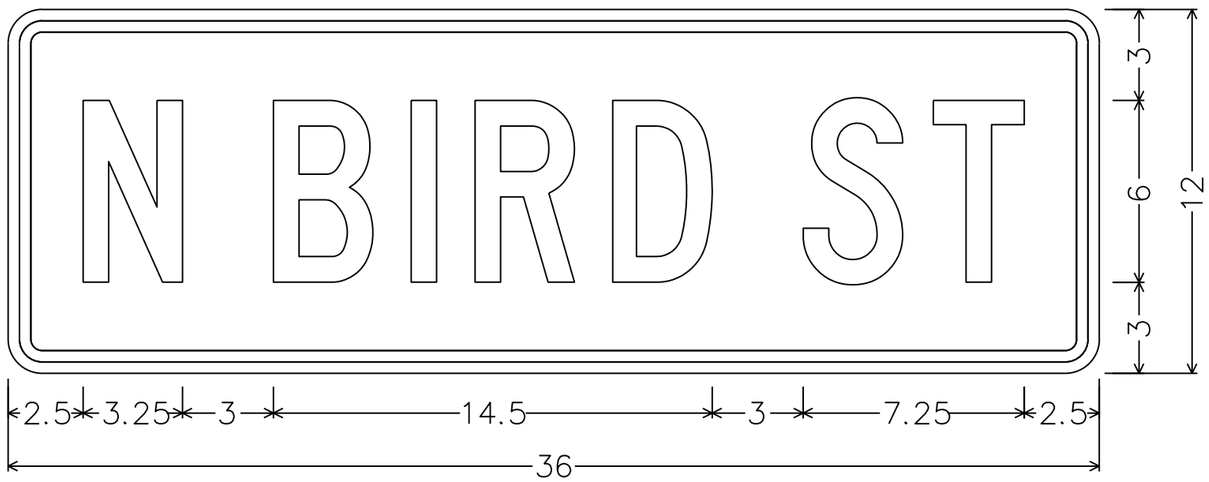

1.125" Radius, 0.375" Border, 0.375" Indent, Black on, Orange;

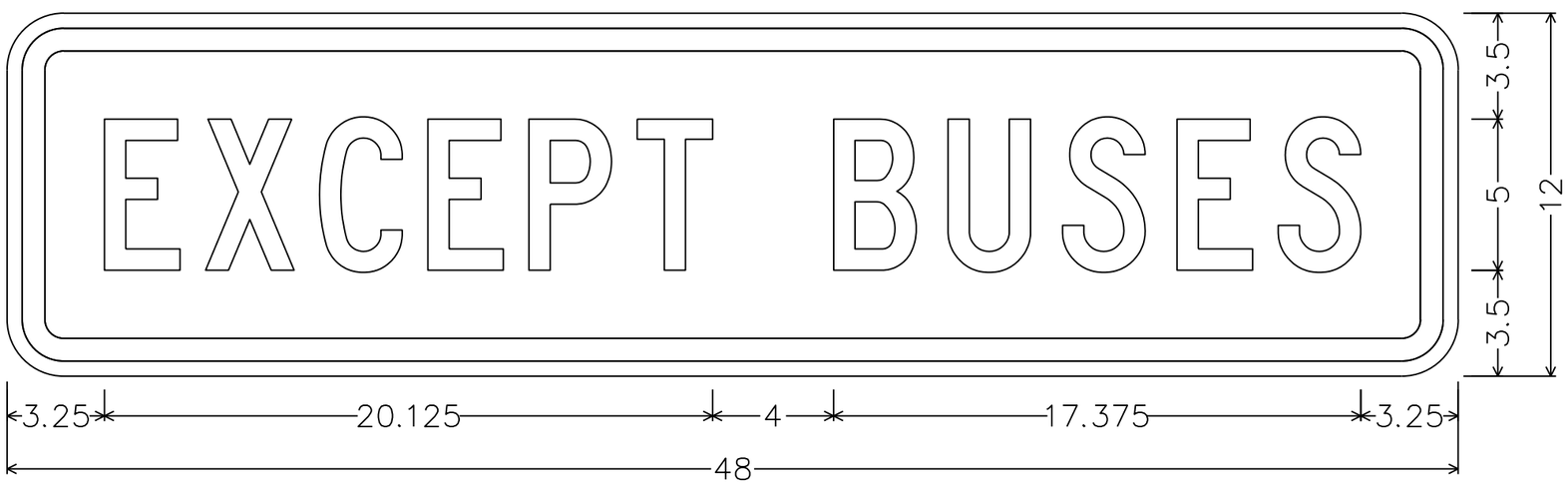

1.875" Radius, 0.750" Border, 0.500" Indent, Black on, White;
"EXCEPT", C; "BUSES", C;

7

7

PROJECT NO: 3996-00-35	HWY: N BIRD ST	COUNTY: DANE	SPECIAL SIGN PLATES	SHEET 118	E

FILE NAME : G:\00\00036\00036327\CADD\C3D\39960034\SHEETS\070101_SD.DWG
LAYOUT NAME - 070101_sd
PLOT DATE : 8/14/2024 11:32 AM PLOT BY : NATHAN COOK PLOT NAME : PLOT SCALE : 1 IN:5 FT
WISDOT/CADDS SHEET

Notes:	
1 - CUT	CUT INCLUDES SALVAGED/UNUSABLE PAVEMENT MATERIAL
2 - SALVAGED/UNUSABLE PAVEMENT MATERIAL	THIS DOES NOT SHOW UP IN CROSS SECTIONS
3 - FILL	DOES NOT INCLUDE UNUSABLE PAVEMENT EXC VOLUME
8 - MASS ORDINATE	IF MARSH AND EBS TO BE BACKFILLED WITH GRANULAR: [CUT - SALVAGED PAVT - ((FILL - EXPANDED ROCK) * FILL FACTOR)]

STAGE 1 - N BIRD ST WEST SIDE

STATION	REAL STATION	DISTANCE	AREA (SF)		INCREMENTAL VOL (CY) (UNADJUSTED)			CUMULATIVE VOL (CY)		
			CUT	FILL	CUT NOTE 1	SALVAGED/UNUSABLE PAVEMENT MATERIAL NOTE 2	FILL NOTE 3	CUT 1.00 NOTE 1	EXPANDED FILL 1.25	MASS ORDINATE NOTE 8
11+00.00	1100.00	0.00	8.69	0.04	0	0	0	0	0	0
11+50.00	1150.00	50	7.75	1.04	8	0	1	8	1	7
11+87.50	1187.50	37.5	11.89	0.00	8	0	1	16	3	14
12+00.00	1200.00	12.5	11.99	0.00	4	0	0	20	3	18
12+50.00	1250.00	50	8.44	1.22	12	0	1	32	4	28
13+00.00	1300.00	50	9.78	1.01	10	0	2	42	6	36
13+50.00	1350.00	50	13.97	0.00	15	0	1	57	8	50
14+00.00	1400.00	50	9.80	0.97	15	0	1	72	9	63
14+23.93	1423.93	23.93	14.88	0.00	7	0	0	79	9	70
14+50.00	1450.00	26.07	9.41	1.07	8	0	1	87	10	77
15+00.00	1500.00	50	8.91	0.00	10	0	1	97	11	86
15+04.97	1504.97	4.97	8.64	0.00	1	0	0	98	11	87
15+50.00	1550.00	45.03	10.10	0.43	9	0	0	107	11	96
15+76.94	1576.94	26.94	13.08	0.00	8	0	0	115	11	104
16+00.00	1600.00	23.06	9.98	0.22	7	0	0	122	11	111
16+50.00	1650.00	50	5.29	2.52	7	0	3	129	15	114
16+55.62	1655.62	5.62	8.08	0.00	0	0	0	129	15	114
17+00.00	1700.00	44.38	7.85	1.23	6	0	1	135	16	119
17+26.32	1726.32	26.32	9.04	0.00	4	0	1	139	18	122
17+50.00	1750.00	23.68	7.53	1.24	3	0	1	142	19	123
18+00.00	1800.00	50	11.55	0.00	11	0	1	153	20	133
18+00.73	1800.73	0.73	11.48	0.00	0	0	0	153	20	133
18+50.00	1850.00	49.27	9.47	0.47	12	0	0	165	20	145
18+80.50	1880.50	30.5	13.83	0.00	8	0	0	173	20	153
19+00.00	1900.00	19.5	11.49	0.02	6	0	0	179	20	159
19+50.00	1950.00	50	11.79	0.00	15	0	0	194	20	174
19+95.52	1995.52	45.52	14.86	0.00	15	0	0	209	20	189
20+00.00	2000.00	4.48	14.09	0.00	1	0	0	210	20	190
20+27.56	2027.56	27.56	8.52	1.53	8	0	1	218	21	197
20+50.00	2050.00	22.44	8.95	0.85	4	0	1	222	23	200
21+00.00	2100.00	50	9.64	0.63	10	0	1	232	24	208
21+26.20	2126.20	26.2	13.51	0.00	7	0	0	239	24	215
21+50.00	2150.00	23.8	10.08	0.15	6	0	0	245	24	221
22+00.00	2200.00	50	12.33	0.00	14	0	0	259	24	235
22+37.25	2237.25	37.25	14.85	0.00	13	0	0	272	24	248
22+50.00	2250.00	12.75	14.65	0.00	5	0	0	277	24	253
23+00.00	2300.00	50	10.35	1.70	16	0	2	293	26	267
23+50.00	2350.00	50	10.75	2.34	13	0	4	306	31	275
24+00.00	2400.00	50	11.89	1.50	14	0	4	320	36	284
24+68.99	2468.99	68.99	0.41	0.00	6	0	2	326	39	287

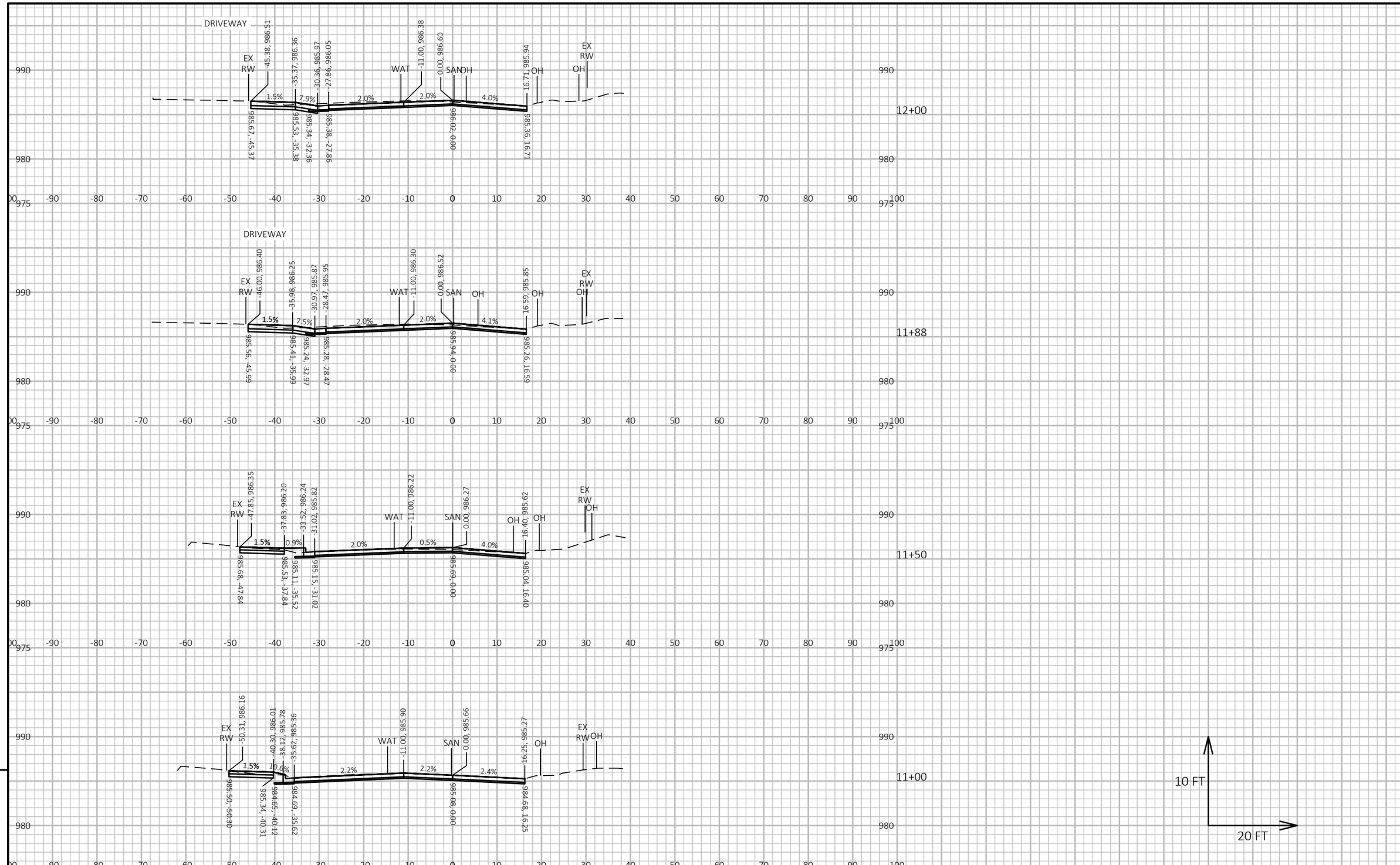

PROJECT NO: 3996-00-35	HWY: N BIRD ST	COUNTY: DANE	CROSS SECTIONS: N BIRD ST	SHEET 120	E

FILE NAME : G:\00\00036\00036327\CADD\C3D\39960034\SHEETS\090201-XS.DWG
LAYOUT NAME - 090201-xs
PLOT DATE : 10/10/2024 8:14 AM
PLOT BY : NATHAN COOK
PLOT NAME :
PLOT SCALE : 1 IN:20 FT HORZ. / 1 IN:10 FT VERT.
WISDOT/CADDS SHEET 49

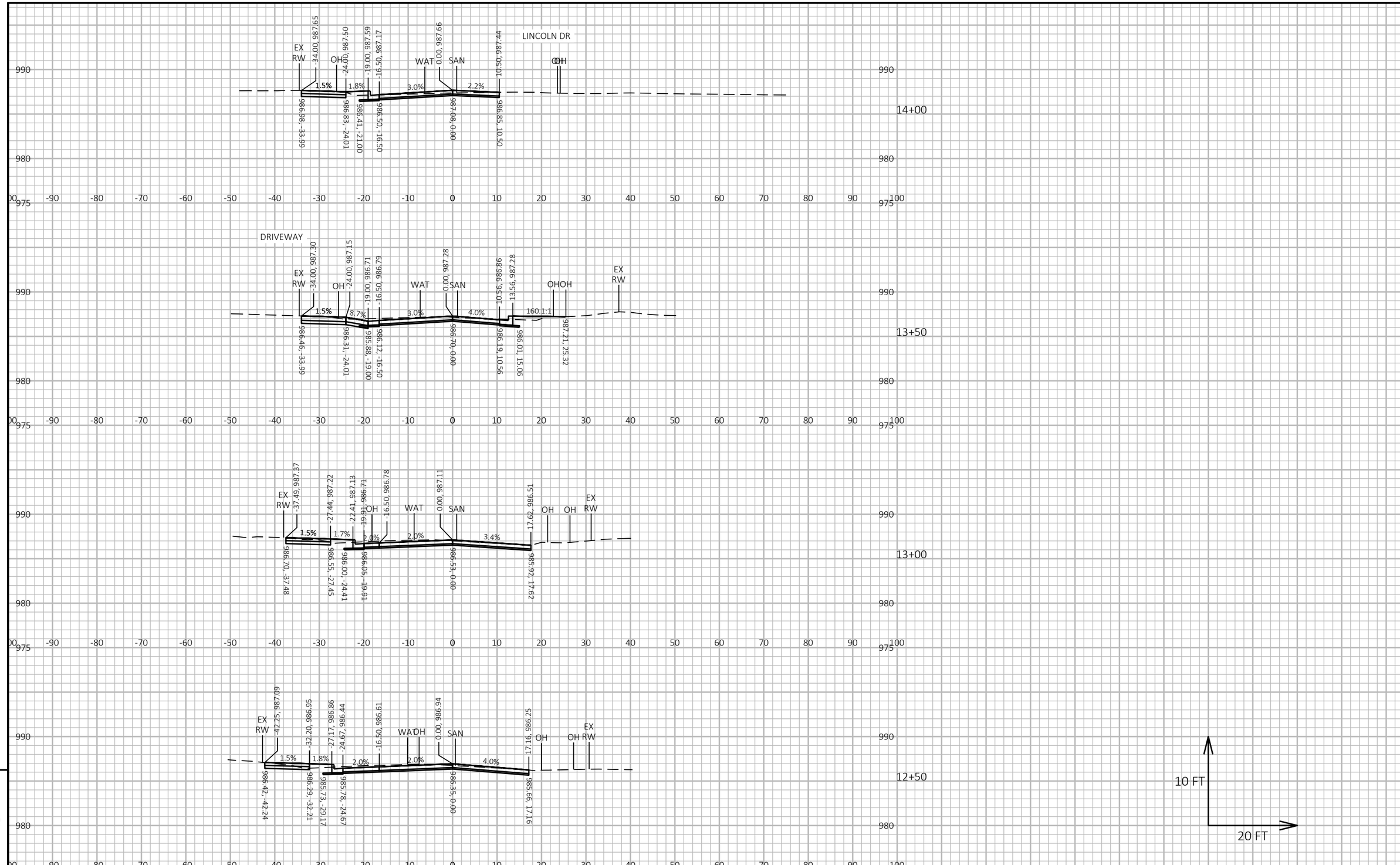

PROJECT NO: 3996-00-35	HWY: N BIRD ST	COUNTY: DANE	CROSS SECTIONS: N BIRD ST	SHEET 121	E

FILE NAME : G:\00\00036\00036327\CADD\C3D\39960034\SHEETS\090201-XS.DWG
LAYOUT NAME - 090202-xs
PLOT DATE : 10/10/2024 8:14 AM
PLOT BY : NATHAN COOK
PLOT NAME :
PLOT SCALE : 1 IN:20 FT HORZ. / 1 IN:10 FT VERT.
WISDOT/CADDS SHEET 49

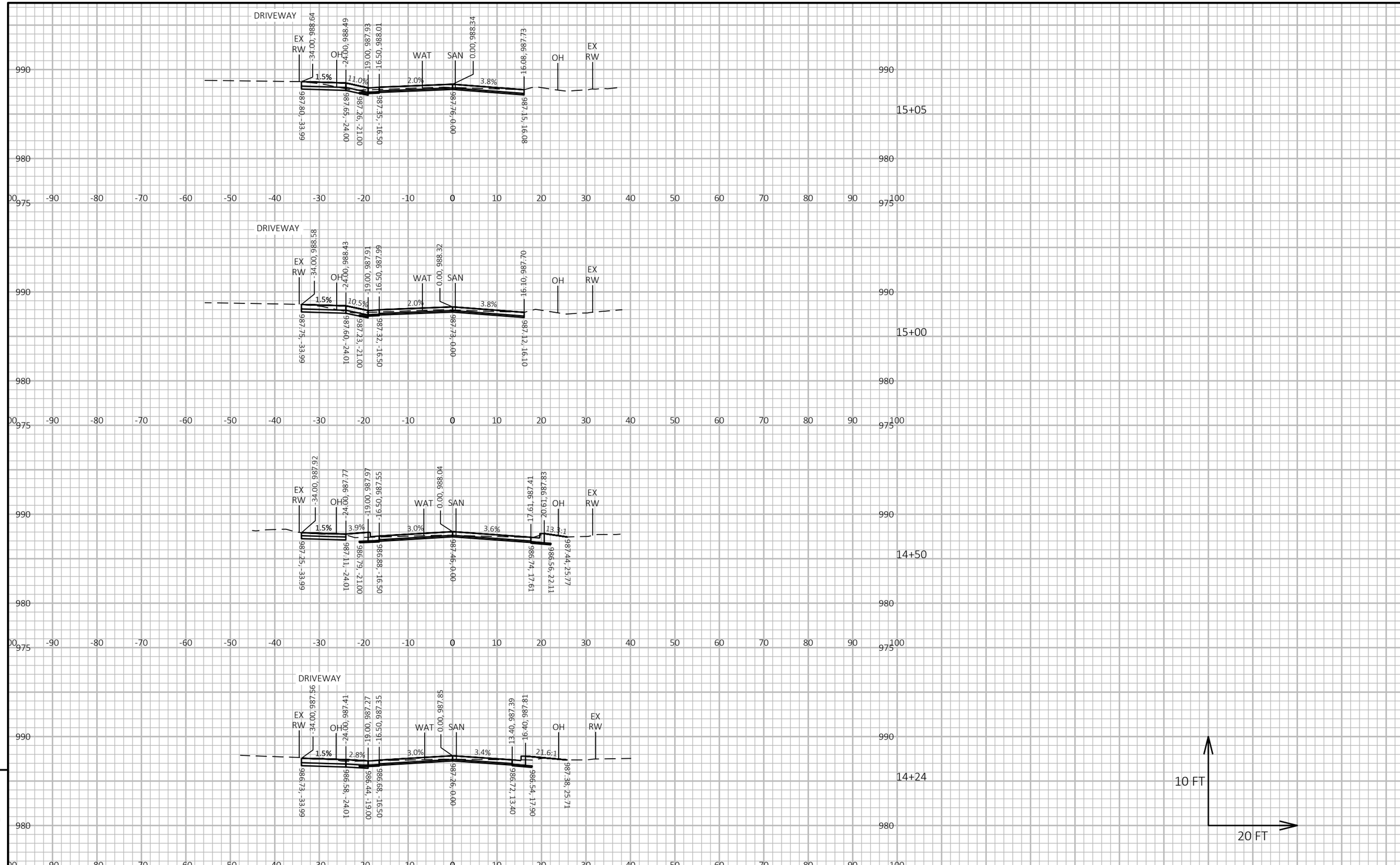

PROJECT NO: 3996-00-35	HWY: N BIRD ST	COUNTY: DANE	CROSS SECTIONS: N BIRD ST	SHEET 122	E

FILE NAME : G:\00\00036\00036327\CADD\C3D\39960034\SHEETS\090201-XS.DWG
LAYOUT NAME - 090203-xs
PLOT DATE : 10/10/2024 8:14 AM
PLOT BY : NATHAN COOK
PLOT NAME :
PLOT SCALE : 1 IN:20 FT HORZ. / 1 IN:10 FT VERT.
WISDOT/CADDS SHEET 49

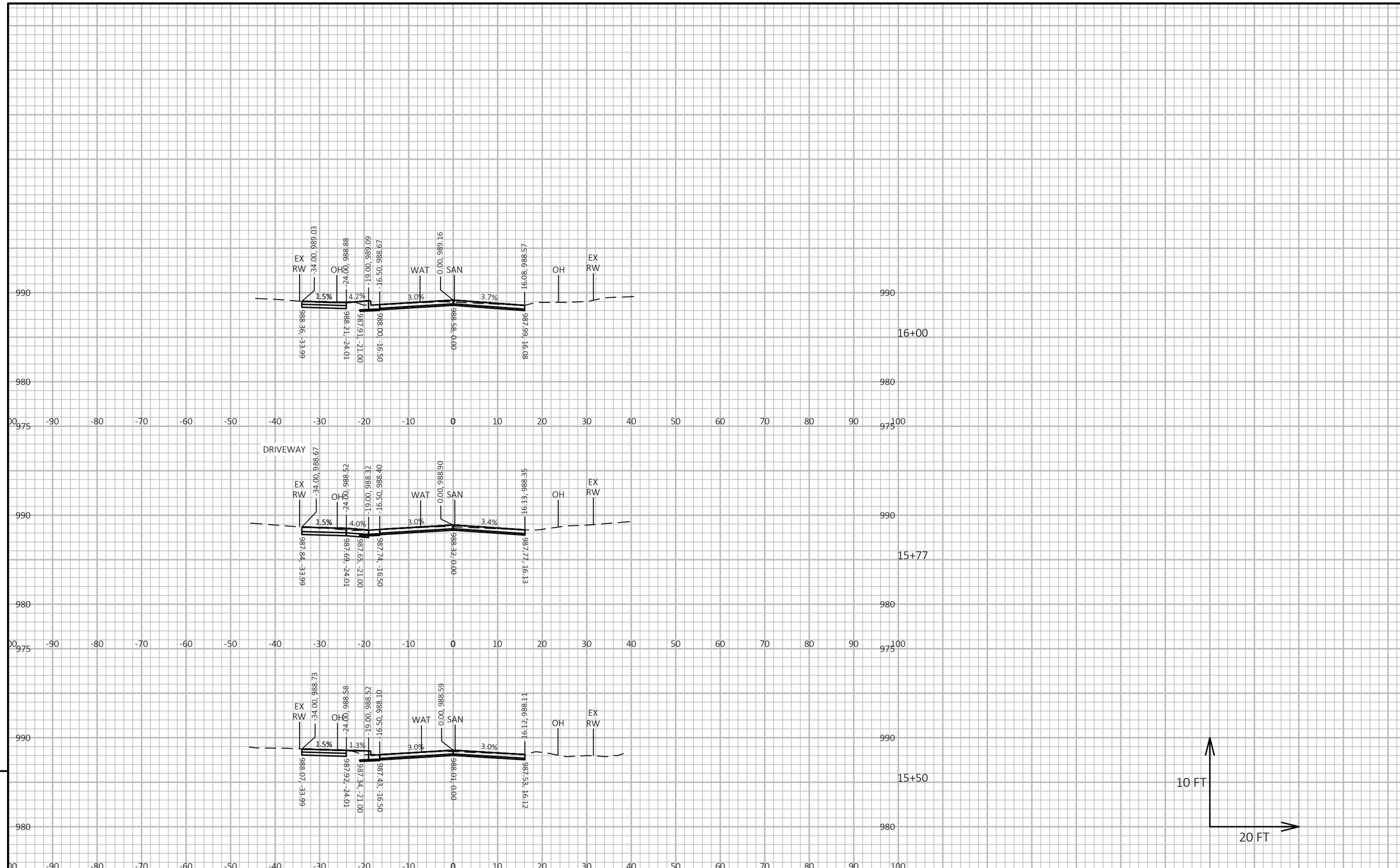

9

9

PROJECT NO: 3996-00-35	HWY: N BIRD ST	COUNTY: DANE	CROSS SECTIONS: N BIRD ST	SHEET 123	E

FILE NAME : G:\00\00036\00036327\CADD\C3D\39960034\SHEETS\090201-XS.DWG
LAYOUT NAME - 090204-xs
PLOT DATE : 10/10/2024 8:14 AM
PLOT BY : NATHAN COOK
PLOT NAME :
PLOT SCALE : 1 IN:20 FT HORZ. / 1 IN:10 FT VERT.
WISDOT/CADDS SHEET 49

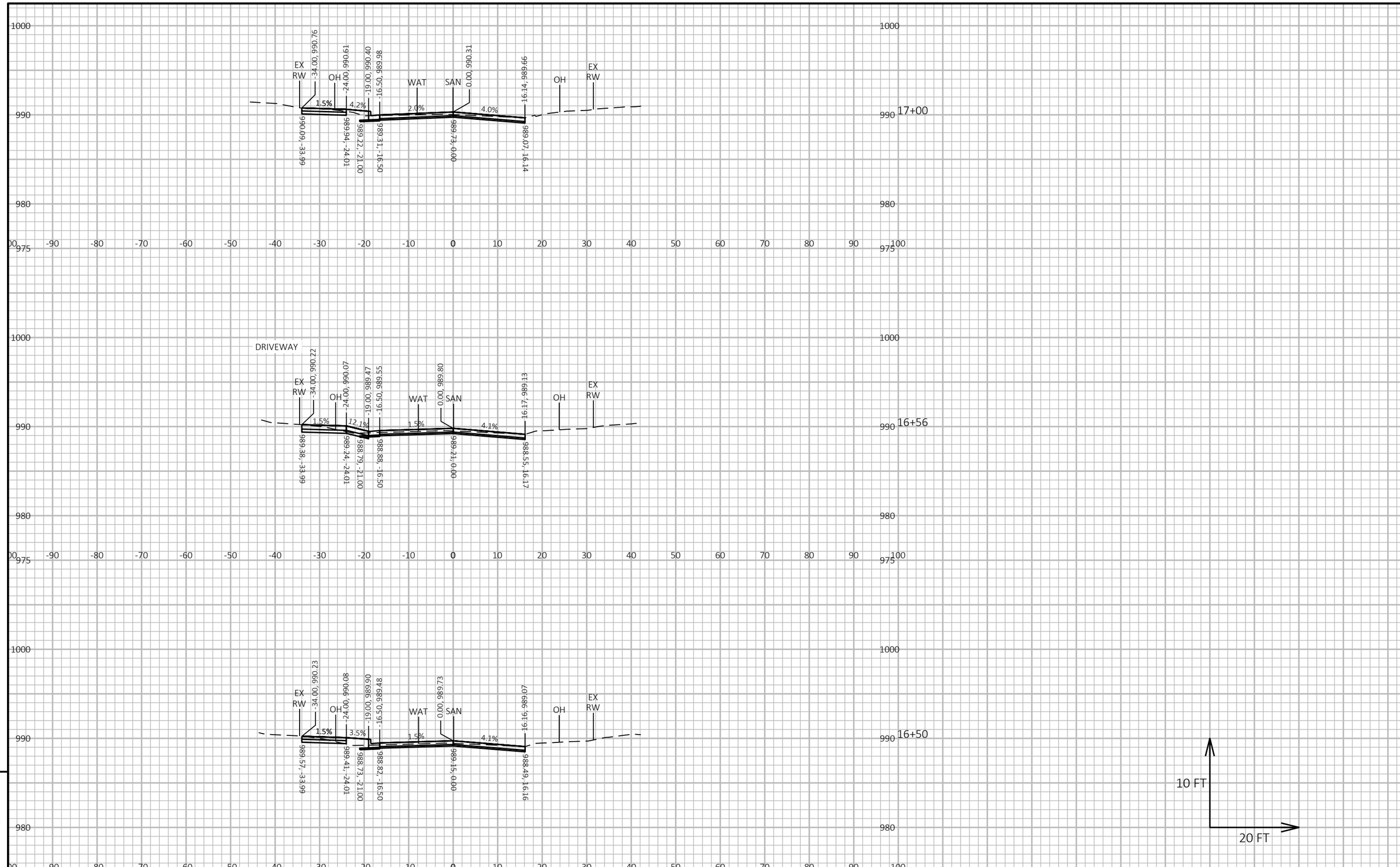

PROJECT NO: 3996-00-35	HWY: N BIRD ST	COUNTY: DANE	CROSS SECTIONS: N BIRD ST	SHEET 124	E

FILE NAME : G:\00\00036\00036327\CADD\C3D\39960034\SHEETS\090201-XS.DWG
LAYOUT NAME - 090205-xs
PLOT DATE : 10/10/2024 8:14 AM
PLOT BY : NATHAN COOK
PLOT NAME :
PLOT SCALE : 1 IN:20 FT HORZ. / 1 IN:10 FT VERT.
WISDOT/CADDS SHEET 49

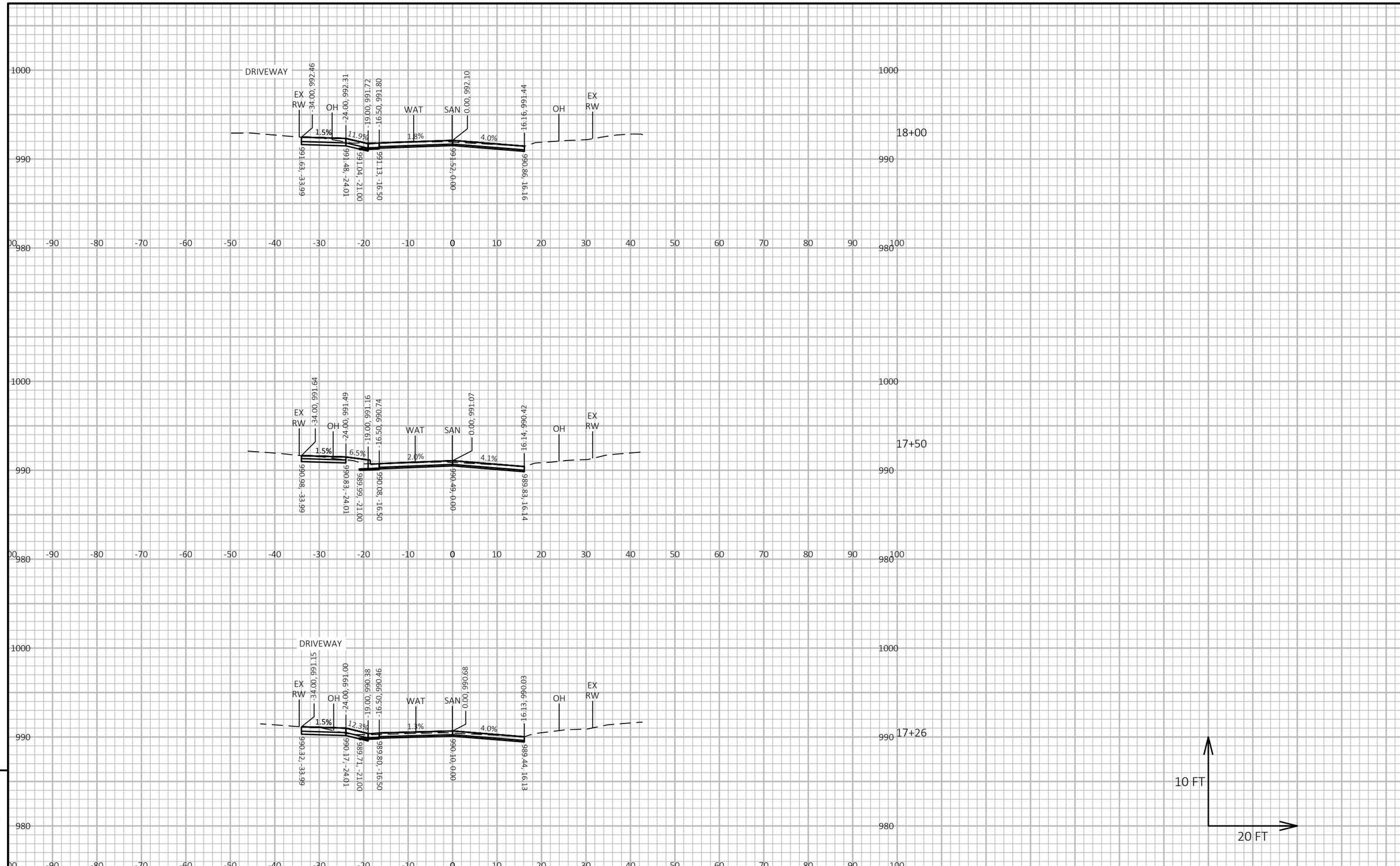

9

9

PROJECT NO: 3996-00-35	HWY: N BIRD ST	COUNTY: DANE	CROSS SECTIONS: N BIRD ST	SHEET 125	E

FILE NAME : G:\00\00036\00036327\CADD\C3D\39960034\SHEETS\090201-XS.DWG
LAYOUT NAME - 090206-xs
PLOT DATE : 10/10/2024 8:14 AM
PLOT BY : NATHAN COOK
PLOT NAME :
PLOT SCALE : 1 IN:20 FT HORZ. / 1 IN:10 FT VERT.
WISDOT/CADDS SHEET 49

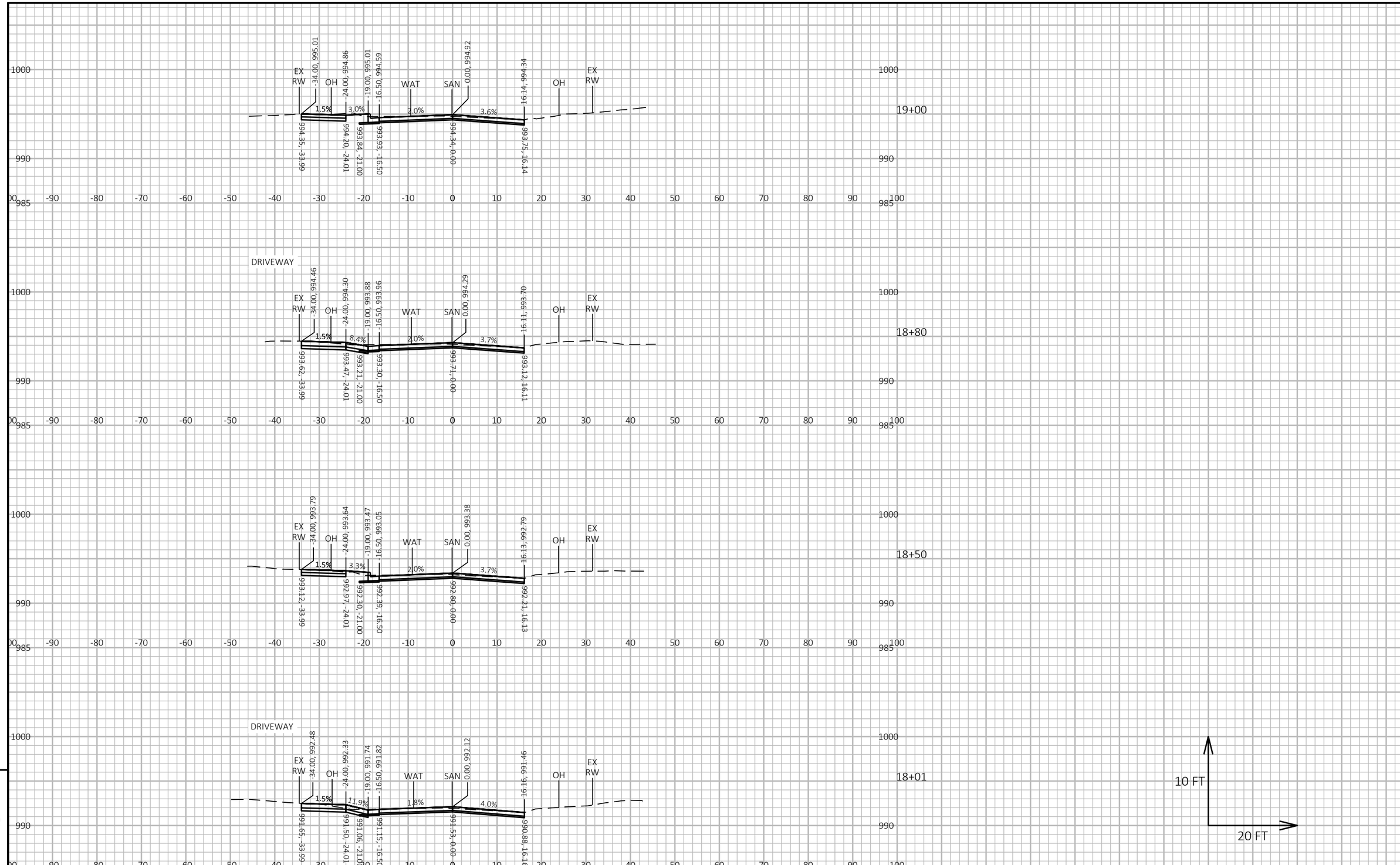

PROJECT NO: 3996-00-35	HWY: N BIRD ST	COUNTY: DANE	CROSS SECTIONS: N BIRD ST	SHEET 126	E

FILE NAME : G:\00\00036\00036327\CADD\C3D\39960034\SHEETS\090201-XS.DWG
LAYOUT NAME - 090207-xs
PLOT DATE : 10/10/2024 8:14 AM
PLOT BY : NATHAN COOK
PLOT NAME :
PLOT SCALE : 1 IN:20 FT HORZ. / 1 IN:10 FT VERT.
WISDOT/CADDS SHEET 49

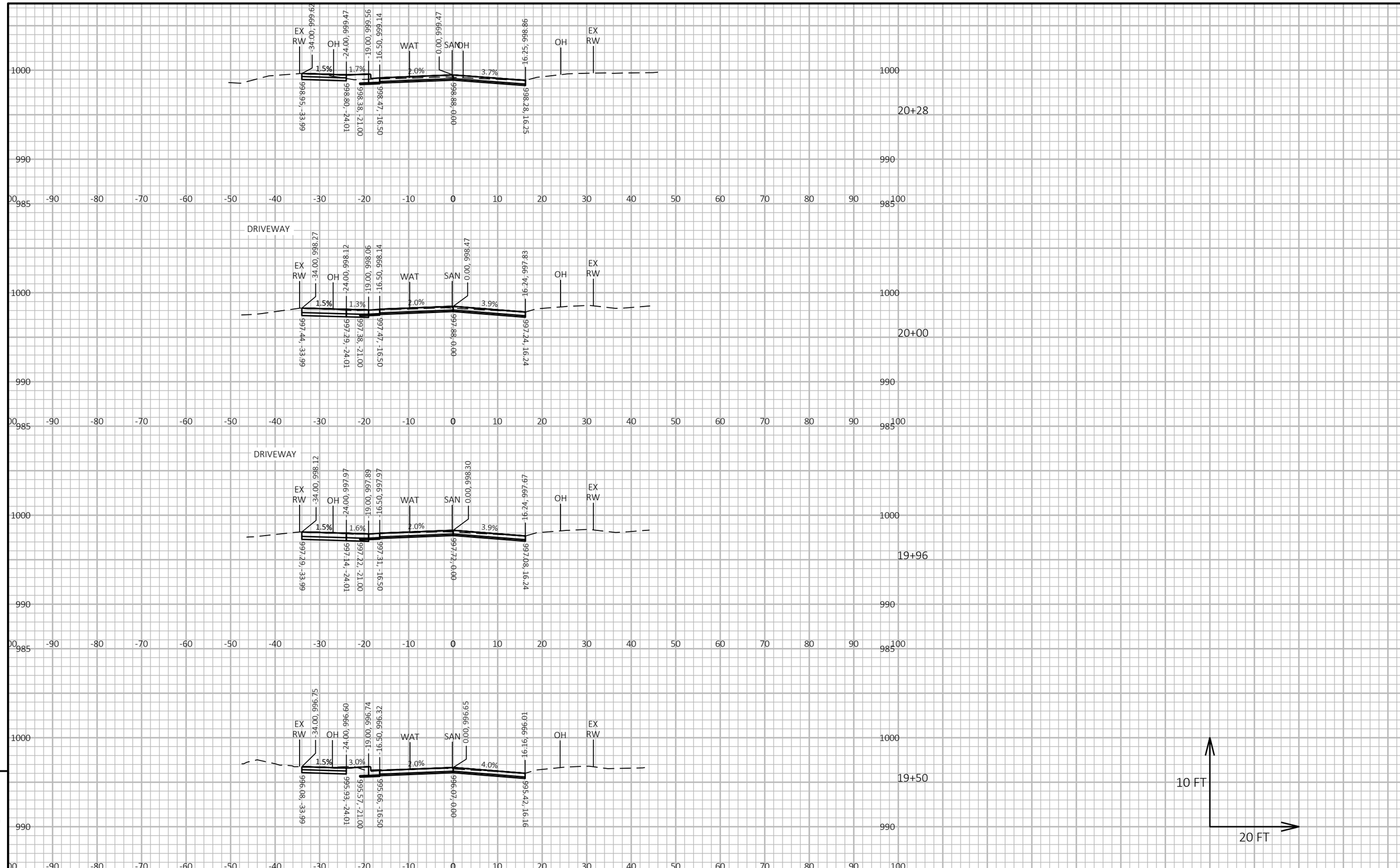

PROJECT NO: 3996-00-35	HWY: N BIRD ST	COUNTY: DANE	CROSS SECTIONS: N BIRD ST	SHEET 127	E

FILE NAME : G:\00\00036\00036327\CADD\C3D\39960034\SHEETS\090201-XS.DWG
LAYOUT NAME - 090208-xs
PLOT DATE : 10/10/2024 8:14 AM
PLOT BY : NATHAN COOK
PLOT NAME :
PLOT SCALE : 1 IN:20 FT HORZ. / 1 IN:10 FT VERT.
WISDOT/CADDS SHEET 49

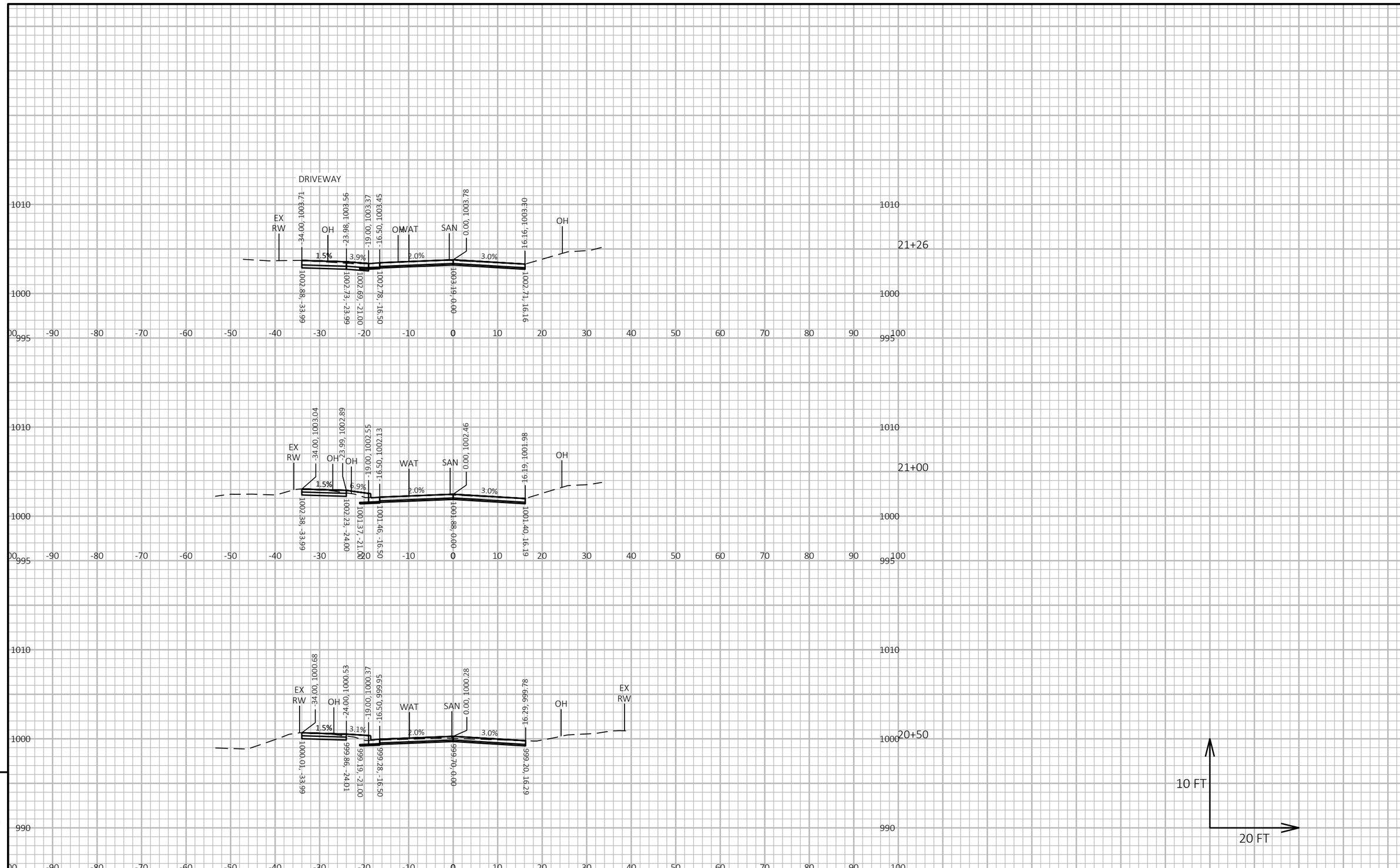

9

9

PROJECT NO: 3996-00-35	HWY: N BIRD ST	COUNTY: DANE	CROSS SECTIONS: N BIRD ST	SHEET 128	E

FILE NAME : G:\00\00036\00036327\CADD\C3D\39960034\SHEETS\090201-XS.DWG
LAYOUT NAME - 090209-xs
PLOT DATE : 10/10/2024 8:14 AM
PLOT BY : NATHAN COOK
PLOT NAME :
PLOT SCALE : 1 IN:20 FT HORZ. / 1 IN:10 FT VERT.
WISDOT/CADDS SHEET 49

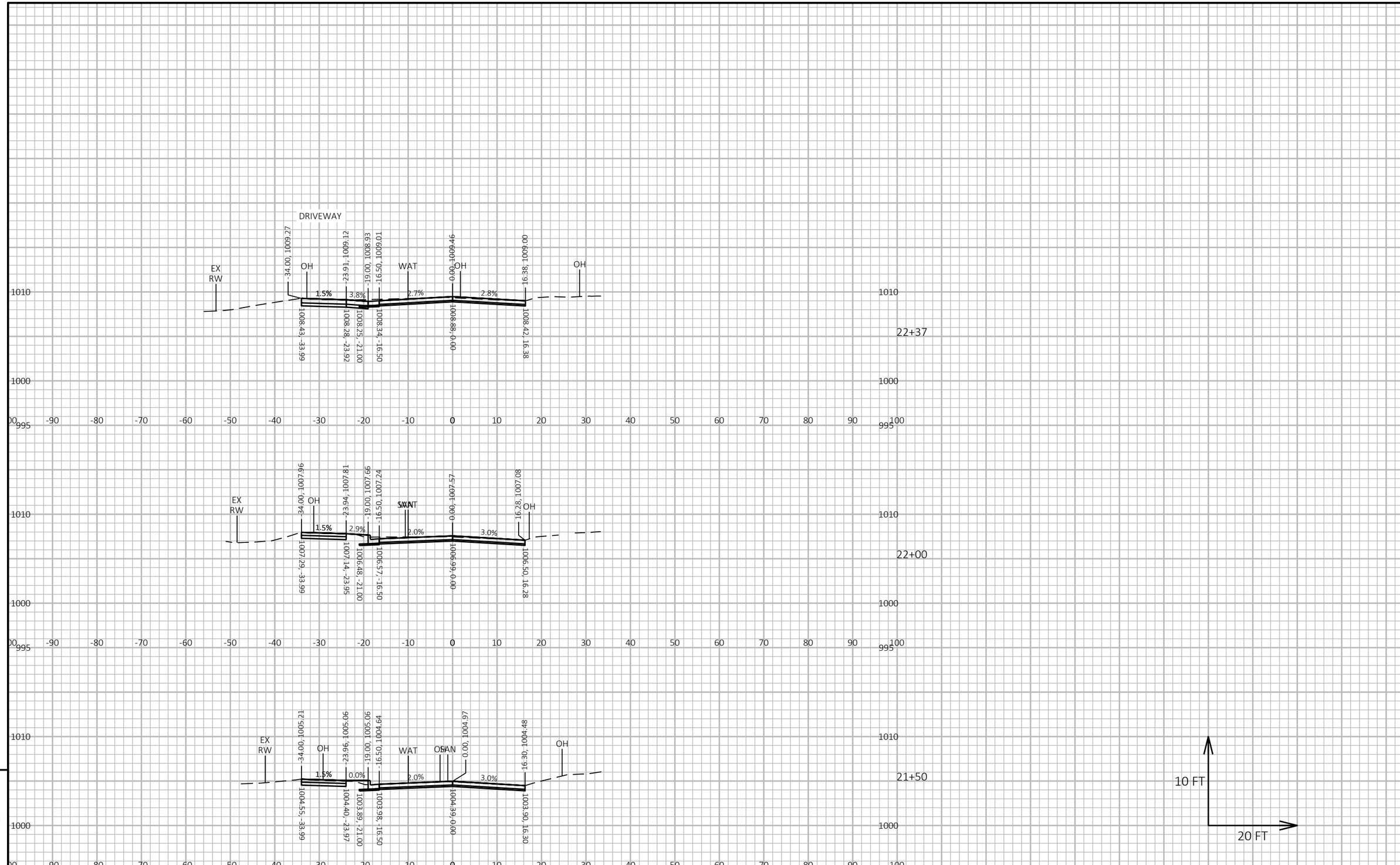

9

9

PROJECT NO: 3996-00-35	HWY: N BIRD ST	COUNTY: DANE	CROSS SECTIONS: N BIRD ST	SHEET 129	E

FILE NAME : G:\00\00036\00036327\CADD\C3D\39960034\SHEETS\090201-XS.DWG
LAYOUT NAME - 090210-xs
PLOT DATE : 10/10/2024 8:14 AM
PLOT BY : NATHAN COOK
PLOT NAME :
PLOT SCALE : 1 IN:20 FT HORZ. / 1 IN:10 FT VERT.
WISDOT/CADDS SHEET 49

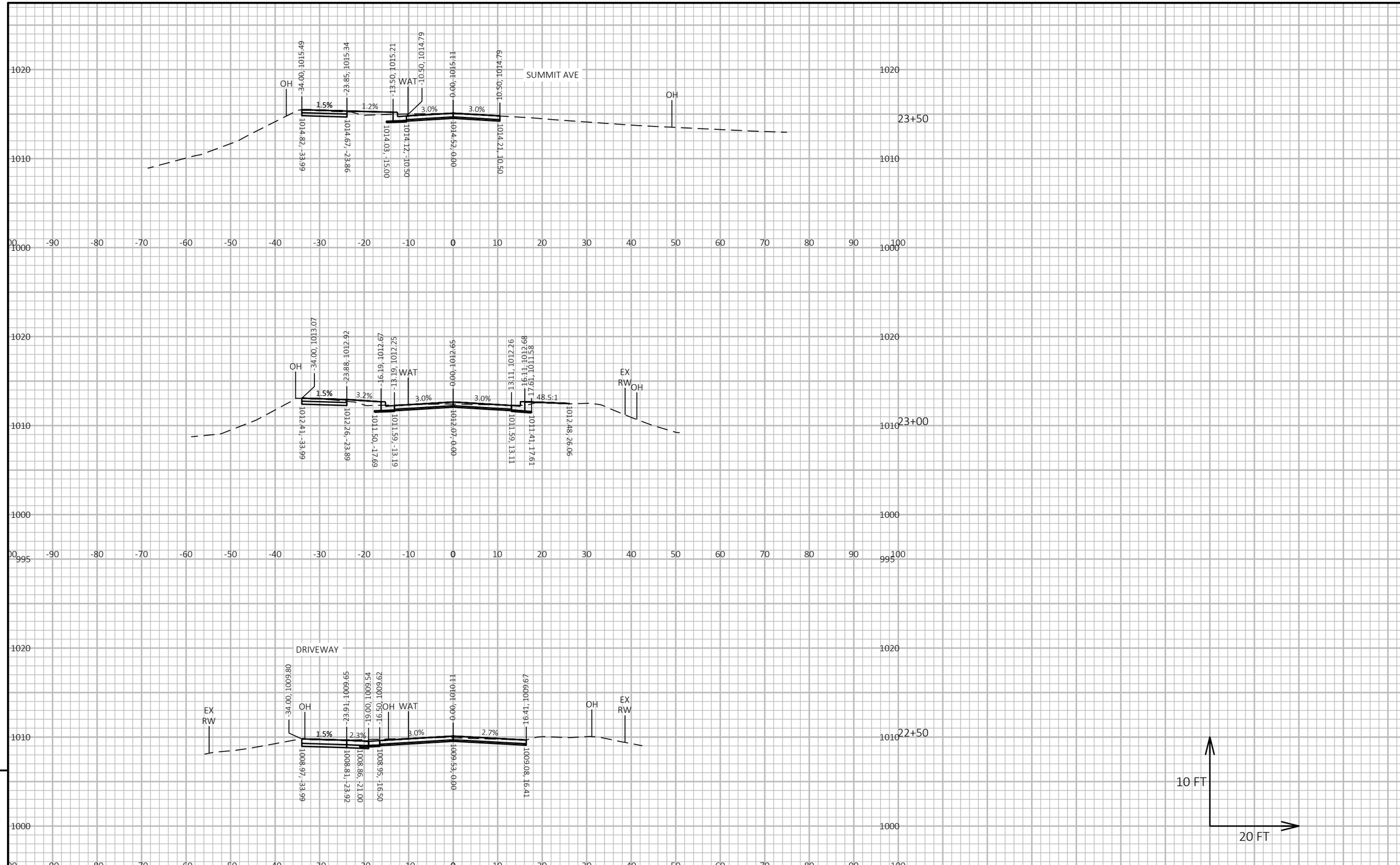

PROJECT NO: 3996-00-35	HWY: N BIRD ST	COUNTY: DANE	CROSS SECTIONS: N BIRD ST	SHEET 130	E

FILE NAME : G:\00\00036\00036327\CADD\C3D\39960034\SHEETS\090201-XS.DWG
LAYOUT NAME - 090211-xs
PLOT DATE : 10/10/2024 8:14 AM
PLOT BY : NATHAN COOK
PLOT NAME :
PLOT SCALE : 1 IN:20 FT HORZ. / 1 IN:10 FT VERT.
WISDOT/CADDS SHEET 49

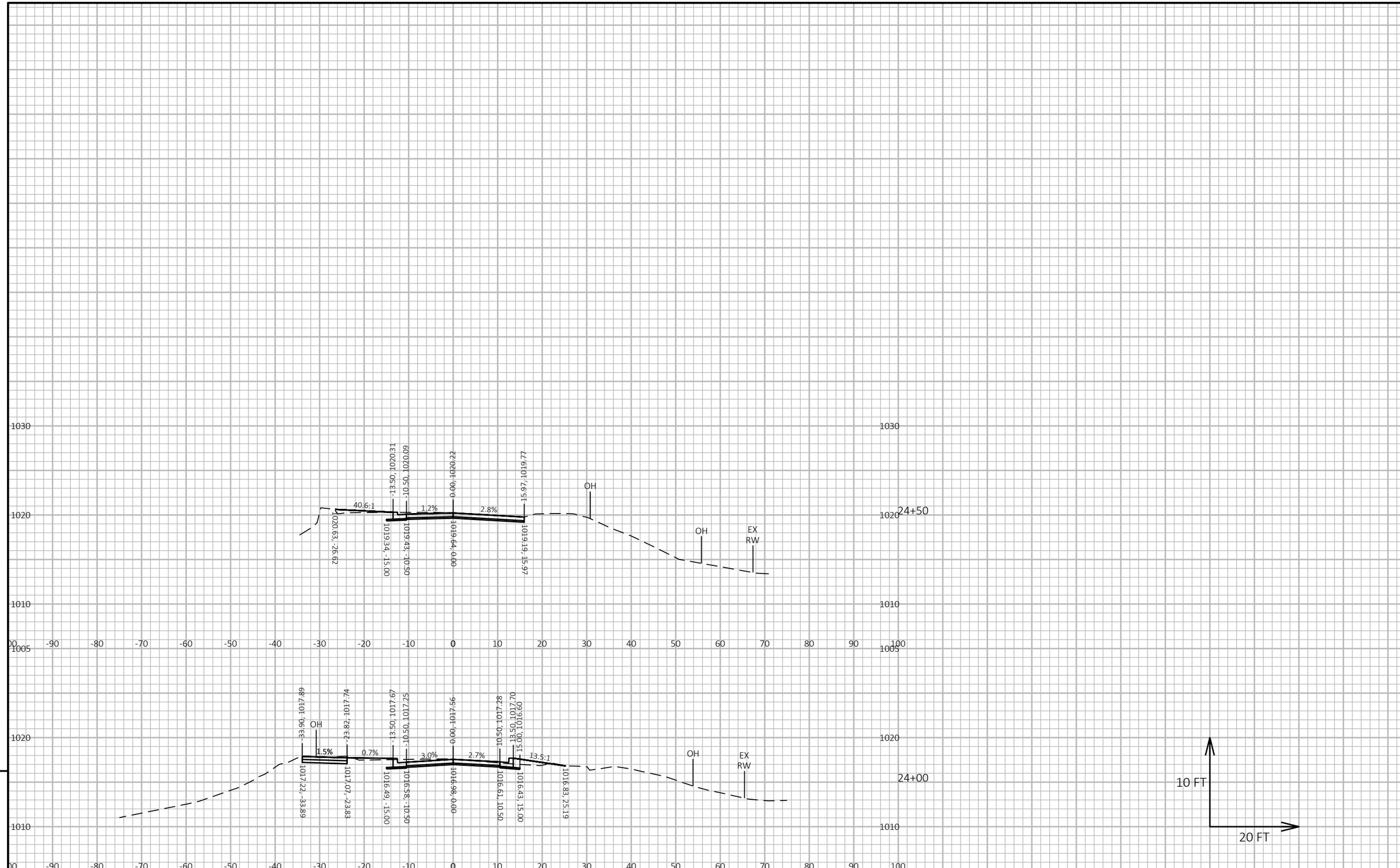

9

9

PROJECT NO: 3996-00-35	HWY: N BIRD ST	COUNTY: DANE	CROSS SECTIONS: N BIRD ST	SHEET 131	E

FILE NAME : G:\00\00036\00036327\CADD\C3D\39960034\SHEETS\090201-XS.DWG
LAYOUT NAME - 090212-xs
PLOT DATE : 10/10/2024 8:14 AM
PLOT BY : NATHAN COOK
PLOT NAME :
PLOT SCALE : 1 IN:20 FT HORZ. / 1 IN:10 FT VERT.
WISDOT/CADDS SHEET 49

Wisconsin Department of Transportation

Dedicated people creating transportation solutions through innovation and exceptional service.

http://www.dot.wisconsin.gov