RHI

PROJECT ID: 9439-02-70

WITH: N/A

COUNTY: MARATHON

MARCH 2025

ORDER OF SHEETS

TOTAL SHEETS = 82

STATE PROJECT	FEDERAL PROJECT	
	PROJECT	CONTRACT
9439-02-70	WISC 2025388	1

STATE OF WISCONSIN
DEPARTMENT OF TRANSPORTATION

PLAN OF PROPOSED IMPROVEMENT

STH 29 - STH 52

CTH N/CTH J INTERSECTION

CTH N

MARATHON COUNTY

STATE PROJECT NUMBER
9439-02-70

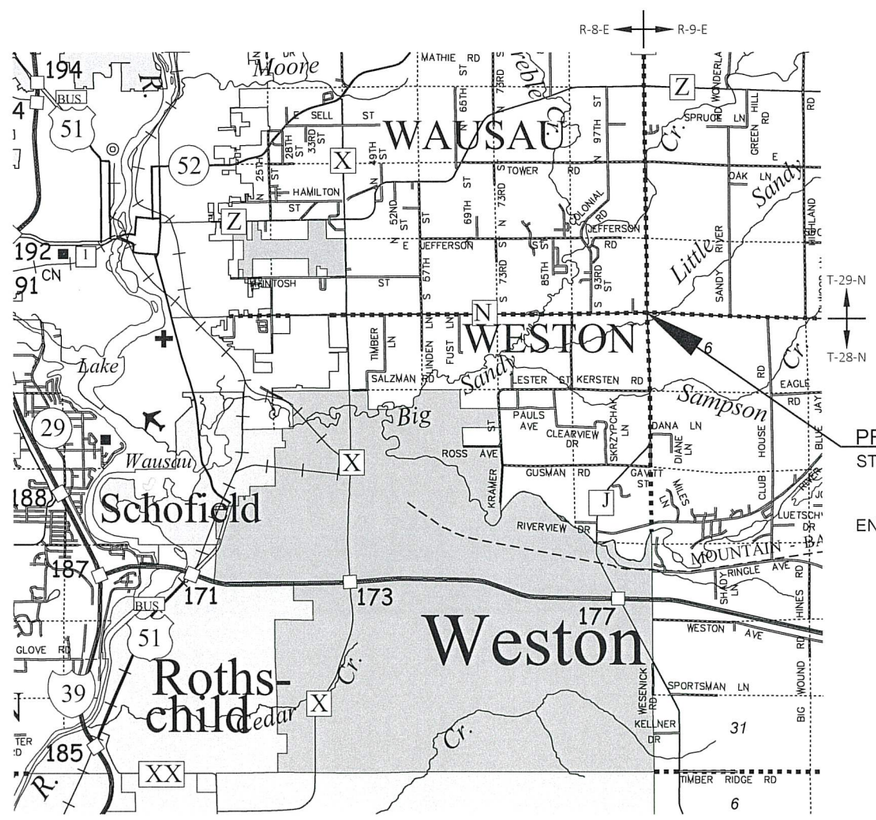

PROJECT LOCATION

START STATION: 609+88.88
X = 316,712.563
Y = 197,046.023

END STATION: 616+62.75
X = 317,386.396
Y = 197,053.628

DESIGN DESIGNATION

A.A.D.T.	2025	=	3500; CTH N: 1,900 CTH J: 1,600
A.A.D.T.	2045	=	5200; CTH N: 2,900 CTH J: 2,300
D.H.V.		=	11.6
D.D.		=	1.90
T.		=	13.50
DESIGN SPEED		=	55 MPH
ESALS		=	1,500,000

CONVENTIONAL SYMBOLS

PLAN

CORPORATE LIMITS
PROPERTY LINE
LOT LINE
LIMITED HIGHWAY EASEMENT
EXISTING RIGHT OF WAY
PROPOSED OR NEW R/W LINE
SLOPE INTERCEPT
REFERENCE LINE (300' EB')
EXISTING CULVERT
PROPOSED CULVERT (Box or Pipe)
COMBUSTIBLE FLUIDS (CAUTION)
MARSH AREA
WOODED OR SHRUB AREA

PROFILE

GRADE LINE
ORIGINAL GROUND
MARSH OR ROCK PROFILE (To be noted as such) (ROCK)
SPECIAL DITCH (LABEL)
GRADE ELEVATION (95.36)
CULVERT (Profile View)

UTILITIES

ELECTRIC — E —
FIBER OPTIC — FO —
GAS — G —
SANITARY SEWER — SAN —
STORM SEWER — SS —
TELEPHONE — T —
WATER — W —
UTILITY PEDESTAL
POWER POLE
TELEPHONE POLE

LAYOUT

SCALE 0 — 2 MI

TOTAL NET LENGTH OF CENTERLINE = 0.128 MILES

HORIZONTAL POSITIONS SHOWN ON THIS PLAN ARE WISCONSIN COORDINATE REFERENCE SYSTEM (WISCRS), MARATHON COUNTY, NAD83 (2011), IN U.S. SURVEY FEET. POSITIONS SHOWN ARE GRID COORDINATES, GRID BEARINGS, AND GRID DISTANCES. GRID DISTANCES ARE THE SAME AS GROUND DISTANCES.

ELEVATIONS ARE REFERENCED TO NAVD 88 (2012). GPS DERIVED ELEVATIONS ARE BASED ON GEOID 18

ACCEPTED FOR

MARATHON COUNTY

Date 10/24/2024 James M. Griesbach
(Signature and Title of Official)

ORIGINAL PLANS PREPARED BY

BECHER HOPPE

WISCONSIN AARON J. WALLNER E-46054-6 WAUSAU, WI PROFESSIONAL ENGINEER

DATE: 10-24-24 (Professional Engineer Signature)

STATE OF WISCONSIN
DEPARTMENT OF TRANSPORTATION

PREPARED BY

Surveyor	BECHER-HOPPE ASSOCIATES, INC
Designer	BECHER-HOPPE ASSOCIATES, INC
Project Manager	MICHAEL GRAGE, PE
Regional Examiner	N/A
Regional Supervisor	DAN ERVA, PE

APPROVED FOR THE DEPARTMENT

DATE: 10/25/2024 (Signature)

E

2

GENERAL NOTES

THE LOCATIONS OF EXISTING AND PROPOSED UTILITY INSTALLATIONS AS SHOWN ON THE PLANS ARE APPROXIMATE. THERE MAY BE OTHER UTILITY INSTALLATIONS WITHIN THE PROJECT AREA THAT ARE NOT SHOWN.

CONTRACTOR WILL BE RESPONSIBLE FOR RESHAPING AND SEEDING ANY PREVIOUSLY GRASSED AREAS WHICH ARE DISTURBED BY OPERATIONS, OUTSIDE OF THE NORMAL CONSTRUCTION LIMITS.

HMA PAVEMENT WEIGHT CALCULATIONS ARE BASED ON 115 LBS/SY/IN.

NO TREES OR SHRUBS ARE TO BE REMOVED WITHOUT THE APPROVAL OF THE ENGINEER.

THE CONTRACTOR IS TO WORK WITH UTMOST CARE AND PROTECT ALL SURVEY MARKERS. REMOVAL OF ANY SURVEY MARKER IS TO BE WITH THE APPROVAL OF THE ENGINEER.

CONTRACTOR SHALL CONTACT THE COUNTY SURVEYOR PRIOR TO START OF PROJECT.

EROSION CONTROL FEATURES AS SHOWN IN THE PLANS ARE AT APPROXIMATE LOCATIONS. EXACT LOCATIONS WILL BE DETERMINED BY THE CONTRACTOR'S EROSION CONTROL IMPLEMENTATION PLAN (ECIP) AND APPROVED BY THE ENGINEER. MAINTAIN EROSION CONTROL MEASURES UNTIL SUCH A TIME AS THE ENGINEER DETERMINES THE MEASURE IS NO LONGER NECESSARY.

RADIUS DIMENSIONS FOR THE CURB AND GUTTER ARE TO THE FLANGE LINE UNLESS OTHERWISE NOTED.

PRIOR TO PLACING THE NEW BASE AGGREGATE DENSE COURSE OR PAVED SHOULDERS EXISTING UNCOMPACTED SHOULDER MATERIAL SHALL BE REMOVED OR DEPOSITED ON THE OUTER PORTION OF THE EXISTING SHOULDER OR AS DIRECTED BY THE ENGINEER.

DRIVEWAYS SHALL BE REPLACED IN KIND.

CURB AND GUTTER PLAN GRADES ARE AT THE FLANGE LINE UNLESS OTHERWISE NOTED.

THE CONTRACTOR'S PAVING OPERATION SHALL BE CONSISTENT WITH THE TYPICAL SECTIONS AND CONSTRUCTED TO PREVENT LONGITUDINAL JOINTS FROM BEING LOCATED WITHIN A DRIVING, TURNING, PASSING, OR PARKING LANE.

SAWCUTS, AS SHOWN ON THE PLANS, ARE SUGGESTED LOCATIONS AND MAY BE ADJUSTED AT THE DISCRETION OF THE ENGINEER TO BETTER SUIT FIELD CONDITIONS.

CONTRACTOR SHALL MAINTAIN ACCESS TO ALL DRIVEWAYS AT ALL TIMES EXCEPT WHEN PAVING OR PIPE LAYING OPERATIONS REQUIRE THE DRIVEWAY TO BE CLOSED. ACCESS TO DRIVEWAYS SHALL BE RE-ESTABLISHED IMMEDIATELY AFTER OPERATIONS ARE COMPLETED. ACCESS SHALL BE PROVIDED DURING ALL NON-WORKING HOURS.

TRAFFIC CONTROL DEVICES SHALL BE ADJUSTED TO FIT FIELD CONDITIONS AS DIRECTED BY THE ENGINEER.

DO NOT DRIVE OR STORE EQUIPMENT, OR STORE CONSTRUCTION MATERIALS IN ENVIRONMENTALLY SENSITIVE AREAS, WETLANDS OR WATERWAYS.

ORDER OF SECTION 2 DETAIL SHEETS

RUNOFF COEFFICIENT TABLE

	HYDROLOGIC SOIL GROUP											
	A			B			C			D		
	SLOPE RANGE (PERCENT)			SLOPE RANGE (PERCENT)			SLOPE RANGE (PERCENT)			SLOPE RANGE (PERCENT)		
LAND USE:	0-2	2-6	6 & OVER	0-2	2-6	6 & OVER	0-2	2-6	6 & OVER	0-2	2-6	6 & OVER
ROW CROPS:	.08	.16	.22	.12	.20	.27	.15	.24	.33	.19	.28	.38
	.22	.30	.38	.26	.34	.44	.30	.37	.50	.34	.41	.56
MEDIAN STRIPTURF:	.19	.20	.24	.19	.22	.26	.20	.23	.30	.20	.25	.30
	.24	.26	.30	.25	.28	.33	.26	.30	.37	.27	.32	.40
SIDE SLOPETURF:			.25			.27			.28			.30
			.32			.34			.36			.38
PAVEMENT:												
ASPHALT:	.70 - .95											
CONCRETE:	.80 - .95											
BRICK:	.70 - .80											
DRIVES, WALKS:	.75 - .85											
ROOFS:	.75 - .95											
GRAVEL ROADS, SHOULDERS:	.40 - .60											

TOTAL PROJECT AREA = 1.91 ACRES
TOTAL AREA EXPECTED TO BE DISTURBED BY CONSTRUCTION ACTIVITIES = 0.31 ACRES

2

DESIGN PROJECT MANAGER

MICHAEL GRAGE
NORTH CENTRAL REGION
510 HANSON LAKE RD
RHINELANDER, WI 54501
PHONE: 715-365-5705
EMAIL: michael.grage@dot.wi.gov

DESIGN PROJECT LEADER

ARRON WALLNER
BECHER HOPPE ASSOCIATES
330 N. 4TH STREET
WAUSAU, WI 54403
PHONE: 715-845-0426
EMAIL: awallner@becherhoppe.com

WISCONSIN DNR LIAISON

JAY SCHIEFELBEIN
NORTHEAST REGION
284 SHAWANO AVE
GREEN BAY, WI 54313
PHONE: 920 360-3784
EMAIL: jeremiah.schiefelbein@wisconsin.gov

COUNTY HIGHWAY COMMISSIONER

JIM GRIESBACH
MARATHON COUNTY
1430 WEST STREET
WAUSAU, WI 54401
PHONE: 715-261-1800
EMAIL: james.griesbach@co.marathon.wi.us

COUNTY HIGHWAY DEPUTY DIRECTOR

KEVIN LANG
MARATHON COUNTY
1430 WEST STREET
WAUSAU, WI 54401
PHONE: 715-261-1809
EMAIL: kevin.lang@co.marathon.wi.us

COUNTY SURVEYOR

DAVE DECKER
MARATHON COUNTY
210 RIVER DRIVE
WAUSAU, WI 54403
PHONE: 715-261-6026
EMAIL: dave.decker@co.marathon.wi.us

TOWN OF EASTON

DEAN BECK
CHAIRMAN
E15212 Co Rd Z
RINGLE, WI 54471
PHONE: 715-446-3400
EMAIL: N/A

TOWN OF RINGLE

AL CHRISTENSEN
CHAIRMAN
223207 ABT ROAD
RINGLE, WI 54471
PHONE: 715-573-6956
EMAIL: ringle446@gmail.com

TOWN OF WESTON

MILTON OLSON
TOWN CHAIRMAN
5209 MESKER STREET
WESTON, WI 54476
PHONE: 715-842-5397
EMAIL: kamolson@outlook.com

TOWN OF WAUSAU

MATT BAER
CHAIRPERSON
161484 COUNTY ROAD Z
WAUSAU, WI 54403
PHONE: 715-297-1157
EMAIL: clerk@townofwausau.com

UTILITIES CONTACTS

COMMUNICATIONS
SPECTRUM
SCOTT OLSEN
853 MCINTOSH P.O. BOX 1818
WAUSAU, WI, 54403
PHONE: 715-842-3910 EXT 256
EMAIL: Scott.Olsen@charter.com

TELECOMMUNICATIONS
FRONTIER COMMUNICATIONS
AUSTIN WEILER
521 FOURTH STREET
WAUSAU, WI 54403
PHONE: 715-301-6107
EMAIL: Austin.Weiler@ftr.com

ELECTRIC
WISCONSIN PUBLIC SERVICE CORP
DONALD DRAKE
P.O. BOX 1166
WAUSAU, WI 5440-1166
PHONE: 715-848-7453
EMAIL: donald.drake@wisconsinpublicservice.com

GAS
WISCONSIN PUBLIC SERVICE CORP
MIKE BOSI
1700 SHERMAN STREET
WAUSAU, WI 54401
PHONE: 715-848-7471
EMAIL: Mike.Bosi@wisconsinpublicservice.com

DIGGERS HOTLINE
Dial 811 or (800)242-8511
www.DiggersHotline.com

2

STANDARD ABBREVIATIONS

ABUT	ABUTMENT
AC	ACRE
AGG	AGGREGATE
AH	AHEAD
∠	ANGLE
AADT	ANNUAL AVERAGE DAILY TRAFFIC
AEW	APRON ENDWALL
ASPH	ASPHALTIC
BK	BACK
BC	BACK OF CURB
BAD	BASE AGGREGATE DENSE
BL OR B/L	BASE LINE
BM	BENCH MARK
CB	CATCH BASIN
CL OR C/L	CENTER LINE
Δ	CENTRAL ANGLE OR DELTA
CE	COMMERCIAL ENTRANCE
CONC	CONCRETE
CSW	CONCRETE SIDEWALK
CONST	CONSTRUCTION
CP	CONTROL POINT
CO	COUNTY
CTH	COUNTY TRUCK HIGHWAY
CY	CUBIC YARD
CP	CULVERT PIPE
CPCA	CULVERT PIPE CORRUGATED ALUMINUM
CPCPE	CULVERT PIPE CORRUGATED POLYETHYLENE
CPCPP	CULVERT PIPE CORRUGATED POLYPROPYLENE
CPCS	CULVERT PIPE CORRUGATED STEEL
CPCSAC	CULVERT PIPE CORRUGATED STEEL ALUMINUM COATED
CPCSPC	CULVERT PIPE CORRUGATED STEEL POLYMER COATED
CPRC	CULVERT PIPE REINFORCED CONCRETE
CPRCHE	CULVERT PIPE REINFORCED CONCRETE HORIZONTAL ELLIPTICAL
CPS	CULVERT PIPE SALVAGED
CPT	CULVERT PIPE TEMPORARY
C & G	CURB AND GUTTER
D	DEGREE OF CURVE
DHV	DESIGN HOUR VOLUME
DIA	DIAMETER
DD	DIRECTIONAL DISTRIBUTION
DE	DRAINAGE EASEMENT
DWY	DRIVEWAY
EA	EACH
EB	EASTBOUND
EL OR ELEV	ELEVATION
EMB	EMBANKMENT
EW	ENDWALL
EAT	ENERGY ABSORBING TERMINAL
ESALS	EQUIVALENT SINGLE AXLE LOADS
EXC	EXCAVATION
EBS	EXCAVATION BELOW SUBGRADE
EXIST	EXISTING
FERT	FERTILIZER
FE	FIELD ENTRANCE
FL OR F/L	FLOW LINE
FT	FOOT
FTMS	FREE TRAFFIC MANAGEMENT SYSTEM
HES	HIGH EARLY STRENGTH
HE	HIGHWAY EASEMENT
CWT	HUNDRED WEIGHT
IN DIA	INCH DIAMETER
INL	INLET
ID	INSIDE DIAMETER
INTERS	INTERSECTION
IH	INTERSTATE HIGHWAY
INV	INVERT
JT	JOINT
LT	LEFT
LHF	LEFT HAND FORWARD
L	LENGTH OF CURVE
LF	LINEAR FOOT
LC	LONG CHORD OF CURVE
LS	LUMP SUM
MGAL	ONE THOUSAND GALLONS
MH	MANHOLE
ML OR M/L	MATCH LINE
NOM	NOMINAL
NC	NORMAL CROWN
NB	NORTHBOUND
NO	NUMBER
OD	OUTSIDE DIAMETER
PAVT	PAVEMENT
PLE	PERMANENT LIMITED EASEMENT
PC	POINT OF CURVATURE
PI	POINT OF INTERSECTION
PT	POINT OF TANGENCY
PCC	PORTLAND CEMENT CONCRETE
LB	POUND
PSI	POUNDS PER SQUARE INCH
PE	PRIVATE ENTRANCE
PROJ	PROJECT
PL	PROPERTY LINE
PRW	PROPOSED RIGHT OF WAY
R	RADIUS
RL OR R/L	REFERENCE LINE
REQD	REQUIRED
RT	RIGHT
RHF	RIGHT HAND FORWARD
R/W	RIGHT OF WAY
RD	ROAD
RDWY	ROADWAY
SHLDR	SHOULDER
SW	SIDEWALK
SB	SOUTHBOUND
SPECS	SPECIFICATIONS
SF	SQUARE FEET
SY	SQUARE YARD
SDD	STANDARD DETAIL DRAWINGS
STH	STATE TRUNK HIGHWAY
STA	STATION
SSPC	STORM SEWER PIPE COMPOSITE
SSCPE	STORM SEWER PIPE CORRUGATED POLYETHYLENE
SSCPP	STORM SEWER PIPE CORRUGATED POLYPROPYLENE
SSPNRC	STORM SEWER PIPE NON-REINFORCED CONCRETE
SSPRC	STORM SEWER PIPE REINFORCED CONCRETE
SSPRC	STORM SEWER PIPE REINFORCED CONCRETE
SSPRCHE	STORM SEWER PIPE REINFORCED CONCRETE HORIZONTAL ELLIPTICAL
SE	SUPERELEVATION
SL OR S/L	SURVEY LINE
TEMP	TEMPORARY
TI	TEMPORARY INTEREST
TLE	TEMPORARY LIMITED EASEMENT
TC	TOP OF CURB
TL OR T/L	TRANSIT LINE
T	TRUCKS (PERCENT OF)
TYP	TYPICAL
USH	UNITED STATES HIGHWAY
VAR	VARIABLE
VC	VERTICAL CURVE
VPC	VERTICAL POINT OF CURVATURE
VPI	VERTICAL POINT OF INTERSECTION
VPT	VERTICAL POINT OF TANGENCY
W	WEST
WB	WESTBOUND

2

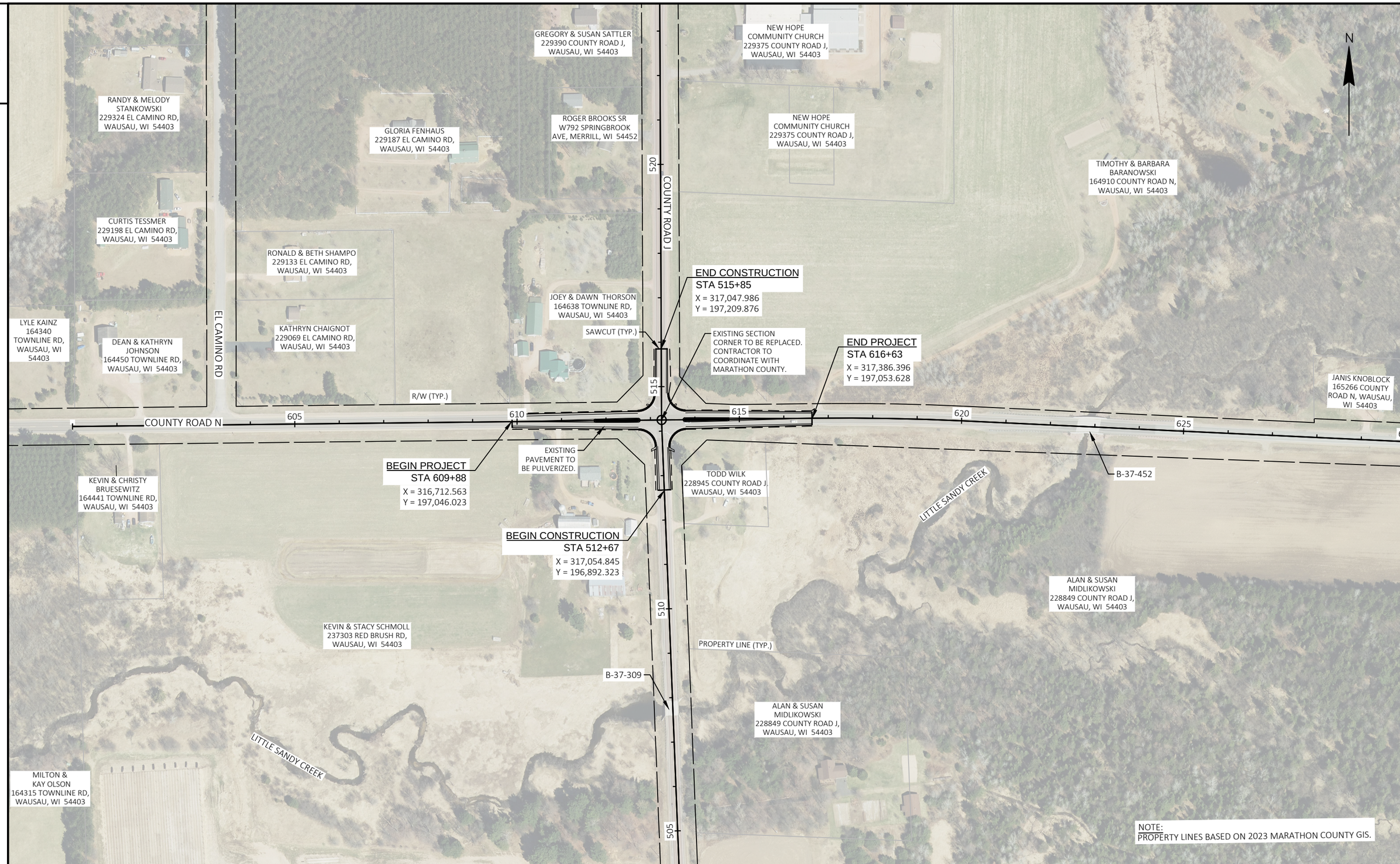

2

PROJECT NO: 9439-02-70	HWY: CTH N/CTH J	COUNTY: MARATHON	PROJECT OVERVIEW	SHEET 4	E

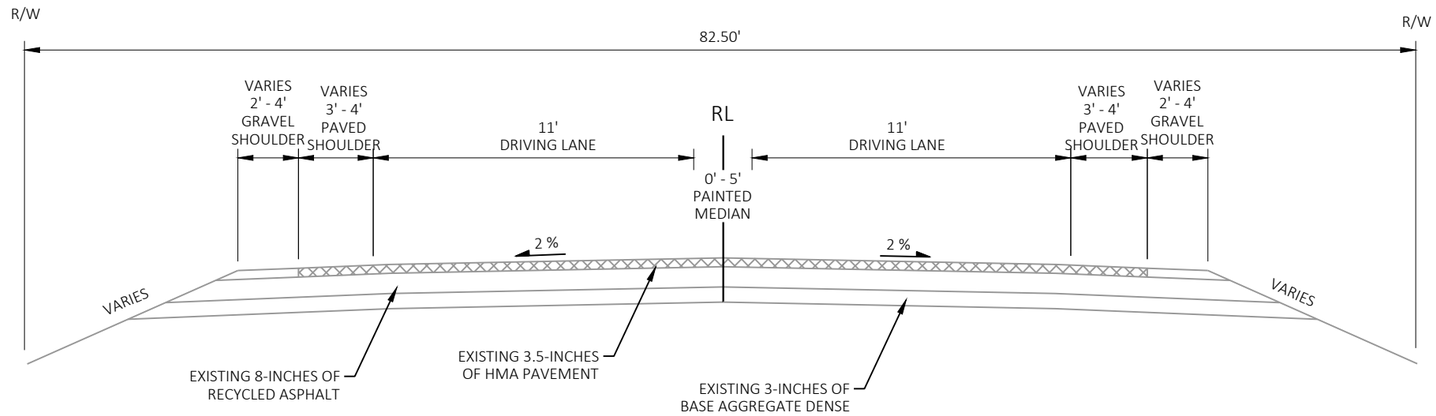

EXISTING CTH N TYPICAL SECTION

STA 609+88- 613+25

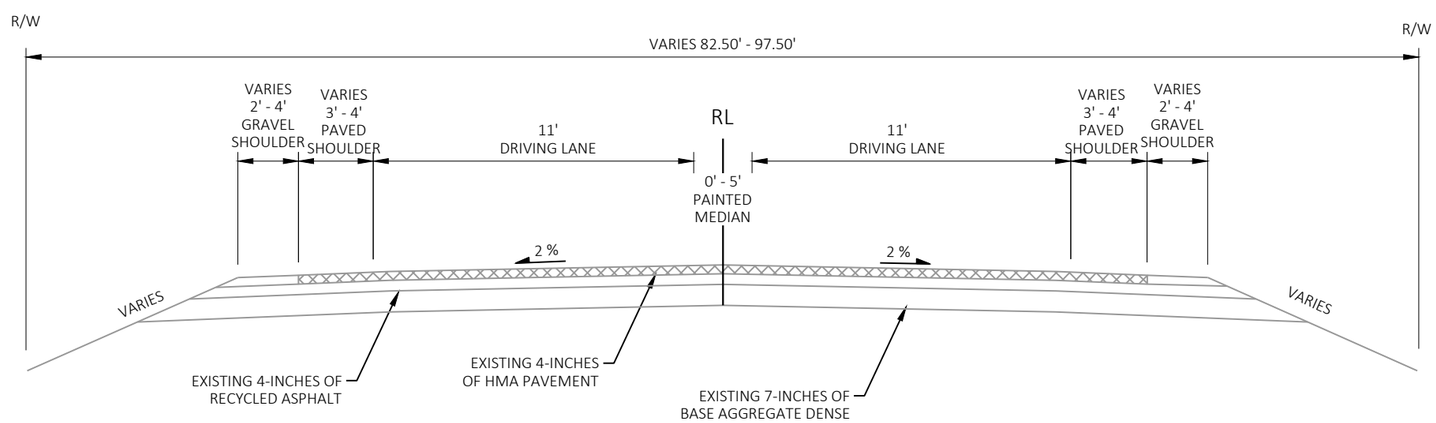

EXISTING CTH N TYPICAL SECTION

STA 613+25 - 616+63

PROJECT NO: 9439-02-70	HWY: CTH N/CTH J	COUNTY: MARATHON	EXISTING TYPICAL SECTION	SHEET 5	E

2

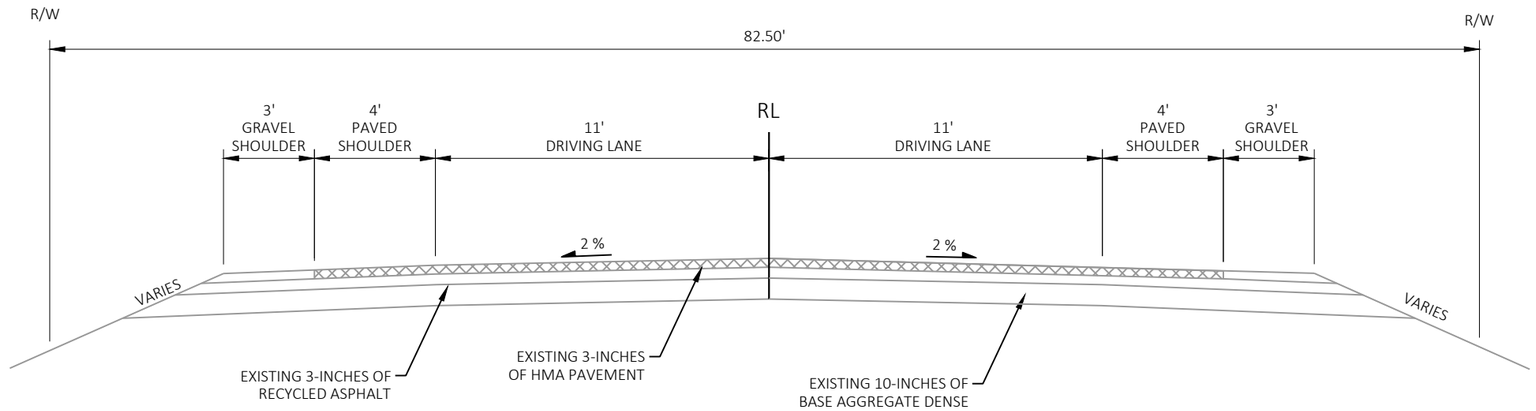

EXISTING CTH J TYPICAL SECTION

STA 512+67 - 514+25

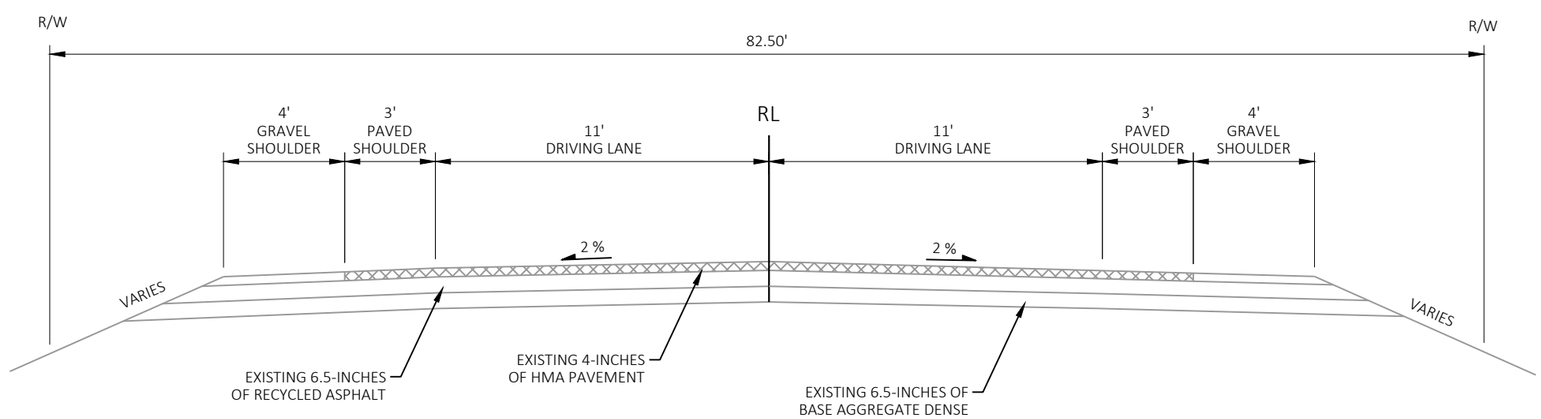

EXISTING CTH J TYPICAL SECTION

STA 514+25 - 515+85

PROJECT NO: 9439-02-70	HWY: CTH N/CTH J	COUNTY: MARATHON	PROPOSED TYPICAL SECTION	SHEET 6	E

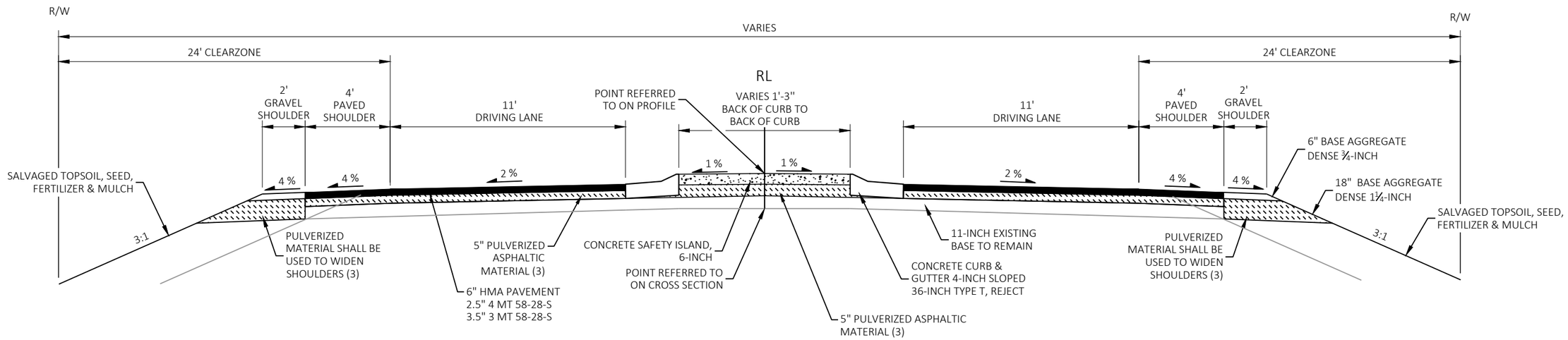

FINISHED CTH N TYPICAL SECTION

STA 611+73 - 612+77
STA 613+73 - 614+77

NOTES:

1. ALL EXISTING PAVEMENT WITHIN PROJECT LIMITS TO BE PULVERIZED IN ACCORDANCE WITH STATE OF WISCONSIN STANDARD SPECIFICATION FOR HIGHWAY AND STRUCTURE CONSTRUCTION CHAPTER 325.
2. CURB AND ISLAND TO BE POURED OVER PULVERIZED MATERIAL.
3. PULVERIZED MATERIAL TO BE USED AS ROAD BASE MATERIAL FOR SHOULDER WIDENING. ALL REMAINING MATERIAL SHALL BE PREPARED AS ROAD BASE FOR ASPHALT PAVING TO MATCH ELEVATIONS SHOWN ELSEWHERE IN THE PLANS.
4. ROW IS 82.5' WIDE FROM STATION 608+30 - 613+25.
5. ROW VARIES IN WIDTH (82.50' - 97.50') FROM STATION 613+25 - 618+21.

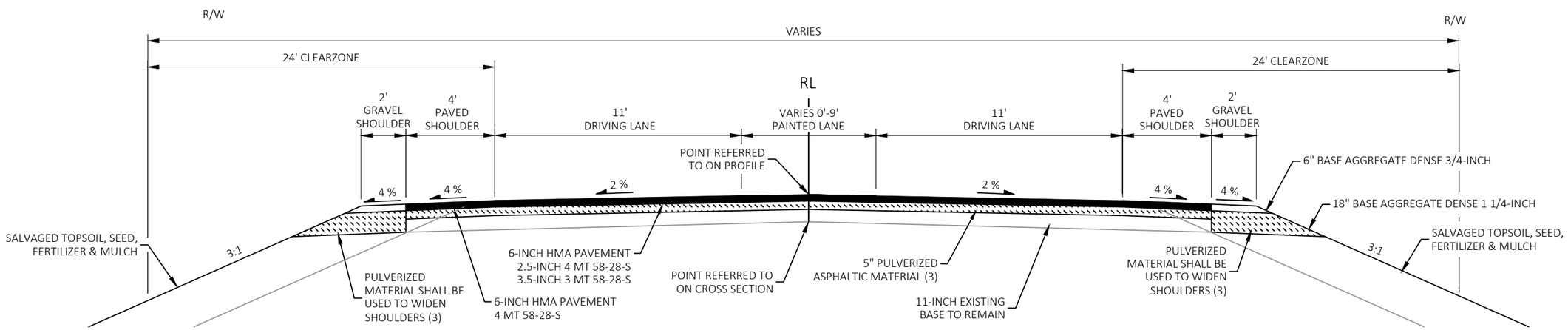

FINISHED CTH N TYPICAL SECTION

STA 609+88 - 611+73
STA 612+77 - 613+73
STA 614+77 - 616+63

PROJECT NO: 9439-02-70	HWY: CTH N/CTH J	COUNTY: MARATHON	TYPICAL SECTION	SHEET 7	E

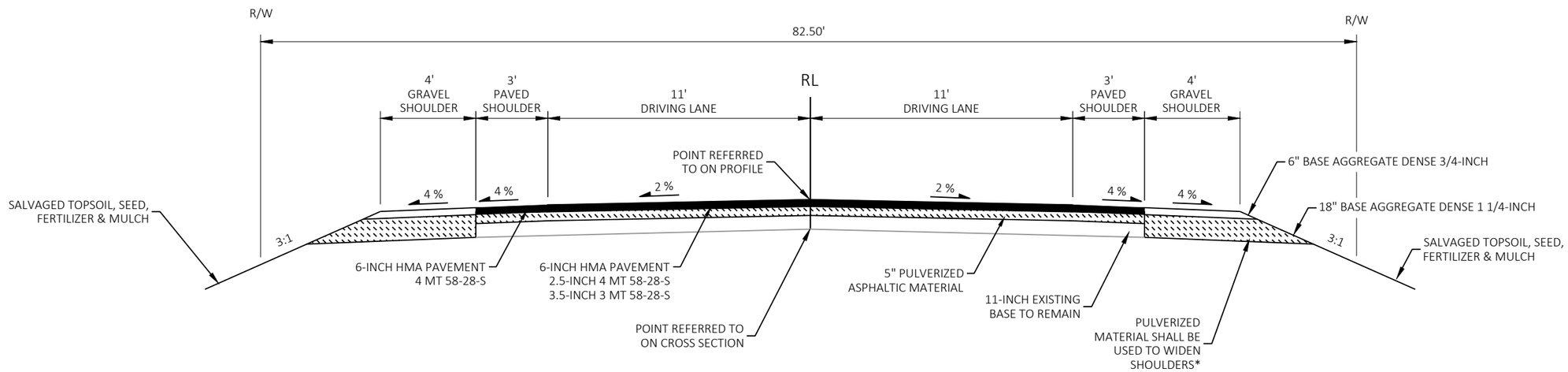

FINISHED CTH J TYPICAL SECTION

STA 512+67- 514+07
STA 514+44 - 515+85

NOTE
PULVERIZED MATERIAL TO BE USED AS ROAD BASE MATERIAL FOR SHOULDER WIDENING. ALL REMAINING MATERIAL SHALL BE PREPARED AS ROAD BASE FOR ASPHALT PAVING TO MATCH ELEVATIONS SHOWN ELSEWHERE IN THE PLANS.

2

CTH N-MEDIAN-WEST							
POINT NUMBER	ALIGNMENT NAME	STATION	OFFSET	ELEVATION	NORTHING	EASTING	DESCRIPTION
1	CTH-N	611+76.43	3.50' LT	1219.79	197051.61	316900.07	CURB FLANGE
2	CTH-N	611+72.81	0.00'	1219.86	197048.07	316896.49	CURB FLANGE
3	CTH-N	611+76.43	3.50' RT	1219.79	197044.61	316900.15	CURB FLANGE
4	CTH-N	612+45.82	4.50' RT	1219.70	197044.38	316969.54	CURB FLANGE
5	CTH-N	612+70.82	4.50' RT	1219.67	197044.66	316994.54	CURB FLANGE
6	CTH-N	612+72.27	4.50' RT	1219.67	197044.67	316995.99	CURB FLANGE
7	CTH-N	612+76.75	0.00'	1219.76	197049.22	317000.42	CURB FLANGE
8	CTH-N	612+72.27	4.50' LT	1219.67	197053.67	316995.89	CURB FLANGE
9	CTH-N	612+70.82	4.50' LT	1219.67	197053.66	316994.44	CURB FLANGE
10	CTH-N	612+45.82	4.50' LT	1219.70	197053.38	316969.44	CURB FLANGE
11	CTH-N	611+76.43	0.00' LT	1219.86	197048.11	316900.11	MEDIAN NOSE CENTER
12	CTH-N	612+72.27	0.00' RT	1219.76	197049.17	316995.94	MEDIAN NOSE CENTER

NW CURB RETURN							
POINT NUMBER	ALIGNMENT NAME	STATION	OFFSET	ELEVATION	NORTHING	EASTING	DESCRIPTION
100	CTH-N	613+11.42	58.48' LT	1219.90	197108.08	317034.43	PT
101	CTH-N	612+99.85	31.15' LT	1219.23	197080.63	317023.17	MID POINT
102	CTH-N	612+71.74	19.49' LT	1219.37	197068.66	316995.19	PC
103	CTH-N	612+71.35	59.57' LT	1218.60	197108.73	316994.35	RADIUS CENTER
104	CTH-N	612+96.60	32.39' LT	1219.12	197081.84	317019.90	FLUME CENTER

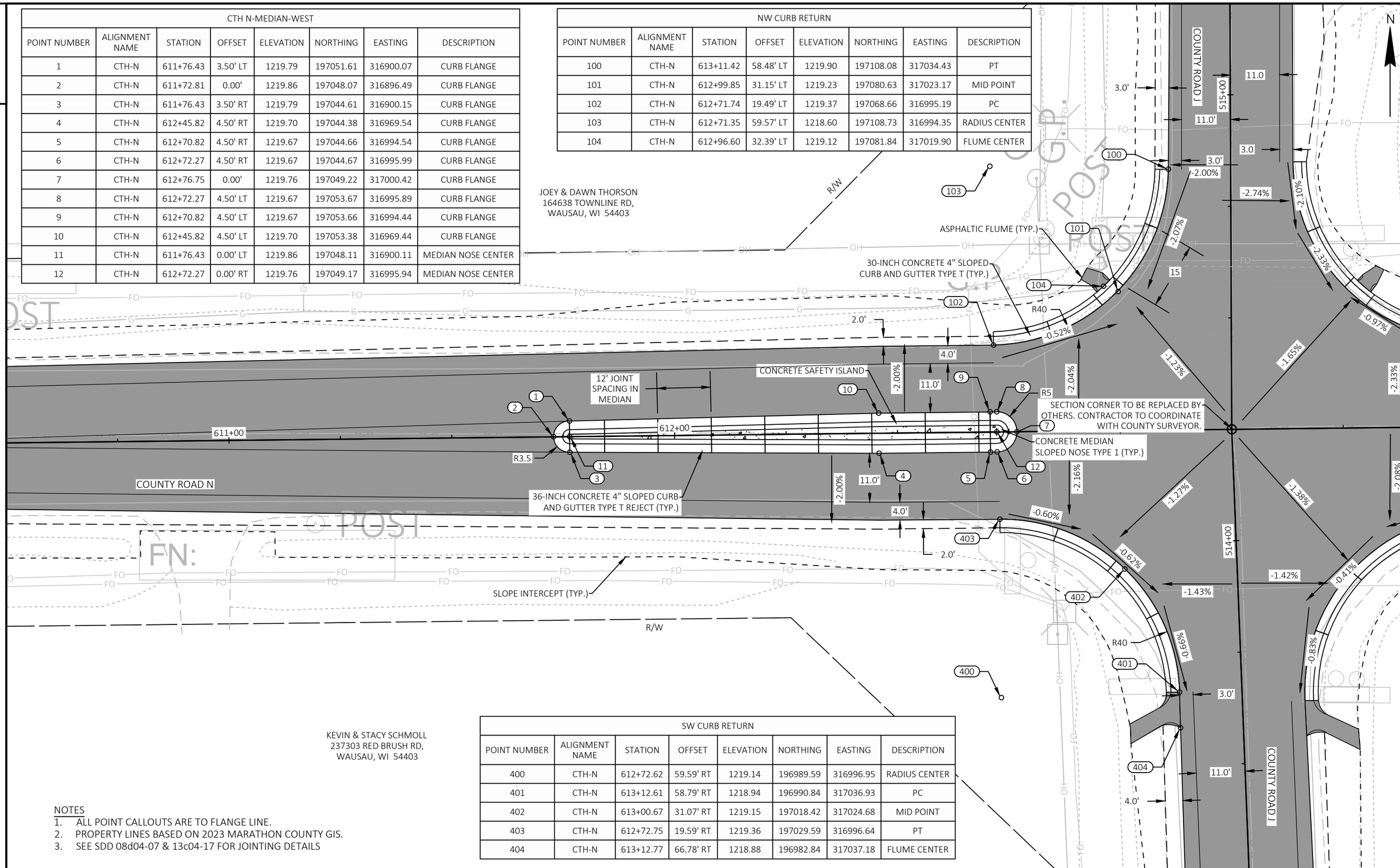

KEVIN & STACY SCHMOLL
237303 RED BRUSH RD,
WAUSAU, WI 54403

SW CURB RETURN							
POINT NUMBER	ALIGNMENT NAME	STATION	OFFSET	ELEVATION	NORTHING	EASTING	DESCRIPTION
400	CTH-N	612+72.62	59.59' RT	1219.14	196989.59	316996.95	RADIUS CENTER
401	CTH-N	613+12.61	58.79' RT	1218.94	196990.84	317036.93	PC
402	CTH-N	613+00.67	31.07' RT	1219.15	197018.42	317024.68	MID POINT
403	CTH-N	612+72.75	19.59' RT	1219.36	197029.59	316996.64	PT
404	CTH-N	613+12.77	66.78' RT	1218.88	196982.84	317037.18	FLUME CENTER

NOTES
1. ALL POINT CALLOUTS ARE TO FLANGE LINE.
2. PROPERTY LINES BASED ON 2023 MARATHON COUNTY GIS.
3. SEE SDD 08d04-07 & 13c04-17 FOR JOINTING DETAILS

PROJECT NO: 9439-02-70	HWY: CTH N/CTH J	COUNTY: MARATHON	INTERSECTION DETAILS	SHEET 9	E

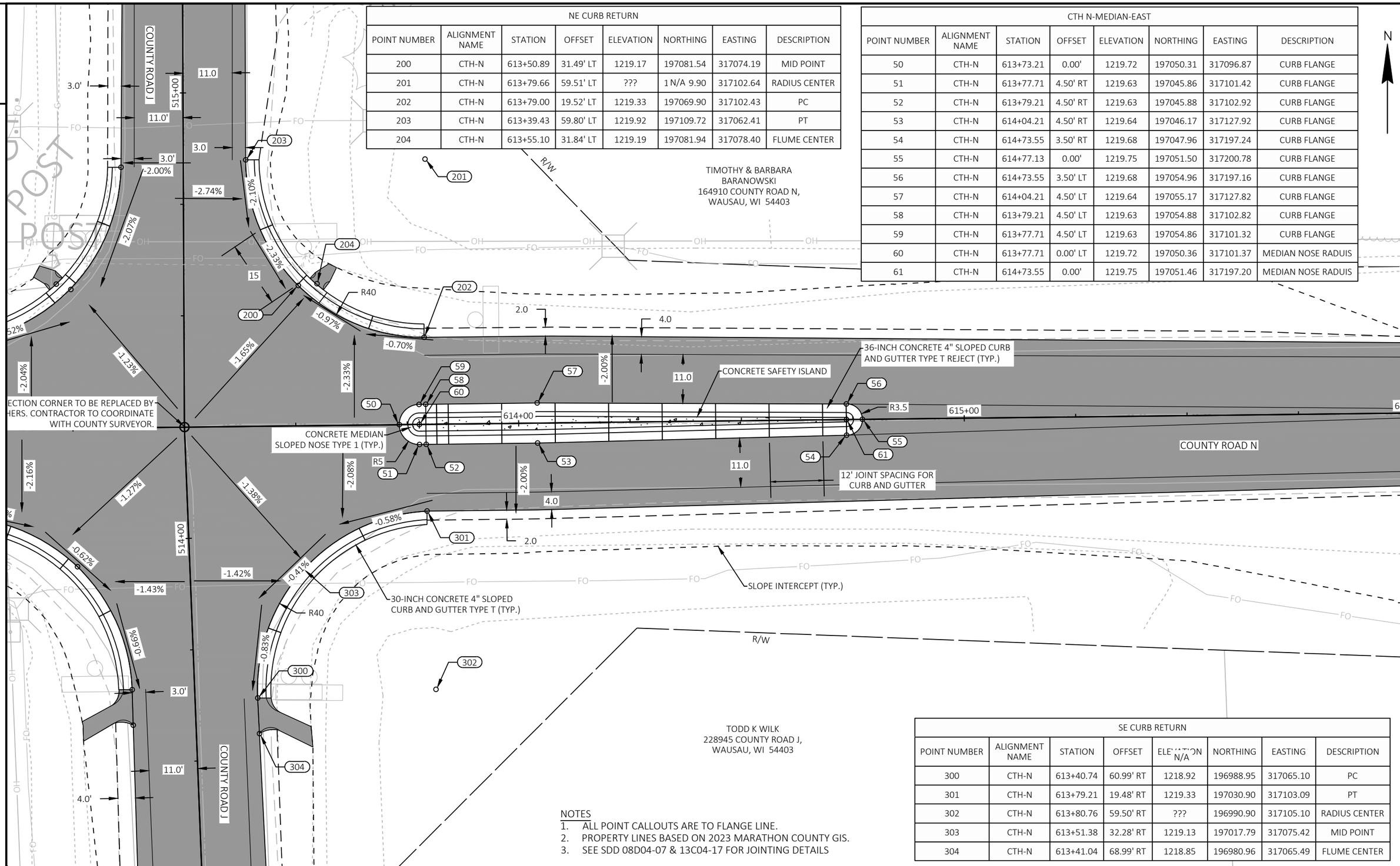

NE CURB RETURN							
POINT NUMBER	ALIGNMENT NAME	STATION	OFFSET	ELEVATION	NORTHING	EASTING	DESCRIPTION
200	CTH-N	613+50.89	31.49' LT	1219.17	197081.54	317074.19	MID POINT
201	CTH-N	613+79.66	59.51' LT	???	1 N/A 9.90	317102.64	RADIUS CENTER
202	CTH-N	613+79.00	19.52' LT	1219.33	197069.90	317102.43	PC
203	CTH-N	613+39.43	59.80' LT	1219.92	197109.72	317062.41	PT
204	CTH-N	613+55.10	31.84' LT	1219.19	197081.94	317078.40	FLUME CENTER

CTH N-MEDIAN-EAST							
POINT NUMBER	ALIGNMENT NAME	STATION	OFFSET	ELEVATION	NORTHING	EASTING	DESCRIPTION
50	CTH-N	613+73.21	0.00'	1219.72	197050.31	317096.87	CURB FLANGE
51	CTH-N	613+77.71	4.50' RT	1219.63	197045.86	317101.42	CURB FLANGE
52	CTH-N	613+79.21	4.50' RT	1219.63	197045.88	317102.92	CURB FLANGE
53	CTH-N	614+04.21	4.50' RT	1219.64	197046.17	317127.92	CURB FLANGE
54	CTH-N	614+73.55	3.50' RT	1219.68	197047.96	317197.24	CURB FLANGE
55	CTH-N	614+77.13	0.00'	1219.75	197051.50	317200.78	CURB FLANGE
56	CTH-N	614+73.55	3.50' LT	1219.68	197054.96	317197.16	CURB FLANGE
57	CTH-N	614+04.21	4.50' LT	1219.64	197055.17	317127.82	CURB FLANGE
58	CTH-N	613+79.21	4.50' LT	1219.63	197054.88	317102.82	CURB FLANGE
59	CTH-N	613+77.71	4.50' LT	1219.63	197054.86	317101.32	CURB FLANGE
60	CTH-N	613+77.71	0.00' LT	1219.72	197050.36	317101.37	MEDIAN NOSE RADUIS
61	CTH-N	614+73.55	0.00'	1219.75	197051.46	317197.20	MEDIAN NOSE RADUIS

SE CURB RETURN							
POINT NUMBER	ALIGNMENT NAME	STATION	OFFSET	ELEVATION N/A	NORTHING	EASTING	DESCRIPTION
300	CTH-N	613+40.74	60.99' RT	1218.92	196988.95	317065.10	PC
301	CTH-N	613+79.21	19.48' RT	1219.33	197030.90	317103.09	PT
302	CTH-N	613+80.76	59.50' RT	???	196990.90	317105.10	RADIUS CENTER
303	CTH-N	613+51.38	32.28' RT	1219.13	197017.79	317075.42	MID POINT
304	CTH-N	613+41.04	68.99' RT	1218.85	196980.96	317065.49	FLUME CENTER

NOTES
1. ALL POINT CALLOUTS ARE TO FLANGE LINE.
2. PROPERTY LINES BASED ON 2023 MARATHON COUNTY GIS.
3. SEE SDD 08D04-07 & 13C04-17 FOR JOINTING DETAILS

PROJECT NO: 9439-02-70	HWY: CTH N/CTH J	COUNTY: MARATHON	INTERSECTION DETAILS	SHEET 10	E

2

JOEY & DAWN THORSON
164638 TOWNLINE RD,
WAUSAU, WI 54403

PROPERTY LINE (TYP.)

EXISTING 18-INCH CULVERT TO REMAIN.

ASPHALTIC FLUME (TYP.)

CULVERT TO BE INSTALLED BY OTHERS PRIOR TO START OF PROJECT.

RE-ESTABLISH DITCH GRADING TO THE EAST. SEE MQ SHEETS FOR LIMITS.

COUNTY ROAD N

609+00 610+00 611+00 612+00 613+00 614+00

514+00

SLOPE INTERCEPT (TYP.)

KEVIN & STACY SCHMOLL
237303 RED BRUSH RD,
WAUSAU, WI 54403

ASPHALTIC FLUME (TYP.)

RE-ESTABLISH DITCH GRADING TO THE SOUTH. SEE MQ SHEETS FOR LIMITS.

R/W

N

2

LEGEND

- SALVAGE TOPSOIL, SEED, FERTILIZER, AND MULCH
- SLOPE INTERCEPT
- TEMPORARY DITCH CHECK
- CULVERT PIPE CHECK
- SURFACE WATER FLOW

NOTES:
1. PROPERTY LINES BASED ON 2023 MARATHON COUNTY GIS.

TIMOTHY & BARBARA
BARANOWSKI
164910 COUNTY ROAD N,
WAUSAU, WI 54403

515+00

EXISTING 18-INCH CULVERT TO REMAIN.

ASPHALTIC FLUME (TYP.)

RE-ESTABLISH DITCH GRADING TO THE EAST. SEE MQ SHEETS FOR LIMITS.

SLOPE INTERCEPT (TYP.)

CULVERT TO BE INSTALLED BY OTHERS PRIOR TO START OF PROJECT.

COUNTY ROAD N

613+00 614+00 615+00 616+00 617+00 618+00

514+00

WETLAND BOUNDARY (TYP.)

TODD K WILK
228945 COUNTY ROAD J,
WAUSAU, WI 54403

PROJECT NO: 9439-02-70	HWY: CTH N/CTH J	COUNTY: MARATHON	EROSION CONTROL	SHEET 11	E

FILE NAME : P:\2023\2023.035 - WISDOT - CTH J-N 9439-02-00 (MARA CO)\94390200\SHEETS\022001-EC.DWG
LAYOUT NAME - 01
PLOT DATE : 10/24/2024 1:49 PM PLOT BY : JUSTIN N. HAASE PLOT NAME : PLOT SCALE : 1 IN:40 FT

2

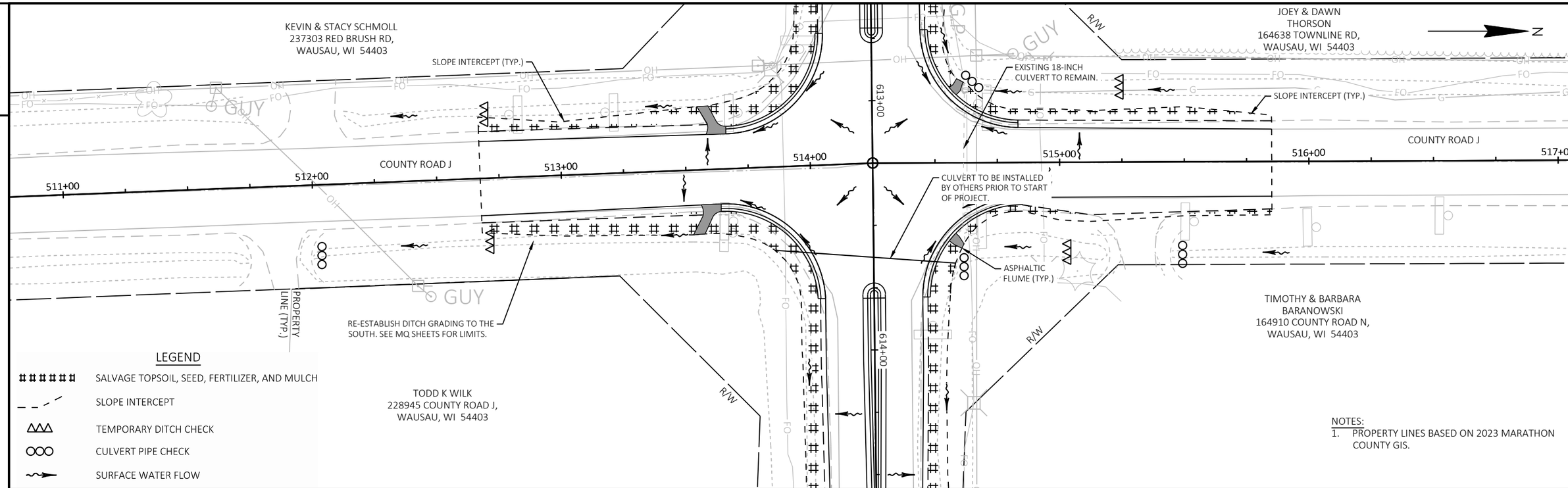

NOTES:
1. PROPERTY LINES BASED ON 2023 MARATHON COUNTY GIS.

PROJECT NO: 9439-02-70	HWY: CTH N/CTH J	COUNTY: MARATHON	EROSION CONTROL	SHEET 12	E

FILE NAME : P:\2023\2023.035 - WISDOT - CTH J-N 9439-02-00 (MARA CO)\94390200\SHEETS\022001-EC.DWG
LAYOUT NAME - 02
PLOT DATE : 10/23/2024 3:24 PM PLOT BY : JUSTIN N. HAASE PLOT NAME : PLOT SCALE : 1 IN:40 FT
WISDOT/CADDS SHEET 44

2

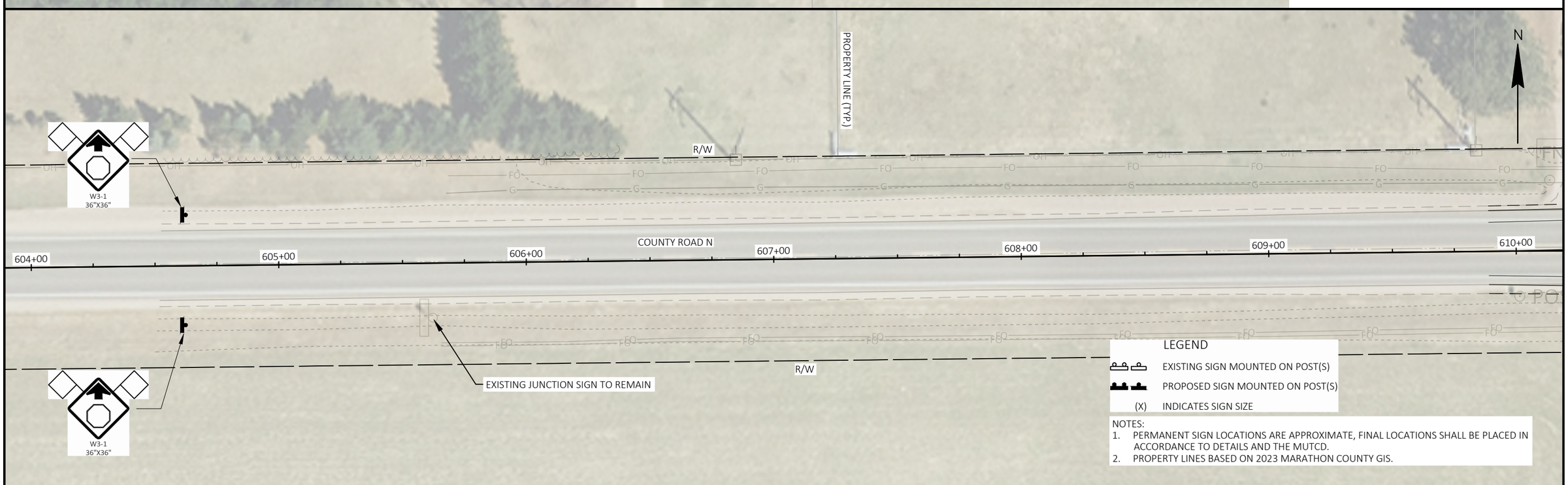

2

PROJECT NO: 9439-02-70	HWY: CTH N/CTH J	COUNTY: MARATHON	CTH N PERMANENT SIGNAGE	SHEET 13	E

FILE NAME : P:\2023\2023.035 - WISDOT - CTH J-N 9439-02-00 (MARA CO)\94390200\SHEETS\023201-PS.DWG
LAYOUT NAME - 01
PLOT DATE : 10/23/2024 3:29 PM
PLOT BY : JUSTIN N. HAASE
PLOT NAME :
PLOT SCALE : 1 IN:40 FT

2

EXISTING JUNCTION SIGN TO BE RELOCATED NEXT TO THE PROPOSED STOP SIGN

SALVAGED
STOP
R1-1
30"X30"

STOP
R1-1B
30"X30"
ALL WAY
R1-3P
18"X6"

R/W

POST POST

611+00

612+00

613+00

COUNTY ROAD N

515+00

COUNTY ROAD J

EXISTING JUNCTION SIGN AND POST TO BE RELOCATED NEXT TO THE PROPOSED STOP SIGN

R4-7
24"X30"

R/W

PROPOSED STOP SIGN TO BE SOLAR POWERED FLASHING

STOP
R1-1B
30"X30"
ALL WAY
R1-3P
18"X6"

514+00

COUNTY ROAD J

EXISTING STOP SIGN TO BE SALVAGED AND INSTALLED IN MEDAIN

EXISTING STOP SIGN TO BE SALVAGED AND INSTALLED IN MEDIAN

PROPOSED STOP SIGN TO BE SOLAR POWERED FLASHING

STOP
R1-1B
30"X30"
ALL WAY
R1-3P
18"X6"

EXISTING JUNCTION SIGN TO BE RELOCATED NEXT TO THE PROPOSED STOP SIGN

R4-7
24"X30"

R/W

N

COUNTY ROAD N

614+00

615+00

616+00

SALVAGED
STOP
R1-1
30"X30"

STOP
R1-1B
30"X30"
ALL WAY
R1-3P
18"X6"

EXISTING STOP SIGN WITH FLASHING LIGHTS AND EXISTING PLAQUES TO BE REMOVED AND BECOME PROPERTY OF MARATHON COUNTY. CONTRACTOR TO INSTALL NEW POSTS AND SIGNS AT THIS LOCATION.

EXISTING JUNCTION SIGN TO BE RELOCATED NEXT TO THE PROPOSED STOP SIGN

R/W

PROPERTY LINE (TYP.)

2

EXISTING JUNCTION SIGN TO REMAIN

TO REMAIN
45 MPH
REMOVE

W3-1
36"X36"

N

R/W

617+00

618+00

619+00

620+00

621+00

622+00

COUNTY ROAD N

POST

LEGEND

EXISTING SIGN MOUNTED ON POST(S)

PROPOSED SIGN MOUNTED ON POST(S)

(X) INDICATES SIGN SIZE

NOTES:
1. PERMANENT SIGN LOCATIONS ARE APPROXIMATE, FINAL LOCATIONS SHALL BE PLACED IN ACCORDANCE TO DETAILS AND THE MUTCD.
2. PROPERTY LINES BASED ON 2023 MARATHON COUNTY GIS.

R/W

W3-1
36"X36"

PROJECT NO: 9439-02-70	HWY: CTH N/CTH J	COUNTY: MARATHON	CTH N PERMANENT SIGNAGE	SHEET 14	E

FILE NAME : P:\2023\2023.035 - WISDOT - CTH J-N 9439-02-00 (MARA CO)\94390200\SHEETS\023201-PS.DWG
LAYOUT NAME - 02

PLOT DATE : 10/24/2024 1:31 PM PLOT BY : JUSTIN N. HAASE PLOT NAME : PLOT SCALE : 1 IN:40 FT

WISDOT/CADDS SHEET 44

2

LEGEND

EXISTING SIGN MOUNTED ON POST(S)

PROPOSED SIGN MOUNTED ON POST(S)

(X) INDICATES SIGN SIZE

NOTES:
1. PERMANENT SIGN LOCATIONS ARE APPROXIMATE, FINAL LOCATIONS SHALL BE PLACED IN ACCORDANCE TO DETAILS AND THE MUTCD.
2. PROPERTY LINES BASED ON 2023 MARATHON COUNTY GIS.

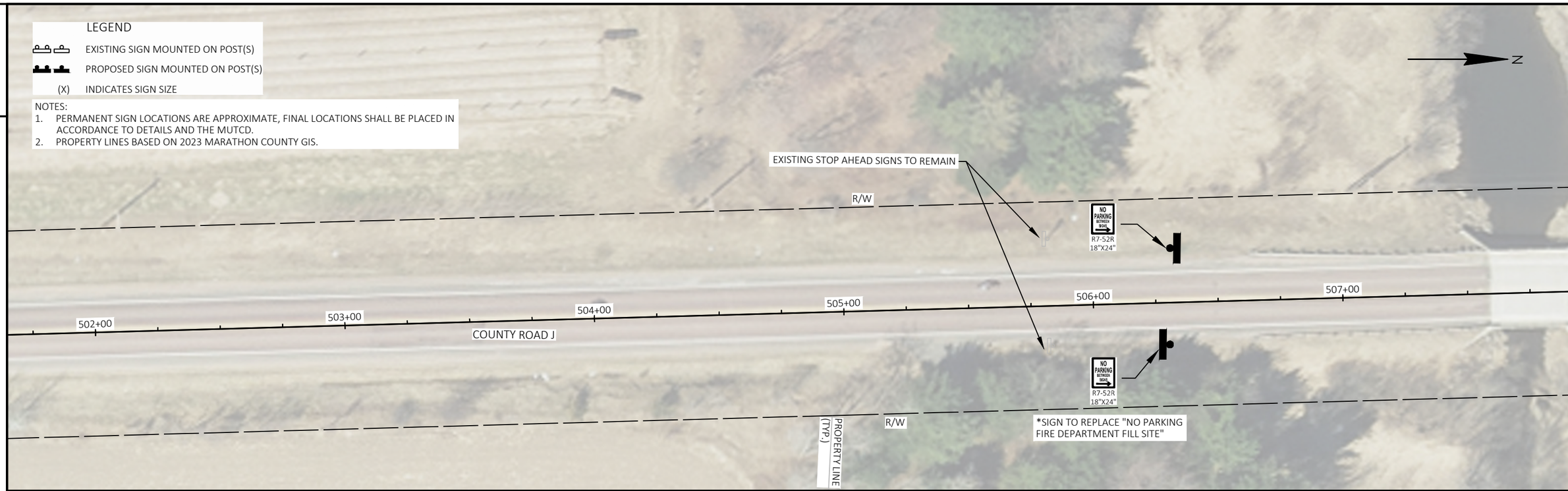

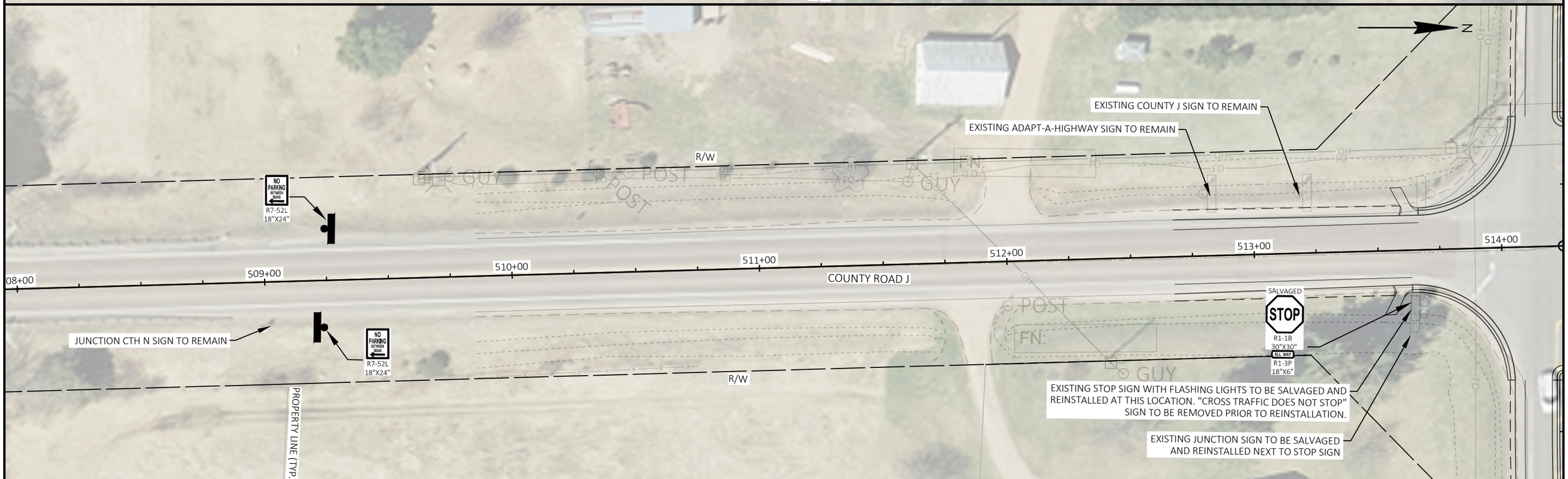

2

PROJECT NO: 9439-02-70	HWY: CTH N/CTH J	COUNTY: MARATHON	CTH J PERMANENT SIGNAGE	SHEET 15	E

2

EXISTING JUNCTION SIGN TO BE SALVAGED AND REINSTALLED NEXT TO STOP SIGN

SALVAGED

SALVAGED

STOP

R1-1B
30"X30"

ALL WAY

R1-3P
18"X6"

EXISTING STOP SIGN WITH FLASHING LIGHTS AND EXISTING PLAQUES TO BE REMOVED AND BECOME PROPERTY OF MARATHON COUNTY. CONTRACTOR TO INSTALL NEW POSTS AND SIGNS AT THIS LOCATION.

EXISTING CTH N JUNCTION SIGN TO REMAIN

N

R/W

613+00

515+00 516+00 517+00 518+00 519+00 520+00

COUNTY ROAD J

R/W

EXISTING WELCOME TO TOWN OF EASTON SIGN TO REMAIN

EXISTING ADOPT-A-HIGHWAY SIGN TO REMAIN

EXISTING JUNCTION SIGN TO REMAIN

614+00

PROPERTY LINE (TYP.)

PROPERTY LINE (TYP.)

N

R/W

EXISTING STOP AHEAD SIGNS TO REMAIN

521+00 522+00 523+00 524+00 525+00 526+00

COUNTY ROAD J

R/W

LEGEND

EXISTING SIGN MOUNTED ON POST(S)

PROPOSED SIGN MOUNTED ON POST(S)

(X) INDICATES SIGN SIZE

NOTES:
1. PERMANENT SIGN LOCATIONS ARE APPROXIMATE, FINAL LOCATIONS SHALL BE PLACED IN ACCORDANCE TO DETAILS AND THE MUTCD.
2. PROPERTY LINES BASED ON 2023 MARATHON COUNTY GIS.

2

PROJECT NO: 9439-02-70	HWY: CTH N/CTH J	COUNTY: MARATHON	CTH J PERMANENT SIGNAGE	SHEET 16	E

FILE NAME : P:\2023\2023.035 - WISDOT - CTH J-N 9439-02-00 (MARA CO)\94390200\SHEETS\023201-PS.DWG
LAYOUT NAME - 04

PLOT DATE : 10/24/2024 1:31 PM PLOT BY : JUSTIN N. HAASE PLOT NAME : PLOT SCALE : 1 IN:40 FT

WISDOT/CADDS SHEET 44


JOEY & DAWN THORSON
164638 TOWNLINE RD,
WAUSAU, WI 54403
GLORIA FENHAUS
229187 EL CAMINO RD,
WAUSAU, WI 54403
PROPERTY LINE (TYP.)
R/W
608+00
609+00
610+00
611+00
612+00
613+00
516+00
515+00
514+00
513+00
COUNTY ROAD J
COUNTY ROAD N
STA 609+95.82, 0.00'
STA 611+76.43, 3.50' RT
STA 612+45.82, 4.50' RT
STA 612+76.75, 0.00'
SEE SDD "STOP LINE AND
CROSSWALK PAVEMENT MARKING"
KEVIN & STACY SCHMOLL
237303 RED BRUSH RD,
WAUSAU, WI 54403
N
LEGEND
1 MARKING ISLAND NOSE EPOXY, YELLOW
2 MARKING LINE EPOXY 6-INCH, WHITE
3 MARKING STOP LINE EPOXY 18-INCH, WHITE
4 MARKING DIAGONAL 12-INCH, EPOXY, YELLOW
5 DOUBLE YELLOW CENTERLINE, 6-INCH, EPOXY
NOTES:
- PROPERTY LINES BASED ON 2023 MARATHON COUNTY GIS.
- SEE SDD 15c18-09a FOR MEDIAN ISLAND PAVEMENT MARKING
- SEE MQ SHEETS FOR PAINT MARKING START AND END STATION AND OFFSETS

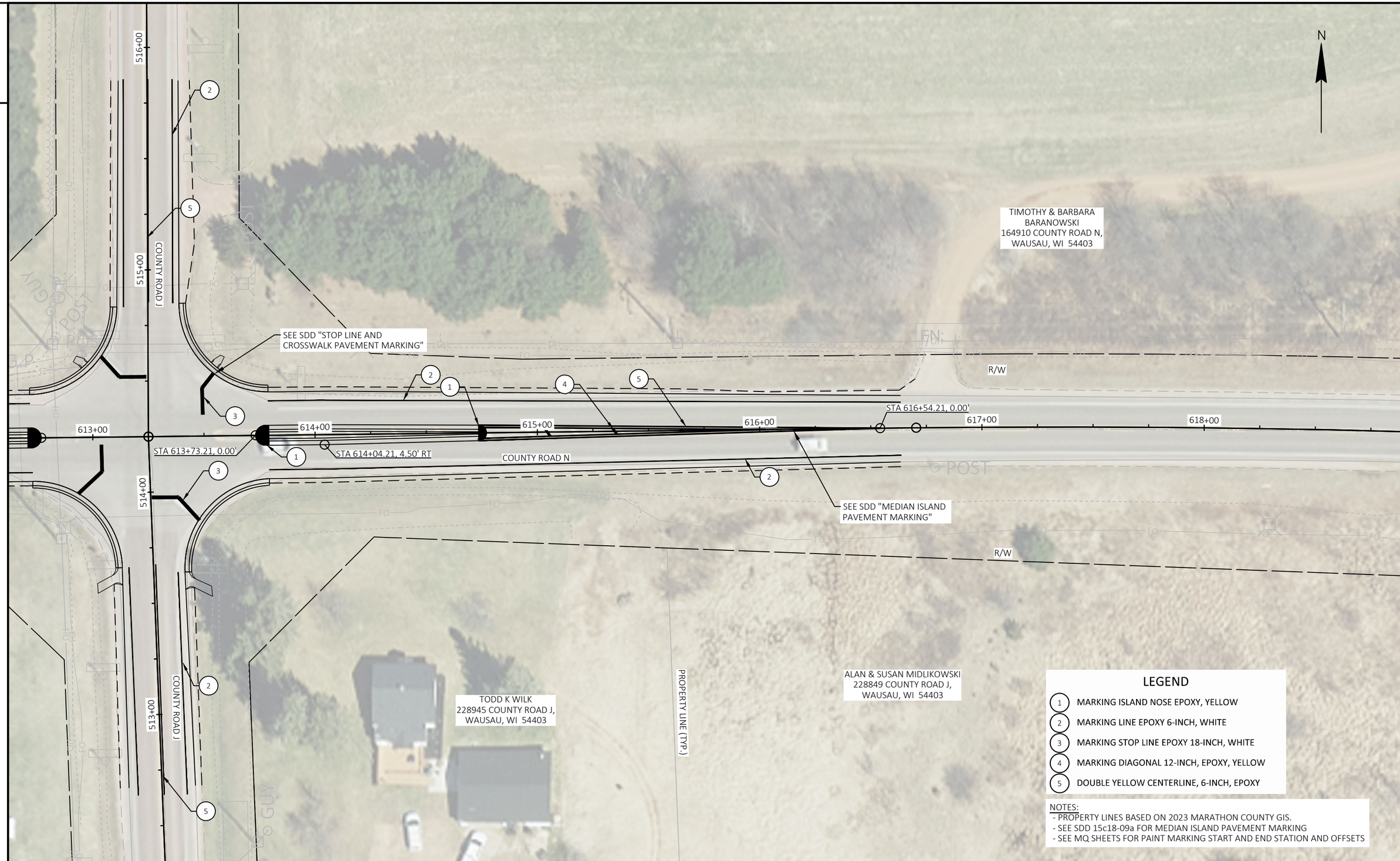

PROJECT NO: 9439-02-70	HWY: CTH N/CTH J	COUNTY: MARATHON	PAVEMENT MARKING	SHEET 18	E

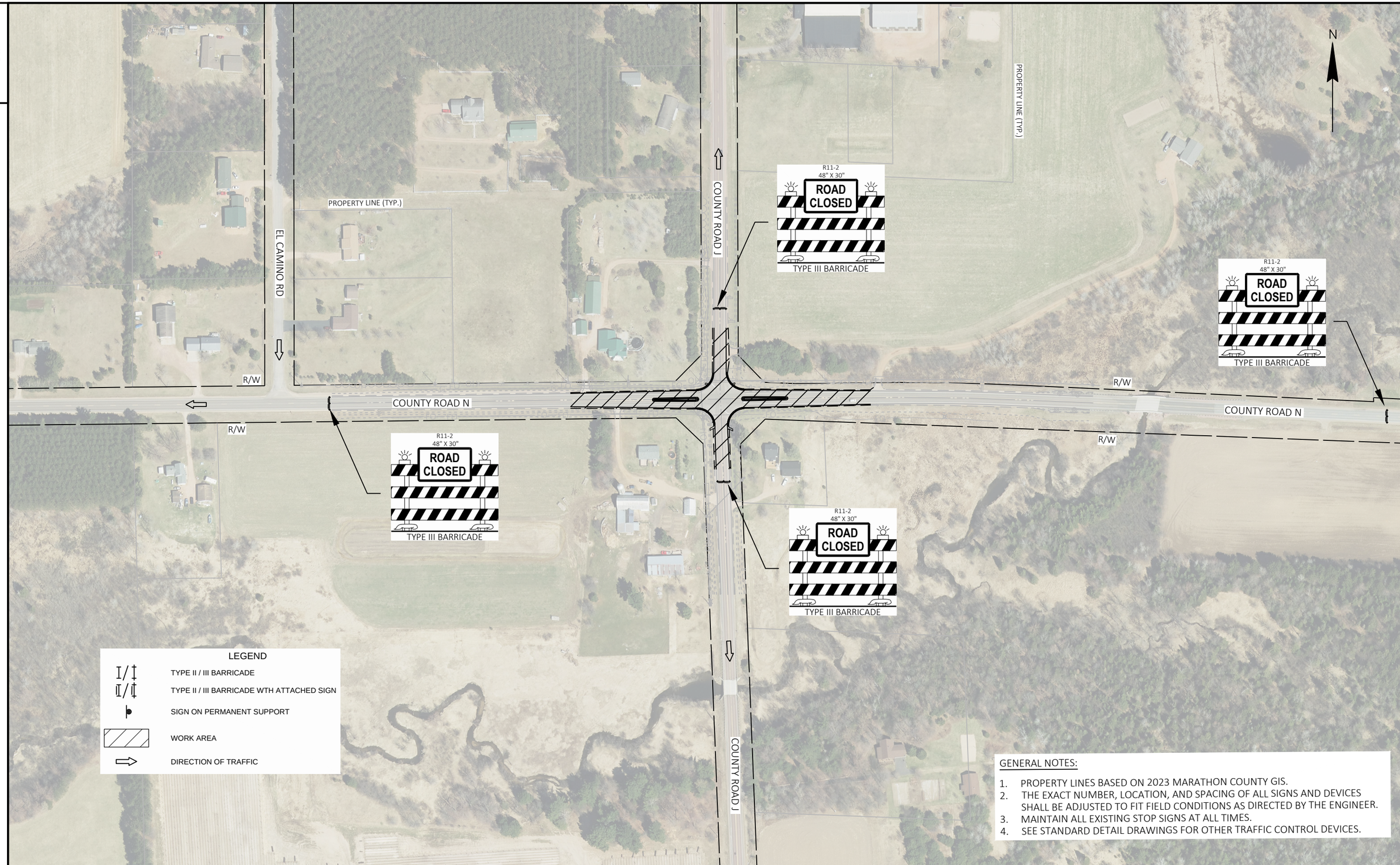

GENERAL NOTES:

1. PROPERTY LINES BASED ON 2023 MARATHON COUNTY GIS.
2. THE EXACT NUMBER, LOCATION, AND SPACING OF ALL SIGNS AND DEVICES SHALL BE ADJUSTED TO FIT FIELD CONDITIONS AS DIRECTED BY THE ENGINEER.
3. MAINTAIN ALL EXISTING STOP SIGNS AT ALL TIMES.
4. SEE STANDARD DETAIL DRAWINGS FOR OTHER TRAFFIC CONTROL DEVICES.

PROJECT NO: 9439-02-70	HWY: CTH N/CTH J	COUNTY: MARATHON	TRAFFIC CONTROL	SHEET 19	E

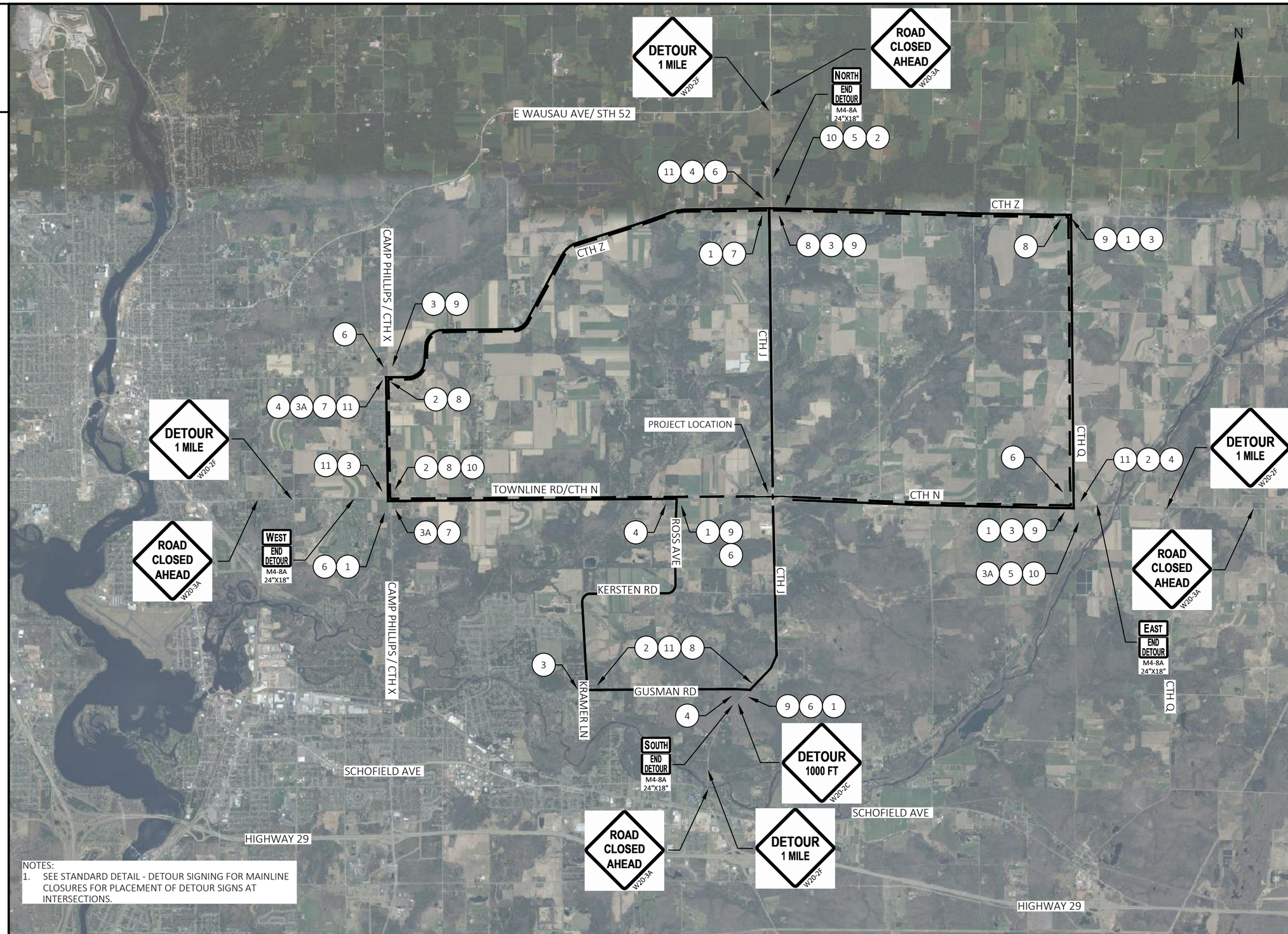

NOTES:
1. SEE STANDARD DETAIL - DETOUR SIGNING FOR MAINLINE CLOSURES FOR PLACEMENT OF DETOUR SIGNS AT INTERSECTIONS.

LEGEND

CTH J NORTH/SOUTH

CTH N EAST/WEST

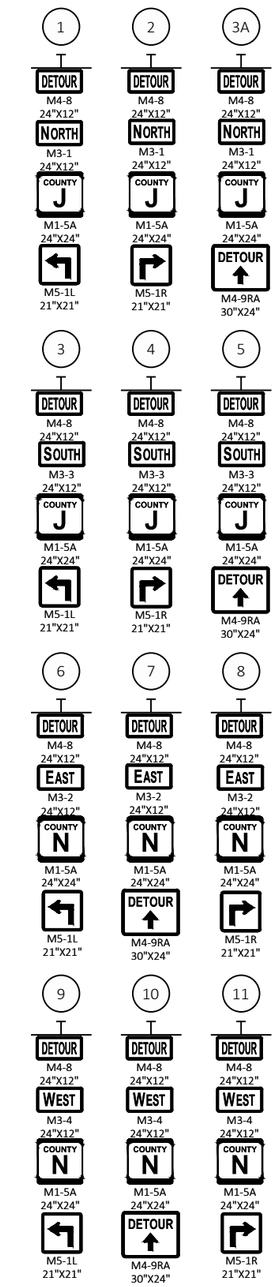

PROJECT NO: 9439-02-70	HWY: CTH N/CTH J	COUNTY: MARATHON	DETOUR PLAN	SHEET 20	E

Estimate Of Quantities

9439-02-70

Line	Item	Item Description	Unit	Total	Qty
0002	204.9180.S	Removing (item description) .01 Removing and Salvaging Pulverized Asphaltic Material	SY	4,056.000	4,056.000
0004	205.0100	Excavation Common	CY	905.000	905.000
0006	211.0101	Prepare Foundation for Asphaltic Paving (project) .01 9439-02-70	EACH	1.000	1.000
0008	213.0100	Finishing Roadway (project) .01 9439-02-70	EACH	1.000	1.000
0010	305.0110	Base Aggregate Dense 3/4-Inch	TON	214.000	214.000
0012	305.0120	Base Aggregate Dense 1 1/4-Inch	TON	757.000	757.000
0014	455.0605	Tack Coat	GAL	246.000	246.000
0016	460.2000	Incentive Density HMA Pavement	DOL	960.000	960.000
0018	460.6223	HMA Pavement 3 MT 58-28 S	TON	704.000	704.000
0020	460.6224	HMA Pavement 4 MT 58-28 S	TON	501.000	501.000
0022	465.0315	Asphaltic Flumes	SY	18.000	18.000
0024	601.0582	Concrete Curb & Gutter 4-Inch Sloped 36-Inch Type T	LF	628.000	628.000
0026	602.2400	Concrete Safety Islands	SF	444.000	444.000
0028	619.1000	Mobilization	EACH	1.000	1.000
0030	620.0300	Concrete Median Sloped Nose	SF	130.000	130.000
0032	624.0100	Water	MGAL	17.100	17.100
0034	625.0500	Salvaged Topsoil	SY	1,389.000	1,389.000
0036	627.0200	Mulching	SY	1,389.000	1,389.000
0038	628.1504	Silt Fence	LF	125.000	125.000
0040	628.1520	Silt Fence Maintenance	LF	125.000	125.000
0042	628.1905	Mobilizations Erosion Control	EACH	1.000	1.000
0044	628.1910	Mobilizations Emergency Erosion Control	EACH	2.000	2.000
0046	628.7504	Temporary Ditch Checks	LF	90.000	90.000
0048	628.7555	Culvert Pipe Checks	EACH	3.000	3.000
0050	629.0210	Fertilizer Type B	CWT	0.990	0.990
0052	630.0130	Seeding Mixture No. 30	LB	30.000	30.000
0054	634.0612	Posts Wood 4x6-Inch X 12-FT	EACH	6.000	6.000
0056	634.0808	Posts Tubular Steel 2x2-Inch X 8-FT	EACH	4.000	4.000
0058	634.0812	Posts Tubular Steel 2x2-Inch X 12-FT	EACH	4.000	4.000
0060	637.0620	Sign Flags Permanent Type II	EACH	8.000	8.000
0062	637.2210	Signs Type II Reflective H	SF	22.500	22.500
0064	637.2230	Signs Type II Reflective F	SF	36.000	36.000
0066	638.2102	Moving Signs Type II	EACH	6.000	6.000
0068	638.2602	Removing Signs Type II	EACH	4.000	4.000
0070	642.5001	Field Office Type B	EACH	1.000	1.000
0072	643.0300	Traffic Control Drums	DAY	720.000	720.000
0074	643.0420	Traffic Control Barricades Type III	DAY	360.000	360.000
0076	643.0705	Traffic Control Warning Lights Type A	DAY	480.000	480.000
0078	643.0900	Traffic Control Signs	DAY	5,430.000	5,430.000
0080	643.5000	Traffic Control	EACH	1.000	1.000
0082	646.2020	Marking Line Epoxy 6-Inch	LF	2,974.000	2,974.000
0084	646.6120	Marking Stop Line Epoxy 18-Inch	LF	100.000	100.000
0086	646.7120	Marking Diagonal Epoxy 12-Inch	LF	24.000	24.000
0088	646.8220	Marking Island Nose Epoxy	EACH	4.000	4.000
0090	650.5000	Construction Staking Base	LF	997.000	997.000
0092	650.5500	Construction Staking Curb Gutter and Curb & Gutter	LF	633.000	633.000
0094	650.8000	Construction Staking Resurfacing Reference	LF	997.000	997.000
0096	650.9911	Construction Staking Supplemental Control (project) .01 9439-02-70	EACH	1.000	1.000
0098	650.9920	Construction Staking Slope Stakes	LF	997.000	997.000

Estimate Of Quantities

9439-02-70

Line	Item	Item Description	Unit	Total	Qty
0100	690.0150	Sawing Asphalt	LF	120.000	120.000
0102	ASP.1T0A	On-the-Job Training Apprentice at $5.00/HR	HRS	300.000	300.000
0104	ASP.1T0G	On-the-Job Training Graduate at $5.00/HR	HRS	600.000	600.000
0106	SPV.0060	Special .01 Stop Sign Traffic Flashing Beacon System, Solar	EACH	4.000	4.000
0108	SPV.0060	Special .02 Salvaging Stop Sign Traffic Flashing Beacon System, Solar	EACH	2.000	2.000
0110	SPV.0090	Special .01 Ditch Cleaning	LF	240.000	240.000

3

SAW CUTTING

CATEGORY	STATION	TO	STATION	LOCATION	690.0150 SAWING ASPHALT LF	REMARKS
0010	609+88	-	609+88	ML	30	CTH N
0010	616+63	-	616+63	ML	30	CTH N
0010	512+67	-	512+67	ML	30	CTH J
0010	515+85	-	515+85	ML	30	CTH J
				TOTAL 0010	120	

REMOVING AND SALVAGING PULVERIZED ASPHALTIC MATERIAL

CATEGORY	STATION	TO	STATION	LOCATION	204.9180.S.01 REMOVING AND SALVAGING PULVERIZED ASPHALTIC MATERIAL SY	REMARKS
0010	PROJECT			ML	4,056	CTH N & CTH J
				TOTAL 0010	4,056	

NOTES:

(1) COMMON EXCAVATION IS THE SUM OF THE CUT AND EBS EXCAVATION COLUMNS. ITEM NUMBER 205.0100

(2) SALVAGED/UNUSABLE PAVEMENT MATERIAL IS INCLUDED IN CUT.

(3) EBS EXCAVATION TO BE BACKFILLED WITH SELECT BORROW MATERIAL. NOTE: THIS IS DESIGNERS CHOICE, CAN BE BACKFILLED WITH BORROW, OR CUT AS WELL.

(4) SALVAGED/UNUSABLE PAVEMENT MATERIAL

5) AVAILABLE MATERIAL = CUT - SALVAGED/UNUSABLE PAVEMENT MATERIAL

(6) MARSH EXCAVATION - TO BE BACKFILLED WITH SELECT BORROW MATERIAL. NOTE: THIS IS DESIGNERS CHOICE, CAN BE BACKFILLED WITH BORROW, OR CUT AS WELL. ITEM NUMBER 205.0500

(7) ROCK EXCAVATION ITEM NUMBER 205.0200

(13) EXPANDED FILL FACTOR = 1.25

DEPENDING ON SELECTIONS: EXPANDED FILL = (UNEXPANDED FILL - EXPANDED ROCK - REDUCED MARSH - REDUCED EBS) * FILL FACTOR

OR EXPANDED FILL = (UNEXPANDED FILL - EXPANDED ROCK - REDUCED EBS) * FILL FACTOR

OR EXPANDED FILL = (UNEXPANDED FILL - EXPANDED ROCK - REDUCED MARSH) * FILL FACTOR

OR EXPANDED FILL = (UNEXPANDED FILL - EXPANDED ROCK) * FILL FACTOR

(14) THE MASS ORDINATE + OR - QTY CALCULATED FOR THE DIVISION. PLUS QUANTITY INDICATES AN EXCESS OF MATERIAL WITHIN THE DIVISION. MINUS INDICATES A SHORTAGE OF MATERIAL WITHIN THE DIVISION.

(15) FACTORS USED TO COMPUTE ANTICIPATED WASTE AND THE COMPUTED WASTE VOLUME IDENTIFIED ARE FOR GENERAL INFORMATION ONLY.

DIVISION	FROM/TO STATION	LOCATION	205.0100 COMMON EXCAVATION (1) CUT (CY) (2)	SALVAGED/UNUSABLE PAVEMENT MATERIAL (CY) (4)	AVAILABLE MATERIAL (CY) (5)	UNEXPANDED FILL (CY)	EXPANDED FILL (13) FACTOR 1.25	MASS ORDINATE (CY) +/- (14)	WASTE (CY)	208.0100 BORROW (CY)	COMMENT
DIVISION 1											
CTH N	609+88.89/616+62.74		645	378	267	171	214	53	53	0	
CTH J	512+67.44/515+85.11		260	169	91	29	36	55	55	0	
DIVISION 1 SUBTOTAL			905	547	358	200	250	108	108	0	
GRAND TOTAL			905	547	358	200	250	108	108	0	
TOTAL COMMON EXC			905								

BASE AGGREGATE

CATEGORY	STATION	TO	STATION	LOCATION	305.0110 BASE AGGREGATE DENSE 3/4-INCH TON	305.0120 BASE AGGREGATE DENSE 1 1/4-INCH TON	624.0100 WATER MGAL	REMARKS
0010	609+88	-	612+72	LT	34	105	2.1	CTH N
0010	609+88	-	612+72	RT	34	105	2.1	CTH N
0010	613+79	-	616+63	LT	34	105	2.1	CTH N
0010	613+79	-	616+63	RT	34	105	2.1	CTH N
0010	512+64	-	513+66	LT	19	-	-	CTH J
0010	512+64	-	513+62	RT	19	-	-	CTH J
0010	514+85	-	515+86	LT	20	-	-	CTH J
0010	514+86	-	515+86	RT	20	-	-	CTH J
0010	612+72	-	613+80	INT	-	337	8.7	CTH N/CTH J INTERSECTION
				TOTAL 0010	214	757	17.1	

3

HMA PAVEMENT

CATEGORY	STATION	TO	STATION	LOCATION	455.0605 TACK COAT GAL	460.6223 HMA PAVEMENT 3 MT 58-28 S TON	460.6224 HMA PAVEMENT 4 MT 58-28 S TON	465.0315 ASPHALTIC FLUMES SY	REMARKS
0010	609+88	-	612+72	LT	37	105	75	-	CTH N
0010	612+73	-	613+13	LT	-	-	-	2	NE FLUME
0010	609+88	-	612+72	RT	34	97	69	-	CTH N
0010	613+79	-	616+63	LT	35	101	72	-	CTH N
0010	612+72	-	613+11	RT	-	-	-	7	SW FLUME
0010	613+40	-	613+79	RT	-	-	-	7	SE FLUME
0010	613+41	-	613+79	LT	-	-	-	2	NE FLUME
0010	613+79	-	616+63	RT	36	103	73	-	CTH N
0010	512+64	-	513+66	LT	11	32	23	-	CTH J
0010	512+64	-	513+62	RT	11	31	22	-	CTH J
0010	514+85	-	515+86	LT	11	31	22	-	CTH J
0010	514+86	-	515+86	RT	11	31	22	-	CTH J
0010	515+86	-	515+86	ML	-	-	-	-	CTH J
0010	612+73	-	613+79	-	60	173	123	-	CTH N/CTH J INTERSECTION
				TOTAL 0010	246	704	501	18	

CONCRETE

CATEGORY	STATION	TO	STATION	LOCATION	601.0582 CONCRETE CURB & GUTTER 4-INCH SLOPED 36-INCH TYPE T LF	602.2400 CONCRETE SAFETY ISLANDS SF	620.0300 CONCRETE MEDIAN SLOPED NOSE SF	REMARKS
0010	611+73	-	612+77	ML	190	222	65	CTH N WEST MEDIAN
0010	612+73	-	613+13	RT	61	-	-	SW QUADRANT
0010	612+72	-	613+11	LT	63	-	-	NW QUADRANT
0010	613+40	-	613+79	LT	62	-	-	NE QUADRANT
0010	613+41	-	613+79	RT	62	-	-	SE QUADRANT
0010	613+73	-	614+77	ML	190	222	65	CTH N EAST MEDIAN
				TOTAL 0010	628	444	130	

EROSION CONTROL

CATEGORY	STATION	TO	STATION	LOCATION	625.0500 SALVAGED TOPSOIL SY	627.0200 MULCHING SY	628.1504 SILT FENCE LF	628.152 SILT FENCE MAINTENANCE LF	628.1905 MOBILIZATIONS EROSION CONTROL EACH	628.1910 MOBILIZATIONS EMERGENCY EROSION CONTROL EACH	628.7504 TEMPORARY DITCH CHECKS LF	628.7555 CULVERT PIPE CHECKS EACH	629.0210 FERTILIZER TYPE B CWT	630.0130 SEEDING MIXTURE NO. 30 LB	SPV.0090.01 DITCH CLEANING LF	REMARKS
0010	609+88	-	612+95	LT	204	204	-	-	-	-	10	1	0.14	4	-	CTH N
0010	609+88	-	612+72	RT	250	250	-	-	-	-	10	-	0.14	5	-	CTH N
0010	613+79	-	616+63	RT	408	408	-	-	-	-	10	-	0.28	7	-	CTH N
0010	613+79	-	616+63	LT	255	255	-	-	-	-	10	-	0.14	5	120	CTH N
0010	615+46	-	616+67	RT	-	-	125	125	-	-	-	-	-	-	-	CTH N
0010	512+64	-	513+66	LT	47	47	-	-	-	-	10	-	0.00	1	-	CTH J
0010	512+64	-	513+62	RT	67	67	-	-	-	-	10	1	0.07	1	-	CTH J
0010	512+67	-	513+87	RT	67	67	-	-	-	-	10	-	0.15	5	120	CTH J
0010	514+85	-	515+86	LT	63	63	-	-	-	-	10	-	0.07	1	-	CTH J
0010	514+86	-	515+86	RT	28	28	-	-	-	-	10	1	0.00	1	-	CTH J
0010	PROJECT			ML	-	-	-	-	1	2	-	-	-	-	-	CTH N & CTH J
				TOTAL 0010	1,389	1,389	125	125	1	2	90	3	0.99	30	240	

3

3

PERMANENT SIGNAGE

CATEGORY	STATION	TO	STATION	LOCATION	634.0612 POSTS WOOD 4X6-INCH X 12-FT EACH	634.0808 POSTS TUBULAR STEEL 2X2-INCH X 8-FT EACH	634.0812 POSTS TUBULAR STEEL 2X2-INCH X 12-FT EACH	637.0620 SIGN FLAGS PERMANENT TYPE II EACH	637.2210 SIGNS TYPE II REFLECTIVE H SF	637.2230 SIGNS TYPE II REFLECTIVE F SF	638.2102 MOVING SIGNS TYPE II EACH	638.2602 REMOVING SIGNS TYPE II EACH	SPV.0060.01 STOP SIGN TRAFFIC FLASHING BEACON SYSTEM, SOLAR EACH	SPV.0060.02 SALVAGING STOP SIGN TRAFFIC FLASHING BEACON SYSTEM, SOLAR EACH	REMARKS	
0010	603+64	-	603+64	RT	-	-	-	-	-	-	-	1	-	-	SPEED PLAQUE	
0010	604+62	-	604+62	LT	1	-	-	2	-	9.00	-	-	-	-	STOP AHEAD	W3-1
0010	604+62	-	604+62	RT	1	-	-	2	-	9.00	-	-	-	-	STOP AHEAD	W3-1
0010	611+76	-	611+76	ML	1	-	-	-	3.75	-	-	-	-	-	KEEP RIGHT	R4-7
0010	612+72	-	612+72	ML	-	-	-	-	-	-	1	-	-	-	STOP SIGN	R1-1
0010	612+75	-	612+75	RT	-	-	-	-	-	-	1	-	-	-	CTH J JUNCTION	
0010	612+75	-	612+75	RT	-	-	1	-	-	-	-	-	1	-	STOP SIGN - BLINKING	R1-1B
0010	612+75	-	612+75	RT	-	-	-	-	0.75	-	-	-	-	-	ALL WAY PLAQUE	R1-3P
0010	613+05	-	613+05	LT	-	-	-	-	-	-	-	1	-	-	CROSS TRAFFIC DOES NOT STOP	W4-4P
0010	613+48	-	613+48	RT	-	-	-	-	-	-	-	1	-	-	CROSS TRAFFIC DOES NOT STOP	W4-4P
0010	613+77	-	613+77	LT	-	-	1	-	-	-	-	-	1	-	STOP SIGN - BLINKING	R1-1B
0010	613+77	-	613+77	LT	-	-	-	-	0.75	-	-	-	-	-	ALL WAY PLAQUE	R1-3P
0010	613+77	-	613+77	LT	-	-	-	-	-	-	1	-	-	-	CTH J JUNCTION	
0010	613+78	-	613+78	ML	-	-	-	-	-	-	1	-	-	-	STOP SIGN	R1-1
0010	614+73	-	614+73	ML	1	-	-	-	3.75	-	-	-	-	-	KEEP RIGHT	R4-7
0010	621+16	-	621+16	LT	-	-	-	-	-	-	-	1	-	-	SPEED PLAQUE	
0010	621+30	-	621+30	LT	1	-	-	2	-	9.00	-	-	-	-	STOP AHEAD	W3-1
0010	621+33	-	621+33	RT	1	-	-	2	-	9.00	-	-	-	-	STOP AHEAD	W3-1
0010	506+30	-	506+30	RT	-	1	-	-	3.00	-	-	-	-	-	NO PARKING BETWEEN SIGNS - RIGHT ARROW	R7-52R
0010	506+32	-	506+32	LT	-	1	-	-	3.00	-	-	-	-	-	NO PARKING BETWEEN SIGNS - LEFT ARROW	R7-52L
0010	509+24	-	509+24	RT	-	1	-	-	3.00	-	-	-	-	-	NO PARKING BETWEEN SIGNS - RIGHT ARROW	R7-52R
0010	509+25	-	509+25	LT	-	1	-	-	3.00	-	-	-	-	-	NO PARKING BETWEEN SIGNS - LEFT ARROW	R7-52L
0010	513+64	-	513+64	RT	-	-	-	-	-	-	1	-	-	-	CTH N JUNCTION	
0010	513+64	-	513+64	RT	-	-	1	-	-	-	-	-	1	1	STOP SIGN - BLINKING	R1-1B
0010	513+64	-	513+64	RT	-	-	-	-	0.75	-	-	-	-	-	ALL WAY PLAQUE	R1-3P
0010	514+82	-	514+82	LT	-	-	1	-	-	-	-	-	1	1	STOP SIGN - BLINKING	R1-1B
0010	514+82	-	514+82	LT	-	-	-	-	0.75	-	-	-	-	-	ALL WAY PLAQUE	R1-3P
0010	514+82	-	514+82	LT	-	-	-	-	-	-	1	-	-	-	CTH N JUNCTION	
				TOTAL 0010	6	4	4	8	22.50	36.00	6	4	4	2		

TRAFFIC CONTROL

CATEGORY	STATION	TO	STATION	LOCATION	643.0300 TRAFFIC CONTROL DRUMS DAY	643.0420 TRAFFIC CONTROL BARRICADES TYPE III DAY	643.0705 TRAFFIC CONTROL WARNING LIGHTS TYPE A DAY	643.0900 TRAFFIC CONTROL SIGNS DAY	REMARKS
0010	612+72	-	613+10	ML	360	180	240	120	CTH N: 20 days
0010	512+64	-	515+86	ML	360	180	240	120	CTH J: 10 days
0010			DETOUR			-	-	5,190	PROJECT DURATION: 30 days
				TOTAL 0010	720	360	480	5,430	

3

3

PAVEMENT MARKING

CATEGORY	STATION	TO	STATION	LOCATION	646.2020 MARKING LINE EPOXY 6-INCH LF	646.6120 MARKING STOP LINE EPOXY 18-INCH LF	646.7120 MARKING DIAGONAL EPOXY 12-INCH LF	646.8220 MARKING ISLAND NOSE EPOXY EACH	REMARKS
0010	609+88	-	612+72	LT	283	-	-	-	CTH N: FOG LINE TO BE WHITE, INTERNAL TO BE YELLOW
0010	609+96	-	612+77	ML	614	-	12	2	CTH N:DIAGONAL TO BE YELLOW, MARKING LINE TO BE YELLOW
0010	609+88	-	612+73	RT	284	-	-	-	CTH N: FOG LINE TO BE WHITE, INTERNAL TO BE YELLOW
0010	612+93	-	613+04	RT	-	25	-	-	-
0010	613+04	-	613+24	LT	-	25	-	-	-
0010	613+26	-	613+48	RT	-	25	-	-	-
0010	613+50	-	613+55	LT	-	25	-	-	-
0010	613+79	-	616+64	LT	285	-	-	-	CTH N: FOG LINE TO BE WHITE, INTERNAL TO BE YELLOW
0010	613+73	-	616+54	ML	614	-	12	2	CTH N:DIAGONAL TO BE YELLOW, MARKING LINE TO BE YELLOW
0010	613+79	-	616+64	RT	284	-	-	-	CTH N: FOG LINE TO BE WHITE, INTERNAL TO BE YELLOW
0010	512+64	-	513+67	LT	103	-	-	-	CTH J: FOG LINE TO BE WHITE
0010	512+64	-	513+37	ML	104	-	-	-	CTH J: CENTERLINE TO BE YELLOW
0010	512+64	-	513+64	RT	100	-	-	-	CTH J: FOG LINE TO BE WHITE
0010	514+83	-	515+86	LT	102	-	-	-	CTH J: FOG LINE TO BE WHITE
0010	514+86	-	515+86	ML	100	-	-	-	CTH J: CENTERLINE TO BE YELLOW
0010	514+85	-	515+86	RT	101	-	-	-	CTH J: FOG LINE TO BE WHITE
				TOTAL 0010	2,974	100	24	4	

CONTRUCTION STAKING

CATEGORY	STATION	TO	STATION	LOCATION	650.5000 CONSTRUCTION STAKING BASE LF	650.5500 CONSTRUCTION STAKING CURB GUTTER AND CURB & GUTTER LF	650.8000 CONSTRUCTION STAKING RESURFACING REFERENCE LF	650.9911 CONSTRUCTION STAKING SUPPLEMENTAL CONTROL EACH	650.9920 CONSTRUCTION STAKING SLOPE STAKES LF	REMARKS
0010	612+73	-	613+13	RT	-	58	-	-	-	SW QUADRANT
0010	612+72	-	613+11	LT	-	61	-	-	-	NW QUADRANT
0010	613+40	-	613+79	LT	-	60	-	-	-	NE QUADRANT
0010	613+41	-	613+79	RT	-	60	-	--	-	SE QUADRANT
0010	609+88	-	616+63	ML	675	197	675	1	675	CTH N
0010	512+67	-	515+85	ML	322	197	322	-	322	CTH J
				TOTAL 0010	997	633	997	1	997	

3

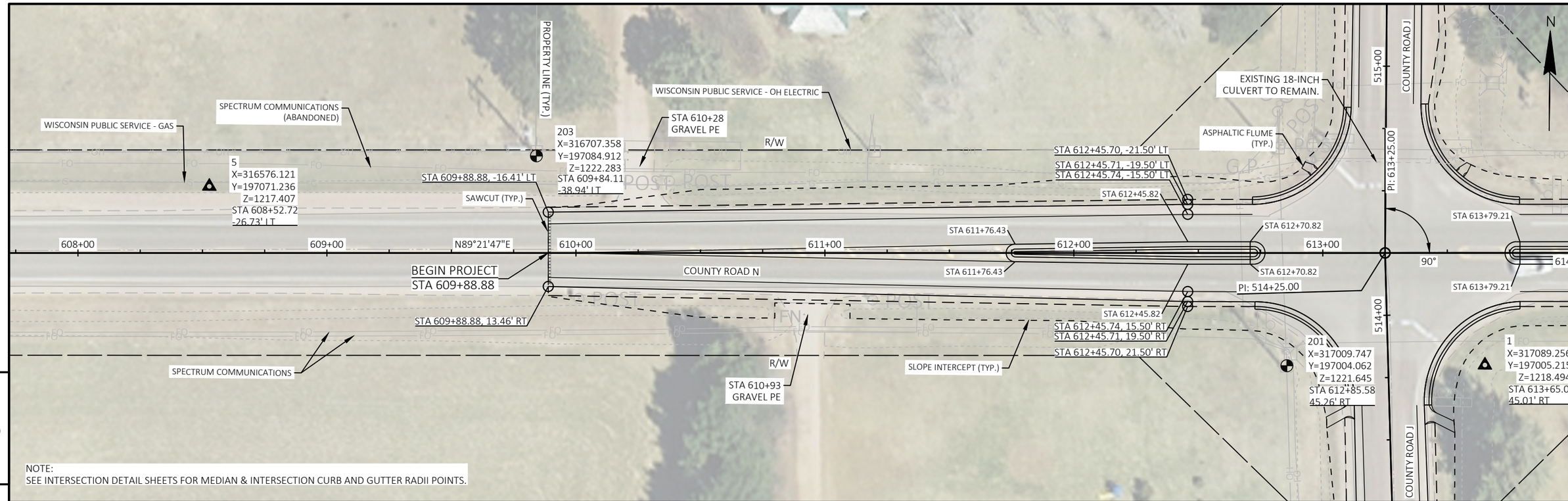

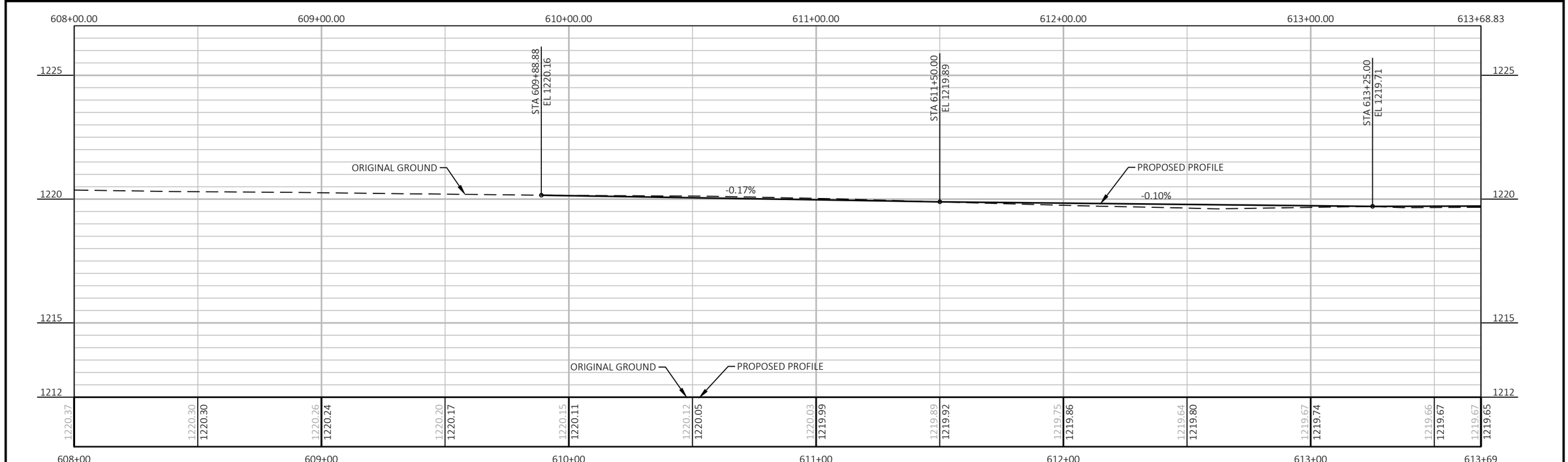

PROJECT NO: 9439-02-70	HWY: CTH N/CTH J	COUNTY: MARATHON	PLAN AND PROFILE: CTH N PLAN PROFILE	SHEET 27	E

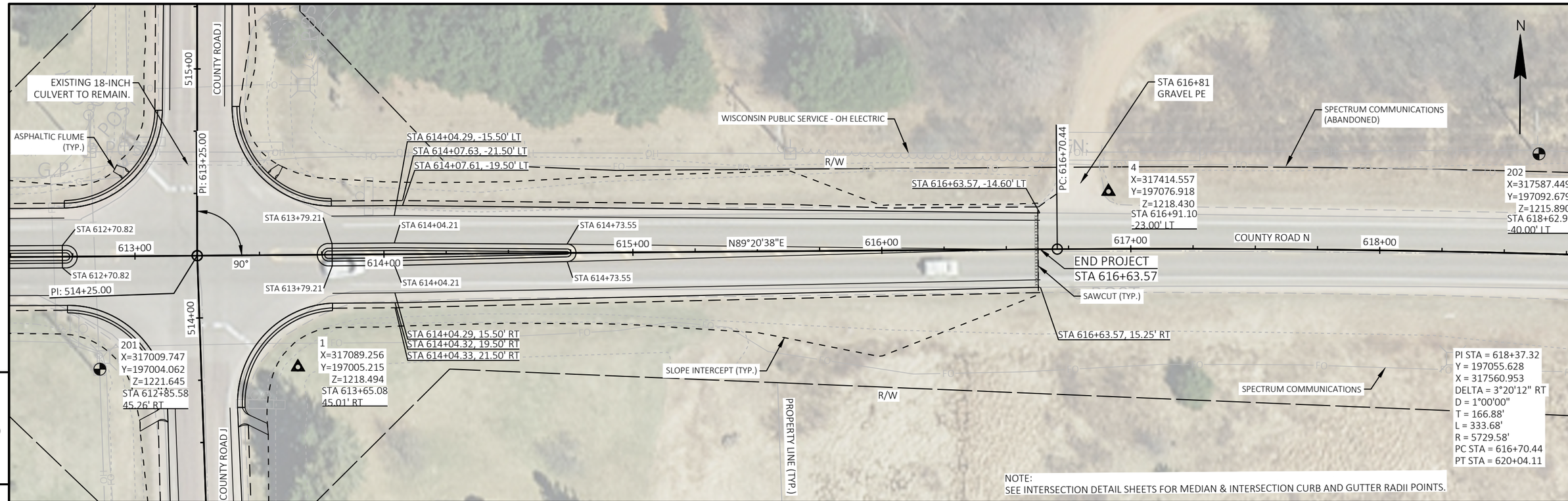

5

5

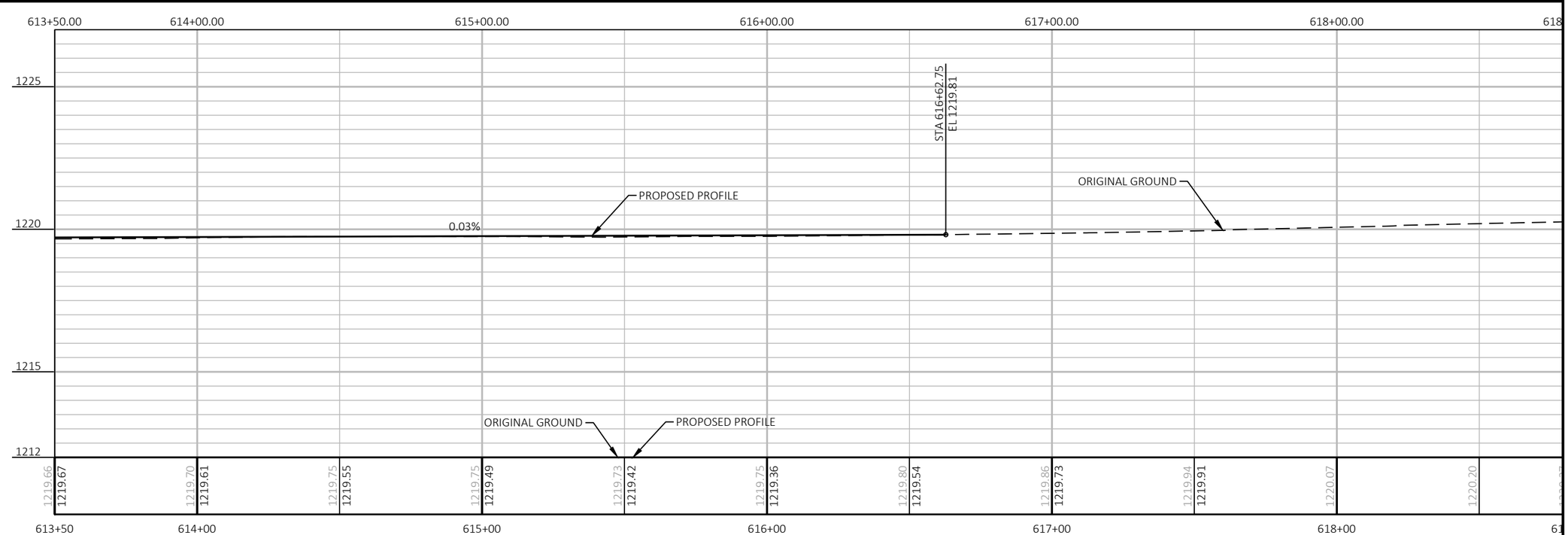

PROJECT NO: 9439-02-70	HWY: CTH N/CTH J	COUNTY: MARATHON	PLAN AND PROFILE: CTH N PLAN PROFILE	SHEET 28	E

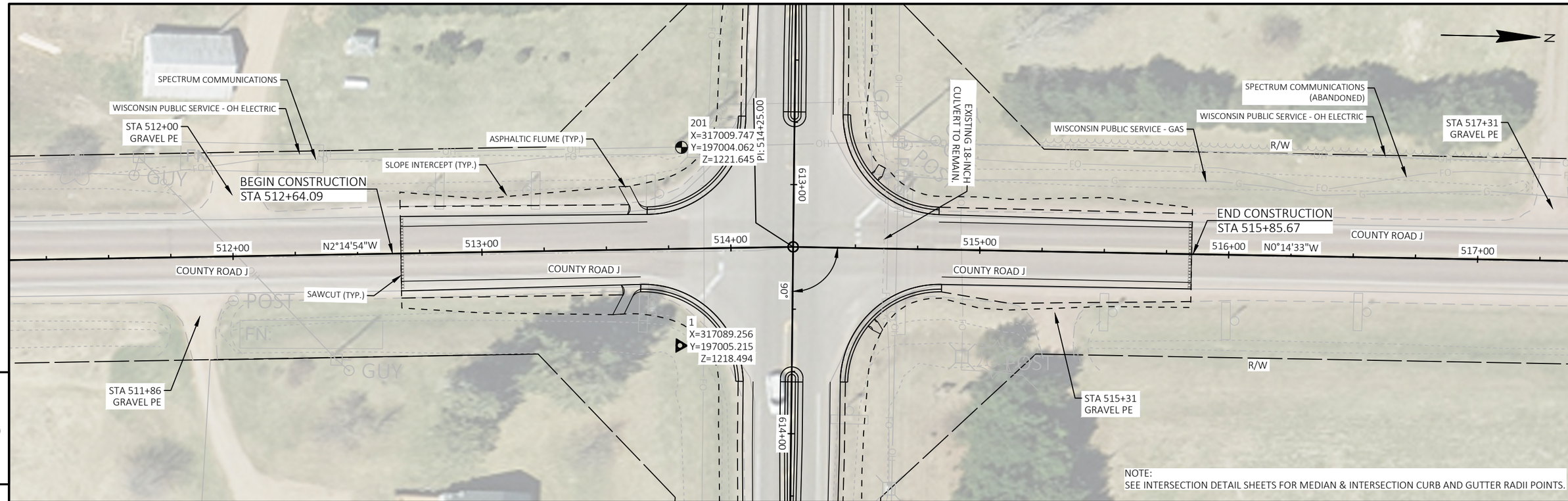

5

5

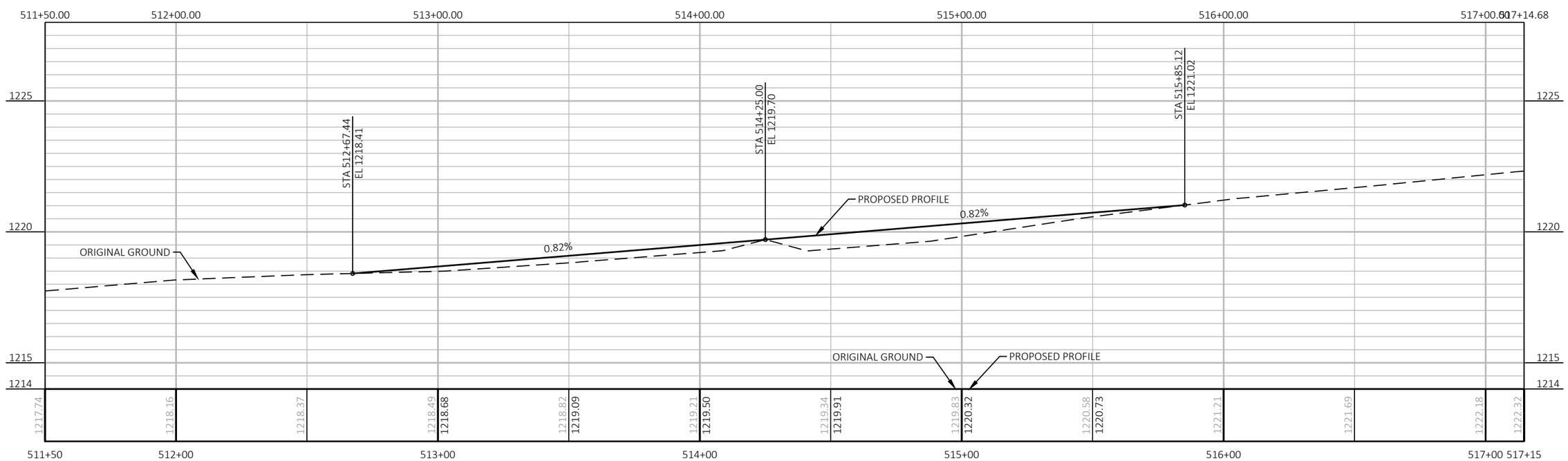

PROJECT NO: 9439-02-70	HWY: CTH N/CTH J	COUNTY: MARATHON	PLAN AND PROFILE: CTH J PLAN PROFILE	SHEET 29	E

FILE NAME : P:\2023\2023.035 - WISDOT - CTH J-N 9439-02-00 (MARA CO)\94390200\SHEETS\050101-PP.DWG
LAYOUT NAME - 03
PLOT DATE : 1/9/2025 10:54 AM
PLOT BY : AARON J. WALLNER
PLOT NAME :
PLOT SCALE : 1 IN:40 FT

Standard Detail Drawing List

08D01-23A	CONCRETE CURB & GUTTER
08D01-23B	CONCRETE CURB, TIES AND CURB AND GUTTER APPLICATIONS
08D04-07	CONCRETE SURFACE DRAINS & ASPHALTIC FLUMES
08D21-01	DRIVEWAYS WITHOUT CURB & GUTTER
08D22-01	DRIVEWAYS WITHOUT CURB & GUTTER RESURFACING PROJECTS RURAL
08E09-06	SILT FENCE
08E15-01	CULVERT PIPE CHECK
11B02-02	CONCRETE MEDIAN NOSE
13C04-17	URBAN NON-DOWELED CONCRETE PAVEMENT
13C19-03	HMA LONGITUDINAL JOINTS
15A03-02A	FLEXIBLE MARKER POST FOR CULVERT END
15A03-02B	FLEXIBLE MARKER POST FOR CULVERT END
15C02-09A	BARRICADES AND SIGNS FOR MAINLINE CLOSURES
15C02-09B	BARRICADES AND SIGNS FOR VARIOUS CLOSURES
15C02-09C	DETOUR SIGNING FOR MAINLINE CLOSURES
15C02-09H	MODIFIED ROUTE ASSEMBLY FOR DETOUR SIGNING
15C08-23A	PERMANENT LONGITUDINAL PAVEMENT MARKINGS
15C11-10A	CHANNELIZING DEVICES FLEXIBLE TUBULAR MARKER POST
15C11-10B	CHANNELIZING DEVICES DRUMS, CONES, BARRICADES AND VERTICAL PANELS
15C12-09A	TRAFFIC CONTROL FOR LANE CLOSURE WITH FLAGGING OPERATION
15C18-08A	MEDIAN ISLAND MARKING PAVEMENT MARKINGS
15C18-08B	MEDIAN ISLAND MARKING MEDIAN ISLAND NOSE
15C33-05	STOP LINE AND CROSSWALK PAVEMENT MARKING

6

6

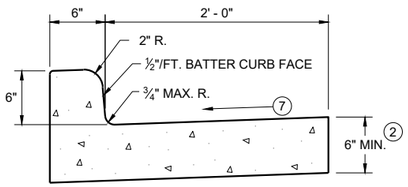

TYPES A (1) & D

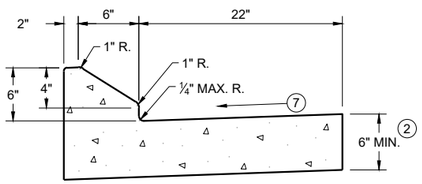

6" SLOPED CURB TYPES G (1) & J

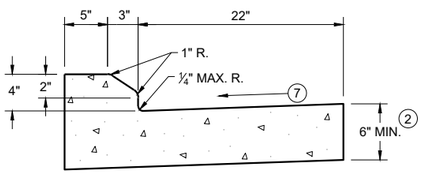

4" SLOPED CURB TYPES G (1) & J

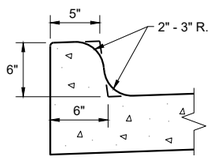

TYPES K (1) & L
(OPTIONAL CURB SHAPE)

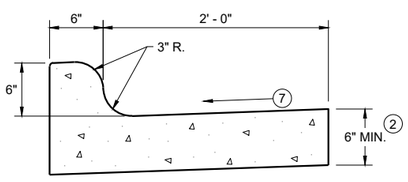

TYPES K (1) & L

CONCRETE CURB AND GUTTER 30"

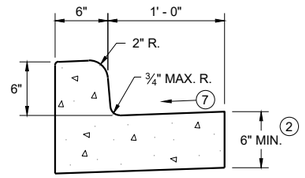

TYPES A (1) & D

CONCRETE CURB AND GUTTER 18"

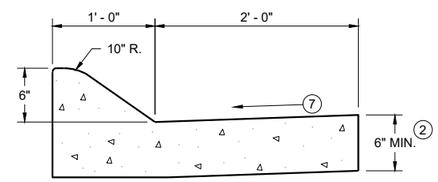

6" SLOPED CURB TYPES A (1) & D

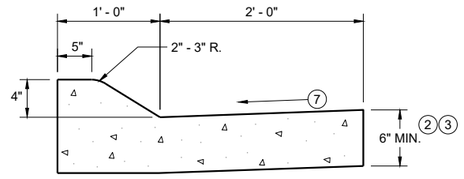

4" SLOPED CURB TYPES A (1) & D

CONCRETE CURB AND GUTTER 36"

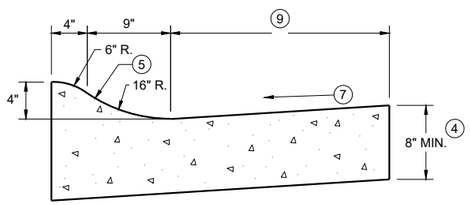

4" SLOPED CURB TYPES R (1) & T

TBT & TBTT	X
30"	22"
36"	28"

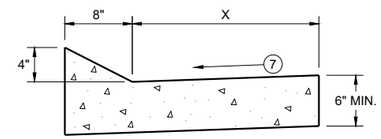

TYPES TBT & TBTT (1)

CONCRETE CURB AND GUTTER

PAVEMENT THICKNESS AND MAXIMUM CONCRETE PANEL WIDTH TABLE

PAVEMENT THICKNESS	MAXIMUM PANEL WIDTH
LESS THAN 10"	12'
10" & ABOVE	15'

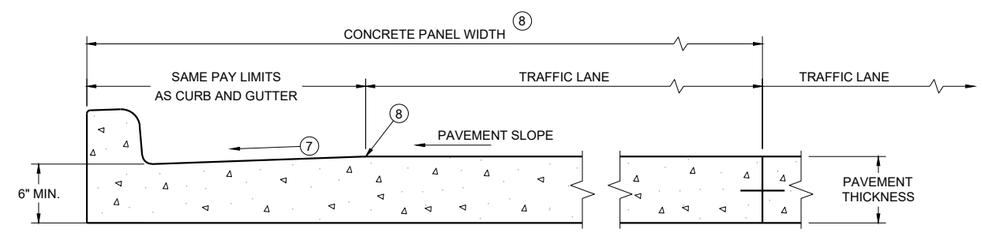

PARTIAL SECTION OF PAVEMENT * WITH INTEGRAL CURB AND GUTTER

* BIKE LANE IS NOT SHOWN

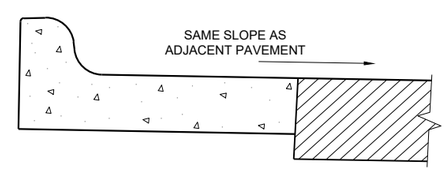

REVERSE SLOPE GUTTER (6)
(TYPICAL FOR ALL CURB & GUTTER TYPES)

GENERAL NOTES

DETAILS OF CONSTRUCTION AND WORKMANSHIP NOT SHOWN ON THIS DRAWING SHALL CONFORM TO THE PERTINENT REQUIREMENTS OF THE CONTRACT.

PAVEMENT TIES AND TIE BARS SHALL BE EPOXY COATED IN CONFORMANCE WITH SUBSECTION 505.2.6.2 OF THE STANDARD SPECIFICATIONS.

INTEGRAL CURB AND GUTTER SHALL CONFORM TO THE DETAILS SHOWN FOR CONCRETE CURB AND GUTTER INCLUDING THE TRANSVERSE GUTTER SLOPE.

UNLESS OTHERWISE SHOWN ON THE TYPICAL CROSS SECTIONS, THE BASE AGGREGATE AND COMMON EXCAVATION LIMITS ARE 2' - 0" BEHIND THE BACK OF CURBS.

(1) TIE BARS ARE REQUIRED FOR CURB AND GUTTERS TYPES A, G, K, R, AND TBTT.

(2) THE BOTTOM OF CURB AND GUTTER MAY BE CONSTRUCTED EITHER LEVEL OR PARALLEL TO THE SLOPE OF THE SUBGRADE OR BASE AGGREGATE PROVIDED A 6" MINIMUM GUTTER THICKNESS IS MAINTAINED.

(3) USE 8" MINIMUM GUTTER THICKNESS WHEN USED WITH AN ADJACENT CONCRETE TRUCK APRON PLACED BEHIND BACK OF CURB.

(4) THE BOTTOM OF CURB AND GUTTER MAY BE CONSTRUCTED EITHER LEVEL OR PARALLEL TO THE SLOPE OF THE SUBGRADE OR BASE AGGREGATE PROVIDED A 8" MINIMUM GUTTER THICKNESS IS MAINTAINED.

(5) UNLESS OTHERWISE NOTED, FOR STAKING PURPOSES THE FACE OF CURB IS 6" FROM THE BACK OF CURB.

(6) WHEN REVERSE SLOPE GUTTER IS REQUIRED, THE LOCATION(S) WILL BE SHOWN ELSEWHERE IN THE PLAN.

(7) USE 4% GUTTER CROSS SLOPE UNLESS OTHERWISE NOTED IN THE PLANS.

(8) INCLUDE LONGITUDINAL JOINT AND TIE BARS ALONG LANE EDGE WHEN CONCRETE PANEL WIDTH EXCEEDS THE MAXIMUM WIDTH PER TABLE BELOW. LONGITUDINAL JOINT(S) ARE NOT ALLOWED WITHIN TRAFFIC LANES AND BIKE LANES. LONGITUDINAL JOINT MAY BE SAWED.

(9) CONCRETE CURB AND GUTTER 4-INCH SLOPED 30-INCH TYPE "R" AND "T" = 17 INCHES
CONCRETE CURB AND GUTTER 4-INCH SLOPED 36-INCH TYPE "R" AND "T" = 23 INCHES

CONCRETE CURB AND GUTTER

STATE OF WISCONSIN
DEPARTMENT OF TRANSPORTATION

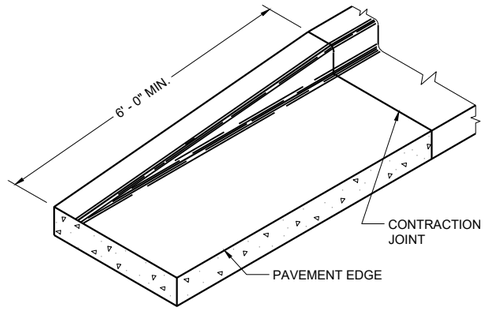

END SECTION CURB AND GUTTER

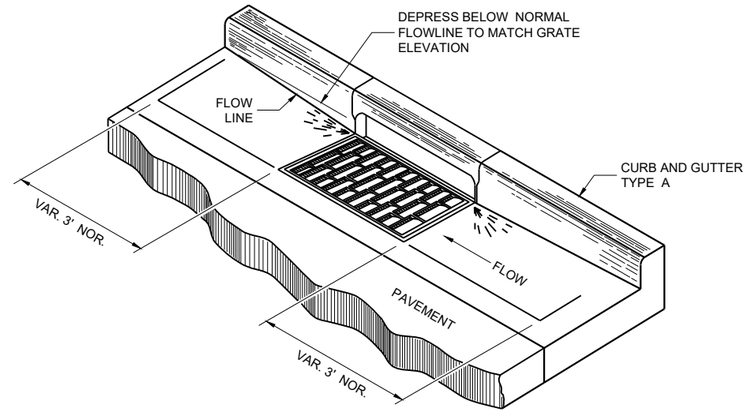

DETAIL OF CURB AND GUTTER AT INLETS

(TYPICAL H INLET COVER SHOWN)

GENERAL NOTES

DETAILS OF CONSTRUCTION AND WORKMANSHIP NOT SHOWN ON THIS DRAWING SHALL CONFORM TO THE PERTINENT REQUIREMENTS OF THE CONTRACT.

PAVEMENT TIES AND TIE BARS SHALL BE EPOXY COATED IN CONFORMANCE WITH SUBSECTION 505.2.6.2 OF THE STANDARD SPECIFICATIONS.

UNLESS OTHERWISE SHOWN ON THE TYPICAL CROSS SECTIONS, THE BASE AGGREGATE AND COMMON EXCAVATION LIMITS ARE 2' - 0" BEHIND THE BACK OF CURBS.

(1) TIE BARS ARE REQUIRED FOR CURB AND GUTTERS TYPES A, G, K, R, AND TBTT.

(2) THE BOTTOM OF CURB AND GUTTER MAY BE CONSTRUCTED EITHER LEVEL OR PARALLEL TO THE SLOPE OF THE SUBGRADE OR BASE AGGREGATE PROVIDED A 6" MINIMUM GUTTER THICKNESS IS MAINTAINED.

(10) REFER TO SDD 08D18 AND 08D19 FOR ADDITIONAL DRIVEWAY ENTRANCE CURB DETAILS.

(11) PLACE 1" THICK EXPANSION JOINT MATERIAL BETWEEN VERTICAL FACE CURB TYPES EXTENDING FROM THE TOP OF CURB TO 1 INCH BELOW THE ADJOINING CONCRETE SURFACE. RIGID CONCRETE STRUCTURES INCLUDE RAISED CONCRETE MEDIANS, CONCRETE SAFETY ISLANDS, SPLITTER ISLANDS, OR LOCATIONS IDENTIFIED ON THE PLANS.

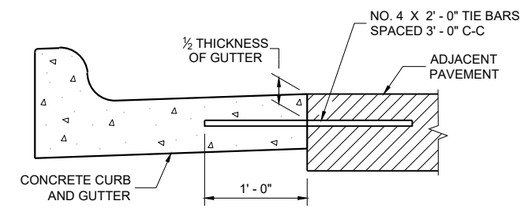

TYPICAL TIE BAR LOCATION (1)

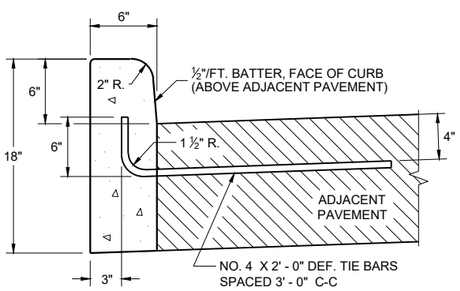

TYPES A (1) & D

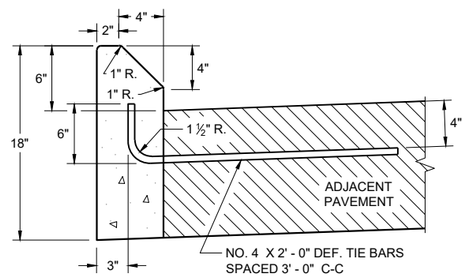

TYPES G (1) & J

CONCRETE CURB

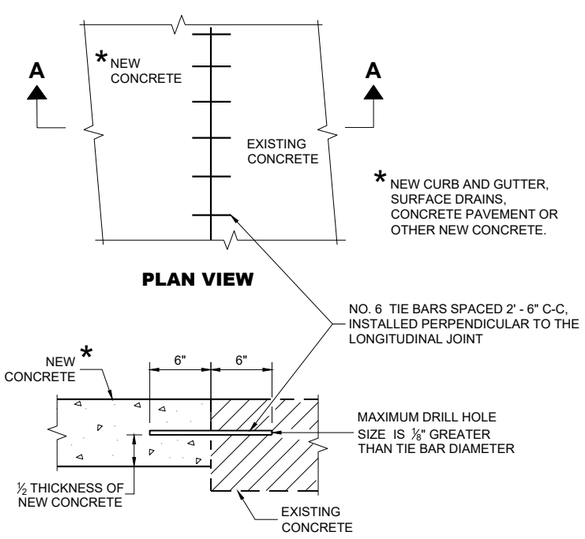

PLAN VIEW

SECTION A - A

TIE BARS DRILLED INTO EXISTING PAVEMENT

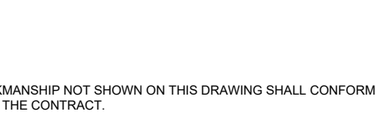

DRIVEWAY ENTRANCE CURB (10)

(WHEN DIRECTED BY THE ENGINEER)

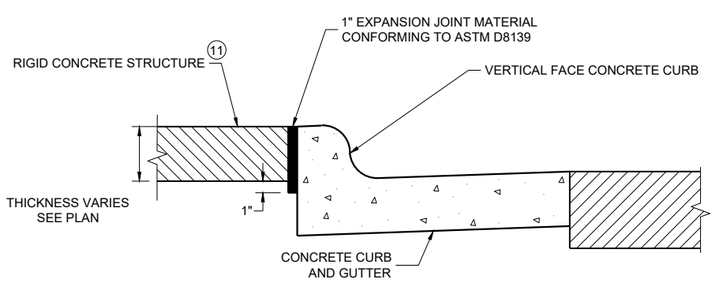

EXPANSION JOINT DETAIL FOR VERTICAL CURB ABUTTING A RIGID STRUCTURE (11)

CONCRETE CURB, TIES AND CURB AND GUTTER APPLICATIONS

STATE OF WISCONSIN
DEPARTMENT OF TRANSPORTATION

APPROVED
May 2023 — DATE
/S/ Rodnery Taylor — ROADWAY STANDARDS DEVELOPMENT UNIT SUPERVISOR

FHWA

NOTE: TAPER CURB ENDS TO GUTTER IN 1' - 0"

ASPHALTIC FLUME

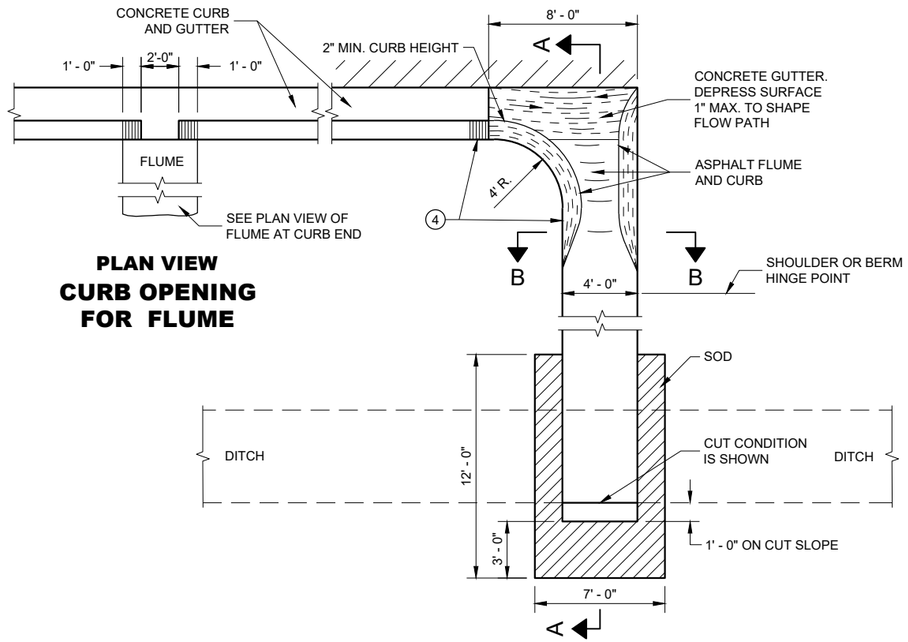

PLAN VIEW
CURB OPENING FOR FLUME

PLAN VIEW
FLUME AT CURB END

GENERAL NOTES

DETAILS OF CONSTRUCTION, MATERIALS AND WORKMANSHIP NOT SHOWN ON THIS DRAWING SHALL CONFORM TO PERTINENT REQUIREMENTS OF THE STANDARD SPECIFICATIONS AND APPLICABLE SPECIAL PROVISIONS.

4" X 4" - W3.0 X W3.0 CONCRETE REINFORCEMENT SHALL BE IN ACCORDANCE WITH AASHTO SPECIFICATION M55.

1. JOINTS SHALL BE ⅛" TO ¼" WIDE BY 1½" DEEP AND SPACED AT UNIFORM INTERVALS OF APPROXIMATELY 4 FEET.
2. GEOTEXTILE TYPE "R" SHALL UNDERLAY THE FULL LENGTH AND WIDTH OF THE CONCRETE SURFACE DRAIN AND RIPRAP.
3. CONCRETE SURFACE DRAIN WITHOUT CURB AND GUTTER MAY BE USED ON BACKSLOPES WHEN SPECIFIED.
4. ANGLE OF FLUME IN RELATION TO BACK OF CURB TO BE CONSTRUCTED PER THE PLAN DETAILS OR AS DIRECTED BY THE ENGINEER. ANGLE OF FLUME MAY BE OTHER THAN 90 DEGREES AS SHOWN.

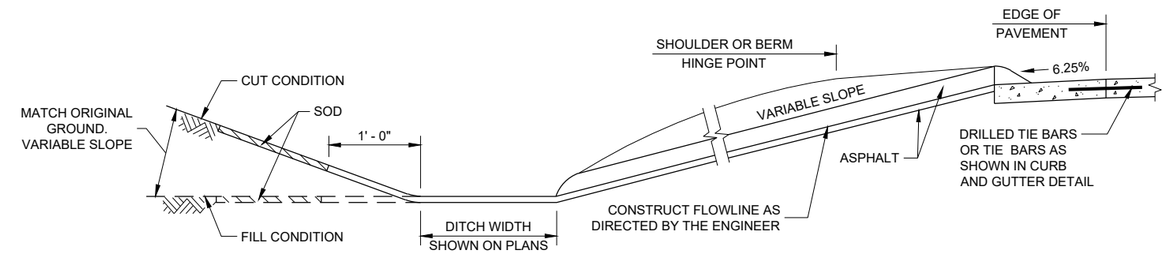

SECTION A - A

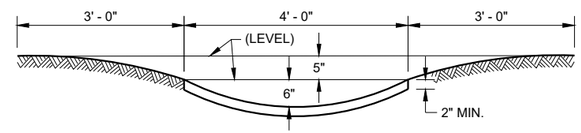

SECTION B - B

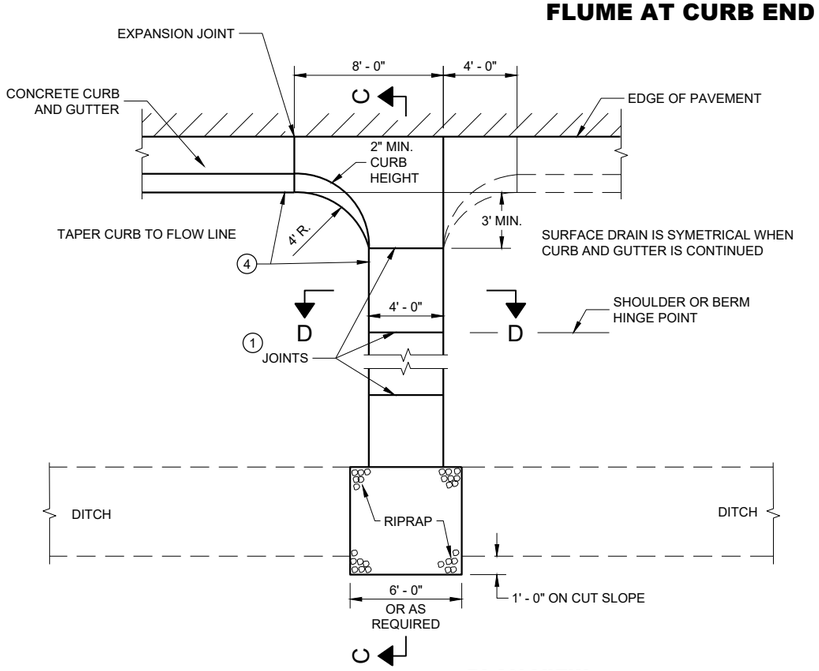

PLAN VIEW
CONCRETE SURFACE DRAIN

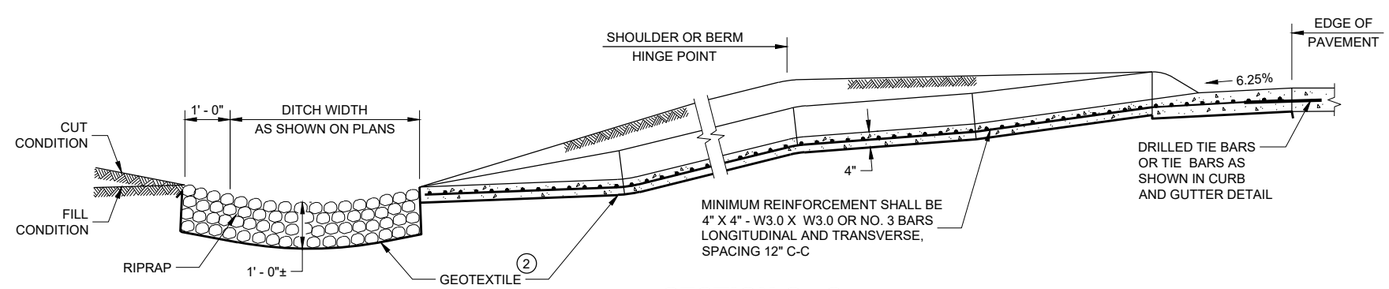

SECTION C - C

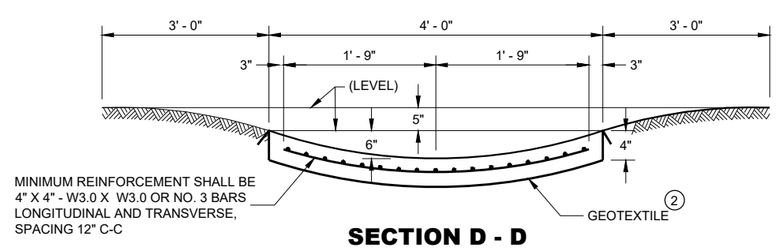

SECTION D - D

CONCRETE SURFACE DRAINS AND ASPHALTIC FLUMES

STATE OF WISCONSIN
DEPARTMENT OF TRANSPORTATION

APPROVED
May 2023 — DATE
/S/ Rodney Taylor — ROADWAY STANDARDS DEVE ENGINEER

FHWA

6

SDD 08D04 - 07

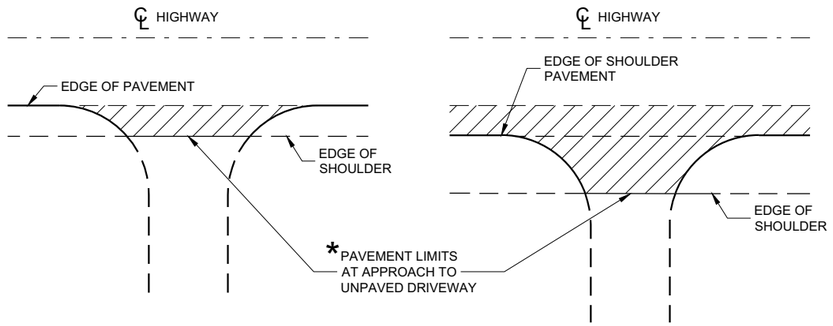

* WHERE DRIVEWAY IS PAVED, APPROACH PAVEMENT SHOULD BE EXTENDED TO MATCH DRIVEWAY PAVEMENT.

PLAN VIEW
(UNPAVED SHOULDER ON HIGHWAY)

PLAN VIEW
(PAVED SHOULDER ON HIGHWAY)

RURAL DRIVEWAY INTERSECTION DETAIL
(NO CURB AND GUTTER OR SIDEWALK)

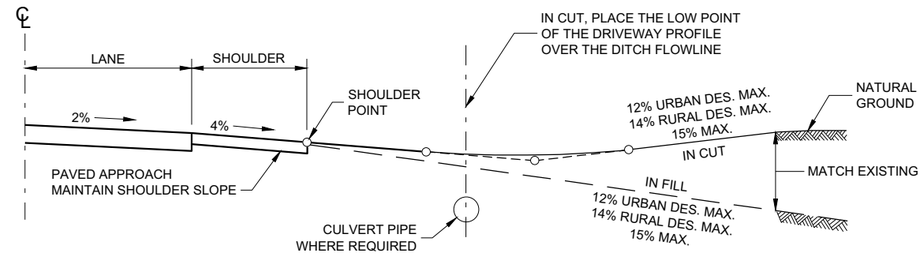

TYPICAL DRIVEWAY PROFILES

6

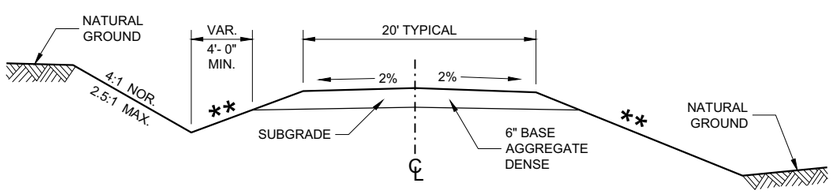

IN CUT **IN FILL**

TYPICAL CROSS SECTION FOR PRIVATE DRIVE OR FIELD ENTRANCE AGGREGATE SURFACE

** SLOPE CAN VARY WITH SPEED. SEE 11-45-30.6.2

POSTED SPEED MPH	MAX. SLOPE
<35	4:1
≥ 35 TO < 60	6:1
≥60	10:1

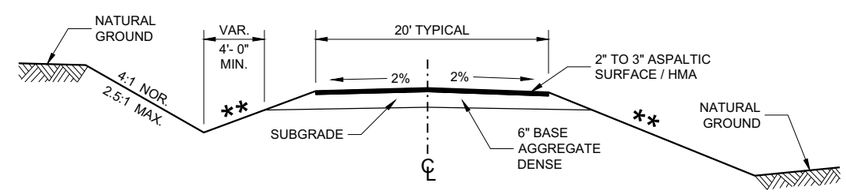

IN CUT **IN FILL**

TYPICAL CROSS SECTION FOR PRIVATE DRIVE OR FIELD ENTRANCE ASPHALTIC SURFACE

DRIVEWAYS WITHOUT CURB AND GUTTER

STATE OF WISCONSIN
DEPARTMENT OF TRANSPORTATION

APPROVED
December 2017 — DATE
/S/ Rodney Taylor — ROADWAY STANDARDS DEVE UNIT SUPERVISOR
FHWA

SDD 08D21 - 01

GENERAL NOTES

1. DESIGN WILL DETERMINE FINAL DRIVEWAY ASPHALTIC THICKNESS BASED ON TYPE OF USAGE AND LOADINGS.

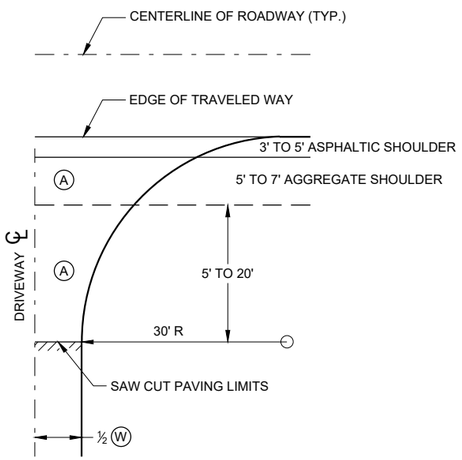

PLAN VIEW

A : PAID FOR AS ASPHALTIC SURFACE DRIVEWAYS AND FIELD ENTRANCES. (TON)

B : PAID FOR AS BASE AGGREGATE DENSE 1 ¼" (TON)

W : DRIVEWAY WIDTH 16' MIN. - 24' MAX.

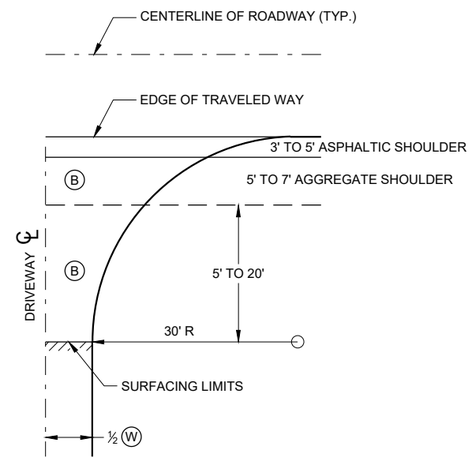

PLAN VIEW

HALF SECTION

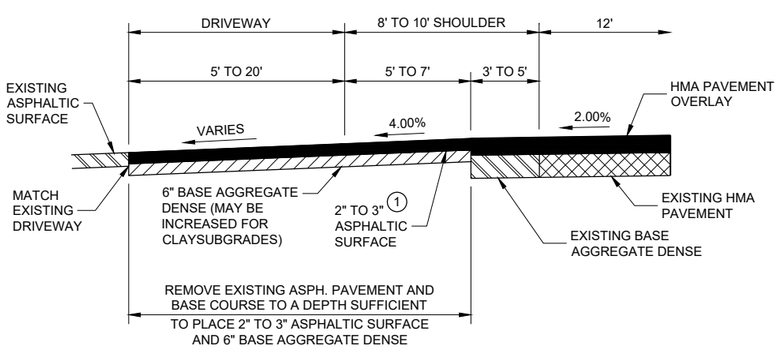

PROFILE VIEW

RURAL ENTRANCE WITH ASPHALTIC SURFACE

RESURFACING PROJECTS

PLAN VIEW

HALF SECTION

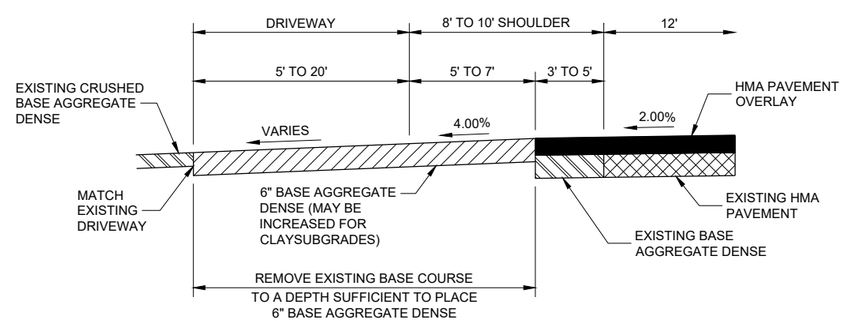

PROFILE VIEW

RURAL ENTRANCE WITH AGGREGATE SURFACE

6" BASE AGGREGATE DENSE RESURFACING PROJECTS

DRIVEWAYS WITHOUT CURB AND GUTTER RESURFACING PROJECTS RURAL

STATE OF WISCONSIN
DEPARTMENT OF TRANSPORTATION

APPROVED
December 2016 — DATE
/S/ Rodney Taylor — ROADWAY STANDARDS DEVE ENGINEER
FHWA

6

SDD 08D22 - 01

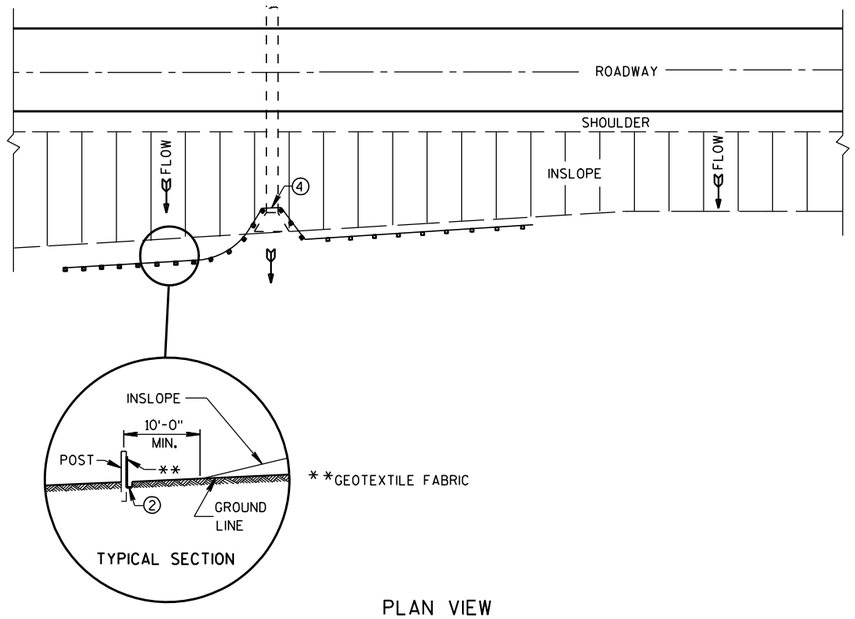

PLAN VIEW

TYPICAL APPLICATION OF SILT FENCE

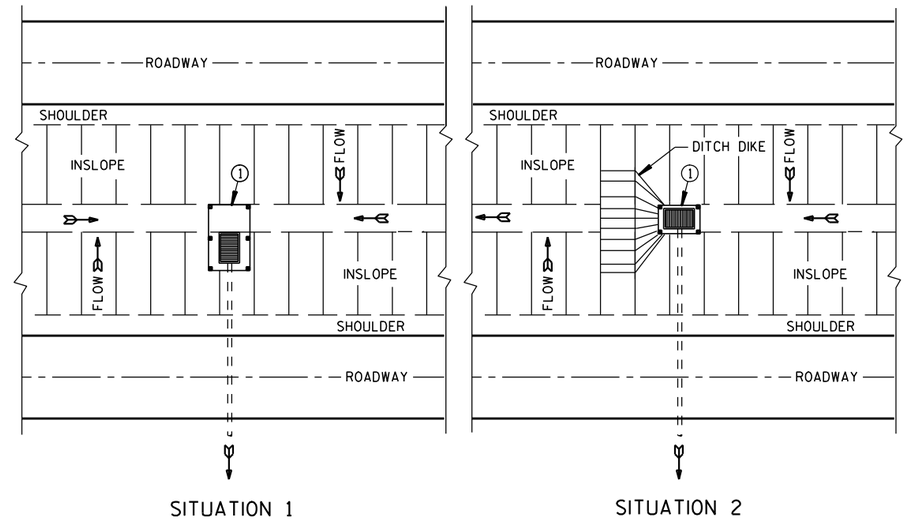

PLAN VIEW

SILT FENCE AT MEDIAN SURFACE DRAINS

GENERAL NOTES

DETAILS OF CONSTRUCTION NOT SHOWN ON THIS DRAWING SHALL CONFORM TO THE PERTINENT REQUIREMENTS OF THE STANDARD SPECIFICATIONS AND APPLICABLE SPECIAL PROVISIONS.

① HORIZONTAL BRACE REQUIRED WITH 2" X 4" WOODEN FRAME OR EQUIVALENT AT TOP OF POSTS.

② FOR MANUAL INSTALLATIONS THE TRENCH SHALL BE A MINIMUM OF 4" WIDE & 6" DEEP TO BURY AND ANCHOR THE GEOTEXTILE FABRIC. FOLD MATERIAL TO FIT TRENCH AND BACKFILL & COMPACT TRENCH WITH EXCAVATED SOIL.

③ WOOD POSTS SHALL BE A MINIMUM SIZE OF 1⅛" X 1⅛" OF OAK OR HICKORY.

④ SILT FENCE TO EXTEND ACROSS THE TOP OF THE PIPE.

⑤ CONSTRUCT SILT FENCE FROM A CONTINUOUS ROLL IF POSSIBLE BY CUTTING LENGTHS TO AVOID JOINTS. IF A JOINT IS NECESSARY USE ONE OF THE FOLLOWING TWO METHODS; A) OVERLAP THE END POSTS AND TWIST, OR ROTATE, AT LEAST 180 DEGREES. B) HOOK THE END OF EACH SILT FENCE LENGTH.

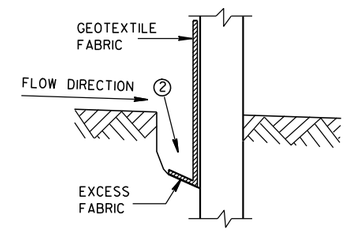

TRENCH DETAIL

NOTE: ADDITIONAL POST DEPTH OR TIE BACKS MAY BE REQUIRED IN UNSTABLE SOILS

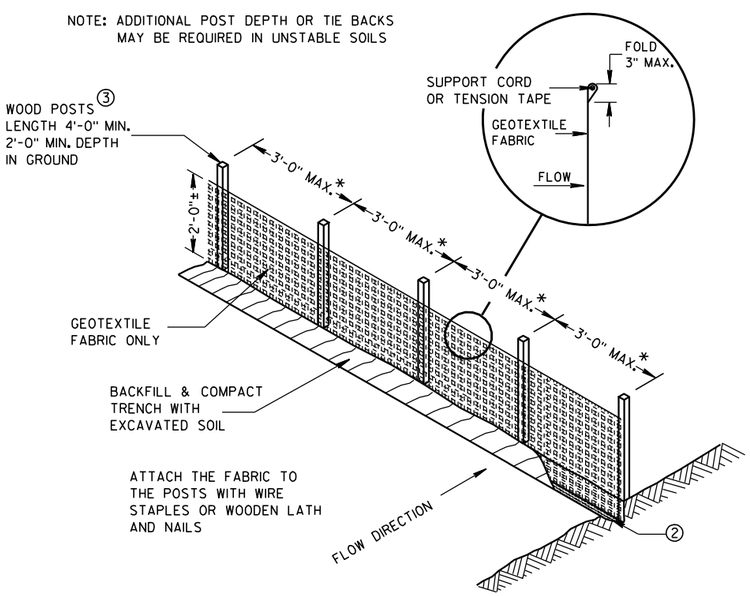

*NOTE: 8'-0" POST SPACING ALLOWED IF A WOVEN GEOTEXTILE FABRIC IS USED.

SILT FENCE

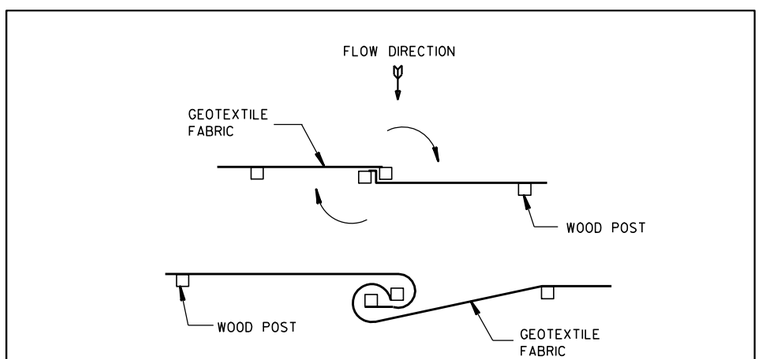

TWIST METHOD

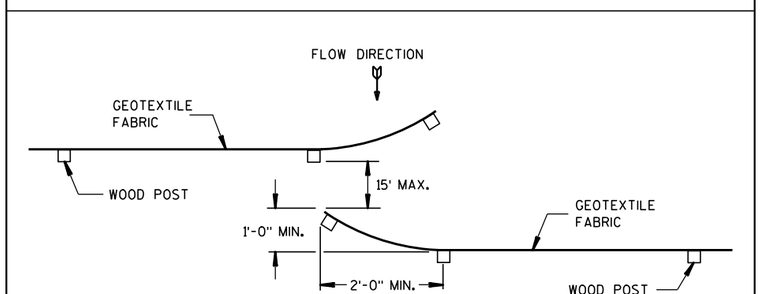

HOOK METHOD

JOINING TWO LENGTHS OF SILT FENCE ⑤

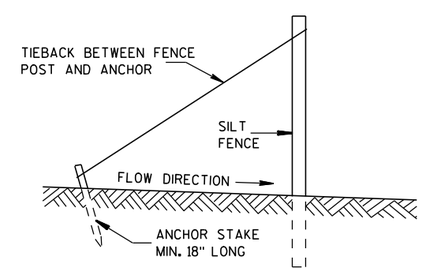

SILT FENCE TIE BACK

(WHEN REQUIRED BY THE ENGINEER)

SILT FENCE
STATE OF WISCONSIN DEPARTMENT OF TRANSPORTATION
APPROVED 4-29-05 DATE — /S/ Beth Cann-- CHIEF ROADWAY DEVELOP ENGINEER FHWA

6

6

S.D.D. 8 E 9-6

S.D.D. 8 E 9-6

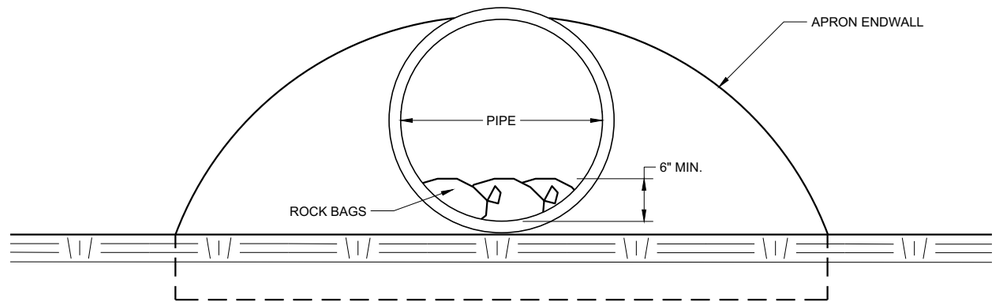

END VIEW

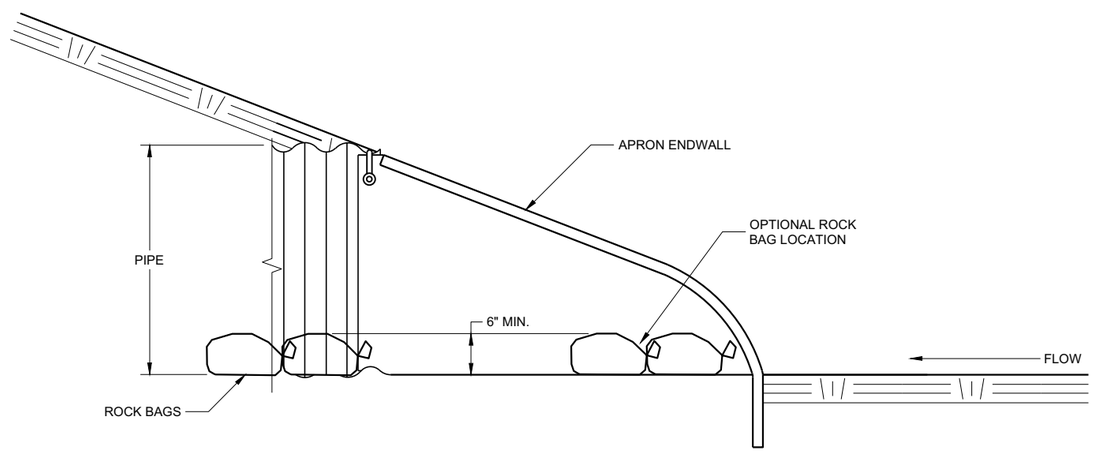

SIDE VIEW

CULVERT PIPE CHECK

(INSTALL ON INLET END ONLY)

CULVERT PIPE CHECK

STATE OF WISCONSIN
DEPARTMENT OF TRANSPORTATION

APPROVED
May 2019 — DATE
/S/ Daniel Schave — EROSION CONTROL ENGI
FHWA

6

6

SDD 08E15 - 01

SDD 08E15 - 01

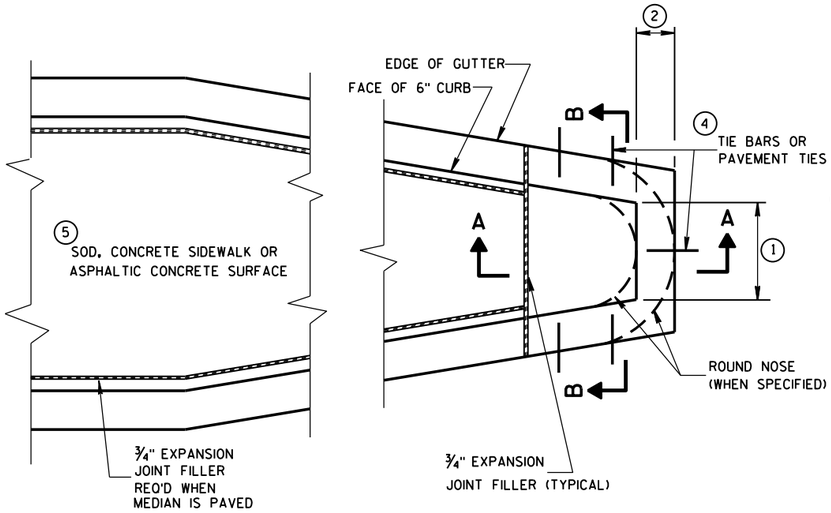

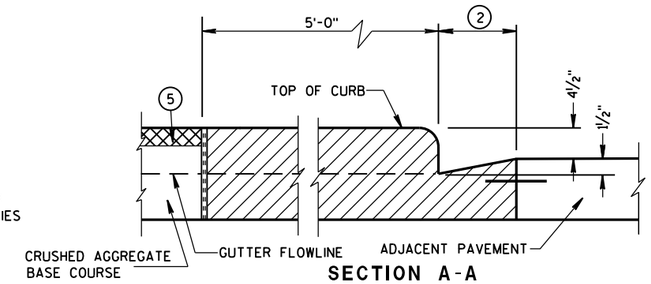

SECTION A-A

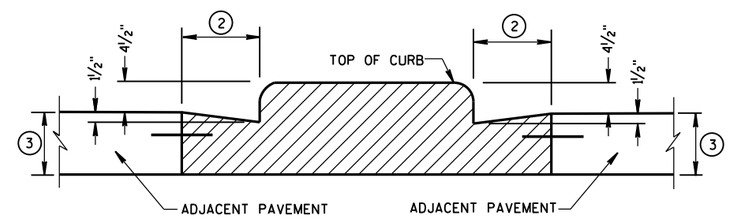

SECTION B-B

CONCRETE MEDIAN BLUNT NOSE DETAIL

GENERAL NOTES

DETAILS OF CONSTRUCTION, MATERIALS AND WORKMANSHIP NOT SHOWN ON THIS DRAWING SHALL CONFORM TO THE PERTINENT REQUIREMENTS OF THE STANDARD SPECIFICATIONS AND THE APPLICABLE SPECIAL PROVISIONS.

1. SEE PLAN FOR MEDIAN NOSE WIDTH AND RADIUS (FOR ROUND NOSE ALTERNATE).
2. WIDTH OF GUTTER TO MATCH EXISTING ADJACENT GUTTER OR AS SPECIFIED ELSEWHERE IN THE PLAN.
3. DEPTH EQUAL TO ADJACENT PAVEMENT. ADJACENT PAVEMENT STRUCTURE DETAILS ARE SHOWN ON THE PLAN. TYPICAL OPTIONS ARE:
   (1) NEW OR EXISTING CONCRETE PAVEMENT.
   (2) ASPHALTIC CONCRETE PAVEMENT OVER NEW OR EXISTING CONCRETE BASE COURSE.
   (3) ASPHALTIC CONCRETE PAVEMENT OVER CRUSHED AGGREGATE BASE COURSE.
4. TIE BARS OR PAVEMENT TIES REQUIRED IN NEW CONCRETE PAVEMENT OR CONCRETE BASE COURSE. TIE BARS SHALL BE NO. 4 X 2'-0" SPACED AT 2'-0" C-C.

   PAVEMENT TIES REQUIRED IN EXISTING CONCRETE BASE COURSE. PAVEMENT TIES SHALL BE NO. 6 X 1'-0" SPACED AT 3'-0" C-C INSTALLED ON A HORIZONTAL SKEW OF 6:1. THE DIRECTION OF SKEW SHALL ALTERNATE AFTER EVERY ONE OR TWO BARS.
5. SURFACE TYPE AND DETAILS ARE SHOWN ELSEWHERE IN THE PLAN.

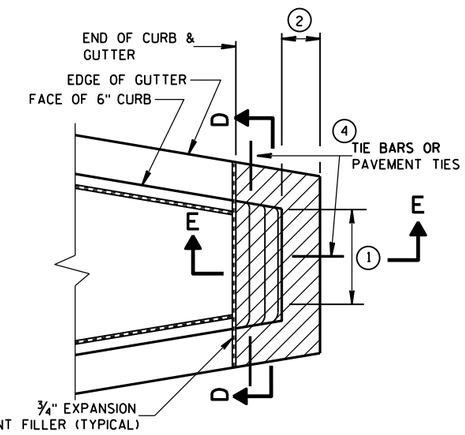

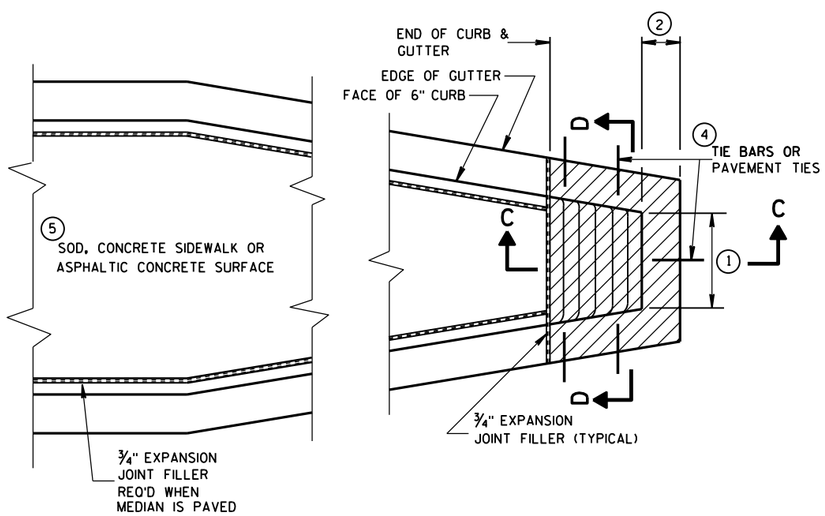

CONCRETE MEDIAN SLOPED NOSE TYPE 1

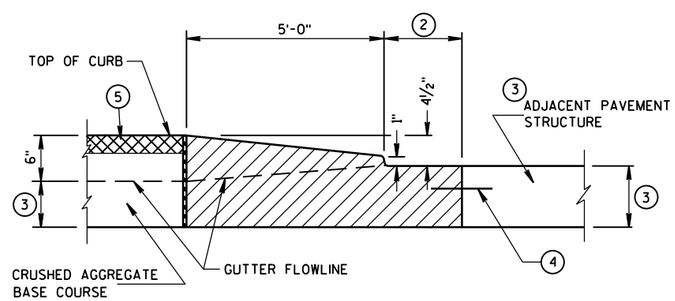

SECTION C-C

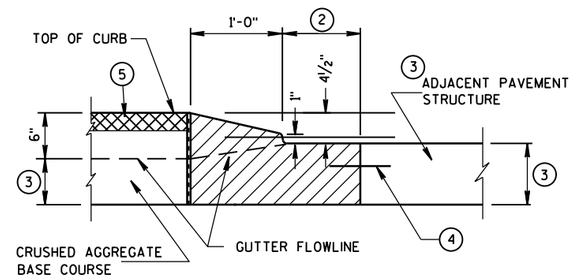

SECTION E-E

CONCRETE MEDIAN SLOPED NOSE TYPE 2

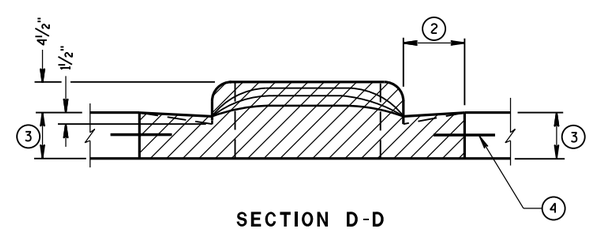

SECTION D-D

CONCRETE MEDIAN NOSE

STATE OF WISCONSIN
DEPARTMENT OF TRANSPORTATION

APPROVED
6/8/2006 — DATE
/S/ Jerry H. Zogg — ROADWAY STANDARDS DEVELOPMENT ENGINEER
FHWA

6

S.D.D. 11 B 2-2

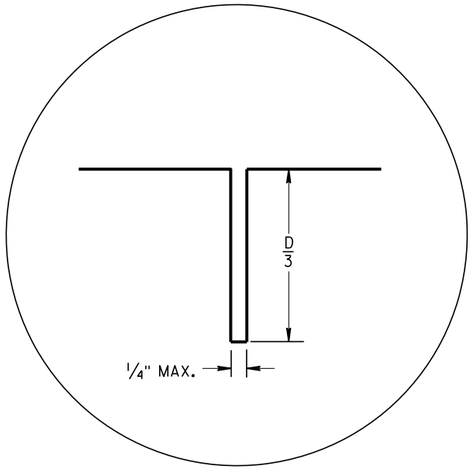

JOINT DETAIL

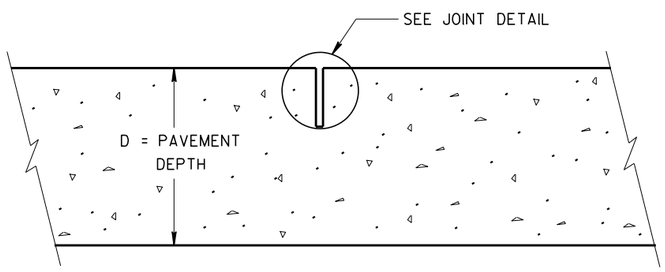

CONTRACTION JOINT

PAVEMENT DEPTH AND JOINT SPACING TABLE

PAVEMENT DEPTH (D)	CONTRACTION JOINT SPACING
6", 6 1/2"	12'
7", 7 1/2"	14'
8" & ABOVE	15'

GENERAL NOTES

CONTRACTION JOINTS

CONSTRUCT TRANSVERSE CONTRACTION JOINTS NORMAL TO THE CENTERLINE.

LOCATE AND ORIENT CONTRACTION JOINTS THROUGH INTERSECTIONS AS SHOWN ON THE PLANS OR AS DIRECTED BY THE ENGINEER.

CONSTRUCTION JOINTS

LOCATE CONSTRUCTION JOINTS A MINIMUM OF 6 FEET FROM THE NEAREST CONTRACTION JOINT AND ALIGN PARALLEL TO THE CONTRACTION JOINTS.

FORM OR SAW CONSTRUCTION JOINTS.

THE CONTRACTOR MAY INSERT TIE BARS THROUGH THE HEADER BOARD AFTER THE CONCRETE HAS BEEN PLACED.

(1) REFER TO TYPICAL CROSS SECTIONS FOR PAVED WIDTH AND LOCATION OF LONGITUDINAL JOINTS.

(2) PROVIDE A SMOOTH VERTICAL FACE FOR THE ENTIRE DEPTH OF THE PAVEMENT WHEN FORMING CONSTRUCTION JOINTS. PROVIDE A 1/4-INCH RADIUS AT FORMED JOINTS.

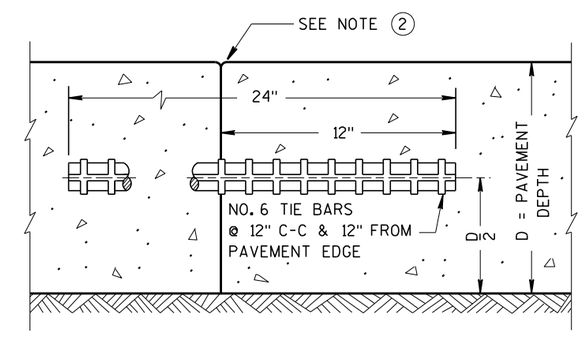

TIED TRANSVERSE CONSTRUCTION JOINT

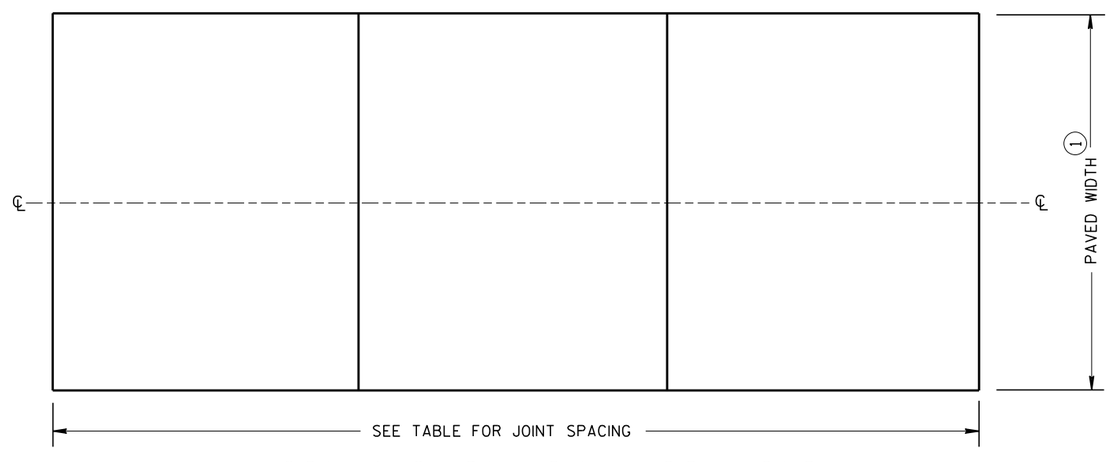

CONTRACTION JOINT LOCATIONS

URBAN NON-DOWELED CONCRETE PAVEMENT	
STATE OF WISCONSIN DEPARTMENT OF TRANSPORTATION	
APPROVED March 2018 DATE	/S/ Peter Kemp PAVEMENT SUPI
FHWA	

6

6

S.D.D. 13 C 4-17

S.D.D. 13 C 4-17

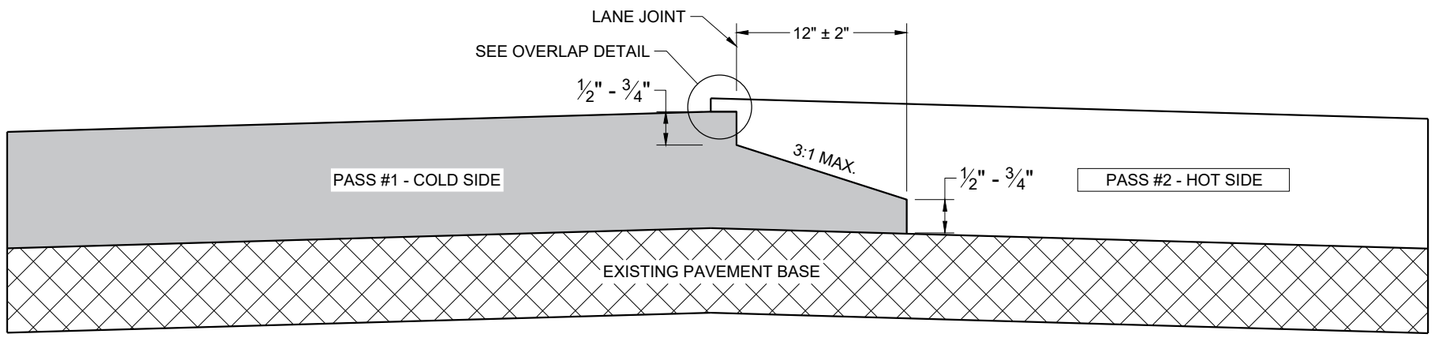

TYPICAL PAVEMENT CROSS SECTION
NOTCHED WEDGE JOINT

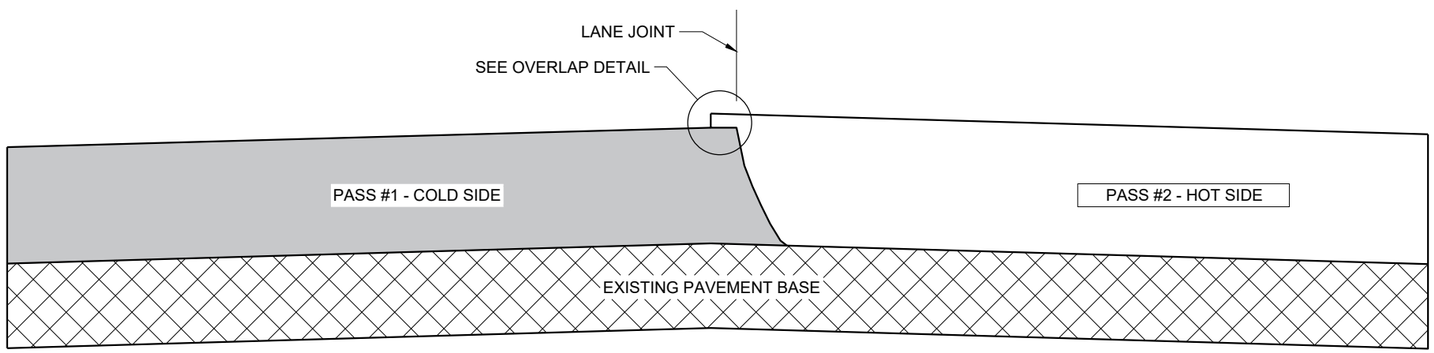

TYPICAL PAVEMENT CROSS SECTION
VERTICAL JOINT

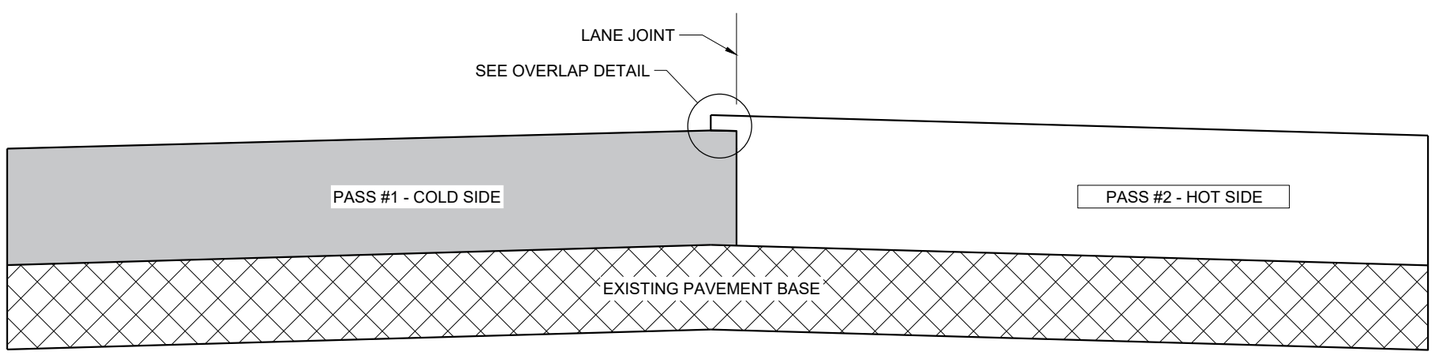

TYPICAL PAVEMENT CROSS SECTION
VERTICAL JOINT (MILLED)

GENERAL NOTES

IN ADDITION TO THE DETAILS PROVIDED IN THIS DRAWING, CONFORM TO STANDARD SPECIFICATION 450.3.2.8 FOR WHEN A NOTCHED WEDGE JOINT IS REQUIRED AND FOR GENERAL JOINT CONSTRUCTION REQUIREMENTS.

FOR ALL LONGITUDINAL JOINTS, ENSURE THE PAVER SCREED OVERLAPS THE PREVIOUSLY PLACED PAVEMENT BY 1" ± 0.5" AND THE HOT SIDE OF THE JOINT REMAINS HIGHER THAN THE COLD SIDE BY APPROXIMATELY 0.1" AFTER FINAL COMPACTION. (IT WILL BE FLUSH WHEN PAVING IN ECHELON.)

ONLY REMOVE THE LONGITUDINAL NOTCHED WEDGE JOINT FOR SMA PAVEMENT OR AS DIRECTED BY THE ENGINEER TO ADDRESS SPECIFIC LENGTHS OF JOINT DAMAGED BY TRAFFIC.

WHEN MILLING BACK OR REMOVING ANY LONGITUDINAL JOINT, LIMIT THE MATERIAL REMOVED TO 2" FROM THE TOP NOTCH OR FROM THE VERTICAL JOINT EDGE ON THE COLD SIDE OF THE JOINT.

USE LONGITUDINAL MILLED JOINT AS PLANS SHOW OR THE AS THE ENGINEER DIRECTS.

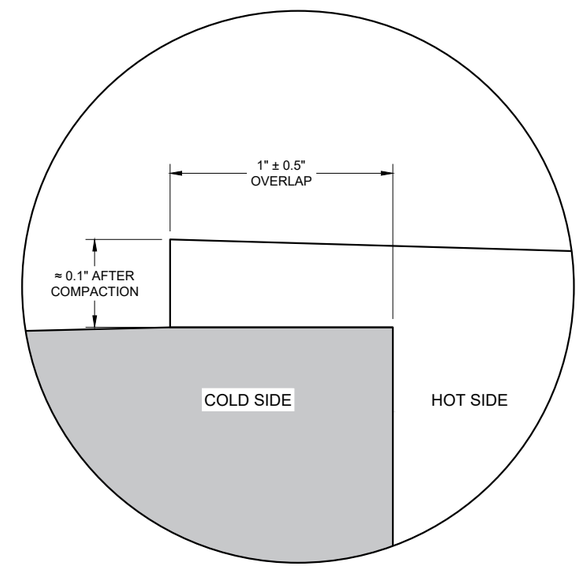

OVERLAP DETAIL (TYPICAL)

6

6

SDD 13C19 - 03

SDD 13C19 - 03

HMA LONGITUDINAL JOINTS

STATE OF WISCONSIN
DEPARTMENT OF TRANSPORTATION

APPROVED
November 2020 /S/ Steven Hefel
DATE HMA PAVEMENT ENGIN
FHWA

GENERAL NOTES

DETAILS OF CONSTRUCTION, MATERIALS AND WORKMANSHIP NOT SHOWN ON THIS DRAWING SHALL CONFORM TO THE PERTINENT REQUIREMENTS OF THE STANDARD SPECIFICATIONS AND THE APPLICABLE SPECIAL PROVISIONS.

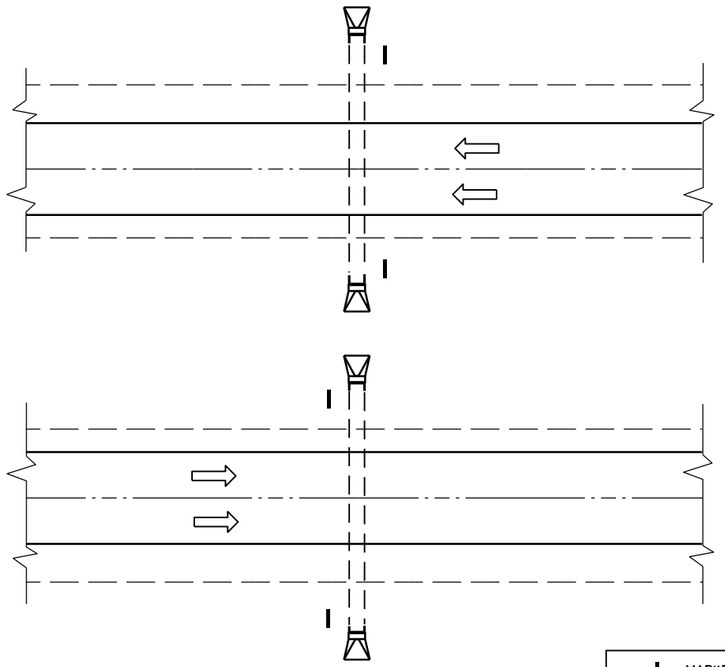

PLAN VIEW

DIVIDED HIGHWAY

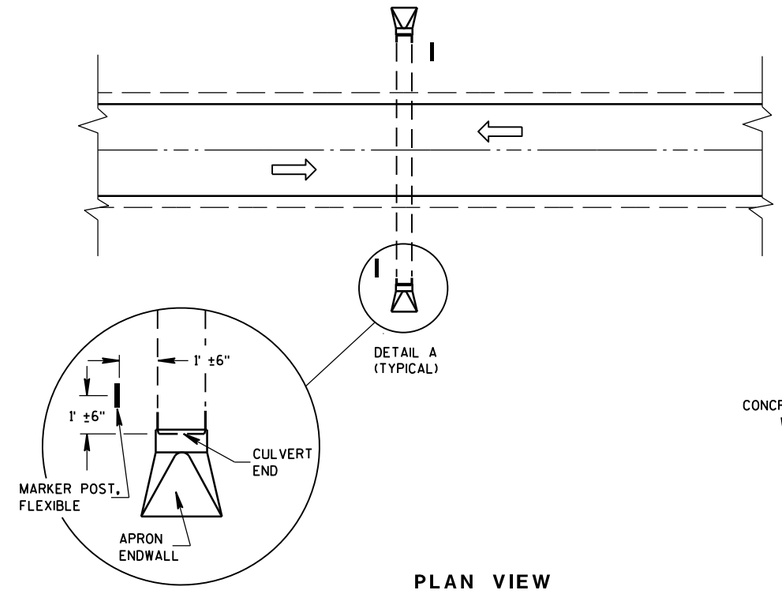

DETAIL A
(TYPICAL)

PLAN VIEW

UNDIVIDED HIGHWAY

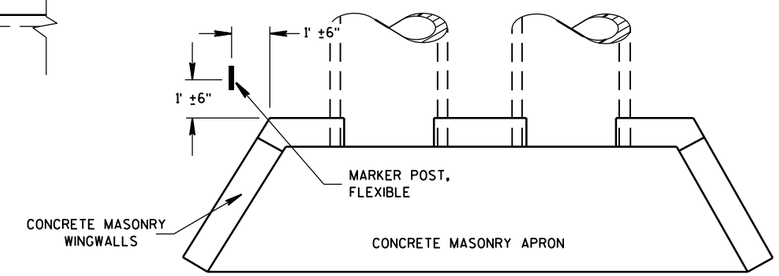

PLAN VIEW

CONCRETE MASONRY ENDWALLS FOR CULVERT PIPE AND PIPE ARCH

MARKER POST, FLEXIBLE

DIRECTION OF TRAFFIC FLOW

FLEXIBLE MARKER POST LOCATION

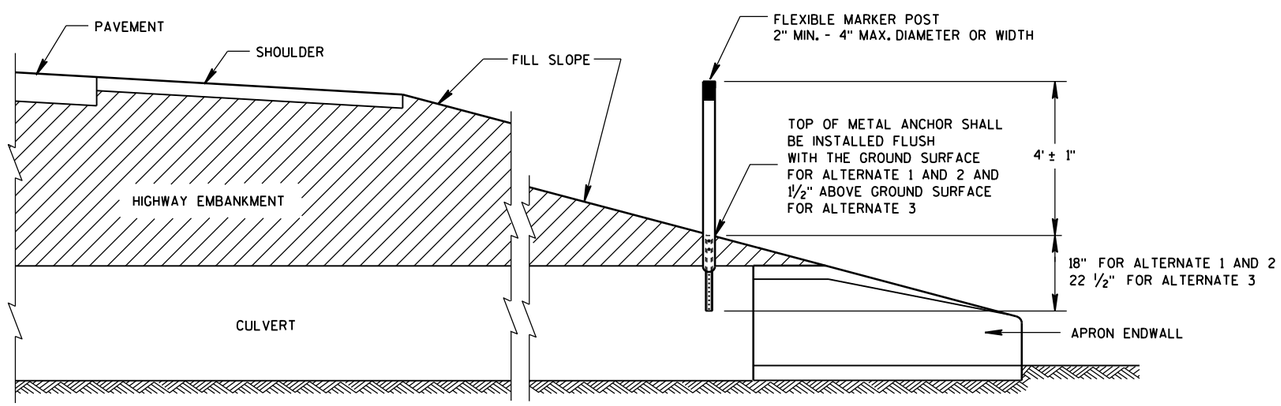

CROSS SECTION

FLEXIBLE MARKER POST

FLEXIBLE MARKER POST FOR CULVERT END

STATE OF WISCONSIN
DEPARTMENT OF TRANSPORTATION

6

S.D.D. 15 A 3-2a

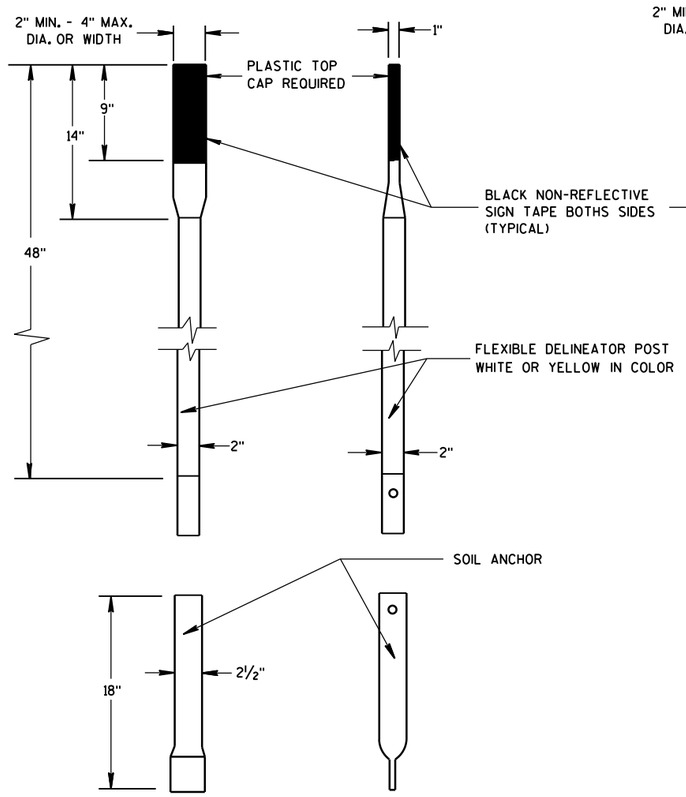

FRONT VIEW SIDE VIEW

ALTERNATE 1

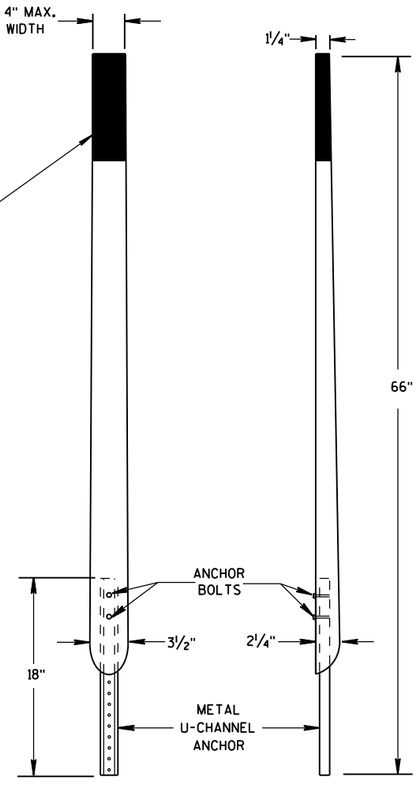

FRONT VIEW SIDE VIEW

ALTERNATE 2

FLEXIBLE MARKER POSTS

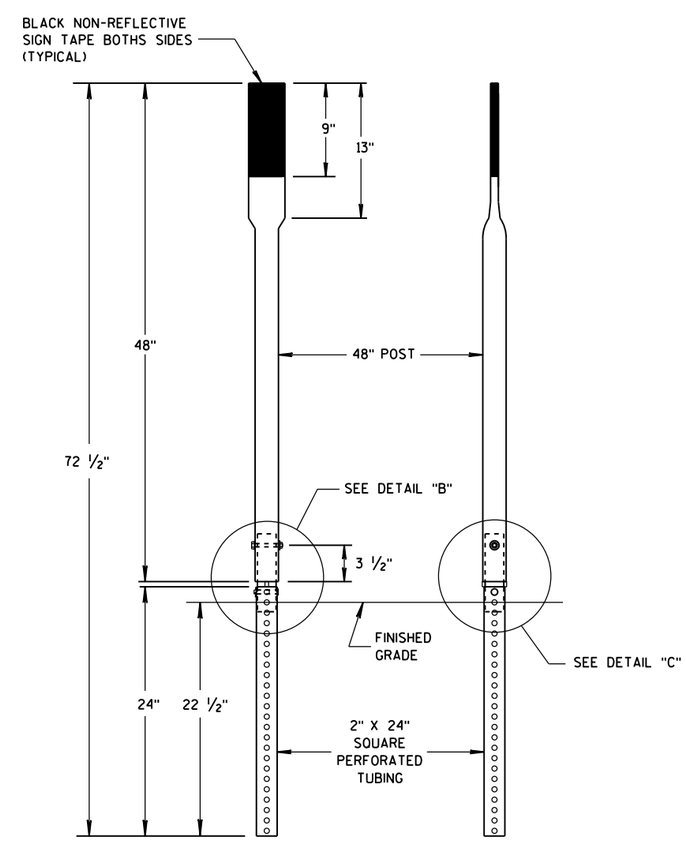

FRONT VIEW SIDE VIEW

ALTERNATE 3

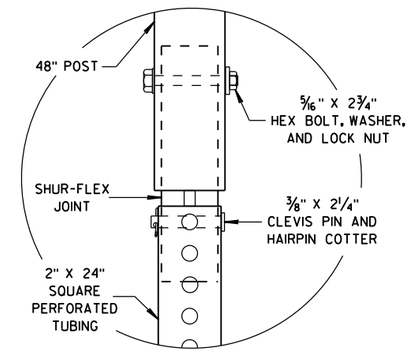

DETAIL B

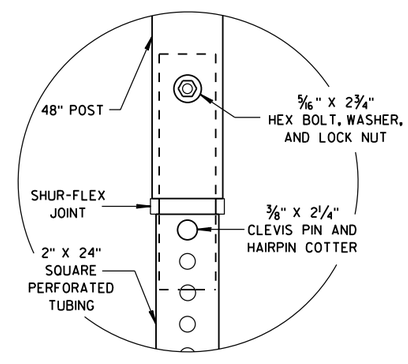

DETAIL C

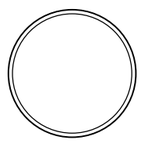

SECTION A-A

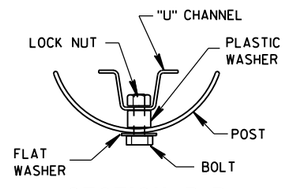

SECTION B-B

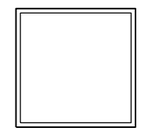

SECTION C-C

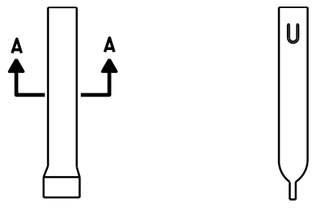

FRONT VIEW SIDE VIEW

ALTERNATE 1

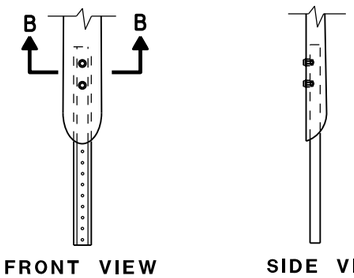

FRONT VIEW SIDE VIEW

ALTERNATE 2

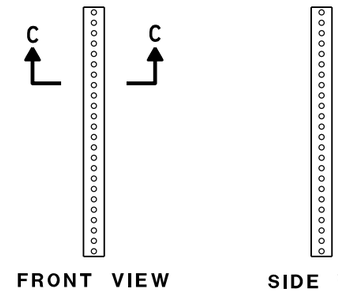

FRONT VIEW SIDE VIEW

ALTERNATE 3

FLEXIBLE MARKER POST ANCHORS

FLEXIBLE MARKER POST
FOR CULVERT END

STATE OF WISCONSIN
DEPARTMENT OF TRANSPORTATION

APPROVED
10/1/2012 /S/ Travis Feltes
DATE STATE TRAFFIC ENGINEER
FHWA

6

6

S.D.D. 15 A 3-2b

S.D.D. 15 A 3-2b

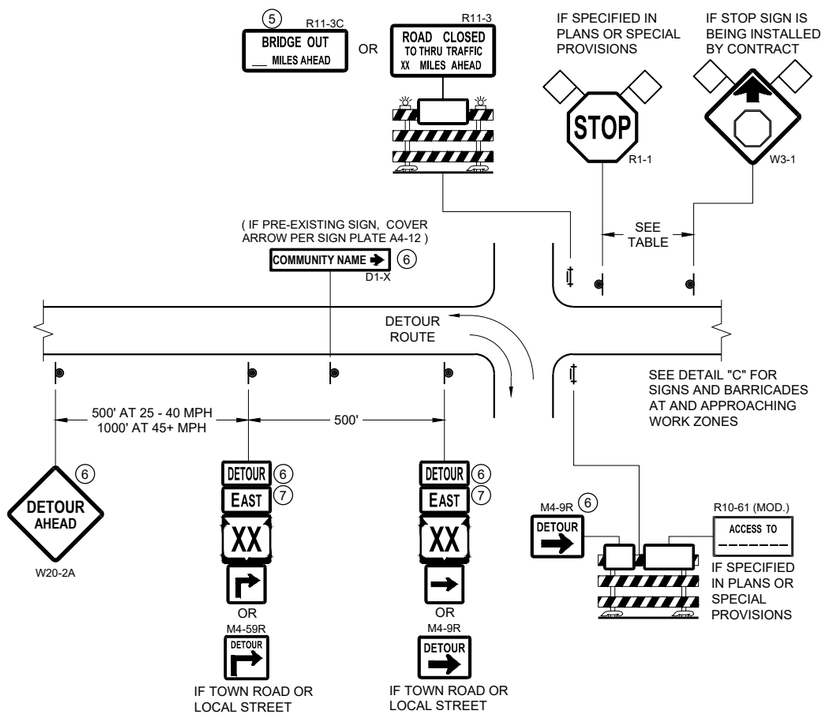

DETAIL A
MAINLINE CLOSURE WITH POSTED DETOUR

WORK ZONE GREATER THAN OR EQUAL TO ½ MILE FROM DETOUR ROUTE (1000 FEET IF URBAN)

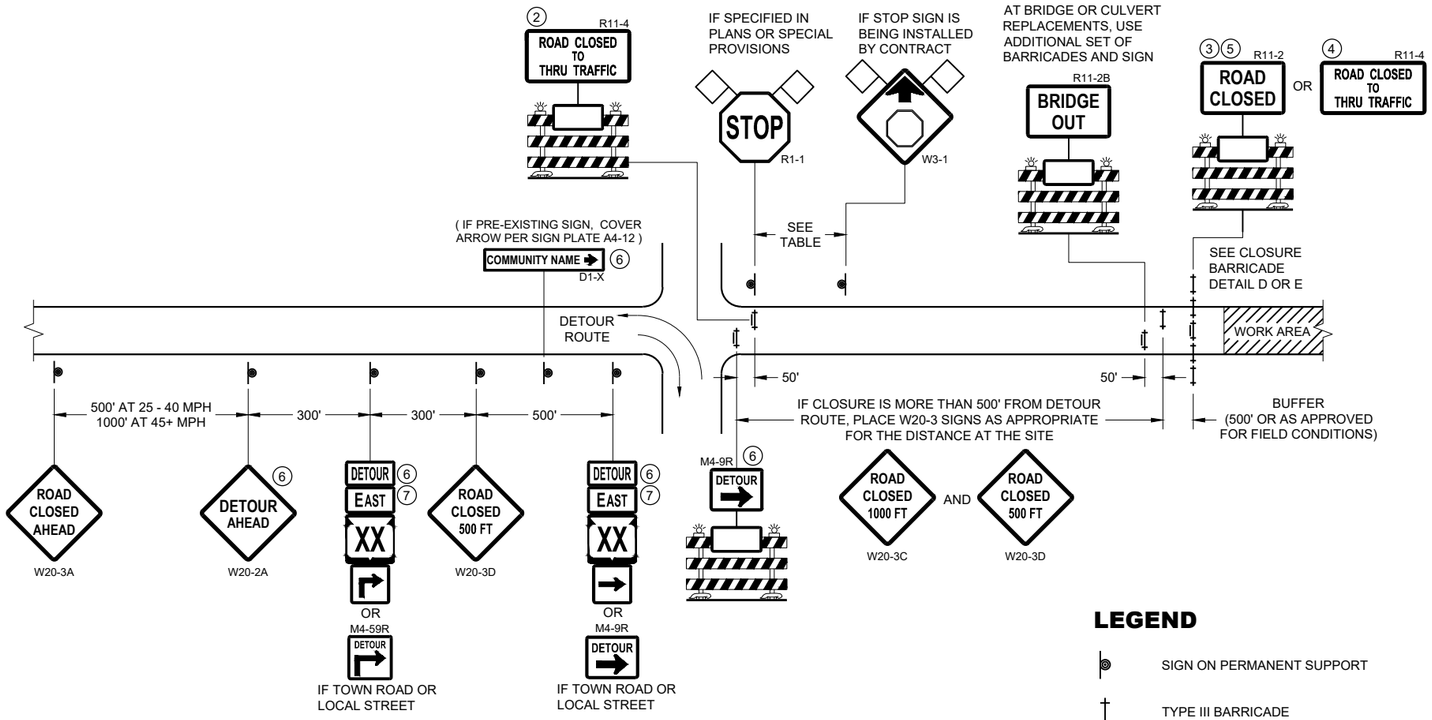

DETAIL B
MAINLINE CLOSURE WITH POSTED DETOUR

WORK ZONE LESS THAN ½ MILE FROM DETOUR ROUTE (1000 FEET IF URBAN)

LEGEND

- SIGN ON PERMANENT SUPPORT
- TYPE III BARRICADE
- TYPE III BARRICADE WITH ATTACHED SIGN
- TYPE "A" WARNING LIGHT (FLASHING)
- WORK AREA
- FLAGS, 16" X 16" MIN. (ORANGE)
- DETOUR — M4 - 8
- EAST — M3 - X
- XX (M1 - 4) OR XX (M1 - 6) OR COUNTY X (M1 - 5A)
- M05 - 1 OR M06 - 1

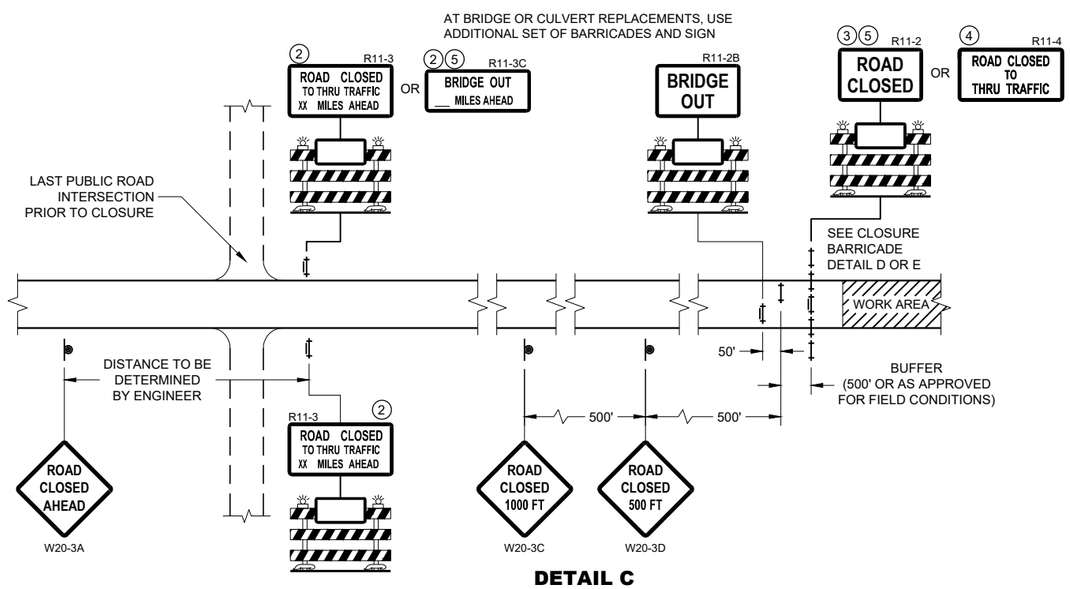

DETAIL C
MAINLINE CLOSURE, NO POSTED DETOUR

SPEED LIMIT (MPH)	"STOP AHEAD" ADVANCE WARNING DISTANCE (FT)
25	200
30	200
35	350
40	350
45	500
50	550
55	750

SEE SDD 15C2-SHEET "b" FOR GENERAL NOTES AND FOOTNOTES 1 THROUGH 7

BARRICADES AND SIGNS FOR MAINLINE CLOSURES

STATE OF WISCONSIN
DEPARTMENT OF TRANSPORTATION

APPROVED
May 2023 — DATE
/S/ Andrew Heidtke — WORK ZONE ENGINEER

FHWA

6

SDD 15C02 - 09a

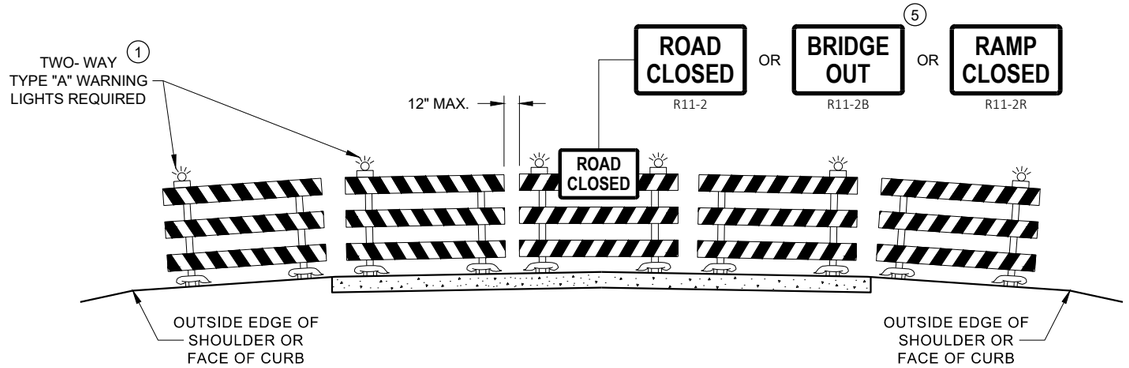

DETAIL D
ROAD CLOSURE BARRICADE DETAIL
APPROACH VIEW

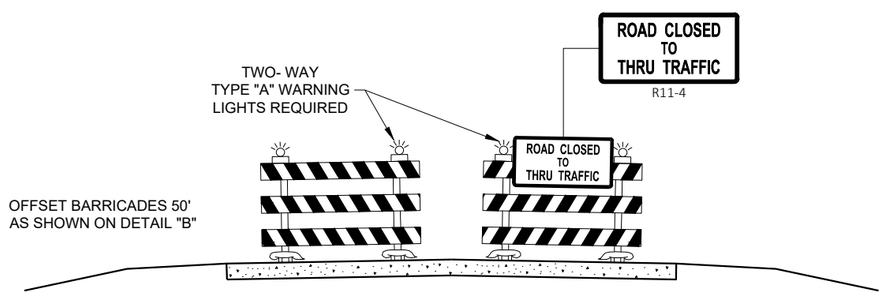

DETAIL E
LANE CLOSURE BARRICADE DETAIL
APPROACH VIEW

SEE SDD 15C2 - SHEET "a" FOR LEGEND

GENERAL NOTES

THE EXACT NUMBER, LOCATION, AND SPACING OF ALL SIGNS AND BARRICADES SHALL BE ADJUSTED TO FIT FIELD CONDITIONS AS APPROVED BY THE ENGINEER.

ANY SIGNS TEMPORARY OR EXISTING, WHICH CONFLICT WITH TRAFFIC CONTROL "IN USE", SHALL BE REMOVED OR COVERED AS NEEDED AND AS APPROVED BY THE ENGINEER.

THE SPACING BETWEEN TRAFFIC CONTROL SIGNS SHOULD BE ADJUSTED TO NOT CONFLICT WITH AND SHOULD PROVIDE A DESIRABLE MINIMUM OF 200 FEET CLEARANCE TO EXISTING SIGNS THAT WILL REMAIN IN PLACE.

BARRICADES THAT MUST BE MOVED FOR A WORK OPERATION SHALL BE IMMEDIATELY RE-ESTABLISHED UPON COMPLETION OF THE OPERATION, OR FOR CONTINUING OPERATIONS, AT THE END OF EACH WORKING DAY.

SIGNS THAT WILL BE IN PLACE LESS THAN 7 CONTINUOUS DAYS AND NIGHTS MAY BE MOUNTED ON PORTABLE SUPPORTS.

ALL TYPE III BARRICADES SHALL HAVE RAILS REFLECTORIZED ON BOTH FACES. STRIPES SHALL BE PROPERLY SLOPED DOWN TOWARD THE TRAFFIC SIDE OR AS SHOWN IN THE ROAD CLOSURE BARRICADE DETAIL "D" FOR FULL ROAD CLOSURES.

TYPE "A" LOW - INTENSITY FLASHING WARNING LIGHTS SHALL BE VISIBLE ON BOTH SIDES OF THE BARRICADE.

THE R11 - 2, R11 - 3, M4 - 9, R11 - 4, AND R10 - 61 SIGNS PLACED ON THE BARRICADES SHALL COVER NO MORE THAN THE TOP RAIL. THE SIGNS SHALL NOT COVER ANY PORTION OF THE MIDDLE RAIL OR BOTTOM RAILS.

"WO" AND "MO" SIGNS ARE THE SAME AS "W" AND "M" SIGNS EXCEPT THE BACKGROUND IS ORANGE.

ALL SIGNS SHALL BE 48" X 48" UNLESS OTHERWISE NOTED BELOW:
- R11 - 2 SHALL BE 48" X 30"
- R11 - 3 SHALL, R11 - 4 AND R10 - 61 SHALL BE 60 " X 30"
- M4 - 9 SHALL BE 30" X 24"
- M3 - X SHALL BE 24" X 12" (36" X 18" IF NEEDED TO MATCH EXISTING SIGNS)
- M4 - 8 SHALL BE 24" X 12" (36" X 18" IF NEEDED TO MATCH EXISTING SIGNS)
- M1 - 4, M1 - 5A AND M1 - 6 SHALL BE 24" X 24" (36" X 36" IF NEEDED TO MATCH EXISTING SIGNS)
- MO5 - 1 AND MO6 - 1 SHALL BE 21" X 21" (30" X 30" IF NEEDED TO MATCH EXISTING SIGNS)
- D1 - X SHALL BE AS SHOWN ON SPECIFIC PROJECT SIGNING DETAIL SHEETS.
- R1 - 1 SHALL BE 36" X 36"

1. TWO WARNING LIGHTS SHALL BE PROVIDED ON THE CENTER BARRICADE AND A MINIMUM OF ONE WARNING LIGHT SHALL BE PROVIDED ON EACH OF THE OTHER BARRICADES WITHIN THE ROADWAY LIMITS. SPACING OF THE WARNING LIGHTS SHALL BE UNIFORM TO THE EDGE OF ROADWAY AS SHOWN (APPROX. 8 FOOT LIGHT SPACING.
2. THESE SIGNS AND BARRICADES ARE NOT REQUIRED IF ROAD CLOSURE BEGINS AT AN INTERSECTION.
3. FOR ROAD CLOSURE WITHOUT LOCAL ACCESS TO PROJECT, SEE ROAD CLOSURE BARRICADE DETAIL "D".
4. FOR ROAD CLOSURE WITH LOCAL ACCESS TO PROJECT, SEE ROAD CLOSURE BARRICADE DETAIL "E".
5. FOR BRIDGE OR CULVERT REPLACEMENTS, SUBSTITUTE "BRIDGE OUT" INSTEAD OF "ROAD CLOSED" ON R11 - 2 AND R11 - 3 SIGNS.
6. INSTALL DETOUR AND COMMUNITY GUIDE SIGNS AND ARROWS ONLY IF SPECIFIED IN THE CONTRACT. IF THERE ARE EXISTING ROUTE MARKER ASSEMBLIES THAT WILL REMAIN IN PLACE, ADJUST THE LOCATION OF THE DETOUR ROUTE SIGNS TO CORRESPOND WITH THE EXISTING ASSEMBLIES. MODIFY EXISTING SIGNS WHERE POSSIBLE. SEE SPECIFIC PROJECT DETOUR SIGNING DETAIL SHEETS. IF DETOUR SIGNS ARE BEING INSTALLED BY OTHERS, PLACE THE CONTRACTED TRAFFIC CONTROL SIGNS TO ALLOW FOR PLACEMENT OF ALL WARNING, DETOUR AND GUIDE SIGNS AS SHOWN.
7. "EAST" CARDINAL DIRECTION MARKERS AND RIGHT TURN ARROWS ARE SHOWN. USE OTHER CARDINAL DIRECTIONS AND ARROWS AS APPROPRIATE.

BARRICADES AND SIGNS FOR VARIOUS CLOSURES

STATE OF WISCONSIN
DEPARTMENT OF TRANSPORTATION

APPROVED
May 2023 — DATE
/S/ Andrew Heidtke — WORK ZONE ENGINEE
FHWA

6
SDD 15C02 - 09b

THIS DRAWING PROVIDES GENERAL GUIDANCE ON TYPICAL DETOUR SIGN LAYOUT AND SPACING. SEE PROJECT DETOUR SIGNING SHEETS FOR SPECIFIC DETAILS FOR EACH PROJECT.

LEGEND

- SIGN ON PERMANENT SUPPORT
- WORK AREA
- DETOUR — M4 - 8
- EAST — M3 - X
- XX — M1 - 4 OR XX — M1 - 6 OR COUNTY X — M1 - 5A
- M05 - 1 OR M06 - 1 OR M06 - 1

GENERAL NOTES

THE EXACT NUMBER, LOCATION AND SPACING OF ALL SIGNS SHALL BE ADJUSTED TO FIT FIELD CONDITIONS AS APPROVED BY THE ENGINEER.

IF THERE ARE EXISTING ROUTE MARKER ASSEMBLIES THAT WILL REMAIN IN PLACE, ADJUST THE LOCATION OF THE DETOUR ROUTE SIGNS TO CORRESPOND WITH THE EXISTING ASSEMBLIES. SEE SPECIFIC PROJECT DETOUR SIGNING DETAIL SHEETS. MODIFY EXISTING SIGNS WHERE POSSIBLE.

THE SPACING BETWEEN TRAFFIC CONTROL AND DETOUR SIGNS SHOULD BE ADJUSTED TO NOT CONFLICT WITH AND TO PROVIDE A DESIRABLE MINIMUM OF 200 FEET CLEARANCE TO EXISTING SIGNS THAT WILL REMAIN IN PLACE.

ANY SIGNS TEMPORARY OR EXISTING, WHICH CONFLICT WITH TRAFFIC CONTROL "IN USE" SHALL BE REMOVED OR COVERED AS NEEDED AND AS APPROVED BY THE ENGINEER.

SIGNS THAT WILL BE IN PLACE LESS THAN 7 CONTINUOUS DAYS AND NIGHTS MAY BE MOUNTED ON PORTABLE SUPPORTS.

"MO" SIGNS ARE THE SAME AS "M" SIGNS EXCEPT THE BACKGROUND IS ORANGE.

SIGN SIZES SHALL BE AS FOLLOWS:

M3-X SHALL BE 24" X 12" (36" X 18" IF NEEDED TO MATCH EXISTING SIGNS)
M4-8 SHALL BE 24" X 12" (36" X 18" IF NEEDED TO MATCH EXISTING SIGNS)
M1-4, M1-5A AND M1-6 SHALL BE 24" X 24" (36" X 36" IF NEEDED TO MATCH EXISTING SIGNS)
M05-1 AND M06-1 SHALL BE 21" X 21" (30" X 30" IF NEEDED TO MATCH EXISTING SIGNS)
M4-9 AND M4-59 SHALL BE 30" X 24"
M4-8a SHALL BE 24" X 18"
G20-51 SHALL BE 60" X 24"
W20-2A SHALL BE 48" X 48"
D1-X SHALL BE AS SHOWN ON SPECIFIC PROJECT SIGNING DETAIL SHEETS.

* OPTIONAL SIGNS. SEE SPECIFIC PROJECT DETOUR SIGNING DETAIL SHEETS.

** FOR A TOWN ROAD OR LOCAL STREET DETOURED ONTO A STATE TRUNK HIGHWAY, PLACE A ROAD NAME PLAQUE ABOVE THE M4-9 SIGN AS SPECIFIED IN THE CONTRACT.

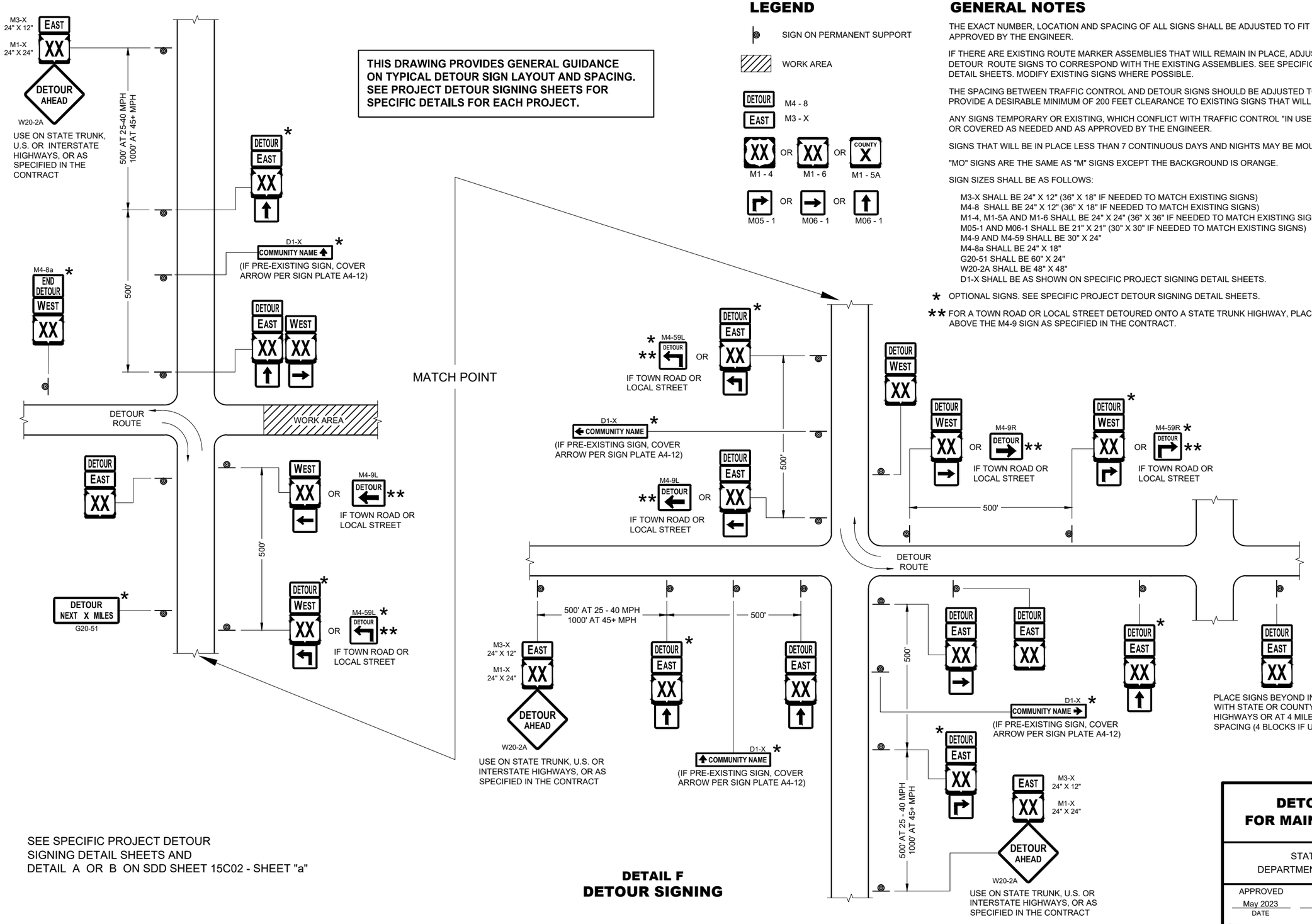

SEE SPECIFIC PROJECT DETOUR SIGNING DETAIL SHEETS AND DETAIL A OR B ON SDD SHEET 15C02 - SHEET "a"

DETAIL F
DETOUR SIGNING

DETOUR SIGNING FOR MAINLINE CLOSURES

STATE OF WISCONSIN
DEPARTMENT OF TRANSPORTATION

APPROVED
May 2023 — DATE
/S/ Andrew Heidtke — WORK ZONE ENGINEER
FHWA

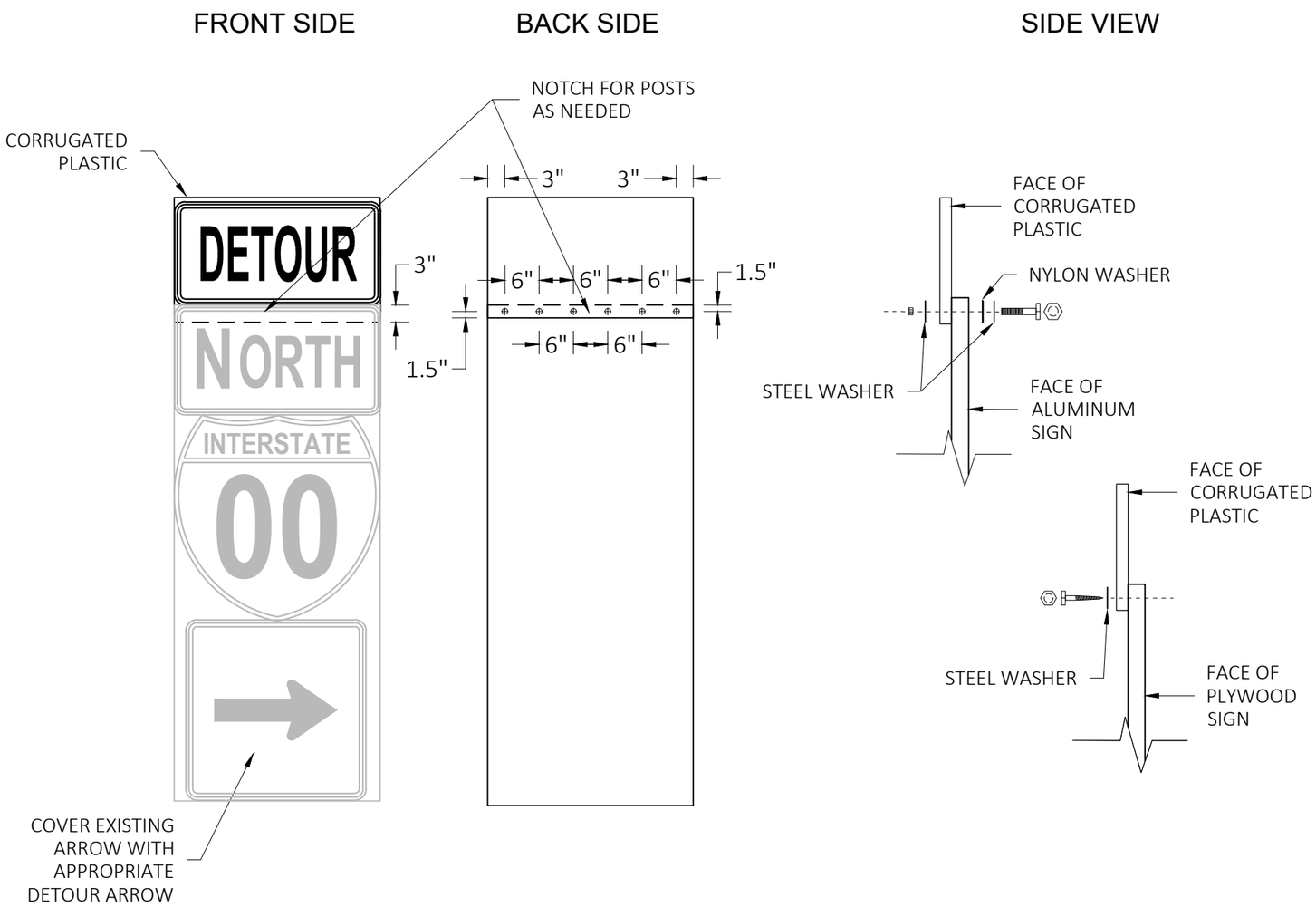

GENERAL NOTES

CELLS OF CORRUGATED PLASTIC SHALL BE VERTICALLY ORIENTED.

PROVIDE A 0.4-INCH THICK BASE CORRUGATED PLASTIC WITH A 0.035-INCH WALL THICKNESS AND 0.4-INCH CELL SIZE.

FOR 36" WIDE SIGNS: USE 6 FASTENERS AS SHOWN.

FOR 24" WIDE SIGNS: USE 4 FASTENERS WITH EDGE SPACING AS SHOWN AND 6" SPACING BETWEEN FASTENERS.

METAL WASHERS, NUTS, BOLTS AND LAGS SHALL HAVE HEXAGONAL HEADS AND SHALL BE EITHER:

A. HOT DIP GALVANIZED IN ACCORDANCE WITH ASTM DESIGNATION: A 153, CLASS D, OR SC 3.

B. ELECTRO-GALVANIZED IN ACCORDANCE WITH ASTM DESIGNATION: B 633, TYPE III, SC3

THREADS ON BOLTS AND NUTS SHALL BE MANUFACTURED WITH SUFFICIENT ALLOWANCE FOR THE CADMIUM PLATE OR GALVANIZED COATING TO PERMIT THE NUTS TO RUN FREELY ON THE BOLTS.

PLYWOOD SIGNS:
LAG SCREWS - 5/16" x 1"
ALUMINUM SIGNS:
MACHINE BOLTS - 5/16" x 1-1/4" LENGTH W/NUTS
WASHERS:
1-1/4" O.D. x 3/8" I.D. x 1/16" STEEL
1-1/4" O.D. x 3/8" I.D. x .080 NYLON

MODIFIED ROUTE ASSEMBLY FOR DETOUR SIGNING

MODIFIED ROUTE ASSEMBLY FOR DETOUR SIGNING

STATE OF WISCONSIN
DEPARTMENT OF TRANSPORTATION

APPROVED
May 2023 — DATE
/S/ Andrew Heidtke — ROADWAY STANDARDS DEVEL ENGINEER
FHWA

6

SDD 15C02-09h

*CONFIRM MARKING LINE WIDTH WITH THE MISCELLANEOUS QUANTITIES

GENERAL NOTES

DETAILS OF CONSTRUCTION NOT SHOWN ON THIS DRAWING SHALL CONFORM TO STANDARD SPECIFICATIONS AND SPECIAL PROVISIONS.

1. LOCATE THE NO PASSING ZONE W14-3 SIGN WITHIN 50 FEET OF THE "T" MARKING
2. MEASURE FROM EDGE OF MARKING TO JOINT LINE. THIS DOES NOT INCLUDE SPACE NEEDED FOR GROOVING OPERATIONS.

LEGEND

"T" MARKING

SIGN ON PERMANENT SUPPORT

DIRECTION OF TRAFFIC

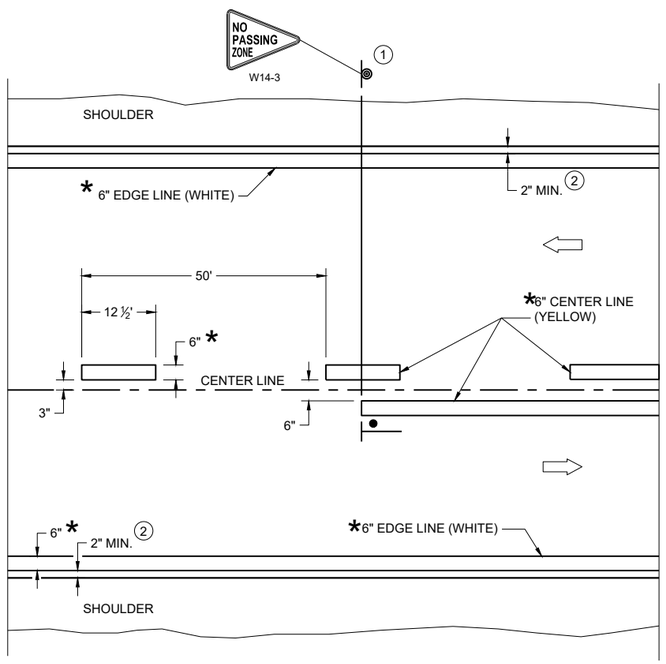

TWO WAY TRAFFIC

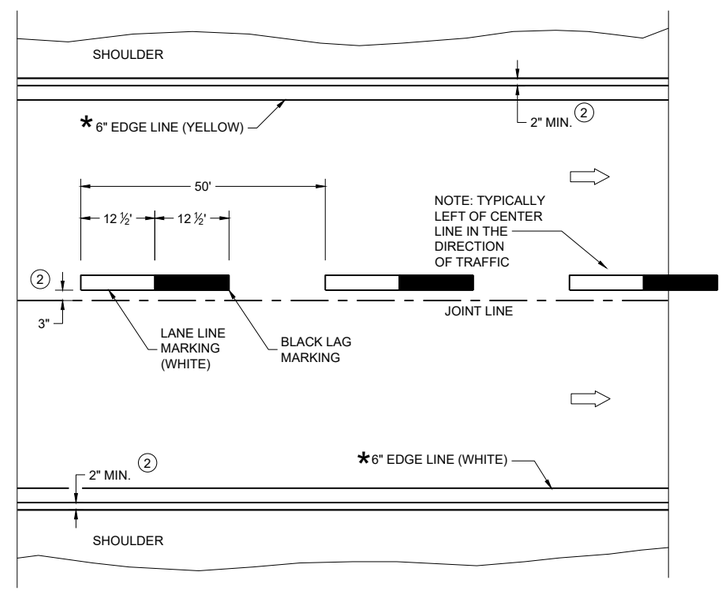

ONE WAY TRAFFIC

PERMANENT PAVEMENT MARKING

6

SDD 15C08-23a

PERMANENT LONGITUDINAL PAVEMENT MARKINGS

STATE OF WISCONSIN
DEPARTMENT OF TRANSPORTATION

APPROVED
May 2023 — DATE
/S/ Jeannie Silver — Statewide Pavement Marking Engineer
FHWA

6

SDD 15C08-23a

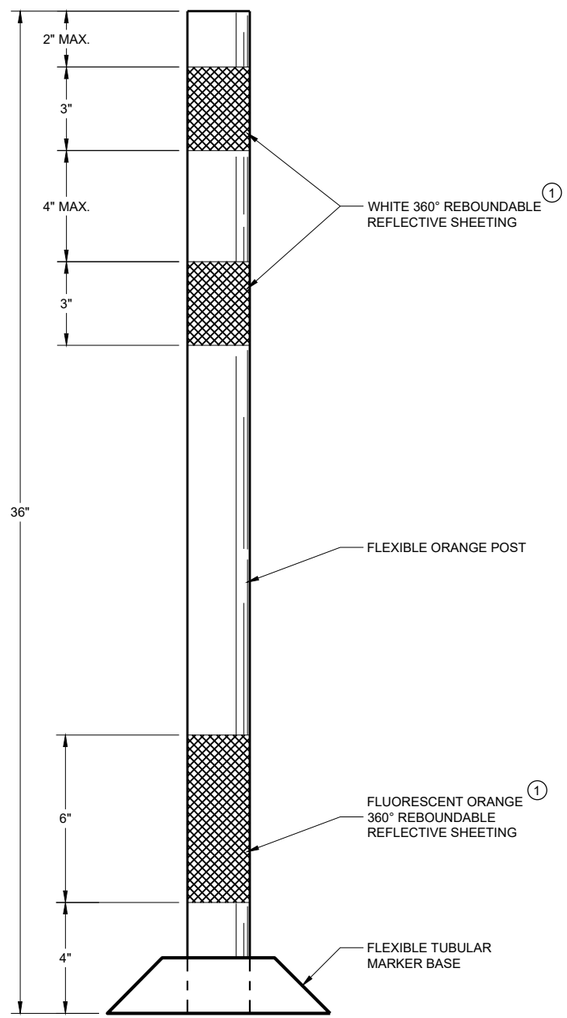

FLEXIBLE TUBULAR MARKER POST WORK ZONE

GENERAL NOTES

DETAILS OF CONSTRUCTION NOT SHOWN ON THIS DRAWING SHALL CONFORM TO THE PERTINENT REQUIREMENTS OF THE STANDARD SPECIFICATIONS AND THE APPLICABLE SPECIAL PROVISIONS.

SURFACE MOUNTED BASES SHALL BE FURNISHED IN ACCORDANCE WITH MANUFACTURERS RECOMMENDATIONS TO BE COMPATIBLE WITH FLEXIBLE TUBULAR MARKER POSTS TO A SIZE AND SHAPE THAT WILL PROVIDE A STABLE POST FOUNDATION WHEN SECURED TO THE PAVEMENT.

THE ASPHALTIC ADHESIVE OR BUTYL PAD FURNISHED SHALL BE IN ACCORDANCE WITH MANUFACTURERS RECOMMENDATIONS, UNLESS DIRECTED BY THE ENGINEER TO USE BOLTS.

(1) REFLECTIVE SHEETING SHALL FOLLOW THE REQUIREMENTS IN THE APPROVED PRODUCTS LISTING FOR SIGN SHEETING.

6

SDD 15C11 - 10a

CHANNELIZING DEVICES FLEXIBLE TUBULAR MARKER POST

STATE OF WISCONSIN
DEPARTMENT OF TRANSPORTATION

APPROVED
November 2022 /S/ Andrew Heidtke
DATE WORK ZONE ENGINEE
FHWA

6

SDD 15C11 - 10a

GENERAL NOTES

1. REFLECTIVE SHEETING SHALL FOLLOW THE REQUIREMENTS IN THE APPROVED PRODUCTS LISTING FOR SIGN SHEETING.
2. LOCATION OF WARNING LIGHTS WHEN SHOWN ON THE PLAN.

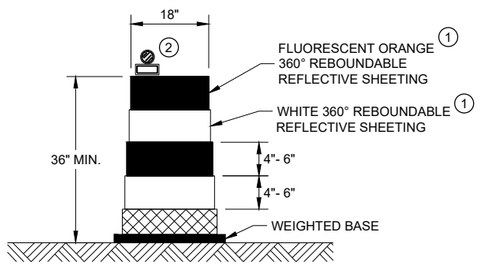

DRUM

BALLAST WIDTHS
RANGE FROM 24"-36"

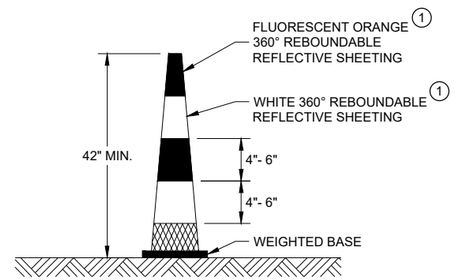

42" CONE

DO NOT USE IN TAPERS
½ SPACING OF DRUMS

BALLAST WIDTHS
RANGE FROM 14"-20"

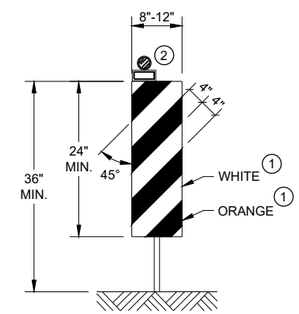

VERTICAL PANEL

THE STRIPES SHALL SLOPE DOWNWARD TO
THE TRAFFIC SIDE FOR CHANNELIZATION.

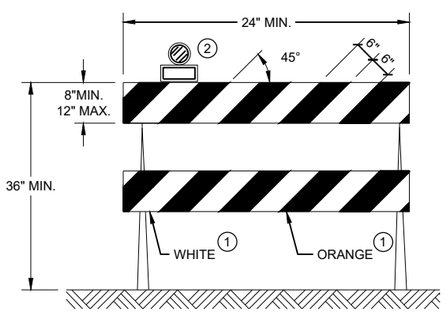

TYPE II BARRICADE

FOR RAILS LESS THAN 36" LONG, 4" WIDE STRIPES
MAY BE USED. ALL STRIPES SHALL SLOPE DOWNWARD
TO THE TRAFFIC SIDE FOR CHANNELIZATION.

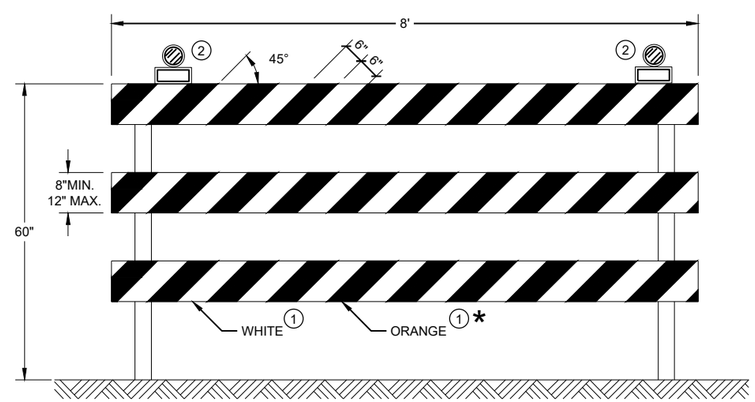

TYPE III BARRICADE

IF SIGN MOUNTED, DO NOT COVER MORE THAN 50% OF THE TOP
TWO RAILS OR 33% OF THE TOTAL AREA OF THE THREE RAILS.

* IF USED FOR A PERMANENT APPLICATION USE RED SHEETING.

CHANNELIZING DEVICES DRUMS, CONES, BARRICADES AND VERTICAL PANELS

STATE OF WISCONSIN
DEPARTMENT OF TRANSPORTATION

APPROVED
November 2022 — DATE
/S/ Andrew Heidtke — WORK ZONE ENGINEE
FHWA

6

SDD 15C11 - 10b

LEGEND

SIGN ON PORTABLE OR PERMANENT SUPPORT

TEMPORARY PORTABLE RUMBLE STRIP ARRAY

DIRECTION OF TRAFFIC

WORK AREA

FLAGGER, EQUIPPED WITH STOP/SLOW PADDLE FASTENED ON SUPPORT STAFF

GENERAL NOTES

DETAILS OF TRAFFIC CONTROL DEVICES AND INSTALLATION NOT SHOWN ON THIS DRAWING SHALL CONFORM TO THE PERTINENT REQUIREMENTS OF THE STANDARD SPECIFICATIONS, THE SPECIAL PROVISIONS, AND THE MANUAL ON UNIFORM TRAFFIC CONTROL DEVICES.

ALL SIGNS ARE 48" X 48" UNLESS OTHERWISE NOTED.

"WO" SIGNS ARE THE SAME AS "W" SIGNS EXCEPT THE BACKGROUND IS ORANGE.

THE EXACT NUMBER, LOCATION AND SPACING OF ALL SIGNS, DEVICES, AND LOCATION OF ALL FLAGGERS SHALL BE ADJUSTED TO FIT FIELD CONDITIONS AS APPROVED BY THE ENGINEER.

THE FIRST ADVANCE WARNING SIGN SHOULD TYPICALLY BE LOCATED IN ADVANCE OF THE ANTICIPATED TRAFFIC BACKUP OR QUEUE.

WHEN A SIDE ROAD OR RAMP INTERSECTS THE FACILITY ON WHICH THE WORK IS BEING PERFORMED, ADDITIONAL TRAFFIC CONTROLS SHALL BE PROVIDED AS SPECIFIED IN THE PLANS AND/OR THE SPECIAL PROVISIONS OR AS APPROVED BY THE ENGINEER.

FLAGGING

FLAGGERS SHALL BE IN SIGHT OF EACH OTHER OR IN DIRECT COMMUNICATION AT ALL TIMES. THEY SHALL BE EQUIPPED WITH STOP/SLOW PADDLES FASTENED ON SUPPORT STAFFS. WHEN THE FLAGGING OPERATION IS NOT IN EFFECT REMOVE TEMPORARY PORTABLE RUMBLE STRIPS PRIOR TO COVERING OR REMOVING ALL ADVANCE SIGNING.

(1) FOR MOVING WORK OPERATIONS, POST ADDITIONAL W20-7A FLAGGER SIGNS AT APPROXIMATELY 3,500' INTERVALS IN THE MOVING WORK OPERATION OR AS APPROVED BY THE ENGINEER.

(2) SIGN NOT REQUIRED IF FLAGGING OPERATION OCCURS WITHIN A SIGNED ROAD WORK ZONE AREA.

WHEN THE DISTANCE BETWEEN FLAGGERS EXCEEDS 2 MILES, A PILOT CAR IS REQUIRED. WHEN CURVES REDUCE SIGHT DISTANCE BELOW 400', A PILOT CAR IS REQUIRED.

TEMPORARY PORTABLE RUMBLE STRIPS

UTILIZE TEMPORARY PORTABLE RUMBLE STRIPS ON ALL FLAGGING OPERATIONS.

(3) EACH TEMPORARY PORTABLE RUMBLE STRIP ARRAY CONSISTS OF THREE RUMBLE STRIPS PLACED TRANSVERSE ACROSS THE LANE AT THE LOCATIONS SHOWN. WITHIN EACH ARRAY, SPACING BETWEEN RUMBLE STRIPS SHALL BE 15 FEET ON CENTER

ONLY USE TEMPORARY PORTABLE RUMBLE STRIPS FROM THE APPROVED PRODUCTS LIST.

INSTALL TEMPORARY RUMBLE STRIPS PER MANUFACTURER'S RECOMMENDATIONS.

PLACE ADVANCE SIGNING PRIOR TO INSTALLING TEMPORARY RUMBLE STRIPS.

DO NOT INSTALL TEMPORARY PORTABLE RUMBLE STRIPS ON GRAVEL, MILLED SURFACES, OR ASPHALT THAT HAS BEEN PAVED LESS THAN 12 HOURS.

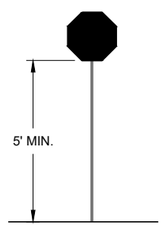

STOP/SLOW PADDLE ON SUPPORT STAFF

SIGN AND TEMPORARY RUMBLE STRIP ARRAY SPACING TABLE

SPEED LIMIT	SPACING "A"
25-30 MPH	200'
35-40 MPH	350'
45-55 MPH	500'

WO3-4

USE OF WO3-4 SIGN IS OPTIONAL. WHEN USED, THIS SIGN SHALL BE LOCATED BETWEEN THE W20-7A AND W20-4A SIGNS, USING SPACING "A".

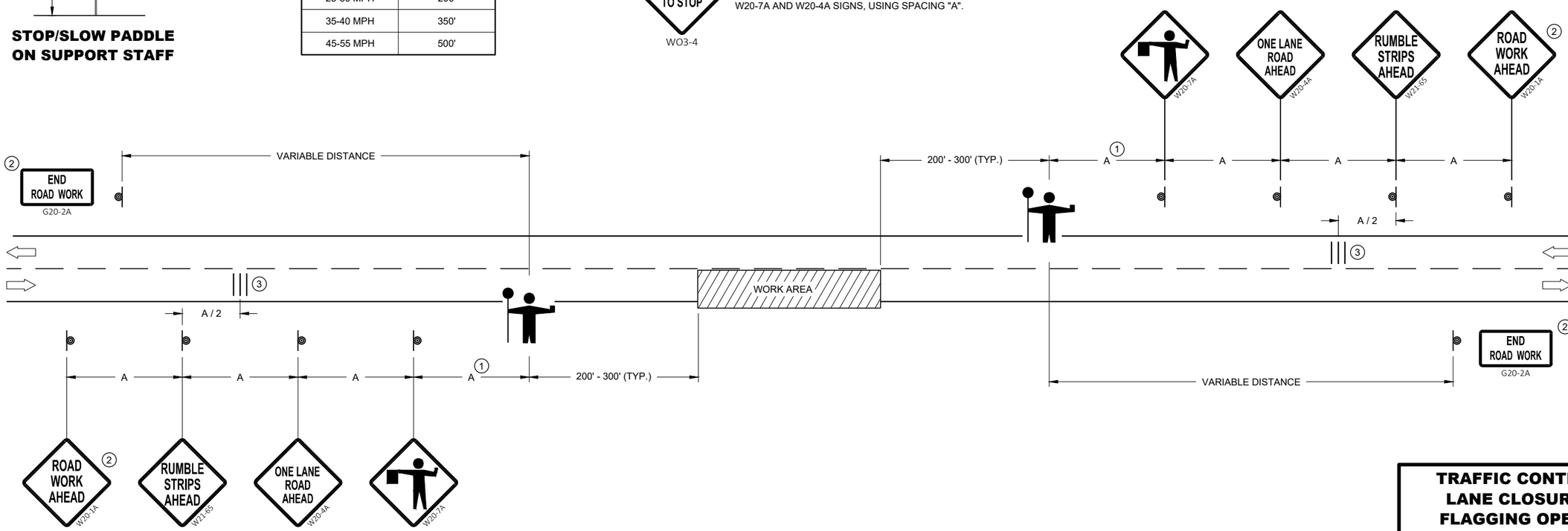

TRAFFIC CONTROL FOR LANE CLOSURE WITH FLAGGING OPERATION

STATE OF WISCONSIN
DEPARTMENT OF TRANSPORTATION

APPROVED
May 2022 — DATE
/S/ Andrew Heidtke — WORK ZONE ENGINEE
FHWA

6
SDD 15C12 - 09a

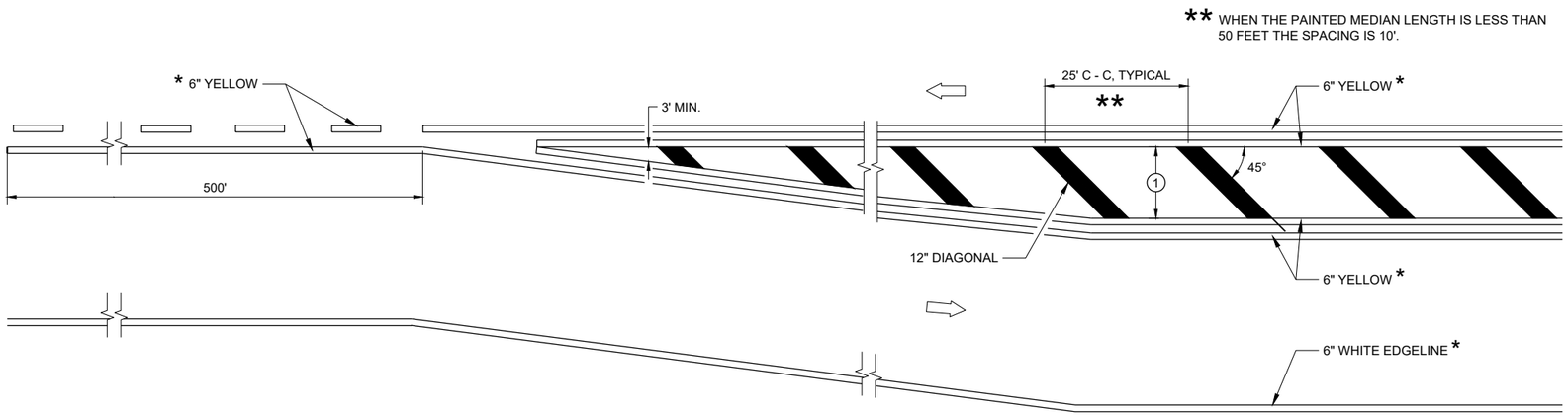

MEDIAN ISLAND DETAIL

GENERAL NOTES

1. DIAGONALS ARE OPTIONAL WHEN PAINTED ISLAND IS LESS THAN 6 FEET AT THE WIDEST POINT. OMIT DIAGONALS IF WIDTH IS LESS THAN 4 FEET.

DIRECTION OF TRAVEL

* CONFIRM MARKING LINE WIDTH WITH THE MISCELLANEOUS QUANTITIES

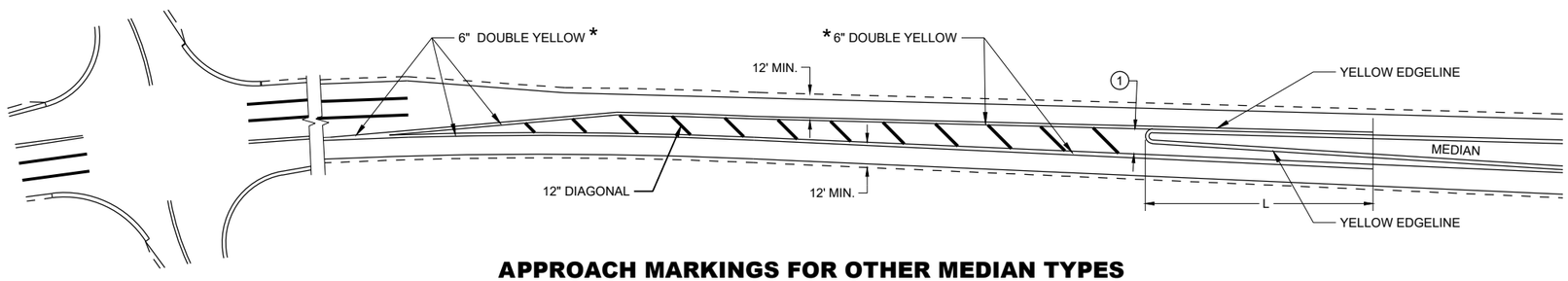

APPROACH MARKINGS FOR OTHER MEDIAN TYPES

SPEED LIMIT	L
<35 MPH	5'
35> MPH	50'

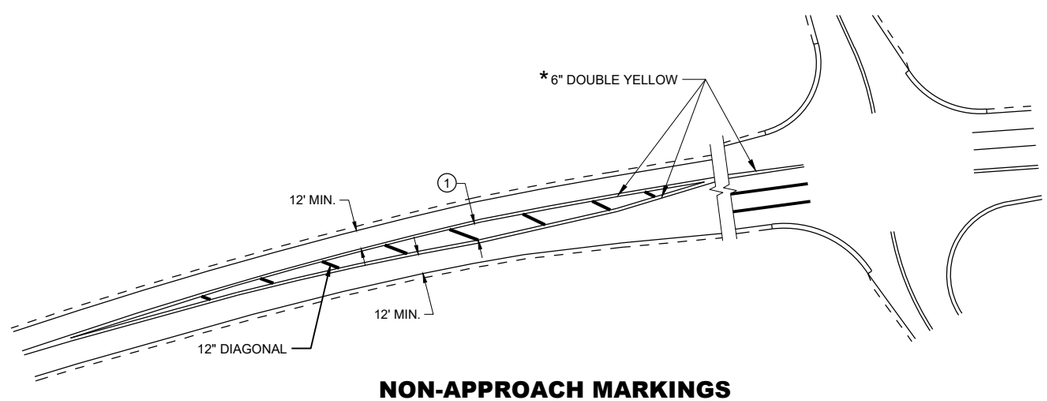

NON-APPROACH MARKINGS

MEDIAN ISLAND PAVEMENT MARKINGS

STATE OF WISCONSIN
DEPARTMENT OF TRANSPORTATION

APPROVED
May 2023 — DATE
/S/ Jeannie Silver — ROADWAY STANDARDS DEVELOPMENT UNIT SUPERVISOR

FHWA

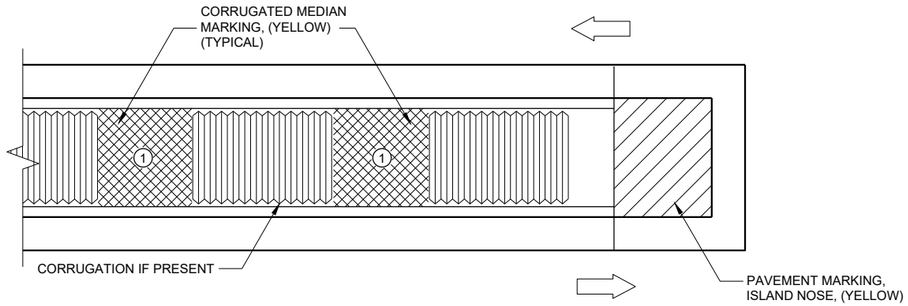

MEDIAN ISLAND WITH SQUARE BLUNT NOSE

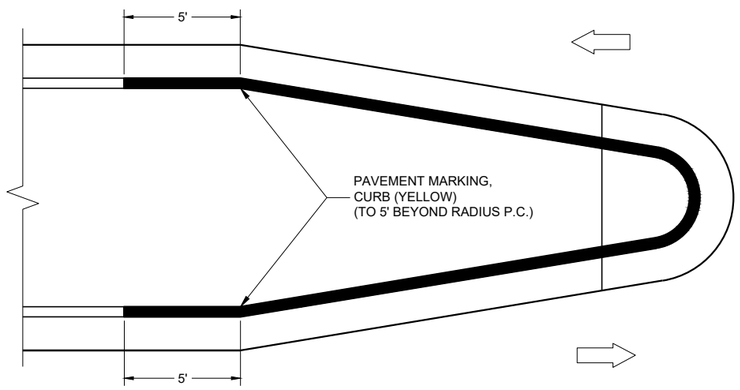

MEDIAN ISLAND WITH ROUND BLUNT NOSE

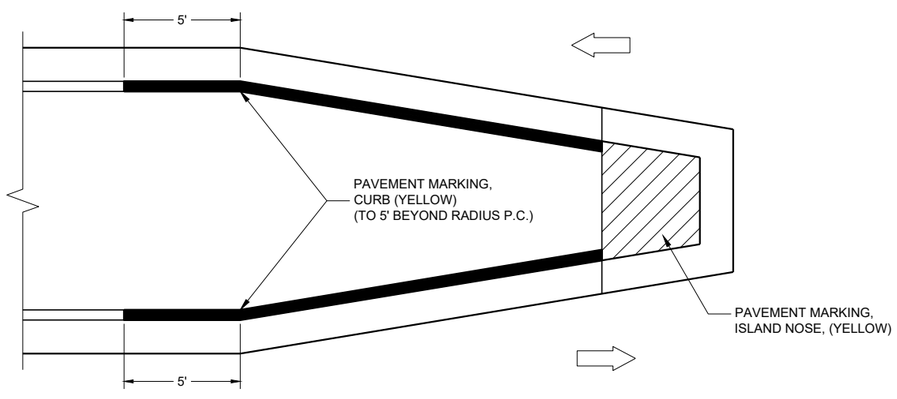

MEDIAN ISLAND WITH SLOPED NOSE

TYPICAL PLACEMENT OF PAVEMENT MARKING ON MEDIAN ISLANDS

GENERAL NOTES

WHEN CONCRETE CORRUGATED MEDIAN IS CONSTRUCTED TO SEPARATE TRAFFIC OPERATING IN THE OPPOSING DIRECTION, YELLOW PAVEMENT MARKING SHALL BE APPLIED TO THE FLAT PORTION OF THE CONCRETE CORRUGATED MEDIAN. THE ITEM OF PAVEMENT MARKING, CONCRETE CORRUGATED MEDIAN, WILL BE MEASURED IN PLACE AND ACCEPTED IN ACCORDANCE WITH THE CONTRACT AND PAID FOR AT THE CONTRACT UNIT PRICE PER SQUARE FOOT.

(1) APPLY PAVEMENT MARKING TO THE FLAT PORTION OF CORRUGATED MEDIAN.

ISLAND NOSE MARKING

CURB MARKING

CORRUGATED MEDIAN MARKING

DIRECTION OF TRAVEL

PAVEMENT MARKINGS, MEDIAN ISLAND NOSE

STATE OF WISCONSIN
DEPARTMENT OF TRANSPORTATION

APPROVED
May 2023 — DATE
/S/ Jeannie Silver — ROADWAY STANDARDS DEVELOPMENT UNIT SUPERVISOR

FHWA

6

SDD 15C18-08b

GENERAL NOTES

STOP SIGN SHALL BE PLACED A MINIMUM OF 6 FEET TO A MAXIMUM OF 50 FEET FROM THE EDGELINE LOCATION.

1. 18-INCH STOP LINES MAY BE DELETED OR ADDED BY THE REGION MARKING ENGINEER BASED ON VISIBILITY AND SIGHT LINES.
2. NO STOP LINE IS REQUIRED IF STOP SIGN IS LESS THAN OR EQUAL TO 40 FEET FROM THE EDGELINE.
3. NO STOP LINE IS REQUIRED IF STOP SIGN IS LESS THAN OR EQUAL TO 30 FEET FROM THE FLANGE LINE EXTENSION.
4. MOVE CLOSER TO THE EDGE OF TRAVEL LINE AS NEEDED FOR VISIBILITY AND SIGHT LINES (NO CLOSER THAN 4 FEET).
5. LADDER BAR CROSSWALKS SHOULD ONLY BE USED FOR MID BLOCK CROSSINGS. USE 2 - 6" TRANSVERSE LINES.
6. POSTED SPEED LIMITS OF 40 MPH OR GREATER USE A MINIMUM WIDTH OF 8' FOR MIDBLOCK CROSSWALKS

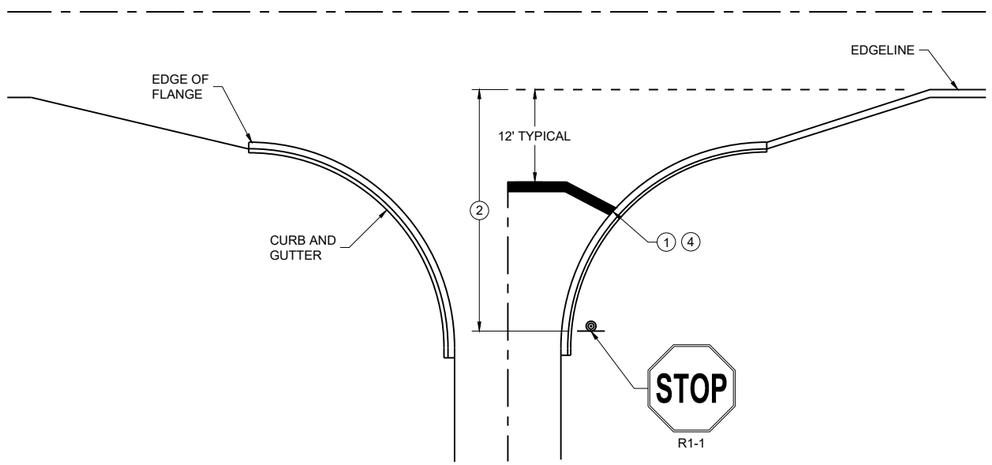

TYPICAL STOP LINE PAVEMENT MARKING WITH CURB AND GUTTER

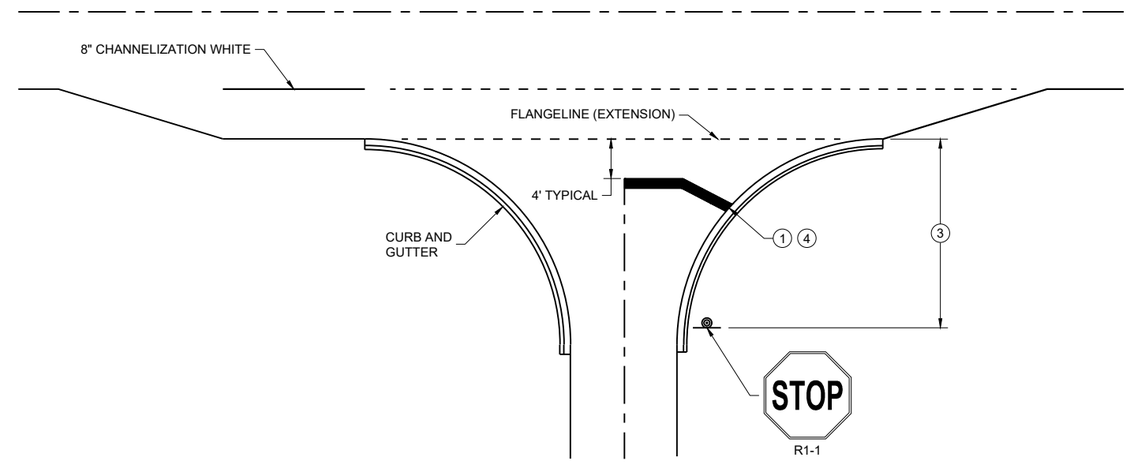

TYPICAL STOP LINE PAVEMENT MARKING FOR SIDE ROADS WITH RIGHT TURN LANE

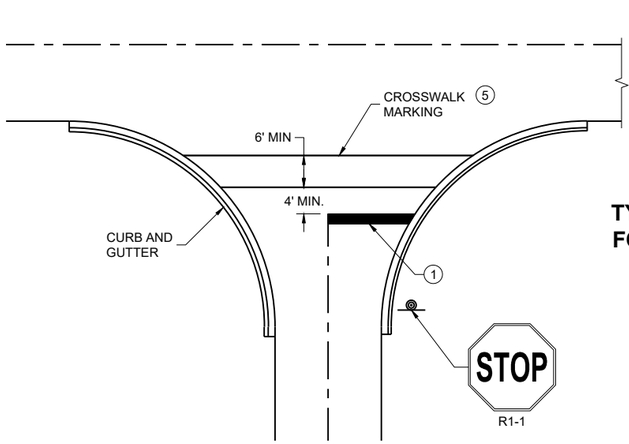

TYPICAL STOP LINE PAVEMENT MARKING FOR SIDE ROADS WITH CROSSWALK MARKING

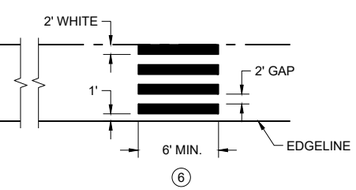

TYPICAL PAVEMENT MARKING FOR MID-BLOCK CROSSWALK 5

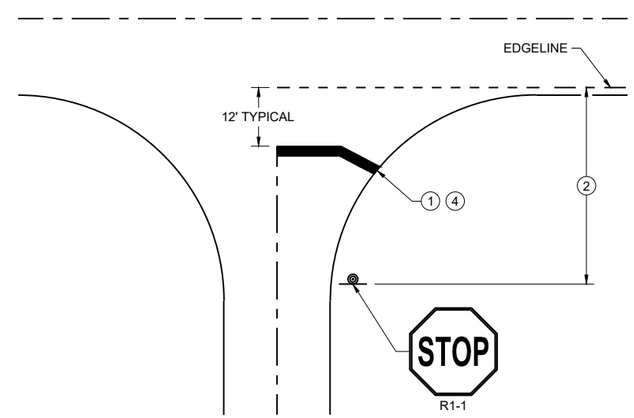

TYPICAL STOP LINE PAVEMENT MARKING WITHOUT CURB AND GUTTER

STOP LINE AND CROSSWALK PAVEMENT MARKING

STATE OF WISCONSIN
DEPARTMENT OF TRANSPORTATION

APPROVED
March 2024 — DATE
/S/ Matthew Rauch — STATE SIGNING AND MARKING ENGINEER

FHWA

6
SDD 15C33-05

URBAN AREA

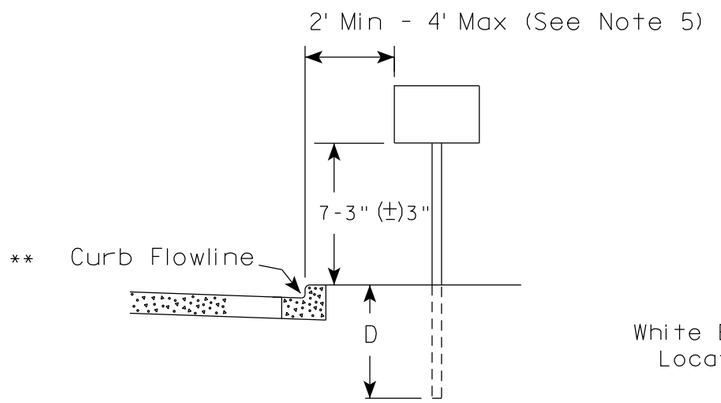

RURAL AREA (See Note 2)

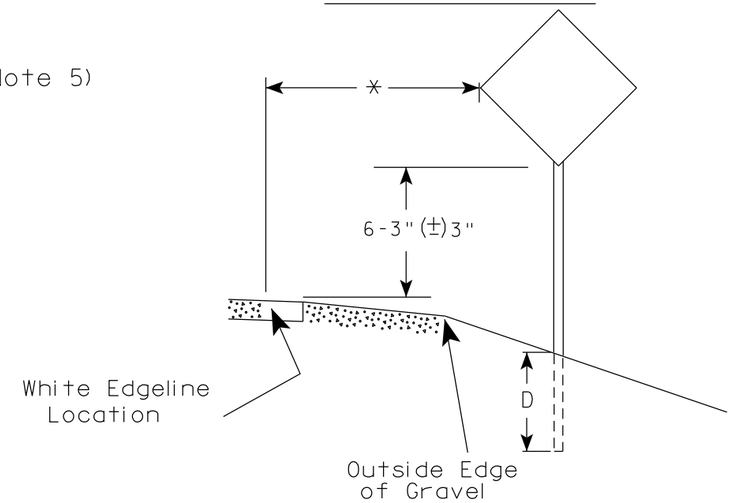

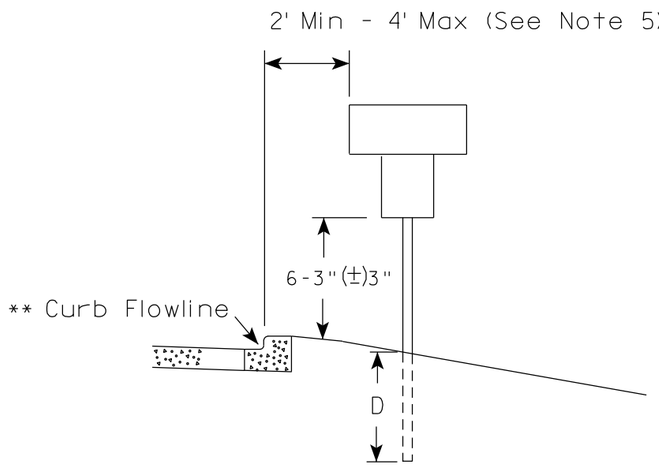

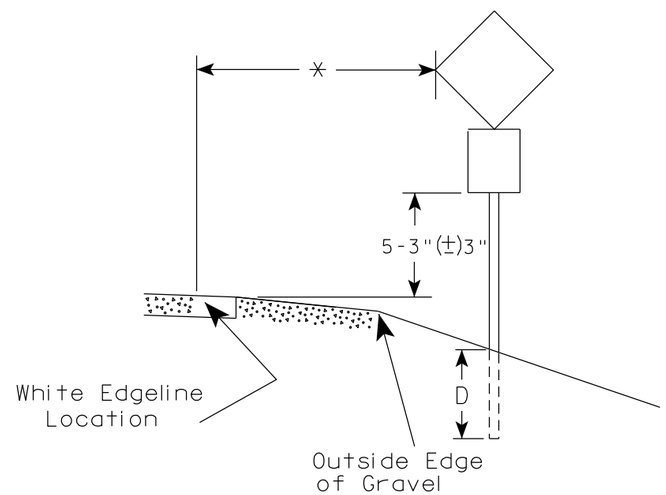

** The existence of curb and gutter does not in itself mandate the vertical clearance illustrated. That height is typically measured where there is sidewalk adjacent to the roadway or parking is permitted. In the absence of sidewalk vertical clearance is measured from the top of the curb. Offset of signs is measured from the flow line.

* 6 feet from edge of a paved shoulder or 12 feet from the edge of pavement (edge line location) or 2 feet from outside edge of gravel, whichever is greater unless directed by project engineer.

GENERAL NOTES

1. Signs wider than 4 feet or 20 sq.ft or larger, shall be mounted on multiple posts. Refer to plate A4-4.
2. If signs are mounted on or behind barrier wall, see A4-10 sign plate.
   The Double Arrow sign (W12-1D) shall be mounted at a height of 2'-3" (±) 3". The Chevron sign (W1-8), Roundabout Chevron panel (R6-4B), Enhanced Reference Markers, Clearance Markers (W5-52), Mile Markers (D10 series), In Road Object Markers (W5-54) & End of Road Markers (W5-56) shall be mounted at a height of 4'-3" (±) 3".
3. For expressways and freeways, mounting height is 7'- 3" (±) 3" or 6'-3" (±) 3" depending upon existence of a sub-sign.
4. Minimum mounting height for signs mounted on traffic signal poles is 5'- 3" (±) 3".
5. Offset distance shall be consistent with existing signs or consistent throughout length of project.
6. Folding signs shall be mounted at a height of 5'-3" (±) 3" or as directd by the Engineer.

POST EMBEDMENT DEPTH

Area of Sign Installation (Sq. Ft.)	D (Min)
20 or Less	4'
Greater than 20	5'

TYPICAL INSTALLATION OF PERMANENT TYPE II SIGNS ON SINGLE POSTS

WISCONSIN DEPT OF TRANSPORTATION

APPROVED Matthew R Rauch
for State Traffic Engineer

DATE 12/6/23 PLATE NO. A4-3.23

7 7

PROJECT NO:	HWY:	COUNTY:		SHEET NO: 54	E

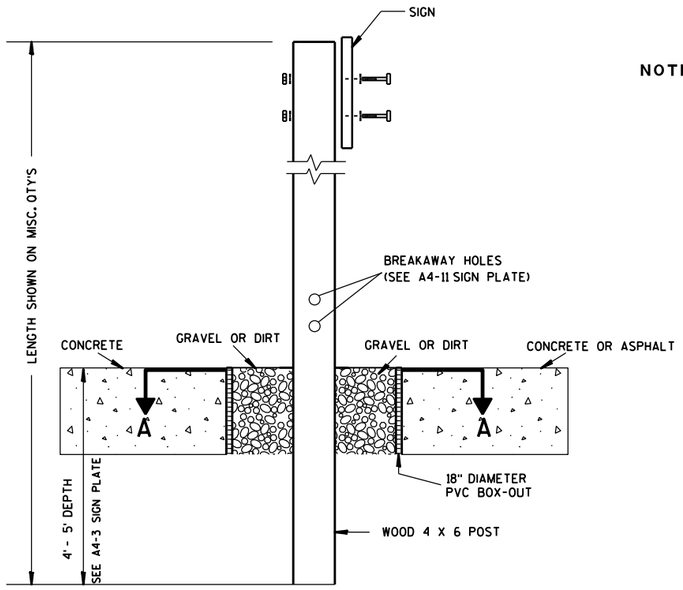

ELEVATION VIEW

DETAIL OF WOOD 4 X 6 SIGN POST IN BOX-OUT

NOTES:
1. ALL MATERIAL TO BE APPROVED BY ENGINEER PRIOR TO INSTALLATION
2. SEE SIGN PLATE A4-8 FOR SIGN HARDWARE REQUIREMENTS
3. 18 INCH X 18 INCH SQUARE BOX-OUTS MAY BE USED FOR INSTALLATIONS IN EXISTING CONCRETE OR ASPHALT LOCATIONS.

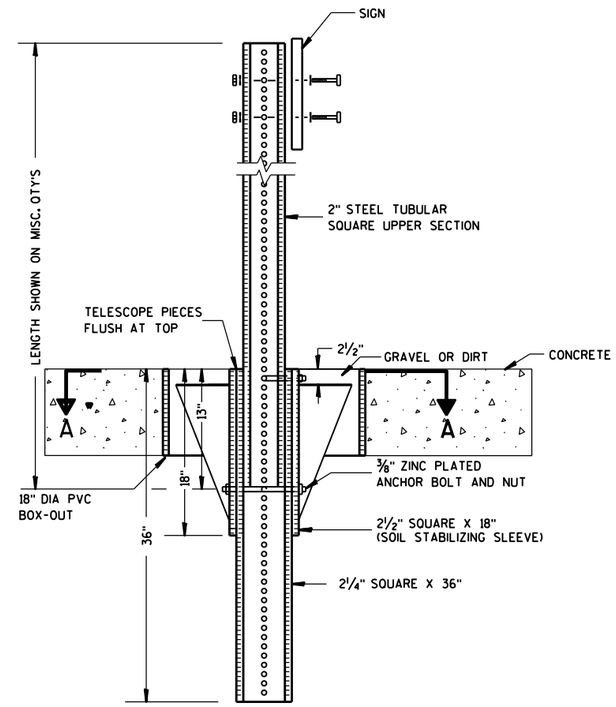

ELEVATION VIEW

DETAIL OF STEEL 2 X 2 SIGN POST IN BOX-OUT

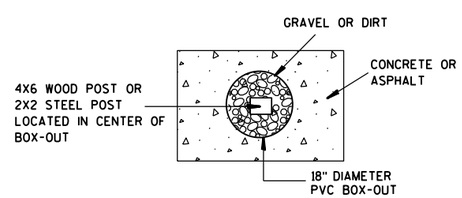

PLAN VIEW

FOR NEW CONCRETE/ASPHALT INSTALLATIONS

SIGN POST
BOX-OUTS
A4-3B

WISCONSIN DEPT OF TRANSPORTATION

APPROVED Matthew R Rauch
for State Traffic Engineer

DATE 1/27/14 PLATE NO. A4-3B.1

55

PROJECT NO:	HWY:	COUNTY:		SHEET NO:	E

URBAN AREA

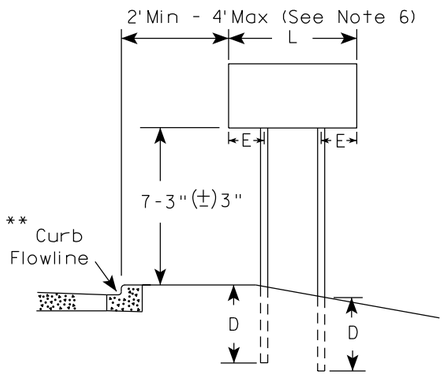

RURAL AREA (See Note 3)

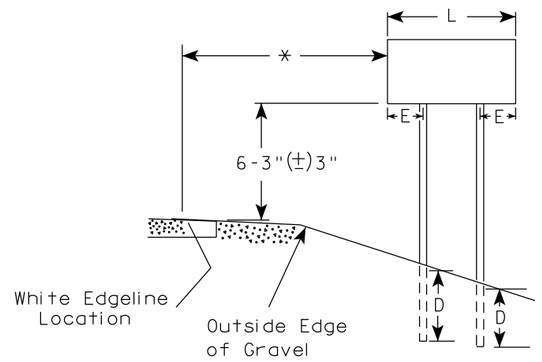

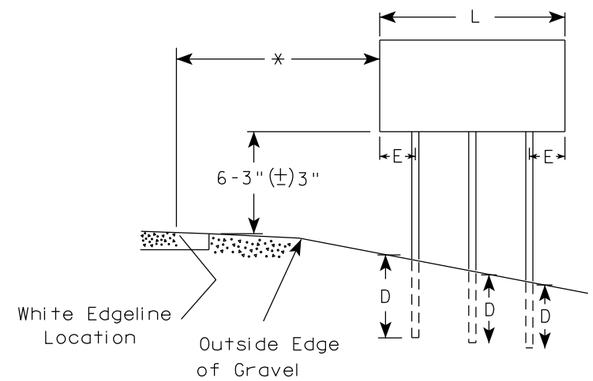

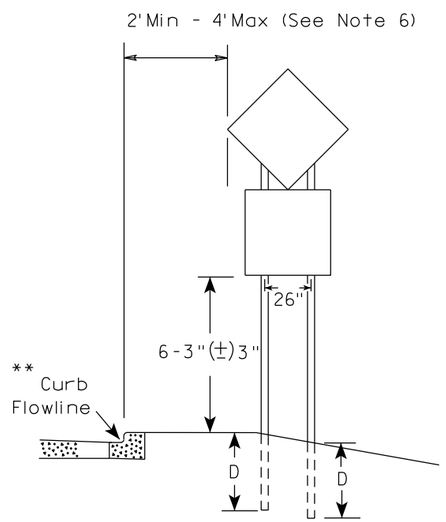

48" DIAMOND WARNING SIGN

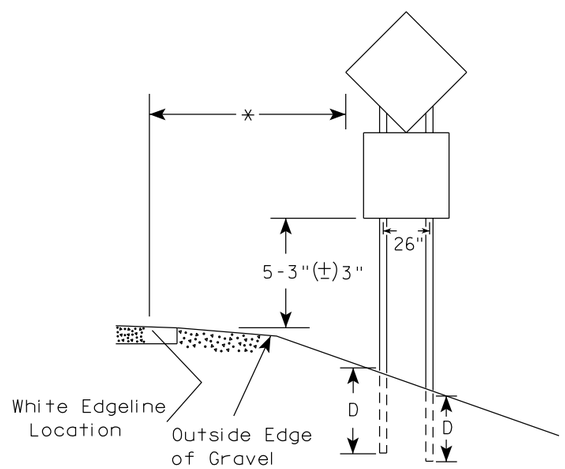

48" DIAMOND WARNING SIGN

GENERAL NOTES

1. For 3 or 4 post installations, individual post spacing shall be greater than 3'-6".
2. See tables below for required number of posts.
3. For expressways and freeways, mounting height is 7'-3" (±) 3" or 6'-3" (±) 3" depending upon existence of sub-sign.
4. The (±) tolerance for mounting height is 3 inches.
5. J-Assemblies are considered to be one sign for mounting height.
6. Offset distance shall be consistent with existing signs or consistent throughout length of project.
7. Folding signs shall be mounted at a height of 5'-3" (±) 3" or as directed by the engineer.
8. The Double Arrow sign (W12-1) shall be mounted at a height of 2'-3" (±) 3". The Chevron sign (W1-8), Roundabout Chevron panel (R6-4B), Clearance Markers (W5-52), Mile Markers (D10 series), In Road Object Markers (W5-54) & End of Road Markers (W5-56) shall be mounted at a height of 4"-3" (±) 3".

* 6 feet from edge of a paved shoulder or 12 feet from the edge of pavement (edge line location) or 2 feet from outside edge of gravel, whichever is greater unless directed by project engineer.

** The existence of curb and gutter does not in itself mandate the vertical clearance illustrated. That height is typically measured where there is sidewalk adjacent to the roadway or parking is permitted. In the absence of sidewalk vertical clearance is measured from the top of the curb. Offset of signs is measured from the flow line.

*** See A4-3 sign plate for signs 4' or less in width and less than 20 S.F. in area.

SIGN SHAPE OTHER THAN DIAMOND (TWO POSTS REQUIRED)	
L	E
*** Greater than 48" Less than 60"	12"
60" to 108"	L/5

SIGN SHAPE OTHER THAN DIAMOND (THREE POSTS REQUIRED)	
L	E
Greater than 108" to 144"	12"

POST EMBEDMENT DEPTH

Area of Sign Installation (Sq. Ft.)	D (Min)
20 or Less	4'
Greater than 20	5'

TYPICAL INSTALLATION OF TYPE II SIGNS ON MULTIPLE POSTS

WISCONSIN DEPT OF TRANSPORTATION

APPROVED Matthew R Rauch
for State Traffic Engineer

DATE 12/6/23 PLATE NO. A4-4.16

PROJECT NO:	HWY:	COUNTY:		SHEET NO: 56	E

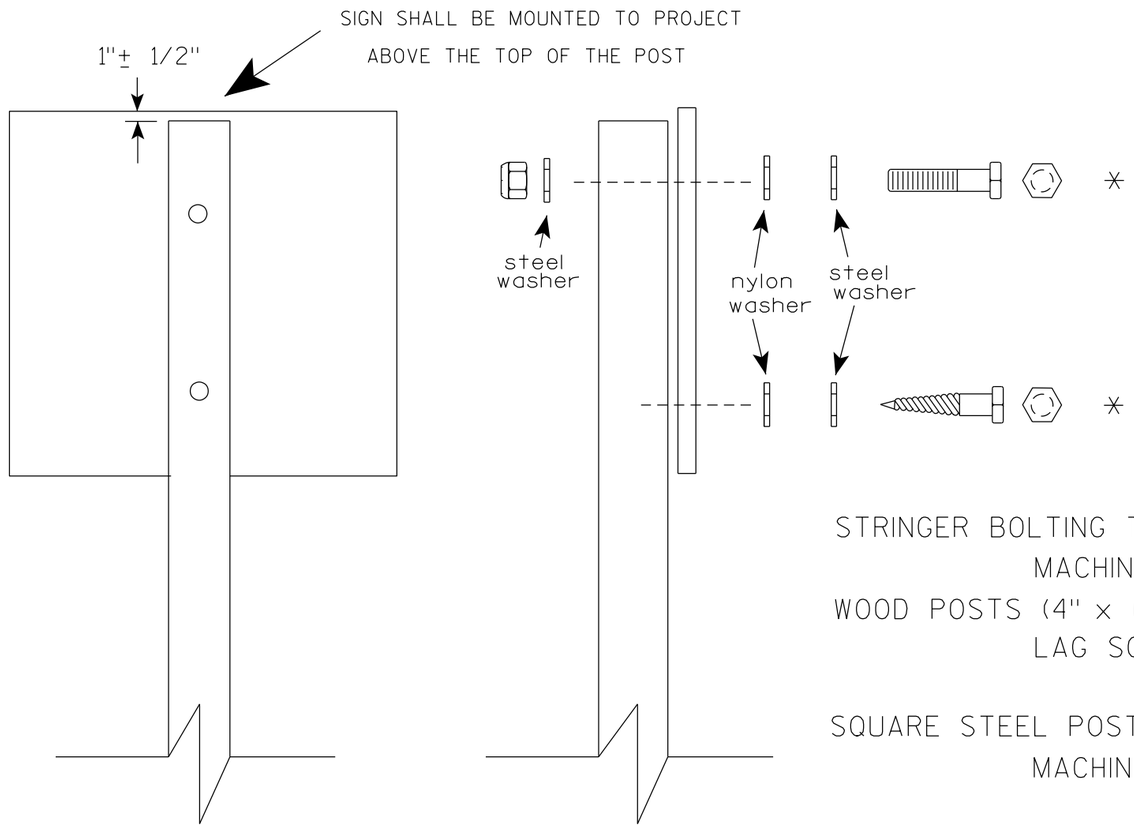

Nuts, bolts and lags used for mounting signs shall have hexagonal heads and shall be either :

a. Hot dip galvanized in accordance with ASTM Designation: A 153, Class D, or SC 3

b. Electro-galvanized in accordance with ASTM Designation : B 633, TYPE III, SC 3.

Threads on bolts and nuts shall be manufactured with sufficient allowance for the cadmium plate or galvanized coating to permit the nuts to run freely on the bolts.

STRINGER BOLTING TO ALUMINUM SIGNS (SEE SIGN PLATE A4-18)

MACHINE BOLTS - 5/16" X 1-3/4" Length w/ lock nuts

WOOD POSTS (4" x 6")

LAG SCREWS - 3/8" X 3" (NO STRINGERS ON BACK OF SIGN)
3/8" X 4" (STRINGERS ON BACK OF SIGN)

SQUARE STEEL POSTS (2" x 2")

MACHINE BOLTS - 3/8" X 3-1/4" Length w/ nuts (NO STRINGER ON BACK OF SIGN)
3/8" X 5" Length w/ nuts (STRINGERS ON BACK OF SIGN)

RIVETS - 9/32 " (6605-9-6) BULB-TITE, TRI-FOLD, ALUMINUM BODY/MANDREL
O.D. FLANGE .720-.765 INCH, GRIP RANGE .042-.375 INCH

WASHERS (ALL POSTS) -

1-1/4" O.D. X 3/8" I.D. X 1/16" STEEL
1-1/4" O.D. X 3/8" I.D. X .080 NYLON

* Two different fastening systems are shown for illustration purposes. On any individual sign, either one or the other system shall be used. Actual number of fasteners per sign varies with the sign area, but normally there are two. For a single post installation, all signs greater than 9 sq. ft. require the use of 3 fasteners.

ATTACHMENT OF SIGNS TO POSTS

WISCONSIN DEPT OF TRANSPORTATION

APPROVED Matthew R Rauch
for State Traffic Engineer

DATE 4/1/2020 PLATE NO. A4-8.9

TELESCOPIC TUBING ANCHORS
TWO PIECE SYSTEM

2 1/4" SQUARE
12 GAUGE
PERFORATED
GALVANIZED FINISH

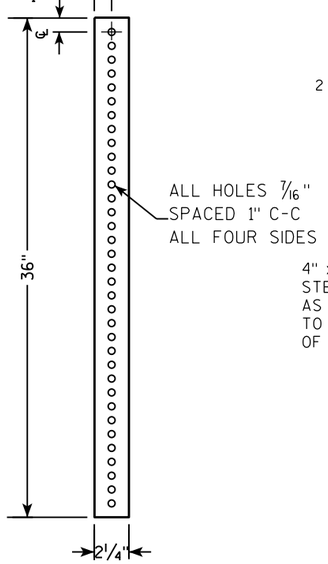

2 1/2" SQUARE
12 GAUGE
OMNI-DIRECTIONAL
PERFORATED
SOIL STABILIZING SLEEVE
GALVANIZED FINISH

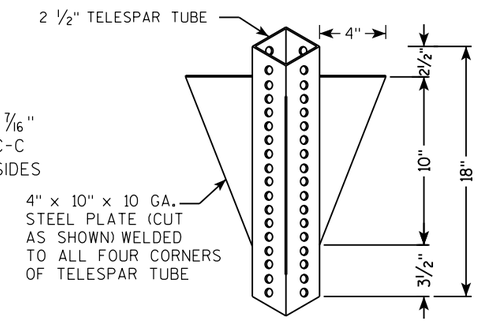

DETAIL OF TUBULAR STEEL SIGN POST
(IN POURED CONCRETE OR ASPHALT)

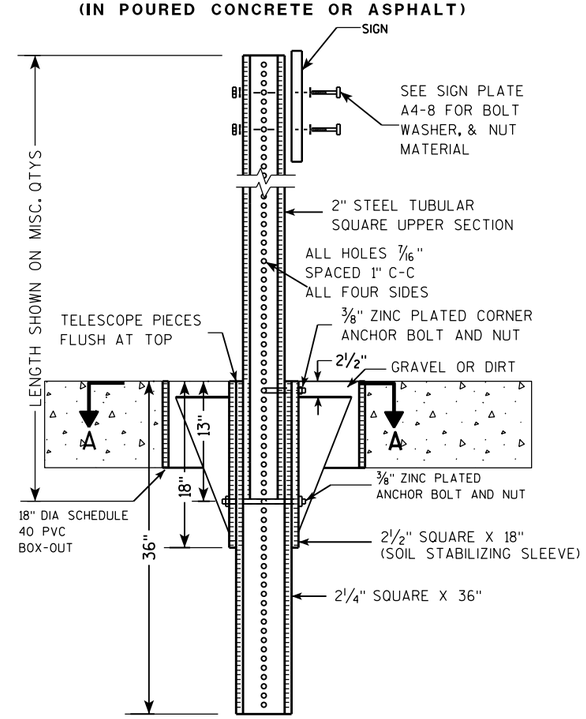

DETAIL OF TUBULAR STEEL SIGN POST
(IN LOCATIONS OTHER THAN POURED CONCRETE OR ASPHALT)

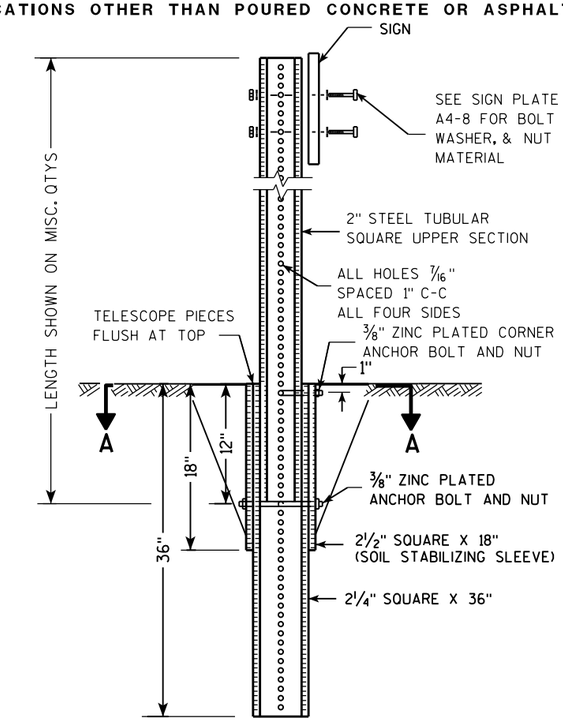

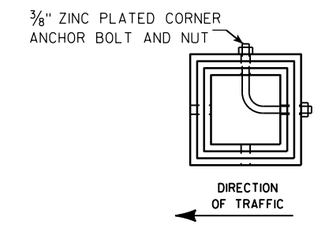

SECTION A-A

Area of Sign Installation (Sq. Ft.)	Number of Required Posts
9 or less	1
Greater than 9 less than or equal to 18	2
Greater than 18 less than or equal to 27	3

Signs wider than 3 feet or larger than 9 sq. ft shall be mounted on multiple posts (see above table).

TUBULAR STEEL
SIGN POST
A4-9

WISCONSIN DEPT OF TRANSPORTATION

APPROVED Matthew R Rauch
for State Traffic Engineer

DATE 2/05/15 PLATE A4-9.9

7 7

PROJECT NO:	HWY:	COUNTY:		SHEET NO:	E

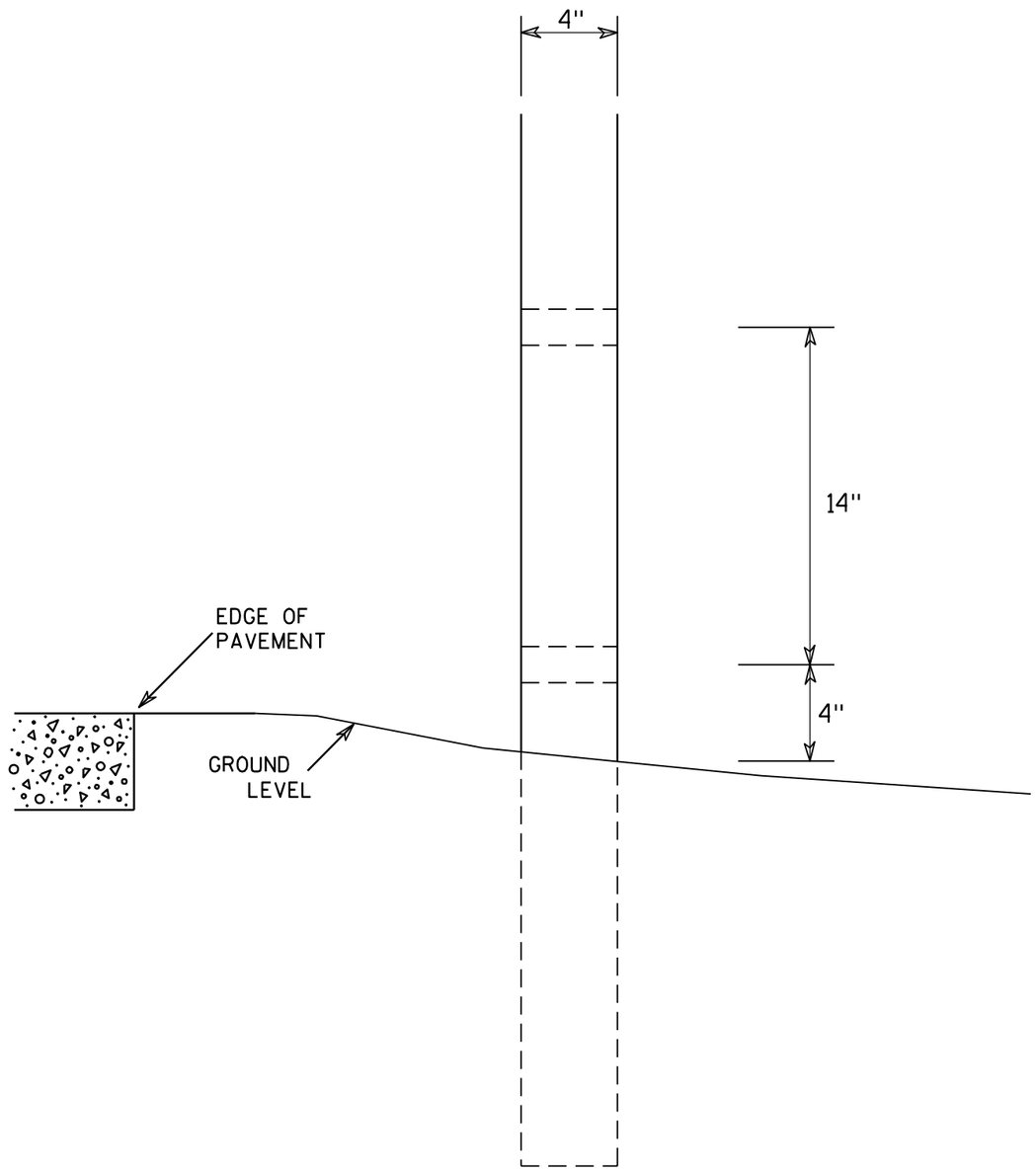

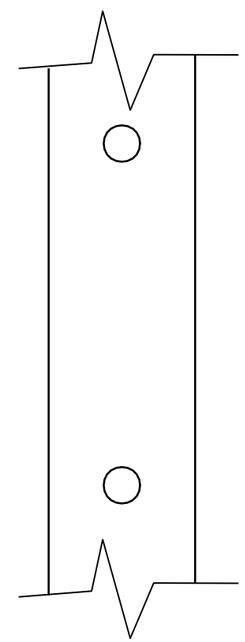

SIDE VIEW

GENERAL NOTES

1. All 4 x 6 Wood Posts shall be modified by having two 1½" diameter holes drilled perpendicular to the roadway centerline.

7

7

4 X 6 WOOD POST MODIFICATIONS

WISCONSIN DEPT OF TRANSPORTATION

APPROVED Chester J Spang for State Traffic Engineer

DATE 3/27/97 PLATE NO. A4-11.2

PROJECT NO:	HWY:	COUNTY:		SHEET NO: 59	E

BANDING

SINGLE SIGN

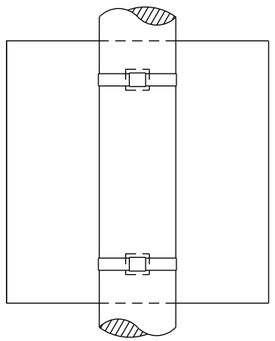

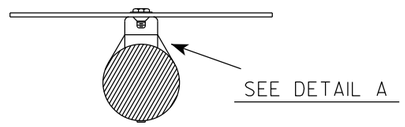

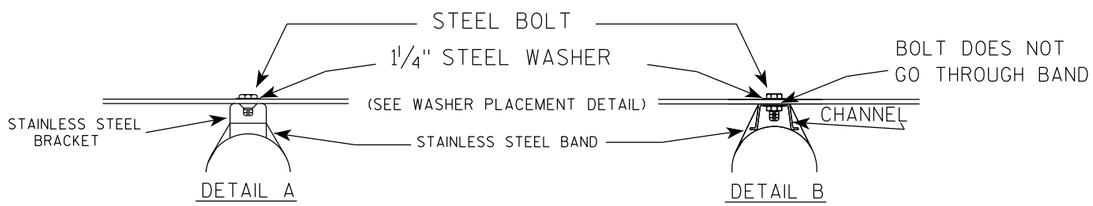

WASHER PLACEMENT

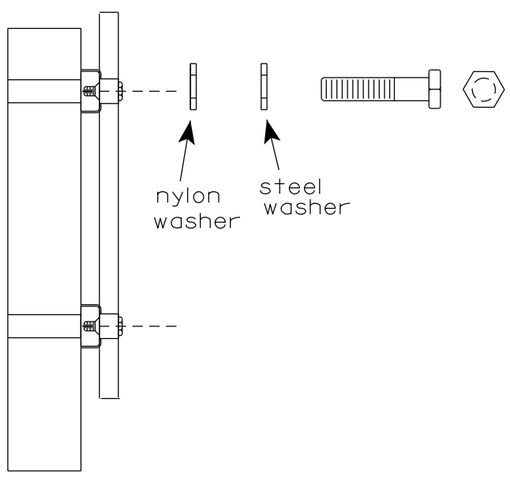

WASHERS (ALL POSTS) -
1-1/4" O.D. X 3/8" I.D. X 1/16" STEEL
1-1/4" O.D. X 3/8" I.D. X .080 NYLON
FOR ALL TYPE H SIGNS

GENERAL NOTES

1. Any sign over 3 feet in width shall use the V-Block banding method. See A5-10 standard plate.
2. Signs 3 feet or greater in height shall have three bracket bands installed. Signs less than 3 feet in height shall have two bracket bands installed.
3. Banding and assembly bracket shall be stainless steel. All bands shall be ¾" in width and 0.025" thickness.
4. ALL SIGN MOUNTING BOLTS AND WASHERS SHALL BE EITHER:
   a. Hot dip or mechanically galvanized in accordance with ASTM Designation: A 153, Class D
   b. Electro-galvanized in accordance with ASTM designation: B 633, Type III, SC 3

"J" ASSEMBLY

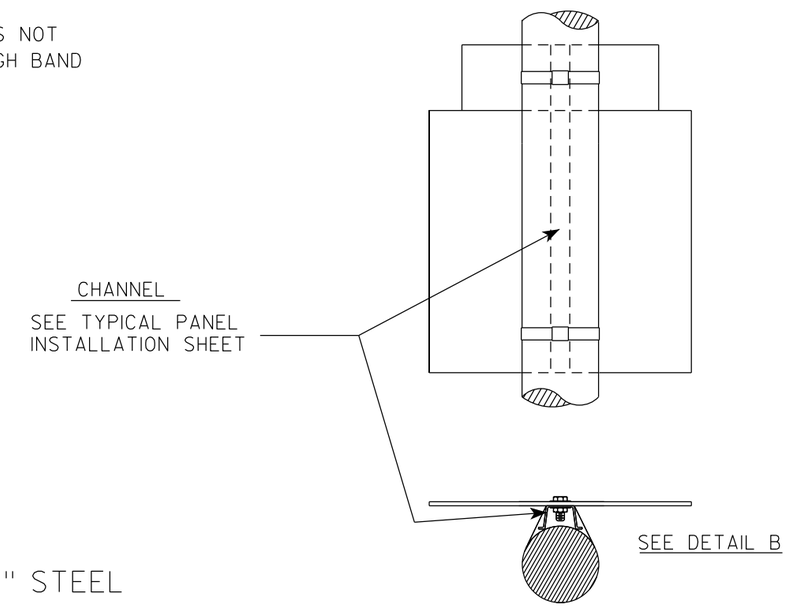

STANDARD SIGN
SIGN BANDING DETAILS

WISCONSIN DEPT OF TRANSPORTATION

APPROVED Matthew R Rauch for State Traffic Engineer

DATE 6/10/19 PLATE NO. A5-9.4

PROJECT NO:	HWY:	COUNTY:		SHEET NO: 60	E

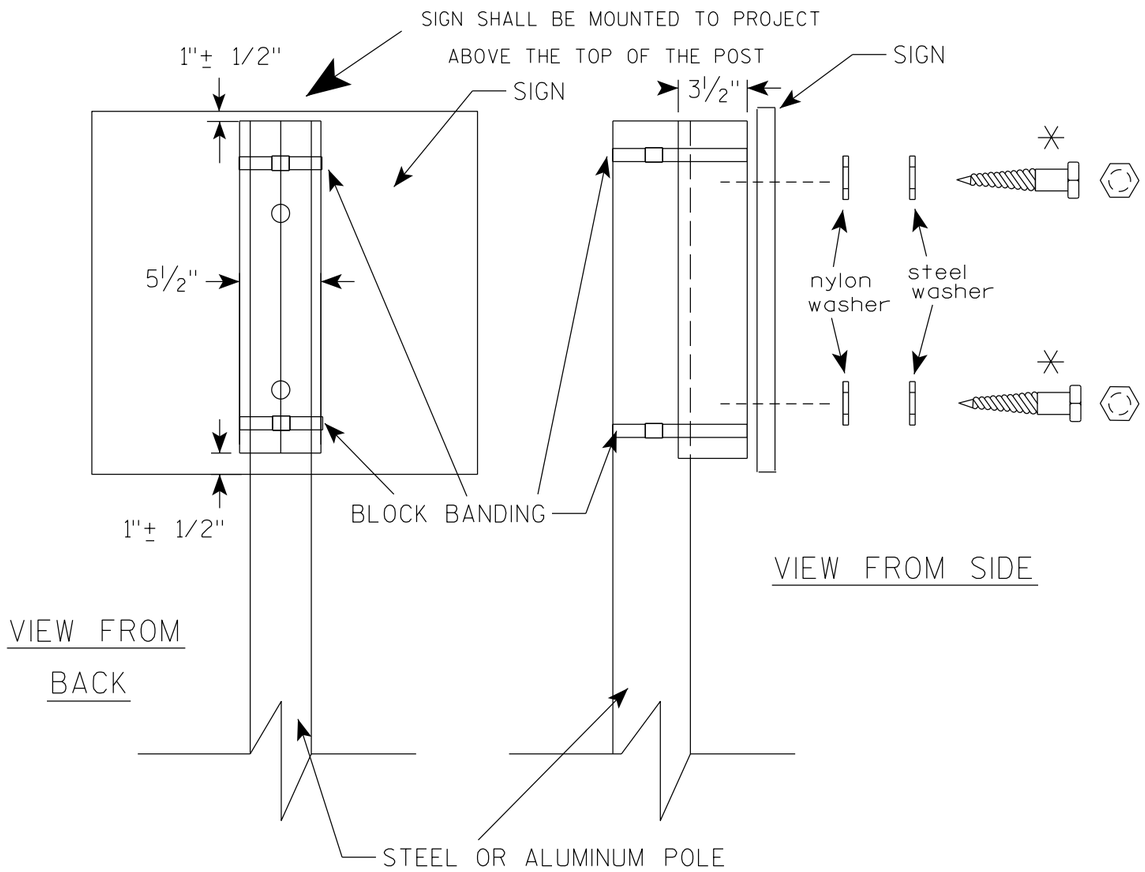

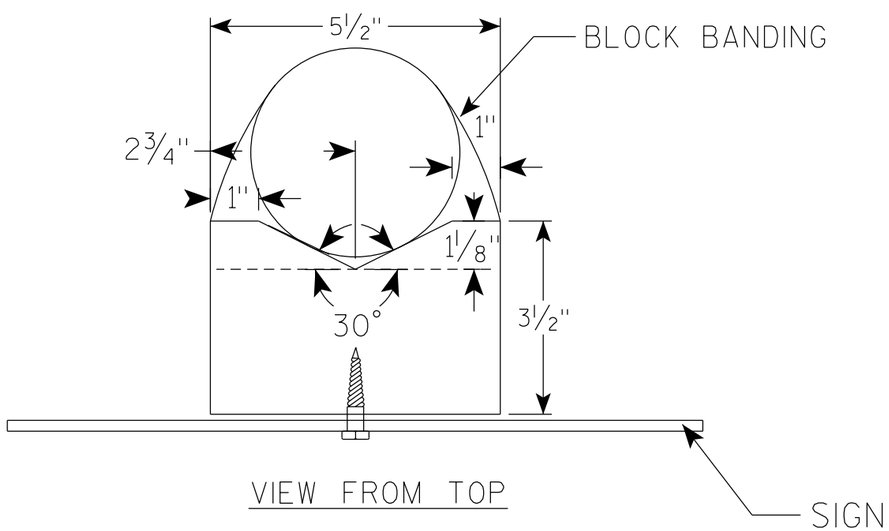

GENERAL NOTES

1. WOOD 4"X6" POST MATERIAL SHALL CONFORM TO 507.2.2 OF THE WisDOT STANDARD SPECIFICATIONS
2. BLOCK BANDING AND CLIPS SHALL BE STAINLESS STEEL, 3/4" WIDTH AND 0.025" THICKNESS
3. SIGNS 3' OR GREATER IN HEIGHT SHALL UTILIZE 3 BLOCK BANDS. SIGNS UNDER 3' IN HEIGHT SHALL UTILIZE 2 BLOCK BANDS
4. ACTUAL NUMBER OF FASTENERS PER SIGN VARIES WITH THE SIGN AREA, BUT NORNALLY THERE ARE TWO. FOR SIGNS GREATER THAN 9 S.F. 3 FASTENERS SHALL BE USED.
5. ALL SIGN MOUNTING BOLTS AND WASHERS SHALL BE EITHER:
   a. Hot dip or mechanically galvanized in accordance with ASTM Designation: A 153, Class D
   b. Electro-galvanized in accordance with ASTM Designation : B 633, TYPE III, SC 3
6. ALL BOLTS SHALL HAVE HEXAGONAL HEADS.
7. STEEL WASHERS SHALL BE 1 1/4" O.D. X 3/8" I.D. X 1/16"
8. NYLON WASHERS SHALL BE 1 1/4" O.D. X 3/8" I.D. X .080 FOR TYPE H OR TYPE F FACE SIGN

✳ LAG BOLTS SHALL BE 3/8" X 2 1/2"

7

7

BLOCK BANDING DETAIL
(V-BLOCK OPTION)

WISCONSIN DEPT OF TRANSPORTATION

APPROVED Matthew R Rauch
for State Traffic Engineer

DATE 4/19/2022 PLATE NO. A5-10.3

PROJECT NO:				SHEET NO: 61	E

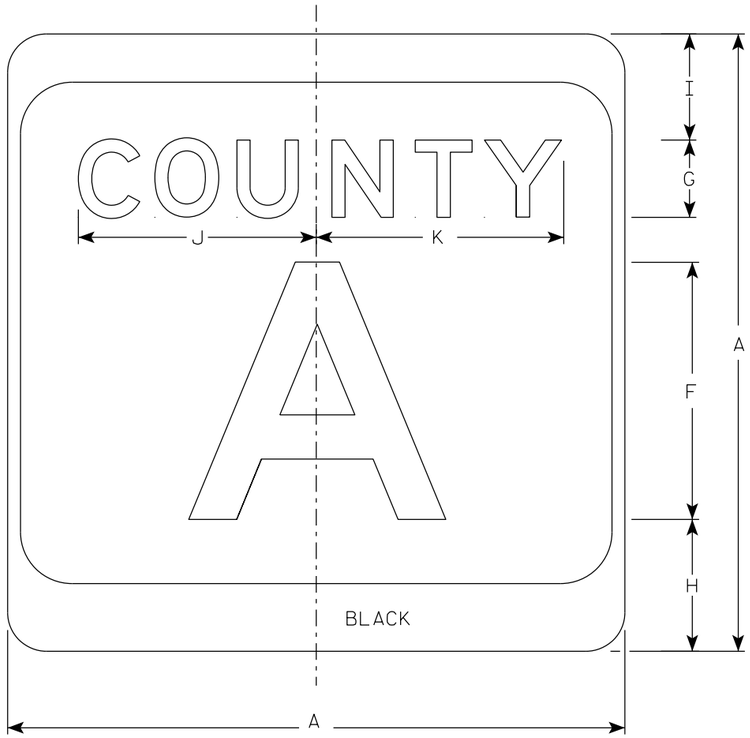

M1-5A

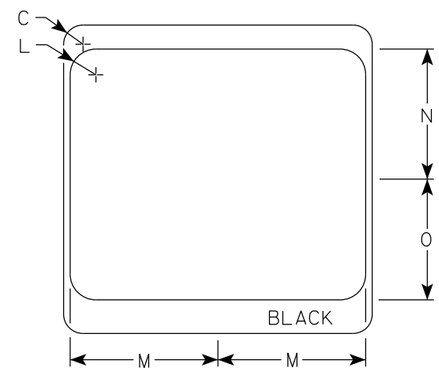

NOTES

1. Sign is Type II - Type H Reflective
2. Color:
   Background - White & Black
   Message - Black
3. Message Series - see Note 4
4. Message Series E for 1 letter.
   Message Series D for 2 letters unless message is too big then Series C.
   Message Series C for 3 letters unless message is too big then Series B.
5. Substitute appropriate letters & optically center to achieve proper balance.

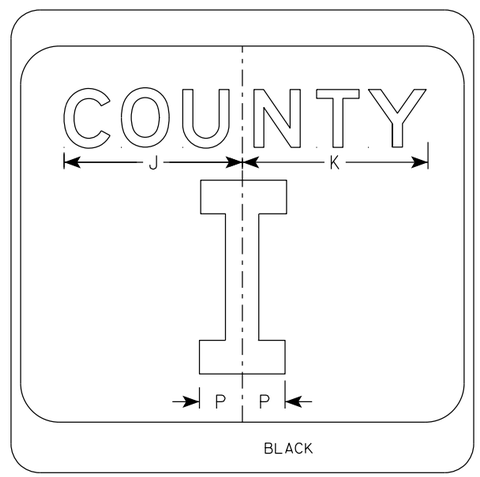

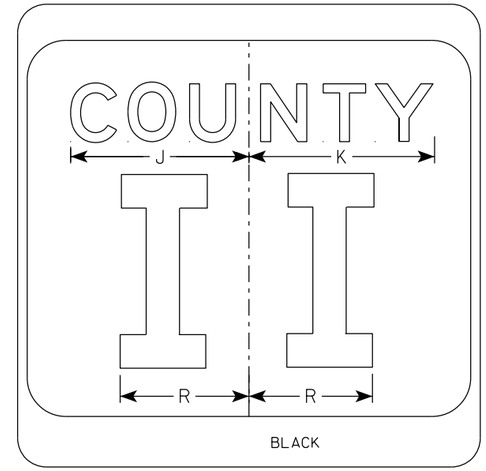

SIZE	A	B	C	D	E	F	G	H	I	J	K	L	M	N	O	P	Q	R	S	T	U	V	W	X	Y	Z	Area sq. ft.
1																											
2	24		1 1/2			10	3	5 1/8	4 1/8	9 1/4	9 5/8	2	11 1/2	10 1/8	9 3/8	2 1/4		6 5/8									4.0
2M	24		1 1/2			10	3	5 1/8	4 1/8	9 1/4	9 5/8	2	11 1/2	10 1/8	9 3/8	2 1/4		6 5/8									4.0
3	36		2 1/4			16	4	7 5/8	5 5/8	12 1/4	12 7/8	3	17 1/8	15 1/4	14	3 3/8		10									9.0
4	36		2 1/4			16	4	7 5/8	5 5/8	12 1/4	12 7/8	3	17 1/8	15 1/4	14	3 3/8		10									9.0
5	36		2 1/4			16	4	7 5/8	5 5/8	12 1/4	12 7/8	3	17 1/8	15 1/4	14	3 3/8		10									9.0

CTH MARKER
M1-5A FOR ASSEMBLIES

WISCONSIN DEPT OF TRANSPORTATION

APPROVED Matthew R Rauch
for State Traffic Engineer

DATE 11/8/2022 PLATE NO. M1-5A.9

PROJECT NO: | HWY: | COUNTY: | SHEET NO: E

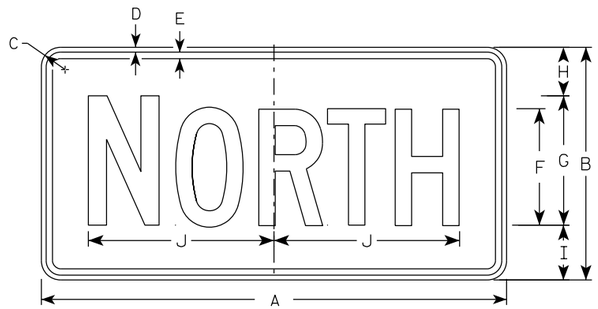

M3-1
MM3-1
MP3-1

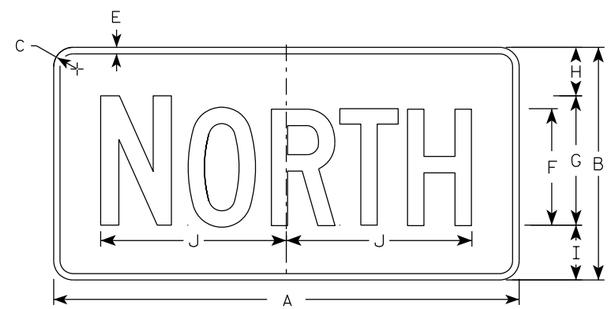

MB3-1
MK3-1
MN3-1

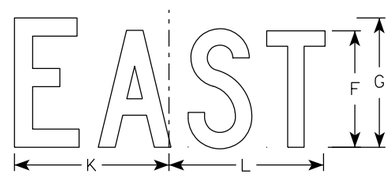

M3-2
MM3-2
MP3-2

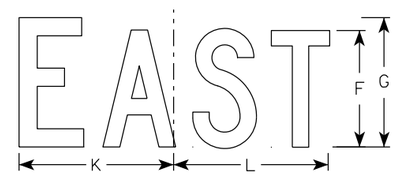

MB3-2
MK3-2
MN3-2

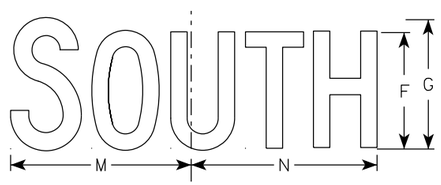

M3-3
MM3-3
MP3-3

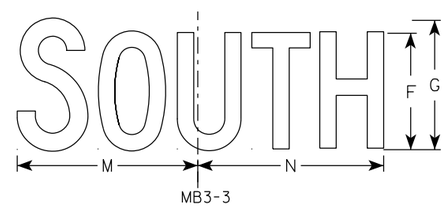

MB3-3
MK3-3
MN3-3

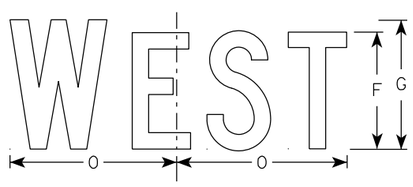

M3-4
MM3-4
MP3-4

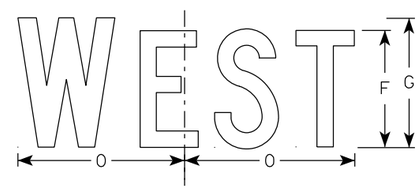

MB3-4
MK3-4
MN3-4

NOTES

1. All Signs Type II - Type H Reflective
2. Color:
   Background - See note 5
   Message - See note 5
3. Message Series - C
4. Corners may be square or rounded when base material is plywood but borders shall be rounded as shown. When base material is metal, the corners and borders shall be rounded.
5. M3-1 thru M3-4 Background - White
   Message - Black
   MB3-1 thru MB3-4 Background - Blue
   Message - White
   MK3-1 thru MK3-4 Background - Green
   Message - White
   MM3-1 thru MM3-4 Background - White
   Message - Green
   MN3-1 thru MN3-4 Background - Brown
   Message - White
   MP3-1 thru MP3-4 Background - White
   Message - Blue
6. Note the first letter of each direction is larger than the remainder of the message.

SIZE	A	B	C	D	E	F	G	H	I	J	K	L	M	N	O	P	Q	R	S	T	U	V	W	X	Y	Z	Area sq. ft.
1																											
2S	24	12	1 1/2	3/8	3/8	6	7	2 1/4	2 3/4	10 1/4	7 7/8	8 3/8	10 1/4	9 3/4	8 3/4												2.00
2M	24	12	1 1/2	3/8	3/8	6	7	2 1/4	2 3/4	10 1/4	7 7/8	8 3/8	10 1/4	9 3/4	8 3/4												2.00
3	36	18	1 1/2	3/8	1/2	9	10	3 3/4	4 1/4	14 3/8	12	12 1/8	14	14 1/8	13												4.5
4	36	18	1 1/2	3/8	1/2	9	10	3 3/4	4 1/4	14 3/8	12	12 1/8	14	14 1/8	13												4.5
5	36	18	1 1/2	3/8	1/2	9	10	3 3/4	4 1/4	14 3/8	12	12 1/8	14	14 1/8	13												4.5

STANDARD SIGNS
M3-1 THRU M3-4
SERIES

WISCONSIN DEPT OF TRANSPORTATION

APPROVED Matthew R Rauch
For State Traffic Engineer

DATE 2/8/2023 PLATE NO. M3-1.15

PROJECT NO: | HWY: | COUNTY: | SHEET NO: 63 | E

NOTES

1. Sign is Type II - Type F Reflective
2. Color:
   Background - Orange
   Message - Black
3. Message Series - B
4. Corners may be square or rounded when base material is plywood but borders shall be rounded as shown. When base material is metal, the corners and borders shall be rounded.

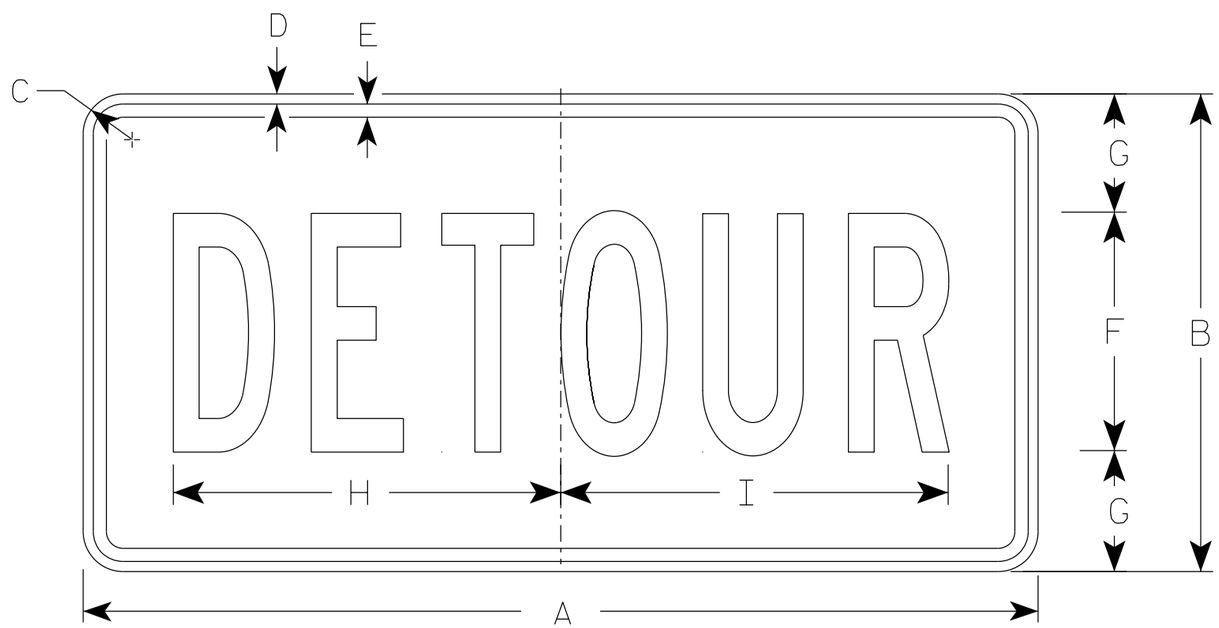

M4-8

SIZE	A	B	C	D	E	F	G	H	I	J	K	L	M	N	O	P	Q	R	S	T	U	V	W	X	Y	Z	Area sq. ft.
1																											
2	24	12	1 1/2	3/8	3/8	6	3	10	10 1/4																		2.0
2M	24	12	1 1/2	3/8	3/8	6	3	10	10 1/4																		2.0
3	36	18	1 1/2	3/8	1/2	9	4 1/2	14 5/8	14 1/2																		4.5
4	36	18	1 1/2	3/8	1/2	9	4 1/2	14 5/8	14 1/2																		4.5
5	36	18	1 1/2	3/8	1/2	9	4 1/2	14 5/8	14 1/2																		4.5

STANDARD SIGN
M4-8

WISCONSIN DEPT OF TRANSPORTATION

APPROVED Matthew R Rauch
for State Traffic Engineer

DATE 2/9/2023 PLATE NO. M4-8.4

PROJECT NO:	HWY:	COUNTY:		SHEET NO: 64	E

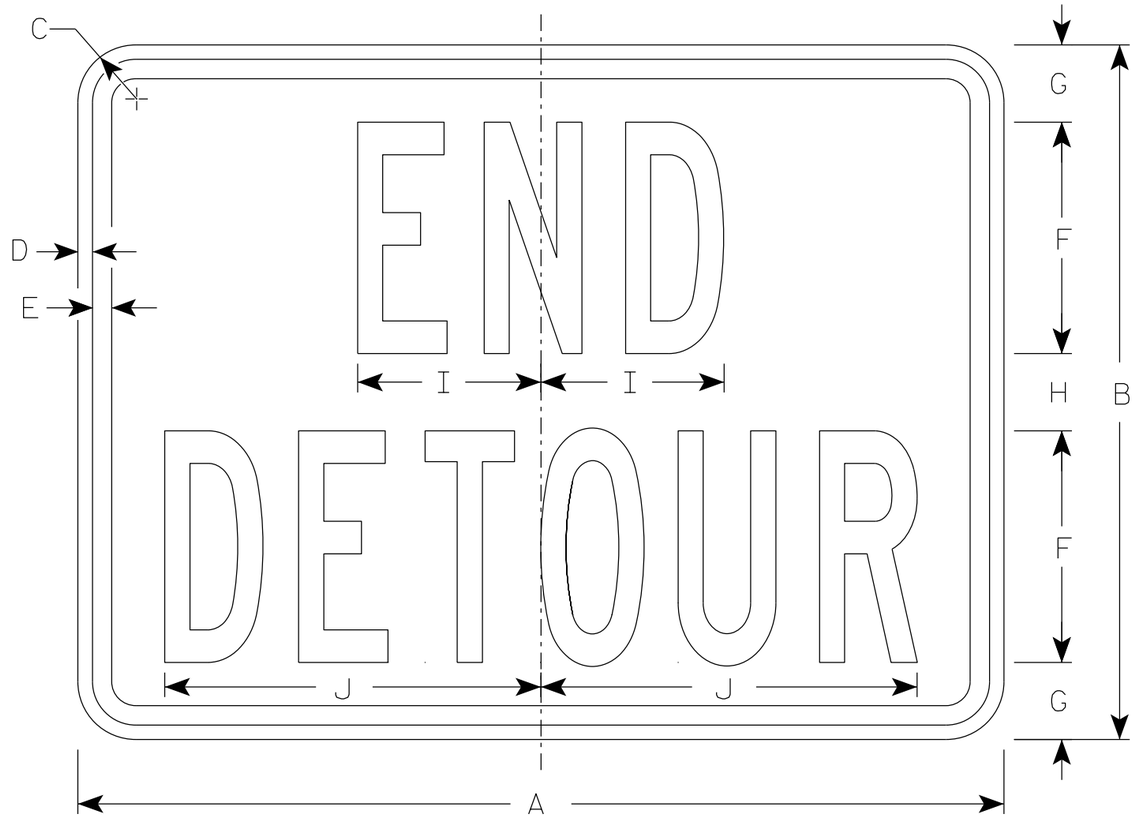

M4-8A

NOTES

1. Sign is Type II - Type F Reflective
2. Color:
   Background - Orange
   Message - Black
3. Message Series - B
4. Corners may be square or rounded when base material is plywood but borders shall be rounded as shown. When base material is metal, the corners and borders shall be rounded.

SIZE	A	B	C	D	E	F	G	H	I	J	K	L	M	N	O	P	Q	R	S	T	U	V	W	X	Y	Z	Area sq. ft.
1																											
2	24	18	1 1/2	3/8	1/2	6	2	2	4 3/4	9 3/4																	3.0
2M	24	18	1 1/2	3/8	1/2	6	2	2	4 3/4	9 3/4																	3.0
3	30	24	1 1/2	3/8	1/2	8	2 1/2	3	6 3/4	13																	5.0
4	30	24	1 1/2	3/8	1/2	8	2 1/2	3	6 3/4	13																	5.0
5	30	24	1 1/2	3/8	1/2	8	2 1/2	3	6 3/4	13																	5.0

STANDARD SIGN
M4-8A

WISCONSIN DEPT OF TRANSPORTATION

APPROVED Matthew R Rauch
for State Traffic Engineer

DATE 2/9/2023 PLATE NO. M4-8A.4

PROJECT NO: | HWY: | COUNTY: | SHEET NO: 65 | E

NOTES

1. Sign is Type II-Type F Reflective
2. Color:
   Background - Orange
   Message - Black
3. Message Series - D

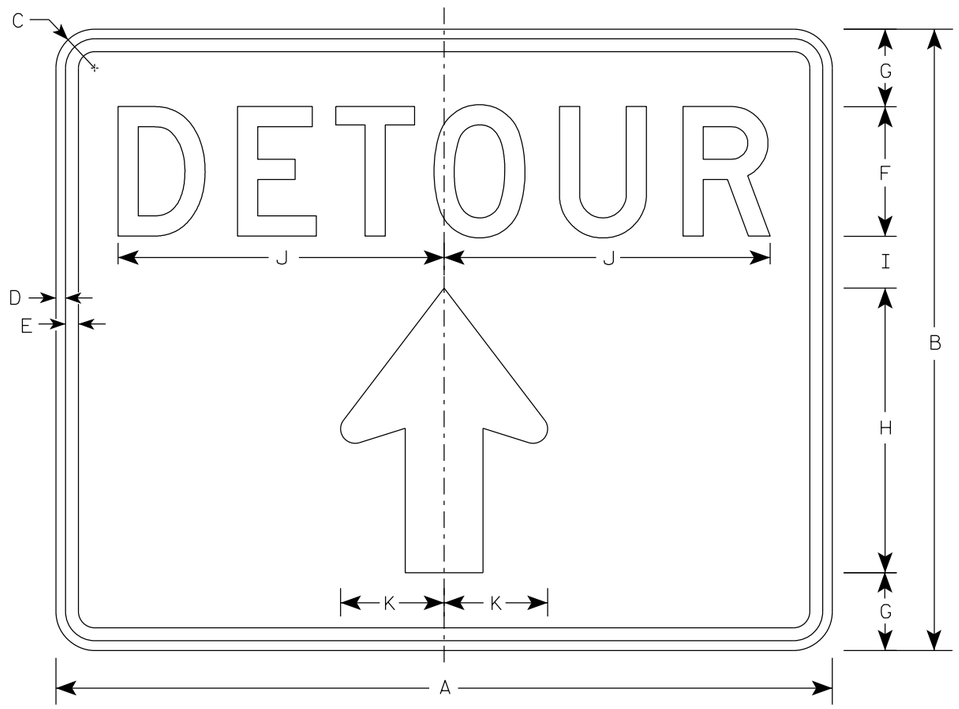

M4-9RA

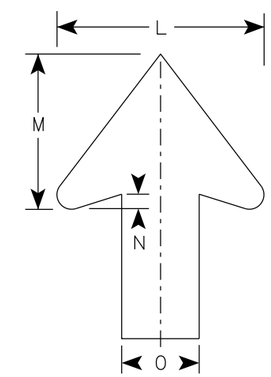

Arrow Detail

SIZE	A	B	C	D	E	F	G	H	I	J	K	L	M	N	O	P	Q	R	S	T	U	V	W	X	Y	Z	Area sq. ft.
1																											
2S	30	24	1 1/2	3/8	1/2	5	3	11	2	12 5/8	4	8	6	1/2	3												5.00
2M	30	24	1 1/2	3/8	1/2	5	3	11	2	12 5/8	4	8	6	1/2	3												5.00
3																											
4																											
5																											

STANDARD SIGN
M4-9RA

WISCONSIN DEPT OF TRANSPORTATION

APPROVED Matthew R Rauch
for State Traffic Engineer

DATE 2/9/2023 PLATE NO. M4-9RA.3

PROJECT NO:	HWY:	COUNTY:		SHEET NO: 66	E

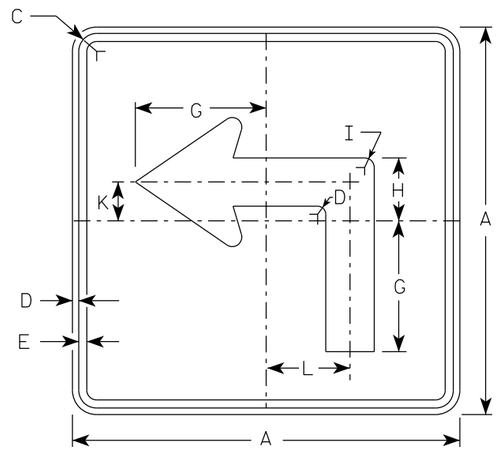

M5-1L
MM5-1L
MO5-1L
MP5-1L

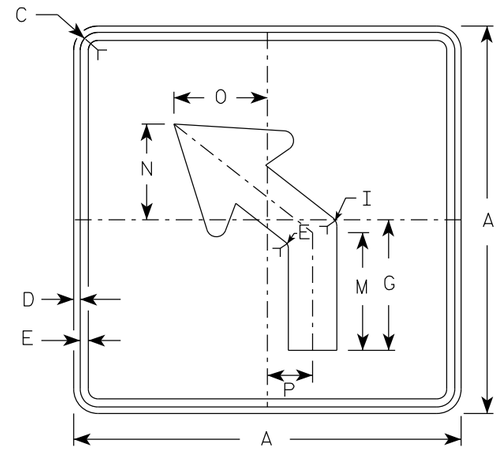

M5-2L
MM5-2L
MO5-2L
MP5-2L

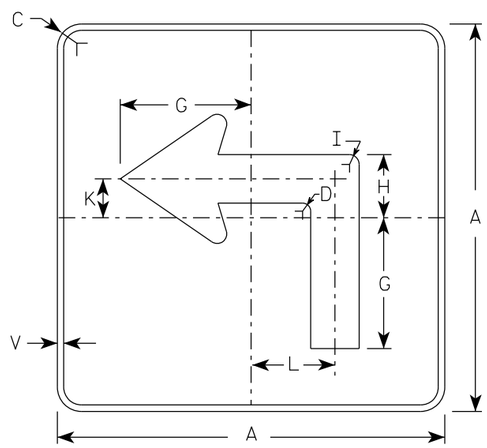

MB5-1L
MK5-1L
MN5-1L
MR5-1L

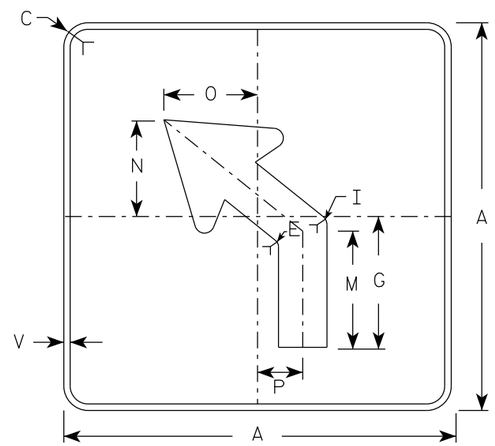

MB5-2L
MK5-2L
MN5-2L
MR5-2L

NOTES

1. Signs are Type II - Type H reflective except as shown
2. Color:
   Background - See note 4
   Message - See note 4
3. Corners may be square or rounded when base material is plywood but borders shall be rounded as shown. When base material is metal, the corners and borders shall be rounded.
4. M5-1 and M5-2 Background - White
   Message - Black
   MB5-1 and MB5-2 Background - Blue
   Message - White
   MK5-1 and MK5-2 Background - Green
   Message - White
   MM5-1 and MM5-2 Background - White
   Message - Green
   MN5-1 and MN5-2 Background - Brown
   Message - White
   MO5-1 and MO5-2 Background - Orange - Type F Reflective
   Message - Black
   MP5-1 and MP5-2 Background - White
   Message - Blue
   MR5-1 and MR5-2 Background - Brown
   Message - Yellow
5. M5-1R same as M5-1L except arrow points right.
6. M5-2R same as M5-2L except arrow tilts right.

ARROW DETAIL

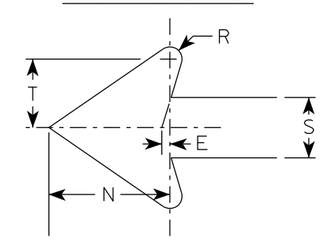

SIZE	A	B	C	D	E	F	G	H	I	J	K	L	M	N	O	P	Q	R	S	T	U	V	W	X	Y	Z	Area sq. ft.
1																											
2S	21		1 1/2	3/8	3/8		7	3 3/8	5/8		2 1/8	4 1/2	6 3/8	5 1/4	5	2 1/2		1/2	2 5/8	3		1/2					3.06
2M	21		1 1/2	3/8	3/8		7	3 3/8	5/8		2 1/8	4 1/2	6 3/8	5 1/4	5	2 1/2		1/2	2 5/8	3		1/2					3.06
3	30		1 7/8	1/2	5/8		10 1/8	4 7/8	7/8		3	6 1/2	9 1/8	7 1/2	7 1/4	3 1/2		3/4	3 3/4	4 1/4		1/2					6.25
4	30		1 7/8	1/2	5/8		10 1/8	4 7/8	7/8		3	6 1/2	9 1/8	7 1/2	7 1/4	3 1/2		3/4	3 3/4	4 1/4		1/2					6.25
5	30		1 7/8	1/2	5/8		10 1/8	4 7/8	7/8		3	6 1/2	9 1/8	7 1/2	7 1/4	3 1/2		3/4	3 3/4	4 1/4		1/2					6.25

STANDARD SIGN
M5-1 & M5-2

WISCONSIN DEPT OF TRANSPORTATION

APPROVED Matthew R Rauch
for State Traffic Engineer

DATE 2/13/2023 PLATE NO. M5-1.15

PROJECT NO: | HWY: | COUNTY: | SHEET NO: 67 | E

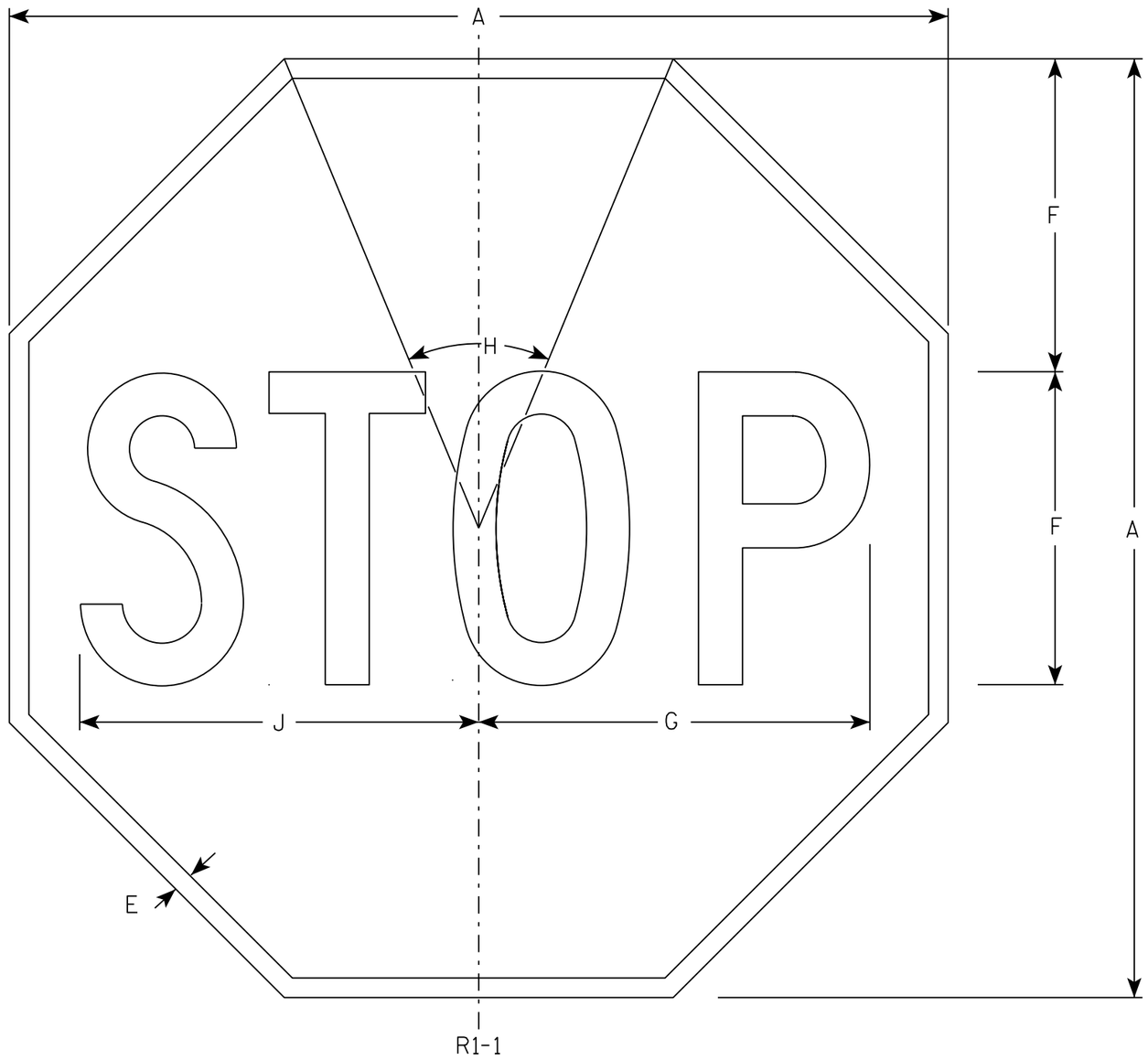

NOTES

1. Sign is Type II - Type H Reflective - reference WIS DOT Standard Specification for HIGHWAY and STRUCTURE CONSTRUCTION latest edition.
2. Color:
   Background - Red
   Message - White
3. Message Series - C

SIZE	A	B	C	D	E	F	G	H	I	J	K	L	M	N	O	P	Q	R	S	T	U	V	W	X	Y	Z	Area sq. ft.
1	30				5/8	10	12 1/2	45°		12 3/4																	5.18
2S	30				5/8	10	12 1/2	45°		12 3/4																	5.18
2M	36				3/4	12	15	45°		15 3/8																	7.46
3	36				3/4	12	15	45°		15 3/8																	7.46
4	48				1	16	20	45°		20 1/2																	13.25
5	48				1	16	20	45°		20 1/2																	13.25
6	18				3/8	6	7 3/4	45°		7 3/4																	1.86
7	12				1/4	4	5	45°		5 1/8																	0.78

STANDARD SIGN
R1-1

WISCONSIN DEPT OF TRANSPORTATION

APPROVED Matthew R Rauch
for State Traffic Engineer

DATE 11/12/15 PLATE NO. R1-1.13

PROJECT NO: | HWY: | COUNTY: | SHEET NO: 68 | E

NOTES

1. Sign is Type II - Type H Reflective
2. Color:
   Background - Red
   Message - White
3. Message Series - C
4. For 30"x30" R1-1 use 18"x6" R1-3P sign
   For 36"x36" R1-1 use 24"x9" R1-3P sign
   For 48"x48" R1-1 use 30"x12" R1-3P sign

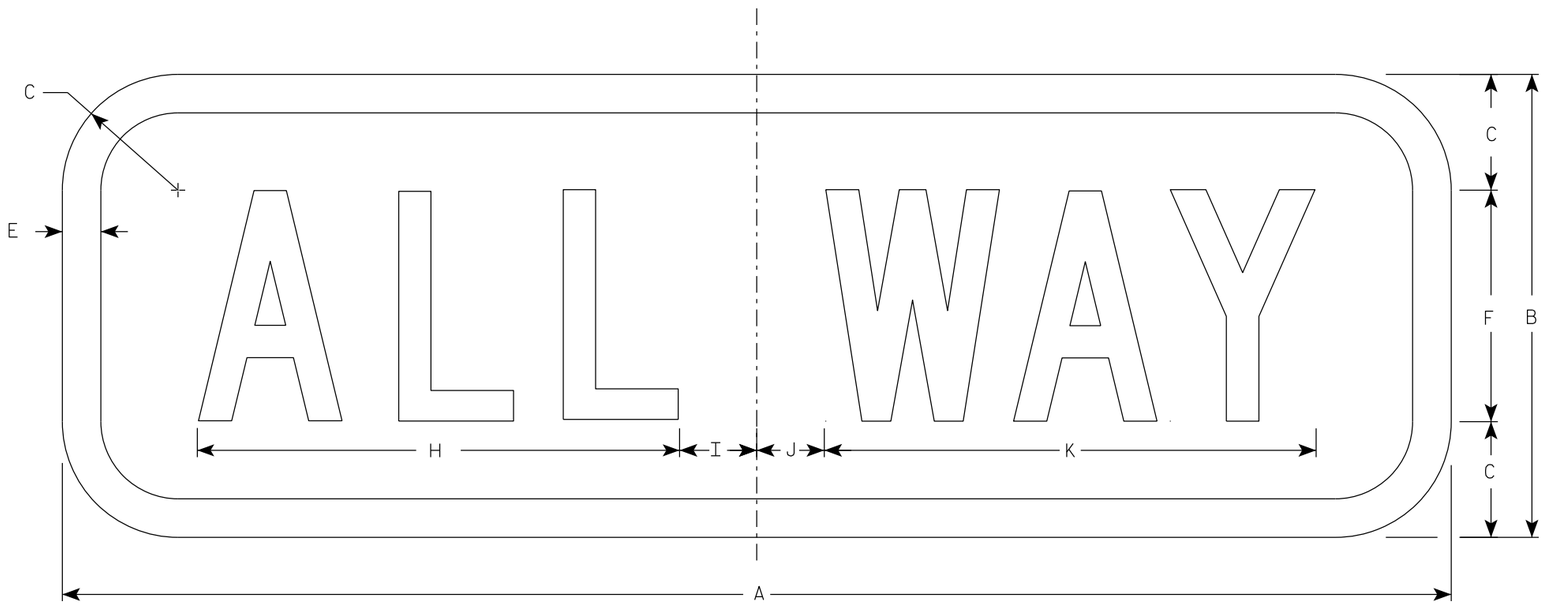

R1-3P

SIZE	A	B	C	D	E	F	G	H	I	J	K	L	M	N	O	P	Q	R	S	T	U	V	W	X	Y	Z	Area sq. ft.
1	18	6	1 1/2		1/2	3		6 1/4	1 1/4	7/8	6 3/8																0.75
2S	18	6	1 1/2		1/2	3		6 1/4	1 1/4	7/8	6 3/8																0.75
2M	24	9	1 1/2		1/2	5		9 1/4	1 1/4	3/4	9 3/4																1.5
3	24	9	1 1/2		1/2	5		9 1/4	1 1/4	3/4	9 3/4																1.5
4	30	12	1 1/2		5/8	6		11	2 1/4	1 1/2	11 3/4																2.5
5	30	12	1 1/2		5/8	6		11	2 1/4	1 1/2	11 3/4																2.5

STANDARD SIGN

R1-3P

WISCONSIN DEPT OF TRANSPORTATION

APPROVED Matthew R Rauch
for State Traffic Engineer

DATE 1/19/23 PLATE NO. R1-3P.4

PROJECT NO: | HWY: | COUNTY: | SHEET NO: 69 | E

NOTES

1. Sign is Type II - Type H Reflective
2. Color:
   Background - White
   Message - Black
3. Message Series - D

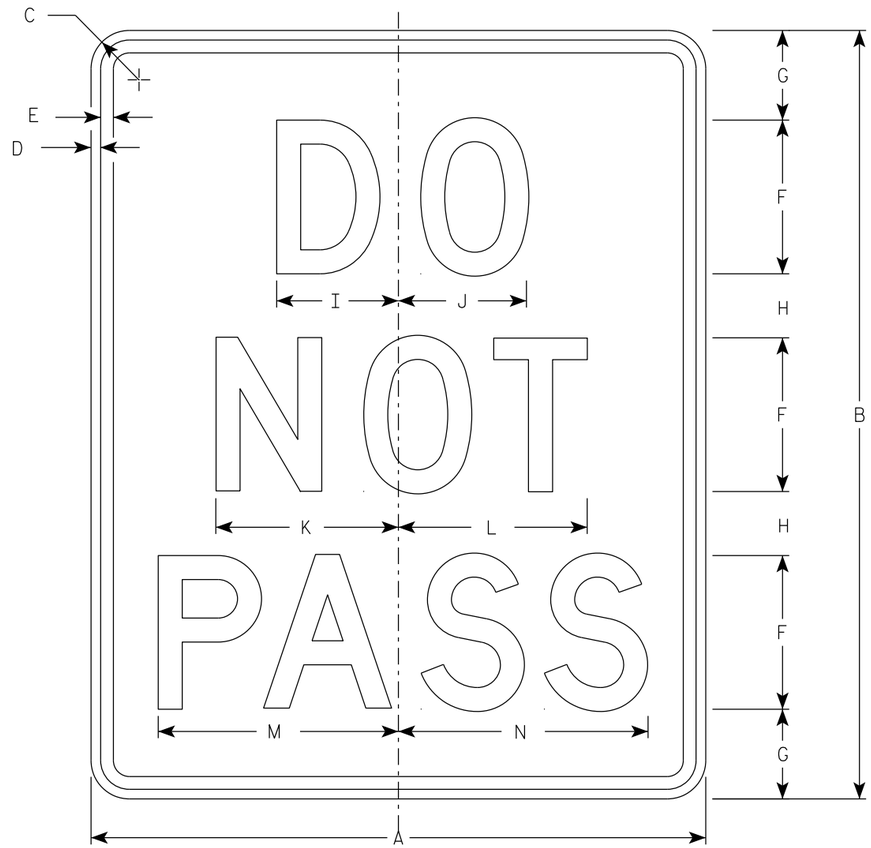

R4-1

SIZE	A	B	C	D	E	F	G	H	I	J	K	L	M	N	O	P	Q	R	S	T	U	V	W	X	Y	Z	Area sq. ft.
1	18	24	1 1/2	3/8	1/2	4	3 1/2	2 1/2	3 1/8	3 1/4	4 3/4	4 7/8	6 1/4	6 1/2													3.0
2S	24	30	1 1/2	3/8	1/2	6	3 1/2	2 1/2	4 3/4	5	7 1/8	7 3/8	9 3/8	9 3/4													5.0
2M	24	30	1 1/2	3/8	1/2	6	3 1/2	2 1/2	4 3/4	5	7 1/8	7 3/8	9 3/8	9 3/4													5.0
3	36	48	1 7/8	5/8	3/4	8	7	5	6 1/4	6 5/8	9 1/2	9 3/4	12 1/2	13													12.0
4	36	48	1 7/8	5/8	3/4	8	7	5	6 1/4	6 5/8	9 1/2	9 3/4	12 1/2	13													12.0
5	48	60	3	3/4	1	10	8	7	7 3/4	8 3/8	11 7/8	12 1/4	15 5/8	16 1/4													20.0

STANDARD SIGN
R4-1

WISCONSIN DEPT OF TRANSPORTATION

APPROVED Matthew R Rauch
for State Traffic Engineer

DATE 3/16/23 PLATE NO. R4-1.8

PROJECT NO: | HWY: | COUNTY: | SHEET NO: 70 | E

R7-52

NOTES

1. Sign is Type II - Type H Reflective
2. Color:
   Background - White
   Message - Red
3. Message Series - See Note 4
4. Lines 1, 3 and 4 are series C, line 2 is series B.
5. R7-52D (double arrow)
   R7-52L (left arrow)
   R7-52R (right arrow)

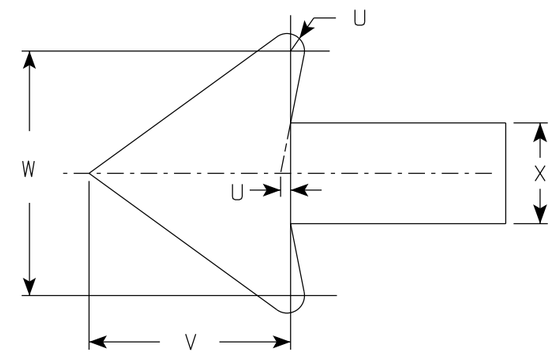

ARROW DETAIL

SIZE	A	B	C	D	E	F	G	H	I	J	K	L	M	N	O	P	Q	R	S	T	U	V	W	X	Y	Z	Area sq. ft.
1	12	18	1 1/2	3/8	3/8	3	1 7/8	1 1/2	7/8	7/8	2	2 1/2	2	2	4 7/8	4 7/8	3 7/8	3 3/4	2 3/8	3 7/8	1/8	1 1/2	1 3/4	3/4			1.5
2S	18	24	1 1/2	3/8	1/2	4	2 1/2	2 1/2	1 1/4	1	2	3 1/4	2 3/4	2 5/8	7 1/8	7	6 3/8	6 1/4	3 7/8	5 7/8	1/4	2 1/4	2 5/8	1 1/8			3.0
2M	24	30	1 1/2	3/8	1/2	5	3	3	2	1 1/4	2 1/2	4	3 1/4	3 3/8	9 1/4	9 1/4	7 5/8	7 5/8	4 3/4	7 3/4	1/4	3	3 1/2	1 1/2			5.0
3	24	30	1 1/2	3/8	1/2	5	3	3	2	1 1/4	2 1/2	4	3 1/4	3 3/8	9 1/4	9 1/4	7 5/8	7 5/8	4 3/4	7 3/4	1/4	3	3 1/2	1 1/2			5.0
4																											
5																											

STANDARD SIGN
R7-52

WISCONSIN DEPT OF TRANSPORTATION

APPROVED Matthew R Rauch
for State Traffic Engineer

DATE 11/9/23 PLATE NO. R7-52.7

PROJECT NO:	HWY:	COUNTY:		SHEET NO: 71	E

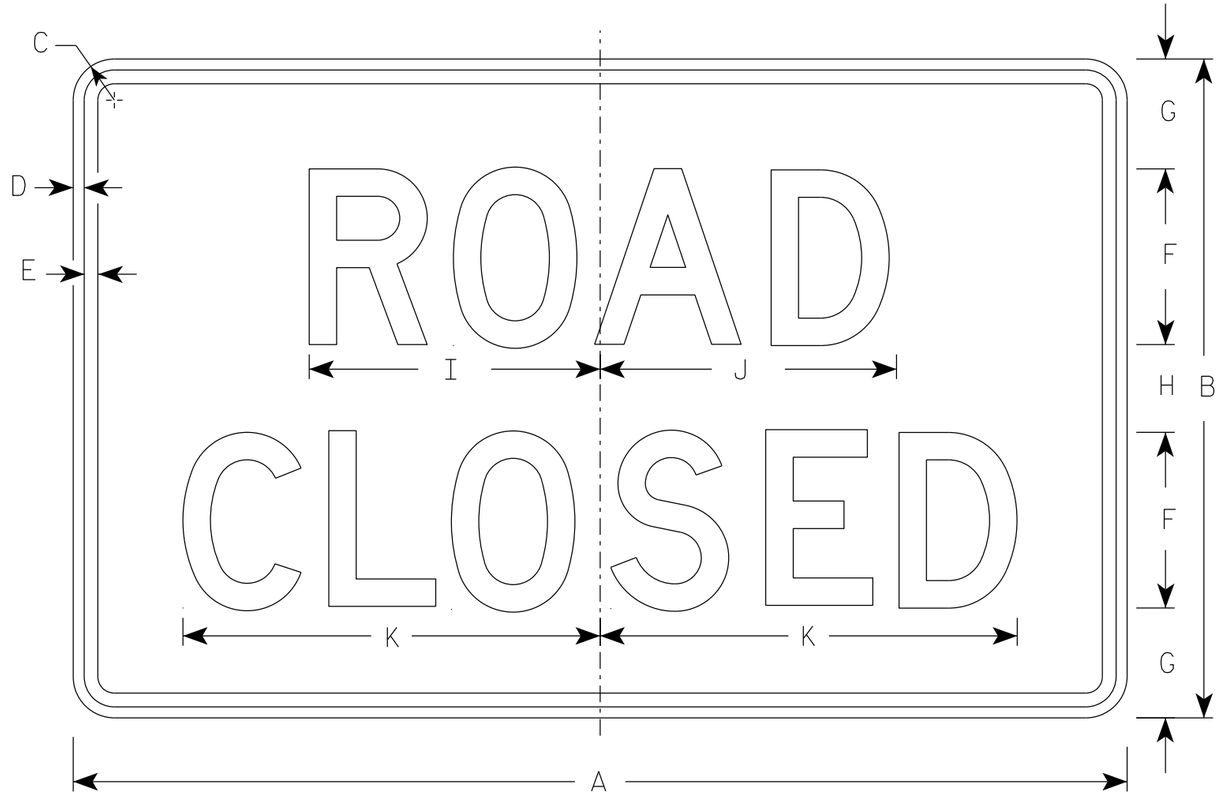

R11-2

NOTES

1. Sign is Type II - Type H Reflective
2. Color:
   Background - White
   Message - Black
3. Message Series - D
4. Corners may be square or rounded when base material is plywood but borders shall be rounded as shown. When base material is metal, the corners and borders shall be rounded.
5. Modify the message as required.

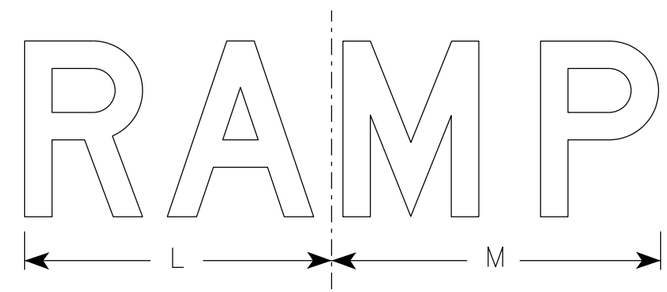

R11-2R

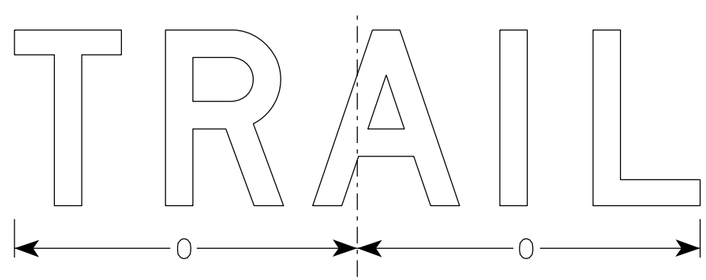

R11-2T

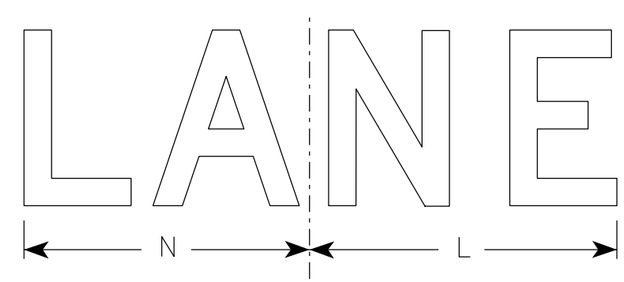

R11-2L

SIZE	A	B	C	D	E	F	G	H	I	J	K	L	M	N	O	P	Q	R	S	T	U	V	W	X	Y	Z	Area sq. ft.
1																											
2S	48	30	1 7/8	1/2	5/8	8	5	4	13 1/4	13 1/2	19	14	15	13	15 5/8												10.0
2M	48	30	1 7/8	1/2	5/8	8	5	4	13 1/4	13 1/2	19	14	15	13	15 5/8												10.0
3	48	30	1 7/8	1/2	5/8	8	5	4	13 1/4	13 1/2	19	14	15	13	15 5/8												10.0
4	48	30	1 7/8	1/2	5/8	8	5	4	13 1/4	13 1/2	19	14	15	13	15 5/8												10.0
5	48	30	1 7/8	1/2	5/8	8	5	4	13 1/4	13 1/2	19	14	15	13	15 5/8												10.0

STANDARD SIGN
R11-2

WISCONSIN DEPT OF TRANSPORTATION

APPROVED Matthew R Rauch
for State Traffic Engineer

DATE 2/5/24 PLATE NO. R11-2.12

PROJECT NO: | HWY: | COUNTY: | SHEET NO: E

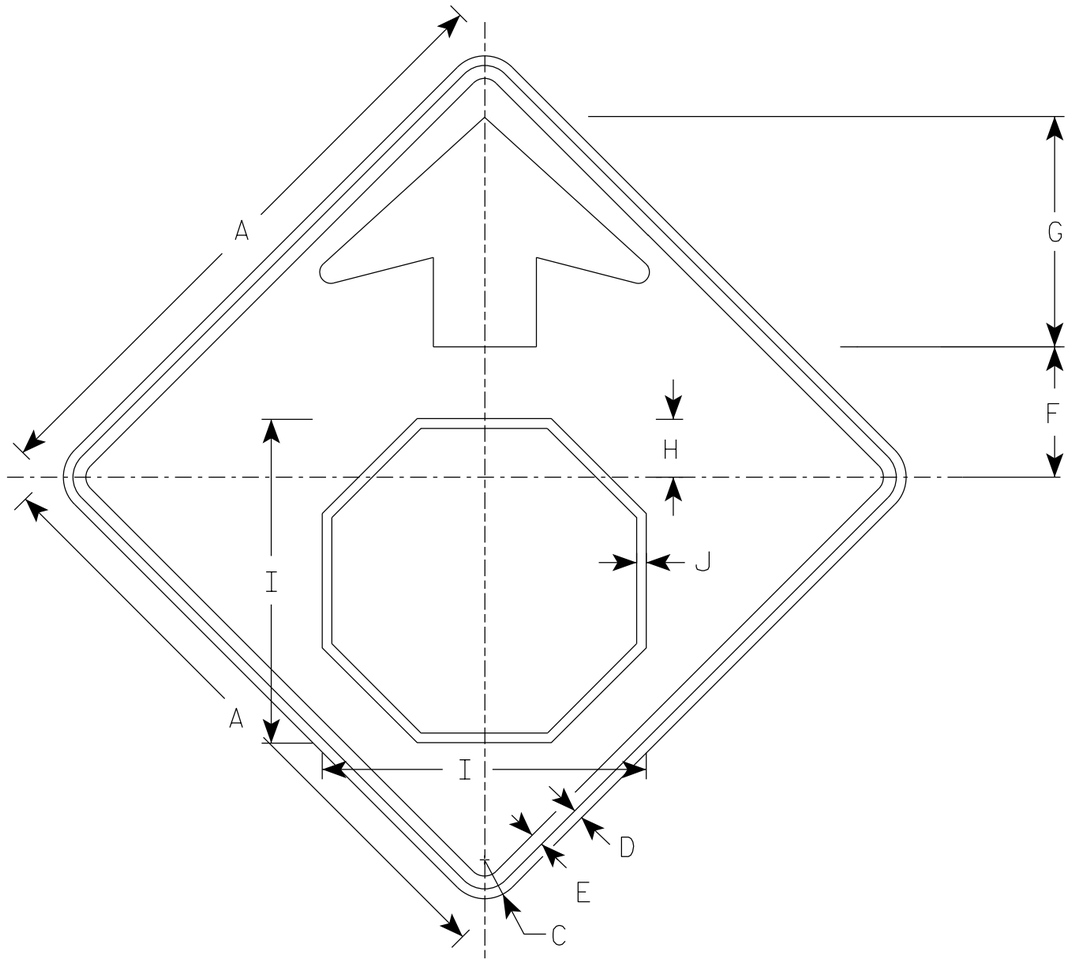

W3-1

NOTES

1. Sign is Type II - Type F Reflective
2. Color:
   Background - Yellow
   Arrow & Border - Black
   Stop Symbol - White Border on Red Background

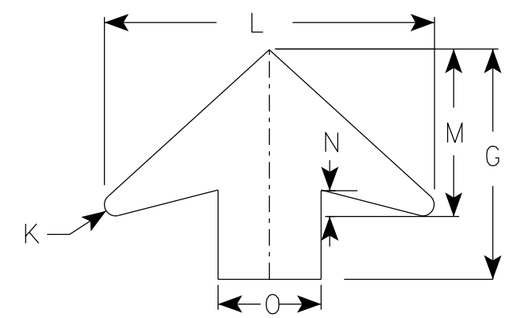

ARROW DETAIL

SIZE	A	B	C	D	E	F	G	H	I	J	K	L	M	N	O	P	Q	R	S	T	U	V	W	X	Y	Z	Area sq. ft.
1	30		1 7/8	1/2	5/8	6 1/4	11 1/4	2 7/8	15 3/4	1/2	1/2	16	8	1 1/4	5												6.25
2S	36		2 1/4	5/8	3/4	7 1/2	13 1/2	3 1/2	19	5/8	5/8	19 1/4	9 3/4	1 5/8	6												9.0
2M	36		2 1/4	5/8	3/4	7 1/2	13 1/2	3 1/2	19	5/8	5/8	19 1/4	9 3/4	1 5/8	6												9.0
3	36		2 1/4	5/8	3/4	7 1/2	13 1/2	3 1/2	19	5/8	5/8	19 1/4	9 3/4	1 5/8	6												9.0
4	48		3	3/4	1	10	17 7/8	4 1/2	25 1/8	3/4	7/8	25 5/8	13	2	8												16.0
5	48		3	3/4	1	10	17 7/8	4 1/2	25 1/8	3/4	7/8	25 5/8	13	2	8												16.0

STANDARD SIGN
W3-1

WISCONSIN DEPT OF TRANSPORTATION

APPROVED Matthew R Rauch
for State Traffic Engineer

DATE 8/17/2023 PLATE NO. W3-1.13

PROJECT NO:

SHEET NO: 73 E

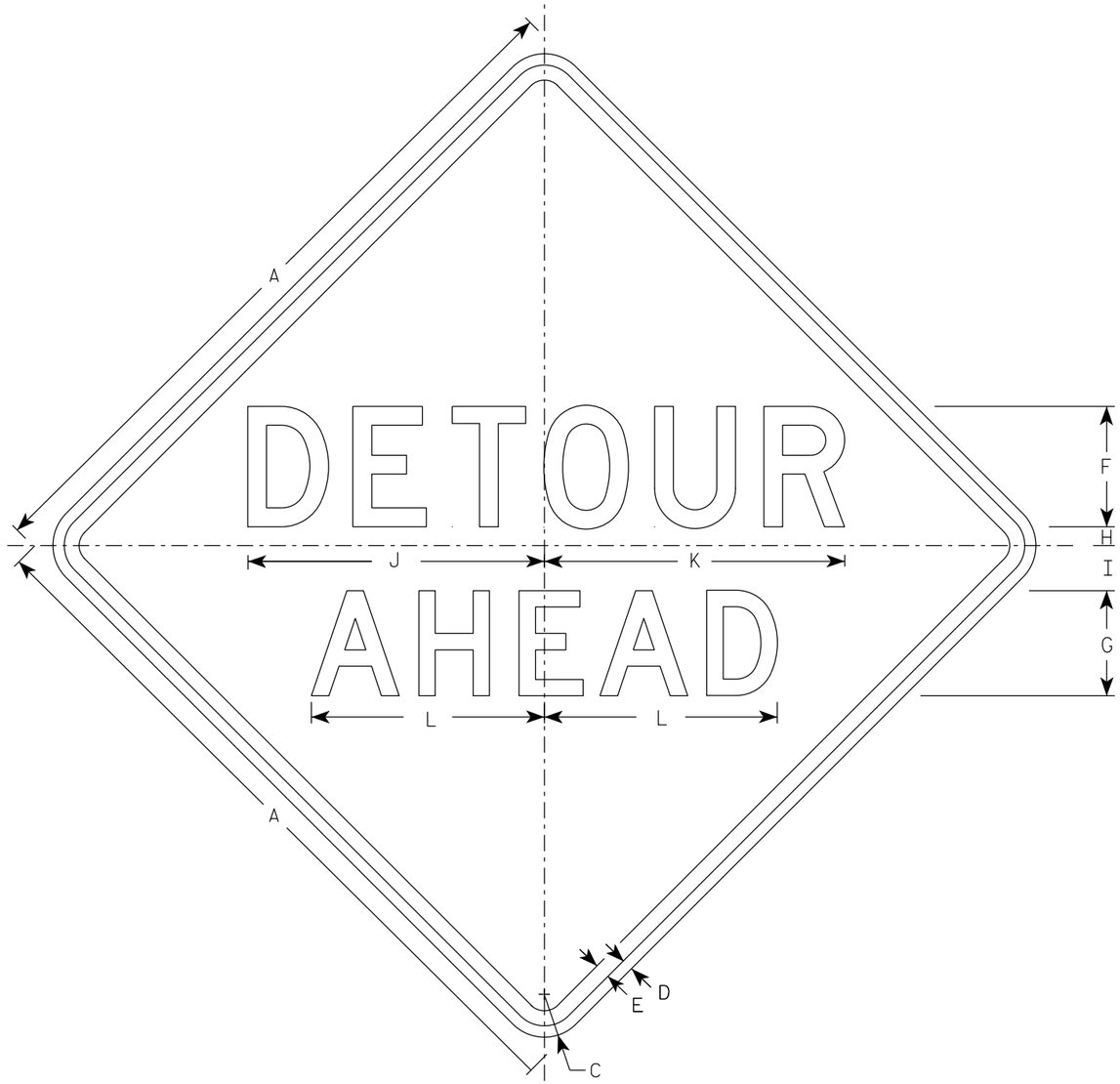

W20-2A

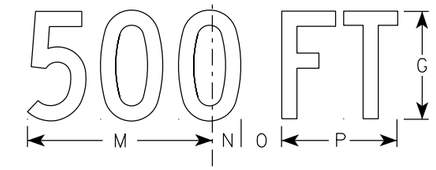

W20-2D

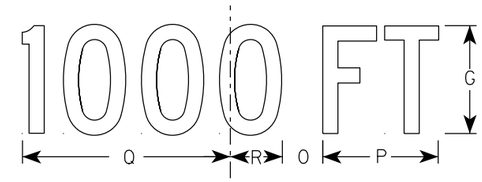

W20-2C

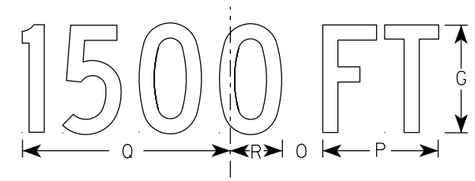

W20-2B

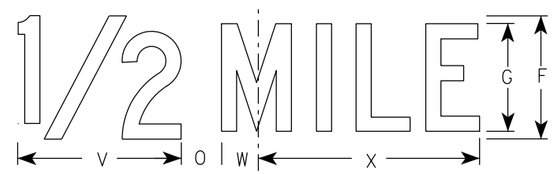

W20-2G

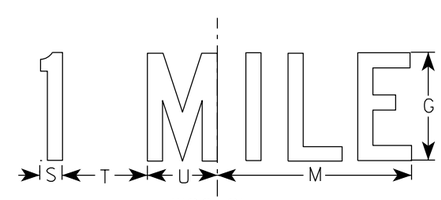

W20-2F

NOTES

1. Sign is Type II - Type F Reflective
2. Color:
   Background - Orange
   Message - Black
3. Message Series - See note 5
4. Corners may be square or rounded when base material is plywood but borders shall be rounded as shown. When base material is metal, the corners and borders shall be rounded.
5. Line 1 is Series D.
   Line 2 is Series D for AHEAD and Series C for all other distances.

SIZE	A	B	C	D	E	F	G	H	I	J	K	L	M	N	O	P	Q	R	S	T	U	V	W	X	Y	Z	Area sq. ft.
1	36		2 1/4	5/8	3/4	6	5	1	2 1/4	14 3/4	15	11 5/8	9	1 3/8	1 7/8	5 5/8	10 1/8	2 1/2	1 1/8	4 1/2	3 1/2	8	1 3/4	10 3/4			9.0
2S	48		3	3/4	1	8	7	1 1/4	3	19 3/4	20	15 1/2	12	1 7/8	2 5/8	7 1/2	13 1/2	3 3/8	1 1/2	6	4 5/8	10 5/8	2 3/8	14 3/8			16.0
2M	48		3	3/4	1	8	7	1 1/4	3	19 3/4	20	15 1/2	12	1 7/8	2 5/8	7 1/2	13 1/2	3 3/8	1 1/2	6	4 5/8	10 5/8	2 3/8	14 3/8			16.0
3	48		3	3/4	1	8	7	1 1/4	3	19 3/4	20	15 1/2	12	1 7/8	2 5/8	7 1/2	13 1/2	3 3/8	1 1/2	6	4 5/8	10 5/8	2 3/8	14 3/8			16.0
4	48		3	3/4	1	8	7	1 1/4	3	19 3/4	20	15 1/2	12	1 7/8	2 5/8	7 1/2	13 1/2	3 3/8	1 1/2	6	4 5/8	10 5/8	2 3/8	14 3/8			16.0
5	48		3	3/4	1	8	7	1 1/4	3	19 3/4	20	15 1/2	12	1 7/8	2 5/8	7 1/2	13 1/2	3 3/8	1 1/2	6	4 5/8	10 5/8	2 3/8	14 3/8			16.0

STANDARD SIGN
W20-2A,B,C,D,F & G

WISCONSIN DEPT OF TRANSPORTATION

APPROVED Matthew R Rauch
For State Traffic Engineer

DATE 1/10/2024 PLATE NO. W20-2.7

PROJECT NO: | HWY: | COUNTY: | SHEET NO: 74 | E

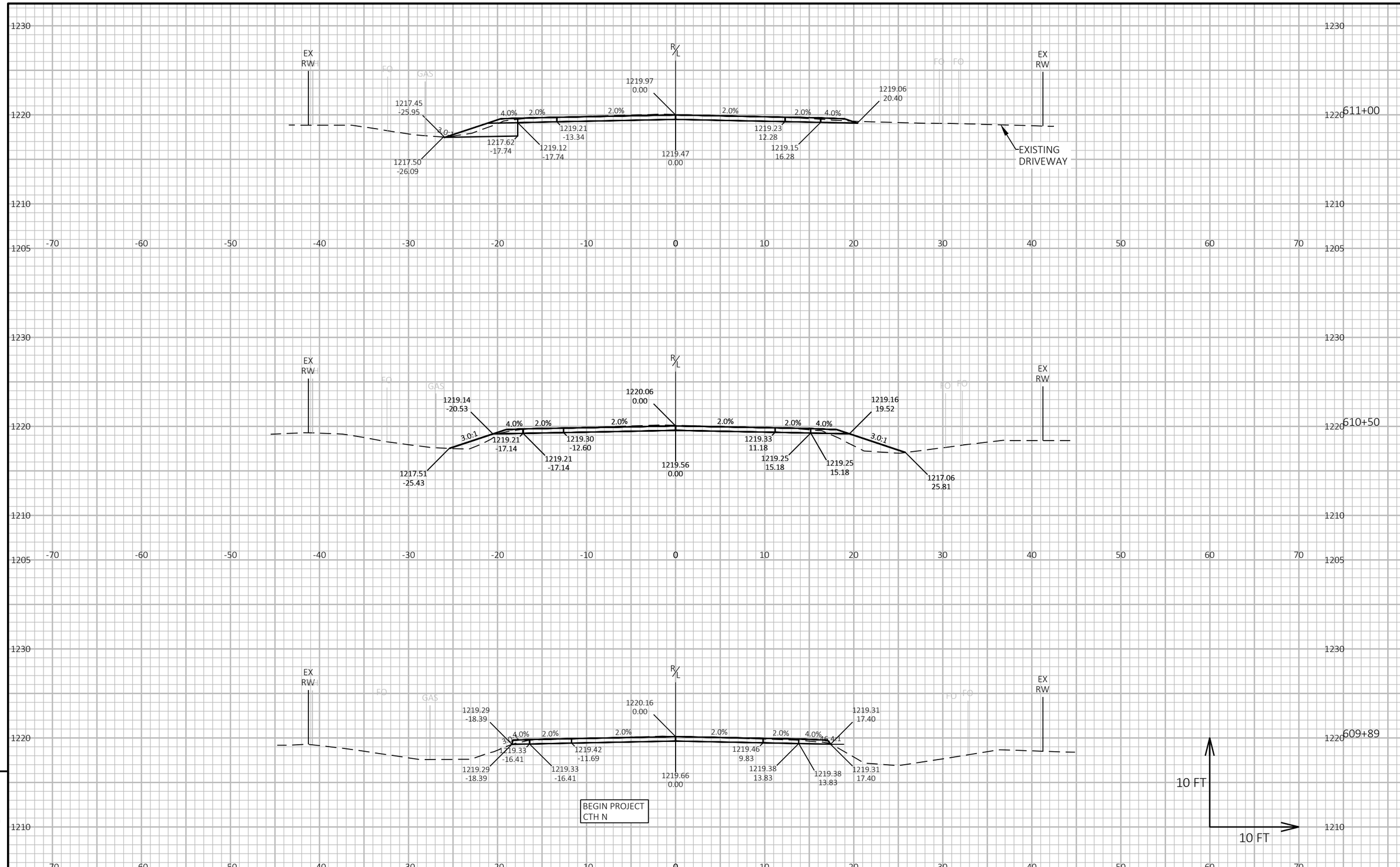

PROJECT NO: 9439-02-70	HWY: CTH N/CTH J	COUNTY: MARATHON	CROSS SECTIONS: COUNTY N	SHEET 75	E

FILE NAME : P:\2023\2023.035 - WISDOT - CTH J-N 9439-02-00 (MARA CO)\94390200\SHEETS\090201-XS.DWG
LAYOUT NAME - 01
PLOT DATE : 8/15/2024 10:23 AM
PLOT BY : JUSTIN N. HAASE
PLOT NAME :
PLOT SCALE : 1 IN:10 FT HORZ. / 1 IN:10 FT VERT.
WISDOT/CADDS SHEET 49

9

9

PROJECT NO: 9439-02-70	HWY: CTH N/CTH J	COUNTY: MARATHON	CROSS SECTIONS: COUNTY N	SHEET 76	E

FILE NAME : P:\2023\2023.035 - WISDOT - CTH J-N 9439-02-00 (MARA CO)\94390200\SHEETS\090201-XS.DWG
LAYOUT NAME - 02

PLOT DATE : 8/15/2024 10:23 AM PLOT BY : JUSTIN N. HAASE PLOT NAME : PLOT SCALE : 1 IN:10 FT HORZ. / 1 IN:10 FT VERT.

WISDOT/CADDS SHEET 49

9

9

PROJECT NO: 9439-02-70	HWY: CTH N/CTH J	COUNTY: MARATHON	CROSS SECTIONS: COUNTY N	SHEET 77	E

FILE NAME : P:\2023\2023.035 - WISDOT - CTH J-N 9439-02-00 (MARA CO)\94390200\SHEETS\090201-XS.DWG
LAYOUT NAME - 03
PLOT DATE : 8/15/2024 10:23 AM
PLOT BY : JUSTIN N. HAASE
PLOT NAME :
PLOT SCALE : 1 IN:10 FT HORZ. / 1 IN:10 FT VERT.

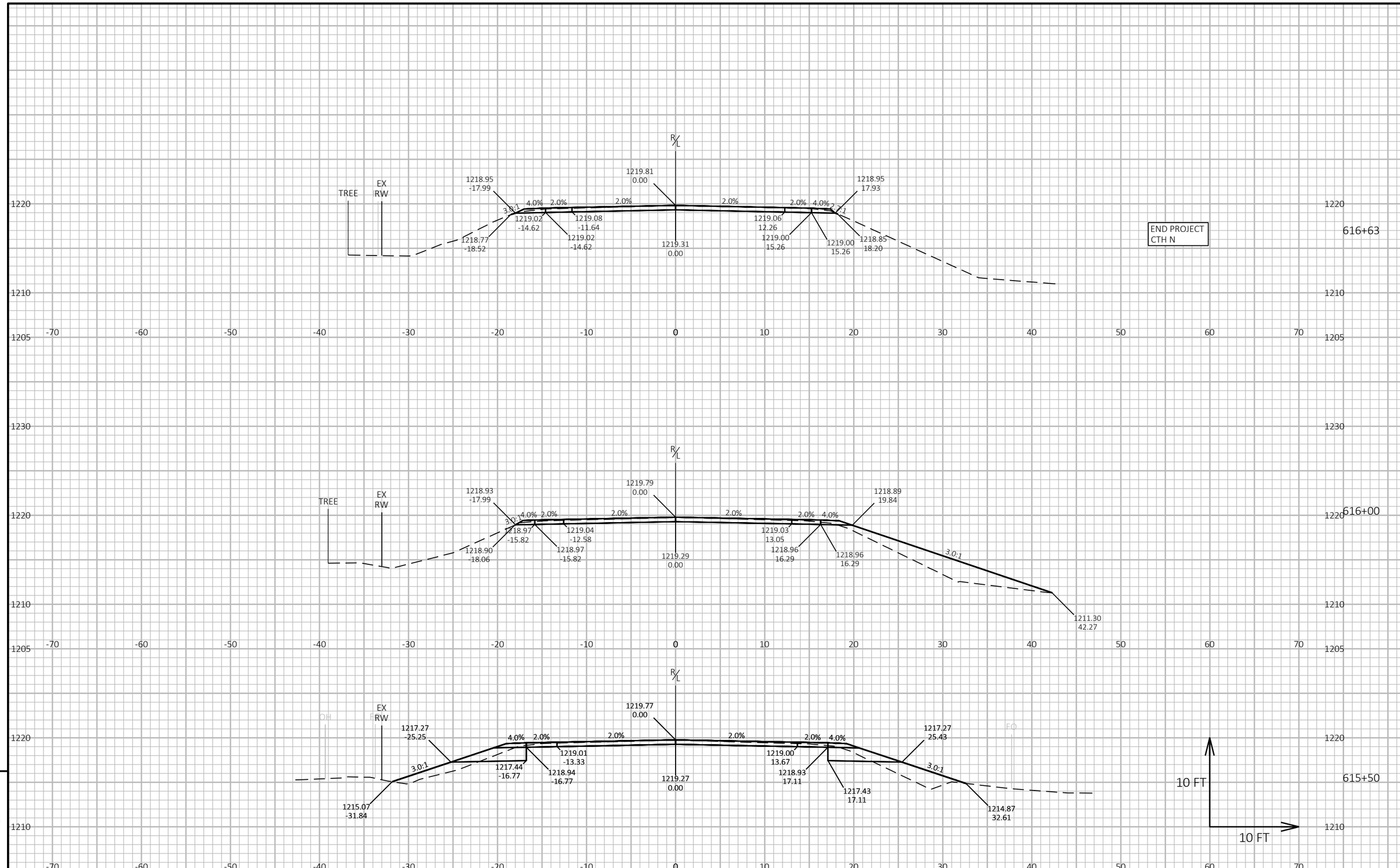

PROJECT NO: 9439-02-70	HWY: CTH N/CTH J	COUNTY: MARATHON	CROSS SECTIONS: COUNTY N	SHEET 78	E

FILE NAME : P:\2023\2023.035 - WISDOT - CTH J-N 9439-02-00 (MARA CO)\94390200\SHEETS\090201-XS.DWG
LAYOUT NAME - 04
PLOT DATE : 8/15/2024 10:23 AM
PLOT BY : JUSTIN N. HAASE
PLOT NAME :
PLOT SCALE : 1 IN:10 FT HORZ. / 1 IN:10 FT VERT.
WISDOT/CADDS SHEET 49

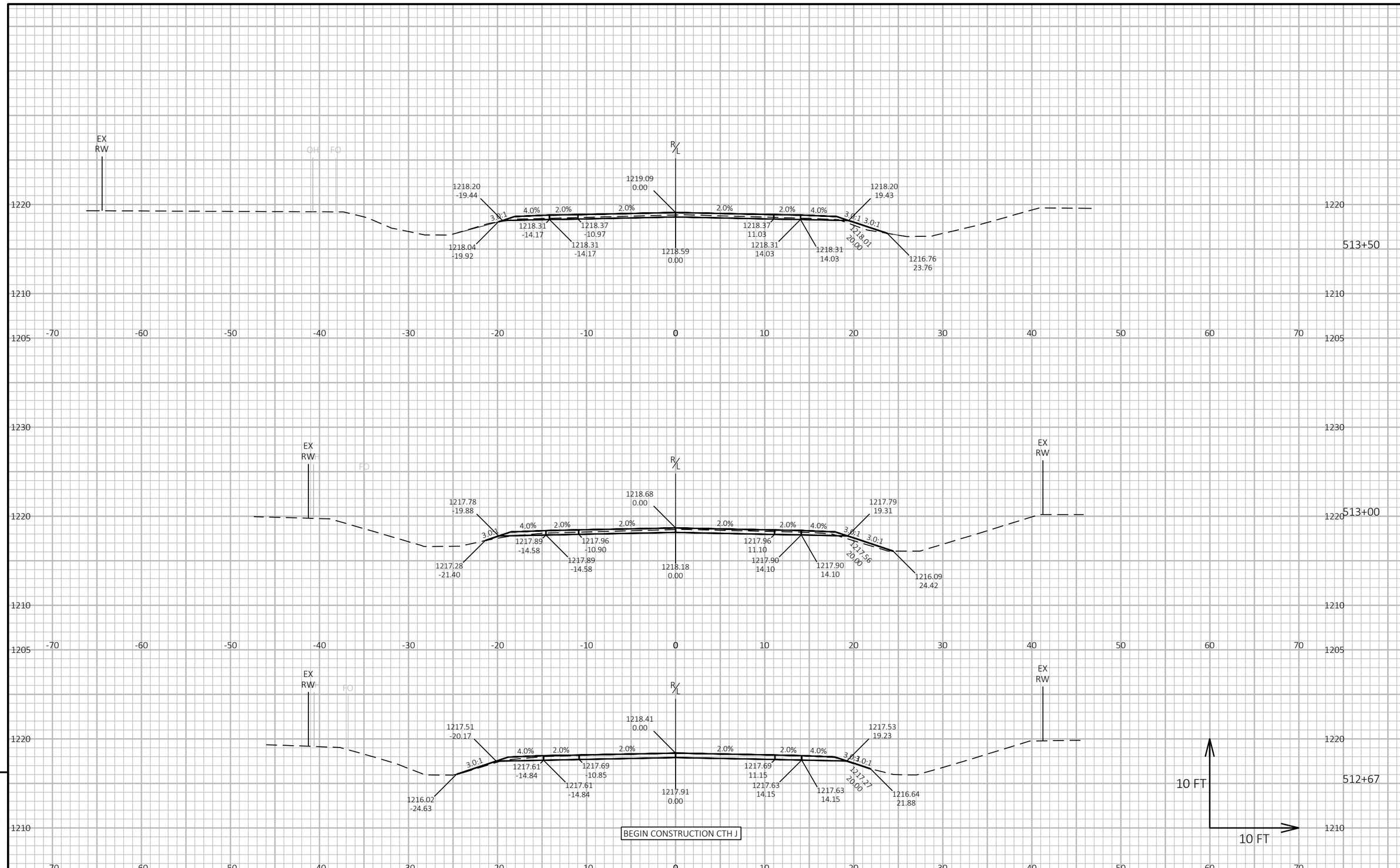

9

9

PROJECT NO: 9439-02-70	HWY: CTH N/CTH J	COUNTY: MARATHON	CROSS SECTIONS: COUNTY J	SHEET 79	E

FILE NAME : P:\2023\2023.035 - WISDOT - CTH J-N 9439-02-00 (MARA CO)\94390200\SHEETS\090201-XS.DWG
LAYOUT NAME - 05

PLOT DATE : 10/23/2024 3:50 PM PLOT BY : JUSTIN N. HAASE PLOT NAME : **PLOT SCALE :** 1 IN:10 FT HORZ. / 1 IN:10 FT VERT.

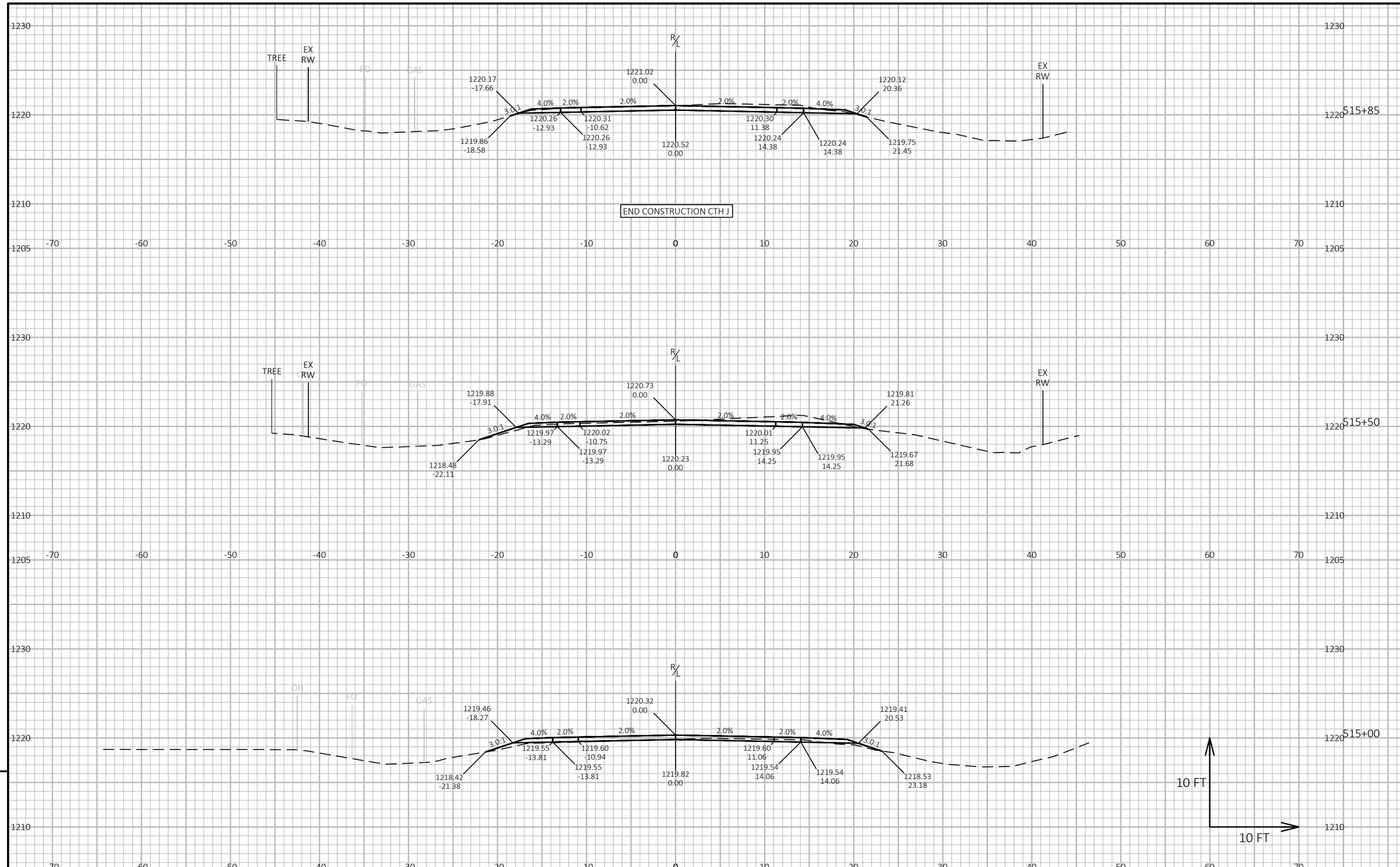

9

9

PROJECT NO: 9439-02-70	HWY: CTH N/CTH J	COUNTY: MARATHON	CROSS SECTIONS: COUNTY J	SHEET 80	E

FILE NAME : P:\2023\2023.035 - WISDOT - CTH J-N 9439-02-00 (MARA CO)\94390200\SHEETS\090201-XS.DWG
LAYOUT NAME - 06

PLOT DATE : 10/23/2024 3:50 PM PLOT BY : JUSTIN N. HAASE PLOT NAME : PLOT SCALE : 1 IN:10 FT HORZ. / 1 IN:10 FT VERT.

WISDOT/CADDS SHEET 49

Notes

Wisconsin Department of Transportation

Dedicated people creating transportation solutions through innovation and exceptional service.

http://www.dot.wisconsin.gov