WIS

PROJECT ID: 6777-00-70

WITH: N/A

COUNTY: PORTAGE

FEBRUARY 2025

ORDER OF SHEETS


| | | |
|---|---|---|
| Section No. | 1 | Title |
| Section No. | 2 | Typical Sections and Details |
| Section No. | 3 | Estimate of Quantities |
| Section No. | 3 | Miscellaneous Quantities |
| Section No. | 4 | Right of Way Plat |
| Section No. | 5 | Plan and Profile |
| Section No. | 6 | Standard Detail Drawings |
| Section No. | 7 | Sign Plates |
| Section No. | 8 | Structure Plans |
| Section No. | 9 | Computer Earthwork Data |
| Section No. | 9 | Cross Sections |


TOTAL SHEETS = 92

# STATE OF WISCONSIN
# DEPARTMENT OF TRANSPORTATION

## PLAN OF PROPOSED IMPROVEMENT

# CTH U - CTH F

**FOUR MILE CREEK BRIDGE, P-49-0001**

## CTH WW
## PORTAGE

| STATE PROJECT | FEDERAL PROJECT | |
|---|---|---|
| | PROJECT | CONTRACT |
| 6777-00-70 | WISC 2025331 | 1 |
| | | |
| | | |
| | | |

| STATE PROJECT NUMBER |
|---|
| 6777-00-70 |

N

DESIGN DESIGNATION

| | | | |
|---|---|---|---|
| A.A.D.T. | 2025 | = | 790 |
| A.A.D.T. | 2045 | = | 850 |
| D.H.V. | | = | 130 |
| D.D. | | = | 50/50 |
| T. | | = | 6% |
| DESIGN SPEED | | = | 45 MPH |
| ESALS | | = | 80,300 |

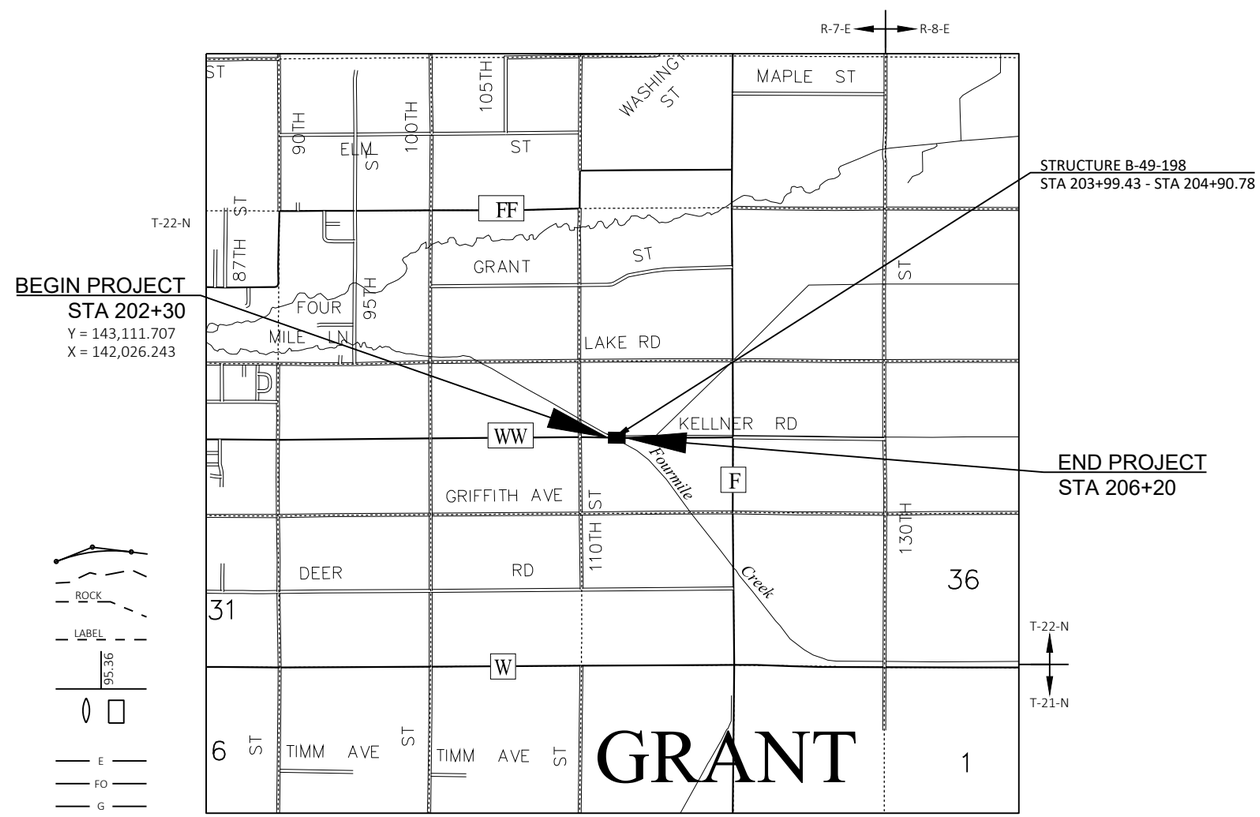


LAYOUT

SCALE 0 1 MI

TOTAL NET LENGTH OF CENTERLINE = 0.073 MI

HORIZONTAL POSITIONS SHOWN ON THIS PLAN ARE WISCONSIN COORDINATE REFERENCE SYSTEM (WISCRS), PORTAGE COUNTY, NAD83 ( 2011 ), IN U.S. SURVEY FEET. POSITIONS SHOWN ARE GRID COORDINATES, GRID BEARINGS, AND GRID DISTANCES. GRID DISTANCES ARE THE SAME AS GROUND DISTANCES.

ELEVATIONS ARE REFERENCED TO NAVD 88 ( 2012 ). GPS DERIVED ELEVATIONS ARE BASED ON GEOID 18.

CONVENTIONAL SYMBOLS

PLAN
- CORPORATE LIMITS
- PROPERTY LINE
- LOT LINE
- LIMITED HIGHWAY EASEMENT
- EXISTING RIGHT OF WAY
- PROPOSED OR NEW R/W LINE
- SLOPE INTERCEPT
- REFERENCE LINE (300'EB')
- EXISTING CULVERT
- PROPOSED CULVERT (Box or Pipe)
- COMBUSTIBLE FLUIDS (CAUTION)
- MARSH AREA
- WOODED OR SHRUB AREA

PROFILE
- GRADE LINE
- ORIGINAL GROUND
- MARSH OR ROCK PROFILE (To be noted as such) (ROCK)
- SPECIAL DITCH (LABEL)
- GRADE ELEVATION (95.36)
- CULVERT (Profile View)

UTILITIES
- ELECTRIC (E)
- FIBER OPTIC (FO)
- GAS (G)
- SANITARY SEWER (SAN)
- STORM SEWER (SS)
- TELEPHONE (T)
- WATER (W)
- UTILITY PEDESTAL
- POWER POLE
- TELEPHONE POLE

ACCEPTED FOR
*PORTAGE COUNTY*

Date 10/24/24 Signature of Highway Commissioner

ORIGINAL PLANS PREPARED BY

JT ENGINEERING

WISCONSIN PROFESSIONAL ENGINEER
VINCENT J. DIFRANCES
E-45790
MILWAUKEE
WI

DATE: 11/1/2024 (Professional Engineer Signature)

STATE OF WISCONSIN
DEPARTMENT OF TRANSPORTATION

PREPARED BY

| | |
|---|---|
| Surveyor | JT ENGINEERING, INC |
| Designer | JT ENGINEERING, INC |
| Project Manager | JASON SCHAEFFER |
| Regional Examiner | |
| Regional Supervisor | DANIEL ERVA |

APPROVED FOR THE DEPARTMENT

DATE: 10/30/2024 (Signature)

E

## UTILITIES CONTACTS

ADAMS-COLUMBIA ELECTRIC COOP (ACEC)
ELECTRIC
JESSE KLEMETSON
401 E. LAKE STREET
FRIENDSHIP, WI 53934
PHONE: (800) 831-8629
EMAIL: ACEC_WO@ACECWI.COM

WOOD COUNTY TELEPHONE (SOLARUS)
COMMUNICATIONS
DENNIS PIERCE
440 E GRAND AVE
WISCONSIN RAPIDS, WI 54494
PHONE: (715) 421-8172 (D) (715) 572-0152 (C)
EMAIL: PIERCE@SOLARUS.NET

## ORDER OF SECTION 2 DETAIL SHEETS

GENERAL NOTES
TYPICAL SECTIONS
EROSION CONTROL
RIPRAP LAYOUT PLAN
PERMANENT SIGNING AND PAVEMENT MARKING
DETOUR PLAN

## WISCONSIN DNR LIAISON

JAY SCHIEFELBEIN
NORTHEAST REGION
625 E COUNTY RD Y STE 700
OSHKOSH, WI 54901-9731
PHONE: (920) 360-3784 (M)
EMAIL: JEREMIAH.SCHIEFELBEIN@WISCONSIN.GOV

## PORTAGE COUNTY HIGHWAY DEPARTMENT

NATHAN CHECK
COUNTY HIGHWAY COMMISIONER
800 PLOVER ROAD
PLOVER, WI 54467
PHONE: (715) 345-5230 (O) (715) 630-2203
EMAIL: CHECKN@CO.PORTAGE.WI.US

## DESIGN CONTACT

VINCENT DIFRANCES
JT ENGINEERING, INC.
1077 CENTENNIAL CENTRE BLVD
HOBART, WI 54155
PHONE: (262) 236-9533
EMAIL: VINCED@JT-ENGINEERING.COM

## GENERAL NOTES

THE LOCATIONS OF EXISTING AND PROPOSED UTILITY INSTALLATIONS AS SHOWN ON THE PLANS ARE APPROXIMATE. THERE MAY BE OTHER UTILITY INSTALLATIONS WITHIN THE PROJECT AREA THAT ARE NOT SHOWN.

CONTRACTOR WILL BE RESPONSIBLE FOR RESHAPING, SEEDING, FERTILIZING, AND EROSION MATTING ANY PREVIOUSLY GRASSED AREAS WHICH ARE DISTURBED BY OPERATIONS, OUTSIDE OF THE NORMAL CONSTRUCTION LIMITS.

HMA PAVEMENT WEIGHT CALCULATIONS ARE BASED ON 112 LBS/SY/IN.

THE CONTRACTOR IS TO WORK WITH UTMOST CARE AND PROTECT ALL SURVEY MARKERS. REMOVAL OF ANY SURVEY MARKER IS TO BE WITH THE APPROVAL OF THE ENGINEER.

WHEN THE QUANTITY OF THE ITEMS OF BASE AGGREGATE, SUBBASE OR HMA PAVEMENT IS MEASURED FOR PAYMENT BY THE TON OR CUBIC YARD, THE DEPTH OR THICKNESS OF THE LAYERS SHOWN ON THE PLAN IS APPROXIMATE AND THE ACTUAL THICKNESS WILL DEPEND ON THE DISTRIBUTION OF THE MATERIAL AS DIRECTED BY THE ENGINEER.

EROSION CONTROL FEATURES AS SHOWN IN THE PLANS ARE AT APPROXIMATE LOCATIONS. EXACT LOCATIONS WILL BE DETERMINED BY THE CONTRACTOR'S EROSION CONTROL IMPLEMENTATION PLAN (ECIP) AND APPROVED BY THE ENGINEER. MAINTAIN EROSION CONTROL MEASURES UNTIL SUCH A TIME AS THE ENGINEER DETERMINES THE MEASURE IS NO LONGER NECESSARY.

THE PROPOSED SHOULDER WIDTH SHOWN IN THE TYPICAL SECTIONS ARE MINIMUM WIDTH. PERPETUATE EXISTING SHOULDERS THAT ARE WIDER THAN WHAT IS SHOWN IN THE TYPICAL SECTIONS.

THE CONTRACTOR'S PAVING OPERATION SHALL BE CONSISTENT WITH THE TYPICAL SECTIONS AND CONSTRUCTED TO PREVENT LONGITUDINAL JOINTS FROM BEING LOCATED WITHIN A DRIVING, TURNING, PASSING, OR PARKING LANE.

SAWCUTS, AS SHOWN ON THE PLANS, ARE SUGGESTED LOCATIONS AND MAY BE ADJUSTED AT THE DISCRETION OF THE ENGINEER TO BETTER SUIT FIELD CONDITIONS.

PRIOR TO PLACEMENT OF BEAM GUARD THE SHOULDERS SHALL BE IN PLACE, SHAPED AND COMPACTED.

TRAFFIC CONTROL DEVICES SHALL BE ADJUSTED TO FIT FIELD CONDITIONS AS DIRECTED BY THE ENGINEER.

DO NOT DRIVE OR STORE EQUIPMENT, OR STORE CONSTRUCTION MATERIALS IN ENVIRONMENTALLY SENSITIVE AREAS, WETLANDS OR WATERWAYS.

TACK COAT HAS BEEN ESTIMATED AT AN APPLICATION OF 0.05 GAL/SY AND SHALL BE PLACED BETWEEN THE LAYERS OF ASPHALTIC PAVEMENT.

NO FERTILIZER WITHIN 20' OF A NAVIGABLE STREAM.

## STANDARD ABBREVIATIONS

| | | | |
|---|---|---|---|
| ADT | AVERAGE DAILY TRAFFIC | NC | NORMAL CROWN |
| AC | ASPHALT CEMENT | PT | POINT OF TANGENT |
| AGG | AGGREGATE | PC | POINT OF CURVATURE |
| ASPH | ASPHALT | PI | POINT OF INTERSECTION |
| BM | BENCHMARK | PE | PRIVATE ENTRANCE |
| C/L | CENTERLINE | R | RADIUS |
| CONC | CONCRETE | REM | REMOVE |
| CMP | CORRUGATED METAL PIPE | R/L OR RL | REFERENCE LINE |
| CR | CREEK | RCCP | REINFORCED CONCRETE CULVERT PIPE |
| D | DEGREE OF CURVE | RCPSS | REINFORCED CONCRETE STORM SEWER |
| DHV | DESIGN HOUR VOLUME | RO | RUNOUT |
| ESALS | EQUIVALENT SINGLE AXIS LOADS | R/W | RIGHT OF WAY |
| EXIST | EXISTING | STA | STATION |
| FE | FIELD ENTRANCE | SE | SUPER ELEVATION |
| HYD | HYDRANT | SS | STORM SEWER |
| IP | IRON PIPE | T | TANGENT |
| L | LENGTH OF CURVE | TEL | TELEPHONE |
| LC | LONG CHORD OF CURVE | TLE | TEMPORARY LIMITED EASEMENT |
| LR | LENGTH OF RUN OFF | T | TRUCKS |
| MH | MANHOLE | VC | VERTICAL CURVE |
| | | W | WELL |

## RUNOFF COEFFICIENT TABLE

| | HYDROLOGIC SOIL GROUP | | | | | | | | | | | |
|---|---|---|---|---|---|---|---|---|---|---|---|---|
| | A | | | B | | | C | | | D | | |
| | SLOPE RANGE (PERCENT) | | | SLOPE RANGE (PERCENT) | | | SLOPE RANGE (PERCENT) | | | SLOPE RANGE (PERCENT) | | |
| LAND USE: | 0-2 | 2-6 | 6 & OVER | 0-2 | 2-6 | 6 & OVER | 0-2 | 2-6 | 6 & OVER | 0-2 | 2-6 | 6 & OVER |
| ROW CROPS: | .08 | .16 | .22 | .12 | .20 | .27 | .15 | .24 | .33 | .19 | .28 | .38 |
| | .22 | .30 | .38 | .26 | .34 | .44 | .30 | .37 | .50 | .34 | .41 | .56 |
| MEDIAN STRIPTURF: | .19 | .20 | .24 | .19 | .22 | .26 | .20 | .23 | .30 | .20 | .25 | .30 |
| | .24 | .26 | .30 | .25 | .28 | .33 | .26 | .30 | .37 | .27 | .32 | .40 |
| SIDE SLOPETURF: | | | .25 | | | .27 | | | .28 | | | .30 |
| | | | .32 | | | .34 | | | .36 | | | .38 |
| PAVEMENT: | | | | | | | | | | | | |
| ASPHALT: | .70 - .95 | | | | | | | | | | | |
| CONCRETE: | .80 - .95 | | | | | | | | | | | |
| BRICK: | .70 - .80 | | | | | | | | | | | |
| DRIVES, WALKS: | .75 - .85 | | | | | | | | | | | |
| ROOFS: | .75 - .95 | | | | | | | | | | | |
| GRAVEL ROADS, SHOULDERS: | .40 - .60 | | | | | | | | | | | |

TOTAL PROJECT AREA = 1.40 ACRES
TOTAL AREA EXPECTED TO BE DISTURBED BY CONSTRUCTION ACTIVITIES = 0.92 ACRES

DIGGERS HOTLINE
Dial 811 or (800)242-8511
www.DiggersHotline.com

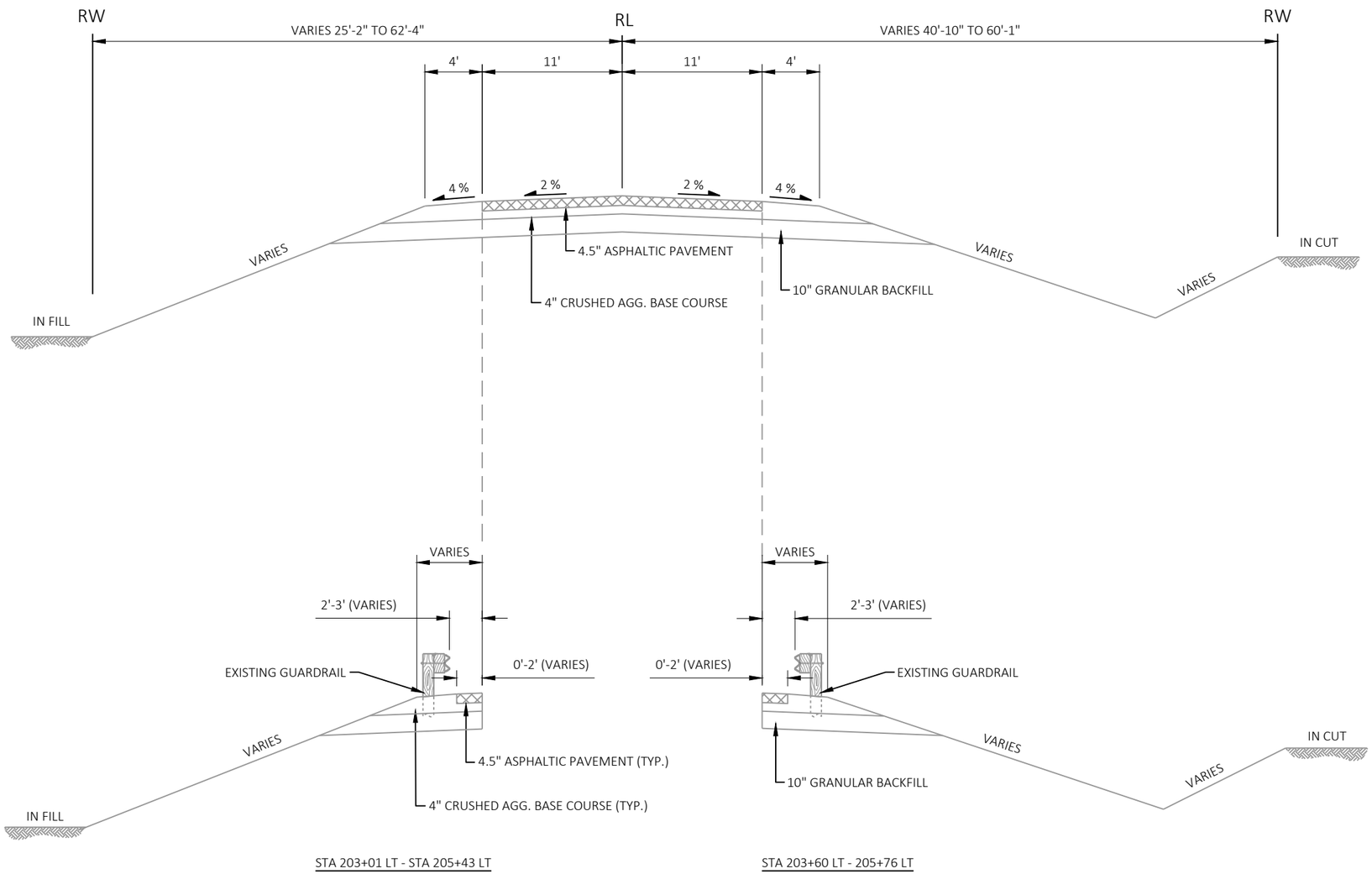


## EXISTING TYPICAL SECTION

STA 202+30 - 206+20

2

1. SEED, FERTILIZER TYPE B AND EROSION MAT URBAN CLASS I, TYPE B
2. LANE WIDTH FOR EB LANE AT STA 202+30 TO MATCH EXISTING LANE WIDTH PRIOR TO WIDENING TO TYPICAL 12-FOOT DIMENSION.

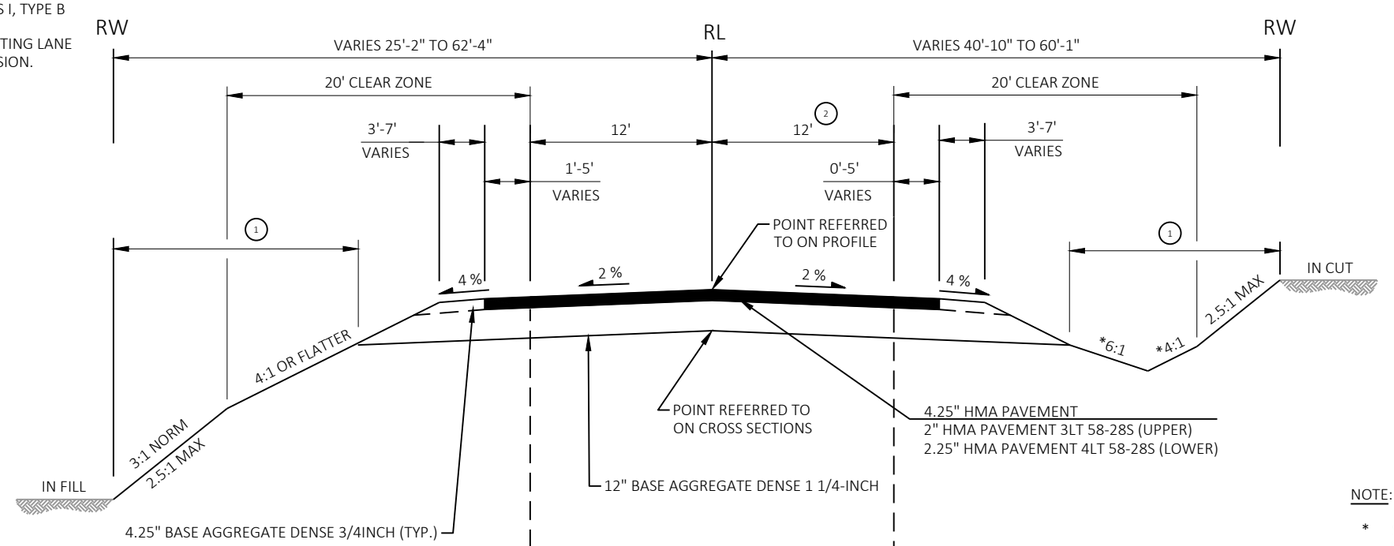


NOTE:

* SLOPE RATIO'S ARE TYPICAL WITHIN CLEAR ZONE LIMITS. FORESLOPES BEYOND CLEAR ZONE OUTSIDE OF GUARDRAIL LIMITS ARE 4:1 NORMAL WITH 2.5:1 MAX BACKSLOPE.

** BEHIND GUARDRAIL, MAX FORESLOPE AND BACKSLOPE IS 2.5:1. SEE SDD "MIDWEST GUARDRAIL SYSTEM (MGS) GUARDRAIL" AND "MIDWEST GUARDRAIL SYSTEM (MGS) TERMINAL" FOR GRADING REFERENCE BEHIND GUARDRAIL SYSTEM.

CONSTRUCT CONCRETE PAVEMENT APPROACH SLABS AND CONCRETE PAVEMENT 6-INCH FROM STATIONS 203+77.50 TO 204+07.95 AND STATIONS 204+82.26 TO 205+12.71 OVER 4½" BASE AGGREGATE DENSE 1-1/4 INCH. SEE SDD 13B02 FOR DETAILS.

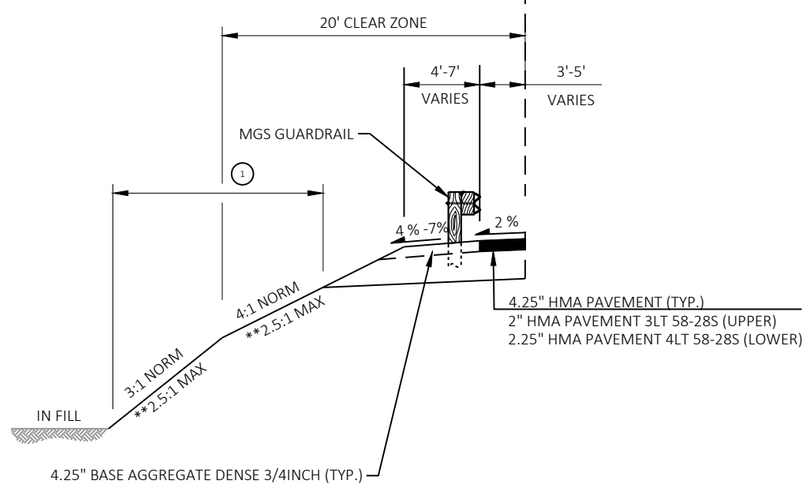


STA 202+75.56 - STA 203+66.15
STA 204+93.03 - STA 205+83.82

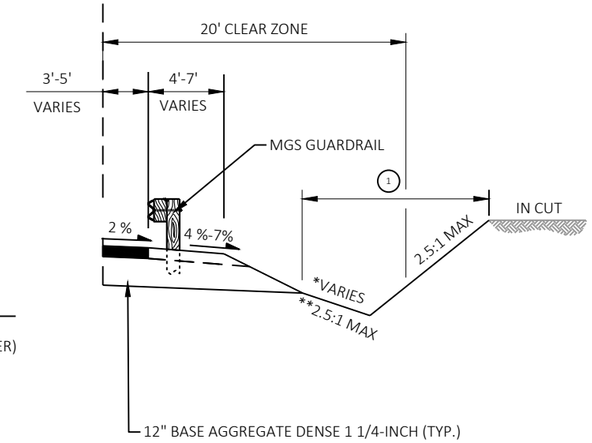


STA 203+06.59 - STA 203+97.18
STA 205+24.06 - STA 206+14.45

## FINISHED TYPICAL SECTION

STA 202+30 - STA 203+99.43
STA 204+90.78 - STA 206+20

2

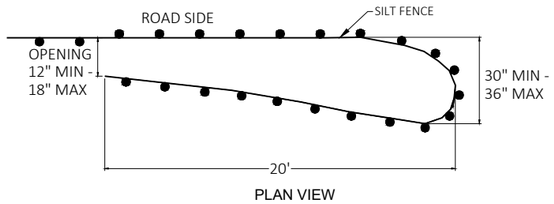


TEMPORARY SMALL ANIMAL TURN-AROUND

GENERAL NOTES:
SILT FENCE POSTS FOR THE TURN-AROUND SHOULD BE ON THE OUTSIDE OF THE TURN-AROUND AND TRENCHED IN ACCORDING TO SILT FENCE REQUIREMENTS.

2

N

STR. P-49-01
(EXISTING)

WETLANDS

PROPOSED R/W

EXISTING R/W

DITCH NUMBER 3

EXISTING R/W

BP: 200+00.00

PI: 202+70.00

PI: 205+30.00

EP: 207+69.09

201+00

202+00

203+00

204+00

205+00

CTH WW

206+00

207+00

FO

FO

FO

FO

FOURMILE CREEK

OH

OH

OH

OH

OH

FO-OH

FO-OH

FO

FO

FO

BEGIN CONSTRUCTION
STA 201+35.03

EXISTING R/W

SOLARUS
FIBER OPTIC

EXISTING R/W

END CONSTRUCTION
STA 207+51.62

LEGEND

SILT FENCE

ADAMS-COLUMBIA
ELECTRIC COOP

| PROJECT NO: 6777-00-70 | HWY: CTH WW | COUNTY: PORTAGE | EROSION CONTROL PLAN - PRECONSTRUCTION | SHEET 5 | E |
|---|---|---|---|---|---|

FILE NAME : X:\PROJECTS\PORTAGE\230064 CTH WW, FOUR MILE CREEK BRIDGE\DESIGN\C3D\SHEETSPLAN\022001-EC.DWG
LAYOUT NAME - 01
PLOT DATE : 10/31/2024 1:13 PM
PLOT BY : VINCE DIFRANCES
PLOT NAME :
PLOT SCALE : 1 IN:50 FT
WISDOT/CADDS SHEET 42

2

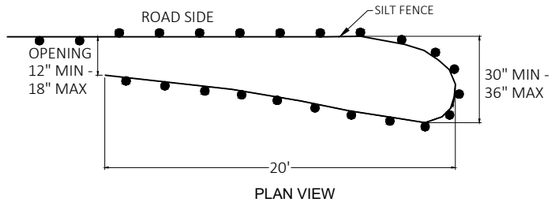


TEMPORARY SMALL ANIMAL TURN-AROUND

GENERAL NOTES:
SILT FENCE POSTS FOR THE TURN-AROUND SHOULD BE ON THE OUTSIDE OF THE TURN-AROUND AND TRENCHED IN ACCORDING TO SILT FENCE REQUIREMENTS.

2

N

RESTORATION UNDER THE BRIDGE IS CONTROLLED BY THE WATER ELEVATION AT THE TIME OF CONSTRUCTION

STR. P-49-01 (EXISTING)

WETLANDS

PROPOSED R/W

EXISTING R/W

SLOPE INTERCEPT

EXISTING R/W

DITCH NUMBER 3

STR. B-49-198 (PROPOSED)

BP: 200+00.00

201+00

202+00

203+00

204+00

205+00

CTH WW

206+00

207+00

EP: 207+69.09

FOURMILE CREEK

BEGIN CONSTRUCTION
STA 201+35.03

BEGIN PROJECT
STA 202+30.00

EXISTING R/W

SLOPE INTERCEPT

SOLARUS
FIBER OPTIC

SEEDING MIXTURE
NO. 60 FOR RESTORATION
BENEATH BRIDGE

EXISTING R/W

END PROJECT
STA 206+20.00

END CONSTRUCTION
STA 207+51.62

ADAMS-COLUMBIA
ELECTRIC COOP

LEGEND

- EROSION MAT URBAN CLASS I, TYPE B
- SILT FENCE
- SLOPE INTERCEPT
- TEMPORARY DITCH CHECK
- CULVERT PIPE CHECK
- SURFACE WATER FLOW
- TURBIDITY BARRIER
- RIP RAP
- SILT FENCE (INSTALLED PRECONSTRUCTION)
- SILT FENCE REMOVAL

| PROJECT NO: 6777-00-70 | HWY: CTH WW | COUNTY: PORTAGE | EROSION CONTROL PLAN | SHEET 6 | E |
|---|---|---|---|---|---|

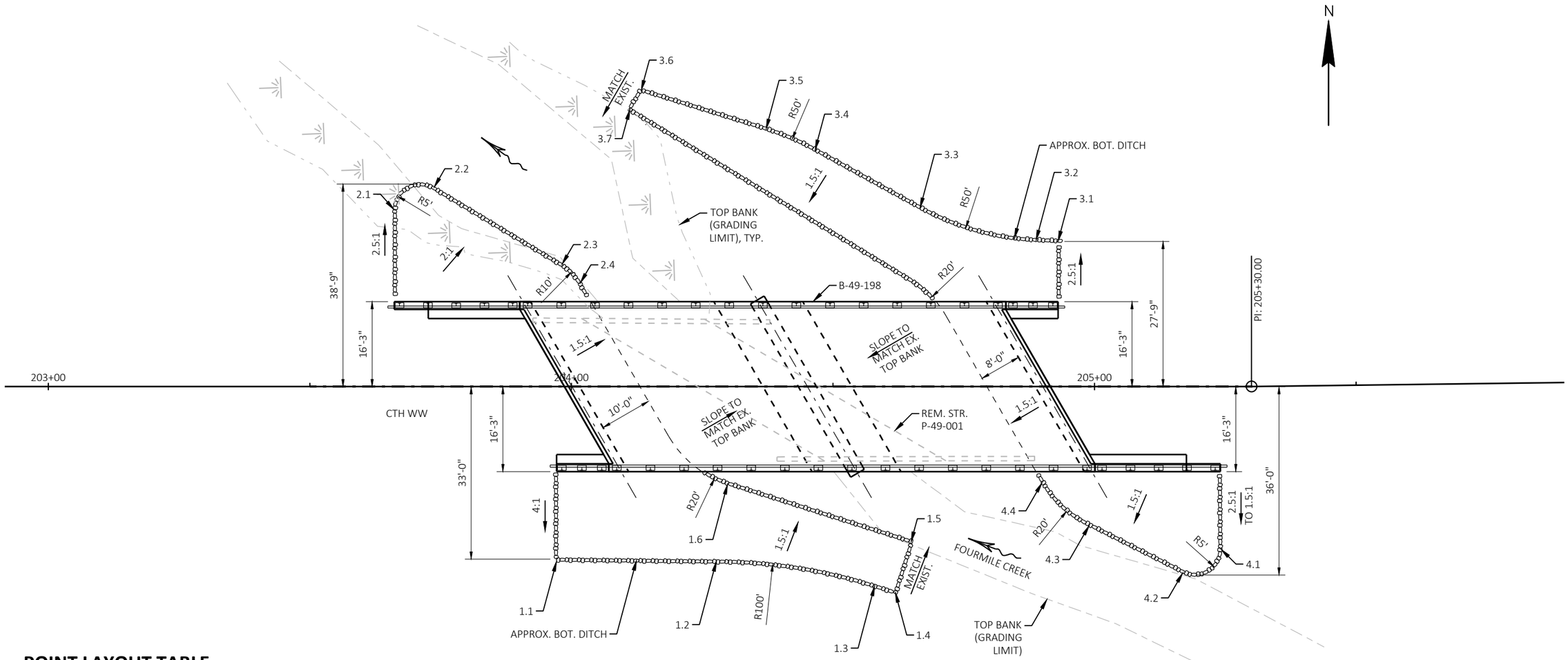


## POINT LAYOUT TABLE

| POINT | STATION | OFFSET | ELEVATION | POINT | STATION | OFFSET | ELEVATION |
|---|---|---|---|---|---|---|---|
| 1.1 | 203+97.18 | 33.0' RT. | 1048.50 | 3.1 | 204+93.03 | 27.75' LT. | 1048.50 |
| 1.2 | 204+27.73 | 33.33' RT. | 1047.91 | 3.2 | 204+88.81 | 27.75' LT. | 1048.42 |
| 1.3 | 204+58.00 | 38.03' RT. | 1049.70 | 3.3 | 204+66.65 | 34.11' LT. | 1051.65 |
| 1.4 | 204+61.90 | 39.27' RT. | 1048.35 | 3.4 | 204+46.57 | 45.20' LT. | 1051.61 |
| 1.5 | 204+64.93 | 29.73' RT. | MATCH BANK | 3.5 | 204+37.20 | 49.18' LT. | 1050.67 |
| 1.6 | 204+29.87 | 18.60' RT. | MATCH BANK | 3.6 | 204+13.33 | 56.58' LT. | 1046.24 |
| 2.1 | 203+66.15 | 33.78' LT. | MATCH EXIST. | 3.7 | 204+11.19 | 53.06' LT. | MATCH BANK |
| 2.2 | 203+73.73 | 38.06' LT. | MATCH EXIST. | 3.8 | 204+64.69 | 20.59' LT. | MATCH BANK |
| 2.3 | 203+98.18 | 23.33' LT. | MATCH BANK | 4.1 | 205+24.15 | 31.05' LT. | MATCH BANK |
| 2.4 | 204+01.68 | 19.77' LT. | MATCH BANK | 4.2 | 205+16.90 | 35.54' RT. | MATCH BANK |
| | | | | 4.3 | 204+99.00 | 26.51' RT. | MATCH BANK |
| | | | | 4.4 | 204+90.00 | 18.32' RT. | MATCH BANK |

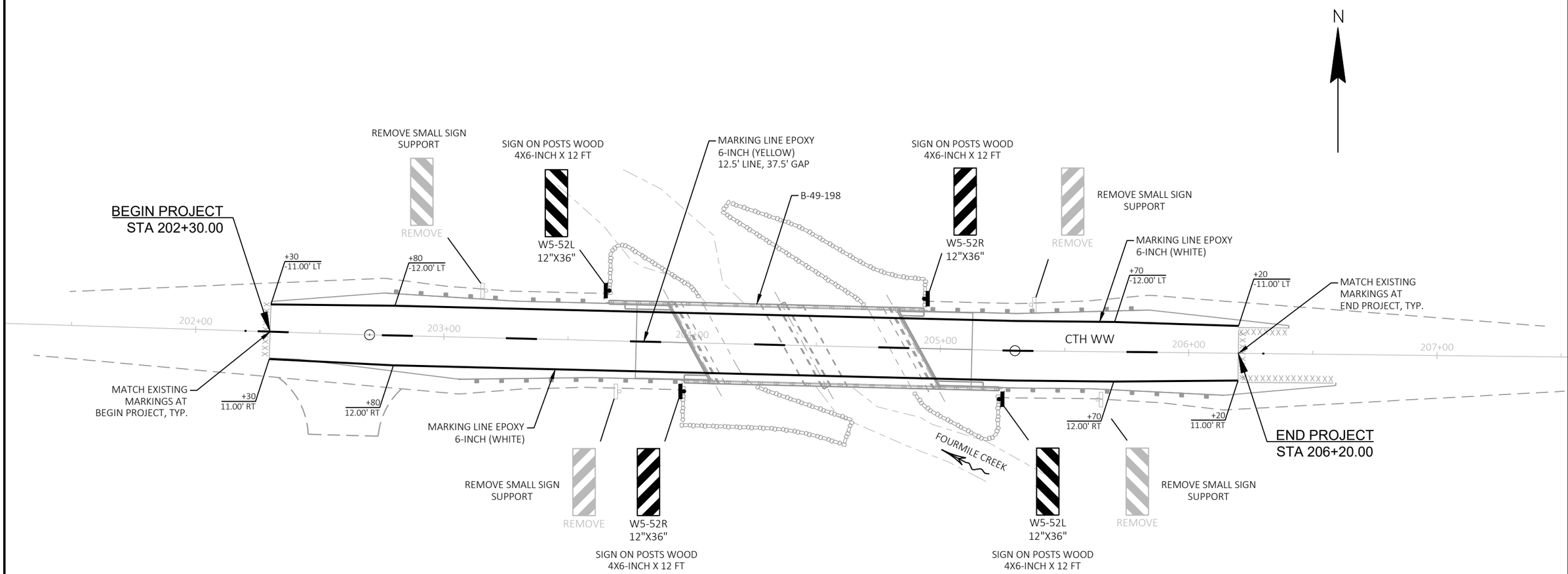


FOR ADDITIONAL PAVEMENT MARKING DETAILS, SEE SDD 15C8.

| PROJECT NO: 6777-00-70 | HWY: CTH WW | COUNTY: PORTAGE | PERMANENT SIGNING & PAVEMENT MARKING | SHEET 8 | E |
|---|---|---|---|---|---|

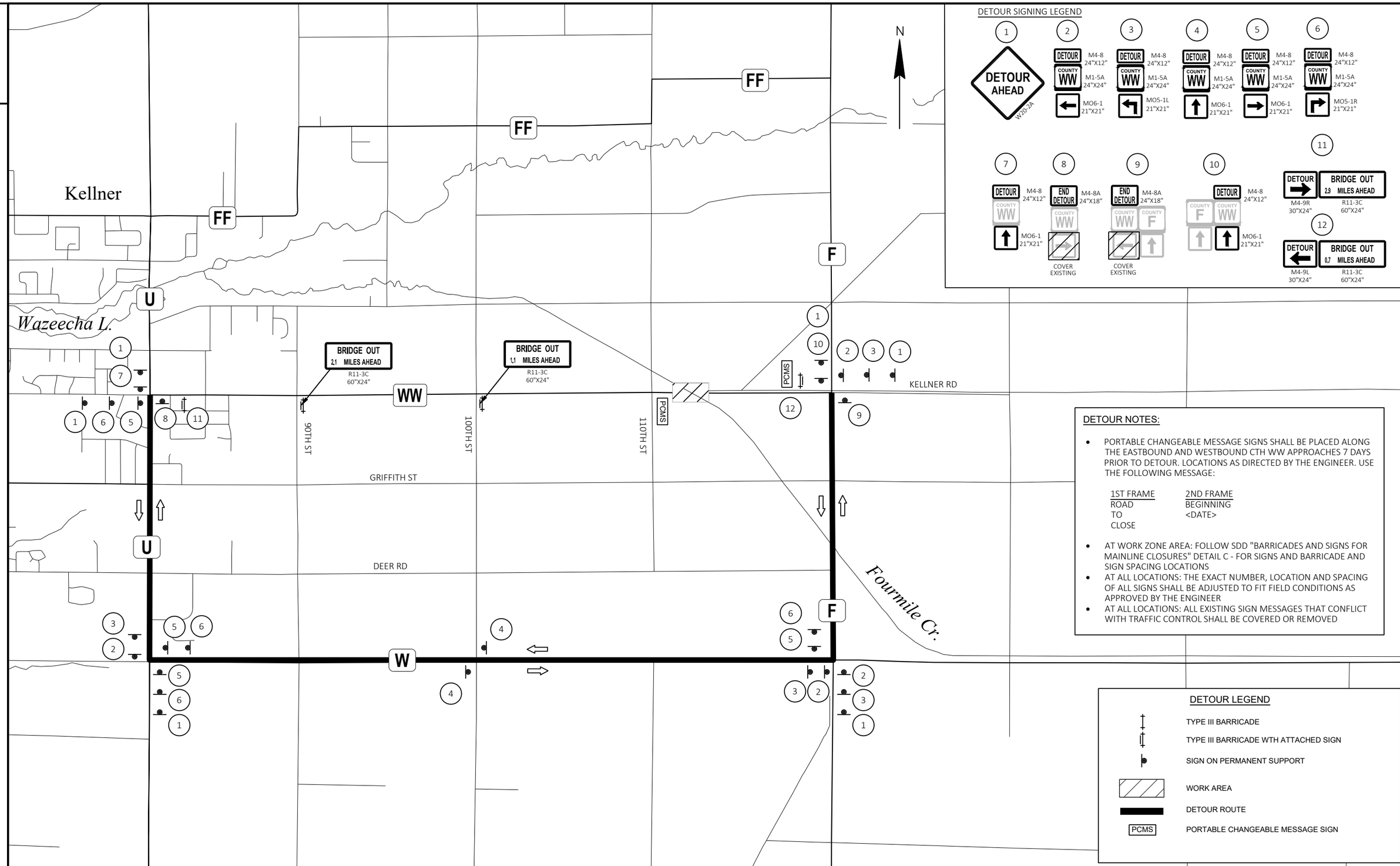


DETOUR SIGNING LEGEND

1 DETOUR AHEAD W20-2A

2 DETOUR M4-8 24"X12" / COUNTY WW M1-5A 24"X24" / ← MO6-1 21"X21"

3 DETOUR M4-8 24"X12" / COUNTY WW M1-5A 24"X24" / ↰ MO5-1L 21"X21"

4 DETOUR M4-8 24"X12" / COUNTY WW M1-5A 24"X24" / ↑ MO6-1 21"X21"

5 DETOUR M4-8 24"X12" / COUNTY WW M1-5A 24"X24" / → MO6-1 21"X21"

6 DETOUR M4-8 24"X12" / COUNTY WW M1-5A 24"X24" / ↱ MO5-1R 21"X21"

7 DETOUR M4-8 24"X12" / COUNTY WW / ↑ MO6-1 21"X21"

8 END DETOUR M4-8A 24"X18" / COUNTY WW / COVER EXISTING

9 END DETOUR M4-8A 24"X18" / COUNTY WW COUNTY F / COVER EXISTING

10 DETOUR M4-8 24"X12" / COUNTY F COUNTY WW / ↑ MO6-1 21"X21"

11 DETOUR → M4-9R 30"X24" / BRIDGE OUT 2.9 MILES AHEAD R11-3C 60"X24"

12 DETOUR ← M4-9L 30"X24" / BRIDGE OUT 0.7 MILES AHEAD R11-3C 60"X24"

DETOUR NOTES:

- PORTABLE CHANGEABLE MESSAGE SIGNS SHALL BE PLACED ALONG THE EASTBOUND AND WESTBOUND CTH WW APPROACHES 7 DAYS PRIOR TO DETOUR. LOCATIONS AS DIRECTED BY THE ENGINEER. USE THE FOLLOWING MESSAGE:

| 1ST FRAME | 2ND FRAME |
|---|---|
| ROAD | BEGINNING |
| TO | <DATE> |
| CLOSE | |

- AT WORK ZONE AREA: FOLLOW SDD "BARRICADES AND SIGNS FOR MAINLINE CLOSURES" DETAIL C - FOR SIGNS AND BARRICADE AND SIGN SPACING LOCATIONS
- AT ALL LOCATIONS: THE EXACT NUMBER, LOCATION AND SPACING OF ALL SIGNS SHALL BE ADJUSTED TO FIT FIELD CONDITIONS AS APPROVED BY THE ENGINEER
- AT ALL LOCATIONS: ALL EXISTING SIGN MESSAGES THAT CONFLICT WITH TRAFFIC CONTROL SHALL BE COVERED OR REMOVED

DETOUR LEGEND

- TYPE III BARRICADE
- TYPE III BARRICADE WTH ATTACHED SIGN
- SIGN ON PERMANENT SUPPORT
- WORK AREA
- DETOUR ROUTE
- PCMS — PORTABLE CHANGEABLE MESSAGE SIGN

| PROJECT NO: 6777-00-70 | HWY: CTH WW | COUNTY: PORTAGE | DETOUR ROUTE - OVERVIEW | SHEET 9 | E |
|---|---|---|---|---|---|

FILE NAME : X:\PROJECTS\PORTAGE\230064 CTH WW, FOUR MILE CREEK BRIDGE\DESIGN\C3D\SHEETSPLAN\027001-DT.DWG
LAYOUT NAME - 01
PLOT DATE : 10/30/2024 11:14 AM PLOT BY : VINCE DIFRANCES PLOT NAME : PLOT SCALE : 1 IN:0.5 MI

2

## DETAIL LEGEND

TYPE III BARRICADE

TYPE III BARRICADE WTH ATTACHED SIGN

WORK AREA

## BRIDGE OUT DETAIL LEGEND




2

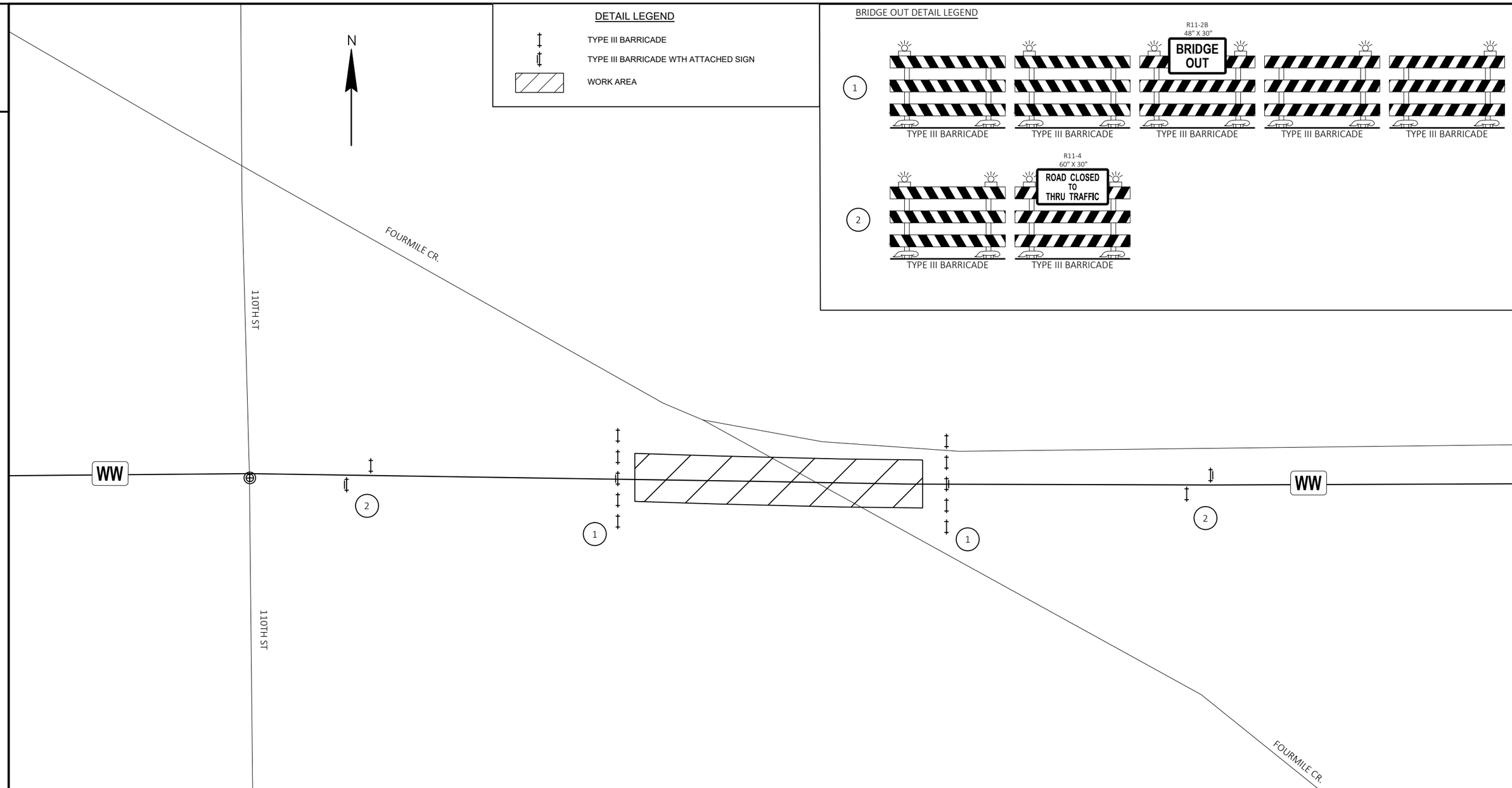


## DETAIL NOTES:

THE EXACT NUMBER, LOCATION, AND SPACING OF ALL SIGNS, BARRICADES, AND BARRIERS SHALL BE ADJUSTED TO FIT FIELD CONDITIONS AS APPROVED BY THE ENGINEER.

IMMEDIATELY REESTABLISH ALL BARRICADES AND/OR DRUMS THAT MUST BE MOVED FOR A WORK OPERATION UPON COMPLETION OF THE OPERATION, OR FOR CONTINUING OPERATIONS, AT THE END OF THE DAY.

INSTALL ADVANCED WARNING SIGNS PRIOR TO THE BEGINNING OF THE PROJECT IN ACCORDANCE WITH STANDARD DETAIL DRAWING "BARRICADES AND SIGNS FOR MAINLINE CLOSURES, DETAIL C AND DETAIL D". NOT ALL REQUIRED SIGNS SHOWN ON THIS SHEET.

| PROJECT NO: 6777-00-70 | HWY: CTH WW | COUNTY: PORTAGE | DETOUR ROUTE - BRIDGE OUT DETAIL | SHEET 10 | E |
|---|---|---|---|---|---|

## Estimate Of Quantities

6777-00-70

| Line | Item | Item Description | Unit | Total | Qty |
|---|---|---|---|---|---|
| 0002 | 201.0205 | Grubbing | STA | 3.000 | 3.000 |
| 0004 | 203.0250 | Removing Structure Over Waterway Remove Debris (structure) 01. P-49-001 | EACH | 1.000 | 1.000 |
| 0006 | 204.0165 | Removing Guardrail | LF | 458.000 | 458.000 |
| 0008 | 204.0180 | Removing Delineators and Markers | EACH | 4.000 | 4.000 |
| 0010 | 205.0100 | Excavation Common | CY | 1,976.000 | 1,976.000 |
| 0012 | 206.1001 | Excavation for Structures Bridges (structure) 01. B-49-198 | EACH | 1.000 | 1.000 |
| 0014 | 210.1500 | Backfill Structure Type A | TON | 220.000 | 220.000 |
| 0016 | 213.0100 | Finishing Roadway (project) 01. 6770-00-70 | EACH | 1.000 | 1.000 |
| 0018 | 305.0110 | Base Aggregate Dense 3/4-Inch | TON | 120.000 | 120.000 |
| 0020 | 305.0120 | Base Aggregate Dense 1 1/4-Inch | TON | 1,100.000 | 1,100.000 |
| 0022 | 415.0060 | Concrete Pavement 6-Inch | SY | 28.000 | 28.000 |
| 0024 | 415.0410 | Concrete Pavement Approach Slab | SY | 118.000 | 118.000 |
| 0026 | 455.0605 | Tack Coat | GAL | 70.000 | 70.000 |
| 0028 | 460.2000 | Incentive Density HMA Pavement | DOL | 140.000 | 140.000 |
| 0030 | 460.5223 | HMA Pavement 3 LT 58-28 S | TON | 101.000 | 101.000 |
| 0032 | 460.5224 | HMA Pavement 4 LT 58-28 S | TON | 113.000 | 113.000 |
| 0034 | 502.0100 | Concrete Masonry Bridges | CY | 289.000 | 289.000 |
| 0036 | 502.3200 | Protective Surface Treatment | SY | 424.000 | 424.000 |
| 0038 | 505.0400 | Bar Steel Reinforcement HS Structures | LB | 9,080.000 | 9,080.000 |
| 0040 | 505.0600 | Bar Steel Reinforcement HS Coated Structures | LB | 52,780.000 | 52,780.000 |
| 0042 | 513.4061 | Railing Tubular Type M | LF | 260.000 | 260.000 |
| 0044 | 516.0500 | Rubberized Membrane Waterproofing | SY | 24.000 | 24.000 |
| 0046 | 520.1018 | Apron Endwalls for Culvert Pipe 18-Inch | EACH | 2.000 | 2.000 |
| 0048 | 521.3118 | Culvert Pipe Corrugated Steel 18-Inch | LF | 46.000 | 46.000 |
| 0050 | 550.0500 | Pile Points | EACH | 22.000 | 22.000 |
| 0052 | 550.2128 | Piling CIP Concrete 12 3/4 X 0.50-Inch | LF | 1,505.000 | 1,505.000 |
| 0054 | 606.0050 | Riprap Extra-Light | CY | 81.000 | 81.000 |
| 0056 | 606.0300 | Riprap Heavy | CY | 320.000 | 320.000 |
| 0058 | 612.0406 | Pipe Underdrain Wrapped 6-Inch | LF | 190.000 | 190.000 |
| 0060 | 614.2500 | MGS Thrie Beam Transition | LF | 157.600 | 157.600 |
| 0062 | 614.2610 | MGS Guardrail Terminal EAT | EACH | 4.000 | 4.000 |
| 0064 | 619.1000 | Mobilization | EACH | 1.000 | 1.000 |
| 0066 | 624.0100 | Water | MGAL | 25.000 | 25.000 |
| 0068 | 625.0100 | Topsoil | SY | 2,080.000 | 2,080.000 |
| 0070 | 628.1504 | Silt Fence | LF | 1,885.000 | 1,885.000 |
| 0072 | 628.1520 | Silt Fence Maintenance | LF | 1,885.000 | 1,885.000 |
| 0074 | 628.1905 | Mobilizations Erosion Control | EACH | 5.000 | 5.000 |
| 0076 | 628.1910 | Mobilizations Emergency Erosion Control | EACH | 3.000 | 3.000 |
| 0078 | 628.2008 | Erosion Mat Urban Class I Type B | SY | 2,425.000 | 2,425.000 |
| 0080 | 628.6005 | Turbidity Barriers | SY | 220.000 | 220.000 |
| 0082 | 628.7504 | Temporary Ditch Checks | LF | 80.000 | 80.000 |
| 0084 | 628.7555 | Culvert Pipe Checks | EACH | 5.000 | 5.000 |
| 0086 | 629.0210 | Fertilizer Type B | CWT | 1.300 | 1.300 |
| 0088 | 630.0120 | Seeding Mixture No. 20 | LB | 80.000 | 80.000 |
| 0090 | 630.0160 | Seeding Mixture No. 60 | LB | 6.000 | 6.000 |
| 0092 | 630.0200 | Seeding Temporary | LB | 57.000 | 57.000 |
| 0094 | 630.0500 | Seed Water | MGAL | 52.000 | 52.000 |
| 0096 | 634.0612 | Posts Wood 4x6-Inch X 12-FT | EACH | 4.000 | 4.000 |
| 0098 | 637.2230 | Signs Type II Reflective F | SF | 12.000 | 12.000 |

## Estimate Of Quantities

6777-00-70

| Line | Item | Item Description | Unit | Total | Qty |
|---|---|---|---|---|---|
| 0100 | 638.2602 | Removing Signs Type II | EACH | 4.000 | 4.000 |
| 0102 | 638.3000 | Removing Small Sign Supports | EACH | 4.000 | 4.000 |
| 0104 | 642.5001 | Field Office Type B | EACH | 1.000 | 1.000 |
| 0106 | 643.0420 | Traffic Control Barricades Type III | DAY | 1,692.000 | 1,692.000 |
| 0108 | 643.0705 | Traffic Control Warning Lights Type A | DAY | 2,632.000 | 2,632.000 |
| 0110 | 643.0900 | Traffic Control Signs | DAY | 7,520.000 | 7,520.000 |
| 0112 | 643.0920 | Traffic Control Covering Signs Type II | EACH | 2.000 | 2.000 |
| 0114 | 643.1050 | Traffic Control Signs PCMS | DAY | 14.000 | 14.000 |
| 0116 | 643.5000 | Traffic Control | EACH | 1.000 | 1.000 |
| 0118 | 645.0111 | Geotextile Type DF Schedule A | SY | 110.000 | 110.000 |
| 0120 | 645.0120 | Geotextile Type HR | SY | 630.000 | 630.000 |
| 0122 | 646.2020 | Marking Line Epoxy 6-Inch | LF | 890.000 | 890.000 |
| 0124 | 650.4500 | Construction Staking Subgrade | LF | 526.000 | 526.000 |
| 0126 | 650.5000 | Construction Staking Base | LF | 280.000 | 280.000 |
| 0128 | 650.6000 | Construction Staking Pipe Culverts | EACH | 1.000 | 1.000 |
| 0130 | 650.6501 | Construction Staking Structure Layout (structure) 01. B-49-198 | EACH | 1.000 | 1.000 |
| 0132 | 650.9911 | Construction Staking Supplemental Control (project) 01. 6777-00-70 | EACH | 1.000 | 1.000 |
| 0134 | 650.9920 | Construction Staking Slope Stakes | LF | 526.000 | 526.000 |
| 0136 | 690.0150 | Sawing Asphalt | LF | 112.000 | 112.000 |
| 0138 | 715.0502 | Incentive Strength Concrete Structures | DOL | 1,734.000 | 1,734.000 |
| 0140 | 715.0720 | Incentive Compressive Strength Concrete Pavement | DOL | 500.000 | 500.000 |
| 0142 | ASP.1T0A | On-the-Job Training Apprentice at $5.00/HR | HRS | 300.000 | 300.000 |
| 0144 | ASP.1T0G | On-the-Job Training Graduate at $5.00/HR | HRS | 600.000 | 600.000 |
| 0146 | SPV.0060 | Special 01. Temporary Stream Diversion | EACH | 1.000 | 1.000 |
| 0148 | SPV.0090 | Special 01. Flashing Stainless Steel | LF | 183.000 | 183.000 |

3

**GRUBBING**

| STA | TO | STA | LOCATION | 201.0205 GRUBBING STA |
|---|---|---|---|---|
| 201+35 | --- | 204+35 | LT & RT | 3 |
| | | | **TOTAL** | **3** |

**REMOVING GUARDRAIL**

| STA | TO | STA | LOCATION | 204.0165 REMOVING GUARDRAIL LF | 204.0180 REMOVING DELINEATORS AND MARKERS EACH |
|---|---|---|---|---|---|
| 203+01 | --- | 205+43 | LT | 242 | 2 |
| 203+60 | --- | 205+76 | RT | 216 | 2 |
| | | | **TOTAL** | **458** | **4** |

**BASE AGGREGATE**

| STA | TO | STA | 305.0110 BASE AGGREGATE DENSE 3/4-INCH TON | 305.0120 BASE AGGREGATE DENSE 1 1/14-INCH TON | 624.0100 WATER MGAL |
|---|---|---|---|---|---|
| 202+30 | -- | 204+07 | 70 | 634 | 15 |
| 205+82 | -- | 206+20 | 50 | 466 | 10 |
| | | **TOTAL** | **120** | **1100** | **25** |

3

CTH WW

| DIVISION | FROM/TO STATION | LOCATION | 205.0100 COMMON EXCAVATION (1) CUT (2) | EBS EXCAVATION (3) | SALVAGED/UNUSABLE PAVEMENT MATERIAL (4) | AVAILABLE MATERIAL (5) | UNEXPANDED FILL | EXPANDED FILL (13) FACTOR 1.25 | MASS ORDINATE +/- (14) | WASTE | COMMENT |
|---|---|---|---|---|---|---|---|---|---|---|---|
| DIVISION 1 | | | | | | | | | | | |
| CTH WW | 201+35.03/207+51.62 | | 1,976 | 0 | 0 | 1,976 | 161 | 201 | 1,775 | 1,775 | |
| DIVISION 1 SUBTOTAL | | | 1,976 | 0 | 0 | 1,976 | 161 | 201 | 1,775 | 1,775 | |
| GRAND TOTAL | | | 1,976 | 0 | 0 | 1,976 | 161 | 201 | 1,775 | 1,775 | |
| TOTAL COMMON EXC | | | 1,976 | | | | | | | | |

NOTES:
(1) COMMON EXCAVATION IS THE SUM OF THE CUT AND EBS EXCAVATION COLUMNS. ITEM NUMBER 205.0100
(2) SALVAGED/UNSUABLE PAVEMENT MATERIAL IS INCLUDED IN CUT.
(13) EXPANDED FILL FACTOR = 1.25
DEPENDING ON SELECTIONS: EXPANDED FILL = (UNEXPANDED FILL - EXPANDED ROCK - REDUCED MARSH - REDUCED EBS) * FILL FACTOR
OR EXPANDED FILL = (UNEXPANDED FILL - EXPANDED ROCK - REDUCED EBS) * FILL FACTOR
OR EXPANDED FILL = (UNEXPANDED FILL - EXPANDED ROCK - REDUCED MARSH) * FILL FACTOR
OR EXPANDED FILL = (UNEXPANDED FILL - EXPANDED ROCK) * FILL FACTOR
(14) THE MASS ORDINATE + OR - QTY CALCULATED FOR THE DIVISION. PLUS QUANTITY INDICATES AN EXCESS OF MATERIAL WITHIN THE DIVISION. MINUS INDICATES A SHORTAGE OF MATERIAL WITHIN THE DIVISION.
(15) FACTORS USED TO COMPUTE ANTICIPATED WASTE AND THE COMPUTED WASTE VOLUME IDENTIFIED ARE FOR GENERAL INFORMATION ONLY.

ALL ITEMS ARE CATEGORY 0010 UNLESS OTHERWISE NOTED.

3

## CULVERT PIPE

| STA | LOCATION | 521.1018 APRON ENDWALLS FOR CULVERT PIPE STEEL 18-INCH EACH | 521.3118 CULVERT PIPE CORRUGATED STEEL 18-INCH LF | STEEL THICKNESS INCHES | OFFSET | INV. ELEV.*** | OFFSET | INV. ELEV*** |
|---|---|---|---|---|---|---|---|---|
| 202+60 | RT | --- | 46 | 0.064 | --- | --- | --- | --- |
| 202+37 | RT | 1 | --- | 0.064 | 28.81 | 1049.33 | --- | --- |
| 202+83 | RT | 1 | --- | 0.064 | --- | --- | 32.17 | 1049.13 |
| | **TOTAL** | **2** | **46** | | | | | |

*** INVERT ELEVATION IS AT THE END OF PIPE

## HMA & CONCRETE PAVEMENT

| STA | TO | STA | 415.0410 CONCRETE PAVEMENT APPROACH SLAB SY | 415.0060 CONCRETE PAVEMENT 6-INCH SY | 455.0605 TACK COAT GAL | 460.5223 HMA PAVEMENT 3 LT 58-28 S TON | 460.5224 HMA PAVEMENT 4 LT 58-28 S TON |
|---|---|---|---|---|---|---|---|
| 202+30 | -- | 203+77 | --- | --- | 40 | 58 | 65 |
| 203+77 | -- | 203+99 | 59 | 14 | --- | --- | --- |
| 204+91 | -- | 205+12 | 59 | 14 | --- | --- | --- |
| 205+12 | -- | 206+60 | --- | --- | 30 | 43 | 48 |
| | | **TOTAL** | **118** | **28** | **70** | **101** | **113** |

3

## PAVEMENT MARKING

| STA | TO | STA | 646.2020 MARKING LINE EPOXY 6-INCH LF | REMARKS |
|---|---|---|---|---|
| 202+30 | -- | 206+20 | 390 | EDGE LINE, WHITE |
| 202+20 | -- | 206+30 | 110 | 12.5' LINE, 37.5' GAP, YELLOW |
| 202+30 | -- | 206+20 | 390 | EDGE LINE, WHITE |
| | | **TOTAL** | **890** | |

## MGS GUARDRAIL

| STA | TO | STA | LOCATION | 614.2500 MGS THRIE BEAM TRANSITION LF | 614.2610 MGS GUARDRAIL TERMINAL EAT EACH |
|---|---|---|---|---|---|
| 202+76 | --- | 203+68 | LT | 39.4 | 1 |
| 203+07 | --- | 203+99 | RT | 39.4 | 1 |
| 204+92 | --- | 205+84 | LT | 39.4 | 1 |
| 205+23 | --- | 206+14 | RT | 39.4 | 1 |
| | | | **TOTAL** | **157.6** | **4** |

## CONSTRUCTION STAKING

| CAT | STA | TO | STA | 650.4500 CONSTRUCTION STAKING SUBGRADE LF | 650.5000 CONSTRUCTION STAKING BASE LF | 650.6000 CONSTRUCTION STAKING PIPE CULVERTS EACH | 650.6501 CONSTRUCTION STAKING STRUCTURE LAYOUT B-49-198 | 650.9911 CONSTRUCTION STAKING SUPPLEMENTAL CONTROL 6777-00-70 | 650.9920 CONSTRUCTION STAKING SLOPE STAKES LF |
|---|---|---|---|---|---|---|---|---|---|
| 0010 | 201+35 | --- | 203+99 | 264 | --- | --- | --- | --- | 264 |
| 0010 | 202+30 | --- | 203+80 | --- | 150 | --- | --- | --- | --- |
| 0010 | 202+37 | --- | 202+83 | --- | --- | 1 | --- | --- | --- |
| 0010 | 204+90 | --- | 207+52 | 262 | --- | --- | --- | 1 | 262 |
| 0010 | 204+90 | --- | 206+20 | --- | 130 | --- | --- | --- | --- |
| 0020 | 203+99 | --- | 204+90 | --- | --- | --- | 1 | --- | --- |
| | | | **TOTAL** | **526** | **280** | **1** | **1** | **1** | **526** |

## PERMANENT SIGNING

| STA | LOCATION | 634.0612 POSTS WOOD 4X6-INCH 12-FT EACH | 637.2230 SIGNS TYPE II REFLECTIVE F SF | 638.2602 REMOVING SIGNS TYPE II EACH | 638.3000 REMOVING SMALL SIGN SUPPORTS EACH |
|---|---|---|---|---|---|
| 203+16 | LT | --- | --- | 1 | 1 |
| 203+71 | RT | --- | --- | 1 | 1 |
| 205+36 | LT | --- | --- | 1 | 1 |
| 205+64 | RT | --- | --- | 1 | 1 |
| 203+66 | LT | 1 | 3 | --- | --- |
| 203+97 | RT | 1 | 3 | --- | --- |
| 204+93 | LT | 1 | 3 | --- | --- |
| 204+24 | RT | 1 | 3 | --- | --- |
| | **TOTAL** | **4** | **12** | **4** | **4** |

ALL ITEMS ARE CATEGORY 0010 UNLESS OTHERWISE NOTED.

3

**SAWING**

| STA | 690.0150 SAWING ASPHALT LF |
|---|---|
| 202+30 | 30 |
| 206+20 | 82 |
| **TOTAL** | **112** |

**LANDSCAPING SUMMARY**

| STA | TO | STA | LOCATION | 625.0100 TOPSOIL SY | 629.0210 FERTILIZER TYPE B CWT | 630.0120 SEEDING MIXTURE NO. 20 LB | 630.0160 SEEDING MIXTURE NO. 60 LB | 630.0200 SEEDING TEMPORARY LB | 630.0500 SEED WATER MGAL |
|---|---|---|---|---|---|---|---|---|---|
| 201+35 | --- | 203+67 | LT | 390 | 0.25 | 15 | 2 | 11 | 9 |
| 201+35 | --- | 203+95 | RT | 470 | 0.30 | 21 | --- | 13 | 12 |
| 204+94 | --- | 207+52 | LT | 510 | 0.30 | 23 | --- | 14 | 13 |
| 205+27 | --- | 207+52 | RT | 520 | 0.30 | 12 | 4 | 14 | 13 |
| UNDISTRIBUTED | | | | 190 | 0.15 | 9 | --- | 5 | 5 |
| | | | **TOTAL** | **2080** | **1.3** | **80** | **6** | **57** | **52** |

**EROSION CONTROL SUMMARY**

| STA | TO | STA | LOCATION | 628.1504 SILT FENCE LF | 628.1520 SILT FENCE MAINTENANCE LF | 628.1905 MOBILIZATION EROSION CONTROL EACH | 628.1910 MOBILIZATION EMERGENCY EROSION CONTROL EACH | 628.2008 EROSION MAT URBAN CLASS I TYPE B SY | 628.6005 TURBIDITY BARRIERS SY | 628.7504 TEMPORARY DITCH CHECKS LF | 628.7555 CULVERT PIPE CHECKS EACH | REMARKS |
|---|---|---|---|---|---|---|---|---|---|---|---|---|
| 201+35 | --- | 204+67 | RT | 566 | 566 | | | 390 | --- | 20 | 1 | |
| 201+48 | --- | 203+93 | LT | 338 | 338 | 5 | 3 | 470 | --- | 20 | --- | |
| 204+12 | --- | 207+43 | LT | 423 | 423 | | | 510 | --- | 20 | --- | |
| 204+88 | --- | 207+52 | RT | 385 | 385 | | | 520 | --- | 10 | --- | |
| 203+55 | --- | 204+71 | LT & RT | --- | --- | --- | --- | --- | 68 | --- | --- | AT WEST BANK |
| 204+10 | --- | 205+49 | LT & RT | --- | --- | --- | --- | --- | 132 | --- | --- | AT EAST BANK |
| 204+05 | --- | 205+17 | LT & RT | --- | --- | --- | --- | 315 | --- | --- | --- | ADJACENT TO FOURMILE CREEK |
| UNDISTRIBUTED | | | | 173 | 173 | --- | --- | 220 | 20 | 10 | 4 | |
| | | | **TOTAL** | **1885** | **1885** | **5** | **3** | **2425** | **220** | **80** | **5** | |

**TRAFFIC CONTROL SUMMARY**

| LOCATION | APPROX. SERVICE DAYS | NO. IN SERVICE | 643.0420 TRAFFIC CONTROL BARRIACADES TYPE III DAY | NO. IN SERVICE | 643.0705 TRAFFIC CONTROL WARNING LIGHTS TYPE A DAY | NO. IN SERVICE | 643.0900 TRAFFIC CONTROL SIGNS DAY | 643.0900 TRAFFIC CONTROL COVERING SIGNS TYPE II EACH | NO. IN SERVICE | 643.1050 TRAFFIC CONTROL SIGNS PCMS DAY | 643.5000 TRAFFIC CONTROL EACH |
|---|---|---|---|---|---|---|---|---|---|---|---|
| CTH WW | 94 | 18 | 1692 | 28 | 2632 | 80 | 7520 | 2 | --- | --- | 1 |
| CTH WW | 7 | --- | --- | --- | --- | --- | --- | --- | 2 | 14 | --- |
| **TOTAL** | | | **1692** | | **2632** | | **7520** | **2** | | **14** | **1** |

ALL ITEMS ARE CATEGORY 0010 UNLESS OTHERWISE NOTED.

POSITIONS SHOWN ON THIS PLAT ARE WISCONSIN COORDINATE REFERENCE SYSTEM (WISCRS), PORTAGE COUNTY, NAD83 (2011) IN US SURVEY FEET. VALUES SHOWN ARE GRID COORDINATES, GRID BEARINGS, AND GRID DISTANCES. GRID DISTANCES MAY BE USED AS GROUND DISTANCES.

ALL NEW RIGHT OF WAY MONUMENTS WILL BE TYPE 2 (TYPICALLY ¾" X 24" IRON REBARS), UNLESS OTHERWISE NOTED, AND WILL BE PLACED PRIOR TO THE COMPLETION OF THE PROJECT.

FOUND MONUMENT INFORMATION SHOWN REPRESENTS TYPE AND LOCATION OF EXISTING MONUMENTS WITHOUT OPINION AS TO THEIR VALIDITY AND USE AS A PROPERTY CORNER.

FOUND IRON PINS ARE 3/4" REBAR, UNLESS OTHERWISE NOTED IN THE FOUND MONUMENTATION TABLE.

FOR THE CURRENT ACCESS/DRIVEWAY INFORMATION, CONTACT THE PORTAGE COUNTY PUBLIC WORKS DEPARTMENT.

RIGHT OF WAY BOUNDARIES ARE DEFINED WITH COURSES OF THE PERIMETER OF THE HIGHWAY LANDS REFERENCED TO THE U.S. PUBLIC LAND SURVEY SYSTEM OR OTHER "SURVEYS" OF PUBLIC RECORD.

EXISTING HIGHWAY RIGHT OF WAY HEREIN IS BASED ON THE FOLLOWING POINTS OF REFERENCE.

EXISTING RIGHT OF WAY FOR CTH WW ESTABLISHED FROM POS BY DONALD J SCHMOLL 2014, TOWN OF GRANT ROAD RECORD FILED ON DECEMBER 9, 1908, AND PRESUMPTION OF 4 ROD WIDTH FROM QUARTER LINE OR CENTERLINE PER SCHMOLL SURVEY BASED UPON CONVERSATION WITH THE COUNTY OF PORTAGE HIGHWAY STAFF, STATE STATUTORY GUIDELINES, AND PHYSICAL OCCUPATION/IMPROVEMENTS. SAID PRESUMPTION APPLIED AS BASE WIDTH FOR CTH WW. "ORIGINAL ROADWAY WIDTH AND LAYOUT RECORDS APPEAR LOST FOR THIS SEGMENT OF ROADWAY." TOWN ROAD RECORD FILED ON DECEMBER 9, 1908 WAS APPLIED TO THIS BASE WIDTH EQUALLY ON EACH SIDE OF CTH WW.

| SCHEDULE OF LANDS & INTERESTS REQUIRED | | | | | |
|---|---|---|---|---|---|
| PARCEL NUMBER | OWNER (S) | INTEREST(S) REQUIRED | FEE R/W S.F. REQUIRED | | |
| | | | NEW | EXISTING | TOTAL |
| 1 | MARY E MILLMAN | FEE | 6449 | 6718 | 13167 |

OWNER'S NAMES ARE SHOWN FOR REFERENCE PURPOSES ONLY AND ARE SUBJECT TO CHANGE PRIOR TO THE TRANSFER OF LAND INTERESTS TO THE COUNTY.

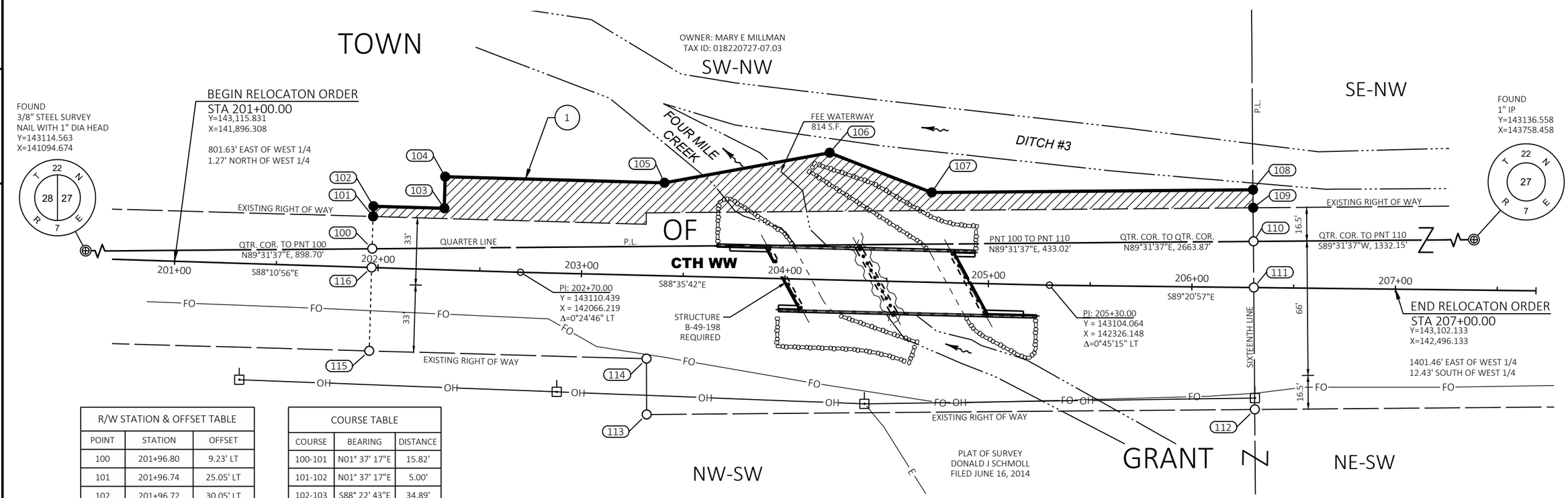


| R/W STATION & OFFSET TABLE | | |
|---|---|---|
| POINT | STATION | OFFSET |
| 100 | 201+96.80 | 9.23' LT |
| 101 | 201+96.74 | 25.05' LT |
| 102 | 201+96.72 | 30.05' LT |
| 103 | 202+31.61 | 30.17' LT |
| 104 | 202+31.56 | 45.73' LT |
| 105 | 203+39.66 | 45.60' LT |
| 106 | 204+20.40 | 62.36' LT |
| 107 | 204+71.08 | 44.12' LT |
| 108 | 206+29.46 | 47.99' LT |
| 109 | 206+29.63 | 39.13' LT |
| 110 | 206+29.95 | 22.63' LT |
| 111 | 206+30.40 | 0.00' RT |
| 112 | 206+31.56 | 59.85' RT |
| 113 | 203+33.66 | 68.30' RT |
| 114 | 203+32.94 | 40.94' RT |
| 115 | 201+96.97 | 40.95' RT |
| 116 | 201+96.83 | 0.00' RT |

| COURSE TABLE | | |
|---|---|---|
| COURSE | BEARING | DISTANCE |
| 100-101 | N01° 37' 17"E | 15.82' |
| 101-102 | N01° 37' 17"E | 5.00' |
| 102-103 | S88° 22' 43"E | 34.89' |
| 103-104 | N01° 37' 17"E | 15.57' |
| 104-105 | S88° 22' 43"E | 107.78' |
| 105-106 | N79° 40' 52"E | 82.45' |
| 106-107 | S68° 48' 16"E | 53.87' |
| 107-108 | N89° 31' 37"E | 157.83' |
| 108-109 | S00° 27' 43"E | 8.86' |
| 109-110 | S00° 27' 43"E | 16.50' |
| 110-111 | S00° 28' 00"E | 22.64' |
| 111-112 | S00° 28' 00"E | 59.86' |
| 112-113 | S89° 31' 37"W | 298.84' |
| 113-114 | N00° 06' 04"W | 27.38' |
| 114-115 | N88° 22' 43"W | 136.26' |
| 115-116 | N01° 37' 17"E | 40.95' |
| 116-100 | N01° 37' 17"E | 9.23' |

| | | | | | |
|---|---|---|---|---|---|
| REVISION DATE | DATE 5/22/2024 | SCALE, FEET 0 25 50 | HWY: CTH WW | STATE R/W PROJECT NUMBER 6777-00-00 | PLAT SHEET 4.01 |
| | GRID FACTOR N/A | | COUNTY: PORTAGE | CONSTRUCTION PROJECT NUMBER 6777-00-70 | PS&E SHEET 16 |

E

FILE NAME : 040101-RP.DWG
LAYOUT NAME - 4.01
PLOT DATE : 5/22/2024 2:17 PM PLOT BY : RYAN MALUEG PLOT NAME : PLOT SCALE : 1 IN:50 FT
WISDOT/CADDS SHEET 75

| BENCH MARKS | | | | | |
|---|---|---|---|---|---|
| NO. | STATION | ELEV. | DESCRIPTION | Y | X |
| 1000 | OFF ALIGN | 1051.54 | RR SPIKE IN RED PINE | 143084.591 | 141662.042 |
| 1001 | 206+32.30 | 1054.54 | PK NAIL IN PPOL | 143048.634 | 142427.825 |
| 1002 | OFF ALIGN | 1052.44 | PK NAIL IN PPOL | 143054.776 | 142929.550 |

| CONTROL POINTS | | | | |
|---|---|---|---|---|
| NO. | Y | X | ELEV. | DESCRIPTION |
| CP1 | 143141.616 | 141837.360 | 1051.45 | ¾" REBAR W/ CAP |
| CP2 | 143090.319 | 142144.761 | 1052.32 | ¾" REBAR W/ CAP |
| CP3 | 143121.047 | 142541.024 | 1052.44 | ¾" REBAR W/ CAP |

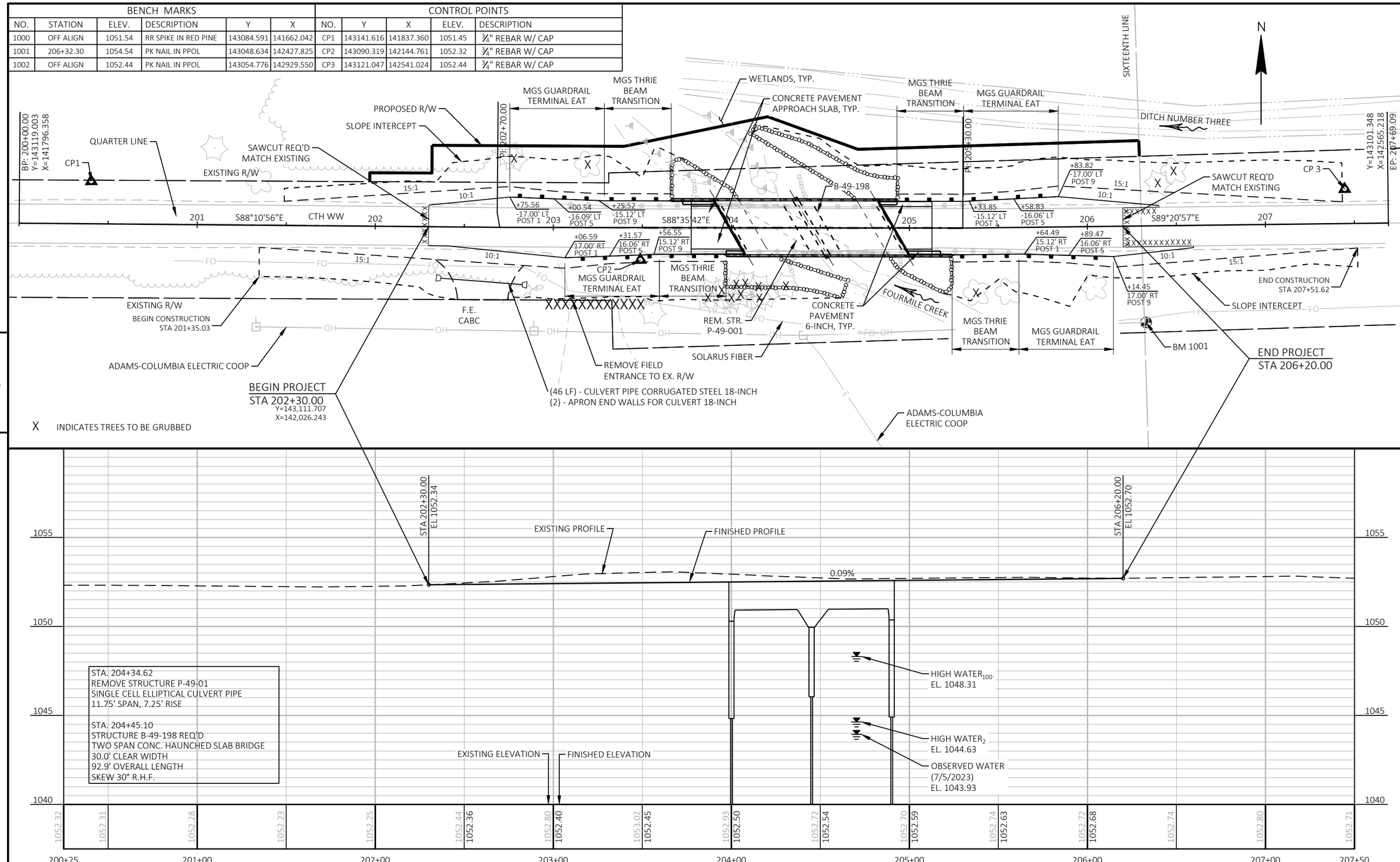


| PROJECT NO: 6777-00-70 | HWY: CTH WW | COUNTY: PORTAGE | PLAN AND PROFILE: CTH WW | SHEET 17 | E |
|---|---|---|---|---|---|

FILE NAME : X:\PROJECTS\PORTAGE\230064 CTH WW, FOUR MILE CREEK BRIDGE\DESIGN\C3D\SHEETSPLAN\050101-PP.DWG
LAYOUT NAME - 01
PLOT DATE : 12/18/2024 5:15 PM
PLOT BY : JOE MALENOFSKI
PLOT NAME :
PLOT SCALE : 1 IN:50 FT
WISDOT/CADDS SHEET 44

# Standard Detail Drawing List

| | |
|---|---|
| 08D21-01 | DRIVEWAYS WITHOUT CURB & GUTTER |
| 08E08-03 | TYPICAL INSTALLATIONS OF EROSION BALES / TEMPORARY DITCH CHECKS |
| 08E09-06 | SILT FENCE |
| 08E11-02 | TURBIDITY BARRIER |
| 08E15-01 | CULVERT PIPE CHECK |
| 08F01-11 | APRON ENDWALLS FOR CULVERT PIPE |
| 12A03-10 | NAME PLATE (STRUCTURES) |
| 13B02-09A | CONCRETE PAVEMENT APPROACH SLAB |
| 13C19-03 | HMA LONGITUDINAL JOINTS |
| 14B42-07A | MIDWEST GUARDRAIL SYSTEM (MGS) GUARDRAIL |
| 14B42-07B | MIDWEST GUARDRAIL SYSTEM (MGS) GUARDRAIL |
| 14B42-07C | MIDWEST GUARDRAIL SYSTEM (MGS) GUARDRAIL |
| 14B42-07D | MIDWEST GUARDRAIL SYSTEM (MGS) GUARDRAIL |
| 14B44-04A | MIDWEST GUARDRAIL SYSTEM ENERGY ABSORBING TERMINAL (MGS) |
| 14B44-04B | MIDWEST GUARDRAIL SYSTEM ENERGY ABSORBING TERMINAL (MGS) |
| 14B44-04C | MIDWEST GUARDRAIL SYSTEM ENERGY ABSORBING TERMINAL (MGS) |
| 14B45-05A | MIDWEST GUARDRAIL SYSTEM THRIE BEAM TRANSITION (MGS) |
| 14B45-05B | MIDWEST GUARDRAIL SYSTEM THRIE BEAM TRANSITION (MGS) |
| 14B45-05C | MIDWEST GUARDRAIL SYSTEM THRIE BEAM TRANSITION (MGS) |
| 14B45-05H | MIDWEST GUARDRAIL SYSTEM THRIE BEAM TRANSITION (MGS) |
| 14B45-05I | MIDWEST GUARDRAIL SYSTEM THRIE BEAM TRANSITION (MGS) |
| 15C02-09A | BARRICADES AND SIGNS FOR MAINLINE CLOSURES |
| 15C02-09B | BARRICADES AND SIGNS FOR VARIOUS CLOSURES |
| 15C02-09C | DETOUR SIGNING FOR MAINLINE CLOSURES |
| 15C02-09H | MODIFIED ROUTE ASSEMBLY FOR DETOUR SIGNING |
| 15C06-12 | SIGNING & MARKING FOR TWO LANE BRIDGES |
| 15C08-23A | PERMANENT LONGITUDINAL PAVEMENT MARKINGS |

6

6

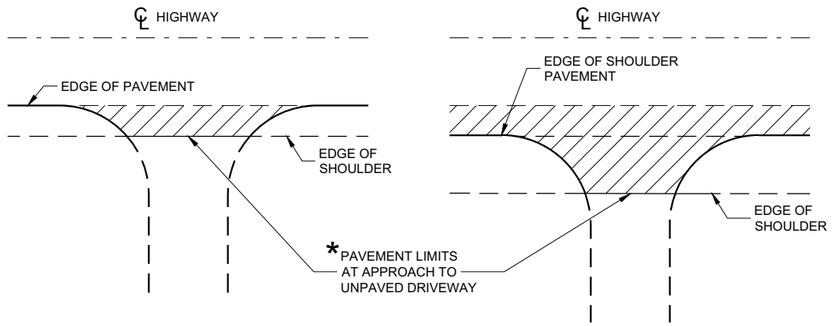


* WHERE DRIVEWAY IS PAVED, APPROACH PAVEMENT SHOULD BE EXTENDED TO MATCH DRIVEWAY PAVEMENT.

**PLAN VIEW**
(UNPAVED SHOULDER ON HIGHWAY)

**PLAN VIEW**
(PAVED SHOULDER ON HIGHWAY)

## RURAL DRIVEWAY INTERSECTION DETAIL
## (NO CURB AND GUTTER OR SIDEWALK)

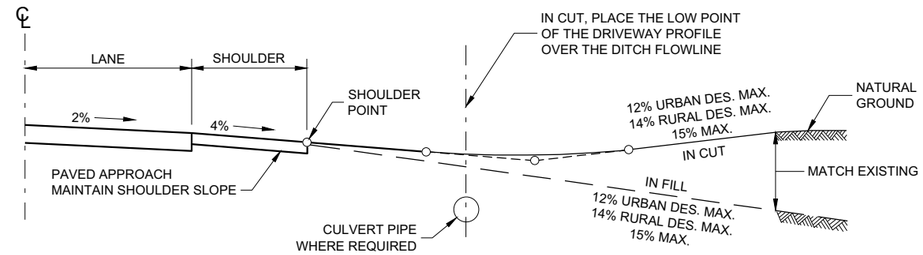


## TYPICAL DRIVEWAY PROFILES

6

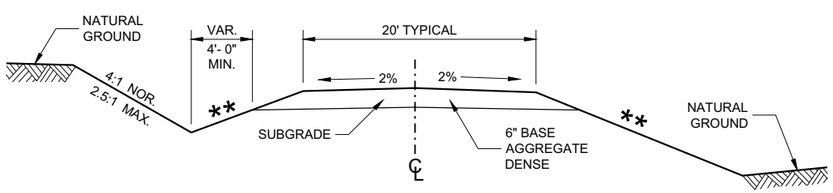


**IN CUT** **IN FILL**

## TYPICAL CROSS SECTION FOR PRIVATE DRIVE OR FIELD ENTRANCE AGGREGATE SURFACE

** SLOPE CAN VARY WITH SPEED. SEE 11-45-30.6.2

| POSTED SPEED MPH | MAX. SLOPE |
|---|---|
| <35 | 4:1 |
| ≥ 35 TO < 60 | 6:1 |
| ≥60 | 10:1 |

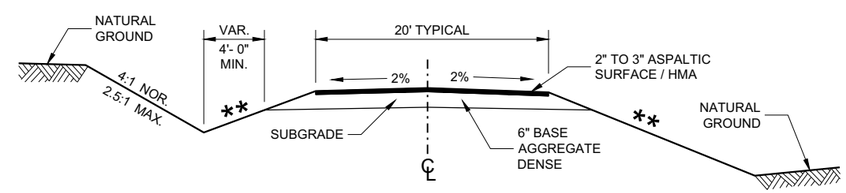


**IN CUT** **IN FILL**

## TYPICAL CROSS SECTION FOR PRIVATE DRIVE OR FIELD ENTRANCE ASPHALTIC SURFACE

6

**DRIVEWAYS WITHOUT CURB AND GUTTER**

STATE OF WISCONSIN
DEPARTMENT OF TRANSPORTATION

APPROVED
December 2017 — DATE
/S/ Rodney Taylor — ROADWAY STANDARDS DEVE UNIT SUPERVISOR
FHWA




SDD 08D21 - 01

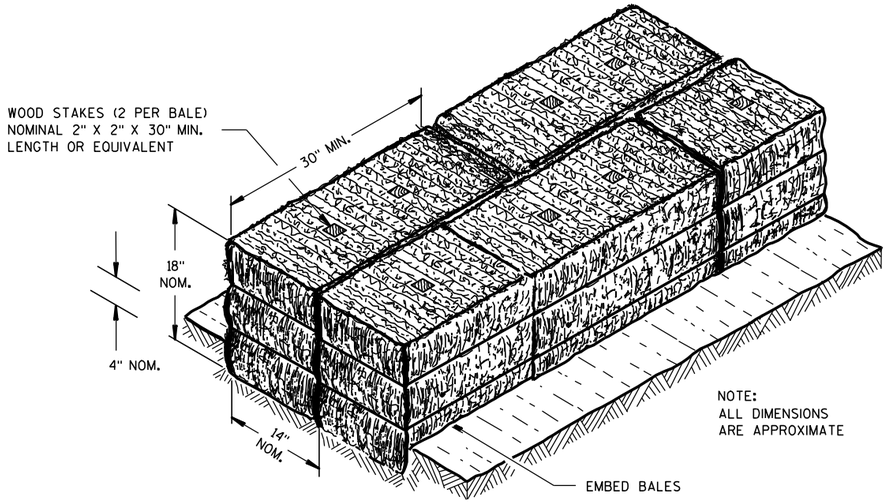


**SECTION A-A**

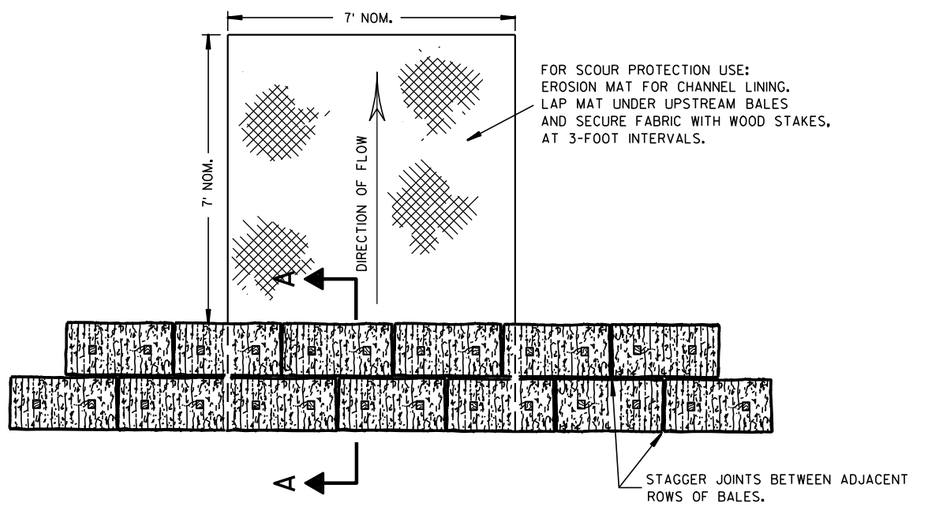


**PLAN VIEW**

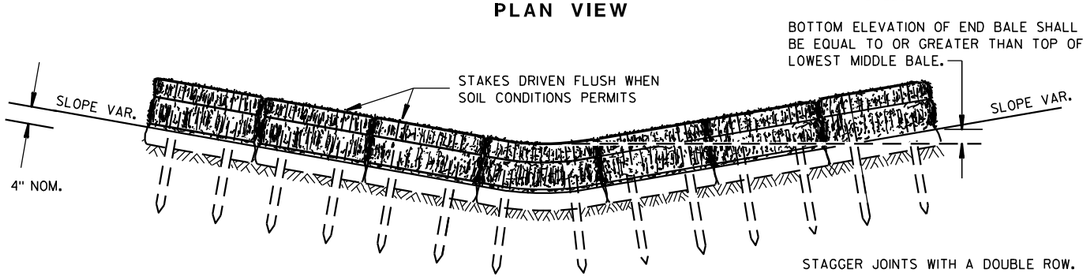


**FRONT ELEVATION**

**TEMPORARY DITCH CHECK USING EROSION BALES ①**

## GENERAL NOTES

DETAILS OF CONSTRUCTION, MATERIALS AND WORKMANSHIP NOT SHOWN ON THIS DRAWING SHALL CONFORM TO THE PERTINENT REQUIREMENTS OF THE STANDARD SPECIFICATIONS AND THE APPLICABLE SPECIAL PROVISIONS.

① TEMPORARY DITCH CHECKS EITHER EROSION BALES OR MANUFACTURED SHALL BE PAID FOR UNDER THE BID ITEM OF TEMPORARY DITCH CHECK. THE DEPARTMENT WILL NOT PAY FOR TEMPORARY DITCH CHECKS CONSTRUCTED OF A SINGLE ROW OF EROSION BALES.

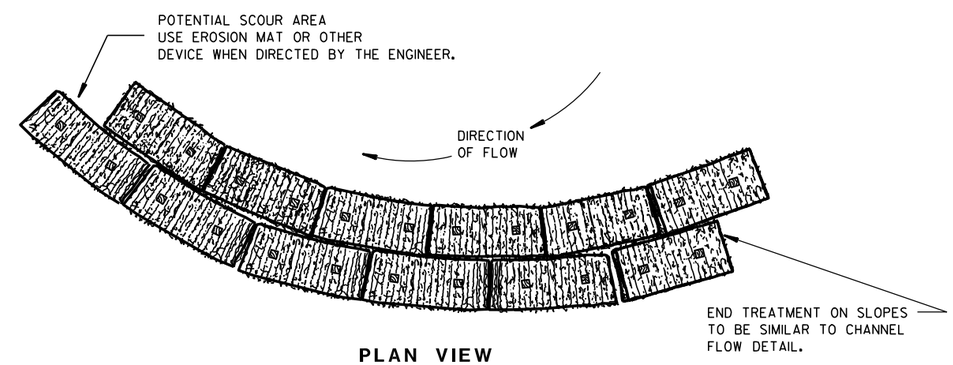


**PLAN VIEW**

WHEN ALTERING THE DIRECTION OF FLOW

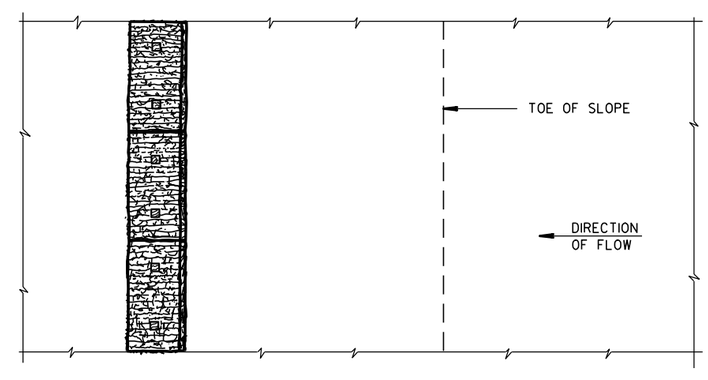


**PLAN VIEW**

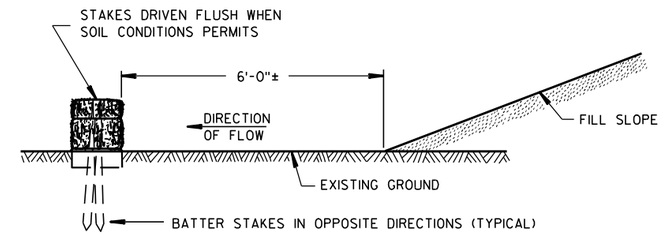


**FRONT ELEVATION**

WHEN EXISTING GROUND SLOPES AWAY FROM FILL SLOPE

**EROSION BALES FOR SHEET FLOW**

**TYPICAL INSTALLATIONS OF EROSION BALES / TEMPORARY DITCH CHECKS**

STATE OF WISCONSIN
DEPARTMENT OF TRANSPORTATION

APPROVED
6/04/02 — /S/ Beth Cann... — ...GINEER
DATE — CHIEF ROADWAY DEVELOP... 20
FHWA

6

6

S.D.D. 8 E 8-3

S.D.D. 8 E 8-3

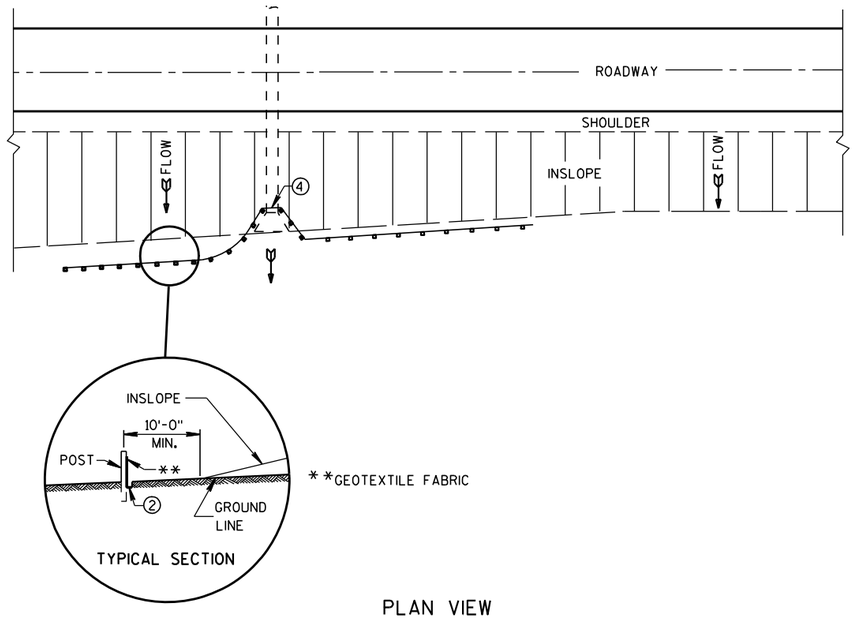


PLAN VIEW

## TYPICAL APPLICATION OF SILT FENCE

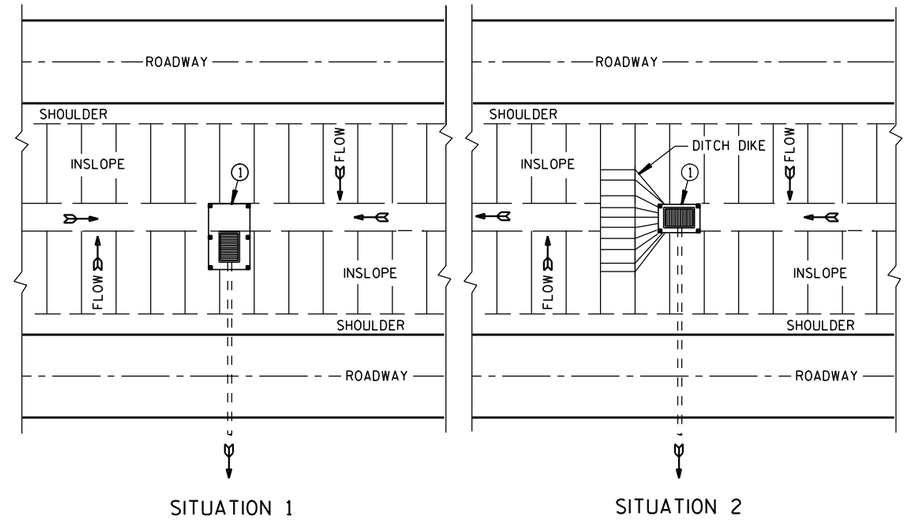


PLAN VIEW

## SILT FENCE AT MEDIAN SURFACE DRAINS

## GENERAL NOTES

DETAILS OF CONSTRUCTION NOT SHOWN ON THIS DRAWING SHALL CONFORM TO THE PERTINENT REQUIREMENTS OF THE STANDARD SPECIFICATIONS AND APPLICABLE SPECIAL PROVISIONS.

① HORIZONTAL BRACE REQUIRED WITH 2" X 4" WOODEN FRAME OR EQUIVALENT AT TOP OF POSTS.

② FOR MANUAL INSTALLATIONS THE TRENCH SHALL BE A MINIMUM OF 4" WIDE & 6" DEEP TO BURY AND ANCHOR THE GEOTEXTILE FABRIC. FOLD MATERIAL TO FIT TRENCH AND BACKFILL & COMPACT TRENCH WITH EXCAVATED SOIL.

③ WOOD POSTS SHALL BE A MINIMUM SIZE OF 1⅛" X 1⅛" OF OAK OR HICKORY.

④ SILT FENCE TO EXTEND ACROSS THE TOP OF THE PIPE.

⑤ CONSTRUCT SILT FENCE FROM A CONTINUOUS ROLL IF POSSIBLE BY CUTTING LENGTHS TO AVOID JOINTS. IF A JOINT IS NECESSARY USE ONE OF THE FOLLOWING TWO METHODS; A) OVERLAP THE END POSTS AND TWIST, OR ROTATE, AT LEAST 180 DEGREES. B) HOOK THE END OF EACH SILT FENCE LENGTH.

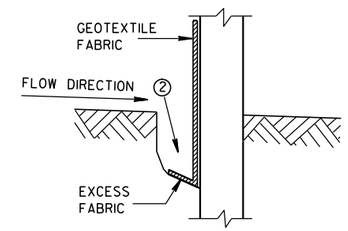


## TRENCH DETAIL

NOTE: ADDITIONAL POST DEPTH OR TIE BACKS MAY BE REQUIRED IN UNSTABLE SOILS

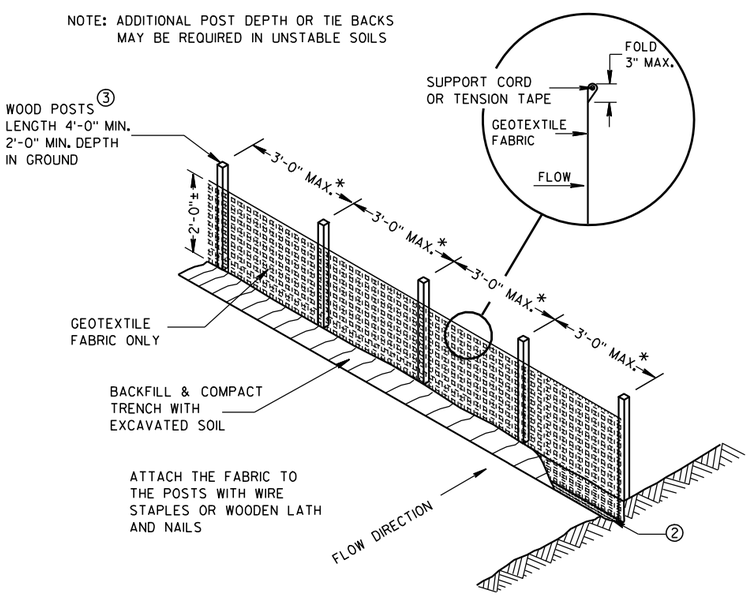


*NOTE: 8'-0" POST SPACING ALLOWED IF A WOVEN GEOTEXTILE FABRIC IS USED.

## SILT FENCE

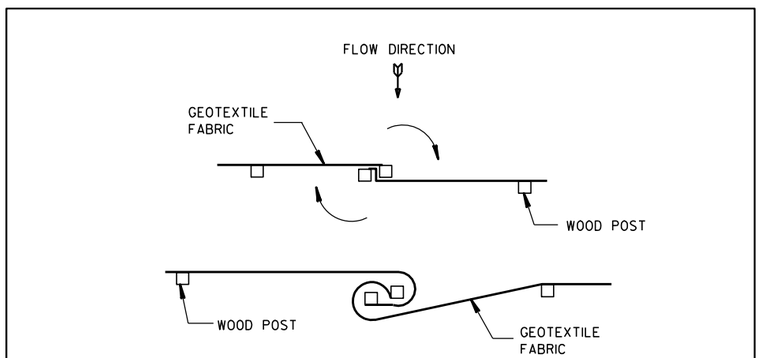


TWIST METHOD

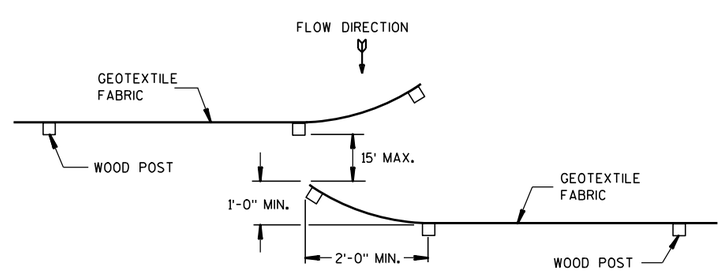


HOOK METHOD

## JOINING TWO LENGTHS OF SILT FENCE ⑤

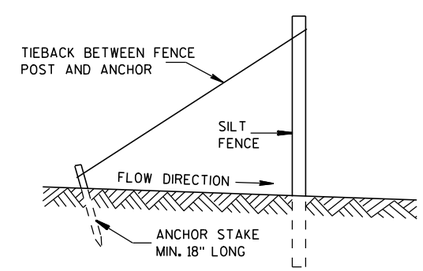


## SILT FENCE TIE BACK

(WHEN REQUIRED BY THE ENGINEER)

| | |
|---|---|
| SILT FENCE | |
| STATE OF WISCONSIN<br>DEPARTMENT OF TRANSPORTATION | |
| APPROVED<br>4-29-05<br>DATE | /S/ Beth Cann-----<br>CHIEF ROADWAY DEVELOP ... GINEER |
| FHWA | |

6

6

S.D.D. 8 E 9-6

S.D.D. 8 E 9-6

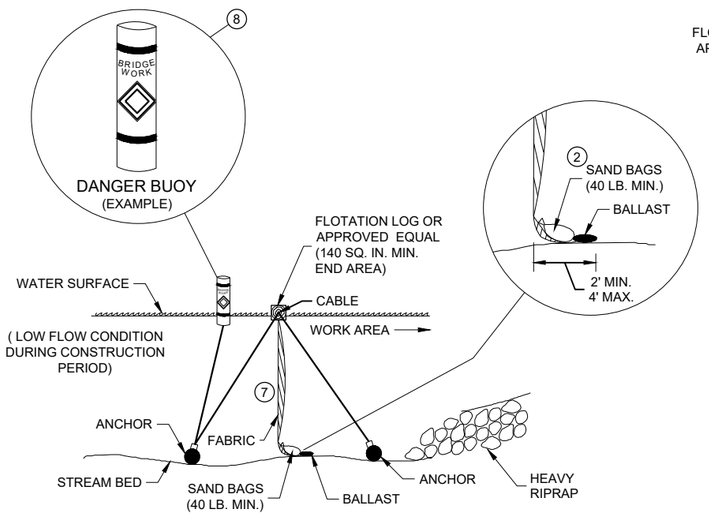


**SECTION B - B**

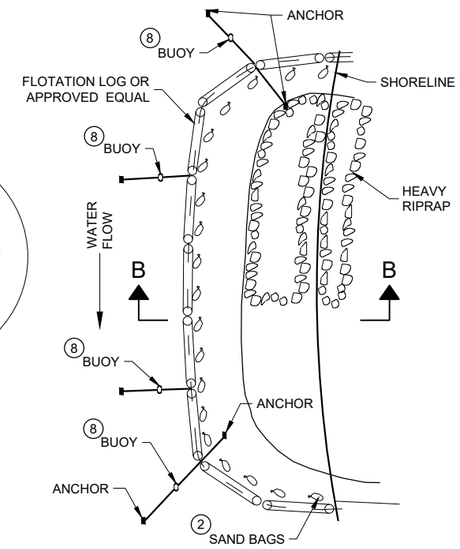


**PLAN VIEW**

**TURBIDITY BARRIER - FLOAT ALTERNATIVE**
**CAUTION - SEE NOTE 6**

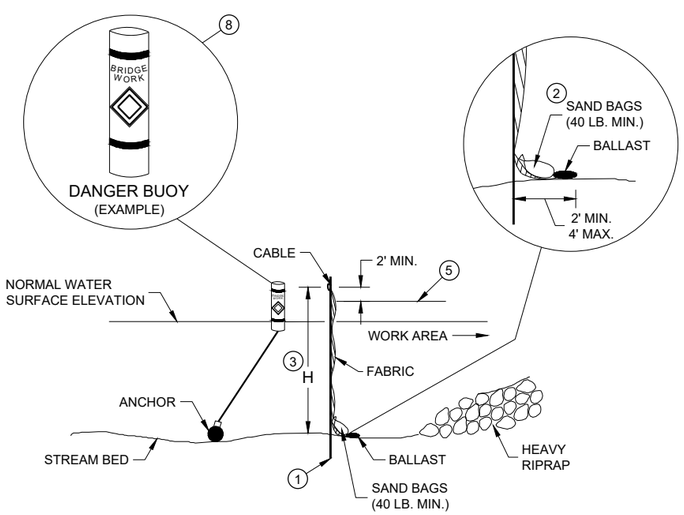


**SECTION A - A**

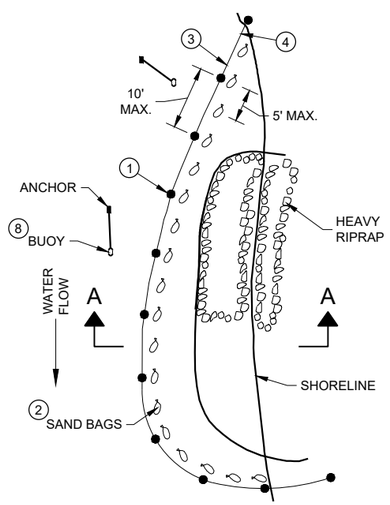


**PLAN VIEW**

**TURBIDITY BARRIER - STANDARD POST INSTALLATION**

**TURBIDITY BARRIER PLACEMENT DETAILS**

## GENERAL NOTES

DETAILS OF CONSTRUCTION, MATERIALS AND WORKMANSHIP NOT SHOWN ON THIS DRAWING SHALL CONFORM TO THE PERTINENT REQUIREMENTS OF THE STANDARD SPECIFICATIONS AND THE APPLICABLE SPECIAL PROVISIONS.

TURBIDITY BARRIER MAY BE REMOVED AT THE ENGINEERS DISCRETION, WHEN PERMANENT EROSION CONTROL MEASURES HAVE BEEN ESTABLISHED.

1. DRIVEN STEEL POSTS, PIPES, OR CHANNELS. LENGTH SHALL BE SUFFICIENT TO SECURELY SUPPORT BARRIER AT HIGH WATER ELEVATIONS.
2. SAND BAGS TO BE USED AS ADDITIONAL BALLAST WHEN ORDERED BY THE ENGINEER TO MEET ADVERSE FIELD CONDITIONS. SPACE AS APPROPRIATE FOR SITE CONDITIONS.
3. WHEN BARRIER HEIGHT "H" EXCEEDS 8 FEET, POST SPACING MAY NEED TO BE DECREASED.
4. IN WATERWAYS SUBJECT TO FLUCTUATING WATER ELEVATIONS, PROVISIONS SHOULD BE MADE TO ALLOW THE WATER TO EQUALIZE ON EACH SIDE OF THE BARRIER. THIS MAY BE ACCOMPLISHED BY LEAVING A PORTION OF THE BARRIER OPEN ON THE UPSTREAM END.
5. ESTIMATED HIGH WATER ELEVATION DURING CONSTRUCTION PERIOD. MINIMUM BARRIER HEIGHT SHALL BE 2' GREATER THAN EITHER THE Q2 ELEVATION OR THE ESTIMATED HIGH WATER ELEVATION DURING CONSTRUCTION, WHICHEVER IS GREATER.
6. FLOAT ALTERNATIVE WILL ONLY BE ALLOWED WITH WRITTEN APPROVAL OF THE ENGINEER, AND IS MEANT FOR LOCATIONS WHERE BEDROCK PREVENTS THE INSTALLATION OF POSTS.
7. ALLOW SUFFICIENT SLACK VERTICALLY AND HORIZONTALLY SO THAT SEDIMENT BUILD UP WILL NOT SEPARATE OR LOWER THE TURBIDITY BARRIER.
8. USE AS DIRECTED BY COAST GUARD OR DNR PERMIT WHEN WORKING IN NAVIGABLE WATERWAYS.

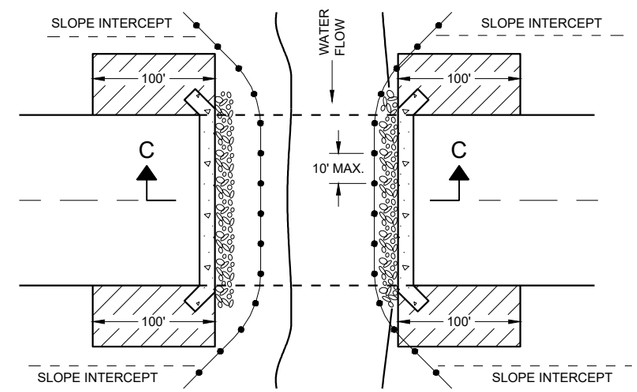


**PLAN VIEW**

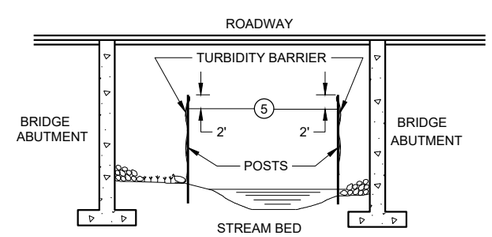


**SECTION C - C**

**TURBIDITY BARRIER DETAIL SHOWING TYPICAL PLACEMENT AT STRUCTURES**

**TURBIDITY BARRIER**

STATE OF WISCONSIN
DEPARTMENT OF TRANSPORTATION

APPROVED
6/4/02 — DATE
/S/ Beth Cannestra — CHIEF ROADWAY DEVELOPMENT ENGINEER
FHWA




6


SDD 08E11 - 02

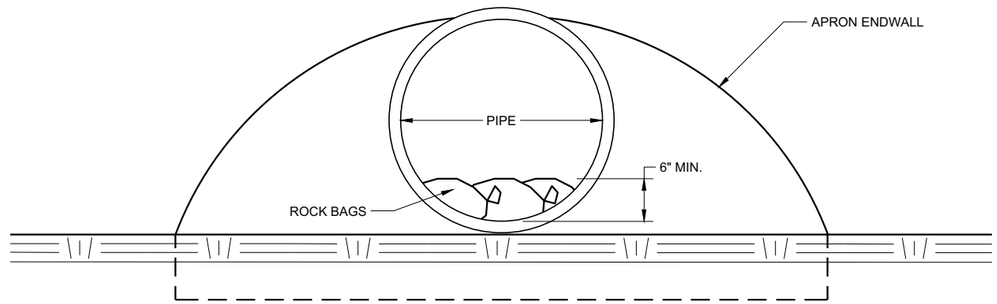


**END VIEW**

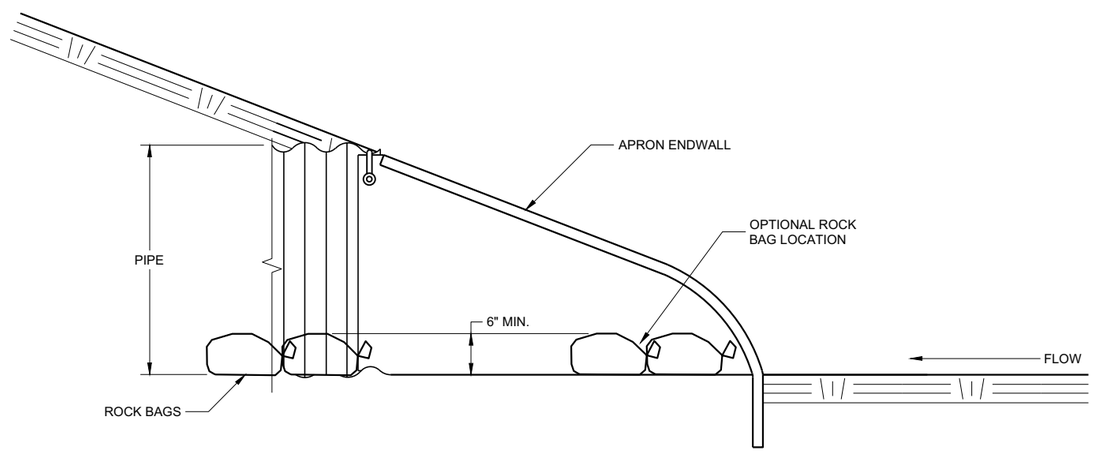


**SIDE VIEW**

## CULVERT PIPE CHECK

(INSTALL ON INLET END ONLY)

**CULVERT PIPE CHECK**

STATE OF WISCONSIN
DEPARTMENT OF TRANSPORTATION

APPROVED
May 2019 — DATE
/S/ Daniel Schave — EROSION CONTROL ENGI
FHWA

6

6

SDD 08E15 - 01

SDD 08E15 - 01

## METAL APRON ENDWALLS

| PIPE DIA. (IN.) | MIN. THICK. (Inches) STEEL | MIN. THICK. (Inches) ALUM. | DIMENSIONS (Inches) A (±1") | B (MAX.) | H (±1") | L (±1 1/2") | L1 ① | L2 ① | W (±2") | APPROX. SLOPE | BODY |
|---|---|---|---|---|---|---|---|---|---|---|---|
| 12 | .064 | .060 | 6 | 6 | 6 | 21 | 12 | 17 1/2 | 24 | 2 1/2 to 1 | 1 Pc. |
| 15 | .064 | .060 | 7 | 8 | 6 | 26 | 14 | 21 3/4 | 30 | 2 1/2 to 1 | 1 Pc. |
| 18 | .064 | .060 | 8 | 10 | 6 | 31 | 15 | 28 1/4 | 36 | 2 1/2 to 1 | 1 Pc. |
| 21 | .064 | .060 | 9 | 12 | 6 | 36 | 18 | 29 5/8 | 42 | 2 1/2 to 1 | 1 Pc. |
| 24 | .064 | .075 | 10 | 13 | 6 | 41 | 18 | 37 1/4 | 48 | 2 1/2 to 1 | 1 Pc. |
| 30 | .079 | .075 | 12 | 16 | 8 | 51 | 18 | 52 1/4 | 60 | 2 1/2 to 1 | 1 Pc. |
| 36 | .079 | .105 | 14 | 19 | 9 | 60 | 24 | 59 3/4 | 72 | 2 1/2 to 1 | 2 Pc. |
| 42 | .109 | .105 | 16 | 22 | 11 | 69 | 24 | 75 5/8 | 84 | 2 1/2 to 1 | 2 Pc. |
| 48 | .109 | .105 | 18 | 27 | 12 | 78 | 24 | 81 | 90 | 2 1/4 to 1 | 3 Pc. |
| 54 | .109 | .105 | 18 | 30 | 12 | 84 | 30 | 85 1/2 | 102 | 2 1/4 to 1 | 3 Pc. |
| 60 | .109× | .105× | 18 | 33 | 12 | 87 | — | — | 114 | 2 to 1 | 3 Pc. |
| 66 | .109× | .105× | 18 | 36 | 12 | 87 | — | — | 120 | 2 to 1 | 3 Pc. |
| 72 | .109× | .105× | 18 | 39 | 12 | 87 | — | — | 126 | 2 to 1 | 3 Pc. |
| 78 | .109× | .105× | 18 | 42 | 12 | 87 | — | — | 132 | 1 1/2 to 1 | 3 Pc. |
| 84 | .109× | .105× | 18 | 45 | 12 | 87 | — | — | 138 | 1 1/2 to 1 | 3 Pc. |
| 90 | .109× | .105× | 18 | 37 | 12 | 87 | — | — | 144 | 1 1/2 to 1 | 3 Pc. |
| 96 | .109× | .105× | 18 | 35 | 12 | 87 | — | — | 150 | 1 1/2 to 1 | 3 Pc. |

× EXCEPT CENTER PANEL
SEE GENERAL NOTES

## REINFORCED CONCRETE APRON ENDWALLS

| PIPE DIA. (IN.) | DIMENSIONS (Inches) T | A | B | C | D | E | G | APPROX. SLOPE |
|---|---|---|---|---|---|---|---|---|
| 12 | 2 | 4 | 24 | 48 7/8 | 72 7/8 | 24 | 2 | 3 to 1 |
| 15 | 2 1/4 | 6 | 27 | 46 | 73 | 30 | 2 1/4 | 3 to 1 |
| 18 | 2 1/2 | 9 | 27 | 46 | 73 | 36 | 2 1/2 | 3 to 1 |
| 21 | 2 3/4 | 9 | 36 | 37 1/2 | 73 1/2 | 42 | 2 3/4 | 3 to 1 |
| 24 | 3 | 9 1/2 | 43 1/2 | 30 | 73 1/2 | 48 | 3 | 3 to 1 |
| 27 | 3 1/4 | 10 1/2 | 49 1/2 | 24 | 73 1/2 | 54 | 3 1/4 | 3 to 1 |
| 30 | 3 1/2 | 12 | 54 | 19 3/4 | 73 1/2 | 60 | 3 1/2 | 3 to 1 |
| 36 | 4 | 15 | 63 | 34 3/4 | 97 3/4 | 72 | 4 | 3 to 1 |
| 42 | 4 1/2 | 21 | 63 | 35 | 98 | 78 | 4 1/2 | 3 to 1 |
| 48 | 5 | 24 | 72 | 26 | 98 | 84 | 5 | 3 to 1 |
| 54 | 5 1/2 | 27 | 65 | *33 1/4-**35 | *98 1/4-**100 | 90 | 5 1/2 | 2 2/5 to 1 |
| 60 | 6 | *30-**35 | 60 | 39 | 99 | 96 | 5 | 2 to 1 |
| 66 | 6 1/2 | *24-**30 | *72-**78 | *21-**27 | 99 | 102 | 5 1/2 | 2 to 1 |
| 72 | 7 | *24-**36 | 78 | 21 | 99 | 108 | 6 | 2 to 1 |
| 78 | 7 1/2 | *24-**36 | 78 | 21 | 99 | 114 | 6 1/2 | 2 to 1 |
| 84 | 8 | 36 | 90 1/2 | 21 | 111 1/2 | 120 | 6 1/2 | 1 1/2 to 1 |
| 90 | 8 1/2 | 41 | 87 1/2 | 24 | 111 1/2 | 132 | 6 1/2 | 1 1/2 to 1 |

*MINIMUM
**MAXIMUM

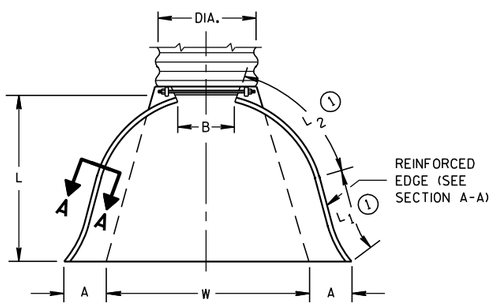


PLAN VIEW

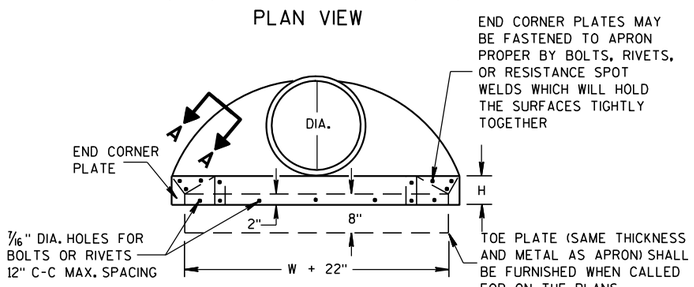


END VIEW

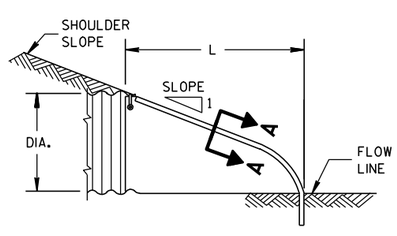


SIDE ELEVATION

## METAL ENDWALLS

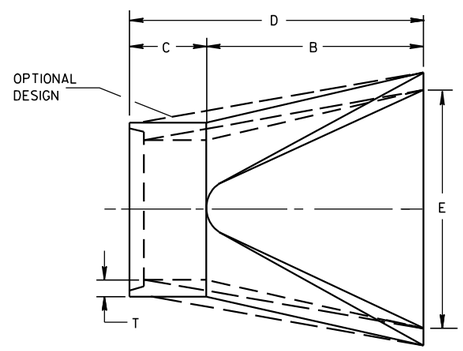


PLAN

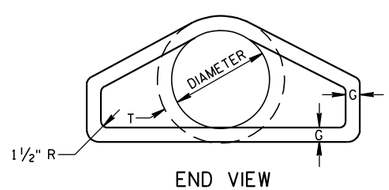


END VIEW

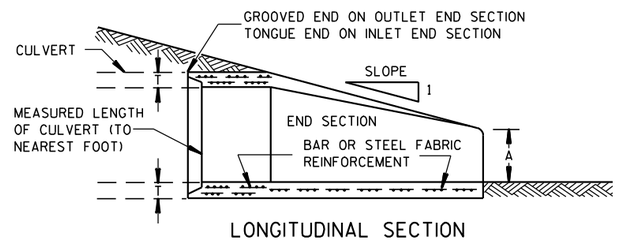


LONGITUDINAL SECTION

## CONCRETE ENDWALLS

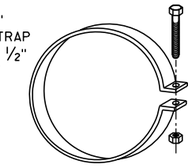


ALTERNATE FOR TYPE 1 CONNECTION

## END SECTION CONNECTOR STRAP

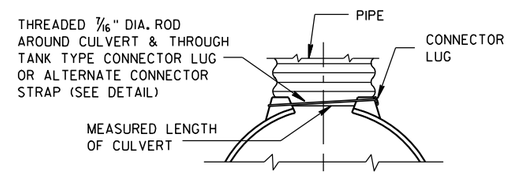


TYPE 1
FOR 12" THRU 24" CORR. PIPE

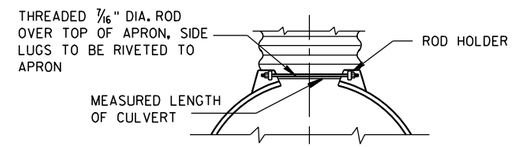


TYPE 2
FOR 30" THRU 96" CORR. PIPE

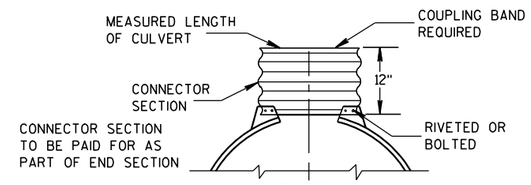


TYPE 3
FOR 42" THRU 96" CORR. PIPE

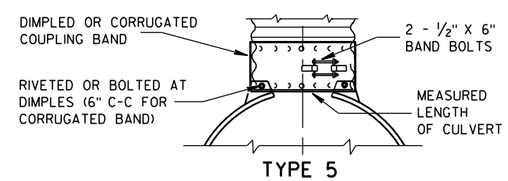


TYPE 5
ALTERNATE FOR:
ALL SIZES CORRUGATED CIRCULAR PIPE

NOTE: DIMPLED BAND FITS OVER OUTSIDE OF ENDWALL, AND CORRUGATED BAND FITS INSIDE ENDWALL. DIMPLED BAND MAY BE USED WITH HELICALLY CORRUGATED PIPE.

FOR CIRCUMFERENTIALLY CORRUGATED PIPE USE ENDWALL CONNECTION DETAILS 1, 2, 3 OR 5 AS APPLICABLE.

FOR HELICALLY CORRUGATED PIPE USE ENDWALL CONNECTION DETAILS 1, 2 OR 5.

FOR HELICALLY CORRUGATED PIPES WITH TWO CIRCUMFERENTIAL CORRUGATIONS AT EACH END USE ENDWALL CONNECTION DETAILS 1, 2 OR 3.

## CONNECTION DETAILS

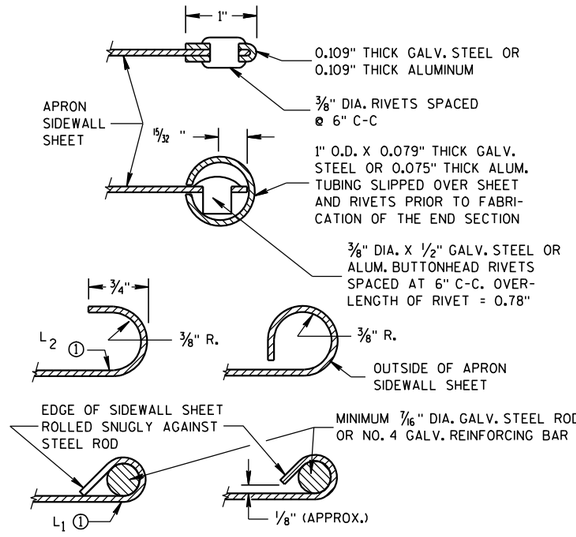


## SECTION A-A

## GENERAL NOTES

DETAILS OF CONSTRUCTION, MATERIALS AND WORKMANSHIP NOT SHOWN ON THIS DRAWING SHALL CONFORM TO THE PERTINENT REQUIREMENTS OF THE STANDARD SPECIFICATIONS AND THE APPLICABLE SPECIAL PROVISIONS.

CONCRETE CULVERT ENDWALLS MAY NOT BE USED WITH GALVANIZED STEEL OR ALUMINUM CULVERT PIPE OR VISE VERSA. GALVANIZED STEEL OR ALUMINUM ENDWALLS SHALL NORMALLY BE INSTALLED ON CULVERT PIPE OF THE SAME METAL.

ALL THREE PIECE STEEL APRON ENDWALLS FOR 60" DIAMETER PIPE AND LARGER SHALL HAVE 0.109" SIDES AND 0.138" CENTER PANELS. ALL THREE PIECE ALUMINUM APRON ENDWALLS FOR 60" DIAMETER PIPE AND LARGER SHALL HAVE 0.105" SIDES AND 0.134" CENTER PANELS. THE WIDTH OF CENTER PANELS SHALL BE GREATER THAN 20 PERCENT OF THE PIPE PERIMETER.

LAP SEAMS SHALL BE TIGHTLY JOINED BY GALVANIZED RIVETS OR BOLTS FOR STEEL UNITS AND ALUMINUM RIVETS AND BOLTS FOR ALUMINUM UNITS. FOR THE 60" THROUGH 96" DIAMETER APRON ENDWALL SIZES, THE REINFORCED EDGES AND CENTER PANEL SEAMS SHALL BE FURTHER REINFORCED WITH GALVANIZED STEEL OR ALUMINUM STIFFENER ANGLES. THE ANGLES SHALL BE ATTACHED BY GALVANIZED NUTS AND BOLTS FOR STEEL UNITS AND ALUMINUM NUTS AND BOLTS FOR ALUMINUM UNITS.

WHERE TWO OR MORE PIPES WITH APRON ENDWALLS ARE LAID ADJACENT TO EACH OTHER, THEY SHALL BE SEPARATED BY A DISTANCE SUFFICIENT TO PROVIDE A MINIMUM CLEARANCE OF 6 INCHES BETWEEN APRON ENDWALLS.

① FOR PIPE SIZES UP TO 60" DIAMETER, A 180° ROLLED EDGE MAY BE USED INSTEAD OF STEEL ROD REINFORCEMENT. SEE SECTION A-A.

**APRON ENDWALLS FOR CULVERT PIPE**

STATE OF WISCONSIN
DEPARTMENT OF TRANSPORTATION

APPROVED
11/30/94 — DATE
/S/ Rory L. Rhinesmith — CHIEF ROADWAY DEVELOPMENT ENGINEER
FHWA

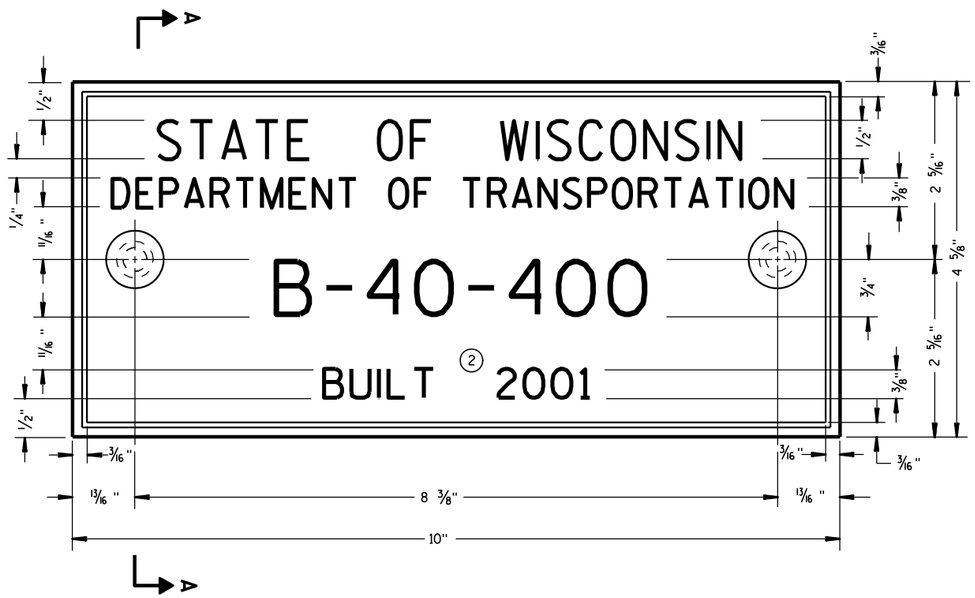


## TYPICAL NAME PLATE

(BRIDGES, CULVERTS, AND RETAINING WALLS)

## GENERAL NOTES

NAME PLATES TO BE INSTALLED ON BRIDGES, CULVERTS, AND RETAINING WALLS SHALL CONFORM TO THE REQUIREMENTS OF SECTION 502.3.11 OF THE STANDARD SPECIFICATIONS.

THE BRIDGE NUMBER AND YEAR BUILT SHOWN ON THIS DRAWING ARE EXAMPLES ONLY. SEE CONSTRUCTION PLANS FOR INDIVIDUAL NUMBERING AND YEAR BUILT.

(1) EPOXY RESIN SHALL BE FROM AN APPROVED MANUFACTURER AND USED IN ACCORDANCE WITH MANUFACTURER'S RECOMMENDATIONS.

(2) REHABILITATION OF AN EXISTING STRUCTURE SHOULD USE THE DATE OF ORIGINAL STRUCTURE CONSTRUCTION.

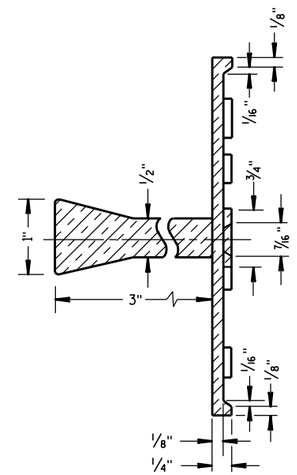


## SECTION A-A

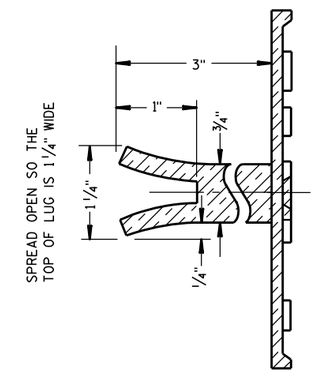


## ALTERNATE LUG

FOR MULTI-UNIT STRUCTURES
LINE 3 ABOVE SHALL READ

B = BRIDGE
C = CULVERT
R = RETAINING WALL

COUNTY NO.

BRIDGE NO.

UNIT NO. FOR MULTIPLE
UNIT BRIDGE

B-40-400-1A

## NUMBERING DESIGNATION
## MULTI-UNIT STRUCTURES

(1) ADHERE ANCHOR LUG TO PRECAST RETAINING WALL WITH EPOXY RESIN.

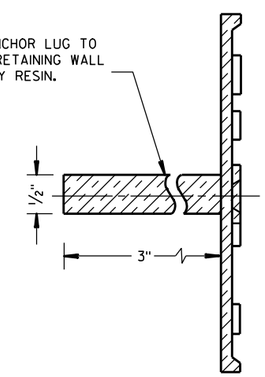


## ALTERNATE LUG

(FOR ATTACHMENT TO PRECAST STRUCTURES)

| NAME PLATE (STRUCTURES) | | |
|---|---|---|
| STATE OF WISCONSIN DEPARTMENT OF TRANSPORTATION | | |
| APPROVED | | |
| 3/26/10 DATE | /S/ Scot Beck-- CHIEF STRUCTURAL DEVELOP ENGINEER | |
| FHWA | | |

6

6

S.D.D. 12 A 3-10

S.D.D. 12 A 3-10

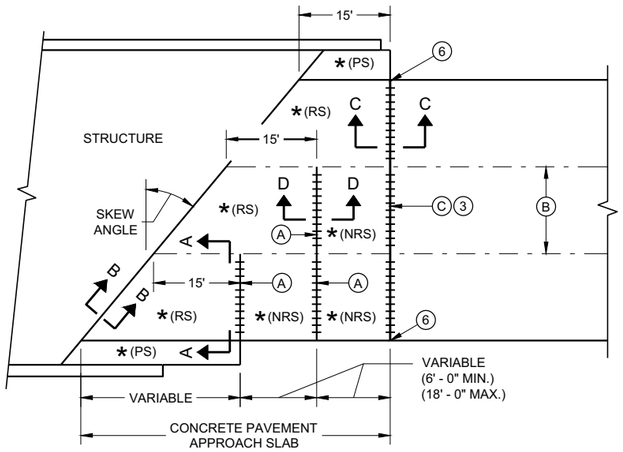


**SKEWED APPROACH**
**(PAVEMENT MORE THAN TWO LANES)**

* (RS) = REINFORCED CONCRETE SLAB

* (PS) = PAVED CONCRETE SHOULDER OR CONCRETE DRAINAGE SLAB

* (NRS) - NON - REINFORCED CONCRETE SLAB

*** STANDARD DOWEL BAR DIAMETER (SEE SDD 13C11 AND SDD 13C13)

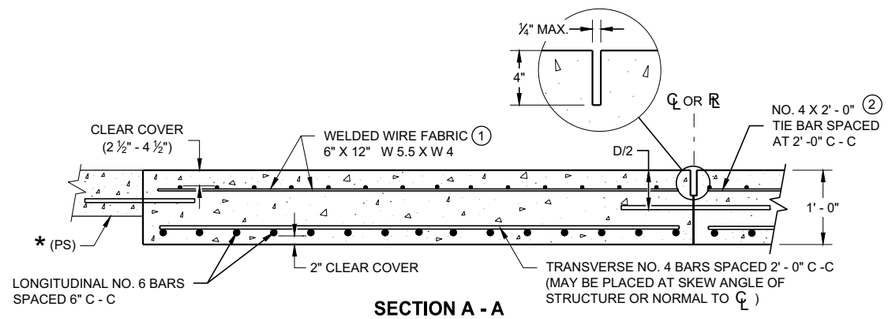


**SECTION A - A**
**REINFORCEMENT POSITIONING DETAIL**

## GENERAL NOTES

THE CONTRACTOR MAY SPLICE NO. 6 BARS IN THE APPROACH SLAB FOR SKEWED STRUCTURES ONLY. STAGGER SPLICES WITH A MAXIMUM OF ONE SPLICE PER BAR. THE LENGTH OF LAP IS 20 INCHES.

TACK WELD DOWEL BARS TO THE BASKETS ON ALTERNATE ENDS.

1. THE CONTRACTOR MAY USE NO. 4 BARS SPACED AT 2' - 0 " C - C IN BOTH THE LONGITUDINAL AND TRANSVERSE DIRECTIONS FOR TOP REINFORCEMENT AS AN ALTERNATIVE TO THE WELDED WIRE FABRIC.
2. THE CONTRACTOR MAY OMIT THE BARS BETWEEN REINFORCED SLABS WHERE SLAB REINFORCEMENT BARS EXTEND ACROSS THE CENTERLINE OR REFERENCE LINE.
3. DO NOT CONSTRUCT AN EXPANSION JOINT OR INSTALL DOWEL BARS WHEN ABUTTING AN HMA PAVEMENT.
4. USE A JOINT SEALANT CONFORMING TO STANDARD SPECIFICATION 415.2.6.
5. PLACE EXPANSION CAP ON THE END OF THE DOWEL THAT IS NOT TACK WELDED TO THE BASKET. DO NOT FORCE DOWEL BAR PAST THE DOWEL STOP.
6. EXTEND EXPANSION JOINT THROUGH ANY ADJACENT TIED CONCRETE.

A. STANDARD CONTRACTION JOINT NORMAL TO ℄ OR ℞.

B. STANDARD LONGITUDINAL JOINT WITH TIE BARS.

C. 1 ½" EXPANSION JOINT WITH DOWEL BARS NORMAL TO ℄ OR ℞ .

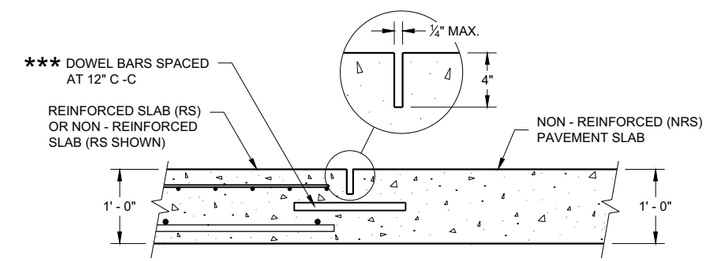


**SECTION D - D**
**CONTRACTION JOINT**

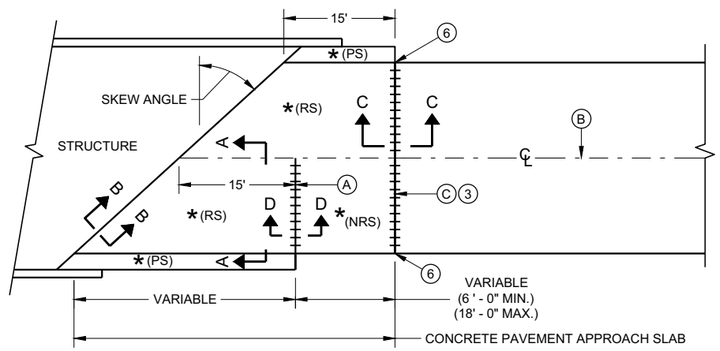


**SKEWS > 20°**
**(PAVEMENT WIDTH ≤ 30')**

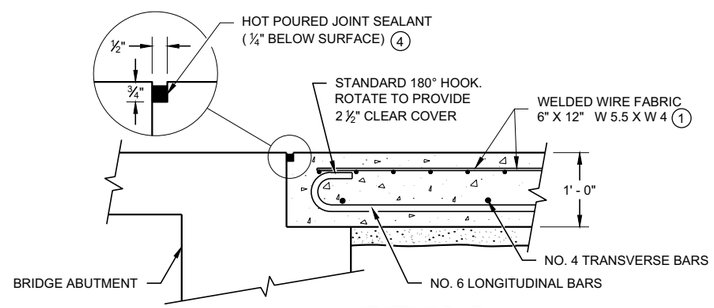


**SECTION B - B**
**BEND DETAIL**
**BOTTOM REINFORCEMENT**

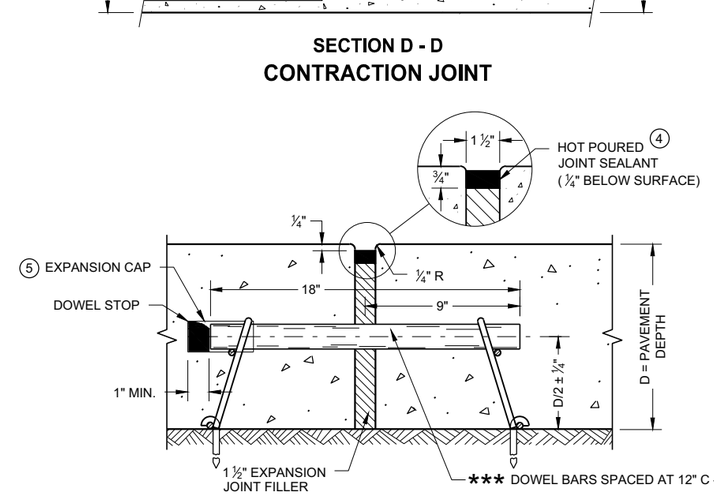


**EXPANSION JOINT DETAIL**

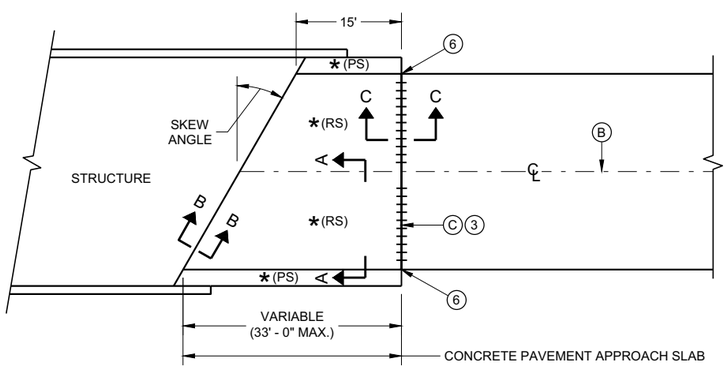


**SKEWS ≤ 20°**
**(PAVEMENT WIDTH ≤ 30')**

**APPROACH SLAB AND ADJACENT PAVEMENT**

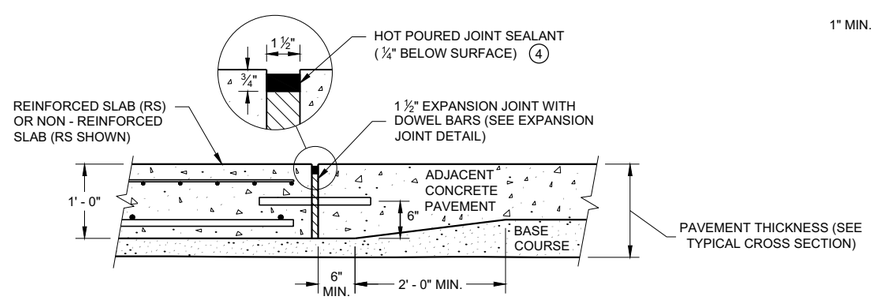


**SECTION C - C**
**TRANSITION DETAIL**
**APPROACH SLAB TO ADJACENT PAVEMENT**

**CONCRETE PAVEMENT APPROACH SLAB**

STATE OF WISCONSIN
DEPARTMENT OF TRANSPORTATION

APPROVED
November 2018 /S/ Peter Kemp, P.E.
DATE PAVEMENT SUPERVISOR

FHWA

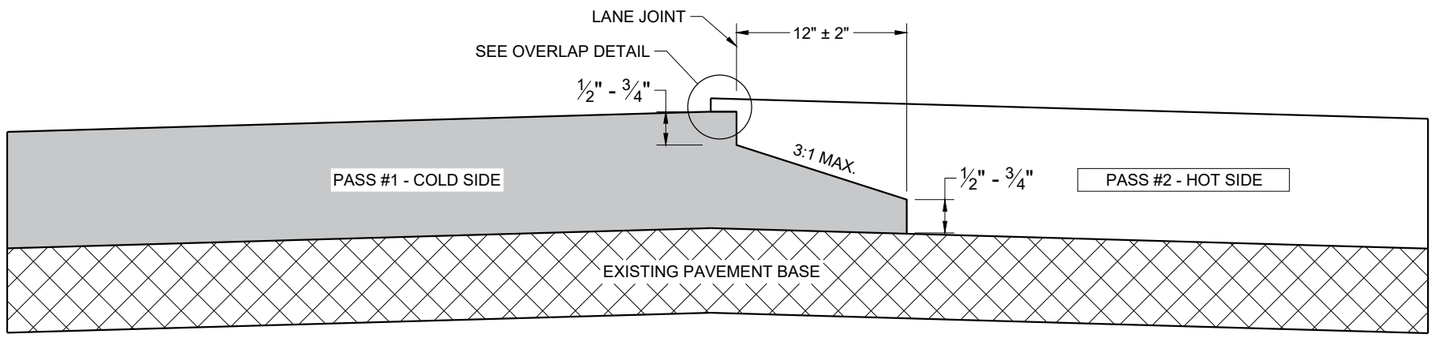


**TYPICAL PAVEMENT CROSS SECTION**
**NOTCHED WEDGE JOINT**

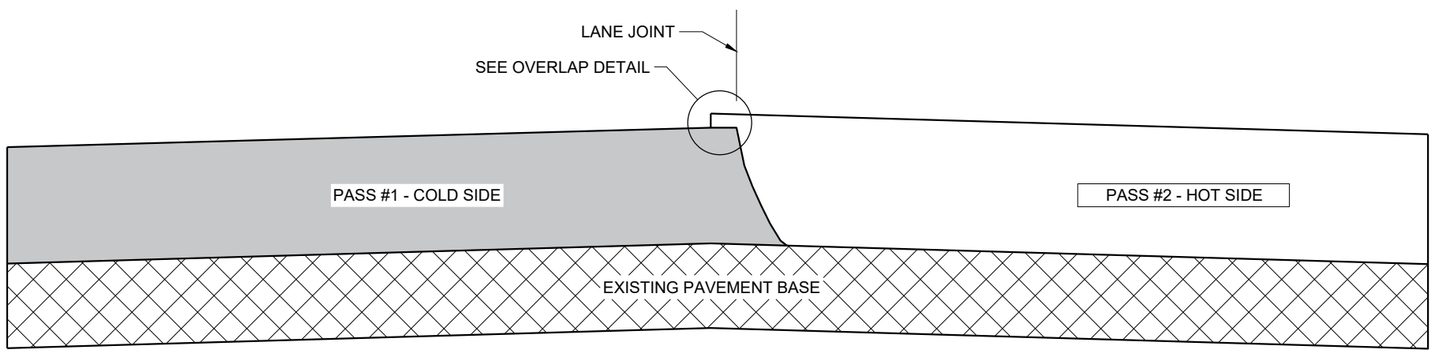


**TYPICAL PAVEMENT CROSS SECTION**
**VERTICAL JOINT**

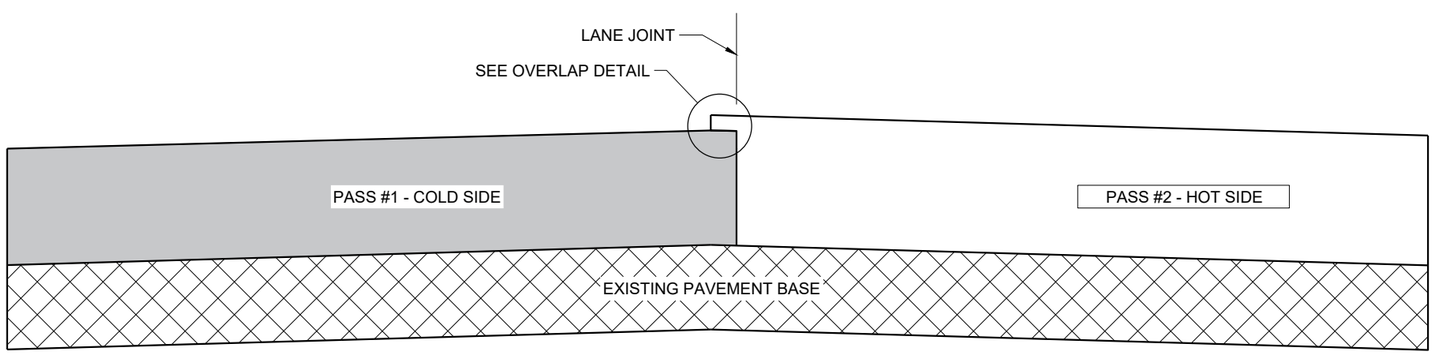


**TYPICAL PAVEMENT CROSS SECTION**
**VERTICAL JOINT (MILLED)**

## GENERAL NOTES

IN ADDITION TO THE DETAILS PROVIDED IN THIS DRAWING, CONFORM TO STANDARD SPECIFICATION 450.3.2.8 FOR WHEN A NOTCHED WEDGE JOINT IS REQUIRED AND FOR GENERAL JOINT CONSTRUCTION REQUIREMENTS.

FOR ALL LONGITUDINAL JOINTS, ENSURE THE PAVER SCREED OVERLAPS THE PREVIOUSLY PLACED PAVEMENT BY 1" ± 0.5" AND THE HOT SIDE OF THE JOINT REMAINS HIGHER THAN THE COLD SIDE BY APPROXIMATELY 0.1" AFTER FINAL COMPACTION. (IT WILL BE FLUSH WHEN PAVING IN ECHELON.)

ONLY REMOVE THE LONGITUDINAL NOTCHED WEDGE JOINT FOR SMA PAVEMENT OR AS DIRECTED BY THE ENGINEER TO ADDRESS SPECIFIC LENGTHS OF JOINT DAMAGED BY TRAFFIC.

WHEN MILLING BACK OR REMOVING ANY LONGITUDINAL JOINT, LIMIT THE MATERIAL REMOVED TO 2" FROM THE TOP NOTCH OR FROM THE VERTICAL JOINT EDGE ON THE COLD SIDE OF THE JOINT.

USE LONGITUDINAL MILLED JOINT AS PLANS SHOW OR THE AS THE ENGINEER DIRECTS.

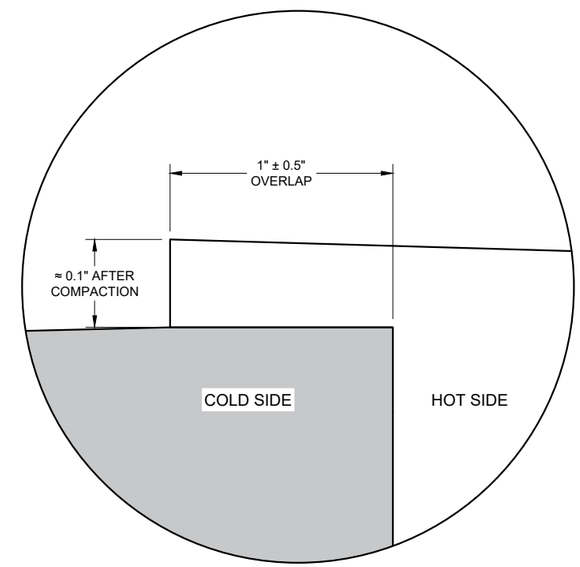


**OVERLAP DETAIL (TYPICAL)**

6

6

SDD 13C19 - 03

SDD 13C19 - 03

**HMA LONGITUDINAL JOINTS**

STATE OF WISCONSIN
DEPARTMENT OF TRANSPORTATION

APPROVED
November 2020 /S/ Steven Hefel
DATE HMA PAVEMENT ENGIN
FHWA

1. WOOD OR STEEL POSTS (w6X9 OR w6X8.5) MAY BE USED. DO NOT INTERMIX WOOD AND STEEL POSTS. INSTALL STEEL POSTS WITH HOLES ON APPROACHING TRAFFIC SIDE.
2. USE WOOD OR APPROVED PLASTIC BLOCKOUTS. WOOD BLOCKOUTS MAY BE CONSTRUCTED OUT OF TWO OR MORE WOOD BLOCKOUTS. SEE ALTERNATE WOOD BLOCKOUT DETAIL. DIMENSIONS OF APPROVED PLASTIC BLOCKOUTS MAY VARY.
3. IF ROCK IS ENCOUNTERED DURING EXCAVATION, PROVIDE A HOLE 12 INCHES IN DIAMETER EXTENDING 20 INCHES DEEP INTO THE ROCK. PLACE APPROXIMATELY 2 1/2" INCHES OF GRANULAR MATERIAL IN THE BOTTOM OF THE HOLE. CUT THE POSTS THE TO LENGTH AMD INSTALL. BACKFILL WITH EXCAVATED MATERIAL AND COMPACT. BACKFILL IS TO BE FREE OF LARGE ROCKS.
4. WHEN THE DISTANCE FROM BACK OF POST TO SHOULDER HINGE POINT IS LESS THAN 2 FEET INSTALL LONGER POST AT HALF POST SPACING (K).
5. FOR NEW MGS INSTALLATION TOP OF W-BEAM RAIL TOLERANCE IS ±1". FOR EXISTING MGS INSTALLATION TOP OF W-BEAM IS BETWEEN 27 ¾" TO 32".
6. WHEN USING STEEL POST AND WOOD BLOCKOUTS INSTALL FOUR 16D GALVANIZED NAILS. INSTALL NAILS AT THE BACK CORNERS OF THE BLOCK AND BEND THE NAILS OVER THE FLANGE OF THE STEEL POST.
7. TOTAL POST LENGTH FOR TYPE K IS 7' - 0". TOTAL POST LENGTH FOR OTHER MGS TYPES IS 6' - 0".

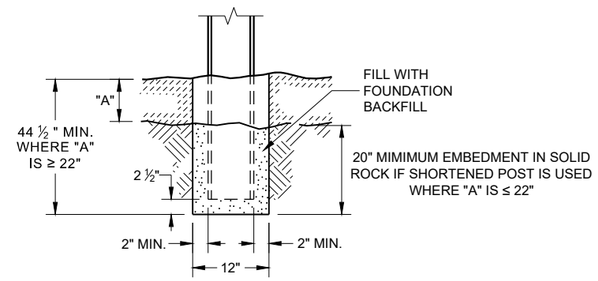


END VIEW
**SETTING STEEL OR WOOD POST IN ROCK** (3)

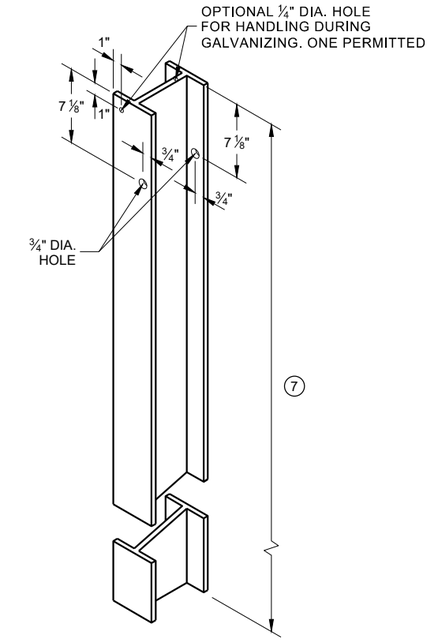


**STEEL POST & HOLE PUNCHING DETAIL (W 6 X 9)** (1)

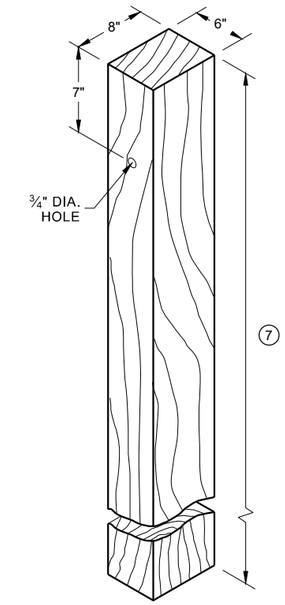


**WOOD POST (6" X 8") NOMINAL** (1)

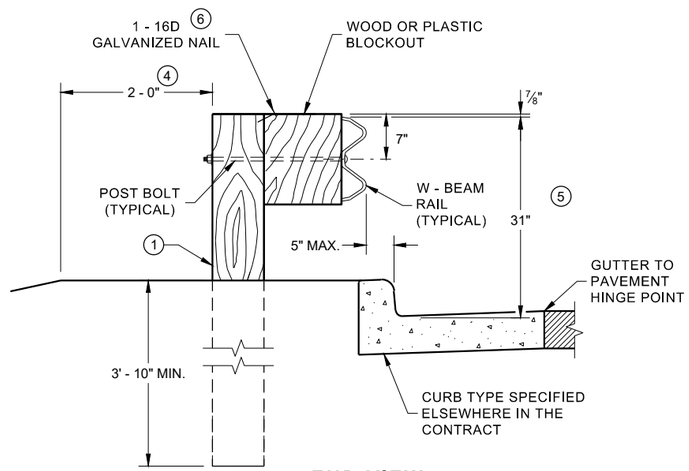


END VIEW
**LOCATED ALONG A CURBED ROADWAY**

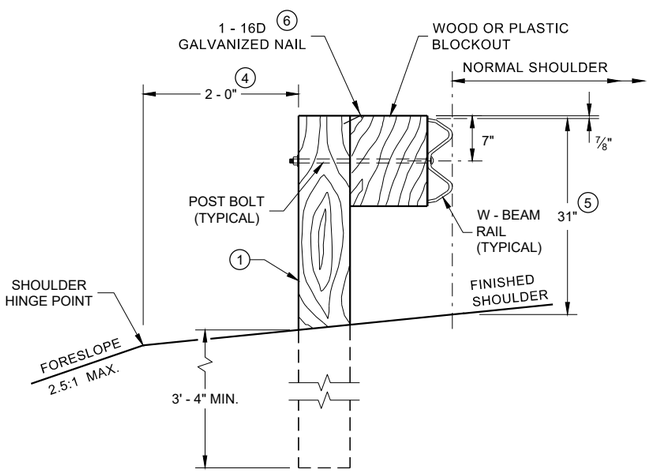


END VIEW
**LOCATED ALONG A ROADWAY SHOULDER STANDARD INSTALLATION**

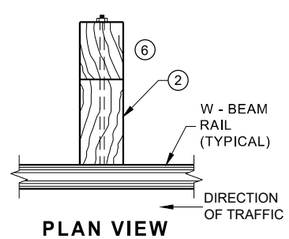


PLAN VIEW
**WOOD POST, BLOCKOUT & BEAM**

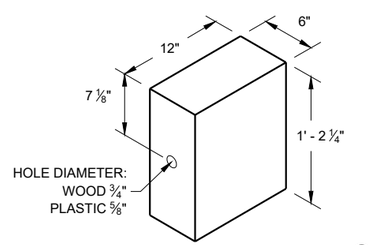


**WOOD OR PLASTIC BLOCKOUT** (2)

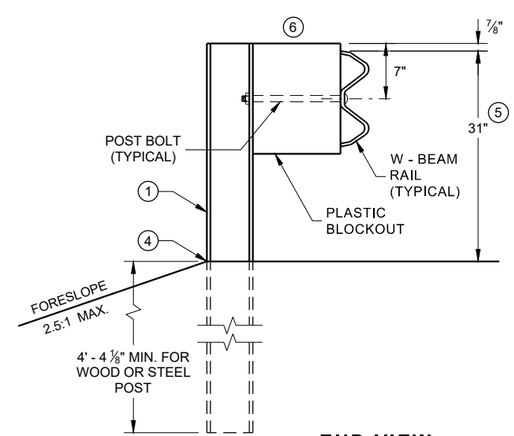


END VIEW
**MGS LONGER POST AT HALFPOST SPACING W BEAM (K)**

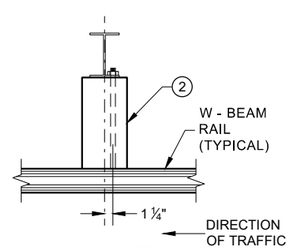


PLAN VIEW
**STEEL POST, PLASTIC BLOCKOUT & BEAM**

**MIDWEST GUARDRAIL SYSTEM (MGS) GUARDRAIL**

STATE OF WISCONSIN
DEPARTMENT OF TRANSPORTA




6


SDD 14B42 - 07a

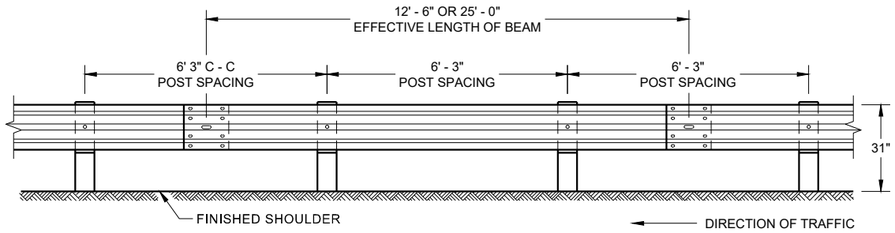


FRONT VIEW
## POST SPACING STANDARD INSTALLATION

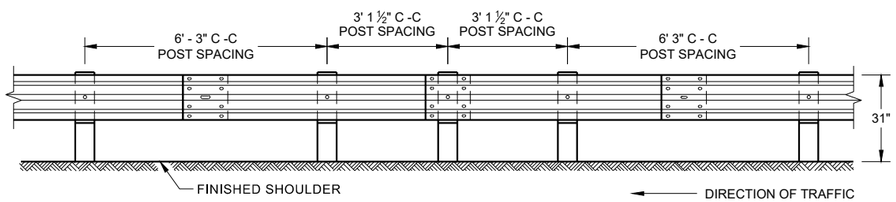


FRONT VIEW
## HALF POST SPACING (HS) AND HALF POST SPACING WITH LONGER POSTS (K)

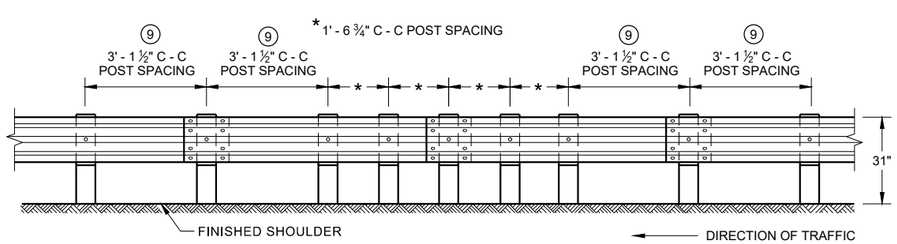


FRONT VIEW
## QUARTER POST SPACING (QS)

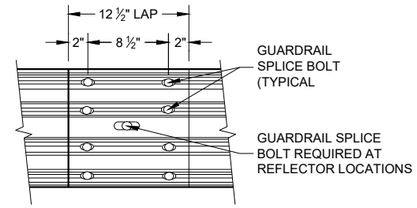


FRONT VIEW
## MID-SPAN BEAM SPLICE

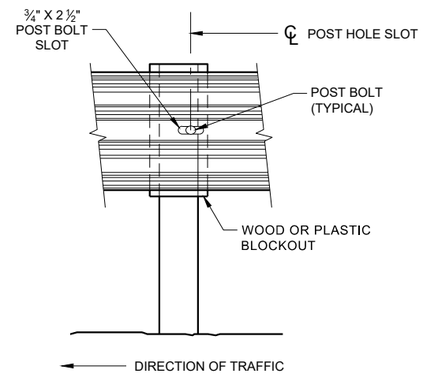


## FRONT VIEW AT STEEL POST

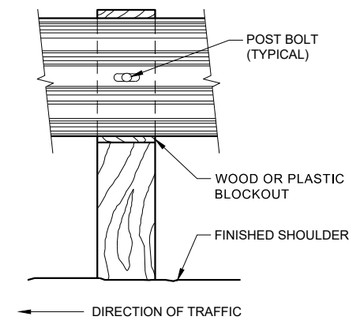


## FRONT VIEW AT WOOD POST

## GENERAL NOTES

8. DO NOT INSTALL REFLECTORS ON THE FIRST 50 FEET OF THE APPROACH END OF THE ENERGY ABSORBING TERMINAL.

9. 25 FEET OF HALF POST SPACING IS REQUIRED ON APPROACH AND DEPARTURE ENDS OF QUARTER POST SPACING.

POST BOLTS ARE A ⅝" DIAMETER ASTM A307 GUARDRAIL BOLT. A POST BOLT REQUIRES ⅝" DIAMETER A563A DOUBLE RECESSED (DR) HEAVY HEX NUT AND ⅝" DIAMETER F844 FLAT WASHER. POST BOLTS MAY BE LONGER IF MULTIPLE BLOCKOUTS ARE BEING USED.

GUARD RAIL SPLICE BOLTS ARE A ⅝" DIAMETER ASTM A307 GUARDRAIL HEAD BOLT. A GUARDRAIL SPLICE BOLT REQUIRES ⅝" DIAMETER A563A DOUBLE RECESSED (DR) HEAVY HEX NUT.

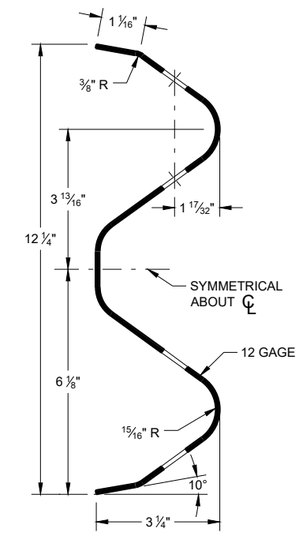


## SECTION THRU W-BEAM RAIL

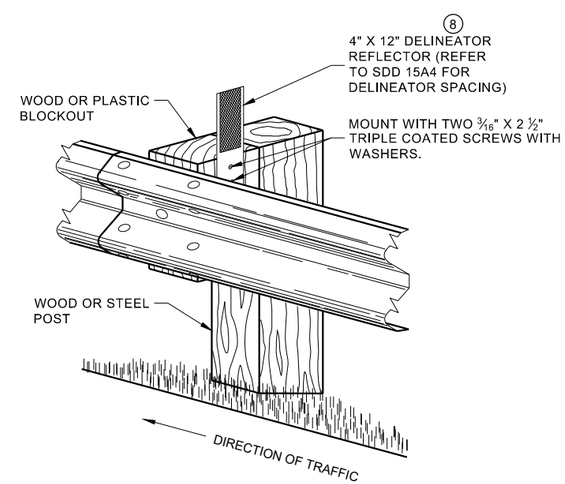


## ONE SIDED REFLECTOR DETAIL AND TYPICAL INSTALLATION

**MIDWEST GUARDRAIL SYSTEM (MGS) GUARDRAIL**

STATE OF WISCONSIN
DEPARTMENT OF TRANSPORTAT




6


SDD 14B42 - 07b

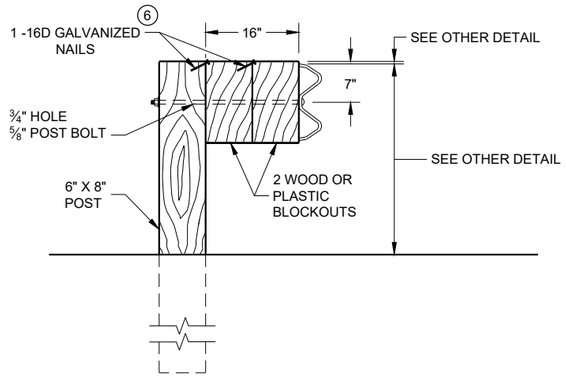


## DETAIL FOR 16" BLOCKOUT DEPTH

IT IS ACCEPTABLE TO USE BLOCKOUTS UP TO 16" DEEP TO INCREASE THE POST OFFSET TO AVOID UNDERGROUND OBSTACLES. THERE IS NO LIMIT TO THE NUMBER OF POSTS THAT CAN HAVE ADDITIONAL BLOCKOUTS UP TO 16" DEEP.

NOTE:

1. ALL FILLETS SHALL HAVE A MINIMUM RADIUS OF 3/16".
2. IF THE BOLT EXTENDS MORE THAN ¼" FROM THE NUT THE BOLT SHOULD BE TRIMMED BACK.

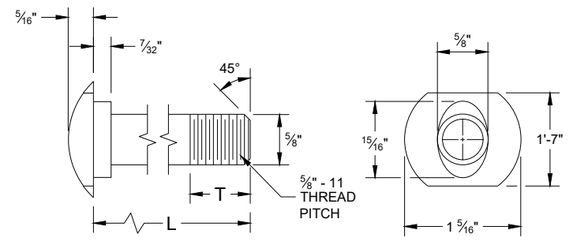


## POST BOLT TABLE

| L | T (MIN.) |
|---|---|
| 1 ¼" | 1 ⅛" |
| 2" | 1 ¾" |
| 10" | 4" |
| 14" | 4 1/16" |
| 18" | 4" |
| 21" | 4 1/16" |
| 25" | 4" |

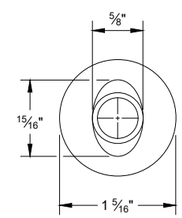


## ALTERNATE BOLT HEAD

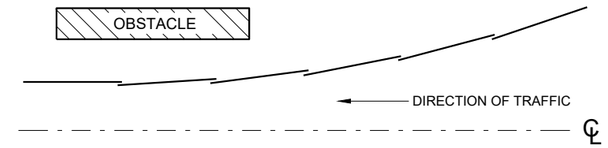


## PLAN VIEW
## BEAM LAPPING DETAIL

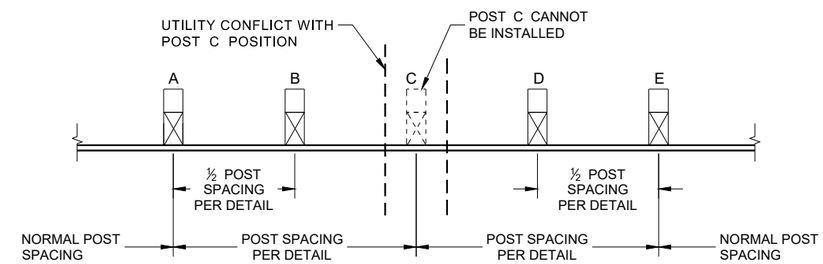


## POST DRIVING FOR CONTINUOUS UNDERGROUND OBSTRUCTION

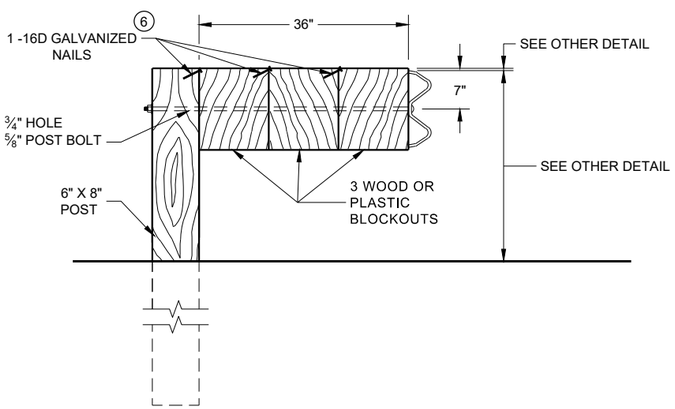


## DETAIL FOR 36" BLOCKOUT DEPTH

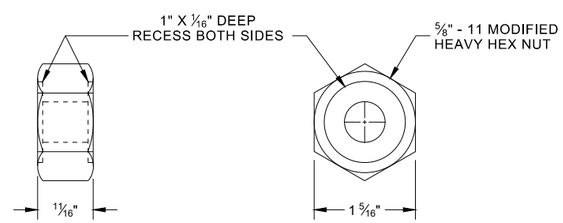


## POST BOLT, SPLICE BOLT AND RECESS NUT

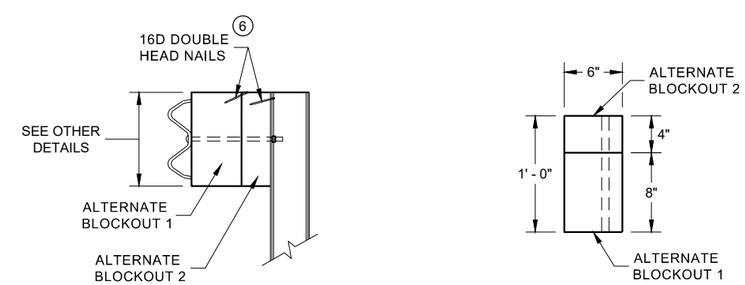


SIDE VIEW

PLAN VIEW

## ALTERNATE WOOD BLOCKOUT DETAIL

NOTES: UNDER SPECIAL CIRCUMSTANCES, SUCH AS AVOIDING OBSTACLES THAT ARE NOT RELOCATED, IT IS ACCEPTABLE TO INSTALL ADDITIONAL BLOCKOUTS TO OBTAIN UP TO 36" DEPTH FOR ONE OR TWO POSTS IN A SECTION OF GUARDRAIL.

DO NOT USE 16" OR 36" BLOCKOUTS IF IT CAUSES THE POST TO BE DRIVEN BEYOND SHOULDER HINGE POINT OR CAUSES A FIXED OBJECT TO BE WITHIN THE DEFLECTION DISTANCE OF THE BARRIER.

(6) WHEN USING STEEL POST AD WOOD BLOCKOUTS, INSTALL FOUR 16D GALVANIZED NAILS. INSTALL NAILS AT THE BACK CORNERS OF THE BLOCK AND BEND THE NAILS OVER THE FLANGE OF THE STEEL POST.

**MIDWEST GUARDRAIL SYSTEM (MGS) GUARDRAIL**

STATE OF WISCONSIN
DEPARTMENT OF TRANSPORTA




6


SDD 14B42 - 07c

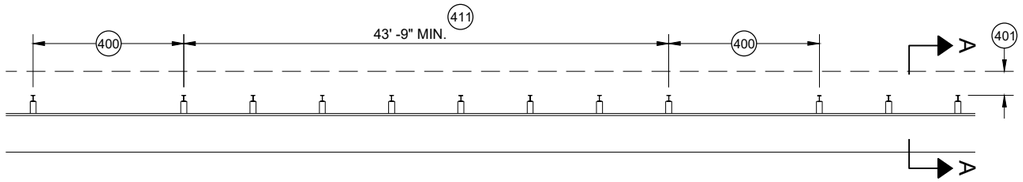


**MISSING POST IN MGS GUARDRAIL**

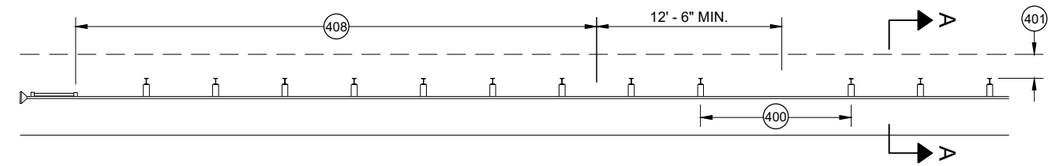


**MISSING POST IN MGS GUARDRAIL NEAR EAT**

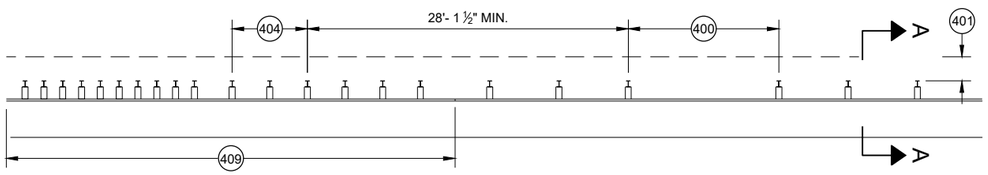


**MISSING POST IN MGS GUARDRAIL NEAR AN APPROACH TRANSITION**

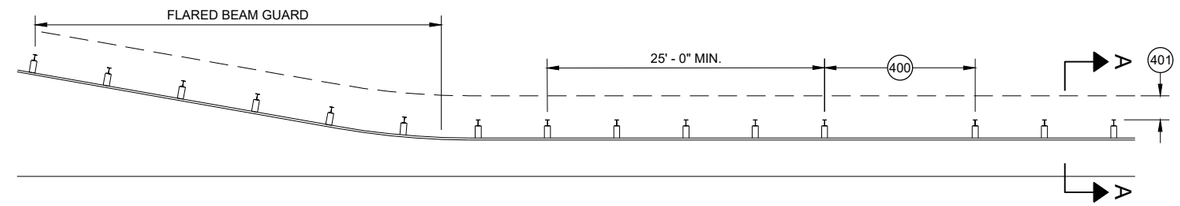


**MISSING POST IN MGS GUARDRAIL NEAR FLARED BEAM GUARD**

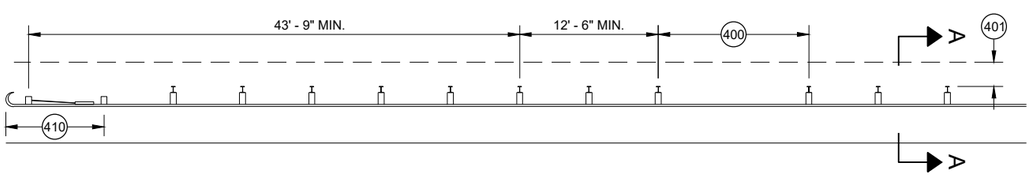


**MISSING POST IN MGS GUARDRAIL NEAR A TYPE 2 END TERMINAL**

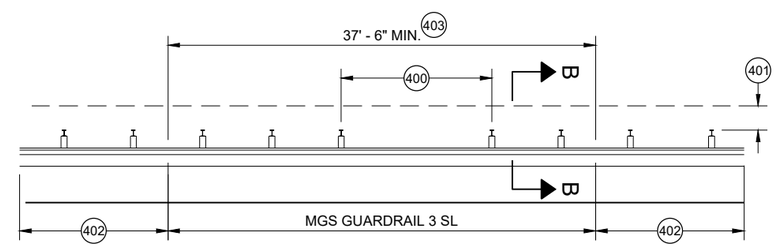


**MISSING POST IN SHORT SPAN MGS GUARDRAIL NEAR CURB (SL)** 407

400 MAX SPAN 12' - 6"
401 2' MIN.
402 MGS GUARDRAIL 3
403 NESTING BEAM GUARD
404 ASYMMETRIC TRANSITION
405 SOIL WELL DRAINED AND COMPACTED
406 SEE OTHER DRAWINGS IN THIS SDD
407 SEE OTHER DRAWINGS FOR MIN. SPACING BETWEEN SPANS
408 SEE SDD 14B44
409 SEE SDD 14B45
410 SEE SDD 14B47
411 MINIMUM DISTANCE BETWEEN MISSING POST SPANS.

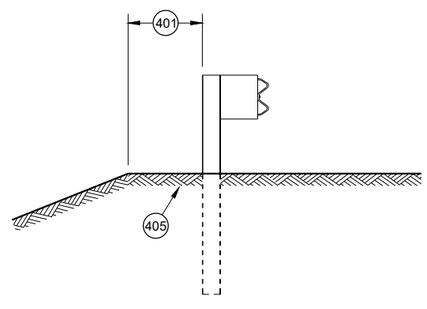


**SECTION A - A** 406

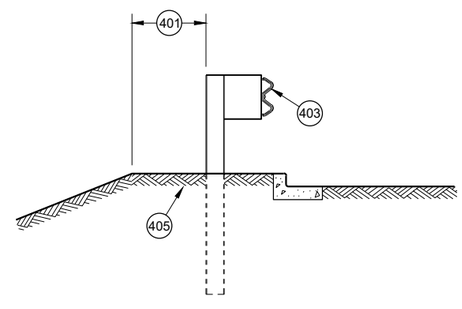


**SECTION B - B** 406

**MIDWEST GUARDRAIL SYSTEM (MGS) GUARDRAIL**

STATE OF WISCONSIN
DEPARTMENT OF TRANSPORTATION

APPROVED
May 2021 — DATE
/S/ Rodney Taylor — ROADWAY STANDARDS DEVE UNIT SUPERVISOR
FHWA




6


SDD 14B42 - 07d

## GENERAL NOTES

(A) THE SLOPE IN THE AREA BOUNDED BY THE GRADELINE, THE HINGE POINT LINE (HPL) AND THE CLEAR ZONE LIMITS (CZL) SHALL BE 4:1 OR FLATTER.

(B) AFTER FINAL ASSEMBLY, RECHECK CABLE TO BE SURE IT IS TAUT AND HAS NOT RELAXED

(C) DIFFERENT MANUFACTURERS REQUIRE DIFFERENT PERFORATED W - BEAM RAIL END PANELS. SEE MANUFACTURER'S INFORMATION.

(D) ATTACH ALUMINUM SHEET TO E.A.T. HEAD USING 4 STAINLESS STEEL SELF - TAPPING SCREWS. ONE SCREW PER CORNER.

(E) HARDWARE MAY VARY BETWEEN MANUFACTURER. SEE MANUFACTURER'S DRAWING FOR INFORMATION.

DIMENSIONS MAY VARY, MANUFACTURER'S INFORMATION.

SEE SDD 14B42 FOR MORE INFORMATION.

* DO NOT ATTACH BLOCKOUTS TO POST 1 AND 2.

DO NOT INSTALL REFLECTORS ON THE FIRST 50 FEET OF THE APPROACH END OF THE ENERGY ABSORBING TERMINAL.

SEE MANUFACTURER'S DRAWING FOR SPLICE LOCATION, HARDWARE DIMENSIONS AND INSTALLATION INSTRUCTIONS.

THE CENTER OF THE UPPER 3 ½" DIAMETER HOLE ON POST NUMBER 3 THROUGH POST 9 IS TO BE FLUSH WITH THE GROUND LINE UP TO A MAXIMUM OF 2" ABOVE GROUND LINE. WOOD BLOCKS ON POSTS NUMBERED 3 THROUGH 9 MAY BE ADJUSTED UP TO 3" ABOVE THE TOP OF POST.

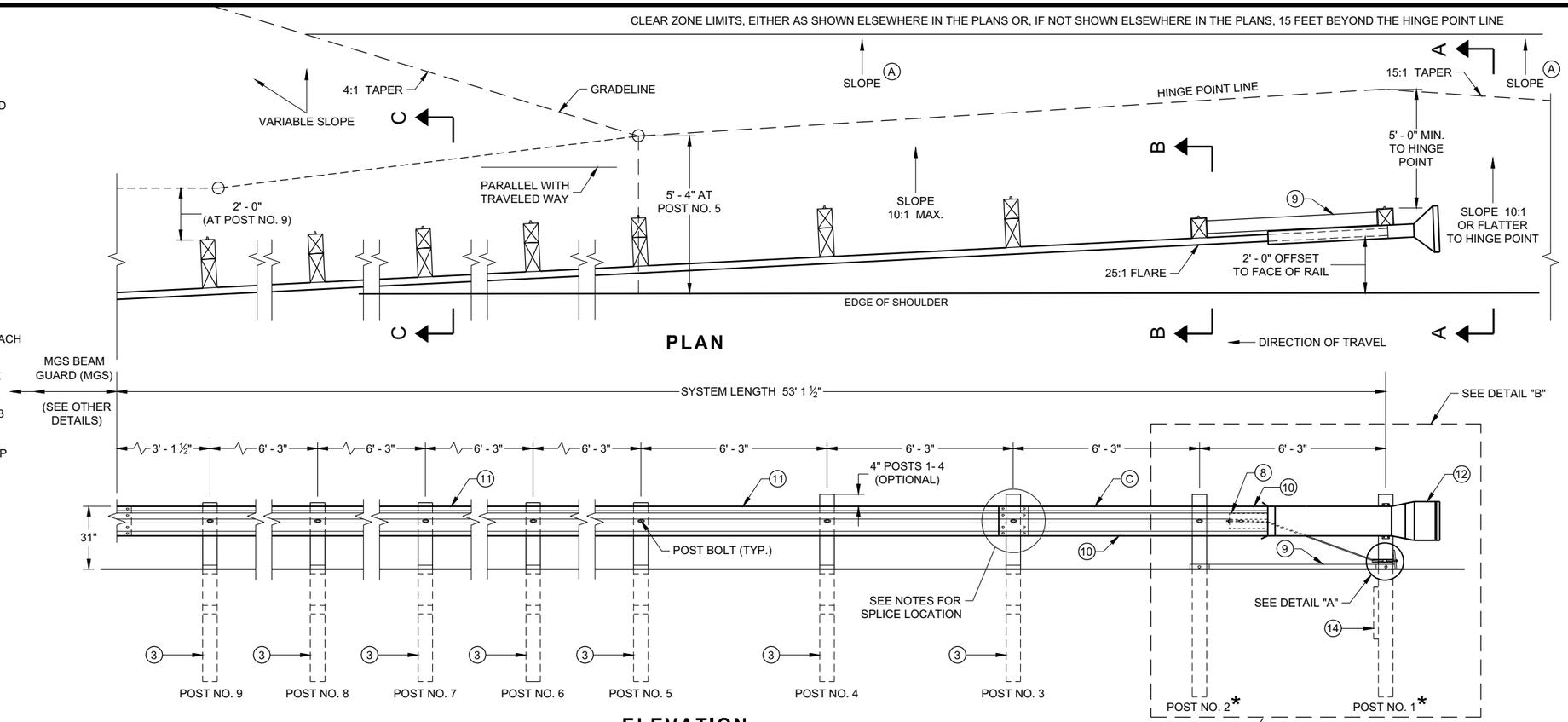


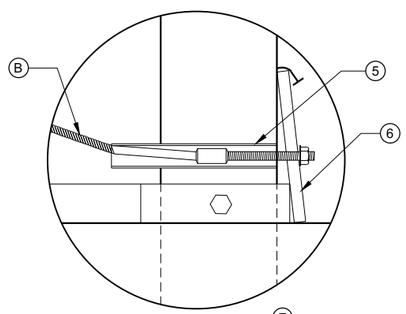


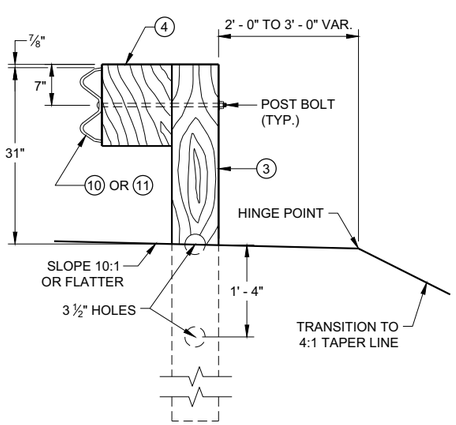


SECTION C - C
TYPICAL AT POST NOS. 3 - 9

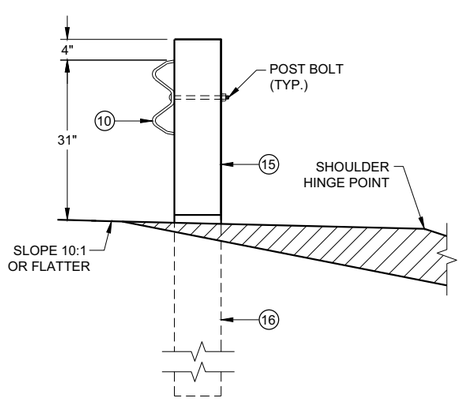


SECTION B - B
TYPICAL AT POST NO. 2*

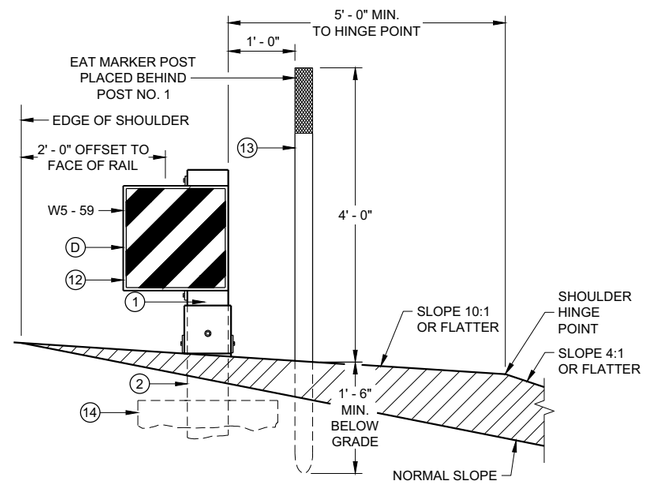


SECTION A - A
TYPICAL AT POST NO. 1*

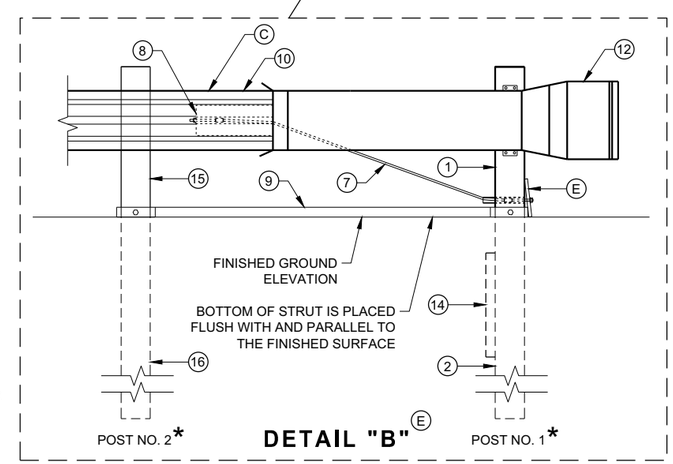


**MIDWEST GUARDRAIL SYSTEM ENERGY ABSORBING TERMINAL (MGS)**

STATE OF WISCONSIN
DEPARTMENT OF TRANSPORTATION

6

6

SDD 14B44 - 04a

SDD 14B44 - 04a

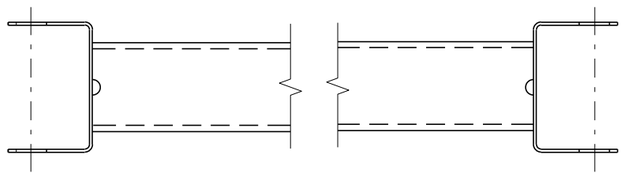

GENERIC GROUND STRUT (9)(E)

## BILL OF MATERIALS

| PART NO. | DESCRIPTION<br>MATERIALS PROVIDED BY MGS EAT MANUFACTURER.<br>SEE MANUGACTURER'S DETAILS FOR MORE INFORMATION. |
|---|---|
| 1 | UPPER POST NO. 1 6" X 6" TUBE |
| 2 | LOWER POST NO. 1 |
| 3 | WOOD CRT |
| 4 | WOOD BLOCKOUT |
| 5 | PIPE SLEEVE |
| 6 | BEARING PLATE |
| 7 | BCT CABLE ASSEMBLY |
| 8 | ANCHOR CABLE BOX |
| 9 | GROUND STRUT |
| 10 | PERFORATED W-BEAM RAIL END PANEL, 12'-6" LONG. |
| 11 | STANDARD W-BEAM RAIL. MULTIPLE SECTIONS REQUIRED.<br>SECTIONS VARY IN LENGTH. |
| 12 | IMPACT HEAD |
| 13 | EAT MARKER POST - YELLOW<br>(SEE APPROVED PRODUCTS LIST) |
| 14 | SOIL PLATE |
| 15 | UPPER POST NO. 2 |
| 16 | LOWER POST NO. 2 |

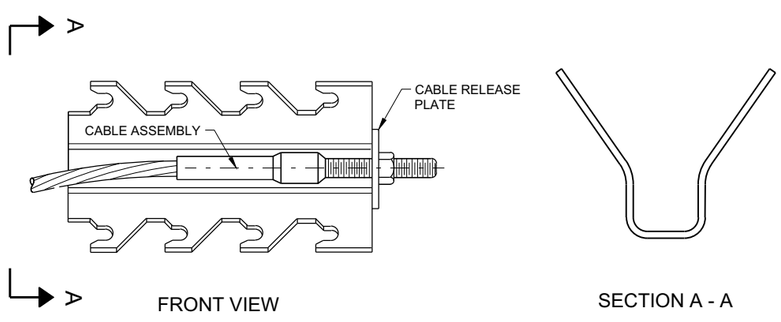


GENERIC ANCHOR CABLE BOX (9)(E)

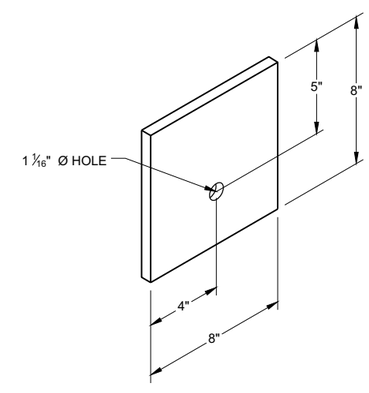


BEARING PLATE (6)(E)

6

6

SDD 14B44 - 04b

SDD 14B44 - 04b

**MIDWEST GUARDRAIL SYSTEM ENERGY ABSORBING TERMINAL (MGS)**

STATE OF WISCONSIN
DEPARTMENT OF TRANSPORTAT

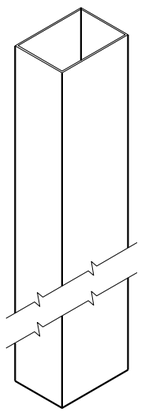

**UPPER POST NO. 1** (1) (E)

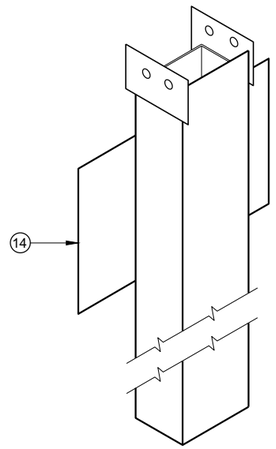


**LOWER POST NO. 1** (2) (E)

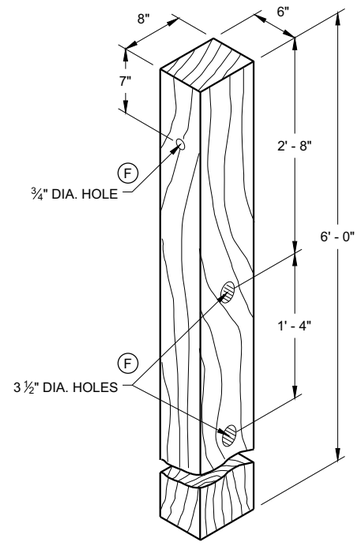


**WOOD CRT POST** (3) (E)
POSTS NUMBER 3-9

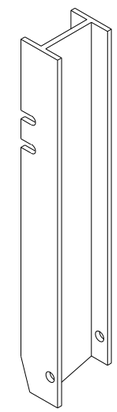

**UPPER POST NO. 2** (15) (E)

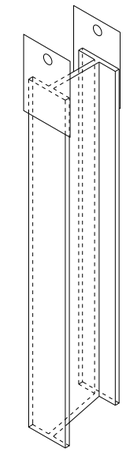

**LOWER POST NO. 2** (16) (E)

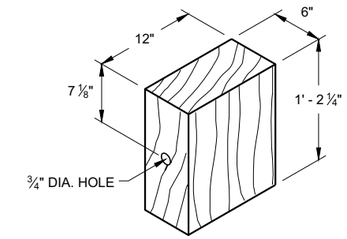


**WOOD BLOCKOUT** (4)
REQ'D. AT ALL POSTS EXCEPT POST NO'S 1 & 2

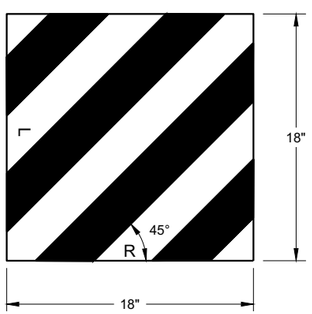


W5 - 59

**REFLECTIVE SHEETING DETAIL** (E)

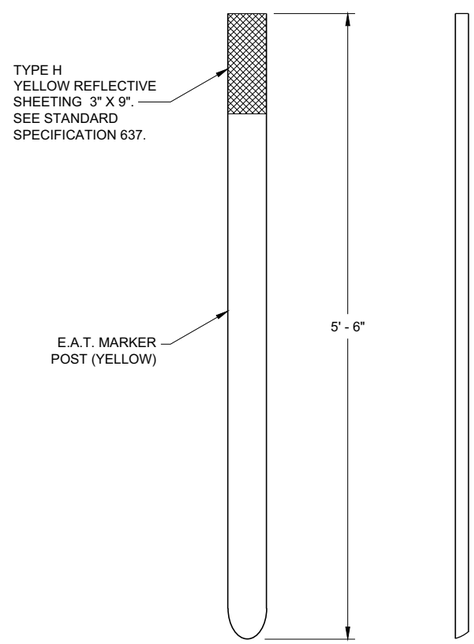


FRONT VIEW SIDE VIEW

**E.A.T. MARKER POST** (13)

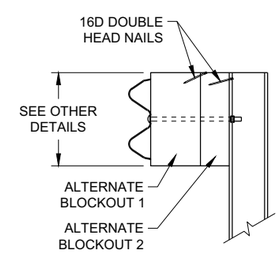


SIDE VIEW

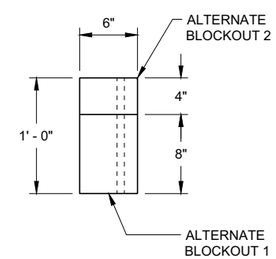


TOP VIEW

**ALTERNATE WOOD BLOCKOUT DETAIL**

**MIDWEST GUARDRAIL SYSTEM ENERGY ABSORBING TERMINAL (MGS)**

STATE OF WISCONSIN
DEPARTMENT OF TRANSPORTATION

APPROVED
7/2018 — DATE
/S/ Rodney Taylor — ROADWAY STANDARDS DEVE UNIT SUPERVISOR
FHWA

6

6

SDD 14B44 - 04c

SDD 14B44 - 04c

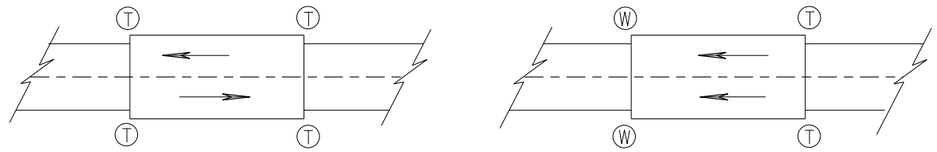


**TWO WAY TRAFFIC** **ONE WAY TRAFFIC**

(T) THRIE BEAM CONNECTION

(W) W-BEAM CONNECTION WHEN REQUIRED

## TYPICAL LOCATIONS OF THRIE BEAM AND W-BEAM CONNECTIONS TO BRIDGE

## GENERAL NOTES

IF ROCK IS ENCOUNTERED, REMOVE ROCK TO FULL DEPTH OF POST PLUS 2½", AND 12" DIAMETER AROUND POST. SEE 14B42 FOR MORE DETAILS.

TRANSITION USES STEEL POSTS ONLY.

SEE STANDARD DETAIL DRAWING 14 B 42 FOR MORE INFORMATION.

POST 2 THROUGH 17 USES STEEL POST ONLY

(1) BRIDGE RAILING TYPE "W" DOES NOT REQUIRE A TERMINAL CONNECTOR.

(2) OPTIONAL CURB AND GUTTER OR DRAINAGE FEATURE SEE PLAN FOR INFORMATION.

(13) STEEL OR WOOD POST IS ACCEPTABLE AT POST 1. SEE SDD14B42

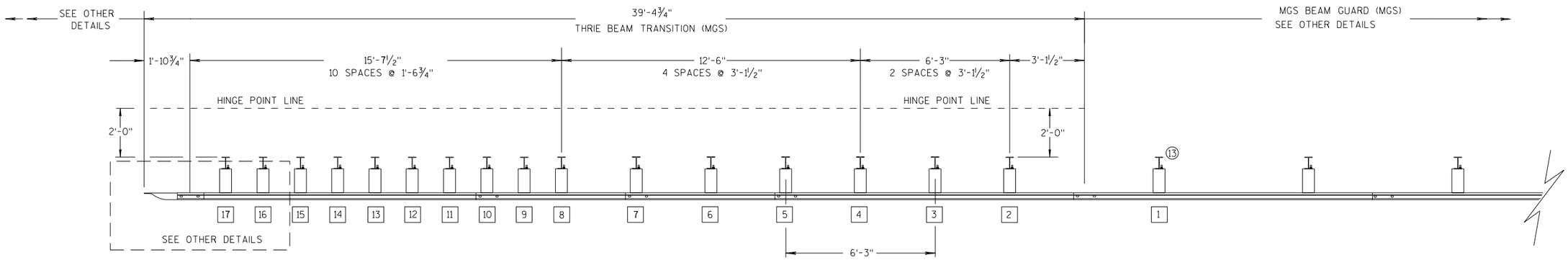


**PLAN VIEW**

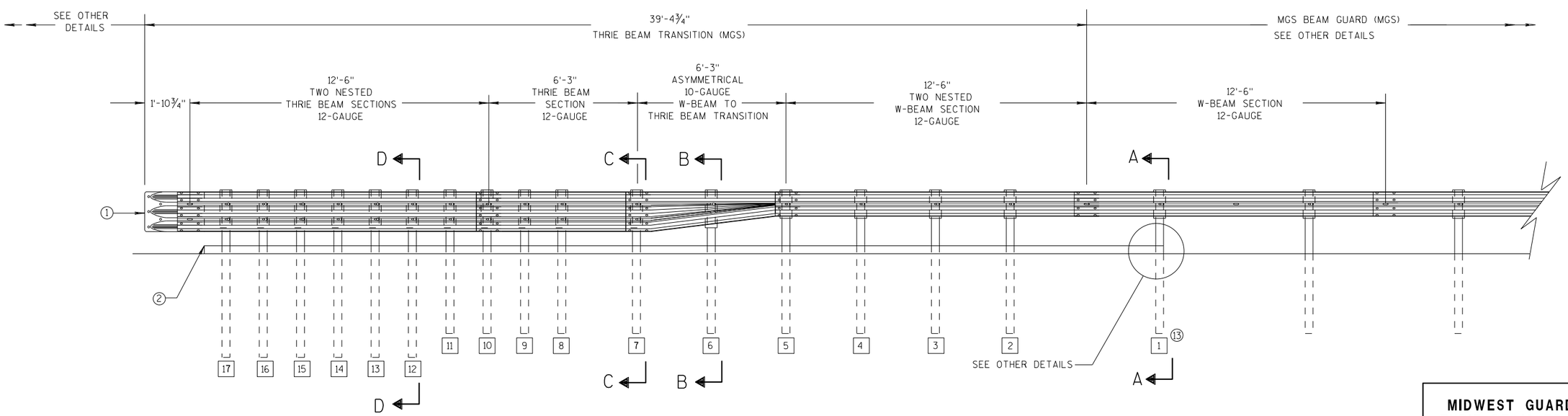


**ELEVATION VIEW**

## MIDWEST GUARDRAIL SYSTEM THRIE BEAM TRANSITION

**MIDWEST GUARDRAIL SYSTEM**
**THRIE BEAM TRANSITION (MGS)**

STATE OF WISCONSIN
DEPARTMENT OF TRANSPOR







6

S.D.D. 14 B 45-5a

## GENERAL NOTES

(2) OPTIONAL CURB AND GUTTER OR DRAINAGE FEATURE SEE PLAN FOR INFORMATION.

(3) WHEN USING STEEL POSTS AND WOOD BLOCKOUTS INSTALL FOUR 10D GALVANIZED NAILS. INSTALL NAILS AT THE BACK CORNERS OF THE BLOCK AND BEND THE NAILS OVER THE FLANGE OF THE STEEL POST.

(4) TOLERANCE FOR TOP OF W-BEAM RAIL IS ± 1".

(13) STEEL OR WOOD POST IS ACCEPTABLE AT POST 1. SEE SDD 14B42

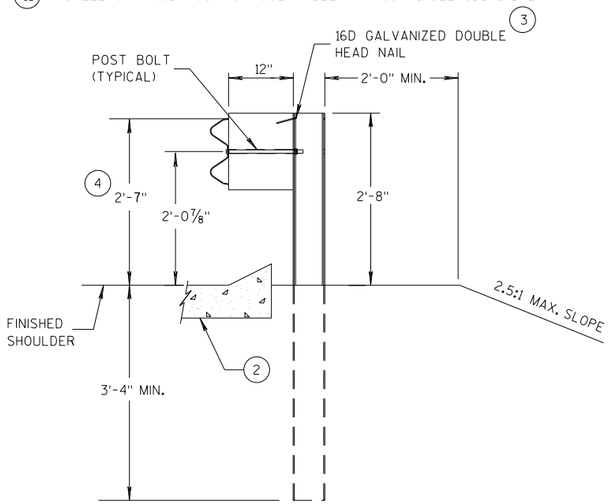


SECTION A-A (13)

POSTS 1-5

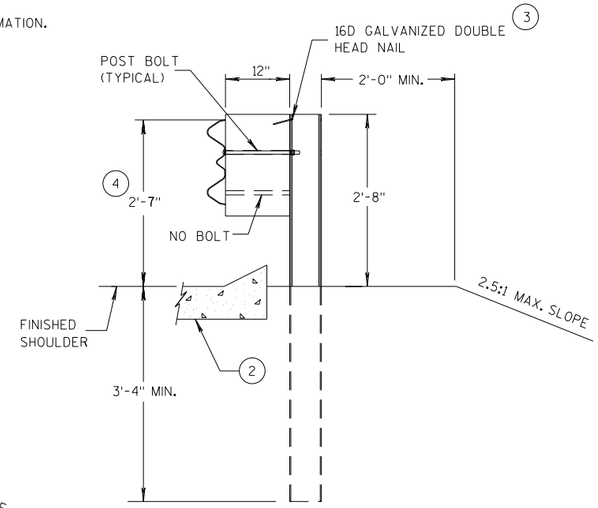


SECTION B-B

POST 6

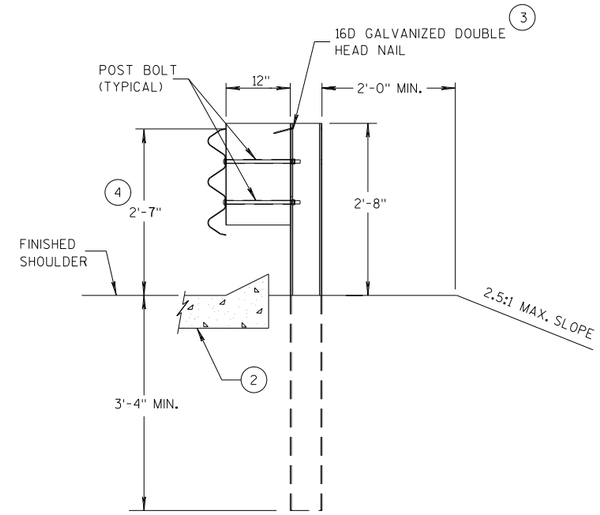


SECTION C-C

POSTS 7-11

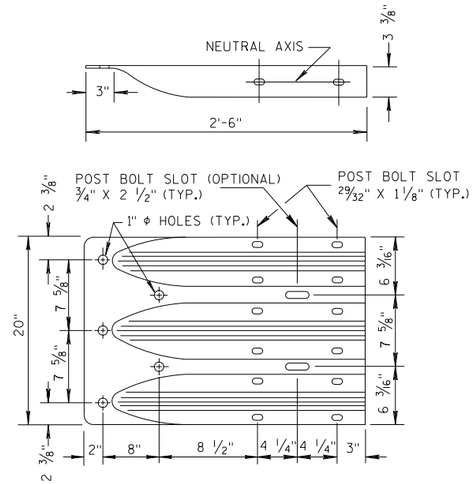


THRIE BEAM TERMINAL CONNECTOR

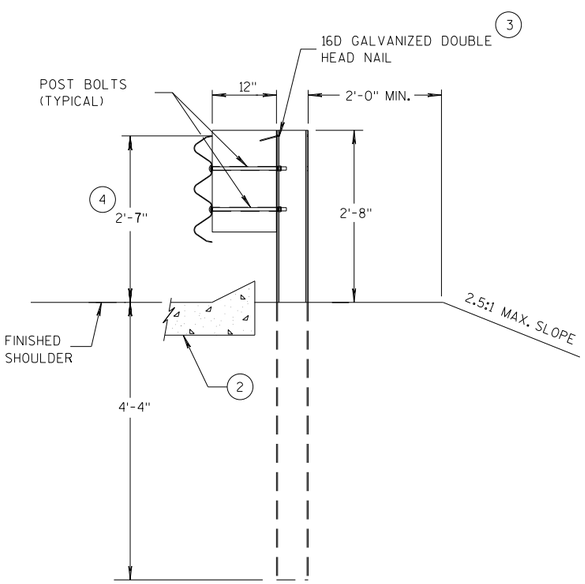


SECTION D-D

POSTS 12-17

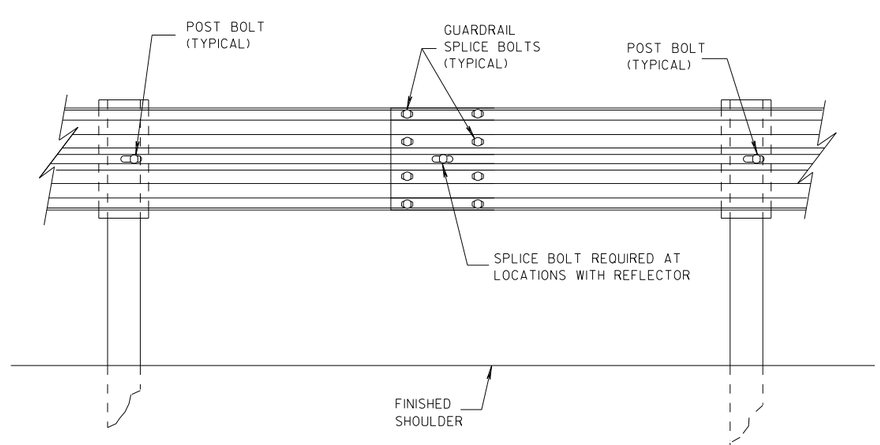


SPLICE DETAIL

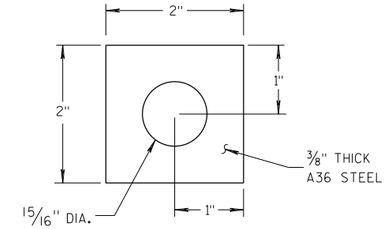


PLATE WASHER DETAIL

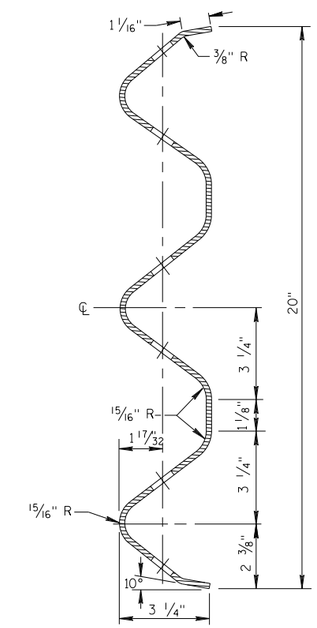


SECTION THRU THRIE BEAM RAIL ELEMENT

MIDWEST GUARDRAIL SYSTEM
THRIE BEAM TRANSITION (MGS)

STATE OF WISCONSIN
DEPARTMENT OF TRANSPORT

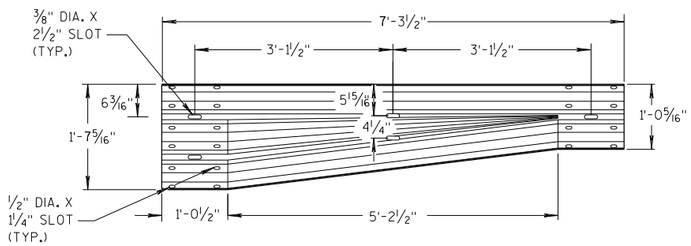


## W-BEAM TO THRIE BEAM TRANSITION SECTION

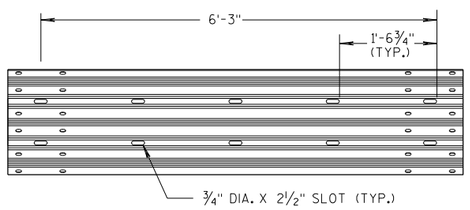


## 6'-3" THRIE BEAM SECTION

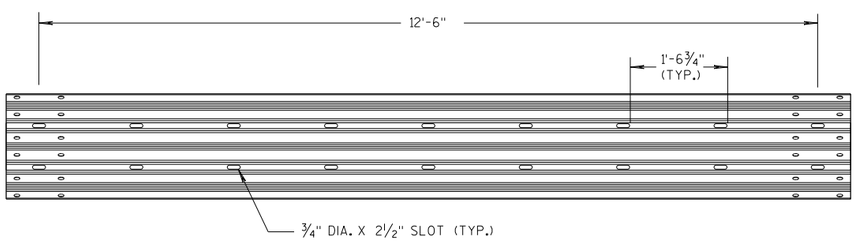


## 12'-6" THRIE BEAM SECTION

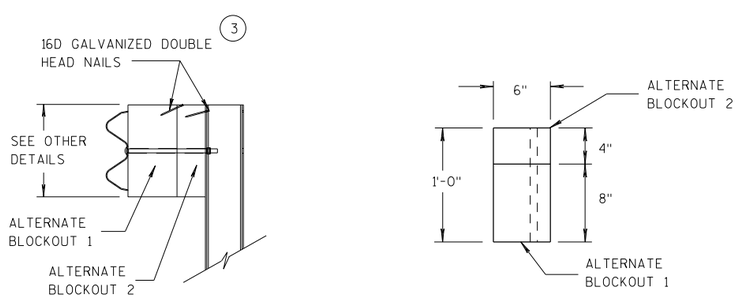


SIDE VIEW TOP VIEW

## ALTERNATE WOOD BLOCKOUT DETAIL

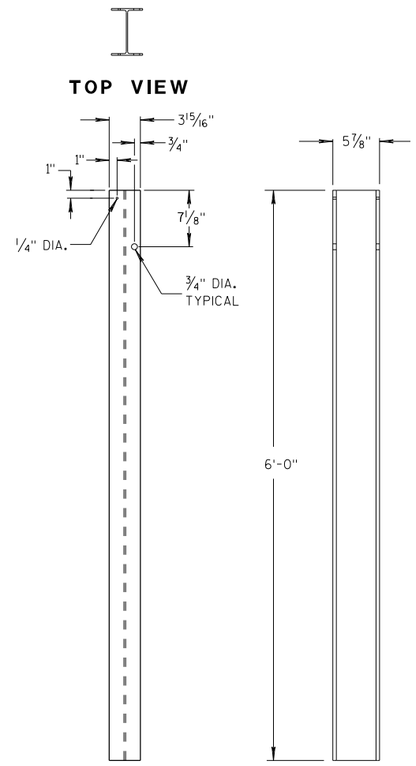


## STEEL POSTS 1-5 (13)

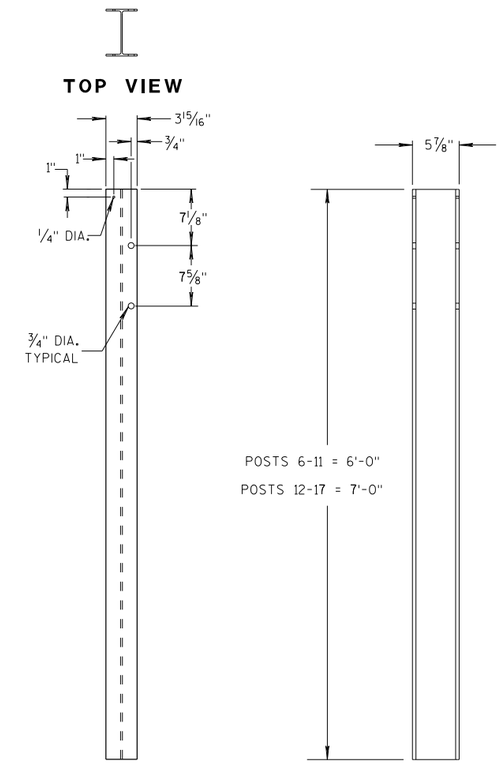


## STEEL POSTS 6-17

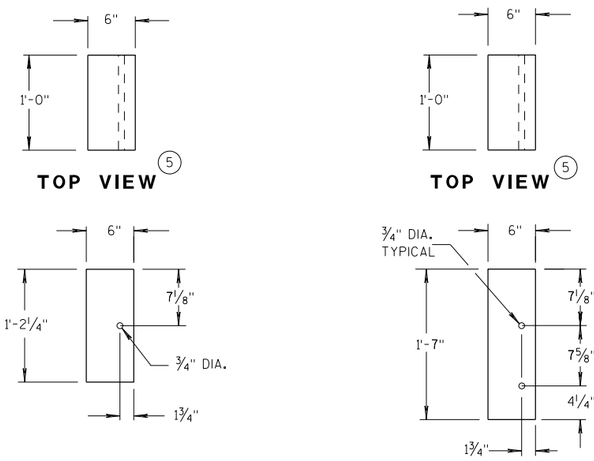


## BLOCKOUT POSTS 1-5

## BLOCKOUT POSTS 6-17

## GENERAL NOTES

STEEL POSTS ARE W6X9 OR W6X8.5.

BOLT HOLES FOR POST ARE ON FRONT AND OF SIDE OF POST.

(3) WHEN USING STEEL POSTS AND WOOD BLOCKOUTS INSTALL FOUR 16D GALVANIZED NAILS. INSTALL NAILS AT THE BACK CORNERS OF THE BLOCK AND BEND THE NAILS OVER THE FLANGE OF THE STEEL POST.

(5) WOOD BLOCKS MAY BE CONSTRUCTED OUT OF 2 WOOD BLOCKS. SEE ALTERNATE WOOD BLOCK DETAIL.

(13) STEEL OR WOOD POST IS ACCEPTABLE AT POST 1. SEE SDD 14B42.

**MIDWEST GUARDRAIL SYSTEM THRIE BEAM TRANSITION (MGS)**

STATE OF WISCONSIN
DEPARTMENT OF TRANSPOR





6



S.D.D. 14 B 45-5c

## GENERAL NOTES

(4) TOLERANCE FOR TOP OF W-BEAM RAIL IS ± 1".

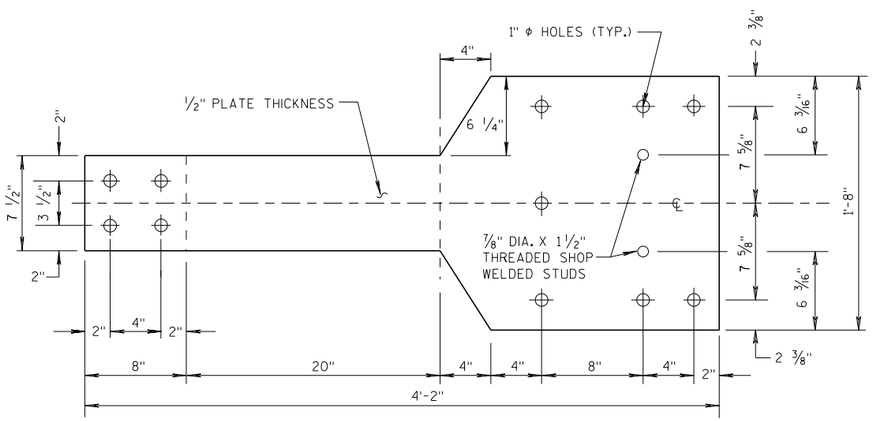


FRONT VIEW

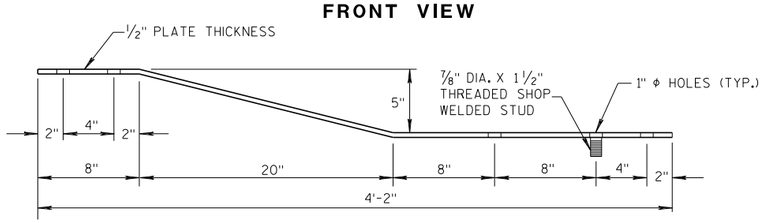


PLAN VIEW

## BACK-UP PLATE DETAIL, TYPE "M"

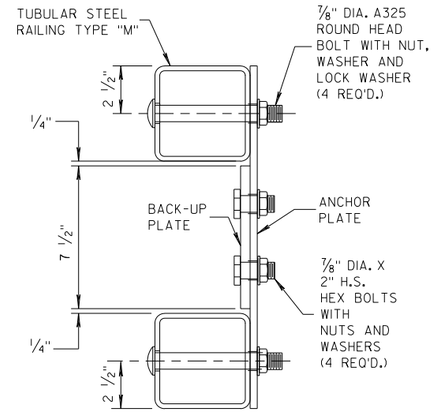


SECTION L-L

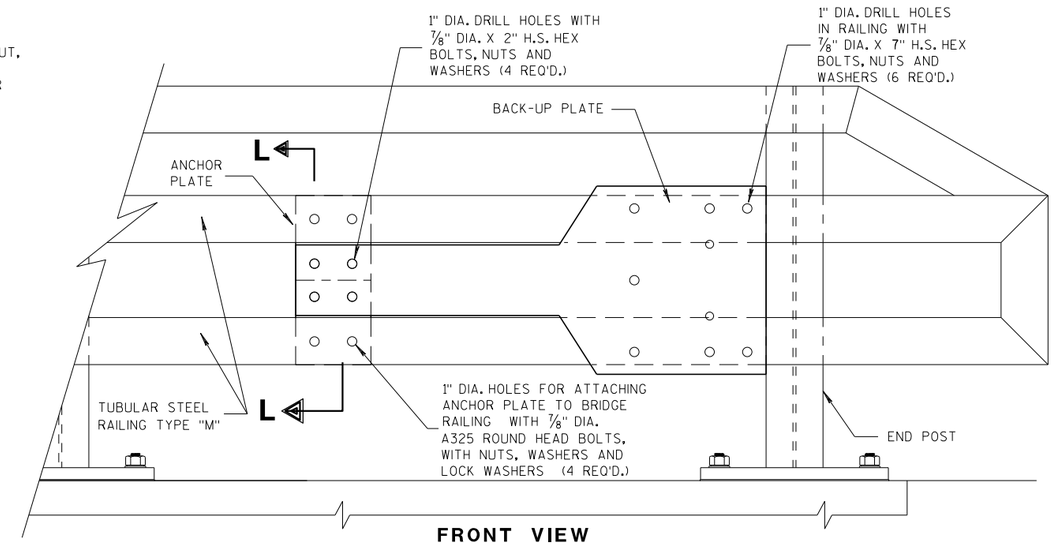


FRONT VIEW

## ANCHOR AND BACK-UP PLATE MOUNTING TO BRIDGE RAILING, TYPE "M"

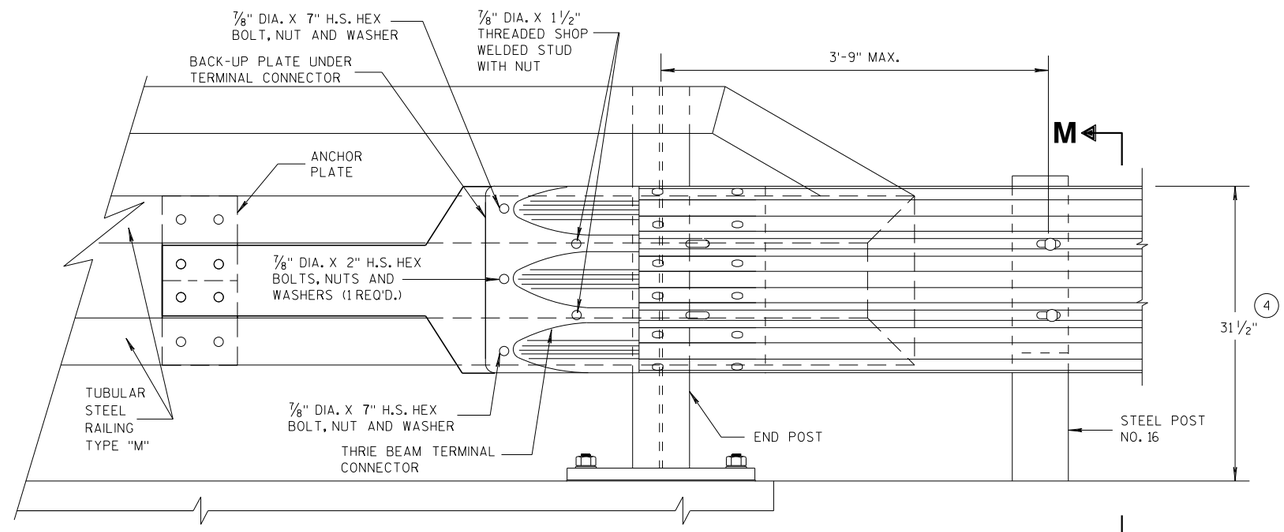


FRONT VIEW

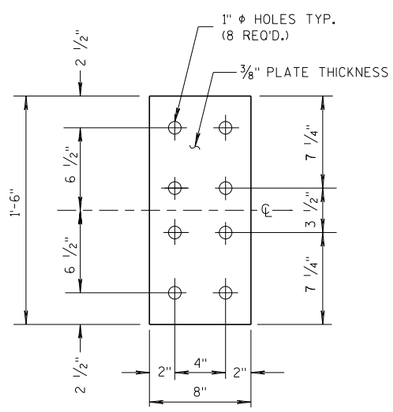


FRONT VIEW

## ANCHOR PLATE DETAIL, TYPE "M"

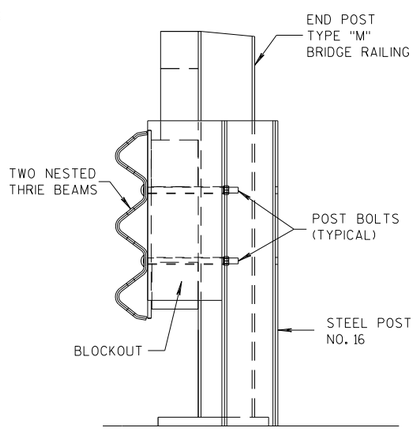


SECTION M-M

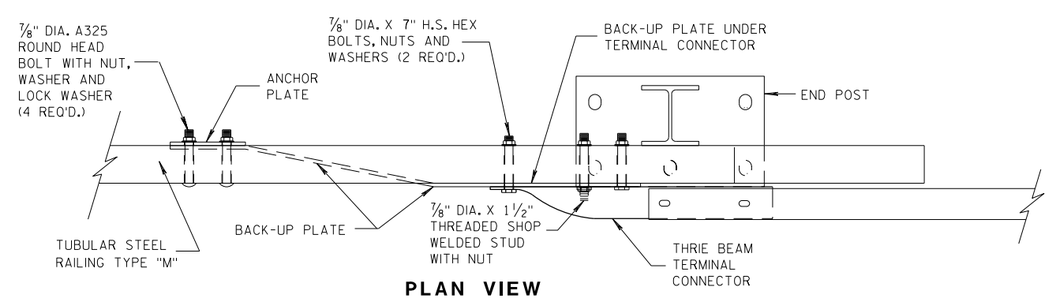


PLAN VIEW

## THRIE BEAM CONNECTION TO TUBULAR RAILING, TYPE "M"

**MIDWEST GUARDRAIL SYSTEM THRIE BEAM TRANSITION (MGS)**

STATE OF WISCONSIN
DEPARTMENT OF TRANSPORTATION

APPROVED
07/2018 — DATE
/S/ Rodney Taylor — ROADWAY STANDARDS DEVELOPMENT UNIT SUPERVISOR
FHWA

## GENERAL NOTES

COVER PLATE PANELS ARE 3/16" THICK.

ALL STIFFENERS ARE 1/4" THICK.

CONNECTOR PLATE SHALL BE FABRICATED FROM ASTM GRADE A36 STEEL AND GALVANIZED.

FOR GALVANIZED REQUIREMENTS, SEE SECTION 614 OF THE STANDARD SPECIFICATIONS.

ALL HOLE DIAMETERS SHALL BE 1".

FOR OPPOSITE SIDE INSTALLATION MIRROR DRAWINGS.

(10) STIFFENERS LOCATED AT THE OUTSIDE EDGES OF THE COVER PLATES SHALL BE WELDED AS FOLLOWS:
SINGLE BEVEL GROOVE WELD ON EXTERNAL SIDES AND 3/16" FILLET WELD BY 1" LONG SPACED AT 2" ON INTERNAL SIDES.

(11) STIFFENERS LOCATED ON THE INSIDE OF THE COVER PLATE SHALL BE WELDED AS FOLLOWS:
3/16" FILLET WELD BY 1" LONG SPACED AT 2".

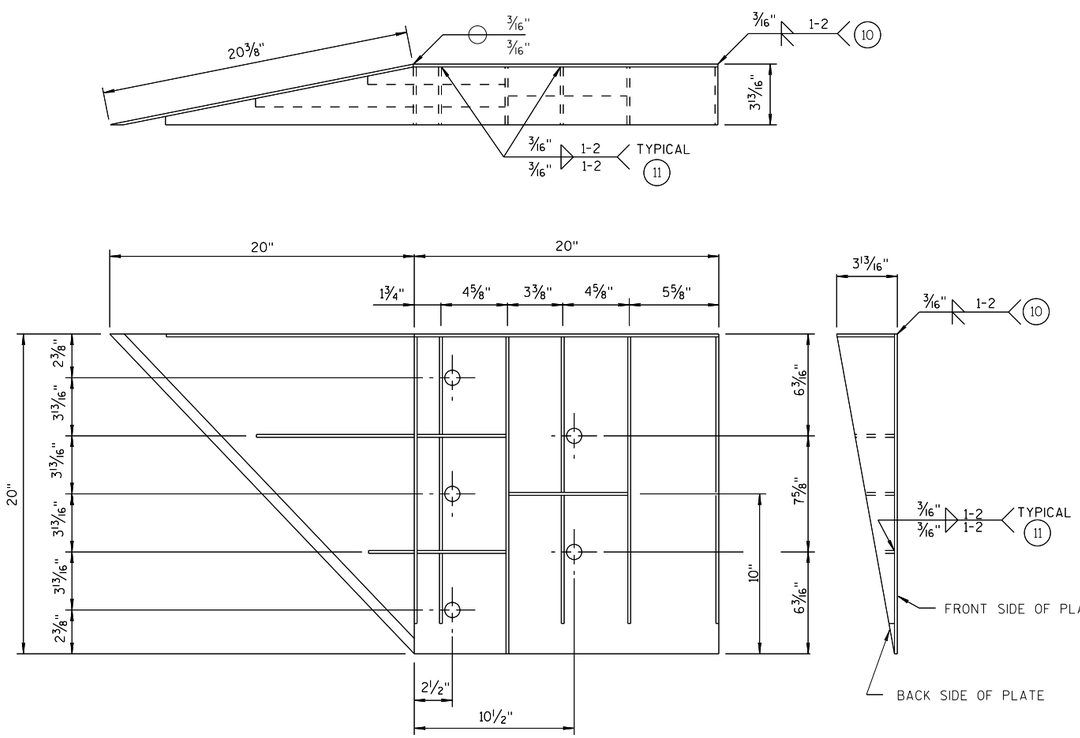


### WELDING INSTRUCTION

(VIEWED FROM BACK SIDE OF PLATE)

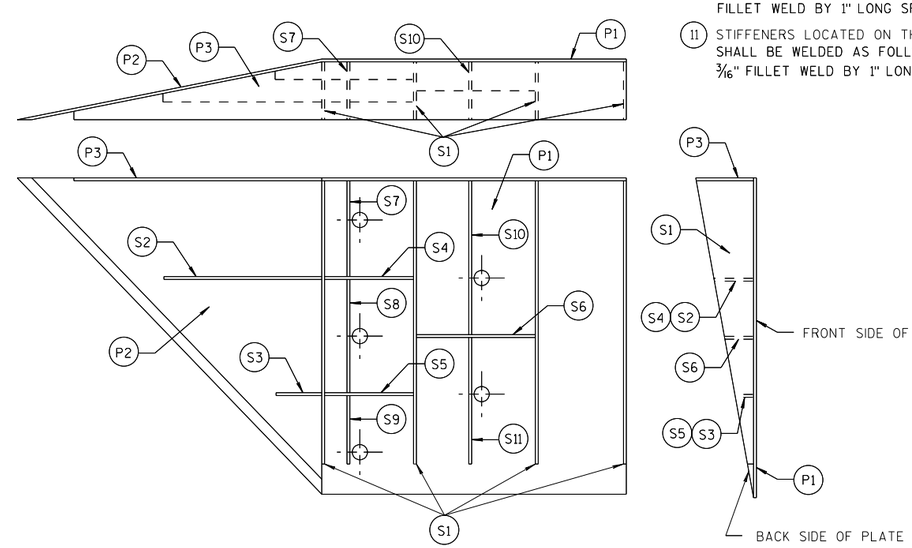


### PLATE AND STIFFENER IDENTIFICATION

(VIEWED FROM BACK SIDE OF PLATE)

| CONNECTOR PLATE DIMENSION (PER ASSEMBLY) | | | | |
|---|---|---|---|---|
| PLATE | QUANTITY | SHAPE | SIZE (A x B x C x D) | THICKNESS |
| P1 | 1 | | 20" x 20" | 3/16" |
| P2 | 1 | | 20" x 20" x 28 9/16" | 3/16" |
| P3 | 1 | | 39" x 3 5/8" x 20" x 19 5/16" | 3/16" |
| S1 | 4 | | 18 7/16" x 3 5/8" x 18 3/4" | 1/4" |
| S2 | 1 | | 10 1/4" x 2 7/16" x 10 3/8" x 1/2" | 1/4" |
| S3 | 1 | | 3" x 1 1/16" x 3 1/8" x 1/2" | 1/4" |
| S4 | 1 | | 6 1/8" x 2 7/16" | 1/4" |
| S5 | 1 | | 6 1/8" x 1 1/16" | 1/4" |
| S6 | 1 | | 7 3/4" x 1 3/4" | 1/4" |
| S7 | 1 | | 2 9/16" x 6" x 3 5/8" x 5 7/8" | 1/4" |
| S8 | 1 | | 1 5/32" x 7 1/2" x 2 1/2" x 7 3/8" | 1/4" |
| S9 | 1 | | 6 1/16" x 6 3/16" x 1 3/32" | 1/4" |
| S10 | 1 | | 1 7/8" x 9 7/8" x 3 5/8" x 9 11/16" | 1/4" |
| S11 | 1 | | 8 1/2" x 8 3/4" x 1 13/16" | 1/4" |

### SINGLE SLOPE CONNECTION PLATE

**MIDWEST GUARDRAIL SYSTEM THRIE BEAM TRANSITION (MGS)**

STATE OF WISCONSIN
DEPARTMENT OF TRANSPORTATION

APPROVED
7/2018 /S/ Rodney Taylor
DATE ROADWAY STANDARDS DEVELOPMENT UNIT SUPERVISOR
FHWA



6
S.D.D. 14 B 45-5i

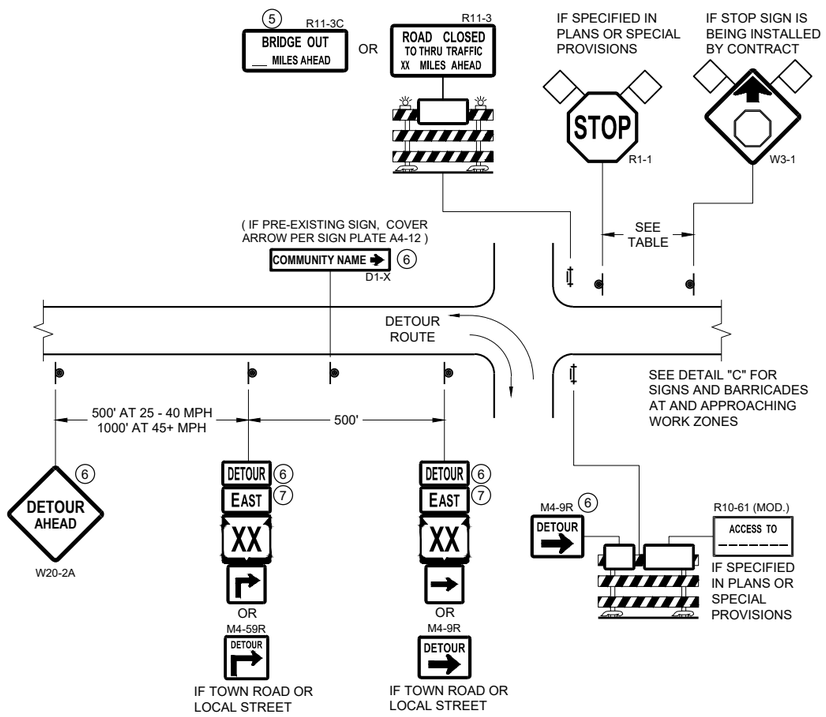


**DETAIL A**
**MAINLINE CLOSURE WITH POSTED DETOUR**

WORK ZONE GREATER THAN OR EQUAL TO ½ MILE FROM DETOUR ROUTE ( 1000 FEET IF URBAN )

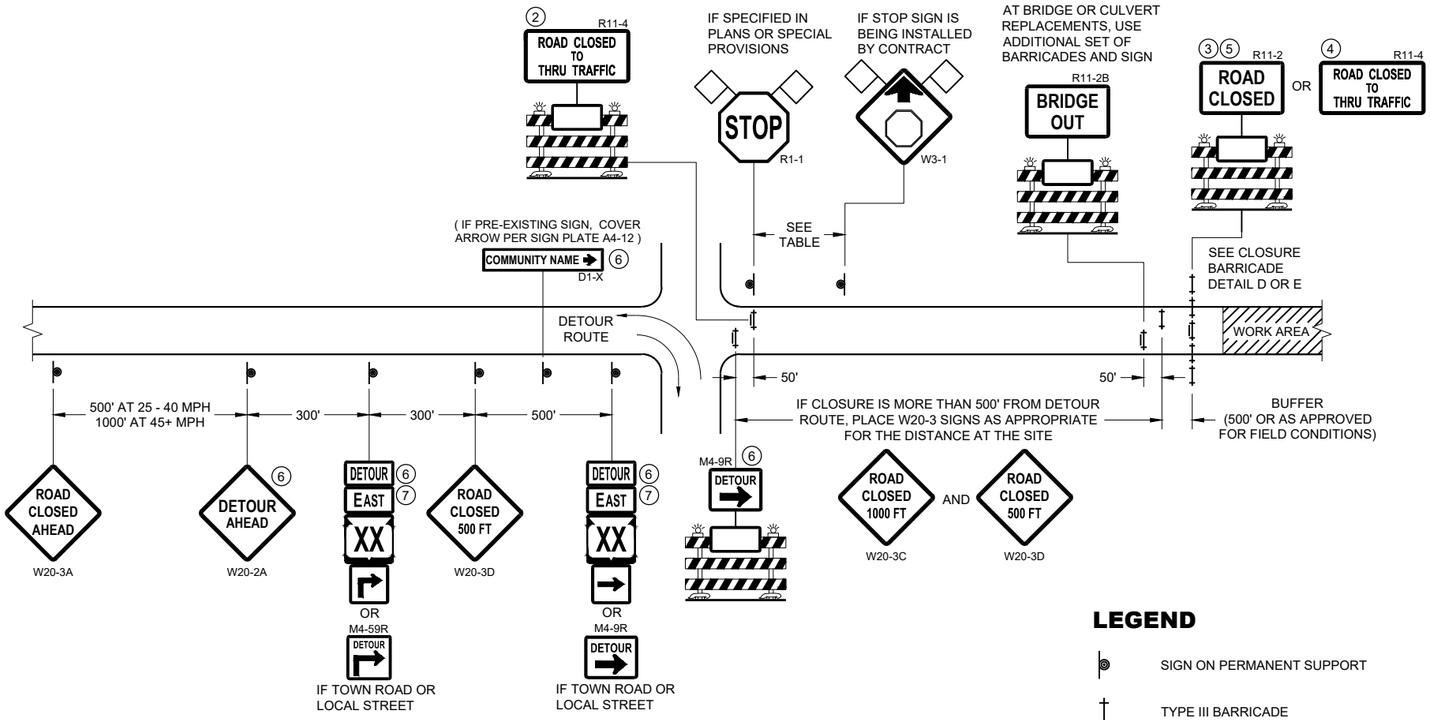


**DETAIL B**
**MAINLINE CLOSURE WITH POSTED DETOUR**

WORK ZONE LESS THAN ½ MILE FROM DETOUR ROUTE ( 1000 FEET IF URBAN )

## LEGEND

- SIGN ON PERMANENT SUPPORT
- TYPE III BARRICADE
- TYPE III BARRICADE WITH ATTACHED SIGN
- TYPE "A" WARNING LIGHT (FLASHING)
- WORK AREA
- FLAGS, 16" X 16" MIN. (ORANGE)
- DETOUR — M4 - 8
- EAST — M3 - X
- XX (M1 - 4) OR XX (M1 - 6) OR COUNTY X (M1 - 5A)
- M05 - 1 OR M06 - 1

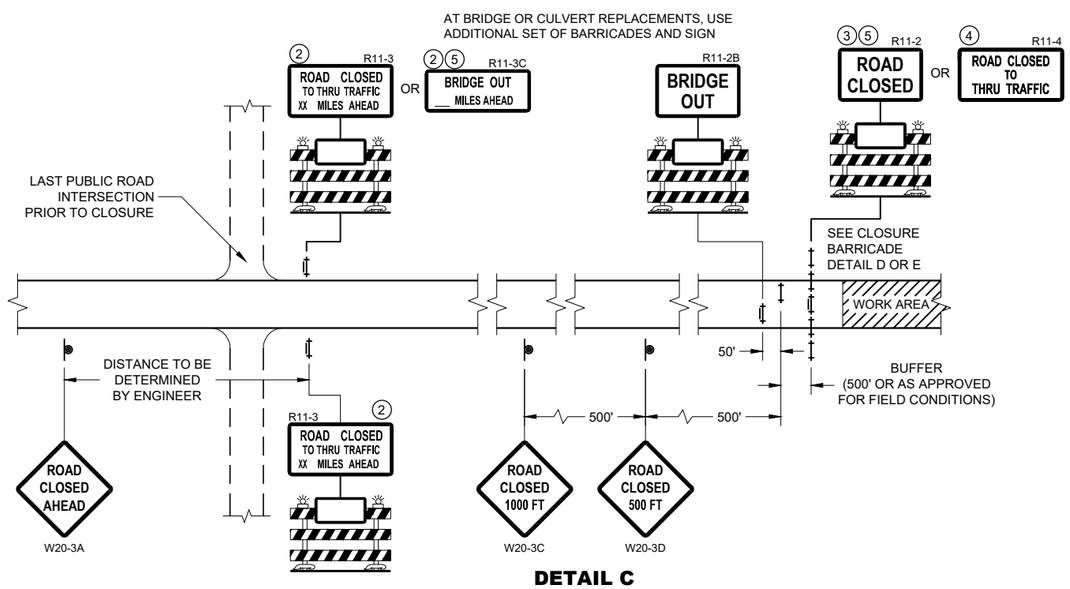


**DETAIL C**
**MAINLINE CLOSURE, NO POSTED DETOUR**

| SPEED LIMIT (MPH) | "STOP AHEAD" ADVANCE WARNING DISTANCE (FT) |
|---|---|
| 25 | 200 |
| 30 | 200 |
| 35 | 350 |
| 40 | 350 |
| 45 | 500 |
| 50 | 550 |
| 55 | 750 |

SEE SDD 15C2-SHEET "b" FOR GENERAL NOTES AND FOOTNOTES 1 THROUGH 7

**BARRICADES AND SIGNS FOR MAINLINE CLOSURES**

STATE OF WISCONSIN
DEPARTMENT OF TRANSPORTATION

APPROVED
May 2023 — DATE
/S/ Andrew Heidtke — WORK ZONE ENGINEER

FHWA




6


SDD 15C02 - 09a

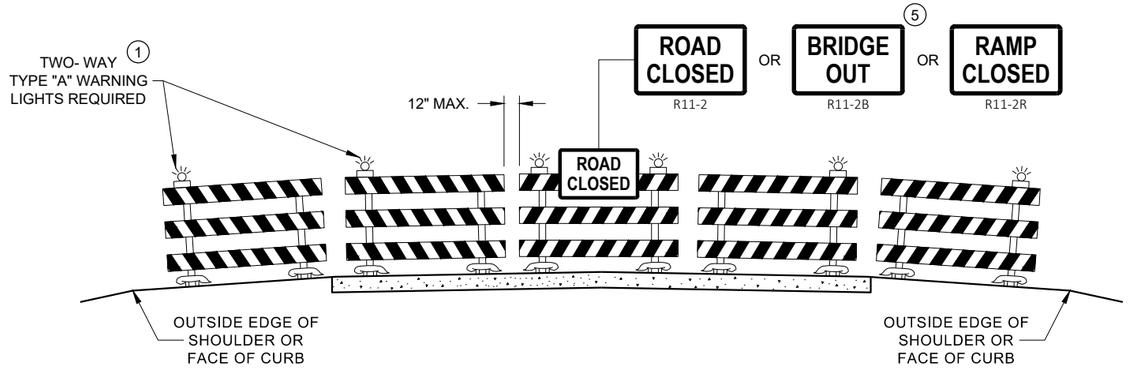


**DETAIL D**
**ROAD CLOSURE BARRICADE DETAIL**
**APPROACH VIEW**

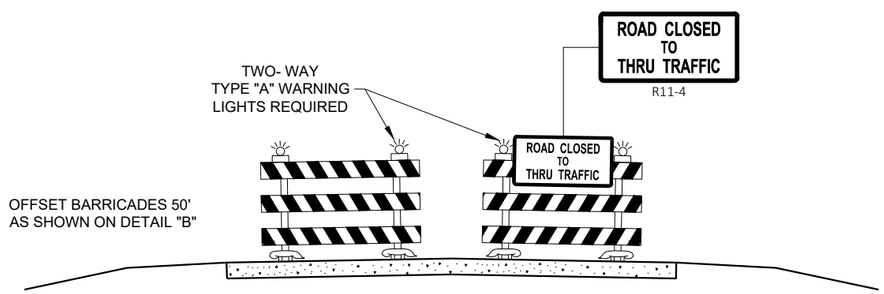


**DETAIL E**
**LANE CLOSURE BARRICADE DETAIL**
**APPROACH VIEW**

SEE SDD 15C2 - SHEET "a" FOR LEGEND

## GENERAL NOTES

THE EXACT NUMBER, LOCATION, AND SPACING OF ALL SIGNS AND BARRICADES SHALL BE ADJUSTED TO FIT FIELD CONDITIONS AS APPROVED BY THE ENGINEER.

ANY SIGNS TEMPORARY OR EXISTING, WHICH CONFLICT WITH TRAFFIC CONTROL "IN USE", SHALL BE REMOVED OR COVERED AS NEEDED AND AS APPROVED BY THE ENGINEER.

THE SPACING BETWEEN TRAFFIC CONTROL SIGNS SHOULD BE ADJUSTED TO NOT CONFLICT WITH AND SHOULD PROVIDE A DESIRABLE MINIMUM OF 200 FEET CLEARANCE TO EXISTING SIGNS THAT WILL REMAIN IN PLACE.

BARRICADES THAT MUST BE MOVED FOR A WORK OPERATION SHALL BE IMMEDIATELY RE-ESTABLISHED UPON COMPLETION OF THE OPERATION, OR FOR CONTINUING OPERATIONS, AT THE END OF EACH WORKING DAY.

SIGNS THAT WILL BE IN PLACE LESS THAN 7 CONTINUOUS DAYS AND NIGHTS MAY BE MOUNTED ON PORTABLE SUPPORTS.

ALL TYPE III BARRICADES SHALL HAVE RAILS REFLECTORIZED ON BOTH FACES. STRIPES SHALL BE PROPERLY SLOPED DOWN TOWARD THE TRAFFIC SIDE OR AS SHOWN IN THE ROAD CLOSURE BARRICADE DETAIL "D" FOR FULL ROAD CLOSURES.

TYPE "A" LOW - INTENSITY FLASHING WARNING LIGHTS SHALL BE VISIBLE ON BOTH SIDES OF THE BARRICADE.

THE R11 - 2, R11 - 3, M4 - 9, R11 - 4, AND R10 - 61 SIGNS PLACED ON THE BARRICADES SHALL COVER NO MORE THAN THE TOP RAIL. THE SIGNS SHALL NOT COVER ANY PORTION OF THE MIDDLE RAIL OR BOTTOM RAILS.

"WO" AND "MO" SIGNS ARE THE SAME AS "W" AND "M" SIGNS EXCEPT THE BACKGROUND IS ORANGE.

ALL SIGNS SHALL BE 48" X 48" UNLESS OTHERWISE NOTED BELOW:
- R11 - 2 SHALL BE 48" X 30"
- R11 - 3 SHALL, R11 - 4 AND R10 - 61 SHALL BE 60 " X 30"
- M4 - 9 SHALL BE 30" X 24"
- M3 - X SHALL BE 24" X 12" (36" X 18" IF NEEDED TO MATCH EXISTING SIGNS)
- M4 - 8 SHALL BE 24" X 12" (36" X 18" IF NEEDED TO MATCH EXISTING SIGNS)
- M1 - 4, M1 - 5A AND M1 - 6 SHALL BE 24" X 24" (36" X 36" IF NEEDED TO MATCH EXISTING SIGNS)
- MO5 - 1 AND MO6 - 1 SHALL BE 21" X 21" (30" X 30" IF NEEDED TO MATCH EXISTING SIGNS)
- D1 - X SHALL BE AS SHOWN ON SPECIFIC PROJECT SIGNING DETAIL SHEETS.
- R1 - 1 SHALL BE 36" X 36"

1. TWO WARNING LIGHTS SHALL BE PROVIDED ON THE CENTER BARRICADE AND A MINIMUM OF ONE WARNING LIGHT SHALL BE PROVIDED ON EACH OF THE OTHER BARRICADES WITHIN THE ROADWAY LIMITS. SPACING OF THE WARNING LIGHTS SHALL BE UNIFORM TO THE EDGE OF ROADWAY AS SHOWN (APPROX. 8 FOOT LIGHT SPACING.
2. THESE SIGNS AND BARRICADES ARE NOT REQUIRED IF ROAD CLOSURE BEGINS AT AN INTERSECTION.
3. FOR ROAD CLOSURE WITHOUT LOCAL ACCESS TO PROJECT, SEE ROAD CLOSURE BARRICADE DETAIL "D".
4. FOR ROAD CLOSURE WITH LOCAL ACCESS TO PROJECT, SEE ROAD CLOSURE BARRICADE DETAIL "E".
5. FOR BRIDGE OR CULVERT REPLACEMENTS, SUBSTITUTE "BRIDGE OUT" INSTEAD OF "ROAD CLOSED" ON R11 - 2 AND R11 - 3 SIGNS.
6. INSTALL DETOUR AND COMMUNITY GUIDE SIGNS AND ARROWS ONLY IF SPECIFIED IN THE CONTRACT. IF THERE ARE EXISTING ROUTE MARKER ASSEMBLIES THAT WILL REMAIN IN PLACE, ADJUST THE LOCATION OF THE DETOUR ROUTE SIGNS TO CORRESPOND WITH THE EXISTING ASSEMBLIES. MODIFY EXISTING SIGNS WHERE POSSIBLE. SEE SPECIFIC PROJECT DETOUR SIGNING DETAIL SHEETS. IF DETOUR SIGNS ARE BEING INSTALLED BY OTHERS, PLACE THE CONTRACTED TRAFFIC CONTROL SIGNS TO ALLOW FOR PLACEMENT OF ALL WARNING, DETOUR AND GUIDE SIGNS AS SHOWN.
7. "EAST" CARDINAL DIRECTION MARKERS AND RIGHT TURN ARROWS ARE SHOWN. USE OTHER CARDINAL DIRECTIONS AND ARROWS AS APPROPRIATE.

**BARRICADES AND SIGNS FOR VARIOUS CLOSURES**

STATE OF WISCONSIN
DEPARTMENT OF TRANSPORTATION

APPROVED
May 2023 — DATE
/S/ Andrew Heidtke — WORK ZONE ENGINEE
FHWA


6
SDD 15C02 - 09b

**THIS DRAWING PROVIDES GENERAL GUIDANCE ON TYPICAL DETOUR SIGN LAYOUT AND SPACING. SEE PROJECT DETOUR SIGNING SHEETS FOR SPECIFIC DETAILS FOR EACH PROJECT.**

## LEGEND

- SIGN ON PERMANENT SUPPORT
- WORK AREA
- DETOUR — M4 - 8
- EAST — M3 - X
- XX — M1 - 4 OR XX — M1 - 6 OR COUNTY X — M1 - 5A
- M05 - 1 OR M06 - 1 OR M06 - 1

## GENERAL NOTES

THE EXACT NUMBER, LOCATION AND SPACING OF ALL SIGNS SHALL BE ADJUSTED TO FIT FIELD CONDITIONS AS APPROVED BY THE ENGINEER.

IF THERE ARE EXISTING ROUTE MARKER ASSEMBLIES THAT WILL REMAIN IN PLACE, ADJUST THE LOCATION OF THE DETOUR ROUTE SIGNS TO CORRESPOND WITH THE EXISTING ASSEMBLIES. SEE SPECIFIC PROJECT DETOUR SIGNING DETAIL SHEETS. MODIFY EXISTING SIGNS WHERE POSSIBLE.

THE SPACING BETWEEN TRAFFIC CONTROL AND DETOUR SIGNS SHOULD BE ADJUSTED TO NOT CONFLICT WITH AND TO PROVIDE A DESIRABLE MINIMUM OF 200 FEET CLEARANCE TO EXISTING SIGNS THAT WILL REMAIN IN PLACE.

ANY SIGNS TEMPORARY OR EXISTING, WHICH CONFLICT WITH TRAFFIC CONTROL "IN USE" SHALL BE REMOVED OR COVERED AS NEEDED AND AS APPROVED BY THE ENGINEER.

SIGNS THAT WILL BE IN PLACE LESS THAN 7 CONTINUOUS DAYS AND NIGHTS MAY BE MOUNTED ON PORTABLE SUPPORTS.

"MO" SIGNS ARE THE SAME AS "M" SIGNS EXCEPT THE BACKGROUND IS ORANGE.

SIGN SIZES SHALL BE AS FOLLOWS:

M3-X SHALL BE 24" X 12" (36" X 18" IF NEEDED TO MATCH EXISTING SIGNS)
M4-8 SHALL BE 24" X 12" (36" X 18" IF NEEDED TO MATCH EXISTING SIGNS)
M1-4, M1-5A AND M1-6 SHALL BE 24" X 24" (36" X 36" IF NEEDED TO MATCH EXISTING SIGNS)
M05-1 AND M06-1 SHALL BE 21" X 21" (30" X 30" IF NEEDED TO MATCH EXISTING SIGNS)
M4-9 AND M4-59 SHALL BE 30" X 24"
M4-8a SHALL BE 24" X 18"
G20-51 SHALL BE 60" X 24"
W20-2A SHALL BE 48" X 48"
D1-X SHALL BE AS SHOWN ON SPECIFIC PROJECT SIGNING DETAIL SHEETS.

* OPTIONAL SIGNS. SEE SPECIFIC PROJECT DETOUR SIGNING DETAIL SHEETS.

** FOR A TOWN ROAD OR LOCAL STREET DETOURED ONTO A STATE TRUNK HIGHWAY, PLACE A ROAD NAME PLAQUE ABOVE THE M4-9 SIGN AS SPECIFIED IN THE CONTRACT.

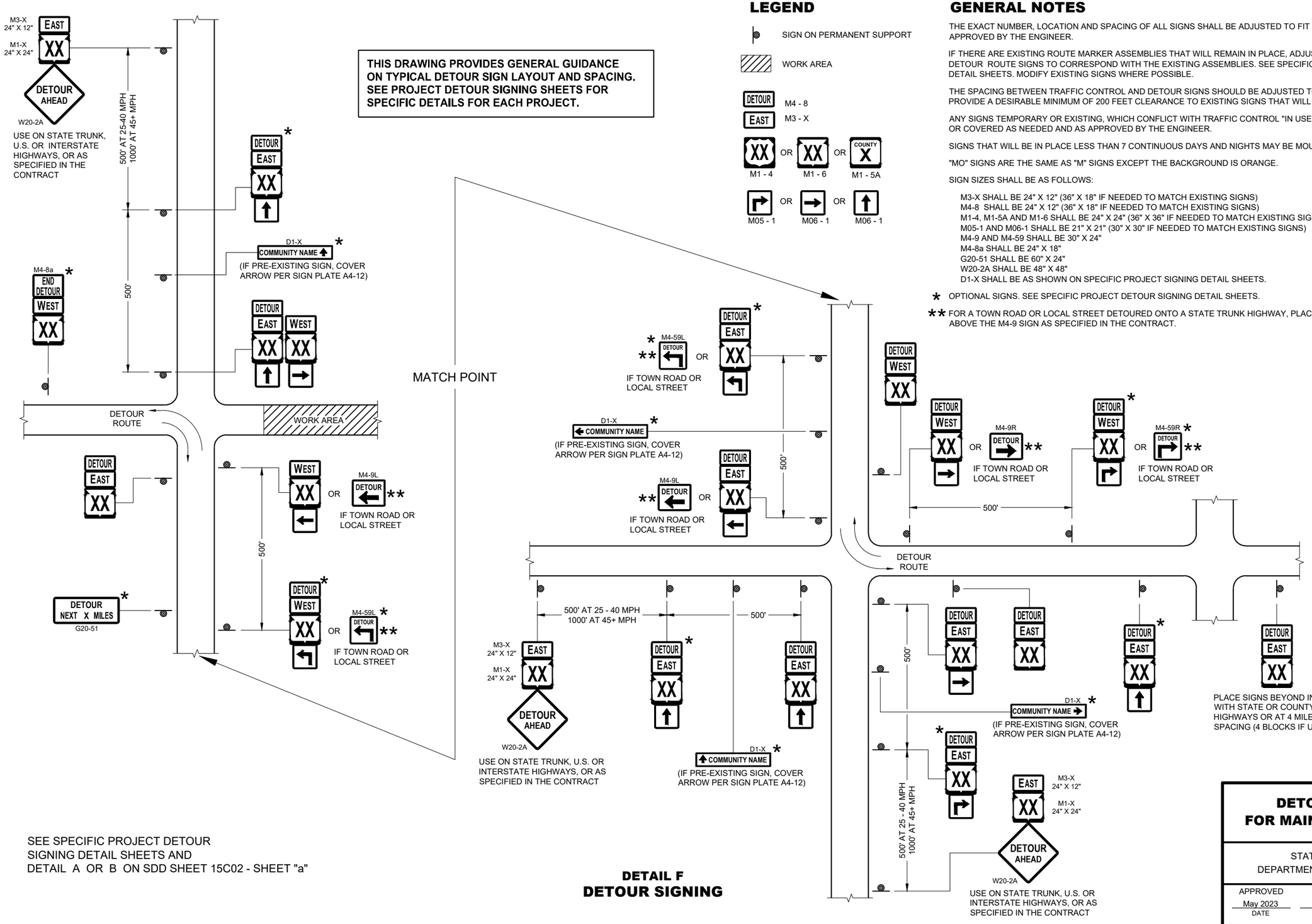


SEE SPECIFIC PROJECT DETOUR SIGNING DETAIL SHEETS AND DETAIL A OR B ON SDD SHEET 15C02 - SHEET "a"

**DETAIL F**
**DETOUR SIGNING**

**DETOUR SIGNING FOR MAINLINE CLOSURES**

STATE OF WISCONSIN
DEPARTMENT OF TRANSPORTATION

APPROVED
May 2023 — DATE
/S/ Andrew Heidtke — WORK ZONE ENGINEER
FHWA

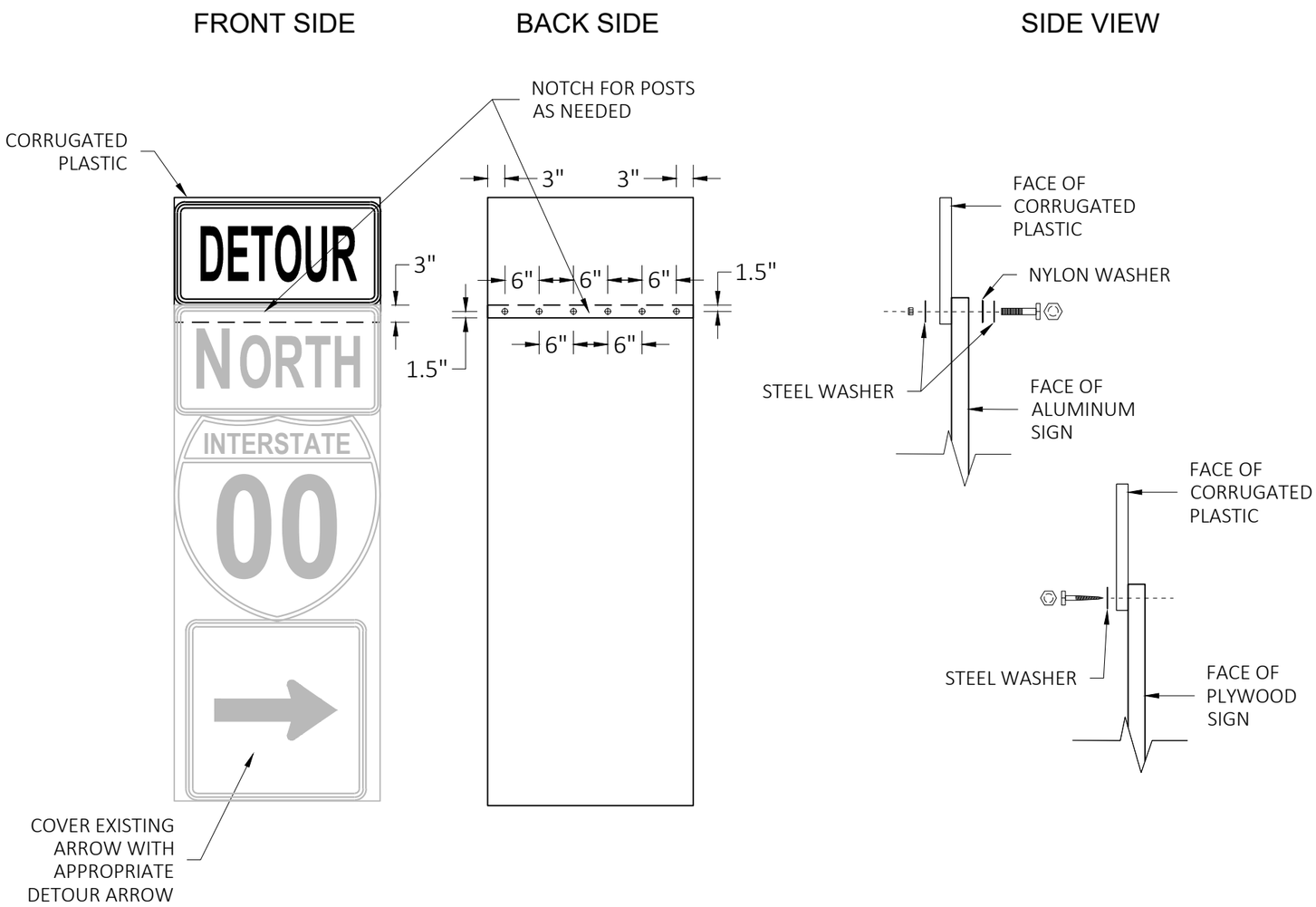


## GENERAL NOTES

CELLS OF CORRUGATED PLASTIC SHALL BE VERTICALLY ORIENTED.

PROVIDE A 0.4-INCH THICK BASE CORRUGATED PLASTIC WITH A 0.035-INCH WALL THICKNESS AND 0.4-INCH CELL SIZE.

FOR 36" WIDE SIGNS: USE 6 FASTENERS AS SHOWN.

FOR 24" WIDE SIGNS: USE 4 FASTENERS WITH EDGE SPACING AS SHOWN AND 6" SPACING BETWEEN FASTENERS.

METAL WASHERS, NUTS, BOLTS AND LAGS SHALL HAVE HEXAGONAL HEADS AND SHALL BE EITHER:

A. HOT DIP GALVANIZED IN ACCORDANCE WITH ASTM DESIGNATION: A 153, CLASS D, OR SC 3.

B. ELECTRO-GALVANIZED IN ACCORDANCE WITH ASTM DESIGNATION: B 633, TYPE III, SC3

THREADS ON BOLTS AND NUTS SHALL BE MANUFACTURED WITH SUFFICIENT ALLOWANCE FOR THE CADMIUM PLATE OR GALVANIZED COATING TO PERMIT THE NUTS TO RUN FREELY ON THE BOLTS.

PLYWOOD SIGNS:
LAG SCREWS - 5/16" x 1"
ALUMINUM SIGNS:
MACHINE BOLTS - 5/16" x 1-1/4" LENGTH W/NUTS
WASHERS:
1-1/4" O.D. x 3/8" I.D. x 1/16" STEEL
1-1/4" O.D. x 3/8" I.D. x .080 NYLON

# MODIFIED ROUTE ASSEMBLY FOR DETOUR SIGNING

**MODIFIED ROUTE ASSEMBLY FOR DETOUR SIGNING**

STATE OF WISCONSIN
DEPARTMENT OF TRANSPORTATION

APPROVED
May 2023 — DATE
/S/ Andrew Heidtke — ROADWAY STANDARDS DEVEL ENGINEER
FHWA




6


SDD 15C02-09h

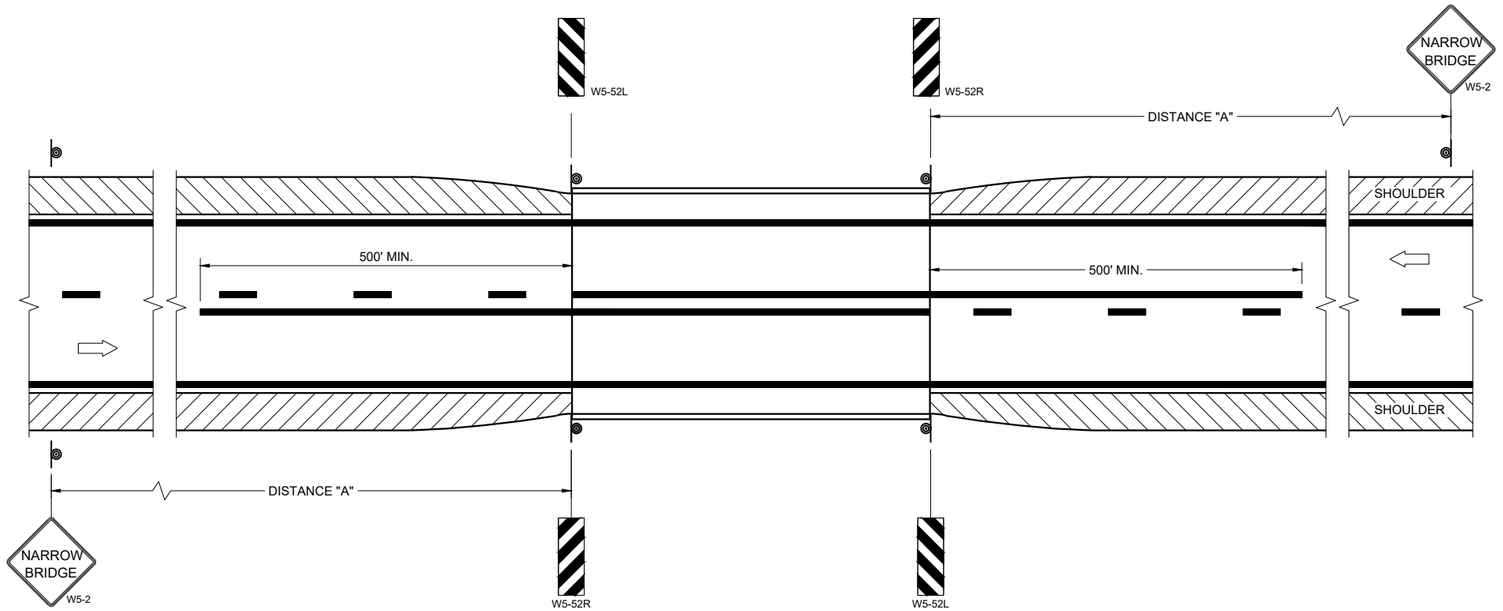


## SITUATION 1

WARRANTING CRITERIA:
BRIDGE WIDTH IS AT LEAST 16 FEET BUT LESS THAN 24 FEET.

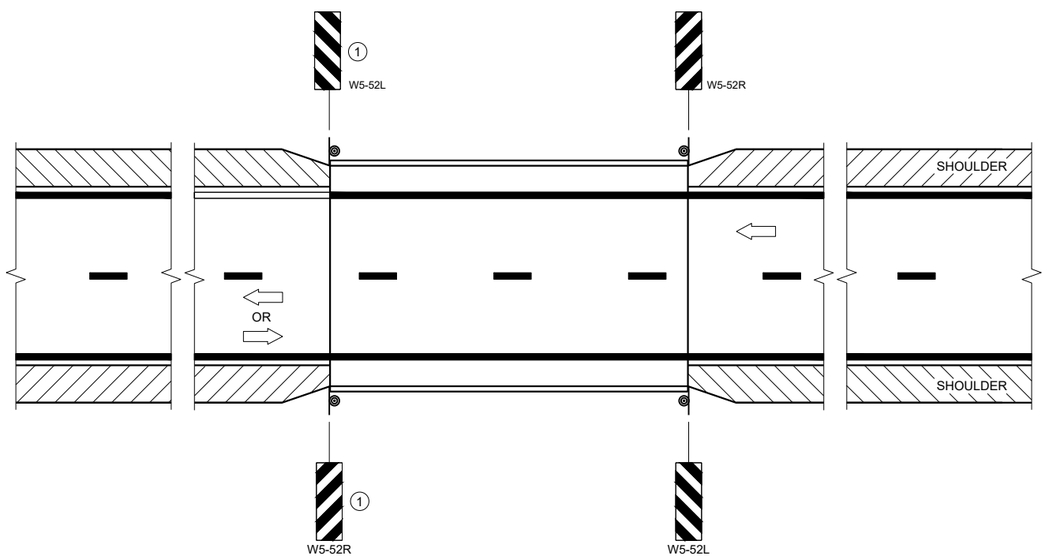


## SITUATION 2

WARRANTING CRITERIA:
1. BRIDGE WIDTH IS AT LEAST 24 FEET AND
2. BRIDGE SHOULDER WIDTH IS LESS THAN 6 FEET

## GENERAL NOTES

DETAILS OF TRAFFIC CONTROL DEVICES AND INSTALLATION NOT SHOWN ON THE DRAWING SHALL CONFORM TO THE PERTINENT REQUIREMENTS OF THE STANDARD SPECIFICATIONS, THE SPECIAL PROVISIONS, AND THE MANUAL ON UNIFORM TRAFFIC CONTROL DEVICES.

LOCATE W5-52 SIGN POST(S) BEHIND GUARDRAIL WHEN PRESENT.

PLACE THE EDGE OF THE W5-52 SIGN IN LINE WITH FACE OF CURB OR PARAPET.

ON BRIDGE ONLY PROJECTS, PLACE 300 FEET OF EDGELINE.

OMIT EDGELINES ON ROADWAYS WITHOUT EXISTING EDGELINES.

(1) OMIT ON ONE-WAY TRAVELED WAYS.

## LEGEND

SIGN ON PERMANENT SUPPORT

DIRECTION OF TRAFFIC

### DISTANCE TABLE

| POSTED OR 85TH PERCENTILE SPEED | DISTANCE "A" |
|---|---|
| 25 | 150' |
| 30 | 200' |
| 35 | 250' |
| 40 | 300' |
| 45 | 400' |
| 50 | 550' |
| 55 | 700' |

**SIGNING AND MARKING FOR TWO LANE BRIDGES**

STATE OF WISCONSIN
DEPARTMENT OF TRANSPORTATION

APPROVED
May 2023 — DATE
/S/ Jeannie Silver — Statewide Pavement Marking Engineer
FHWA


6

SDD 15C06-12

## GENERAL NOTES

DETAILS OF CONSTRUCTION NOT SHOWN ON THIS DRAWING SHALL CONFORM TO STANDARD SPECIFICATIONS AND SPECIAL PROVISIONS.

1. LOCATE THE NO PASSING ZONE W14-3 SIGN WITHIN 50 FEET OF THE "T" MARKING
2. MEASURE FROM EDGE OF MARKING TO JOINT LINE. THIS DOES NOT INCLUDE SPACE NEEDED FOR GROOVING OPERATIONS.

*CONFIRM MARKING LINE WIDTH WITH THE MISCELLANEOUS QUANTITIES

## LEGEND

"T" MARKING

SIGN ON PERMANENT SUPPORT

DIRECTION OF TRAFFIC

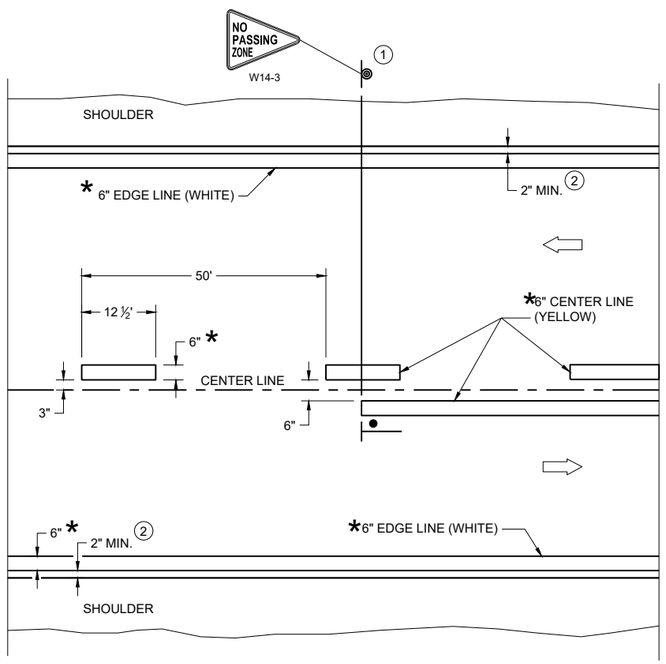


**TWO WAY TRAFFIC**

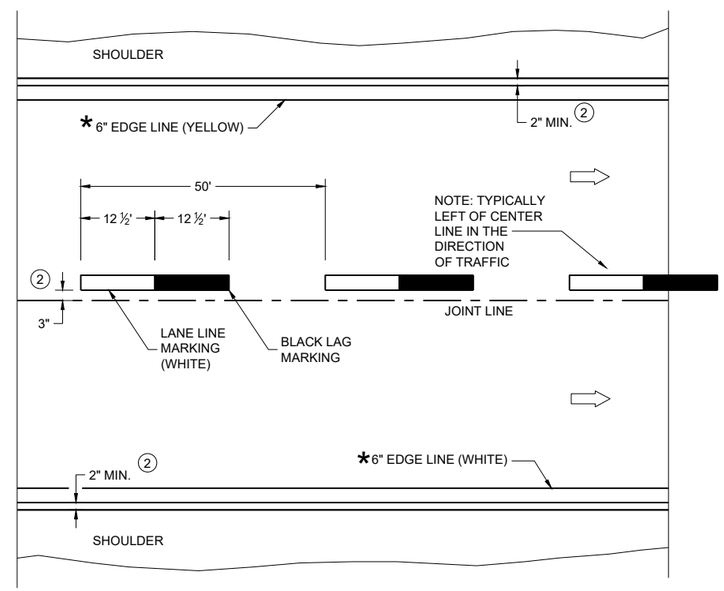


**ONE WAY TRAFFIC**

**PERMANENT PAVEMENT MARKING**

6

6

SDD 15C08-23a

SDD 15C08-23a

**PERMANENT LONGITUDINAL PAVEMENT MARKINGS**

STATE OF WISCONSIN
DEPARTMENT OF TRANSPORTATION

APPROVED

May 2023 — DATE

/S/ Jeannie Silver — Statewide Pavement Marking Engineer

FHWA

## URBAN AREA

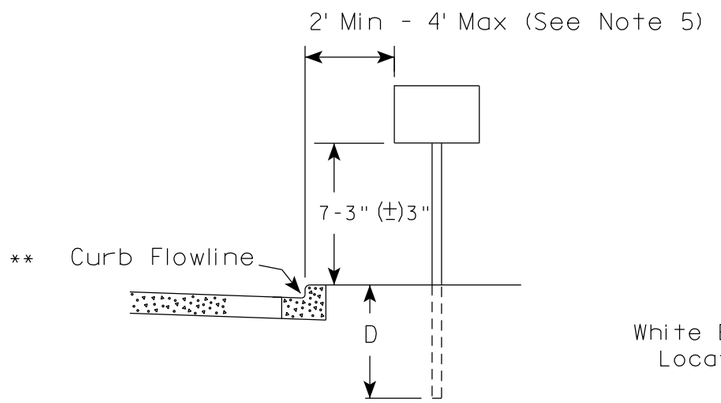


## RURAL AREA (See Note 2)

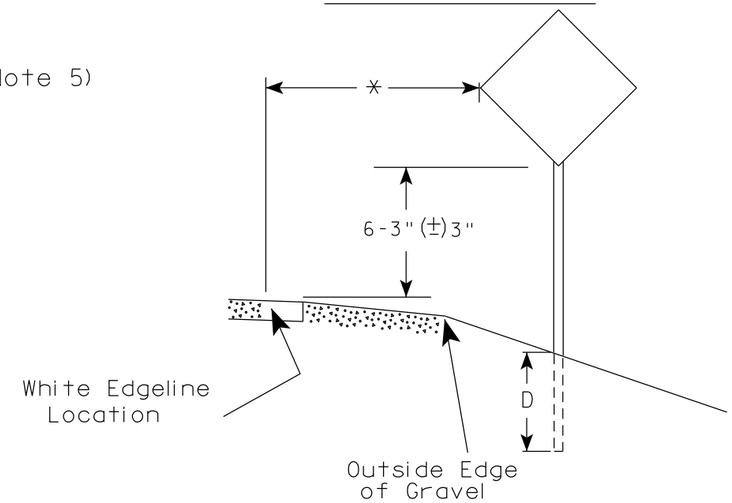


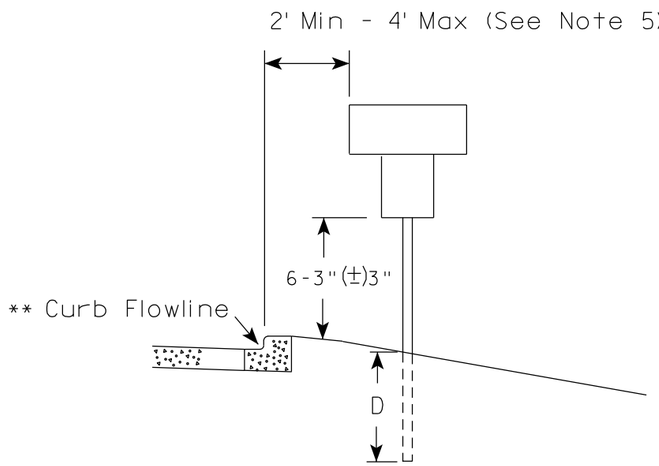


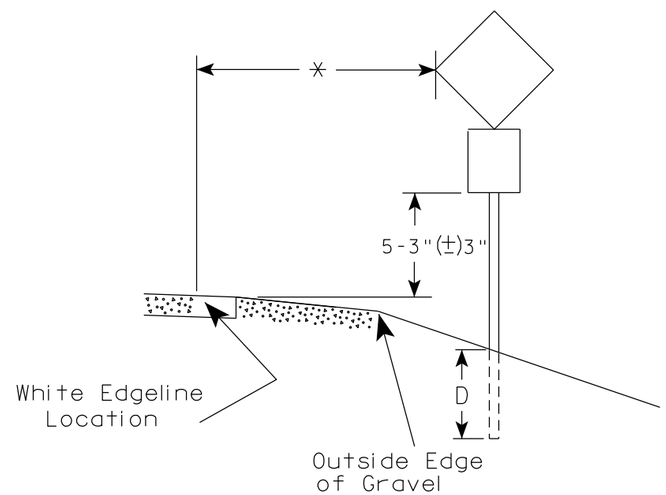


** The existence of curb and gutter does not in itself mandate the vertical clearance illustrated. That height is typically measured where there is sidewalk adjacent to the roadway or parking is permitted. In the absence of sidewalk vertical clearance is measured from the top of the curb. Offset of signs is measured from the flow line.

* 6 feet from edge of a paved shoulder or 12 feet from the edge of pavement (edge line location) or 2 feet from outside edge of gravel, whichever is greater unless directed by project engineer.

### GENERAL NOTES

1. Signs wider than 4 feet or 20 sq.ft or larger, shall be mounted on multiple posts. Refer to plate A4-4.
2. If signs are mounted on or behind barrier wall, see A4-10 sign plate.
   The Double Arrow sign (W12-1D) shall be mounted at a height of 2'-3" (±) 3". The Chevron sign (W1-8), Roundabout Chevron panel (R6-4B), Enhanced Reference Markers, Clearance Markers (W5-52), Mile Markers (D10 series), In Road Object Markers (W5-54) & End of Road Markers (W5-56) shall be mounted at a height of 4'-3" (±) 3".
3. For expressways and freeways, mounting height is 7'- 3" (±) 3" or 6'-3" (±) 3" depending upon existence of a sub-sign.
4. Minimum mounting height for signs mounted on traffic signal poles is 5'- 3" (±) 3".
5. Offset distance shall be consistent with existing signs or consistent throughout length of project.
6. Folding signs shall be mounted at a height of 5'-3" (±) 3" or as directd by the Engineer.

### POST EMBEDMENT DEPTH

| Area of Sign Installation ( Sq. Ft. ) | D ( Min ) |
|---|---|
| 20 or Less | 4' |
| Greater than 20 | 5' |

TYPICAL INSTALLATION OF PERMANENT TYPE II SIGNS ON SINGLE POSTS

WISCONSIN DEPT OF TRANSPORTATION

APPROVED Matthew R Rauch
for State Traffic Engineer

DATE 12/6/23 PLATE NO. A4-3.23

7 7

| PROJECT NO: | HWY: | COUNTY: | | SHEET NO: 46 | E |
|---|---|---|---|---|---|

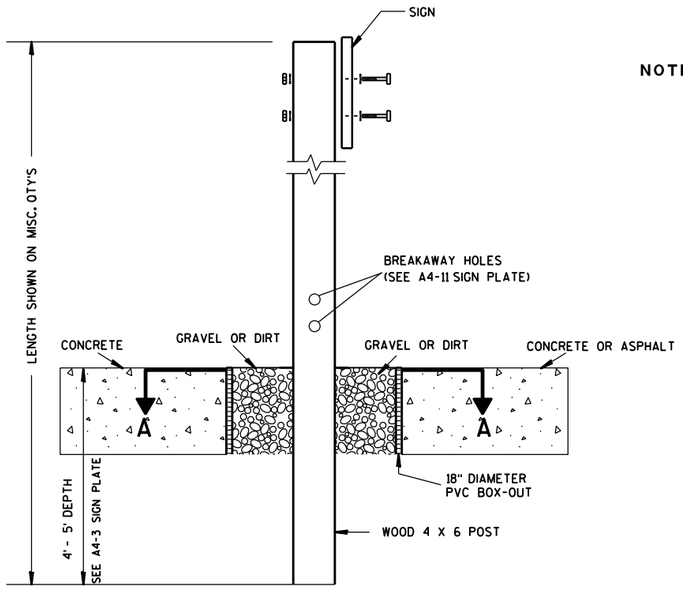


**ELEVATION VIEW**

**DETAIL OF WOOD 4 X 6 SIGN POST IN BOX-OUT**

NOTES:
1. ALL MATERIAL TO BE APPROVED BY ENGINEER PRIOR TO INSTALLATION
2. SEE SIGN PLATE A4-8 FOR SIGN HARDWARE REQUIREMENTS
3. 18 INCH X 18 INCH SQUARE BOX-OUTS MAY BE USED FOR INSTALLATIONS IN EXISTING CONCRETE OR ASPHALT LOCATIONS.

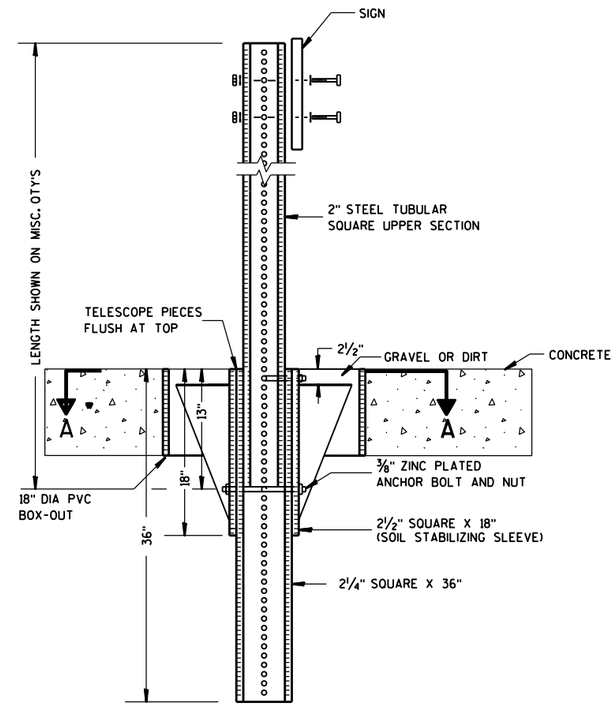


**ELEVATION VIEW**

**DETAIL OF STEEL 2 X 2 SIGN POST IN BOX-OUT**

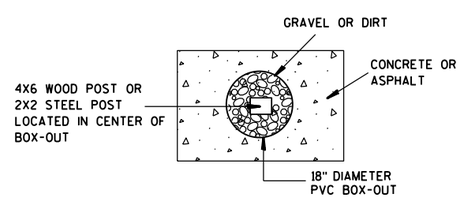


**PLAN VIEW**

**FOR NEW CONCRETE/ASPHALT INSTALLATIONS**

SIGN POST
BOX-OUTS
A4-3B

WISCONSIN DEPT OF TRANSPORTATION

APPROVED Matthew R Rauch
for State Traffic Engineer

DATE 1/27/14 PLATE NO. A4-3B.1

| PROJECT NO: | HWY: | COUNTY: | | SHEET NO: | E |
|---|---|---|---|---|---|

## URBAN AREA

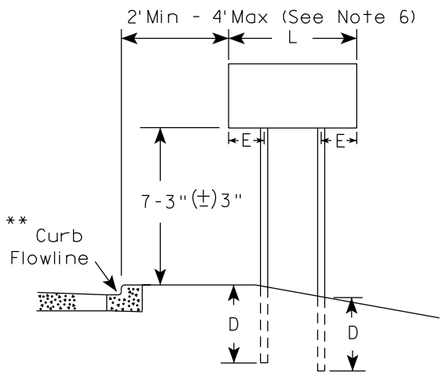


## RURAL AREA (See Note 3)

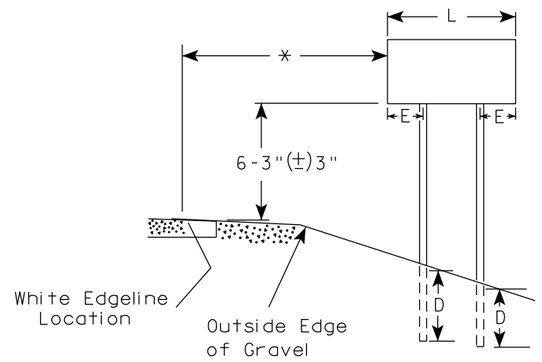


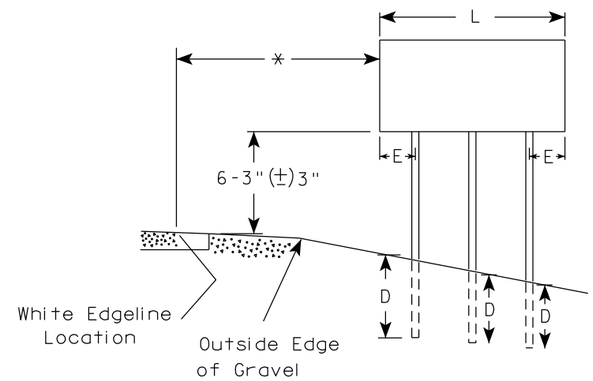


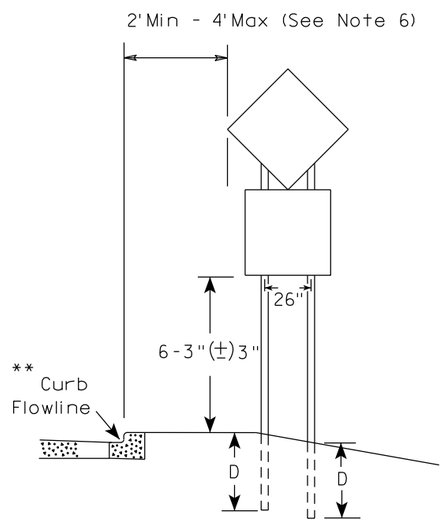


48" DIAMOND WARNING SIGN

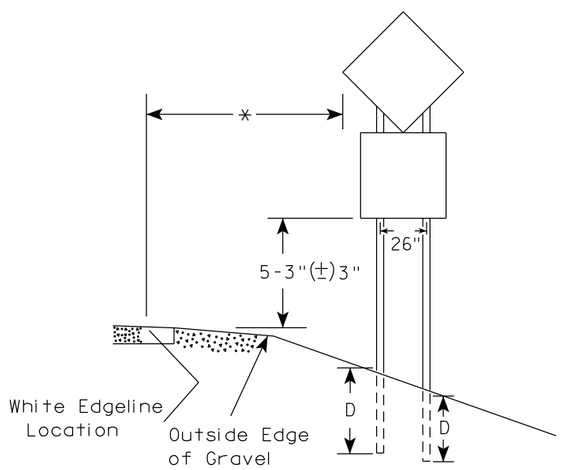


48" DIAMOND WARNING SIGN

### GENERAL NOTES

1. For 3 or 4 post installations, individual post spacing shall be greater than 3'-6".
2. See tables below for required number of posts.
3. For expressways and freeways, mounting height is 7'-3" (±) 3" or 6'-3" (±) 3" depending upon existence of sub-sign.
4. The (±) tolerance for mounting height is 3 inches.
5. J-Assemblies are considered to be one sign for mounting height.
6. Offset distance shall be consistent with existing signs or consistent throughout length of project.
7. Folding signs shall be mounted at a height of 5'-3" (±) 3" or as directed by the engineer.
8. The Double Arrow sign (W12-1) shall be mounted at a height of 2'-3" (±) 3". The Chevron sign (W1-8), Roundabout Chevron panel (R6-4B), Clearance Markers (W5-52), Mile Markers (D10 series), In Road Object Markers (W5-54) & End of Road Markers (W5-56) shall be mounted at a height of 4"-3" (±) 3".

* 6 feet from edge of a paved shoulder or 12 feet from the edge of pavement (edge line location) or 2 feet from outside edge of gravel, whichever is greater unless directed by project engineer.

** The existence of curb and gutter does not in itself mandate the vertical clearance illustrated. That height is typically measured where there is sidewalk adjacent to the roadway or parking is permitted. In the absence of sidewalk vertical clearance is measured from the top of the curb. Offset of signs is measured from the flow line.

*** See A4-3 sign plate for signs 4' or less in width and less than 20 S.F. in area.

| SIGN SHAPE OTHER THAN DIAMOND (TWO POSTS REQUIRED) | |
|---|---|
| L | E |
| *** Greater than 48" Less than 60" | 12" |
| 60" to 108" | L/5 |

| SIGN SHAPE OTHER THAN DIAMOND (THREE POSTS REQUIRED) | |
|---|---|
| L | E |
| Greater than 108" to 144" | 12" |

### POST EMBEDMENT DEPTH

| Area of Sign Installation ( Sq. Ft. ) | D ( Min ) |
|---|---|
| 20 or Less | 4' |
| Greater than 20 | 5' |

TYPICAL INSTALLATION OF TYPE II SIGNS ON MULTIPLE POSTS

*WISCONSIN DEPT OF TRANSPORTATION*

APPROVED Matthew R Rauch
for State Traffic Engineer

DATE 12/6/23 PLATE NO. A4-4.16

| PROJECT NO: | HWY: | COUNTY: | | SHEET NO: 48 | E |
|---|---|---|---|---|---|

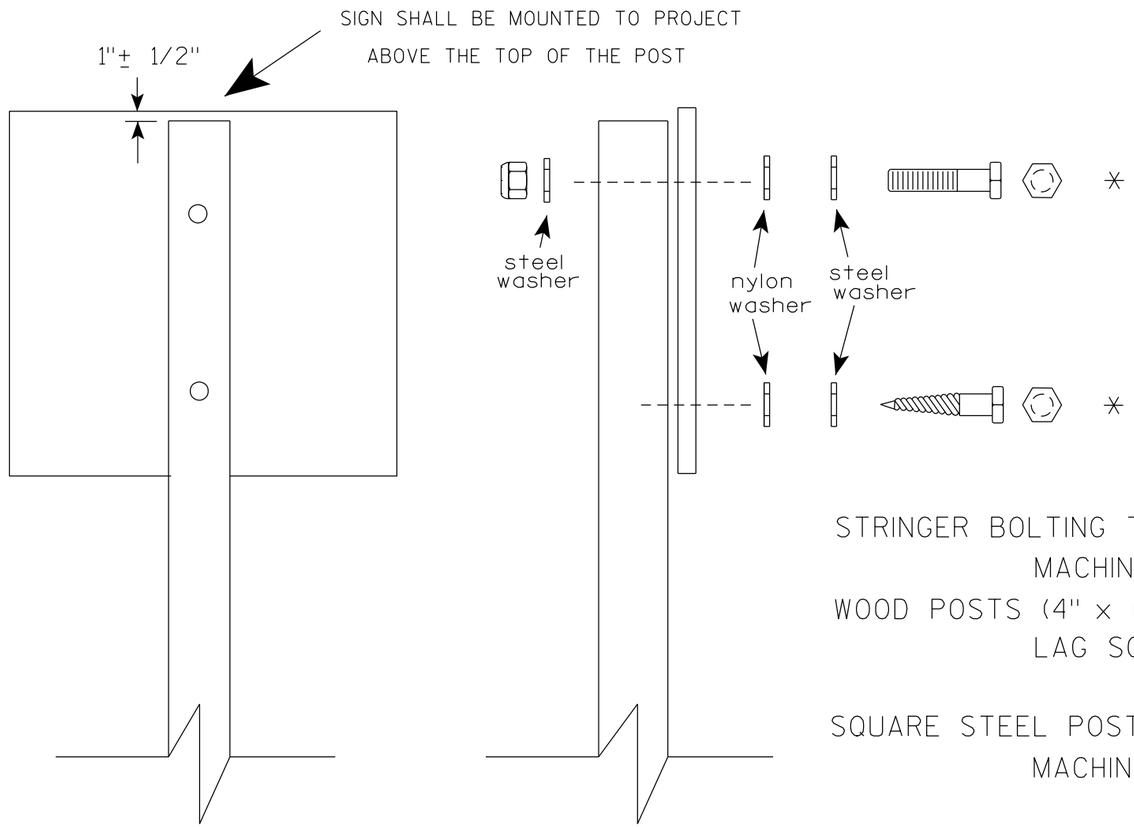


Nuts, bolts and lags used for mounting signs shall have hexagonal heads and shall be either :

a. Hot dip galvanized in accordance with ASTM Designation: A 153, Class D, or SC 3

b. Electro-galvanized in accordance with ASTM Designation : B 633, TYPE III, SC 3.

Threads on bolts and nuts shall be manufactured with sufficient allowance for the cadmium plate or galvanized coating to permit the nuts to run freely on the bolts.

STRINGER BOLTING TO ALUMINUM SIGNS (SEE SIGN PLATE A4-18)

MACHINE BOLTS - 5/16" X 1-3/4" Length w/ lock nuts

WOOD POSTS (4" x 6")

LAG SCREWS - 3/8" X 3" (NO STRINGERS ON BACK OF SIGN)
3/8" X 4" (STRINGERS ON BACK OF SIGN)

SQUARE STEEL POSTS (2" x 2")

MACHINE BOLTS - 3/8" X 3-1/4" Length w/ nuts (NO STRINGER ON BACK OF SIGN)
3/8" X 5" Length w/ nuts (STRINGERS ON BACK OF SIGN)

RIVETS - 9/32 " (6605-9-6) BULB-TITE, TRI-FOLD, ALUMINUM BODY/MANDREL
O.D. FLANGE .720-.765 INCH, GRIP RANGE .042-.375 INCH

WASHERS (ALL POSTS) -

1-1/4" O.D. X 3/8" I.D. X 1/16" STEEL
1-1/4" O.D. X 3/8" I.D. X .080 NYLON

* Two different fastening systems are shown for illustration purposes. On any individual sign, either one or the other system shall be used. Actual number of fasteners per sign varies with the sign area, but normally there are two. For a single post installation, all signs greater than 9 sq. ft. require the use of 3 fasteners.

ATTACHMENT OF SIGNS TO POSTS

WISCONSIN DEPT OF TRANSPORTATION

APPROVED Matthew R Rauch
for State Traffic Engineer

DATE 4/1/2020 PLATE NO. A4-8.9

## TELESCOPIC TUBING ANCHORS
## TWO PIECE SYSTEM

**2 1/4" SQUARE**
**12 GAUGE**
**PERFORATED**
**GALVANIZED FINISH**

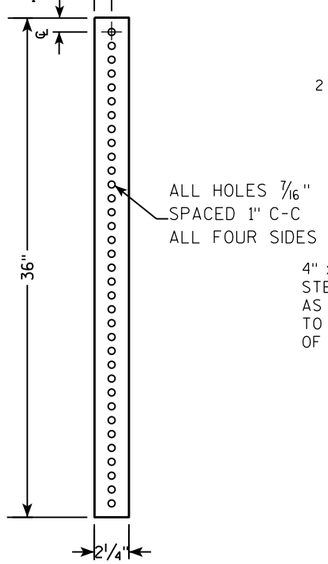


**2 1/2" SQUARE**
**12 GAUGE**
**OMNI-DIRECTIONAL**
**PERFORATED**
**SOIL STABILIZING SLEEVE**
**GALVANIZED FINISH**

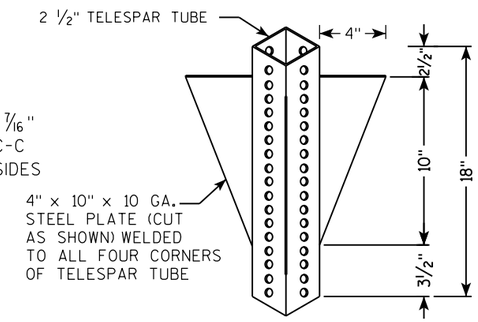


## DETAIL OF TUBULAR STEEL SIGN POST
**(IN POURED CONCRETE OR ASPHALT)**

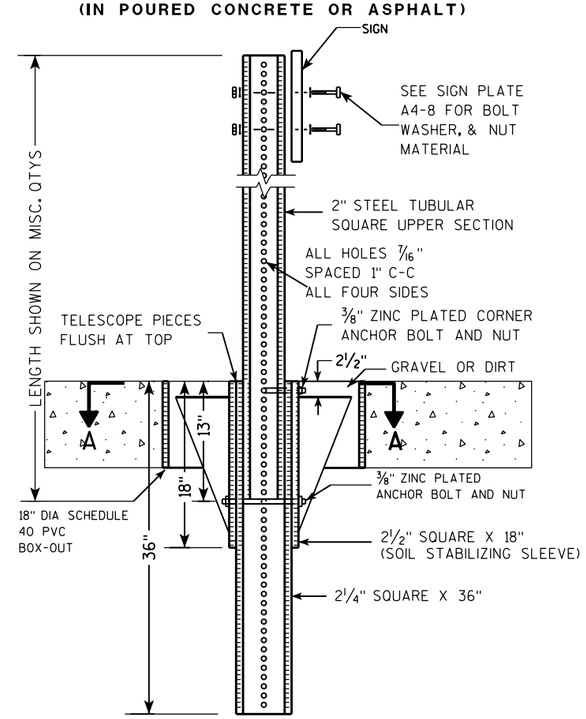


## DETAIL OF TUBULAR STEEL SIGN POST
**(IN LOCATIONS OTHER THAN POURED CONCRETE OR ASPHALT)**

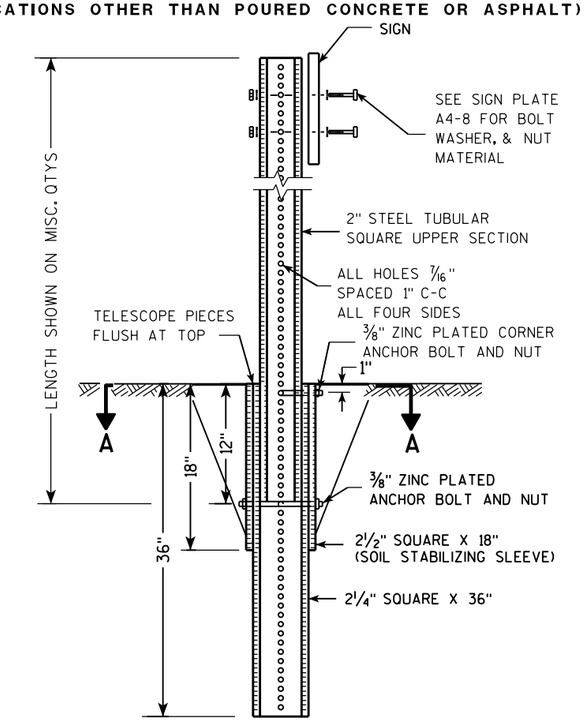


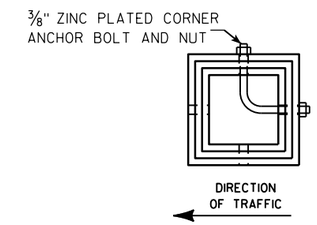


**SECTION A-A**

| Area of Sign Installation (Sq. Ft.) | Number of Required Posts |
|---|---|
| 9 or less | 1 |
| Greater than 9 less than or equal to 18 | 2 |
| Greater than 18 less than or equal to 27 | 3 |

**Signs wider than 3 feet or larger than 9 sq. ft shall be mounted on multiple posts (see above table).**

TUBULAR STEEL
SIGN POST
A4-9

*WISCONSIN DEPT OF TRANSPORTATION*

APPROVED Matthew R Rauch
*for* State Traffic Engineer

DATE 2/05/15 PLATE 50 A4-9.9

| PROJECT NO: | HWY: | COUNTY: | | SHEET NO: | E |
|---|---|---|---|---|---|

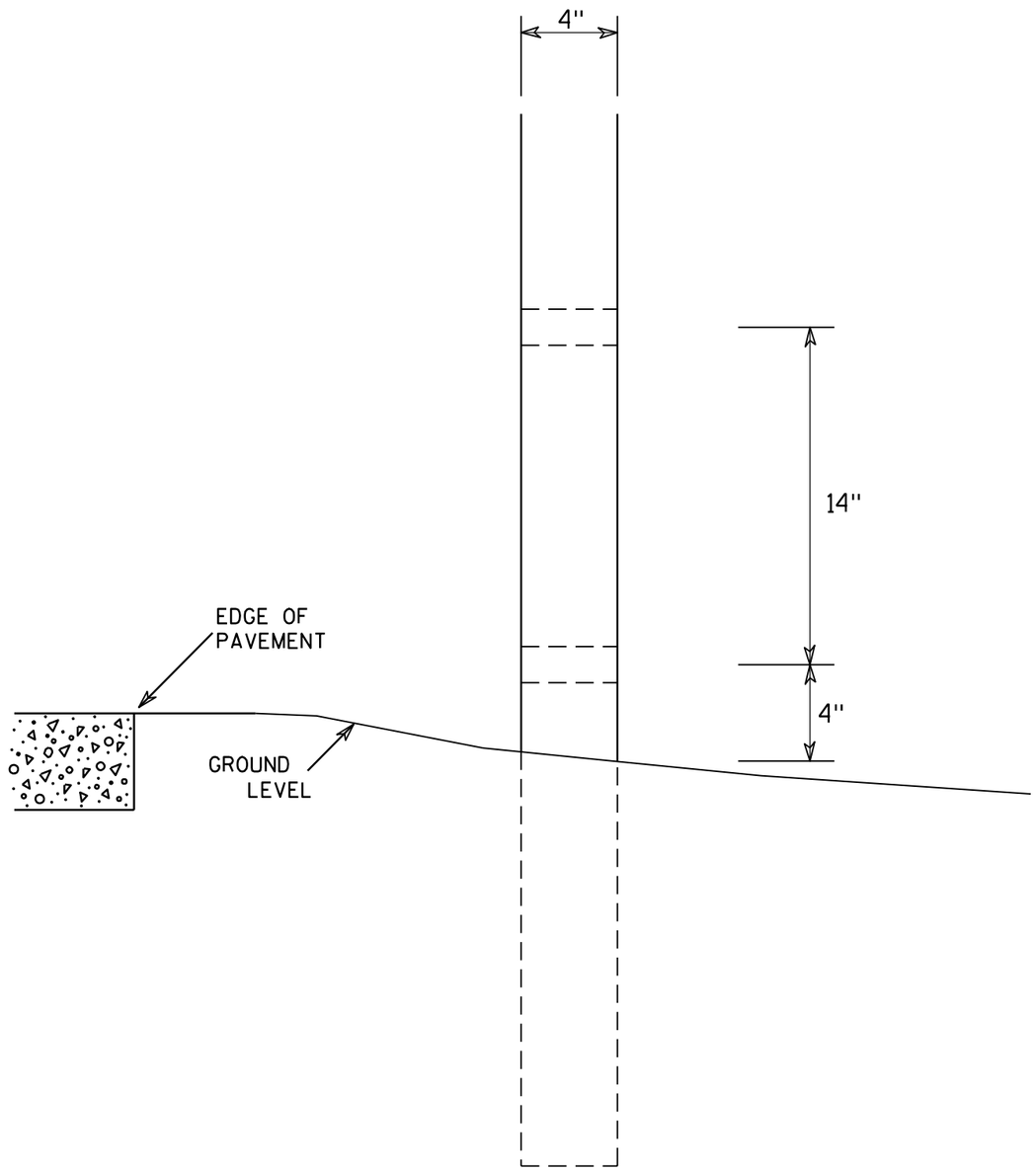


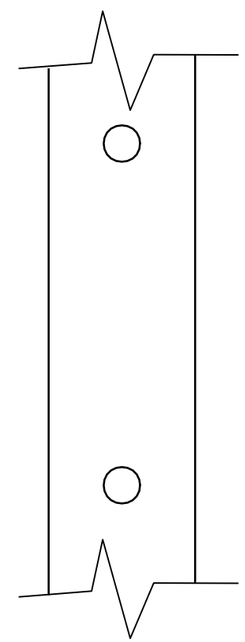

SIDE VIEW

GENERAL NOTES

1. All 4 x 6 Wood Posts shall be modified by having two 1½" diameter holes drilled perpendicular to the roadway centerline.

7

7

4 X 6 WOOD POST MODIFICATIONS

WISCONSIN DEPT OF TRANSPORTATION

APPROVED Chester J Spang for State Traffic Engineer

DATE 3/27/97 PLATE NO. A4-11.2

| PROJECT NO: | HWY: | COUNTY: | | SHEET NO: 51 | E |
|---|---|---|---|---|---|

# BANDING

SINGLE SIGN

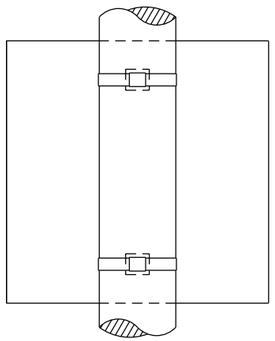

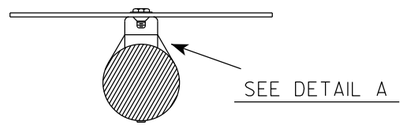


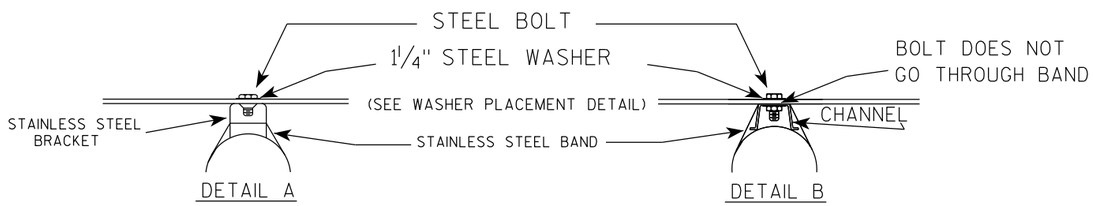


WASHER PLACEMENT

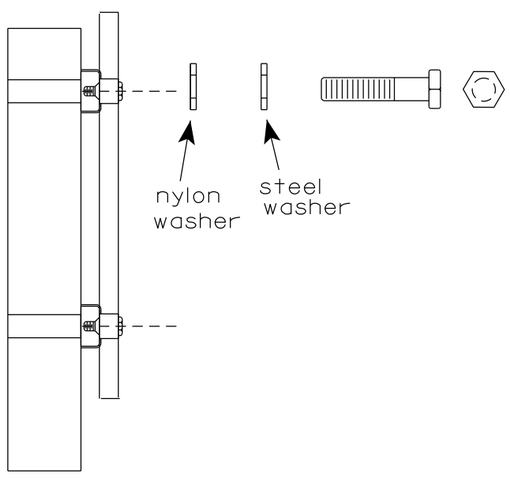


WASHERS (ALL POSTS) -
1-1/4" O.D. X 3/8" I.D. X 1/16" STEEL
1-1/4" O.D. X 3/8" I.D. X .080 NYLON
FOR ALL TYPE H SIGNS

GENERAL NOTES

1. Any sign over 3 feet in width shall use the V-Block banding method. See A5-10 standard plate.
2. Signs 3 feet or greater in height shall have three bracket bands installed. Signs less than 3 feet in height shall have two bracket bands installed.
3. Banding and assembly bracket shall be stainless steel. All bands shall be ¾" in width and 0.025" thickness.
4. ALL SIGN MOUNTING BOLTS AND WASHERS SHALL BE EITHER:
   a. Hot dip or mechanically galvanized in accordance with ASTM Designation: A 153, Class D
   b. Electro-galvanized in accordance with ASTM designation: B 633, Type III, SC 3

"J" ASSEMBLY

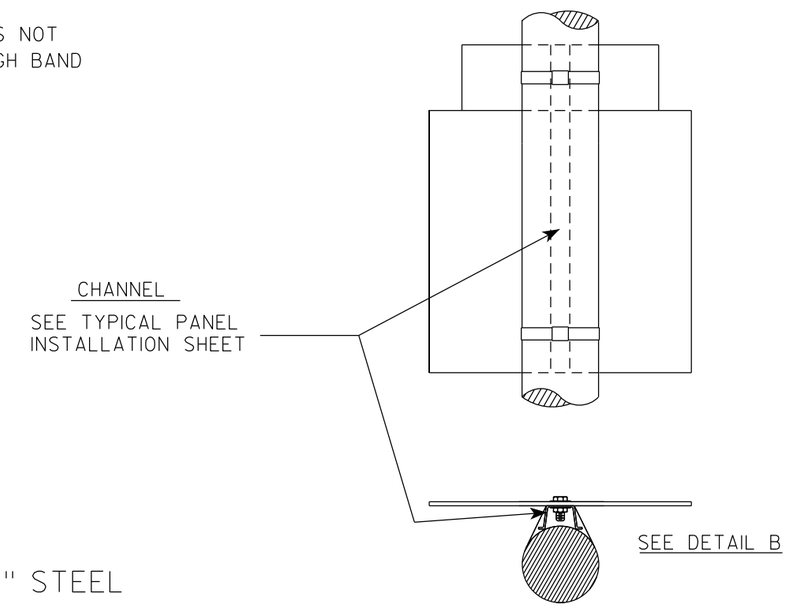


STANDARD SIGN
SIGN BANDING DETAILS

WISCONSIN DEPT OF TRANSPORTATION

APPROVED Matthew R Rauch for State Traffic Engineer

DATE 6/10/19 PLATE NO. A5-9.4

| PROJECT NO: | HWY: | COUNTY: | | SHEET NO: 52 | E |
|---|---|---|---|---|---|

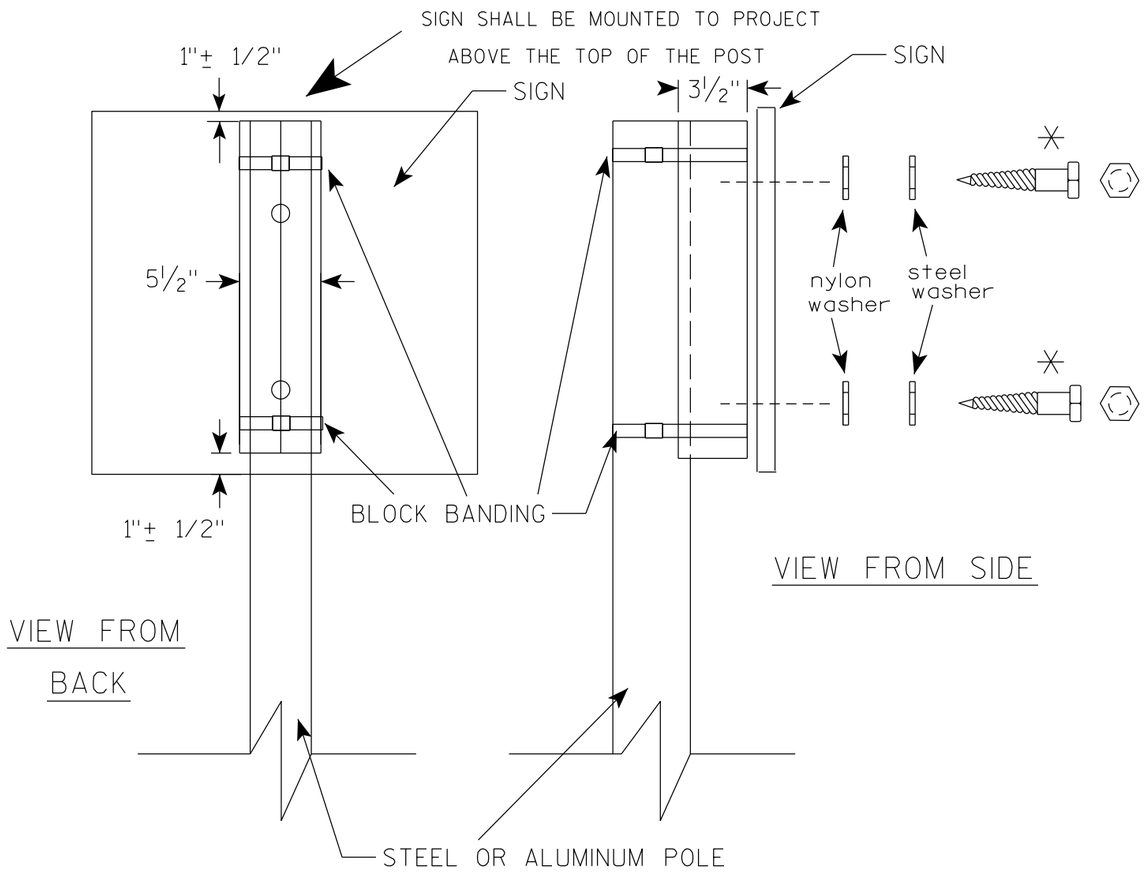


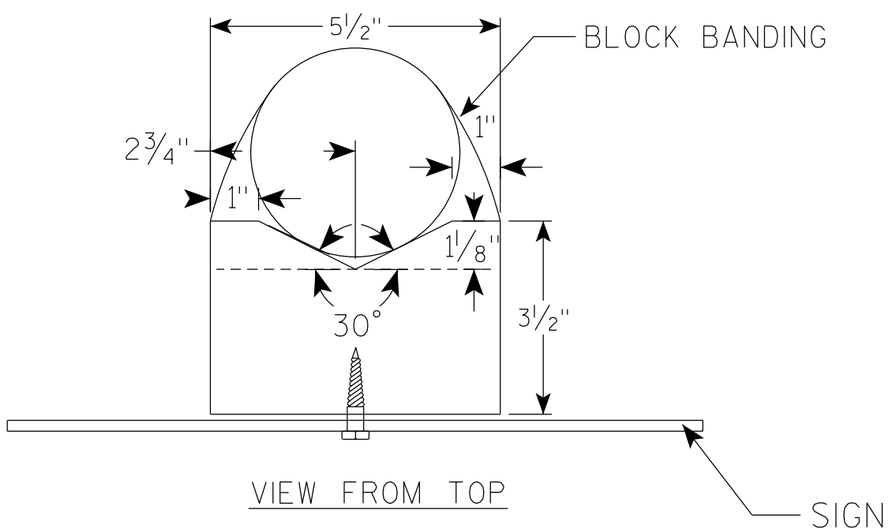


## GENERAL NOTES

1. WOOD 4"X6" POST MATERIAL SHALL CONFORM TO 507.2.2 OF THE WisDOT STANDARD SPECIFICATIONS
2. BLOCK BANDING AND CLIPS SHALL BE STAINLESS STEEL, 3/4" WIDTH AND 0.025" THICKNESS
3. SIGNS 3' OR GREATER IN HEIGHT SHALL UTILIZE 3 BLOCK BANDS. SIGNS UNDER 3' IN HEIGHT SHALL UTILIZE 2 BLOCK BANDS
4. ACTUAL NUMBER OF FASTENERS PER SIGN VARIES WITH THE SIGN AREA, BUT NORNALLY THERE ARE TWO. FOR SIGNS GREATER THAN 9 S.F. 3 FASTENERS SHALL BE USED.
5. ALL SIGN MOUNTING BOLTS AND WASHERS SHALL BE EITHER:
   a. Hot dip or mechanically galvanized in accordance with ASTM Designation: A 153, Class D
   b. Electro-galvanized in accordance with ASTM Designation : B 633, TYPE III, SC 3
6. ALL BOLTS SHALL HAVE HEXAGONAL HEADS.
7. STEEL WASHERS SHALL BE 1 1/4" O.D. X 3/8" I.D. X 1/16"
8. NYLON WASHERS SHALL BE 1 1/4" O.D. X 3/8" I.D. X .080 FOR TYPE H OR TYPE F FACE SIGN

✳ LAG BOLTS SHALL BE 3/8" X 2 1/2"

7

7

BLOCK BANDING DETAIL
( V-BLOCK OPTION )

WISCONSIN DEPT OF TRANSPORTATION

APPROVED Matthew R Rauch
for State Traffic Engineer

DATE 4/19/2022 PLATE NO. A5-10.3

| PROJECT NO: | | | | SHEET NO: 53 | E |
|---|---|---|---|---|---|

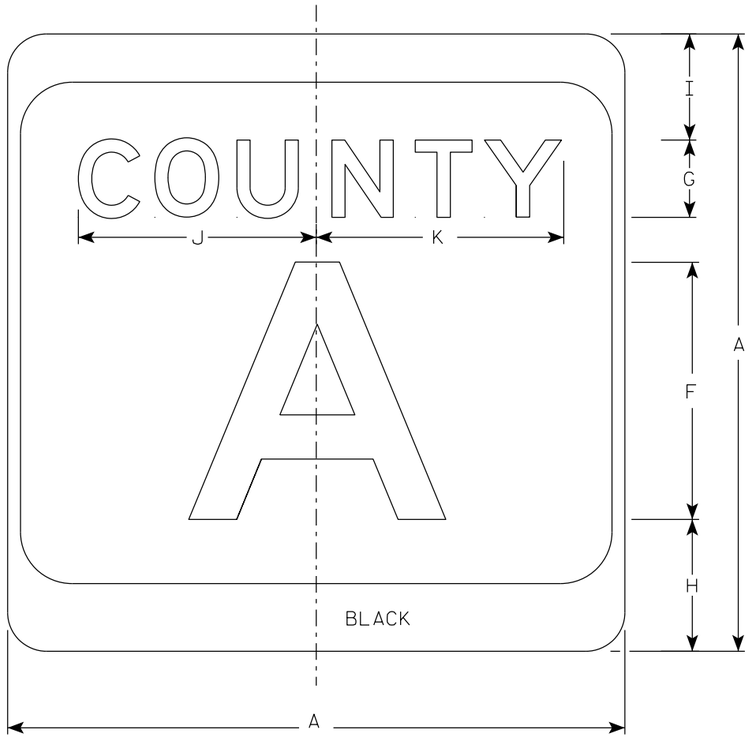


M1-5A

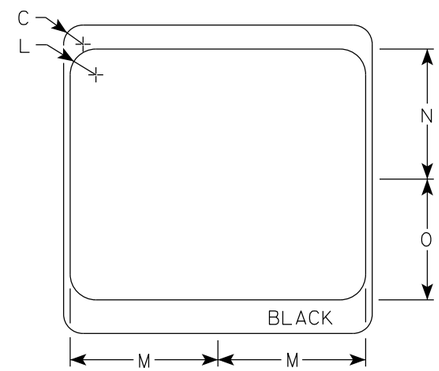


NOTES

1. Sign is Type II - Type H Reflective
2. Color:
   Background - White & Black
   Message - Black
3. Message Series - see Note 4
4. Message Series E for 1 letter.
   Message Series D for 2 letters unless message is too big then Series C.
   Message Series C for 3 letters unless message is too big then Series B.
5. Substitute appropriate letters & optically center to achieve proper balance.

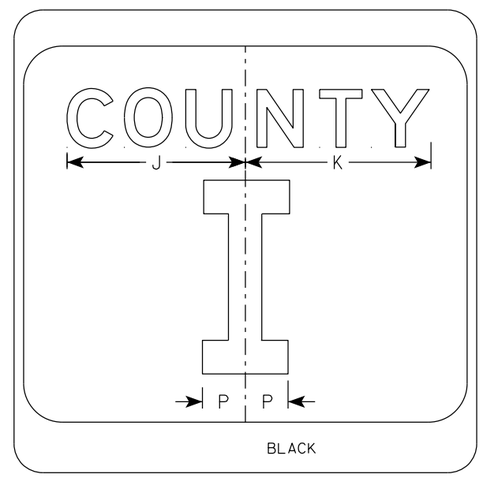


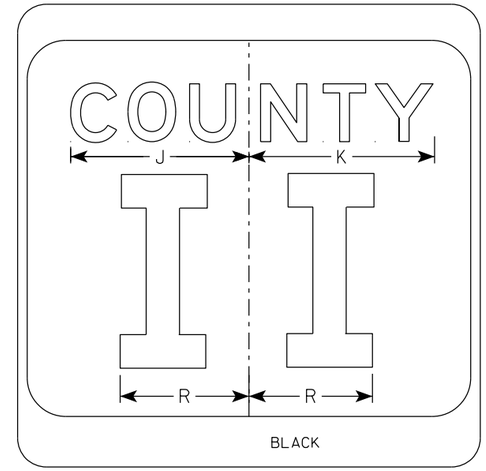


| SIZE | A | B | C | D | E | F | G | H | I | J | K | L | M | N | O | P | Q | R | S | T | U | V | W | X | Y | Z | Area sq. ft. |
|---|---|---|---|---|---|---|---|---|---|---|---|---|---|---|---|---|---|---|---|---|---|---|---|---|---|---|---|
| 1 | | | | | | | | | | | | | | | | | | | | | | | | | | | |
| 2 | 24 | | 1 1/2 | | | 10 | 3 | 5 1/8 | 4 1/8 | 9 1/4 | 9 5/8 | 2 | 11 1/2 | 10 1/8 | 9 3/8 | 2 1/4 | | 6 5/8 | | | | | | | | | 4.0 |
| 2M | 24 | | 1 1/2 | | | 10 | 3 | 5 1/8 | 4 1/8 | 9 1/4 | 9 5/8 | 2 | 11 1/2 | 10 1/8 | 9 3/8 | 2 1/4 | | 6 5/8 | | | | | | | | | 4.0 |
| 3 | 36 | | 2 1/4 | | | 16 | 4 | 7 5/8 | 5 5/8 | 12 1/4 | 12 7/8 | 3 | 17 1/8 | 15 1/4 | 14 | 3 3/8 | | 10 | | | | | | | | | 9.0 |
| 4 | 36 | | 2 1/4 | | | 16 | 4 | 7 5/8 | 5 5/8 | 12 1/4 | 12 7/8 | 3 | 17 1/8 | 15 1/4 | 14 | 3 3/8 | | 10 | | | | | | | | | 9.0 |
| 5 | 36 | | 2 1/4 | | | 16 | 4 | 7 5/8 | 5 5/8 | 12 1/4 | 12 7/8 | 3 | 17 1/8 | 15 1/4 | 14 | 3 3/8 | | 10 | | | | | | | | | 9.0 |

CTH MARKER
M1-5A FOR ASSEMBLIES

*WISCONSIN DEPT OF TRANSPORTATION*

APPROVED Matthew R Rauch
for State Traffic Engineer

DATE 11/8/2022 PLATE NO. M1-5A.9

PROJECT NO: | HWY: | COUNTY: | SHEET NO: | E

NOTES

1. Sign is Type II - Type F Reflective
2. Color:
   Background - Orange
   Message - Black
3. Message Series - B
4. Corners may be square or rounded when base material is plywood but borders shall be rounded as shown. When base material is metal, the corners and borders shall be rounded.

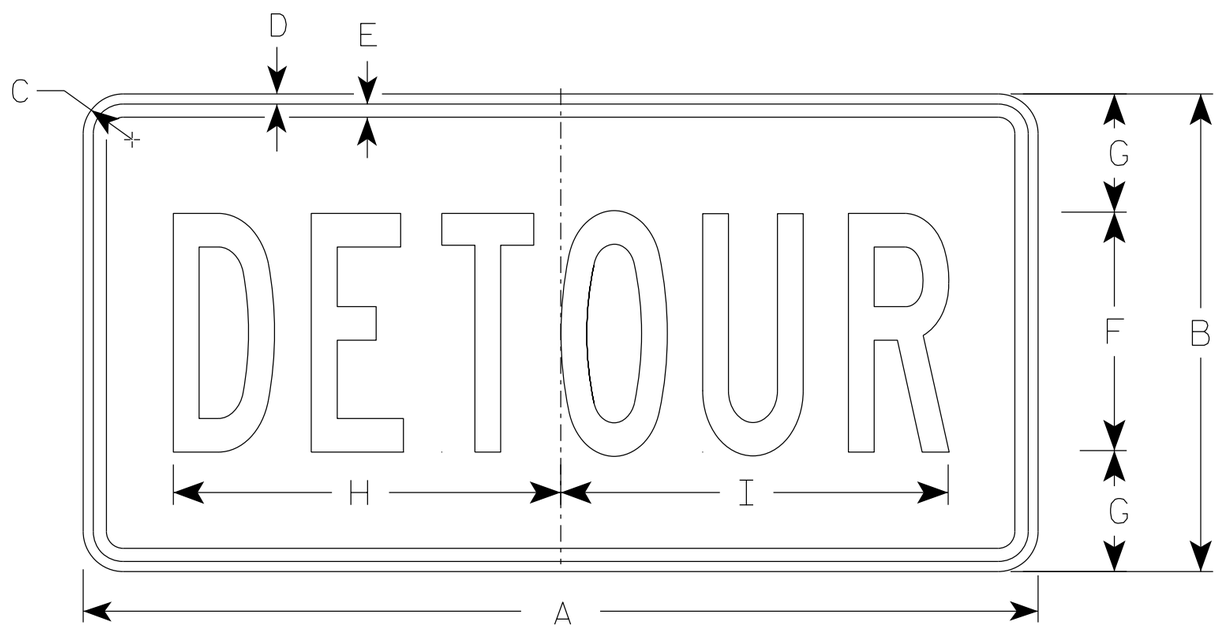


M4-8

| SIZE | A | B | C | D | E | F | G | H | I | J | K | L | M | N | O | P | Q | R | S | T | U | V | W | X | Y | Z | Area sq. ft. |
|---|---|---|---|---|---|---|---|---|---|---|---|---|---|---|---|---|---|---|---|---|---|---|---|---|---|---|---|
| 1 | | | | | | | | | | | | | | | | | | | | | | | | | | | |
| 2 | 24 | 12 | 1 1/2 | 3/8 | 3/8 | 6 | 3 | 10 | 10 1/4 | | | | | | | | | | | | | | | | | | 2.0 |
| 2M | 24 | 12 | 1 1/2 | 3/8 | 3/8 | 6 | 3 | 10 | 10 1/4 | | | | | | | | | | | | | | | | | | 2.0 |
| 3 | 36 | 18 | 1 1/2 | 3/8 | 1/2 | 9 | 4 1/2 | 14 5/8 | 14 1/2 | | | | | | | | | | | | | | | | | | 4.5 |
| 4 | 36 | 18 | 1 1/2 | 3/8 | 1/2 | 9 | 4 1/2 | 14 5/8 | 14 1/2 | | | | | | | | | | | | | | | | | | 4.5 |
| 5 | 36 | 18 | 1 1/2 | 3/8 | 1/2 | 9 | 4 1/2 | 14 5/8 | 14 1/2 | | | | | | | | | | | | | | | | | | 4.5 |

STANDARD SIGN
M4-8

WISCONSIN DEPT OF TRANSPORTATION

APPROVED Matthew R Rauch
for State Traffic Engineer

DATE 2/9/2023 PLATE NO. M4-8.4

| PROJECT NO: | HWY: | COUNTY: | | SHEET NO: 55 | E |
|---|---|---|---|---|---|

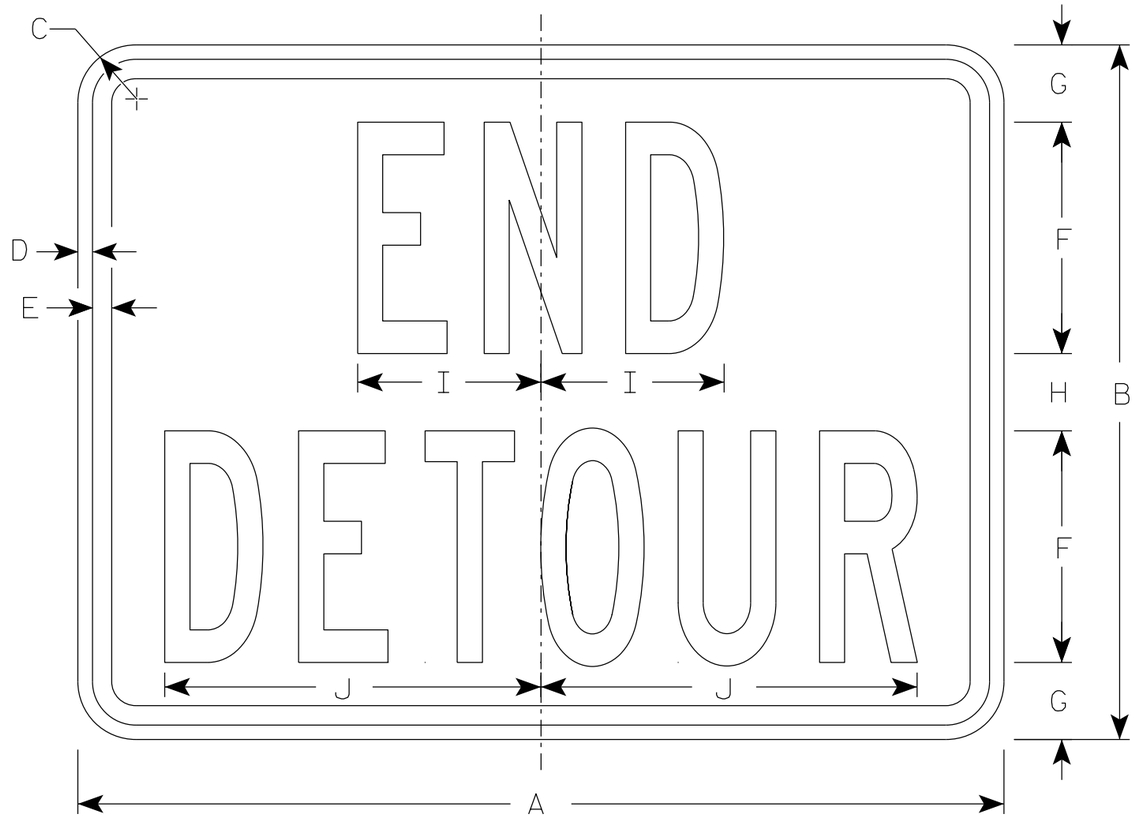


M4-8A

NOTES

1. Sign is Type II - Type F Reflective
2. Color:
   Background - Orange
   Message - Black
3. Message Series - B
4. Corners may be square or rounded when base material is plywood but borders shall be rounded as shown. When base material is metal, the corners and borders shall be rounded.

| SIZE | A | B | C | D | E | F | G | H | I | J | K | L | M | N | O | P | Q | R | S | T | U | V | W | X | Y | Z | Area sq. ft. |
|---|---|---|---|---|---|---|---|---|---|---|---|---|---|---|---|---|---|---|---|---|---|---|---|---|---|---|---|
| 1 | | | | | | | | | | | | | | | | | | | | | | | | | | | |
| 2 | 24 | 18 | 1 1/2 | 3/8 | 1/2 | 6 | 2 | 2 | 4 3/4 | 9 3/4 | | | | | | | | | | | | | | | | | 3.0 |
| 2M | 24 | 18 | 1 1/2 | 3/8 | 1/2 | 6 | 2 | 2 | 4 3/4 | 9 3/4 | | | | | | | | | | | | | | | | | 3.0 |
| 3 | 30 | 24 | 1 1/2 | 3/8 | 1/2 | 8 | 2 1/2 | 3 | 6 3/4 | 13 | | | | | | | | | | | | | | | | | 5.0 |
| 4 | 30 | 24 | 1 1/2 | 3/8 | 1/2 | 8 | 2 1/2 | 3 | 6 3/4 | 13 | | | | | | | | | | | | | | | | | 5.0 |
| 5 | 30 | 24 | 1 1/2 | 3/8 | 1/2 | 8 | 2 1/2 | 3 | 6 3/4 | 13 | | | | | | | | | | | | | | | | | 5.0 |

STANDARD SIGN
M4-8A

WISCONSIN DEPT OF TRANSPORTATION

APPROVED Matthew R Rauch
for State Traffic Engineer

DATE 2/9/2023 PLATE NO. M4-8A.4

PROJECT NO: | HWY: | COUNTY: | SHEET NO: 56 | E

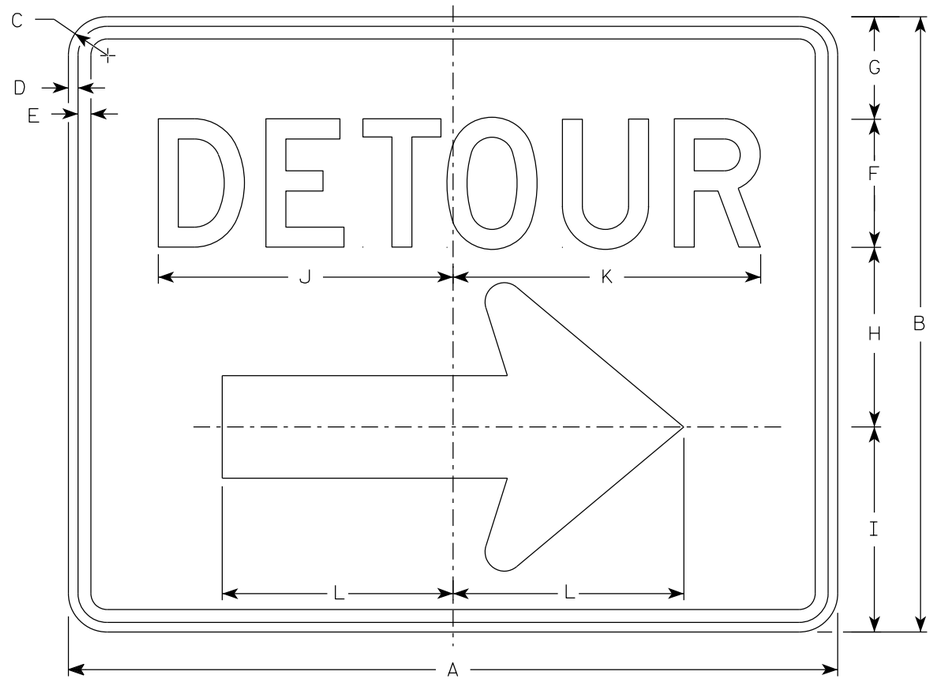


M4-9R

## NOTES

1. Sign is Type II - Type F Reflective
2. Color:
   Background - Orange
   Message - Black
3. Message Series - D
4. Corners may be square or rounded when base material is plywood but borders shall be rounded as shown. When base material is metal, the corners and borders shall be rounded.
4. M4-9L is the same as M4-9R except the arrow is reversed.

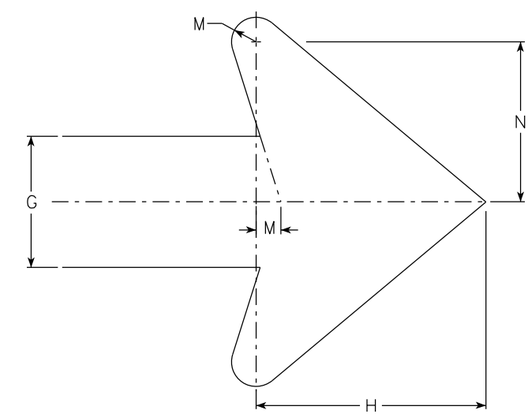


Arrow Detail

| SIZE | A | B | C | D | E | F | G | H | I | J | K | L | M | N | O | P | Q | R | S | T | U | V | W | X | Y | Z | Area sq. ft. |
|---|---|---|---|---|---|---|---|---|---|---|---|---|---|---|---|---|---|---|---|---|---|---|---|---|---|---|---|
| 1 | | | | | | | | | | | | | | | | | | | | | | | | | | | |
| 2 | 30 | 24 | 1 1/2 | 3/8 | 1/2 | 5 | 4 | 7 | 8 | 11 1/2 | 12 | 9 | 3/4 | 4 7/8 | | | | | | | | | | | | | 5.00 |
| 2M | 30 | 24 | 1 1/2 | 3/8 | 1/2 | 5 | 4 | 7 | 8 | 11 1/2 | 12 | 9 | 3/4 | 4 7/8 | | | | | | | | | | | | | 5.00 |
| 3 | 30 | 24 | 1 1/2 | 3/8 | 1/2 | 5 | 4 | 7 | 8 | 11 1/2 | 12 | 9 | 3/4 | 4 7/8 | | | | | | | | | | | | | 5.00 |
| 4 | 48 | 36 | 1 7/8 | 1/2 | 5/8 | 8 | 6 | 10 1/2 | 11 5/8 | 20 5/8 | 20 1/2 | 13 1/4 | 1 1/8 | 6 7/8 | | | | | | | | | | | | | 12.0 |
| 5 | 48 | 36 | 1 7/8 | 1/2 | 5/8 | 8 | 6 | 10 1/2 | 11 5/8 | 20 5/8 | 20 1/2 | 13 1/4 | 1 1/8 | 6 7/8 | | | | | | | | | | | | | 12.0 |

STANDARD SIGN
M4-9 R & L

WISCONSIN DEPT OF TRANSPORTATION

APPROVED Matthew R Rauch
For State Traffic Engineer

DATE 2/9/2023 PLATE NO. M4-9R.6

PROJECT NO: | HWY: | COUNTY: | SHEET NO: E

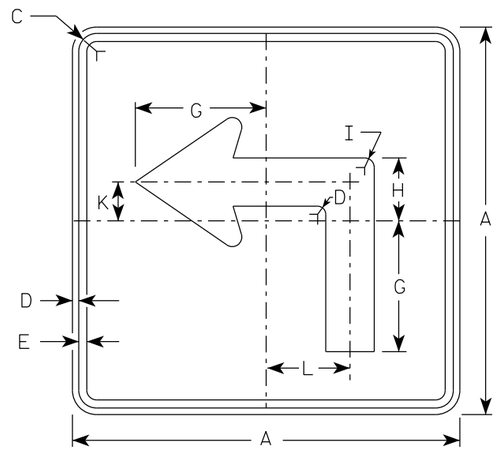


M5-1L
MM5-1L
MO5-1L
MP5-1L

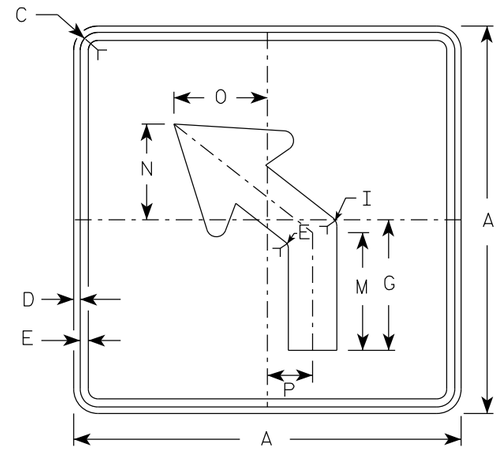


M5-2L
MM5-2L
MO5-2L
MP5-2L

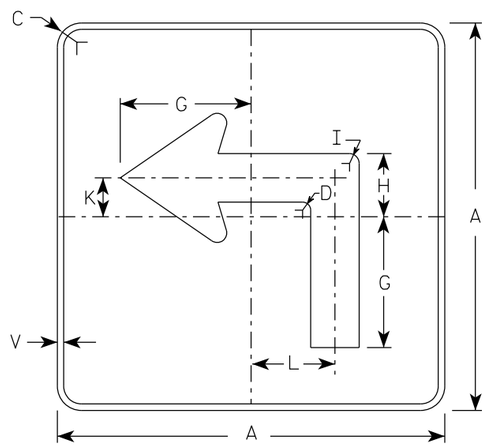


MB5-1L
MK5-1L
MN5-1L
MR5-1L

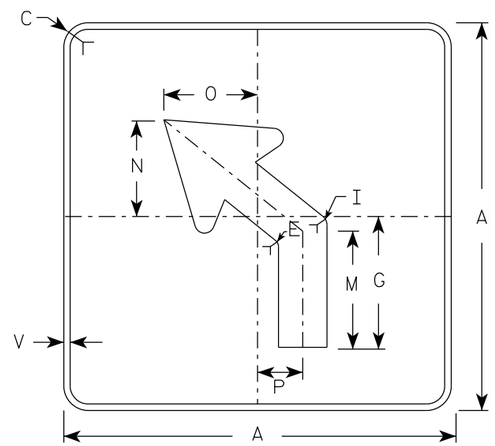


MB5-2L
MK5-2L
MN5-2L
MR5-2L

NOTES

1. Signs are Type II - Type H reflective except as shown
2. Color:
   Background - See note 4
   Message - See note 4
3. Corners may be square or rounded when base material is plywood but borders shall be rounded as shown. When base material is metal, the corners and borders shall be rounded.
4. M5-1 and M5-2 Background - White
   Message - Black
   MB5-1 and MB5-2 Background - Blue
   Message - White
   MK5-1 and MK5-2 Background - Green
   Message - White
   MM5-1 and MM5-2 Background - White
   Message - Green
   MN5-1 and MN5-2 Background - Brown
   Message - White
   MO5-1 and MO5-2 Background - Orange - Type F Reflective
   Message - Black
   MP5-1 and MP5-2 Background - White
   Message - Blue
   MR5-1 and MR5-2 Background - Brown
   Message - Yellow
5. M5-1R same as M5-1L except arrow points right.
6. M5-2R same as M5-2L except arrow tilts right.

ARROW DETAIL

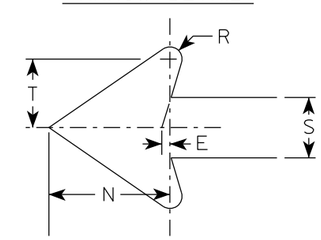


| SIZE | A | B | C | D | E | F | G | H | I | J | K | L | M | N | O | P | Q | R | S | T | U | V | W | X | Y | Z | Area sq. ft. |
|---|---|---|---|---|---|---|---|---|---|---|---|---|---|---|---|---|---|---|---|---|---|---|---|---|---|---|---|
| 1 | | | | | | | | | | | | | | | | | | | | | | | | | | | |
| 2S | 21 | | 1 1/2 | 3/8 | 3/8 | | 7 | 3 3/8 | 5/8 | | 2 1/8 | 4 1/2 | 6 3/8 | 5 1/4 | 5 | 2 1/2 | | 1/2 | 2 5/8 | 3 | | 1/2 | | | | | 3.06 |
| 2M | 21 | | 1 1/2 | 3/8 | 3/8 | | 7 | 3 3/8 | 5/8 | | 2 1/8 | 4 1/2 | 6 3/8 | 5 1/4 | 5 | 2 1/2 | | 1/2 | 2 5/8 | 3 | | 1/2 | | | | | 3.06 |
| 3 | 30 | | 1 7/8 | 1/2 | 5/8 | | 10 1/8 | 4 7/8 | 7/8 | | 3 | 6 1/2 | 9 1/8 | 7 1/2 | 7 1/4 | 3 1/2 | | 3/4 | 3 3/4 | 4 1/4 | | 1/2 | | | | | 6.25 |
| 4 | 30 | | 1 7/8 | 1/2 | 5/8 | | 10 1/8 | 4 7/8 | 7/8 | | 3 | 6 1/2 | 9 1/8 | 7 1/2 | 7 1/4 | 3 1/2 | | 3/4 | 3 3/4 | 4 1/4 | | 1/2 | | | | | 6.25 |
| 5 | 30 | | 1 7/8 | 1/2 | 5/8 | | 10 1/8 | 4 7/8 | 7/8 | | 3 | 6 1/2 | 9 1/8 | 7 1/2 | 7 1/4 | 3 1/2 | | 3/4 | 3 3/4 | 4 1/4 | | 1/2 | | | | | 6.25 |

STANDARD SIGN
M5-1 & M5-2

WISCONSIN DEPT OF TRANSPORTATION

APPROVED Matthew R Rauch
for State Traffic Engineer

DATE 2/13/2023 PLATE NO. M5-1.15

PROJECT NO: | HWY: | COUNTY: | SHEET NO: 58 | E

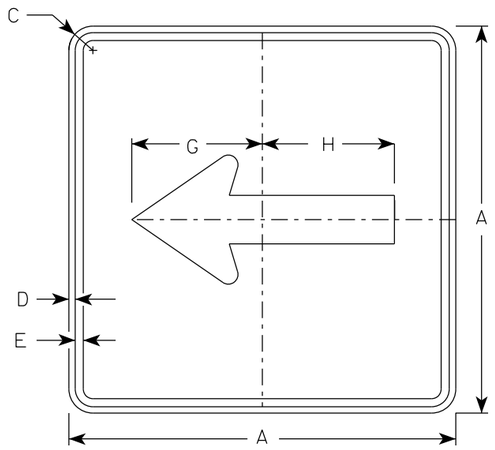


M6-1
MM6-1
MO6-1
MP6-1

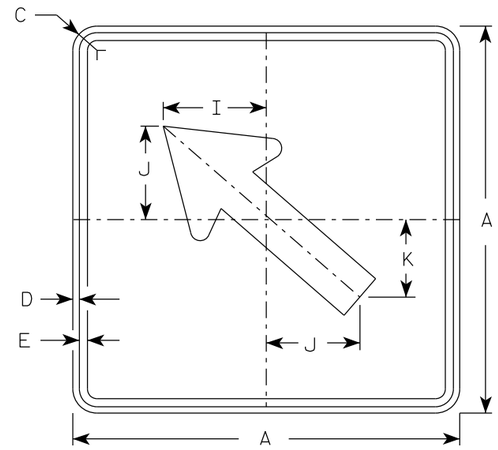


M6-2
MM6-2
MO6-2
MP6-2

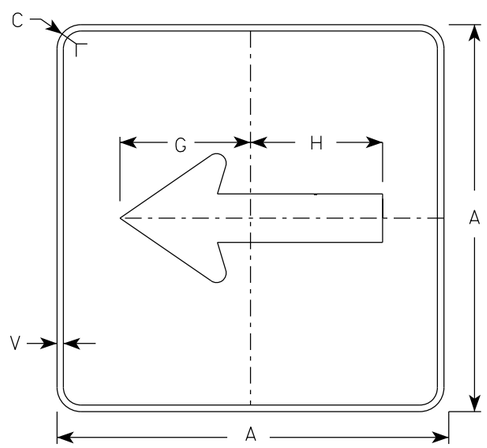


MB6-1
MK6-1
MN6-1
MR6-1

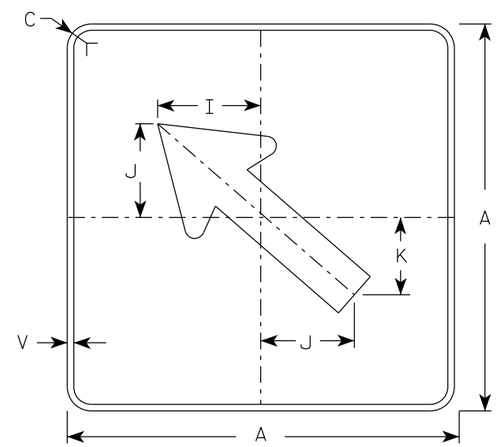


MB6-2
MK6-2
MN6-2
MR6-2

NOTES

1. Signs are Type II - Type H Reflective except as Shown
2. Color:
   Background - See note 4
   Message - See note 4
3. Corners may be square or rounded when base material is plywood but borders shall be rounded as shown. When base material is metal, the corners and borders shall be rounded.
4. M6-1 and M6-2 Background - White
   Message - Black
   MB6-1 and MB6-2 Background - Blue
   Message - White
   MK6-1 and MK6-2 Background - Green
   Message - White
   MM6-1 and MM6-2 Background - White
   Message - Green
   MN6-1 and MN6-2 Background - Brown
   Message - White
   MO6-1 and MO6-2 Background - Orange - Type F Reflective
   Message - Black
   MP6-1 and MP6-2 Background - White
   Message - Blue
   MR6-1 and MR6-2 Background - Brown
   Message - Yellow

ARROW DETAIL

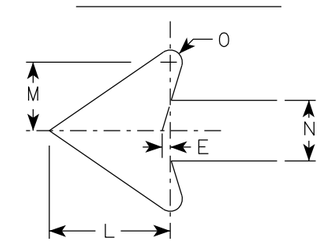


| SIZE | A | B | C | D | E | F | G | H | I | J | K | L | M | N | O | P | Q | R | S | T | U | V | W | X | Y | Z | Area sq. ft. |
|---|---|---|---|---|---|---|---|---|---|---|---|---|---|---|---|---|---|---|---|---|---|---|---|---|---|---|---|
| 1 | | | | | | | | | | | | | | | | | | | | | | | | | | | |
| 2S | 21 | | 1 1/2 | 3/8 | 3/8 | | 7 1/2 | 7 1/8 | 5 5/8 | 5 | 4 1/4 | 5 1/4 | 3 | 2 5/8 | 1/2 | | | | | | | 1/2 | | | | | 3.06 |
| 2M | 21 | | 1 1/2 | 3/8 | 3/8 | | 7 1/2 | 7 1/8 | 5 5/8 | 5 | 4 1/4 | 5 1/4 | 3 | 2 5/8 | 1/2 | | | | | | | 1/2 | | | | | 3.06 |
| 3 | 30 | | 1 7/8 | 1/2 | 5/8 | | 10 3/4 | 10 1/4 | 8 | 7 1/4 | 6 | 7 1/2 | 4 1/4 | 3 3/4 | 3/4 | | | | | | | 1/2 | | | | | 6.25 |
| 4 | 30 | | 1 7/8 | 1/2 | 5/8 | | 10 3/4 | 10 1/4 | 8 | 7 1/4 | 6 | 7 1/2 | 4 1/4 | 3 3/4 | 3/4 | | | | | | | 1/2 | | | | | 6.25 |
| 5 | 30 | | 1 7/8 | 1/2 | 5/8 | | 10 3/4 | 10 1/4 | 8 | 7 1/4 | 6 | 7 1/2 | 4 1/4 | 3 3/4 | 3/4 | | | | | | | 1/2 | | | | | 6.25 |

STANDARD SIGN
M6-1 & M6-2
SERIES

WISCONSIN DEPT OF TRANSPORTATION

APPROVED Matthew R Rauch
for State Traffic Engineer

DATE 2/13/2023 PLATE NO. M6-1.16

PROJECT NO: | HWY: | COUNTY: | SHEET NO: 59 | E

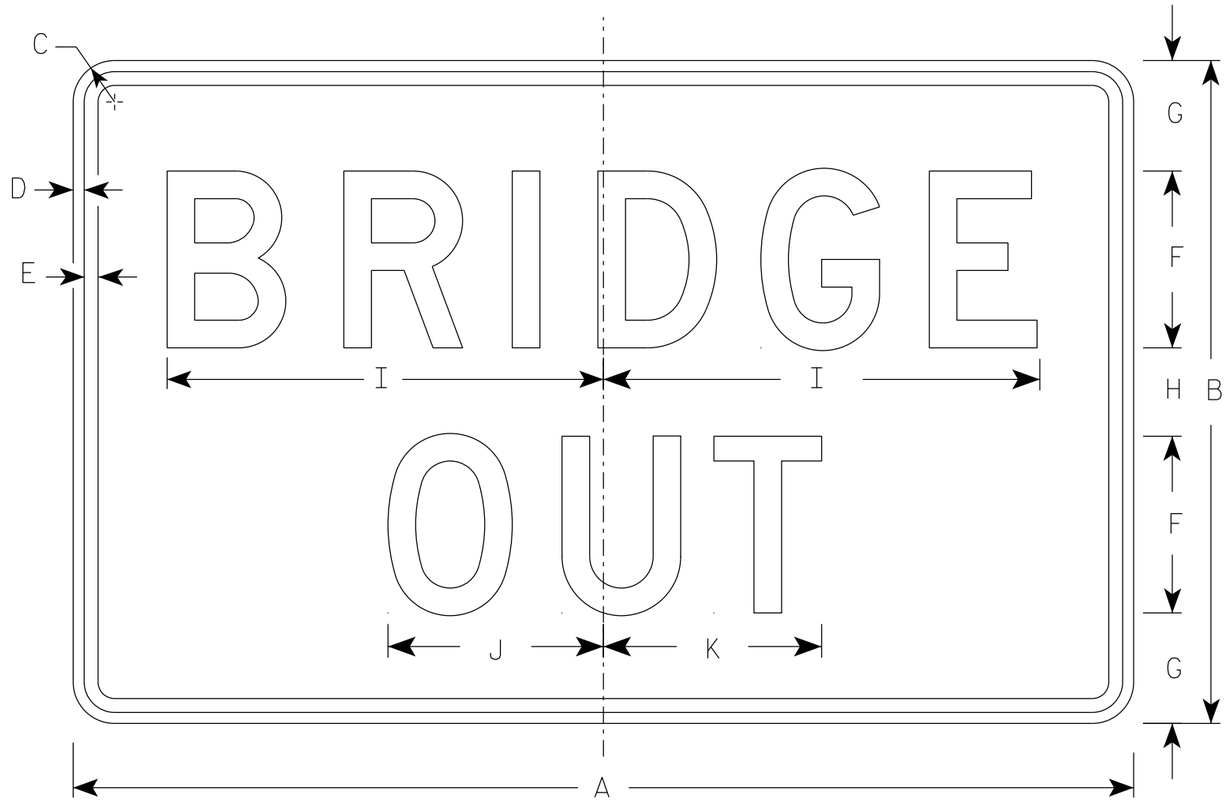


R11-2B

NOTES

1. Sign is Type II - Type H Reflective
2. Color:
   Background - White
   Message - Black
3. Message Series - D
4. Corners may be square or rounded when base material is plywood but borders shall be rounded as shown. When base material is metal, the corners and borders shall be rounded.

| SIZE | A | B | C | D | E | F | G | H | I | J | K | L | M | N | O | P | Q | R | S | T | U | V | W | X | Y | Z | Area sq. ft. |
|---|---|---|---|---|---|---|---|---|---|---|---|---|---|---|---|---|---|---|---|---|---|---|---|---|---|---|---|
| 1 | | | | | | | | | | | | | | | | | | | | | | | | | | | |
| 2S | 48 | 30 | 1 7/8 | 1/2 | 5/8 | 8 | 5 | 4 | 19 3/4 | 9 3/4 | 9 7/8 | | | | | | | | | | | | | | | | 10.0 |
| 2M | 48 | 30 | 1 7/8 | 1/2 | 5/8 | 8 | 5 | 4 | 19 3/4 | 9 3/4 | 9 7/8 | | | | | | | | | | | | | | | | 10.0 |
| 3 | 48 | 30 | 1 7/8 | 1/2 | 5/8 | 8 | 5 | 4 | 19 3/4 | 9 3/4 | 9 7/8 | | | | | | | | | | | | | | | | 10.0 |
| 4 | 48 | 30 | 1 7/8 | 1/2 | 5/8 | 8 | 5 | 4 | 19 3/4 | 9 3/4 | 9 7/8 | | | | | | | | | | | | | | | | 10.0 |
| 5 | 48 | 30 | 1 7/8 | 1/2 | 5/8 | 8 | 5 | 4 | 19 3/4 | 9 3/4 | 9 7/8 | | | | | | | | | | | | | | | | 10.0 |

STANDARD SIGN
R11-2B

WISCONSIN DEPT OF TRANSPORTATION

APPROVED Matthew R Rauch
For State Traffic Engineer

DATE 2/5/24 PLATE NO. R11-2B.3

PROJECT NO:

SHEET NO: 60 E

NOTES

1. Sign is Type II - Type H Reflective
2. Color:
   Background - White
   Message - Black
3. Message Series - C
4. Corners may be square or rounded when base material is plywood but borders shall be rounded as shown. When base material is metal, the corners and borders shall be rounded.
5. Substitute appropriate numerals to nearest quarter mile and optically adjust spacing to achieve proper balance.

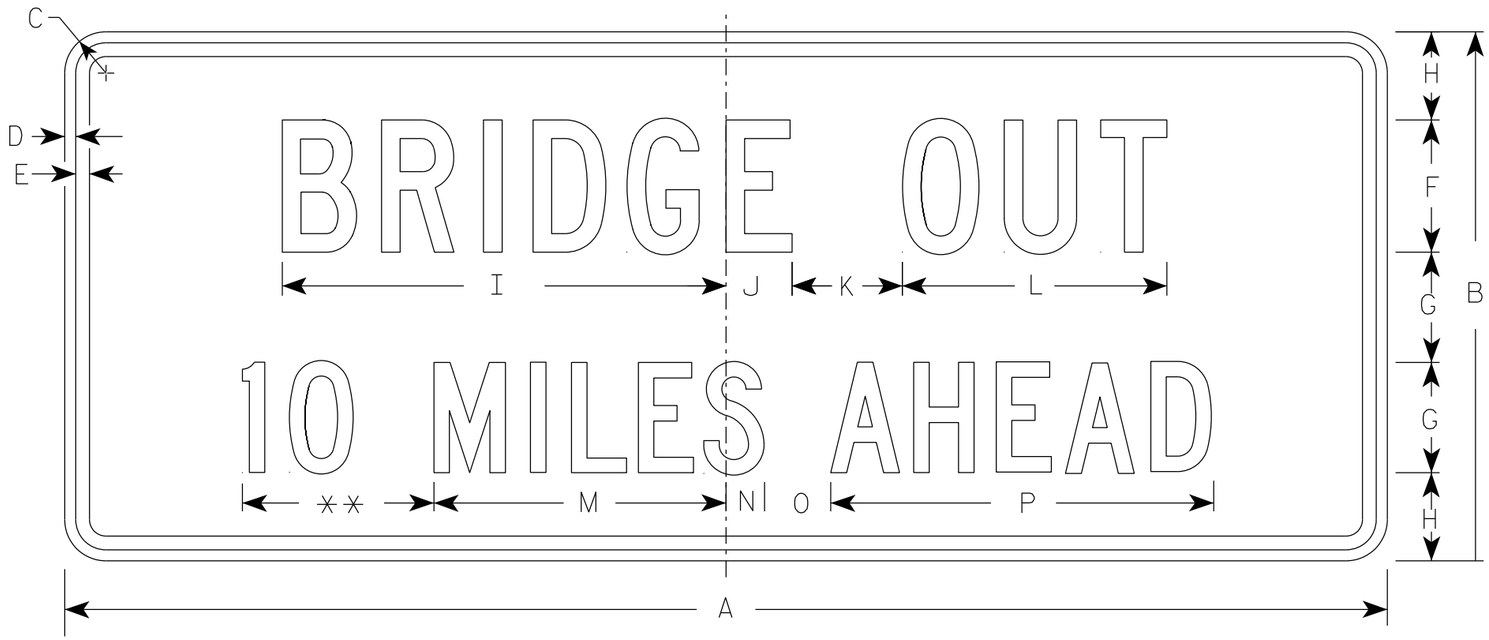


R11-3C

** See Note 5

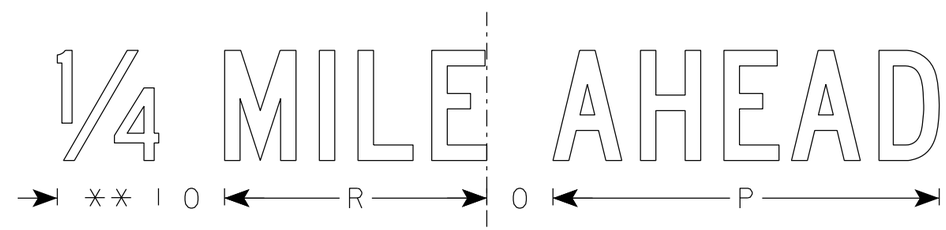


| SIZE | A | B | C | D | E | F | G | H | I | J | K | L | M | N | O | P | Q | R | S | T | U | V | W | X | Y | Z | Area sq. ft. |
|---|---|---|---|---|---|---|---|---|---|---|---|---|---|---|---|---|---|---|---|---|---|---|---|---|---|---|---|
| 1 | 36 | 15 | 1 1/2 | 1/2 | 5/8 | 4 | 3 | 2 1/2 | 13 1/4 | 2 1/4 | 3 | 8 | 8 | 1 1/2 | 2 | 10 3/4 | | 7 1/8 | | | | | | | | | 3.75 |
| 2S | 60 | 24 | 1 7/8 | 1/2 | 5/8 | 6 | 5 | 4 | 20 1/8 | 3 | 5 | 12 | 13 1/4 | 1 3/4 | 3 | 17 3/8 | | 11 7/8 | | | | | | | | | 10.0 |
| 2M | 60 | 24 | 1 7/8 | 1/2 | 5/8 | 6 | 5 | 4 | 20 1/8 | 3 | 5 | 12 | 13 1/4 | 1 3/4 | 3 | 17 3/8 | | 11 7/8 | | | | | | | | | 10.0 |
| 3 | | | | | | | | | | | | | | | | | | | | | | | | | | | |
| 4 | | | | | | | | | | | | | | | | | | | | | | | | | | | |
| 5 | | | | | | | | | | | | | | | | | | | | | | | | | | | |

STANDARD SIGN
R11-3C

WISCONSIN DEPT OF TRANSPORTATION

APPROVED Matthew R Rauch
for State Traffic Engineer

DATE 2/5/24 PLATE NO. R11-3C.4

PROJECT NO:

SHEET NO: 61 E

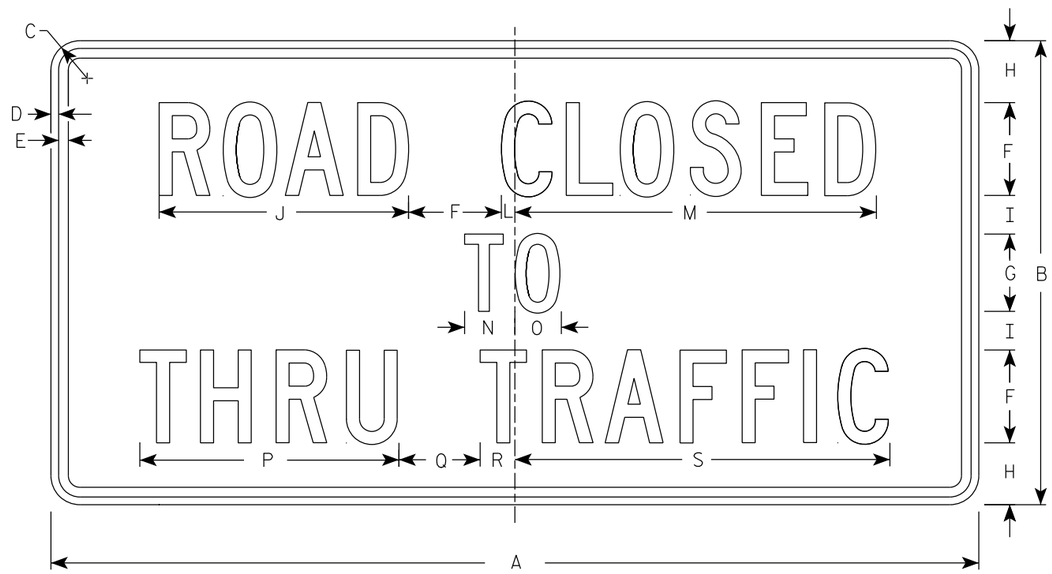


R11-4

## NOTES

1. Sign is Type II - Type H Reflective
2. Color:
   Background - White
   Message - Black
3. Message Series - C
4. Corners may be square or rounded when base material is plywood but borders shall be rounded as shown. When base material is metal, the corners and borders shall be rounded.

| SIZE | A | B | C | D | E | F | G | H | I | J | K | L | M | N | O | P | Q | R | S | T | U | V | W | X | Y | Z | Area sq. ft. |
|---|---|---|---|---|---|---|---|---|---|---|---|---|---|---|---|---|---|---|---|---|---|---|---|---|---|---|---|
| 1 | | | | | | | | | | | | | | | | | | | | | | | | | | | |
| 2S | 60 | 30 | 1 7/8 | 1/2 | 5/8 | 6 | 5 | 4 | 2 1/2 | 16 1/8 | | 7/8 | 23 3/8 | 3 1/4 | 3 | 16 3/4 | 5 1/4 | 2 1/4 | 24 1/4 | | | | | | | | 12.5 |
| 2M | 60 | 30 | 1 7/8 | 1/2 | 5/8 | 6 | 5 | 4 | 2 1/2 | 16 1/8 | | 7/8 | 23 3/8 | 3 1/4 | 3 | 16 3/4 | 5 1/4 | 2 1/4 | 24 1/4 | | | | | | | | 12.5 |
| 3 | | | | | | | | | | | | | | | | | | | | | | | | | | | |
| 4 | | | | | | | | | | | | | | | | | | | | | | | | | | | |
| 5 | | | | | | | | | | | | | | | | | | | | | | | | | | | |

STANDARD SIGN
R11 - 4

WISCONSIN DEPT OF TRANSPORTATION

APPROVED Matthew R Rauch for State Traffic Engineer

DATE 2/5/24 PLATE NO. R11-4.4

PROJECT NO: | HWY: | COUNTY: | SHEET NO: 62 | E

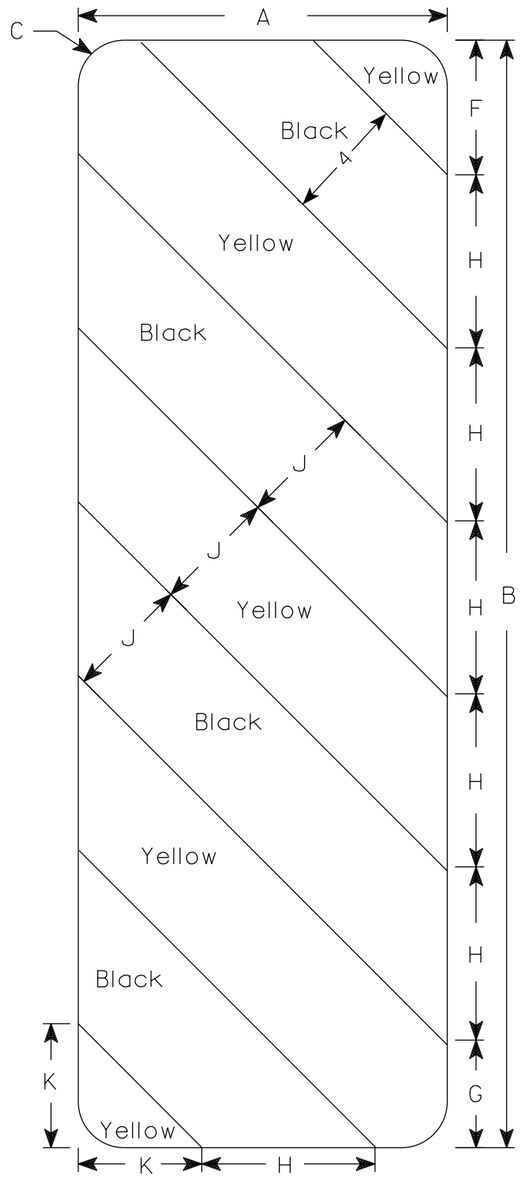


W5-52L

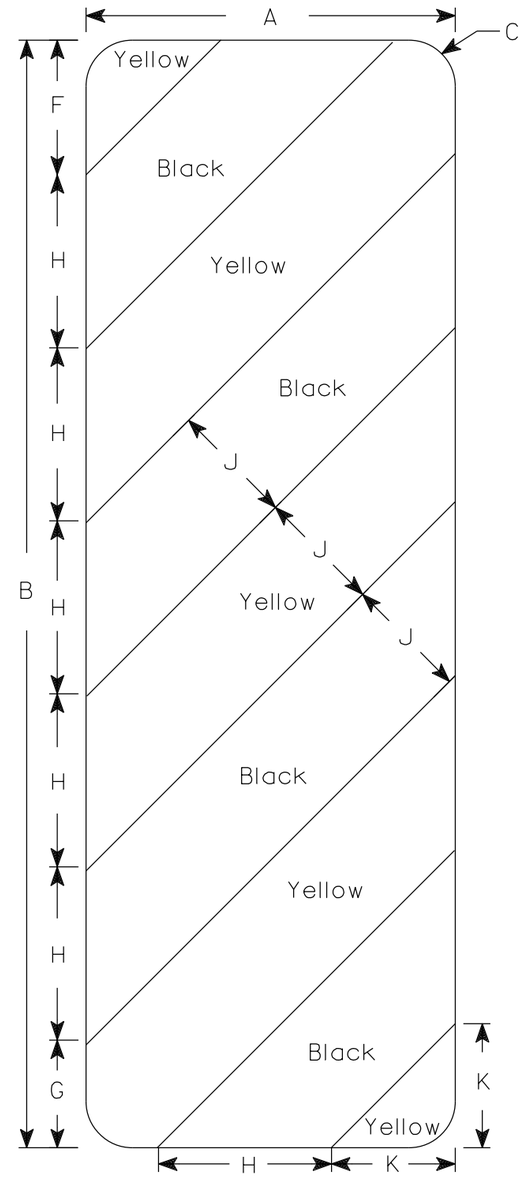


W5-52R

NOTES

1. Sign is Type II - Type F Reflective
2. Color:
   Background - Yellow
   Message - Black
3. Alternate colors of stripes as shown.

| SIZE | A | B | C | D | E | F | G | H | I | J | K | L | M | N | O | P | Q | R | S | T | U | V | W | X | Y | Z | Area sq. ft. |
|---|---|---|---|---|---|---|---|---|---|---|---|---|---|---|---|---|---|---|---|---|---|---|---|---|---|---|---|
| 1 | | | | | | | | | | | | | | | | | | | | | | | | | | | |
| 2S | 12 | 36 | 1 1/2 | | | 4 3/8 | 3 1/2 | 5 5/8 | 45° | 4 | 4 | | | | | | | | | | | | | | | | 3.0 |
| 2M | 12 | 36 | 1 1/2 | | | 4 3/8 | 3 1/2 | 5 5/8 | 45° | 4 | 4 | | | | | | | | | | | | | | | | 3.0 |
| 3 | 18 | 54 | 1 1/2 | | | 6 | 5 1/2 | 8 1/2 | 45° | 6 | 6 9/16 | | | | | | | | | | | | | | | | 6.75 |
| 4 | | | | | | | | | | | | | | | | | | | | | | | | | | | |
| 5 | | | | | | | | | | | | | | | | | | | | | | | | | | | |

STANDARD SIGN
W5-52L & W5-52R

WISCONSIN DEPT OF TRANSPORTATION

APPROVED Matthew R Rauch
For State Traffic Engineer

DATE 3/4/2024 PLATE NO. W5-52.10

PROJECT NO: | HWY: | COUNTY: | SHEET NO: 63 | E

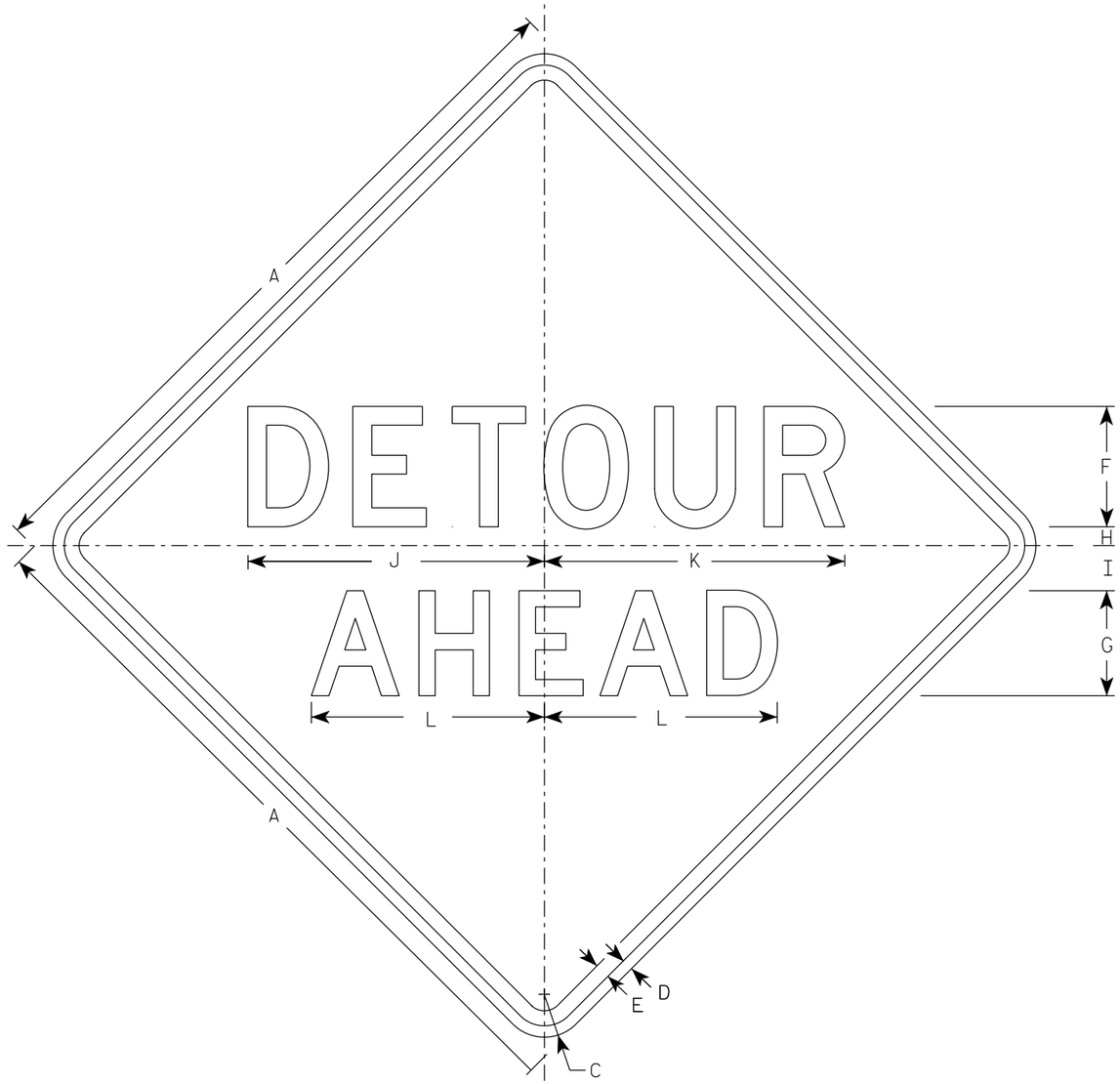


W20-2A

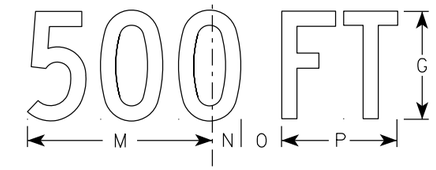


W20-2D

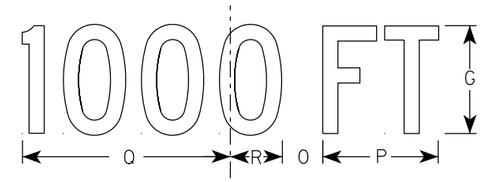


W20-2C

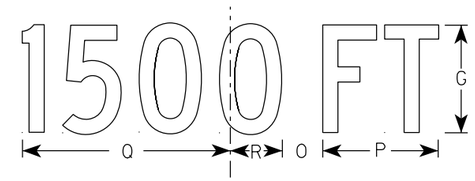


W20-2B

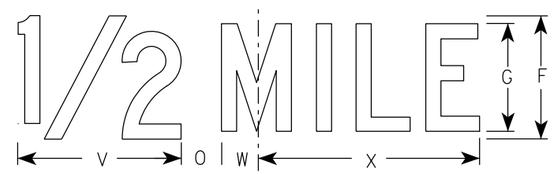


W20-2G

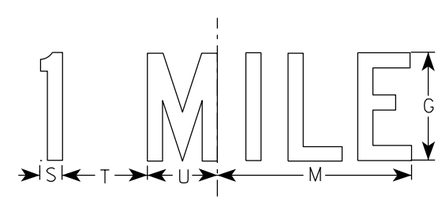


W20-2F

NOTES

1. Sign is Type II - Type F Reflective
2. Color:
   Background - Orange
   Message - Black
3. Message Series - See note 5
4. Corners may be square or rounded when base material is plywood but borders shall be rounded as shown. When base material is metal, the corners and borders shall be rounded.
5. Line 1 is Series D.
   Line 2 is Series D for AHEAD and Series C for all other distances.

| SIZE | A | B | C | D | E | F | G | H | I | J | K | L | M | N | O | P | Q | R | S | T | U | V | W | X | Y | Z | Area sq. ft. |
|---|---|---|---|---|---|---|---|---|---|---|---|---|---|---|---|---|---|---|---|---|---|---|---|---|---|---|---|
| 1 | 36 | | 2 1/4 | 5/8 | 3/4 | 6 | 5 | 1 | 2 1/4 | 14 3/4 | 15 | 11 5/8 | 9 | 1 3/8 | 1 7/8 | 5 5/8 | 10 1/8 | 2 1/2 | 1 1/8 | 4 1/2 | 3 1/2 | 8 | 1 3/4 | 10 3/4 | | | 9.0 |
| 2S | 48 | | 3 | 3/4 | 1 | 8 | 7 | 1 1/4 | 3 | 19 3/4 | 20 | 15 1/2 | 12 | 1 7/8 | 2 5/8 | 7 1/2 | 13 1/2 | 3 3/8 | 1 1/2 | 6 | 4 5/8 | 10 5/8 | 2 3/8 | 14 3/8 | | | 16.0 |
| 2M | 48 | | 3 | 3/4 | 1 | 8 | 7 | 1 1/4 | 3 | 19 3/4 | 20 | 15 1/2 | 12 | 1 7/8 | 2 5/8 | 7 1/2 | 13 1/2 | 3 3/8 | 1 1/2 | 6 | 4 5/8 | 10 5/8 | 2 3/8 | 14 3/8 | | | 16.0 |
| 3 | 48 | | 3 | 3/4 | 1 | 8 | 7 | 1 1/4 | 3 | 19 3/4 | 20 | 15 1/2 | 12 | 1 7/8 | 2 5/8 | 7 1/2 | 13 1/2 | 3 3/8 | 1 1/2 | 6 | 4 5/8 | 10 5/8 | 2 3/8 | 14 3/8 | | | 16.0 |
| 4 | 48 | | 3 | 3/4 | 1 | 8 | 7 | 1 1/4 | 3 | 19 3/4 | 20 | 15 1/2 | 12 | 1 7/8 | 2 5/8 | 7 1/2 | 13 1/2 | 3 3/8 | 1 1/2 | 6 | 4 5/8 | 10 5/8 | 2 3/8 | 14 3/8 | | | 16.0 |
| 5 | 48 | | 3 | 3/4 | 1 | 8 | 7 | 1 1/4 | 3 | 19 3/4 | 20 | 15 1/2 | 12 | 1 7/8 | 2 5/8 | 7 1/2 | 13 1/2 | 3 3/8 | 1 1/2 | 6 | 4 5/8 | 10 5/8 | 2 3/8 | 14 3/8 | | | 16.0 |

STANDARD SIGN
W20-2A,B,C,D,F & G

WISCONSIN DEPT OF TRANSPORTATION

APPROVED Matthew R Rauch
For State Traffic Engineer

DATE 1/10/2024 PLATE NO. W20-2.7

PROJECT NO: | HWY: | COUNTY: | SHEET NO: E

STATE PROJECT NUMBER

**6777-00-70**

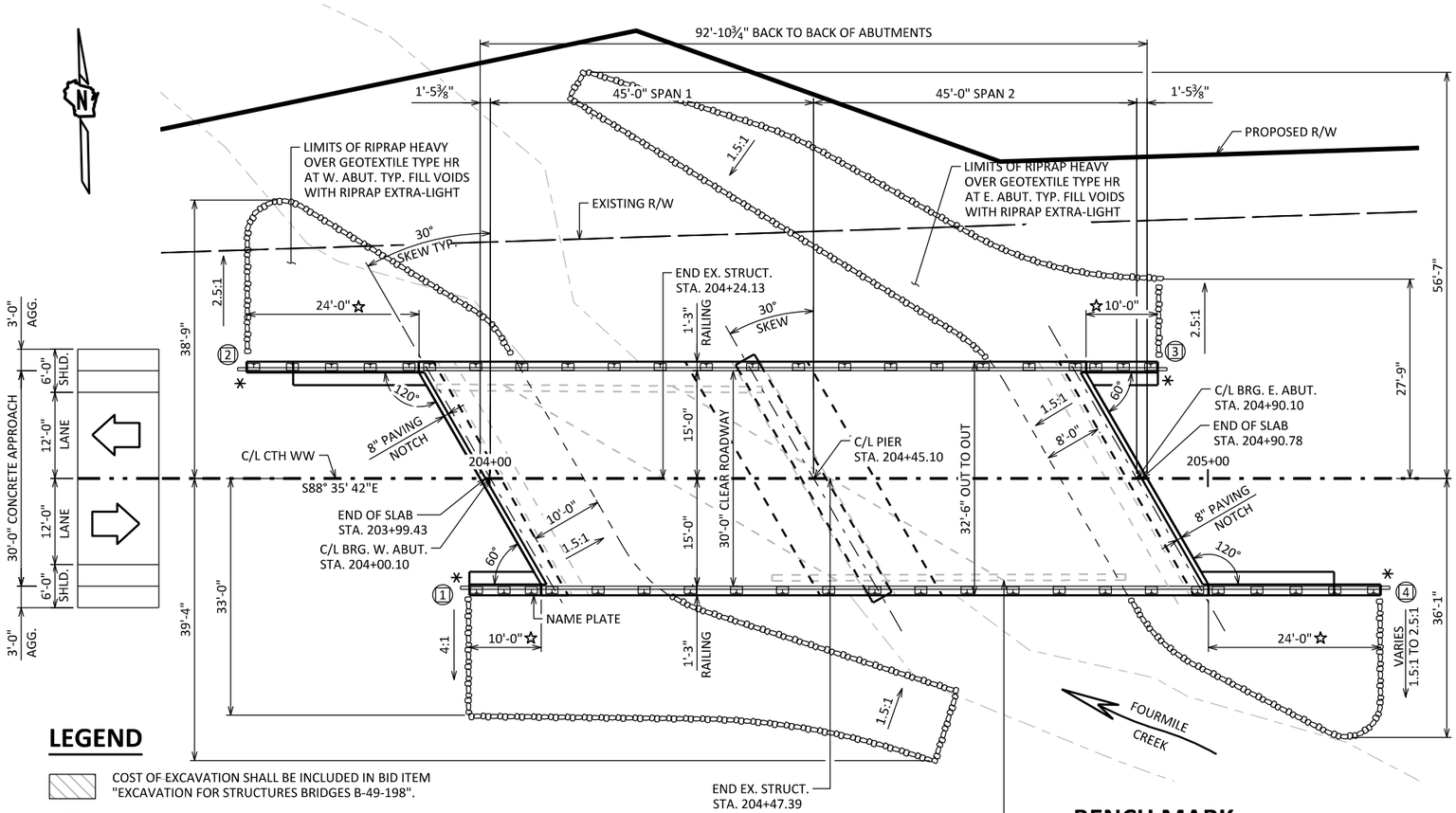


## PLAN

TWO SPAN CONCRETE HAUNCHED SLAB

## LEGEND

- COST OF EXCAVATION SHALL BE INCLUDED IN BID ITEM "EXCAVATION FOR STRUCTURES BRIDGES B-49-198".
- (X) INDICATES WING WALL NUMBER
- F. FIXED BEARING
- S.E. SEMI-EXPANSION BEARING
- ✳ PROVIDE FOR THRIE BEAM GUARD RAIL ATTACHMENT.
- ☆ SURFACE DRAIN ANCHORS REQUIRED.

## BENCH MARK

| NO. | STATION | DESCRIPTION | ELEV. | Y | X |
|---|---|---|---|---|---|
| 1000 | OFF ALIGNMENT | RR SPIKE IN RED PINE | 1051.54 | 143084.591 | 141662.042 |
| 1001 | STA. 206+32.31, 54.28' RT. | PK NAIL IN PPOL | 1054.54 | 143048.634 | 142427.825 |
| 1002 | OFF ALIGNMENT | PK NAIL IN PPOL | 1052.44 | 143054.776 | 142929.550 |

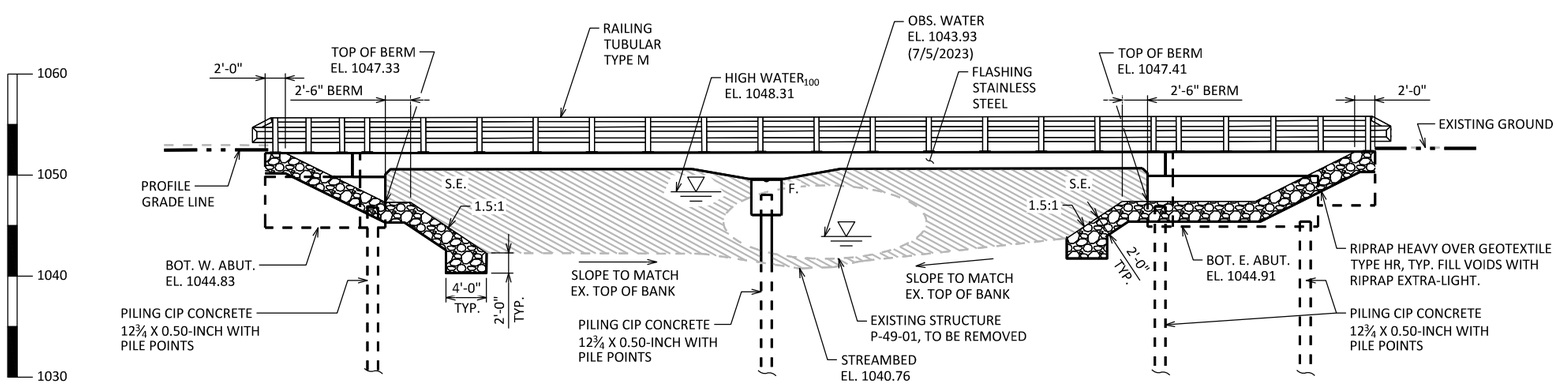


## ELEVATION

LOOKING NORTH
NORMAL TO C/L SUBSTRUCTURE

## DESIGN DATA

**LIVE LOAD:**

DESIGN LOADING: HL-93
INVENTORY RATING: RF = 1.22
OPERATING RATING: RF = 1.58
WISCONSIN STANDARD PERMIT VEHICLE (WIS-SPV): 210 (KIPS)

STRUCTURE IS DESIGNED FOR A FUTURE WEARING SURFACE OF 20 POUNDS PER SQUARE FOOT.

**MATERIAL PROPERTIES:**

CONCRETE MASONRY:
SUPERSTRUCTURE ——— $f'_c$ = 4,000 PSI
ALL OTHER ——— $f'_c$ = 3,500 PSI

BAR STEEL REINFORCEMENT
GRADE 60 ——— $f_y$ = 60,000 PSI

## FOUNDATION DATA

ABUTMENTS TO BE SUPPORTED ON CIP CONCRETE 12¾ X 0.50-INCH PILING WITH PILE POINTS DRIVEN TO A REQUIRED DRIVING RESISTANCE OF 130 TONS ** PER PILE AS DETERMINED BY THE MODIFIED GATES DYNAMIC FORMULA.

ESTIMATED 65'-0" LONG AT W. ABUT.
ESTIMATED 70'-0" LONG AT E. ABUT.

PIER TO BE SUPPORTED ON CIP CONCRETE 12 ¾ X 0.50-INCH PILING DRIVEN TO A REQUIRED DRIVING RESISTANCE OF 200 TONS ** PER PILE AS DETERMINED BY THE MODIFIED GATES DYNAMIC FORMULA.

ESTIMATED 70-'0" LONG AT PIER.

**THE FACTORED AXIAL RESISTANCE OF PILES IN COMPRESSION USED FOR DESIGN IS THE REQUIRED DRIVING RESISTANCE MULTIPLIED BY A RESISTANCE FACTOR OF 0.5 USING MODIFIED GATES TO DETERMINE PILE CAPACITY.

## HYDRAULIC DATA

**100-YEAR FREQUENCY:**
$Q_{100}$= 580 C.F.S.
$V_{100}$= 3.13 F.P.S.
$HW_{100}$= EL. 1048.31
WATERWAY AREA = 185 SQ. FT.
DRAINAGE AREA = 22.5 SQ. MI.
ROADWAY OVERTOPPING = N/A
SCOUR CRITICAL CODE = 5

**2-YEAR FREQUENCY:**
$Q_2$= 190 C.F.S.
$V_2$= 3.53 F.P.S.
$HW_2$= EL. 1044.63

## TRAFFIC DATA

**FEATURE ON: CTH WW**
ADT = 790 (2025)
ADT = 850 (2045)
R.D.S. = 45 MPH

WISCONSIN CHRISTOPHER J. MARCUM 44676 EAU CLAIRE WISCONSIN PROFESSIONAL ENGINEER

10/31/2024

## LIST OF DRAWINGS:

1. GENERAL PLAN AND ELEVATION
2. CROSS SECTION, QUANTITIES, AND NOTES
3. SUBSURFACE EXPLORATION
4. WEST ABUTMENT
5. WING 1 DETAILS
6. WING 2 DETAILS
7. EAST ABUTMENT
8. WING 3 DETAILS
9. WING 4 DETAILS
10. ABUTMENT DETAILS
11. PIER
12. SUPERSTRUCTURE
13. SUPERSTRUCTURE DETAILS 1
14. SUPERSTRUCTURE DETAILS 2
15. TUBULAR STEEL RAILING TYPE "M"


**STRUCTURE DESIGN CONTACTS:**
CHRISTOPHER MARCUM 715-861-4823
AARON BONK 608-261-0261


| NO. | DATE | REVISION | BY |
|---|---|---|---|
| | | | |

JT ENGINEERING REAL. TRUSTED. PROVEN.

STATE OF WISCONSIN
DEPARTMENT OF TRANSPORATION

ACCEPTED SDR 11/07/24
CHIEF STRUCTURES DESIGN ENGINEER DATE

**STRUCTURE B-49-198**

CTH WW OVER FOURMILE CREEK

COUNTY PORTAGE | TOWN GRANT

DESIGN SPEC. AASHTO LRFD BRIDGE DESIGN SPECIFICATION

DESIGNED BY CJM/LAB | DESIGNED CK'D VJD/CJM | DRAWN BY VJD/LAB | PLANS CK'D CJM

**GENERAL PLAN AND ELEVATION**

SHEET 1 OF 15
65

SCALE = N.T.S.

8

8

I.D. 6777-00-00 DATE: 08/26/2024

| STATE PROJECT NUMBER |
|---|
| **6777-00-70** |

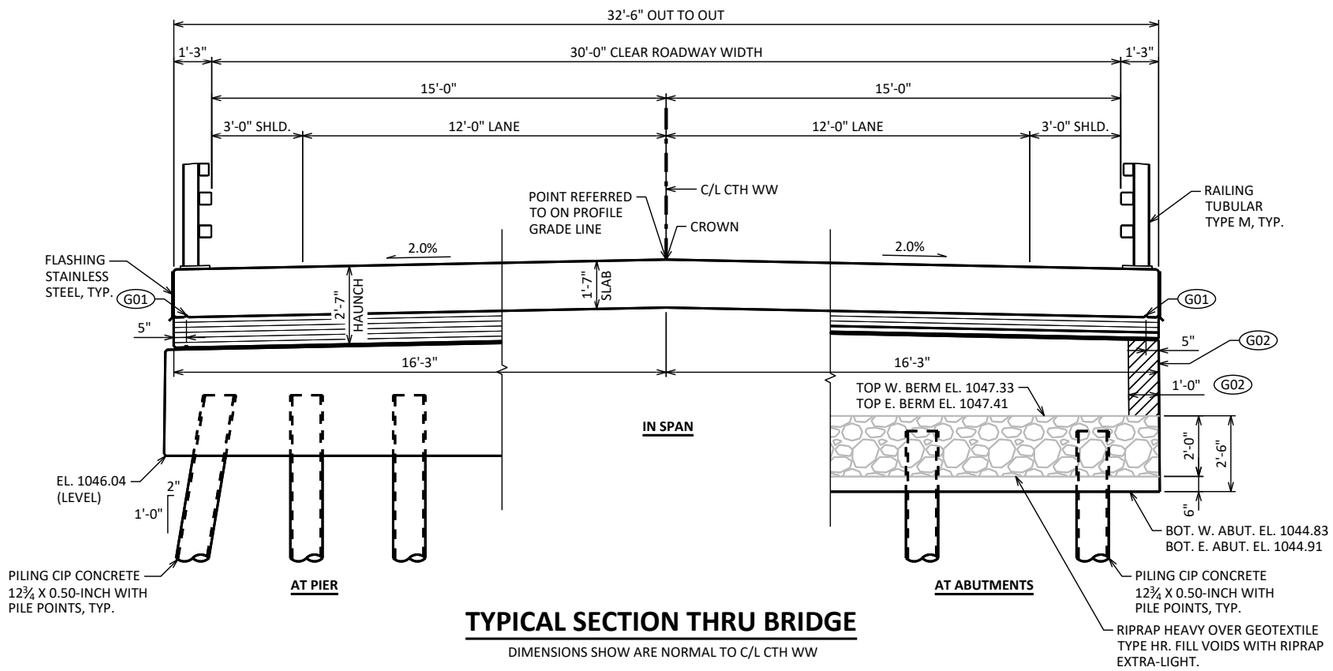


## TYPICAL SECTION THRU BRIDGE

DIMENSIONS SHOW ARE NORMAL TO C/L CTH WW

## GENERAL NOTES

DRAWINGS SHALL NOT BE SCALED.

BAR STEEL REINFORCEMENT SHALL BE EMBEDDED 2" CLEAR UNLESS OTHERWISE SHOWN OR NOTED.

THE FIRST OR FIRST TWO DIGITS OF THE BAR MARK SIGNIFIES THE BAR SIZE.

BEVEL EXPOSED EDGES OF CONCRETE ¾" UNLESS OTHERWISE NOTED.

THE UPPER LIMITS OF "EXCAVATION FOR STRUCTURES BRIDGES B-49-198" SHALL BE THE EXISTING GROUNDLINE.

THE EXISTING STRUCTURE, P-49-01, IS A SINGLE CELL ELLIPTICAL STEEL CULVERT PIPE WITH STEEL HEADWALLS. THE STRUCTURE HAS AN 11'-9" SPAN AND 7'-3" RISE AND AN OVERALL LENGTH OF 54'-0". THE EXISTING STRUCTURE P-49-01 IS TO BE REMOVED.

AT THE BACK FACE OF ABUTMENT ALL VOLUME WHICH CANNOT BE PLACED BEFORE ABUTMENT CONSTRUCTION AND IS NOT OCCUPIED BY THE NEW STRUCTURE SHALL BE BACKFILLED WITH STRUCTURE BACKFILL TYPE A.

EXCAVATION BELOW THE ABUTMENT AND ABUTMENT BEDDING MATERIALS REQUIRES ENGINEER APPROVAL. GEOTEXTILE SHALL BE SET AT THE BOTTOM OF EXCAVATION AND EXTEND 2'-0" ABOVE BOTTOM OF ABUTMENT.

EXCAVATE TO THE BOTTOM OF ABUTMENT ELEVATION PRIOR TO DRIVING PILES.

THE QUANTITY FOR BACKFILL STRUCTURE IS CALCULATED BASED ON THE DETAIL SHOWN IN THE PLANS.

PROTECTIVE SURFACE TREATMENT TO BE APPLIED TO THE ENTIRE TOP OF DECK, EDGES OF THE DECK, THE EXTERIOR 1'-0" OF THE UNDERSIDE OF THE DECK, AND THE EXPOSED FRONT FACES OF THE ABUTMENTS AND WINGWALLS TO 1'-0" PAST THE EDGE OF DECK.

THE SLOPE OF THE FILL IN FRONT OF THE ABUTMENTS SHALL BE COVERED WITH HEAVY RIPRAP AND GEOTEXTILE TYPE HR TO THE EXTENT SHOWN ON SHEET 1 AND THE ABUTMENT DETAILS. FILL VOIDS IN RIPRAP HEAVY WITH RIPRAP EXTRA-LIGHT TO FULLY FILL ALL VOIDS AND LEAVE, ON AVERAGE, 2-INCHES ABOVE THE HIGHEST ROCK POINTS WHERE THEY ABUT EACH OTHER.

SLAB FALSEWORK SHALL BE SUPPORTED ON PILES OR THE SUBSTRUCTURE, UNLESS AN ALTERNATE METHOD IS APPROVED BY THE ENGINEER.

THE UTILITY INFORMATION SHOWN ON THESE DRAWINGS CONCERNING TYPE AND LOCATION OF UNDERGROUND AND OVERHEAD UTILITIES IS NOT GUARANTEED TO BE ACCURATE OR ALL INCLUSIVE. THE CONTRACTOR IS RESPONSIBLE FOR MAKING THEIR OWN DETERMINATIONS AS TO THE TYPE AND LOCATION OF UNDERGROUND UTILITIES AS MAY BE NECESSARY TO AVOID DAMAGE.

HORIZONTAL POSITIONS SHOWN ON THIS PLAN ARE WISCONSIN COORDINATE REFERENCE SYSTEM (WISCRS), PORTAGE COUNTY, NAD83 (2011), IN U.S. SURVEY FEET. POSITIONS SHOWN ARE GRID COORDINATES, GRID BEARINGS, AND GRID DISTANCES. GRID DISTANCES ARE THE SAME AS GROUND DISTANCES.

ELEVATIONS ARE REFERENCE TO NAVD88 (2012). GPS DERIVED ELEVATIONS ARE BASED ON GEOID 18.

## LEGEND

(G01) ¾" V-GROOVE REQUIRED. EXTEND TO 6" FROM FRONT FACE OF ABUTMENT DIAPHRAGM. TYP. AT EACH EDGE OF THE SLAB.

(G02) PROTECTIVE SURFACE TREATMENT TO BE APPLIED TO THE ENTIRE TOP OF DECK, EDGES OF THE DECK, THE EXTERIOR 1'-0" OF THE UNDERSIDE OF THE DECK, AND THE EXPOSED TOP AND FRONT FACES OF THE ABUTMENT AND WINGS TO 1'-0" PAST THE EDGE OF DECK.

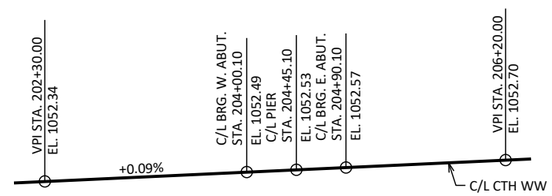


## PROFILE GRADE LINE

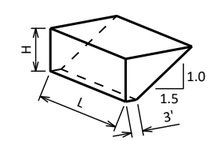


## ABUTMENT BACKFILL DIAGRAM

L = OUT TO OUT OF ABUTMENT BODY INCLUDING WINGS (FT)
H = AVERAGE ABUTMENT FILL HEIGHT (FT)
EF = EXPANSION FACTOR (1.20 FOR CY BID ITEMS AND 1.00 FOR TON BID ITEMS)
$V_{CF}$ = (L)(3.0')(H) + (L)(0.5)(1.5H)(H)
$V_{CY}$ = $V_{CF}$(EF)/27
$V_{TON}$ = $V_{CY}$(2.0)

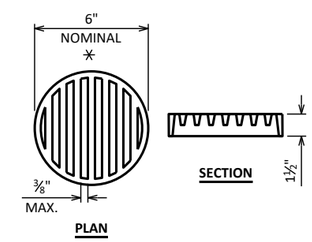


## RODENT SHIELD DETAIL

✳ DIMENSIONS ARE APPROXIMATE. THE GRATE IS SIZED TO FIT INTO A PIPE COUPLING. ORIENT SO SLOTS ARE VERTICAL.

THE RODENT SHIELD, PIPE COUPLING AND SCREWS SHALL BE CONSIDERED INCIDENTAL TO THE BID ITEM "PIPE UNDERDRAIN WRAPPED 6-INCH".

THE RODENT SHIELD SHALL BE A PVC GRATE SIMILAR TO THIS DETAIL. THE GRATE IS COMMERCIALLY AVAILABLE AS A FLOOR STRAINER. A PIPE COUPLING IS REQUIRED FOR THE ATTACHMENT OF THIS SHIELD TO THE EXPOSED END OF THE PIPE UNDERDRAIN. THE SHIELD SHALL BE FASTENED TO THE PIPE COUPLING WITH TWO OR MORE NO. 10 X 1-INCH STAINLESS STEEL SHEET METAL SCREWS.

## TOTAL ESTIMATED QUANTITIES

| BID ITEM NUMBER | BID ITEMS | UNIT | SUPER | WEST ABUT. | PIER | EAST ABUT. | TOTALS |
|---|---|---|---|---|---|---|---|
| 203.0250 | REMOVING STRUCTURE OVER WATERWAY REMOVE DEBRIS P-49-01 | EACH | - | - | - | - | 1 |
| 206.1001 | EXCAVATION FOR STRUCTURES BRIDGES B-49-198 | EACH | - | - | - | - | 1 |
| 210.1500 | BACKFILL STRUCTURE TYPE A | TON | - | 110 | - | 110 | 220 |
| 502.0100 | CONCRETE MASONRY BRIDGES | CY | 195 | 39 | 16 | 39 | 289 |
| 502.3200 | PROTECTIVE SURFACE TREATMENT | SY | 392 | 16 | - | 16 | 424 |
| 505.0400 | BAR STEEL REINFORCEMENT HS STRUCTURES | LB | - | 2,810 | 3,460 | 2,810 | 9,080 |
| 505.0600 | BAR STEEL REINFORCEMENT HS COATED STRUCTURES | LB | 48,200 | 2,250 | 80 | 2,250 | 52,780 |
| 513.4061 | RAILING TUBULAR TYPE M | LF | 186 | 37 | - | 37 | 260 |
| 516.0500 | RUBBERIZED MEMBRANE WATERPROOFING | SY | - | 12 | - | 12 | 24 |
| 550.0500 | PILE POINTS | EACH | - | 7 | 8 | 7 | 22 |
| 550.2128 | PILING CIP CONCRETE 12 3/4 X 0.50-INCH | LF | - | 455 | 560 | 490 | 1,505 |
| 606.0050 | RIPRAP EXTRA-LIGHT | CY | - | 42 | - | 39 | 81 |
| 606.0300 | RIPRAP HEAVY | CY | - | 166 | - | 154 | 320 |
| 612.0406 | PIPE UNDERDRAIN WRAPPED 6-INCH | LF | - | 95 | - | 95 | 190 |
| 645.0111 | GEOTEXTILE TYPE DF SCHEDULE A | SY | - | 55 | - | 55 | 110 |
| 645.0120 | GEOTEXTILE TYPE HR | SY | - | 320 | - | 310 | 630 |
| SPV.0090.01 | FLASHING STAINLESS STEEL | LF | 183 | - | - | - | 183 |
| | | | | | | | |
| | NON-BID ITEMS | | | | | | |
| | PREFORMED JOINT FILLER | SIZE | | | | | ½" & ¾" |
| | NON-STAINING GRAY, NON-BITUMINOUS JOINT SEALER | SIZE | | | | | 1" |
| | NAME PLATE | EACH | | | | | 1 |

ALL B-49-198 BID ITEMS ARE CATEGORY 0020

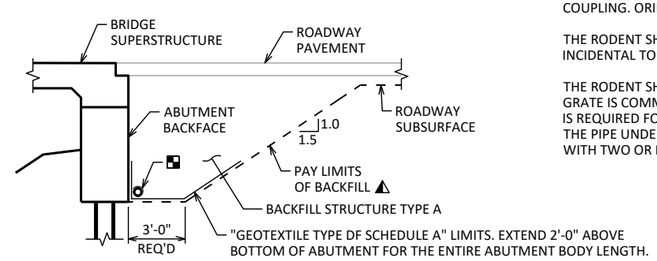


## TYPICAL SECTION THRU ABUTMENT

⚠ BACKFILL PAY LIMITS. BACKFILL BEYOND PAY LIMITS SHALL BE INCIDENTAL TO EXCAVATION FOR STRUCTURES. LIMITS OF EXCAVATION SHALL BE DETERMINED BY THE CONTRACTOR.

PIPE UNDERDRAIN WRAPPED (6-INCH). SLOPE 0.5% MIN. TO SUITABLE DRAINAGE. ATTACH RODENT SHIELD AT ENDS OF PIPE UNDERDRAIN.

8

8

| NO. | DATE | REVISION | BY |
|---|---|---|---|
| | | | |

STATE OF WISCONSIN
DEPARTMENT OF TRANSPORTATION

**STRUCTURE B-49-198**

DRAWN BY VJD/LAB PLANS CK'D CJM

**CROSS SECTION, QUANTITIES, AND NOTES**

SHEET 2 OF 15



SCALE = N.T.S.

| BORING # | DATE COMPLETED | NORTHING (Y) | EASTING (X) |
|---|---|---|---|
| 1 | JULY 26,2023 | 143112.519 | 142169.387 |
| 2 | JULY 27, 2023 | 143095.923 | 142283.543 |
| 3 | AUGUST 13, 2024 | 143105.545 | 142193.171 |
| BORINGS COMPLETED BY: ECS MIDWEST, LLC. | | | |
| REPORT COMPLETED BY: ECS MIDWEST, LLC. | | | |
| ALL COORDINATES REFERENCED TO WCCS NAD 83(11), PORTAGE COUNTY | | | |

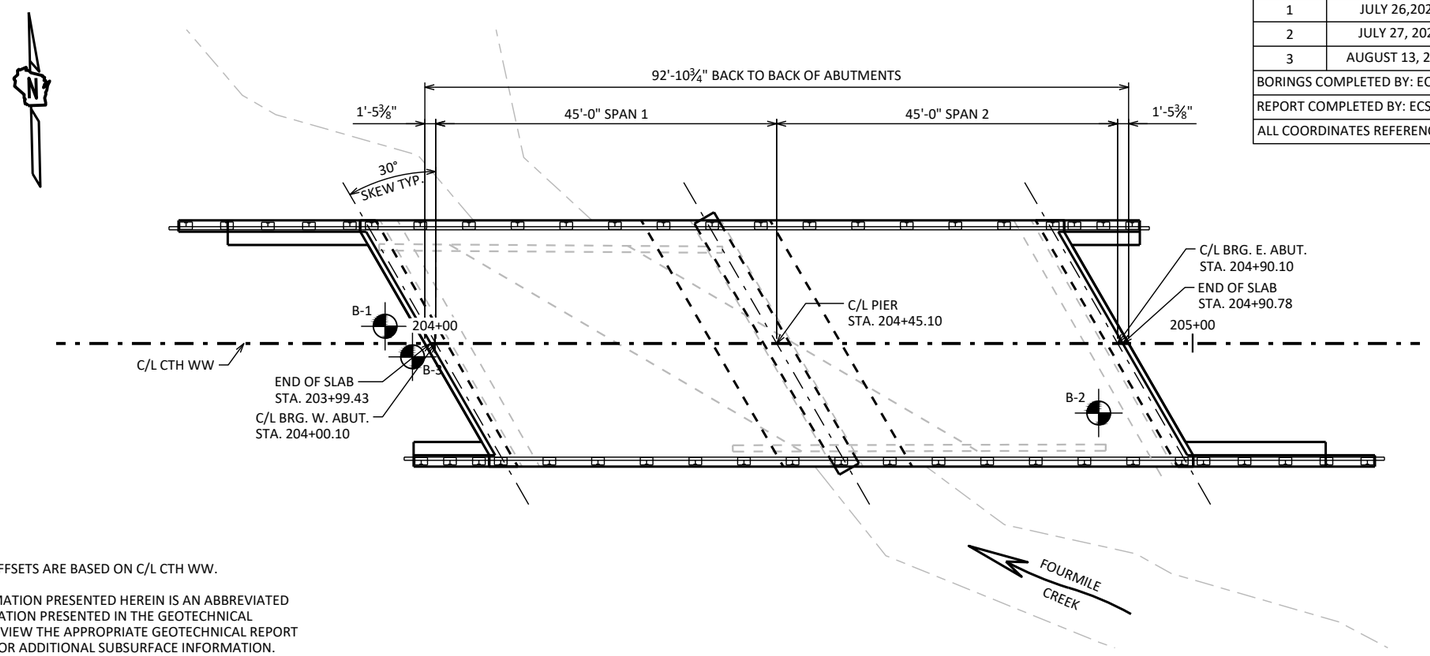


## NOTES

BORING STATIONS AND OFFSETS ARE BASED ON C/L CTH WW.

THE SUBSURFACE INFORMATION PRESENTED HEREIN IS AN ABBREVIATED VERSION OF THE INFORMATION PRESENTED IN THE GEOTECHNICAL ENGINEERING REPORT. REVIEW THE APPROPRIATE GEOTECHNICAL REPORT AND SOIL BORING LOGS FOR ADDITIONAL SUBSURFACE INFORMATION.

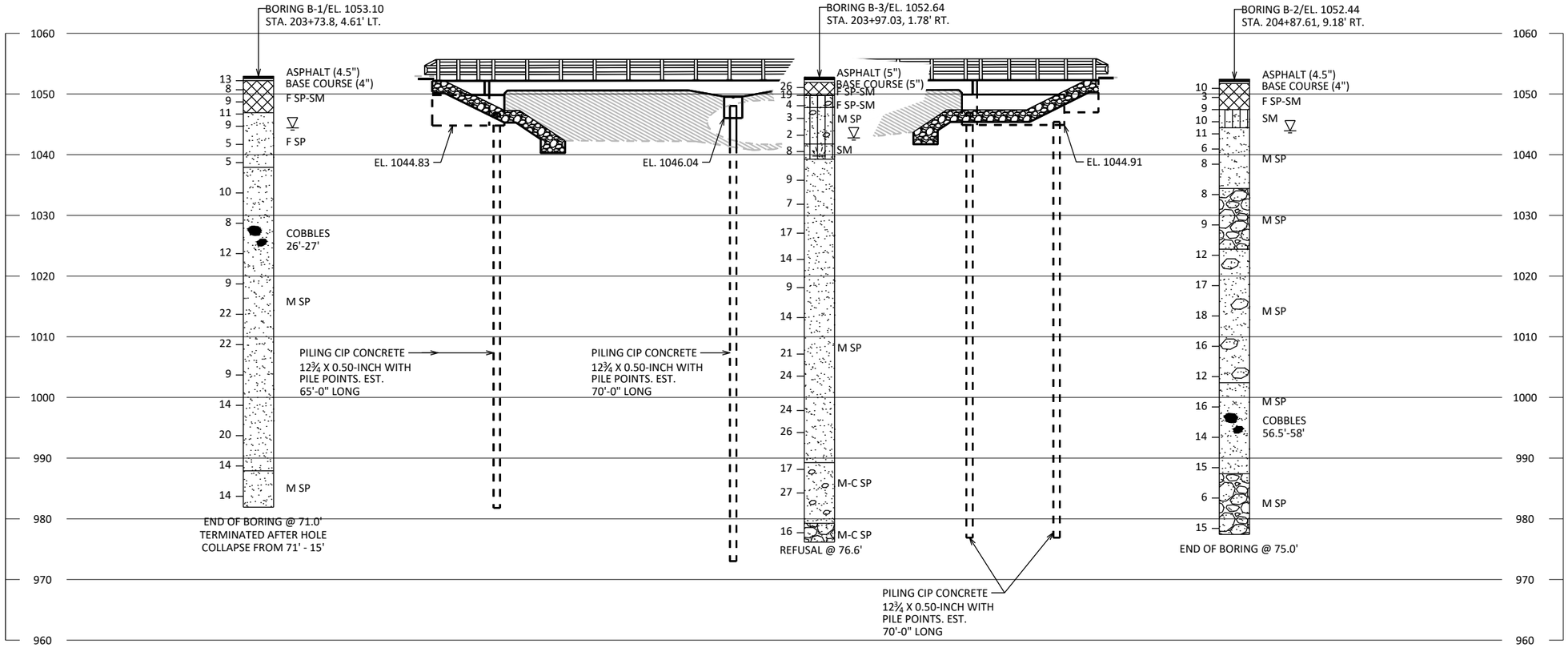


STATE PROJECT NUMBER

**6777-00-70**

**MATERIAL SYMBOLS**

ASPHALT, TOPSOIL, PEAT, CONCRETE, FILL, GRAVEL, SAND, CLAY, SILT, BOULDERS OR COBBLES, LIMESTONE, BEDROCK (UNKNOWN), SHALE, SANDSTONE, IGNEOUS/ META

**LEGEND OF BORING**

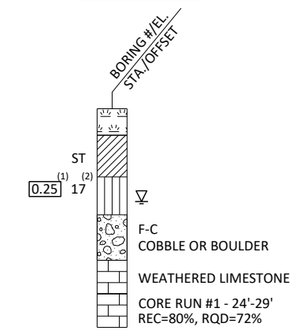


(1) UNCONFINED STRENGTH, AS DETERMINED BY A POCKET PENETROMETER (TSF)

(2) UNLESS OTHERWISE, SPECIFIED THE SPT 'N' VALUE IS BASED ON AASHTO T-206, STANDARD PENETRATION TEST. THE SPT 'N' VALUE PRESENTED HAS NOT BEEN CORRECTED FOR OVERBURDEN PRESSURE OR HAMMER EFFICIENCY.

**GROUND WATER ELEVATION**

AT TIME OF DRILLING

END OF DRILLING

AFTER DRILLING

**ABBREVIATIONS**

F-FINE M-MEDIUM C-COARSE ST-SHELBY TUBE

SUBSURFACE EXPLORATION FOR FOUNDATION DESIGN AND BIDDERS INFORMATION

BORINGS WERE COMPLETED AT POINTS APPROXIMATELY AS INDICATED ON THIS DRAWING TO OBTAIN INFORMATION CONCERNING THE CHARACTER OF SUBSURFACE MATERIALS FOUND AT THE SITE. BECAUSE THE INVESTIGATED DEPTHS ARE LIMITED AND THE AREA OF THE BORINGS IS VERY SMALL IN RELATION TO THE ENTIRE SITE, THE WISCONSIN DEPARTMENT OF TRANSPORTATION DOES NOT WARRANT SIMILAR SUBSURFACE CONDITIONS BELOW, BETWEEN, OR BEYOND THESE BORINGS. VARIATIONS IN SOIL CONDITIONS SHOULD BE EXPECTED AND FLUCTUATIONS IN GROUNDWATER LEVELS MAY OCCUR.

| NO. | DATE | REVISION | BY |
|---|---|---|---|

STATE OF WISCONSIN
DEPARTMENT OF TRANSPORTATION

**STRUCTURE B-49-198**

DRAWN BY VJD PLANS CK'D CJM

**SUBSURFACE EXPLORATION**

SHEET 3 OF 15



SCALE = N.T.S.

8

8

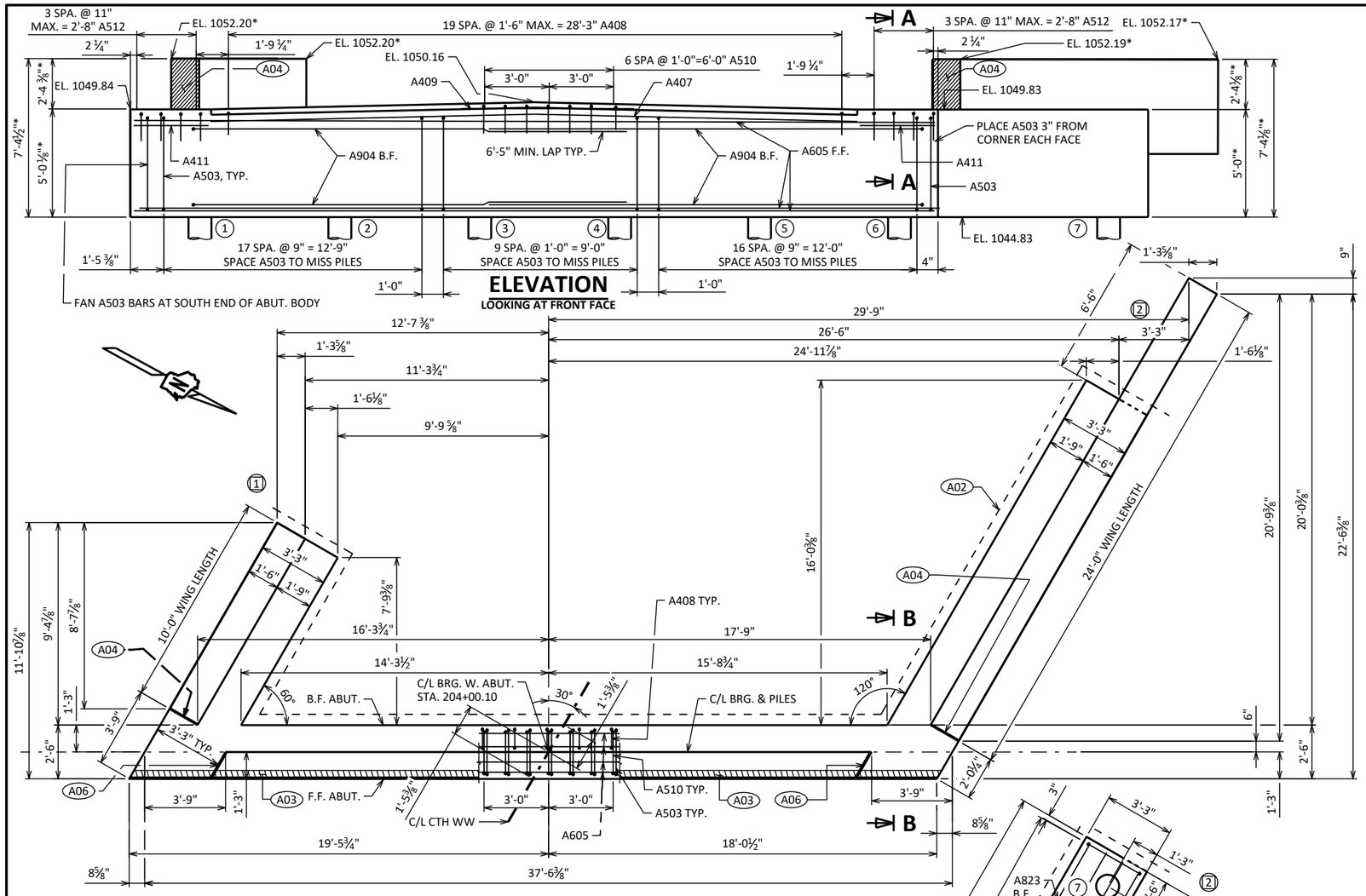


## ELEVATION

LOOKING AT FRONT FACE




## PLAN

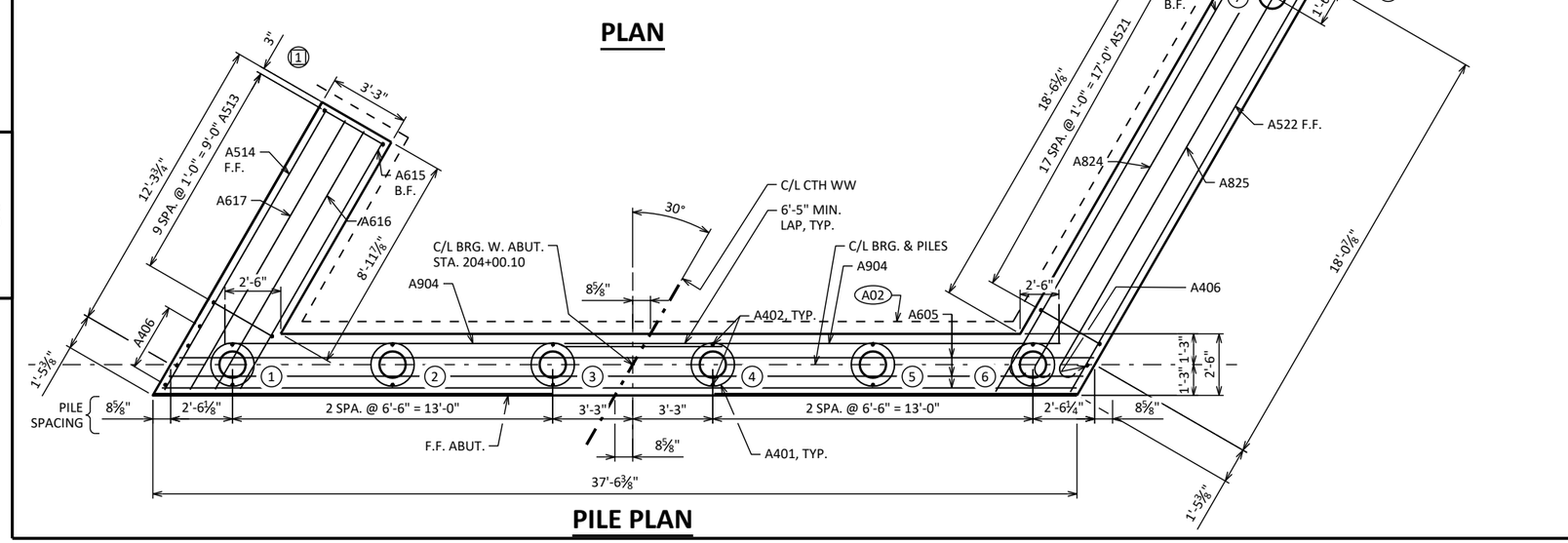


## PILE PLAN

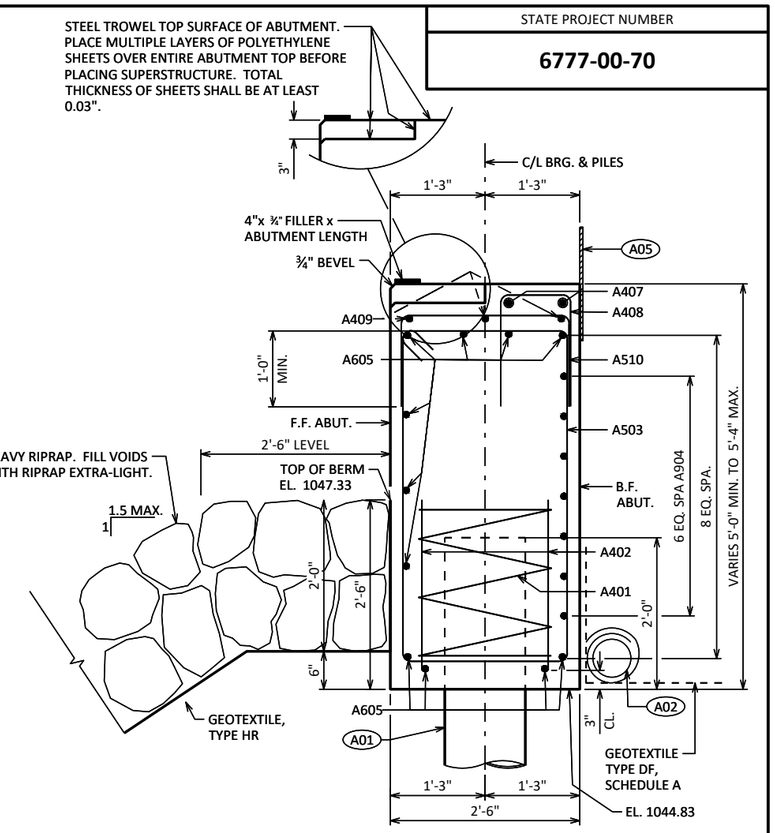


## SECTION THRU ABUTMENT

DIMENSIONS ARE NORMAL TO C/L OF BRG.

## LEGEND

- (A01) SUPPORT ABUTMENT ON CIP PILING CONCRETE 12 ¾ X 0.50-INCH WITH PILE POINTS ESTIMATED 65'-0" LONG WITH A REQUIRED DRIVING RESISTANCE OF 130 TONS PER PILE.
- (A02) PIPE UNDERDRAIN WRAPPED (6-INCH). SLOPE 0.5% MIN. TO SUITABLE DRAINAGE. RODENT SHIELD REQUIRED. SEE SHEET 2 FOR RODENT SHIELD DETAIL.
- (A03) 4"X ¾" PREFORMED JOINT FILLER, OUT TO OUT OF ABUTMENT.
- (A04) ½" FILLER. EXTEND FROM BRIDGE SEAT TO TOP OF WING WALL. FILLER INCLUDED IN WING LENGTH.
- (A05) 18" (RMW) RUBBERIZED MEMBRANE WATERPROOFING. SEAL ALL HORIZ. & VERT. JOINTS AT BACK FACE
- (A06) ¾" CORK FILLER ON VERTICAL FACE ONLY.
- F.F. = FRONT FACE B.F. = BACK FACE
- (X) INDICATES WING WALL NUMBER
- (X) INDICATES PILE NUMBER
- * DIMENSION IS TO FRONT FACE OF WING.

## NOTES

SOME BARS HAVE BEEN OMITTED FOR CLARITY. SEE SHEET 10 FOR WEST ABUTMENT BILL OF BARS

SPACE A503 BARS TO MISS STEEL PILING.

SEE SHEET 5 FOR PILE SPLICE DETAILS

FOR SECTIONS A & B, SEE SHEET 10.

| NO. | DATE | REVISION | BY |
|---|---|---|---|

STATE OF WISCONSIN
DEPARTMENT OF TRANSPORTATION

**STRUCTURE B-49-198**

DRAWN BY LAB/CJM PLANS CK'D CJM/VJD

**WEST ABUTMENT**



8

8

| STATE PROJECT NUMBER |
|---|
| **6777-00-70** |

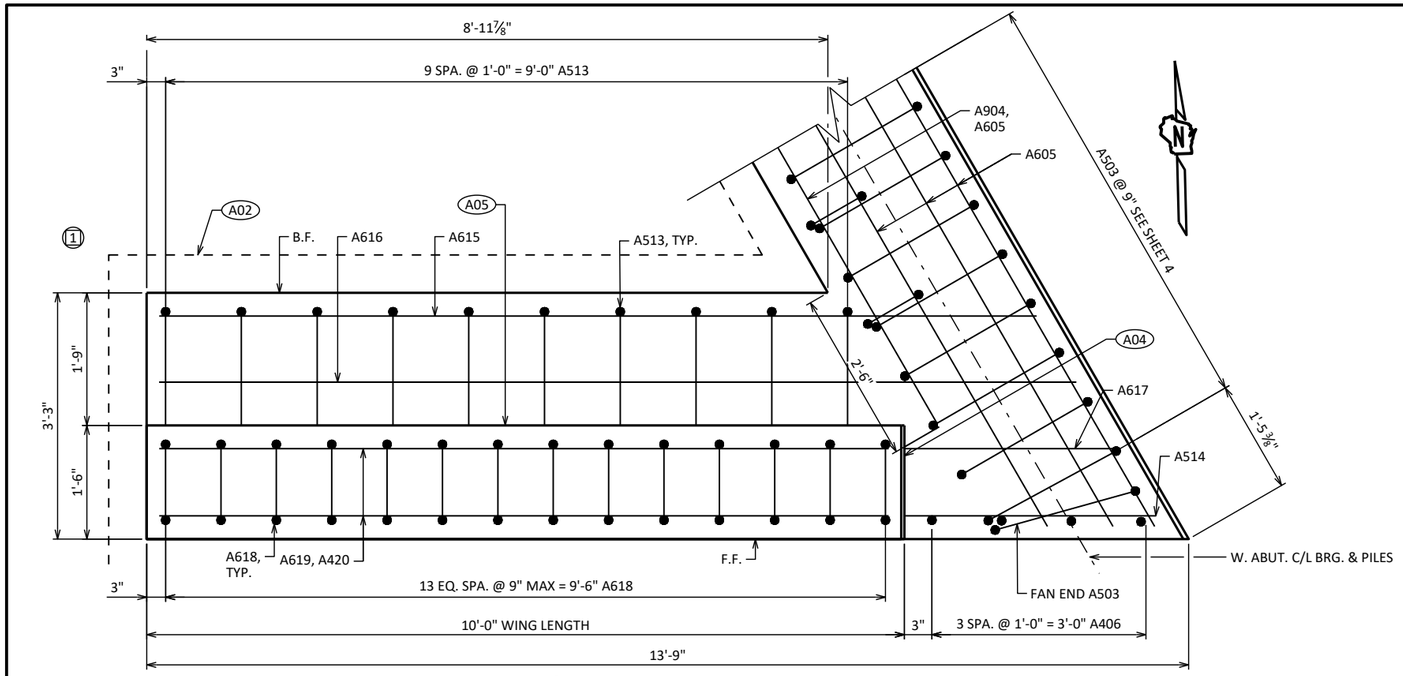


## WING 1 PLAN

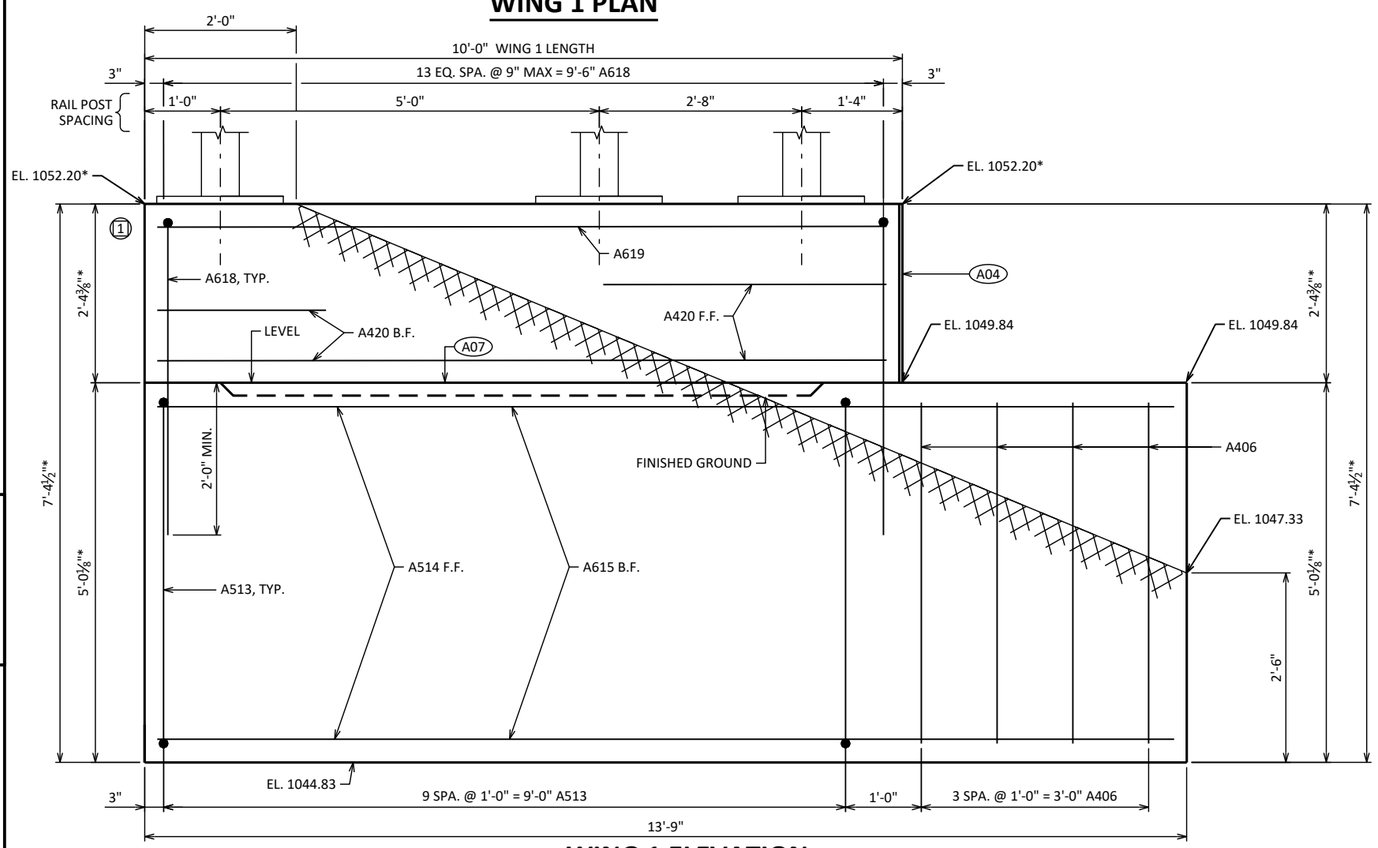


## WING 1 ELEVATION

LOOKING AT FRONT FACE

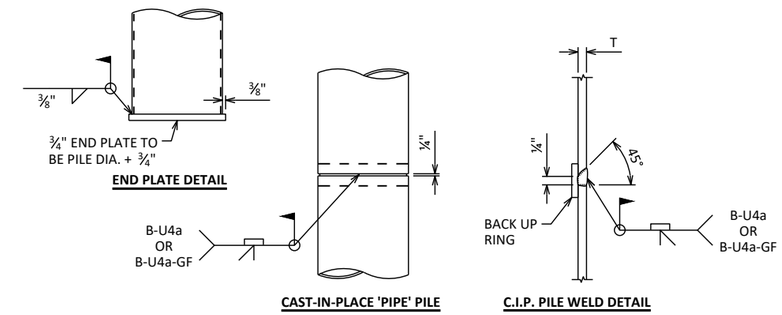


## CIP PILE DETAILS

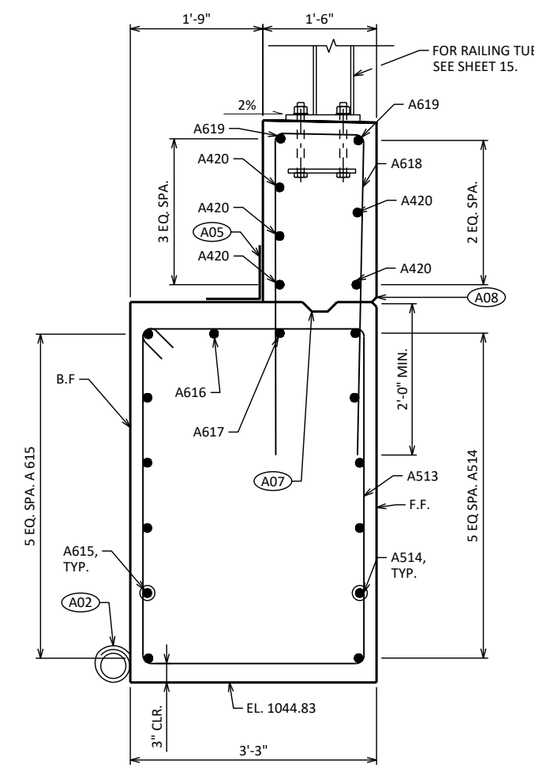


## SECTION THROUGH WING 1

## NOTES

SOME BARS HAVE BEEN OMITTED FOR CLARITY.

SEE SHEET 10 FOR BILL OF BARS AND ABUTMENT DETAILS ON SHEET 4.

## LEGEND

- (A02) PIPE UNDERDRAIN WRAPPED (6-INCH). SLOPE 0.5% MIN. TO SUITABLE DRAINAGE. RODENT SHIELD REQUIRED. SEE SHEET 2 FOR RODENT SHIELD DETAIL.
- (A04) ½" FILLER. EXTEND FROM BRIDGE SEAT TO TOP OF WING WALL. FILLER INCLUDED IN WING LENGTH.
- (A05) 18" (RMW) RUBBERIZED MEMBRANE WATERPROOFING. SEAL ALL HORIZ. & VERT. JOINTS AT BACK FACE.
- (A07) OPTIONAL CONSTRUCTION JOINT FORMED BY BEVELED 2" X 6" KEYWAY WITH MEMBRANE ON BACK FACE.
- (A08) ¾" "V" GROOVE ON FRONT FACE OF WINGWALL.
- F.F. = FRONT FACE B.F. = BACK FACE
- (X) INDICATES WING WALL NUMBER
- * DIMENSION IS TO FRONT FACE OF WING.

| NO. | DATE | REVISION | BY |
|---|---|---|---|
| | | | |

STATE OF WISCONSIN
DEPARTMENT OF TRANSPORTATION

**STRUCTURE B-49-198**

DRAWN BY LAB/CJM PLANS CK'D CJM/VJD

**WING 1 DETAILS**

SHEET 5 OF 15



8

8

STATE PROJECT NUMBER

**6777-00-70**

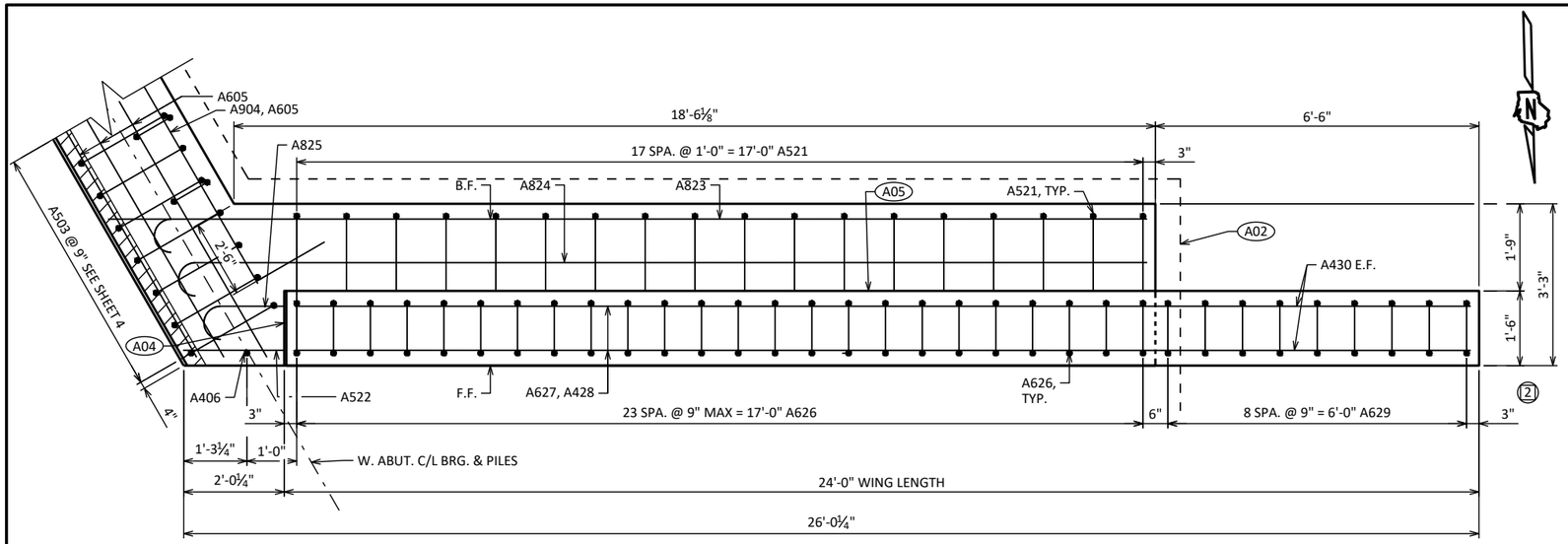


## WING 2 PLAN

## LEGEND

- (A01) SUPPORT ABUTMENT ON CIP PILING CONCRETE 12 ¾ X 0.50-INCH WITH PILE POINTS ESTIMATED 65'-0" LONG WITH A REQUIRED DRIVING RESISTANCE OF 130 TONS PER PILE.
- (A02) PIPE UNDERDRAIN WRAPPED (6-INCH). SLOPE 0.5% MIN. TO SUITABLE DRAINAGE. RODENT SHIELD REQUIRED. SEE SHEET 2 FOR RODENT SHIELD DETAIL.
- (A04) ½" FILLER. EXTEND FROM BRIDGE SEAT TO TOP OF WING WALL. FILLER INCLUDED IN WING LENGTH.
- (A05) 18" (RMW) RUBBERIZED MEMBRANE WATERPROOFING. SEAL ALL HORIZ. & VERT. JOINTS AT BACK FACE.
- (A07) OPTIONAL CONSTRUCTION JOINT FORMED BY BEVELED 2" X 6" KEYWAY WITH MEMBRANE ON BACK FACE.
- (A08) ¾" "V" GROOVE ON FRONT FACE OF WINGWALL.
- F.F. = FRONT FACE B.F. = BACK FACE
- (X) INDICATES WING WALL NUMBER
- * DIMENSION IS TO FRONT FACE OF WING.

## NOTES

SOME BARS HAVE BEEN OMITTED FOR CLARITY.

SEE SHEET 10 FOR BILL OF BARS AND ABUTMENT DETAILS ON SHEET 4.

SEE SHEET 5 FOR PILE SPLICE DETAILS.

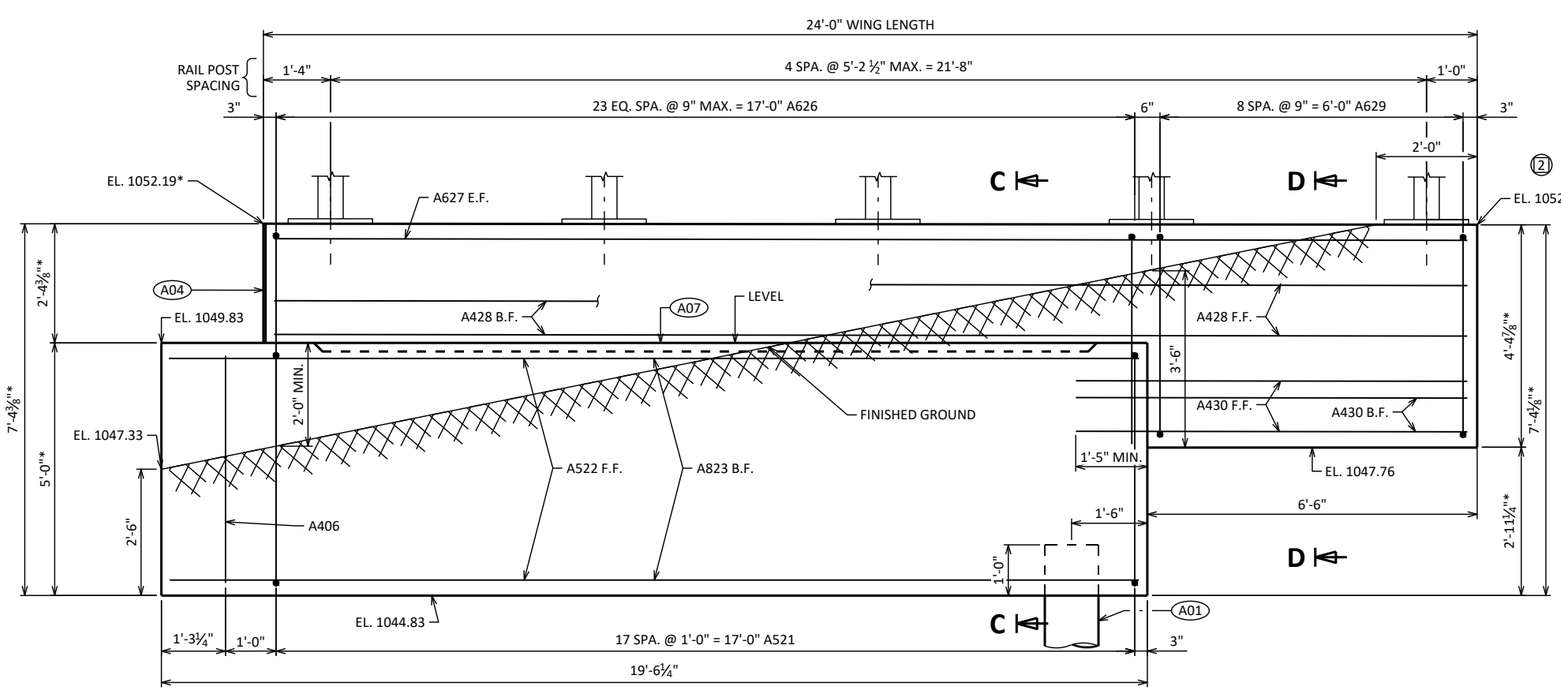


## WING 2 ELEVATION

LOOKING AT FRONT FACE

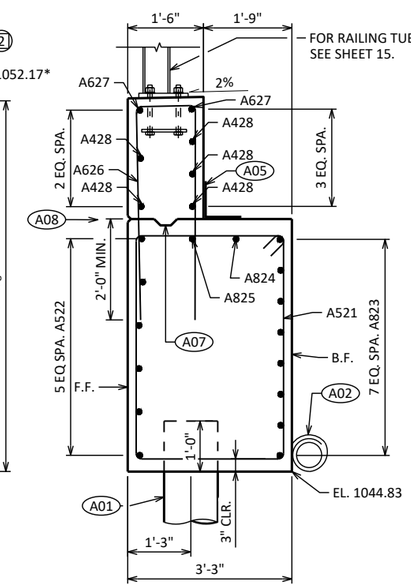


## SECTION C-C

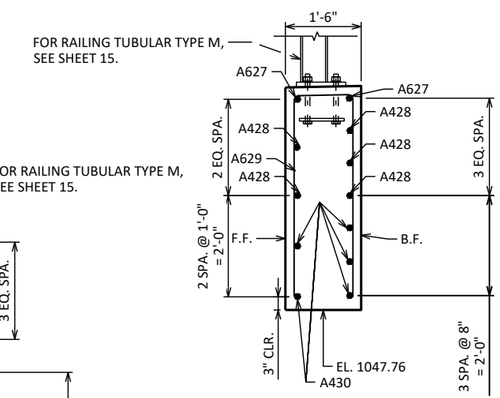


## SECTION D-D

8

8

| NO. | DATE | REVISION | BY |
|---|---|---|---|
| | | | |

STATE OF WISCONSIN
DEPARTMENT OF TRANSPORTATION

**STRUCTURE B-49-198**

DRAWN BY LAB/CJM PLANS CK'D CJM/VJD

**WING 2 DETAILS**

SHEET 6 OF 15

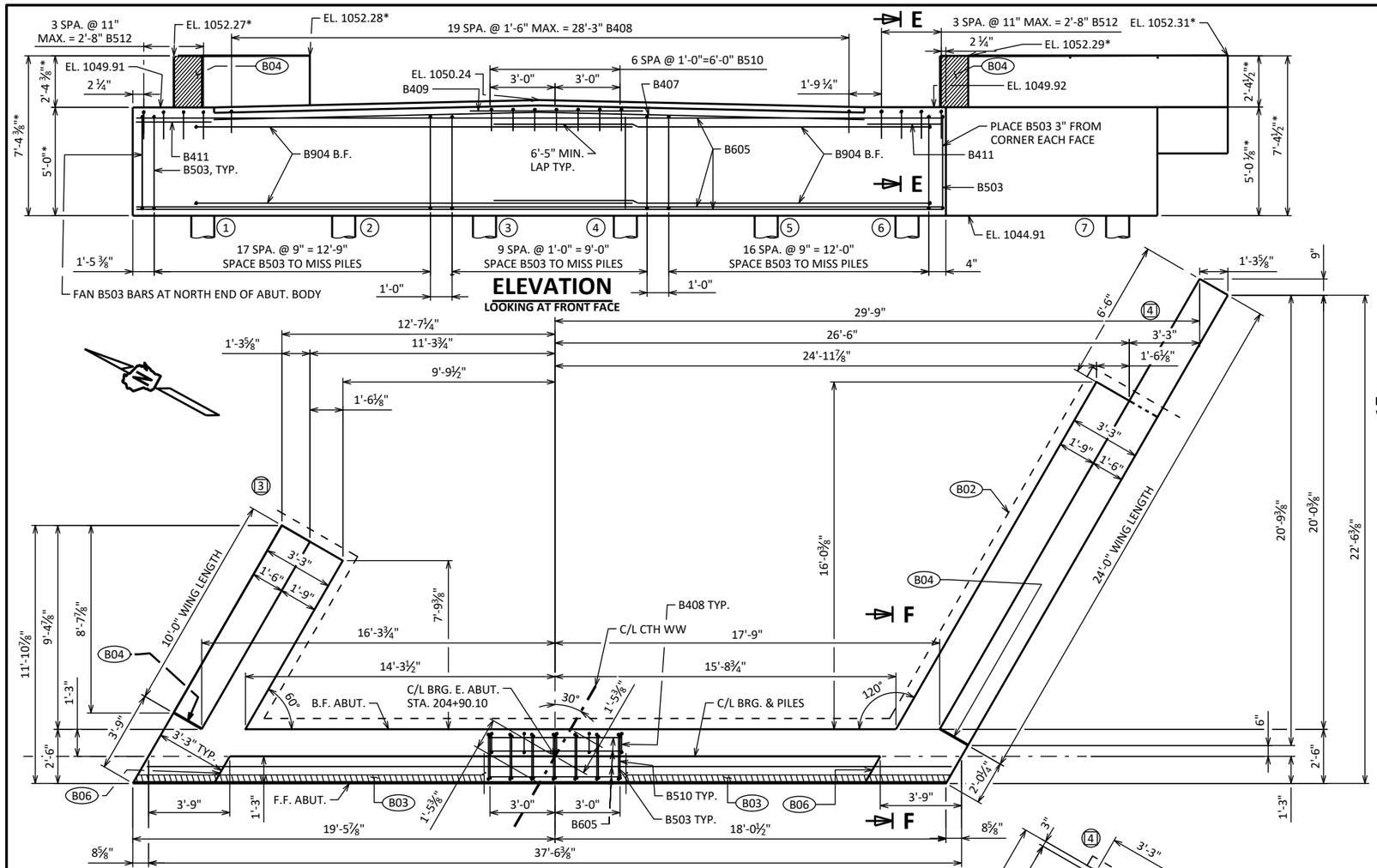


## ELEVATION

LOOKING AT FRONT FACE




## PLAN

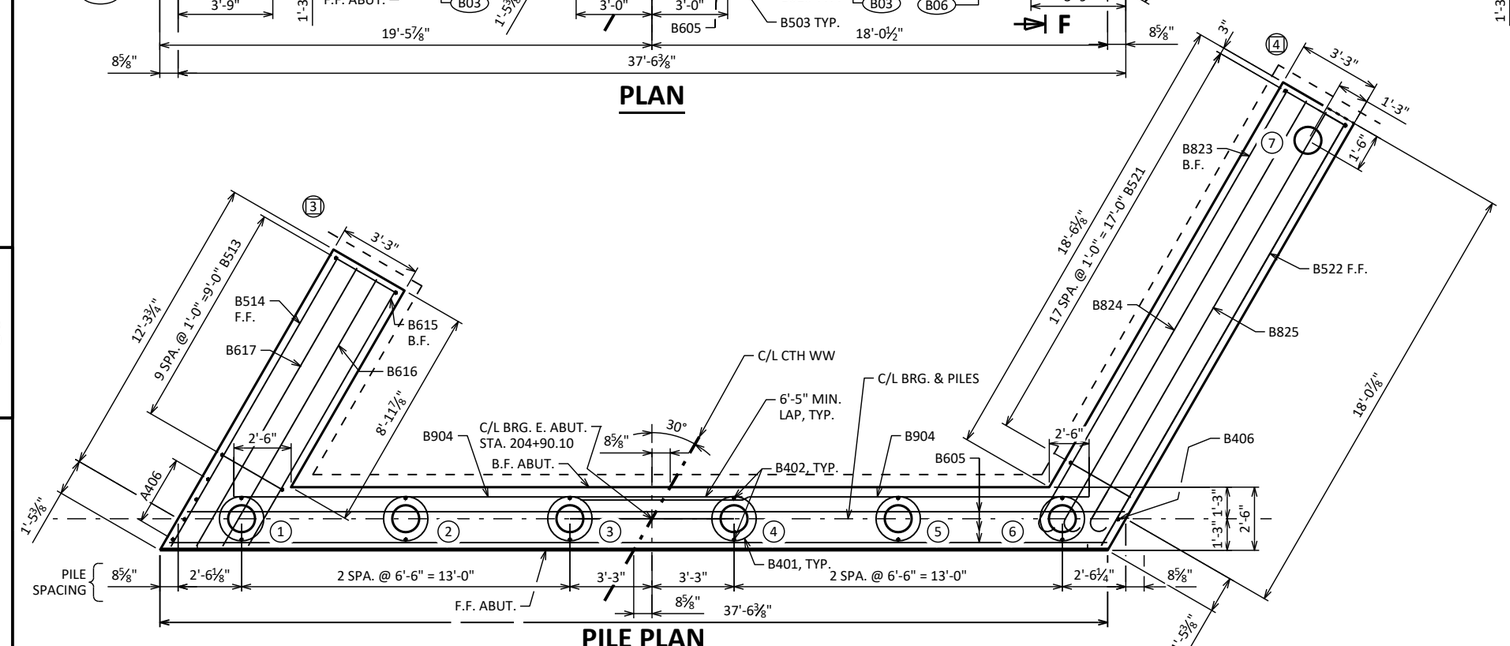


## PILE PLAN

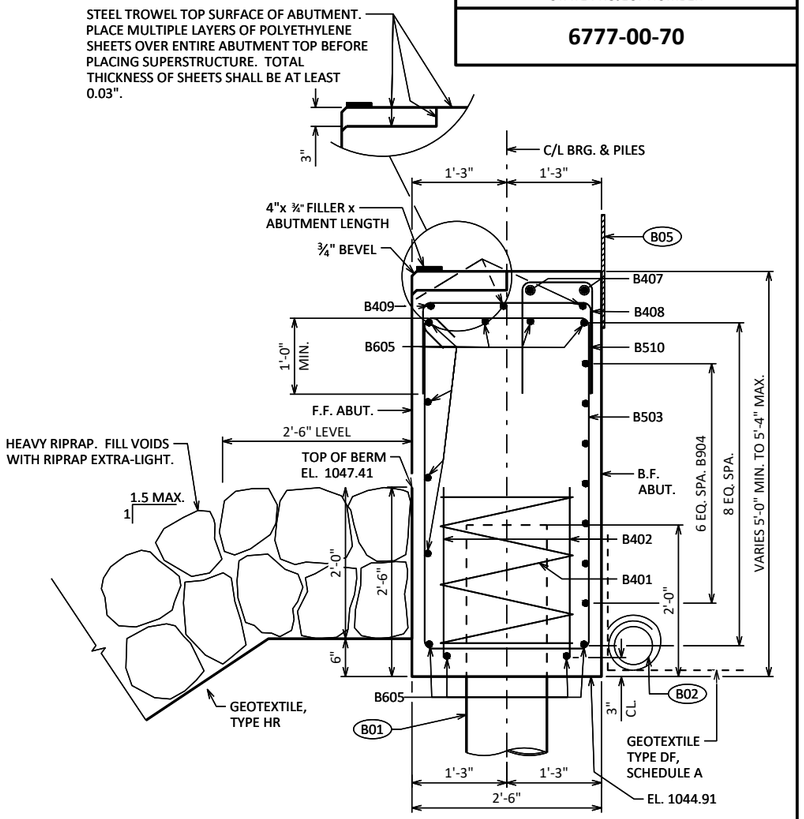


## SECTION THRU BODY

DIMENSIONS ARE NORMAL TO C/L BRG.

## LEGEND

- (B01) SUPPORT ABUTMENT ON CIP PILING CONCRETE 12 ¾ X 0.50-INCH WITH PILE POINTS ESTIMATED 70'-0" LONG WITH A REQUIRED DRIVING RESISTANCE OF 130 TONS PER PILE.
- (B02) PIPE UNDERDRAIN WRAPPED (6-INCH). SLOPE 0.5% MIN. TO SUITABLE DRAINAGE. RODENT SHIELD REQUIRED. SEE SHEET 2 FOR RODENT SHIELD DETAIL.
- (B03) 4"X ¾" PREFORMED JOINT FILLER, OUT TO OUT OF ABUTMENT.
- (B04) ½" FILLER. EXTEND FROM BRIDGE SEAT TO TOP OF WING WALL. FILLER INCLUDED IN WING LENGTH.
- (B05) 18" (RMW) RUBBERIZED MEMBRANE WATERPROOFING. SEAL ALL HORIZ. & VERT. JOINTS AT BACK FACE
- (B06) ¾" CORK FILLER ON VERTICAL FACE ONLY.
- F.F. = FRONT FACE B.F. = BACK FACE
- (X) INDICATES WING WALL NUMBER
- (X) INDICATES PILE NUMBER
- * DIMENSION IS TO FRONT FACE OF WING.

## NOTES

SOME BARS HAVE BEEN OMITTED FOR CLARITY. SEE SHEET 10 FOR EAST ABUTMENT BILL OF BARS

SPACE B503 BARS TO MISS STEEL PILING.

SEE SHEET 5 FOR PILE SPLICE DETAILS

FOR SECTIONS E AND F, SEE SHEET 10.

| NO. | DATE | REVISION | BY |
|---|---|---|---|
| | | | |

STATE OF WISCONSIN
DEPARTMENT OF TRANSPORTATION

**STRUCTURE B-49-198**

DRAWN BY LAB PLANS CK'D CJM

**EAST ABUTMENT**

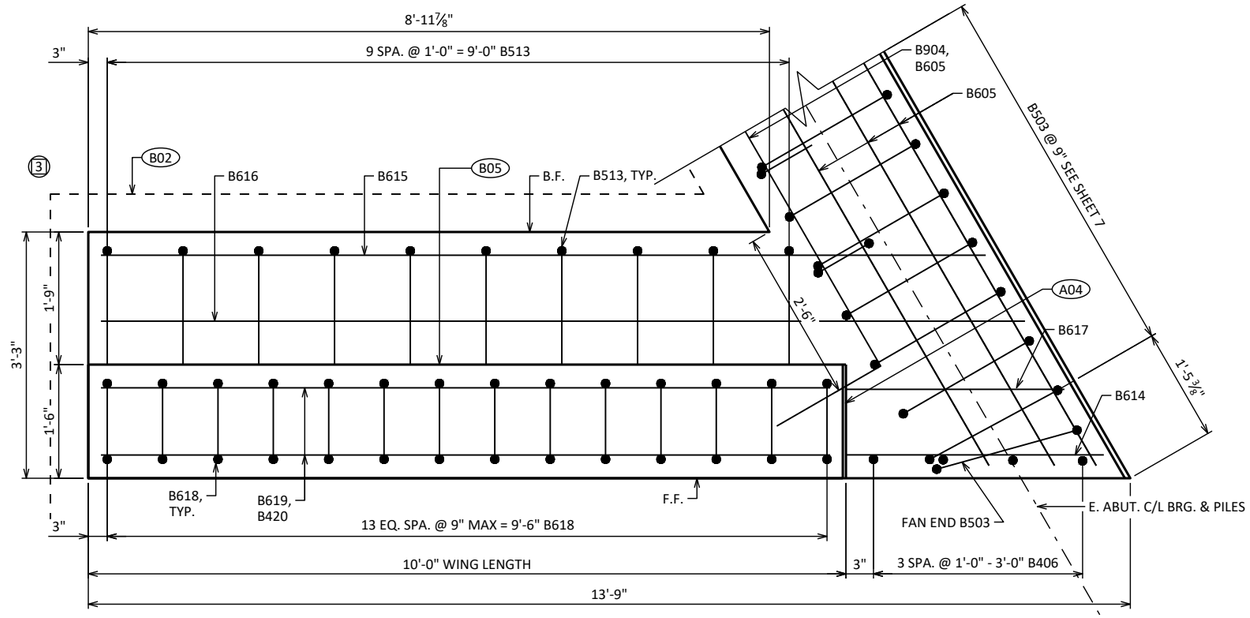


## WING 3 PLAN

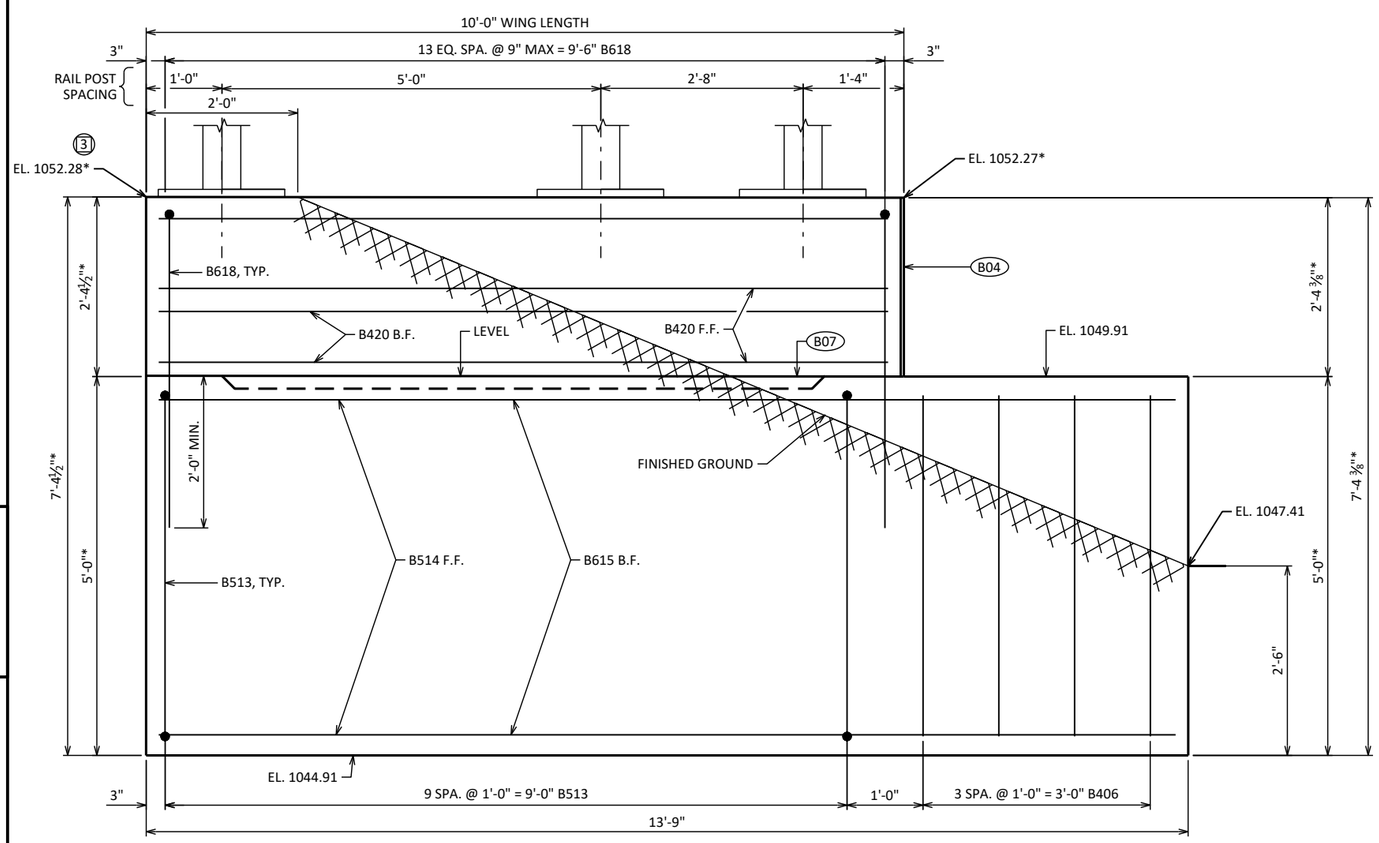


## WING 3 ELEVATION

LOOKING AT FRONT FACE

## LEGEND

- (B02) PIPE UNDERDRAIN WRAPPED (6-INCH). SLOPE 0.5% MIN. TO SUITABLE DRAINAGE. RODENT SHIELD REQUIRED. SEE SHEET 2 FOR RODENT SHIELD DETAIL.
- (B04) ½" FILLER. EXTEND FROM BRIDGE SEAT TO TOP OF WING WALL. FILLER INCLUDED IN WING LENGTH.
- (B05) 18" (RMW) RUBBERIZED MEMBRANE WATERPROOFING. SEAL ALL HORIZ. & VERT. JOINTS AT BACK FACE.
- (B07) OPTIONAL CONSTRUCTION JOINT FORMED BY BEVELED 2" X 6" KEYWAY WITH MEMBRANE ON BACK FACE.
- (B08) ¾" "V" GROOVE ON FRONT FACE OF WINGWALL.
- F.F. = FRONT FACE B.F. = BACK FACE
- (X) INDICATES WING WALL NUMBER
- * DIMENSION IS TO FRONT FACE OF WING.

## NOTES

SOME BARS HAVE BEEN OMITTED FOR CLARITY.

SEE SHEET 10 FOR BILL OF BARS AND ABUTMENT DETAILS ON SHEET 7.

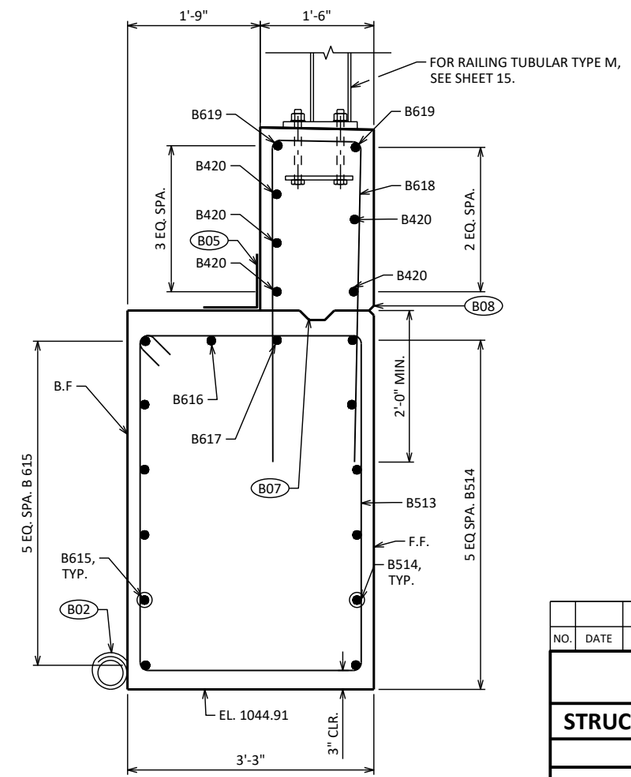


## SECTION THROUGH WING 3

| NO. | DATE | REVISION | BY |
|---|---|---|---|
| | | | |

STATE OF WISCONSIN
DEPARTMENT OF TRANSPORTATION

**STRUCTURE B-49-198**

DRAWN BY LAB/CJM PLANS CK'D CJM/VJD

**WING 3 DETAILS**

SHEET 8 OF 15



8

8

STATE PROJECT NUMBER

**6777-00-70**

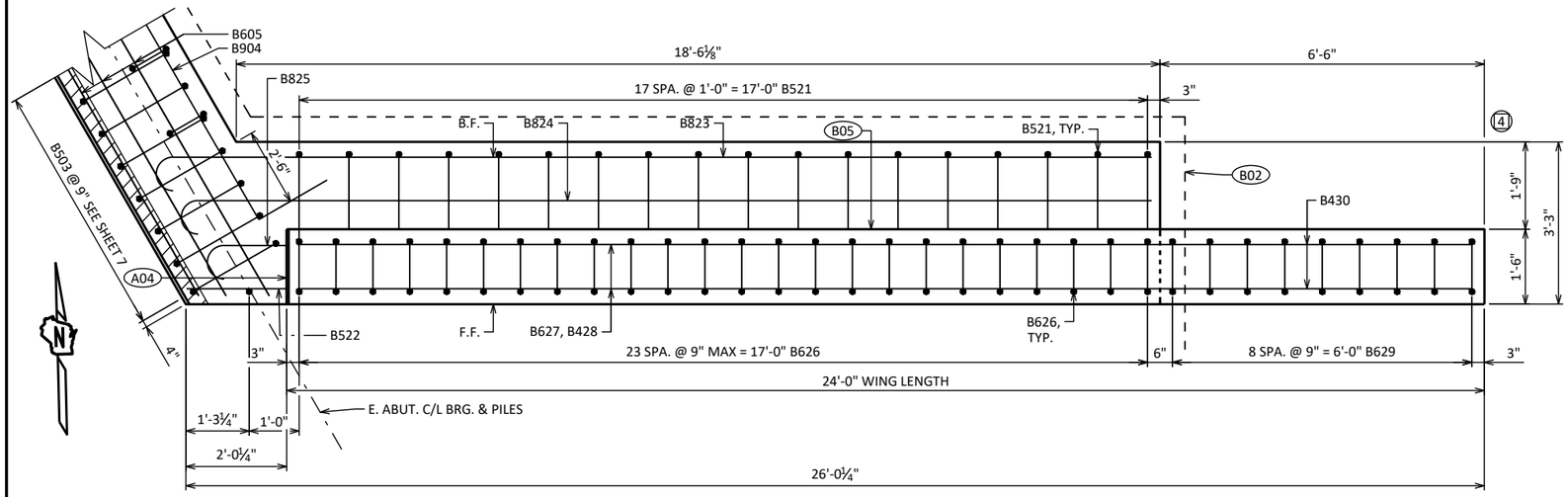


## WING 4 PLAN

## LEGEND

- (B01) SUPPORT ABUTMENT ON CIP PILING CONCRETE 12 ¾ X 0.50-INCH WITH PILE POINTS ESTIMATED 70'-0" LONG WITH A REQUIRED DRIVING RESISTANCE OF 130 TONS PER PILE.
- (B02) PIPE UNDERDRAIN WRAPPED (6-INCH). SLOPE 0.5% MIN. TO SUITABLE DRAINAGE. RODENT SHIELD REQUIRED. SEE SHEET 2 FOR RODENT SHIELD DETAIL.
- (B04) ½" FILLER. EXTEND FROM BRIDGE SEAT TO TOP OF WING WALL. FILLER INCLUDED IN WING LENGTH.
- (B05) 18" (RMW) RUBBERIZED MEMBRANE WATERPROOFING. SEAL ALL HORIZ. & VERT. JOINTS AT BACK FACE.
- (B07) OPTIONAL CONSTRUCTION JOINT FORMED BY BEVELED 2" X 6" KEYWAY WITH MEMBRANE ON BACK FACE.
- (B08) ¾" "V" GROOVE ON FRONT FACE OF WINGWALL.
- F.F. = FRONT FACE B.F. = BACK FACE
- (X) INDICATES WING WALL NUMBER
- * DIMENSION IS TO FRONT FACE OF WING.

## NOTES

SOME BARS HAVE BEEN OMITTED FOR CLARITY.

SEE SHEET 10 FOR BILL OF BARS AND ABUTMENT DETAILS ON SHEET 7.

SEE SHEET 5 FOR PILE SPLICE DETAILS.

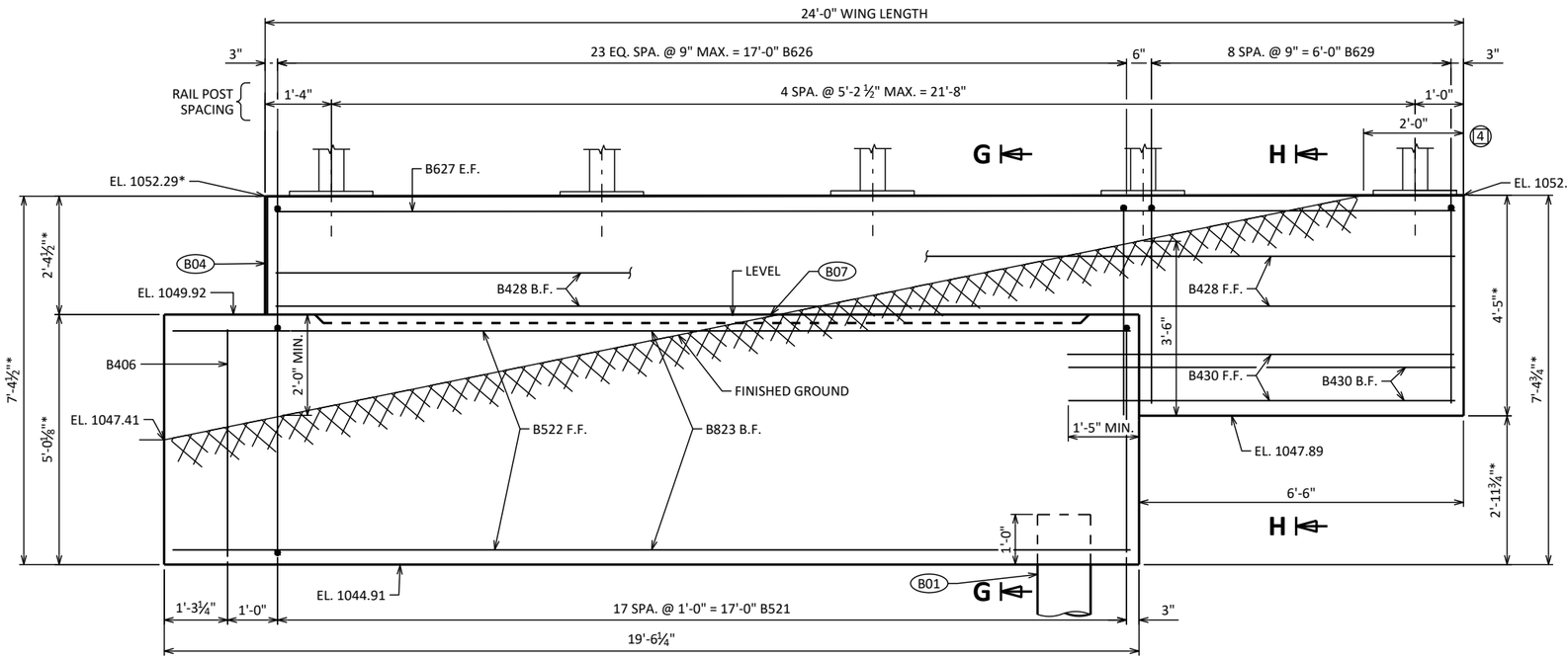


## WING 4 ELEVATION

LOOKING AT FRONT FACE

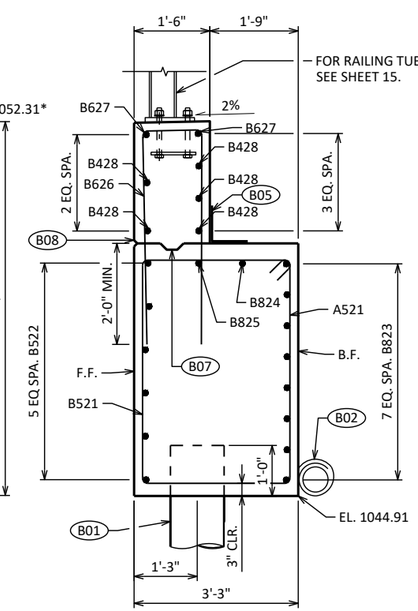


## SECTION G-G

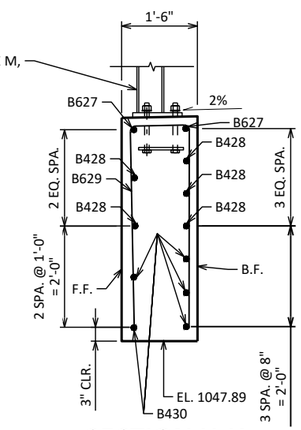


## SECTION H-H

| NO. | DATE | REVISION | BY |
|---|---|---|---|

STATE OF WISCONSIN
DEPARTMENT OF TRANSPORTATION

**STRUCTURE B-49-198**

DRAWN BY LAB/CJM PLANS CK'D CJM/VJD

**WING 4 DETAILS**

SHEET 9 OF 15



8

8

STATE PROJECT NUMBER

**6777-00-70**

## BILL OF BARS - WEST ABUTMENT

NOTE: THE FIRST OR FIRST TWO DIGITS OF THE BAR MARK SIGNIFIES THE BAR SIZE.

| BAR MARK | COAT | NO. REQ'D. | LENGTH | BENT | BAR SERIES | LOCATION |
|---|---|---|---|---|---|---|
| A401 | | 6 | 28'-0" | X | | ABUT. BODY - VERT. - PILES |
| A402 | | 12 | 2'-3" | | | ABUT. BODY - VERT. - PILES |
| A503 | | 47 | 13'-6" | X | | ABUT. BODY - VERT. - STIRRUPS |
| A904 | | 14 | 25'-4" | X | | ABUT. BODY - HORIZ. BACK FACE |
| A605 | | 11 | 37'-1" | | | ABUT. BODY - HORIZ. |
| A406 | X | 5 | 4'-7" | | | ABUT. BODY - VERT. - ENDS |
| A407 | | 2 | 37'-1" | | | ABUT. BODY - HORIZ. - SEAT |
| A408 | | 20 | 3'-5" | X | | ABUT. BODY - VERT - SEAT |
| A409 | | 3 | 6'-4" | | | ABUT. BODY - HORIZ. - HIGH |
| A510 | | 7 | 4'-7" | X | | ABUT. BODY - VERT. - HIGH |
| A411 | | 4 | 3'-5" | | | ABUT. BODY - HORIZ. - ENDS |
| A512 | | 8 | 5'-1" | X | | ABUT. BODY - VERT. - ENDS |
| A513 | X | 10 | 15'-0" | X | | WING 1 BODY - VERT. STIRRUPS |
| A514 | X | 6 | 13'-4" | | | WING 1 BODY - HORIZ. FRONT FACE |
| A615 | X | 6 | 11'-6" | | | WING 1 BODY - HORIZ. BACK FACE |
| A616 | X | 1 | 12'-1" | | | WING 1 BODY HORIZ. - TOP |
| A617 | X | 1 | 12'-7" | | | WING 1 BODY HORIZ. - TOP |
| A618 | X | 14 | 9'-4" | X | | WING 1 STEM - VERT. |
| A619 | X | 2 | 9'-8" | | | WING 1 STEM - HORIZ. - TOP - EACH FACE |
| A420 | X | 5 | 9'-8" | | | WING 1 STEM - HORIZ. |
| A521 | X | 18 | 15'-0" | X | | WING 2 BODY - VERT. STIRRUPS |
| A522 | X | 6 | 19'-2" | | | WING 2 BODY - HORIZ. FRONT FACE |
| A823 | X | 8 | 20'-8" | X | | WING 2 BODY - HORIZ. BACK FACE |
| A824 | X | 1 | 20'-2" | X | | WING 2 BODY HORIZ. - TOP |
| A825 | X | 1 | 19'-8" | X | | WING 2 BODY HORIZ. - TOP |
| A626 | X | 24 | 9'-4" | X | | WING 2 STEM - VERT. |
| A627 | X | 2 | 23'-7" | | | WING 2 STEM - HORIZ. - TOP - EACH FACE |
| A428 | X | 5 | 23'-7" | | | WING 2 STEM - HORIZ. |
| A629 | X | 9 | 8'-8" | X | | WING 2 STEM EXTENSION - VERT. |
| A430 | X | 5 | 7'-9" | | | WING 2 STEM EXTENSION - HORIZ. |

## BILL OF BARS - EAST ABUTMENT

NOTE: THE FIRST OR FIRST TWO DIGITS OF THE BAR MARK SIGNIFIES THE BAR SIZE.

| BAR MARK | COAT | NO. REQ'D. | LENGTH | BENT | BAR SERIES | LOCATION |
|---|---|---|---|---|---|---|
| B401 | | 6 | 28'-0" | X | | ABUT. BODY - VERT. - PILES |
| B402 | | 12 | 2'-3" | | | ABUT. BODY - VERT. - PILES |
| B503 | | 47 | 13'-6" | X | | ABUT. BODY - VERT. - STIRRUPS |
| B904 | | 14 | 25'-4" | X | | ABUT. BODY - HORIZ. BACK FACE |
| B605 | | 11 | 37'-1" | | | ABUT. BODY - HORIZ. |
| B406 | X | 5 | 4'-7" | | | ABUT. BODY - VERT. - ENDS |
| B407 | | 2 | 37'-1" | | | ABUT. BODY - HORIZ. - SEAT |
| B408 | | 20 | 3'-5" | X | | ABUT. BODY - VERT - SEAT |
| B409 | | 3 | 6'-4" | | | ABUT. BODY - HORIZ. - HIGH |
| B510 | | 7 | 4'-7" | X | | ABUT. BODY - VERT. - HIGH |
| B411 | | 4 | 3'-5" | | | ABUT. BODY - HORIZ. - ENDS |
| B512 | | 8 | 5'-1" | X | | ABUT. BODY - VERT. - ENDS |
| B513 | X | 10 | 15'-0" | X | | WING 3 BODY - VERT. STIRRUPS |
| B514 | X | 6 | 13'-4" | | | WING 3 BODY - HORIZ. FRONT FACE |
| B615 | X | 6 | 11'-6" | | | WING 3 BODY - HORIZ. BACK FACE |
| B616 | X | 1 | 12'-1" | | | WING 3 BODY HORIZ. - TOP |
| B617 | X | 1 | 12'-7" | | | WING 3 BODY HORIZ. - TOP |
| B618 | X | 14 | 9'-4" | X | | WING 3 STEM - VERT. |
| B619 | X | 2 | 9'-8" | | | WING 3 STEM - HORIZ. - TOP - EACH FACE |
| B420 | X | 5 | 9'-8" | | | WING 3 STEM - HORIZ. |
| B521 | X | 18 | 15'-0" | X | | WING 4 BODY - VERT. STIRRUPS |
| B522 | X | 6 | 19'-2" | | | WING 4 BODY - HORIZ. FRONT FACE |
| B823 | X | 8 | 20'-8" | X | | WING 4 BODY - HORIZ. BACK FACE |
| B824 | X | 1 | 20'-2" | X | | WING 4 BODY HORIZ. - TOP |
| B825 | X | 1 | 19'-8" | X | | WING 4 BODY HORIZ. - TOP |
| B626 | X | 24 | 9'-4" | X | | WING 4 STEM - VERT. |
| B627 | X | 2 | 23'-7" | | | WING 4 STEM - HORIZ. - TOP - EACH FACE |
| B428 | X | 5 | 23'-7" | | | WING 4 STEM - HORIZ. |
| B629 | X | 9 | 8'-10" | X | | WING 4 STEM EXTENSION - VERT. |
| B430 | X | 5 | 7'-9" | | | WING 4 STEM EXTENSION - HORIZ. |

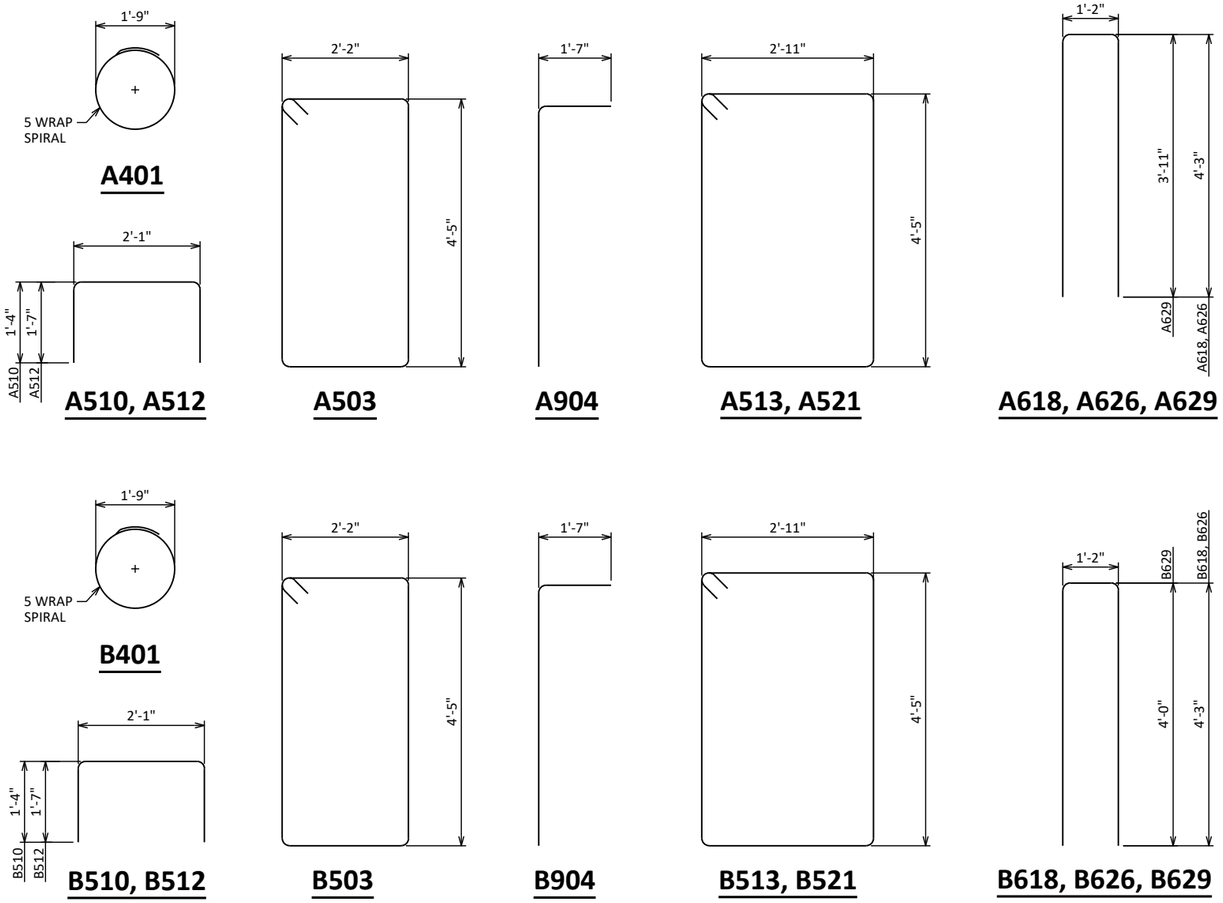


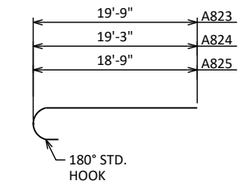


**A823, A824, A825**

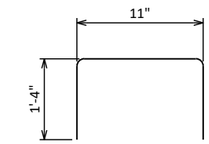


**A408**

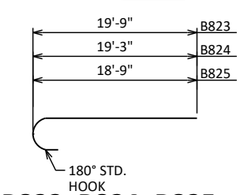


**B823, B824, B825**

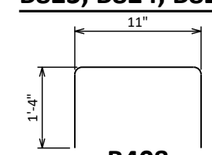


**B408**

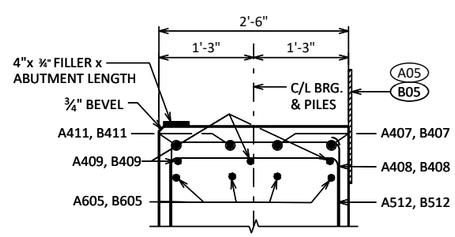


**SECTIONS A & E**

**NOTE BAR NUMBER IS ONLY APPLICABLE TO RESPECTIVE ABUT.**

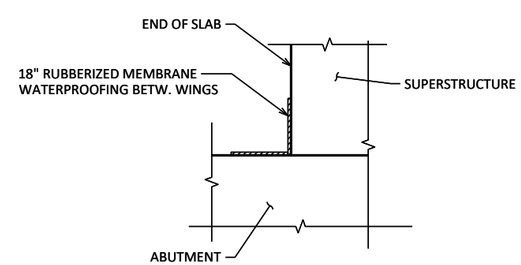


**SECTIONS B & F**

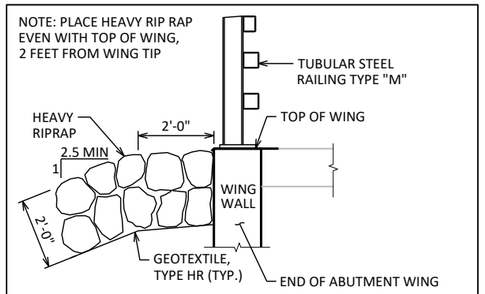


**TYPICAL FILL SECTION AT WING TIPS**

## LEGEND

(A05) 18" (RMW) RUBBERIZED MEMBRANE WATERPROOFING. SEAL ALL HORIZ. & VERT. JOINTS AT BACK FACE.

(B05) 18" (RMW) RUBBERIZED MEMBRANE WATERPROOFING. SEAL ALL HORIZ. & VERT. JOINTS AT BACK FACE.

8

8

| NO. | DATE | REVISION | BY |
|---|---|---|---|

STATE OF WISCONSIN
DEPARTMENT OF TRANSPORTATION

**STRUCTURE B-49-198**

DRAWN BY LAB | PLANS CK'D CJM

**ABUTMENT DETAILS**

SHEET 10 OF 15

STATE PROJECT NUMBER

**6777-00-70**

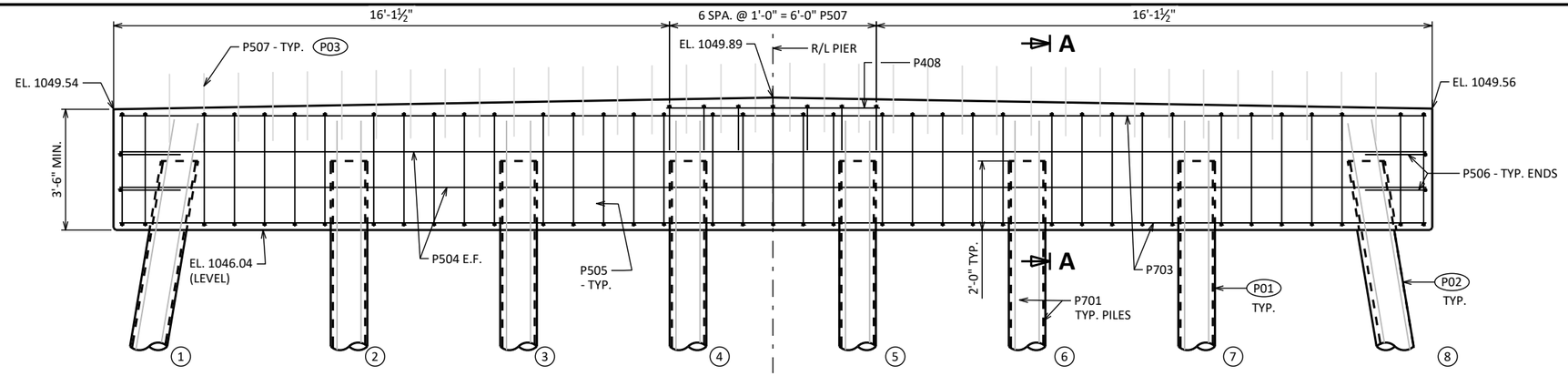


## ELEVATION

**(LOOKING EAST)**

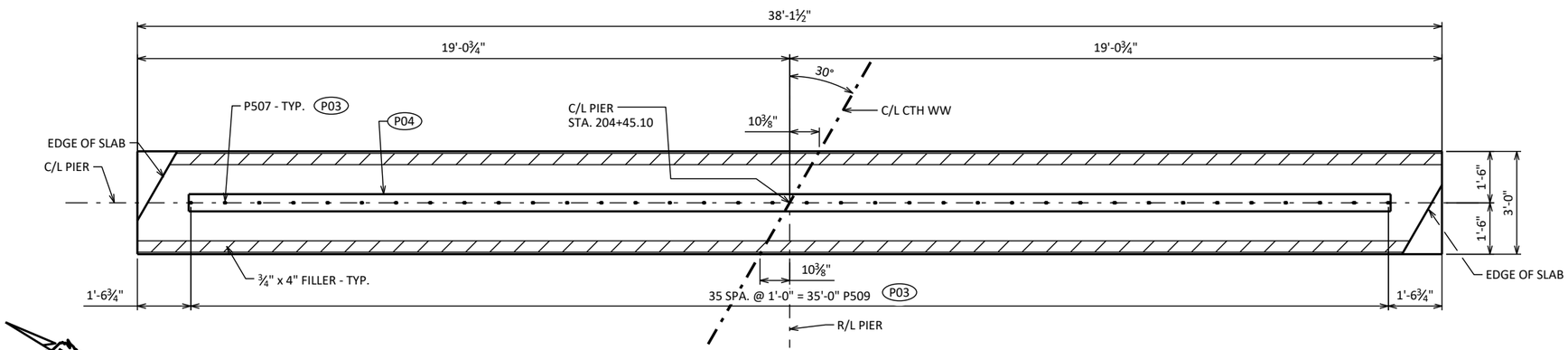


## PLAN

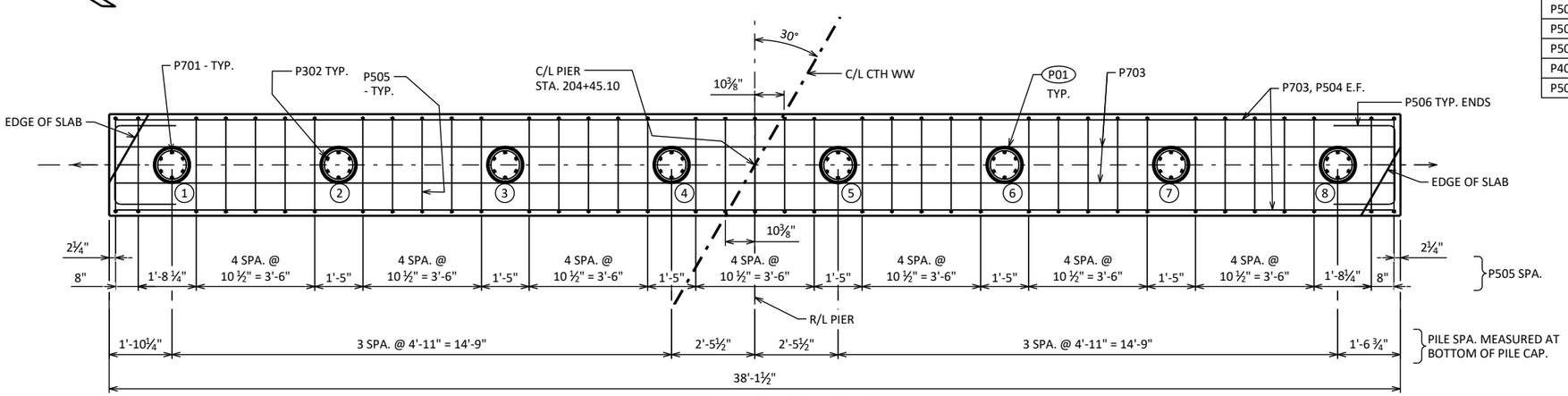


## PILE AND REINFORCEMENT PLAN

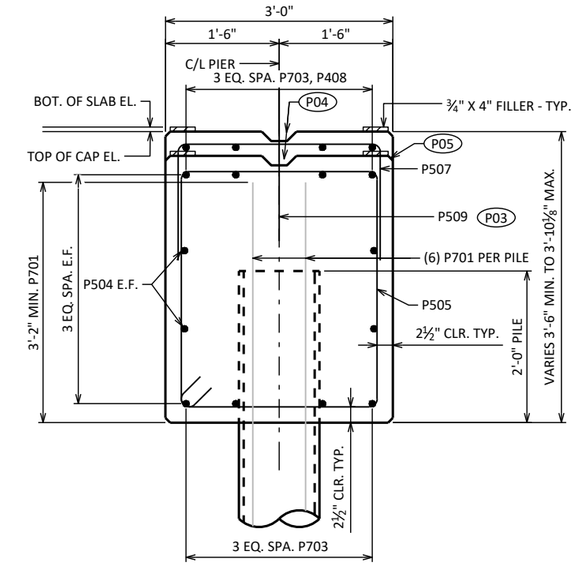


## SECTION A-A

## BILL OF BARS

NOTE: THE FIRST OR FIRST TWO DIGITS OF THE BAR MARK SIGNIFIES THE BAR SIZE.

| BAR MARK | COAT | NO. REQ'D. | LENGTH | BENT | BAR SERIES | LOCATION |
|---|---|---|---|---|---|---|
| P701 | | 48 | 20'-6" | | | PILE VERT. |
| P302 | | 88 | 3'-7" | X | | PILE TIES |
| P703 | | 8 | 37'-9" | | | PIER CAP HORIZ. TOP & BOT. |
| P504 | | 4 | 37'-9" | | | PIER CAP HORIZ. |
| P505 | | 39 | 11'-8" | X | | PIER CAP VERT. |
| P506 | | 4 | 5'-5" | X | | PIER CAP HORIZ. ENDS |
| P507 | | 7 | 4'-11" | X | | VERT. BAR TOP |
| P408 | | 4 | 6'-6" | | | HORIZ. BAR TOP |
| P509 | X | 36 | 2'-0" | | | PIER CAP DOWELS |

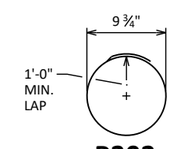


## P302

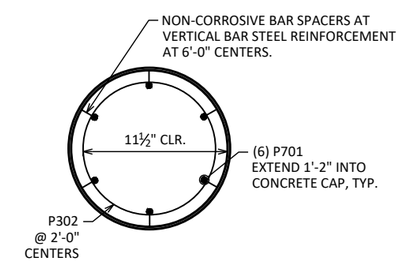


## SECTION THRU PILE

## LEGEND

- (P01) PILING CIP CONCRETE 12 ¾ X 0.50-INCH WITH PILE POINTS DRIVEN TO A REQUIRED RESISTANCE OF 200 TONS PER PILE. ESTIMATED 70'-0" PILE LENGTHS AT PIER.
- (P02) BATTER EXTERIOR PILES 2-INCH PER FOOT.
- (P03) P509 BARS MAY BE PLACED AFTER CONCRETE IS PLACED, BUT BEFORE INITIAL SET HAS TAKEN PLACE.
- (P04) KEYED CONSTRUCTION JOINT FORMED BY BEVELED 2" X 6".
- (P05) ¾" BEVEL - TYP.
- (X) INDICATES PILE NUMBER.
- E.F. = EACH FACE
- —— - —→ DIRECTION OF PILE BATTER

## NOTES

FOR PILE AND SPLICE DETAILS, SEE SHEET 5.

ALL BAR BEND DIMENSIONS ARE OUT-TO-OUT OF BAR.

PILES SHALL BE PAINTED IN ACCORDANCE WITH SECTION 550.3.11.3 OF THE STANDARD SPECIFICATIONS.

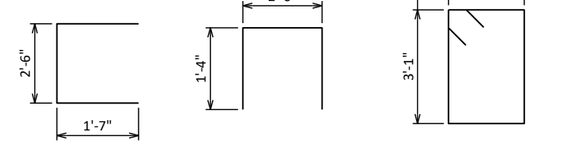


P506 P507 P505

| NO. | DATE | REVISION | BY |
|---|---|---|---|

STATE OF WISCONSIN
DEPARTMENT OF TRANSPORTATION

**STRUCTURE B-49-198**

DRAWN BY CJM PLANS CK'D VJD

**PIER**

SHEET 11 OF 15



8

8

| STATE PROJECT NUMBER |
|---|
| 6777-00-70 |

## TOP OF DECK ELEVATIONS

ELEVATIONS SHOWN ARE FINISHED DECK ELEVATIONS AND DO NOT INCLUDE ALLOWANCES OF DEAD LOAD DEFLECTION AND FUTURE CREEP.

| LOCATION | C/L BRG. W. ABUT. | 1/10 PT. | 2/10 PT. | 3/10 PT. | 4/10 PT. | 5/10 PT. | 6/10 PT. | 7/10 PT. | 8/10 PT. | 9/10 PT. | C/L PIER | 1/10 PT. | 2/10 PT. | 3/10 PT. | 4/10 PT. | 5/10 PT. | 6/10 PT. | 7/10 PT. | 8/10 PT. | 9/10 PT. | C/L BRG. E. ABUT. |
|---|---|---|---|---|---|---|---|---|---|---|---|---|---|---|---|---|---|---|---|---|---|
| N. EDGE OF DECK | 1052.16 | 1052.16 | 1052.17 | 1052.17 | 1052.18 | 1052.18 | 1052.18 | 1052.19 | 1052.19 | 1052.20 | 1052.20 | 1052.20 | 1052.21 | 1052.21 | 1052.22 | 1052.22 | 1052.23 | 1052.23 | 1052.23 | 1052.24 | 1052.24 |
| C/L CTH WW | 1052.49 | 1052.50 | 1052.50 | 1052.51 | 1052.51 | 1052.51 | 1052.52 | 1052.52 | 1052.53 | 1052.53 | 1052.53 | 1052.54 | 1052.54 | 1052.55 | 1052.55 | 1052.55 | 1052.56 | 1052.56 | 1052.57 | 1052.57 | 1052.57 |
| S. EDGE OF DECK | 1052.18 | 1052.18 | 1052.18 | 1052.19 | 1052.19 | 1052.20 | 1052.20 | 1052.20 | 1052.21 | 1052.21 | 1052.22 | 1052.22 | 1052.22 | 1052.23 | 1052.23 | 1052.24 | 1052.24 | 1052.24 | 1052.25 | 1052.25 | 1052.26 |

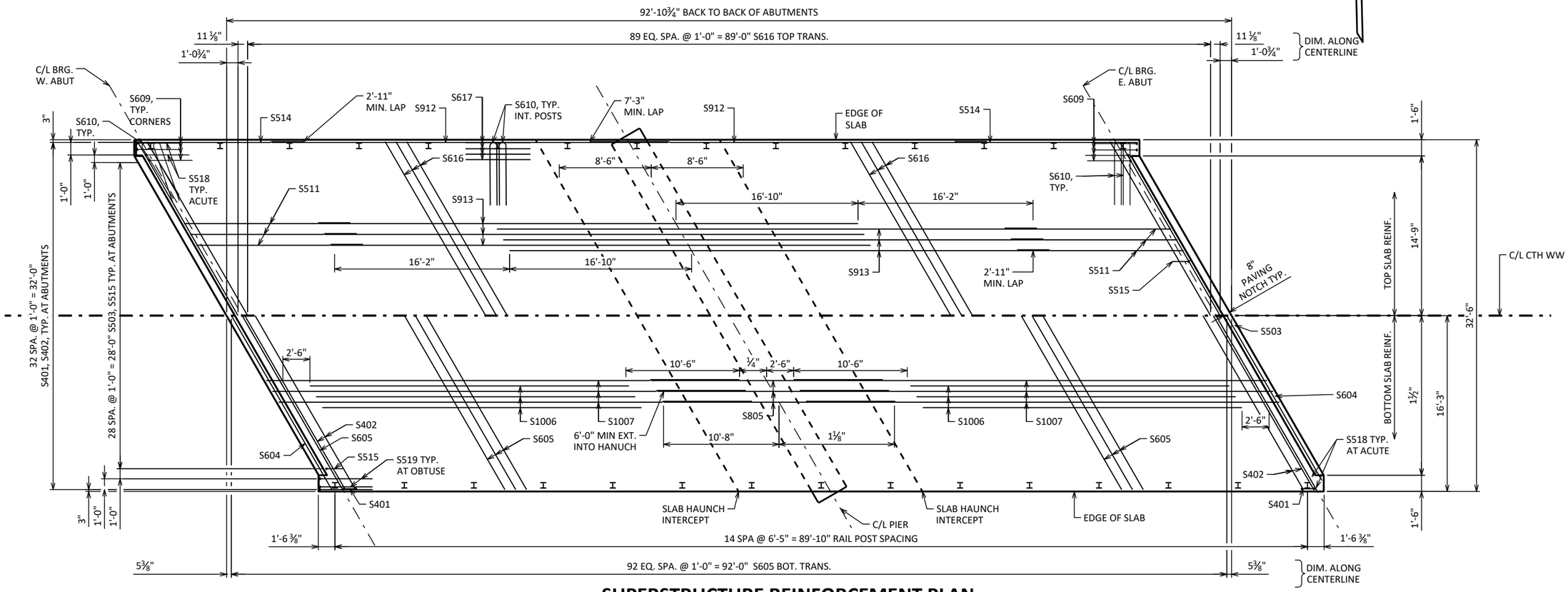


## SUPERSTRUCTURE REINFORCEMENT PLAN

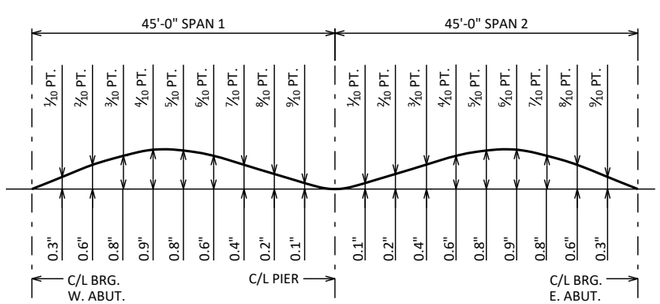


## CAMBER DIAGRAM

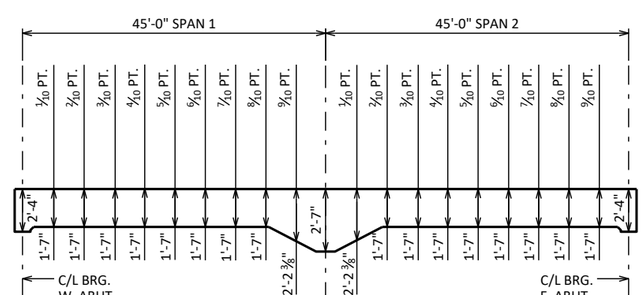


## THICKNESS DIAGRAM

TO DETERMINE FALSEWORK ELEVATION AT GUTTER AND CROWN FOLLOW THIS PROCEDURE:

TOP OF SLAB ELEVATION AT FINAL GRADE
MINUS.....SLAB THICKNESS
PLUS.....CAMBER
PLUS.....FORM SETTLEMENT/DEFLECTION DUE TO PLACEMENT OF SLAB CONCRETE (TO BE COMPUTED BY THE CONTRACTOR)

EQUALS = TOP OF SLAB FALSEWORK ELEVATION

## NOTES

ALL TRANSVERSE BAR STEEL REINFORCEMENT SHALL BE PLACED ON THE SKEW.

TOP TRANSVERSE BARS IN SLAB SHALL BE SUPPORTED BY INDIVIDUAL BAR CHAIRS AT APPROXIMATELY 3'-0" CENTERS EACH WAY. BOTTOM LONGITUDINAL BARS SHALL BE SUPPORTED BY CONTINUOUS BAR CHAIRS AT APPROXIMATELY 4'-0" CENTERS.

ALL SLAB THICKNESS DIMENSIONS ARE MINIMUM. ANY TOLERANCES NECESSARY TO CORRECT CONSTRUCTION DISCREPANCIES ARE TO BE PLUS (+).

CAMBER SHOWN IS BASED ON 3 TIMES DEAD LOAD DEFLECTION.

CAMBER SPANS AS SHOWN TO PROVIDE FOR DEAD LOAD DEFLECTION AND FUTURE CREEP. CAMBER DOES NOT INCLUDE ALLOWANCE FOR FORM SETTLEMENT.

PRIOR TO RELEASING SLAB FALSEWORK, TAKE TOP OF SLAB ELEVATIONS AT THE C/L OF ABUTMENTS, C/L OF PIER, AND AT 5/10 POINTS TO VERIFY CAMBER. TAKE ELEVATIONS ALONG GUTTER LINES AND CROWN. RECORD THE ELEVATIONS IN THE ABOVE TABLE FOR THE "AS-BUILT" PLANS.

## SURVEY TOP OF SLAB ELEVATIONS

| LOCATION | C/L BRG. W. ABUT. | 5/10 PT. | C/L PIER | 5/10 PT. | C/L BRG. E. ABUT. |
|---|---|---|---|---|---|
| NORTH EDGE OF DECK | | | | | |
| C/L CTH WW | | | | | |
| SOUTH EDGE OF DECK | | | | | |

| NO. | DATE | REVISION | BY |
|---|---|---|---|
| | | | |

STATE OF WISCONSIN
DEPARTMENT OF TRANSPORTATION

**STRUCTURE B-49-198**

DRAWN BY LAB | PLANS CK'D CJM

**SUPERSTRUCTURE**

SHEET 12 OF 15



8

8

STATE PROJECT NUMBER

**6777-00-70**

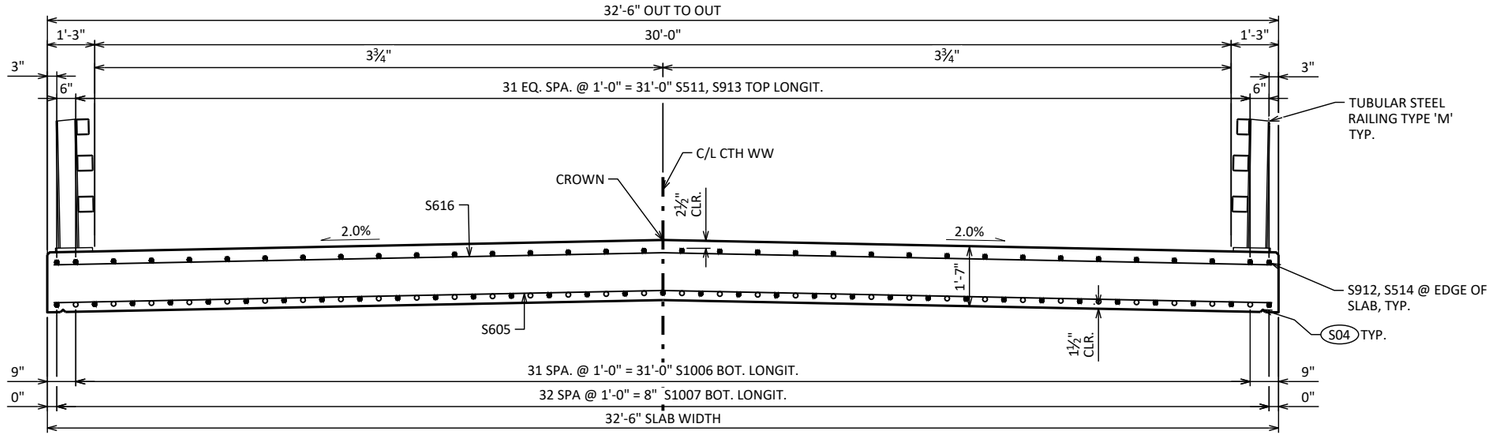


## CROSS SECTION THRU BRIDGE - SPAN 1

IN SPAN SHOWING REINFORCEMENT

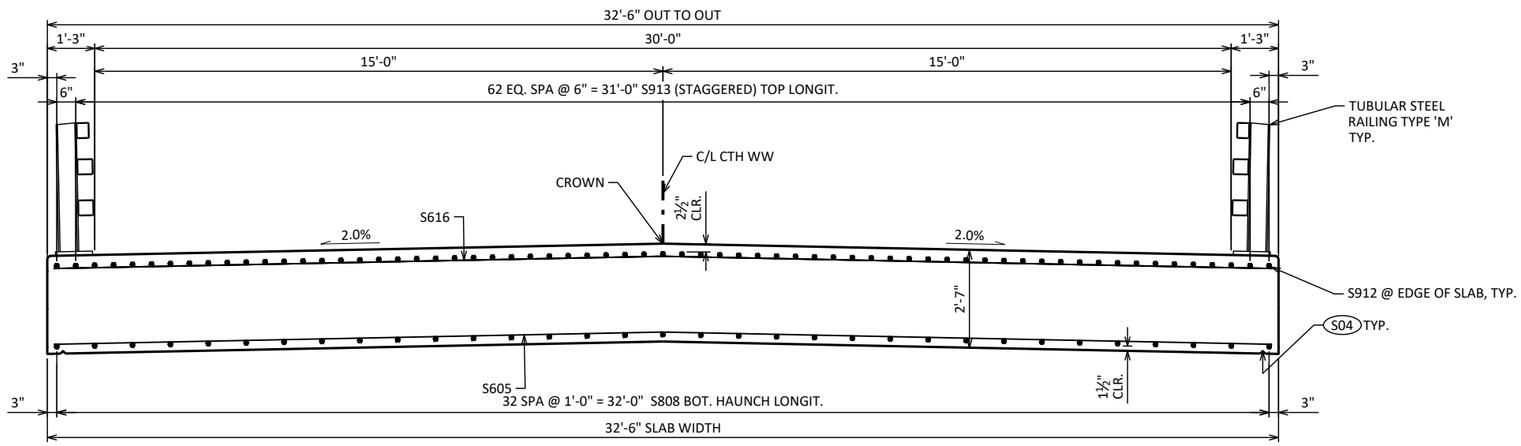


## CROSS SECTION THRU BRIDGE - AT PIER

AT PIER CENTERLINE SHOWING REINFORCEMENT

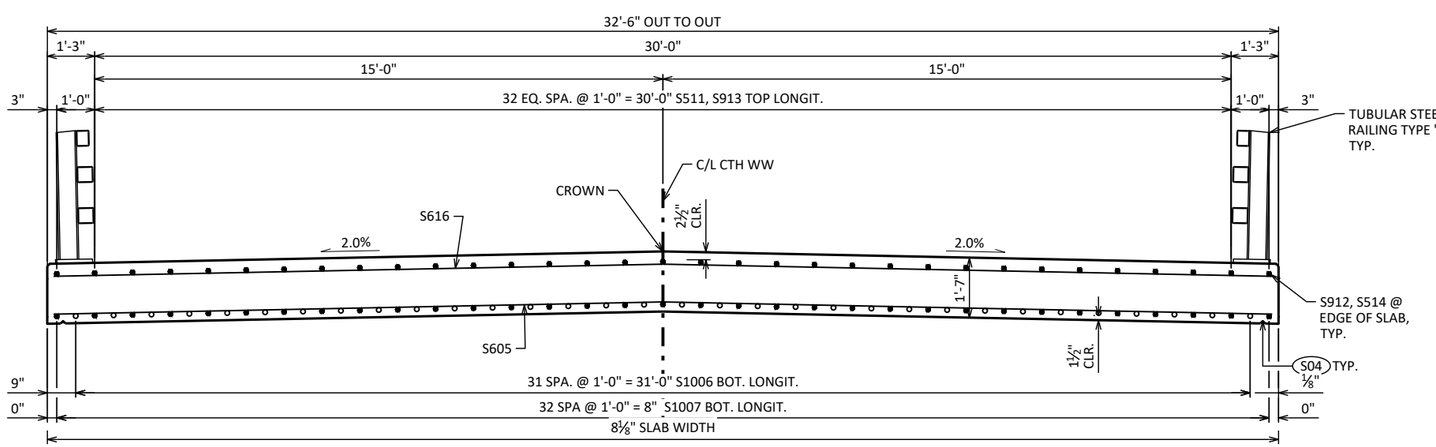


## CROSS SECTION THRU BRIDGE - SPAN 2

IN SPAN SHOWING REINFORCEMENT

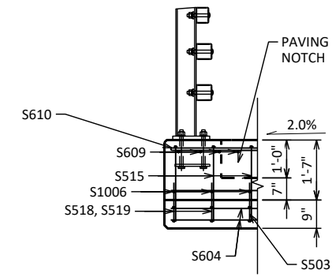


*TOP OF SLAB BARS OMITTED FOR CLARITY

## SECTION THRU TYPE M RAIL

AT PAVING NOTCH
SHOWING ABUTMENT HAUNCH

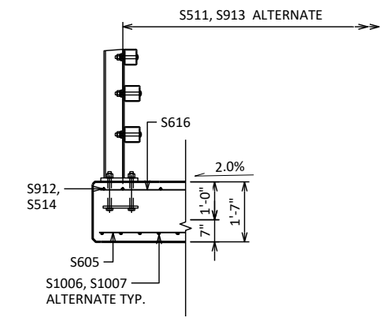


## SECTION THRU TYPE M RAIL

IN SPAN
SIMILAR AT EACH EDGE OF SLAB

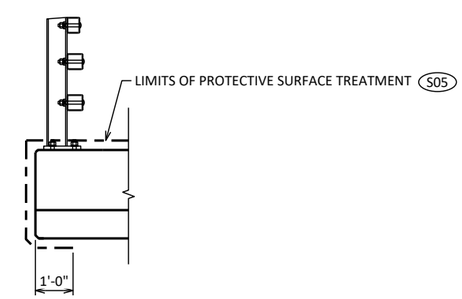


## PROTECTIVE SURFACE TREATMENT DETAIL

## LEGEND

S04 ¾" V-GROOVE REQUIRED. EXTEND TO 6" FROM FRONT FACE OF ABUTMENT DIAPHRAGM.

S05 PROTECTIVE SURFACE TREATMENT SHALL BE APPLIED TO THE ENTIRE TOP OF SLAB, THE SIDE OF THE SLAB, 1'-0" OUTSIDE EDGES OF THE SLAB, AND ON THE VERTICAL AND HORIZONTAL SURFACES OF PAVING NOTCHES.

| NO. | DATE | REVISION | BY |
|---|---|---|---|

STATE OF WISCONSIN
DEPARTMENT OF TRANSPORTATION

**STRUCTURE B-49-198**

DRAWN BY LAB PLANS CK'D CJM

**SUPERSTRUCTURE DETAILS 1**

SHEET 13 OF 15



8

8

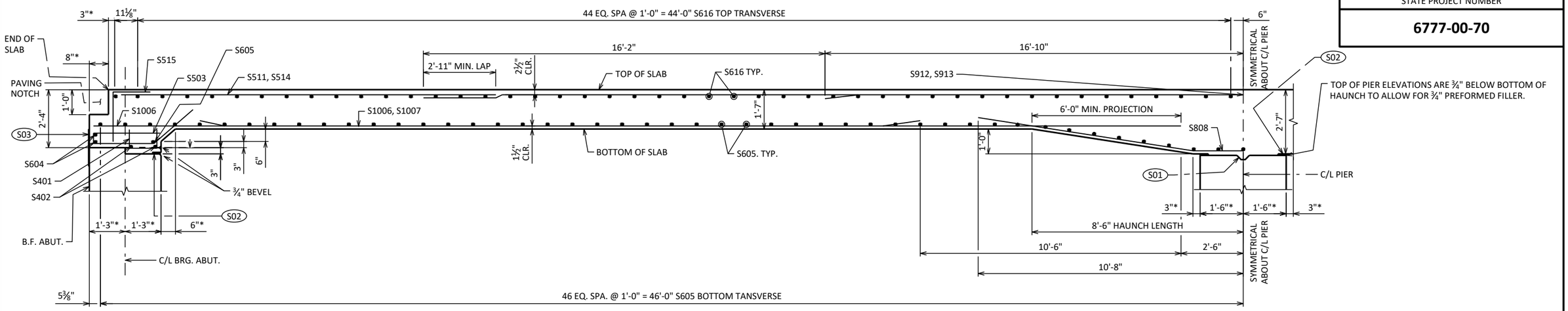


## PARTIAL LONGITUDINAL SECTION

**DIMENSIONS ARE ALONG C/L CTH WW UNLESS OTHERWISE NOTED.**
**DIMENSIONS AND LAYOUT IS SYMMETRICAL ABOUT C/L PIER.**

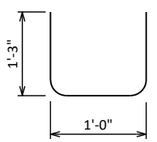


**S401**

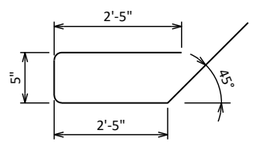


**S503**

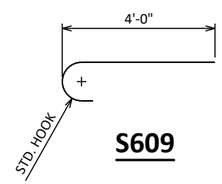


**S609**

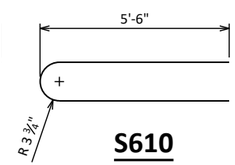


**S610**

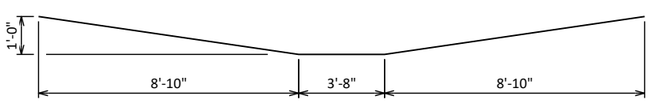


**S808**

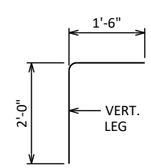


**S515**

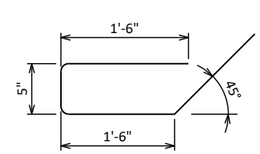


**S518**

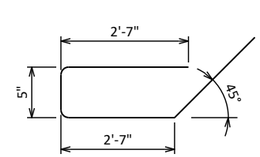


**S519**

## BILL OF BARS

NOTE: THE FIRST OR FIRST TWO DIGITS OF THE BAR MARK SIGNIFIES THE BAR SIZE.

| BAR MARK | COAT | NO. REQ'D. | LENGTH | BENT | BAR SERIES | LOCATION |
|---|---|---|---|---|---|---|
| S401 | X | 66 | 3'-4" | X | | SLAB- VERTICAL AT ENDS |
| S402 | X | 4 | 37'-1" | | | SLAB- BOTTOM TRANSVERSE AT ENDS |
| S503 | X | 58 | 7'-0" | X | | SLAB - ABUT. HAUNCH - VERTICAL |
| S604 | X | 4 | 35'-0" | | | BOTTOM TRANSVERSE AT ENDS |
| S605 | X | 95 | 37'-1" | | | BOTTOM TRANSVERSE |
| S1006 | X | 64 | 29'-6" | | | BOTTOM LONGIT. |
| S1007 | X | 66 | 43'-9" | | | BOTTOM LONGIT. |
| S808 | X | 33 | 21'-6" | X | | BOTTOM LONGIT. - HAUNCH |
| S609 | X | 16 | 4'-8" | X | | SLAB AT RAIL END |
| S610 | X | 60 | 11'-4" | X | | SLAB AT RAIL POSTS |
| S511 | X | 64 | 19'-2" | | | TOP LONGIT. SLAB |
| S912 | X | 4 | 33'-8" | | | TOP LONGIT. EDGES OF SLAB |
| S913 | X | 63 | 46'-10" | | | TOP LONGIT. SLAB |
| S514 | X | 4 | 20'-1" | | | TOP LONGIT. - EDGES OF SLAB |
| S515 | X | 58 | 3'-5" | X | | SLAB VERT. ENDS |
| S616 | X | 92 | 37'-1" | | | TOP TRANSVERSE |
| S617 | X | 104 | 6'-0" | | | TOP INTERIOR RAIL POSTS |
| S518 | X | 4 | 5'-2" | X | | SLAB ABUT. HAUNCH VERT. - ENDS |
| S519 | X | 4 | 7'-4" | X | | SLAB ABUT. HAUNCH VERT. - ENDS |

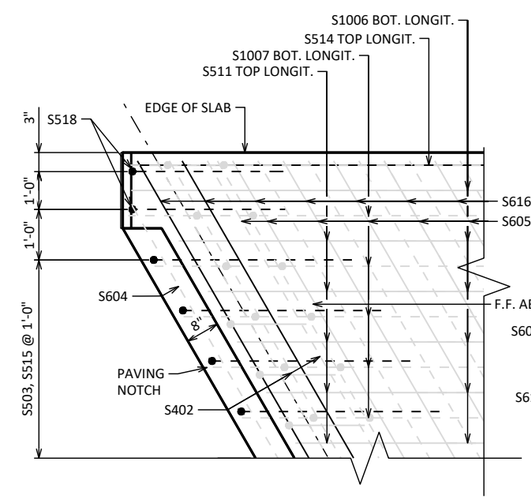


## CORNER DETAIL - WING 2 & 4

**SHOWING VERT. HAUNCH BAR PLACEMENT**
**WING 2 SHOWN, WING 4 CORNER SIMILAR**
**ADDITIONAL OPEN RAIL BARS ARE NOT SHOWN FOR CLARITY**

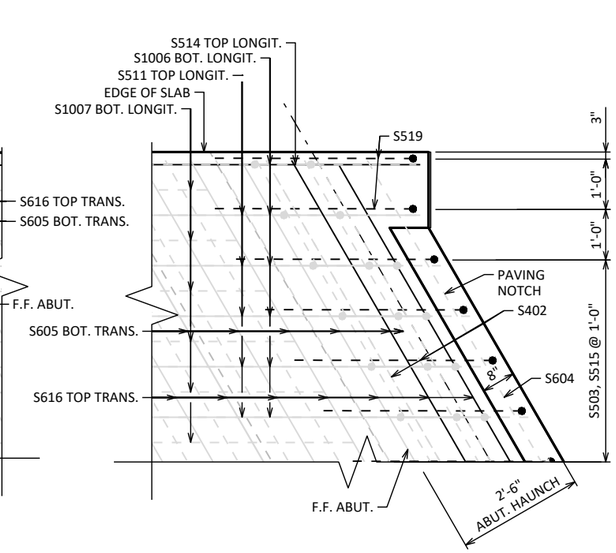


## CORNER DETAIL - WING 1 & 3

**SHOWING VERT. HAUNCH BAR PLACEMENT**
**WING 3 SHOWN, WING 1 CORNER SIMILAR**
**ADDITIONAL OPEN RAIL BARS ARE NOT SHOWN FOR CLARITY**

## LEGEND

- (S01) CONSTRUCTION JOINT. KEYWAY FORMED BY A BEVELED 2" X 6".
- (S02) 4" X ¾" PREFORMED FILLER (LENGTH OF ABUTMENT AND PIER).
- (S03) 18" (RMW) RUBBERIZED MEMBRANE WATERPROOFING. SEAL ALL HORIZONTAL AND VERTICAL JOINTS AT BACK FACE OF ABUTMENT.
- * DIMENSION IS NORMAL TO CENTERLINE OF SUBSTRUCTURE.

| NO. | DATE | REVISION | BY |
|---|---|---|---|
| | | | |

STATE OF WISCONSIN
DEPARTMENT OF TRANSPORTATION

**STRUCTURE B-49-198**

DRAWN BY LAB | PLANS CK'D CJM

**SUPERSTRUCTURE DETAILS 2**



8

8

STATE PROJECT NUMBER

**6777-00-70**

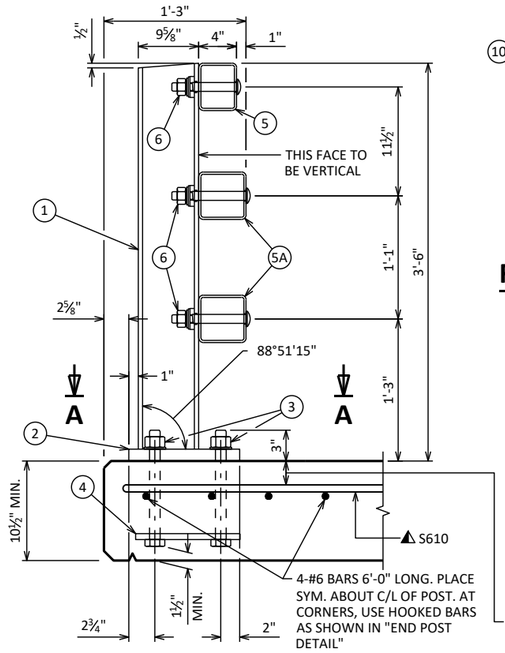


## SECTION THRU RAILING ON DECK

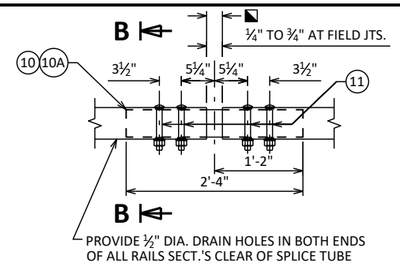


## FIELD ERECTION JOINT DETAIL

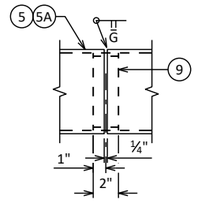


## SHOP RAIL SPLICE DETAIL

LOCATION MUST BE SHOWN ON SHOP DRAWINGS

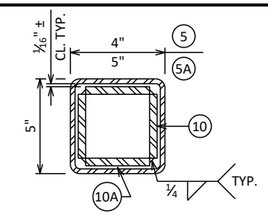


## SECTION B-B

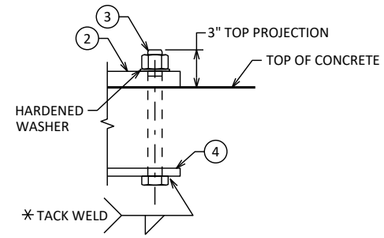


## ANCHOR BOLTS

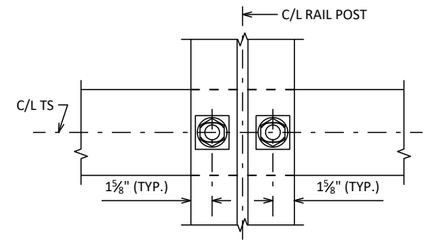


SECTION THRU POST WEB

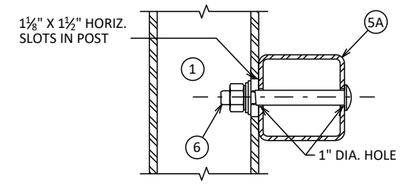


SECTION THRU RAIL

NOTE: CONNECTIONS AT LOWER RAILS SHOWN. CONNECTIONS AT TOP RAIL SIMILAR.

## TYPICAL RAIL TO POST CONNECTIONS

## LEGEND

1. W6 X 25 WITH 1⅛" X 1½" HORIZ. SLOTS ON EACH SIDE OF POST FOR BOLT NO. 6. CUT BOTTOM OF POST TO MATCH CROSS SLOPE OF ROADWAY. PLACE POST VERTICAL. PLACE POSTS NORMAL TO GRADE LINE.
2. PLATE 1¼" X 11¾" X 1'-8" WITH 1 7/16" DIA. OVERSIZED HOLES FOR ANCHOR BOLTS NO. 3. WELD TO NO. 1 AS SHOWN.
3. ASTM A449 - 1⅛" DIA. ANCHOR BOLTS WITH NUT AND HARDENED WASHER (ALL GALVANIZED). 5 REQ'D. PER POST. THREAD 3" AND PLACE NORMAL TO PLATE NO. 2. CHAMFER TOP OF BOLTS BEFORE THREADING. USE 1'-9" LONG IN ABUTMENT WINGS. AT POSTS ON CONCRETE SLAB SUPERSTRUCTURES WHERE THE SLAB THICKNESS IS > 16" USE 1'-3" LONG. USE 10¾" LONG AT ALL OTHER LOCATIONS. (AN EQUIVALENT THREADED ROD WITH NUTS AND HARDENED WASHERS MAY BE SUBSTITUTED FOR ANCHOR BOLTS IN WINGS IF REQ'D. FOR CONSTRUCTABILITY.)
4. ⅝" X 11" X 1'-8" ANCHOR PLATE (GALVANIZED) WITH 1 3/16" DIA. HOLES FOR ANCHOR BOLTS NO. 3
5. TS 5 X 4 X 0.25 STRUCTURAL TUBING. ATTACH TO NO. 1 WITH NO. 6.
5A. TS 5 X 5 X 0.25 STRUCTURAL TUBING. ATTACH TO NO. 1 WITH NO. 6.
6. ⅞" DIA. A325 SLOTTED ROUND HEAD BOLT WITH NUT, 3/16" X 1⅝" X 1⅝" MIN. WASHER, AND LOCK WASHER (2 REQ'D. AT EACH RAIL TO POST LOCATION.)
7. ½" THK. BACK-UP PLATE WITH 2 - ⅞" X 1½" THREADED SHOP WELDED STUDS (NO. 12). BOLT TO RAIL AS SHOWN IN DETAIL. REQUIRED AT THRIE BEAM GUARD RAIL ATTACHMENTS ONLY. PLACE SYMMETRICALLY ABOUT TUBES NO. 5A.
8. 1" DIA. HOLES IN PLATE NO. 7 & TUBES NO. 5A FOR ⅞" DIA. A325 BOLTS WITH HEX NUTS AND WASHERS. 6 HOLES IN TUBES AND PLATE NO. 7.
9. SPLICE SLEEVE FABRICATED FROM ¼" PLATE. PROVIDE "SLIDING FIT".
10. ⅜" X 3⅝" X 2'-4" PLATE. 2 PER RAIL. USED IN NO. 5 & 5A.
10A. ⅜" X 2⅝" X 2'-4" PLATE USED IN NO. 5, ⅜" X 3⅝" X 2'-4" PLATE USED IN NO. 5A. 2 PER RAIL.
11. ⅞" DIA. A325 ROUND HEAD BOLT WITH NUT, WASHER, AND LOCK WASHER. USE 15/16" X 1¼" LONGIT. SLOTTED HOLES IN PLATE NO. 10A. AT FIELD JOINTS AND 15/16" X 2¼" MIN. LONGIT. SLOTTED HOLES AT EXP. JOINTS IN PLATE NO. 10A. PROVIDE 15/16" DIA. ROUND HOLES IN TUBES NO. 5 AND NO. 5A.
12. ⅞" DIA. X 1½" LONG THREADED SHOP WELDED STUDS (2 REQ'D).
13. ⅜" X 8" X 1'-6" PLATE. BOLT TO RAIL AS SHOWN IN DETAIL. REQ'D. AT THRIE BEAM GUARD RAIL ATTACHMENTS ONLY. PLACE SYM. ABOUT TUBES NO. 5A.
14. ⅞" DIA. X 2" LONG A325 HEX BOLT WITH NUT AND WASHER (5 REQ'D.).
15. 1" DIA. HOLES IN TUBES NO. 5A FOR ⅞" DIA. A325 ROUND HEAD BOLT WITH NUT, WASHER AND LOCK WASHER (4 REQ'D.). 4 HOLES IN TUBES.

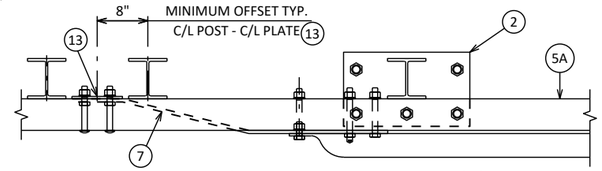


## TOP VIEW AT END POST

THRIE BEAM RAIL ATTACHMENT

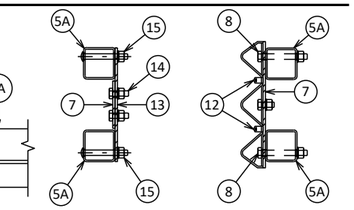

## SECTION C-C SECTION D-D

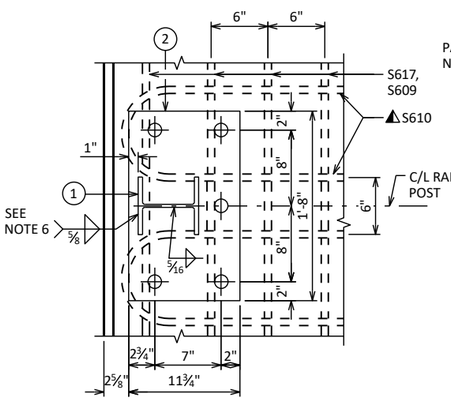


## SECTION A-A

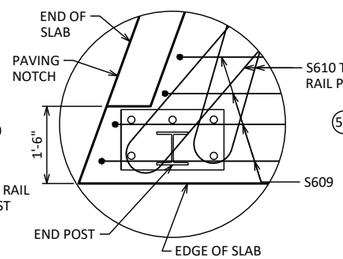


## END POST DETAIL

REINFORCEMENT AT CORNERS

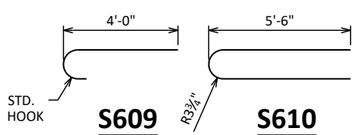


## S609 S610

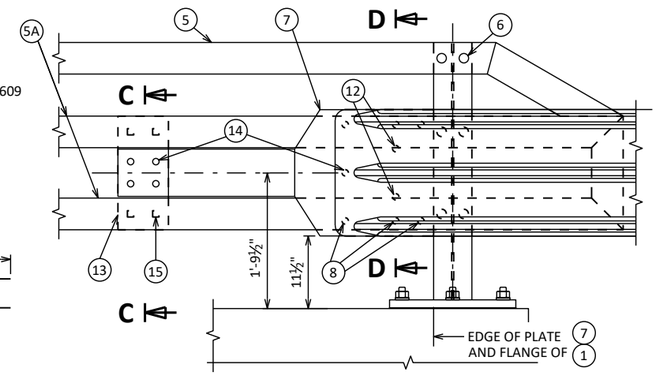


## DETAIL AT END POST

THRIE BEAM RAIL ATTACHMENT

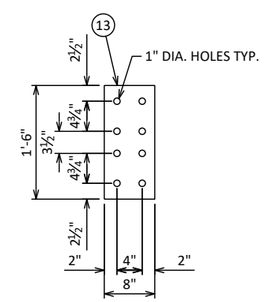


## ANCHOR PLATE

AT BEAM GUARD ATTACHMENT

## GENERAL NOTES

1. BID ITEM SHALL BE "RAILING TUBULAR TYPE M" WHICH INCLUDES ALL ITEMS SHOWN.
2. RAIL POST AND BASE PLATES SHALL CONFORM TO THE REQUIREMENTS OF ASTM A709 GRADE 50. HOLLOW RAILING STRUCTURAL TUBING SHALL CONFORM TO THE REQUIREMENTS OF ASTM A500 GRADE B OR C WITH A CERTIFIED FY = 50 KSI. ANCHOR PLATES, AND SPLICE TUBE PLATES SHALL CONFORM TO THE REQUIREMENTS OF ASTM A709 GRADE 36.
3. THE NUT SECURING THE POST BASE PLATE TO THE CONCRETE SHALL BE TIGHTENED TO A SNUG FIT AND GIVEN AN ADDITIONAL ⅛ TURN.
4. RAILS SHALL BE CONTINUOUS OVER A MINIMUM OF THREE (3) POSTS WITHOUT SPLICES WHERE POSSIBLE. RAILS SHALL BE SPLICED IN A PANEL OVER EXPANSION JOINTS.
5. ENDS OF TUBE SECTIONS SHALL BE SAWED. GRIND SMOOTH EXPOSED EDGES. ALL CUT ENDS SHALL BE TRUE AND SMOOTH.
6. WELD IS THE SAME ON BOTH FLANGES. FLANGE WELD DOES NOT REQUIRE MAGNETIC PARTICLE TESTING.
7. FILL BOLT SLOT OPENINGS IN POST SHIMS AND PLATE NO. 2 AND CAULK AROUND PERIMETER OF PLATE NO. 2 WITH NON-STAINING GRAY NON-BITUMINOUS JOINT SEALER. STEEL POST SHIMS MAY BE USED UNDER POSTS WHERE REQ'D. FOR ALIGNMENT.
8. POST BASE PLATES SHALL BE FLAT WITH ALL SURFACES SMOOTH AND FREE FROM WARP AND ALL EDGES SMOOTH, STRAIGHT AND VERTICAL. ALL PLATE CUTS SHALL BE MACHINE OR MACHINE FLAME CUT.
9. ALL MATERIAL SHALL BE GALVANIZED AFTER FABRICATION. PRIOR TO GALVANIZING, ALL STEEL RAILING POSTS & STEEL TUBING SHALL BE GIVEN A NO. 6 BLAST CLEANING BY SSPC SPECIFICATIONS.

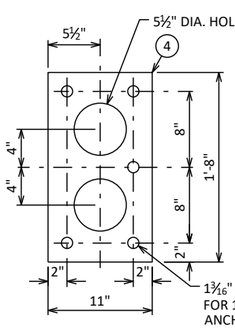


## ANCHOR PLATE

AT RAIL TO DECK CONNECTION

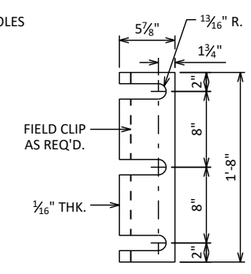


## POST SHIM DETAIL

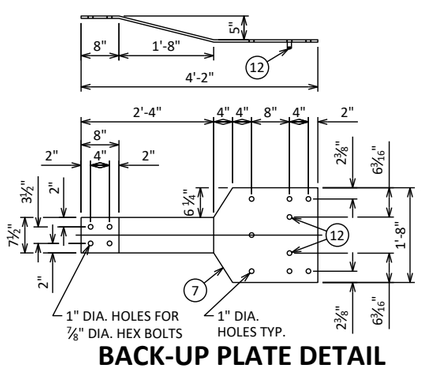


## BACK-UP PLATE DETAIL

AT BEAM GUARD ATTACHMENT

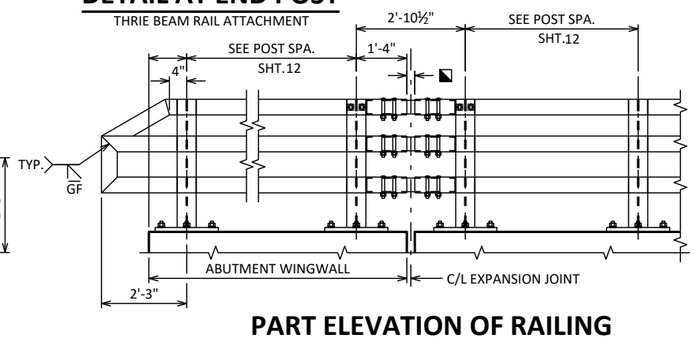


## PART ELEVATION OF RAILING

TIE TO TOP MAT OF STEEL.

ANCHOR BOLT ASSEMBLY MAY BE TACK WELDED, EITHER IN THE SHOP, OR IN THE FIELD AFTER THE ANCHOR PLATE IS PLACED.

RDWY. OPENING OR 2½" MIN. FOR STRIP SEAL EXP. JOINT & ( ¼" TO ¾") OPENING FOR A1 ABUTMENT.

| NO. | DATE | REVISION | BY |
|---|---|---|---|

STATE OF WISCONSIN
DEPARTMENT OF TRANSPORTATION

**STRUCTURE B-49-198**

DRAWN BY CJM PLANS CK'D VJD

**TUBULAR STEEL RAILING TYPE "M"**

SHEET 15 OF 15

| DIVISION 1 - CTH-WW | | | | | | | | | | | |
|---|---|---|---|---|---|---|---|---|---|---|---|
| STATION | DISTANCE | AREA (SF) | | INCREMENTAL VOL (CY) (UNADJUSTED) | | | | | CUMULATIVE VOL (CY) | | |
| | | CUT | FILL | CUT | FILL | MARSH EXC | ROCK EXC | EBS | CUT 1.00 | EXPANDED FILL 1.25 | MASS ORDINATE |
| 201+35.03 | 0.00 | 11.47 | 0.00 | 0 | 0 | 0 | 0 | 0 | 0 | 0 | 0 |
| 201+48.85 | 13.82 | 16.97 | 0.50 | 7 | 0 | 0 | 0 | 0 | 7 | 0 | 7 |
| 202+00.00 | 51.15 | 20.94 | 2.12 | 36 | 2 | 0 | 0 | 0 | 43 | 3 | 41 |
| 202+30.00 | 30.00 | 64.34 | 1.77 | 47 | 2 | 0 | 0 | 0 | 90 | 5 | 85 |
| 202+60.73 | 30.73 | 74.98 | 0.00 | 79 | 1 | 0 | 0 | 0 | 169 | 6 | 163 |
| 202+75.56 | 14.83 | 85.75 | 0.00 | 44 | 0 | 0 | 0 | 0 | 213 | 6 | 207 |
| 202+86.59 | 11.03 | 93.26 | 0.00 | 37 | 0 | 0 | 0 | 0 | 250 | 6 | 244 |
| 203+00.54 | 13.95 | 100.23 | 0.00 | 50 | 0 | 0 | 0 | 0 | 300 | 6 | 294 |
| 203+06.59 | 6.05 | 104.49 | 0.00 | 23 | 0 | 0 | 0 | 0 | 323 | 6 | 317 |
| 203+25.52 | 18.93 | 131.13 | 0.00 | 83 | 0 | 0 | 0 | 0 | 406 | 6 | 400 |
| 203+31.57 | 6.05 | 131.37 | 0.00 | 29 | 0 | 0 | 0 | 0 | 435 | 6 | 429 |
| 203+56.55 | 24.98 | 109.26 | 21.37 | 111 | 10 | 0 | 0 | 0 | 546 | 19 | 527 |
| 203+66.15 | 9.60 | 109.34 | 65.67 | 39 | 15 | 0 | 0 | 0 | 585 | 38 | 548 |
| 203+97.18 | 31.03 | 106.53 | 8.37 | 124 | 43 | 0 | 0 | 0 | 709 | 91 | 618 |
| 204+14.79 | 17.61 | 133.45 | 0.00 | 78 | 3 | 0 | 0 | 0 | 787 | 95 | 692 |
| 204+61.90 | 47.11 | 137.89 | 0.00 | 237 | 0 | 0 | 0 | 0 | 1024 | 95 | 929 |
| 204+93.03 | 31.13 | 140.78 | 0.75 | 161 | 0 | 0 | 0 | 0 | 1185 | 95 | 1090 |
| 205+24.06 | 31.03 | 168.85 | 60.65 | 178 | 35 | 0 | 0 | 0 | 1363 | 139 | 1224 |
| 205+33.85 | 9.79 | 68.49 | 32.16 | 43 | 17 | 0 | 0 | 0 | 1406 | 160 | 1246 |
| 205+58.83 | 24.98 | 101.75 | 0.00 | 79 | 15 | 0 | 0 | 0 | 1485 | 179 | 1306 |
| 205+64.49 | 5.66 | 112.46 | 0.00 | 22 | 0 | 0 | 0 | 0 | 1507 | 179 | 1328 |
| 205+83.82 | 19.33 | 128.23 | 0.00 | 86 | 0 | 0 | 0 | 0 | 1593 | 179 | 1414 |
| 205+89.47 | 5.65 | 120.95 | 0.01 | 26 | 0 | 0 | 0 | 0 | 1619 | 179 | 1440 |
| 206+03.82 | 14.35 | 79.73 | 3.75 | 53 | 1 | 0 | 0 | 0 | 1672 | 180 | 1492 |
| 206+14.45 | 10.63 | 79.08 | 7.08 | 31 | 2 | 0 | 0 | 0 | 1703 | 183 | 1521 |
| 206+20.00 | 5.55 | 77.99 | 8.41 | 16 | 2 | 0 | 0 | 0 | 1719 | 185 | 1534 |
| 207+00.00 | 80.00 | 47.58 | 0.08 | 186 | 13 | 0 | 0 | 0 | 1905 | 201 | 1704 |
| 207+43.34 | 43.34 | 33.86 | 0.02 | 65 | 0 | 0 | 0 | 0 | 1970 | 201 | 1769 |
| 207+51.62 | 8.28 | 7.88 | 0.00 | 6 | 0 | 0 | 0 | 0 | 1976 | 201 | 1775 |

9

9

9

9

| PROJECT NO: 6777-00-70 | HWY: CTH WW | COUNTY: PORTAGE | CROSS SECTIONS: CTH WW | SHEET 81 | E |
|---|---|---|---|---|---|

FILE NAME : X:\PROJECTS\PORTAGE\230064 CTH WW, FOUR MILE CREEK BRIDGE\DESIGN\C3D\SHEETSPLAN\090201-XS.DWG
LAYOUT NAME - 01
PLOT DATE : 10/30/2024 4:23 PM
PLOT BY : ADAM SARAUER
PLOT NAME :
**PLOT SCALE :** 1 IN:10 FT HORZ. / 1 IN:10 FT VERT.
WISDOT/CADDS SHEET 49

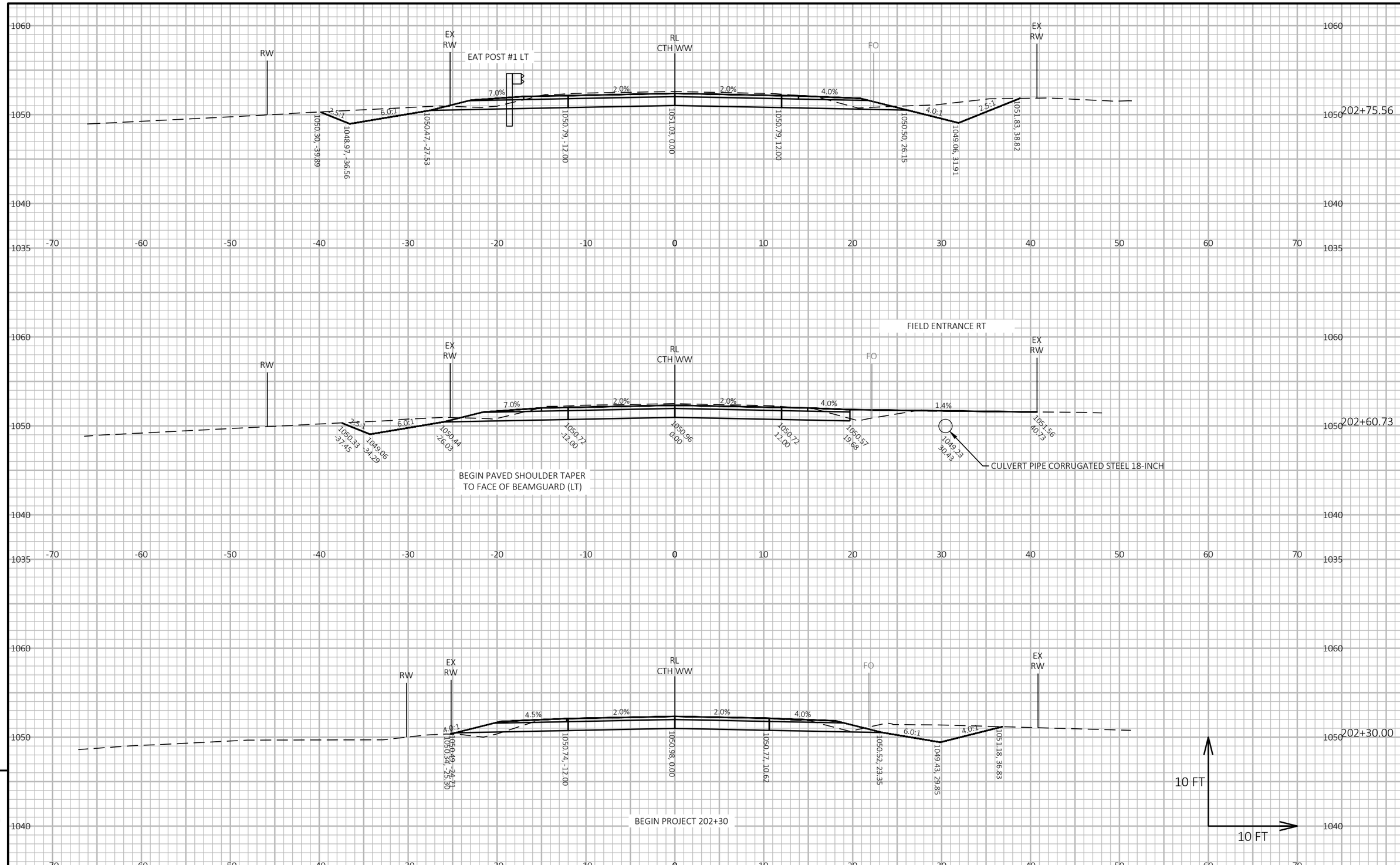


9

9

| PROJECT NO: 6777-00-70 | HWY: CTH WW | COUNTY: PORTAGE | CROSS SECTIONS: CTH WW | SHEET 82 | E |
|---|---|---|---|---|---|

FILE NAME : X:\PROJECTS\PORTAGE\230064 CTH WW, FOUR MILE CREEK BRIDGE\DESIGN\C3D\SHEETSPLAN\090201-XS.DWG
LAYOUT NAME - 02
PLOT DATE : 10/30/2024 4:23 PM
PLOT BY : ADAM SARAUER
PLOT NAME :
**PLOT SCALE :** 1 IN:10 FT HORZ. / 1 IN:10 FT VERT.
WISDOT/CADDS SHEET 49

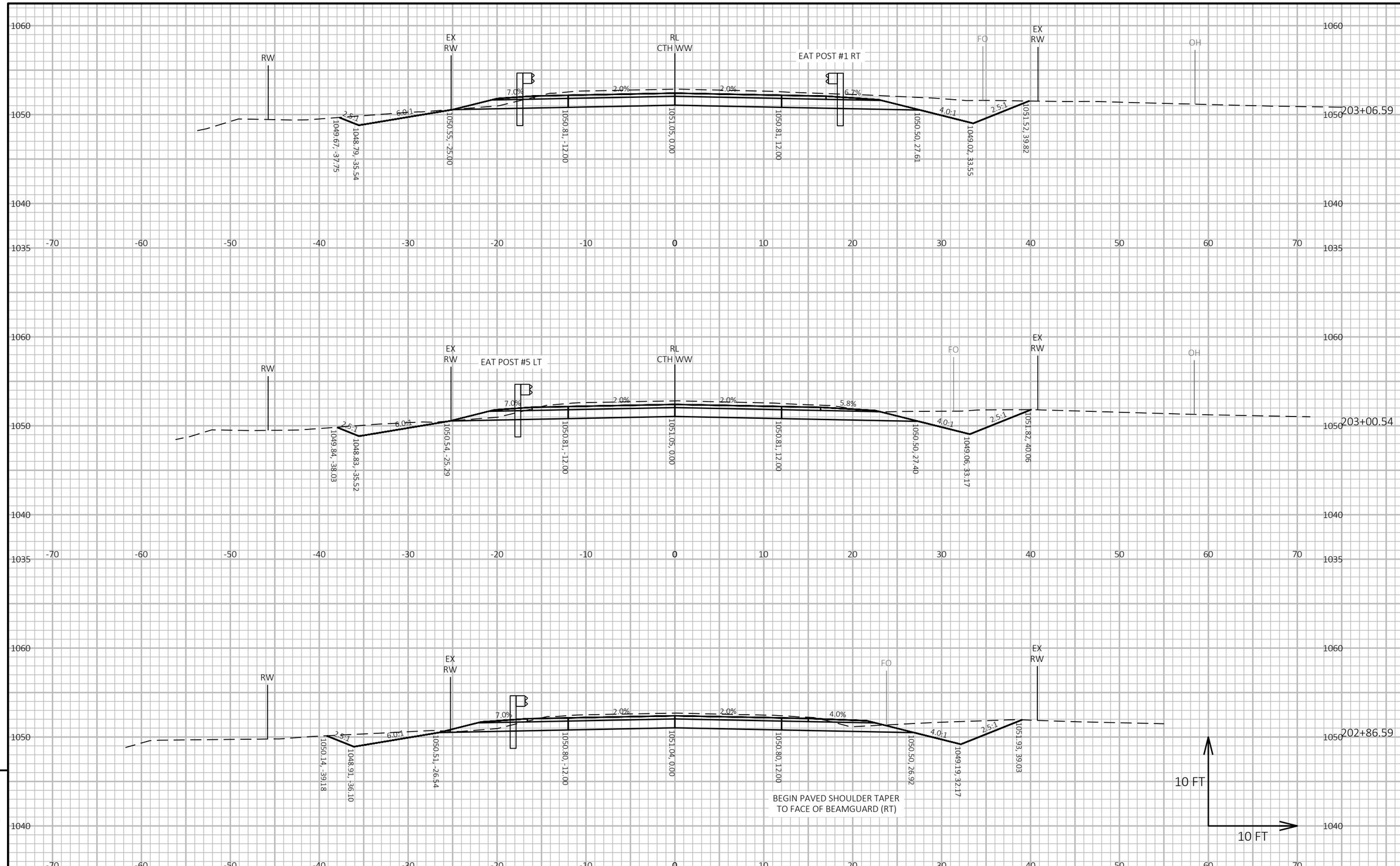


9

9

| PROJECT NO: 6777-00-70 | HWY: CTH WW | COUNTY: PORTAGE | CROSS SECTIONS: CTH WW | SHEET 83 | E |
|---|---|---|---|---|---|

FILE NAME : X:\PROJECTS\PORTAGE\230064 CTH WW, FOUR MILE CREEK BRIDGE\DESIGN\C3D\SHEETSPLAN\090201-XS.DWG
LAYOUT NAME - 03
PLOT DATE : 10/30/2024 4:23 PM
PLOT BY : ADAM SARAUER
PLOT NAME :
**PLOT SCALE :** 1 IN:10 FT HORZ. / 1 IN:10 FT VERT.
WISDOT/CADDS SHEET 49

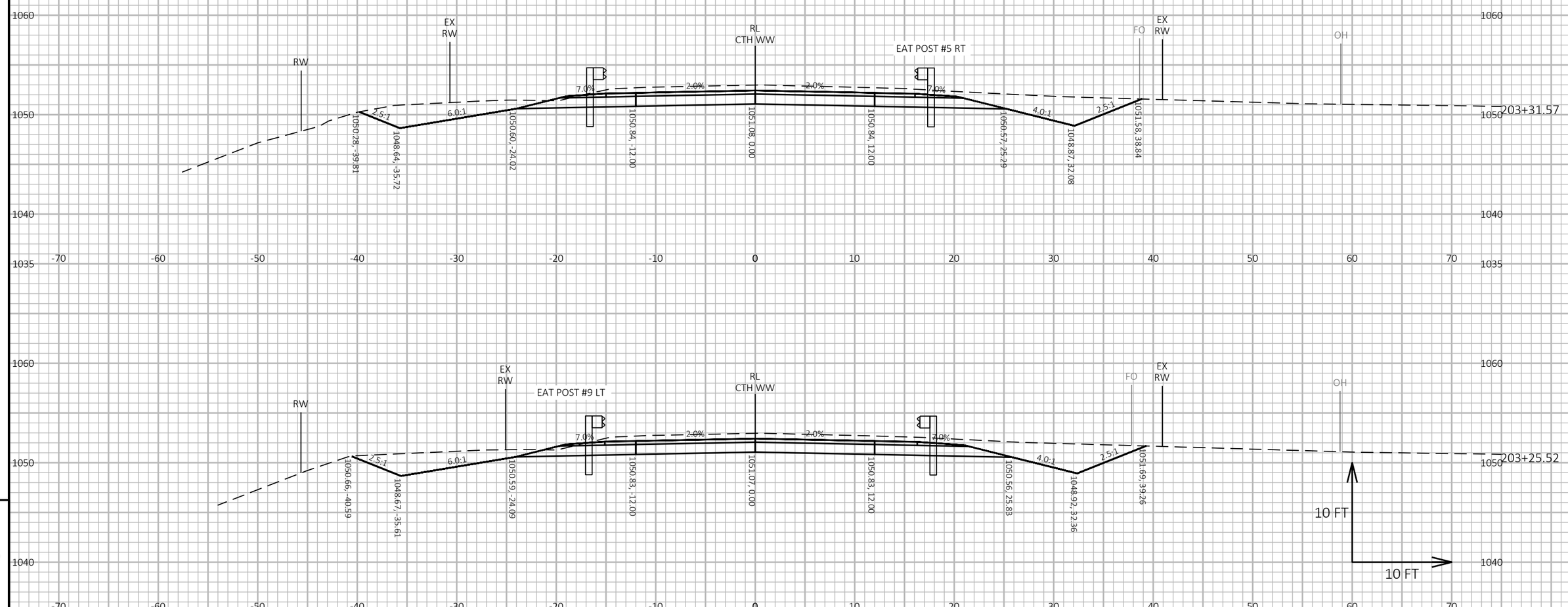


9

9

| PROJECT NO: 6777-00-70 | HWY: CTH WW | COUNTY: PORTAGE | CROSS SECTIONS: CTH WW | SHEET 84 | E |
|---|---|---|---|---|---|

FILE NAME : X:\PROJECTS\PORTAGE\230064 CTH WW, FOUR MILE CREEK BRIDGE\DESIGN\C3D\SHEETSPLAN\090201-XS.DWG
LAYOUT NAME - 04
PLOT DATE : 10/30/2024 4:23 PM
PLOT BY : ADAM SARAUER
PLOT NAME :
**PLOT SCALE :** 1 IN:10 FT HORZ. / 1 IN:10 FT VERT.
WISDOT/CADDS SHEET 49

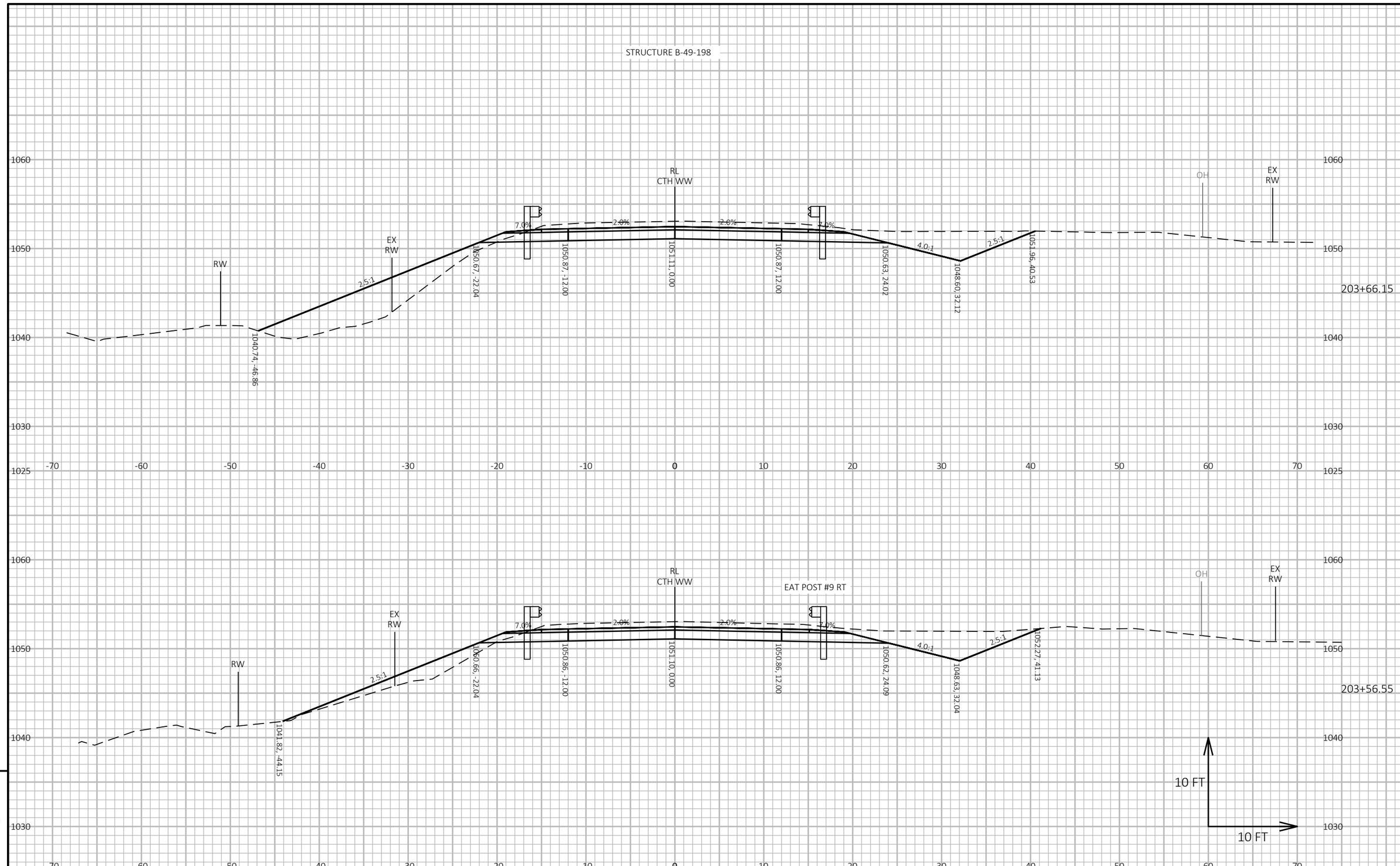


| PROJECT NO: 6777-00-70 | HWY: CTH WW | COUNTY: PORTAGE | CROSS SECTIONS: CTH WW | SHEET 85 | E |
|---|---|---|---|---|---|

FILE NAME : X:\PROJECTS\PORTAGE\230064 CTH WW, FOUR MILE CREEK BRIDGE\DESIGN\C3D\SHEETSPLAN\090201-XS.DWG
LAYOUT NAME - 05
PLOT DATE : 10/30/2024 4:23 PM
PLOT BY : ADAM SARAUER
PLOT NAME :
**PLOT SCALE :** 1 IN:10 FT HORZ. / 1 IN:10 FT VERT.
WISDOT/CADDS SHEET 49

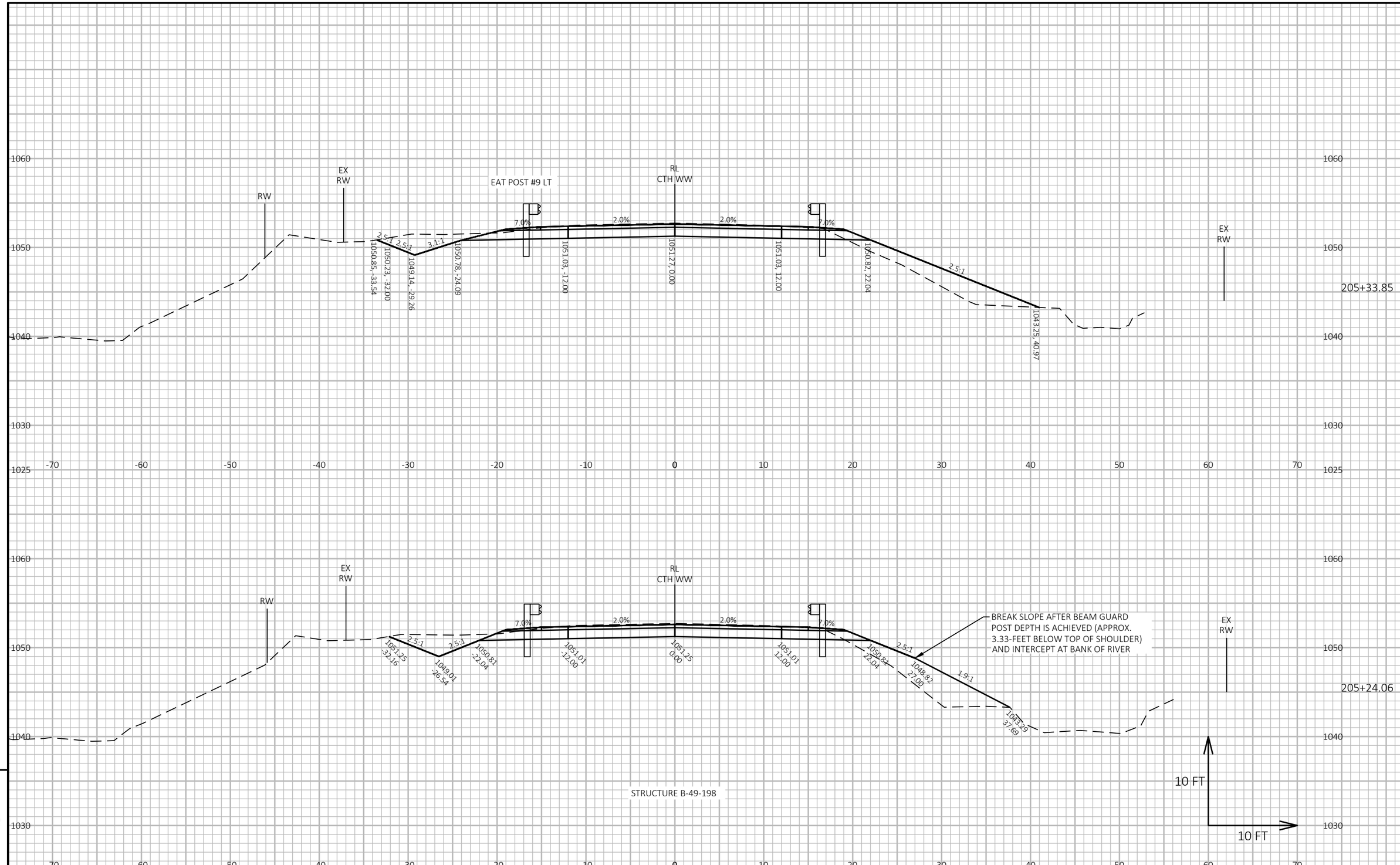


9

9

| PROJECT NO: 6777-00-70 | HWY: CTH WW | COUNTY: PORTAGE | CROSS SECTIONS: CTH WW | SHEET 86 | E |
|---|---|---|---|---|---|

FILE NAME : X:\PROJECTS\PORTAGE\230064 CTH WW, FOUR MILE CREEK BRIDGE\DESIGN\C3D\SHEETSPLAN\090201-XS.DWG
LAYOUT NAME - 06
PLOT DATE : 10/30/2024 4:23 PM
PLOT BY : ADAM SARAUER
PLOT NAME :
**PLOT SCALE :** 1 IN:10 FT HORZ. / 1 IN:10 FT VERT.
WISDOT/CADDS SHEET 49

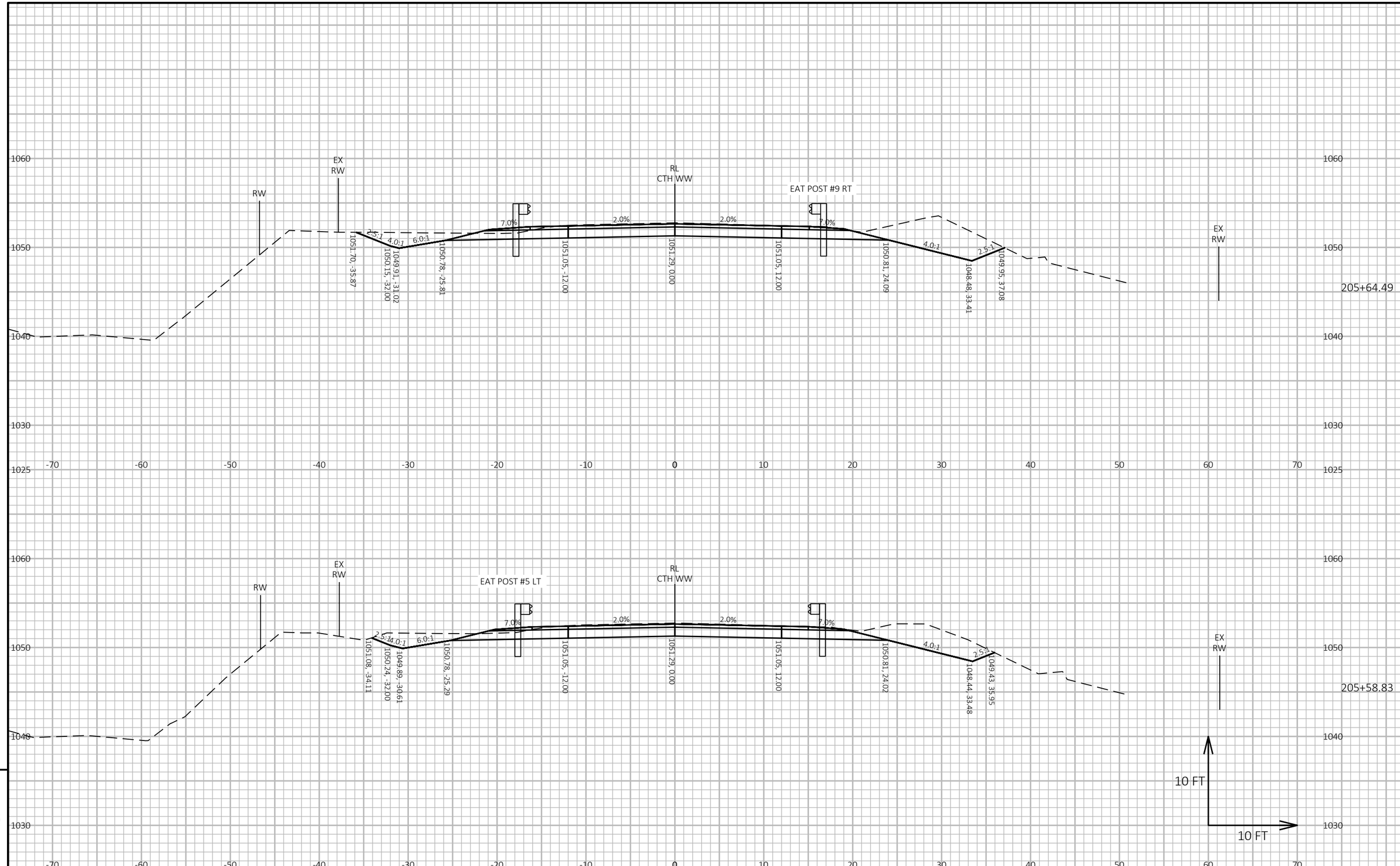


| PROJECT NO: 6777-00-70 | HWY: CTH WW | COUNTY: PORTAGE | CROSS SECTIONS: CTH WW | SHEET 87 | E |
|---|---|---|---|---|---|

FILE NAME : X:\PROJECTS\PORTAGE\230064 CTH WW, FOUR MILE CREEK BRIDGE\DESIGN\C3D\SHEETSPLAN\090201-XS.DWG
LAYOUT NAME - 07
PLOT DATE : 10/30/2024 4:23 PM
PLOT BY : ADAM SARAUER
PLOT NAME :
**PLOT SCALE :** 1 IN:10 FT HORZ. / 1 IN:10 FT VERT.
WISDOT/CADDS SHEET 49

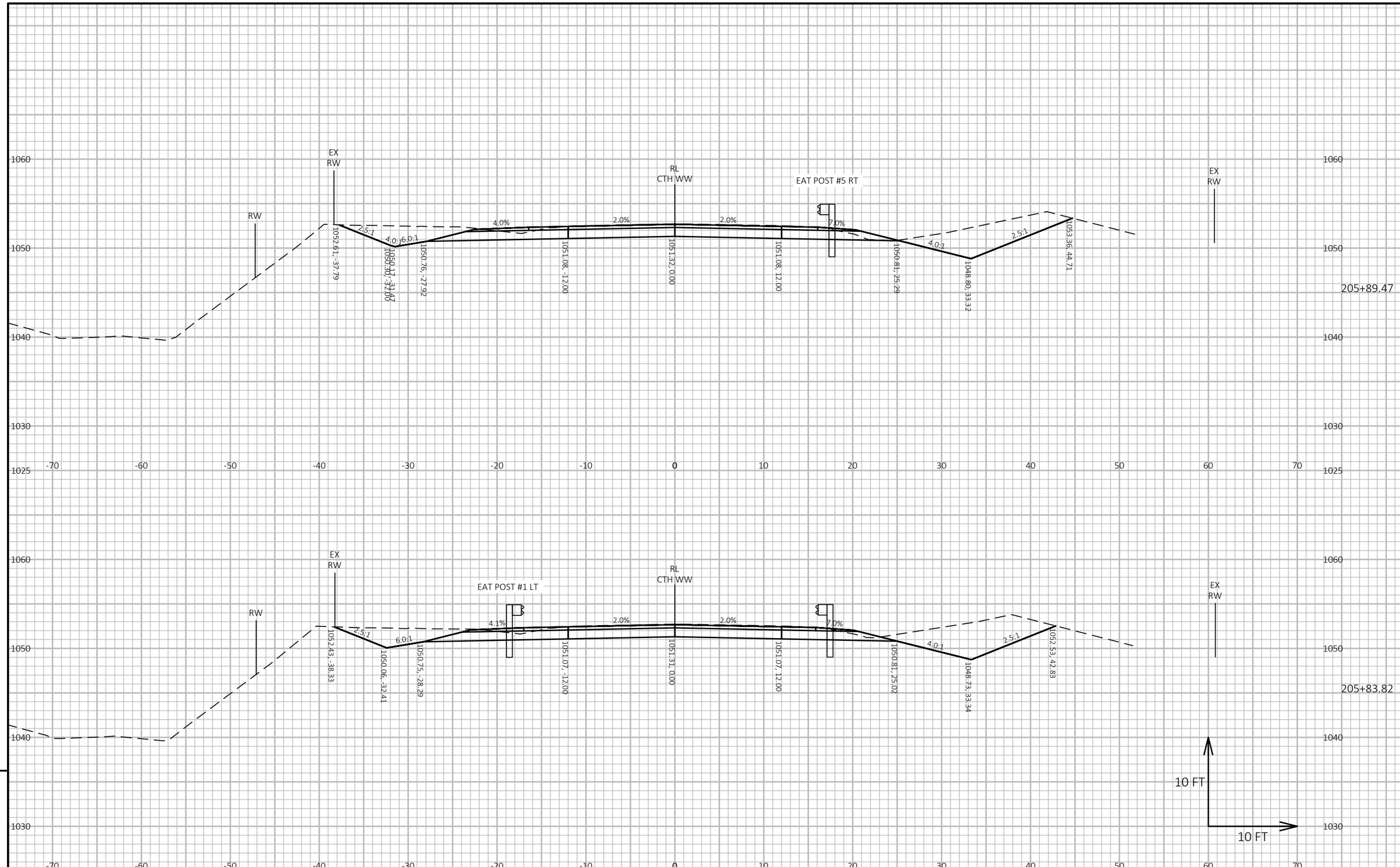


9

9

| PROJECT NO: 6777-00-70 | HWY: CTH WW | COUNTY: PORTAGE | CROSS SECTIONS: CTH WW | SHEET 88 | E |
|---|---|---|---|---|---|

FILE NAME : X:\PROJECTS\PORTAGE\230064 CTH WW, FOUR MILE CREEK BRIDGE\DESIGN\C3D\SHEETSPLAN\090201-XS.DWG
LAYOUT NAME - 08
PLOT DATE : 10/30/2024 4:23 PM
PLOT BY : ADAM SARAUER
PLOT NAME :
**PLOT SCALE :** 1 IN:10 FT HORZ. / 1 IN:10 FT VERT.
WISDOT/CADDS SHEET 49

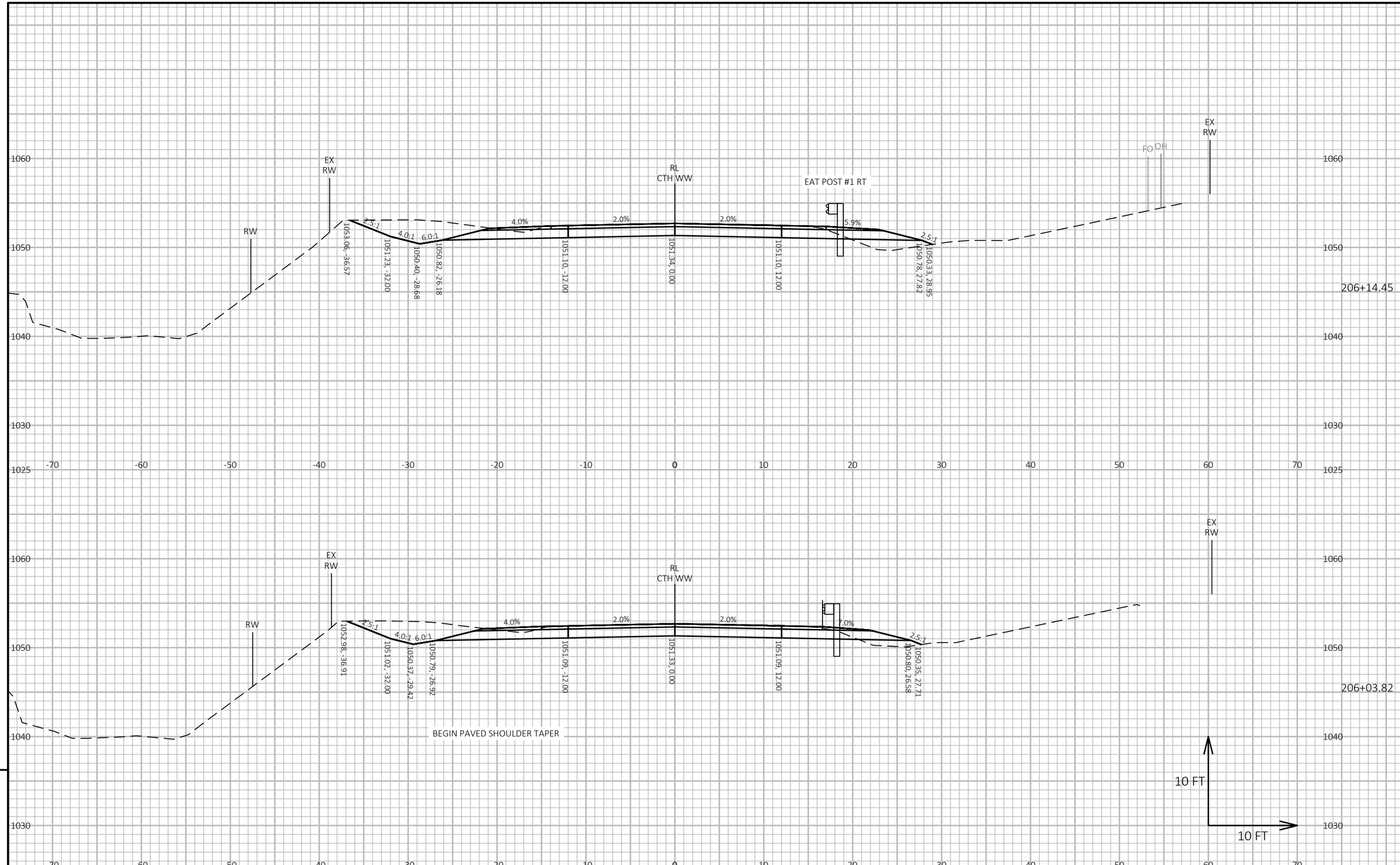


9

9

| PROJECT NO: 6777-00-70 | HWY: CTH WW | COUNTY: PORTAGE | CROSS SECTIONS: CTH WW | SHEET 89 | E |
|---|---|---|---|---|---|

FILE NAME : X:\PROJECTS\PORTAGE\230064 CTH WW, FOUR MILE CREEK BRIDGE\DESIGN\C3D\SHEETSPLAN\090201-XS.DWG
LAYOUT NAME - 09
PLOT DATE : 10/30/2024 4:23 PM
PLOT BY : ADAM SARAUER
PLOT NAME :
**PLOT SCALE :** 1 IN:10 FT HORZ. / 1 IN:10 FT VERT.
WISDOT/CADDS SHEET 49

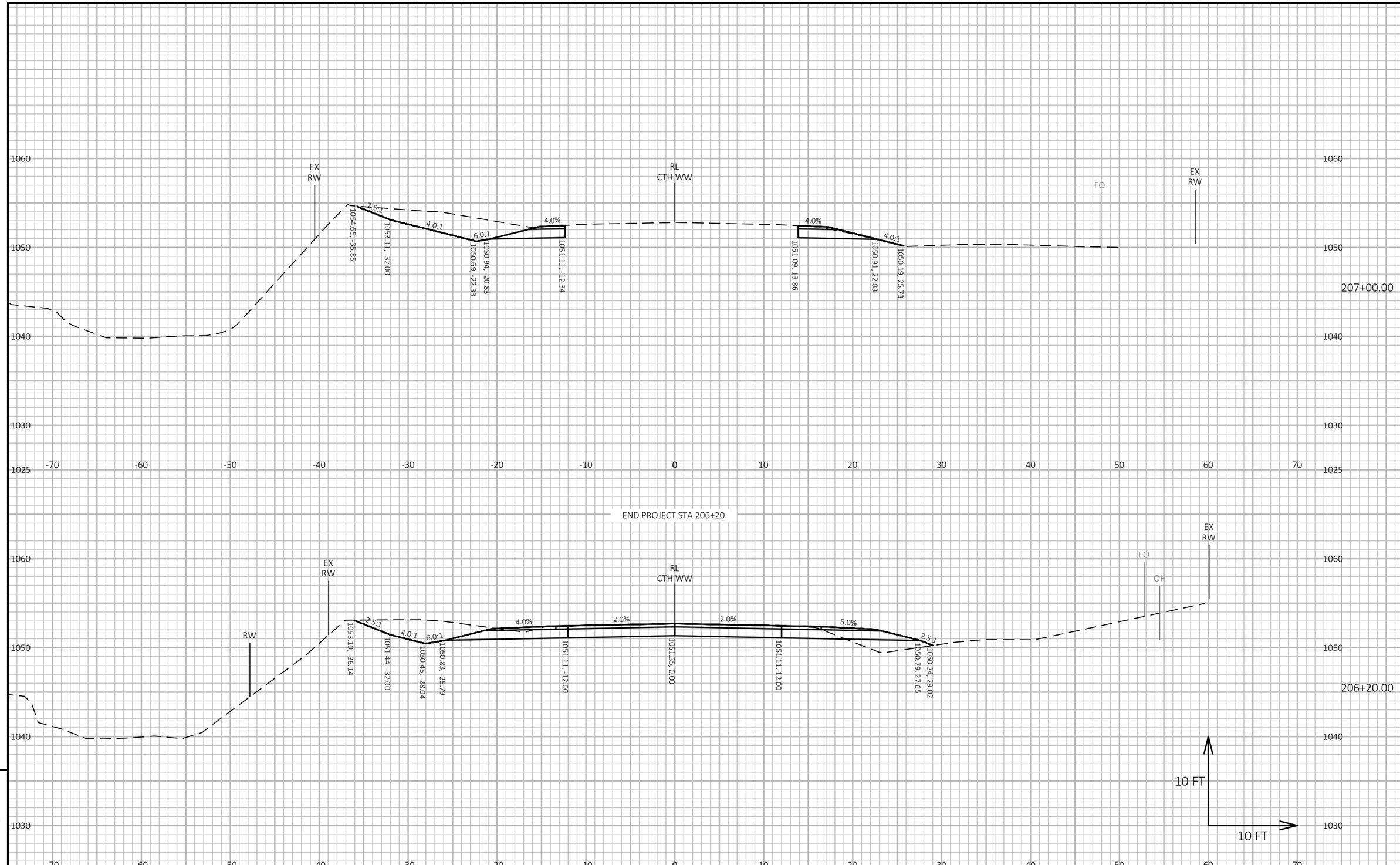


9

9

| PROJECT NO: 6777-00-70 | HWY: CTH WW | COUNTY: PORTAGE | CROSS SECTIONS: CTH WW | SHEET 90 | E |
|---|---|---|---|---|---|

FILE NAME : X:\PROJECTS\PORTAGE\230064 CTH WW, FOUR MILE CREEK BRIDGE\DESIGN\C3D\SHEETSPLAN\090201-XS.DWG
LAYOUT NAME - 10
PLOT DATE : 10/30/2024 4:23 PM
PLOT BY : ADAM SARAUER
PLOT NAME :
**PLOT SCALE :** 1 IN:10 FT HORZ. / 1 IN:10 FT VERT.
WISDOT/CADDS SHEET 49

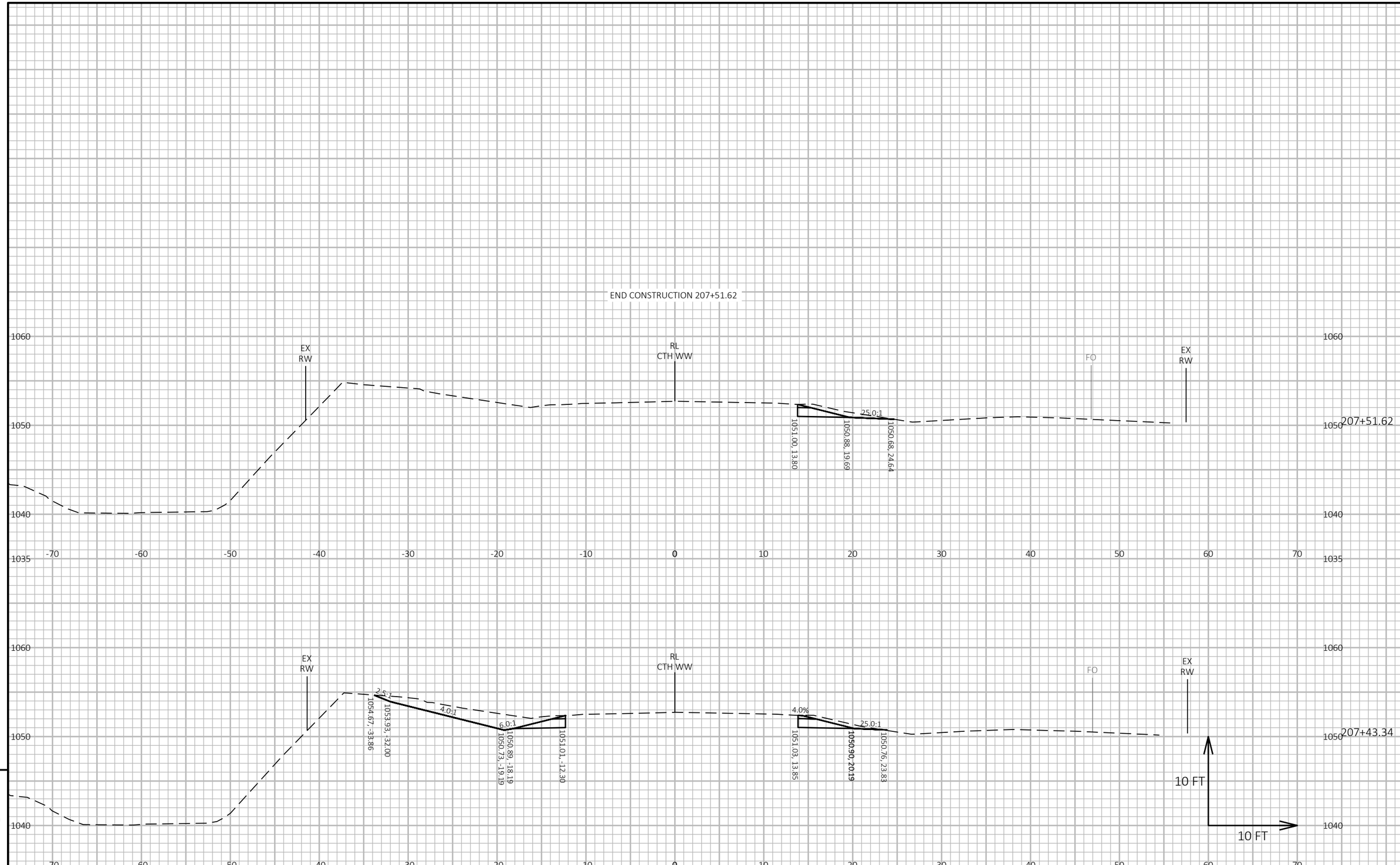


| PROJECT NO: 6777-00-70 | HWY: CTH WW | COUNTY: PORTAGE | CROSS SECTIONS: CTH WW | SHEET 91 | E |
|---|---|---|---|---|---|

FILE NAME : X:\PROJECTS\PORTAGE\230064 CTH WW, FOUR MILE CREEK BRIDGE\DESIGN\C3D\SHEETSPLAN\090201-XS.DWG
LAYOUT NAME - 11
PLOT DATE : 10/30/2024 4:23 PM
PLOT BY : ADAM SARAUER
PLOT NAME :
**PLOT SCALE :** 1 IN:10 FT HORZ. / 1 IN:10 FT VERT.
WISDOT/CADDS SHEET 49

**Wisconsin Department of Transportation**

Dedicated people creating transportation solutions through innovation and exceptional service.

http://www.dot.wisconsin.gov