WKE | FEBRUARY 2025

PROJECT ID: 4869-03-70

WITH: N/A

COUNTY: WASHINGTON

24

ORDER OF SHEETS

Section No.	1	Title
Section No.	2	Typical Sections and Details
Section No.	3	Estimate of Quantities
Section No.	3	Miscellaneous Quantities
~~Section No.~~	~~4~~	~~Right-of-Way Plat~~
Section No.	5	Plan and Profile
Section No.	6	Standard Detail Drawings
Section No.	7	Sign Plates
~~Section No.~~	~~8~~	~~Structure Plans~~
~~Section No.~~	~~9~~	~~Computer Earthwork Data~~
Section No.	9	Cross Sections

TOTAL SHEETS = 120

STATE OF WISCONSIN
DEPARTMENT OF TRANSPORTATION

PLAN OF PROPOSED IMPROVEMENT

ADDISON - BARTON

CTH WW TO KETTLE VIEW DR S

CTH D
WASHINGTON COUNTY

STATE PROJECT	FEDERAL PROJECT	
	PROJECT	CONTRACT
4869-03-70	WISC 2025321	1

STATE PROJECT NUMBER

4869-03-70

N

DESIGN DESIGNATION

A.A.D.T.	(2025)	=	3100
A.A.D.T.	(2045)	=	3100
D.H.V.		=	
D.D.		=	50/50
T		=	14.3%
DESIGN SPEED		=	55 MPH
ESALS		=	710,000

NET EXCEPTION TO CL LENGTH
STA 114+88.83 - STA 116+52.81
STRUCTURE B-66-196

BEGIN PROJECT
STA 100+83.50
Y = 201,556.503
X = 325,559.265

END PROJECT
STA 365+00.00

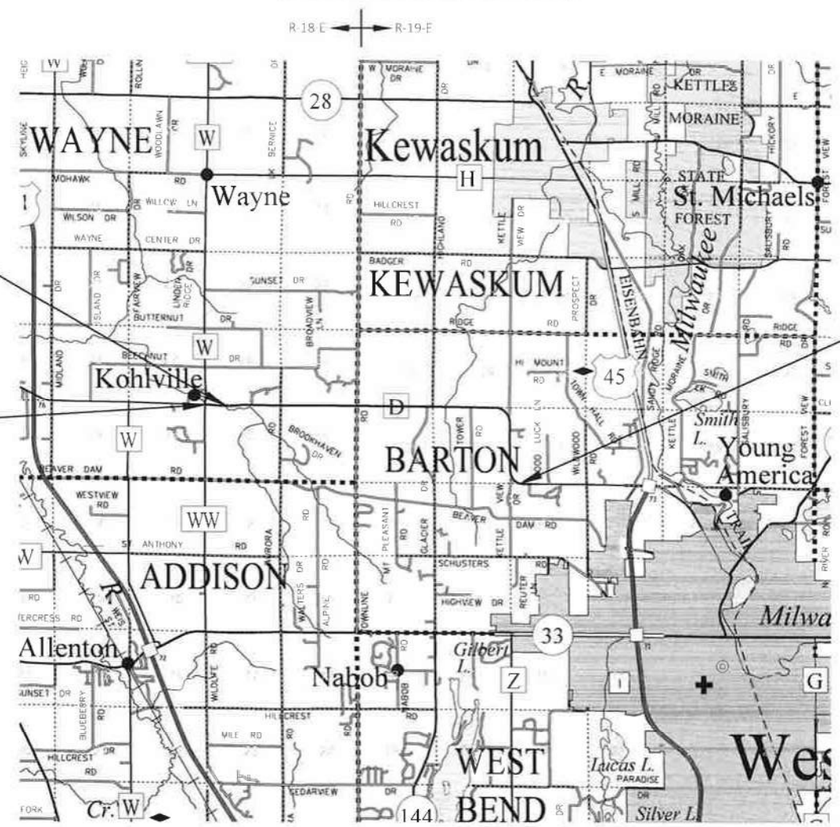

CONVENTIONAL SYMBOLS

PLAN

CORPORATE LIMITS
PROPERTY LINE
LOT LINE
LIMITED HIGHWAY EASEMENT
EXISTING RIGHT OF WAY
PROPOSED OR NEW R/W LINE
SLOPE INTERCEPT
REFERENCE LINE (300 FB)
EXISTING CULVERT
PROPOSED CULVERT (Box or Pipe)
COMBUSTIBLE FLUIDS (CAUTION)
MARSH AREA
WOODED OR SHRUB AREA

PROFILE

GRADE LINE
ORIGINAL GROUND
MARSH OR ROCK PROFILE (To be noted as such) (ROCK)
SPECIAL DITCH (LABEL)
GRADE ELEVATION (95.36)
CULVERT (Profile View)

UTILITIES

ELECTRIC — E —
FIBER OPTIC — FO —
GAS — G —
OVERHEAD — OH —
SANITARY SEWER — SAN —
STORM SEWER — SS —
TELEPHONE — T —
WATER — W —
UTILITY PEDESTAL
POWER POLE
TELEPHONE POLE

LAYOUT

SCALE 0 — 2 MI

TOTAL NET LENGTH OF CENTERLINE = 4.995 MI

HORIZONTAL POSITIONS SHOWN ON THIS PLAN ARE WISCONSIN COORDINATE REFERENCE SYSTEM (WISCRS), WASHINGTON COUNTY NAD83 (2011), IN U.S. SURVEY FEET. POSITIONS SHOWN ARE GRID COORDINATES, GRID BEARINGS, AND GRID DISTANCES. GRID DISTANCES ARE THE SAME AS GROUND DISTANCES.

ELEVATIONS ARE REFERENCED TO NAVD 88 (2012).

ACCEPTED FOR WASHINGTON COUNTY

Date 10/29/24 (Signature and Title of Official)

CHIEF PUBLIC WORKS OFFICER

ORIGINAL PLANS PREPARED BY

CORRE ENGINEERING

MADISON | EAU CLAIRE | WAUKESHA | APPLETON | TOMAH | WAUSAU

WISCONSIN PROFESSIONAL ENGINEER — JOSHUA A WEISS E-37150 OREGON WI

Josh Weiss

Digitally signed by Josh Weiss
DN: C=US, E=jweiss@correinc.com, O=CORRE Inc., CN=Josh Weiss
Date: 2024.10.30 06:56:53-05'00'

STATE OF WISCONSIN
DEPARTMENT OF TRANSPORTATION

PREPARED BY

Surveyor	CORRE INC.
Designer	CORRE INC.
Project Manager	JOSEPH JELACIC
Regional Examiner	REGIONAL EXAMINER
Regional Supervisor	AMY TAETSCH

APPROVED FOR THE DEPARTMENT

Joseph Jelacic

Digitally signed by Joseph Jelacic
DN: CN=JJ, E=joseph.jelacic@dot.wi.gov, O=WISDOT, OU=Joseph Jelacic
Date: 2024.10.29 16:27:38-05'00'

DATE 10/29/24 (Signature)

E

GENERAL NOTES

THE LOCATIONS OF EXISTING AND PROPOSED UTILITY INSTALLATIONS AS SHOWN ON THE PLANS ARE APPROXIMATE. THERE MAY BE OTHER UTILITY INSTALLATIONS WITHIN THE PROJECT AREA THAT ARE NOT SHOWN.

CONTRACTOR WILL BE RESPONSIBLE FOR RESHAPING AND SEEDING ANY PREVIOUSLY GRASSED AREAS WHICH ARE DISTURBED BY OPERATIONS, OUTSIDE OF THE NORMAL CONSTRUCTION LIMITS.

HMA PAVEMENT WEIGHT CALCULATIONS ARE BASED ON 112 LBS/SY/IN.

MATCH EXISTING SUPERELEVATIONS IN PULVERIZE AND RELAY SECTIONS.

NO TREES OR SHRUBS ARE TO BE REMOVED WITHOUT THE APPROVAL OF THE ENGINEER.

RIGHT OF WAY INFORMATION SHOWN ON THE PLANS IS APPROXIMATE.

THE CONTRACTOR IS TO WORK WITH UTMOST CARE AND PROTECT ALL SURVEY MARKERS. REMOVAL OF ANY SURVEY MARKER IS TO BE WITH THE APPROVAL OF THE ENGINEER.

WHEN THE QUANTITY OF THE ITEMS OF BASE AGGREGATE, SUBBASE OR HMA PAVEMENT IS MEASURED FOR PAYMENT BY THE TON OR CUBIC YARD, THE DEPTH OR THICKNESS OF THE LAYERS SHOWN ON THE PLAN IS APPROXIMATE AND THE ACTUAL THICKNESS WILL DEPEND ON THE DISTRIBUTION OF THE MATERIAL AS DIRECTED BY THE ENGINEER.

EROSION CONTROL FEATURES AS SHOWN IN THE PLANS ARE AT APPROXIMATE LOCATIONS. EXACT LOCATIONS WILL BE DETERMINED BY THE CONTRACTOR'S EROSION CONTROL IMPLEMENTATION PLAN (ECIP) AND APPROVED BY THE ENGINEER. MAINTAIN EROSION CONTROL MEASURES UNTIL SUCH A TIME AS THE ENGINEER DETERMINES THE MEASURE IS NO LONGER NECESSARY.

PIPE ELEVATIONS, LENGTHS AND LOCATIONS AS SHOWN ON THE PLANS, MAY BE ADJUSTED TO FIT EXISTING FIELD CONDITIONS AS DIRECTED BY THE ENGINEER.

THE PROPOSED SHOULDER WIDTH SHOWN IN THE TYPICAL SECTIONS ARE MINIMUM WIDTH. PERPETUATE EXISTING SHOULDERS THAT ARE WIDER THAN WHAT IS SHOWN IN THE TYPICAL SECTIONS.

THE CONTRACTOR'S PAVING OPERATION SHALL BE CONSISTENT WITH THE TYPICAL SECTIONS AND CONSTRUCTED TO PREVENT LONGITUDINAL JOINTS FROM BEING LOCATED WITHIN A DRIVING, TURNING, PASSING, OR PARKING LANE.

SAWCUTS, AS SHOWN ON THE PLANS, ARE SUGGESTED LOCATIONS AND MAY BE ADJUSTED AT THE DISCRETION OF THE ENGINEER TO BETTER SUIT FIELD CONDITIONS.

PRIOR TO PLACEMENT OF BEAM GUARD, HMA PAVEMENT SHALL BE IN PLACE AND THE AGGREGATE SHOULDERS, SHAPED AND COMPACTED.

ADJUST BEAM GUARD POST SPACING AT CULVERT PIPES TO AVOID POUNDING POSTS INTO EXISTING OR PROPOSED CULVERT PIPES.

CONTRACTOR SHALL MAINTAIN ACCESS TO ALL DRIVEWAYS AT ALL TIMES EXCEPT WHEN PAVING OR PIPE LAYING OPERATIONS REQUIRE THE DRIVEWAY TO BE CLOSED. ACCESS TO DRIVEWAYS SHALL BE RE-ESTABLISHED IMMEDIATELY AFTER OPERATIONS ARE COMPLETED. ACCESS SHALL BE PROVIDED DURING ALL NON-WORKING HOURS.

TRAFFIC CONTROL DEVICES SHALL BE ADJUSTED TO FIT FIELD CONDITIONS AS DIRECTED BY THE ENGINEER.

PRIOR TO ORDERING DRAINAGE PIPES, THE CONTRACTOR SHALL FIELD VERIFY RELATED DRAINAGE INFORMATION IN THE PLAN WITH THE ENGINEER.

DO NOT DRIVE OR STORE EQUIPMENT, OR STORE CONSTRUCTION MATERIALS IN ENVIRONMENTALLY SENSITIVE AREAS, WETLANDS OR WATERWAYS.

ORDER OF SECTION 2 DETAIL SHEETS

GENERAL NOTES
PROJECT OVERVIEW
TYPICAL SECTIONS
CONSTRUCTION DETAILS
DETOUR ROUTE

UTILITIES CONTACTS

AT&T DISTRIBUTION
COMMUNICATION
STEVE BURTCH
220 WISCONSIN AVENUE
WAUKESHA, WI 53186
PHONE: (262) 506-2849
EMAIL: SB7561@ATT.COM

FRONTIER COMMUNICATIONS
COMMUNICATION
CHRISTOPHER POLLACK
521 N. 4TH STREET
WAUSAU, WI 54403
PHONE: (715) 847-1240
EMAIL: CHRISTOPHER.POLLACK@FTR.COM

SPECTRUM/CHARTER
COMMUNICATION
NICK FRASE
1515 W. WASHINGTON STREET
WEST BEND, WI 53095
PHONE: (920) 304-6797
EMAIL: NICK.FRASE@CHARTER.COM

WE ENERGIES
ELECTRIC
JOE FELLENZ
W140 N9100 LILLY ROAD
MENOMINEE FALLS, WI 53051
PHONE: (414) 322-8928
EMAIL: JOSEPH.FELLENZ@WE-ENERGIES.COM

WE ENERGIES
GAS/PETROLEUM
JACOB HULBERT
500 S. 116TH STREET
WEST ALLIS, WI 53214
PHONE: (414) 651-1577
EMAIL: JACOB.HULBERT@WE-ENERGIES.COM

DIGGERS HOTLINE
Dial 811 or (800)242-8511
www.DiggersHotline.com

WISCONSIN DNR LIAISON

BENTON STELZEL
DNR SERVICE CENTER
141 NW BARSTOW ROOM 180
WAUKESHA, WI 53188
PHONE: (262) 623-0194
EMAIL: BENTON.STELZEL@WISCONSIN.GOV

CONSULTANT CONTACT

JOSH WEISS
CORRE, INC
6510 GRAND TETON PLAZA, SUITE 314
MADISON, WI 53719
PHONE: (608) 826-6140
EMAIL: JWEISS@CORREINC.COM

COUNTY HIGHWAY COMMISSIONER

SCOTT SCHMIDT
WASHINGTON COUNTY
900 LANG STREET
WEST BEND, WI 53090
PHONE: (262) 335-6881
EMAIL: SCOTT.SCHMIDT@WASHCOWISCO.GOV

TOWN OF WAYNE

CAROL GONWA
TOWN CLERK
W6030 MOHAWK ROAD
CAMPBELLSPORT, WI 53010
PHONE: (262) 626-4818
EMAIL: CLERK@TOWNOFWAYNE.WASHCO.WI.GOV

TOWN OF BARTON

SHERRY ECKERT
TOWN CLERK
3482 TOWN HALL ROAD
KEWASKUM, WI 53040
PHONE: (262) 334-2765
EMAIL: CLERK@TN.BARTON.WI.GOV

RUNOFF COEFFICIENT TABLE

	HYDROLOGIC SOIL GROUP											
	A			B			C			D		
	SLOPE RANGE (PERCENT)			SLOPE RANGE (PERCENT)			SLOPE RANGE (PERCENT)			SLOPE RANGE (PERCENT)		
LAND USE:	0-2	2-6	6 & OVER	0-2	2-6	6 & OVER	0-2	2-6	6 & OVER	0-2	2-6	6 & OVER
ROW CROPS:	.08	.16	.22	.12	.20	.27	.15	.24	.33	.19	.28	.38
	.22	.30	.38	.26	.34	.44	.30	.37	.50	.34	.41	.56
MEDIAN STRIPTURF:	.19	.20	.24	.19	.22	.26	.20	.23	.30	.20	.25	.30
	.24	.26	.30	.25	.28	.33	.26	.30	.37	.27	.32	.40
SIDE SLOPETURF:			.25			.27			.28			.30
			.32			.34			.36			.38
PAVEMENT:												
ASPHALT:	.70 - .95											
CONCRETE:	.80 - .95											
BRICK:	.70 - .80											
DRIVES, WALKS:	.75 - .85											
ROOFS:	.75 - .95											
GRAVEL ROADS, SHOULDERS:	.40 - .60											

TOTAL PROJECT AREA = 24.86 ACRES
TOTAL AREA EXPECTED TO BE DISTURBED BY CONSTRUCTION ACTIVITIES = 1.83 ACRES

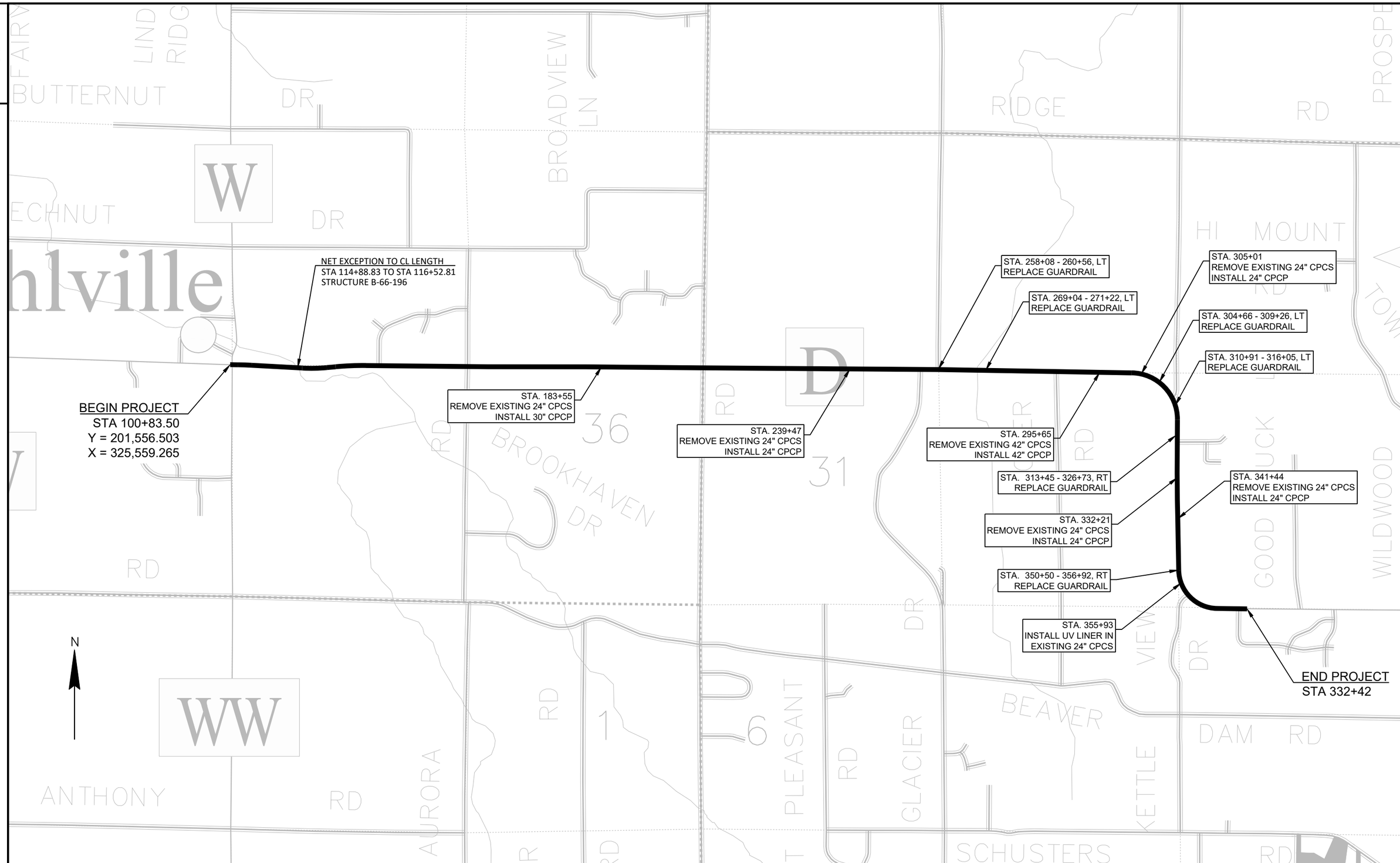

PROJECT NO: 4869-03-70	HWY: CTH D	COUNTY: WASHINGTON	PROJECT OVERVIEW	SHEET 3	E

FILE NAME : C:\OD\CORRE, INC\PROJECTS - 4869-03-00_CTH_D_WASHINGTON_COUNTY\500_CADD\501_C3D_2022\48690300\SHEETS\020201-PO.DWG
LAYOUT NAME - 01
PLOT DATE : 12/17/2024 2:49 PM
PLOT BY : MATT KOSKI
PLOT NAME :
PLOT SCALE : 1 IN:2000 FT
WISDOT/CADDS SHEET 42

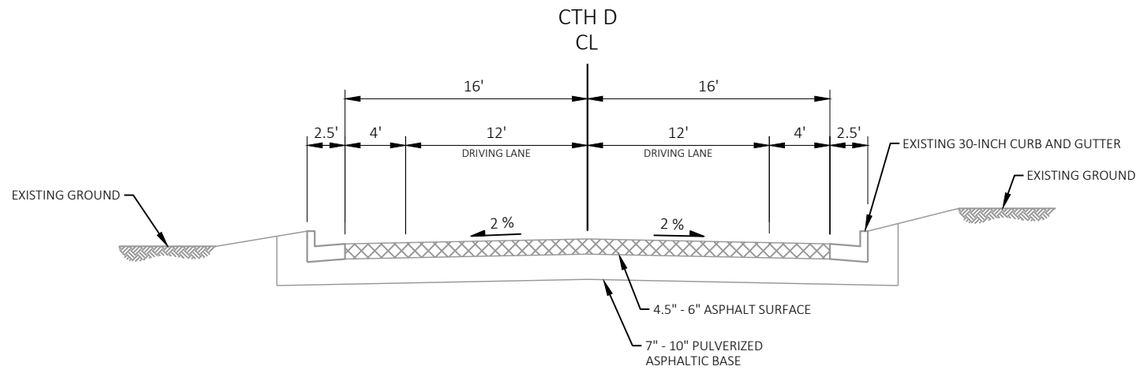

EXISTING TYPICAL SECTION - CTH D

STA 100+83.5 -104+26.0

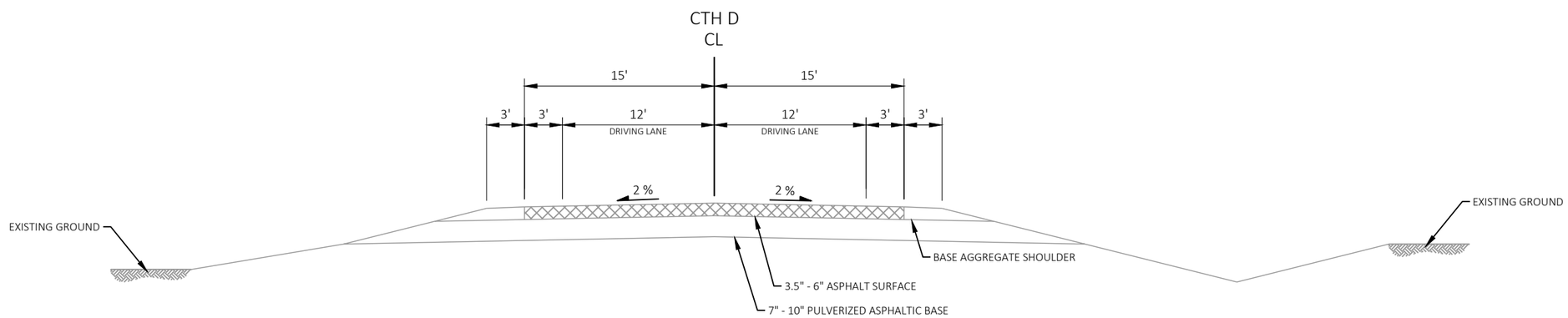

EXISTING TYPICAL SECTION - CTH D

STA 104+26.0 - 364+50.0

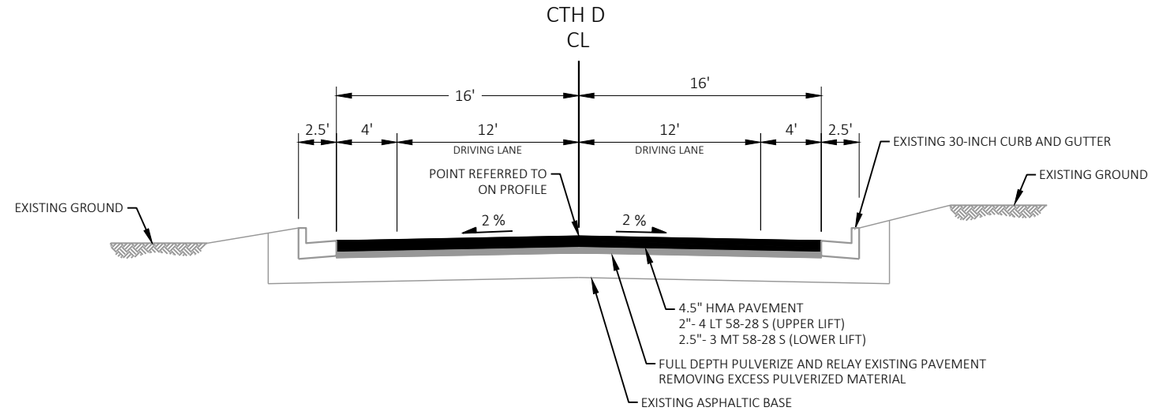

FINISHED TYPICAL SECTION - CTH D

STA 100+83.5 -104+26.0

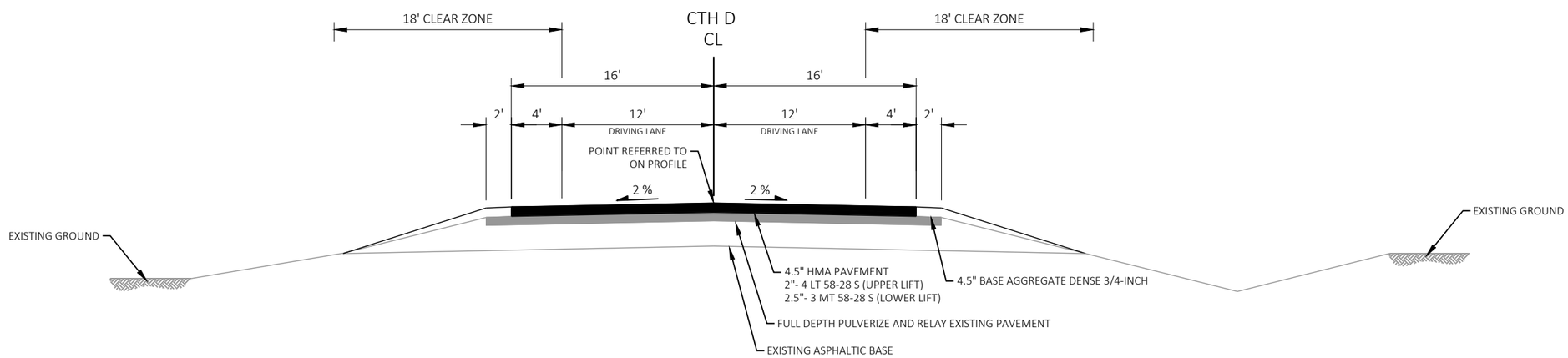

FINISHED TYPICAL SECTION - CTH D

STA 104+26.0 - 113+26.0

STA 118+15.0 - 364+50.0

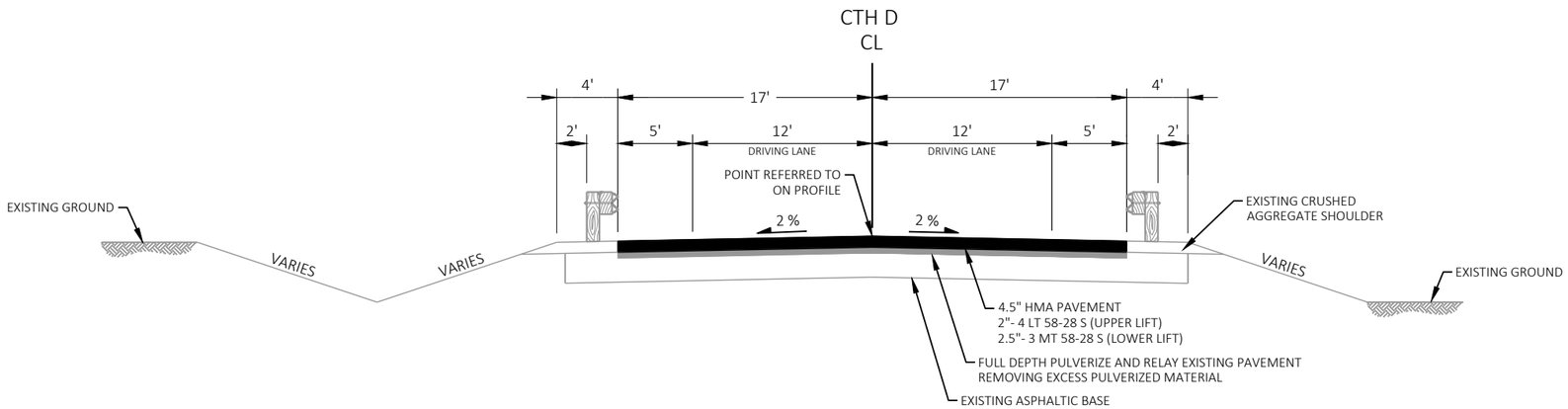

FINISHED TYPICAL SECTION - CTH D

STA 113+26.0 -114+88.8
STA 116+52.8 - 118+15.0

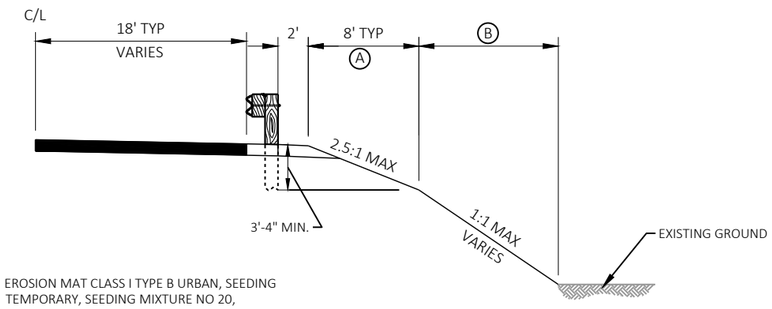

(A) EROSION MAT CLASS I TYPE B URBAN, SEEDING TEMPORARY, SEEDING MIXTURE NO 20, FERTILIZER TYPE B

(B) EROSION MAT CLASS III TYPE D, SOIL STABILIZER TYPE A, SEEDING TEMPORARY, SEEDING MIXTURE NO 20, FERTILIZER TYPE B

*NOTE: FINAL LOCATIONS TO BE FIELD VERIFIED WITH THE ENGINEER.

GUARDRAIL EMBANKMENT DETAIL

*STA 257+16 - 261+46 LT
*STA 268+43 - 270+44 LT
*STA 305+16 - 308+73 LT
*STA 316+50 - 322+80 RT

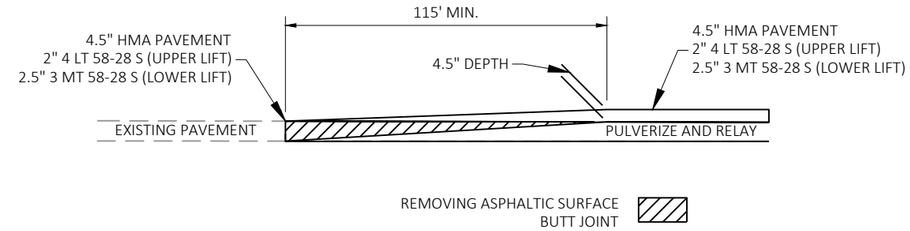

MAINLINE BUTT JOINT

END TERMINI

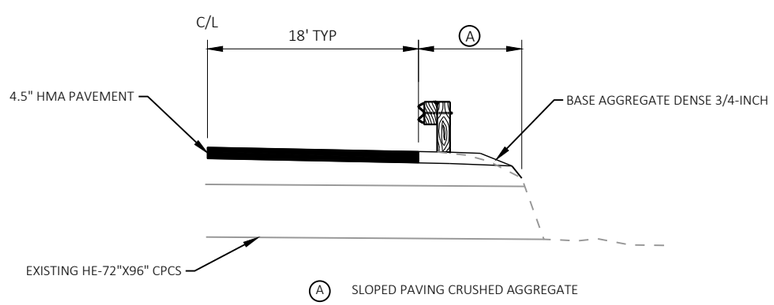

*NOTE: FINAL LOCATIONS TO BE FIELD VERIFIED WITH THE ENGINEER.

SLOPE PAVING DETAIL

*STA 269+90 - 270+33 LT

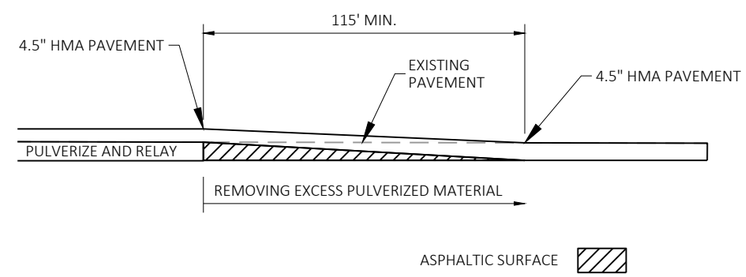

MAINLINE PAVING TRANSITION DETAIL

STA 112+11 - 113+26
STA 118+15 - 119+30

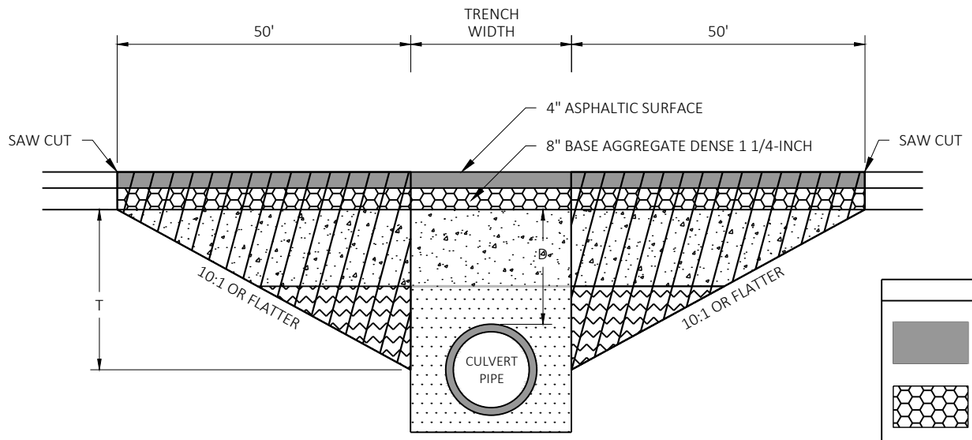

DEPTH D < 6 FT

TRANSITION CUT DEPTH (T) = THE LESSER OF DEPTH TO CENTER OF PIPE OR 5 FT.
DO NOT EXTEND TRANSITION CUT BELOW HORIZONTAL CENTER OF PIPE.

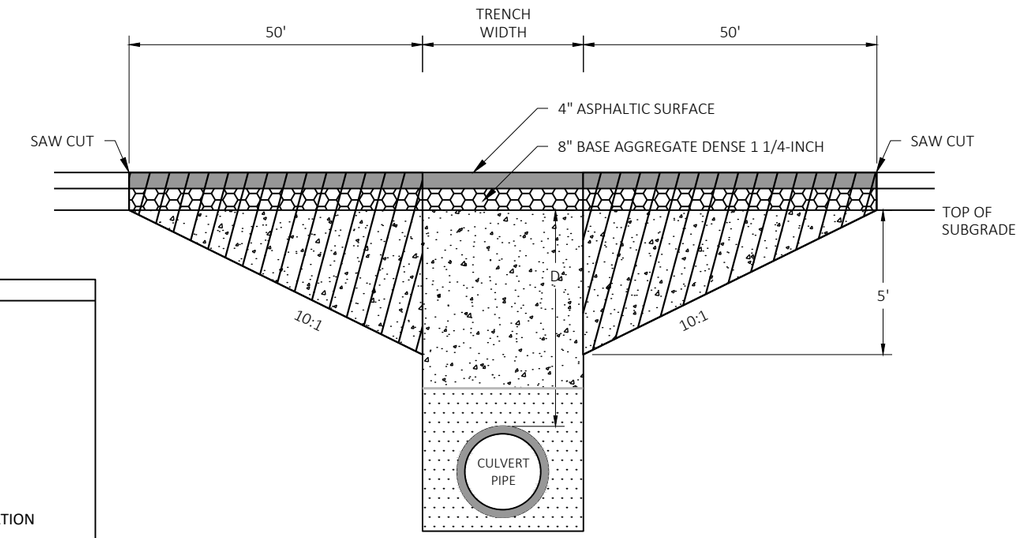

DEPTH D ≥ 6 FT

KEY

- PROPOSED SURFACE
- PROPOSED BASE
- TRENCH BACKFILL
- TRENCH OR FOUNDATION BACKFILL
- FOUNDATION BACKFILL
- TRANSITION CUT

NOTES

TRANSITION CUT IS PAID AS EXCAVATION COMMON.
TRANSITION CUT WIDTH IS FROM SUBGRADE SHOULDER POINT TO SUBGRADE SHOULDER POINT.
BACKFILL THE TRANSITION CUT AREAS WITH FOUNDATION AND TRENCH BACKFILL AS SPECIFIED IN STANDARD SPEC 520.
FOUNDATION BACKFILL IS PAID AS BACKFILL GRANULAR GRADE 2.
PERFORM CULVERT PIPE INSTALLATION BEFORE PULVERIZE AND RELAY OPERATIONS.

CROSS DRAIN INSTALLATION DETAIL
PULVERIZE AND RELAY

ROUTE	STA (CL)	DEPTH D (FT)	PIPE DIA (IN)
CTH D	183+55	6.3'	30"
CTH D	239+47	3.5'	24"
CTH D	295+65	2.4'	42"
CTH D	305+01	2.7'	24"
CTH D	332+21	2.8'	24"
CTH D	341+44	6.8'	24"

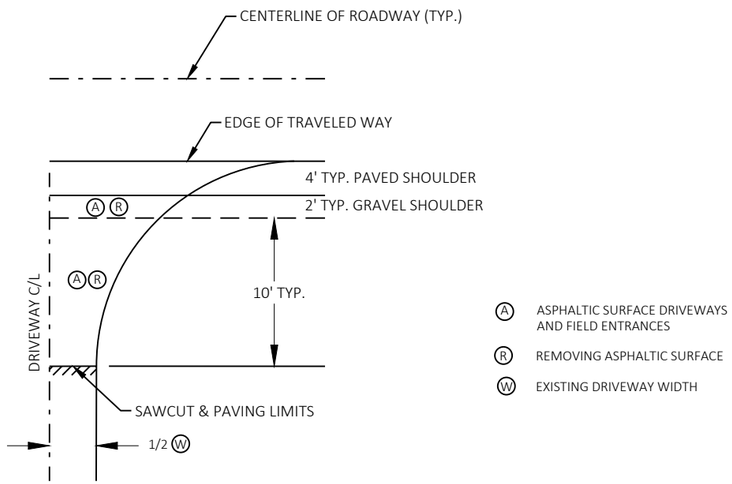

RURAL ENTRANCE WITH ASPHALTIC SURFACE

HALF SECTION

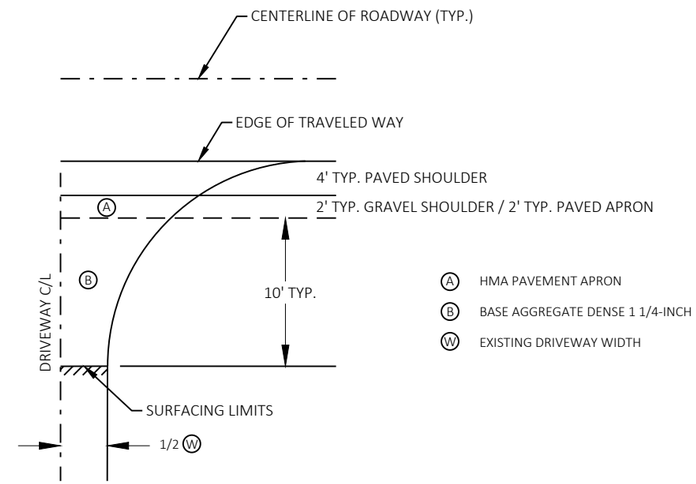

RURAL ENTRANCE WITH AGGREGATE SURFACE

HALF SECTION

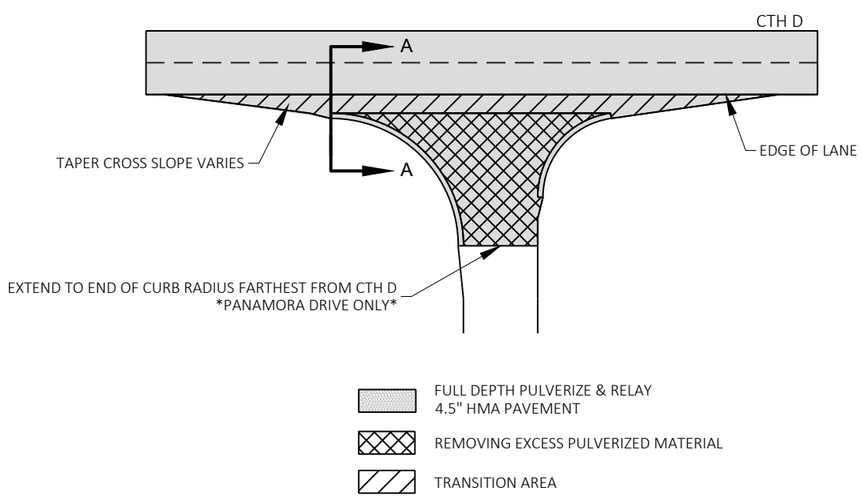

SIDEROADS & PRIVATE ENTRANCES

WITH CURB AND GUTTER

PANAMORA DRIVE, STA. 133+56 LT
PRIVATE ENTRANCE, STA. 307+99 RT

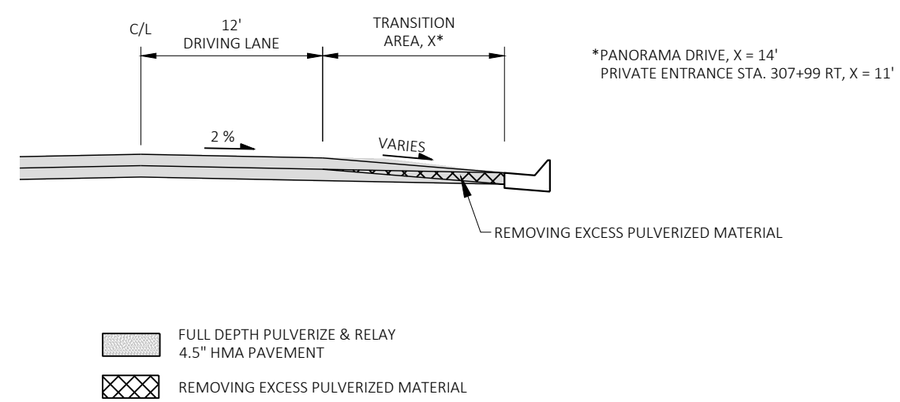

SAW CUT IS CONSIDERED INCIDENTAL TO PULVERIZE AND RELAY.

AGGREGATE SIDE ROADS DO NOT REQUIRE BUTT JOINTS.

TRANSITION AREA PAID FOR UNDER PULVERIZE AND RELAY BID ITEM.

SECTION A-A

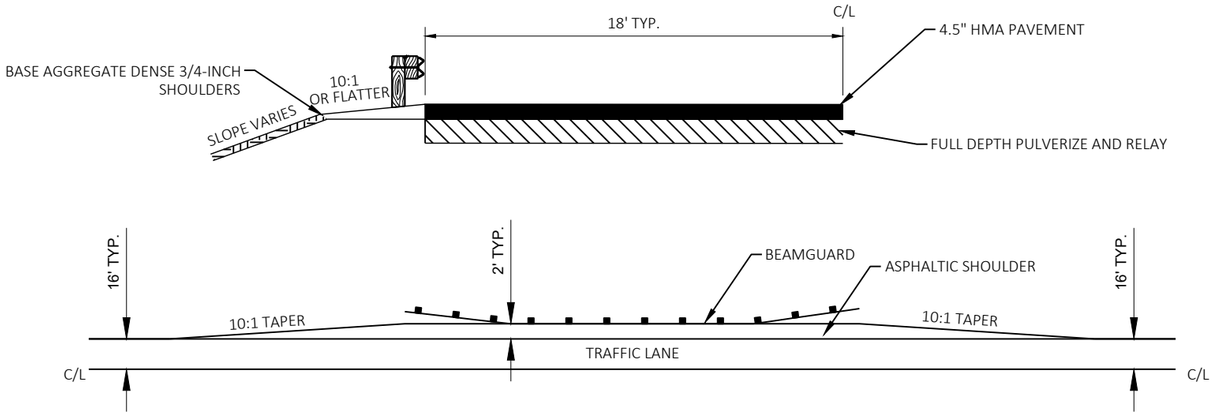

NOTE: USE IN CONJUNCTION WITH SDD "MIDWEST GUARDRAIL SYSTEM (MGS) ENERGY ABSORBING TERMINAL"

DETAIL FOR GUARDRAIL INSTALLATION

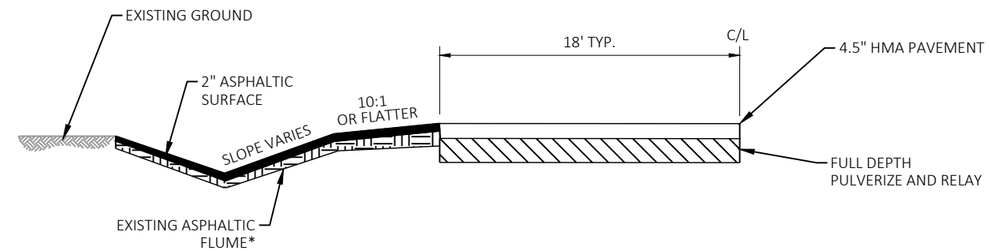

DETAIL FOR ASPHALTIC FLUME

STA 315+80 TO 318+30 LT

NOTE: GUARDRAIL END TERMINAL EXTENDS AT THIS LOCATION TO APPROXIMATELY STA. 316+14. AVOID PAVING BETWEEN GUARDRAIL POSTS.

*REMOVE LOOSE ASPHALTIC MATERIAL PRIOR TO PAVING. REMOVAL OF MATERIAL IS INCIDENTAL TO ASPHALTIC SURFACE.

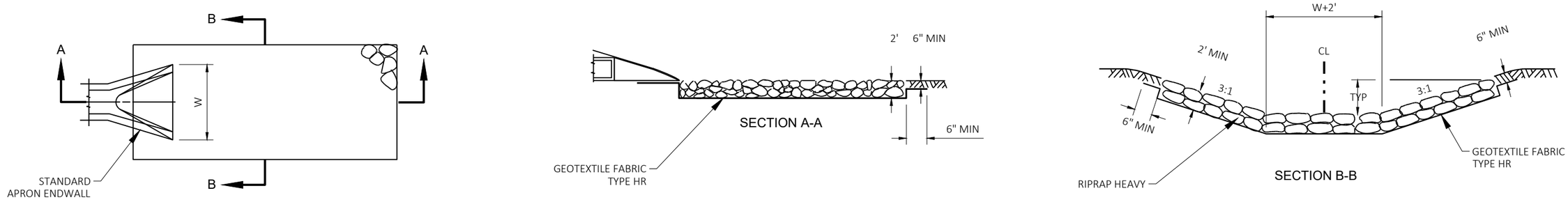

RIP RAP AND GEOTEXTILE

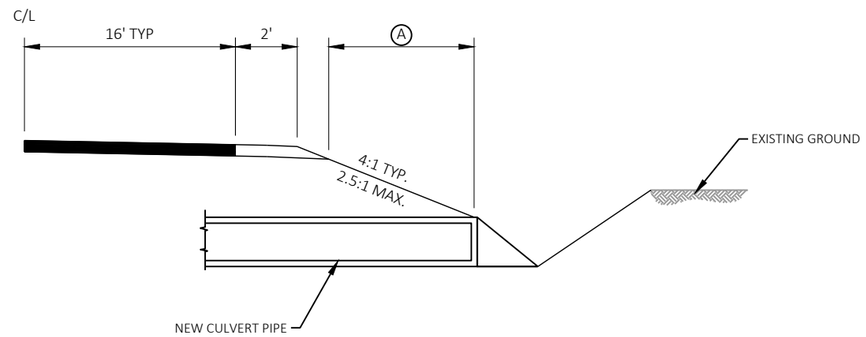

(A) MULCHING*, SEEDING TEMPORARY, SEEDING MIXTURE NO. 20, FERTILIZER TYPE B

*EROSION MAT CLASS I TYPE B URBAN IS TO BE USED AT STA. 183+55

NOTE: FINAL LOCATIONS TO BE FIELD VERIFIED WITH THE ENGINEER.

EROSION CONTROL AT CULVERT REPLACEMENTS

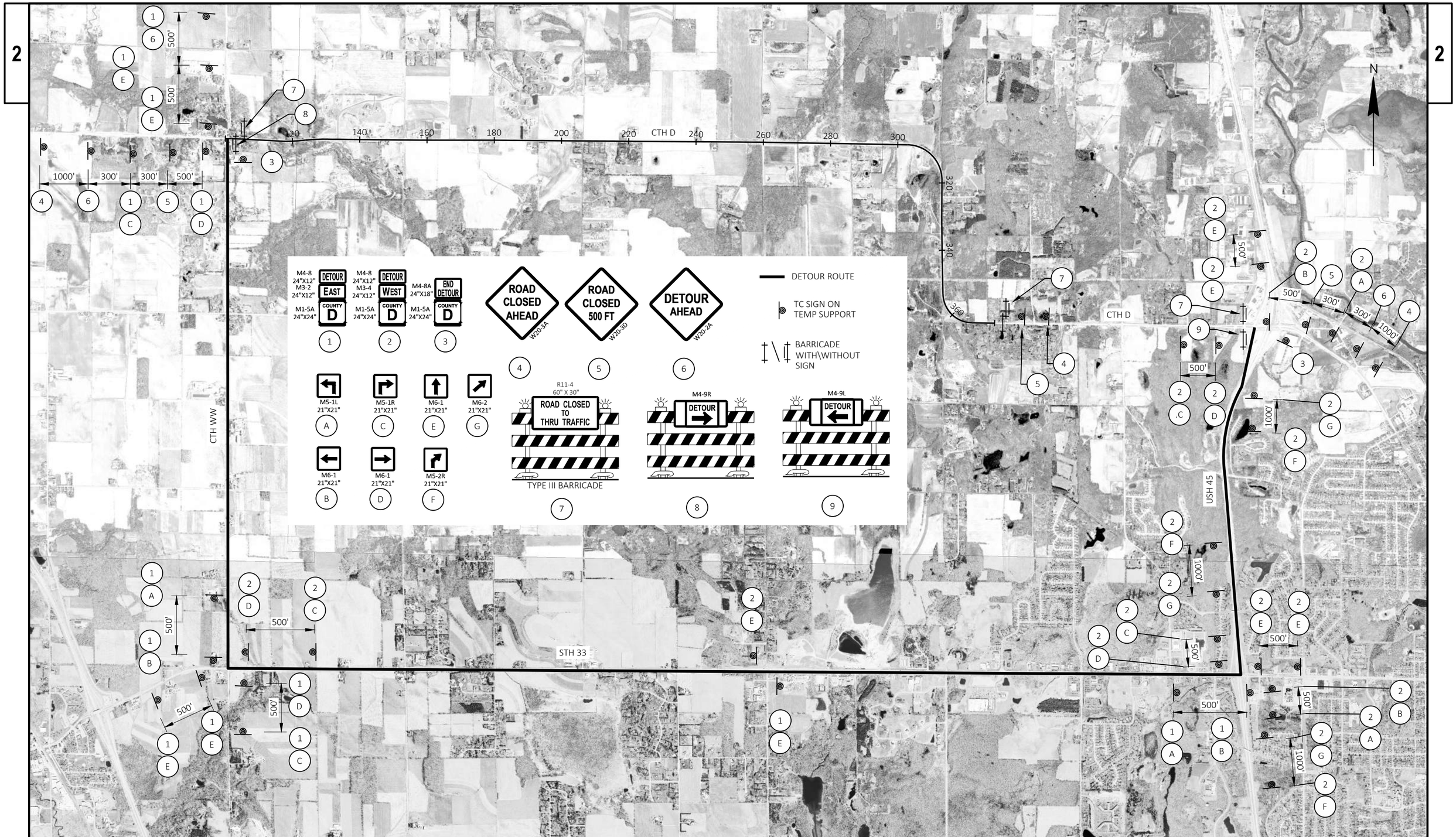

PROJECT NO: 4869-03-70	HWY: CTH D	COUNTY: WASHINGTON	DETOUR ROUTE	SHEET 12	E

FILE NAME : C:\OD\CORRE, INC\PROJECTS - 4869-03-00_CTH_D_WASHINGTON_COUNTY\500_CADD\501_C3D_2022\48690300\SHEETS\027001-DT.DWG
LAYOUT NAME - 01
PLOT DATE : 12/17/2024 3:32 PM PLOT BY : MATT KOSKI PLOT NAME : PLOT SCALE : 1 IN:0.5 MI

Estimate Of Quantities

4869-03-70

Line	Item	Item Description	Unit	Total	Qty
0002	201.0205	Grubbing	STA	11.000	11.000
0004	203.0100	Removing Small Pipe Culverts	EACH	8.000	8.000
0006	204.0110	Removing Asphaltic Surface	SY	741.000	741.000
0008	204.0115	Removing Asphaltic Surface Butt Joints	SY	1,361.000	1,361.000
0010	204.0165	Removing Guardrail	LF	3,571.000	3,571.000
0012	205.0100	Excavation Common	CY	3,903.000	3,903.000
0014	208.0100	Borrow	CY	4,000.000	4,000.000
0016	209.2100	Backfill Granular Grade 2	CY	193.000	193.000
0018	213.0100	Finishing Roadway (project) 01. 4869-03-70	EACH	1.000	1.000
0020	305.0110	Base Aggregate Dense 3/4-Inch	TON	3,875.000	3,875.000
0022	305.0120	Base Aggregate Dense 1 1/4-Inch	TON	949.000	949.000
0024	325.0100	Pulverize and Relay	SY	98,270.000	98,270.000
0026	374.1020.S	QMP Pulverize and Relay Compaction	SY	98,270.000	98,270.000
0028	455.0605	Tack Coat	GAL	7,292.000	7,292.000
0030	460.0105.S	HMA Percent Within Limits (PWL) Test Strip Volumetrics	EACH	2.000	2.000
0032	460.0110.S	HMA Percent Within Limits (PWL) Test Strip Density	EACH	2.000	2.000
0034	460.2005	Incentive Density PWL HMA Pavement	DOL	24,971.000	24,971.000
0036	460.2007	Incentive Density HMA Pavement Longitudinal Joints	DOL	10,580.000	10,580.000
0038	460.2010	Incentive Air Voids HMA Pavement	DOL	24,971.000	24,971.000
0040	460.5224	HMA Pavement 4 LT 58-28 S	TON	11,097.000	11,097.000
0042	460.6223	HMA Pavement 3 MT 58-28 S	TON	13,874.000	13,874.000
0044	465.0105	Asphaltic Surface	TON	360.000	360.000
0046	465.0120	Asphaltic Surface Driveways and Field Entrances	TON	239.000	239.000
0048	521.1018	Apron Endwalls for Culvert Pipe Steel 18-Inch	EACH	4.000	4.000
0050	521.1024	Apron Endwalls for Culvert Pipe Steel 24-Inch	EACH	8.000	8.000
0052	521.1030	Apron Endwalls for Culvert Pipe Steel 30-Inch	EACH	2.000	2.000
0054	521.1042	Apron Endwalls for Culvert Pipe Steel 42-Inch	EACH	2.000	2.000
0056	530.0118	Culvert Pipe Corrugated Polyethylene 18-Inch	LF	58.000	58.000
0058	530.0124	Culvert Pipe Corrugated Polyethylene 24-Inch	LF	295.000	295.000
0060	530.0130	Culvert Pipe Corrugated Polyethylene 30-Inch	LF	78.000	78.000
0062	604.0500	Slope Paving Crushed Aggregate	SY	25.000	25.000
0064	606.0300	Riprap Heavy	CY	5.000	5.000
0066	614.2300	MGS Guardrail 3	LF	2,525.000	2,525.000
0068	614.2340	MGS Guardrail 3 L	LF	112.500	112.500
0070	614.2350	MGS Guardrail Short Radius	LF	291.000	291.000
0072	614.2610	MGS Guardrail Terminal EAT	EACH	16.000	16.000
0074	619.1000	Mobilization	EACH	1.000	1.000
0076	624.0100	Water	MGAL	491.000	491.000
0078	625.0500	Salvaged Topsoil	SY	7,620.000	7,620.000
0080	627.0200	Mulching	SY	486.000	486.000
0082	628.1504	Silt Fence	LF	5,100.000	5,100.000
0084	628.1520	Silt Fence Maintenance	LF	5,100.000	5,100.000
0086	628.1905	Mobilizations Erosion Control	EACH	3.000	3.000
0088	628.1910	Mobilizations Emergency Erosion Control	EACH	1.000	1.000
0090	628.2008	Erosion Mat Urban Class I Type B	SY	7,134.000	7,134.000
0092	628.2039	Erosion Mat Class III Type D	SY	1,240.000	1,240.000
0094	628.6505	Soil Stabilizer Type A	ACRE	0.270	0.270
0096	628.7555	Culvert Pipe Checks	EACH	9.000	9.000
0098	629.0210	Fertilizer Type B	CWT	4.850	4.850

Estimate Of Quantities

4869-03-70

Line	Item	Item Description	Unit	Total	Qty
0100	630.0120	Seeding Mixture No. 20	LB	348.000	348.000
0102	630.0500	Seed Water	MGAL	347.000	347.000
0104	633.5200	Markers Culvert End	EACH	18.000	18.000
0106	642.5001	Field Office Type B	EACH	1.000	1.000
0108	643.0420	Traffic Control Barricades Type III	DAY	620.000	620.000
0110	643.0705	Traffic Control Warning Lights Type A	DAY	1,230.000	1,230.000
0112	643.0900	Traffic Control Signs	DAY	15,610.000	15,610.000
0114	643.5000	Traffic Control	EACH	1.000	1.000
0116	645.0120	Geotextile Type HR	SY	5.000	5.000
0118	646.1005	Marking Line Paint 4-Inch	LF	78,492.000	78,492.000
0120	646.3005	Marking Line Paint 8-Inch	LF	110.000	110.000
0122	646.6105	Marking Stop Line Paint 18-Inch	LF	151.000	151.000
0124	648.0100	Locating No-Passing Zones	MI	5.000	5.000
0126	650.6000	Construction Staking Pipe Culverts	EACH	8.000	8.000
0128	650.8000	Construction Staking Resurfacing Reference	LF	26,416.000	26,416.000
0130	650.9911	Construction Staking Supplemental Control (project) 01. 4869-03-70	EACH	1.000	1.000
0132	650.9920	Construction Staking Slope Stakes	LF	4,189.000	4,189.000
0134	690.0150	Sawing Asphalt	LF	719.000	719.000
0136	740.0440	Incentive IRI Ride	DOL	19,900.000	19,900.000
0138	ASP.1T0A	On-the-Job Training Apprentice at $5.00/HR	HRS	800.000	800.000
0140	ASP.1T0G	On-the-Job Training Graduate at $5.00/HR	HRS	2,280.000	2,280.000
0142	SPV.0090	Special 01. Culvert Pipe Corrugated Polyethylene 42-Inch	LF	62.000	62.000
0144	SPV.0090	Special 02. UV GRP CIPP 24-Inch	LF	104.000	104.000
0146	SPV.0180	Special 01. Removing Excess Pulverized Material	SY	3,820.000	3,820.000

3

STATION	TO	STATION	LOCATION	201.0205 GRUBBING STA
312+00	-	313+00	CTH D LT	1
316+00	-	326+00	CTH D RT	10
			TOTAL 0010	11

STATION	LOCATION	203.0100 REMOVING SMALL PIPE CULVERTS EACH	REMARKS
183+55	MAINLINE	1	30" CPCS - 70 LF
239+47	MAINLINE	1	24" CPCS - 70 LF
295+65	MAINLINE	1	30" CPCS - 55 LF
305+01	MAINLINE	1	18" CPCS - 65 LF
310+18	AGG FE	1	15" CPCS - 28 LF
332+21	MAINLINE	1	24" CPCS - 60 LF
341+44	MAINLINE	1	24" CPCS - 85 LF
349+81	AGG PE	1	18" CPCS - 28 LF
	TOTAL 0010	8	

STATION	LOCATION	204.0110 REMOVING ASPHALTIC SURFACE SY
105+34	ASPH PE	15
106+78	ASPH PE	18
110+03	ASPH PE	22
113+04	ASPH PE	24
122+85	ASPH PE	23
122+88	ASPH PE	28
125+37	ASPH PE	19
126+60	ASPH PE	17
143+32	ASPH PE	20
146+01	ASPH PE	37
147+20	ASPH PE	26
176+14	ASPH PE	27
188+69	ASPH PE	41
204+73	ASPH PE	20
209+44	ASPH PE	30
210+09	ASPH PE	27
212+57	ASPH PE	28
215+97	ASPH PE	28
219+40	ASPH PE	25
219+45	ASPH PE	28
221+12	ASPH PE	27
298+66	ASPH PE	45
327+66	ASPH PE	31
337+09	ASPH PE	24
338+90	ASPH PE	21
342+08	ASPH PE	41
342+77	ASPH PE	27
343+95	ASPH PE	22
	TOTAL 0010	741

STATION	LOCATION	204.0115 REMOVING ASPHALTIC SURFACE BUTT JOINTS SY
153+39	AURORA RD	120
153+40	AURORA RD	74
206+41	TOWNLINE RD	100
206+41	TOWNLINE RD	124
255+36	GLACIER DR	91
259+25	HIGHLAND DR	118
314+00	KETTLE VIEW DR	192
324+18	EDELWEISS LN	115
359+10	KETTLE MORAINE SCENIC DR	71
365+00	END PROJECT	356
	TOTAL 0010	1,361

STATION	TO	STATION	LOCATION	204.0165 REMOVING GUARDRAIL LF
258+28	-	259+10	CTH D LT	139
259+40	-	260+34	CTH D LT	138
269+11	-	270+97	CTH D LT	191
304+65	-	309+25	CTH D LT	472
310+96	-	11+81	CTH D LT	425
313+45	-	326+74	CTH D RT	1,327
11+01	-	316+10	CTH D LT	252
350+05	-	356+88	CTH D RT	627
			TOTAL 0010	3,571

CATEGORY	STATION	TO	STATION	LOCATION	205.0100 EXCAVATION COMMON CY	208.0100 BORROW CY	209.2100 BACKFILL GRANULAR GRADE 2 CY	REMARKS
0010	100+84	-	365+00	CTH D	100	4,000	-	
0010			183+55	CTH D	647	-	34	CULVERT REPLACEMENT
0010			239+47	CTH D	647	-	27	CULVERT REPLACEMENT
0010			295+65	CTH D	639	-	51	CULVERT REPLACEMENT
0010			305+01	CTH D	647	-	27	CULVERT REPLACEMENT
0010			332+21	CTH D	585	-	27	CULVERT REPLACEMENT
0010			341+44	CTH D	638	-	27	CULVERT REPLACEMENT
				TOTAL 0010	3,903	4,000	193	

3

STATION	TO	STATION	LOCATION	305.0110 BASE AGGREGATE DENSE 3/4-INCH TON
100+84	-	114+89	SHOULDERS	135
116+53	-	206+00	SHOULDERS	1,240
206+00	-	314+00	SHOULDERS	1,680
314+00	-	365+00	SHOULDERS	820
			TOTAL 0010	3,875

*

STATION	LOCATION	305.0120 BASE AGGREGATE DENSE 1 1/4-INCH TON	465.0105 ASPHALTIC SURFACE TON
183+55	CULVERT REPLACEMENT	105	50
239+47	CULVERT REPLACEMENT	105	50
295+65	CULVERT REPLACEMENT	105	50
305+01	CULVERT REPLACEMENT	130	65
316+00	ASPHALT FLUME	--	45
332+21	CULVERT REPLACEMENT	105	50
341+44	CULVERT REPLACEMENT	105	50
	TOTAL 0010	655	360

STATION	TO	STATION	LOCATION	325.0100 PULVERIZE AND RELAY SY
100+84	-	114+89	KOHLSVILLE TO B-66-196	4,840
118+00	-	132+88	B-66-196 TO PANORAMA DR	5,130
132+88	-	152+55	PANORAMA DR TO AURORA RD	7,530
152+55	-	205+55	AURORA RD TO TOWNLINE RD	17,770
205+55	-	254+93	TOWNLINE RD TO HIGHLAND DR	16,900
254+93	-	286+46	HIGHLAND DR TO TOWER RD	11,030
286+46	-	313+66	TOWER RD TO KETTLE VIEW DR	10,330
313+66	-	323+90	KETTLE VIEW DR TO EDELWEISS LN	10,360
323+90	-	365+00	EDELWEISS LN TO END PROJECT	14,380
			TOTAL 0010	98,270

3

*

STATION	LOCATION	305.0120 BASE AGGREGATE DENSE 1 1/4-INCH TON
120+12	AGG PE	7
123+60	AGG PE	4
157+82	AGG PE	17
159+82	AGG PE	13
173+46	AGG PE	11
174+91	AGG PE	7
175+10	AGG PE	7
191+19	AGG PE	12
194+81	AGG PE	5
203+57	AGG PE	5
204+62	AGG PE	6
205+11	AGG PE	5
220+85	AGG PE	8
226+20	AGG PE	15
226+63	AGG PE	7
230+92	AGG PE	5
234+89	AGG PE	6
240+92	AGG PE	14
243+96	AGG PE	6
245+70	AGG PE	7
250+07	AGG FE	5
259+64	AGG PE	8
269+56	AGG PE	9
270+70	AGG PE	9
279+76	AGG PE	5
289+14	AGG PE	9
303+56	AGG FE	8
310+18	AGG FE	8
331+76	AGG PE	6
332+50	AGG PE	6
332+81	AGG PE	15
335+00	AGG PE	9
340+26	AGG PE	14
345+62	AGG PE	11
349+81	AGG PE	5
	TOTAL 0010	294

CATEGORY	STATION	TO	STATION	LOCATION	455.0605 TACK COAT GAL	460.5224 HMA PAVEMENT 4 LT 58-28 S TON	460.6223 HMA PAVEMENT 3 MT 58-28 S TON
0010	100+84	-	114+89	KOHLSVILLE TO B-66-196	710	565	710
0010	116+53	-	134+10	B-66-196 TO PANORAMA DR	485	775	970
0010	134+10	-	154+15	PANORAMA DR TO AURORA RD	520	835	1,045
0010	154+15	-	206+97	AURORA RD TO TOWNLINE RD	1,320	2,110	2,635
0010	206+97	-	258+86	TOWNLINE RD TO HIGHLAND DR	1,300	2,080	2,600
0010	258+86	-	313+53	HIGHLAND DR TO KETTLE VIEW DR	1,450	2,320	2,900
0010	313+53	-	323+82	KETTLE VIEW DR TO EDELWEISS LN	275	445	555
0010	323+82	-	365+00	EDELWEISS LN TO END PROJECT	1,050	1,680	2,100
0010				PANORAMA DR	23	36	45
0010				AURORA RD	19	30	38
0010				AURORA RD	20	32	39
0010				TOWNLINE RD	15	24	30
0010				TOWNLINE RD	27	43	54
0010				GLACIER DR	11	17	21
0010				HIGHLAND DR	13	20	25
0010				KETTLE VIEW DR	19	30	38
0010				EDELWEISS LN	27	43	54
0010				KETTLE MORAINE SCENIC DR	8	12	15
				TOTAL 0010	7,292	11,097	13,874

LOCATION	624.0100 WATER MGAL
BASE AGGREGATE COMPACTION	97
PULVERIZE AND RELAY COMPACTION	394
TOTAL 0010	491

FOR INFORMATIONAL PURPOSES ONLY								
LOCATION	STATION	MIXTURE USE:	UNDERLYING SURFACE	BID ITEM	TONS	THICKNESS	QUALITY MANAGEMENT PROGRAM TO BE USED FOR: MIXTURE ACCEPTANCE	DENSITY ACCEPTANCE
12 FT DRIVING LANES	100+83 TO 365+00	UPPER LAYER	LOWER LAYER	4 LT 58-28 S	7,890	2"	INCENTIVE AIR VOIDS HMA PAVEMENT 460.2010	INCENTIVE DENSITY PWL HMA PAVEMENT 460.2005
12 FT DRIVING LANES	100+83 TO 365+00	LOWER LAYER	PULVERIZED SURFACE	3 MT 58-28 S	9,862	2.5"		
4-FT SHOULDERS	100+83 TO 365+00	UPPER LAYER	LOWER LAYER	4 LT 58-28 S	2,630	2"		ACCEPTANCE TESTING BY THE DEPARTMENT; NOT ELIGIBLE FOR INCENTIVE OR DISINCENTIVE
4-FT SHOULDERS	100+83 TO 365+00	LOWER LAYER	PULVERIZED SURFACE	3 MT 58-28 S	3,287	2.5"		
SIDE ROAD INTERSECTIONS	100+83 TO 365+00	UPPER LAYER	LOWER LAYER	4 LT 58-28 S	578	2"		
SIDE ROAD INTERSECTIONS	100+83 TO 365+00	LOWER LAYER	PULVERIZED SURFACE	3 MT 58-28 S	725	2.5"		

*ADDITIONAL QUANTITIES SHOWN ELSEWHERE

3

STATION	LOCATION	465.0120 ASPHALTIC SURFACE DRIVEWAYS AND FIELD ENTRANCES TON
105+34	ASPH PE	4
106+78	ASPH PE	5
110+03	ASPH PE	6
113+04	ASPH PE	6
122+85	ASPH PE	6
122+88	ASPH PE	7
125+37	ASPH PE	5
126+60	ASPH PE	5
143+32	ASPH PE	5
146+01	ASPH PE	10
147+20	ASPH PE	7
176+14	ASPH PE	7
188+69	ASPH PE	11
204+73	ASPH PE	5
209+44	ASPH PE	8
210+09	ASPH PE	7
212+57	ASPH PE	7
215+97	ASPH PE	7
219+40	ASPH PE	7
219+45	ASPH PE	7
221+12	ASPH PE	7
298+66	ASPH PE	12
307+99	ASPH CE	44
327+66	ASPH PE	8
337+09	ASPH PE	6
338+90	ASPH PE	6
342+08	ASPH PE	11
342+77	ASPH PE	7
343+95	ASPH PE	6
	TOTAL 0010	239

CATEGORY	STATION	TO	STATION	LOCATION	460.0105.S HMA PERCENT WITHIN LIMITS (PWL) TEST STRIP VOLUMETRICS EACH	460.0110.S HMA PERCENT WITHIN LIMITS (PWL) TEST STRIP DENSITY EACH
0010	100+83	-	365+00	3 MT 58-28 S	1	1
0010	100+83	-	365+00	4 LT 58-28 S	1	1
				TOTAL 0010	2	2

STATION	TO	STATION	LOCATION	604.0500 SLOPE PAVING CRUSHED AGGREGATE SY
269+90	-	270+33	CTH D LT	25
			TOTAL 0010	25

STATION	LOCATION	606.0300 RIPRAP HEAVY CY	645.0120 GEOTEXTILE TYPE HR SY
183+55	CULVERT REPLACEMENT	5	5
	TOTAL 0010	5	5

STATION	TO	STATION	LOCATION	614.2300 MGS GUARDRAIL 3 LF	614.2340 MGS GUARDRAIL 3 L LF	614.2610 MGS GUARDRAIL TERMINAL EAT EACH
258+08	-	259+10	CTH D LT	25	--	2
259+39	-	260+56	CTH D LT	25	--	2
269+04	-	271+22	CTH D LT	--	112.5	2
304+66	-	309+26	CTH D LT	362.5	--	2
310+91	-	11+85	CTH D LT	262.5	--	2
313+45	-	326+73	CTH D RT	1,212.5	--	2
11+35	-	316+05	CTH D LT	50	--	2
350+50	-	356+92	CTH D RT	587.5	--	2
			TOTAL 0010	2,525.0	112.5	16

STATION	TO	STATION	LOCATION	RADIUS	CRT POSTS	614.2350 MGS GUARDRAIL SHORT RADIUS LF
258+86	-	259+10	HIGHLAND DR	25'	6	39
259+40	-	259+78	HIGHLAND DR	38'	10	60
313+53	-	10+77	KETTLE VIEW DR	32'	10	63
10+85	-	315+02	KETTLE VIEW DR	130'	21	129
					TOTAL 0010	291

STATION	LOCATION	521.1018 APRON ENDWALLS FOR CULVERT PIPE STEEL 18-INCH EACH	521.1024 APRON ENDWALLS FOR CULVERT PIPE STEEL 24-INCH EACH	521.1030 APRON ENDWALLS FOR CULVERT PIPE STEEL 30-INCH EACH	521.1042 APRON ENDWALLS FOR CULVERT PIPE STEEL 42-INCH EACH	530.0118 CULVERT PIPE CORRUGATED POLYETHYLENE 18-INCH LF	530.0124 CULVERT PIPE CORRUGATED POLYETHYLENE 24-INCH LF	530.0130 CULVERT PIPE CORRUGATED POLYETHYLENE 30-INCH LF	628.7555 CULVERT PIPE CHECKS EACH	633.5200 MARKERS CULVERT END EACH	650.6000 CONSTRUCTION STAKING PIPE CULVERTS EACH	SPV.0090.01 SPECIAL (01. CULVERT PIPE CORRUGATED POLYETHYLENE 42-INCH) LF	SPV.0090.02 SPECIAL (02. UV GRP CIPP 24-INCH) LF
183+55	CTH D	--	--	2	--	--	--	78	1	2	1	--	--
239+47	CTH D	--	2	--	--	--	65	--	1	2	1	--	--
295+65	CTH D	--	--	--	2	--	--	--	1	2	1	62	--
305+01	CTH D	--	2	--	--	--	72	--	1	2	1	--	--
310+18	AGG FE	2	--	--	--	28	--	--	1	2	1	--	--
332+21	CTH D	--	2	--	--	--	66	--	1	2	1	--	--
341+44	CTH D	--	2	--	--	--	92	--	1	2	1	--	--
349+81	AGG PE	2	--	--	--	30	--	--	1	2	1	--	--
355+93	CTH D	--	--	--	--	--	--	--	1	2	--	--	104
	TOTAL 0010	4	8	2	2	58	295	78	9	18	8	62	104

3

3

STATION	TO	STATION	LOCATION	625.0500 SALVAGED TOPSOIL SY	627.0200 MULCHING SY	628.2008 EROSION MAT URBAN CLASS I TYPE B SY	629.0210 FERTILIZER TYPE B CWT	630.0120 SEEDING MIXTURE NO. 20 LB	630.0500 SEED WATER MGAL
	183+55		CULVERT REPLACEMENT	159	--	159	0.11	8	8
	239+47		CULVERT REPLACEMENT	75	75	--	0.05	4	4
257+09	-	261+72	GUARDRAIL GRADING LT	503	--	503	0.32	23	23
268+25	-	272+38	GUARDRAIL GRADING LT	466	--	466	0.30	21	21
	295+65		CULVERT REPLACEMENT	130	130	--	0.09	6	6
302+49	-	312+45	GUARDRAIL GRADING & CULVERT REPLACEMENT	2,057	21	2,036	1.30	93	93
312+45	-	327+55	GUARDRAIL GRADING RT	2,003	--	2,003	1.27	91	90
	332+21		CULVERT REPLACEMENT	73	73	--	0.05	4	4
	341+44		CULVERT REPLACEMENT	187	187	--	0.12	9	9
349+97	-	358+07	GUARDRAIL GRADING RT	1,967	--	1,967	1.24	89	89
			TOTAL 0010	7,620	486	7,134	4.85	348	347

STATION	TO	STATION	LOCATION	628.1504 SILT FENCE LF	628.1520 SILT FENCE MAINTENANCE LF
257+09	-	261+72	GUARDRAIL GRADING LT	600	600
268+25	-	272+38	GUARDRAIL GRADING LT	420	420
302+49	-	312+45	GUARDRAIL GRADING	1,700	1,700
312+45	-	327+55	GUARDRAIL GRADING RT	1,520	1,520
349+97	-	358+07	GUARDRAIL GRADING RT	860	860
			TOTAL 0010	5,100	5,100

LOCATION	628.1905 MOBILIZATIONS EROSION CONTROL EACH	628.1910 MOBILIZATIONS EMERGENCY EROSION CONTROL EACH
PROJECT	3	1
TOTAL 0010	3	1

STATION	TO	STATION	LOCATION	628.2039 EROSION MAT CLASS III TYPE D SY	628.6505 SOIL STABILIZER TYPE A ACRE
257+09	-	261+72	GUARDRAIL GRADING LT	280	0.06
268+25	-	272+38	GUARDRAIL GRADING LT	85	0.02
302+49	-	312+45	GUARDRAIL GRADING	335	0.07
312+45	-	327+55	GUARDRAIL GRADING RT	540	0.12
			TOTAL 0010	1,240	0.27

3

LOCATION	643.0420 TRAFFIC CONTROL BARRICADES TYPE III DAY	643.0705 TRAFFIC CONTROL WARNING LIGHTS TYPE A DAY	643.0900 TRAFFIC CONTROL SIGNS DAY	643.5000 TRAFFIC CONTROL EACH
PROJECT	620	1,230	15,610	1
TOTAL 0010	620	1,230	15,610	1

STATION	TO	STATION	LOCATION	646.1005 MARKING LINE PAINT 4-INCH LF	646.3005 MARKING LINE PAINT 8-INCH LF
100+84	-	365+00	CTH D YELLOW CENTERLINE	25,660	--
100+84	-	365+00	CTH D WHITE EDGELINE	52,832	--
134+00	-	135+10	PANORAMA DR TURN LANE	--	110
			TOTAL 0010	78,492	110

STATION	TO	STATION	LOCATION	650.8000 CONSTRUCTION STAKING RESURFACING REFERENCE LF	650.9911.01 CONSTRUCTION STAKING SUPPLEMENTAL CONTROL (PROJECT) (01. 4869-03-70) EACH	650.9920 CONSTRUCTION STAKING SLOPE STAKES LF
100+84	-	365+00	CTH D	26,416	--	--
257+09	-	261+69	GUARDRAIL GRADING	--	--	460
268+25	-	272+39	GUARDRAIL GRADING	--	--	414
302+48	-	327+55	GUARDRAIL GRADING	--	--	2,507
349+99	-	358+07	GUARDRAIL GRADING	--	--	808
			PROJECT	--	1	--
			TOTAL 0010	26,416	1	4,189

STATION	TO	STATION	LOCATION	SPV.0180.01 SPECIAL (01. REMOVING EXCESS PULVERIZED MATERIAL) SY
100+84	-	104+26	KOHSVILLE CURB & GUTTER	1,230
113+30	-	114+89	B-66-196 APPROACH	670
116+53	-	118+00	B-66-196 APPROACH	630
		13356, LT	PANORAMA DR	900
		307+99, RT	ASPHALT P.E.	390
			TOTAL 0010	3,820

STATION	TO	STATION	LOCATION	648.0100 LOCATING NO-PASSING ZONES MI
100+84	-	365+00	CTH D	5.00
			TOTAL 0010	5.00

STATION	LOCATION	646.6105 MARKING STOP LINE PAINT 18-INCH LF
133+56	PANORAMA DR	15
153+39	AURORA RD	15
153+40	AURORA RD	16
206+41	TOWNLINE RD	17
206+41	TOWNLINE RD	15
255+36	GLACIER DR	14
259+25	HIGHLAND DR	15
314+00	KETTLE VIEW DR	15
324+18	EDELWEISS LN	15
359+10	KETTLE MORAINE SCENIC DR	14
	TOTAL 0010	151

STATION	LOCATION	690.0150 SAWING ASPHALT LF
100+84	BEGIN PROJECT	32
133+56	PANORAMA DR	27
153+39	AURORA RD	25
153+40	AURORA RD	30
183+55	CULVERT REPLACEMENT	60
206+41	TOWNLINE RD	22
206+41	TOWNLINE RD	22
239+47	CULVERT REPLACEMENT	60
255+36	GLACIER DR	26
259+25	HIGHLAND DR	25
285+93	TOWER RD	23
295+65	CULVERT REPLACEMENT	60
305+01	CULVERT REPLACEMENT	76
314+00	KETTLE VIEW DR	27
324+18	EDELWEISS LN	27
332+21	CULVERT REPLACEMENT	60
341+44	CULVERT REPLACEMENT	60
359+10	KETTLE MORAINE SCENIC DR	27
365+00	END PROJECT	30
	TOTAL 0010	719

3

PROJECT NO: 4869-03-70	HWY: CTH D	COUNTY: WASHINGTON	PLAN DETAILS	SHEET 20	E

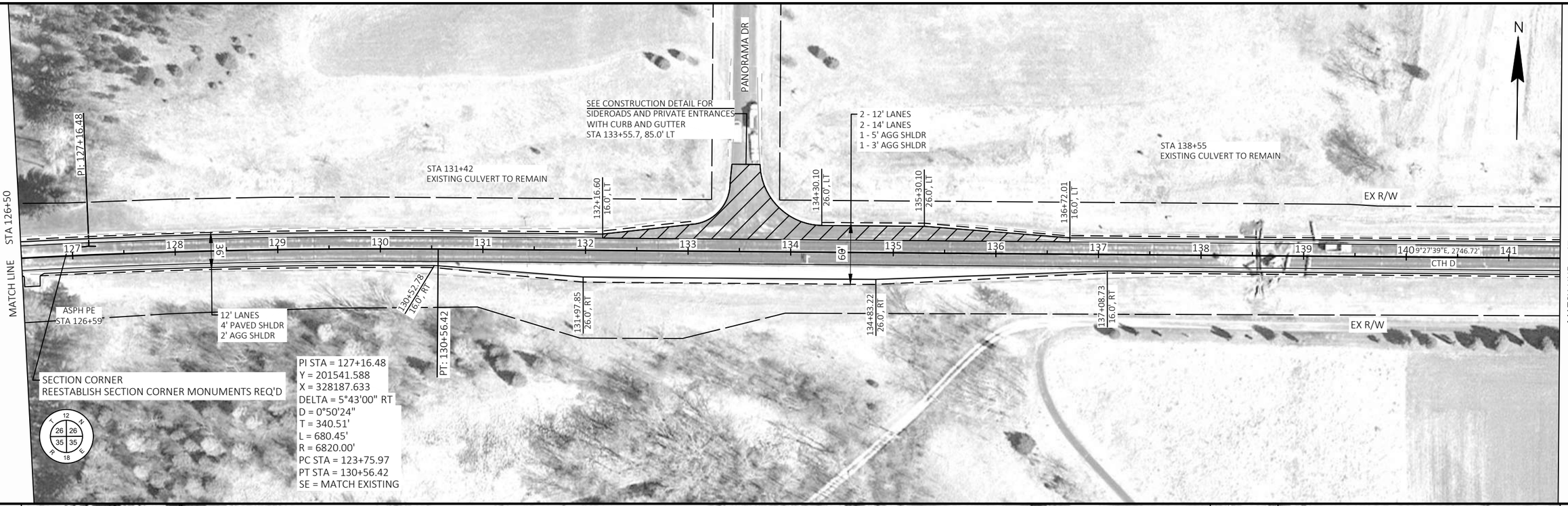

PROJECT NO: 4869-03-70	HWY: CTH D	COUNTY: WASHINGTON	PLAN DETAILS	SHEET 21	E

FILE NAME : C:\OD\CORRE, INC\PROJECTS - 4869-03-00_CTH_D_WASHINGTON_COUNTY\500_CADD\501_C3D_2022\48690300\SHEETS\050201-PN.DWG
LAYOUT NAME - 02
PLOT DATE : 12/17/2024 3:35 PM
PLOT BY : MATT KOSKI
PLOT NAME :
PLOT SCALE : 1 IN:100 FT
WISDOT/CADDS SHEET 44

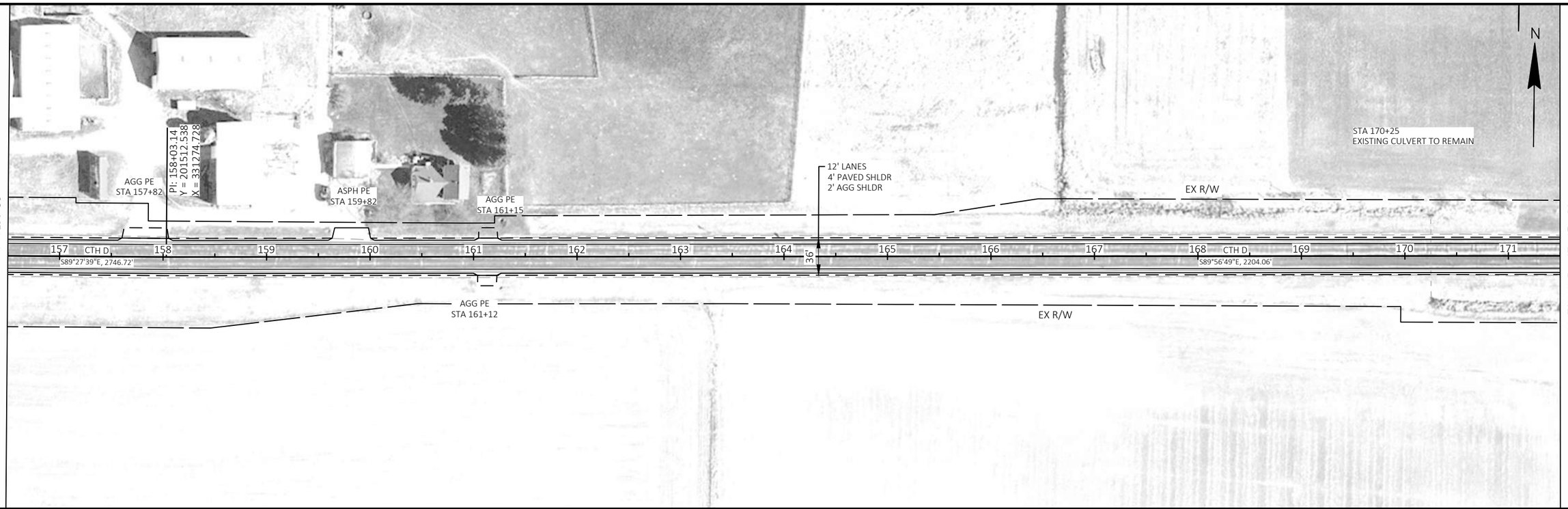

5

5

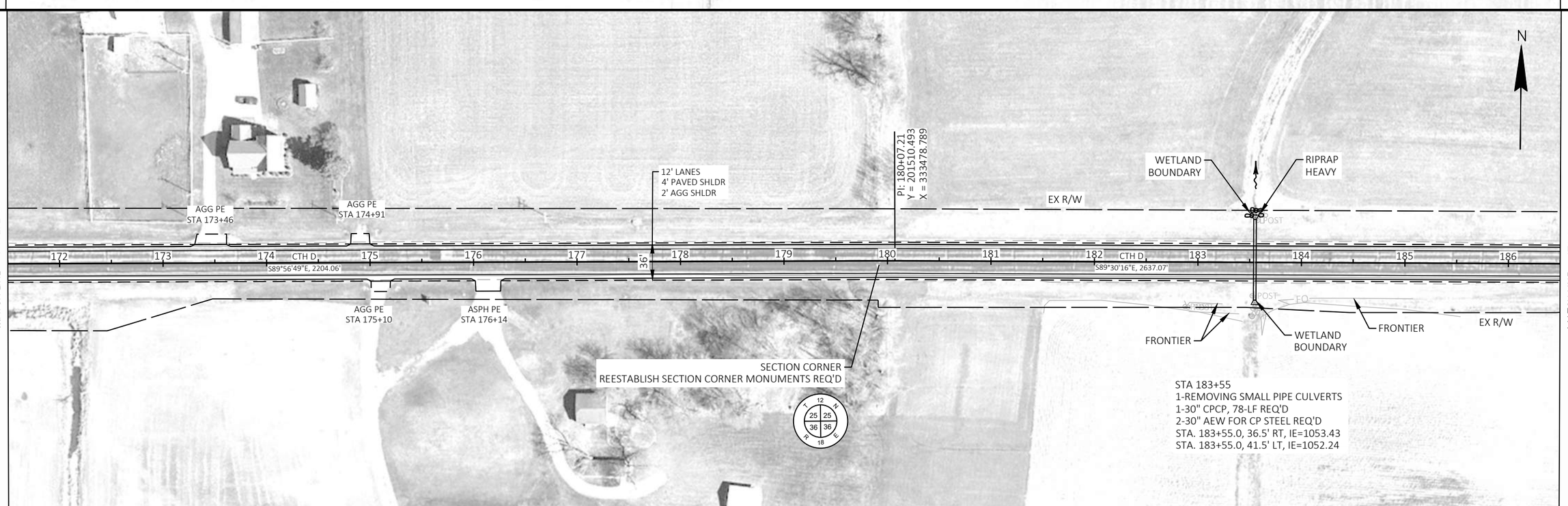

PROJECT NO: 4869-03-70	HWY: CTH D	COUNTY: WASHINGTON	PLAN DETAILS	SHEET 22	E

FILE NAME : C:\OD\CORRE, INC\PROJECTS - 4869-03-00_CTH_D_WASHINGTON_COUNTY\500_CADD\501_C3D_2022\48690300\SHEETS\050201-PN.DWG
LAYOUT NAME - 03
PLOT DATE : 12/17/2024 3:35 PM PLOT BY : MATT KOSKI PLOT NAME : PLOT SCALE : 1 IN:100 FT

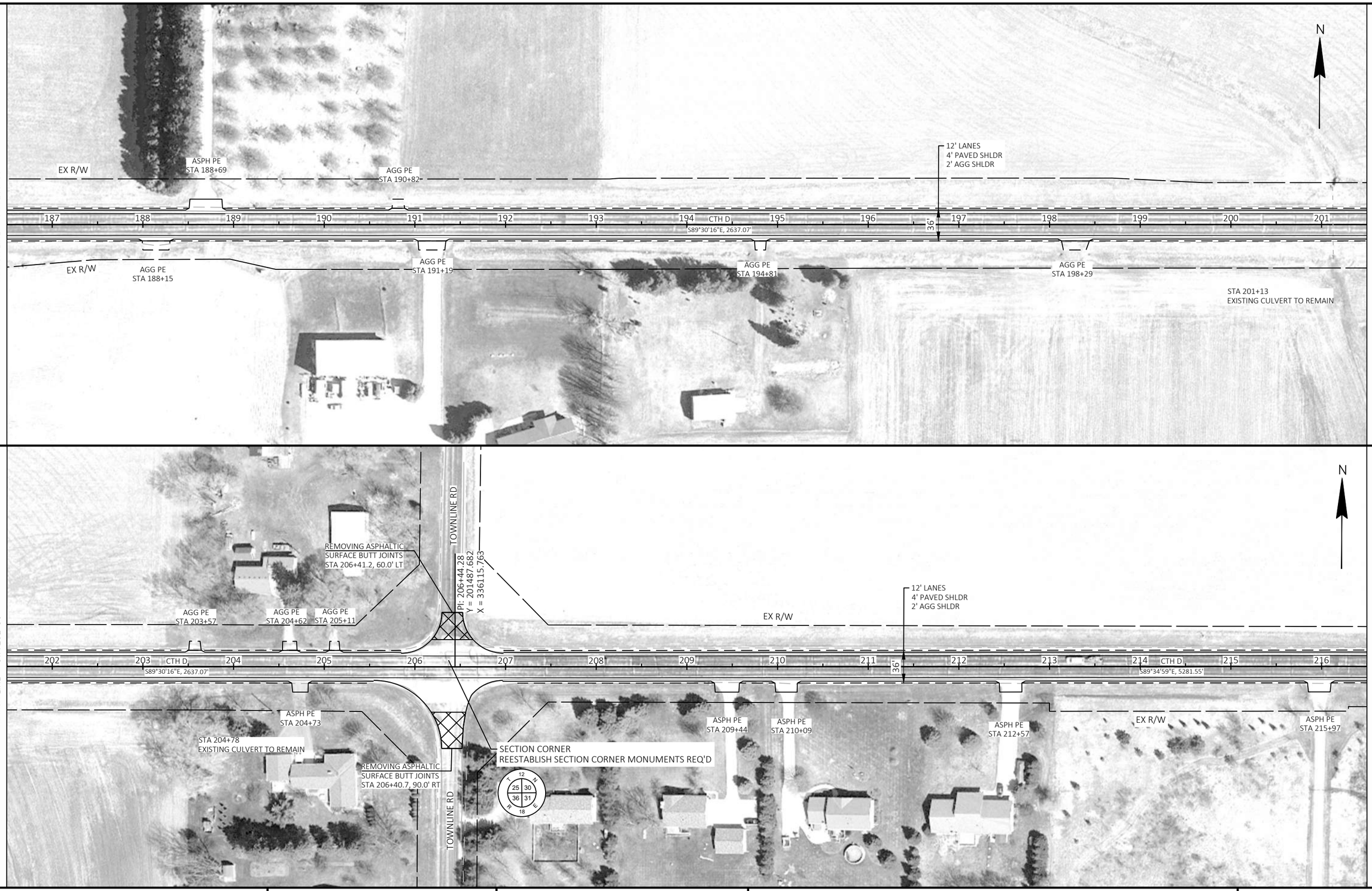

PROJECT NO: 4869-03-70	HWY: CTH D	COUNTY: WASHINGTON	PLAN DETAILS	SHEET 23	E

FILE NAME : C:\OD\CORRE, INC\PROJECTS - 4869-03-00_CTH_D_WASHINGTON_COUNTY\500_CADD\501_C3D_2022\48690300\SHEETS\050201-PN.DWG
LAYOUT NAME - 04
PLOT DATE : 12/17/2024 3:35 PM
PLOT BY : MATT KOSKI
PLOT NAME :
PLOT SCALE : 1 IN:100 FT
WISDOT/CADDS SHEET 44

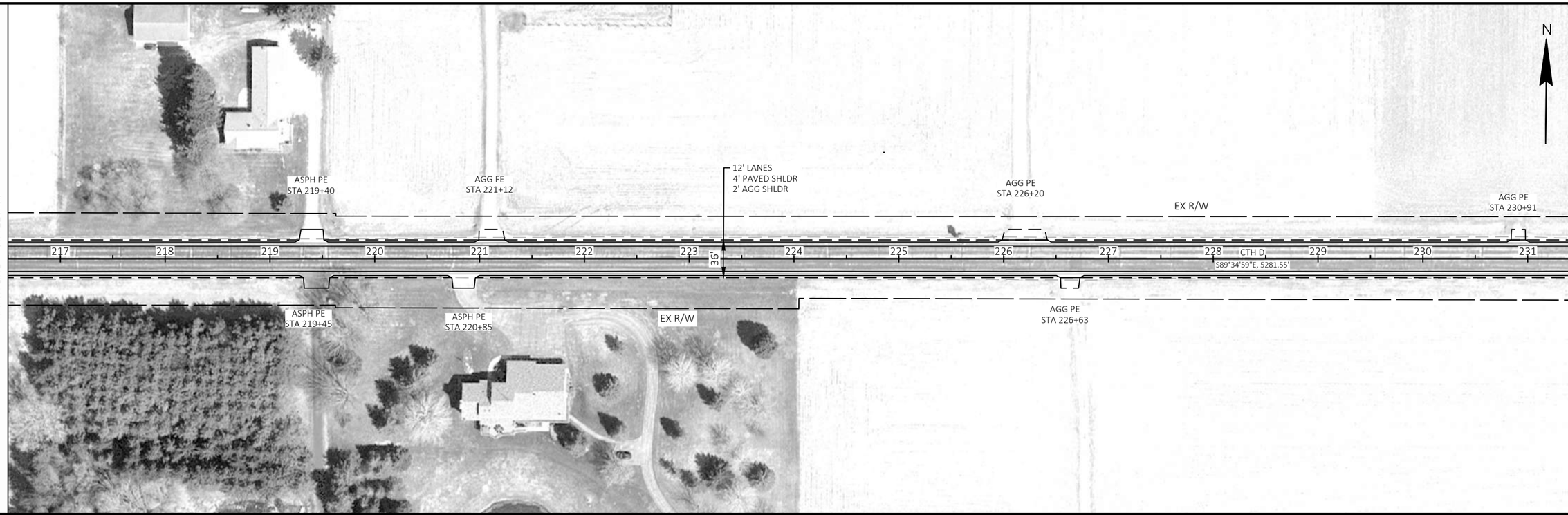

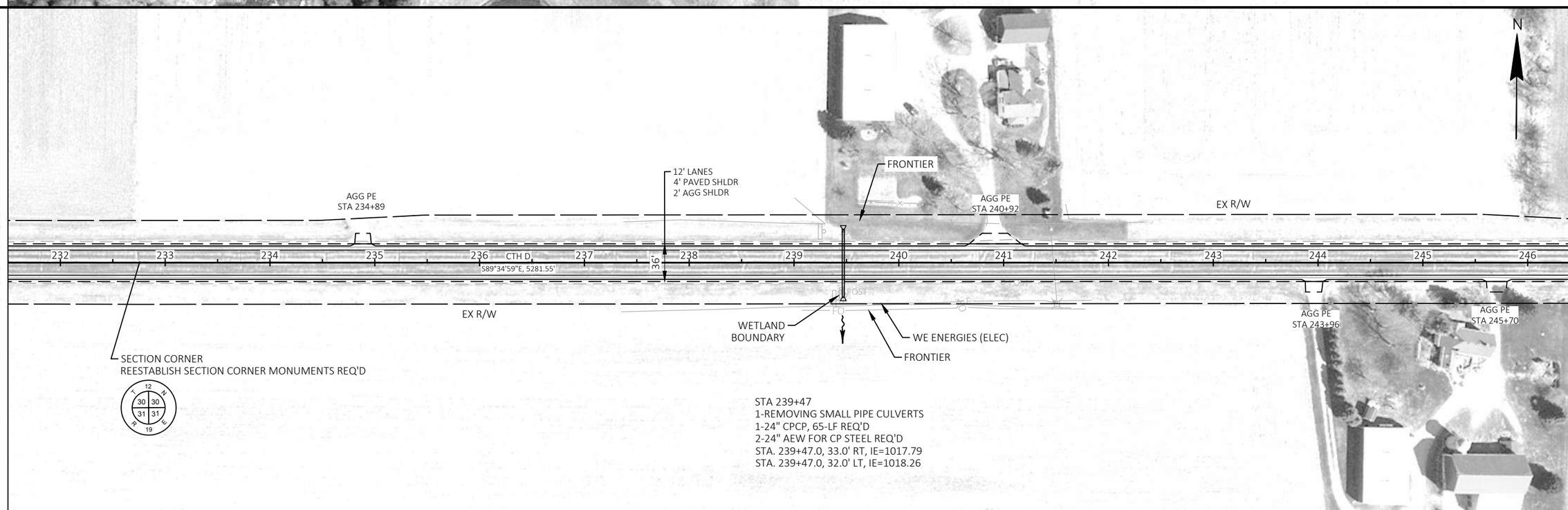

PROJECT NO: 4869-03-70	HWY: CTH D	COUNTY: WASHINGTON	PLAN DETAILS	SHEET 24	E

FILE NAME : C:\OD\CORRE, INC\PROJECTS - 4869-03-00_CTH_D_WASHINGTON_COUNTY\500_CADD\501_C3D_2022\48690300\SHEETS\050201-PN.DWG
LAYOUT NAME - 05
PLOT DATE : 12/17/2024 3:35 PM PLOT BY : MATT KOSKI PLOT NAME : PLOT SCALE : 1 IN:100 FT

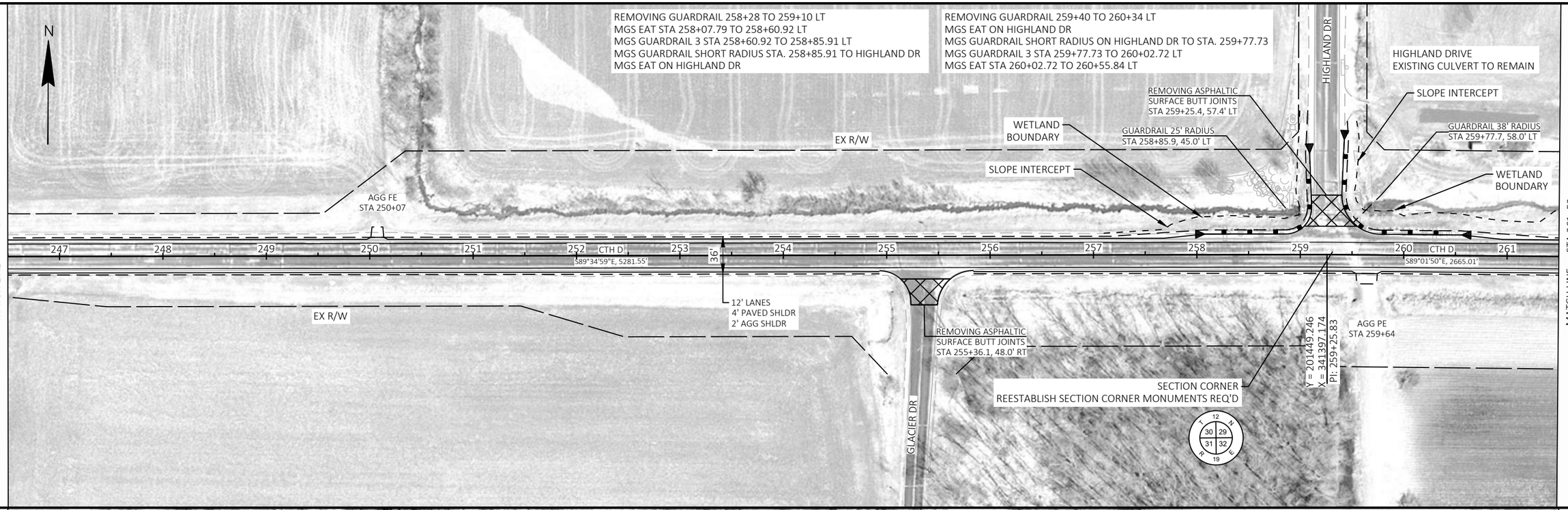

PROJECT NO: 4869-03-70	HWY: CTH D	COUNTY: WASHINGTON	PLAN DETAILS	SHEET 25	E

FILE NAME : C:\OD\CORRE, INC\PROJECTS - 4869-03-00_CTH_D_WASHINGTON_COUNTY\500_CADD\501_C3D_2022\48690300\SHEETS\050201-PN.DWG
LAYOUT NAME - 06
PLOT DATE : 12/17/2024 3:35 PM PLOT BY : MATT KOSKI PLOT NAME : PLOT SCALE : 1 IN:100 FT

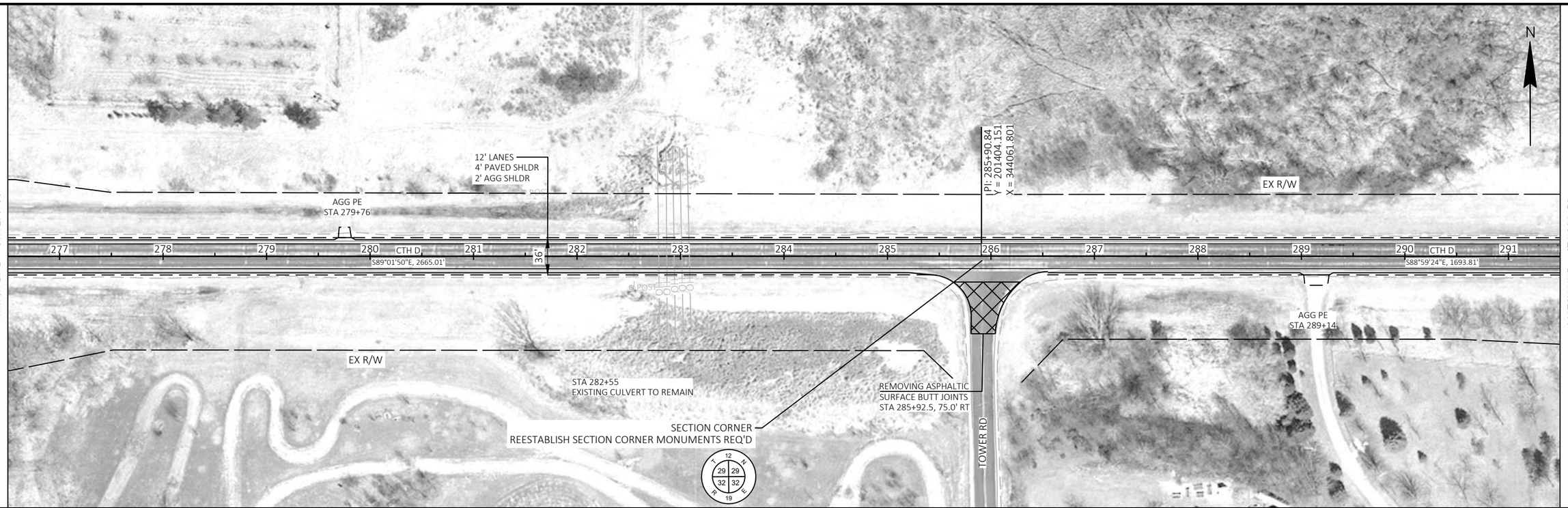

5

5

PROJECT NO: 4869-03-70	HWY: CTH D	COUNTY: WASHINGTON	PLAN DETAILS	SHEET 26	E

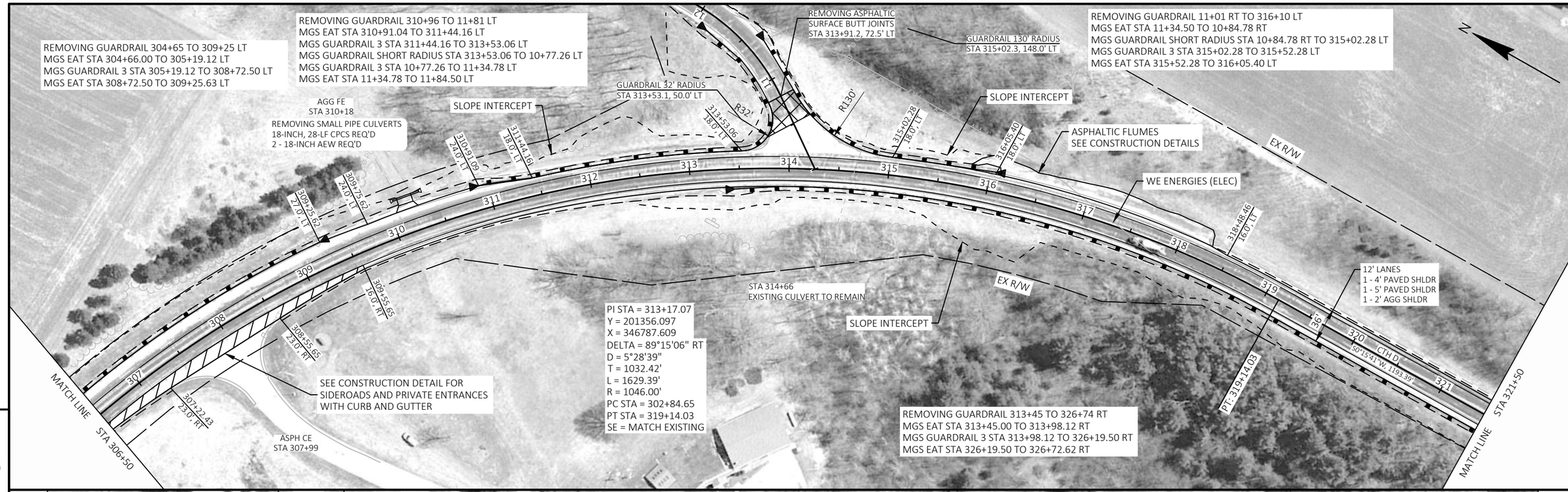

PROJECT NO: 4869-03-70	HWY: CTH D	COUNTY: WASHINGTON	PLAN DETAILS	SHEET 27	E

5

STA 336+50

MATCH LINE

PI: 337+21.20
Y = 198516.552
X = 346782.449

PI: 341+28.85
Y = 198108.968
X = 346789.837

WETLAND BOUNDARY

AT&T

EX R/W

ASPH PE
STA 342+77

12' LANES
4' PAVED SHLDR
2' AGG SHLDR

337 338 339 CTH D 340 341 342 343 344 345 346 CTH D 347 348 349 350 351

S1°02'18"E, 407.65'

36'

S1°05'05"E, 1171.61'

STA 351+50

MATCH LINE

ASPH PE
STA 337+09

EX R/W

ASPH PE
STA 338+90

AGG PE
STA 340+26

WE ENERGIES (ELEC)

WETLAND BOUNDARY

ASPH PE
STA 342+08

AGG PE
STA 343+95

AGG PE
STA 345+62

348+94.43
16.0', RT

AGG PE
STA 349+81

350+55.00
18.0', RT

REMOVING SMALL PIPE CULVERTS
18-INCH, 30-LF CPCS REQ'D
2 - 18-INCH AEW REQ'D
GRADE OUTLET TO DRAIN

WE ENERGIES (ELEC)

SLOPE INTERCEPT

STA 341+43
1-REMOVING SMALL PIPE CULVERTS
1-24" CPCP, 92-LF REQ'D
2-24" AEW FOR CP STEEL REQ'D
STA. 341+42.3, 48.0' RT, IE=1110.14
STA. 341+45.5, 44.0' LT, IE=1110.95
SKEW 2°

REMOVING GUARDRAIL 350+05 TO 356+88 RT
MGS EAT STA 350+05.15 TO 350+58.12 RT
MGS GUARDRAIL 3 STA 350+58.12 TO 356+38.67 RT
MGS EAT STA 356+38.67 TO 356+91.80 RT

5

AGG PE
STA 351+85

MATCH LINE STA 351+50

EX R/W

PC: 353+00.46

352 CTH D 353

S1°05'05"E, 1171.61'

PI STA = 361+46.92
Y = 196091.256
X = 346828.037
DELTA = 88°06'03" LT
D = 6°32'53"
T = 846.47'
L = 1345.44'
R = 875.00'
PC STA = 353+00.46
PT STA = 366+45.90
SE = MATCH EXISTING

PT: 366+45.90

367 CTH D

S89°11'08"E, 675.82'

366

REMOVING ASPHALTIC
SURFACE BUTT JOINT
SEE CONSTRUCTION DETAILS

END PROJECT
STA 365+00.00
MATCH EXISTING
REMOVING ASPHALTIC
SURFACE BUTT JOINT

SLOPE INTERCEPT

EX R/W

12' LANES
1 - 4' PAVED SHLDR
1 - 5' PAVED SHLDR
1 - 2' AGG SHLDR

354 36 355 356 357 358 359 360 361 362 363 364 365

AT&T

STA 360+49
EXISTING PIPE & LINER TO REMAIN

AT&T

ASPH PE
STA 364+24

REMOVING GUARDRAIL 350+05 TO 356+88 RT
MGS EAT STA 350+05.15 TO 350+58.12 RT
MGS GUARDRAIL 3 STA 350+58.12 TO 356+38.67 RT
MGS EAT STA 356+38.67 TO 356+91.80 RT

WE ENERGIES (ELEC)

AGG PE
STA 362+34

STA 355+93
EXISTING 24" CSCP
1-UV GRP CIPP 24-INCH X 104' REQ'D

REMOVING ASPHALTIC
SURFACE BUTT JOINTS
STA 359+09.6, 63.0' RT

KETTLE MORAINE SCENIC DR

PROJECT NO: 4869-03-70	HWY: CTH D	COUNTY: WASHINGTON	PLAN DETAILS	SHEET 28	E

FILE NAME : C:\OD\CORRE, INC\PROJECTS - 4869-03-00_CTH_D_WASHINGTON_COUNTY\500_CADD\501_C3D_2022\48690300\SHEETS\050201-PN.DWG
LAYOUT NAME - 09
PLOT DATE : 12/17/2024 3:36 PM PLOT BY : MATT KOSKI PLOT NAME : PLOT SCALE : 1 IN:100 FT

Standard Detail Drawing List

08E09-06	SILT FENCE
08E15-01	CULVERT PIPE CHECK
08F01-11	APRON ENDWALLS FOR CULVERT PIPE
09A01-14A	AT-GRADE SIDE ROAD INTERSECTION, TYPES "B1", "B2", "C" AND D AND TEE INTERSECTION BYPASS LANE
13C19-03	HMA LONGITUDINAL JOINTS
14B42-07A	MIDWEST GUARDRAIL SYSTEM (MGS) GUARDRAIL
14B42-07B	MIDWEST GUARDRAIL SYSTEM (MGS) GUARDRAIL
14B42-07C	MIDWEST GUARDRAIL SYSTEM (MGS) GUARDRAIL
14B42-07D	MIDWEST GUARDRAIL SYSTEM (MGS) GUARDRAIL
14B43-04A	MIDWEST GUARDRAIL SYSTEM LONG SPAN MGS (L)
14B43-04B	MIDWEST GUARDRAIL SYSTEM LONG SPAN MGS (L)
14B43-04C	MIDWEST GUARDRAIL SYSTEM LONG SPAN MGS (L)
14B44-04A	MIDWEST GUARDRAIL SYSTEM ENERGY ABSORBING TERMINAL (MGS)
14B44-04B	MIDWEST GUARDRAIL SYSTEM ENERGY ABSORBING TERMINAL (MGS)
14B44-04C	MIDWEST GUARDRAIL SYSTEM ENERGY ABSORBING TERMINAL (MGS)
14B53-02A	SHORT RADIUS BEAM GUARD (MGS) SHORT RADIUS TERMINAL (MGS)
14B53-02B	SHORT RADIUS BEAM GUARD (MGS) SHORT RADIUS TERMINAL (MGS)
14B53-02C	SHORT RADIUS BEAM GUARD (MGS) SHORT RADIUS TERMINAL (MGS)
14B53-02D	SHORT RADIUS BEAM GUARD (MGS) SHORT RADIUS TERMINAL (MGS)
14B53-02E	SHORT RADIUS BEAM GUARD (MGS) SHORT RADIUS TERMINAL (MGS)
14B53-02F	SHORT RADIUS BEAM GUARD (MGS) SHORT RADIUS TERMINAL (MGS)
14B53-02G	SHORT RADIUS BEAM GUARD (MGS) SHORT RADIUS TERMINAL (MGS)
14B53-02H	SHORT RADIUS BEAM GUARD (MGS) SHORT RADIUS TERMINAL (MGS)
14B53-02I	SHORT RADIUS BEAM GUARD (MGS) SHORT RADIUS TERMINAL (MGS)
15A03-02A	FLEXIBLE MARKER POST FOR CULVERT END
15A03-02B	FLEXIBLE MARKER POST FOR CULVERT END
15C02-09A	BARRICADES AND SIGNS FOR MAINLINE CLOSURES
15C02-09B	BARRICADES AND SIGNS FOR VARIOUS CLOSURES
15C02-09C	DETOUR SIGNING FOR MAINLINE CLOSURES
15C03-05	BARRICADES AND SIGNS FOR SIDEROAD CLOSURES
15C04-05	TRAFFIC CONTROL, ADVANCE WARNING SIGNS 45 M.P.H. OR GREATER TWO-WAY UNDIVIDED ROAD OPEN TO TRAFFIC
15C05-05	TRAFFIC CONTROL, ADVANCE WARNING SIGNS 40 M.P.H. OR LESS
15C08-23A	PERMANENT LONGITUDINAL PAVEMENT MARKINGS
15C12-09A	TRAFFIC CONTROL FOR LANE CLOSURE WITH FLAGGING OPERATION
15C19-09A	MOVING PAVEMENT MARKING OPERATION TWO-LANE TWO-WAY ROADWAY
15C33-05	STOP LINE AND CROSSWALK PAVEMENT MARKING
15C35-06A	PAVEMENT MARKING (INTERSECTIONS)
15D44-02	TRAFFIC CONTROL, SIGNING ON ROADWAYS WITH MILLED SURFACES
15D48-01	TRAFFIC CONTROL, LANE SHIFT IN FLAGGING OPERATION
15D51-01	TRAFFIC CONTROL, MOBILE OPERATIONS ON AN UNDIVIDED ROADWAY

6

6

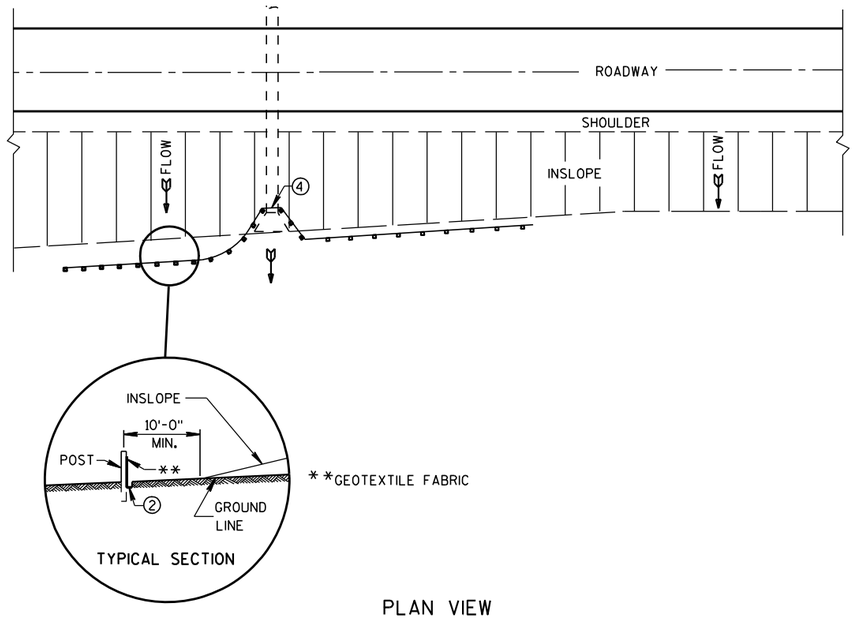

PLAN VIEW

TYPICAL APPLICATION OF SILT FENCE

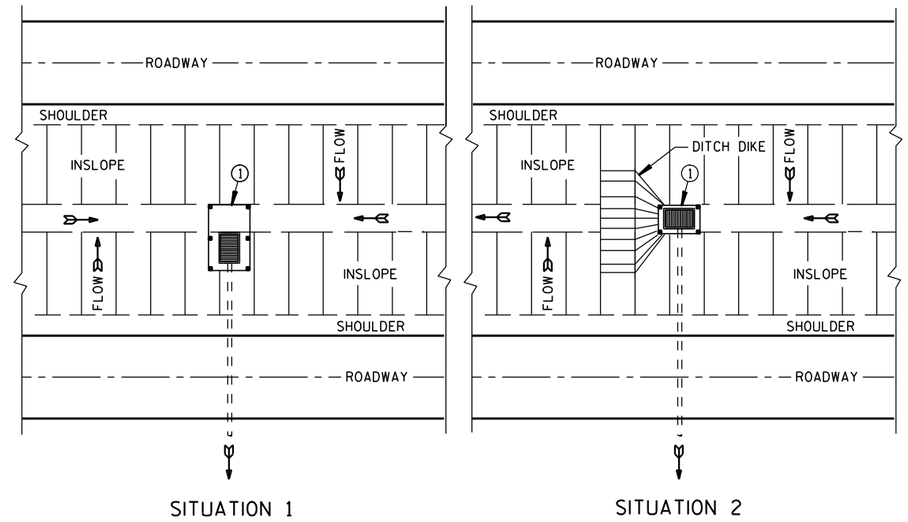

PLAN VIEW

SILT FENCE AT MEDIAN SURFACE DRAINS

GENERAL NOTES

DETAILS OF CONSTRUCTION NOT SHOWN ON THIS DRAWING SHALL CONFORM TO THE PERTINENT REQUIREMENTS OF THE STANDARD SPECIFICATIONS AND APPLICABLE SPECIAL PROVISIONS.

① HORIZONTAL BRACE REQUIRED WITH 2" X 4" WOODEN FRAME OR EQUIVALENT AT TOP OF POSTS.

② FOR MANUAL INSTALLATIONS THE TRENCH SHALL BE A MINIMUM OF 4" WIDE & 6" DEEP TO BURY AND ANCHOR THE GEOTEXTILE FABRIC. FOLD MATERIAL TO FIT TRENCH AND BACKFILL & COMPACT TRENCH WITH EXCAVATED SOIL.

③ WOOD POSTS SHALL BE A MINIMUM SIZE OF 1⅛" X 1⅛" OF OAK OR HICKORY.

④ SILT FENCE TO EXTEND ACROSS THE TOP OF THE PIPE.

⑤ CONSTRUCT SILT FENCE FROM A CONTINUOUS ROLL IF POSSIBLE BY CUTTING LENGTHS TO AVOID JOINTS. IF A JOINT IS NECESSARY USE ONE OF THE FOLLOWING TWO METHODS; A) OVERLAP THE END POSTS AND TWIST, OR ROTATE, AT LEAST 180 DEGREES. B) HOOK THE END OF EACH SILT FENCE LENGTH.

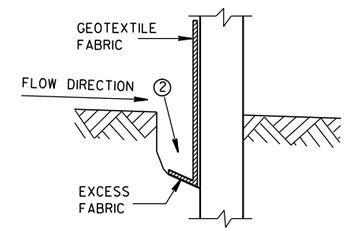

TRENCH DETAIL

NOTE: ADDITIONAL POST DEPTH OR TIE BACKS MAY BE REQUIRED IN UNSTABLE SOILS

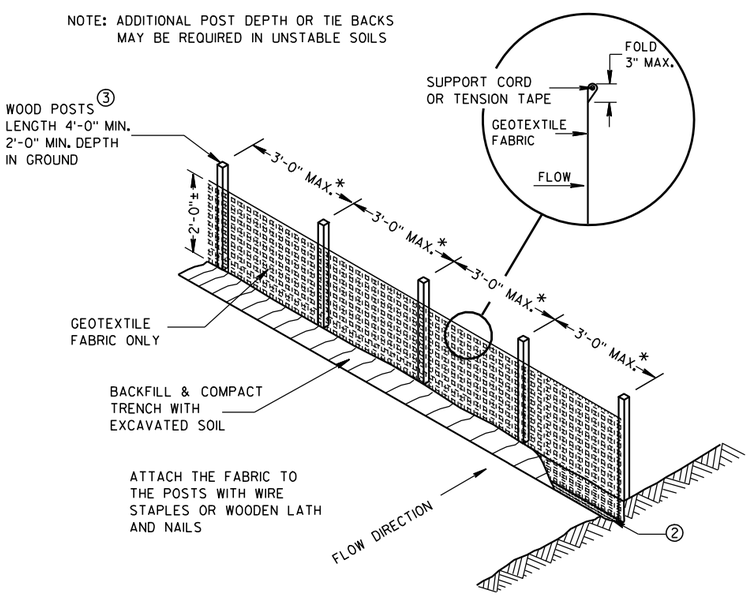

*NOTE: 8'-0" POST SPACING ALLOWED IF A WOVEN GEOTEXTILE FABRIC IS USED.

SILT FENCE

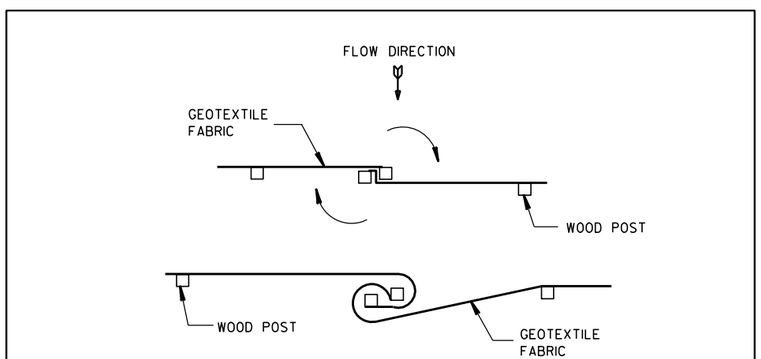

TWIST METHOD

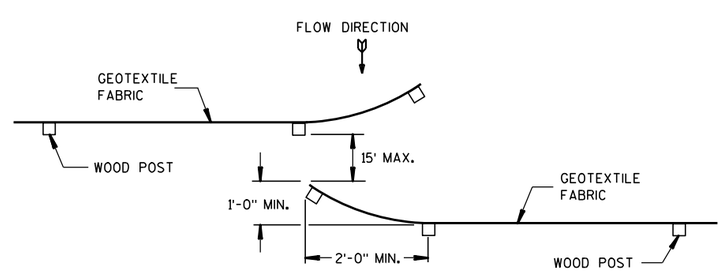

HOOK METHOD

JOINING TWO LENGTHS OF SILT FENCE ⑤

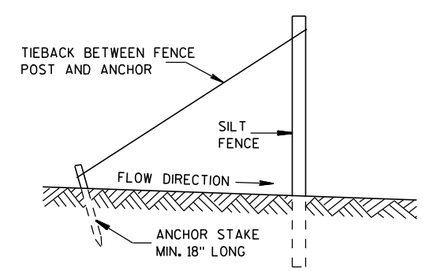

SILT FENCE TIE BACK

(WHEN REQUIRED BY THE ENGINEER)

SILT FENCE
STATE OF WISCONSIN DEPARTMENT OF TRANSPORTATION
APPROVED 4-29-05 /S/ Beth Cann----- DATE CHIEF ROADWAY DEVELOP ENGINEER FHWA

6

6

S.D.D. 8 E 9-6

S.D.D. 8 E 9-6

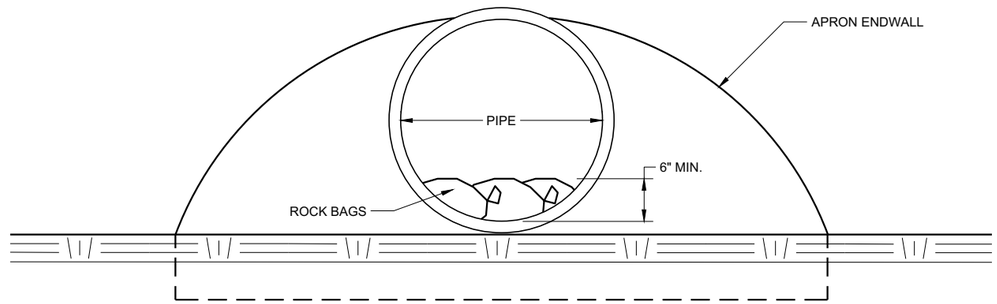

END VIEW

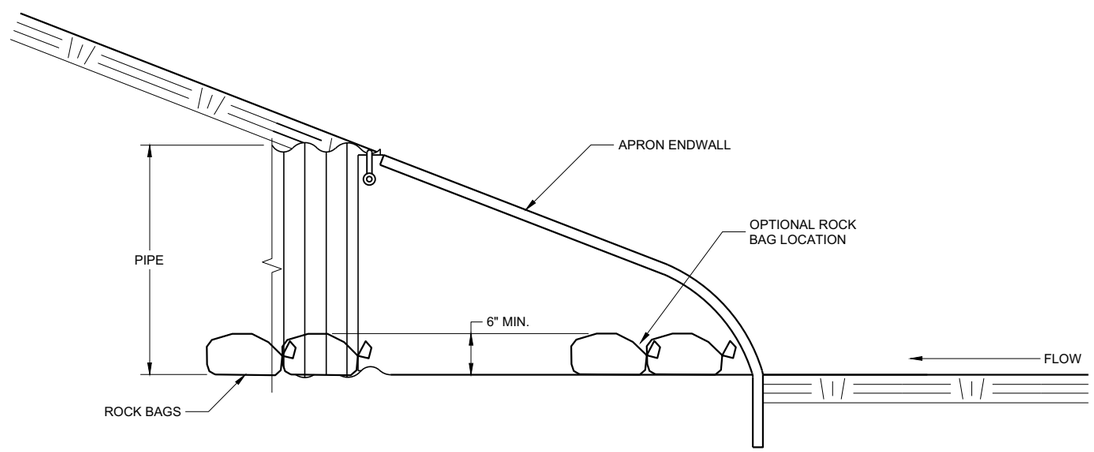

SIDE VIEW

CULVERT PIPE CHECK

(INSTALL ON INLET END ONLY)

CULVERT PIPE CHECK

STATE OF WISCONSIN
DEPARTMENT OF TRANSPORTATION

APPROVED
May 2019 — DATE
/S/ Daniel Schave — EROSION CONTROL ENGI
FHWA

6

6

SDD 08E15 - 01

SDD 08E15 - 01

METAL APRON ENDWALLS

PIPE DIA. (IN.)	MIN. THICK. (Inches) STEEL	MIN. THICK. (Inches) ALUM.	DIMENSIONS (Inches) A (±1")	B (MAX.)	H (±1")	L (±1 1/2")	L1 ①	L2 ①	W (±2")	APPROX. SLOPE	BODY
12	.064	.060	6	6	6	21	12	17 1/2	24	2 1/2 to 1	1 Pc.
15	.064	.060	7	8	6	26	14	21 3/4	30	2 1/2 to 1	1 Pc.
18	.064	.060	8	10	6	31	15	28 1/4	36	2 1/2 to 1	1 Pc.
21	.064	.060	9	12	6	36	18	29 5/8	42	2 1/2 to 1	1 Pc.
24	.064	.075	10	13	6	41	18	37 1/4	48	2 1/2 to 1	1 Pc.
30	.079	.075	12	16	8	51	18	52 1/4	60	2 1/2 to 1	1 Pc.
36	.079	.105	14	19	9	60	24	59 3/4	72	2 1/2 to 1	2 Pc.
42	.109	.105	16	22	11	69	24	75 5/8	84	2 1/2 to 1	2 Pc.
48	.109	.105	18	27	12	78	24	81	90	2 1/4 to 1	3 Pc.
54	.109	.105	18	30	12	84	30	85 1/2	102	2 1/4 to 1	3 Pc.
60	.109×	.105×	18	33	12	87	—	—	114	2 to 1	3 Pc.
66	.109×	.105×	18	36	12	87	—	—	120	2 to 1	3 Pc.
72	.109×	.105×	18	39	12	87	—	—	126	2 to 1	3 Pc.
78	.109×	.105×	18	42	12	87	—	—	132	1 1/2 to 1	3 Pc.
84	.109×	.105×	18	45	12	87	—	—	138	1 1/2 to 1	3 Pc.
90	.109×	.105×	18	37	12	87	—	—	144	1 1/2 to 1	3 Pc.
96	.109×	.105×	18	35	12	87	—	—	150	1 1/2 to 1	3 Pc.

× EXCEPT CENTER PANEL SEE GENERAL NOTES

REINFORCED CONCRETE APRON ENDWALLS

PIPE DIA. (IN.)	DIMENSIONS (Inches) T	A	B	C	D	E	G	APPROX. SLOPE
12	2	4	24	48 7/8	72 7/8	24	2	3 to 1
15	2 1/4	6	27	46	73	30	2 1/4	3 to 1
18	2 1/2	9	27	46	73	36	2 1/2	3 to 1
21	2 3/4	9	36	37 1/2	73 1/2	42	2 3/4	3 to 1
24	3	9 1/2	43 1/2	30	73 1/2	48	3	3 to 1
27	3 1/4	10 1/2	49 1/2	24	73 1/2	54	3 1/4	3 to 1
30	3 1/2	12	54	19 3/4	73 1/2	60	3 1/2	3 to 1
36	4	15	63	34 3/4	97 3/4	72	4	3 to 1
42	4 1/2	21	63	35	98	78	4 1/2	3 to 1
48	5	24	72	26	98	84	5	3 to 1
54	5 1/2	27	65	*33 1/4-**35	*98 1/4-**100	90	5 1/2	2 2/5 to 1
60	6	*30-**35	60	39	99	96	5	2 to 1
66	6 1/2	*24-**30	*72-**78	*21-**27	99	102	5 1/2	2 to 1
72	7	*24-**36	78	21	99	108	6	2 to 1
78	7 1/2	*24-**36	78	21	99	114	6 1/2	2 to 1
84	8	36	90 1/2	21	111 1/2	120	6 1/2	1 1/2 to 1
90	8 1/2	41	87 1/2	24	111 1/2	132	6 1/2	1 1/2 to 1

*MINIMUM
**MAXIMUM

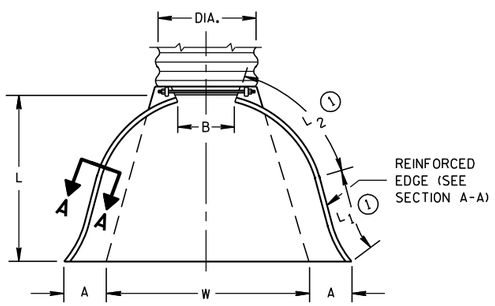

PLAN VIEW

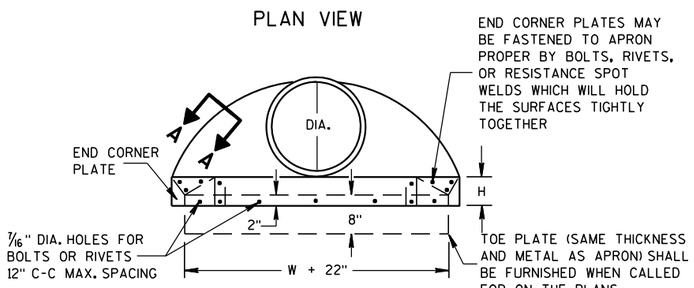

END VIEW

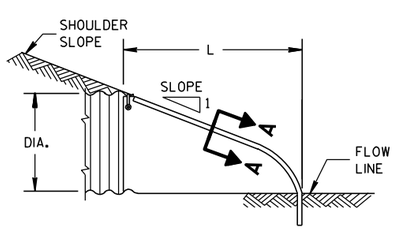

SIDE ELEVATION

METAL ENDWALLS

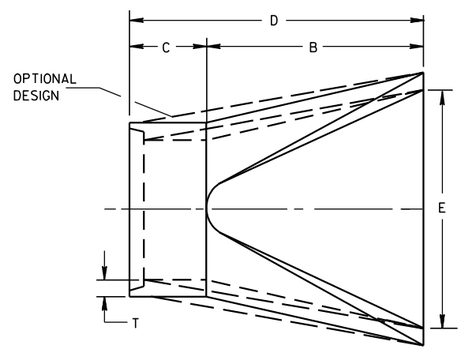

PLAN

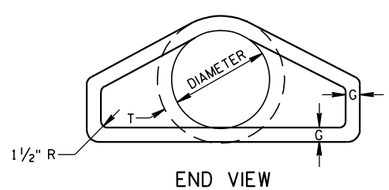

END VIEW

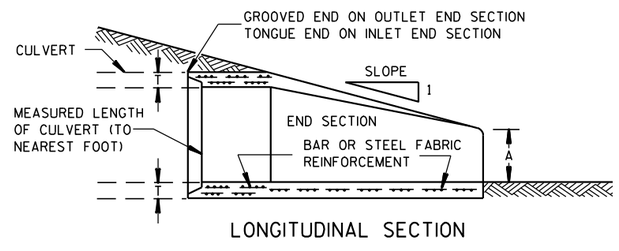

LONGITUDINAL SECTION

CONCRETE ENDWALLS

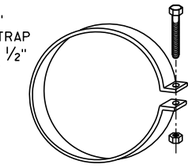

ALTERNATE FOR TYPE 1 CONNECTION

END SECTION CONNECTOR STRAP

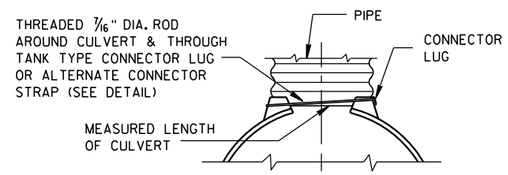

TYPE 1
FOR 12" THRU 24" CORR. PIPE

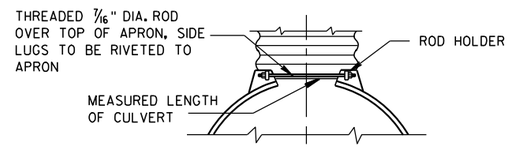

TYPE 2
FOR 30" THRU 96" CORR. PIPE

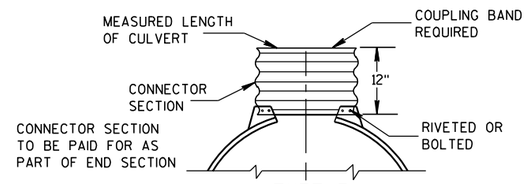

TYPE 3
FOR 42" THRU 96" CORR. PIPE

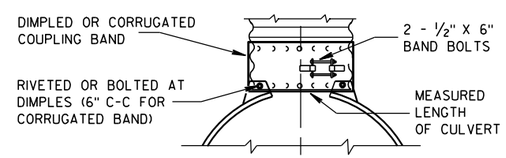

TYPE 5
ALTERNATE FOR:
ALL SIZES CORRUGATED CIRCULAR PIPE

NOTE: DIMPLED BAND FITS OVER OUTSIDE OF ENDWALL, AND CORRUGATED BAND FITS INSIDE ENDWALL. DIMPLED BAND MAY BE USED WITH HELICALLY CORRUGATED PIPE.

FOR CIRCUMFERENTIALLY CORRUGATED PIPE USE ENDWALL CONNECTION DETAILS 1, 2, 3 OR 5 AS APPLICABLE.

FOR HELICALLY CORRUGATED PIPE USE ENDWALL CONNECTION DETAILS 1, 2 OR 5.

FOR HELICALLY CORRUGATED PIPES WITH TWO CIRCUMFERENTIAL CORRUGATIONS AT EACH END USE ENDWALL CONNECTION DETAILS 1, 2 OR 3.

CONNECTION DETAILS

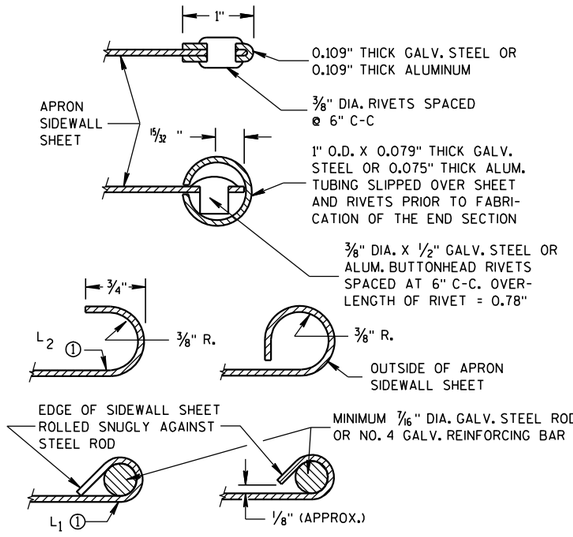

SECTION A-A

GENERAL NOTES

DETAILS OF CONSTRUCTION, MATERIALS AND WORKMANSHIP NOT SHOWN ON THIS DRAWING SHALL CONFORM TO THE PERTINENT REQUIREMENTS OF THE STANDARD SPECIFICATIONS AND THE APPLICABLE SPECIAL PROVISIONS.

CONCRETE CULVERT ENDWALLS MAY NOT BE USED WITH GALVANIZED STEEL OR ALUMINUM CULVERT PIPE OR VISE VERSA. GALVANIZED STEEL OR ALUMINUM ENDWALLS SHALL NORMALLY BE INSTALLED ON CULVERT PIPE OF THE SAME METAL.

ALL THREE PIECE STEEL APRON ENDWALLS FOR 60" DIAMETER PIPE AND LARGER SHALL HAVE 0.109" SIDES AND 0.138" CENTER PANELS. ALL THREE PIECE ALUMINUM APRON ENDWALLS FOR 60" DIAMETER PIPE AND LARGER SHALL HAVE 0.105" SIDES AND 0.134" CENTER PANELS. THE WIDTH OF CENTER PANELS SHALL BE GREATER THAN 20 PERCENT OF THE PIPE PERIMETER.

LAP SEAMS SHALL BE TIGHTLY JOINED BY GALVANIZED RIVETS OR BOLTS FOR STEEL UNITS AND ALUMINUM RIVETS AND BOLTS FOR ALUMINUM UNITS. FOR THE 60" THROUGH 96" DIAMETER APRON ENDWALL SIZES, THE REINFORCED EDGES AND CENTER PANEL SEAMS SHALL BE FURTHER REINFORCED WITH GALVANIZED STEEL OR ALUMINUM STIFFENER ANGLES. THE ANGLES SHALL BE ATTACHED BY GALVANIZED NUTS AND BOLTS FOR STEEL UNITS AND ALUMINUM NUTS AND BOLTS FOR ALUMINUM UNITS.

WHERE TWO OR MORE PIPES WITH APRON ENDWALLS ARE LAID ADJACENT TO EACH OTHER, THEY SHALL BE SEPARATED BY A DISTANCE SUFFICIENT TO PROVIDE A MINIMUM CLEARANCE OF 6 INCHES BETWEEN APRON ENDWALLS.

① FOR PIPE SIZES UP TO 60" DIAMETER, A 180° ROLLED EDGE MAY BE USED INSTEAD OF STEEL ROD REINFORCEMENT. SEE SECTION A-A.

APRON ENDWALLS FOR CULVERT PIPE

STATE OF WISCONSIN
DEPARTMENT OF TRANSPORTATION

APPROVED
11/30/94 — DATE
/S/ Rory L. Rhinesmith — CHIEF ROADWAY DEVELOPMENT ENGINEER
FHWA

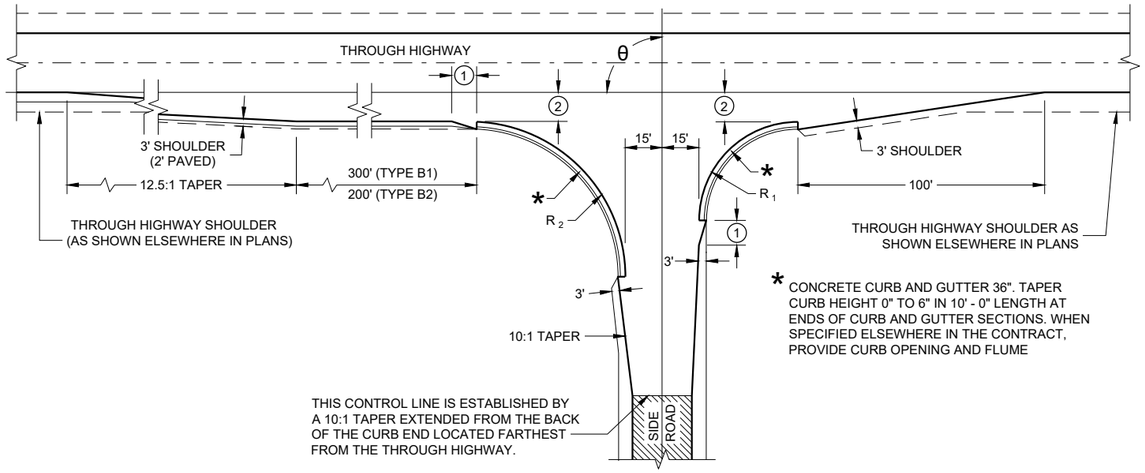

* CONCRETE CURB AND GUTTER 36". TAPER CURB HEIGHT 0" TO 6" IN 10' - 0" LENGTH AT ENDS OF CURB AND GUTTER SECTIONS. WHEN SPECIFIED ELSEWHERE IN THE CONTRACT, PROVIDE CURB OPENING AND FLUME

TYPE "B1" AND "B2"

RADII DIMENSIONS FOR TYPES "B1", "B2", "C" AND "D" INTERSECTIONS

θ	R_1	R_2
65 - 70	35	70
71 - 80	40	70
81 - 90	40	60
91 - 100	50	55
101 - 110	60	45

GENERAL NOTES

DESIGNS MAY BE USED INTERCHANGEABLY IN COMBINATION OR SEPARATELY FOR ANY ONE COMPLETE INTERSECTION DEPENDING UPON INTERSECTION ANGLE AND SURFACING OF EACH APPROACH ROADWAY.

SIDE ROAD SURFACING NOTE

WHEN THE SIDE ROAD IS NOT PRESENTLY PAVED, PAVEMENT SHALL BE PLACED TO THE LIMITS SHOWN UNLESS OTHERWISE PROVIDED IN THE CONTRACT. WHERE THE CONSTRUCTION LIMITS ARE BEYOND THE PAVING LIMITS, CRUSHED AGGREGATE SURFACING SHALL BE PLACED BETWEEN THE PAVING LIMITS AND CONSTRUCTION LIMITS.

WHEN THE SIDE ROAD IS PRESENTLY PAVED, NEW PAVEMENT SHALL BE PLACED TO THE LIMITS OF DESIGN AS SHOWN AND BEYOND, IF NECESSARY, TO MEET EXISTING PAVEMENT.

WHEN THE SIDE ROAD IS THE CONSTRUCTION PROJECT, THE INTERSECTION SURFACING SHALL BE THE SAME AS FOR THE PROJECT.

1. 10-FT TYPICAL.
2. 12-FT** PLUS ADDITIONAL WIDTH FOR BIKE LANE IF SHOWN ELSEWHERE IN THE PLAN.

   **10-FT MAY BE USED ON TYPE B2 ON RESURFACING PROJECTS IF SPECIFIED IN THE CONTRACT.
3. BYPASS LANE PAVED SURFACE WIDTH OUTSIDE OF TRAVEL LANE
   - ASPHALT = 12-FT PLUS PAVED SHOULDER WIDTH
   - PC CONCRETE = 13-FT PLUS PAVED SHOULDER WIDTH
4. BYPASS LANE PAVED SHOULDER WIDTH = THE GREATER OF 1-FT OR THE PAVED SHOULDER WIDTH OF THE THROUGH HIGHWAY.

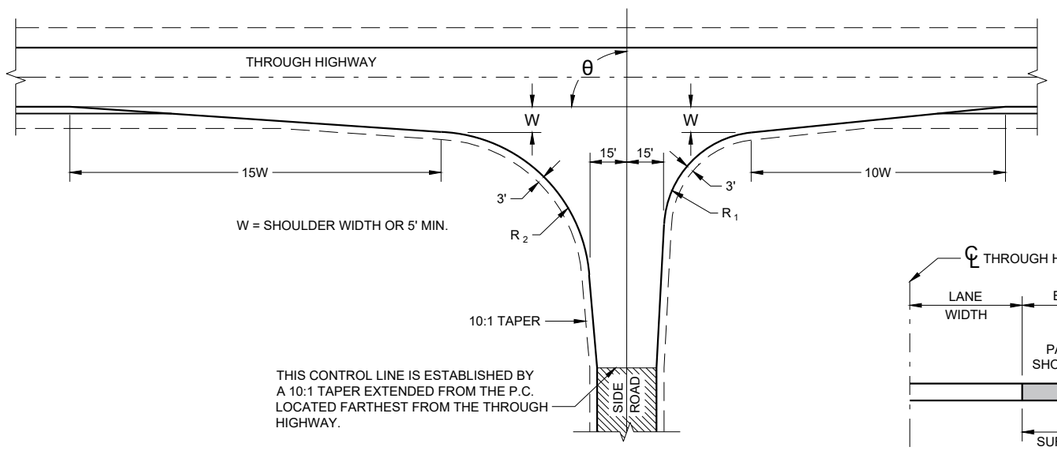

TYPE "C"

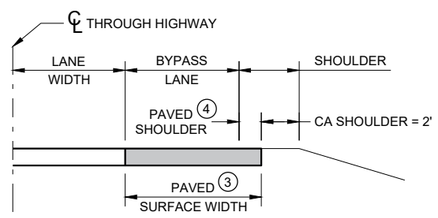

SECTION A - A

(SHOWING BYPASS LANE AND SHOULDER)

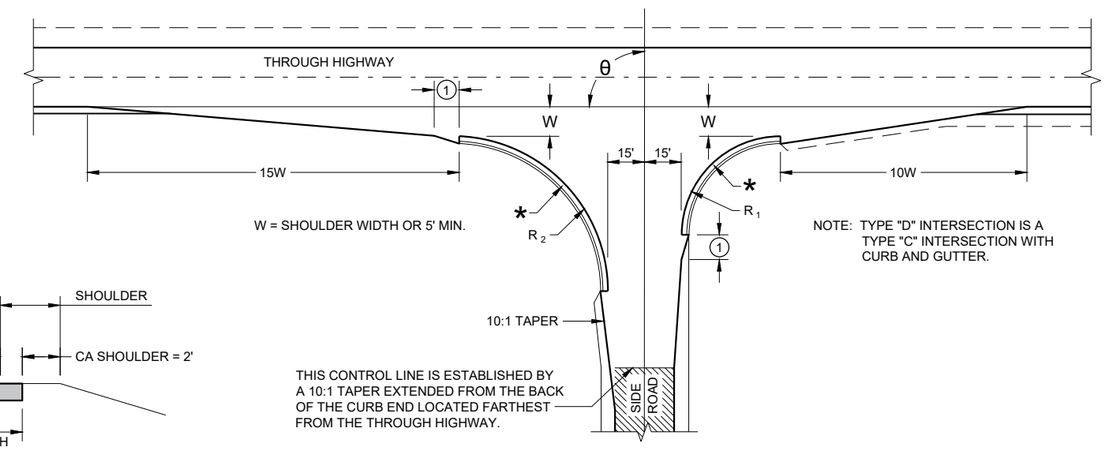

NOTE: TYPE "D" INTERSECTION IS A TYPE "C" INTERSECTION WITH CURB AND GUTTER.

TYPE "D"

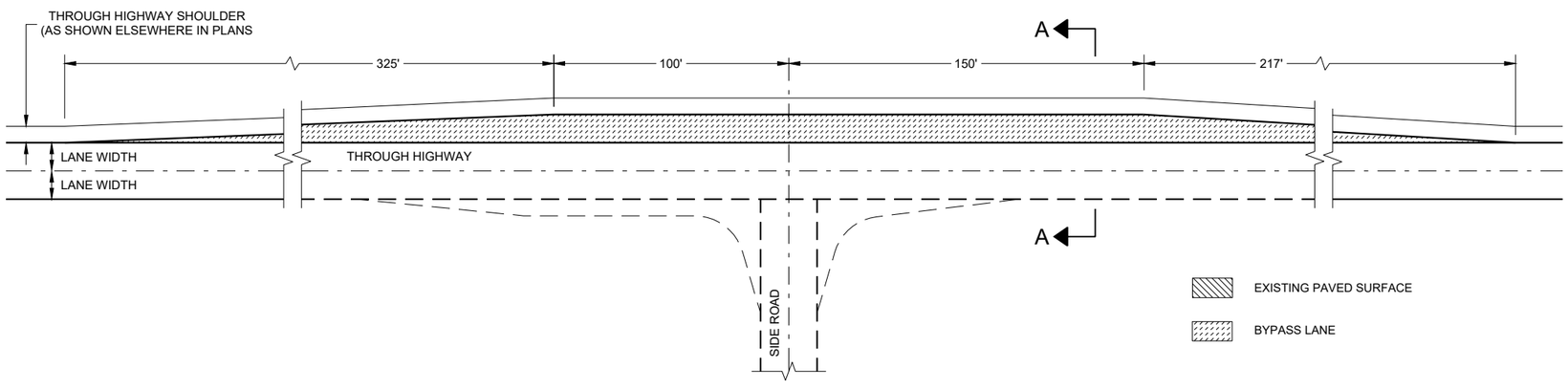

TEE INTERSECTION BYPASS LANE DETAIL

AT GRADE SIDE ROAD INTERSECTION TYPES "B1", "B2", "C", "D" AND TEE INTERSECTION BYPASS LANE

STATE OF WISCONSIN
DEPARTMENT OF TRANSPORTATION

6

SDD 09A01 - 14a

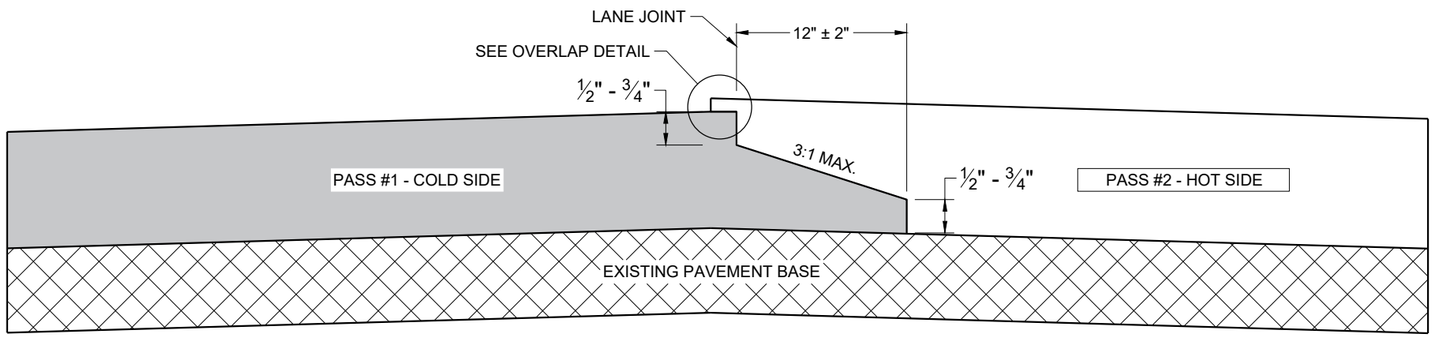

TYPICAL PAVEMENT CROSS SECTION
NOTCHED WEDGE JOINT

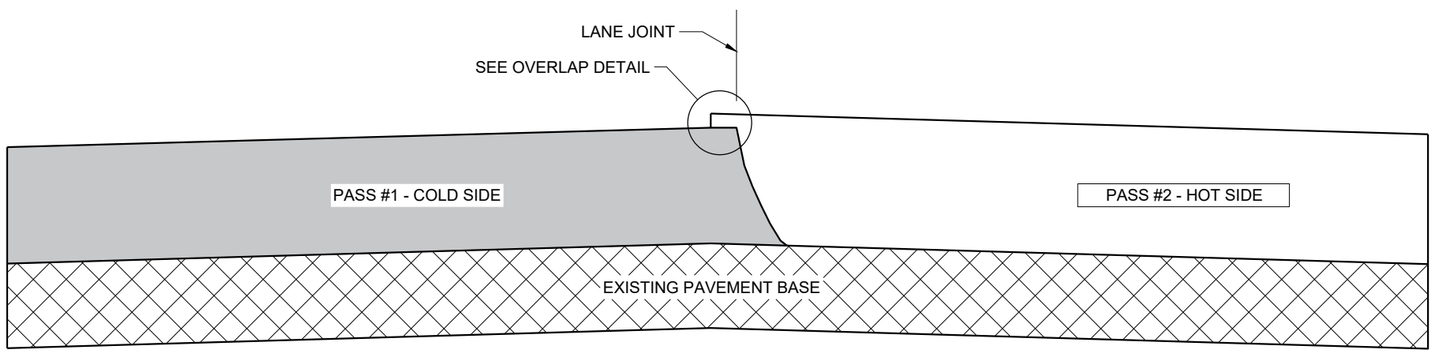

TYPICAL PAVEMENT CROSS SECTION
VERTICAL JOINT

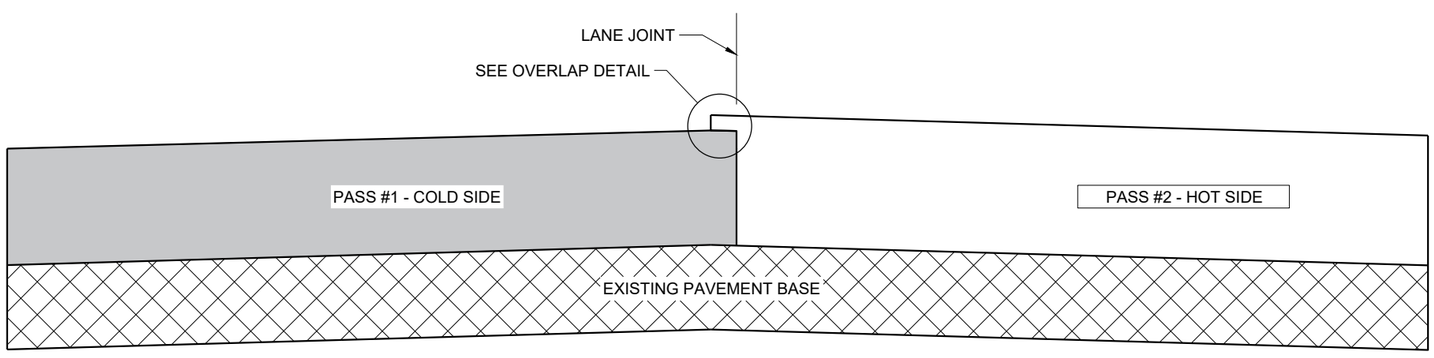

TYPICAL PAVEMENT CROSS SECTION
VERTICAL JOINT (MILLED)

GENERAL NOTES

IN ADDITION TO THE DETAILS PROVIDED IN THIS DRAWING, CONFORM TO STANDARD SPECIFICATION 450.3.2.8 FOR WHEN A NOTCHED WEDGE JOINT IS REQUIRED AND FOR GENERAL JOINT CONSTRUCTION REQUIREMENTS.

FOR ALL LONGITUDINAL JOINTS, ENSURE THE PAVER SCREED OVERLAPS THE PREVIOUSLY PLACED PAVEMENT BY 1" ± 0.5" AND THE HOT SIDE OF THE JOINT REMAINS HIGHER THAN THE COLD SIDE BY APPROXIMATELY 0.1" AFTER FINAL COMPACTION. (IT WILL BE FLUSH WHEN PAVING IN ECHELON.)

ONLY REMOVE THE LONGITUDINAL NOTCHED WEDGE JOINT FOR SMA PAVEMENT OR AS DIRECTED BY THE ENGINEER TO ADDRESS SPECIFIC LENGTHS OF JOINT DAMAGED BY TRAFFIC.

WHEN MILLING BACK OR REMOVING ANY LONGITUDINAL JOINT, LIMIT THE MATERIAL REMOVED TO 2" FROM THE TOP NOTCH OR FROM THE VERTICAL JOINT EDGE ON THE COLD SIDE OF THE JOINT.

USE LONGITUDINAL MILLED JOINT AS PLANS SHOW OR THE AS THE ENGINEER DIRECTS.

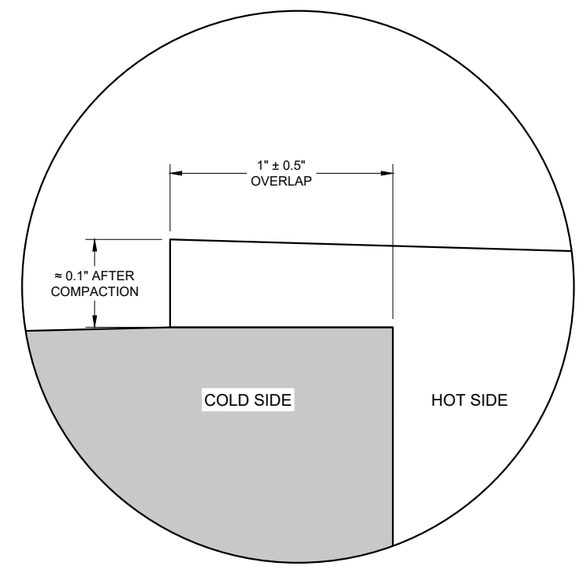

OVERLAP DETAIL (TYPICAL)

6

6

SDD 13C19 - 03

SDD 13C19 - 03

HMA LONGITUDINAL JOINTS

STATE OF WISCONSIN
DEPARTMENT OF TRANSPORTATION

APPROVED
November 2020 /S/ Steven Hefel
DATE HMA PAVEMENT ENGIN

FHWA

1. WOOD OR STEEL POSTS (w6X9 OR w6X8.5) MAY BE USED. DO NOT INTERMIX WOOD AND STEEL POSTS. INSTALL STEEL POSTS WITH HOLES ON APPROACHING TRAFFIC SIDE.
2. USE WOOD OR APPROVED PLASTIC BLOCKOUTS. WOOD BLOCKOUTS MAY BE CONSTRUCTED OUT OF TWO OR MORE WOOD BLOCKOUTS. SEE ALTERNATE WOOD BLOCKOUT DETAIL. DIMENSIONS OF APPROVED PLASTIC BLOCKOUTS MAY VARY.
3. IF ROCK IS ENCOUNTERED DURING EXCAVATION, PROVIDE A HOLE 12 INCHES IN DIAMETER EXTENDING 20 INCHES DEEP INTO THE ROCK. PLACE APPROXIMATELY 2 1/2" INCHES OF GRANULAR MATERIAL IN THE BOTTOM OF THE HOLE. CUT THE POSTS THE TO LENGTH AMD INSTALL. BACKFILL WITH EXCAVATED MATERIAL AND COMPACT. BACKFILL IS TO BE FREE OF LARGE ROCKS.
4. WHEN THE DISTANCE FROM BACK OF POST TO SHOULDER HINGE POINT IS LESS THAN 2 FEET INSTALL LONGER POST AT HALF POST SPACING (K).
5. FOR NEW MGS INSTALLATION TOP OF W-BEAM RAIL TOLERANCE IS ±1". FOR EXISTING MGS INSTALLATION TOP OF W-BEAM IS BETWEEN 27 ¾" TO 32".
6. WHEN USING STEEL POST AND WOOD BLOCKOUTS INSTALL FOUR 16D GALVANIZED NAILS. INSTALL NAILS AT THE BACK CORNERS OF THE BLOCK AND BEND THE NAILS OVER THE FLANGE OF THE STEEL POST.
7. TOTAL POST LENGTH FOR TYPE K IS 7' - 0". TOTAL POST LENGTH FOR OTHER MGS TYPES IS 6' - 0".

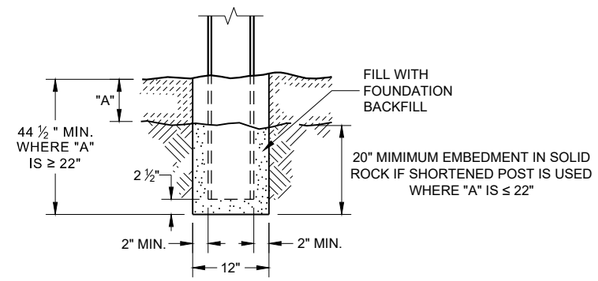

END VIEW
SETTING STEEL OR WOOD POST IN ROCK (3)

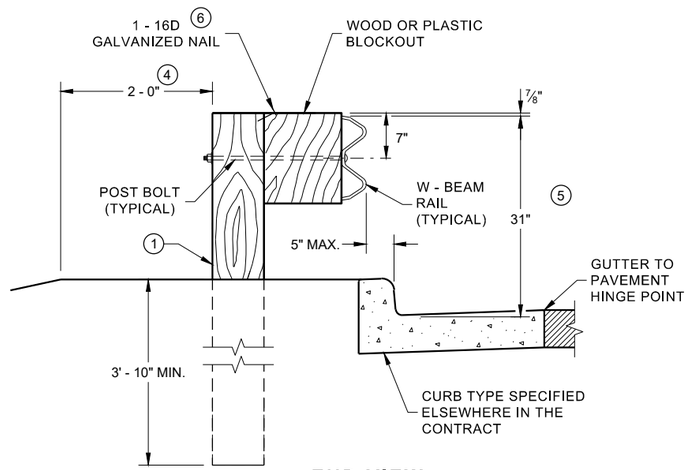

END VIEW
LOCATED ALONG A CURBED ROADWAY

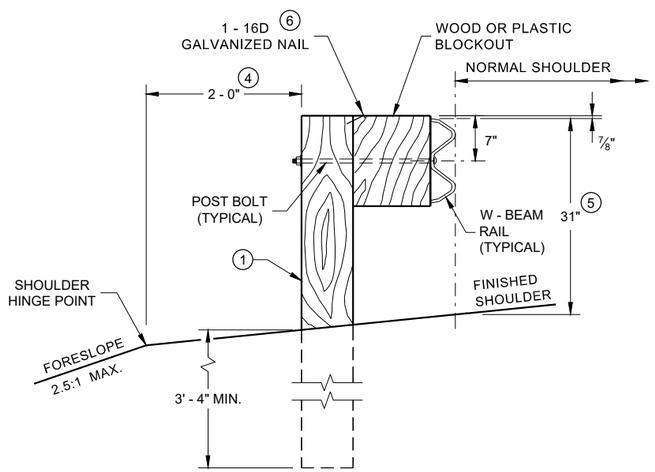

END VIEW
LOCATED ALONG A ROADWAY SHOULDER STANDARD INSTALLATION

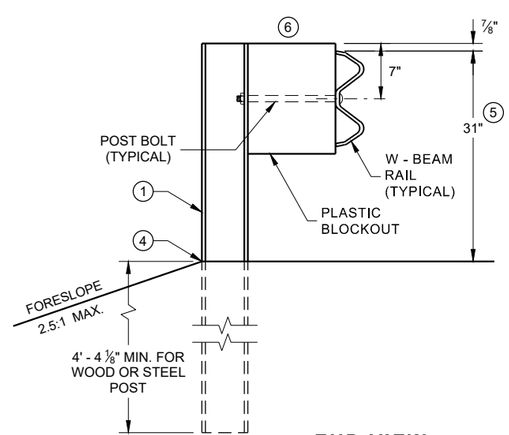

END VIEW
MGS LONGER POST AT HALFPOST SPACING W BEAM (K)

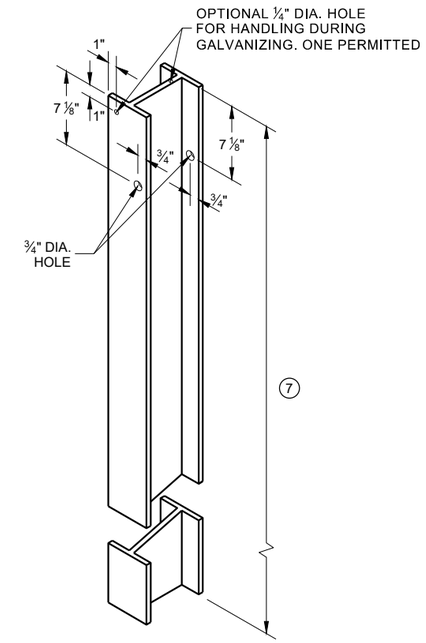

STEEL POST & HOLE PUNCHING DETAIL (W 6 X 9) (1)

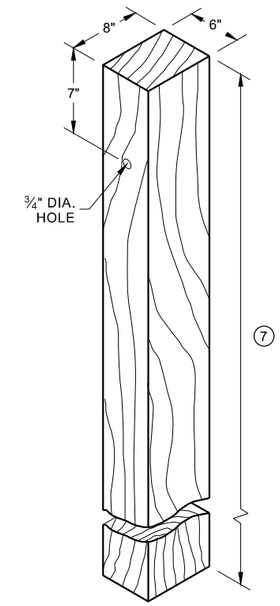

WOOD POST (6" X 8") NOMINAL (1)

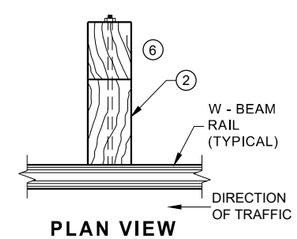

PLAN VIEW WOOD POST, BLOCKOUT & BEAM

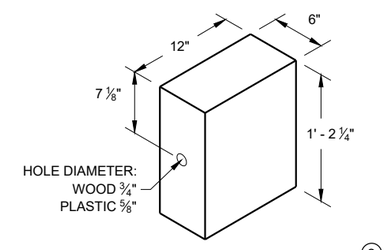

WOOD OR PLASTIC BLOCKOUT (2)

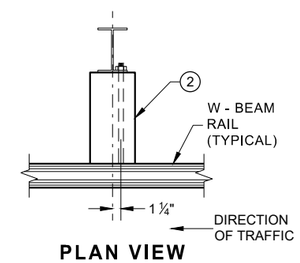

PLAN VIEW STEEL POST, PLASTIC BLOCKOUT & BEAM

MIDWEST GUARDRAIL SYSTEM (MGS) GUARDRAIL

STATE OF WISCONSIN
DEPARTMENT OF TRANSPORTA

6

SDD 14B42 - 07a

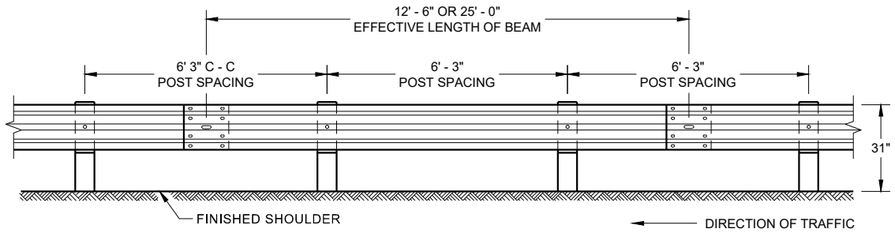

FRONT VIEW
POST SPACING STANDARD INSTALLATION

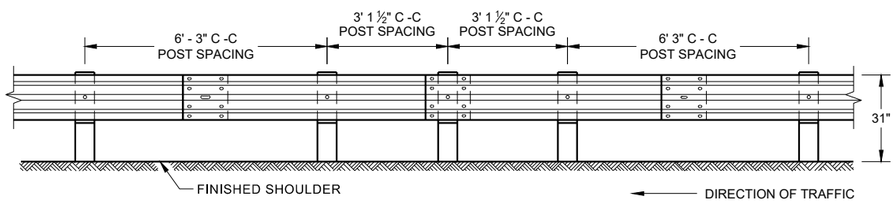

FRONT VIEW
HALF POST SPACING (HS) AND HALF POST SPACING WITH LONGER POSTS (K)

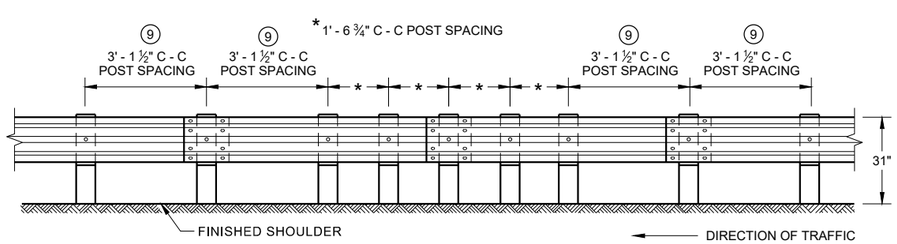

FRONT VIEW
QUARTER POST SPACING (QS)

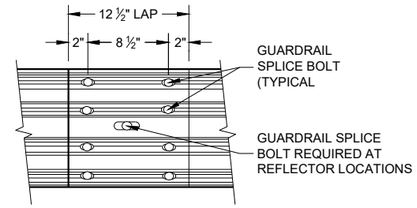

FRONT VIEW
MID-SPAN BEAM SPLICE

GENERAL NOTES

(8) DO NOT INSTALL REFLECTORS ON THE FIRST 50 FEET OF THE APPROACH END OF THE ENERGY ABSORBING TERMINAL.

(9) 25 FEET OF HALF POST SPACING IS REQUIRED ON APPROACH AND DEPARTURE ENDS OF QUARTER POST SPACING.

POST BOLTS ARE A ⅝" DIAMETER ASTM A307 GUARDRAIL BOLT. A POST BOLT REQUIRES ⅝" DIAMETER A563A DOUBLE RECESSED (DR) HEAVY HEX NUT AND ⅝" DIAMETER F844 FLAT WASHER. POST BOLTS MAY BE LONGER IF MULTIPLE BLOCKOUTS ARE BEING USED.

GUARD RAIL SPLICE BOLTS ARE A ⅝" DIAMETER ASTM A307 GUARDRAIL HEAD BOLT. A GUARDRAIL SPLICE BOLT REQUIRES ⅝" DIAMETER A563A DOUBLE RECESSED (DR) HEAVY HEX NUT.

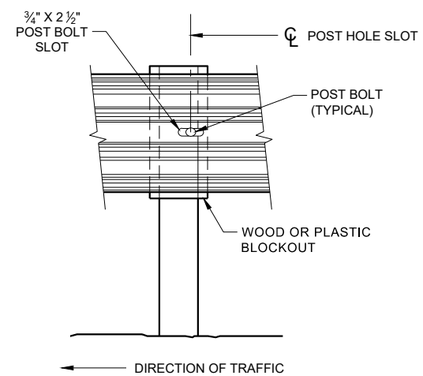

FRONT VIEW AT STEEL POST

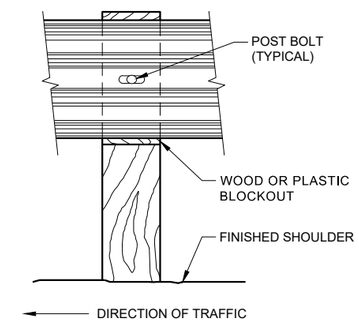

FRONT VIEW AT WOOD POST

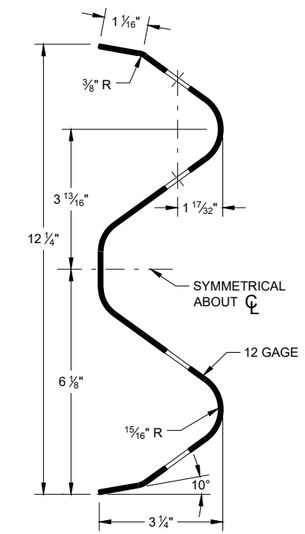

SECTION THRU W-BEAM RAIL

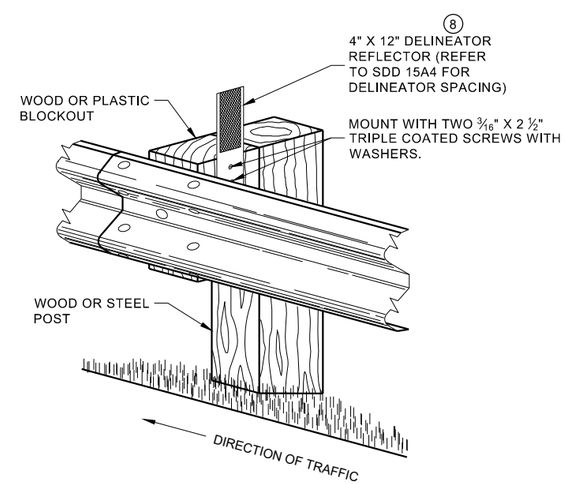

ONE SIDED REFLECTOR DETAIL AND TYPICAL INSTALLATION

MIDWEST GUARDRAIL SYSTEM (MGS) GUARDRAIL

STATE OF WISCONSIN
DEPARTMENT OF TRANSPORTAT

6

SDD 14B42 - 07b

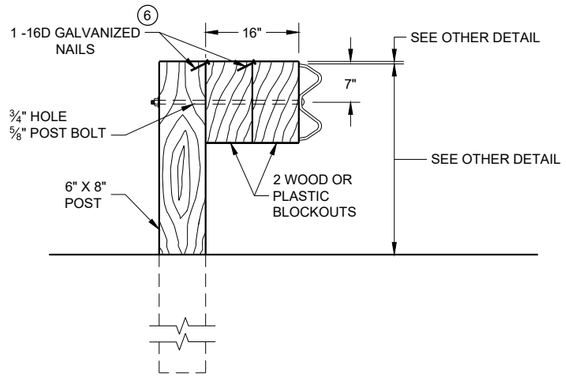

DETAIL FOR 16" BLOCKOUT DEPTH

IT IS ACCEPTABLE TO USE BLOCKOUTS UP TO 16" DEEP TO INCREASE THE POST OFFSET TO AVOID UNDERGROUND OBSTACLES. THERE IS NO LIMIT TO THE NUMBER OF POSTS THAT CAN HAVE ADDITIONAL BLOCKOUTS UP TO 16" DEEP.

NOTE:

1. ALL FILLETS SHALL HAVE A MINIMUM RADIUS OF 3/16".
2. IF THE BOLT EXTENDS MORE THAN ¼" FROM THE NUT THE BOLT SHOULD BE TRIMMED BACK.

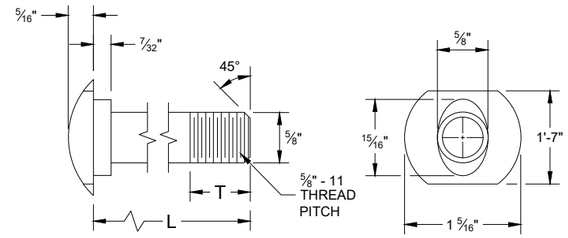

POST BOLT TABLE

L	T (MIN.)
1 ¼"	1 ⅛"
2"	1 ¾"
10"	4"
14"	4 1/16"
18"	4"
21"	4 1/16"
25"	4"

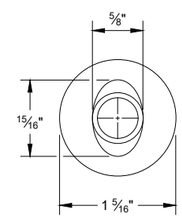

ALTERNATE BOLT HEAD

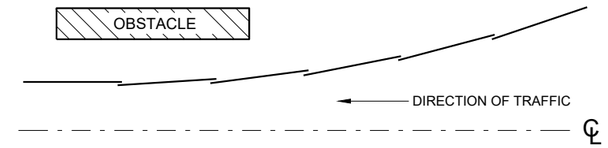

PLAN VIEW
BEAM LAPPING DETAIL

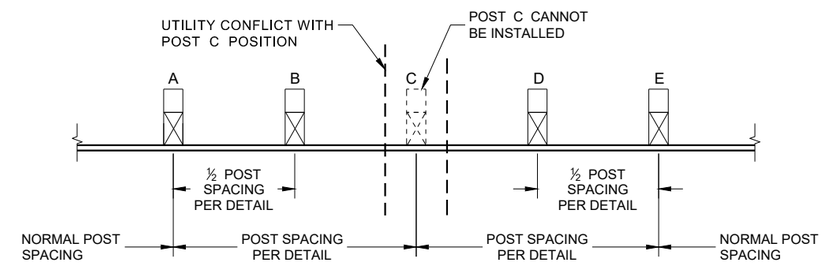

POST DRIVING FOR CONTINUOUS UNDERGROUND OBSTRUCTION

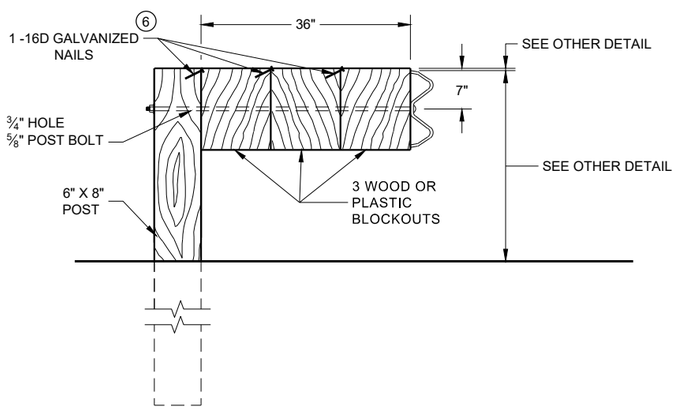

DETAIL FOR 36" BLOCKOUT DEPTH

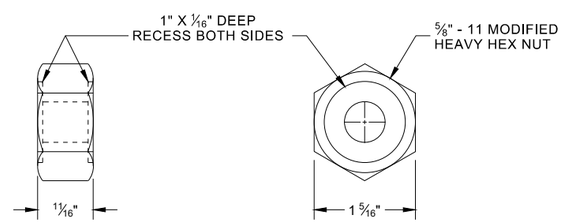

POST BOLT, SPLICE BOLT AND RECESS NUT

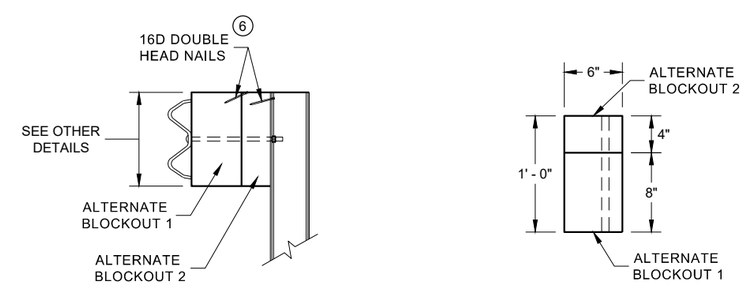

SIDE VIEW

PLAN VIEW

ALTERNATE WOOD BLOCKOUT DETAIL

NOTES: UNDER SPECIAL CIRCUMSTANCES, SUCH AS AVOIDING OBSTACLES THAT ARE NOT RELOCATED, IT IS ACCEPTABLE TO INSTALL ADDITIONAL BLOCKOUTS TO OBTAIN UP TO 36" DEPTH FOR ONE OR TWO POSTS IN A SECTION OF GUARDRAIL.

DO NOT USE 16" OR 36" BLOCKOUTS IF IT CAUSES THE POST TO BE DRIVEN BEYOND SHOULDER HINGE POINT OR CAUSES A FIXED OBJECT TO BE WITHIN THE DEFLECTION DISTANCE OF THE BARRIER.

(6) WHEN USING STEEL POST AD WOOD BLOCKOUTS, INSTALL FOUR 16D GALVANIZED NAILS. INSTALL NAILS AT THE BACK CORNERS OF THE BLOCK AND BEND THE NAILS OVER THE FLANGE OF THE STEEL POST.

MIDWEST GUARDRAIL SYSTEM (MGS) GUARDRAIL

STATE OF WISCONSIN
DEPARTMENT OF TRANSPORTA

6

SDD 14B42 - 07c

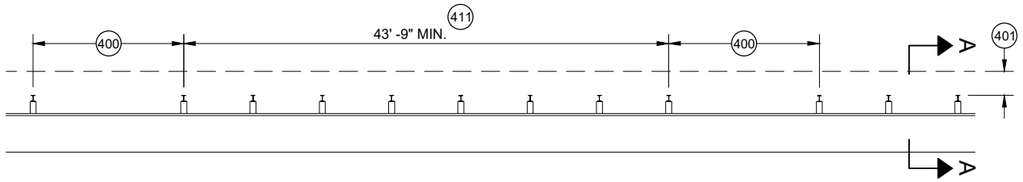

MISSING POST IN MGS GUARDRAIL

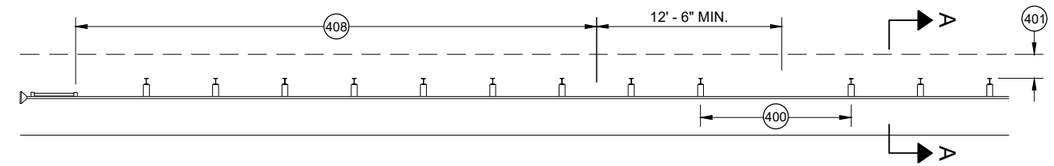

MISSING POST IN MGS GUARDRAIL NEAR EAT

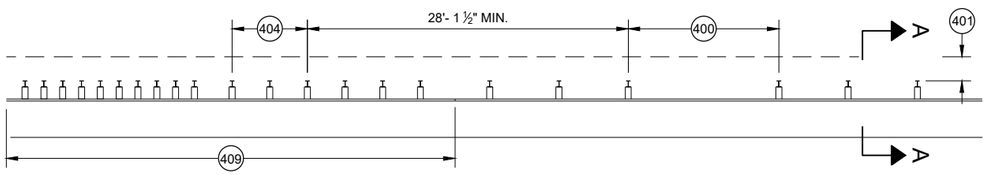

MISSING POST IN MGS GUARDRAIL NEAR AN APPROACH TRANSITION

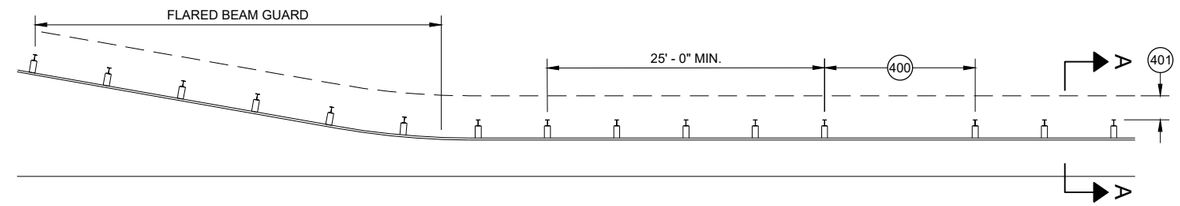

MISSING POST IN MGS GUARDRAIL NEAR FLARED BEAM GUARD

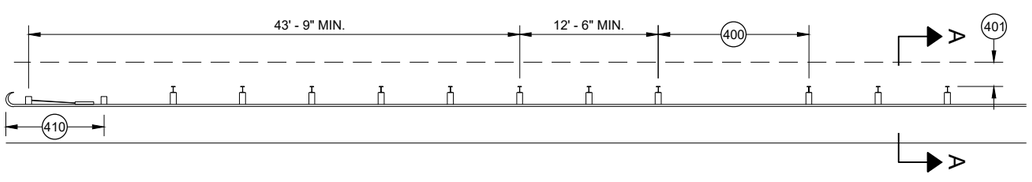

MISSING POST IN MGS GUARDRAIL NEAR A TYPE 2 END TERMINAL

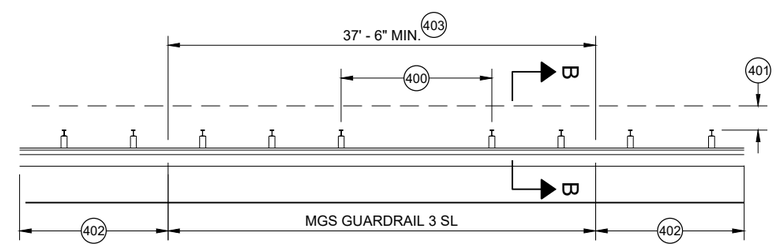

MISSING POST IN SHORT SPAN MGS GUARDRAIL NEAR CURB (SL) 407

400 MAX SPAN 12' - 6"
401 2' MIN.
402 MGS GUARDRAIL 3
403 NESTING BEAM GUARD
404 ASYMMETRIC TRANSITION
405 SOIL WELL DRAINED AND COMPACTED
406 SEE OTHER DRAWINGS IN THIS SDD
407 SEE OTHER DRAWINGS FOR MIN. SPACING BETWEEN SPANS
408 SEE SDD 14B44
409 SEE SDD 14B45
410 SEE SDD 14B47
411 MINIMUM DISTANCE BETWEEN MISSING POST SPANS.

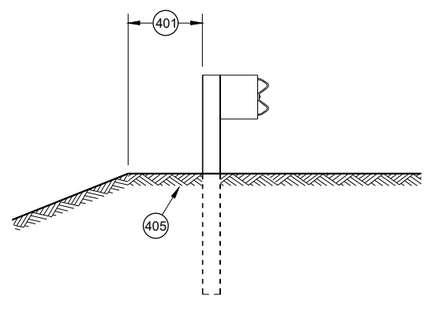

SECTION A - A 406

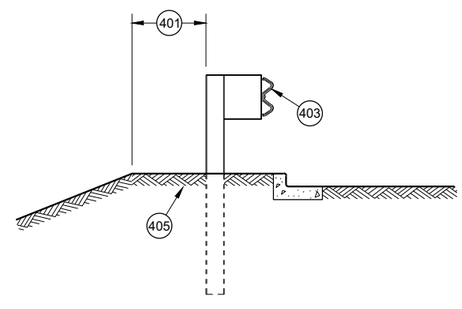

SECTION B - B 406

MIDWEST GUARDRAIL SYSTEM (MGS) GUARDRAIL

STATE OF WISCONSIN
DEPARTMENT OF TRANSPORTATION

APPROVED
May 2021 — DATE
/S/ Rodney Taylor — ROADWAY STANDARDS DEVE UNIT SUPERVISOR
FHWA

6

SDD 14B42 - 07d

GENERAL NOTES

POSTS 1 THROUGH 3 ARE CRT POSTS.
ALL OTHER POSTS SHALL BE WOOD OR STEEL.

SEE SDD 14 B 42 FOR MORE DETAILS.

(A) FLARE FOR MGS EAT SHOWN. IF INSTALLING MGS NO FLARE NEEDED.

(B) VALUES SHOWN ON DRAWING REPRESENT THE MAXIMUM LENGTH. SHORTER DIMENSIONS ARE POSSIBLE. SEE OTHER SECTION OF PLAN FOR MORE INFORMATION.

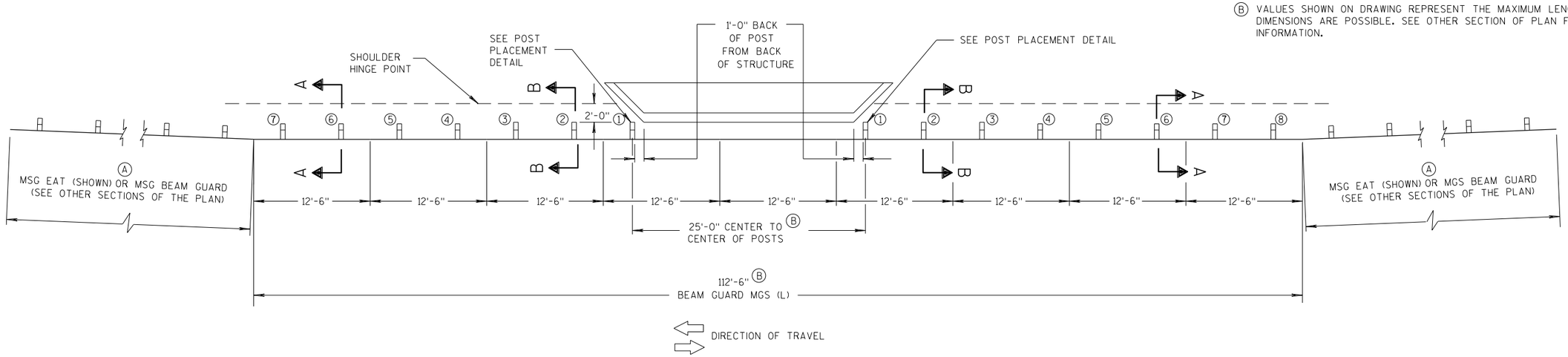

PLAN VIEW

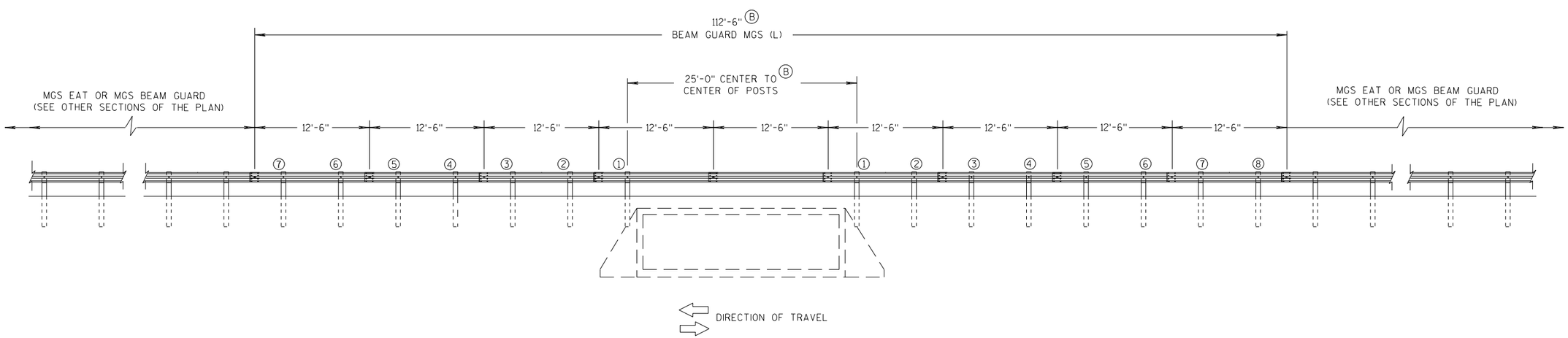

ELEVATION VIEW

MIDWEST GUARDRAIL SYSTEM LONG SPAN MGS (L) TWO-WAY TRAFFIC

MIDWEST GUARDRAIL SYSTEM
LONG SPAN MGS (L)

STATE OF WISCONSIN
DEPARTMENT OF TRANSPORTATION

6
S.D.D. 14 B 43-4a

GENERAL NOTES

POSTS 1 THROUGH 3 ARE CRT POSTS.
ALL OTHER POSTS SHALL BE WOOD OR STEEL.

SEE SDD 14 B 42 FOR MORE DETAILS.

(A) FLARE FOR MGS EAT SHOWN. IF INSTALLING MGS NO FLARE NEEDED.

(B) VALUES SHOWN ON DRAWING REPRESENT THE MAXIMUM LENGTH. SHORTER DIMENSIONS ARE POSSIBLE. SEE OTHER SECTION OF PLAN FOR MORE INFORMATION.

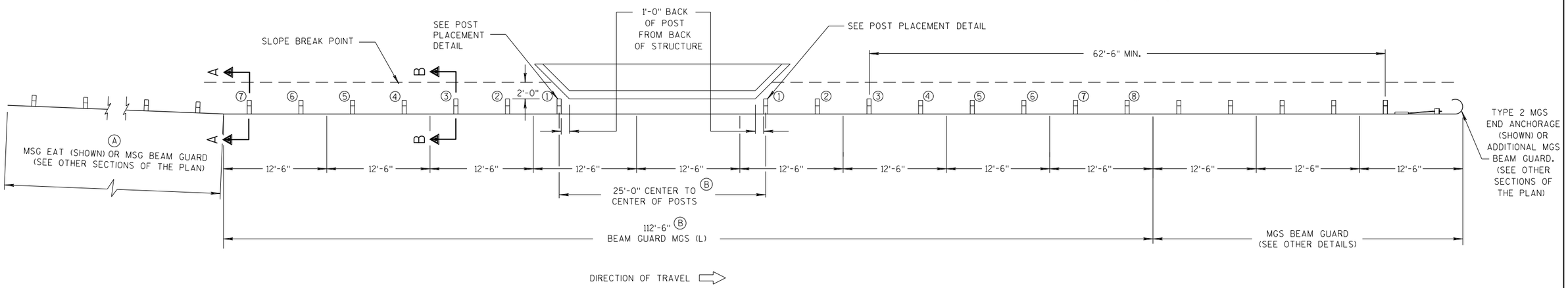

PLAN VIEW

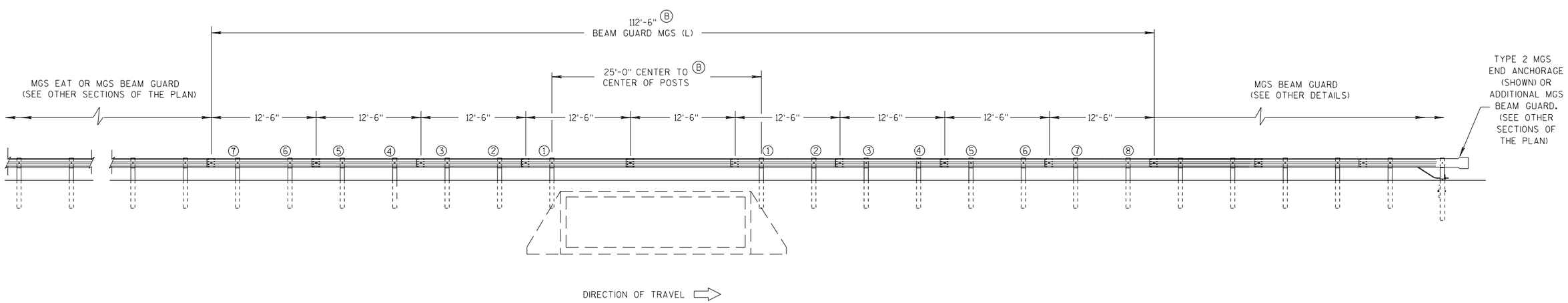

ELEVATION VIEW

MIDWEST GUARDRAIL SYSTEM LONG SPAN MGS (L) ONE-WAY TRAFFIC

MIDWEST GUARDRAIL SYSTEM LONG SPAN MGS (L)

STATE OF WISCONSIN
DEPARTMENT OF TRANSPORTATION

6

S.D.D. 14 B 43-4b

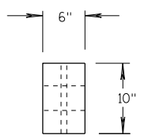

PLAN VIEW

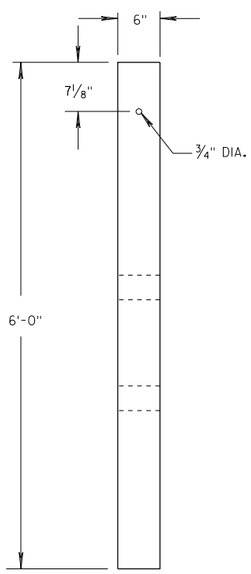

FRONT VIEW

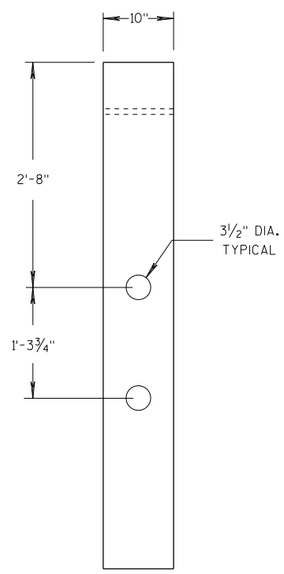

SIDE VIEW

CRT WOOD POST

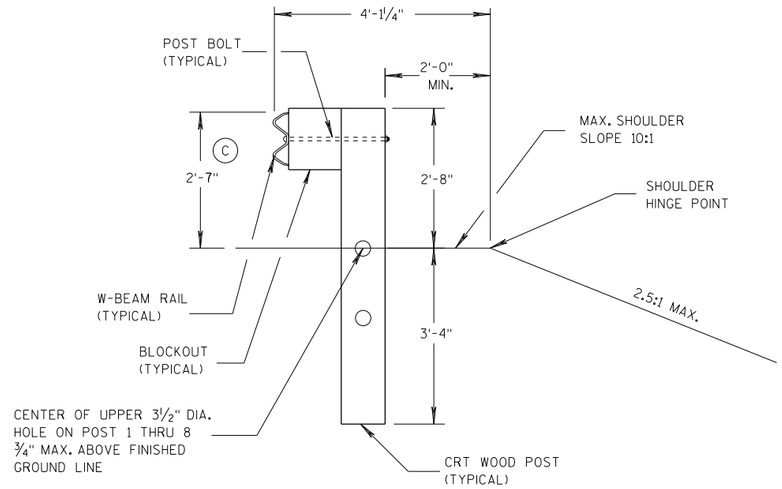

SECTION B-B

POSTS NO. 1-3

SEE OTHER DETAILS

GENERAL NOTES

(C) TOLERANCE FOR TOP OF W-BEAM RAIL IS ± 1".

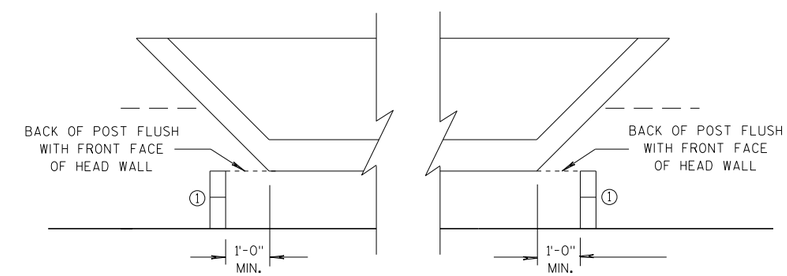

POST PLACEMENT DETAIL

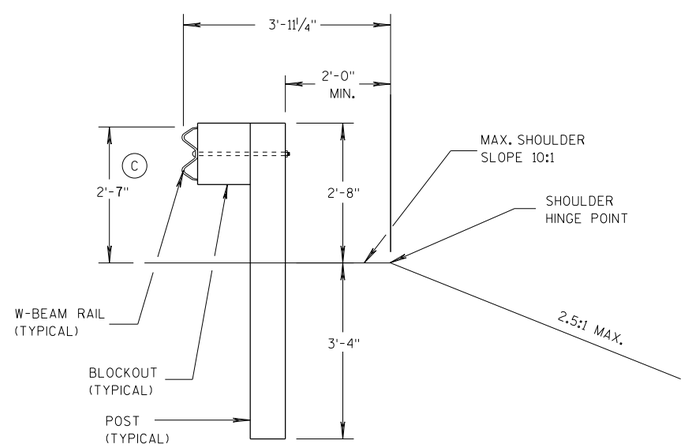

SECTION A-A

POSTS NO. 4-8

SEE OTHER DETAILS

6

6

S.D.D. 14 B 43-4c

S.D.D. 14 B 43-4c

MIDWEST GUARDRAIL SYSTEM
LONG SPAN MGS (L)

STATE OF WISCONSIN
DEPARTMENT OF TRANSPORTATION

APPROVED
07/2018
DATE
FHWA

/S/ Rodney Taylor
ROADWAY STANDARDS D 41 NT
ENGINEER

GENERAL NOTES

(A) THE SLOPE IN THE AREA BOUNDED BY THE GRADELINE, THE HINGE POINT LINE (HPL) AND THE CLEAR ZONE LIMITS (CZL) SHALL BE 4:1 OR FLATTER.

(B) AFTER FINAL ASSEMBLY, RECHECK CABLE TO BE SURE IT IS TAUT AND HAS NOT RELAXED

(C) DIFFERENT MANUFACTURERS REQUIRE DIFFERENT PERFORATED W - BEAM RAIL END PANELS. SEE MANUFACTURER'S INFORMATION.

(D) ATTACH ALUMINUM SHEET TO E.A.T. HEAD USING 4 STAINLESS STEEL SELF - TAPPING SCREWS. ONE SCREW PER CORNER.

(E) HARDWARE MAY VARY BETWEEN MANUFACTURER. SEE MANUFACTURER'S DRAWING FOR INFORMATION.

DIMENSIONS MAY VARY, MANUFACTURER'S INFORMATION.

SEE SDD 14B42 FOR MORE INFORMATION.

* DO NOT ATTACH BLOCKOUTS TO POST 1 AND 2.

DO NOT INSTALL REFLECTORS ON THE FIRST 50 FEET OF THE APPROACH END OF THE ENERGY ABSORBING TERMINAL.

SEE MANUFACTURER'S DRAWING FOR SPLICE LOCATION, HARDWARE DIMENSIONS AND INSTALLATION INSTRUCTIONS.

THE CENTER OF THE UPPER 3 ½" DIAMETER HOLE ON POST NUMBER 3 THROUGH POST 9 IS TO BE FLUSH WITH THE GROUND LINE UP TO A MAXIMUM OF 2" ABOVE GROUND LINE. WOOD BLOCKS ON POSTS NUMBERED 3 THROUGH 9 MAY BE ADJUSTED UP TO 3" ABOVE THE TOP OF POST.

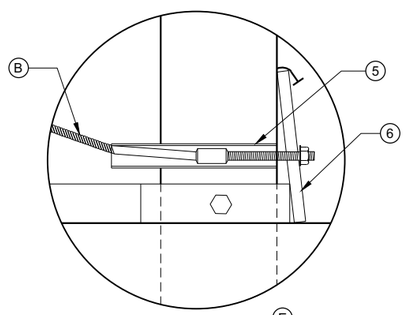

DETAIL "A" (E)

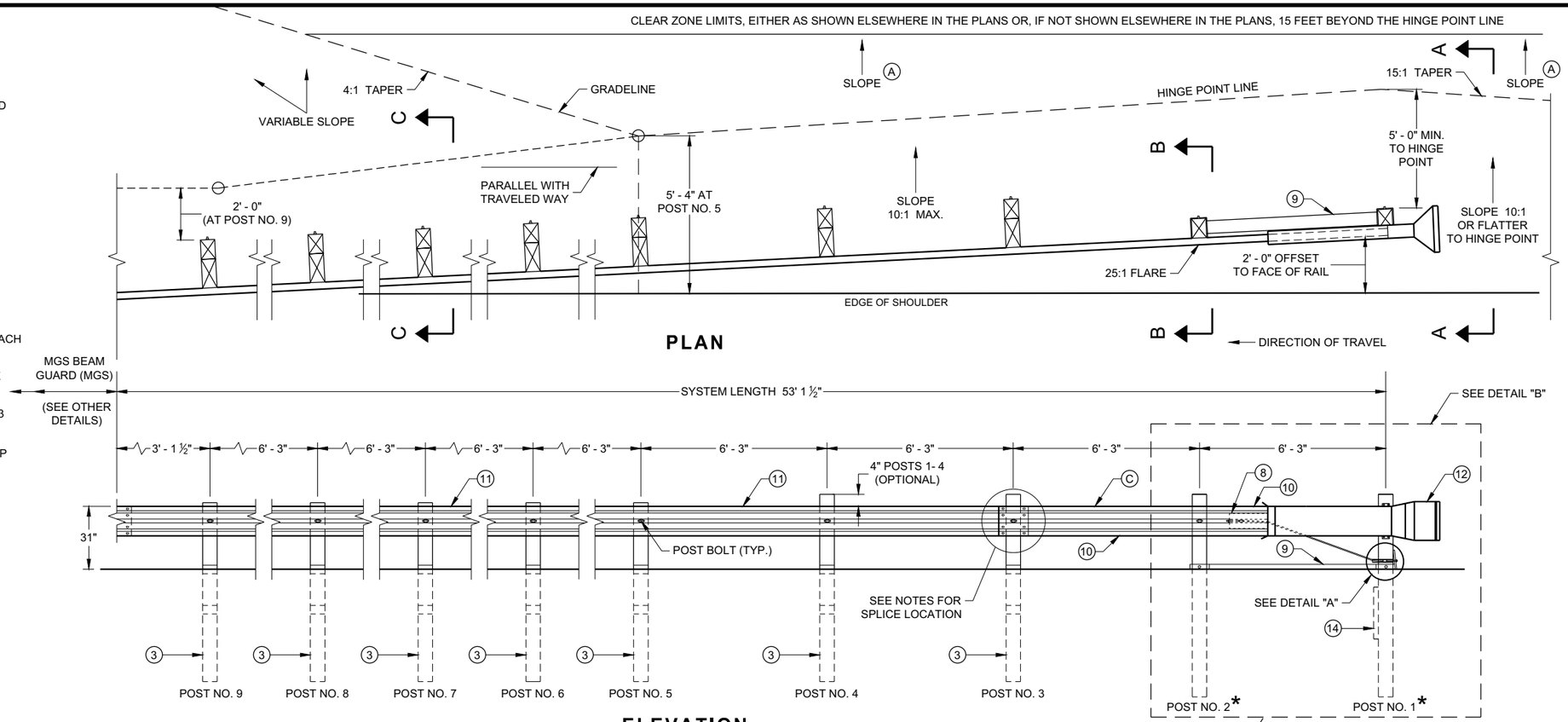

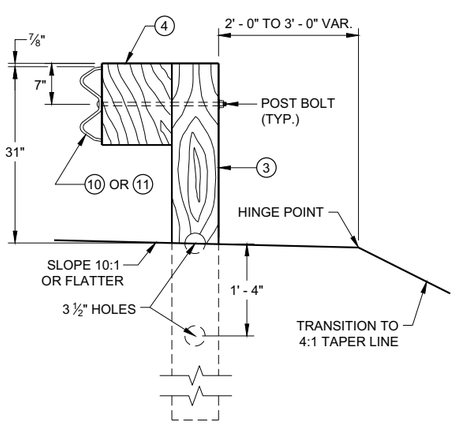

SECTION C - C
TYPICAL AT POST NOS. 3 - 9

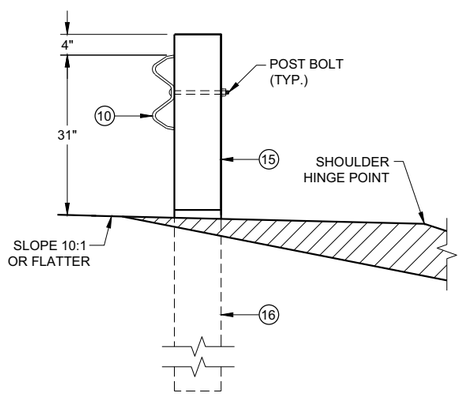

SECTION B - B
TYPICAL AT POST NO. 2*

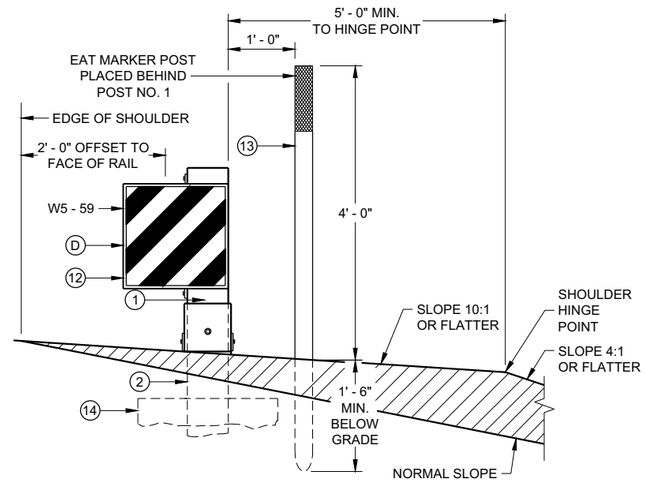

SECTION A - A
TYPICAL AT POST NO. 1*

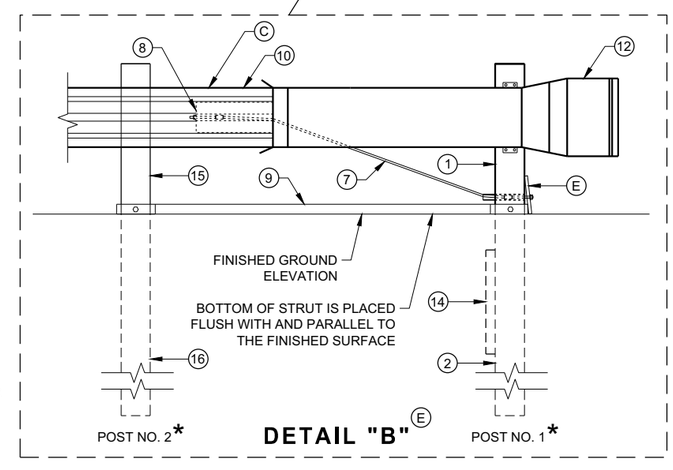

DETAIL "B" (E)

MIDWEST GUARDRAIL SYSTEM ENERGY ABSORBING TERMINAL (MGS)

STATE OF WISCONSIN
DEPARTMENT OF TRANSPORTATION

6

SDD 14B44 - 04a

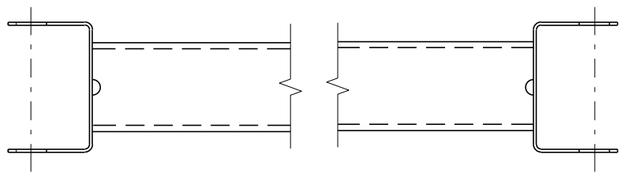

GENERIC GROUND STRUT 9 E

BILL OF MATERIALS

PART NO.	DESCRIPTION MATERIALS PROVIDED BY MGS EAT MANUFACTURER. SEE MANUGACTURER'S DETAILS FOR MORE INFORMATION.
1	UPPER POST NO. 1 6" X 6" TUBE
2	LOWER POST NO. 1
3	WOOD CRT
4	WOOD BLOCKOUT
5	PIPE SLEEVE
6	BEARING PLATE
7	BCT CABLE ASSEMBLY
8	ANCHOR CABLE BOX
9	GROUND STRUT
10	PERFORATED W-BEAM RAIL END PANEL, 12'-6" LONG.
11	STANDARD W-BEAM RAIL. MULTIPLE SECTIONS REQUIRED. SECTIONS VARY IN LENGTH.
12	IMPACT HEAD
13	EAT MARKER POST - YELLOW (SEE APPROVED PRODUCTS LIST)
14	SOIL PLATE
15	UPPER POST NO. 2
16	LOWER POST NO. 2

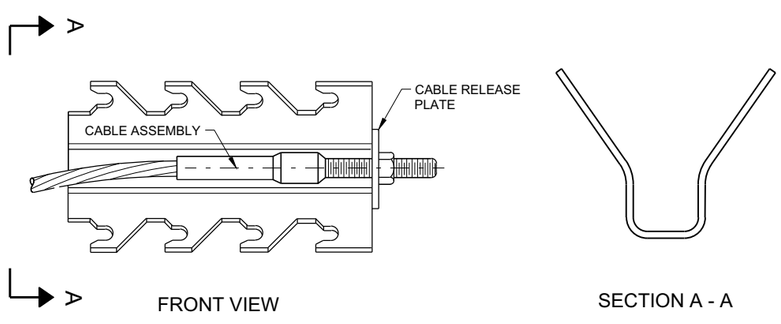

GENERIC ANCHOR CABLE BOX 9 E

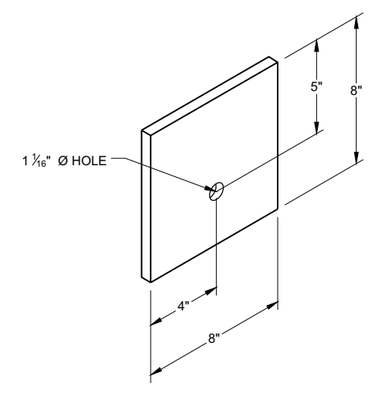

BEARING PLATE 6 E

6

6

SDD 14B44 - 04b

SDD 14B44 - 04b

MIDWEST GUARDRAIL SYSTEM ENERGY ABSORBING TERMINAL (MGS)

STATE OF WISCONSIN
DEPARTMENT OF TRANSPORTAT

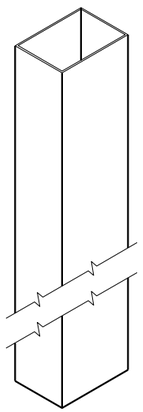

UPPER POST NO. 1 (1) (E)

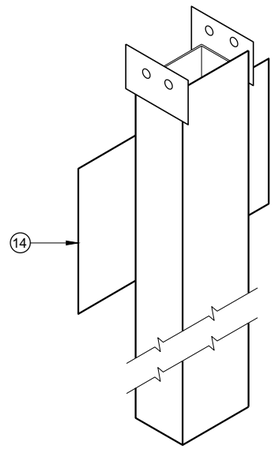

LOWER POST NO. 1 (2) (E)

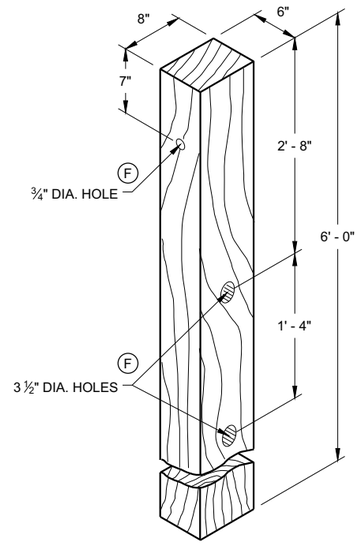

WOOD CRT POST (3) (E)

POSTS NUMBER 3-9

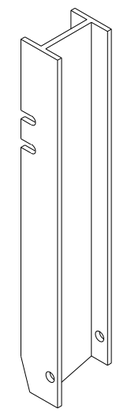

UPPER POST NO. 2 (15) (E)

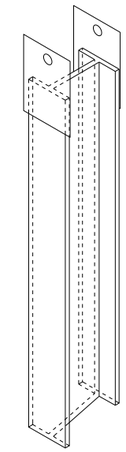

LOWER POST NO. 2 (16) (E)

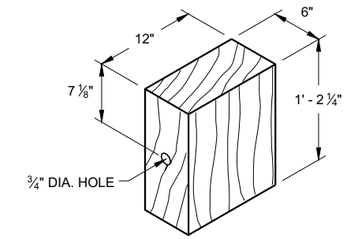

WOOD BLOCKOUT (4)

REQ'D. AT ALL POSTS EXCEPT POST NO'S 1 & 2

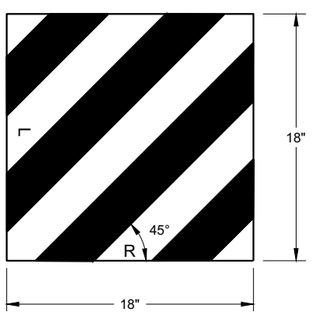

W5 - 59

REFLECTIVE SHEETING DETAIL (E)

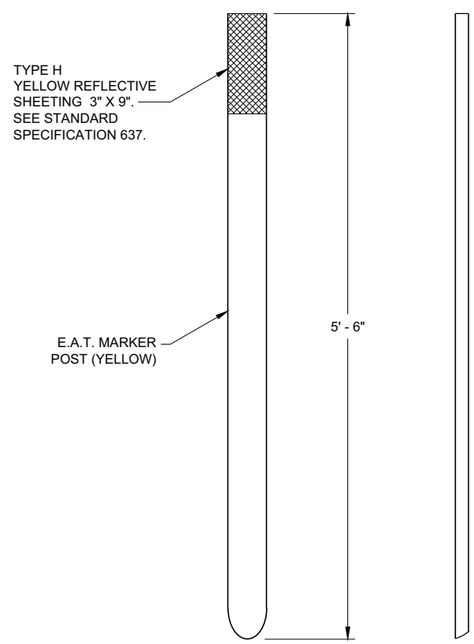

FRONT VIEW SIDE VIEW

E.A.T. MARKER POST (13)

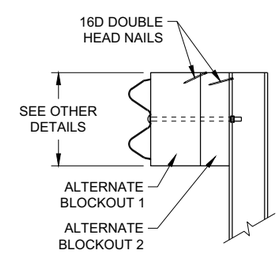

SIDE VIEW

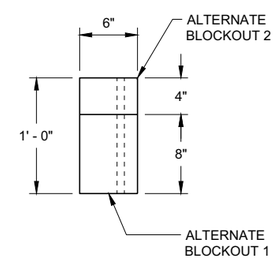

TOP VIEW

ALTERNATE WOOD BLOCKOUT DETAIL

MIDWEST GUARDRAIL SYSTEM ENERGY ABSORBING TERMINAL (MGS)

STATE OF WISCONSIN
DEPARTMENT OF TRANSPORTATION

APPROVED
7/2018 — DATE
/S/ Rodney Taylor — ROADWAY STANDARDS DEVE UNIT SUPERVISOR
FHWA

6

SDD 14B44 - 04c

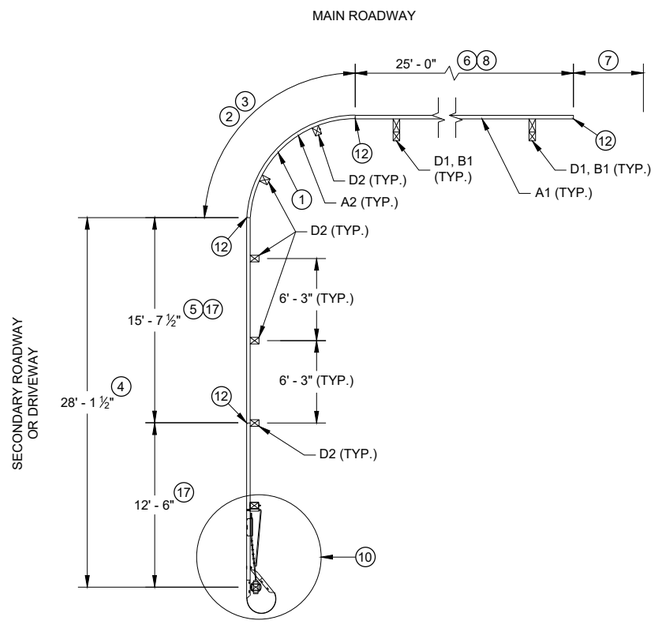

PLAN VIEW

SHORT RADIUS BEAM GUARD WITH SHORT RADIUS TERMINAL ON SECONDARY ROAD OR DRIVEWAY

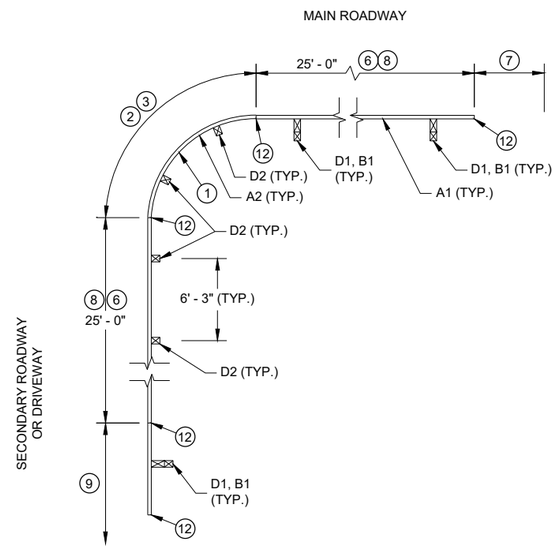

PLAN VIEW

SHORT RADIUS BEAM GUARD WITH EAT, ADDITIONAL BEAM GUARD OR TRANSITION TO RIGID BARRIER ON SECONDARY ROAD OR DRIVEWAY

TABLE FOR RADIUS OF 32' AND LESS

RADIUS (FT)	LENGTH (FT)	WIDTH (FT)
8	25	15
16	30	15
24	40	20
32	50	30

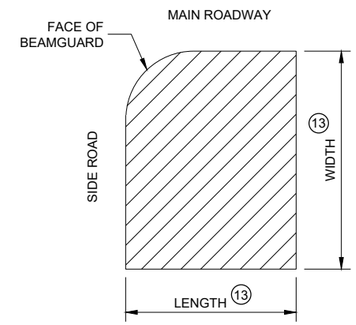

AREA FREE OF FIXED OBJECTS FOR RADIUS 32' AND LESS 16

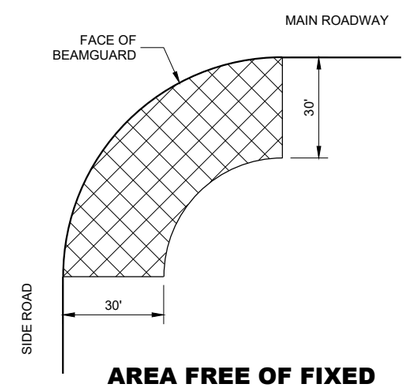

AREA FREE OF FIXED OBJECTS FOR RADIUS GREATER THAN 32'

GENERAL NOTES

SEE PLANS FOR OTHER BARRIER SYSTEM AND LOCATION SPECIFICS.

SEE SDD 14B42 FOR MORE INFORMATION ON BEAM GUARD INSTALLATION, PARTS, MATERIALS, AND INSTALLATION INFORMATION.

GALVANIZE PARTS AFTER FABRICATION.

WELDING TO FOLLOW CURRENT REQUIREMENTS OF THE AMERICAN WELDING SOCIETY STRUCTURAL WELDING CODE ANSI / AWS D1.1.

UNLESS NOTED OTHERWISE, ALL PLATES ARE FLAT AND FREE OF WARP.

UNLESS NOTED OTHERWISE, ALL EDGES ARE SMOOTH, STRAIGHT AND VERTICAL.

ALL CUTS AND HOLES, EXCEPT IN BEAM GUARD RAIL ARE TO BE MACHINED OR MACHINE FLAME CUT.

UNLESS NOTED OTHERWISE, CUT OR PROVIDE BOLTS THAT ARE ¼" TO ½" BEYOND THE NUT.

DRAWINGS ARE NOT TO SCALE.

1. RADIUS MEASURE FROM INSIDE OF RAIL. LENGTH OF BEAM GUARD SHORT RADIUS GUARD MEASURED ALONG TRAFFIC SIDE OF RAIL. RADIUS BETWEEN 8 FEET TO 150 FEET. SEE PLAN FOR REQUIRED RADIUS. BEAM GUARD RAIL IN RADIUS IS SHOP BENT. ODD RAIL LENGTH OR FIELD CUTS MAY BE REQUIRED.
2. CONTROLLED RELEASE TERMINAL (CRT) POSTS ARE USED IN THE RADIUS. CONTROLLED RELEASE TERMINAL (CRT) POSTS ARE SPACED 6' - 3". SEE PLAN FOR NUMBER OF CONTROLLED RELEASE (CRT) POSTS.
3. WITHIN RADIUS BEAM GUARD RAILS ARE NOT BOLTED TO POSTS. BEAM GUARD RAIL IS RESTED ON TOP OF LAG SCREW.
4. MINIMUM LENGTH OF BEAM GUARD ALONG SIDE ROAD OR DRIVEWAY TO INSTALL SHORT RADIUS TERMINAL. BEAM GUARD IS PAID WITH BEAM GUARD ITEM.
5. ODD LENGTH OF BEAM GUARD REQUIRED TO INSTALL SHORT RADIUS TERMINAL.
6. MINIMUM AMOUNT OF BEAM GUARD TO BE INSTALLED PRIOR TO TRANSITION TO RIGID BARRIER. ADDITIONAL BEAM GUARD, OR EAT. BEAM GUARD PAID FOR WITH BEAM GUARD ITEM. SEE PLANS FOR MORE DETAIL.
7. BEAM GUARD, EAT, OR TRANSITION TO RIGID BARRIER. SEE PLAN.
8. TOP OF BEAM GUARD BY THE RADIUS IS 27". HEIGHT OF BEAM GUARD IS 31" BY TRANSITION TO RIGID BARRIER, ADDITIONAL BEAM GUARD OR EAT.
9. ADDITIONAL BEAM GUARD, EAT OR TRANSITION TO RIGID BARRIER. BEAM GUARD SHOWN. SEE PLAN FOR DETAILS.
10. SHORT RADIUS TERMINAL (SEE OTHER DETAILS).
11. HEIGHT VARIES. SEE NOTE 8 AND 8.
12. BEAM GUARD RAIL SPLICE LOCATION. SPLICE LOCATION REQUIRES PART F1 AND F2. SEE SDD 14B42 FOR DETAILS.
13. SEE TABLE FOR VALUES.
14. MAXIMUM HEIGHT FOR CENTER OF HOLE IS ¾" ABOVE FINISHED GROUND ±1".
15. DRILL POST $^{15}/_{64}$" DIA. PILOT HOLE. DO NOT HAMMER LAG SCREW INTO POST.
16. SMALL SIGNS ON BREAKAWAY HARDWARE ARE ACCEPTABLE.
17. TOP OF RAIL HEIGHT IS 27" WHEN USING A SHORT RADIUS TERMINAL (CRT).

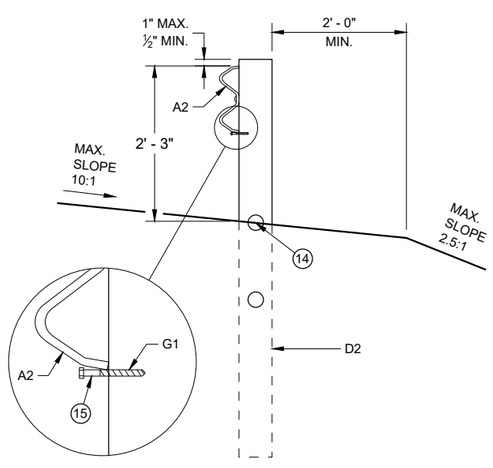

CONTROLLED RELEASE TERMINAL POST (CRT) IN RADIUS

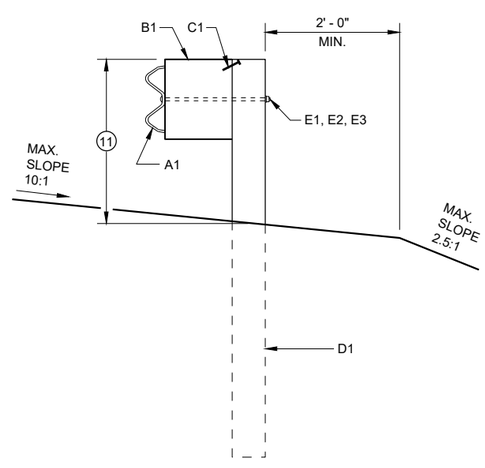

BEAM GUARD POSTS IN HEIGHT TRANSITION

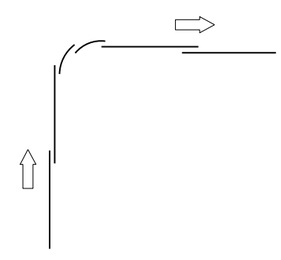

LAP SPLICE DETAIL

SHORT RADIUS BEAM GUARD (MGS) SHORT RADIUS TERMINAL (MGS)

STATE OF WISCONSIN
DEPARTMENT OF TRANSPORTATION

6

SDD 14B53 - 02a

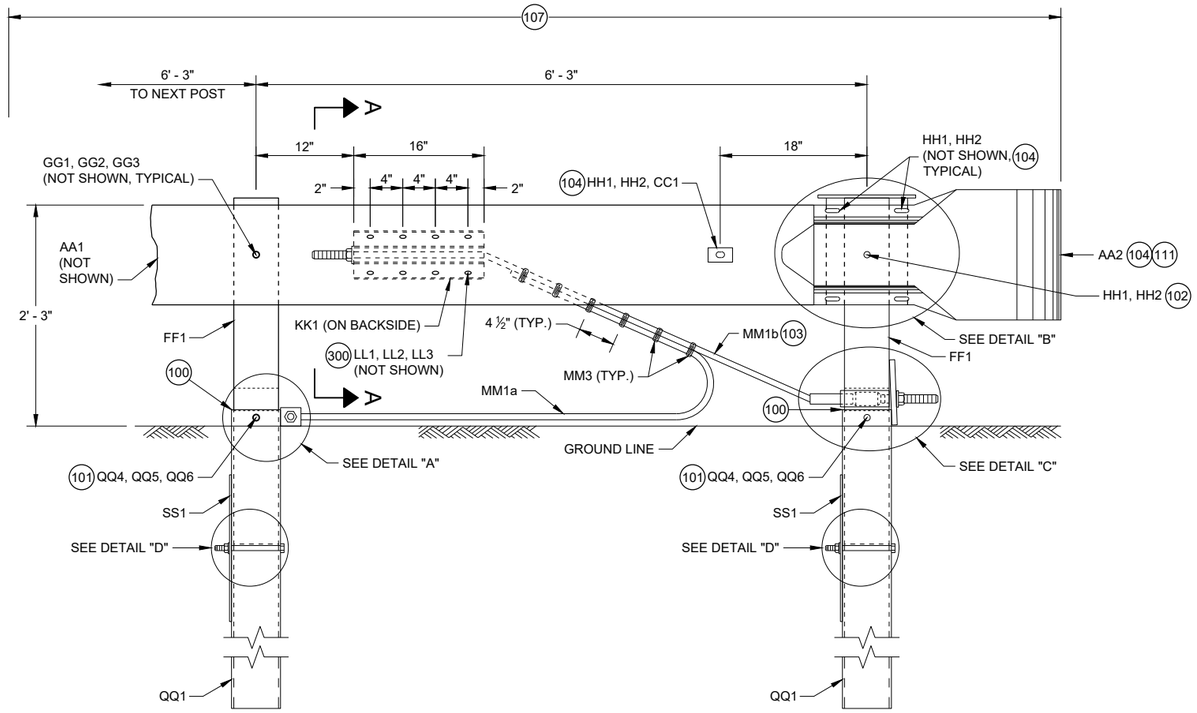

PROFILE VIEW

SHORT RADIUS TERMINAL

GENERAL NOTES

100 TOP OF FOUNDATION TUBE 2 INCHES MAXIMUM ABOVE FINISHED GROUND.

101 WASHERS REQUIRED BETWEEN BOLT HEAD AND FOUNDATION TUBE AND BETWEEN NUT AND FOUNDATION TUBE.

102 SPLICE BOLT AND NUT CONNECTS BEAM GUARD RAIL, W-BEAM SECTION BUFFER, AND STEEL PIPE ASSEMBLY. NO WASHER REQUIRED. SEE DETAIL "B".

103 CABLE IS TAUT.

104 ADJUST AA2 AND BB1 TO FIT.

105 BREAK POINT OF SHOULDER.

106 TACK WELD CABLE CONNECTOR TUBE PLATE TO CABLE CONNECTION TUBE. SEE DETAIL "A" PROFILE VIEW.

107 PAY LIMIT FOR BEAM GUARD.

108 SQUARE WASHER BETWEEN HEAD OF BOLT AND TRAFFIC FACE OF BEAM GUARD. ROUND WASHER REQUIRED BETWEEN NUT AND BB1.

109 CUT OR PROVIDE THREADED STUD THAT IS FLUSH WITH FACE OF BEAM GUARD RAIL KK1 (PLUS OR MINUS ½" TOLERANCE). DEBURR AFTER CUTTING.

110 SEE STEEL PIPE ASSEMBLY DETAILS.

111 ATTACH UU2 WITH UU3. SHOP APPLY UU1 TO UU2.

112 FOUR (4) HH1 AND HH2 REQUIRED TO ATTACH AA1 TO AA2.

113 FOUR (4) HH1 AND HH2 REQUIRED TO ATTACH AA2 TO BB1.

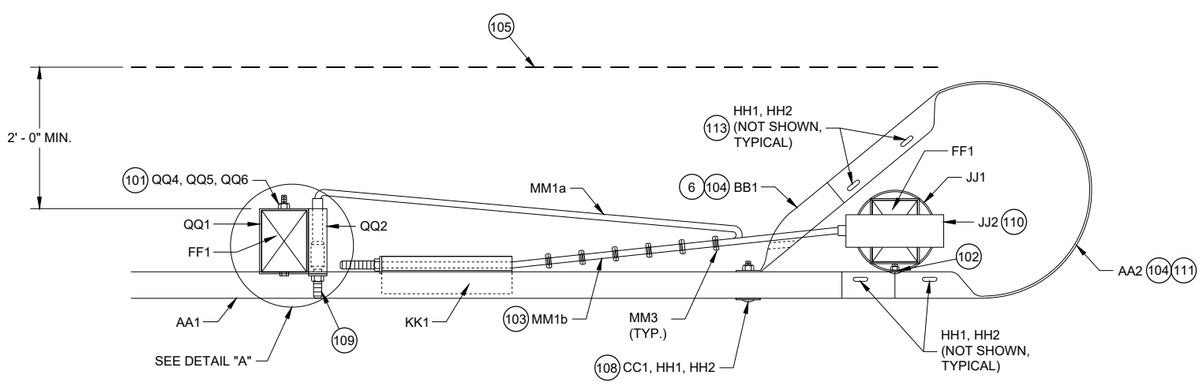

TOP VIEW

SHORT RADIUS TERMINAL

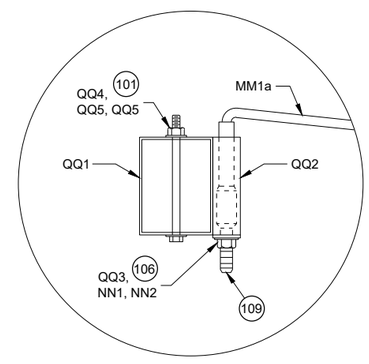

TOP VIEW

DETAIL "A"

(WOOD BREAKAWAY AND BEAM GUARD RAIL POSTS NOT SHOWN)

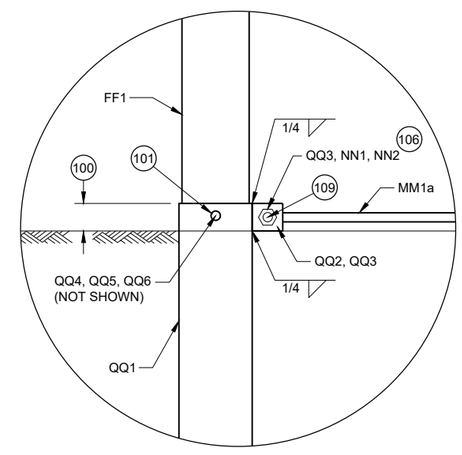

PROFILE VIEW

DETAIL "A"

6

6

SDD 14B53 - 02b

SDD 14B53 - 02b

SHORT RADIUS BEAM GUARD (MGS) SHORT RADIUS TERMINAL (MGS)

STATE OF WISCONSIN
DEPARTMENT OF TRANSPORTAT

GENERAL NOTES

(200) TWO (2) NAILS SPACED 4 INCHES CENTER TO CENTER.

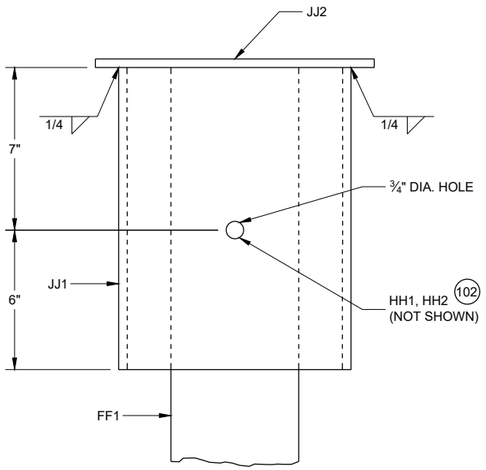

PROFILE VIEW

DETAIL "B"
STEEL PIPE ASSEMBLY
(BEAM GUARD AND W BEAM END SECTION NOT SHOWN)

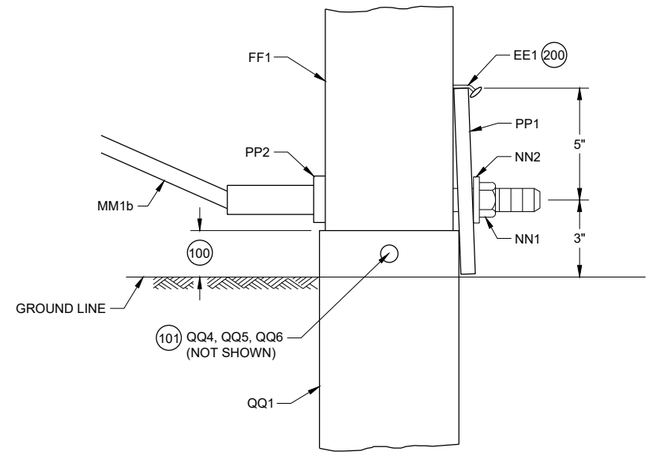

PROFILE VIEW

DETAIL "C"

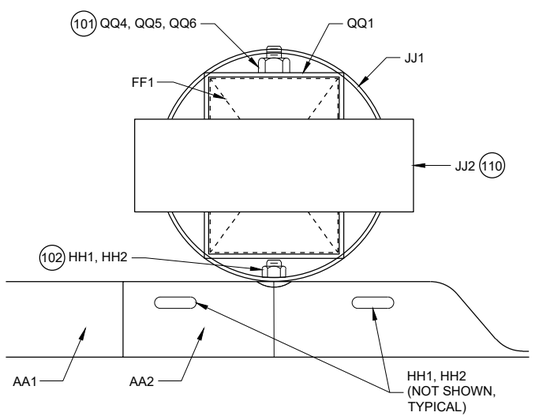

PLAN VIEW

DETAIL "B"
STEEL PIPE ASSEMBLY

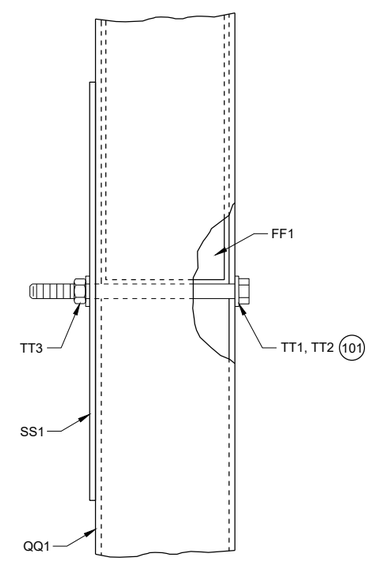

PROFILE VIEW

DETAIL "D"

SHORT RADIUS BEAM GUARD (MGS) SHORT RADIUS TERMINAL (MGS)

STATE OF WISCONSIN
DEPARTMENT OF TRANSPORTAT

6
SDD 14B53 - 02c

GENERAL NOTES

(300) WASHERS REQUIRED BETWEEN BOLT HEAD AND BEAM GUARD RAIL AND BETWEEN NUT AND ANCHOR BRACKET. EIGHT (8) LL1 AND LL3 REQUIRED. SIXTEEN (16) LL2 REQUIRED.

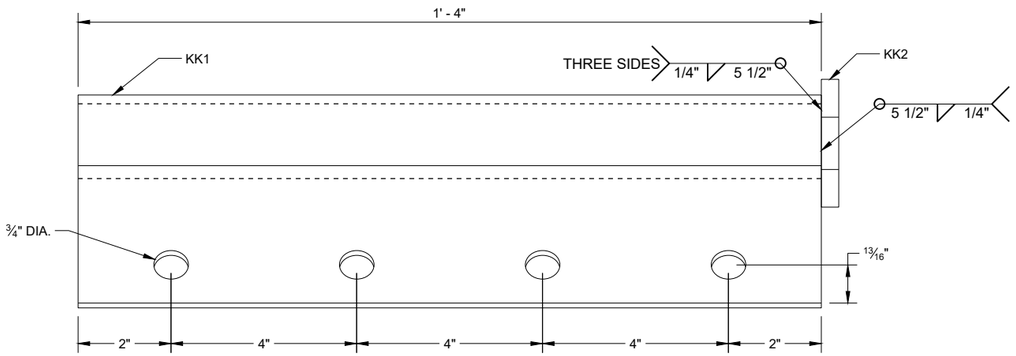

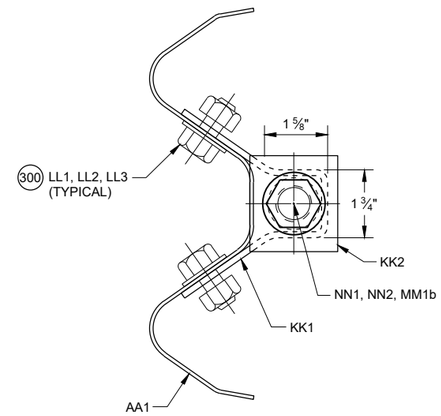

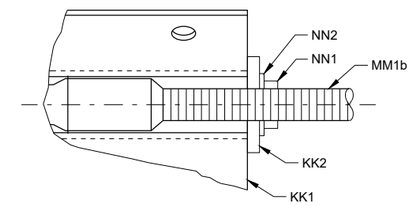

SECTION A - A

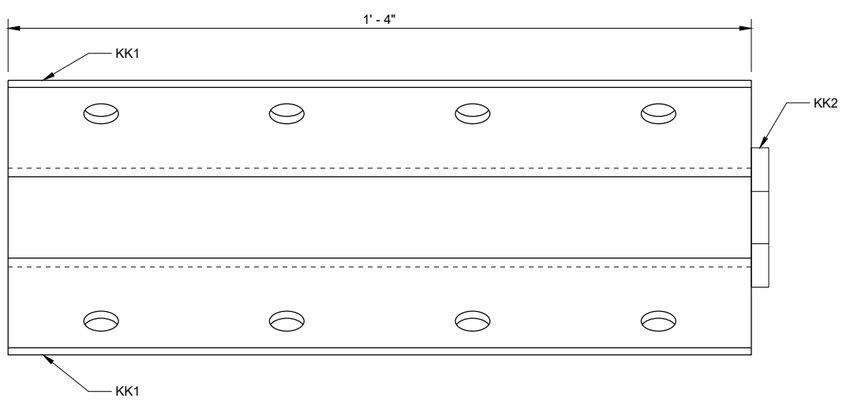

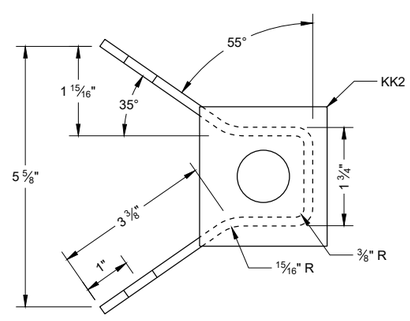

ANCHOR BRACKET (KK1, KK2)

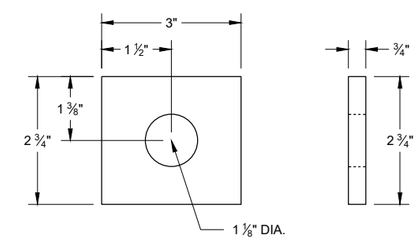

ANCHOR BRACKET BEARING PLATE (KK2)

6

6

SHORT RADIUS BEAM GUARD (MGS) SHORT RADIUS TERMINAL (MGS)

STATE OF WISCONSIN
DEPARTMENT OF TRANSPORTAT

SDD 14B53 - 02d

SDD 14B53 - 02d

GENERAL NOTES

400 CROSS SECTION OF PART IS TO FIT OVER AA1 .

401 CROSS SECTION OF PART IS TO FIT OVER OR UNDER AA1 .

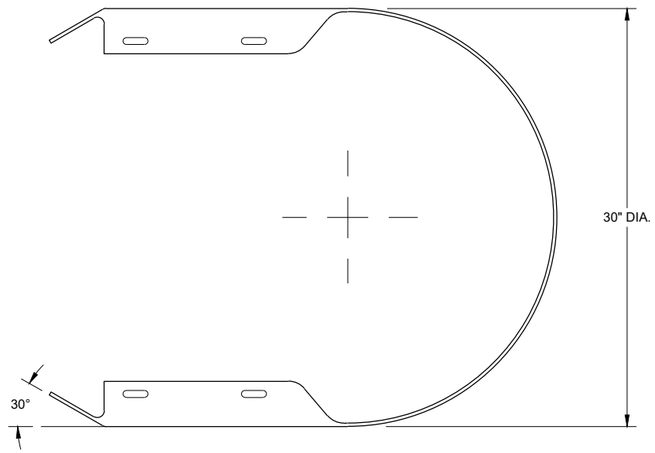

TOP VIEW

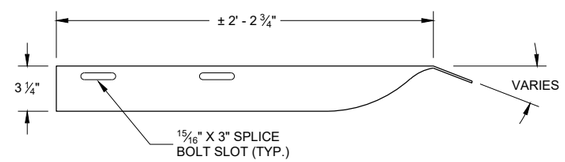

TOP VIEW

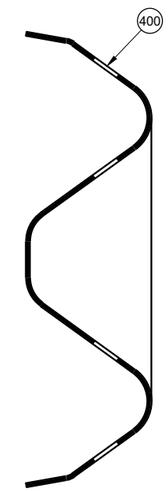

SECTION B -B

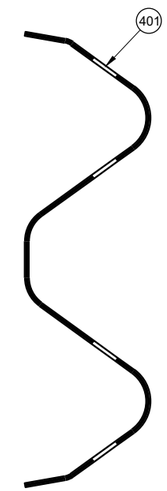

SECTION C -C

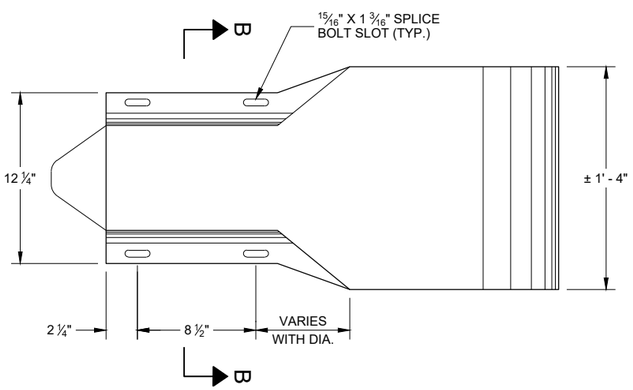

PROFILE VIEW

W BEAM
END SECTION BUFFER (AA2)

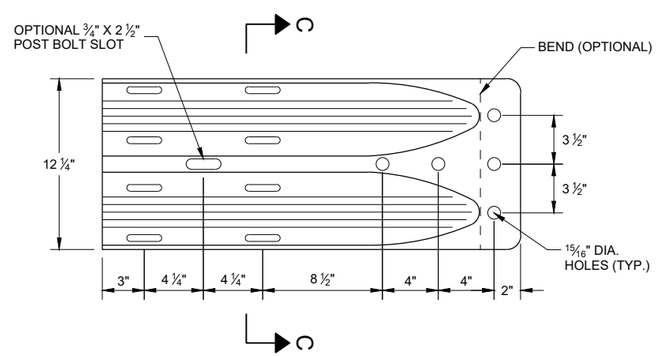

PROFILE VIEW

W BEAM
TERMINAL CONNECTOR (BB1)

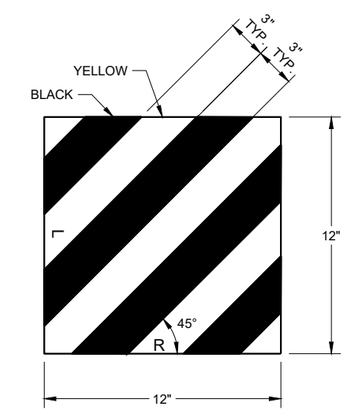

REFLECTIVE SHEETING (UU1, UU2)

SHORT RADIUS BEAM GUARD (MGS) SHORT RADIUS TERMINAL (MGS)

STATE OF WISCONSIN
DEPARTMENT OF TRANSPORTAT

6

6

SDD 14B53 - 02e

SDD 14B53 - 02e

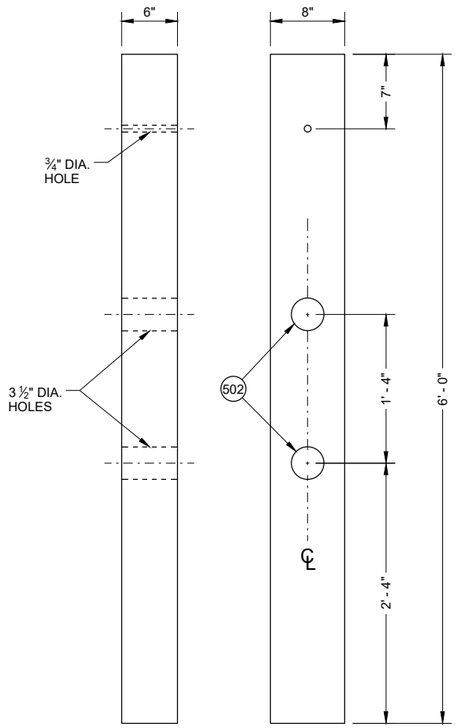

FRONT VIEW SIDE VIEW

CONTROLLED RELEASE POST (CRT) (DD2)

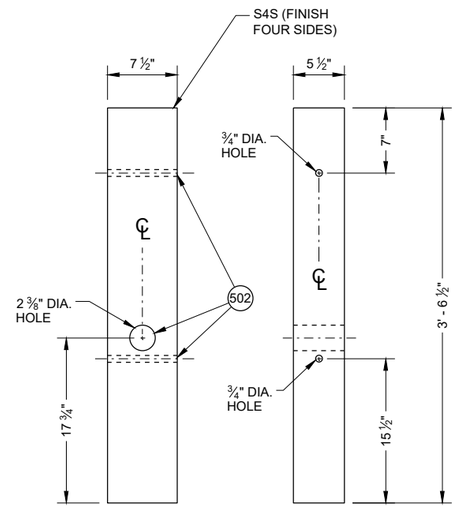

FRONT VIEW SIDE VIEW

WOOD BREAKAWAY POST (FF1)

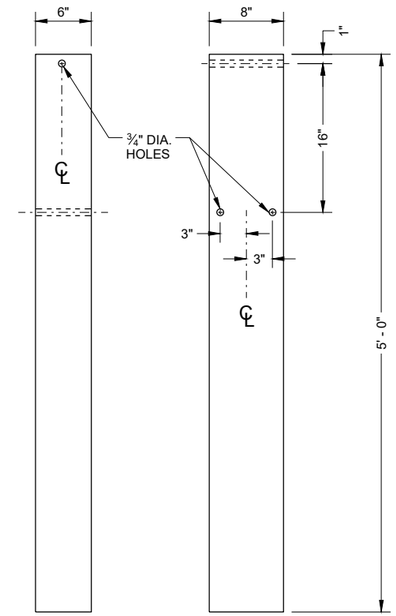

FRONT VIEW SIDE VIEW

FOUNDATION TUBE (QQ1) 500

GENERAL NOTES

500 SEE DETAIL "D" FOR LOCATION AND ATTACHMENT OF SS1.

501 FOR MM1a THREADED STUD ONLY REQUIRED ON ONE END. SWAGED FITTING REQUIRED.

502 LOCATE HOLES ON THE CENTERLINE OF THE SIDE OF THE POST.

503 MM1a MAY HAVE ONE THREADED STUD 4 INCHES LONG. SEE NOTE 109.

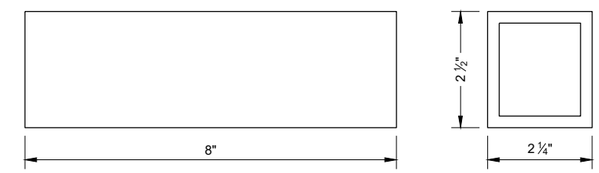

FOUNDATION TUBE - ANCHOR CABLE TUBE (QQ2)

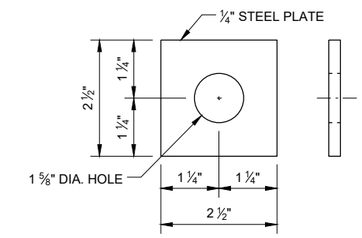

ANCHOR CABLE TUBE END PLATE (QQ3)

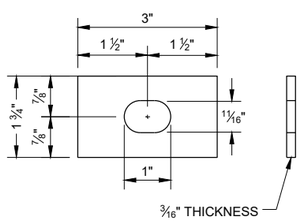

RECTANGULAR PLATE WASHER (CC1)

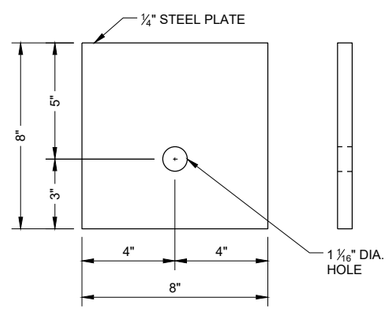

BEARING PLATE (PP1)

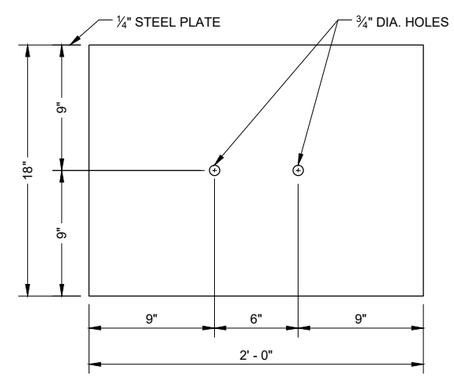

SOIL PLATE (SS1)

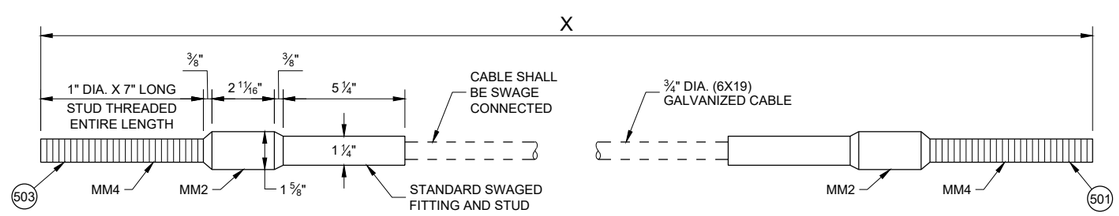

CABLE ASSEMBLY (MM1a, MM1b)

"X" LENGTH

MM1b	9' - 0"
MM1b	6' - 8"

SHORT RADIUS BEAM GUARD (MGS) SHORT RADIUS TERMINAL (MGS)

STATE OF WISCONSIN
DEPARTMENT OF TRANSPORTATION

6

6

SDD 14B53 - 02f

SDD 14B53 - 02f

BILL OF MATERIALS - SHORT RADIUS BEAM GUARD (MGS)

PART	DESCRIPTION	MATERIALS SPECIFICATIONS	NOTES
A1	BEAM GUARD RAIL	AASHTO M180, CLASS A, TYPE 2	
		APPROVED PRODUCER	
A2	BEAM GUARD RAIL - SHOP BENT	INDICATE ON BACK OF RAIL THE RADIUS THAT RAIL WAS BENT TO. SHOP BEND RADIUS IS TO THE NEAREST FOOT. FOLLOW AASHTO M180 ON HOW TO MARK RADIUS INFORMATION.	
		AASHTO M180, CLASS A, TYPE 2	
		APPROVED PRODUCER	
B1	BLOCK - WOOD	WISDOT SPEC. 614	SEE SDD 14B42
C1	NAIL	ASTM A153 HOT DIP CLASS D	
		ASTM F1667 TYPE 1 STYLE 12 (16 DOUBLE HEAD)	
D1	POST-STRONG POST-WOOD	WISDOT SPEC. 614	SEE SDD 14B42
D2	POST-CRT-WOOD	WISDOT SPEC. 614	
E1	POST BOLT	ASTM A307 GRADE A OR SAE J429 GRADE 2	5/8" DIA. SEE SDD 14B42 FOR BOLT GEOMETRY
		AASHTO M180	
		GALV. HOT DIP TO AASHTO M232 CLASS C / ASTM A153 CLASS C / ASTM F2329 OR GALV. MECHANICALLY TO AASHTO M298 CLASS 50, TYPE 1 / ASTM B695 CLASS 50, TYPE 1	
		UNC	
E2	POST BOLT - WASHER	ASTM F436 TYPE 1 (HARDEN TYPICALLY USED WITH STEEL) OR ASTM F844 (UNHARDENED TYPICALLY WITH WOOD)	5/8" DIA.
		GALV. AASHTO M111 / ASTM A 123 OR GALV. HOT DIP. TO AASHTO M232 CLASS C / ASTM A153 CLASS C / ASTM F2329	
E3	POST BOLT - NUT	AASHTO M180 DOUBLE RECESSED HEAVY HEX HEAD	5/8" DIA. SEE SDD 14B42 FOR BOLT GEOMETRY
		GALV. HOT DIP TO AASHTO M232 CLASS C / ASTM A153 CLASS C / ASTM F2329 OR GALV. MECHANICALLY TO AASHTO M298 CLASS 50, TYPE 1 / ASTM B695 CLASS 50, TYPE 1	
		UNC	
		OVER TAPPED NUTS OVER-SIZE AS SPECIFIED IN AASHTO 291 / ASTM A 563	
		ASTM A563 GRADE A HEAVY HEX HEAD	
F1	SPLICE BOLT	GALV. HOT DIP TO AASHTO M232 CLASS C / ASTM A153 CLASS C / ASTM F2329 OR GALV. MECHANICALLY TO AASHTO M298 CLASS 50, TYPE 1 / ASTM B695 CLASS 50, TYPE 1	5/8" DIA. SEE SDD 14B42 FOR BOLT GEOMETRY
		ASTM A307 GRADE A OR SAE J429 GRADE 2	
		UNC	
		AASHTO M180	

PART	DESCRIPTION	MATERIALS SPECIFICATIONS	NOTES
F2	SPLICE BOLT - NUT	ASTM A563 GRADE A	5/8" DIA. SEE SDD 14B42 FOR BOLT GEOMETRY
		AASHTO M180 DOUBLE RECESSED HEAVY HEX HEAD	
		GALV. HOT DIP TO AASHTO M232 CLASS C/ASTM A153 CLASS C/ASTM F2329 OR GALV. MECHANICALLY TO AASHTO M298 CLASS 50, TYPE 1/ASTM B695 CLASS 50, TYPE 1	
		OVER TAPPED NUTS OVER-SIZE AS SPECIFIED IN AASHTO 291 / ASTM A 563	
		UNC	
G1	LAG SCREW	ASTM A308 GRADE A ASTM A153 CLASS D	1/2" DIA. 6" LONG
H1	DELINEATOR - BEAM GUARD		SEE SDD 14B42 FOR MORE INFORMATION
H2	DELINEATION - SHEETING	YELLOW OR WHITE	
		WISDOT SPEC 637 TYPE SH	
		APPROVED PRODUCT LIST	
J1	FOUNDATION BACKFILL	STANDARD SPEC. 614	
AA1	BEAM GUARD RAIL - PUNCHED	AASHTO M180, CLASS A, TYPE 2	
		APPROVED PRODUCER	
AA2	BEAM GUARD RAIL - END SECTION BUFFER	AASHTO M180, CLASS A, TYPE 2	
		APPROVED PRODUCER	
BB1	BEAM GUARD RAIL - TERMINAL CONNECTOR MODIFIED	AASHTO M180, CLASS A, TYPE 2	
		APPROVED PRODUCER	
CC1	SHORT RADIUS - SQUARE WASHER	AASHTO M180	
		GALV. AASHTO M111 / ASTM A123	
EE1	NAIL	ASTM A153 HOT DIP CLASS D	
		ASTM F1667 TYPE 1 STYLE 12 (16 DOUBLE HEADED)	
FF1	POST - BCT - WOOD	S4S FINISH ON 4 SIDES	
		WISDOT SPEC. 614	
GG1	POST BOLT	ASTM A307 GRADE A OR SAE J429 GRADE 2	3/8" DIA. SEE SDD 14B42 FOR BOLT GEOMETRY
		AASHTO M180	
		GALV. HOT DIP TO AASHTO M232 CLASS C/ASTM A153 CLASS C/ASTM F2329 OR GALV. MECHANICALLY TO AASHTO M298 CLASS 50, TYPE 1/ASTM B695 CLASS 50, TYPE 1	
		UNC	
GG2	POST BOLT - WASHER	ASTM F436 TYPE 1 (HARDEN TYPICALLY USED WITH STEEL) OR ASTM F844 (UNHARDENED TYPICALLY WITH WOOD)	3/8" DIA.
		GALV. AASHTO M111 / ASTM A 123 OR GALV. HOT DIP. TO AASHTO M232 CLASS C/ASTM A153 CLASS C / ASTM F2329	

SHORT RADIUS BEAM GUARD (MGS) SHORT RADIUS TERMINAL (MGS)

STATE OF WISCONSIN
DEPARTMENT OF TRANSPORTA

6
SDD 14B53 - 02g

BILL OF MATERIALS - SHORT RADIUS BEAM GUARD (MGS)

PART	DESCRIPTION	MATERIALS SPECIFICATIONS	NOTES
GG3	POST BOLT - NUT	ASTM A563 GRADE A	⅜" DIA. SEE 14B42 FOR GEOMETRY
		AASHTO M180 DOUBLE RECESSED HEAVY HEX HEAD	
		GALV. HOT DIP TO AASHTO M232 CLASS C / ASTM A153 CLASS C / ASTM F2329 OR GALV. MECHANICALLY TO AASHTO M298 CLASS 50, TYPE 1 / ASTM B695 CLASS 50, TYPE 1	
		UNC	
		OVER TAPPED NUTS OVER-SIZE AS SPECIFIED IN AASHTO 291 / ASTM A 563	
		ASTM A563 GRADE A HEAVY HEX HEAD	
HH1	SPLICE BOLT	GALV. HOT DIP TO AASHTO M232 CLASS C / ASTM A153 CLASS C / ASTM F2329 OR GALV. MECHANICALLY TO AASHTO M298 CLASS 50, TYPE 1 / ASTM B695 CLASS 50, TYPE 1	⅜" DIA. SEE SDD 14B42 FOR BOLT GEOMETRY
		ASTM A307 GRADE A OR SAE J429 GRADE 2	
		UNC	
		AASHTO M180 HEAD GEOMETRY	
HH2	SPLICE BOLT - NUT	ASTM A563 GRADE A	⅜" DIA. SEE SDD 14B42 FOR BOLT GEOMETRY
		AASHTO M180 DOUBLE RECESSED HEAVY HEX HEAD	
		GALV. HOT DIP TO AASHTO M232 CLASS C / ASTM A153 CLASS C / ASTM F2329 OR GALV. MECHANICALLY TO AASHTO M298 CLASS 50, TYPE 1 / ASTM B695 CLASS 50, TYPE 1	
		OVER TAPPED NUTS OVER-SIZE AS SPECIFIED IN AASHTO 291 / ASTM A 563	
		UNC	
JJ1	PIPE - STEEL	ASTM A53 GALVANIZED GRADE B SCHEDULE 40	10" O.D.
JJ2	TOP PLATE	ASTM A36 MIN. STRENGTH 36 KSI, OR ASTM A529 MAX. STRENGTH 50 KSI, OR ASTM A572 MAX STRENGTH 50 KSI OR ASTM A709 MAX STRENGTH 50 KSI OR ASTM A992 MAX STRENGTH 50 KSI	DIMENSIONS ⅜" X 4" X 1' - 0"
		GALV. AASHTO M111 / ASTM A123	
KK1	ANCHOR BRACKET	ASTM A36 MIN. STRENGTH 36 KSI, OR ASTM A529 MAX. STRENGTH 50 KSI, OR ASTM A572 MAX STRENGTH 50 KSI OR ASTM A709 MAX STRENGTH 50 KSI OR ASTM A992 MAX STRENGTH 50 KSI	
		GALV. AASHTO M111 / ASTM A123	
KK2	ANCHOR BRACKET - BEARING PLATE	ASTM A36 MIN. STRENGTH 36 KSI, OR ASTM A529 MAX. STRENGTH 50 KSI, OR ASTM A572 MAX STRENGTH 50 KSI OR ASTM A709 MAX STRENGTH 50 KSI OR ASTM A992 MAX STRENGTH 50 KSI	
		GALV. AASHTO M111 / ASTM A123	
LL1	ANCHOR BRACKET - BOLT	ASTM A307 GRADE B HEAVY HEX HEAD OR SAE J429 GRADE 2 HEAVY HEX HEAD	⅝" DIA.
		GALV. HOT DIP TO AASHTO M232 CLASS C / ASTM A153 CLASS C / ASTM F2329 OR GALV. MECHANICALLY TO AASHTO M298 CLASS 50, TYPE 1 / ASTM B695 CLASS 50, TYPE 1	
		UNC	

PART	DESCRIPTION	MATERIALS SPECIFICATIONS	NOTES
LL2	ANCHOR BRACKET - WASHER	ASTM F436 TYPE 1 (HARDEN WASHER ONLY)	⅝" DIA.
		GALV. AASHTO M111 / ASTM A123 OR GALV. HOT DIP TO AASHTO M232 CLASS C / ASTM A153 CLASS C / ASTM F2329	
LL3	ANCHOR BRACKET - NUT	ASTM A563 GRADE A	⅝" DIA.
		GALV. HOT DIP TO AASHTO M232 CLASS C / ASTM A153 CLASS C / ASTM F2329 OR GALV. MECHANICALLY TO AASHTO M298 CLASS 50, TYPE 1 / ASTM B695 CLASS 50, TYPE 1	
		OVER TAPPED NUTS OVER-SIZE AS SPECIFIED IN AASHTO 291 / ASTM A 563	
		UNC	
MM1a	ANCHOR CABLE	AASHTO M30 / ASTM A741 INDEPENDENT WIRE CORE (IWRC) OR WIRE STRAND CORE (WCS), IMPROVED PLOW STEEL (IPS), 6X19, TYPE II OR IIc CLASS C ZINC COATED	
MM1b	ANCHOR CABLE	AASHTO M30 / ASTM A741 INDEPENDENT WIRE CORE (IWRC) OR WIRE STRAND CORE (WCS), IMPROVED PLOW STEEL (IPS), 6X19, TYPE II OR IIc CLASS C ZINC COATED	
MM2	ANCHOR CABLE - SWAGE FITTING	ASTM A576 GRADE 1035	
		SWAGE FITTINGS ARE TO BE FACTORY SWEDGED. WITH A BREAKING STRENGTH 40,000 LBS.	
		GALV. AASHTO M111 / ASTM A123	
		ASME B30.26 FORGED, CAST, OR DIE STAMPED WITH THE FOLLOWING INTO CONNECTION: NAME OF MANUFACTURER OR TRADEMARK OF CONNECTION'S MANUFACTURER, SIZE OR RATED LOAD, GRADE.	
MM3	WIRE ROPE CABLE CLAMPS	FF-C-450D TYPE 1 CLASS 1	¾"
		ASTM A153 HOT DIP CLASS D	
MM4	ANCHOR CABLE - SWAGE FITTING - STUD	ASTM F3125 GRADE A325 TYPE 1 OR SAE GRADE 5 OR ASTM A449 TYPE 1 HEAVY HEX HEAD	
		GALV. HOT DIP TO AASHTO M232 CLASS C / ASTM A153 CLASS C / ASTM F2329 OR GALV. MECHANICALLY TO AASHTO M298 CLASS 50, TYPE 1 / ASTM B695 CLASS 50, TYPE 1	
		UNC	
NN1	ANCHOR CABLE - NUT	ASTM A563 GRADE A	1" DIA.
		AASHTO M180 DOUBLE RECESSED HEAVY HEX HEAD	
		GALV. HOT DIP TO AASHTO M232 CLASS C / ASTM A153 CLASS C / ASTM F2329 OR GALV. MECHANICALLY TO AASHTO M298 CLASS 50, TYPE 1 / ASTM B695 CLASS 50, TYPE 1	
		OVER TAPPED NUTS OVER-SIZE AS SPECIFIED IN AASHTO 291 / ASTM A 563	
		UNC	
NN2	ANCHOR CABLE - NUT - WASHER	ASTM F436 TYPE 1 (HARDEN WASHER ONLY)	1" DIA.
		GALV. AASHTO M111 / ASTM A123 OR GALV. HOT DIP TO AASHTO M232 CLASS C / ASTM A153 CLASS C / ASTM F2329	

SHORT RADIUS BEAM GUARD (MGS) SHORT RADIUS TERMINAL (MGS)

STATE OF WISCONSIN
DEPARTMENT OF TRANSPORTAT

6
SDD 14B53 - 02h

BILL OF MATERIALS - SHORT RADIUS BEAM GUARD (MGS)

PART	DESCRIPTION	MATERIALS SPECIFICATIONS	NOTES
PP1	BEARING PLATE AT POST	ASTM A36 MIN. STRENGTH 36 KSI, OR ASTM A529 MAX. STRENGTH 50 KSI, OR ASTM A572 MAX STRENGTH 50 KSI OR ASTM A709 MAX STRENGTH 50 KSI OR ASTM A992 MAX STRENGTH 50 KSI	
		GALV. AASHTO M111 / ASTM A123	
PP2	PIPE - STEEL	ASTM A53 GALVANIZED GRADE B SCHEDULE 40	2" DIA. x 6" LONG
QQ1	FOUNDATION TUBE	ASTM A500 GRADE B	8" X 6" X 3/16"
		GALV. AASHTO M111 / ASTM A123	
QQ2	SHORT RADIUS - FOUNDATION TUBE - ANCHOR CABLE - TUBE	ASTM A500 GRADE B	DIMENSIONS 2 1/2" X 2 1/4" X 1/4" X 8"
		GALV. AASHTO M111 / ASTM A123	
QQ3	SHORT RADIUS - SOIL TUBE - ANCHOR CABLE - TUBE - END PLATE	ASTM A36 MIN. STRENGTH 36 KSI, OR ASTM A529 MAX. STRENGTH 50 KSI, OR ASTM A572 MAX STRENGTH 50 KSI OR ASTM A709 MAX STRENGTH 50 KSI OR ASTM A992 MAX STRENGTH 50 KSI	DIMENSIONS 2 1/2" X 2 1/2" X 1/4"
		GALV. AASHTO M111 / ASTM A123	
QQ4	GROUND STRUT AND YOKE - BOLT	GALV. HOT DIP TO AASHTO M232 CLASS C / ASTM A153 CLASS C / ASTM F2329 OR GALV. MECHANICALLY TO AASHTO M298 CLASS 50, TYPE 1 / ASTM B695 CLASS 50, TYPE 1	5/8 DIA.
		ASTM A307 GRADE B HEAVY HEX HEAD OR SAE J429 GRADE 2 HEAVY HEX HEAD	
		UNC	
QQ5	GROUND PLATE AND YOKE - WASHER	ASTM F436 TYPE 1 (HARDEN WASHER ONLY)	5/8 DIA.
		GALV. AASHTO M111 / ASTM A123 OR GALV. HOT DIP TO AASHTO M232 CLASS C / ASTM A153 CLASS C / ASTM F2329	
QQ6	GROUND STRUT AND YOKE - NUT	HEAVY HEX	5/8 DIA.
		UNC	
		ASTM A563 GRADE A	
		OVER TAPPED NUTS AS SPECIFIED IN AASHTO 291 / ASTM A 563	
		GALV. HOT DIP TO AASHTO M232 CLASS C / ASTM A153 CLASS C / ASTM F2329 OR GALV. MECHANICALLY TO AASHTO M298 CLASS 50, TYPE 1 / ASTM B695 CLASS 50, TYPE 1	

PART	DESCRIPTION	MATERIALS SPECIFICATIONS	NOTES
SS1	SOIL PLATE	ASTM A36 MIN. STRENGTH 36 KSI, OR ASTM A529 MAX. STRENGTH 50 KSI, OR ASTM A572 MAX STRENGTH 50 KSI OR ASTM A709 MAX STRENGTH 50 KSI OR ASTM A992 MAX STRENGTH 50 KSI	
		GALV. AASHTO M111 / A123	
TT1	SOIL PLATE - BOLT	ASTM A307 GRADE B HEAVY HEX HEAD OR SAE J429 GRADE 2 HEAVY HEX HEAD	5/8 DIA.
		GALV. HOT DIP TO AASHTO M232 CLASS C / ASTM A153 CLASS C / ASTM F2329 OR GALV. MECHANICALLY TO AASHTO M298 CLASS 50, TYPE 1 / ASTM B695 CLASS 50, TYPE 1	
		UNC	
TT2	SOIL PLATE - WASHER	ASTM F436 TYPE 1 (HARDEN WASHER ONLY)	5/8 DIA.
		GALV. AASHTO M111 / ASTM A123 OR GALV. HOT DIP TO AASHTO M232 CLASS C / ASTM A153 CLASS C / ASTM F2329	
TT3	SOIL PLATE - NUT	GALV. HOT DIP TO AASHTO M232 CLASS C / ASTM A153 CLASS C / ASTM F2329 OR GALV. MECHANICALLY TO AASHTO M298 CLASS 50, TYPE 1 / ASTM B695 CLASS 50, TYPE 1	5/8 DIA.
UU1	OBJECT MARKER - SHEETING	MUTCD / WISDOT OBJECT MARKER TYPE 3	PATTERN AND COLOR FOR SHEETING. SHEETING TYPE FOR MARKER.
		WISDOT SPEC 637 TYPE F	
		APPROVED PRODUCT LIST	
UU2	OBJECT MARKER - ALUMINUM PLATE	WISDOT SPEC 637 ALUMINUM PLATE	MATERIAL AND THICKNESS OF MATERIALS
UU3	OBJECT MARKER - SCREWS	STAINLESS SELF-TAPPING SCREWS	
VV1	FOUNDATION BACKFILL	WISDOT SPEC 614	

6

6

SHORT RADIUS BEAM GUARD (MGS) SHORT RADIUS TERMINAL (MGS)

STATE OF WISCONSIN
DEPARTMENT OF TRANSPORTATION

APPROVED
May 2022 — DATE
/S/ Rodney Taylor — ROADWAY STANDARDS DEVE ENGINEER
FHWA

SDD 14B53 - 02i

GENERAL NOTES

DETAILS OF CONSTRUCTION, MATERIALS AND WORKMANSHIP NOT SHOWN ON THIS DRAWING SHALL CONFORM TO THE PERTINENT REQUIREMENTS OF THE STANDARD SPECIFICATIONS AND THE APPLICABLE SPECIAL PROVISIONS.

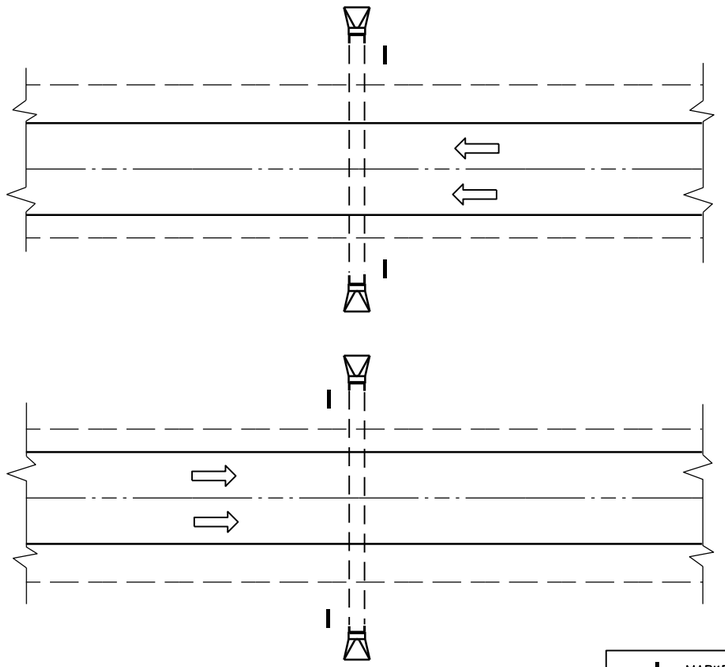

PLAN VIEW

DIVIDED HIGHWAY

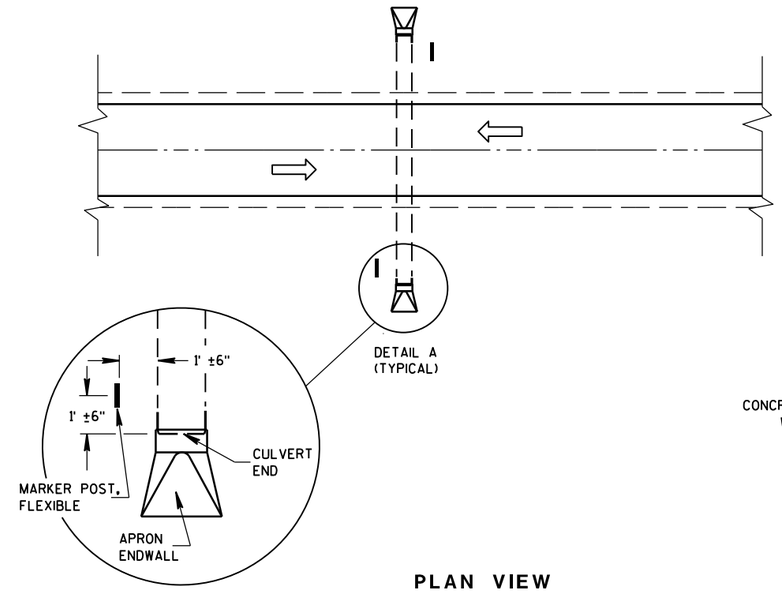

DETAIL A
(TYPICAL)

PLAN VIEW

UNDIVIDED HIGHWAY

MARKER POST, FLEXIBLE

DIRECTION OF TRAFFIC FLOW

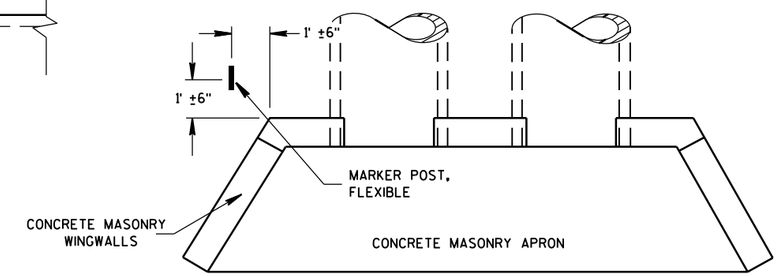

PLAN VIEW

CONCRETE MASONRY ENDWALLS FOR CULVERT PIPE AND PIPE ARCH

FLEXIBLE MARKER POST LOCATION

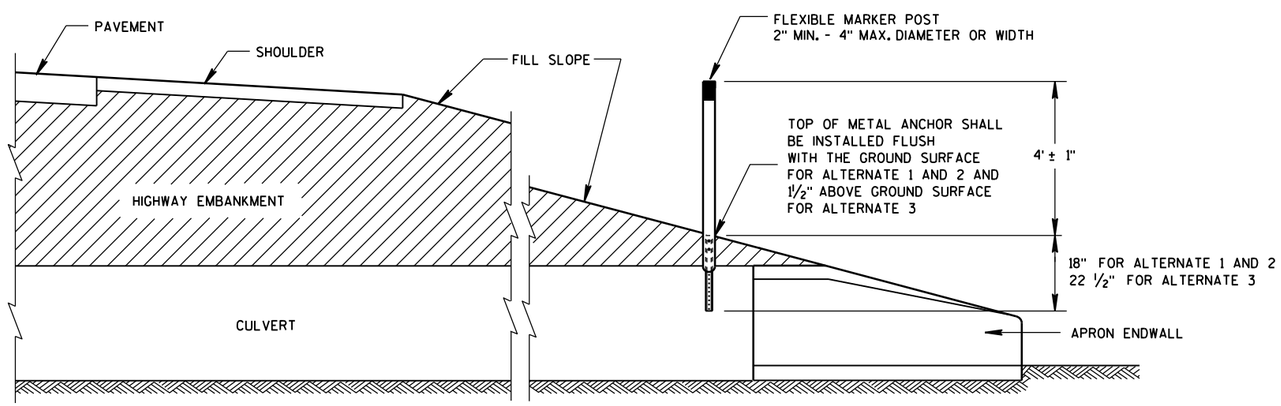

CROSS SECTION

FLEXIBLE MARKER POST

FLEXIBLE MARKER POST FOR CULVERT END

STATE OF WISCONSIN
DEPARTMENT OF TRANSPOR

6

6

S.D.D. 15 A 3-2a

S.D.D. 15 A 3-2a

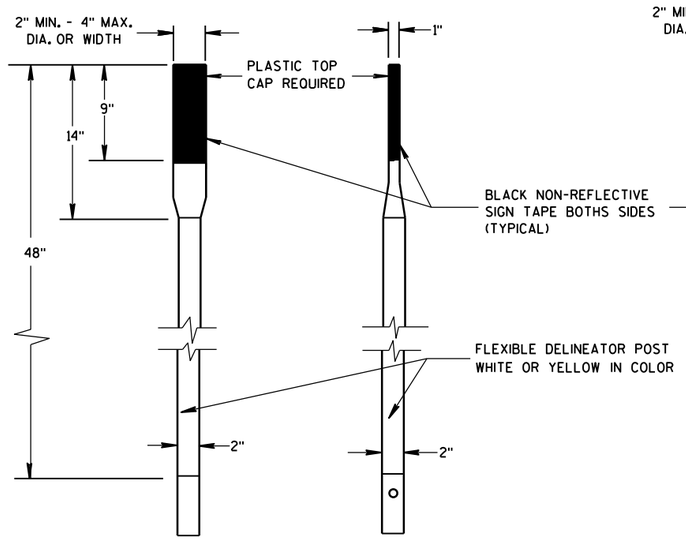

FRONT VIEW SIDE VIEW

ALTERNATE 1

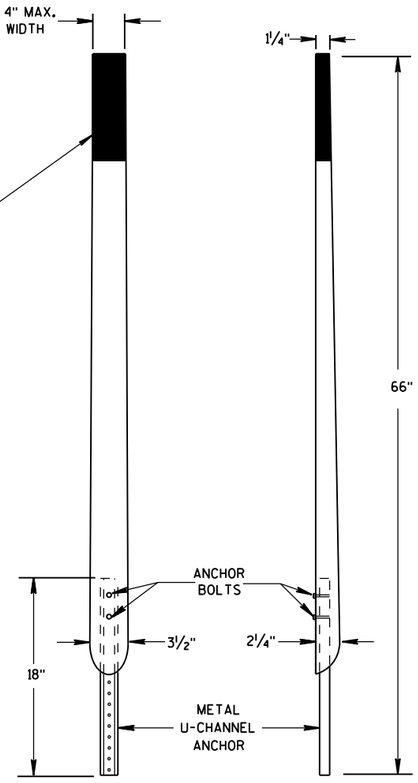

FRONT VIEW SIDE VIEW

ALTERNATE 2

FLEXIBLE MARKER POSTS

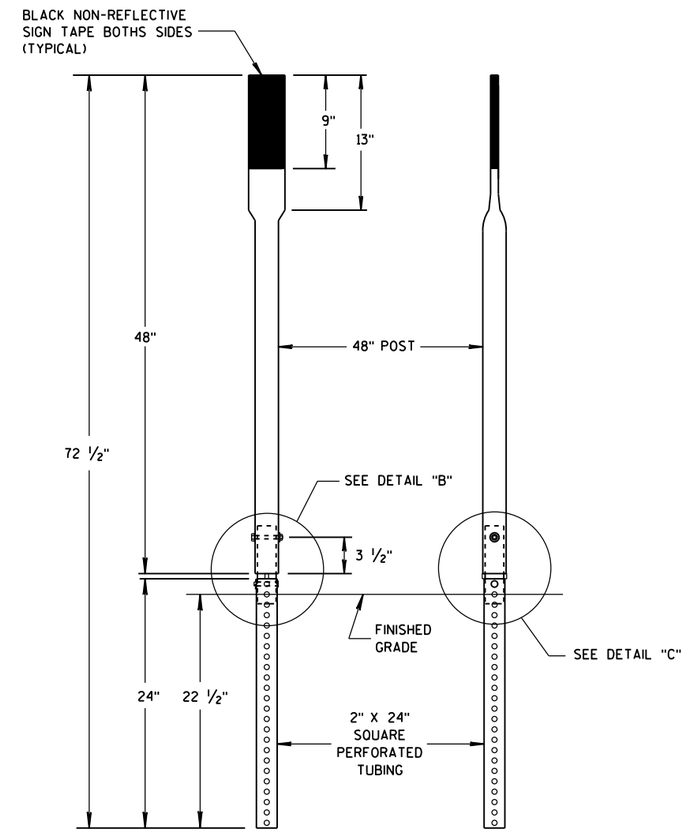

FRONT VIEW SIDE VIEW

ALTERNATE 3

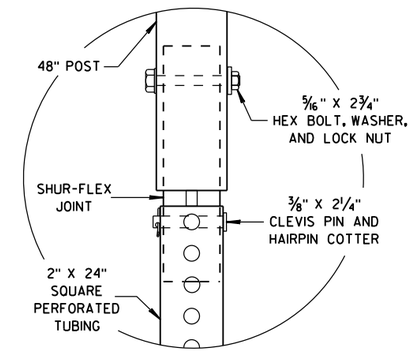

DETAIL B

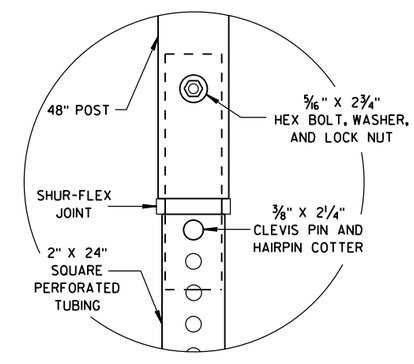

DETAIL C

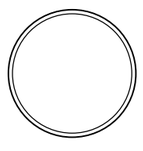

SECTION A-A

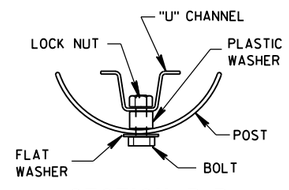

SECTION B-B

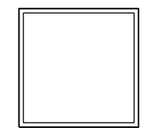

SECTION C-C

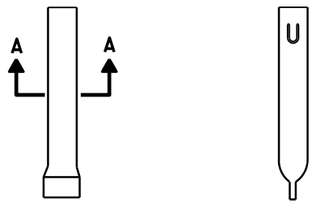

FRONT VIEW SIDE VIEW

ALTERNATE 1

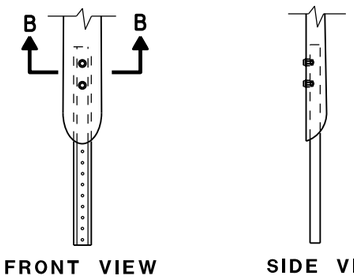

FRONT VIEW SIDE VIEW

ALTERNATE 2

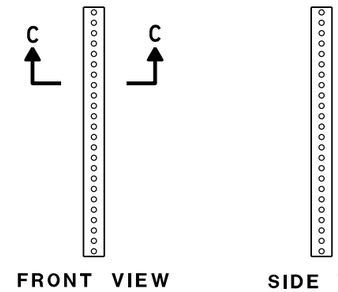

FRONT VIEW SIDE VIEW

ALTERNATE 3

FLEXIBLE MARKER POST ANCHORS

FLEXIBLE MARKER POST
FOR CULVERT END

STATE OF WISCONSIN
DEPARTMENT OF TRANSPORTATION

APPROVED
10/1/2012 /S/ Travis Feltes
DATE STATE TRAFFIC ENGINEER
FHWA

6

6

S.D.D. 15 A 3-2b

S.D.D. 15 A 3-2b

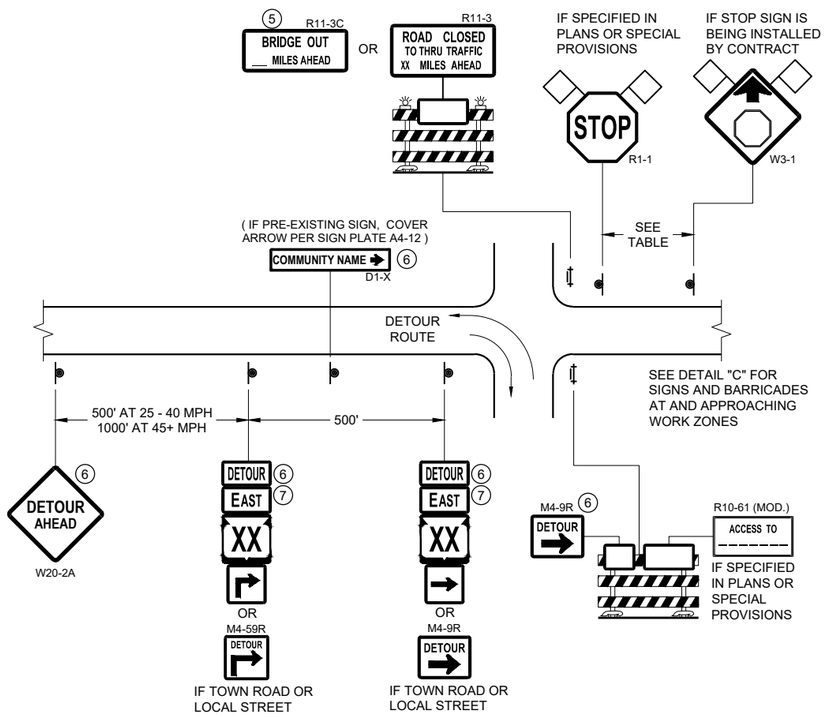

DETAIL A
MAINLINE CLOSURE WITH POSTED DETOUR

WORK ZONE GREATER THAN OR EQUAL TO ½ MILE FROM DETOUR ROUTE (1000 FEET IF URBAN)

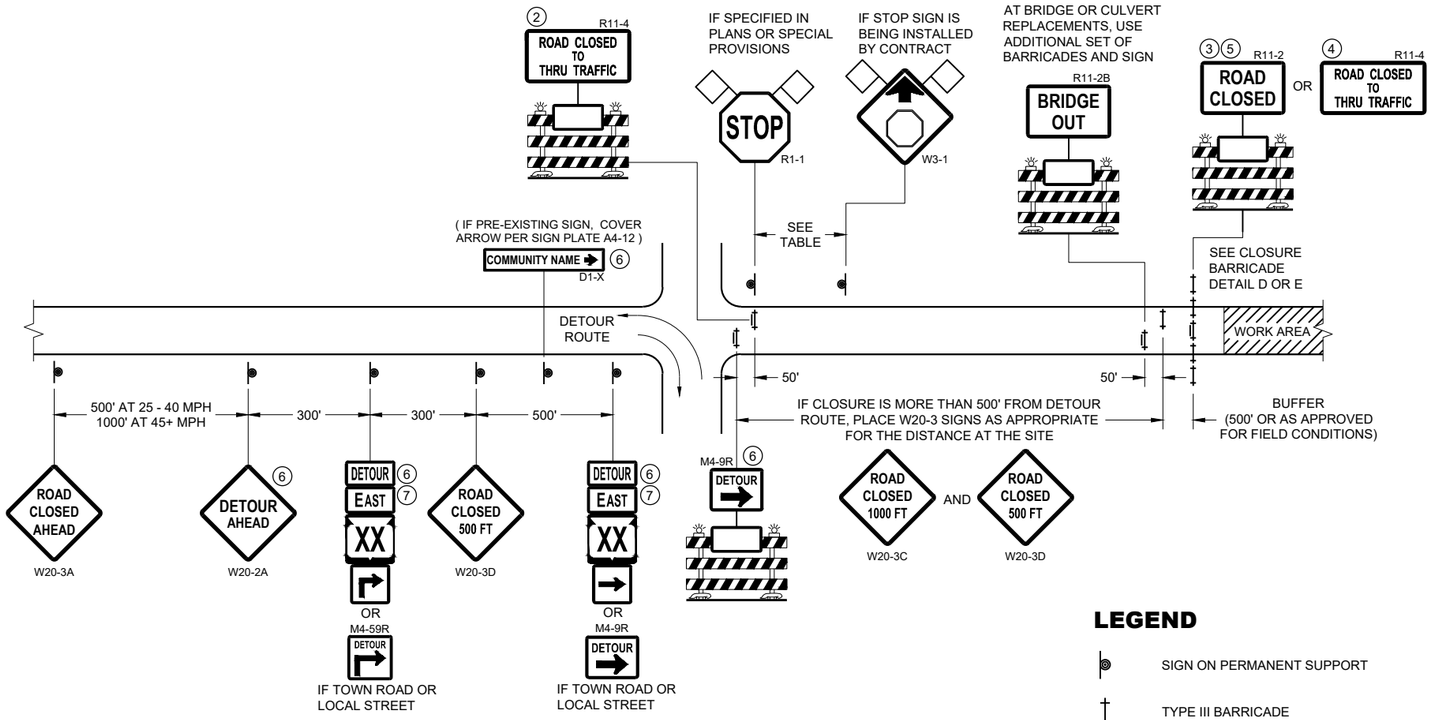

DETAIL B
MAINLINE CLOSURE WITH POSTED DETOUR

WORK ZONE LESS THAN ½ MILE FROM DETOUR ROUTE (1000 FEET IF URBAN)

LEGEND

- SIGN ON PERMANENT SUPPORT
- TYPE III BARRICADE
- TYPE III BARRICADE WITH ATTACHED SIGN
- TYPE "A" WARNING LIGHT (FLASHING)
- WORK AREA
- FLAGS, 16" X 16" MIN. (ORANGE)
- DETOUR — M4 - 8
- EAST — M3 - X
- XX (M1 - 4) OR XX (M1 - 6) OR COUNTY X (M1 - 5A)
- M05 - 1 OR M06 - 1

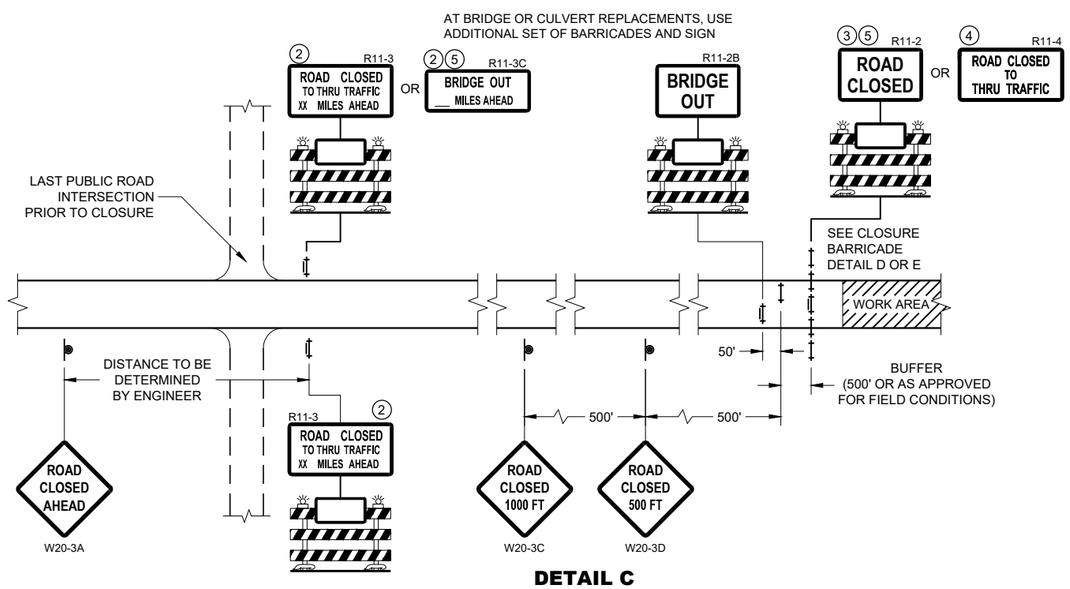

DETAIL C
MAINLINE CLOSURE, NO POSTED DETOUR

SPEED LIMIT (MPH)	"STOP AHEAD" ADVANCE WARNING DISTANCE (FT)
25	200
30	200
35	350
40	350
45	500
50	550
55	750

SEE SDD 15C2-SHEET "b" FOR GENERAL NOTES AND FOOTNOTES ① THROUGH ⑦

BARRICADES AND SIGNS FOR MAINLINE CLOSURES

STATE OF WISCONSIN
DEPARTMENT OF TRANSPORTATION

APPROVED
May 2023 — DATE
/S/ Andrew Heidtke — WORK ZONE ENGINEER

FHWA

6

SDD 15C02 - 09a

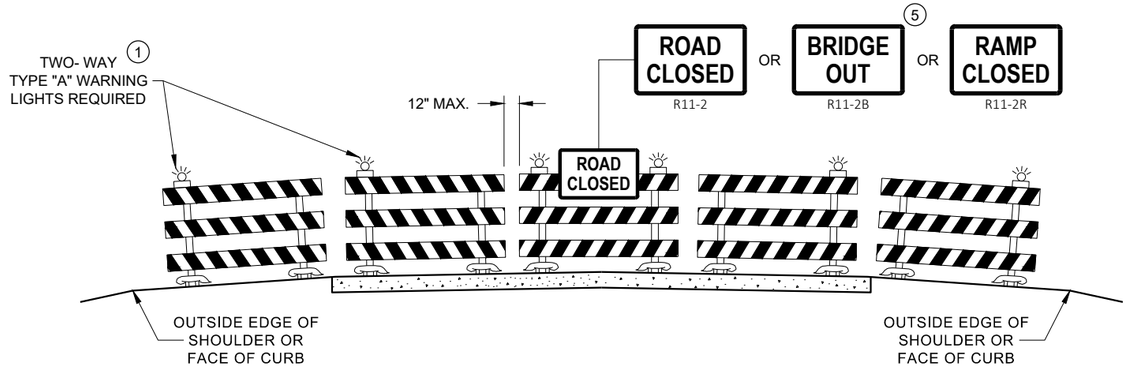

DETAIL D
ROAD CLOSURE BARRICADE DETAIL
APPROACH VIEW

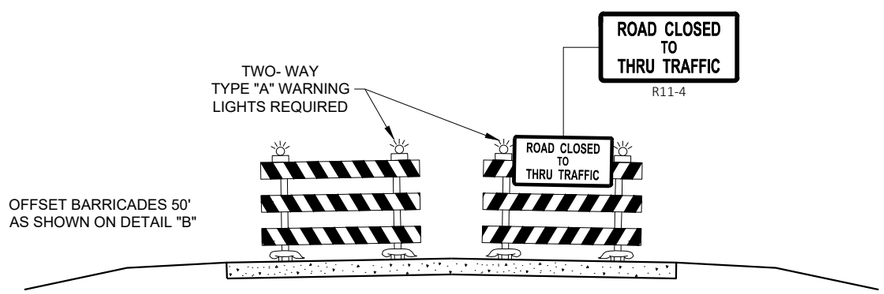

DETAIL E
LANE CLOSURE BARRICADE DETAIL
APPROACH VIEW

SEE SDD 15C2 - SHEET "a" FOR LEGEND

GENERAL NOTES

THE EXACT NUMBER, LOCATION, AND SPACING OF ALL SIGNS AND BARRICADES SHALL BE ADJUSTED TO FIT FIELD CONDITIONS AS APPROVED BY THE ENGINEER.

ANY SIGNS TEMPORARY OR EXISTING, WHICH CONFLICT WITH TRAFFIC CONTROL "IN USE", SHALL BE REMOVED OR COVERED AS NEEDED AND AS APPROVED BY THE ENGINEER.

THE SPACING BETWEEN TRAFFIC CONTROL SIGNS SHOULD BE ADJUSTED TO NOT CONFLICT WITH AND SHOULD PROVIDE A DESIRABLE MINIMUM OF 200 FEET CLEARANCE TO EXISTING SIGNS THAT WILL REMAIN IN PLACE.

BARRICADES THAT MUST BE MOVED FOR A WORK OPERATION SHALL BE IMMEDIATELY RE-ESTABLISHED UPON COMPLETION OF THE OPERATION, OR FOR CONTINUING OPERATIONS, AT THE END OF EACH WORKING DAY.

SIGNS THAT WILL BE IN PLACE LESS THAN 7 CONTINUOUS DAYS AND NIGHTS MAY BE MOUNTED ON PORTABLE SUPPORTS.

ALL TYPE III BARRICADES SHALL HAVE RAILS REFLECTORIZED ON BOTH FACES. STRIPES SHALL BE PROPERLY SLOPED DOWN TOWARD THE TRAFFIC SIDE OR AS SHOWN IN THE ROAD CLOSURE BARRICADE DETAIL "D" FOR FULL ROAD CLOSURES.

TYPE "A" LOW - INTENSITY FLASHING WARNING LIGHTS SHALL BE VISIBLE ON BOTH SIDES OF THE BARRICADE.

THE R11 - 2, R11 - 3, M4 - 9, R11 - 4, AND R10 - 61 SIGNS PLACED ON THE BARRICADES SHALL COVER NO MORE THAN THE TOP RAIL. THE SIGNS SHALL NOT COVER ANY PORTION OF THE MIDDLE RAIL OR BOTTOM RAILS.

"WO" AND "MO" SIGNS ARE THE SAME AS "W" AND "M" SIGNS EXCEPT THE BACKGROUND IS ORANGE.

ALL SIGNS SHALL BE 48" X 48" UNLESS OTHERWISE NOTED BELOW:
- R11 - 2 SHALL BE 48" X 30"
- R11 - 3 SHALL, R11 - 4 AND R10 - 61 SHALL BE 60 " X 30"
- M4 - 9 SHALL BE 30" X 24"
- M3 - X SHALL BE 24" X 12" (36" X 18" IF NEEDED TO MATCH EXISTING SIGNS)
- M4 - 8 SHALL BE 24" X 12" (36" X 18" IF NEEDED TO MATCH EXISTING SIGNS)
- M1 - 4, M1 - 5A AND M1 - 6 SHALL BE 24" X 24" (36" X 36" IF NEEDED TO MATCH EXISTING SIGNS)
- MO5 - 1 AND MO6 - 1 SHALL BE 21" X 21" (30" X 30" IF NEEDED TO MATCH EXISTING SIGNS)
- D1 - X SHALL BE AS SHOWN ON SPECIFIC PROJECT SIGNING DETAIL SHEETS.
- R1 - 1 SHALL BE 36" X 36"

1. TWO WARNING LIGHTS SHALL BE PROVIDED ON THE CENTER BARRICADE AND A MINIMUM OF ONE WARNING LIGHT SHALL BE PROVIDED ON EACH OF THE OTHER BARRICADES WITHIN THE ROADWAY LIMITS. SPACING OF THE WARNING LIGHTS SHALL BE UNIFORM TO THE EDGE OF ROADWAY AS SHOWN (APPROX. 8 FOOT LIGHT SPACING.
2. THESE SIGNS AND BARRICADES ARE NOT REQUIRED IF ROAD CLOSURE BEGINS AT AN INTERSECTION.
3. FOR ROAD CLOSURE WITHOUT LOCAL ACCESS TO PROJECT, SEE ROAD CLOSURE BARRICADE DETAIL "D".
4. FOR ROAD CLOSURE WITH LOCAL ACCESS TO PROJECT, SEE ROAD CLOSURE BARRICADE DETAIL "E".
5. FOR BRIDGE OR CULVERT REPLACEMENTS, SUBSTITUTE "BRIDGE OUT" INSTEAD OF "ROAD CLOSED" ON R11 - 2 AND R11 - 3 SIGNS.
6. INSTALL DETOUR AND COMMUNITY GUIDE SIGNS AND ARROWS ONLY IF SPECIFIED IN THE CONTRACT. IF THERE ARE EXISTING ROUTE MARKER ASSEMBLIES THAT WILL REMAIN IN PLACE, ADJUST THE LOCATION OF THE DETOUR ROUTE SIGNS TO CORRESPOND WITH THE EXISTING ASSEMBLIES. MODIFY EXISTING SIGNS WHERE POSSIBLE. SEE SPECIFIC PROJECT DETOUR SIGNING DETAIL SHEETS. IF DETOUR SIGNS ARE BEING INSTALLED BY OTHERS, PLACE THE CONTRACTED TRAFFIC CONTROL SIGNS TO ALLOW FOR PLACEMENT OF ALL WARNING, DETOUR AND GUIDE SIGNS AS SHOWN.
7. "EAST" CARDINAL DIRECTION MARKERS AND RIGHT TURN ARROWS ARE SHOWN. USE OTHER CARDINAL DIRECTIONS AND ARROWS AS APPROPRIATE.

BARRICADES AND SIGNS FOR VARIOUS CLOSURES

STATE OF WISCONSIN
DEPARTMENT OF TRANSPORTATION

APPROVED
May 2023 — DATE
/S/ Andrew Heidtke — WORK ZONE ENGINEE
FHWA

6
SDD 15C02 - 09b

THIS DRAWING PROVIDES GENERAL GUIDANCE ON TYPICAL DETOUR SIGN LAYOUT AND SPACING. SEE PROJECT DETOUR SIGNING SHEETS FOR SPECIFIC DETAILS FOR EACH PROJECT.

LEGEND

- SIGN ON PERMANENT SUPPORT
- WORK AREA
- DETOUR — M4 - 8
- EAST — M3 - X
- XX — M1 - 4 OR XX — M1 - 6 OR COUNTY X — M1 - 5A
- M05 - 1 OR M06 - 1 OR M06 - 1

GENERAL NOTES

THE EXACT NUMBER, LOCATION AND SPACING OF ALL SIGNS SHALL BE ADJUSTED TO FIT FIELD CONDITIONS AS APPROVED BY THE ENGINEER.

IF THERE ARE EXISTING ROUTE MARKER ASSEMBLIES THAT WILL REMAIN IN PLACE, ADJUST THE LOCATION OF THE DETOUR ROUTE SIGNS TO CORRESPOND WITH THE EXISTING ASSEMBLIES. SEE SPECIFIC PROJECT DETOUR SIGNING DETAIL SHEETS. MODIFY EXISTING SIGNS WHERE POSSIBLE.

THE SPACING BETWEEN TRAFFIC CONTROL AND DETOUR SIGNS SHOULD BE ADJUSTED TO NOT CONFLICT WITH AND TO PROVIDE A DESIRABLE MINIMUM OF 200 FEET CLEARANCE TO EXISTING SIGNS THAT WILL REMAIN IN PLACE.

ANY SIGNS TEMPORARY OR EXISTING, WHICH CONFLICT WITH TRAFFIC CONTROL "IN USE" SHALL BE REMOVED OR COVERED AS NEEDED AND AS APPROVED BY THE ENGINEER.

SIGNS THAT WILL BE IN PLACE LESS THAN 7 CONTINUOUS DAYS AND NIGHTS MAY BE MOUNTED ON PORTABLE SUPPORTS.

"MO" SIGNS ARE THE SAME AS "M" SIGNS EXCEPT THE BACKGROUND IS ORANGE.

SIGN SIZES SHALL BE AS FOLLOWS:

- M3-X SHALL BE 24" X 12" (36" X 18" IF NEEDED TO MATCH EXISTING SIGNS)
- M4-8 SHALL BE 24" X 12" (36" X 18" IF NEEDED TO MATCH EXISTING SIGNS)
- M1-4, M1-5A AND M1-6 SHALL BE 24" X 24" (36" X 36" IF NEEDED TO MATCH EXISTING SIGNS)
- M05-1 AND M06-1 SHALL BE 21" X 21" (30" X 30" IF NEEDED TO MATCH EXISTING SIGNS)
- M4-9 AND M4-59 SHALL BE 30" X 24"
- M4-8a SHALL BE 24" X 18"
- G20-51 SHALL BE 60" X 24"
- W20-2A SHALL BE 48" X 48"
- D1-X SHALL BE AS SHOWN ON SPECIFIC PROJECT SIGNING DETAIL SHEETS.

* OPTIONAL SIGNS. SEE SPECIFIC PROJECT DETOUR SIGNING DETAIL SHEETS.

** FOR A TOWN ROAD OR LOCAL STREET DETOURED ONTO A STATE TRUNK HIGHWAY, PLACE A ROAD NAME PLAQUE ABOVE THE M4-9 SIGN AS SPECIFIED IN THE CONTRACT.

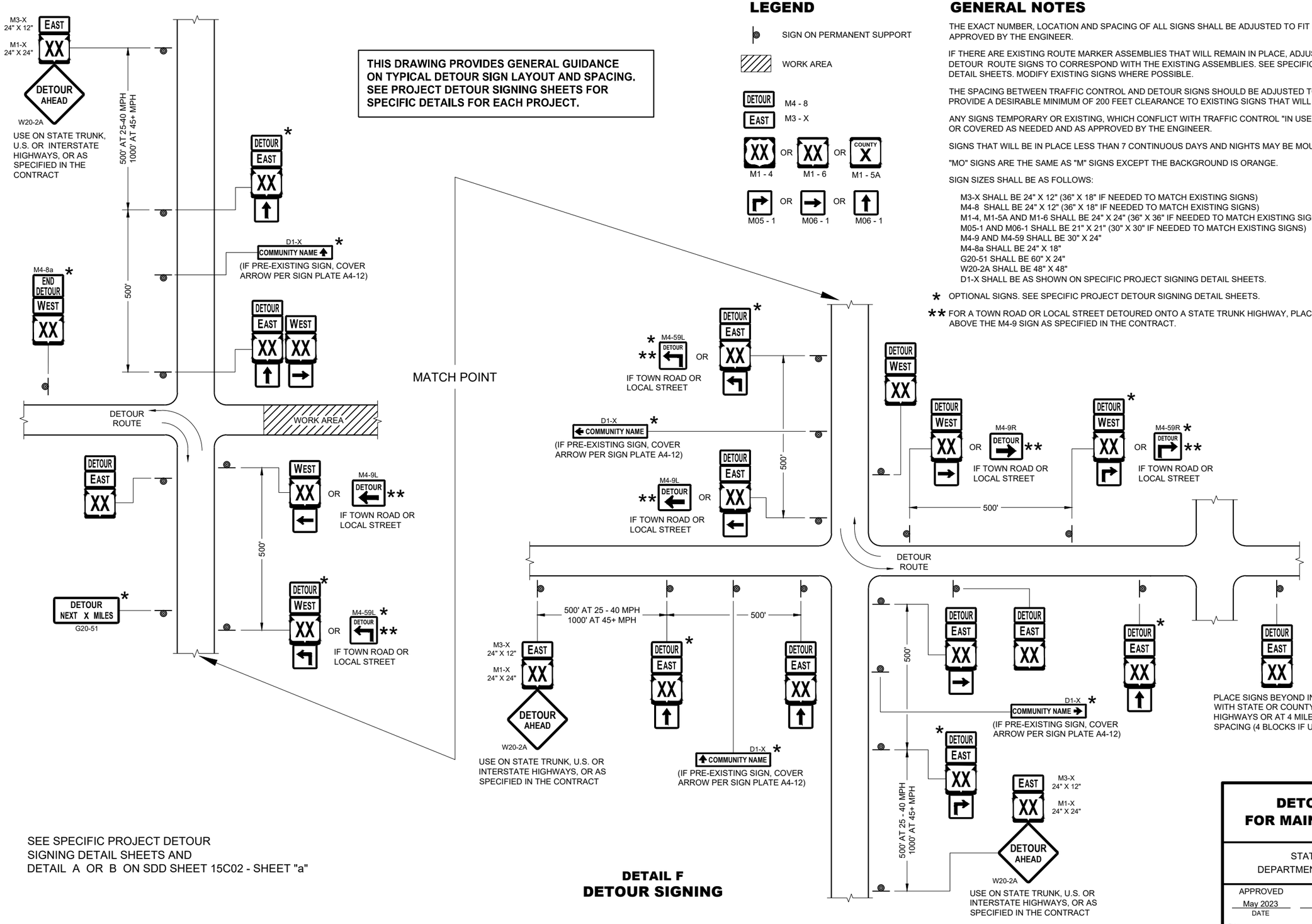

SEE SPECIFIC PROJECT DETOUR SIGNING DETAIL SHEETS AND DETAIL A OR B ON SDD SHEET 15C02 - SHEET "a"

DETAIL F
DETOUR SIGNING

DETOUR SIGNING FOR MAINLINE CLOSURES

STATE OF WISCONSIN
DEPARTMENT OF TRANSPORTATION

APPROVED
May 2023 — DATE
/S/ Andrew Heidtke — WORK ZONE ENGINEER
FHWA

6

SDD 15C02 - 09c

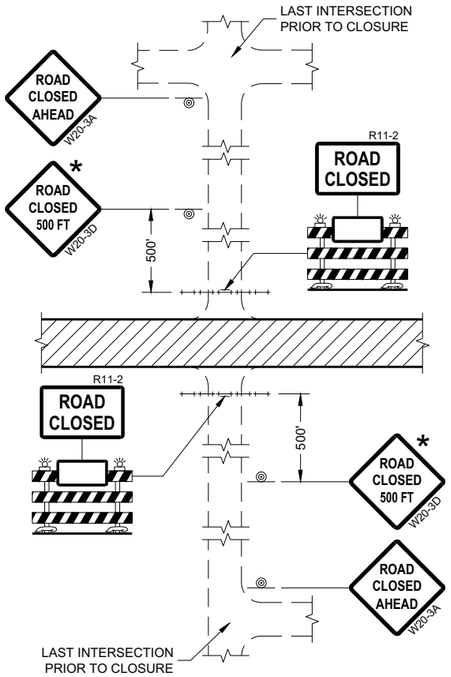

DETAIL 1
(NO ACCESS TO PROJECT)

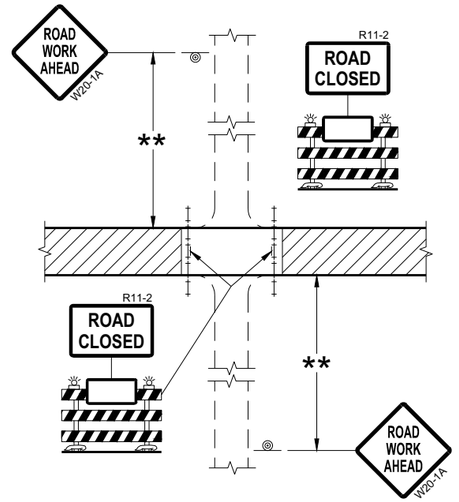

DETAIL 2
(PUBLIC CROSS-TRAFFIC MAINTAINED.
NO ACCESS TO PROJECT)

GENERAL NOTES

THE EXACT NUMBER, LOCATION, AND SPACING OF ALL SIGNS AND BARRICADES SHALL BE ADJUSTED TO FIT FIELD CONDITIONS AS APPROVED BY THE ENGINEER.

ANY SIGNS TEMPORARY OR EXISTING, WHICH CONFLICT WITH TRAFFIC CONTROL "IN USE" SHALL BE REMOVED OR COVERED AS NEEDED AND AS APPROVED BY THE ENGINEER.

THE SPACING BETWEEN TRAFFIC CONTROL SIGNS SHOULD BE ADJUSTED TO NOT CONFLICT WITH AND SHOULD PROVIDE A DESIRABLE MINIMUM OF 200 FEET CLEARANCE (500 FEET DESIRABLE) TO EXISTING SIGNS THAT WILL REMAIN IN PLACE.

IF A "STOP" SIGN MUST BE REMOVED FOR A WORK OPERATION, A TEMPORARY "STOP" SIGN SHALL BE PLACED PRIOR TO THE SIGN REMOVAL, OR A FLAGGER SHALL BE PROVIDED UNTIL THE SIGN IS REESTABLISHED.

BARRICADES THAT MUST BE MOVED FOR A WORK OPERATION SHALL BE IMMEDIATELY REESTABLISHED UPON COMPLETION OF THE OPERATION OR FOR CONTINUING OPERATIONS, AT THE END OF EACH WORKING DAY.

SIGNS THAT WILL BE IN PLACE LESS THAN SEVEN CONTINUOUS DAYS AND NIGHTS MAY BE MOUNTED ON PORTABLE SUPPORTS.

ALL TYPE III BARRICADES SHALL HAVE RAILS REFLECTORIZED ON BOTH FACES. STRIPES SHALL BE PROPERLY SLOPED DOWN TOWARD THE TRAFFIC SIDE OR AS SHOWN IN THE ROAD CLOSURE BARRICADE DETAIL "D" FOR FULL ROAD CLOSURES.

TYPE "A" LOW-INTENSITY FLASHING WARNING LIGHTS SHALL BE VISIBLE ON BOTH SIDES OF THE BARRICADE.

THE R11-2, R11-3, AND R11-4 SIGNS PLACED ON BARRICADES SHALL COVER NO MORE THAN THE TOP RAIL. THE SIGNS SHALL NOT COVER ANY PORTION OF THE MIDDLE OR BOTTOM RAILS.

ALL SIGNS SHALL BE 48" X 48" UNLESS OTHERWISE NOTED BELOW:
R11-2 SHALL BE 48" X 30".
R11-4 AND R11-3 SHALL BE 60" X 30".

* OMIT THE "ROAD CLOSED 500 FT." SIGN IF THE LAST INTERSECTION IS 500 FEET OR LESS FROM THE WORK ZONE.

** 500' MAX. OR AT LAST INTERSECTION, WHICHEVER IS CLOSEST.

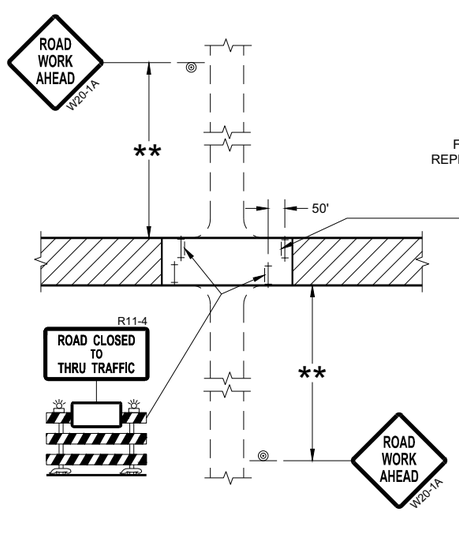

DETAIL 3
(PUBLIC CROSS-TRAFFIC MAINTAINED.
CONTRACTOR, LOCAL BUSINESS AND
RESIDENT ACCESS TO PROJECT)

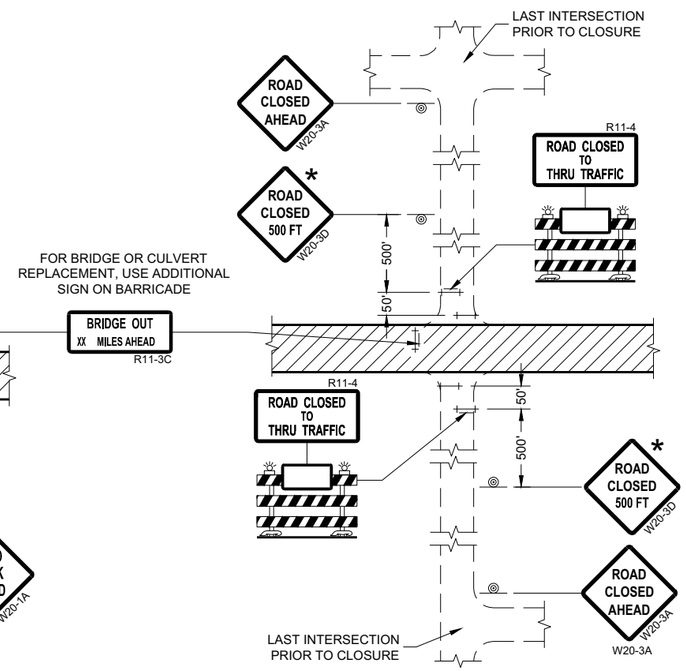

DETAIL 4
(CONTRACTOR, LOCAL BUSINESS AND
RESIDENT ACCESS TO PROJECT)

LEGEND

- SIGN ON PERMANENT SUPPORT
- TYPE III BARRICADE
- TYPE III BARRICADE WITH ATTACHED SIGN
- TYPE "A" WARNING LIGHT (FLASHING)
- WORK AREA

BARRICADES AND SIGNS FOR SIDEROAD CLOSURES

STATE OF WISCONSIN
DEPARTMENT OF TRANSPORTATION

APPROVED
July 2018 — DATE
/S/ Andrew Heidtke — WORK ZONE ENGINEE
FHWA

6
SDD 15C03 - 05

GENERAL NOTES

THE EXACT NUMBER, LOCATION, AND SPACING OF ALL SIGNS AND DEVICES SHALL BE ADJUSTED TO FIT FIELD CONDITIONS.

THE SPACING BETWEEN TRAFFIC CONTROL SIGNS SHOULD BE ADJUSTED TO NOT CONFLICT WITH AND SHOULD PROVIDE A MINIMUM OF 200 FEET (500 FEET DESIRABLE) CLEARANCE TO EXISTING SIGNS THAT WILL REMAIN IN PLACE.

ALL SIGNS ARE 48" X 48" UNLESS OTHERWISE NOTED.

SIGNS THAT WILL BE IN PLACE LESS THAN SEVEN CONTINUOUS DAYS AND NIGHTS MAY BE MOUNTED ON PORTABLE SUPPORTS.

IF A "STOP" SIGN MUST BE REMOVED FOR A WORK OPERATION, A TEMPORARY "STOP" SIGN SHALL BE PLACED PRIOR TO THE SIGN REMOVAL, OR A FLAGGER SHALL BE PROVIDED UNTIL THE SIGN IS REESTABLISHED.

* OMIT G20-1 SIGNS IF LENGTH OF WORK AREA IS 2 MILES OR LESS

** PLACE AN ADDITIONAL W20-1A "ROAD WORK AHEAD" SIGN IF WORK AREA WITHIN THE PROJECT IS SEPARATED BY MORE THAN 2 MILES FROM PREVIOUS WORK AREA.

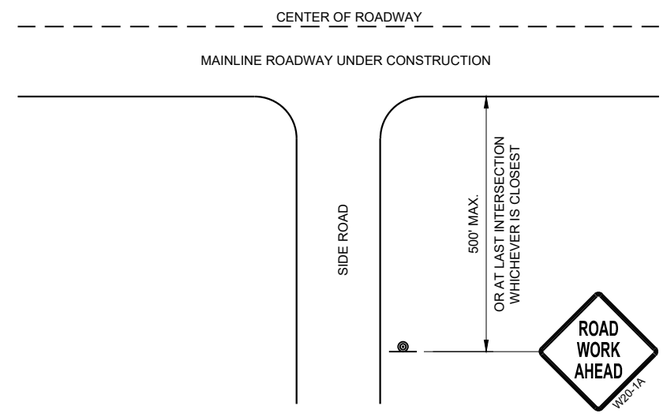

TYPICAL SIDE ROAD APPROACH WARNING SIGN DETAIL

LEGEND

- SIGN ON PERMANENT SUPPORT
- DIRECTION OF TRAFFIC
- WORK AREA

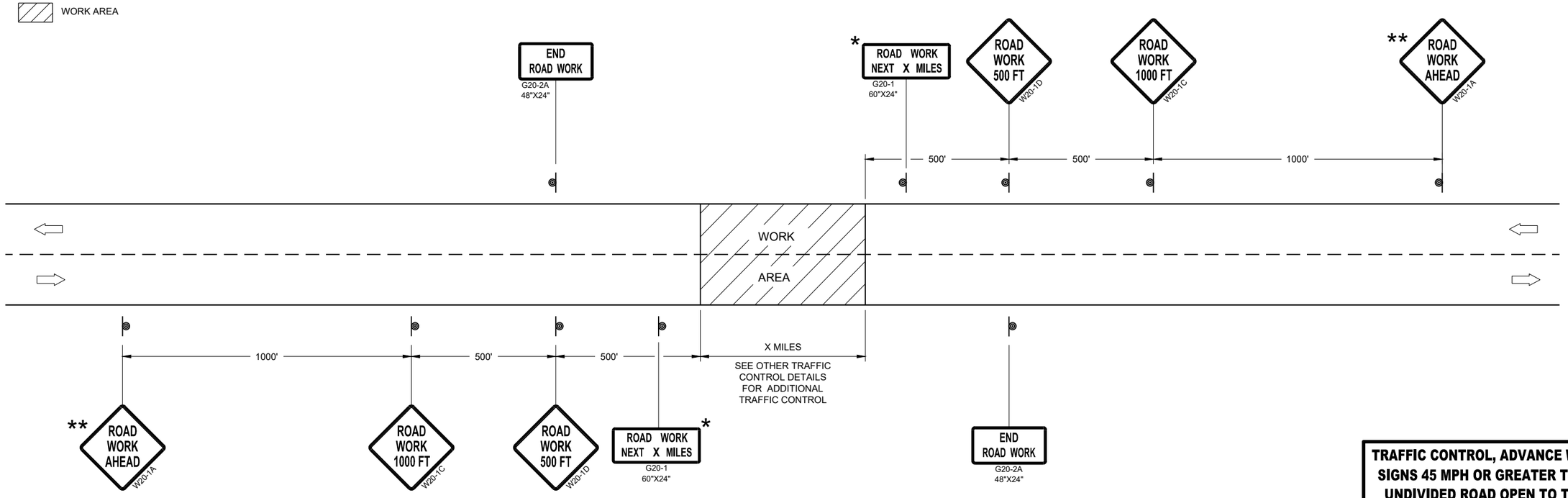

TRAFFIC CONTROL, ADVANCE WARNING SIGNS 45MPH OR GREATER

TRAFFIC CONTROL, ADVANCE WARNING SIGNS 45 MPH OR GREATER TWO-WAY UNDIVIDED ROAD OPEN TO TRAFFIC

STATE OF WISCONSIN
DEPARTMENT OF TRANSPORTATION

APPROVED
July 2018 — DATE
/S/ Andrew Heidtke — WORK ZONE ENGINEE
FHWA

6
SDD 15C04 - 05

GENERAL NOTES

THE EXACT NUMBER, LOCATION, AND SPACING OF ALL SIGNS AND DEVICES SHALL BE ADJUSTED TO FIT FIELD CONDITIONS.

THE SPACING BETWEEN TRAFFIC CONTROL SIGNS SHOULD BE ADJUSTED TO NOT CONFLICT WITH AND SHOULD PROVIDE A MINIMUM OF 200 FEET (500 FEET DESIRABLE) CLEARANCE TO EXISTING SIGNS THAT WILL REMAIN IN PLACE.

ALL SIGNS ARE 48" X 48" UNLESS OTHERWISE NOTED. IF NECESSARY DUE TO SPACE CONSTRAINTS, 36"X36" SIGNS MAY BE USED INSTEAD OF 48" X 48" SIGNS.

SIGNS THAT WILL BE IN PLACE LESS THAN SEVEN CONTINUOUS DAYS AND NIGHTS MAY BE MOUNTED ON PORTABLE SUPPORTS.

IF A "STOP" SIGN MUST BE REMOVED FOR A WORK OPERATION, A TEMPORARY "STOP" SIGN SHALL BE PLACED PRIOR TO THE SIGN REMOVAL, OR A FLAGGER SHALL BE PROVIDED UNTIL THE SIGN IS REESTABLISHED.

* THE THIRD W20-1 SIGN IS REQUIRED ONLY IF THERE IS AN INTERSECTION BETWEEN THE "ROAD WORK 500 FEET" SIGN AND THE WORK ZONE. ADJUST THE PLACEMENT OF THIS SIGN BASED ON INTERSECTION LOCATION AND OTHER FIELD CONDITIONS.

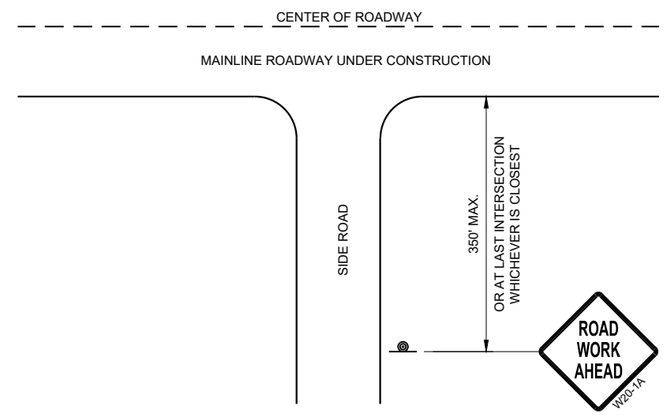

TYPICAL SIDE ROAD APPROACH WARNING SIGN DETAIL

LEGEND

- SIGN ON PERMANENT SUPPORT
- DIRECTION OF TRAFFIC
- WORK AREA

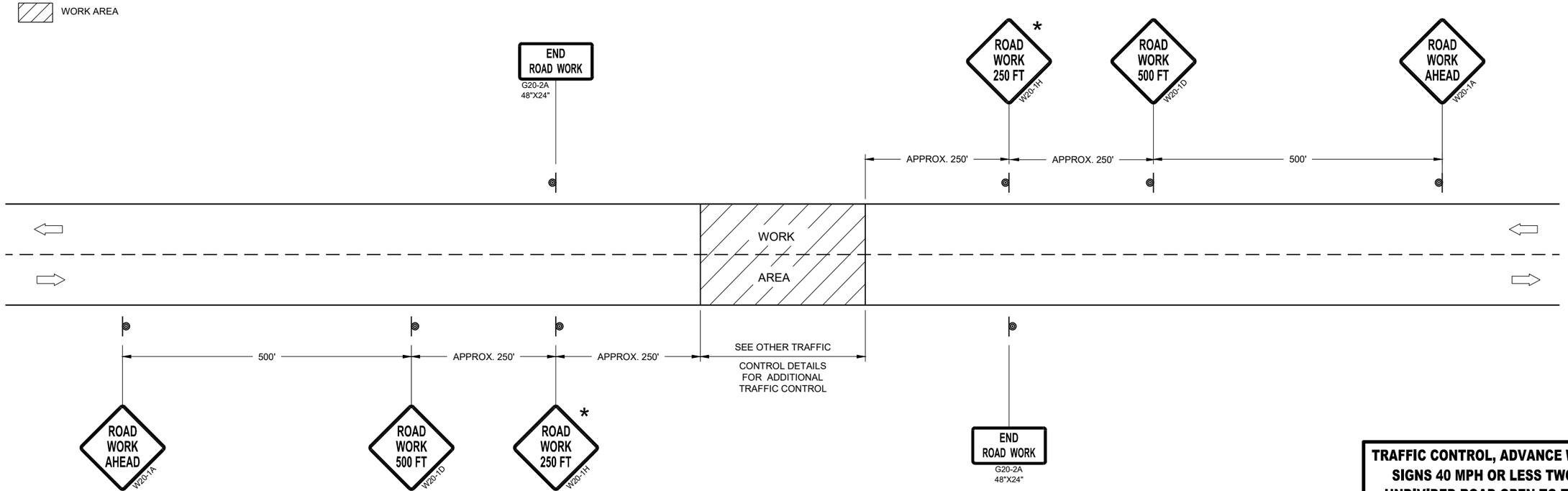

TRAFFIC CONTROL, ADVANCE WARNING SIGNS 40MPH OR LESS

TRAFFIC CONTROL, ADVANCE WARNING SIGNS 40 MPH OR LESS TWO-WAY UNDIVIDED ROAD OPEN TO TRAFFIC

STATE OF WISCONSIN
DEPARTMENT OF TRANSPORTATION

APPROVED
July 2018
DATE

/S/ Andrew Heidtke
WORK ZONE ENGINEE

FHWA

6

SDD 15C05 - 05

GENERAL NOTES

DETAILS OF CONSTRUCTION NOT SHOWN ON THIS DRAWING SHALL CONFORM TO STANDARD SPECIFICATIONS AND SPECIAL PROVISIONS.

1. LOCATE THE NO PASSING ZONE W14-3 SIGN WITHIN 50 FEET OF THE "T" MARKING
2. MEASURE FROM EDGE OF MARKING TO JOINT LINE. THIS DOES NOT INCLUDE SPACE NEEDED FOR GROOVING OPERATIONS.

*CONFIRM MARKING LINE WIDTH WITH THE MISCELLANEOUS QUANTITIES

LEGEND

"T" MARKING

SIGN ON PERMANENT SUPPORT

DIRECTION OF TRAFFIC

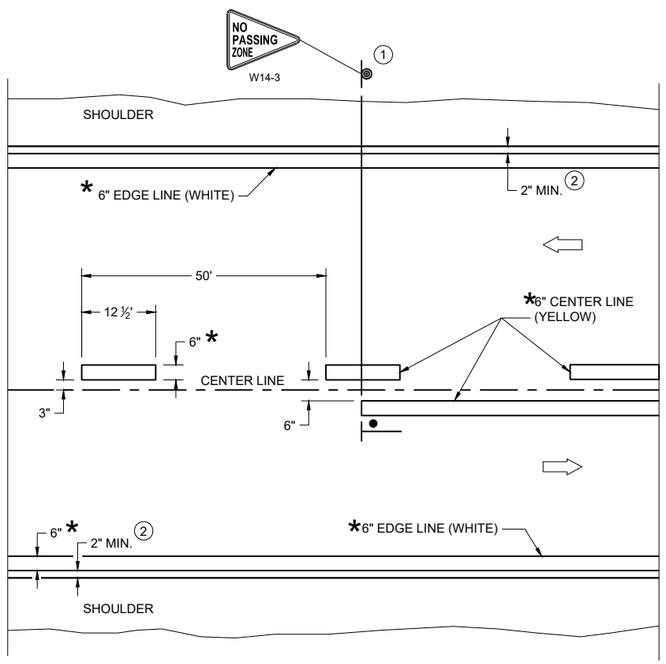

TWO WAY TRAFFIC

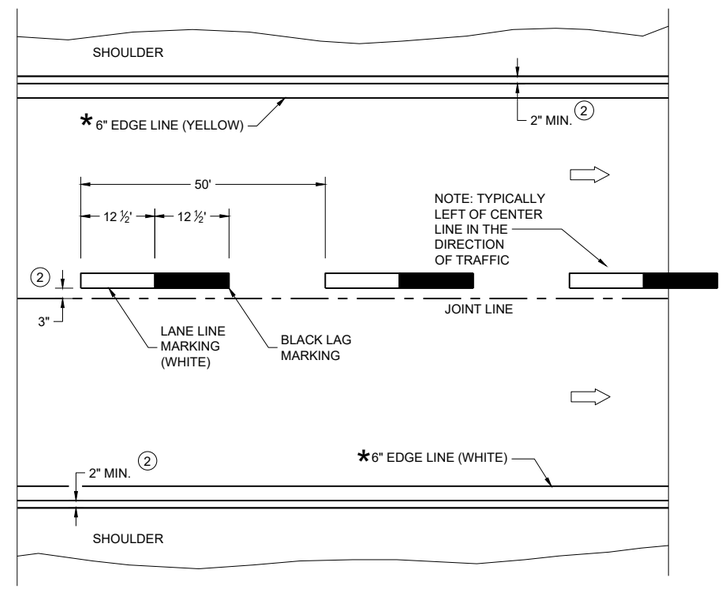

ONE WAY TRAFFIC

PERMANENT PAVEMENT MARKING

6

6

SDD 15C08-23a

SDD 15C08-23a

PERMANENT LONGITUDINAL PAVEMENT MARKINGS

STATE OF WISCONSIN
DEPARTMENT OF TRANSPORTATION

APPROVED

May 2023 — DATE

/S/ Jeannie Silver — Statewide Pavement Marking Engineer

FHWA

LEGEND

SIGN ON PORTABLE OR PERMANENT SUPPORT

TEMPORARY PORTABLE RUMBLE STRIP ARRAY

DIRECTION OF TRAFFIC

WORK AREA

FLAGGER, EQUIPPED WITH STOP/SLOW PADDLE FASTENED ON SUPPORT STAFF

GENERAL NOTES

DETAILS OF TRAFFIC CONTROL DEVICES AND INSTALLATION NOT SHOWN ON THIS DRAWING SHALL CONFORM TO THE PERTINENT REQUIREMENTS OF THE STANDARD SPECIFICATIONS, THE SPECIAL PROVISIONS, AND THE MANUAL ON UNIFORM TRAFFIC CONTROL DEVICES.

ALL SIGNS ARE 48" X 48" UNLESS OTHERWISE NOTED.

"WO" SIGNS ARE THE SAME AS "W" SIGNS EXCEPT THE BACKGROUND IS ORANGE.

THE EXACT NUMBER, LOCATION AND SPACING OF ALL SIGNS, DEVICES, AND LOCATION OF ALL FLAGGERS SHALL BE ADJUSTED TO FIT FIELD CONDITIONS AS APPROVED BY THE ENGINEER.

THE FIRST ADVANCE WARNING SIGN SHOULD TYPICALLY BE LOCATED IN ADVANCE OF THE ANTICIPATED TRAFFIC BACKUP OR QUEUE.

WHEN A SIDE ROAD OR RAMP INTERSECTS THE FACILITY ON WHICH THE WORK IS BEING PERFORMED, ADDITIONAL TRAFFIC CONTROLS SHALL BE PROVIDED AS SPECIFIED IN THE PLANS AND/OR THE SPECIAL PROVISIONS OR AS APPROVED BY THE ENGINEER.

FLAGGING

FLAGGERS SHALL BE IN SIGHT OF EACH OTHER OR IN DIRECT COMMUNICATION AT ALL TIMES. THEY SHALL BE EQUIPPED WITH STOP/SLOW PADDLES FASTENED ON SUPPORT STAFFS. WHEN THE FLAGGING OPERATION IS NOT IN EFFECT REMOVE TEMPORARY PORTABLE RUMBLE STRIPS PRIOR TO COVERING OR REMOVING ALL ADVANCE SIGNING.

(1) FOR MOVING WORK OPERATIONS, POST ADDITIONAL W20-7A FLAGGER SIGNS AT APPROXIMATELY 3,500' INTERVALS IN THE MOVING WORK OPERATION OR AS APPROVED BY THE ENGINEER.

(2) SIGN NOT REQUIRED IF FLAGGING OPERATION OCCURS WITHIN A SIGNED ROAD WORK ZONE AREA.

WHEN THE DISTANCE BETWEEN FLAGGERS EXCEEDS 2 MILES, A PILOT CAR IS REQUIRED. WHEN CURVES REDUCE SIGHT DISTANCE BELOW 400', A PILOT CAR IS REQUIRED.

TEMPORARY PORTABLE RUMBLE STRIPS

UTILIZE TEMPORARY PORTABLE RUMBLE STRIPS ON ALL FLAGGING OPERATIONS.

(3) EACH TEMPORARY PORTABLE RUMBLE STRIP ARRAY CONSISTS OF THREE RUMBLE STRIPS PLACED TRANSVERSE ACROSS THE LANE AT THE LOCATIONS SHOWN. WITHIN EACH ARRAY, SPACING BETWEEN RUMBLE STRIPS SHALL BE 15 FEET ON CENTER

ONLY USE TEMPORARY PORTABLE RUMBLE STRIPS FROM THE APPROVED PRODUCTS LIST.

INSTALL TEMPORARY RUMBLE STRIPS PER MANUFACTURER'S RECOMMENDATIONS.

PLACE ADVANCE SIGNING PRIOR TO INSTALLING TEMPORARY RUMBLE STRIPS.

DO NOT INSTALL TEMPORARY PORTABLE RUMBLE STRIPS ON GRAVEL, MILLED SURFACES, OR ASPHALT THAT HAS BEEN PAVED LESS THAN 12 HOURS.

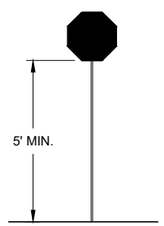

STOP/SLOW PADDLE ON SUPPORT STAFF

SIGN AND TEMPORARY RUMBLE STRIP ARRAY SPACING TABLE

SPEED LIMIT	SPACING "A"
25-30 MPH	200'
35-40 MPH	350'
45-55 MPH	500'

WO3-4

USE OF WO3-4 SIGN IS OPTIONAL. WHEN USED, THIS SIGN SHALL BE LOCATED BETWEEN THE W20-7A AND W20-4A SIGNS, USING SPACING "A".

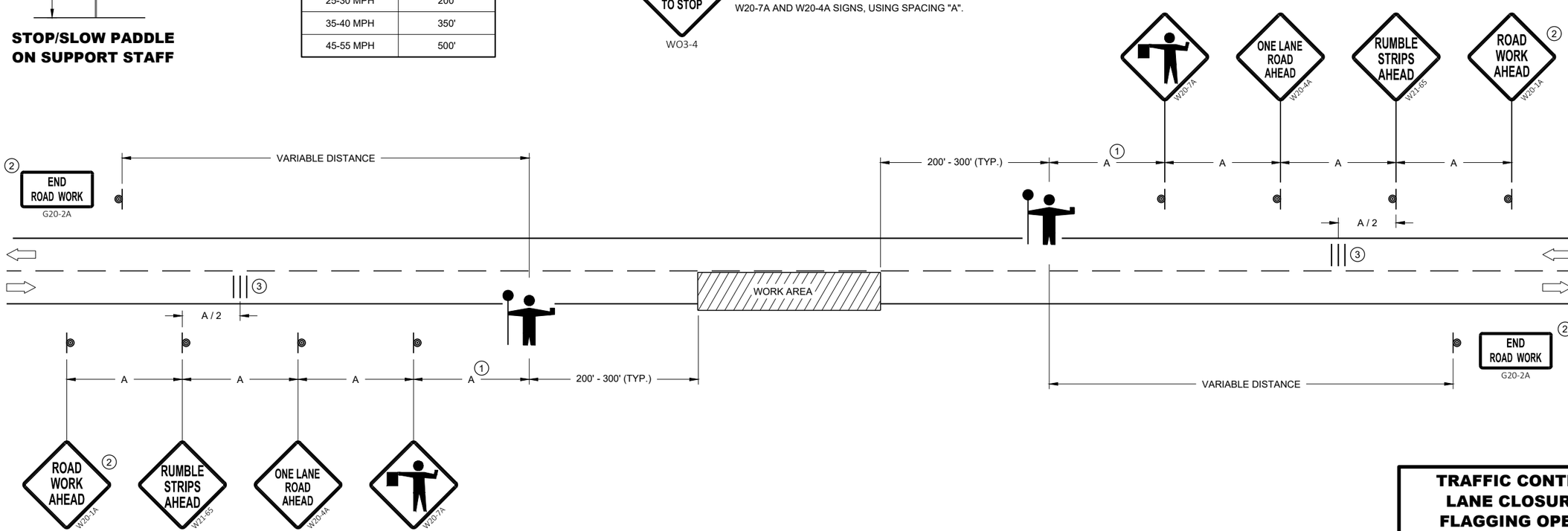

TRAFFIC CONTROL FOR LANE CLOSURE WITH FLAGGING OPERATION

STATE OF WISCONSIN
DEPARTMENT OF TRANSPORTATION

APPROVED
May 2022 — DATE
/S/ Andrew Heidtke — WORK ZONE ENGINEE
FHWA

6

SDD 15C12 - 09a

LEGEND

V1 LEAD VEHICLE

V2 MARKING VEHICLE

V3 SHADOW VEHICLE

TRUCK MOUNTED ATTENUATOR (TMA)

SIGN ON TEMPORARY SUPPORT

DIRECTION OF TRAFFIC

GENERAL NOTES

ALL VEHICLES SHALL BE EQUIPPED WITH TWO 360 DEGREE HIGH INTENSITY YELLOW FLASHING LIGHTS OR STROBE LIGHTS AND OPERATED WITH HEADLIGHTS TURNED ON.

ALL VEHICLES SHALL BE EQUIPPED WITH REAR FACING TYPE B OR C FLASHING ARROW PANEL OPERATING IN CAUTION MODE. SIGNS PLACED ON VEHICLES MUST NOT OBSCURE THE ARROW PANEL.

ALL SIGNS ARE 48" X 48" UNLESS OTHERWISE SPECIFIED.

DISTANCE BETWEEN VEHICLES MAY VARY ACCORDING TO TERRAIN, SIGHT DISTANCE, PAINT DRYING TIME, AND OTHER FACTORS. WHENEVER ADEQUATE STOPPING SIGHT DISTANCE EXISTS TO THE REAR, SHADOW VEHICLES SHOULD MAINTAIN THE MINIMUM DISTANCE FROM THE WORK VEHICLE AND PROCEED AT THE SAME SPEED AS THE WORK VEHICLE. SHADOW VEHICLES SHOULD SLOW DOWN IN ADVANCE OF VERTICAL AND HORIZONTAL CURVES THAT RESTRICT SIGHT DISTANCE.

THE WORK AND SHADOW VEHICLES SHOULD PULL OVER PERIODICALLY TO ALLOW TRAFFIC TO PASS.

WHEN NO WORK ACTIVITY IS TAKING PLACE, REMOVE OR LAY STATIONARY SIGNS AND SUPPORTS FLAT ON THE GRADE WITH UPRIGHTS ORIENTED PARALLEL TO AND DOWNSTREAM FROM TRAFFIC.

CONES SHOULD BE USED BETWEEN THE MARKING AND SHADOW VEHICLE AT 100 FOOT SPACING. CONES MAY BE OMITTED ON PAINTED LINE IF APPROVED BY THE ENGINEER. CONSIDER PAVEMENT MARKING DRY OR CURE TIMES AND TRAFFIC VOLUME.

CONES SHALL BE A MINIMUM OF 28" FOR WET PAVEMENT MARKING .

1. SIGNS SHALL BE REPEATED APPROXIMATELY EVERY THREE MILES AND AFTER EVERY MAJOR INTERSECTION.
2. IF CONSTRUCTION WORK ZONE SIGNS ARE IN PLACE, W20-1A OR W21-63 ARE NOT REQUIRED.
3. V1 AND V2 CAN BE SWITCHED SO THAT THE MARKER IS THE LEAD VEHICLE.

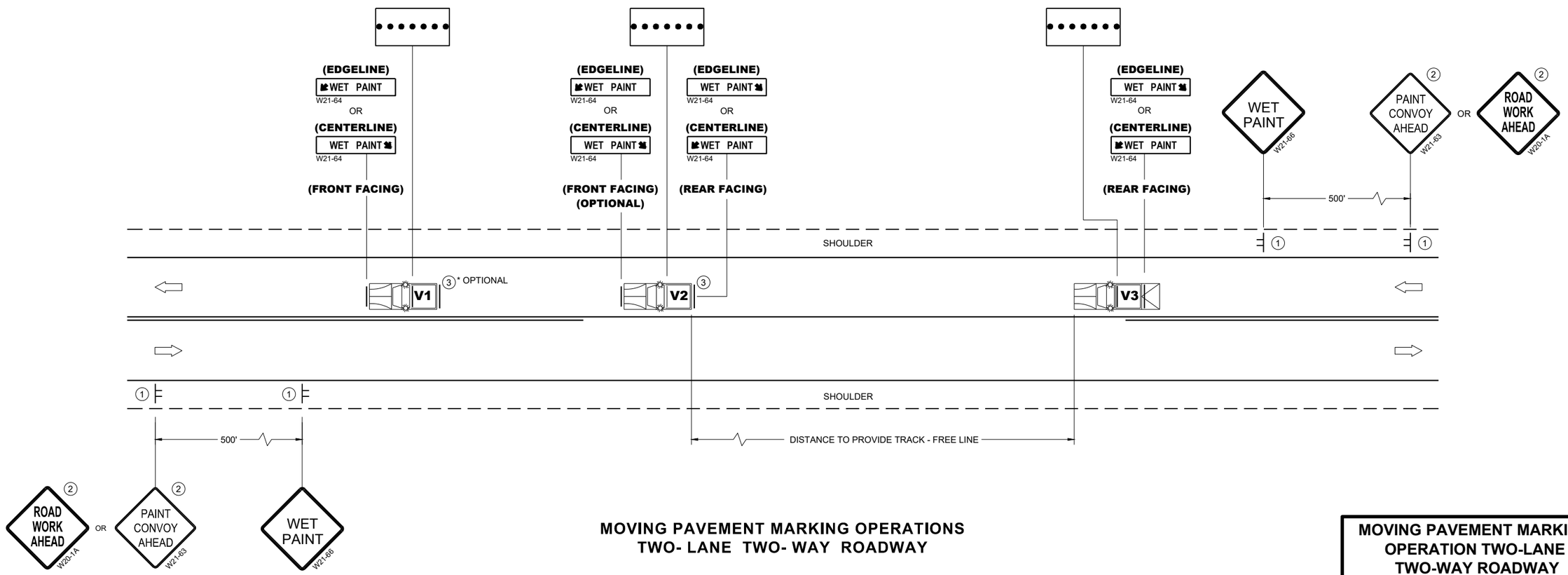

MOVING PAVEMENT MARKING OPERATIONS
TWO- LANE TWO- WAY ROADWAY

MOVING PAVEMENT MARKING OPERATION TWO-LANE TWO-WAY ROADWAY

STATE OF WISCONSIN
DEPARTMENT OF TRANSPORTATION

APPROVED
March 2024 — DATE
/S/ Andrew Heidtke — WORK ZONE ENGINEER
FHWA

6

SDD 15C19-9a

GENERAL NOTES

STOP SIGN SHALL BE PLACED A MINIMUM OF 6 FEET TO A MAXIMUM OF 50 FEET FROM THE EDGELINE LOCATION.

1. 18-INCH STOP LINES MAY BE DELETED OR ADDED BY THE REGION MARKING ENGINEER BASED ON VISIBILITY AND SIGHT LINES.
2. NO STOP LINE IS REQUIRED IF STOP SIGN IS LESS THAN OR EQUAL TO 40 FEET FROM THE EDGELINE.
3. NO STOP LINE IS REQUIRED IF STOP SIGN IS LESS THAN OR EQUAL TO 30 FEET FROM THE FLANGE LINE EXTENSION.
4. MOVE CLOSER TO THE EDGE OF TRAVEL LINE AS NEEDED FOR VISIBILITY AND SIGHT LINES (NO CLOSER THAN 4 FEET).
5. LADDER BAR CROSSWALKS SHOULD ONLY BE USED FOR MID BLOCK CROSSINGS. USE 2 - 6" TRANSVERSE LINES.
6. POSTED SPEED LIMITS OF 40 MPH OR GREATER USE A MINIMUM WIDTH OF 8' FOR MIDBLOCK CROSSWALKS

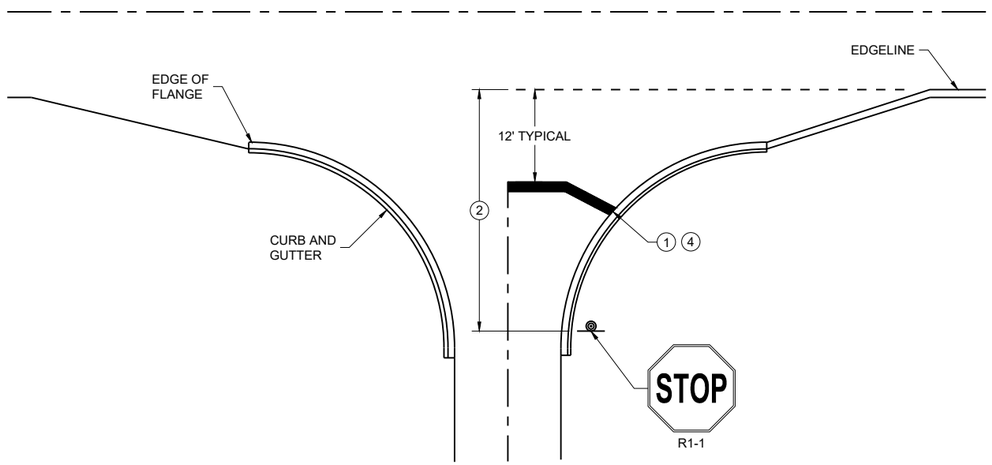

TYPICAL STOP LINE PAVEMENT MARKING WITH CURB AND GUTTER

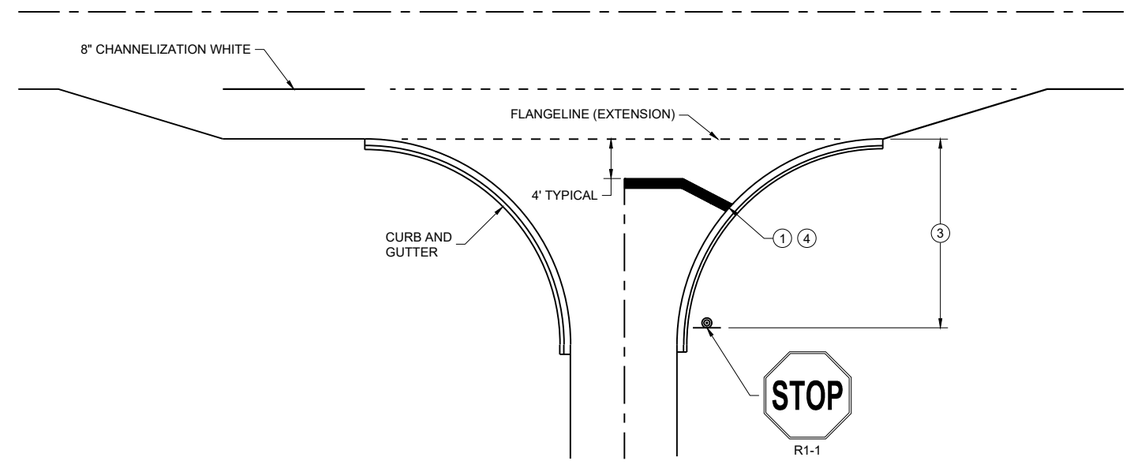

TYPICAL STOP LINE PAVEMENT MARKING FOR SIDE ROADS WITH RIGHT TURN LANE

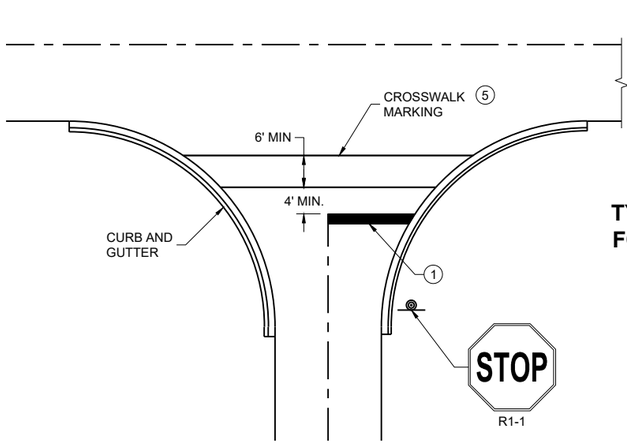

TYPICAL STOP LINE PAVEMENT MARKING FOR SIDE ROADS WITH CROSSWALK MARKING

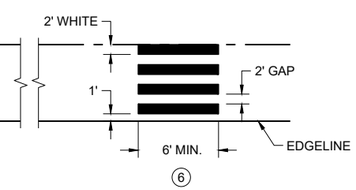

TYPICAL PAVEMENT MARKING FOR MID-BLOCK CROSSWALK 5

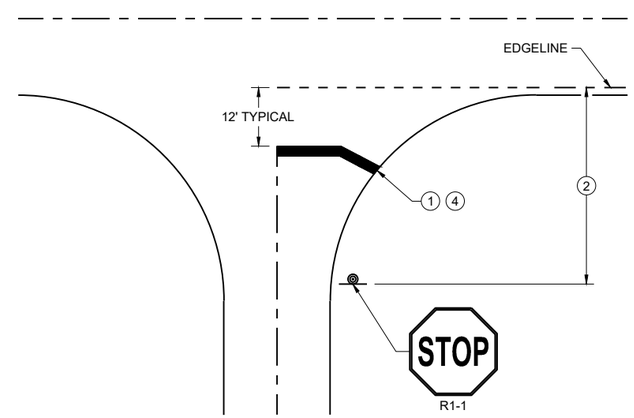

TYPICAL STOP LINE PAVEMENT MARKING WITHOUT CURB AND GUTTER

STOP LINE AND CROSSWALK PAVEMENT MARKING

STATE OF WISCONSIN
DEPARTMENT OF TRANSPORTATION

APPROVED
March 2024 — DATE
/S/ Matthew Rauch — STATE SIGNING AND MARKING ENGINEER

FHWA

6
SDD 15C33-05

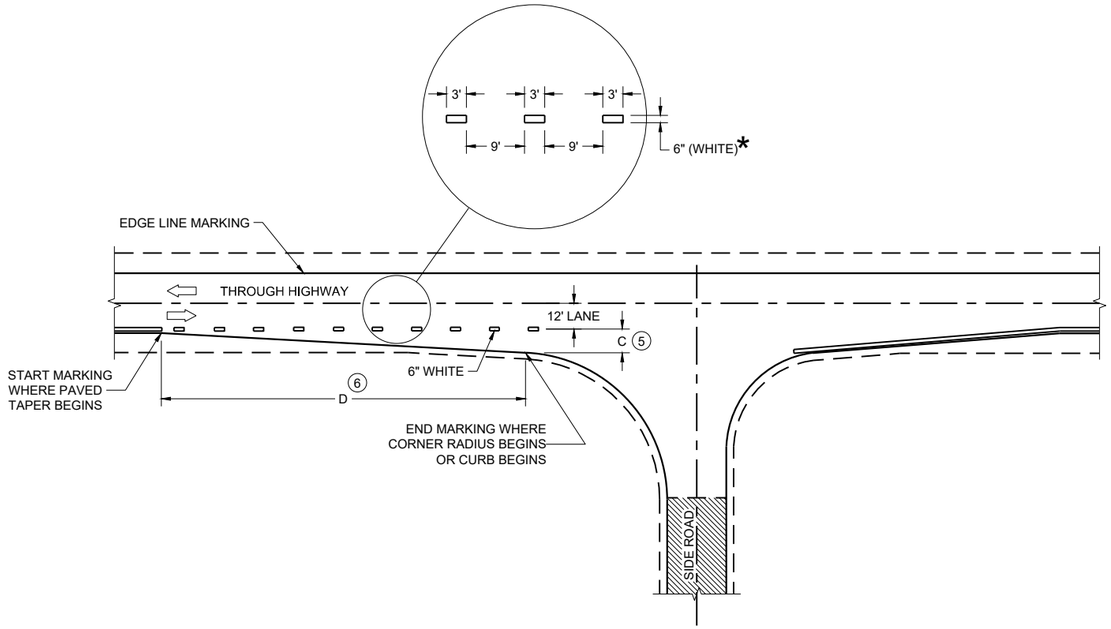

MINOR INTERSECTION

*CONFIRM MARKING LINE WIDTH WITH THE MISCELLANEOUS QUANTITIES

GENERAL NOTES

OMIT EDGE LINES THROUGH INTERSECTIONS. CONTINUE EDGE LINES THROUGH DRIVEWAYS.

1. WHEN DISTANCE "A" IS LESS THAN 250 FEET, OMIT LANE LINE.
2. WHEN DISTANCE "B" IS LESS THAN 100 FEET, OMIT CHANNELIZING LANE LINE.
3. BARRIER LINE ENDS AT SIDE ROAD PAVEMENT / SURFACE EDGE EXTENSION.
4. BARRIER LINE STARTS 500 FEET PRIOR TO THE BYPASS TAPER.
5. WHEN DISTANCE "C" IS LESS THAN 4 FEET, OMIT DOTTED EXTENSION.
6. WHEN DISTANCE "D" IS LESS THAN 50 FEET, OMIT DOTTED EXTENSION.

LEGEND

⇨ DIRECTION OF TRAVEL

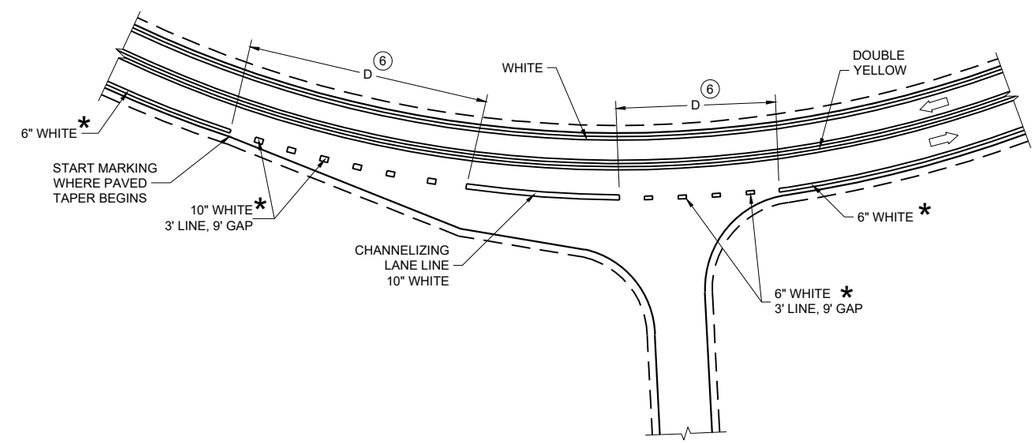

INTERSECTION ON OUTSIDE OF CURVE

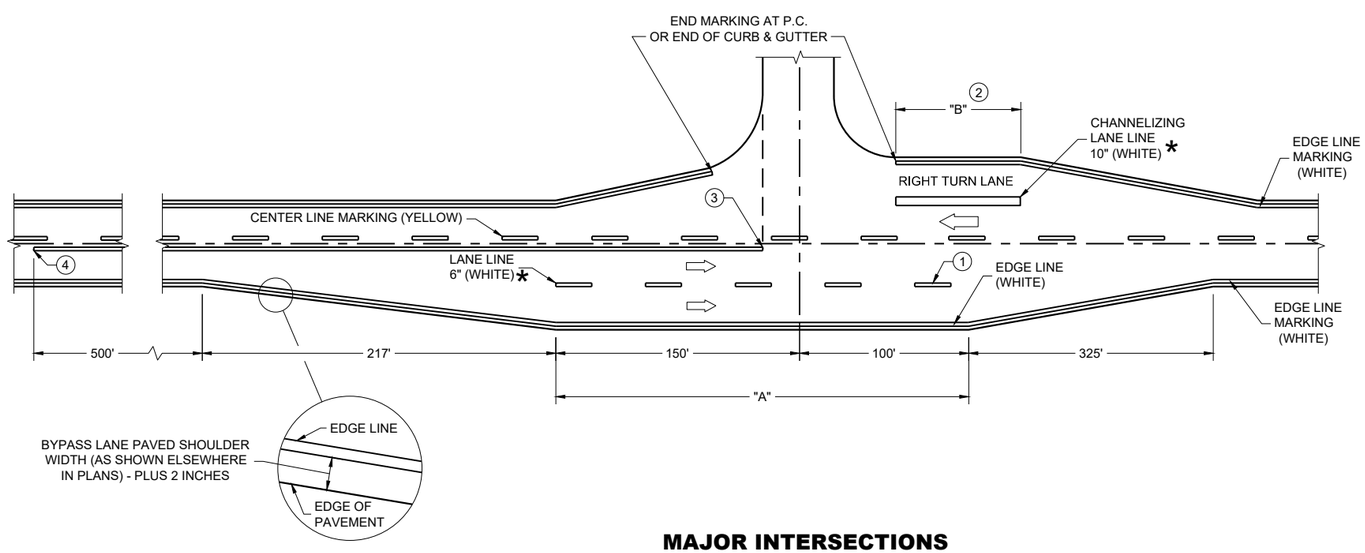

MAJOR INTERSECTIONS

(INTERSECTION WITH FULL RIGHT TURN LANE OR BYPASS LANE)

PAVEMENT MARKING (INTERSECTIONS)

STATE OF WISCONSIN
DEPARTMENT OF TRANSPORTATION

6

SDD 15C35-06a

GENERAL NOTES

DRAWING NOT TO SCALE. ALL SIGNS AND POSTS ON THIS SHEET SHALL BE PAID FOR WITH 'TRAFFIC CONTROL SIGNS' BID ITEM. ALL SIDE ROADS WHICH ARE UNDER CONSTRUCTION OF CURB AND GUTTER AND/OR GRADING SHALL BE ADEQUATELY SIGNED.

ALL SIGNS AND DEVICES SHALL BE IN CONFORMANCE WITH THE WISCONSIN MANUAL OF UNIFORM TRAFFIC CONTROL DEVICES (WMUTCD). SIGN LAYOUTS SHALL BE IN ACCORDANCE WITH THE WISDOT STANDARD SIGN PLATES.

"WO" SIGNS ARE THE SAME AS "W" SIGNS EXCEPT THAT THE BACKGROUND IS ORANGE.

ALL SIGNS ARE 48" X 48" UNLESS OTHERWISE NOTED.

THE EXACT NUMBER, LOCATION AND SPACING OF ALL SIGNS AND DEVICES SHALL BE ADJUSTED TO FIT FIELD CONDITIONS AS DIRECTED BY THE ENGINEER.

ALL SIGNS INAPPROPRIATE TO THE STATUS OF THE CONTROL ZONE, INCLUDING PRE-EXISTING SIGNS IN THE VICINITY, SHALL BE COVERED OR REMOVED AS DIRECTED BY THE ENGINEER.

SEE 15C34 FOR ADDITIONAL TRAFFIC CONTROL SIGNING WHEN CENTERLINE PAVEMENT MAKINGS ARE MISSING. 'DO NOT PASS' SIGNS MUST BE INSTALLED ON THE SAME DAY AS MILLING OPERATIONS.

(1) PLACE SIGNS 350' IN ADVANCE OF MILLED SURFACES AND AT 1 MILE INTERVALS, OR AS DIRECTED BY THE ENGINEER.

(2) PLACE SIGN 200' MIN. FROM INTERSECTION AND 200' MIN. AFTER ADVANCE WARNING SIGN SHOWN IN SDD 15C04.

LEGEND

SIGN ON TEMPORARY SUPPORT

DIRECTION OF TRAFFIC

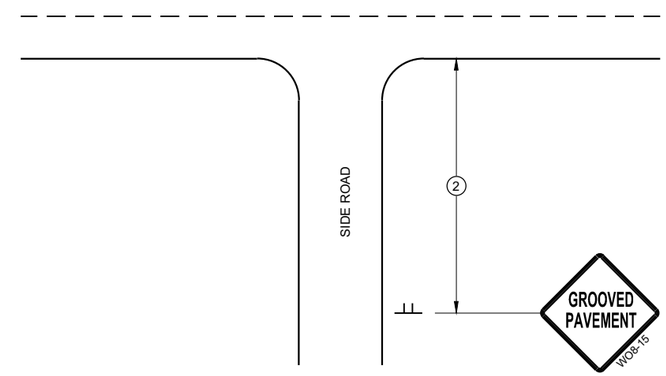

TYPICAL SIDE ROAD APPROACH SIGN DETAIL

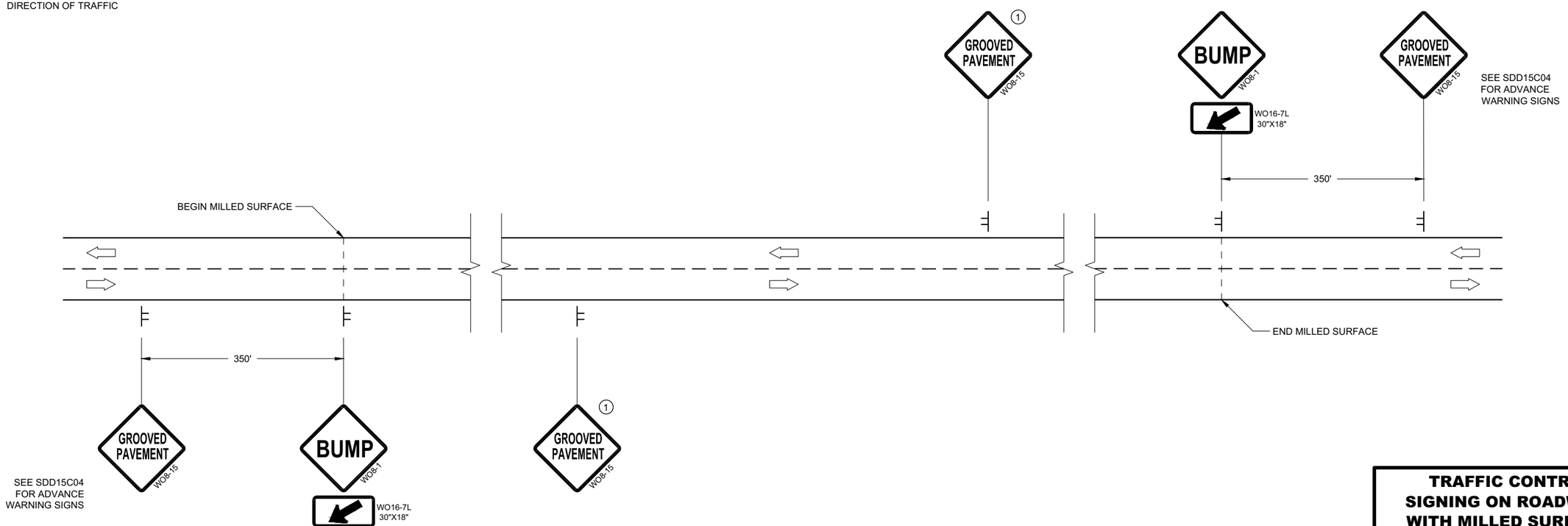

DETAIL FOR SIGNING ON MILLED SURFACES

TRAFFIC CONTROL, SIGNING ON ROADWAYS WITH MILLED SURFACES

STATE OF WISCONSIN
DEPARTMENT OF TRANSPORTATION

APPROVED
February 2020 — DATE
/S/ Andrew Heidtke — WORK ZONE ENGINEE
FHWA

6
SDD 15D44 - 02

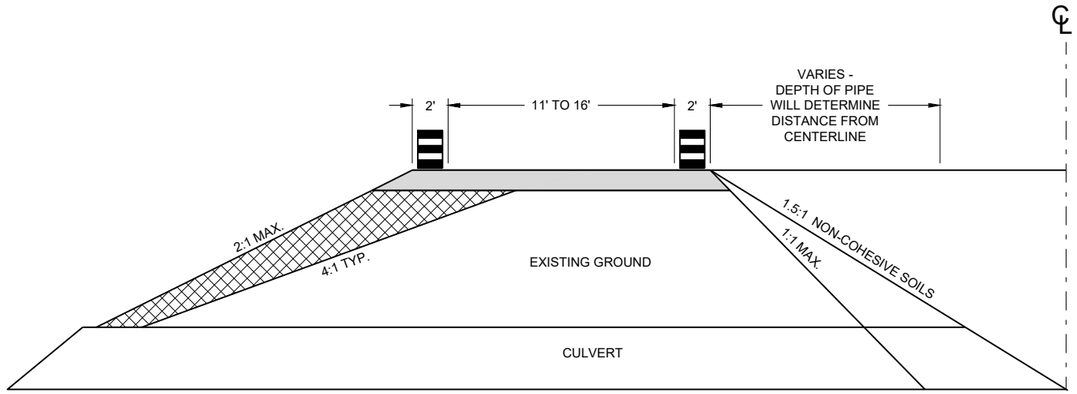

CROSS SECTION

GENERAL NOTES

USE 1:1 FOR COHESIVE CLAYS AND SILTS, LOAMS, SANDY CLAYS AND ANGULAR GRAVEL SOILS.
USE 1.5:1 FOR NON-COHESIVE SOILS.

THE TAPER SHOULD EXTEND ACROSS THE SHOULDER UNLESS DOING SO WOULD GREATLY CONFLICT WITH THE WORK OPERATION.

ALL LANE CLOSURE SIGNS SHALL BE REMOVED OR COVERED AND ALL DEVICES REMOVED BEYOND THE SHOULDER WHEN WORK IS NOT IN PROGRESS AND THE LANE IS RESTORED TO A SAFE OPERATING CONDITION.

CHANNELIZING DEVICES PLACED ADJACENT TO WORK AREA SHALL BE PULLED BACK FROM TRAVEL LANE WHEN WORK IS NOT IN PROGRESS.

USE WITH SDD 15C12 "TRAFFIC CONTROL FOR LANE CLOSURE WITH FLAGGING OPERATIONS"

USE WITH SDD 15D45 "SIGNING ON ROADWAYS WITH LOOSE GRAVEL"

LEGEND

- DRUM WITHOUT WARNING LIGHT
- 6" BASE AGGREGATE DENSE 1 ¼" -INCIDENTAL TO LANE SHIFT ITEM
- FILL - INCIDENTAL TO LANE SHIFT ITEM
- WORK AREA
- FLAGGER, EQUIPPED WITH STOP/SLOW PADDLE FASTENED ON SUPPORT STAFF

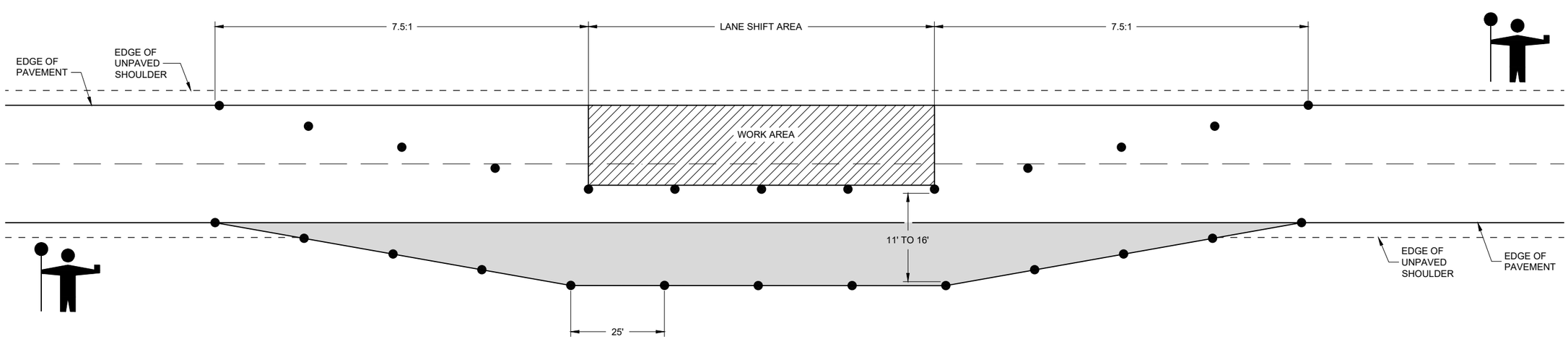

LANE SHIFT IN FLAGGING OPERATION

TRAFFIC CONTROL, TEMPORARY LANE SHIFT DURING CULVERT WORK

STATE OF WISCONSIN
DEPARTMENT OF TRANSPORTATION

APPROVED
February 2021 — DATE
/S/ Andrew Heidtke — WORK ZONE ENGINEE
FHWA

6

SDD 15D48 - 01

LEGEND

V1 WORK VEHICLE

V2 SHADOW VEHICLE

TRUCK MOUNTED ATTENUATOR (TMA)

FLASHING ARROW PANEL (CAUTION)

WORK AREA

DIRECTION OF TRAFFIC

POSTED SPEED PRIOR TO WORK STARTING (MPH)	DECISION SIGHT DISTANCE (D)
0 - 25	550'
30	550'
35	700'
40	700'
45	900'
50	900'
55	1200'

GENERAL NOTES

ALL SIGNS ARE 48"X48" UNLESS OTHERWISE NOTED.

MOBILE IS WORK THAT MOVES CONTINUOUSLY OR MOVES AT LEAST THE DECISION SIGHT DISTANCE EVERY 15 MINUTES.

ALL VEHICLES SHALL BE EQUIPPED WITH TWO 360 DEGREE HIGH INTENSITY YELLOW FLASHING LIGHTS OR STROBE LIGHTS AND OPERATED WITH HEADLIGHTS TURNED ON.

ALL ARROW PANELS SHALL BE REAR FACING, TYPE "B" OR "C", AND DISPLAYING THE FLASHING CAUTION MODE. SIGNS PLACED ON VEHICLES MUST NOT OBSCURE THE ARROW PANEL.

USE AN ATTENUATOR ON THE REARMOST VEHICLE THAT BLOCKS ALL OR PART OF THE TRAFFIC LANE.

1 DISTANCE BETWEEN VEHICLES MAY INCREASE FROM THE ATTENUATOR'S ROLL AHEAD BASED ON TERRAIN, SIGHT DISTANCE, AND OTHER FACTORS. WHENEVER ADEQUATE STOPPING SIGHT DISTANCE EXISTS TO THE REAR, SHADOW VEHICLES SHOULD MAINTAIN THE MINIMUM DISTANCE FROM THE WORK VEHICLE AND PROCEED AT THE SAME SPEED AS THE WORK VEHICLE. SHADOW VEHICLES SHOULD SLOW DOWN IN ADVANCE OF VERTICAL OR HORIZONTAL CURVES THAT RESTRICT SIGHT DISTANCE.

2 ALIGN LEFT SIDE OF SHADOW VEHICLE WITH EDGE OF WORK AREA.

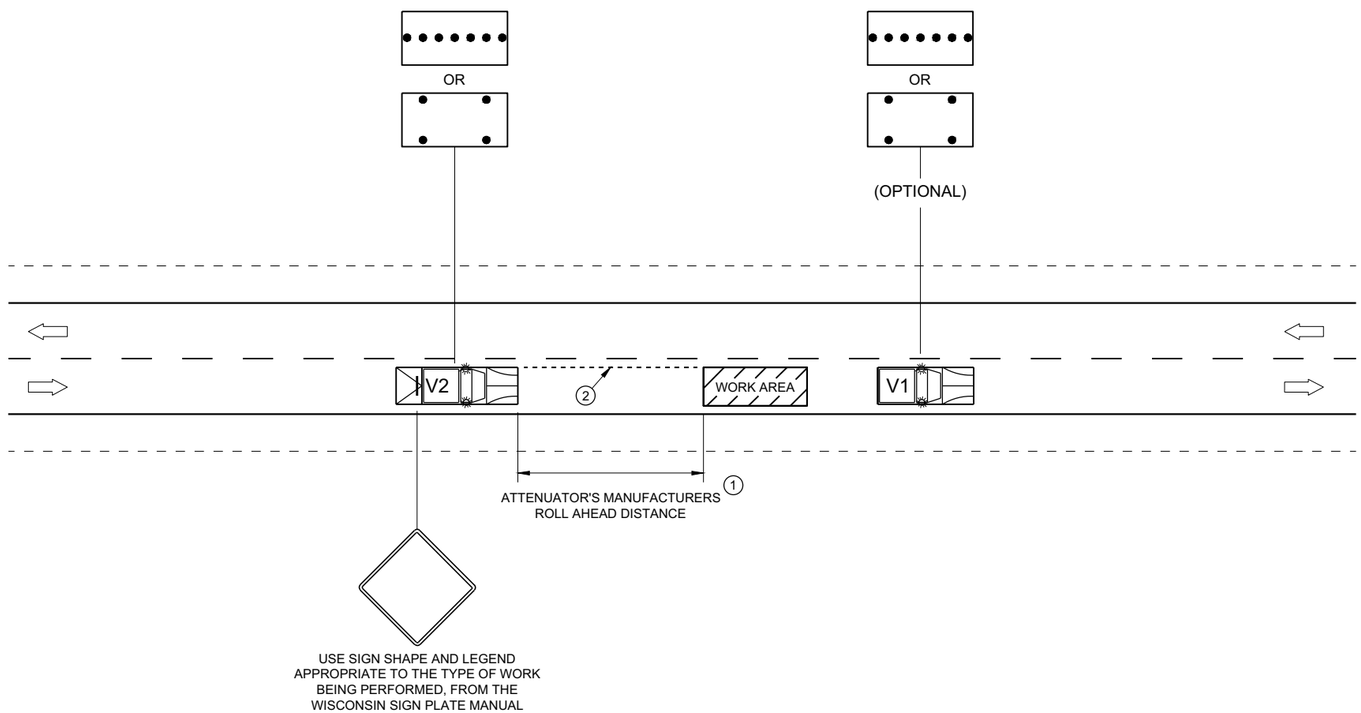

TRAFFIC CONTROL, MOBILE OPERATIONS ON AN UNDIVIDED ROADWAY

STATE OF WISCONSIN
DEPARTMENT OF TRANSPORTATION

APPROVED
February 2021 — DATE
/S/ Andrew Heidtke — STATEWIDE WORK ZONE T SAFETY ENGINEER
FHWA

URBAN AREA

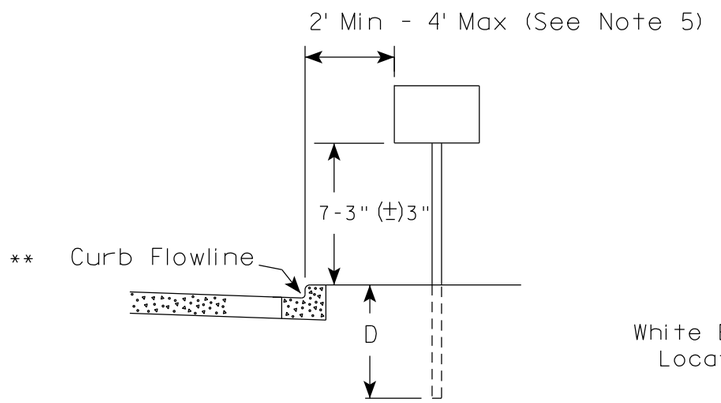

RURAL AREA (See Note 2)

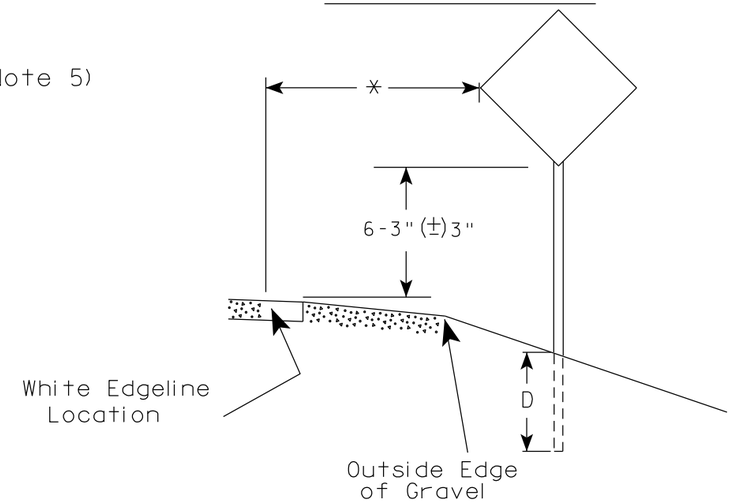

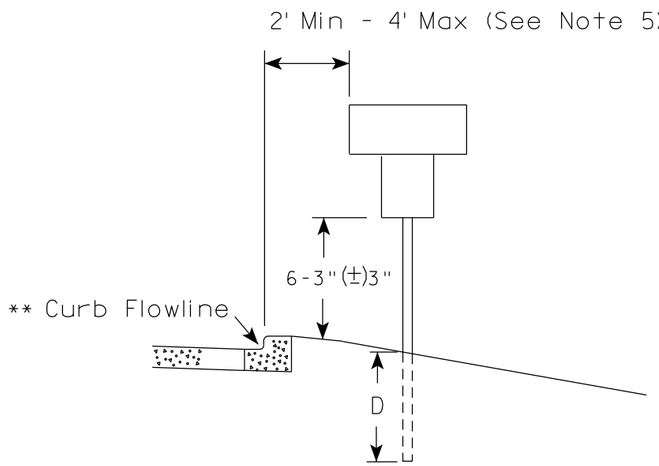

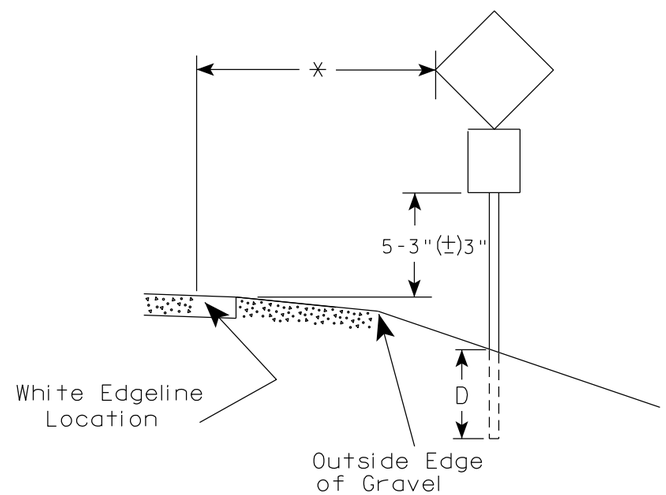

** The existence of curb and gutter does not in itself mandate the vertical clearance illustrated. That height is typically measured where there is sidewalk adjacent to the roadway or parking is permitted. In the absence of sidewalk vertical clearance is measured from the top of the curb. Offset of signs is measured from the flow line.

* 6 feet from edge of a paved shoulder or 12 feet from the edge of pavement (edge line location) or 2 feet from outside edge of gravel, whichever is greater unless directed by project engineer.

GENERAL NOTES

1. Signs wider than 4 feet or 20 sq.ft or larger, shall be mounted on multiple posts. Refer to plate A4-4.
2. If signs are mounted on or behind barrier wall, see A4-10 sign plate.
   The Double Arrow sign (W12-1D) shall be mounted at a height of 2'-3" (±) 3". The Chevron sign (W1-8), Roundabout Chevron panel (R6-4B), Enhanced Reference Markers, Clearance Markers (W5-52), Mile Markers (D10 series), In Road Object Markers (W5-54) & End of Road Markers (W5-56) shall be mounted at a height of 4'-3" (±) 3".
3. For expressways and freeways, mounting height is 7'- 3" (±) 3" or 6'-3" (±) 3" depending upon existence of a sub-sign.
4. Minimum mounting height for signs mounted on traffic signal poles is 5'- 3" (±) 3".
5. Offset distance shall be consistent with existing signs or consistent throughout length of project.
6. Folding signs shall be mounted at a height of 5'-3" (±) 3" or as directd by the Engineer.

POST EMBEDMENT DEPTH

Area of Sign Installation (Sq. Ft.)	D (Min)
20 or Less	4'
Greater than 20	5'

TYPICAL INSTALLATION OF PERMANENT TYPE II SIGNS ON SINGLE POSTS

WISCONSIN DEPT OF TRANSPORTATION

APPROVED Matthew R Rauch
for State Traffic Engineer

DATE 12/6/23 PLATE NO. A4-3.23

7 7

PROJECT NO:	HWY:	COUNTY:		SHEET NO: 70	E

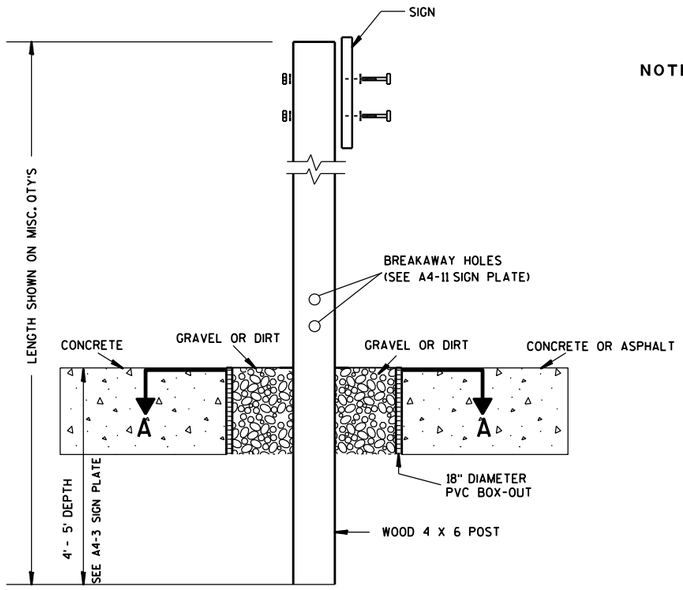

ELEVATION VIEW

DETAIL OF WOOD 4 X 6 SIGN POST IN BOX-OUT

NOTES:
1. ALL MATERIAL TO BE APPROVED BY ENGINEER PRIOR TO INSTALLATION
2. SEE SIGN PLATE A4-8 FOR SIGN HARDWARE REQUIREMENTS
3. 18 INCH X 18 INCH SQUARE BOX-OUTS MAY BE USED FOR INSTALLATIONS IN EXISTING CONCRETE OR ASPHALT LOCATIONS.

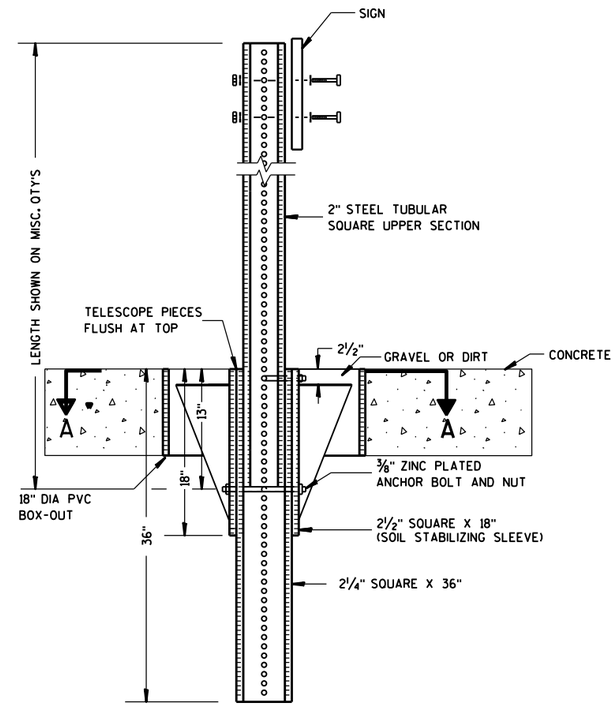

ELEVATION VIEW

DETAIL OF STEEL 2 X 2 SIGN POST IN BOX-OUT

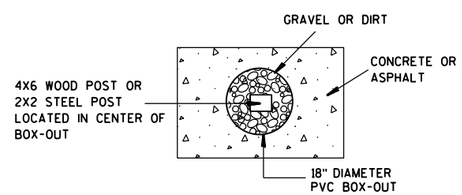

PLAN VIEW

FOR NEW CONCRETE/ASPHALT INSTALLATIONS

SIGN POST
BOX-OUTS
A4-3B

WISCONSIN DEPT OF TRANSPORTATION

APPROVED Matthew R Rauch
for State Traffic Engineer

DATE 1/27/14 PLATE NO. A4-3B.1

PROJECT NO:	HWY:	COUNTY:		SHEET NO:	E

URBAN AREA

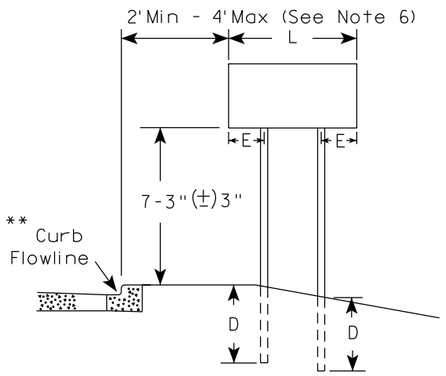

RURAL AREA (See Note 3)

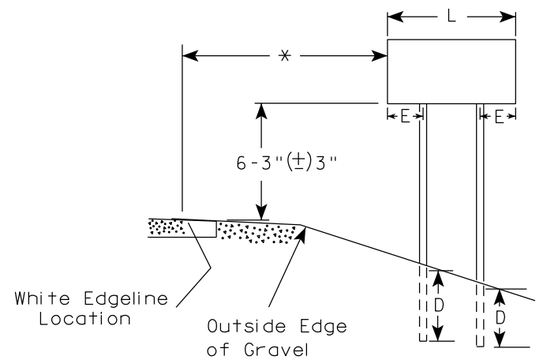

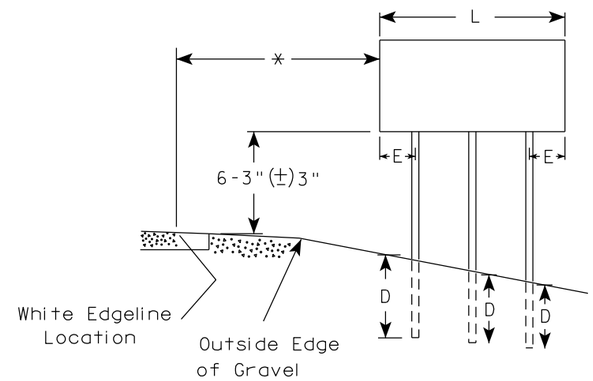

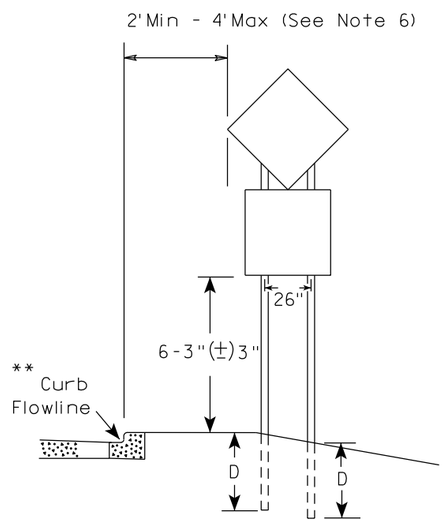

48" DIAMOND WARNING SIGN

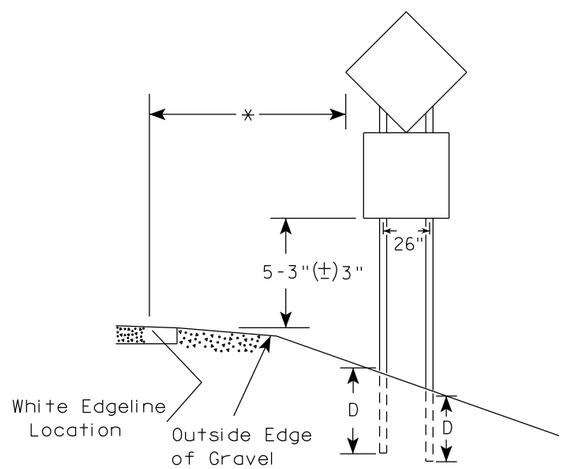

48" DIAMOND WARNING SIGN

GENERAL NOTES

1. For 3 or 4 post installations, individual post spacing shall be greater than 3'-6".
2. See tables below for required number of posts.
3. For expressways and freeways, mounting height is 7'-3" (±) 3" or 6'-3" (±) 3" depending upon existence of sub-sign.
4. The (±) tolerance for mounting height is 3 inches.
5. J-Assemblies are considered to be one sign for mounting height.
6. Offset distance shall be consistent with existing signs or consistent throughout length of project.
7. Folding signs shall be mounted at a height of 5'-3" (±) 3" or as directed by the engineer.
8. The Double Arrow sign (W12-1) shall be mounted at a height of 2'-3" (±) 3". The Chevron sign (W1-8), Roundabout Chevron panel (R6-4B), Clearance Markers (W5-52), Mile Markers (D10 series), In Road Object Markers (W5-54) & End of Road Markers (W5-56) shall be mounted at a height of 4"-3" (±) 3".

* 6 feet from edge of a paved shoulder or 12 feet from the edge of pavement (edge line location) or 2 feet from outside edge of gravel, whichever is greater unless directed by project engineer.

** The existence of curb and gutter does not in itself mandate the vertical clearance illustrated. That height is typically measured where there is sidewalk adjacent to the roadway or parking is permitted. In the absence of sidewalk vertical clearance is measured from the top of the curb. Offset of signs is measured from the flow line.

*** See A4-3 sign plate for signs 4' or less in width and less than 20 S.F. in area.

SIGN SHAPE OTHER THAN DIAMOND (TWO POSTS REQUIRED)	
L	E
*** Greater than 48" Less than 60"	12"
60" to 108"	L/5

SIGN SHAPE OTHER THAN DIAMOND (THREE POSTS REQUIRED)	
L	E
Greater than 108" to 144"	12"

POST EMBEDMENT DEPTH

Area of Sign Installation (Sq. Ft.)	D (Min)
20 or Less	4'
Greater than 20	5'

TYPICAL INSTALLATION OF TYPE II SIGNS ON MULTIPLE POSTS

WISCONSIN DEPT OF TRANSPORTATION

APPROVED Matthew R Rauch
for State Traffic Engineer

DATE 12/6/23 PLATE NO. A4-4.16

PROJECT NO:	HWY:	COUNTY:		SHEET NO: 72	E

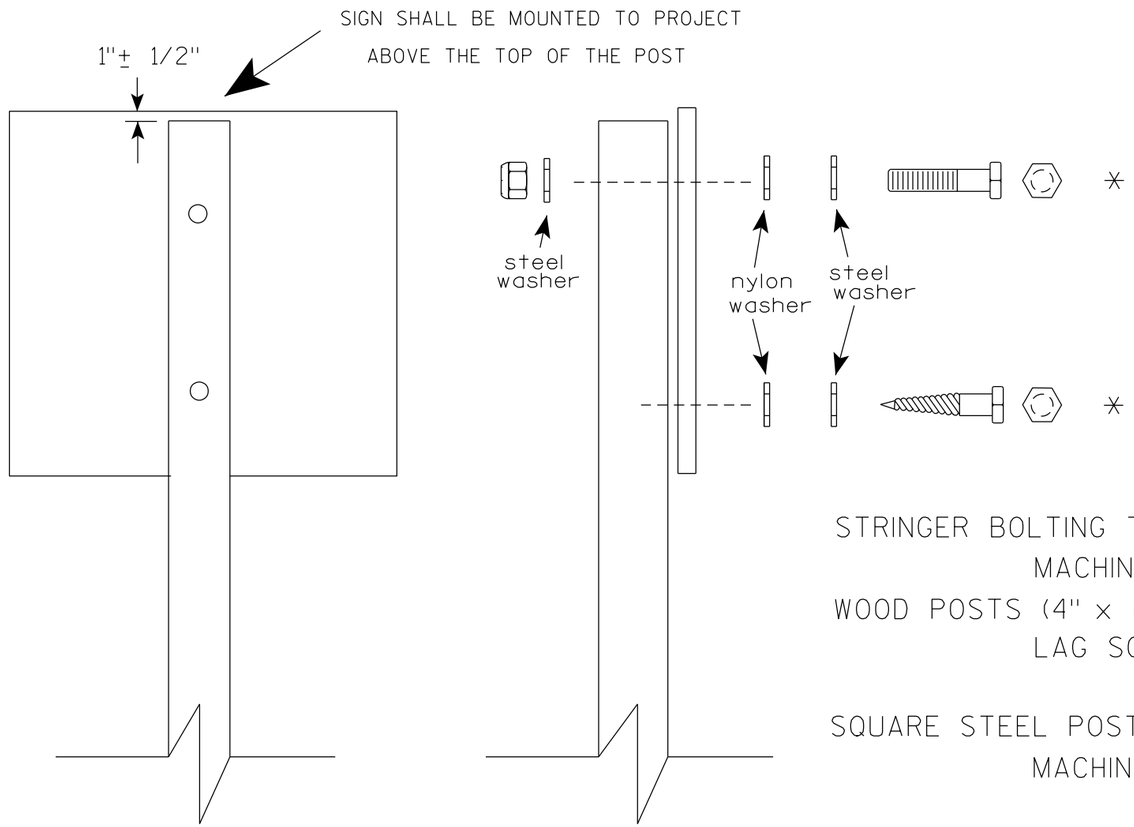

Nuts, bolts and lags used for mounting signs shall have hexagonal heads and shall be either :

a. Hot dip galvanized in accordance with ASTM Designation: A 153, Class D, or SC 3

b. Electro-galvanized in accordance with ASTM Designation : B 633, TYPE III, SC 3.

Threads on bolts and nuts shall be manufactured with sufficient allowance for the cadmium plate or galvanized coating to permit the nuts to run freely on the bolts.

STRINGER BOLTING TO ALUMINUM SIGNS (SEE SIGN PLATE A4-18)

MACHINE BOLTS - 5/16" X 1-3/4" Length w/ lock nuts

WOOD POSTS (4" x 6")

LAG SCREWS - 3/8" X 3" (NO STRINGERS ON BACK OF SIGN)
3/8" X 4" (STRINGERS ON BACK OF SIGN)

SQUARE STEEL POSTS (2" x 2")

MACHINE BOLTS - 3/8" X 3-1/4" Length w/ nuts (NO STRINGER ON BACK OF SIGN)
3/8" X 5" Length w/ nuts (STRINGERS ON BACK OF SIGN)

RIVETS - 9/32 " (6605-9-6) BULB-TITE, TRI-FOLD, ALUMINUM BODY/MANDREL
O.D. FLANGE .720-.765 INCH, GRIP RANGE .042-.375 INCH

WASHERS (ALL POSTS) -

1-1/4" O.D. X 3/8" I.D. X 1/16" STEEL
1-1/4" O.D. X 3/8" I.D. X .080 NYLON

* Two different fastening systems are shown for illustration purposes. On any individual sign, either one or the other system shall be used. Actual number of fasteners per sign varies with the sign area, but normally there are two. For a single post installation, all signs greater than 9 sq. ft. require the use of 3 fasteners.

ATTACHMENT OF SIGNS TO POSTS

WISCONSIN DEPT OF TRANSPORTATION

APPROVED Matthew R Rauch
for State Traffic Engineer

DATE 4/1/2020 PLATE NO. A4-8.9

TELESCOPIC TUBING ANCHORS
TWO PIECE SYSTEM

2 1/4" SQUARE
12 GAUGE
PERFORATED
GALVANIZED FINISH

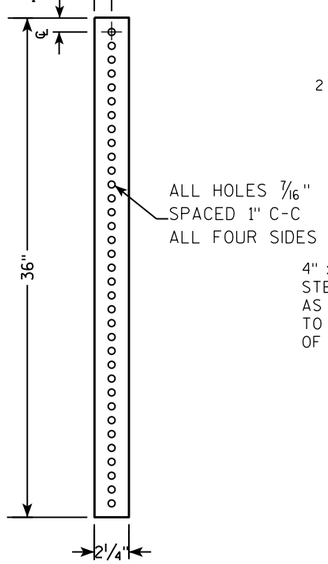

2 1/2" SQUARE
12 GAUGE
OMNI-DIRECTIONAL
PERFORATED
SOIL STABILIZING SLEEVE
GALVANIZED FINISH

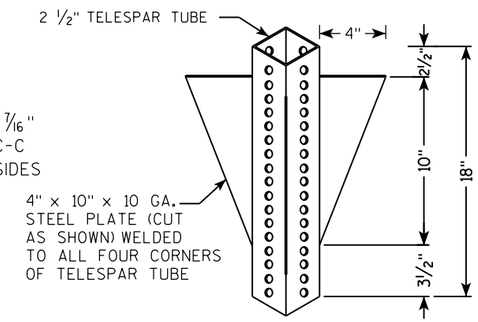

DETAIL OF TUBULAR STEEL SIGN POST
(IN POURED CONCRETE OR ASPHALT)

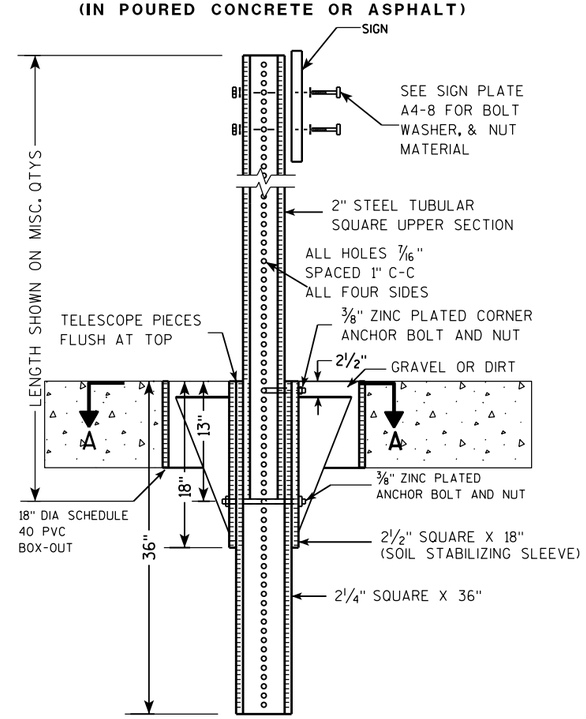

DETAIL OF TUBULAR STEEL SIGN POST
(IN LOCATIONS OTHER THAN POURED CONCRETE OR ASPHALT)

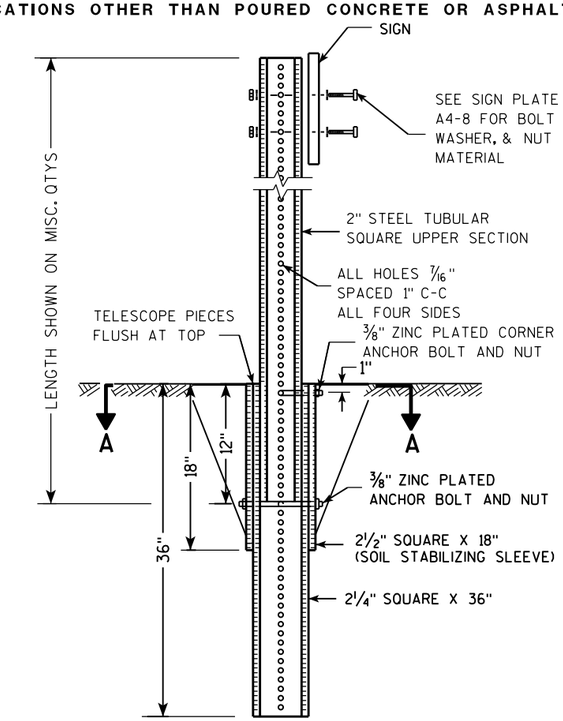

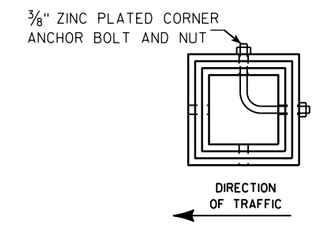

SECTION A-A

Area of Sign Installation (Sq. Ft.)	Number of Required Posts
9 or less	1
Greater than 9 less than or equal to 18	2
Greater than 18 less than or equal to 27	3

Signs wider than 3 feet or larger than 9 sq. ft shall be mounted on multiple posts (see above table).

TUBULAR STEEL
SIGN POST
A4-9

WISCONSIN DEPT OF TRANSPORTATION

APPROVED Matthew R Rauch
for State Traffic Engineer

DATE 2/05/15 PLATE A4-9.9

7 7

PROJECT NO:	HWY:	COUNTY:		SHEET NO:	E

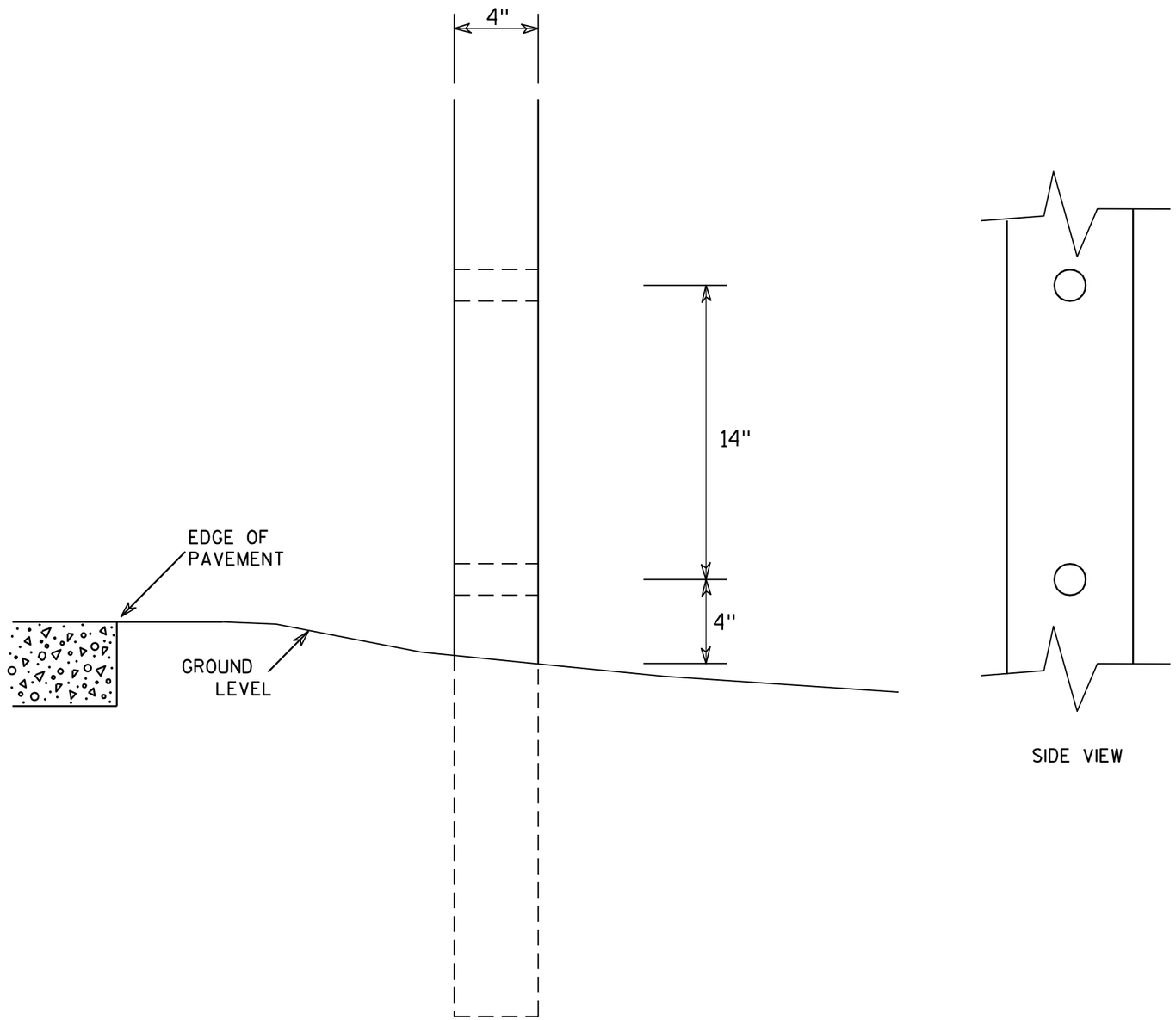

GENERAL NOTES

1. All 4 x 6 Wood Posts shall be modified by having two 1½" diameter holes drilled perpendicular to the roadway centerline.

4 X 6 WOOD POST MODIFICATIONS

WISCONSIN DEPT OF TRANSPORTATION

APPROVED Chester J Spang for State Traffic Engineer

DATE 3/27/97 PLATE NO. A4-11.2

PROJECT NO:	HWY:	COUNTY:		SHEET NO: 75	E

BANDING

SINGLE SIGN

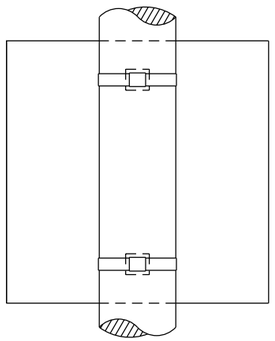

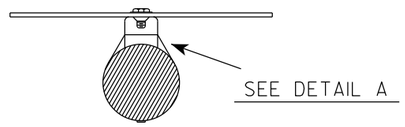

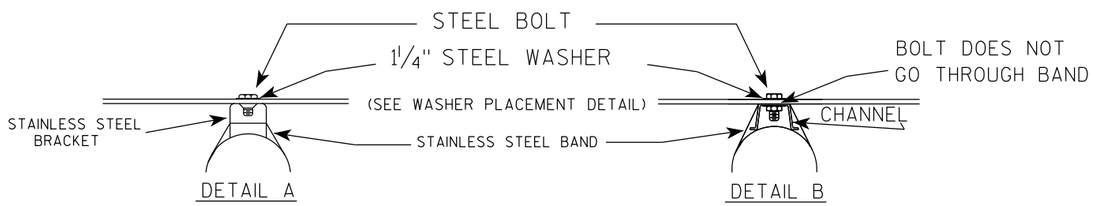

WASHER PLACEMENT

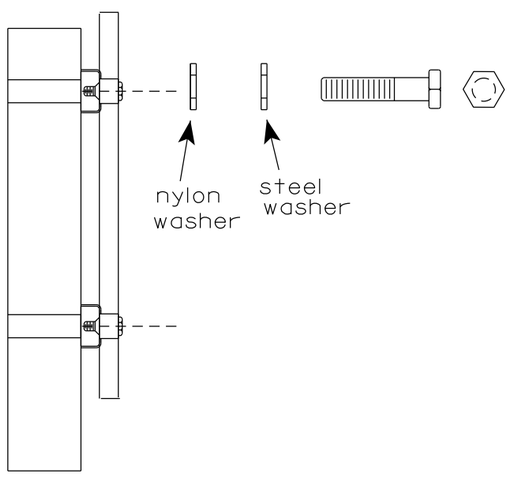

WASHERS (ALL POSTS) -
1-1/4" O.D. X 3/8" I.D. X 1/16" STEEL
1-1/4" O.D. X 3/8" I.D. X .080 NYLON
FOR ALL TYPE H SIGNS

GENERAL NOTES

1. Any sign over 3 feet in width shall use the V-Block banding method. See A5-10 standard plate.
2. Signs 3 feet or greater in height shall have three bracket bands installed. Signs less than 3 feet in height shall have two bracket bands installed.
3. Banding and assembly bracket shall be stainless steel. All bands shall be ¾" in width and 0.025" thickness.
4. ALL SIGN MOUNTING BOLTS AND WASHERS SHALL BE EITHER:
   a. Hot dip or mechanically galvanized in accordance with ASTM Designation: A 153, Class D
   b. Electro-galvanized in accordance with ASTM designation: B 633, Type III, SC 3

"J" ASSEMBLY

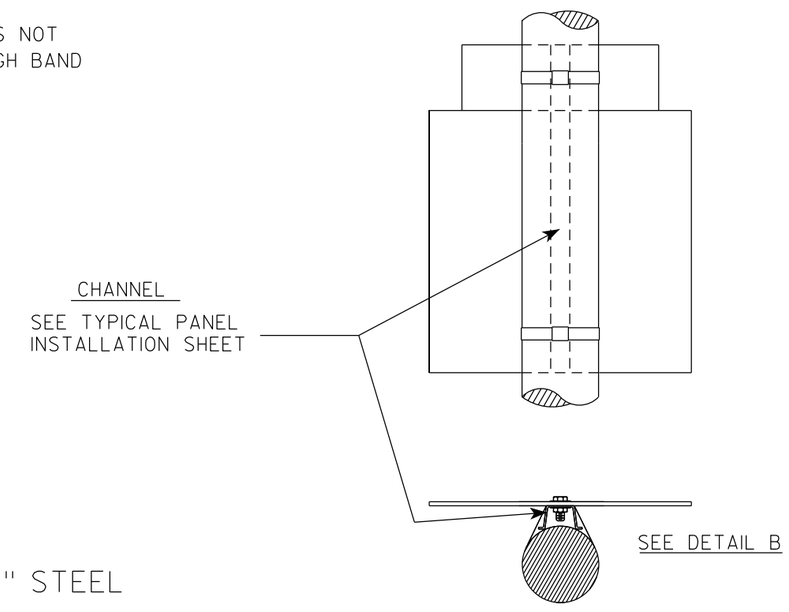

STANDARD SIGN
SIGN BANDING DETAILS

WISCONSIN DEPT OF TRANSPORTATION

APPROVED Matthew R Rauch
for State Traffic Engineer

DATE 6/10/19 PLATE NO. A5-9.4

PROJECT NO:	HWY:	COUNTY:		SHEET NO: 76	E

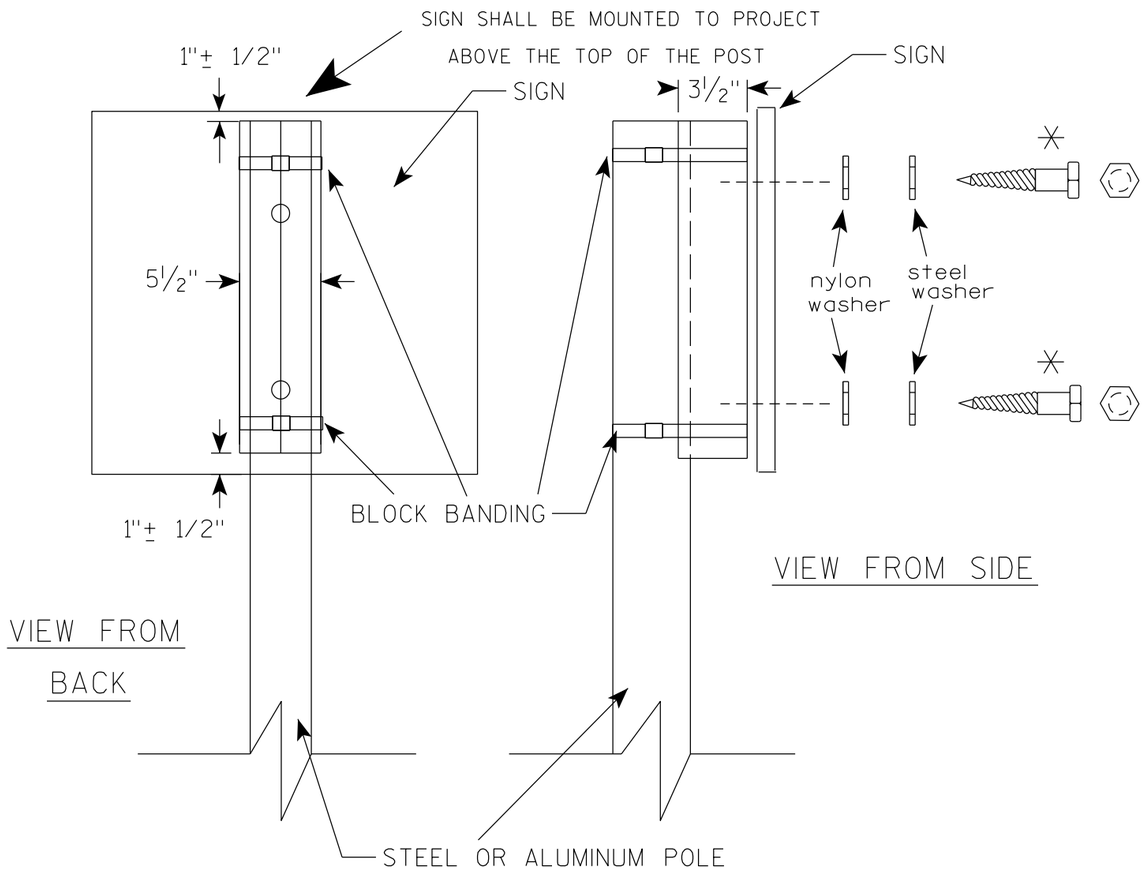

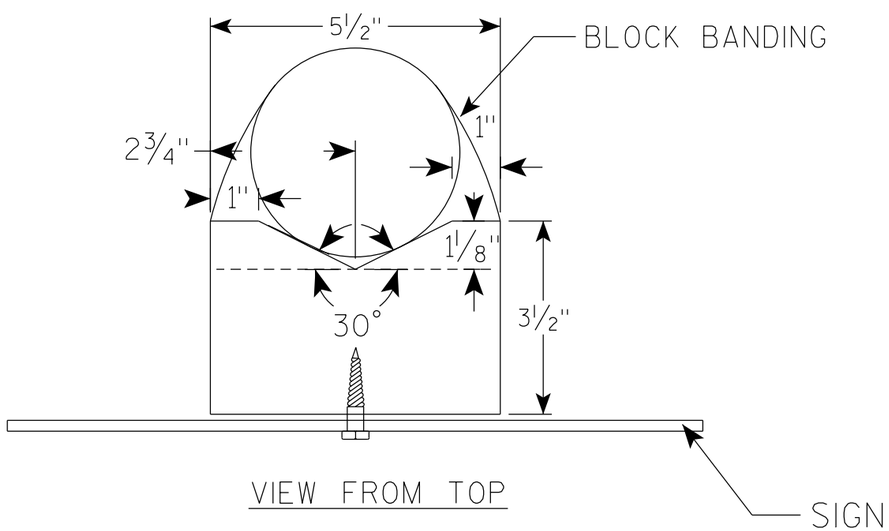

GENERAL NOTES

1. WOOD 4"X6" POST MATERIAL SHALL CONFORM TO 507.2.2 OF THE WisDOT STANDARD SPECIFICATIONS
2. BLOCK BANDING AND CLIPS SHALL BE STAINLESS STEEL, 3/4" WIDTH AND 0.025" THICKNESS
3. SIGNS 3' OR GREATER IN HEIGHT SHALL UTILIZE 3 BLOCK BANDS. SIGNS UNDER 3' IN HEIGHT SHALL UTILIZE 2 BLOCK BANDS
4. ACTUAL NUMBER OF FASTENERS PER SIGN VARIES WITH THE SIGN AREA, BUT NORNALLY THERE ARE TWO. FOR SIGNS GREATER THAN 9 S.F. 3 FASTENERS SHALL BE USED.
5. ALL SIGN MOUNTING BOLTS AND WASHERS SHALL BE EITHER:
   a. Hot dip or mechanically galvanized in accordance with ASTM Designation: A 153, Class D
   b. Electro-galvanized in accordance with ASTM Designation : B 633, TYPE III, SC 3
6. ALL BOLTS SHALL HAVE HEXAGONAL HEADS.
7. STEEL WASHERS SHALL BE 1 1/4" O.D. X 3/8" I.D. X 1/16"
8. NYLON WASHERS SHALL BE 1 1/4" O.D. X 3/8" I.D. X .080 FOR TYPE H OR TYPE F FACE SIGN

✳ LAG BOLTS SHALL BE 3/8" X 2 1/2"

7

7

BLOCK BANDING DETAIL
(V-BLOCK OPTION)

WISCONSIN DEPT OF TRANSPORTATION

APPROVED Matthew R Rauch
for State Traffic Engineer

DATE 4/19/2022 PLATE NO. A5-10.3

PROJECT NO:				SHEET NO: 77	E

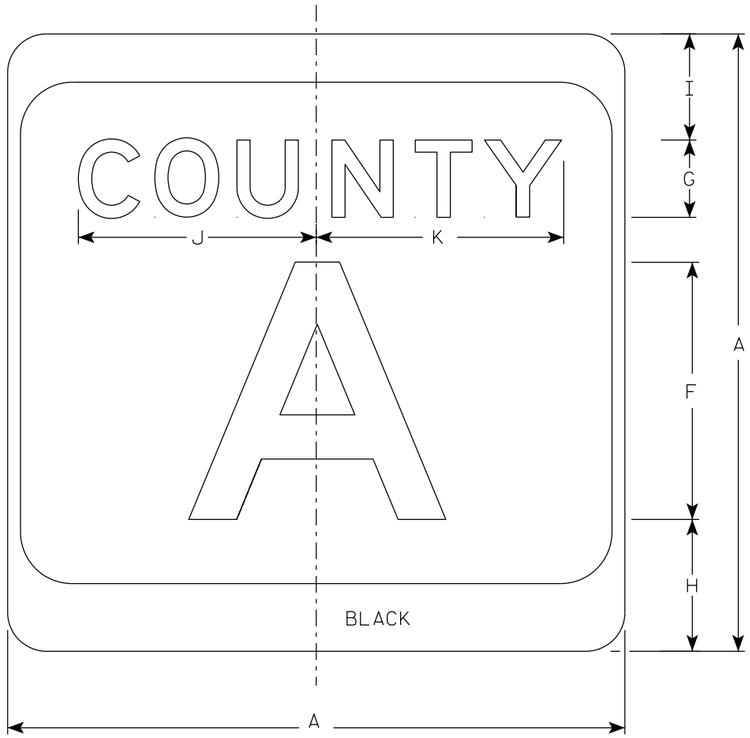

M1-5A

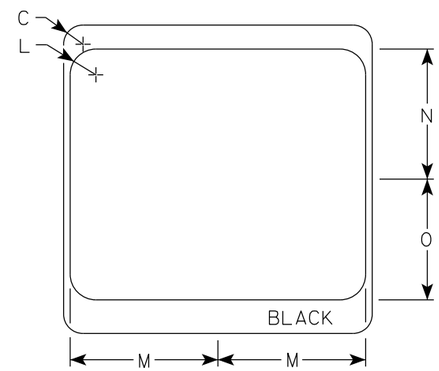

NOTES

1. Sign is Type II - Type H Reflective
2. Color:
   Background - White & Black
   Message - Black
3. Message Series - see Note 4
4. Message Series E for 1 letter.
   Message Series D for 2 letters unless message is too big then Series C.
   Message Series C for 3 letters unless message is too big then Series B.
5. Substitute appropriate letters & optically center to achieve proper balance.

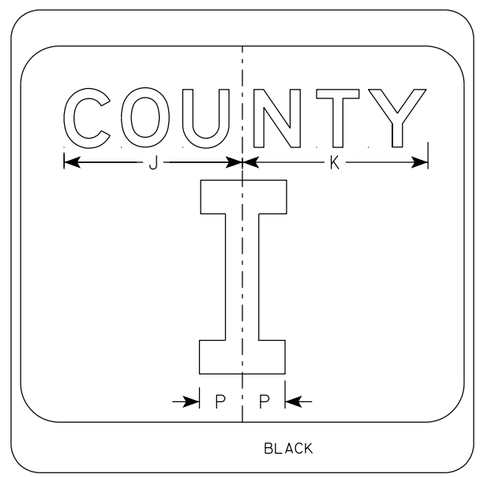

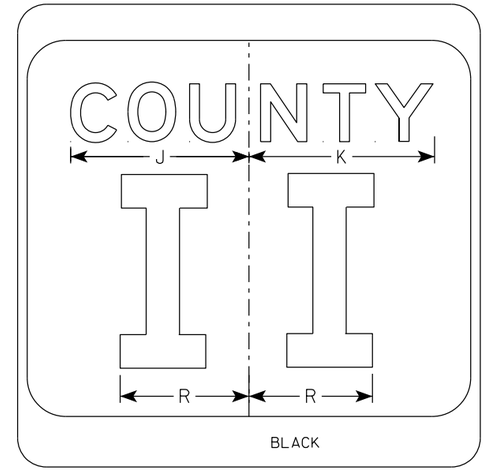

SIZE	A	B	C	D	E	F	G	H	I	J	K	L	M	N	O	P	Q	R	S	T	U	V	W	X	Y	Z	Area sq. ft.
1																											
2	24		1 1/2			10	3	5 1/8	4 1/8	9 1/4	9 5/8	2	11 1/2	10 1/8	9 3/8	2 1/4		6 5/8									4.0
2M	24		1 1/2			10	3	5 1/8	4 1/8	9 1/4	9 5/8	2	11 1/2	10 1/8	9 3/8	2 1/4		6 5/8									4.0
3	36		2 1/4			16	4	7 5/8	5 5/8	12 1/4	12 7/8	3	17 1/8	15 1/4	14	3 3/8		10									9.0
4	36		2 1/4			16	4	7 5/8	5 5/8	12 1/4	12 7/8	3	17 1/8	15 1/4	14	3 3/8		10									9.0
5	36		2 1/4			16	4	7 5/8	5 5/8	12 1/4	12 7/8	3	17 1/8	15 1/4	14	3 3/8		10									9.0

CTH MARKER
M1-5A FOR ASSEMBLIES

WISCONSIN DEPT OF TRANSPORTATION

APPROVED Matthew R Rauch
for State Traffic Engineer

DATE 11/8/2022 PLATE NO. M1-5A.9

PROJECT NO: | HWY: | COUNTY: | SHEET NO: | E

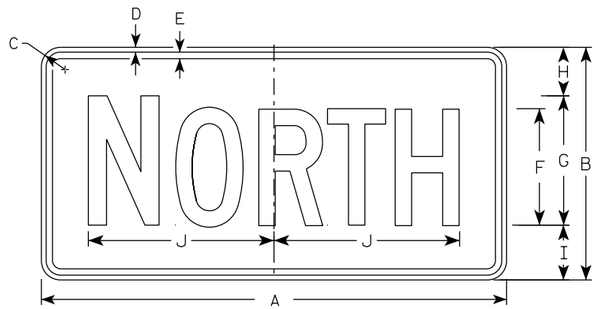

M3-1
MM3-1
MP3-1

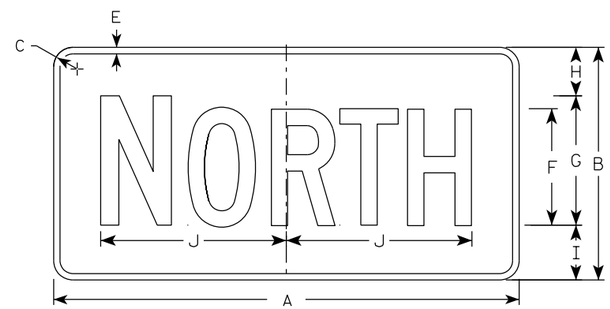

MB3-1
MK3-1
MN3-1

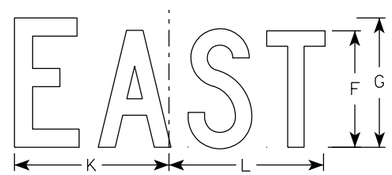

M3-2
MM3-2
MP3-2

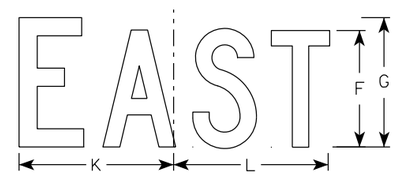

MB3-2
MK3-2
MN3-2

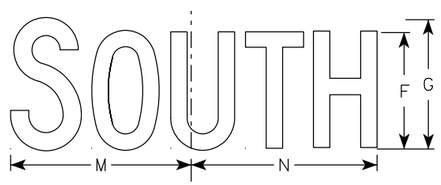

M3-3
MM3-3
MP3-3

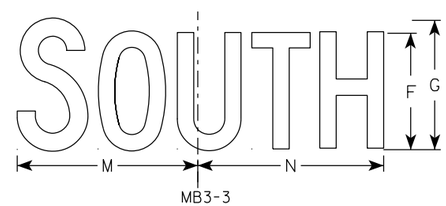

MB3-3
MK3-3
MN3-3

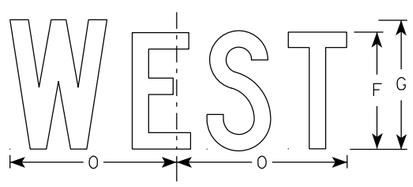

M3-4
MM3-4
MP3-4

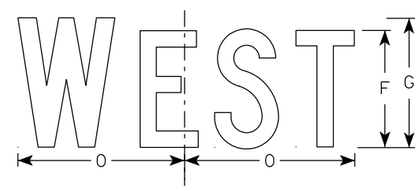

MB3-4
MK3-4
MN3-4

NOTES

1. All Signs Type II - Type H Reflective
2. Color:
   Background - See note 5
   Message - See note 5
3. Message Series - C
4. Corners may be square or rounded when base material is plywood but borders shall be rounded as shown. When base material is metal, the corners and borders shall be rounded.
5. M3-1 thru M3-4 Background - White
   Message - Black
   MB3-1 thru MB3-4 Background - Blue
   Message - White
   MK3-1 thru MK3-4 Background - Green
   Message - White
   MM3-1 thru MM3-4 Background - White
   Message - Green
   MN3-1 thru MN3-4 Background - Brown
   Message - White
   MP3-1 thru MP3-4 Background - White
   Message - Blue
6. Note the first letter of each direction is larger than the remainder of the message.

SIZE	A	B	C	D	E	F	G	H	I	J	K	L	M	N	O	P	Q	R	S	T	U	V	W	X	Y	Z	Area sq. ft.
1																											
2S	24	12	1 1/2	3/8	3/8	6	7	2 1/4	2 3/4	10 1/4	7 7/8	8 3/8	10 1/4	9 3/4	8 3/4												2.00
2M	24	12	1 1/2	3/8	3/8	6	7	2 1/4	2 3/4	10 1/4	7 7/8	8 3/8	10 1/4	9 3/4	8 3/4												2.00
3	36	18	1 1/2	3/8	1/2	9	10	3 3/4	4 1/4	14 3/8	12	12 1/8	14	14 1/8	13												4.5
4	36	18	1 1/2	3/8	1/2	9	10	3 3/4	4 1/4	14 3/8	12	12 1/8	14	14 1/8	13												4.5
5	36	18	1 1/2	3/8	1/2	9	10	3 3/4	4 1/4	14 3/8	12	12 1/8	14	14 1/8	13												4.5

STANDARD SIGNS
M3-1 THRU M3-4
SERIES

WISCONSIN DEPT OF TRANSPORTATION

APPROVED Matthew R Rauch
For State Traffic Engineer

DATE 2/8/2023 PLATE NO. M3-1.15

PROJECT NO: | HWY: | COUNTY: | SHEET NO: 79 | E

NOTES

1. Sign is Type II - Type F Reflective
2. Color:
   Background - Orange
   Message - Black
3. Message Series - B
4. Corners may be square or rounded when base material is plywood but borders shall be rounded as shown. When base material is metal, the corners and borders shall be rounded.

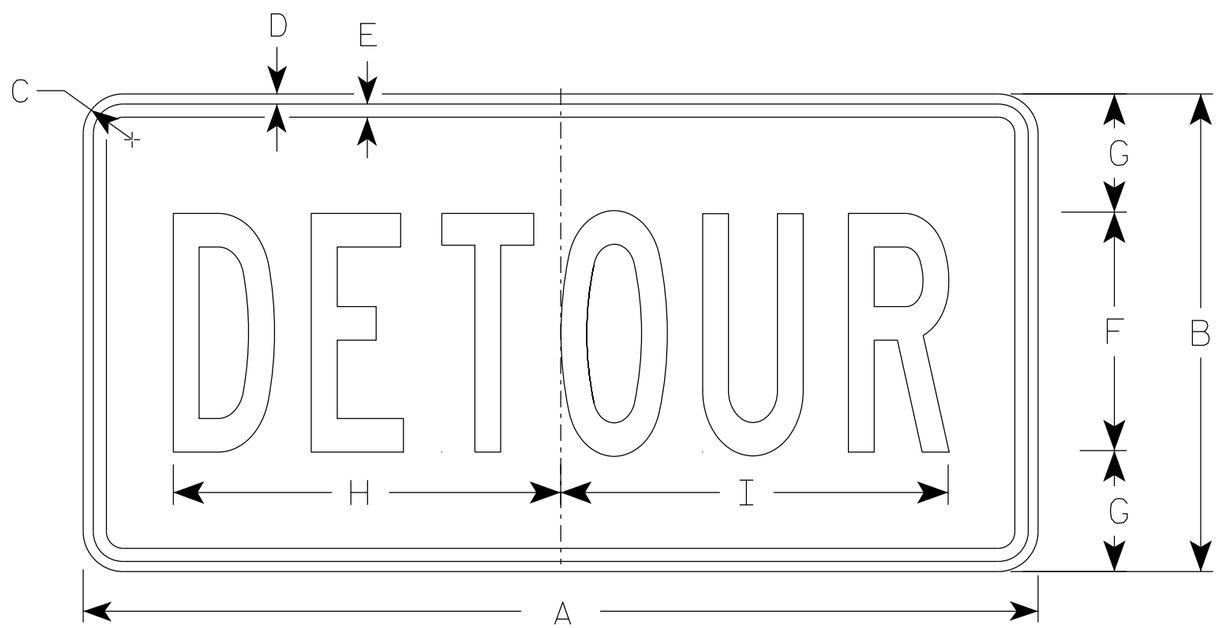

M4-8

SIZE	A	B	C	D	E	F	G	H	I	J	K	L	M	N	O	P	Q	R	S	T	U	V	W	X	Y	Z	Area sq. ft.
1																											
2	24	12	1 1/2	3/8	3/8	6	3	10	10 1/4																		2.0
2M	24	12	1 1/2	3/8	3/8	6	3	10	10 1/4																		2.0
3	36	18	1 1/2	3/8	1/2	9	4 1/2	14 5/8	14 1/2																		4.5
4	36	18	1 1/2	3/8	1/2	9	4 1/2	14 5/8	14 1/2																		4.5
5	36	18	1 1/2	3/8	1/2	9	4 1/2	14 5/8	14 1/2																		4.5

STANDARD SIGN
M4-8

WISCONSIN DEPT OF TRANSPORTATION

APPROVED Matthew R Rauch
for State Traffic Engineer

DATE 2/9/2023 PLATE NO. M4-8.4

PROJECT NO:	HWY:	COUNTY:		SHEET NO: 80	E

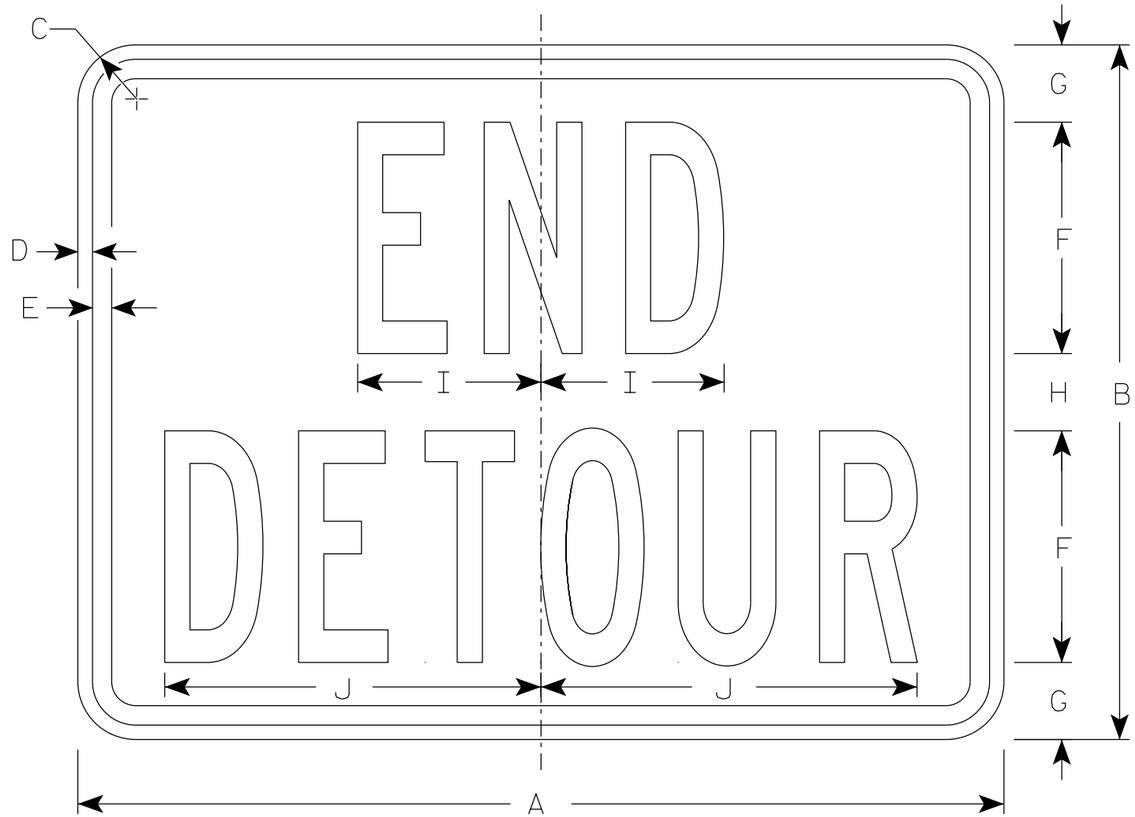

M4-8A

NOTES

1. Sign is Type II - Type F Reflective
2. Color:
   Background - Orange
   Message - Black
3. Message Series - B
4. Corners may be square or rounded when base material is plywood but borders shall be rounded as shown. When base material is metal, the corners and borders shall be rounded.

SIZE	A	B	C	D	E	F	G	H	I	J	K	L	M	N	O	P	Q	R	S	T	U	V	W	X	Y	Z	Area sq. ft.
1																											
2	24	18	1 1/2	3/8	1/2	6	2	2	4 3/4	9 3/4																	3.0
2M	24	18	1 1/2	3/8	1/2	6	2	2	4 3/4	9 3/4																	3.0
3	30	24	1 1/2	3/8	1/2	8	2 1/2	3	6 3/4	13																	5.0
4	30	24	1 1/2	3/8	1/2	8	2 1/2	3	6 3/4	13																	5.0
5	30	24	1 1/2	3/8	1/2	8	2 1/2	3	6 3/4	13																	5.0

STANDARD SIGN
M4-8A

WISCONSIN DEPT OF TRANSPORTATION

APPROVED Matthew R Rauch
for State Traffic Engineer

DATE 2/9/2023 PLATE NO. M4-8A.4

PROJECT NO: | HWY: | COUNTY: | SHEET NO: 81 | E

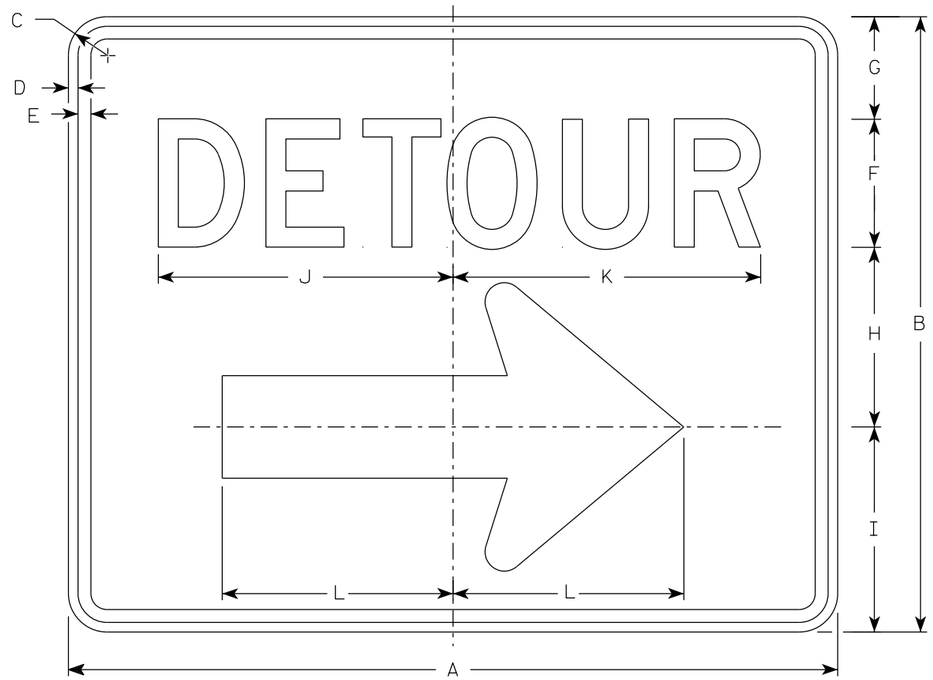

M4-9R

NOTES

1. Sign is Type II - Type F Reflective
2. Color:
   Background - Orange
   Message - Black
3. Message Series - D
4. Corners may be square or rounded when base material is plywood but borders shall be rounded as shown. When base material is metal, the corners and borders shall be rounded.
4. M4-9L is the same as M4-9R except the arrow is reversed.

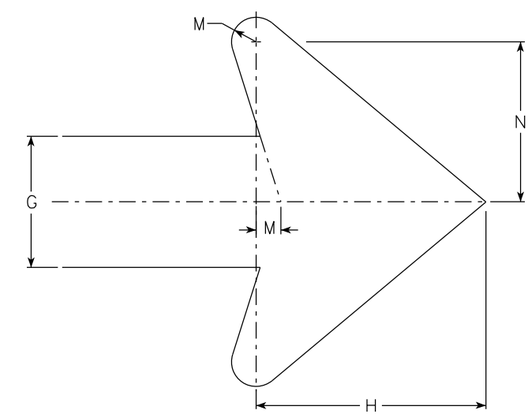

Arrow Detail

SIZE	A	B	C	D	E	F	G	H	I	J	K	L	M	N	O	P	Q	R	S	T	U	V	W	X	Y	Z	Area sq. ft.
1																											
2	30	24	1 1/2	3/8	1/2	5	4	7	8	11 1/2	12	9	3/4	4 7/8													5.00
2M	30	24	1 1/2	3/8	1/2	5	4	7	8	11 1/2	12	9	3/4	4 7/8													5.00
3	30	24	1 1/2	3/8	1/2	5	4	7	8	11 1/2	12	9	3/4	4 7/8													5.00
4	48	36	1 7/8	1/2	5/8	8	6	10 1/2	11 5/8	20 5/8	20 1/2	13 1/4	1 1/8	6 7/8													12.0
5	48	36	1 7/8	1/2	5/8	8	6	10 1/2	11 5/8	20 5/8	20 1/2	13 1/4	1 1/8	6 7/8													12.0

STANDARD SIGN
M4-9 R & L

WISCONSIN DEPT OF TRANSPORTATION

APPROVED Matthew R Rauch
For State Traffic Engineer

DATE 2/9/2023 PLATE NO. M4-9R.6

PROJECT NO: | HWY: | COUNTY: | SHEET NO: E

FILE NAME : C:\CAEfiles\Projects\tr_stdplate\M49R.dgn PLOT DATE : 21-MARCH 2023 1:40 PLOT BY : dotc4c PLOT NAME : PLOT SCALE : $$.....plotscale.....$$ WISDOT/CADDS SHEET 42

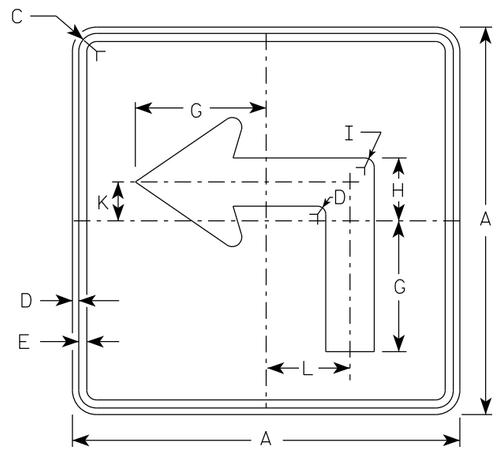

M5-1L
MM5-1L
MO5-1L
MP5-1L

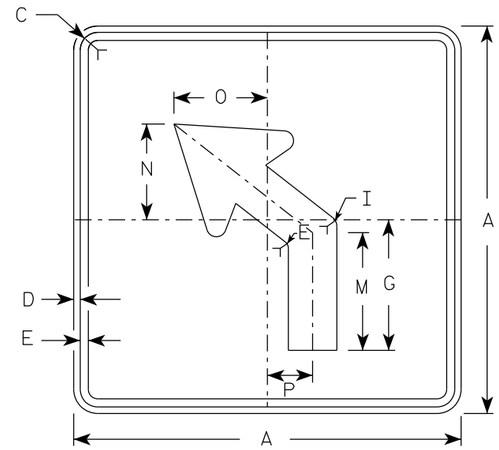

M5-2L
MM5-2L
MO5-2L
MP5-2L

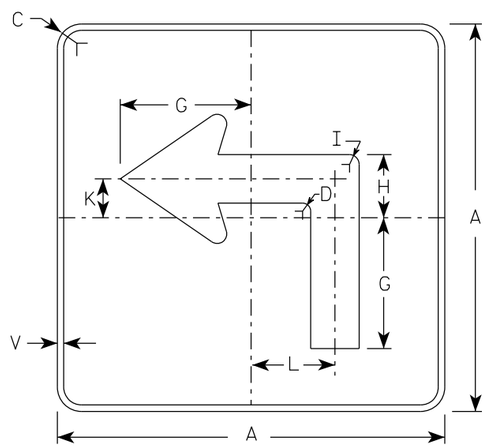

MB5-1L
MK5-1L
MN5-1L
MR5-1L

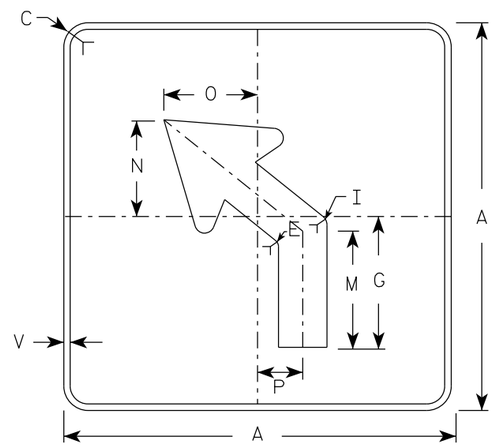

MB5-2L
MK5-2L
MN5-2L
MR5-2L

NOTES

1. Signs are Type II - Type H reflective except as shown
2. Color:
   Background - See note 4
   Message - See note 4
3. Corners may be square or rounded when base material is plywood but borders shall be rounded as shown. When base material is metal, the corners and borders shall be rounded.
4. M5-1 and M5-2 Background - White
   Message - Black
   MB5-1 and MB5-2 Background - Blue
   Message - White
   MK5-1 and MK5-2 Background - Green
   Message - White
   MM5-1 and MM5-2 Background - White
   Message - Green
   MN5-1 and MN5-2 Background - Brown
   Message - White
   MO5-1 and MO5-2 Background - Orange - Type F Reflective
   Message - Black
   MP5-1 and MP5-2 Background - White
   Message - Blue
   MR5-1 and MR5-2 Background - Brown
   Message - Yellow
5. M5-1R same as M5-1L except arrow points right.
6. M5-2R same as M5-2L except arrow tilts right.

ARROW DETAIL

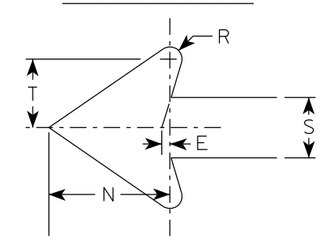

SIZE	A	B	C	D	E	F	G	H	I	J	K	L	M	N	O	P	Q	R	S	T	U	V	W	X	Y	Z	Area sq. ft.
1																											
2S	21		1 1/2	3/8	3/8		7	3 3/8	5/8		2 1/8	4 1/2	6 3/8	5 1/4	5	2 1/2		1/2	2 5/8	3		1/2					3.06
2M	21		1 1/2	3/8	3/8		7	3 3/8	5/8		2 1/8	4 1/2	6 3/8	5 1/4	5	2 1/2		1/2	2 5/8	3		1/2					3.06
3	30		1 7/8	1/2	5/8		10 1/8	4 7/8	7/8		3	6 1/2	9 1/8	7 1/2	7 1/4	3 1/2		3/4	3 3/4	4 1/4		1/2					6.25
4	30		1 7/8	1/2	5/8		10 1/8	4 7/8	7/8		3	6 1/2	9 1/8	7 1/2	7 1/4	3 1/2		3/4	3 3/4	4 1/4		1/2					6.25
5	30		1 7/8	1/2	5/8		10 1/8	4 7/8	7/8		3	6 1/2	9 1/8	7 1/2	7 1/4	3 1/2		3/4	3 3/4	4 1/4		1/2					6.25

STANDARD SIGN
M5-1 & M5-2

WISCONSIN DEPT OF TRANSPORTATION

APPROVED Matthew R Rauch
for State Traffic Engineer

DATE 2/13/2023 PLATE NO. M5-1.15

PROJECT NO: | HWY: | COUNTY: | SHEET NO: 83 | E

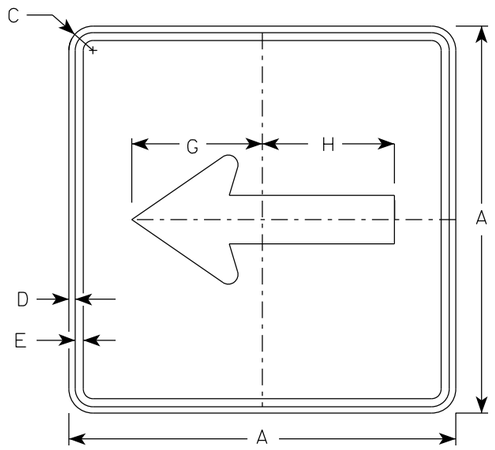

M6-1
MM6-1
MO6-1
MP6-1

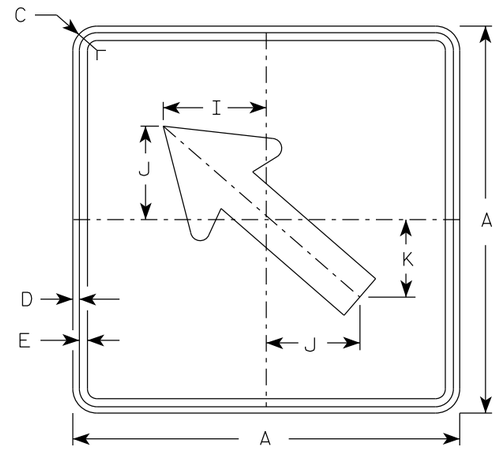

M6-2
MM6-2
MO6-2
MP6-2

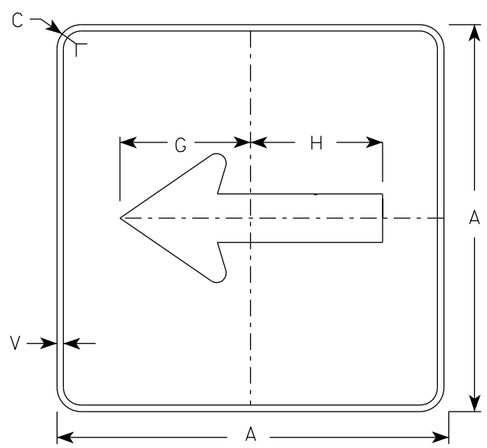

MB6-1
MK6-1
MN6-1
MR6-1

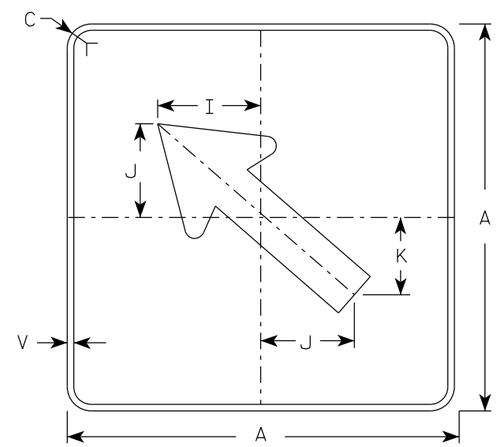

MB6-2
MK6-2
MN6-2
MR6-2

NOTES

1. Signs are Type II - Type H Reflective except as Shown
2. Color:
   Background - See note 4
   Message - See note 4
3. Corners may be square or rounded when base material is plywood but borders shall be rounded as shown. When base material is metal, the corners and borders shall be rounded.
4. M6-1 and M6-2 Background - White
   Message - Black
   MB6-1 and MB6-2 Background - Blue
   Message - White
   MK6-1 and MK6-2 Background - Green
   Message - White
   MM6-1 and MM6-2 Background - White
   Message - Green
   MN6-1 and MN6-2 Background - Brown
   Message - White
   MO6-1 and MO6-2 Background - Orange - Type F Reflective
   Message - Black
   MP6-1 and MP6-2 Background - White
   Message - Blue
   MR6-1 and MR6-2 Background - Brown
   Message - Yellow

ARROW DETAIL

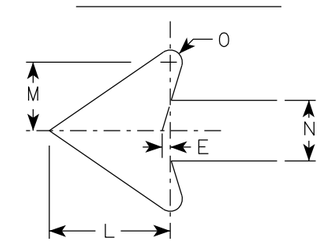

SIZE	A	B	C	D	E	F	G	H	I	J	K	L	M	N	O	P	Q	R	S	T	U	V	W	X	Y	Z	Area sq. ft.
1																											
2S	21		1 1/2	3/8	3/8		7 1/2	7 1/8	5 5/8	5	4 1/4	5 1/4	3	2 5/8	1/2							1/2					3.06
2M	21		1 1/2	3/8	3/8		7 1/2	7 1/8	5 5/8	5	4 1/4	5 1/4	3	2 5/8	1/2							1/2					3.06
3	30		1 7/8	1/2	5/8		10 3/4	10 1/4	8	7 1/4	6	7 1/2	4 1/4	3 3/4	3/4							1/2					6.25
4	30		1 7/8	1/2	5/8		10 3/4	10 1/4	8	7 1/4	6	7 1/2	4 1/4	3 3/4	3/4							1/2					6.25
5	30		1 7/8	1/2	5/8		10 3/4	10 1/4	8	7 1/4	6	7 1/2	4 1/4	3 3/4	3/4							1/2					6.25

STANDARD SIGN
M6-1 & M6-2
SERIES

WISCONSIN DEPT OF TRANSPORTATION

APPROVED Matthew R Rauch
for State Traffic Engineer

DATE 2/13/2023 PLATE NO. M6-1.16

PROJECT NO: | HWY: | COUNTY: | SHEET NO: 84 | E

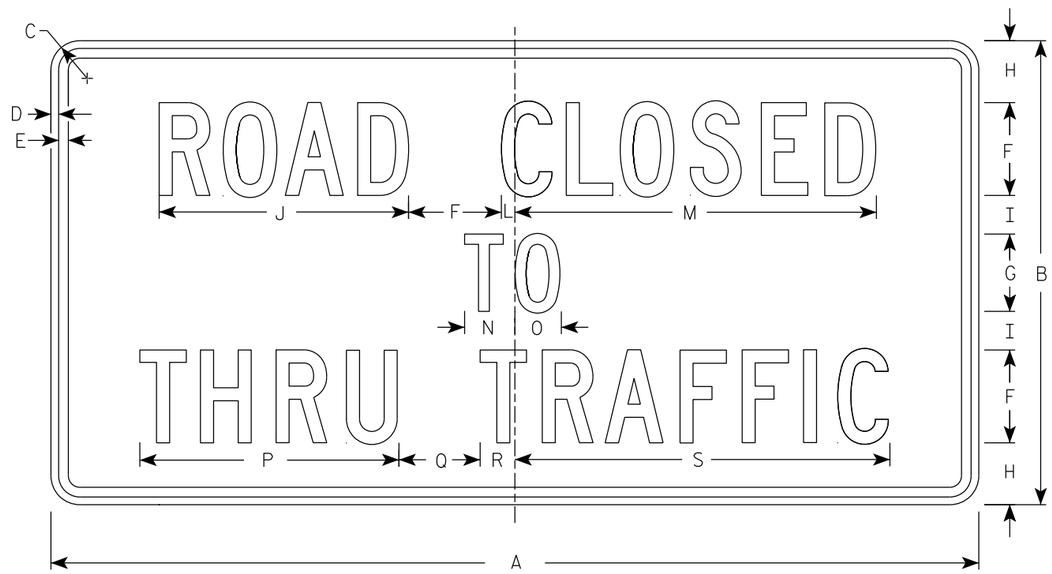

R11-4

NOTES

1. Sign is Type II - Type H Reflective
2. Color:
   Background - White
   Message - Black
3. Message Series - C
4. Corners may be square or rounded when base material is plywood but borders shall be rounded as shown. When base material is metal, the corners and borders shall be rounded.

SIZE	A	B	C	D	E	F	G	H	I	J	K	L	M	N	O	P	Q	R	S	T	U	V	W	X	Y	Z	Area sq. ft.
1																											
2S	60	30	1 7/8	1/2	5/8	6	5	4	2 1/2	16 1/8		7/8	23 3/8	3 1/4	3	16 3/4	5 1/4	2 1/4	24 1/4								12.5
2M	60	30	1 7/8	1/2	5/8	6	5	4	2 1/2	16 1/8		7/8	23 3/8	3 1/4	3	16 3/4	5 1/4	2 1/4	24 1/4								12.5
3																											
4																											
5																											

STANDARD SIGN
R11 - 4

WISCONSIN DEPT OF TRANSPORTATION

APPROVED Matthew R Rauch for State Traffic Engineer

DATE 2/5/24 PLATE NO. R11-4.4

PROJECT NO: | HWY: | COUNTY: | SHEET NO: 85 | E

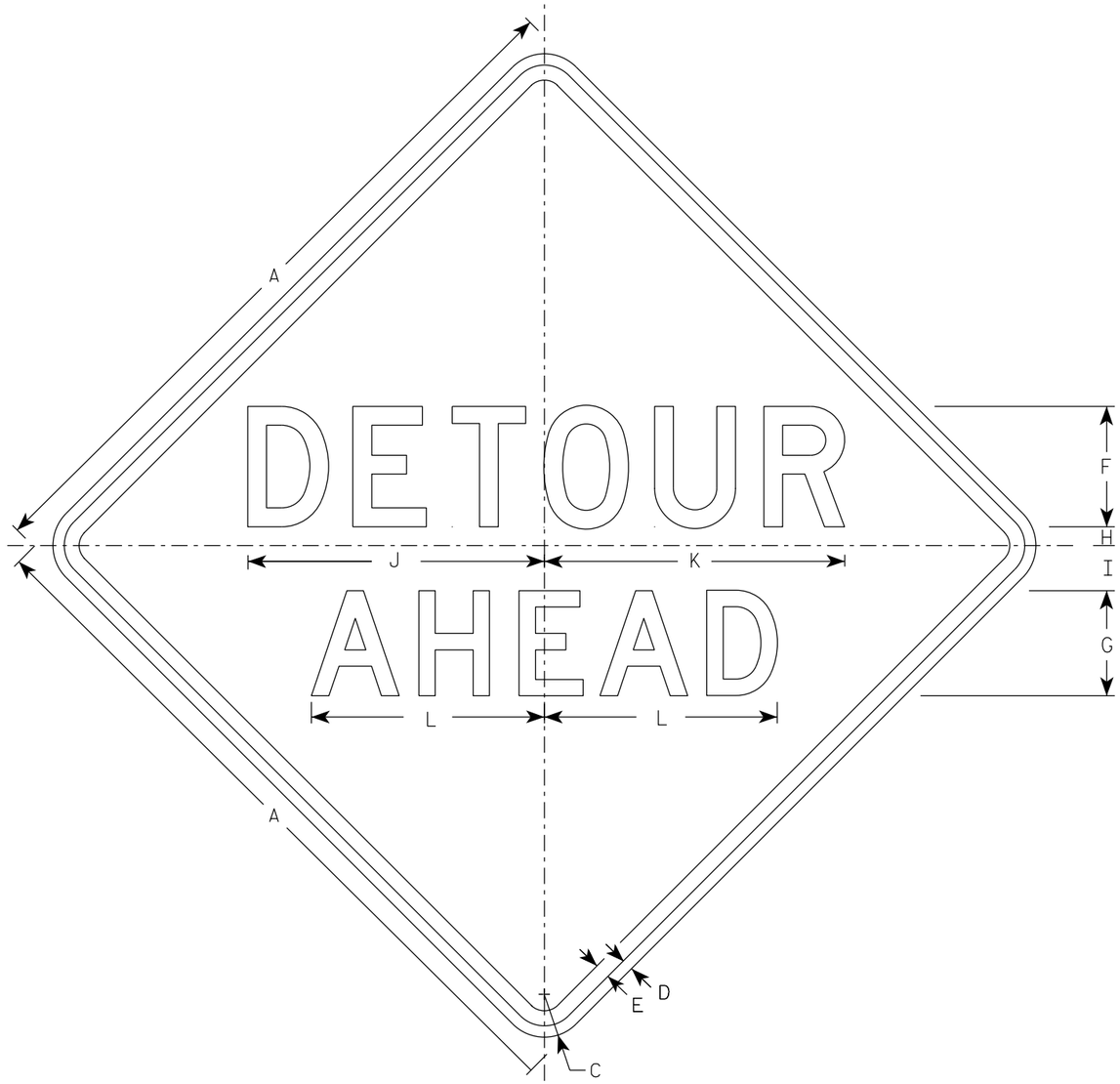

W20-2A

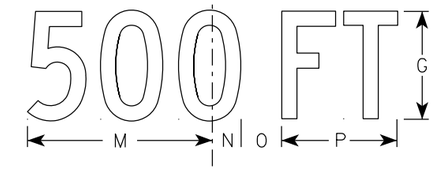

W20-2D

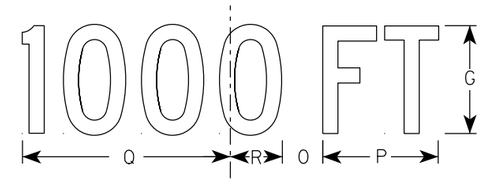

W20-2C

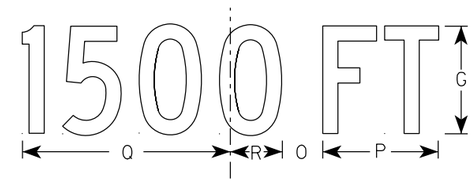

W20-2B

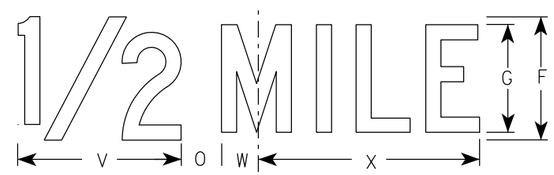

W20-2G

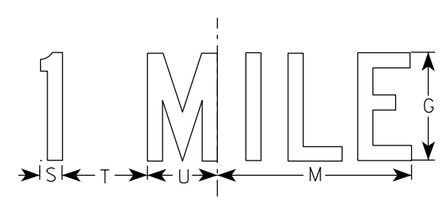

W20-2F

NOTES

1. Sign is Type II - Type F Reflective
2. Color:
   Background - Orange
   Message - Black
3. Message Series - See note 5
4. Corners may be square or rounded when base material is plywood but borders shall be rounded as shown. When base material is metal, the corners and borders shall be rounded.
5. Line 1 is Series D.
   Line 2 is Series D for AHEAD and Series C for all other distances.

SIZE	A	B	C	D	E	F	G	H	I	J	K	L	M	N	O	P	Q	R	S	T	U	V	W	X	Y	Z	Area sq. ft.
1	36		2 1/4	5/8	3/4	6	5	1	2 1/4	14 3/4	15	11 5/8	9	1 3/8	1 7/8	5 5/8	10 1/8	2 1/2	1 1/8	4 1/2	3 1/2	8	1 3/4	10 3/4			9.0
2S	48		3	3/4	1	8	7	1 1/4	3	19 3/4	20	15 1/2	12	1 7/8	2 5/8	7 1/2	13 1/2	3 3/8	1 1/2	6	4 5/8	10 5/8	2 3/8	14 3/8			16.0
2M	48		3	3/4	1	8	7	1 1/4	3	19 3/4	20	15 1/2	12	1 7/8	2 5/8	7 1/2	13 1/2	3 3/8	1 1/2	6	4 5/8	10 5/8	2 3/8	14 3/8			16.0
3	48		3	3/4	1	8	7	1 1/4	3	19 3/4	20	15 1/2	12	1 7/8	2 5/8	7 1/2	13 1/2	3 3/8	1 1/2	6	4 5/8	10 5/8	2 3/8	14 3/8			16.0
4	48		3	3/4	1	8	7	1 1/4	3	19 3/4	20	15 1/2	12	1 7/8	2 5/8	7 1/2	13 1/2	3 3/8	1 1/2	6	4 5/8	10 5/8	2 3/8	14 3/8			16.0
5	48		3	3/4	1	8	7	1 1/4	3	19 3/4	20	15 1/2	12	1 7/8	2 5/8	7 1/2	13 1/2	3 3/8	1 1/2	6	4 5/8	10 5/8	2 3/8	14 3/8			16.0

STANDARD SIGN
W20-2A,B,C,D,F & G

WISCONSIN DEPT OF TRANSPORTATION

APPROVED Matthew R Rauch
For State Traffic Engineer

DATE 1/10/2024 PLATE NO. W20-2.7

PROJECT NO:	HWY:	COUNTY:		SHEET NO:	E

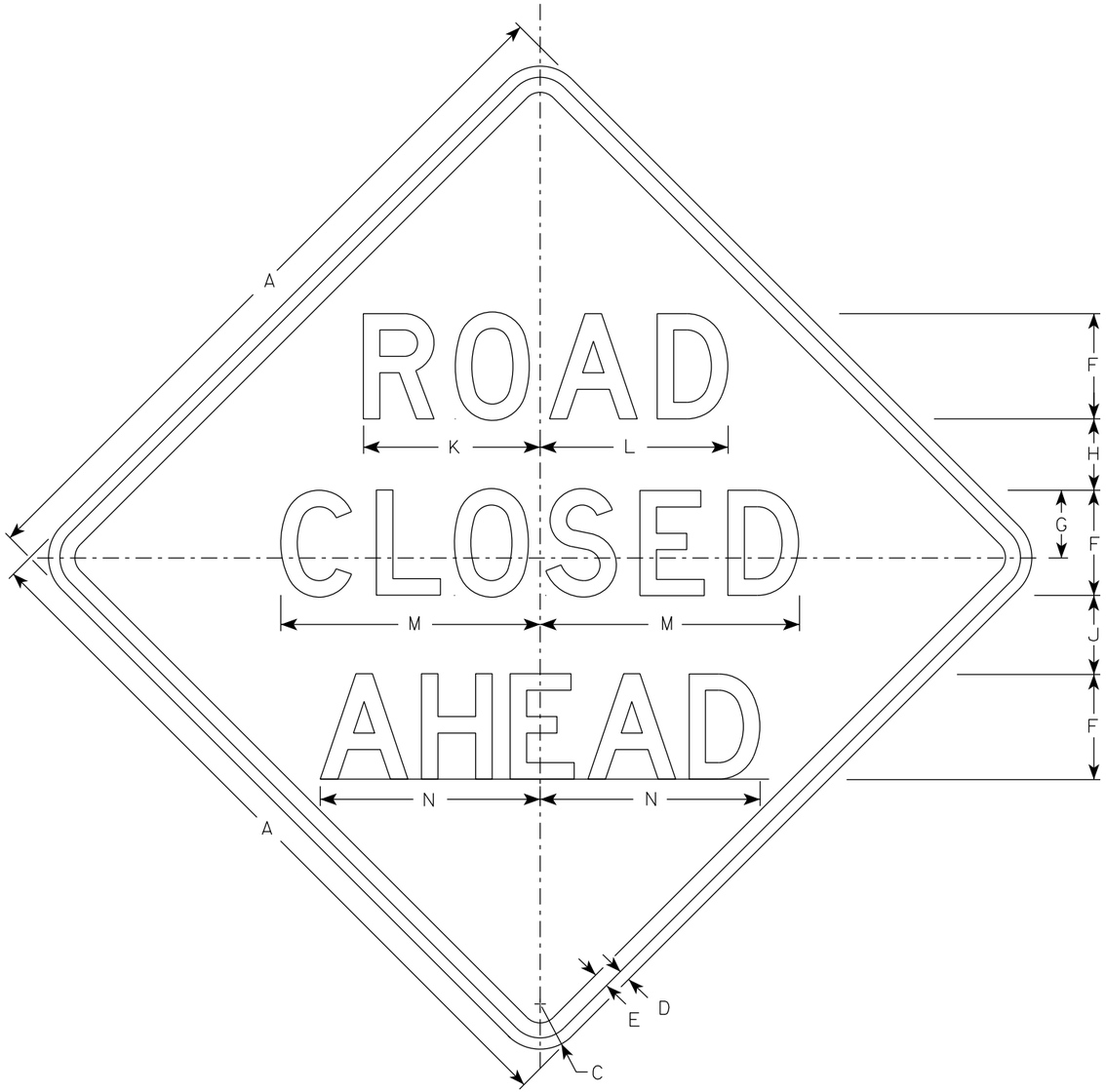

W20-3A

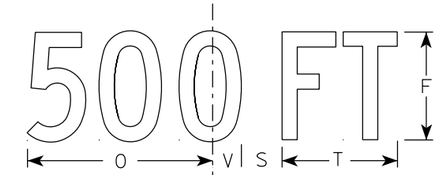

W20-3D

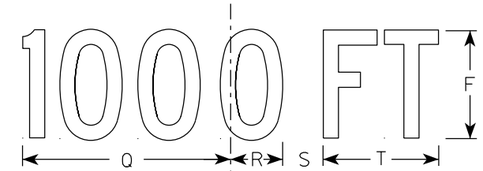

W20-3C

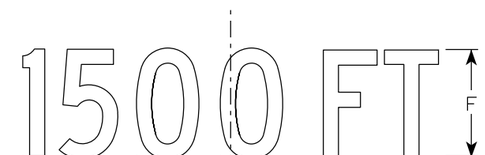

W20-3B

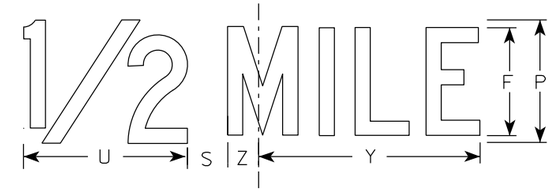

W20-3G

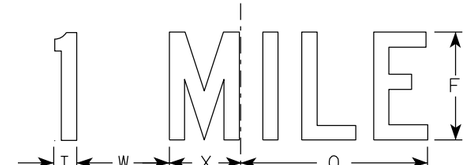

W20-3F

NOTES

1. Sign is Type II - Type F Reflective
2. Color:
   Background - Orange
   Message - Black
3. Message Series - see note 5
4. Corners may be square or rounded when base material is plywood but borders shall be rounded as shown. When base material is metal, the corners and borders shall be rounded.
5. Lines 1 and 2 are Series D.
   Line 3 is Series D for AHEAD and Series C for all other distances.

SIZE	A	B	C	D	E	F	G	H	I	J	K	L	M	N	O	P	Q	R	S	T	U	V	W	X	Y	Z	Area sq. ft.
1	36		2 1/4	5/8	3/4	5	3 3/8	3 1/2	1 1/8	4	8 3/8	8 7/8	12 1/2	11	9	6	10 1/8	2 1/2	1 7/8	5 5/8	8	1 3/8	4 1/2	3 1/2	10 3/4	1 3/4	9.0
2S	48		3	3/4	1	7	4 1/2	4 3/4	1 1/2	5 1/4	11 3/4	12 1/2	17 1/4	14 5/8	12	8	13 1/2	3 3/8	2 5/8	7 1/2	10 5/8	1 7/8	6	4 5/8	14 3/8	2 3/8	16.0
2M	48		3	3/4	1	7	4 1/2	4 3/4	1 1/2	5 1/4	11 3/4	12 1/2	17 1/4	14 5/8	12	8	13 1/2	3 3/8	2 5/8	7 1/2	10 5/8	1 7/8	6	4 5/8	14 3/8	2 3/8	16.0
3	48		3	3/4	1	7	4 1/2	4 3/4	1 1/2	5 1/4	11 3/4	12 1/2	17 1/4	14 5/8	12	8	13 1/2	3 3/8	2 5/8	7 1/2	10 5/8	1 7/8	6	4 5/8	14 3/8	2 3/8	16.0
4	48		3	3/4	1	7	4 1/2	4 3/4	1 1/2	5 1/4	11 3/4	12 1/2	17 1/4	14 5/8	12	8	13 1/2	3 3/8	2 5/8	7 1/2	10 5/8	1 7/8	6	4 5/8	14 3/8	2 3/8	16.0
5	48		3	3/4	1	7	4 1/2	4 3/4	1 1/2	5 1/4	11 3/4	12 1/2	17 1/4	14 5/8	12	8	13 1/2	3 3/8	2 5/8	7 1/2	10 5/8	1 7/8	6	4 5/8	14 3/8	2 3/8	16.0

STANDARD SIGN
W20-3A, B, C, D, F & G

WISCONSIN DEPT OF TRANSPORTATION

APPROVED Matthew R Rauch
for State Traffic Engineer

DATE 1/10/2024 PLATE NO. W20-3.8

PROJECT NO: | HWY: | COUNTY: | SHEET NO: E

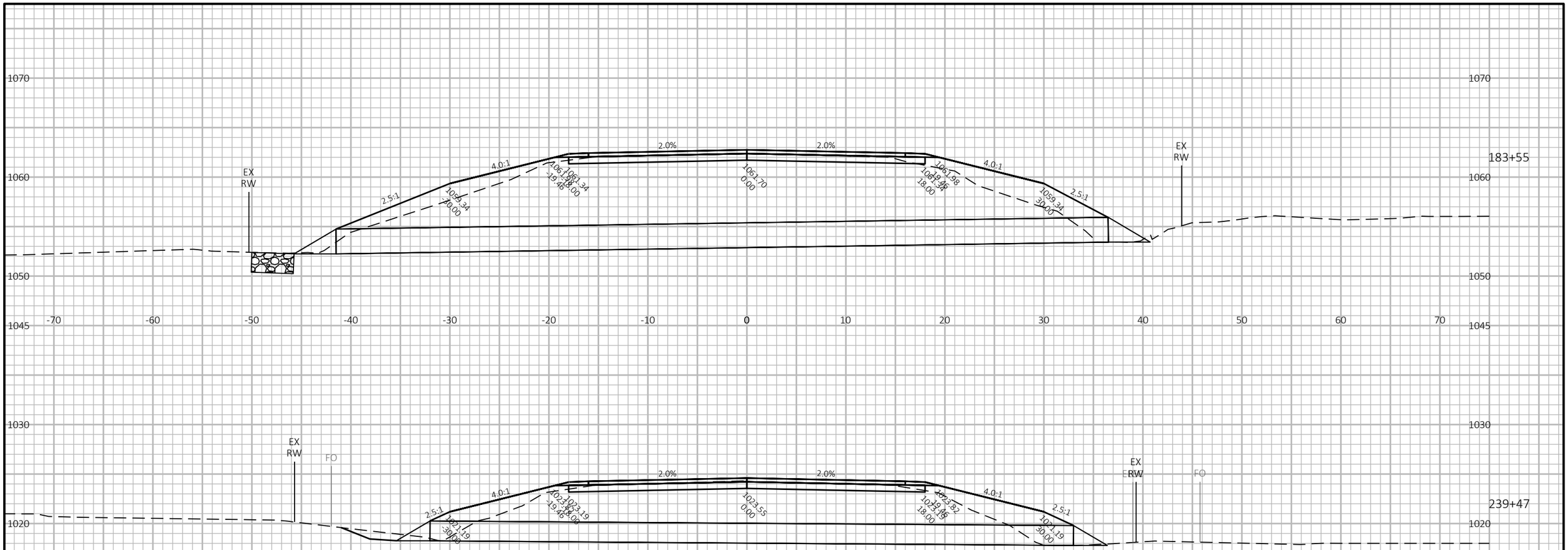

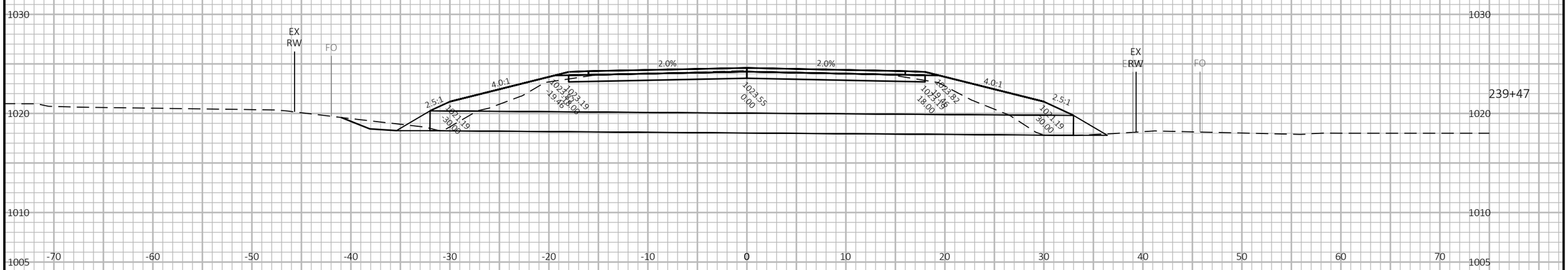

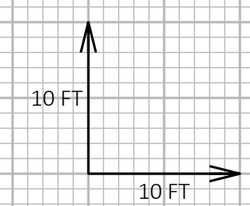

9

9

PROJECT NO: 4869-03-70	HWY: CTH D	COUNTY: WASHINGTON	CROSS SECTIONS: MAINLINE	SHEET 88	E

FILE NAME : C:\OD\CORRE, INC\PROJECTS - 4869-03-00_CTH_D_WASHINGTON_COUNTY\500_CADD\501_C3D_2022\48690300\SHEETS\090201-XS.DWG
LAYOUT NAME - 01
PLOT DATE : 12/17/2024 3:39 PM
PLOT BY : MATT KOSKI
PLOT NAME :
PLOT SCALE : 1 IN:10 FT HORZ. / 1 IN:10 FT VERT.
WISDOT/CADDS SHEET 49

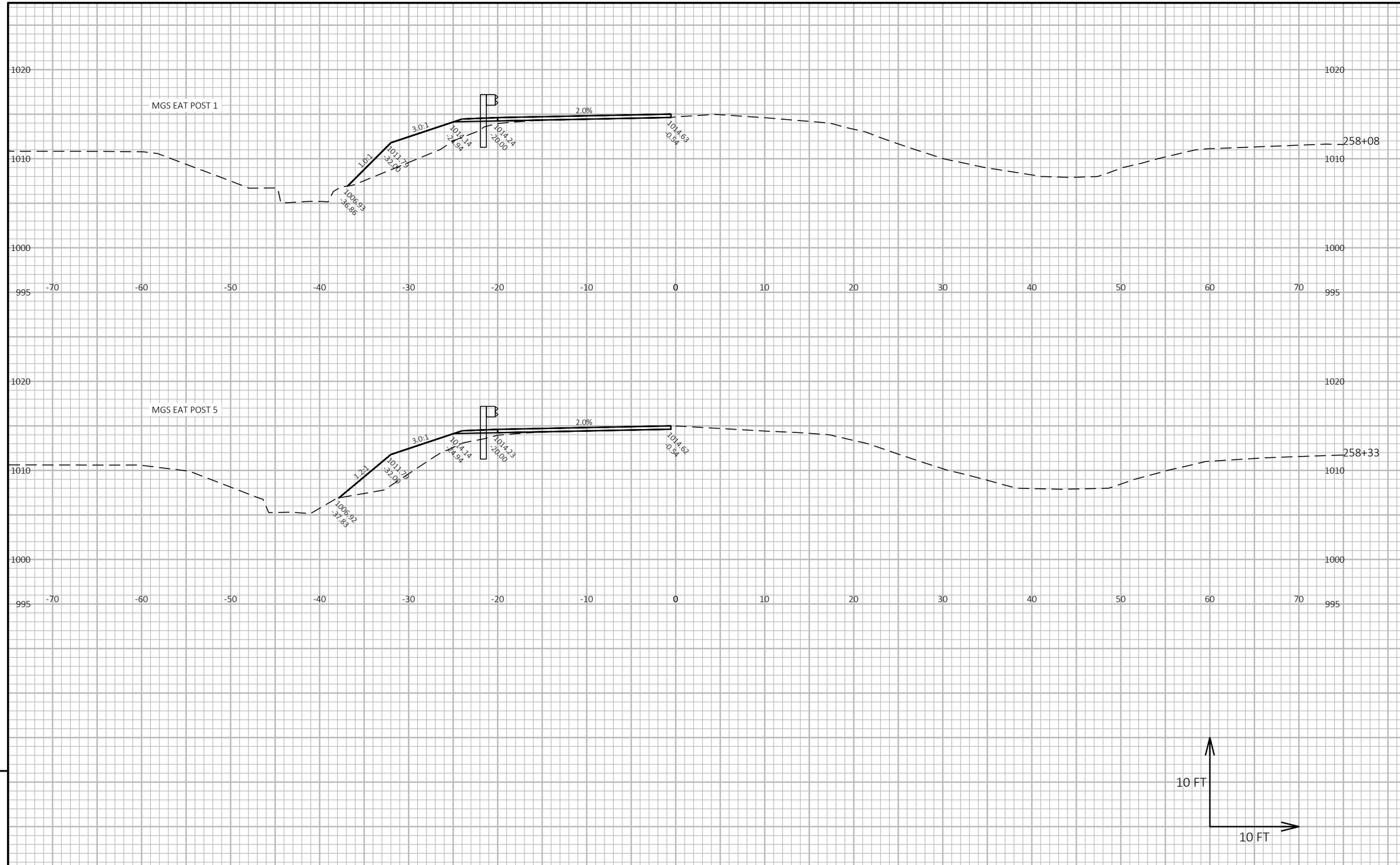

9

9

PROJECT NO: 4869-03-70	HWY: CTH D	COUNTY: WASHINGTON	CROSS SECTIONS: MAINLINE	SHEET 89	E

FILE NAME : C:\OD\CORRE, INC\PROJECTS - 4869-03-00_CTH_D_WASHINGTON_COUNTY\500_CADD\501_C3D_2022\48690300\SHEETS\090201-XS.DWG
LAYOUT NAME - 02
PLOT DATE : 12/17/2024 3:39 PM PLOT BY : MATT KOSKI PLOT NAME : PLOT SCALE : 1 IN:10 FT HORZ. / 1 IN:10 FT VERT.

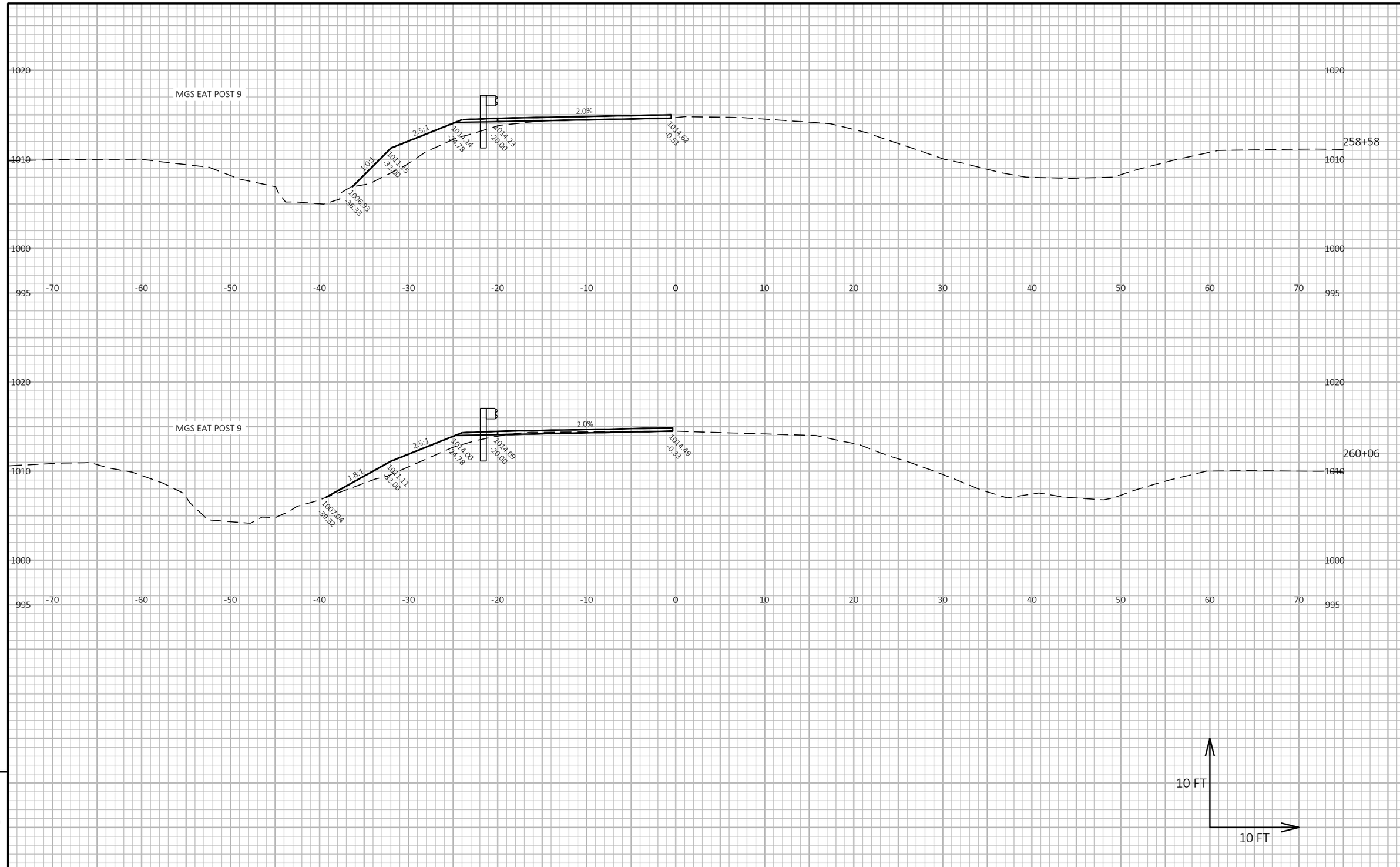

9

9

PROJECT NO: 4869-03-70	HWY: CTH D	COUNTY: WASHINGTON	CROSS SECTIONS: MAINLINE	SHEET 90	E

FILE NAME : C:\OD\CORRE, INC\PROJECTS - 4869-03-00_CTH_D_WASHINGTON_COUNTY\500_CADD\501_C3D_2022\48690300\SHEETS\090201-XS.DWG
LAYOUT NAME - 03
PLOT DATE : 12/17/2024 3:39 PM
PLOT BY : MATT KOSKI
PLOT NAME :
PLOT SCALE : 1 IN:10 FT HORZ. / 1 IN:10 FT VERT.
WISDOT/CADDS SHEET 49

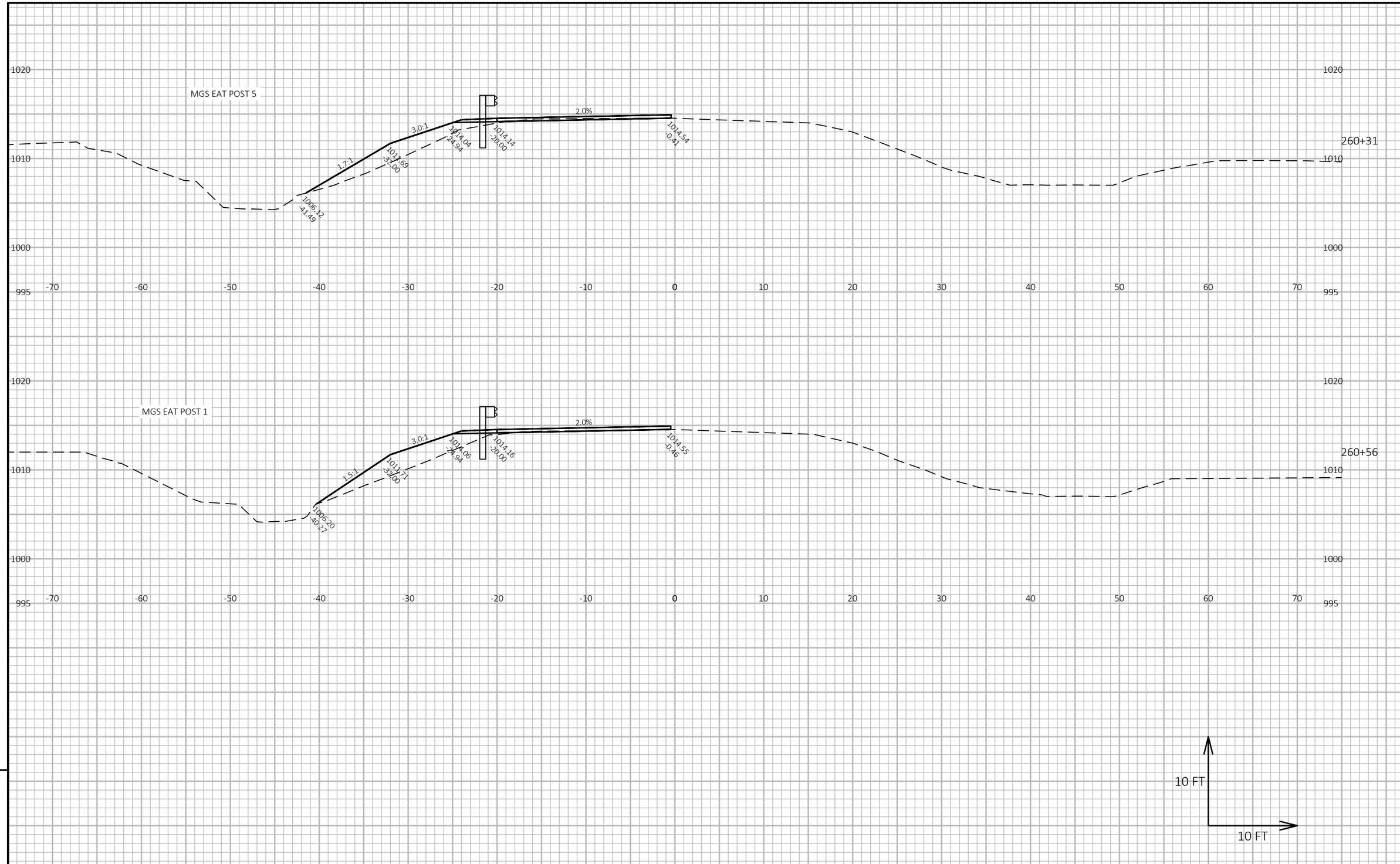

9

9

PROJECT NO: 4869-03-70	HWY: CTH D	COUNTY: WASHINGTON	CROSS SECTIONS: MAINLINE	SHEET 91	E

FILE NAME : C:\OD\CORRE, INC\PROJECTS - 4869-03-00_CTH_D_WASHINGTON_COUNTY\500_CADD\501_C3D_2022\48690300\SHEETS\090201-XS.DWG
LAYOUT NAME - 04
PLOT DATE : 12/17/2024 3:39 PM
PLOT BY : MATT KOSKI
PLOT NAME :
PLOT SCALE : 1 IN:10 FT HORZ. / 1 IN:10 FT VERT.
WISDOT/CADDS SHEET 49

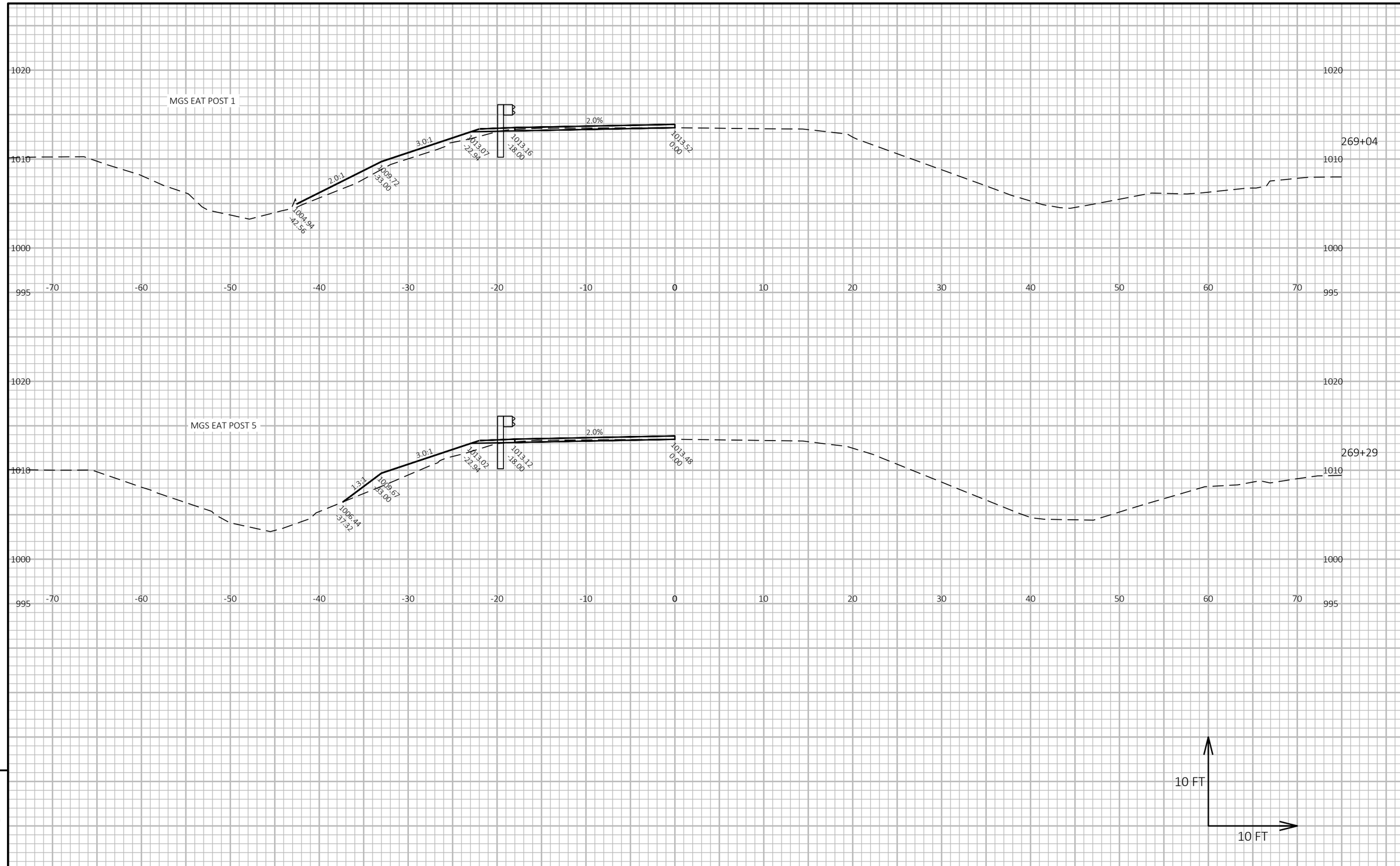

9

9

PROJECT NO: 4869-03-70	HWY: CTH D	COUNTY: WASHINGTON	CROSS SECTIONS: MAINLINE	SHEET 92	E

FILE NAME : C:\OD\CORRE, INC\PROJECTS - 4869-03-00_CTH_D_WASHINGTON_COUNTY\500_CADD\501_C3D_2022\48690300\SHEETS\090201-XS.DWG
LAYOUT NAME - 05

PLOT DATE : 12/17/2024 3:39 PM PLOT BY : MATT KOSKI PLOT NAME : PLOT SCALE : 1 IN:10 FT HORZ. / 1 IN:10 FT VERT.

WISDOT/CADDS SHEET 49

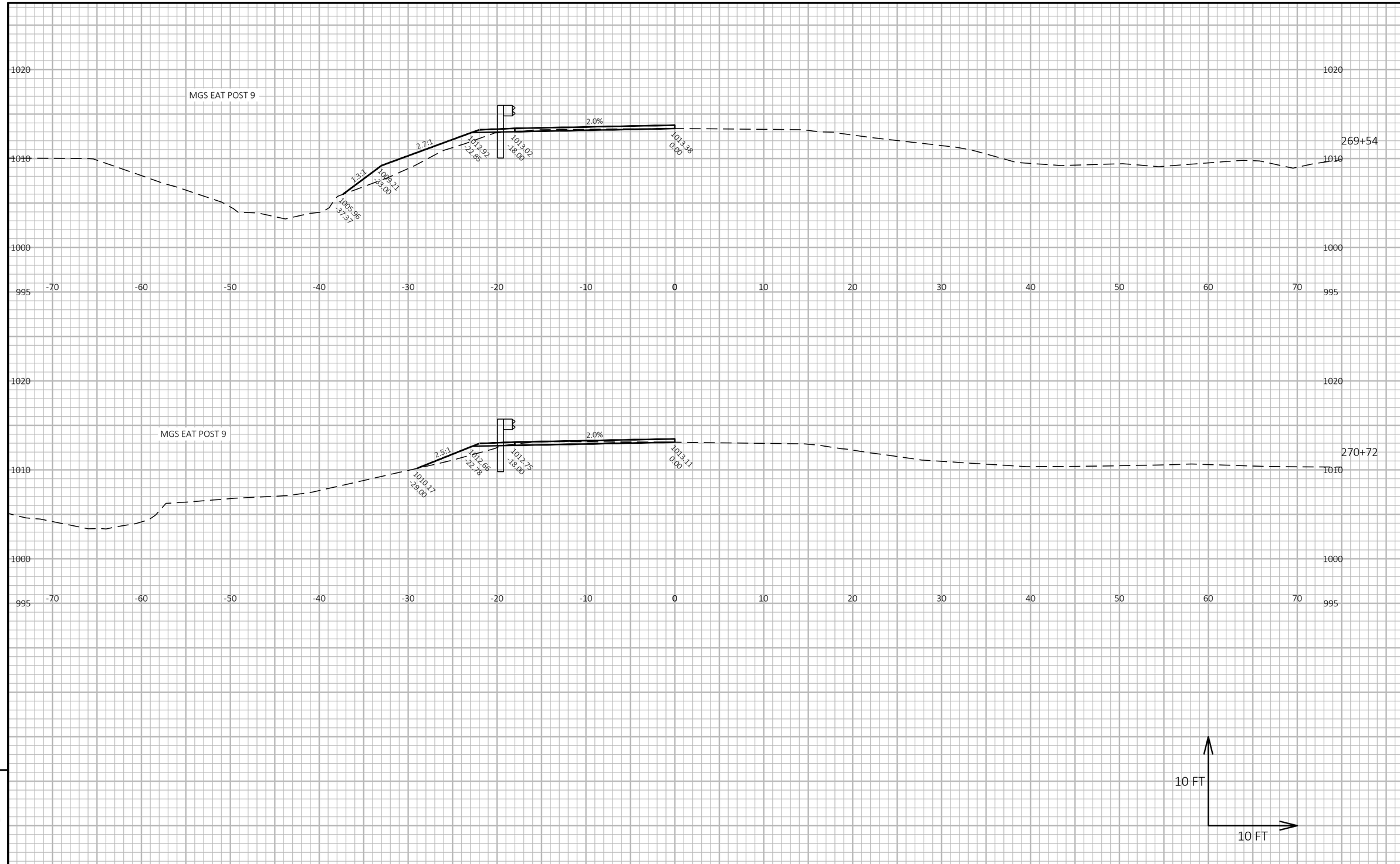

9

9

PROJECT NO: 4869-03-70	HWY: CTH D	COUNTY: WASHINGTON	CROSS SECTIONS: MAINLINE	SHEET 93	E

FILE NAME : C:\OD\CORRE, INC\PROJECTS - 4869-03-00_CTH_D_WASHINGTON_COUNTY\500_CADD\501_C3D_2022\48690300\SHEETS\090201-XS.DWG
LAYOUT NAME - 06
PLOT DATE : 12/17/2024 3:39 PM PLOT BY : MATT KOSKI PLOT NAME : **PLOT SCALE :** 1 IN:10 FT HORZ. / 1 IN:10 FT VERT.

WISDOT/CADDS SHEET 49

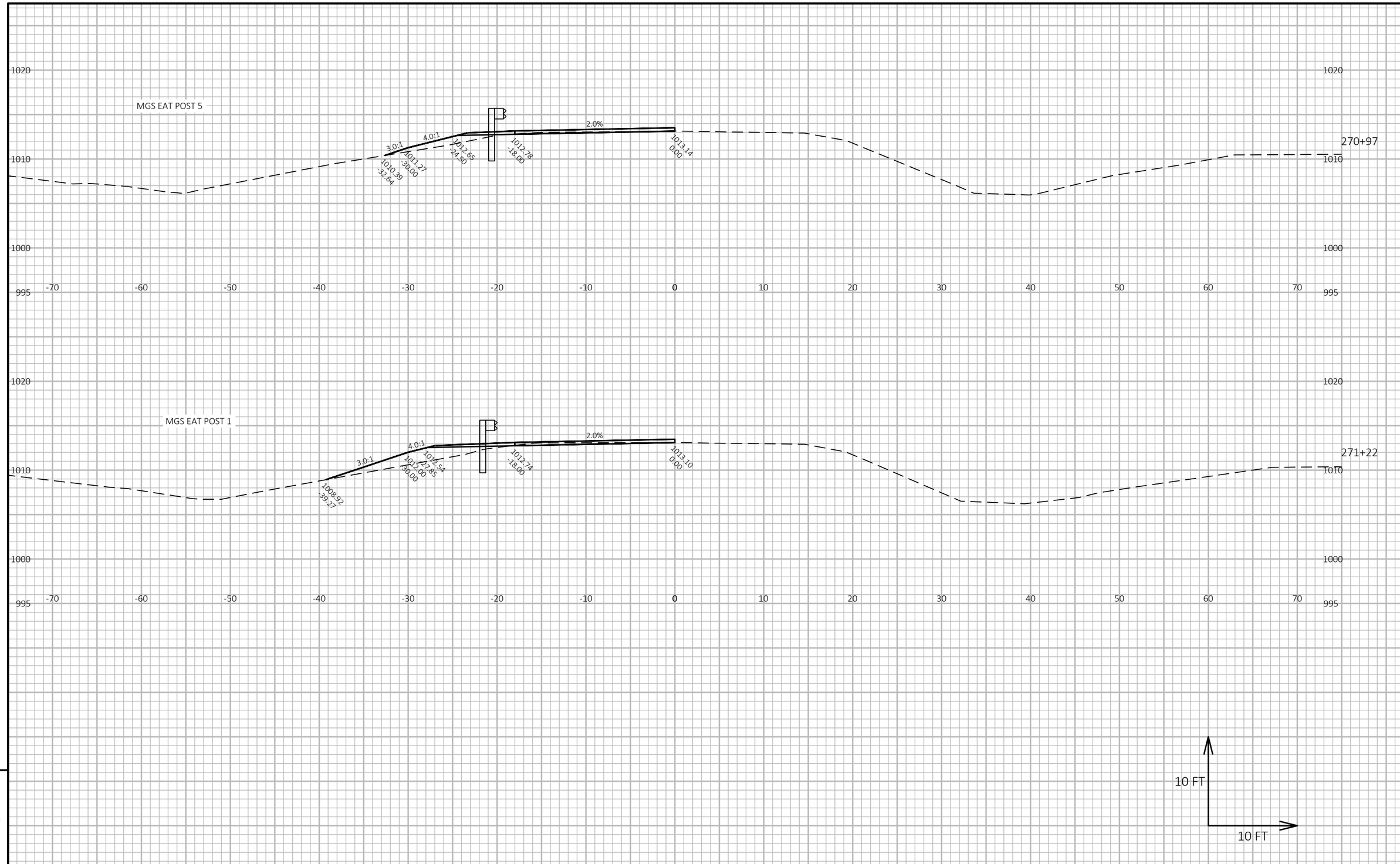

9

9

PROJECT NO: 4869-03-70	HWY: CTH D	COUNTY: WASHINGTON	CROSS SECTIONS: MAINLINE	SHEET 94	E

FILE NAME : C:\OD\CORRE, INC\PROJECTS - 4869-03-00_CTH_D_WASHINGTON_COUNTY\500_CADD\501_C3D_2022\48690300\SHEETS\090201-XS.DWG
LAYOUT NAME - 07

PLOT DATE : 12/17/2024 3:39 PM PLOT BY : MATT KOSKI PLOT NAME : **PLOT SCALE :** 1 IN:10 FT HORZ. / 1 IN:10 FT VERT.

WISDOT/CADDS SHEET 49

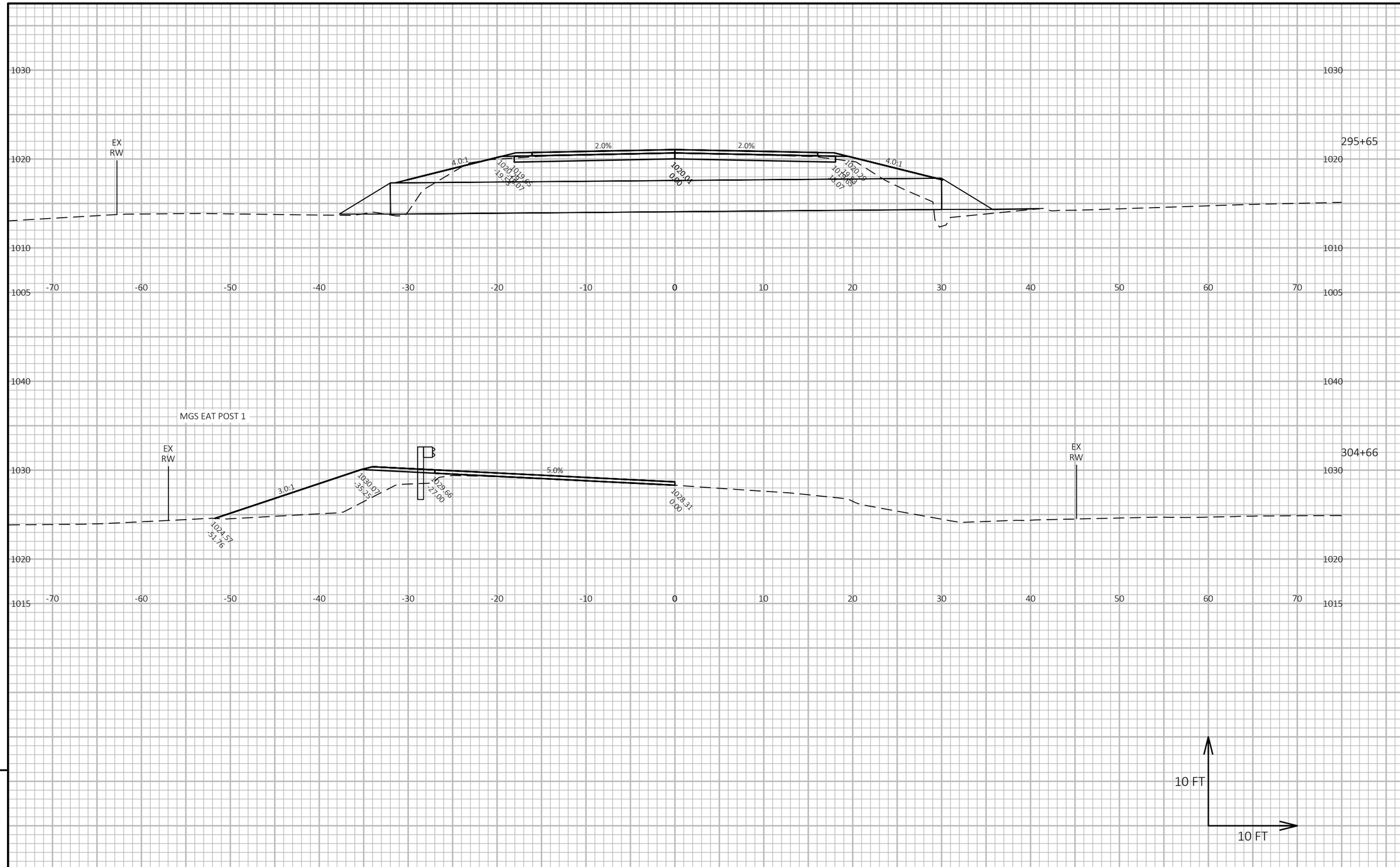

9

9

PROJECT NO: 4869-03-70	HWY: CTH D	COUNTY: WASHINGTON	CROSS SECTIONS: MAINLINE	SHEET 95	E

FILE NAME : C:\OD\CORRE, INC\PROJECTS - 4869-03-00_CTH_D_WASHINGTON_COUNTY\500_CADD\501_C3D_2022\48690300\SHEETS\090201-XS.DWG
LAYOUT NAME - 08
PLOT DATE : 12/17/2024 3:39 PM
PLOT BY : MATT KOSKI
PLOT NAME :
PLOT SCALE : 1 IN:10 FT HORZ. / 1 IN:10 FT VERT.
WISDOT/CADDS SHEET 49

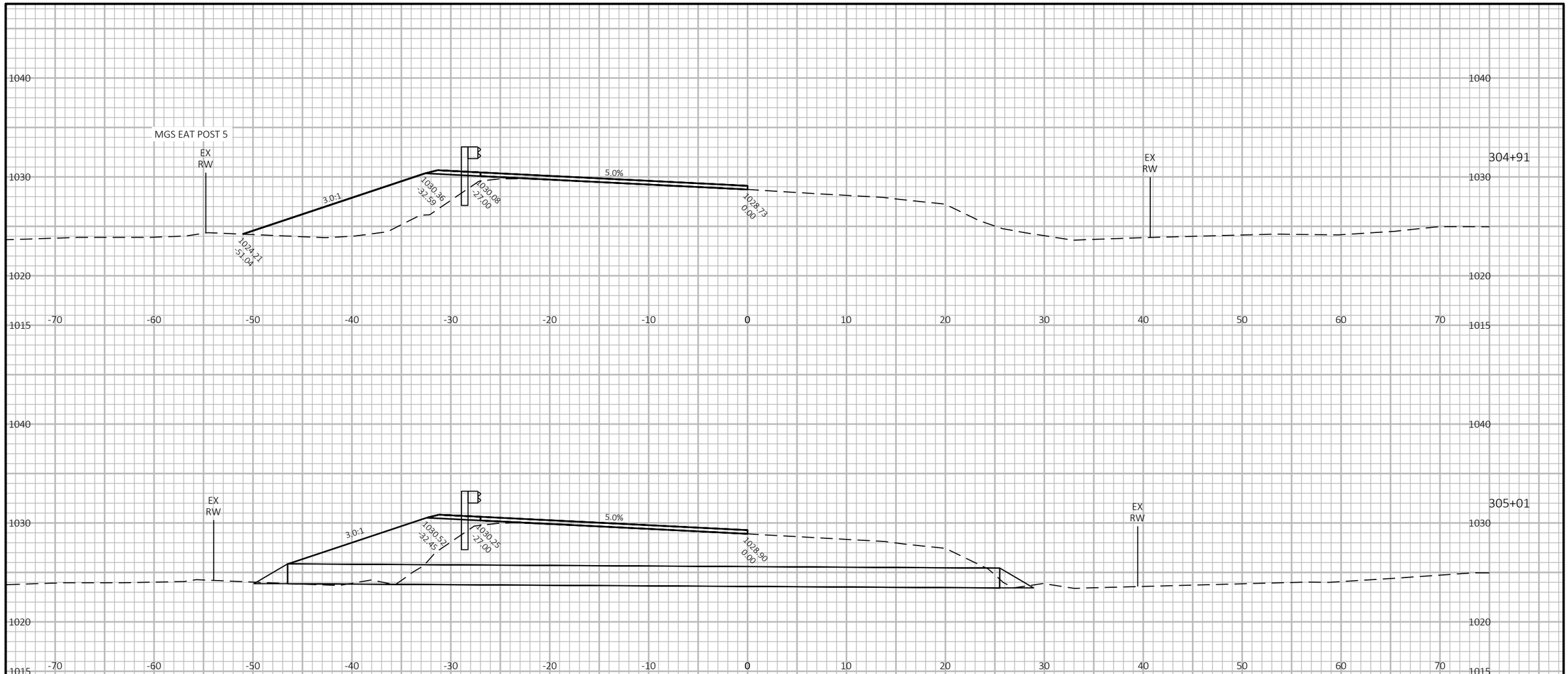

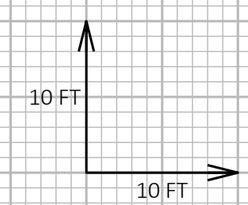

9

9

PROJECT NO: 4869-03-70	HWY: CTH D	COUNTY: WASHINGTON	CROSS SECTIONS: MAINLINE	SHEET 96	E

FILE NAME : C:\OD\CORRE, INC\PROJECTS - 4869-03-00_CTH_D_WASHINGTON_COUNTY\500_CADD\501_C3D_2022\48690300\SHEETS\090201-XS.DWG
LAYOUT NAME - 09
PLOT DATE : 12/17/2024 3:39 PM
PLOT BY : MATT KOSKI
PLOT NAME :
PLOT SCALE : 1 IN:10 FT HORZ. / 1 IN:10 FT VERT.
WISDOT/CADDS SHEET 49

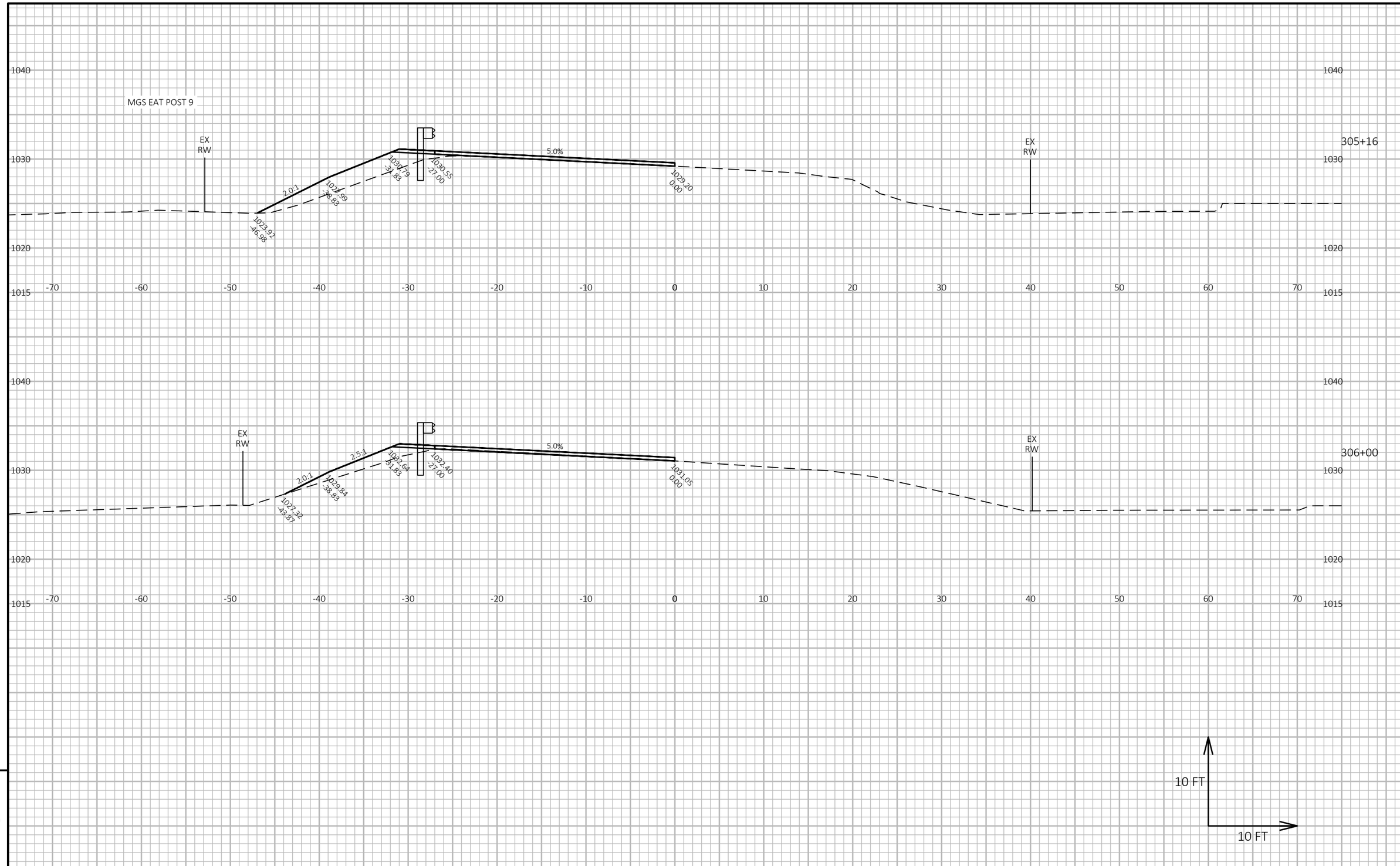

9

9

PROJECT NO: 4869-03-70	HWY: CTH D	COUNTY: WASHINGTON	CROSS SECTIONS: MAINLINE	SHEET 97	E

FILE NAME : C:\OD\CORRE, INC\PROJECTS - 4869-03-00_CTH_D_WASHINGTON_COUNTY\500_CADD\501_C3D_2022\48690300\SHEETS\090201-XS.DWG
LAYOUT NAME - 10
PLOT DATE : 12/17/2024 3:39 PM
PLOT BY : MATT KOSKI
PLOT NAME :
PLOT SCALE : 1 IN:10 FT HORZ. / 1 IN:10 FT VERT.
WISDOT/CADDS SHEET 49

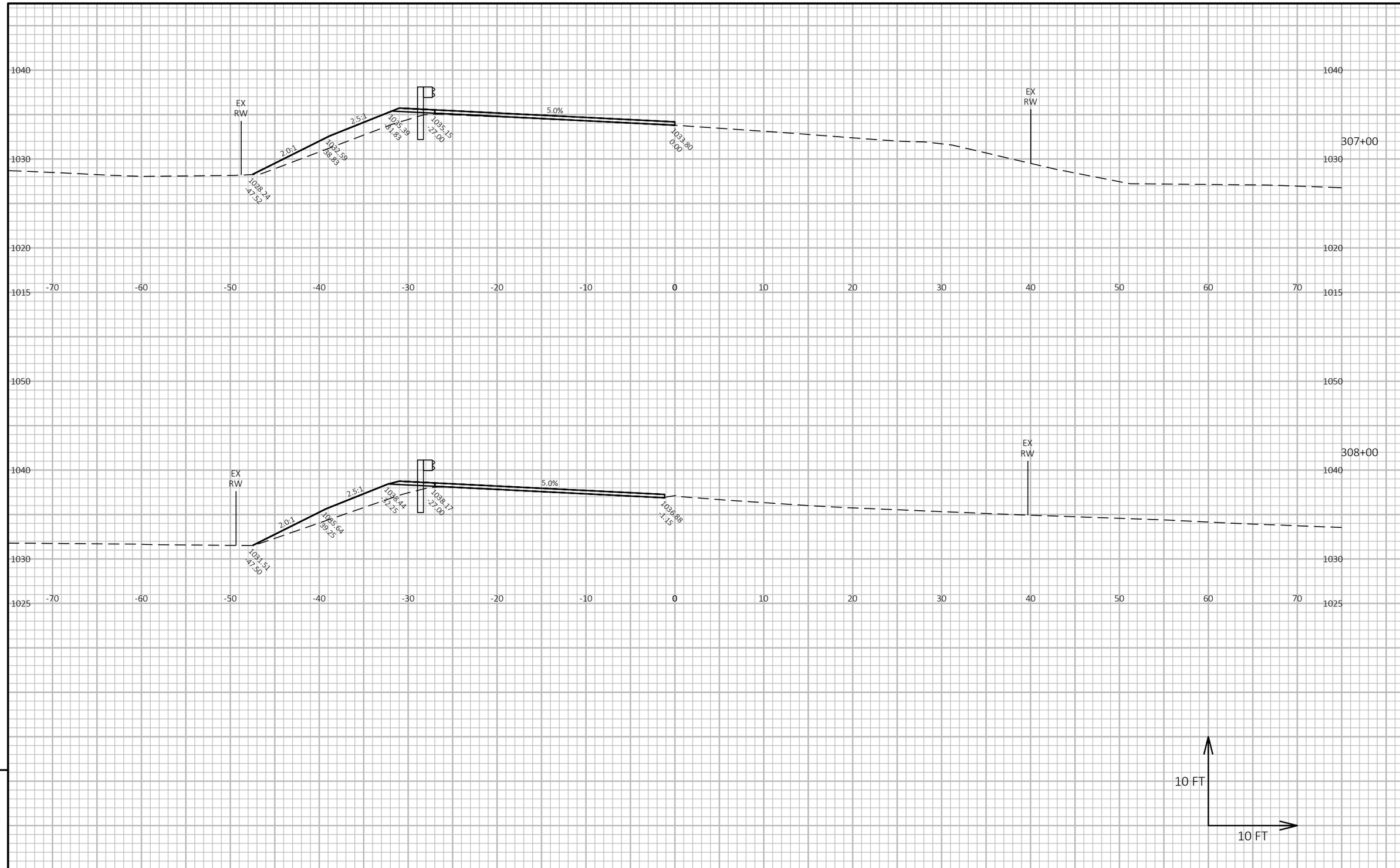

9

9

PROJECT NO: 4869-03-70	HWY: CTH D	COUNTY: WASHINGTON	CROSS SECTIONS: MAINLINE	SHEET 98	E

FILE NAME : C:\OD\CORRE, INC\PROJECTS - 4869-03-00_CTH_D_WASHINGTON_COUNTY\500_CADD\501_C3D_2022\48690300\SHEETS\090201-XS.DWG
LAYOUT NAME - 11
PLOT DATE : 12/17/2024 3:39 PM
PLOT BY : MATT KOSKI
PLOT NAME :
PLOT SCALE : 1 IN:10 FT HORZ. / 1 IN:10 FT VERT.
WISDOT/CADDS SHEET 49

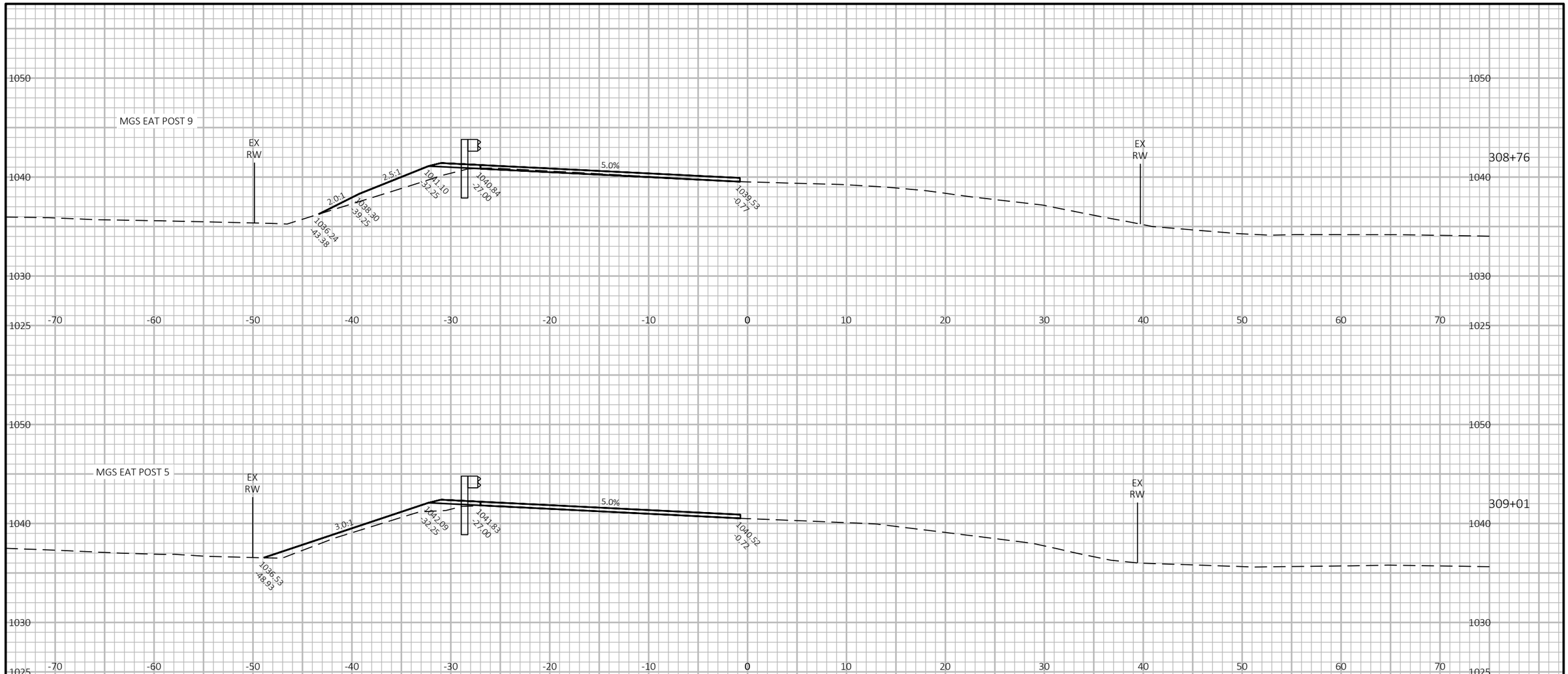

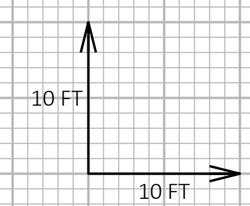

9

9

PROJECT NO: 4869-03-70	HWY: CTH D	COUNTY: WASHINGTON	CROSS SECTIONS: MAINLINE	SHEET 99	E

FILE NAME : C:\OD\CORRE, INC\PROJECTS - 4869-03-00_CTH_D_WASHINGTON_COUNTY\500_CADD\501_C3D_2022\48690300\SHEETS\090201-XS.DWG
LAYOUT NAME - 12
PLOT DATE : 12/17/2024 3:39 PM PLOT BY : MATT KOSKI PLOT NAME : PLOT SCALE : 1 IN:10 FT HORZ. / 1 IN:10 FT VERT.

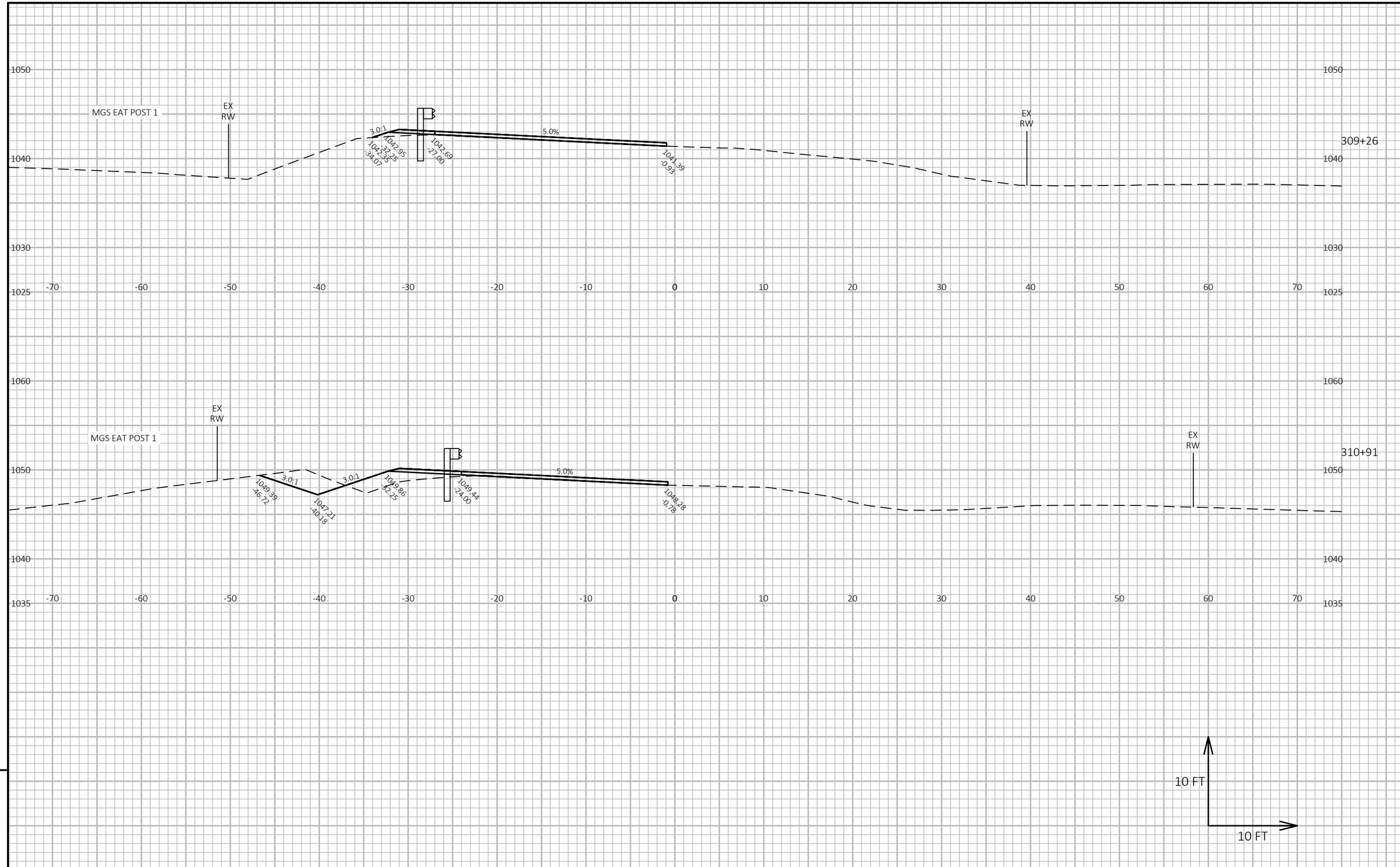

9

9

PROJECT NO: 4869-03-70	HWY: CTH D	COUNTY: WASHINGTON	CROSS SECTIONS: MAINLINE	SHEET 100	E

FILE NAME : C:\OD\CORRE, INC\PROJECTS - 4869-03-00_CTH_D_WASHINGTON_COUNTY\500_CADD\501_C3D_2022\48690300\SHEETS\090201-XS.DWG
LAYOUT NAME - 13
PLOT DATE : 12/17/2024 3:39 PM
PLOT BY : MATT KOSKI
PLOT NAME :
PLOT SCALE : 1 IN:10 FT HORZ. / 1 IN:10 FT VERT.
WISDOT/CADDS SHEET 49

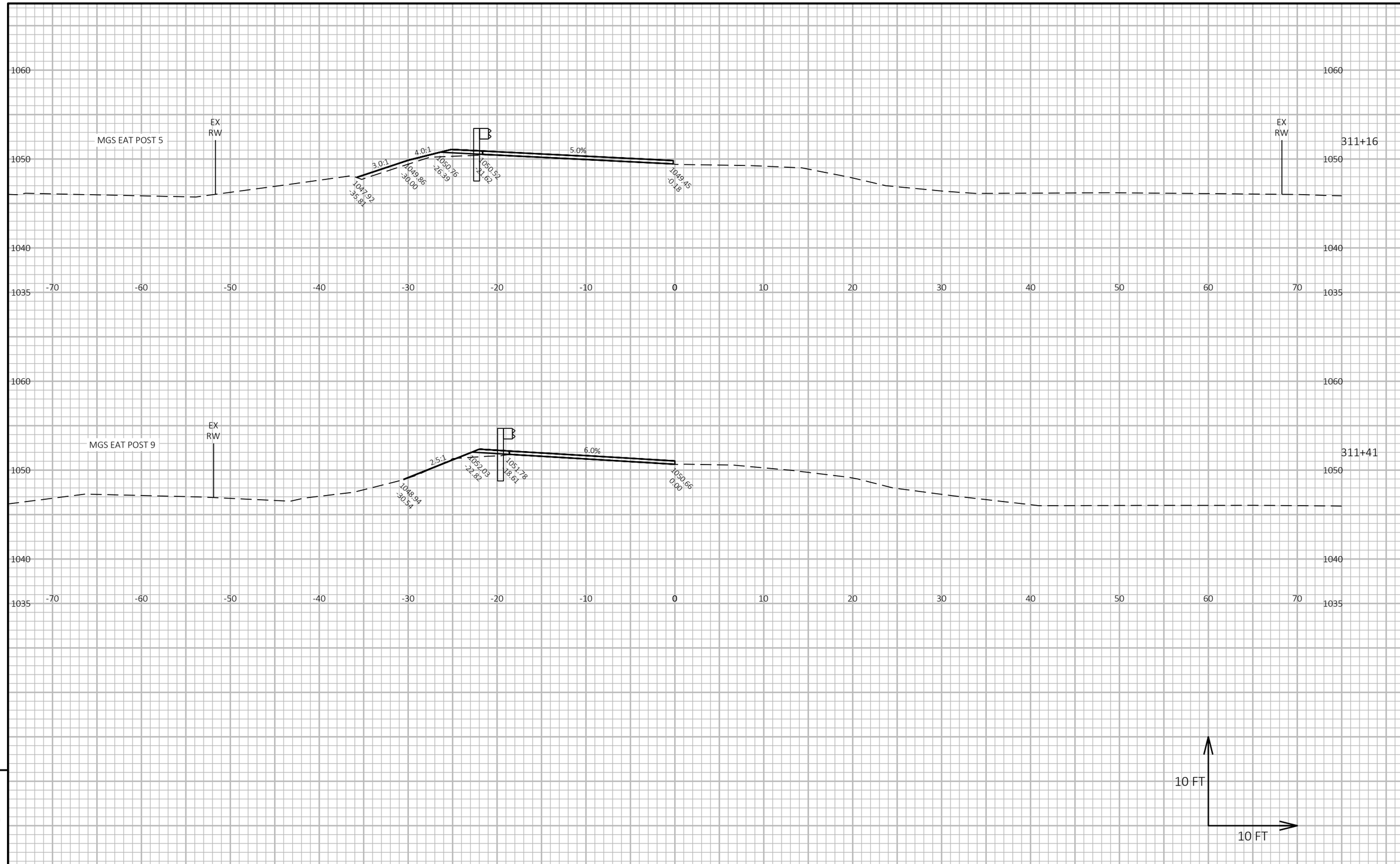

9

9

PROJECT NO: 4869-03-70	HWY: CTH D	COUNTY: WASHINGTON	CROSS SECTIONS: MAINLINE	SHEET 101	E

FILE NAME : C:\OD\CORRE, INC\PROJECTS - 4869-03-00_CTH_D_WASHINGTON_COUNTY\500_CADD\501_C3D_2022\48690300\SHEETS\090201-XS.DWG
LAYOUT NAME - 14
PLOT DATE : 12/17/2024 3:39 PM
PLOT BY : MATT KOSKI
PLOT NAME :
PLOT SCALE : 1 IN:10 FT HORZ. / 1 IN:10 FT VERT.
WISDOT/CADDS SHEET 49

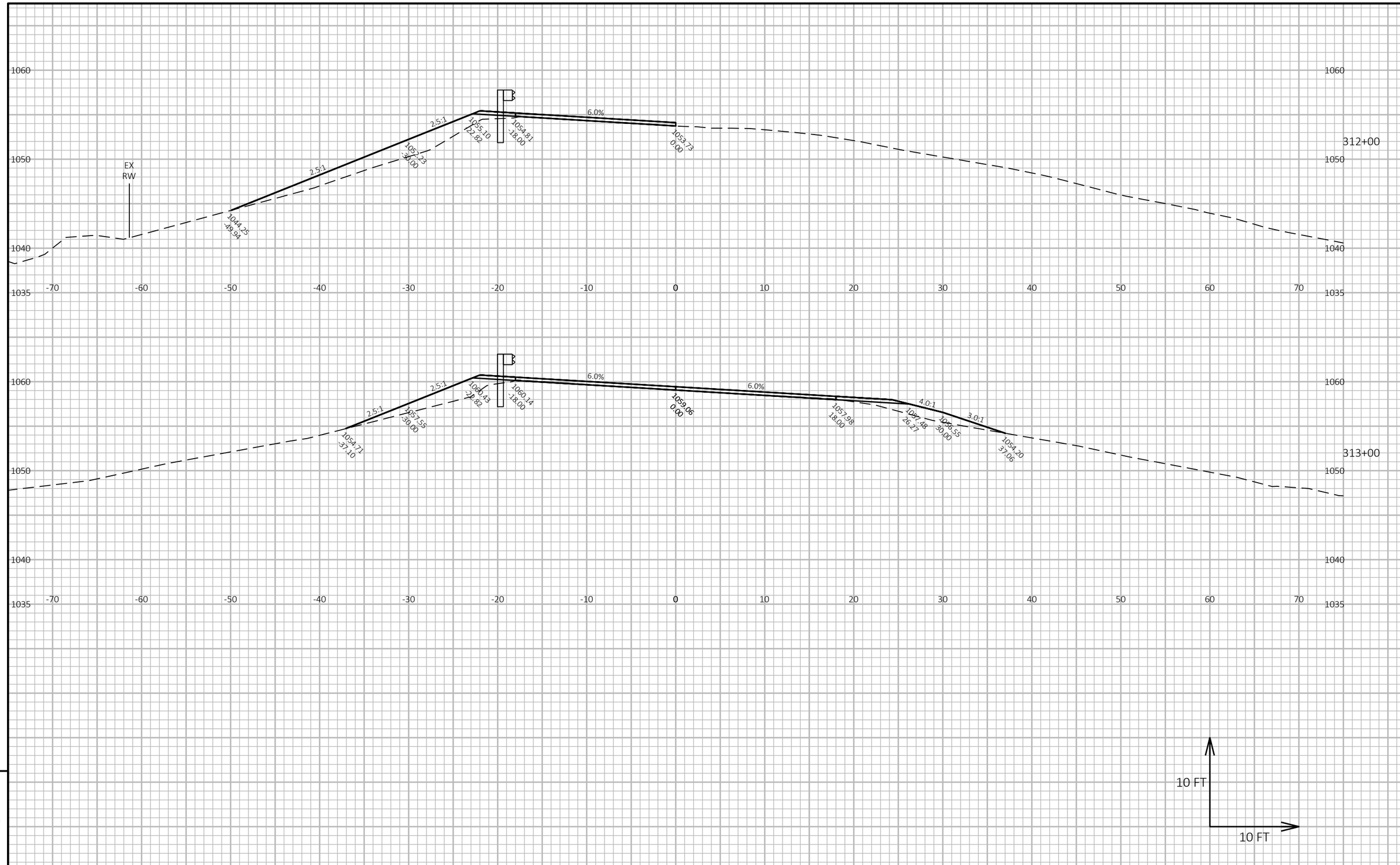

9

9

PROJECT NO: 4869-03-70	HWY: CTH D	COUNTY: WASHINGTON	CROSS SECTIONS: MAINLINE	SHEET 102	E

FILE NAME : C:\OD\CORRE, INC\PROJECTS - 4869-03-00_CTH_D_WASHINGTON_COUNTY\500_CADD\501_C3D_2022\48690300\SHEETS\090201-XS.DWG
LAYOUT NAME - 15
PLOT DATE : 12/17/2024 3:40 PM PLOT BY : MATT KOSKI PLOT NAME : **PLOT SCALE :** 1 IN:10 FT HORZ. / 1 IN:10 FT VERT.

WISDOT/CADDS SHEET 49

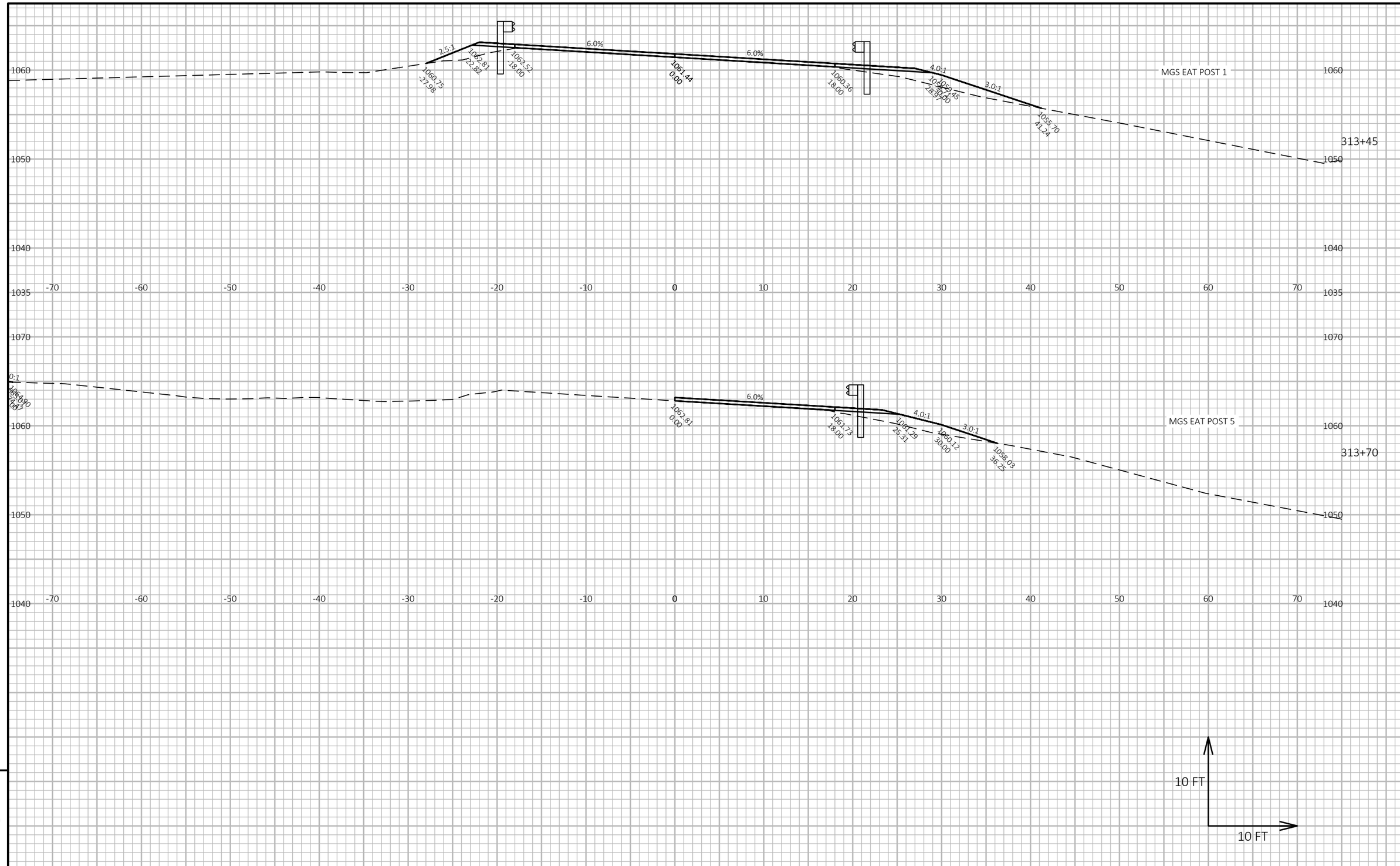

9

9

PROJECT NO: 4869-03-70	HWY: CTH D	COUNTY: WASHINGTON	CROSS SECTIONS: MAINLINE	SHEET 103	E

FILE NAME : C:\OD\CORRE, INC\PROJECTS - 4869-03-00_CTH_D_WASHINGTON_COUNTY\500_CADD\501_C3D_2022\48690300\SHEETS\090201-XS.DWG
LAYOUT NAME - 16
PLOT DATE : 12/17/2024 3:40 PM
PLOT BY : MATT KOSKI
PLOT NAME :
PLOT SCALE : 1 IN:10 FT HORZ. / 1 IN:10 FT VERT.
WISDOT/CADDS SHEET 49

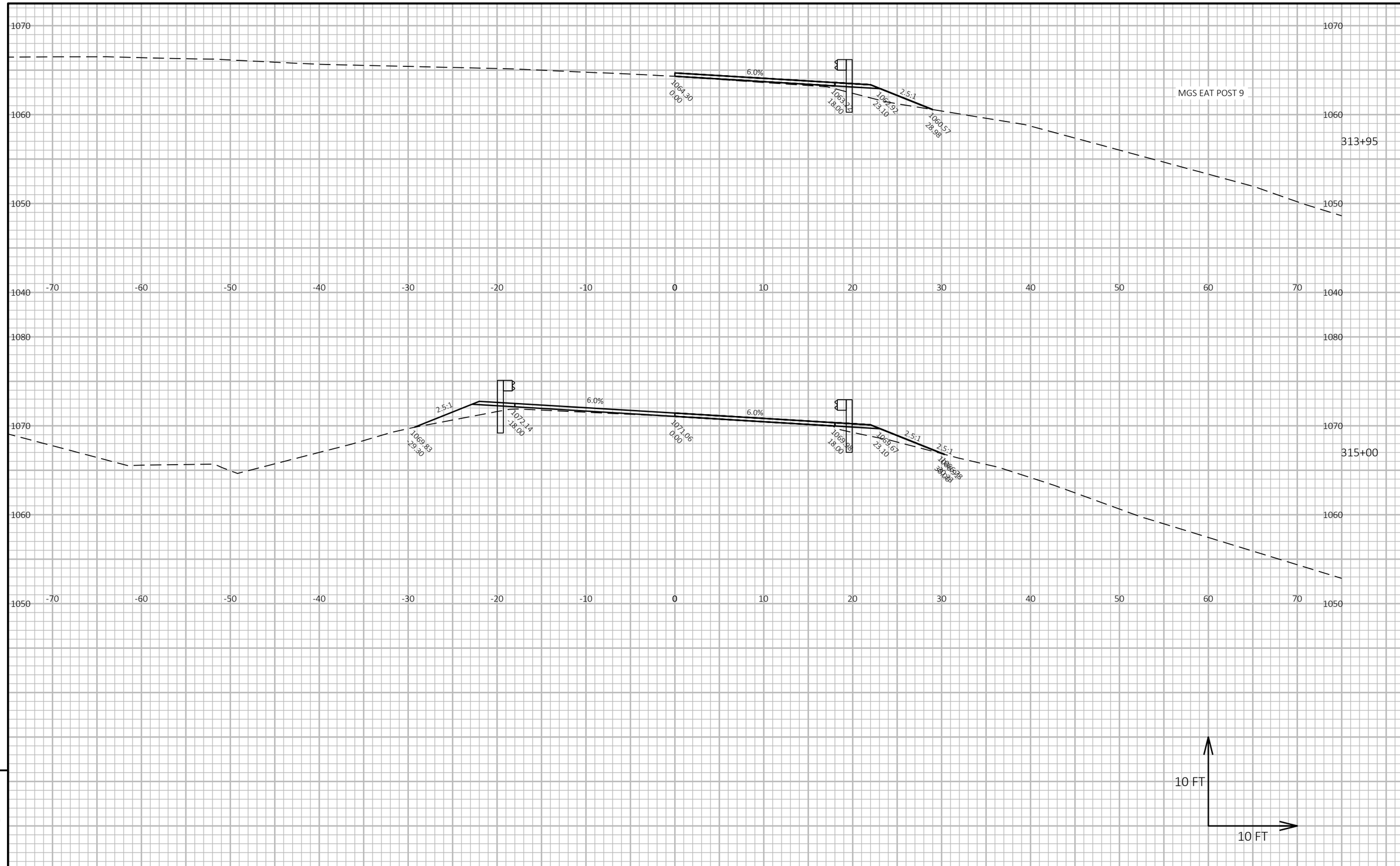

9

9

PROJECT NO: 4869-03-70	HWY: CTH D	COUNTY: WASHINGTON	CROSS SECTIONS: MAINLINE	SHEET 104	E

FILE NAME : C:\OD\CORRE, INC\PROJECTS - 4869-03-00_CTH_D_WASHINGTON_COUNTY\500_CADD\501_C3D_2022\48690300\SHEETS\090201-XS.DWG
LAYOUT NAME - 17
PLOT DATE : 12/17/2024 3:40 PM
PLOT BY : MATT KOSKI
PLOT NAME :
PLOT SCALE : 1 IN:10 FT HORZ. / 1 IN:10 FT VERT.
WISDOT/CADDS SHEET 49

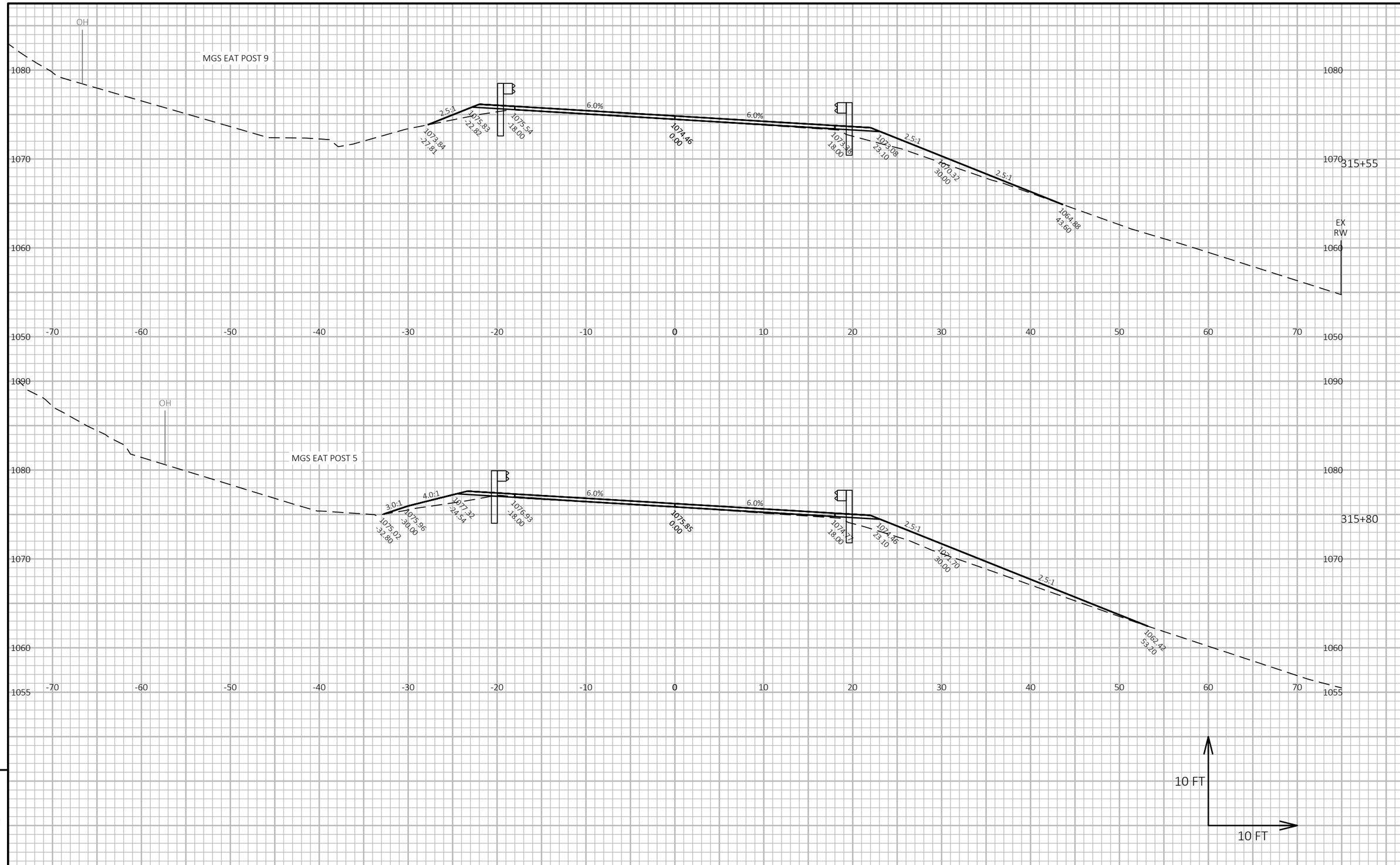

PROJECT NO: 4869-03-70	HWY: CTH D	COUNTY: WASHINGTON	CROSS SECTIONS: MAINLINE	SHEET 105	E

FILE NAME : C:\OD\CORRE, INC\PROJECTS - 4869-03-00_CTH_D_WASHINGTON_COUNTY\500_CADD\501_C3D_2022\48690300\SHEETS\090201-XS.DWG
LAYOUT NAME - 18
PLOT DATE : 12/17/2024 3:40 PM PLOT BY : MATT KOSKI PLOT NAME : **PLOT SCALE :** 1 IN:10 FT HORZ. / 1 IN:10 FT VERT.

WISDOT/CADDS SHEET 49

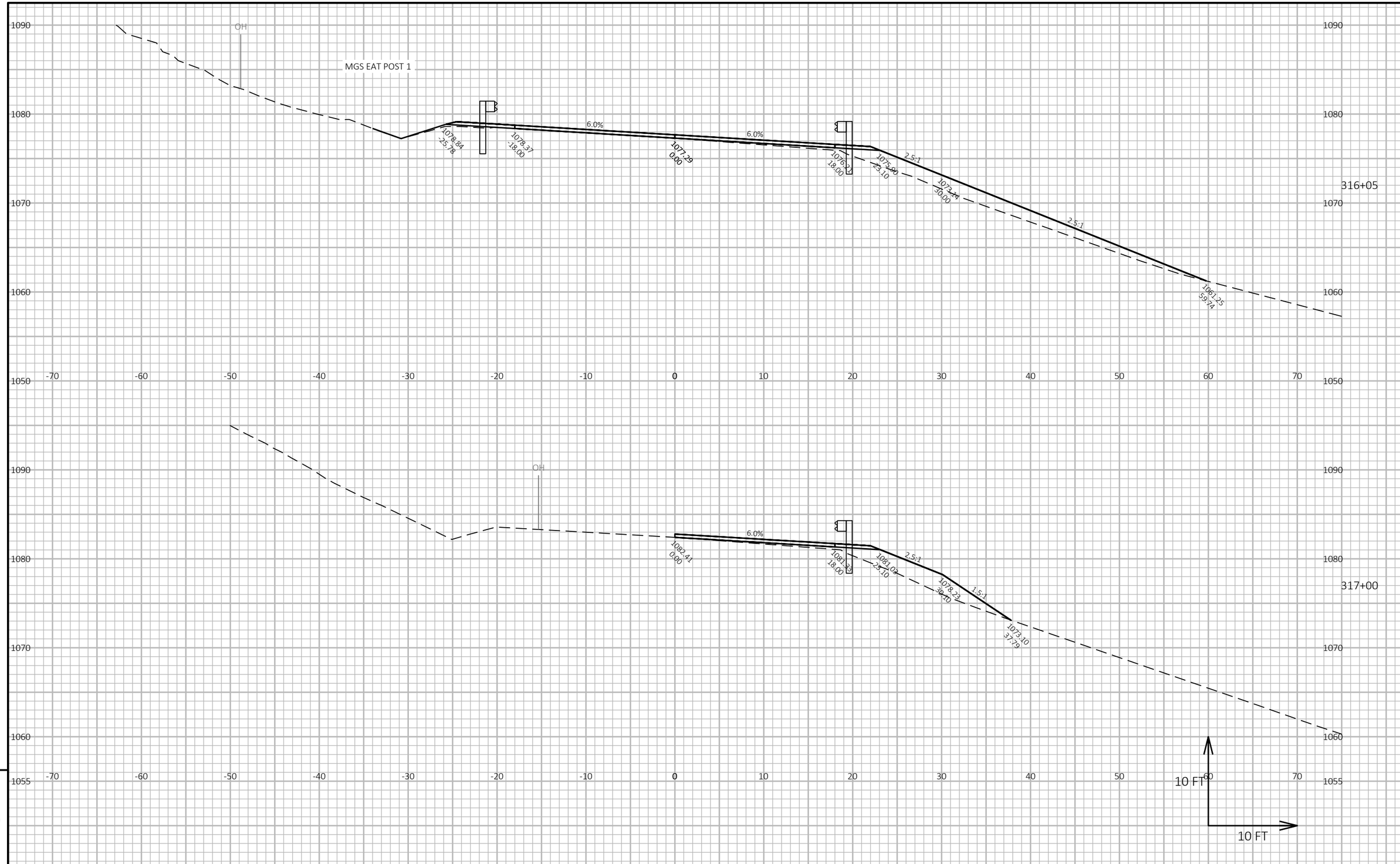

9

9

PROJECT NO: 4869-03-70	HWY: CTH D	COUNTY: WASHINGTON	CROSS SECTIONS: MAINLINE	SHEET 106	E

FILE NAME : C:\OD\CORRE, INC\PROJECTS - 4869-03-00_CTH_D_WASHINGTON_COUNTY\500_CADD\501_C3D_2022\48690300\SHEETS\090201-XS.DWG
LAYOUT NAME - 19

PLOT DATE : 12/17/2024 3:40 PM PLOT BY : MATT KOSKI PLOT NAME : **PLOT SCALE :** 1 IN:10 FT HORZ. / 1 IN:10 FT VERT.

WISDOT/CADDS SHEET 49

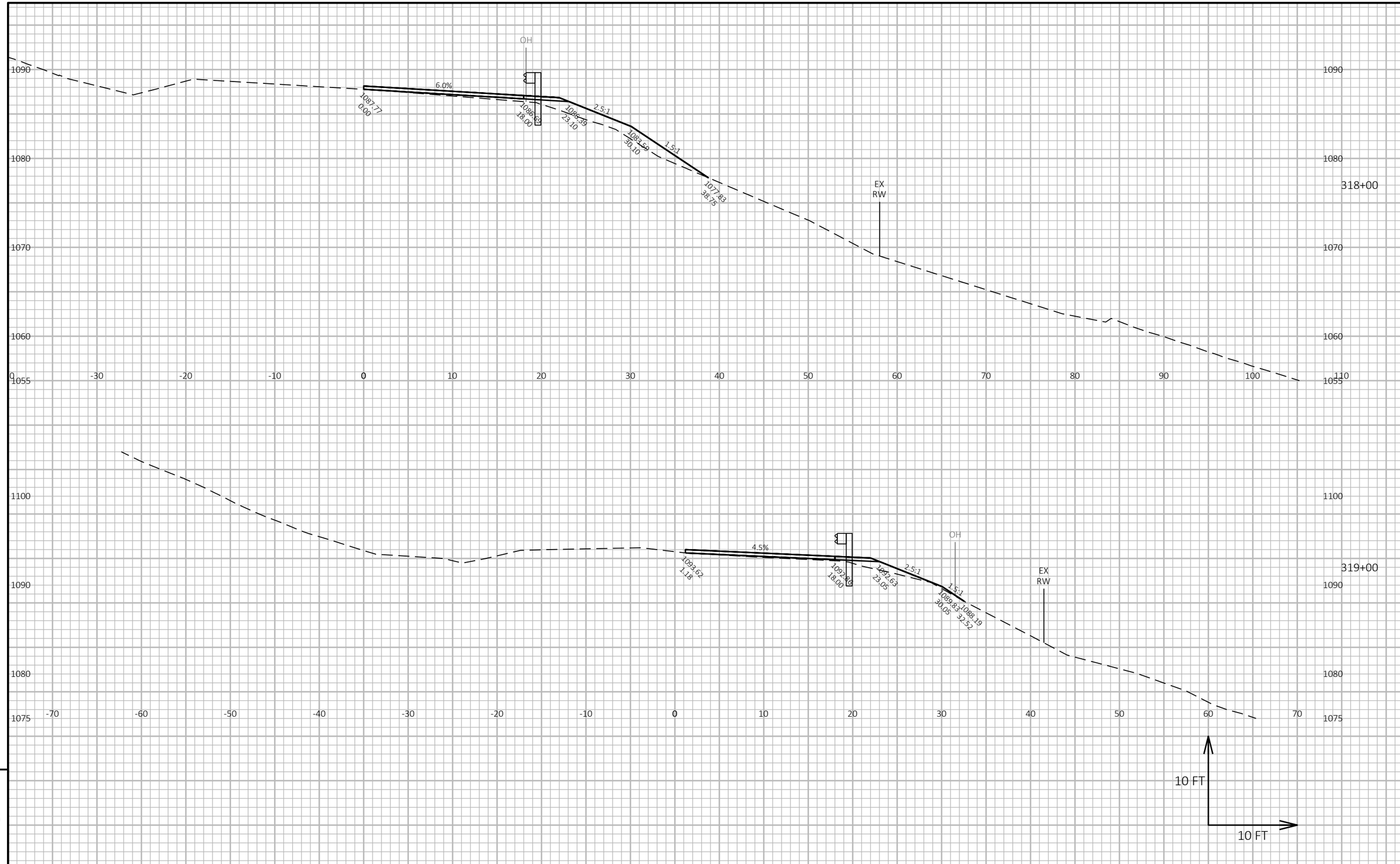

9

9

PROJECT NO: 4869-03-70	HWY: CTH D	COUNTY: WASHINGTON	CROSS SECTIONS: MAINLINE	SHEET 107	E

FILE NAME : C:\OD\CORRE, INC\PROJECTS - 4869-03-00_CTH_D_WASHINGTON_COUNTY\500_CADD\501_C3D_2022\48690300\SHEETS\090201-XS.DWG
LAYOUT NAME - 20
PLOT DATE : 12/17/2024 3:40 PM
PLOT BY : MATT KOSKI
PLOT NAME :
PLOT SCALE : 1 IN:10 FT HORZ. / 1 IN:10 FT VERT.
WISDOT/CADDS SHEET 49

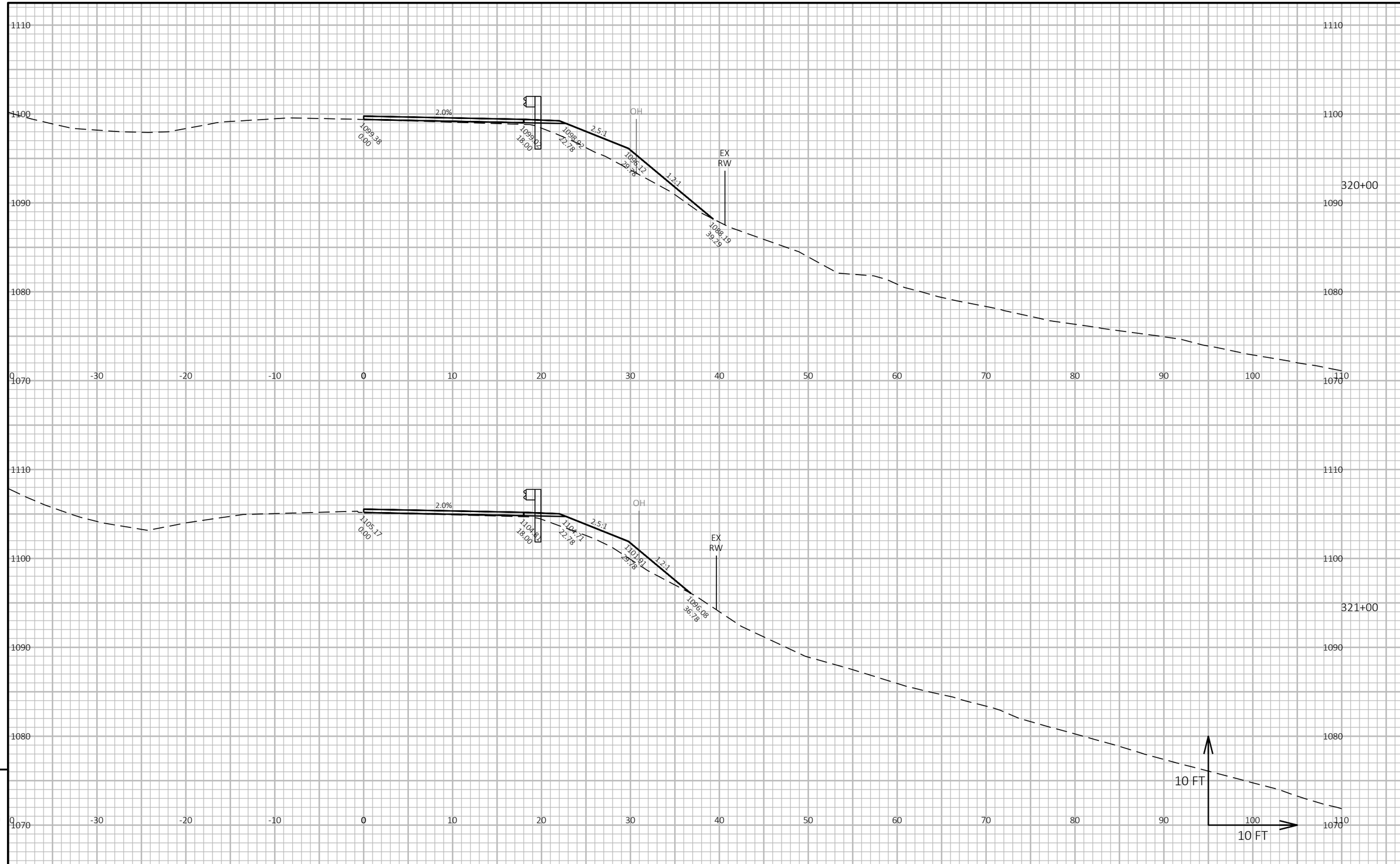

9

9

PROJECT NO: 4869-03-70	HWY: CTH D	COUNTY: WASHINGTON	CROSS SECTIONS: MAINLINE	SHEET 108	E

FILE NAME : C:\OD\CORRE, INC\PROJECTS - 4869-03-00_CTH_D_WASHINGTON_COUNTY\500_CADD\501_C3D_2022\48690300\SHEETS\090201-XS.DWG
LAYOUT NAME - 22
PLOT DATE : 12/17/2024 3:40 PM
PLOT BY : MATT KOSKI
PLOT NAME :
PLOT SCALE : 1 IN:10 FT HORZ. / 1 IN:10 FT VERT.
WISDOT/CADDS SHEET 49

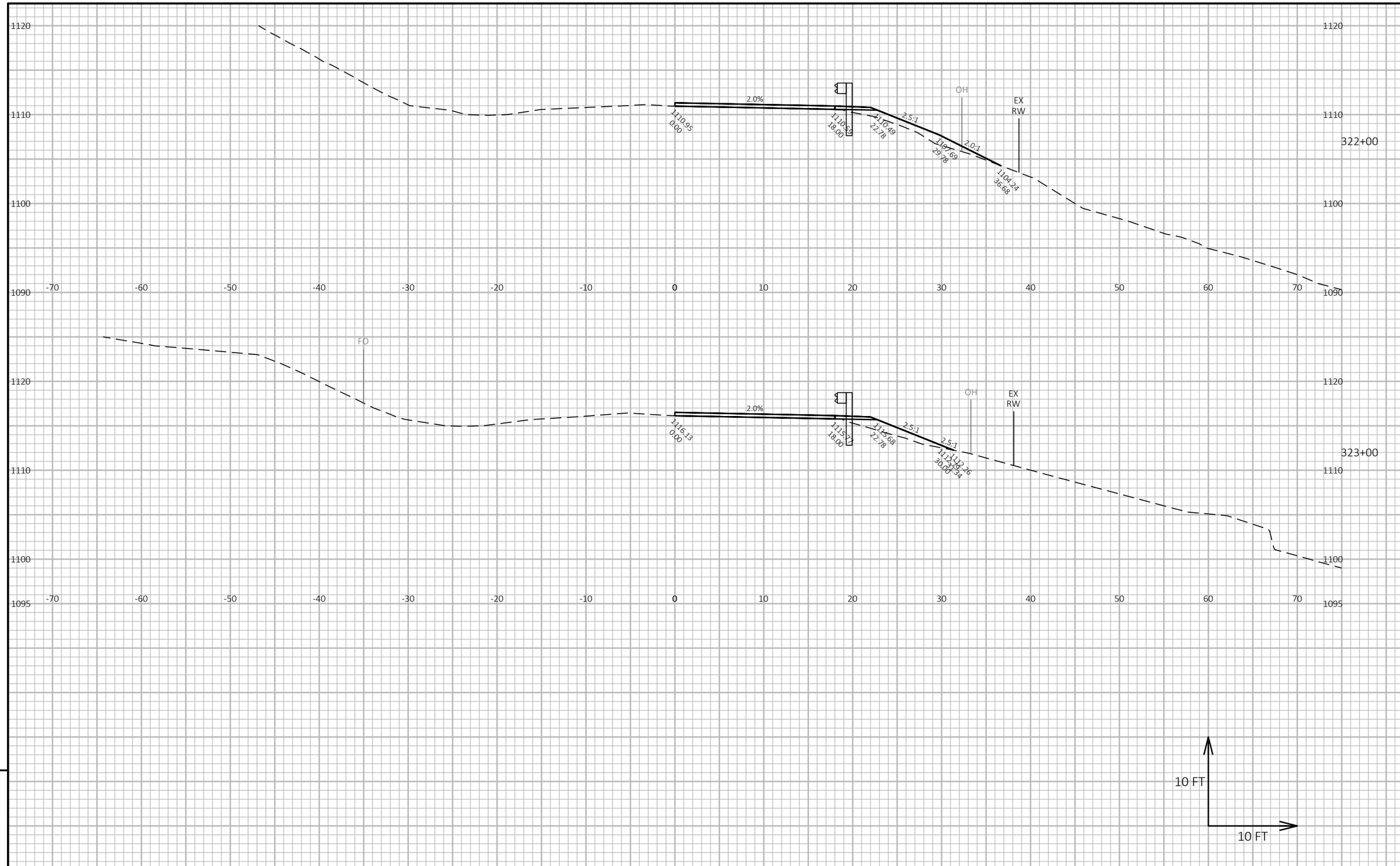

PROJECT NO: 4869-03-70	HWY: CTH D	COUNTY: WASHINGTON	CROSS SECTIONS: MAINLINE	SHEET 109	E

FILE NAME : C:\OD\CORRE, INC\PROJECTS - 4869-03-00_CTH_D_WASHINGTON_COUNTY\500_CADD\501_C3D_2022\48690300\SHEETS\090201-XS.DWG
LAYOUT NAME - 23
PLOT DATE : 12/17/2024 3:40 PM
PLOT BY : MATT KOSKI
PLOT NAME :
PLOT SCALE : 1 IN:10 FT HORZ. / 1 IN:10 FT VERT.
WISDOT/CADDS SHEET 49

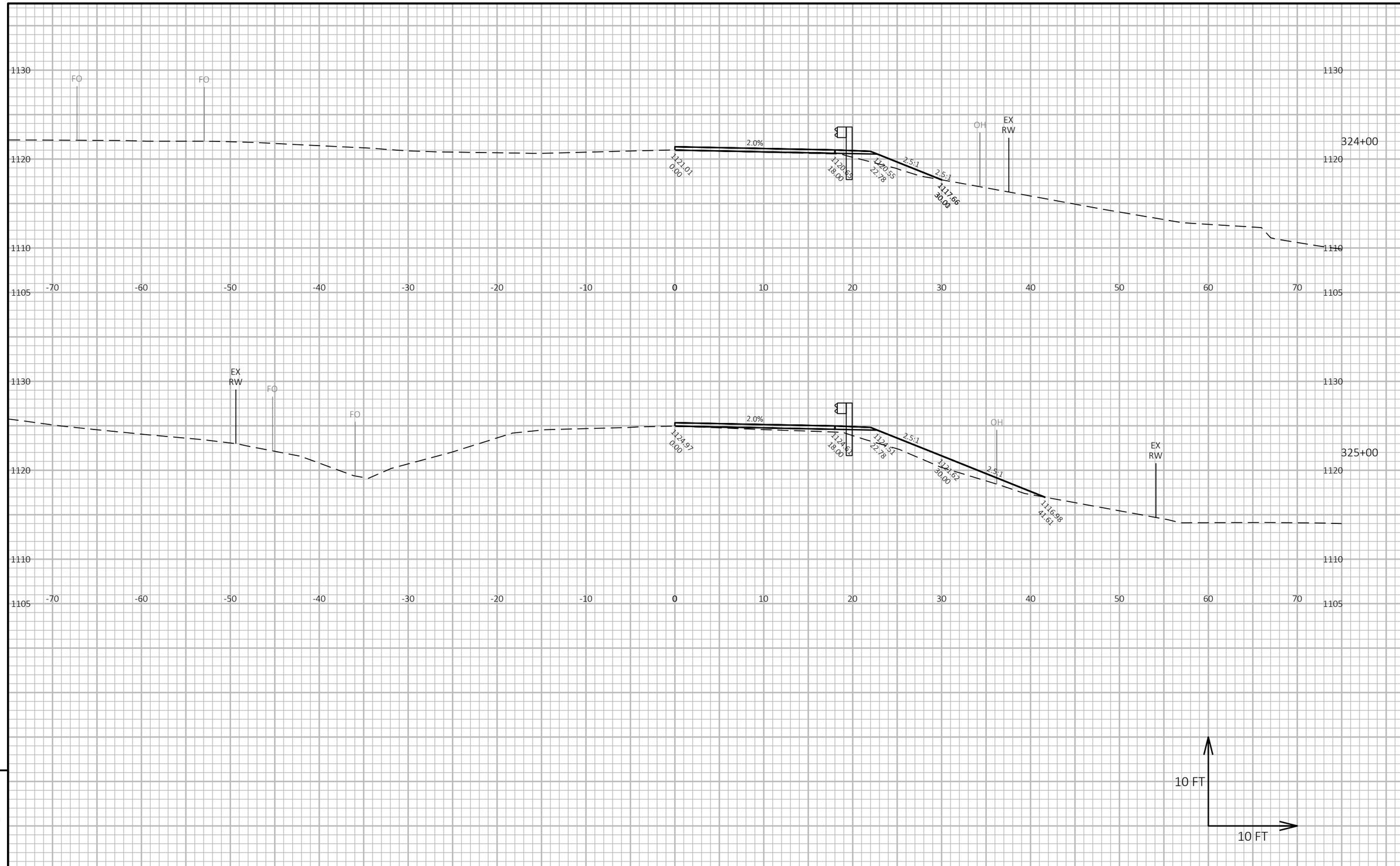

9

9

PROJECT NO: 4869-03-70	HWY: CTH D	COUNTY: WASHINGTON	CROSS SECTIONS: MAINLINE	SHEET 110	E

FILE NAME : C:\OD\CORRE, INC\PROJECTS - 4869-03-00_CTH_D_WASHINGTON_COUNTY\500_CADD\501_C3D_2022\48690300\SHEETS\090201-XS.DWG
LAYOUT NAME - 24
PLOT DATE : 12/17/2024 3:40 PM
PLOT BY : MATT KOSKI
PLOT NAME :
PLOT SCALE : 1 IN:10 FT HORZ. / 1 IN:10 FT VERT.
WISDOT/CADDS SHEET 49

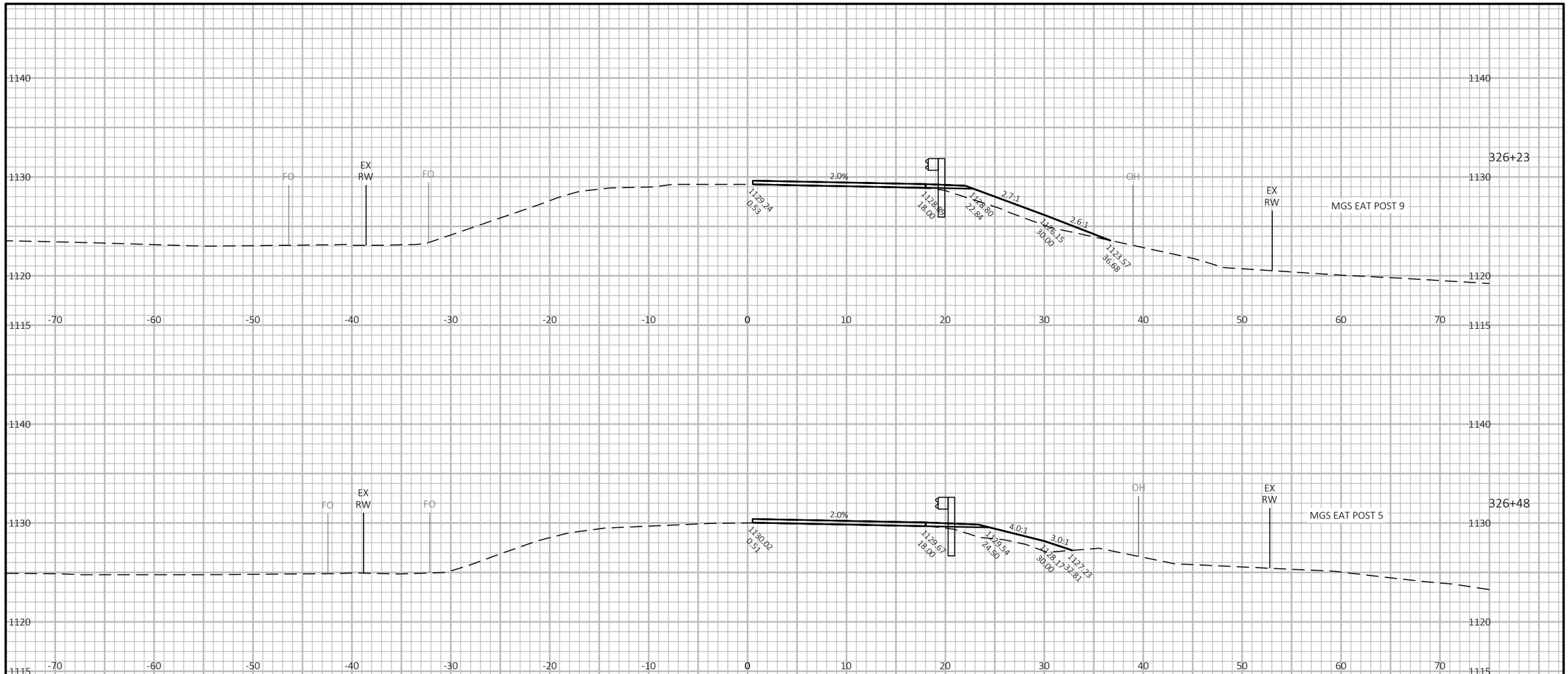

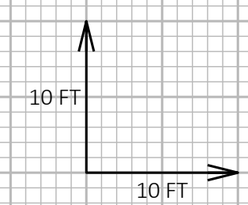

9

9

PROJECT NO: 4869-03-70	HWY: CTH D	COUNTY: WASHINGTON	CROSS SECTIONS: MAINLINE	SHEET 111	E

FILE NAME : C:\OD\CORRE, INC\PROJECTS - 4869-03-00_CTH_D_WASHINGTON_COUNTY\500_CADD\501_C3D_2022\48690300\SHEETS\090201-XS.DWG
LAYOUT NAME - 25
PLOT DATE : 12/17/2024 3:40 PM
PLOT BY : MATT KOSKI
PLOT NAME :
PLOT SCALE : 1 IN:10 FT HORZ. / 1 IN:10 FT VERT.
WISDOT/CADDS SHEET 49

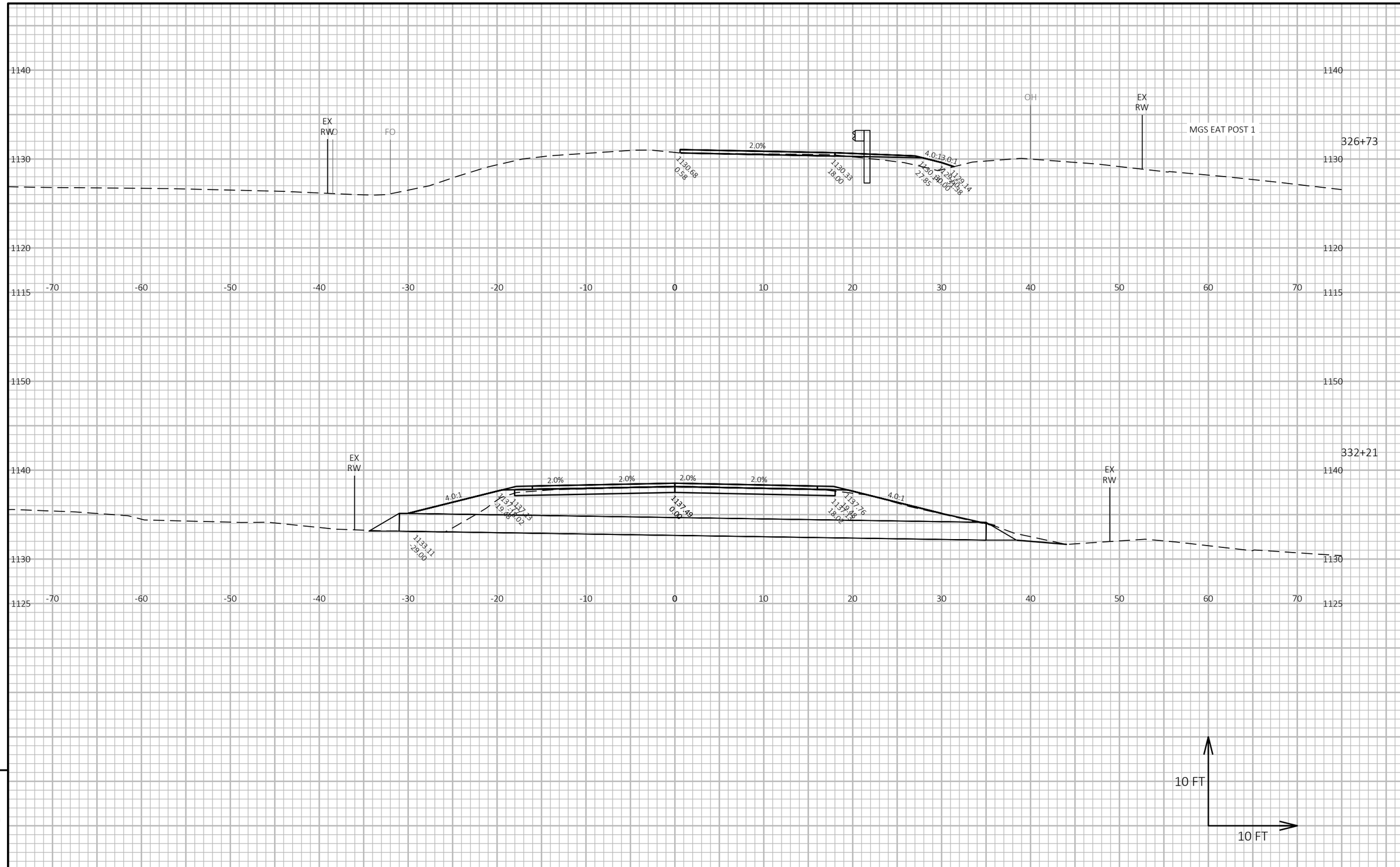

PROJECT NO: 4869-03-70	HWY: CTH D	COUNTY: WASHINGTON	CROSS SECTIONS: MAINLINE	SHEET 112	E

FILE NAME : C:\OD\CORRE, INC\PROJECTS - 4869-03-00_CTH_D_WASHINGTON_COUNTY\500_CADD\501_C3D_2022\48690300\SHEETS\090201-XS.DWG
LAYOUT NAME - 26
PLOT DATE : 12/17/2024 3:40 PM PLOT BY : MATT KOSKI PLOT NAME : PLOT SCALE : 1 IN:10 FT HORZ. / 1 IN:10 FT VERT.
WISDOT/CADDS SHEET 49

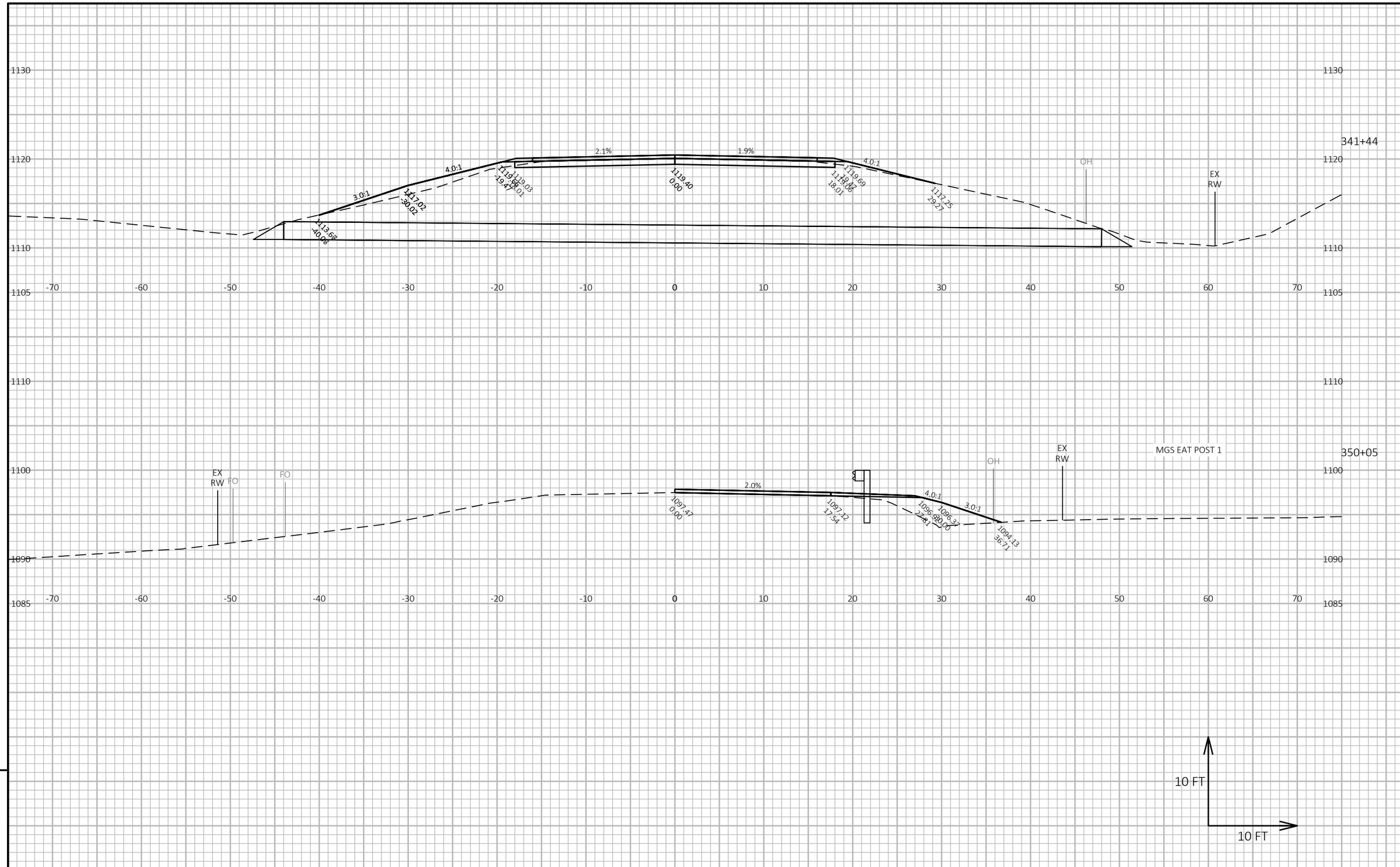

PROJECT NO: 4869-03-70	HWY: CTH D	COUNTY: WASHINGTON	CROSS SECTIONS: MAINLINE	SHEET 113	E

FILE NAME : C:\OD\CORRE, INC\PROJECTS - 4869-03-00_CTH_D_WASHINGTON_COUNTY\500_CADD\501_C3D_2022\48690300\SHEETS\090201-XS.DWG
LAYOUT NAME - 27
PLOT DATE : 12/17/2024 3:40 PM PLOT BY : MATT KOSKI PLOT NAME : **PLOT SCALE :** 1 IN:10 FT HORZ. / 1 IN:10 FT VERT.

WISDOT/CADDS SHEET 49

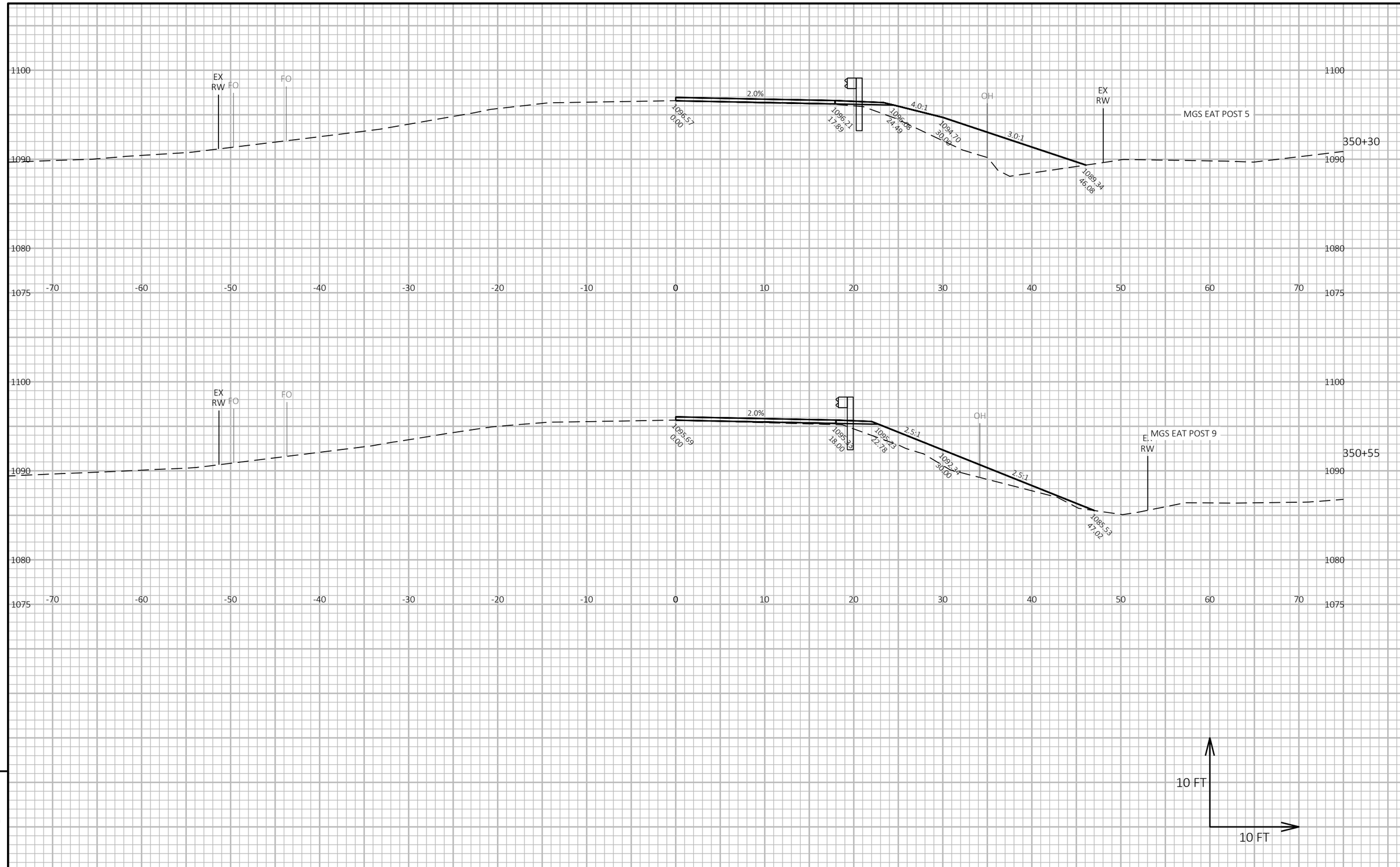

9

9

PROJECT NO: 4869-03-70	HWY: CTH D	COUNTY: WASHINGTON	CROSS SECTIONS: MAINLINE	SHEET 114	E

FILE NAME : C:\OD\CORRE, INC\PROJECTS - 4869-03-00_CTH_D_WASHINGTON_COUNTY\500_CADD\501_C3D_2022\48690300\SHEETS\090201-XS.DWG
LAYOUT NAME - 28
PLOT DATE : 12/17/2024 3:40 PM
PLOT BY : MATT KOSKI
PLOT NAME :
PLOT SCALE : 1 IN:10 FT HORZ. / 1 IN:10 FT VERT.
WISDOT/CADDS SHEET 49

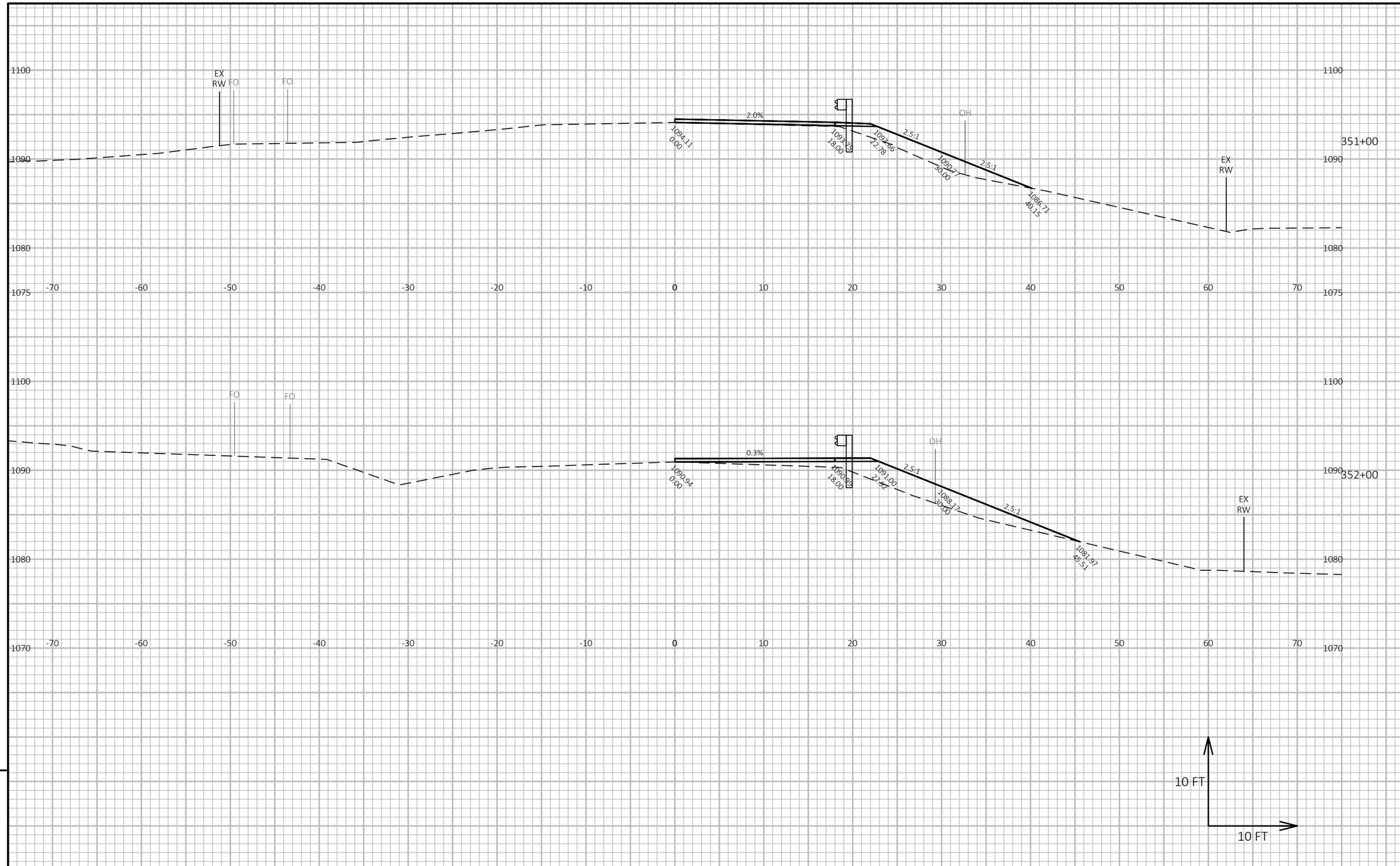

9

9

PROJECT NO: 4869-03-70	HWY: CTH D	COUNTY: WASHINGTON	CROSS SECTIONS: MAINLINE	SHEET 115	E

FILE NAME : C:\OD\CORRE, INC\PROJECTS - 4869-03-00_CTH_D_WASHINGTON_COUNTY\500_CADD\501_C3D_2022\48690300\SHEETS\090201-XS.DWG
LAYOUT NAME - 29
PLOT DATE : 12/17/2024 3:40 PM PLOT BY : MATT KOSKI PLOT NAME : PLOT SCALE : 1 IN:10 FT HORZ. / 1 IN:10 FT VERT.

WISDOT/CADDS SHEET 49

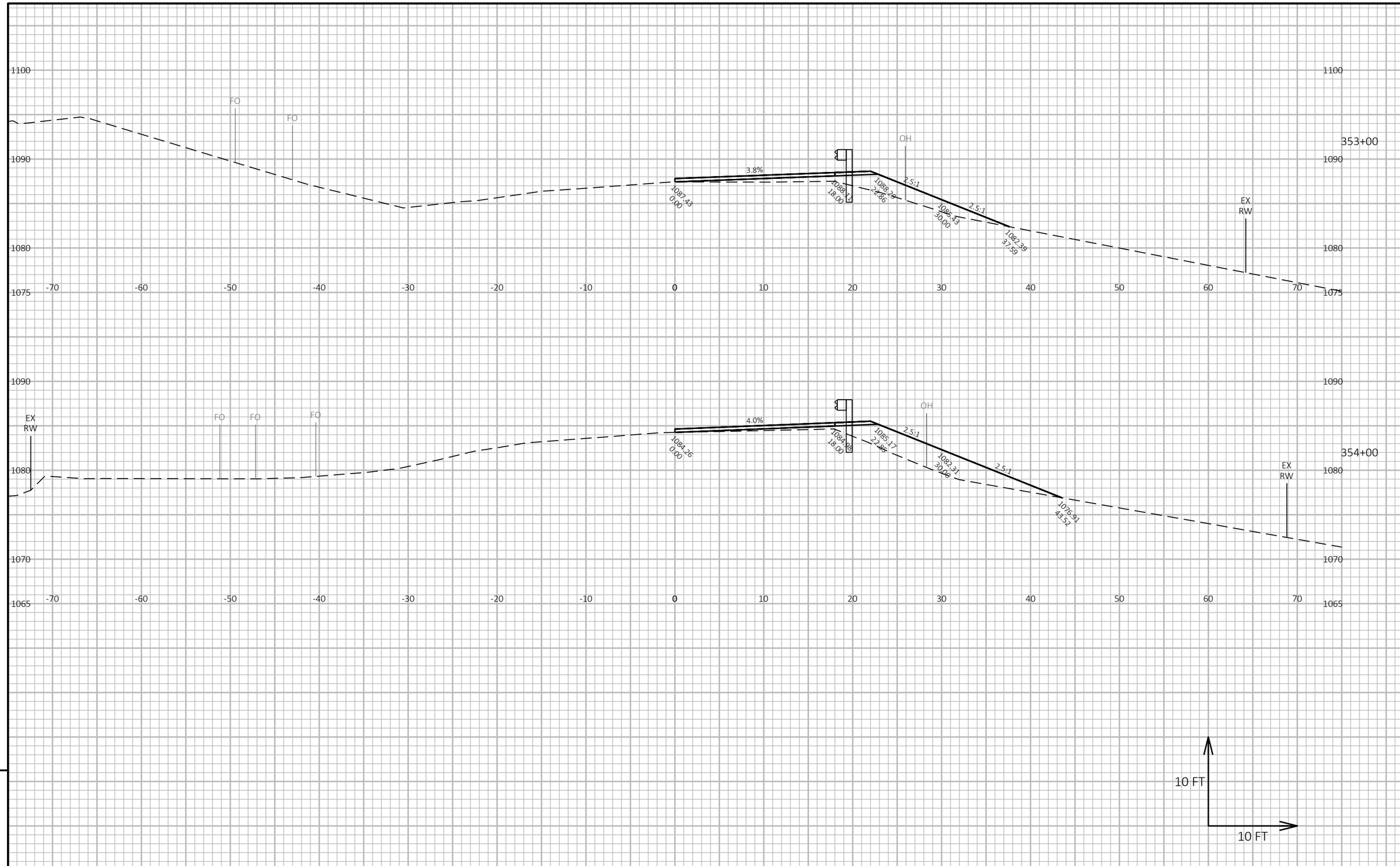

9

9

PROJECT NO: 4869-03-70	HWY: CTH D	COUNTY: WASHINGTON	CROSS SECTIONS: MAINLINE	SHEET 116	E

FILE NAME : C:\OD\CORRE, INC\PROJECTS - 4869-03-00_CTH_D_WASHINGTON_COUNTY\500_CADD\501_C3D_2022\48690300\SHEETS\090201-XS.DWG
LAYOUT NAME - 30
PLOT DATE : 12/17/2024 3:40 PM
PLOT BY : MATT KOSKI
PLOT NAME :
PLOT SCALE : 1 IN:10 FT HORZ. / 1 IN:10 FT VERT.
WISDOT/CADDS SHEET 49

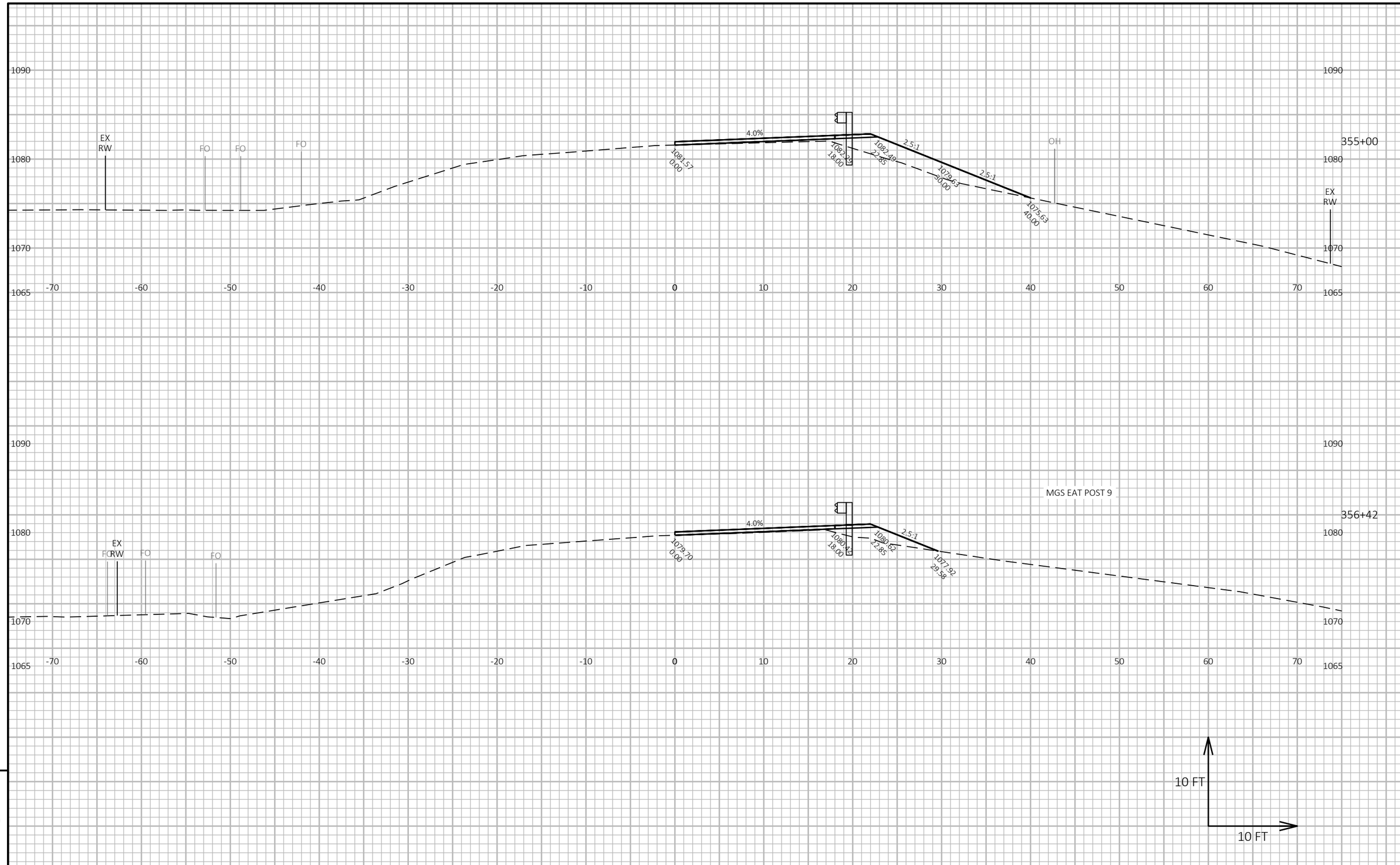

9

9

PROJECT NO: 4869-03-70	HWY: CTH D	COUNTY: WASHINGTON	CROSS SECTIONS: MAINLINE	SHEET 117	E

FILE NAME : C:\OD\CORRE, INC\PROJECTS - 4869-03-00_CTH_D_WASHINGTON_COUNTY\500_CADD\501_C3D_2022\48690300\SHEETS\090201-XS.DWG
LAYOUT NAME - 31
PLOT DATE : 12/17/2024 3:40 PM
PLOT BY : MATT KOSKI
PLOT NAME :
PLOT SCALE : 1 IN:10 FT HORZ. / 1 IN:10 FT VERT.
WISDOT/CADDS SHEET 49

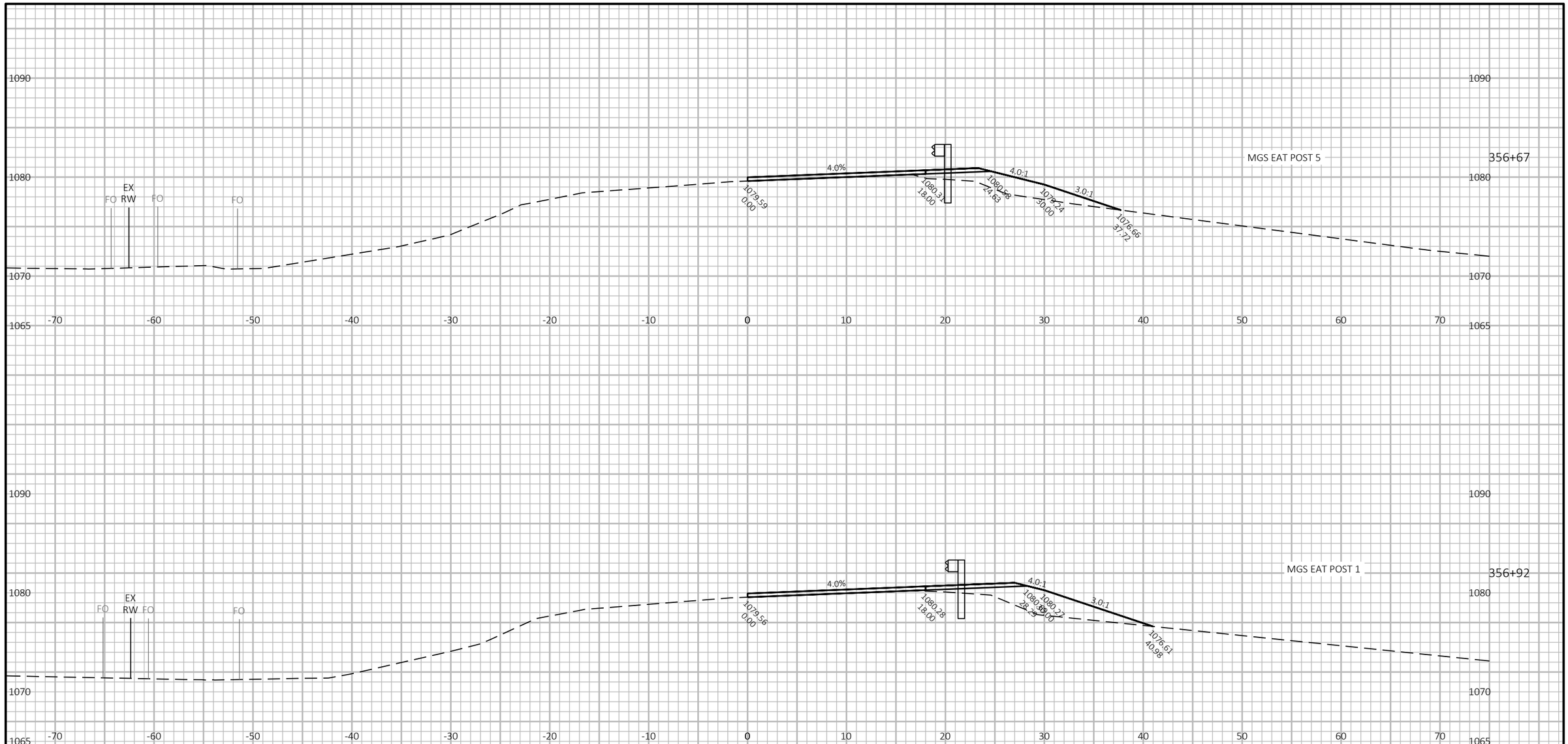

9

9

PROJECT NO: 4869-03-70	HWY: CTH D	COUNTY: WASHINGTON	CROSS SECTIONS: MAINLINE	SHEET 118	E

FILE NAME : C:\OD\CORRE, INC\PROJECTS - 4869-03-00_CTH_D_WASHINGTON_COUNTY\500_CADD\501_C3D_2022\48690300\SHEETS\090201-XS.DWG
LAYOUT NAME - 32
PLOT DATE : 12/17/2024 3:40 PM
PLOT BY : MATT KOSKI
PLOT NAME :
PLOT SCALE : 1 IN:10 FT HORZ. / 1 IN:10 FT VERT.
WISDOT/CADDS SHEET 49

Notes

Wisconsin Department of Transportation

Dedicated people creating transportation solutions through innovation and exceptional service.

http://www.dot.wisconsin.gov