LAX | FEBRUARY 2025

PROJECT ID: 1014-00-75

WITH: N/A

COUNTY: SAUK, JUNEAU

ORDER OF SHEETS

Section No.	1	Title
Section No.	2	Typical Sections and Details
Section No.	3	Estimate of Quantities
Section No.	3	Miscellaneous Quantities
~~Section No.~~	~~4~~	~~Right of Way Plat~~
Section No.	5	Plan and Profile
Section No.	6	Standard Detail Drawings
Section No.	7	Sign Plates
~~Section No.~~	~~8~~	~~Structure Plans~~
~~Section No.~~	~~9~~	~~Computer Earthwork Data~~
Section No.	9	Cross Sections

TOTAL SHEETS = 166

STATE PROJECT	FEDERAL PROJECT	
	PROJECT	CONTRACT
1014-00-75	WISC 2025301	1

STATE OF WISCONSIN
DEPARTMENT OF TRANSPORTATION

PLAN OF PROPOSED IMPROVEMENT

MAUSTON - WISCONSIN DELLS

USH 12 TO STH 23

IH-90

JUNEAU AND SAUK COUNTIES

STATE PROJECT NUMBER
1014-00-75

N

DESIGN DESIGNATION 1014-00-75

A.A.D.T.	2025	=	44800
A.A.D.T.	2045	=	51200
D.H.V.		=	19.5
D.D.		=	53/47
T.		=	25.6%
DESIGN SPEED		=	70 M.P.H.
ESALS		=	33,000,000

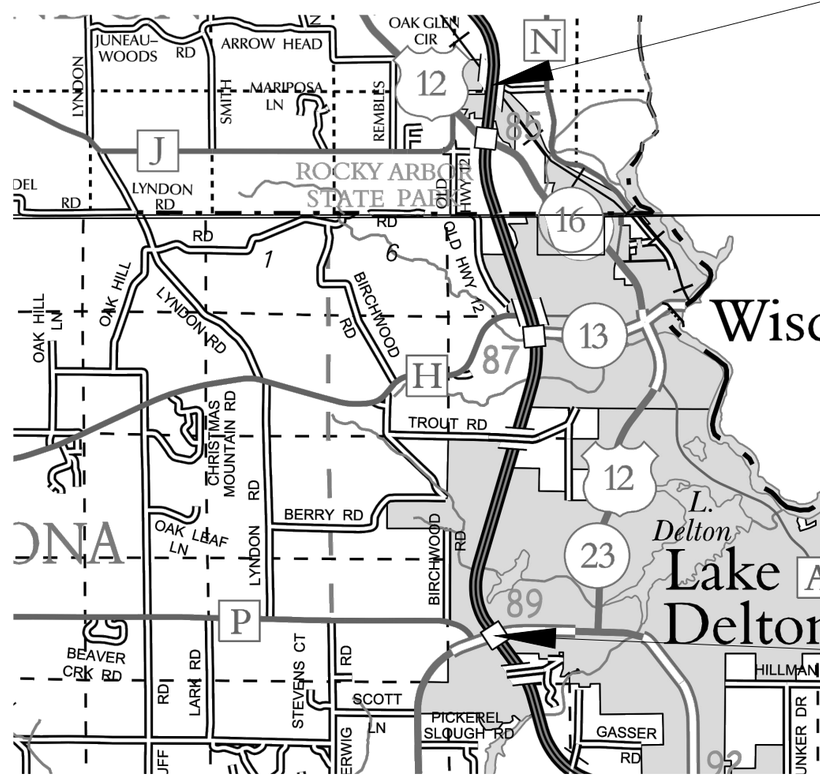

BEGIN PROJECT
STA. 1822+70 EB
X = 632219.51
Y = 305093.10
STA. 1826+21 WB
X = 632281.99
Y = 305010.24

END PROJECT
STA 2078+28 EB
X = 632572.80
Y = 280508.98
STA 2080+42 WB
X = 632633.24
Y = 280528.12

LAYOUT

SCALE 0 1 MI

TOTAL NET LENGTH OF CENTERLINE = 4.840

HORIZONTAL POSITIONS SHOWN ON THIS PLAN ARE WISCONSIN COORDINATE REFERENCE SYSTEM (WISCRS), SAUK COUNTY, NAD83 (2011), IN U.S. SURVEY FEET. POSITIONS SHOWN ARE GRID COORDINATES, GRID BEARINGS, AND GRID DISTANCES. GRID DISTANCES ARE THE SAME AS GROUND DISTANCES. ELEVATIONS ARE REFERENCED TO NAVD 88 (2012). GPS DERIVED ELEVATIONS ARE BASED ON GEOID 12A.

CONVENTIONAL SYMBOLS

PLAN
- CORPORATE LIMITS
- PROPERTY LINE
- LOT LINE
- LIMITED HIGHWAY EASEMENT
- EXISTING RIGHT OF WAY
- PROPOSED OR NEW R/W LINE
- SLOPE INTERCEPT
- REFERENCE LINE (300'EB')
- EXISTING CULVERT
- PROPOSED CULVERT (Box or Pipe)
- COMBUSTIBLE FLUIDS (CAUTION)
- MARSH AREA
- WOODED OR SHRUB AREA

PROFILE
- GRADE LINE
- ORIGINAL GROUND
- MARSH OR ROCK PROFILE (To be noted as such) (ROCK)
- SPECIAL DITCH (LABEL)
- GRADE ELEVATION (95.36)
- CULVERT (Profile View)

UTILITIES
- ELECTRIC (E)
- FIBER OPTIC (FO)
- GAS (G)
- SANITARY SEWER (SAN)
- STORM SEWER (SS)
- TELEPHONE (T)
- WATER (W)
- UTILITY PEDESTAL
- POWER POLE
- TELEPHONE POLE

STATE OF WISCONSIN
DEPARTMENT OF TRANSPORTATION

PREPARED BY

Surveyor	WISDOT
Designer	BRIAN DAHL
Project Manager	CORY MIKSHOWSKY
Regional Examiner	SW REGION
Regional Supervisor	JAMES SAVOLDELLI

APPROVED FOR THE DEPARTMENT

DATE: 11/01/2023 (Signature)

E

GENERAL NOTES

- THERE ARE UTILITY FACILITIES WITHIN THE PROJECT AREA THAT ARE NOT SHOWN ON THE PLANS. THE CONTRACTOR SHALL COORDINATE THEIR CONSTRUCTION ACTIVITIES WITH A CALL TO DIGGERS HOTLINE AND/OR A DIRECT CALL TO THE UTILITIES THAT HAVE FACILITIES IN THE AREA. NOT ALL UTILITIES ARE MEMBERS OF DIGGERS HOTLINE.
- HMA PAVEMENT WEIGHT CALCULATIONS ARE BASED ON 112 LB/SY/IN.
- APPLY TACK COAT AT A RATE OF 0.07 GAL/SY TO MILLED PAVEMENT SURFACES AND EXISTING PAVEMENT SURFACES (INCLUCING CONCRETE) AND 0.05 GAL/SY BETWEEN LAYERS OF NEW HMA PAVEMENT
- THE CONTRACTOR'S PAVING OPERATIONS SHALL BE CONSISTENT WITH THE PLAN TYPICAL SECTIONS AND CONSTRUCTED TO PREVENT HMA LONGITUDINAL JOINTS FROM BEING LOCATED WITHIN A DRIVING, TURNING, BIKE OR PARKING LANE.
- CONCRETE PAVEMENT REPAIR AND REPLACEMENT LOCATIONS IN THE PLAN ARE APPROXIMATE. VERIFY LOCATIONS WITH ENGINEER
- SAWING CONCRETE WILL BE MEASURED AND PAID FOR ONLY ONCE WHEN REPAIRS ARE ADJACENT ALONG THE CENTERLINE OF THE LANES
- OVER-SAWING INTO PAVEMENT THAT IS TO REMAIN TO FACILITATE REMOVAL OF REPAIR AREAS SHALL BE SEALED WITH AN APPROVED EPOXY. THE OVER-SAWING AND EPOXY ARE INCIDENTAL TO BID ITEMS 416.1715, 416.1725.
- WITHIN CONCRETE PAVEMENT REPLACEMENT SECTIONS, THE NEW CONTRACTION JOINTS MAY NOT MATCH ABUTTING EXISTING JOINTS BECAUSE OF CHANGES TO STANDARDS AND PRIOR REPAIRS. ADJUST NEW JOINTS TO MATCH EXISTING JOINTS WHERE PRACTICAL. DO NOT EXCEED THE MAXIMUM CONTRACTION JOINT SPACING OF 15 FEET.
- THE NEW TINING SHOULD MATCH THE ADJACENT PAVEMENT PATTERN.
- THE QUANTITY OF THE ITEMS FOR EROSION PROTECTION INCLUDES AN UNDISTRIBUTED AMOUNT FOR PROTECTION, CONTROL AND ABATEMENT OF WATER POLLUTION RESULTING FROM SOIL EROSION. THE DISTRIBUTION AND LOCATION OF THESE MATERIALS ARE TO BE DETERMINED BY THE ENGINEER.
- DISTURBED AREAS WITHIN THE RIGHT OF WAY ARE TO BE TOPSOILED (SALVAGED), FERTILIZED, SEEDED, AND MULCHED OR SODDED AS DIRECTED BY THE ENGINEER.
- NO TREES OR SHRUBS ARE TO BE REMOVED WITHOUT APPROVAL OF THE ENGINEER

RUNOFF COEFFICIENT TABLE

	Hydrologic Soil Group											
	A			B			C			D		
	Slope Range (Percent)			Slope Range (Percent)			Slope Range (Percent)			Slope Range (Percent)		
Land Use:	0 - 2	2 - 6	6 & Over	0 - 2	2 - 6	6 & Over	0 - 2	2 - 6	6 & Over	0 - 2	2 - 6	6 & Over
Row Crops	.08 .22	.16 .30	.22 .38	.12 .26	.20 .34	.27 .44	.15 .30	.24 .37	.33 .50	.19 .34	.28 .41	.38 .56
Median Strip Turf	.19 .24	.20 .26	.24 .30	.19 .25	.22 .28	.26 .33	.20 .26	.23 .30	.30 .37	.20 .27	.25 .32	.30 .40
Side Slope Turf			.25 .32			.27 .34			.28 .36			.30 .38
Pavement												
Asphalt	.70 - .95											
Concrete	.80 - .95											
Brick	.70 - .80											
Drives, Walks	.75 - .85											
Roofs	.75 - .95											
Gravel Roads, Shoulders	.40 - .60											

Total Project Area = 150 Acres

Total Area Expected To Be Disturbed By Construction Activities = 0.986 Acres

STANDARD ABBREVIATIONS

AC	ACRE
AGG	AGGREGATE
<	ANGLE
AE, AEW	APRON ENDWALL
ASPH.	ASPHALTIC
A.D.T.	AVERAGE DAILY TRAFFIC
A.A.D.T.	ANNUAL AVERAGE DAILY TRAFFIC
B.F.	BACK FACE
BM	BENCHMARK
BTWN	BETWEEN
CTR.	CENTER
C/L	CENTER LINE
Δ	CENTRAL ANGLE OR DELTA
C.E.	COMMERCIAL ENTRANCE
CONST.	CONSTRUCTION
CMCP	CORRUGATED METAL CULVERT PIPE
CMP	CORRUGATED METAL PIPE
CO.	COUNTY
CTH	COUNTY TRUNK HIGHWAY
CR.	CREEK
CABC	CRUSHED AGGREGATE BASE COURSE
CY	CUBIC YARD
CP	CONTROL POINT OR CULVERT PIPE
C&G	CURB AND GUTTER
D	DEGREE OF CURVE
D.H.V.	DESIGN HOURLY VOLUME
DIA.	DIAMETER
D.D.	DIRECTIONAL DISTRIBUTION
DISCH.	DISCHARGE
DMS	DYNAMIC MESSAGE SIGN
EA	EACH
E	EAST
EB	EASTBOUND
ELEC.	ELECTRIC(AL), ELEC. CABLE
EL., ELEV.	ELEVATION
ESALS	EQUIVALENT SINGLE AXLE LOADS
EXC.	EXCAVATION
EXIST	EXISTING
F.F.	FACE TO FACE
FERT.	FERTILIZER
F.E.	FIELD ENTRANCE
F/L, F.L.	FLOW LINE
GALV.	GALVANIZE
H.S.	HIGH STRENGTH
CWT	HUNDRED WEIGHT
INL	INLET
INTER.	INTERSECTION
IH	INTERSTATE HIGHWAY
JT.	JOINT
LT	LEFT
L.H.F.	LEFT HAND FORWARD
L.	LENGTH OF CURVE
L.F.	LINEAR FOOT(FEET)
LC.	LONG CHORD
LS	LUMP SUM
M.P.	MARKER POST
MGAL	1000 GALLONS
N.C.	NORMAL CROWN
N	NORTH
NB	NORTHBOUND
NOR	NORMAL
NO.	NUMBER
PAV'T	PAVEMENT
P.L.E.	PERMANENT LIMITED EASEMENT
P.C.	POINT OF CURVATURE
P.I.	POINT OF INTERSECTION
P.T.	POINT OF TANGENCY
PCC	PORTLAND CEMENT CONCRETE
P.E.	PRIVATE ENTRANCE
PGL	PROFILE GRADE LINE
P.L.	PROPERTY LINE
R	RADIUS OR RANGE
R/L	REFERENCE LINE
R.C.C.P.	REINFORCED CONCRETE CULVERT PIPE
REQ'D	REQUIRED
RT	RIGHT
R.H.F.	RIGHT HAND FORWARD
R/W	RIGHT OF WAY
RD.	ROAD
SHLD.	SHOULDER(S)
SHR.	SHRINKAGE
S	SOUTH
SB	SOUTHBOUND
S.F.	SQUARE FOOT (FEET)
SDD	STANDARD DETAIL DRAWING(S)
STH	STATE TRUNK HIGHWAY
STA.	STATION
S.E.	SUPERELEVATION
S/L	SURVEY LINE
SYM	SYMMETRICAL
T.	PERCENT TRUCKS
TEL.	TELEPHONE
TEMP.	TEMPORARY
T.L.E.	TEMPORARY LIMITED EASEMENT
T.O.C.	TOP OF CURB
TYP	TYPICAL
UNCL.	UNCLASSIFIED
U.G.	UNDERGROUND (CABLE)
VAR	VARIABLE
V.C.	VERTICAL CURVE
V.P.C.	VERTICAL POINT OF CURVATURE
V.P.I.	VERTICAL POINT OF INTERSECTION
V.P.T.	VERTICAL POINT OF TANGENCY
Wt.	WEIGHT
W	WEST
WB	WESTBOUND

DESIGN CONTACTS

CORY MIKSHOWSKY
PROJECT MANAGER
WISDOT SW REGION
3550 MORMON COULEE RD
LA CROSSE, WI 54601
608-785-9729
cory.mikshowsky@dot.wi.gov

BRIAN DAHL
PROJECT DESIGNER
WISDOT SW REGION
3550 MORMON COULEE RD
LA CROSSE, WI 54601
608-785-9074
brian.dahl@dot.wi.gov

DNR LIAISON

ANDY BARTA
ENVIRONMENTAL ANALYSIS & REVIEW SPECIALIST
WISCONSIN DEPT. OF NATURAL RESOURCES
SOUTH CENTRAL REGION
3911 FISH HATCHERY ROAD
FITCHBURG, WI 53711
608-275-3308

UTILITY CONTACTS

Kenneth Nine - Field Contact
AT&T Legacy - Communication Line
110 North Main Street
Culver, IN 46511
(574) 842-8830
Knine@jmceainc.com

Chris Tollaksen - Field Contact
City of Wisconsin Dells - Water
300 Lacrosse St
Wisconsin Dells, WI 53965
(608) 253-2542
ctollaksen@dellscitygov.com

Chris Tollaksen - Field Contact
City of Wisconsin Dells - Sewer
300 Lacrosse St
Wisconsin Dells, WI 53965
(608) 253-2542
ctollaksen@dellscitygov.com

Chris Tollaksen - Field Contact
City of Wisconsin Dells - Electricity
300 Lacrosse St
Wisconsin Dells, WI 53965
(608) 253-2542
ctollaksen@dellscitygov.com

Ryan Dickinson - Field Contact
Alliant Energy - Electricity
520 Commerce Street
Baraboo, WI 53913
608-356-0610
RyanDickinson@alliant Energy.com

Ryan Dickinson - Field Contact
Alliant Energy - Gas/petroleum
520 Commerce Street
Baraboo, WI 53913
608-356-0610
RyanDickinson@alliant Energy.com

Mike Olsen - Field Contact
ATC Management, Inc. - Electricity
801 O'keefe Rd
P.O. Box 6113
De Pere, WI 54115-6113
(920) 338-6582
molsen@atcllc.com

Matt Riggs - Field Contact
Oakdale Electric Cooperative - Electricity
489 Oakwood St.
Tomah, WI 54660
(608) 372-8828
mriggs@oakdalerec.com

Typer Coffman - Field Contact
Frontier Communications of WI LLC - Communication Line
330 Blackburn Street
Ripon, WI 54971
217-491-7186
Tyler.Coffman@jsitel.com

Lori Ketter - Field Contact
Windstream KDL, LLC - Communication Line
314 N. Danz Avenue
Green Bay, WI 54302-3526
(920) 410-6902
Lori.Ketter@windstream.com

Scott McPhail - Field Contact
Northern Natural Gas - Gas/Petroleum
5557 County RD D
Platteville, WI 53818
402-530-2805
Scott.Mcphail@NNG.com

Logan Coy - Field Contact
Reedsburg Utility Commission - Communication line
501 Utility court
PO Box 230
Reedsburg, WI 53959
608-768-6431
logan@rucls.net

DIGGERS HOTLINE
Dial 811 or (800) 242-8511
www.DiggersHotline.com

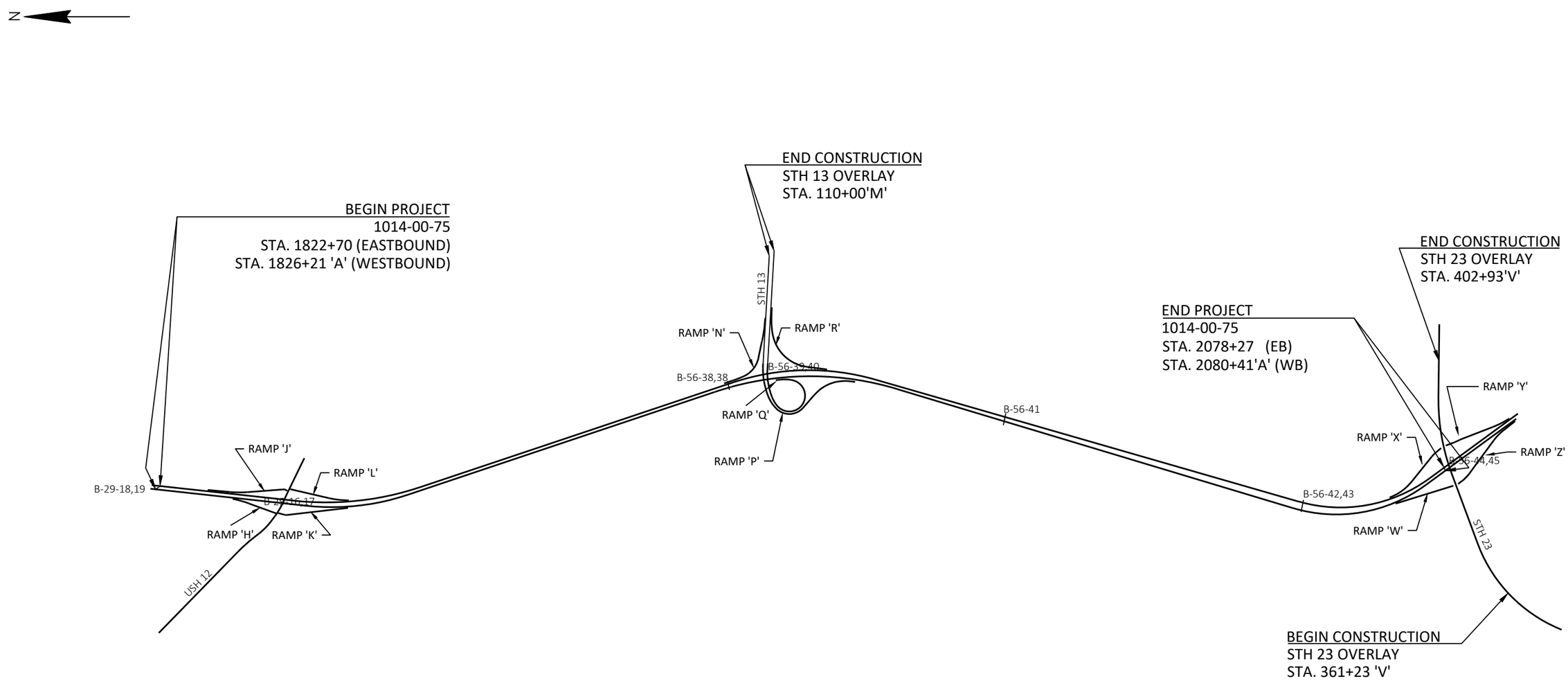
N
END CONSTRUCTION
STH 13 OVERLAY
STA. 110+00'M'
BEGIN PROJECT
1014-00-75
STA. 1822+70 (EASTBOUND)
STA. 1826+21 'A' (WESTBOUND)
END CONSTRUCTION
STH 23 OVERLAY
STA. 402+93'V'
END PROJECT
1014-00-75
STA. 2078+27 (EB)
STA. 2080+41'A' (WB)
STH 13
RAMP 'N'
RAMP 'R'
B-56-38,38
B-56-39,40
RAMP 'Q'
RAMP 'P'
B-56-41
RAMP 'Y'
RAMP 'X'
RAMP 'Z'
B-56-44,45
B-56-42,43
RAMP 'W'
STH 23
RAMP 'J'
RAMP 'L'
B-29-18,19
B-29-16,17
RAMP 'H'
RAMP 'K'
USH 12
BEGIN CONSTRUCTION
STH 23 OVERLAY
STA. 361+23 'V'

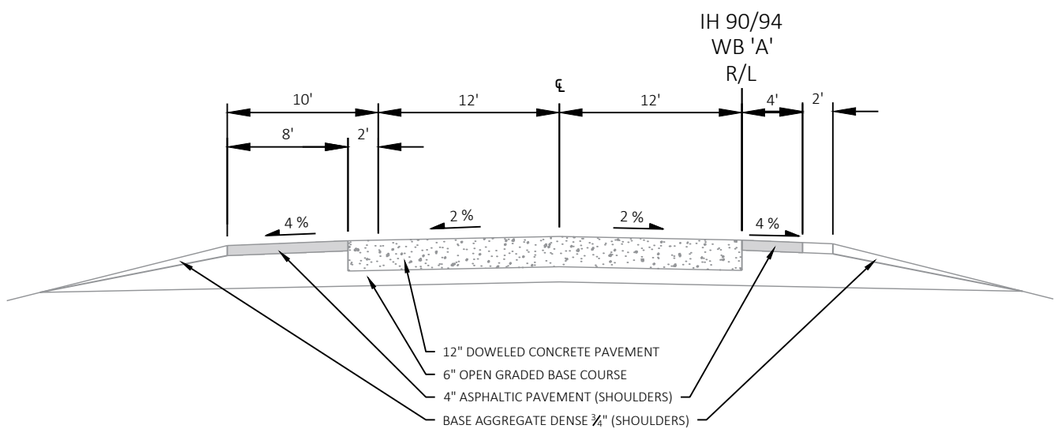

WESTBOUND

STA. 1826+21'A' - STA. 2080+41'A'

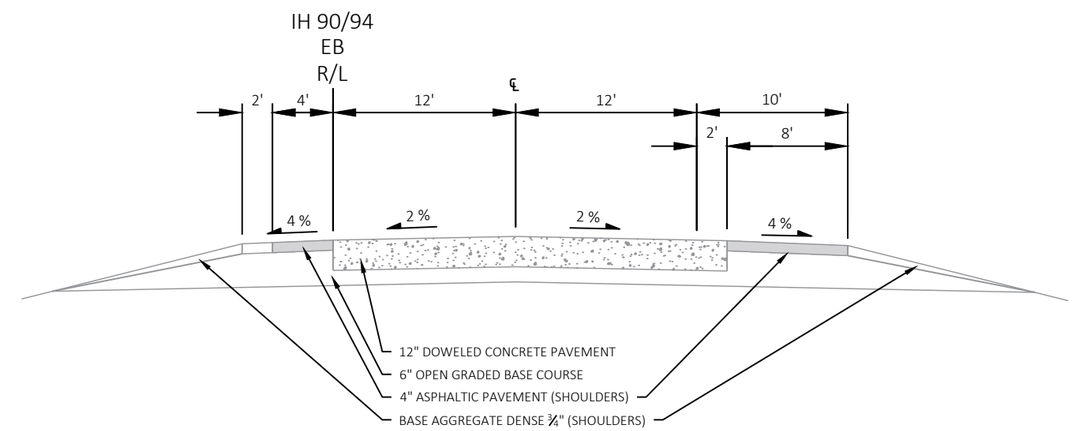

EASTBOUND

STA. 1822+70 - STA. 2078+27

TYPICAL EXISTING MAINLINE TANGENT SECTION

NOTE: EXISTING CONCRETE PAVEMENT VARIES FROM 11.5" TO 13.5" THICK.

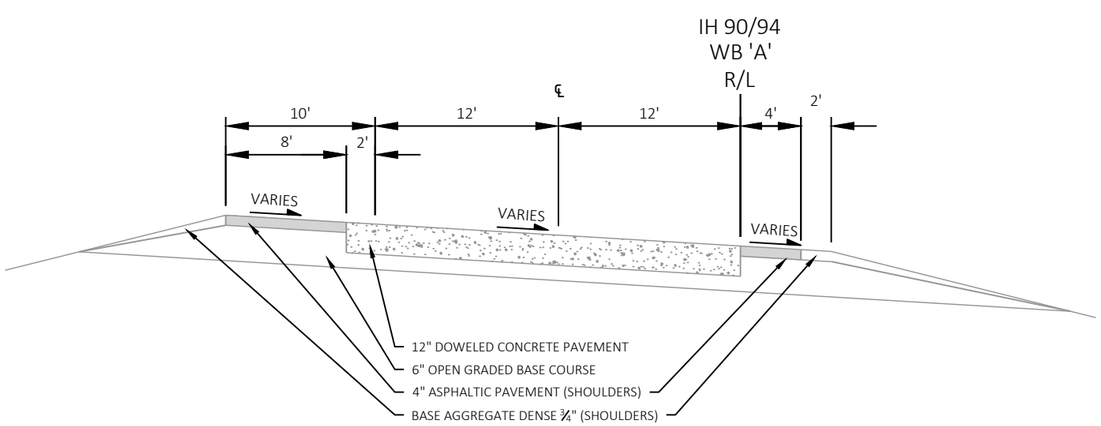

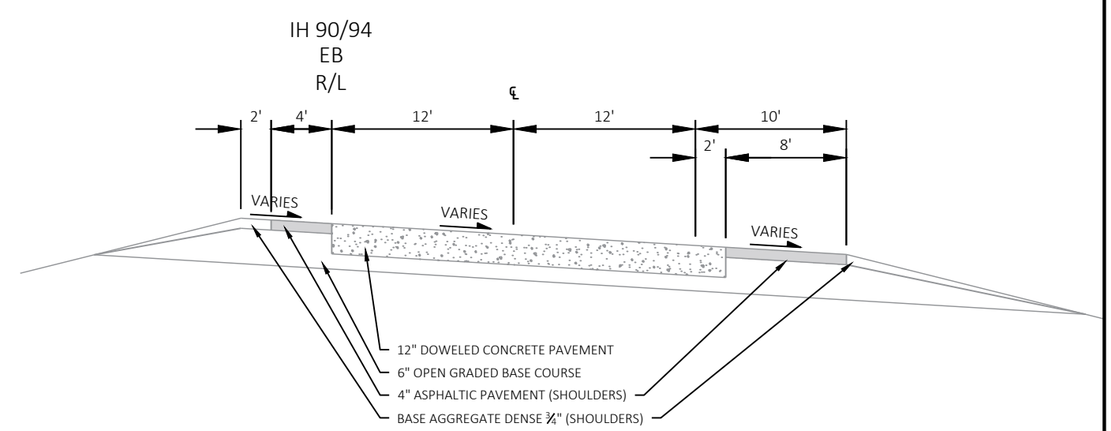

TYPICAL EXISTING MAINLINE SUPERELEVATED SECTION

NOTE: EXISTING CONCRETE PAVEMENT VARIES FROM 11.5" TO 13.5" THICK.

NOT TO SCALE

PROJECT NO: 1014-00-75	HWY: IH-90	COUNTY: JUNEAU, SAUK	TYPICAL SECTIONS	SHEET 5	E

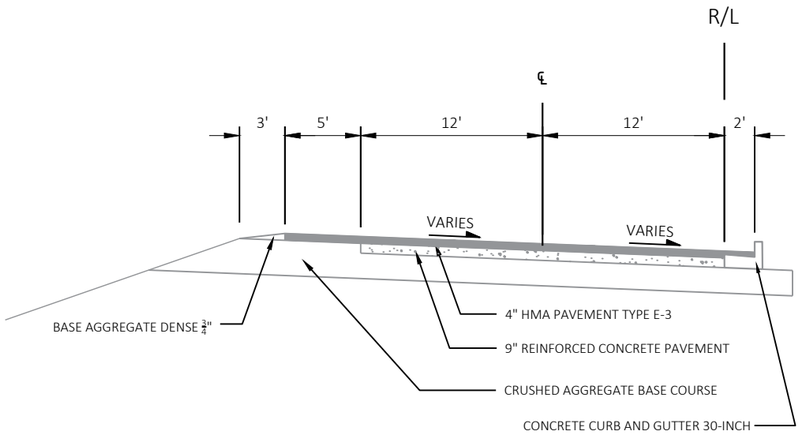

TYPICAL EXISTING SECTION - EXIT 87 EB OFF RAMP

STA. 65+88 'Q' - STA. 88+92'Q'

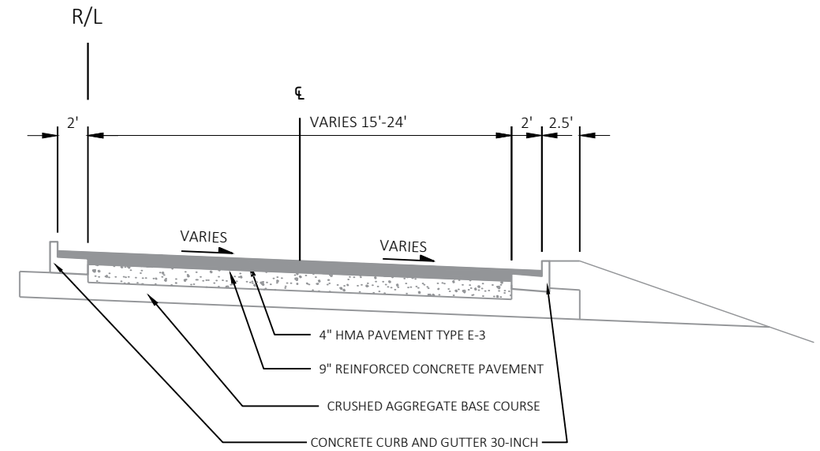

TYPICAL EXISTING SECTION - EXIT 87 EB ON RAMP

STA. 62+16 'P' - STA. 88+92'P'

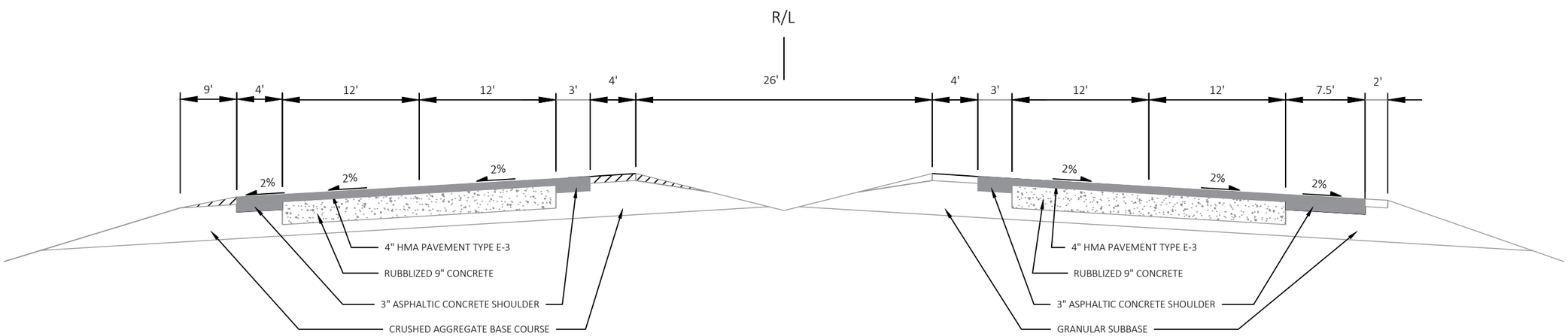

TYPICAL EXISTING SECTION - STH 13

STA. 88+42.73'M' - STA. 110+00'M'

NOT TO SCALE

PROJECT NO: 1014-00-75	HWY: IH-90	COUNTY: SAUK	TYPICAL SECTIONS	SHEET 6	E

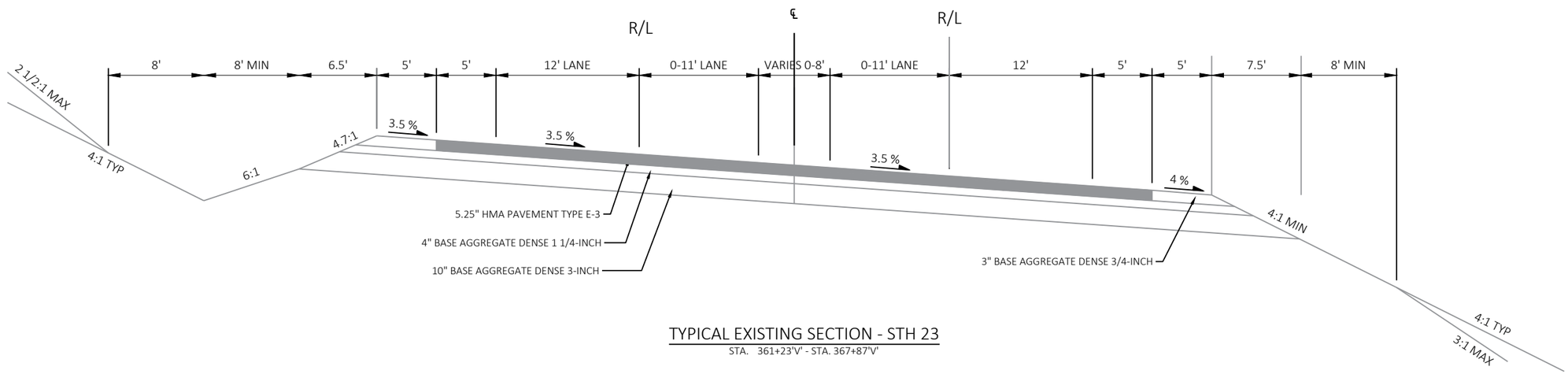

TYPICAL EXISTING SECTION - STH 23

STA. 361+23'V' - STA. 367+87'V'

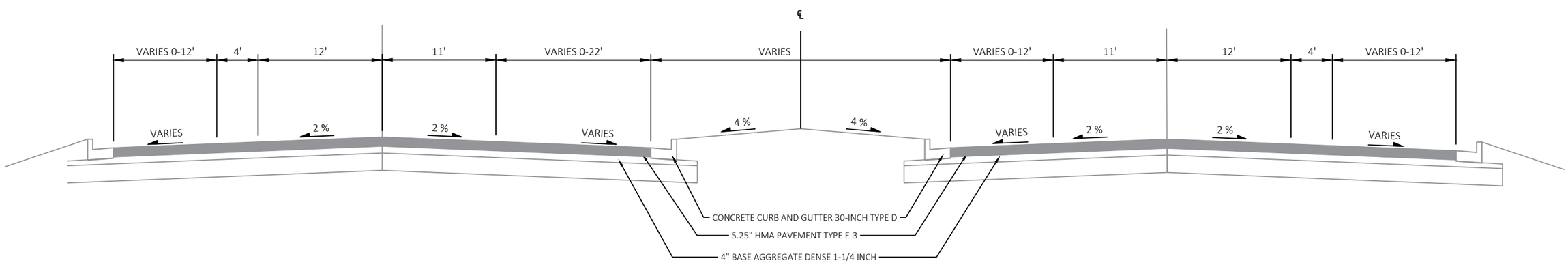

TYPICAL EXISTING SECTION - STH 23

STA. 367+87'V' - STA. 402+93'V'

PROJECT NO: 1014-00-75	HWY: IH-90	COUNTY: SAUK	TYPICAL SECTIONS	SHEET 7	E

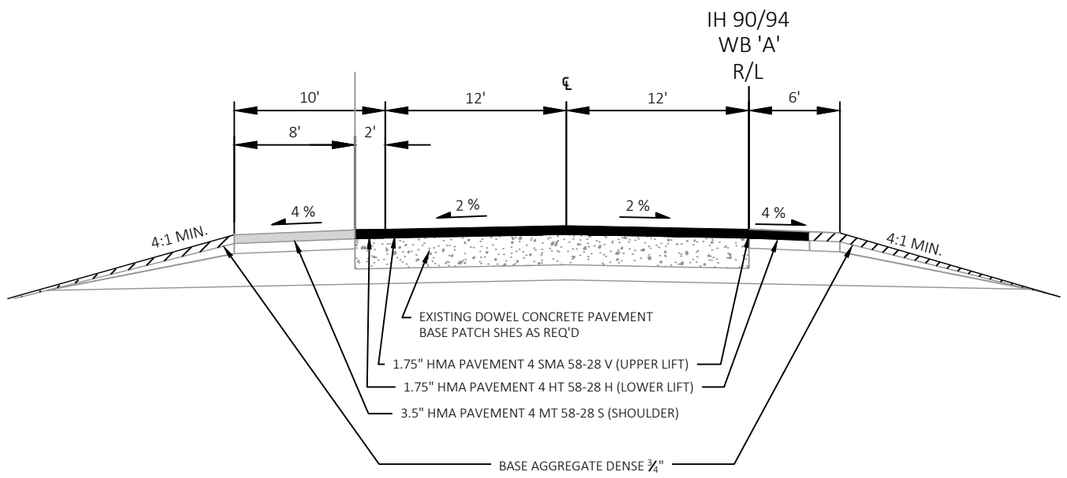

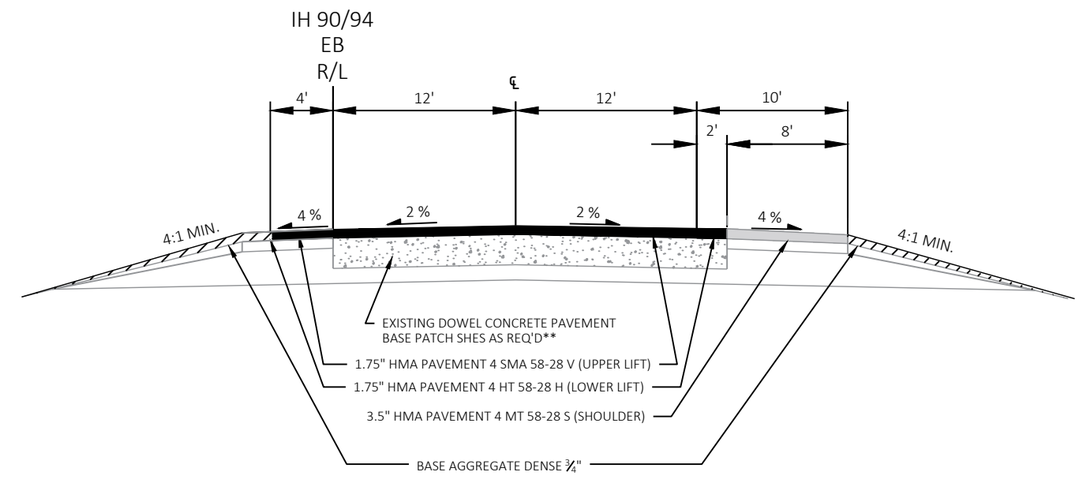

TYPICAL FINISHED MAINLINE SECTION

WESTBOUND

STA. 1826+21'A' - STA. 2080+41'A'

EASTBOUND

STA. 1822+70 - STA. 2078+27

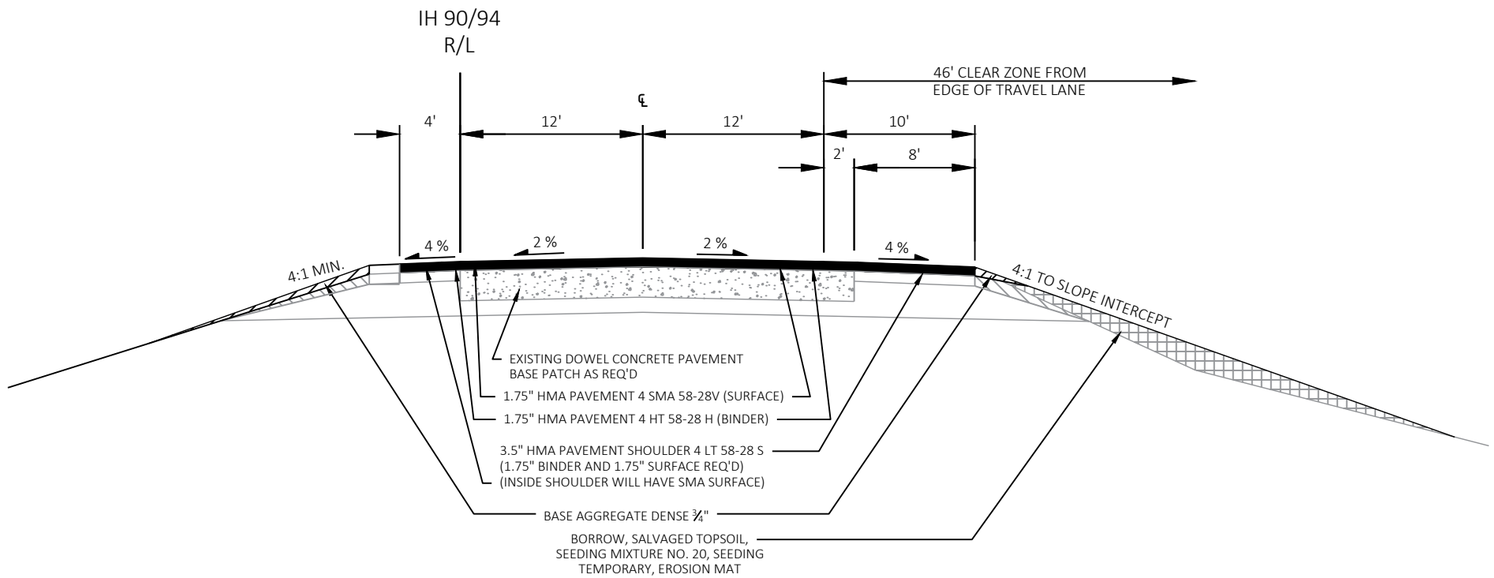

TYPICAL FINISHED SLOPE CORRECTION SECTION

STA. 1872+00'A' - STA. 1875+50'A', RIGHT
STA. 1898+50 - STA. 1903+00, RIGHT

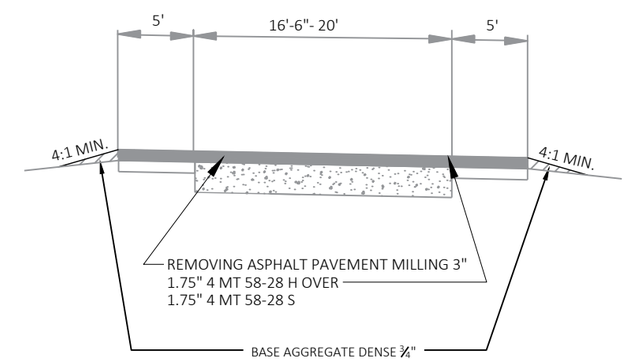

TYPICAL FINISHED RAMP SECTION

EXIT 85	EXIT 89
EB OFF RAMP 'H'	EB OFF RAMP 'W'
WB ON RAMP 'J'	WB ON RAMP 'X'
EB ON RAMP 'K'	WB OFF RAMP 'Y'
WB OFF RAMP 'L'	EB ON RAMP 'Z'

NOT TO SCALE

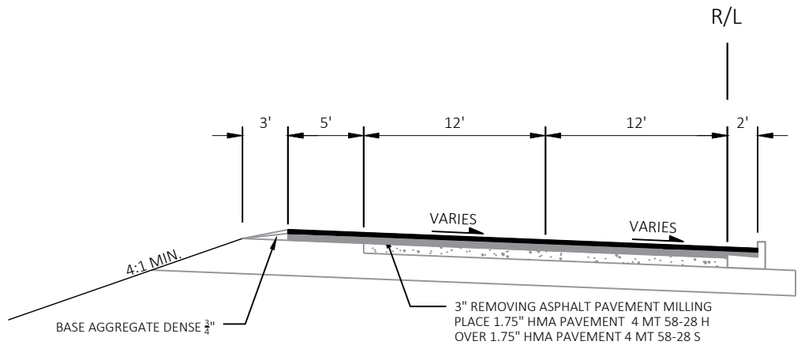

TYPICAL FINISHED SECTION - EXIT 87 EB OFF RAMP 'Q'

STA. 65+88 'Q' - STA. 88+92'Q'

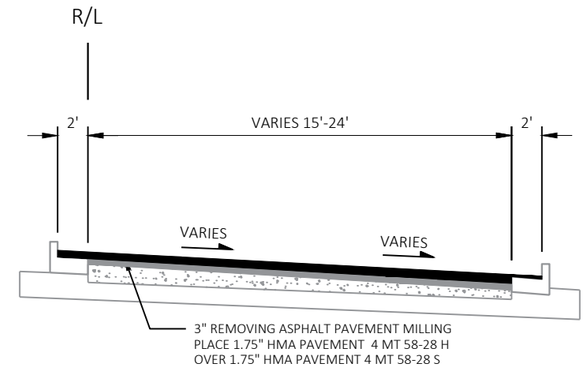

TYPICAL FINISHED SECTION - EXIT 87 EB ON RAMP 'P'

STA. 62+16 'P' - STA. 88+92'P'

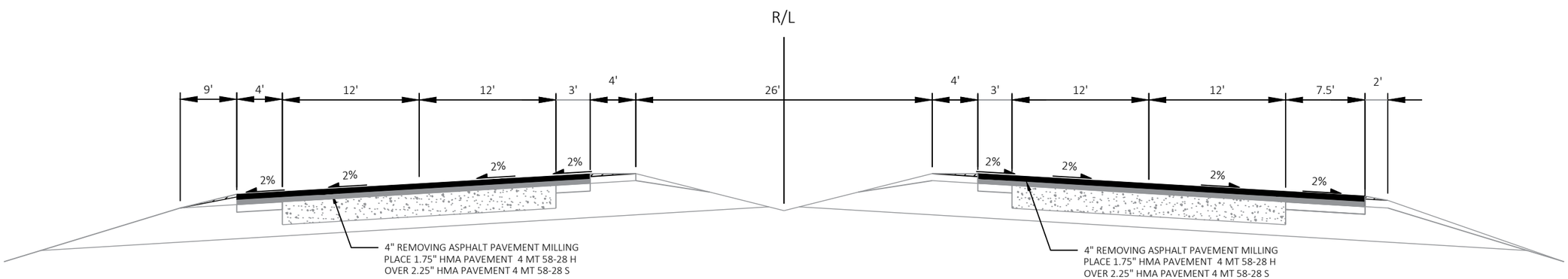

TYPICAL FINISHED SECTION - STH 13

STA. 88+42.73'M' - STA. 110+00'M'

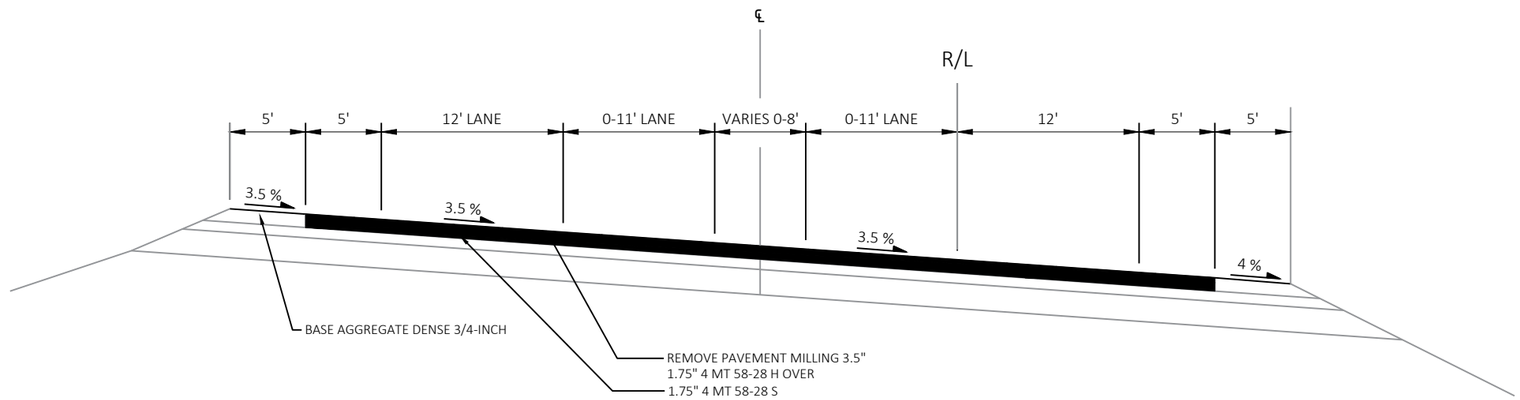

TYPICAL FINISHED SECTION - STH 23

STA. 361+23'V' - STA. 367+87'V'

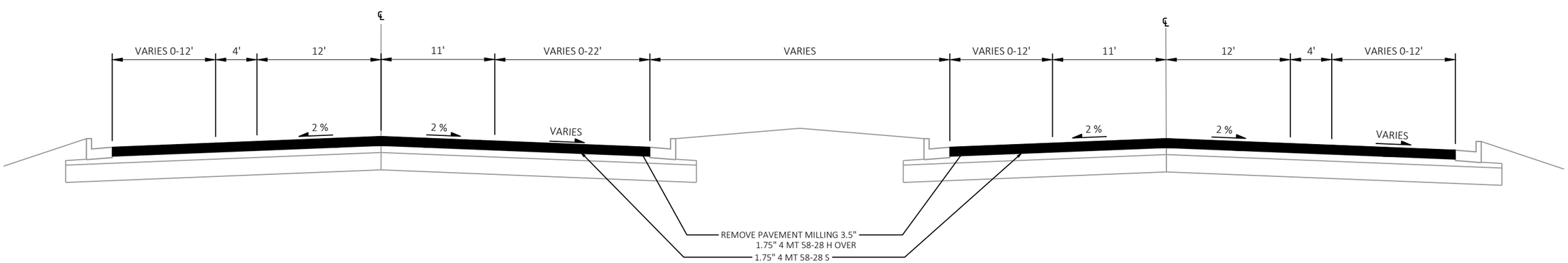

TYPICAL FINISHED SECTION - STH 23

STA. 367+87'V' - STA. 402+93'V'

PROJECT NO: 1014-00-75	HWY: IH-90	COUNTY: SAUK	TYPICAL SECTIONS	SHEET 10	E

2

NOT TO SCALE

BUTT JOINT DETAIL

MINIMUM
L(ft) = T(in) X 25
87.5=3.5x25

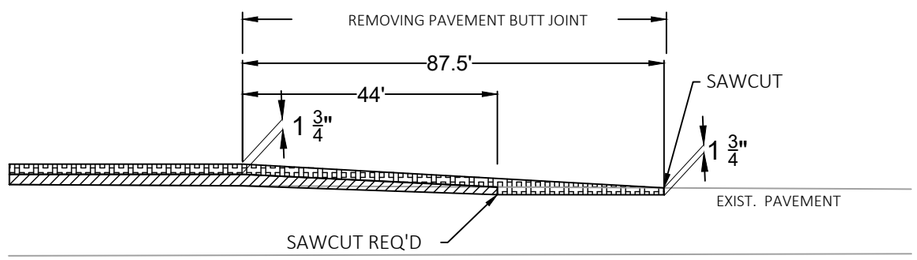

SURFACE LIFT (SEE RIGHT FOR SPECIFIC MIX)

LOWER LIFT (SEE RIGHT FOR SPECIFIC MIX)

IH 90

STA. 1822+70	STA. 1826+21'A'	(BEGIN PROJECT)
STA. 1846+02	STA. 1849+08'A'	(B-29-16&17)
STA. 1847+81	STA. 1851+04'A'	
STA. 1934+44	STA. 1937+14'A'	(B-56-37&38)
STA. 1936+10	STA. 1938+85'A'	
STA. 1941+77	STA. 1944+37'A'	(B-56-39&40)
STA. 1948+00	STA. 1947+51'A'	
STA. 1989+10	STA. 1992+20'A'	(B-56-41)
STA. 1990+00	STA. 1993+00'A'	
STA. 2047+91	STA. 2050+28'A'	(B-56-42&43)
STA. 2049+51	STA. 2051+91'A'	
STA. 2078+27	STA. 2080+41'A'	(END PROJECT)

1 3/4" HMA PAVEMENT 4 SMA 58-28 V

1 3/4" HMA PAVEMENT 4 HT 58-28 S

RAMP TERMINALS

STA. 7+22 'H'	(EXIT 85 EB OFF RAMP)
STA. 1+85 'K'	(EXIT 85 EB ON RAMP)
STA. 69+61'Q'	(EXIT 87 EB OFF RAMP)

1 3/4" HMA PAVEMENT 4 MT 58-28 S

1 3/4" HMA PAVEMENT 4 MT 58-28 H

2

NOT TO SCALE

IH 90

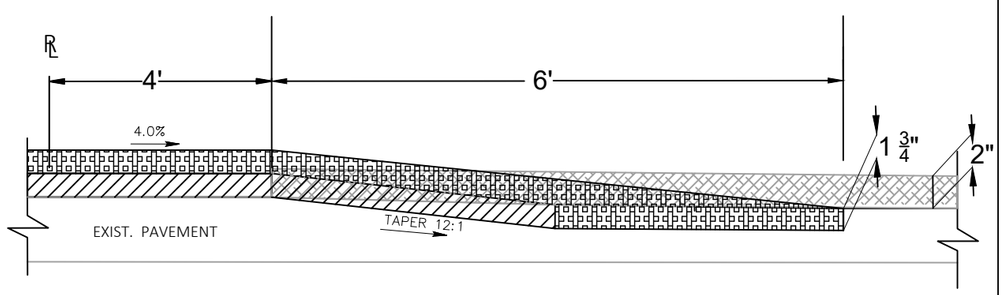

1 3/4" HMA PAVEMENT 4 SMA 58-28 V

1 3/4" HMA PAVEMENT 4 HT 58-28 S

2" HMA PAVEMENT 4 MT 58-28 S

BUTTED JOINT AT MAINTENANCE CROSSOVER

STA. 1827+97	STA. 1832+72'A'
STA. 1883+62	STA. 1886+01'A'
STA. 1924+88	STA. 1927+26'A'
STA. 1988+00	STA. 1991+00'A'
STA. 2024+07	STA. 2027+05'A'

NOT TO SCALE

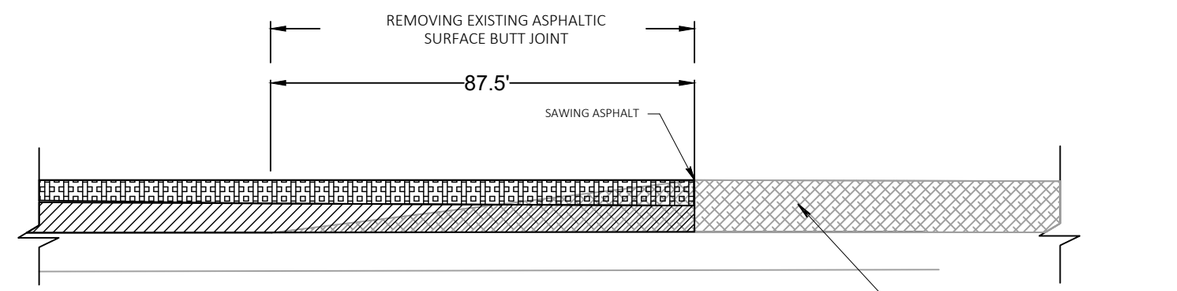

1 3/4-INCH HMA PAVEMENT 4 SMA 58-28 V

1 3/4" HMA PAVEMENT 4 HT 58-28 S

3 1/2" ASPHALTIC OVERLAY RAMP PAVEMENT

BUTT JOINT AT RAMP END TRANSITIONS

STA. 2+53 'H'	STA. 64+04 'P'	STA. 2+24 'W'
STA. 10+85 'K'	STA. 10+49 'N'	STA. 5+24 'X'
STA. 6+92 'J'	STA. 7+30 'R'	STA. 10+88 'Y'
STA. 2+03 'L'		STA. 10+78 'Z'

2

LEGEND

- (X) CURB RAMP TYPE
- (SOD) SOD LAWN
- (SW5) CONCRETE SIDWALK 5-INCH
- (XX / YYY.YY) POINT NUMBER & ELEVATION

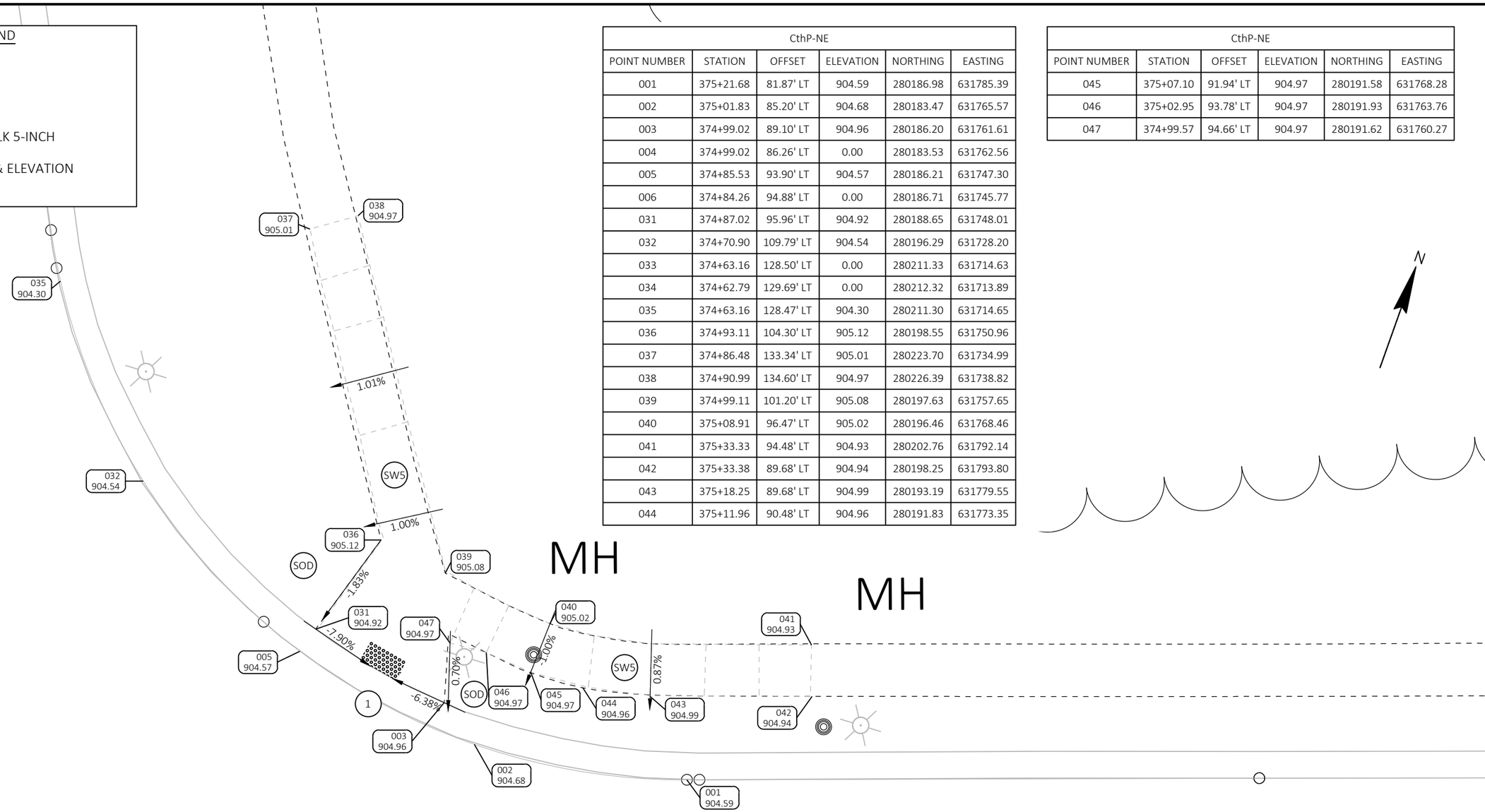

CthP-NE					
POINT NUMBER	STATION	OFFSET	ELEVATION	NORTHING	EASTING
001	375+21.68	81.87' LT	904.59	280186.98	631785.39
002	375+01.83	85.20' LT	904.68	280183.47	631765.57
003	374+99.02	89.10' LT	904.96	280186.20	631761.61
004	374+99.02	86.26' LT	0.00	280183.53	631762.56
005	374+85.53	93.90' LT	904.57	280186.21	631747.30
006	374+84.26	94.88' LT	0.00	280186.71	631745.77
031	374+87.02	95.96' LT	904.92	280188.65	631748.01
032	374+70.90	109.79' LT	904.54	280196.29	631728.20
033	374+63.16	128.50' LT	0.00	280211.33	631714.63
034	374+62.79	129.69' LT	0.00	280212.32	631713.89
035	374+63.16	128.47' LT	904.30	280211.30	631714.65
036	374+93.11	104.30' LT	905.12	280198.55	631750.96
037	374+86.48	133.34' LT	905.01	280223.70	631734.99
038	374+90.99	134.60' LT	904.97	280226.39	631738.82
039	374+99.11	101.20' LT	905.08	280197.63	631757.65
040	375+08.91	96.47' LT	905.02	280196.46	631768.46
041	375+33.33	94.48' LT	904.93	280202.76	631792.14
042	375+33.38	89.68' LT	904.94	280198.25	631793.80
043	375+18.25	89.68' LT	904.99	280193.19	631779.55
044	375+11.96	90.48' LT	904.96	280191.83	631773.35

CthP-NE					
POINT NUMBER	STATION	OFFSET	ELEVATION	NORTHING	EASTING
045	375+07.10	91.94' LT	904.97	280191.58	631768.28
046	375+02.95	93.78' LT	904.97	280191.93	631763.76
047	374+99.57	94.66' LT	904.97	280191.62	631760.27

2

NOTES:

1. CONTRACTOR TO FIELD VERIFY ELEVATION, GRADES, SLOPES, LENGTHS AND MATCH POINTS PRIOR CURB RAMP AND SIDEWALK CONSTRUCTION
2. THE ENGINEER MAY ADJUST ELEVATIONS TO FIT FIELD CONDITIONS
3. DASHED LINES SHOWN FOR PROPOSED SIDEWALK ARE FOR INFORMATION ONLY AND DO NOT INDICATE JOINT LOCATIONS
4. SEE THE STANDARD DETAIL DRAWINGS FOR COMPLETE CURB RAMP REQUIREMENTS
5. ALL STATION AND OFFSET INFORMATION STH 23 R/L

CthP-SE					
POINT NUMBER	STATION	OFFSET	ELEVATION	NORTHING	EASTING
048	374+66.18	68.42' RT	904.95	280026.77	631783.40
049	374+69.09	52.80' RT	904.72	280042.47	631780.92
050	374+77.45	40.02' RT	904.54	280057.31	631784.51
051	374+89.38	31.62' RT	904.53	280069.22	631792.94
052	375+06.01	28.02' RT	904.45	280078.18	631807.41
053	374+68.68	68.41' RT	905.37	280027.63	631785.75
054	374+77.58	43.64' RT	905.05	280053.95	631785.85
055	374+88.23	34.67' RT	905.00	280065.96	631792.88
056	375+04.30	30.51' RT	904.88	280075.26	631806.63
057	374+80.73	46.74' RT	904.81	280052.08	631789.85
058	374+91.29	39.03' RT	904.71	280062.88	631797.22
059	374+84.57	50.73' RT	904.64	280049.61	631794.81
060	374+93.88	43.83' RT	904.56	280059.22	631801.27
061	375+01.92	39.72' RT	904.66	280065.79	631807.47
062	375+06.24	38.54' RT	904.69	280068.35	631811.15
063	375+11.04	38.23' RT	904.69	280070.24	631815.56
064	375+11.18	33.74' RT	904.79	280074.52	631814.20
065	375+06.18	33.58' RT	904.78	280073.00	631809.43
066	375+01.31	34.23' RT	904.93	280070.75	631805.06
067	374+77.38	51.84' RT	904.91	280046.15	631788.40

CthP-SE					
POINT NUMBER	STATION	OFFSET	ELEVATION	NORTHING	EASTING
068	374+75.65	57.15' RT	905.04	280040.57	631788.55
069	374+74.76	61.35' RT	905.09	280036.31	631789.12
070	374+79.45	62.34' RT	905.20	280036.95	631793.87
071	374+80.42	58.08' RT	904.97	280041.29	631793.36
072	374+81.51	54.12' RT	904.78	280045.38	631793.06

LEGEND

- (X) CURB RAMP TYPE
- (SOD) SOD LAWN
- (SW5) CONCRETE SIDWALK 5-INCH
- (XX / YYY.YY) POINT NUMBER & ELEVATION

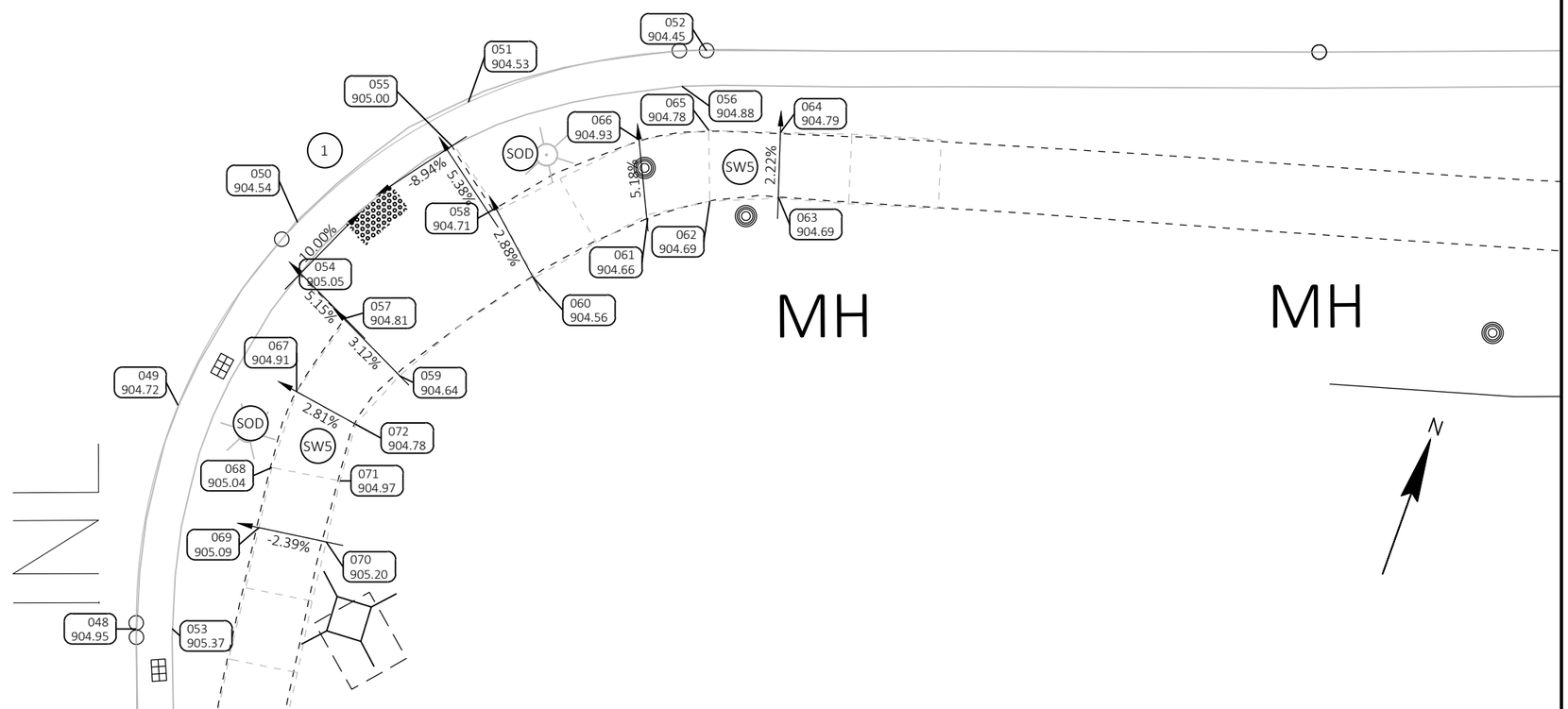

NOTES:

1. CONTRACTOR TO FIELD VERIFY ELEVATION, GRADES, SLOPES, LENGTHS AND MATCH POINTS PRIOR CURB RAMP AND SIDEWALK CONSTRUCTION
2. THE ENGINEER MAY ADJUST ELEVATIONS TO FIT FIELD CONDITIONS
3. DASHED LINES SHOWN FOR PROPOSED SIDEWALK ARE FOR INFORMATION ONLY AND DO NOT INDICATE JOINT LOCATIONS
4. SEE THE STANDARD DETAIL DRAWINGS FOR COMPLETE CURB RAMP REQUIREMENTS
5. ALL STATION AND OFFSET INFORMATION STH 23 R/L

EB_off-NW					
POINT NUMBER	STATION	OFFSET	ELEVATION	NORTHING	EASTING
073	380+20.86	127.10' LT	899.71	280396.69	632240.63
074	380+15.68	109.45' LT	899.98	280378.33	632241.66
075	380+04.52	94.85' LT	900.11	280360.83	632236.03
076	379+88.85	85.23' LT	900.32	280346.52	632224.48
077	379+69.78	81.88' LT	900.42	280336.98	632207.63
078	380+18.37	127.35' LT	900.13	280396.10	632238.20
079	380+12.64	109.50' LT	900.41	280377.36	632238.77
080	380+02.24	96.13' LT	900.36	280361.28	632233.46
081	379+90.82	88.73' LT	900.36	280350.49	632225.17
082	379+69.78	84.38' LT	900.84	280339.34	632206.80
083	379+85.43	94.70' LT	900.69	280354.30	632218.09
084	379+79.57	94.66' LT	900.78	280352.30	632212.58
085	379+85.29	89.25' LT	900.62	280349.12	632219.78
086	379+76.89	89.51' LT	900.80	280346.56	632211.78
087	379+69.75	89.49' LT	901.04	280344.14	632205.06

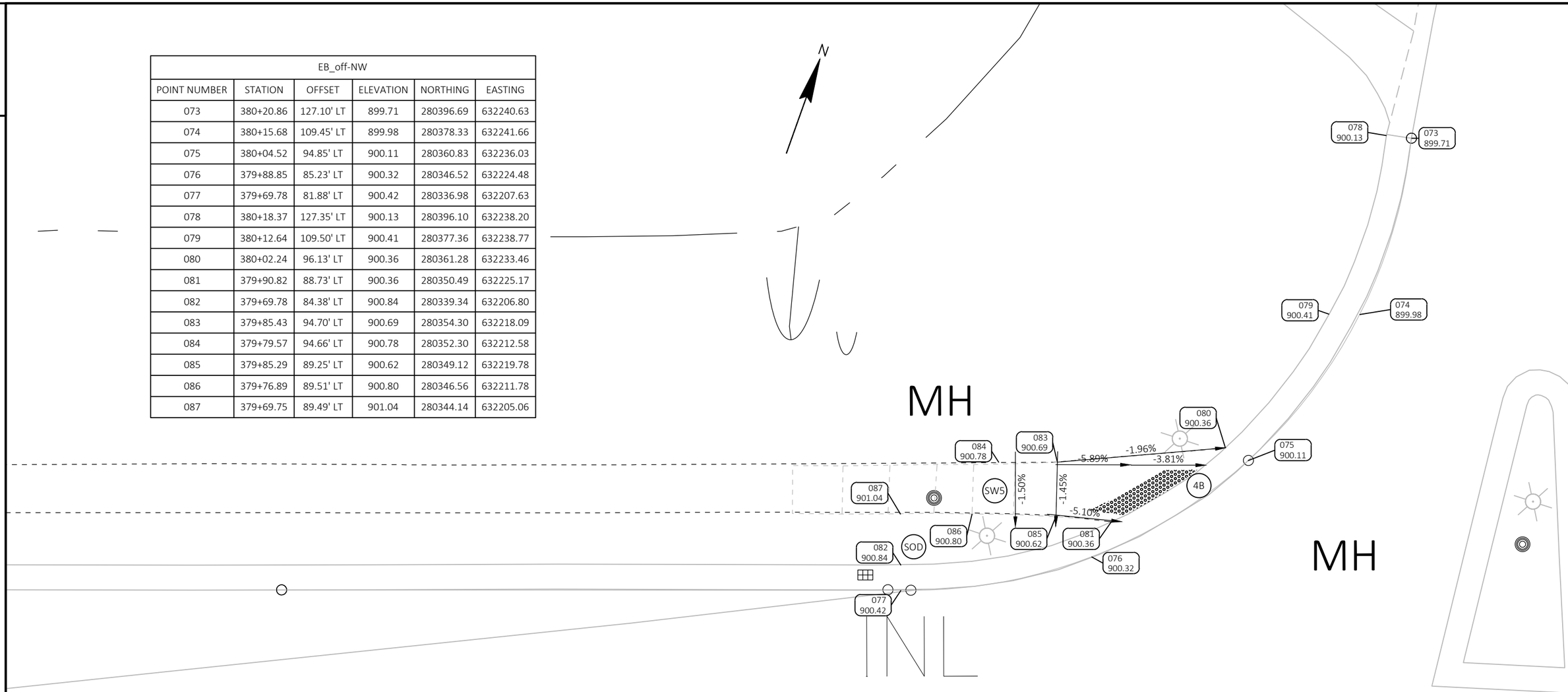

LEGEND

- (X) CURB RAMP TYPE
- (SOD) SOD LAWN
- (SW5) CONCRETE SIDWALK 5-INCH
- (XX / YYY.YY) POINT NUMBER & ELEVATION

NOTES:

1. CONTRACTOR TO FIELD VERIFY ELEVATION, GRADES, SLOPES, LENGTHS AND MATCH POINTS PRIOR CURB RAMP AND SIDEWALK CONSTRUCTION
2. THE ENGINEER MAY ADJUST ELEVATIONS TO FIT FIELD CONDITIONS
3. DASHED LINES SHOWN FOR PROPOSED SIDEWALK ARE FOR INFORMATION ONLY AND DO NOT INDICATE JOINT LOCATIONS
4. SEE THE STANDARD DETAIL DRAWINGS FOR COMPLETE CURB RAMP REQUIREMENTS
5. ALL STATION AND OFFSET INFORMATION STH 23 R/L

2

EB_off-NE					
POINT NUMBER	STATION	OFFSET	ELEVATION	NORTHING	EASTING
301	380+72.71	69.99' LT	899.94	280360.24	632308.61
302	380+70.48	70.00' LT	899.97	280359.50	632306.50
303	380+61.95	72.26' LT	900.07	280358.77	632297.70
304	380+55.64	77.30' LT	0.00	280361.41	632290.08
305	380+55.98	76.98' LT	900.11	280361.22	632290.50
306	380+51.72	84.62' LT	899.87	280367.00	632283.93
307	380+51.05	92.92' LT	899.74	280374.59	632280.52
308	380+70.27	72.52' LT	900.39	280361.80	632305.46
309	380+59.48	76.85' LT	900.20	280362.27	632293.84
310	380+54.08	85.06' LT	900.22	280368.20	632286.01
311	380+71.92	77.60' LT	900.44	280367.14	632305.32
312	380+68.52	82.61' LT	900.42	280370.73	632300.43
313	380+75.28	82.46' LT	900.50	280372.84	632306.86
314	380+75.08	77.45' LT	900.42	280368.06	632308.34
315	380+62.22	83.43' LT	900.33	280369.39	632294.22
316	380+60.32	83.36' LT	900.22	280368.68	632292.46
317	380+65.69	77.42' LT	900.33	280364.89	632299.50

LEGEND

- X — CURB RAMP TYPE
- SOD — SOD LAWN
- SW5 — CONCRETE SIDWALK 5-INCH
- PED — CONCRETE CURB PEDESTRIAN
- XX YYY.YY — POINT NUMBER & ELEVATION

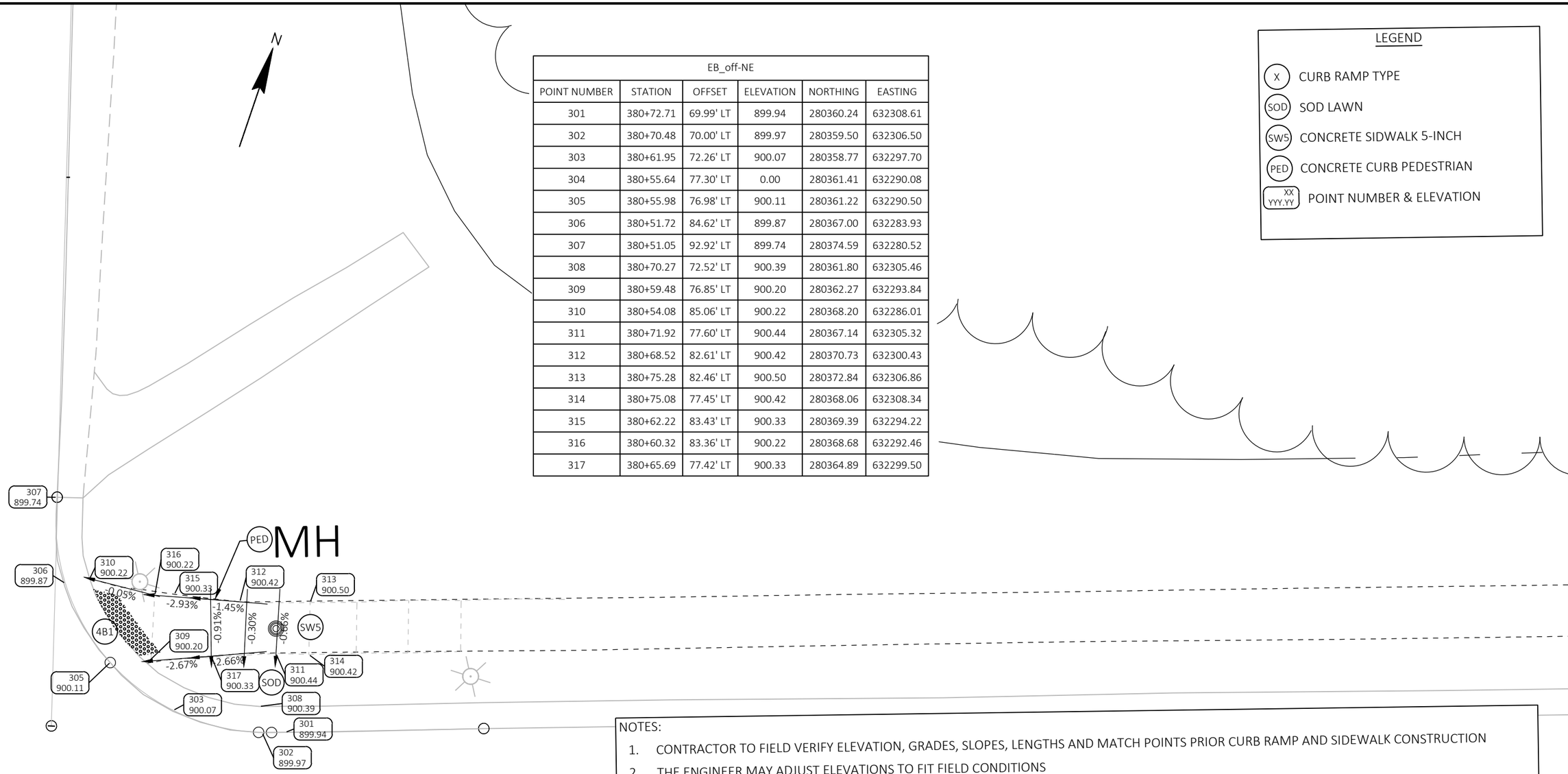

NOTES:

1. CONTRACTOR TO FIELD VERIFY ELEVATION, GRADES, SLOPES, LENGTHS AND MATCH POINTS PRIOR CURB RAMP AND SIDEWALK CONSTRUCTION
2. THE ENGINEER MAY ADJUST ELEVATIONS TO FIT FIELD CONDITIONS
3. DASHED LINES SHOWN FOR PROPOSED SIDEWALK ARE FOR INFORMATION ONLY AND DO NOT INDICATE JOINT LOCATIONS
4. SEE THE STANDARD DETAIL DRAWINGS FOR COMPLETE CURB RAMP REQUIREMENTS
5. ALL STATION AND OFFSET INFORMATION STH 23 R/L

STH 23 /W

EB_on-SW (1)					
POINT NUMBER	STATION	OFFSET	ELEVATION	NORTHING	EASTING
201	379+91.59	27.77' RT	900.23	280240.96	632264.89
202	379+93.37	27.79' RT	900.23	280241.54	632266.57
203	380+08.69	30.71' RT	900.27	280243.91	632281.99
204	380+11.50	31.83' RT	900.19	280243.80	632285.01
205	380+14.35	33.19' RT	900.23	280243.47	632288.16
206	380+22.06	38.12' RT	900.31	280241.41	632297.06
207	380+24.48	40.15' RT	900.33	280240.31	632300.03
208	380+34.68	52.88' RT	900.45	280231.73	632313.90
209	380+36.30	56.10' RT	900.41	280229.23	632316.51
210	380+39.02	63.44' RT	900.50	280223.23	632321.52
211	379+89.39	30.29' RT	900.64	280237.85	632263.66
212	380+10.59	34.36' RT	900.52	280241.11	632285.00
213	380+21.80	41.67' RT	900.67	280237.97	632298.02
214	380+36.61	64.11' RT	900.92	280221.79	632319.48
215	379+89.42	35.43' RT	900.74	280233.02	632265.41
216	380+00.53	35.52' RT	900.49	280236.65	632275.91
217	380+01.24	40.22' RT	900.67	280232.46	632278.15

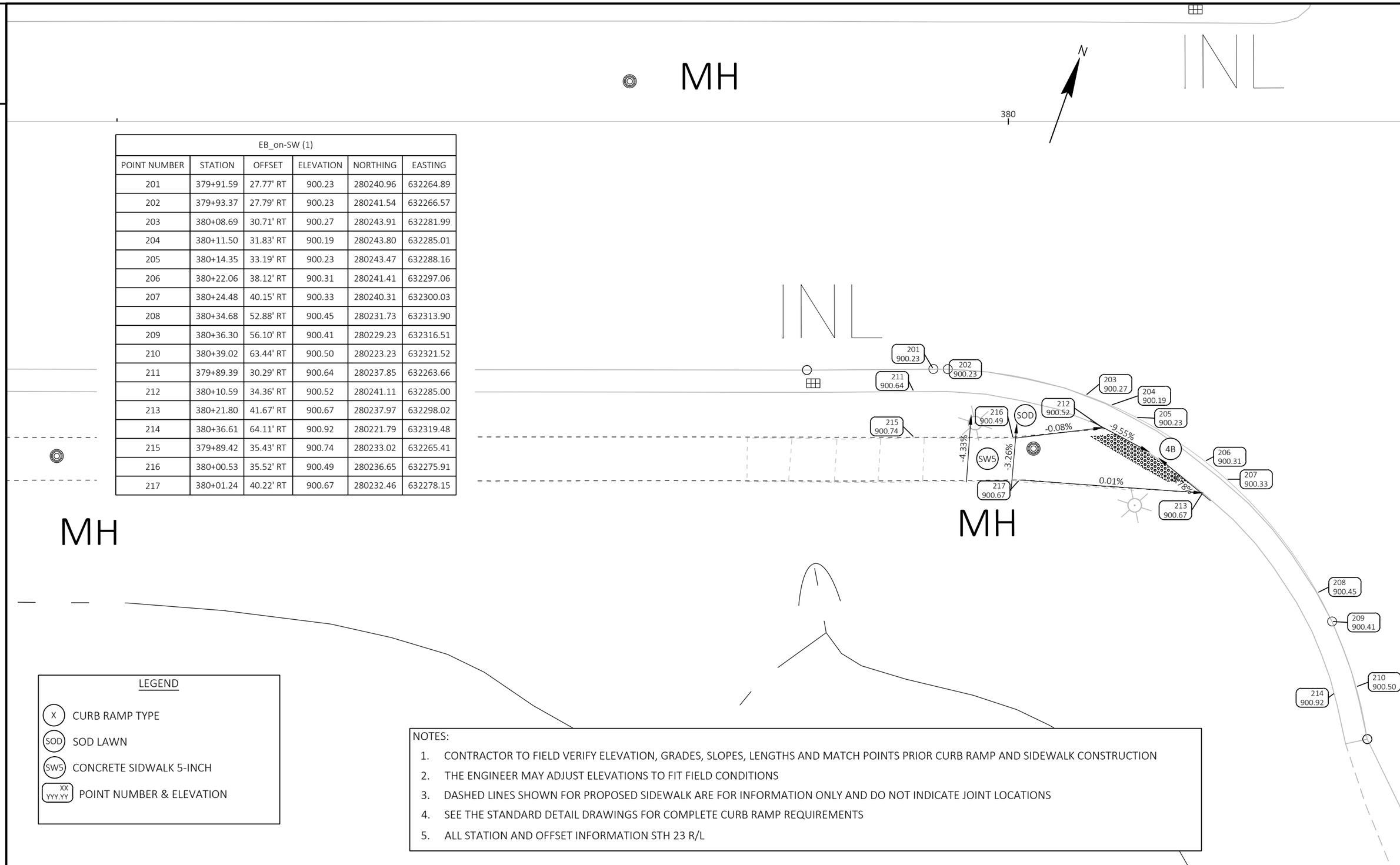

LEGEND

- (X) CURB RAMP TYPE
- (SOD) SOD LAWN
- (SW5) CONCRETE SIDWALK 5-INCH
- (XX YYY.YY) POINT NUMBER & ELEVATION

NOTES:

1. CONTRACTOR TO FIELD VERIFY ELEVATION, GRADES, SLOPES, LENGTHS AND MATCH POINTS PRIOR CURB RAMP AND SIDEWALK CONSTRUCTION
2. THE ENGINEER MAY ADJUST ELEVATIONS TO FIT FIELD CONDITIONS
3. DASHED LINES SHOWN FOR PROPOSED SIDEWALK ARE FOR INFORMATION ONLY AND DO NOT INDICATE JOINT LOCATIONS
4. SEE THE STANDARD DETAIL DRAWINGS FOR COMPLETE CURB RAMP REQUIREMENTS
5. ALL STATION AND OFFSET INFORMATION STH 23 R/L

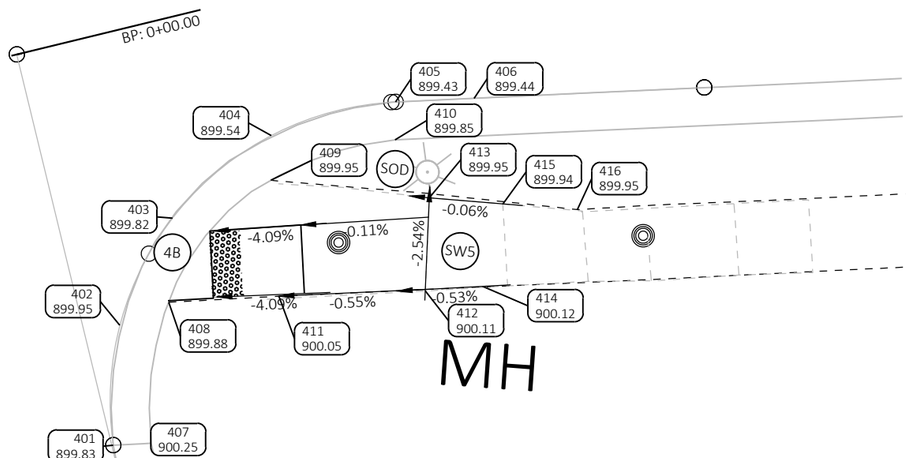

EB_on-SE					
POINT NUMBER	STATION	OFFSET	ELEVATION	NORTHING	EASTING
401	380+60.97	52.08' RT	899.83	280241.28	632338.40
402	380+60.82	44.15' RT	899.95	280248.70	632335.61
403	380+63.77	36.85' RT	899.82	280256.56	632335.95
404	380+69.87	30.94' RT	899.54	280264.18	632339.72
405	380+77.90	28.14' RT	899.43	280269.51	632346.34
406	380+83.04	27.52' RT	899.44	280271.81	632350.98
407	380+63.41	51.53' RT	900.25	280242.61	632340.52
408	380+63.93	42.41' RT	899.88	280251.38	632337.96
409	380+70.06	33.89' RT	899.95	280261.46	632340.89
410	380+78.04	30.64' RT	899.85	280267.20	632347.31
411	380+71.15	41.48' RT	900.05	280254.67	632344.45
412	380+80.76	40.43' RT	900.11	280258.88	632353.16
413	380+80.59	34.27' RT	899.95	280264.62	632350.93
414	380+84.51	39.85' RT	900.12	280260.69	632356.50
415	380+85.44	34.33' RT	899.94	280266.20	632355.53
416	380+90.38	34.34' RT	899.95	280267.84	632360.18

LEGEND

- X — CURB RAMP TYPE
- SOD — SOD LAWN
- SW5 — CONCRETE SIDWALK 5-INCH
- XX YYY.YY — POINT NUMBER & ELEVATION

NOTES:

1. CONTRACTOR TO FIELD VERIFY ELEVATION, GRADES, SLOPES, LENGTHS AND MATCH POINTS PRIOR CURB RAMP AND SIDEWALK CONSTRUCTION
2. THE ENGINEER MAY ADJUST ELEVATIONS TO FIT FIELD CONDITIONS
3. DASHED LINES SHOWN FOR PROPOSED SIDEWALK ARE FOR INFORMATION ONLY AND DO NOT INDICATE JOINT LOCATIONS
4. SEE THE STANDARD DETAIL DRAWINGS FOR COMPLETE CURB RAMP REQUIREMENTS
5. ALL STATION AND OFFSET INFORMATION STH 23 R/L

WB_on-NW					
POINT NUMBER	STATION	OFFSET	ELEVATION	NORTHING	EASTING
501	387+61.24	82.01' LT	895.32	280583.28	632968.41
502	387+65.35	82.59' LT	895.36	280584.82	632972.36
503	387+72.94	85.52' LT	895.42	280589.45	632979.21
504	387+78.82	91.60' LT	895.47	280596.76	632983.66
505	387+81.61	99.56' LT	895.54	280605.15	632984.63
506	387+80.89	108.03' LT	895.56	280613.23	632981.97
507	387+66.64	85.40' LT	895.84	280587.85	632972.98
508	387+73.64	89.42' LT	895.70	280593.41	632979.02
509	387+73.90	89.38' LT	895.70	280593.44	632979.28
510	387+78.54	97.00' LT	895.64	280601.95	632982.15
511	387+78.57	107.28' LT	895.98	280611.96	632979.82
512	387+72.67	95.91' LT	895.84	280599.50	632976.55
513	387+72.95	89.43' LT	895.73	280593.27	632978.32
514	387+68.96	89.33' LT	895.89	280592.22	632974.38
515	387+68.22	95.18' LT	896.01	280597.73	632972.28
516	387+63.20	94.23' LT	896.15	280595.62	632967.51
517	387+63.77	89.27' LT	896.07	280590.94	632969.23
518	387+60.43	88.96' LT	895.84	280589.83	632965.98

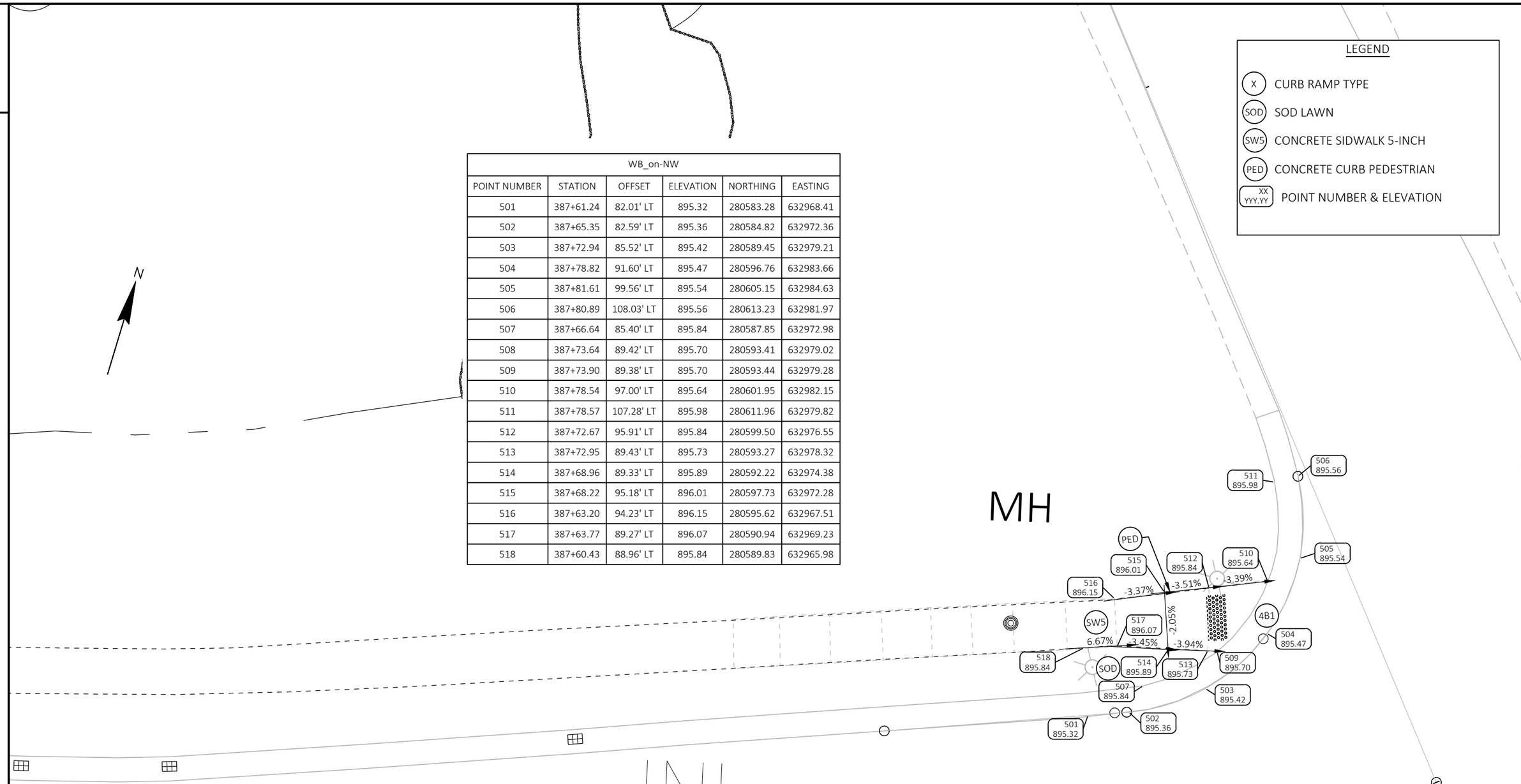

NOTES:

1. CONTRACTOR TO FIELD VERIFY ELEVATION, GRADES, SLOPES, LENGTHS AND MATCH POINTS PRIOR CURB RAMP AND SIDEWALK CONSTRUCTION
2. THE ENGINEER MAY ADJUST ELEVATIONS TO FIT FIELD CONDITIONS
3. DASHED LINES SHOWN FOR PROPOSED SIDEWALK ARE FOR INFORMATION ONLY AND DO NOT INDICATE JOINT LOCATIONS
4. SEE THE STANDARD DETAIL DRAWINGS FOR COMPLETE CURB RAMP REQUIREMENTS
5. ALL STATION AND OFFSET INFORMATION STH 23 R/L

2

LEGEND

- (X) CURB RAMP TYPE
- (SOD) SOD LAWN
- (SW5) CONCRETE SIDWALK 5-INCH
- (PED) CONCRETE CURB PEDESTRIAN
- (XX / YYY.YY) POINT NUMBER & ELEVATION

WB_on-NE					
POINT NUMBER	STATION	OFFSET	ELEVATION	NORTHING	EASTING
601	388+52.07	81.57' LT	895.73	280603.45	633058.87
602	388+49.94	81.64' LT	895.74	280603.07	633056.73
603	388+38.16	83.70' LT	895.79	280602.51	633044.55
604	388+31.93	86.14' LT	895.75	280603.52	633037.81
605	388+29.17	87.56' LT	895.78	280604.30	633034.75
606	388+25.46	89.86' LT	895.78	280605.72	633030.55
607	388+22.34	92.19' LT	895.82	280607.29	633026.92
608	388+19.95	94.26' LT	895.83	280608.78	633024.08
609	388+15.06	99.51' LT	895.87	280612.80	633018.05
610	388+07.87	111.78' LT	895.92	280623.14	633008.13
611	388+54.37	84.06' LT	896.12	280606.38	633060.64
612	388+50.05	84.07' LT	896.16	280605.46	633056.34
613	388+32.96	88.49' LT	896.14	280606.05	633038.34
615	388+22.49	95.33' LT	896.06	280610.40	633026.39
616	388+10.10	112.79' LT	896.35	280624.63	633010.14
617	388+54.42	89.32' LT	896.21	280611.53	633059.59
618	388+53.16	89.31' LT	896.20	280611.25	633058.33
619	388+43.58	89.44' LT	896.15	280609.30	633048.73
620	388+38.27	94.68' LT	896.06	280613.26	633042.30
621	388+43.17	94.18' LT	896.06	280613.85	633047.31

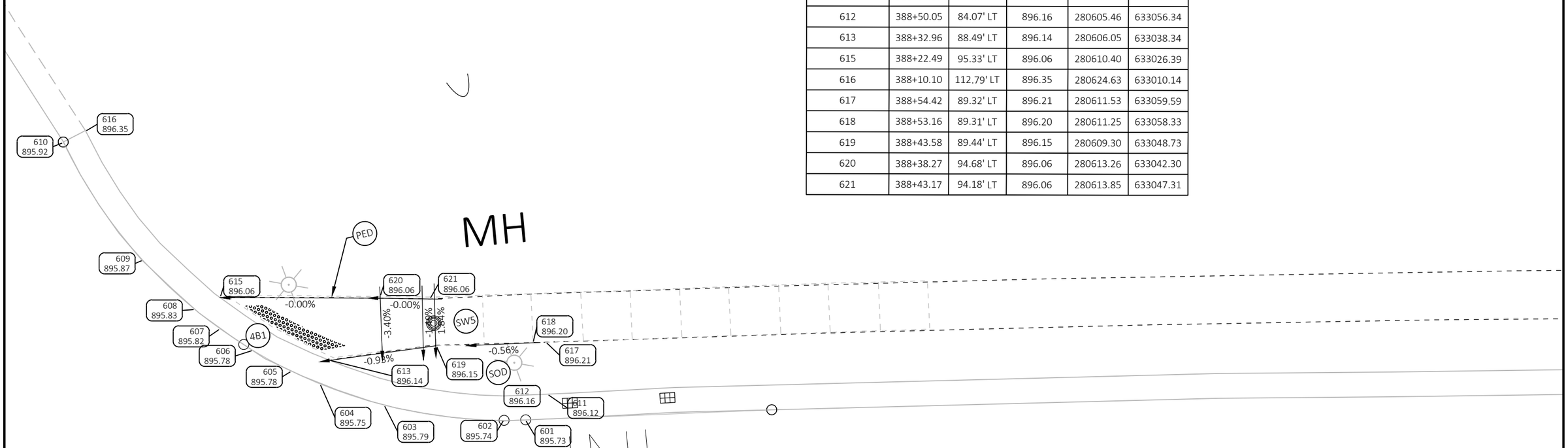

NOTES:

1. CONTRACTOR TO FIELD VERIFY ELEVATION, GRADES, SLOPES, LENGTHS AND MATCH POINTS PRIOR CURB RAMP AND SIDEWALK CONSTRUCTION
2. THE ENGINEER MAY ADJUST ELEVATIONS TO FIT FIELD CONDITIONS
3. DASHED LINES SHOWN FOR PROPOSED SIDEWALK ARE FOR INFORMATION ONLY AND DO NOT INDICATE JOINT LOCATIONS
4. SEE THE STANDARD DETAIL DRAWINGS FOR COMPLETE CURB RAMP REQUIREMENTS
5. ALL STATION AND OFFSET INFORMATION STH 23 R/L

WB_off-SW					
POINT NUMBER	STATION	OFFSET	ELEVATION	NORTHING	EASTING
701	388+06.76	15.73' RT	895.63	280498.57	633035.37
702	388+13.27	15.70' RT	895.69	280500.03	633041.69
703	388+18.36	17.01' RT	895.71	280499.87	633046.92
704	388+20.02	18.15' RT	895.68	280499.12	633048.79
705	388+21.65	19.89' RT	895.72	280497.78	633050.76
706	388+22.91	21.97' RT	895.72	280496.02	633052.43
707	388+24.85	27.68' RT	895.59	280490.87	633055.55
708	388+25.26	30.84' RT	895.60	280487.87	633056.64
709	388+25.52	32.98' RT	895.57	280485.84	633057.36
710	388+06.77	18.23' RT	896.05	280496.13	633035.94
711	388+18.57	20.15' RT	896.08	280496.85	633047.81
712	388+20.27	22.28' RT	895.74	280495.15	633049.94
713	388+22.39	28.03' RT	895.52	280489.99	633053.25
714	388+22.61	29.92' RT	895.84	280488.19	633053.88
715	388+23.01	33.28' RT	895.99	280485.01	633055.00
716	388+13.64	21.81' RT	896.07	280494.15	633043.40
717	388+16.62	28.54' RT	895.82	280488.24	633047.77
718	388+17.01	28.14' RT	895.75	280488.71	633048.06
719	388+08.53	23.31' RT	896.08	280491.57	633038.78
720	388+06.84	23.33' RT	896.08	280491.17	633037.14
721	388+09.24	28.27' RT	895.88	280486.88	633040.56
722	388+09.24	28.27' RT	895.88	280486.88	633040.56
723	388+08.57	28.10' RT	895.88	280486.91	633039.88

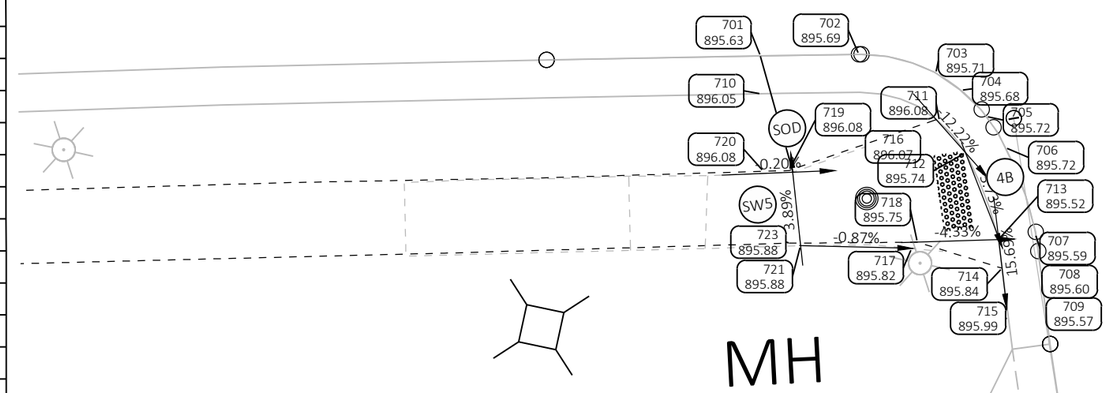

LEGEND

- (X) CURB RAMP TYPE
- (SOD) SOD LAWN
- (SW5) CONCRETE SIDWALK 5-INCH
- (XX / YYY.YY) POINT NUMBER & ELEVATION

NOTES:

1. CONTRACTOR TO FIELD VERIFY ELEVATION, GRADES, SLOPES, LENGTHS AND MATCH POINTS PRIOR CURB RAMP AND SIDEWALK CONSTRUCTION
2. THE ENGINEER MAY ADJUST ELEVATIONS TO FIT FIELD CONDITIONS
3. DASHED LINES SHOWN FOR PROPOSED SIDEWALK ARE FOR INFORMATION ONLY AND DO NOT INDICATE JOINT LOCATIONS
4. SEE THE STANDARD DETAIL DRAWINGS FOR COMPLETE CURB RAMP REQUIREMENTS
5. ALL STATION AND OFFSET INFORMATION STH 23 R/L

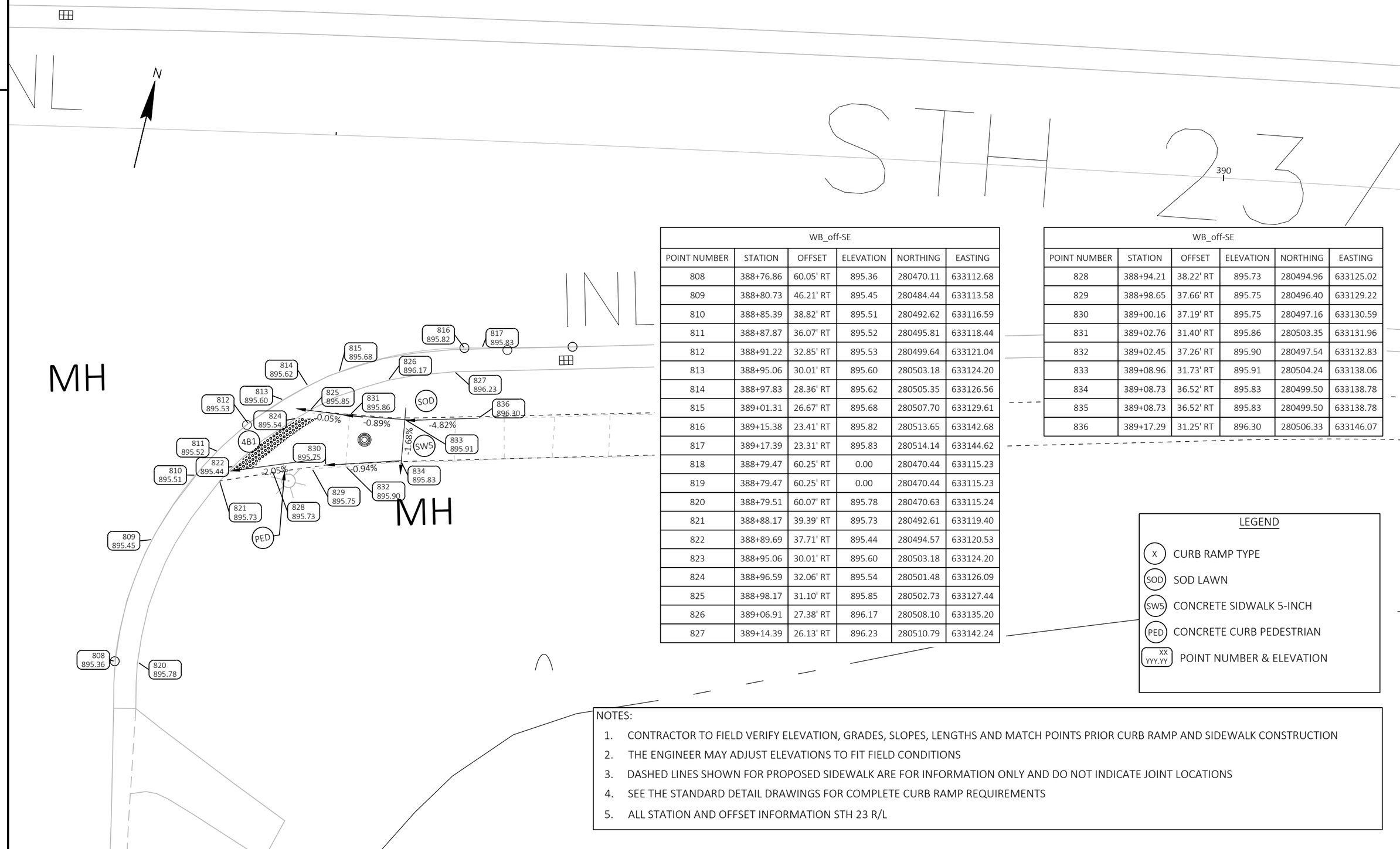

WB_off-SE					
POINT NUMBER	STATION	OFFSET	ELEVATION	NORTHING	EASTING
808	388+76.86	60.05' RT	895.36	280470.11	633112.68
809	388+80.73	46.21' RT	895.45	280484.44	633113.58
810	388+85.39	38.82' RT	895.51	280492.62	633116.59
811	388+87.87	36.07' RT	895.52	280495.81	633118.44
812	388+91.22	32.85' RT	895.53	280499.64	633121.04
813	388+95.06	30.01' RT	895.60	280503.18	633124.20
814	388+97.83	28.36' RT	895.62	280505.35	633126.56
815	389+01.31	26.67' RT	895.68	280507.70	633129.61
816	389+15.38	23.41' RT	895.82	280513.65	633142.68
817	389+17.39	23.31' RT	895.83	280514.14	633144.62
818	388+79.47	60.25' RT	0.00	280470.44	633115.23
819	388+79.47	60.25' RT	0.00	280470.44	633115.23
820	388+79.51	60.07' RT	895.78	280470.63	633115.24
821	388+88.17	39.39' RT	895.73	280492.61	633119.40
822	388+89.69	37.71' RT	895.44	280494.57	633120.53
823	388+95.06	30.01' RT	895.60	280503.18	633124.20
824	388+96.59	32.06' RT	895.54	280501.48	633126.09
825	388+98.17	31.10' RT	895.85	280502.73	633127.44
826	389+06.91	27.38' RT	896.17	280508.10	633135.20
827	389+14.39	26.13' RT	896.23	280510.79	633142.24

WB_off-SE					
POINT NUMBER	STATION	OFFSET	ELEVATION	NORTHING	EASTING
828	388+94.21	38.22' RT	895.73	280494.96	633125.02
829	388+98.65	37.66' RT	895.75	280496.40	633129.22
830	389+00.16	37.19' RT	895.75	280497.16	633130.59
831	389+02.76	31.40' RT	895.86	280503.35	633131.96
832	389+02.45	37.26' RT	895.90	280497.54	633132.83
833	389+08.96	31.73' RT	895.91	280504.24	633138.06
834	389+08.73	36.52' RT	895.83	280499.50	633138.78
835	389+08.73	36.52' RT	895.83	280499.50	633138.78
836	389+17.29	31.25' RT	896.30	280506.33	633146.07

LEGEND

- (X) CURB RAMP TYPE
- (SOD) SOD LAWN
- (SW5) CONCRETE SIDWALK 5-INCH
- (PED) CONCRETE CURB PEDESTRIAN
- [XX / YYY.YY] POINT NUMBER & ELEVATION

NOTES:

1. CONTRACTOR TO FIELD VERIFY ELEVATION, GRADES, SLOPES, LENGTHS AND MATCH POINTS PRIOR CURB RAMP AND SIDEWALK CONSTRUCTION
2. THE ENGINEER MAY ADJUST ELEVATIONS TO FIT FIELD CONDITIONS
3. DASHED LINES SHOWN FOR PROPOSED SIDEWALK ARE FOR INFORMATION ONLY AND DO NOT INDICATE JOINT LOCATIONS
4. SEE THE STANDARD DETAIL DRAWINGS FOR COMPLETE CURB RAMP REQUIREMENTS
5. ALL STATION AND OFFSET INFORMATION STH 23 R/L

2

SIGN

7H'

1845

IH 90/94

REALIGN RAMP TERMINAL

10" SHES CONCRETE PAVEMENT
OVER 12" COARSE AGGREGATE BASE COURSE

PC: 7+77.95

R104

Alignment=Exit85EBoff
Station=7+99.59 'H'
Offset=2.800
Northing=302856.2489
Easting=631780.3278

PT: 7+99.83

REMOVE EXISTING ISLAND
CONCRETE CURB AND GUTTER

PAVEMENT MARKING

510'G'

USH 12/STH 16

Alignment=Exit85EBoff
Station=8+46.69 'H'
Offset=30.711
Northing=302821.4420
Easting=631738.0614

END CONSTRUCTION
EB OFF RAMP TERMINAL
MATCH EXISTING

Alignment=Exit85EBoff
Station=8+50.65 'H'
Offset=16.241
Northing=302812.8029
Easting=631750.3246

INL

BEGIN CONSTRUCTION
EB ON RAMP CONCRETE PAVEMENT
MATCH EXISTING
BUTT JOINT REQUIRED

N

BEGIN CONSTRUCTION
WB ON RAMP CONCRETE PAVEMENT
MATCH EXISTING
BUTT JOINT REQUIRED

515'G'

END CONSTRUCTION
WB OFF RAMP TERMINAL
MATCH EXISTING
SAW CUT REQ'D

PC: 1851+85.39

N

2

PROJECT NO: 1014-00-75	HWY: IH-90	COUNTY: SAUK, JUNEAU	PLAN VIEW - EXIT 85 RAMPS	SHEET 22	E

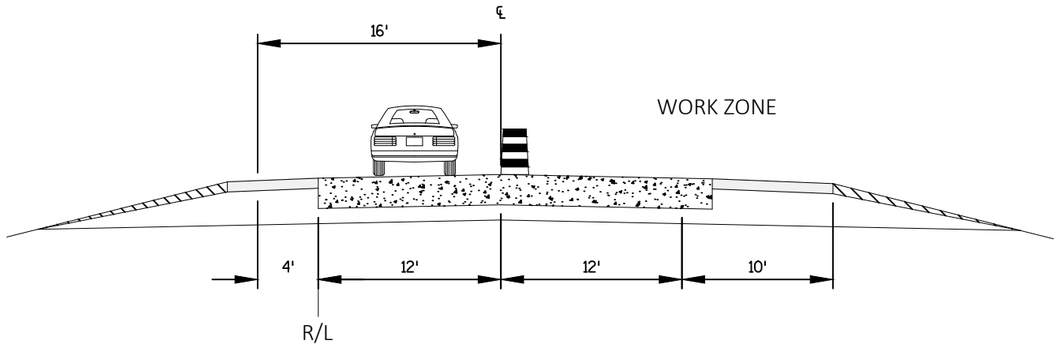

TYPICAL SECTION: OUTSIDE LANE CLOSED
STAGE 1A: BASE PATCHING

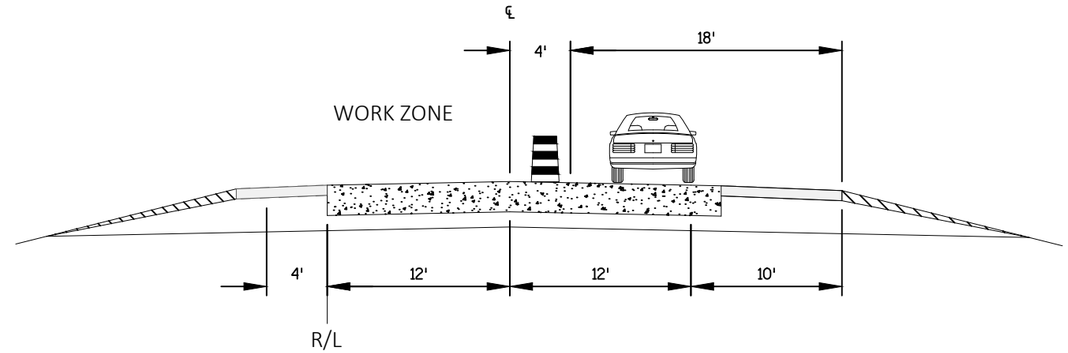

TYPICAL SECTION: MEDIAN LANE CLOSED
STAGE 1B: BASE PATCHING

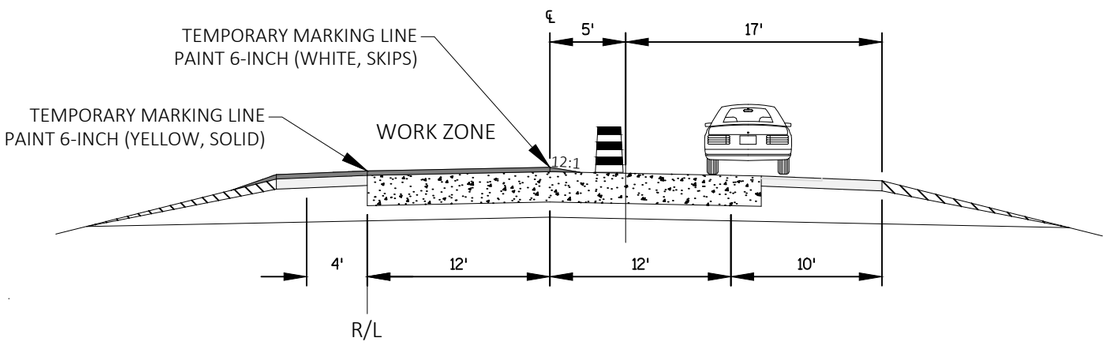

TYPICAL SECTION: MEDIAN LANE CLOSED
STAGE 2A: ASPHALT BINDER

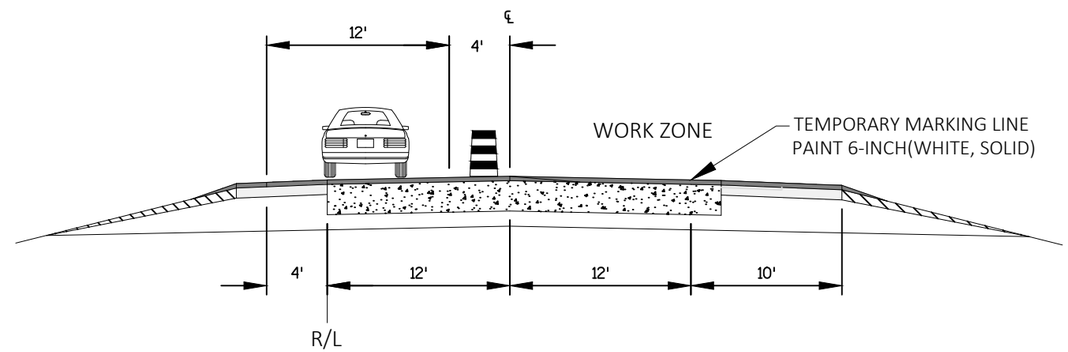

TYPICAL SECTION: OUTSIDE LANE CLOSED
STAGE 2B: ASPHALT BINDER

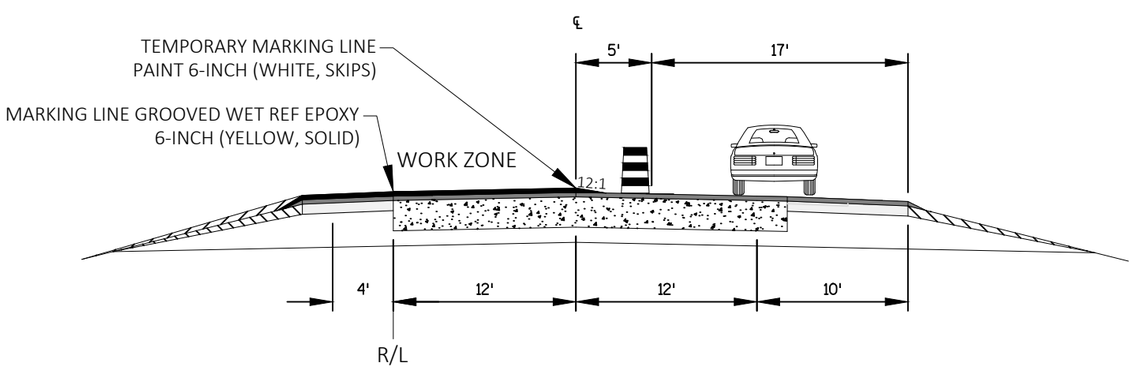

TYPICAL SECTION: MEDIAN LANE CLOSED
STAGE 3A: ASPHALT SURFACE

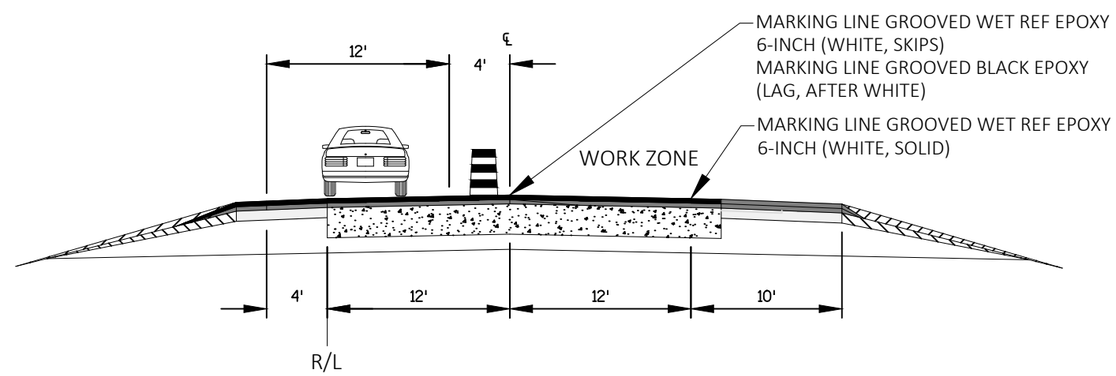

TYPICAL SECTION: OUTSIDE LANE CLOSED
STAGE 3B: ASPHALT SURFACE

TRAFFIC CONTROL AND PAVING OPERATIONS

(SHOWING DIRECTION OF TRAVEL - SAME STAGING FOR BOTH DIRECTIONS)

NOT TO SCALE

PROJECT NO: 1014-00-75	HWY: IH-90	COUNTY: JUNEAU, SAUK	CONSTRUCTION DETAIL TRAFFIC CONTROL	SHEET 23	E

2

GENERAL NOTES

THE EXACT NUMBER, LOCATION, AND SPACING OF ALL SIGNS AND DEVICES SHALL BE ADJUSTED TO FIT FIELD CONDITIONS AS APPROVED BY THE ENGINEER.

THE SPACING BETWEEN SIGNS SHOULD BE ADJUSTED TO NOT CONFLICT WITH AND TO PROVIDE A MINIMUM OF 200 FEET (500 FEET DESIRABLE) CLEARANCE TO EXISTING SIGNS.

THIS LANE CLOSURE IS TYPICAL FOR CLOSING RIGHT LANE - REVERSE FOR CLOSING LEFT LANE.

ALL SIGNS ARE 48" x 48" UNLESS OTHERWISE NOTED.

"WO" SIGNS ARE THE SAME AS "W" SIGNS EXCEPT THE BACKGROUND IS ORANGE.

ANY SIGNS TEMPORARY OR EXISTING, WHICH CONFLICT WITH TRAFFIC CONTROL "IN USE" SHALL BE REMOVED OR COVERED AS NEEDED OR AS APPROVED BY THE ENGINEER.

CONSIDER ROADWAY GEOMETRICS WHEN LOCATING SIGNS AND ARROW BOARD SO THE DRIVER HAS A CLEAR VIEW OF THE ARROW BOARD AND LANE CLOSURE DRUMS.

FOR A LANE CLOSURE THAT IS IN PLACE LESS THAN 7 CONTINUOUS DAYS AND NIGHTS, THE ADVANCED WARNING SIGNS MAY BE MOUNTED ON PORTABLE SUPPORTS.

REMOVE PAVEMENT MARKINGS AND PLACE TEMPORARY PAVEMENT MARKING LINE IF LANE CLOSURE IS TO BE IN PLACE 4 OR MORE CONTINUOUS DAYS AND NIGHTS.

WARNING LIGHTS ARE NOT REQUIRED IF THE LANE CLOSURE IS A DAYTIME ONLY OPERATION.

IF THE HORIZONTAL ALIGNMENT IS SUCH THAT A CURVE MAY REQUIRE ADDITIONAL DELINEATION, THE DEVICE SPACING MAY BE DECREASED TO 50 FEET.

ADJUSTMENTS IN BUFFER SPACE NEED TO BE INCORPORATED WHEN THE LANE CLOSURE OCCURS NEAR AN INTERCHANGE EXIT OR ENTRANCE RAMP OR INTERSECTION. THE LANE CLOSURE MUST TAKE PLACE FAR ENOUGH IN ADVANCE OF AN EXIT OR ENTRANCE RAMP TO STILL ALLOW FOR ADEQUATE BUFFER SPACE. THE MINIMUM LENGTH OF THE BUFFER SPACE BEFORE AN EXIT RAMP SHOULD BE ONE HALF THE LENGTH OF THE TRANSITION AREA. THE ENTRANCE RAMP SHOULD BE FOLLOWED BY THE ORIGINAL BUFFER SPACE LENGTH OF 800 FEET DESIRABLE PRIOR TO ANOTHER TRAFFIC CONTROL CHANGE SUCH AS A CROSSOVER MANEUVER.

- EXISTING POST MOUNTED SPEED LIMIT SIGNS SHOULD BE COVERED OR REMOVED.
- PCMS SHALL FOLLOW ARROW BOARD STANDARDS WHEN DISPLAYING FLASHING FOUR CORNER CAUTION MODE.
- PLACE A DIGITAL SPEED LIMIT TRAILER 700' FEET UPSTREAM OF EACH ACTIVE WORK AREA WHERE WORKERS ARE PRESENT.
- A DIGITAL SPEED LIMIT TRAILER SHALL BE LOCATED 1500 FEET BEYOND THE END OF THE ACCELERATION LANE OF EACH ENTRANCE RAMP.
- IF WORK AREA STARTS LESS THAN 1,000 FEET FROM END OF LANE CLOSURE TAPER, OMIT DIGITAL SPEED LIMIT TRAILER AT THAT LOCATION.
- PLACE A DIGITAL SPEED LIMIT TRAILER A MINIMUM OF EVERY ONE MILE. MODIFY PLACEMENT AS DIRECTED BY ENGINEER WHEN DIGITAL SPEED LIMIT TRAILER IS LOCATED IN CLOSE PROXIMITY TO AN ACCELERATION LANE OF AN ENTRANCE RAMP.
- OMIT DRUM DELINEATION FOR DIGITAL SPEED LIMIT TRAILER WITHIN A CLOSURE.
- INCLUDE NON-DIGITAL R2-1 RESUME SPEED LIMIT SIGNS 200 FEET MINIMUM (500 FEET DESIRABLE) BEYOND THE "END ROAD WORK" SIGN.

LEGEND

- SIGN ON PERMANENT SUPPORT
- TRAFFIC CONTROL DRUM
- TRAFFIC CONTROL DRUM WITH TYPE "C" STEADY BURN LIGHT
- TYPE III BARRICADE WITH ATTACHED SIGN
- TYPE "A" WARNING LIGHT (FLASHING)
- REMOVING PAVEMENT MARKINGS
- DIRECTION OF TRAFFIC
- WORK AREA
- FLASHING ARROW BOARD
- DIGITAL SPEED LIMIT TRAILER
- PCMS — PORTABLE CHANGEABLE MESSAGE SIGN

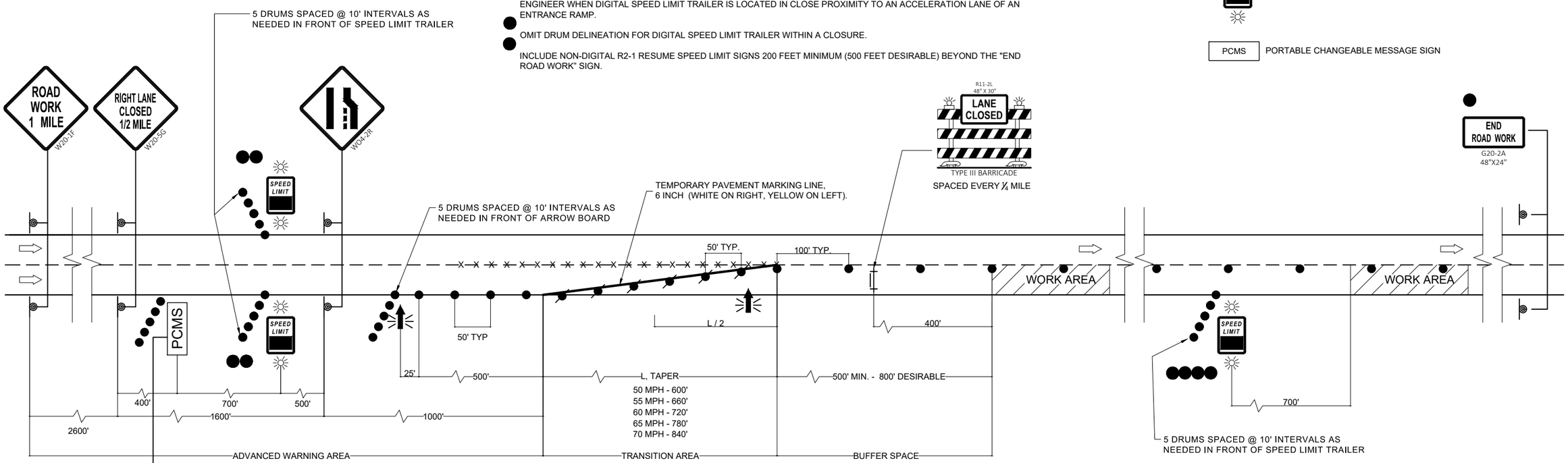

PCMS MESSAGING

POSTED SPEED REDUCTION	
FRAME 1	FRAME 2
REDUCED SPEED AHEAD	XX MPH

NO SPEED REDUCTION

(FLASHING CAUTION MODE)

TRAFFIC CONTROL, LANE CLOSURE, DIGITAL SPEED REDUCTION SYSTEM

STATE OF WISCONSIN
DEPARTMENT OF TRANSPORTATION

APPROVED
August 2023 — DATE
/S/ Andrew Heidtke — ROADWAY STANDARDS DEVELOPMENT UNIT SUPERVISOR
FHWA

2

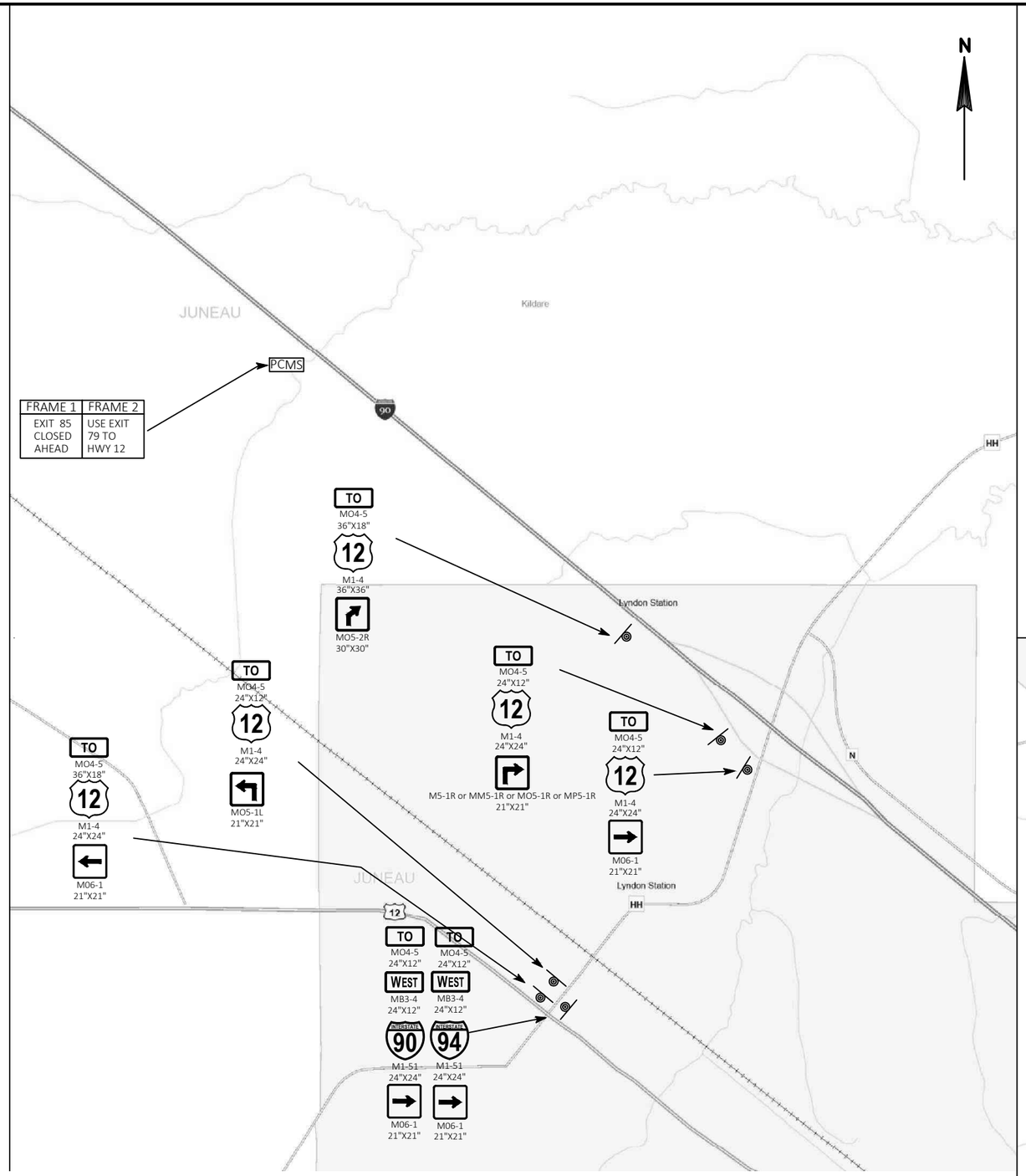

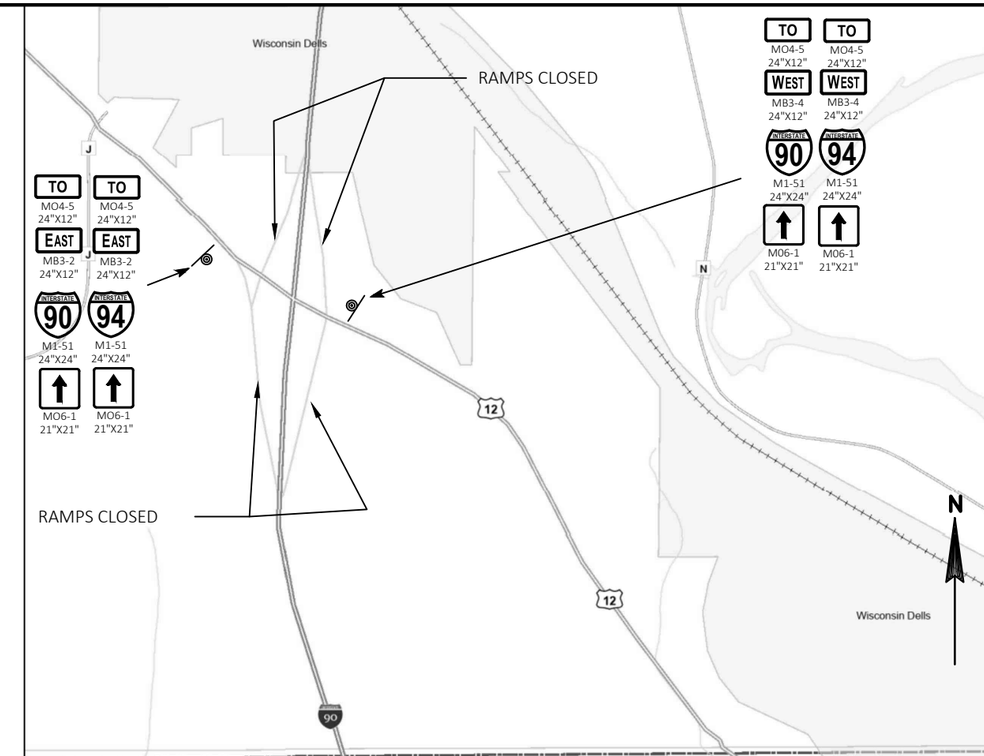

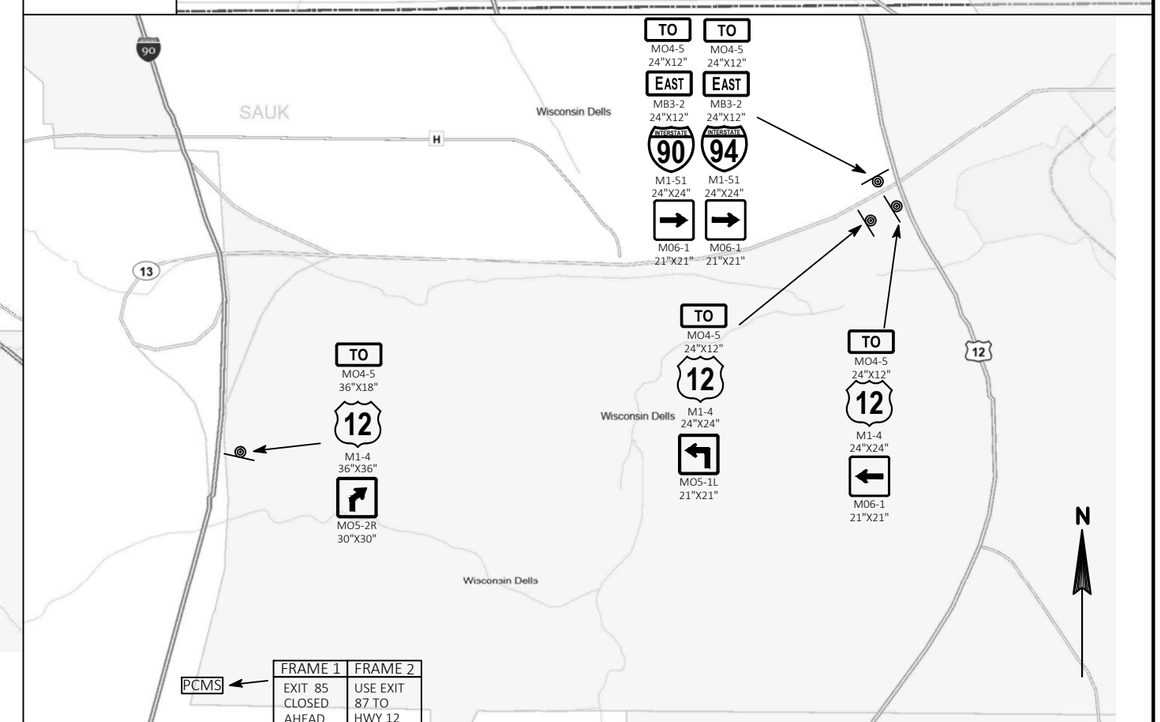

2

PROJECT NO: 1014-00-75	HWY: IH-90	COUNTY: JUNEAU, SAUK	EXIT 85 DETOUR	SHEET 25	E

FILE NAME : \\LAX31FP2\N3PUBLIC\PDS\C3D\10140005\SHEETSPLAN\025002_TC.DWG PLOT DATE : 10/10/2023 2:41 AM PLOT BY : DAHL, BRIAN D PLOT NAME : PLOT SCALE : 1:100_XREF

WISDOT/CADDS SHEET 42

2

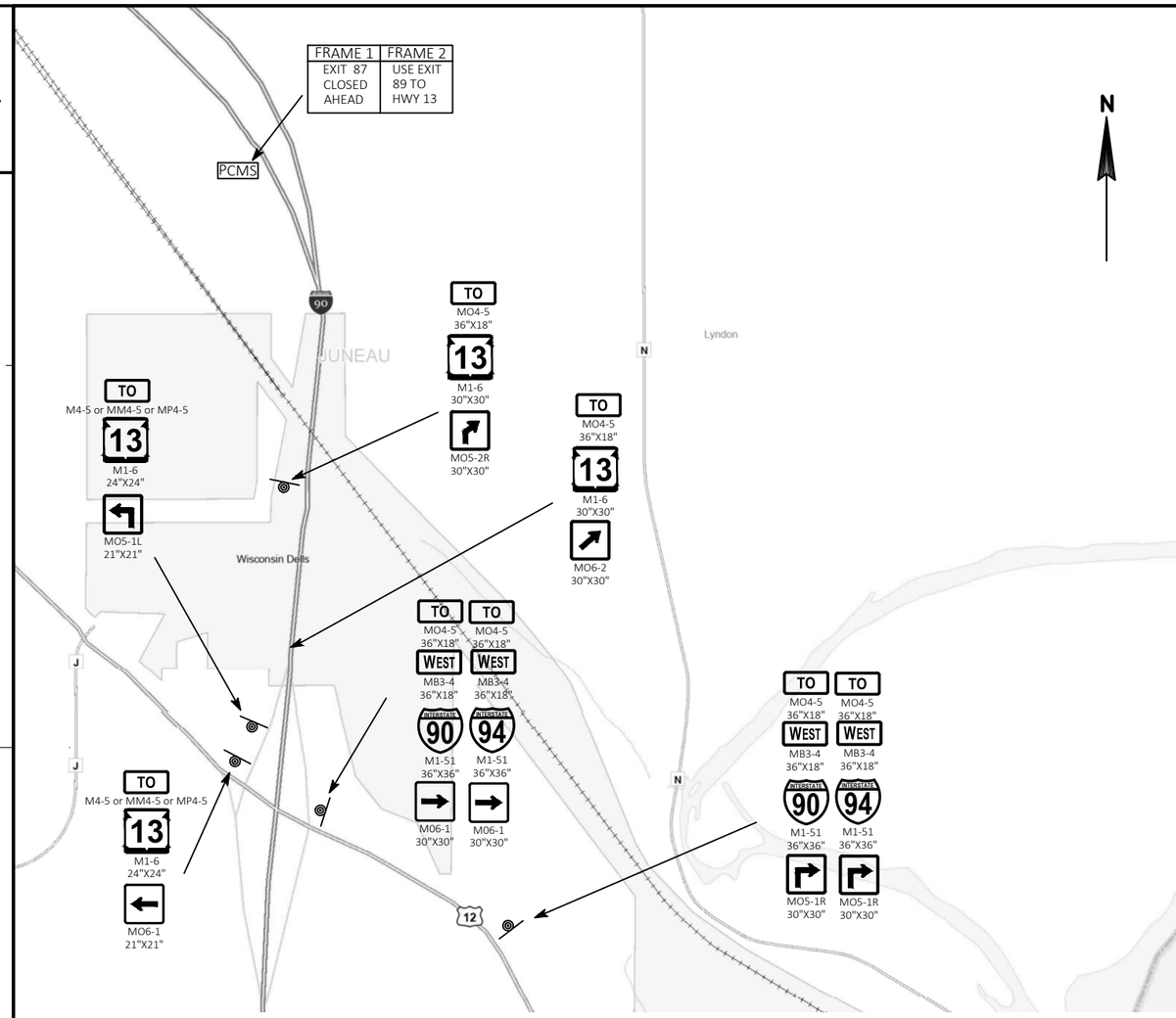

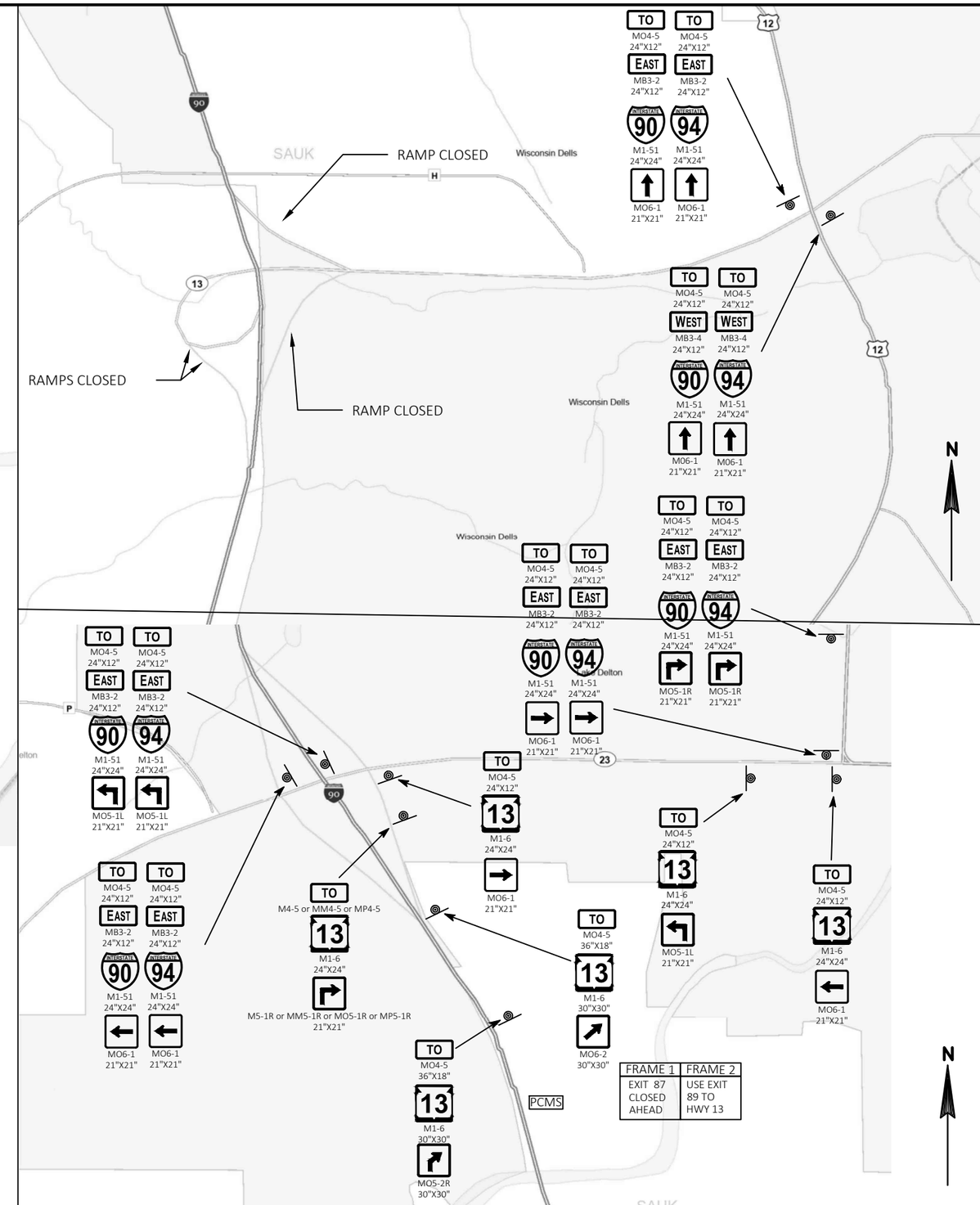

2

PROJECT NO: 1014-00-75	HWY: IH-90	COUNTY: JUNEAU, SAUK	EXIT 87 DETOUR(S)	SHEET 26	E

2

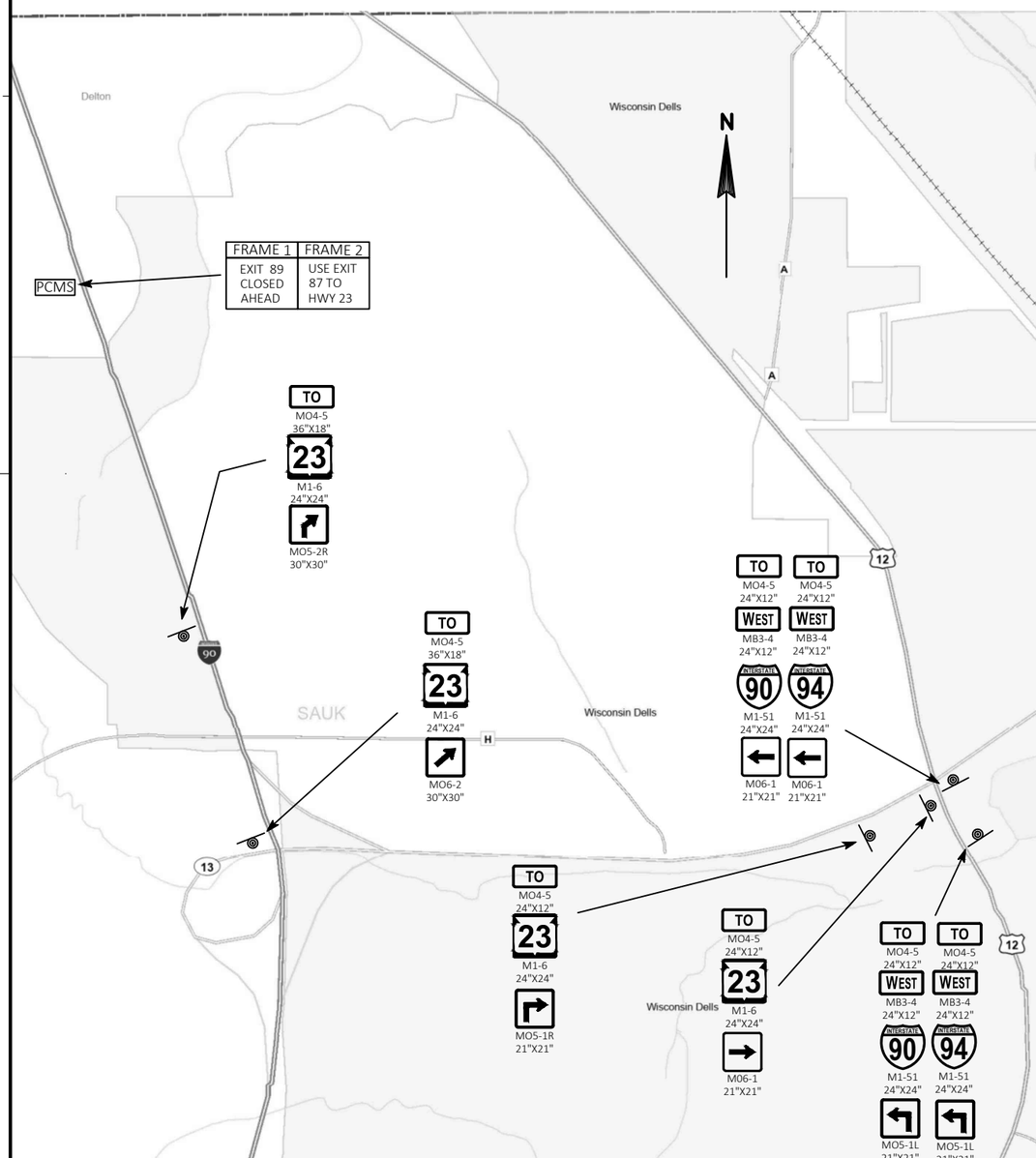

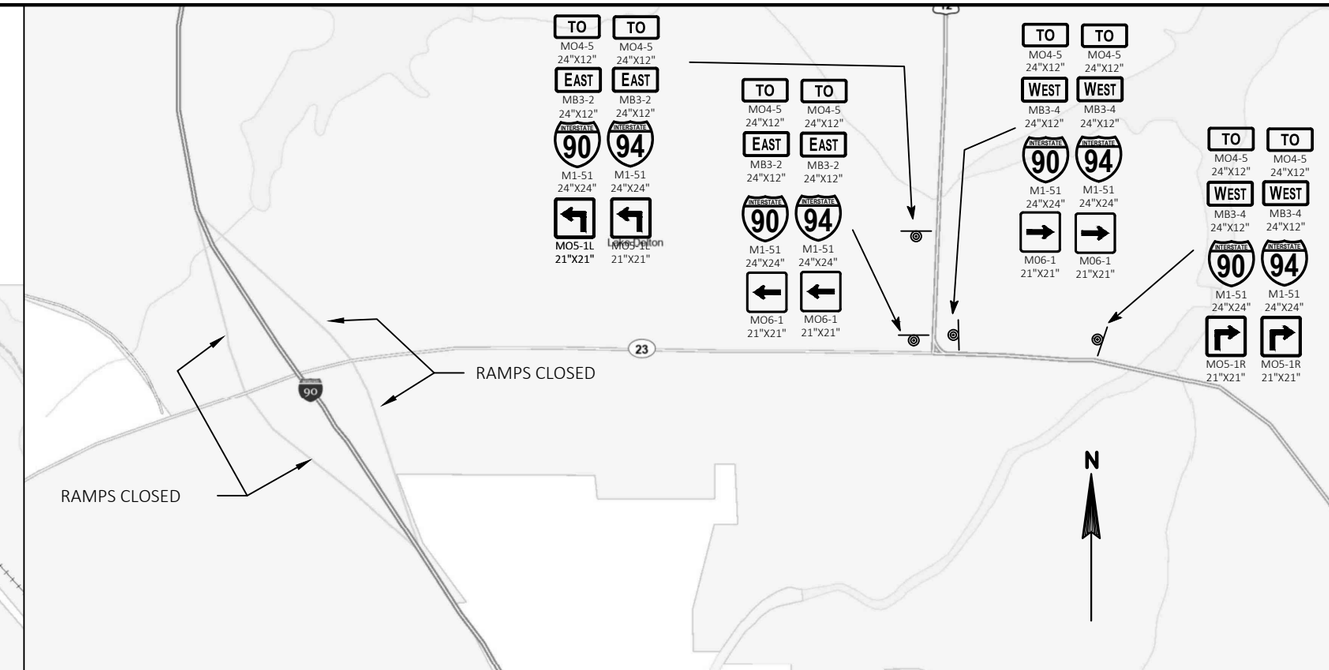

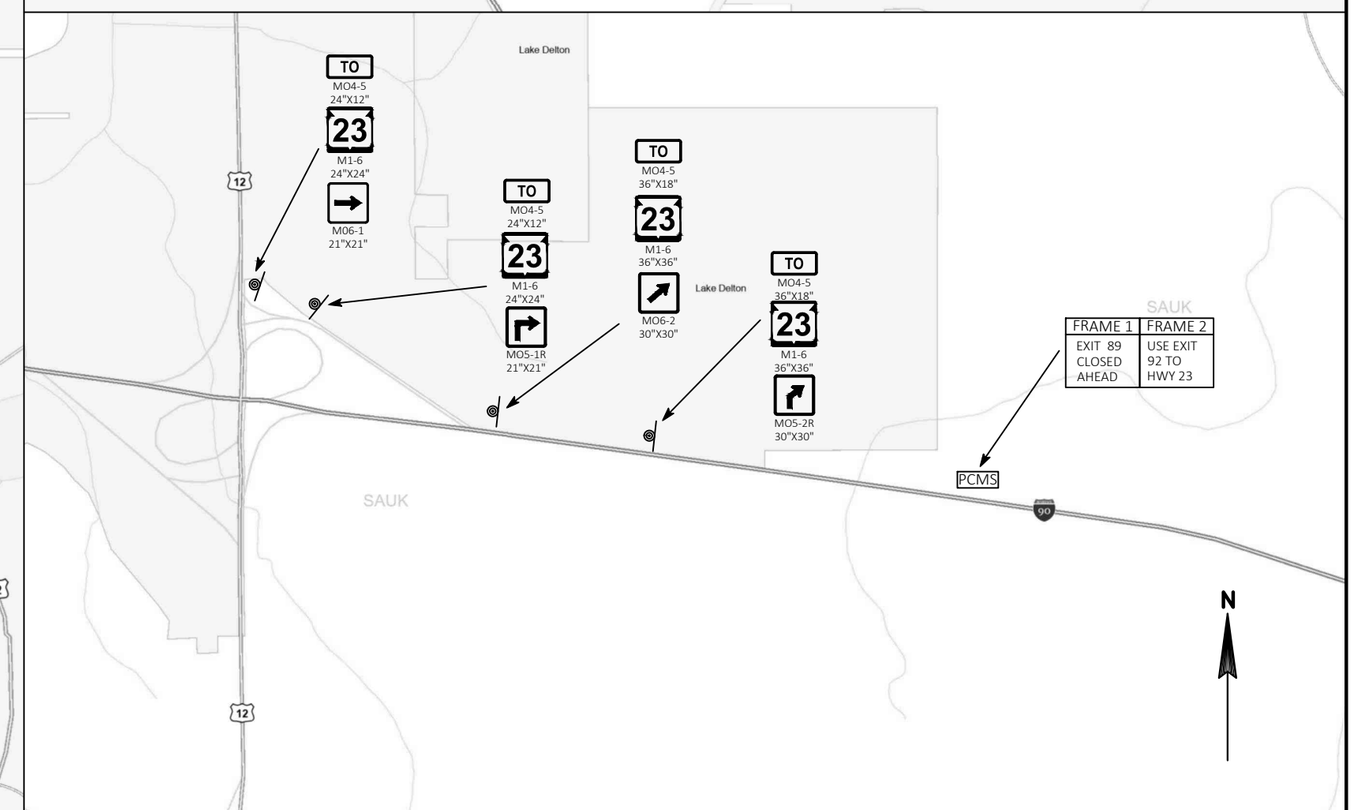

2

PROJECT NO: 1014-00-75	HWY: IH-90	COUNTY: JUNEAU, SAUK	EXIT 89 DETOUR(S)	SHEET 27	E

Estimate Of Quantities

1014-00-75

Line	Item	Item Description	Unit	Total	Qty
0002	204.0105	Removing Concrete Pavement Butt Joints	SY	6,630.000	6,630.000
0004	204.0115	Removing Asphaltic Surface Butt Joints	SY	5,090.000	5,090.000
0006	204.0120	Removing Asphaltic Surface Milling	SY	129,647.000	129,647.000
0008	204.0126.S	Removing Asphaltic Longitudinal Notched Wedge Joint Milling	LF	52,026.000	52,026.000
0010	204.0150	Removing Curb & Gutter	LF	75.000	75.000
0012	204.0165	Removing Guardrail	LF	23,400.000	23,400.000
0014	205.0100	Excavation Common	CY	20.000	20.000
0016	208.0100	Borrow	CY	20.000	20.000
0018	211.0101	Prepare Foundation for Asphaltic Paving (project) 01. 1014-00-75	EACH	1.000	1.000
0020	213.0100	Finishing Roadway (project) 01. 1014-00-75	EACH	1.000	1.000
0022	305.0110	Base Aggregate Dense 3/4-Inch	TON	9,580.000	9,580.000
0024	390.0100	Removing Pavement for Base Patching	CY	2,141.000	2,141.000
0026	390.0405	Base Patching Concrete SHES	CY	2,141.000	2,141.000
0028	415.1100	Concrete Pavement HES 10-Inch	SY	54.000	54.000
0030	416.0610	Drilled Tie Bars	EACH	917.000	917.000
0032	416.0620	Drilled Dowel Bars	EACH	8,064.000	8,064.000
0034	455.0605	Tack Coat	GAL	40,700.000	40,700.000
0036	460.0105.S	HMA Percent Within Limits (PWL) Test Strip Volumetrics	EACH	1.000	1.000
0038	460.0110.S	HMA Percent Within Limits (PWL) Test Strip Density	EACH	1.000	1.000
0040	460.0115.S	HMA Pavement Test Strip Volumetrics	EACH	1.000	1.000
0042	460.0120.S	HMA Pavement Test Strip Density	EACH	1.000	1.000
0044	460.2005	Incentive Density PWL HMA Pavement	DOL	43,193.000	43,193.000
0046	460.2007	Incentive Density HMA Pavement Longitudinal Joints	DOL	25,623.000	25,623.000
0048	460.2010	Incentive Air Voids HMA Pavement	DOL	45,930.000	45,930.000
0050	460.6224	HMA Pavement 4 MT 58-28 S	TON	20,420.000	20,420.000
0052	460.6424	HMA Pavement 4 MT 58-28 H	TON	11,130.000	11,130.000
0054	460.7224	HMA Pavement 4 HT 58-28 S	TON	16,870.000	16,870.000
0056	460.8624	HMA Pavement 4 SMA 58-28 V	TON	17,980.000	17,980.000
0058	460.9000.S	Material Transfer Vehicle	EACH	1.000	1.000
0060	465.0510	Asphaltic Rumble Strips, Shoulder Divided Roadway	LF	102,452.000	102,452.000
0062	520.1030	Apron Endwalls for Culvert Pipe 30-Inch	EACH	1.000	1.000
0064	520.3430	Culvert Pipe Class III-A Non-metal 30-Inch	LF	10.000	10.000
0066	601.0411	Concrete Curb & Gutter 30-Inch Type D	LF	32.000	32.000
0068	601.0600	Concrete Curb Pedestrian	LF	60.000	60.000
0070	602.0410	Concrete Sidewalk 5-Inch	SF	1,470.000	1,470.000
0072	602.0505	Curb Ramp Detectable Warning Field Yellow	SF	50.000	50.000
0074	602.0605	Curb Ramp Detectable Warning Field Radial Yellow	SF	80.000	80.000
0076	614.0010	Barrier System Grading Shaping Finishing	EACH	32.000	32.000
0078	614.2300	MGS Guardrail 3	LF	22,090.000	22,090.000
0080	614.2500	MGS Thrie Beam Transition	LF	280.000	280.000
0082	614.2610	MGS Guardrail Terminal EAT	EACH	32.000	32.000
0084	614.2620	MGS Guardrail Terminal Type 2	EACH	23.000	23.000
0086	618.0100	Maintenance and Repair of Haul Roads (project) 01. 1014-00-75	EACH	1.000	1.000
0088	619.1000	Mobilization	EACH	1.000	1.000
0090	624.0100	Water	MGAL	192.000	192.000
0092	625.0500	Salvaged Topsoil	SY	1,000.000	1,000.000
0094	628.1504	Silt Fence	LF	1,200.000	1,200.000
0096	628.1520	Silt Fence Maintenance	LF	1,200.000	1,200.000
0098	628.1905	Mobilizations Erosion Control	EACH	5.000	5.000

Estimate Of Quantities

1014-00-75

Line	Item	Item Description	Unit	Total	Qty
0100	628.1910	Mobilizations Emergency Erosion Control	EACH	3.000	3.000
0102	628.2027	Erosion Mat Class II Type C	SY	1,000.000	1,000.000
0104	629.0210	Fertilizer Type B	CWT	0.630	0.630
0106	630.0120	Seeding Mixture No. 20	LB	28.000	28.000
0108	630.0200	Seeding Temporary	LB	18.000	18.000
0110	631.1000	Sod Lawn	SY	100.000	100.000
0112	638.2102	Moving Signs Type II	EACH	19.000	19.000
0114	638.4000	Moving Small Sign Supports	EACH	19.000	19.000
0116	642.5201	Field Office Type C	EACH	1.000	1.000
0118	643.0300	Traffic Control Drums	DAY	21,663.000	21,663.000
0120	643.0420	Traffic Control Barricades Type III	DAY	348.000	348.000
0122	643.0705	Traffic Control Warning Lights Type A	DAY	696.000	696.000
0124	643.0715	Traffic Control Warning Lights Type C	DAY	522.000	522.000
0126	643.0800	Traffic Control Arrow Boards	DAY	174.000	174.000
0128	643.0900	Traffic Control Signs	DAY	2,304.000	2,304.000
0130	643.1051	Traffic Control Signs PCMS with TMC Communications	DAY	198.000	198.000
0132	643.1205.S	Basic Traffic Queue Warning System	DAY	60.000	60.000
0134	643.3165	Temporary Marking Line Paint 6-Inch	LF	256,229.000	256,229.000
0136	643.4100	Traffic Control Interim Lane Closure	EACH	87.000	87.000
0138	643.5000	Traffic Control	EACH	1.000	1.000
0140	646.2025	Marking Line Grooved Black Epoxy 6-Inch	LF	25,623.000	25,623.000
0142	646.2040	Marking Line Grooved Wet Ref Epoxy 6-Inch	LF	194,598.000	194,598.000
0144	646.4040	Marking Line Grooved Wet Ref Epoxy 10-Inch	LF	715.000	715.000
0146	646.9400	Marking Removal Plowable Raised Pavement Markers	EACH	1,025.000	1,025.000
0148	650.5500	Construction Staking Curb Gutter and Curb & Gutter	LF	60.000	60.000
0150	650.6000	Construction Staking Pipe Culverts	EACH	1.000	1.000
0152	650.9000	Construction Staking Curb Ramps	EACH	10.000	10.000
0154	650.9911	Construction Staking Supplemental Control (project) 01. 1014-00-75	EACH	1.000	1.000
0156	690.0250	Sawing Concrete	LF	17,525.000	17,525.000
0158	740.0440	Incentive IRI Ride	DOL	19,420.000	19,420.000
0160	ASP.1T0A	On-the-Job Training Apprentice at $5.00/HR	HRS	200.000	200.000
0162	ASP.1T0G	On-the-Job Training Graduate at $5.00/HR	HRS	300.000	300.000

3

BASE PATCH SUMMARY

EB MILE MARKER	PLUS	SIDE	LENGTH	390.0100 REMOVING PAVEMENT FORBASE PATCHING CY	390.0405 BASE PATCHING CONCRETE SHES CY	416.0610 DRILLED TIE BARS EACH	416.0620 DRILLED DOWEL BARS EACH	690.0250 SAWING CONCRETE LF	REMARKS
85	946	LEFT	6.00	2.67	2.67	-	16	30	
85	2386	LEFT	6.00	2.67	2.67	-	16	30	
85	2515	RIGHT	20.00	10.37	10.37	8	16	48	
85	2527	LEFT	6.00	2.67	2.67	-	16	30	
85	2604	RIGHT	25.00	12.96	12.96	10	16	53	
85	2700	RIGHT	6.00	3.11	3.11	-	16	34	
85	2762	LEFT	6.00	2.67	2.67	-	16	30	
85	2867	LEFT	6.00	2.67	2.67	-	16	30	
85	2875	LEFT	6.00	2.67	2.67	-	16	30	
85	2900	RIGHT	50.00	25.93	25.93	20	16	78	
85	2903	LEFT	6.00	2.67	2.67	-	16	30	
85	2975	RIGHT	6.00	3.11	3.11	-	16	34	
85	3015	RIGHT	6.00	3.11	3.11	-	16	34	
85	3038	RIGHT	8.00	4.15	4.15	4	16	36	
85	3282	LEFT	6.00	2.67	2.67	-	16	30	
85	3399	LEFT	6.00	2.67	2.67	-	16	30	
85	3538	RIGHT	15.00	7.78	7.78	6	16	43	
85	3654	LEFT	6.00	2.67	2.67	-	16	30	
85	4040	RIGHT	25.00	12.96	12.96	10	16	53	
86	217	RIGHT	15.00	7.78	7.78	6	16	43	
86	381	LEFT	6.00	2.67	2.67	-	16	30	
86	402	RIGHT	6.00	3.11	3.11	-	16	34	
86	453	LEFT	6.00	2.67	2.67	-	16	30	
86	542	RIGHT	6.00	3.11	3.11	-	16	34	
86	658	RIGHT	6.00	3.11	3.11	-	16	34	
86	744	RIGHT	6.00	3.11	3.11	-	16	34	
86	782	LEFT	6.00	2.67	2.67	-	16	30	
86	867	RIGHT	10.00	5.19	5.19	4	16	38	
86	1152	LEFT	6.00	2.67	2.67	-	16	30	
86	1240	RIGHT	6.00	3.11	3.11	-	16	34	
86	1410	LEFT	6.00	2.67	2.67	-	16	30	
86	1410	RIGHT	6.00	3.11	3.11	-	16	34	
86	1698	LEFT	6.00	2.67	2.67	-	16	30	
86	1788	RIGHT	6.00	3.11	3.11	-	16	34	
86	1803	RIGHT	6.00	3.11	3.11	-	16	34	
86	1957	RIGHT	6.00	3.11	3.11	-	16	34	
86	2100	RIGHT	25.00	12.96	12.96	10	16	53	
86	2345	BOTH	6.00	5.78	5.78	-	32	58	
86	20	LEFT	6.00	2.67	2.67	-	16	30	
86	412	RIGHT	6.00	3.11	3.11	-	16	34	
86	533	BOTH	6.00	5.78	5.78	-	32	58	
86	561	LEFT	8.00	3.56	3.56	4	16	32	
86	663	RIGHT	6.00	3.11	3.11	-	16	34	
86	687	RIGHT	6.00	3.11	3.11	-	16	34	
86	699	RIGHT	12.00	6.22	6.22	5	16		
86	754	LEFT	12.00	5.33	5.33	5	16	36	
86	806	BOTH	6.00	5.78	5.78	-	32	58	
86	855	LEFT	6.00	2.67	2.67	-	16	30	
86	937	LEFT	8.00	3.56	3.56	4	16	32	
	SUBTOTAL 1 =			231	231	96	832	1,769	

BASE PATCH SUMMARY (CONTINUED)

EB MILE MARKER	PLUS	SIDE	LENGTH	390.0100 REMOVING PAVEMENT FORBASE PATCHING CY	390.0405 BASE PATCHING CONCRETE SHES CY	416.0610 DRILLED TIE BARS EACH	416.0620 DRILLED DOWEL BARS EACH	690.0250 SAWING CONCRETE LF	REMARKS
86	937	RIGHT	8.00	4.15	4.15	4	16	36	
86	956	LEFT	6.00	2.67	2.67	-	16	30	
86	989	LEFT	12.00	5.33	5.33	5	16	36	
86	989	RIGHT	6.00	3.11	3.11	-	16	34	
86	1054	LEFT	6.00	2.67	2.67	-	16	30	
86	1089	LEFT	6.00	2.67	2.67	-	16	30	
86	1098	LEFT	6.00	2.67	2.67	-	16	30	
86	1135	RIGHT	10.00	5.19	5.19	4	16	38	
86	1157	RIGHT	30.00	15.56	15.56	12	16	58	
86	1232	RIGHT	20.00	10.37	10.37	8	16	48	
86	1253	RIGHT	10.00	5.19	5.19	4	16	38	
86	1306	RIGHT	20.00	10.37	10.37	8	16	48	
86	1358	LEFT	6.00	2.67	2.67	-	16	30	
86	1419	LEFT	6.00	2.67	2.67	-	16	30	
86	1434	RIGHT	20.00	10.37	10.37	8	16	48	
86	1497	LEFT	6.00	2.67	2.67	-	16	30	
86	1544	LEFT	12.00	5.33	5.33	5	16	36	
86	1598	BOTH	10.00	9.63	9.63	4	32	62	
86	1620	LEFT	6.00	2.67	2.67	-	16	30	
86	1669	LEFT	6.00	2.67	2.67	-	16	30	
86	1785	RIGHT	8.00	4.15	4.15	4	16	36	
86	1768	LEFT	6.00	2.67	2.67	-	16	30	
86	1720	RIGHT	15.00	7.78	7.78	6	16	43	
86	1768	RIGHT	15.00	7.78	7.78	6	16	43	
86	1738	LEFT	6.00	2.67	2.67	-	16	30	
86	1749	LEFT	6.00	2.67	2.67	-	16	30	
86	1773	LEFT	6.00	2.67	2.67	-	16	30	
86	1774	RIGHT	10.00	5.19	5.19	4	16	38	
86	1787	LEFT	6.00	2.67	2.67	-	16	30	
86	1816	LEFT	6.00	2.67	2.67	-	16	30	
86	1863	BOTH	6.00	5.78	5.78	-	32	58	
86	1893	RIGHT	6.00	3.11	3.11	-	16	34	
86	1900	LEFT	10.00	4.44	4.44	4	16	34	
86	1989	LEFT	6.00	2.67	2.67	-	16	30	
86	2001	RIGHT	20.00	10.37	10.37	8	16	48	
86	2024	LEFT	6.00	2.67	2.67	-	16	30	
86	2057	RIGHT	20.00	10.37	10.37	8	16	48	
86	2082	BOTH	6.00	5.78	5.78	-	32	58	
86	2090	LEFT	6.00	2.67	2.67	-	16	30	
86	2115	RIGHT	10.00	5.19	5.19	4	16	38	
86	2149	RIGHT	10.00	5.19	5.19	4	16	38	
86	2201	LEFT	6.00	2.67	2.67	-	16	30	
86	2333	RIGHT	40.00	20.74	20.74	16	16	68	
86	2355	LEFT	6.00	2.67	2.67	-	16	30	
86	2555	RIGHT	6.00	3.11	3.11	-	16	34	
86	2696	LEFT	6.00	2.67	2.67	-	16	30	
86	2761	RIGHT	6.00	3.11	3.11	-	16	34	
86	2875	LEFT	6.00	2.67	2.67	-	16	30	
86	2895	LEFT	6.00	2.67	2.67	-	16	30	
86	2985	RIGHT	8.00	4.15	4.15	4	16	36	
	SUBTOTAL 2 =			252	252	130	848	1,860	

3

3

BASE PATCH SUMMARY (CONTINUED)

EB MILE MARKER	PLUS	SIDE	LENGTH	390.0100 REMOVING PAVEMENT FORBASE PATCHING CY	390.0405 BASE PATCHING CONCRETE SHES CY	416.0610 DRILLED TIE BARS EACH	416.0620 DRILLED DOWEL BARS EACH	690.0250 SAWING CONCRETE LF	REMARKS
86	3015	LEFT	6.00	2.67	2.67	-	16	30	
86	3059	LEFT	6.00	2.67	2.67	-	16	30	
86	3215	LEFT	8.00	3.56	3.56	4	16	32	
86	3321	LEFT	6.00	2.67	2.67	-	16	30	
86	3350	LEFT	6.00	2.67	2.67	-	16	30	
86	3389	LEFT	6.00	2.67	2.67	-	16	30	
86	3531	RIGHT	15.00	7.78	7.78	6	16	43	
86	3588	LEFT	6.00	2.67	2.67	-	16	30	
86	3750	RIGHT	6.00	3.11	3.11	-	16	34	
86	3804	RIGHT	20.00	10.37	10.37	8	16	48	
86	3912	LEFT	6.00	2.67	2.67	-	16	30	
86	4065	RIGHT	6.00	3.11	3.11	-	16	34	
86	4188	RIGHT	25.00	12.96	12.96	10	16	53	
86	4495	LEFT	8.00	3.56	3.56	4	16	32	
86	4617	RIGHT	25.00	12.96	12.96	10	16	53	
86	4714	RIGHT	8.00	4.15	4.15	4	16	36	
86	4799	RIGHT	10.00	5.19	5.19	4	16	38	
86	4909	RIGHT	10.00	5.19	5.19	4	16	38	
86	4999	LEFT	40.00	17.78	17.78	16	16	64	
86	5041	RIGHT	25.00	12.96	12.96	10	16	53	
86	5108	RIGHT	10.00	5.19	5.19	4	16	38	
86	5186	RIGHT	10.00	5.19	5.19	4	16	38	
87	1430	RIGHT	25.00	12.96	12.96	10	16	53	
87	1558	BOTH	6.00	5.78	5.78	-	32	58	
87	1832	RIGHT	10.00	5.19	5.19	4	16	38	
87	2148	RIGHT	30.00	15.56	15.56	12	16	58	
87	2372	RIGHT	25.00	12.96	12.96	10	16	53	
87	2886	RIGHT	8.00	4.15	4.15	4	16	36	
87	3094	LEFT	8.00	3.56	3.56	4	16	32	
87	3473	RIGHT	25.00	12.96	12.96	10	16	53	
87	3496	LEFT	6.00	2.67	2.67	-	16	30	
87	3555	RIGHT	15.00	7.78	7.78	6	16	43	
87	3887	RIGHT	15.00	7.78	7.78	6	16	43	
87	3985	RIGHT	15.00	7.78	7.78	6	16	43	
87	4123	RIGHT	6.00	3.11	3.11	-	16	34	
87	4358	LEFT	6.00	2.67	2.67	-	16	30	
87	4360	RIGHT	6.00	3.11	3.11	-	16	34	
87	4852	RIGHT	6.00	3.11	3.11	-	16	34	
87	5038	RIGHT	6.00	3.11	3.11	-	16	34	
88	433	LEFT	6.00	2.67	2.67	-	16	30	
88	489	LEFT	6.00	2.67	2.67	-	16	30	
88	757	RIGHT	8.00	4.15	4.15	4	16	36	
88	843	RIGHT	6.00	3.11	3.11	-	16	34	
88	1231	RIGHT	25.00	12.96	12.96	10	16	53	
88	1427	RIGHT	25.00	12.96	12.96	10	16	53	
88	1553	RIGHT	25.00	12.96	12.96	10	16	53	
88	1674	RIGHT	8.00	4.15	4.15	4	16	36	
88	1821	RIGHT	20.00	10.37	10.37	8	16	48	
88	1998	RIGHT	6.00	3.11	3.11	-	16	34	
88	2112	RIGHT	25.00	12.96	12.96	10	16	53	
	SUBTOTAL 3 =			328	328	216	816	2,010	

BASE PATCH SUMMARY (CONTINUED)

EB MILE MARKER	PLUS	SIDE	LENGTH	390.0100 REMOVING PAVEMENT FORBASE PATCHING CY	390.0405 BASE PATCHING CONCRETE SHES CY	416.0610 DRILLED TIE BARS EACH	416.0620 DRILLED DOWEL BARS EACH	690.0250 SAWING CONCRETE LF	REMARKS
88	2544	RIGHT	25.00	12.96	12.96	10	16	53	
88	2678	LEFT	25.00	11.11	11.11	10	16	49	
88	2732	RIGHT	25.00	12.96	12.96	10	16	53	
88	2800	RIGHT	6.00	3.11	3.11	-	16	34	
88	3348	RIGHT	10.00	5.19	5.19	4	16	38	
88	3418	RIGHT	8.00	4.15	4.15	4	16	36	
88	3481	RIGHT	25.00	12.96	12.96	10	16	53	
88	3668	LEFT	6.00	2.67	2.67	-	16	30	
88	4178	RIGHT	6.00	3.11	3.11	-	16	34	
88	4267	LEFT	6.00	2.67	2.67	-	16	30	
88	4289	RIGHT	6.00	3.11	3.11	-	16	34	
88	4347	RIGHT	45.00	23.33	23.33	18	16	73	
88	4433	RIGHT	6.00	3.11	3.11	-	16	34	
88	4472	RIGHT	6.00	3.11	3.11	-	16	34	
88	4496	RIGHT	6.00	3.11	3.11	-	16	34	
88	4508	BOTH	6.00	5.78	5.78	-	32	58	
88	4525	RIGHT	6.00	3.11	3.11	-	16	34	
88	4535	RIGHT	6.00	3.11	3.11	-	16	34	
88	4546	RIGHT	6.00	3.11	3.11	-	16	34	
88	4597	RIGHT	6.00	3.11	3.11	-	16	34	
88	4628	BOTH	6.00	5.78	5.78	-	32	58	
88	4652	RIGHT	6.00	3.11	3.11	-	16	34	
88	4743	RIGHT	6.00	3.11	3.11	-	16	34	
88	4781	RIGHT	6.00	3.11	3.11	-	16	34	
88	4825	RIGHT	6.00	3.11	3.11	-	16	34	
88	4852	RIGHT	6.00	3.11	3.11	-	16	34	
88	4907	RIGHT	6.00	3.11	3.11	-	16	34	
88	5006	RIGHT	6.00	3.11	3.11	-	16	34	
88	5088	RIGHT	10.00	5.19	5.19	4	16	38	
88	5097	RIGHT	6.00	3.11	3.11	-	16	34	
89	5	RIGHT	6.00	3.11	3.11	-	16	34	
89	132	LEFT	6.00	2.67	2.67	-	16	30	
89	171	LEFT	6.00	2.67	2.67	-	16	30	
89	244	RIGHT	6.00	3.11	3.11	-	16	34	
89	289	BOTH	6.00	5.78	5.78	-	32	58	
89	388	BOTH	6.00	5.78	5.78	-	32	58	
89	411	LEFT	6.00	2.67	2.67	-	16	30	
89	440	LEFT	6.00	2.67	2.67	-	16	30	
89	467	RIGHT	6.00	3.11	3.11	-	16	34	
89	750	RIGHT	6.00	3.11	3.11	-	16	34	
89	817	LEFT	6.00	2.67	2.67	-	16	30	
89	922	RIGHT	6.00	3.11	3.11	-	16	34	
89	1368	LEFT	6.00	2.67	2.67	-	16	30	
89	1420	BOTH	6.00	5.78	5.78	-	32	58	
89	1456	LEFT	6.00	2.67	2.67	-	16	30	
89	1482	RIGHT	6.00	3.11	3.11	-	16	34	
89	1655	RIGHT	6.00	3.11	3.11	-	16	34	
89	1674	LEFT	6.00	2.67	2.67	-	16	30	
89	1717	RIGHT	6.00	3.11	3.11	-	16	34	
89	1758	RIGHT	6.00	3.11	3.11	-	16	34	
	SUBTOTAL 4 =			227	227	70	880	1,901	

3

3

BASE PATCH SUMMARY (CONTINUED)

EB MILE MARKER	PLUS	SIDE	LENGTH	390.0100 REMOVING PAVEMENT FORBASE PATCHING CY	390.0405 BASE PATCHING CONCRETE SHES CY	416.0610 DRILLED TIE BARS EACH	416.0620 DRILLED DOWEL BARS EACH	690.0250 SAWING CONCRETE LF	REMARKS
89	1784	RIGHT	6.00	3.11	3.11	-	16	34	
89	1822	LEFT	6.00	2.67	2.67	-	16	30	
89	1843	LEFT	10.00	4.44	4.44	4	16	34	
89	1924	RIGHT	6.00	3.11	3.11	-	16	34	
89	1950	LEFT	6.00	2.67	2.67	-	16	30	
89	2012	LEFT	8.00	3.56	3.56	4	16	32	
89	2036	LEFT	6.00	2.67	2.67	-	16	30	
89	2096	RIGHT	6.00	3.11	3.11	-	16	34	
89	2255	RIGHT	10.00	5.19	5.19	4	16	38	
89	2308	LEFT	10.00	4.44	4.44	4	16	34	
89	2375	RIGHT	6.00	3.11	3.11	-	16	34	
89	2434	RIGHT	10.00	5.19	5.19	4	16	38	
89	2434	LEFT	15.00	6.67	6.67	6	16	39	
89	2472	LEFT	6.00	2.67	2.67	-	16	30	
89	2496	LEFT	6.00	2.67	2.67	-	16	30	
89	2513	RIGHT	6.00	3.11	3.11	-	16	34	
89	2550	BOTH	6.00	5.78	5.78	-	32	58	
89	2632	LEFT	10.00	4.44	4.44	4	16	34	
89	2668	LEFT	6.00	2.67	2.67	-	16	30	
89	2700	LEFT	6.00	2.67	2.67	-	16	30	
89	2716	LEFT	6.00	2.67	2.67	-	16	30	
89	3027	BOTH	6.00	5.78	5.78	-	32	58	
89	3064	BOTH	6.00	5.78	5.78	-	32	58	
89	3140	RIGHT	6.00	3.11	3.11	-	16	34	
89	3225	RIGHT	6.00	3.11	3.11	-	16	34	
89	3644	RIGHT	6.00	3.11	3.11	-	16	34	
	SUBTOTAL 5 =			97	97	30	464	935	

BASE PATCH SUMMARY (CONTINUED)

WB MILE MARKER	MINUS	SIDE	LENGTH	390.0100 REMOVING PAVEMENT FORBASE PATCHING CY	390.0405 BASE PATCHING CONCRETE SHES CY	416.0610 DRILLED TIE BARS EACH	416.0620 DRILLED DOWEL BARS EACH	690.0250 SAWING CONCRETE LF	REMARKS
90	1390	LEFT	6.00	2.67	2.67	-	16	30	
90	1520	LEFT	6.00	2.67	2.67	-	16	30	
90	1570	BOTH	6.00	5.78	5.78	-	32	58	
90	1670	BOTH	6.00	5.78	5.78	-	32	58	
90	1780	LEFT	6.00	2.67	2.67	-	16	30	
90	1800	LEFT	6.00	2.67	2.67	-	16	30	
90	1820	LEFT	6.00	2.67	2.67	-	16	30	
90	1970	BOTH	6.00	5.78	5.78	-	32	58	
90	2040	LEFT	6.00	2.67	2.67	-	16	30	
90	2060	LEFT	6.00	2.67	2.67	-	16	30	
90	2070	LEFT	6.00	2.67	2.67	-	16	30	
90	2090	BOTH	6.00	5.78	5.78	-	32	58	
90	2130	LEFT	6.00	2.67	2.67	-	16	30	
90	2140	BOTH	6.00	5.78	5.78	-	32	58	
90	2340	LEFT	6.00	2.67	2.67	-	16	30	
90	2350	RIGHT	6.00	3.11	3.11	-	16	34	
90	2400	LEFT	6.00	2.67	2.67	-	16	30	
90	2440	LEFT	6.00	2.67	2.67	-	16	30	
90	2450	LEFT	6.00	2.67	2.67	-	16	30	
90	2510	LEFT	6.00	2.67	2.67	-	16	30	
90	2580	LEFT	6.00	2.67	2.67	-	16	30	
90	2670	LEFT	6.00	2.67	2.67	-	16	30	
90	2680	LEFT	6.00	2.67	2.67	-	16	30	
90	3080	LEFT	6.00	2.67	2.67	-	16	30	
90	3205	RIGHT	6.00	3.11	3.11	-	16	34	
90	3265	LEFT	6.00	2.67	2.67	-	16	30	
90	3340	RIGHT	6.00	3.11	3.11	-	16	34	
90	3450	LEFT	6.00	2.67	2.67	-	16	30	
90	3540	LEFT	6.00	2.67	2.67	-	16	30	
90	3605	RIGHT	6.00	3.11	3.11	-	16	34	
90	3685	LEFT	6.00	2.67	2.67	-	16	30	
90	3760	LEFT	6.00	2.67	2.67	-	16	30	
90	3965	RIGHT	6.00	3.11	3.11	-	16	34	
90	3985	LEFT	6.00	2.67	2.67	-	16	30	
90	4085	LEFT	6.00	2.67	2.67	-	16	30	
90	4105	RIGHT	6.00	3.11	3.11	-	16	34	
90	4135	RIGHT	6.00	3.11	3.11	-	16	34	
90	4305	RIGHT	6.00	3.11	3.11	-	16	34	
90	4400	LEFT	6.00	2.67	2.67	-	16	30	
90	4495	LEFT	6.00	2.67	2.67	-	16	30	
90	4555	RIGHT	6.00	3.11	3.11	-	16	34	
90	4600	LEFT	6.00	2.67	2.67	-	16	30	
90	4720	LEFT	6.00	2.67	2.67	-	16	30	
90	4735	LEFT	6.00	2.67	2.67	-	16	30	
90	4750	RIGHT	6.00	3.11	3.11	-	16	34	
90	4800	RIGHT	6.00	3.11	3.11	-	16	34	
90	4825	RIGHT	6.00	3.11	3.11	-	16	34	
90	4870	RIGHT	6.00	3.11	3.11	-	16	34	
89	90	LEFT	6.00	2.67	2.67	-	16	30	
89	105	LEFT	6.00	2.67	2.67	-	16	30	
	SUBTOTAL 6 =			155	155	0	880	1,692	

3

3

BASE PATCH SUMMARY (CONTINUED)

WB MILE MARKER	MINUS	SIDE	LENGTH	390.0100 REMOVING PAVEMENT FORBASE PATCHING CY	390.0405 BASE PATCHING CONCRETE SHES CY	416.0610 DRILLED TIE BARS EACH	416.0620 DRILLED DOWEL BARS EACH	690.0250 SAWING CONCRETE LF	REMARKS
89	165	LEFT	6.00	2.67	2.67	-	16	30	
89	185	RIGHT	6.00	3.11	3.11	-	16	34	
89	220	RIGHT	6.00	3.11	3.11	-	16	34	
89	235	BOTH	6.00	5.78	5.78	-	32	58	
89	255	RIGHT	6.00	3.11	3.11	-	16	34	
89	265	RIGHT	6.00	3.11	3.11	-	16	34	
89	325	RIGHT	6.00	3.11	3.11	-	16	34	
89	340	RIGHT	6.00	3.11	3.11	-	16	34	
89	375	RIGHT	6.00	3.11	3.11	-	16	34	
89	405	LEFT	6.00	2.67	2.67	-	16	30	
89	545	RIGHT	6.00	3.11	3.11	-	16	34	
89	585	LEFT	6.00	2.67	2.67	-	16	30	
89	635	RIGHT	6.00	3.11	3.11	-	16	34	
89	680	RIGHT	6.00	3.11	3.11	-	16	34	
89	715	BOTH	6.00	5.78	5.78	-	32	58	
89	730	RIGHT	6.00	3.11	3.11	-	16	34	
89	765	RIGHT	6.00	3.11	3.11	-	16	34	
89	790	RIGHT	6.00	3.11	3.11	-	16	34	
89	830	RIGHT	6.00	3.11	3.11	-	16	34	
89	845	RIGHT	6.00	3.11	3.11	-	16	34	
89	870	LEFT	6.00	2.67	2.67	-	16	30	
89	900	LEFT	6.00	2.67	2.67	-	16	30	
89	925	LEFT	6.00	2.67	2.67	-	16	30	
89	950	LEFT	6.00	2.67	2.67	-	16	30	
89	1015	RIGHT	6.00	3.11	3.11	-	16	34	
89	1060	RIGHT	8.00	4.15	4.15	4	16	36	
89	1100	RIGHT	6.00	3.11	3.11	-	16	34	
89	1115	LEFT	6.00	2.67	2.67	-	16	30	
89	1165	RIGHT	6.00	3.11	3.11	-	16	34	
89	1295	RIGHT	6.00	3.11	3.11	-	16	34	
89	1315	RIGHT	6.00	3.11	3.11	-	16	34	
89	1485	LEFT	6.00	2.67	2.67	-	16	30	
89	1575	LEFT	6.00	2.67	2.67	-	16	30	
89	1760	RIGHT	6.00	3.11	3.11	-	16	34	
89	1860	RIGHT	6.00	3.11	3.11	-	16	34	
89	1970	RIGHT	6.00	3.11	3.11	-	16	34	
89	2080	RIGHT	6.00	3.11	3.11	-	16	34	
89	2195	RIGHT	6.00	3.11	3.11	-	16	34	
89	2270	RIGHT	6.00	3.11	3.11	-	16	34	
89	2380	LEFT	20.00	8.89	8.89	8	16	44	
89	2415	RIGHT	15.00	7.78	7.78	6	16	43	
89	2495	RIGHT	6.00	3.11	3.11	-	16	34	
89	2760	RIGHT	6.00	3.11	3.11	-	16	34	
89	3040	RIGHT	6.00	3.11	3.11	-	16	34	
89	3040	LEFT	6.00	2.67	2.67	-	16	30	
89	3100	RIGHT	6.00	3.11	3.11	-	16	34	
89	3280	RIGHT	6.00	3.11	3.11	-	16	34	
89	3350	RIGHT	6.00	3.11	3.11	-	16	34	
89	3550	RIGHT	6.00	3.11	3.11	-	16	34	
89	4040	RIGHT	6.00	3.11	3.11	-	16	34	
	SUBTOTAL 7 =			167	167	18	832	1,725	

BASE PATCH SUMMARY (CONTINUED)

WB MILE MARKER	MINUS	SIDE	LENGTH	390.0100 REMOVING PAVEMENT FORBASE PATCHING CY	390.0405 BASE PATCHING CONCRETE SHES CY	416.0610 DRILLED TIE BARS EACH	416.0620 DRILLED DOWEL BARS EACH	690.0250 SAWING CONCRETE LF	REMARKS
89	4140	RIGHT	6.00	3.11	3.11	-	16	34	
89	4225	LEFT	6.00	2.67	2.67	-	16	30	
89	4650	RIGHT	6.00	3.11	3.11	-	16	34	
89	4760	RIGHT	20.00	10.37	10.37	8	16	48	
89	4840	RIGHT	15.00	7.78	7.78	6	16	43	
88	10	RIGHT	6.00	3.11	3.11	-	16	34	
88	200	LEFT	6.00	2.67	2.67	-	16	30	
88	480	RIGHT	6.00	3.11	3.11	-	16	34	
88	790	RIGHT	6.00	3.11	3.11	-	16	34	
88	910	RIGHT	6.00	3.11	3.11	-	16	34	
88	1060	LEFT	6.00	2.67	2.67	-	16	30	
88	1090	RIGHT	6.00	3.11	3.11	-	16	34	
88	1145	RIGHT	6.00	3.11	3.11	-	16	34	
88	1245	RIGHT	6.00	3.11	3.11	-	16	34	
88	1265	RIGHT	6.00	3.11	3.11	-	16	34	
88	1370	RIGHT	8.00	4.15	4.15	4	16	36	
88	1445	RIGHT	6.00	3.11	3.11	-	16	34	
88	1515	RIGHT	6.00	3.11	3.11	-	16	34	
88	1650	LEFT	6.00	2.67	2.67	-	16	30	
88	1675	RIGHT	6.00	3.11	3.11	-	16	34	
88	2150	LEFT	6.00	2.67	2.67	-	16	30	
88	2205	RIGHT	6.00	3.11	3.11	-	16	34	
88	2380	RIGHT	6.00	3.11	3.11	-	16	34	
88	2420	LEFT	6.00	2.67	2.67	-	16	30	
88	2460	RIGHT	6.00	3.11	3.11	-	16	34	
88	2690	RIGHT	6.00	3.11	3.11	-	16	34	
88	2760	RIGHT	6.00	3.11	3.11	-	16	34	
88	2780	LEFT	6.00	2.67	2.67	-	16	30	
88	2920	BOTH	6.00	5.78	5.78	-	32	58	
88	3230	LEFT	6.00	2.67	2.67	-	16	30	
88	3305	LEFT	6.00	2.67	2.67	-	16	30	
88	3380	LEFT	6.00	2.67	2.67	-	16	30	
88	3460	RIGHT	6.00	3.11	3.11	-	16	34	
88	3535	RIGHT	6.00	3.11	3.11	-	16	34	
88	3570	RIGHT	6.00	3.11	3.11	-	16	34	
88	3720	RIGHT	6.00	3.11	3.11	-	16	34	
88	4325	LEFT	6.00	2.67	2.67	-	16	30	
88	4440	RIGHT	6.00	3.11	3.11	-	16	34	
88	4460	BOTH	6.00	5.78	5.78	-	32	58	
88	4540	LEFT	6.00	2.67	2.67	-	16	30	
88	4560	RIGHT	6.00	3.11	3.11	-	16	34	
88	4620	RIGHT	6.00	3.11	3.11	-	16	34	
88	4640	RIGHT	6.00	3.11	3.11	-	16	34	
88	4950	LEFT	6.00	2.67	2.67	-	16	30	
87	20	RIGHT	6.00	3.11	3.11	-	16	34	
87	250	LEFT	6.00	2.67	2.67	-	16	30	
87	710	RIGHT	6.00	3.11	3.11	-	16	34	
87	870	RIGHT	6.00	3.11	3.11	-	16	34	
87	975	RIGHT	30.00	15.56	15.56	12	16	58	
87	1280	RIGHT	6.00	3.11	3.11	-	16	34	
	SUBTOTAL 8 =			180	180	30	832	1,741	

3

3

BASE PATCH SUMMARY (CONTINUED)

WB MILE MARKER	MINUS	SIDE	LENGTH	390.0100 REMOVING PAVEMENT FORBASE PATCHING CY	390.0405 BASE PATCHING CONCRETE SHES CY	416.0610 DRILLED TIE BARS EACH	416.0620 DRILLED DOWEL BARS EACH	690.0250 SAWING CONCRETE LF	REMARKS
87	1335	RIGHT	6.00	3.11	3.11	-	16	34	
87	1545	RIGHT	15.00	7.78	7.78	6	16	43	
87	1615	RIGHT	6.00	3.11	3.11	-	16	34	
87	1780	RIGHT	8.00	4.15	4.15	4	16	36	
87	1900	RIGHT	10.00	5.19	5.19	4	16	38	
87	1990	RIGHT	8.00	4.15	4.15	4	16	36	
87	2090	LEFT	6.00	2.67	2.67	-	16	30	
87	2130	RIGHT	20.00	10.37	10.37	8	16	48	
87	2300	RIGHT	30.00	15.56	15.56	12	16	58	
87	2365	RIGHT	6.00	3.11	3.11	-	16	34	
87	2400	RIGHT	10.00	5.19	5.19	4	16	38	
87	2470	RIGHT	6.00	3.11	3.11	-	16	34	
87	2610	RIGHT	30.00	15.56	15.56	12	16	58	
87	2700	RIGHT	10.00	5.19	5.19	4	16	38	
87	2750	RIGHT	10.00	5.19	5.19	4	16	38	
87	2850	RIGHT	15.00	7.78	7.78	6	16	43	
87	2925	RIGHT	10.00	5.19	5.19	4	16	38	
87	3045	RIGHT	10.00	5.19	5.19	4	16	38	
87	3155	RIGHT	10.00	5.19	5.19	4	16	38	
87	3220	BOTH	6.00	5.78	5.78	-	32	58	
87	3420	RIGHT	12.00	6.22	6.22	5	16	40	
87	3480	RIGHT	6.00	3.11	3.11	-	16	34	
87	3540	RIGHT	6.00	3.11	3.11	-	16	34	
87	3595	RIGHT	6.00	3.11	3.11	-	16	34	
87	3660	LEFT	6.00	2.67	2.67	-	16	30	
87	4060	LEFT	6.00	2.67	2.67	-	16	30	
87	4225	RIGHT	20.00	10.37	10.37	8	16	48	
87	4380	LEFT	6.00	2.67	2.67	-	16	30	
87	4630	RIGHT	20.00	10.37	10.37	8	16	48	
87	4950	LEFT	6.00	2.67	2.67	-	16	30	
87	5130	RIGHT	7.00	3.63	3.63	-	-	-	
86	40	RIGHT	10.00	5.19	5.19	4	16	38	
86	105	RIGHT	6.00	3.11	3.11	-	16	34	
86	280	RIGHT	10.00	5.19	5.19	4	16	38	
86	460	RIGHT	10.00	5.19	5.19	4	16	38	
86	530	RIGHT	6.00	3.11	3.11	-	16	34	
86	670	LEFT	6.00	2.67	2.67	-	16	30	
86	720	LEFT	6.00	2.67	2.67	-	16	30	
86	750	RIGHT	6.00	3.11	3.11	-	16	34	
86	830	LEFT	6.00	2.67	2.67	-	16	30	
86	900	LEFT	6.00	2.67	2.67	-	16	30	
86	910	LEFT	6.00	2.67	2.67	-	16	30	
86	965	RIGHT	6.00	3.11	3.11	-	16	34	
86	1015	RIGHT	24.00	12.44	12.44	10	16	52	
86	1060	RIGHT	6.00	3.11	3.11	-	16	34	
86	1120	RIGHT	20.00	10.37	10.37	8	16	48	
86	1175	BOTH	10.00	9.63	9.63	4	32	62	
86	1200	RIGHT	6.00	3.11	3.11	-	16	34	
86	1230	LEFT	6.00	2.67	2.67	-	16	30	
86	1245	RIGHT	8.00	4.15	4.15	4	16	36	
	SUBTOTAL 9 =			260	260	139	816	1,866	

BASE PATCH SUMMARY (CONTINUED)

WB MILE MARKER	MINUS	SIDE	LENGTH	390.0100 REMOVING PAVEMENT FORBASE PATCHING CY	390.0405 BASE PATCHING CONCRETE SHES CY	416.0610 DRILLED TIE BARS EACH	416.0620 DRILLED DOWEL BARS EACH	690.0250 SAWING CONCRETE LF	REMARKS
86	1270	LEFT	6.00	2.67	2.67	-	16	30	
86	1305	RIGHT	10.00	5.19	5.19	4	16	38	
86	1340	LEFT	6.00	2.67	2.67	-	16	30	
86	1350	LEFT	8.00	3.56	3.56	4	16	32	
86	1455	RIGHT	6.00	3.11	3.11	-	16	34	
86	1510	RIGHT	8.00	4.15	4.15	4	16	36	
86	1550	LEFT	6.00	2.67	2.67	-	16	30	
86	1590	RIGHT	8.00	4.15	4.15	4	16	36	
86	1615	RIGHT	6.00	3.11	3.11	-	16	34	
86	1720	LEFT	6.00	2.67	2.67	-	16	30	
86	1770	RIGHT	6.00	3.11	3.11	-	16	34	
86	1815	RIGHT	6.00	3.11	3.11	-	16	34	
86	2000	LEFT	6.00	2.67	2.67	-	16	30	
86	2050	LEFT	6.00	2.67	2.67	-	16	30	
86	2115	LEFT	6.00	2.67	2.67	-	16	30	
86	2165	LEFT	6.00	2.67	2.67	-	16	30	
86	2240	LEFT	6.00	2.67	2.67	-	16	30	
86	2263	BOTH	6.00	5.78	5.78	-	32	58	
86	3000	LEFT	6.00	2.67	2.67	-	16	30	
86	3090	LEFT	6.00	2.67	2.67	-	16	30	
86	3330	RIGHT	8.00	4.15	4.15	4	16	36	
86	3440	RIGHT	30.00	15.56	15.56	12	16	58	
86	3605	RIGHT	8.00	4.15	4.15	4	16	36	
86	3645	RIGHT	6.00	3.11	3.11	-	16	34	
86	3890	RIGHT	15.00	7.78	7.78	6	16	43	
86	4950	RIGHT	10.00	5.19	5.19	4	16	38	
85	50	RIGHT	6.00	3.11	3.11	-	16	34	
86	120	LEFT	10.00	4.44	4.44	4	16	34	
86	150	LEFT	6.00	2.67	2.67	-	16	30	
86	255	RIGHT	6.00	3.11	3.11	-	16	34	
86	2325	RIGHT	6.00	3.11	3.11	-	16	34	
86	2400	RIGHT	40.00	20.74	20.74	16	16	68	
86	2500	RIGHT	30.00	15.56	15.56	12	16	58	
86	2640	LEFT	6.00	2.67	2.67	-	16	30	
86	3700	LEFT	6.00	2.67	2.67	-	16	30	
86	4030	LEFT	6.00	2.67	2.67	-	16	30	
86	4115	LEFT	6.00	2.67	2.67	-	16	30	
86	4150	LEFT	6.00	2.67	2.67	-	16	30	
86	4180	LEFT	8.00	3.56	3.56	4	16	32	
86	4325	LEFT	6.00	2.67	2.67	-	16	30	
86	4450	RIGHT	6.00	3.11	3.11	-	16	34	
86	4630	RIGHT	15.00	7.78	7.78	6	16	43	
85	5020	RIGHT	6.00	3.11	3.11	-	16	34	
	UNDISTRIBUTED			52.00	52.00	100	160	500	
	SUBTOTAL 10 =			243	243	188	864	2,026	

3

3

BASE PATCH SUMMARY (CONTINUED)

	390.0100 REMOVING PAVEMENT FORBASE PATCHING CY	390.0405 BASE PATCHING CONCRETE SHES CY	416.0610 DRILLED TIE BARS EACH	416.0620 DRILLED DOWEL BARS EACH	690.0250 SAWING CONCRETE LF	REMARKS
SUBTOTAL 1	231	231	96	832	1769	EASTBOUND
SUBTOTAL 2	252	252	130	848	1860	
SUBTOTAL 3	328	328	216	816	2010	
SUBTOTAL 4	227	227	70	880	1901	
SUBTOTAL 5	97	97	30	464	935	
SUBTOTAL 6	155	155	0	880	1692	WESTBOUND
SUBTOTAL 7	167	167	18	832	1725	
SUBTOTAL 8	180	180	30	832	1741	
SUBTOTAL 9	260	260	139	816	1866	
SUBTOTAL 10	243	243	188	864	2026	
TOTAL 0010	2,141	2,141	917	8,064	17,525	

BUTT JOINT SUMMARY

STATION	TO	STATION	LOCATION	204.0105 REMOVING PAVEMENT BUTT JOINTS SY	204.0115 REMOVING ASPHALTIC SURFACE BUTT JOINTS SY	REMARKS
1822+70	-	1823+55	B-29-18	246	132	
1846+02	-	1846+87	B-29-16	246	132	
1847+81	-	1848+66	B-29-16	246	132	
1934+44	-	1935+29	B-56-37	246	132	
1936+10	-	1936+95	B-56-37	246	123	
1941+77	-	1942+62	B-56-39	340	132	
1948+00	-	1948+85	EXIT 87 EB OFF RAMP	246	132	
1989+10	-	1989+95	B-56-41	246	113	
1990+00	-	1990+85	B-56-41	246	113	
2047+91	-	2048+76	B-56-42	246	132	
2049+51	-	2050+36	B-56-42	246	113	
2077+42	-	2078+27	B-56-44	246	132	
1826+21A	-	1827+06A	B-29-19	246	132	
1849+08A	-	1849+93A	B-29-17	246	113	
1851+04A	-	1851+89A	B-29-17	246	132	
1937+14A	-	1937+99A	B-56-38	340	132	
1938+58A	-	1939+43A	B-56-38	340	132	
1944+37A	-	1945+22A	B-56-40	246	132	
1947+51A	-	1948+36A	B-56-40	246	132	
1992+20A	-	1993+05A	B-56-41	246	113	
1993+00A	-	1993+85A	B-56-41	246	113	
2050+28A	-	2051+13A	B-56-43	246	113	
2051+91A	-	2052+76A	B-56-43	246	132	
2079+56A	-	2080+41A	B-56-45	246	132	
6+37H	-	7+22H	EXIT 85 EB OFF RAMP	151	94	
1+00K	-	1+85K	EXIT 85 EB ON RAMP	151	94	
68+76Q	-	69+61Q	EXIT 87 EB OFF RAMP	151	76	
		1827+97	CROSSOVER	-	46	
		1883+62	CROSSOVER	-	37	
		1927+88	CROSSOVER	-	35	
		1988+00	CROSSOVER	-	42	
		2024+07	CROSSOVER	-	37	
		1832+72A	CROSSOVER	-	41	
		1886+01A	CROSSOVER	-	37	
		1927+26A	CROSSOVER	-	34	
		1991+00A	CROSSOVER	-	45	
		2027+05A	CROSSOVER	-	42	
2+53H	-	3+38H	EXIT 85 EB OFF RAMP	-	113	
10+85K	-	11+70K	EXIT 85 EB ON RAMP	-	113	
6+92J	-	7+77J	EXIT 85 WB ON RAMP	-	113	
2+03L	-	2+88L	EXIT 85 WB OFF RAMP	-	113	
64+04P	-	64+89P	EXIT 87 EB ON RAMP	-	113	
10+49N	-	11+34N	EXIT 87 WB ON RAMP	-	113	
7+30R	-	8+15R	EXIT 87 WB OFF RAMP	-	113	
2+24W	-	3+09W	EXIT 89 EB OFF RAMP	-	113	
5+24X	-	6+09X	EXIT 89 WB ON RAMP	-	113	
10+88Y	-	11+73Y	EXIT 89 EB ON RAMP	-	113	
10+78Z	-	11+63Z	EXIT 89 WB OFF RAMP	-	264	
			TOTAL 0010	6,630	5,090	

3

3

ASPHALT SUMMARY

STATION	TO	STATION	LOCATION	204.0120 REMOVING ASPHALTIC SURFACE MILLING SY	204.0126.S REMOVING ASPHALTIC LONGITUDINAL NOTCHED WEDGE JOINT MILLING LF	305.0110 BASE AGGREGATE DENSE 3/4-INCH TON	455.0605 TACK COAT GAL	460.6224 HMA PAVEMENT 4 MT 58-28 S TON	460.6424 HMA PAVEMENT 4 MT 58-28 H TON	460.7224 HMA PAVEMENT 4 HT 58-28 S TON	460.8624 HMA PAVEMENT 4 SMA 58-28 V TON	465.0510 ASPHALTIC RUMBLE STRIPS, SHOULDER DIVIDED ROADWAY LF	624.0100 WATER MGAL	REMARKS
1822+84	-	1879+50	EB JUNEAU BINDER	-	-	-	1,400	-	-	1,860	-	-	-	26' DRIVING LANES AND 4' MEDIAN SHOULDER
1823+58A	-	1879+50A	WB JUNEAU BINDER	-	-	-	1,400	-	-	1,830	-	-	-	26' DRIVING LANES AND 4' MEDIAN SHOULDER
1879+50	-	2078+27	EB SAUK BINDER	-	-	-	4,700	-	-	6,500	-	-	-	26' DRIVING LANES AND 4' MEDIAN SHOULDER
1937+00	-	1945+00	EB SAUK BINDER	-	-	-	100	-	-	110	-	-	-	12' AUXILARY LANE
1879+50A	-	2080+41A	WB SAUK BINDER	-	-	-	4,700	-	-	6,570	-	-	-	26' DRIVING LANES AND 4' MEDIAN SHOULDER
1822+84	-	1879+50	EB JUNEAU SURFACE	-	5,666	-	1,000	-	-	-	1,980	-	-	26' DRIVING LANES AND 4' MEDIAN SHOULDER
1823+58A	-	1879+50A	WB JUNEAU SURFACE	-	5,592	-	1,000	-	-	-	1,950	-	-	26' DRIVING LANES AND 4' MEDIAN SHOULDER
1879+50	-	2078+27	EB SAUK SURFACE	-	19,877	-	3,400	-	-	-	7,000	-	-	26' DRIVING LANES AND 4' MEDIAN SHOULDER
1937+00	-	1945+00	EB SAUK SURFACE	-	800	-	100	-	-	-	110	-	-	12' AUXILARY LANE
1879+50A	-	2080+41A	WB SAUK SURFACE	-	20,091	-	3,400	-	-	-	6,940	-	-	26' DRIVING LANES AND 4' MEDIAN SHOULDER
1822+84	-	1879+50	EB JUNEAU	-	-	620	700	990	-	-	-	5,666	12	8' OUTSIDE SHOULDER (UPPER & LOWER LIFT)
1823+58A	-	1879+50A	WB JUNEAU	-	-	610	600	980	-	-	-	5,592	12	8' OUTSIDE SHOULDER (UPPER & LOWER LIFT)
1879+50	-	2078+27	EB SAUK	-	-	2,150	2,200	3,470	-	-	-	19,877	43	8' OUTSIDE SHOULDER (UPPER & LOWER LIFT)
1879+50A	-	2080+41A	WB SAUK	-	-	2,180	2,200	3,510	-	-	-	20,091	44	8' OUTSIDE SHOULDER (UPPER & LOWER LIFT)
1822+84	-	1879+50	EB JUNEAU	-	-	390	-	-	-	-	-	5,666	8	MEDIAN SHOULDER
1823+58A	-	1879+50A	WB JUNEAU	-	-	390	-	-	-	-	-	5,592	8	MEDIAN SHOULDER
1879+50	-	2078+27	EB SAUK	-	-	1,360	-	-	-	-	-	19,877	27	MEDIAN SHOULDER
1879+50A	-	2080+41A	WB SAUK	-	-	1,380	-	-	-	-	-	20,091	28	MEDIAN SHOULDER
1827+97	-	1832+72A	CROSSOVER	-	-	-	-	-	30	-	-	-	-	MEDIAN CROSSOVER
1883+62	-	1886+01A	CROSSOVER	-	-	-	-	-	30	-	-	-	-	MEDIAN CROSSOVER
1924+88	-	1927+26A	CROSSOVER	-	-	-	-	-	40	-	-	-	-	MEDIAN CROSSOVER
1988+00	-	1991+00A	CROSSOVER	-	-	-	-	-	40	-	-	-	-	MEDIAN CROSSOVER
2024+07	-	2027+05A	CROSSOVER	-	-	-	-	-	50	-	-	-	-	MEDIAN CROSSOVER
0+00H	-	7+22H	EXIT 85 EB OFF RAMP 'H'	3,023	-	-	400	300	300	-	-	-	-	
1+85K	-	13+50K	EXIT 85 EB ON RAMP 'K'	4,267	-	-	600	420	420	-	-	-	-	
0+00J	-	11+28J	EXIT 85 WB ON RAMP 'J'	4,623	-	-	600	460	460	-	-	-	-	
0+00L	-	15+33L	EXIT 85 WB OFF RAMP 'L'	3,734	-	-	500	370	370	-	-	-	-	
68+92Q	-	88+92Q	EXIT 87 EB OFF RAMP 'Q'	4,089	-	-	500	410	410	-	-	-	-	
62+16P	-	88+92P	EXIT 87 EB ON RAMP 'P'	8,326	-	-	1,000	820	820	-	-	-	-	
0+00N	-	15+00N	EXIT 87 WB ON RAMP 'N'	4,978	-	-	600	490	490	-	-	-	-	
0+00R	-	17+30R	EXIT 87 WB OFF RAMP 'R'	6,400	-	-	800	630	630	-	-	-	-	
88+92M	-	110+00M	STH 13	18,738	-	-	1,400	2,370	-	-	-	-	-	MAINLINE (LOWER LIFT)
88+92M	-	110+00M	STH 13	18,738	-	-	1,000	-	1,840	-	-	-	-	MAINLINE (UPPER LIFT)
0+00W	-	11+50W	EXIT 89 EB OFF RAMP 'W'	4,089	-	-	500	410	410	-	-	-	-	
0+00Z	-	16+20Z	EXIT 89 EB ON RAMP 'Z'	4,978	-	-	600	490	490	-	-	-	-	
0+00X	-	17+80X	EXIT 89 WB ON RAMP 'X'	6,400	-	-	800	630	630	-	-	-	-	
0+00Y	-	13+10Y	EXIT 89 WB OFF RAMP 'Y'	4,800	-	-	600	480	480	-	-	-	-	
361+23V	-	402+93V	STH 23	32,464	-	-	3,900	3,190	3,190	-	-	-	-	MAINLINE (UPPER & LOWER LIFT)
			UNDISTRIBUTED	-	-	500	-	-	-	-	-	-	10	
			TOTAL 0010	129,647	52,026	9,580	40,700	20,420	11,130	16,870	17,980	102,452	192	
													HMA	

3

3

CURB RAMP SUMMARY

LOCATION	601.0600 CONCRETE CURB PEDESTRIAN LF	602.0505 CURB RAMP DETECTABLE WARNING FIELD YELLOW SF	602.0605 CURB RAMP DETECTABLE WARNING FIELD RADIAL YELLOW SF	602.0410 CONCRETE SIDEWALK 5" SF	602.0410 SOD LAWN SY	REMARKS
CTH P INTERSECTION	-	10	-	300	20	NORTHEAST CORNER
CTH P INTERSECTION	-	10	-	260	10	SOUTHEAST CORNER
EXIT 89 EB OFF RAMP 'W'	-	-	16	120	10	NORTHWEST CORNER
EXIT 89 EB OFF RAMP 'W'	14	-	16	150	10	NORTHEAST CORNER
EXIT 89 EB ON RAMP 'Z'	-	-	16	120	10	SOUTHWEST CORNER
EXIT 89 EB ON RAMP 'Z'	-	10	-	120	5	SOUTHEAST CORNER
EXIT 89 WB ON RAMP 'X'	16	10	-	100	5	NORTHWEST CORNER
EXIT 89 WB ON RAMP 'X'	14	-	16	100	10	NORTHEAST CORNER
EXIT 89 WB OFF RAMP 'Y'	-	10	-	100	10	SOUTHWEST CORNER
EXIT 89 WB OFF RAMP 'Y'	16	-	16	100	10	NORTHEAST CORNER
TOTAL 0010	60	50	80	1,470	100	

RAMP REALIGNMENT

STATION	TO	STATION	LOCATION	204.0150 REMOVING CURB & GUTTER LF	415.1100 CONCRETE PAVEMENT HES 10-INCH SY	601.0411 CONCRETE CURB & GUTTER 30-INCH TYPE D LF	REMARKS
7+78H	-	8+61H	EB OFF RAMP	75	54	32	
	-						
			TOTAL 0010	75	54	32	

EARTHWORK

STATION	TO	STATION	LOCATION	205.0100 EXCAVATION COMMON CY	208.0100 BORROW CY	520.1030 APRON ENDWALLS FOR CULVERT PIPE 30-INCH EACH	520.3430 CULVERT PIPE CLASS III-A NON-METAL 30-INCH LF	REMARKS
1872+00A	-	1875+50A	RIGHT	10	10	-	-	
		1872+62A	RIGHT	-	-	1	10	CULVERT PIPE EXTENTION
1898+50	-	1903+00	RIGHT	10	10	-	-	
			TOTAL 0010	20	20	1	10	

EROSION CONTROL SUMMARY

STATION	TO	STATION	LOCATION	625.0500 SALVAGED TOPSOIL SY	628.1504 SILT FENCE LF	628.1520 SILT FENCE MAINTENANCE LF	628.2027 EROSION MAT CLASS II TYPE C SY	629.0210 FERTILIZER TYPE B CWT	630.0120 SEEDING MIXTURE NO. 20 LB	630.0200 SEEDING TEMPORARY LB	REMARKS
1872+00A	-	1875+50A	RIGHT	430	400	400	430	0.27	12	8	SLOPE CORRECTION AREA
1898+50	-	1903+00	RIGHT	435	500	500	435	0.27	12	8	SLOPE CORRECTION AREA
			UNDISTRIBUTED	135	300	300	135	0.09	4	2	
			TOTAL 0010	1,000	1,200	1,200	1,000	0.63	28	18	

3

3

GUARDRAIL SUMMARY

STATION	TO	STATION	LOCATION	204.0165 REMOVING GUARDRAIL LF	614.2300 MGS GUARDRAIL 3 LF	614.2500 MGS THRIE BEAM TRANSITION LF	614.2610 MGS GUARDRAIL TERMINAL EAT EACH	614.2620 MGS GUARDRAIL TERMINAL TYPE 2 EACH	638.2102 MOVING SIGNS TYPE II EACH	638.4000 MOVING SMALL SIGN SUPPORTS EACH	614.0010 BARRIER SYSTEM GRADING SHAPING FINISHING EACH	REMARKS
1822+25	-	1825+25	CP RR UNDERPASS, RIGHT	300	280	10	-	1	-	-	-	
1840+10	-	1846+10	CP RR UNDERPASS, RIGHT	600	565	10	1	-	-	-	1	
1842+90	-	1845+90	USH 12 UNDERPASS. LEFT	300	265	10	1	-	-	-	1	
1847+60	-	1849+10	USH 12 UNDERPASS, RIGHT	150	140	-	-	1	1	1	-	
1876+30	-	1883+30	RIGHT	700	665	-	1	1	1	1	1	
1905+40	-	1919+40	RIGHT	1,400	1365	-	1	1	-	-	1	
1924+50	-	1934+50	CTH H UNDERPASS, RIGHT	1,000	965	10	1	-	2	2	1	
1932+00	-	1935+00	CTH H UNDERPASS, LEFT	300	265	10	1	-	1	1	1	
1936+00	-	1942+00	STH 13 UNDERPASS, RIGHT	600	580	20	-	-	1	1	-	
1938+30		1942+30	STH 13 UNDERPASS, LEFT	400	365	10	1	-	1	1	1	
1945+00	-	1957+00	STH 13 UNDERPASS, LEFT	1,200	1180	10	-	1	1	1	-	
83+00P	-	83+50P	STH 13 WB, RIGHT	900	865	-	1	1	-	-	1	
64+08P	-	64+58P	EXIT 87 EB ON RAMP, RIGHT	750	715	-	1	1	-	-	1	
1986+50	-	1989+50	TROUT RD. OVERPASS, RIGHT	300	265	10	1	-	-	-	1	
2045+20	-	2047+70	SPRING BROOK BRIDGE, LEFT	250	215	10	1	-	-	-	1	
2045+50	-	2048+00	SPRING BROOK BRIDGE, RIGHT	250	215	10	1	-	1	1	1	
2063+80	-	2069+80	EXIT 89 EB OFF RAMP, RIGHT	600	565	-	1	1	-	-	1	
2069+50	-	2078+00	STH 23 UNDERPASS, RIGHT	850	815	10	1	-	-	-	1	
2075+50	-	2078+50	STH 23 UNDERPASS, LEFT	300	265	10	1	-	1	1	1	
1826+10A	-	1830+10A	CP RR UNDERPASS, LEFT	400	365	10	1	-	-	-	1	
1826+40A	-	1832+40A	CP RR UNDERPASS, RIGHT	600	565	10	1	-	-	-	1	
1847+50A	-	1849+50A	RIGHT	200	180	10	-	1	-	-	-	
1850+60A	-	1854+10A	LEFT	350	315	-	1	1	-	-	1	
1850+70A	-	1855+70A	RIGHT	500	465	-	1	1	-	-	1	
1880+00A	-	1884+00A	RIGHT	400	365	-	1	1	1	1	1	
1908+00A	-	1918+00A	RIGHT	1,000	965	-	1	1	1	1	1	
1935+50A	-	1937+50A	CTH H UNDERPASS, RIGHT	200	180	10	-	1	-	-	-	
1938+60A	-	1944+60A	CTH H UNDERPASS, LEFT	600	580	20	-	-	1	1	-	
1939+00A	-	1943+50A	CTH H UNDERPASS, RIGHT	450	415	-	1	1	-	-	1	
1942+90A	-	1944+90A	STH 13 UNDERPASS, RIGHT	200	180	10	-	1	1	1	-	
1947+20A	-	1952+20A	STH 13 UNDERPASS, RIGHT	500	465	10	1	-	-	-	1	
1947+25A	-	1964+25A	STH 13 UNDERPASS, LEFT	1,700	1665	10	1	-	1	1	1	
5+75R	-	6+75R	EXIT 87 WB OFF RAMP, RIGHT	100	65	-	1	1	-	-	1	
8+00R	-	15+00R	EXIT 87 WB OFF RAMP, LEFT	700	665	-	1	1	1	1	1	
1960+30A	-	1970+30A	RIGHT	1,000	965	-	1	1	-	-	1	
1978+00A	-	1982+00A	RIGHT	400	365	-	1	1	-	-	1	
1992+50A	-	1995+50A	TROUT RD. OVERPASS, RIGHT	300	265	10	1	-	1	1	1	
2049+00A	-	2050+50A	SPRING BROOK BRIDGE, RIGHT	150	130	10	-	1	-	-	-	
2051+70A	-	2054+20A	SPRING BROOK BRIDGE, RIGHT	250	215	10	1	-	1	1	1	
2051+80A	-	2054+80A	SPRING BROOK BRIDGE, LEFT	300	265	10	1	-	-	-	1	
2062+40A	-	2072+90A	EXIT 89 ON RAMP, RIGHT	1,050	1015	-	1	1	-	-	1	
2071+10A	-	2080+10A	STH 23 UNDERPASS, RIGHT	900	880	10	-	1	1	1	-	
			TOTAL 0010	23,400	22,090	280	32	23	19	19	32	

FOR REFERENCE ONLY

BARRIERS SYSTEM GRADING, SHAPING, FINISHING

205.0100 EXCAVATION COMMON CY	208.0100 BORROW CY	625.0100 TOPSOIL SY	627.0200 MULCHING SY	629.0205 FERTILIZER TYPE A CWT	630.0110 SEEDING MIXTURE NO. 10 LB
-	-	-	-	-	-
1	18	320	320	0.20	5
0	2	80	80	0.05	1
-	-	-	-	-	-
0	45	210	210	0.13	3
0	23	150	150	0.09	2
0	73	140	140	0.09	2
0	2	80	80	0.05	1
-	-	-	-	-	-
0	10	80	80	0.05	1
-	-	-	-	-	-
0	6	80	80	0.05	1
3	0	190	190	0.12	3
0	1	80	80	0.05	1
0	26	180	180	0.11	3
0	12	190	190	0.12	3
3	24	220	220	0.14	3
1	1	80	80	0.05	1
0	22	200	200	0.13	3
0	1	80	80	0.05	1
0	1	80	80	0.05	1
-	-	-	-	-	-
0	2	80	80	0.05	1
1	1	80	80	0.05	1
0	29	170	170	0.11	2
1	12	150	150	0.09	2
-	-	-	-	-	-
-	-	-	-	-	-
1	1	160	160	0.10	2
-	-	-	-	-	-
0	13	80	80	0.05	1
0	1	80	80	0.05	1
0	109	80	80	0.05	1
1	1	80	80	0.05	1
2	11	80	80	0.05	1
0	27	80	80	0.05	1
1	30	220	220	0.14	3
-	-	-	-	-	-
1	1	80	80	0.05	1
0	1	80	80	0.05	1
0	0	80	80	0.05	1
-	-	-	-	-	-
16	506	4,020	4,020	3	55

3

3

PAVEMENT MARKING SUMMARY

STATION	TO	STATION	LOCATION	643.3165 TEMPORARY MARKING LINE PAINT 6-INCH LF	646.2025 MARKING LINE GROOVED BLACK EPOXY 6-INCH LF	646.2040 MARKING LINE GROOVED WET REF EPOXY 6-INCH LF	646.4040 MARKING LINE GROOVED WET REF EPOXY 10-INCH LF	646.9400 MARKING REMOVAL PLOWABLE RAISED PAVEMENT MARKERS EACH	COLOR
1822+84	-	1879+50	IH 90 EB LT EDGELINE (JUNEAU)	11,333	-	5,666	-	-	YELLOW
1823+58A	-	1879+50A	IH 90 WB LT EDGELINE (JUNEAU)	11,185	-	5,592	-	-	YELLOW
198+82	-	399+64	IH 90 EB LT EDGELINE (SAUK)	40,165	-	20,083	-	-	YELLOW
198+82A	-	397+86A	IH 90 WB LT EDGELINE (SAUK)	39,809	-	19,905	-	-	YELLOW
1822+84	-	1879+50	IH 90 EB RT EDGELINE (JUNEAU)	11,333	-	5,666	-	-	WHITE
1823+58A	-	1879+50A	IH 90 WB RT EDGELINE (JUNEAU)	11,185	-	5,592	-	-	WHITE
198+82	-	399+64	IH 90 EB RT EDGELINE (SAUK)	40,165	-	20,083	-	-	WHITE
198+82A	-	397+86A	IH 90 WB RT EDGELINE (SAUK)	39,809	-	19,905	-	-	WHITE
1822+84	-	1879+50	IH 90 EB CL SKIPS (JUNEAU)	5,666	-	2,833	-	113	WHITE
1823+58A	-	1879+50A	IH 90 WB CL SKIPS (JUNEAU)	5,592	-	2,796	-	112	WHITE
198+82	-	399+64	IH 90 EB CL SKIPS (SAUK)	20,083	-	10,041	-	402	WHITE
198+82A	-	397+86A	IH 90 WB CL SKIPS (SAUK)	19,905	-	9,952	-	398	WHITE
1822+84	-	1879+50	IH 90 EB CL SKIPS (JUNEAU)	-	2,833	-	-	-	BLACK
1823+58A	-	1879+50A	IH 90 WB CL SKIPS (JUNEAU)	-	2,796	-	-	-	BLACK
198+82	-	399+64	IH 90 EB CL SKIPS (SAUK)	-	10,041	-	-	-	BLACK
198+82A	-	397+86A	IH 90 WB CL SKIPS (SAUK)	-	9,952	-	-	-	BLACK
0+00H	-	8+68H	EXIT 85 EB OFF RAMP	-	-	1,100	200	-	WHITE
0+00H	-	8+68H	EXIT 85 EB OFF RAMP	-	-	600	-	-	YELLOW
0+00K	-	13+50K	EXIT 85 EB ON RAMP	-	-	1,500	84	-	WHITE
0+00K	-	13+50K	EXIT 85 EB ON RAMP	-	-	1,000	-	-	YELLOW
0+00J	-	11+28J	EXIT 85 WB ON RAMP	-	-	2,261	-	-	WHITE
0+00J	-	11+28J	EXIT 85 WB ON RAMP	-	-	933	-	-	YELLOW
0+00L	-	15+33L	EXIT 85 WB OFF RAMP	-	-	1,400	132	-	WHITE
0+00L	-	15+33L	EXIT 85 WB OFF RAMP	-	-	933	-	-	YELLOW
68+92Q	-	88+92Q	EXIT 87 EB OFF RAMP	-	-	2,400	140	-	WHITE
68+92Q	-	88+92Q	EXIT 87 EB OFF RAMP	-	-	1,850	-	-	YELLOW
61+00P	-	70+20P	EXIT 87 EB ON RAMP	-	-	2,815	-	-	WHITE
61+00P	-	70+20P	EXIT 87 EB ON RAMP	-	-	2,432	-	-	YELLOW
0+00N	-	15+00N	EXIT 87 WB ON RAMP	-	-	2,250	72	-	WHITE
0+00N	-	15+00N	EXIT 87 WB ON RAMP	-	-	800	-	-	YELLOW
0+00R	-	17+30R	EXIT 87 WB OFF RAMP	-	-	2,000	45	-	WHITE
0+00R	-	17+30R	EXIT 87 WB OFF RAMP	-	-	1,050	-	-	YELLOW
70+20P		110+00M	STH 13 WB	-	-	2,850	-	-	WHITE
70+20P		110+00M	STH 13 WB	-	-	2,280	-	-	YELLOW
88+92Q		110+00M	STH 13 EB	-	-	2,790	-	-	WHITE
88+92Q		110+00M	STH 13 EB	-	-	2,260	-	-	YELLOW
0+00W	-	11+50W	EXIT 89 EB OFF RAMP	-	-	1,370	42	-	WHITE
0+00W	-	11+50W	EXIT 89 EB OFF RAMP	-	-	900	-	-	YELLOW
0+00Z	-	16+20Z	EXIT 89 EB ON RAMP	-	-	2,040	-	-	WHITE
0+00Z	-	16+20Z	EXIT 89 EB ON RAMP	-	-	1,050	-	-	YELLOW
0+00X	-	17+80X	EXIT 89 WB ON RAMP	-	-	2,500	-	-	WHITE
0+00X	-	17+80X	EXIT 89 WB ON RAMP	-	-	1,080	-	-	YELLOW
0+00Y	-	13+10Y	EXIT 89 WB OFF RAMP	-	-	1,080	-	-	WHITE
0+00Y	-	13+10Y	EXIT 89 WB OFF RAMP	-	-	1,080	-	-	YELLOW
361+23V	-	402+93V	STH 23 WB	-	-	5,053	-	-	WHITE
361+23V	-	402+93V	STH 23 WB	-	-	4,920	-	-	YELLOW
361+23V	-	402+93V	STH 23 EB	-	-	5,028	-	-	WHITE
361+23V	-	402+93V	STH 23 EB	-	-	4,879	-	-	YELLOW
			TOTAL 0010	256,229	25,623	194,598	715	1,025	

3

3

TRAFFIC CONTROL SUMMARY

STATION	TO	STATION	LOCATION	SERVICE DAYS	QTY	643.0300 TRAFFIC CONTROL DRUMS DAY	QTY	643.0420 TRAFFIC CONTROL BARRICADES TYPE III DAY	QTY	643.0705 TRAFFIC CONTROL WARNING LIGHTS TYPE A DAY	QTY	643.0715 TRAFFIC CONTROL WARNING LIGHTS TYPE C DAY	QTY	643.0800 TRAFFIC CONTROL ARROW BOARDS DAY	QTY	643.0900 TRAFFIC CONTROL SIGNS DAY	QTY	643.1051 TRAFFIC CONTROL SIGNS PCMS WITH CELLULAR COMMUNICATIONS DAY	643.4100 TRAFFIC CONTROL INTERIM LANE CLOSURE EACH	643.1205.S TRAFFIC CONTROL BASIC QUEUE WARNING SYSTEM DAY	REMARKS
1822+84	-	1879+50	IH 90 EB	30	249	7470	4	120	8	240	6	180	2	60	16	480	2	60	30	30	
1823+58A	-	1879+50A	IH 90 WB	29	249	7221	4	116	8	232	6	174	2	58	16	464	2	58	29	30	
	-		USH 12	5	249	1245	4	20	8	40	6	30	2	10	16	80	2	10	5	-	
	-		STH 13	10	249	2490	4	40	8	80	6	60	2	20	16	160	2	20	10	-	
	-		STH 23	13	249	3237	4	52	8	104	6	78	2	26	16	208	2	26	13	-	
	-		EXIT 85	4		-		-		-		-		-	62	248	2	8	-	-	RAMP CLOSURE DETOUR
	-		EXIT 87	4		-		-		-		-		-	94	376	2	8	-	-	RAMP CLOSURE DETOUR
	-		EXIT 89	4		-		-		-		-		-	72	288	2	8	-	-	RAMP CLOSURE DETOUR
			TOTAL 0010			21,663		348		696		522		174		2,304		198	87	60	

CONSTRUCTION STAKING

LOCATION	650.5500 CONSTRUCTION STAKING CURB GUTTER AND CURB & GUTTER LF	650.6000 CONSTRUCTION STAKING PIPE CULVERTS EACH	650.9000 CONSTRUCTION STAKING CURB RAMPS EACH	650.9911 CONSTRUCTION STAKING SUPPLEMENTAL CONTROL (1014-00-75) LF	REMARKS
EXIT 85 EB OFF RAMP	60	-	-	-	RAMP REALIGNMENT
1872+62A	-	1	-	-	CULVERT PIPE EXTENTION
STH 23 INTERSECTIONS	-	-	10	-	CURB RAMPS
	-	-	-	1	
TOTAL 0010	60	1	10	1	

MOVING SIGNS

638.2102 MOVING SIGNS TYPE II EACH	638.4000 MOVING SMALL SIGN SUPPORTS SY	REMARKS
19	19	VARIOUS LOCATIONS
19	19	

3

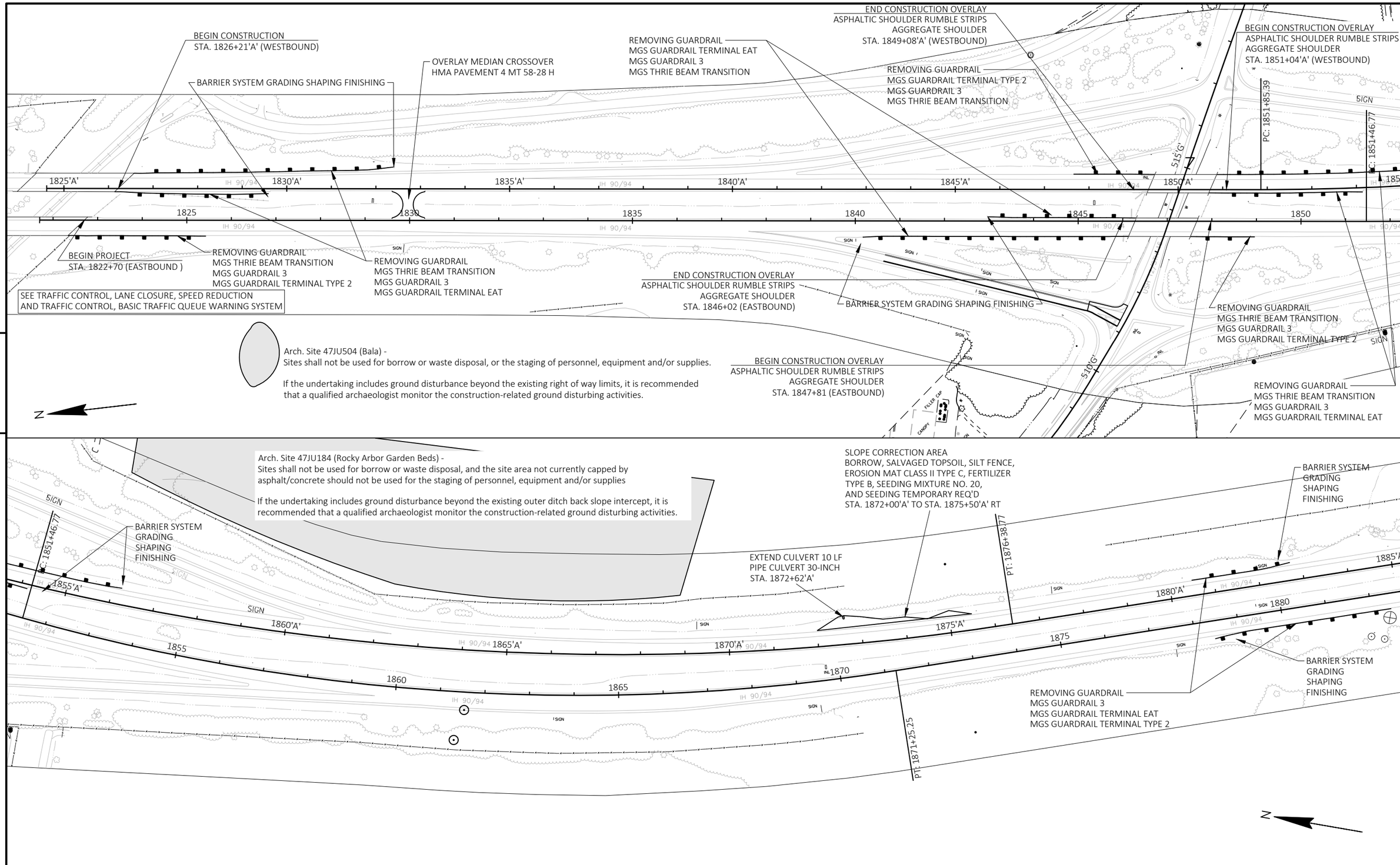

PROJECT NO: 1014-00-75	HWY: IH-90	COUNTY: JUNEAU, SAUK	PLAN VIEW	SHEET 41	E

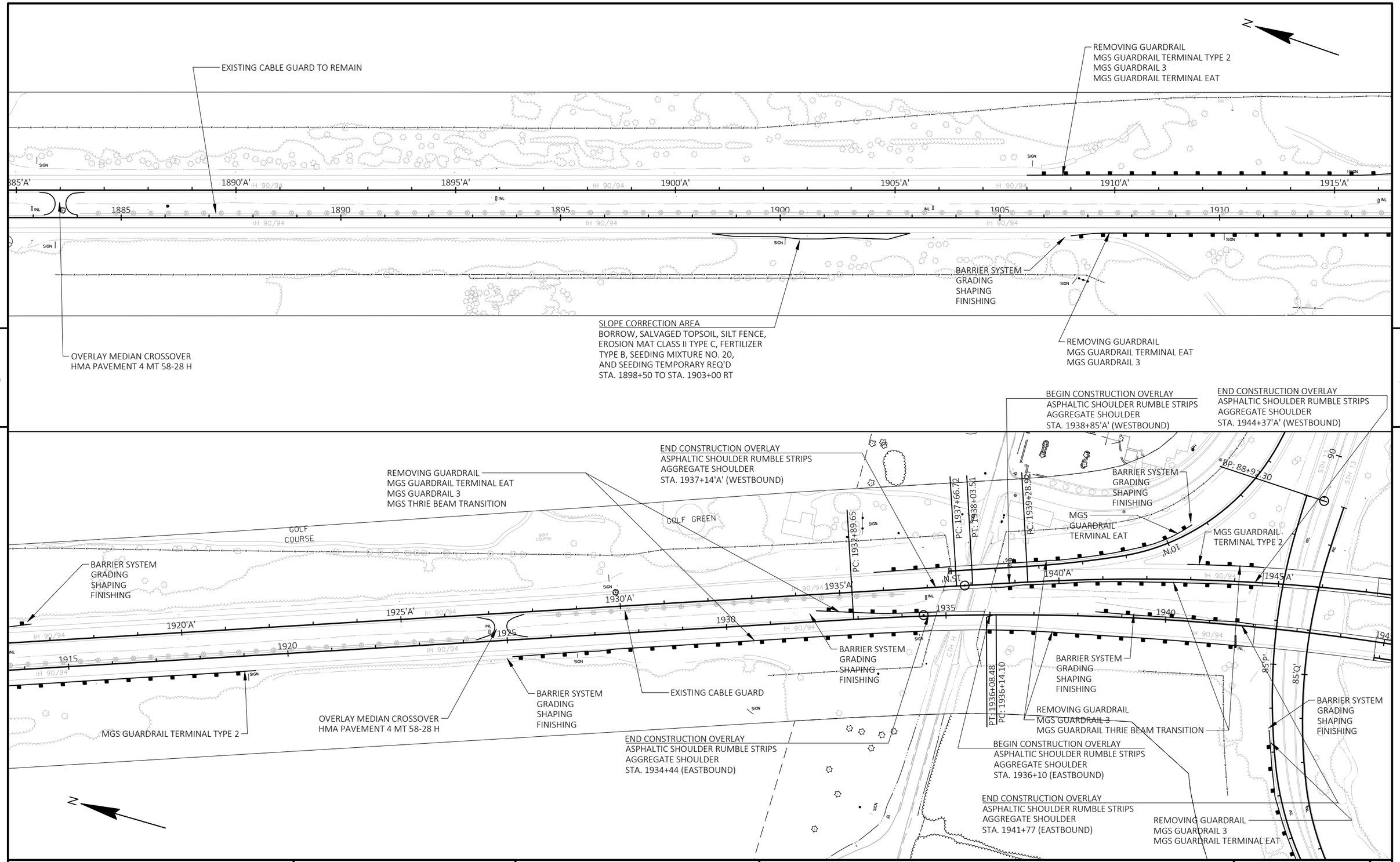

PROJECT NO: 1014-00-75	HWY: IH-90	COUNTY: SAUK	PLAN VIEW	SHEET 42	E

FILE NAME : \\LAX31FP2\N3PUBLIC\PDS\C3D\10140005\SHEETSPLAN\050201_PN.DWG
LAYOUT NAME - 02
PLOT DATE : 11/1/2023 10:04 AM
PLOT BY : DAHL, BRIAN D
PLOT NAME :
PLOT SCALE : 1 IN:200 FT
WISDOT/CADDS SHEET 44

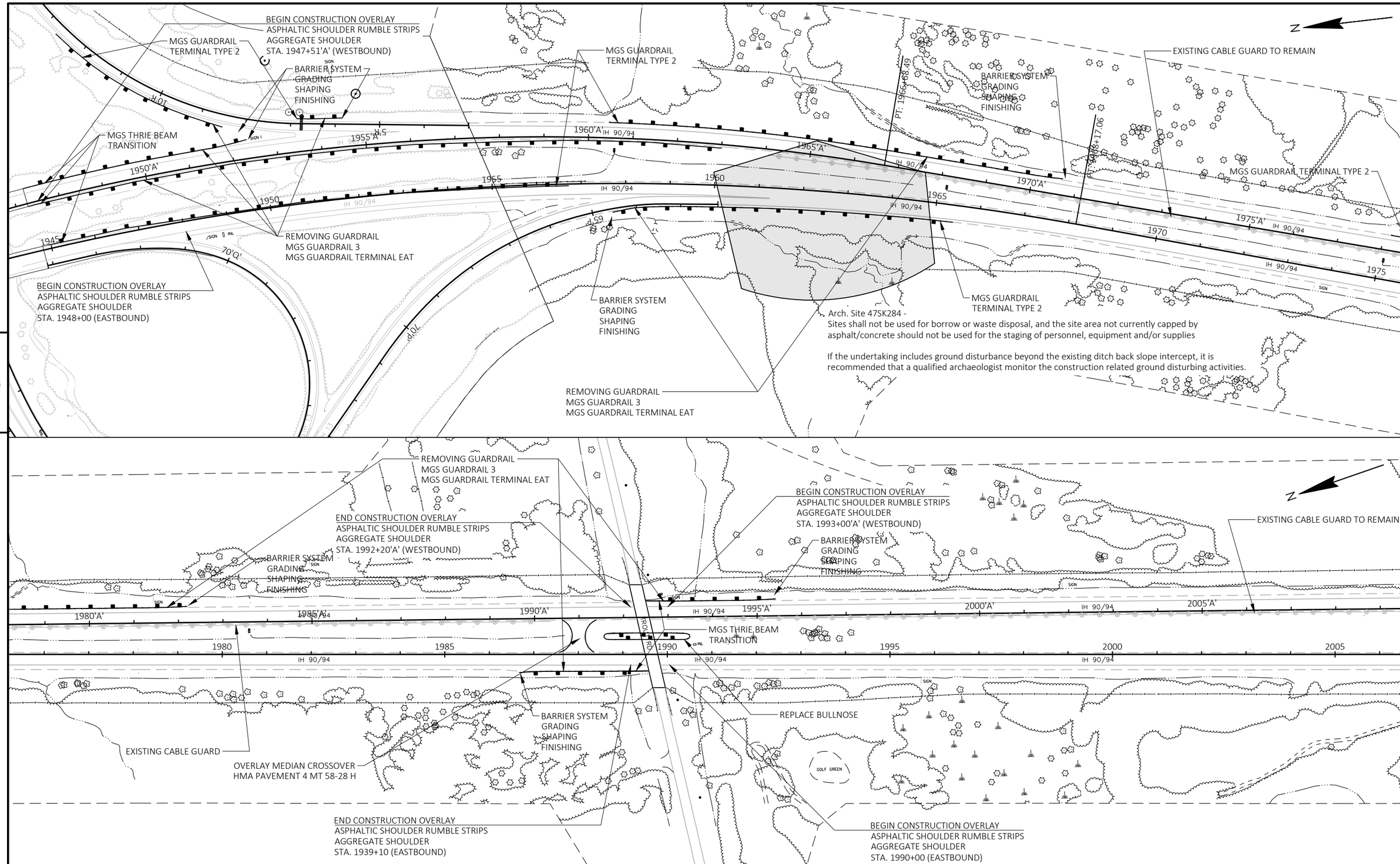

5

5

PROJECT NO: 1014-00-75	HWY: IH-90	COUNTY: SAUK	PLAN VIEW	SHEET 43	E

FILE NAME : \\LAX31FP2\N3PUBLIC\PDS\C3D\10140005\SHEETSPLAN\050201_PN.DWG
LAYOUT NAME - 03
PLOT DATE : 10/31/2023 1:35 PM
PLOT BY : DAHL, BRIAN D
PLOT NAME :
PLOT SCALE : 1 IN:200 FT

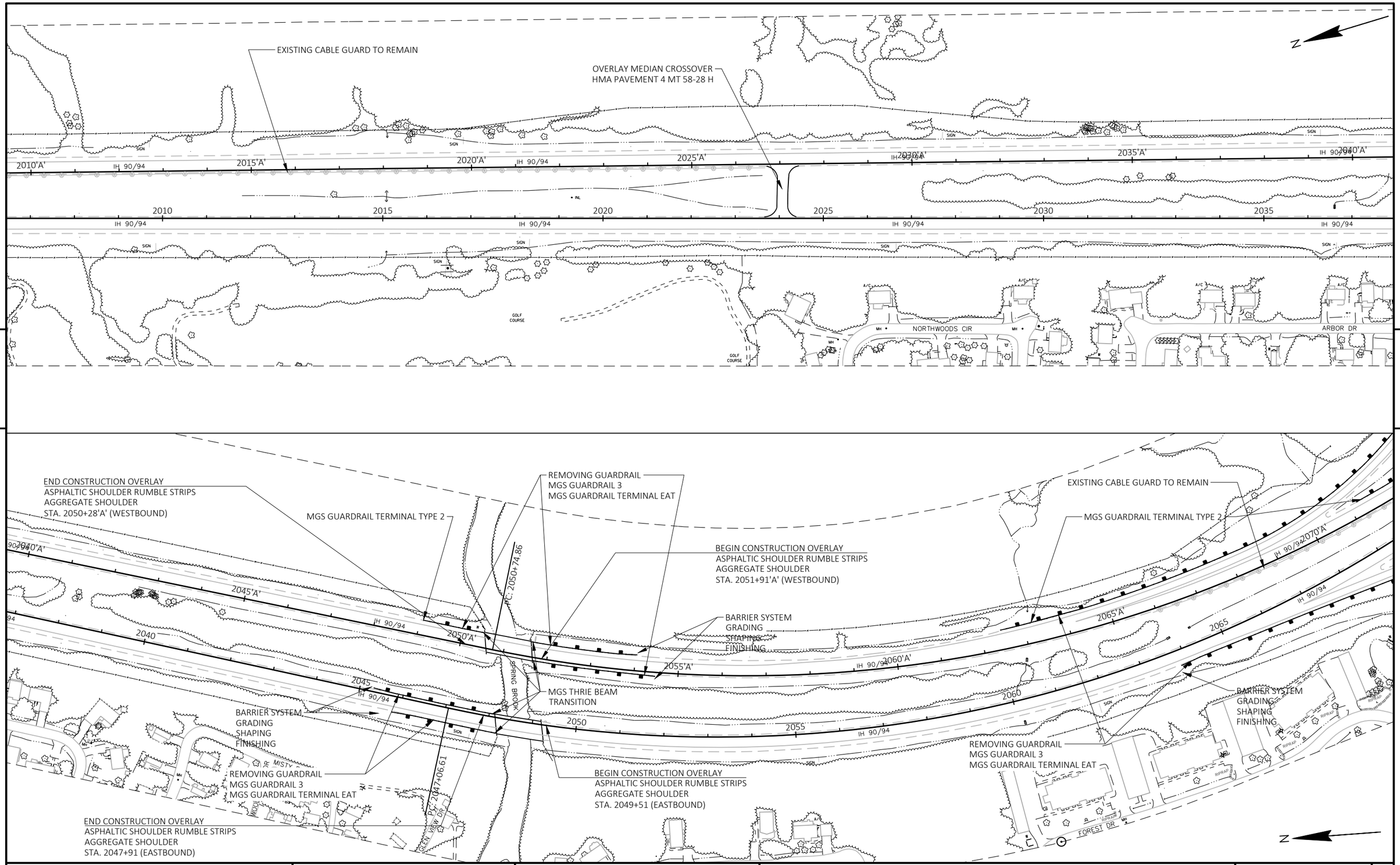

PROJECT NO: 1014-00-75	HWY: IH-90	COUNTY: SAUK	PLAN VIEW	SHEET 44	E

FILE NAME : \\LAX31FP2\N3PUBLIC\PDS\C3D\10140005\SHEETSPLAN\050201_PN.DWG
LAYOUT NAME - 04
PLOT DATE : 10/31/2023 1:35 PM
PLOT BY : DAHL, BRIAN D
PLOT NAME :
PLOT SCALE : 1 IN:200 FT

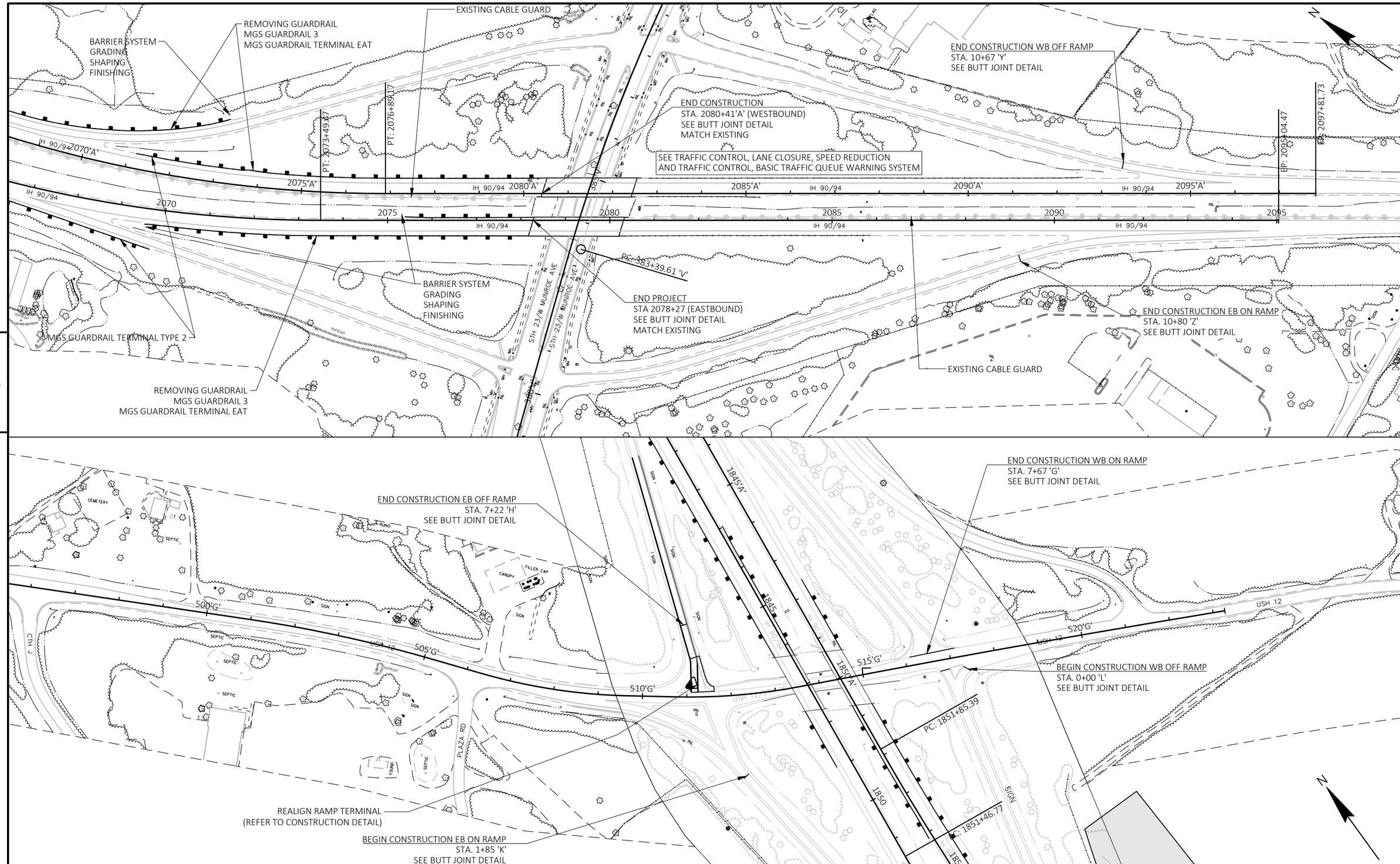

PROJECT NO: 1014-00-75	HWY: IH-90	COUNTY: SAUK, JUNEAU	PLAN VIEW - IH 90, EXIT 85 RAMPS	SHEET 45	E

FILE NAME : \\LAX31FP2\N3PUBLIC\PDS\C3D\10140005\SHEETSPLAN\050201_PN.DWG
LAYOUT NAME - 05
PLOT DATE : 10/31/2023 1:36 PM
PLOT BY : DAHL, BRIAN D
PLOT NAME :
PLOT SCALE : 1 IN:200 FT

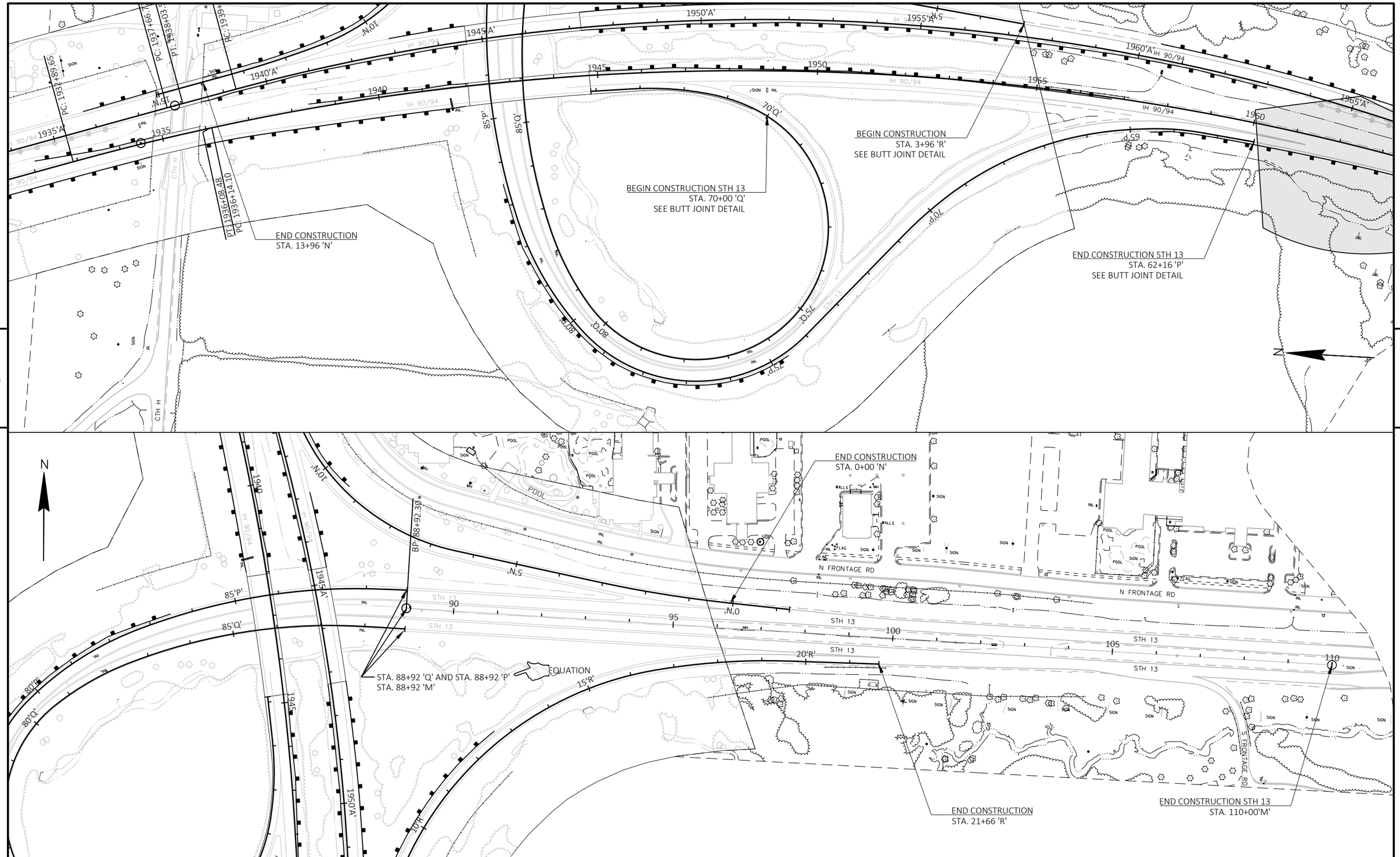

PROJECT NO: 1014-00-75	HWY: IH-90	COUNTY: SAUK	PLAN VIEW - STH 13 & 'N', 'P', 'Q', 'R' Alignments	SHEET 46	E

FILE NAME : \\LAX31FP2\N3PUBLIC\PDS\C3D\10140005\SHEETSPLAN\050201_PN.DWG
LAYOUT NAME - 07
PLOT DATE : 10/31/2023 1:37 PM
PLOT BY : DAHL, BRIAN D
PLOT NAME :
PLOT SCALE : 1 IN:200 FT

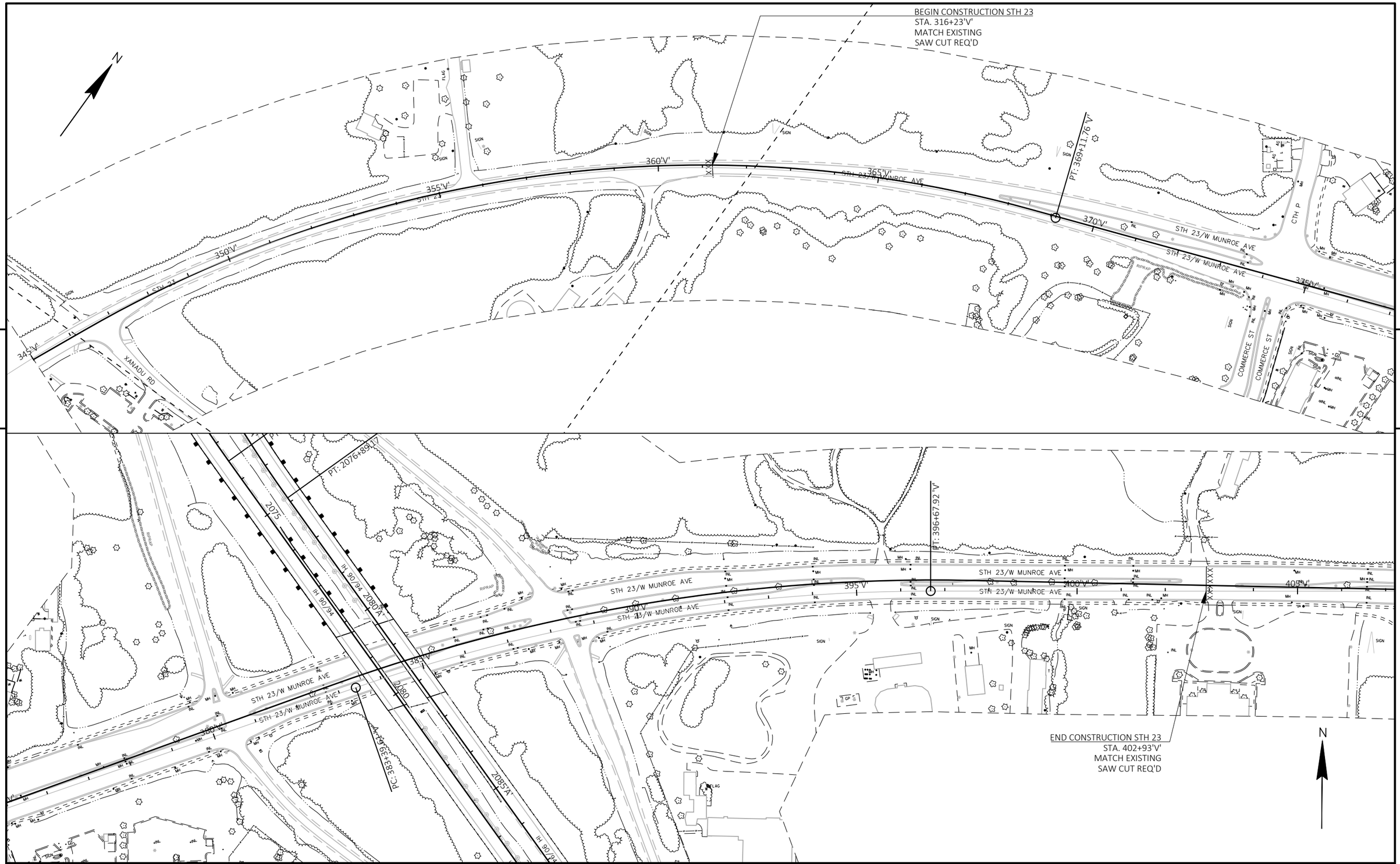

PROJECT NO: 1014-00-75	HWY: IH-90	COUNTY: SAUK	PLAN VIEW - STH 23	SHEET 47	E

FILE NAME : \\LAX31FP2\N3PUBLIC\PDS\C3D\10140005\SHEETSPLAN\050201_PN.DWG
LAYOUT NAME - 08
PLOT DATE : 10/31/2023 1:38 PM
PLOT BY : DAHL, BRIAN D
PLOT NAME :
PLOT SCALE : 1 IN:200 FT

Standard Detail Drawing List

08D01-23A	CONCRETE CURB & GUTTER
08D01-23B	CONCRETE CURB, TIES AND CURB AND GUTTER APPLICATIONS
08D05-21A	CURB RAMPS TYPES 1 AND 1-A
08D05-21B	CURB RAMPS TYPES 2 AND 3
08D05-21C	CURB RAMPS TYPES 4A AND 4A1
08D05-21D	CURB RAMPS TYPE 4B AND 4B1
08D05-21E	CURB RAMPS TYPES 5, 6, 7A, 7B & 8
08D05-21F	CURB RAMPS RADIAL DETECTABLE WARNING FIELD APPLICATIONS
08D05-21G	CURB RAMPS RECTANGULAR AND RADIAL DETECTABLE WARNING PLATES
08E09-06	SILT FENCE
08F01-11	APRON ENDWALLS FOR CULVERT PIPE
13A05-06A	SHOULDER RUMBLE STRIPS, DIVIDED ROADWAY
13A05-06B	SHOULDER RUMBLE STRIPS, DIVIDED ROADWAY
13C14-07A	BASE PATCHING CONCRETE
13C14-07B	BASE PATCHING CONCRETE
13C14-07C	BASE PATCHING CONCRETE
13C19-03	HMA LONGITUDINAL JOINTS
14B42-07A	MIDWEST GUARDRAIL SYSTEM (MGS) GUARDRAIL
14B42-07B	MIDWEST GUARDRAIL SYSTEM (MGS) GUARDRAIL
14B42-07C	MIDWEST GUARDRAIL SYSTEM (MGS) GUARDRAIL
14B42-07D	MIDWEST GUARDRAIL SYSTEM (MGS) GUARDRAIL
14B44-04A	MIDWEST GUARDRAIL SYSTEM ENERGY ABSORBING TERMINAL (MGS)
14B44-04B	MIDWEST GUARDRAIL SYSTEM ENERGY ABSORBING TERMINAL (MGS)
14B44-04C	MIDWEST GUARDRAIL SYSTEM ENERGY ABSORBING TERMINAL (MGS)
14B45-05A	MIDWEST GUARDRAIL SYSTEM THRIE BEAM TRANSITION (MGS)
14B45-05B	MIDWEST GUARDRAIL SYSTEM THRIE BEAM TRANSITION (MGS)
14B45-05C	MIDWEST GUARDRAIL SYSTEM THRIE BEAM TRANSITION (MGS)
14B45-05D	MIDWEST GUARDRAIL SYSTEM THRIE BEAM TRANSITION (MGS)
14B45-05E	MIDWEST GUARDRAIL SYSTEM THRIE BEAM TRANSITION (MGS)
14B45-05F	MIDWEST GUARDRAIL SYSTEM THRIE BEAM TRANSITION (MGS)
14B45-05G	MIDWEST GUARDRAIL SYSTEM THRIE BEAM TRANSITION (MGS)
14B45-05H	MIDWEST GUARDRAIL SYSTEM THRIE BEAM TRANSITION (MGS)
14B45-05I	MIDWEST GUARDRAIL SYSTEM THRIE BEAM TRANSITION (MGS)
14B45-05J	MIDWEST GUARDRAIL SYSTEM THRIE BEAM TRANSITION (MGS)
14B45-05K	MIDWEST GUARDRAIL SYSTEM THRIE BEAM TRANSITION (MGS)
14B45-05L	MIDWEST GUARDRAIL SYSTEM THRIE BEAM TRANSITION (MGS)
14B47-05A	MIDWEST GUARDRAIL SYSTEM (MGS) TYPE 2 TERMINAL
14B47-05B	MIDWEST GUARDRAIL SYSTEM (MGS) TYPE 2 TERMINAL
14B47-05C	MIDWEST GUARDRAIL SYSTEM (MGS) TYPE 2 TERMINAL
14B47-05D	MIDWEST GUARDRAIL SYSTEM (MGS) TYPE 2 TERMINAL
14B47-05E	MIDWEST GUARDRAIL SYSTEM (MGS) TYPE 2 TERMINAL
14B47-05F	MIDWEST GUARDRAIL SYSTEM (MGS) TYPE 2 TERMINAL
14B47-05G	MIDWEST GUARDRAIL SYSTEM (MGS) TYPE 2 TERMINAL
15C02-09B	BARRICADES AND SIGNS FOR VARIOUS CLOSURES
15C02-09C	DETOUR SIGNING FOR MAINLINE CLOSURES
15C02-09D	ON RAMP LANE CLOSURE
15C02-09E	OFF RAMP LANE CLOSURE
15C02-09F	ADVANCED WIDTH RESTRICTION SIGNING
15C02-09G	TRAFFIC CONTROL FOR ENTRANCE RAMP CLOSURE
15C02-09H	MODIFIED ROUTE ASSEMBLY FOR DETOUR SIGNING
15C08-23A	PERMANENT LONGITUDINAL PAVEMENT MARKINGS
15C08-23B	TEMPORARY LONGITUDINAL PAVEMENT MARKING
15C08-23C	PAVEMENT MARKING (TURN LANES)
15C08-23D	PAVEMENT MARKING (TURN LANES)
15C11-10B	CHANNELIZING DEVICES DRUMS, CONES, BARRICADES AND VERTICAL PANELS
15C12-09A	TRAFFIC CONTROL FOR LANE CLOSURE WITH FLAGGING OPERATION
15C19-09A	MOVING PAVEMENT MARKING OPERATION TWO-LANE TWO-WAY ROADWAY
15C19-09B	MOVING PAVEMENT MARKING OPERATION MULTI-LANE UNDIVIDED ROADWAY
15C19-09C	MOVING PAVEMENT MARKING OPERATION MULTI-LANE DIVIDED ROADWAY
15C31-06A	PAVEMENT MARKING EXIT RAMP AND PARALLEL EXIT RAMP
15C31-06C	PAVEMENT MARKING ENTRANCE RAMP AND PARALLEL ENTRANCE RAMP
15C31-07A	PAVEMENT MARKING EXIT RAMP AND PARALLEL EXIT RAMP
15C31-07C	PAVEMENT MARKING ENTRANCE RAMP AND PARALLEL ENTRANCE RAMP
15C35-06A	PAVEMENT MARKING (INTERSECTIONS)
15D04-01	TRAFFIC CONTROL, RAMP CONSTRUCTION STAGING
15D12-13A	TRAFFIC CONTROL, TAPERED ENTRANCE RAMP WITHIN LANE CLOSURE
15D12-13B	TRAFFIC CONTROL, PARALLEL EXIT RAMP WITHIN LANE CLOSURE

6

6

Standard Detail Drawing List

15D12-13C	TRAFFIC CONTROL, EXIT RAMP CLOSURE
Error 2023	
Error 2023	
15D14-07	TRAFFIC CONTROL, TWO LANE CLOSURE ON FREEWAY OR EXPRESSWAY
15D15-07A	TRAFFIC CONTROL, PARALLEL ENTRANCE RAMP WITHIN LANE CLOSURE
15D15-07B	TRAFFIC CONTROL, ENTRANCE RAMP WITHIN LANE CLOSURE
15D15-07C	TRAFFIC CONTROL, TAPERED ENTRANCE RAMP WITHIN LANE CLOSURE
15D15-07D	TRAFFIC CONTROL, TAPERED ENTRANCE RAMP WITHIN LANE CLOSURE
15D15-07E	TRAFFIC CONTROL, PARALLEL EXIT RAMP WITHIN LANE CLOSURE
15D16-06	TRAFFIC CONTROL, EXIT RAMP CLOSURE
15D20-08A	TRAFFIC CONTROL, SINGLE LANE CLOSURE, DIVIDED NON-FREEWAY/EXPRESSWAY
15D20-08B	TRAFFIC CONTROL, SINGLE RIGHT LANE CLOSURE, UNDIVIDED NON-FREEWAY/EXPRESSWAY
15D20-08C	TRAFFIC CONTROL, SINGLE LEFT LANE CLOSURE, UNDIVIDED NON-FREEWAY/EXPRESSWAY
15D21-07A	TRAFFIC CONTROL, INTERSECTION WITHIN SINGLE LANE CLOSURE
15D21-07B	TRAFFIC CONTROL, INTERSECTION WITHIN SINGLE LANE CLOSURE
15D27-03	TRAFFIC CONTROL, SHOULDER CLOSURE ON DIVIDED ROADWAY, SPEEDS GREATER THAN 40 MPH

6

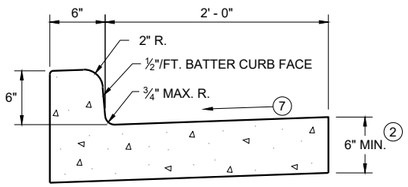

TYPES A (1) & D

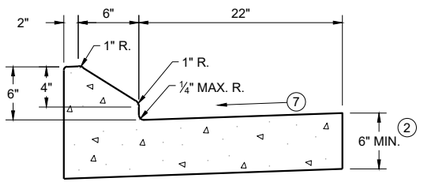

6" SLOPED CURB TYPES G (1) & J

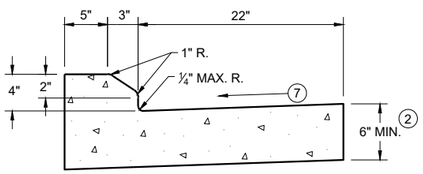

4" SLOPED CURB TYPES G (1) & J

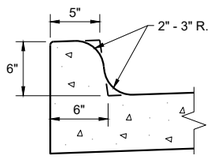

TYPES K (1) & L
(OPTIONAL CURB SHAPE)

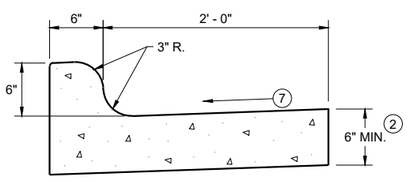

TYPES K (1) & L

CONCRETE CURB AND GUTTER 30"

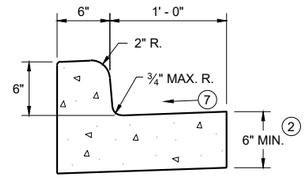

TYPES A (1) & D

CONCRETE CURB AND GUTTER 18"

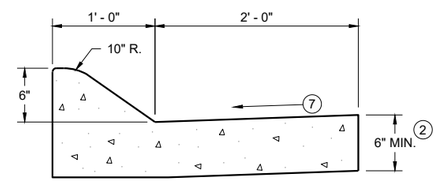

6" SLOPED CURB TYPES A (1) & D

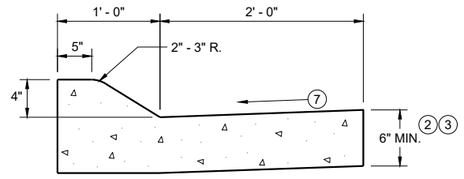

4" SLOPED CURB TYPES A (1) & D

CONCRETE CURB AND GUTTER 36"

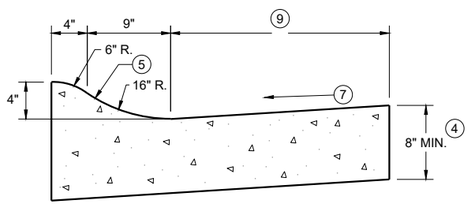

4" SLOPED CURB TYPES R (1) & T

TBT & TBTT	X
30"	22"
36"	28"

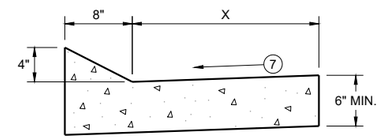

TYPES TBT & TBTT (1)

CONCRETE CURB AND GUTTER

PAVEMENT THICKNESS AND MAXIMUM CONCRETE PANEL WIDTH TABLE

PAVEMENT THICKNESS	MAXIMUM PANEL WIDTH
LESS THAN 10"	12'
10" & ABOVE	15'

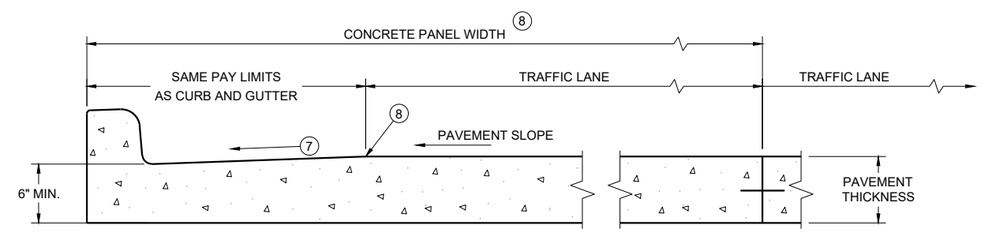

PARTIAL SECTION OF PAVEMENT WITH INTEGRAL CURB AND GUTTER *

* BIKE LANE IS NOT SHOWN

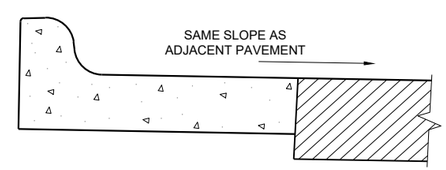

REVERSE SLOPE GUTTER (6)
(TYPICAL FOR ALL CURB & GUTTER TYPES)

GENERAL NOTES

DETAILS OF CONSTRUCTION AND WORKMANSHIP NOT SHOWN ON THIS DRAWING SHALL CONFORM TO THE PERTINENT REQUIREMENTS OF THE CONTRACT.

PAVEMENT TIES AND TIE BARS SHALL BE EPOXY COATED IN CONFORMANCE WITH SUBSECTION 505.2.6.2 OF THE STANDARD SPECIFICATIONS.

INTEGRAL CURB AND GUTTER SHALL CONFORM TO THE DETAILS SHOWN FOR CONCRETE CURB AND GUTTER INCLUDING THE TRANSVERSE GUTTER SLOPE.

UNLESS OTHERWISE SHOWN ON THE TYPICAL CROSS SECTIONS, THE BASE AGGREGATE AND COMMON EXCAVATION LIMITS ARE 2' - 0" BEHIND THE BACK OF CURBS.

(1) TIE BARS ARE REQUIRED FOR CURB AND GUTTERS TYPES A, G, K, R, AND TBTT.

(2) THE BOTTOM OF CURB AND GUTTER MAY BE CONSTRUCTED EITHER LEVEL OR PARALLEL TO THE SLOPE OF THE SUBGRADE OR BASE AGGREGATE PROVIDED A 6" MINIMUM GUTTER THICKNESS IS MAINTAINED.

(3) USE 8" MINIMUM GUTTER THICKNESS WHEN USED WITH AN ADJACENT CONCRETE TRUCK APRON PLACED BEHIND BACK OF CURB.

(4) THE BOTTOM OF CURB AND GUTTER MAY BE CONSTRUCTED EITHER LEVEL OR PARALLEL TO THE SLOPE OF THE SUBGRADE OR BASE AGGREGATE PROVIDED A 8" MINIMUM GUTTER THICKNESS IS MAINTAINED.

(5) UNLESS OTHERWISE NOTED, FOR STAKING PURPOSES THE FACE OF CURB IS 6" FROM THE BACK OF CURB.

(6) WHEN REVERSE SLOPE GUTTER IS REQUIRED, THE LOCATION(S) WILL BE SHOWN ELSEWHERE IN THE PLAN.

(7) USE 4% GUTTER CROSS SLOPE UNLESS OTHERWISE NOTED IN THE PLANS.

(8) INCLUDE LONGITUDINAL JOINT AND TIE BARS ALONG LANE EDGE WHEN CONCRETE PANEL WIDTH EXCEEDS THE MAXIMUM WIDTH PER TABLE BELOW. LONGITUDINAL JOINT(S) ARE NOT ALLOWED WITHIN TRAFFIC LANES AND BIKE LANES. LONGITUDINAL JOINT MAY BE SAWED.

(9) CONCRETE CURB AND GUTTER 4-INCH SLOPED 30-INCH TYPE "R" AND "T" = 17 INCHES
CONCRETE CURB AND GUTTER 4-INCH SLOPED 36-INCH TYPE "R" AND "T" = 23 INCHES

CONCRETE CURB AND GUTTER

STATE OF WISCONSIN
DEPARTMENT OF TRANSPORTATION

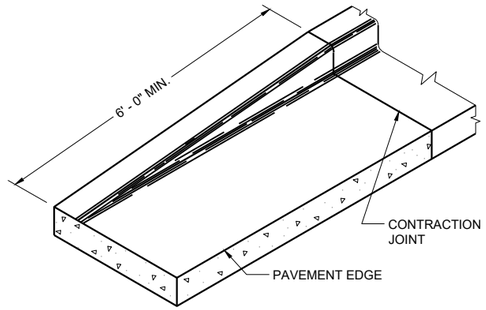

END SECTION CURB AND GUTTER

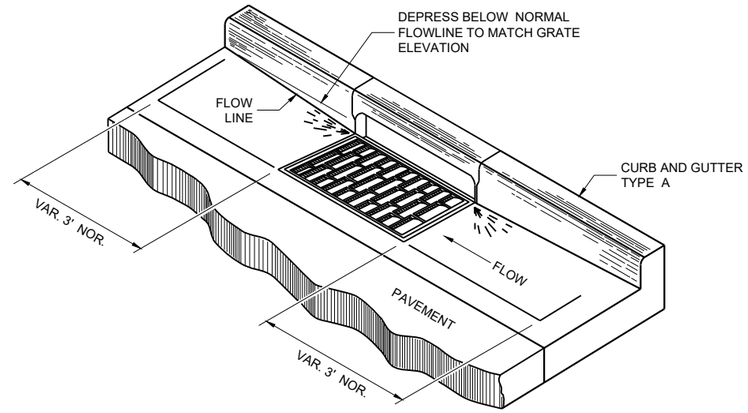

DETAIL OF CURB AND GUTTER AT INLETS

(TYPICAL H INLET COVER SHOWN)

GENERAL NOTES

DETAILS OF CONSTRUCTION AND WORKMANSHIP NOT SHOWN ON THIS DRAWING SHALL CONFORM TO THE PERTINENT REQUIREMENTS OF THE CONTRACT.

PAVEMENT TIES AND TIE BARS SHALL BE EPOXY COATED IN CONFORMANCE WITH SUBSECTION 505.2.6.2 OF THE STANDARD SPECIFICATIONS.

UNLESS OTHERWISE SHOWN ON THE TYPICAL CROSS SECTIONS, THE BASE AGGREGATE AND COMMON EXCAVATION LIMITS ARE 2' - 0" BEHIND THE BACK OF CURBS.

(1) TIE BARS ARE REQUIRED FOR CURB AND GUTTERS TYPES A, G, K, R, AND TBTT.

(2) THE BOTTOM OF CURB AND GUTTER MAY BE CONSTRUCTED EITHER LEVEL OR PARALLEL TO THE SLOPE OF THE SUBGRADE OR BASE AGGREGATE PROVIDED A 6" MINIMUM GUTTER THICKNESS IS MAINTAINED.

(10) REFER TO SDD 08D18 AND 08D19 FOR ADDITIONAL DRIVEWAY ENTRANCE CURB DETAILS.

(11) PLACE 1" THICK EXPANSION JOINT MATERIAL BETWEEN VERTICAL FACE CURB TYPES EXTENDING FROM THE TOP OF CURB TO 1 INCH BELOW THE ADJOINING CONCRETE SURFACE. RIGID CONCRETE STRUCTURES INCLUDE RAISED CONCRETE MEDIANS, CONCRETE SAFETY ISLANDS, SPLITTER ISLANDS, OR LOCATIONS IDENTIFIED ON THE PLANS.

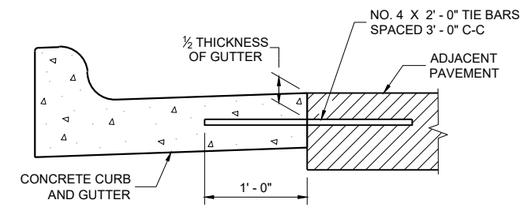

TYPICAL TIE BAR LOCATION (1)

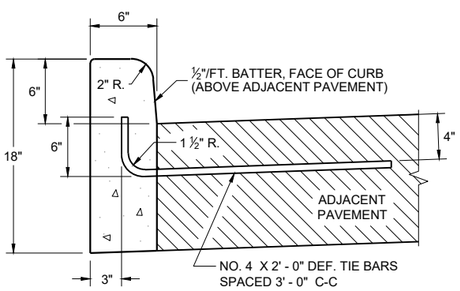

TYPES A (1) & D

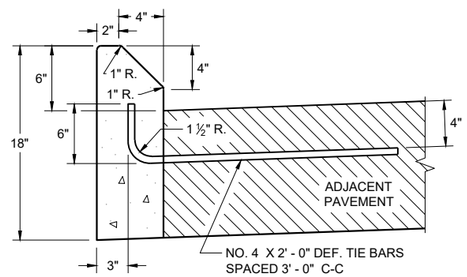

TYPES G (1) & J

CONCRETE CURB

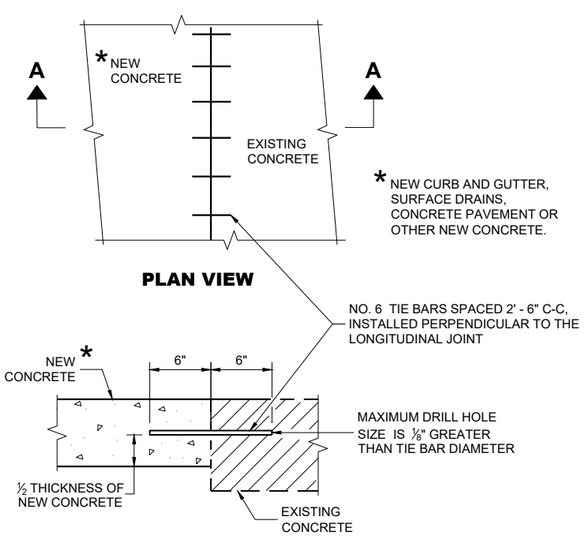

PLAN VIEW

SECTION A - A

TIE BARS DRILLED INTO EXISTING PAVEMENT

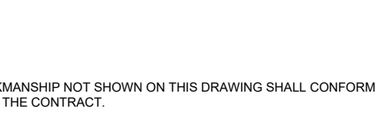

DRIVEWAY ENTRANCE CURB (10)

(WHEN DIRECTED BY THE ENGINEER)

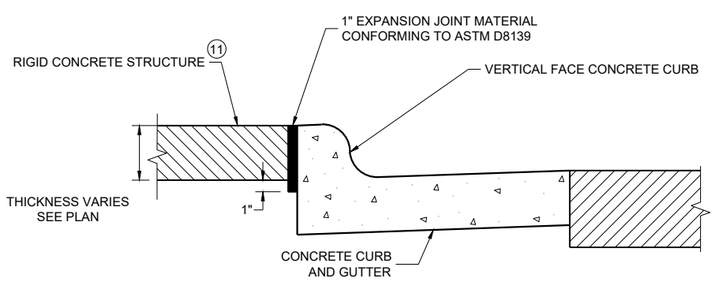

EXPANSION JOINT DETAIL FOR VERTICAL CURB ABUTTING A RIGID STRUCTURE (11)

CONCRETE CURB, TIES AND CURB AND GUTTER APPLICATIONS

STATE OF WISCONSIN
DEPARTMENT OF TRANSPORTATION

APPROVED
May 2023 — DATE
/S/ Rodnery Taylor — ROADWAY STANDARDS DEVELOPMENT UNIT SUPERVISOR

FHWA

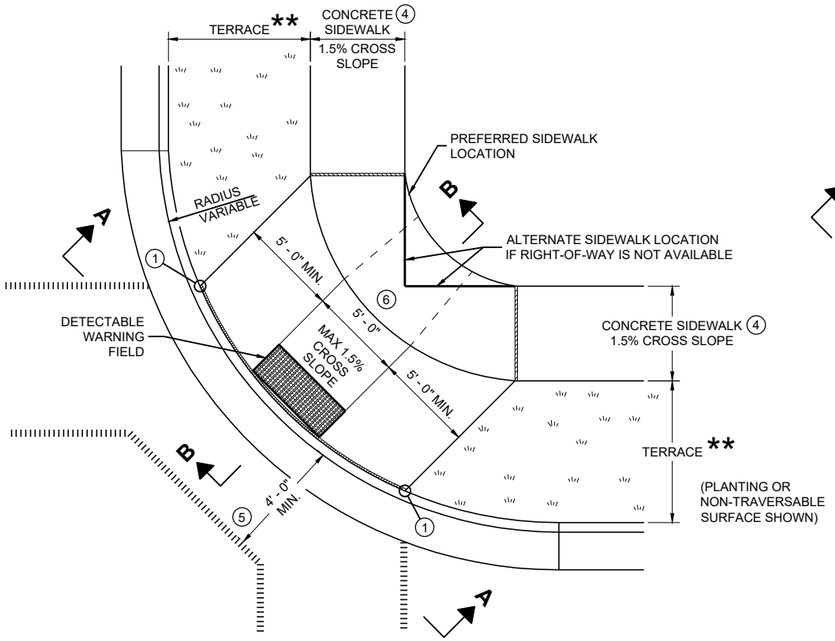

PLAN VIEW

CURB RAMP TYPE 1

(CENTER OF CORNER RADIUS)

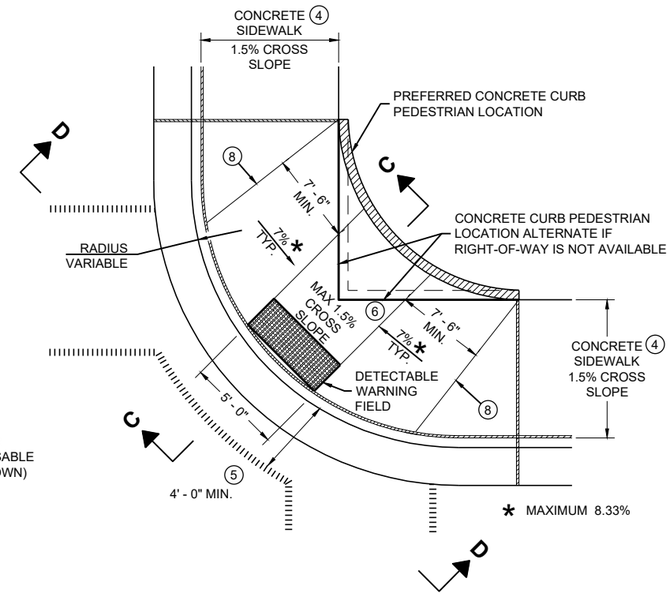

PLAN VIEW

CURB RAMP TYPE 1 - A

(NO TERRACE)

GENERAL NOTES

AVOID PLACING DRAINAGE STRUCTURES, JUNCTION BOXES OR OTHER OBSTRUCTIONS IN FRONT OF RAMP ACCESS AREAS.

DETAILS OF CONSTRUCTION, MATERIALS AND WORKMANSHIP NOT SHOWN ON THIS DRAWING SHALL CONFORM TO THE PERTINENT REQUIREMENTS OF THE STANDARD SPECIFICATIONS AND THE APPLICABLE SPECIAL PROVISIONS.

WHEN NECESSARY, THE SIDEWALK ELEVATION MAY BE LOWERED TO MEET THE HIGH POINT ON THE RAMP.

TYPE 1 CURB RAMPS SHALL HAVE A NORMAL SIDEWALK APRON AND CURB ON BOTH SIDES OF RAMP.

DETECTABLE WARNING FILED SHALL BE MEASURED AND PAID BY THE SQUARE FOOT AS "CURB RAMP DETECTABLE WARNING FIELD". THE CONCRETE PEDESTRIAN CURB, IF NEEDED, SHALL BE MEASURED AND PAID BY THE LINEAR FOOT AS "CONCRETE CURB PEDESTRIAN". CONCRETE SIDEWALK IN THE CURB RAMP AREA SHALL BE MEASURED AND PAID BY THE SQUARE FOOT AS CONCRETE SIDEWALK, INCLUDING THE AREA UNDER THE DETECTABLE WARNING FIELD.

SELECT CURB RAMP DETECTABLE WARNING FIELD MATERIALS AND DEVICES FROM THE DEPARTMENT'S APPROVED MATERIALS LIST. THE COLOR OF THE DETECTABLE WARNING FIELD IS SPECIFIED ELSEWHERE AND IS INCIDENTAL TO THE BID ITEM OF "CURB RAMP DETECTABLE WARNING FIELD"

DETECTABLE WARNING FIELDS THAT ARE INSTALLED AS A GROUP OR SIDE BY SIDE, SHALL BE FROM THE SAME MANUFACTURER.

SURFACE TEXTURE OF THE RAMP SHALL BE OBTAINED BY COARSE BROOMING TRANSVERSE TO THE SLOPE OF THE RAMP.

1. THIS POINT IS AN EXTENSION OF OUTSIDE EDGE OF APPROACHING SIDEWALK WHERE IT MEETS THE BACK OF CONCRETE CURB. POINT LOCATION MAY BE ADJUSTED TO ALIGN WITH BEGINNING OF FULL-HEIGHT CURB IF THIS DISTANCE IS SHORT.
2. GRADE CHANGE BETWEEN GUTTER FLAG SLOPE AND THE CURB RAMP SLOPE SHALL NOT EXCEED 11%. MAXIMUM GUTTER FLAG SLOPE IS 4%. PROVIDE LONGITUDINAL DRAINAGE AROUND CURB AND AWAY FROM CURB RAMP. NO VERTICAL LIPS OR DISCONTINUITIES GREATER THAN ¼ - INCH ARE ALLOWED. SLOPE OF CURB HEAD OPENING SHALL MATCH THE RAMP SLOPE, MINIMALLY 1.5% AND NOT TO EXCEED 7%. WHEN ADJACENT TO 1.5% LANDING, CONSTRUCT CURB HEAD OPENING AT 1.5% IN THE DIRECTION OF PEDESTRIAN TRAVEL.
3. MAXIMUM 8.33% CURB RAMP SLOPE IS ALLOWABLE WITH FLATTENED GUTTER FLAG SLOPE AND NOT TO EXCEED 11% GRADE CHANGE.
4. ±0.5% CONSTRUCTION TOLERANCE IN SIDEWALK CROSS SLOPE. THE SIDEWALK CROSS SLOPE SHALL NOT EXCEED 2% WITHOUT PRIOR APPROVAL FROM THE ENGINEER.
5. PROVIDE A LEVEL LANDING IN THE STREET AND GUTTER AREA (2% MAXIMUM SLOPE IN ANY DIRECTION). WHEN THE GUTTER SLOPE EXCEEDS 2%, CONSTRUCT THE LEVEL LANDING IN THE STREET AREA. 4 FOOT WIDTH IS MEASURED FROM THE FLANGE LINE
6. PROVIDE A LEVEL LANDING (MAXIMUM 2% SLOPE) IN ANY DIRECTION OF PEDESTRIAN TRAVEL. STANDARD LEVEL LANDING SIZE IS 5 FEET BY 5 FEET.
8. PROVIDE GRADE BREAK PERPENDICULAR TO DIRECTION OF WHEELCHAIR TRAVEL.

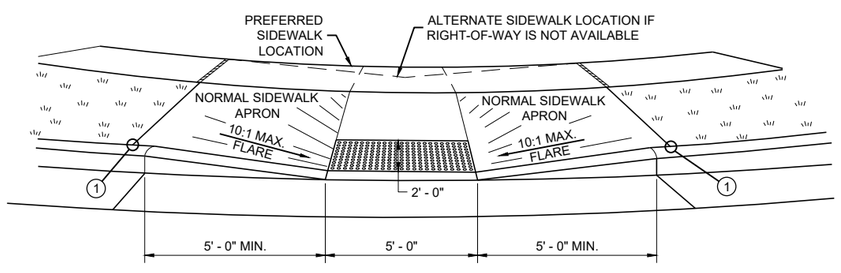

VIEW A - A FOR TYPE 1

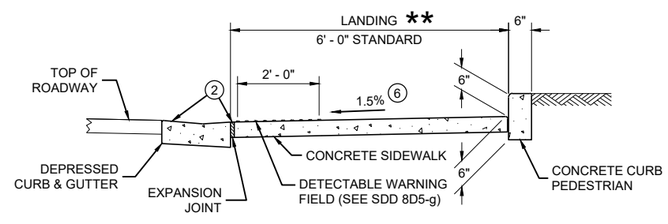

SECTION C - C FOR TYPE 1 - A

LEGEND

- ½" EXPANSION JOINT SIDEWALK
- CONTRACTION JOINT FIELD LOCATED
- PAVEMENT MARKING CROSSWALK (WHITE)

** WIDTH SHOWN ELSEWHERE IN THE PLANS

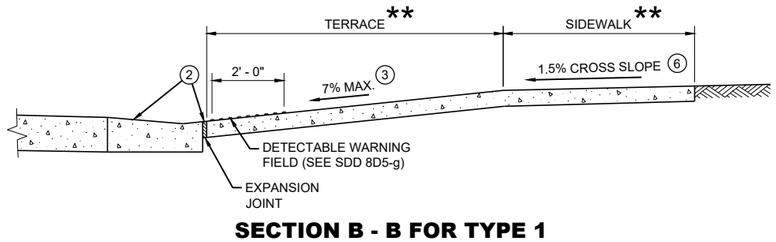

SECTION B - B FOR TYPE 1

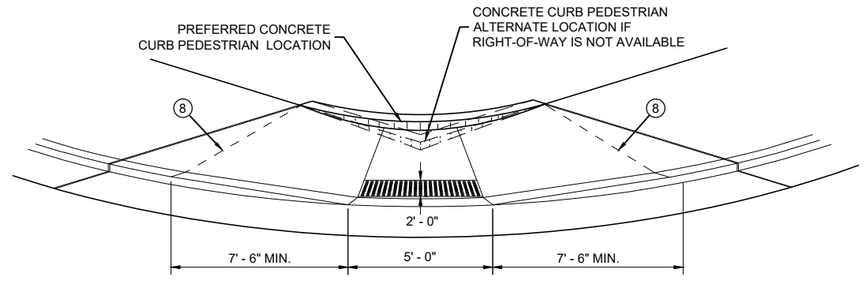

VIEW D - D FOR TYPE 1 - A

CURB RAMPS TYPE 1 AND 1-A

STATE OF WISCONSIN
DEPARTMENT OF TRANSPORTATION

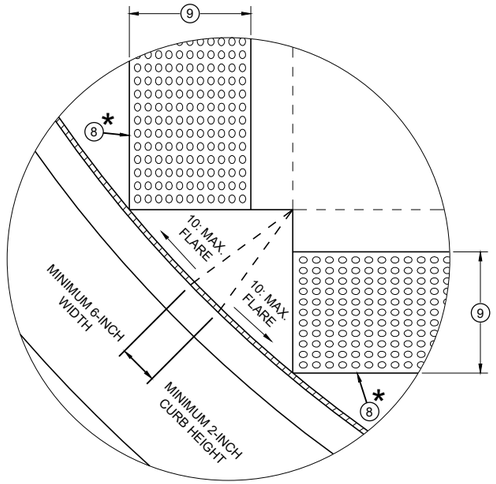

DETAIL A

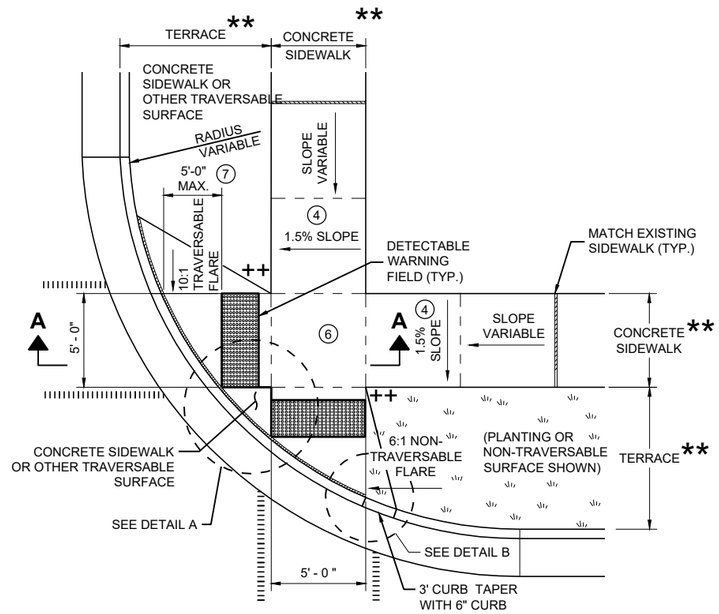

PLAN VIEW
CURB RAMP TYPE 2
(CENTER OF CORNER RADIUS)

GENERAL NOTES

AVOID PLACING DRAINAGE STRUCTURES, JUNCTION BOXES OR OTHER OBSTRUCTIONS IN FRONT OF RAMP ACCESS AREAS.

DETAILS OF CONSTRUCTION, MATERIALS AND WORKMANSHIP NOT SHOWN ON THIS DRAWING SHALL CONFORM TO THE PERTINENT REQUIREMENTS OF THE STANDARD SPECIFICATIONS AND THE APPLICABLE SPECIAL PROVISIONS.

DETECTABLE WARNING FIELDS THAT ARE INSTALLED AS A GROUP OR SIDE BY SIDE SHALL BE FROM THE SAME MANUFACTURER.

2. GRADE CHANGE BETWEEN GUTTER FLAG SLOPE AND THE CURB RAMP SLOPE SHALL NOT EXCEED 11%. MAXIMUM GUTTER FLAG SLOPE IS 4%. PROVIDE LONGITUDINAL DRAINAGE AROUND CURB AND AWAY FROM CURB RAMP. NO VERTICAL LIPS OR DISCONTINUITIES GREATER THAN ¼ - INCH ARE ALLOWED. SLOPE OF CURB HEAD OPENING SHALL MATCH THE RAMP SLOPE, MINIMALLY 1.5% AND NOT TO EXCEED 7%. WHEN ADJACENT TO 1.5% LANDING, CONSTRUCT CURB HEAD OPENING AT 1.5% IN THE DIRECTION OF PEDESTRIAN TRAVEL.

3. AN 8.33% CURB RAMP SLOPE IS ALLOWABLE WITH FLATTENED GUTTER FLAG SLOPE (2.67% OR LESS) AND NOT TO EXCEED 11% GRADE CHANGE.

4. ±0.5% CONSTRUCTION TOLERANCE IN SIDEWALK CROSS SLOPE. THE SIDEWALK CROSS SLOPE SHALL NOT EXCEED 2% WITHOUT PRIOR APPROVAL FROM THE ENGINEER.

6. PROVIDE A LEVEL LANDING (MAXIMUM 2% SLOPE) IN ANY DIRECTION OF PEDESTRIAN TRAVEL. STANDARD LEVEL LANDING SIZE IS 5 FEET X 5 FEET.

7. WHEN GRADE BREAK DISTANCE EXCEEDS 5 FEET, USE RADIAL DETECTABLE WARNING FIELD PER SDD 8D5-f.

8. PROVIDE GRADE BREAK PERPENDICULAR TO DIRECTION OF WHEELCHAIR TRAVEL.

9. WHEN DISTANCE IS LESS THAN 6' - 0", IT MAY BE DIFFICULT TO ACHIEVE A 7% SLOPE OR FLATTER ALONG THE RAMP. REDUCE CURB HEIGHT IN TRIANGLE AREA TO ACHIEVE 7% SLOPE OR FLATTER ON RAMP. CONSTRUCT 2-INCH MINIMUM CURB HEIGHT BETWEEN 10:1 FLARES.

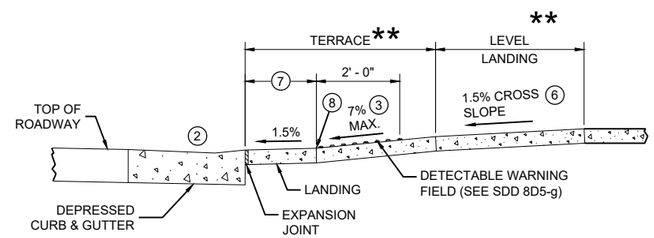

SECTION A - A FOR TYPE 2

* MAXIMUM 2.0% SLOPE IN ALL DIRECTIONS IN FRONT OF GRADE BREAK

** WIDTH SHOWN ELSEWHERE IN THE PLANS

++ CONSTRUCT 6" WEDGE TO AVOID CONCRETE BREAKAGE

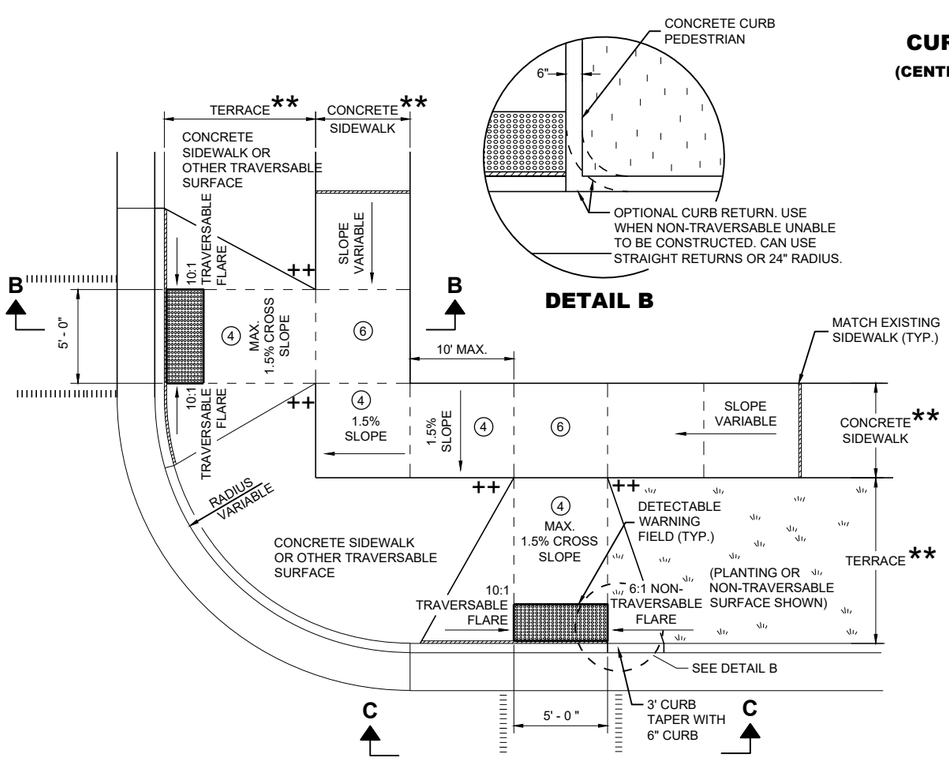

PLAN VIEW
CURB RAMP TYPE 3
(OUTSIDE OF CROSSWALK AREA)

DETAIL B

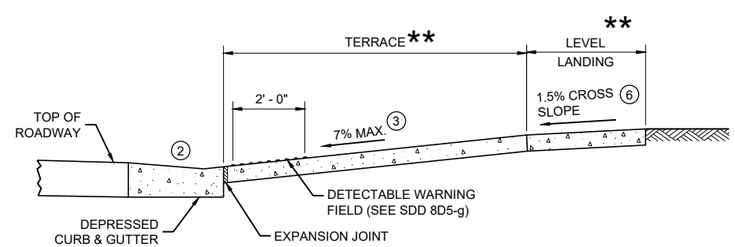

SECTION B - B FOR TYPE 3

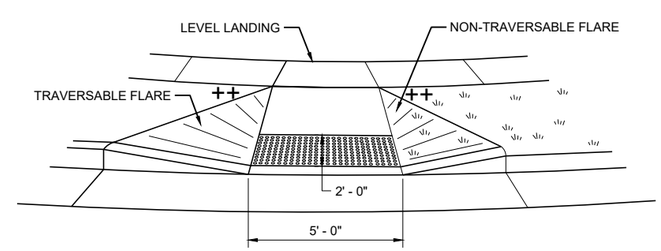

VIEW C - C FOR TYPE 3

LEGEND

- ½" EXPANSION JOINT SIDEWALK
- CONTRACTION JOINT SIDEWALK
- PAVEMENT MARKING CROSSWALK (WHITE)

CURB RAMPS TYPE 2 AND 3

STATE OF WISCONSIN
DEPARTMENT OF TRANSPORTATION

6

SDD 08D05-21b

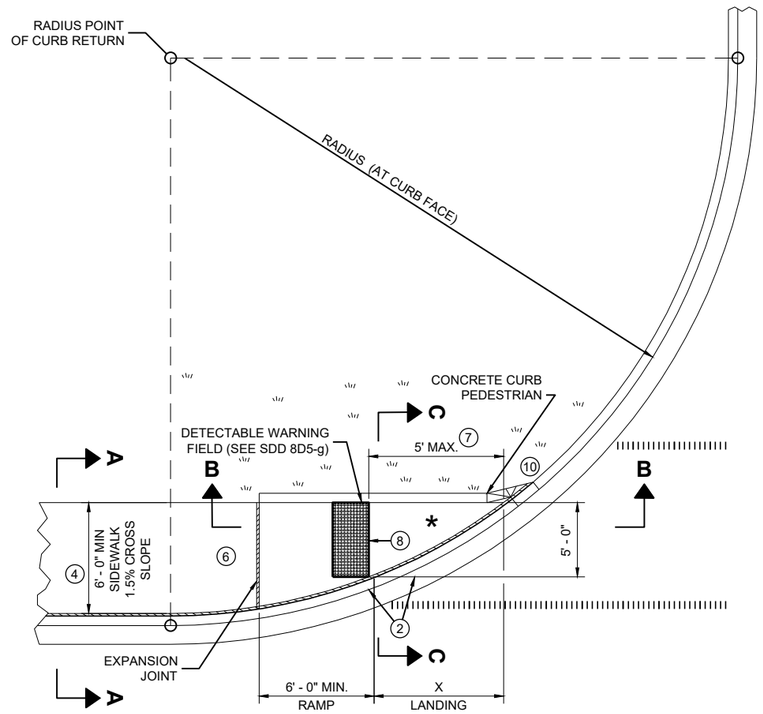

PLAN VIEW

CURB RAMP TYPE 4A

RADIUS (AT CURB FACE)	X
10 FEET	4' - 7"

INTERMEDIATE RADII CAN BE INTERPOLATED

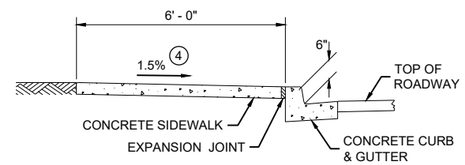

SECTION A - A FOR TYPE 4A

GENERAL NOTES

AVOID PLACING DRAINAGE STRUCTURES, JUNCTION BOXES OR OTHER OBSTRUCTIONS IN FRONT OF RAMP ACCESS AREAS.

DETAILS OF CONSTRUCTION, MATERIALS AND WORKMANSHIP NOT SHOWN ON THIS DRAWING SHALL CONFORM TO THE PERTINENT REQUIREMENTS OF THE STANDARD SPECIFICATIONS AND THE APPLICABLE SPECIAL PROVISIONS.

DETECTABLE WARNING FIELDS THAT ARE INSTALLED AS A GROUP OR SIDE BY SIDE, SHALL BE FROM THE SAME MANUFACTURER.

(2) GRADE CHANGE BETWEEN GUTTER FLAG SLOPE AND THE CURB RAMP SLOPE SHALL NOT EXCEED 11%. MAXIMUM GUTTER FLAG SLOPE IS 4%. PROVIDE LONGITUDINAL DRAINAGE AROUND CURB AND AWAY FROM CURB RAMP. NO VERTICAL LIPS OR DISCONTINUITIES GREATER THAN ¼ - INCH ARE ALLOWED. SLOPE OF CURB HEAD OPENING SHALL MATCH THE RAMP SLOPE, MINIMALLY 1.5% AND NOT TO EXCEED 7%. WHEN ADJACENT TO 1.5% LANDING, CONSTRUCT CURB HEAD OPENING AT 1.5% IN THE DIRECTION OF PEDESTRIAN TRAVEL.

(3) AN 8.33% CURB RAMP SLOPE IS ALLOWABLE WITH FLATTENED GUTTER FLAG SLOPE AND NOT TO EXCEED 11% GRADE CHANGE.

(4) ±0.5% CONSTRUCTION TOLERANCE IN SIDEWALK CROSS SLOPE. THE SIDEWALK CROSS SLOPE SHALL NOT EXCEED 2% WITHOUT PRIOR APPROVAL FROM THE ENGINEER.

(6) PROVIDE A LEVEL LANDING (MAXIMUM 2% SLOPE) IN ANY DIRECTION OF PEDESTRIAN TRAVEL. STANDARD LEVEL LANDING SIZE IS 5 FEET BY 5 FEET.

(7) WHEN THIS GRADE BREAK DISTANCE EXCEEDS 5 FEET, USE RADIAL DETECTABLE WARNING FIELD PER SDD 8D5-f.

(8) PROVIDE GRADE BREAK PERPENDICULAR TO DIRECTION OF WHEELCHAIR TRAVEL.

(10) INSTALL TRANSITION NOSE (INCIDENTAL TO OTHER PAY ITEMS). DO NOT MARK TRANSITION NOSE.

LEGEND

½" EXPANSION JOINT SIDEWALK

CONTRACTION JOINT SIDEWALK

PAVEMENT MARKING CROSSWALK (WHITE)

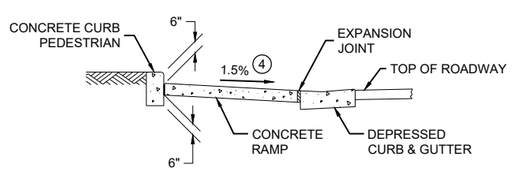

SECTION C - C FOR TYPE 4A

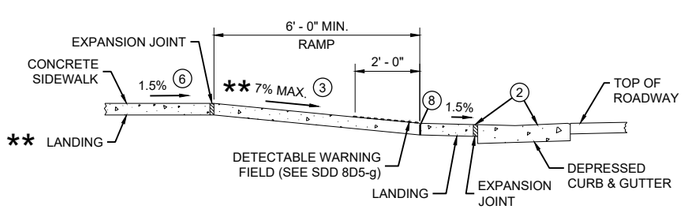

** IF RAMP SLOPE IS LESS THAN 5.0%, THEN NO ADJACENT UPHILL LANDING IS REQUIRED

SECTION B - B FOR TYPE 4A AND TYPE 4A1

* MAXIMUM 2.0% SLOPE IN ALL DIRECTIONS IF FRONT OF GRADE BREAK

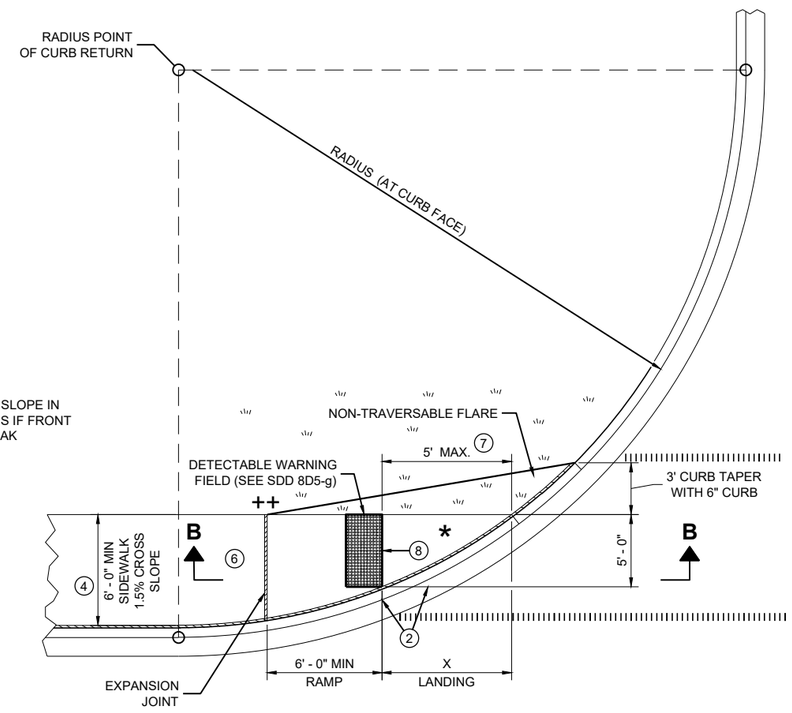

PLAN VIEW

CURB RAMP TYPE 4A1

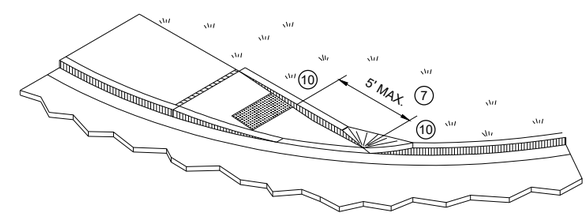

ISOMETRIC VIEW FOR TYPE 4A

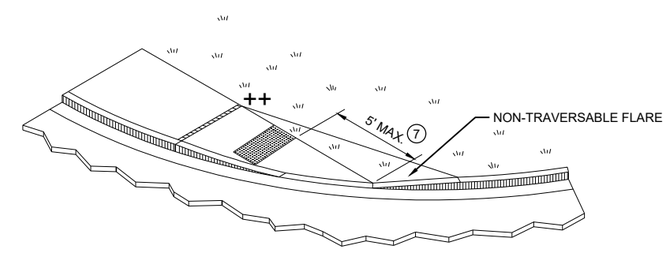

ISOMETRIC VIEW FOR TYPE 4A1

++ CONSTRUCT 6" WEDGE TO AVOID CONCRETE BREAKAGE

CURB RAMPS TYPE 4A AND 4A1

STATE OF WISCONSIN
DEPARTMENT OF TRANSPORTATION

6

6

SDD 08D05-21c

SDD 08D05-21c

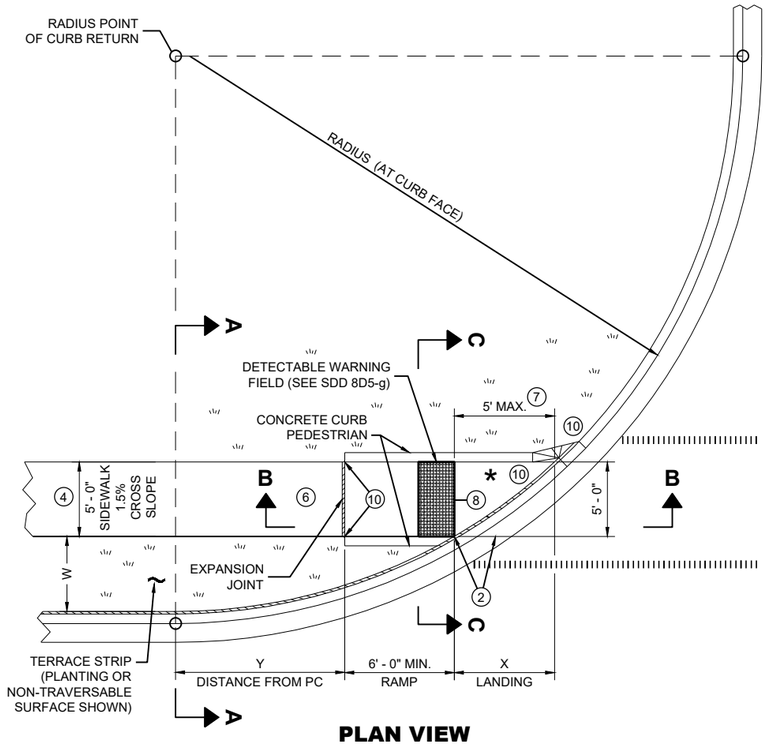

PLAN VIEW
CURB RAMP TYPE 4B

RADIUS (AT CURB FACE)	W = 3' - 0"		W = 4' - 0"		W = 5' - 0"		W = 6' - 0"		W = 7' - 0"		W = 8' - 0"		W = 9' - 0"		W = 10' - 0"	
	X	Y	X	Y	X	Y	X	Y	X	Y	X	Y	X	Y	X	Y
10 FEET	2' - 10 ¼"	0' - 5"	2' - 1"	1' - 4 ½"	1' - 5"	2' - 1"	0' - 10"	2' - 7 ½"	0' - 3 ¼"	3' - 0 ¼"						
15 FEET	4' - 6 ¾"	2' - 1 ¾"	3' - 9"	3' - 5 ¾"	3' - 1 ¼"	4' - 6"	2' - 6 ¾"	5' - 4 ½"	2' - 1"	6' - 1"	1' - 8"	6' - 8 ½"	1' - 3 ¼"	7' - 2 ½"	0' - 10 ¾"	7' - 7 ¼"
20 FEET			4' - 11 ½"	5' - 1 ¾"	4' - 3 ¼"	6' - 5 ½"	3' - 8 ¾"	7' - 7"	3' - 3"	8' - 6 ½"	2' - 10"	9' - 4 ½"	2' - 5 ½"	10' - 1 ¼"	2' - 1 ¼"	10' - 9"
30 FEET									4' - 10 ¾"	12' - 5 ¾"	4' - 5 ½"	13' - 7 ¾"	4' - 0 ¾"	14' - 8 ½"	3' - 8 ½"	15' - 8 ¼"
40 FEET															4' - 10 ¾"	19' - 8 ¼"

INTERMEDIATE RADII CAN BE INTERPOLATED
DIMENSION "Y" IS CALCULATED BASED ON 6'-0" RAMP LENGTH
DIMENSION "X" IS CALCULATED BASED ON 5'-0" SIDEWALK WIDTH

LEGEND

- ½" EXPANSION JOINT SIDEWALK
- CONTRACTION JOINT SIDEWALK
- PAVEMENT MARKING CROSSWALK (WHITE)

GENERAL NOTES

AVOID PLACING DRAINAGE STRUCTURES, JUNCTION BOXES OR OTHER OBSTRUCTIONS IN FRONT OF RAMP ACCESS AREAS.

DETAILS OF CONSTRUCTION, MATERIALS AND WORKMANSHIP NOT SHOWN ON THIS DRAWING SHALL CONFORM TO THE PERTINENT REQUIREMENTS OF THE STANDARD SPECIFICATIONS AND THE APPLICABLE SPECIAL PROVISIONS.

DETECTABLE WARNING FIELDS THAT ARE INSTALLED AS A GROUP OR SIDE BY SIDE, SHALL BE FROM THE SAME MANUFACTURER.

2. GRADE CHANGE BETWEEN GUTTER FLAG SLOPE AND THE CURB RAMP SLOPE SHALL NOT EXCEED 11%. MAXIMUM GUTTER FLAG SLOPE IS 4%. PROVIDE LONGITUDINAL DRAINAGE AROUND CURB AND AWAY FROM CURB RAMP. NO VERTICAL LIPS OR DISCONTINUITIES GREATER THAN ¼ - INCH ARE ALLOWED. SLOPE OF CURB HEAD OPENING SHALL MATCH THE RAMP SLOPE, MINIMALLY 1.5% AND NOT TO EXCEED 7%. WHEN ADJACENT TO 1.5% LANDING, CONSTRUCT CURB HEAD OPENING AT 1.5% IN THE DIRECTION OF PEDESTRIAN TRAVEL.
3. AN 8.33% CURB RAMP SLOPE IS ALLOWABLE WITH FLATTENED GUTTER FLAG SLOPE AND NOT TO EXCEED 11% GRADE CHANGE.
4. ±0.5% CONSTRUCTION TOLERANCE IN SIDEWALK CROSS SLOPE. THE SIDEWALK CROSS SLOPE SHALL NOT EXCEED 2% WITHOUT PRIOR APPROVAL FROM THE ENGINEER.
6. PROVIDE A LEVEL LANDING (MAXIMUM 2% SLOPE) IN ANY DIRECTION OF PEDESTRIAN TRAVEL. STANDARD LEVEL LANDING SIZE IS 5 FEET BY 5 FEET.
7. WHEN THIS GRADE BREAK DISTANCE EXCEEDS 5 FEET, USE RADIAL DETECTABLE WARNING FIELD PER SDD 8D5-f.
8. PROVIDE GRADE BREAK PERPENDICULAR TO DIRECTION OF WHEELCHAIR TRAVEL.
10. INSTALL TRANSITION NOSE (INCIDENTAL TO OTHER PAY ITEMS). DO NOT MARK TRANSITION NOSE.

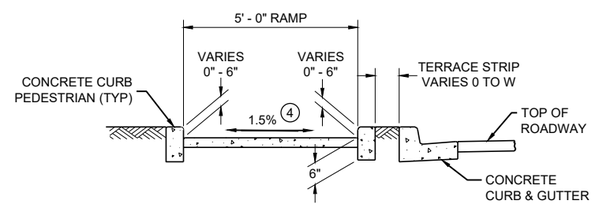

SECTION C - C FOR TYPE 4B

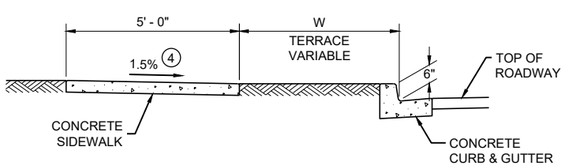

SECTION A - A FOR TYPE 4B

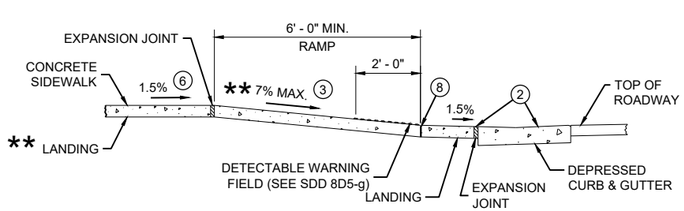

** IF RAMP SLOPE IS LESS THAN 5.0%, THEN NO ADJACENT UPHILL LANDING IS REQUIRED

SECTION B - B FOR TYPE 4B AND TYPE 4B1

* MAXIMUM 2.0% SLOPE IN ALL DIRECTIONS IF FRONT OF GRADE BREAK

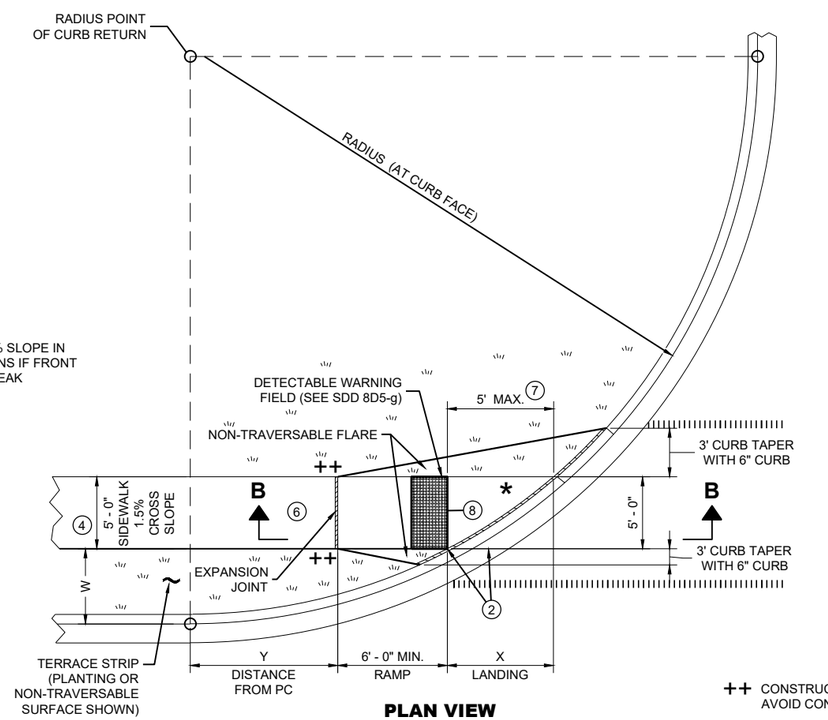

PLAN VIEW
CURB RAMP TYPE 4B1

++ CONSTRUCT 6" WEDGE TO AVOID CONCRETE BREAKAGE

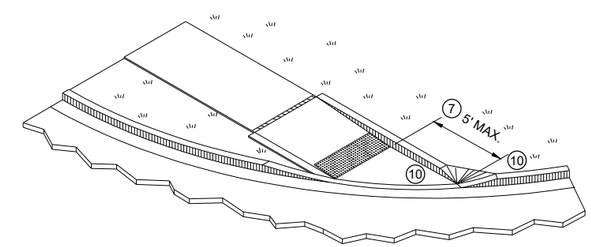

ISOMETRIC VIEW FOR TYPE 4B

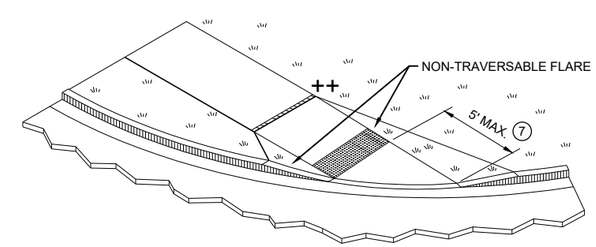

ISOMETRIC VIEW FOR TYPE 4B1

CURB RAMPS TYPE 4B AND 4B1

STATE OF WISCONSIN
DEPARTMENT OF TRANSPORTATION

6

SDD 08D05-21d

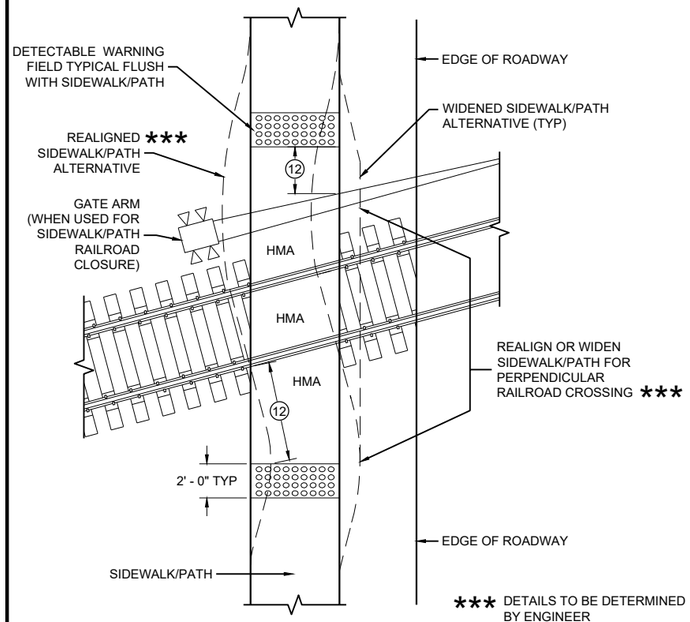

CURB RAMP TYPE 8

DETECTABLE WARNINGS FOR SIDEWALKS OR SHARED USE PATHS AT RAILROAD CROSSINGS

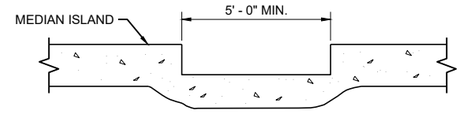

SECTION A - A FOR TYPE 5

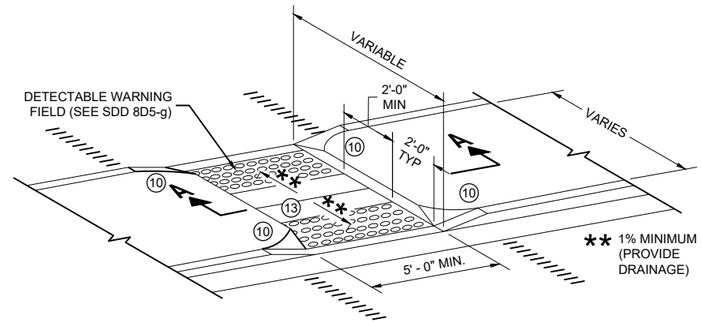

CURB RAMP TYPE 5

MEDIAN ISLAND NON-ELEVATED PEDESTRIAN CROSSING

GENERAL NOTES

AVOID PLACING DRAINAGE STRUCTURES, JUNCTION BOXES OR OTHER OBSTRUCTIONS IN FRONT OF RAMP ACCESS AREAS.

DETAILS OF CONSTRUCTION, MATERIALS AND WORKMANSHIP NOT SHOWN ON THIS DRAWING SHALL CONFORM TO THE PERTINENT REQUIREMENTS OF THE STANDARD SPECIFICATIONS AND THE APPLICABLE SPECIAL PROVISIONS.

SIDEWALK CROSS SLOPE SHALL NOT EXCEED 2%.

DETECTABLE WARNING FIELDS THAT ARE INSTALLED AS A GROUP OR SIDE BY SIDE, SHALL BE FROM THE SAME MANUFACTURER.

(2) GRADE CHANGE BETWEEN GUTTER FLAG SLOPE AND THE CURB RAMP SLOPE SHALL NOT EXCEED 11%. MAXIMUM GUTTER FLAG SLOPE IS 4%. PROVIDE LONGITUDINAL DRAINAGE AROUND CURB AND AWAY FROM CURB RAMP. NO VERTICAL LIPS OR DISCONTINUITIES GREATER THAN ¼ - INCH ARE ALLOWED. SLOPE OF CURB HEAD OPENING SHALL MATCH THE RAMP SLOPE, MINIMALLY 1.5% AND NOT TO EXCEED 7%. WHEN ADJACENT TO 1.5% LANDING, CONSTRUCT CURB HEAD OPENING AT 1.5% IN THE DIRECTION OF PEDESTRIAN TRAVEL.

(3) AN 8.33% CURB RAMP SLOPE IS ALLOWABLE WITH FLATTENED GUTTER FLAG SLOPE AND NOT TO EXCEED 11% GRADE CHANGE.

(4) ±0.5% CONSTRUCTION TOLERANCE IN SIDEWALK CROSS SLOPE. THE SIDEWALK CROSS SLOPE SHALL NOT EXCEED 2% WITHOUT PRIOR APPROVAL FROM THE ENGINEER.

(6) PROVIDE A LEVEL LANDING (MAXIMUM 2% SLOPE) IN ANY DIRECTION OF PEDESTRIAN TRAVEL. STANDARD LEVEL LANDING SIZE IS 5 FEET BY 5 FEET.

(10) INSTALL TRANSITION NOSE (INCIDENTAL TO OTHER PAY ITEMS). DO NOT MARK TRANSITION NOSE.

(11) SLOPE SIDEWALK TOWARD LANDING AS SHOWN WHERE THERE IS NO TERRACE OR WHERE THE TERRACE WIDTH IS LESS THAN 6 FEET WIDE.

(12) THE EDGE OF THE DETECTABLE WARNING FIELD NEAREST TO A RAILROAD CROSSING SHALL BE 1.5 FEET ±0.1' FROM THE FACE OF THE GATE ARM IF THE GATE ARM EXTENDS ACROSS THE SIDEWALK/PATH. WHERE THERE IS NO PEDESTRIAN GATE, THE EDGE OF THE DETECTABLE WARNING FIELD NEAREST TO THE RAILROAD TRACK IS 15 FEET MAXIMUM AND 12 FEET MINIMUM, 15 FEET TYPICAL FROM THE NEAREST RAIL.

(13) DO NOT INSTALL DETECTABLE WARNING FIELDS AT THE EDGES OF STEET-LEVEL PEDESTRIAN REFUGE ISLANDS IF A MINIMUM 2 FOOT CONCRETE SURFACE WITHOUT DETECTABLE WARNINGS (MEASURED IN THE DIRECTION OF PEDESTRIAN TRAVEL) CANNOT BE ACHIEVED.

LEGEND

- ½" EXPANSION JOINT SIDEWALK
- CONTRACTION JOINT FIELD LOCATED
- PAVEMENT MARKING CROSSWALK (WHITE)

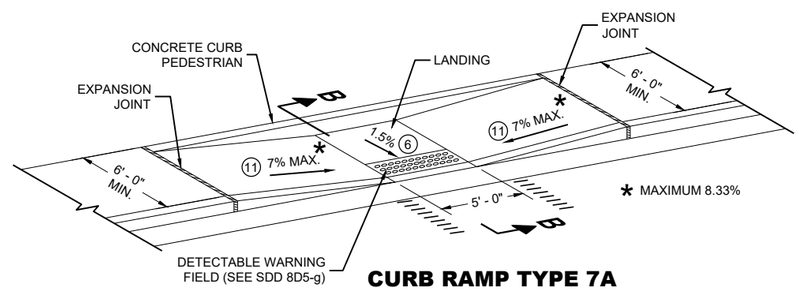

CURB RAMP TYPE 7A

FOR INTERSECTIONS AND MID BLOCK CROSSINGS

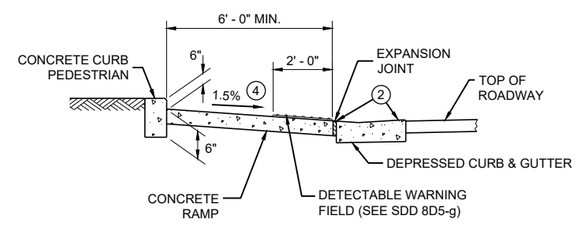

SECTION B - B FOR TYPE 7A

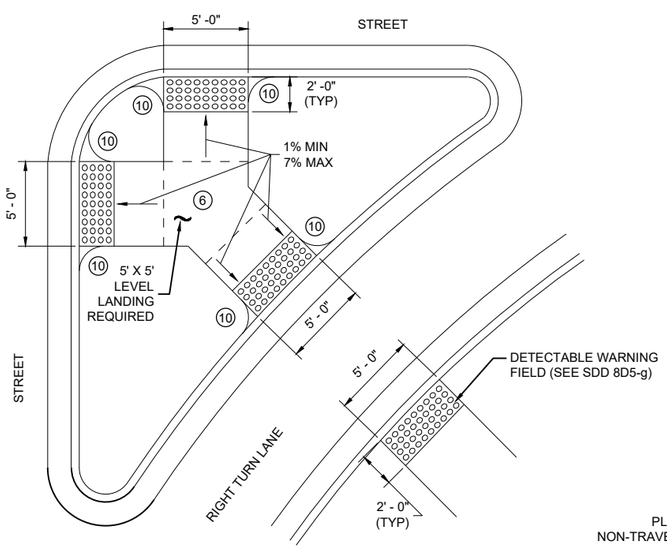

CURB RAMP TYPE 6

DETECTABLE WARNING AT ISLANDS

REFER TO GENERAL NOTES (2) AND (3) FOR ALL ISLAND CURB RAMPS

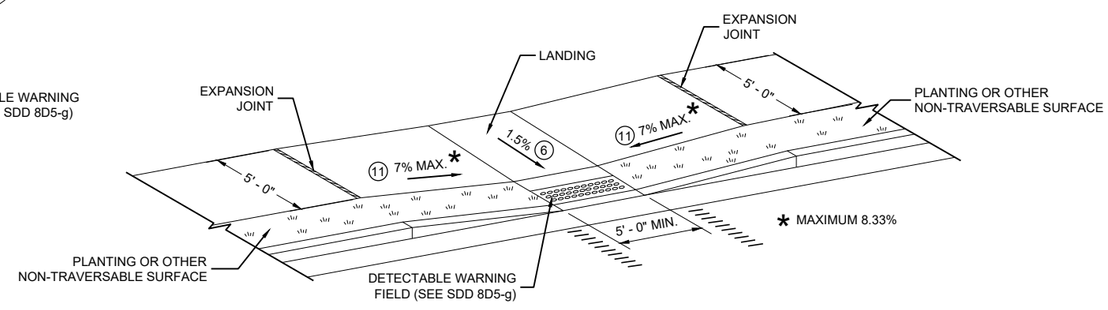

CURB RAMP TYPE 7B

FOR INTERSECTIONS AND MID BLOCK CROSSINGS

CURB RAMPS TYPE 5, 6, 7A, 7B & 8

STATE OF WISCONSIN
DEPARTMENT OF TRANSPORTATION

6

6

SDD 08D05-21e

SDD 08D05-21e

RADIAL DETECTABLE WARNING FIELD PLACEMENT WHEN 5 FOOT GRADE BREAK DISTANCE PER SDD 8D5-c IS EXCEEDED

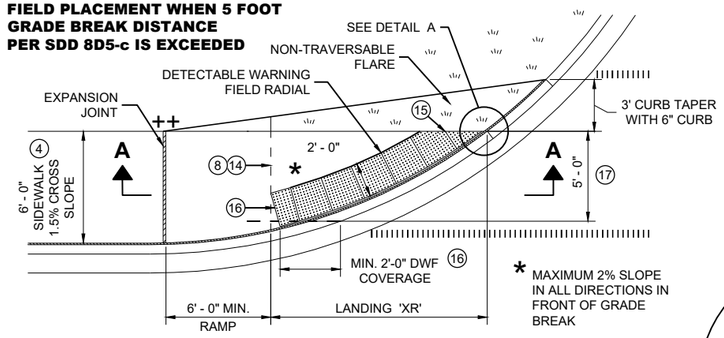

PLAN VIEW

CURB RAMP TYPE 4A1

(GRADE BREAK DISTANCE GREATER THAN 5 FEET)

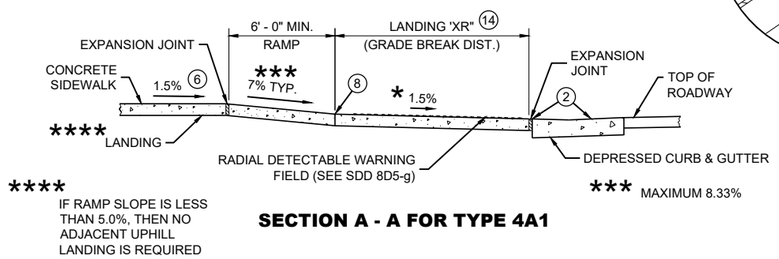

SECTION A - A FOR TYPE 4A1

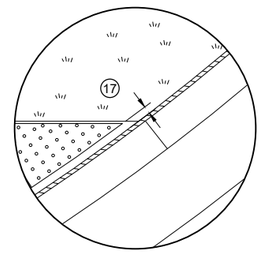

DETAIL A

LEGEND

- ½" EXPANSION JOINT SIDEWALK
- CONTRACTION JOINT SIDEWALK
- PAVEMENT MARKING CROSSWALK (WHITE)

GENERAL NOTES

AVOID PLACING DRAINAGE STRUCTURES, JUNCTION BOXES OR OTHER OBSTRUCTIONS IN FRONT OF RAMP ACCESS AREAS.

DETAILS OF CONSTRUCTION, MATERIALS AND WORKMANSHIP NOT SHOWN ON THIS DRAWING SHALL CONFORM TO THE PERTINENT REQUIREMENTS OF THE STANDARD SPECIFICATIONS AND THE APPLICABLE SPECIAL PROVISIONS.

DETECTABLE WARNING FIELDS THAT ARE INSTALLED AS A GROUP OR SIDE BY SIDE, SHALL BE FROM THE SAME MANUFACTURER.

APPLY RADIAL DETECTABLE WARNING PLACEMENT SIMILARLY FOR TYPE 4A AND 4A1 CURB RAMPS AND SIMILARLY FOR TYPE 4B AND 4B1 CURB RAMPS. TYPE 4A AND 4B CURB RAMPS ARE NOT SHOWN.

REFER TO SDD 8D5-g FOR ADDITIONAL RADIAL PLATE REQUIREMENTS.

FIELD CUTS AT INTERMEDIATE JOINTS WITHIN THE RADIAL DETECTABLE WARNING FILED ARE PROHIBITED.

DETERMINE FINAL RADIAL WARNING FIELD CONFIGURATION AD ITS INDIVIDUAL PLATE LOCATIONS. PERFORM PRE-LAYOUT PRIOR TO PLACEMENT IN PLASTIC CONCRETE. FOLLOW MANUFACTURER'S PRODUCT LIST AND INSTALLATION RECOMMENDATIONS.

(2) GRADE CHANGE BETWEEN GUTTER FLAG SLOPE AND THE CURB RAMP SLOPE SHALL NOT EXCEED 11%. MAXIMUM GUTTER FLAG SLOPE IS 4%. PROVIDE LONGITUDINAL DRAINAGE AROUND CURB AND AWAY FROM CURB RAMP. NO VERTICAL LIPS OR DISCONTINUITIES GREATER THAN ¼ - INCH ARE ALLOWED. SLOPE OF CURB HEAD OPENING SHALL MATCH THE RAMP SLOPE, MINIMALLY 1.5% AND NOT TO EXCEED 7%. WHEN ADJACENT TO 1.5% LANDING, CONSTRUCT CURB HEAD OPENING AT 1.5% IN THE DIRECTION OF PEDESTRIAN TRAVEL.

(3) AN 8.33% CURB RAMP SLOPE IS ALLOWABLE WITH FLATTENED GUTTER FLAG SLOPE AND NOT TO EXCEED 11% GRADE CHANGE.

(4) ±0.5% CONSTRUCTION TOLERANCE IN SIDEWALK CROSS SLOPE. THE SIDEWALK CROSS SLOPE SHALL NOT EXCEED 2% WITHOUT PRIOR APPROVAL FROM THE ENGINEER.

(6) PROVIDE A LEVEL LANDING (MAXIMUM 2% SLOPE) IN ANY DIRECTION OF PEDESTRIAN TRAVEL. STANDARD LANDING SIZE IS 5 FEET BY 5 FEET.

(8) PROVIDE GRADE BREAK PERPENDICULAR TO DIRECTION OF WHEELCHAIR TRAVEL.

(14) CONSULT ENGINEER IF GRADE BREAK LOCATION (END OF LANDING DIMENSION "XR") REQUIRES FIELD ADJUSTMENT WHEN ESTABLISHING FINAL RADIAL DETECTABLE WARNING FIELD LOCATION.

(15) FIELD SAW CUTS ALONG RADIAL DETECTABLE WARNING PLATES WILL BE NECESSARY TO MATCH EACH CURB RAMP EDGE. AVOID CUTTING THROUGH DOMES WHENEVER POSSIBLE. MAKE FIELD CUTS TRUE TO LINE AND WITHIN ⅛" DEVIATION. SMOOTH EDGES OF FIELD CUT PLATES.

(16) USE 1' X 2" RECTANGULAR END PLATE AT END OF TYPE 4A1 RAMP AND PROVIDE MINIMUM 2' - 0" DETECTABLE WARNING FIELD COVERAGE (IN DIRECTION OF PEDESTRIAN TRAVEL) ALONG THE ENTIRE CURB RAMP WIDTH.

(17) A MAXIMUM 3 INCH CONCRETE BORDER WIDTH IS ALLOWABLE IN FRONT OF RADIAL DETECTABLE WARNING FIELD FOR CONSTRUCTABILITY PURPOSES. CONCRETE BORDER WIDTH MAY VARY UP TO 1 INCH.

RADIAL DETECTABLE WARNING FIELD PLACEMENT WHEN 5 FOOT GRADE BREAK DISTANCE PER SDD 8D5-d IS EXCEEDED

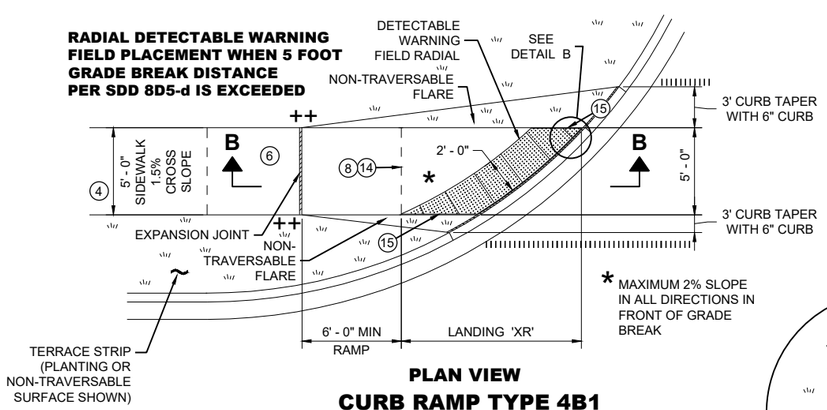

PLAN VIEW

CURB RAMP TYPE 4B1

(GRADE BREAK DISTANCE GREATER THAN 5 FEET)

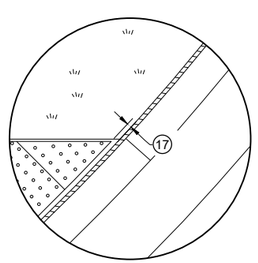

DETAIL B

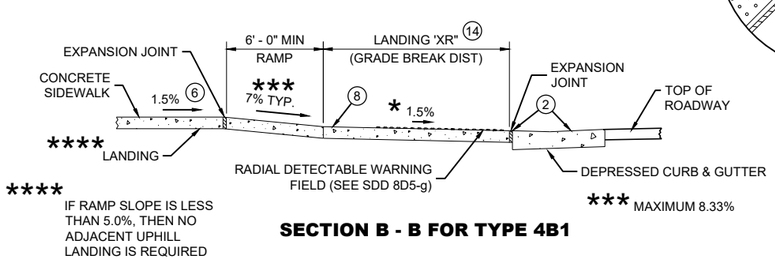

SECTION B - B FOR TYPE 4B1

RADIAL DETECTABLE WARNING FIELD PLACEMENT WHEN 5 FOOT GRADE BREAK DISTANCE PER SDD 8D5-b IS EXCEEDED

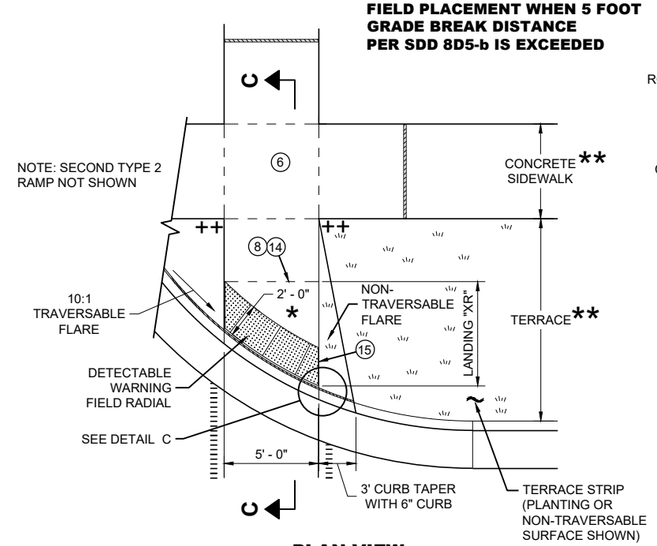

PLAN VIEW

CURB RAMP TYPE 2

(GRADE BREAK DISTANCE GREATER THAN 5 FEET)

(ON LINE WITH SIDEWALK)

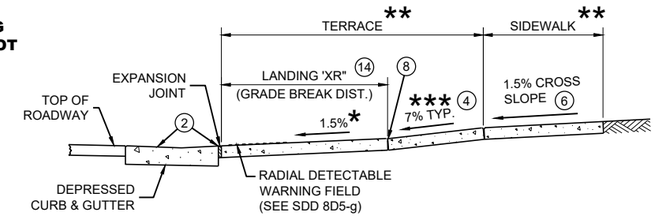

SECTION C - C FOR TYPE 2

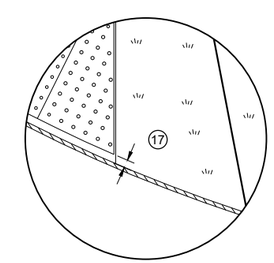

DETAIL C

* MAXIMUM 2% SLOPE IN ALL DIRECTIONS IN FRONT OF GRADE BREAK

** WIDTH SHOWN ELSEWHERE IN THE PLANS

*** MAXIMUM 8.33%

++ CONSTRUCT 6" WEDGE TO AVOID CONCRETE BREAKAGE

CURB RAMPS
RADIAL DETECTABLE WARNING

STATE OF WISCONSIN
DEPARTMENT OF TRANSPORTATION

6

SDD 08D05-21f

	MIN.	MAX.
A	1.6"	2.4"
B	0.65"	1.5"
C	*	*
D	0.9"	1.4"

* THE C DIMENSION IS 50% TO 65% OF THE D DIMENSION.

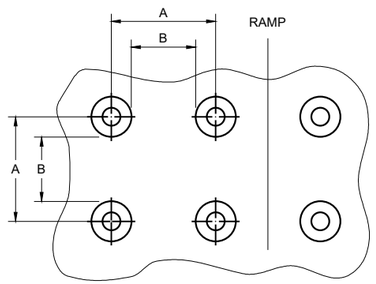

PLAN VIEW

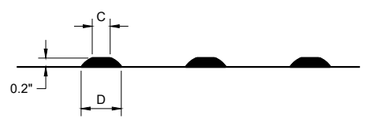

ELEVATION VIEW

TRUNCATED DOMES
DETECTABLE WARNING PATTERN DETAIL

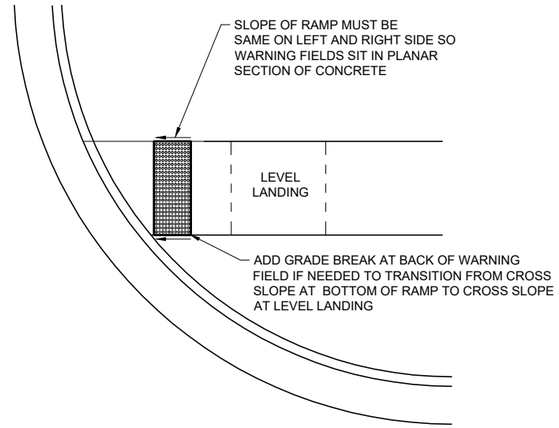

DETECTABLE WARNING FIELD
PLANAR INSTALLATION

GENERAL NOTES

DETECTABLE WARNING FIELDS THAT ARE INSTALLED AT A CURB RAMP SHALL BE FROM THE SAME MANUFACTURER.

PLACE ALL DETECTABLE WARNING FIELD SYSTEMS IN ACCORDANCE TO THE MANUFACTURER'S RECOMMENDATION.

FIELD CUTS AT INTERMEDIATE JOINTS WITHIN THE RADIAL DETECTABLE WARNING FILED ARE PROHIBITED.

DETERMINE FINAL RADIAL WARNING FIELD CONFIGURATION AND ITS INDIVIDUAL PLATE LOCATIONS. PERFORM PRE-LAYOUT PRIOR TO PLACEMENT IN PLASTIC CONCRETE. FOLLOW MANUFACTURER'S PRODUCT LIST AND INSTALLATION RECOMMENDATIONS.

FOR RADIAL DETECTABLE WARNING FIELD APPLICATIONS WHERE STANDARD RADIAL PLATES ARE NOT AVAILABLE AT AN INTERSECTION CURB RADIUS, A COMBINATION OF SQUARE OR RECTANGULAR PLATES AND RADIAL PLATES MAY BE USED TO FORM RADIAL CONFIGURATION. RADIAL WEDGE PLATES IN COMBINATION WITH SQUARE PLATES ARE ALSO ACCEPTABLE. FOLLOW MANUFACTURER'S RECOMMENDATIONS.

REFER TO CONTRACT AND STANDARD SPECIFICATIONS FOR FIELD CUTTING REQUIREMENTS.

DO NOT EMBED IN CONCRETE ANY FIELD-CUT PLATES WITH CUT EDGES SHORTER THAN 6 INCHES. CONSULT WITH MANUFACTURER FOR RE-DRILLING AND ANCHORING REQUIREMENTS OF FIELD-CUT PLATES.

(15) FIELD SAW CUTS ALONG RADIAL DETECTABLE WARNING PLATES WILL BE NECESSARY TO MATCH EACH CURB RAMP EDGE. AVOID CUTTING THROUGH DOMES WHENEVER POSSIBLE. MAKE FIELD CUTS TRUE TO LINE AND WITHIN ⅛" DEVIATION. SMOOTH EDGES OF FIELD CUT PLATES.

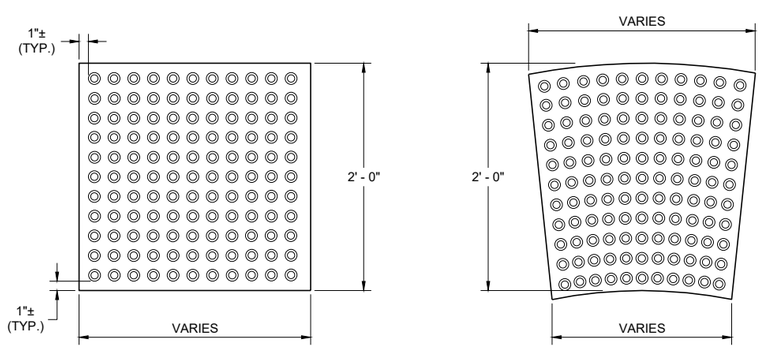

RECTANGULAR PLATES **RADIAL PLATES**

PLAN VIEW
DETECTABLE WARNING FIELDS (TYPICAL)

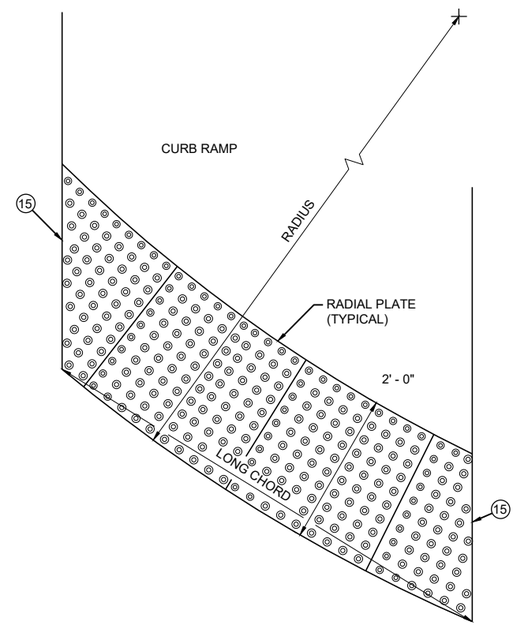

PLAN VIEW
RADIAL DETECTABLE WARNING FIELD ATTRIBUTES

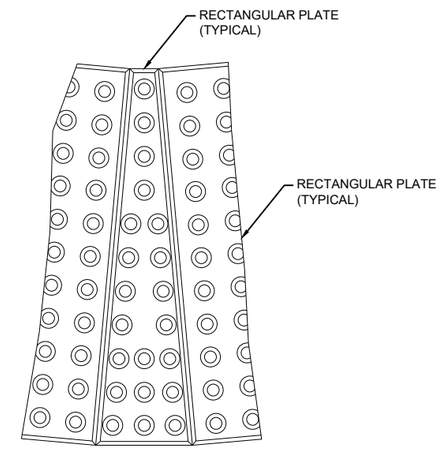

PLAN VIEW
RADIAL WEDGE PLATE CONNECTION DETAIL

6

6

SDD 08D05-21g

SDD 08D05-21g

CURB RAMPS
RECTANGULAR AND RADIAL DETECTABLE WARNING PLATES

STATE OF WISCONSIN
DEPARTMENT OF TRANSPORTATION

APPROVED
July 2023 — DATE
/S/ Rodney Taylor — ROADWAY STANDARDS DEVELOPMENT UNIT SUPERVISOR
FHWA

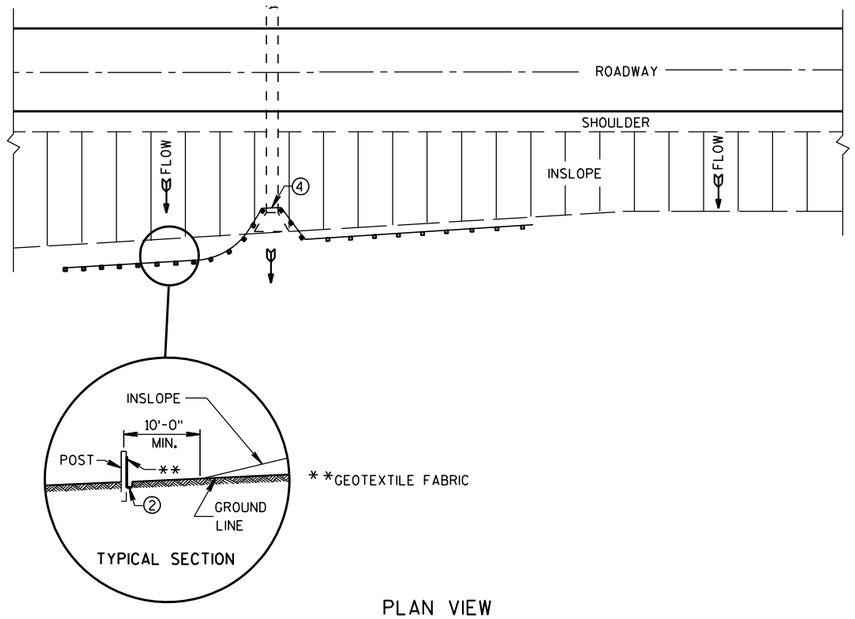

PLAN VIEW

TYPICAL APPLICATION OF SILT FENCE

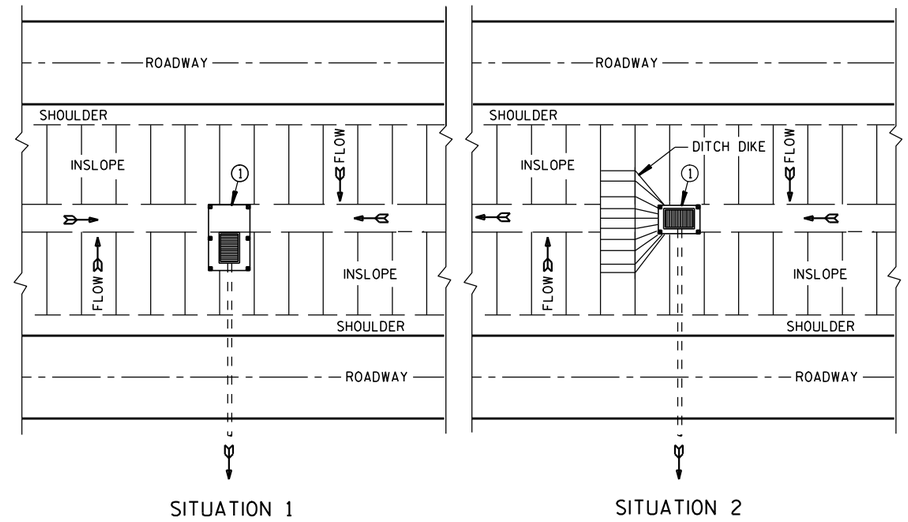

PLAN VIEW

SILT FENCE AT MEDIAN SURFACE DRAINS

GENERAL NOTES

DETAILS OF CONSTRUCTION NOT SHOWN ON THIS DRAWING SHALL CONFORM TO THE PERTINENT REQUIREMENTS OF THE STANDARD SPECIFICATIONS AND APPLICABLE SPECIAL PROVISIONS.

① HORIZONTAL BRACE REQUIRED WITH 2" X 4" WOODEN FRAME OR EQUIVALENT AT TOP OF POSTS.

② FOR MANUAL INSTALLATIONS THE TRENCH SHALL BE A MINIMUM OF 4" WIDE & 6" DEEP TO BURY AND ANCHOR THE GEOTEXTILE FABRIC. FOLD MATERIAL TO FIT TRENCH AND BACKFILL & COMPACT TRENCH WITH EXCAVATED SOIL.

③ WOOD POSTS SHALL BE A MINIMUM SIZE OF 1⅛" X 1⅛" OF OAK OR HICKORY.

④ SILT FENCE TO EXTEND ACROSS THE TOP OF THE PIPE.

⑤ CONSTRUCT SILT FENCE FROM A CONTINUOUS ROLL IF POSSIBLE BY CUTTING LENGTHS TO AVOID JOINTS. IF A JOINT IS NECESSARY USE ONE OF THE FOLLOWING TWO METHODS; A) OVERLAP THE END POSTS AND TWIST, OR ROTATE, AT LEAST 180 DEGREES, B) HOOK THE END OF EACH SILT FENCE LENGTH.

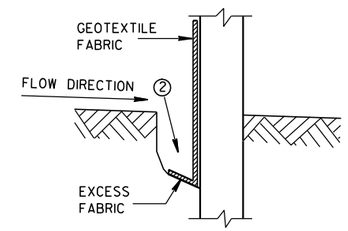

TRENCH DETAIL

NOTE: ADDITIONAL POST DEPTH OR TIE BACKS MAY BE REQUIRED IN UNSTABLE SOILS

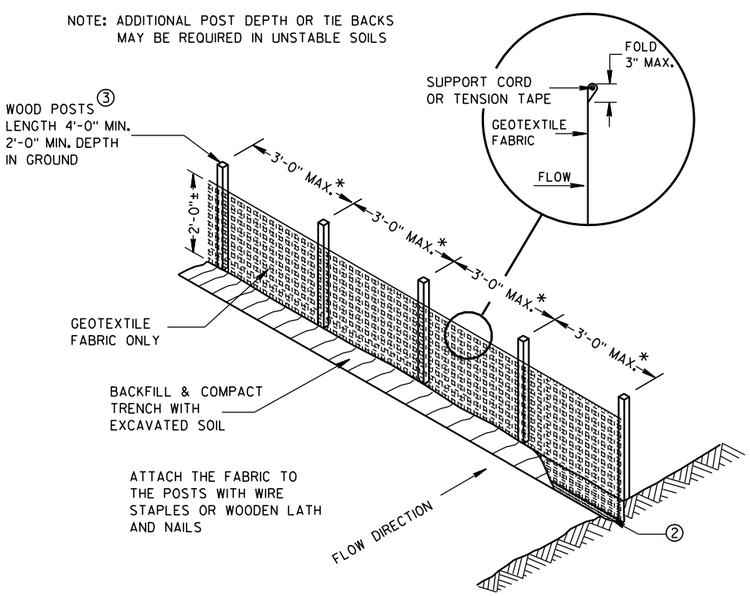

*NOTE: 8'-0" POST SPACING ALLOWED IF A WOVEN GEOTEXTILE FABRIC IS USED.

SILT FENCE

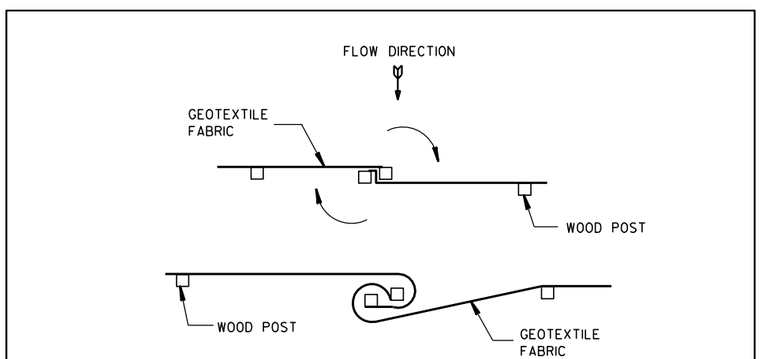

TWIST METHOD

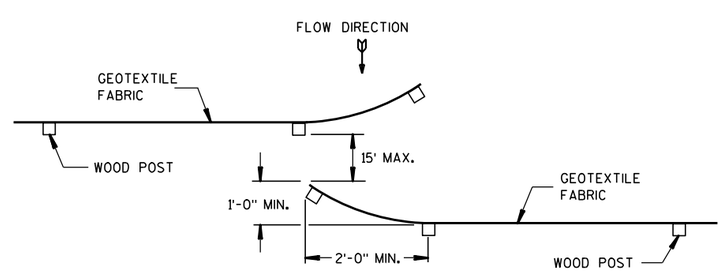

HOOK METHOD

JOINING TWO LENGTHS OF SILT FENCE ⑤

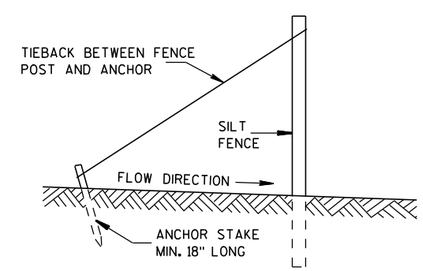

SILT FENCE TIE BACK

(WHEN REQUIRED BY THE ENGINEER)

SILT FENCE
STATE OF WISCONSIN DEPARTMENT OF TRANSPORTATION
APPROVED 4-29-05 /S/ Beth Cann----- DATE CHIEF ROADWAY DEVELOP ENGINEER FHWA

6

6

S.D.D. 8 E 9-6

S.D.D. 8 E 9-6

METAL APRON ENDWALLS

PIPE DIA. (IN.)	MIN. THICK. (Inches) STEEL	MIN. THICK. (Inches) ALUM.	DIMENSIONS (Inches) A (±1")	B (MAX.)	H (±1")	L (±1 1/2")	L1 ①	L2 ①	W (±2")	APPROX. SLOPE	BODY
12	.064	.060	6	6	6	21	12	17 1/2	24	2 1/2 to 1	1 Pc.
15	.064	.060	7	8	6	26	14	21 3/4	30	2 1/2 to 1	1 Pc.
18	.064	.060	8	10	6	31	15	28 1/4	36	2 1/2 to 1	1 Pc.
21	.064	.060	9	12	6	36	18	29 5/8	42	2 1/2 to 1	1 Pc.
24	.064	.075	10	13	6	41	18	37 1/4	48	2 1/2 to 1	1 Pc.
30	.079	.075	12	16	8	51	18	52 1/4	60	2 1/2 to 1	1 Pc.
36	.079	.105	14	19	9	60	24	59 3/4	72	2 1/2 to 1	2 Pc.
42	.109	.105	16	22	11	69	24	75 5/8	84	2 1/2 to 1	2 Pc.
48	.109	.105	18	27	12	78	24	81	90	2 1/4 to 1	3 Pc.
54	.109	.105	18	30	12	84	30	85 1/2	102	2 1/4 to 1	3 Pc.
60	.109×	.105×	18	33	12	87	—	—	114	2 to 1	3 Pc.
66	.109×	.105×	18	36	12	87	—	—	120	2 to 1	3 Pc.
72	.109×	.105×	18	39	12	87	—	—	126	2 to 1	3 Pc.
78	.109×	.105×	18	42	12	87	—	—	132	1 1/2 to 1	3 Pc.
84	.109×	.105×	18	45	12	87	—	—	138	1 1/2 to 1	3 Pc.
90	.109×	.105×	18	37	12	87	—	—	144	1 1/2 to 1	3 Pc.
96	.109×	.105×	18	35	12	87	—	—	150	1 1/2 to 1	3 Pc.

× EXCEPT CENTER PANEL
SEE GENERAL NOTES

REINFORCED CONCRETE APRON ENDWALLS

PIPE DIA. (IN.)	DIMENSIONS (Inches) T	A	B	C	D	E	G	APPROX. SLOPE
12	2	4	24	48 7/8	72 7/8	24	2	3 to 1
15	2 1/4	6	27	46	73	30	2 1/4	3 to 1
18	2 1/2	9	27	46	73	36	2 1/2	3 to 1
21	2 3/4	9	36	37 1/2	73 1/2	42	2 3/4	3 to 1
24	3	9 1/2	43 1/2	30	73 1/2	48	3	3 to 1
27	3 1/4	10 1/2	49 1/2	24	73 1/2	54	3 1/4	3 to 1
30	3 1/2	12	54	19 3/4	73 1/2	60	3 1/2	3 to 1
36	4	15	63	34 3/4	97 3/4	72	4	3 to 1
42	4 1/2	21	63	35	98	78	4 1/2	3 to 1
48	5	24	72	26	98	84	5	3 to 1
54	5 1/2	27	65	*33 1/4-**35	*98 1/4-**100	90	5 1/2	2 2/5 to 1
60	6	*30-**35	60	39	99	96	5	2 to 1
66	6 1/2	*24-**30	*72-**78	*21-**27	99	102	5 1/2	2 to 1
72	7	*24-**36	78	21	99	108	6	2 to 1
78	7 1/2	*24-**36	78	21	99	114	6 1/2	2 to 1
84	8	36	90 1/2	21	111 1/2	120	6 1/2	1 1/2 to 1
90	8 1/2	41	87 1/2	24	111 1/2	132	6 1/2	1 1/2 to 1

*MINIMUM
**MAXIMUM

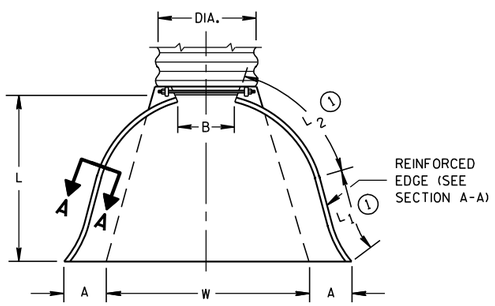

PLAN VIEW

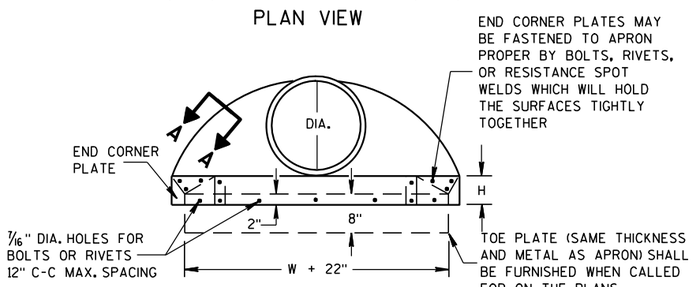

END VIEW

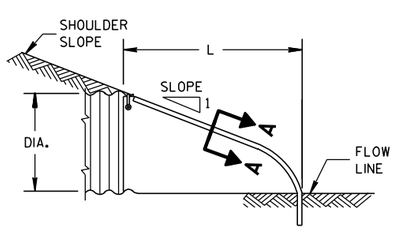

SIDE ELEVATION

METAL ENDWALLS

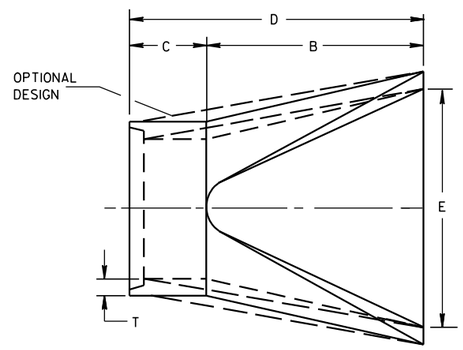

PLAN

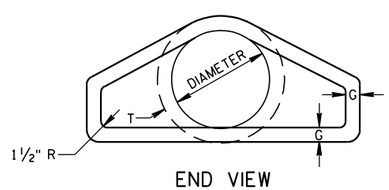

END VIEW

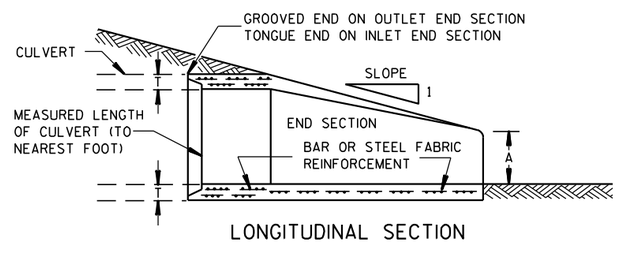

LONGITUDINAL SECTION

CONCRETE ENDWALLS

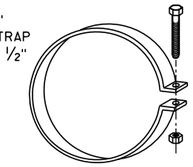

ALTERNATE FOR TYPE 1 CONNECTION

END SECTION CONNECTOR STRAP

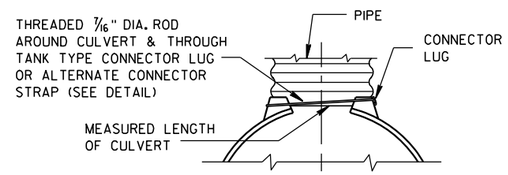

TYPE 1
FOR 12" THRU 24" CORR. PIPE

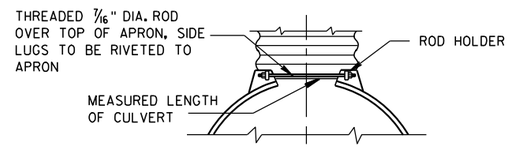

TYPE 2
FOR 30" THRU 96" CORR. PIPE

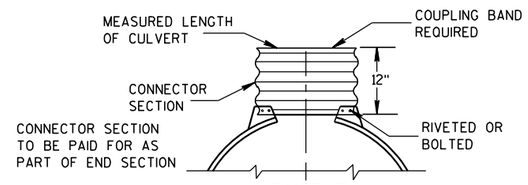

TYPE 3
FOR 42" THRU 96" CORR. PIPE

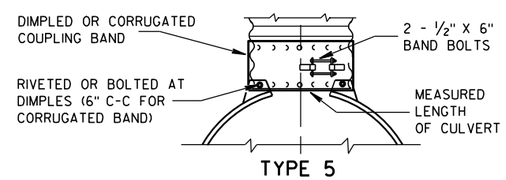

TYPE 5
ALTERNATE FOR:
ALL SIZES CORRUGATED CIRCULAR PIPE

NOTE: DIMPLED BAND FITS OVER OUTSIDE OF ENDWALL, AND CORRUGATED BAND FITS INSIDE ENDWALL. DIMPLED BAND MAY BE USED WITH HELICALLY CORRUGATED PIPE.

FOR CIRCUMFERENTIALLY CORRUGATED PIPE USE ENDWALL CONNECTION DETAILS 1, 2, 3 OR 5 AS APPLICABLE.

FOR HELICALLY CORRUGATED PIPE USE ENDWALL CONNECTION DETAILS 1, 2 OR 5.

FOR HELICALLY CORRUGATED PIPES WITH TWO CIRCUMFERENTIAL CORRUGATIONS AT EACH END USE ENDWALL CONNECTION DETAILS 1, 2 OR 3.

CONNECTION DETAILS

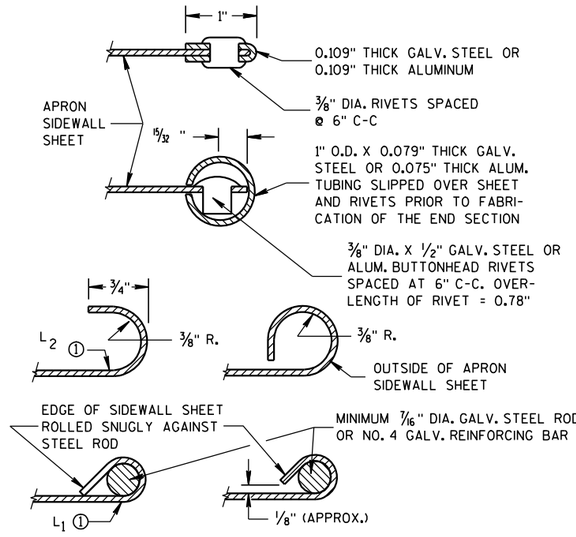

SECTION A-A

GENERAL NOTES

DETAILS OF CONSTRUCTION, MATERIALS AND WORKMANSHIP NOT SHOWN ON THIS DRAWING SHALL CONFORM TO THE PERTINENT REQUIREMENTS OF THE STANDARD SPECIFICATIONS AND THE APPLICABLE SPECIAL PROVISIONS.

CONCRETE CULVERT ENDWALLS MAY NOT BE USED WITH GALVANIZED STEEL OR ALUMINUM CULVERT PIPE OR VISE VERSA. GALVANIZED STEEL OR ALUMINUM ENDWALLS SHALL NORMALLY BE INSTALLED ON CULVERT PIPE OF THE SAME METAL.

ALL THREE PIECE STEEL APRON ENDWALLS FOR 60" DIAMETER PIPE AND LARGER SHALL HAVE 0.109" SIDES AND 0.138" CENTER PANELS. ALL THREE PIECE ALUMINUM APRON ENDWALLS FOR 60" DIAMETER PIPE AND LARGER SHALL HAVE 0.105" SIDES AND 0.134" CENTER PANELS. THE WIDTH OF CENTER PANELS SHALL BE GREATER THAN 20 PERCENT OF THE PIPE PERIMETER.

LAP SEAMS SHALL BE TIGHTLY JOINED BY GALVANIZED RIVETS OR BOLTS FOR STEEL UNITS AND ALUMINUM RIVETS AND BOLTS FOR ALUMINUM UNITS. FOR THE 60" THROUGH 96" DIAMETER APRON ENDWALL SIZES, THE REINFORCED EDGES AND CENTER PANEL SEAMS SHALL BE FURTHER REINFORCED WITH GALVANIZED STEEL OR ALUMINUM STIFFENER ANGLES. THE ANGLES SHALL BE ATTACHED BY GALVANIZED NUTS AND BOLTS FOR STEEL UNITS AND ALUMINUM NUTS AND BOLTS FOR ALUMINUM UNITS.

WHERE TWO OR MORE PIPES WITH APRON ENDWALLS ARE LAID ADJACENT TO EACH OTHER, THEY SHALL BE SEPARATED BY A DISTANCE SUFFICIENT TO PROVIDE A MINIMUM CLEARANCE OF 6 INCHES BETWEEN APRON ENDWALLS.

① FOR PIPE SIZES UP TO 60" DIAMETER, A 180° ROLLED EDGE MAY BE USED INSTEAD OF STEEL ROD REINFORCEMENT. SEE SECTION A-A.

APRON ENDWALLS FOR CULVERT PIPE

STATE OF WISCONSIN
DEPARTMENT OF TRANSPORTATION

APPROVED
11/30/94 — DATE
/S/ Rory L. Rhinesmith — CHIEF ROADWAY DEVELOPMENT ENGINEER
FHWA

GENERAL NOTES

SDD 13A5, SHEET "b" SHOWS THE LOCATION OF THE RUMBLE STRIPS AT RAMP AND GORE LOCATIONS.

RUMBLE STRIPS ON EXPRESSWAYS:
DO NOT INSTALL SHOULDER RUMBLE STRIPS ACROSS SIDE ROAD INTERSECTIONS, COMMERCIAL AND PRIVATE DRIVEWAYS, ADJACENT TO RIGHT TURN LANES, LEFT TURN LANES, TURN LANE TAPERS, 25' IN ADVANCE OF BRIDGE DECKS, 25' IN ADVANCE OF BRIDGE APPROACHES, OR 100 FEET IN ADVANCE OF RAILROAD CROSSINGS.

(1) CONCRETE PAVEMENT - RUMBLE STRIPS SHALL BE A MINIMUM OF 6 INCHES AWAY FROM TRANSVERSE JOINTS.

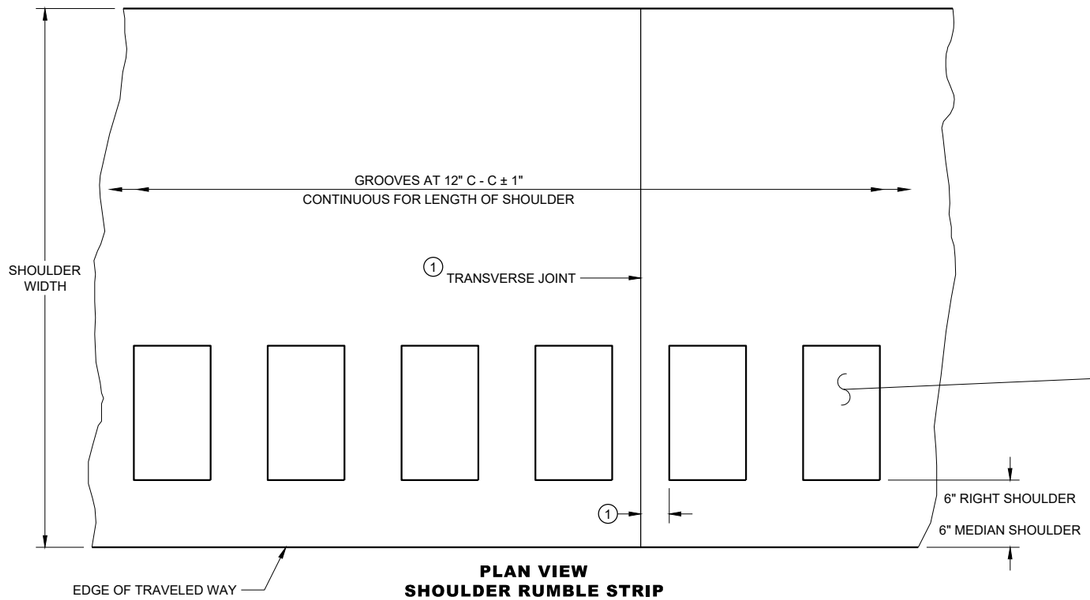

PLAN VIEW
SHOULDER RUMBLE STRIP

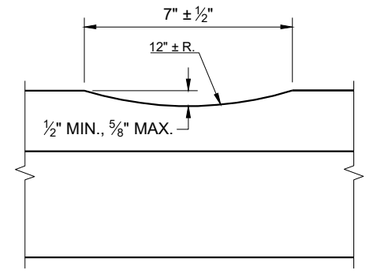

SECTION A - A

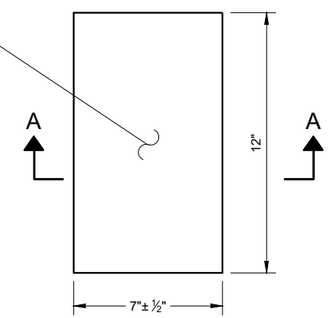

PLAN VIEW
(SINGLE GROOVE)

PLACEMENT DETAIL FOR RUMBLE STRIP

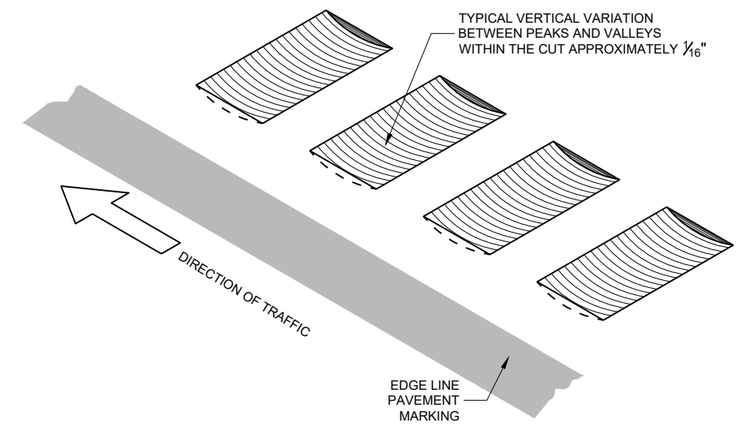

ISOMETRIC

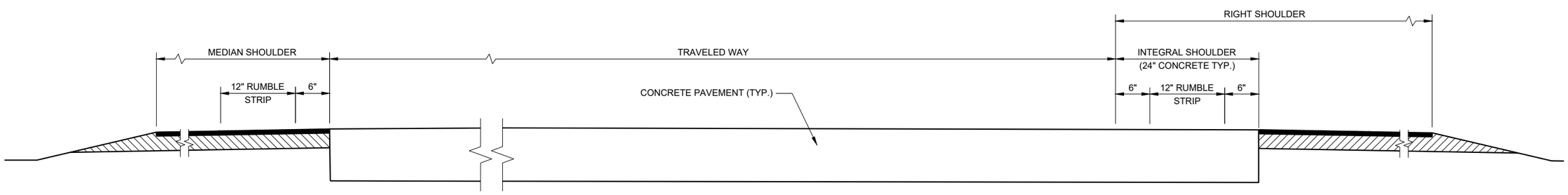

SECTION VIEW

TYPICAL SHOULDER RUMBLE STRIPS
(ONE ROADWAY IS SHOWN)

SHOULDER RUMBLE STRIPS, DIVIDED ROADWAY

STATE OF WISCONSIN
DEPARTMENT OF TRANSPORTATION

6
SDD 13A05-06a

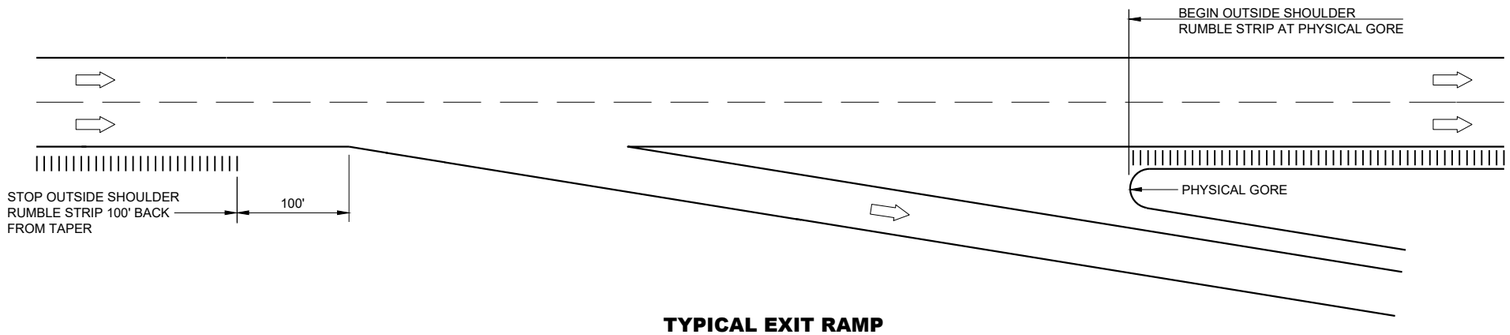

TYPICAL EXIT RAMP

GENERAL NOTES

NO RUMBLE STRIP ON EXIT, DIRECTIONAL OR ENTRANCE RAMPS, EXCEPT NEAR THE ENTRANCE TAPER END AND ALONG THE PARALLEL RAMP AREA AS SHOWN.

RUMBLE STRIPS ON EXPRESSWAYS:
DO NOT INSTALL SHOULDER RUMBLE STRIPS ACROSS SIDE ROAD INTERSECTIONS, COMMERCIALAND PRIVATE DRIVEWAYS, ADJACENT TO RIGHT TURN LANES, LEFT TURN LANES, TURN LANE TAPERS, 25' IN ADVANCE OF BRIDGE DECKS, 25' IN ADVANCE OF BRIDGE APPROACHES, OR 100 FEET IN ADVANCE OF RAILROAD CROSSINGS.

LEGEND

DIRECTION OF TRAFFIC

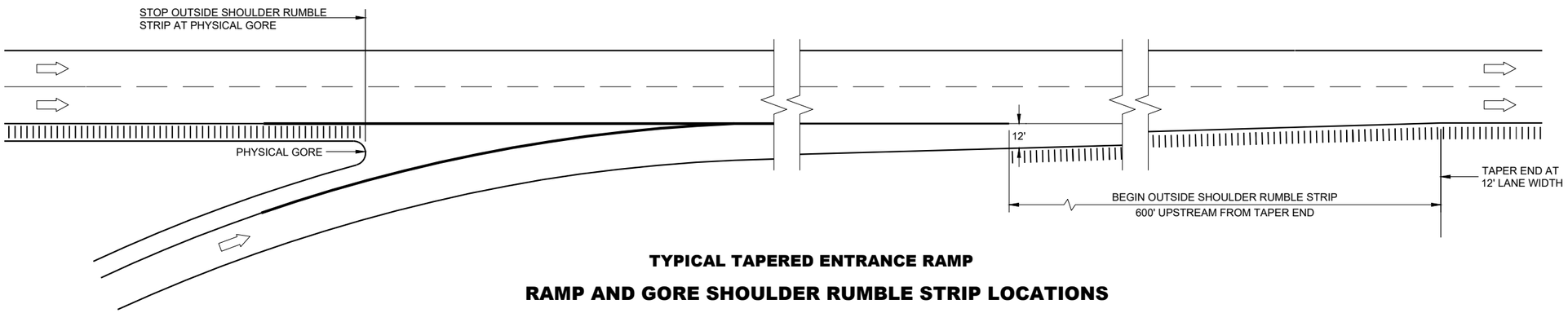

TYPICAL TAPERED ENTRANCE RAMP

RAMP AND GORE SHOULDER RUMBLE STRIP LOCATIONS

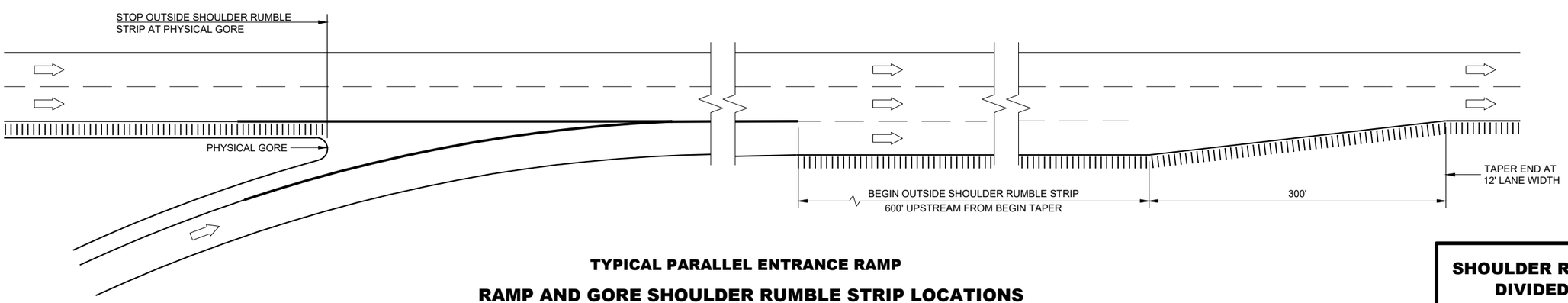

TYPICAL PARALLEL ENTRANCE RAMP

RAMP AND GORE SHOULDER RUMBLE STRIP LOCATIONS

SHOULDER RUMBLE STRIPS, DIVIDED ROADWAY

STATE OF WISCONSIN
DEPARTMENT OF TRANSPORTATION

APPROVED
May 2023 — DATE
/S/ Rodney Taylor — ROADWAY DESIGN STANDARDS UNIT SUPERVISOR
FHWA

6
SDD 13A05-06b

GENERAL NOTES

SAW CUT, DRILL, AND LIFT OUT EXISTING CONCRETE PAVEMENT WITHIN THE BOUNDARIES OF CONCRETE REPAIR AREAS. THE CONTRACTOR MAY MAKE ADDITIONAL SAW CUTS INSIDE THE REPAIR LIMITS TO REDUCE WEIGHT AND SIZE OF CONCRETE PIECES.

PROVIDE A 6 FOOT MINIMUM DISTANCE FROM BOUNDARIES OF CONCRETE REPAIR AREA TO ADJACENT TRANSVERSE JOINT OR CRACK.

THE LENGTH OF THE REPAIRS MAY VARY FROM THE DIMENSIONS SHOWN IF THE EXISTING CONCRETE PAVEMENT IS NON-DOWELED AND THE PAVEMENT IS TO BE OVERLAID AFTER REPAIRING.

(1) DOWEL BARS MAY NOT BE PRESENT.

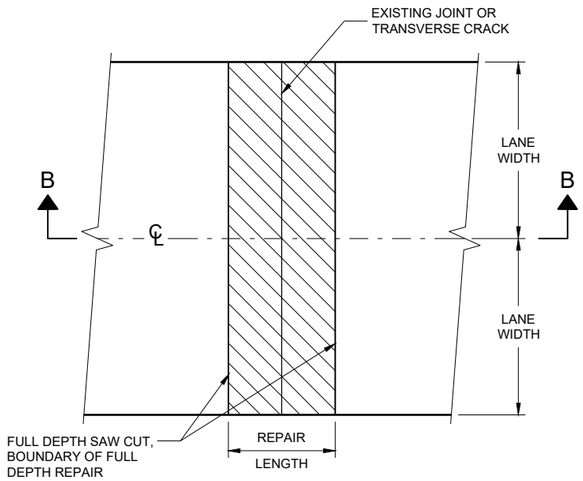

PLAN VIEW
DOUBLE LANE REPAIR

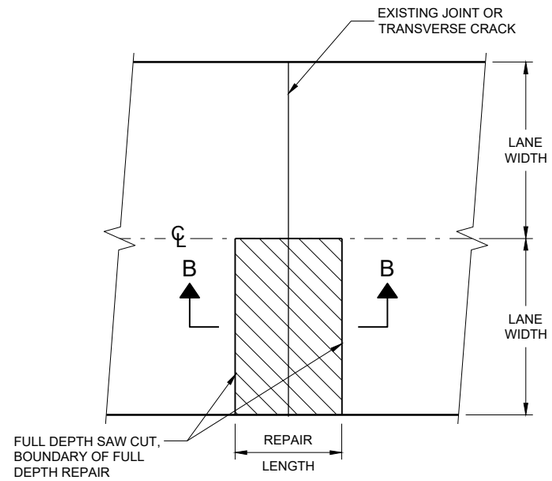

PLAN VIEW
SINGLE LANE REPAIR

FULL DEPTH CONCRETE PAVEMENT REMOVAL

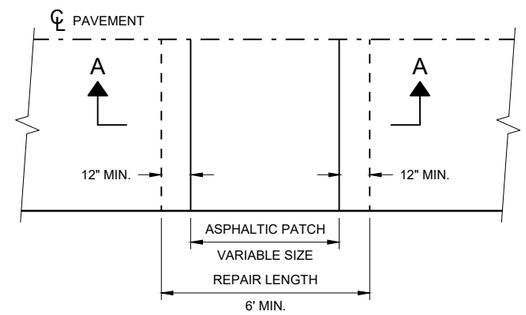

PLAN VIEW

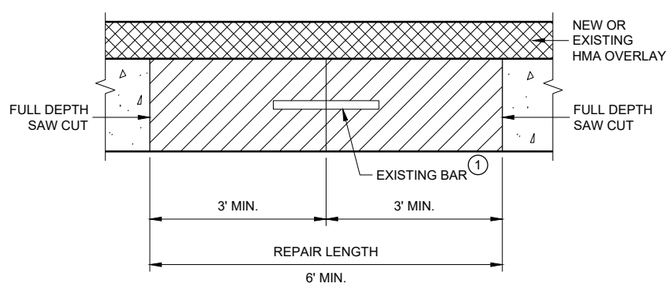

SECTION B - B
CONCRETE REMOVAL

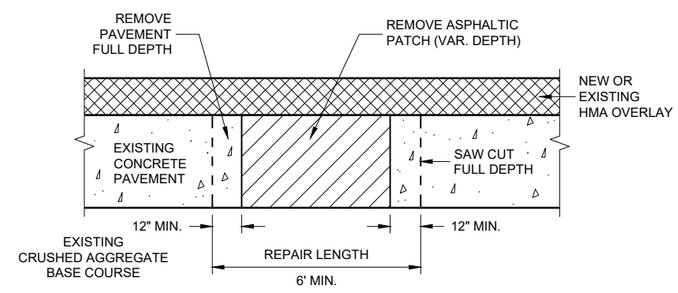

SECTION A - A

HMA PATCH REMOVAL

6

6

BASE PATCHING CONCRETE

STATE OF WISCONSIN
DEPARTMENT OF TRANSPORTAT

SDD 13C14 - 07a

SDD 13C14 - 07a

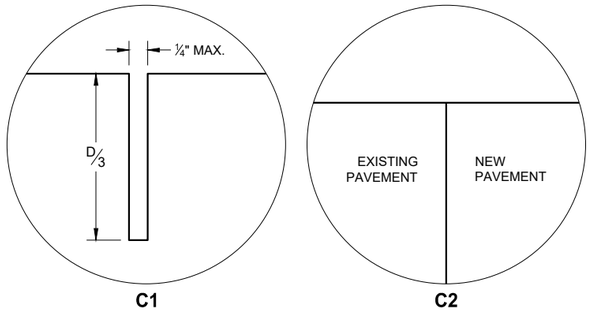

TRANSVERSE JOINTS

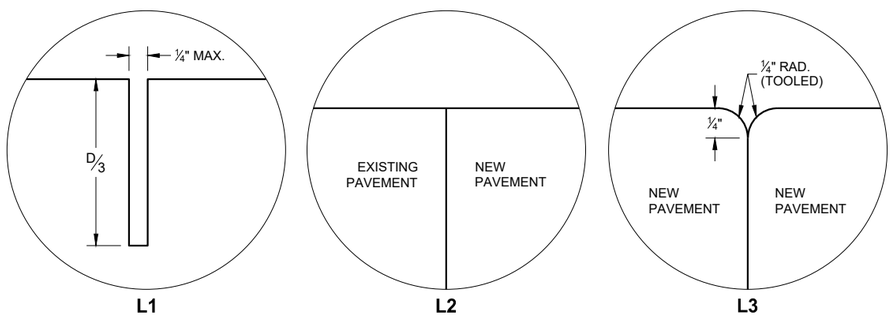

LONGITUDINAL JOINTS

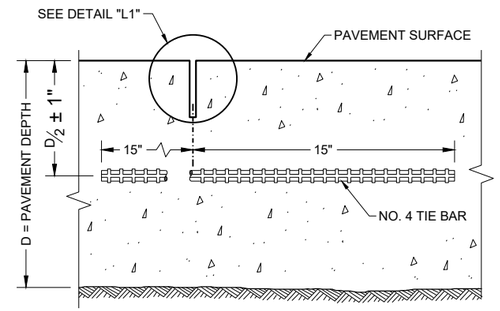

SECTION C - C

SAWED LONGITUDINAL JOINT

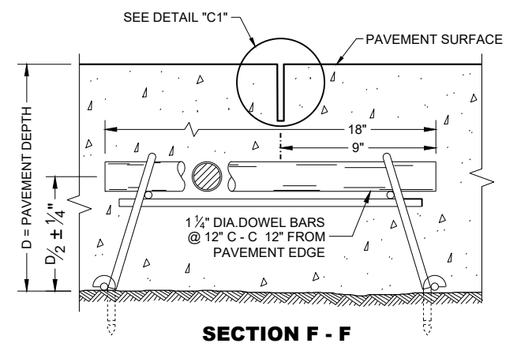

SECTION F - F

CONTRACTION JOINT

GENERAL NOTES

INSTALL DOWEL BARS PARALLEL TO THE PAVEMENT CENTERLINE AND PAVEMENT SURFACE.

CONCRETE BASE PATCHES OF EXISTING NON-DOWELED CONCRETE PAVEMENTS DO NOT NEED TO BE DOWELED.

ANCHOR DOWEL BARS AND TIE BARS INTO DRILLED HOLES WITH AN EPOXY.

PROVIDE A MINIMUM DISTANCE OF 15 INCHES FROM ALL TRANSVERSE JOINTS OR EDGES OF REPLACEMENT TO THE CENTER OF THE TIE BAR NEAREST THAT JOINT O EDGE.

(1) APPLY A THIN UNIFORM COATING OF SURFACE TREATMENT TO THE FREE END OF DOWEL BARS TO PREVENT BONDING.

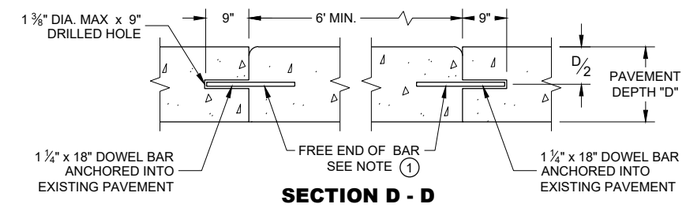

SECTION D - D

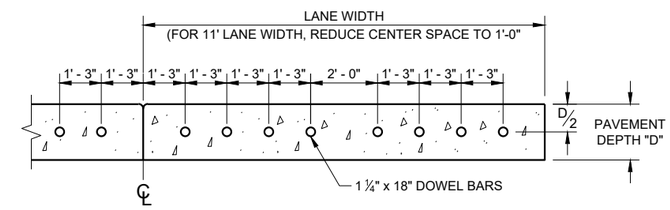

SECTION E - E

SPACING OF DOWEL BARS ANCHORED INTO EXISTING PAVEMENT

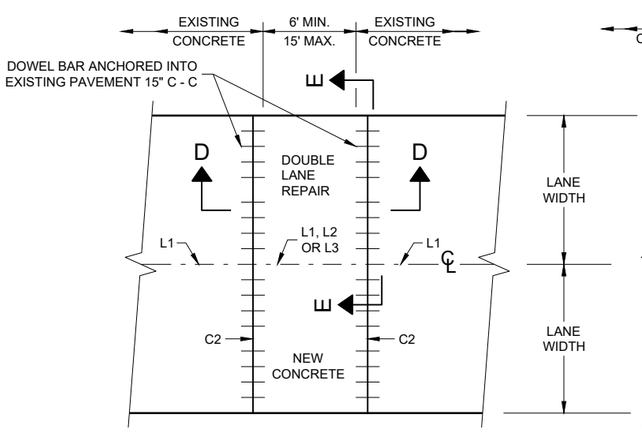

PLAN VIEW

MULTILANE CONCRETE BASE PATCH 15' MAXIMUM LENGTH

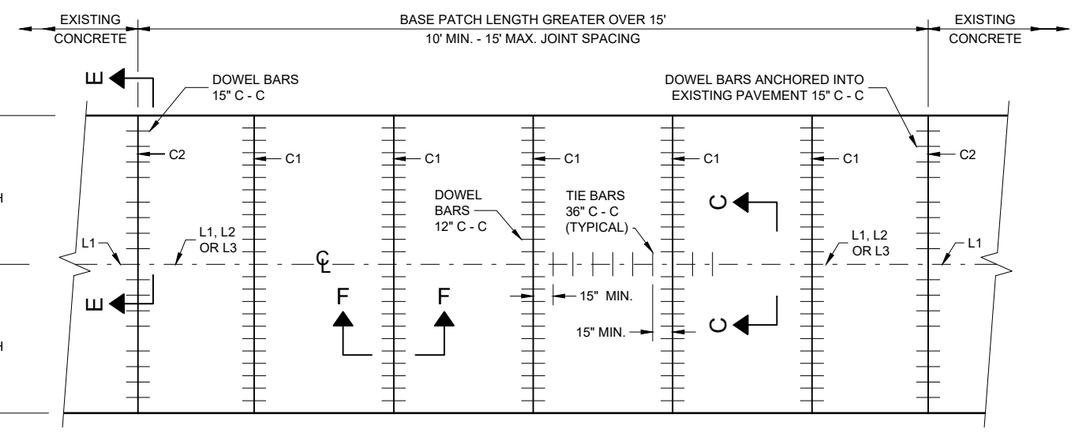

PLAN VIEW

MULTILANE CONCRETE BASE PATCH GREATER THAN 15' IN LENGTH

BASE PATCHING CONCRETE

STATE OF WISCONSIN
DEPARTMENT OF TRANSPORTAT

6

SDD 13C14 - 07b

GENERAL NOTES

1. WITH THE APPROVAL OF THE ENGINEER, FOR SINGLE LANE PAVEMENT REPLACEMENTS LESS THAN 30 FEET IN LENGTH, THE CONTRACTOR MAY INSTALL DRILLED TIE BARS ON 6:1 SKEW HORIZONTALLY, DIRECTION OF SKEW ALTERNATING WITH EACH SUCCESSIVE BAR. DRIVE SKEWED TIE BARS TO A DEPTH OF 6 INCHES IN A HOLE OF SUCH A DIAMETER AS TO PROVIDE A TIGHT DRIVEN FIT.
2. USE AN ENGINEER APPROVED BOND BREAKER (E.G. RELEASE AGENT, CURING COMPOUND) FOR SINGLE LANE REPAIRS UP TO 15 FEET IN LENGTH.
3. ANCHOR TIE BARS INTO DRILLED HOES WITH AN EPOXY.

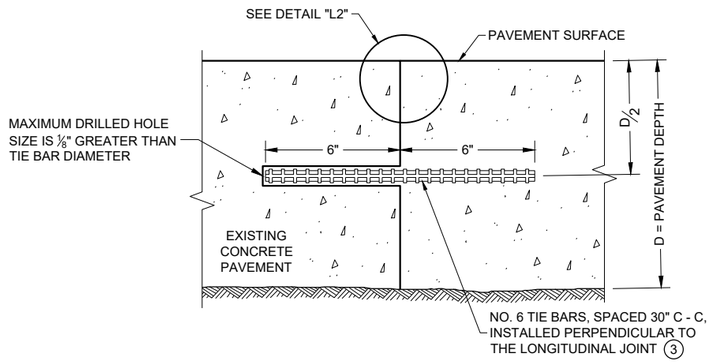

SECTION G - G

TIE BARS ANCHORED INTO EXISTING PAVEMENT

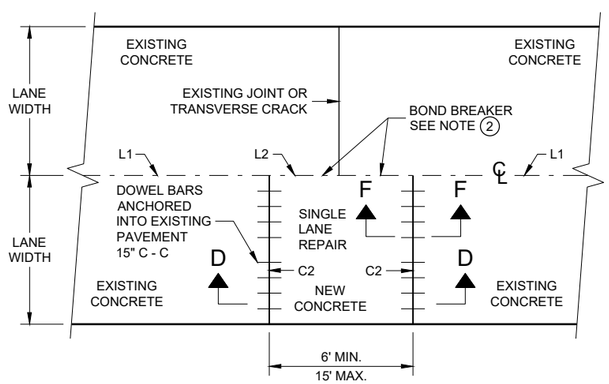

PLAN VIEW

SINGLE LANE CONCRETE BASE PATCH
15' MAXIMUM LENGTH

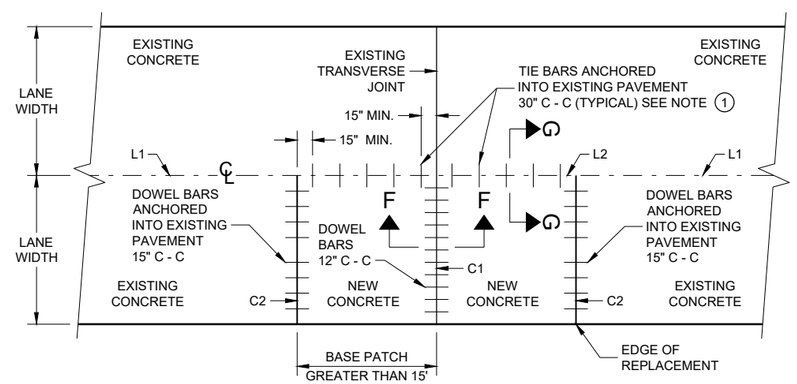

PLAN VIEW

SINGLE LANE CONCRETE BASE PATCH
GREATER THAN 15' LENGTH

BASE PATCHING CONCRETE

STATE OF WISCONSIN
DEPARTMENT OF TRANSPORTATION

APPROVED
March 2018 — DATE
/S/ Peter Kemp, P.E. — PAVEMENT SUPERVISOR
FHWA

6
SDD 13C14 - 07c

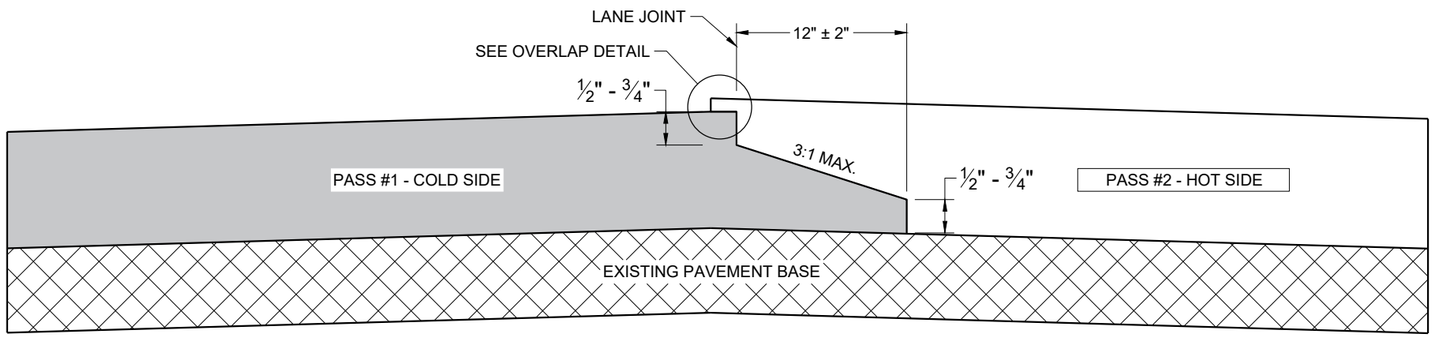

TYPICAL PAVEMENT CROSS SECTION
NOTCHED WEDGE JOINT

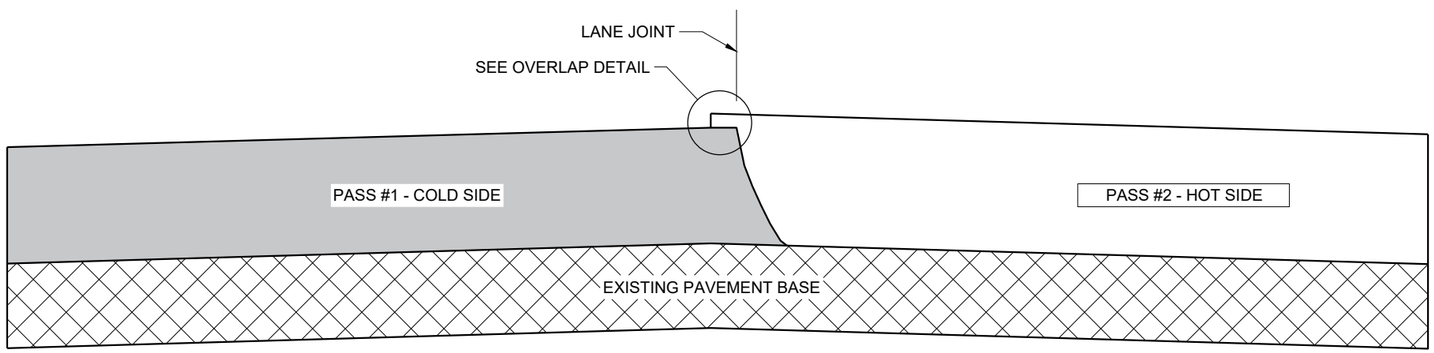

TYPICAL PAVEMENT CROSS SECTION
VERTICAL JOINT

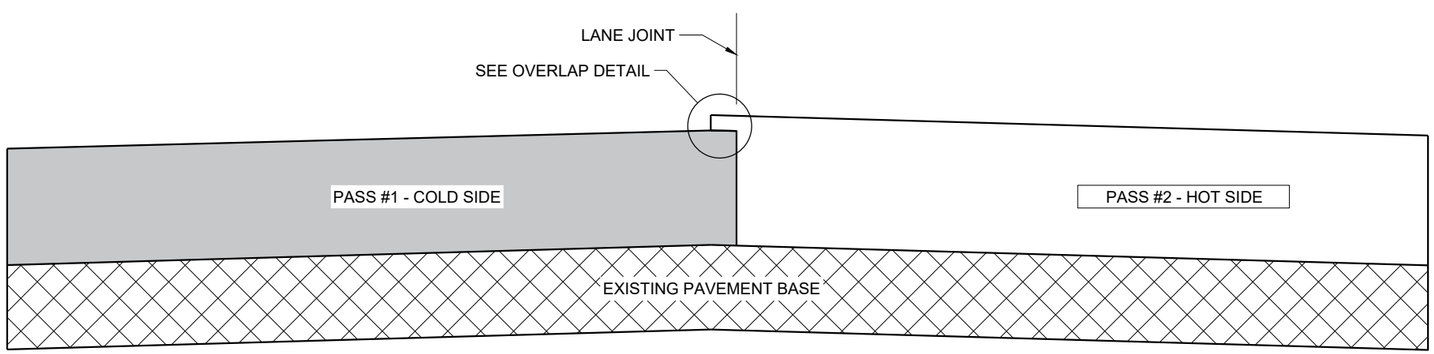

TYPICAL PAVEMENT CROSS SECTION
VERTICAL JOINT (MILLED)

GENERAL NOTES

IN ADDITION TO THE DETAILS PROVIDED IN THIS DRAWING, CONFORM TO STANDARD SPECIFICATION 450.3.2.8 FOR WHEN A NOTCHED WEDGE JOINT IS REQUIRED AND FOR GENERAL JOINT CONSTRUCTION REQUIREMENTS.

FOR ALL LONGITUDINAL JOINTS, ENSURE THE PAVER SCREED OVERLAPS THE PREVIOUSLY PLACED PAVEMENT BY 1" ± 0.5" AND THE HOT SIDE OF THE JOINT REMAINS HIGHER THAN THE COLD SIDE BY APPROXIMATELY 0.1" AFTER FINAL COMPACTION. (IT WILL BE FLUSH WHEN PAVING IN ECHELON.)

ONLY REMOVE THE LONGITUDINAL NOTCHED WEDGE JOINT FOR SMA PAVEMENT OR AS DIRECTED BY THE ENGINEER TO ADDRESS SPECIFIC LENGTHS OF JOINT DAMAGED BY TRAFFIC.

WHEN MILLING BACK OR REMOVING ANY LONGITUDINAL JOINT, LIMIT THE MATERIAL REMOVED TO 2" FROM THE TOP NOTCH OR FROM THE VERTICAL JOINT EDGE ON THE COLD SIDE OF THE JOINT.

USE LONGITUDINAL MILLED JOINT AS PLANS SHOW OR THE AS THE ENGINEER DIRECTS.

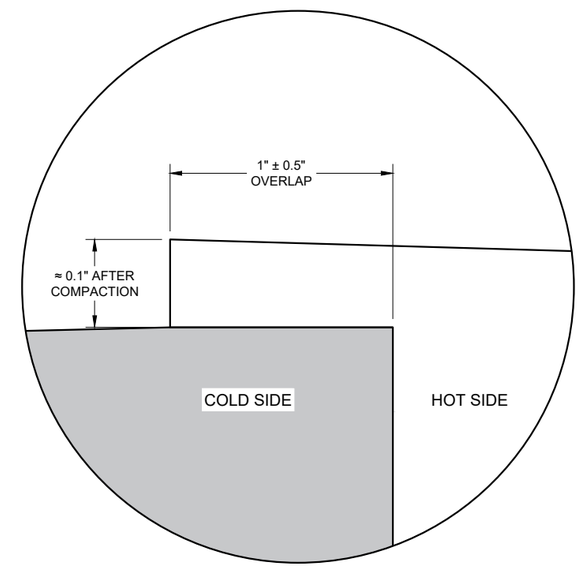

OVERLAP DETAIL (TYPICAL)

6

6

SDD 13C19 - 03

SDD 13C19 - 03

HMA LONGITUDINAL JOINTS

STATE OF WISCONSIN
DEPARTMENT OF TRANSPORTATION

APPROVED
November 2020 /S/ Steven Hefel
DATE HMA PAVEMENT ENGIN
FHWA

1. WOOD OR STEEL POSTS (w6X9 OR w6X8.5) MAY BE USED. DO NOT INTERMIX WOOD AND STEEL POSTS. INSTALL STEEL POSTS WITH HOLES ON APPROACHING TRAFFIC SIDE.
2. USE WOOD OR APPROVED PLASTIC BLOCKOUTS. WOOD BLOCKOUTS MAY BE CONSTRUCTED OUT OF TWO OR MORE WOOD BLOCKOUTS. SEE ALTERNATE WOOD BLOCKOUT DETAIL. DIMENSIONS OF APPROVED PLASTIC BLOCKOUTS MAY VARY.
3. IF ROCK IS ENCOUNTERED DURING EXCAVATION, PROVIDE A HOLE 12 INCHES IN DIAMETER EXTENDING 20 INCHES DEEP INTO THE ROCK. PLACE APPROXIMATELY 2 1/2" INCHES OF GRANULAR MATERIAL IN THE BOTTOM OF THE HOLE. CUT THE POSTS THE TO LENGTH AMD INSTALL. BACKFILL WITH EXCAVATED MATERIAL AND COMPACT. BACKFILL IS TO BE FREE OF LARGE ROCKS.
4. WHEN THE DISTANCE FROM BACK OF POST TO SHOULDER HINGE POINT IS LESS THAN 2 FEET INSTALL LONGER POST AT HALF POST SPACING (K).
5. FOR NEW MGS INSTALLATION TOP OF W-BEAM RAIL TOLERANCE IS ±1". FOR EXISTING MGS INSTALLATION TOP OF W-BEAM IS BETWEEN 27 ¾" TO 32".
6. WHEN USING STEEL POST AND WOOD BLOCKOUTS INSTALL FOUR 16D GALVANIZED NAILS. INSTALL NAILS AT THE BACK CORNERS OF THE BLOCK AND BEND THE NAILS OVER THE FLANGE OF THE STEEL POST.
7. TOTAL POST LENGTH FOR TYPE K IS 7' - 0". TOTAL POST LENGTH FOR OTHER MGS TYPES IS 6' - 0".

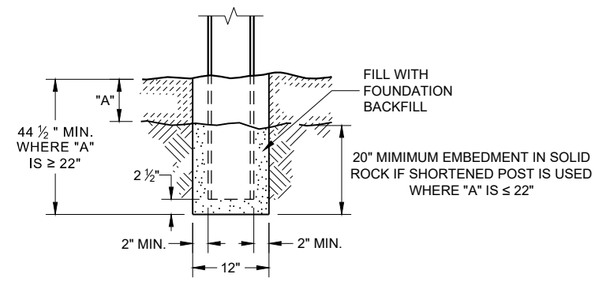

END VIEW
SETTING STEEL OR WOOD POST IN ROCK (3)

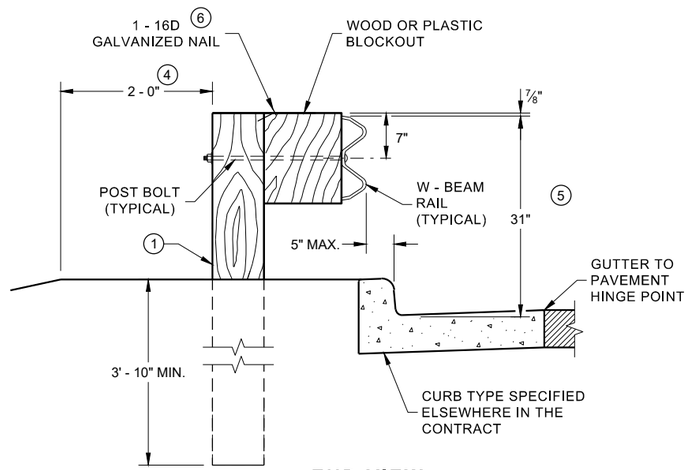

END VIEW
LOCATED ALONG A CURBED ROADWAY

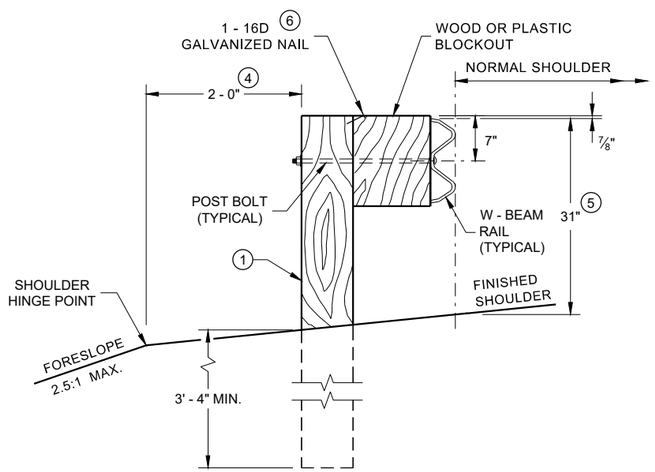

END VIEW
LOCATED ALONG A ROADWAY SHOULDER STANDARD INSTALLATION

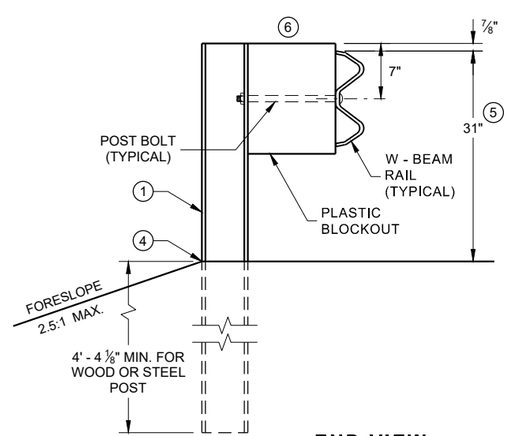

END VIEW
MGS LONGER POST AT HALFPOST SPACING W BEAM (K)

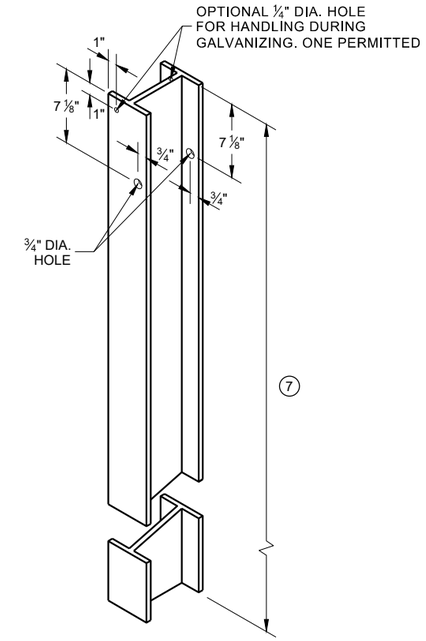

STEEL POST & HOLE PUNCHING DETAIL (W 6 X 9) (1)

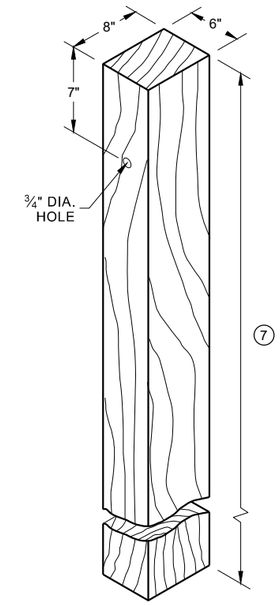

WOOD POST (6" X 8") NOMINAL (1)

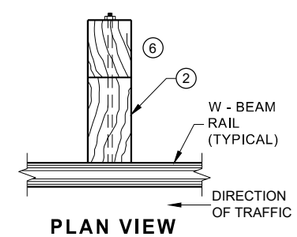

PLAN VIEW WOOD POST, BLOCKOUT & BEAM

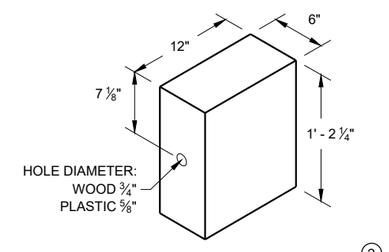

WOOD OR PLASTIC BLOCKOUT (2)

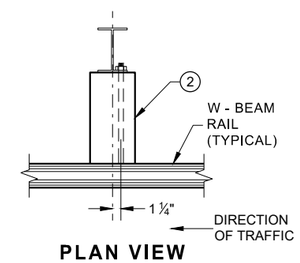

PLAN VIEW STEEL POST, PLASTIC BLOCKOUT & BEAM

MIDWEST GUARDRAIL SYSTEM (MGS) GUARDRAIL

STATE OF WISCONSIN
DEPARTMENT OF TRANSPORTA

6

SDD 14B42 - 07a

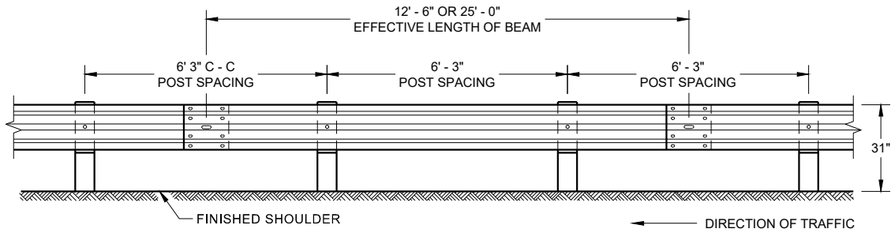

FRONT VIEW
POST SPACING STANDARD INSTALLATION

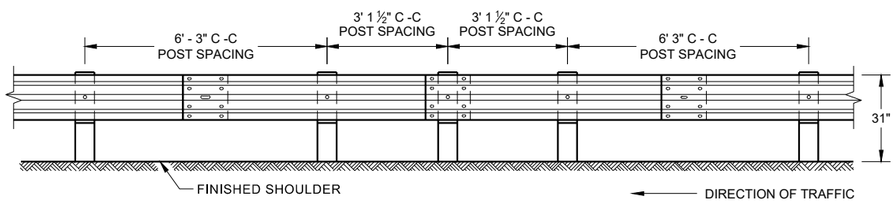

FRONT VIEW
HALF POST SPACING (HS) AND HALF POST SPACING WITH LONGER POSTS (K)

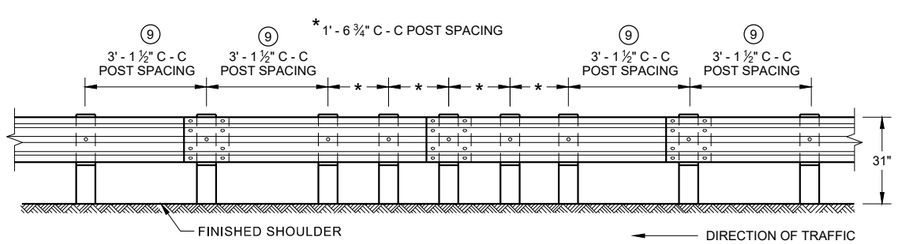

FRONT VIEW
QUARTER POST SPACING (QS)

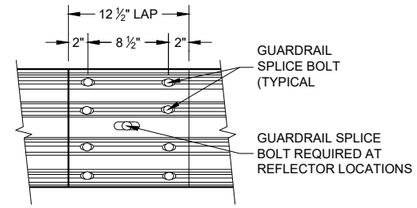

FRONT VIEW
MID-SPAN BEAM SPLICE

GENERAL NOTES

(8) DO NOT INSTALL REFLECTORS ON THE FIRST 50 FEET OF THE APPROACH END OF THE ENERGY ABSORBING TERMINAL.

(9) 25 FEET OF HALF POST SPACING IS REQUIRED ON APPROACH AND DEPARTURE ENDS OF QUARTER POST SPACING.

POST BOLTS ARE A ⅝" DIAMETER ASTM A307 GUARDRAIL BOLT. A POST BOLT REQUIRES ⅝" DIAMETER A563A DOUBLE RECESSED (DR) HEAVY HEX NUT AND ⅝" DIAMETER F844 FLAT WASHER. POST BOLTS MAY BE LONGER IF MULTIPLE BLOCKOUTS ARE BEING USED.

GUARD RAIL SPLICE BOLTS ARE A ⅝" DIAMETER ASTM A307 GUARDRAIL HEAD BOLT. A GUARDRAIL SPLICE BOLT REQUIRES ⅝" DIAMETER A563A DOUBLE RECESSED (DR) HEAVY HEX NUT.

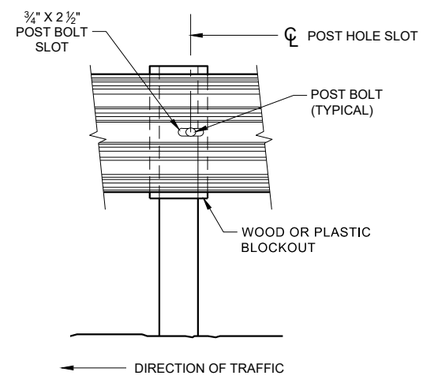

FRONT VIEW AT STEEL POST

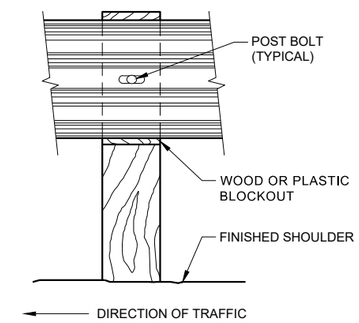

FRONT VIEW AT WOOD POST

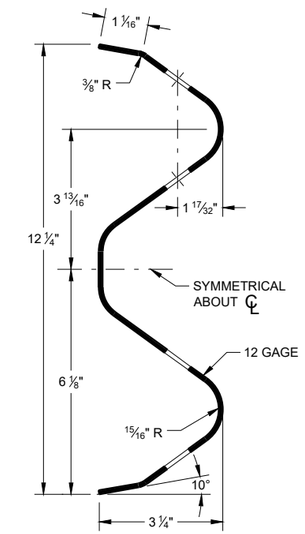

SECTION THRU W-BEAM RAIL

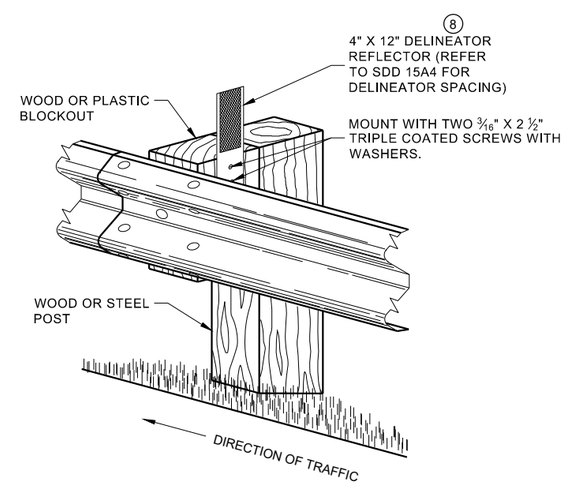

ONE SIDED REFLECTOR DETAIL AND TYPICAL INSTALLATION

MIDWEST GUARDRAIL SYSTEM (MGS) GUARDRAIL

STATE OF WISCONSIN
DEPARTMENT OF TRANSPORTAT

6

SDD 14B42 - 07b

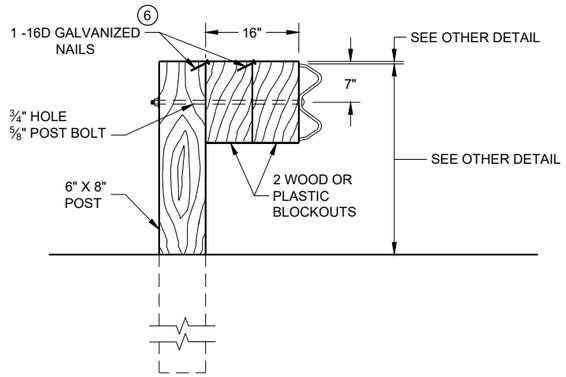

DETAIL FOR 16" BLOCKOUT DEPTH

IT IS ACCEPTABLE TO USE BLOCKOUTS UP TO 16" DEEP TO INCREASE THE POST OFFSET TO AVOID UNDERGROUND OBSTACLES. THERE IS NO LIMIT TO THE NUMBER OF POSTS THAT CAN HAVE ADDITIONAL BLOCKOUTS UP TO 16" DEEP.

NOTE:

1. ALL FILLETS SHALL HAVE A MINIMUM RADIUS OF 3/16".
2. IF THE BOLT EXTENDS MORE THAN ¼" FROM THE NUT THE BOLT SHOULD BE TRIMMED BACK.

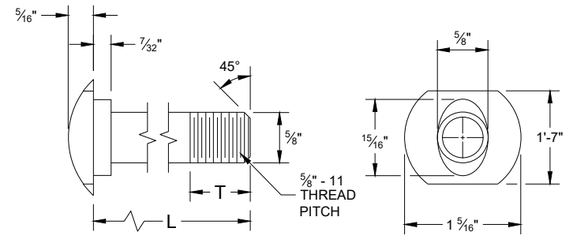

POST BOLT TABLE

L	T (MIN.)
1 ¼"	1 ⅛"
2"	1 ¾"
10"	4"
14"	4 1/16"
18"	4"
21"	4 1/16"
25"	4"

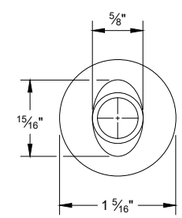

ALTERNATE BOLT HEAD

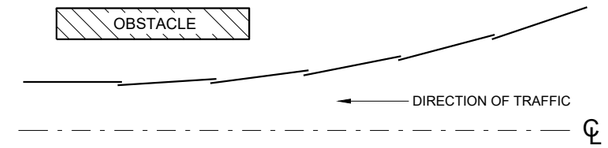

PLAN VIEW
BEAM LAPPING DETAIL

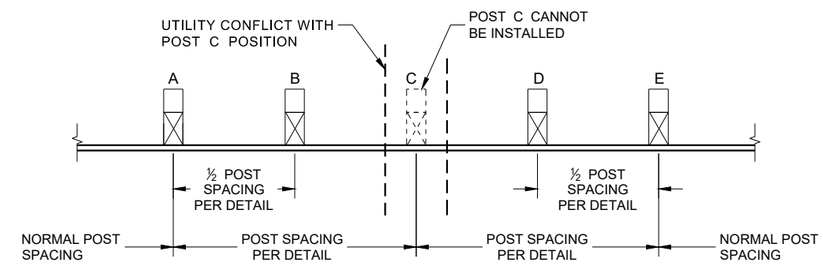

POST DRIVING FOR CONTINUOUS UNDERGROUND OBSTRUCTION

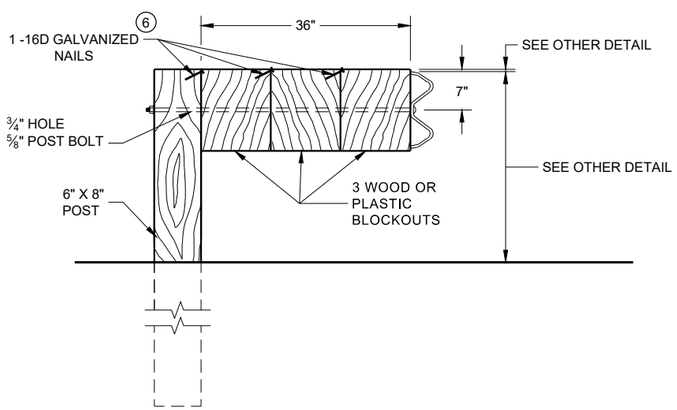

DETAIL FOR 36" BLOCKOUT DEPTH

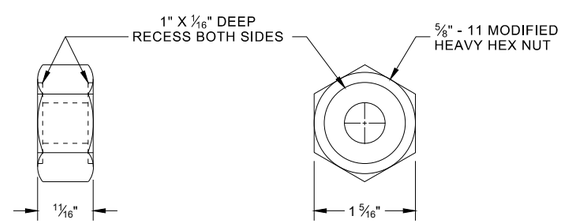

POST BOLT, SPLICE BOLT AND RECESS NUT

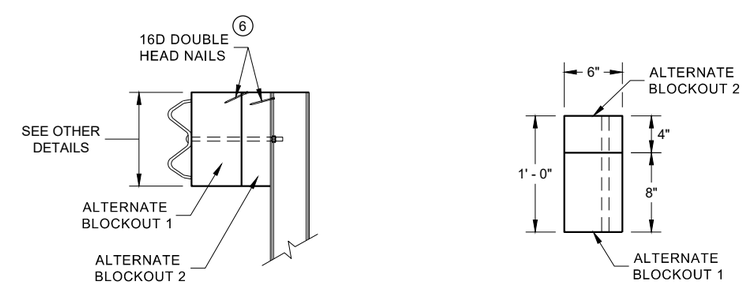

SIDE VIEW

PLAN VIEW

ALTERNATE WOOD BLOCKOUT DETAIL

NOTES: UNDER SPECIAL CIRCUMSTANCES, SUCH AS AVOIDING OBSTACLES THAT ARE NOT RELOCATED, IT IS ACCEPTABLE TO INSTALL ADDITIONAL BLOCKOUTS TO OBTAIN UP TO 36" DEPTH FOR ONE OR TWO POSTS IN A SECTION OF GUARDRAIL.

DO NOT USE 16" OR 36" BLOCKOUTS IF IT CAUSES THE POST TO BE DRIVEN BEYOND SHOULDER HINGE POINT OR CAUSES A FIXED OBJECT TO BE WITHIN THE DEFLECTION DISTANCE OF THE BARRIER.

(6) WHEN USING STEEL POST AD WOOD BLOCKOUTS, INSTALL FOUR 16D GALVANIZED NAILS. INSTALL NAILS AT THE BACK CORNERS OF THE BLOCK AND BEND THE NAILS OVER THE FLANGE OF THE STEEL POST.

MIDWEST GUARDRAIL SYSTEM (MGS) GUARDRAIL

STATE OF WISCONSIN
DEPARTMENT OF TRANSPORTA

6

SDD 14B42 - 07c

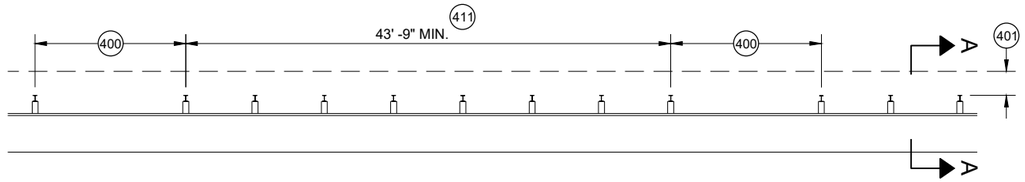

MISSING POST IN MGS GUARDRAIL

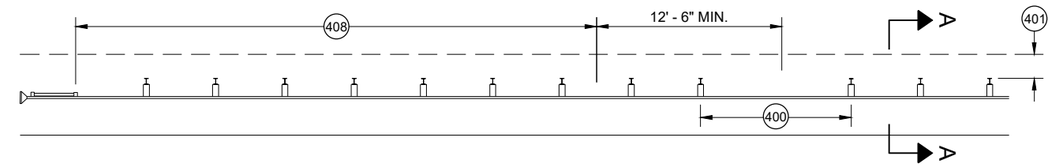

MISSING POST IN MGS GUARDRAIL NEAR EAT

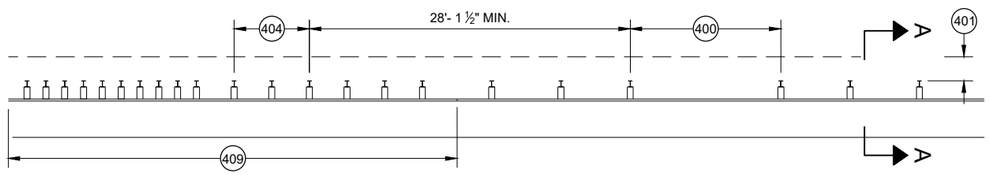

MISSING POST IN MGS GUARDRAIL NEAR AN APPROACH TRANSITION

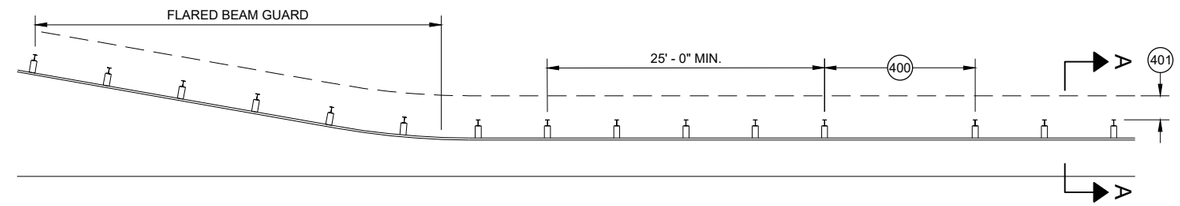

MISSING POST IN MGS GUARDRAIL NEAR FLARED BEAM GUARD

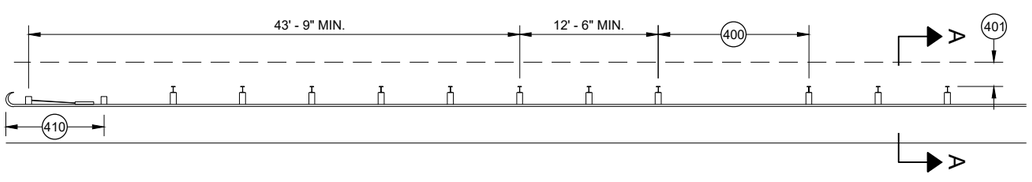

MISSING POST IN MGS GUARDRAIL NEAR A TYPE 2 END TERMINAL

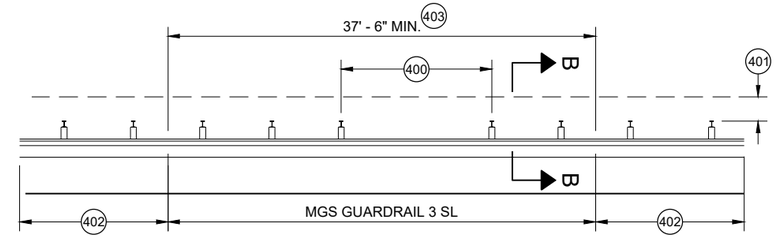

MISSING POST IN SHORT SPAN MGS GUARDRAIL NEAR CURB (SL) 407

400 MAX SPAN 12' - 6"
401 2' MIN.
402 MGS GUARDRAIL 3
403 NESTING BEAM GUARD
404 ASYMMETRIC TRANSITION
405 SOIL WELL DRAINED AND COMPACTED
406 SEE OTHER DRAWINGS IN THIS SDD
407 SEE OTHER DRAWINGS FOR MIN. SPACING BETWEEN SPANS
408 SEE SDD 14B44
409 SEE SDD 14B45
410 SEE SDD 14B47
411 MINIMUM DISTANCE BETWEEN MISSING POST SPANS.

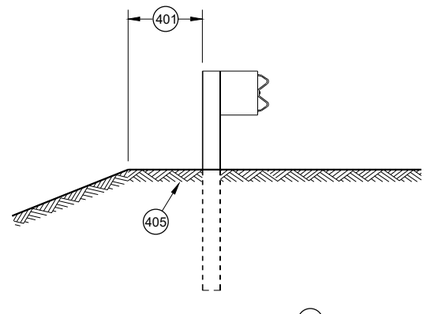

SECTION A - A 406

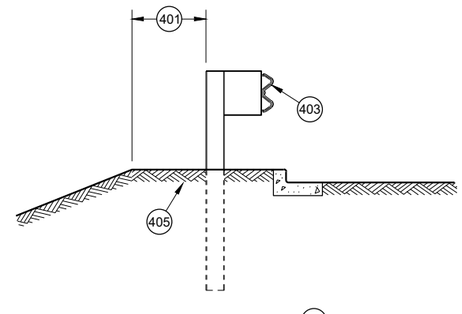

SECTION B - B 406

MIDWEST GUARDRAIL SYSTEM (MGS) GUARDRAIL

STATE OF WISCONSIN
DEPARTMENT OF TRANSPORTATION

APPROVED
May 2021 — DATE
/S/ Rodney Taylor — ROADWAY STANDARDS DEVE UNIT SUPERVISOR
FHWA

6

SDD 14B42 - 07d

GENERAL NOTES

(A) THE SLOPE IN THE AREA BOUNDED BY THE GRADELINE, THE HINGE POINT LINE (HPL) AND THE CLEAR ZONE LIMITS (CZL) SHALL BE 4:1 OR FLATTER.

(B) AFTER FINAL ASSEMBLY, RECHECK CABLE TO BE SURE IT IS TAUT AND HAS NOT RELAXED

(C) DIFFERENT MANUFACTURERS REQUIRE DIFFERENT PERFORATED W - BEAM RAIL END PANELS. SEE MANUFACTURER'S INFORMATION.

(D) ATTACH ALUMINUM SHEET TO E.A.T. HEAD USING 4 STAINLESS STEEL SELF - TAPPING SCREWS. ONE SCREW PER CORNER.

(E) HARDWARE MAY VARY BETWEEN MANUFACTURER. SEE MANUFACTURER'S DRAWING FOR INFORMATION.

DIMENSIONS MAY VARY, MANUFACTURER'S INFORMATION.

SEE SDD 14B42 FOR MORE INFORMATION.

* DO NOT ATTACH BLOCKOUTS TO POST 1 AND 2.

DO NOT INSTALL REFLECTORS ON THE FIRST 50 FEET OF THE APPROACH END OF THE ENERGY ABSORBING TERMINAL.

SEE MANUFACTURER'S DRAWING FOR SPLICE LOCATION, HARDWARE DIMENSIONS AND INSTALLATION INSTRUCTIONS.

THE CENTER OF THE UPPER 3 ½" DIAMETER HOLE ON POST NUMBER 3 THROUGH POST 9 IS TO BE FLUSH WITH THE GROUND LINE UP TO A MAXIMUM OF 2" ABOVE GROUND LINE. WOOD BLOCKS ON POSTS NUMBERED 3 THROUGH 9 MAY BE ADJUSTED UP TO 3" ABOVE THE TOP OF POST.

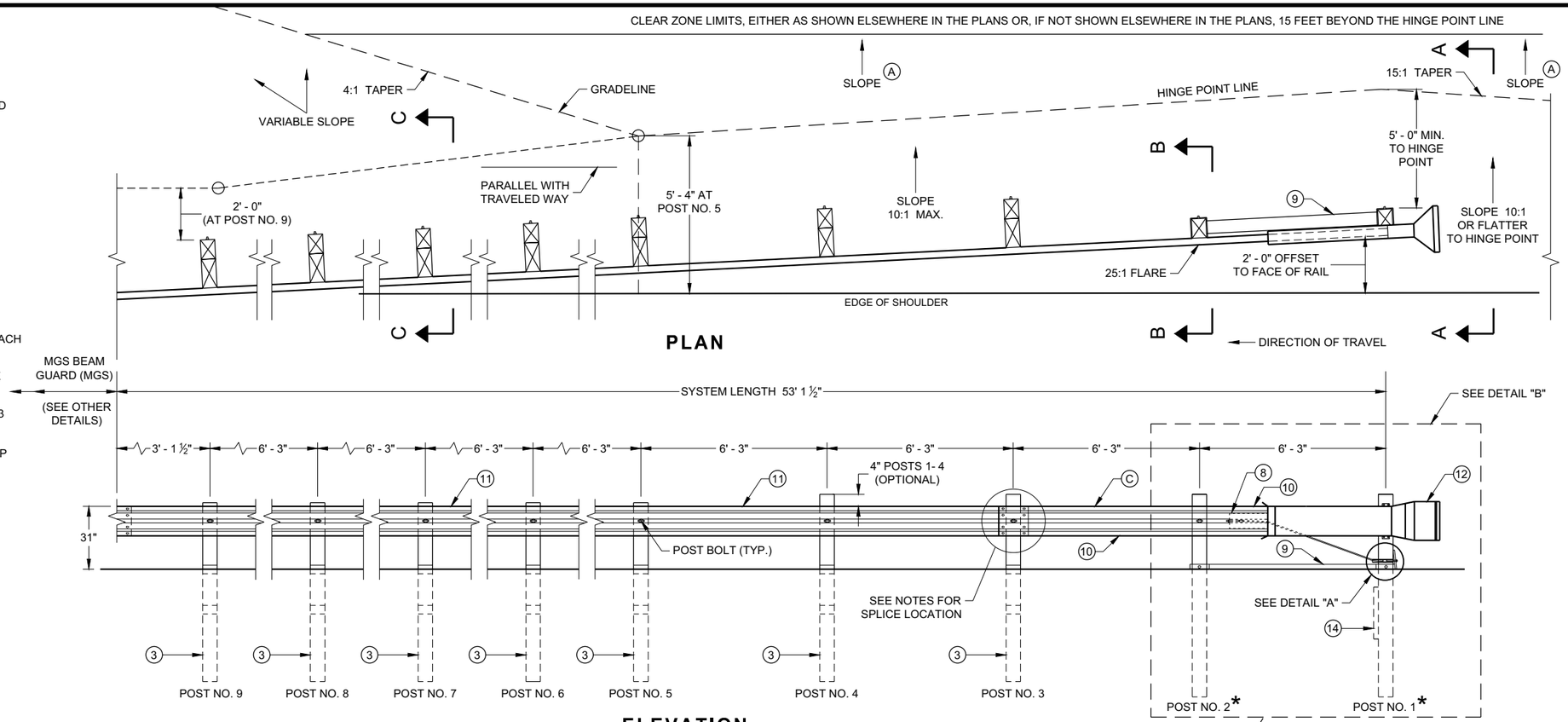

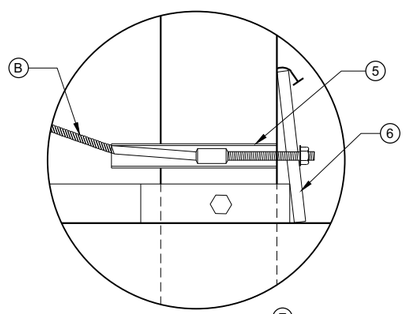

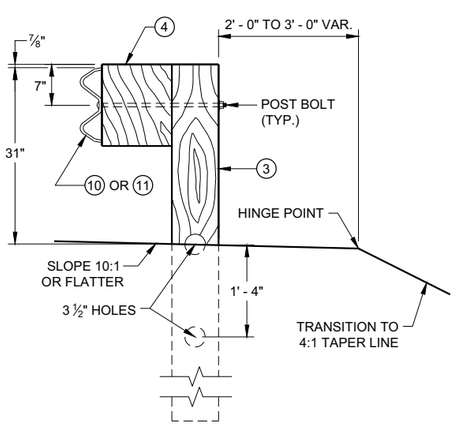

SECTION C - C
TYPICAL AT POST NOS. 3 - 9

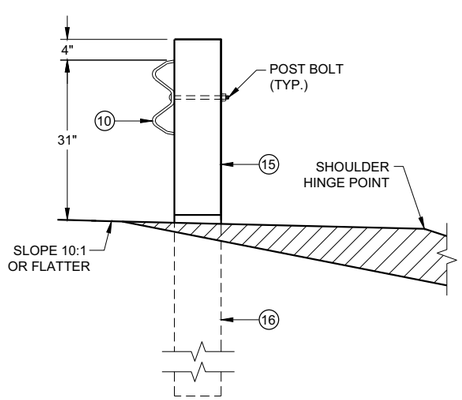

SECTION B - B
TYPICAL AT POST NO. 2*

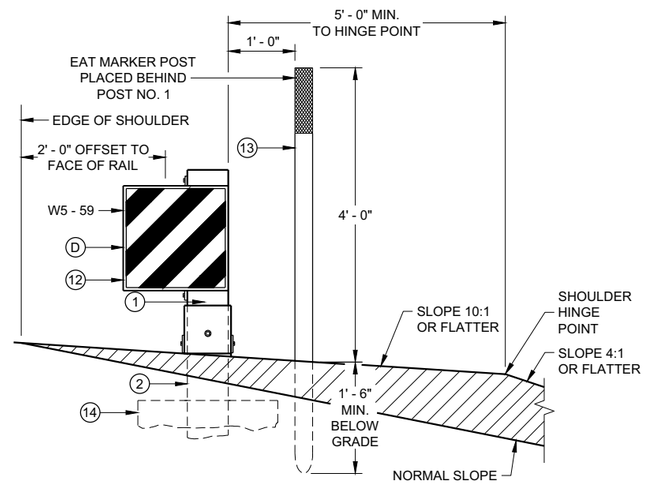

SECTION A - A
TYPICAL AT POST NO. 1*

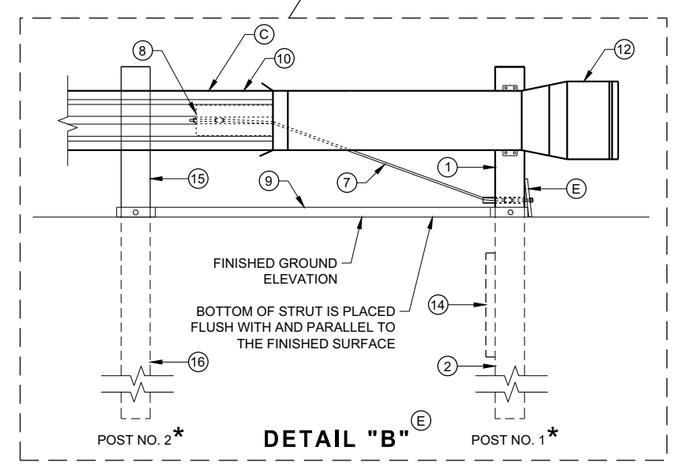

MIDWEST GUARDRAIL SYSTEM ENERGY ABSORBING TERMINAL (MGS)

STATE OF WISCONSIN
DEPARTMENT OF TRANSPORTATION

6

6

SDD 14B44 - 04a

SDD 14B44 - 04a

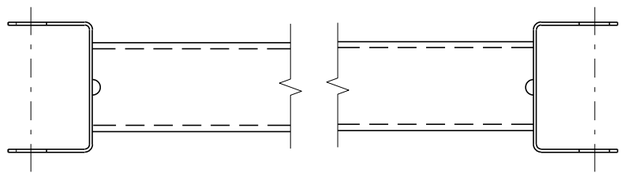

GENERIC GROUND STRUT 9 E

BILL OF MATERIALS

PART NO.	DESCRIPTION MATERIALS PROVIDED BY MGS EAT MANUFACTURER. SEE MANUGACTURER'S DETAILS FOR MORE INFORMATION.
1	UPPER POST NO. 1 6" X 6" TUBE
2	LOWER POST NO. 1
3	WOOD CRT
4	WOOD BLOCKOUT
5	PIPE SLEEVE
6	BEARING PLATE
7	BCT CABLE ASSEMBLY
8	ANCHOR CABLE BOX
9	GROUND STRUT
10	PERFORATED W-BEAM RAIL END PANEL, 12'-6" LONG.
11	STANDARD W-BEAM RAIL. MULTIPLE SECTIONS REQUIRED. SECTIONS VARY IN LENGTH.
12	IMPACT HEAD
13	EAT MARKER POST - YELLOW (SEE APPROVED PRODUCTS LIST)
14	SOIL PLATE
15	UPPER POST NO. 2
16	LOWER POST NO. 2

6

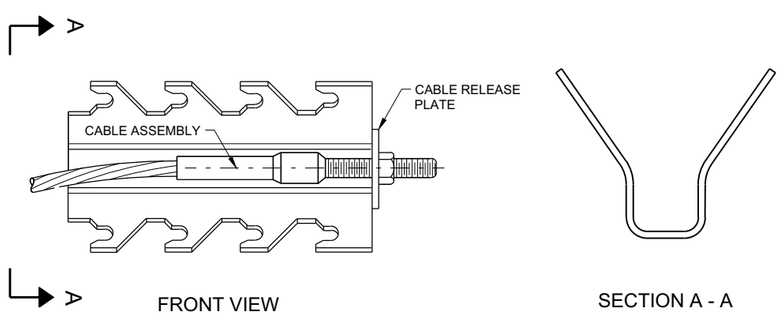

GENERIC ANCHOR CABLE BOX 9 E

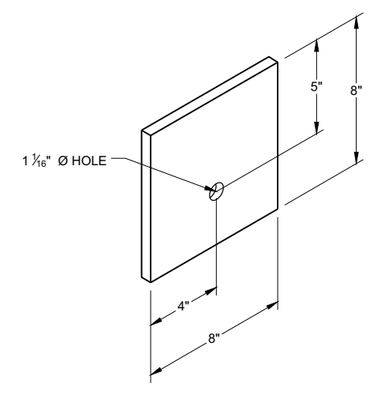

BEARING PLATE 6 E

6

MIDWEST GUARDRAIL SYSTEM ENERGY ABSORBING TERMINAL (MGS)

STATE OF WISCONSIN
DEPARTMENT OF TRANSPORTAT

SDD 14B44 - 04b

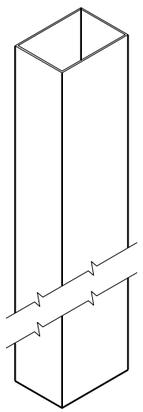

UPPER POST NO. 1 (1) (E)

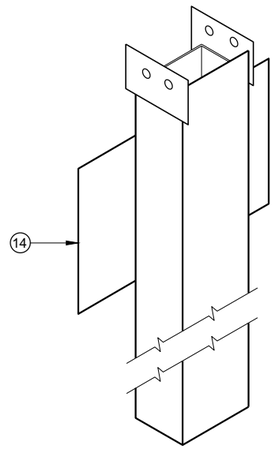

LOWER POST NO. 1 (2) (E)

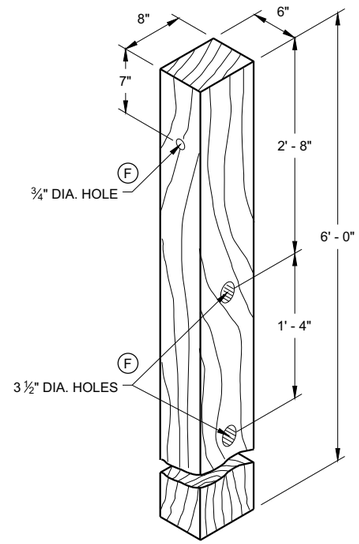

WOOD CRT POST (3) (E)
POSTS NUMBER 3-9

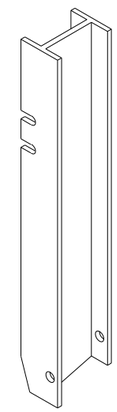

UPPER POST NO. 2 (15) (E)

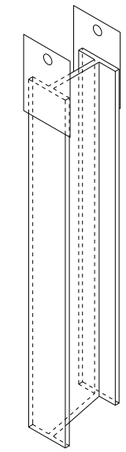

LOWER POST NO. 2 (16) (E)

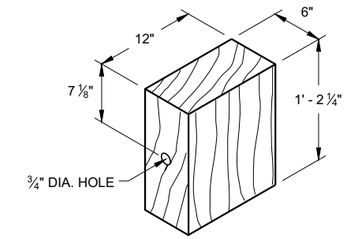

WOOD BLOCKOUT (4)
REQ'D. AT ALL POSTS EXCEPT POST NO'S 1 & 2

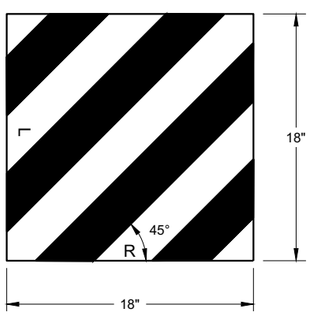

W5 - 59

REFLECTIVE SHEETING DETAIL (E)

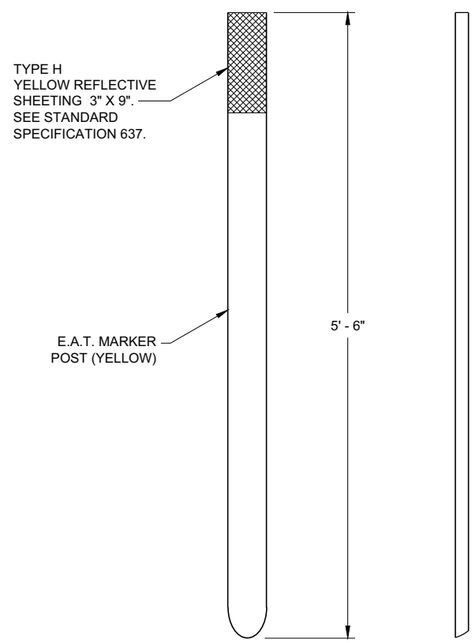

FRONT VIEW SIDE VIEW

E.A.T. MARKER POST (13)

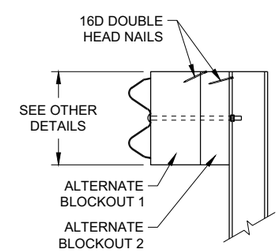

SIDE VIEW

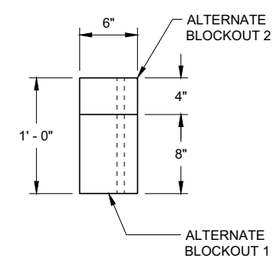

TOP VIEW

ALTERNATE WOOD BLOCKOUT DETAIL

MIDWEST GUARDRAIL SYSTEM ENERGY ABSORBING TERMINAL (MGS)

STATE OF WISCONSIN
DEPARTMENT OF TRANSPORTATION

APPROVED
7/2018 — DATE
/S/ Rodney Taylor — ROADWAY STANDARDS DEVE UNIT SUPERVISOR
FHWA

6
SDD 14B44 - 04c

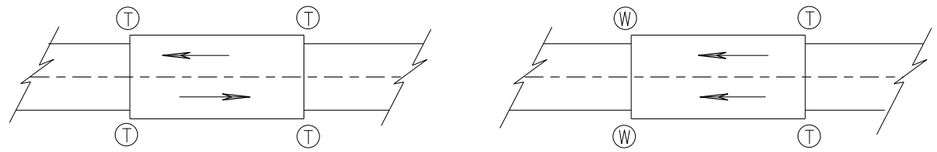

TWO WAY TRAFFIC **ONE WAY TRAFFIC**

(T) THRIE BEAM CONNECTION

(W) W-BEAM CONNECTION WHEN REQUIRED

TYPICAL LOCATIONS OF THRIE BEAM AND W-BEAM CONNECTIONS TO BRIDGE

GENERAL NOTES

IF ROCK IS ENCOUNTERED, REMOVE ROCK TO FULL DEPTH OF POST PLUS 2½", AND 12" DIAMETER AROUND POST. SEE 14B42 FOR MORE DETAILS.

TRANSITION USES STEEL POSTS ONLY.

SEE STANDARD DETAIL DRAWING 14 B 42 FOR MORE INFORMATION.

POST 2 THROUGH 17 USES STEEL POST ONLY

(1) BRIDGE RAILING TYPE "W" DOES NOT REQUIRE A TERMINAL CONNECTOR.

(2) OPTIONAL CURB AND GUTTER OR DRAINAGE FEATURE SEE PLAN FOR INFORMATION.

(13) STEEL OR WOOD POST IS ACCEPTABLE AT POST 1. SEE SDD14B42

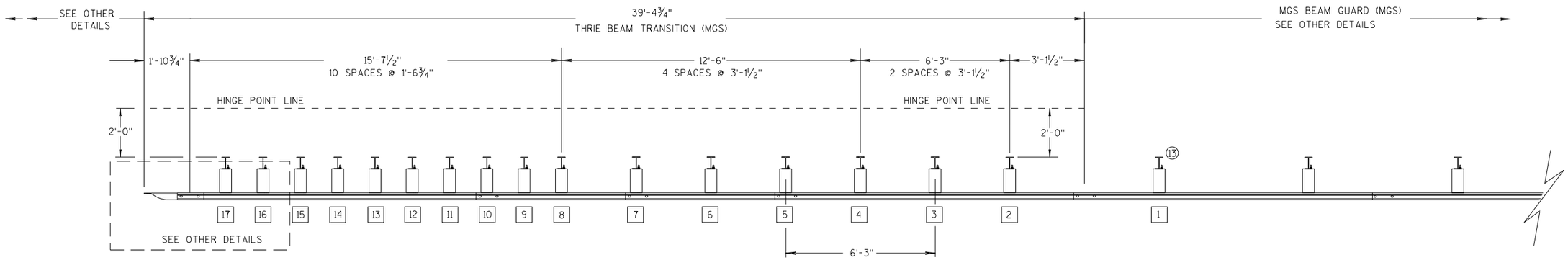

PLAN VIEW

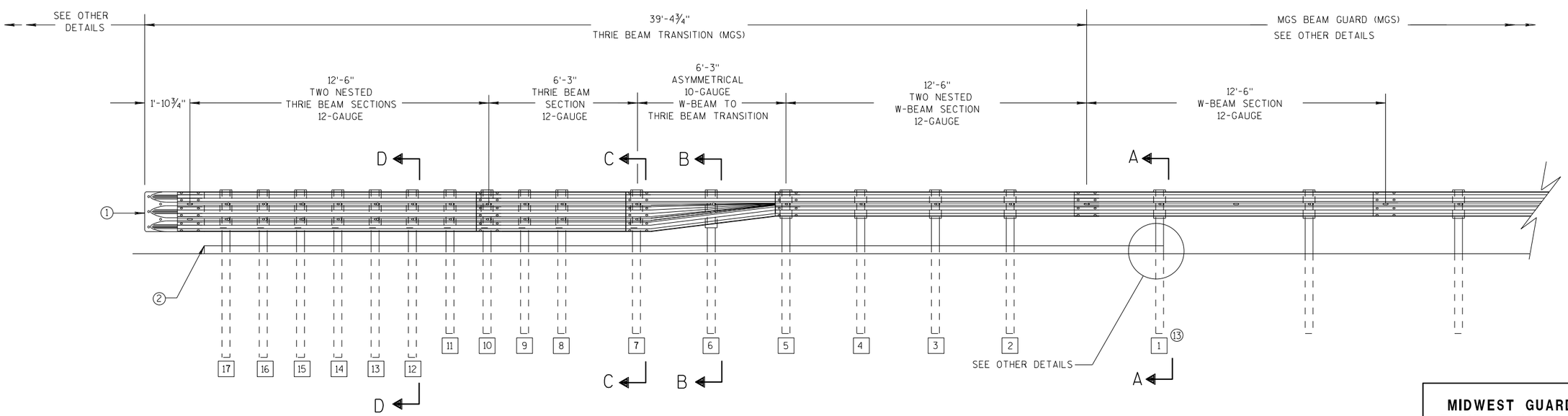

ELEVATION VIEW

MIDWEST GUARDRAIL SYSTEM THRIE BEAM TRANSITION

MIDWEST GUARDRAIL SYSTEM THRIE BEAM TRANSITION (MGS)

STATE OF WISCONSIN
DEPARTMENT OF TRANSPOR

6

S.D.D. 14 B 45-5a

GENERAL NOTES

(2) OPTIONAL CURB AND GUTTER OR DRAINAGE FEATURE SEE PLAN FOR INFORMATION.

(3) WHEN USING STEEL POSTS AND WOOD BLOCKOUTS INSTALL FOUR 10D GALVANIZED NAILS. INSTALL NAILS AT THE BACK CORNERS OF THE BLOCK AND BEND THE NAILS OVER THE FLANGE OF THE STEEL POST.

(4) TOLERANCE FOR TOP OF W-BEAM RAIL IS ± 1".

(13) STEEL OR WOOD POST IS ACCEPTABLE AT POST 1. SEE SDD 14B42

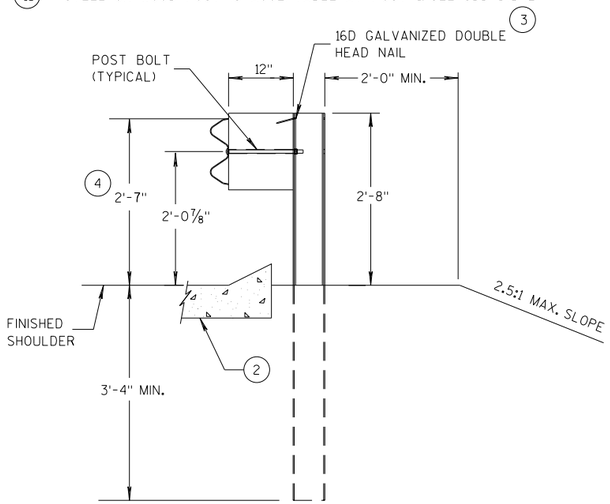

SECTION A-A (13)

POSTS 1-5

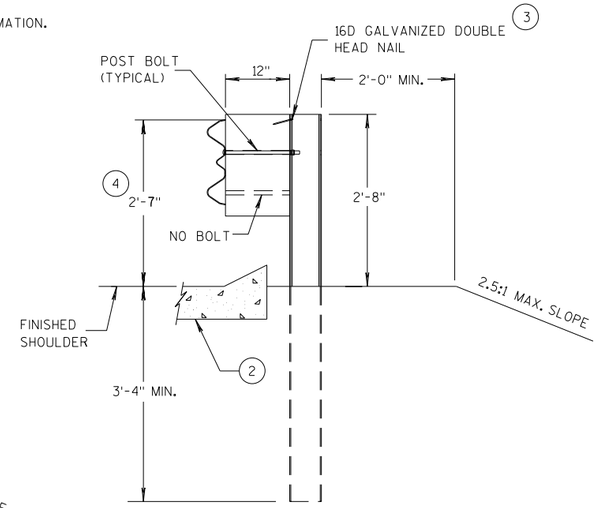

SECTION B-B

POST 6

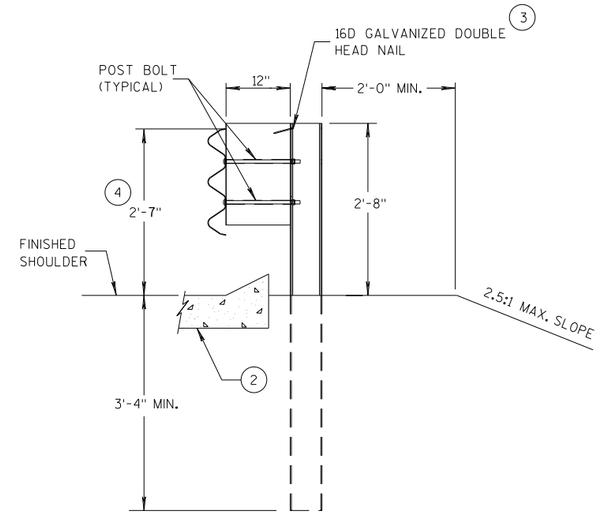

SECTION C-C

POSTS 7-11

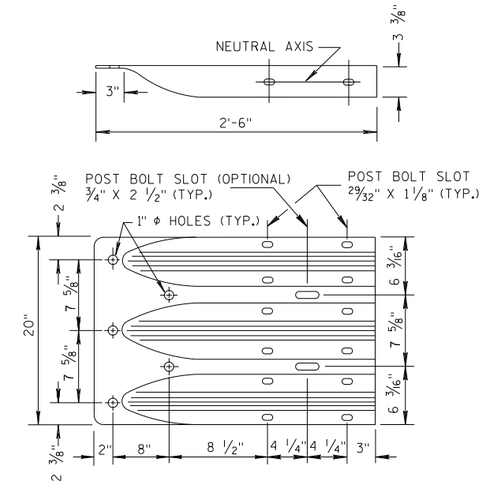

THRIE BEAM TERMINAL CONNECTOR

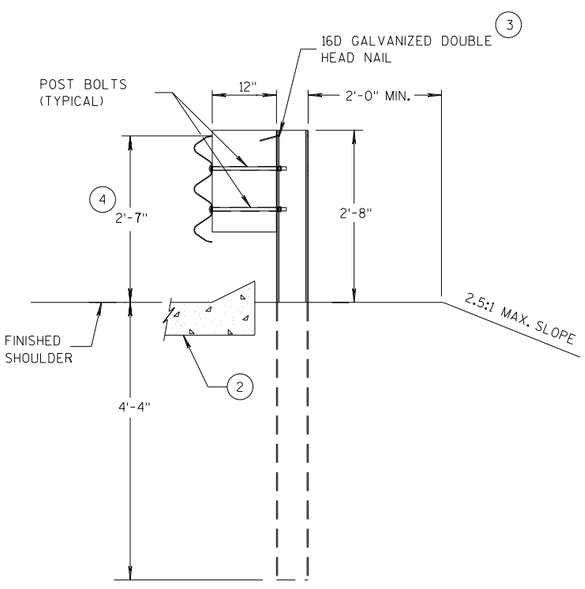

SECTION D-D

POSTS 12-17

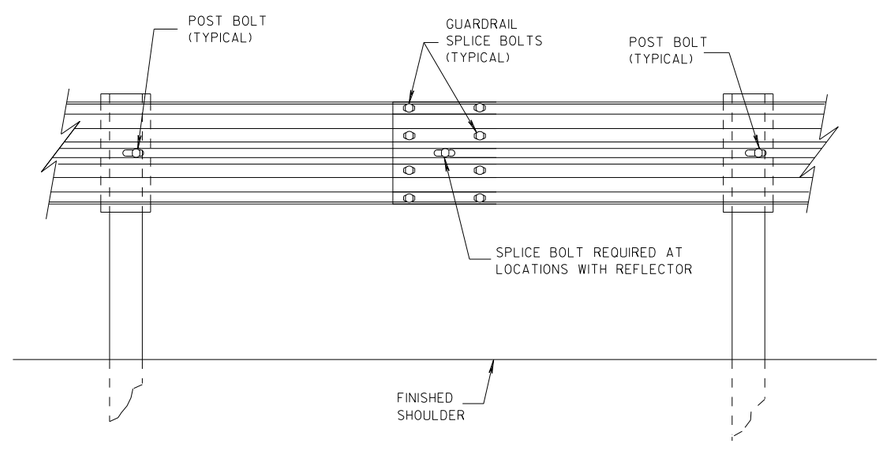

SPLICE DETAIL

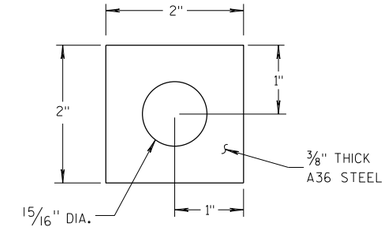

PLATE WASHER DETAIL

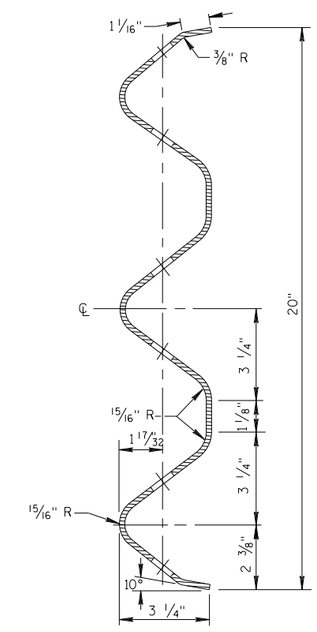

SECTION THRU THRIE BEAM RAIL ELEMENT

MIDWEST GUARDRAIL SYSTEM
THRIE BEAM TRANSITION (MGS)

STATE OF WISCONSIN
DEPARTMENT OF TRANSPORTATION

6

S.D.D. 14 B 45-5b

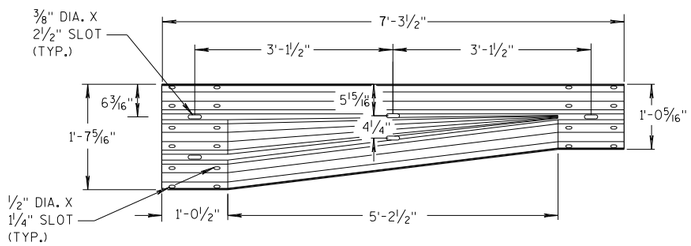

W-BEAM TO THRIE BEAM TRANSITION SECTION

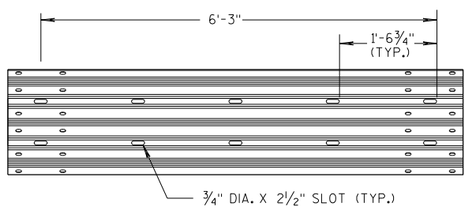

6'-3" THRIE BEAM SECTION

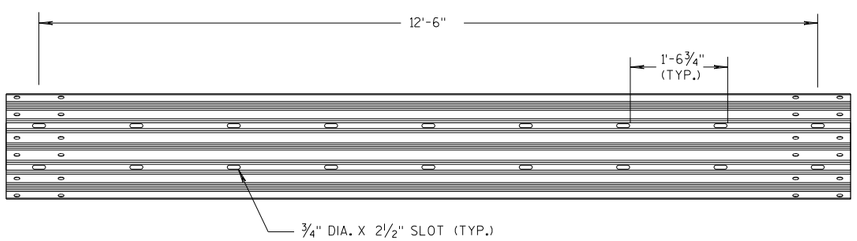

12'-6" THRIE BEAM SECTION

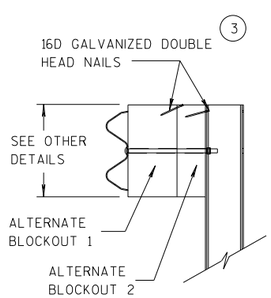

SIDE VIEW

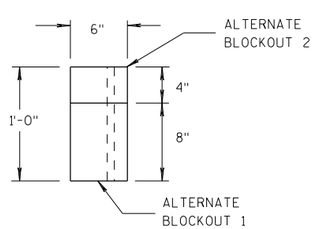

TOP VIEW

ALTERNATE WOOD BLOCKOUT DETAIL

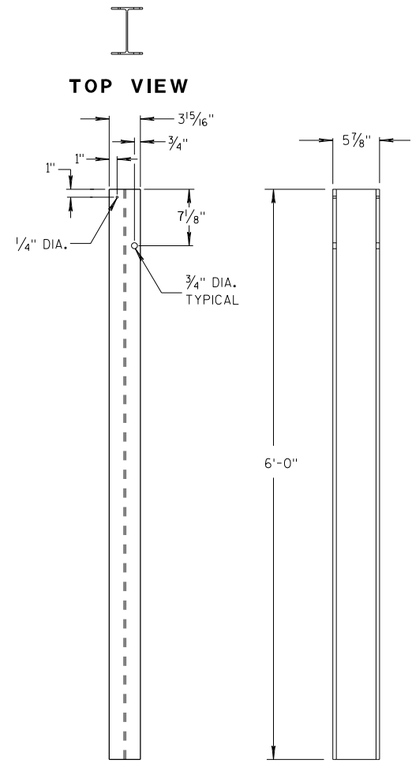

STEEL POSTS 1-5 (13)

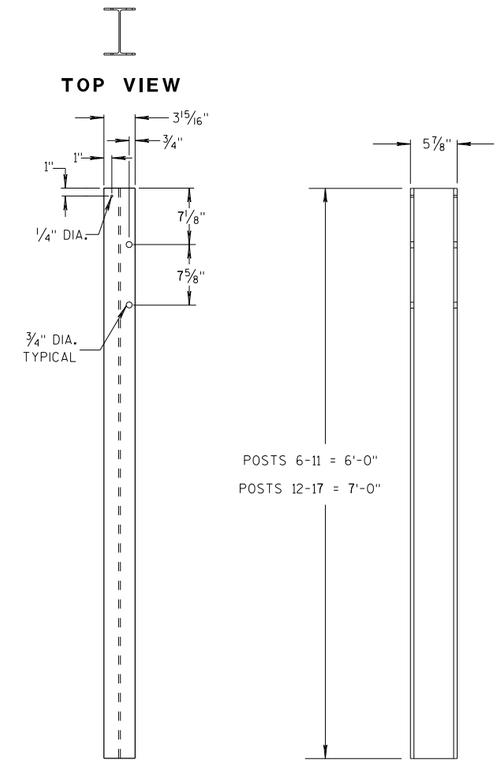

STEEL POSTS 6-17

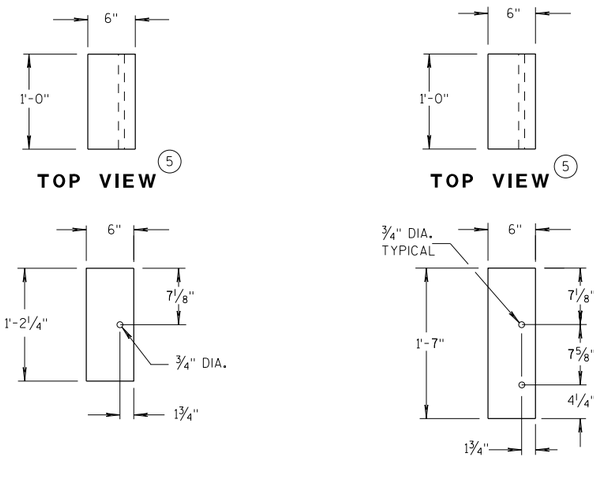

BLOCKOUT POSTS 1-5

BLOCKOUT POSTS 6-17

GENERAL NOTES

STEEL POSTS ARE W6X9 OR W6X8.5.

BOLT HOLES FOR POST ARE ON FRONT AND OF SIDE OF POST.

(3) WHEN USING STEEL POSTS AND WOOD BLOCKOUTS INSTALL FOUR 16D GALVANIZED NAILS. INSTALL NAILS AT THE BACK CORNERS OF THE BLOCK AND BEND THE NAILS OVER THE FLANGE OF THE STEEL POST.

(5) WOOD BLOCKS MAY BE CONSTRUCTED OUT OF 2 WOOD BLOCKS. SEE ALTERNATE WOOD BLOCK DETAIL.

(13) STEEL OR WOOD POST IS ACCEPTABLE AT POST 1. SEE SDD 14B42.

MIDWEST GUARDRAIL SYSTEM
THRIE BEAM TRANSITION (MGS)

STATE OF WISCONSIN
DEPARTMENT OF TRANSPOR

6

S.D.D. 14 B 45-5c

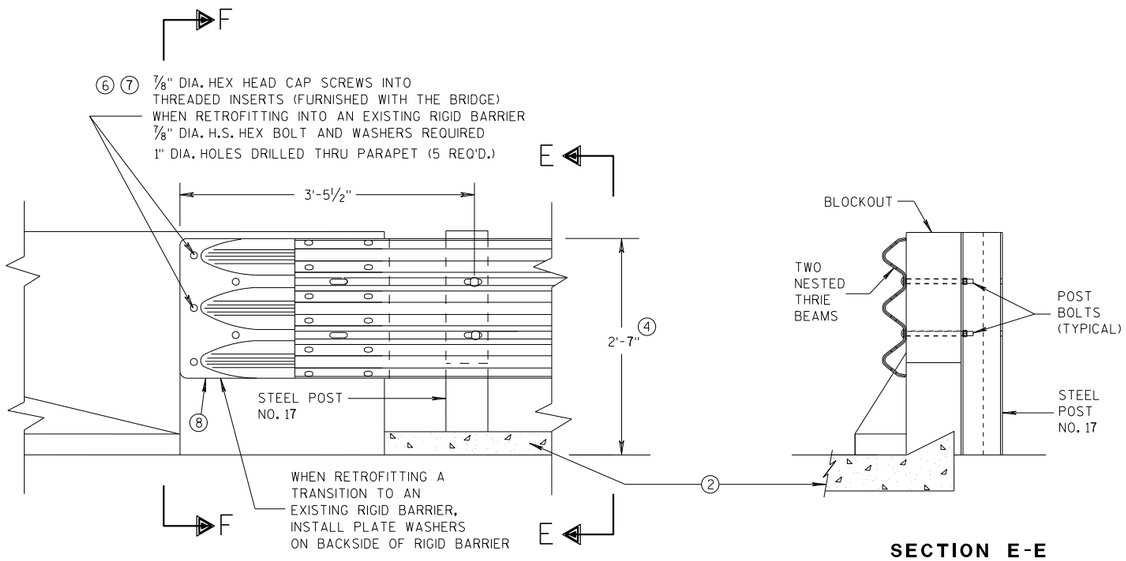

FRONT VIEW

SECTION E-E

THRIE BEAM CONNECTION TO BRIDGE PARAPET WITH SQUARE ENDS

GENERAL NOTES

THESE ARE TYPICAL CONNECTION DETAILS. ADJUST THE POSTION OF CONNECTIONS TO EXISTING BRIDGES TO FIT THE ACTUAL BRIDGE AND SITE DIMENSIONS.

② OPTIONAL CURB AND GUTTER OR DRAINAGE FEATURE SEE PLAN FOR INFORMATION.

④ TOLERANCE FOR TOP OF BEAM IS ± 1".

⑥ DRILLING BOLT HOLES THROUGH THE PARAPET, BOLTS, NUTS, WASHERS AND REPAIRING DAMAGED CONCRETE ARE INCIDENTAL TO THE CONTRACT.

⑦ BOLTS MAY BE A325 BOLTS OR A449 BOLTS. BOLT LENGTH AND THREADING LENGTH ARE TO ALLOW FOR A TIGHT CONNECTION BETWEEN RIGID BARRIER AND THRIE BEAM CONNECTION PLATE. CONTRACTOR IS TO FIELD VERIFY BOLT LENGTH AND THREAD LENGTH. ONE ROUND WASHER REQUIRED BETWEEN BOLT HEAD AND THRIE BEAM CONNECTOR PLATE. BOLTS THAT EXTEND THROUGH THE PARAPET AND OUT THE BACK FACE REQUIRE A HARDENED ROUND STEEL WASHER THAT IS 2" O.D. X 5/32" THICK AND ONE PLATE WASHER. REPAIR ANY DAMAGED CONCRETE FROM BOLT INSTALLATION.

⑧ THE RECESS FOR A W-BEAM CONNECTION, WHICH EXISTS ON SOME PARAPETS OF THIS TYPE, SHALL BE FILLED WITH A TREATED TIMBER BLOCKOUT. BLOCKOUT SIZE IS 1'-6" X 2'-0" X 3 1/2".

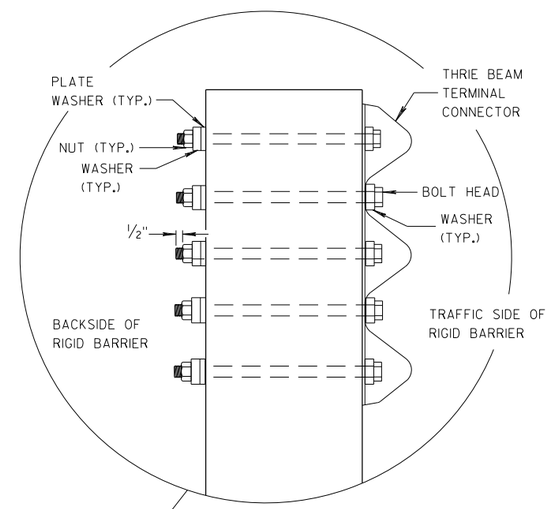

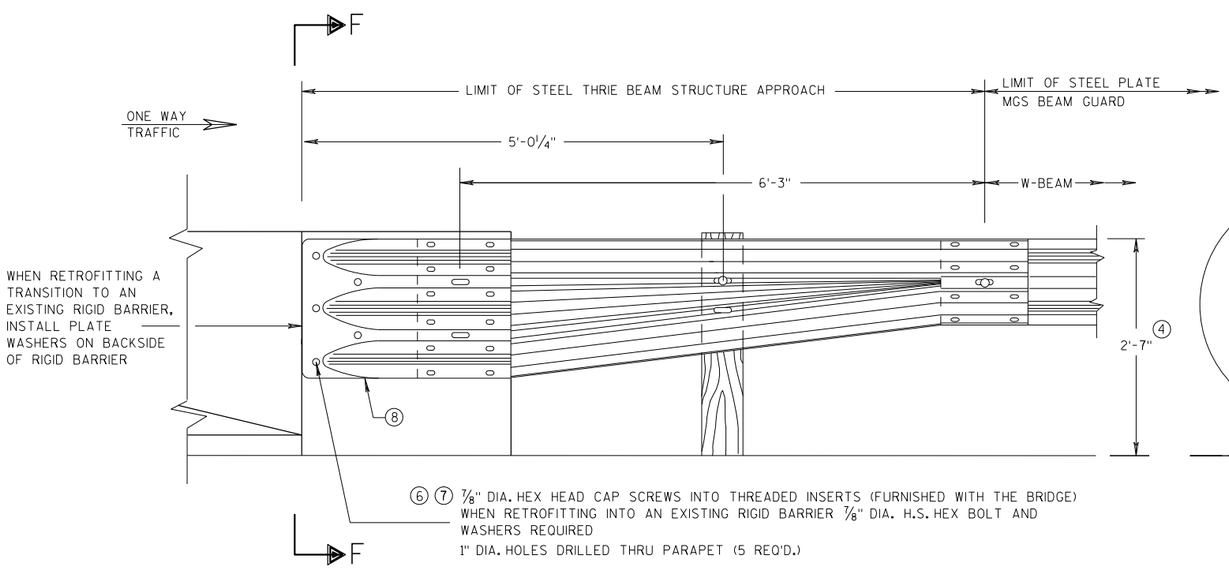

FRONT VIEW

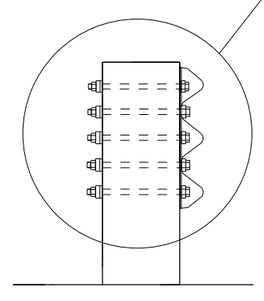

SECTION F-F

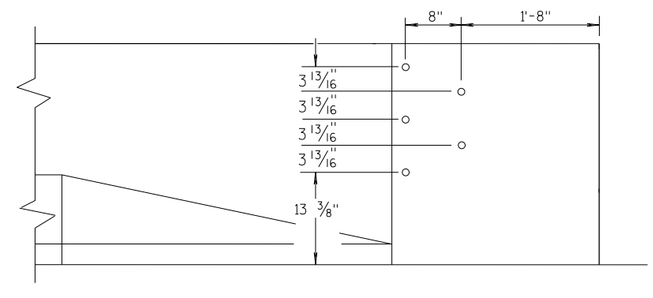

DRILL HOLE LOCATION

W BEAM TRANSITION AND CONNECTION TO BRIDGE PARAPETS WITH SQUARE ENDS

(USE ONLY ON THE TRAFFIC EXIT END OF ONE WAY BRIDGES)

MIDWEST GUARDRAIL SYSTEM THRIE BEAM TRANSITION (MGS)

STATE OF WISCONSIN
DEPARTMENT OF TRANSPORTATION

APPROVED
07/2018 — DATE
/S/ Rodney Taylor — ROADWAY STANDARDS DEVELOPMENT UNIT SUPERVISOR
FHWA

GENERAL NOTES

THESE ARE TYPICAL CONNECTION DETAILS. ADJUST THE POSTION OF CONNECTIONS TO EXISTING BRIDGES TO FIT THE ACTUAL BRIDGE AND SITE DIMENSIONS.

(2) OPTIONAL CURB AND GUTTER OR DRAINAGE FEATURE SEE PLAN FOR INFORMATION.

(4) TOLERANCE FOR TOP OF BEAM IS ± 1".

(6) DRILLING BOLT HOLES THROUGH THE PARAPET, BOLTS, NUTS, WASHERS AND REPAIRING DAMAGED CONCRETE ARE INCIDENTAL TO THE CONTRACT.

(7) BOLTS MAY BE A325 BOLTS OR A449 BOLTS. BOLT LENGTH AND THREADING LENGTH ARE TO ALLOW FOR A TIGHT CONNECTION BETWEEN RIGID BARRIER AND THRIE BEAM CONNECTION PLATE. CONTRACTOR IS TO FIELD VERIFY BOLT LENGTH AND THREAD LENGTH. ONE ROUND WASHER REQUIRED BETWEEN BOLT HEAD AND THRIE BEAM CONNECTOR PLATE. BOLTS THAT EXTEND THROUGH THE PARAPET AND OUT THE BACK FACE REQUIRE A HARDENED ROUND STEEL WASHER THAT IS 2" O.D. X 5/32" THICK AND ONE PLATE WASHER. REPAIR ANY DAMAGED CONCRETE FROM BOLT INSTALLATION.

(8) THE RECESS FOR A W-BEAM CONNECTION, WHICH EXISTS ON SOME PARAPETS OF THIS TYPE, SHALL BE FILLED WITH A TREATED TIMBER BLOCKOUT. BLOCKOUT SIZE IS 1'-6" X 2'-0" X 3 1/2".

(9) BOLT, NUT AND WASHERS NOT REQUIRED FOR THIS LOCATION WHEN RETROFITTING AN EXISTING PAPAPET AND THE HOLE IS EITHER ABOVE PARAPET OR WITHIN 4 INCHES OF THE EDGE OF PARAPET.

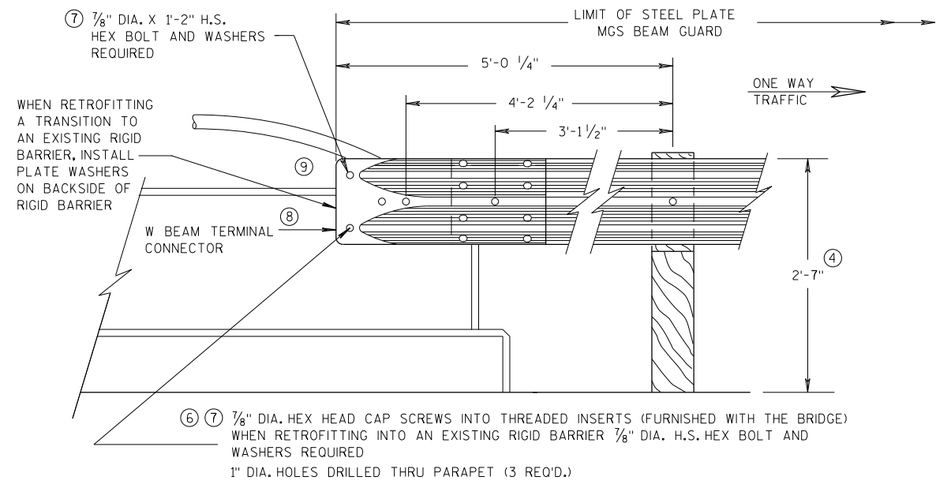

FRONT VIEW

W BEAM CONNECTION TO VERTICAL FACE PARAPET

(USE ONLY ON THE TRAFFIC EXIT END OF ONE WAY BRIDGES)

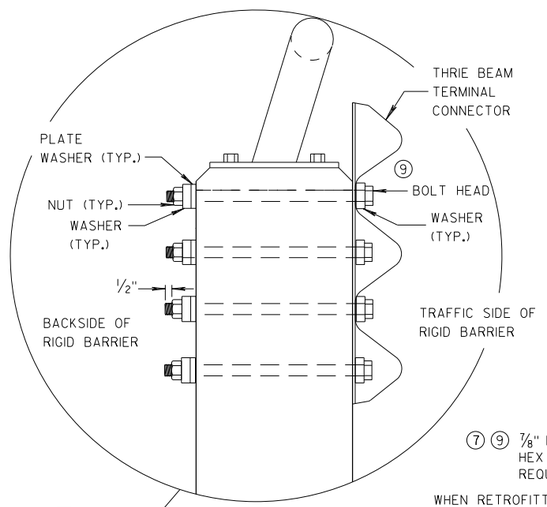

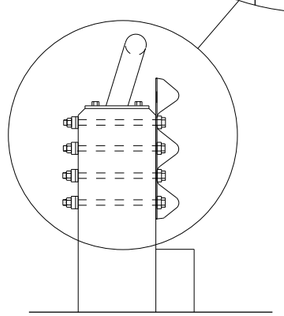

SECTION G-G

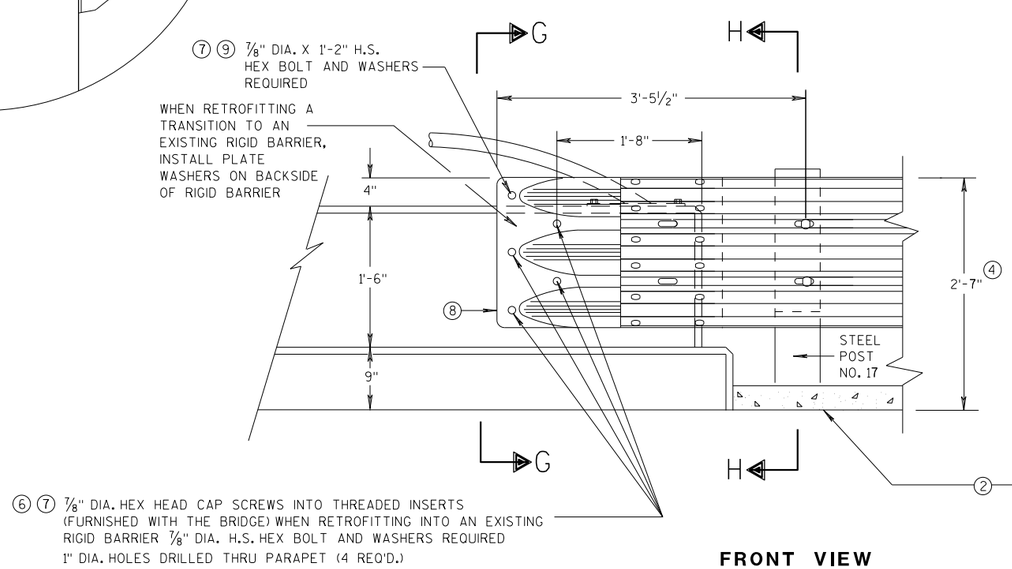

FRONT VIEW

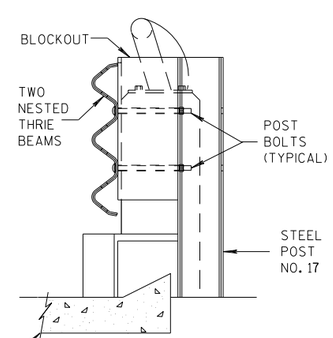

SECTION H-H

THRIE BEAM CONNECTION TO VERTICAL FACED PARAPETS

MIDWEST GUARDRAIL SYSTEM
THRIE BEAM TRANSITION (MGS)

STATE OF WISCONSIN
DEPARTMENT OF TRANSPORTATION

APPROVED
07/2018 — DATE
/S/ Rodney Taylor
ROADWAY STANDARDS D
UNIT SUPERVI
FHWA

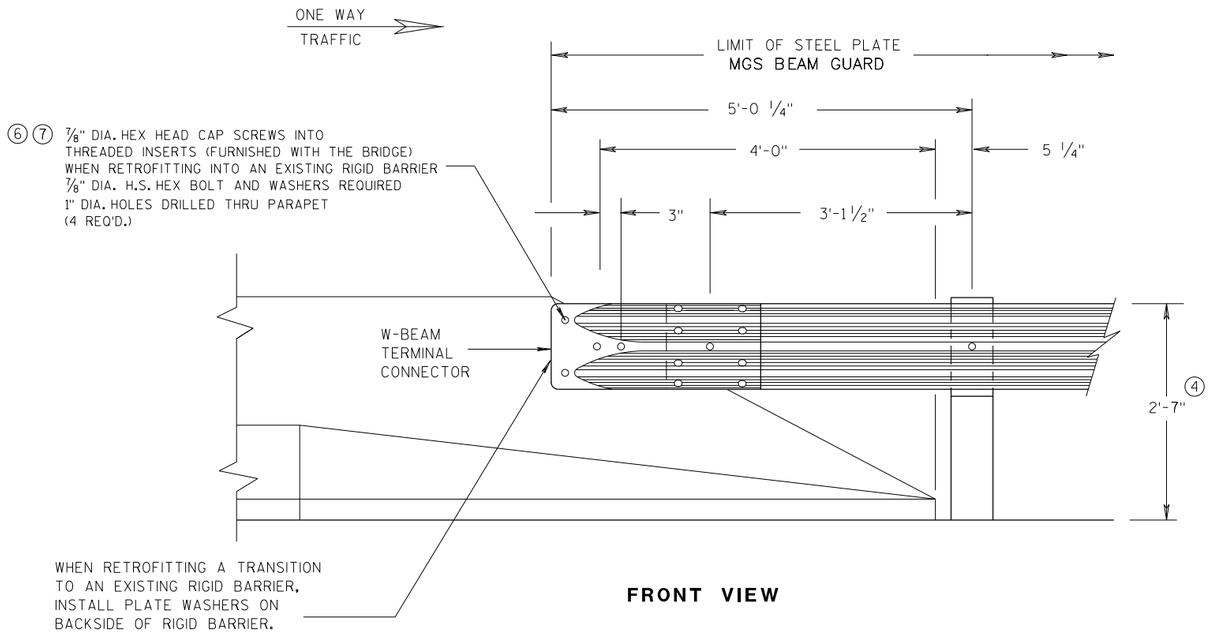

FRONT VIEW

W BEAM CONNECTION TO PARAPETS WITH SLOPED ENDS

(USE ONLY AT TRAFFIC EXIT END OF ONE WAY BRIDGE)

GENERAL NOTES

② OPTIONAL CURB AND GUTTER OR DRAINAGE FEATURE SEE PLAN FOR INFORMATION.

④ TOLERANCE FOR TOP OF BEAM IS ± 1".

⑥ DRILLING BOLT HOLES THROUGH THE PARAPET, BOLTS, NUTS, WASHERS AND REPAIRING DAMAGED CONCRETE ARE INCIDENTAL TO THE CONTRACT.

⑦ BOLTS MAY BE A325 BOLTS OR A449 BOLTS. BOLT LENGTH AND THREADING LENGTH ARE TO ALLOW FOR A TIGHT CONNECTION BETWEEN RIGID BARRIER AND THRIE BEAM CONNECTION PLATE. CONTRACTOR IS TO FIELD VERIFY BOLT LENGTH AND THREAD LENGTH. ONE ROUND WASHER REQUIRED BETWEEN BOLT HEAD AND THRIE BEAM CONNECTOR PLATE. BOLTS THAT EXTEND THROUGH THE PARAPET AND OUT THE BACK FACE REQUIRE A HARDENED ROUND STEEL WASHER THAT IS 2" O.D. X 5/32" THICK AND ONE PLATE WASHER. REPAIR ANY DAMAGED CONCRETE FROM BOLT INSTALLATION.

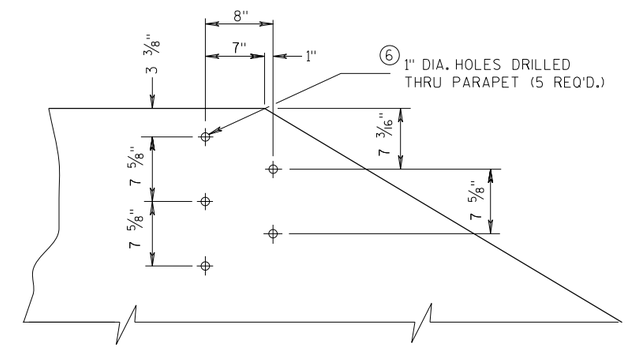

DRILL HOLE LOCATION AND PATTERN FOR THRIE BEAM CONNECTION

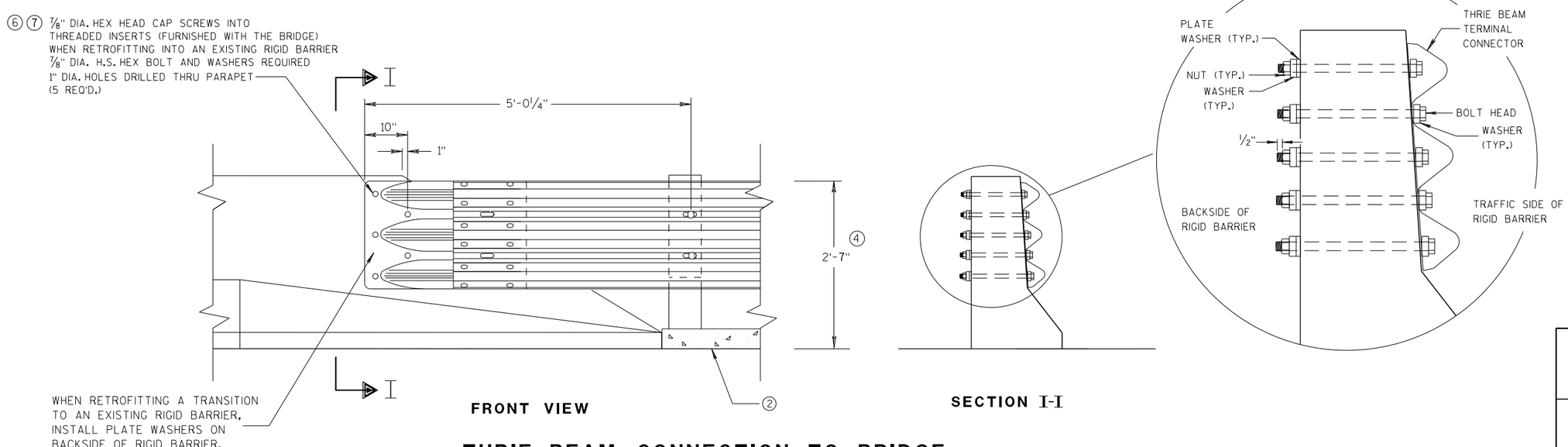

FRONT VIEW

SECTION I-I

THRIE BEAM CONNECTION TO BRIDGE PARAPETS WITH SLOPED ENDS

MIDWEST GUARDRAIL SYSTEM THRIE BEAM TRANSITION (MGS)

STATE OF WISCONSIN
DEPARTMENT OF TRANSPORTATION

APPROVED
07/2018 — DATE
/S/ Rodney Taylor — ROADWAY STANDARDS DEVELOPMENT UNIT SUPERVISOR
FHWA

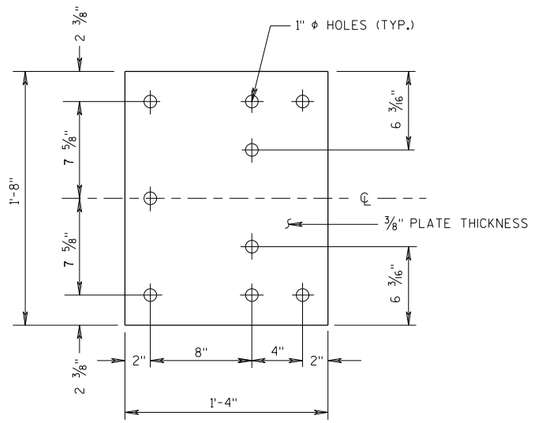

BACK-UP PLATE DETAIL

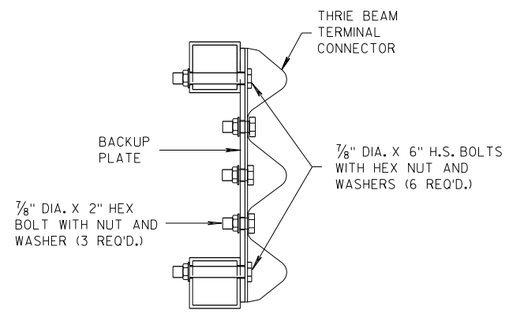

SECTION J-J

GENERAL NOTES

(4) TOLERANCE FOR TOP OF BEAM IS ± 1".

(6) DRILLING HOLES THROUGH THE PAPRPET, BOLTS, NUTS, WASHERS AND REPAIRING DAMAGED CONCRETE ARE INCIDENTAL TO THE CONTRACT.

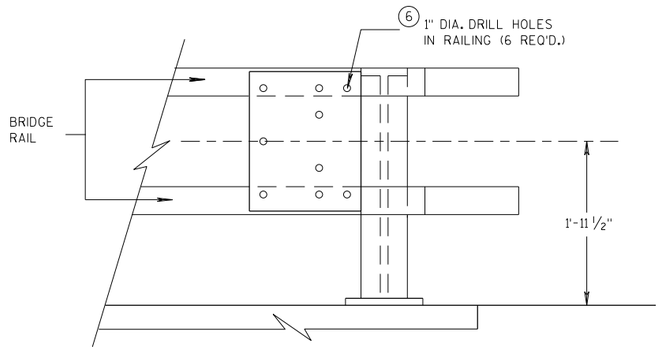

BACK-UP PLATE MOUNTING ONTO BRIDGE RAILING

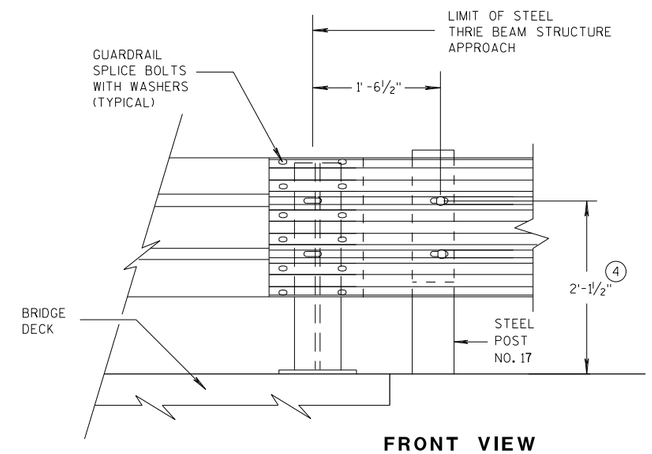

FRONT VIEW

THRIE BEAM CONNECTION TO STEEL RAILING TYPE "W"

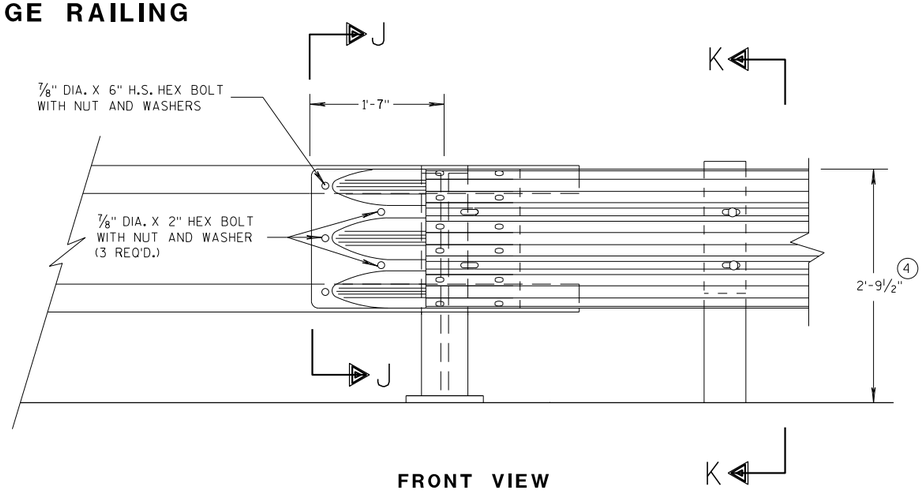

FRONT VIEW

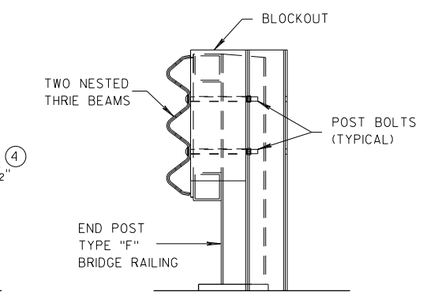

SECTION K-K

THRIE BEAM CONNECTION TO TUBULAR RAILING TYPE "F"

MIDWEST GUARDRAIL SYSTEM THRIE BEAM TRANSITION (MGS)

STATE OF WISCONSIN
DEPARTMENT OF TRANSPORTATION

APPROVED 07/2018 — DATE — FHWA

/S/ Rodney Taylor — ROADWAY STANDARDS DEVELOPMENT UNIT SUPERVISOR

S.D.D. 14 B 45-5g

GENERAL NOTES

(4) TOLERANCE FOR TOP OF W-BEAM RAIL IS ± 1".

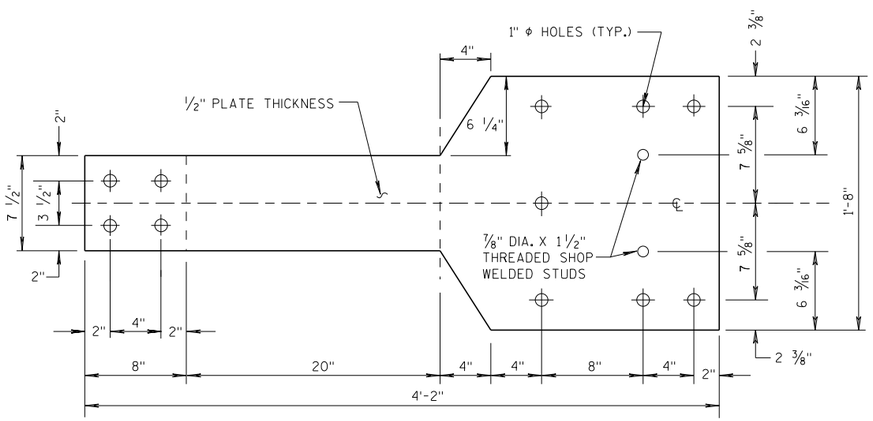

FRONT VIEW

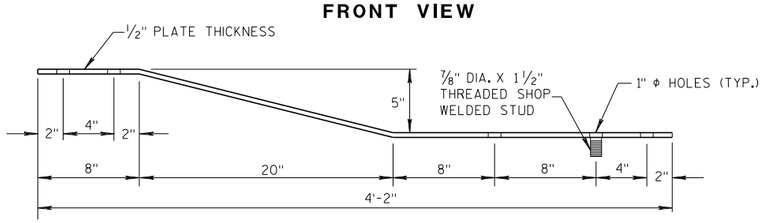

PLAN VIEW

BACK-UP PLATE DETAIL, TYPE "M"

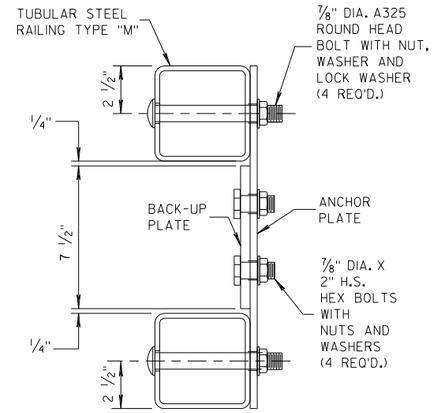

SECTION L-L

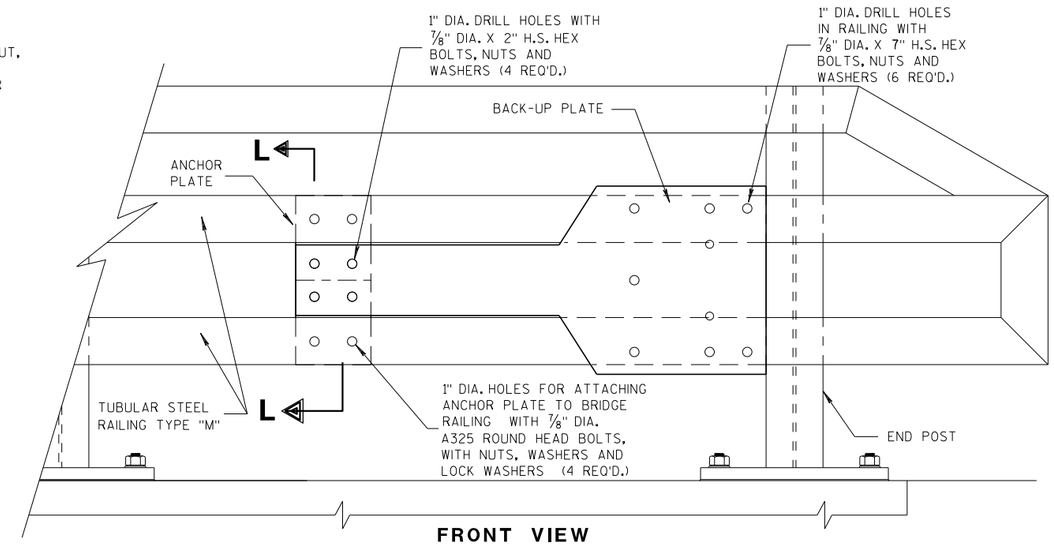

FRONT VIEW

ANCHOR AND BACK-UP PLATE MOUNTING TO BRIDGE RAILING, TYPE "M"

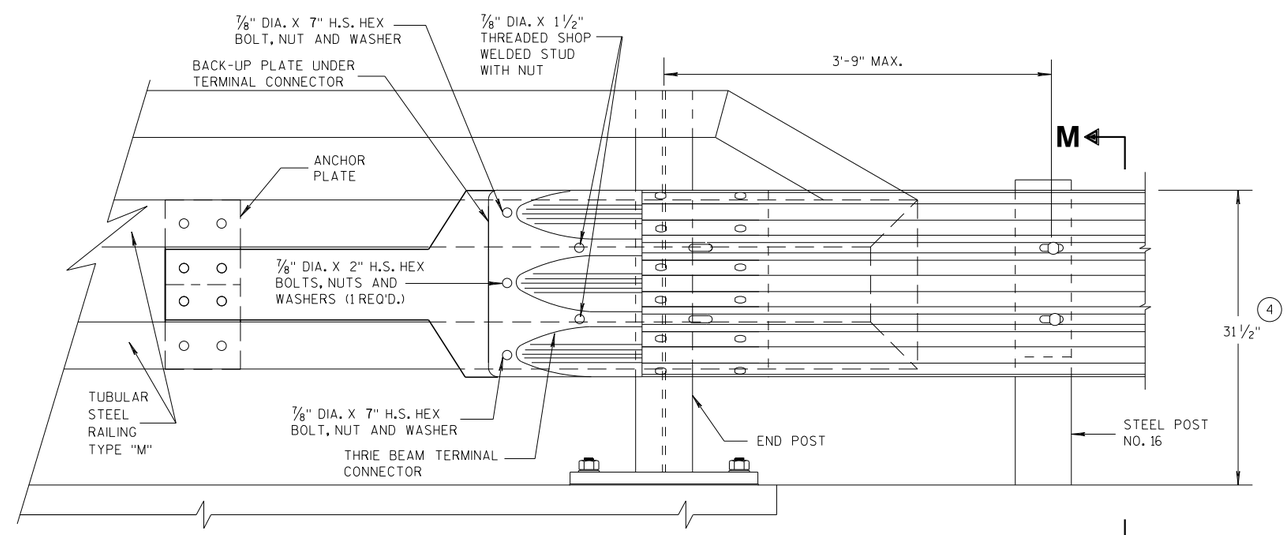

FRONT VIEW

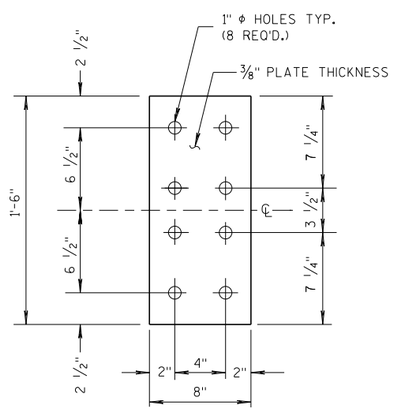

FRONT VIEW

ANCHOR PLATE DETAIL, TYPE "M"

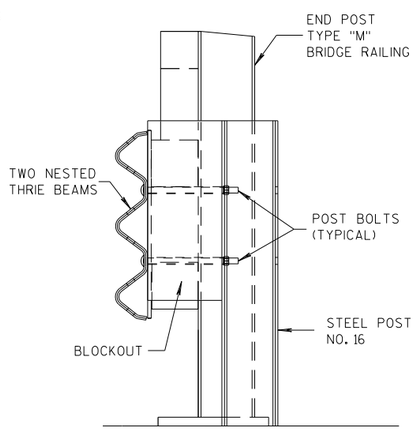

SECTION M-M

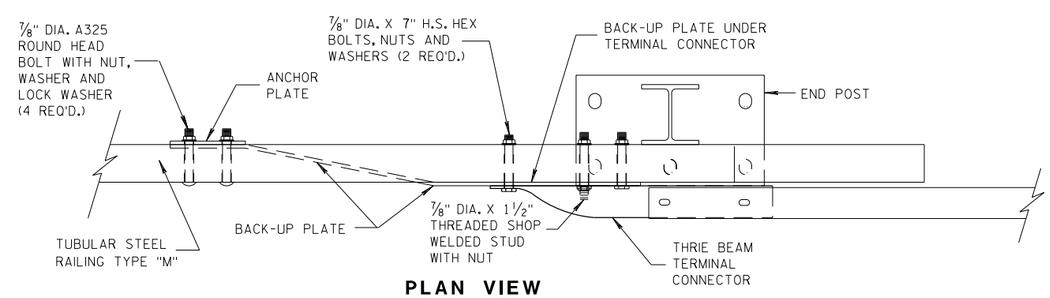

PLAN VIEW

THRIE BEAM CONNECTION TO TUBULAR RAILING, TYPE "M"

MIDWEST GUARDRAIL SYSTEM THRIE BEAM TRANSITION (MGS)

STATE OF WISCONSIN
DEPARTMENT OF TRANSPORTATION

APPROVED
07/2018 — DATE
/S/ Rodney Taylor — ROADWAY STANDARDS DEVELOPMENT UNIT SUPERVISOR
FHWA

6

S.D.D. 14 B 45-5h

GENERAL NOTES

COVER PLATE PANELS ARE 3/16" THICK.

ALL STIFFENERS ARE 1/4" THICK.

CONNECTOR PLATE SHALL BE FABRICATED FROM ASTM GRADE A36 STEEL AND GALVANIZED.

FOR GALVANIZED REQUIREMENTS, SEE SECTION 614 OF THE STANDARD SPECIFICATIONS.

ALL HOLE DIAMETERS SHALL BE 1".

FOR OPPOSITE SIDE INSTALLATION MIRROR DRAWINGS.

(10) STIFFENERS LOCATED AT THE OUTSIDE EDGES OF THE COVER PLATES SHALL BE WELDED AS FOLLOWS:
SINGLE BEVEL GROOVE WELD ON EXTERNAL SIDES AND 3/16" FILLET WELD BY 1" LONG SPACED AT 2" ON INTERNAL SIDES.

(11) STIFFENERS LOCATED ON THE INSIDE OF THE COVER PLATE SHALL BE WELDED AS FOLLOWS:
3/16" FILLET WELD BY 1" LONG SPACED AT 2".

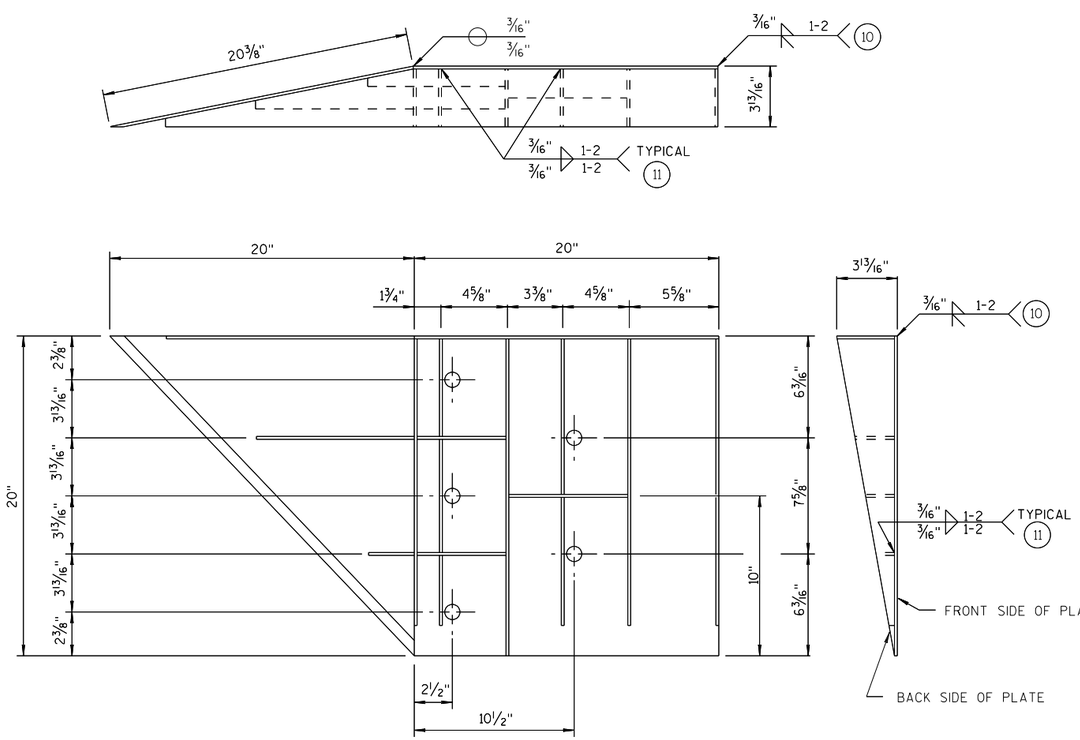

WELDING INSTRUCTION

(VIEWED FROM BACK SIDE OF PLATE)

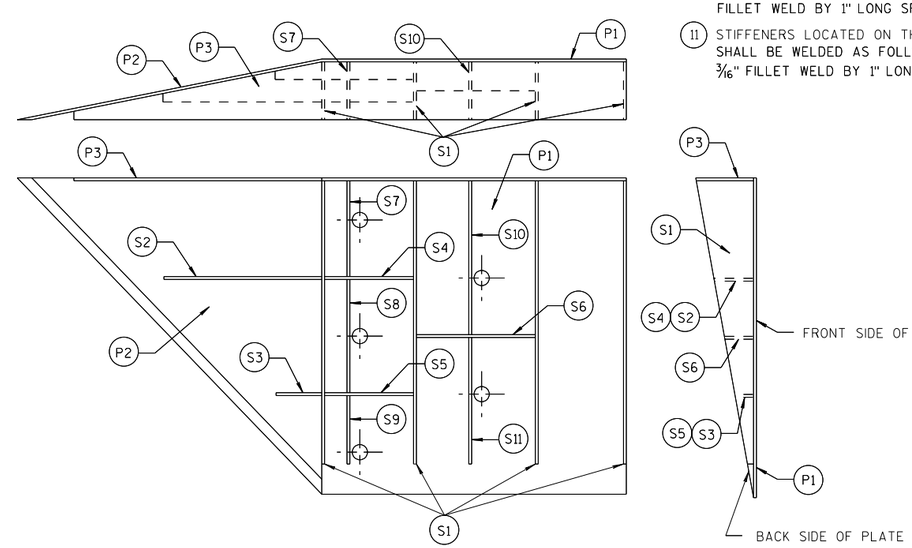

PLATE AND STIFFENER IDENTIFICATION

(VIEWED FROM BACK SIDE OF PLATE)

CONNECTOR PLATE DIMENSION (PER ASSEMBLY)				
PLATE	QUANTITY	SHAPE	SIZE (A x B x C x D)	THICKNESS
P1	1		20" x 20"	3/16"
P2	1		20" x 20" x 28 9/16"	3/16"
P3	1		39" x 3 5/8" x 20" x 19 5/16"	3/16"
S1	4		18 7/16" x 3 5/8" x 18 3/4"	1/4"
S2	1		10 1/4" x 2 7/16" x 10 3/8" x 1/2"	1/4"
S3	1		3" x 1 1/16" x 3 1/8" x 1/2"	1/4"
S4	1		6 1/8" x 2 7/16"	1/4"
S5	1		6 1/8" x 1 1/16"	1/4"
S6	1		7 3/4" x 1 3/4"	1/4"
S7	1		2 9/16" x 6" x 3 5/8" x 5 7/8"	1/4"
S8	1		1 5/32" x 7 1/2" x 2 1/2" x 7 3/8"	1/4"
S9	1		6 1/16" x 6 3/16" x 1 3/32"	1/4"
S10	1		1 7/8" x 9 7/8" x 3 5/8" x 9 11/16"	1/4"
S11	1		8 1/2" x 8 3/4" x 1 13/16"	1/4"

SINGLE SLOPE CONNECTION PLATE

MIDWEST GUARDRAIL SYSTEM THRIE BEAM TRANSITION (MGS)

STATE OF WISCONSIN
DEPARTMENT OF TRANSPORTATION

APPROVED
7/2018 /S/ Rodney Taylor
DATE ROADWAY STANDARDS DEVELOPMENT UNIT SUPERVISOR
FHWA

6

S.D.D. 14 B 45-5i

GENERAL NOTES

CONNECTOR PLATE, DRILLING BOLT HOLES THROUGH THE PARAPET, BOLTS, NUTS, WASHERS AND REPAIRING DAMAGED CONCRETE ARE INCIDENTAL TO THE CONTRACT.

(2) OPTIONAL CURB AND GUTTER OR DRAINAGE FEATURE SEE PLAN FOR INFORMATION.

(7) BOLTS MAY BE A325 BOLTS OR A449 BOLTS. BOLT LENGTH AND THREADING LENGTH ARE TO ALLOW FOR A TIGHT CONNECTION BETWEEN RIGID BARRIER AND THRIE BEAM CONNECTION PLATE. CONTRACTOR IS TO FIELD VERIFY BOLT LENGTH AND THREAD LENGTH. ONE ROUND WASHER REQUIRED BETWEEN BOLT HEAD AND THRIE BEAM CONNECTOR PLATE. BOLTS THAT EXTEND THROUGH THE PARAPET AND OUT THE BACK FACE REQUIRE A HARDENED ROUND STEEL WASHER THAT IS 2" O.D. X 5/32" THICK AND ONE PLATE WASHER. REPAIR ANY DAMAGED CONCRETE FROM BOLT INSTALLATION.

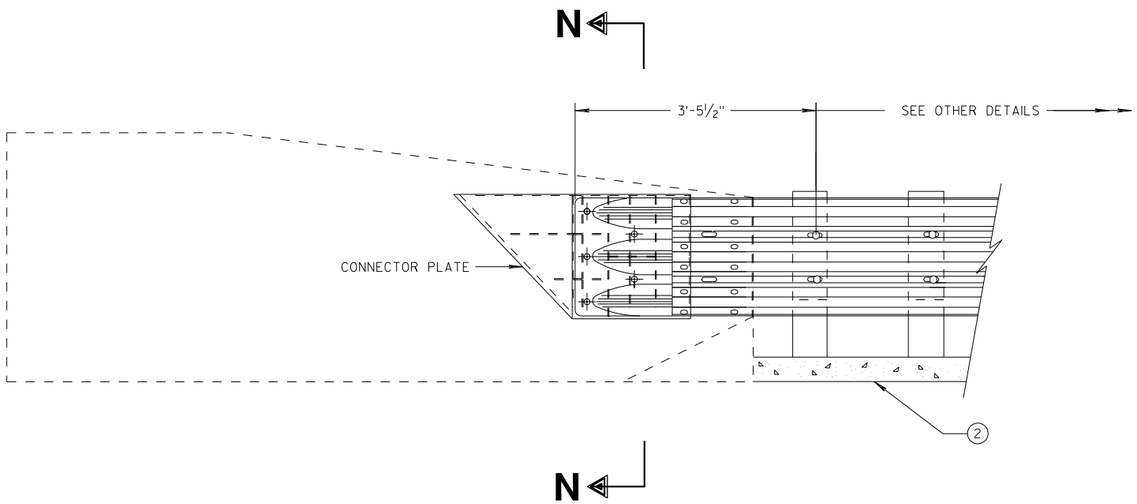

THRIE BEAM CONNECTION TO SINGLE SLOPE BARRIER

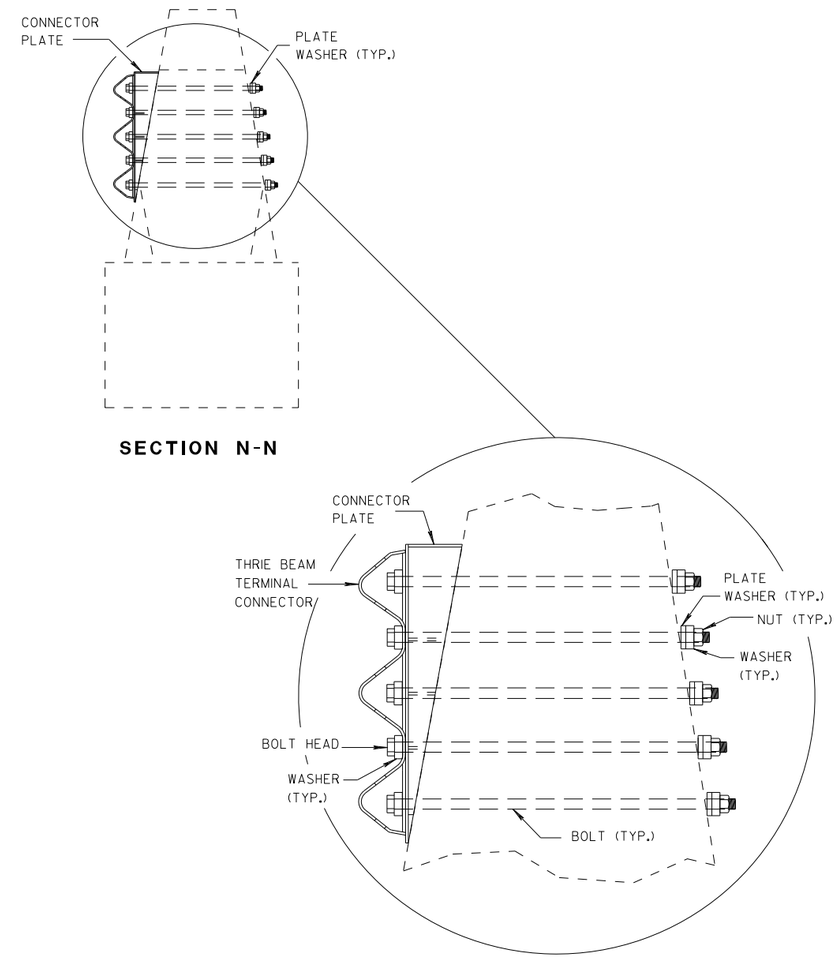

SECTION N-N

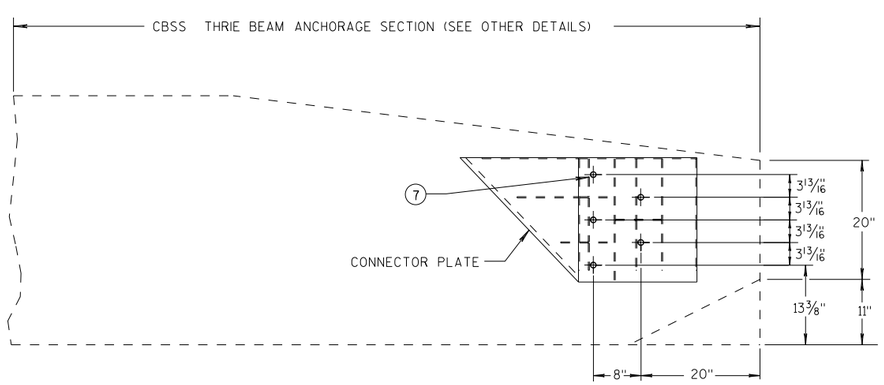

SINGLE SLOPE CONNECTION PLATE PLACEMENT

MIDWEST GUARDRAIL SYSTEM THRIE BEAM TRANSITION (MGS)

STATE OF WISCONSIN
DEPARTMENT OF TRANSPORTATION

APPROVED
7/2018 — DATE
/S/ Rodney Taylor — ROADWAY STANDARDS DEVELOPMENT UNIT SUPERVISOR
FHWA

6

S.D.D. 14 B 45-5j

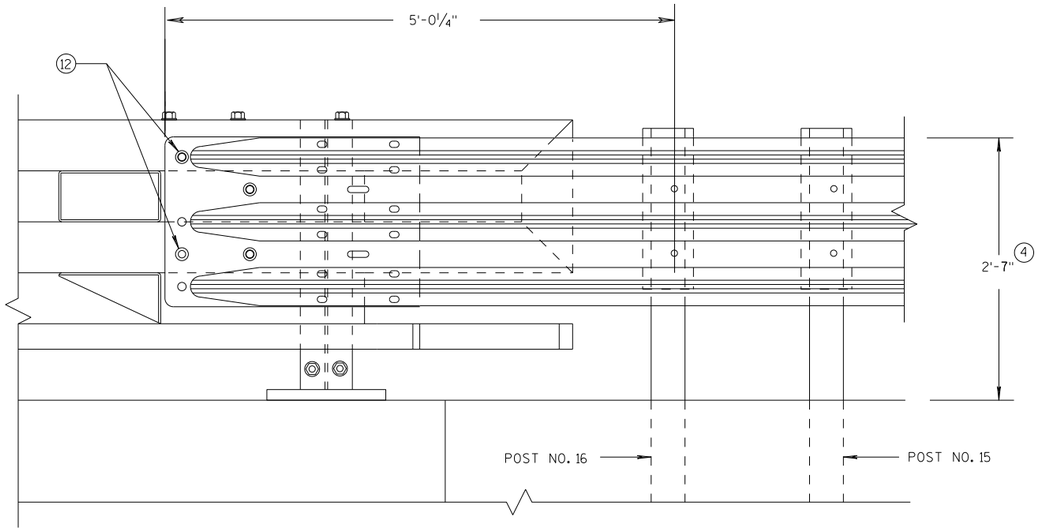

ELEVATION OF DETAIL AT NY3 END POST

THRIE BEAM RAIL ATTACHMENT

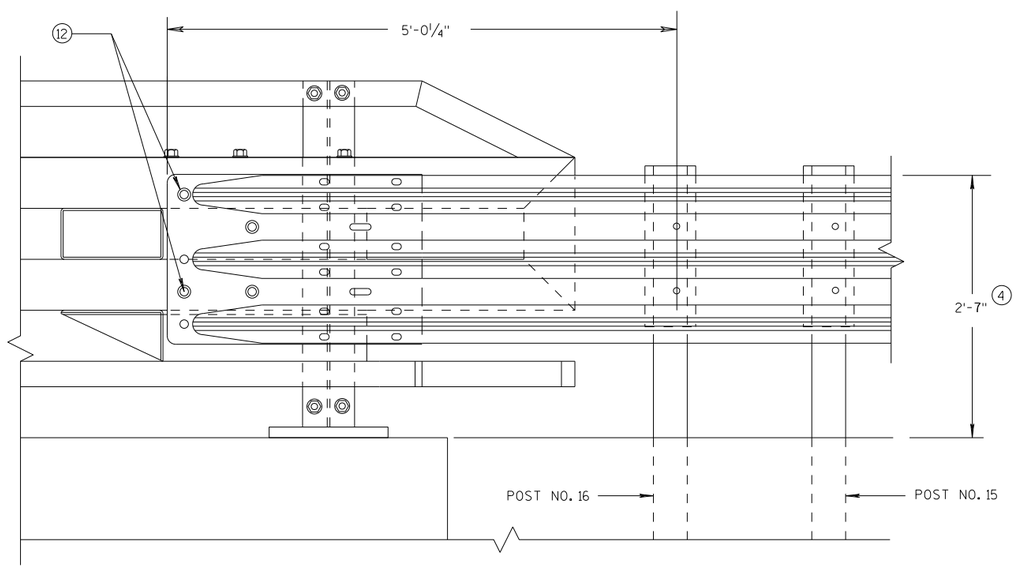

ELEVATION OF DETAIL AT NY4 END POST

THRIE BEAM RAIL ATTACHMENT

GENERAL NOTES

(4) TOLERANCE FOR TOP OF BEAM IS ± 1".

(12) BOLTS MAY BE A325 BOLTS OR A449 BOLTS. BOLT LENGTH AND THREADING LENGTH ARE TO ALLOW FOR A TIGHT CONNECTION BETWEEN RIGID BARRIER AND THRIE BEAM CONNECTION PLATE. CONTRACTOR IS TO FIELD VERIFY BOLT LENGTH AND THREAD LENGTH. ONE ROUND WASHER REQUIRED BETWEEN BOLT HEAD AND THRIE BEAM CONNECTOR PLATE. ON BACKSIDE OF PARAPET ONE ROUND WASHER, AND NUT REQUIRED. BOLT THREAD IS TO EXTEND ½-INCH BEYOND NUT.

MIDWEST GUARDRAIL SYSTEM
THRIE BEAM TRANSITION (MGS)

STATE OF WISCONSIN
DEPARTMENT OF TRANSPORTATION

APPROVED
7/2018
DATE
FHWA

/S/ Rodney Taylor
ROADWAY STANDARDS D
UNIT SUPERVIS

NT

6
S.D.D. 14 B 45-5k

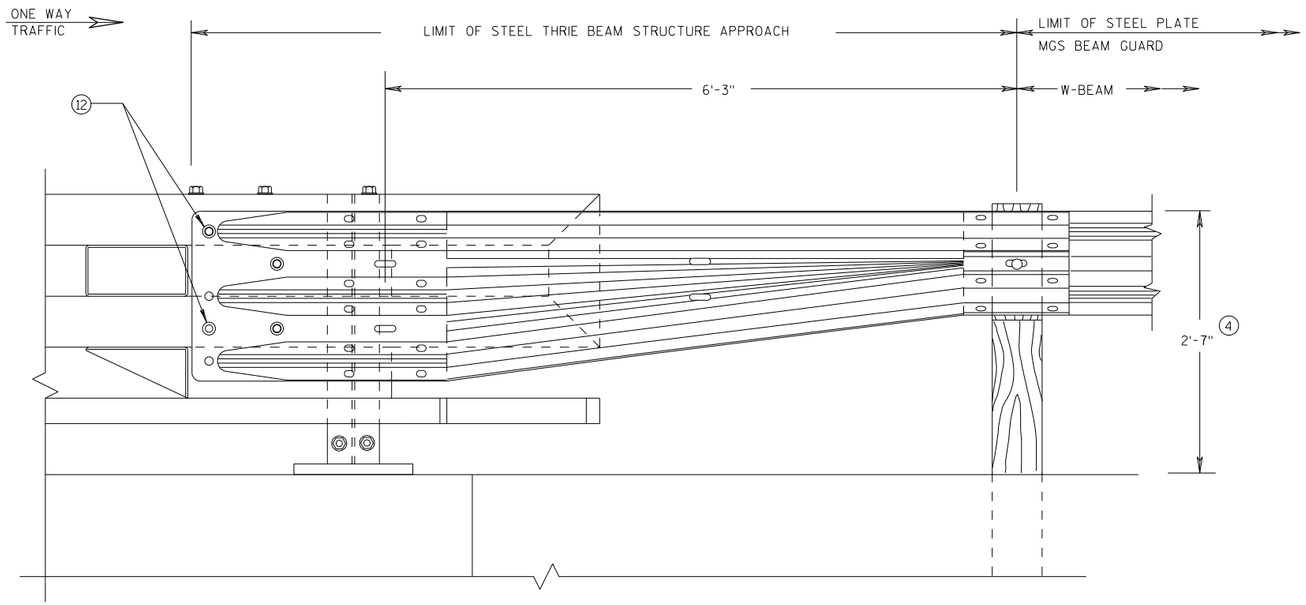

FRONT VIEW

W BEAM TRANSITION AND CONNECTION TO BRIDGE RAILING TYPE "NY3"

(USE ONLY ON THE TRAFFIC EXIT END OF ONE WAY BRIDGES)

GENERAL NOTES

(4) TOLERANCE FOR TOP OF BEAM IS ± 1".

(12) BOLTS MAY BE A325 BOLTS OR A449 BOLTS. BOLT LENGTH AND THREADING LENGTH ARE TO ALLOW FOR A TIGHT CONNECTION BETWEEN RIGID BARRIER AND THRIE BEAM CONNECTION PLATE. CONTRACTOR IS TO FIELD VERIFY BOLT LENGTH AND THREAD LENGTH. ONE ROUND WASHER REQUIRED BETWEEN BOLT HEAD AND THRIE BEAM CONNECTOR PLATE. ON BACKSIDE OF PARAPET ONE ROUND WASHER, AND NUT REQUIRED. BOLT THREAD IS TO EXTEND ½-INCH BEYOND NUT.

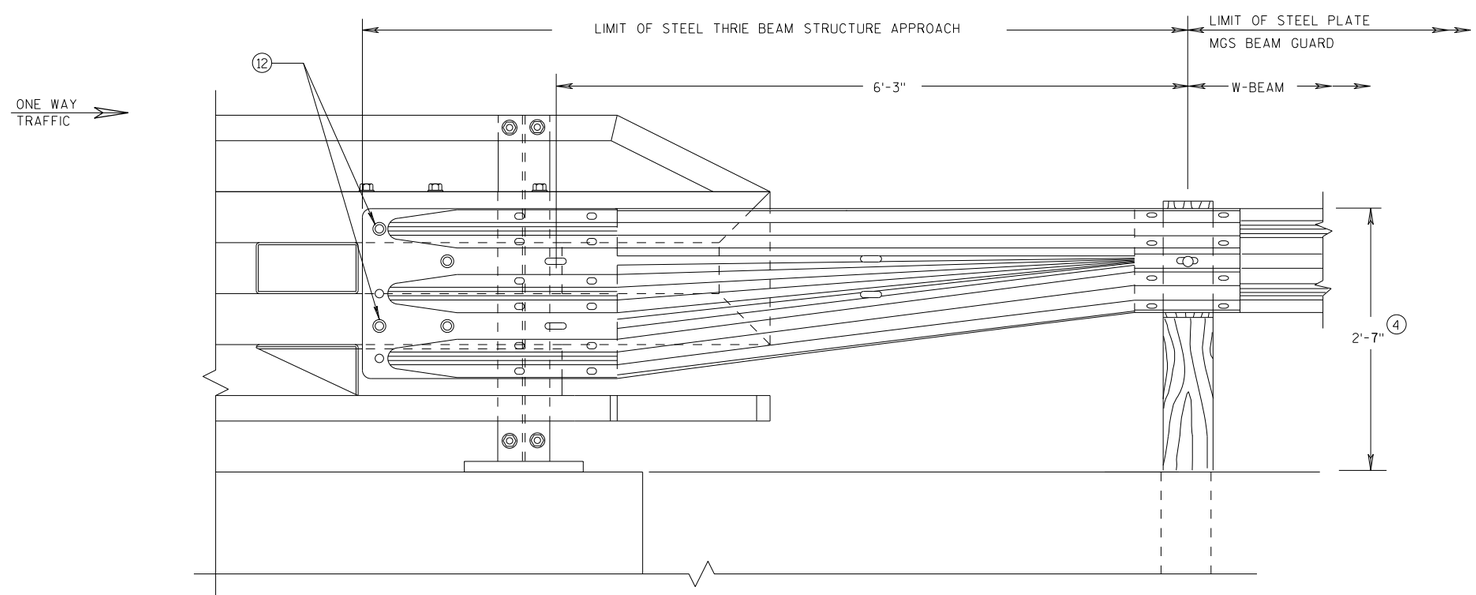

FRONT VIEW

W BEAM TRANSITION AND CONNECTION TO BRIDGE RAILING TYPE "NY4"

(USE ONLY ON THE TRAFFIC EXIT END OF ONE WAY BRIDGES)

MIDWEST GUARDRAIL SYSTEM THRIE BEAM TRANSITION (MGS)

STATE OF WISCONSIN
DEPARTMENT OF TRANSPORTATION

APPROVED
7/2018 — DATE
/S/ Rodney Taylor — ROADWAY STANDARDS DEVELOPMENT UNIT SUPERVISOR
FHWA

NT

6

S.D.D. 14 B 45-5L

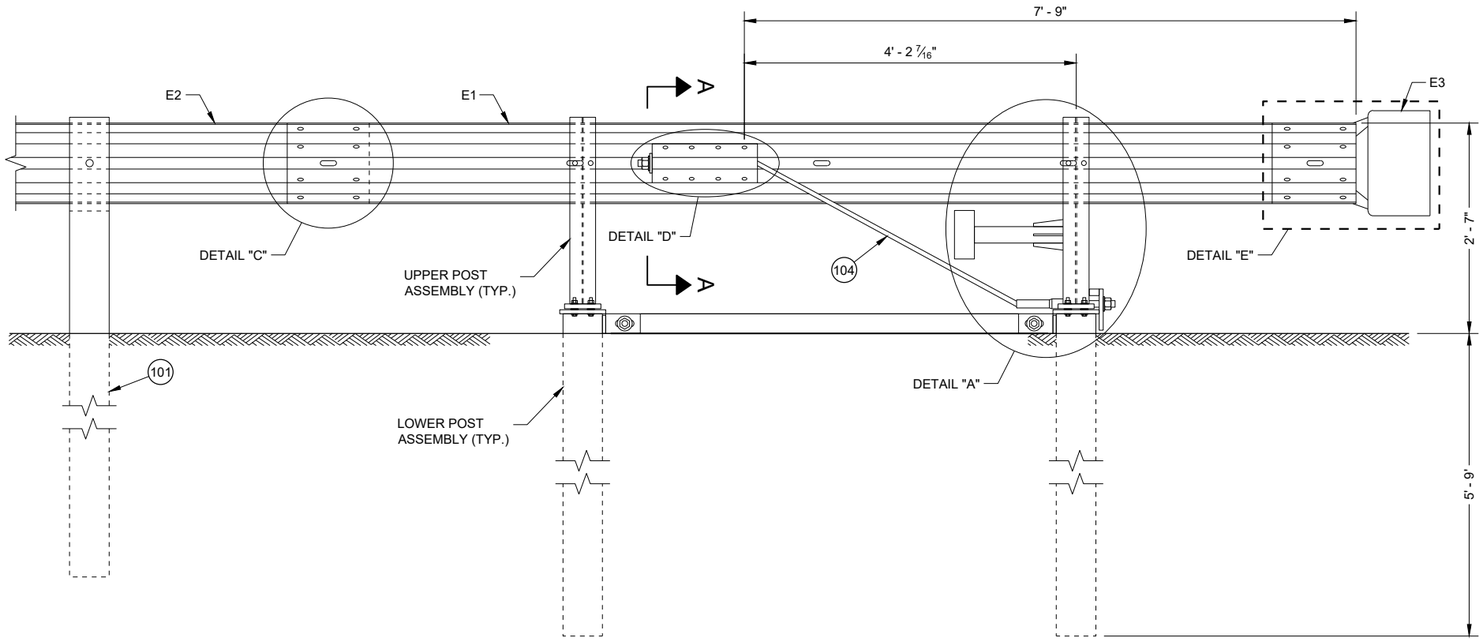

BACK VIEW
TYPE 2 TERMINAL

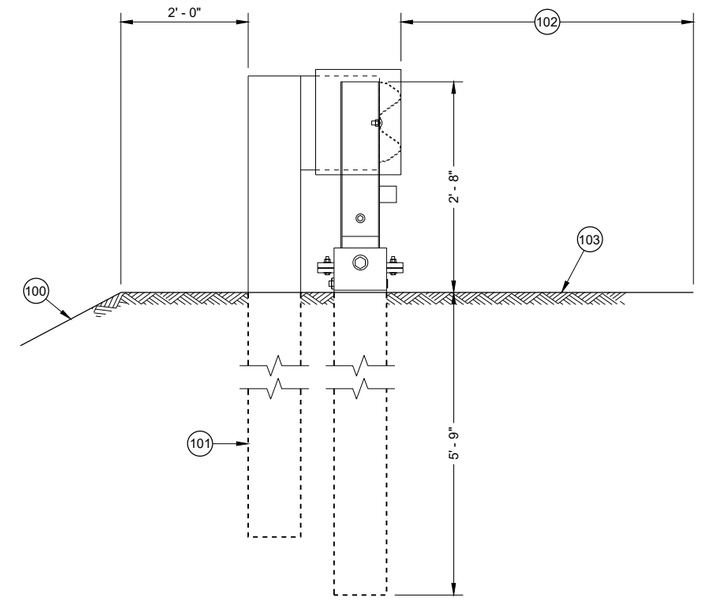

SIDE VIEW
TYPE 2 TERMINAL

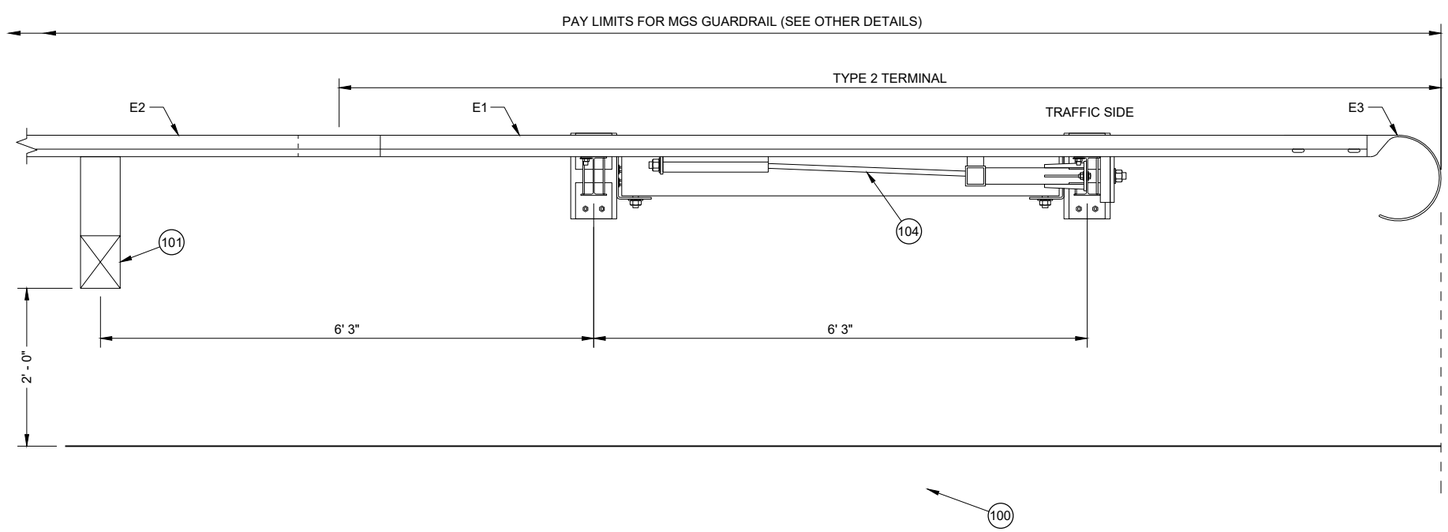

TOP VIEW
TYPE 2 TERMINAL

GENERAL NOTES

100 MAXIMUM SLOPE IS 2.5:1.

101 SEE SDD 14B42 FOR MORE INFORMATION.

102 SHOULDER

103 MAXIMUM SLOPE IS 10:1.

104 AFTER ASSEMBLY, CABLE IS TO BE TIGHTENED WITHOUT TWISTING THE CABLE.

MIDWEST GUARDRAIL SYSTEM (MGS) TYPE 2 TERMINAL

STATE OF WISCONSIN
DEPARTMENT OF TRANSPORTAT

6

SDD 14B47 - 05a

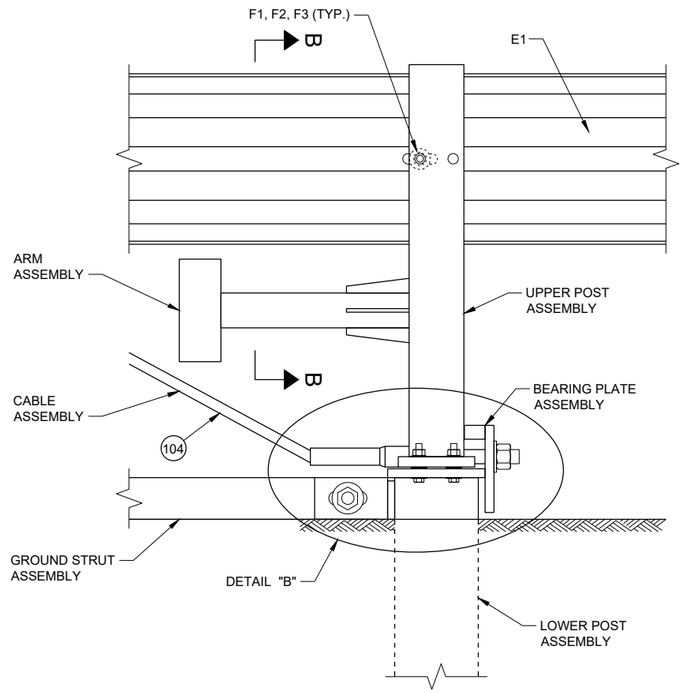

DETAIL "A"

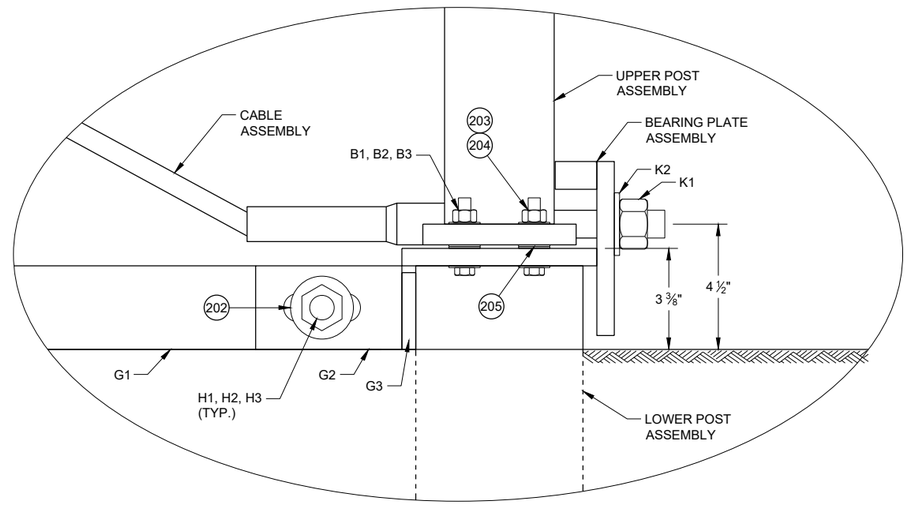

DETAIL "B"

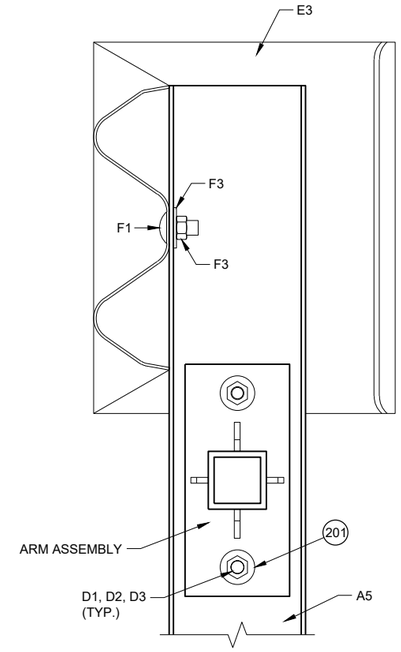

SECTION B - B

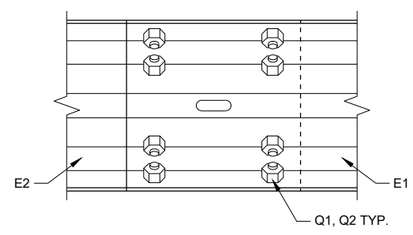

DETAIL "C"

GENERAL NOTES

200 INSTALL ONE WASHER UNDER BOLT HEAD AND RAIL AND ON WASHER BETWEEN NUT AND ANCHOR BRACKET ASSEMBLY.

201 INSTALL ONE WASHER UNDER BOLT HEAD AND UPPER POST ASSEMBLY AND ONE WASHER BETWEEN NUT AND ARM PLATE.

202 INSTALL ONE WASHER UNDER BOLT HEAD AND GROUND STRUT CONNECTOR AND ONE WASHER BETWEEN NUT AND GROUND STRUT CONNECTOR.

203 INSTALL ONE WASHER UNDER BOLT HEAD AND LOWER POST ASSEMBLY AND ONE WASHER BETWEEN NUT AND UPPER POST ASSEMBLY.

204 TORQUE VALUE IS BETWEEN 60 - 75 FT-LB.

205 TWO WASHERS BETWEEN UPPER AND LOWER POST ASSEMBLY.

206 INSTALL ONE WASHER BETWEEN NUT AND ANCHOR BRACKET ASSEMBLY.

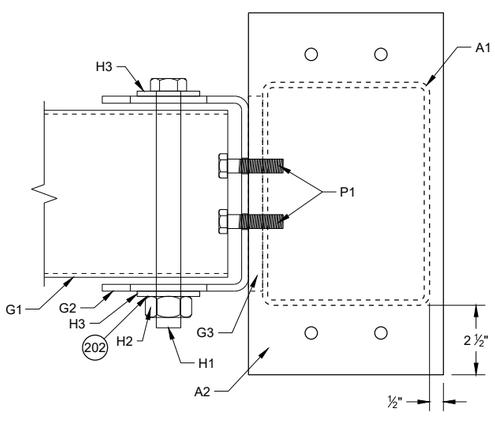

TOP VIEW

GROUND STRUT CONNECTION DETAIL

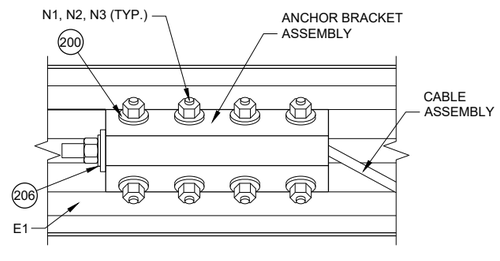

DETAIL "D"

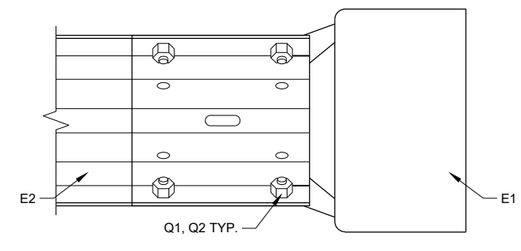

DETAIL "E"

MIDWEST GUARDRAIL SYSTEM (MGS) TYPE 2 TERMINAL

STATE OF WISCONSIN
DEPARTMENT OF TRANSPORTA

6

SDD 14B47 - 05b

GENERAL NOTES

(300) TAP FOR 1/2" AFTER GALVANIZATION

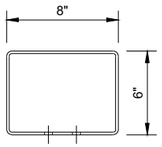

TOP VIEW

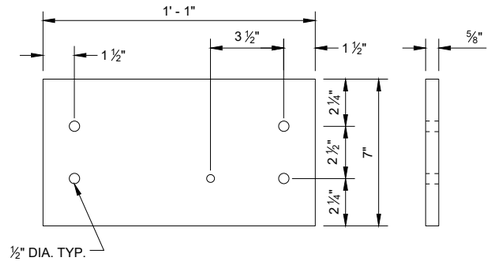

LOWER PLATE (A2)

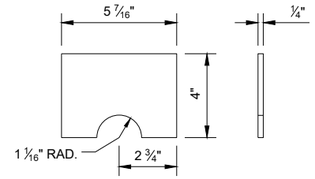

POST GUSSET (A3)

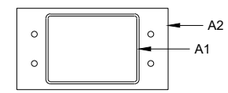

PLAN VIEW

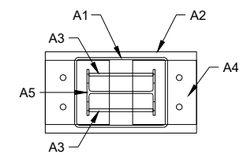

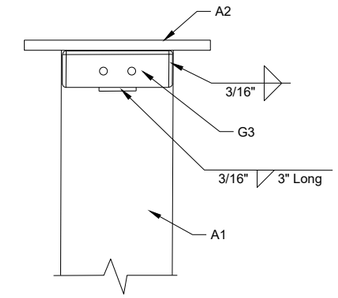

WELDING DETAIL
G3 AND A1

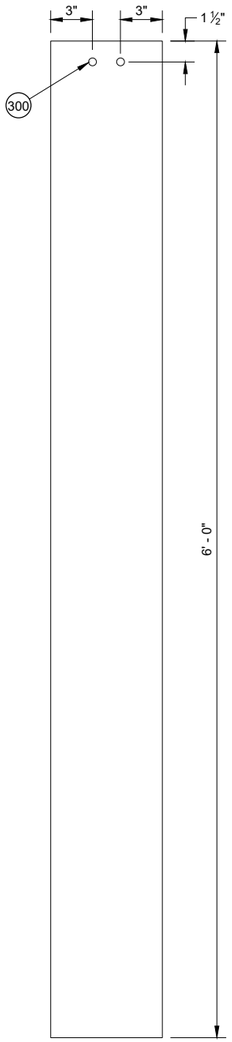

SIDE VIEW

FOUNDATION
TUBE (A1)

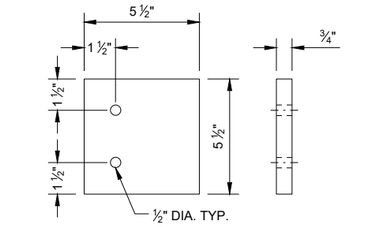

UPPER PLATE (A4)

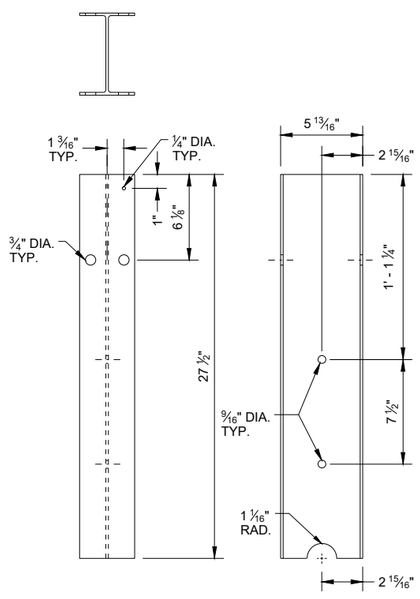

FRONT VIEW SIDE VIEW

TYPE 2 POST (A5)

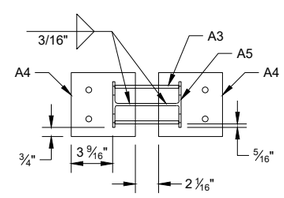

PLAN VIEW

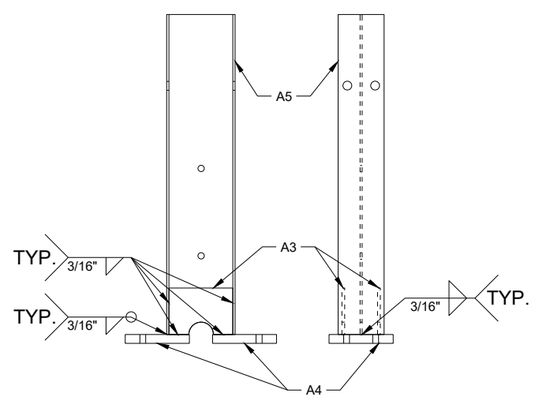

SIDE VIEW FRONT VIEW

UPPER POST ASSEMBLY

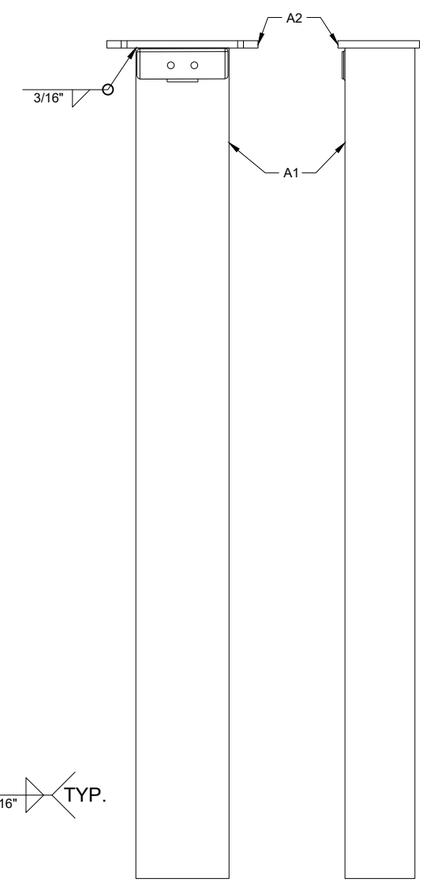

FRONT VIEW SIDE VIEW

LOWER POST ASSEMBLY

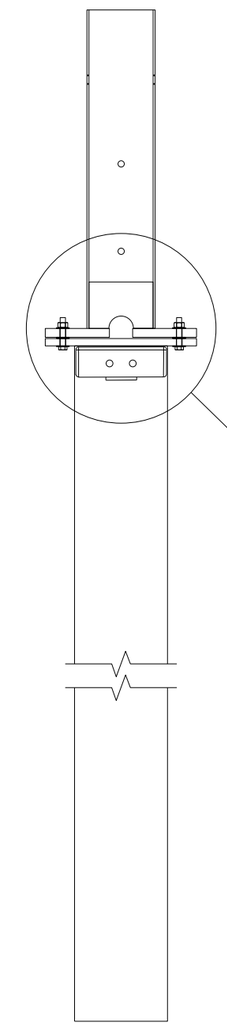

ASSEMBLED POST

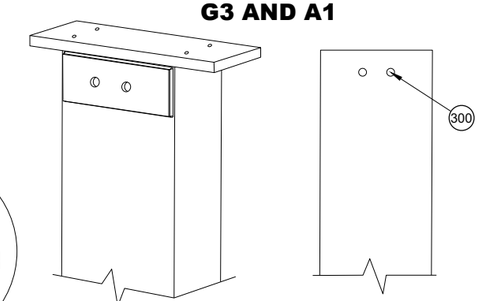

ASSEMBLY DETAIL
ISOMETRIC

A1

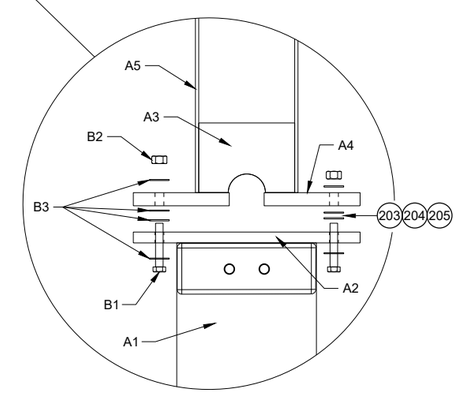

POST CONNECTION DETAIL

MIDWEST GUARDRAIL SYSTEM (MGS) TYPE 2 TERMINAL

STATE OF WISCONSIN
DEPARTMENT OF TRANSPORTAT

6

SDD 14B47 - 05c

6

SDD 14B47 - 05c

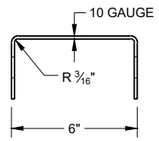

SIDE VIEW

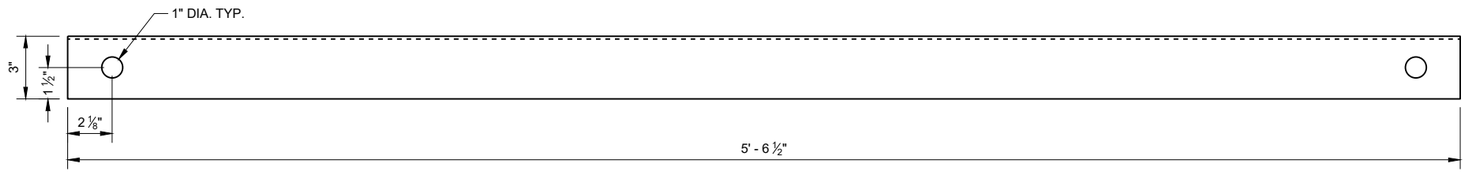

FRONT VIEW

GROUND STRUT CHANNEL (G1)

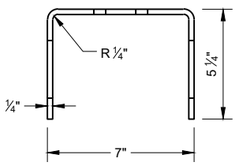

TOP VIEW

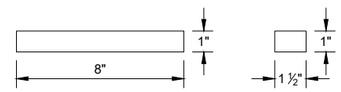

BEARING PLATE FLANGE (L2)

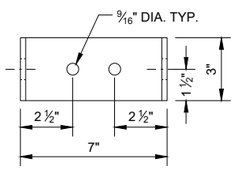

FRONT VIEW

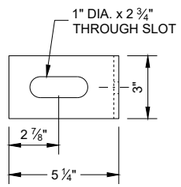

SIDE VIEW

GROUND STRUT CONNECTOR (G2)

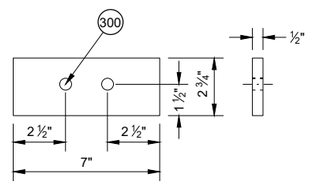

GROUND STRUT PLATE (G3)

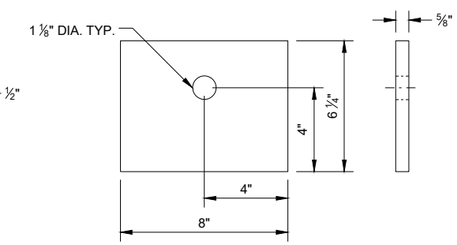

BEARING PLATE (L1)

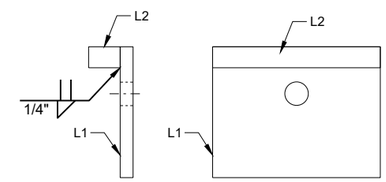

SIDE VIEW FRONT VIEW

BEARING PLATE ASSEMBLY

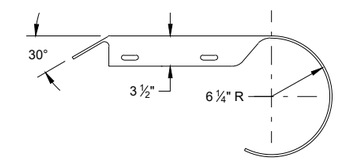

PLAN VIEW

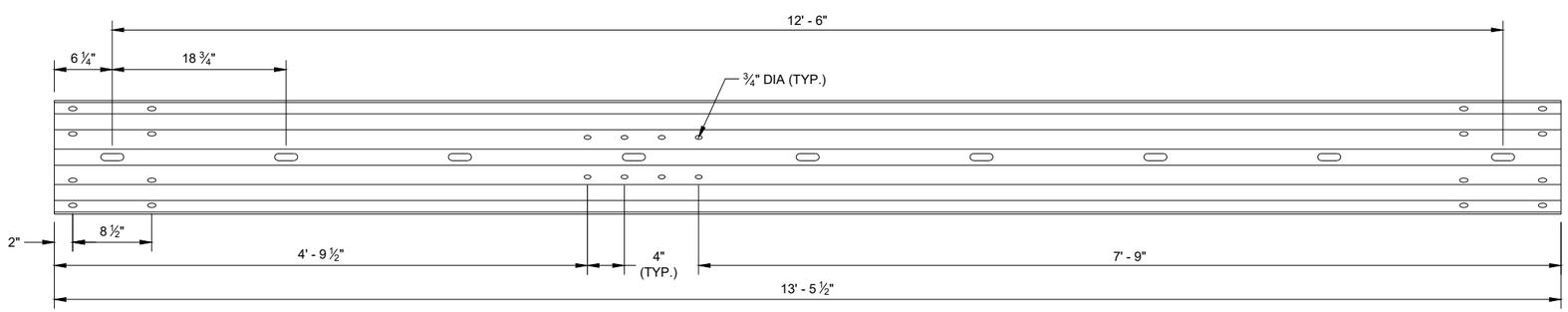

TYPE 2 GUARDRAIL (E1)

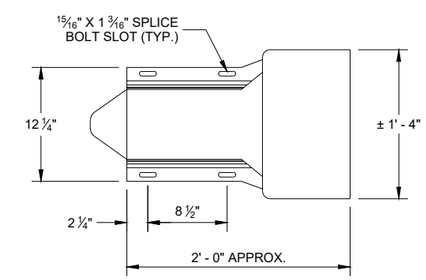

ELEVATION VIEW

ROUNDED BUFFER END (E3)

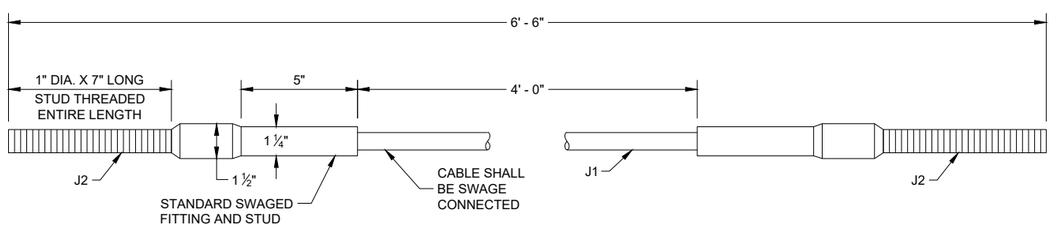

CABLE ASSEMBLY

MIDWEST GUARDRAIL SYSTEM (MGS) TYPE 2 TERMINAL

STATE OF WISCONSIN
DEPARTMENT OF TRANSPORTAT

6

SDD 14B47 - 05d

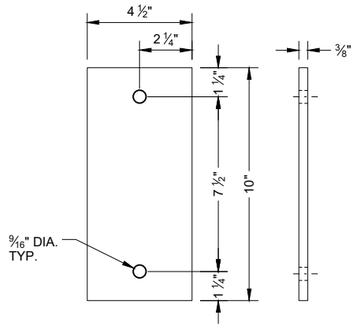

ARM PLATE (C1)

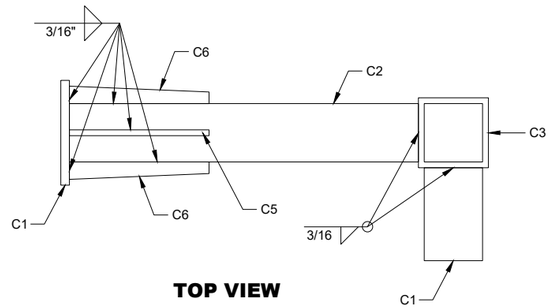

TOP VIEW
ARM ASSEMBLY

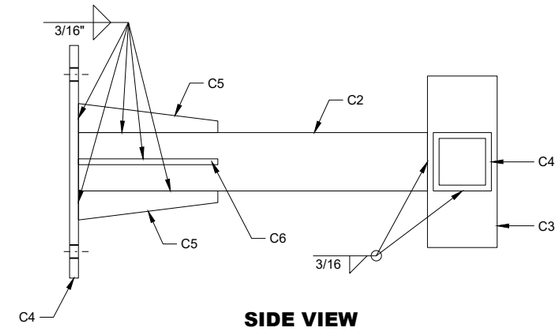

SIDE VIEW
ARM ASSEMBLY

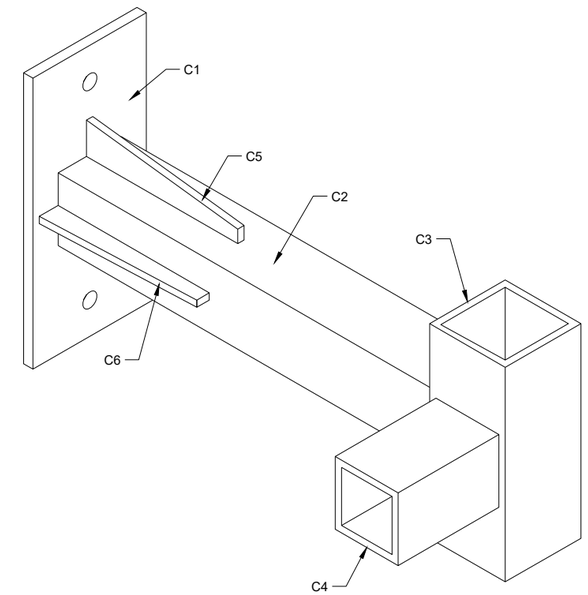

ISOMETRIC VIEW
ARM ASSEMBLY

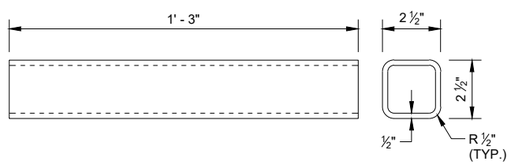

ARM TUBE 1 (C2)

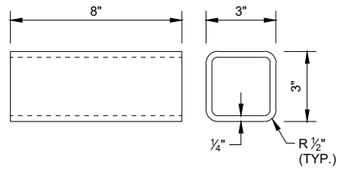

ARM TUBE 2 (C3)

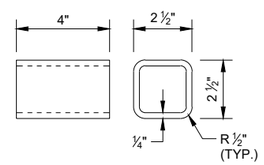

ARM TUBE 3 (C4)

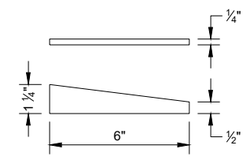

ARM GUSSET PLATE 1 (C5)

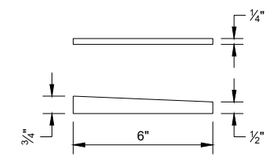

ARM GUSSET PLATE 2 (C6)

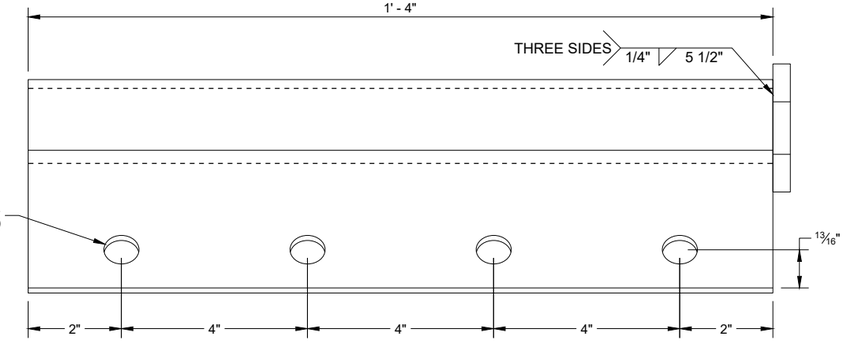

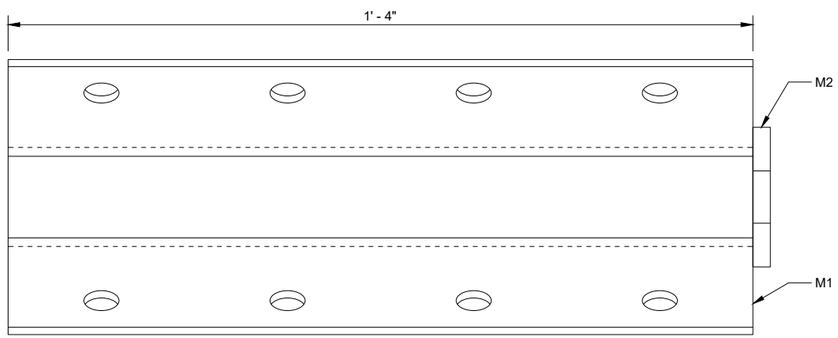

ANCHOR BRACKET (M1, M2)

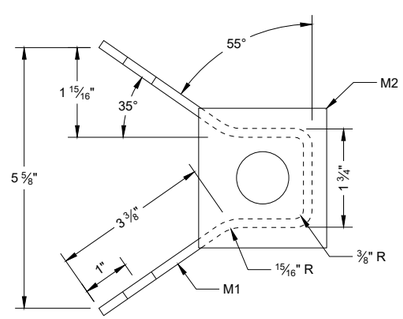

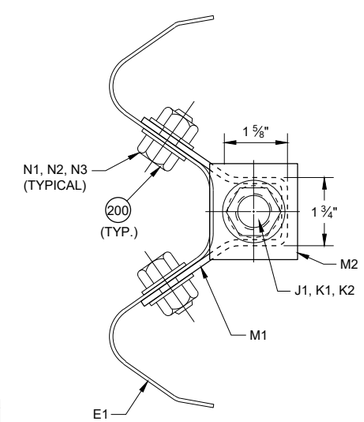

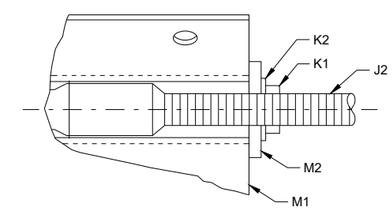

SECTION A - A

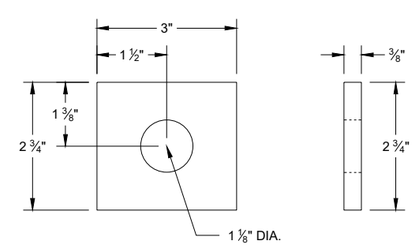

ANCHOR BRACKET BEARING PLATE (M2)

MIDWEST GUARDRAIL SYSTEM (MGS) TYPE 2 TERMINAL

STATE OF WISCONSIN
DEPARTMENT OF TRANSPORTA

6

SDD 14B47 - 05e

BILL OF MATERIALS - TYPE 2 TERMINAL (MGS)

PART	DESCRIPTION	MATERIALS SPECIFICATIONS	NOTES
A1	TYPE 2 FOUNDATION TUBE	AASHTO M111 / ASTM A123 ASTM A500 GRADE B OR ASTM A-501	TS 8" x 6" x 3/16"
A2	LOWER PLATE	AASHTO M111 / ASTM A123 ASTM A36 MIN. STRENGTH 36 KSI, OR ASTM A529 MAX. STRENGTH 50 KSI, OR ASTM A572 MAX STRENGTH 50 KSI, OR ASTM A709 MAX STRENGTH 50 KSI, OR ASTM A992 MAX STRENGTH 50 KSI	5/8" THICKNESS
A3	POST GUSSET	AASHTO M111 / ASTM A123 ASTM A36 MIN. STRENGTH 36 KSI, OR ASTM A529 MAX. STRENGTH 50 KSI, OR ASTM A572 MAX STRENGTH 50 KSI, OR ASTM A709 MAX STRENGTH 50 KSI, OR ASTM A992 MAX STRENGTH 50 KSI	1/4" THICKNESS
A4	UPPER PLATE	AASHTO M111 / ASTM A123 ASTM A36 MIN. STRENGTH 36 KSI, OR ASTM A529 MAX. STRENGTH 50 KSI, OR ASTM A572 MAX STRENGTH 50 KSI, OR ASTM A709 MAX STRENGTH 50 KSI, OR ASTM A992 MAX STRENGTH 50 KSI	3/4" THICKNESS
A5	TYPE 2 POST	AASHTO M111 / ASTM A123 ASTM A36 MIN. STRENGTH 36 KSI, OR ASTM A529 MAX. STRENGTH 50 KSI, OR ASTM A572 MAX STRENGTH 50 KSI, OR ASTM A709 MAX STRENGTH 50 KSI, OR ASTM A992 MAX STRENGTH 50 KSI, w6x9 or w6x8.5	
B1	BREAKAWAY BOLT	HOT DIP AASHTO M232 CLASS / ASTM A153 CLASS C / ASTM F2329 C OR MECHANICAL GAL. TO AASHTO M298 CLASS 50 TYPE 1 / ASTM B695 CLASS 50 TYPE 1 UNC HEAVY HEX HEAD ASTM F3125 GRADE A325 TYPE 1 HEAVY HEX HEAD OR SAE J429 GRADE 5 HEAVY HEX HEAD / ASTM A449 TYPE 1 HEAVY HEX HEAD. BOLTS MAY BE FULLY THREADED . PROVIDE ENOUGH THREADING FOR PROPER TIGHTENING OF BOLT.	7/16" DIA.
B2	BREAKAWAY BOLT WASHER	HOT DIP AASHTO M232 CLASS / ASTM A153 CLASS C / ASTM F2329 C OR MECHANICAL GAL. TO AASHTO M298 CLASS 50 TYPE 1 / ASTM B695 CLASS 50 TYPE 1 F436 TYPE 1 (HARDEN WASHER ONLY)	7/16" DIA.
B3	BREAKAWAY BOLT NUT	HOT DIP AASHTO M232 CLASS / ASTM A153 CLASS C / ASTM F2329 C OR MECHANICAL GAL. TO AASHTO M298 CLASS 50 TYPE 1 / ASTM B695 CLASS 50 TYPE 1 UNC OVER TAP NUTS AS SPECIFIED IN AASHTO 291/ASTM A 563 HEAVY HEX HEAD ASTM A563DH OR SAE J995 GRADE 5	
C1	ARM ASSEMBLY PLATE	AASHTO M111 / ASTM A123 ASTM A36 MIN. STRENGTH 36 KSI, OR ASTM A529 MAX. STRENGTH 50 KSI, OR ASTM A572 MAX STRENGTH 50 KSI, OR ASTM A709 MAX STRENGTH 50 KSI, OR ASTM A992 MAX STRENGTH 50 KSI	3/8" THICKNESS
C2	ARM ASSEMBLY TUBE 1	AASHTO M111 / ASTM A123 ASTM A500 GRADE B OR ASTM A-501	TS 8" x 6" x 3/16"
C3	ARM ASSEMBLY TUBE 2	AASHTO M111 / ASTM A123 ASTM A500 GRADE B OR ASTM A-501	TS 3" x 3" x 1/4"
C4	ARM ASSEMBLY TUBE 3	AASHTO M111 / ASTM A123 ASTM A500 GRADE B OR ASTM A-501	TS 2 1/2" x 2 1/2" X 1/4"
C5	ARM ASSEMBLY GUSSET PLATE 1	AASHTO M111 / ASTM A123 ASTM A36 MIN. STRENGTH 36 KSI, OR ASTM A529 MAX. STRENGTH 50 KSI, OR ASTM A572 MAX STRENGTH 50 KSI, OR ASTM A709 MAX STRENGTH 50 KSI, OR ASTM A992 MAX STRENGTH 50 KSI	1/4" THICKNESS
C6	ARM ASSEMBLY GUSSET PLATE 2	AASHTO M111 / ASTM A123 ASTM A36 MIN. STRENGTH 36 KSI, OR ASTM A529 MAX. STRENGTH 50 KSI, OR ASTM A572 MAX STRENGTH 50 KSI, OR ASTM A709 MAX STRENGTH 50 KSI, OR ASTM A992 MAX STRENGTH 50 KSI	1/4" THICKNESS
D1	ARM ASSEMBLY BOLT	HOT DIP AASHTO M232 CLASS / ASTM A153 CLASS C / ASTM F2329 C OR MECHANICAL GAL. TO AASHTO M298 CLASS 50 TYPE 1 / ASTM B695 CLASS 50 TYPE 1 UNC HEAVY HEX HEAD ASTM A307 GRADE B OR SAE J429 GRADE 2 OR ASTM F1554 GRADE 36	1/2" DIA.
D2	ARM ASSEMBLY WASHER	HOT DIP AASHTO M232 CLASS / ASTM A153 CLASS C / ASTM F2329 C OR MECHANICAL GAL. TO AASHTO M298 CLASS 50 TYPE 1 / ASTM B695 CLASS 50 TYPE 1 F436 TYPE 1 (HARDEN WASHER ONLY)	1/2" DIA.
D3	ARM ASSEMBLY NUT	HOT DIP AASHTO M232 CLASS / ASTM A153 CLASS C / ASTM F2329 C OR MECHANICAL GAL. TO AASHTO M298 CLASS 50 TYPE 1 / ASTM B695 CLASS 50 TYPE 1 UNC OVER TAP NUTS AS SPECIFIED IN AASHTO 291 / ASTM A 563 HEAVY HEX HEAD ASTM A563DH OR SAE J995 GRADE 5	1/2" DIA.
E1	TYPE 2 GUARD RAIL	AASHTO M180 CLASS A TYPE 2 12 GAUGE APPROVED PRODUCER	
E2	BEAM GUARD RAIL	AASHTO M180 CLASS A TYPE 2 12 GAUGE APPROVED PRODUCER	
E3	BEAM GUARD ROUNDED BUFFER END	AASHTO M180 CLASS A TYPE 2 12 GAUGE APPROVED PRODUCER	
F1	POST BOLT	HOT DIP AASHTO M232 CLASS / ASTM A153 CLASS C / ASTM F2329 C OR MECHANICAL GAL. TO AASHTO M298 CLASS 50 TYPE 1 / ASTM B695 CLASS 50 TYPE 1 UNC UNC HEAVY HEX HEAD ASTM A307 GRADE B OR SAE J429 GRADE 2 OR ASTM F1554 GRADE 36	5/8" DIA.
F2	POST BOLT WASHER	HOT DIP AASHTO M232 CLASS / ASTM A153 CLASS C / ASTM F2329 C OR MECHANICAL GAL. TO AASHTO M298 CLASS 50 TYPE 1 / ASTM B695 CLASS 50 TYPE 1 F436 TYPE 1 (HARDEN WASHER ONLY)	5/8" DIA.
F3	POST BOLT NUT	HOT DIP AASHTO M232 CLASS / ASTM A153 CLASS C / ASTM F2329 C OR MECHANICAL GAL. TO AASHTO M298 CLASS 50 TYPE 1 / ASTM B695 CLASS 50 TYPE 1 UNC OVER TAP NUTS AS SPECIFIED IN AASHTO 291/ASTM A 563 AASHTO M180 RECESSED HEAVY HEX HEAD ASTM A563DH OR SAE J995 GRADE 5	
G1	GROUND STRUT CHANNEL	AASHTO M111 / ASTM A123 ASTM A36 MIN. STRENGTH 36 KSI, OR ASTM A529 MAX. STRENGTH 50 KSI, OR ASTM A572 MAX STRENGTH 50 KSI, OR ASTM A709 MAX STRENGTH 50 KSI, OR ASTM A992 MAX STRENGTH 50 KSI	1/2" x 11 3/4" x 10 GAUGE
G2	GROUND STRUT CONNECTOR	AASHTO M111 / ASTM A123 ASTM A36 MIN. STRENGTH 36 KSI, OR ASTM A529 MAX. STRENGTH 50 KSI, OR ASTM A572 MAX STRENGTH 50 KSI, OR ASTM A709 MAX STRENGTH 50 KSI, OR ASTM A992 MAX STRENGTH 50 KSI	1/4" THICKNESS
G3	GROUND STRUT PLATE	AASHTO M111 / ASTM A123 ASTM A36 MIN. STRENGTH 36 KSI, OR ASTM A529 MAX. STRENGTH 50 KSI, OR ASTM A572 MAX STRENGTH 50 KSI, OR ASTM A709 MAX STRENGTH 50 KSI, OR ASTM A992 MAX STRENGTH 50 KSI	1/2" THICKNESS

MIDWEST GUARDRAIL SYSTEM (MGS) TYPE 2 TERMINAL

STATE OF WISCONSIN
DEPARTMENT OF TRANSPORTAT

6

SDD 14B47 - 05f

BILL OF MATERIALS - TYPE 2 TERMINAL (MGS)

PART	DESCRIPTION	MATERIALS SPECIFICATIONS	NOTES
H1	GROUND STRUT BOLT	HOT DIP AASHTO M232 CLASS / ASTM A153 CLASS C / ASTM F2329 C OR MECHANICAL GAL. TO AASHTO M298 CLASS 50 TYPE 1 / ASTM B695 CLASS 50 TYPE 1 UNC HEAVY HEX HEAD ASTM A307 GRADE B OR SAE J429 GRADE 2 OR ASTM F1554 GRADE 36	7/8" DIA.
H2	GROUND STRUT BOLT WASHER	HOT DIP AASHTO M232 CLASS / ASTM A153 CLASS C / ASTM F2329 C OR MECHANICAL GAL. TO AASHTO M298 CLASS 50 TYPE 1/ ASTM B695 CLASS 50 TYPE 1 F436 TYPE 1 (HARDEN WASHER ONLY)	7/8" DIA.
H3	GROUND STRUT BOLT NUT	HOT DIP AASHTO M232 CLASS / ASTM A153 CLASS C / ASTM F2329 C OR MECHANICAL GAL. TO AASHTO M298 CLASS 50 TYPE 1 / ASTM B695 CLASS 50 TYPE 1 UNC HEAVY HEX HEAD 5/8" ASTM A307 GRADE B OR SAE J429 GRADE 2 OR ASTM F1554 GRADE 36	
J1	BCT CABLE	AASHTO M30 / ASTM A741 6 x 19 INDEPENDENT WIRE CORE (IWRC) IMPROVED PLOW STEEL (IPS), 6 x 19 INDEPENDENT WIRE CORE (IWRC) IMPROVED PLOW STEEL (IPS) TYPE II OR IIC, CLASS C ZINC COATED MIN. BREAKING STRENGTH OF 42.7 KIPS	3/4" DIA.
J2	BCT CABLE	UNC 1" ASTM A576 GRADE 1035 SWAGE FITTINGS ARE TO BE FACTORY SWEDGED. MIN BREAKING STRENGTH OF 42.7 KIPS ASME B30.26 "FORGED, CAST, OR DIE STAMPED WITH THE FOLLOWING IN TO CONNECTION: NAME OF MANUFACTURE OR TRADEMARK OF CONNECTION'S MANUFACTURER, SIZE OR RATED LOAD, GRADE FOR ALLOY EYEBOLTS."	
K1	CABLE ASSEMBLY NUT	HOT DIP AASHTO M232 CLASS / ASTM A153 CLASS C / ASTM F2329 C OR MECHANICAL GAL. TO AASHTO M298 CLASS 50 TYPE 1 / ASTM B695 CLASS 50 TYPE 1 UNC OVER TAP NUTS AS SPECIFIED IN AASHTO 291 / ASTM A 563 HEAVY HEX HEAD ASTM A563DH OR SAE J995 GRADE 5	1" DIA.
K2	CABLE ASSEMBLY WASHER	HOT DIP AASHTO M232 CLASS / ASTM A153 CLASS C / ASTM F2329 C OR MECHANICAL GAL. TO AASHTO M298 CLASS 50 TYPE 1	1" DIA.
L1	BEARING PLATE	AASHTO M111 / ASTM A123 ASTM A36 MIN. STRENGTH 36 KSI, OR ASTM A529 MAX. STRENGTH 50 KSI, OR ASTM A572 MAX STRENGTH 50 KSI, OR ASTM A709 MAX STRENGTH 50 KSI, OR ASTM A992 MAX STRENGTH 50 KSI	5/8" THICKNESS
L2	BEARING PLATE FLANGE	AASHTO M111 / ASTM A123 ASTM A36 MIN. STRENGTH 36 KSI, OR ASTM A529 MAX. STRENGTH 50 KSI, OR ASTM A572 MAX STRENGTH 50 KSI, OR ASTM A709 MAX STRENGTH 50 KSI, OR ASTM A992 MAX STRENGTH 50 KSI	1" THICKNESS
M1	BEAM GUARD ANCHOR BRACKET	AASHTO M111 / ASTM A123 ASTM A36 MIN. STRENGTH 36 KSI, OR ASTM A529 MAX. STRENGTH 50 KSI, OR ASTM A572 MAX STRENGTH 50 KSI, OR ASTM A709 MAX STRENGTH 50 KSI, OR ASTM A992 MAX STRENGTH 50 KSI	
M2	BEAM GUARD ANCHOR END PLATE	AASHTO M111 / ASTM A123 ASTM A36 MIN. STRENGTH 36 KSI, OR ASTM A529 MAX. STRENGTH 50 KSI, OR ASTM A572 MAX STRENGTH 50 KSI, OR ASTM A709 MAX STRENGTH 50 KSI, OR ASTM A992 MAX STRENGTH 50 KSI	3/8" THICKNESS
N1	ANCHOR BRACKET BOLT	HOT DIP AASHTO M232 CLASS / ASTM A153 CLASS C / ASTM F2329 C OR MECHANICAL GAL. TO AASHTO M298 CLASS 50 TYPE 1 / ASTM B695 CLASS 50 TYPE 1 UNC AASHTO M180 HEAD ASTM A307 GRADE B OR SAE J429 GRADE 2 OR ASTM F1554 GRADE 36	5/8" DIA.
N2	ANCHOR BRACKET BOLT WASHER	HOT DIP AASHTO M232 CLASS / ASTM A153 CLASS C / ASTM F2329 C OR MECHANICAL GAL. TO AASHTO M298 CLASS 50 TYPE 1/ ASTM B695 CLASS 50 TYPE 1 F436 TYPE 1 (HARDEN WASHER ONLY)	5/8" DIA.
N3	ANCHOR BRACKET BOLT NUT	HOT DIP AASHTO M232 CLASS / ASTM A153 CLASS C / ASTM F2329 C OR MECHANICAL GAL. TO AASHTO M298 CLASS 50 TYPE 1 / ASTM B695 CLASS 50 TYPE 1 UNC OVER TAP NUTS AS SPECIFIED IN AASHTO 291 /ASTM A 563 HEAVY HEX HEAD ASTM A563DH OR SAE J995 GRADE 5	
P1	FOUNDATION TUBE BOLT	HOT DIP AASHTO M232 CLASS / ASTM A153 CLASS C / ASTM F2329 C OR MECHANICAL GAL. TO AASHTO M298 CLASS 50 TYPE 1/ ASTM B695 CLASS 50 TYPE 1 UNC OVER TAP NUTS AS SPECIFIED IN AASHTO 291 / ASTM A 563 HEAVY HEX HEAD ASTM A563DH OR SAE J995 GRADE 5	1/2" DIA.
Q1	SPLICE BOLT	HOT DIP AASHTO M232 CLASS / ASTM A153 CLASS C / ASTM F2329 C OR MECHANICAL GAL. TO AASHTO M298 CLASS 50 TYPE 1 / ASTM B695 CLASS 50 TYPE 1 UNC AASHTO M180 HEAD ASTM A307 GRADE B OR SAE J429 GRADE 2 OR ASTM F1554 GRADE 36	
Q2	SPLICE NUT	HOT DIP AASHTO M232 CLASS / ASTM A153 CLASS C / ASTM F2329 C OR MECHANICAL GAL. TO AASHTO M298 CLASS 50 TYPE 1 / ASTM B695 CLASS 50 TYPE 1 UNC OVER TAP NUTS AS SPECIFIED IN AASHTO 291 / ASTM A 563 AASHTO M180 RECESSED HEAVY HEX HEAD ASTM A563DH OR SAE J995 GRADE 5	5/8" DIA.

6

SDD 14B47 - 05g

MIDWEST GUARDRAIL SYSTEM (MGS) TYPE 2 TERMINAL

STATE OF WISCONSIN
DEPARTMENT OF TRANSPORTATION

APPROVED
May 2023 — DATE
/S/ Rodney Taylor — ROADWAY STANDARDS DEVE ENGINEER
FHWA

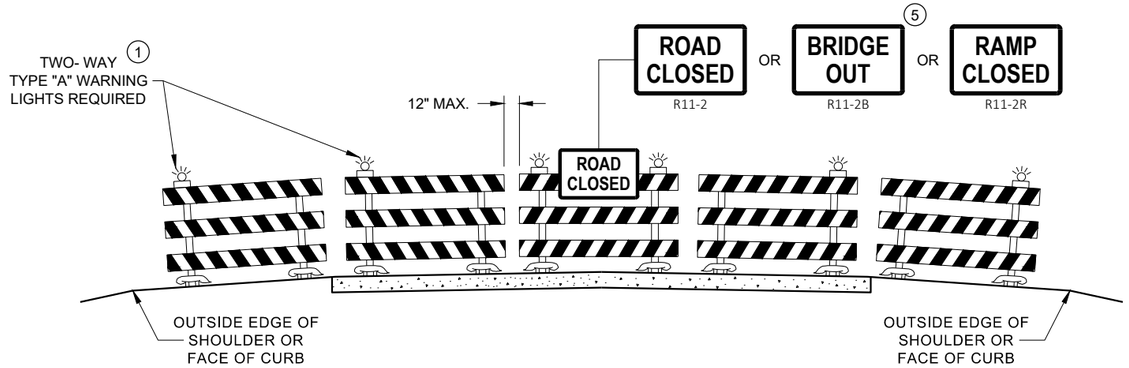

DETAIL D
ROAD CLOSURE BARRICADE DETAIL
APPROACH VIEW

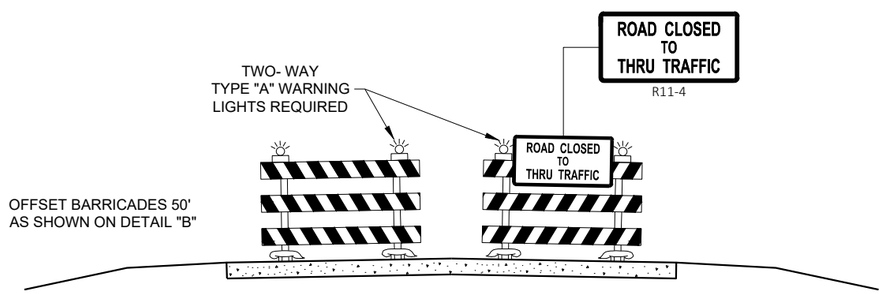

DETAIL E
LANE CLOSURE BARRICADE DETAIL
APPROACH VIEW

SEE SDD 15C2 - SHEET "a" FOR LEGEND

GENERAL NOTES

THE EXACT NUMBER, LOCATION, AND SPACING OF ALL SIGNS AND BARRICADES SHALL BE ADJUSTED TO FIT FIELD CONDITIONS AS APPROVED BY THE ENGINEER.

ANY SIGNS TEMPORARY OR EXISTING, WHICH CONFLICT WITH TRAFFIC CONTROL "IN USE", SHALL BE REMOVED OR COVERED AS NEEDED AND AS APPROVED BY THE ENGINEER.

THE SPACING BETWEEN TRAFFIC CONTROL SIGNS SHOULD BE ADJUSTED TO NOT CONFLICT WITH AND SHOULD PROVIDE A DESIRABLE MINIMUM OF 200 FEET CLEARANCE TO EXISTING SIGNS THAT WILL REMAIN IN PLACE.

BARRICADES THAT MUST BE MOVED FOR A WORK OPERATION SHALL BE IMMEDIATELY RE-ESTABLISHED UPON COMPLETION OF THE OPERATION, OR FOR CONTINUING OPERATIONS, AT THE END OF EACH WORKING DAY.

SIGNS THAT WILL BE IN PLACE LESS THAN 7 CONTINUOUS DAYS AND NIGHTS MAY BE MOUNTED ON PORTABLE SUPPORTS.

ALL TYPE III BARRICADES SHALL HAVE RAILS REFLECTORIZED ON BOTH FACES. STRIPES SHALL BE PROPERLY SLOPED DOWN TOWARD THE TRAFFIC SIDE OR AS SHOWN IN THE ROAD CLOSURE BARRICADE DETAIL "D" FOR FULL ROAD CLOSURES.

TYPE "A" LOW - INTENSITY FLASHING WARNING LIGHTS SHALL BE VISIBLE ON BOTH SIDES OF THE BARRICADE.

THE R11 - 2, R11 - 3, M4 - 9, R11 - 4, AND R10 - 61 SIGNS PLACED ON THE BARRICADES SHALL COVER NO MORE THAN THE TOP RAIL. THE SIGNS SHALL NOT COVER ANY PORTION OF THE MIDDLE RAIL OR BOTTOM RAILS.

"WO" AND "MO" SIGNS ARE THE SAME AS "W" AND "M" SIGNS EXCEPT THE BACKGROUND IS ORANGE.

ALL SIGNS SHALL BE 48" X 48" UNLESS OTHERWISE NOTED BELOW:
- R11 - 2 SHALL BE 48" X 30"
- R11 - 3 SHALL, R11 - 4 AND R10 - 61 SHALL BE 60 " X 30"
- M4 - 9 SHALL BE 30" X 24"
- M3 - X SHALL BE 24" X 12" (36" X 18" IF NEEDED TO MATCH EXISTING SIGNS)
- M4 - 8 SHALL BE 24" X 12" (36" X 18" IF NEEDED TO MATCH EXISTING SIGNS)
- M1 - 4, M1 - 5A AND M1 - 6 SHALL BE 24" X 24" (36" X 36" IF NEEDED TO MATCH EXISTING SIGNS)
- MO5 - 1 AND MO6 - 1 SHALL BE 21" X 21" (30" X 30" IF NEEDED TO MATCH EXISTING SIGNS)
- D1 - X SHALL BE AS SHOWN ON SPECIFIC PROJECT SIGNING DETAIL SHEETS.
- R1 - 1 SHALL BE 36" X 36"

1. TWO WARNING LIGHTS SHALL BE PROVIDED ON THE CENTER BARRICADE AND A MINIMUM OF ONE WARNING LIGHT SHALL BE PROVIDED ON EACH OF THE OTHER BARRICADES WITHIN THE ROADWAY LIMITS. SPACING OF THE WARNING LIGHTS SHALL BE UNIFORM TO THE EDGE OF ROADWAY AS SHOWN (APPROX. 8 FOOT LIGHT SPACING.
2. THESE SIGNS AND BARRICADES ARE NOT REQUIRED IF ROAD CLOSURE BEGINS AT AN INTERSECTION.
3. FOR ROAD CLOSURE WITHOUT LOCAL ACCESS TO PROJECT, SEE ROAD CLOSURE BARRICADE DETAIL "D".
4. FOR ROAD CLOSURE WITH LOCAL ACCESS TO PROJECT, SEE ROAD CLOSURE BARRICADE DETAIL "E".
5. FOR BRIDGE OR CULVERT REPLACEMENTS, SUBSTITUTE "BRIDGE OUT" INSTEAD OF "ROAD CLOSED" ON R11 - 2 AND R11 - 3 SIGNS.
6. INSTALL DETOUR AND COMMUNITY GUIDE SIGNS AND ARROWS ONLY IF SPECIFIED IN THE CONTRACT. IF THERE ARE EXISTING ROUTE MARKER ASSEMBLIES THAT WILL REMAIN IN PLACE, ADJUST THE LOCATION OF THE DETOUR ROUTE SIGNS TO CORRESPOND WITH THE EXISTING ASSEMBLIES. MODIFY EXISTING SIGNS WHERE POSSIBLE. SEE SPECIFIC PROJECT DETOUR SIGNING DETAIL SHEETS. IF DETOUR SIGNS ARE BEING INSTALLED BY OTHERS, PLACE THE CONTRACTED TRAFFIC CONTROL SIGNS TO ALLOW FOR PLACEMENT OF ALL WARNING, DETOUR AND GUIDE SIGNS AS SHOWN.
7. "EAST" CARDINAL DIRECTION MARKERS AND RIGHT TURN ARROWS ARE SHOWN. USE OTHER CARDINAL DIRECTIONS AND ARROWS AS APPROPRIATE.

BARRICADES AND SIGNS FOR VARIOUS CLOSURES

STATE OF WISCONSIN
DEPARTMENT OF TRANSPORTATION

APPROVED
May 2023 — DATE
/S/ Andrew Heidtke — WORK ZONE ENGINEE
FHWA

THIS DRAWING PROVIDES GENERAL GUIDANCE ON TYPICAL DETOUR SIGN LAYOUT AND SPACING. SEE PROJECT DETOUR SIGNING SHEETS FOR SPECIFIC DETAILS FOR EACH PROJECT.

LEGEND

- SIGN ON PERMANENT SUPPORT
- WORK AREA
- DETOUR — M4 - 8
- EAST — M3 - X
- XX — M1 - 4 OR XX — M1 - 6 OR COUNTY X — M1 - 5A
- M05 - 1 OR M06 - 1 OR M06 - 1

GENERAL NOTES

THE EXACT NUMBER, LOCATION AND SPACING OF ALL SIGNS SHALL BE ADJUSTED TO FIT FIELD CONDITIONS AS APPROVED BY THE ENGINEER.

IF THERE ARE EXISTING ROUTE MARKER ASSEMBLIES THAT WILL REMAIN IN PLACE, ADJUST THE LOCATION OF THE DETOUR ROUTE SIGNS TO CORRESPOND WITH THE EXISTING ASSEMBLIES. SEE SPECIFIC PROJECT DETOUR SIGNING DETAIL SHEETS. MODIFY EXISTING SIGNS WHERE POSSIBLE.

THE SPACING BETWEEN TRAFFIC CONTROL AND DETOUR SIGNS SHOULD BE ADJUSTED TO NOT CONFLICT WITH AND TO PROVIDE A DESIRABLE MINIMUM OF 200 FEET CLEARANCE TO EXISTING SIGNS THAT WILL REMAIN IN PLACE.

ANY SIGNS TEMPORARY OR EXISTING, WHICH CONFLICT WITH TRAFFIC CONTROL "IN USE" SHALL BE REMOVED OR COVERED AS NEEDED AND AS APPROVED BY THE ENGINEER.

SIGNS THAT WILL BE IN PLACE LESS THAN 7 CONTINUOUS DAYS AND NIGHTS MAY BE MOUNTED ON PORTABLE SUPPORTS.

"MO" SIGNS ARE THE SAME AS "M" SIGNS EXCEPT THE BACKGROUND IS ORANGE.

SIGN SIZES SHALL BE AS FOLLOWS:

- M3-X SHALL BE 24" X 12" (36" X 18" IF NEEDED TO MATCH EXISTING SIGNS)
- M4-8 SHALL BE 24" X 12" (36" X 18" IF NEEDED TO MATCH EXISTING SIGNS)
- M1-4, M1-5A AND M1-6 SHALL BE 24" X 24" (36" X 36" IF NEEDED TO MATCH EXISTING SIGNS)
- M05-1 AND M06-1 SHALL BE 21" X 21" (30" X 30" IF NEEDED TO MATCH EXISTING SIGNS)
- M4-9 AND M4-59 SHALL BE 30" X 24"
- M4-8a SHALL BE 24" X 18"
- G20-51 SHALL BE 60" X 24"
- W20-2A SHALL BE 48" X 48"
- D1-X SHALL BE AS SHOWN ON SPECIFIC PROJECT SIGNING DETAIL SHEETS.

* OPTIONAL SIGNS. SEE SPECIFIC PROJECT DETOUR SIGNING DETAIL SHEETS.

** FOR A TOWN ROAD OR LOCAL STREET DETOURED ONTO A STATE TRUNK HIGHWAY, PLACE A ROAD NAME PLAQUE ABOVE THE M4-9 SIGN AS SPECIFIED IN THE CONTRACT.

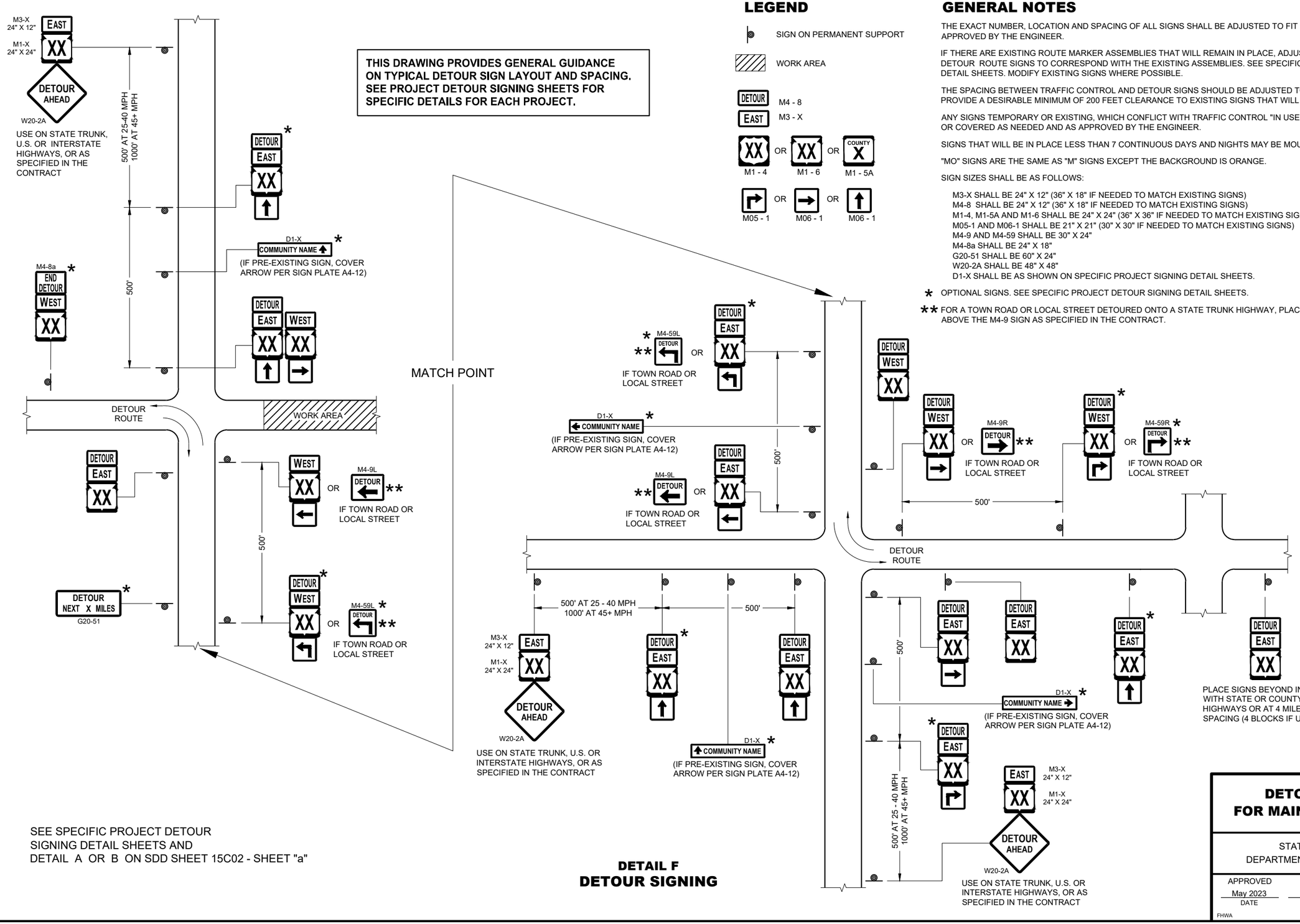

SEE SPECIFIC PROJECT DETOUR SIGNING DETAIL SHEETS AND DETAIL A OR B ON SDD SHEET 15C02 - SHEET "a"

DETAIL F
DETOUR SIGNING

DETOUR SIGNING FOR MAINLINE CLOSURES

STATE OF WISCONSIN
DEPARTMENT OF TRANSPORTATION

APPROVED
May 2023 — DATE
/S/ Andrew Heidtke — WORK ZONE ENGINEER
FHWA

SDD 15C02 - 09c
6

THIS DRAWING PROVIDES GENERAL GUIDANCE ON TYPICAL TO SIGN LAYOUT AND SPACING. SEE PROJECT TO SIGNING SHEETS FOR SPECIFIC DETAILS FOR EACH PROJECT.

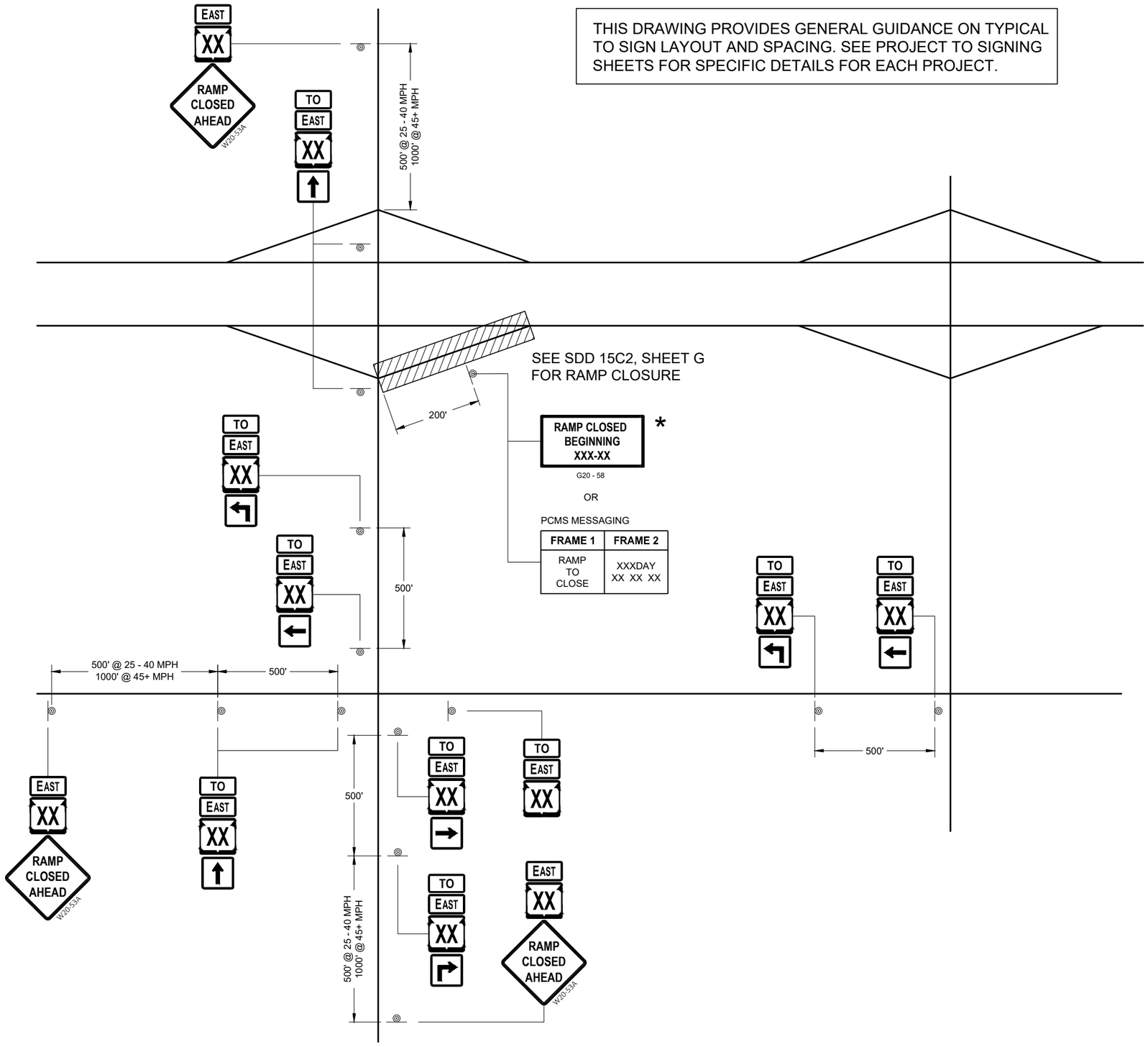

LEGEND

SIGN ON PERMANENT SUPPORT

TO / EAST — MO4 - 5, M3 - X

XX M1 - 6 OR XX M1 - 4 OR INTERSTATE XX M1 - 1

M05 - 1 OR M06 - 1 OR M06 - 1

GENERAL NOTES

THE EXACT NUMBER, LOCATION AND SPACING OF ALL SIGNS SHALL BE ADJUSTED TO FIT FIELD CONDITIONS AS APPROVED BY THE ENGINEER.

IF THERE ARE ANY ROUTE MARKER ASSEMBLIES THAT WILL REMAIN IN PLACE, ADJUST THE LOCATION OF THE TO ROUTE SIGNS TO CORRESPOND WITH THE EXISTING ASSEMBLIES. SEE SPECIFIC PROJECT TO SIGNING DETAIL SHEETS. MODIFY EXISTING SIGNS WHERE POSSIBLE.

THE SPACING BETWEEN TRAFFIC CONTROL AND TO SIGNS SHOULD BE ADJUSTED TO NOT CONFLICT WITH AND TO PROVIDE A DESIRABLE MINIMUM OF 200 FEET CLEARANCE TO EXISTING SIGNS THAT WILL REMAIN IN PLACE.

ANY SIGNS TEMPORARY OR EXISTING, WHICH CONFLICT WITH TRAFFIC CONTROL " IN USE" SHALL BE REMOVED OR COVERED AS NEEDED AND AS APPROVED BY THE ENGINEER.

SIGNS THAT SHALL BE IN PLACE LESS THAN 7 CONTINUOUS DAYS AND NIGHTS MAY BE MOUNTED ON PORTABLE SUPPORTS.

"MO" SIGNS ARE THE SAME AS "M" SIGNS EXCEPT THE BACKGROUND IS ORANGE.

SIGN SIZES SHALL BE AS FOLLOW:
- M3 - X SHALL BE 24" X 12". (36" X 18" IF NEEDED TO MATCH EXISTING SIGNS).
- MO4 - 5 SHALL BE 24" X 12". (36" X 18" IF NEEDED TO MATCH EXISTING SIGNS).
- M1 - 1, M1 - 4, AND M1 - 6 SHALL BE 24" X 24" (36" X 36" IF NEEDED TO MATCH EXISTING SIGNS).
- MO5 - 1, MO5 - 2, AND MO6 - 1, SHALL BE 21" X 21". (30" X 30" IF NEEDED TO MATCH EXISTING SIGNS).
- W20 - 53A SHALL BE 48" X 48"

* PLACE "RAMP CLOSED BEGINNING" SIGN 7 CALENDAR DAYS PRIOR TO CLOSURE OR AS DIRECTED BY THE ENGINEER. SEE WISCONSIN STANDARD SIGN PLATES FOR LAYOUT.

ON RAMP LANE CLOSURE

STATE OF WISCONSIN
DEPARTMENT OF TRANSPORTATION

APPROVED
May 2023 — DATE
/S/ Andrew Heidtke — WORK ZONE ENGINEE
FHWA

THIS DRAWING PROVIDES GENERAL GUIDANCE ON TYPICAL "TO" MO-4 SIGN LAYOUT AND SPACING. SEE PROJECT TO SIGNING SHEETS FOR SPECIFIC DETAILS FOR EACH PROJECT.

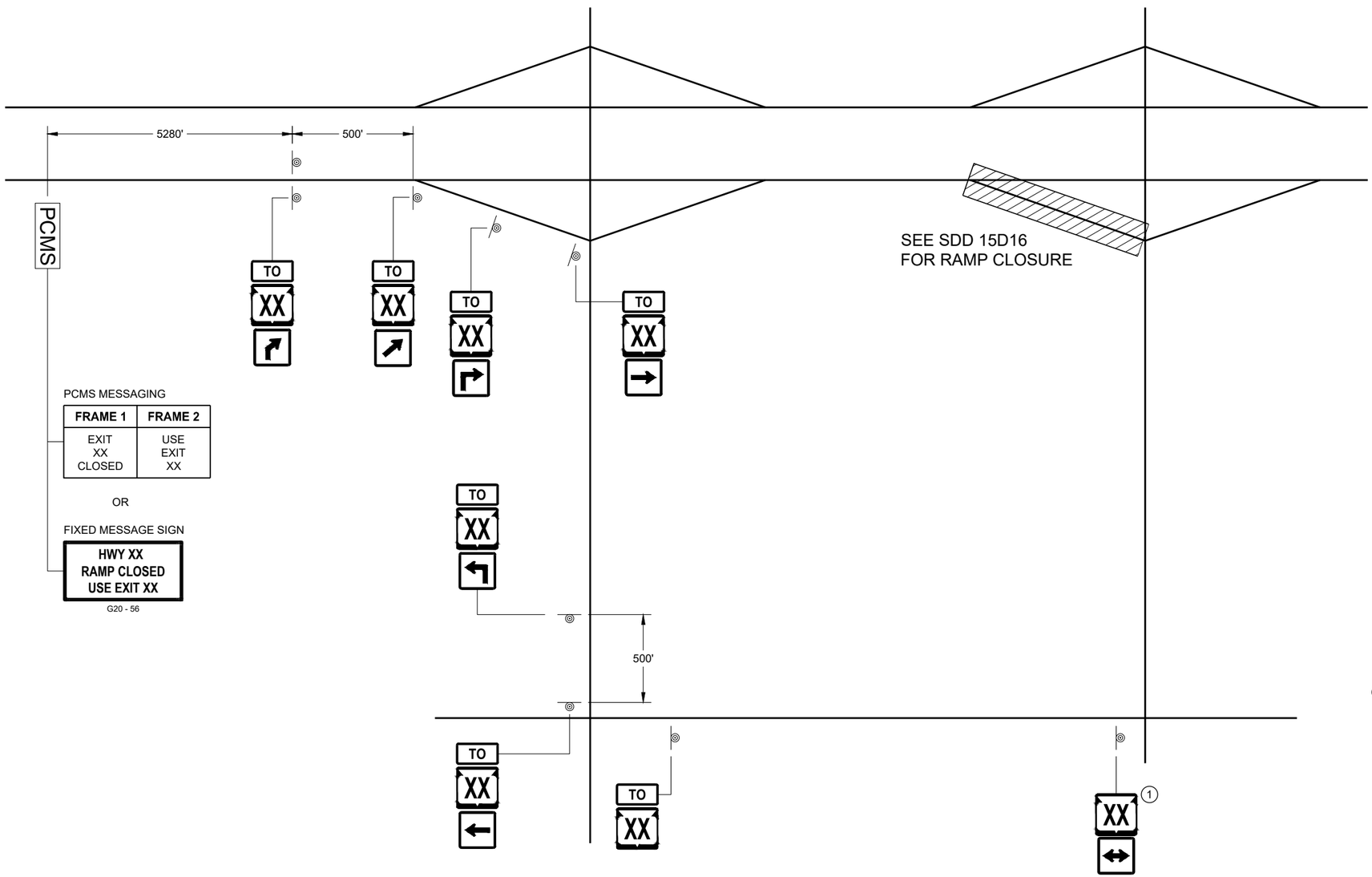

PCMS MESSAGING

FRAME 1	FRAME 2
EXIT XX CLOSED	USE EXIT XX

OR

FIXED MESSAGE SIGN

HWY XX
RAMP CLOSED
USE EXIT XX

G20 - 56

LEGEND

SIGN ON PERMANENT SUPPORT

PCMS PORTABLE CHANGEABLE MESSAGE SIGN

TO MO4 - 5

XX M1 - 4 OR XX M1 - 6 OR COUNTY X M1 - 5A

M05 - 1 OR M05 - 2 OR M06 - 1 OR M06 - 2 OR M06 - 4

GENERAL NOTES

SEE SDD 15D16 "TRAFFIC CONTROL, EXIT RAMP CLOSURE" DETAIL FOR TRAFFIC CONTROL AT EXIT RAMP CLOSURE.

THE EXACT NUMBER, LOCATION AND SPACING OF ALL SIGNS SHALL BE ADJUSTED TO FIT FIELD CONDITIONS AS APPROVED BY THE ENGINEER.

IF THERE ARE ANY ROUTE MARKER ASSEMBLIES THAT WILL REMAIN IN PLACE, ADJUST THE LOCATION OF THE "TO" MO-4 ROUTE SIGNS TO CORRESPOND WITH THE EXISTING ASSEMBLIES. SEE SPECIFIC PROJECT TO SIGNING DETAIL SHEETS. MODIFY EXISTING SIGNS WHERE POSSIBLE.

THE SPACING BETWEEN TRAFFIC CONTROL AND "TO" MO-4 SIGNS SHOULD BE ADJUSTED TO NOT CONFLICT WITH AND TO PROVIDE A DESIRABLE MINIMUM OF 200 FEET CLEARANCE TO EXISTING SIGNS THAT WILL REMAIN IN PLACE.

ANY SIGNS TEMPORARY OR EXISTING, WHICH CONFLICT WITH TRAFFIC CONTROL " IN USE" SHALL BE REMOVED OR COVERED AS NEEDED AND AS APPROVED BY THE ENGINEER.

SIGNS THAT SHALL BE IN PLACE LESS THAN 7 CONTINUOUS DAYS AND NIGHTS MAY BE MOUNTED ON PORTABLE SUPPORTS.

"MO" SIGNS ARE THE SAME AS "M" SIGNS EXCEPT THE BACKGROUND IS ORANGE.

SIGN SIZES SHALL BE AS FOLLOW:
- MO4 - 5 SHALL BE 24" X 12". (36" X 18" IF NEEDED TO MATCH EXISTING SIGNS).
- M1 - 4, M1 - 5A, AND M1 - 6 SHALL BE 24" X 24" (36" X 36" IF NEEDED TO MATCH EXISTING SIGNS).
- MO5 - 1, MO5 - 2, AND MO6 - 1, SHALL BE 21" X 21". (30" X 30" IF NEEDED TO MATCH EXISTING SIGNS).

(1) ONLY ADD IF THERE ARE NO EXISTING ROUTE MARKERS FOR THE INTERSECTING ROADWAY.

OFF RAMP LANE CLOSURE

STATE OF WISCONSIN
DEPARTMENT OF TRANSPORTATION

APPROVED
May 2023 — DATE
/S/ Andrew Heidtke — WORK ZONE ENGINEE
FHWA

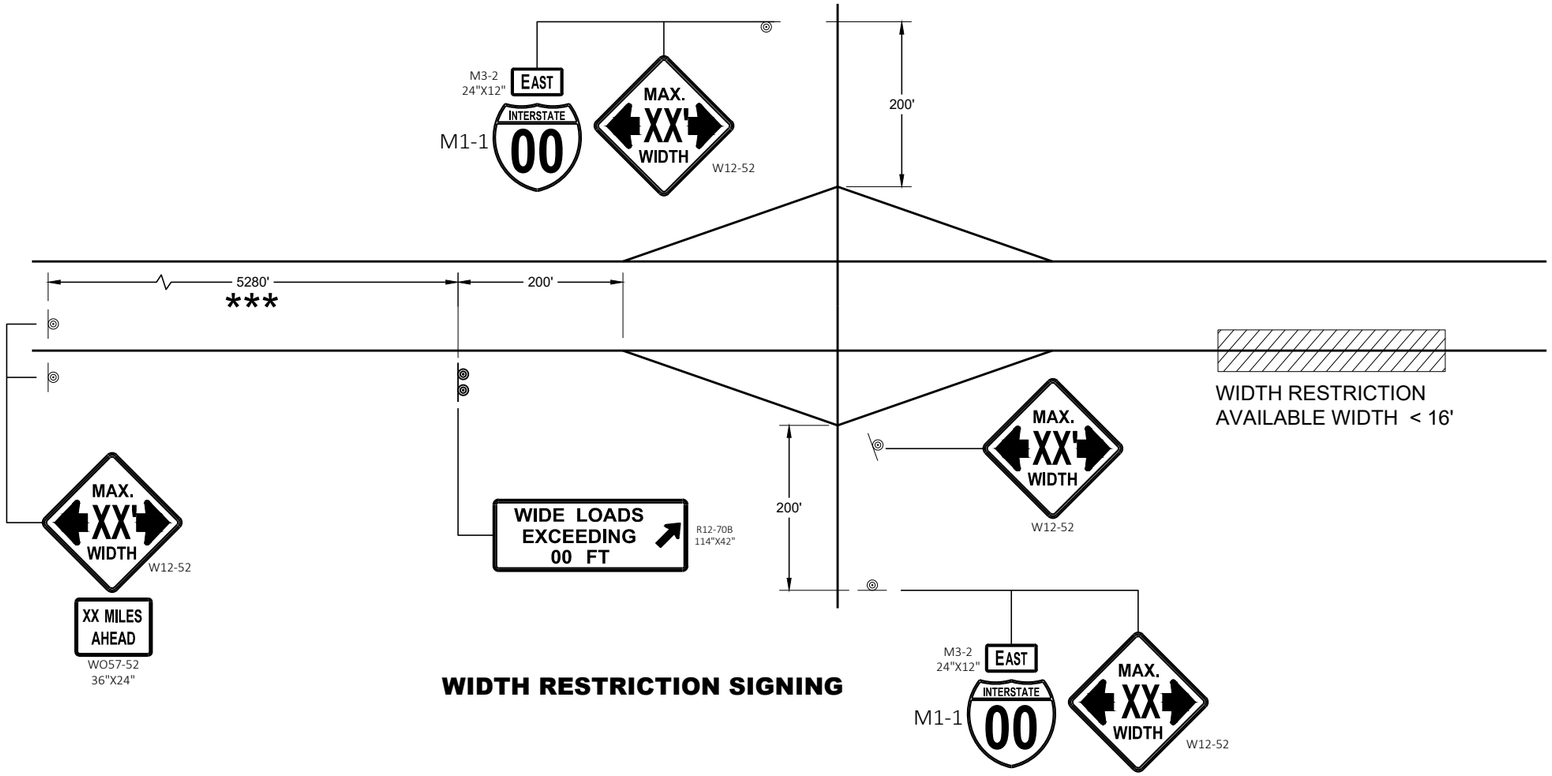

WIDTH RESTRICTION SIGNING

LEGEND

◎ SIGN ON PERMANENT SUPPORT

GENERAL NOTES

THE EXACT NUMBER, LOCATION AND SPACING OF ALL SIGNS SHALL BE ADJUSTED TO FIT FIELD CONDITIONS AS APPROVED BY THE ENGINEER.

THE SPACING BETWEEN SIGNS SHOULD BE ADJUSTED TO NOT CONFLICT WITH AND TO PROVIDE A DESIRABLE MINIMUM OF 200 FEET CLEARANCE TO EXISTING SIGNS THAT WILL REMAIN IN PLACE.

ANY SIGNS TEMPORARY OR EXISTING, WHICH CONFLICT WITH TRAFFIC CONTROL " IN USE" SHALL BE REMOVED OR COVERED AS NEEDED AND AS APPROVED BY THE ENGINEER.

ALL SIGNS ARE 48" X 48" UNLESS OTHERWISE NOTED.

"WO" SIGNS ARE THE SAME AS "W" SIGNS EXCEPT THE BACKGROUND IS ORANGE.

WIDTH ON SIGN TO BE APPROXIMATELY ONE FOOT LESS THAN AVAILABLE WIDTH.

* PLACE 500 FEET AFTER THE W20 - 1A AND 500 FEET BEFORE ADDITIONAL SIGNS FOR ROADWAYS WITH A PRE - CONSTRUCTION SPEED LIMIT OF 45 MPH OR MORE. FOR 35-40 MPH, USE 350 FOOT TYPICAL SPACING. FOR 25-30 MPH, USE 200 FOOT TYPICAL SPACING.

** SIGN SHALL BE VISIBLE FROM ROADWAY.

*** ADDITIONAL SIGNS NEEDED IF THERE IS AN ON RAMP BETWEEN SIGNS.

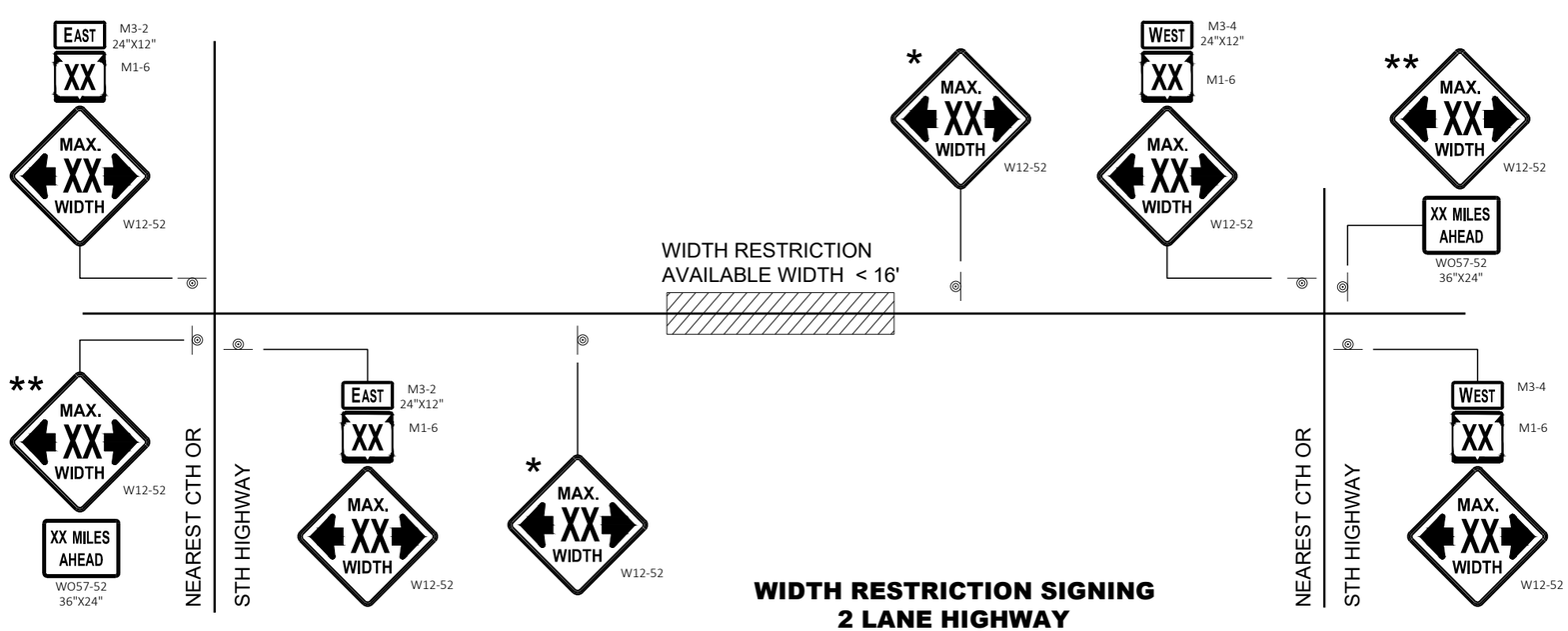

WIDTH RESTRICTION SIGNING
2 LANE HIGHWAY

WIDTH ON SIGN TO BE APPROX. 1 - FOOT LESS THAN AVAILABLE WIDTH

ADVANCED WIDTH RESTRICTION SIGNING

STATE OF WISCONSIN
DEPARTMENT OF TRANSPORTATION

APPROVED
May 2023 — DATE
/S/ Andrew Heidtke — WORK ZONE ENGINEER
FHWA

6
SDD 15C02 - 09f

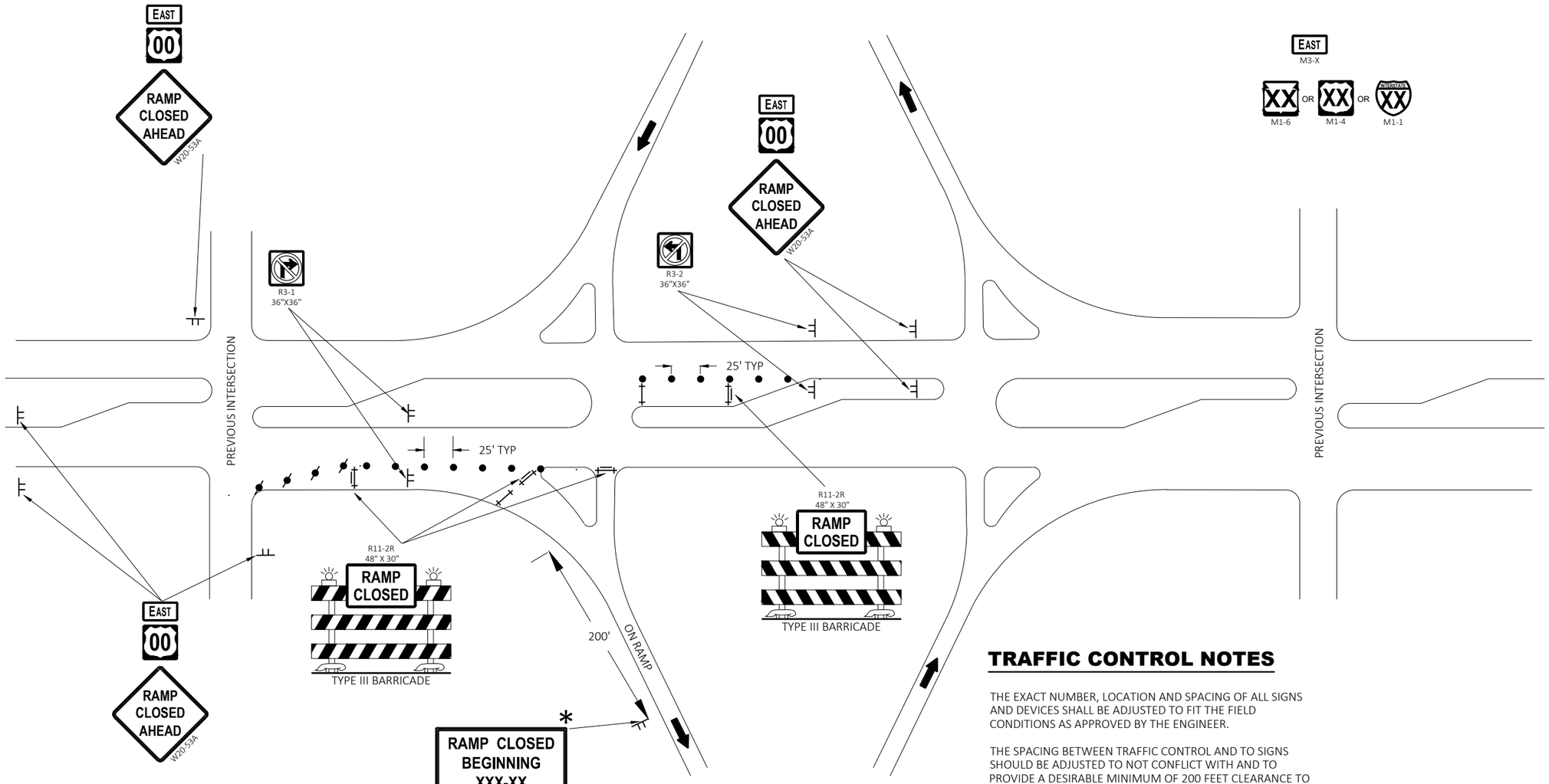

OR

PCMS MESSAGING

FRAME 1	FRAME 2
RAMP TO CLOSE	XXX DAY XX XX XX

LEGEND

- TRAFFIC CONTROL DRUM
- TRAFFIC CONTROL DRUM WITH TYPE "C" STEADY BURN LIGHT
- TYPE III BARRICADE
- TYPE III BARRICADE WITH ATTACHED SIGN
- SIGN ON PERMANENT SUPPORT
- SIGN ON TEMPORARY SUPPORT
- DIRECTION OF TRAFFIC

TRAFFIC CONTROL NOTES

THE EXACT NUMBER, LOCATION AND SPACING OF ALL SIGNS AND DEVICES SHALL BE ADJUSTED TO FIT THE FIELD CONDITIONS AS APPROVED BY THE ENGINEER.

THE SPACING BETWEEN TRAFFIC CONTROL AND TO SIGNS SHOULD BE ADJUSTED TO NOT CONFLICT WITH AND TO PROVIDE A DESIRABLE MINIMUM OF 200 FEET CLEARANCE TO EXISTING SIGNS THAT WILL REMAIN IN PLACE.

ANY SIGNS TEMPORARY OR EXISTING, WHICH CONFLICT WITH THE TRAFFIC CONTROL "IN USE" SHALL BE REMOVED OR COVERED AS NEEDED AND AS APPROVED BY THE ENGINEER.

SIGNS THAT SHALL BE IN PLACE LESS THAN 7 CONTINUOUS DAYS AND NIGHTS MAY BE MOUNTED ON PORTABLE SUPPORTS.

SIGN SIZES SHALL BE AS FOLLOWS:

- M3-X SHALL BE 24"x24" (36" x18" IF NEEDED TO MATCH EXISTING SIGNS)
- M1-1, M1-4, AND M1-6 SHALL BE 24"x24" (36"x36" IF NEEDED TO MATCH EXISTING SIGNS)
- W20-53A SHALL BE 48"X48"

* PLACE "RAMP CLOSED BEGINNING" SIGN 7 CALENDAR DAYS PRIOR TO CLOSURE OR AS DIRECTED BY THE ENGINEER. SEE WISCONSIN STANDARD SIGN PLATES FOR LAYOUT.

TRAFFIC CONTROL FOR ENTRANCE RAMP CLOSURE

TRAFFIC CONTROL FOR ENTRANCE RAMP CLOSURE

STATE OF WISCONSIN
DEPARTMENT OF TRANSPORTATION

APPROVED

May 2023	/S/ Andrew Heidtke
DATE	WORK ZONE ENGINEE

FHWA

6

SDD 15C02-09g

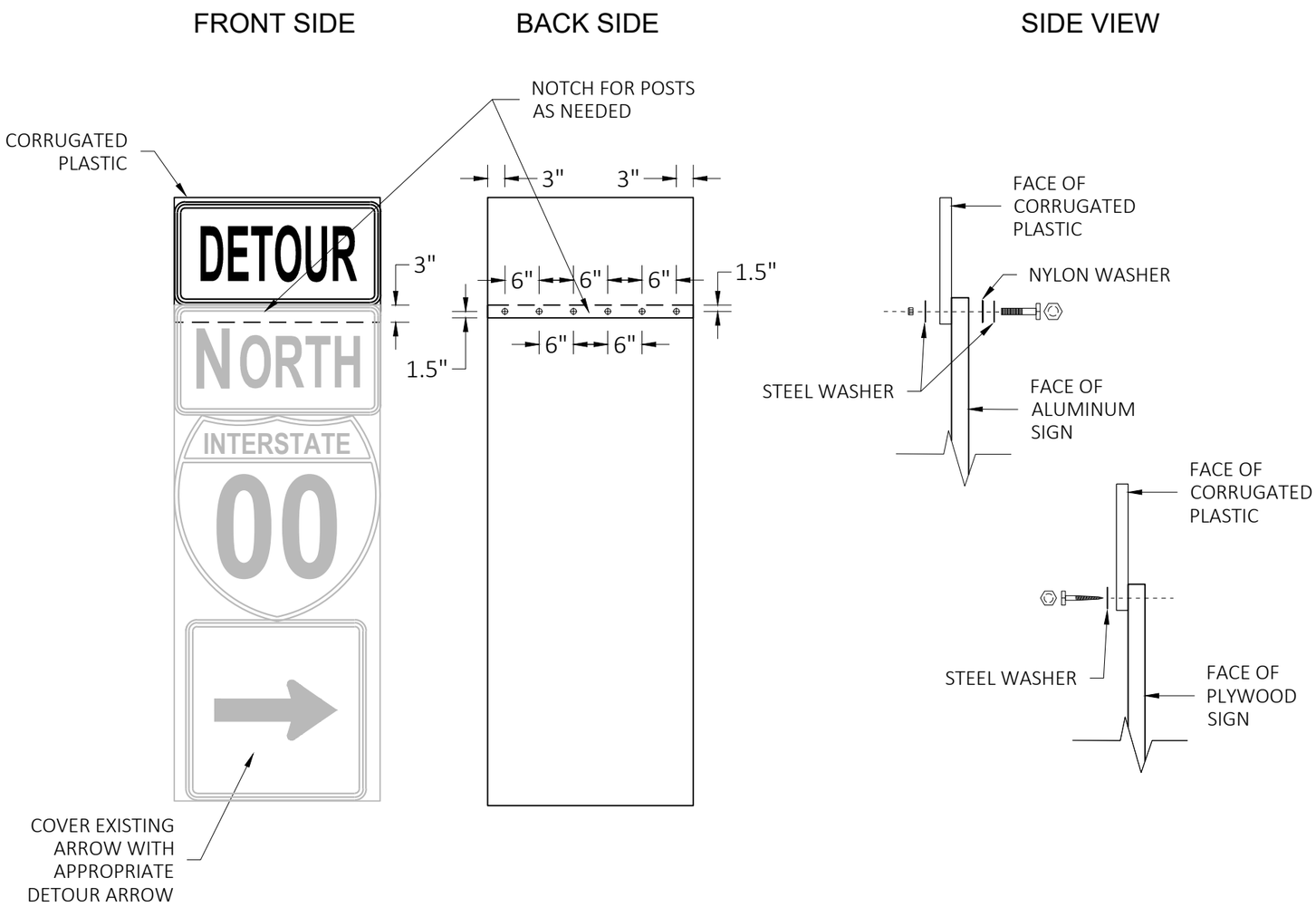

GENERAL NOTES

CELLS OF CORRUGATED PLASTIC SHALL BE VERTICALLY ORIENTED.

PROVIDE A 0.4-INCH THICK BASE CORRUGATED PLASTIC WITH A 0.035-INCH WALL THICKNESS AND 0.4-INCH CELL SIZE.

FOR 36" WIDE SIGNS: USE 6 FASTENERS AS SHOWN.

FOR 24" WIDE SIGNS: USE 4 FASTENERS WITH EDGE SPACING AS SHOWN AND 6" SPACING BETWEEN FASTENERS.

METAL WASHERS, NUTS, BOLTS AND LAGS SHALL HAVE HEXAGONAL HEADS AND SHALL BE EITHER:

A. HOT DIP GALVANIZED IN ACCORDANCE WITH ASTM DESIGNATION: A 153, CLASS D, OR SC 3.

B. ELECTRO-GALVANIZED IN ACCORDANCE WITH ASTM DESIGNATION: B 633, TYPE III, SC3

THREADS ON BOLTS AND NUTS SHALL BE MANUFACTURED WITH SUFFICIENT ALLOWANCE FOR THE CADMIUM PLATE OR GALVANIZED COATING TO PERMIT THE NUTS TO RUN FREELY ON THE BOLTS.

PLYWOOD SIGNS:
LAG SCREWS - 5/16" x 1"
ALUMINUM SIGNS:
MACHINE BOLTS - 5/16" x 1-1/4" LENGTH W/NUTS
WASHERS:
1-1/4" O.D. x 3/8" I.D. x 1/16" STEEL
1-1/4" O.D. x 3/8" I.D. x .080 NYLON

MODIFIED ROUTE ASSEMBLY FOR DETOUR SIGNING

MODIFIED ROUTE ASSEMBLY FOR DETOUR SIGNING

STATE OF WISCONSIN
DEPARTMENT OF TRANSPORTATION

APPROVED
May 2023 — DATE
/S/ Andrew Heidtke — ROADWAY STANDARDS DEVEL ENGINEER
FHWA

*CONFIRM MARKING LINE WIDTH WITH THE MISCELLANEOUS QUANTITIES

GENERAL NOTES

DETAILS OF CONSTRUCTION NOT SHOWN ON THIS DRAWING SHALL CONFORM TO STANDARD SPECIFICATIONS AND SPECIAL PROVISIONS.

1. LOCATE THE NO PASSING ZONE W14-3 SIGN WITHIN 50 FEET OF THE "T" MARKING
2. MEASURE FROM EDGE OF MARKING TO JOINT LINE. THIS DOES NOT INCLUDE SPACE NEEDED FOR GROOVING OPERATIONS.

LEGEND

"T" MARKING

SIGN ON PERMANENT SUPPORT

DIRECTION OF TRAFFIC

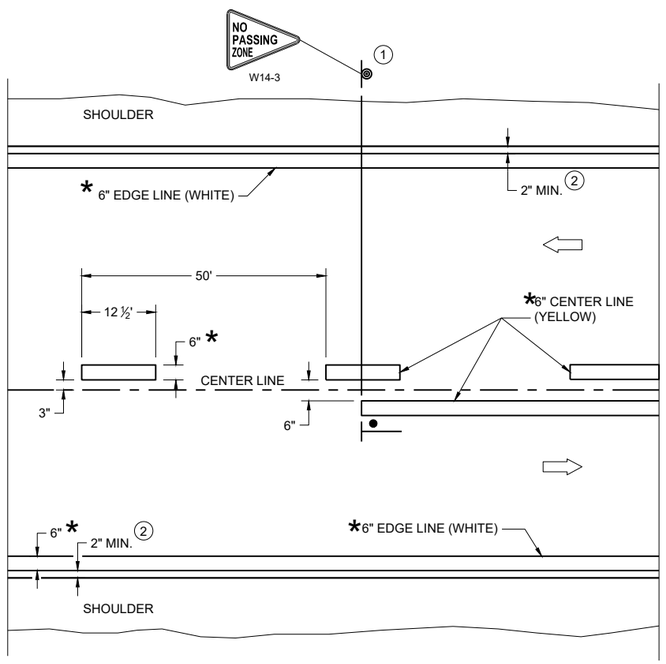

TWO WAY TRAFFIC

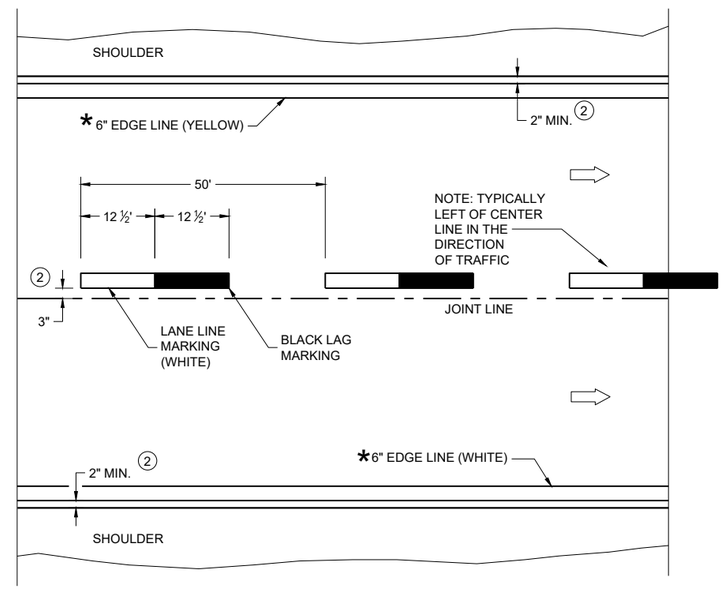

ONE WAY TRAFFIC

PERMANENT PAVEMENT MARKING

6

SDD 15C08-23a

PERMANENT LONGITUDINAL PAVEMENT MARKINGS

STATE OF WISCONSIN
DEPARTMENT OF TRANSPORTATION

APPROVED
May 2023 — DATE
/S/ Jeannie Silver — Statewide Pavement Marking Engineer
FHWA

6

SDD 15C08-23a

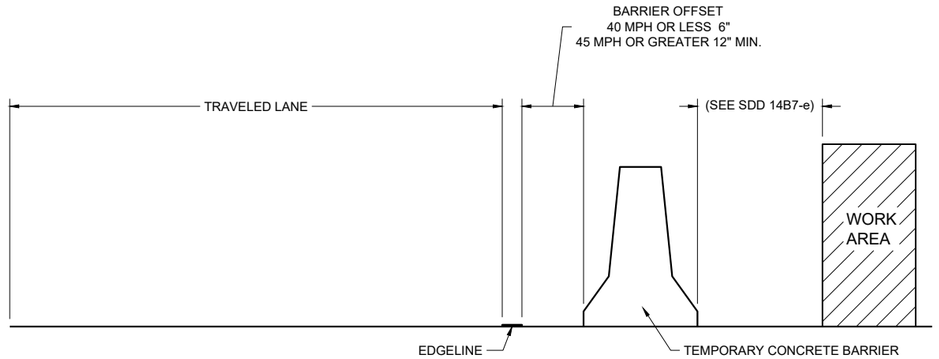

TEMPORARY BARRIER OFFSET FROM EDGELINE

GENERAL NOTES

DETAILS OF CONSTRUCTION NOT SHOWN ON THIS DRAWING SHALL CONFORM TO STANDARD SPECIFICATIONS AND SPECIAL PROVISIONS.

LEGEND

DIRECTION OF TRAFFIC

*CONFIRM MARKING LINE WIDTH WITH THE MISCELLANEOUS QUANTITIES

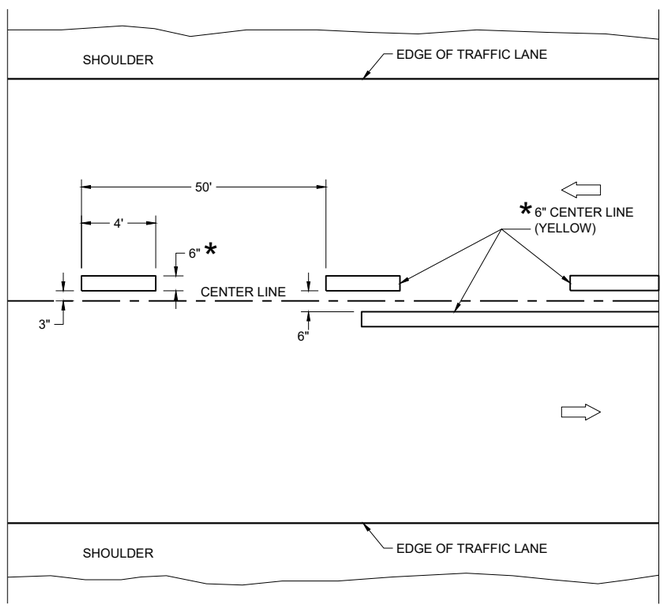

TWO WAY TRAFFIC

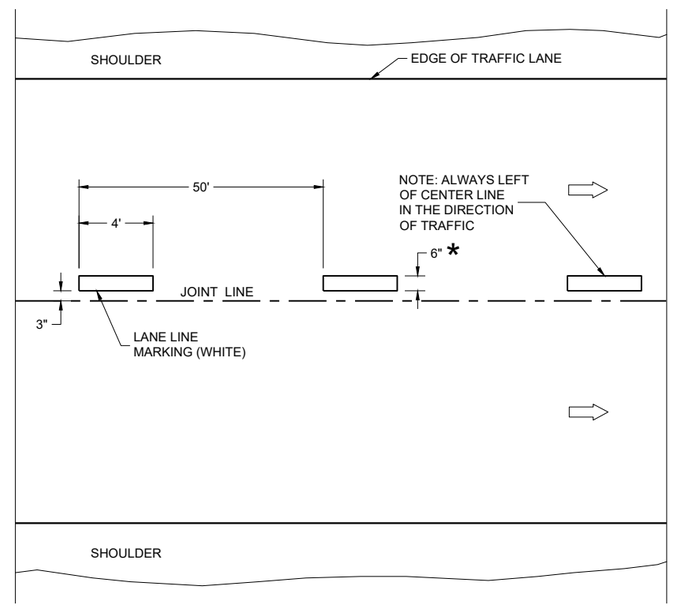

ONE WAY TRAFFIC

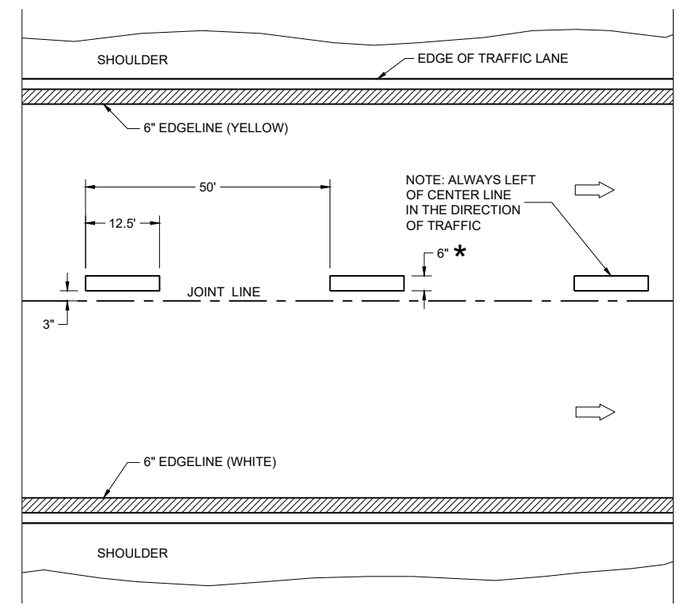

FREEWAYS AND EXPRESSWAYS

TEMPORARY PAVEMENT MARKING

TEMPORARY LONGITUDINAL PAVEMENT MARKING	
STATE OF WISCONSIN DEPARTMENT OF TRANSPORTATION	
APPROVED May 2023 DATE	/S/ Jeannie Silver Statewide Pavement Marking Engineer
FHWA	

6

SDD 15C08-23b

6

SDD 15C08-23b

GENERAL NOTES

1. A SET OF ARROWS IS REQUIRED EVERY 400 FEET OR NEAR INTERSECTIONS OR DRIVEWAYS WITH TURNING TRAFFIC.
2. 10" WHITE
3. TURN BAY LENGTH OF LESS THAN 48' DOES NOT REQUIRE PAVEMENT ARROWS OR TEXT.

⇨ DIRECTION OF TRAFFIC

* CONFIRM MARKING LINE WIDTH WITH THE MISCELLANEOUS QUANTITIES

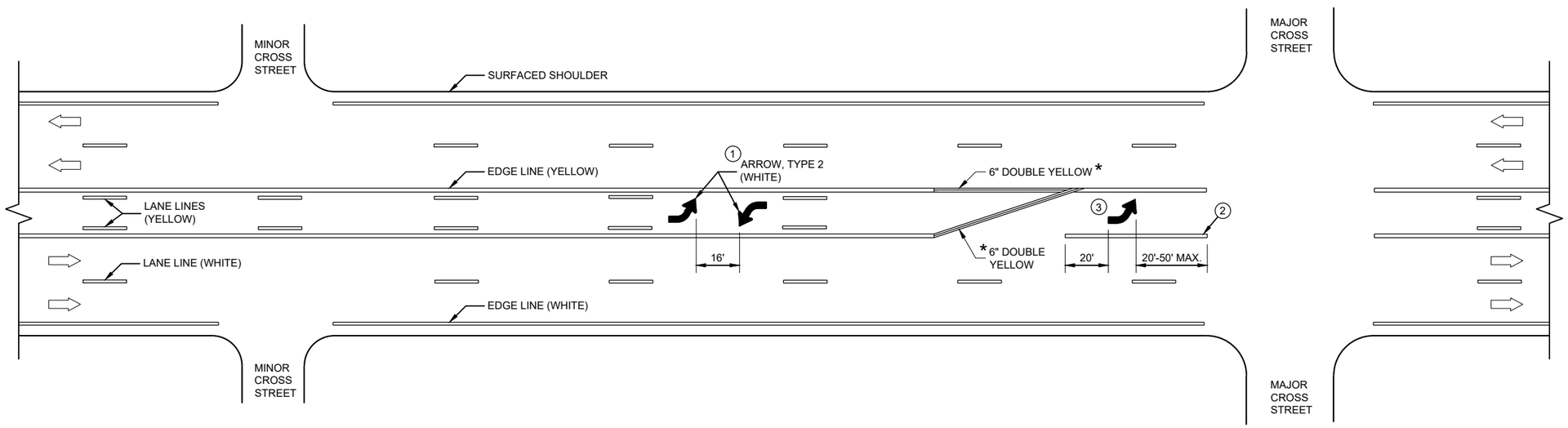

TWO WAY LEFT TURN LANE

6

SDD 15C08-23c

PAVEMENT MARKING (TURN LANES)

STATE OF WISCONSIN
DEPARTMENT OF TRANSPORTA

6

SDD 15C08-23c

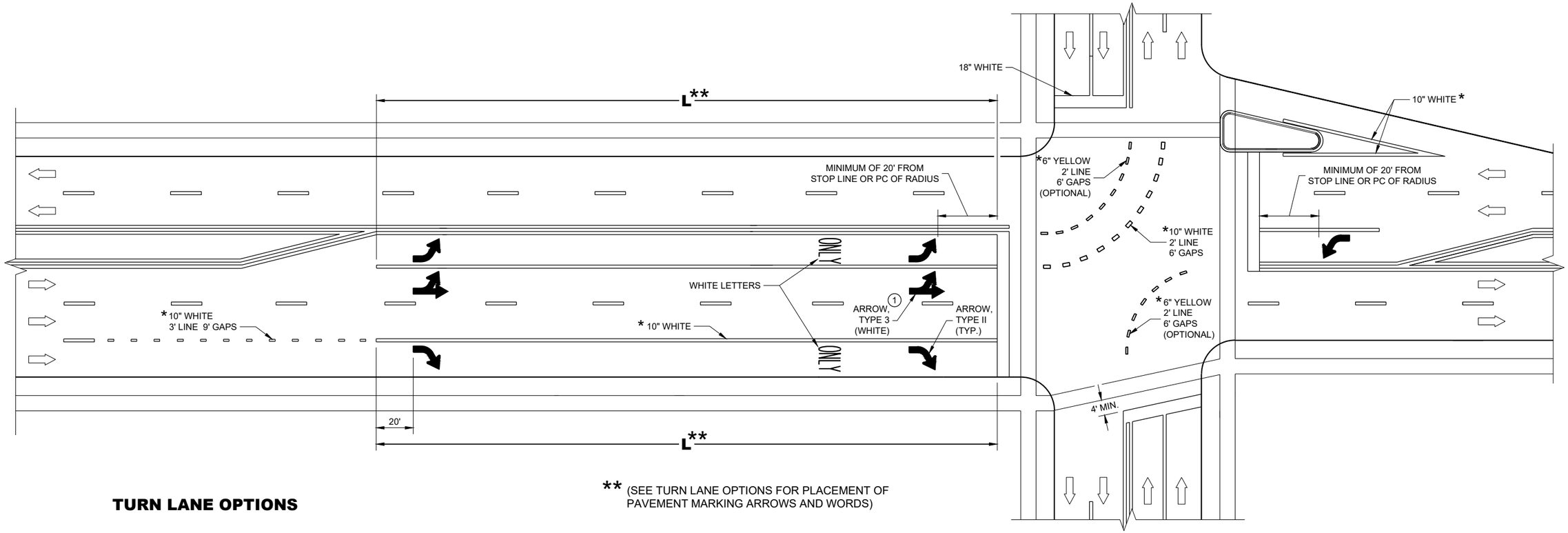

** (SEE TURN LANE OPTIONS FOR PLACEMENT OF PAVEMENT MARKING ARROWS AND WORDS)

TURN LANE OPTIONS

LENGTH OF TURN BAY (L) OF 0 - 47' DOES NOT REQUIRE PAVEMENT MARKING ARROWS OR WORDS

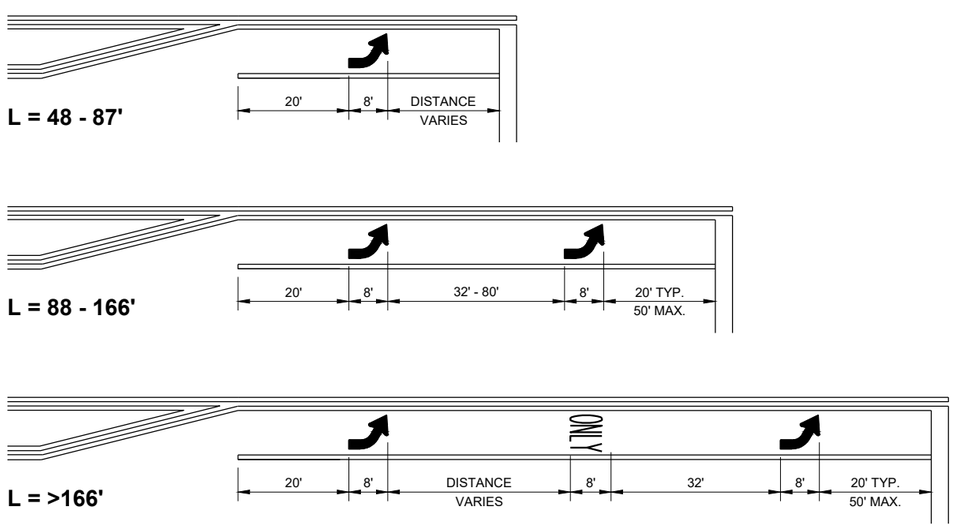

GENERAL NOTES

1. QUANTITY AND LOCATION OF TYPE 3 ARROWS ARE THE SAME AS THE TYPE II ARROWS IN THE ADJACENT TURN LANE. FOR TURN LANES WITH A PHYSICAL SEPARATION IN THE SAME DIRECTION OF TRAVEL, THE ARROWS AND "ONLY" MARKING MAY BE ELIMINATED.

⇨ DIRECTION OF TRAFFIC

L = LENGTH OF TURN BAY

* CONFIRM MARKING LINE WIDTH WITH THE MISCELLANEOUS QUANTITIES

PAVEMENT MARKING (TURN LANES)

STATE OF WISCONSIN
DEPARTMENT OF TRANSPORTAT

6

SDD 15C08-23d

GENERAL NOTES

1. REFLECTIVE SHEETING SHALL FOLLOW THE REQUIREMENTS IN THE APPROVED PRODUCTS LISTING FOR SIGN SHEETING.
2. LOCATION OF WARNING LIGHTS WHEN SHOWN ON THE PLAN.

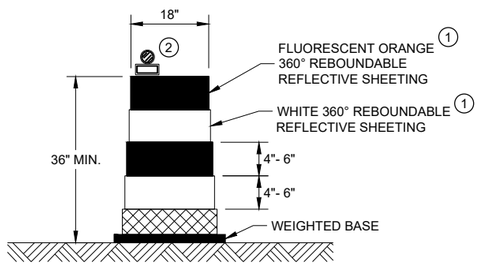

DRUM

BALLAST WIDTHS
RANGE FROM 24"-36"

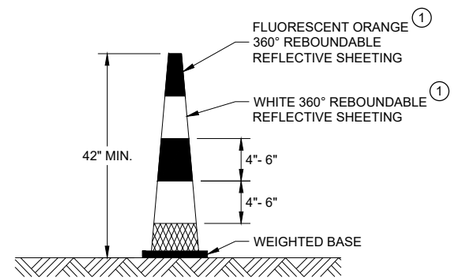

42" CONE

DO NOT USE IN TAPERS
½ SPACING OF DRUMS

BALLAST WIDTHS
RANGE FROM 14"-20"

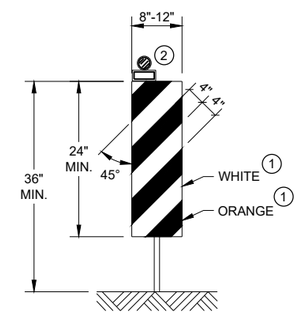

VERTICAL PANEL

THE STRIPES SHALL SLOPE DOWNWARD TO
THE TRAFFIC SIDE FOR CHANNELIZATION.

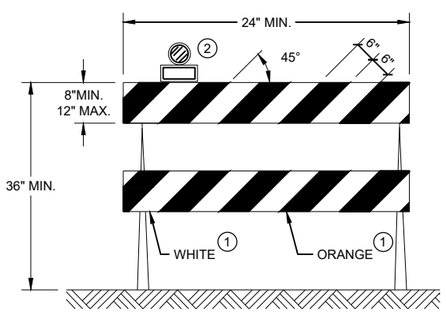

TYPE II BARRICADE

FOR RAILS LESS THAN 36" LONG, 4" WIDE STRIPES
MAY BE USED. ALL STRIPES SHALL SLOPE DOWNWARD
TO THE TRAFFIC SIDE FOR CHANNELIZATION.

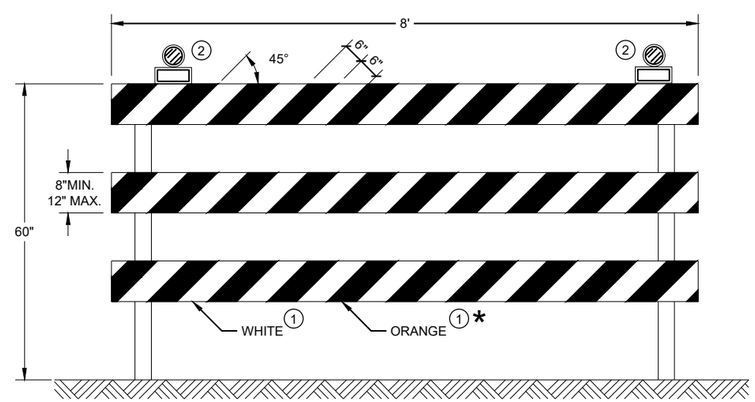

TYPE III BARRICADE

IF SIGN MOUNTED, DO NOT COVER MORE THAN 50% OF THE TOP
TWO RAILS OR 33% OF THE TOTAL AREA OF THE THREE RAILS.

* IF USED FOR A PERMANENT APPLICATION USE RED SHEETING.

CHANNELIZING DEVICES
DRUMS, CONES, BARRICADES
AND VERTICAL PANELS

STATE OF WISCONSIN
DEPARTMENT OF TRANSPORTATION

APPROVED
November 2022 /S/ Andrew Heidtke
DATE WORK ZONE ENGINEE
FHWA

6

6

SDD 15C11 - 10b

SDD 15C11 - 10b

LEGEND

SIGN ON PORTABLE OR PERMANENT SUPPORT

TEMPORARY PORTABLE RUMBLE STRIP ARRAY

DIRECTION OF TRAFFIC

WORK AREA

FLAGGER, EQUIPPED WITH STOP/SLOW PADDLE FASTENED ON SUPPORT STAFF

GENERAL NOTES

DETAILS OF TRAFFIC CONTROL DEVICES AND INSTALLATION NOT SHOWN ON THIS DRAWING SHALL CONFORM TO THE PERTINENT REQUIREMENTS OF THE STANDARD SPECIFICATIONS, THE SPECIAL PROVISIONS, AND THE MANUAL ON UNIFORM TRAFFIC CONTROL DEVICES.

ALL SIGNS ARE 48" X 48" UNLESS OTHERWISE NOTED.

"WO" SIGNS ARE THE SAME AS "W" SIGNS EXCEPT THE BACKGROUND IS ORANGE.

THE EXACT NUMBER, LOCATION AND SPACING OF ALL SIGNS, DEVICES, AND LOCATION OF ALL FLAGGERS SHALL BE ADJUSTED TO FIT FIELD CONDITIONS AS APPROVED BY THE ENGINEER.

THE FIRST ADVANCE WARNING SIGN SHOULD TYPICALLY BE LOCATED IN ADVANCE OF THE ANTICIPATED TRAFFIC BACKUP OR QUEUE.

WHEN A SIDE ROAD OR RAMP INTERSECTS THE FACILITY ON WHICH THE WORK IS BEING PERFORMED, ADDITIONAL TRAFFIC CONTROLS SHALL BE PROVIDED AS SPECIFIED IN THE PLANS AND/OR THE SPECIAL PROVISIONS OR AS APPROVED BY THE ENGINEER.

FLAGGING

FLAGGERS SHALL BE IN SIGHT OF EACH OTHER OR IN DIRECT COMMUNICATION AT ALL TIMES. THEY SHALL BE EQUIPPED WITH STOP/SLOW PADDLES FASTENED ON SUPPORT STAFFS. WHEN THE FLAGGING OPERATION IS NOT IN EFFECT REMOVE TEMPORARY PORTABLE RUMBLE STRIPS PRIOR TO COVERING OR REMOVING ALL ADVANCE SIGNING.

(1) FOR MOVING WORK OPERATIONS, POST ADDITIONAL W20-7A FLAGGER SIGNS AT APPROXIMATELY 3,500' INTERVALS IN THE MOVING WORK OPERATION OR AS APPROVED BY THE ENGINEER.

(2) SIGN NOT REQUIRED IF FLAGGING OPERATION OCCURS WITHIN A SIGNED ROAD WORK ZONE AREA.

WHEN THE DISTANCE BETWEEN FLAGGERS EXCEEDS 2 MILES, A PILOT CAR IS REQUIRED. WHEN CURVES REDUCE SIGHT DISTANCE BELOW 400', A PILOT CAR IS REQUIRED.

TEMPORARY PORTABLE RUMBLE STRIPS

UTILIZE TEMPORARY PORTABLE RUMBLE STRIPS ON ALL FLAGGING OPERATIONS.

(3) EACH TEMPORARY PORTABLE RUMBLE STRIP ARRAY CONSISTS OF THREE RUMBLE STRIPS PLACED TRANSVERSE ACROSS THE LANE AT THE LOCATIONS SHOWN. WITHIN EACH ARRAY, SPACING BETWEEN RUMBLE STRIPS SHALL BE 15 FEET ON CENTER

ONLY USE TEMPORARY PORTABLE RUMBLE STRIPS FROM THE APPROVED PRODUCTS LIST.

INSTALL TEMPORARY RUMBLE STRIPS PER MANUFACTURER'S RECOMMENDATIONS.

PLACE ADVANCE SIGNING PRIOR TO INSTALLING TEMPORARY RUMBLE STRIPS.

DO NOT INSTALL TEMPORARY PORTABLE RUMBLE STRIPS ON GRAVEL, MILLED SURFACES, OR ASPHALT THAT HAS BEEN PAVED LESS THAN 12 HOURS.

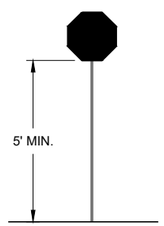

STOP/SLOW PADDLE ON SUPPORT STAFF

SIGN AND TEMPORARY RUMBLE STRIP ARRAY SPACING TABLE

SPEED LIMIT	SPACING "A"
25-30 MPH	200'
35-40 MPH	350'
45-55 MPH	500'

WO3-4

USE OF WO3-4 SIGN IS OPTIONAL. WHEN USED, THIS SIGN SHALL BE LOCATED BETWEEN THE W20-7A AND W20-4A SIGNS, USING SPACING "A".

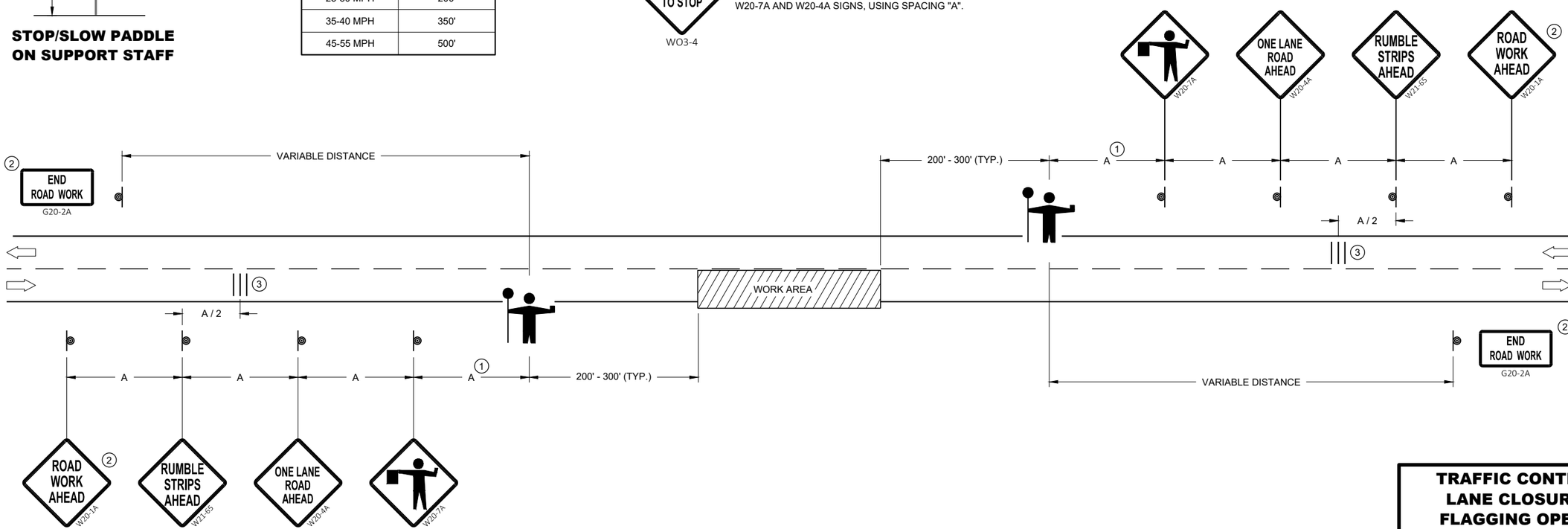

TRAFFIC CONTROL FOR LANE CLOSURE WITH FLAGGING OPERATION

STATE OF WISCONSIN
DEPARTMENT OF TRANSPORTATION

APPROVED
May 2022 — DATE
/S/ Andrew Heidtke — WORK ZONE ENGINEE
FHWA

6

SDD 15C12 - 09a

LEGEND

V1 LEAD VEHICLE

V2 MARKING VEHICLE

V3 SHADOW VEHICLE

TRUCK MOUNTED ATTENUATOR (TMA)

SIGN ON TEMPORARY SUPPORT

DIRECTION OF TRAFFIC

GENERAL NOTES

ALL VEHICLES SHALL BE EQUIPPED WITH TWO 360 DEGREE HIGH INTENSITY YELLOW FLASHING LIGHTS OR STROBE LIGHTS AND OPERATED WITH HEADLIGHTS TURNED ON.

ALL VEHICLES SHALL BE EQUIPPED WITH REAR FACING TYPE B OR C FLASHING ARROW PANEL OPERATING IN CAUTION MODE. SIGNS PLACED ON VEHICLES MUST NOT OBSCURE THE ARROW PANEL.

ALL SIGNS ARE 48" X 48" UNLESS OTHERWISE SPECIFIED.

DISTANCE BETWEEN VEHICLES MAY VARY ACCORDING TO TERRAIN, SIGHT DISTANCE, PAINT DRYING TIME, AND OTHER FACTORS. WHENEVER ADEQUATE STOPPING SIGHT DISTANCE EXISTS TO THE REAR, SHADOW VEHICLES SHOULD MAINTAIN THE MINIMUM DISTANCE FROM THE WORK VEHICLE AND PROCEED AT THE SAME SPEED AS THE WORK VEHICLE. SHADOW VEHICLES SHOULD SLOW DOWN IN ADVANCE OF VERTICAL AND HORIZONTAL CURVES THAT RESTRICT SIGHT DISTANCE.

THE WORK AND SHADOW VEHICLES SHOULD PULL OVER PERIODICALLY TO ALLOW TRAFFIC TO PASS.

WHEN NO WORK ACTIVITY IS TAKING PLACE, REMOVE OR LAY STATIONARY SIGNS AND SUPPORTS FLAT ON THE GRADE WITH UPRIGHTS ORIENTED PARALLEL TO AND DOWNSTREAM FROM TRAFFIC.

CONES SHOULD BE USED BETWEEN THE MARKING AND SHADOW VEHICLE AT 100 FOOT SPACING. CONES MAY BE OMITTED ON PAINTED LINE IF APPROVED BY THE ENGINEER. CONSIDER PAVEMENT MARKING DRY OR CURE TIMES AND TRAFFIC VOLUME.

CONES SHALL BE A MINIMUM OF 28" FOR WET PAVEMENT MARKING .

1. SIGNS SHALL BE REPEATED APPROXIMATELY EVERY THREE MILES AND AFTER EVERY MAJOR INTERSECTION.
2. IF CONSTRUCTION WORK ZONE SIGNS ARE IN PLACE, W20-1A OR W21-63 ARE NOT REQUIRED.
3. V1 AND V2 CAN BE SWITCHED SO THAT THE MARKER IS THE LEAD VEHICLE.

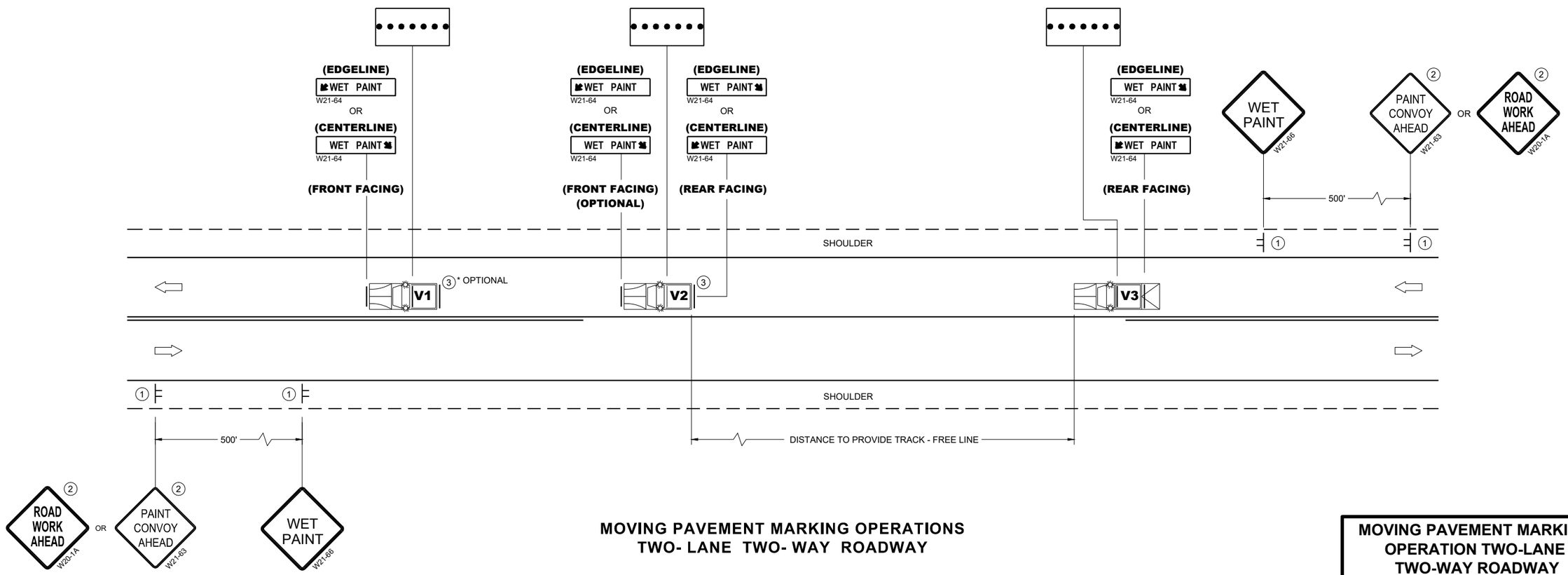

MOVING PAVEMENT MARKING OPERATIONS
TWO- LANE TWO- WAY ROADWAY

MOVING PAVEMENT MARKING OPERATION TWO-LANE TWO-WAY ROADWAY

STATE OF WISCONSIN
DEPARTMENT OF TRANSPORTATION

APPROVED
March 2024 — DATE
/S/ Andrew Heidtke — WORK ZONE ENGINEER
FHWA

6

SDD 15C19-9a

LEGEND

V1 LEAD VEHICLE

V2 MARKING VEHICLE

V3 SHADOW VEHICLE

TRUCK MOUNTED ATTENUATOR (TMA)

SIGN ON TEMPORARY SUPPORT

DIRECTION OF TRAFFIC

FLASHING ARROW PANEL (MERGE)

GENERAL NOTES

ALL VEHICLES SHALL BE EQUIPPED WITH TWO 360 DEGREE HIGH INTENSITY YELLOW FLASHING LIGHTS OR STROBE LIGHTS AND OPERATED WITH HEADLIGHTS TURNED ON.

ALL VEHICLES SHALL BE EQUIPPED WITH REAR FACING TYPE B OR C FLASHING ARROW PANEL. SIGNS PLACED ON VEHICLES MUST NOT OBSCURE THE ARROW PANEL.

ALL SIGNS ARE 48" X 48" UNLESS OTHERWISE SPECIFIED.

DISTANCE BETWEEN VEHICLES MAY VARY ACCORDING TO TERRAIN, SIGHT DISTANCE, PAINT DRYING TIME, AND OTHER FACTORS. WHENEVER ADEQUATE STOPPING SIGHT DISTANCE EXISTS TO THE REAR, SHADOW VEHICLES SHOULD MAINTAIN THE MINIMUM DISTANCE FROM THE WORK VEHICLE AND PROCEED AT THE SAME SPEED AS THE WORK VEHICLE. SHADOW VEHICLES SHOULD SLOW DOWN IN ADVANCE OF VERTICAL AND HORIZONTAL CURVES THAT RESTRICT SIGHT DISTANCE.

WHEN WORK ACTIVITY BLOCKS THE LEFT LANE, REVERSE TRAFFIC CONTROL.

WHEN A RAMP INTERSECTS THE FACILITY ON WHICH THE WORK IS BEING PERFORMED, PROVIDE ADDITIONAL TRAFFIC CONTROLS AS SPECIFIED IN THE CONTRACT OR AS APPROVED BY THE ENGINEER.

WHEN NO WORK ACTIVITY IS TAKING PLACE, REMOVE OR LAY STATIONARY SIGNS AND SUPPORTS FLAT ON THE GRADE WITH UPRIGHTS ORIENTED PARALLEL TO AND DOWNSTREAM FROM TRAFFIC.

CONES SHOULD BE USED BETWEEN THE MARKING AND SHADOW VEHICLES AT 100 FOOT SPACING. CONES MAY BE OMITTED ON PAINTED LINE IF APPROVED BY THE ENGINEER. CONSIDER PAVEMENT MARKING DRY OR CURE TIMES AND TRAFFIC VOLUME.

CONES SHALL HAVE A MINIMUM HEIGHT OF 28" FOR WET PAVEMENT MARKINGS.

(1) SIGNS SHALL BE REPEATED APPROXIMATELY EVERY THREE MILES AND AFTER EVERY MAJOR INTERSECTION.

(2) IF CONSTRUCTION WORK ZONE SIGNS ARE IN PLACE, W20-1A OR W21-63 ARE NOT REQUIRED.

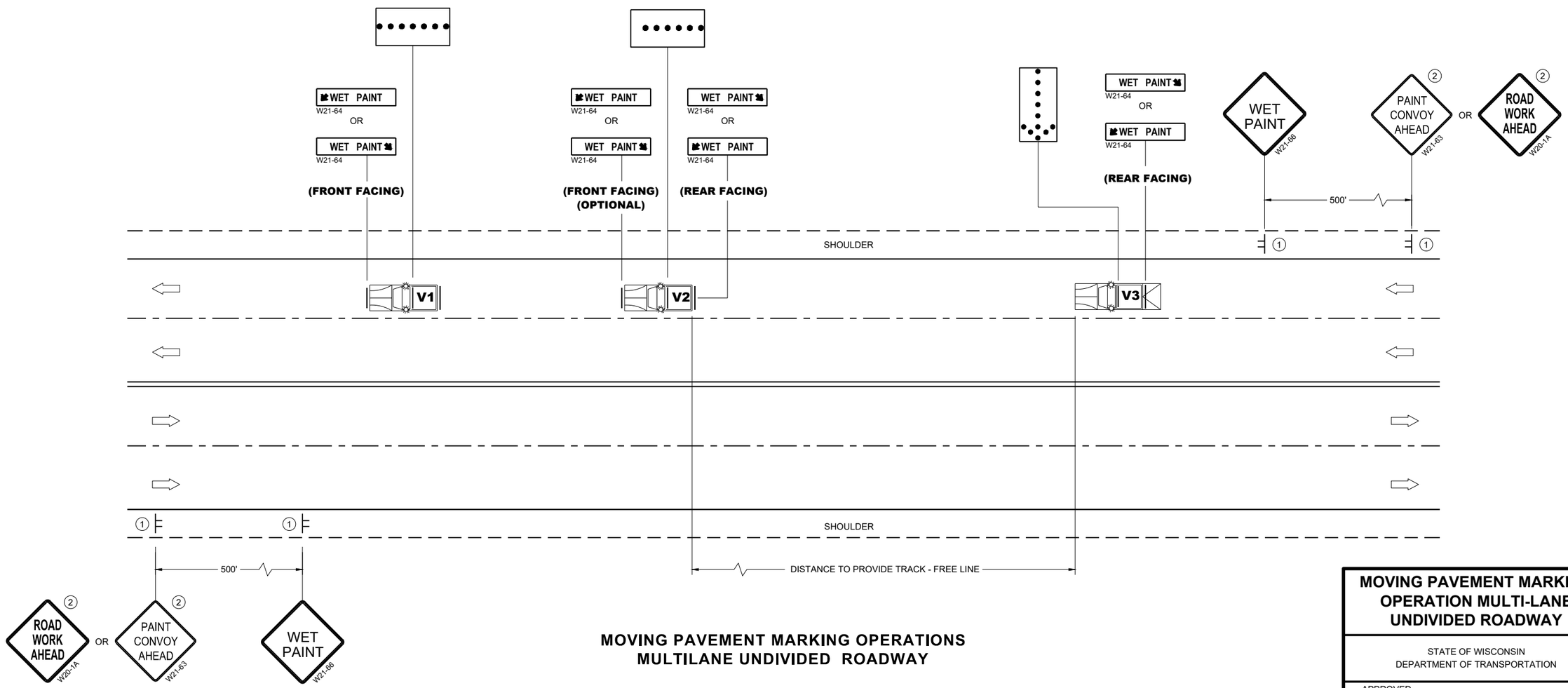

MOVING PAVEMENT MARKING OPERATIONS MULTILANE UNDIVIDED ROADWAY

MOVING PAVEMENT MARKING OPERATION MULTI-LANE UNDIVIDED ROADWAY

STATE OF WISCONSIN
DEPARTMENT OF TRANSPORTATION

APPROVED
March 2024 — DATE
/S/ Andrew Heidtke — WORK ZONE ENGINEER
FHWA

6

SDD 15C19-9b

LEGEND

V1 MARKING VEHICLE

V2 SHADOW VEHICLE

V3 TRAIL VEHICLE

TRUCK MOUNTED ATTENUATOR (TMA)

SIGN ON TEMPORARY SUPPORT

DIRECTION OF TRAFFIC

FLASHING ARROW PANEL (MERGE)

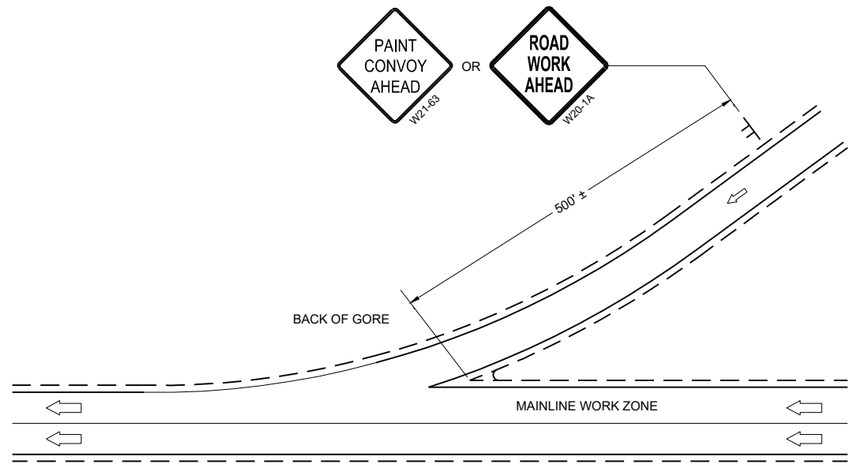

GENERAL NOTES

ALL VEHICLES SHALL BE EQUIPPED WITH TWO 360 DEGREE HIGH INTENSITY YELLOW FLASHING LIGHTS OR STROBE LIGHTS AND OPERATED WITH HEADLIGHTS TURNED ON.

ALL VEHICLES SHALL BE EQUIPPED WITH REAR FACING TYPE B OR C FLASHING ARROW PANEL. SIGNS PLACED ON VEHICLES MUST NOT OBSCURE THE ARROW PANEL.

ALL SIGNS ARE 48" X 48" UNLESS OTHERWISE SPECIFIED.

DISTANCE BETWEEN VEHICLES MAY VARY ACCORDING TO TERRAIN, SIGHT DISTANCE, PAINT DRYING TIME, AND OTHER FACTORS. WHENEVER ADEQUATE STOPPING SIGHT DISTANCE EXISTS TO THE REAR, SHADOW VEHICLES SHOULD MAINTAIN THE MINIMUM DISTANCE FROM THE WORK VEHICLE AND PROCEED AT THE SAME SPEED AS THE WORK VEHICLE. SHADOW VEHICLES SHOULD SLOW DOWN IN ADVANCE OF VERTICAL AND HORIZONTAL CURVES THAT RESTRICT SIGHT DISTANCE.

WHEN WORK ACTIVITY BLOCKS THE LEFT LANE, REVERSE TRAFFIC CONTROL.

WHEN A RAMP INTERSECTS THE FACILITY ON WHICH THE WORK IS BEING PERFORMED, PROVIDE ADDITIONAL TRAFFIC CONTROLS AS SPECIFIED IN THE CONTRACT OR AS APPROVED BY THE ENGINEER.

USE AN ATTENUATOR ON THE REARMOST VEHICLE THAT BLOCKS ALL OR PART OF THE TRAFFIC LANE.

IF THE SHOULDER IS TOO NARROW TO ACCOMMODATE THE LAST TRAILING VEHICLE, THE VEHICLE SHOULD STRADDLE THE EDGE LINE.

WHEN NO WORK ACTIVITY IS TAKING PLACE, REMOVE OR LAY STATIONARY SIGNS AND SUPPORTS FLAT ON THE GRADE WITH UPRIGHTS ORIENTED PARALLEL TO AND DOWNSTREAM FROM TRAFFIC

CONES SHOULD BE USED BETWEEN THE MARKING AND SHADOW VEHICLE AT 100 FOOT SPACING. CONES MAY BE OMITTED ON PAINTED LINE IF APPROVED BY THE ENGINEER. CONSIDER PAVEMENT MARKING DRY OR CURE TIMES AND TRAFFIC VOLUME.

CONES SHALL BE A MINIMUM HEIGHT OF 28" FOR WET PAVEMENT MARKINGS

(1) SIGNS SHALL BE REPEATED APPROXIMATELY EVERY THREE MILES AND AFTER EVERY ON RAMP.

(2) IF CONSTRUCTION WORK ZONE SIGNS ARE IN PLACE, W20-1A OR W21-63 ARE NOT REQUIRED.

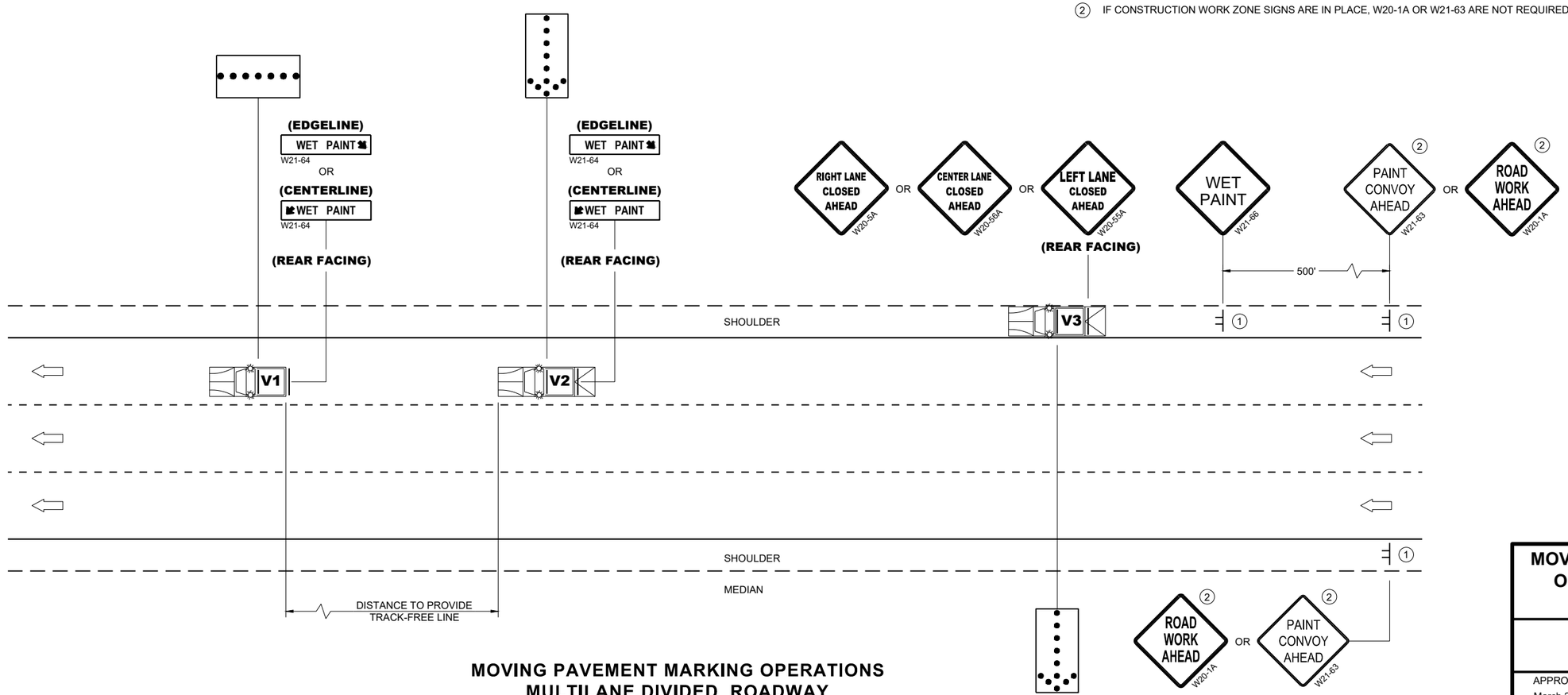

MOVING PAVEMENT MARKING OPERATIONS
MULTILANE DIVIDED ROADWAY

MOVING PAVEMENT MARKING OPERATION MULTI-LANE DIVIDED ROADWAY

STATE OF WISCONSIN
DEPARTMENT OF TRANSPORTATION

APPROVED
March 2024 — DATE
/S/ Andrew Heidtke — WORK ZONE ENGINEER
FHWA

6

SDD 15C19-9c

GENERAL NOTES

PLACE GROOVE 3 INCHES LEFT OF JOINT.

LEGEND

SIGN ON PERMANENT SUPPORT

DIRECTION OF TRAVEL

* CONFIRM MARKING LINE WIDTH WITH THE MISCELLANEOUS QUANTITIES

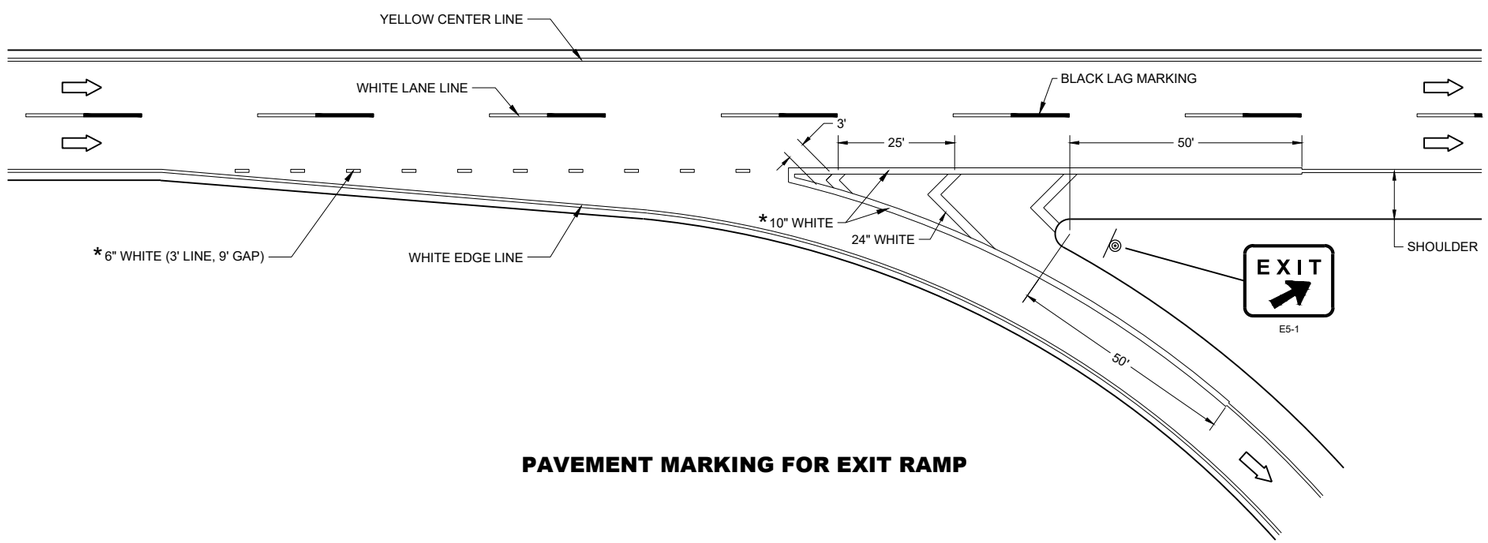

PAVEMENT MARKING FOR EXIT RAMP

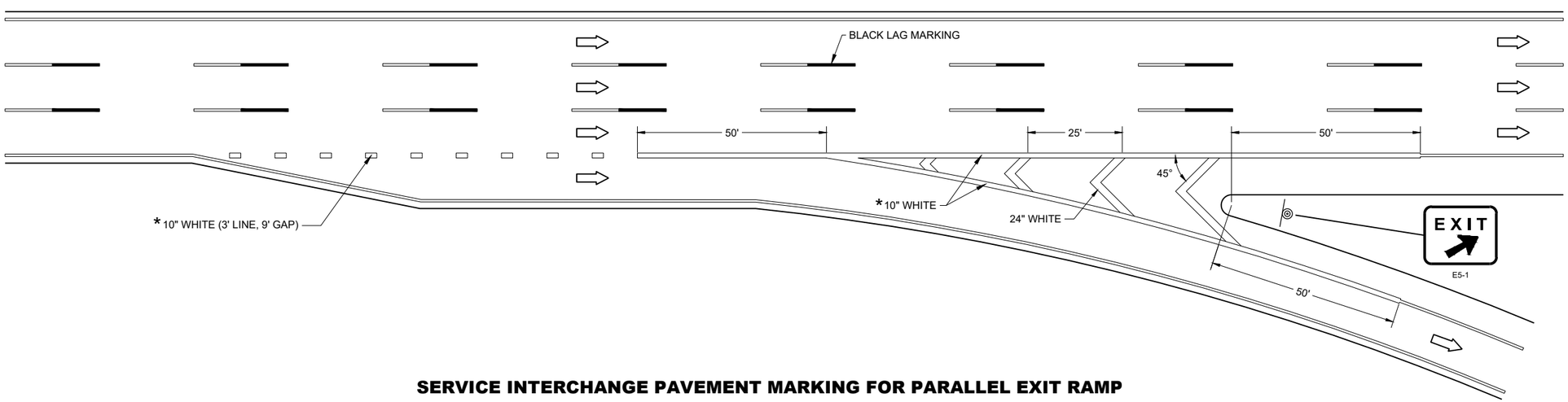

SERVICE INTERCHANGE PAVEMENT MARKING FOR PARALLEL EXIT RAMP

PAVEMENT MARKING, EXIT RAMP AND PARALLEL EXIT RAMP

STATE OF WISCONSIN
DEPARTMENT OF TRANSPORTATION

6

SDD 15C31-06a

GENERAL NOTES

PLACE GROOVE 3 INCHES LEFT OF JOINT.

(1) ½ LENGTH OF FULL WIDTH ACCELERATION LANE.

LEGEND

DIRECTION OF TRAVEL

* CONFIRM MARKING LINE WIDTH WITH THE MISCELLANEOUS QUANTITIES

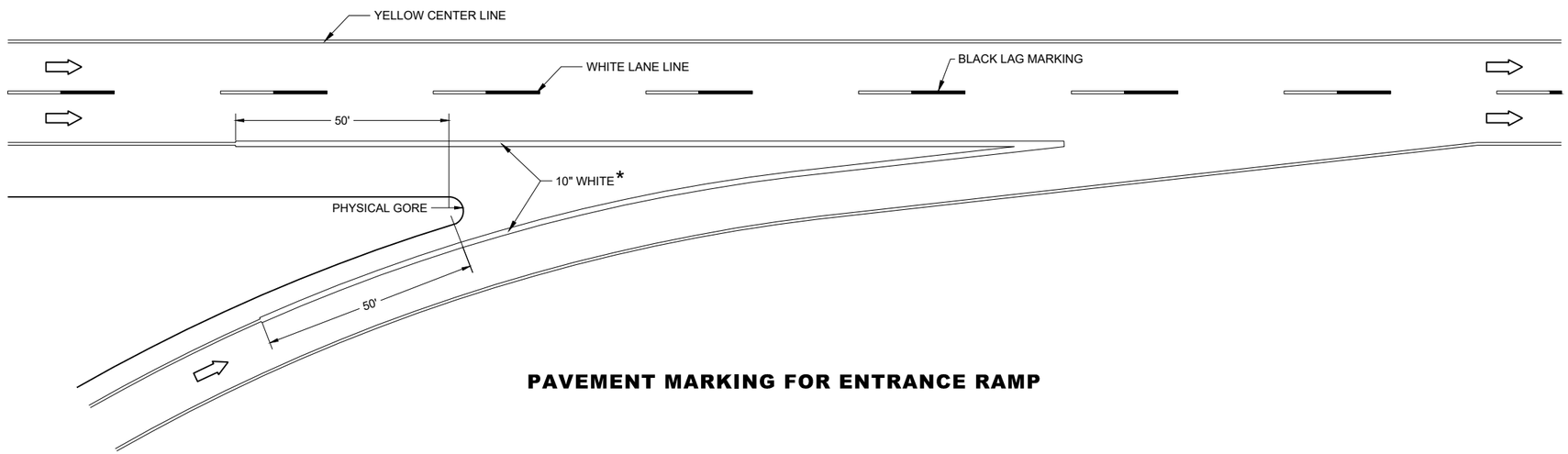

PAVEMENT MARKING FOR ENTRANCE RAMP

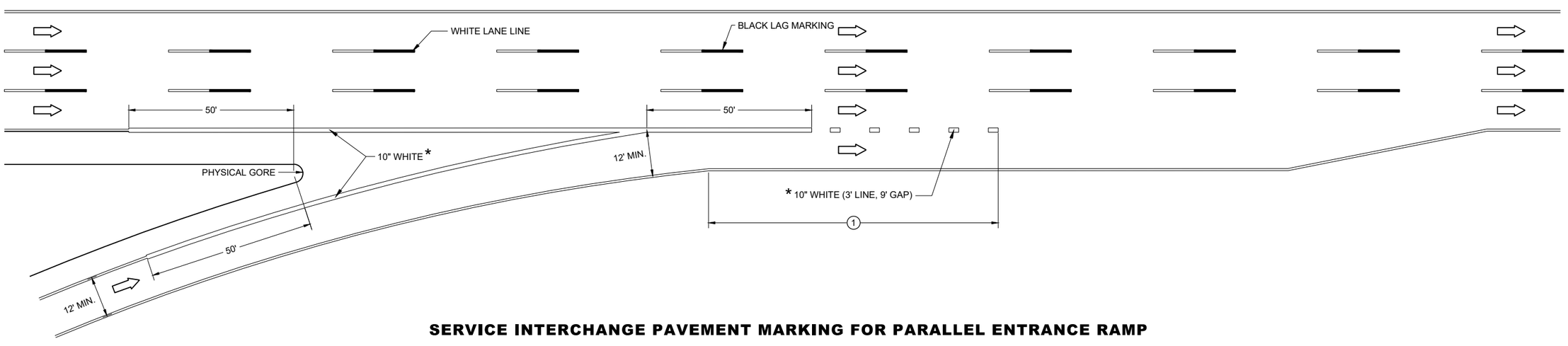

SERVICE INTERCHANGE PAVEMENT MARKING FOR PARALLEL ENTRANCE RAMP

6

6

SDD 15C31-06c

SDD 15C31-06c

PAVEMENT MARKING, ENTRANCE RAMP AND PARALLEL ENTRANCE RAMP

STATE OF WISCONSIN
DEPARTMENT OF TRANSPORTATION

GENERAL NOTES

PLACE GROOVE 3 INCHES LEFT OF JOINT.

LEGEND

SIGN ON PERMANENT SUPPORT

DIRECTION OF TRAVEL

*CONFIRM MARKING LINE WIDTH WITH THE MISCELLANEOUS QUANTITIES

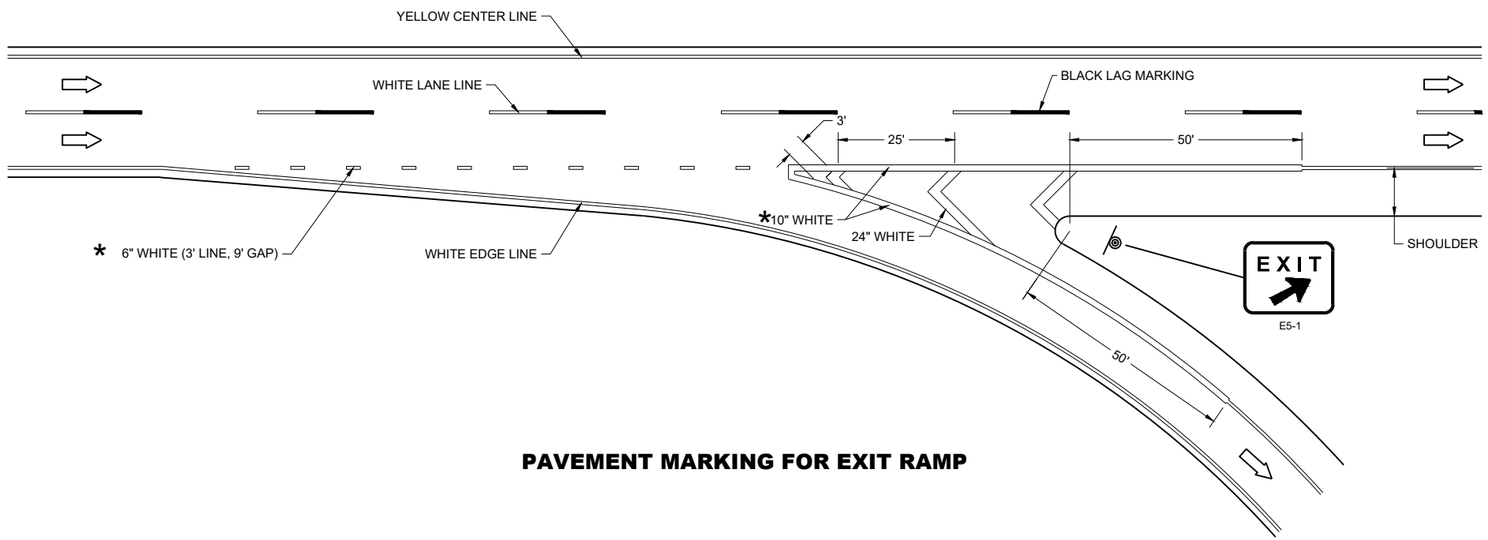

PAVEMENT MARKING FOR EXIT RAMP

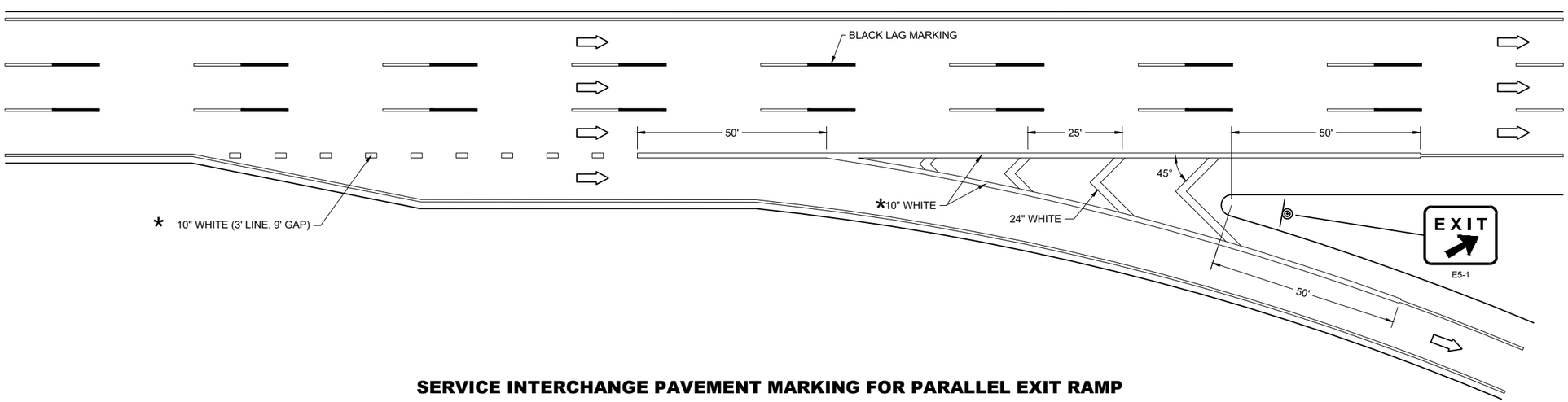

SERVICE INTERCHANGE PAVEMENT MARKING FOR PARALLEL EXIT RAMP

PAVEMENT MARKING, EXIT RAMP AND PARALLEL EXIT RAMP

STATE OF WISCONSIN
DEPARTMENT OF TRANSPORTATION

6
SDD 15C31-07a

GENERAL NOTES

PLACE GROOVE 3 INCHES LEFT OF JOINT.

LEGEND

DIRECTION OF TRAVEL

*CONFIRM MARKING LINE WIDTH WITH THE MISCELLANEOUS QUANTITIES

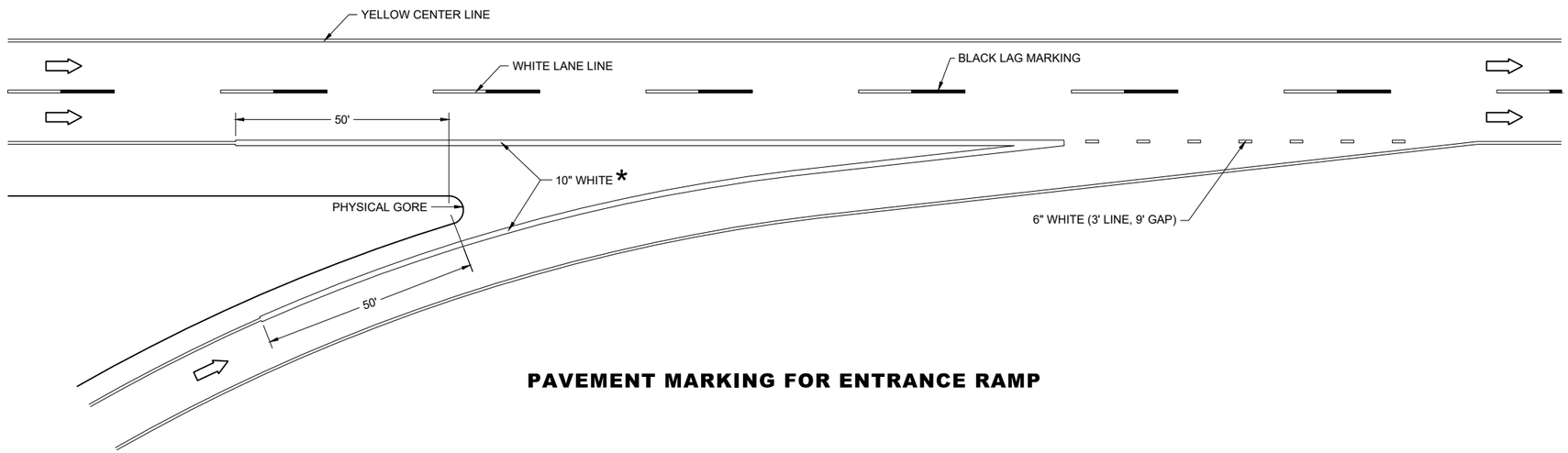

PAVEMENT MARKING FOR ENTRANCE RAMP

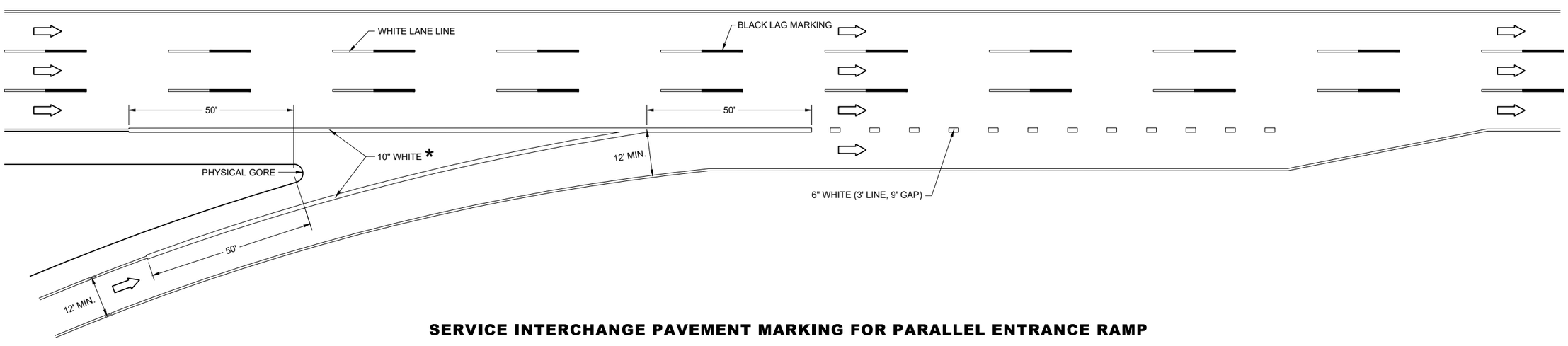

SERVICE INTERCHANGE PAVEMENT MARKING FOR PARALLEL ENTRANCE RAMP

PAVEMENT MARKING, ENTRANCE RAMP AND PARALLEL ENTRANCE RAMP

STATE OF WISCONSIN
DEPARTMENT OF TRANSPORTATION

6

SDD 15C31-07c

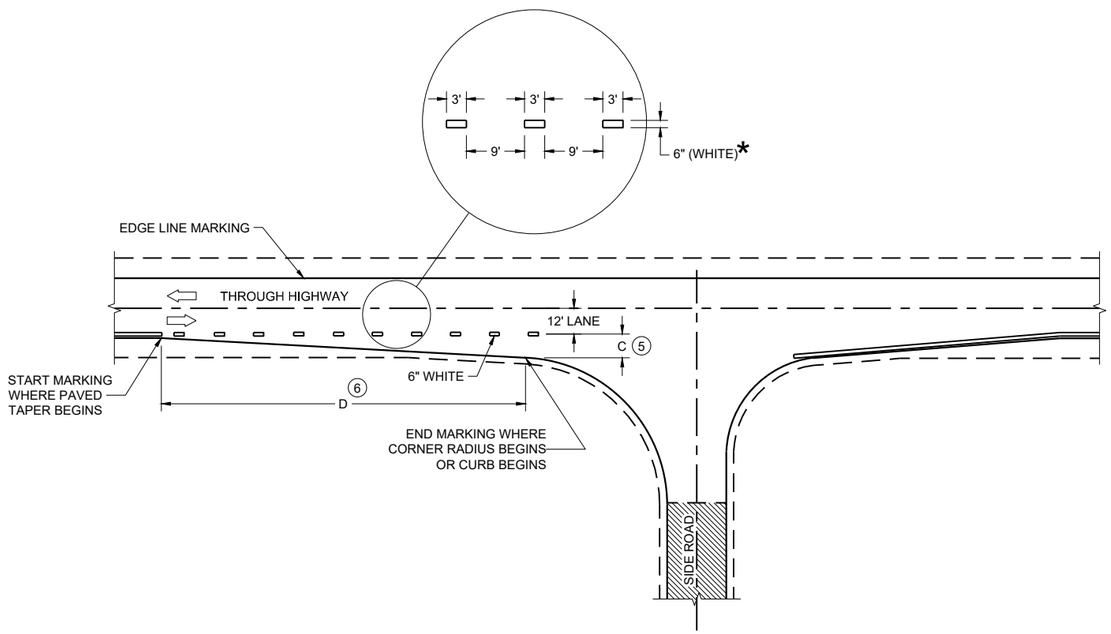

MINOR INTERSECTION

*CONFIRM MARKING LINE WIDTH WITH THE MISCELLANEOUS QUANTITIES

GENERAL NOTES

OMIT EDGE LINES THROUGH INTERSECTIONS. CONTINUE EDGE LINES THROUGH DRIVEWAYS.

1. WHEN DISTANCE "A" IS LESS THAN 250 FEET, OMIT LANE LINE.
2. WHEN DISTANCE "B" IS LESS THAN 100 FEET, OMIT CHANNELIZING LANE LINE.
3. BARRIER LINE ENDS AT SIDE ROAD PAVEMENT / SURFACE EDGE EXTENSION.
4. BARRIER LINE STARTS 500 FEET PRIOR TO THE BYPASS TAPER.
5. WHEN DISTANCE "C" IS LESS THAN 4 FEET, OMIT DOTTED EXTENSION.
6. WHEN DISTANCE "D" IS LESS THAN 50 FEET, OMIT DOTTED EXTENSION.

LEGEND

⇨ DIRECTION OF TRAVEL

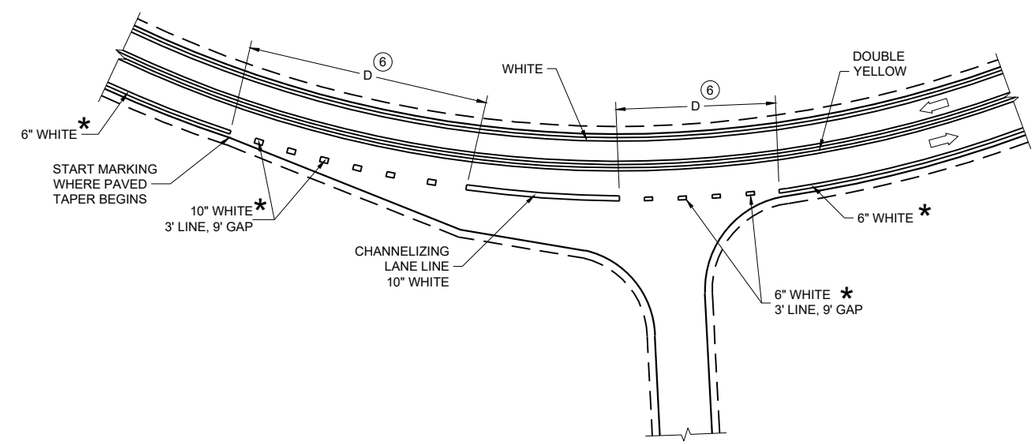

INTERSECTION ON OUTSIDE OF CURVE

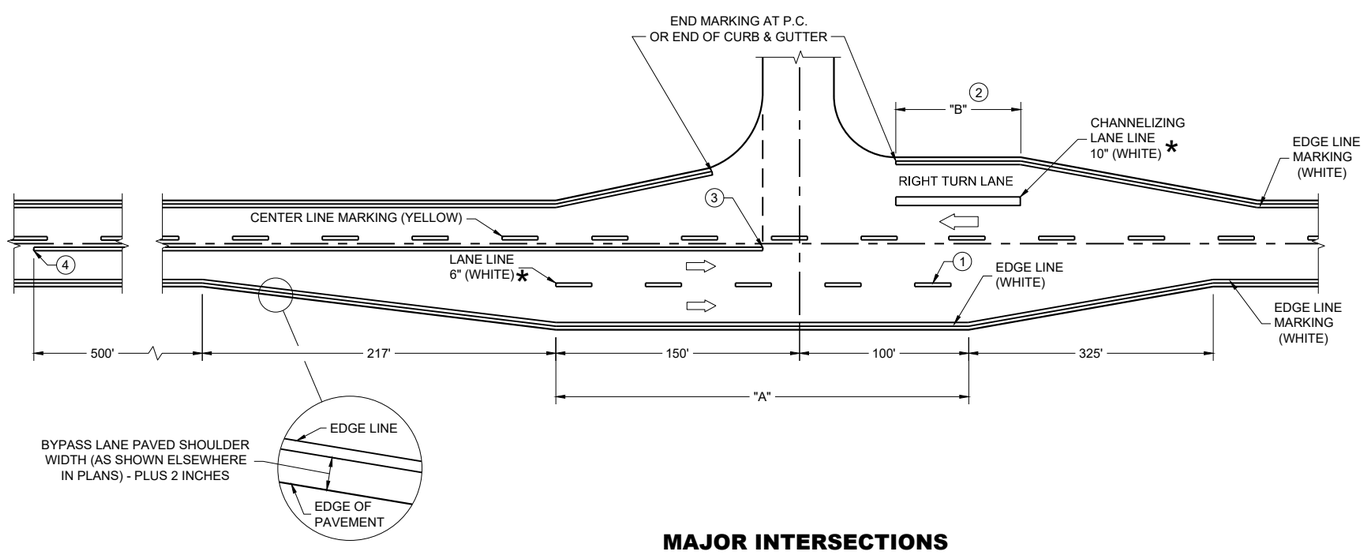

MAJOR INTERSECTIONS

(INTERSECTION WITH FULL RIGHT TURN LANE OR BYPASS LANE)

PAVEMENT MARKING (INTERSECTIONS)

STATE OF WISCONSIN
DEPARTMENT OF TRANSPORTATION

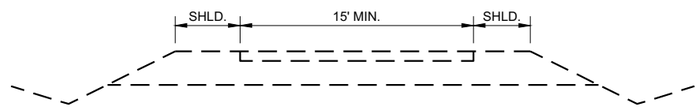

INITIAL RAMP - TYPICAL

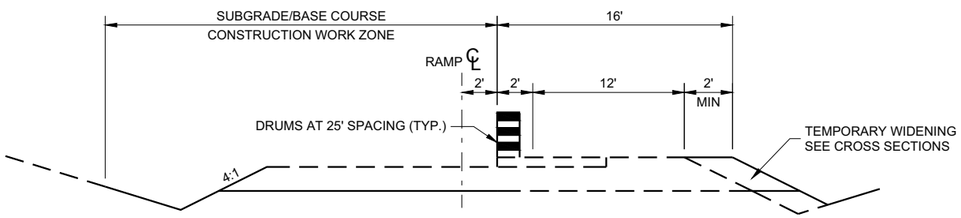

STAGE I - CONSTRUCTION TO SUBGRADE, LEFT

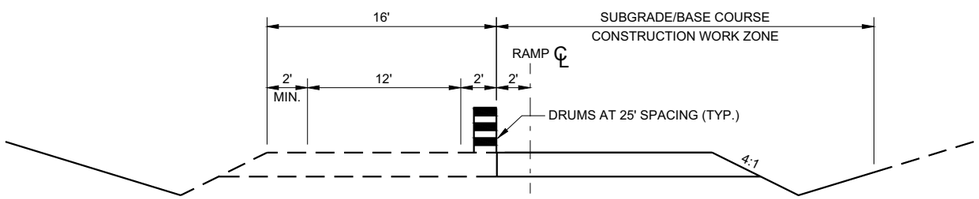

STAGE II - CONSTRUCTION TO SUBGRADE, RIGHT

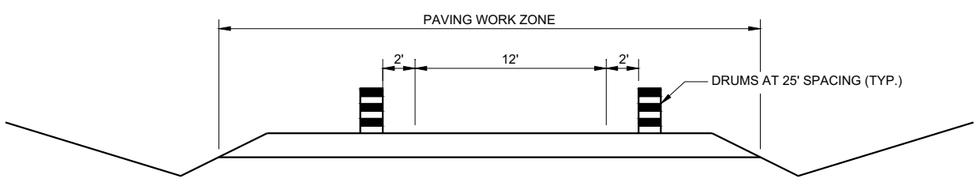

STAGE III - TRAFFIC ON BASE COURSE

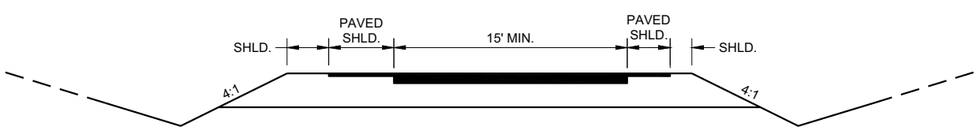

STAGE IV - PAVING

GENERAL NOTES

WORK SHALL BE SCHEDULED FOR ALL STAGES TO MINIMIZE INCONVENIENCE TO THE TRAFFIC USING THE RAMP WHILE IT IS ONLY BASE COURSE.

IN STATE III, A MINIMUM 12' LANE WIDTH SHALL BE DELINEATED WITH DRUMS ALONG BOTH EDGES AT ALL TIMES UNTIL PAVED AND PAVEMENT MARKINGS ARE PLACED.

TRAFFIC CONTROL,
RAMP CONSTRUCTION STAGING

STATE OF WISCONSIN
DEPARTMENT OF TRANSPORTATION

APPROVED
July 1994 — DATE
/S/ Chester J. Spang — DIRECTOR, OFFICE OF TR
FHWA

6
SDD 15D04 - 01

GENERAL NOTES

THE EXACT NUMBER, LOCATION, AND SPACING OF ALL SIGNS AND DEVICES SHALL BE ADJUSTED TO FIT FIELD CONDITIONS AS APPROVED BY THE ENGINEER.

THE SPACING BETWEEN SIGNS SHOULD BE ADJUSTED TO NOT CONFLICT WITH AND TO PROVIDE A MINIMUM OF 200 FEET (500 FEET DESIRABLE) CLEARANCE TO EXISTING SIGNS.

THIS LANE CLOSURE IS TYPICAL FOR CLOSING RIGHT LANE - REVERSE FOR CLOSING LEFT LANE.

ALL SIGNS ARE 48" x 48" UNLESS OTHERWISE NOTED.

"WO" IS THE SAME AS "W" EXCEPT THE BACKGROUND IS ORANGE.

ANY SIGNS TEMPORARY OR EXISTING, WHICH CONFLICT WITH TRAFFIC CONTROL "IN USE" SHALL BE REMOVED OR COVERED AS NEEDED OR AS APPROVED BY THE ENGINEER.

FOR A LANE CLOSURE THAT IS IN PLACE LESS THAN 7 CONTINUOUS DAYS AND NIGHTS, THE ADVANCED WARNING SIGNS MAY BE MOUNTED ON PORTABLE SUPPORTS.

REMOVE PAVEMENT MARKINGS AND PLACE TEMPORARY PAVEMENT MARKING LINE IF LANE CLOSURE IS TO BE IN PLACE 4 OR MORE CONTINUOUS DAYS AND NIGHTS.

IF THE HORIZONTAL ALIGNMENT IS SUCH THAT A CURVE MAY REQUIRE ADDITIONAL DELINEATION, THE DEVICE SPACING MAY BE DECREASED TO 50 FEET.

WARNING LIGHTS ARE NOT REQUIRED IF THE LANE CLOSURE IS A DAYTIME ONLY OPERATION.

ADJUSTMENTS IN BUFFER SPACE NEED TO BE INCORPORATED WHEN THE LANE CLOSURE OCCURS NEAR AN INTERCHANGE EXIT OR ENTRANCE RAMP OR INTERSECTION. THE LANE CLOSURE MUST TAKE PLACE FAR ENOUGH IN ADVANCE OF AN EXIT OR ENTRANCE RAMP TO STILL ALLOW FOR ADEQUATE BUFFER SPACE. THE MINIMUM LENGTH OF THE BUFFER SPACE BEFORE AN EXIT RAMP SHOULD BE ONE HALF THE LENGTH OF THE TRANSITION AREA. THE ENTRANCE RAMP SHOULD BE FOLLOWED BY THE ORIGINAL BUFFER SPACE LENGTH OF 800 FEET DESIRABLE PRIOR TO ANOTHER TRAFFIC CONTROL CHANGE SUCH AS A CROSSOVER MANEUVER.

CONSIDER ROADWAY GEOMETRICS WHEN LOCATING SIGNS AND ARROW BOARD SO THE DRIVER HAS A CLEAR VIEW OF THE ARROW BOARD AND LANE CLOSURE DRUMS.

LEGEND

- SIGN ON PERMANENT SUPPORT
- TRAFFIC CONTROL DRUM
- TRAFFIC CONTROL DRUM WITH TYPE "C" STEADY BURN LIGHT
- TYPE III BARRICADE WITH ATTACHED SIGN
- TYPE "A" WARNING LIGHT (FLASHING)
- REMOVING PAVEMENT MARKINGS
- DIRECTION OF TRAFFIC
- WORK AREA
- FLASHING ARROW BOARD

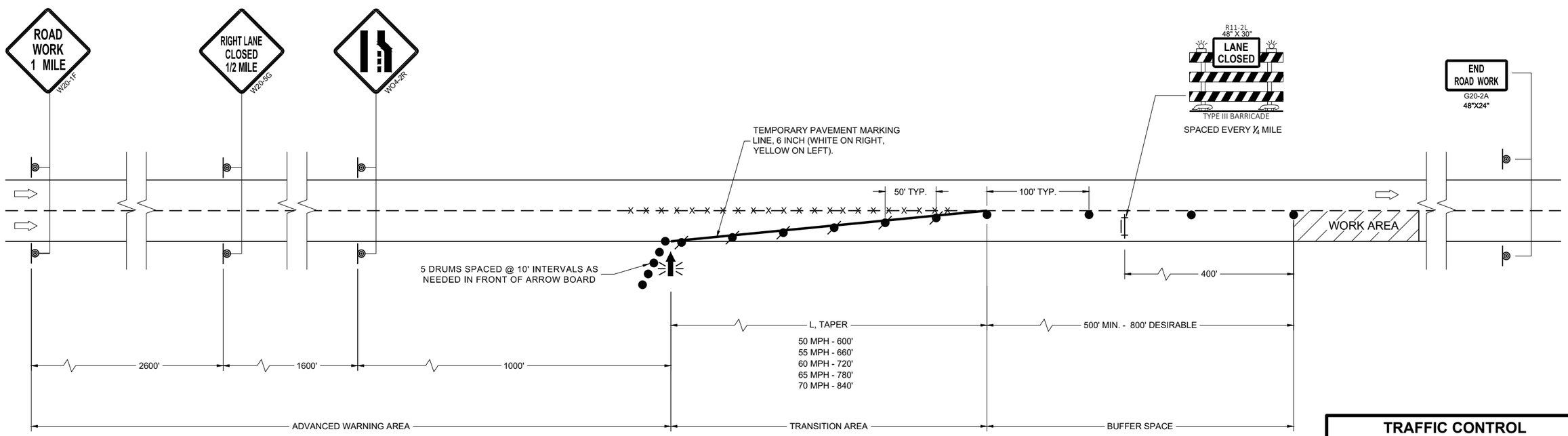

TRAFFIC CONTROL
LANE CLOSURE

STATE OF WISCONSIN
DEPARTMENT OF TRANSPORTATION

APPROVED
March 2024 — DATE
/S/ Andrew Heidtke — Work Zone Engineer
FHWA

6

SDD 15D12-13a

6

SDD 15D12-13a

GENERAL NOTES

THE EXACT NUMBER, LOCATION, AND SPACING OF ALL SIGNS AND DEVICES SHALL BE ADJUSTED TO FIT FIELD CONDITIONS AS APPROVED BY THE ENGINEER.

THE SPACING BETWEEN SIGNS SHOULD BE ADJUSTED TO NOT CONFLICT WITH AND TO PROVIDE A MINIMUM OF 200 FEET (500 FEET DESIRABLE) CLEARANCE TO EXISTING SIGNS.

THIS LANE CLOSURE IS TYPICAL FOR CLOSING RIGHT LANE - REVERSE FOR CLOSING LEFT LANE.

ALL SIGNS ARE 48" x 48" UNLESS OTHERWISE NOTED.

"WO" SIGNS ARE THE SAME AS "W" SIGNS EXCEPT THE BACKGROUND IS ORANGE.

ANY SIGNS TEMPORARY OR EXISTING, WHICH CONFLICT WITH TRAFFIC CONTROL "IN USE" SHALL BE REMOVED OR COVERED AS NEEDED OR AS APPROVED BY THE ENGINEER.

CONSIDER ROADWAY GEOMETRICS WHEN LOCATING SIGNS AND ARROW BOARD SO THE DRIVER HAS A CLEAR VIEW OF THE ARROW BOARD AND LANE CLOSURE DRUMS.

FOR A LANE CLOSURE THAT IS IN PLACE LESS THAN 7 CONTINUOUS DAYS AND NIGHTS, THE ADVANCED WARNING SIGNS MAY BE MOUNTED ON PORTABLE SUPPORTS.

REMOVE PAVEMENT MARKINGS AND PLACE TEMPORARY PAVEMENT MARKING LINE IF LANE CLOSURE IS TO BE IN PLACE 4 OR MORE CONTINUOUS DAYS AND NIGHTS.

WARNING LIGHTS ARE NOT REQUIRED IF THE LANE CLOSURE IS A DAYTIME ONLY OPERATION.

IF THE HORIZONTAL ALIGNMENT IS SUCH THAT A CURVE MAY REQUIRE ADDITIONAL DELINEATION, THE DEVICE SPACING MAY BE DECREASED TO 50 FEET.

ADJUSTMENTS IN BUFFER SPACE NEED TO BE INCORPORATED WHEN THE LANE CLOSURE OCCURS NEAR AN INTERCHANGE EXIT OR ENTRANCE RAMP OR INTERSECTION. THE LANE CLOSURE MUST TAKE PLACE FAR ENOUGH IN ADVANCE OF AN EXIT OR ENTRANCE RAMP TO STILL ALLOW FOR ADEQUATE BUFFER SPACE. THE MINIMUM LENGTH OF THE BUFFER SPACE BEFORE AN EXIT RAMP SHOULD BE ONE HALF THE LENGTH OF THE TRANSITION AREA. THE ENTRANCE RAMP SHOULD BE FOLLOWED BY THE ORIGINAL BUFFER SPACE LENGTH OF 800 FEET DESIRABLE PRIOR TO ANOTHER TRAFFIC CONTROL CHANGE SUCH AS A CROSSOVER MANEUVER.

(1) A SPEED LIMIT SIGN SHALL BE LOCATED 1500 FEET BEYOND THE END OF THE ACCELERATION LANE OF EACH ENTRANCE RAMP. PLACE A SPEED LIMIT SIGN A MINIMUM OF EVERY 3 MILES. INCLUDE A RESUME SPEED LIMIT SIGN 200 FEET MINIMUM (500 FEET DESIRABLE) BEYOND THE "END OF ROADWORK" SIGN.

LEGEND

- SIGN ON PERMANENT SUPPORT
- TRAFFIC CONTROL DRUM
- TRAFFIC CONTROL DRUM WITH TYPE "C" STEADY BURN LIGHT
- TYPE III BARRICADE WITH ATTACHED SIGN
- TYPE "A" WARNING LIGHT (FLASHING)
- REMOVING PAVEMENT MARKINGS
- DIRECTION OF TRAFFIC
- WORK AREA
- FLASHING ARROW BOARD

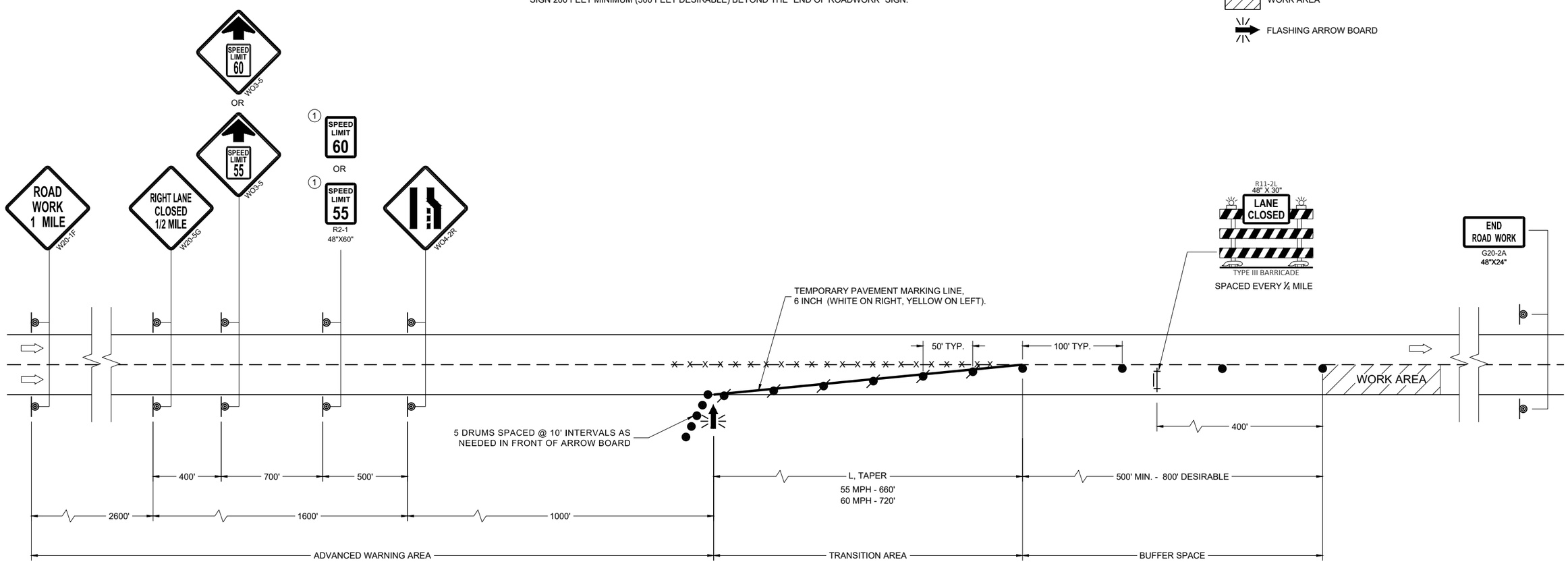

TRAFFIC CONTROL, LANE CLOSURE, SPEED REDUCTION

STATE OF WISCONSIN
DEPARTMENT OF TRANSPORTATION

APPROVED
March 2024 — DATE
/S/ Andrew Heidtke — Work Zone Engineer
FHWA

6

SDD 15D12-13b

6

SDD 15D12-13b

LEGEND

- SIGN ON PERMANENT SUPPORT
- TRAFFIC CONTROL DRUM
- TRAFFIC CONTROL DRUM WITH TYPE "C" STEADY BURN LIGHT
- TYPE III BARRICADE WITH ATTACHED SIGN
- TYPE "A" WARNING LIGHT (FLASHING)
- REMOVING PAVEMENT MARKINGS
- DIRECTION OF TRAFFIC
- WORK AREA
- FLASHING ARROW BOARD
- PCMS — PORTABLE CHANGEABLE MESSAGE SIGN
- (S) — PORTABLE TRAFFIC SENSOR (PTS)
- FBS — FLASHING BEACON SIGNS

STOPPED OR SLOW TRAFFIC WHEN FLASHING
WO8-76
96" x 48"

GENERAL NOTES

THE EXACT NUMBER, LOCATION, AND SPACING OF ALL SIGNS AND DEVICES SHALL BE ADJUSTED TO FIT FIELD CONDITIONS AS APPROVED BY THE ENGINEER.

THE SPACING BETWEEN SIGNS SHOULD BE ADJUSTED TO NOT CONFLICT WITH AND TO PROVIDE A MINIMUM OF 200 FEET (500 FEET DESIRABLE) CLEARANCE TO EXISTING SIGNS.

ALL SIGNS ARE 48" x 48" UNLESS OTHERWISE NOTED.

"WO" SIGNS ARE THE SAME AS "W" SIGNS EXCEPT THE BACKGROUND IS ORANGE.

ANY SIGNS TEMPORARY OR EXISTING, WHICH CONFLICT WITH TRAFFIC CONTROL "IN USE" SHALL BE REMOVED OR COVERED AS NEEDED OR AS APPROVED BY THE ENGINEER.

FOR A LANE CLOSURE THAT IS IN PLACE LESS THAN 7 CONTINUOUS DAYS AND NIGHTS, THE ADVANCED WARNING SIGNS MAY BE MOUNTED ON PORTABLE SUPPORTS.

REMOVE PAVEMENT MARKINGS AND PLACE TEMPORARY PAVEMENT MARKING LINE IF LANE CLOSURE IS TO BE IN PLACE 4 OR MORE CONTINUOUS DAYS AND NIGHTS.

IF THE HORIZONTAL ALIGNMENT IS SUCH THAT A CURVE MAY REQUIRE ADDITIONAL DELINEATION, THE DEVICE SPACING MAY BE DECREASED TO 50 FEET.

WARNING LIGHTS ARE NOT REQUIRED IF THE LANE CLOSURE IS A DAYTIME ONLY OPERATION. ADJUSTMENTS IN BUFFER SPACE NEED TO BE INCORPORATED WHEN THE LANE CLOSURE OCCURS NEAR AN INTERCHANGE EXIT OR ENTRANCE RAMP OR INTERSECTION. THE LANE CLOSURE MUST TAKE PLACE FAR ENOUGH IN ADVANCE OF AN EXIT OR ENTRANCE RAMP TO STILL ALLOW FOR ADEQUATE BUFFER SPACE. THE MINIMUM LENGTH OF THE BUFFER SPACE BEFORE AN EXIT RAMP SHOULD BE ONE HALF THE LENGTH OF THE TRANSITION AREA. THE ENTRANCE RAMP SHOULD BE FOLLOWED BY THE ORIGINAL BUFFER SPACE LENGTH OF 800 FEET DESIRABLE PRIOR TO ANOTHER TRAFFIC CONTROL CHANGE SUCH AS A CROSSOVER MANEUVER.

CONSIDER ROADWAY GEOMETRICS WHEN LOCATING SIGNS AND ARROW BOARD SO THE DRIVER HAS A CLEAR VIEW OF THE ARROW BOARD AND LANE CLOSURE DRUMS.

PORTABLE TRAFFIC SENSOR (PTS) MAY BE MOUNTED ON PCMS, FBS, ARROW BOARD OR OTHER TRAILER DEVICES.

1. IF THERE ARE MORE THAN TWO LANES, CHANGE FRAME 2 OF THE PCMS TO STATE "USE ALL LANES".
2. PLACE FLASHING BEACON SIGNS EVERY ONE MILE BETWEEN PCMS #1 AND FBS #1. THE NUMBER OF FBS MAY BE MORE THAN SHOWN ON THIS DETAIL.
3. FOR THREE LANE CONFIGURATION, PLACE FBS ON BOTH SIDES OF ROADWAY. CHANGE PCMS #1 FRAME 2 MESSAGE TO "USE ALL LANES".
4. 5 DRUMS SPACED @ 10' INTERVALS AS NEEDED.
5. PCMS SHALL FOLLOW ARROW BOARD STANDARDS WHEN DISPLAYING FLASHING FOUR CORNER CAUTION MODE OR FLASHING ARROW MERGE MODE.
6. TO REMOVE OBSTRUCTION OF THE ARROW BOARD BY THE PCMS, OFFSET THE PCMS AS NEEDED FROM THE EDGE LINE
7. IF THERE IS AN APPROVED TEMPORARY SPEED DECLARATION, ADD WO-3-5 SIGNS 400 FEET AFTER THE W20-5G SIGNS AND ADD R2-1 SIGNS (48"x60") 700 FEET AFTER THE WO3-5 SIGNS. A SPEED LIMIT SIGN SHALL BE LOCATED 1500 FEET BEYOND THE END OF THE ACCELERATION LANE OF EACH ENTRANCE RAMP. PLACE A SPEED LIMIT SIGN A MINIMUM OF EVERY 3 MILES. INCLUDE A "RESUME SPEED LIMIT" SIGN 200 FEET MINIMUM (800 FEET DESIRABLE) BEYOND THE G30-3A "END ROAD WORK" SIGN.
8. IF THERE ARE MORE THAN TWO LANES OR IF SPECIFIED IN THE PLANS, PLACE PCMS AND FBS ON THE SAME SIDE OF THE ROADWAY.

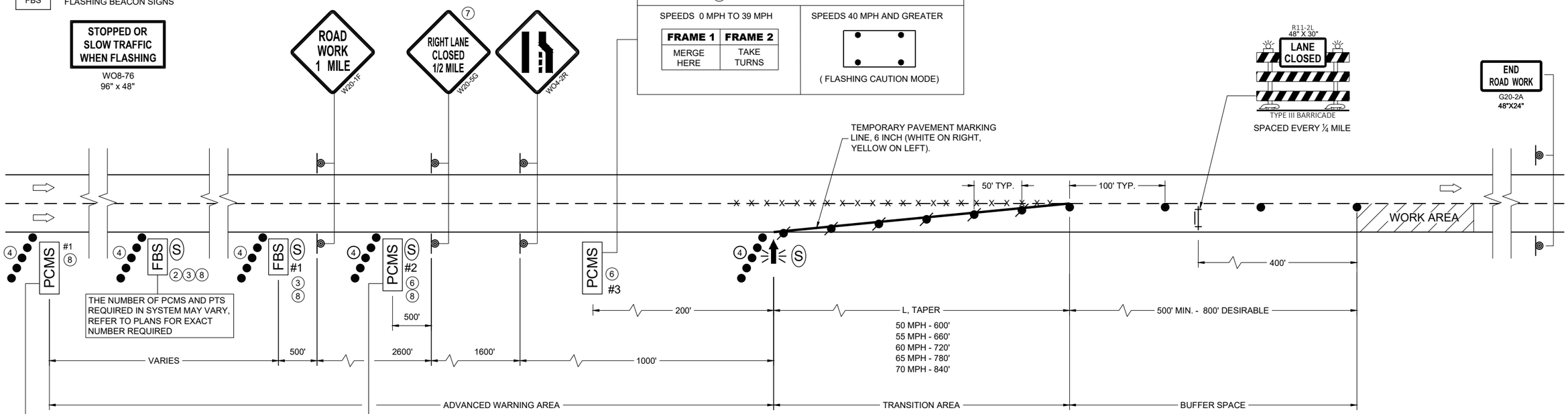

⑤ PCMS #3 MESSAGING

SPEEDS 0 MPH TO 39 MPH

FRAME 1	FRAME 2
MERGE HERE	TAKE TURNS

SPEEDS 40 MPH AND GREATER

(FLASHING CAUTION MODE)

③⑤① PCMS #1 MESSAGING

SPEEDS 0 MPH TO 39 MPH

FRAME 1	FRAME 2
STOPPED TRAFFIC AHEAD	USE BOTH LANES

SPEEDS 40 MPH AND GREATER

(FLASHING CAUTION MODE)

⑤ PCMS #2 MESSAGING

SPEEDS 0 MPH TO 39 MPH

FRAME 1	FRAME 2
STAY IN LANE	DO NOT MERGE

SPEEDS 40 MPH AND GREATER

(FLASHING CAUTION MODE)

TRAFFIC CONTROL, DYNAMIC LATE MERGE SYSTEM

STATE OF WISCONSIN
DEPARTMENT OF TRANSPORTATION

APPROVED
March 2024 — DATE
/S/ Erin Schwark — Work Zone Engineer
FHWA

LEGEND

- SIGN ON PERMANENT SUPPORT
- TRAFFIC CONTROL DRUM
- TRAFFIC CONTROL DRUM WITH TYPE "C" STEADY BURN LIGHT
- TYPE III BARRICADE WITH ATTACHED SIGN
- TYPE "A" WARNING LIGHT (FLASHING)
- REMOVING PAVEMENT MARKINGS
- DIRECTION OF TRAFFIC
- WORK AREA
- FLASHING ARROW BOARD
- (S) PORTABLE TRAFFIC SENSOR (PTS)
- FBS FLASHING BEACON SIGN

GENERAL NOTES

THE EXACT NUMBER, LOCATION, AND SPACING OF ALL SIGNS, INCLUDING FBS AND DEVICES SHALL BE ADJUSTED TO FIT FIELD CONDITIONS AS APPROVED BY THE ENGINEER.

THE SPACING BETWEEN SIGNS SHOULD BE ADJUSTED TO NOT CONFLICT WITH AND TO PROVIDE A MINIMUM OF 200 FEET (500 FEET DESIRABLE) CLEARANCE TO EXISTING SIGNS.

THIS LANE CLOSURE IS TYPICAL FOR CLOSING RIGHT LANE - REVERSE FOR CLOSING LEFT LANE.

ALL SIGNS ARE 48" x 48" UNLESS OTHERWISE NOTED.

"WO" SIGNS ARE THE SAME AS "W" SIGNS EXCEPT THE BACKGROUND IS ORANGE.

ANY SIGNS TEMPORARY OR EXISTING, WHICH CONFLICT WITH TRAFFIC CONTROL "IN USE" SHALL BE REMOVED OR COVERED AS NEEDED OR AS APPROVED BY THE ENGINEER. NO WARNING LIGHTS SHALL BE WORKING ON "COVERED" OR "DOWNED SIGNS.

FOR A LANE CLOSURE THAT IS IN PLACE LESS THAN 7 CONTINUOUS DAYS AND NIGHTS, THE ADVANCED WARNING SIGNS MAY BE MOUNTED ON PORTABLE SUPPORTS.

REMOVE PAVEMENT MARKINGS AND PLACE TEMPORARY PAVEMENT MARKING LINE IF LANE CLOSURE IS TO BE IN PLACE 4 OR MORE CONTINUOUS DAYS AND NIGHTS. WARNING LIGHTS ARE NOT REQUIRED IF THE LANE CLOSURE IS A DAYTIME ONLY OPERATION.

IF THE HORIZONTAL ALIGNMENT IS SUCH THAT A CURVE MAY REQUIRE ADDITIONAL DELINEATION, THE DEVICE SPACING MAY BE DECREASED TO 50 FEET.

ADJUSTMENTS IN BUFFER SPACE NEED TO BE INCORPORATED WHEN THE LANE CLOSURE OCCURS NEAR AN INTERCHANGE EXIT OR ENTRANCE RAMP OR INTERSECTION. THE LANE CLOSURE MUST TAKE PLACE FAR ENOUGH IN ADVANCE OF AN EXIT OR ENTRANCE RAMP TO STILL ALLOW FOR ADEQUATE BUFFER SPACE. THE MINIMUM LENGTH OF THE BUFFER SPACE BEFORE AN EXIT RAMP SHOULD BE ONE HALF THE LENGTH OF THE TRANSITION AREA. THE ENTRANCE RAMP SHOULD BE FOLLOWED BY THE ORIGINAL BUFFER SPACE LENGTH OF 800 FEET DESIRABLE PRIOR TO ANOTHER TRAFFIC CONTROL CHANGE SUCH AS A CROSSOVER MANEUVER.

CONSIDER ROADWAY GEOMETRICS WHEN LOCATING SIGNS AND ARROW BOARD SO THE DRIVER HAS A CLEAR VIEW OF THE ARROW BOARD AND LANE CLOSURE DRUMS.

PORTABLE TRAFFIC SENSOR (PTS) MAY BE MOUNTED ON THE FBS, ARROW BOARD OR OTHER TRAILER DEVICES.

1. 5 DRUMS SPACED AT 10 FOOT INTERVALS AS NEEDED.
2. IF THERE ARE MORE THAN TWO LANES OR IF SPECIFIED IN THE PLANS, PLACE FBS ON BOTH SIDES OF THE ROADWAY.
3. IF THERE IS AN APPROVED TEMPORARY SPEED DECLARATION, ADD WO-3-5 SIGNS 400 FEET AFTER THE W20-5G SIGNS AND ADD R2-1 SIGNS (48"x60") 700 FEET AFTER THE WO3-5 SIGNS. A SPEED LIMIT SIGN SHALL BE LOCATED 1500 FEET BEYOND THE END OF THE ACCELERATION LANE OF EACH ENTRANCE RAMP. PLACE A SPEED LIMIT SIGN A MINIMUM OF EVERY 3 MILES. INCLUDE A "RESUME SPEED LIMIT" SIGN 200 FEET MINIMUM (800 FEET DESIRABLE) BEYOND THE G30-3A "END ROAD WORK" SIGN.

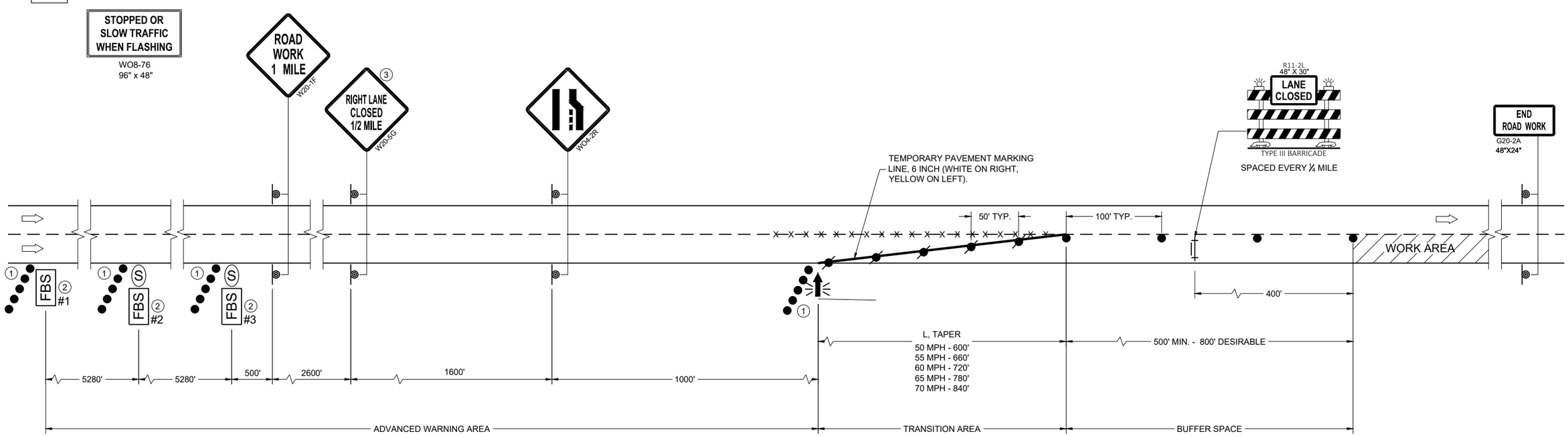

TRAFFIC CONTROL, LANE CLOSURE, BASIC TRAFFIC QUEUE WARNING SYSTEM

STATE OF WISCONSIN
DEPARTMENT OF TRANSPORTATION

APPROVED
March 2024 — DATE
/S/ Erin Schwark — Work Zone Engineer
FHWA

6

SDD 15D12-13d

LEGEND

- SIGN ON PERMANENT SUPPORT
- TRAFFIC CONTROL DRUM
- TRAFFIC CONTROL DRUM WITH TYPE "C" STEADY BURN LIGHT
- TYPE III BARRICADE WITH ATTACHED SIGN
- TYPE "A" WARNING LIGHT (FLASHING)
- REMOVING PAVEMENT MARKINGS
- DIRECTION OF TRAFFIC
- WORK AREA
- FLASHING ARROW BOARD
- (S) PORTABLE TRAFFIC SENSOR (PTS)
- PCMS PORTABLE CHANGEABLE MESSAGE SIGN

GENERAL NOTES

THE EXACT NUMBER, LOCATION, AND SPACING OF ALL SIGNS, INCLUDING FBS AND DEVICES SHALL BE ADJUSTED TO FIT FIELD CONDITIONS AS APPROVED BY THE ENGINEER.

THE SPACING BETWEEN SIGNS SHOULD BE ADJUSTED TO NOT CONFLICT WITH AND TO PROVIDE A MINIMUM OF 200 FEET (500 FEET DESIRABLE) CLEARANCE TO EXISTING SIGNS.

THIS LANE CLOSURE IS TYPICAL FOR CLOSING RIGHT LANE - REVERSE FOR CLOSING LEFT LANE.

ALL SIGNS ARE 48" x 48" UNLESS OTHERWISE NOTED.

"WO" SIGNS ARE THE SAME AS "W" SIGNS EXCEPT THE BACKGROUND IS ORANGE.

ANY SIGNS TEMPORARY OR EXISTING, WHICH CONFLICT WITH TRAFFIC CONTROL "IN USE" SHALL BE REMOVED OR COVERED AS NEEDED OR AS APPROVED BY THE ENGINEER. NO WARNING LIGHTS SHALL BE WORKING ON "COVERED" OR "DOWNED SIGNS.

FOR A LANE CLOSURE THAT IS IN PLACE LESS THAN 7 CONTINUOUS DAYS AND NIGHTS, THE ADVANCED WARNING SIGNS MAY BE MOUNTED ON PORTABLE SUPPORTS.

REMOVE PAVEMENT MARKINGS AND PLACE TEMPORARY PAVEMENT MARKING LINE IF LANE CLOSURE IS TO BE IN PLACE 4 OR MORE CONTINUOUS DAYS AND NIGHTS.

WARNING LIGHTS ARE NOT REQUIRED IF THE LANE CLOSURE IS A DAYTIME ONLY OPERATION.

IF THE HORIZONTAL ALIGNMENT IS SUCH THAT A CURVE MAY REQUIRE ADDITIONAL DELINEATION, THE DEVICE SPACING MAY BE DECREASED TO 50 FEET.

ADJUSTMENTS IN BUFFER SPACE NEED TO BE INCORPORATED WHEN THE LANE CLOSURE OCCURS NEAR AN INTERCHANGE EXIT OR ENTRANCE RAMP OR INTERSECTION. THE LANE CLOSURE MUST TAKE PLACE FAR ENOUGH IN ADVANCE OF AN EXIT OR ENTRANCE RAMP TO STILL ALLOW FOR ADEQUATE BUFFER SPACE. THE MINIMUM LENGTH OF THE BUFFER SPACE BEFORE AN EXIT RAMP SHOULD BE ONE HALF THE LENGTH OF THE TRANSITION AREA. THE ENTRANCE RAMP SHOULD BE FOLLOWED BY THE ORIGINAL BUFFER SPACE LENGTH OF 800 FEET DESIRABLE PRIOR TO ANOTHER TRAFFIC CONTROL CHANGE SUCH AS A CROSSOVER MANEUVER.

CONSIDER ROADWAY GEOMETRICS WHEN LOCATING SIGNS AND ARROW BOARD SO THE DRIVER HAS A CLEAR VIEW OF THE ARROW BOARD AND LANE CLOSURE DRUMS.

PORTABLE TRAFFIC SENSOR (PTS) MAY BE MOUNTED ON PCMS, ARROW BOARD OR OTHER TRAILER DEVICES.

1. 5 DRUMS SPACED AT 10 FOOT INTERVALS AS NEEDED.
2. IF THERE ARE MORE THAN TWO LANES OR IF SPECIFIED IN THE PLANS, PLACE PCMS ON BOTH SIDES OF THE ROADWAY.
3. IF THERE IS AN APPROVED TEMPORARY SPEED DECLARATION, ADD WO-3-5 SIGNS 400 FEET AFTER THE W20-5G SIGNS AND ADD R2-1 SIGNS (48"x60") 700 FEET AFTER THE WO3-5 SIGNS. A SPEED LIMIT SIGN SHALL BE LOCATED 1500 FEET BEYOND THE END OF THE ACCELERATION LANE OF EACH ENTRANCE RAMP. PLACE A SPEED LIMIT SIGN A MINIMUM OF EVERY 3 MILES. INCLUDE A "RESUME SPEED LIMIT" SIGN 200 FEET MINIMUM (800 FEET DESIRABLE) BEYOND THE G30-3A "END ROAD WORK" SIGN.
4. PLACE PCMS EVERY ONE MILE BETWEEN PCMS #1 AND PCMS #2, OR AS THE ENGINEER DIRECTS. THE NUMBER OF PCMS MAY BE MORE THAN SHOWN ON THIS DETAIL.
5. PCMS SHALL FOLLOW ARROW BOARD STANDARDS WHEN DISPLAYING FLASHING FOUR CORNER CAUTION MODE OR FLASHING ARROW MERGE MODE.

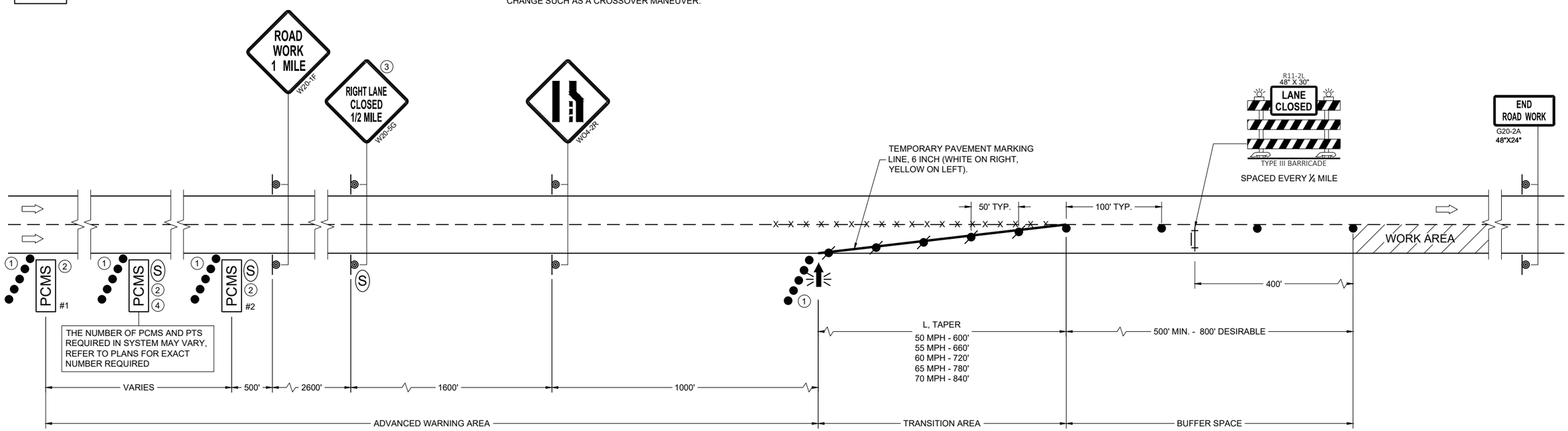

5 PCMS MESSAGING

SPEEDS 0 MPH TO 19 MPH		SPEEDS 20 MPH TO 39 MPH		SPEEDS 40 MPH AND GREATER
FRAME 1	FRAME 2	FRAME 1	FRAME 2	
STOPPED TRAFFIC AHEAD	EXPECT DELAYS	SLOW TRAFFIC AHEAD	PREPARE TO STOP	(FLASHING CAUTION MODE)

TRAFFIC CONTROL, LANE CLOSURE, TRAFFIC QUEUE WARNING SYSTEM

STATE OF WISCONSIN
DEPARTMENT OF TRANSPORTATION

APPROVED
March 2024 — DATE
/S/ Erin Schwark — Work Zone Engineer
FHWA

6
SDD 15D12-13e

LEGEND

- SIGN ON TEMPORARY SUPPORT
- TRAFFIC CONTROL DRUM
- TRAFFIC CONTROL DRUM WITH TYPE "C" STEADY BURN LIGHT
- TYPE III BARRICADE
- TYPE III BARRICADE WITH ATTACHED SIGN
- TYPE "A" WARNING LIGHT (FLASHING)
- REMOVING PAVEMENT MARKINGS
- FLASHING ARROW BOARD
- DIRECTION OF TRAFFIC
- WORK AREA

GENERAL NOTES

THIS DETAIL IS TYPICAL FOR CLOSING THE RIGHT TWO LANES. FOR CLOSING THE LEFT TWO LANES, REVERSE THE TRAFFIC CONTROL.

ALL SIGNS ARE 48"X48" UNLESS OTHERWISE NOTED.

"WO" SIGN IS THE SAME AS "W" SIGN EXCEPT THE BACKGROUND IS ORANGE.

ANY SIGNS TEMPORARY OR EXISTING, WHICH CONFLICT WITH THE TRAFFIC CONTROL "IN USE" SHALL BE REMOVED OR COVERED AS NEEDED AND AS APPROVED BY THE ENGINEER. NO WARNING LIGHTS SHALL BE WORKING ON COVERED OR "DOWNED" SIGNS.

THE EXACT NUMBER, LOCATION, AND SPACING OF ALL SIGNS AND DEVICES SHALL BE ADJUSTED TO FIT FIELD CONDITIONS AS APPROVED BY THE ENGINEER.

THE SPACING BETWEEN TRAFFIC CONTROL SIGNS SHOULD BE ADJUSTED TO NOT CONFLICT WITH AND TO PROVIDE A MINIMUM OF 200 FEET (500' DESIRABLE) DISTANCE TO EXISTING SIGNS THAT WILL REMAIN IN PLACE

W20-1E AND G20-2A SIGNS ARE NOT REQUIRED IF THE LANE CLOSURE IS WITHIN A LARGER WORK ZONE WHERE THESE SIGNS ARE ALREADY PRESENT.

CONSIDER ROADWAY GEOMETRICS WHEN LOCATING SIGNS AND ARROW BOARDS SO THE APPROACHING DRIVER HAS A CLEAR VIEW OF THE ARROW BOARDS AND LANE CLOSURE DRUMS.

WHEN A RAMP OR SIDE ROAD INTERSECTS THE FACILITY ON WHICH THE WORK IS BEING PERFORMED, ADDITIONAL TRAFFIC CONTROLS SHALL BE PROVIDED AS SPECIFIED IN THE PLANS AND/OR SPECIAL PROVISIONS OR AS APPROVED BY THE ENGINEER.

BARRICADES IN A CLOSED LANE THAT MUST BE MOVED FOR A WORK OPERATION SHALL BE IMMEDIATELY REESTABLISHED UPON COMPLETION OF THE OPERATION, OR FOR CONTINUING OPERATIONS, AT THE END OF EACH WORKING DAY.

CHANNELIZING DEVICES PLACED ADJACENT TO WORK AREA SHALL BE PULLED BACK FROM THE TRAVEL LANE WHEN WORK IS NOT IN PROGRESS.

WARNING LIGHTS ARE NOT REQUIRED IF THE LANE CLOSURE IS A DAYTIME ONLY OPERATION.

REMOVE PAVEMENT MARKINGS AND PLACE TEMPORARY PAVEMENT MARKING LINE IF LANE CLOSURE IS TO BE IN PLACE 4 OR MORE CONTINUOUS DAYS AND NIGHTS.

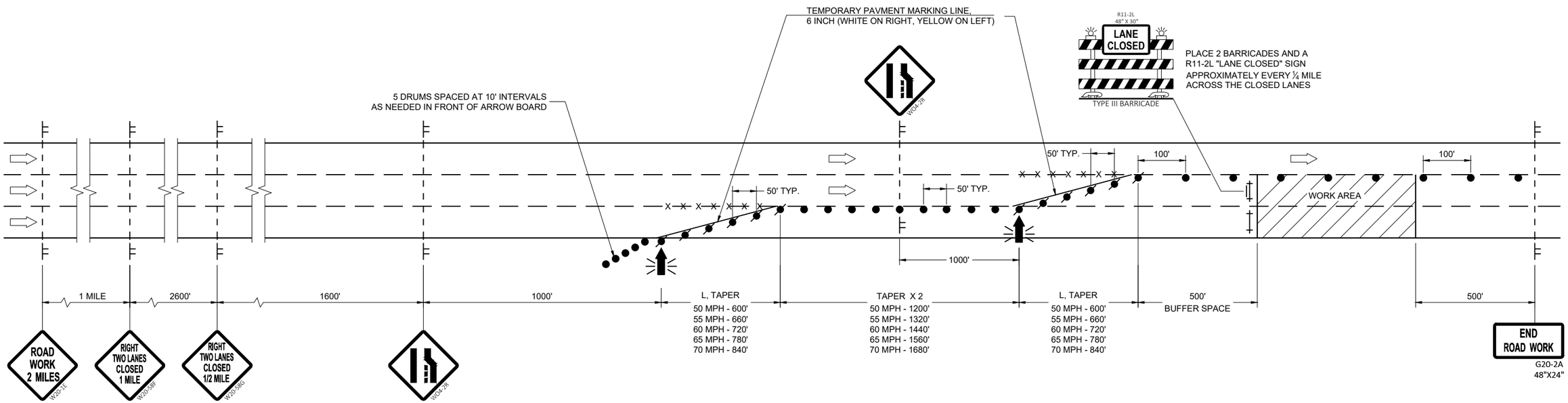

6

6

TRAFFIC CONTROL, TWO LANE CLOSURE ON FREEWAY OR EXPRESSWAY

STATE OF WISCONSIN
DEPARTMENT OF TRANSPORTATION

APPROVED
March 2024 — DATE
/S/ Andrew Heidtke — WORK ZONE ENGINEER
FHWA

SDD 15D14-07

SDD 15D14-07

LEGEND

SIGN ON PERMANENT SUPPORT

SIGN ON TEMPORARY SUPPORT

TRAFFIC CONTROL DRUM

TRAFFIC CONTROL DRUM WITH TYPE "C" STEADY BURN LIGHT

REMOVING PAVEMENT MARKING (SEE GENERAL NOTES)

TYPE III BARRICADE WITH ATTACHED SIGN

DIRECTION OF TRAFFIC

GENERAL NOTES

THE INSTALLATIONS SHOWN ON THIS SHEET ARE TYPICAL EXAMPLES AND ARE NOT INTENDED TO REPRESENT ANY PARTICULAR RAMP. AT SPECIFIC FIELD LOCATIONS, SIMILAR INSTALLATIONS SHALL BE USED AND ADJUSTED TO THE GEOMETRICS OF THE RAMP AS COORDINATED WITH THE ENGINEER.

THE EXACT NUMBER, LOCATION, AND SPACING OF ALL SIGNS AND DEVICES SHALL BE ADJUSTED TO FIT FIELD CONDITIONS AS APPROVED BY THE ENGINEER.

THE SPACING BETWEEN TRAFFIC CONTROL SIGNS SHOULD BE ADJUSTED TO NOT CONFLICT WITH AND SHOULD PROVIDE A MINIMUM OF 200 FEET (500 FEET DESIRABLE) CLEARANCE TO EXISTING SIGNS THAT WILL REMAIN IN PLACE.

ALL SIGNS ARE 48" X 48" UNLESS OTHERWISE NOTED.

"WO" IS THE SAME AS "W" EXCEPT THE BACKGROUND IS ORANGE.

SEE SEPARATE LANE CLOSURE DETAIL FOR TYPICAL SPACING OF TYPE III BARRICADES AND R11-2L "LANE CLOSED" SIGNS.

SIGNS THAT WILL BE IN PLACE LESS THAN 7 CONSECUTIVE DAYS AND NIGHTS OR THAT WILL BE PLACED IN A CLOSED LANE, MAY BE MOUNTED ON PORTABLE SUPPORTS. USE SUPPORTS THAT PROVIDE A MINIMUM OF 5 FEET FROM THE BOTTOM OF THE SIGN TO THE PAVEMENT.

IF INDICATED IN MISCELLANEOUS QUANTITIES, SUBSTITUTE FLEXIBLE TUBULAR MARKERS FOR DRUMS IN THE GORE BETWEEN THE ENTRANCE RAMP AND MAINLINE TRAFFIC.

ANY SIGNS TEMPORARY OR EXISTING, WHICH CONFLICT WITH TRAFFIC CONTROL "IN USE" SHALL BE REMOVED OR COVERED AS NEEDED AND AS APPROVED BY THE ENGINEER.

REMOVE PAVEMENT MARKINGS AND PLACE TEMPORARY PAVEMENT MARKING LINES IF LANE CLOSURE IS TO BE IN PLACE FOR 4 OR MORE CONTINUOUS DAYS AND NIGHTS.

WARNING LIGHTS ARE NOT REQUIRED IF THE LANE CLOSURE IS A DAYTIME ONLY OPERATION.

1. EXTEND THE LENGTH OF THE MERGE ARE IF THE ENTERING (DESIGN) SPEED IS LESS THAN 50MPH OR IF THE MAINLINE GRADE EXCEEDS ±2.2%.
2. END TEMPORARY PAVEMENT MARKING LINE AT ½ THE LENGTH OF FULL WIDTH OF THE ACCELERATION LANE.

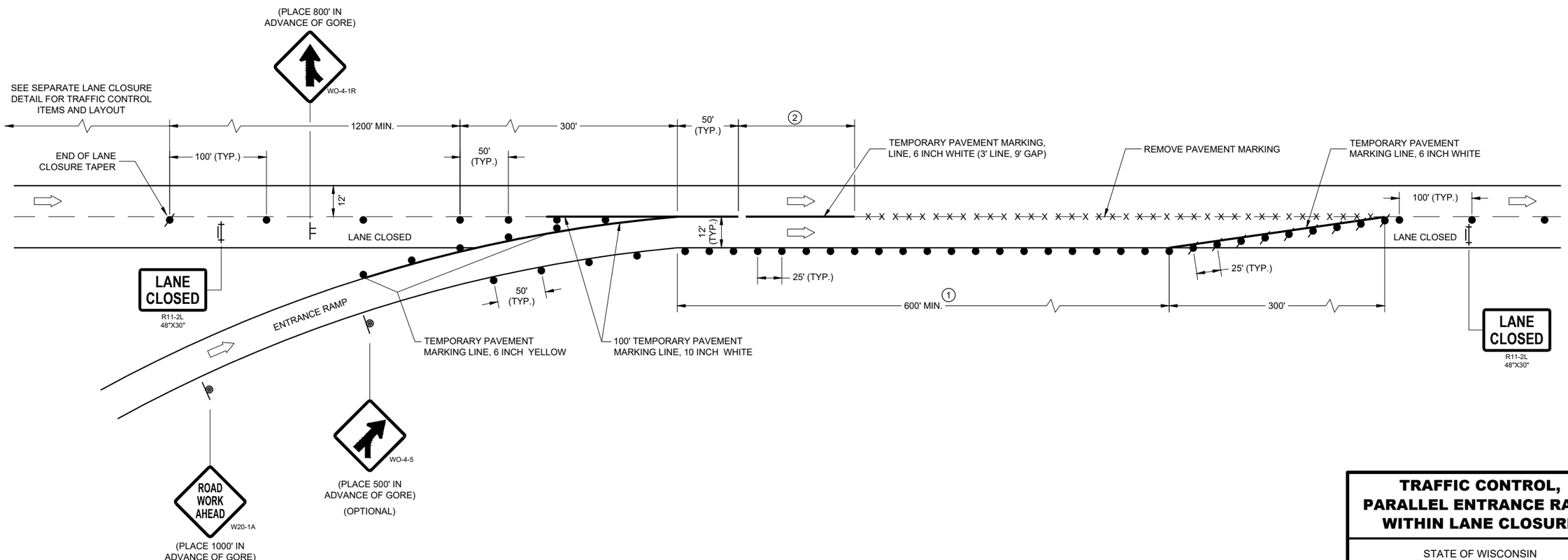

TRAFFIC CONTROL, PARALLEL ENTRANCE RAMP WITHIN LANE CLOSURE

STATE OF WISCONSIN
DEPARTMENT OF TRANSPORTATION

APPROVED
May 2023 — DATE
/S/ Andrew Heidtke — WORK ZONE ENGINEER
FHWA

LEGEND

- SIGN ON PERMANENT SUPPORT
- SIGN ON TEMPORARY SUPPORT
- TRAFFIC CONTROL DRUM
- TRAFFIC CONTROL DRUM WITH TYPE "C" STEADY BURN LIGHT
- REMOVING PAVEMENT MARKING (SEE GENERAL NOTES)
- TYPE III BARRICADE WITH ATTACHED SIGN
- DIRECTION OF TRAFFIC

GENERAL NOTES

THE INSTALLATIONS SHOWN ON THIS SHEET ARE TYPICAL EXAMPLES AND ARE NOT INTENDED TO REPRESENT ANY PARTICULAR RAMP. AT SPECIFIC FIELD LOCATIONS, SIMILAR INSTALLATIONS SHALL BE USED AND ADJUSTED TO THE GEOMETRICS OF THE RAMP AS COORDINATED WITH THE ENGINEER.

THE EXACT NUMBER, LOCATION, AND SPACING OF ALL SIGNS AND DEVICES SHALL BE ADJUSTED TO FIT FIELD CONDITIONS AS APPROVED BY THE ENGINEER.

THE SPACING BETWEEN TRAFFIC CONTROL SIGNS SHOULD BE ADJUSTED TO NOT CONFLICT WITH AND SHOULD PROVIDE A MINIMUM OF 200 FEET (500 FEET DESIRABLE) CLEARANCE TO EXISTING SIGNS THAT WILL REMAIN IN PLACE.

ALL SIGNS ARE 48" X 48" UNLESS OTHERWISE NOTED.

"WO" IS THE SAME AS "W" EXCEPT THE BACKGROUND IS ORANGE.

SEE SEPARATE LANE CLOSURE DETAIL FOR TYPICAL SPACING OF TYPE III BARRICADES AND R11-2L "LANE CLOSED" SIGNS.

SIGNS THAT WILL BE IN PLACE LESS THAN 7 CONSECUTIVE DAYS AND NIGHTS OR THAT WILL BE PLACED IN A CLOSED LANE, MAY BE MOUNTED ON PORTABLE SUPPORTS.

IF INDICATED IN MISCELLANEOUS QUANTITIES, SUBSTITUTE FLEXIBLE TUBULAR MARKERS /OR DRUMS IN THE GORE BETWEEN THE EXIT RAMP AND MAINLINE TRAFFIC.

ANY SIGNS TEMPORARY OR EXISTING, WHICH CONFLICT WITH TRAFFIC CONTROL "IN USE" SHALL BE REMOVED OR COVERED AS NEEDED AND AS APPROVED BY THE ENGINEER.

REMOVE PAVEMENT MARKINGS AND PLACE TEMPORARY PAVEMENT MARKING LINES IF LANE CLOSURE IS TO BE IN PLACE FOR 4 OR MORE CONTINUOUS DAYS AND NIGHTS.

WARNING LIGHTS ARE NOT REQUIRED IF THE LANE CLOSURE IS A DAYTIME ONLY OPERATION.

(1) EXTEND THE LENGTH OF THE MERGE AREA IF THE ENTERING (DESIGN) SPEED OF THE RAMP IS LESS THAN 50 MPH OR IF THE MAINLINE GRADE EXCEEDS ±2.2%.

(2) END TEMPORARY PAVEMENT MARKING LINE AT ½ THE LENGTH OF FULL WIDTH OF THE ACCELERATION LANE.

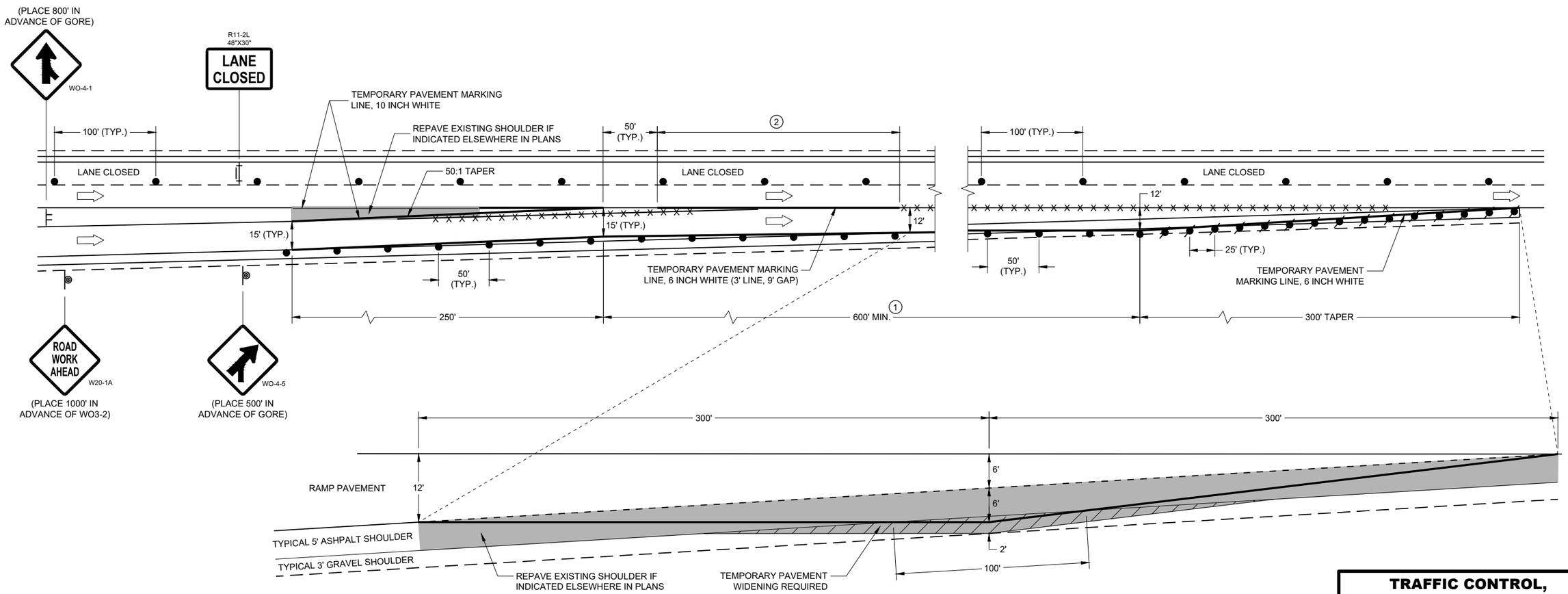

TEMPORARY PAVEMENT DETAIL

(EXISTING RAMP DIMENSIONS MAY VARY, ADJUST TEMPORARY PAVEMENT ACCORDINGLY)

TRAFFIC CONTROL, ENTRANCE RAMP WITHIN LANE CLOSURE

STATE OF WISCONSIN
DEPARTMENT OF TRANSPORTATION

APPROVED
May 2023 — DATE
/S/ Andrew Heidtke — WORK ZONE ENGINEE
FHWA

6

SDD 15D15-07b

LEGEND

SIGN ON PERMANENT SUPPORT

SIGN ON TEMPORARY SUPPORT

TRAFFIC CONTROL DRUM

TRAFFIC CONTROL DRUM WITH TYPE "C" STEADY BURN LIGHT

REMOVING PAVEMENT MARKING (SEE GENERAL NOTES)

TYPE III BARRICADE WITH ATTACHED SIGN

FLAGS, 16" X 16" MIN., ORANGE

DIRECTION OF TRAFFIC

GENERAL NOTES

THE INSTALLATIONS SHOWN ON THIS SHEET ARE TYPICAL EXAMPLES AND ARE NOT INTENDED TO REPRESENT ANY PARTICULAR RAMP. AT SPECIFIC FIELD LOCATIONS, SIMILAR INSTALLATIONS SHALL BE USED AND ADJUSTED TO THE GEOMETRICS OF THE RAMP AS COORDINATED WITH THE ENGINEER.

THE EXACT NUMBER, LOCATION, AND SPACING OF ALL SIGNS AND DEVICES SHALL BE ADJUSTED TO FIT FIELD CONDITIONS AS APPROVED BY THE ENGINEER.

THE SPACING BETWEEN TRAFFIC CONTROL SIGNS SHOULD BE ADJUSTED TO NOT CONFLICT WITH AND SHOULD PROVIDE A MINIMUM OF 200 FEET (500 FEET DESIRABLE) CLEARANCE TO EXISTING SIGNS THAT WILL REMAIN IN PLACE.

ALL SIGNS ARE 48" X 48" UNLESS OTHERWISE NOTED.

"WO" IS THE SAME AS "W" EXCEPT THE BACKGROUND IS ORANGE.

SEE SEPARATE LANE CLOSURE DETAIL FOR TYPICAL SPACING OF TYPE III BARRICADES AND R11-2L "LANE CLOSED" SIGNS.

YIELD SIGN AND WARNING SIGNS ON ENTRANCE RAMP ARE ALSO APPROPRIATE FOR CLOSURE OF THE MAINLINE LEFT LANE. OMIT THE YIELD SIGN IF MORE THAN ONE LANE REMAINS OPEN ON THE MAINLINE AND THE RAMP TAPER IS AT LEAST AS LONG AS THE NORMAL ENTRANCE RAMP TAPER AT THE SITE.

SIGNS THAT WILL BE IN PLACE LESS THAN 7 CONSECUTIVE DAYS AND NIGHTS OR THAT WILL BE PLACED IN A CLOSED LANE, MAY BE MOUNTED ON PORTABLE SUPPORTS. USE SUPPORTS THAT PROVIDE A MINIMUM OF 5 FEET FROM THE BOTTOM OF THE SIGN TO THE PAVEMENT.

IF INDICATED IN MISCELLANEOUS QUANTITIES, SUBSTITUTE FLEXIBLE TUBULAR MARKERS FOR DRUMS IN THE GORE BETWEEN THE ENTRANCE RAMP AND MAINLINE TRAFFIC.

ANY SIGNS TEMPORARY OR EXISTING, WHICH CONFLICT WITH TRAFFIC CONTROL "IN USE" SHALL BE REMOVED OR COVERED AS NEEDED AND AS APPROVED BY THE ENGINEER.

REMOVE PAVEMENT MARKINGS AND PLACE TEMPORARY PAVEMENT MARKING LINES IF LANE CLOSURE IS TO BE IN PLACE FOR 4 OR MORE CONTINUOUS DAYS AND NIGHTS.

WARNING LIGHTS ARE NOT REQUIRED IF THE LANE CLOSURE IS A DAYTIME ONLY OPERATION.

(1) CONSULT WITH REGIONAL WORK ZONE ENGINEER IF NEED TO REDUCE LENGTH EXISTS.

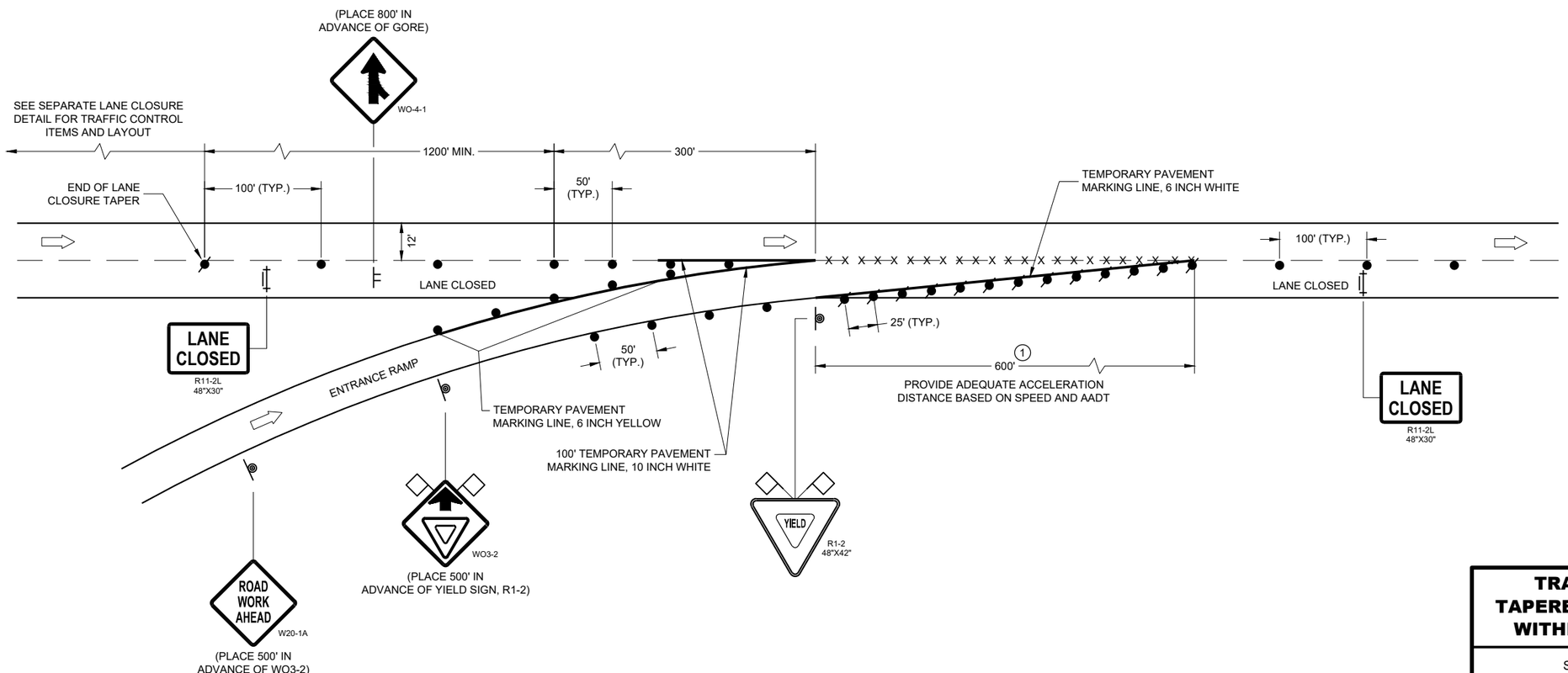

TRAFFIC CONTROL, TAPERED ENTRANCE RAMP WITHIN LANE CLOSURE

STATE OF WISCONSIN
DEPARTMENT OF TRANSPORTATION

APPROVED
May 2023 — DATE
/S/ Andrew Heidtke — WORK ZONE ENGINEER
FHWA

6

SDD 15D15-07c

LEGEND

SIGN ON PERMANENT SUPPORT

SIGN ON TEMPORARY SUPPORT

TRAFFIC CONTROL DRUM

TRAFFIC CONTROL DRUM WITH TYPE "C" STEADY BURN LIGHT

TYPE III BARRICADE WITH ATTACHED SIGN

FLAGS, 16" X 16" MIN., ORANGE

DIRECTION OF TRAFFIC

GENERAL NOTES

THE INSTALLATIONS SHOWN ON THIS SHEET ARE TYPICAL EXAMPLES AND ARE NOT INTENDED TO REPRESENT ANY PARTICULAR RAMP. AT SPECIFIC FIELD LOCATIONS, SIMILAR INSTALLATIONS SHALL BE USED AND ADJUSTED TO THE GEOMETRICS OF THE RAMP AS COORDINATED WITH THE ENGINEER.

THE EXACT NUMBER, LOCATION, AND SPACING OF ALL SIGNS AND DEVICES SHALL BE ADJUSTED TO FIT FIELD CONDITIONS AS APPROVED BY THE ENGINEER.

THE SPACING BETWEEN TRAFFIC CONTROL SIGNS SHOULD BE ADJUSTED TO NOT CONFLICT WITH AND SHOULD PROVIDE A MINIMUM OF 200 FEET (500 FEET DESIRABLE) CLEARANCE TO EXISTING SIGNS THAT WILL REMAIN IN PLACE.

ALL SIGNS ARE 48" X 48" UNLESS OTHERWISE NOTED.

"WO" IS THE SAME AS "W" EXCEPT THE BACKGROUND IS ORANGE.

SEE SEPARATE LANE CLOSURE DETAIL FOR TYPICAL SPACING OF TYPE III BARRICADES AND R11-2L "LANE CLOSED" SIGNS.

YIELD SIGN AND WARNING SIGNS ON ENTRANCE RAMP ARE ALSO APPROPRIATE FOR CLOSURE OF THE MAINLINE LEFT LANE. OMIT THE YIELD SIGN IF MORE THAN ONE LANE REMAINS OPEN ON THE MAINLINE AND THE RAMP TAPER IS AT LEAST AS LONG AS THE NORMAL ENTRANCE RAMP TAPER AT THE SITE.

SIGNS THAT WILL BE IN PLACE LESS THAN 7 CONSECUTIVE DAYS AND NIGHTS OR THAT WILL BE PLACED IN A CLOSED LANE, MAY BE MOUNTED ON PORTABLE SUPPORTS. USE SUPPORTS THAT PROVIDE A MINIMUM OF 5 FEET FROM THE BOTTOM OF THE SIGN TO THE PAVEMENT.

IF INDICATED IN MISCELLANEOUS QUANTITIES, SUBSTITUTE FLEXIBLE TUBULAR MARKERS FOR DRUMS IN THE GORE BETWEEN THE ENTRANCE RAMP AND MAINLINE TRAFFIC.

ANY SIGNS TEMPORARY OR EXISTING, WHICH CONFLICT WITH TRAFFIC CONTROL "IN USE" SHALL BE REMOVED OR COVERED AS NEEDED AND AS APPROVED BY THE ENGINEER.

WARNING LIGHTS ARE NOT REQUIRED IF THE LANE CLOSURE IS A DAYTIME ONLY OPERATION.

(1) PLACE YIELD SIGN TO PROVIDE ADEQUATE SIGHT DISTANCE AND ACCELERATION DISTANCE.

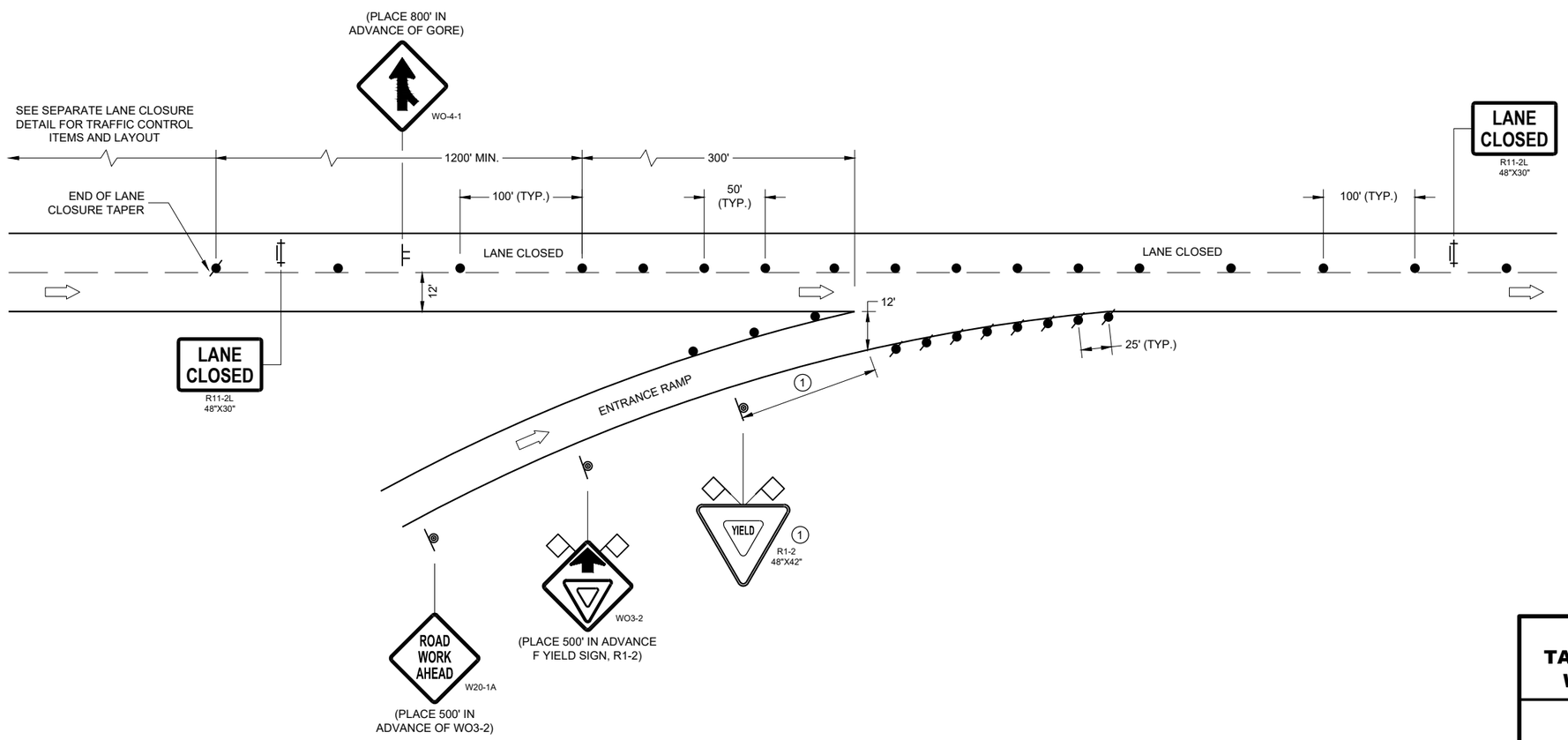

TRAFFIC CONTROL, TAPERED ENTRANCE RAMP WITHIN LANE CLOSURE

STATE OF WISCONSIN
DEPARTMENT OF TRANSPORTATION

APPROVED
May 2023 — DATE
/S/ Andrew Heidtke — WORK ZONE ENGINEE
FHWA

6
SDD 15D15-07d

LEGEND

- SIGN ON PERMANENT SUPPORT
- SIGN ON TEMPORARY SUPPORT
- TRAFFIC CONTROL DRUM
- TRAFFIC CONTROL DRUM WITH TYPE "C" STEADY BURN LIGHT
- REMOVING PAVEMENT MARKING (SEE GENERAL NOTES)
- TYPE III BARRICADE WITH ATTACHED SIGN
- DIRECTION OF TRAFFIC

GENERAL NOTES

THE INSTALLATIONS SHOWN ON THIS SHEET ARE TYPICAL EXAMPLES AND ARE NOT INTENDED TO REPRESENT ANY PARTICULAR RAMP. AT SPECIFIC FIELD LOCATIONS, SIMILAR INSTALLATIONS SHALL BE USED AND ADJUSTED TO THE GEOMETRICS OF THE RAMP AS COORDINATED WITH THE ENGINEER.

THE EXACT NUMBER, LOCATION, AND SPACING OF ALL SIGNS AND DEVICES SHALL BE ADJUSTED TO FIT FIELD CONDITIONS AS APPROVED BY THE ENGINEER.

THE SPACING BETWEEN TRAFFIC CONTROL SIGNS SHOULD BE ADJUSTED TO NOT CONFLICT WITH AND SHOULD PROVIDE A MINIMUM OF 200 FEET (500 FEET DESIRABLE) CLEARANCE TO EXISTING SIGNS THAT WILL REMAIN IN PLACE.

ALL SIGNS ARE 48" X 48" UNLESS OTHERWISE NOTED.

"WO" IS THE SAME AS "W" EXCEPT THE BACKGROUND IS ORANGE.

SEE SEPARATE LANE CLOSURE DETAIL FOR TYPICAL SPACING OF TYPE III BARRICADES AND R11-2L "LANE CLOSED" SIGNS.

SIGNS THAT WILL BE IN PLACE LESS THAN 7 CONSECUTIVE DAYS AND NIGHTS OR THAT WILL BE PLACED IN A CLOSED LANE, MAY BE MOUNTED ON PORTABLE SUPPORTS.

IF INDICATED IN MISCELLANEOUS QUANTITIES, SUBSTITUTE FLEXIBLE TUBULAR MARKERS FOR DRUMS IN THE GORE BETWEEN THE EXIT RAMP AND MAINLINE TRAFFIC.

ANY SIGNS TEMPORARY OR EXISTING, WHICH CONFLICT WITH TRAFFIC CONTROL "IN USE" SHALL BE REMOVED OR COVERED AS NEEDED AND AS APPROVED BY THE ENGINEER.

REMOVE PAVEMENT MARKINGS AND PLACE TEMPORARY PAVEMENT MARKING LINES IF LANE CLOSURE IS TO BE IN PLACE FOR 4 OR MORE CONTINUOUS DAYS AND NIGHTS.

WARNING LIGHTS ARE NOT REQUIRED IF THE LANE CLOSURE IS A DAYTIME ONLY OPERATION.

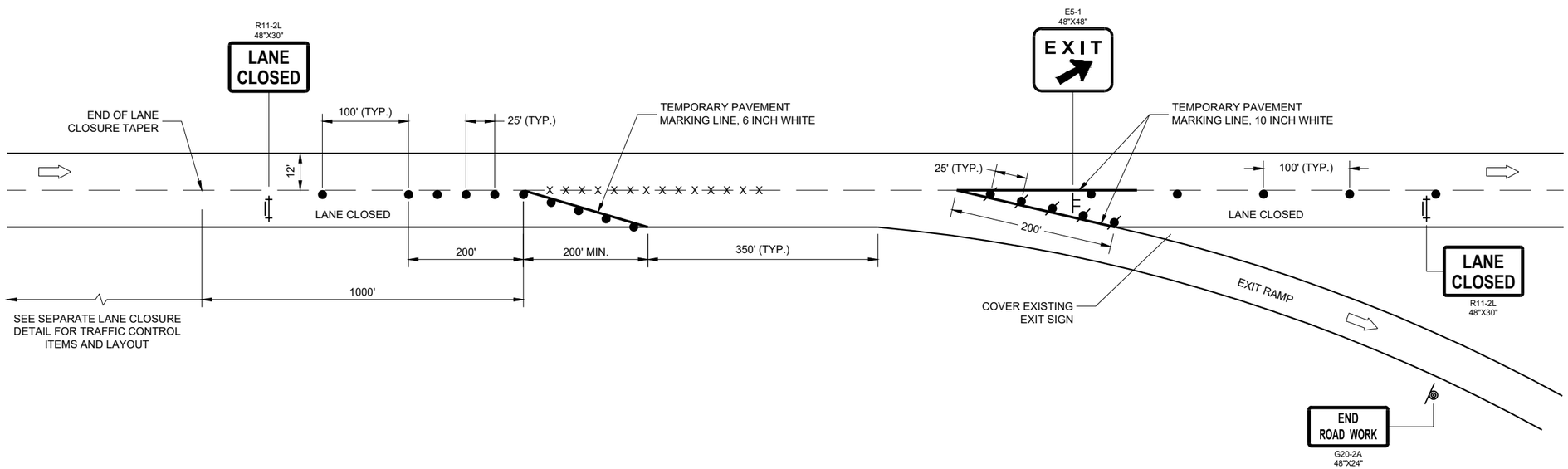

TRAFFIC CONTROL, PARALLEL EXIT RAMP WITHIN LANE CLOSURE

STATE OF WISCONSIN
DEPARTMENT OF TRANSPORTATION

APPROVED
May 2023 — DATE
/S/ Andrew Heidtke — WORK ZONE ENGINEE
FHWA

6
SDD 15D15-07e

LEGEND

- TYPE III BARRICADE
- TYPE III BARRICADE WITH ATTACHED SIGN
- TRAFFIC CONTROL DRUM
- SIGN ON PERMANENT SUPPORT
- TYPE "A" WARNING LIGHT (FLASHING)
- DIRECTION OF TRAFFIC

GENERAL NOTES

THIS RAMP CLOSURE DETAIL IS TYPICAL FOR CLOSING A RIGHT SIDE EXIT RAMP. FOR A LEFT SIDE EXIT RAMP, REVERSE THE TRAFFIC CONTROL.

THE EXACT NUMBER, LOCATION, AND SPACING OF ALL SIGNS AND DEVICES SHALL BE ADJUSTED TO FIT FIELD CONDITIONS AS APPROVED BY THE ENGINEER.

THE SPACING BETWEEN TRAFFIC CONTROL SIGNS SHOULD BE ADJUSTED TO NOT CONFLICT WITH AND SHOULD PROVIDE A MINIMUM OF 200 FEET (500 FEET DESIRABLE) CLEARANCE TO EXISTING SIGNS THAT WILL REMAIN IN PLACE.

ALL SIGNS ARE 48" X 48" UNLESS OTHERWISE NOTED.

SIGNS THAT WILL BE IN PLACE LESS THAN 7 CONTINUOUS DAYS AND NIGHTS MAY BE MOUNTED ON PORTABLE SUPPORTS.

ANY SIGNS, TEMPORARY OR EXISTING, WHICH CONFLICT WITH TRAFFIC CONTROL "IN USE" SHALL BE REMOVED OR COVERED AS NEEDED AND AS APPROVED BY THE ENGINEER.

PLACE TEMPORARY PAVEMENT MARKING LINE IF RAMP CLOSURE IS TO BE IN PLACE 4 OR MORE CONTINUOUS DAYS AND NIGHTS.

WORK AREAS WITH A DROP OFF ALONG THE EDGE OF AN OPEN TRAVEL LANE SHALL BE LEVELED WITH TEMPORARY FILL WHEN THE CONTRACTOR IS NOT WORKING ADJACENT TO THE TRAVEL LANE. DRUMS SHALL BE PLACED ENTIRELY OUTSIDE THE TRAVEL LANE, ALLOWING THE FULL UNOBSTRUCTED LANE WIDTH, WHEN WORK IS NOT IN PROGRESS.

WHERE MEDIAN BARRIER IS IN PLACE, SIGNS SHOWN ON LEFT SIDE OF ROADWAY MAY BE OMITTED FOR RIGHT SIDE RAMP CLOSURES OF LESS THAN 12 - HOUR DURATION.

1. W20 - 1A AND G20 - 2A SIGNS ARE NOT REQUIRED IF THE RAMP CLOSURE IS WITHIN A LARGER WORK ZONE WHERE THESE SIGNS ARE ALREADY PRESENT.
2. PLACE "RAMP CLOSED BEGINNING" SIGN OR PCMS 7 CALENDAR DAYS PRIOR TO CLOSURE OR AS DIRECTED BY THE ENGINEER. SEE WISCONSIN STANDARD SIGN PLATES FOR SIGN LAYOUT.

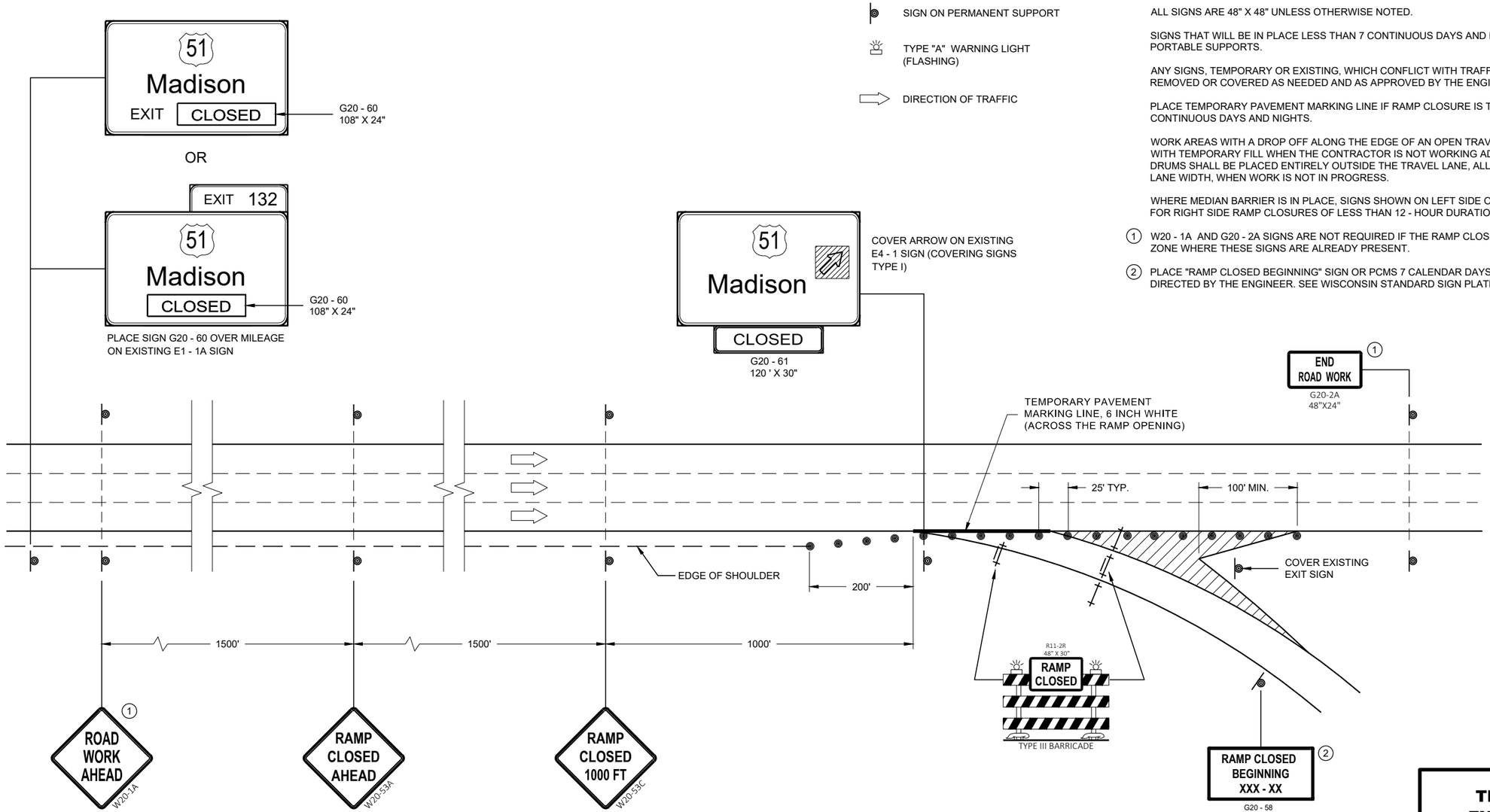

OR

PCMS MESSAGING

FRAME 1	FRAME 2
RAMP TO CLOSE	XXXDAY XX XX XX

TRAFFIC CONTROL, EXIT RAMP CLOSURE

STATE OF WISCONSIN
DEPARTMENT OF TRANSPORTATION

APPROVED
May 2023 — DATE
/S/ Andrew Heidtke — ROADWAY STANDARDS DEVE ENGINEER

FHWA

6
SDD 15D16-06

LEGEND

- SIGN ON PERMANENT SUPPORT
- TRAFFIC CONTROL DRUM
- TRAFFIC CONTROL DRUM WITH TYPE "C" STEADY BURN LIGHT
- TYPE III BARRICADE WITH ATTACHED SIGN
- TYPE "A" WARNING LIGHT (FLASHING)
- REMOVING PAVEMENT MARKINGS
- FLASHING ARROW BOARD
- DIRECTION OF TRAFFIC
- WORK AREA

GENERAL NOTES

FOR WORK ON ROADWAYS WITH SPEEDS GREATER THAN 45MPH, USE SDD 15D12.

THIS LANE CLOSURE DETAIL IS TYPICAL FOR CLOSING THE LEFT LANE. FOR A RIGHT LANE CLOSURE, REVERSE THE TRAFFIC CONTROL.

THIS DETAIL MAY BE USED FOR ROADWAYS WITH EITHER TWO OR THREE LANES IN EACH DIRECTION.

ALL SIGNS ARE 48"X48" UNLESS OTHERWISE NOTED. IF NECESSARY DUE TO SPACE CONSTRAINTS IN URBAN AREAS, 36"X 36" SIGNS MAY BE USED IF APPROVED BY REGIONAL TRAFFIC UNIT.

"WO" SIGN IS THE SAME AS "W" SIGN EXCEPT THE BACKGROUND IS ORANGE.

ANY SIGNS TEMPORARY OR EXISTING, WHICH CONFLICT WITH THE TRAFFIC CONTROL "IN USE" SHALL BE REMOVED OR COVERED AS NEEDED AND AS APPROVED BY THE ENGINEER. NO WARNING LIGHTS SHALL BE WORKING ON COVERED OR "DOWNED" SIGNS.

SIGNS THAT WILL BE IN PLACE LESS THAN 7 CONTINUOUS DAYS AND NIGHTS OR THAT WILL BE PLACED IN A CLOSED LANE MAY BE MOUNTED ON TEMPORARY SUPPORTS.

THE EXACT NUMBER, LOCATION, AND SPACING OF ALL SIGNS AND DEVICES SHALL BE ADJUSTED TO FIT FIELD CONDITIONS AS APPROVED BY THE ENGINEER.

THE SPACING BETWEEN TRAFFIC CONTROL SIGNS SHOULD BE ADJUSTED TO NOT CONFLICT WITH AND TO PROVIDE A MINIMUM OF 200 FEET (500' DESIRABLE) DISTANCE TO EXISTING SIGNS THAT WILL REMAIN IN PLACE

W20-1A, G20-1 AND G20-2A SIGNS ARE NOT REQUIRED IF THE LANE CLOSURE IS WITHIN A LARGER WORK ZONE WHERE THESE SIGNS ARE ALREADY PRESENT.

REMOVE PAVEMENT MARKINGS AND PLACE TEMPORARY PAVEMENT MARKING LINE IF LANE CLOSURE IS TO BE IN PLACE FOR 4 OR MORE CONTINUOUS DAYS AND NIGHTS.

CONSIDER GEOMETRICS WHEN LOCATING SIGNS AND ARROW BOARDS SO THE APPROACHING DRIVER HAS A CLEAR VIEW OF THE ARROW BOARDS AND LANE CLOSURE DRUMS FOR A MINIMUM 1500 FEET IN FRONT OF DRUMS.

BARRICADES IN A CLOSED LANE THAT MUST BE MOVED FOR A WORK OPERATION SHALL BE IMMEDIATELY REESTABLISHED UPON COMPLETION OF THE OPERATION, OR FOR CONTINUING OPERATIONS, AT THE END OF EACH WORKING DAY.

CHANNELIZING DEVICES PLACED ADJACENT TO WORK AREA SHALL BE PULLED BACK FROM THE TRAVEL LANE WHEN WORK IS NOT IN PROGRESS.

WARNING LIGHTS ARE NOT REQUIRED IF THE LANE CLOSURE IS A DAYTIME ONLY OPERATION.

(1) OMIT G20-1 SIGNS IF LENGTH OF WORK AREA IS 2 MILES OR LESS.

(2) WHERE THE SHOULDER OR TERRACE HAS INSUFFICIENT SPACE TO PLACE THE ARROW BOARD AS SHOWN, PLACE THE ARROW BOARD AT THE END OF THE TAPER.

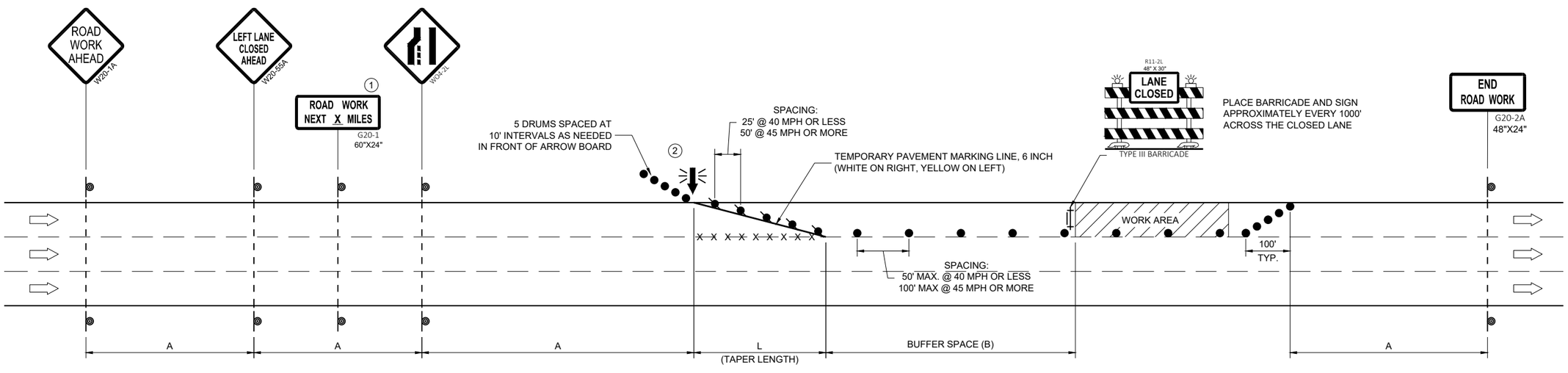

POSTED SPEED LIMIT PRIOR TO WORK STARTING (MPH)	ADVANCE WARNING SIGN SPACING (A) FEET	TAPER LENGTH (12 FT. LANE) (L) FEET	BUFFER SPACE (B) FEET
25	200'	125'	55'
30	200'	180'	85'
35	350'	245'	120'
40	350'	320'	170'
45	500'	540'	220'

TRAFFIC CONTROL, SINGLE LANE CLOSURE, DIVIDED NON-FREEWAY/EXPRESSWAY

STATE OF WISCONSIN
DEPARTMENT OF TRANSPORTATION

APPROVED
March 2024 — DATE
/S/ Andrew Heidtke — WORK ZONE ENGINEER

FHWA

6

SDD 15D20-08a

LEGEND

- SIGN ON PERMANENT SUPPORT
- TRAFFIC CONTROL DRUM
- TRAFFIC CONTROL DRUM WITH TYPE "C" STEADY BURN LIGHT
- TYPE III BARRICADE WITH ATTACHED SIGN
- TYPE "A" WARNING LIGHT (FLASHING)
- REMOVING PAVEMENT MARKINGS
- FLASHING ARROW BOARD
- DIRECTION OF TRAFFIC
- WORK AREA

GENERAL NOTES

THIS DETAIL MAY BE USED FOR ROADWAYS WITH EITHER TWO OR THREE LANES IN EACH DIRECTION.

ALL SIGNS ARE 48"X48" UNLESS OTHERWISE NOTED. IF NECESSARY DUE TO SPACE CONSTRAINTS IN URBAN AREAS, 36"X 36" SIGNS MAY BE USED IF APPROVED BY REGIONAL TRAFFIC UNIT.

"WO" SIGN IS THE SAME AS "W" SIGN EXCEPT THE BACKGROUND IS ORANGE.

ANY SIGNS TEMPORARY OR EXISTING, WHICH CONFLICT WITH THE TRAFFIC CONTROL "IN USE" SHALL BE REMOVED OR COVERED AS NEEDED AND AS APPROVED BY THE ENGINEER. NO WARNING LIGHTS SHALL BE WORKING ON COVERED OR "DOWNED" SIGNS.

SIGNS THAT WILL BE IN PLACE LESS THAN 7 CONTINUOUS DAYS AND NIGHTS OR THAT WILL BE PLACED IN A CLOSED LANE MAY BE MOUNTED ON TEMPORARY SUPPORTS.

THE EXACT NUMBER, LOCATION, AND SPACING OF ALL SIGNS AND DEVICES SHALL BE ADJUSTED TO FIT FIELD CONDITIONS AS APPROVED BY THE ENGINEER.

THE SPACING BETWEEN TRAFFIC CONTROL SIGNS SHOULD BE ADJUSTED TO NOT CONFLICT WITH AND TO PROVIDE A MINIMUM OF 200 FEET (500' DESIRABLE) DISTANCE TO EXISTING SIGNS THAT WILL REMAIN IN PLACE

W20-1A, G20-1 AND G20-2A SIGNS ARE NOT REQUIRED IF THE LANE CLOSURE IS WITHIN A LARGER WORK ZONE WHERE THESE SIGNS ARE ALREADY PRESENT.

REMOVE PAVEMENT MARKINGS AND PLACE TEMPORARY PAVEMENT MARKING LINE IF LANE CLOSURE IS TO BE IN PLACE FOR 4 OR MORE CONTINUOUS DAYS AND NIGHTS.

CONSIDER GEOMETRICS WHEN LOCATING SIGNS AND ARROW BOARDS SO THE APPROACHING DRIVER HAS A CLEAR VIEW OF THE ARROW BOARDS AND LANE CLOSURE DRUMS FOR A MINIMUM 1500 FEET IN FRONT OF DRUMS.

BARRICADES IN A CLOSED LANE THAT MUST BE MOVED FOR A WORK OPERATION SHALL BE IMMEDIATELY REESTABLISHED UPON COMPLETION OF THE OPERATION, OR FOR CONTINUING OPERATIONS, AT THE END OF EACH WORKING DAY.

CHANNELIZING DEVICES PLACED ADJACENT TO WORK AREA SHALL BE PULLED BACK FROM THE TRAVEL LANE WHEN WORK IS NOT IN PROGRESS.

WARNING LIGHTS ARE NOT REQUIRED IF THE LANE CLOSURE IS A DAYTIME ONLY OPERATION.

(1) OMIT G20-1 SIGNS IF LENGTH OF WORK AREA IS 2 MILES OR LESS.

POSTED SPEED LIMIT PRIOR TO WORK STARTING (MPH)	ADVANCE WARNING SIGN SPACING (A) FEET	TAPER LENGTH (12 FT. LANE) (L) FEET	BUFFER SPACE (B) FEET
25	200'	125'	55'
30	200'	180'	85'
35	350'	245'	120'
40	350'	320'	170'
45	500'	540'	220'
50	500'	600'	280'
55	500'	660'	335'

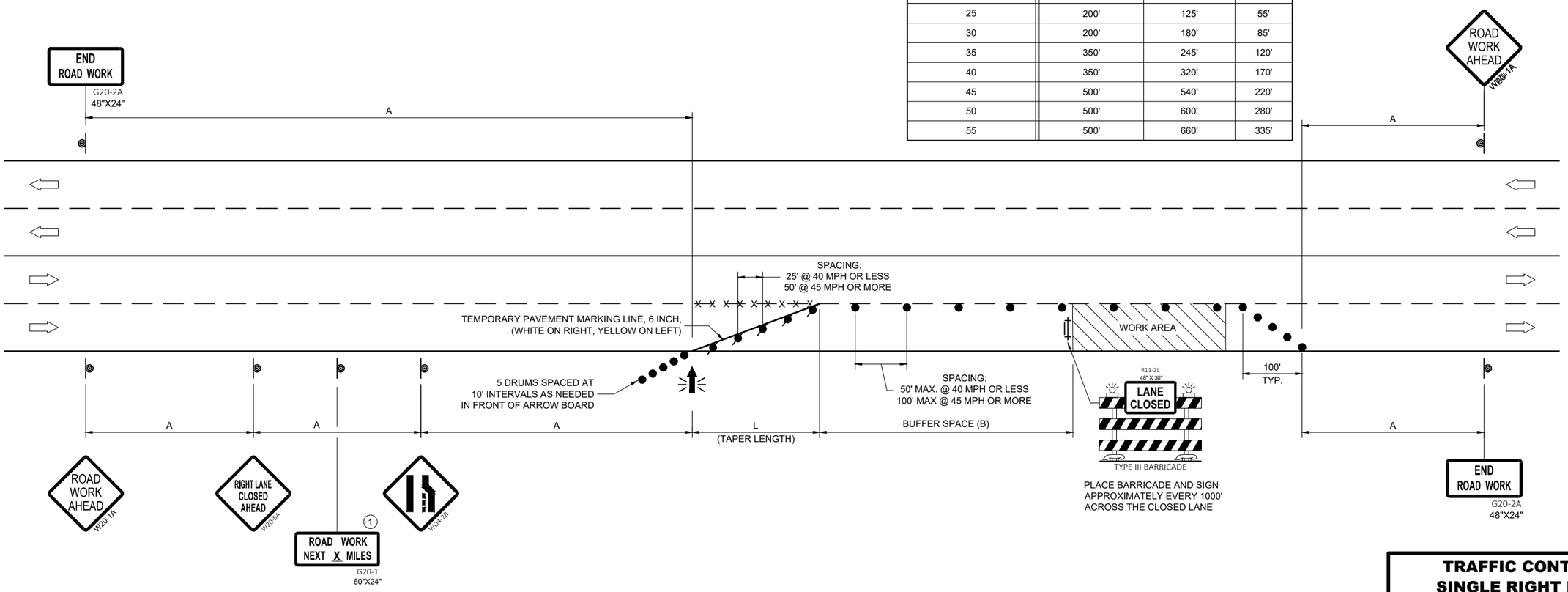

TRAFFIC CONTROL, SINGLE RIGHT LANE CLOSURE, UNDIVIDED NON-FREEWAY/EXPRESSWAY

STATE OF WISCONSIN
DEPARTMENT OF TRANSPORTATION

APPROVED
March 2024 — DATE
/S/ Andrew Heidtke — WORK ZONE ENGINEER
FHWA

6

SDD 15D20-08b

LEGEND

- SIGN ON PERMANENT SUPPORT
- TRAFFIC CONTROL DRUM
- TRAFFIC CONTROL DRUM WITH TYPE "C" STEADY BURN LIGHT
- TYPE III BARRICADE WITH ATTACHED SIGN
- TYPE "A" WARNING LIGHT (FLASHING)
- REMOVING PAVEMENT MARKINGS
- FLASHING ARROW BOARD
- DIRECTION OF TRAFFIC
- WORK AREA

GENERAL NOTES

THIS DETAIL MAY BE USED FOR ROADWAYS WITH EITHER TWO OR THREE LANES IN EACH DIRECTION.

ALL SIGNS ARE 48"X48" UNLESS OTHERWISE NOTED. IF NECESSARY DUE TO SPACE CONSTRAINTS IN URBAN AREAS, 36"X 36" SIGNS MAY BE USED IF APPROVED BY REGIONAL TRAFFIC UNIT.

"WO" SIGN IS THE SAME AS "W" SIGN EXCEPT THE BACKGROUND IS ORANGE.

ANY SIGNS TEMPORARY OR EXISTING, WHICH CONFLICT WITH THE TRAFFIC CONTROL "IN USE" SHALL BE REMOVED OR COVERED AS NEEDED AND AS APPROVED BY THE ENGINEER. NO WARNING LIGHTS SHALL BE WORKING ON COVERED OR "DOWNED" SIGNS.

SIGNS THAT WILL BE IN PLACE LESS THAN 7 CONTINUOUS DAYS AND NIGHTS OR THAT WILL BE PLACED IN A CLOSED LANE MAY BE MOUNTED ON TEMPORARY SUPPORTS.

THE EXACT NUMBER, LOCATION, AND SPACING OF ALL SIGNS AND DEVICES SHALL BE ADJUSTED TO FIT FIELD CONDITIONS AS APPROVED BY THE ENGINEER.

THE SPACING BETWEEN TRAFFIC CONTROL SIGNS SHOULD BE ADJUSTED TO NOT CONFLICT WITH AND TO PROVIDE A MINIMUM OF 200 FEET (500' DESIRABLE) DISTANCE TO EXISTING SIGNS THAT WILL REMAIN IN PLACE.

W20-1A, G20-1 AND G20-2A SIGNS ARE NOT REQUIRED IF THE LANE CLOSURE IS WITHIN A LARGER WORK ZONE WHERE THESE SIGNS ARE ALREADY PRESENT.

REMOVE PAVEMENT MARKINGS AND PLACE TEMPORARY PAVEMENT MARKING LINE IF LANE CLOSURE IS TO BE IN PLACE FOR 4 OR MORE CONTINUOUS DAYS AND NIGHTS.

CONSIDER GEOMETRICS WHEN LOCATING SIGNS AND ARROW BOARDS SO THE APPROACHING DRIVER HAS A CLEAR VIEW OF THE ARROW BOARDS AND LANE CLOSURE DRUMS FOR A MINIMUM 1500 FEET IN FRONT OF DRUMS.

DUE TO LACK OF SHOULDER/MEDIAN, ARROW BOARD IS PLACED AT THE THE END OF THE TAPER.

BARRICADES IN A CLOSED LANE THAT MUST BE MOVED FOR A WORK OPERATION SHALL BE IMMEDIATELY REESTABLISHED UPON COMPLETION OF THE OPERATION, OR FOR CONTINUING OPERATIONS, AT THE END OF EACH WORKING DAY.

CHANNELIZING DEVICES PLACED ADJACENT TO WORK AREA SHALL BE PULLED BACK FROM THE TRAVEL LANE WHEN WORK IS NOT IN PROGRESS.

WARNING LIGHTS ARE NOT REQUIRED IF THE LANE CLOSURE IS A DAYTIME ONLY OPERATION.

(1) OMIT G20-1 SIGNS IF LENGTH OF WORK AREA IS 2 MILES OR LESS.

(2) LANE MAY BE OPENED WHEN WORKERS ARE NOT PRESENT IN THE WORK AREA.

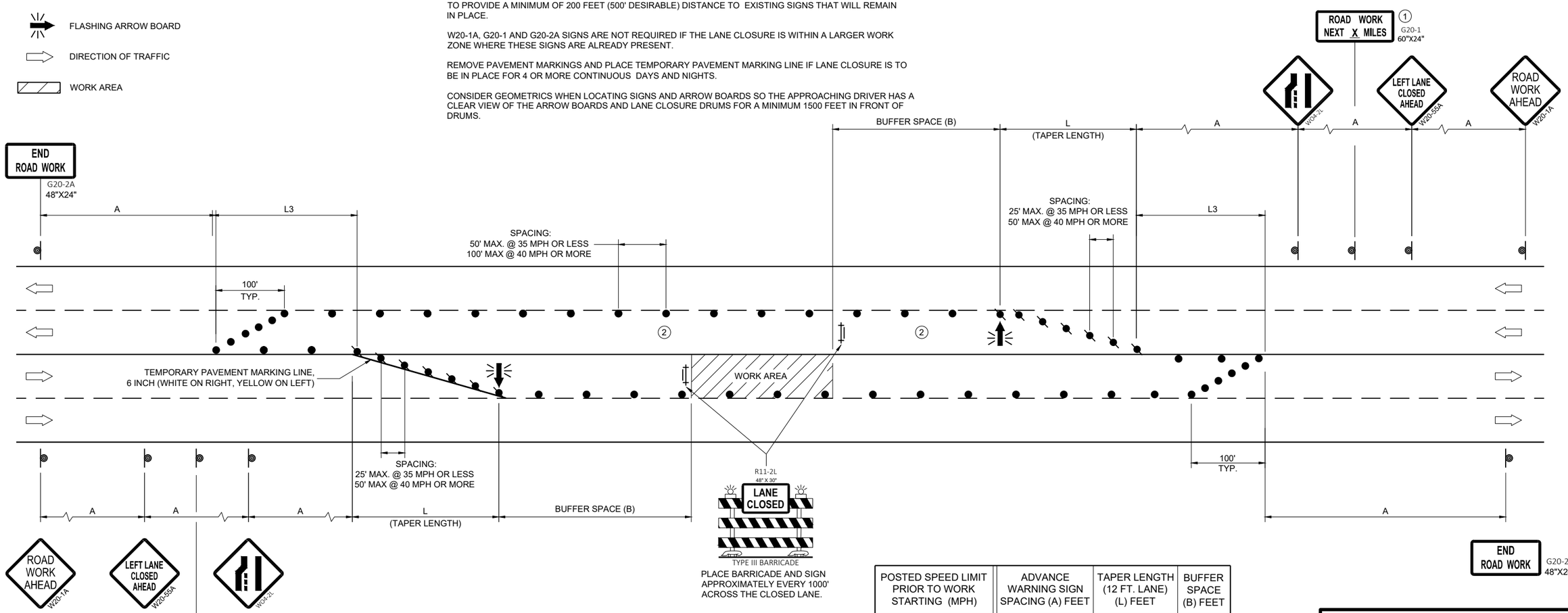

PLACE BARRICADE AND SIGN APPROXIMATELY EVERY 1000' ACROSS THE CLOSED LANE.

POSTED SPEED LIMIT PRIOR TO WORK STARTING (MPH)	ADVANCE WARNING SIGN SPACING (A) FEET	TAPER LENGTH (12 FT. LANE) (L) FEET	BUFFER SPACE (B) FEET
25	200'	125'	55'
30	200'	180'	85'
35	350'	245'	120'
40	350'	320'	170'
45	500'	540'	220'
50	500'	600'	280'
55	500'	660'	335'

TRAFFIC CONTROL, SINGLE LEFT LANE CLOSURE, UNDIVIDED NON-FREEWAY/EXPRESSWAY

STATE OF WISCONSIN
DEPARTMENT OF TRANSPORTATION

APPROVED
March 2024 — DATE
/S/ Andrew Heidtke — WORK ZONE ENGINEER
FHWA

6

SDD 15D20-08c

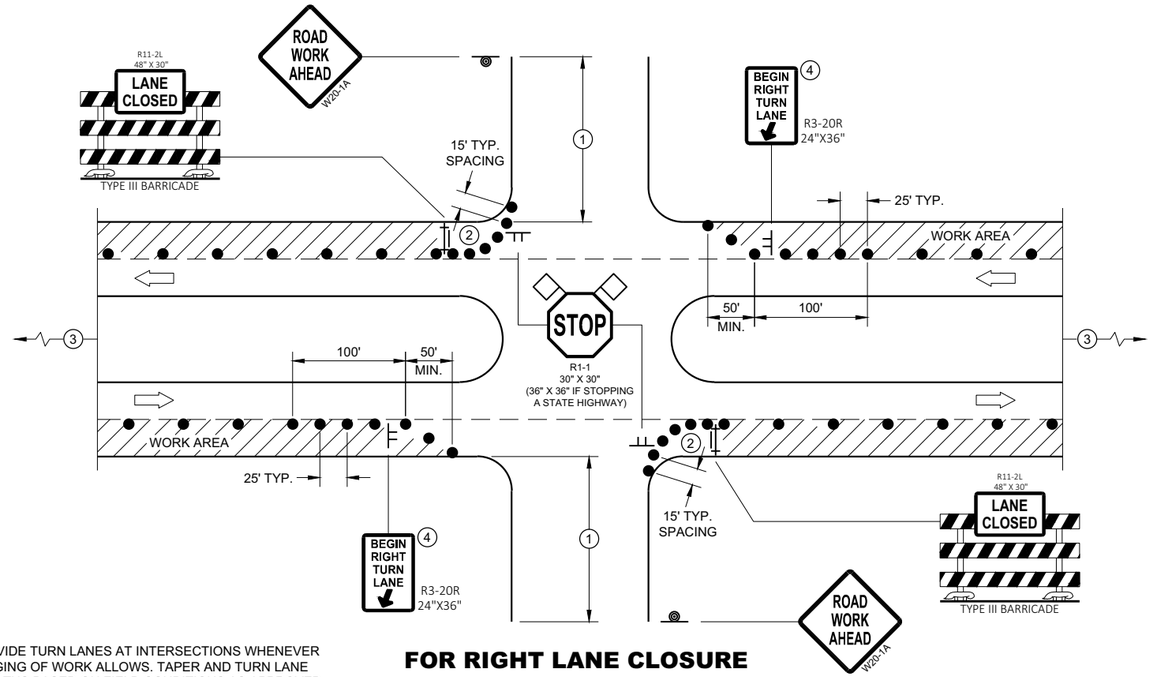

PROVIDE TURN LANES AT INTERSECTIONS WHENEVER STAGING OF WORK ALLOWS. TAPER AND TURN LANE LENGTHS BASED ON FIELD CONDITIONS AS APPROVED BY THE ENGINEER.

FOR RIGHT LANE CLOSURE AT INTERSECTION

GENERAL NOTES

ALL SIGNS ARE 48"X48" UNLESS OTHERWISE NOTED. IF NECESSARY DUE TO SPACE CONSTRAINTS IN URBAN AREAS, 36" X 36" MAY BE USED IF APPROVED BY THE DISTRICT TRAFFIC UNIT.

"WO" SIGN IS THE SAME AS "W" SIGN EXCEPT THE BACKGROUND IS ORANGE.

ANY SIGNS TEMPORARY OR EXISTING, WHICH CONFLICT WITH THE TRAFFIC CONTROL "IN USE" SHALL BE REMOVED OR COVERED AS NEEDED AND AS APPROVED BY THE ENGINEER. NO WARNING LIGHTS SHALL BE WORKING ON COVERED OR "DOWNED" SIGNS.

THE EXACT NUMBER, LOCATION, AND SPACING OF ALL SIGNS AND DEVICES SHALL BE ADJUSTED TO FIT FIELD CONDITIONS AS APPROVED BY THE ENGINEER.

THE SPACING BETWEEN TRAFFIC CONTROL SIGNS SHOULD BE ADJUSTED TO NOT CONFLICT WITH AND TO PROVIDE A MINIMUM OF 200 FEET (500' DESIRABLE) DISTANCE TO EXISTING SIGNS THAT WILL REMAIN IN PLACE

SIGN LAYOUTS SHALL BE IN ACCORDANCE WITH THE FHWA'S MANUAL OF STANDARD HIGHWAY SIGNS OR THE WISCONSIN STANDARD SIGN PLATES.

SIGNS THAT WILL REMAIN IN PLACE LESS THAN 7 CONTINUOUS DAYS AND NIGHTS OR THAT WILL BE PLACED IN A CLOSED LANE MAY BE MOUNTED ON PORTABLE SUPPORTS.

BARRICADES IN A CLOSED LANE THAT MUST BE MOVED FOR A WORK OPERATION SHALL BE IMMEDIATELY REESTABLISHED UPON COMPLETION OF THE OPERATION, OR FOR CONTINUING OPERATIONS, AT THE END OF EACH WORKING DAY.

CHANNELIZING DEVICES PLACED ADJACENT TO WORK AREA SHALL BE PULLED BACK FROM THE TRAVEL LANE WHEN WORK IS NOT IN PROGRESS.

1. 500' TYPICAL OR AT LAST INTERSECTION, WHICHEVER IS CLOSER.
   350' IF 35 - 40 MPH.
   200' IF 25 - 30 MPH.
2. ALSO USE BARRICADE AND 15 FOOT TYPICAL DRUM SPACING AT COMMERCIAL DRIVEWAYS
3. SEE SEPARATE LANE CLOSURE DETAIL FOR ADDITIONAL TRAFFIC CONTROL.
4. MINIMUM MOUNTING HEIGHT OF 5 FEET FROM EDGE OF PAVEMENT (AT EDGE LINE LOCATION) TO BOTTOM OF SIGN.

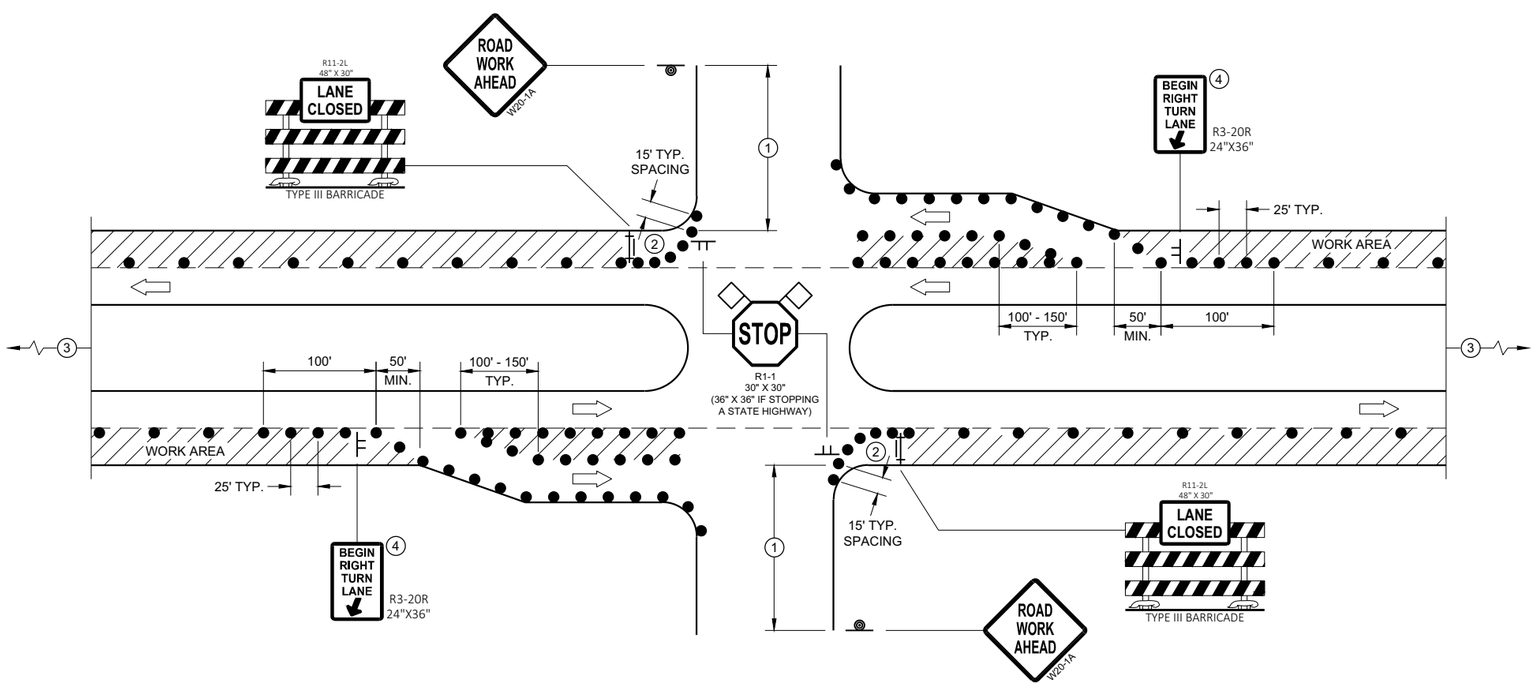

FOR RIGHT LANE CLOSURE AT INTERSECTION (WITH RIGHT TURN BAY OPEN)

LEGEND

- SIGN ON TEMPORARY SUPPORT
- SIGN ON PERMANENT SUPPORT
- TRAFFIC CONTROL DRUM
- TYPE III BARRICADE WITH ATTACHED SIGN
- DIRECTION OF TRAFFIC
- FLAGS, 16" X 16" MIN., ORANGE
- WORK AREA

TRAFFIC CONTROL, INTERSECTION WITHIN SINGLE RIGHT LANE CLOSURE

STATE OF WISCONSIN
DEPARTMENT OF TRANSPORTAT

6

SDD 15D21 - 07a

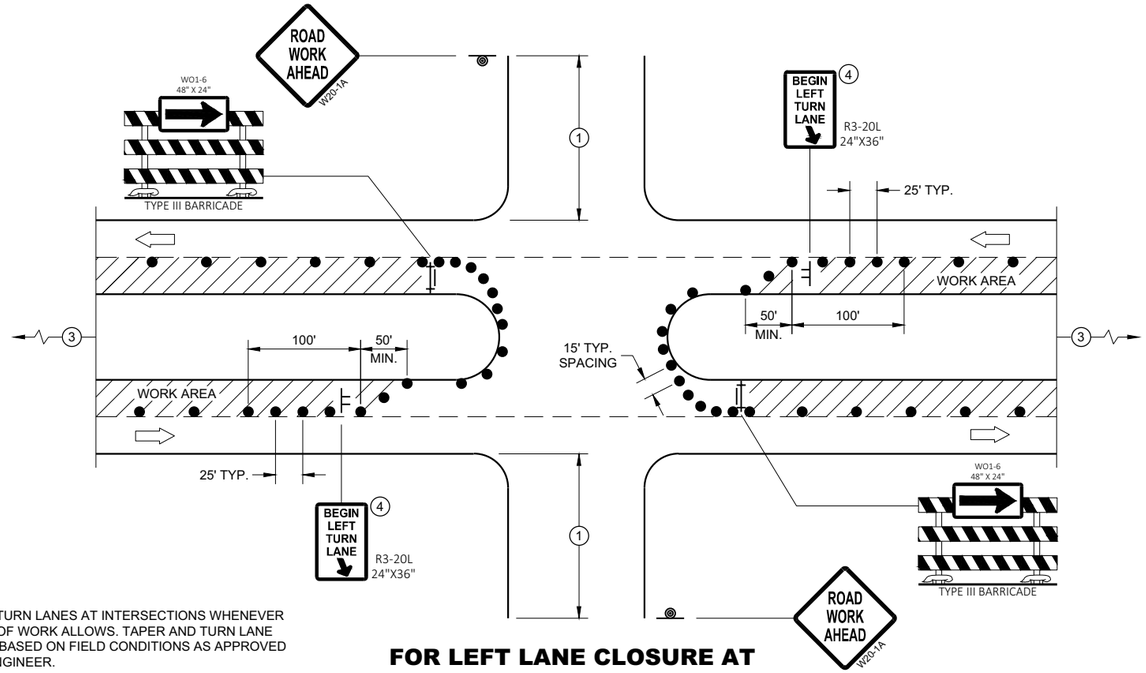

PROVIDE TURN LANES AT INTERSECTIONS WHENEVER STAGING OF WORK ALLOWS. TAPER AND TURN LANE LENGTHS BASED ON FIELD CONDITIONS AS APPROVED BY THE ENGINEER.

FOR LEFT LANE CLOSURE AT INTERSECTION OR MEDIAN OPENING

GENERAL NOTES

ALL SIGNS ARE 48"X48" UNLESS OTHERWISE NOTED. IF NECESSARY DUE TO SPACE CONSTRAINTS IN URBAN AREAS, 36" X 36" MAY BE USED IF APPROVED BY THE DISTRICT TRAFFIC UNIT.

"WO" SIGN IS THE SAME AS "W" SIGN EXCEPT THE BACKGROUND IS ORANGE.

ANY SIGNS TEMPORARY OR EXISTING, WHICH CONFLICT WITH THE TRAFFIC CONTROL "IN USE" SHALL BE REMOVED OR COVERED AS NEEDED AND AS APPROVED BY THE ENGINEER. NO WARNING LIGHTS SHALL BE WORKING ON COVERED OR "DOWNED" SIGNS.

THE EXACT NUMBER, LOCATION, AND SPACING OF ALL SIGNS AND DEVICES SHALL BE ADJUSTED TO FIT FIELD CONDITIONS AS APPROVED BY THE ENGINEER.

THE SPACING BETWEEN TRAFFIC CONTROL SIGNS SHOULD BE ADJUSTED TO NOT CONFLICT WITH AND TO PROVIDE A MINIMUM OF 200 FEET (500' DESIRABLE) DISTANCE TO EXISTING SIGNS THAT WILL REMAIN IN PLACE

SIGN LAYOUTS SHALL BE IN ACCORDANCE WITH THE FHWA'S MANUAL OF STANDARD HIGHWAY SIGNS OR THE WISCONSIN STANDARD SIGN PLATES.

SIGNS THAT WILL REMAIN IN PLACE LESS THAN 7 CONTINUOUS DAYS AND NIGHTS OR THAT WILL BE PLACED IN A CLOSED LANE MAY BE MOUNTED ON PORTABLE SUPPORTS.

BARRICADES IN A CLOSED LANE THAT MUST BE MOVED FOR A WORK OPERATION SHALL BE IMMEDIATELY REESTABLISHED UPON COMPLETION OF THE OPERATION, OR FOR CONTINUING OPERATIONS, AT THE END OF EACH WORKING DAY.

CHANNELIZING DEVICES PLACED ADJACENT TO WORK AREA SHALL BE PULLED BACK FROM THE TRAVEL LANE WHEN WORK IS NOT IN PROGRESS.

1. 500' TYPICAL OR AT LAST INTERSECTION, WHICHEVER IS CLOSER.
   350' IF 35 - 40 MPH.
   200' IF 25 - 30 MPH.
2. ALSO USE BARRICADE AND 15 FOOT TYPICAL DRUM SPACING AT COMMERCIAL DRIVEWAYS
3. SEE SEPARATE LANE CLOSURE DETAIL FOR ADDITIONAL TRAFFIC CONTROL.
4. MINIMUM MOUNTING HEIGHT OF 5 FEET FROM EDGE OF PAVEMENT (AT EDGE LINE LOCATION) TO BOTTOM OF SIGN.

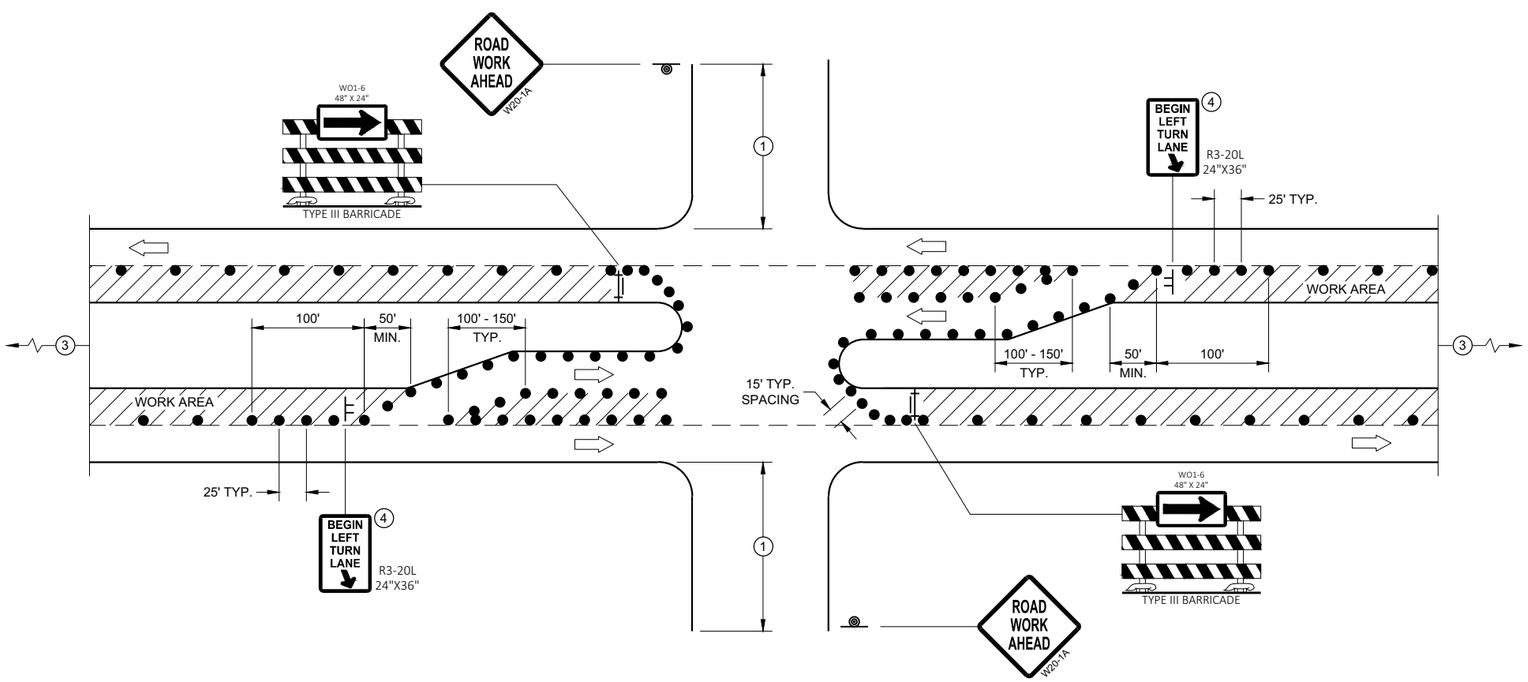

FOR LEFT LANE CLOSURE AT INTERSECTION OR MEDIAN OPENING (WITH LEFT TURN BAY OPEN)

LEGEND

- SIGN ON TEMPORARY SUPPORT
- SIGN ON PERMANENT SUPPORT
- TRAFFIC CONTROL DRUM
- TYPE III BARRICADE WITH ATTACHED SIGN
- DIRECTION OF TRAFFIC
- FLAGS, 16" X 16" MIN., ORANGE
- WORK AREA

TRAFFIC CONTROL, INTERSECTION WITHIN SINGLE LEFT LANE CLOSURE

STATE OF WISCONSIN
DEPARTMENT OF TRANSPORTATION

APPROVED
August 2020 — DATE
/S/ Andrew Heidtke — WORK ZONE ENGINEER
FHWA

LEGEND

- TRAFFIC CONTROL DRUM
- SIGN ON PERMANENT SUPPORT
- DIRECTION OF TRAFFIC
- FLASHING ARROW BOARD
- WORK AREA

GENERAL NOTES

THIS DETAIL IS TYPICAL FOR CLOSING THE RIGHT SHOULDER. FOR CLOSING THE LEFT SHOULDER, REVERSE THE TRAFFIC CONTROL.

THIS DETAIL MAY BE USED FOR DIVIDED ROADWAYS WITH ANY NUMBER OF TRAVEL LANES.

THE EXACT NUMBER, LOCATION AND SPACING OF ALL SIGNS AND DEVICES SHALL BE ADJUSTED TO FIT FIELD CONDITIONS AS APPROVED BY THE ENGINEER.

ALL SIGNS ARE 48" X 48" UNLESS OTHERWISE NOTED.

SIGN LAYOUTS SHALL BE IN ACCORDANCE WITH THE FHWA'S MANUAL OF STANDARD HIGHWAY SIGNS OR THE WISCONSIN STANDARD SIGN PLATES.

SIGNS THAT WILL BE IN PLACE LESS THAN 7 CONTINUOUS DAYS AND NIGHTS MAY BE MOUNTED ON PORTABLE SUPPORTS.

ANY SIGNS TEMPORARY OR EXISTING, WHICH CONFLICT WITH TRAFFIC CONTROL "IN USE" SHALL BE REMOVED OR COVERED AS NEEDED AND AS APPROVED BY THE ENGINEER.

CHANNELIZING DEVICES PLACED ADJACENT TO THE WORK AREA SHALL BE PULLED BACK FROM THE TRAVEL LANE WHEN WORK IS NOT IN PROGRESS.

WHEN A RAMP INTERSECTS THE FACILITY ON WHICH THE WORK IS BEING PERFORMED, ADDITIONAL TRAFFIC CONTROLS SHALL BE PROVIDED AS SPECIFIED IN THE PLANS AND/OR THE SPECIAL PROVISIONS OR AS APPROVED BY THE ENGINEER.

*FOR SHORT DURATION SHOULDER WORK OF LESS THAN ONE HOUR, THE W21-5a SIGN MAY BE OMITTED.

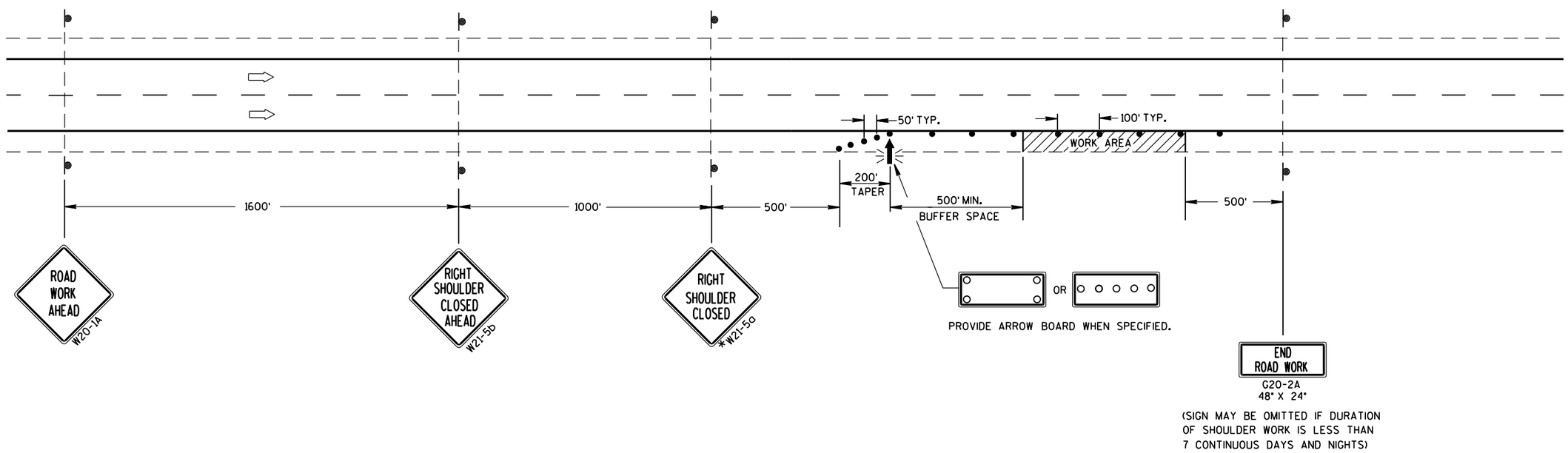

TRAFFIC CONTROL SHOULDER CLOSURE ON DIVIDED ROADWAY, SPEEDS GREATER THAN 40 MPH

STATE OF WISCONSIN
DEPARTMENT OF TRANSPORTATION

APPROVED

June 2016 — DATE

/S/ Peter Amakobe Atepe — STATEWIDE WORK ZONE TRAFFIC SAFETY ENGINEER

FHWA

URBAN AREA

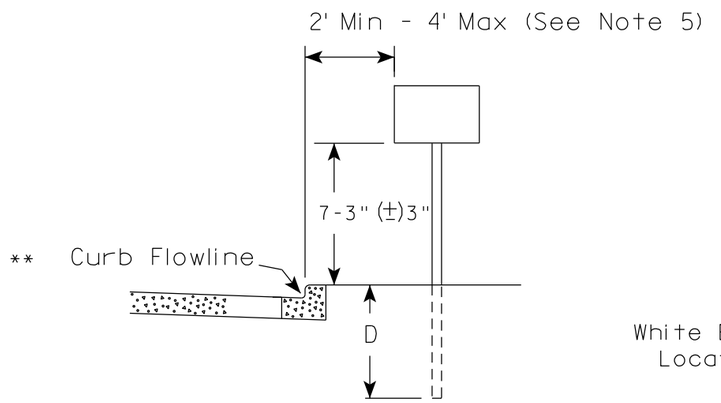

RURAL AREA (See Note 2)

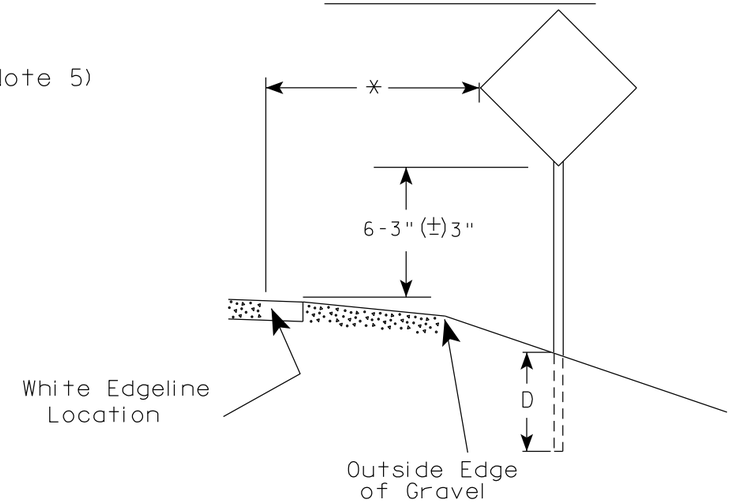

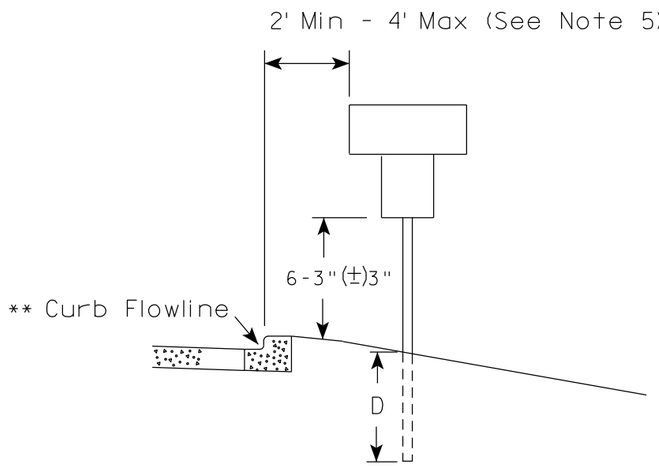

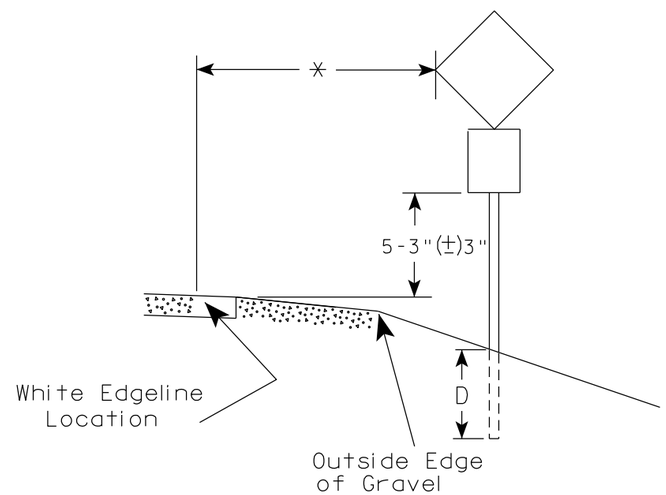

** The existence of curb and gutter does not in itself mandate the vertical clearance illustrated. That height is typically measured where there is sidewalk adjacent to the roadway or parking is permitted. In the absence of sidewalk vertical clearance is measured from the top of the curb. Offset of signs is measured from the flow line.

* 6 feet from edge of a paved shoulder or 12 feet from the edge of pavement (edge line location) or 2 feet from outside edge of gravel, whichever is greater unless directed by project engineer.

POST EMBEDMENT DEPTH

Area of Sign Installation (Sq. Ft.)	D (Min)
20 or Less	4'
Greater than 20	5'

GENERAL NOTES

1. Signs wider than 4 feet or 20 sq.ft or larger, shall be mounted on multiple posts. Refer to plate A4-4.
2. If signs are mounted on or behind barrier wall, see A4-10 sign plate.
   The Double Arrow sign (W12-1D) shall be mounted at a height of 2'-3" (±) 3". The Chevron sign (W1-8), Roundabout Chevron panel (R6-4B), Enhanced Reference Markers, Clearance Markers (W5-52), Mile Markers (D10 series), In Road Object Markers (W5-54) & End of Road Markers (W5-56) shall be mounted at a height of 4'-3" (±) 3".
3. For expressways and freeways, mounting height is 7'- 3" (±) 3" or 6'-3" (±) 3" depending upon existence of a sub-sign.
4. Minimum mounting height for signs mounted on traffic signal poles is 5'- 3" (±) 3".
5. Offset distance shall be consistent with existing signs or consistent throughout length of project.
6. Folding signs shall be mounted at a height of 5'-3" (±) 3" or as directd by the Engineer.

TYPICAL INSTALLATION OF PERMANENT TYPE II SIGNS ON SINGLE POSTS

WISCONSIN DEPT OF TRANSPORTATION

APPROVED Matthew R Rauch
for State Traffic Engineer

DATE 12/6/23 PLATE NO. A4-3.23

PROJECT NO:	HWY:	COUNTY:		SHEET NO: 133	E

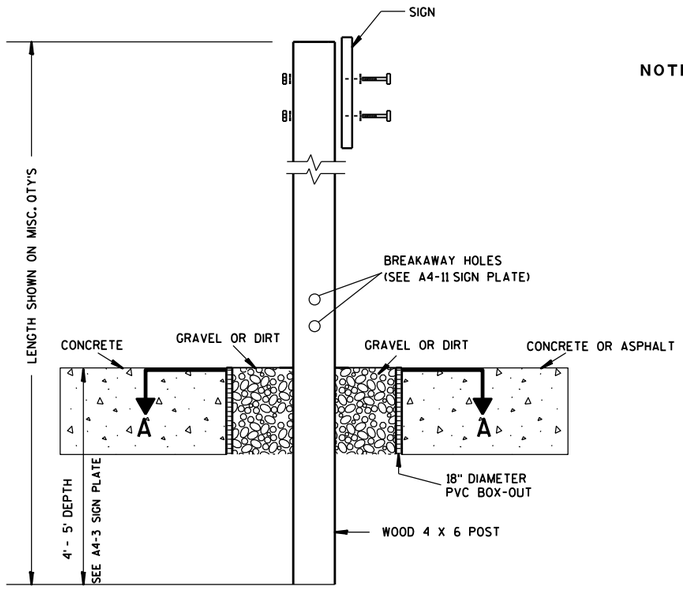

ELEVATION VIEW

DETAIL OF WOOD 4 X 6 SIGN POST IN BOX-OUT

NOTES:
1. ALL MATERIAL TO BE APPROVED BY ENGINEER PRIOR TO INSTALLATION
2. SEE SIGN PLATE A4-8 FOR SIGN HARDWARE REQUIREMENTS
3. 18 INCH X 18 INCH SQUARE BOX-OUTS MAY BE USED FOR INSTALLATIONS IN EXISTING CONCRETE OR ASPHALT LOCATIONS.

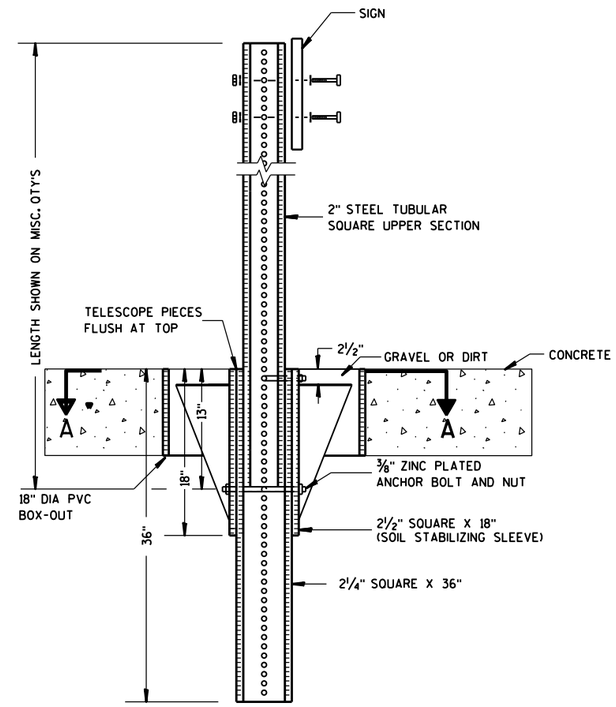

ELEVATION VIEW

DETAIL OF STEEL 2 X 2 SIGN POST IN BOX-OUT

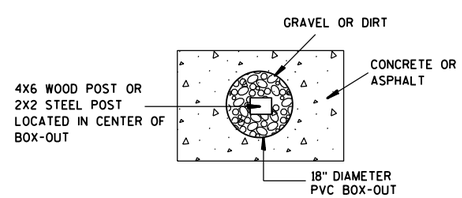

PLAN VIEW

FOR NEW CONCRETE/ASPHALT INSTALLATIONS

SIGN POST
BOX-OUTS
A4-3B

WISCONSIN DEPT OF TRANSPORTATION

APPROVED Matthew R Rauch
for State Traffic Engineer

DATE 1/27/14 PLATE NO. A4-3B.1

PROJECT NO:	HWY:	COUNTY:		SHEET NO:	E

URBAN AREA

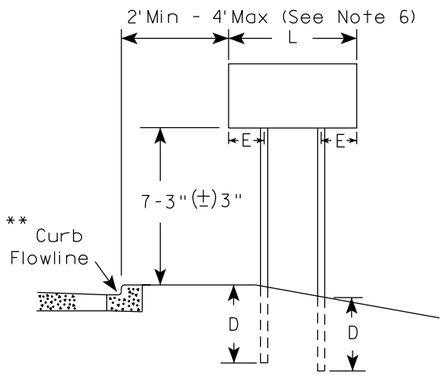

RURAL AREA (See Note 3)

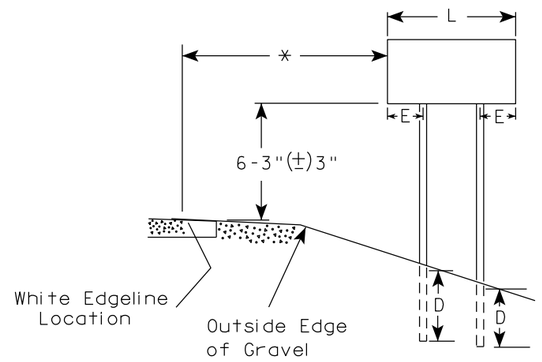

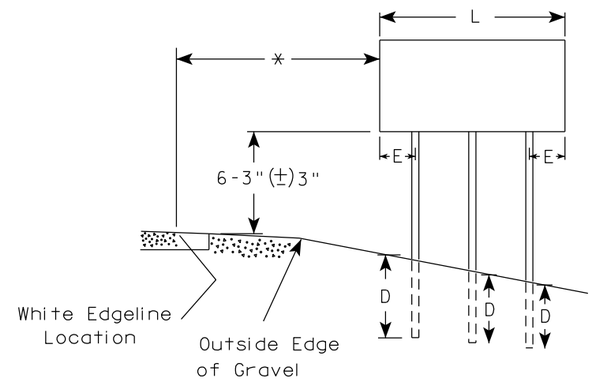

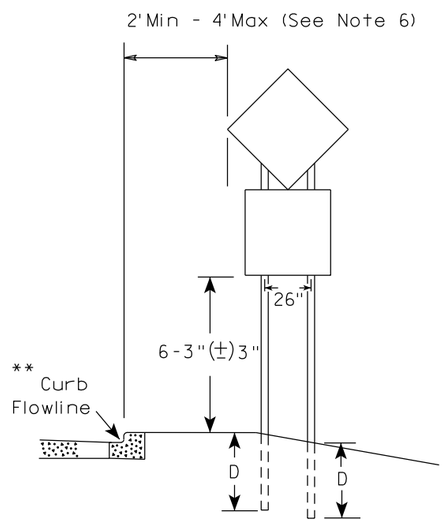

48" DIAMOND WARNING SIGN

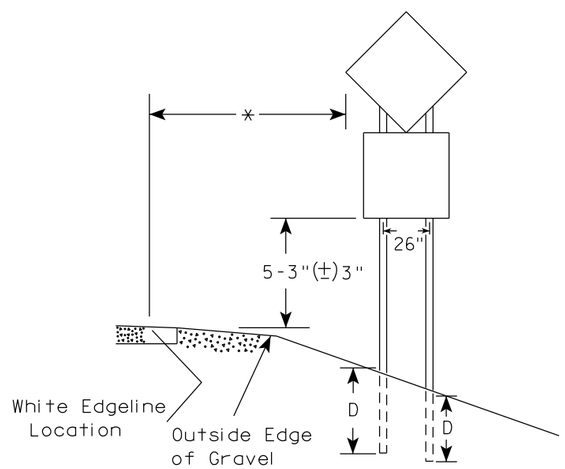

48" DIAMOND WARNING SIGN

GENERAL NOTES

1. For 3 or 4 post installations, individual post spacing shall be greater than 3'-6".
2. See tables below for required number of posts.
3. For expressways and freeways, mounting height is 7'-3" (±) 3" or 6'-3" (±) 3" depending upon existence of sub-sign.
4. The (±) tolerance for mounting height is 3 inches.
5. J-Assemblies are considered to be one sign for mounting height.
6. Offset distance shall be consistent with existing signs or consistent throughout length of project.
7. Folding signs shall be mounted at a height of 5'-3" (±) 3" or as directed by the engineer.
8. The Double Arrow sign (W12-1) shall be mounted at a height of 2'-3" (±) 3". The Chevron sign (W1-8), Roundabout Chevron panel (R6-4B), Clearance Markers (W5-52), Mile Markers (D10 series), In Road Object Markers (W5-54) & End of Road Markers (W5-56) shall be mounted at a height of 4"-3" (±) 3".

* 6 feet from edge of a paved shoulder or 12 feet from the edge of pavement (edge line location) or 2 feet from outside edge of gravel, whichever is greater unless directed by project engineer.

** The existence of curb and gutter does not in itself mandate the vertical clearance illustrated. That height is typically measured where there is sidewalk adjacent to the roadway or parking is permitted. In the absence of sidewalk vertical clearance is measured from the top of the curb. Offset of signs is measured from the flow line.

*** See A4-3 sign plate for signs 4' or less in width and less than 20 S.F. in area.

SIGN SHAPE OTHER THAN DIAMOND (TWO POSTS REQUIRED)	
L	E
*** Greater than 48" Less than 60"	12"
60" to 108"	L/5

SIGN SHAPE OTHER THAN DIAMOND (THREE POSTS REQUIRED)	
L	E
Greater than 108" to 144"	12"

POST EMBEDMENT DEPTH

Area of Sign Installation (Sq. Ft.)	D (Min)
20 or Less	4'
Greater than 20	5'

TYPICAL INSTALLATION OF TYPE II SIGNS ON MULTIPLE POSTS

WISCONSIN DEPT OF TRANSPORTATION

APPROVED Matthew R Rauch
for State Traffic Engineer

DATE 12/6/23 PLATE NO. A4-4.16

PROJECT NO:	HWY:	COUNTY:		SHEET NO: 135	E

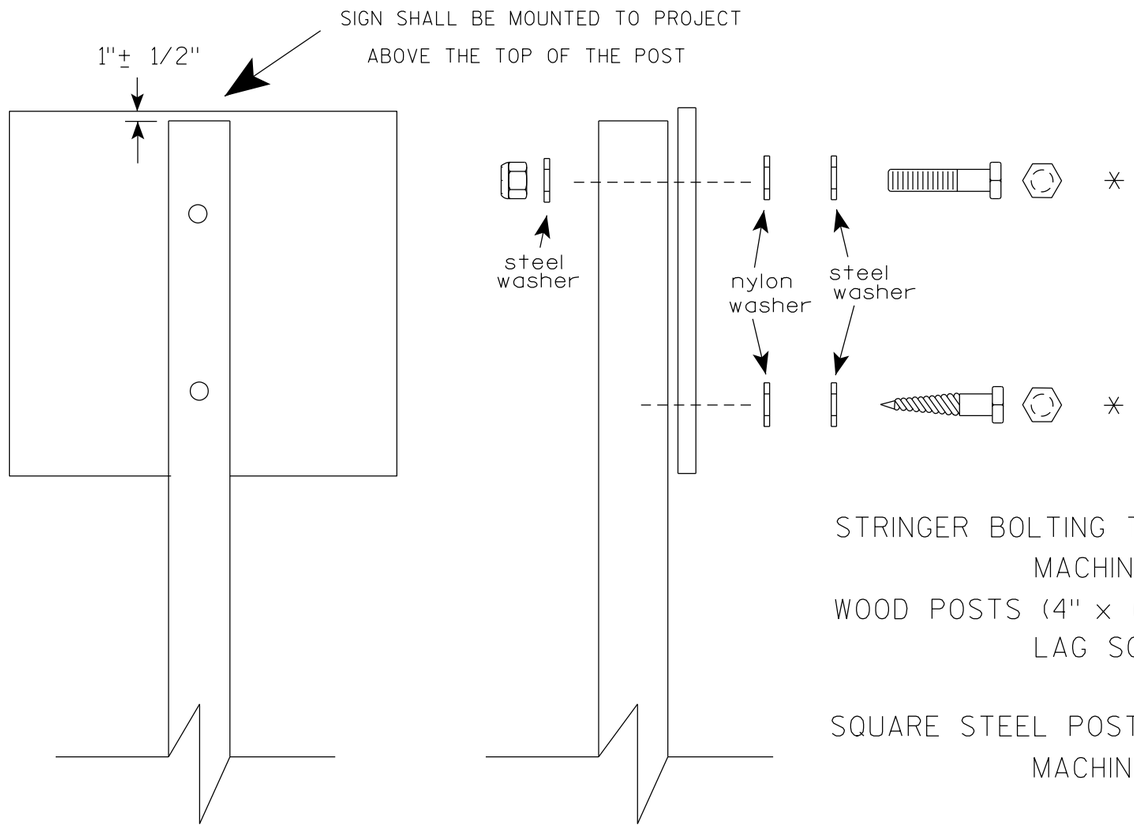

Nuts, bolts and lags used for mounting signs shall have hexagonal heads and shall be either :

a. Hot dip galvanized in accordance with ASTM Designation: A 153, Class D, or SC 3

b. Electro-galvanized in accordance with ASTM Designation : B 633, TYPE III, SC 3.

Threads on bolts and nuts shall be manufactured with sufficient allowance for the cadmium plate or galvanized coating to permit the nuts to run freely on the bolts.

STRINGER BOLTING TO ALUMINUM SIGNS (SEE SIGN PLATE A4-18)

MACHINE BOLTS - 5/16" X 1-3/4" Length w/ lock nuts

WOOD POSTS (4" x 6")

LAG SCREWS - 3/8" X 3" (NO STRINGERS ON BACK OF SIGN)
3/8" X 4" (STRINGERS ON BACK OF SIGN)

SQUARE STEEL POSTS (2" x 2")

MACHINE BOLTS - 3/8" X 3-1/4" Length w/ nuts (NO STRINGER ON BACK OF SIGN)
3/8" X 5" Length w/ nuts (STRINGERS ON BACK OF SIGN)

RIVETS - 9/32 " (6605-9-6) BULB-TITE, TRI-FOLD, ALUMINUM BODY/MANDREL
O.D. FLANGE .720-.765 INCH, GRIP RANGE .042-.375 INCH

WASHERS (ALL POSTS) -

1-1/4" O.D. X 3/8" I.D. X 1/16" STEEL
1-1/4" O.D. X 3/8" I.D. X .080 NYLON

* Two different fastening systems are shown for illustration purposes. On any individual sign, either one or the other system shall be used. Actual number of fasteners per sign varies with the sign area, but normally there are two. For a single post installation, all signs greater than 9 sq. ft. require the use of 3 fasteners.

ATTACHMENT OF SIGNS TO POSTS

WISCONSIN DEPT OF TRANSPORTATION

APPROVED Matthew R Rauch
for State Traffic Engineer

DATE 4/1/2020 PLATE NO. A4-8.9

TELESCOPIC TUBING ANCHORS
TWO PIECE SYSTEM

2 1/4 " SQUARE
12 GAUGE
PERFORATED
GALVANIZED FINISH

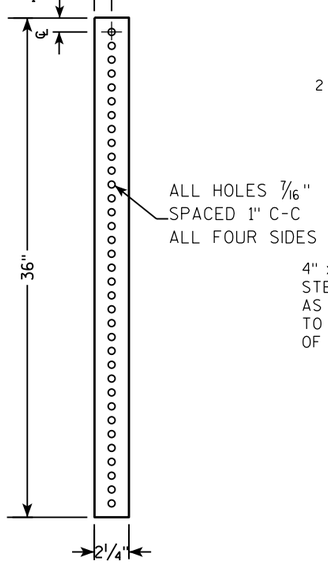

2 1/2 " SQUARE
12 GAUGE
OMNI-DIRECTIONAL
PERFORATED
SOIL STABILIZING SLEEVE
GALVANIZED FINISH

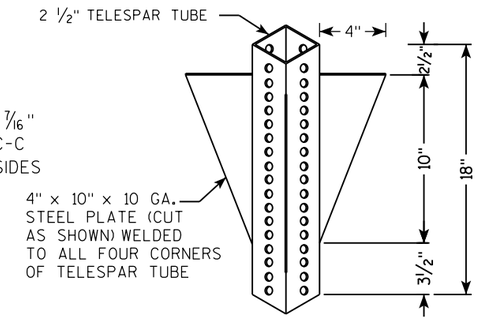

DETAIL OF TUBULAR STEEL SIGN POST
(IN POURED CONCRETE OR ASPHALT)

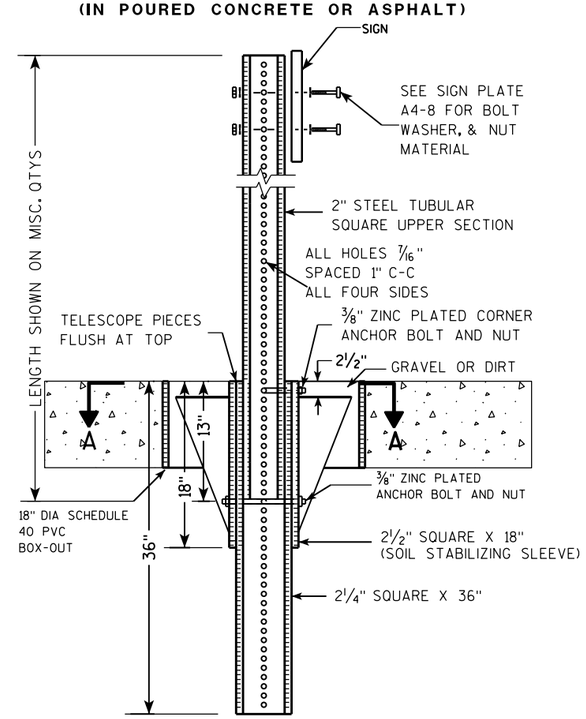

DETAIL OF TUBULAR STEEL SIGN POST
(IN LOCATIONS OTHER THAN POURED CONCRETE OR ASPHALT)

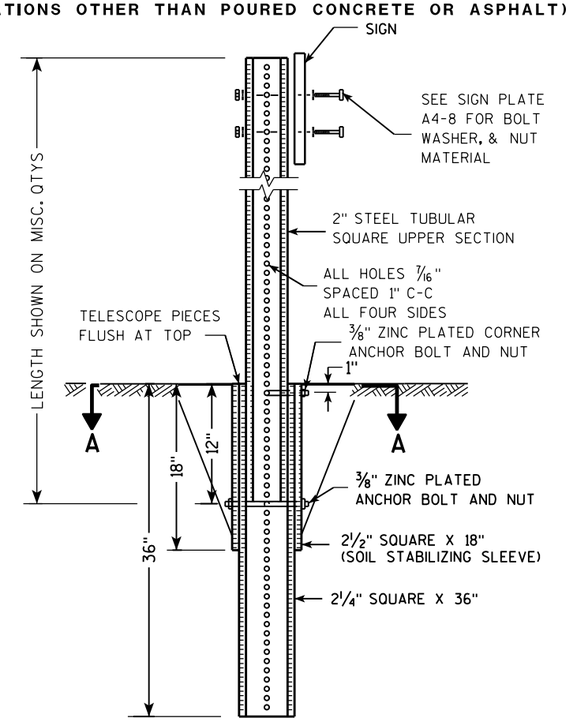

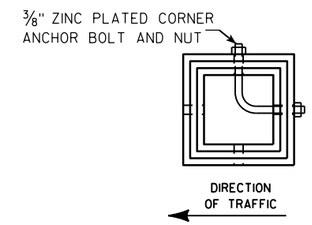

SECTION A-A

Area of Sign Installation (Sq. Ft.)	Number of Required Posts
9 or less	1
Greater than 9 less than or equal to 18	2
Greater than 18 less than or equal to 27	3

Signs wider than 3 feet or larger than 9 sq. ft shall be mounted on multiple posts (see above table).

TUBULAR STEEL
SIGN POST
A4-9

WISCONSIN DEPT OF TRANSPORTATION

APPROVED Matthew R Rauch
for State Traffic Engineer

DATE 2/05/15 PLATE A4-9.9

7 7

PROJECT NO:	HWY:	COUNTY:		SHEET NO:	E

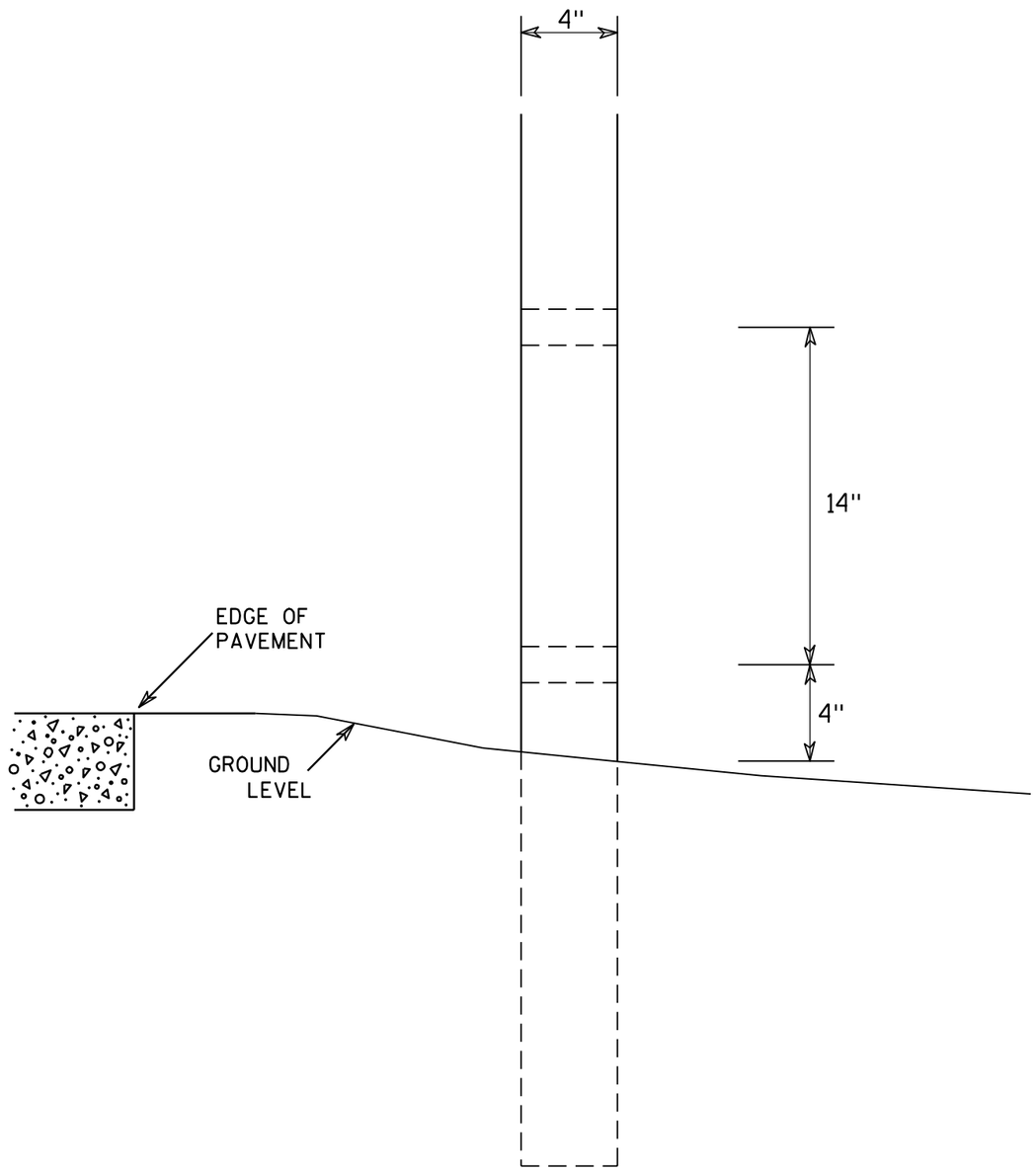

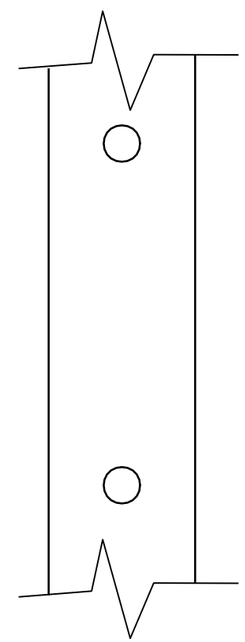

SIDE VIEW

GENERAL NOTES

1. All 4 x 6 Wood Posts shall be modified by having two 1½" diameter holes drilled perpendicular to the roadway centerline.

7

7

4 X 6 WOOD POST MODIFICATIONS

WISCONSIN DEPT OF TRANSPORTATION

APPROVED Chester J Spang for State Traffic Engineer

DATE 3/27/97 PLATE NO. A4-11.2

PROJECT NO:	HWY:	COUNTY:		SHEET NO: 138	E

BANDING

SINGLE SIGN

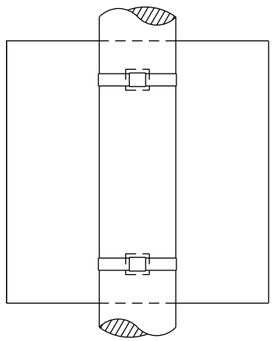

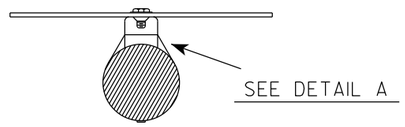

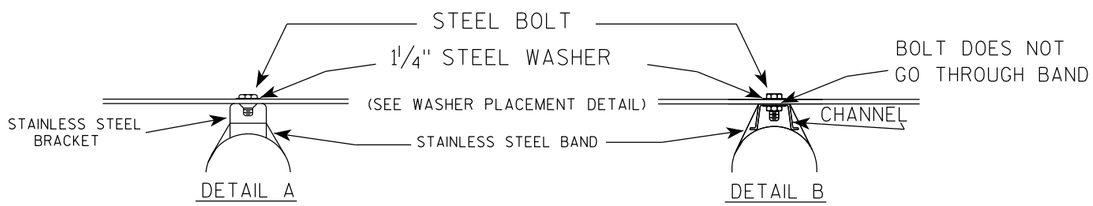

WASHER PLACEMENT

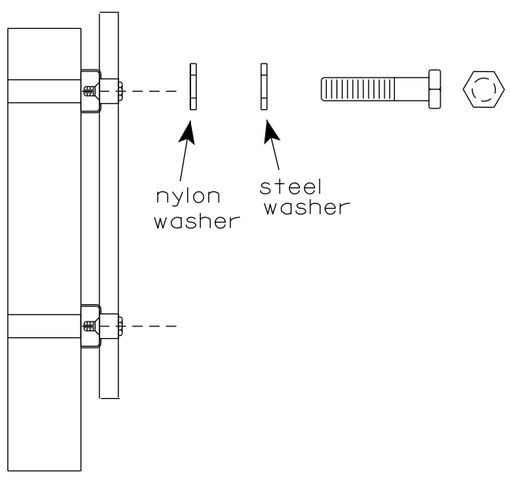

WASHERS (ALL POSTS) -
1-1/4" O.D. X 3/8" I.D. X 1/16" STEEL
1-1/4" O.D. X 3/8" I.D. X .080 NYLON
FOR ALL TYPE H SIGNS

GENERAL NOTES

1. Any sign over 3 feet in width shall use the V-Block banding method. See A5-10 standard plate.
2. Signs 3 feet or greater in height shall have three bracket bands installed. Signs less than 3 feet in height shall have two bracket bands installed.
3. Banding and assembly bracket shall be stainless steel. All bands shall be ¾" in width and 0.025" thickness.
4. ALL SIGN MOUNTING BOLTS AND WASHERS SHALL BE EITHER:
   a. Hot dip or mechanically galvanized in accordance with ASTM Designation: A 153, Class D
   b. Electro-galvanized in accordance with ASTM designation: B 633, Type III, SC 3

"J" ASSEMBLY

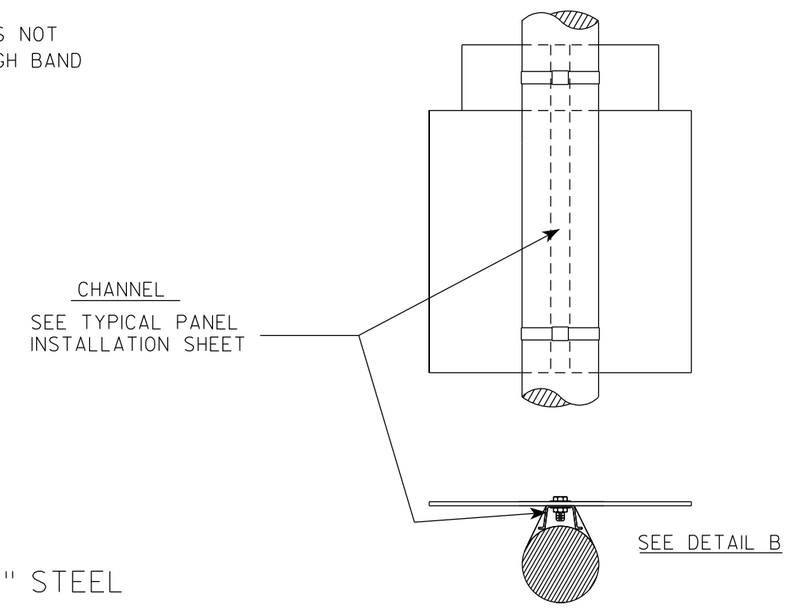

STANDARD SIGN
SIGN BANDING DETAILS

WISCONSIN DEPT OF TRANSPORTATION

APPROVED Matthew R Rauch for State Traffic Engineer

DATE 6/10/19 PLATE NO. A5-9.4

PROJECT NO:	HWY:	COUNTY:		SHEET NO: 139	E

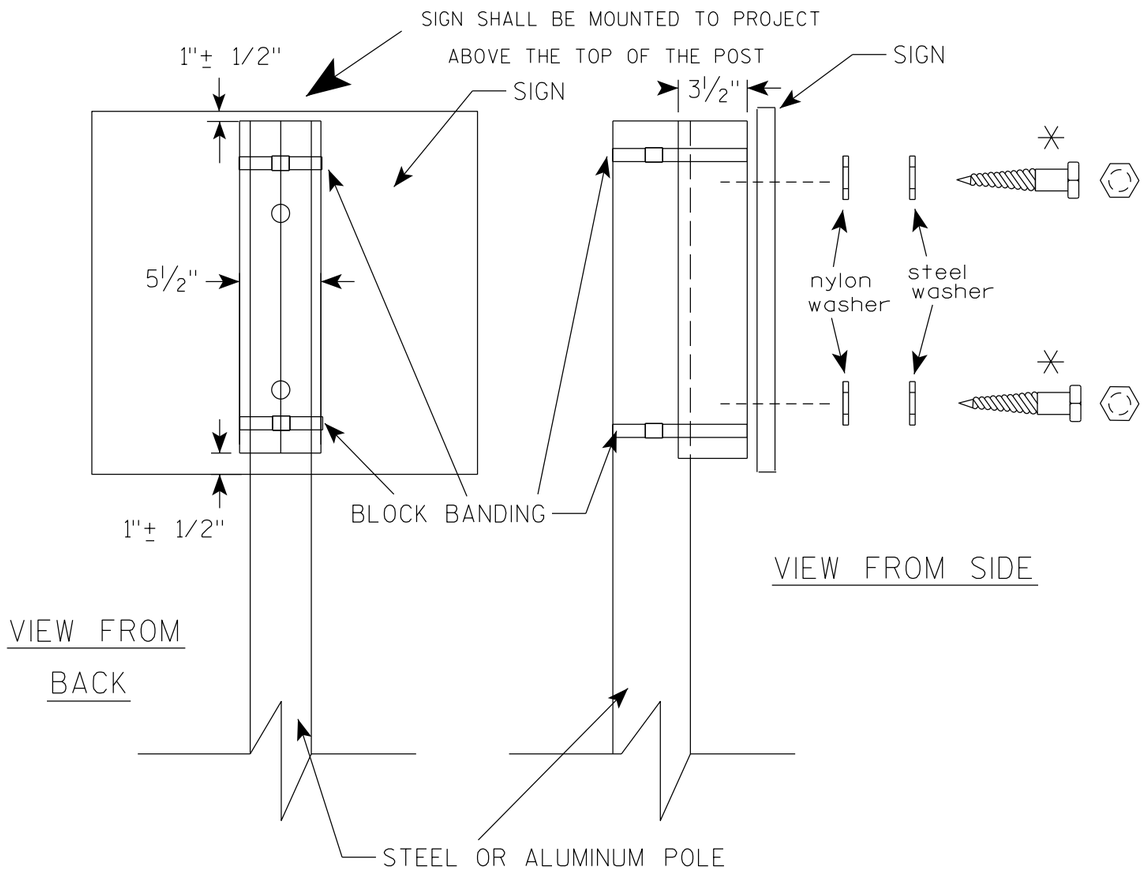

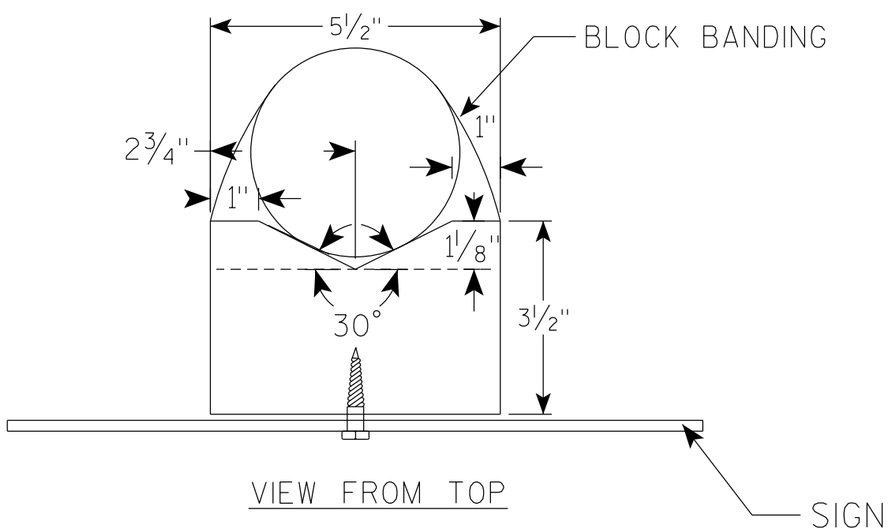

GENERAL NOTES

1. WOOD 4"X6" POST MATERIAL SHALL CONFORM TO 507.2.2 OF THE WisDOT STANDARD SPECIFICATIONS
2. BLOCK BANDING AND CLIPS SHALL BE STAINLESS STEEL, 3/4" WIDTH AND 0.025" THICKNESS
3. SIGNS 3' OR GREATER IN HEIGHT SHALL UTILIZE 3 BLOCK BANDS. SIGNS UNDER 3' IN HEIGHT SHALL UTILIZE 2 BLOCK BANDS
4. ACTUAL NUMBER OF FASTENERS PER SIGN VARIES WITH THE SIGN AREA, BUT NORNALLY THERE ARE TWO. FOR SIGNS GREATER THAN 9 S.F. 3 FASTENERS SHALL BE USED.
5. ALL SIGN MOUNTING BOLTS AND WASHERS SHALL BE EITHER:
   a. Hot dip or mechanically galvanized in accordance with ASTM Designation: A 153, Class D
   b. Electro-galvanized in accordance with ASTM Designation : B 633, TYPE III, SC 3
6. ALL BOLTS SHALL HAVE HEXAGONAL HEADS.
7. STEEL WASHERS SHALL BE 1 1/4" O.D. X 3/8" I.D. X 1/16"
8. NYLON WASHERS SHALL BE 1 1/4" O.D. X 3/8" I.D. X .080 FOR TYPE H OR TYPE F FACE SIGN

✳ LAG BOLTS SHALL BE 3/8" X 2 1/2"

7

7

BLOCK BANDING DETAIL
(V-BLOCK OPTION)

WISCONSIN DEPT OF TRANSPORTATION

APPROVED Matthew R Rauch
for State Traffic Engineer

DATE 4/19/2022 PLATE NO. A5-10.3

PROJECT NO:				SHEET NO: 140	E

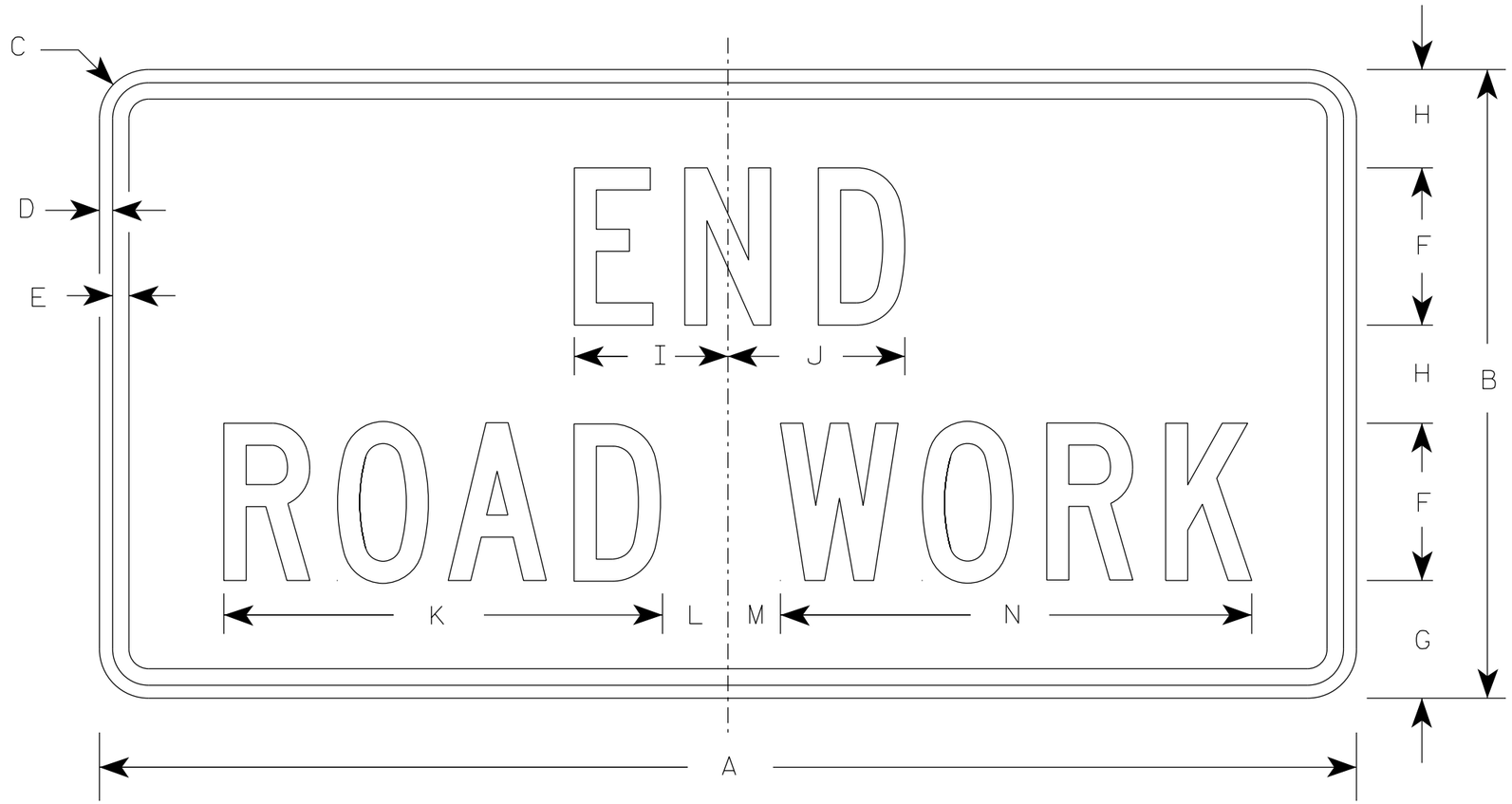

G20-2A

NOTES

1. Sign is Type II - Type F Reflective
2. Color:
   Background - Orange
   Message - Black
3. Message Series - C
4. Corners may be square or rounded when base material is plywood but borders shall be rounded as shown. When base material is metal, the corners and borders shall be rounded.

SIZE	A	B	C	D	E	F	G	H	I	J	K	L	M	N	O	P	Q	R	S	T	U	V	W	X	Y	Z	Area sq. ft.
1	36	18	1 1/2	3/8	1/2	4	3 3/4	2 1/2	4 1/8	4 1/8	11 1/8	2	1	12 1/8													4.5
2	48	24	1 7/8	1/2	5/8	6	4 1/2	3 3/4	5 7/8	6 3/4	16 3/4	2 1/2	1 3/4	18 1/2													8.0
2M	48	24	1 7/8	1/2	5/8	6	4 1/2	3 3/4	5 7/8	6 3/4	16 3/4	2 1/2	1 3/4	18 1/2													8.0
3	48	24	1 7/8	1/2	5/8	6	4 1/2	3 3/4	5 7/8	6 3/4	16 3/4	2 1/2	1 3/4	18 1/2													8.0
4	48	24	1 7/8	1/2	5/8	6	4 1/2	3 3/4	5 7/8	6 3/4	16 3/4	2 1/2	1 3/4	18 1/2													8.0
5	48	24	1 7/8	1/2	5/8	6	4 1/2	3 3/4	5 7/8	6 3/4	16 3/4	2 1/2	1 3/4	18 1/2													8.0

STANDARD SIGN
G20-2A

WISCONSIN DEPT OF TRANSPORTATION

APPROVED Matthew R Rauch
for State Traffic Engineer

DATE 1/26/2023 PLATE NO. G20-2A.10

PROJECT NO: | HWY: | COUNTY: | SHEET NO: 141 | E

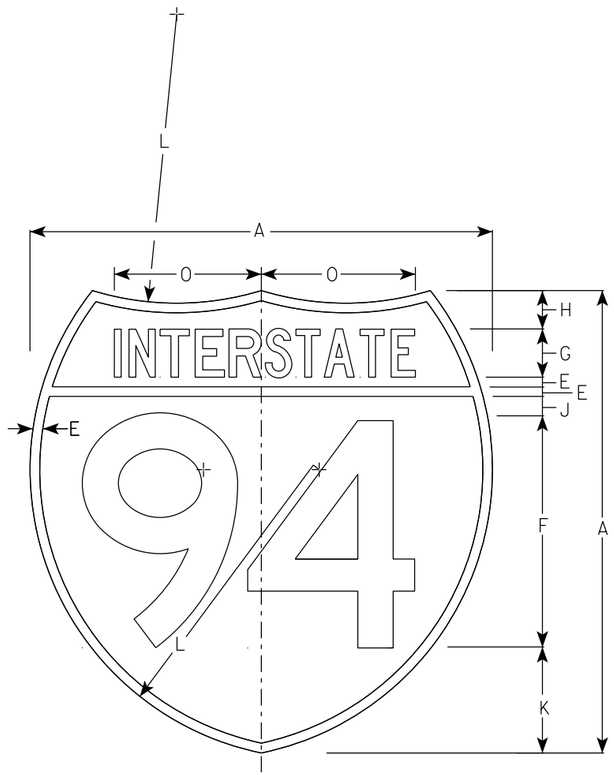

M1-1

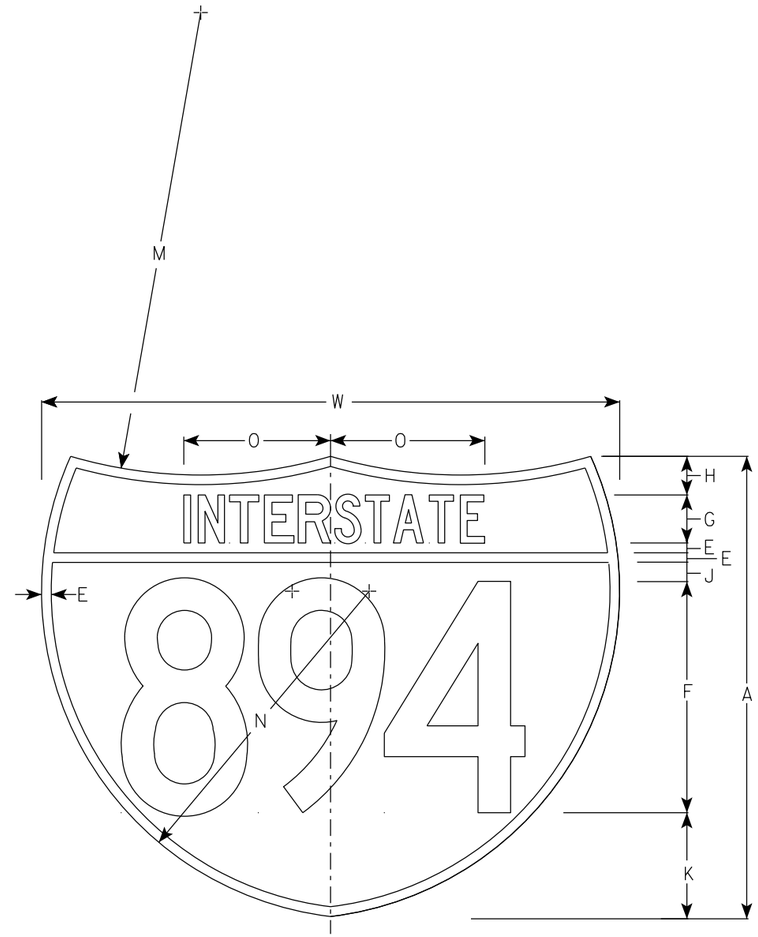

M1-1A

NOTES

1. Sign is Type II - Type H Reflective
2. Color:
   Background - Top Red - Bottom Blue
   Message - White
3. Message Series - See note 5
4. Substitute appropriate numerals & ajust spacing as per plate A10-1.
5. M1-1 - Numerals - D
   Interstate - C
   M1-1A - All copy - C

SIZE	A	B	C	D	E	F	G	H	I	J	K	L	M	N	O	P	Q	R	S	T	U	V	W	X	Y	M1-1 Area sq. ft.	M1-1A Area sq. ft.
1																											
2	24				½	12	2 ½	2		1	5 ½	15	24	17	7 ⅞								30			3.13	3.91
2M	24				½	12	2 ½	2		1	5 ½	15	24	17	7 ⅞								30			3.13	3.91
3	36				¾	18	3 ¾	3		1 ½	8 ¼	22 ½	36	25 ½	11 ¾								45			7.03	8.79
4	36				¾	18	3 ¾	3		1 ½	8 ¼	22 ½	36	25 ½	11 ¾								45			7.03	8.79
5	36				¾	18	3 ¾	3		1 ½	8 ¼	22 ½	36	25 ½	11 ¾								45			7.03	8.79

INTERSTATE ROUTE MARKER
M1-1 FOR ASSEMBLIES

WISCONSIN DEPT OF TRANSPORTATION

APPROVED Matthew R Rauch
for State Traffic Engineer

DATE 11/7/2022 PLATE NO. M1-1.9

PROJECT NO: | HWY: | COUNTY: | SHEET NO: 142 | E

NOTES

1. Sign is Type II - Type H Reflective
2. Color:
   Background - White
   Message - Black
3. Message Series - D except 3 number signs Series C

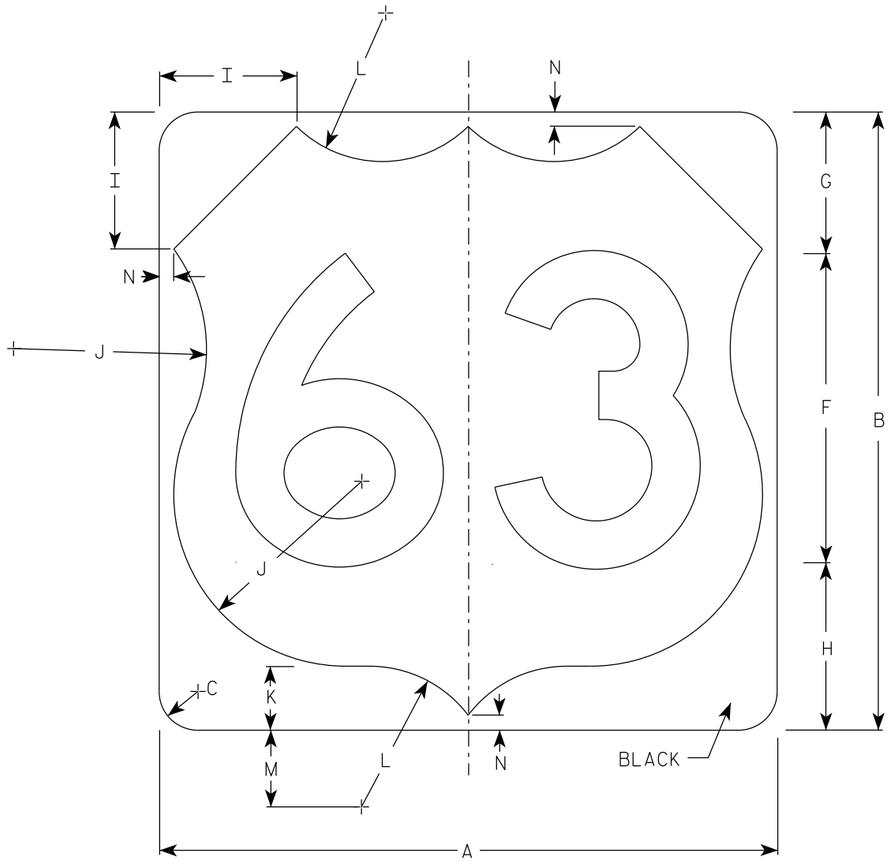

M1-4

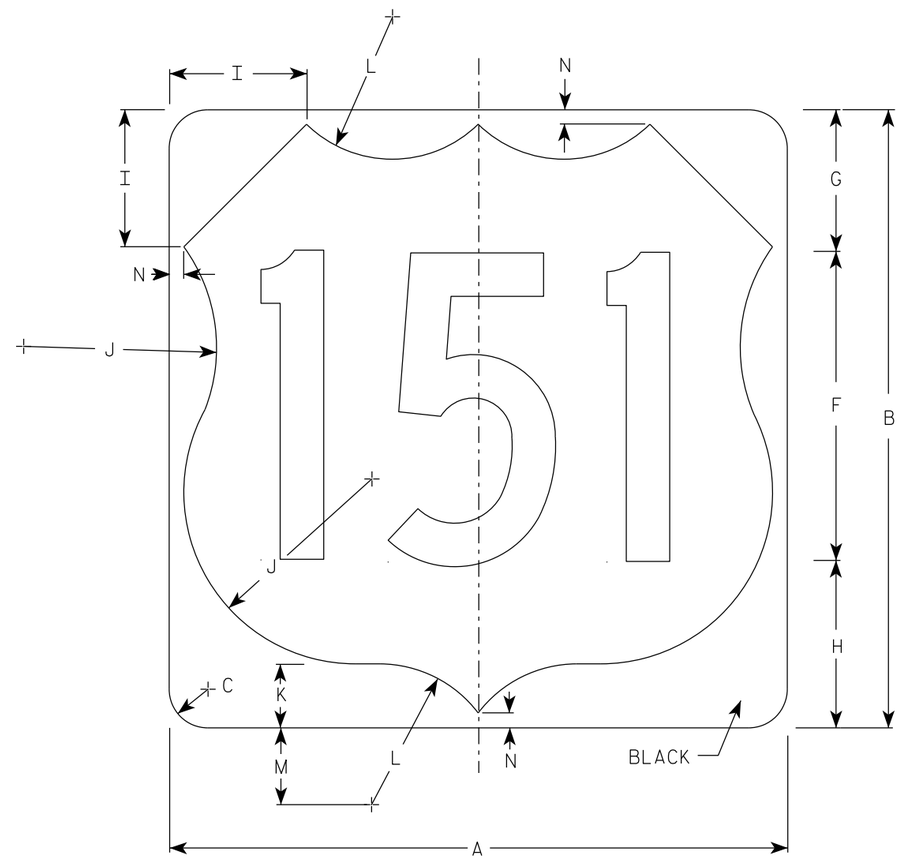

M1-4

SIZE	A	B	C	D	E	F	G	H	I	J	K	L	M	N	O	P	Q	R	S	T	U	V	W	X	Y	Z	Area sq. ft.
1																											
2	24	24	1 1/2			12	5 1/2	6 1/2	5	7 1/2	2 1/2	5 1/2	3	1/2													4.0
2M	24	24	1 1/2			12	5 1/2	6 1/2	5	7 1/2	2 1/2	5 1/2	3	1/2													4.0
3	36	36	2 1/4			18	8 1/4	9 1/4	7 1/4	11 1/4	3 3/4	8 1/4	4 1/2	3/4													9.0
4	36	36	2 1/4			18	8 1/4	9 1/4	7 1/4	11 1/4	3 3/4	8 1/4	4 1/2	3/4													9.0
5	36	36	2 1/4			18	8 1/4	9 1/4	7 1/4	11 1/4	3 3/4	8 1/4	4 1/2	3/4													9.0

USH MARKER
M1-4 FOR ASSEMBLIES

WISCONSIN DEPT OF TRANSPORTATION

APPROVED Matthew R Rauch
for State Traffic Engineer

DATE 12/20/22 PLATE NO. M1-4.11

PROJECT NO: | HWY: | COUNTY: | SHEET NO: 143 | E

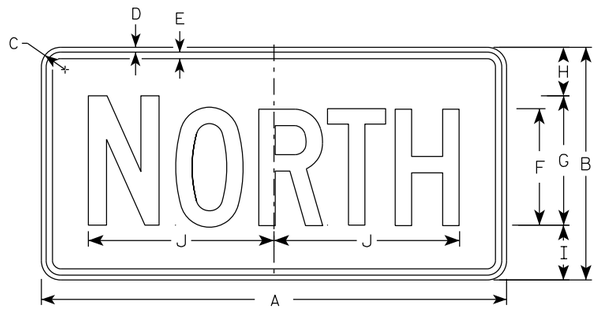

M3-1
MM3-1
MP3-1

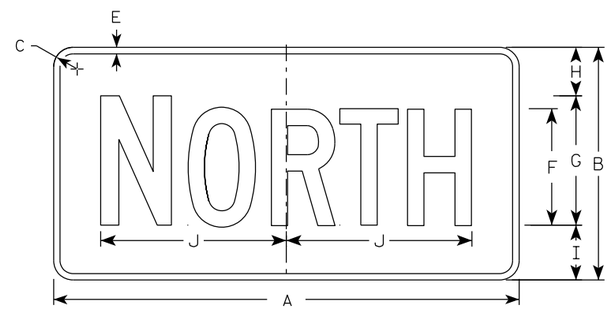

MB3-1
MK3-1
MN3-1

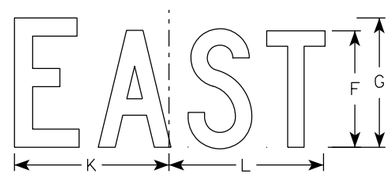

M3-2
MM3-2
MP3-2

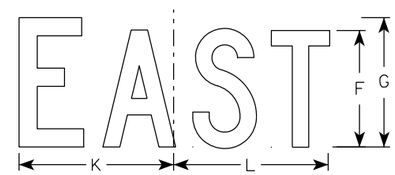

MB3-2
MK3-2
MN3-2

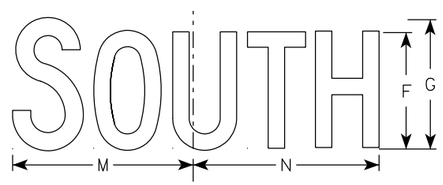

M3-3
MM3-3
MP3-3

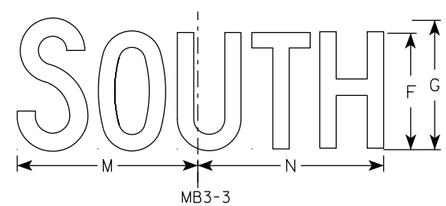

MB3-3
MK3-3
MN3-3

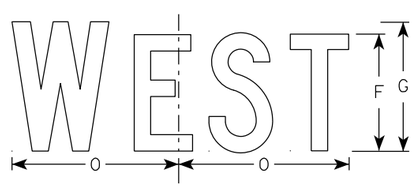

M3-4
MM3-4
MP3-4

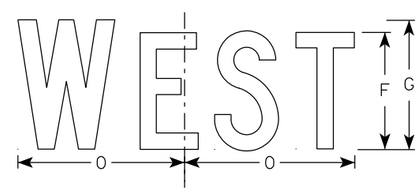

MB3-4
MK3-4
MN3-4

NOTES

1. All Signs Type II - Type H Reflective
2. Color:
   Background - See note 5
   Message - See note 5
3. Message Series - C
4. Corners may be square or rounded when base material is plywood but borders shall be rounded as shown. When base material is metal, the corners and borders shall be rounded.
5. M3-1 thru M3-4 Background - White
   Message - Black
   MB3-1 thru MB3-4 Background - Blue
   Message - White
   MK3-1 thru MK3-4 Background - Green
   Message - White
   MM3-1 thru MM3-4 Background - White
   Message - Green
   MN3-1 thru MN3-4 Background - Brown
   Message - White
   MP3-1 thru MP3-4 Background - White
   Message - Blue
6. Note the first letter of each direction is larger than the remainder of the message.

SIZE	A	B	C	D	E	F	G	H	I	J	K	L	M	N	O	P	Q	R	S	T	U	V	W	X	Y	Z	Area sq. ft.
1																											
2S	24	12	1 1/2	3/8	3/8	6	7	2 1/4	2 3/4	10 1/4	7 7/8	8 3/8	10 1/4	9 3/4	8 3/4												2.00
2M	24	12	1 1/2	3/8	3/8	6	7	2 1/4	2 3/4	10 1/4	7 7/8	8 3/8	10 1/4	9 3/4	8 3/4												2.00
3	36	18	1 1/2	3/8	1/2	9	10	3 3/4	4 1/4	14 3/8	12	12 1/8	14	14 1/8	13												4.5
4	36	18	1 1/2	3/8	1/2	9	10	3 3/4	4 1/4	14 3/8	12	12 1/8	14	14 1/8	13												4.5
5	36	18	1 1/2	3/8	1/2	9	10	3 3/4	4 1/4	14 3/8	12	12 1/8	14	14 1/8	13												4.5

STANDARD SIGNS
M3-1 THRU M3-4
SERIES

WISCONSIN DEPT OF TRANSPORTATION

APPROVED Matthew R Rauch
For State Traffic Engineer

DATE 2/8/2023 PLATE NO. M3-1.15

PROJECT NO: | HWY: | COUNTY: | SHEET NO: 144 | E

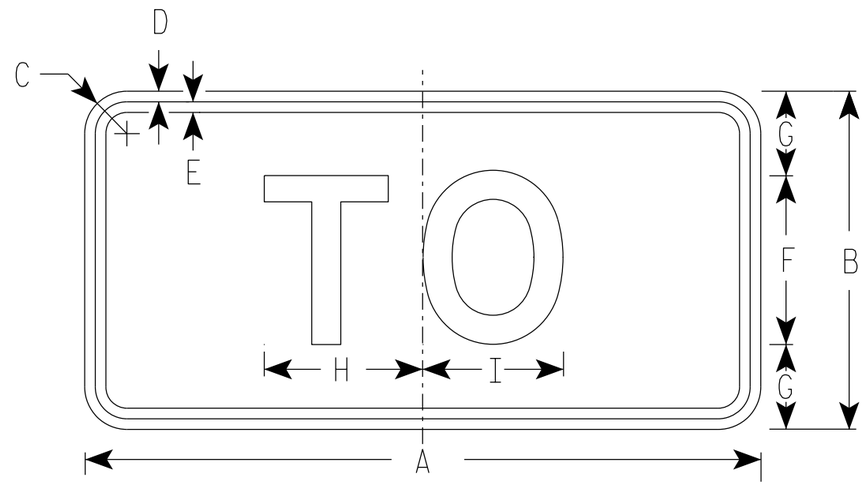

M4-5
MM4-5
MP4-5
M04-5

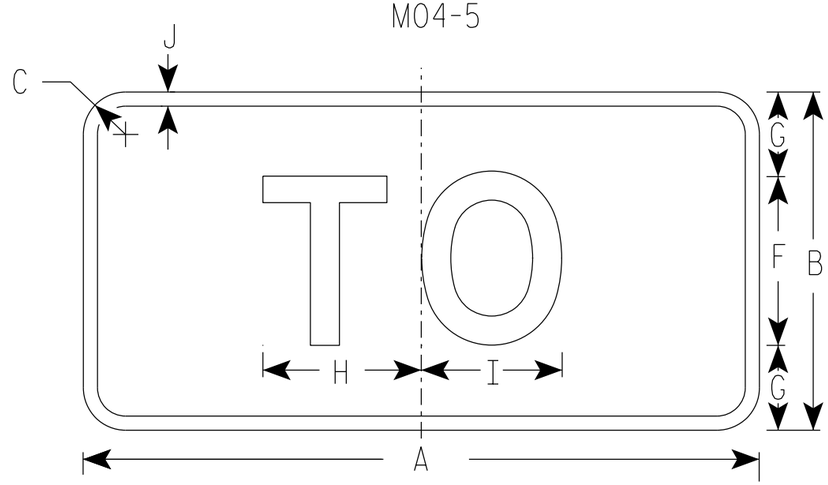

MB4-5
MK4-5
MN4-5

NOTES

1. Sign is Type II - Type H Reflective
2. Color:
   Background - See note 5
   Message - See note 5
3. Message Series - E
4. Corners may be square or rounded when base material is plywood but borders shall be rounded as shown. When base material is metal, the corners and borders shall be rounded.
5. M4-5 Background - White
   Message - Black
   MB4-5 Background - Blue
   Message - White
   MK4-5 Background - Green
   Message - White
   MM4-5 Background - White
   Message - Green
   MN4-5 Background - Brown
   Message - White
   MP4-5 Background - White
   Message - Blue
   M04-5 Background - Orange Type F Reflective
   Message - Black

SIZE	A	B	C	D	E	F	G	H	I	J	K	L	M	N	O	P	Q	R	S	T	U	V	W	X	Y	Z	Area sq. ft.
1																											
2S	24	12	1 1/2	3/8	3/8	6	3	5 3/8	5 1/4	1/2																	2.00
2M	24	12	1 1/2	3/8	3/8	6	3	5 3/8	5 1/4	1/2																	2.00
3	36	18	1 1/2	3/8	1/2	9	4 1/2	8 1/4	8 3/8	1/2																	4.5
4	36	18	1 1/2	3/8	1/2	9	4 1/2	8 1/4	8 3/8	1/2																	4.5
5	36	18	1 1/2	3/8	1/2	9	4 1/2	8 1/4	8 3/8	1/2																	4.5

STANDARD SIGN
M4-5

WISCONSIN DEPT OF TRANSPORTATION

APPROVED Matthew R Rauch
for State Traffic Engineer

DATE 2/8/2023 PLATE NO. M4-5.11

PROJECT NO: | HWY: | COUNTY: | SHEET NO: 145 | E

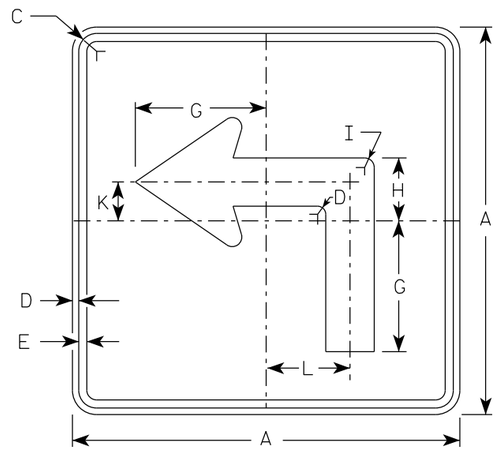

M5-1L
MM5-1L
MO5-1L
MP5-1L

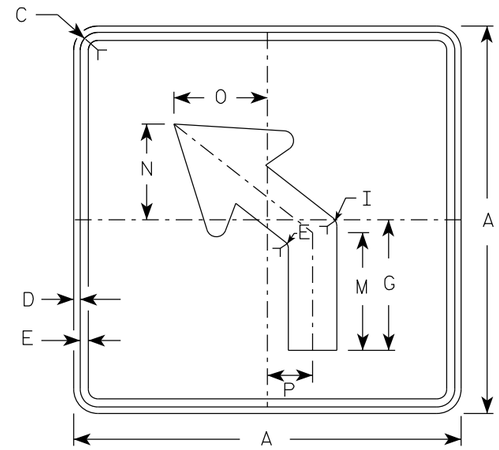

M5-2L
MM5-2L
MO5-2L
MP5-2L

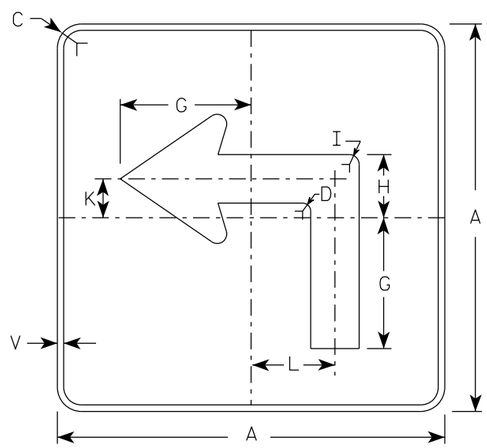

MB5-1L
MK5-1L
MN5-1L
MR5-1L

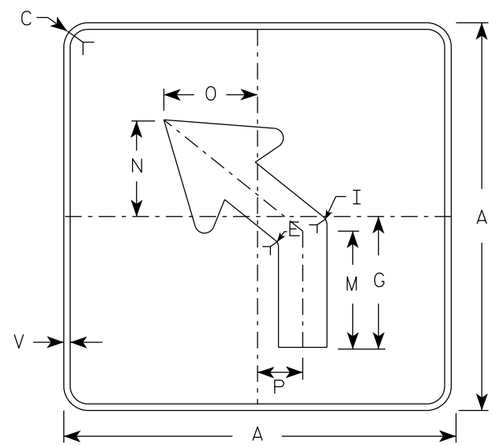

MB5-2L
MK5-2L
MN5-2L
MR5-2L

NOTES

1. Signs are Type II - Type H reflective except as shown
2. Color:
   Background - See note 4
   Message - See note 4
3. Corners may be square or rounded when base material is plywood but borders shall be rounded as shown. When base material is metal, the corners and borders shall be rounded.
4. M5-1 and M5-2 Background - White
   Message - Black
   MB5-1 and MB5-2 Background - Blue
   Message - White
   MK5-1 and MK5-2 Background - Green
   Message - White
   MM5-1 and MM5-2 Background - White
   Message - Green
   MN5-1 and MN5-2 Background - Brown
   Message - White
   MO5-1 and MO5-2 Background - Orange - Type F Reflective
   Message - Black
   MP5-1 and MP5-2 Background - White
   Message - Blue
   MR5-1 and MR5-2 Background - Brown
   Message - Yellow
5. M5-1R same as M5-1L except arrow points right.
6. M5-2R same as M5-2L except arrow tilts right.

ARROW DETAIL

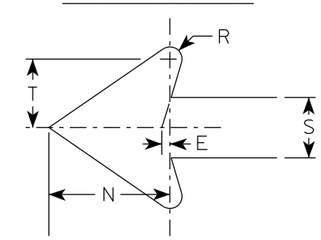

SIZE	A	B	C	D	E	F	G	H	I	J	K	L	M	N	O	P	Q	R	S	T	U	V	W	X	Y	Z	Area sq. ft.
1																											
2S	21		1 1/2	3/8	3/8		7	3 3/8	5/8		2 1/8	4 1/2	6 3/8	5 1/4	5	2 1/2		1/2	2 5/8	3		1/2					3.06
2M	21		1 1/2	3/8	3/8		7	3 3/8	5/8		2 1/8	4 1/2	6 3/8	5 1/4	5	2 1/2		1/2	2 5/8	3		1/2					3.06
3	30		1 7/8	1/2	5/8		10 1/8	4 7/8	7/8		3	6 1/2	9 1/8	7 1/2	7 1/4	3 1/2		3/4	3 3/4	4 1/4		1/2					6.25
4	30		1 7/8	1/2	5/8		10 1/8	4 7/8	7/8		3	6 1/2	9 1/8	7 1/2	7 1/4	3 1/2		3/4	3 3/4	4 1/4		1/2					6.25
5	30		1 7/8	1/2	5/8		10 1/8	4 7/8	7/8		3	6 1/2	9 1/8	7 1/2	7 1/4	3 1/2		3/4	3 3/4	4 1/4		1/2					6.25

STANDARD SIGN
M5-1 & M5-2

WISCONSIN DEPT OF TRANSPORTATION

APPROVED Matthew R Rauch
for State Traffic Engineer

DATE 2/13/2023 PLATE NO. M5-1.15

PROJECT NO: | HWY: | COUNTY: | SHEET NO: 146 | E

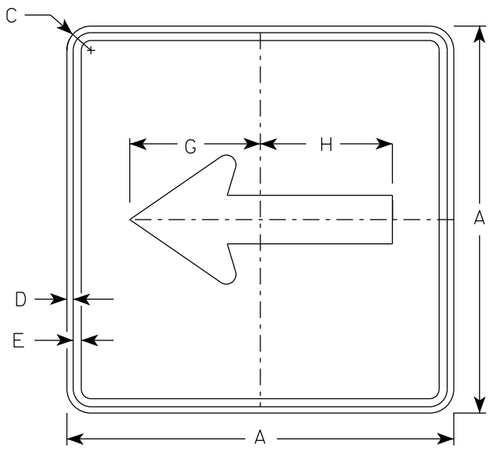

M6-1
MM6-1
MO6-1
MP6-1

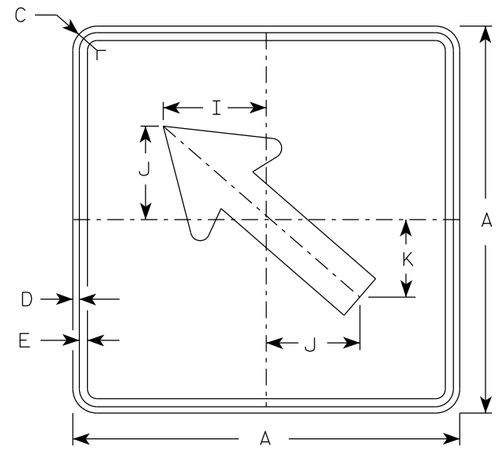

M6-2
MM6-2
MO6-2
MP6-2

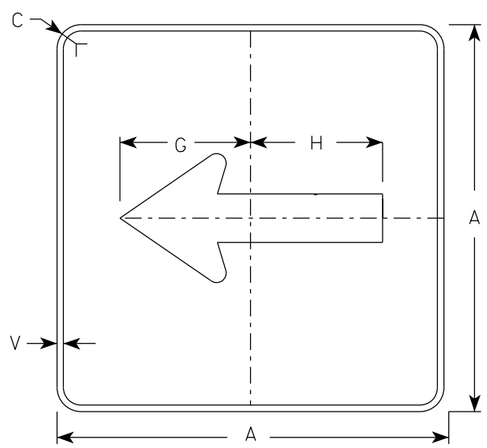

MB6-1
MK6-1
MN6-1
MR6-1

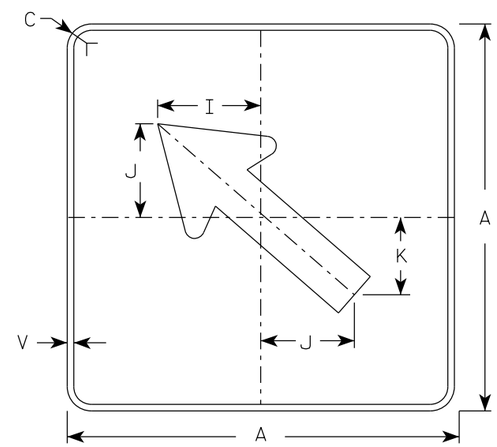

MB6-2
MK6-2
MN6-2
MR6-2

NOTES

1. Signs are Type II - Type H Reflective except as Shown
2. Color:
   Background - See note 4
   Message - See note 4
3. Corners may be square or rounded when base material is plywood but borders shall be rounded as shown. When base material is metal, the corners and borders shall be rounded.
4. M6-1 and M6-2 Background - White
   Message - Black
   MB6-1 and MB6-2 Background - Blue
   Message - White
   MK6-1 and MK6-2 Background - Green
   Message - White
   MM6-1 and MM6-2 Background - White
   Message - Green
   MN6-1 and MN6-2 Background - Brown
   Message - White
   MO6-1 and MO6-2 Background - Orange - Type F Reflective
   Message - Black
   MP6-1 and MP6-2 Background - White
   Message - Blue
   MR6-1 and MR6-2 Background - Brown
   Message - Yellow

ARROW DETAIL

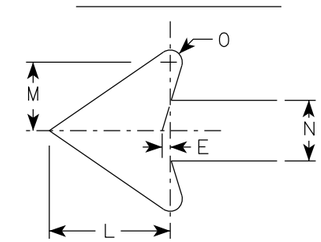

SIZE	A	B	C	D	E	F	G	H	I	J	K	L	M	N	O	P	Q	R	S	T	U	V	W	X	Y	Z	Area sq. ft.
1																											
2S	21		1 1/2	3/8	3/8		7 1/2	7 1/8	5 5/8	5	4 1/4	5 1/4	3	2 5/8	1/2							1/2					3.06
2M	21		1 1/2	3/8	3/8		7 1/2	7 1/8	5 5/8	5	4 1/4	5 1/4	3	2 5/8	1/2							1/2					3.06
3	30		1 7/8	1/2	5/8		10 3/4	10 1/4	8	7 1/4	6	7 1/2	4 1/4	3 3/4	3/4							1/2					6.25
4	30		1 7/8	1/2	5/8		10 3/4	10 1/4	8	7 1/4	6	7 1/2	4 1/4	3 3/4	3/4							1/2					6.25
5	30		1 7/8	1/2	5/8		10 3/4	10 1/4	8	7 1/4	6	7 1/2	4 1/4	3 3/4	3/4							1/2					6.25

STANDARD SIGN
M6-1 & M6-2
SERIES

WISCONSIN DEPT OF TRANSPORTATION

APPROVED Matthew R Rauch
for State Traffic Engineer

DATE 2/13/2023 PLATE NO. M6-1.16

PROJECT NO: | HWY: | COUNTY: | SHEET NO: 147 | E

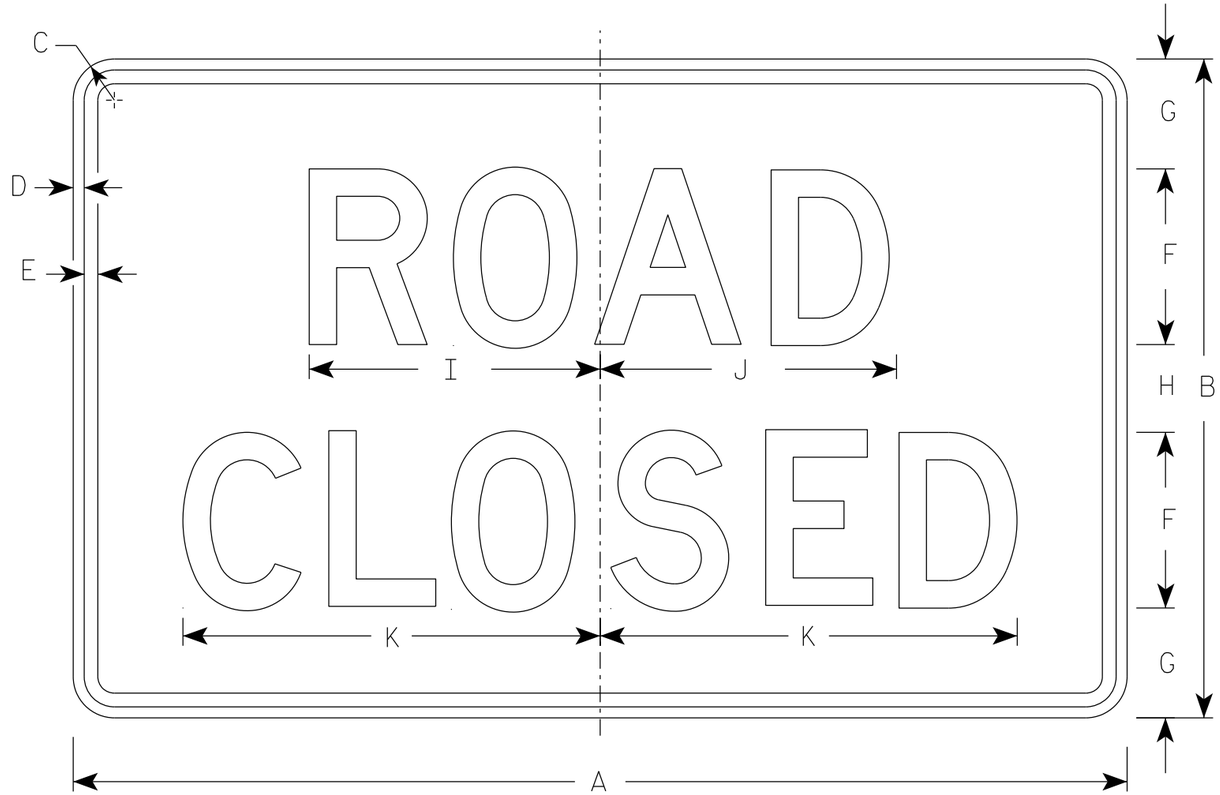

R11-2

NOTES

1. Sign is Type II - Type H Reflective
2. Color:
   Background - White
   Message - Black
3. Message Series - D
4. Corners may be square or rounded when base material is plywood but borders shall be rounded as shown. When base material is metal, the corners and borders shall be rounded.
5. Modify the message as required.

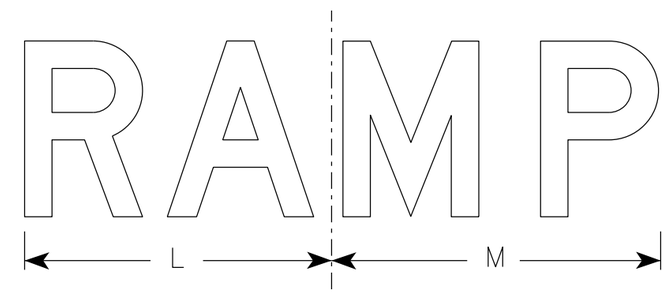

R11-2R

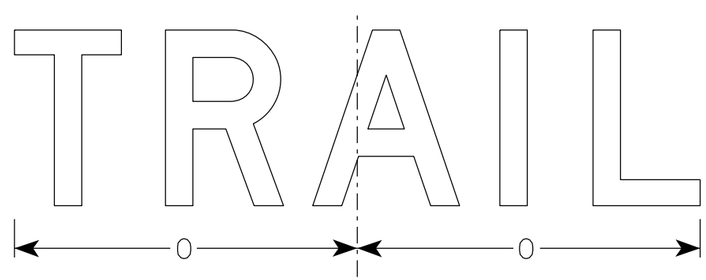

R11-2T

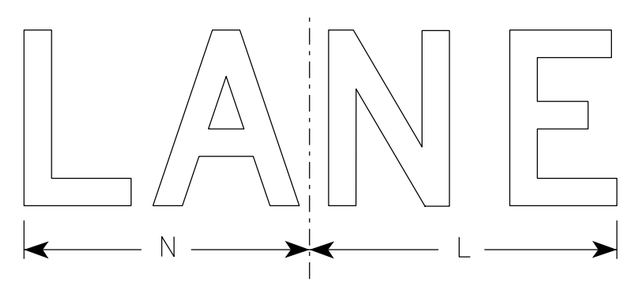

R11-2L

SIZE	A	B	C	D	E	F	G	H	I	J	K	L	M	N	O	P	Q	R	S	T	U	V	W	X	Y	Z	Area sq. ft.
1																											
2S	48	30	1 7/8	1/2	5/8	8	5	4	13 1/4	13 1/2	19	14	15	13	15 5/8												10.0
2M	48	30	1 7/8	1/2	5/8	8	5	4	13 1/4	13 1/2	19	14	15	13	15 5/8												10.0
3	48	30	1 7/8	1/2	5/8	8	5	4	13 1/4	13 1/2	19	14	15	13	15 5/8												10.0
4	48	30	1 7/8	1/2	5/8	8	5	4	13 1/4	13 1/2	19	14	15	13	15 5/8												10.0
5	48	30	1 7/8	1/2	5/8	8	5	4	13 1/4	13 1/2	19	14	15	13	15 5/8												10.0

STANDARD SIGN
R11-2

WISCONSIN DEPT OF TRANSPORTATION

APPROVED Matthew R Rauch
for State Traffic Engineer

DATE 2/5/24 PLATE NO. R11-2.12

PROJECT NO: | HWY: | COUNTY: | SHEET NO: E

7

NOTES

1. Sign is Type II - Type F Reflective
2. Color:
   Background - Orange
   Message - Black
3. Message Series - C
4. Corners may be square or rounded when base material is plywood but borders shall be rounded as shown. When base material is metal, the corners and borders shall be rounded.

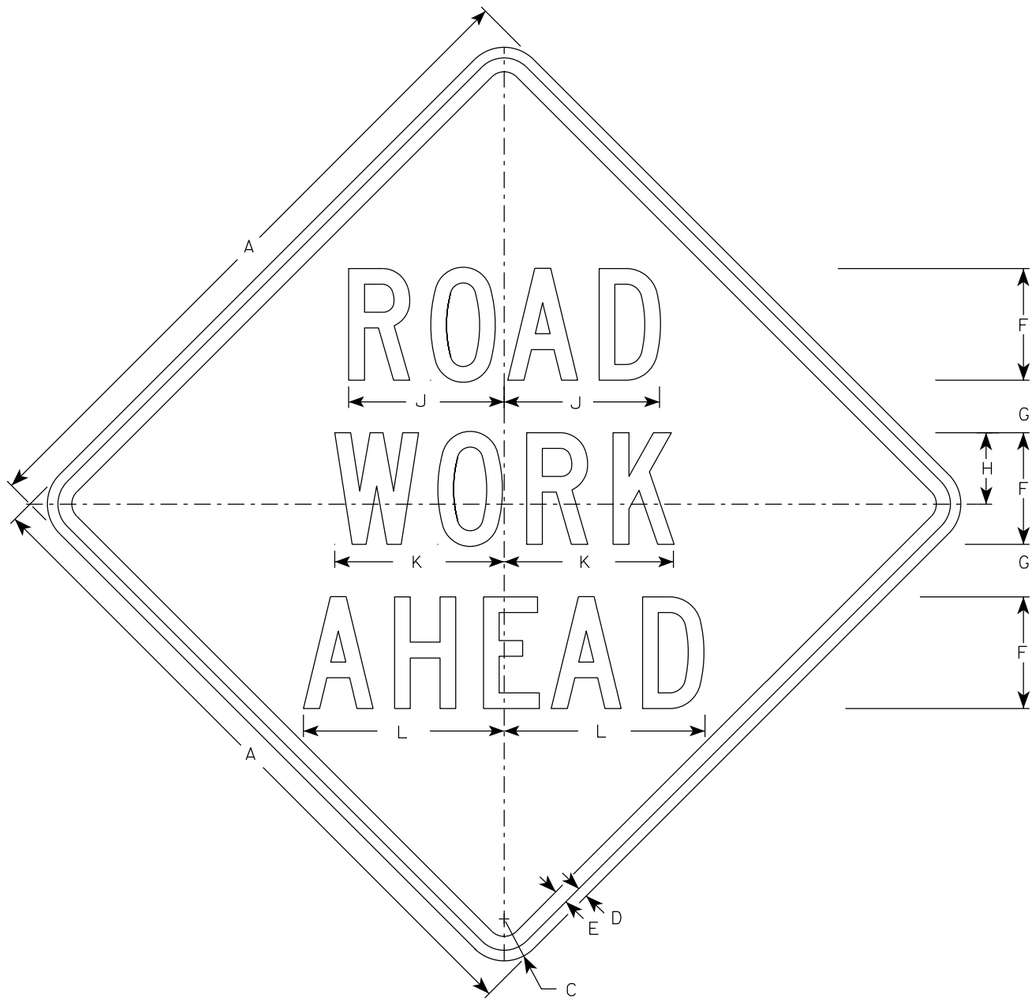

W20-1A

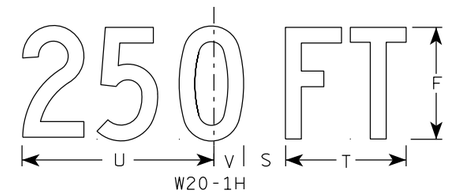

W20-1H

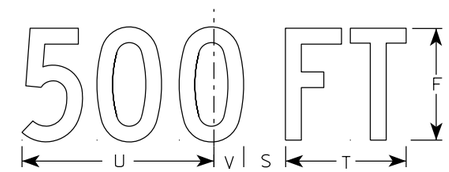

W20-1D

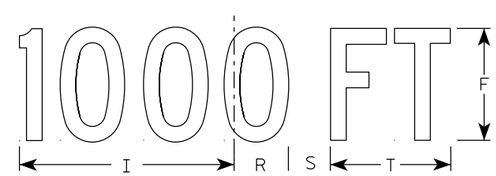

W20-1C

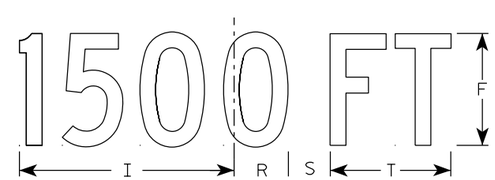

W20-1B

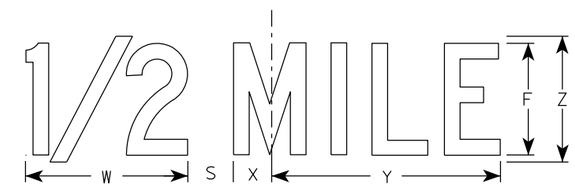

W20-1G

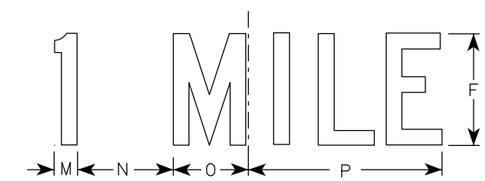

W20-1F

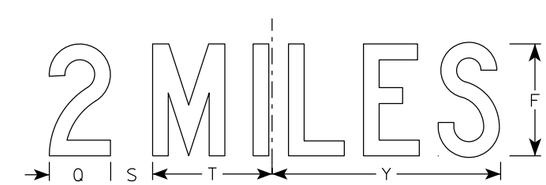

W20-1E

SIZE	A	B	C	D	E	F	G	H	I	J	K	L	M	N	O	P	Q	R	S	T	U	V	W	X	Y	Z	Area sq. ft.
1	36		2 1/4	5/8	3/4	5	2 5/8	3 1/4	10 1/8	7	7 5/8	8 7/8	1 1/8	4 1/2	3 1/2	9	3 1/4	2 1/2	2 1/4	5 5/8	9	1 3/8	8	1 3/4	10 3/4	6	9.0
2S	48		3	3/4	1	8	3 3/4	5 1/8	15 3/8	11 1/8	12 1/8	14 3/8	1 5/8	6 7/8	5 3/8	13 7/8	4 3/8	3 7/8	3	8 5/8	13 3/4	2 1/8	11 7/8	2 3/4	16 3/8	9	16.0
2M	48		3	3/4	1	8	3 3/4	5 1/8	15 3/8	11 1/8	12 1/8	14 3/8	1 5/8	6 7/8	5 3/8	13 7/8	4 3/8	3 7/8	3	8 5/8	13 3/4	2 1/8	11 7/8	2 3/4	16 3/8	9	16.0
3	48		3	3/4	1	8	3 3/4	5 1/8	15 3/8	11 1/8	12 1/8	14 3/8	1 5/8	6 7/8	5 3/8	13 7/8	4 3/8	3 7/8	3	8 5/8	13 3/4	2 1/8	11 7/8	2 3/4	16 3/8	9	16.0
4	48		3	3/4	1	8	3 3/4	5 1/8	15 3/8	11 1/8	12 1/8	14 3/8	1 5/8	6 7/8	5 3/8	13 7/8	4 3/8	3 7/8	3	8 5/8	13 3/4	2 1/8	11 7/8	2 3/4	16 3/8	9	16.0
5	48		3	3/4	1	8	3 3/4	5 1/8	15 3/8	11 1/8	12 1/8	14 3/8	1 5/8	6 7/8	5 3/8	13 7/8	4 3/8	3 7/8	3	8 5/8	13 3/4	2 1/8	11 7/8	2 3/4	16 3/8	9	16.0

STANDARD SIGN
W20-1A, B, C, D, E, F, G & H

WISCONSIN DEPT OF TRANSPORTATION

APPROVED Matthew R Rauch
For State Traffic Engineer

DATE 1/10/2024 PLATE NO. W20-1.12

PROJECT NO:

SHEET NO: E

FILE NAME : C:\CAEfiles\Projects\tr_stdplate\W201.DGN PLOT DATE : 10-JAN 2024 11:16 PLOT BY : dotc4c

WISDOT/CADDS SHEET 42

7

7

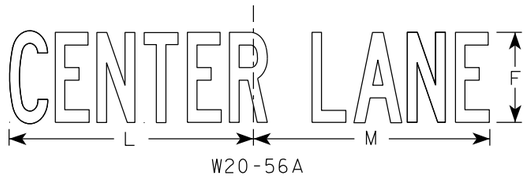

W20-56A

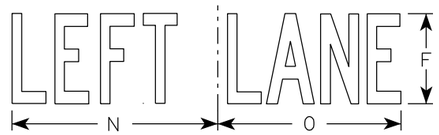

W20-55A

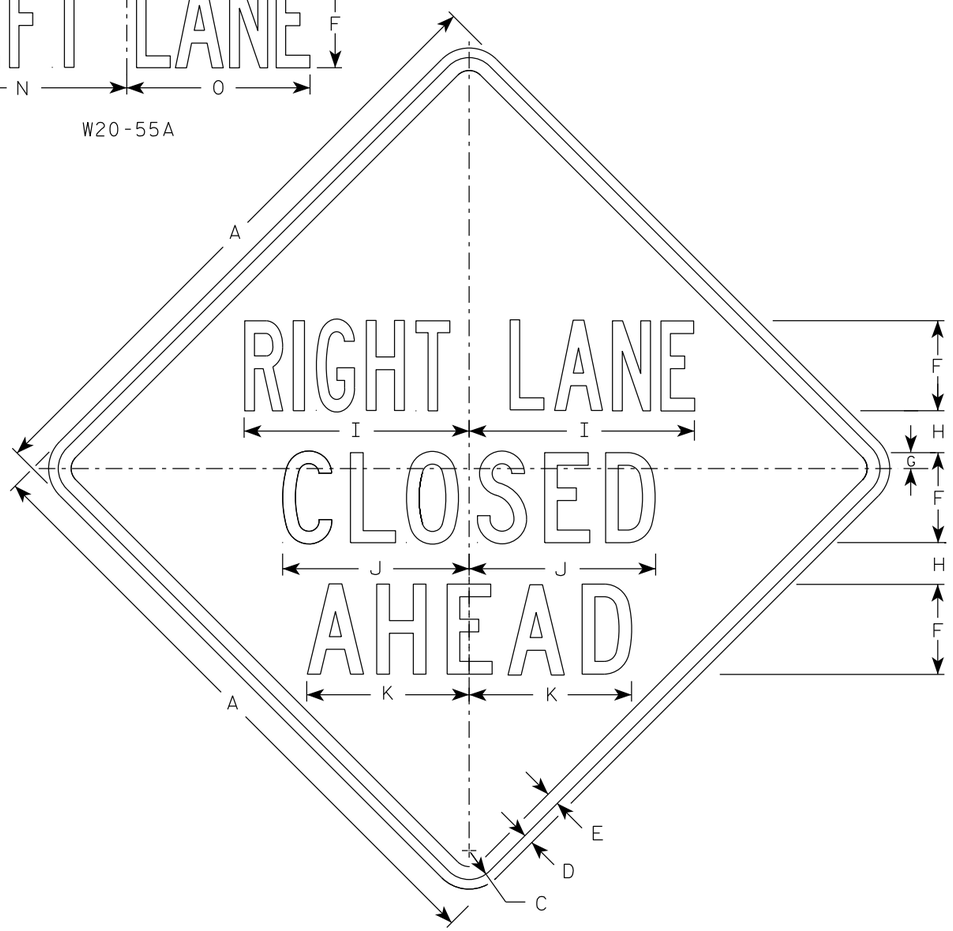

W20-5A

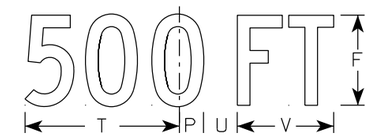

W20-5D

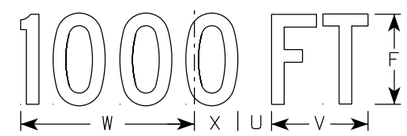

W20-5C

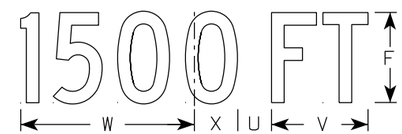

W20-5B

W20-5G

W20-5F

NOTES

1. Sign is Type II - Type F Reflective
2. Color:
   Background - Orange
   Message - Black
3. Message Series - See Note 5
4. Corners may be square or rounded when base material is plywood but borders shall be rounded as shown. When base material is metal, the corners and borders shall be rounded.
5. " _____ LANE" is Series B.
   All other copy is Series C.

SIZE	A	B	C	D	E	F	G	H	I	J	K	L	M	N	O	P	Q	R	S	T	U	V	W	X	Y	Z	Area sq. ft.
1	36	6	2 1/4	5/8	3/4	5	7/8	2 1/2	13 1/8	10 3/4	9 1/2	14 1/4	13 5/8	12	12	1 3/8	1 1/8	4 1/2	3 1/2	9	1 7/8	5 5/8	10 1/8	2 1/2	1 3/4	8	9.0
2S	48	8	3	3/4	1	7	1 1/4	3 1/4	17 1/2	14 3/8	12 5/8	19	18 3/8	16	14 1/4	1 7/8	1 1/2	6	4 5/8	12	2 5/8	7 1/2	13 1/2	3 3/8	2 3/8	10 5/8	16.0
2M	48	8	3	3/4	1	7	1 1/4	3 1/4	17 1/2	14 3/8	12 5/8	19	18 3/8	16	14 1/4	1 7/8	1 1/2	6	4 5/8	12	2 5/8	7 1/2	13 1/2	3 3/8	2 3/8	10 5/8	16.0
3	48	8	3	3/4	1	7	1 1/4	3 1/4	17 1/2	14 3/8	12 5/8	19	18 3/8	16	14 1/4	1 7/8	1 1/2	6	4 5/8	12	2 5/8	7 1/2	13 1/2	3 3/8	2 3/8	10 5/8	16.0
4	48	8	3	3/4	1	7	1 1/4	3 1/4	17 1/2	14 3/8	12 5/8	19	18 3/8	16	14 1/4	1 7/8	1 1/2	6	4 5/8	12	2 5/8	7 1/2	13 1/2	3 3/8	2 3/8	10 5/8	16.0
5	48	8	3	3/4	1	7	1 1/4	3 1/4	17 1/2	14 3/8	12 5/8	19	18 3/8	16	14 1/4	1 7/8	1 1/2	6	4 5/8	12	2 5/8	7 1/2	13 1/2	3 3/8	2 3/8	10 5/8	16.0

STANDARD SIGN
W20-5A, B, C, D, F & G

WISCONSIN DEPT OF TRANSPORTATION

APPROVED Matthew R Rauch
for State Traffic Engineer

DATE 3/27/24 PLATE NO. W20-5.12

PROJECT NO:	HWY:	COUNTY:		SHEET NO: 150	E

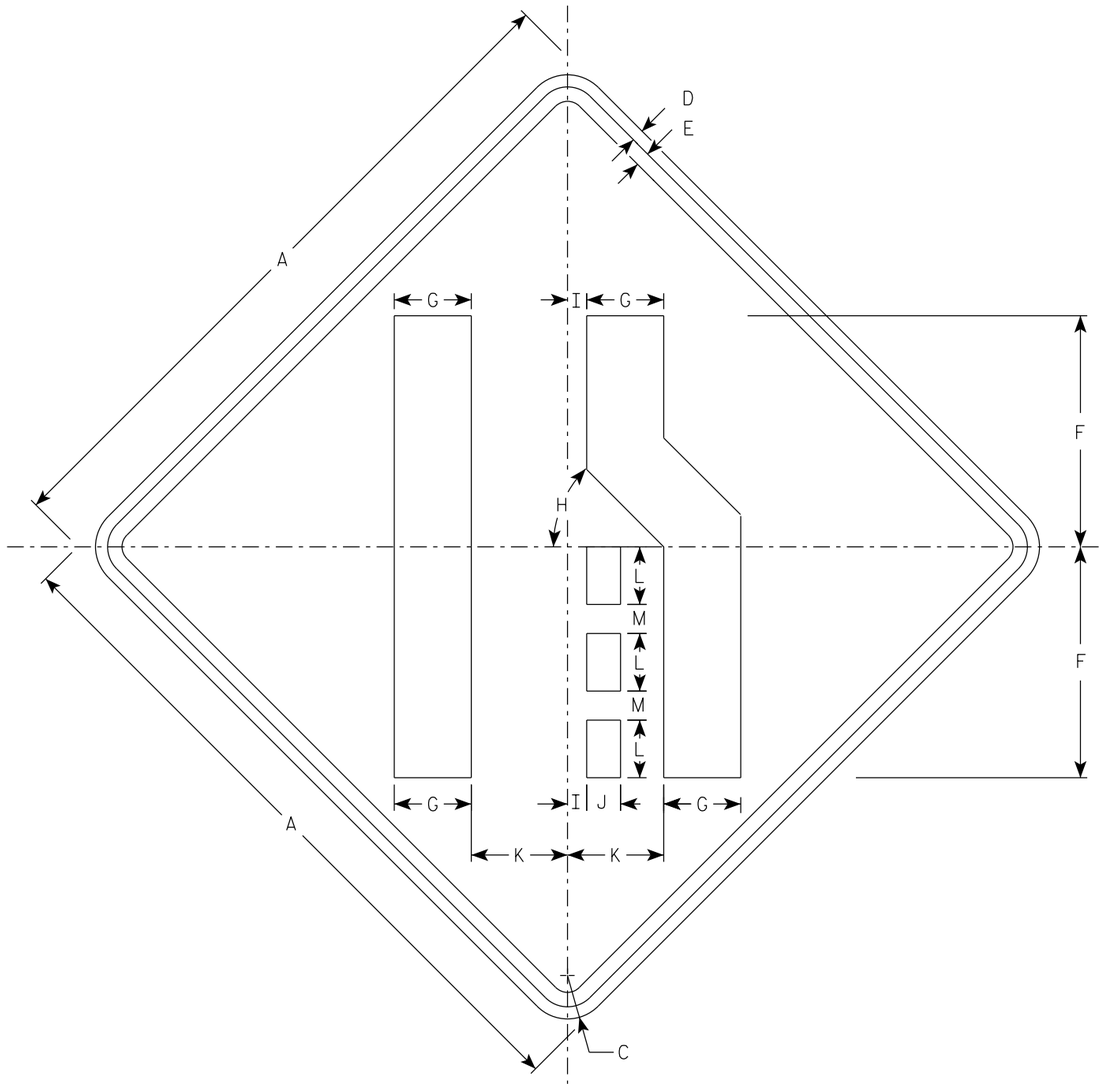

W04-2R

NOTES

1. Sign is Type II - Type F Reflective
2. Color:
   Background - Orange
   Message - Black
3. Corners may be square or rounded when base material is plywood but borders shall be rounded as shown. When base material is metal, the corners and borders shall be rounded.
4. W04-2L is the same as W04-2R except the symbol is reversed along the vertical centerline.

SIZE	A	B	C	D	E	F	G	H	I	J	K	L	M	N	O	P	Q	R	S	T	U	V	W	X	Y	Z	Area sq. ft.
1	36		2 1/4	5/8	3/4	12	4	45°	1	1 3/4	5	3	1 1/2														9.0
2S	48		3	3/4	1	16	5 3/8	45°	1 1/4	2 3/8	6 3/4	4	2														16.0
2M	48		3	3/4	1	16	5 3/8	45°	1 1/4	2 3/8	6 3/4	4	2														16.0
3	48		3	3/4	1	16	5 3/8	45°	1 1/4	2 3/8	6 3/4	4	2														16.0
4	48		3	3/4	1	16	5 3/8	45°	1 1/4	2 3/8	6 3/4	4	2														16.0
5	48		3	3/4	1	16	5 3/8	45°	1 1/4	2 3/8	6 3/4	4	2														16.0

STANDARD SIGN
W04-2

WISCONSIN DEPT OF TRANSPORTATION

APPROVED Matthew R Rauch
for State Traffic Engineer

DATE 1/25/2024 PLATE NO. W04-2.2

PROJECT NO:

SHEET NO: 151 E

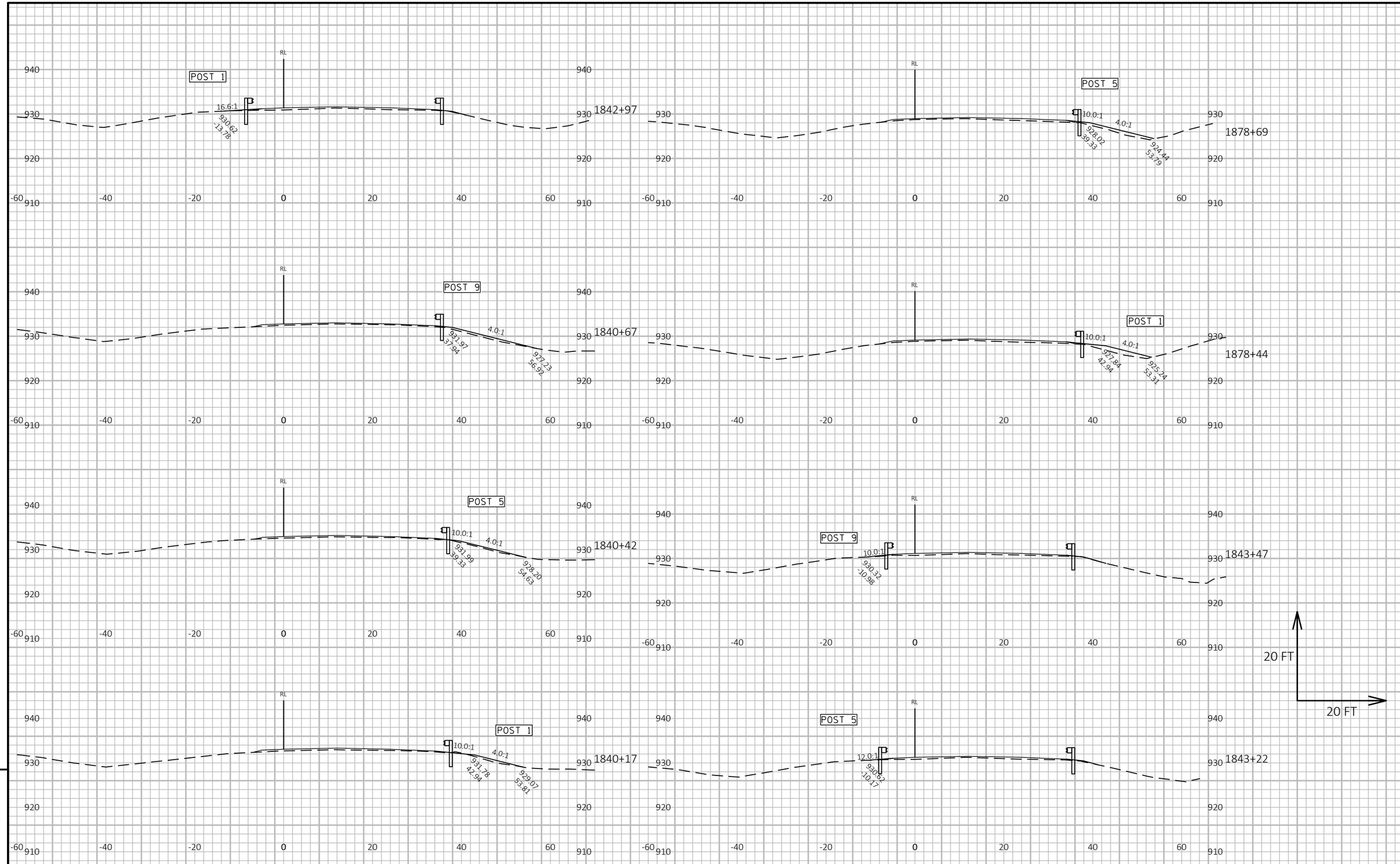

PROJECT NO: 1014-00-75	HWY: IH-90	COUNTY: SAUK AND JUNEAU	CROSS SECTIONS: GUARDRAIL END TERMINALS	SHEET 152	E

FILE NAME : \\LAX31FP2\N3PUBLIC\PDS\C3D\10140005\DESIGN\CORRIDORS\EB_CORRIDORBG0.DWG
LAYOUT NAME - 01
PLOT DATE : 10/3/2023 4:08 PM
PLOT BY : DAHL, BRIAN D
PLOT NAME :
PLOT SCALE : 1 IN:20 FT HORZ. / 1 IN:20 FT VERT.
WISDOT/CADDS SHEET 49

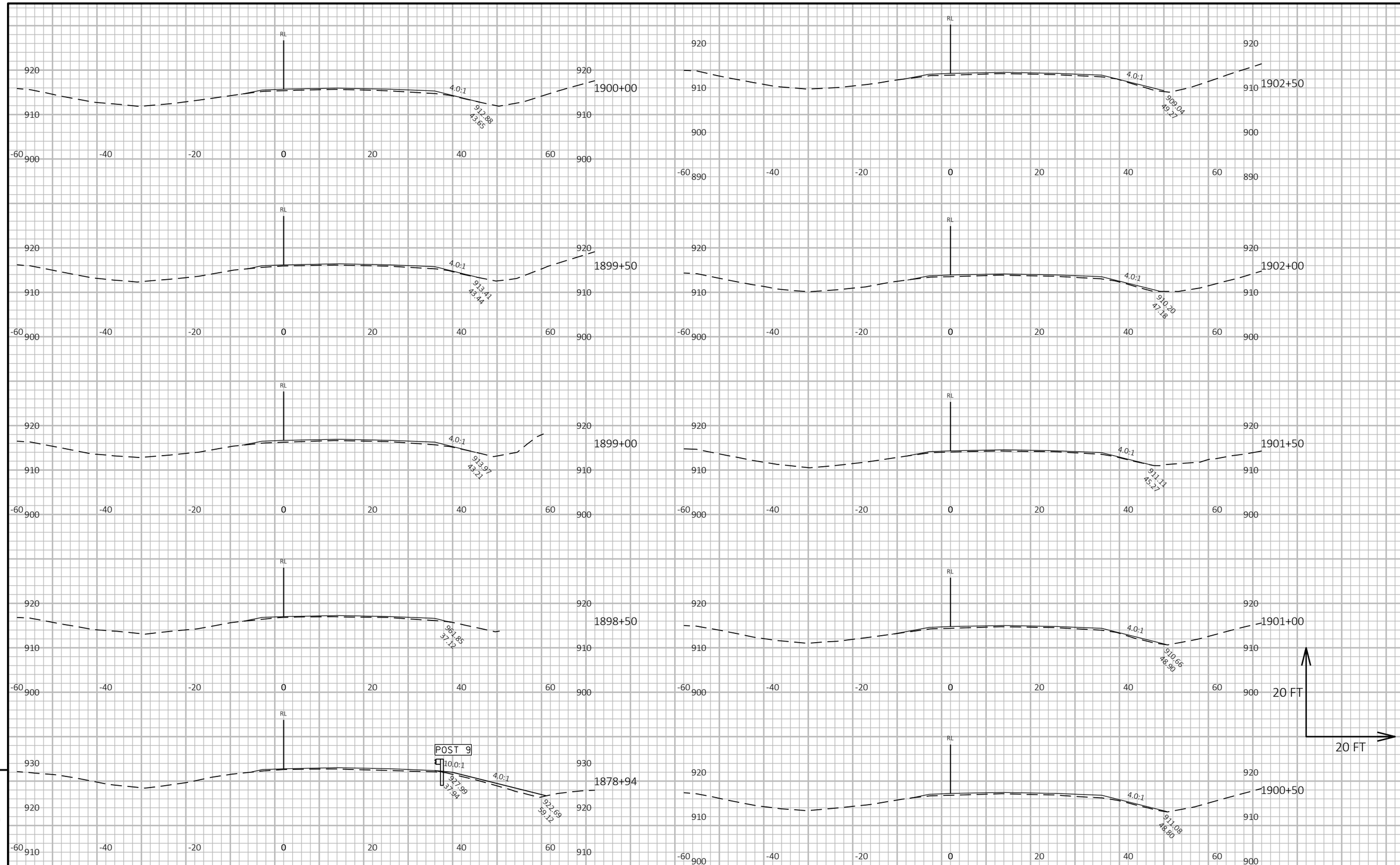

9

9

PROJECT NO: 1014-00-75	HWY: IH-90	COUNTY: SAUK AND JUNEAU	CROSS SECTIONS: GUARDRAIL END TERMINALS AND SLOPE CORRECTION	SHEET 153	E

FILE NAME : \\LAX31FP2\N3PUBLIC\PDS\C3D\10140005\DESIGN\CORRIDORS\EB_CORRIDORBG0.DWG
LAYOUT NAME - 02
PLOT DATE : 10/3/2023 4:08 PM
PLOT BY : DAHL, BRIAN D
PLOT NAME :
PLOT SCALE : 1 IN:20 FT HORZ. / 1 IN:20 FT VERT.
WISDOT/CADDS SHEET 49

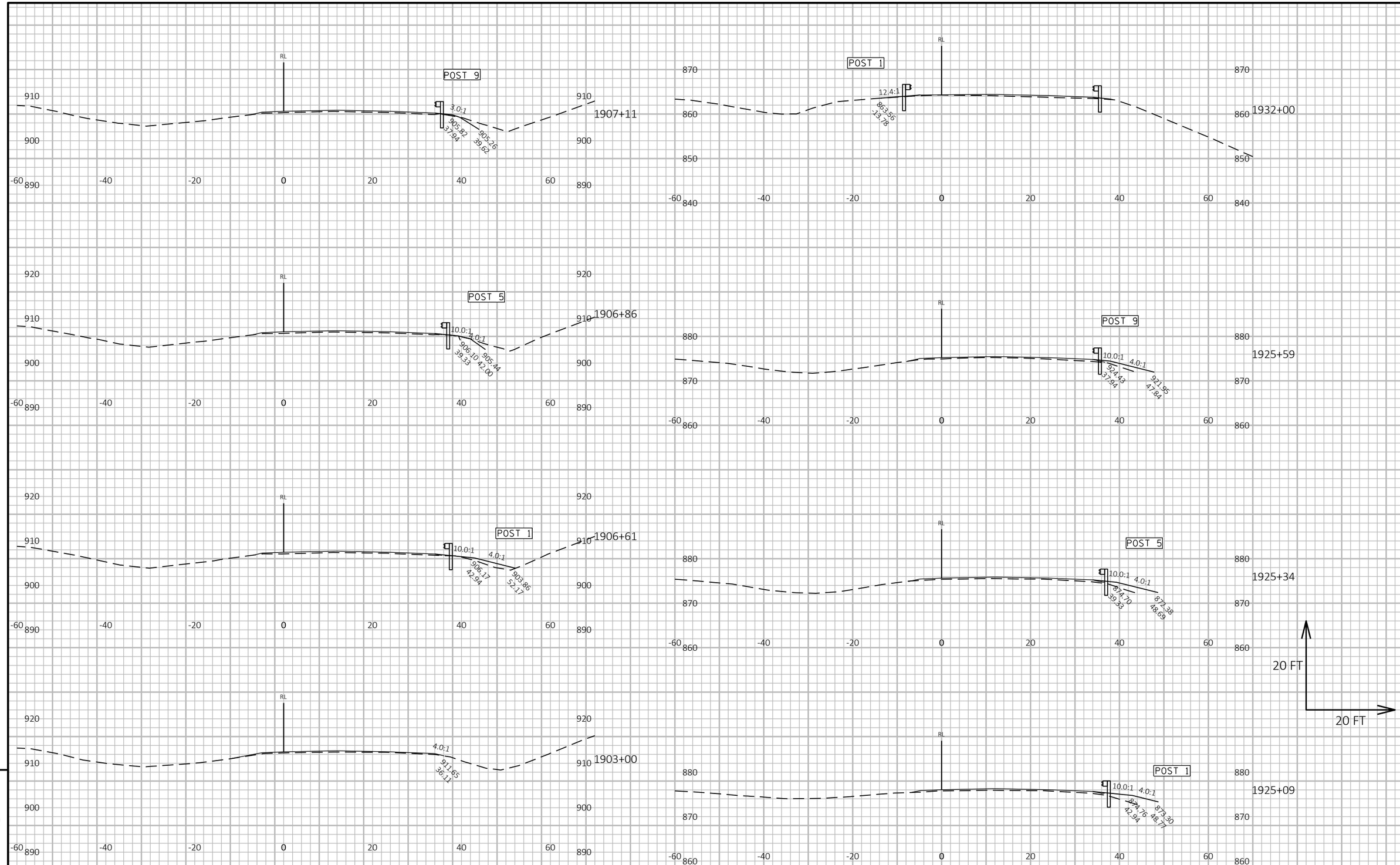

9

9

PROJECT NO: 1014-00-75	HWY: IH-90	COUNTY: SAUK AND JUNEAU	CROSS SECTIONS: GUARDRAIL END TERMINALS	SHEET 154	E

FILE NAME : \\LAX31FP2\N3PUBLIC\PDS\C3D\10140005\DESIGN\CORRIDORS\EB_CORRIDORBG0.DWG
LAYOUT NAME - 03
PLOT DATE : 10/3/2023 4:08 PM
PLOT BY : DAHL, BRIAN D
PLOT NAME :
PLOT SCALE : 1 IN:20 FT HORZ. / 1 IN:20 FT VERT.

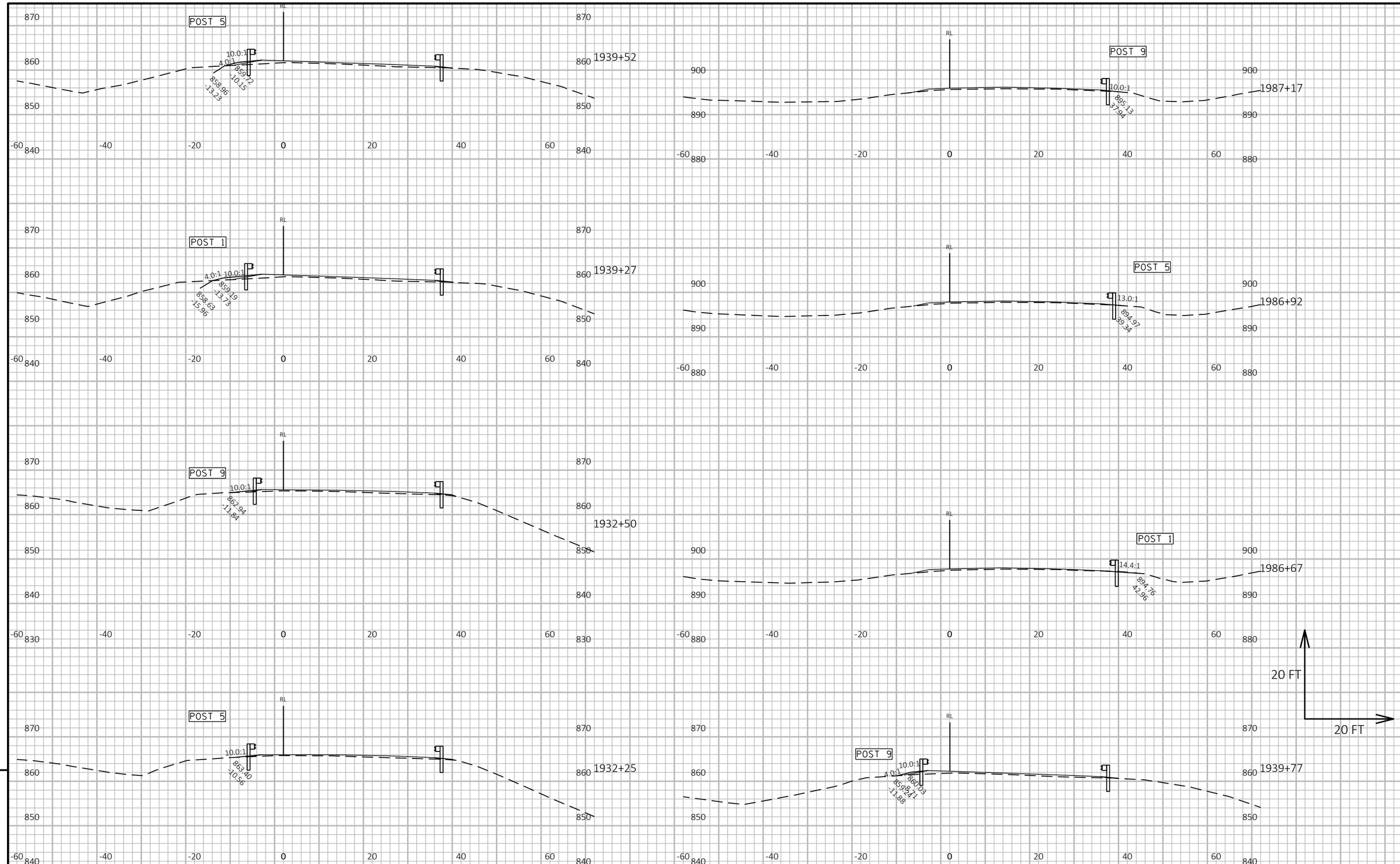

9

9

PROJECT NO: 1014-00-75	HWY: IH-90	COUNTY: SAUK AND JUNEAU	CROSS SECTIONS: GUARDRAIL END TERMINALS	SHEET 155	E

FILE NAME : \\LAX31FP2\N3PUBLIC\PDS\C3D\10140005\DESIGN\CORRIDORS\EB_CORRIDORBG0.DWG
LAYOUT NAME - 04

PLOT DATE : 10/3/2023 4:08 PM PLOT BY : DAHL, BRIAN D PLOT NAME : PLOT SCALE : 1 IN:20 FT HORZ. / 1 IN:20 FT VERT.

WISDOT/CADDS SHEET 49

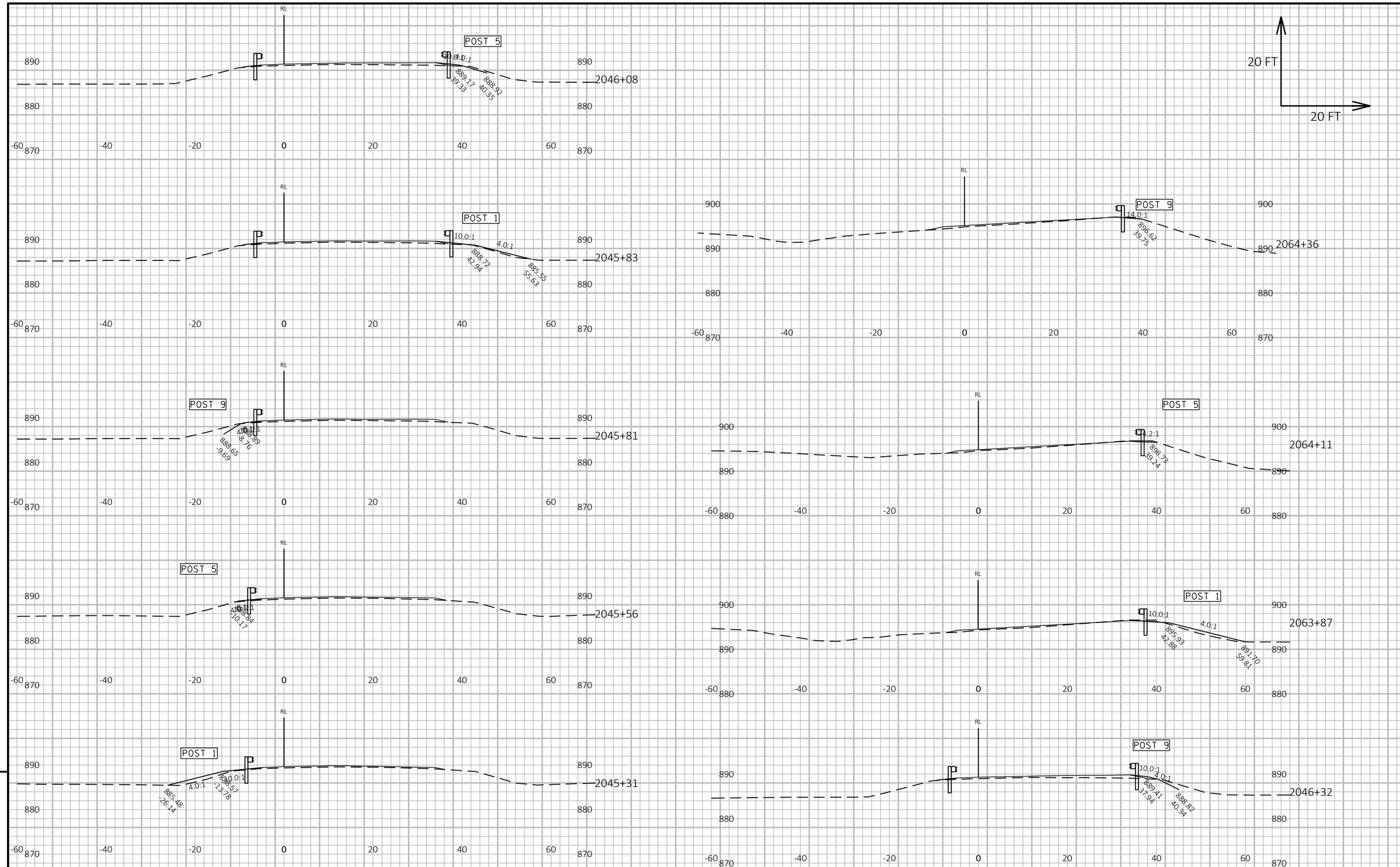

9

9

PROJECT NO: 1014-00-75	HWY: IH-90	COUNTY: SAUK AND JUNEAU	CROSS SECTIONS: GUARDRAIL END TERMINALS	SHEET 156	E

FILE NAME : \\LAX31FP2\N3PUBLIC\PDS\C3D\10140005\DESIGN\CORRIDORS\EB_CORRIDORBG0.DWG
LAYOUT NAME - 05
PLOT DATE : 10/3/2023 4:08 PM
PLOT BY : DAHL, BRIAN D
PLOT NAME :
PLOT SCALE : 1 IN:20 FT HORZ. / 1 IN:20 FT VERT.
WISDOT/CADDS SHEET 49

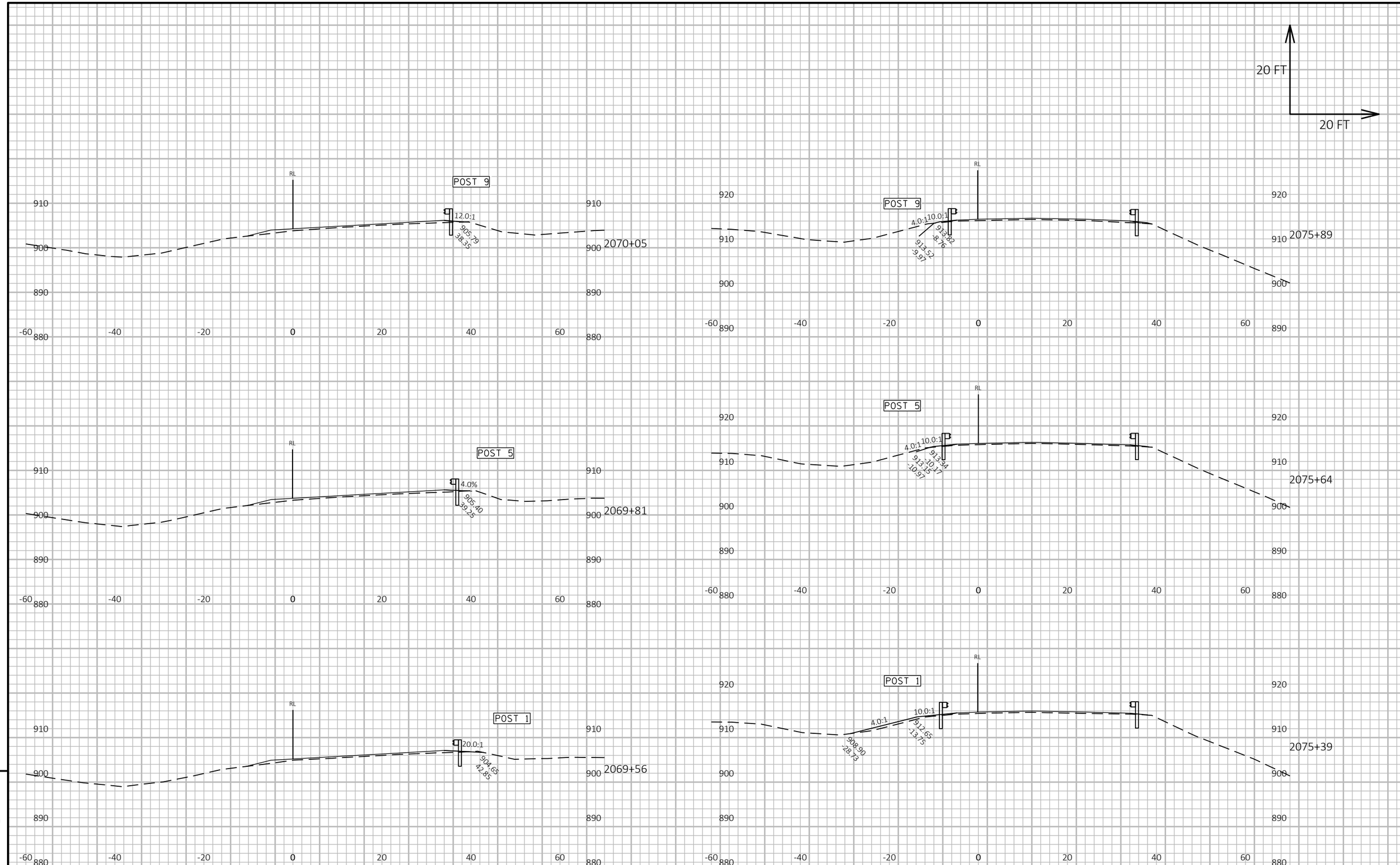

9

9

PROJECT NO: 1014-00-75	HWY: IH-90	COUNTY: SAUK AND JUNEAU	CROSS SECTIONS: GUARDRAIL END TERMINALS	SHEET 157	E

FILE NAME : \\LAX31FP2\N3PUBLIC\PDS\C3D\10140005\DESIGN\CORRIDORS\EB_CORRIDORBG0.DWG
LAYOUT NAME - 06

PLOT DATE : 10/3/2023 4:08 PM PLOT BY : DAHL, BRIAN D PLOT NAME : PLOT SCALE : 1 IN:20 FT HORZ. / 1 IN:20 FT VERT.

WISDOT/CADDS SHEET 49

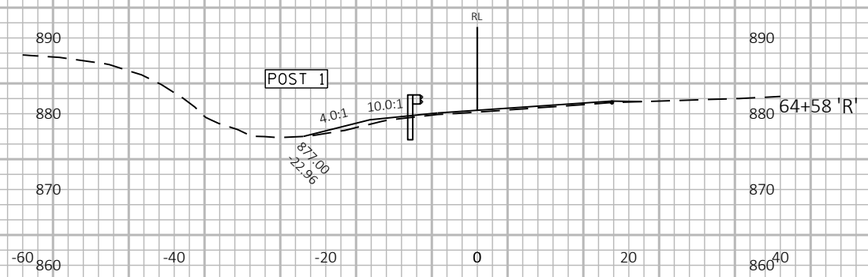

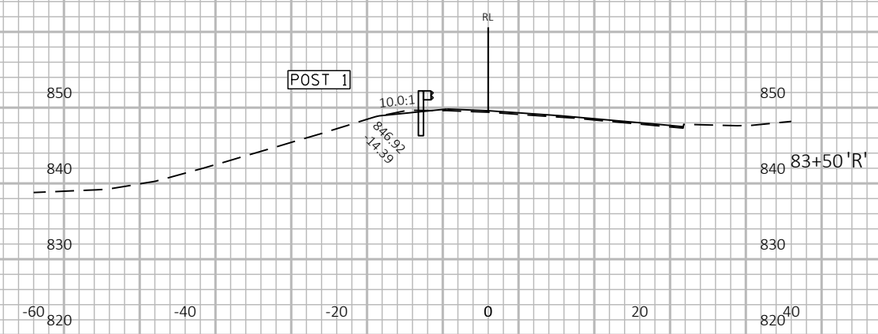

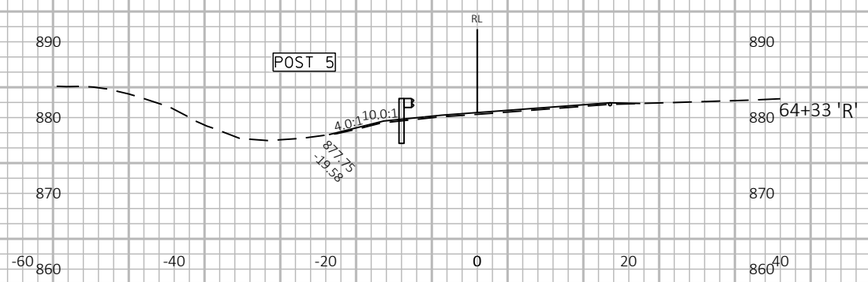

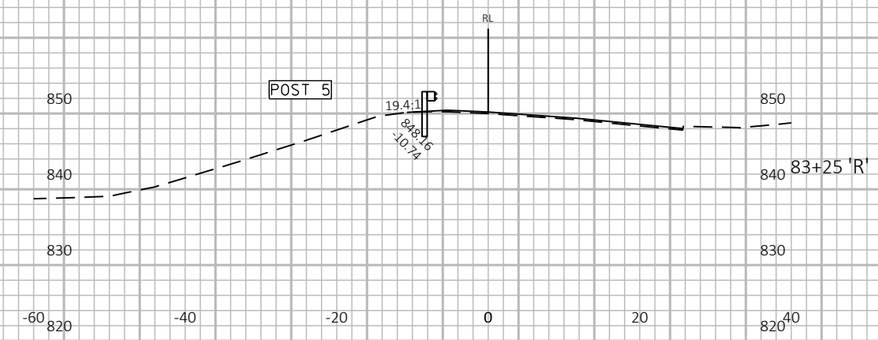

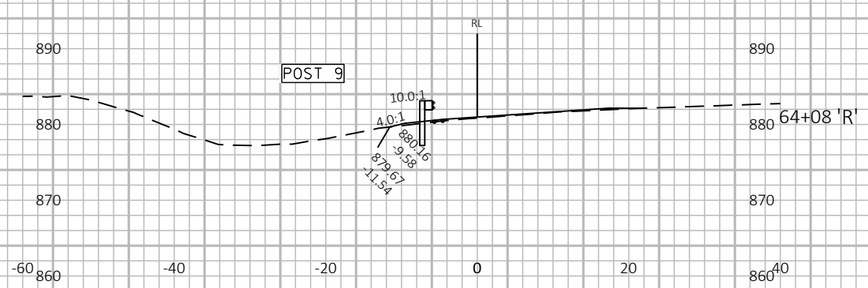

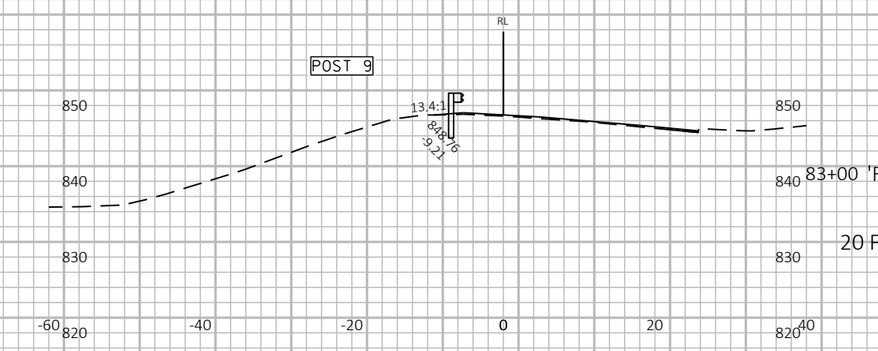

9

9

PROJECT NO: 1014-00-75	HWY: IH-90	COUNTY: SAUK AND JUNEAU	CROSS SECTIONS: GUARDRAIL END TERMINALS	SHEET 158	E

FILE NAME : \\LAX31FP2\N3PUBLIC\PDS\C3D\10140005\DESIGN\CORRIDORS\EB_CORRIDORBG0.DWG
LAYOUT NAME - 07
PLOT DATE : 10/3/2023 4:08 PM
PLOT BY : DAHL, BRIAN D
PLOT NAME :
PLOT SCALE : 1 IN:20 FT HORZ. / 1 IN:20 FT VERT.

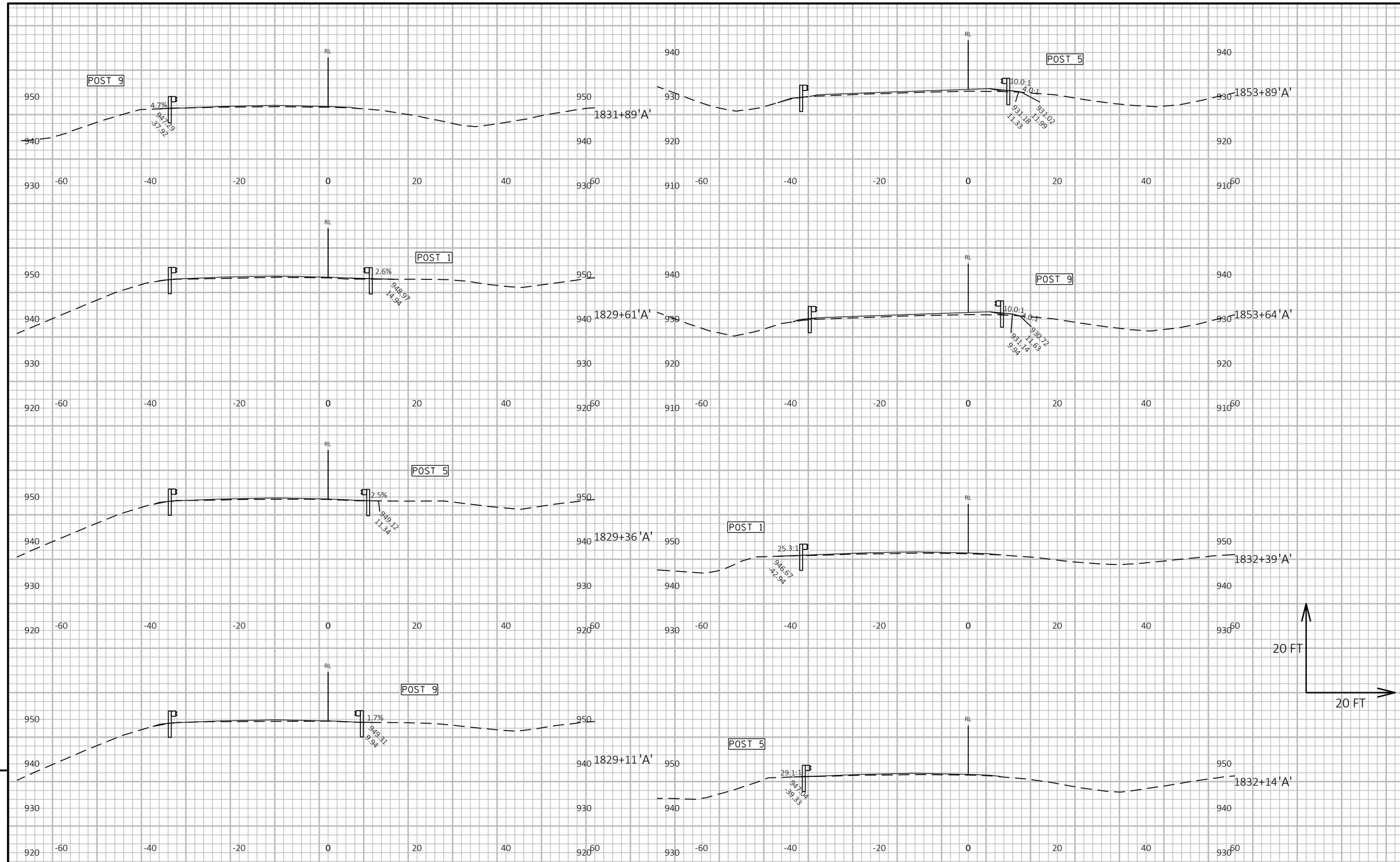

PROJECT NO: 1014-00-75	HWY: IH-90	COUNTY: SAUK AND JUNEAU	CROSS SECTIONS: GUARDRAIL END TERMINALS	SHEET 159	E

FILE NAME : \\LAX31FP2\N3PUBLIC\PDS\C3D\10140005\DESIGN\CORRIDORS\WB_CORRIDORBG0.DWG
LAYOUT NAME - 01
PLOT DATE : 10/3/2023 4:08 PM
PLOT BY : DAHL, BRIAN D
PLOT NAME :
PLOT SCALE : 1 IN:20 FT HORZ. / 1 IN:20 FT VERT.

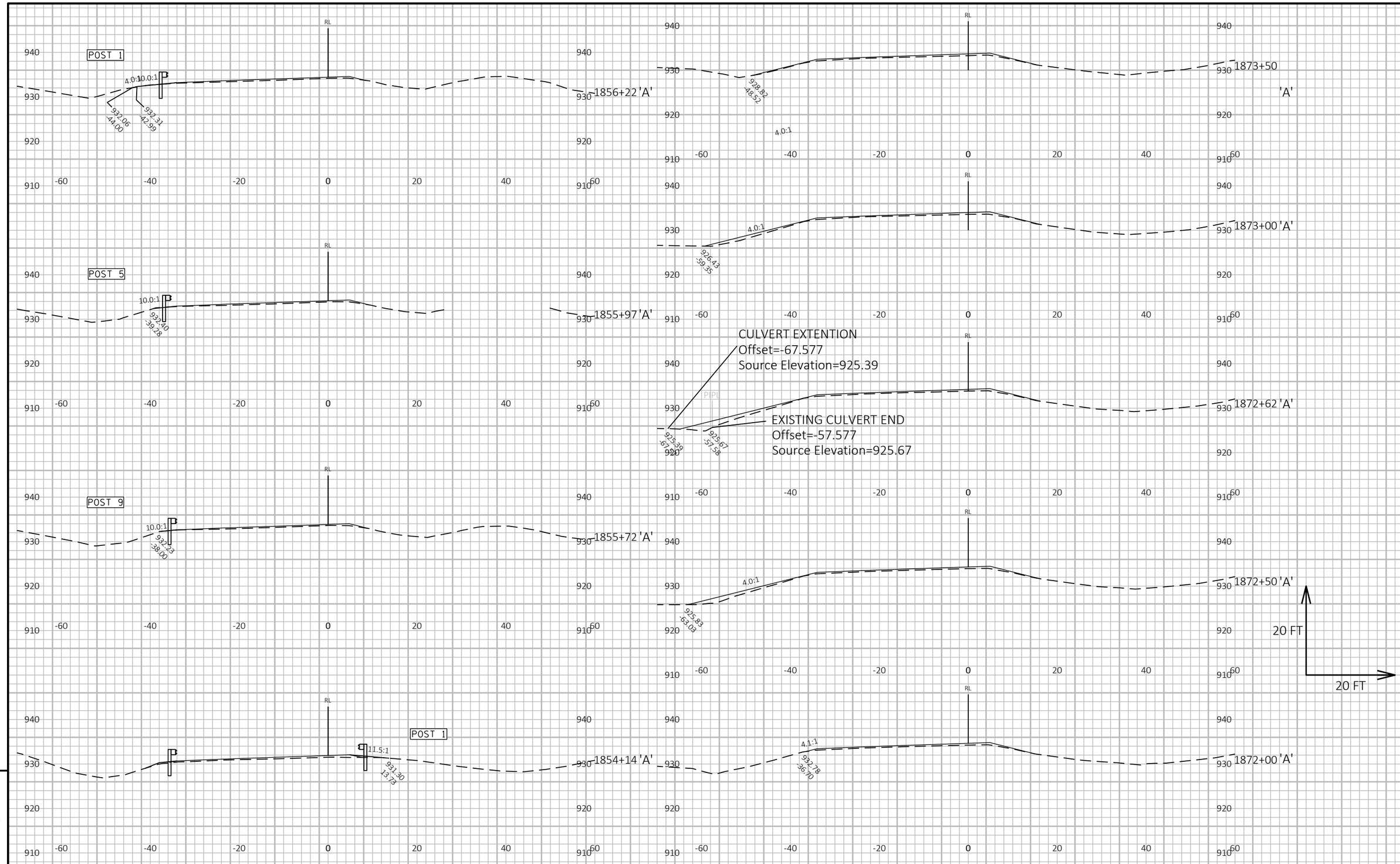

9

9

PROJECT NO: 1014-00-75	HWY: IH-90	COUNTY: SAUK AND JUNEAU	CROSS SECTIONS: GUARDRAIL END TERMINALS AND SLOPE CORRECTION	SHEET 160	E

FILE NAME : \\LAX31FP2\N3PUBLIC\PDS\C3D\10140005\DESIGN\CORRIDORS\WB_CORRIDORBG0.DWG
LAYOUT NAME - 02
PLOT DATE : 10/31/2023 3:13 PM
PLOT BY : DAHL, BRIAN D
PLOT NAME :
PLOT SCALE : 1 IN:20 FT HORZ. / 1 IN:20 FT VERT.

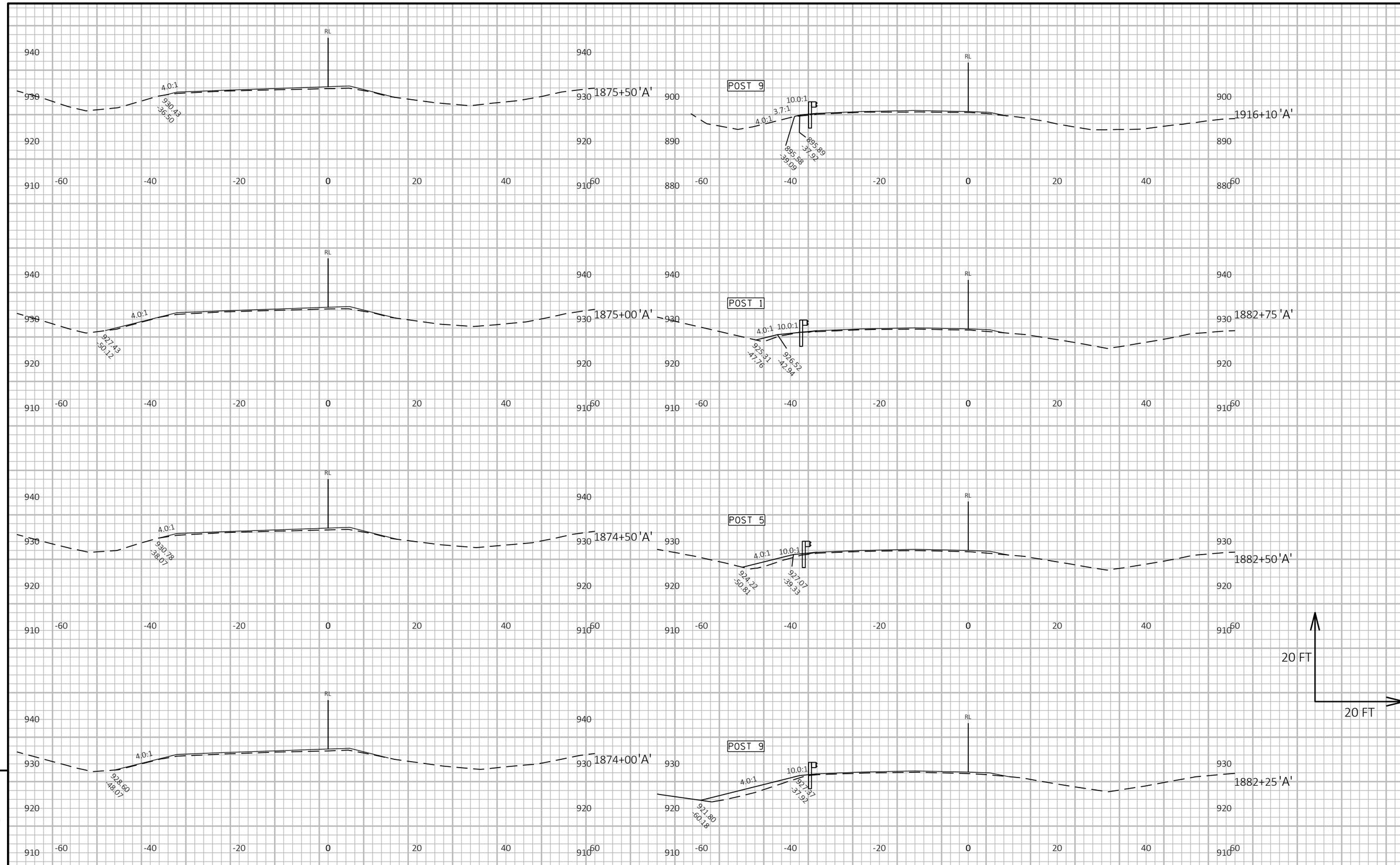

9

9

PROJECT NO: 1014-00-75	HWY: IH-90	COUNTY: SAUK AND JUNEAU	CROSS SECTIONS: GUARDRAIL END TERMINALS AND SLOPE CORRECTION	SHEET 161	E

FILE NAME : \\LAX31FP2\N3PUBLIC\PDS\C3D\10140005\DESIGN\CORRIDORS\WB_CORRIDORBG0.DWG
LAYOUT NAME - 03
PLOT DATE : 10/3/2023 4:08 PM
PLOT BY : DAHL, BRIAN D
PLOT NAME :
PLOT SCALE : 1 IN:20 FT HORZ. / 1 IN:20 FT VERT.

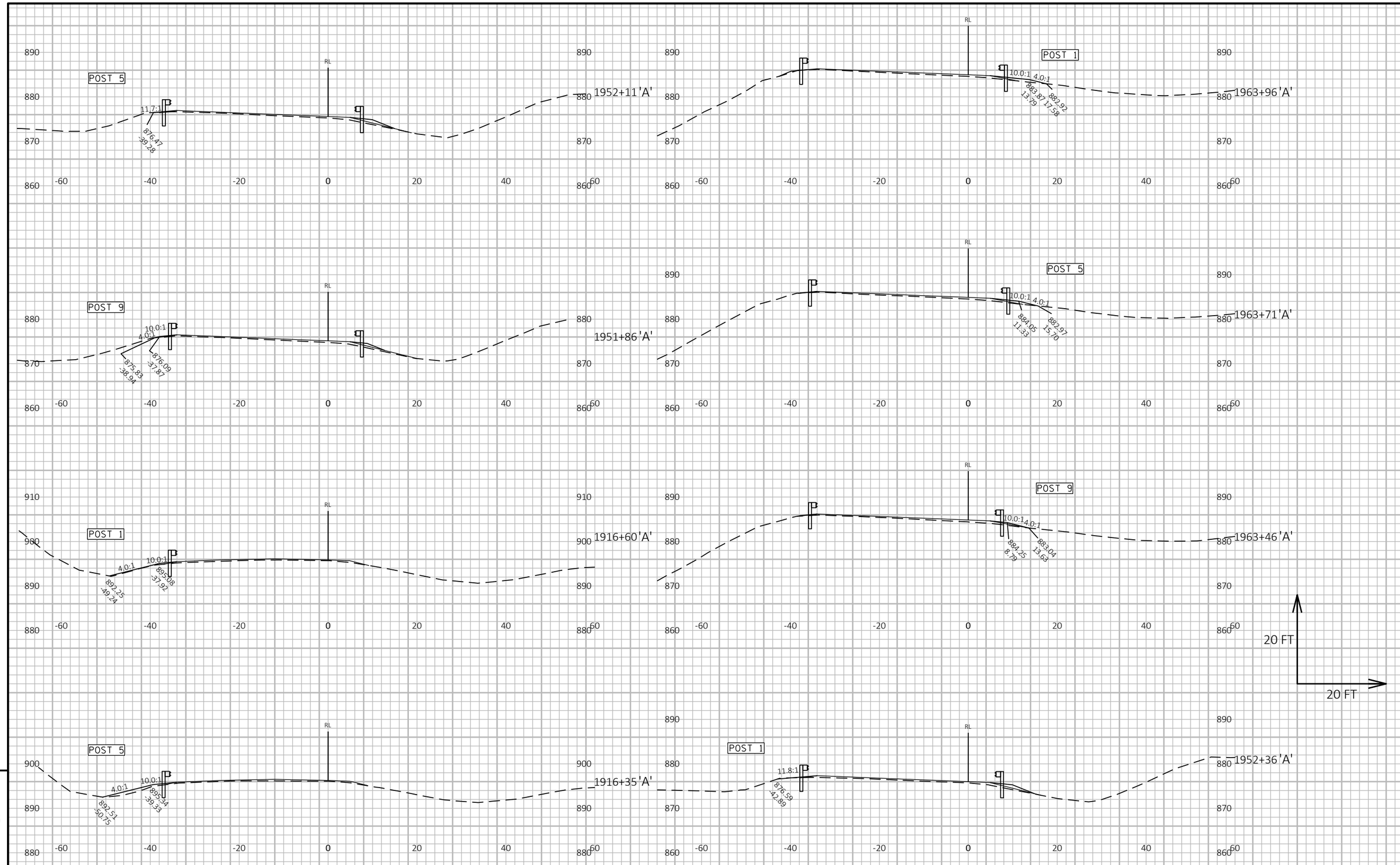

9

9

PROJECT NO: 1014-00-75	HWY: IH-90	COUNTY: SAUK AND JUNEAU	CROSS SECTIONS: GUARDRAIL END TERMINALS	SHEET 162	E

FILE NAME : \\LAX31FP2\N3PUBLIC\PDS\C3D\10140005\DESIGN\CORRIDORS\WB_CORRIDORBG0.DWG
LAYOUT NAME - 04
PLOT DATE : 10/3/2023 4:08 PM
PLOT BY : DAHL, BRIAN D
PLOT NAME :
PLOT SCALE : 1 IN:20 FT HORZ. / 1 IN:20 FT VERT.

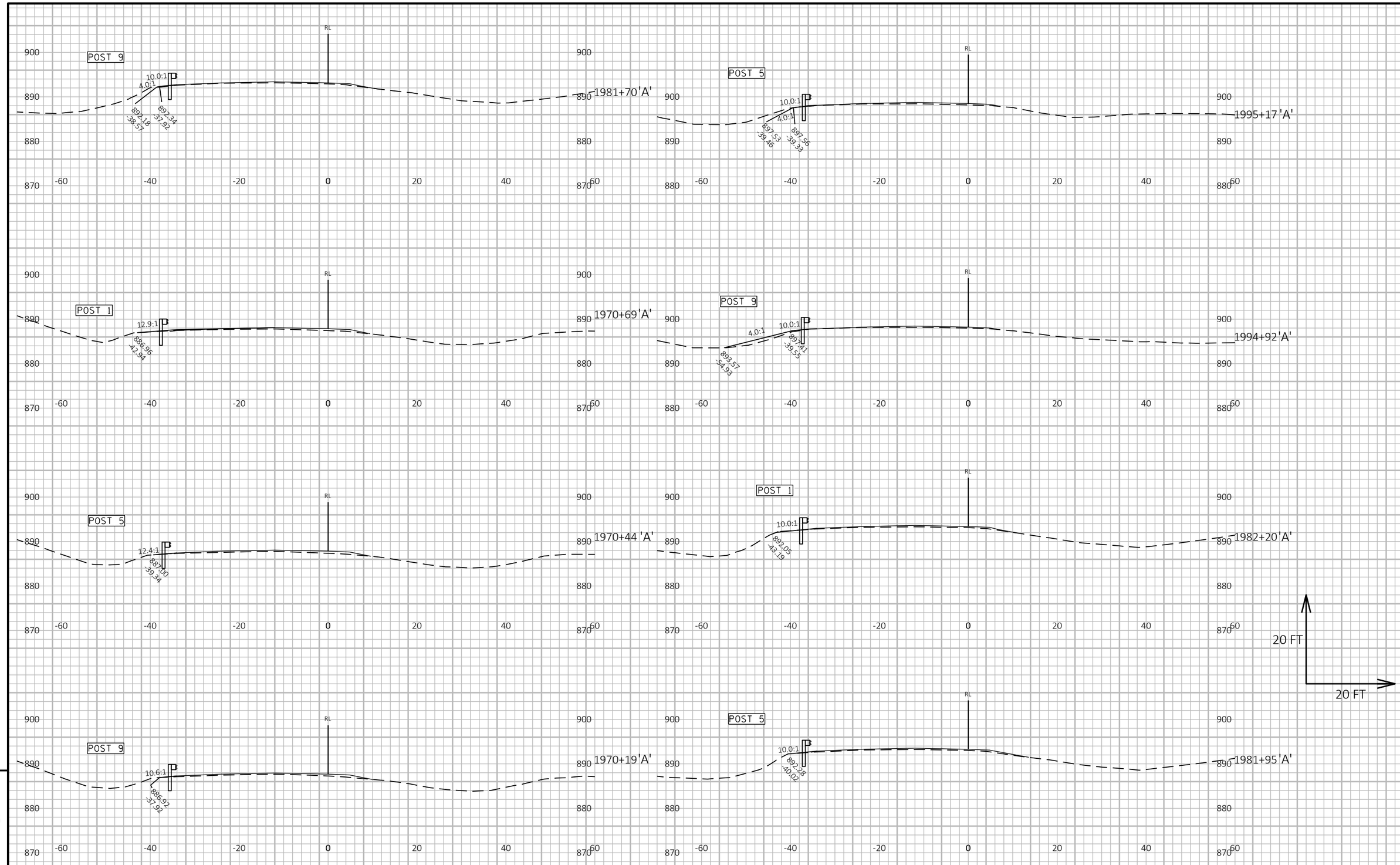

9

9

PROJECT NO: 1014-00-75	HWY: IH-90	COUNTY: SAUK AND JUNEAU	CROSS SECTIONS: GUARDRAIL END TERMINALS	SHEET 163	E

FILE NAME : \\LAX31FP2\N3PUBLIC\PDS\C3D\10140005\DESIGN\CORRIDORS\WB_CORRIDORBG0.DWG
LAYOUT NAME - 05
PLOT DATE : 10/3/2023 4:08 PM
PLOT BY : DAHL, BRIAN D
PLOT NAME :
PLOT SCALE : 1 IN:20 FT HORZ. / 1 IN:20 FT VERT.

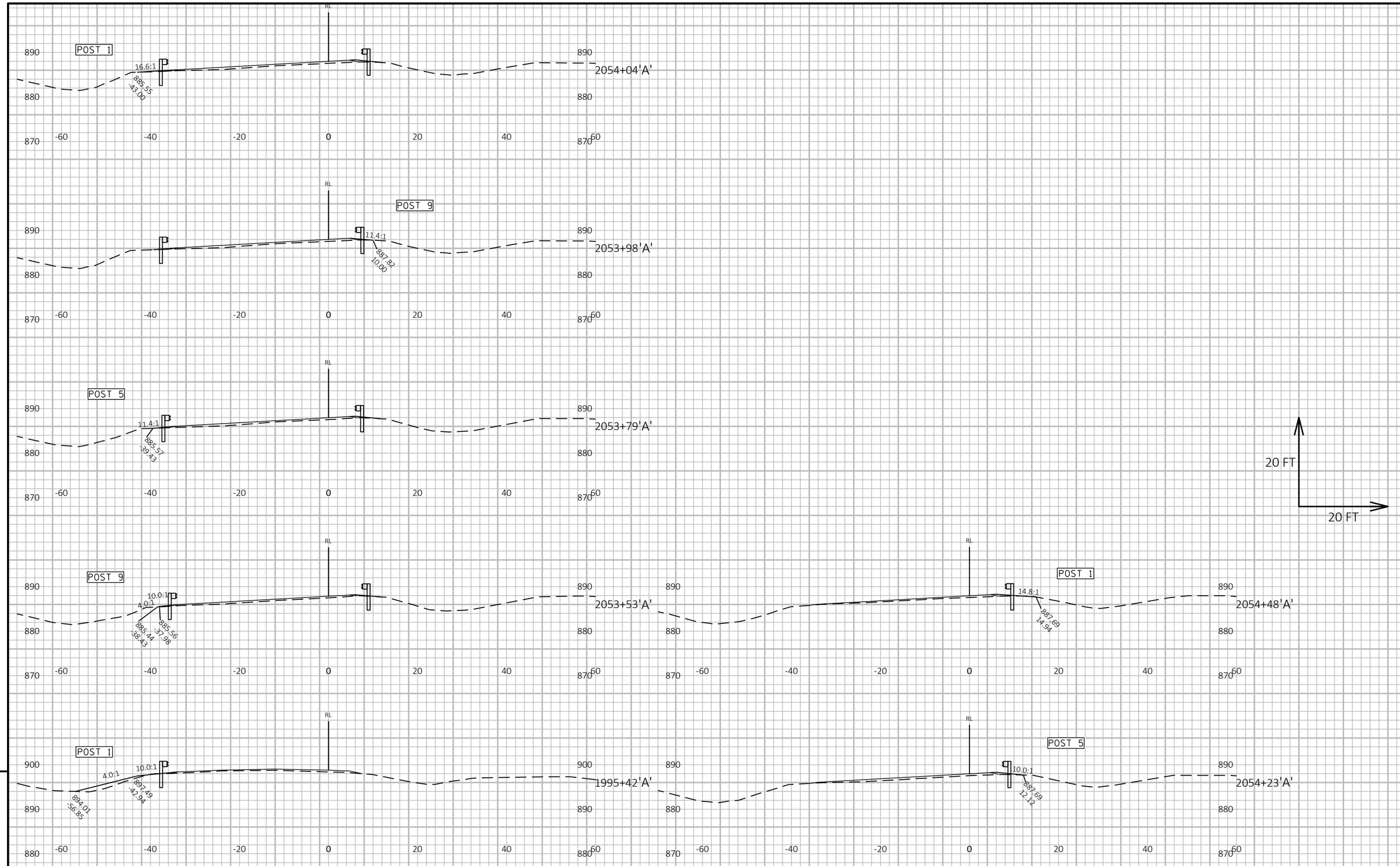

9

9

PROJECT NO: 1014-00-75	HWY: IH-90	COUNTY: SAUK AND JUNEAU	CROSS SECTIONS: GUARDRAIL END TERMINALS	SHEET 164	E

FILE NAME : \\LAX31FP2\N3PUBLIC\PDS\C3D\10140005\DESIGN\CORRIDORS\WB_CORRIDORBG0.DWG
LAYOUT NAME - 06

PLOT DATE : 10/3/2023 4:08 PM PLOT BY : DAHL, BRIAN D PLOT NAME : PLOT SCALE : 1 IN:20 FT HORZ. / 1 IN:20 FT VERT.

WISDOT/CADDS SHEET 49

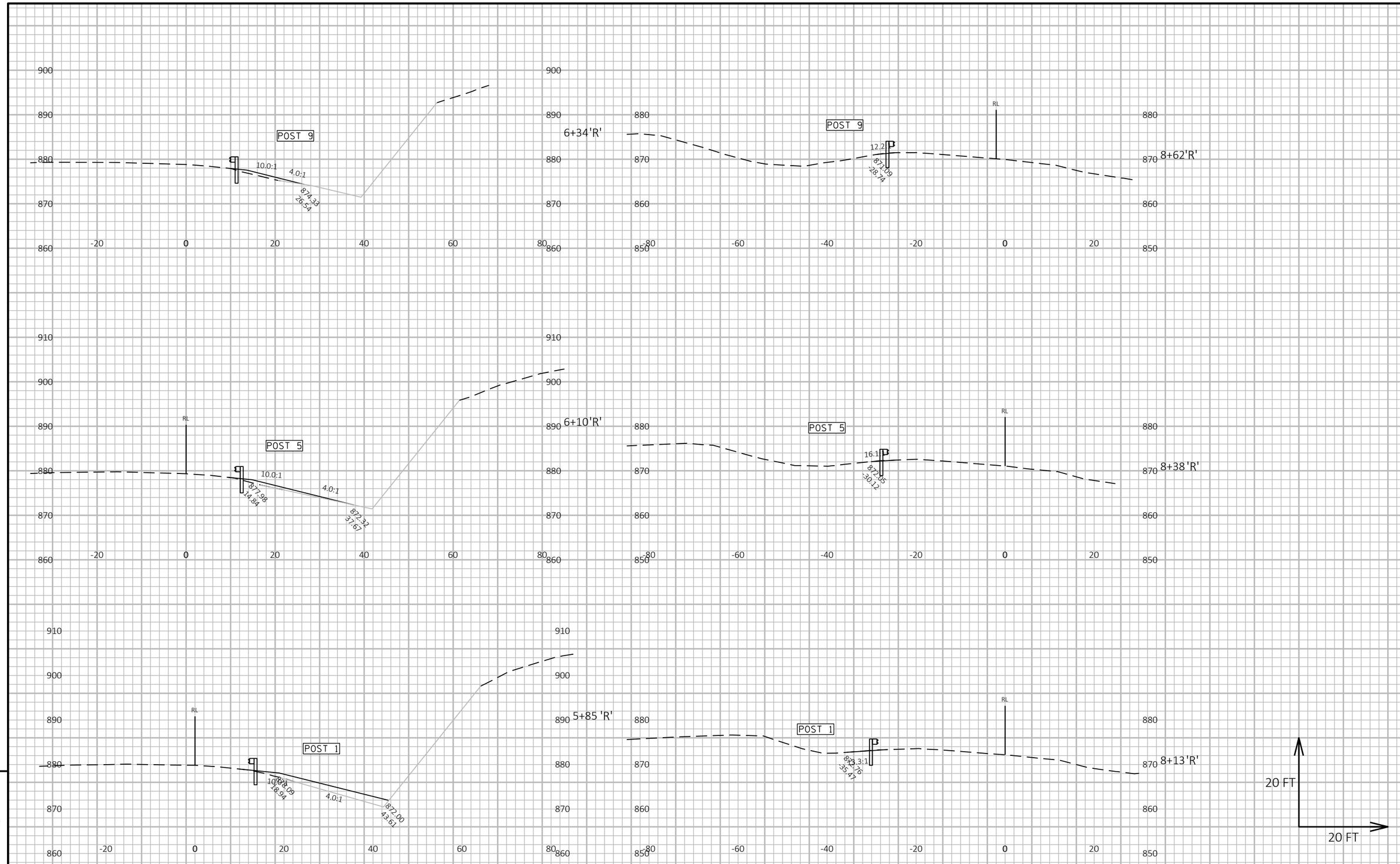

9

9

PROJECT NO: 1014-00-75	HWY: IH-90	COUNTY: SAUK AND JUNEAU	CROSS SECTIONS: GUARDRAIL END TERMINALS	SHEET 165	E

FILE NAME : \\LAX31FP2\N3PUBLIC\PDS\C3D\10140005\DESIGN\CORRIDORS\WB_CORRIDORBG0.DWG
LAYOUT NAME - 07
PLOT DATE : 10/3/2023 4:08 PM
PLOT BY : DAHL, BRIAN D
PLOT NAME :
PLOT SCALE : 1 IN:20 FT HORZ. / 1 IN:20 FT VERT.
WISDOT/CADDS SHEET 49

Wisconsin Department of Transportation

Dedicated people creating transportation solutions through innovation and exceptional service.

http://www.dot.wisconsin.gov