SUP

PROJECT ID: 9925-00-70

WITH: 9925-00-71

COUNTY: ASHLAND

JANUARY 2025

ORDER OF SHEETS

TOTAL SHEETS = 162

STATE PROJECT	FEDERAL PROJECT	
	PROJECT	CONTRACT
9925-00-70	WISC 2025178	1
9925-00-71	WISC 2025179	1

STATE OF WISCONSIN
DEPARTMENT OF TRANSPORTATION

PLAN OF PROPOSED IMPROVEMENT

MELLEN - USH 2

STH 13 TO ASHLAND/IRON COUNTY LINE

STH 169

ASHLAND COUNTY

STATE PROJECT NUMBER

9925-00-70

MELLEN - USH 2

BAD RIVER BRIDGE, B-02-0026

STH 169

ASHLAND COUNTY

STATE PROJECT NUMBER

9925-00-71

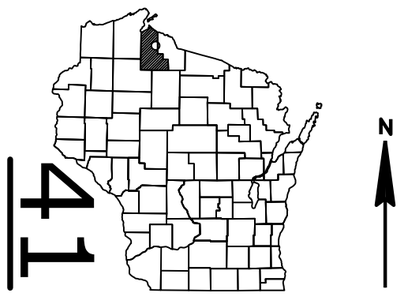

DESIGN DESIGNATION 9925-00-00

A.A.D.T.	2026	=	320
A.A.D.T.	2046	=	370
D.H.V.		=	113
D.D.		=	50/50
T.		=	7.7%
DESIGN SPEED		=	55
ESALS		=	50,000

BEGIN PROJECT
STA 0+28
X=557616.5529
Y=228259.3798

END PROJECT
STA 547+16.24
X=585748.7746
Y=263321.8061

NET EXCEPTION TO CL LENGTH
B-02-043 TYLER FORKS RIVER BRIDGE
STA 428+67 - STA 429+32

PROJECT 9925-00-71
BAD RIVER BRIDGE, B-02-0026
STA 22+25.89 - STA 22+91.44

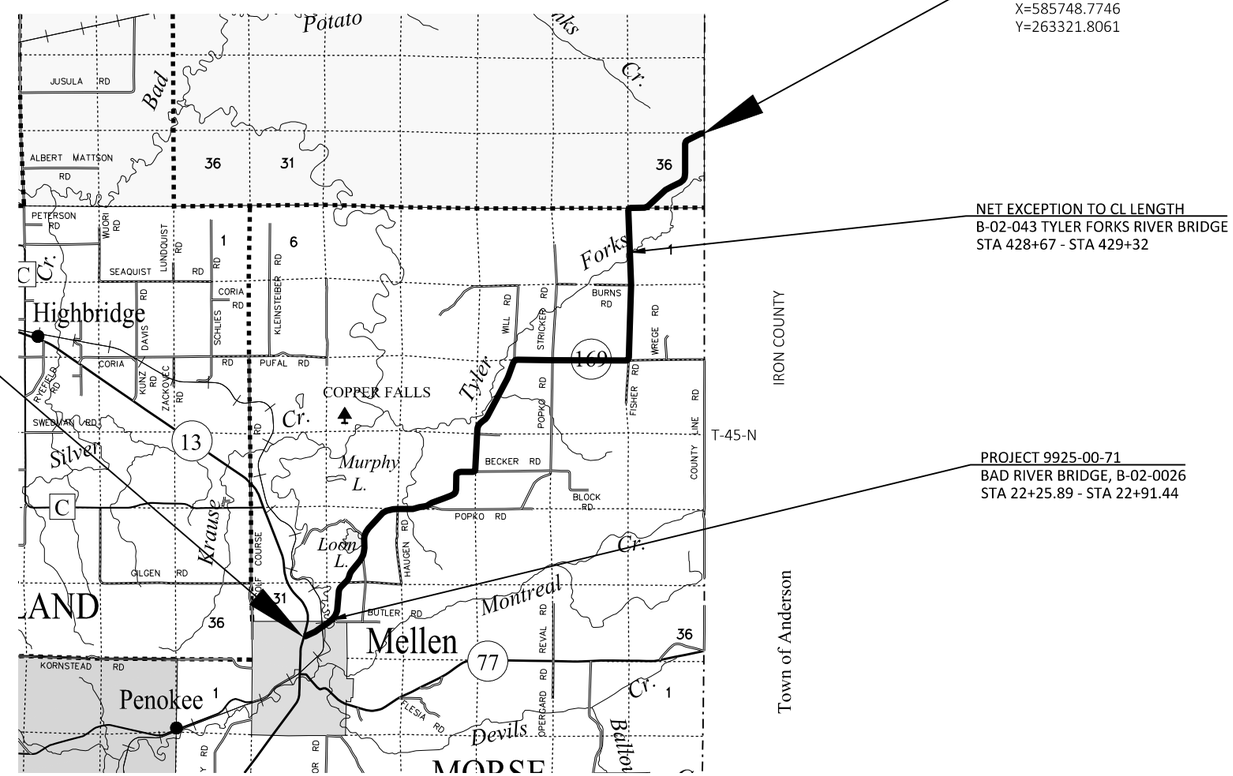

LAYOUT

SCALE 0 2 MI

TOTAL NET LENGTH OF CENTERLINE = 10.333

HORIZONTAL POSITIONS SHOWN ON THIS PLAN ARE WISCONSIN COORDINATE REFERENCE SYSTEM (WISCRS), {ASHLAND} COUNTY, NAD83 (2011), IN U.S. SURVEY FEET. POSITIONS SHOWN ARE GRID COORDINATES, GRID BEARINGS, AND GRID DISTANCES. GRID DISTANCES ARE THE SAME AS GROUND DISTANCES.

ELEVATIONS ARE REFERENCED TO NAVD 88 (2012). GPS DERIVED ELEVATIONS ARE BASED ON GEOID 88

CONVENTIONAL SYMBOLS

PLAN

- CORPORATE LIMITS
- PROPERTY LINE
- LOT LINE
- LIMITED HIGHWAY EASEMENT
- EXISTING RIGHT OF WAY
- PROPOSED OR NEW R/W LINE
- SLOPE INTERCEPT
- REFERENCE LINE (300'EB')
- EXISTING CULVERT
- PROPOSED CULVERT (Box or Pipe)
- COMBUSTIBLE FLUIDS (CAUTION)
- MARSH AREA
- WOODED OR SHRUB AREA

PROFILE

- GRADE LINE
- ORIGINAL GROUND
- MARSH OR ROCK PROFILE (To be noted as such) (ROCK)
- SPECIAL DITCH (LABEL)
- GRADE ELEVATION (95.36)
- CULVERT (Profile View)

UTILITIES

- ELECTRIC (E)
- FIBER OPTIC (FO)
- GAS (G)
- SANITARY SEWER (SAN)
- STORM SEWER (SS)
- TELEPHONE (T)
- WATER (W)
- UTILITY PEDESTAL
- POWER POLE
- TELEPHONE POLE

STATE OF WISCONSIN
DEPARTMENT OF TRANSPORTATION

PREPARED BY

Surveyor	TOM ARMSTRONG
Designer	MICHAEL PEARSON
Project Manager	PHIL KEPPERS
Regional Examiner	MITCH FINNEGAN
Regional Supervisor	JEFF OLSON

APPROVED FOR THE DEPARTMENT Jeffrey G. Olson Digitally signed by Jeffrey G. Olson Date: 2024.07.30 08:39:04 -05'00'

DATE: _____ (Signature)

E

UTILITIES CONTACTS

ASTREA-COMMUNICATION
COMMUNICATIONS
RYAN NELSON
1810 LAKE SHORE DRIVE E.
ASHLAND, WI 54806
PHONE: 715-931-0238
EMAIL: RYAN.NELSON@CHARTER.COM

CENTURYLINK
COMMUNICATIONS
THOMAS SCHWARTZ
215 DAKOTA ST. N.
PRESCOTT, WI 54201
PHONE: 608-642-2949
EMAIL: THOMAS.SCHWARTZ@LUMEN.COM

NORVADO
COMMUNICATIONS
GUY FOLSOM
43705 USH 63/PO BOX 67
CABLE, WI 54821
PHONE: 715-798-7123
EMAIL: GFOLSOM@NORVADO.COM

BAYFIELD ELECTRIC COOPERATIVE
ELECTRICITY
KEN KOOSMANN
68460 DISTRICT ST./PO BOX 68
IRON RIVER, WI 54847
PHONE: 715-372-4287
EMAIL: KKOOSMANN@BAYFIELDELECTRIC.COM

XCEL ENERGY - ELEC. TRANSMISSION
ELECTRIC TRANSMISSION
MITCHELL DIEGER
414 NICOLLET MALL
MINNEAPOLIS, MN 55401
PHONE: 612-321-3109
EMAIL: MITCHELL.A.DIENGER@XCELENERGY.COM

FOX VALLEY AND LAKE SUPERIOR RR
RAILROAD
ROGER SCHAALMA
1980 EAST JOHNSON STREET
MADISON, WI 53704
PHONE: 608-620-2044
EMAIL: RSCHAALMA@WATCO.COM

XCEL ENERGY - ELECTRICITY
ELECTRIC DISTRIBUTION
SARAH MCDOWELL
2400 FARM ROAD
ASHLAND, WI 54806
PHONE: 715-682-6911
EMAIL: SARAH.I.MCDOWELL@XCELENERY.COM

NORTHERN NATURAL GAS
NATURAL GAS
MITCH KLEIST
1120 CENTRE POINT DRIVE, STE 400
MENDOTA HEIGHTS, MN 55120
PHONE: 507-340-0081
EMAIL: MITCHELL.KLEIST@NNGCO.COM

XCEL ENERGY - GAS
NATURAL GAS
CHERI MARCHELLO
1751 LIBERTY ST.
IRONWOOD, MI 49938
PHONE: 906-767-5125
EMAIL: CHERI.J.MARCHELLO@XCELENERGY.COM

ORDER OF SECTION 2 DETAIL SHEETS

GENERAL NOTES
TYPICAL SECTIONS
CONSTRUCTION DETAILS
QUANTITIES

HMA 3.5 - INCHES		
LAYER	THICKNESS	TYPE
UPPER	1.75 - INCHES	4 MT 58-34 V
LOWER	1.75 - INCHES	4 MT 58-34 V

WISCONSIN DNR LIAISON

SHAWN HASELEU
N W REGION
810 W. MAPLE ST.
SPOONER, WI 54540
PHONE: 715-416-0478
EMAIL: SHAWN.HASELEU@WISCONSIN.GOV

REGION SURVEY COORDINATOR

TOM ARMSTRONG
NW REGION - SUPERIOR
1701 N. 4TH ST.
SUPERIOR, WI 54880
PHONE: 715-392-7955
EMAIL: THOMAS.ARMSTRONG@DOT.WI.GOV

TOWN OF SANBORN

LUIS SALAS
CHAIRPERSON
53108 BEARTRAP ROAD
ASHLAND, WI 54806
PHONE: 715-292-4698
EMAIL: SALASLUIS0150@GMAIL.COM

CITY OF MELLEN

TERRY VAN BUREN
MAYOR
P.O. BOX 354
MELLEN, WI 54846
PHONE: 715-651-0664
EMAIL: VANBURENTERRANCE@OUTLOOK.COM

DESIGN PROJECT MANAGER

JEFF SAXBY
SHORT ELLIOTT HINDRICKSON, INC.
326 S. MAIN ST., SUITE 100
RICE LAKE, WI 54868
PHONE: 920-380-2805
EMAIL: JSAXBY@SEHINC.COM

DESIGN PROJECT LEADER

MICHAEL PEARSON
WISCONSIN DOT NW REGION - SUPERIOR
1701 N. 4TH ST.
SUPERIOR, WI 54880
PHONE: 715-395-3024
EMAIL: MICHAEL.PEARSON@DOT.WI.GOV

COUNTY HIGHWAY COMMISSIONER

MATT ERICKSON
ASHLAND COUNTY HIGHWAY COMM
39181 HWY 13
HIGHBRIDGE, WI 54846
PHONE: 715-274-3662
EMAIL: MATT.ERICKSON@ASHLANDCOUNTYWI.GOV

TOWN OF MORSE

JEFF EHRHARDT
CHAIRPERSON
31490 LONG LAKE ROAD
MELLEN, WI 54546
PHONE: 715-681-0184
EMAIL: EHRHARDTJEFF@GMAIL.COM

GENERAL NOTES

THE LOCATIONS OF EXISTING AND PROPOSED UTILITY INSTALLATIONS AS SHOWN ON THE PLANS ARE APPROXIMATE. THERE MAY BE OTHER UTILITY INSTALLATIONS WITHIN THE PROJECT AREA THAT ARE NOT SHOWN. THE CONTRACTOR SHALL COORDINATE THEIR CONSTRUCTION ACTIVITIES WITH A CALL TO DIGGERS HOTLINE.

CONTRACTOR WILL BE RESPONSIBLE FOR RESHAPING AND SEEDING ANY PREVIOUSLY GRASSED AREAS WHICH ARE DISTURBED BY OPERATIONS, OUTSIDE OF THE NORMAL CONSTRUCTION LIMITS.

HMA PAVEMENT WEIGHT CALCULATIONS ARE BASED ON 112 LBS/SY/IN.

NO TREES OR SHRUBS ARE TO BE REMOVED WITHOUT THE APPROVAL OF THE ENGINEER.

RIGHT OF WAY INFORMATION SHOWN ON THE PLANS IS APPROXIMATE.

THE CONTRACTOR IS TO WORK WITH UTMOST CARE AND PROTECT ALL SURVEY MARKERS. REMOVAL OF ANY SURVEY MARKER IS TO BE WITH THE APPROVAL OF THE ENGINEER.

TOPSOIL SHALL BE PLACED 1-INCH BELOW THE TOP OF ADJACENT CONCRETE CURBS OR SIDEWALKS.

WHEN THE QUANTITY OF THE ITEMS OF BASE AGGREGATE, SUBBASE OR HMA PAVEMENT IS MEASURED FOR PAYMENT BY THE TON OR CUBIC YARD, THE DEPTH OR THICKNESS OF THE LAYERS SHOWN ON THE PLAN IS APPROXIMATE AND THE ACTUAL THICKNESS WILL DEPEND ON THE DISTRIBUTION OF THE MATERIAL AS DIRECTED BY THE ENGINEER.

EROSION CONTROL FEATURES AS SHOWN IN THE PLANS ARE AT APPROXIMATE LOCATIONS. EXACT LOCATIONS WILL BE DETERMINED BY THE CONTRACTOR'S EROSION CONTROL IMPLEMENTATION PLAN (ECIP) AND APPROVED BY THE ENGINEER. MAINTAIN EROSION CONTROL MEASURES UNTIL SUCH A TIME AS THE ENGINEER DETERMINES THE MEASURE IS NO LONGER NECESSARY.

RADIUS DIMENSIONS FOR THE CURB AND GUTTER ARE TO THE FLANGE LINE UNLESS OTHERWISE NOTED.

CURVE DATA IS BASED ON THE ARC DEFINITION.

PRIOR TO PLACING THE NEW BASE AGGREGATE DENSE COURSE OR PAVED SHOULDERS EXISTING UNCOMPACTED SHOULDER MATERIAL SHALL BE REMOVED OR DEPOSITED ON THE OUTER PORTION OF THE EXISTING SHOULDER OR AS DIRECTED BY THE ENGINEER.

THE EXACT LOCATION AND WIDTH OF DRIVEWAYS SHALL BE DETERMINED BY THE ENGINEER IN THE FIELD. DRIVEWAYS SHALL BE REPLACED IN KIND. COMMERCIAL DRIVEWAYS SHALL BE A MINIMUM OF 30 FEET WIDE UNLESS SHOWN OTHERWISE IN THE PLANS. ALL RESIDENTIAL DRIVEWAYS SHALL BE A MAXIMUM OF 20 FEET WIDE.

PIPE ELEVATIONS, LENGTHS AND LOCATIONS AS SHOWN ON THE PLANS, MAY BE ADJUSTED TO FIT EXISTING FIELD CONDITIONS AS DIRECTED BY THE ENGINEER.

THE PROPOSED SHOULDER WIDTH SHOWN IN THE TYPICAL SECTIONS ARE MINIMUM WIDTH. PERPETUATE EXISTING SHOULDERS THAT ARE WIDER THAN WHAT IS SHOWN IN THE TYPICAL SECTIONS.

THE CONTRACTOR'S PAVING OPERATION SHALL BE CONSISTENT WITH THE TYPICAL SECTIONS AND CONSTRUCTED TO PREVENT LONGITUDINAL JOINTS FROM BEING LOCATED WITHIN A DRIVING, TURNING, PASSING, OR PARKING LANE.

SAWCUTS, AS SHOWN ON THE PLANS, ARE SUGGESTED LOCATIONS AND MAY BE ADJUSTED AT THE DISCRETION OF THE ENGINEER TO BETTER SUIT FIELD CONDITIONS.

PRIOR TO PLACEMENT OF BEAM GUARD THE SHOULDERS SHALL BE IN PLACE, SHAPED AND COMPACTED.

CONTRACTOR SHALL MAINTAIN ACCESS TO ALL DRIVEWAYS AT ALL TIMES EXCEPT WHEN PAVING OR PIPE LAYING OPERATIONS REQUIRE THE DRIVEWAY TO BE CLOSED. ACCESS TO DRIVEWAYS SHALL BE RE-ESTABLISHED IMMEDIATELY AFTER OPERATIONS ARE COMPLETED. ACCESS SHALL BE PROVIDED DURING ALL NON-WORKING HOURS.

TRAFFIC CONTROL DEVICES SHALL BE ADJUSTED TO FIT FIELD CONDITIONS AS DIRECTED BY THE ENGINEER.

PRIOR TO ORDERING DRAINAGE PIPES, THE CONTRACTOR SHALL FIELD VERIFY RELATED DRAINAGE INFORMATION IN THE PLAN WITH THE ENGINEER.

DO NOT DRIVE OR STORE EQUIPMENT, OR STORE CONSTRUCTION MATERIALS IN ENVIRONMENTALLY SENSITIVE AREAS, WETLANDS OR WATERWAYS.

PRESERVE STATIONING AND LINE TYPES OF THE EXISTING PAVEMENT MARKINGS TO BE RESTORED WITH NEW PAVEMENT MARKING

RUNOFF COEFFICIENT TABLE

	HYDROLOGIC SOIL GROUP											
	A			B			C			D		
	SLOPE RANGE (PERCENT)			SLOPE RANGE (PERCENT)			SLOPE RANGE (PERCENT)			SLOPE RANGE (PERCENT)		
LAND USE:	0-2	2-6	6 & OVER	0-2	2-6	6 & OVER	0-2	2-6	6 & OVER	0-2	2-6	6 & OVER
ROW CROPS:	.08 .22	.16 .30	.22 .38	.12 .26	.20 .34	.27 .44	.15 .30	.24 .37	.33 .50	.19 .34	.28 .41	.38 .56
MEDIAN STRIPTURF:	.19 .24	.20 .26	.24 .30	.19 .25	.22 .28	.26 .33	.20 .26	.23 .30	.30 .37	.20 .27	.25 .32	.30 .40
SIDE SLOPETURF:			.25 .32			.27 .34			.28 .36			.30 .38
PAVEMENT:												
ASPHALT:	.70 - .95											
CONCRETE:	.80 - .95											
BRICK:	.70 - .80											
DRIVES, WALKS:	.75 - .85											
ROOFS:	.75 - .95											
GRAVEL ROADS, SHOULDERS:	.40 - .60											

TOTAL PROJECT AREA = ____####____ ACRES
TOTAL AREA EXPECTED TO BE DISTURBED BY CONSTRUCTION ACTIVITIES = ____####____ACRES

DIGGERS HOTLINE
Dial 811 or (800)242-8511
www.DiggersHotline.com

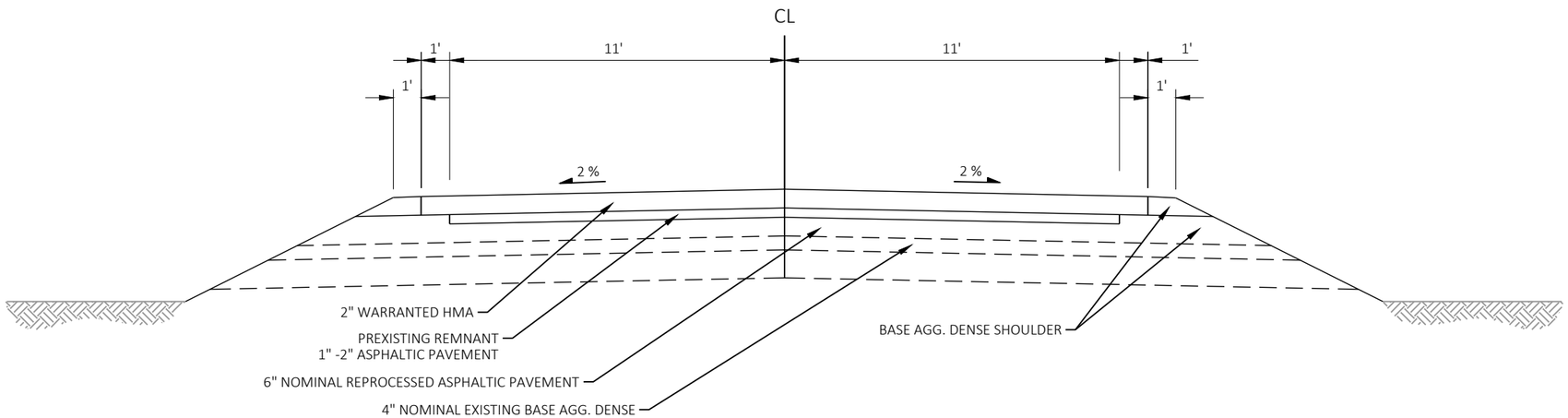

EXISTING TYPICAL SECTION

STATION 00+28 - 547+16.24
INCLUDES RR CROSSING

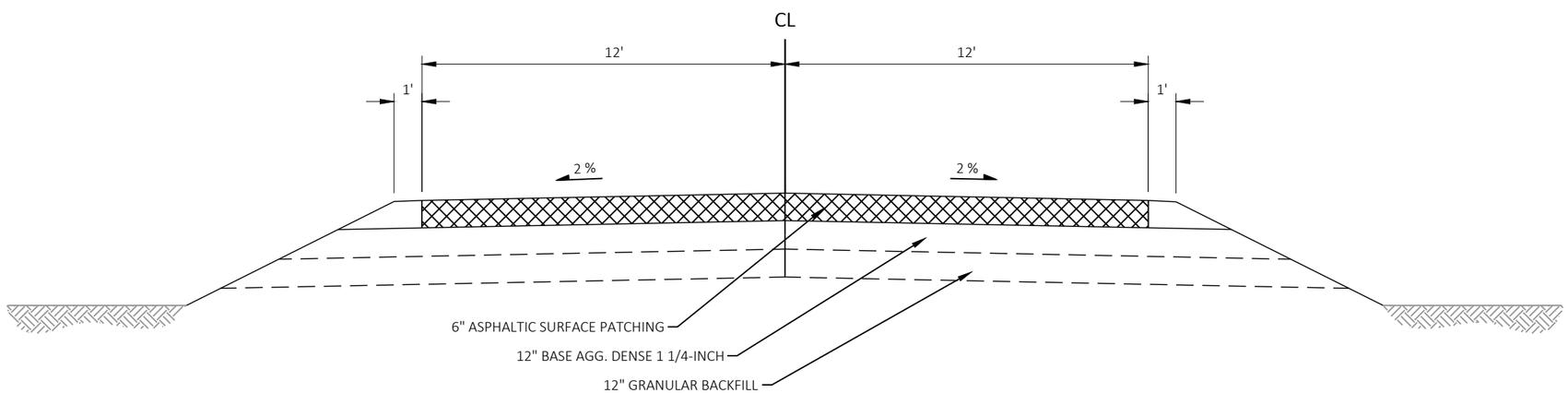

FINISHED TYPICAL SECTION

CULVERT PIPE REPLACEMENT AREAS
AND RR CROSSING REMOVAL
STA 14+75 TO STA 15+15

TO BE COMPLETED PRIOR TO OTHER PRESCRIBED SURFACE TREATMENTS

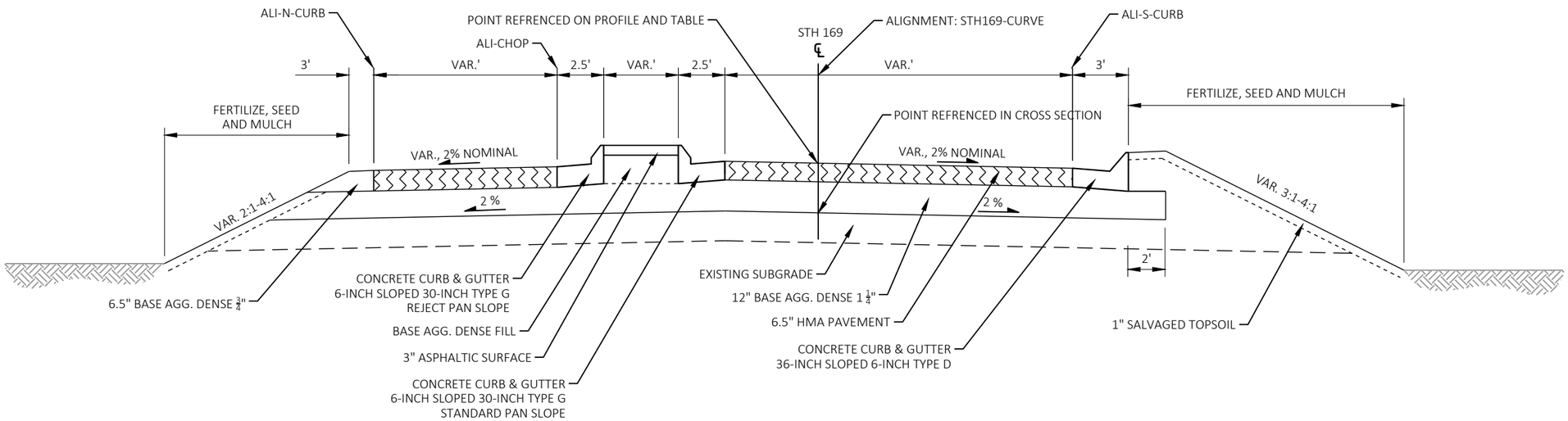

6.5" HMA PAVEMENT 4MT58-34V
1.75" UPPER LAYER
1.75" MID LAYER
3.0" LOWER LAYER

FINISHED TYPICAL SECTION

STH 13 INTERSECTION: STATIONS 0+00 - 2+22
SEE DETAILS FOR ADDITIONAL INFORMATION

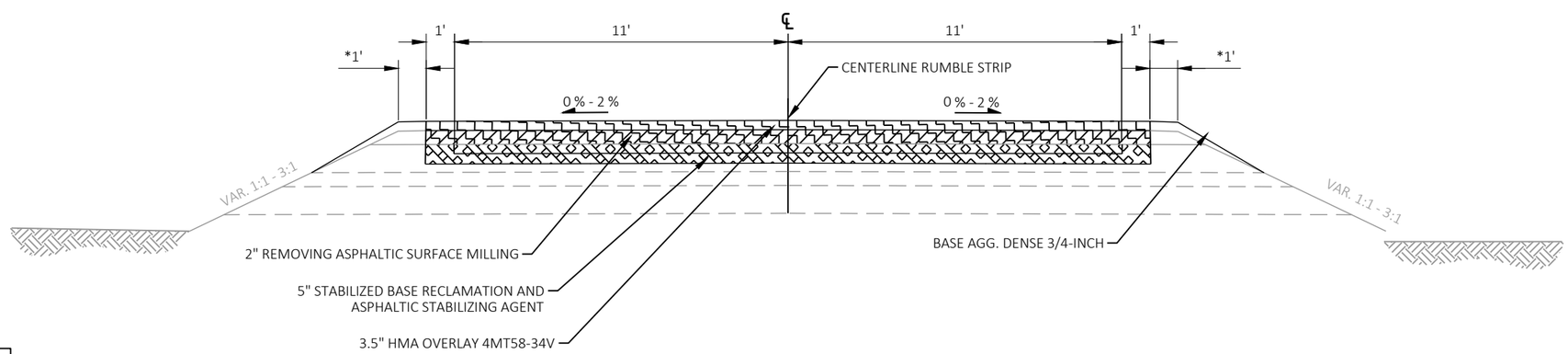

2" REMOVING ASPHALTIC SURFACE MILLING

5" STABILIZED BASE RECLAMATION WITH
STABILIZING AGENT

3.5" HMA PAVEMENT 4MT58-34V
1.75" UPPER LAYER
1.75" LOWER LAYER

FINISHED TYPICAL SECTION

STATIONS 14+52 - 16+00
RAILROAD CROSSING AREA

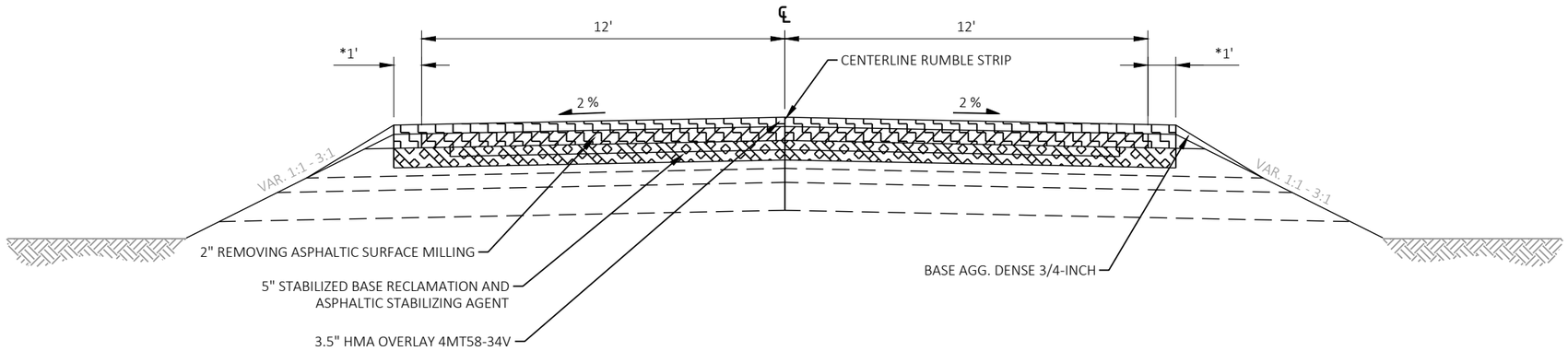

2" REMOVING ASPHALTIC SURFACE MILLING

5" STABILIZED BASE RECLAMATION WTIH
STABILIZING AGENT

3.5" HMA PAVEMENT 4MT58-34V
1.75" UPPER LAYER
1.75" LOWER LAYER

FINISHED TYPICAL SECTION

STATIONS 25+00 - 87+00
* BUTLER AVE. TO PARK ENTRANCE

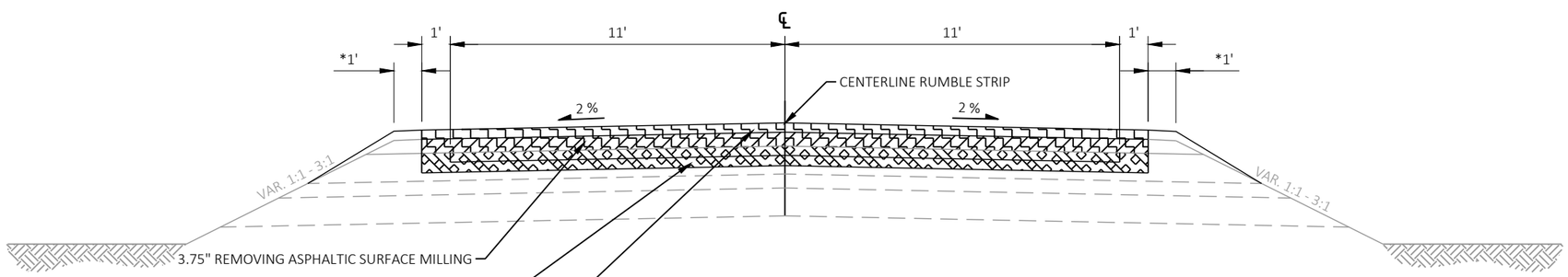

3.75" REMOVING ASPHALTIC SURFACE MILLING

8" STABILIZED BASE RECLAMATION WITH
STABILIZING AGENT

3.5" HMA PAVEMENT 4MT58-34V
1.75" UPPER LAYER
1.75" LOWER LAYER

FINISHED TYPICAL SECTION

STATION 16+00 - 22+00 (VAR. AT BEAMGUARD)
STATION 23+18 - 25+00 (VAR. AT BEAMGUARD)
STATIONS 392+80 - 395+30
SEE TRANSITION DETAIL

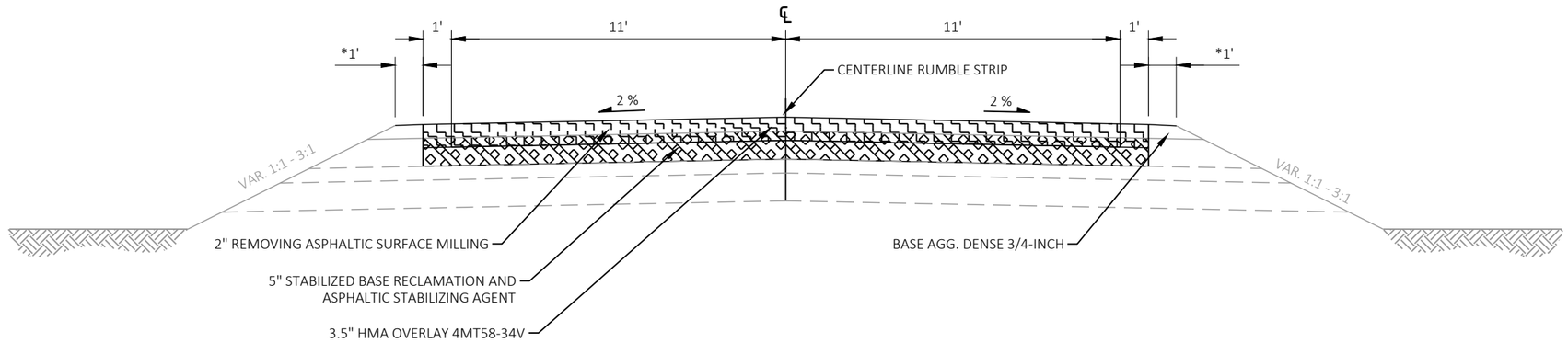

2" REMOVING ASPHALTIC SURFACE MILLING

5" STABILIZED BASE RECLAMATION WITH STABILIZING AGENT

3.5" HMA PAVEMENT 4MT58-34V
1.75" UPPER LAYER
1.75" LOWER LAYER

FINISHED TYPICAL SECTION

STATIONS 2+22 - 14+52 (NO RUMBLE STRIP)
STATIONS 87+00 - 392+80
STATIONS 395+30 - 547+16.24

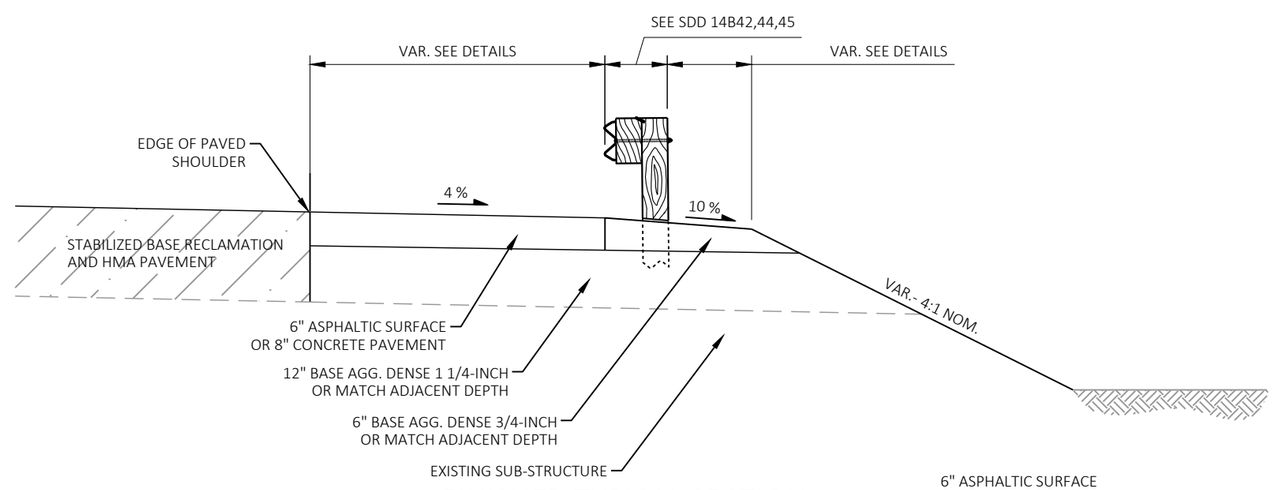

6" ASPHALTIC SURFACE
1.75" UPPER LAYER
1.75" MID LAYER
2.5" LOWER LAYER

FINISHED TYPICAL SECTION BEAMGUARD SHOULDERS

STATIONS 19+78 - 25+21 RT & LT
OUTSIDE APPROACH SLABS
AND RECONSTRUCTED AREAS
SEE PLANS FOR ADDITIONAL DETAILS

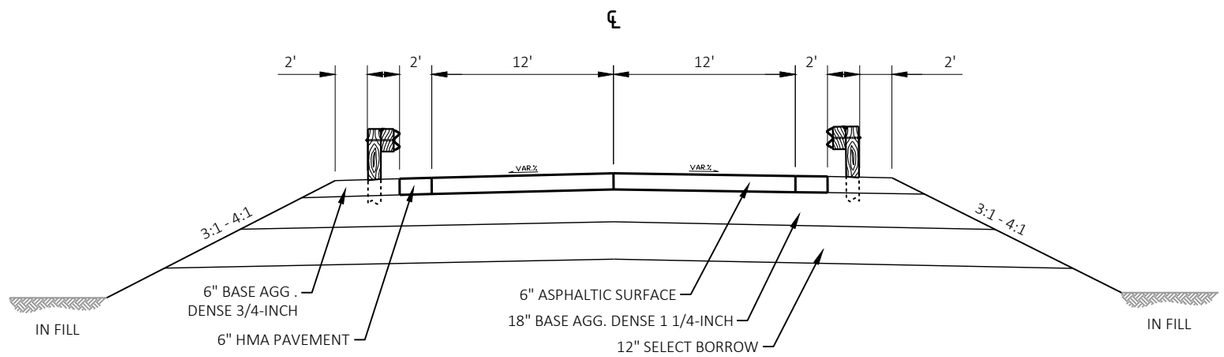

6" ASPHALTIC SURFACE TO COMPLY
WITH HMA 4MT58-34V
1.75" UPPER LAYER
1.75" MID LAYER
2.5" LOWER LAYER

FINISHED TYPICAL SECTION - RECONSTRUCTED

STA 22+00 - 22+08.92
STA 23+08.30 - 23+18

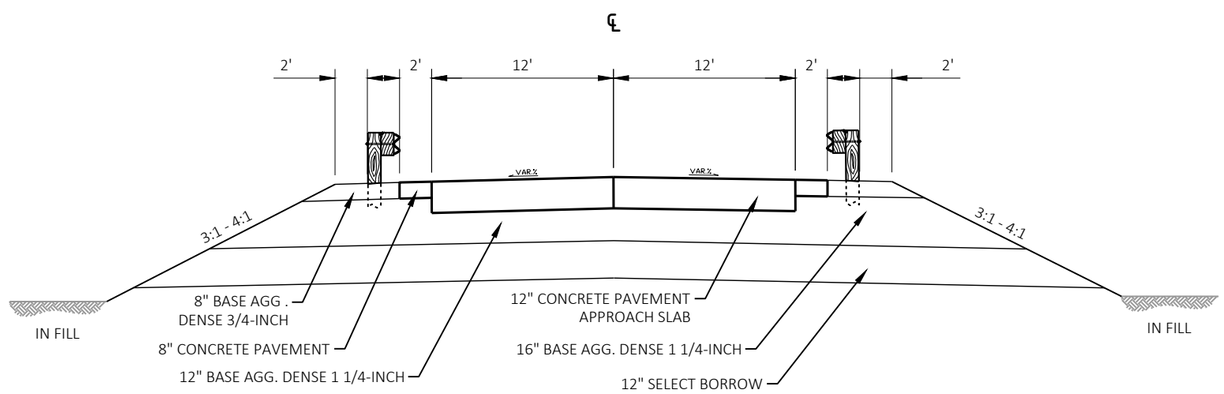

FINISHED TYPICAL SECTION - APPROACH SLAB

STA 22+08.92 - 22+25.86
STA 22+91.36 - 23+08.30

2

1.75" HMA UPPER LAYER

1.75" HMA LOWER LAYER

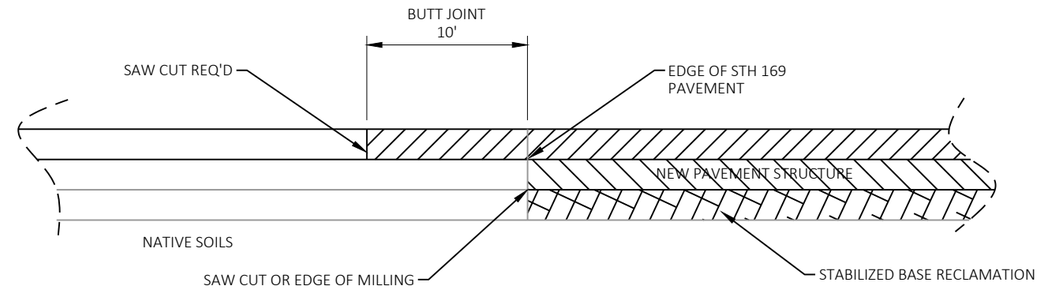

SIDE ROAD BUTT JOINT

SIDE ROADS AND PAVED DRIVEWAYS

1.75" HMA UPPER LAYER

1.75" HMA LOWER LAYER

5" TO 8" STABILIZED BASE RECLAMATION

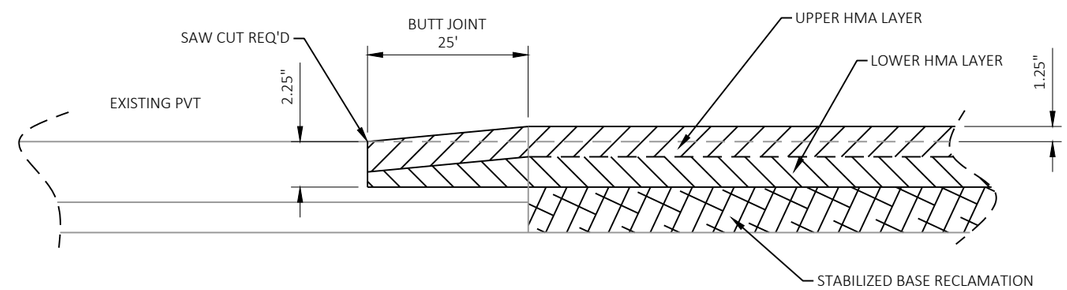

TERMINAL BUTT JOINT

STA 547+16.24

1.75" HMA UPPER LAYER

1.75" HMA LOWER LAYER

5" TO 8" STABILIZED BASE RECLAMATION

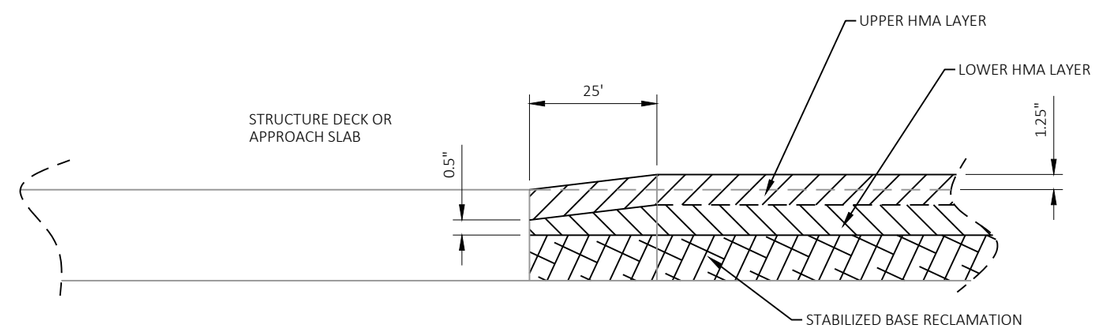

BUTT JOINT AT STRUCTURES

STA 547+16.24

PROJECT NO: 9925-00-70	HWY: STH 169	COUNTY: ASHLAND	CONSTRUCTION DETAILS	SHEET 8	E

RUNOFF COEFFICIENT TABLE

	HYDROLOGIC SOIL GROUP											
	A			B			C			D		
	SLOPE RANGE (PERCENT)			SLOPE RANGE (PERCENT)			SLOPE RANGE (PERCENT)			SLOPE RANGE (PERCENT)		
LAND USE:	0-2	2-6	OVER 6	0-2	2-6	OVER 6	0-2	2-6	OVER 6	0-2	2-6	OVER 6
ROW CROPS	0.08-0.22	0.16-0.30	0.22-0.38	0.12-0.26	0.20-0.34	0.27-0.44	0.15-0.30	0.24-0.37	0.33-0.50	0.19-0.34	0.28-0.41	0.38-0.56
MEDIAN STRIP TURF	0.19-0.24	0.20-0.26	0.24-0.30	0.19-0.25	0.22-0.28	0.26-0.33	0.20-0.26	0.23-0.30	0.30-0.37	0.20-0.27	0.25-0.32	0.30-0.40
SIDE SLOPE TURF			0.25-0.32			0.27-0.34			0.28-0.36			0.30-0.38
PAVEMENT:												
ASPHALT	0.70-0.95											
CONCRETE	0.80-0.95											
BRICK	0.70-0.80											
DRIVES, WALKS	0.75-0.85											
ROOFS	0.75-0.95											
GRAVEL ROADS, SHOULDERS	0.40-0.60											

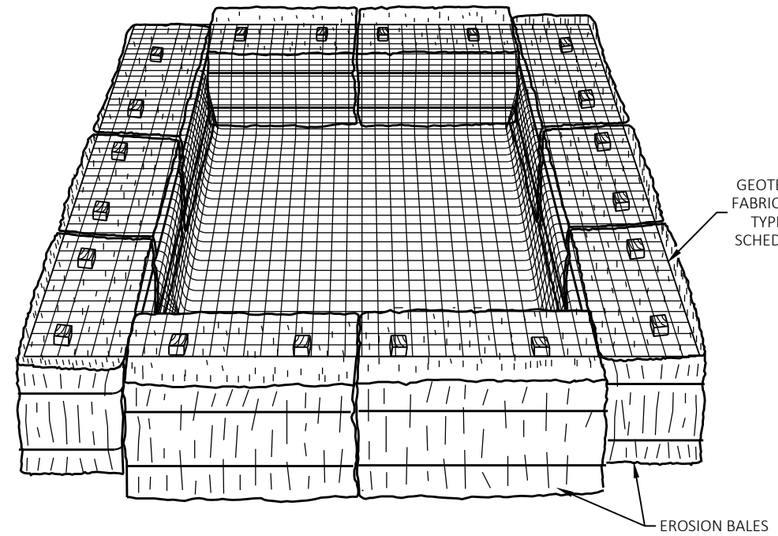

TEMPORARY SETTLING BASIN

(SIZE TO BE DETERMINED IN FIELD AS INDICATED BELOW:)

STORAGE VOLUME (CF) = 16 X GPM (PUMP RATE)

EXAMPLE:
CONTRACTOR INDICATES PUMP CAPABLE OF 50 GPM
HEIGHT OF BALES = 1.5 FT

SOLUTION:
SV (CF) = 16 X 50
SV = 800 CF

$\frac{800\ CF}{1.5\ FT} = 533\ SF$

USE A 20 FT X 27 FT BASIN

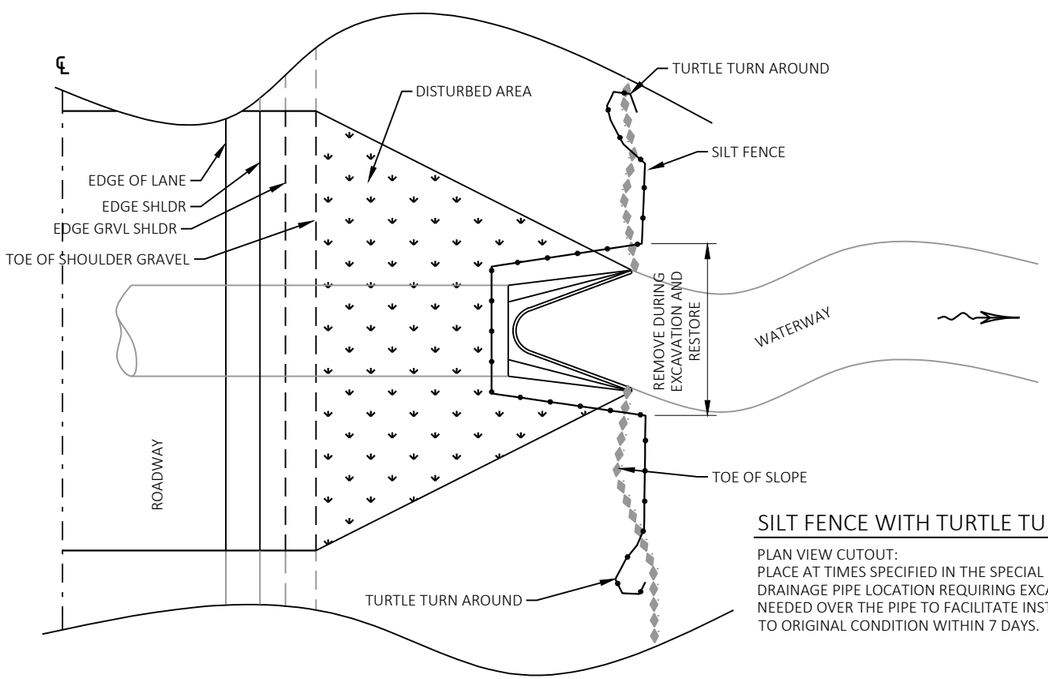

SILT FENCE WITH TURTLE TURN AROUND AT PIPE DETAIL

PLAN VIEW CUTOUT:
PLACE AT TIMES SPECIFIED IN THE SPECIAL PROVISIONS AT EACH DRAINAGE PIPE LOCATION REQUIRING EXCAVATION. REMOVE AS NEEDED OVER THE PIPE TO FACILITATE INSTALLATION AND RESTORE TO ORIGINAL CONDITION WITHIN 7 DAYS.

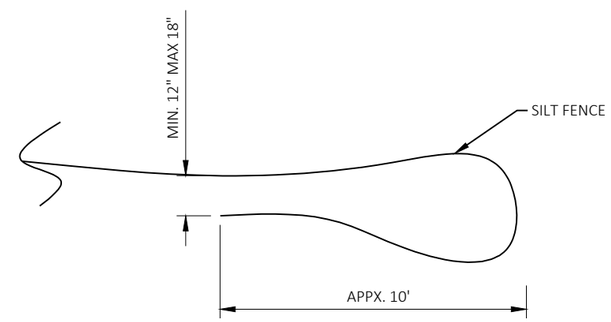

FENCE PLAN VIEW

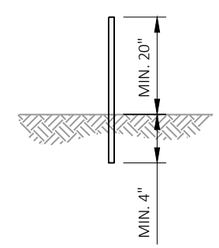

FENCE SECTION VIEW

TURTLE TURN AROUND DETAIL

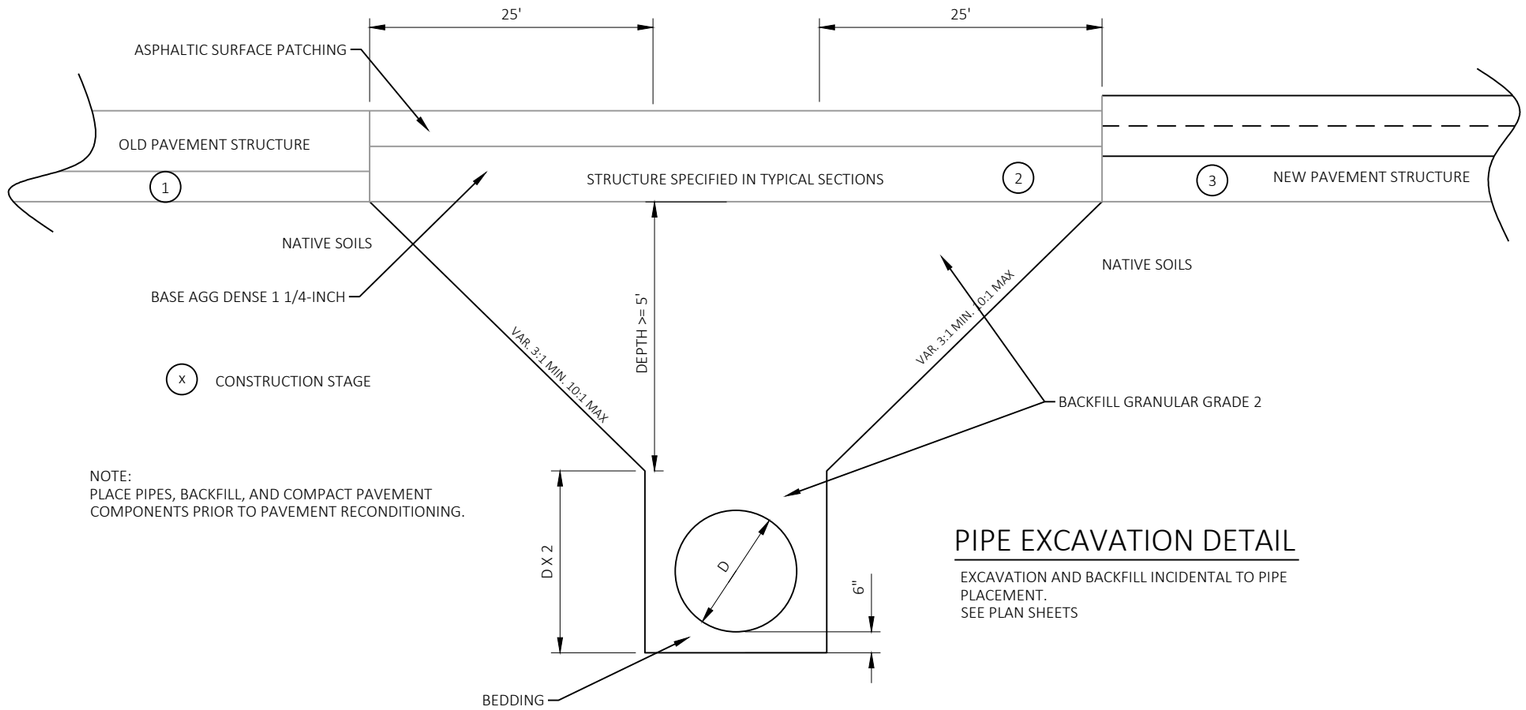

NOTE:
PLACE PIPES, BACKFILL, AND COMPACT PAVEMENT COMPONENTS PRIOR TO PAVEMENT RECONDITIONING.

PIPE EXCAVATION DETAIL

EXCAVATION AND BACKFILL INCIDENTAL TO PIPE PLACEMENT.
SEE PLAN SHEETS

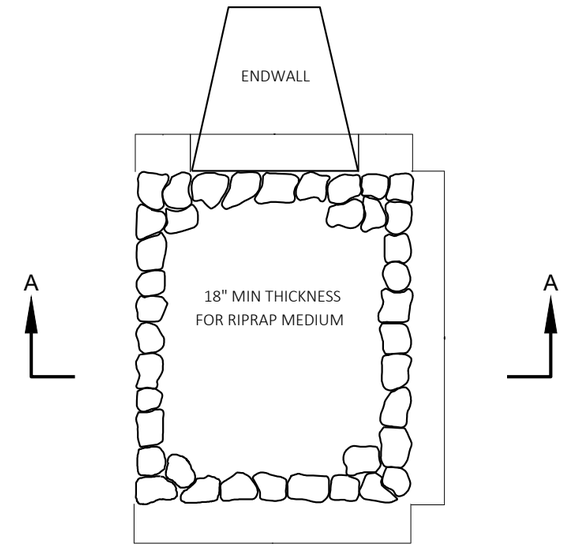

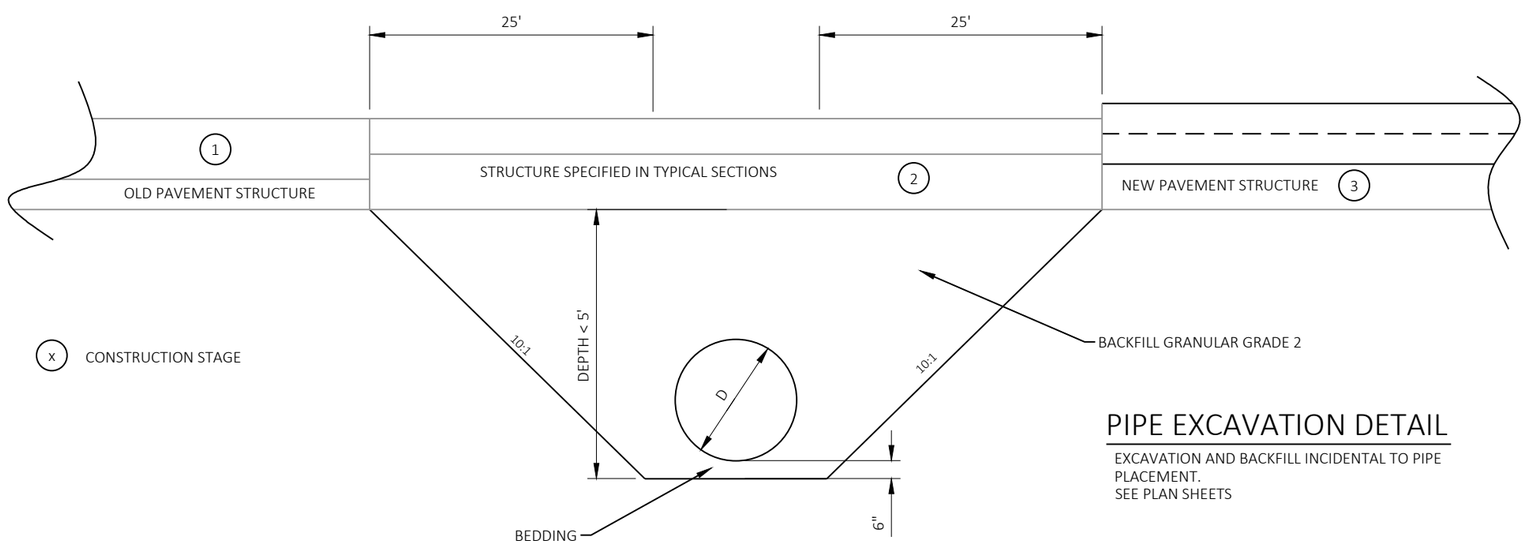

PIPE EXCAVATION DETAIL

EXCAVATION AND BACKFILL INCIDENTAL TO PIPE PLACEMENT.
SEE PLAN SHEETS

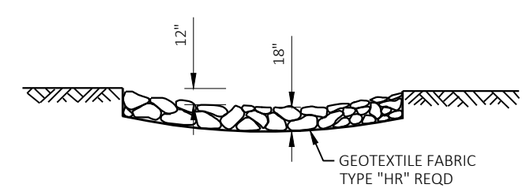

SECTION A-A

RIPRAP MEDIUM TREATMENT AT CULVERTS

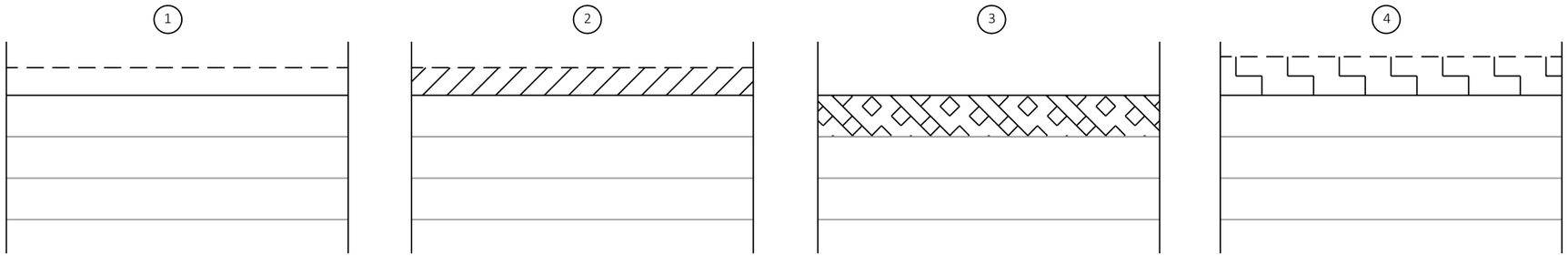

EXISTING PAVEMENT STRUCTURE

REMOVING ASPHALTIC SURFACE MILLING

2" DEPTH FOR PROJECT EXCEPT,
3.75" DEPTH FOR:
STA 16+00 TO 24+75
STA 392+80 TO 395+30

STABILIZED BASE RECLAMATION WITH STABILIZING AGENT

5" DEPTH FOR PROJECT EXCEPT,
8" DEPTH FOR:
STA 16+00 TO 24.75
STA 392+80 TO 395+30

HMA PAVEMENT OVERLAY

3.5" HMA PAVEMENT OVERLAY
1.75" UPPER LAYER
1.75" LOWER LAYER

ROADWAY SECTION IN STAGES

SECTION VIEW

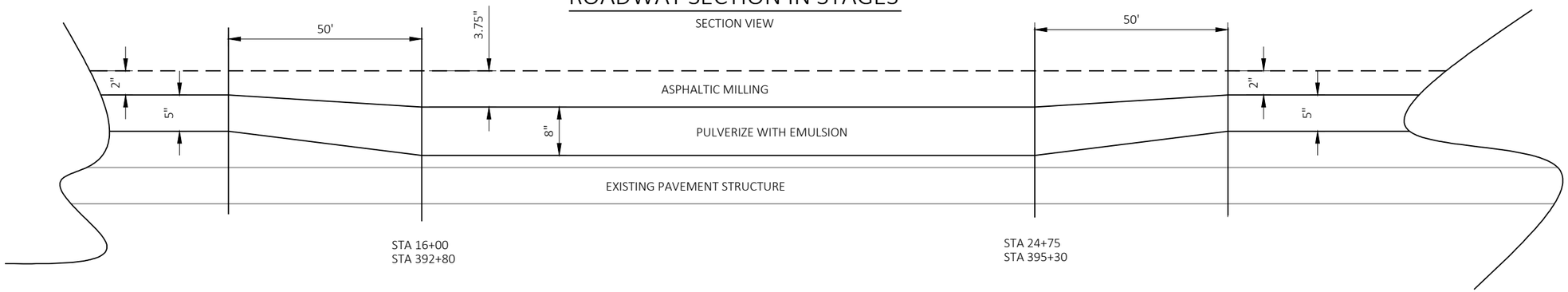

MILLING AND PULVERIZING TRANSITION DETAIL

PROFILE VIEW

Control Points				
Northing	Easting	Elevation	Number	Description
255607.391999999963	521770.929999999993	817.295	900	CP 223 MINERSVILLE GPS
248304.214999999967	538990.077000000048	1022.079	901	CP HIGH BRIDGE GPS 2
256785.993999999977	580280.819999999949	1175.836	902	CP MORSE NE GPS
233048.429999999964	594176.966000000015	1451.808	903	CP ANDERSON W GPS
225452.288999999961	559040.525999999838	1226.065	904	CP MELLEN GPS 2
215851.831000000006	518152.319000000018	1384.592	905	CP MINERAL LAKE GPS
192818.608999999997	554882.368000000017	1480.36	906	CP CAYUGA GPS
252978.315000000002	632264.939999999944	1426.979	907	CP ALDER CREEK GPS
281889.082999999926	595543.697999999975	969.161	908	CP 8S89
287198.968999999983	516357.193000000028	737.752	909	CP WHITE RIVER N GPS
256785.967999999993	580280.695999999996	1175.797	910	CP MORSE NE GPS
239749.391999999993	568378.373999999953	1167.379	911	CP 8S83
228390.023999999976	557678.566999999923	1237.783	912	CP 8S81

CURVE NUMBER	Station	Description	Left Outside Shoulder	Left Outside Lane	Right Outside Shoulder	Right Outside Lane
1	-1+04.97'	End Normal Shoulder	-4.00%	-2.00%	-4.00%	-2.00%
1	-0+60.69'	End Normal Crown	-4.00%	-2.00%	-2.00%	-2.00%
1	-0+16.40'	Level Crown	-4.00%	-2.00%	0.00%	0.00%
1	0+27.88'	Reverse Crown	-4.00%	-2.00%	2.00%	2.00%
1	0+72.17'	Low Shoulder Match	-4.00%	-4.00%	4.00%	4.00%
1	1+07.60'	Begin Full Super	-5.60%	-5.60%	5.60%	5.60%
1	1+93.36'	End Full Super	-5.60%	-5.60%	5.60%	5.60%
1	2+28.79'	Low Shoulder Match	-4.00%	-4.00%	4.00%	4.00%
1	2+73.08'	Reverse Crown	-4.00%	-2.00%	2.00%	2.00%
1	3+17.36'	Level Crown	-4.00%	-2.00%	0.00%	0.00%
1	3+61.65'	Begin Normal Crown	-4.00%	-2.00%	-2.00%	-2.00%
1	4+05.94'	Begin Normal Shoulder	-4.00%	-2.00%	-4.00%	-2.00%
2	6+86.12'	End Normal Shoulder	-4.00%	-2.00%	-4.00%	-2.00%
2	7+30.67'	End Normal Crown	-4.00%	-2.00%	-2.00%	-2.00%
2	7+75.21'	Level Crown	-4.00%	-2.00%	0.00%	0.00%
2	8+19.76'	Reverse Crown	-4.00%	-2.00%	2.00%	2.00%
2	8+64.30'	Low Shoulder Match	-4.00%	-4.00%	4.00%	4.00%
2	8+73.21'	Begin Full Super	-4.40%	-4.40%	4.40%	4.40%
2	11+41.39'	End Full Super	-4.40%	-4.40%	4.40%	4.40%
2	11+50.30'	Low Shoulder Match	-4.00%	-4.00%	4.00%	4.00%
2	11+94.84'	Reverse Crown	-4.00%	-2.00%	2.00%	2.00%
2	12+39.39'	Level Crown	-4.00%	-2.00%	0.00%	0.00%
2	12+83.93'	Begin Normal Crown	-4.00%	-2.00%	-2.00%	-2.00%
2	13+28.48'	Begin Normal Shoulder	-4.00%	-2.00%	-4.00%	-2.00%
3	19+54.36	End Normal Crown	-4.00%	-2.00%	-2.00%	-4.00%
3	21+02.51	Level Crown	-4.00%	-2.00%	0.00%	0.00%
3	22+50.66	Reverse Crown	-4.00%	-2.00%	2.00%	2.00%
3	23+79.69	Begin Full Super	-4.37%	-4.37%	4.37%	4.37%
3	31+08.45	End Full Super	-4.37%	-4.37%	4.37%	4.37%
3	32+84.01	Reverse Crown	-4.00%	-2.00%	2.00%	2.00%
3	34+32.15	Level Crown	-4.00%	-2.00%	0.00%	0.00%
3	35+80.30	Begin Normal Crown	-4.00%	-2.00%	-2.00%	-4.00%

CURVE NUMBER	Station	Description	Left Outside Shoulder	Left Outside Lane	Right Outside Shoulder	Right Outside Lane
4	42+12.92'	End Normal Shoulder	-4.00%	-2.00%	-4.00%	-2.00%
4	42+66.25'	End Normal Crown	-2.00%	-2.00%	-4.00%	-2.00%
4	43+19.59'	Level Crown	0.00%	0.00%	-4.00%	-2.00%
4	43+72.92'	Reverse Crown	2.00%	2.00%	-4.00%	-2.00%
4	44+26.25'	Low Shoulder Match	4.00%	4.00%	-4.00%	-4.00%
4	44+79.59'	Begin Full Super	6.00%	6.00%	-6.00%	-6.00%
4	47+22.02'	End Full Super	6.00%	6.00%	-6.00%	-6.00%
4	47+75.36'	Low Shoulder Match	4.00%	4.00%	-4.00%	-4.00%
4	48+28.69'	Reverse Crown	2.00%	2.00%	-4.00%	-2.00%
4	48+82.02'	Level Crown	0.00%	0.00%	-4.00%	-2.00%
4	49+35.36'	Begin Normal Crown	-2.00%	-2.00%	-4.00%	-2.00%
4	49+88.69'	Begin Normal Shoulder	-4.00%	-2.00%	-4.00%	-2.00%
5	50+99.72'	End Normal Shoulder	-4.00%	-2.00%	-4.00%	-2.00%
5	51+53.06'	End Normal Crown	-4.00%	-2.00%	-2.00%	-2.00%
5	52+06.39'	Level Crown	-4.00%	-2.00%	0.00%	0.00%
5	52+59.72'	Reverse Crown	-4.00%	-2.00%	2.00%	2.00%
5	53+13.06'	Low Shoulder Match	-4.00%	-4.00%	4.00%	4.00%
5	53+66.39'	Begin Full Super	-6.00%	-6.00%	6.00%	6.00%
5	54+95.39'	End Full Super	-6.00%	-6.00%	6.00%	6.00%
6	59+19.89'	Begin Full Super	6.00%	6.00%	-6.00%	-6.00%
6	62+03.82'	End Full Super	6.00%	6.00%	-6.00%	-6.00%
6	62+57.15'	Low Shoulder Match	4.00%	4.00%	-4.00%	-4.00%
6	63+10.49'	Reverse Crown	2.00%	2.00%	-4.00%	-2.00%
6	63+63.82'	Level Crown	0.00%	0.00%	-4.00%	-2.00%
6	64+17.15'	Begin Normal Crown	-2.00%	-2.00%	-4.00%	-2.00%
6	64+70.49'	Begin Normal Shoulder	-4.00%	-2.00%	-4.00%	-2.00%
7	68+73.80'	End Normal Shoulder	-4.00%	-2.00%	-4.00%	-2.00%
7	69+27.13'	End Normal Crown	-4.00%	-2.00%	-2.00%	-2.00%
7	69+80.46'	Level Crown	-4.00%	-2.00%	0.00%	0.00%
7	70+33.80'	Reverse Crown	-4.00%	-2.00%	2.00%	2.00%
7	70+87.13'	Low Shoulder Match	-4.00%	-4.00%	4.00%	4.00%
7	71+40.46'	Begin Full Super	-6.00%	-6.00%	6.00%	6.00%
7	75+40.36'	End Full Super	-6.00%	-6.00%	6.00%	6.00%

CURVE NUMBER	Station	Description	Left Outside Shoulder	Left Outside Lane	Right Outside Shoulder	Right Outside Lane
8	77+10.51'	Begin Full Super	-6.00%	-6.00%	6.00%	6.00%
8	80+46.28'	End Full Super	-6.00%	-6.00%	6.00%	6.00%
8	80+99.62'	Low Shoulder Match	-4.00%	-4.00%	4.00%	4.00%
8	81+52.95'	Reverse Crown	-4.00%	-2.00%	2.00%	2.00%
8	82+06.28'	Level Crown	-4.00%	-2.00%	0.00%	0.00%
8	82+59.62'	Begin Normal Crown	-4.00%	-2.00%	-2.00%	-2.00%
9	83+65.19'	End Normal Crown	-2.00%	-2.00%	-4.00%	-2.00%
9	84+18.53'	Level Crown	0.00%	0.00%	-4.00%	-2.00%
9	84+71.86'	Reverse Crown	2.00%	2.00%	-4.00%	-2.00%
9	85+25.19'	Low Shoulder Match	4.00%	4.00%	-4.00%	-4.00%
9	85+78.53'	Begin Full Super	6.00%	6.00%	-6.00%	-6.00%
9	93+47.87'	End Full Super	6.00%	6.00%	-6.00%	-6.00%
9	94+01.20'	Low Shoulder Match	4.00%	4.00%	-4.00%	-4.00%
9	94+54.53'	Reverse Crown	2.00%	2.00%	-4.00%	-2.00%
9	95+07.87'	Level Crown	0.00%	0.00%	-4.00%	-2.00%
9	95+61.20'	Begin Normal Crown	-2.00%	-2.00%	-4.00%	-2.00%
9	96+14.53'	Begin Normal Shoulder	-4.00%	-2.00%	-4.00%	-2.00%
10	104+65.06'	End Normal Shoulder	-4.00%	-2.00%	-4.00%	-2.00%
10	105+18.39'	End Normal Crown	-2.00%	-2.00%	-4.00%	-2.00%
10	105+71.72'	Level Crown	0.00%	0.00%	-4.00%	-2.00%
10	106+25.06'	Reverse Crown	2.00%	2.00%	-4.00%	-2.00%
10	106+78.39'	Low Shoulder Match	4.00%	4.00%	-4.00%	-4.00%
10	107+31.72'	Begin Full Super	6.00%	6.00%	-6.00%	-6.00%
10	113+50.19'	End Full Super	6.00%	6.00%	-6.00%	-6.00%
11	116+14.56'	Begin Full Super	6.00%	6.00%	-6.00%	-6.00%
11	119+12.31'	End Full Super	6.00%	6.00%	-6.00%	-6.00%
11	119+65.64'	Low Shoulder Match	4.00%	4.00%	-4.00%	-4.00%
11	120+18.98'	Reverse Crown	2.00%	2.00%	-4.00%	-2.00%
11	120+72.31'	Level Crown	0.00%	0.00%	-4.00%	-2.00%
11	121+25.64'	Begin Normal Crown	-2.00%	-2.00%	-4.00%	-2.00%
11	121+78.98'	Begin Normal Shoulder	-4.00%	-2.00%	-4.00%	-2.00%

CURVE NUMBER	Station	Description	Left Outside Shoulder	Left Outside Lane	Right Outside Shoulder	Right Outside Lane
12	122+64.69'	End Normal Shoulder	-4.00%	-2.00%	-4.00%	-2.00%
12	123+18.03'	End Normal Crown	-4.00%	-2.00%	-2.00%	-2.00%
12	123+71.36'	Level Crown	-4.00%	-2.00%	0.00%	0.00%
12	124+24.69'	Reverse Crown	-4.00%	-2.00%	2.00%	2.00%
12	124+51.36'	Begin Full Super	-4.00%	-3.00%	3.00%	3.00%
12	125+71.63'	End Full Super	-4.00%	-3.00%	3.00%	3.00%
12	125+98.30'	Reverse Crown	-4.00%	-2.00%	2.00%	2.00%
12	126+51.63'	Level Crown	-4.00%	-2.00%	0.00%	0.00%
12	127+04.96'	Begin Normal Crown	-4.00%	-2.00%	-2.00%	-2.00%
12	127+58.30'	Begin Normal Shoulder	-4.00%	-2.00%	-4.00%	-2.00%
13	127+83.12'	End Normal Shoulder	-4.00%	-2.00%	-4.00%	-2.00%
13	128+36.45'	End Normal Crown	-4.00%	-2.00%	-2.00%	-2.00%
13	128+89.78'	Level Crown	-4.00%	-2.00%	0.00%	0.00%
13	129+43.12'	Reverse Crown	-4.00%	-2.00%	2.00%	2.00%
13	129+96.45'	Low Shoulder Match	-4.00%	-4.00%	4.00%	4.00%
13	130+49.78'	Begin Full Super	-6.00%	-6.00%	6.00%	6.00%
13	132+21.62'	End Full Super	-6.00%	-6.00%	6.00%	6.00%
14	135+35.93'	Begin Full Super	6.00%	6.00%	-6.00%	-6.00%
14	136+33.73'	End Full Super	6.00%	6.00%	-6.00%	-6.00%
15	139+31.40'	Begin Full Super	-6.00%	-6.00%	6.00%	6.00%
15	140+87.56'	End Full Super	-6.00%	-6.00%	6.00%	6.00%
16	143+23.19'	Begin Full Super	6.00%	6.00%	-6.00%	-6.00%
16	144+99.03'	End Full Super	6.00%	6.00%	-6.00%	-6.00%
16	145+52.36'	Low Shoulder Match	4.00%	4.00%	-4.00%	-4.00%
16	146+05.70'	Reverse Crown	2.00%	2.00%	-4.00%	-2.00%
16	146+59.03'	Level Crown	0.00%	0.00%	-4.00%	-2.00%
16	147+12.36'	Begin Normal Crown	-2.00%	-2.00%	-4.00%	-2.00%
16	147+65.70'	Begin Normal Shoulder	-4.00%	-2.00%	-4.00%	-2.00%

CURVE NUMBER	Station	Description	Left Outside Shoulder	Left Outside Lane	Right Outside Shoulder	Right Outside Lane
17	157+60.60'	End Normal Shoulder	-4.00%	-2.00%	-4.00%	-2.00%
17	158+13.94'	End Normal Crown	-4.00%	-2.00%	-2.00%	-2.00%
17	158+67.27'	Level Crown	-4.00%	-2.00%	0.00%	0.00%
17	159+20.60'	Reverse Crown	-4.00%	-2.00%	2.00%	2.00%
17	159+73.94'	Low Shoulder Match	-4.00%	-4.00%	4.00%	4.00%
17	160+27.27'	Begin Full Super	-6.00%	-6.00%	6.00%	6.00%
17	164+35.99'	End Full Super	-6.00%	-6.00%	6.00%	6.00%
17	164+89.32'	Low Shoulder Match	-4.00%	-4.00%	4.00%	4.00%
17	165+42.65'	Reverse Crown	-4.00%	-2.00%	2.00%	2.00%
17	165+95.99'	Level Crown	-4.00%	-2.00%	0.00%	0.00%
17	166+49.32'	Begin Normal Crown	-4.00%	-2.00%	-2.00%	-2.00%
17	167+02.65'	Begin Normal Shoulder	-4.00%	-2.00%	-4.00%	-2.00%
18	172+52.51'	End Normal Shoulder	-4.00%	-2.00%	-4.00%	-2.00%
18	173+05.85'	End Normal Crown	-2.00%	-2.00%	-4.00%	-2.00%
18	173+59.18'	Level Crown	0.00%	0.00%	-4.00%	-2.00%
18	174+12.51'	Reverse Crown	2.00%	2.00%	-4.00%	-2.00%
18	174+65.85'	Low Shoulder Match	4.00%	4.00%	-4.00%	-4.00%
18	175+19.18'	Begin Full Super	6.00%	6.00%	-6.00%	-6.00%
18	178+06.04'	End Full Super	6.00%	6.00%	-6.00%	-6.00%
18	178+59.38'	Low Shoulder Match	4.00%	4.00%	-4.00%	-4.00%
18	179+12.71'	Reverse Crown	2.00%	2.00%	-4.00%	-2.00%
18	179+66.04'	Level Crown	0.00%	0.00%	-4.00%	-2.00%
18	180+19.38'	Begin Normal Crown	-2.00%	-2.00%	-4.00%	-2.00%
18	180+72.71'	Begin Normal Shoulder	-4.00%	-2.00%	-4.00%	-2.00%
19	185+67.39'	End Normal Shoulder	-4.00%	-2.00%	-4.00%	-2.00%
19	186+20.72'	End Normal Crown	-4.00%	-2.00%	-2.00%	-2.00%
19	186+74.05'	Level Crown	-4.00%	-2.00%	0.00%	0.00%
19	187+27.39'	Reverse Crown	-4.00%	-2.00%	2.00%	2.00%
19	187+80.72'	Low Shoulder Match	-4.00%	-4.00%	4.00%	4.00%
19	188+34.05'	Begin Full Super	-6.00%	-6.00%	6.00%	6.00%
19	190+01.23'	End Full Super	-6.00%	-6.00%	6.00%	6.00%
19	190+54.56'	Low Shoulder Match	-4.00%	-4.00%	4.00%	4.00%
19	191+07.90'	Reverse Crown	-4.00%	-2.00%	2.00%	2.00%
19	191+61.23'	Level Crown	-4.00%	-2.00%	0.00%	0.00%
19	192+14.56'	Begin Normal Crown	-4.00%	-2.00%	-2.00%	-2.00%
19	192+67.90'	Begin Normal Shoulder	-4.00%	-2.00%	-4.00%	-2.00%

CURVE NUMBER	Station	Description	Left Outside Shoulder	Left Outside Lane	Right Outside Shoulder	Right Outside Lane
20	215+48.25'	End Normal Shoulder	-4.00%	-2.00%	-4.00%	-2.00%
20	216+01.58'	End Normal Crown	-2.00%	-2.00%	-4.00%	-2.00%
20	216+54.91'	Level Crown	0.00%	0.00%	-4.00%	-2.00%
20	217+08.25'	Reverse Crown	2.00%	2.00%	-4.00%	-2.00%
20	217+61.58'	Low Shoulder Match	4.00%	4.00%	-4.00%	-4.00%
20	218+14.91'	Begin Full Super	6.00%	6.00%	-6.00%	-6.00%
20	224+95.98'	End Full Super	6.00%	6.00%	-6.00%	-6.00%
21	226+95.61'	Begin Full Super	-6.00%	-6.00%	6.00%	6.00%
21	229+33.89'	End Full Super	-6.00%	-6.00%	6.00%	6.00%
21	229+87.23'	Low Shoulder Match	-4.00%	-4.00%	4.00%	4.00%
21	230+40.56'	Reverse Crown	-4.00%	-2.00%	2.00%	2.00%
21	230+93.89'	Level Crown	-4.00%	-2.00%	0.00%	0.00%
21	231+47.23'	Begin Normal Crown	-4.00%	-2.00%	-2.00%	-2.00%
21	232+00.56'	Begin Normal Shoulder	-4.00%	-2.00%	-4.00%	-2.00%
22	240+21.32'	End Normal Shoulder	-4.00%	-2.00%	-4.00%	-2.00%
22	240+74.65'	End Normal Crown	-2.00%	-2.00%	-4.00%	-2.00%
22	241+27.99'	Level Crown	0.00%	0.00%	-4.00%	-2.00%
22	241+81.32'	Reverse Crown	2.00%	2.00%	-4.00%	-2.00%
22	242+34.65'	Low Shoulder Match	4.00%	4.00%	-4.00%	-4.00%
22	242+71.99'	Begin Full Super	5.40%	5.40%	-5.40%	-5.40%
22	243+28.18'	End Full Super	5.40%	5.40%	-5.40%	-5.40%
22	243+65.51'	Low Shoulder Match	4.00%	4.00%	-4.00%	-4.00%
22	244+18.84'	Reverse Crown	2.00%	2.00%	-4.00%	-2.00%
22	244+72.18'	Level Crown	0.00%	0.00%	-4.00%	-2.00%
22	245+25.51'	Begin Normal Crown	-2.00%	-2.00%	-4.00%	-2.00%
22	245+78.84'	Begin Normal Shoulder	-4.00%	-2.00%	-4.00%	-2.00%
23	256+02.27'	End Normal Shoulder	-4.00%	-2.00%	-4.00%	-2.00%
23	256+55.61'	End Normal Crown	-4.00%	-2.00%	-2.00%	-2.00%
23	257+08.94'	Level Crown	-4.00%	-2.00%	0.00%	0.00%
23	257+62.27'	Reverse Crown	-4.00%	-2.00%	2.00%	2.00%
23	258+15.61'	Low Shoulder Match	-4.00%	-4.00%	4.00%	4.00%
23	258+52.94'	Begin Full Super	-5.40%	-5.40%	5.40%	5.40%
23	260+75.04'	End Full Super	-5.40%	-5.40%	5.40%	5.40%
23	261+12.37'	Low Shoulder Match	-4.00%	-4.00%	4.00%	4.00%
23	261+65.70'	Reverse Crown	-4.00%	-2.00%	2.00%	2.00%
23	262+19.04'	Level Crown	-4.00%	-2.00%	0.00%	0.00%
23	262+72.37'	Begin Normal Crown	-4.00%	-2.00%	-2.00%	-2.00%
23	263+25.70'	Begin Normal Shoulder	-4.00%	-2.00%	-4.00%	-2.00%

CURVE NUMBER	Station	Description	Left Outside Shoulder	Left Outside Lane	Right Outside Shoulder	Right Outside Lane
24	269+43.84'	End Normal Shoulder	-4.00%	-2.00%	-4.00%	-2.00%
24	269+97.17'	End Normal Crown	-2.00%	-2.00%	-4.00%	-2.00%
24	270+50.51'	Level Crown	0.00%	0.00%	-4.00%	-2.00%
24	271+03.84'	Reverse Crown	2.00%	2.00%	-4.00%	-2.00%
24	271+57.17'	Low Shoulder Match	4.00%	4.00%	-4.00%	-4.00%
24	272+10.51'	Begin Full Super	6.00%	6.00%	-6.00%	-6.00%
24	275+62.89'	End Full Super	6.00%	6.00%	-6.00%	-6.00%
24	276+16.23'	Low Shoulder Match	4.00%	4.00%	-4.00%	-4.00%
24	276+69.56'	Reverse Crown	2.00%	2.00%	-4.00%	-2.00%
24	277+22.89'	Level Crown	0.00%	0.00%	-4.00%	-2.00%
24	277+76.23'	Begin Normal Crown	-2.00%	-2.00%	-4.00%	-2.00%
24	278+29.56'	Begin Normal Shoulder	-4.00%	-2.00%	-4.00%	-2.00%
25	349+51.63'	End Normal Shoulder	-4.00%	-2.00%	-4.00%	-2.00%
25	350+04.96'	End Normal Crown	-4.00%	-2.00%	-2.00%	-2.00%
25	350+58.29'	Level Crown	-4.00%	-2.00%	0.00%	0.00%
25	351+11.63'	Reverse Crown	-4.00%	-2.00%	2.00%	2.00%
25	351+64.96'	Low Shoulder Match	-4.00%	-4.00%	4.00%	4.00%
25	352+18.29'	Begin Full Super	-6.00%	-6.00%	6.00%	6.00%
25	353+77.59'	End Full Super	-6.00%	-6.00%	6.00%	6.00%
25	354+30.93'	Low Shoulder Match	-4.00%	-4.00%	4.00%	4.00%
25	354+84.26'	Reverse Crown	-4.00%	-2.00%	2.00%	2.00%
25	355+37.59'	Level Crown	-4.00%	-2.00%	0.00%	0.00%
25	355+90.93'	Begin Normal Crown	-4.00%	-2.00%	-2.00%	-2.00%
25	356+44.26'	Begin Normal Shoulder	-4.00%	-2.00%	-4.00%	-2.00%
26	402+79.03'	End Normal Shoulder	-4.00%	-2.00%	-4.00%	-2.00%
26	403+32.36'	End Normal Crown	-4.00%	-2.00%	-2.00%	-2.00%
26	403+85.69'	Level Crown	-4.00%	-2.00%	0.00%	0.00%
26	404+39.03'	Reverse Crown	-4.00%	-2.00%	2.00%	2.00%
26	404+65.69'	Begin Full Super	-4.00%	-3.00%	3.00%	3.00%
26	407+59.36'	End Full Super	-4.00%	-3.00%	3.00%	3.00%
26	407+86.02'	Reverse Crown	-4.00%	-2.00%	2.00%	2.00%
26	408+39.36'	Level Crown	-4.00%	-2.00%	0.00%	0.00%
26	408+92.69'	Begin Normal Crown	-4.00%	-2.00%	-2.00%	-2.00%
26	409+46.02'	Begin Normal Shoulder	-4.00%	-2.00%	-4.00%	-2.00%

CURVE NUMBER	Station	Description	Left Outside Shoulder	Left Outside Lane	Right Outside Shoulder	Right Outside Lane
27	454+92.97'	End Normal Shoulder	-4.00%	-2.00%	-4.00%	-2.00%
27	455+46.30'	End Normal Crown	-2.00%	-2.00%	-4.00%	-2.00%
27	455+99.63'	Level Crown	0.00%	0.00%	-4.00%	-2.00%
27	456+52.97'	Reverse Crown	2.00%	2.00%	-4.00%	-2.00%
27	457+06.30'	Low Shoulder Match	4.00%	4.00%	-4.00%	-4.00%
27	457+59.63'	Begin Full Super	6.00%	6.00%	-6.00%	-6.00%
27	459+55.79'	End Full Super	6.00%	6.00%	-6.00%	-6.00%
27	460+09.12'	Low Shoulder Match	4.00%	4.00%	-4.00%	-4.00%
27	460+62.45'	Reverse Crown	2.00%	2.00%	-4.00%	-2.00%
27	461+15.79'	Level Crown	0.00%	0.00%	-4.00%	-2.00%
27	461+69.12'	Begin Normal Crown	-2.00%	-2.00%	-4.00%	-2.00%
27	462+22.45'	Begin Normal Shoulder	-4.00%	-2.00%	-4.00%	-2.00%
28	467+32.91'	End Normal Shoulder	-4.00%	-2.00%	-4.00%	-2.00%
28	467+86.24'	End Normal Crown	-4.00%	-2.00%	-2.00%	-2.00%
28	468+39.57'	Level Crown	-4.00%	-2.00%	0.00%	0.00%
28	468+92.91'	Reverse Crown	-4.00%	-2.00%	2.00%	2.00%
28	469+46.24'	Low Shoulder Match	-4.00%	-4.00%	4.00%	4.00%
28	469+99.57'	Begin Full Super	-6.00%	-6.00%	6.00%	6.00%
28	471+77.91'	End Full Super	-6.00%	-6.00%	6.00%	6.00%
28	472+31.25'	Low Shoulder Match	-4.00%	-4.00%	4.00%	4.00%
28	472+84.58'	Reverse Crown	-4.00%	-2.00%	2.00%	2.00%
28	473+37.91'	Level Crown	-4.00%	-2.00%	0.00%	0.00%
28	473+91.25'	Begin Normal Crown	-4.00%	-2.00%	-2.00%	-2.00%
28	474+44.58'	Begin Normal Shoulder	-4.00%	-2.00%	-4.00%	-2.00%
29	485+94.74'	End Normal Shoulder	-4.00%	-2.00%	-4.00%	-2.00%
29	486+48.08'	End Normal Crown	-2.00%	-2.00%	-4.00%	-2.00%
29	487+01.41'	Level Crown	0.00%	0.00%	-4.00%	-2.00%
29	487+54.74'	Reverse Crown	2.00%	2.00%	-4.00%	-2.00%
29	488+08.08'	Low Shoulder Match	4.00%	4.00%	-4.00%	-4.00%
29	488+61.41'	Begin Full Super	6.00%	6.00%	-6.00%	-6.00%
29	491+26.02'	End Full Super	6.00%	6.00%	-6.00%	-6.00%
29	491+79.36'	Low Shoulder Match	4.00%	4.00%	-4.00%	-4.00%
29	492+32.69'	Reverse Crown	2.00%	2.00%	-4.00%	-2.00%
29	492+86.02'	Level Crown	0.00%	0.00%	-4.00%	-2.00%
29	493+39.36'	Begin Normal Crown	-2.00%	-2.00%	-4.00%	-2.00%
29	493+92.69'	Begin Normal Shoulder	-4.00%	-2.00%	-4.00%	-2.00%

CURVE NUMBER	Station	Description	Left Outside Shoulder	Left Outside Lane	Right Outside Shoulder	Right Outside Lane
30	497+84.79'	End Normal Shoulder	-4.00%	-2.00%	-4.00%	-2.00%
30	498+38.13'	End Normal Crown	-4.00%	-2.00%	-2.00%	-2.00%
30	498+91.46'	Level Crown	-4.00%	-2.00%	0.00%	0.00%
30	499+44.79'	Reverse Crown	-4.00%	-2.00%	2.00%	2.00%
30	499+98.13'	Low Shoulder Match	-4.00%	-4.00%	4.00%	4.00%
30	500+51.46'	Begin Full Super	-6.00%	-6.00%	6.00%	6.00%
30	503+00.01'	End Full Super	-6.00%	-6.00%	6.00%	6.00%
31	504+55.14'	Begin Full Super	-6.00%	-6.00%	6.00%	6.00%
31	506+18.65'	End Full Super	-6.00%	-6.00%	6.00%	6.00%
31	506+71.99'	Low Shoulder Match	-4.00%	-4.00%	4.00%	4.00%
31	507+25.32'	Reverse Crown	-4.00%	-2.00%	2.00%	2.00%
31	507+78.65'	Level Crown	-4.00%	-2.00%	0.00%	0.00%
31	508+31.99'	Begin Normal Crown	-4.00%	-2.00%	-2.00%	-2.00%
31	508+85.32'	Begin Normal Shoulder	-4.00%	-2.00%	-4.00%	-2.00%
32	526+24.27'	End Normal Shoulder	-4.00%	-2.00%	-4.00%	-2.00%
32	526+77.60'	End Normal Crown	-2.00%	-2.00%	-4.00%	-2.00%
32	527+30.94'	Level Crown	0.00%	0.00%	-4.00%	-2.00%
32	527+84.27'	Reverse Crown	2.00%	2.00%	-4.00%	-2.00%
32	528+37.60'	Low Shoulder Match	4.00%	4.00%	-4.00%	-4.00%
32	528+90.94'	Begin Full Super	6.00%	6.00%	-6.00%	-6.00%
32	531+31.84'	End Full Super	6.00%	6.00%	-6.00%	-6.00%
32	531+85.17'	Low Shoulder Match	4.00%	4.00%	-4.00%	-4.00%
32	532+38.50'	Reverse Crown	2.00%	2.00%	-4.00%	-2.00%
32	532+91.84'	Level Crown	0.00%	0.00%	-4.00%	-2.00%
32	533+45.17'	Begin Normal Crown	-2.00%	-2.00%	-4.00%	-2.00%
32	533+98.50'	Begin Normal Shoulder	-4.00%	-2.00%	-4.00%	-2.00%
33	539+15.17'	End Normal Shoulder	-4.00%	-2.00%	-4.00%	-2.00%
33	539+68.51'	End Normal Crown	-2.00%	-2.00%	-4.00%	-2.00%
33	540+21.84'	Level Crown	0.00%	0.00%	-4.00%	-2.00%
33	540+75.17'	Reverse Crown	2.00%	2.00%	-4.00%	-2.00%
33	541+28.51'	Low Shoulder Match	4.00%	4.00%	-4.00%	-4.00%
33	541+81.84'	Begin Full Super	6.00%	6.00%	-6.00%	-6.00%
33	544+12.87'	End Full Super	6.00%	6.00%	-6.00%	-6.00%
33	544+66.20'	Low Shoulder Match	4.00%	4.00%	-4.00%	-4.00%
33	545+19.54'	Reverse Crown	2.00%	2.00%	-4.00%	-2.00%
33	545+72.87'	Level Crown	0.00%	0.00%	-4.00%	-2.00%
33	546+26.20'	Begin Normal Crown	-2.00%	-2.00%	-4.00%	-2.00%
33	546+79.54'	Begin Normal Shoulder	-4.00%	-2.00%	-4.00%	-2.00%

2

POINT NUMBER	NORTHING	EASTING	ELEV.
1	228299.6744	557693.3534	1238.6912
2	228279.7858	557629.1306	1239.7837
3	228310.6115	557635.5692	1239.565
4	228206.4893	557601.8769	1239.8423
5	228238.7388	557629.4513	1239.3576
6	228314.8208	557712.6539	1237.8053
7	228368.9403	557651.538	1239.572
8	228392.1711	557653.7149	1239.8738
9	228329.9294	557774.9881	1237.1903
10	228356.0104	557784.5813	1237.1685
11	228317.2128	557802.7554	1237.1524
12	228325.8375	557798.608	1237.3438
13	228336.7662	557793.3527	1237.1715
14	228259.4058	557616.6906	1239.8637
15	228299.935	557705.996	1238.3534
16	228328.3498	557775.6812	1237.2412
17	228312.5519	557631.5115	1239.5523
18	228331.7951	557662.5794	1238.616
19	228313.8832	557695.0699	1238.0824
20	228277.134	557714.2444	1237.728
21	228277.7971	557621.8194	1239.7358

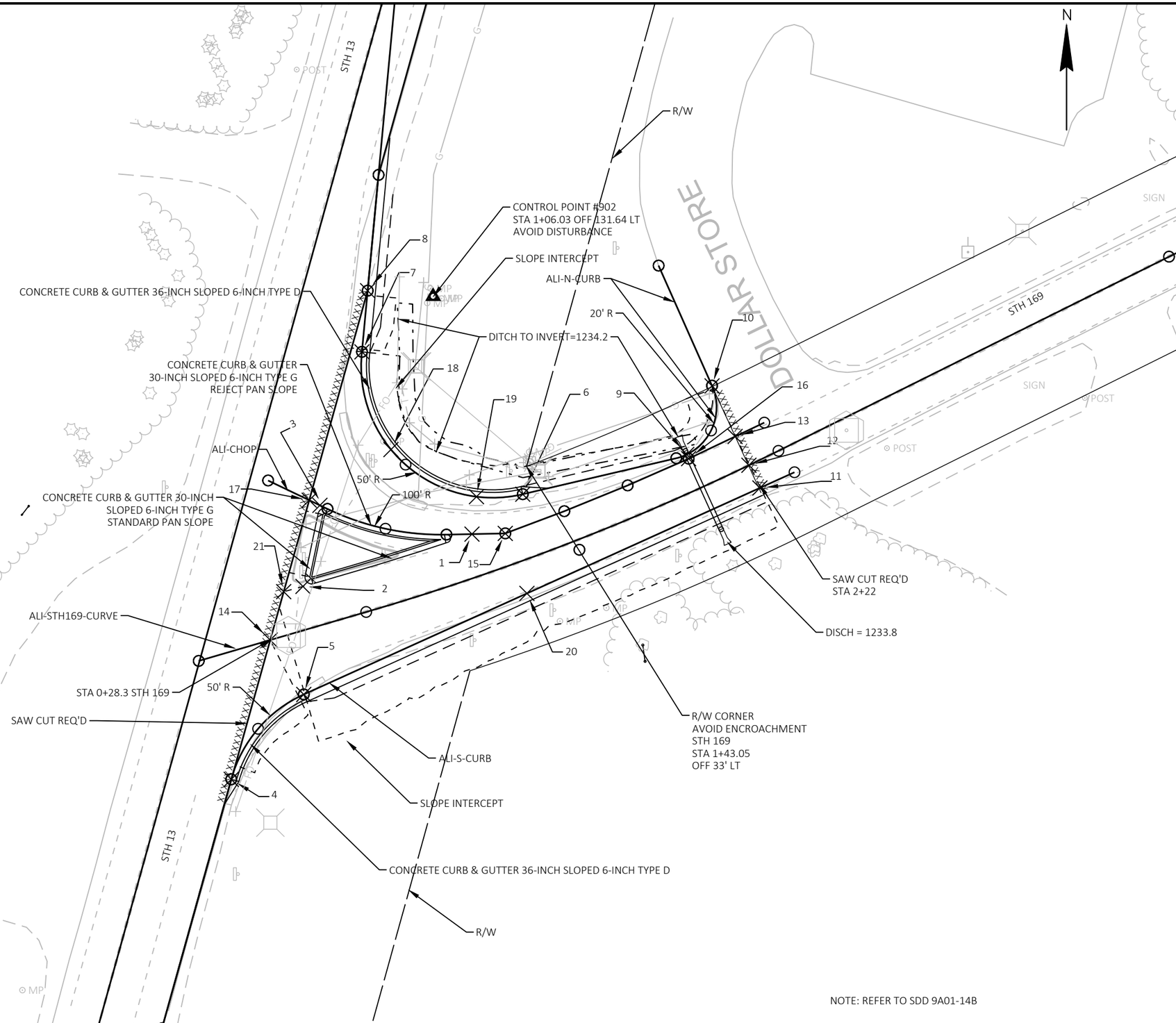

NOTE: REFER TO SDD 9A01-14B

PROJECT NO: 9925-00-70	HWY: STH 169	COUNTY: ASHLAND	STH 169/STH 13 INTERSECTION DETAIL	SHEET 18	E

2

PROJECT NO: 9925-00-70	HWY: STH 169	COUNTY: ASHLAND	STH 169/STH 13 INTERSECTION ALIGNMENTS	SHEET 19	E

FILE NAME : C:\CIVIL 3D PROJECTS\99250000\SHEETS PLAN\99250000_INT ALI.DWG
LAYOUT NAME - PLAN DETAIL
PLOT DATE : 11/13/2024 9:31 AM PLOT BY : PEARSON, MICHAEL R PLOT NAME : PLOT SCALE : 1 IN:40 FT
WISDOT/CADDS SHEET 42

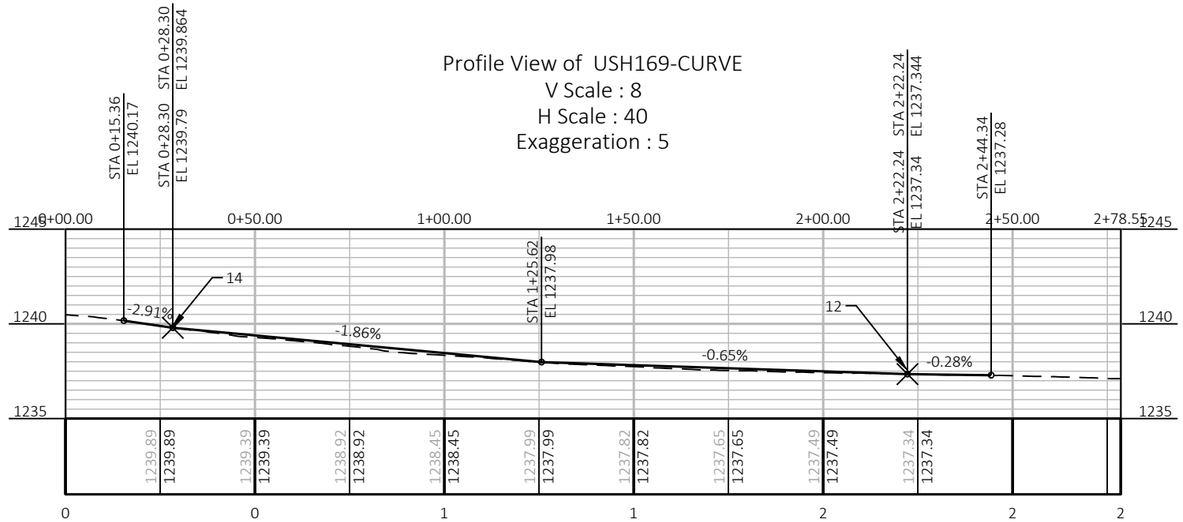

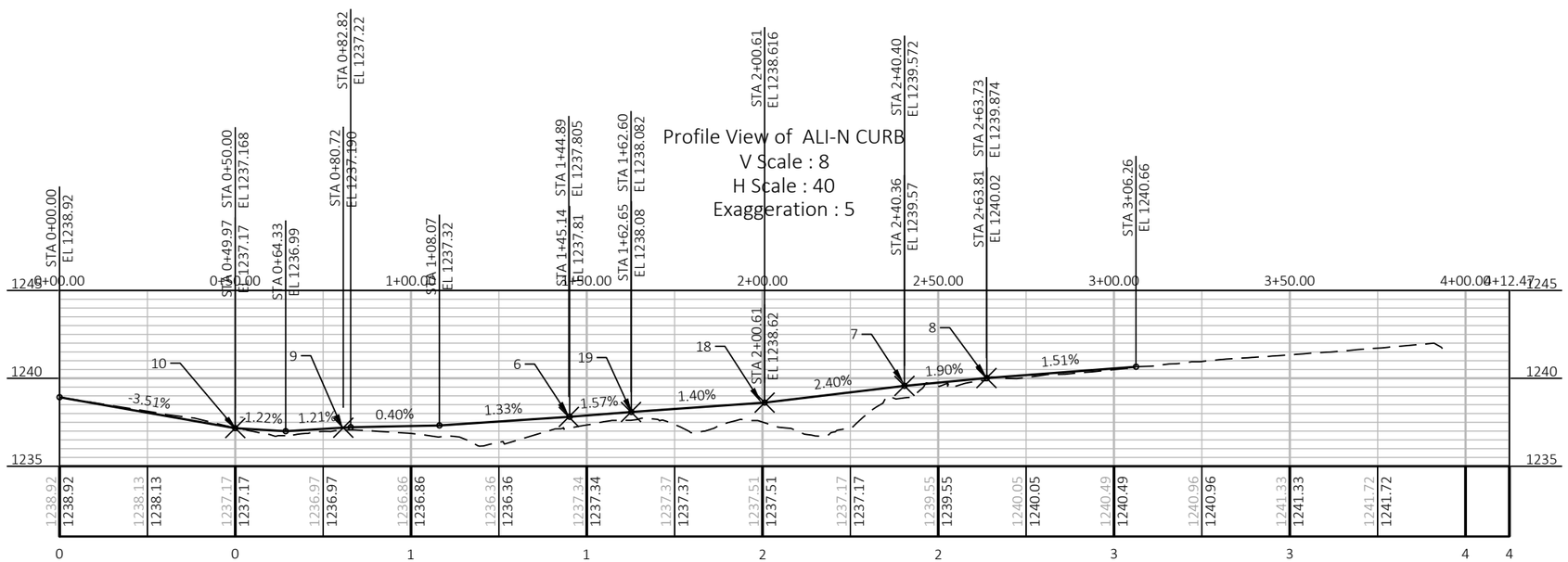

PROJECT NO: 9925-00-70	HWY: STH 169	COUNTY: ASHLAND	STH 169/STH 13 INTERSECTION DETAIL	SHEET 20	E

FILE NAME : C:\CIVIL 3D PROJECTS\99250000\SHEETS PLAN\99250000_CD2.DWG
LAYOUT NAME - PROF1
PLOT DATE : 11/13/2024 9:37 AM
PLOT BY : PEARSON, MICHAEL R
PLOT NAME :
PLOT SCALE : 1 IN:40 FT
WISDOT/CADDS SHEET 42

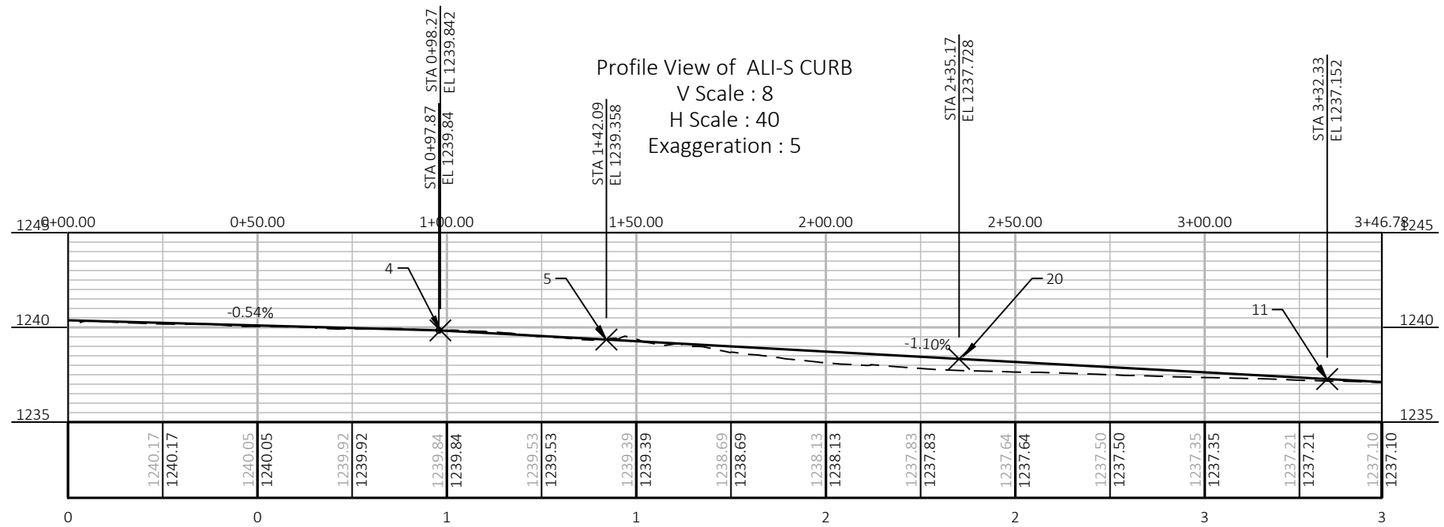

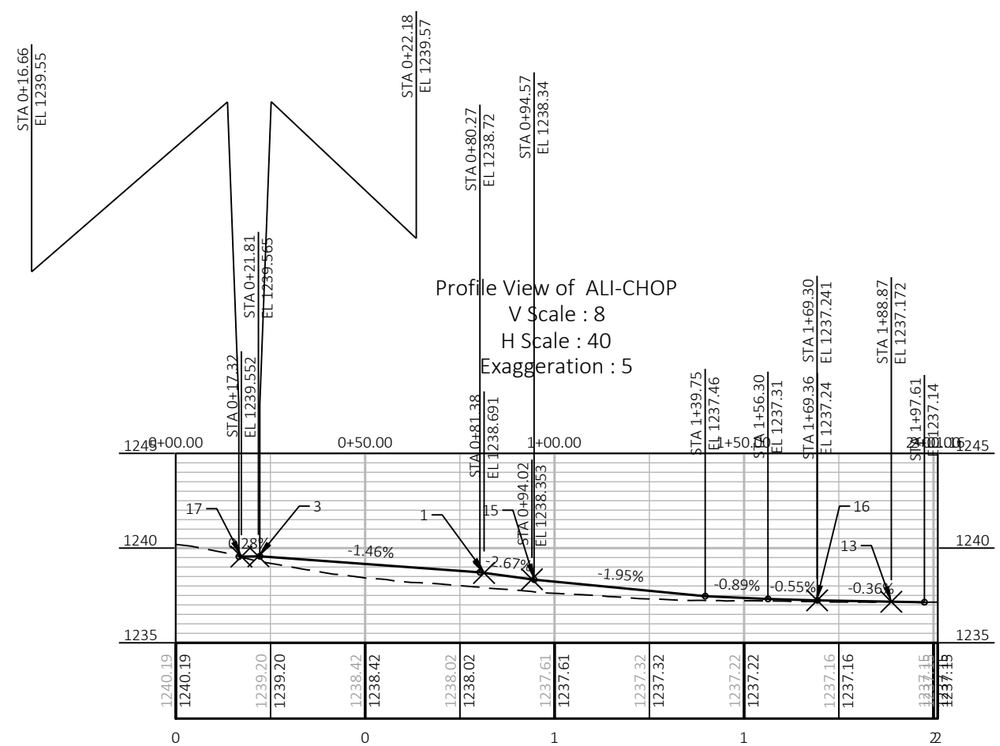

PROJECT NO: 9925-00-70	HWY: STH 169	COUNTY: ASHLAND	STH 169/STH 13 INTERSECTION DETAIL	SHEET 21	E

FILE NAME : C:\CIVIL 3D PROJECTS\99250000\SHEETS PLAN\99250000_CD2.DWG
LAYOUT NAME - PROF2
PLOT DATE : 11/13/2024 9:38 AM
PLOT BY : PEARSON, MICHAEL R
PLOT NAME :
PLOT SCALE : 1 IN:40 FT

PROPOSE SIGNAL TIMINGS; BUTLER AVE., COPPER FALLS PARK ACCESS ROUTE					
				PHASE 1 DIRECTION	PHASE 2 DIRECTION
MAINLINE		PHASE TIME (SECONDS)	CUMULATIVE TIME (SECONDS)	NORTH	SOUTH
EB	WB	30	30	GREEN	RED
15	15	4	34	YELLOW	RED
5	5	30	64	RED	RED
3	3	30	94	RED	GREEN
20	20	4	98	RED	YELLOW
6	6	30	128	RED	RED

IS COMPUTED TIME LESS THAN ASSUMED CYCLE?.....YES

TIME CAN BE ADDED AS NEEDED TO PHASES. FOUR (4) SECONDS FOR YELLOW PHASE TIMES..

THE CONTRACTOR SHALL REVIEW SIGNALS AFTER PROGRAMMING TO ASSURE THERE ARE NO CONFLICTING MOVEMENTS. IF CONFLICTING MOVEMENTS EXIST OR IF MORE ALL-RED TIME IS NEEDED, THE CONTRACTOR SHALL MAKE THE NECESSARY CHANGES.

IF THERE ARE QUESTIONS REGARDING THE TIMINGS, PLEASE CONTACT THE TRAFFIC ENGINEER AARON CHRIST 715-833-9816

PROJECT ID:	9925-00-70	
PROJECT DESCRIPTION:	STH 13 TO ASHLAND/IRON CO. LINE	
COUNTY:	ASHLAND	
STRUCTURE #:	BUTLER AVE., B-02-0026	
ADT:	2900	
DHV:	30	
MINIMUM WIDTH:	22	FEET
STOPLINE TO STOPLINE DISTANCE:	1056	FEET
SPEED:	25	MPH
SPEED:	37	FPS
MINIMUM RED-RED TIME:	29	SECONDS
RED-RED TIME:	30	SECONDS
ASSUMED CYCLE LENGTH:	130	SECONDS
CALC'D MINIMUM GREEN PER SIDE:	15	SECONDS
ASSUMED MIN. GREEN PER SIDE:	30	SECONDS

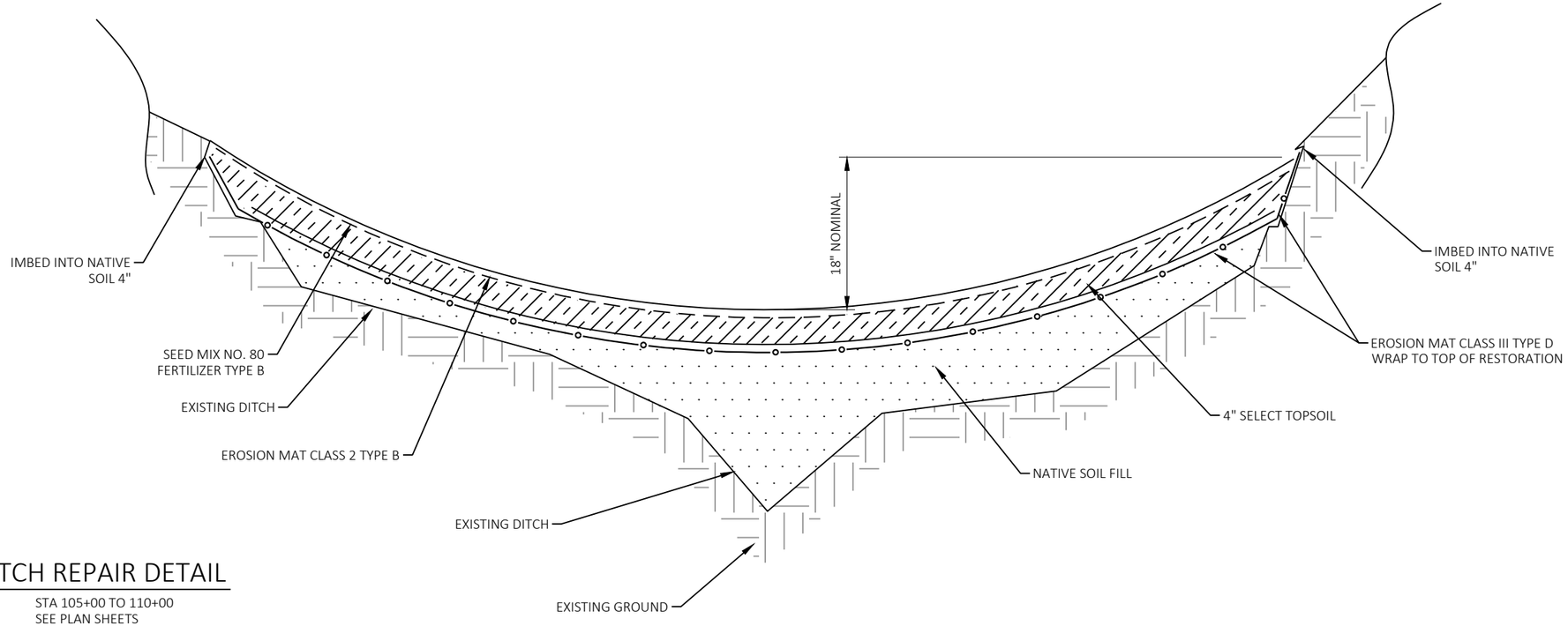

DITCH REPAIR DETAIL

STA 105+00 TO 110+00
SEE PLAN SHEETS

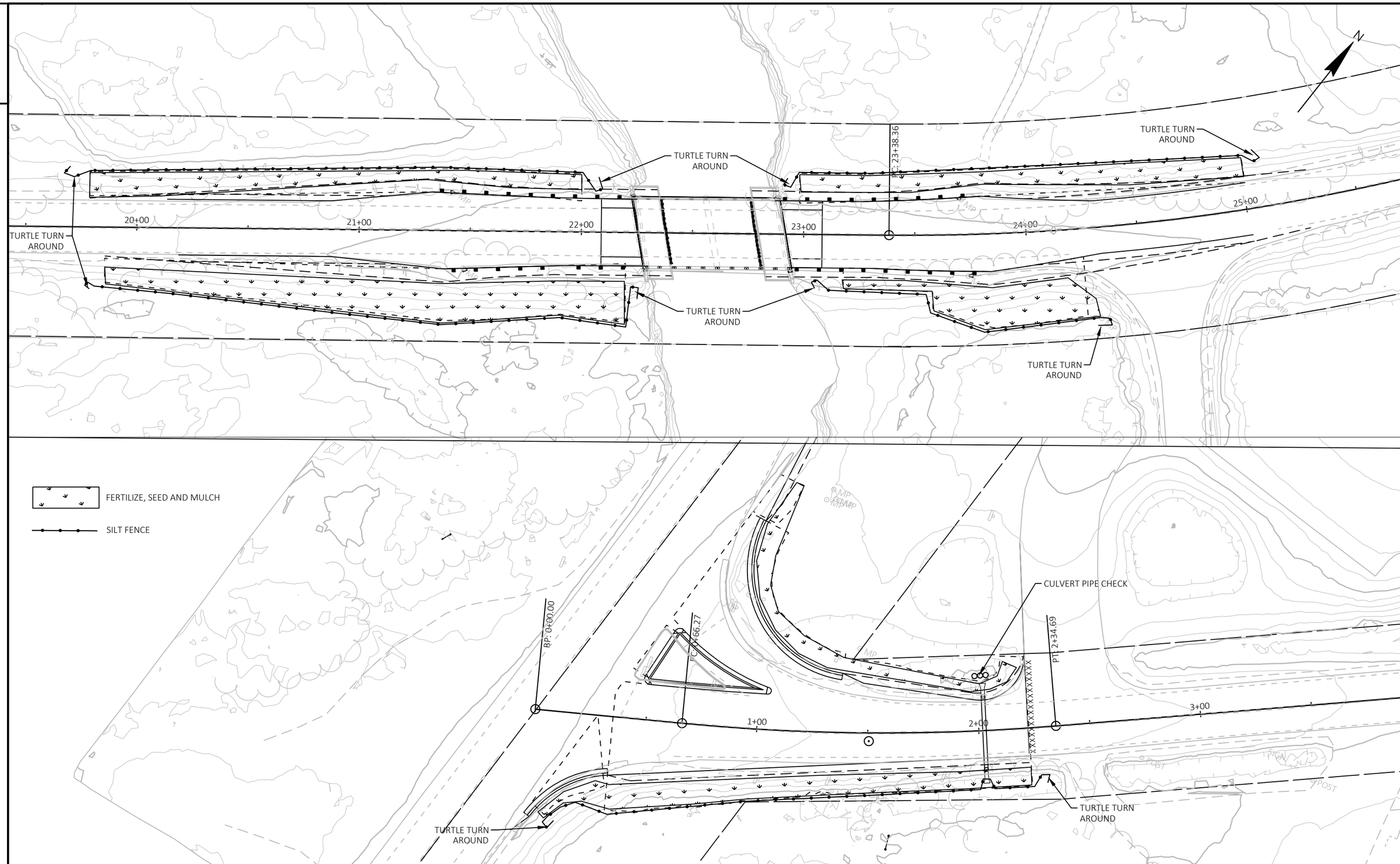

PROJECT NO: 9925-00-70	HWY: STH 169	COUNTY: ASHLAND	EROSION CONTROL	SHEET 23	E

2

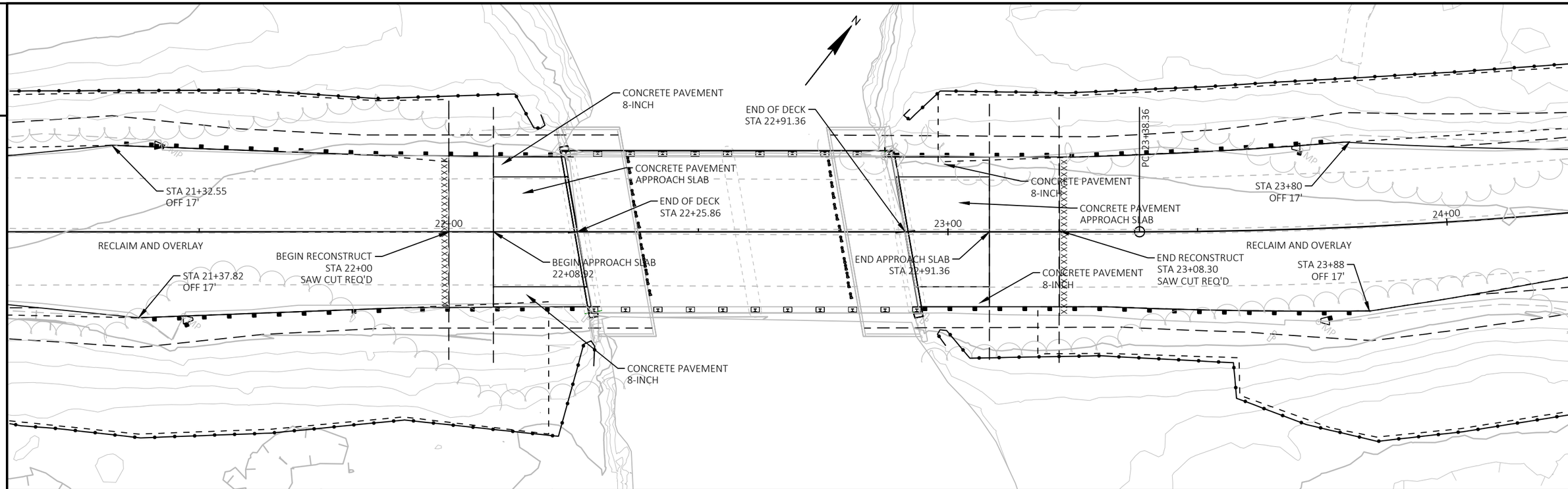

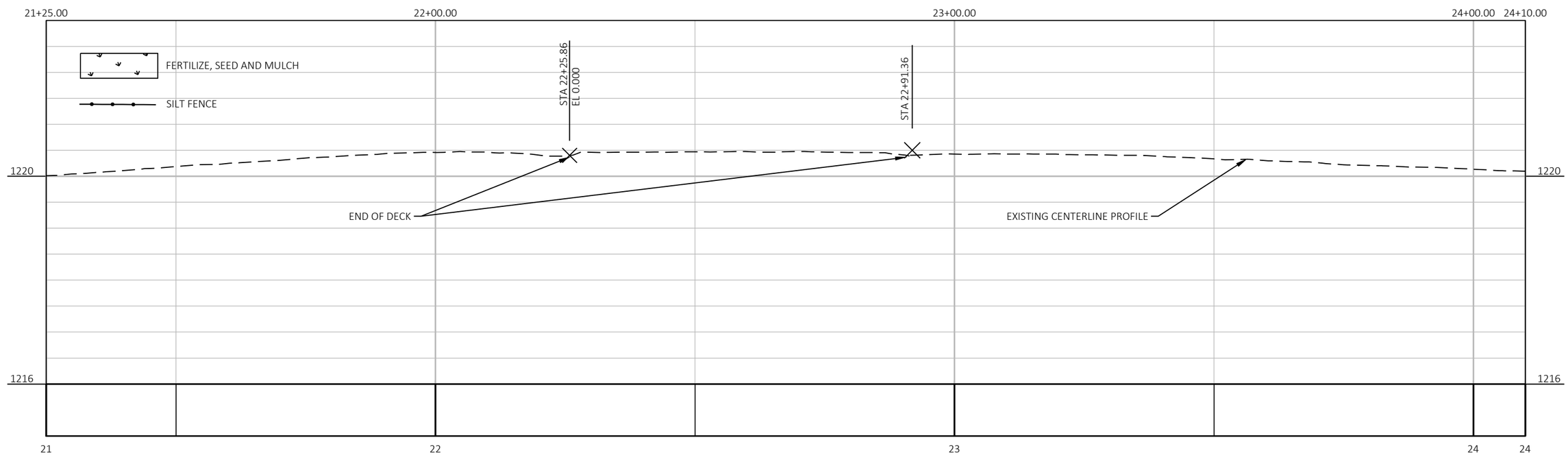

PROJECT NO: 9925-00-70	HWY: STH 169	COUNTY: ASHLAND	PLAN PROFILE - BAD RIVER BRIDGE B-02-0026	SHEET 24	E

FILE NAME : C:\CIVIL 3D PROJECTS\99250000\SHEETS PLAN\99250000_PP_BRIDGE.DWG
LAYOUT NAME - Plan Dbl 1 IN 100 FT
PLOT DATE : 11/19/2024 7:39 AM PLOT BY : PEARSON, MICHAEL R PLOT NAME : PLOT SCALE : 1 IN:20 FT

2

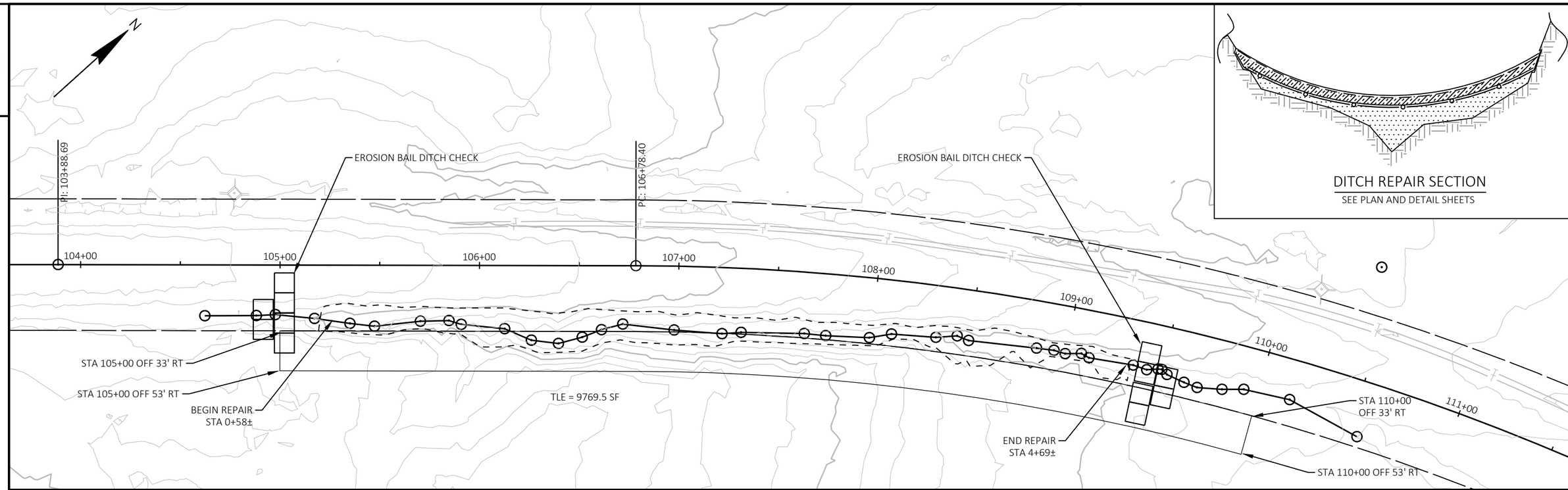

DITCH REPAIR SECTION

SEE PLAN AND DETAIL SHEETS

2

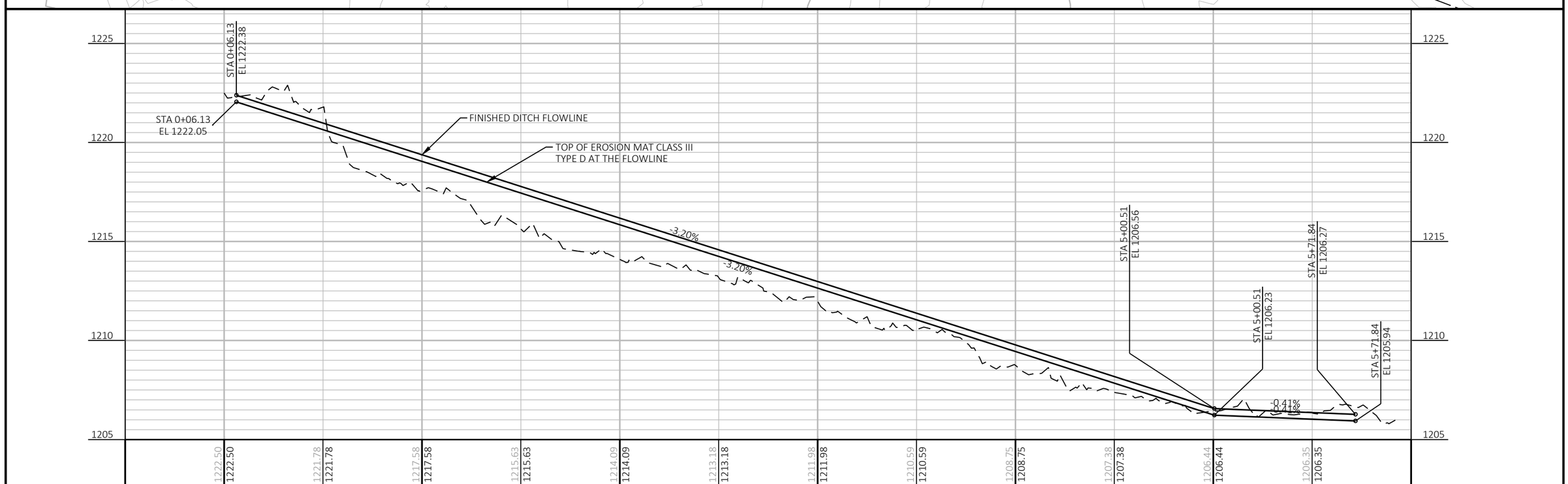

PROJECT NO: 9925-00-70	HWY: STH 169	COUNTY: ASHLAND	DITCH REPAIR PLAN AND PROFILE	SHEET 25	E

FILE NAME : C:\CIVIL 3D PROJECTS\99250000\SHEETS PLAN\99250000_PP DITCH.DWG
LAYOUT NAME - PP DTCH

PLOT DATE : 11/19/2024 1:10 PM PLOT BY : PEARSON, MICHAEL R PLOT NAME : PLOT SCALE : 1 IN:50 FT

WISDOT/CADDS SHEET 44

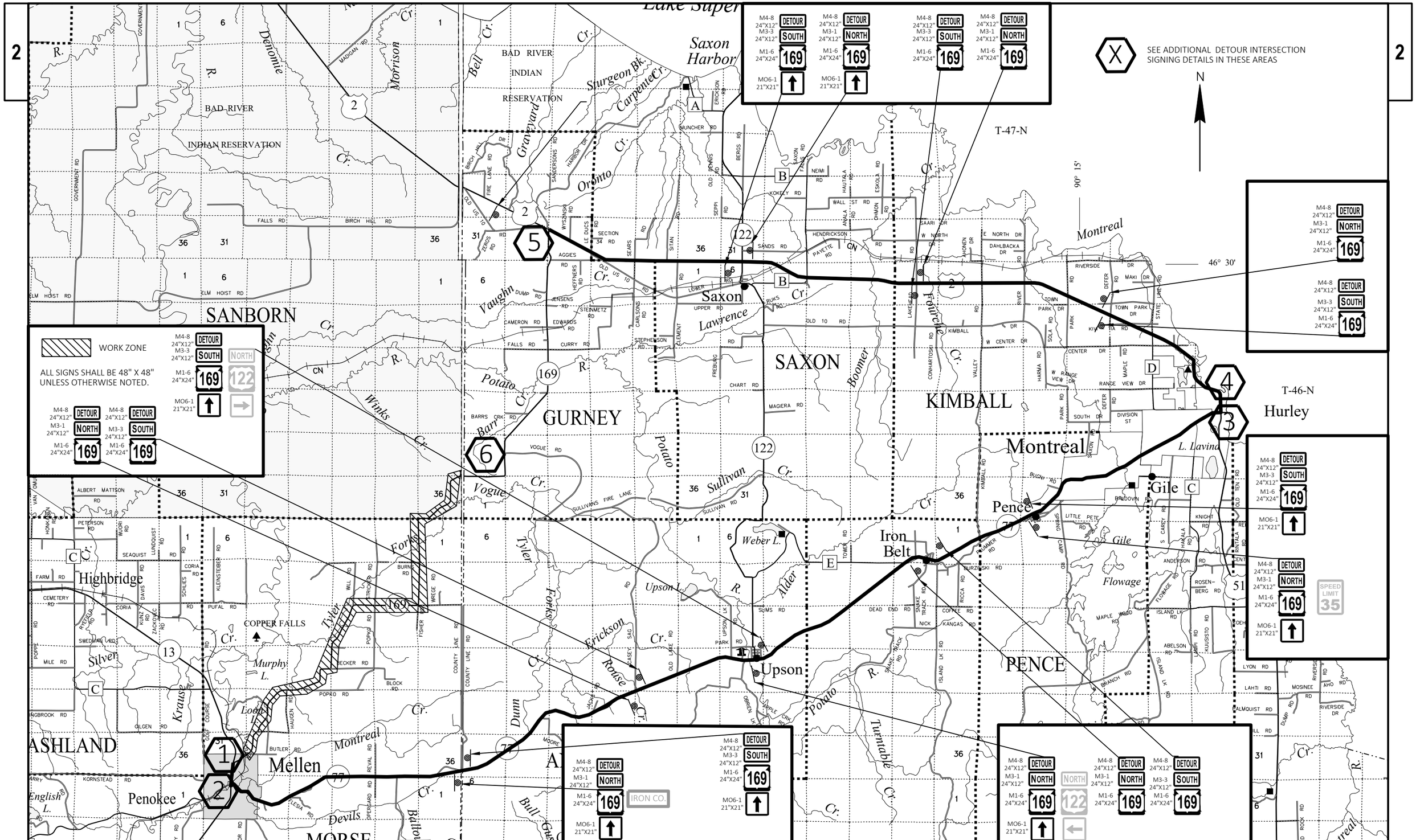

WORK ZONE

ALL SIGNS SHALL BE 48" X 48" UNLESS OTHERWISE NOTED.

SEE ADDITIONAL DETOUR INTERSECTION SIGNING DETAILS IN THESE AREAS

PROJECT NO: 9925-00-70	HWY: STH 169	COUNTY: ASHLAND	DETOUR OVERVIEW AND SIGNING	SHEET 26	E

FILE NAME : C:\CIVIL 3D PROJECTS\99250000\SHEETS PLAN\99250000_TC.DWG
LAYOUT NAME - DETOUR1
PLOT DATE : 7/30/2024 7:48 AM
PLOT BY : PEARSON, MICHAEL R
PLOT NAME :
PLOT SCALE : 1:2m
WISDOT/CADDS SHEET 42

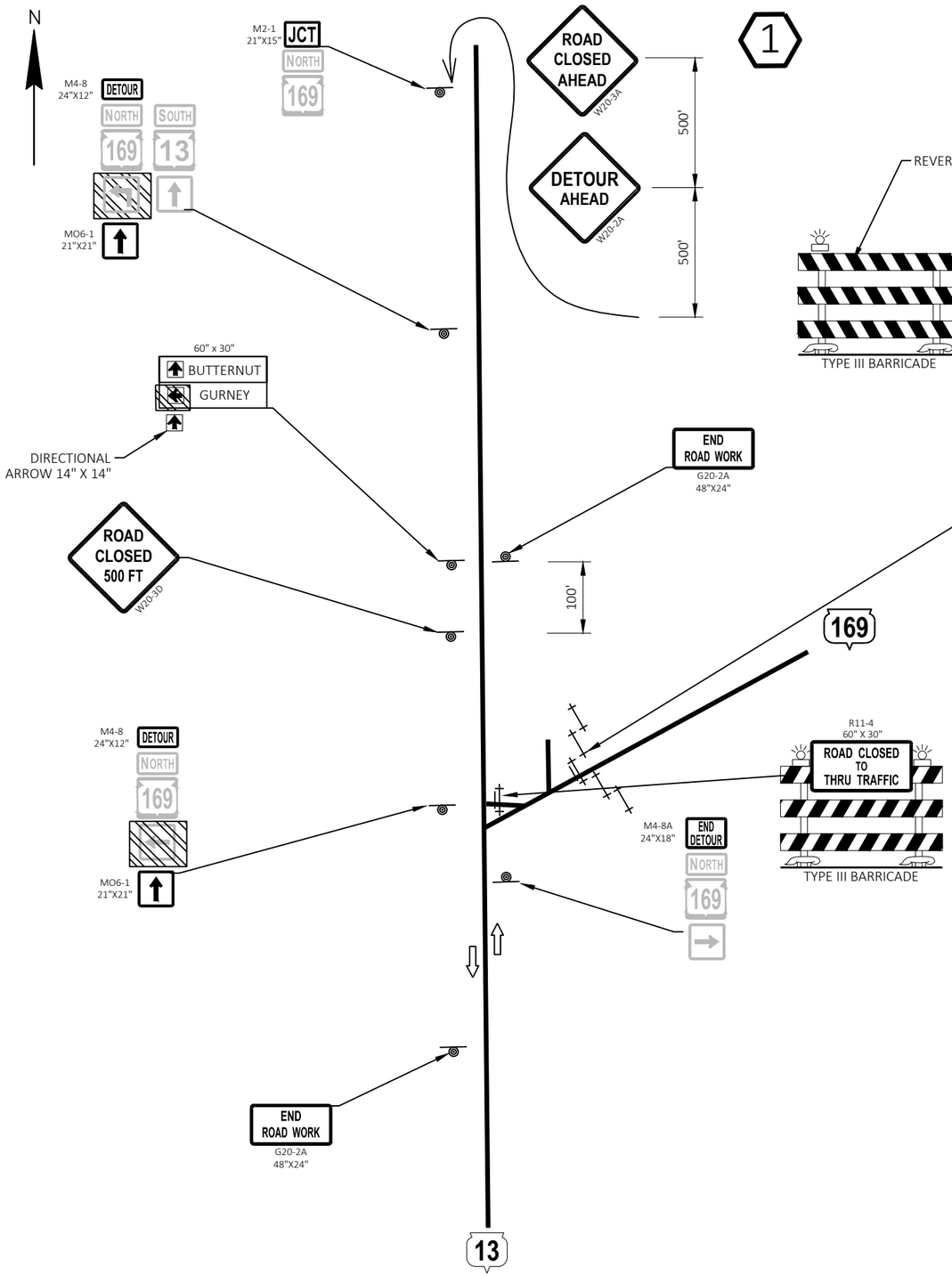

NOTE:
REFER TO SDD 15C02-09b, BARRICADES AND SIGNS FOR VARIOUS CLOSURES.

ALL SIGNS SHALL BE 48" X 48" UNLESS OTHERWISE NOTED.

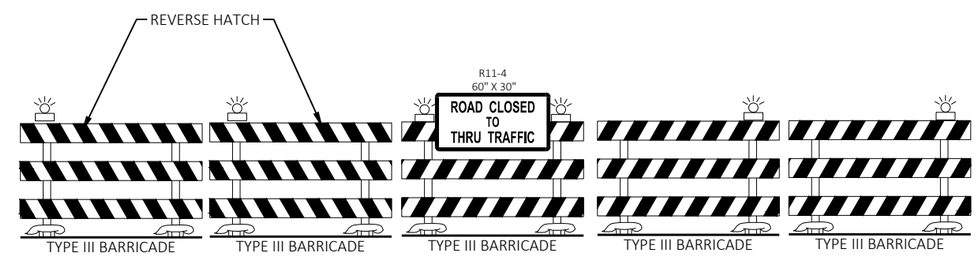

6

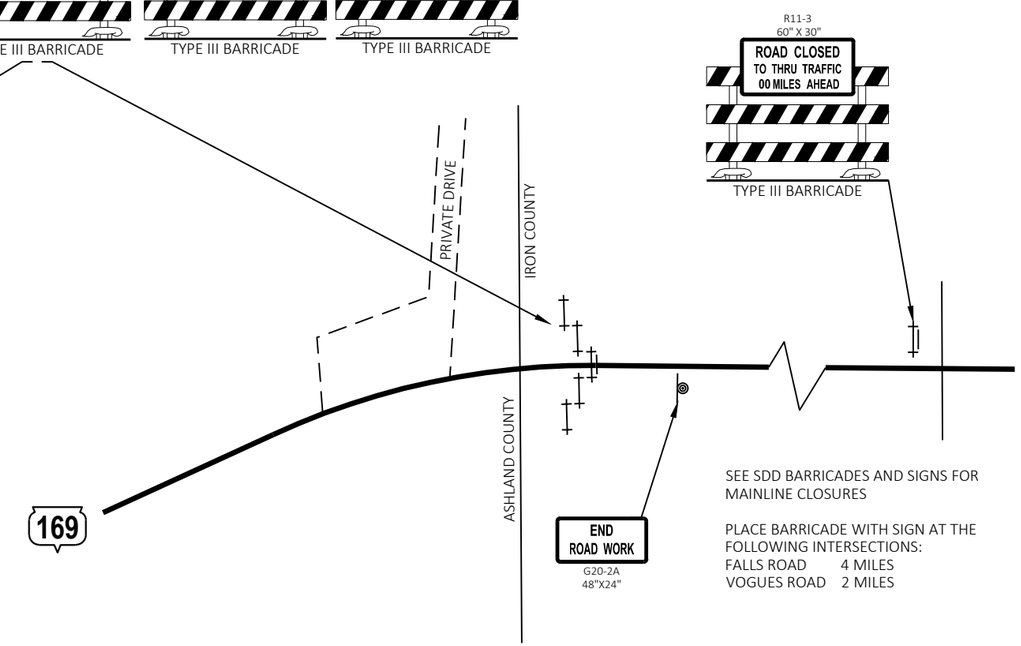

SEE SDD BARRICADES AND SIGNS FOR MAINLINE CLOSURES

PLACE BARRICADE WITH SIGN AT THE FOLLOWING INTERSECTIONS:
FALLS ROAD 4 MILES
VOGUES ROAD 2 MILES

LEGEND

- TYPE III BARRICADE
- TYPE III BARRICADE WTH ATTACHED SIGN
- TRAFFIC CONTROL DRUM WITH TYPE C STEADY BURN LIGHT
- SIGN ON PERMANENT SUPPORT
- WORK AREA
- FLAGGER, EQUIPPED WITH STOP/SLOW PADDLE FASTENED ON SUPPORT STAFF
- DIRECTION OF TRAFFIC
- COVERING SIGNS

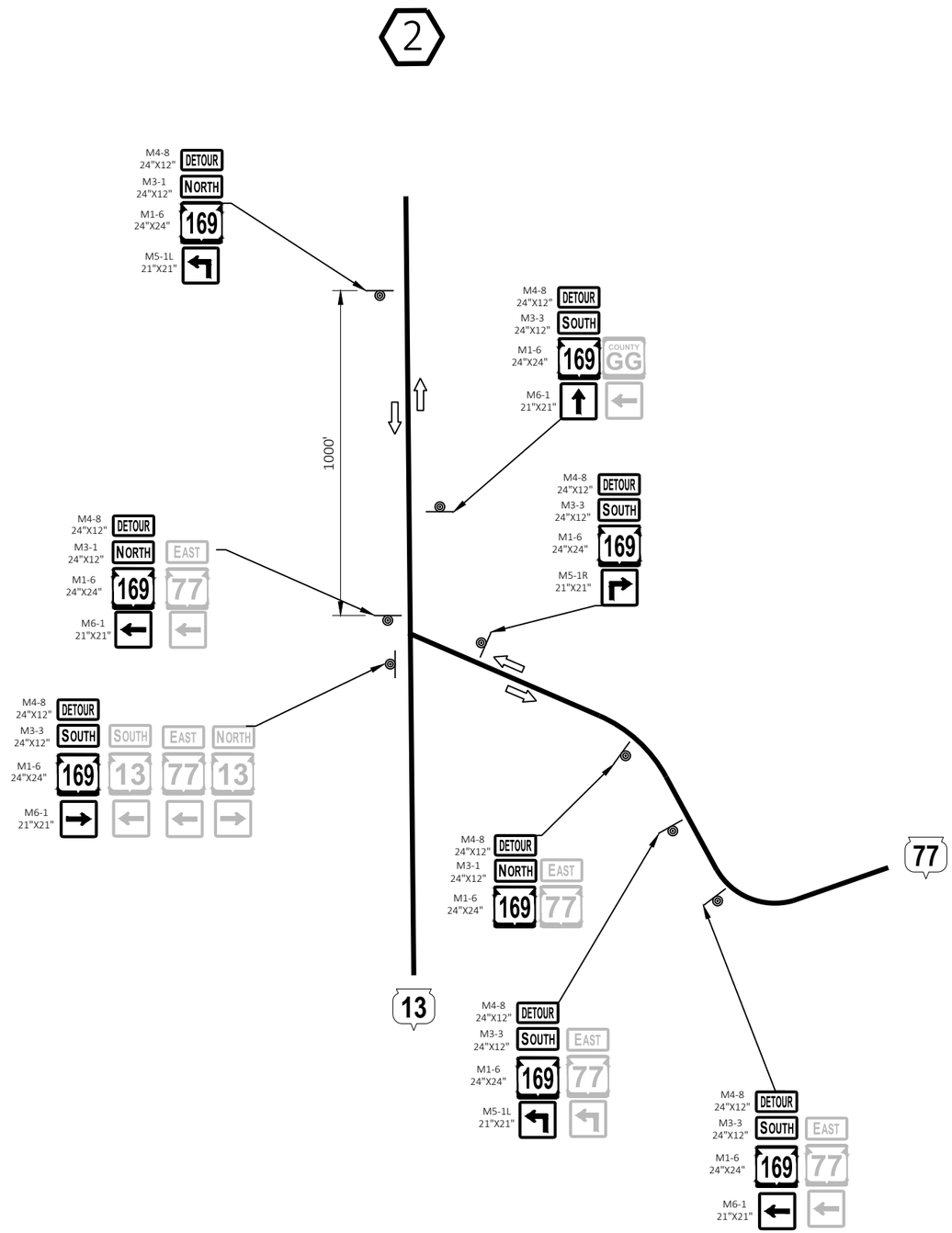

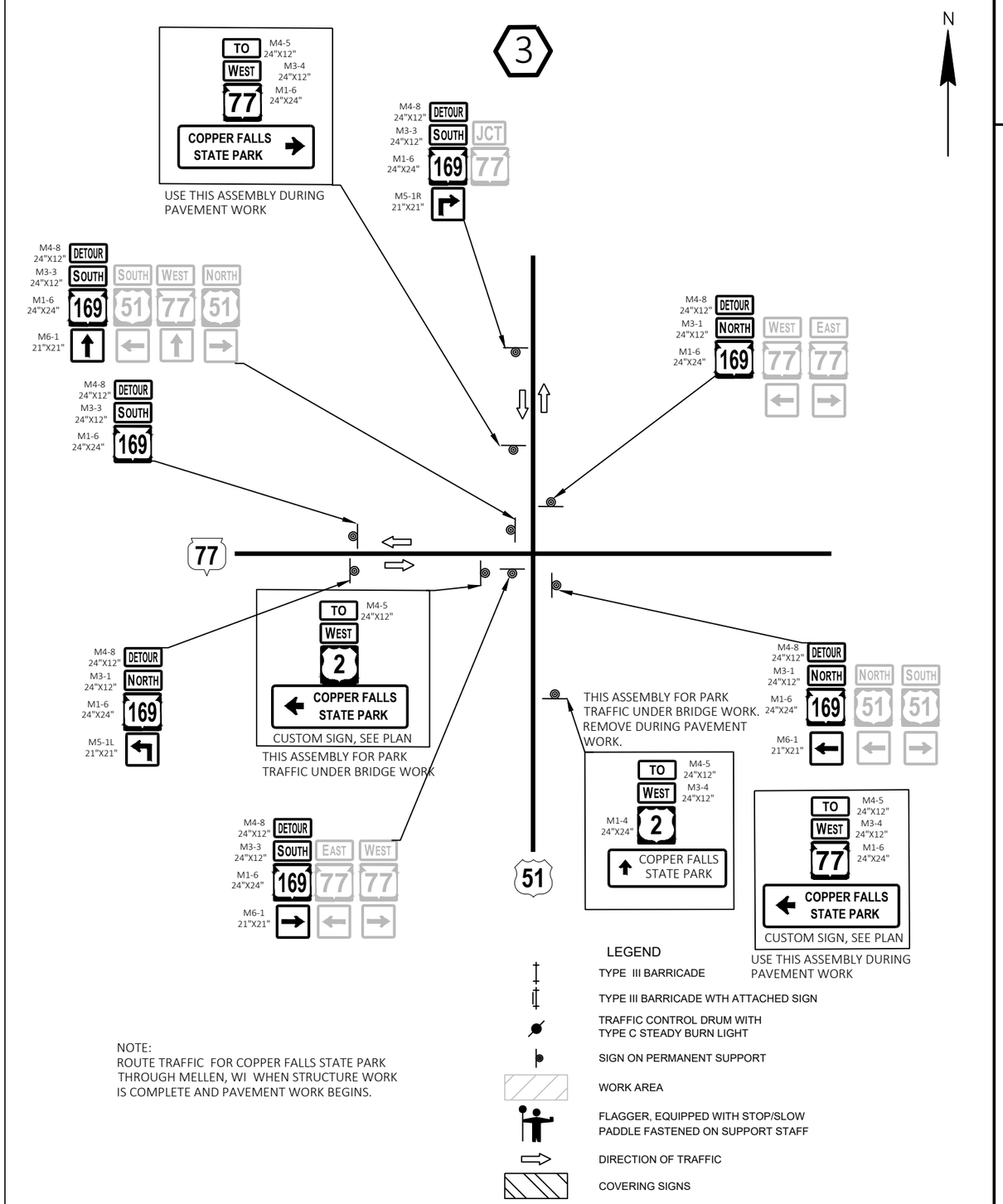

NOTE:
ROUTE TRAFFIC FOR COPPER FALLS STATE PARK THROUGH MELLEN, WI WHEN STRUCTURE WORK IS COMPLETE AND PAVEMENT WORK BEGINS.

PROJECT NO: 9925-00-70	HWY: STH 169	COUNTY: ASHLAND	DETOUR INTERSECTION SIGNING DETAILS	SHEET 28	E

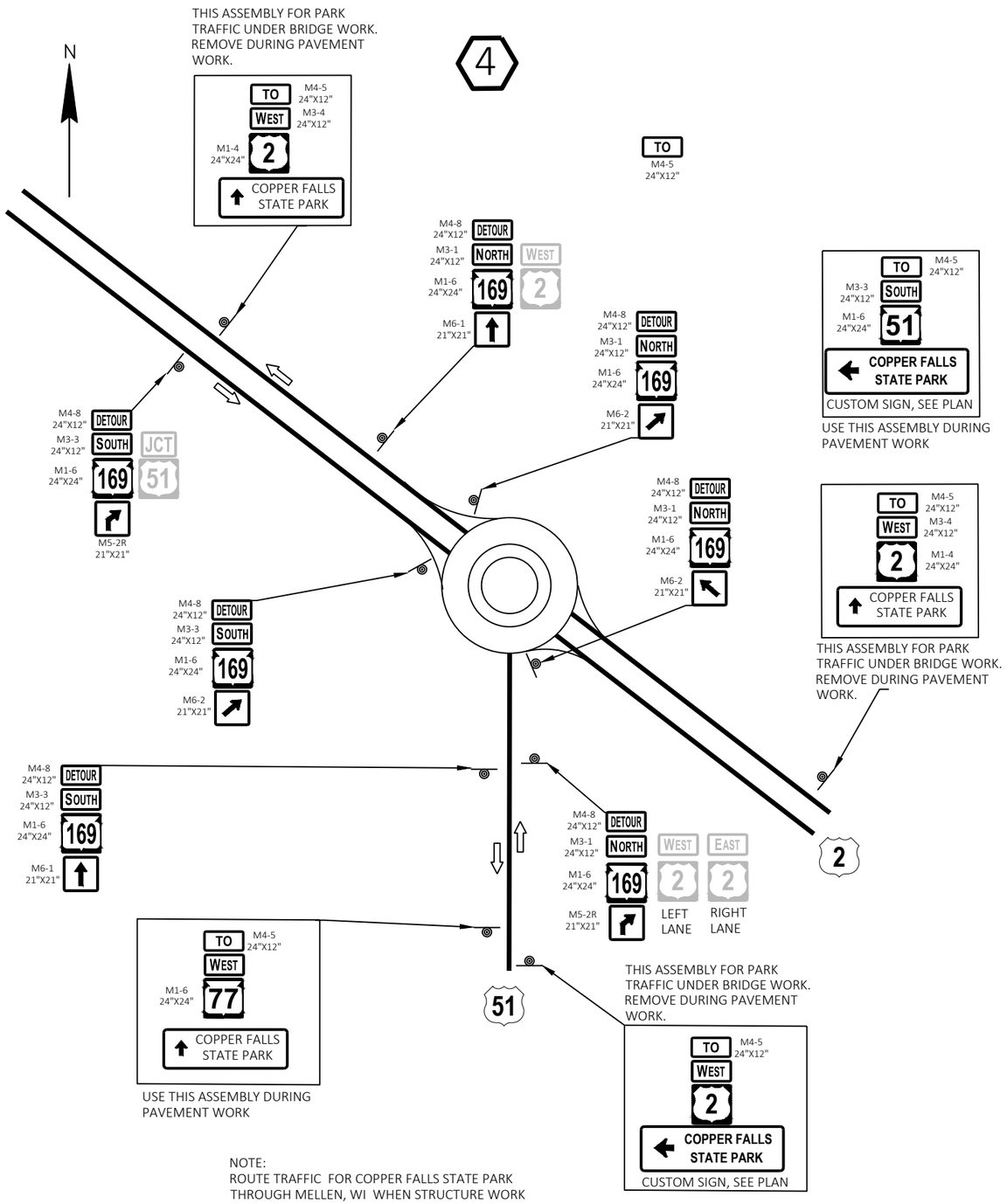

NOTE:
ROUTE TRAFFIC FOR COPPER FALLS STATE PARK THROUGH MELLEN, WI WHEN STRUCTURE WORK IS COMPLETE AND PAVEMENT WORK BEGINS.

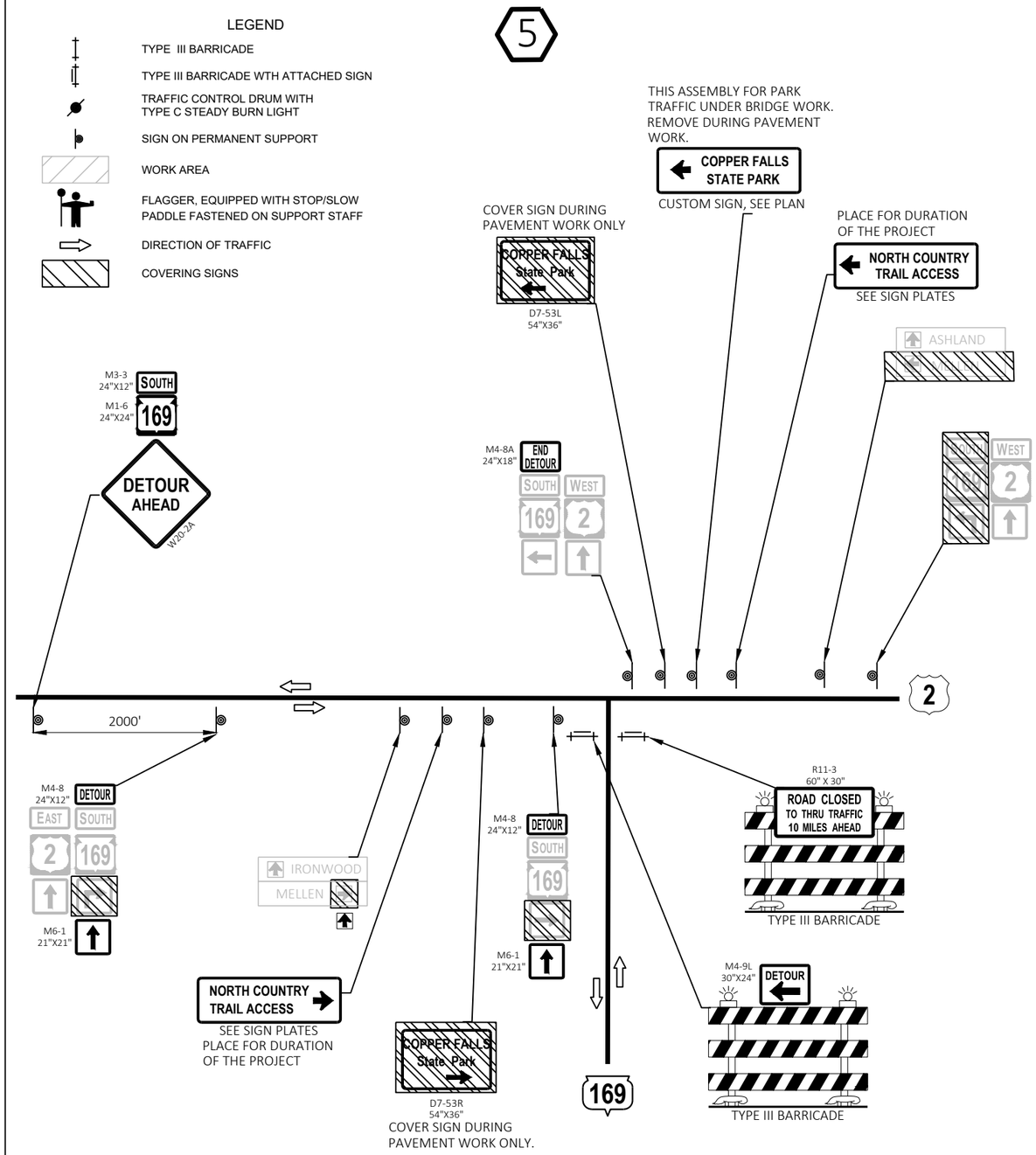

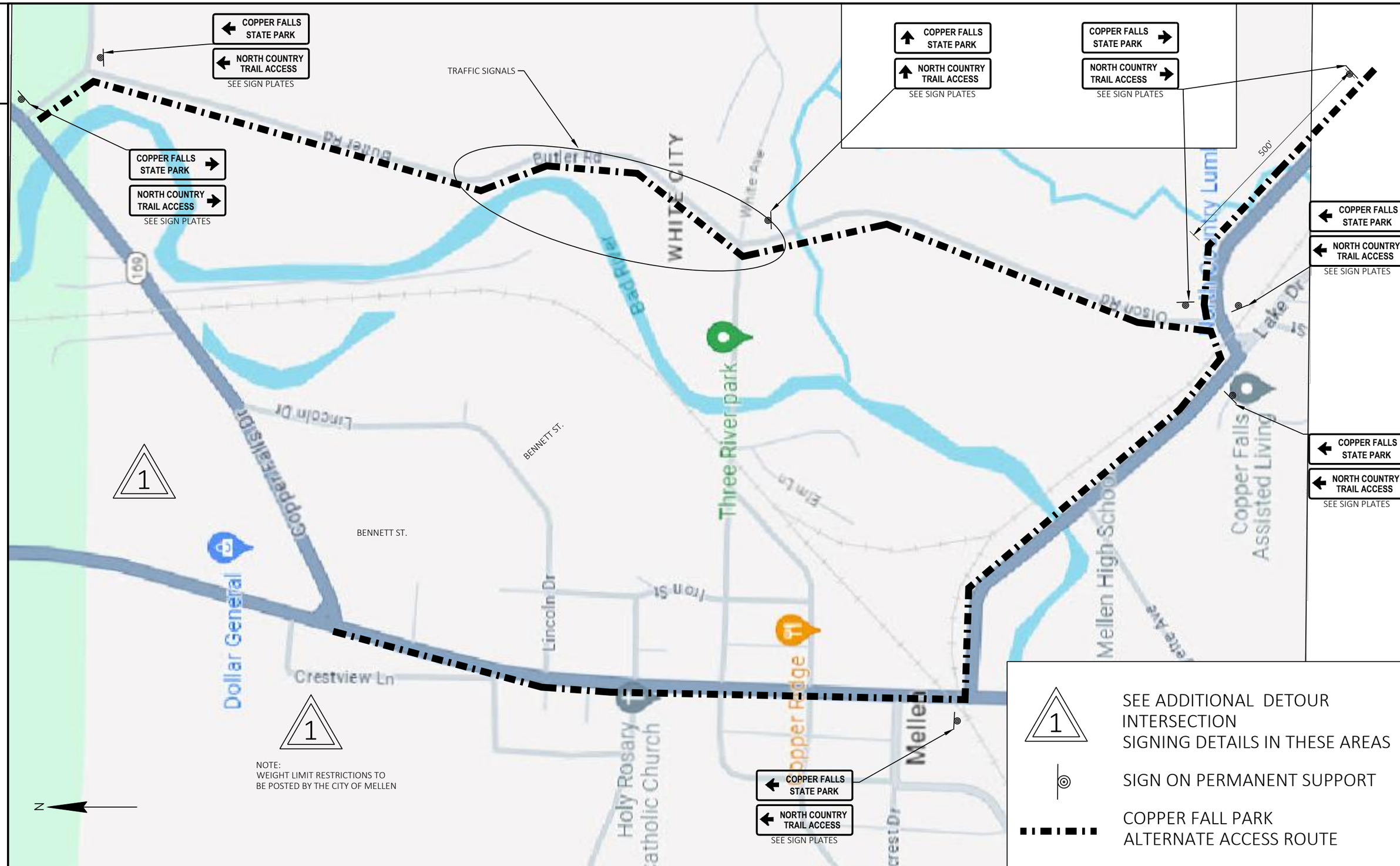

PROJECT NO: 9925-00-70	HWY: STH 169	COUNTY: ASHLAND	COPPER FALLS PARK CONSTRUCTION ACCESS ROUTE	SHEET 30	E

FILE NAME : C:\CIVIL 3D PROJECTS\99250000\SHEETS PLAN\99250000_TCPARK.DWG
LAYOUT NAME - DETOUR1 (2)
PLOT DATE : 7/1/2024 1:44 PM PLOT BY : PEARSON, MICHAEL R PLOT NAME : PLOT SCALE : Custom

WISDOT/CADDS SHEET 42

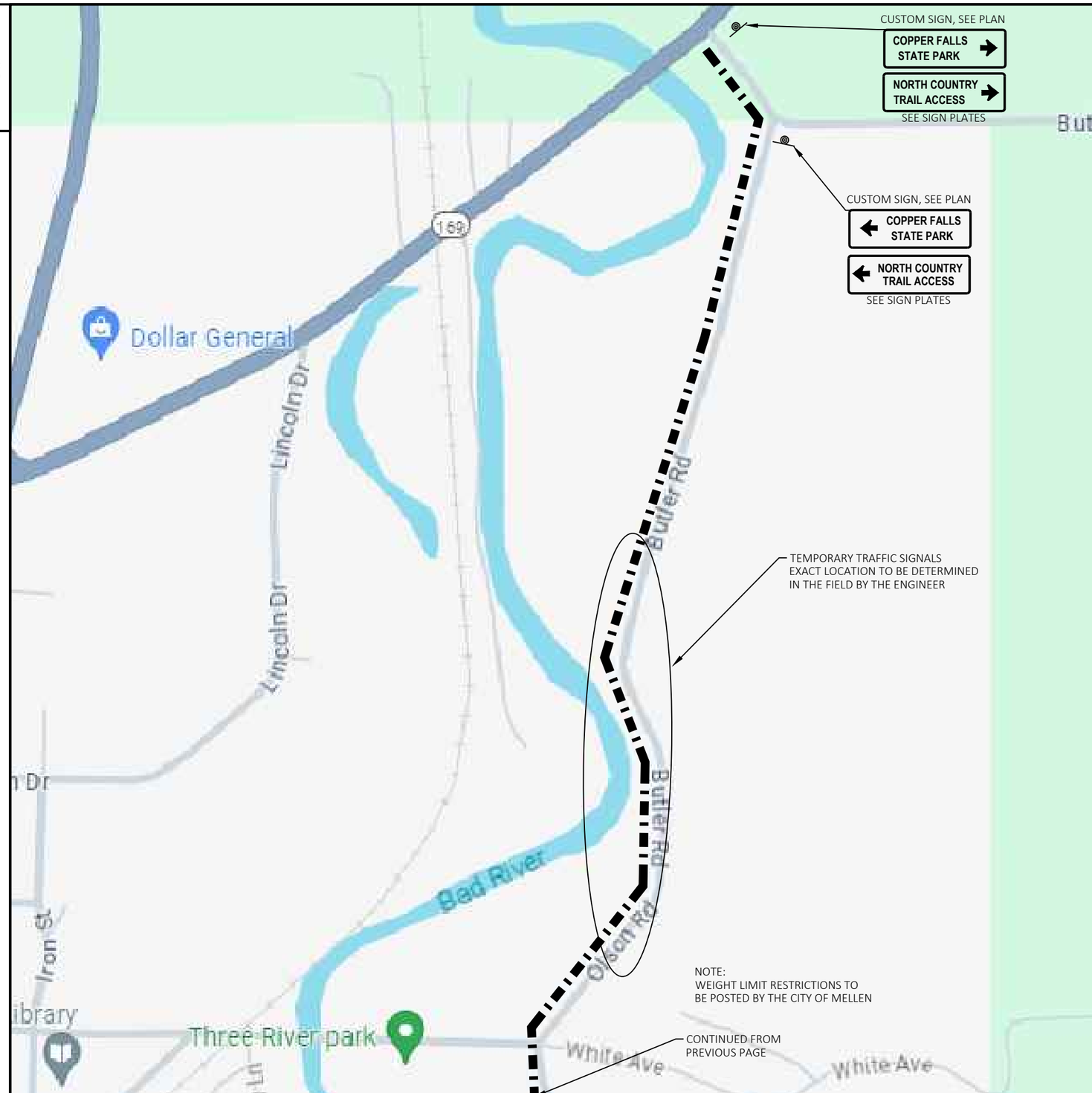
CUSTOM SIGN, SEE PLAN
COPPER FALLS STATE PARK
NORTH COUNTRY TRAIL ACCESS
SEE SIGN PLATES
CUSTOM SIGN, SEE PLAN
COPPER FALLS STATE PARK
NORTH COUNTRY TRAIL ACCESS
SEE SIGN PLATES
169
Dollar General
Lincoln Dr
Butler Rd
Bad River
Olson Rd
Iron St
library
Three River park
White Ave
White Ave
TEMPORARY TRAFFIC SIGNALS
EXACT LOCATION TO BE DETERMINED
IN THE FIELD BY THE ENGINEER
NOTE:
WEIGHT LIMIT RESTRICTIONS TO
BE POSTED BY THE CITY OF MELLEN
CONTINUED FROM
PREVIOUS PAGE

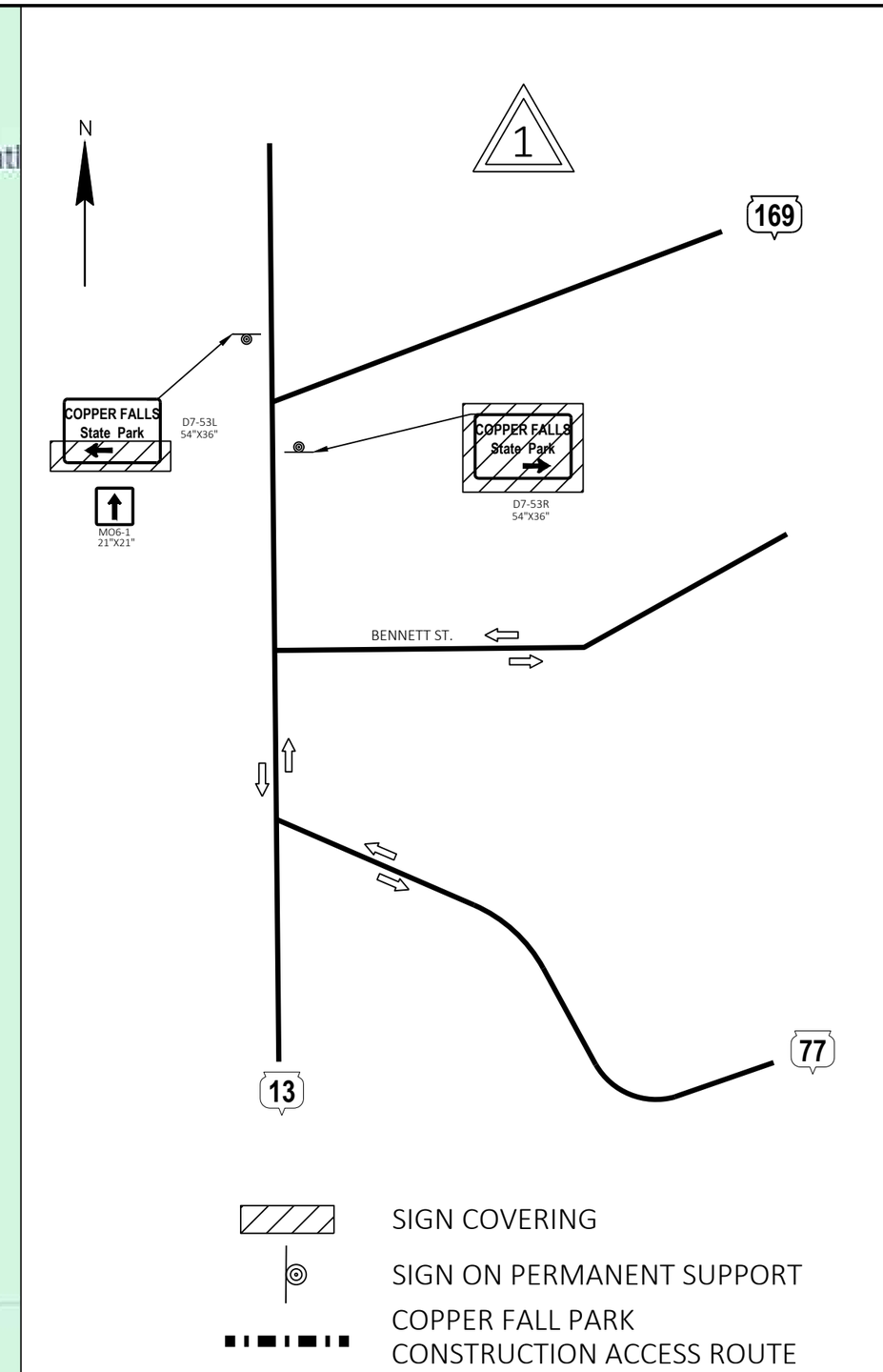
N
1
169
COPPER FALLS State Park
D7-53L
54"X36"
MO6-1
21"X21"
COPPER FALLS State Park
D7-53R
54"X36"
BENNETT ST.
13
77
SIGN COVERING
SIGN ON PERMANENT SUPPORT
COPPER FALL PARK
CONSTRUCTION ACCESS ROUTE

2

INTERSECTION STAGE I

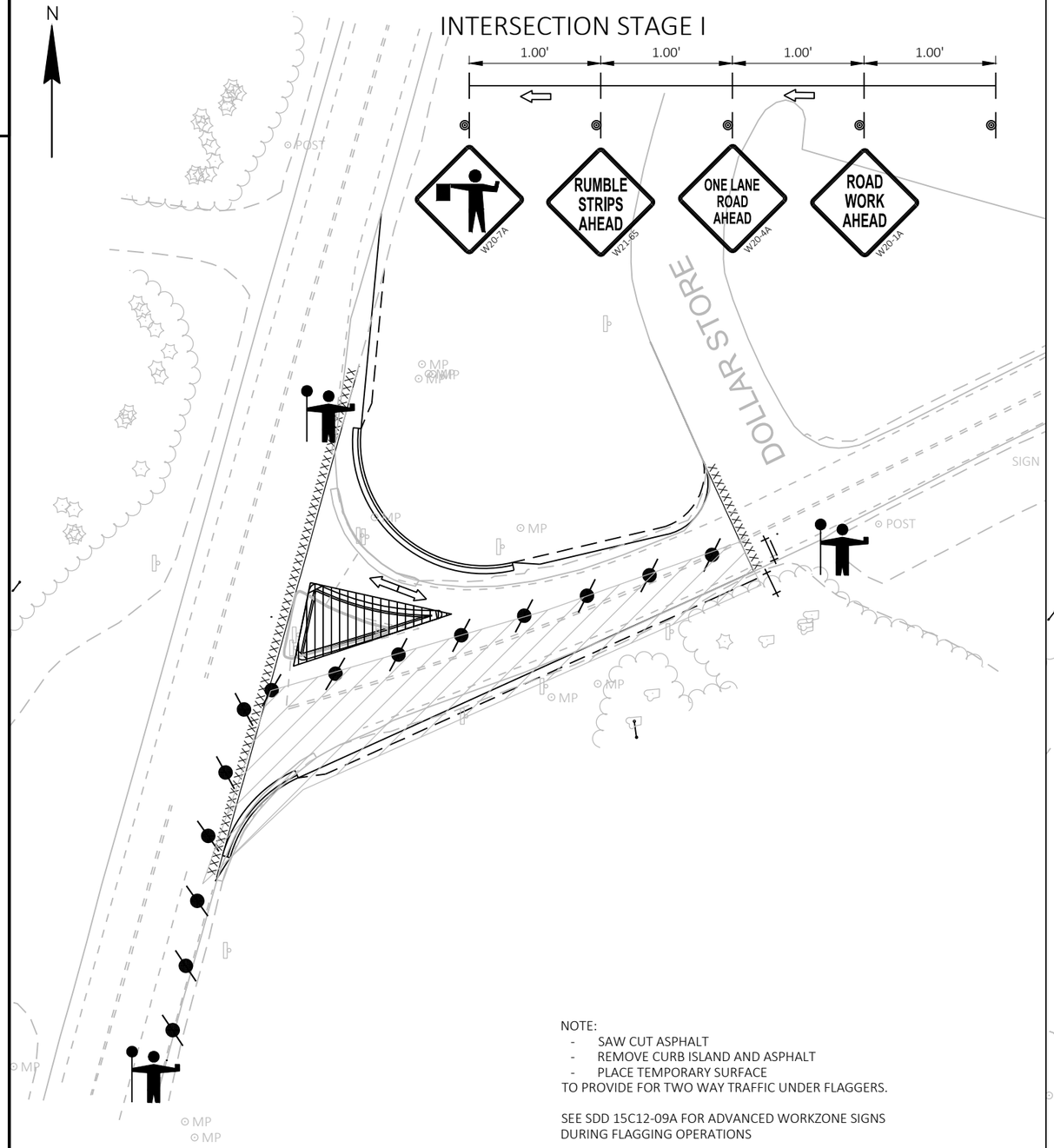

NOTE:
- SAW CUT ASPHALT
- REMOVE CURB ISLAND AND ASPHALT
- PLACE TEMPORARY SURFACE

TO PROVIDE FOR TWO WAY TRAFFIC UNDER FLAGGERS.

SEE SDD 15C12-09A FOR ADVANCED WORKZONE SIGNS DURING FLAGGING OPERATIONS

INTERSECTION STAGE II

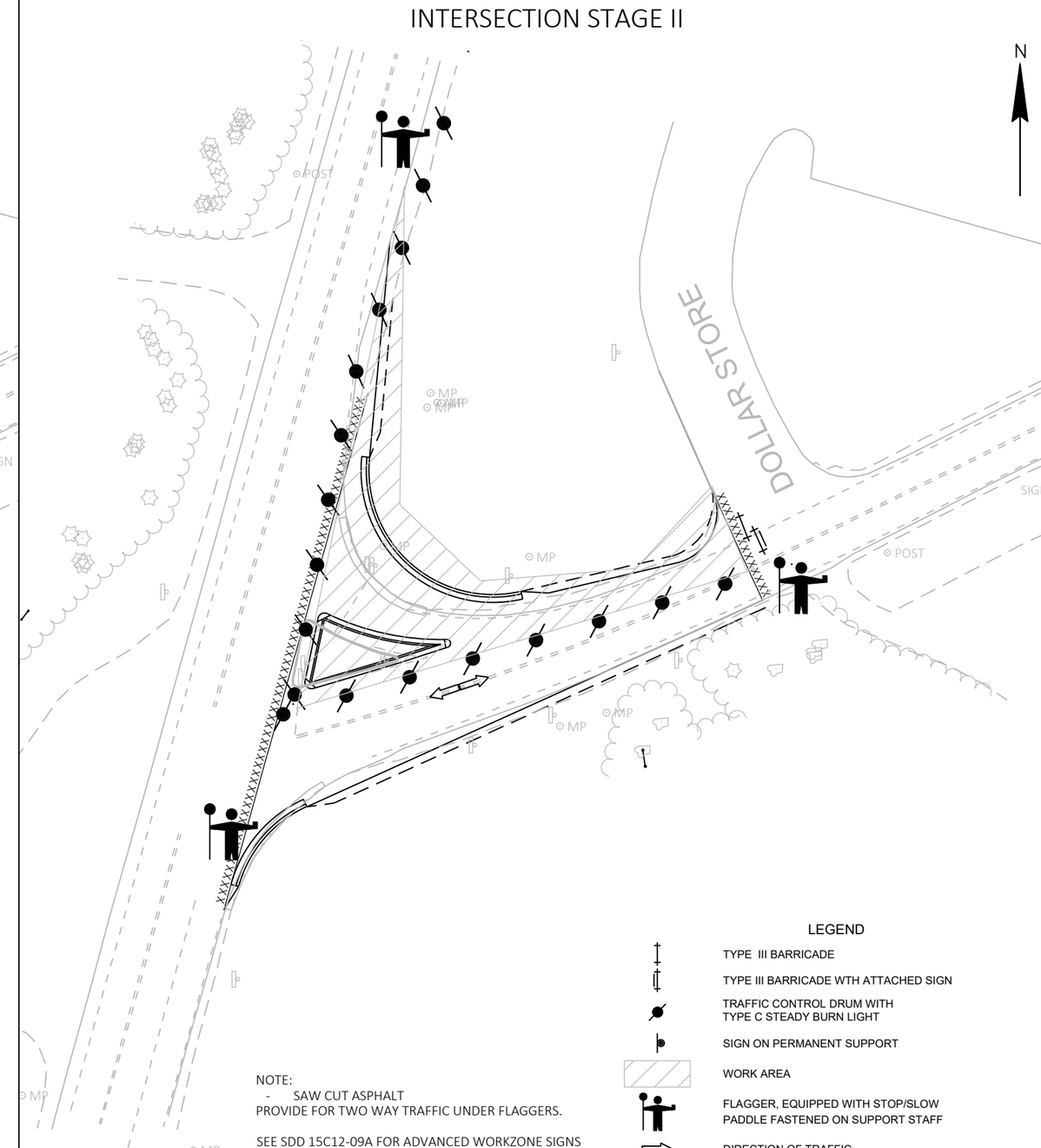

NOTE:
- SAW CUT ASPHALT

PROVIDE FOR TWO WAY TRAFFIC UNDER FLAGGERS.

SEE SDD 15C12-09A FOR ADVANCED WORKZONE SIGNS DURING FLAGGING OPERATIONS

LEGEND

- TYPE III BARRICADE
- TYPE III BARRICADE WTH ATTACHED SIGN
- TRAFFIC CONTROL DRUM WITH TYPE C STEADY BURN LIGHT
- SIGN ON PERMANENT SUPPORT
- WORK AREA
- FLAGGER, EQUIPPED WITH STOP/SLOW PADDLE FASTENED ON SUPPORT STAFF
- DIRECTION OF TRAFFIC
- COVERING SIGNS

PROJECT NO: 9925-00-70	HWY: STH 169	COUNTY: ASHLAND	INTERSECTION STAGING DETAILS	SHEET 32	E

Estimate Of Quantities

Line	Item	Item Description	Unit	Total	9925-00-70 Qty	9925-00-71 Qty
0002	201.0105	Clearing	STA	2.000	2.000	
0004	201.0205	Grubbing	STA	2.000	2.000	
0006	203.0100	Removing Small Pipe Culverts	EACH	11.000	11.000	
0008	203.0270	Removing Structure Over Waterway Debris Capture (structure) 01. B-2-26	EACH	1.000		1.000
0010	204.0110	Removing Asphaltic Surface	SY	459.000	459.000	
0012	204.0115	Removing Asphaltic Surface Butt Joints	SY	268.000	268.000	
0014	204.0120	Removing Asphaltic Surface Milling	SY	149,431.000	149,431.000	
0016	204.0150	Removing Curb & Gutter	LF	227.000	227.000	
0018	205.0100	Excavation Common	CY	198.000	198.000	
0020	205.9016.S	Grading Shaping and Finishing Intersection (location) 01. STH 13/STH 169	EACH	1.000	1.000	
0022	206.1001	Excavation for Structures Bridges (structure) 01. B-2-26	EACH	1.000		1.000
0024	208.0100	Borrow	CY	154.000	154.000	
0026	208.1100	Select Borrow	CY	94.000	94.000	
0028	210.1500	Backfill Structure Type A	TON	70.000		70.000
0030	213.0100	Finishing Roadway (project) 01. 9925-00-70	EACH	1.000	1.000	
0032	213.0100	Finishing Roadway (project) 02. 9925-00-71	EACH	1.000		1.000
0034	305.0110	Base Aggregate Dense 3/4-Inch	TON	5,057.000	5,057.000	
0036	305.0120	Base Aggregate Dense 1 1/4-Inch	TON	1,564.000	1,564.000	
0038	374.1020.S	QMP Pulverize and Relay Compaction	SY	145,318.000	145,318.000	
0040	415.0120	Concrete Pavement 12-Inch	SY	40.000		40.000
0042	415.0410	Concrete Pavement Approach Slab	SY	118.000		118.000
0044	450.4000	HMA Cold Weather Paving	TON	2,500.000	2,500.000	
0046	455.0605	Tack Coat	GAL	21,386.000	21,386.000	
0048	460.0105.S	HMA Percent Within Limits (PWL) Test Strip Volumetrics	EACH	1.000	1.000	
0050	460.0110.S	HMA Percent Within Limits (PWL) Test Strip Density	EACH	1.000	1.000	
0052	460.2000	Incentive Density HMA Pavement	DOL	910.000	910.000	
0054	460.2005	Incentive Density PWL HMA Pavement	DOL	28,483.000	28,483.000	
0056	460.2007	Incentive Density HMA Pavement Longitudinal Joints	DOL	21,800.000	21,800.000	
0058	460.2010	Incentive Air Voids HMA Pavement	DOL	28,483.000	28,483.000	
0060	460.6644	HMA Pavement 4 MT 58-34 V	TON	29,203.000	29,203.000	
0062	460.9000.S	Material Transfer Vehicle	EACH	1.000	1.000	
0064	465.0105	Asphaltic Surface	TON	400.000	400.000	
0066	465.0110	Asphaltic Surface Patching	TON	102.000	102.000	
0068	465.0115	Asphaltic Surface Detours	TON	500.000	500.000	
0070	465.0120	Asphaltic Surface Driveways and Field Entrances	TON	91.000	91.000	
0072	465.0305	Asphaltic Surface Safety Islands	TON	8.000	8.000	
0074	465.0560	Asphaltic Rumble Strips, Centerline	LF	52,427.000	52,427.000	
0076	502.0100	Concrete Masonry Bridges	CY	115.000		115.000
0078	502.3200	Protective Surface Treatment	SY	279.000		279.000
0080	502.4204	Adhesive Anchors No. 4 Bar	EACH	16.000		16.000
0082	502.4205	Adhesive Anchors No. 5 Bar	EACH	107.000		107.000
0084	505.0600	Bar Steel Reinforcement HS Coated Structures	LB	24,940.000		24,940.000
0086	509.1500	Concrete Surface Repair	SF	20.000		20.000
0088	513.4061	Railing Tubular Type M	LF	138.000		138.000
0090	516.0500	Rubberized Membrane Waterproofing	SY	14.000		14.000
0092	521.1024	Apron Endwalls for Culvert Pipe Steel 24-Inch	EACH	4.000	4.000	
0094	521.1036	Apron Endwalls for Culvert Pipe Steel 36-Inch	EACH	2.000	2.000	
0096	521.1228	Apron Endwalls for Pipe Arch Steel 28x20-Inch	EACH	14.000	14.000	
0098	521.1235	Apron Endwalls for Pipe Arch Steel 35x24-Inch	EACH	4.000	4.000	

Estimate Of Quantities

Line	Item	Item Description	Unit	Total	9925-00-70 Qty	9925-00-71 Qty
0100	521.5124	Culvert Pipe Corrugated Steel Polymer Coated 24-Inch	LF	100.000	100.000	
0102	521.5136	Culvert Pipe Corrugated Steel Polymer Coated 36-Inch	LF	40.000	40.000	
0104	521.5728	Pipe Arch Polymer Coated Corrugated Steel 28x20-Inch	LF	266.000	266.000	
0106	521.5735	Pipe Arch Polymer Coated Corrugated Steel 35x24-Inch	LF	72.000	72.000	
0108	522.0130	Culvert Pipe Reinforced Concrete Class III 30-Inch	LF	84.000	84.000	
0110	522.0415	Culvert Pipe Reinforced Concrete Class IV 15-Inch	LF	32.000	32.000	
0112	522.1015	Apron Endwalls for Culvert Pipe Reinforced Concrete 15-Inch	EACH	2.000	2.000	
0114	522.1030	Apron Endwalls for Culvert Pipe Reinforced Concrete 30-Inch	EACH	4.000	4.000	
0116	522.2319	Culvert Pipe Reinforced Concrete Horizontal Elliptical Class HE-III 19x30-Inch	LF	72.000	72.000	
0118	522.2619	Apron Endwalls for Culvert Pipe Reinforced Concrete Horizontal Elliptical 19x30-Inch	EACH	4.000	4.000	
0120	601.0413	Concrete Curb & Gutter 6-Inch Sloped 30-Inch Type G	LF	164.000	164.000	
0122	601.0557	Concrete Curb & Gutter 6-Inch Sloped 36-Inch Type D	LF	140.000	140.000	
0124	606.0300	Riprap Heavy	CY	20.000		20.000
0126	614.0010	Barrier System Grading Shaping Finishing	EACH	4.000	4.000	
0128	614.0400	Adjusting Steel Plate Beam Guard	LF	458.000	458.000	
0130	614.2500	MGS Thrie Beam Transition	LF	156.000	156.000	
0132	614.2610	MGS Guardrail Terminal EAT	EACH	4.000	4.000	
0134	618.0100	Maintenance and Repair of Haul Roads (project) 01. 9925-00-70	EACH	1.000	1.000	
0136	618.0100	Maintenance and Repair of Haul Roads (project) 02. 9925-00-71	EACH	1.000		1.000
0138	619.1000	Mobilization	EACH	1.000	1.000	
0140	624.0100	Water	MGAL	660.000	660.000	
0142	625.0100	Topsoil	SY	645.000	645.000	
0144	625.0500	Salvaged Topsoil	SY	2,540.000	2,540.000	
0146	627.0200	Mulching	SY	2,540.000	2,540.000	
0148	628.1104	Erosion Bales	EACH	20.000	20.000	
0150	628.1504	Silt Fence	LF	2,850.000	2,850.000	
0152	628.1520	Silt Fence Maintenance	LF	2,850.000	2,850.000	
0154	628.1905	Mobilizations Erosion Control	EACH	3.000	3.000	
0156	628.1910	Mobilizations Emergency Erosion Control	EACH	1.000	1.000	
0158	628.2023	Erosion Mat Class II Type B	SY	680.000	680.000	
0160	628.2039	Erosion Mat Class III Type D	SY	680.000	680.000	
0162	628.7555	Culvert Pipe Checks	EACH	1.000	1.000	
0164	629.0210	Fertilizer Type B	CWT	2.600	2.600	
0166	630.0120	Seeding Mixture No. 20	LB	60.000	60.000	
0168	630.0180	Seeding Mixture No. 80	LB	10.000	10.000	
0170	630.0200	Seeding Temporary	LB	60.000	60.000	
0172	630.0400	Seeding Nurse Crop	LB	10.000	10.000	
0174	630.0500	Seed Water	MGAL	95.000	95.000	
0176	633.5200	Markers Culvert End	EACH	98.000	98.000	
0178	642.5201	Field Office Type C	EACH	1.000	1.000	
0180	643.0300	Traffic Control Drums	DAY	210.000	210.000	
0182	643.0420	Traffic Control Barricades Type III	DAY	3,295.000	3,295.000	
0184	643.0705	Traffic Control Warning Lights Type A	DAY	3,476.000	3,476.000	
0186	643.0715	Traffic Control Warning Lights Type C	DAY	210.000	210.000	
0188	643.0900	Traffic Control Signs	DAY	14,208.000	14,208.000	
0190	643.0920	Traffic Control Covering Signs Type II	EACH	14.000	14.000	
0192	643.3165	Temporary Marking Line Paint 6-Inch	LF	286,231.000	286,231.000	
0194	643.5000	Traffic Control	EACH	1.000	1.000	
0196	646.2040	Marking Line Grooved Wet Ref Epoxy 6-Inch	LF	196,856.000	196,404.000	452.000

Line	Item	Item Description	Unit	Total	9925-00-70 Qty	9925-00-71 Qty
0198	646.6120	Marking Stop Line Epoxy 18-Inch	LF	47.000	47.000	
0200	646.8220	Marking Island Nose Epoxy	EACH	3.000	3.000	
0202	648.0100	Locating No-Passing Zones	MI	10.300	10.300	
0204	650.5500	Construction Staking Curb Gutter and Curb & Gutter	LF	304.000	304.000	
0206	650.6000	Construction Staking Pipe Culverts	EACH	17.000	17.000	
0208	650.6501	Construction Staking Structure Layout (structure) 01. B-2-26	EACH	1.000		1.000
0210	650.8000	Construction Staking Resurfacing Reference	LF	54,688.000	54,688.000	
0212	650.9911	Construction Staking Supplemental Control (project) 01. 9925-00-70	EACH	1.000	1.000	
0214	650.9911	Construction Staking Supplemental Control (project) 02. 9925-00-71	EACH	1.000		1.000
0216	650.9920	Construction Staking Slope Stakes	LF	450.000	450.000	
0218	661.0101	Temporary Traffic Signals for Bridges (structure) 01. B-02-0026	EACH	1.000	1.000	
0220	690.0150	Sawing Asphalt	LF	604.000	604.000	
0222	715.0502	Incentive Strength Concrete Structures	DOL	690.000		690.000
0224	715.0720	Incentive Compressive Strength Concrete Pavement	DOL	500.000		500.000
0226	740.0440	Incentive IRI Ride	DOL	41,200.000	41,200.000	
0228	ASP.1T0A	On-the-Job Training Apprentice at $5.00/HR	HRS	2,700.000	2,400.000	300.000
0230	ASP.1T0G	On-the-Job Training Graduate at $5.00/HR	HRS	2,300.000	2,000.000	300.000
0232	SPV.0035	Special 01. Base Repair for Stabilized Base Reclamation Layer	CY	1,206.000	1,206.000	
0234	SPV.0060	Special 01. Railroad Crossing Removal	EACH	1.000	1.000	
0236	SPV.0090	Special 01. Regrading Ditch	LF	150.000	150.000	
0238	SPV.0090	Special 02. Flashing Stainless Steel	LF	64.000		64.000
0240	SPV.0180	Special 01. Stabilized Base Reclamation	SY	145,318.000	145,318.000	
0242	SPV.0195	Special 01. Asphalt Stabilizing Agent	TON	2,268.000	2,268.000	

3

CLEAR AND GRUB SUMMARY

CAT	STATION	TO	STATION	LOC	201.0105 CLEARING STA	201.0205 GRUBBING STA	REMARKS
0010	107+00	-	109+00	RT	2	2	DITCH REPAIR
				TOTAL 0010	2	2	

COMMON EXCAVATION

CAT	STATION	TO	STATION	LOC	205.0100 EXCAVATION COMMON CY	REMARKS
0010	19+78	-	25+21	LT&RT	175	BAD R. BRIDGE
0010	107+00	-	110+00	RT	8	DITCH
0010	UNDISTRIBUTED			RT&LT	15	
				TOTAL 0010	198	

REMOVING SMALL PIPE CULVERTS

CAT	STATION	LOC	203.0100 REMOVING SMALL PIPE CULVERTS EACH	REMARKS
0010	0+88		1	
0010	8+64		1	
0010	308+61		1	
0010	330+86		1	
0010	331+65		1	
0010	367+37		1	
0010	401+69		1	
0010	465+80		1	
0010	490+72		1	
0010	513+84		1	
0010	518+26		1	
	TOTAL 0010		11	

REMOVING CURB & GUTTER

CAT	STATION	TO	STATION	LOC	204.0150 REMOVING CURB & GUTTER LF	REMARKS
0010	0+23	-	1+10	LT&RT	227	STH 13 INTERSECTION
				TOTAL 0010	227	

GRADING SHAPING AND FINISHING INTERSECTION (STH 13/STH 169)

CAT	STATION	TO	STATION	LOC	205.9016.S.01 GRADING SHAPING AND FINISHING INTERSECTION (LOCATION) (01. TBD) EACH	REMARKS
0010	0+28	-	2+22	RT&LT	1	STH 13/STH 169
				TOTAL 0010	1	

HMA MILLING SUMMARY

CAT	STATION	TO	STATION	LOC	204.0110 REMOVING ASPHALTIC SURFACE SY	204.0115 REMOVING ASPHALTIC SURFACE BUTT JOINTS SY	204.0120 REMOVING ASPHALTIC SURFACE MILLING SY	REMARKS
0010	2+22	-	547+16		459			PIPES
0010	2+22					134		TERMINI
0010			547+16			134		TERMINI
	2+22	-	547+16				4,113	ROADS & DRIVES
0010	2+22	-	547+16				145,318	MAINLINE
				TOTAL 0010	459	268	149,431	

BORROW SUMMARY

CAT	STATION	TO	STATION	LOC	208.0100 BORROW CY	208.1100 SELECT BORROW CY	REMARKS
0010	1978		2521	LT&RT		60	BAD R. BRIDGE
0010	107+00	-	110+00	RT	154		DITCH
0010	0+28	-	547+16			34	UNDIST.
				TOTAL 0010	154	94	

BASE AGGREGATE SUMMARY

CAT	STATION	TO	STATION	LOC	305.0110 BASE AGGREGATE DENSE 3/4-INCH TON	305.0120 BASE AGGREGATE DENSE 1 1/4-INCH TON	REMARKS
0010	0+28	-	547+16		4,874		SHLDR
0010	0+28	-	547+16		77		DRIVES
0010	19+80	-	25+00		24	200	BMGRD
0010	0+28	-	2+22	STH 13		918	INTERSECTION
0010	0+28	-	547+16			302	PIPE PATCH
0010	19+78	-	25+21	BAD R.	82	144	BRDG APPROACH
				TOTAL 0010	5,057	1,564	

QMP PULVERIZE AND RELAY COMPACTION

CAT	STATION	TO	STATION	LOC	374.1020.S QMP PULVERIZE AND RELAY COMPACTION SY	REMARKS
0010	2+22	-	16+00	LT&RT	3,675	MAINLINE
0010	16+00	-	24+75	LT&RT	2,333	|
0010	24+75	-	392+80	LT&RT	98,147	|
0010	392+80	-	395+30	LT&RT	667	V
0010	395+30	-	547+16	LT&RT	40,496	
				TOTAL 0010	145,318	

COLD WEATHER PAVING

CAT	STATION	TO	STATION	LOC	450.4000 HMA COLD WEATHER PAVING TON	REMARKS
0010	0+28	-	547+16		2,500	
				TOTAL 0010	2,500	

3

3

PWL SUMMARY

CAT	STATION	TO	STATION	LOC	460.0105.S HMA PERCENT WITHIN LIMITS (PWL) TEST STRIP VOLUMETRICS EACH	460.0110.S HMA PERCENT WITHIN LIMITS (PWL) TEST STRIP DENSITY EACH	460.2000 INCENTIVE DENSITY HMA PAVEMENT DOL	460.2005 INCENTIVE DENSITY PWL HMA PAVEMENT DOL	460.2007 INCENTIVE DENSITY HMA PAVEMENT LONGITUDINAL JOINTS DOL	460.2010 INCENTIVE AIR VOIDS HMA PAVEMENT DOL	REMARKS
0010	2+22	-	547+16		1	1		28,483	21,800	28,483	MAINLINE
0010	0+28	-	2+22				265				INTERSECTION
0010	0+28	-	547+16				67				PIPES
0010	0+28	-	547+16				258				DRIVES AND SIDE ROADS
0010	PROJECT						320				UNDISTRIBUTED
				TOTAL 0010	1	1	910	28,483	21,800	28,483	

PWL QMP APPLICATION TABLE

LOCATION	STATION	MIXTURE USE	UNDERLYING SURFACE	BID ITEM	TONS	THICKNESS INCH	QUALITY MANAGEMENT PROGRAM TO BE USED FOR: MIXTURE ACCEPTANCE	DENSITY ACCEPTANCE
DRIVING LANES AND SHOULDER UPPER LAYER	2+22 TO 547+16	4MT 58-34V	ASPHALTIC STABILIZED BASE	4MT 58-34V	28483.00	1.75	PWL INCENTIVE AIR VOIDS HMA PAVEMENT 460.2010	INCENTIVE DENSITY PWL HMA PAVEMENT 460.6644
DRIVING LANES AND SHOULDER LOWER LAYER	2+22 TO 547+16	4MT 58-34V	ASPHALTIC STABILIZED BASE	4MT 58-34V	28483.00	1.75	PWL INCENTIVE AIR VOIDS HMA PAVEMENT 460.2010	INCENTIVE DENSITY PWL HMA PAVEMENT 460.6644
INTERSECTION	0+28 TO 2+22	4MT 58-34V	BASE AGG. DENSE.	4MT 58-34V	409.00	1.75 2.25 2.5	QMP AS PER SS 465	INCENTIVE DENSITY HMA PAVEMENT 460.2000
SIDEROADS	0+28 TO 547+16	4MT 58-34V	HMA PAVEMENT	4MT 58-34V	311.00	1.75	QMP AS PER SS 465	INCENTIVE DENSITY HMA PAVEMENT 460.2000
DRIVEWAYS	0+28 TO 547+16	ASPHALTIC SURFACE	VARIABLE	ASPHALTIC SURFACE	91.00	1.75	QMP AS PER SS 465	INCENTIVE DENSITY HMA PAVEMENT 460.2000
CULVERT PATCHES	0+28 TO 547+16	ASPHALTIC SURFACE	BASE AGG. DENSE.	ASPHALTIC SURFACE PATCHING	102.00	2.0 2.0	QMP AS PER SS 465	ACCEPTANCE BY ORDINARY COMPACTION
SAFETY ISLAND	0+35	ASPHALTIC SURFACE	BASE AGG. DENSE.	ASPHALTIC SURFACE SAFETY ISLAND	8.00	1.5 1.5	QMP AS PER SS 465	ACCEPTANCE BY ORDINARY COMPACTION
DETOURS	UNDISTRIBUTED	ASPHALTIC SURFACE	VARIABLE	ASPHALTIC SURFACE DETOURS	VARIABLE	VARIABLE	QMP AS PER SS 465	ACCEPTANCE BY ORDINARY COMPACTION

CENTERLINE RUMBLE STRIPS

CAT	STATION	TO	STATION	LOC	465.0475 ASPHALT CENTERLINE RUMBLE STRIPS 2-LANE RURAL LF	REMARKS
0010	2+22	-	547+16	CL	52,427	
				TOTAL 0010	52,427	

CURB AND GUTTER SUMMARY

CAT	STATION	601.0413 CONCRETE CURB & GUTTER 6-INCH SLOPED 30- LF	601.0557 CONCRETE CURB & GUTTER 6-INCH SLOPED 36-INCH TYPE D LF	REMARKS
0010	INTERSECTIO	164	140	
	TOTAL 0010	164	140	

STEEL PLATE BEAMGUARD SUMMARY

CAT	STATION	TO	STATION	LOC	614.0010 BARRIER SYSTEM GRADING SHAPING EACH	614.0400 ADJUSTING STEEL PLATE BEAM GUARD LF	614.2500 MGS THRIE BEAM TRANSITION LF	614.2610 MGS GUARDRAIL TERMINAL EAT EACH	REMARKS
0010	427+53	-	428+67	LT&RT		228			TYLER FORKS
0010	429+32	-	430+47	LT&RT		230			TYLER FORKS
0010	21+34		22+26	LT	1		39	1	BAD RIVER
0010	21+34		22+26	RT	1		39	1	BAD RIVER
0010	22+91		23+83	LT	1		39	1	BAD RIVER
0010	22+91		23+83	RT	1		39	1	BAD RIVER
				TOTAL 0010	4	458	156	4	

3

HMA SUMMARY

CAT	STATION	TO	STATION	LOC	455.0605 TACK COAT GAL	460.6644 HMA PAVEMENT 4 MT 58-34 V TON	460.9000.S MATERIAL TRANSFER VEHICLE EACH	465.0105 ASPHALTIC SURFACE TON	465.0110 ASPHALTIC SURFACE PATCHING TON	465.0115 ASPHALTIC SURFACE DETOURS TON	465.0120 ASPHALTIC SURFACE DRIVEWAYS AND FIELD ENTRANCES TON	465.0305 ASPHALTIC SURFACE SAFETY ISLANDS TON	REMARKS
0010	2+22	-	547+16		20,628	28,483	1						MAINLINE
0010	0+28	-	2+22	STH 13	158	409						8	INTERSECTION
0010	0+28	-	547+16		32				102				PIPES
0010	2+22	-	547+16	DRIVES	61						91		DRIVES
0010	2+22	-	547+16	SIDE RD	222	311							SIDE ROADS
0010	PROJECT			DETOURS	285			400		500			UNDISTRIBUTED
				TOTAL 0010	21,386	29,203	1	400	102	500	91	8	

PIPE REPLACEMENT SUMMARY

CAT	STATION	521.1024 APRON ENDWALLS FOR CULVERT PIPE STEEL 24-INCH EACH	521.1036 APRON ENDWALLS FOR CULVERT PIPE STEEL 36-INCH EACH	521.1228 APRON ENDWALLS FOR PIPE ARCH STEEL 28X20-INCH EACH	521.1235 APRON ENDWALLS FOR PIPE ARCH STEEL 35X24-INCH EACH	521.5124 CULVERT PIPE CORRUGATED STEEL POLYMER COATED 24-INCH; 0.064 THICK LF	521.5136 CULVERT PIPE CORRUGATED STEEL POLYMER COATED 36-INCH; 0.079 THICK LF	521.5728 PIPE ARCH POLYMER COATED CORRUGATED STEEL 28X20-INCH; 0.064 THICK LF	521.5735 PIPE ARCH POLYMER COATED CORRUGATED STEEL 35X24-INCH; 0.079 THICK LF	522.0130 CULVERT PIPE REINFORCED CONCRETE CLASS III 30-INCH LF	522.0415 CULVERT PIPE REINFORCED CONCRETE CLASS IV 15-INCH LF	522.1015 APRON ENDWALLS FOR CULVERT PIPE REINFORCED CONCRETE 15-INCH EACH	522.1030 APRON ENDWALLS FOR CULVERT PIPE REINFORCED CONCRETE 30-INCH EACH	522.2319 CULVERT PIPE REINFORCED CONCRETE HORIZONTAL ELLIPTICAL CLASS HE-III 19X30-INCH LF	522.2619 APRON ENDWALLS FOR CULVERT PIPE REINFORCED CONCRETE HORIZONTAL ELLIPTICAL 19X30-INCH EACH
0010	2+02										32	2			
0010	8+64	2				50									
0010	188+41	2				50									
0010	283+33			4				76							
0010	308+61									84			4		
0010	330+86													72	4
0010	331+65			2				36							
0010	367+37		2				40								
0010	401+69				4				72						
0010	465+80			2				44							
0010	490+72			2				34							
0010	513+84			2				40							
0010	518+26			2				36							
		4	2	14	4	100	40	266	72	84	32	2	4	72	4

MAINTENANCE AND REPAIR OF HAUL ROADS

CAT	STATION	618.0100.01 MAINTENANCE AND REPAIR OF HAUL ROADS (9925-00-70) EACH	REMARKS
0010	PROJECT	1	
	TOTAL 0010	1	

WATER

CAT	STATION	TO	STATION	LOC	624.0100 WATER MGAL	REMARKS
0010	0+28	-	547+16	LT&RT	4	PIPE PATCH
0010	2+22	-	16+00	LT&RT	17	MAINLINE
0010	16+00	-	24+75	LT&RT	11	PULVERIZE
0010	24+75	-	392+80	LT&RT	442	COMPACTION
0010	392+80	-	395+30	LT&RT	3	"
0010	395+30	-	547+16	LT&RT	183	"
				TOTAL 0010	660	

MOBILIZATION EROSION CONTROL SUMMARY

CAT	STATION	TO	STATION	LOC	628.1905 MOBILIZATIONS EROSION CONTROL EACH	628.1910 MOBILIZATIONS EMERGENCY EROSION EACH	REMARKS
0010	0+28	-	547+16		3	1	
				TOTAL 0010	3	1	

3

3

SILT FENCE MAINTENANCE

CAT	STATION	LOC	628.1504 SILT FENCE LF	628.1520 SILT FENCE MAINTENANCE LF	REMARKS
0010	0+28	RT	230	230	INTERSECTION
0010	8+64	LT&RT	160	160	PIPE
0010	22+50	LT	580	580	BRIDGE
0010	22+50	RT	380	380	BRIDGE
0010	188+41	LT&RT	160	160	PIPE
0010	283+33	LT&RT	200	200	PIPE
0010	308+61	LT&RT	160	160	PIPE
0010	330+86	LT&RT	160	160	PIPE
0010	331+65	LT&RT	100	100	PIPE
0010	367+37	LT&RT	100	100	PIPE
0010	401+69	LT&RT	160	160	PIPE
0010	465+80	LT&RT	160	160	PIPE
0010	490+72	LT&RT	100	100	PIPE
0010	513+84	LT&RT	100	100	PIPE
0010	518+26	LT&RT	100	100	PIPE
TOTAL 0010			2,850	2,850	

EROSION CONTROL SUMMARY 1

CAT	STATION	TO	STATION	LOC	625.0100 TOPSOIL SY	625.0500 SALVAGED TOPSOIL SY	627.0200 MULCHING SY	628.1104 EROSION BALES EACH	628.7555 CULVERT PIPE CHECKS EACH	REMARKS
0010	0+00	-	2+22	LT&RT		460	460			INTERSECTION
0010		-	2+02	LT&RT		0	0		1	PIPE
0010		-	8+64	LT&RT		78	78			PIPE
0010	19+78		25+21	LT&RT		944	944			BAD R. BRIDGE
0010		-	188+41	LT&RT		78	78			PIPE
0010		-	283+33	LT&RT		78	78			PIPE
0010		-	308+61	LT&RT		78	78			PIPE
0010		-	330+86	LT&RT		78	78			PIPE
0010		-	331+65	LT&RT		78	78			PIPE
0010		-	367+37	LT&RT		78	78			PIPE
0010		-	401+69	LT&RT		78	78			PIPE
0010		-	465+80	LT&RT		78	78			PIPE
0010		-	490+72	LT&RT		78	78			PIPE
0010		-	513+84	LT&RT		78	78			PIPE
0010		-	518+26	LT&RT		78	78			PIPE
0010	105+00	-	110+00	RT	625			10		DITCH REPAIR
0010	0+28	-	547+16	LT&RT	20	200	200	10		UNDISTRIBUTED
				TOTAL 0010	645	2,540	2,540	20	1	

3

EROSION CONTROL SUMMARY 2

CAT	STATION	TO	STATION	LOC	628.2023 EROSION MAT CLASS II TYPE B SY	628.2039 EROSION MAT CLASS III TYPE D SY	629.0210 FERTILIZER TYPE B CWT	630.0120 SEEDING MIXTURE NO. 20 LB	630.0180 SEEDING MIXTURE NO. 80 LB	630.0200 SEEDING TEMPORARY LB	630.0400 SEEDING NURSE CROP LB	630.0500 SEED WATER MGAL	6 WEEKS OF WATER REMARKS
0010		-	8+64	LT&RT			0.1	2		2		3	PIPES
0009	19+78		25+21	LT&RT			0.7	26		26		32	BAD R. BRIDGE
0010		-	188+41	LT&RT			0.1	2		2		3	PIPES
0010		-	283+33	LT&RT			0.1	2		2		3	PIPES
0010		-	308+61	LT&RT			0.1	2		2		3	PIPES
0010		-	330+86	LT&RT			0.1	2		2		3	PIPES
0010		-	331+65	LT&RT			0.1	2		2		3	PIPES
0010		-	367+37	LT&RT			0.1	2		2		3	PIPES
0010		-	401+69	LT&RT			0.1	2		2		3	PIPES
0010		-	465+80	LT&RT			0.1	2		2		3	PIPES
0010		-	490+72	LT&RT			0.1	2		2		3	PIPES
0010		-	513+84	LT&RT			0.1	2		2		3	PIPES
0010		-	518+26	LT&RT			0.1	2		2		3	PIPES
0010	105+00	-	110+00	RT	680	680	0.5		10		10	21	DITCH REPAIR
0010	0+28	-	547+16	LT&RT			0.2	10		10		6	UNDIST.
				TOTAL 0010	680	680	2.6	60	10	60	10	95	

MARKERS CULVERT END

CAT	STATION	633.5200 MARKERS CULVERT END EACH	REMARKS
0010	2+02	2	
0010	8+64	2	
0010	188+41	2	
0010	283+33	2	
0010	308+61	2	
0010	330+86	2	
0010	331+65	2	
0010	367+37	2	
0010	401+69	2	
0010	465+80	2	
0010	490+72	2	
0010	513+84	2	
0010	518+26	2	
0010	EXISTING	72	UNDIST.
	TOTAL 0010	98	

FIELD OFFICE

CAT	STATION	LOC	642.5201 FIELD OFFICE TYPE C EACH	REMARKS
0010	PROJECT		1	
	TOTAL 0010		1	

PAVEMENT MARKING ISLAND NOSE

CAT	STATION	TO	STATION	LOC	646.8220 MARKING ISLAND NOSE EPOXY EACH	REMARKS
0010	0+28	-	0+28	LT	3	CHOP
			TOTAL 0010		3	

3

TRAFFIC CONTROL SUMMARY

CAT	STATION		STATION	LOC	643.0300 TRAFFIC CONTROL DRUMS DAY	643.0420 TRAFFIC CONTROL BARRICADES TYPE III DAY	643.0705 TRAFFIC CONTROL WARNING LIGHTS TYPE A DAY	643.0715 TRAFFIC CONTROL WARNING LIGHTS TYPE C DAY	643.0900 TRAFFIC CONTROL SIGNS DAY	643.0920 TRAFFIC CONTROL COVERING SIGNS TYPE II EACH	643.5000 TRAFFIC CONTROL (9925-00-70) EACH	661.0101.01 TEMPORARY TRAFFIC SIGNALS FOR BRIDGES (01. B-02-0026) EACH	REMARKS
0010	9+75	-	530+25	RT		2,340	2496		1,248				SIDE ROADS
0010	DETOUR			0					4368				OVERVIEW
0010	DETOUR			1		175	200		275	3			INSET 1
0010	DETOUR			2					775				INSET 2
0010	DETOUR			3					2652				INSET 3
0010	DETOUR			4					2908				INSET 4
0010	DETOUR			5		156	312		1039	9			INSET 5
0010	DETOUR			6		624	468		468				INSET 6
0010	N/A		N/A						475	2		1	PARK DETOUR
0010	0+28	-	547+16								1		PROJECT
0010	0+28	-	2+22		210			210					INTERSECTION
				TOTAL 0010	210	3,295	3,476	210	14,208	14	1	1	

CONSTRUCTION STAKING PIPE CULVERTS

CAT	STATION	LOC	650.6000 CONSTRUCTION STAKING PIPE CULVERTS EACH	REMARKS
0010	2+02		1	
0010	8+64		1	
0010	188+41		1	
0010	283+33		2	
0010	308+61		2	
0010	330+86		2	
0010	331+65		1	
0010	367+37		1	
0010	401+69		2	
0010	465+80		1	
0010	490+72		1	
0010	513+84		1	
0010	518+26		1	
	TOTAL 0010		17	

LOCATING NO PASSING ZONES

CAT	STATION	TO	STATION	LOC	648.0100 LOCATING NO-PASSING ZONES MI
0010	0+28	-	547+16		10.3
				TOTAL 0010	10.3

SAWING ASPHALT

CATEGOR`	STATION	LOCATION	690.0150 SAWING ASPHALT LF	REMARKS
0010	0+28		200	STH 13
0010	2+22		30	RECSTRCT
0010	2+50		20	dollar store
0010	5+25		12	drive
0011	22+50		60	BAD R. BRDG
0010	24+50		24	butler
0010	51+75		24	haugen
0010	74+00		24	N. butler
0010	87+50		40	copper falls
0010	117+75		12	DRIVE
0010	120+00		24	haugen
0010	182+25		12	DRIVE
0010	215+25		12	DRIVE
0010	223+50		12	DRIVE
0010	228+75		12	DRIVE
0010	405+00		24	burns
0010	412+50		12	drive
0010	413+25		12	drive
0010	455+50		12	drive
0010	547+16		26	TERMINI
		TOTAL 0010	604	

PAVEMENT MARKING SUMMARY

CAT	STATION	TO	STATION	LOC	646.2040 MARKING LINE GROOVED WET REF EPOXY 6-INCH WHITE EDGE LF	646.2040 MARKING LINE GROOVED WET REF EPOXY 6-INCH YELLOW CL LF	643.3165 TEMPORARY MARKING LINE PAINT 6-INCH TEMP CL LF	646.6120 MARKING STOP LINE EPOXY 18-INCH LF	REMARKS
0010	0+28	-	547+16		107,481	89,375	286,231		PROJECT
0010	0+28	-	0+28					47	STH 13
				TOTAL 0010	107,255	89,149	286,231	47	
				6-INCH COMBINED TOTAL	196,404.00				

3

3

BASE REPAIR SUMMARY

CAT	STATION	TO	STATION	LOC	SPV.0035.01 SPECIAL (01. BASE REPAIR FOR STABILIZED BASE RECLAMATION LAYER) CY	REMARKS
0010	6+60	-	6+80	LT	6	ASSUMED
0010	6+60	-	6+80	RT	6	AVERAGE
0010	34+00	-	34+20	LT	6	1 FOOT
0010	34+00	-	34+20	RT	6	DEPTH
0010	45+00	-	45+40	RT	12	OF
0010	71+00	-	74+00	LT	89	REPAIR
0010	111+00	-	114+00	RT	89	I
0010	134+50	-	136+50	RT	60	I
0010	142+50	-	143+50	RT	30	I
0010	222+00	-	223+00	RT	30	I
0010	248+00	-	249+50	LT	45	I
0010	252+50	-	255+00	RT	75	I
0010	270+70	-	270+90	LT	6	I
0010	270+70	-	270+90	RT	6	I
0010	290+00	-	290+50	LT	15	I
0010	290+00	-	290+50	RT	15	I
0010	308+25	-	308+65	LT	12	I
0010	308+25	-	308+65	RT	12	I
0010	332+80	-	333+50	RT	21	I
0010	333+00	-	333+80	LT	24	I
0010	336+40	-	336+90	RT	15	I
0010	411+50	-	412+00	RT	15	V
0010	418+25	-	418+75	RT	15	I
0010	418+25	-	418+75	LT	15	I
0010	432+25	-	432+75	RT	15	I
0010	432+50	-	433+00	LT	15	I
0010	437+00	-	437+50	RT	15	I
0010	438+25	-	438+75	LT	15	I
0010	450+50	-	454+00	LT	104	I
0010	473+50	-	476+00	LT	75	I
0010	486+00	-	488+50	LT	75	I
0010	494+50	-	497+00	LT	75	I
0010	521+00	-	521+20	LT	6	I
0010	521+00	-	521+20	RT	6	I
0010	522+40	-	522+60	LT	6	I
0010	522+40	-	522+60	RT	6	I
0010	525+00	-	526+25	LT	38	I
0010	536+25	-	536+75	RT	15	I
0010	537+75	-	538+25	LT	15	V
0010	UNDISTRIBUTED				100	V
				TOTAL 0010	1206	

CONSTRUCTION STAKING SUMMARY

CAT	STATION	TO	STATION	LOC	650.5500 CONSTRUCTION STAKING CURB GUTTER AND CURB & GUTTER LF	650.8000 CONSTRUCTION STAKING RESURFACING REFERENCE LF	650.9911.01 CONSTRUCTION STAKING SUPPLEMENTAL CONTROL (9925-00-70) EACH	650.9920 CONSTRUCTION STAKING SLOPE STAKES LF	REMARKS
0010	105+00	-	109+50	LT&RT				450	DITCH
0010	0+28	-	547+16			54,688	1		PROJECT
0010	0+28	-	2+22		304				INTERSECTION
				TOTAL 0010	304	54,688	1	450	

RAILROAD CROSSING REMOVAL

CAT	STATION		STATION	LOC	SPV.0060.01 SPECIAL (01. RAILROAD CROSSING REMOVAL) EACH	REMARKS
0010	14+75	TO	15+15	RT&LT	1	
				TOTAL 0010	1	

REGRADING DITCH SPECIAL

CAT	STATION	TO	STATION	LOC	SPV.0090.01 SPECIAL (01. REGRADING DITCH) LF	REMARKS
0010	142+50	-	144+00		150	
				TOTAL 0010	150	

BASE STABILIZATION SUMMARY

CAT	STATION	TO	STATION	LOC	SPV.0180.01 SPECIAL (01. STABILIZED BASE RECLAMATION) SY	SPV.0195.01 SPECIAL (01. ASPHALT STABILIZING AGENT) TON
0010	2+22	-	16+00	LT&RT	3,675	57
0010	16+00	-	24+75	LT&RT	2,333	58
0010	24+75	-	392+80	LT&RT	98,147	1,512
0010	392+80	-	395+30	LT&RT	667	17
0010	395+30	-	547+16	LT&RT	40,496	624
				TOTAL 0010	145,318	2,268

3

3

CONCRETE ITEMS

CATEGORY	STATION TO STATION	LOCATION	415.0120 CONCRETE PAVEMENT 12-INCH SY	415.0410 CONCRETE PAVEMENT APPROACH SLAB SY
0010	22+02 - 22+08	STH 169	20	—
0010	22+08 - 22+28	STH 169	—	59
0010	22+89 - 23+09	STH 169	—	59
0010	23+09 - 23+17	STH 169	20	—
		TOTAL 0010	40	118

CONSTRUCTION STAKING

CATEGORY	LOCATION	650.6501.01 CONSTRUCTION STAKING STRUCTURE LAYOUT (STRUCTURE) (01. B-02-0026) EACH	650.9911.01 CONSTRUCTION STAKING SUPPLEMENTAL CONTROL (PROJECT) (01. 9925-00-71) EACH
0010	PROJECT	—	1
0010	B-02-0026	1	—
	TOTAL 0010	1	1

PAVEMENT MARKING

CATEGORY	STATION TO STATION	LOCATION	646.2040 MARKING LINE GROOVED WET REF EPOXY 6-INCH LF	REMARKS
0010	22+02 - 23+15	B-02-0026	226	DOUBLE YELLOW
0010	22+02 23+15	B-02-0026	226	SOLID WHITE
		TOTAL 0010	452	

TLE ACQUISITION IS LOCATED APPROXIMATELY 974 FEET SOUTHWEST, MEASURED ALONG THE SOUTH RIGHT-OF-WAY LINE OF S.T.H. 169, OF THE EAST LINE OF THE NE 1/4 OF THE NE 1/4 OF SECTION 29, T45N, R2W, TOWN OF MORSE, ASHLAND COUNTY, WI.

R/W PROJECT NUMBER: 9925-00-20	EXHIBIT NUMBER: 1

TLE ACQUISITION MAP
MELLEN - USH2 (STH 13 TO ASHLAND/IRON CO LN)
TOWN OF MORSE

S.T.H. "169" ASHLAND COUNTY

PART OF THE NORTHEAST 1/4 OF THE NORTHEAST 1/4, SECTION 29, TOWNSHIP 45 NORTH, RANGE 2 WEST, TOWN OF MORSE, ASHLAND COUNTY, WISCONSIN

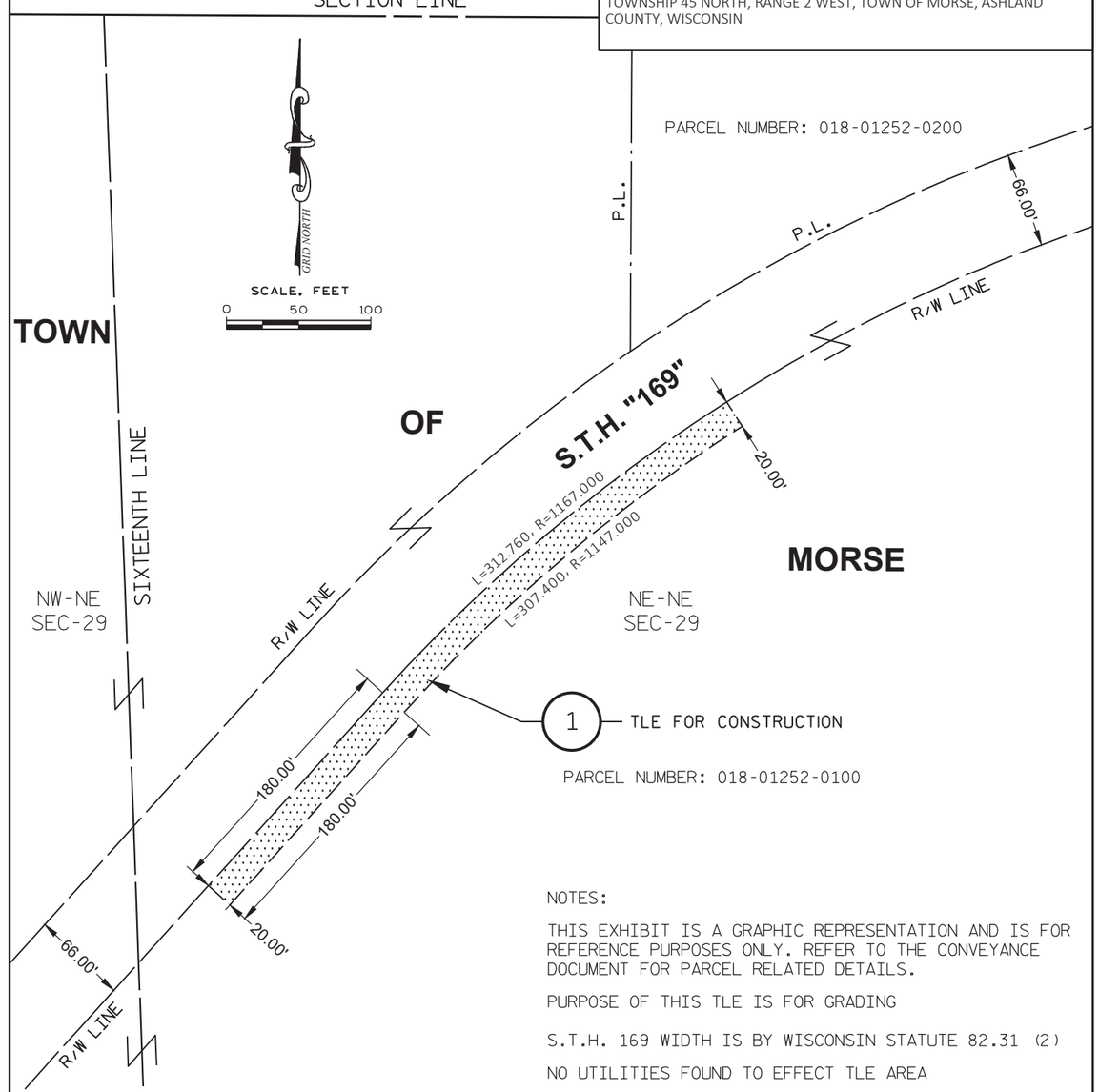

NOTES:

THIS EXHIBIT IS A GRAPHIC REPRESENTATION AND IS FOR REFERENCE PURPOSES ONLY. REFER TO THE CONVEYANCE DOCUMENT FOR PARCEL RELATED DETAILS.

PURPOSE OF THIS TLE IS FOR GRADING

S.T.H. 169 WIDTH IS BY WISCONSIN STATUTE 82.31 (2)

NO UTILITIES FOUND TO EFFECT TLE AREA

SCHEDULE OF LANDS AND INTERESTS REQUIRED		OWNER NAMES ARE SHOWN FOR REFERENCE PURPOSES ONLY AND ARE SUBJECT TO CHANGE PRIOR TO THE TRANSFER OF LAND INTERESTS TO THE DEPARTMENT	
PARCEL NUMBER	OWNERS	INTEREST REQUIRED	TLE S.F. REQUIRED
1	STATE OF WISCONSIN	TLE	9802

AUGUST 8TH, 2023

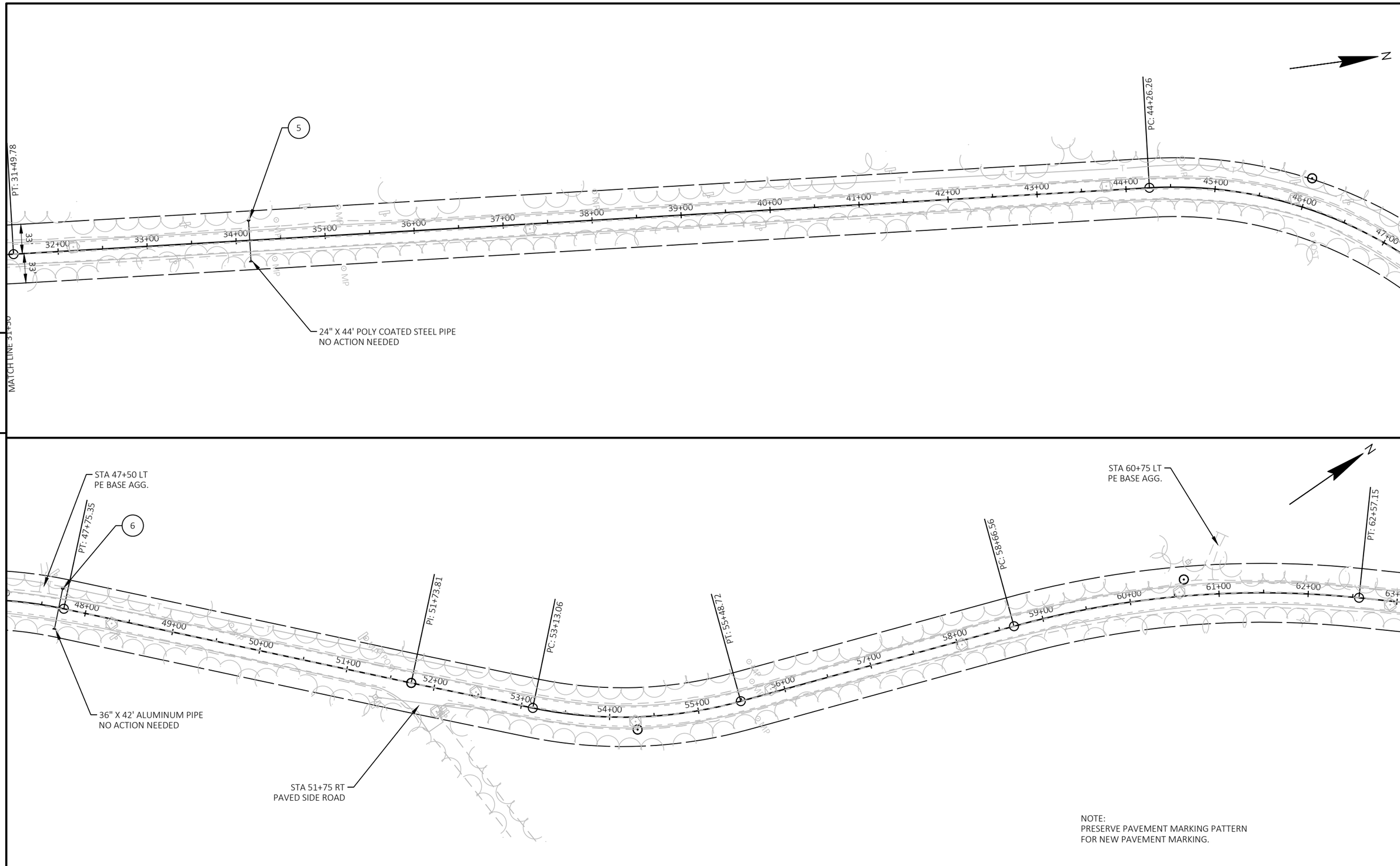

PROJECT NO: 9925-00-70	HWY: STH 169	COUNTY: ASHLAND	PLAN	SHEET 44	E

FILE NAME : C:\CIVIL 3D PROJECTS\99250000\SHEETS PLAN\99250000_PLN.DWG
LAYOUT NAME - P2
PLOT DATE : 7/31/2024 1:39 PM
PLOT BY : PEARSON, MICHAEL R
PLOT NAME :
PLOT SCALE : 1 IN:100 FT

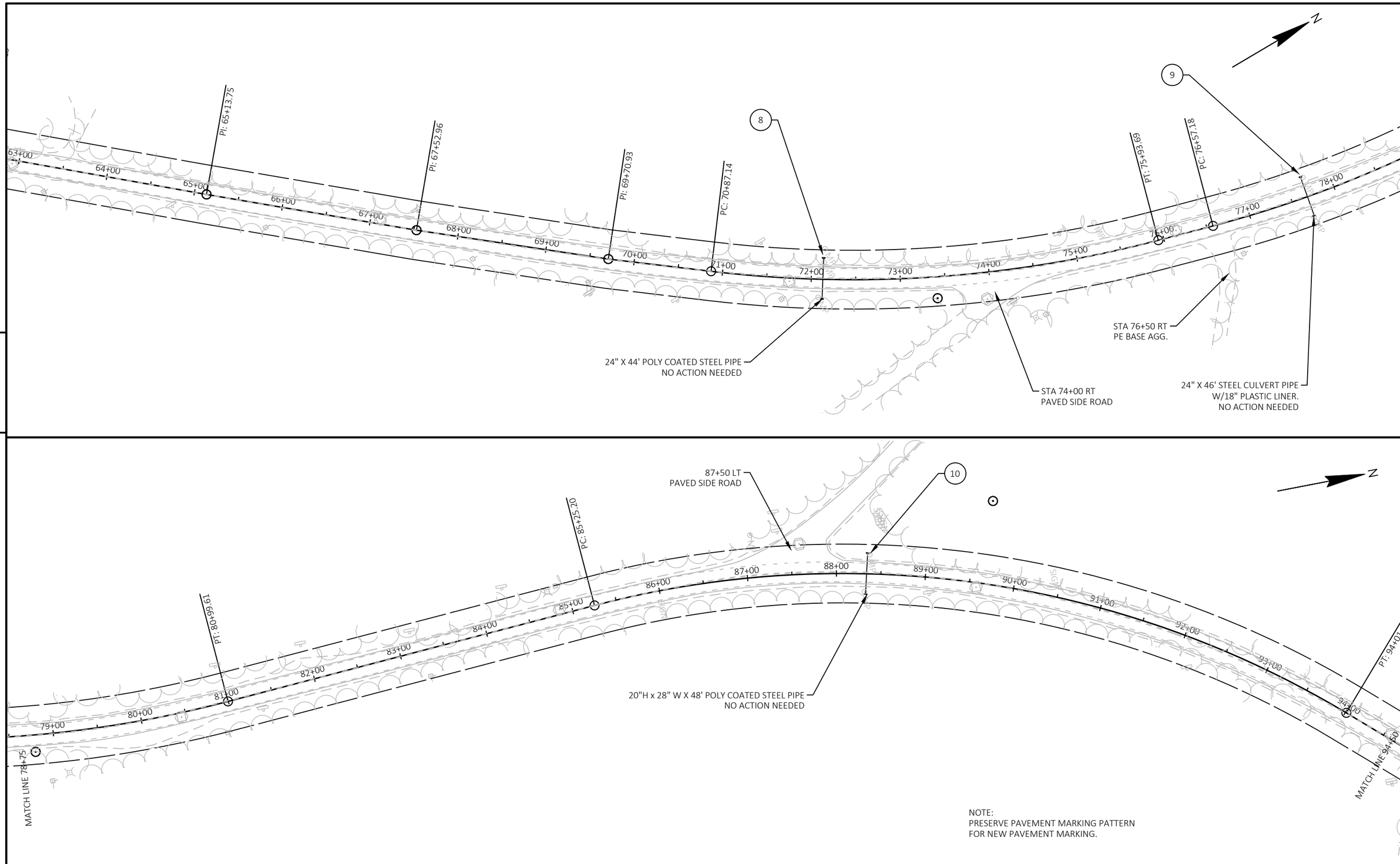

5

5

PROJECT NO: 9925-00-70	HWY: STH 169	COUNTY: ASHLAND	PLAN	SHEET 45	E

FILE NAME : C:\CIVIL 3D PROJECTS\99250000\SHEETS PLAN\99250000_PLN.DWG
LAYOUT NAME - P3
PLOT DATE : 7/31/2024 1:41 PM
PLOT BY : PEARSON, MICHAEL R
PLOT NAME :
PLOT SCALE : 1 IN:100 FT

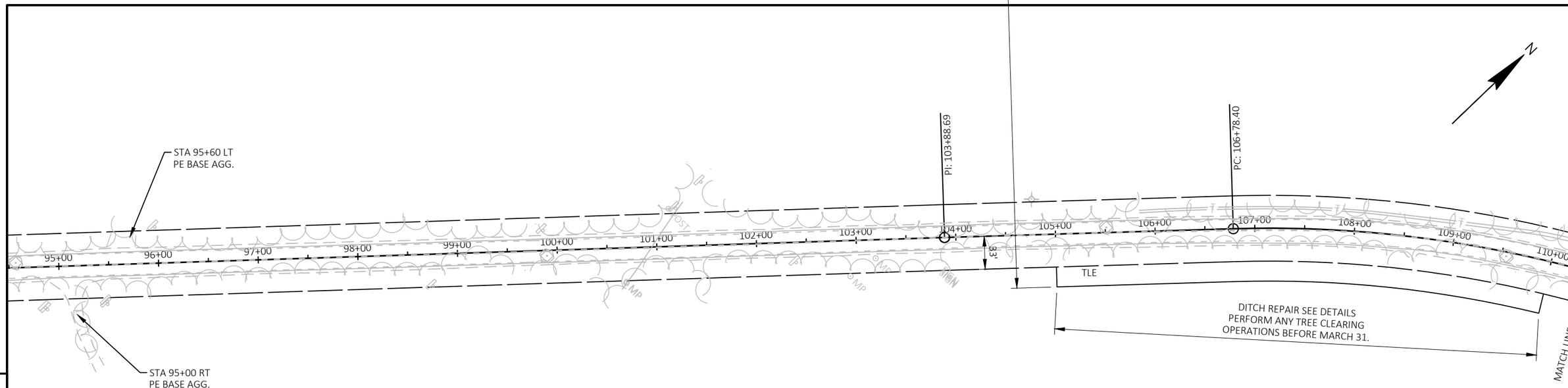

5

5

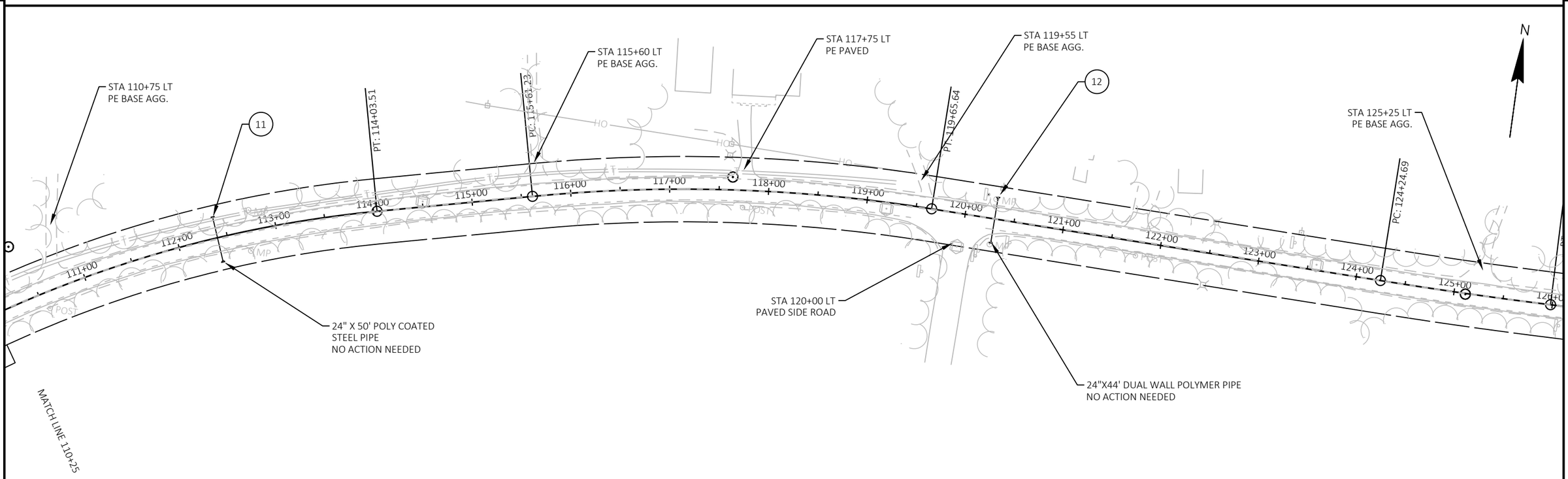

PROJECT NO: 9925-00-70	HWY: STH 169	COUNTY: ASHLAND	PLAN	SHEET 46	E

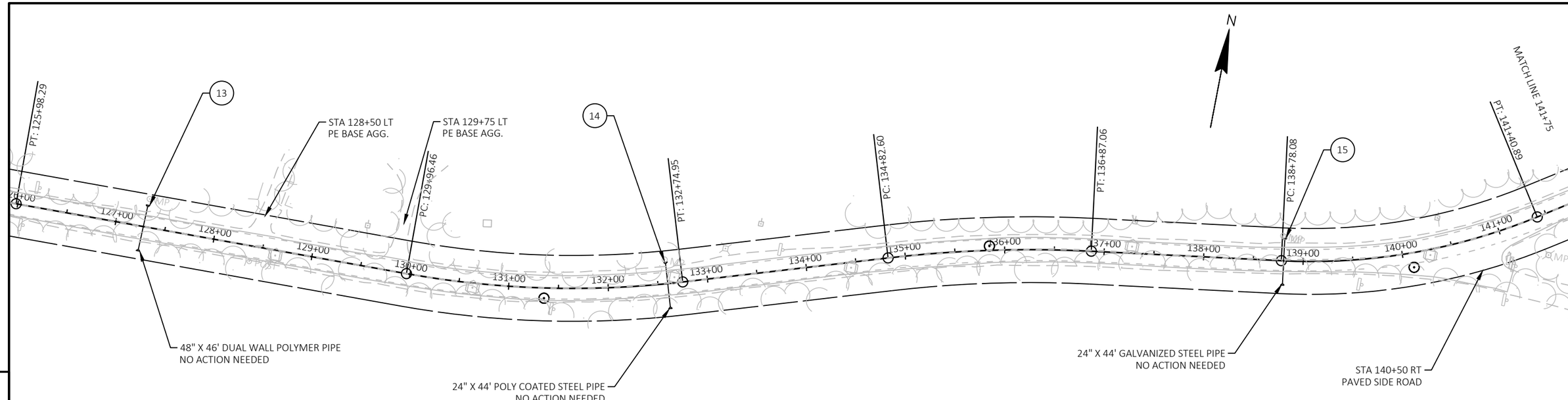

5

5

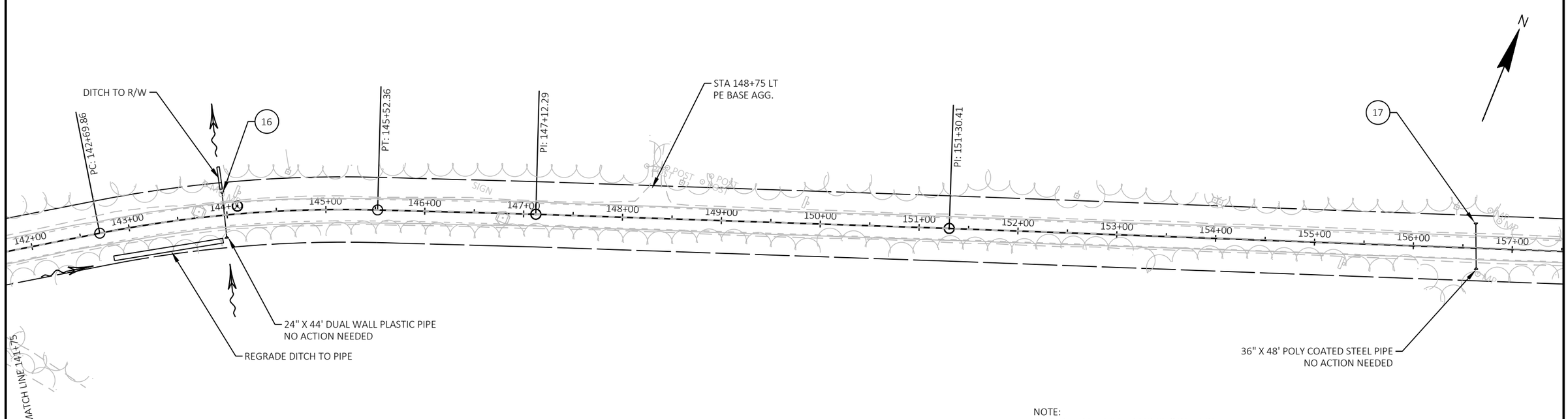

NOTE:
PRESERVE PAVEMENT MARKING PATTERN
FOR NEW PAVEMENT MARKING.

PROJECT NO: 9925-00-70	HWY: STH 169	COUNTY: ASHLAND	PLAN	SHEET 47	E

FILE NAME : C:\CIVIL 3D PROJECTS\99250000\SHEETS PLAN\99250000_PLN.DWG
LAYOUT NAME - P5
PLOT DATE : 7/31/2024 1:45 PM
PLOT BY : PEARSON, MICHAEL R
PLOT NAME :
PLOT SCALE : 1 IN:100 FT

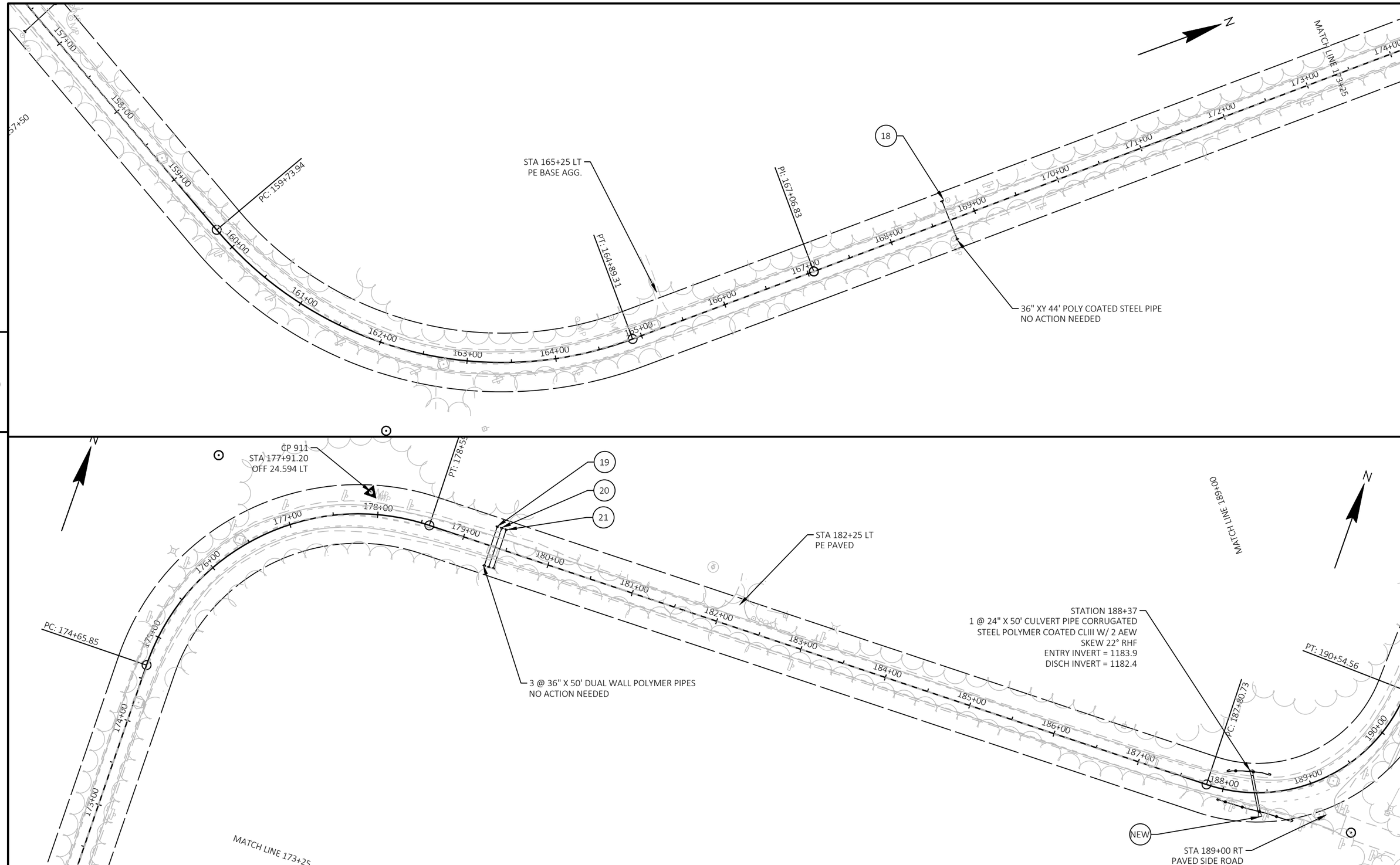

PROJECT NO: 9925-00-70	HWY: STH 169	COUNTY: ASHLAND	PLAN	SHEET 48	E

FILE NAME : C:\CIVIL 3D PROJECTS\99250000\SHEETS PLAN\99250000_PLN.DWG
LAYOUT NAME - P6
PLOT DATE : 7/31/2024 1:46 PM
PLOT BY : PEARSON, MICHAEL R
PLOT NAME :
PLOT SCALE : 1 IN:100 FT

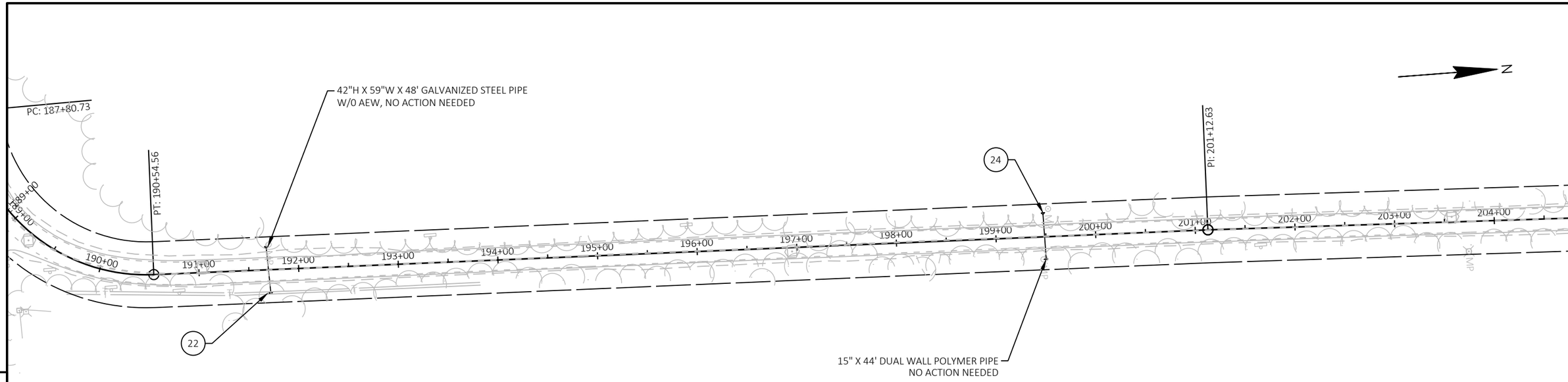

5

5

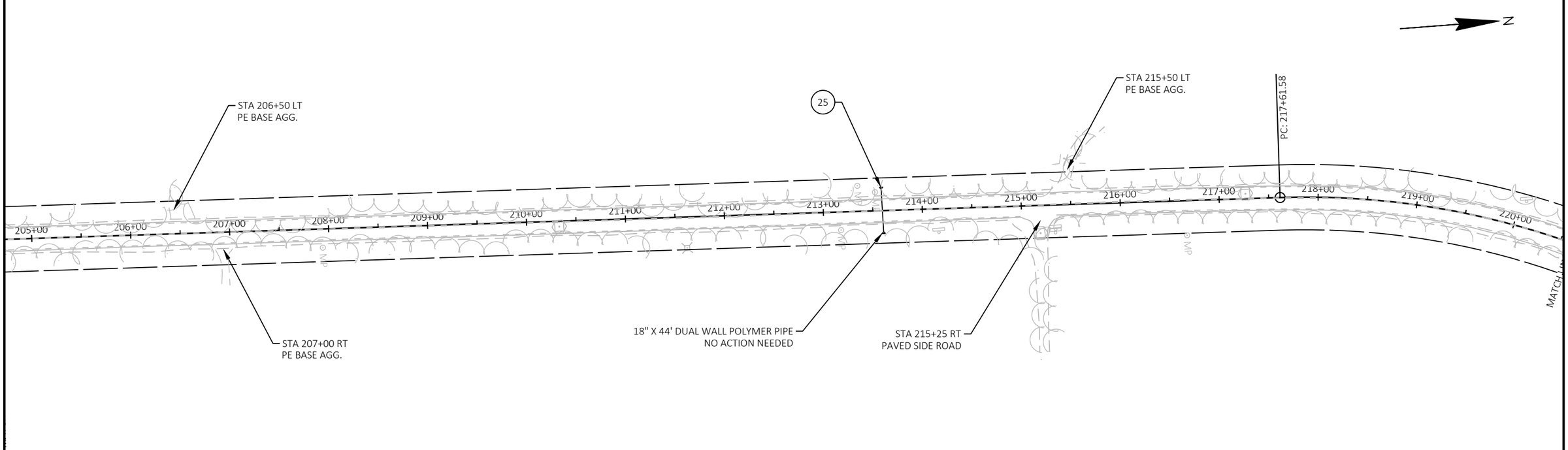

PROJECT NO: 9925-00-70	HWY: STH 169	COUNTY: ASHLAND	PLAN	SHEET 49	E

NOTE:
PRESERVE PAVEMENT MARKING PATTERN
FOR NEW PAVEMENT MARKING.

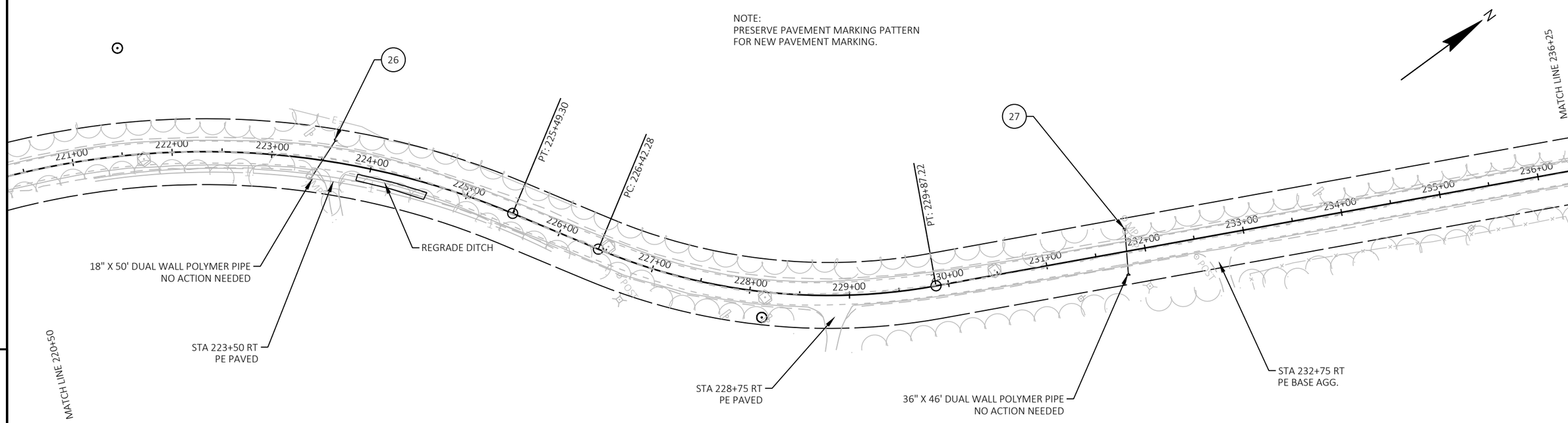

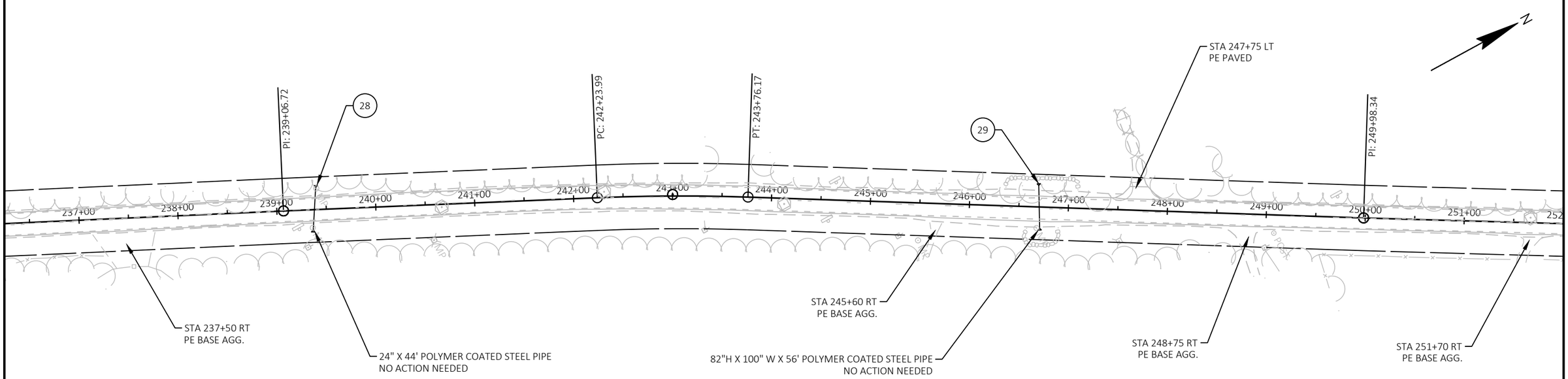

PROJECT NO: 9925-00-70	HWY: STH 169	COUNTY: ASHLAND	PLAN	SHEET 50	E

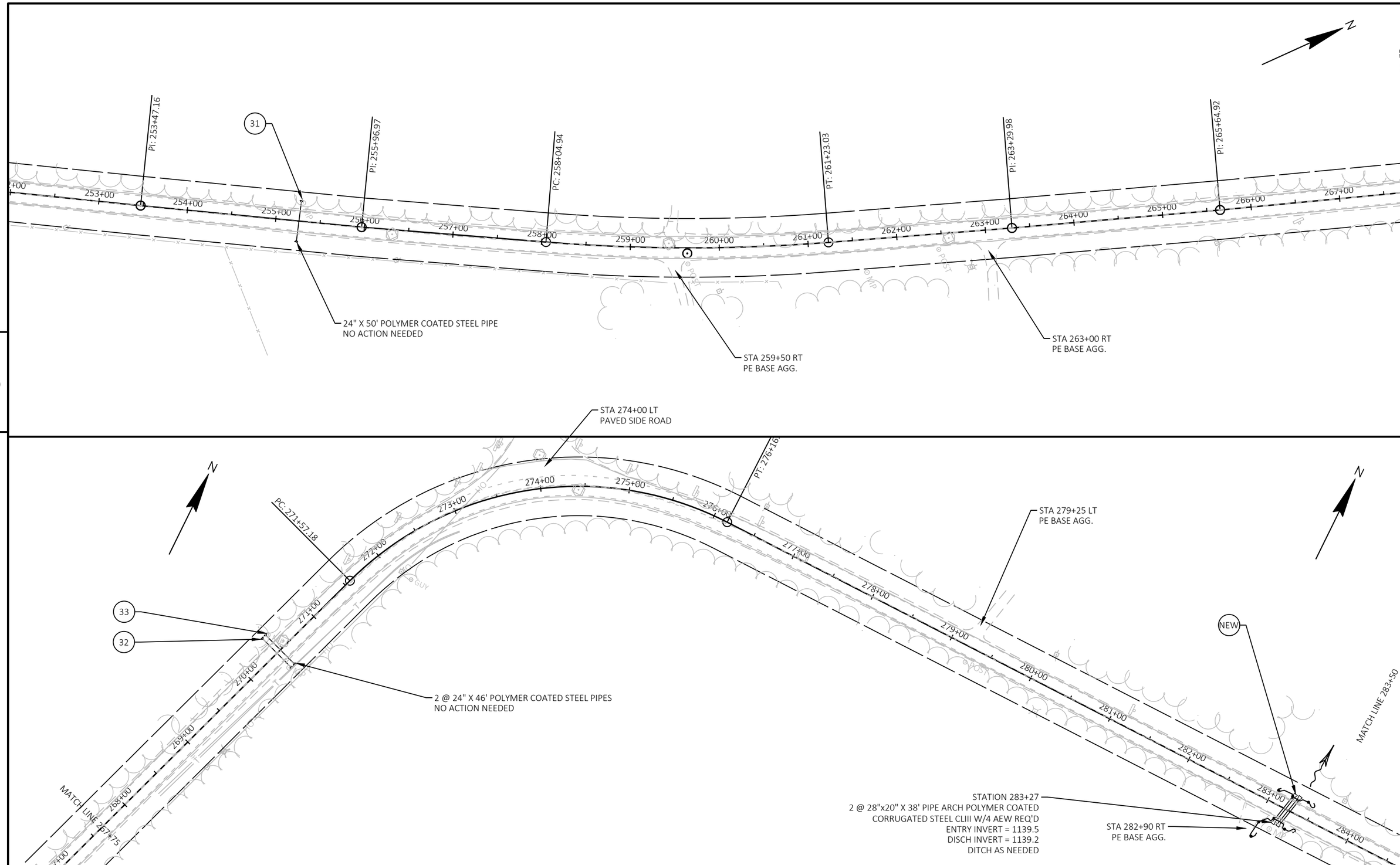

PROJECT NO: 9925-00-70	HWY: STH 169	COUNTY: ASHLAND	PLAN	SHEET 51	E

FILE NAME : C:\CIVIL 3D PROJECTS\99250000\SHEETS PLAN\99250000_PLN.DWG
LAYOUT NAME - P9
PLOT DATE : 7/31/2024 1:52 PM
PLOT BY : PEARSON, MICHAEL R
PLOT NAME :
PLOT SCALE : 1 IN:100 FT

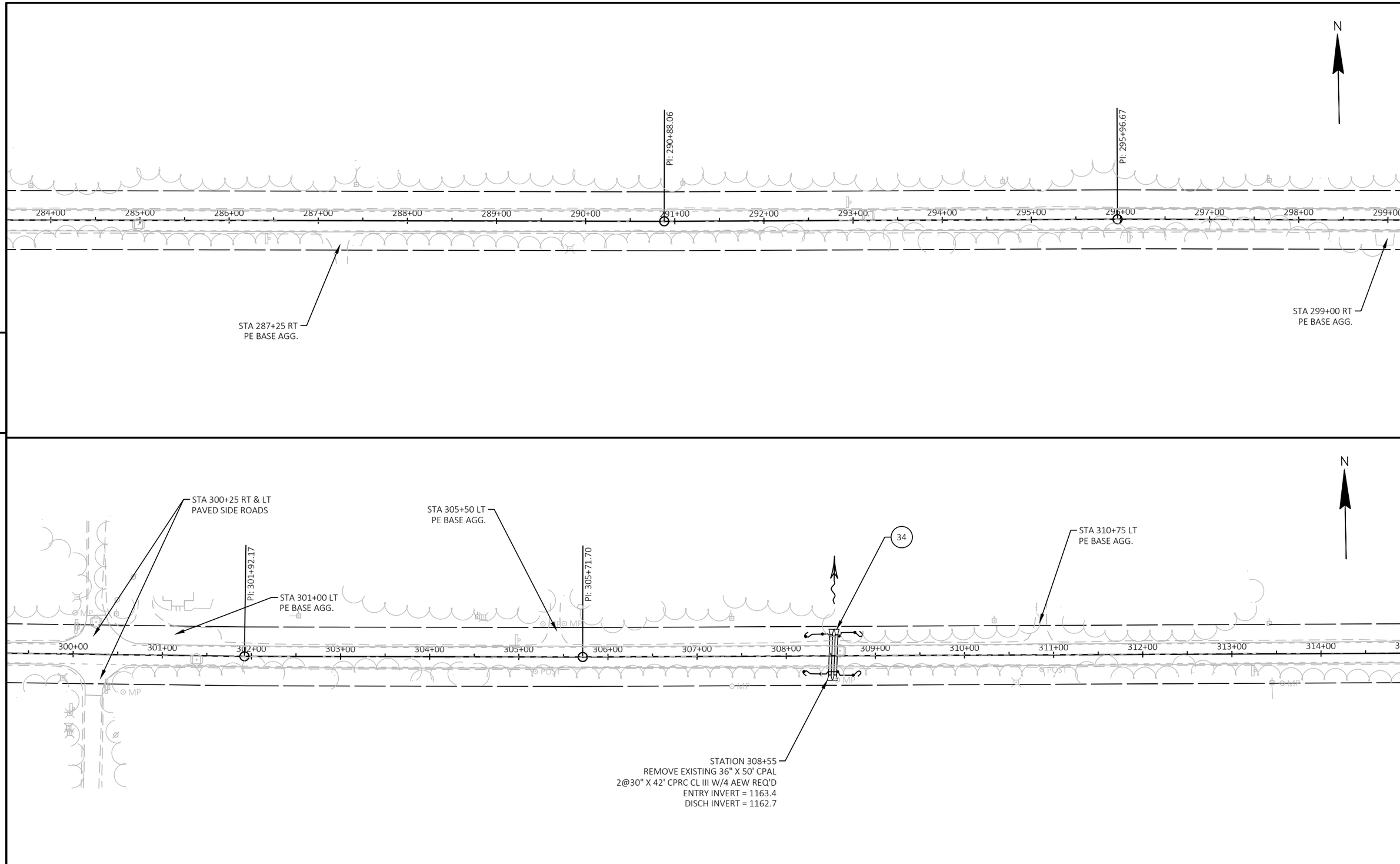

PROJECT NO: 9925-00-70	HWY: STH 169	COUNTY: ASHLAND	PLAN	SHEET 52	E

FILE NAME : C:\CIVIL 3D PROJECTS\99250000\SHEETS PLAN\99250000_PLN.DWG
LAYOUT NAME - P10
PLOT DATE : 7/31/2024 1:54 PM
PLOT BY : PEARSON, MICHAEL R
PLOT NAME :
PLOT SCALE : 1 IN:100 FT

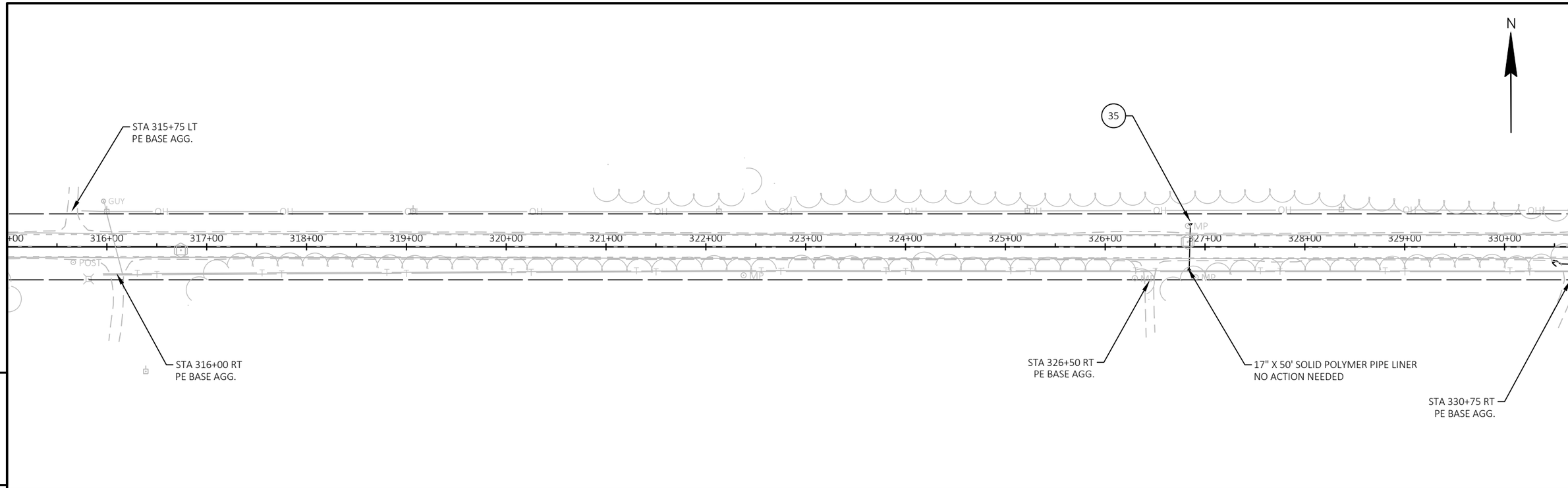

5

5

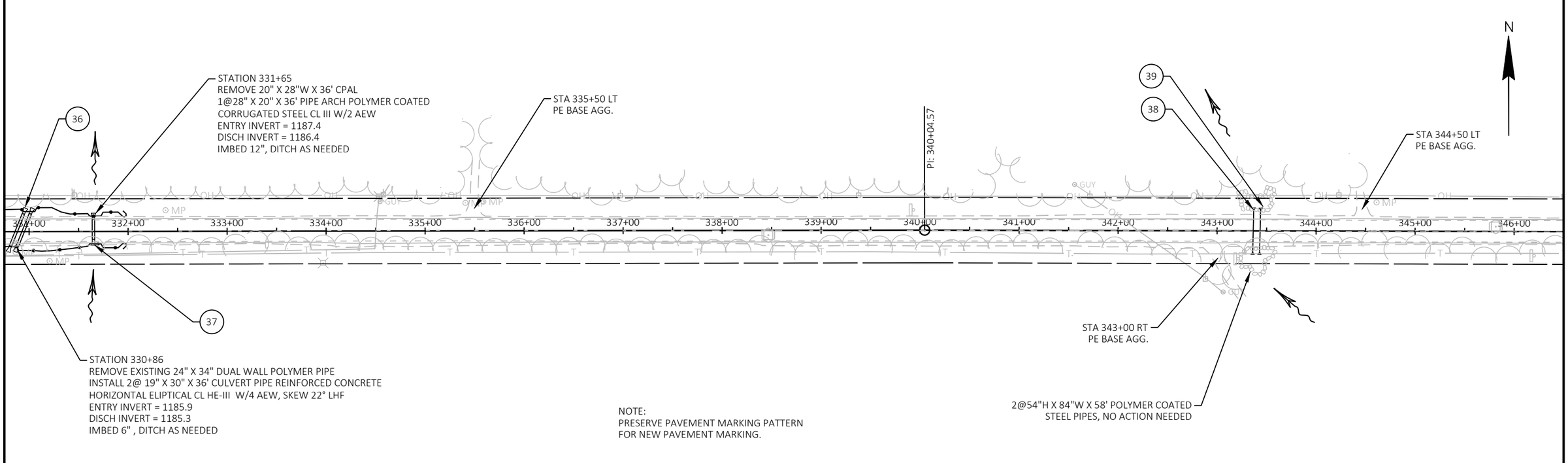

PROJECT NO: 9925-00-70	HWY: STH 169	COUNTY: ASHLAND	PLAN	SHEET 53	E

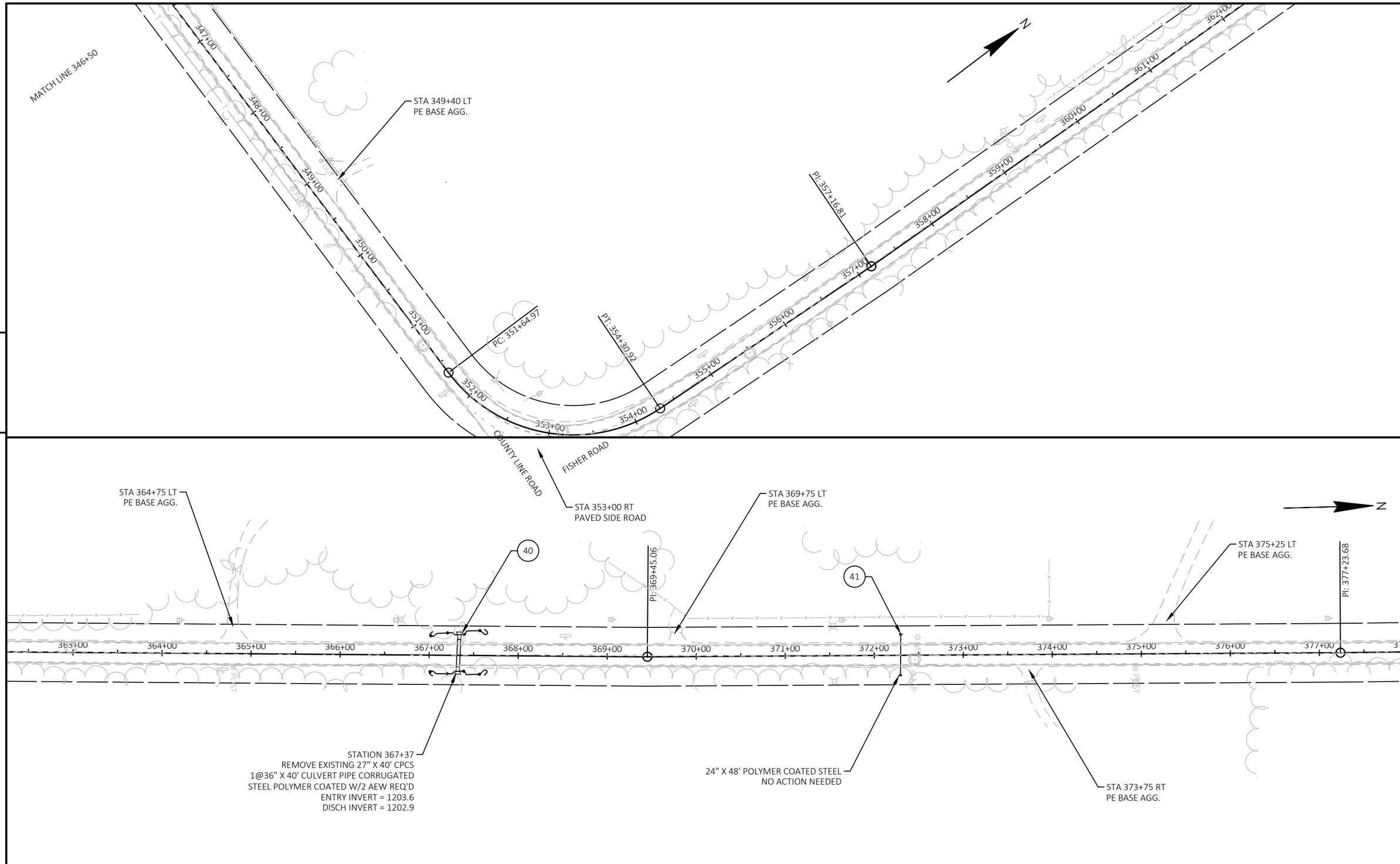

5

5

PROJECT NO: 9925-00-70	HWY: STH 169	COUNTY: ASHLAND	PLAN	SHEET 54	E

FILE NAME : C:\CIVIL 3D PROJECTS\99250000\SHEETS PLAN\99250000_PLN.DWG
LAYOUT NAME - P12
PLOT DATE : 7/31/2024 1:58 PM
PLOT BY : PEARSON, MICHAEL R
PLOT NAME :
PLOT SCALE : 1 IN:100 FT

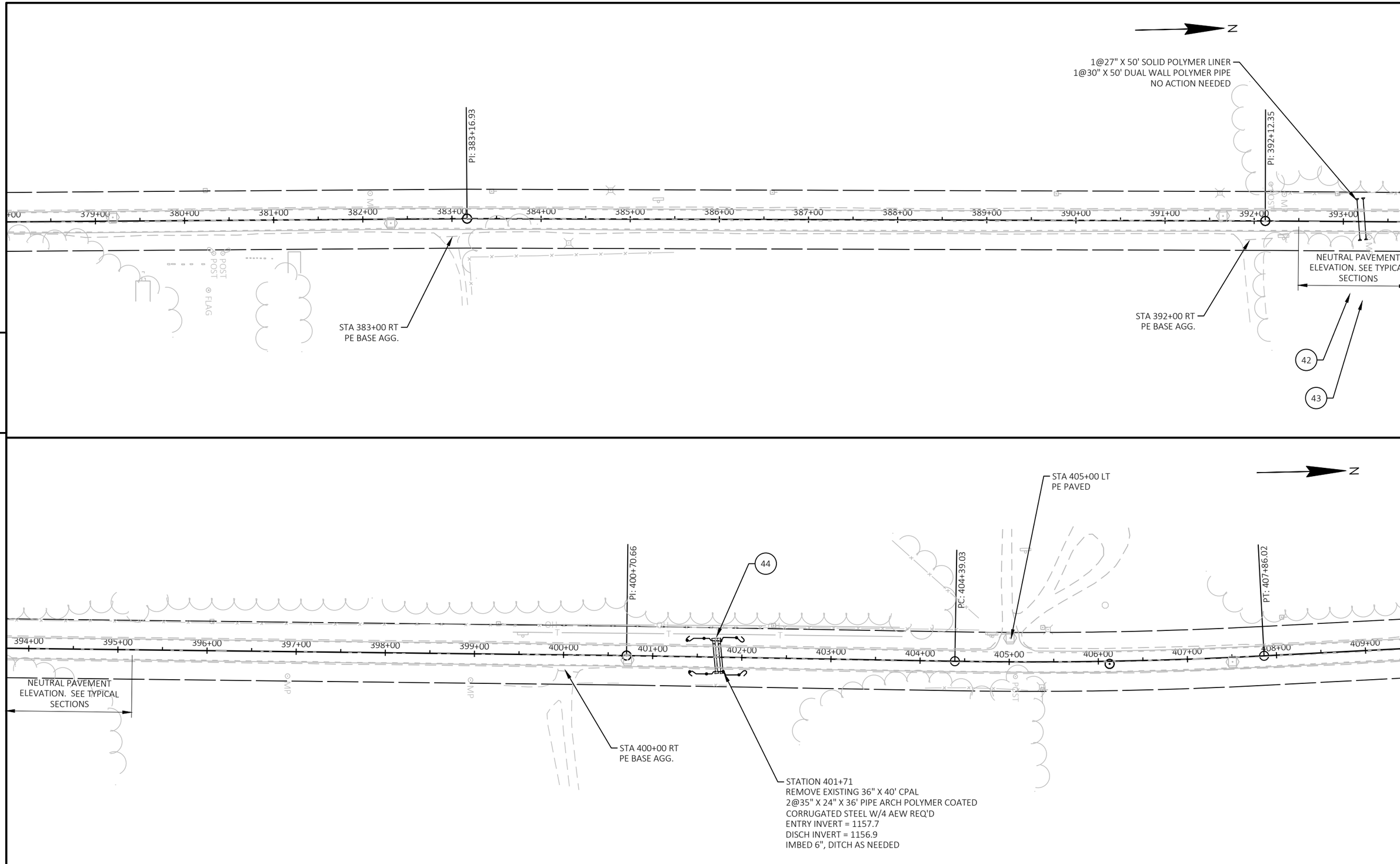

PROJECT NO: 9925-00-70	HWY: STH 169	COUNTY: ASHLAND	PLAN	SHEET 55	E

FILE NAME : C:\CIVIL 3D PROJECTS\99250000\SHEETS PLAN\99250000_PLN.DWG
LAYOUT NAME - P13
PLOT DATE : 7/31/2024 2:00 PM
PLOT BY : PEARSON, MICHAEL R
PLOT NAME :
PLOT SCALE : 1 IN:100 FT
WISDOT/CADDS SHEET 44

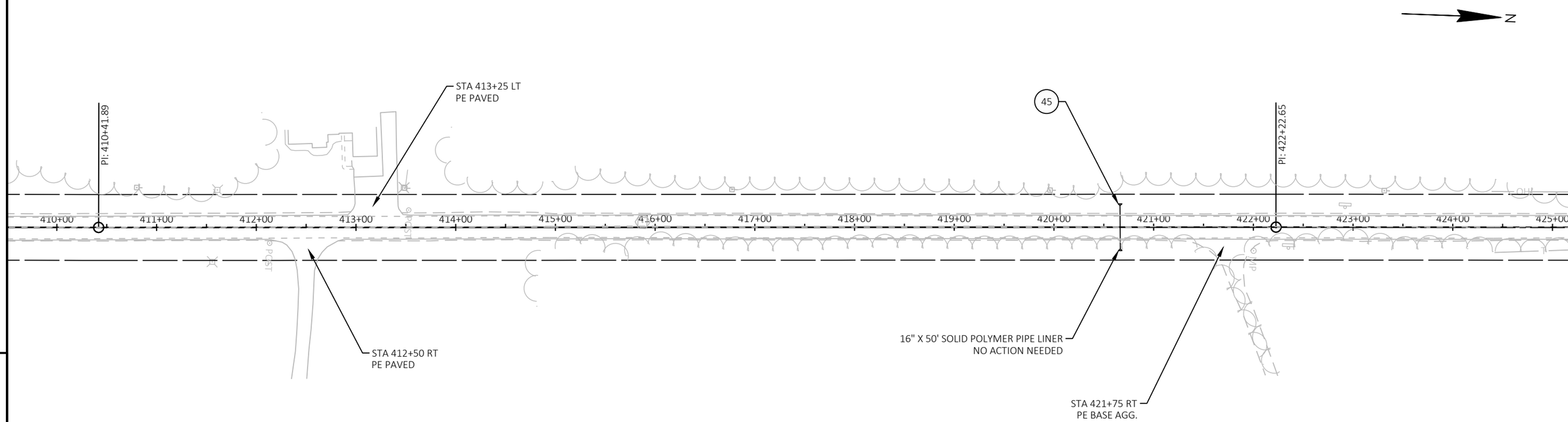

5

5

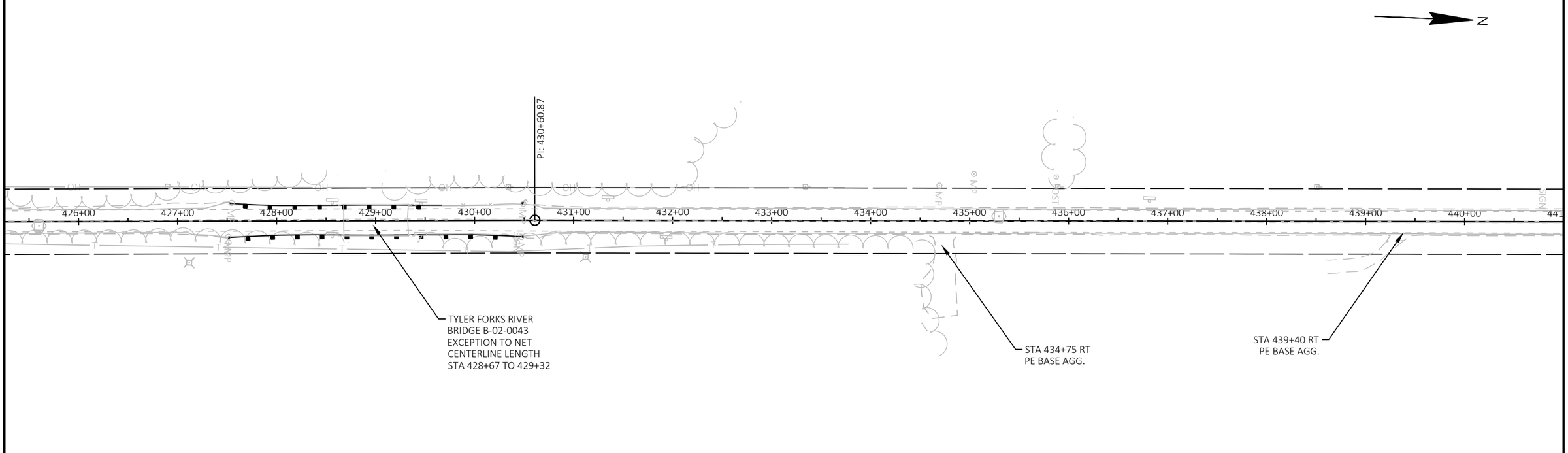

PROJECT NO: 9925-00-70	HWY: STH 169	COUNTY: ASHLAND	PLAN	SHEET 56	E

FILE NAME : C:\CIVIL 3D PROJECTS\99250000\SHEETS PLAN\99250000_PLN.DWG
LAYOUT NAME - P14
PLOT DATE : 7/31/2024 2:02 PM
PLOT BY : PEARSON, MICHAEL R
PLOT NAME :
PLOT SCALE : 1 IN:100 FT

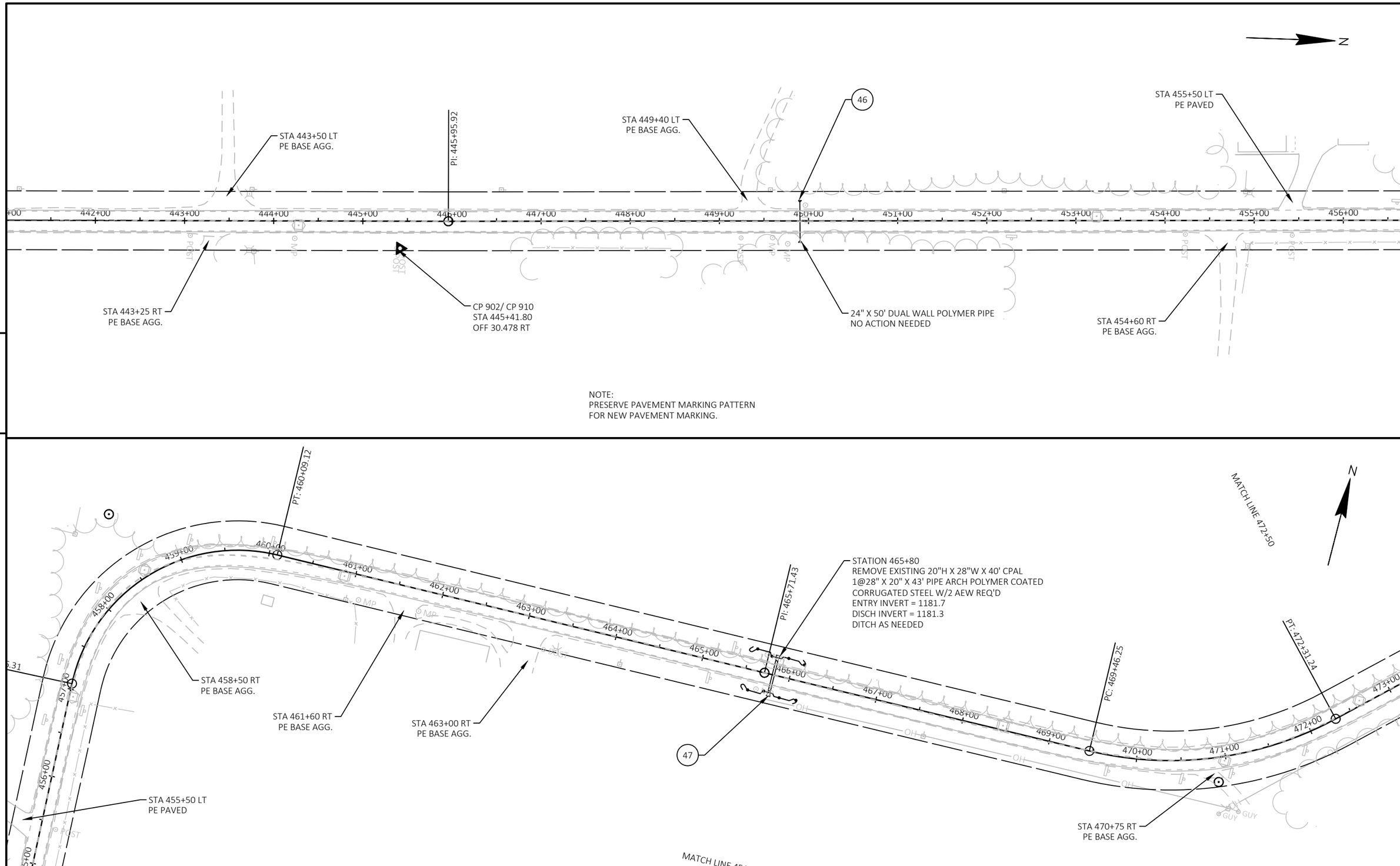

PROJECT NO: 9925-00-70	HWY: STH 169	COUNTY: ASHLAND	PLAN	SHEET 57	E

FILE NAME : C:\CIVIL 3D PROJECTS\99250000\SHEETS PLAN\99250000_PLN.DWG
LAYOUT NAME - P15
PLOT DATE : 7/31/2024 2:04 PM
PLOT BY : PEARSON, MICHAEL R
PLOT NAME :
PLOT SCALE : 1 IN:100 FT
WISDOT/CADDS SHEET 44

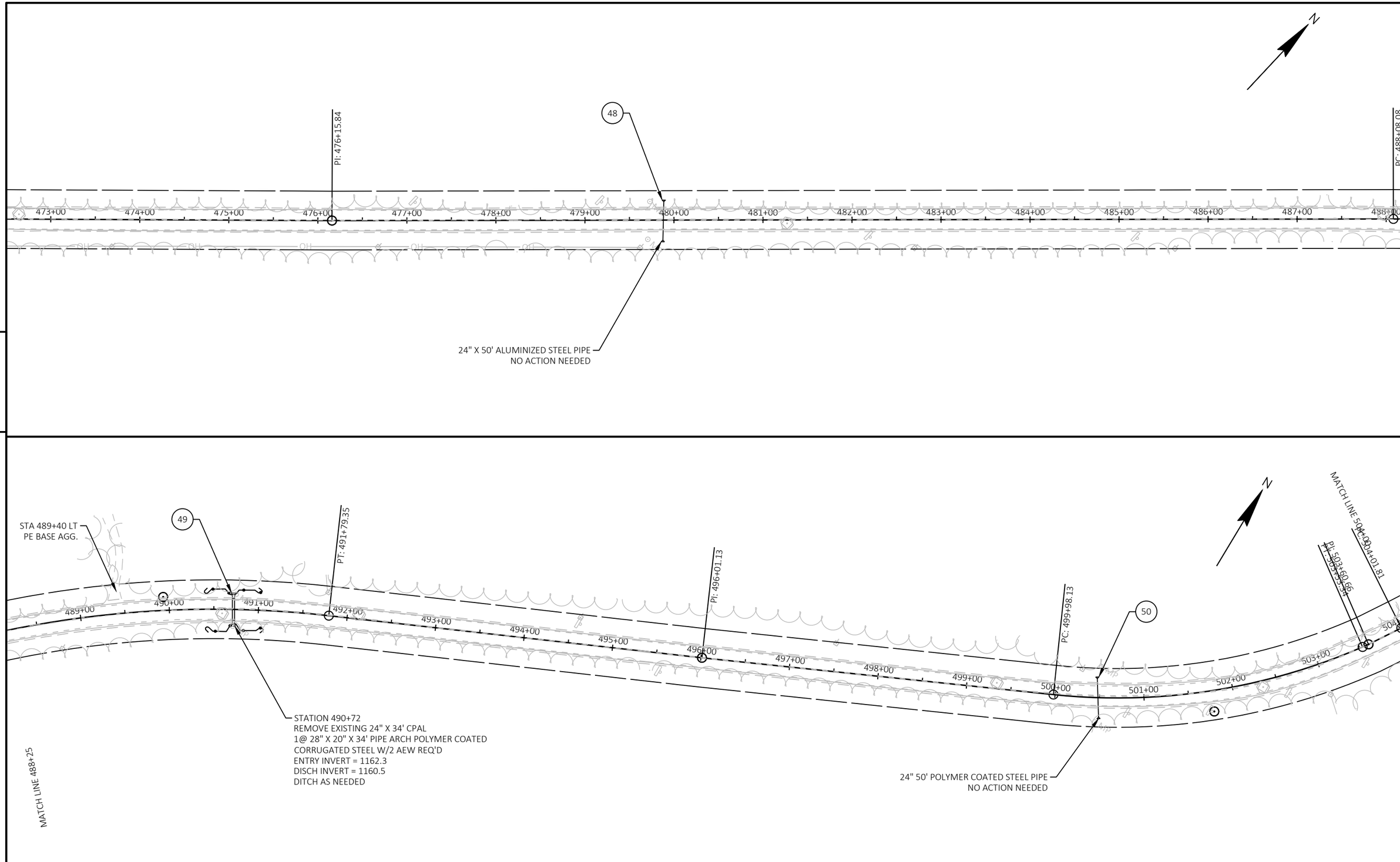

PROJECT NO: 9925-00-70	HWY: STH 169	COUNTY: ASHLAND	PLAN	SHEET 58	E

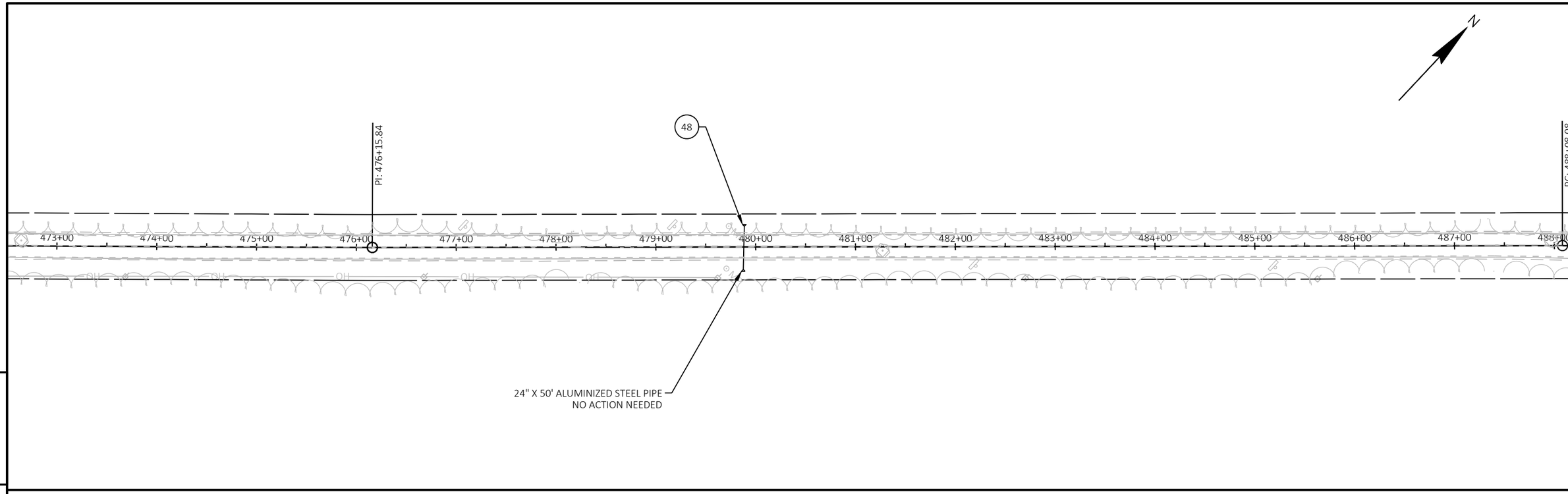

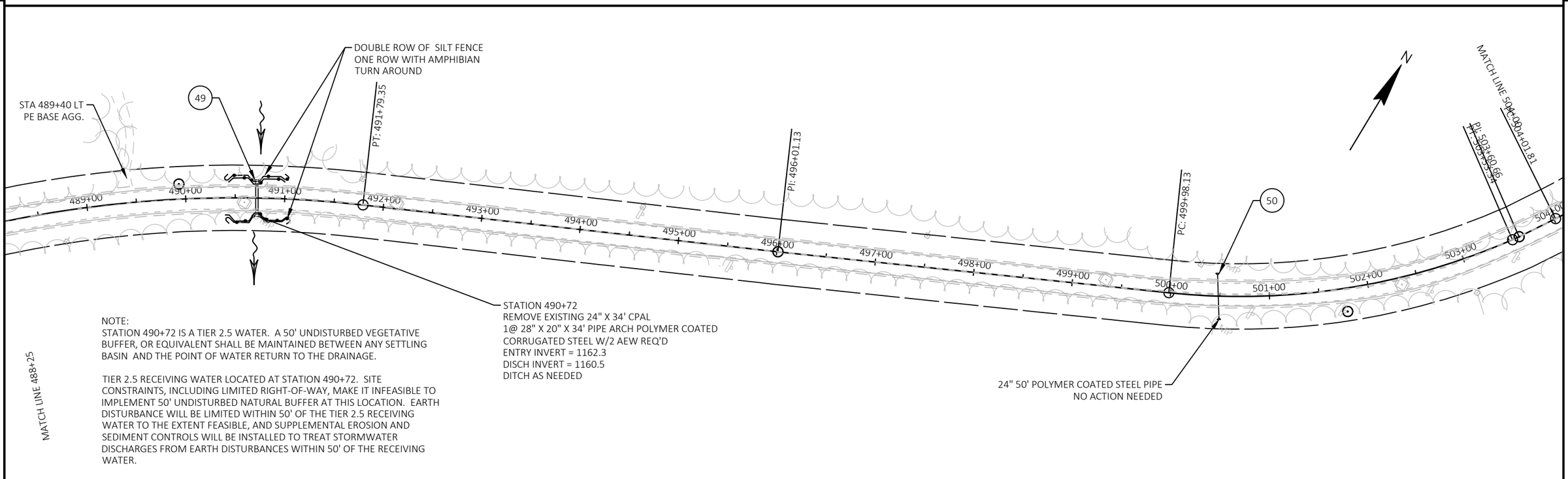

NOTE:
STATION 490+72 IS A TIER 2.5 WATER. A 50' UNDISTURBED VEGETATIVE BUFFER, OR EQUIVALENT SHALL BE MAINTAINED BETWEEN ANY SETTLING BASIN AND THE POINT OF WATER RETURN TO THE DRAINAGE.

TIER 2.5 RECEIVING WATER LOCATED AT STATION 490+72. SITE CONSTRAINTS, INCLUDING LIMITED RIGHT-OF-WAY, MAKE IT INFEASIBLE TO IMPLEMENT 50' UNDISTURBED NATURAL BUFFER AT THIS LOCATION. EARTH DISTURBANCE WILL BE LIMITED WITHIN 50' OF THE TIER 2.5 RECEIVING WATER TO THE EXTENT FEASIBLE, AND SUPPLEMENTAL EROSION AND SEDIMENT CONTROLS WILL BE INSTALLED TO TREAT STORMWATER DISCHARGES FROM EARTH DISTURBANCES WITHIN 50' OF THE RECEIVING WATER.

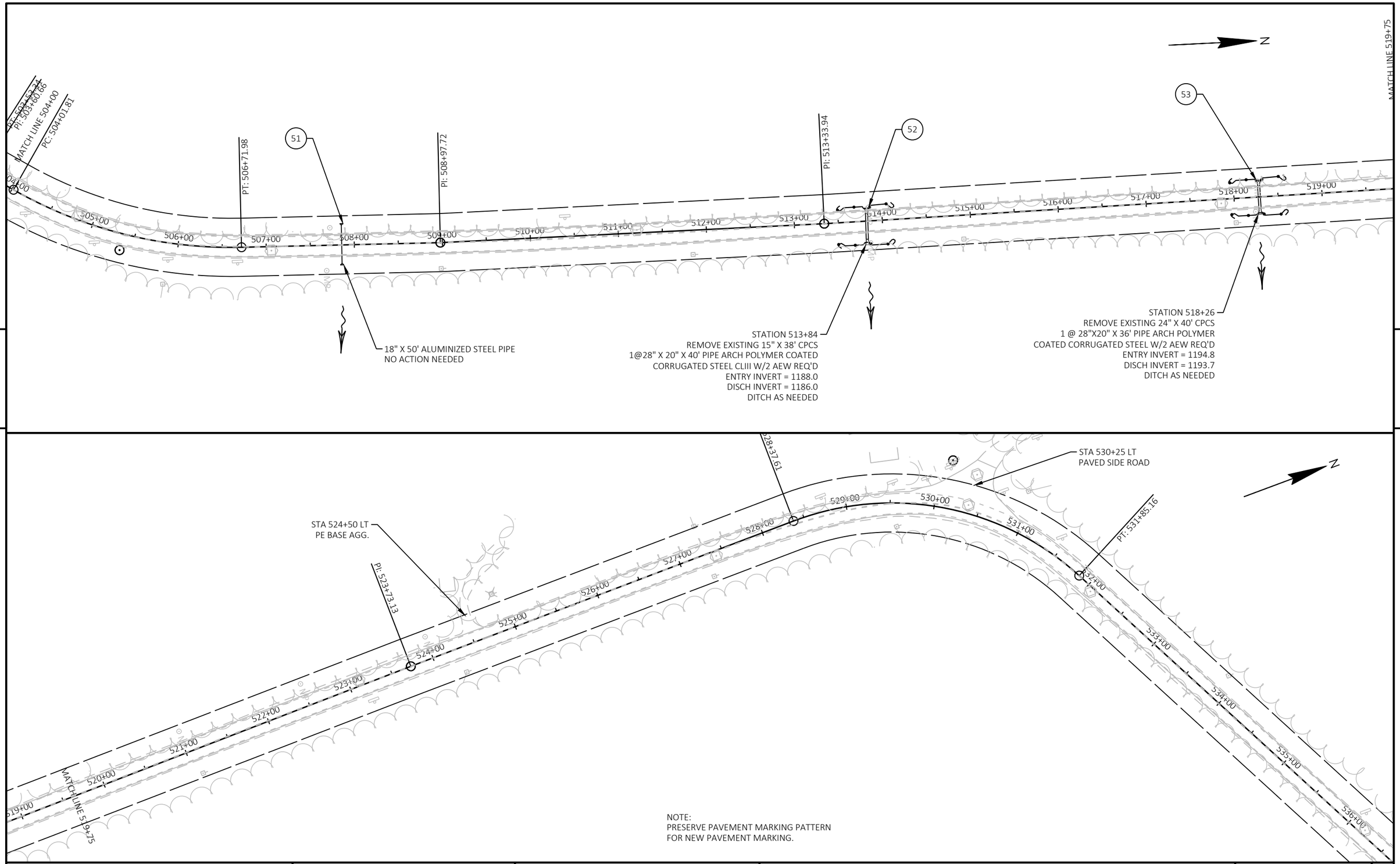

NOTE:
PRESERVE PAVEMENT MARKING PATTERN
FOR NEW PAVEMENT MARKING.

PROJECT NO: 9925-00-70	HWY: STH 169	COUNTY: ASHLAND	PLAN	SHEET 60	E

FILE NAME : C:\CIVIL 3D PROJECTS\99250000\SHEETS PLAN\99250000_PLN.DWG
LAYOUT NAME - P17
PLOT DATE : 7/31/2024 2:08 PM
PLOT BY : PEARSON, MICHAEL R
PLOT NAME :
PLOT SCALE : 1 IN:100 FT
WISDOT/CADDS SHEET 44

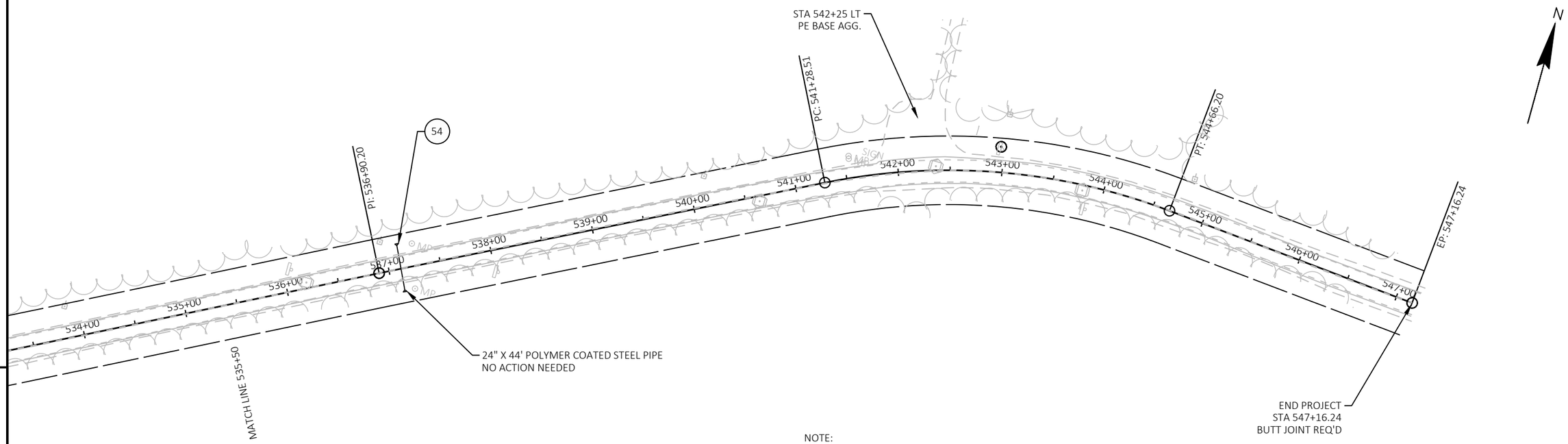

NOTE:
PRESERVE PAVEMENT MARKING PATTERN
FOR NEW PAVEMENT MARKING.

5

5

PROJECT NO: 9925-00-70	HWY: STH 169	COUNTY: ASHLAND	PLAN	SHEET 61	E

FILE NAME : C:\CIVIL 3D PROJECTS\99250000\SHEETS PLAN\99250000_PLN.DWG
LAYOUT NAME - P18
PLOT DATE : 7/31/2024 2:09 PM
PLOT BY : PEARSON, MICHAEL R
PLOT NAME :
PLOT SCALE : 1 IN:100 FT
WISDOT/CADDS SHEET 44

Standard Detail Drawing List

08D01-23A	CONCRETE CURB & GUTTER
08D16-11	CONCRETE GUTTER, CURB AND GUTTER AND PAVEMENT TIES
08D21-01	DRIVEWAYS WITHOUT CURB & GUTTER
08D22-01	DRIVEWAYS WITHOUT CURB & GUTTER RESURFACING PROJECTS RURAL
08E08-03	TYPICAL INSTALLATIONS OF EROSION BALES / TEMPORARY DITCH CHECKS
08E09-06	SILT FENCE
08F01-11	APRON ENDWALLS FOR CULVERT PIPE
08F02-01	APRON ENDWALLS FOR PIPE ARCH AND ELLIPTICAL PIPE
08F04-08	JOINT TIES FOR CONCRETE PIPE AND CONCRETE COLLAR DETAIL
08F08-02	STEEL APRON ENDWALLS FOR CULVERT PIPE AND PIPE ARCH SLOPED CROSS DRAINS
11B02-02	CONCRETE MEDIAN NOSE
12A03-10	NAME PLATE (STRUCTURES)
13B02-09A	CONCRETE PAVEMENT APPROACH SLAB
13C11-14A	RURAL DOWELED CONCRETE PAVEMENT
13C11-14B	RURAL DOWELED CONCRETE PAVEMENT
14B42-07A	MIDWEST GUARDRAIL SYSTEM (MGS) GUARDRAIL
14B42-07B	MIDWEST GUARDRAIL SYSTEM (MGS) GUARDRAIL
14B42-07C	MIDWEST GUARDRAIL SYSTEM (MGS) GUARDRAIL
14B42-07D	MIDWEST GUARDRAIL SYSTEM (MGS) GUARDRAIL
14B45-05B	MIDWEST GUARDRAIL SYSTEM THRIE BEAM TRANSITION (MGS)
14B45-05C	MIDWEST GUARDRAIL SYSTEM THRIE BEAM TRANSITION (MGS)
14B45-05D	MIDWEST GUARDRAIL SYSTEM THRIE BEAM TRANSITION (MGS)
14B45-05E	MIDWEST GUARDRAIL SYSTEM THRIE BEAM TRANSITION (MGS)
14B45-05F	MIDWEST GUARDRAIL SYSTEM THRIE BEAM TRANSITION (MGS)
14B45-05G	MIDWEST GUARDRAIL SYSTEM THRIE BEAM TRANSITION (MGS)
14B45-05H	MIDWEST GUARDRAIL SYSTEM THRIE BEAM TRANSITION (MGS)
14B45-05I	MIDWEST GUARDRAIL SYSTEM THRIE BEAM TRANSITION (MGS)
14B45-05J	MIDWEST GUARDRAIL SYSTEM THRIE BEAM TRANSITION (MGS)
14B45-05K	MIDWEST GUARDRAIL SYSTEM THRIE BEAM TRANSITION (MGS)
14B45-05L	MIDWEST GUARDRAIL SYSTEM THRIE BEAM TRANSITION (MGS)
15A03-02A	FLEXIBLE MARKER POST FOR CULVERT END
15A03-02B	FLEXIBLE MARKER POST FOR CULVERT END
15C02-09A	BARRICADES AND SIGNS FOR MAINLINE CLOSURES
15C02-09B	BARRICADES AND SIGNS FOR VARIOUS CLOSURES
15C02-09F	ADVANCED WIDTH RESTRICTION SIGNING
15C03-05	BARRICADES AND SIGNS FOR SIDEROAD CLOSURES
15C04-05	TRAFFIC CONTROL, ADVANCE WARNING SIGNS 45 M.P.H. OR GREATER TWO-WAY UNDIVIDED ROAD OPEN TO TRAFFIC
15C06-12	SIGNING & MARKING FOR TWO LANE BRIDGES
15C08-23A	PERMANENT LONGITUDINAL PAVEMENT MARKINGS
15C08-23B	TEMPORARY LONGITUDINAL PAVEMENT MARKING
15C09-13A	SIGNING AND PAVEMENT MARKING DETAILS FOR RAILROAD-HIGHWAY GRADE CROSSINGS
15C12-09A	TRAFFIC CONTROL FOR LANE CLOSURE WITH FLAGGING OPERATION
15C19-09A	MOVING PAVEMENT MARKING OPERATION TWO-LANE TWO-WAY ROADWAY
15C33-04	STOP LINE AND CROSSWALK PAVEMENT MARKING
15C33-05	STOP LINE AND CROSSWALK PAVEMENT MARKING
15C35-06A	PAVEMENT MARKING (INTERSECTIONS)
15D28-04	TRAFFIC CONTROL, WORK ON SHOULDER OR PARKING LANE, UNDIVIDED ROADWAY
15D39-02	TRAFFIC CONTROL, DROP-OFF SIGNING
15D43-02	TRAFFIC CONTROL, SHORT DURATION MOBILE OPERATIONS
15D44-02	TRAFFIC CONTROL, SIGNING ON ROADWAYS WITH MILLED SURFACES
15D45-03	TRAFFIC CONTROL, SIGNING ON ROADWAYS WITH LOOSE GRAVEL
15D51-01	TRAFFIC CONTROL, MOBILE OPERATIONS ON AN UNDIVIDED ROADWAY

6

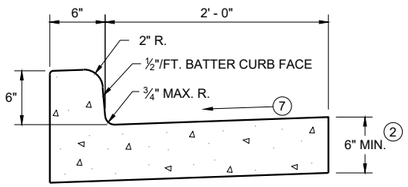

TYPES A (1) & D

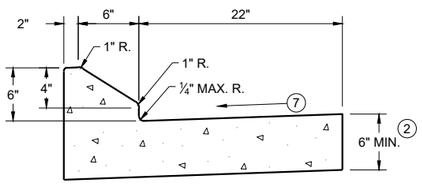

6" SLOPED CURB TYPES G (1) & J

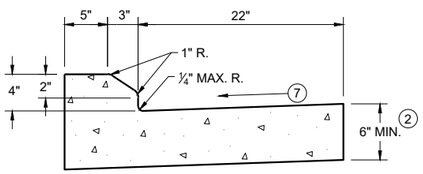

4" SLOPED CURB TYPES G (1) & J

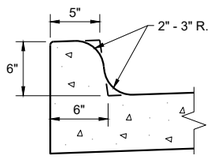

TYPES K (1) & L
(OPTIONAL CURB SHAPE)

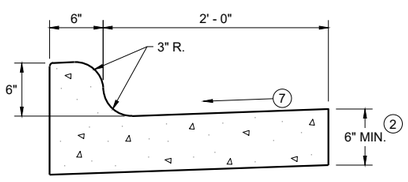

TYPES K (1) & L

CONCRETE CURB AND GUTTER 30"

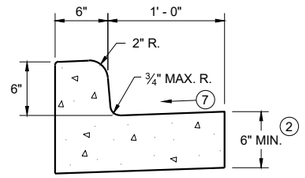

TYPES A (1) & D

CONCRETE CURB AND GUTTER 18"

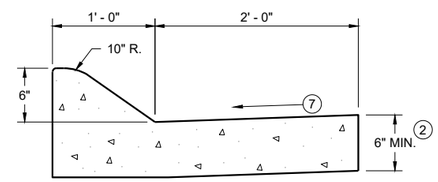

6" SLOPED CURB TYPES A (1) & D

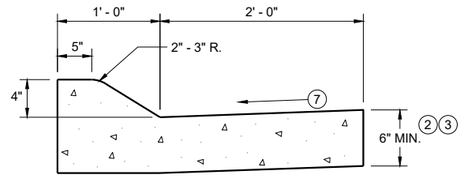

4" SLOPED CURB TYPES A (1) & D

CONCRETE CURB AND GUTTER 36"

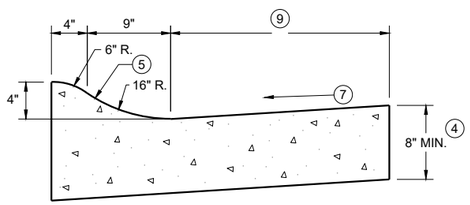

4" SLOPED CURB TYPES R (1) & T

TBT & TBTT	X
30"	22"
36"	28"

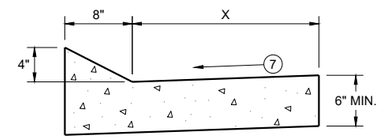

TYPES TBT & TBTT (1)

CONCRETE CURB AND GUTTER

PAVEMENT THICKNESS AND MAXIMUM CONCRETE PANEL WIDTH TABLE

PAVEMENT THICKNESS	MAXIMUM PANEL WIDTH
LESS THAN 10"	12'
10" & ABOVE	15'

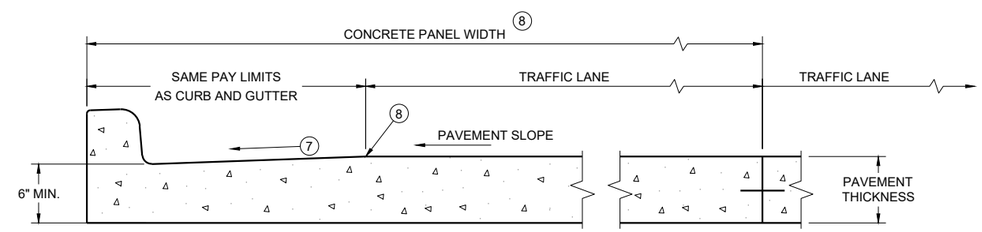

PARTIAL SECTION OF PAVEMENT * WITH INTEGRAL CURB AND GUTTER

* BIKE LANE IS NOT SHOWN

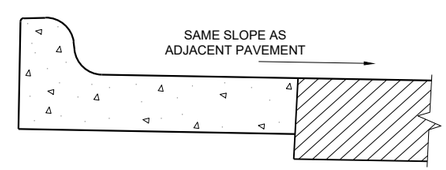

REVERSE SLOPE GUTTER (6)
(TYPICAL FOR ALL CURB & GUTTER TYPES)

GENERAL NOTES

DETAILS OF CONSTRUCTION AND WORKMANSHIP NOT SHOWN ON THIS DRAWING SHALL CONFORM TO THE PERTINENT REQUIREMENTS OF THE CONTRACT.

PAVEMENT TIES AND TIE BARS SHALL BE EPOXY COATED IN CONFORMANCE WITH SUBSECTION 505.2.6.2 OF THE STANDARD SPECIFICATIONS.

INTEGRAL CURB AND GUTTER SHALL CONFORM TO THE DETAILS SHOWN FOR CONCRETE CURB AND GUTTER INCLUDING THE TRANSVERSE GUTTER SLOPE.

UNLESS OTHERWISE SHOWN ON THE TYPICAL CROSS SECTIONS, THE BASE AGGREGATE AND COMMON EXCAVATION LIMITS ARE 2' - 0" BEHIND THE BACK OF CURBS.

(1) TIE BARS ARE REQUIRED FOR CURB AND GUTTERS TYPES A, G, K, R, AND TBTT.

(2) THE BOTTOM OF CURB AND GUTTER MAY BE CONSTRUCTED EITHER LEVEL OR PARALLEL TO THE SLOPE OF THE SUBGRADE OR BASE AGGREGATE PROVIDED A 6" MINIMUM GUTTER THICKNESS IS MAINTAINED.

(3) USE 8" MINIMUM GUTTER THICKNESS WHEN USED WITH AN ADJACENT CONCRETE TRUCK APRON PLACED BEHIND BACK OF CURB.

(4) THE BOTTOM OF CURB AND GUTTER MAY BE CONSTRUCTED EITHER LEVEL OR PARALLEL TO THE SLOPE OF THE SUBGRADE OR BASE AGGREGATE PROVIDED A 8" MINIMUM GUTTER THICKNESS IS MAINTAINED.

(5) UNLESS OTHERWISE NOTED, FOR STAKING PURPOSES THE FACE OF CURB IS 6" FROM THE BACK OF CURB.

(6) WHEN REVERSE SLOPE GUTTER IS REQUIRED, THE LOCATION(S) WILL BE SHOWN ELSEWHERE IN THE PLAN.

(7) USE 4% GUTTER CROSS SLOPE UNLESS OTHERWISE NOTED IN THE PLANS.

(8) INCLUDE LONGITUDINAL JOINT AND TIE BARS ALONG LANE EDGE WHEN CONCRETE PANEL WIDTH EXCEEDS THE MAXIMUM WIDTH PER TABLE BELOW. LONGITUDINAL JOINT(S) ARE NOT ALLOWED WITHIN TRAFFIC LANES AND BIKE LANES. LONGITUDINAL JOINT MAY BE SAWED.

(9) CONCRETE CURB AND GUTTER 4-INCH SLOPED 30-INCH TYPE "R" AND "T" = 17 INCHES
CONCRETE CURB AND GUTTER 4-INCH SLOPED 36-INCH TYPE "R" AND "T" = 23 INCHES

CONCRETE CURB AND GUTTER

STATE OF WISCONSIN
DEPARTMENT OF TRANSPORTATION

6
SDD 08D01-23a

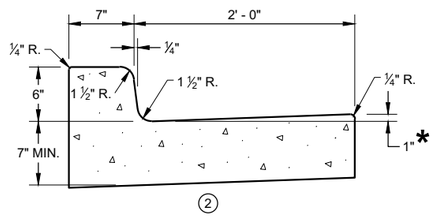

CONCRETE CURB AND GUTTER 31" ①

*TO BE MEASURED TO A MAXIMUM OF 3" WHERE DRAINAGE PROBLEMS EXIST.

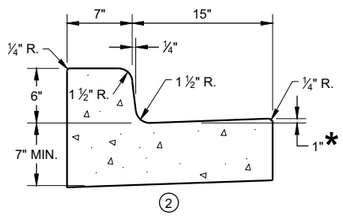

CONCRETE CURB AND GUTTER 22" ①

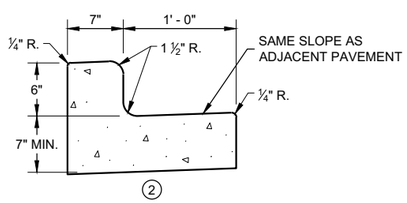

CONCRETE CURB AND GUTTER 19" ①

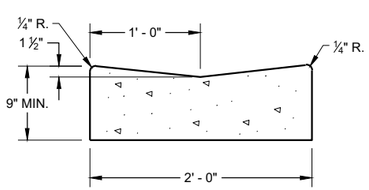

CONCRETE GUTTER 24" ①

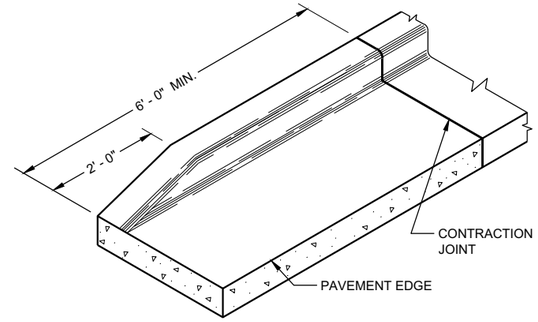

END SECTIONCURB AND GUTTER

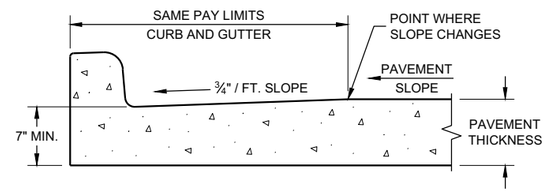

PARTIAL SECTION OF PAVEMENT WITH INTEGRAL CURB AND GUTTER

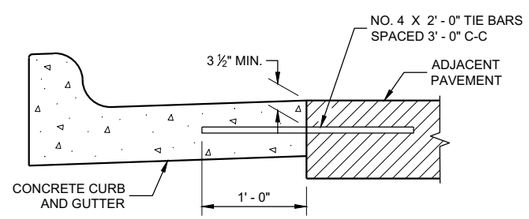

TYPICAL TIE BAR LOCATION ①

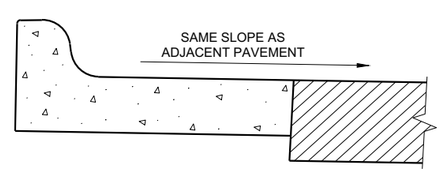

HIGH SIDE SECTION ③

(TYPICAL FOR ALL CURB & GUTTER TYPES)

GENERAL NOTES

DETAILS OF CONSTRUCTION AND WORKMANSHIP NOT SHOWN ON THIS DRAWING SHALL CONFORM TO THE PERTINENT REQUIREMENTS OF THE CONTRACT.

PAVEMENT TIES AND TIE BARS SHALL BE EPOXY COATED IN CONFORMANCE WITH SUBSECTION 505.2.6.2 OF THE STANDARD SPECIFICATIONS.

INTEGRAL CURB AND GUTTER SHALL CONFORM TO THE DETAILS SHOWN FOR CONCRETE CURB AND GUTTER INCLUDING THE TRANSVERSE GUTTER SLOPE. A LONGITUDINAL CONSTRUCTION JOINT IS NOT REQUIRED WITH INTEGRAL CURB AND GUTTER.

UNLESS OTHERWISE SHOWN ON THE TYPICAL CROSS SECTIONS, THE BASE COURSE AND UNCLASSIFIED EXCAVATION LIMITS ARE 2' - 0" BEHIND THE BACK OF CURBS.

① WHEN PLACED ADJACENT TO NEW CONCRETE, TIE BARS ARE REQUITED FOR CURB AND GUTTER 31", 22", 19" AND CONCRETE GUTTER 24".

② THE BOTTOM OF CURB AND GUTTER MAY BE CONSTRUCTED EITHER LEVEL OR PARALLEL TO THE SLOPE OF THE SUBGRADE OR BASE COURSE PROVIDED A 7" MINIMUM GUTTER THICKNESS IS MAINTAINED.

③ WHEN HIGH SIDE CURB SECTION IS REQUIRED, THE LOCATION(S) WILL BE NOTED ON THE PLANS

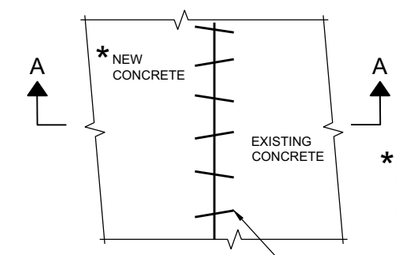

*EXISTING AND NEW CONCRETE MAY BE CURB AND GUTTER, SURFACE DRAINS, PAVEMENT OR OTHER CONCRETE STRUCTURE.

PLAN VIEW

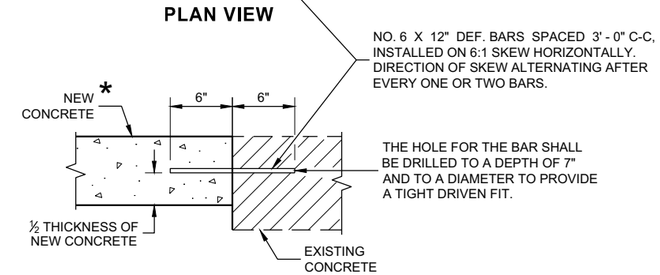

SECTION A - A

PAVEMENT TIES

CONCRETE GUTTER, CURB AND GUTTER AND PAVEMENT TIES

(For Optional use in Milwaukee Co. Only)

STATE OF WISCONSIN
DEPARTMENT OF TRANSPORTATION

APPROVED
February 2020 — DATE
/S/ Rodney Taylor — ROADWAY STANDARDS DEVE ENGINEER
FHWA

6

SDD 08D16 - 11

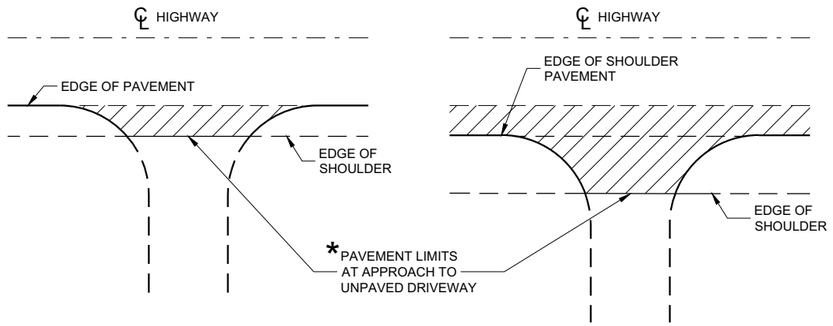

* WHERE DRIVEWAY IS PAVED, APPROACH PAVEMENT SHOULD BE EXTENDED TO MATCH DRIVEWAY PAVEMENT.

PLAN VIEW
(UNPAVED SHOULDER ON HIGHWAY)

PLAN VIEW
(PAVED SHOULDER ON HIGHWAY)

RURAL DRIVEWAY INTERSECTION DETAIL
(NO CURB AND GUTTER OR SIDEWALK)

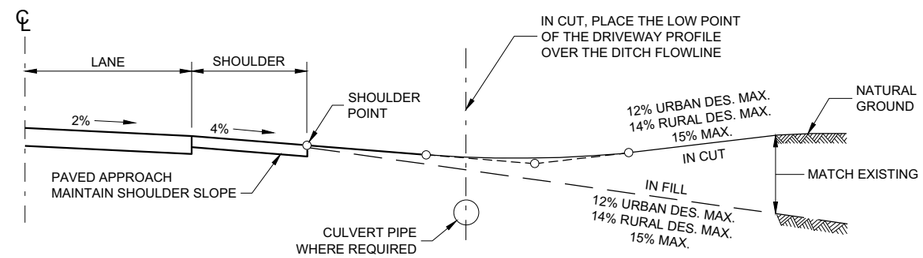

TYPICAL DRIVEWAY PROFILES

6

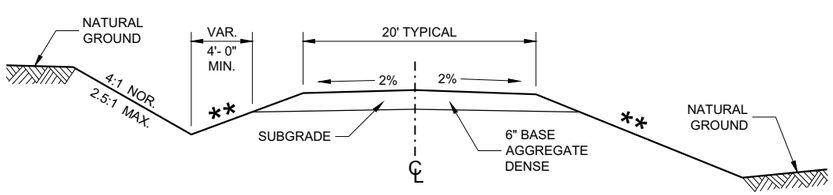

IN CUT **IN FILL**

TYPICAL CROSS SECTION FOR PRIVATE DRIVE OR FIELD ENTRANCE AGGREGATE SURFACE

** SLOPE CAN VARY WITH SPEED. SEE 11-45-30.6.2

POSTED SPEED MPH	MAX. SLOPE
<35	4:1
≥ 35 TO < 60	6:1
≥60	10:1

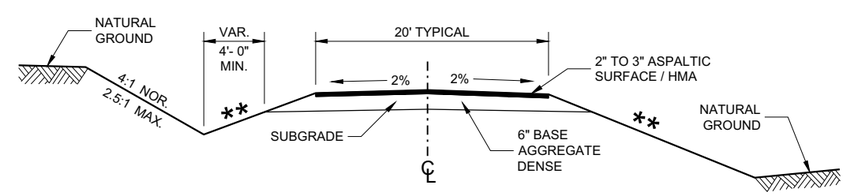

IN CUT **IN FILL**

TYPICAL CROSS SECTION FOR PRIVATE DRIVE OR FIELD ENTRANCE ASPHALTIC SURFACE

DRIVEWAYS WITHOUT CURB AND GUTTER

STATE OF WISCONSIN
DEPARTMENT OF TRANSPORTATION

APPROVED
December 2017 — DATE
/S/ Rodney Taylor — ROADWAY STANDARDS DEVE UNIT SUPERVISOR
FHWA

SDD 08D21 - 01

GENERAL NOTES

(1) DESIGN WILL DETERMINE FINAL DRIVEWAY ASPHALTIC THICKNESS BASED ON TYPE OF USAGE AND LOADINGS.

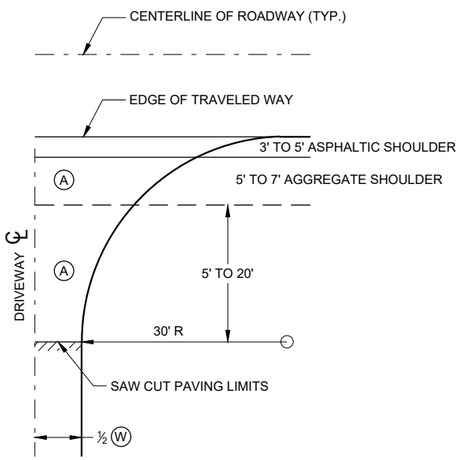

PLAN VIEW

HALF SECTION

(A) : PAID FOR AS ASPHALTIC SURFACE DRIVEWAYS AND FIELD ENTRANCES. (TON)

(B) : PAID FOR AS BASE AGGREGATE DENSE 1 ¼" (TON)

(W) : DRIVEWAY WIDTH 16' MIN. - 24' MAX.

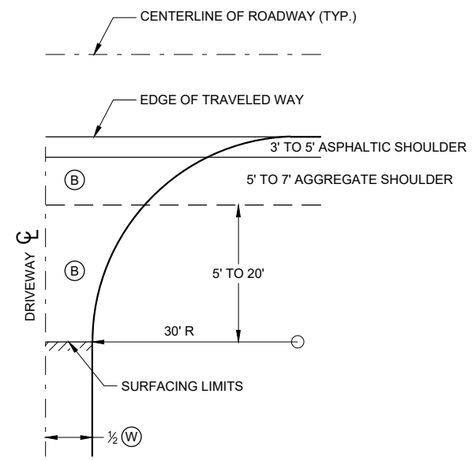

PLAN VIEW

HALF SECTION

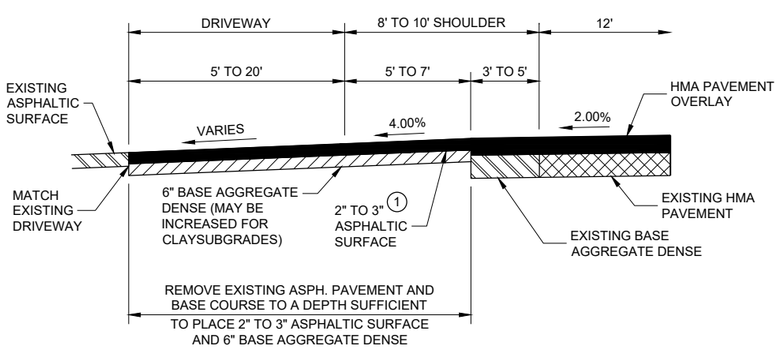

PROFILE VIEW

RURAL ENTRANCE WITH ASPHALTIC SURFACE

RESURFACING PROJECTS

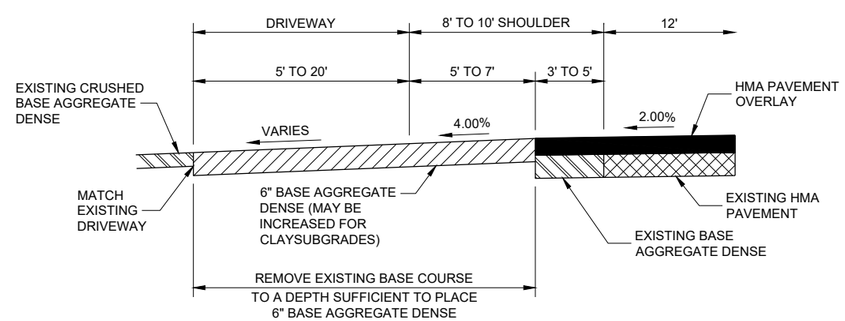

PROFILE VIEW

RURAL ENTRANCE WITH AGGREGATE SURFACE

6" BASE AGGREGATE DENSE RESURFACING PROJECTS

DRIVEWAYS WITHOUT CURB AND GUTTER RESURFACING PROJECTS RURAL

STATE OF WISCONSIN
DEPARTMENT OF TRANSPORTATION

APPROVED
December 2016 — DATE
/S/ Rodney Taylor — ROADWAY STANDARDS DEVE ENGINEER
FHWA

6

SDD 08D22 - 01

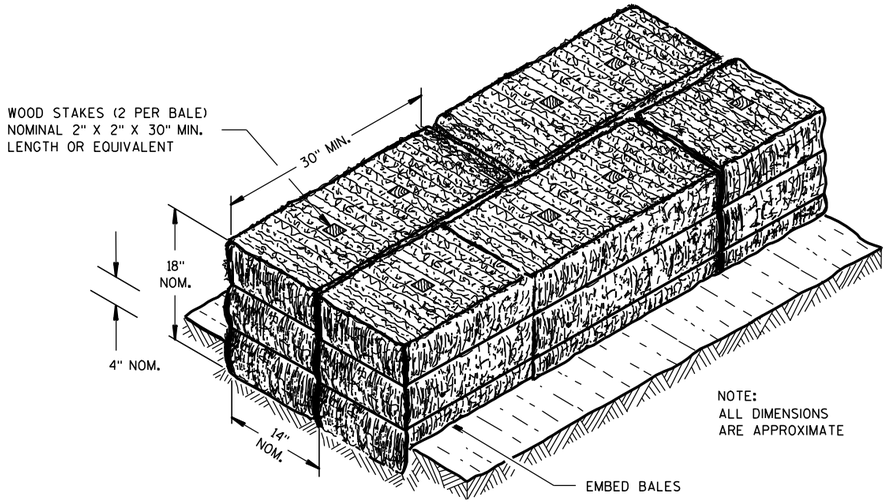

SECTION A-A

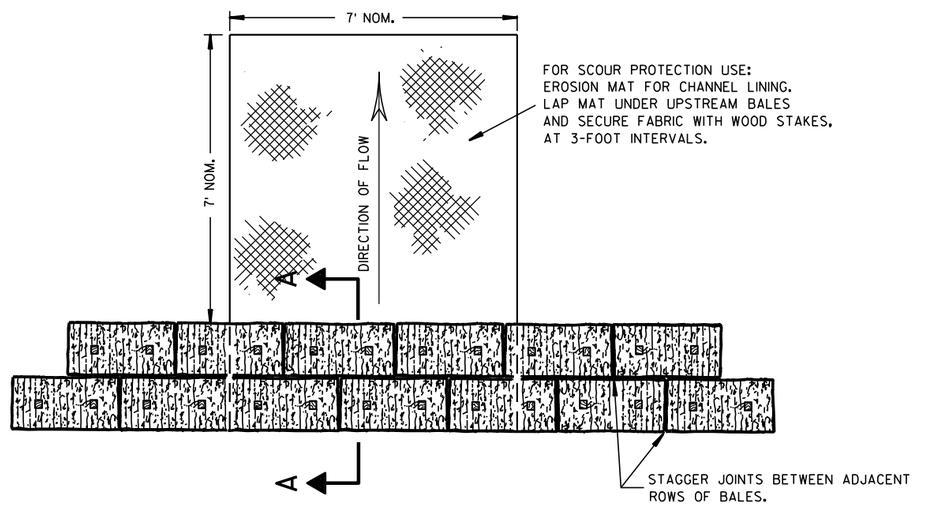

PLAN VIEW

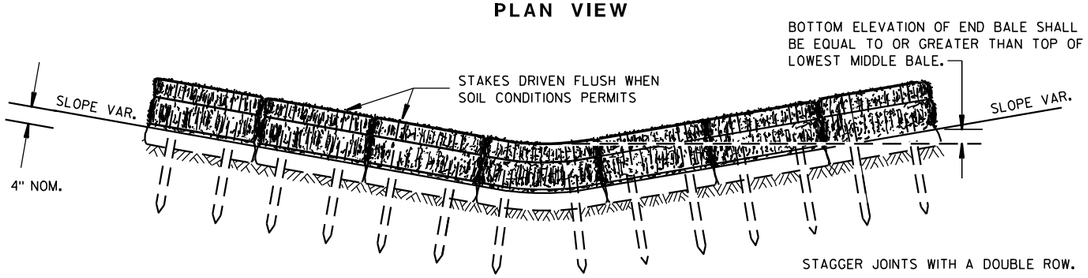

FRONT ELEVATION

TEMPORARY DITCH CHECK USING EROSION BALES ①

GENERAL NOTES

DETAILS OF CONSTRUCTION, MATERIALS AND WORKMANSHIP NOT SHOWN ON THIS DRAWING SHALL CONFORM TO THE PERTINENT REQUIREMENTS OF THE STANDARD SPECIFICATIONS AND THE APPLICABLE SPECIAL PROVISIONS.

① TEMPORARY DITCH CHECKS EITHER EROSION BALES OR MANUFACTURED SHALL BE PAID FOR UNDER THE BID ITEM OF TEMPORARY DITCH CHECK. THE DEPARTMENT WILL NOT PAY FOR TEMPORARY DITCH CHECKS CONSTRUCTED OF A SINGLE ROW OF EROSION BALES.

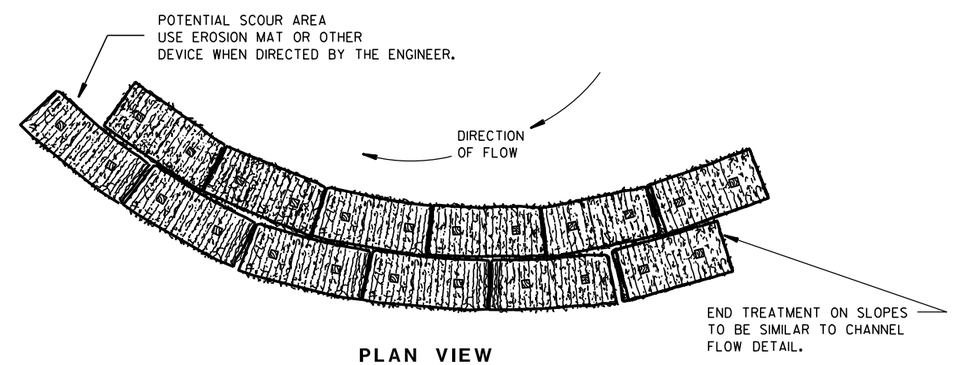

PLAN VIEW

WHEN ALTERING THE DIRECTION OF FLOW

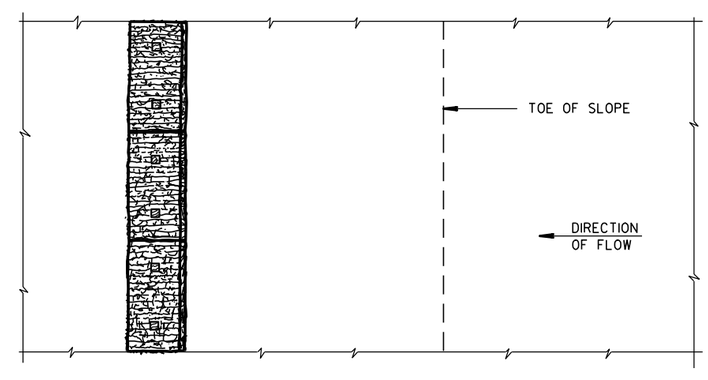

PLAN VIEW

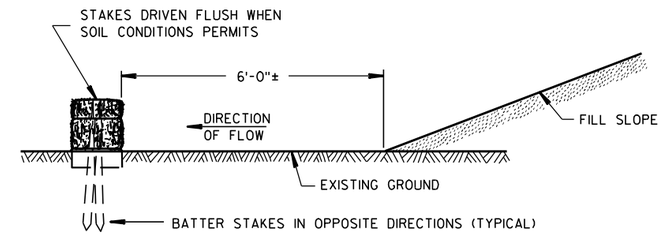

FRONT ELEVATION

WHEN EXISTING GROUND SLOPES AWAY FROM FILL SLOPE

EROSION BALES FOR SHEET FLOW

TYPICAL INSTALLATIONS OF EROSION BALES / TEMPORARY DITCH CHECKS

STATE OF WISCONSIN
DEPARTMENT OF TRANSPORTATION

APPROVED

6/04/02 — DATE

/S/ Beth Cann — CHIEF ROADWAY DEVELOPMENT ENGINEER

FHWA

6

6

S.D.D. 8 E 8-3

S.D.D. 8 E 8-3

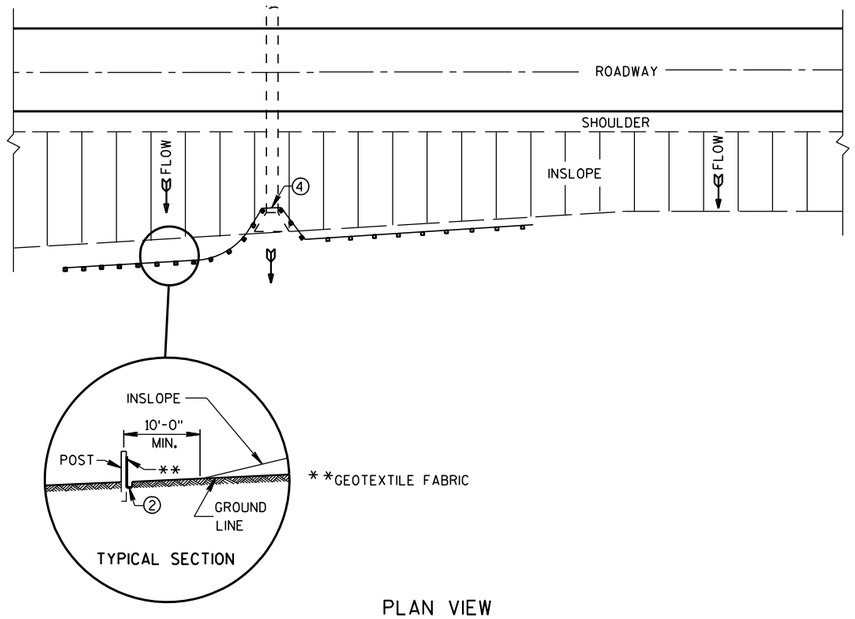

PLAN VIEW

TYPICAL APPLICATION OF SILT FENCE

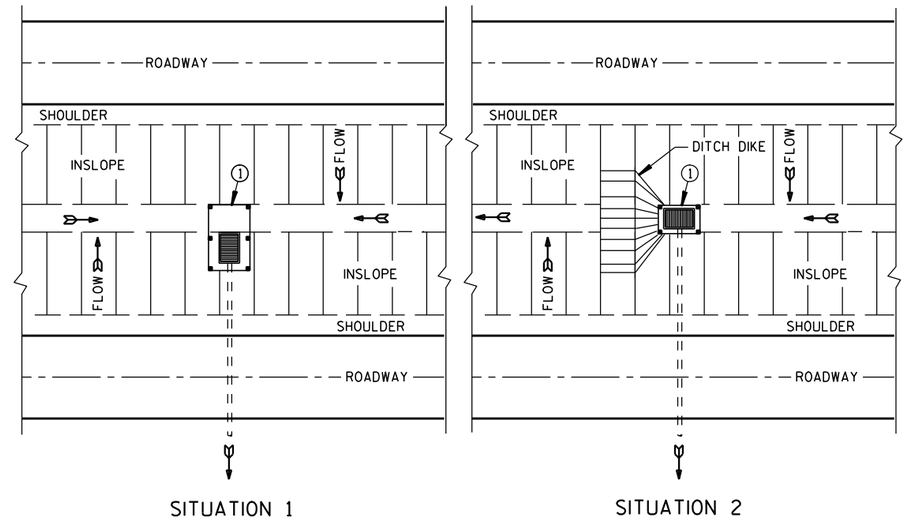

PLAN VIEW

SILT FENCE AT MEDIAN SURFACE DRAINS

GENERAL NOTES

DETAILS OF CONSTRUCTION NOT SHOWN ON THIS DRAWING SHALL CONFORM TO THE PERTINENT REQUIREMENTS OF THE STANDARD SPECIFICATIONS AND APPLICABLE SPECIAL PROVISIONS.

① HORIZONTAL BRACE REQUIRED WITH 2" X 4" WOODEN FRAME OR EQUIVALENT AT TOP OF POSTS.

② FOR MANUAL INSTALLATIONS THE TRENCH SHALL BE A MINIMUM OF 4" WIDE & 6" DEEP TO BURY AND ANCHOR THE GEOTEXTILE FABRIC. FOLD MATERIAL TO FIT TRENCH AND BACKFILL & COMPACT TRENCH WITH EXCAVATED SOIL.

③ WOOD POSTS SHALL BE A MINIMUM SIZE OF 1⅛" X 1⅛" OF OAK OR HICKORY.

④ SILT FENCE TO EXTEND ACROSS THE TOP OF THE PIPE.

⑤ CONSTRUCT SILT FENCE FROM A CONTINUOUS ROLL IF POSSIBLE BY CUTTING LENGTHS TO AVOID JOINTS. IF A JOINT IS NECESSARY USE ONE OF THE FOLLOWING TWO METHODS; A) OVERLAP THE END POSTS AND TWIST, OR ROTATE, AT LEAST 180 DEGREES. B) HOOK THE END OF EACH SILT FENCE LENGTH.

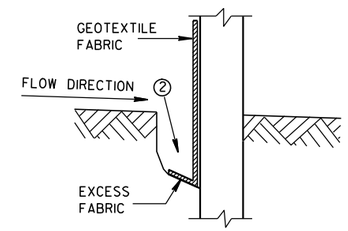

TRENCH DETAIL

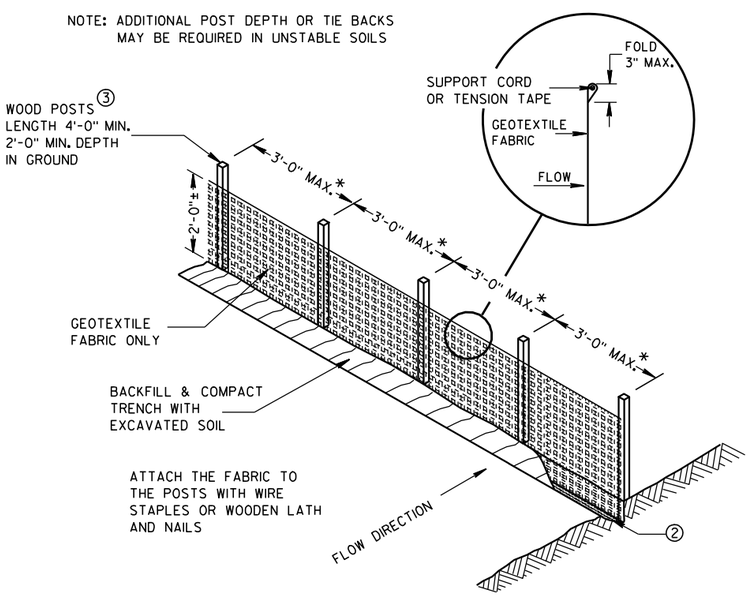

*NOTE: 8'-0" POST SPACING ALLOWED IF A WOVEN GEOTEXTILE FABRIC IS USED.

SILT FENCE

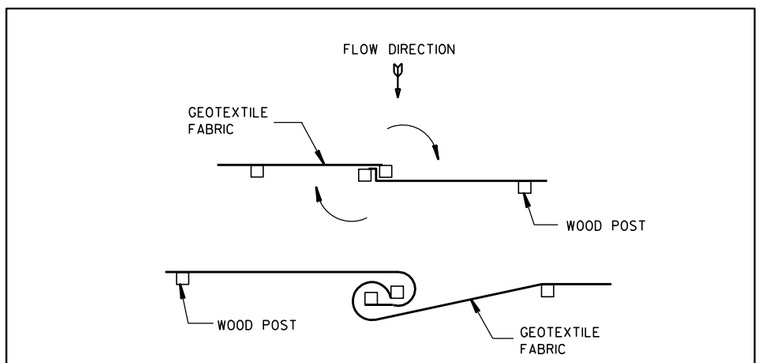

TWIST METHOD

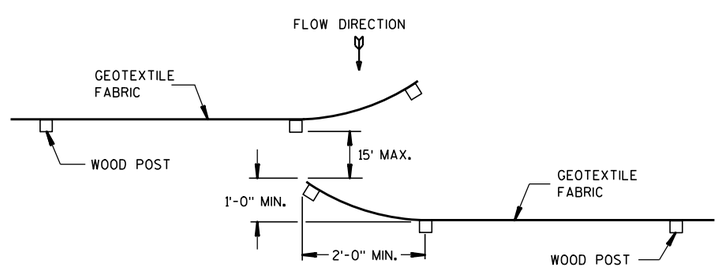

HOOK METHOD

JOINING TWO LENGTHS OF SILT FENCE ⑤

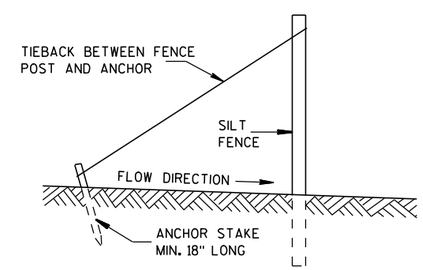

SILT FENCE TIE BACK

(WHEN REQUIRED BY THE ENGINEER)

SILT FENCE
STATE OF WISCONSIN DEPARTMENT OF TRANSPORTATION
APPROVED 4-29-05 DATE — /S/ Beth Cann-- CHIEF ROADWAY DEVELOP ENGINEER FHWA

6

6

S.D.D. 8 E 9-6

S.D.D. 8 E 9-6

METAL APRON ENDWALLS

PIPE DIA. (IN.)	MIN. THICK. (Inches) STEEL	MIN. THICK. (Inches) ALUM.	DIMENSIONS (Inches) A (±1")	B (MAX.)	H (±1")	L (±1 1/2")	L1 ①	L2 ①	W (±2")	APPROX. SLOPE	BODY
12	.064	.060	6	6	6	21	12	17 1/2	24	2 1/2 to 1	1 Pc.
15	.064	.060	7	8	6	26	14	21 3/4	30	2 1/2 to 1	1 Pc.
18	.064	.060	8	10	6	31	15	28 1/4	36	2 1/2 to 1	1 Pc.
21	.064	.060	9	12	6	36	18	29 5/8	42	2 1/2 to 1	1 Pc.
24	.064	.075	10	13	6	41	18	37 1/4	48	2 1/2 to 1	1 Pc.
30	.079	.075	12	16	8	51	18	52 1/4	60	2 1/2 to 1	1 Pc.
36	.079	.105	14	19	9	60	24	59 3/4	72	2 1/2 to 1	2 Pc.
42	.109	.105	16	22	11	69	24	75 5/8	84	2 1/2 to 1	2 Pc.
48	.109	.105	18	27	12	78	24	81	90	2 1/4 to 1	3 Pc.
54	.109	.105	18	30	12	84	30	85 1/2	102	2 1/4 to 1	3 Pc.
60	.109×	.105×	18	33	12	87	—	—	114	2 to 1	3 Pc.
66	.109×	.105×	18	36	12	87	—	—	120	2 to 1	3 Pc.
72	.109×	.105×	18	39	12	87	—	—	126	2 to 1	3 Pc.
78	.109×	.105×	18	42	12	87	—	—	132	1 1/2 to 1	3 Pc.
84	.109×	.105×	18	45	12	87	—	—	138	1 1/2 to 1	3 Pc.
90	.109×	.105×	18	37	12	87	—	—	144	1 1/2 to 1	3 Pc.
96	.109×	.105×	18	35	12	87	—	—	150	1 1/2 to 1	3 Pc.

× EXCEPT CENTER PANEL
SEE GENERAL NOTES

REINFORCED CONCRETE APRON ENDWALLS

PIPE DIA. (IN.)	DIMENSIONS (Inches) T	A	B	C	D	E	G	APPROX. SLOPE
12	2	4	24	48 7/8	72 7/8	24	2	3 to 1
15	2 1/4	6	27	46	73	30	2 1/4	3 to 1
18	2 1/2	9	27	46	73	36	2 1/2	3 to 1
21	2 3/4	9	36	37 1/2	73 1/2	42	2 3/4	3 to 1
24	3	9 1/2	43 1/2	30	73 1/2	48	3	3 to 1
27	3 1/4	10 1/2	49 1/2	24	73 1/2	54	3 1/4	3 to 1
30	3 1/2	12	54	19 3/4	73 1/2	60	3 1/2	3 to 1
36	4	15	63	34 3/4	97 3/4	72	4	3 to 1
42	4 1/2	21	63	35	98	78	4 1/2	3 to 1
48	5	24	72	26	98	84	5	3 to 1
54	5 1/2	27	65	*33 1/4-**35	*98 1/4-**100	90	5 1/2	2 2/5 to 1
60	6	*30-**35	60	39	99	96	5	2 to 1
66	6 1/2	*24-**30	*72-**78	*21-**27	99	102	5 1/2	2 to 1
72	7	*24-**36	78	21	99	108	6	2 to 1
78	7 1/2	*24-**36	78	21	99	114	6 1/2	2 to 1
84	8	36	90 1/2	21	111 1/2	120	6 1/2	1 1/2 to 1
90	8 1/2	41	87 1/2	24	111 1/2	132	6 1/2	1 1/2 to 1

*MINIMUM
**MAXIMUM

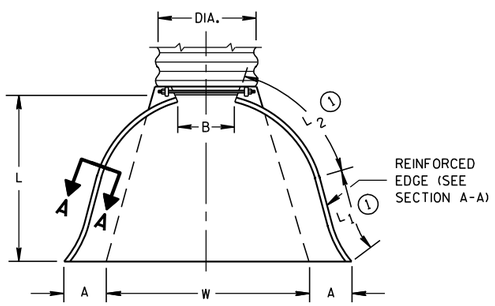

PLAN VIEW

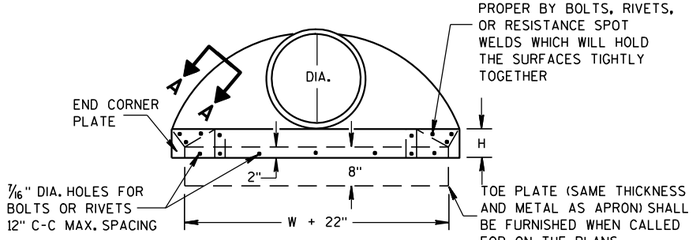

END VIEW

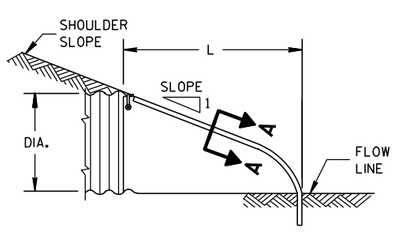

SIDE ELEVATION

METAL ENDWALLS

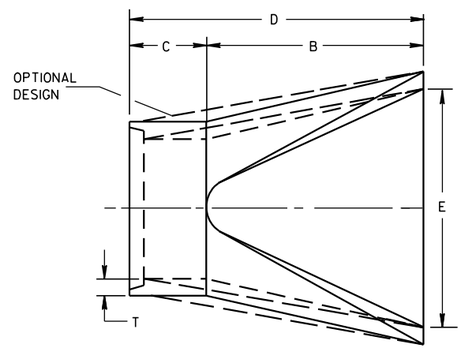

PLAN

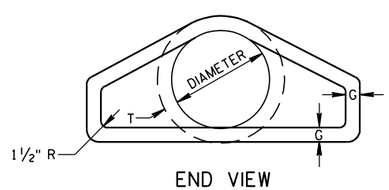

END VIEW

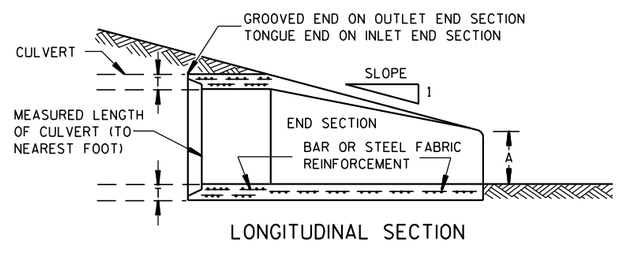

LONGITUDINAL SECTION

CONCRETE ENDWALLS

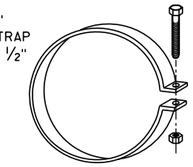

ALTERNATE FOR TYPE 1 CONNECTION

END SECTION CONNECTOR STRAP

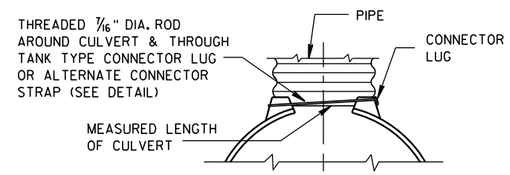

TYPE 1
FOR 12" THRU 24" CORR. PIPE

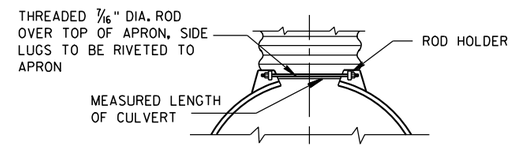

TYPE 2
FOR 30" THRU 96" CORR. PIPE

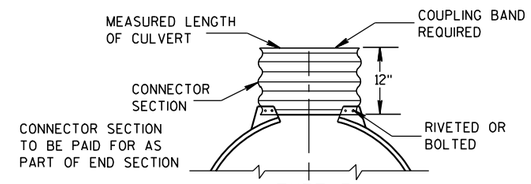

TYPE 3
FOR 42" THRU 96" CORR. PIPE

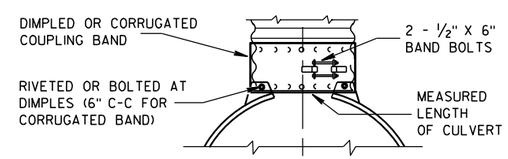

TYPE 5
ALTERNATE FOR:
ALL SIZES CORRUGATED CIRCULAR PIPE

NOTE: DIMPLED BAND FITS OVER OUTSIDE OF ENDWALL, AND CORRUGATED BAND FITS INSIDE ENDWALL. DIMPLED BAND MAY BE USED WITH HELICALLY CORRUGATED PIPE.

FOR CIRCUMFERENTIALLY CORRUGATED PIPE USE ENDWALL CONNECTION DETAILS 1, 2, 3 OR 5 AS APPLICABLE.

FOR HELICALLY CORRUGATED PIPE USE ENDWALL CONNECTION DETAILS 1, 2 OR 5.

FOR HELICALLY CORRUGATED PIPES WITH TWO CIRCUMFERENTIAL CORRUGATIONS AT EACH END USE ENDWALL CONNECTION DETAILS 1, 2 OR 3.

CONNECTION DETAILS

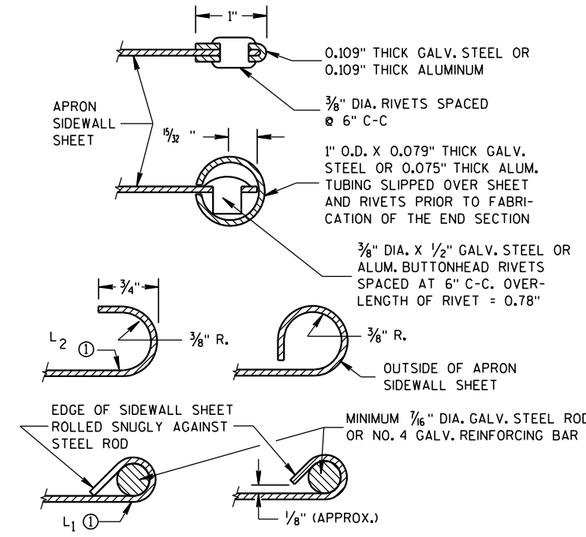

SECTION A-A

GENERAL NOTES

DETAILS OF CONSTRUCTION, MATERIALS AND WORKMANSHIP NOT SHOWN ON THIS DRAWING SHALL CONFORM TO THE PERTINENT REQUIREMENTS OF THE STANDARD SPECIFICATIONS AND THE APPLICABLE SPECIAL PROVISIONS.

CONCRETE CULVERT ENDWALLS MAY NOT BE USED WITH GALVANIZED STEEL OR ALUMINUM CULVERT PIPE OR VISE VERSA. GALVANIZED STEEL OR ALUMINUM ENDWALLS SHALL NORMALLY BE INSTALLED ON CULVERT PIPE OF THE SAME METAL.

ALL THREE PIECE STEEL APRON ENDWALLS FOR 60" DIAMETER PIPE AND LARGER SHALL HAVE 0.109" SIDES AND 0.138" CENTER PANELS. ALL THREE PIECE ALUMINUM APRON ENDWALLS FOR 60" DIAMETER PIPE AND LARGER SHALL HAVE 0.105" SIDES AND 0.134" CENTER PANELS. THE WIDTH OF CENTER PANELS SHALL BE GREATER THAN 20 PERCENT OF THE PIPE PERIMETER.

LAP SEAMS SHALL BE TIGHTLY JOINED BY GALVANIZED RIVETS OR BOLTS FOR STEEL UNITS AND ALUMINUM RIVETS AND BOLTS FOR ALUMINUM UNITS. FOR THE 60" THROUGH 96" DIAMETER APRON ENDWALL SIZES, THE REINFORCED EDGES AND CENTER PANEL SEAMS SHALL BE FURTHER REINFORCED WITH GALVANIZED STEEL OR ALUMINUM STIFFENER ANGLES. THE ANGLES SHALL BE ATTACHED BY GALVANIZED NUTS AND BOLTS FOR STEEL UNITS AND ALUMINUM NUTS AND BOLTS FOR ALUMINUM UNITS.

WHERE TWO OR MORE PIPES WITH APRON ENDWALLS ARE LAID ADJACENT TO EACH OTHER, THEY SHALL BE SEPARATED BY A DISTANCE SUFFICIENT TO PROVIDE A MINIMUM CLEARANCE OF 6 INCHES BETWEEN APRON ENDWALLS.

① FOR PIPE SIZES UP TO 60" DIAMETER, A 180° ROLLED EDGE MAY BE USED INSTEAD OF STEEL ROD REINFORCEMENT. SEE SECTION A-A.

APRON ENDWALLS FOR CULVERT PIPE

STATE OF WISCONSIN
DEPARTMENT OF TRANSPORTATION

APPROVED
11/30/94 — DATE
/S/ Rory L. Rhinesmith — CHIEF ROADWAY DEVELOPMENT ENGINEER
FHWA

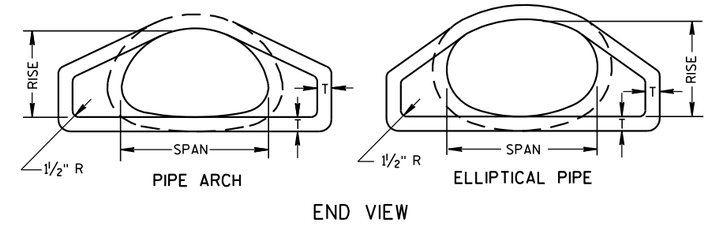

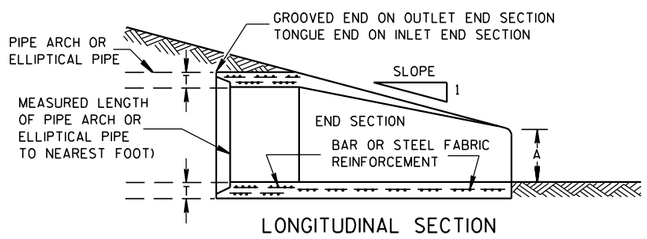

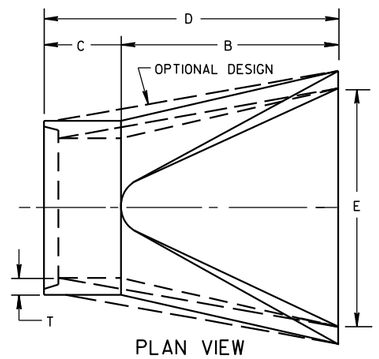

CONCRETE ENDWALLS

2- ⅔" X ½" CORRUGATIONS														
EQUIV. DIA. (Inches)	(Inches)		MIN. THICK. (Inches)		DIMENSIONS (Inches)							APPROX. SLOPE	BODY
	SPAN	RISE	STEEL	ALUM.	A (±1")	B (MAX.)	H (±1")	L (±1½")	L1 ①	L2 ①	W (±2")		
15	17	13	.064	.060	7	9	6	19	14	16	30	2½ to 1	1 Pc.
18	21	15	.064	.060	7	10	6	23	14	19⅜	36	2½ to 1	1 Pc.
21	24	18	.064	.060	8	12	6	28	18	21¾	42	2½ to 1	1 Pc.
24	28	20	.064	.060	9	14	6	32	18	27½	48	2½ to 1	1 Pc.
30	35	24	.079	.075	10	16	6	39	18	37⅝	60	2½ to 1	1 Pc.
36	42	29	.079	.075	12	18	8	46	24	45⅜	75	2½ to 1	1 Pc.
42	49	33	.109	.105	13	21	9	53	24	54¾	85	2½ to 1	2 Pc.
48	57	38	.109	.105	18	26	12	63	24	68	90	2½ to 1	3 Pc.
54	64	43	.109	.105	18	30	12	70	24	72¾	102	2¼ to 1	3 Pc.
60	71	47	.109*	.105*	18	33	12	77	30	82¼	114	2¼ to 1	3 Pc.
66	77	52	.109*	.105*	18	36	12	77	—	—	126	2 to 1	3 Pc.
72	83	57	.109*	.105*	18	39	12	77	—	—	138	2 to 1	3 Pc.

3" X 1" CORRUGATIONS														
EQUIV. DIA. (Inches)	(Inches)		MIN. THICK. (Inches)		DIMENSIONS (Inches)							APPROX. SLOPE	BODY
	SPAN	RISE	STEEL	ALUM.	A (±1")	B (MAX.)	H (±1")	L (±1½")	L1 ①	L2 ①	W (±2")		
48	53	41	.109	.105	18	26	12	63	24	72¾	90	2½ to 1	2 Pc.
54	60	46	.109	.105	18	30	12	70	30	82¼	102	2 to 1	2 Pc.
60	66	51	.109*	.105*	18	33	12	77	—	—	114	1½ to 1	3 Pc.
66	73	55	.109*	.105*	18	36	12	77	—	—	126	1½ to 1	3 Pc.
72	81	59	.109*	.105*	18	39	12	77	—	—	138	2 to 1	3 Pc.
78	87	63	.109*	.105*	22	38	12	77	—	—	148	1½ to 1	3 Pc.
84	95	67	.109*	.105*	22	34	12	77	—	—	162	1½ to 1	3 Pc.
90	103	71	.109*	.105*	22	38	12	77	—	—	174	1½ to 1	3 Pc.
96	112	75	.109*	.105*	24	40	12	77	—	—	174	1½ to 1	3 Pc.

NOTE: ALL SPLICES TO BE LAP RIVETED OR BOLTED.

* EXCEPT CENTER PANEL SEE GENERAL NOTES

REINFORCED CONCRETE PIPE ARCH									
EQUIV. DIA. (Inches)	DIMENSIONS (Inches)								APPROX. SLOPE
	** SPAN	** RISE	T	A	B	C	D	E	
24	29	18	3	8½	39	33	72	48	3 to 1
30	36	22	3½	9½	50	46	96	60	3 to 1
36	44	27	4	11⅛	60	36	96	72	3 to 1
42	51	31	4½	15 13/16	60	36	96	78	3 to 1
48	58	36	5	21	60	36	96	84	3 to 1
54	65	40	5½	25½	60	36	96	90	3 to 1
60	73	45	6	31	60	36	96	96	3 to 1
72	88	54	7	31	60	39	99	120	2 to 1
84	102	62	8	28½	83	19	102	144	2 to 1

REINFORCED CONCRETE ELLIPTICAL PIPE									
EQUIV. DIA. (Inches)	DIMENSIONS (Inches)								APPROX. SLOPE
	** SPAN	** RISE	T	A	B	C	D	E	
24	30	19	3¼	8½	39	33	72	48	3 to 1
30	38	24	3¾	9½	54	18	72	60	3 to 1
36	45	29	4½	11⅛	60	24	84	72	2½ to 1
42	53	34	5	15¾	60	36	96	78	2½ to 1
48	60	38	5½	21	60	36	96	84	2½ to 1
54	68	43	6	25½	60	36	96	90	2½ to 1
60	76	48	6½	30	60	36	96	96	2½ to 1

**NOMINAL SIZE

GENERAL NOTES

DETAILS OF CONSTRUCTION, MATERIALS AND WORKMANSHIP NOT SHOWN ON THIS DRAWING SHALL CONFORM TO THE PERTINENT REQUIREMENTS OF THE STANDARD SPECIFICATIONS AND THE APPLICABLE SPECIAL PROVISIONS.

CONCRETE APRON ENDWALLS MAY NOT BE USED WITH GALVANIZED STEEL OR ALUMINUM CULVERT PIPE OR VISE VERSA. GALVANIZED STEEL OR ALUMINUM APRON ENDWALLS SHALL NORMALLY BE INSTALLED ON CULVERT PIPE OF THE SAME METAL.

ALL THREE PIECE STEEL APRON ENDWALLS FOR 66" X 51" PIPE ARCH AND LARGER SHALL HAVE 0.109" SIDES AND 0.138" CENTER PANELS. ALL THREE PIECE ALUMINUM APRON ENDWALLS FOR 66" X 51" PIPE ARCH AND LARGER SHALL HAVE 0.105" SIDES AND 0.134" CENTER PANELS. THE WIDTH OF CENTER PANELS SHALL BE GREATER THAN 20 PERCENT OF THE PIPE ARCH PERIMETER.

LAP SEAMS SHALL BE TIGHTLY JOINED BY GALVANIZED RIVETS OR BOLTS FOR STEEL UNITS AND ALUMINUM RIVETS AND BOLTS FOR ALUMINUM UNITS. FOR THE 77" X 52" THROUGH 112" X 75" APRON ENDWALL SIZES, THE REINFORCED EDGES AND CENTER PANEL SEAMS SHALL BE FURTHER REINFORCED WITH GALVANIZED STEEL OR ALUMINUM STIFFENER ANGLES. THE ANGLES SHALL BE ATTACHED BY GALVANIZED NUTS AND BOLTS FOR STEEL UNITS AND ALUMINUM NUTS AND BOLTS FOR ALUMINUM UNITS.

WHERE TWO OR MORE PIPES WITH APRON ENDWALLS ARE LAID ADJACENT TO EACH OTHER, THEY SHALL BE SEPARATED BY A DISTANCE SUFFICIENT TO PROVIDE A MINIMUM CLEARANCE OF 6 INCHES BETWEEN APRON ENDWALLS.

① FOR PIPE ARCH SIZES UP TO 73" X 55" A 180° ROLLED EDGE MAY BE USED INSTEAD OF STEEL ROD REINFORCEMENT. SEE SECTION A-A.

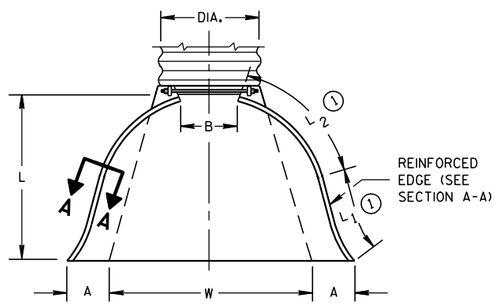

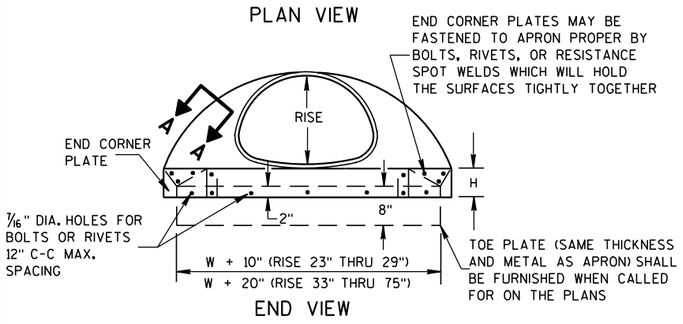

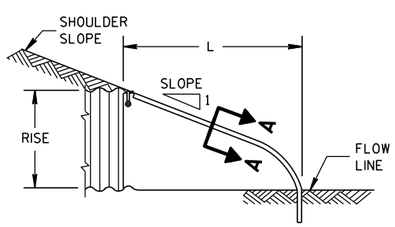

SIDE ELEVATION

METAL ENDWALLS

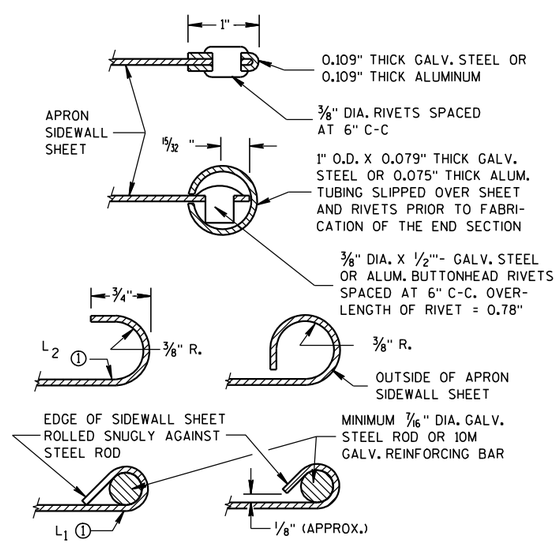

SECTION A-A

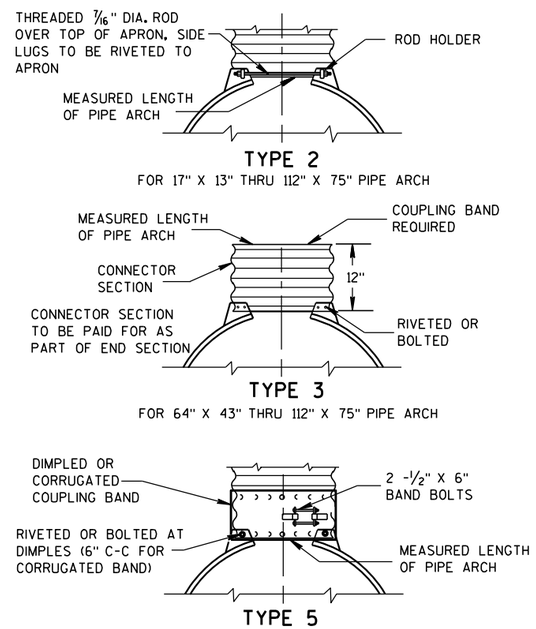

NOTE: DIMPLED BAND FITS OVER OUTSIDE OF ENDWALL, AND CORRUGATED BAND FITS INSIDE ENDWALL.

CONNECTION DETAILS

APRON ENDWALLS FOR PIPE ARCH AND ELLIPTICAL PIPE

STATE OF WISCONSIN
DEPARTMENT OF TRANSPORTATION

APPROVED
11/30/94 — DATE
/S/ Rory L. Rhinesmith — CHIEF ROADWAY DEVELOPMENT ENGINEER
FHWA

6

S.D.D. 8 F 2-1

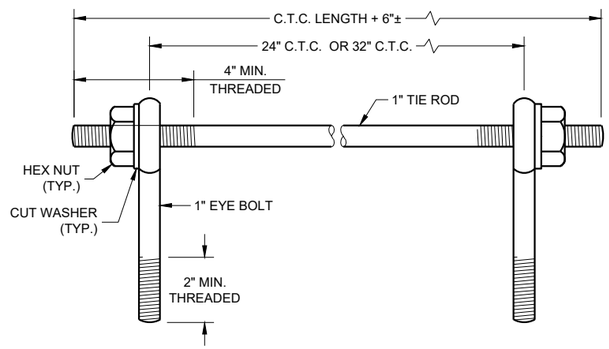

EYE BOLTS AND TIE ROD

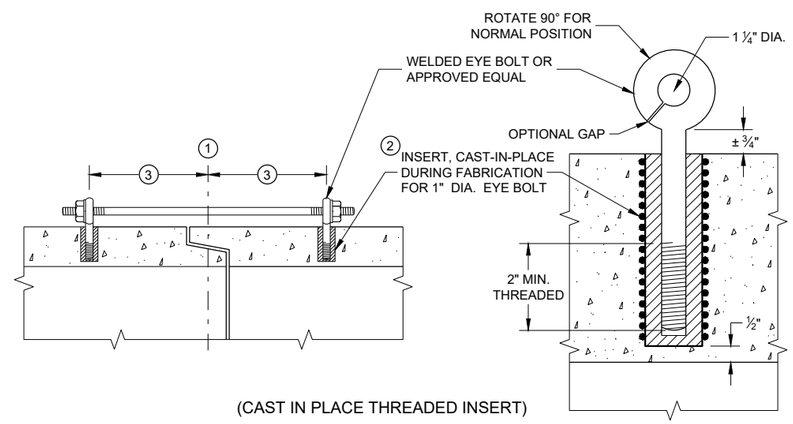

(CAST IN PLACE THREADED INSERT)

LONGITUDINAL SECTIONS

EYE BOLT AND TIE ROD ASSEMBLY (ALTERNATE NO. 1)

GENERAL NOTES

DETAILS OF CONSTRUCTION, MATERIALS, AND WORKMANSHIP NOT SHOWN ON THIS DRAWING SHALL CONFORM TO THE PERTINENT REQUIREMENTS OF THE STANDARD SPECIFICATIONS AND APPLICABLE SPECIAL PROVISIONS.

CONCRETE CULVERT AND STORM SEWER PIPE SHALL BE TIED TOGETHER IN THE MANNER ILLUSTRATED BY THIS DETAIL AT LOCATIONS DESIGNATED IN THE STANDARD SPECIFICATIONS AND THE PLAN. THE CONTRACTOR MAY USE EITHER ALTERNATE 1, 2 OR 3 FOR DRAINAGE STRUCTURES. ONLY ALTERNATE 1 AND 3 MAY BE USED FOR CATTLE PASSES, UNLESS OTHERWISE STATED IN THE CONTRACT. THE MATERIALS, FABRICATION AND WORK NECESSARY TO TIE THE PIPE BY THIS DETAIL WILL BE CONSIDERED INCIDENTAL TO THE PIPE AND APRON ENDWALLS IF REQUIRED.

DETAILED DRAWINGS FOR PROPOSED ALTERNATE DESIGNS FOR JOINT TIES SHALL BE SUBMITTED TO THE ENGINEER FOR APPROVAL.

JOINT TIES TO BE HOT-DIP GALVANIZED PER ASTM A 153.

1. CENTER LINE OF TONGUE AND GROOVE OR BELL AND SPIGOT JOINTS.
2. THE INSIDE OF THE THREADED INSERTS SHALL BE CLEAN TO ALLOW THE INSERTION OF THREADED EYE BOLTS.
3. HOLES SHALL BE CAST-IN-PLACE OR DRILLED PER THE APPLICABLE DETAIL, AND EQUAL DISTANCE FROM THE CENTERLINE OF THE JOINT.
4. BOLT PROJECTION INSIDE OF PIPE SHALL NOT EXCEED 2 INCHES.
5. OPENING TO BE ROD DIAMETER PLUS 1 INCH.
6. LENGTH ADEQUATE TO EXTEND TO WITHIN ½ INCH OF THE INNER SURFACE OF THE PIPE.
7. EYE BOLT LENGTH DETERMINED BY WALL THICKNESS, BELL THICKNESS AND BOLT PROJECTION INSIDE PIPE.

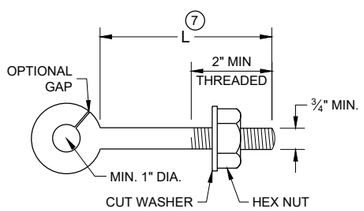

EYE BOLT 7

NOTE: TWO EYE BOLTS MAY BE USED WITH A 30" OR 38" LONG THREADED ROD IN LIEU OF THE 90° BENT TIE ROD.

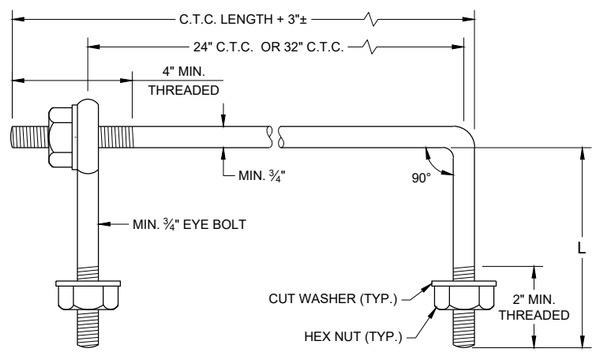

EYE BOLT AND TIE ROD

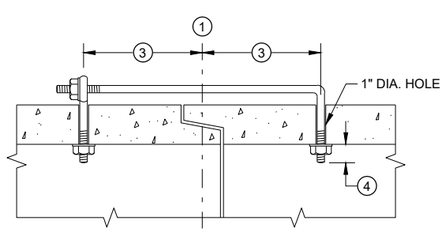

(TONGUE AND GROOVE PIPE)

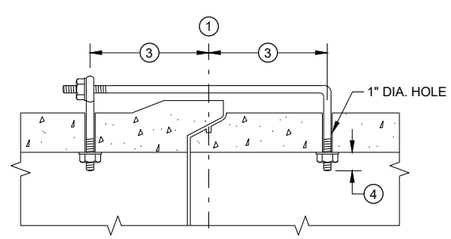

(MODIFIED BELL PIPE)

LONGITUDINAL SECTION

(JOINT TIES FOR 18" TO 66" DIA. CONCRETE PIPE)

EYE BOLT AND TIE ROD ASSEMBLY (ALTERNATE NO. 2)

ADJUSTABLE TIE ROD TABLE

PIPE DIAMETER	TIE ROD DIAMETER	D	L_1	N
12 - 60	⅝	⅝	5	½
66 - 84	¾	¾	5	½
90 - 144	1	1	7	1 7/16

DIMENSIONS SHOWN ARE IN INCHES

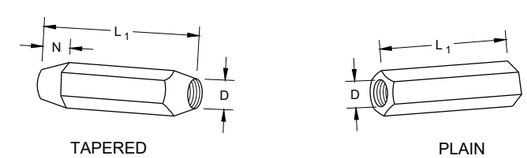

RIGHT AND LEFT THREADS

SLEEVE NUTS

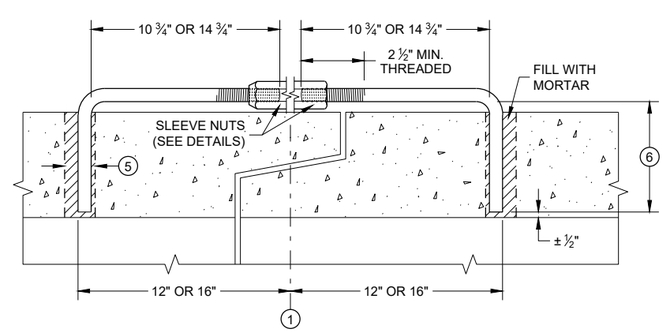

LONGITUDINAL SECTION

ADJUSTABLE TIE ROD (ALTERNATE NO. 3)

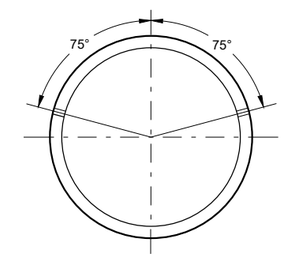

PLACEMENT OF (2) CAST-IN-PLACE INSERTS OR HOLES DURING FABRICATION FOR PIPE SECTIONS REQUIRING TIE RODS

TRANSVERSE SECTION

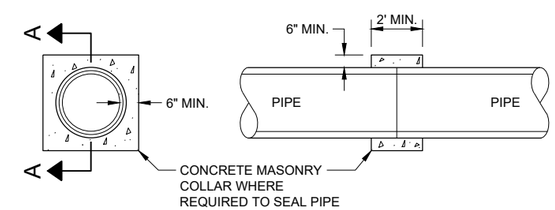

SECTION A - A

CONCRETE COLLAR DETAIL

JOINT TIES FOR CONCRETE PIPE AND CONCRETE COLLAR DETAIL

STATE OF WISCONSIN
DEPARTMENT OF TRANSPORTATION

APPROVED
November 2021 — DATE
/S/ Rodney Taylor — ROADWAY STANDARDS DEVE ENGINEER
FHWA

6

SDD 08F04 - 08

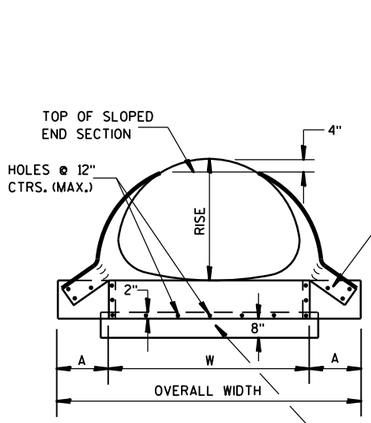

FRONT VIEW

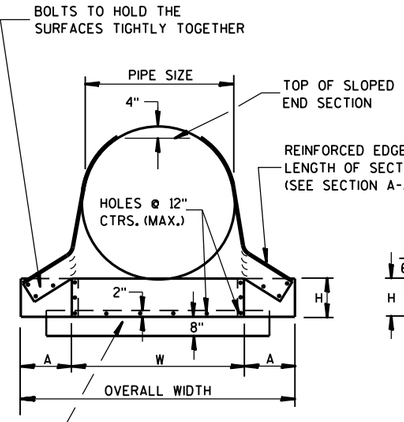

FRONT VIEW

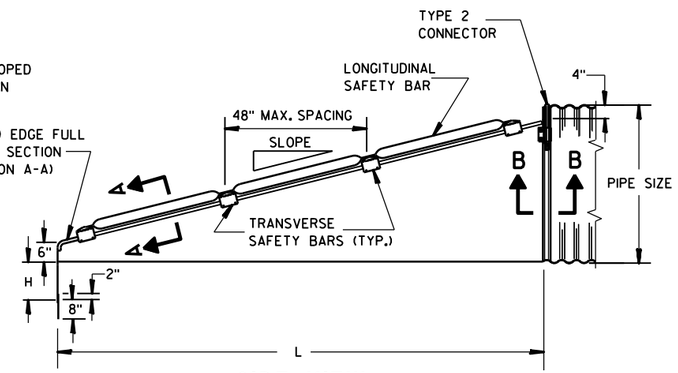

SIDE VIEW
(48" SIZE ILLUSTRATED)

GENERAL NOTES

DETAILS OF CONSTRUCTION, MATERIALS AND WORKMANSHIP NOT SHOWN ON THIS DRAWING SHALL CONFORM TO THE PERTINENT REQUIREMENTS OF THE STANDARD SPECIFICATIONS AND APPLICABLE SPECIAL PROVISIONS.

SAFETY GRATES SHALL BE FABRICATED FROM 3-INCH DIAMETER GALVANIZED PIPE MEETING THE REQUIREMENTS OF ASTM A-53, GRADE B, SCHEDULE 40 OR APPROVED EQUAL. THE LONGITUDINAL BAR SHALL BE WELDED TO THE TRANSVERSE BARS WHERE THE BARS CROSS. THE NUMBER OF TRANSVERSE BARS REQUIRED WILL VARY DEPENDING ON THE LENGTH OF THE END SECTION.

SLOPED STEEL ENDWALLS LOCATED AT THE ENDS OF CONCRETE CULVERT PIPE SHALL BE FURNISHED WITH STEEL ADAPTER SLEEVES.

STEEL APRON ENDWALLS FOR CULVERT PIPE CROSS DRAINS

PIPE DIA. (IN.)	MIN. THICK.		DIMENSIONS (Inches)				L DIMENSIONS			
	IN.	GAGE	A	H	W	OVERALL WIDTH	SLOPE	LENGTH INCHES	SLOPE	LENGTH INCHES
36	.109	12	12	9	42	66	4:1	104	6:1	156
42	.109	12	16	12	48	80	4:1	128	6:1	192
48	.109	12	16	12	54	86	4:1	152	6:1	228
54	.109	12	16	12	60	92	4:1	176	6:1	264
60	.109	12	16	12	66	98	4:1	200	6:1	300

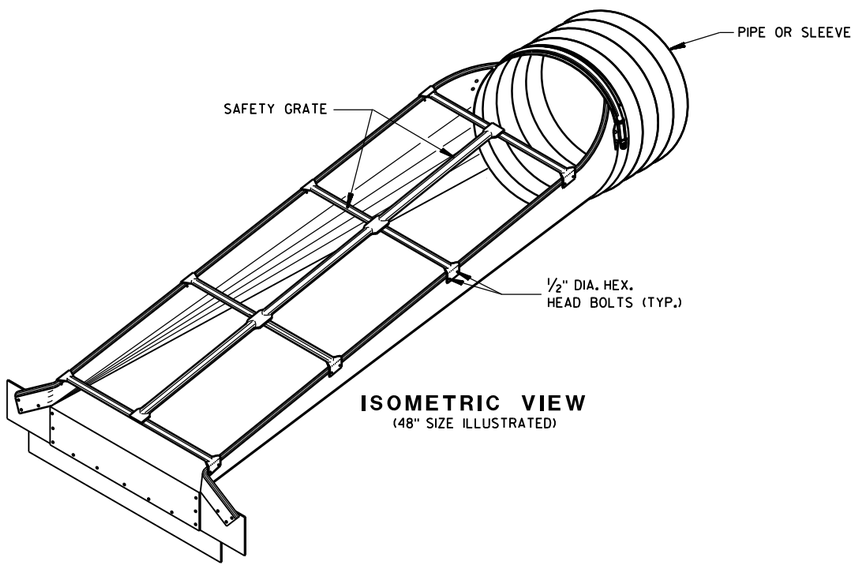

ISOMETRIC VIEW
(48" SIZE ILLUSTRATED)

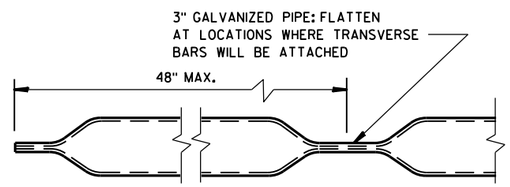

LONGITUDINAL SAFETY BAR

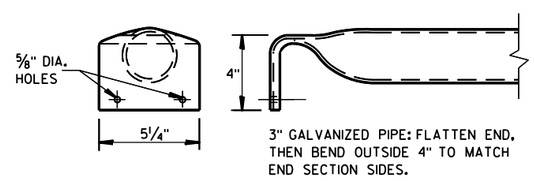

TRANSVERSE SAFETY BAR

STEEL APRON ENDWALLS FOR PIPE ARCH SLOPED CROSS DRAINS

EQUIV. DIA. (IN.)	INCHES		MIN. THICK.		DIMENSIONS (Inches)				L DIMENSIONS			
	SPAN	RISE	IN.	GAGE	A	H	W	OVERALL WIDTH	SLOPE	LENGTH INCHES	SLOPE	LENGTH INCHES
30	35	24	.079	14	12	9	41	65	4:1	56	6:1	84
36	42	29	.109	12	12	9	48	72	4:1	76	6:1	114
42	49	33	.109	12	16	12	55	87	4:1	92	6:1	138
48	57	38	.109	12	16	12	63	95	4:1	112	6:1	168
54	64	43	.109	12	16	12	70	102	4:1	132	6:1	198
60	71	47	.109	12	16	12	77	109	4:1	148	6:1	222

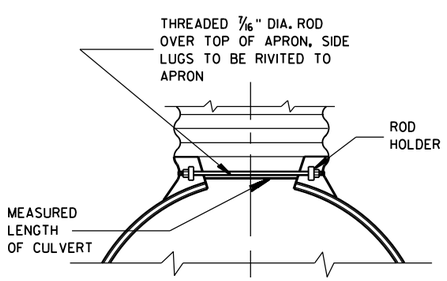

TYPE 2 CONNECTOR DETAIL

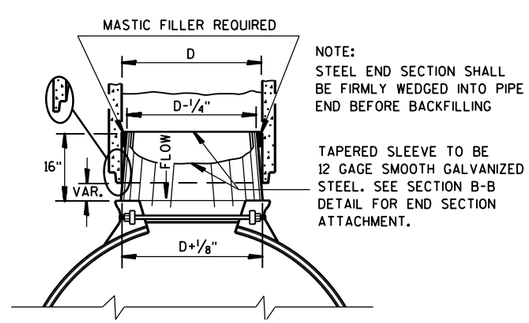

NOTE:
STEEL END SECTION SHALL BE FIRMLY WEDGED INTO PIPE END BEFORE BACKFILLING

TAPERED SLEEVE TO BE 12 GAGE SMOOTH GALVANIZED STEEL. SEE SECTION B-B DETAIL FOR END SECTION ATTACHMENT.

STEEL ADAPTER SLEEVE FOR CONCRETE PIPE

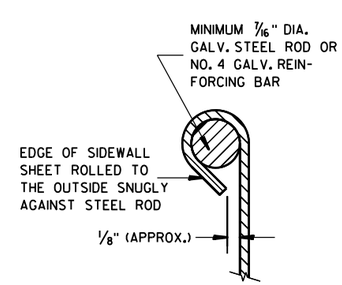

SECTION A-A

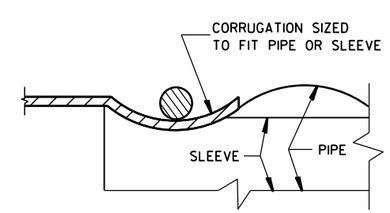

SECTION B-B

STEEL APRON ENDWALLS FOR CULVERT PIPE AND PIPE ARCH SLOPED CROSS DRAINS

STATE OF WISCONSIN
DEPARTMENT OF TRANSPORTATION

APPROVED
6/5/2012 — DATE
/S/ Jerry H. Zogg — ROADWAY STANDARDS ENGINEER
FHWA

6

S.D.D. 8 F 8-2

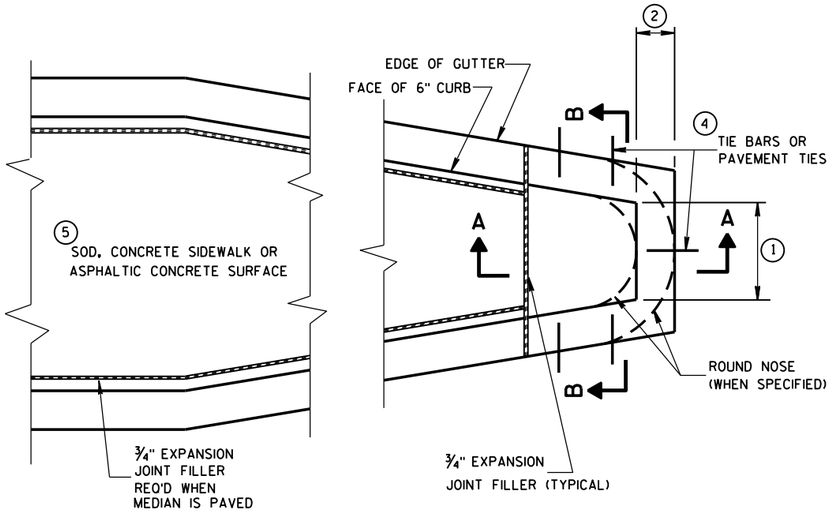

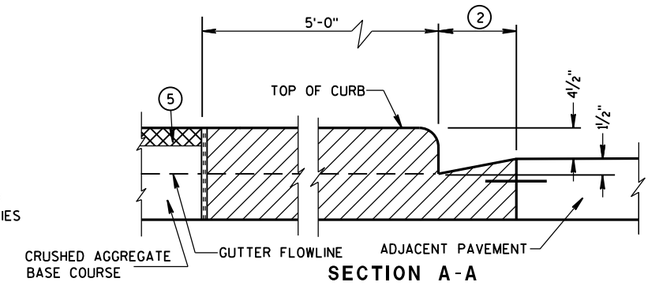

SECTION A-A

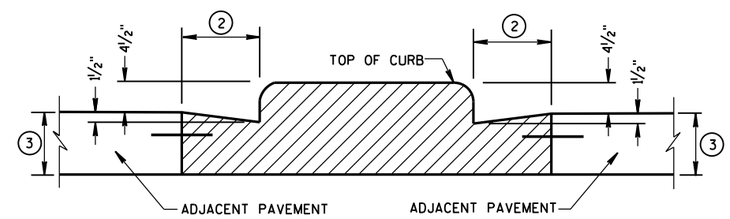

SECTION B-B

CONCRETE MEDIAN BLUNT NOSE DETAIL

GENERAL NOTES

DETAILS OF CONSTRUCTION, MATERIALS AND WORKMANSHIP NOT SHOWN ON THIS DRAWING SHALL CONFORM TO THE PERTINENT REQUIREMENTS OF THE STANDARD SPECIFICATIONS AND THE APPLICABLE SPECIAL PROVISIONS.

1. SEE PLAN FOR MEDIAN NOSE WIDTH AND RADIUS (FOR ROUND NOSE ALTERNATE).
2. WIDTH OF GUTTER TO MATCH EXISTING ADJACENT GUTTER OR AS SPECIFIED ELSEWHERE IN THE PLAN.
3. DEPTH EQUAL TO ADJACENT PAVEMENT. ADJACENT PAVEMENT STRUCTURE DETAILS ARE SHOWN ON THE PLAN. TYPICAL OPTIONS ARE:
   (1) NEW OR EXISTING CONCRETE PAVEMENT.
   (2) ASPHALTIC CONCRETE PAVEMENT OVER NEW OR EXISTING CONCRETE BASE COURSE.
   (3) ASPHALTIC CONCRETE PAVEMENT OVER CRUSHED AGGREGATE BASE COURSE.
4. TIE BARS OR PAVEMENT TIES REQUIRED IN NEW CONCRETE PAVEMENT OR CONCRETE BASE COURSE. TIE BARS SHALL BE NO. 4 X 2'-0" SPACED AT 2'-0" C-C.

   PAVEMENT TIES REQUIRED IN EXISTING CONCRETE BASE COURSE. PAVEMENT TIES SHALL BE NO. 6 X 1'-0" SPACED AT 3'-0" C-C INSTALLED ON A HORIZONTAL SKEW OF 6:1. THE DIRECTION OF SKEW SHALL ALTERNATE AFTER EVERY ONE OR TWO BARS.
5. SURFACE TYPE AND DETAILS ARE SHOWN ELSEWHERE IN THE PLAN.

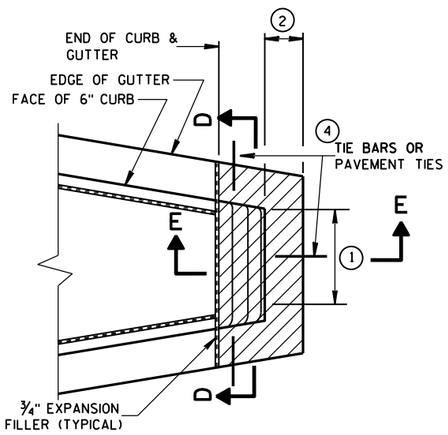

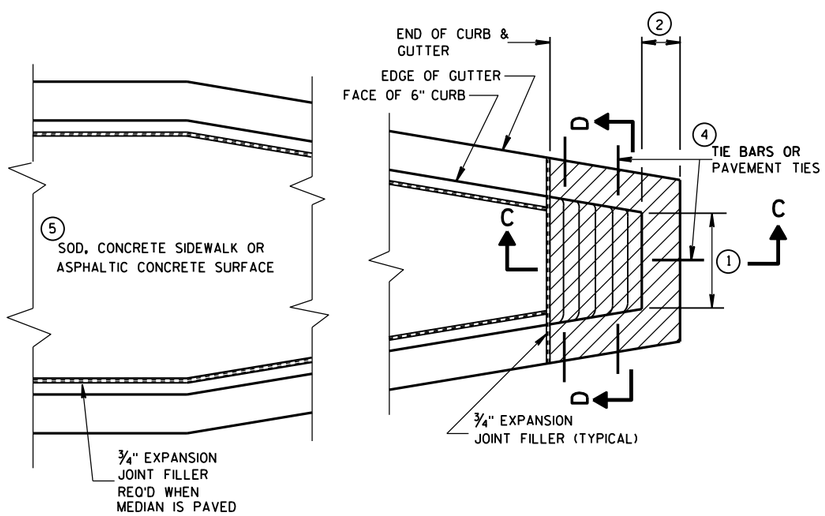

CONCRETE MEDIAN SLOPED NOSE TYPE 1

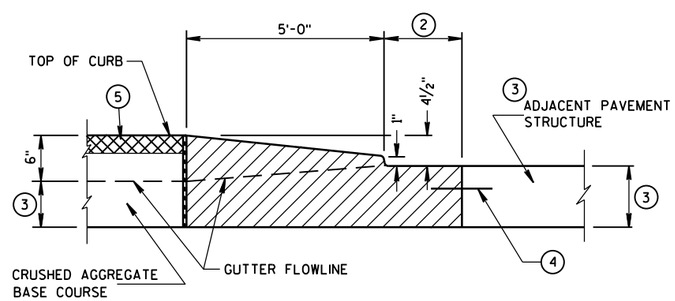

SECTION C-C

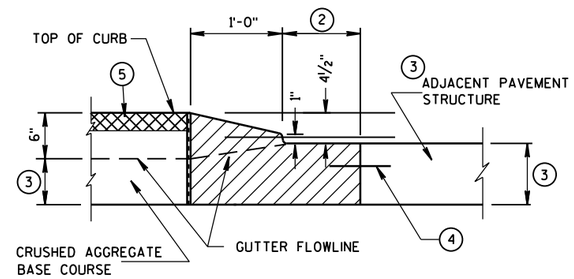

SECTION E-E

CONCRETE MEDIAN SLOPED NOSE TYPE 2

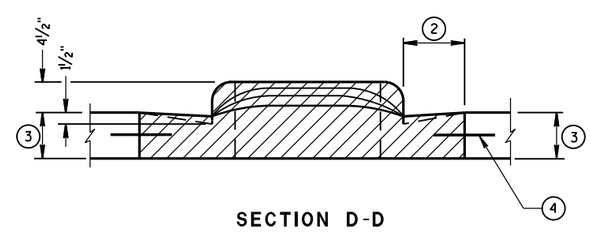

SECTION D-D

CONCRETE MEDIAN NOSE	
STATE OF WISCONSIN DEPARTMENT OF TRANSPORTATION	
APPROVED 6/8/2006 DATE	/S/ Jerry H. Zogg ROADWAY STANDARDS DEVELOPMENT ENGINEER
FHWA	

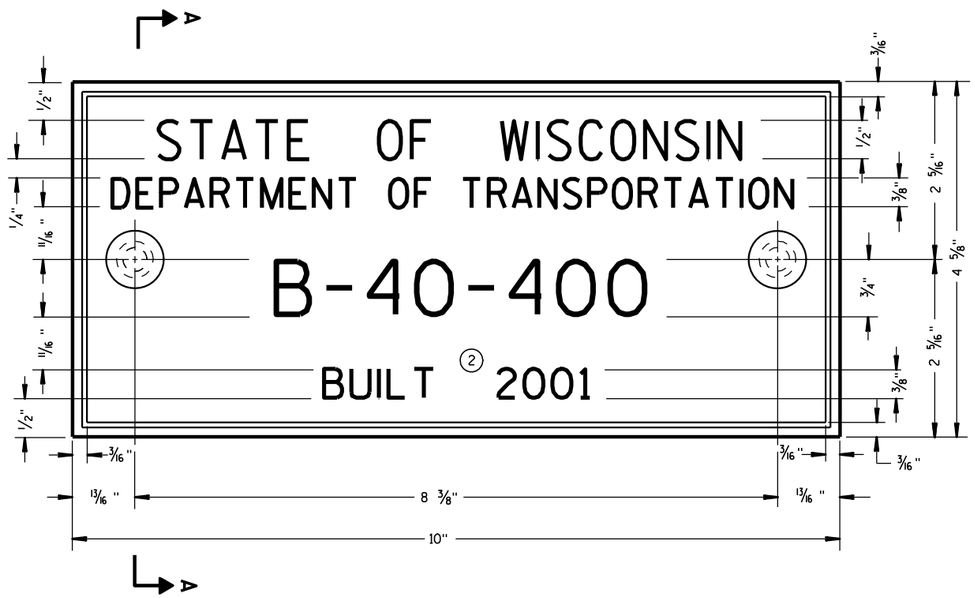

TYPICAL NAME PLATE

(BRIDGES, CULVERTS, AND RETAINING WALLS)

GENERAL NOTES

NAME PLATES TO BE INSTALLED ON BRIDGES, CULVERTS, AND RETAINING WALLS SHALL CONFORM TO THE REQUIREMENTS OF SECTION 502.3.11 OF THE STANDARD SPECIFICATIONS.

THE BRIDGE NUMBER AND YEAR BUILT SHOWN ON THIS DRAWING ARE EXAMPLES ONLY. SEE CONSTRUCTION PLANS FOR INDIVIDUAL NUMBERING AND YEAR BUILT.

1. EPOXY RESIN SHALL BE FROM AN APPROVED MANUFACTURER AND USED IN ACCORDANCE WITH MANUFACTURER'S RECOMMENDATIONS.
2. REHABILITATION OF AN EXISTING STRUCTURE SHOULD USE THE DATE OF ORIGINAL STRUCTURE CONSTRUCTION.

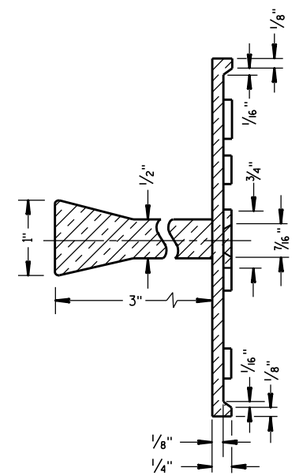

SECTION A-A

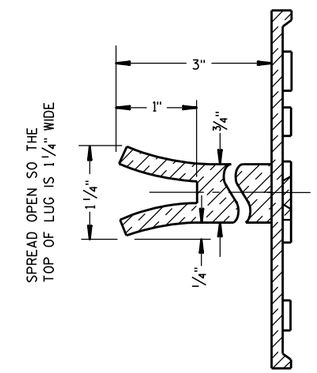

ALTERNATE LUG

FOR MULTI-UNIT STRUCTURES
LINE 3 ABOVE SHALL READ

B = BRIDGE
C = CULVERT
R = RETAINING WALL

COUNTY NO.

BRIDGE NO.

UNIT NO. FOR MULTIPLE
UNIT BRIDGE

B-40-400-1A

NUMBERING DESIGNATION
MULTI-UNIT STRUCTURES

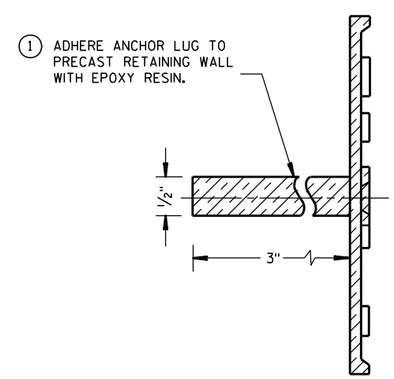

ALTERNATE LUG

(FOR ATTACHMENT TO PRECAST STRUCTURES)

NAME PLATE (STRUCTURES)	
STATE OF WISCONSIN DEPARTMENT OF TRANSPORTATION	
APPROVED	
3/26/10 DATE	/S/ Scot Beck -- CHIEF STRUCTURAL DEVELOP ... EER
FHWA	

6

6

S.D.D. 12 A 3-10

S.D.D. 12 A 3-10

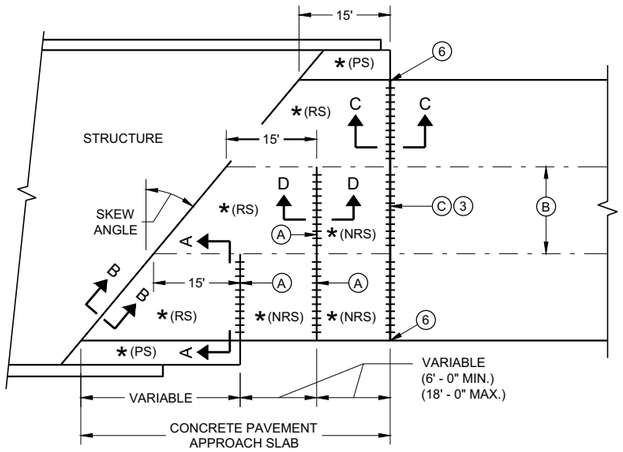

SKEWED APPROACH
(PAVEMENT MORE THAN TWO LANES)

* (RS) = REINFORCED CONCRETE SLAB

* (PS) = PAVED CONCRETE SHOULDER OR CONCRETE DRAINAGE SLAB

* (NRS) - NON - REINFORCED CONCRETE SLAB

*** STANDARD DOWEL BAR DIAMETER (SEE SDD 13C11 AND SDD 13C13)

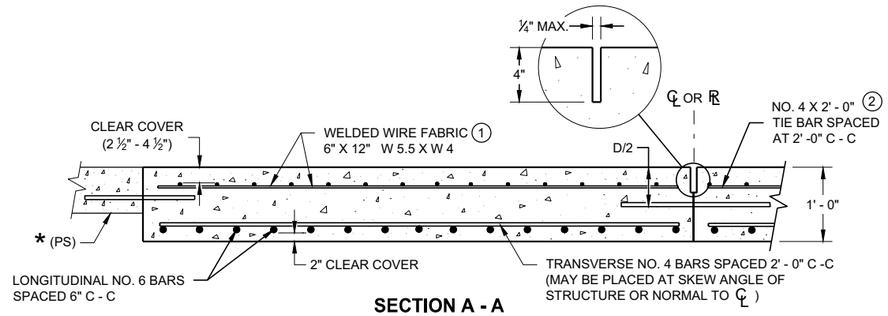

SECTION A - A
REINFORCEMENT POSITIONING DETAIL

GENERAL NOTES

THE CONTRACTOR MAY SPLICE NO. 6 BARS IN THE APPROACH SLAB FOR SKEWED STRUCTURES ONLY. STAGGER SPLICES WITH A MAXIMUM OF ONE SPLICE PER BAR. THE LENGTH OF LAP IS 20 INCHES.

TACK WELD DOWEL BARS TO THE BASKETS ON ALTERNATE ENDS.

1. THE CONTRACTOR MAY USE NO. 4 BARS SPACED AT 2' - 0 " C - C IN BOTH THE LONGITUDINAL AND TRANSVERSE DIRECTIONS FOR TOP REINFORCEMENT AS AN ALTERNATIVE TO THE WELDED WIRE FABRIC.
2. THE CONTRACTOR MAY OMIT THE BARS BETWEEN REINFORCED SLABS WHERE SLAB REINFORCEMENT BARS EXTEND ACROSS THE CENTERLINE OR REFERENCE LINE.
3. DO NOT CONSTRUCT AN EXPANSION JOINT OR INSTALL DOWEL BARS WHEN ABUTTING AN HMA PAVEMENT.
4. USE A JOINT SEALANT CONFORMING TO STANDARD SPECIFICATION 415.2.6.
5. PLACE EXPANSION CAP ON THE END OF THE DOWEL THAT IS NOT TACK WELDED TO THE BASKET. DO NOT FORCE DOWEL BAR PAST THE DOWEL STOP.
6. EXTEND EXPANSION JOINT THROUGH ANY ADJACENT TIED CONCRETE.

A. STANDARD CONTRACTION JOINT NORMAL TO ℄ OR ℞.

B. STANDARD LONGITUDINAL JOINT WITH TIE BARS.

C. 1 ½" EXPANSION JOINT WITH DOWEL BARS NORMAL TO ℄ OR ℞ .

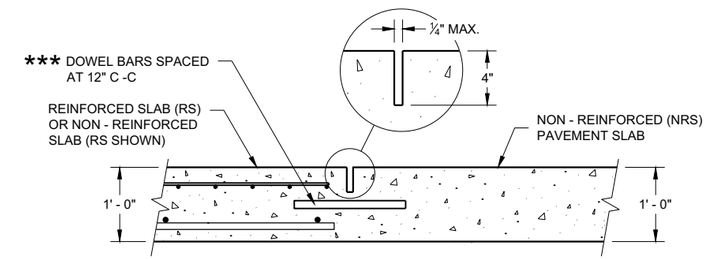

SECTION D - D
CONTRACTION JOINT

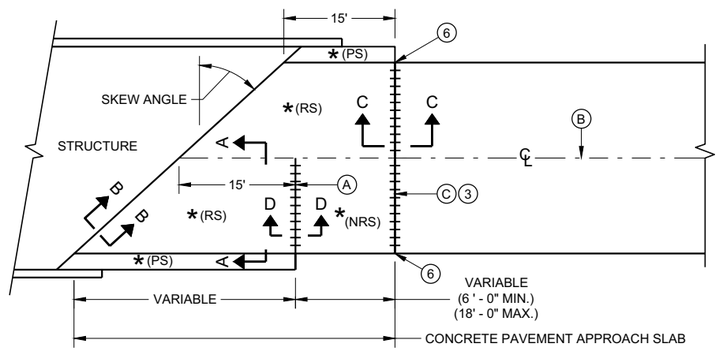

SKEWS > 20°
(PAVEMENT WIDTH ≤ 30')

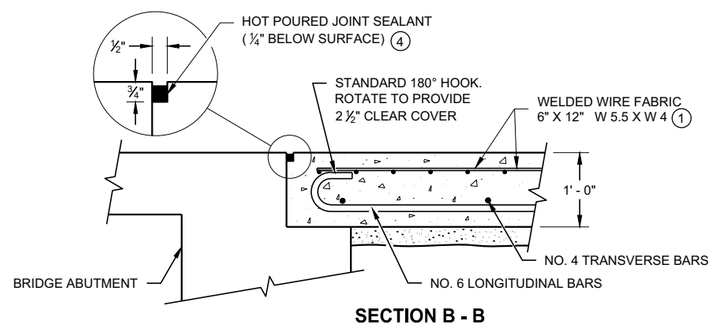

SECTION B - B
BEND DETAIL
BOTTOM REINFORCEMENT

EXPANSION JOINT DETAIL

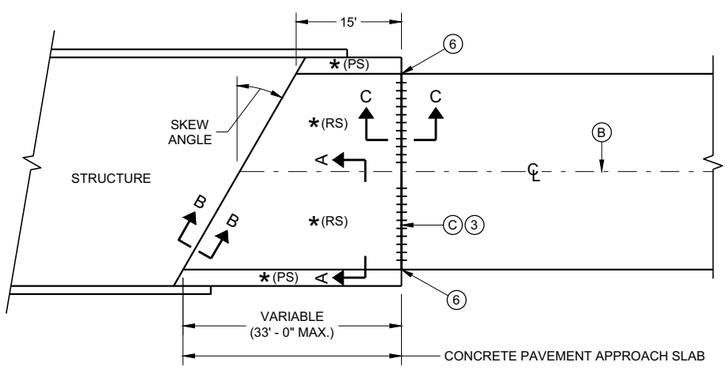

SKEWS ≤ 20°
(PAVEMENT WIDTH ≤ 30')

APPROACH SLAB AND ADJACENT PAVEMENT

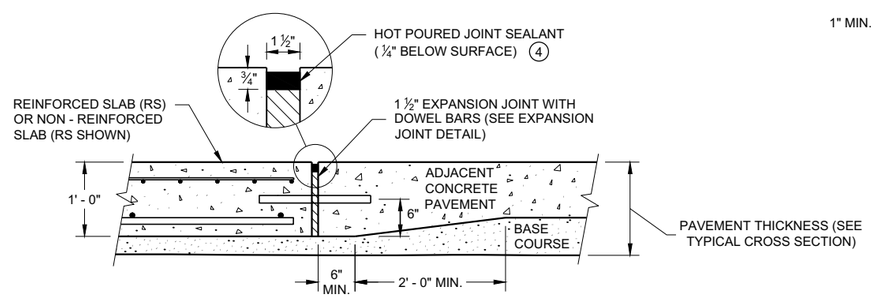

SECTION C - C
TRANSITION DETAIL
APPROACH SLAB TO ADJACENT PAVEMENT

CONCRETE PAVEMENT APPROACH SLAB

STATE OF WISCONSIN
DEPARTMENT OF TRANSPORTATION

APPROVED
November 2018 /S/ Peter Kemp, P.E.
DATE PAVEMENT SUPERVIS
FHWA

6

6

SDD 13B02 - 09a

SDD 13B02 - 09a

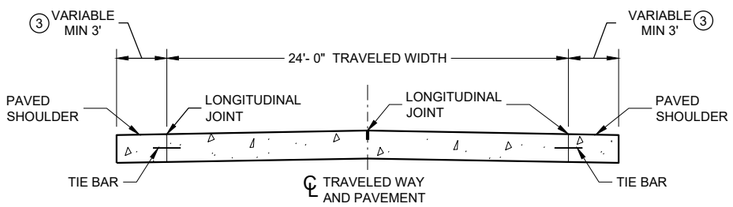

SECTION A - A

TWO-LANE TWO-WAY HIGHWAY 1

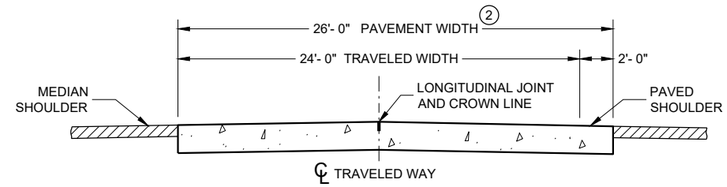

SECTION B - B

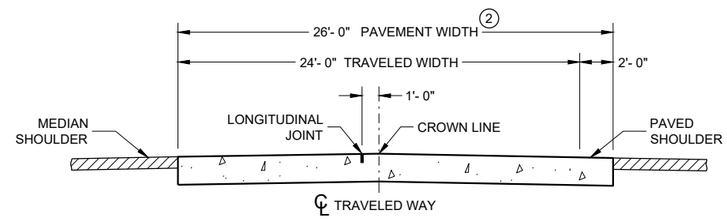

ALTERNATIVE SECTION B - B

DIVIDED HIGHWAY 1

GENERAL NOTES

CONTRACTION JOINTS

CONSTRUCT TRANSVERSE CONTRACTION JOINTS NORMAL TO THE CENTERLINE. SHOW THE LOCATION OF CONTRACTION JOINTS THROUGH INTERSECTIONS ON THE PLANS OR AS DIRECTED BY THE ENGINEER.

INSTALL DOWEL BARS PARALLEL TO THE PAVEMENT CENTERLINE AND PAVEMENT SURFACE.

FOR PAVEMENT SLABS OF VARYING WIDTHS, LOCATE THE OUTER MOST DOWEL BAR SO THAT THE CENTER OF THE BAR IS A MINIMUM OF 6 INCHES FROM AND A MAXIMUM OF 18 INCHES FROM THE FREE EDGE OF PAVEMENT.

CONSTRUCTION JOINTS

LOCATE CONSTRUCTION JOINTS A MINIMUM OF 6 FEET FROM THE NEAREST CONTRACTION JOINT AND ALIGN PARALLEL TO THE CONTRACTION JOINTS.

1. REFER TO TYPICAL CROSS SECTIONS FOR ADDITIONAL DETAILS.
2. MEASURE THE ENTIRE PAVED WIDTH INCLUDING THE PORTION(S) LABELED "PAVED SHOULDER" AS CONCRETE PAVEMENT.
3. SHOULDER WIDTHS LESS THAN 3 FEET SHALL BE PAVED INTEGRAL TO THE MAINLINE CONCRETE PAVEMENT, SEE SECTION B-B.

PAVEMENT DEPTH, DOWEL BAR SIZE AND JOINT SPACING TABLE

PAVEMENT DEPTH (D)	DOWEL BAR DIAMETER	CONTRACTION JOINT SPACING
6", 6 ½"	NONE	12'
7", 7 ½"	1"	14'
8" & ABOVE	1 ¼"	15'

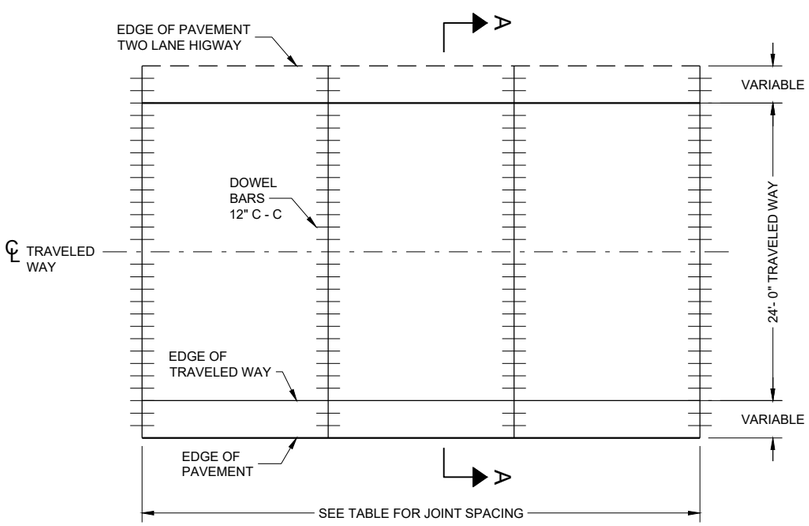

CONTRACTION JOINT LAYOUT FOR TWO-LANE TWO-WAY HIGHWAY

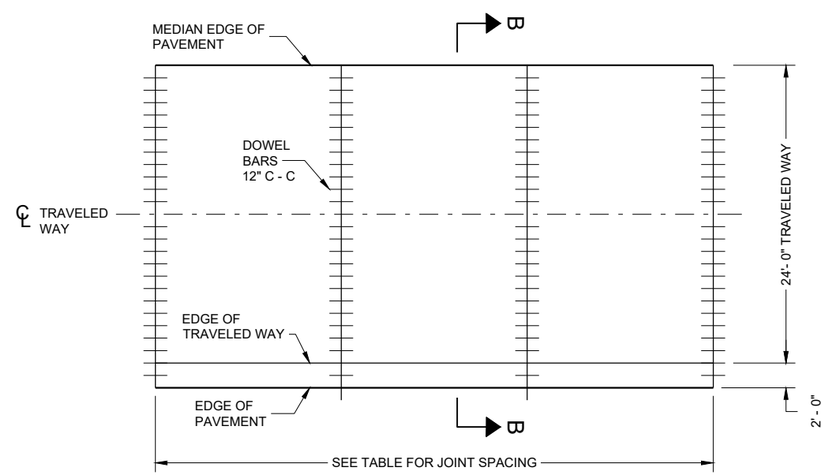

CONTRACTION JOINT LAYOUT FOR DIVIDED HIGHWAY

RURAL DOWELED CONCRETE PAVEMENT

STATE OF WISCONSIN
DEPARTMENT OF TRANSPORTAT

6

SDD 13C11 - 14a

GENERAL NOTES

1. OBTAIN THE ENGINEER'S APPROVAL FOR THE USE OF ALTERNATIVE DESIGNS OF THE DOWEL ASSEMBLY. USE MECHANICAL DOWEL BAR INSERTERS OR DOWEL ASSEMBLIES WHEN CONSTRUCTION CONTRACTION JOINTS.
2. SECURE BASKETS WITH ANCHORS TO HOLD DOWEL BARS IN THE CORRECT POSITION AND ALIGNMENT. TYPE, LOCATION, NUMBER AND LENGTH OF ANCHORS ARE DEPENDENT UPON FIELD CONDITIONS.
3. FORM OR SAW CONSTRUCTION JOINTS. PROVIDE A ¼" RADIUS AT FORMED JOINTS.
4. PROVIDE A SMOOTH VERTICAL FACE FOR THE ENTIRE DEPTH OF THE PAVEMENT WHEN FORMING CONSTRUCTION JOINTS.
5. INSTALL DOWEL BARS AT CONSTRUCTION JOINTS BY FORMING OR DRILLING. INSTALL FORMED DOWEL BARS 12 INCHES C - C AND 12 INCHES FROM PAVEMENT EDGE. REMOVE EXCESS CONCRETE FROM THE FREE END OF THE DOWEL BAR IF DOWEL BARS ARE FORMED THROUGH A HEADER BOARD. INSTALL DRILLED DOWEL BARS ACCORDING TO THE "DRILLED DOWEL BAR CONSTRUCTION JOINT" DETAIL.
6. APPLY A THIN UNIFORM COATING OF SURFACE TREATMENT TO THE FREE END OF DOWEL BARS TO PREVENT BONDING.
7. ANCHOR DOWEL BARS AND TIE BARS INTO DRILLED HOLES WITH AN EPOXY. MAXIMUM DRILLED HOLE SIZE IS ⅛" GREATER THAN DOWEL BAR DIAMETER, 9 INCHES IN LENGTH.

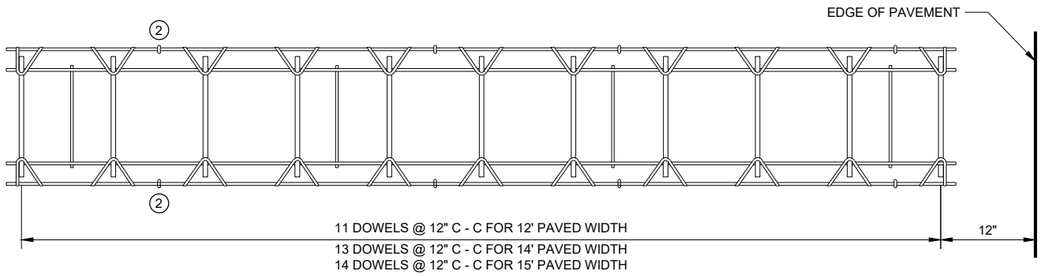

PLAN VIEW

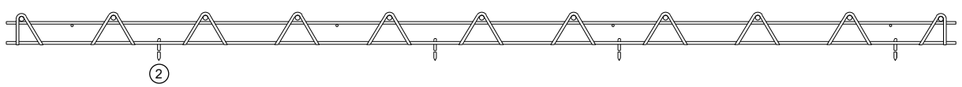

SIDE VIEW

(NORMAL TO CENTERLINE)

CONTRACTION JOINT DOWEL ASSEMBLY (1)

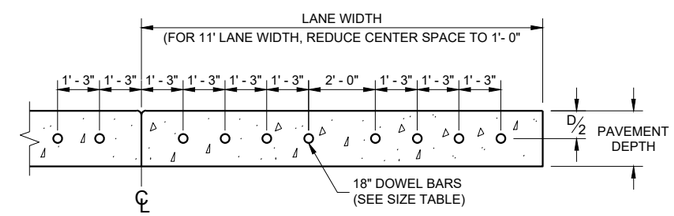

DRILLED DOWEL BAR CONSTRUCTION JOINT (7)

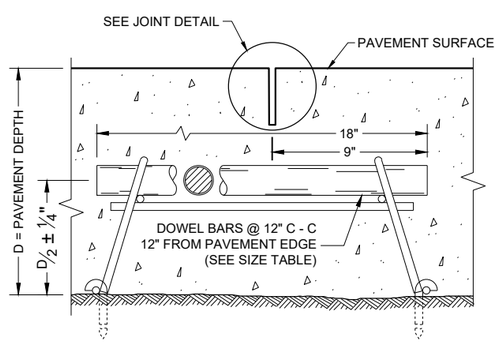

DOWELED CONTRACTION JOINT

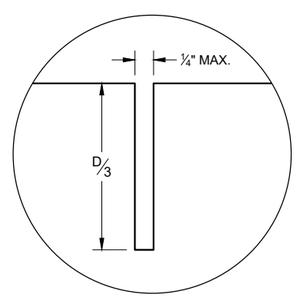

JOINT DETAIL

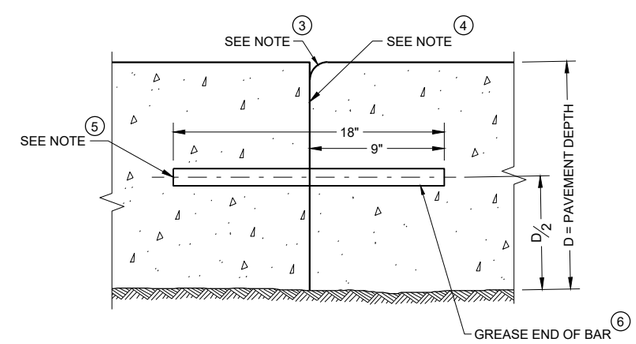

TRANSVERSE CONSTRUCTION JOINT

RURAL DOWELED CONCRETE PAVEMENT

STATE OF WISCONSIN
DEPARTMENT OF TRANSPORTATION

APPROVED
November 2022 — DATE
/S/ Peter Kemp P.E. — PAVEMENT SUPERVISOR
FHWA

6
SDD 13C11 - 14b

1. WOOD OR STEEL POSTS (w6X9 OR w6X8.5) MAY BE USED. DO NOT INTERMIX WOOD AND STEEL POSTS. INSTALL STEEL POSTS WITH HOLES ON APPROACHING TRAFFIC SIDE.
2. USE WOOD OR APPROVED PLASTIC BLOCKOUTS. WOOD BLOCKOUTS MAY BE CONSTRUCTED OUT OF TWO OR MORE WOOD BLOCKOUTS. SEE ALTERNATE WOOD BLOCKOUT DETAIL. DIMENSIONS OF APPROVED PLASTIC BLOCKOUTS MAY VARY.
3. IF ROCK IS ENCOUNTERED DURING EXCAVATION, PROVIDE A HOLE 12 INCHES IN DIAMETER EXTENDING 20 INCHES DEEP INTO THE ROCK. PLACE APPROXIMATELY 2 1/2" INCHES OF GRANULAR MATERIAL IN THE BOTTOM OF THE HOLE. CUT THE POSTS THE TO LENGTH AMD INSTALL. BACKFILL WITH EXCAVATED MATERIAL AND COMPACT. BACKFILL IS TO BE FREE OF LARGE ROCKS.
4. WHEN THE DISTANCE FROM BACK OF POST TO SHOULDER HINGE POINT IS LESS THAN 2 FEET INSTALL LONGER POST AT HALF POST SPACING (K).
5. FOR NEW MGS INSTALLATION TOP OF W-BEAM RAIL TOLERANCE IS ±1". FOR EXISTING MGS INSTALLATION TOP OF W-BEAM IS BETWEEN 27 ¾" TO 32".
6. WHEN USING STEEL POST AND WOOD BLOCKOUTS INSTALL FOUR 16D GALVANIZED NAILS. INSTALL NAILS AT THE BACK CORNERS OF THE BLOCK AND BEND THE NAILS OVER THE FLANGE OF THE STEEL POST.
7. TOTAL POST LENGTH FOR TYPE K IS 7' - 0". TOTAL POST LENGTH FOR OTHER MGS TYPES IS 6' - 0".

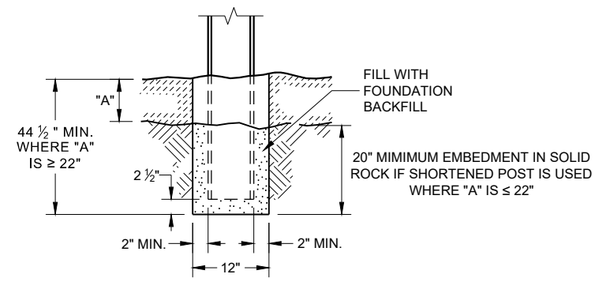

END VIEW
SETTING STEEL OR WOOD POST IN ROCK (3)

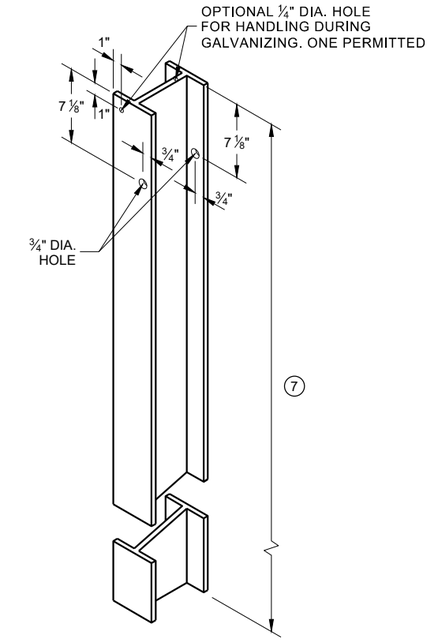

STEEL POST & HOLE PUNCHING DETAIL (W 6 X 9) (1)

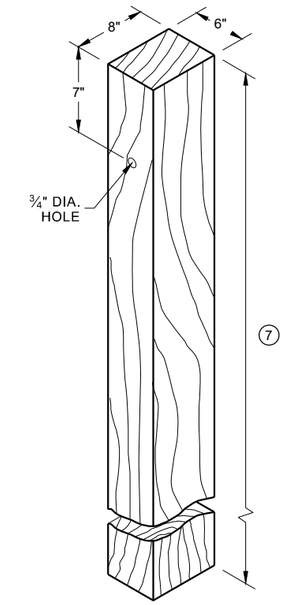

WOOD POST (6" X 8") NOMINAL (1)

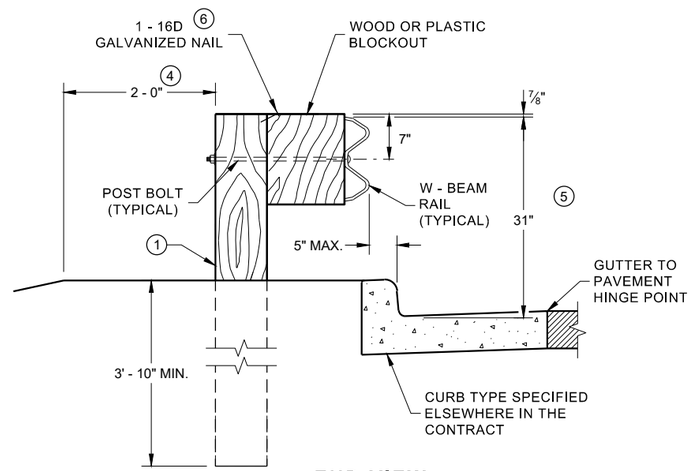

END VIEW
LOCATED ALONG A CURBED ROADWAY

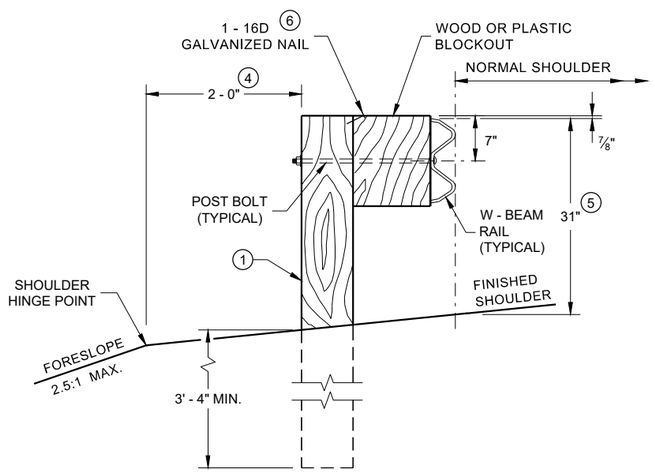

END VIEW
LOCATED ALONG A ROADWAY SHOULDER STANDARD INSTALLATION

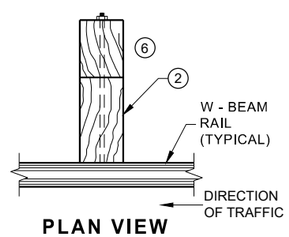

PLAN VIEW
WOOD POST, BLOCKOUT & BEAM

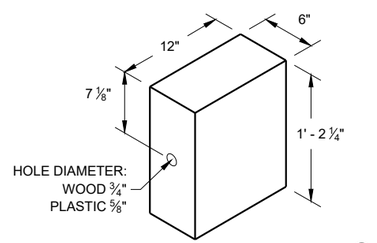

WOOD OR PLASTIC BLOCKOUT (2)

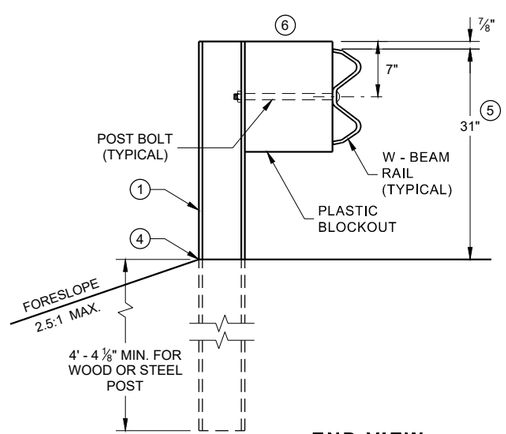

END VIEW
MGS LONGER POST AT HALFPOST SPACING W BEAM (K)

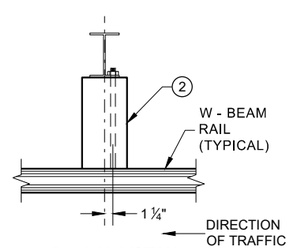

PLAN VIEW
STEEL POST, PLASTIC BLOCKOUT & BEAM

MIDWEST GUARDRAIL SYSTEM (MGS) GUARDRAIL

STATE OF WISCONSIN
DEPARTMENT OF TRANSPORTA

6

SDD 14B42 - 07a

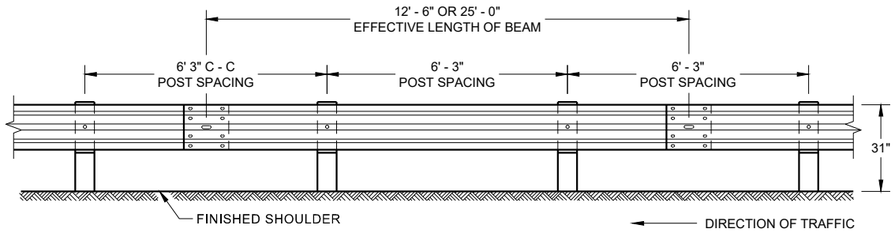

FRONT VIEW
POST SPACING STANDARD INSTALLATION

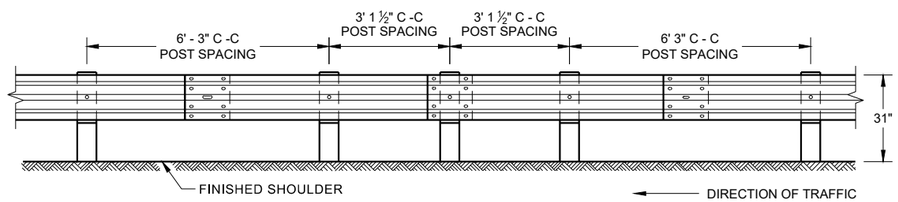

FRONT VIEW
HALF POST SPACING (HS) AND HALF POST SPACING WITH LONGER POSTS (K)

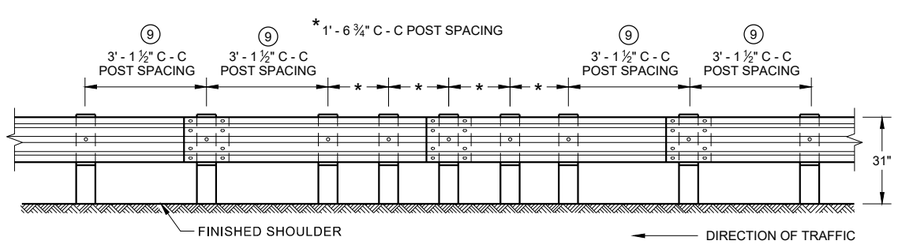

FRONT VIEW
QUARTER POST SPACING (QS)

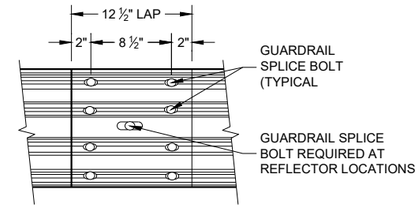

FRONT VIEW
MID-SPAN BEAM SPLICE

GENERAL NOTES

(8) DO NOT INSTALL REFLECTORS ON THE FIRST 50 FEET OF THE APPROACH END OF THE ENERGY ABSORBING TERMINAL.

(9) 25 FEET OF HALF POST SPACING IS REQUIRED ON APPROACH AND DEPARTURE ENDS OF QUARTER POST SPACING.

POST BOLTS ARE A ⅝" DIAMETER ASTM A307 GUARDRAIL BOLT. A POST BOLT REQUIRES ⅝" DIAMETER A563A DOUBLE RECESSED (DR) HEAVY HEX NUT AND ⅝" DIAMETER F844 FLAT WASHER. POST BOLTS MAY BE LONGER IF MULTIPLE BLOCKOUTS ARE BEING USED.

GUARD RAIL SPLICE BOLTS ARE A ⅝" DIAMETER ASTM A307 GUARDRAIL HEAD BOLT. A GUARDRAIL SPLICE BOLT REQUIRES ⅝" DIAMETER A563A DOUBLE RECESSED (DR) HEAVY HEX NUT.

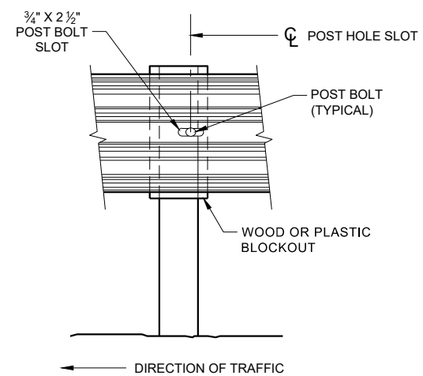

FRONT VIEW AT STEEL POST

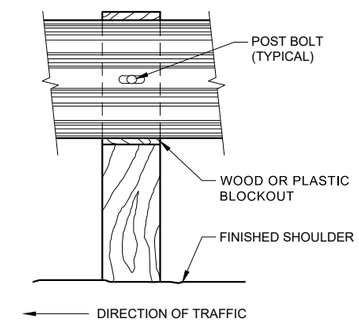

FRONT VIEW AT WOOD POST

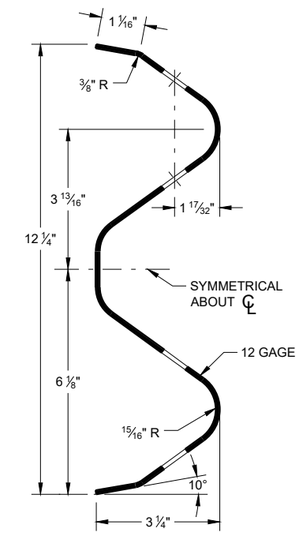

SECTION THRU W-BEAM RAIL

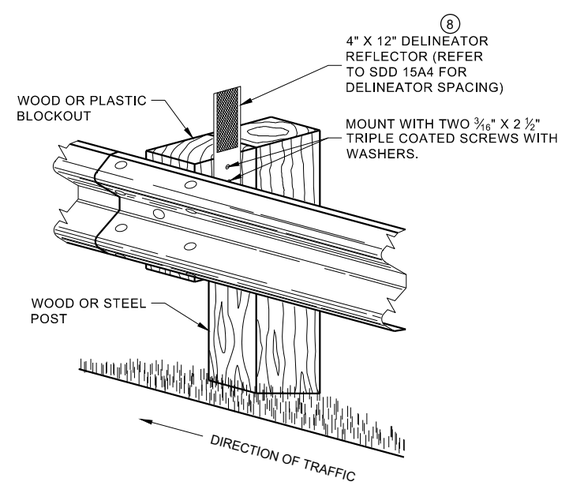

ONE SIDED REFLECTOR DETAIL AND TYPICAL INSTALLATION

MIDWEST GUARDRAIL SYSTEM (MGS) GUARDRAIL

STATE OF WISCONSIN
DEPARTMENT OF TRANSPORTAT

6

SDD 14B42 - 07b

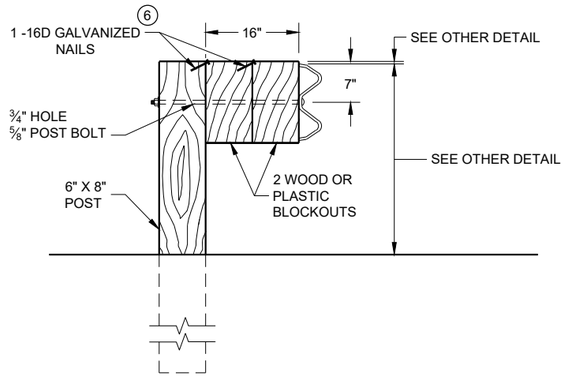

DETAIL FOR 16" BLOCKOUT DEPTH

IT IS ACCEPTABLE TO USE BLOCKOUTS UP TO 16" DEEP TO INCREASE THE POST OFFSET TO AVOID UNDERGROUND OBSTACLES. THERE IS NO LIMIT TO THE NUMBER OF POSTS THAT CAN HAVE ADDITIONAL BLOCKOUTS UP TO 16" DEEP.

NOTE:

1. ALL FILLETS SHALL HAVE A MINIMUM RADIUS OF 3/16".
2. IF THE BOLT EXTENDS MORE THAN ¼" FROM THE NUT THE BOLT SHOULD BE TRIMMED BACK.

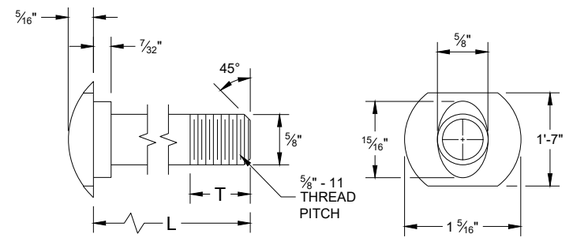

POST BOLT TABLE

L	T (MIN.)
1 ¼"	1 ⅛"
2"	1 ¾"
10"	4"
14"	4 1/16"
18"	4"
21"	4 1/16"
25"	4"

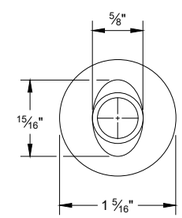

ALTERNATE BOLT HEAD

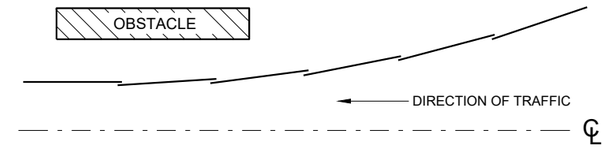

PLAN VIEW
BEAM LAPPING DETAIL

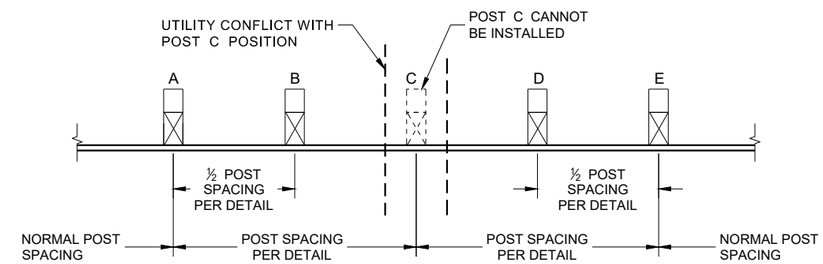

POST DRIVING FOR CONTINUOUS UNDERGROUND OBSTRUCTION

6

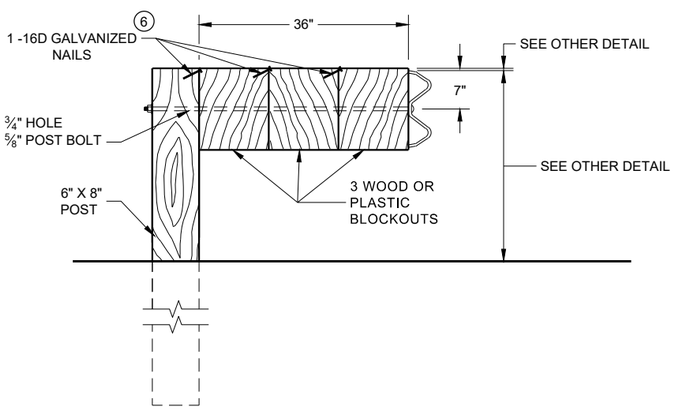

DETAIL FOR 36" BLOCKOUT DEPTH

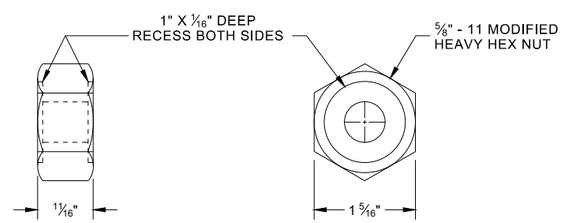

POST BOLT, SPLICE BOLT AND RECESS NUT

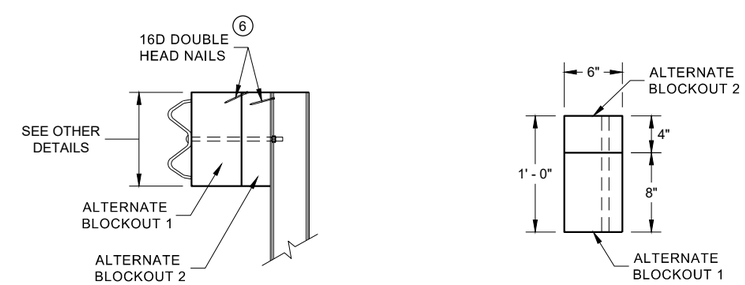

SIDE VIEW

PLAN VIEW

ALTERNATE WOOD BLOCKOUT DETAIL

NOTES: UNDER SPECIAL CIRCUMSTANCES, SUCH AS AVOIDING OBSTACLES THAT ARE NOT RELOCATED, IT IS ACCEPTABLE TO INSTALL ADDITIONAL BLOCKOUTS TO OBTAIN UP TO 36" DEPTH FOR ONE OR TWO POSTS IN A SECTION OF GUARDRAIL.

DO NOT USE 16" OR 36" BLOCKOUTS IF IT CAUSES THE POST TO BE DRIVEN BEYOND SHOULDER HINGE POINT OR CAUSES A FIXED OBJECT TO BE WITHIN THE DEFLECTION DISTANCE OF THE BARRIER.

(6) WHEN USING STEEL POST AD WOOD BLOCKOUTS, INSTALL FOUR 16D GALVANIZED NAILS. INSTALL NAILS AT THE BACK CORNERS OF THE BLOCK AND BEND THE NAILS OVER THE FLANGE OF THE STEEL POST.

MIDWEST GUARDRAIL SYSTEM (MGS) GUARDRAIL

STATE OF WISCONSIN
DEPARTMENT OF TRANSPORTA

SDD 14B42 - 07c

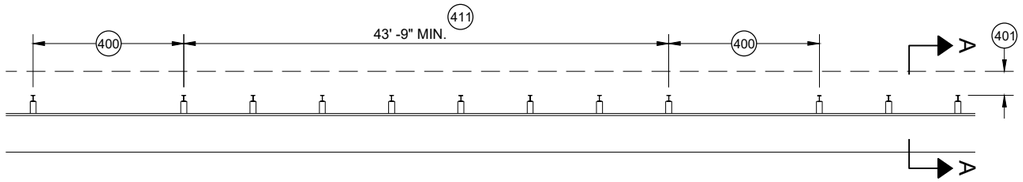

MISSING POST IN MGS GUARDRAIL

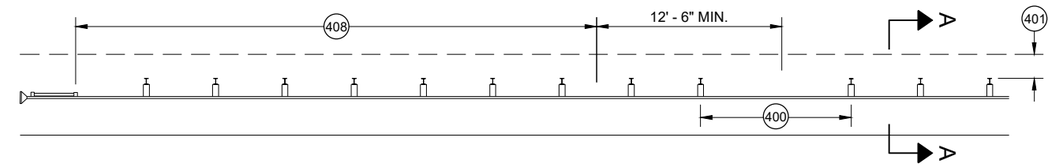

MISSING POST IN MGS GUARDRAIL NEAR EAT

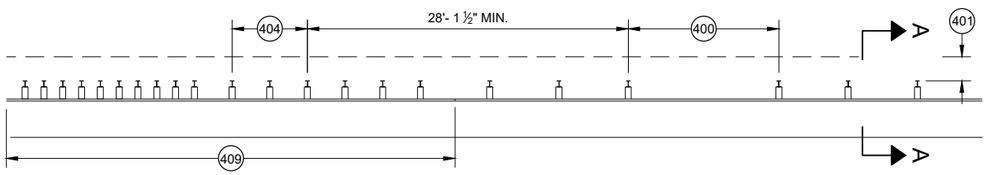

MISSING POST IN MGS GUARDRAIL NEAR AN APPROACH TRANSITION

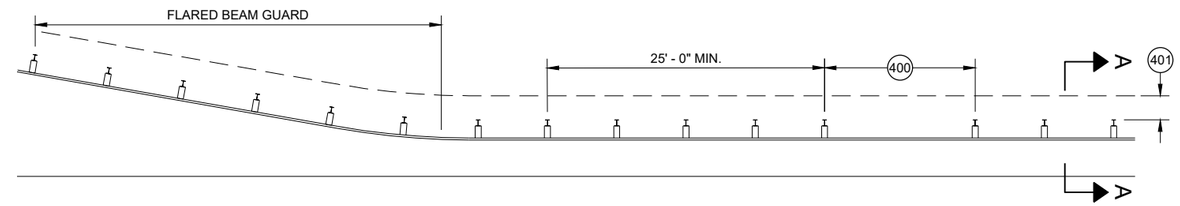

MISSING POST IN MGS GUARDRAIL NEAR FLARED BEAM GUARD

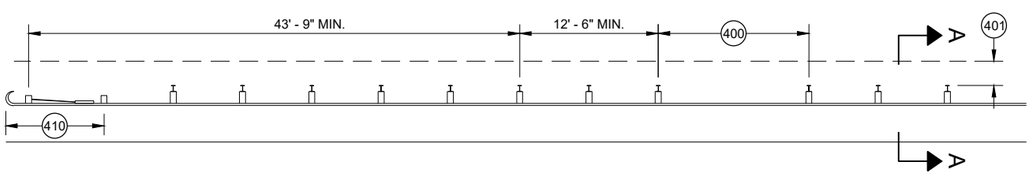

MISSING POST IN MGS GUARDRAIL NEAR A TYPE 2 END TERMINAL

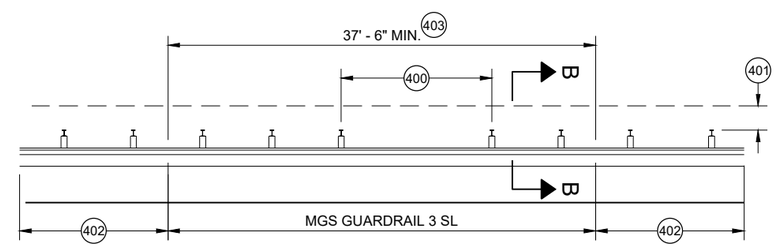

MISSING POST IN SHORT SPAN MGS GUARDRAIL NEAR CURB (SL) 407

400 MAX SPAN 12' - 6"
401 2' MIN.
402 MGS GUARDRAIL 3
403 NESTING BEAM GUARD
404 ASYMMETRIC TRANSITION
405 SOIL WELL DRAINED AND COMPACTED
406 SEE OTHER DRAWINGS IN THIS SDD
407 SEE OTHER DRAWINGS FOR MIN. SPACING BETWEEN SPANS
408 SEE SDD 14B44
409 SEE SDD 14B45
410 SEE SDD 14B47
411 MINIMUM DISTANCE BETWEEN MISSING POST SPANS.

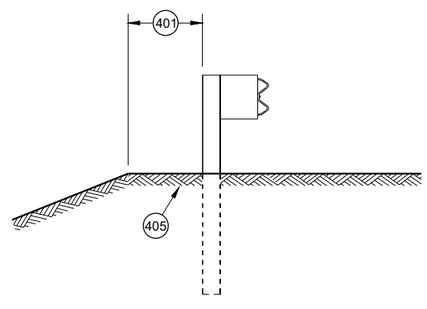

SECTION A - A 406

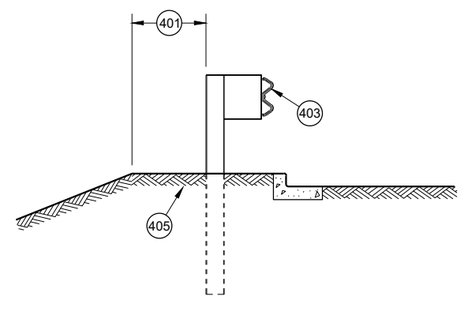

SECTION B - B 406

MIDWEST GUARDRAIL SYSTEM (MGS) GUARDRAIL

STATE OF WISCONSIN
DEPARTMENT OF TRANSPORTATION

APPROVED
May 2021 — DATE
/S/ Rodney Taylor — ROADWAY STANDARDS DEVE UNIT SUPERVISOR
FHWA

6

SDD 14B42 - 07d

GENERAL NOTES

(2) OPTIONAL CURB AND GUTTER OR DRAINAGE FEATURE SEE PLAN FOR INFORMATION.

(3) WHEN USING STEEL POSTS AND WOOD BLOCKOUTS INSTALL FOUR 10D GALVANIZED NAILS. INSTALL NAILS AT THE BACK CORNERS OF THE BLOCK AND BEND THE NAILS OVER THE FLANGE OF THE STEEL POST.

(4) TOLERANCE FOR TOP OF W-BEAM RAIL IS ± 1".

(13) STEEL OR WOOD POST IS ACCEPTABLE AT POST 1. SEE SDD 14B42

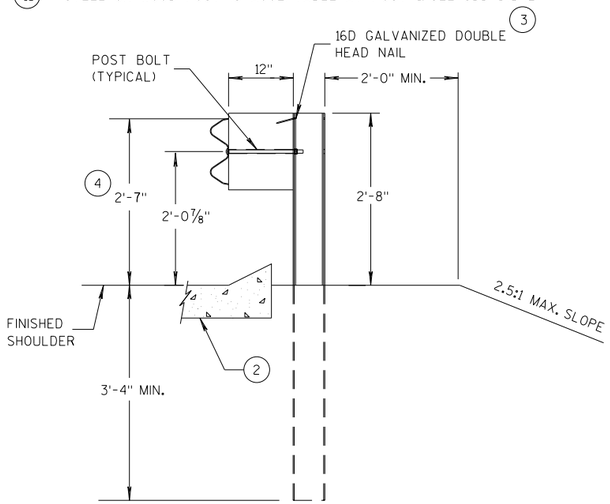

SECTION A-A (13)

POSTS 1-5

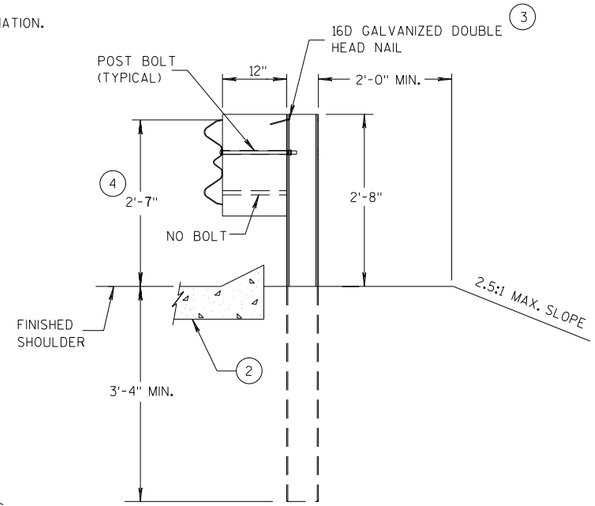

SECTION B-B

POST 6

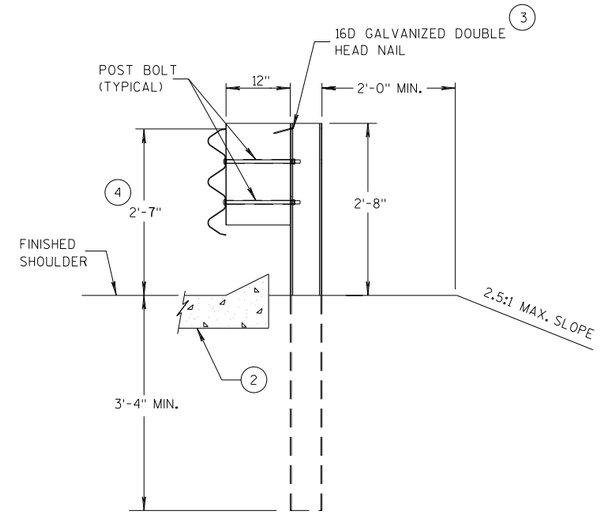

SECTION C-C

POSTS 7-11

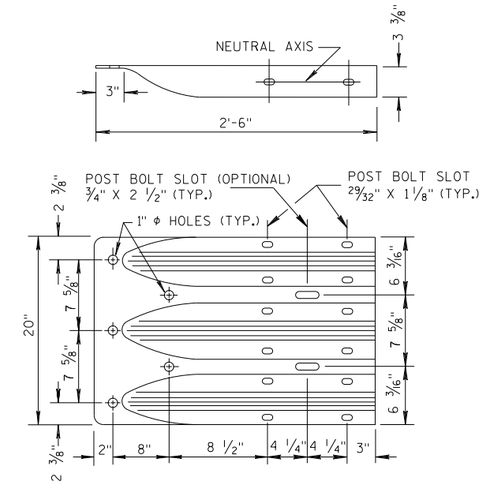

THRIE BEAM TERMINAL CONNECTOR

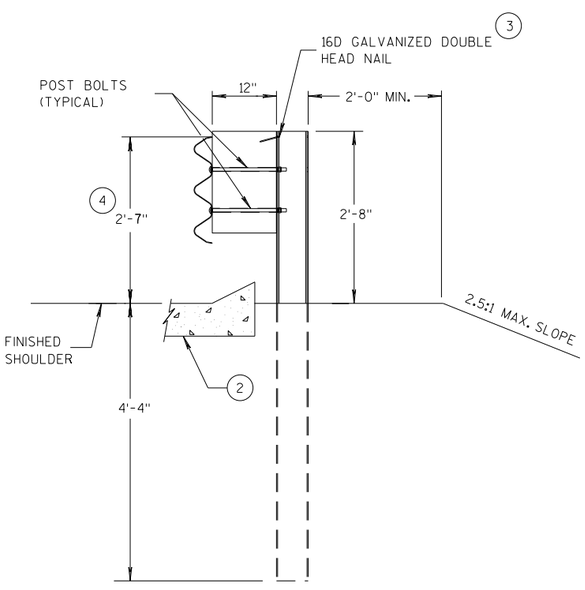

SECTION D-D

POSTS 12-17

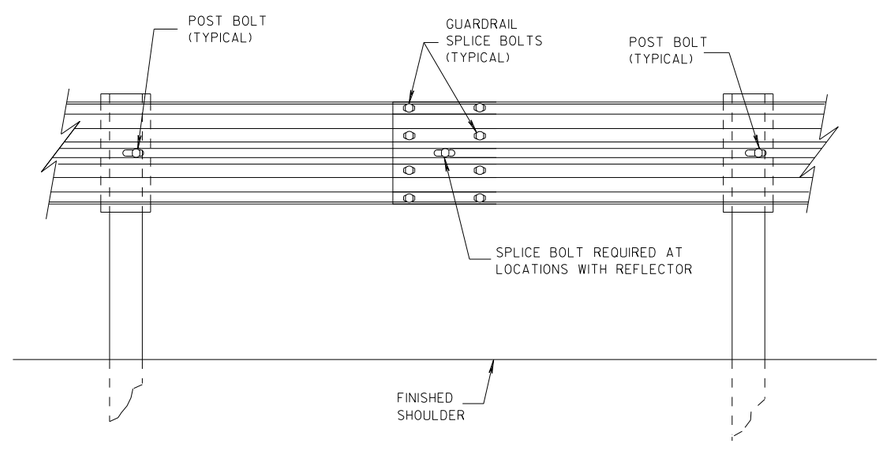

SPLICE DETAIL

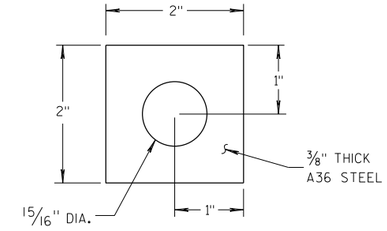

PLATE WASHER DETAIL

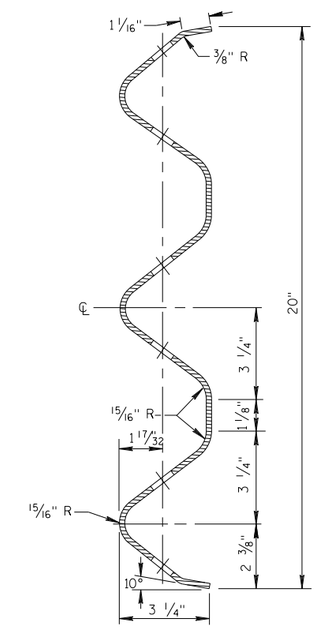

SECTION THRU THRIE BEAM RAIL ELEMENT

MIDWEST GUARDRAIL SYSTEM
THRIE BEAM TRANSITION (MGS)

STATE OF WISCONSIN
DEPARTMENT OF TRANSPORT

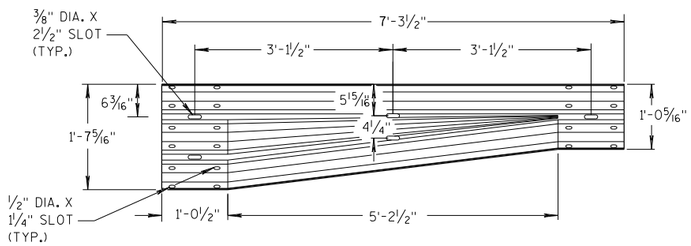

W-BEAM TO THRIE BEAM TRANSITION SECTION

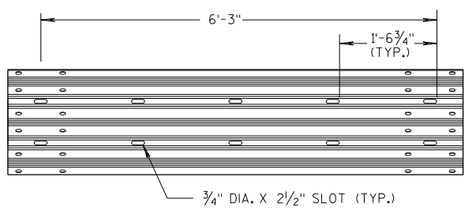

6'-3" THRIE BEAM SECTION

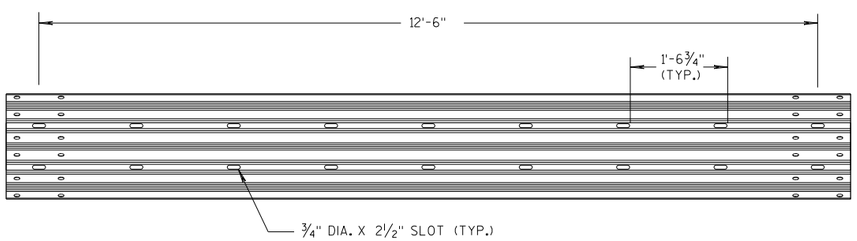

12'-6" THRIE BEAM SECTION

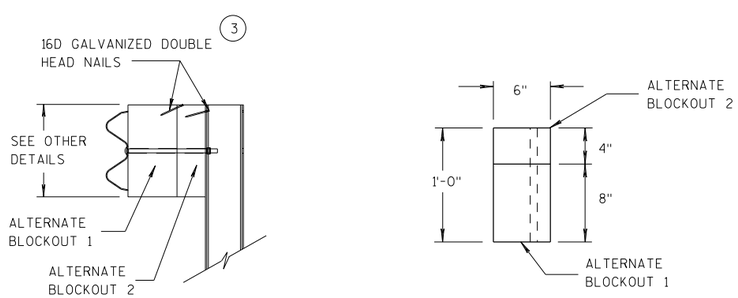

SIDE VIEW TOP VIEW

ALTERNATE WOOD BLOCKOUT DETAIL

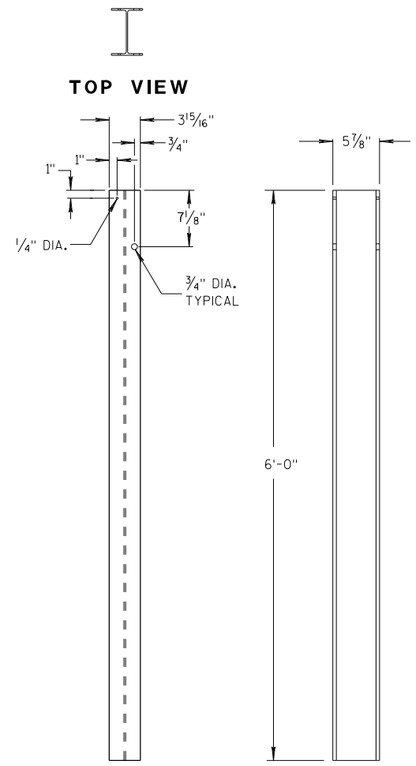

STEEL POSTS 1-5 (13)

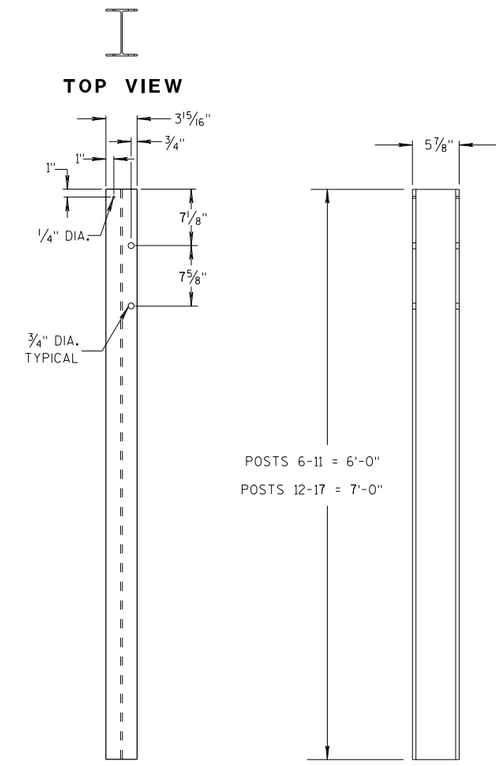

STEEL POSTS 6-17

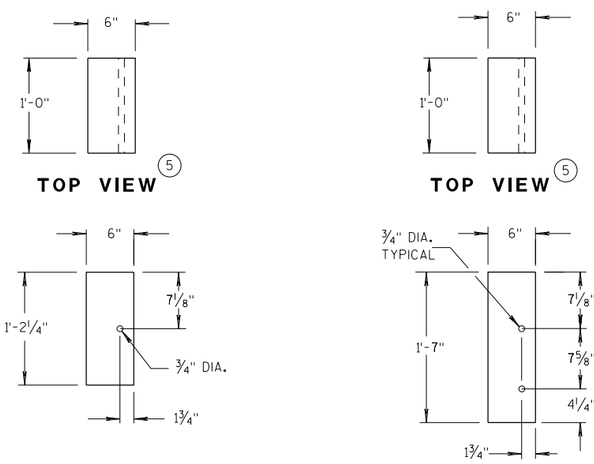

BLOCKOUT POSTS 1-5

BLOCKOUT POSTS 6-17

GENERAL NOTES

STEEL POSTS ARE W6X9 OR W6X8.5.

BOLT HOLES FOR POST ARE ON FRONT AND OF SIDE OF POST.

(3) WHEN USING STEEL POSTS AND WOOD BLOCKOUTS INSTALL FOUR 16D GALVANIZED NAILS. INSTALL NAILS AT THE BACK CORNERS OF THE BLOCK AND BEND THE NAILS OVER THE FLANGE OF THE STEEL POST.

(5) WOOD BLOCKS MAY BE CONSTRUCTED OUT OF 2 WOOD BLOCKS. SEE ALTERNATE WOOD BLOCK DETAIL.

(13) STEEL OR WOOD POST IS ACCEPTABLE AT POST 1. SEE SDD 14B42.

MIDWEST GUARDRAIL SYSTEM THRIE BEAM TRANSITION (MGS)

STATE OF WISCONSIN
DEPARTMENT OF TRANSPOR

6

S.D.D. 14 B 45-5c

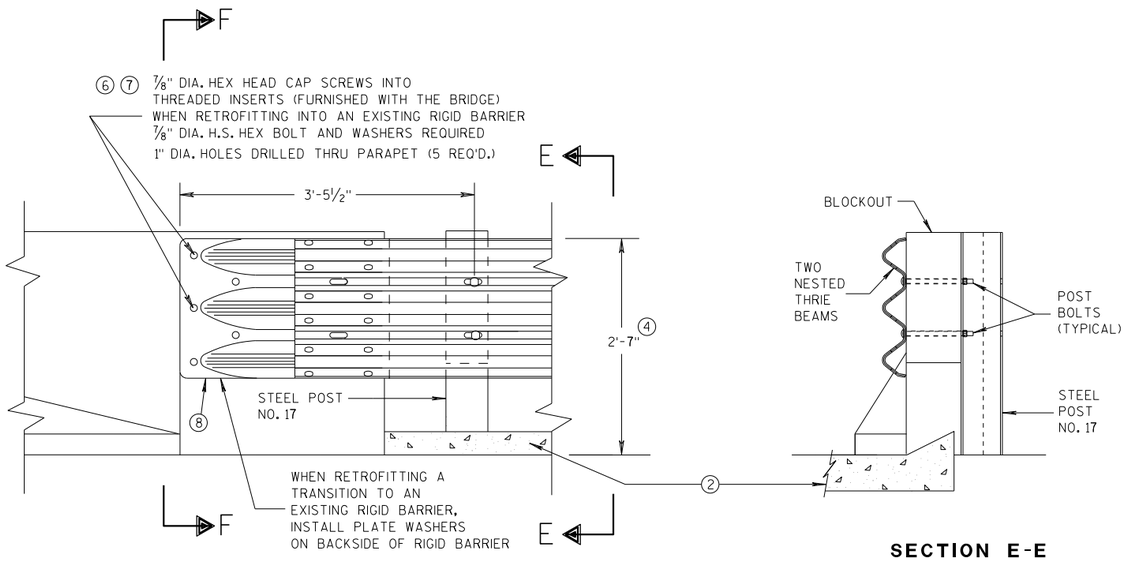

FRONT VIEW

SECTION E-E

THRIE BEAM CONNECTION TO BRIDGE PARAPET WITH SQUARE ENDS

GENERAL NOTES

THESE ARE TYPICAL CONNECTION DETAILS. ADJUST THE POSTION OF CONNECTIONS TO EXISTING BRIDGES TO FIT THE ACTUAL BRIDGE AND SITE DIMENSIONS.

② OPTIONAL CURB AND GUTTER OR DRAINAGE FEATURE SEE PLAN FOR INFORMATION.

④ TOLERANCE FOR TOP OF BEAM IS ± 1".

⑥ DRILLING BOLT HOLES THROUGH THE PARAPET, BOLTS, NUTS, WASHERS AND REPAIRING DAMAGED CONCRETE ARE INCIDENTAL TO THE CONTRACT.

⑦ BOLTS MAY BE A325 BOLTS OR A449 BOLTS. BOLT LENGTH AND THREADING LENGTH ARE TO ALLOW FOR A TIGHT CONNECTION BETWEEN RIGID BARRIER AND THRIE BEAM CONNECTION PLATE. CONTRACTOR IS TO FIELD VERIFY BOLT LENGTH AND THREAD LENGTH. ONE ROUND WASHER REQUIRED BETWEEN BOLT HEAD AND THRIE BEAM CONNECTOR PLATE. BOLTS THAT EXTEND THROUGH THE PARAPET AND OUT THE BACK FACE REQUIRE A HARDENED ROUND STEEL WASHER THAT IS 2" O.D. X 5/32" THICK AND ONE PLATE WASHER. REPAIR ANY DAMAGED CONCRETE FROM BOLT INSTALLATION.

⑧ THE RECESS FOR A W-BEAM CONNECTION, WHICH EXISTS ON SOME PARAPETS OF THIS TYPE, SHALL BE FILLED WITH A TREATED TIMBER BLOCKOUT. BLOCKOUT SIZE IS 1'-6" X 2'-0" X 3 1/2".

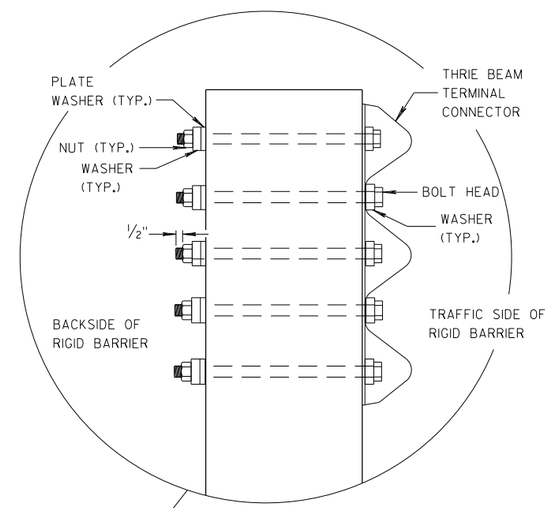

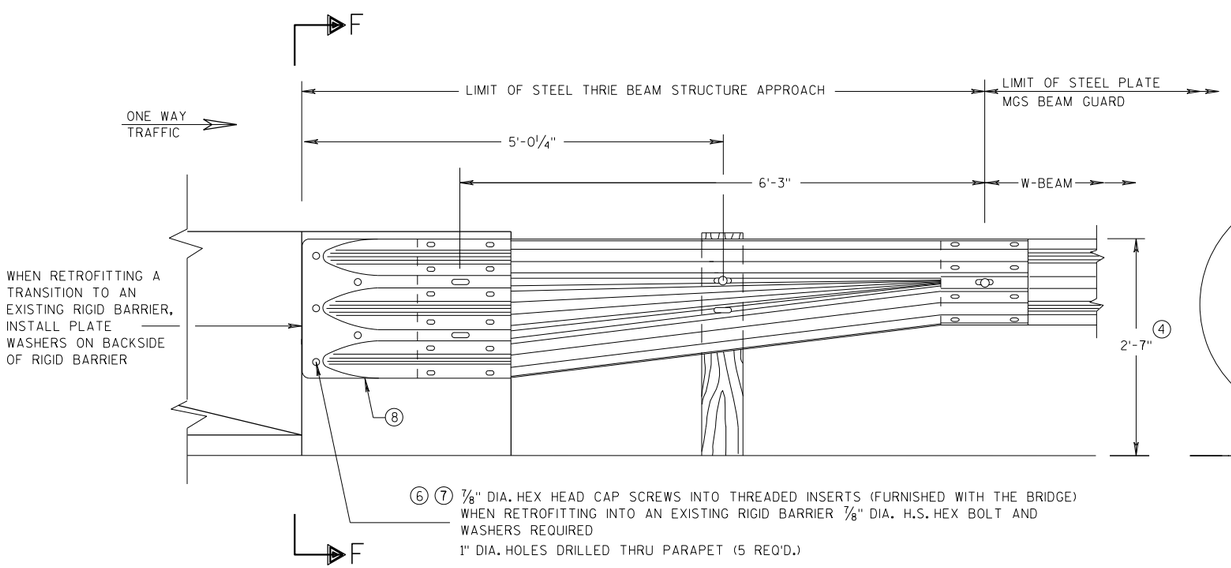

FRONT VIEW

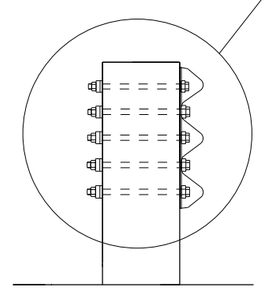

SECTION F-F

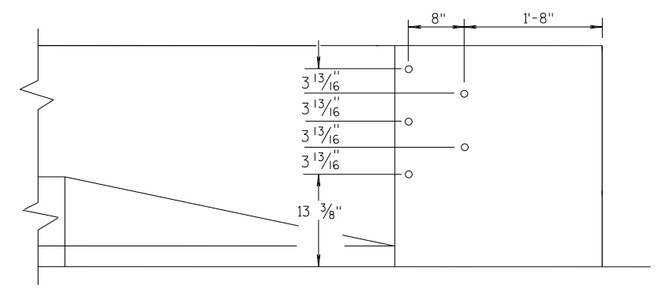

DRILL HOLE LOCATION

W BEAM TRANSITION AND CONNECTION TO BRIDGE PARAPETS WITH SQUARE ENDS

(USE ONLY ON THE TRAFFIC EXIT END OF ONE WAY BRIDGES)

MIDWEST GUARDRAIL SYSTEM THRIE BEAM TRANSITION (MGS)

STATE OF WISCONSIN
DEPARTMENT OF TRANSPORTATION

APPROVED
07/2018 — DATE
/S/ Rodney Taylor — ROADWAY STANDARDS D[illegible] UNIT SUPERVI[illegible]
[illegible]NT
FHWA

6

S.D.D. 14 B 45-5d

GENERAL NOTES

THESE ARE TYPICAL CONNECTION DETAILS. ADJUST THE POSTION OF CONNECTIONS TO EXISTING BRIDGES TO FIT THE ACTUAL BRIDGE AND SITE DIMENSIONS.

(2) OPTIONAL CURB AND GUTTER OR DRAINAGE FEATURE SEE PLAN FOR INFORMATION.

(4) TOLERANCE FOR TOP OF BEAM IS ± 1".

(6) DRILLING BOLT HOLES THROUGH THE PARAPET, BOLTS, NUTS, WASHERS AND REPAIRING DAMAGED CONCRETE ARE INCIDENTAL TO THE CONTRACT.

(7) BOLTS MAY BE A325 BOLTS OR A449 BOLTS. BOLT LENGTH AND THREADING LENGTH ARE TO ALLOW FOR A TIGHT CONNECTION BETWEEN RIGID BARRIER AND THRIE BEAM CONNECTION PLATE. CONTRACTOR IS TO FIELD VERIFY BOLT LENGTH AND THREAD LENGTH. ONE ROUND WASHER REQUIRED BETWEEN BOLT HEAD AND THRIE BEAM CONNECTOR PLATE. BOLTS THAT EXTEND THROUGH THE PARAPET AND OUT THE BACK FACE REQUIRE A HARDENED ROUND STEEL WASHER THAT IS 2" O.D. X 5/32" THICK AND ONE PLATE WASHER. REPAIR ANY DAMAGED CONCRETE FROM BOLT INSTALLATION.

(8) THE RECESS FOR A W-BEAM CONNECTION, WHICH EXISTS ON SOME PARAPETS OF THIS TYPE, SHALL BE FILLED WITH A TREATED TIMBER BLOCKOUT. BLOCKOUT SIZE IS 1'-6" X 2'-0" X 3 1/2".

(9) BOLT, NUT AND WASHERS NOT REQUIRED FOR THIS LOCATION WHEN RETROFITTING AN EXISTING PAPAPET AND THE HOLE IS EITHER ABOVE PARAPET OR WITHIN 4 INCHES OF THE EDGE OF PARAPET.

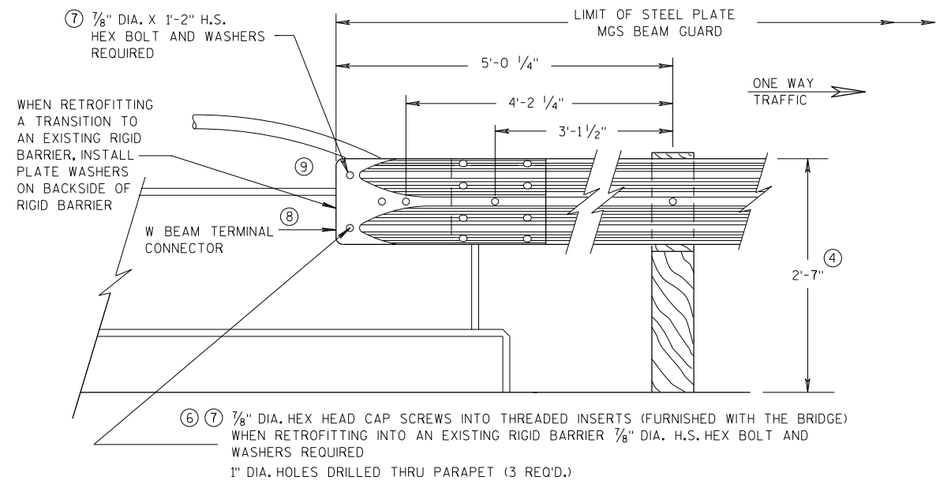

FRONT VIEW

W BEAM CONNECTION TO VERTICAL FACE PARAPET

(USE ONLY ON THE TRAFFIC EXIT END OF ONE WAY BRIDGES)

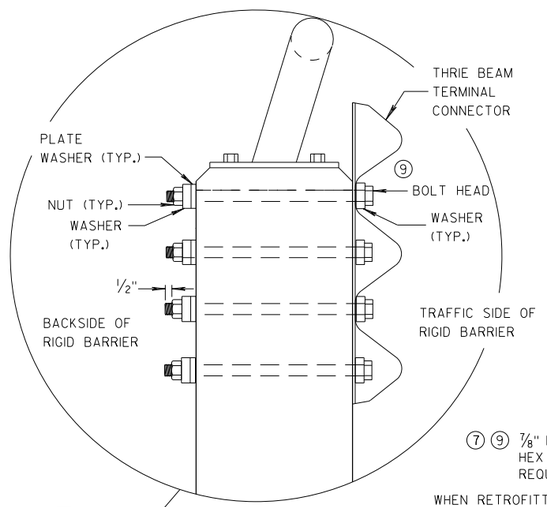

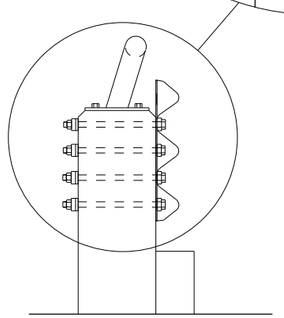

SECTION G-G

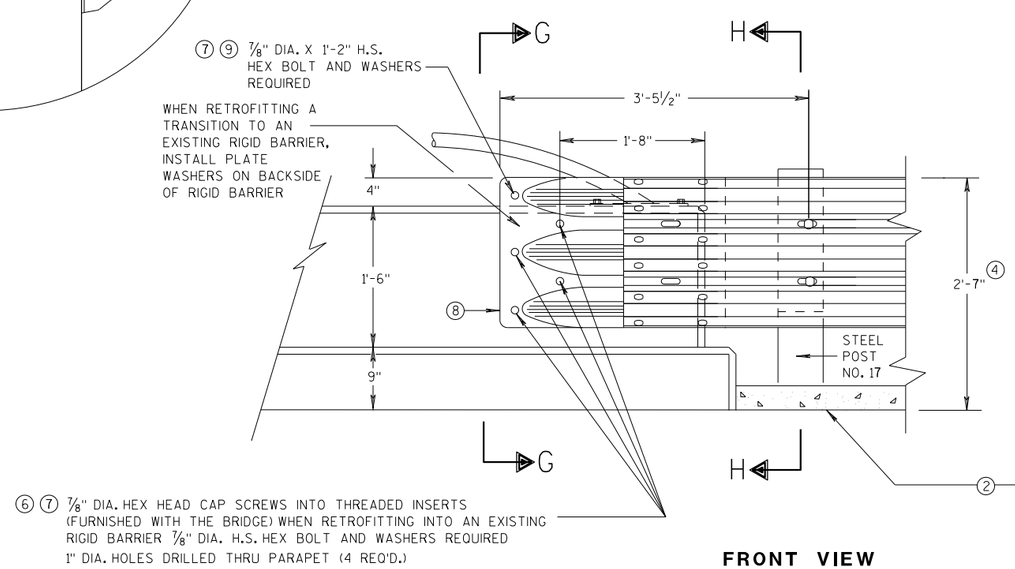

FRONT VIEW

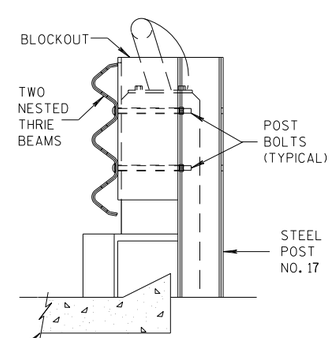

SECTION H-H

THRIE BEAM CONNECTION TO VERTICAL FACED PARAPETS

MIDWEST GUARDRAIL SYSTEM
THRIE BEAM TRANSITION (MGS)

STATE OF WISCONSIN
DEPARTMENT OF TRANSPORTATION

APPROVED
07/2018 — DATE
/S/ Rodney Taylor
ROADWAY STANDARDS D[illegible] UNIT SUPERVI[illegible]
FHWA

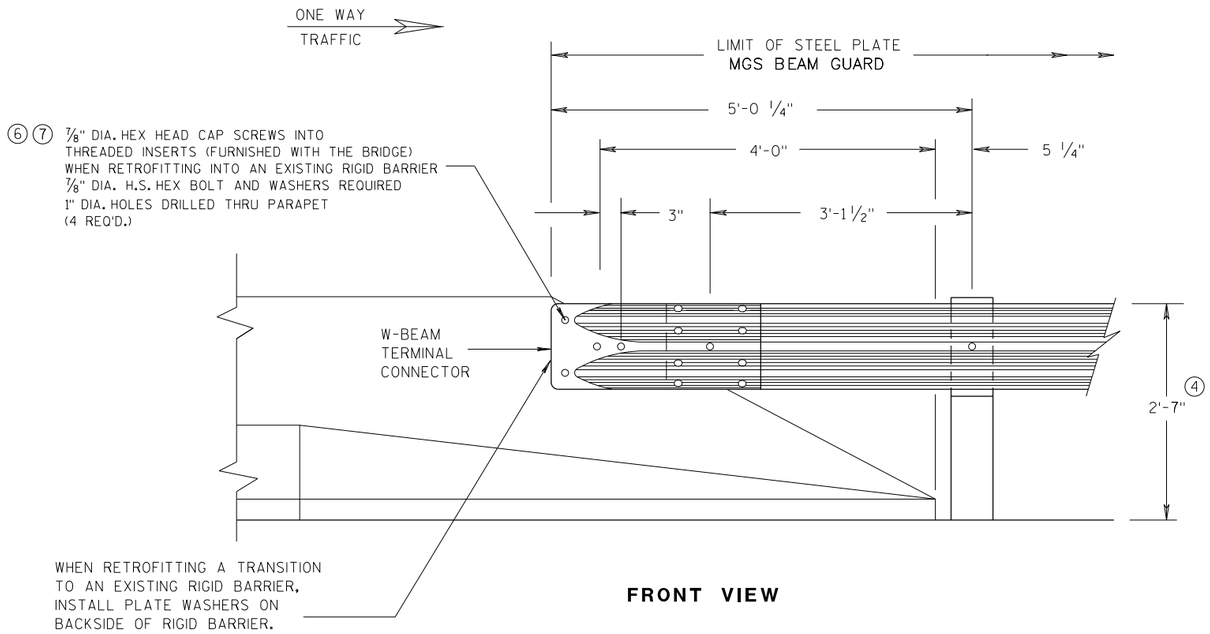

FRONT VIEW

W BEAM CONNECTION TO PARAPETS WITH SLOPED ENDS

(USE ONLY AT TRAFFIC EXIT END OF ONE WAY BRIDGE)

GENERAL NOTES

② OPTIONAL CURB AND GUTTER OR DRAINAGE FEATURE SEE PLAN FOR INFORMATION.

④ TOLERANCE FOR TOP OF BEAM IS ± 1".

⑥ DRILLING BOLT HOLES THROUGH THE PARAPET, BOLTS, NUTS, WASHERS AND REPAIRING DAMAGED CONCRETE ARE INCIDENTAL TO THE CONTRACT.

⑦ BOLTS MAY BE A325 BOLTS OR A449 BOLTS. BOLT LENGTH AND THREADING LENGTH ARE TO ALLOW FOR A TIGHT CONNECTION BETWEEN RIGID BARRIER AND THRIE BEAM CONNECTION PLATE. CONTRACTOR IS TO FIELD VERIFY BOLT LENGTH AND THREAD LENGTH. ONE ROUND WASHER REQUIRED BETWEEN BOLT HEAD AND THRIE BEAM CONNECTOR PLATE. BOLTS THAT EXTEND THROUGH THE PARAPET AND OUT THE BACK FACE REQUIRE A HARDENED ROUND STEEL WASHER THAT IS 2" O.D. X 5/32" THICK AND ONE PLATE WASHER. REPAIR ANY DAMAGED CONCRETE FROM BOLT INSTALLATION.

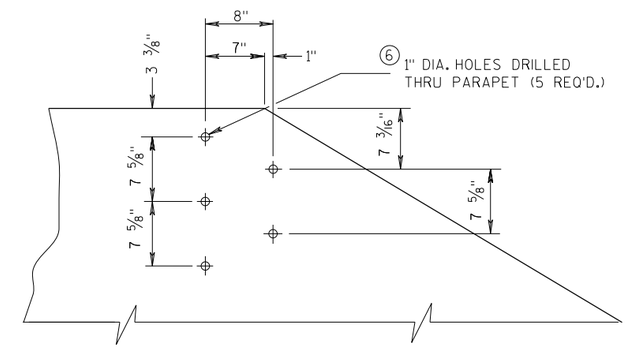

DRILL HOLE LOCATION AND PATTERN FOR THRIE BEAM CONNECTION

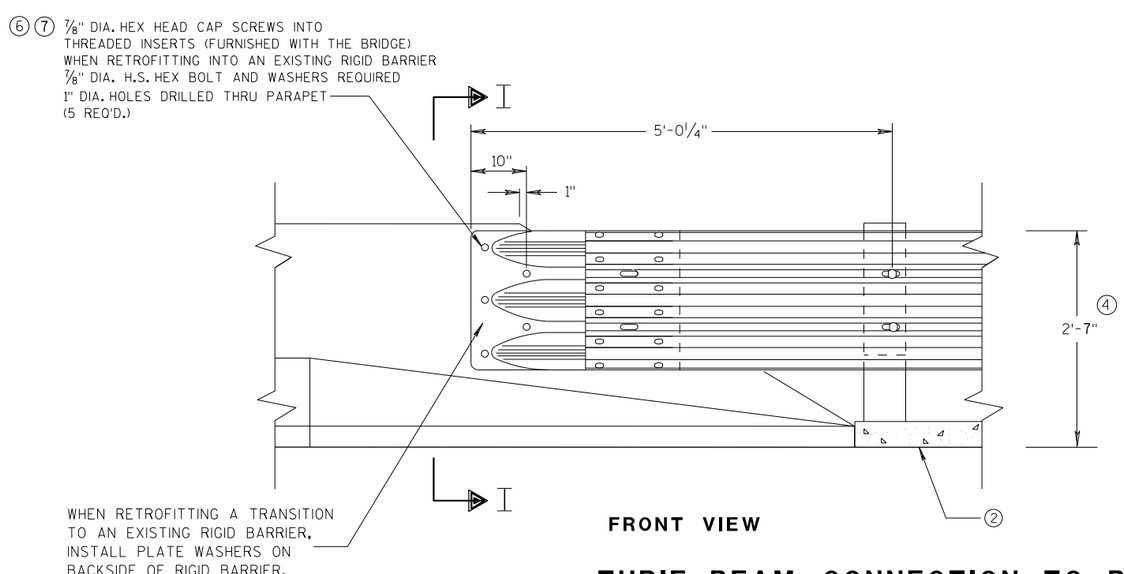

FRONT VIEW

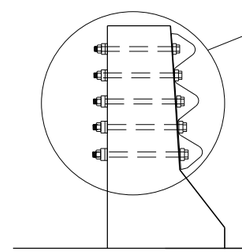

SECTION I-I

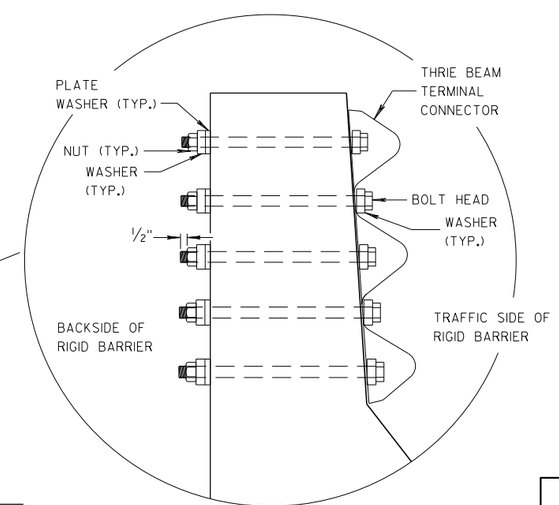

THRIE BEAM CONNECTION TO BRIDGE PARAPETS WITH SLOPED ENDS

MIDWEST GUARDRAIL SYSTEM THRIE BEAM TRANSITION (MGS)

STATE OF WISCONSIN
DEPARTMENT OF TRANSPORTATION

APPROVED
07/2018 — DATE
/S/ Rodney Taylor — ROADWAY STANDARDS DEVELOPMENT UNIT SUPERVISOR
FHWA

6

S.D.D. 14 B 45-5f

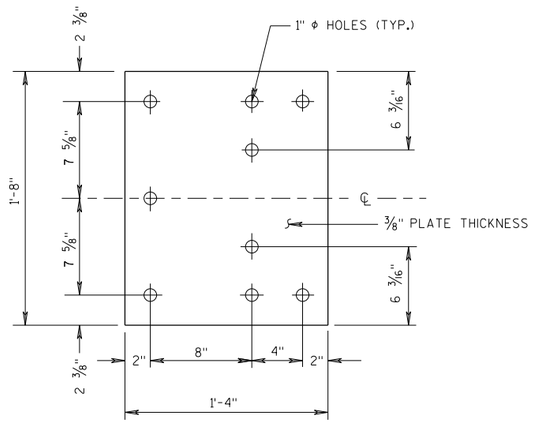

BACK-UP PLATE DETAIL

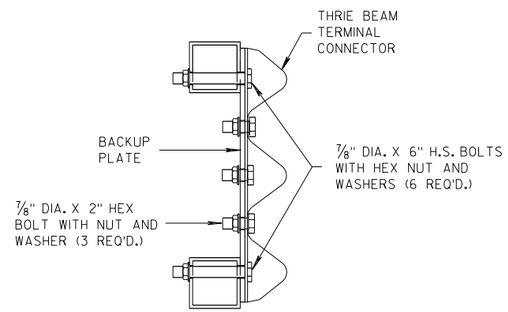

SECTION J-J

GENERAL NOTES

(4) TOLERANCE FOR TOP OF BEAM IS ± 1".

(6) DRILLING HOLES THROUGH THE PAPRPET, BOLTS, NUTS, WASHERS AND REPAIRING DAMAGED CONCRETE ARE INCIDENTAL TO THE CONTRACT.

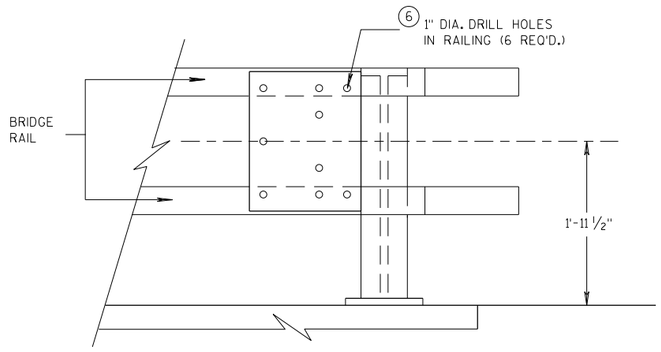

BACK-UP PLATE MOUNTING ONTO BRIDGE RAILING

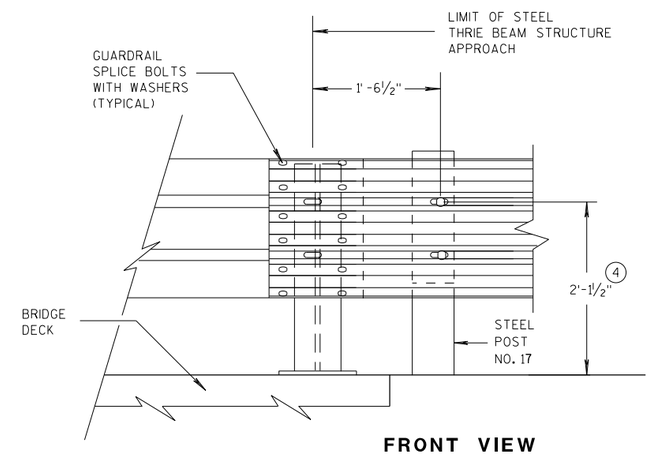

FRONT VIEW

THRIE BEAM CONNECTION TO STEEL RAILING TYPE "W"

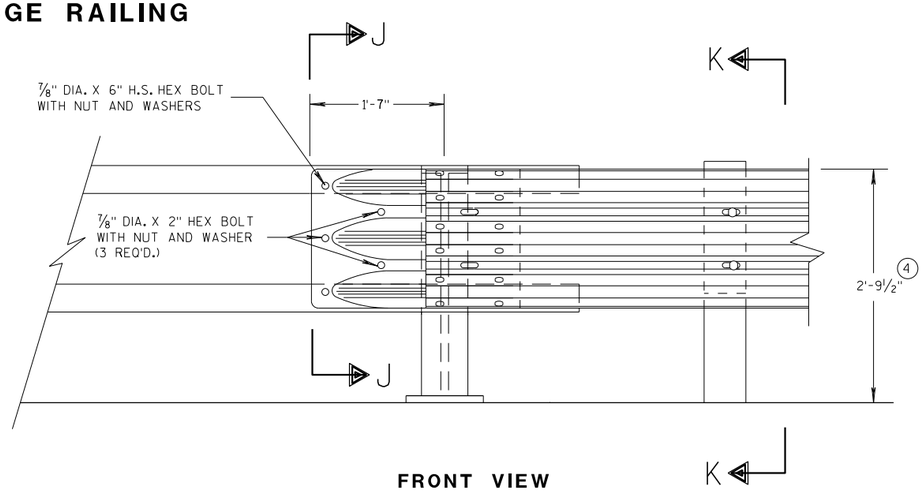

FRONT VIEW

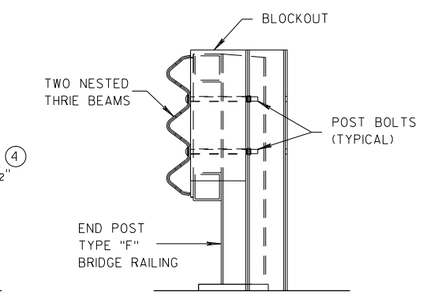

SECTION K-K

THRIE BEAM CONNECTION TO TUBULAR RAILING TYPE "F"

MIDWEST GUARDRAIL SYSTEM THRIE BEAM TRANSITION (MGS)

STATE OF WISCONSIN
DEPARTMENT OF TRANSPORTATION

APPROVED 07/2018 — DATE — FHWA

/S/ Rodney Taylor — ROADWAY STANDARDS DEVELOPMENT UNIT SUPERVISOR

S.D.D. 14 B 45-5g

GENERAL NOTES

(4) TOLERANCE FOR TOP OF W-BEAM RAIL IS ± 1".

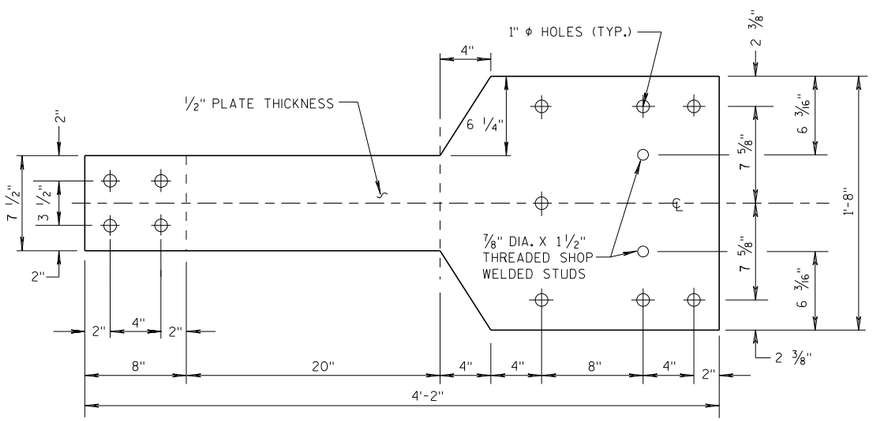

FRONT VIEW

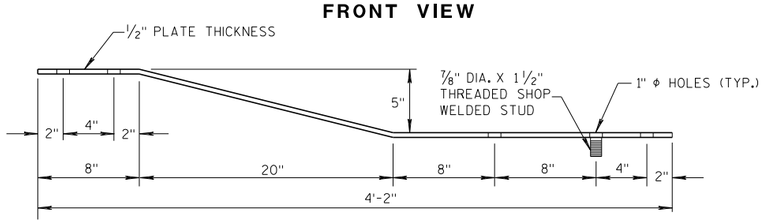

PLAN VIEW

BACK-UP PLATE DETAIL, TYPE "M"

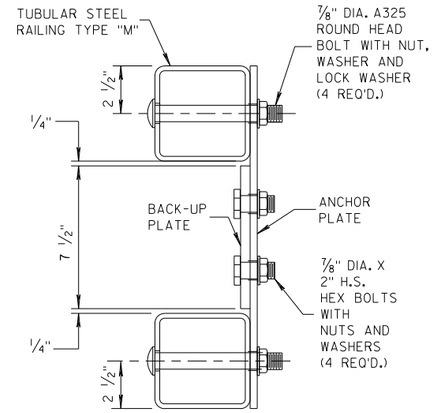

SECTION L-L

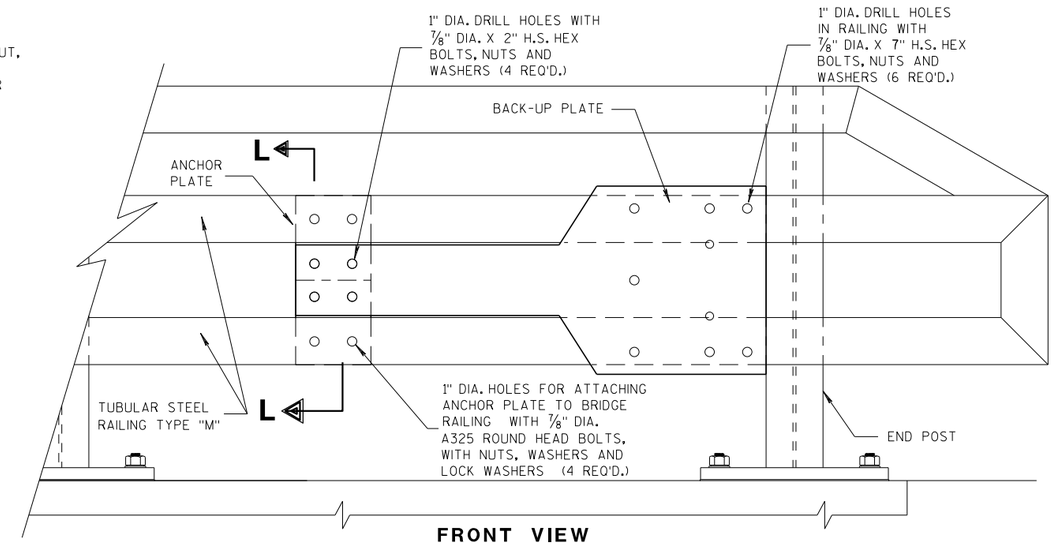

FRONT VIEW

ANCHOR AND BACK-UP PLATE MOUNTING TO BRIDGE RAILING, TYPE "M"

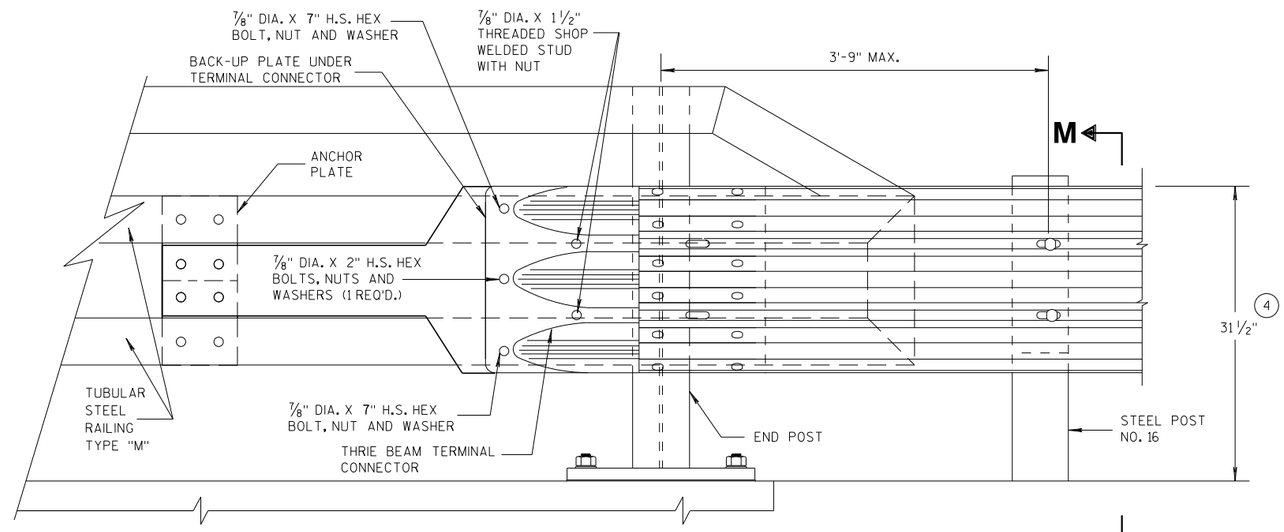

FRONT VIEW

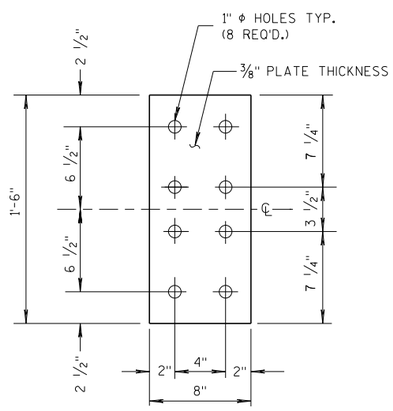

FRONT VIEW

ANCHOR PLATE DETAIL, TYPE "M"

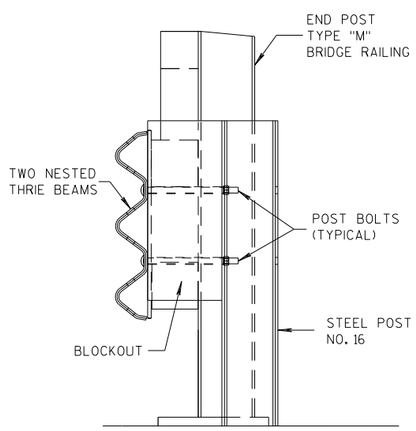

SECTION M-M

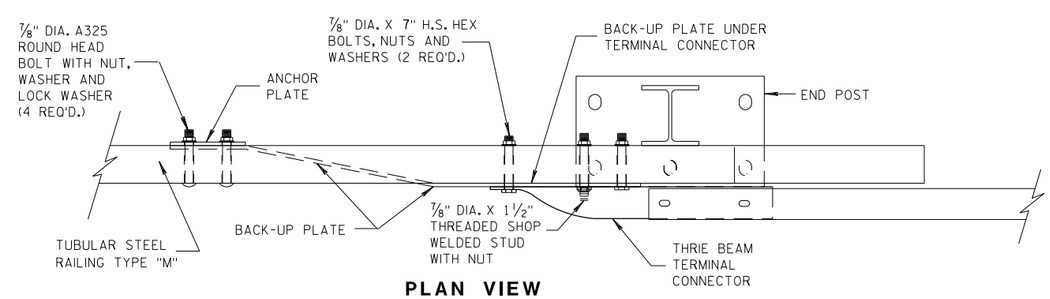

PLAN VIEW

THRIE BEAM CONNECTION TO TUBULAR RAILING, TYPE "M"

MIDWEST GUARDRAIL SYSTEM THRIE BEAM TRANSITION (MGS)

STATE OF WISCONSIN
DEPARTMENT OF TRANSPORTATION

APPROVED
07/2018 — DATE
/S/ Rodney Taylor — ROADWAY STANDARDS DEVELOPMENT UNIT SUPERVISOR
FHWA

6

S.D.D. 14 B 45-5h

GENERAL NOTES

COVER PLATE PANELS ARE 3/16" THICK.

ALL STIFFENERS ARE 1/4" THICK.

CONNECTOR PLATE SHALL BE FABRICATED FROM ASTM GRADE A36 STEEL AND GALVANIZED.

FOR GALVANIZED REQUIREMENTS, SEE SECTION 614 OF THE STANDARD SPECIFICATIONS.

ALL HOLE DIAMETERS SHALL BE 1".

FOR OPPOSITE SIDE INSTALLATION MIRROR DRAWINGS.

(10) STIFFENERS LOCATED AT THE OUTSIDE EDGES OF THE COVER PLATES SHALL BE WELDED AS FOLLOWS:
SINGLE BEVEL GROOVE WELD ON EXTERNAL SIDES AND 3/16" FILLET WELD BY 1" LONG SPACED AT 2" ON INTERNAL SIDES.

(11) STIFFENERS LOCATED ON THE INSIDE OF THE COVER PLATE SHALL BE WELDED AS FOLLOWS:
3/16" FILLET WELD BY 1" LONG SPACED AT 2".

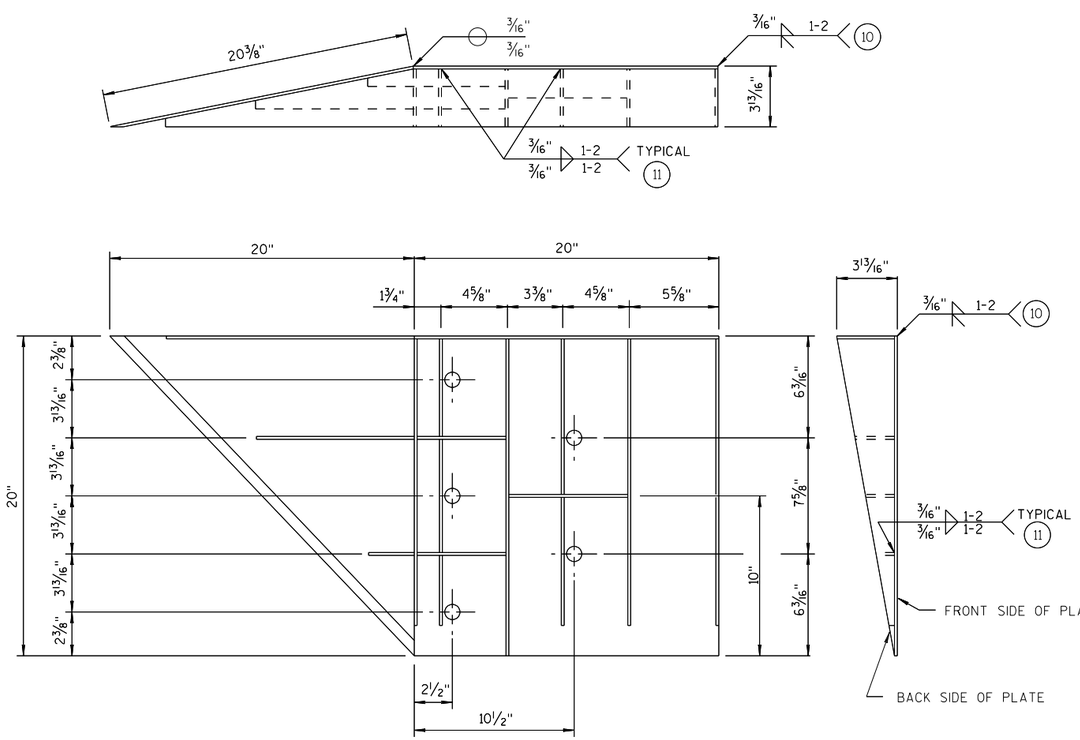

WELDING INSTRUCTION

(VIEWED FROM BACK SIDE OF PLATE)

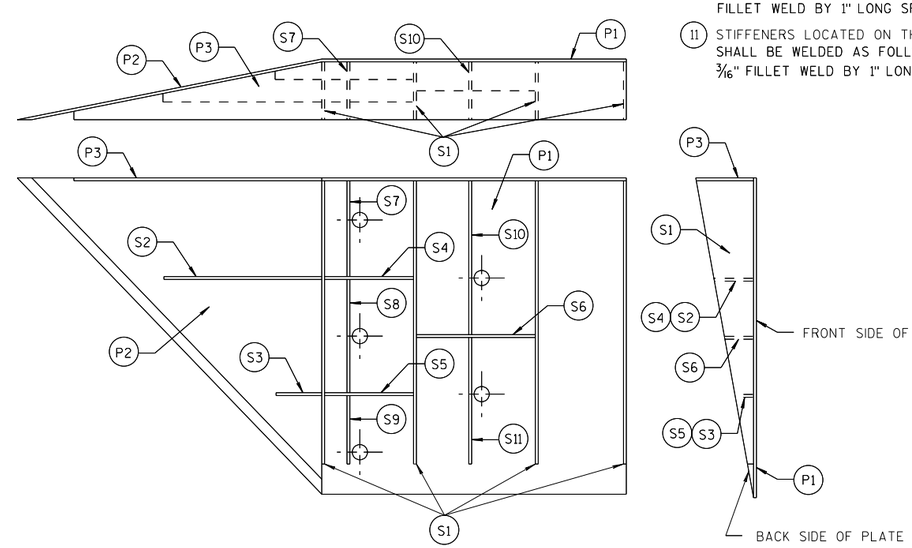

PLATE AND STIFFENER IDENTIFICATION

(VIEWED FROM BACK SIDE OF PLATE)

CONNECTOR PLATE DIMENSION (PER ASSEMBLY)

PLATE	QUANTITY	SHAPE	SIZE (A x B x C x D)	THICKNESS
P1	1		20" x 20"	3/16"
P2	1		20" x 20" x 28 9/16"	3/16"
P3	1		39" x 3 5/8" x 20" x 19 5/16"	3/16"
S1	4		18 7/16" x 3 5/8" x 18 3/4"	1/4"
S2	1		10 1/4" x 2 7/16" x 10 3/8" x 1/2"	1/4"
S3	1		3" x 1 1/16" x 3 1/8" x 1/2"	1/4"
S4	1		6 1/8" x 2 7/16"	1/4"
S5	1		6 1/8" x 1 1/16"	1/4"
S6	1		7 3/4" x 1 3/4"	1/4"
S7	1		2 9/16" x 6" x 3 5/8" x 5 7/8"	1/4"
S8	1		1 5/32" x 7 1/2" x 2 1/2" x 7 3/8"	1/4"
S9	1		6 1/16" x 6 3/16" x 1 3/32"	1/4"
S10	1		1 7/8" x 9 7/8" x 3 5/8" x 9 11/16"	1/4"
S11	1		8 1/2" x 8 3/4" x 1 13/16"	1/4"

SINGLE SLOPE CONNECTION PLATE

MIDWEST GUARDRAIL SYSTEM THRIE BEAM TRANSITION (MGS)

STATE OF WISCONSIN
DEPARTMENT OF TRANSPORTATION

APPROVED
7/2018 — DATE
/S/ Rodney Taylor
ROADWAY STANDARDS DEVELOPMENT UNIT SUPERVISOR
FHWA

GENERAL NOTES

CONNECTOR PLATE, DRILLING BOLT HOLES THROUGH THE PARAPET, BOLTS, NUTS, WASHERS AND REPAIRING DAMAGED CONCRETE ARE INCIDENTAL TO THE CONTRACT.

(2) OPTIONAL CURB AND GUTTER OR DRAINAGE FEATURE SEE PLAN FOR INFORMATION.

(7) BOLTS MAY BE A325 BOLTS OR A449 BOLTS. BOLT LENGTH AND THREADING LENGTH ARE TO ALLOW FOR A TIGHT CONNECTION BETWEEN RIGID BARRIER AND THRIE BEAM CONNECTION PLATE. CONTRACTOR IS TO FIELD VERIFY BOLT LENGTH AND THREAD LENGTH. ONE ROUND WASHER REQUIRED BETWEEN BOLT HEAD AND THRIE BEAM CONNECTOR PLATE. BOLTS THAT EXTEND THROUGH THE PARAPET AND OUT THE BACK FACE REQUIRE A HARDENED ROUND STEEL WASHER THAT IS 2" O.D. X 5/32" THICK AND ONE PLATE WASHER. REPAIR ANY DAMAGED CONCRETE FROM BOLT INSTALLATION.

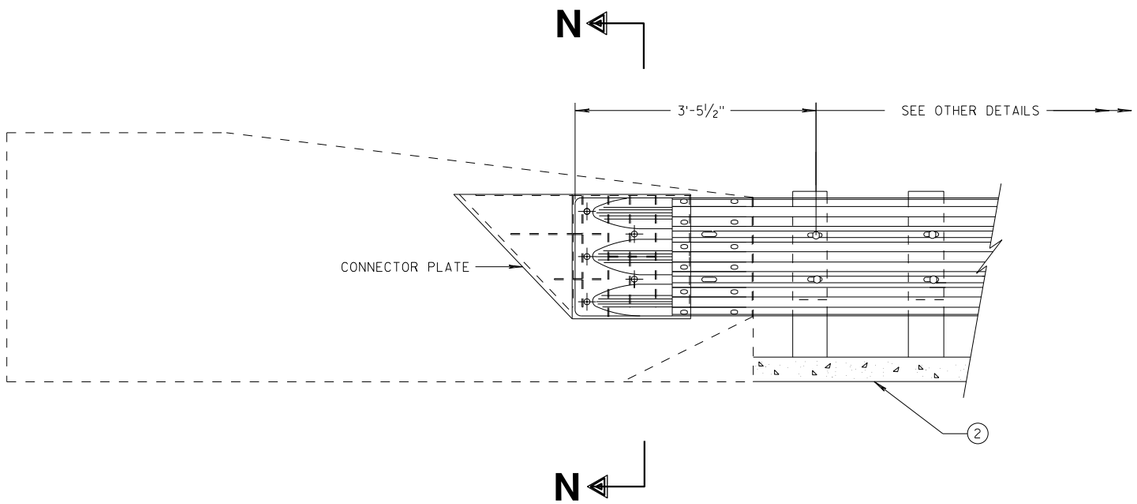

THRIE BEAM CONNECTION TO SINGLE SLOPE BARRIER

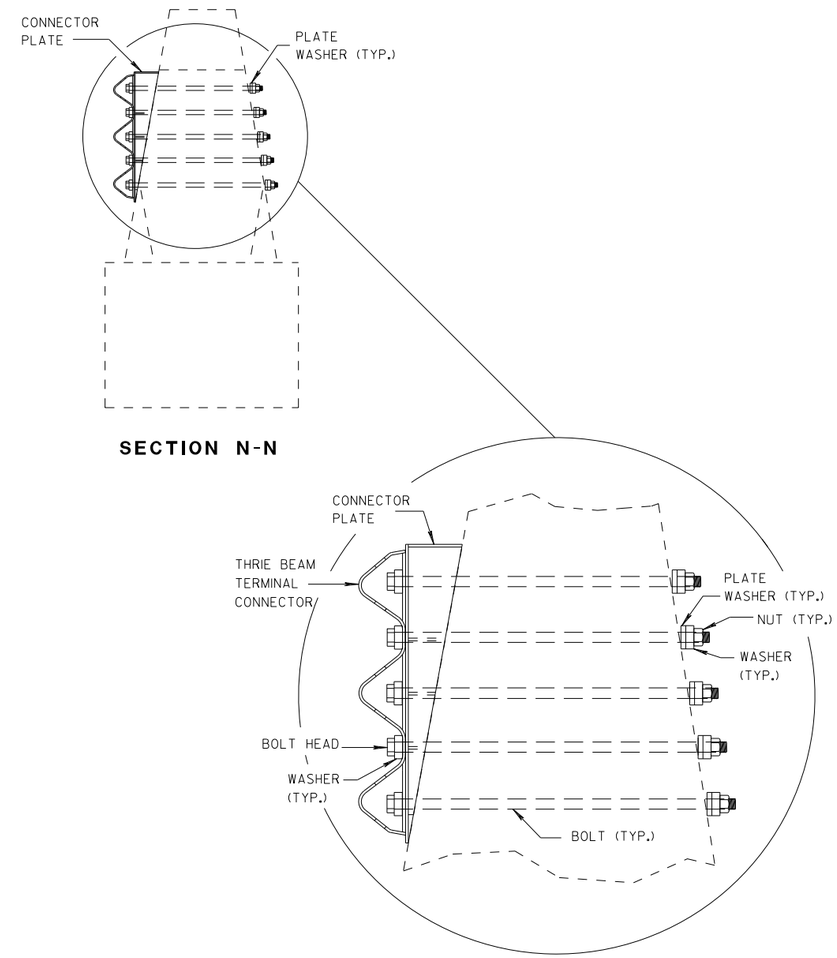

SECTION N-N

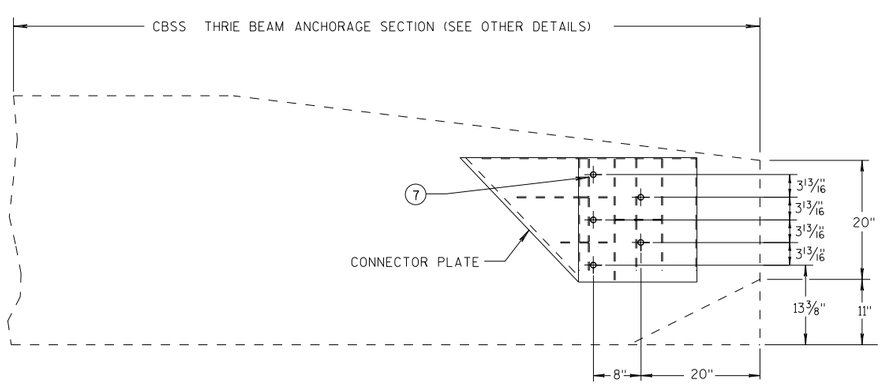

SINGLE SLOPE CONNECTION PLATE PLACEMENT

MIDWEST GUARDRAIL SYSTEM THRIE BEAM TRANSITION (MGS)

STATE OF WISCONSIN
DEPARTMENT OF TRANSPORTATION

APPROVED
7/2018 — DATE
/S/ Rodney Taylor — ROADWAY STANDARDS DEVELOPMENT UNIT SUPERVISOR
FHWA

6

S.D.D. 14 B 45-5j

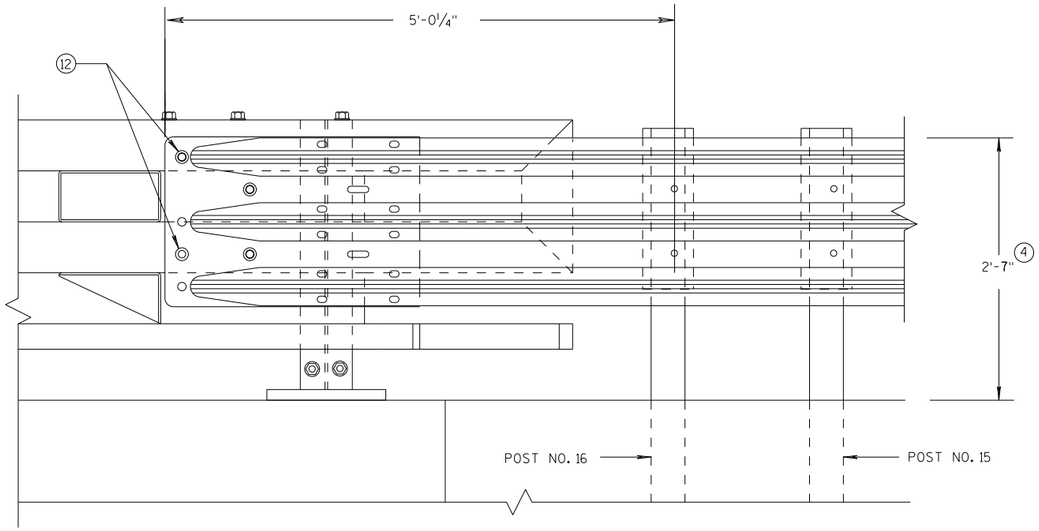

ELEVATION OF DETAIL AT NY3 END POST

THRIE BEAM RAIL ATTACHMENT

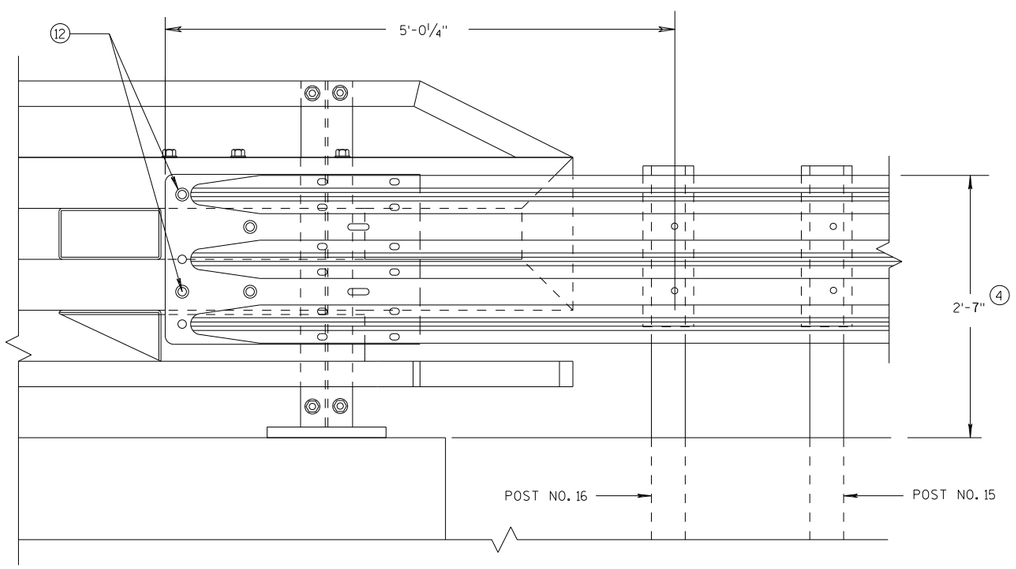

ELEVATION OF DETAIL AT NY4 END POST

THRIE BEAM RAIL ATTACHMENT

GENERAL NOTES

(4) TOLERANCE FOR TOP OF BEAM IS ± 1".

(12) BOLTS MAY BE A325 BOLTS OR A449 BOLTS. BOLT LENGTH AND THREADING LENGTH ARE TO ALLOW FOR A TIGHT CONNECTION BETWEEN RIGID BARRIER AND THRIE BEAM CONNECTION PLATE. CONTRACTOR IS TO FIELD VERIFY BOLT LENGTH AND THREAD LENGTH. ONE ROUND WASHER REQUIRED BETWEEN BOLT HEAD AND THRIE BEAM CONNECTOR PLATE. ON BACKSIDE OF PARAPET ONE ROUND WASHER, AND NUT REQUIRED. BOLT THREAD IS TO EXTEND ½-INCH BEYOND NUT.

MIDWEST GUARDRAIL SYSTEM
THRIE BEAM TRANSITION (MGS)

STATE OF WISCONSIN
DEPARTMENT OF TRANSPORTATION

APPROVED
7/2018
DATE
FHWA

/S/ Rodney Taylor
ROADWAY STANDARDS D
UNIT SUPERVIS
NT

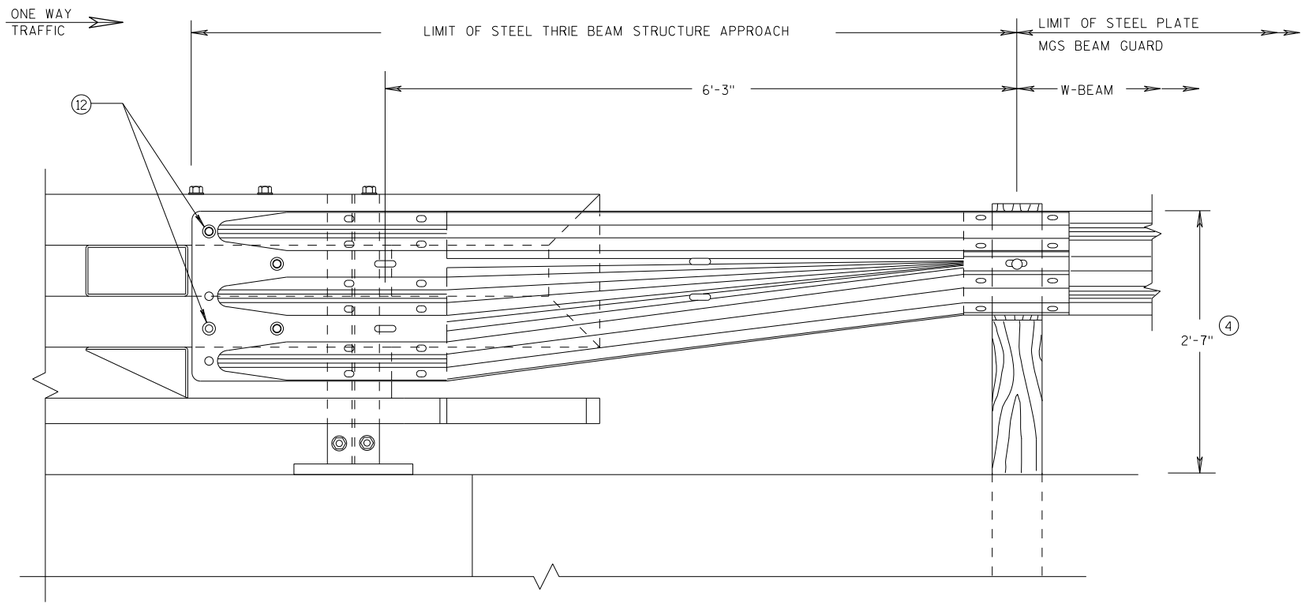

FRONT VIEW

W BEAM TRANSITION AND CONNECTION TO BRIDGE RAILING TYPE "NY3"

(USE ONLY ON THE TRAFFIC EXIT END OF ONE WAY BRIDGES)

GENERAL NOTES

(4) TOLERANCE FOR TOP OF BEAM IS ± 1".

(12) BOLTS MAY BE A325 BOLTS OR A449 BOLTS. BOLT LENGTH AND THREADING LENGTH ARE TO ALLOW FOR A TIGHT CONNECTION BETWEEN RIGID BARRIER AND THRIE BEAM CONNECTION PLATE. CONTRACTOR IS TO FIELD VERIFY BOLT LENGTH AND THREAD LENGTH. ONE ROUND WASHER REQUIRED BETWEEN BOLT HEAD AND THRIE BEAM CONNECTOR PLATE. ON BACKSIDE OF PARAPET ONE ROUND WASHER, AND NUT REQUIRED. BOLT THREAD IS TO EXTEND ½-INCH BEYOND NUT.

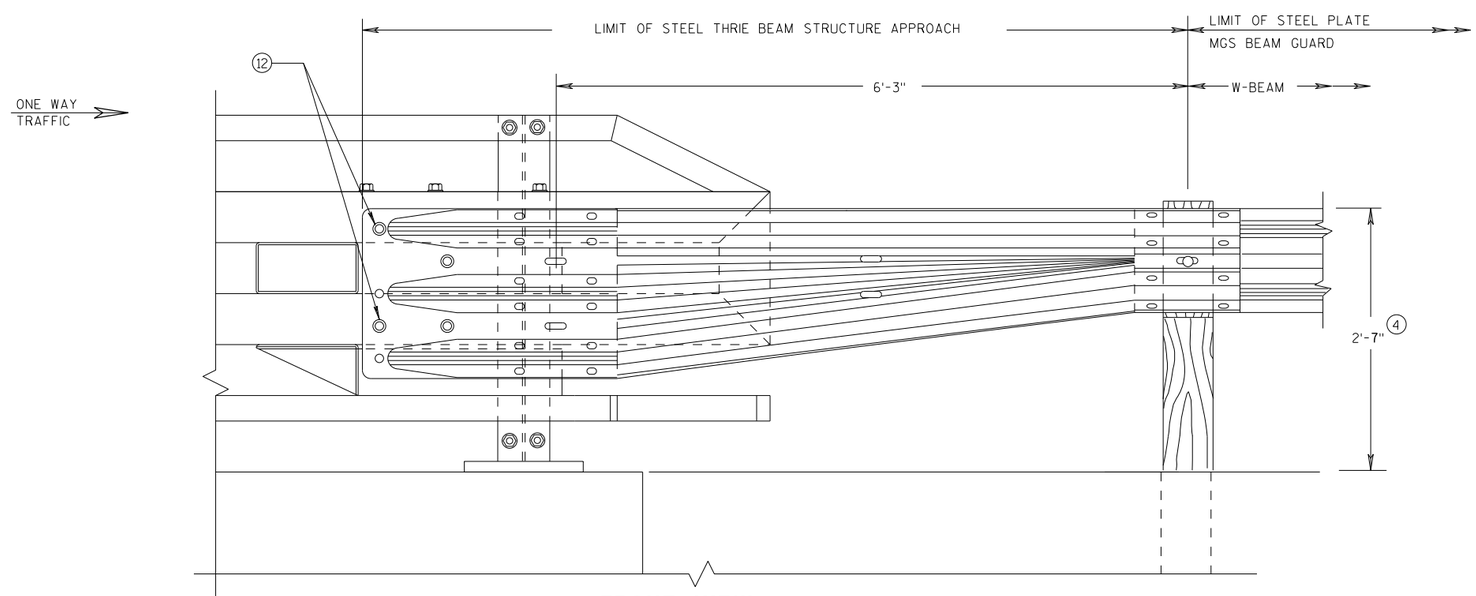

FRONT VIEW

W BEAM TRANSITION AND CONNECTION TO BRIDGE RAILING TYPE "NY4"

(USE ONLY ON THE TRAFFIC EXIT END OF ONE WAY BRIDGES)

MIDWEST GUARDRAIL SYSTEM THRIE BEAM TRANSITION (MGS)

STATE OF WISCONSIN
DEPARTMENT OF TRANSPORTATION

APPROVED
7/2018 — DATE
/S/ Rodney Taylor — ROADWAY STANDARDS DEVELOPMENT UNIT SUPERVISOR
FHWA

NT

6

S.D.D. 14 B 45-5L

GENERAL NOTES

DETAILS OF CONSTRUCTION, MATERIALS AND WORKMANSHIP NOT SHOWN ON THIS DRAWING SHALL CONFORM TO THE PERTINENT REQUIREMENTS OF THE STANDARD SPECIFICATIONS AND THE APPLICABLE SPECIAL PROVISIONS.

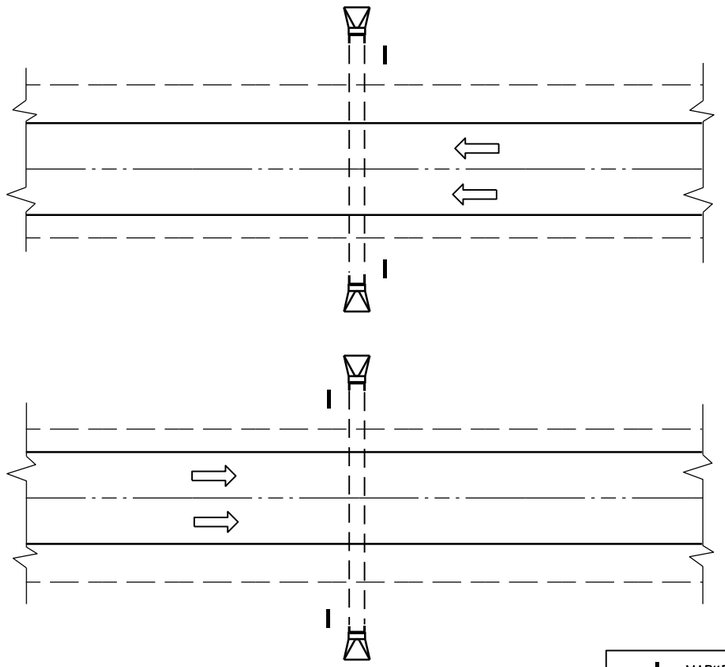

PLAN VIEW

DIVIDED HIGHWAY

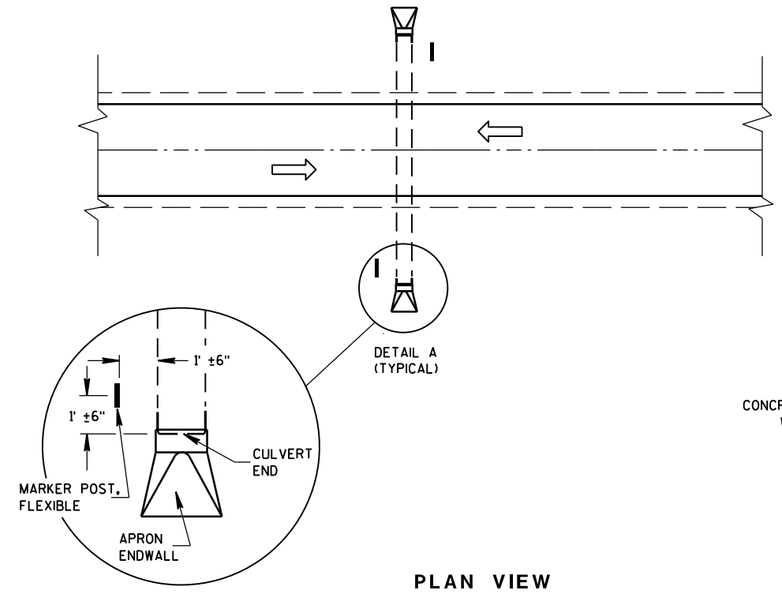

DETAIL A
(TYPICAL)

PLAN VIEW

UNDIVIDED HIGHWAY

MARKER POST, FLEXIBLE

DIRECTION OF TRAFFIC FLOW

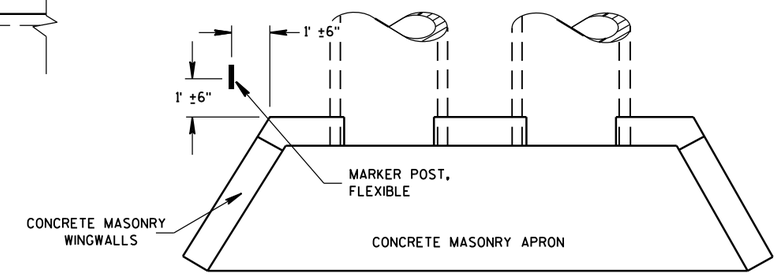

PLAN VIEW

CONCRETE MASONRY ENDWALLS FOR CULVERT PIPE AND PIPE ARCH

FLEXIBLE MARKER POST LOCATION

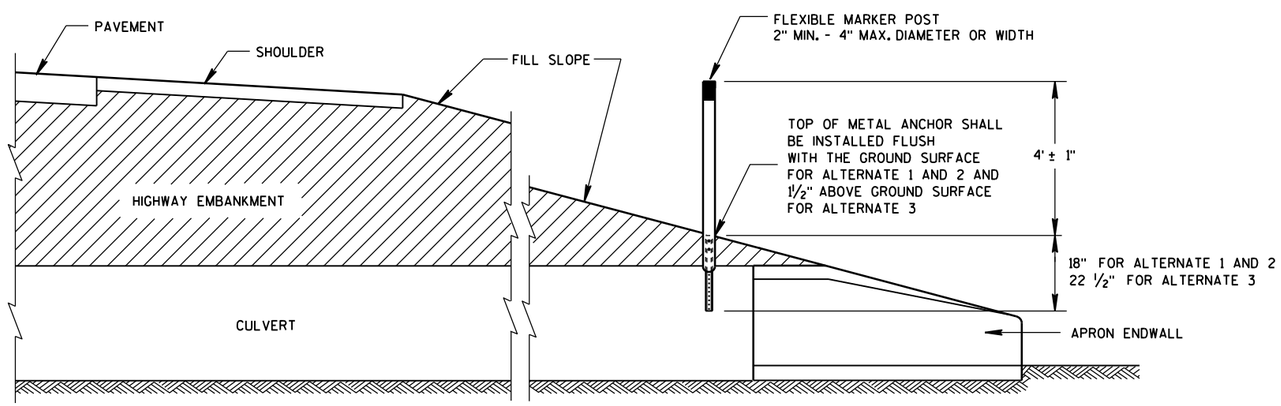

CROSS SECTION

FLEXIBLE MARKER POST

FLEXIBLE MARKER POST FOR CULVERT END

STATE OF WISCONSIN
DEPARTMENT OF TRANSPOR

6

6

S.D.D. 15 A 3-2a

S.D.D. 15 A 3-2a

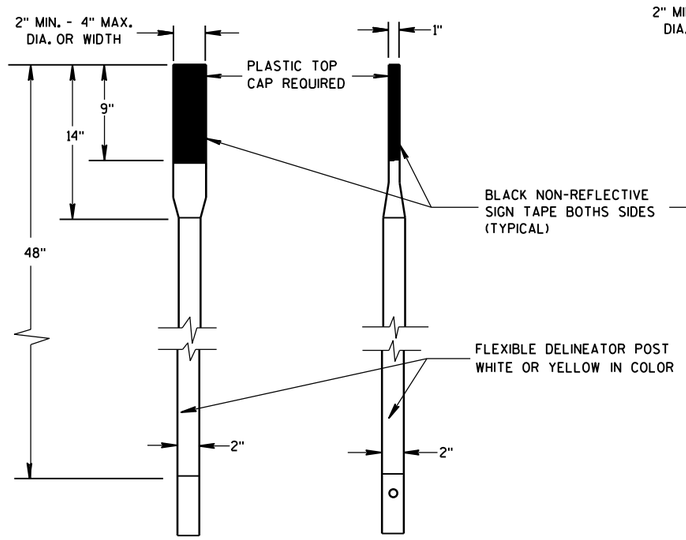

FRONT VIEW SIDE VIEW

ALTERNATE 1

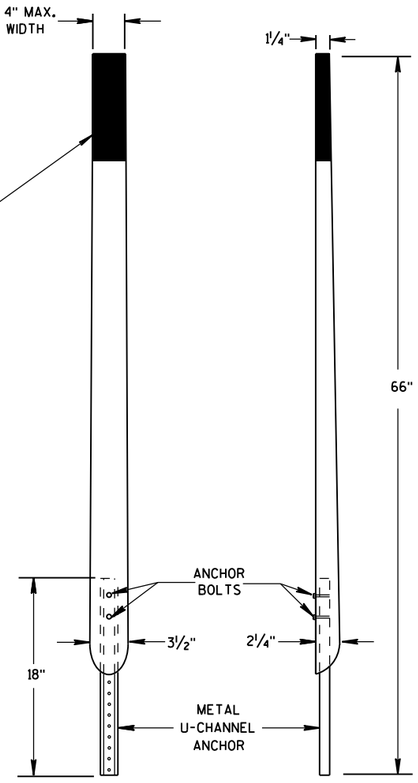

FRONT VIEW SIDE VIEW

ALTERNATE 2

FLEXIBLE MARKER POSTS

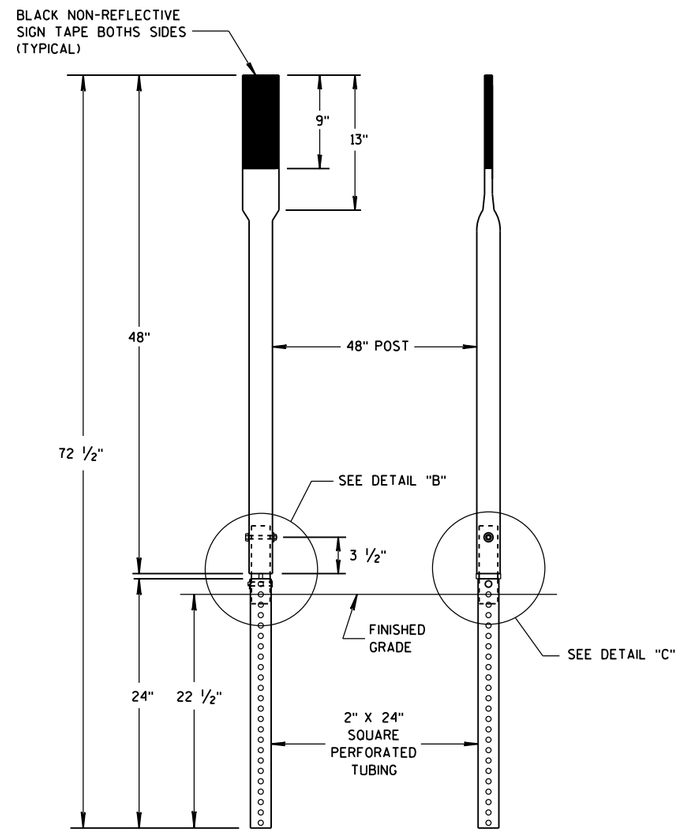

FRONT VIEW SIDE VIEW

ALTERNATE 3

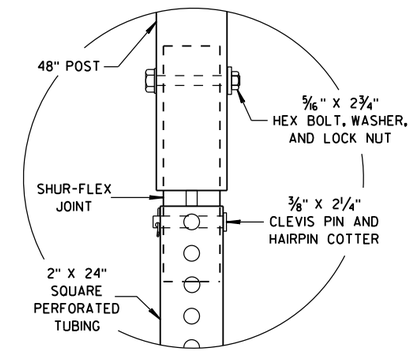

DETAIL B

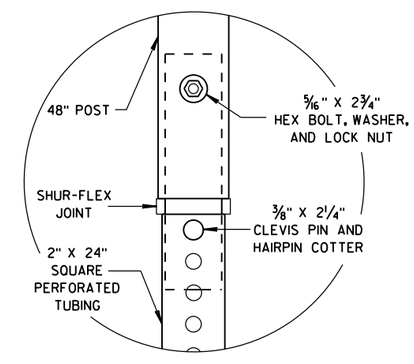

DETAIL C

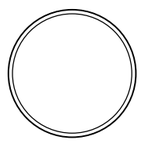

SECTION A-A

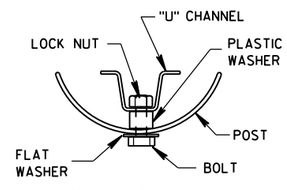

SECTION B-B

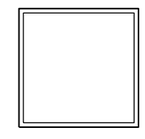

SECTION C-C

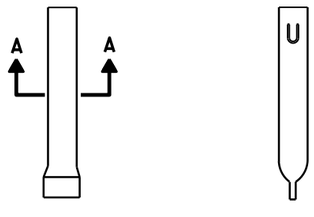

FRONT VIEW SIDE VIEW

ALTERNATE 1

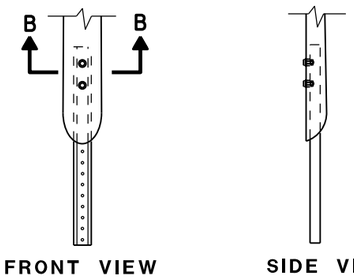

FRONT VIEW SIDE VIEW

ALTERNATE 2

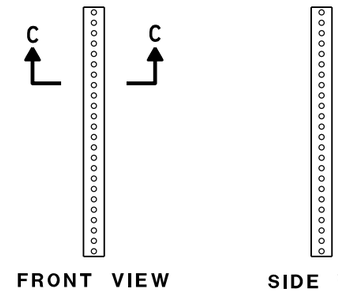

FRONT VIEW SIDE VIEW

ALTERNATE 3

FLEXIBLE MARKER POST ANCHORS

FLEXIBLE MARKER POST
FOR CULVERT END

STATE OF WISCONSIN
DEPARTMENT OF TRANSPORTATION

APPROVED
10/1/2012 /S/ Travis Feltes
DATE STATE TRAFFIC ENGINEER
FHWA

6

6

S.D.D. 15 A 3-2b

S.D.D. 15 A 3-2b

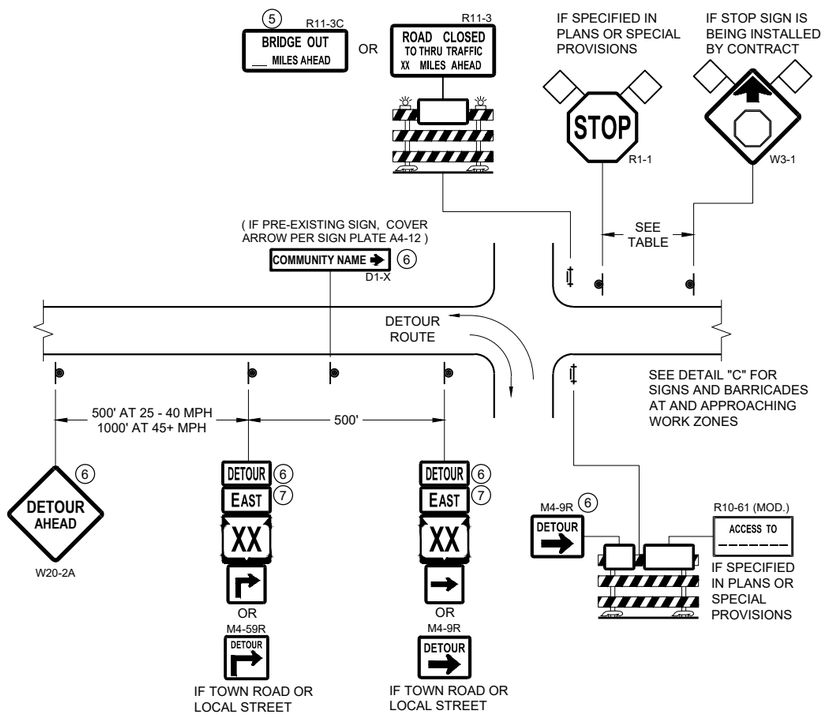

DETAIL A
MAINLINE CLOSURE WITH POSTED DETOUR

WORK ZONE GREATER THAN OR EQUAL TO ½ MILE FROM DETOUR ROUTE (1000 FEET IF URBAN)

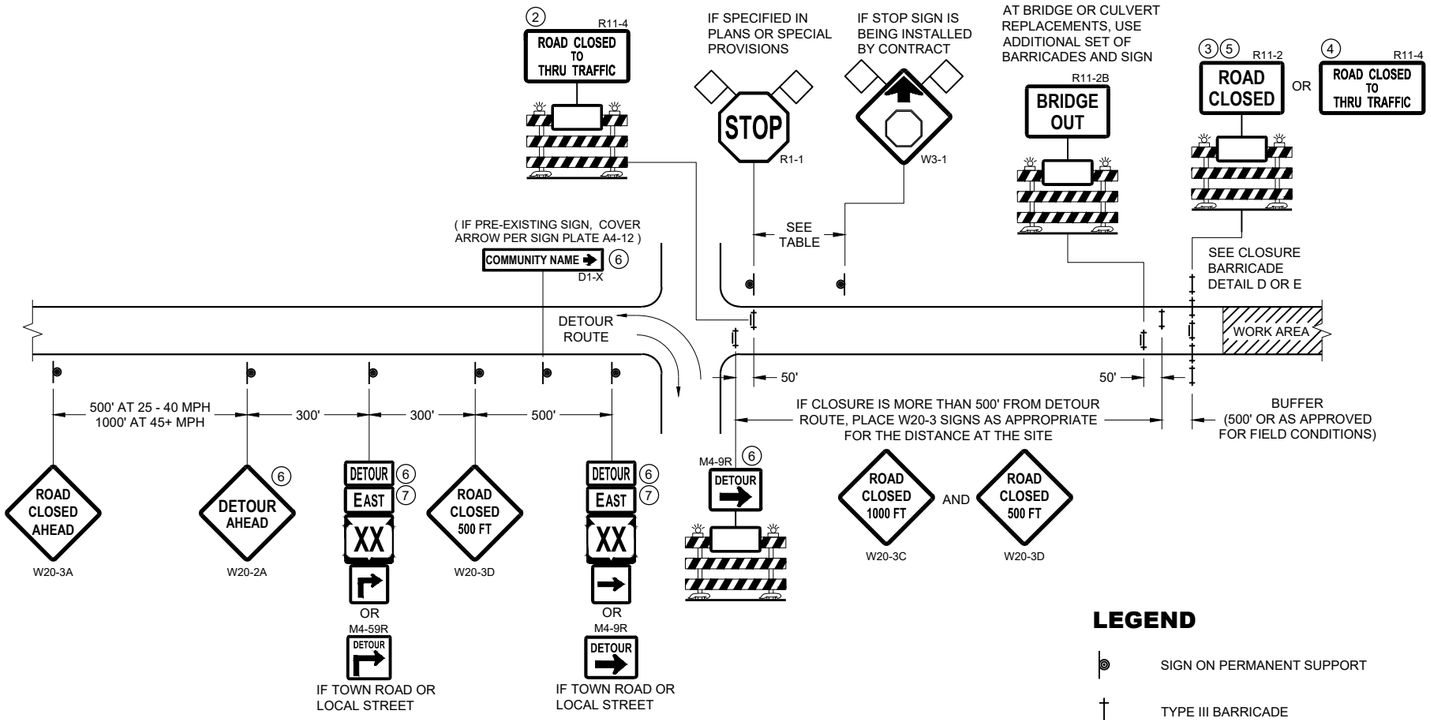

DETAIL B
MAINLINE CLOSURE WITH POSTED DETOUR

WORK ZONE LESS THAN ½ MILE FROM DETOUR ROUTE (1000 FEET IF URBAN)

LEGEND

- SIGN ON PERMANENT SUPPORT
- TYPE III BARRICADE
- TYPE III BARRICADE WITH ATTACHED SIGN
- TYPE "A" WARNING LIGHT (FLASHING)
- WORK AREA
- FLAGS, 16" X 16" MIN. (ORANGE)
- DETOUR — M4 - 8
- EAST — M3 - X
- XX (M1 - 4) OR XX (M1 - 6) OR COUNTY X (M1 - 5A)
- M05 - 1 OR M06 - 1

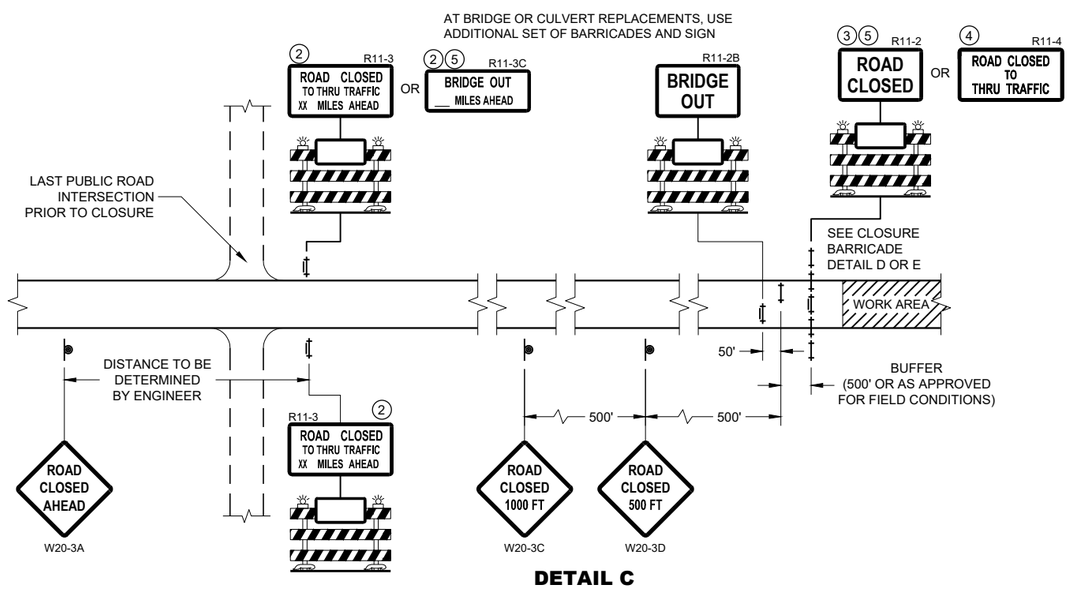

DETAIL C
MAINLINE CLOSURE, NO POSTED DETOUR

SPEED LIMIT (MPH)	"STOP AHEAD" ADVANCE WARNING DISTANCE (FT)
25	200
30	200
35	350
40	350
45	500
50	550
55	750

SEE SDD 15C2-SHEET "b" FOR GENERAL NOTES AND FOOTNOTES 1 THROUGH 7

BARRICADES AND SIGNS FOR MAINLINE CLOSURES

STATE OF WISCONSIN
DEPARTMENT OF TRANSPORTATION

APPROVED
May 2023 — DATE
/S/ Andrew Heidtke — WORK ZONE ENGINEER

FHWA

6

SDD 15C02 - 09a

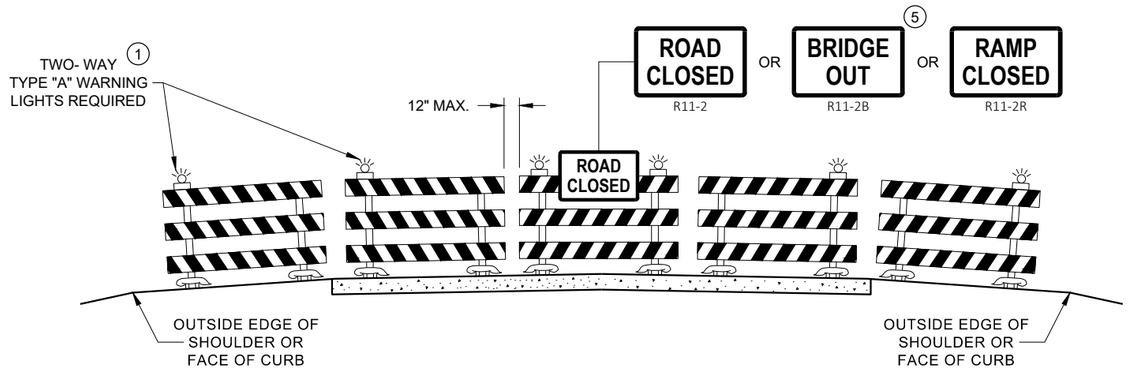

DETAIL D
ROAD CLOSURE BARRICADE DETAIL
APPROACH VIEW

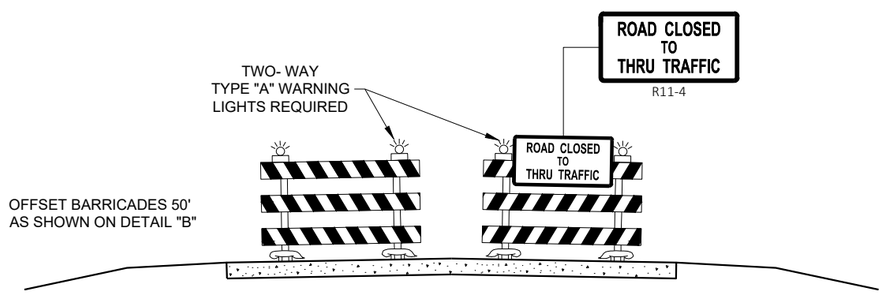

DETAIL E
LANE CLOSURE BARRICADE DETAIL
APPROACH VIEW

SEE SDD 15C2 - SHEET "a" FOR LEGEND

GENERAL NOTES

THE EXACT NUMBER, LOCATION, AND SPACING OF ALL SIGNS AND BARRICADES SHALL BE ADJUSTED TO FIT FIELD CONDITIONS AS APPROVED BY THE ENGINEER.

ANY SIGNS TEMPORARY OR EXISTING, WHICH CONFLICT WITH TRAFFIC CONTROL "IN USE", SHALL BE REMOVED OR COVERED AS NEEDED AND AS APPROVED BY THE ENGINEER.

THE SPACING BETWEEN TRAFFIC CONTROL SIGNS SHOULD BE ADJUSTED TO NOT CONFLICT WITH AND SHOULD PROVIDE A DESIRABLE MINIMUM OF 200 FEET CLEARANCE TO EXISTING SIGNS THAT WILL REMAIN IN PLACE.

BARRICADES THAT MUST BE MOVED FOR A WORK OPERATION SHALL BE IMMEDIATELY RE-ESTABLISHED UPON COMPLETION OF THE OPERATION, OR FOR CONTINUING OPERATIONS, AT THE END OF EACH WORKING DAY.

SIGNS THAT WILL BE IN PLACE LESS THAN 7 CONTINUOUS DAYS AND NIGHTS MAY BE MOUNTED ON PORTABLE SUPPORTS.

ALL TYPE III BARRICADES SHALL HAVE RAILS REFLECTORIZED ON BOTH FACES. STRIPES SHALL BE PROPERLY SLOPED DOWN TOWARD THE TRAFFIC SIDE OR AS SHOWN IN THE ROAD CLOSURE BARRICADE DETAIL "D" FOR FULL ROAD CLOSURES.

TYPE "A" LOW - INTENSITY FLASHING WARNING LIGHTS SHALL BE VISIBLE ON BOTH SIDES OF THE BARRICADE.

THE R11 - 2, R11 - 3, M4 - 9, R11 - 4, AND R10 - 61 SIGNS PLACED ON THE BARRICADES SHALL COVER NO MORE THAN THE TOP RAIL. THE SIGNS SHALL NOT COVER ANY PORTION OF THE MIDDLE RAIL OR BOTTOM RAILS.

"WO" AND "MO" SIGNS ARE THE SAME AS "W" AND "M" SIGNS EXCEPT THE BACKGROUND IS ORANGE.

ALL SIGNS SHALL BE 48" X 48" UNLESS OTHERWISE NOTED BELOW:
- R11 - 2 SHALL BE 48" X 30"
- R11 - 3 SHALL, R11 - 4 AND R10 - 61 SHALL BE 60 " X 30"
- M4 - 9 SHALL BE 30" X 24"
- M3 - X SHALL BE 24" X 12" (36" X 18" IF NEEDED TO MATCH EXISTING SIGNS)
- M4 - 8 SHALL BE 24" X 12" (36" X 18" IF NEEDED TO MATCH EXISTING SIGNS)
- M1 - 4, M1 - 5A AND M1 - 6 SHALL BE 24" X 24" (36" X 36" IF NEEDED TO MATCH EXISTING SIGNS)
- MO5 - 1 AND MO6 - 1 SHALL BE 21" X 21" (30" X 30" IF NEEDED TO MATCH EXISTING SIGNS)
- D1 - X SHALL BE AS SHOWN ON SPECIFIC PROJECT SIGNING DETAIL SHEETS.
- R1 - 1 SHALL BE 36" X 36"

1. TWO WARNING LIGHTS SHALL BE PROVIDED ON THE CENTER BARRICADE AND A MINIMUM OF ONE WARNING LIGHT SHALL BE PROVIDED ON EACH OF THE OTHER BARRICADES WITHIN THE ROADWAY LIMITS. SPACING OF THE WARNING LIGHTS SHALL BE UNIFORM TO THE EDGE OF ROADWAY AS SHOWN (APPROX. 8 FOOT LIGHT SPACING.
2. THESE SIGNS AND BARRICADES ARE NOT REQUIRED IF ROAD CLOSURE BEGINS AT AN INTERSECTION.
3. FOR ROAD CLOSURE WITHOUT LOCAL ACCESS TO PROJECT, SEE ROAD CLOSURE BARRICADE DETAIL "D".
4. FOR ROAD CLOSURE WITH LOCAL ACCESS TO PROJECT, SEE ROAD CLOSURE BARRICADE DETAIL "E".
5. FOR BRIDGE OR CULVERT REPLACEMENTS, SUBSTITUTE "BRIDGE OUT" INSTEAD OF "ROAD CLOSED" ON R11 - 2 AND R11 - 3 SIGNS.
6. INSTALL DETOUR AND COMMUNITY GUIDE SIGNS AND ARROWS ONLY IF SPECIFIED IN THE CONTRACT. IF THERE ARE EXISTING ROUTE MARKER ASSEMBLIES THAT WILL REMAIN IN PLACE, ADJUST THE LOCATION OF THE DETOUR ROUTE SIGNS TO CORRESPOND WITH THE EXISTING ASSEMBLIES. MODIFY EXISTING SIGNS WHERE POSSIBLE. SEE SPECIFIC PROJECT DETOUR SIGNING DETAIL SHEETS. IF DETOUR SIGNS ARE BEING INSTALLED BY OTHERS, PLACE THE CONTRACTED TRAFFIC CONTROL SIGNS TO ALLOW FOR PLACEMENT OF ALL WARNING, DETOUR AND GUIDE SIGNS AS SHOWN.
7. "EAST" CARDINAL DIRECTION MARKERS AND RIGHT TURN ARROWS ARE SHOWN. USE OTHER CARDINAL DIRECTIONS AND ARROWS AS APPROPRIATE.

BARRICADES AND SIGNS FOR VARIOUS CLOSURES

STATE OF WISCONSIN
DEPARTMENT OF TRANSPORTATION

APPROVED
May 2023 — DATE
/S/ Andrew Heidtke — WORK ZONE ENGINEE
FHWA

6
SDD 15C02 - 09b

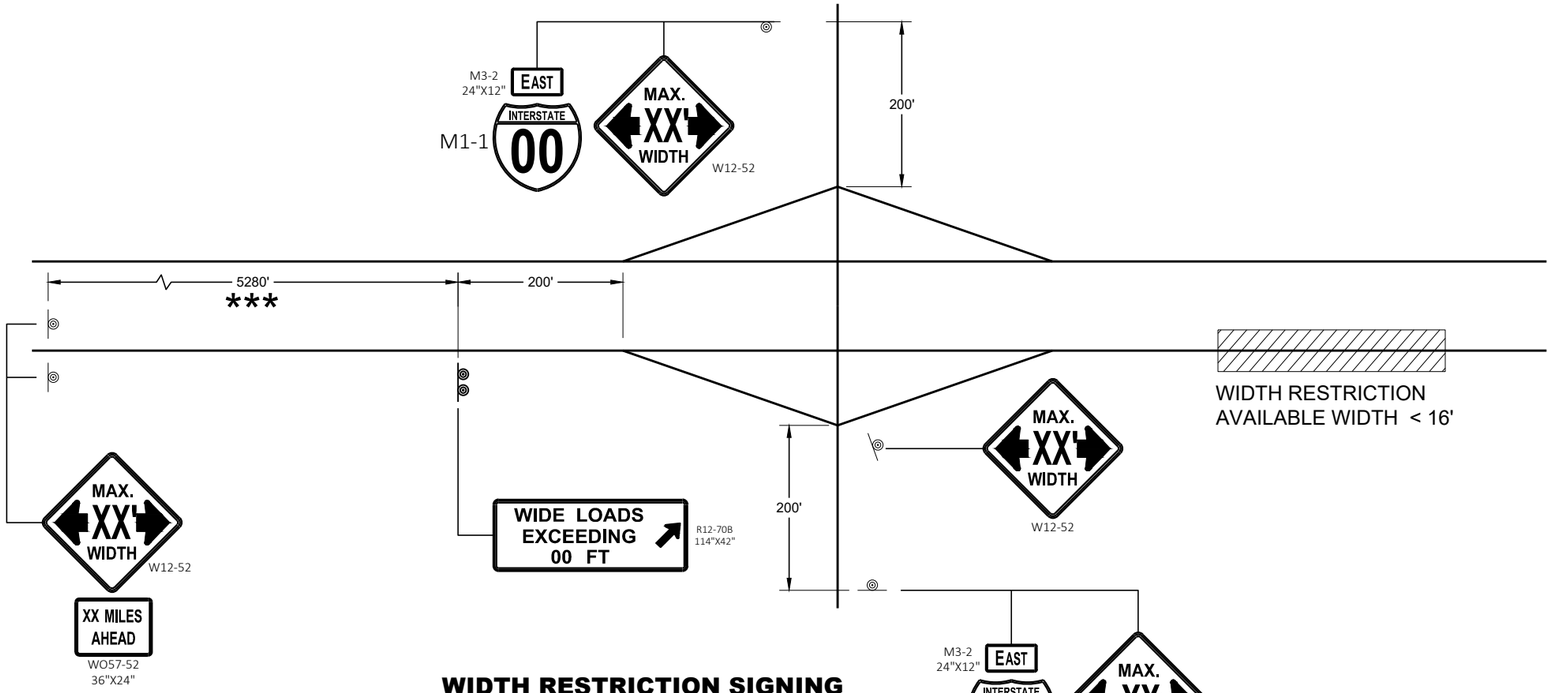

WIDTH RESTRICTION SIGNING

LEGEND

◎ SIGN ON PERMANENT SUPPORT

GENERAL NOTES

THE EXACT NUMBER, LOCATION AND SPACING OF ALL SIGNS SHALL BE ADJUSTED TO FIT FIELD CONDITIONS AS APPROVED BY THE ENGINEER.

THE SPACING BETWEEN SIGNS SHOULD BE ADJUSTED TO NOT CONFLICT WITH AND TO PROVIDE A DESIRABLE MINIMUM OF 200 FEET CLEARANCE TO EXISTING SIGNS THAT WILL REMAIN IN PLACE.

ANY SIGNS TEMPORARY OR EXISTING, WHICH CONFLICT WITH TRAFFIC CONTROL " IN USE" SHALL BE REMOVED OR COVERED AS NEEDED AND AS APPROVED BY THE ENGINEER.

ALL SIGNS ARE 48" X 48" UNLESS OTHERWISE NOTED.

"WO" SIGNS ARE THE SAME AS "W" SIGNS EXCEPT THE BACKGROUND IS ORANGE.

WIDTH ON SIGN TO BE APPROXIMATELY ONE FOOT LESS THAN AVAILABLE WIDTH.

* PLACE 500 FEET AFTER THE W20 - 1A AND 500 FEET BEFORE ADDITIONAL SIGNS FOR ROADWAYS WITH A PRE - CONSTRUCTION SPEED LIMIT OF 45 MPH OR MORE. FOR 35-40 MPH, USE 350 FOOT TYPICAL SPACING. FOR 25-30 MPH, USE 200 FOOT TYPICAL SPACING.

** SIGN SHALL BE VISIBLE FROM ROADWAY.

*** ADDITIONAL SIGNS NEEDED IF THERE IS AN ON RAMP BETWEEN SIGNS.

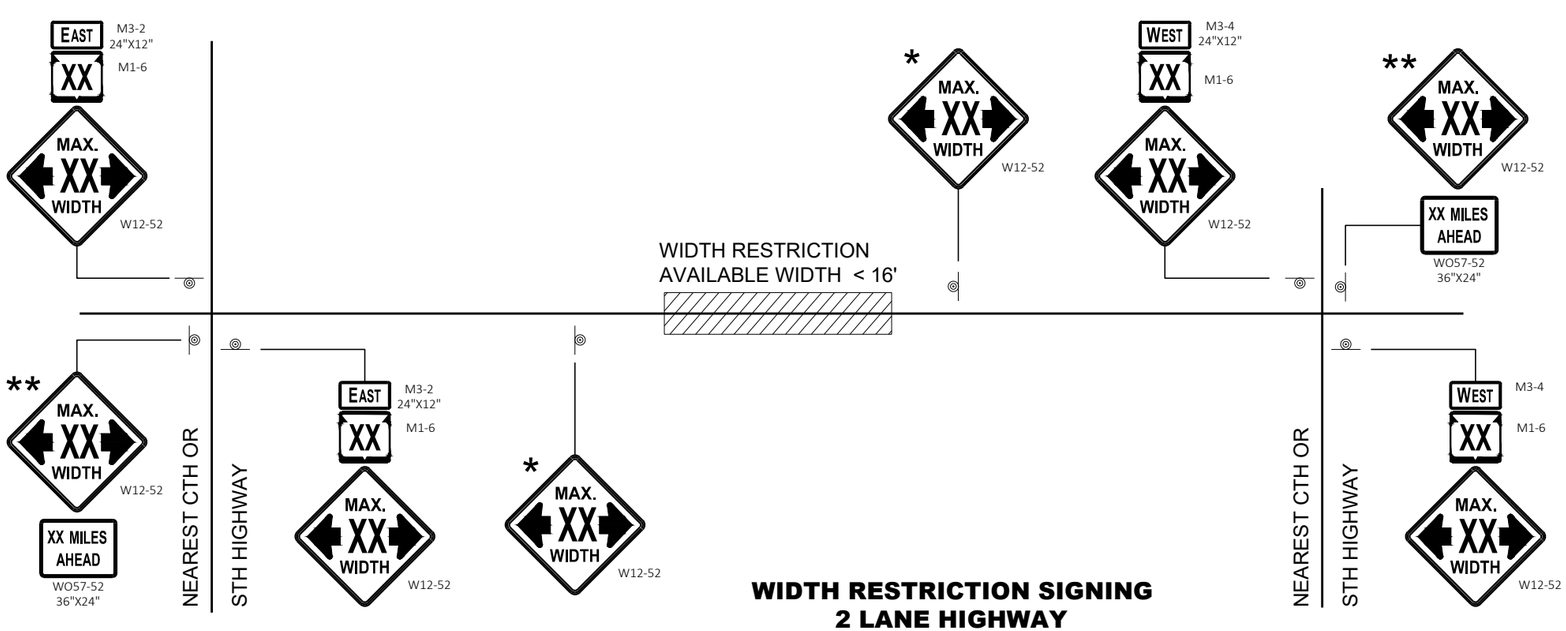

WIDTH RESTRICTION SIGNING
2 LANE HIGHWAY

WIDTH ON SIGN TO BE APPROX. 1 - FOOT LESS THAN AVAILABLE WIDTH

ADVANCED WIDTH RESTRICTION SIGNING

STATE OF WISCONSIN
DEPARTMENT OF TRANSPORTATION

APPROVED
May 2023 — DATE
/S/ Andrew Heidtke — WORK ZONE ENGINEER
FHWA

6
SDD 15C02 - 09f

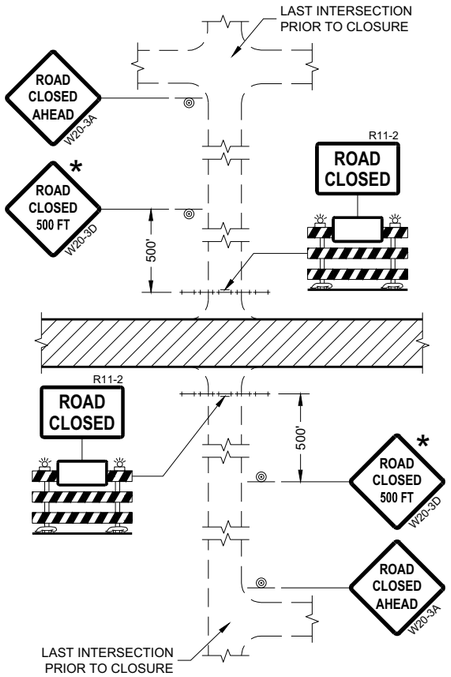

DETAIL 1
(NO ACCESS TO PROJECT)

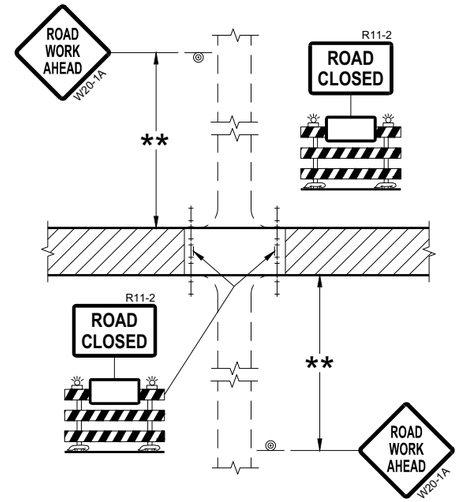

DETAIL 2
(PUBLIC CROSS-TRAFFIC MAINTAINED.
NO ACCESS TO PROJECT)

GENERAL NOTES

THE EXACT NUMBER, LOCATION, AND SPACING OF ALL SIGNS AND BARRICADES SHALL BE ADJUSTED TO FIT FIELD CONDITIONS AS APPROVED BY THE ENGINEER.

ANY SIGNS TEMPORARY OR EXISTING, WHICH CONFLICT WITH TRAFFIC CONTROL "IN USE" SHALL BE REMOVED OR COVERED AS NEEDED AND AS APPROVED BY THE ENGINEER.

THE SPACING BETWEEN TRAFFIC CONTROL SIGNS SHOULD BE ADJUSTED TO NOT CONFLICT WITH AND SHOULD PROVIDE A DESIRABLE MINIMUM OF 200 FEET CLEARANCE (500 FEET DESIRABLE) TO EXISTING SIGNS THAT WILL REMAIN IN PLACE.

IF A "STOP" SIGN MUST BE REMOVED FOR A WORK OPERATION, A TEMPORARY "STOP" SIGN SHALL BE PLACED PRIOR TO THE SIGN REMOVAL, OR A FLAGGER SHALL BE PROVIDED UNTIL THE SIGN IS REESTABLISHED.

BARRICADES THAT MUST BE MOVED FOR A WORK OPERATION SHALL BE IMMEDIATELY REESTABLISHED UPON COMPLETION OF THE OPERATION OR FOR CONTINUING OPERATIONS, AT THE END OF EACH WORKING DAY.

SIGNS THAT WILL BE IN PLACE LESS THAN SEVEN CONTINUOUS DAYS AND NIGHTS MAY BE MOUNTED ON PORTABLE SUPPORTS.

ALL TYPE III BARRICADES SHALL HAVE RAILS REFLECTORIZED ON BOTH FACES. STRIPES SHALL BE PROPERLY SLOPED DOWN TOWARD THE TRAFFIC SIDE OR AS SHOWN IN THE ROAD CLOSURE BARRICADE DETAIL "D" FOR FULL ROAD CLOSURES.

TYPE "A" LOW-INTENSITY FLASHING WARNING LIGHTS SHALL BE VISIBLE ON BOTH SIDES OF THE BARRICADE.

THE R11-2, R11-3, AND R11-4 SIGNS PLACED ON BARRICADES SHALL COVER NO MORE THAN THE TOP RAIL. THE SIGNS SHALL NOT COVER ANY PORTION OF THE MIDDLE OR BOTTOM RAILS.

ALL SIGNS SHALL BE 48" X 48" UNLESS OTHERWISE NOTED BELOW:
R11-2 SHALL BE 48" X 30".
R11-4 AND R11-3 SHALL BE 60" X 30".

* OMIT THE "ROAD CLOSED 500 FT." SIGN IF THE LAST INTERSECTION IS 500 FEET OR LESS FROM THE WORK ZONE.

** 500' MAX. OR AT LAST INTERSECTION, WHICHEVER IS CLOSEST.

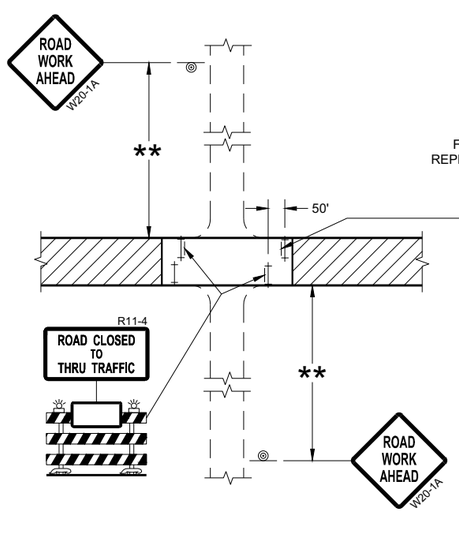

DETAIL 3
(PUBLIC CROSS-TRAFFIC MAINTAINED.
CONTRACTOR, LOCAL BUSINESS AND
RESIDENT ACCESS TO PROJECT)

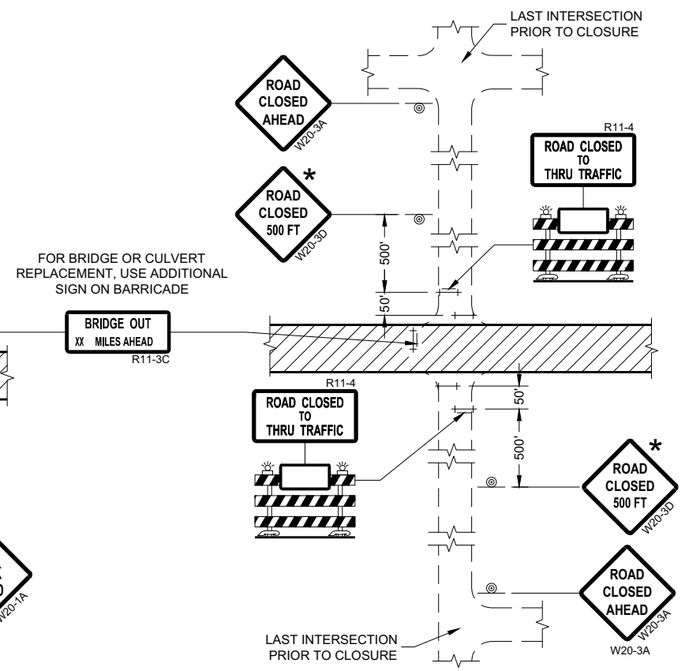

DETAIL 4
(CONTRACTOR, LOCAL BUSINESS AND
RESIDENT ACCESS TO PROJECT)

LEGEND

- SIGN ON PERMANENT SUPPORT
- TYPE III BARRICADE
- TYPE III BARRICADE WITH ATTACHED SIGN
- TYPE "A" WARNING LIGHT (FLASHING)
- WORK AREA

BARRICADES AND SIGNS FOR SIDEROAD CLOSURES

STATE OF WISCONSIN
DEPARTMENT OF TRANSPORTATION

APPROVED
July 2018 — DATE
/S/ Andrew Heidtke — WORK ZONE ENGINEE
FHWA

6

SDD 15C03 - 05

GENERAL NOTES

THE EXACT NUMBER, LOCATION, AND SPACING OF ALL SIGNS AND DEVICES SHALL BE ADJUSTED TO FIT FIELD CONDITIONS.

THE SPACING BETWEEN TRAFFIC CONTROL SIGNS SHOULD BE ADJUSTED TO NOT CONFLICT WITH AND SHOULD PROVIDE A MINIMUM OF 200 FEET (500 FEET DESIRABLE) CLEARANCE TO EXISTING SIGNS THAT WILL REMAIN IN PLACE.

ALL SIGNS ARE 48" X 48" UNLESS OTHERWISE NOTED.

SIGNS THAT WILL BE IN PLACE LESS THAN SEVEN CONTINUOUS DAYS AND NIGHTS MAY BE MOUNTED ON PORTABLE SUPPORTS.

IF A "STOP" SIGN MUST BE REMOVED FOR A WORK OPERATION, A TEMPORARY "STOP" SIGN SHALL BE PLACED PRIOR TO THE SIGN REMOVAL, OR A FLAGGER SHALL BE PROVIDED UNTIL THE SIGN IS REESTABLISHED.

* OMIT G20-1 SIGNS IF LENGTH OF WORK AREA IS 2 MILES OR LESS

** PLACE AN ADDITIONAL W20-1A "ROAD WORK AHEAD" SIGN IF WORK AREA WITHIN THE PROJECT IS SEPARATED BY MORE THAN 2 MILES FROM PREVIOUS WORK AREA.

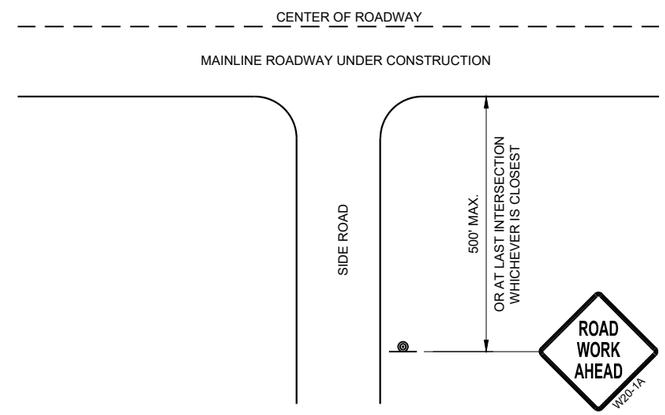

TYPICAL SIDE ROAD APPROACH WARNING SIGN DETAIL

LEGEND

- SIGN ON PERMANENT SUPPORT
- DIRECTION OF TRAFFIC
- WORK AREA

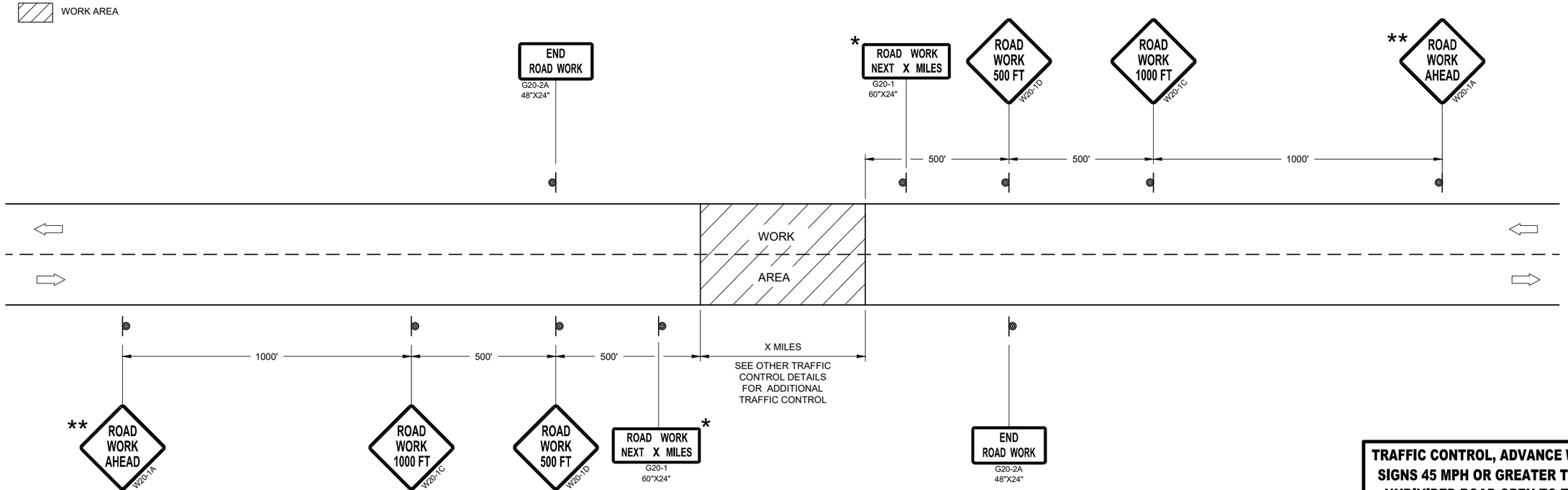

TRAFFIC CONTROL, ADVANCE WARNING SIGNS 45MPH OR GREATER

TRAFFIC CONTROL, ADVANCE WARNING SIGNS 45 MPH OR GREATER TWO-WAY UNDIVIDED ROAD OPEN TO TRAFFIC

STATE OF WISCONSIN
DEPARTMENT OF TRANSPORTATION

APPROVED
July 2018 — DATE
/S/ Andrew Heidtke — WORK ZONE ENGINEE
FHWA

6
SDD 15C04 - 05

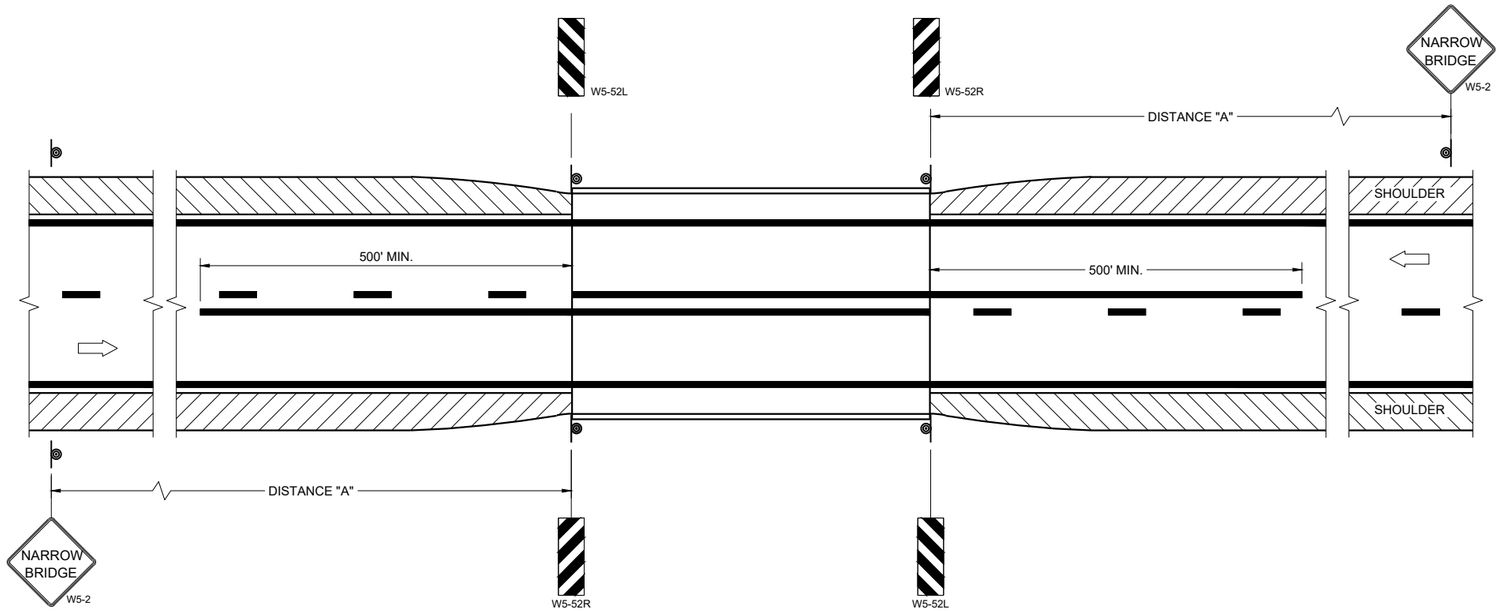

SITUATION 1

WARRANTING CRITERIA:
BRIDGE WIDTH IS AT LEAST 16 FEET BUT LESS THAN 24 FEET.

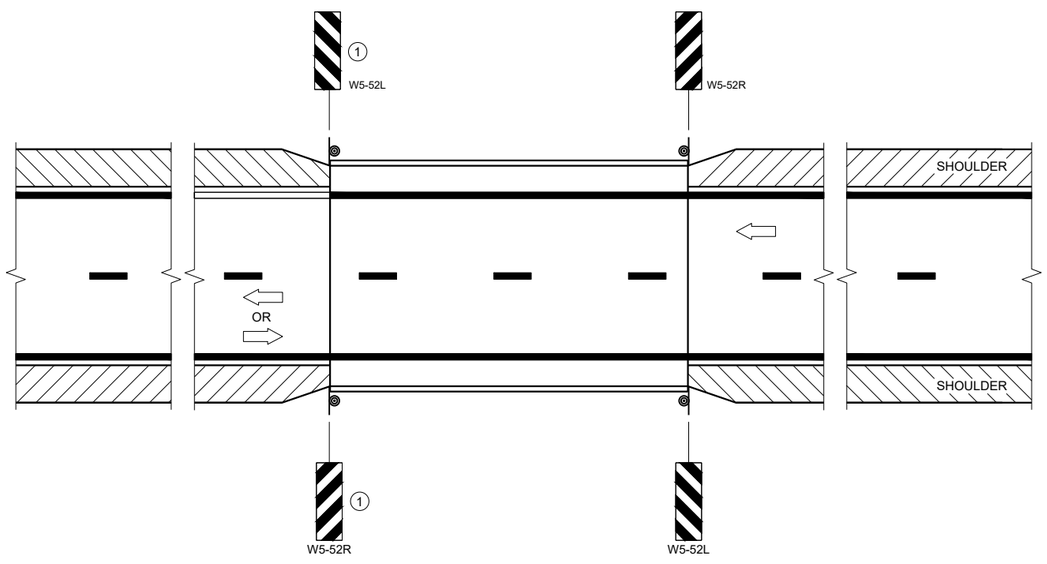

SITUATION 2

WARRANTING CRITERIA:
1. BRIDGE WIDTH IS AT LEAST 24 FEET AND
2. BRIDGE SHOULDER WIDTH IS LESS THAN 6 FEET

GENERAL NOTES

DETAILS OF TRAFFIC CONTROL DEVICES AND INSTALLATION NOT SHOWN ON THE DRAWING SHALL CONFORM TO THE PERTINENT REQUIREMENTS OF THE STANDARD SPECIFICATIONS, THE SPECIAL PROVISIONS, AND THE MANUAL ON UNIFORM TRAFFIC CONTROL DEVICES.

LOCATE W5-52 SIGN POST(S) BEHIND GUARDRAIL WHEN PRESENT.

PLACE THE EDGE OF THE W5-52 SIGN IN LINE WITH FACE OF CURB OR PARAPET.

ON BRIDGE ONLY PROJECTS, PLACE 300 FEET OF EDGELINE.

OMIT EDGELINES ON ROADWAYS WITHOUT EXISTING EDGELINES.

(1) OMIT ON ONE-WAY TRAVELED WAYS.

LEGEND

SIGN ON PERMANENT SUPPORT

DIRECTION OF TRAFFIC

DISTANCE TABLE

POSTED OR 85TH PERCENTILE SPEED	DISTANCE "A"
25	150'
30	200'
35	250'
40	300'
45	400'
50	550'
55	700'

SIGNING AND MARKING FOR TWO LANE BRIDGES

STATE OF WISCONSIN
DEPARTMENT OF TRANSPORTATION

APPROVED
May 2023 — DATE
/S/ Jeannie Silver — Statewide Pavement Marking Engineer
FHWA

6

SDD 15C06-12

*CONFIRM MARKING LINE WIDTH WITH THE MISCELLANEOUS QUANTITIES

GENERAL NOTES

DETAILS OF CONSTRUCTION NOT SHOWN ON THIS DRAWING SHALL CONFORM TO STANDARD SPECIFICATIONS AND SPECIAL PROVISIONS.

1. LOCATE THE NO PASSING ZONE W14-3 SIGN WITHIN 50 FEET OF THE "T" MARKING
2. MEASURE FROM EDGE OF MARKING TO JOINT LINE. THIS DOES NOT INCLUDE SPACE NEEDED FOR GROOVING OPERATIONS.

LEGEND

"T" MARKING

SIGN ON PERMANENT SUPPORT

DIRECTION OF TRAFFIC

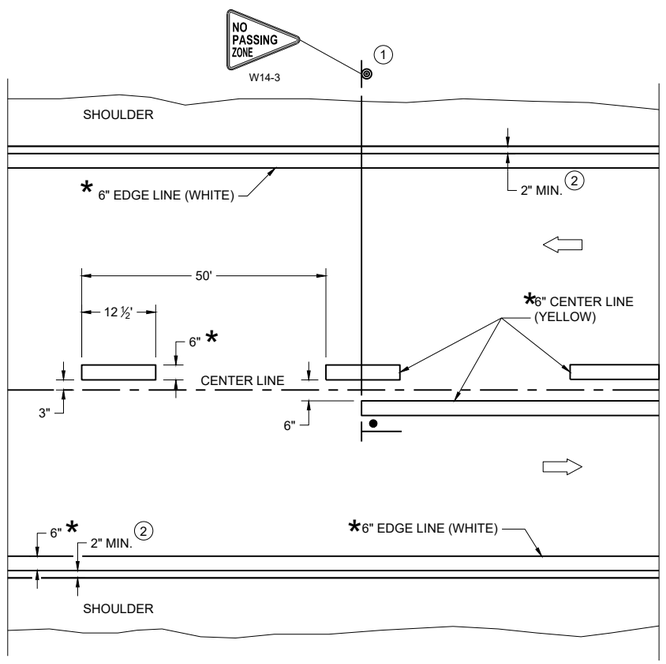

TWO WAY TRAFFIC

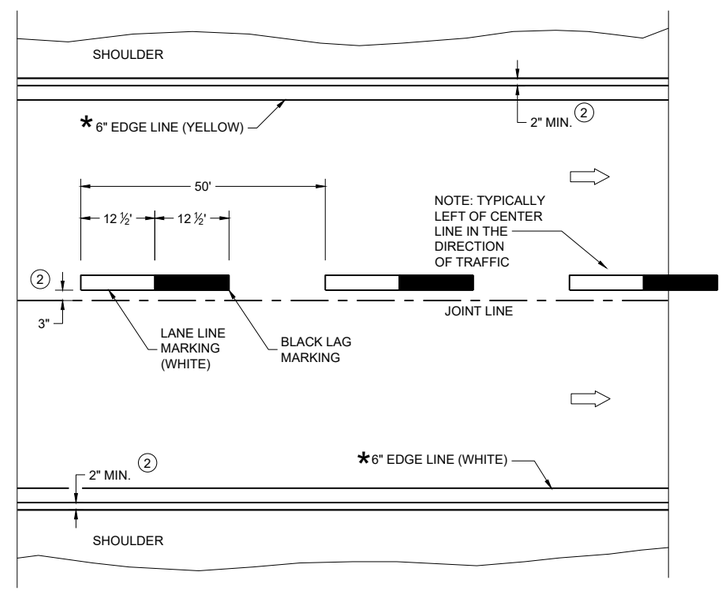

ONE WAY TRAFFIC

PERMANENT PAVEMENT MARKING

6

SDD 15C08-23a

PERMANENT LONGITUDINAL PAVEMENT MARKINGS

STATE OF WISCONSIN
DEPARTMENT OF TRANSPORTATION

APPROVED

May 2023 — DATE

/S/ Jeannie Silver — Statewide Pavement Marking Engineer

FHWA

6

SDD 15C08-23a

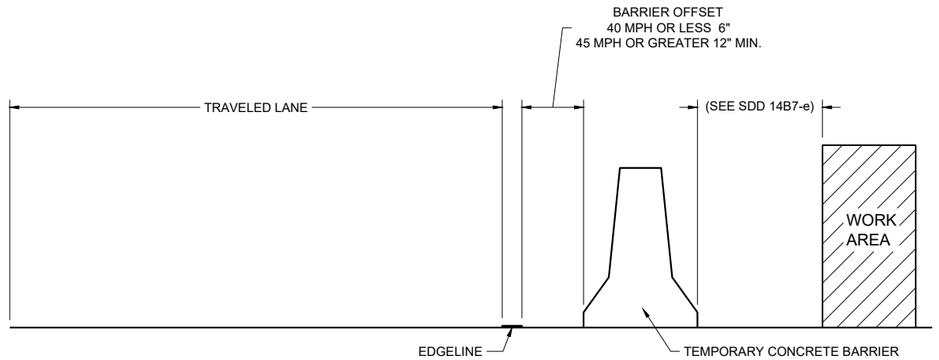

TEMPORARY BARRIER OFFSET FROM EDGELINE

GENERAL NOTES

DETAILS OF CONSTRUCTION NOT SHOWN ON THIS DRAWING SHALL CONFORM TO STANDARD SPECIFICATIONS AND SPECIAL PROVISIONS.

LEGEND

⇨ DIRECTION OF TRAFFIC

*CONFIRM MARKING LINE WIDTH WITH THE MISCELLANEOUS QUANTITIES

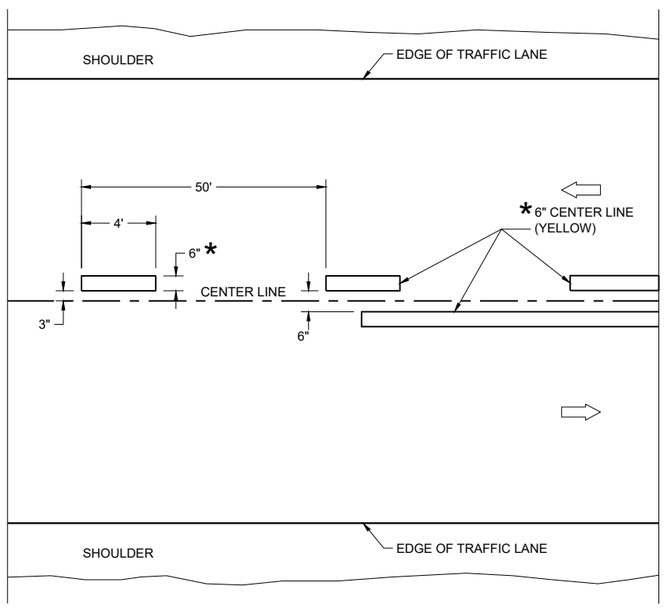

TWO WAY TRAFFIC

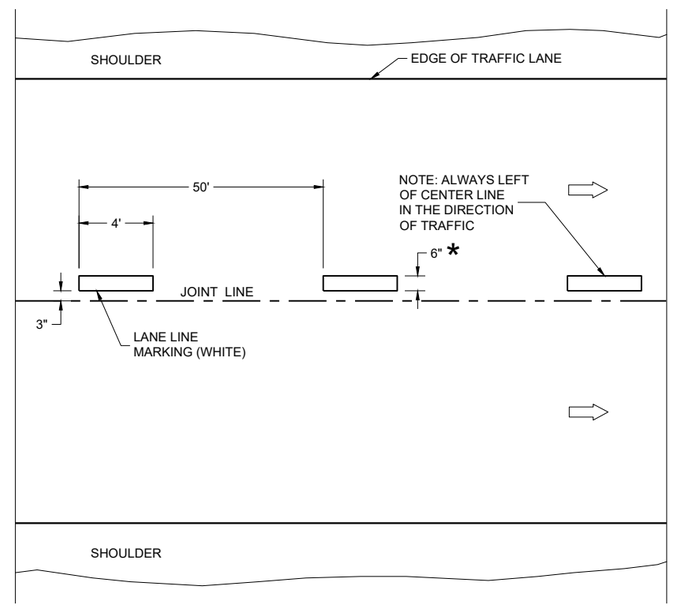

ONE WAY TRAFFIC

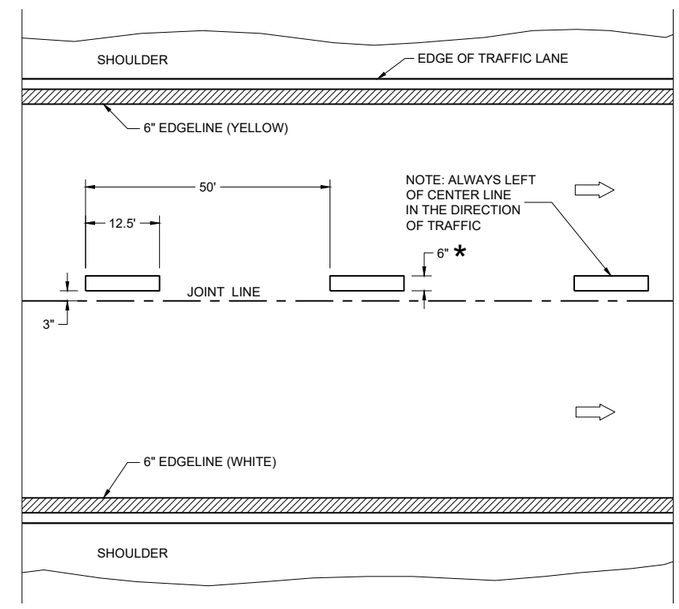

FREEWAYS AND EXPRESSWAYS

TEMPORARY PAVEMENT MARKING

TEMPORARY LONGITUDINAL PAVEMENT MARKING
STATE OF WISCONSIN DEPARTMENT OF TRANSPORTATION
APPROVED May 2023 — DATE /S/ Jeannie Silver — Statewide Pavement Marking Engineer FHWA

6

SDD 15C08-23b

6

SDD 15C08-23b

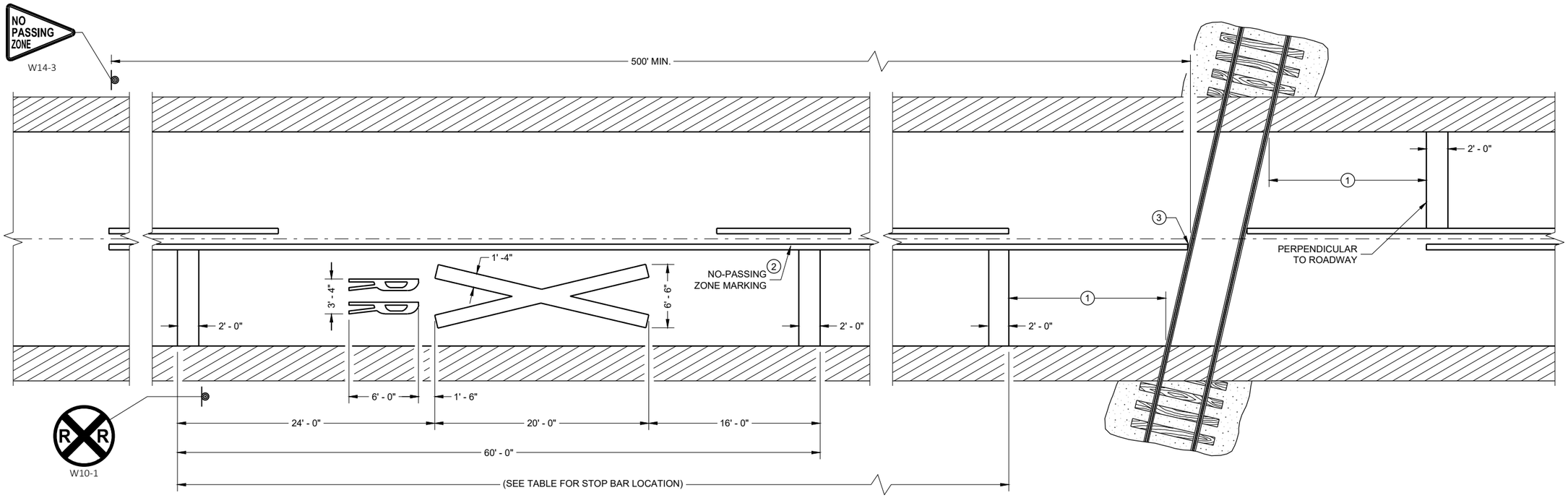

PAVEMENT MARKING

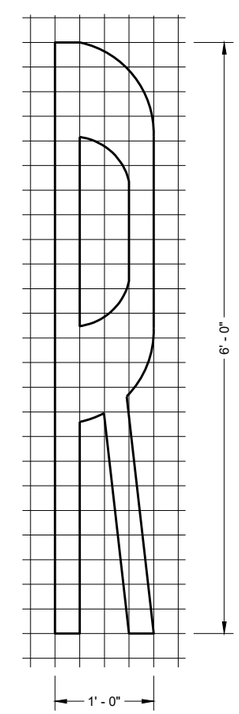

LEGEND

SIGN ON PERMANENT SUPPORT

GENERAL NOTES

DETAILS OF CONSTRUCTION, MATERIALS, AND WORKMANSHIP NOT SHOWN ON THIS DRAWING SHALL CONFORM TO THE PERTINENT REQUIREMENTS OF THE STANDARD SPECIFICATIONS AND THE APPLICABLE SPECIAL PROVISIONS.

ON MULTI-LANE ROADS THE TRANSVERSE BANDS SHOULD EXTEND ACROSS ALL APPROACH LANES, AND INDIVIDUAL R X R SYMBOLS SHOULD BE USED IN EACH APPROACH LANE.

CENTER OR LANE LINES AND NO-PASSING ZONE MARKINGS SHOWN ON THIS DRAWING ARE REQUIRED AND PAID FOR UNDER OTHER ITEMS IN THE CONTRACT.

TRACE EXISTING SYMBOL WHERE EXISTING SYMBOLS ARE PLACED.

1. PLACE STOP BAR APPROXIMATELY 8 FEET IN ADVANCE OF THE GATE (IF PRESENT), BUT NO CLOSER THAN 15 FEET IN ADVANCE OF THE NEAREST RAIL. FIELD-FIT STOP BAR TO MAXIMIZE VIEW OF APPROACHING TRAIN.
2. 500' MINIMUM. MARKING LIMITS MAY BE EXTENDED AS DIRECTED BY THE ENGINEER TO MEET ADJACENT NO-PASSING ZONE MARKINGS.
3. FOR MULTIPLE TRACK CROSSINGS, THE BARRIER LINE SHALL EXTEND TO THE NEAR RAIL OF THE FURTHEST TRACK IN THE DIRECTION OF HIGHWAY TRAVEL.

DISTANCE TABLE

TABLE BASED UPON 2C-4 WISCONSIN SUPPLEMENT OF MANUAL ON UNIFORM TRAFFIC CONTROL DEVICES.

POSTED SPEED (M.P.H.)	DIMENSION RANGE (FEET)
25	150* - 250'
30	200* - 300'
35	250* - 450'
40	300* - 500'
45	400* - 650'
50	550* - 800'
55	750* - 1000'
60	1000* - 1250'
65	1000* - 1250'

* THE MINIMUM DISTANCES IN THE TABLE ARE DESIRABLE AND SHOULD BE USED. THE DISTANCES MAY BE INCREASED UP TO THE MAXIMUM TO ALLOW FOR FIELD CONDITIONS SUCH AS THE CLOSED PROXIMITY OF DRIVEWAYS, BRIDGES, SIDE ROADS OR OTHER FEATURES THAT WOULD PROHIBIT THE MINIMUM DISTANCES FROM BEING USED.

SIGNING AND PAVEMENT MARKING DETAILS FOR RAILROAD - HIGHWAY GRADE CROSSINGS

STATE OF WISCONSIN
DEPARTMENT OF TRANSPORTATION

APPROVED
May 2023 — DATE
/S/ Matthew R. Rauch — STATE SIGNING AND MAF ENGINEER
FHWA

6
SDD 15C09-13a

LEGEND

SIGN ON PORTABLE OR PERMANENT SUPPORT

TEMPORARY PORTABLE RUMBLE STRIP ARRAY

DIRECTION OF TRAFFIC

WORK AREA

FLAGGER, EQUIPPED WITH STOP/SLOW PADDLE FASTENED ON SUPPORT STAFF

GENERAL NOTES

DETAILS OF TRAFFIC CONTROL DEVICES AND INSTALLATION NOT SHOWN ON THIS DRAWING SHALL CONFORM TO THE PERTINENT REQUIREMENTS OF THE STANDARD SPECIFICATIONS, THE SPECIAL PROVISIONS, AND THE MANUAL ON UNIFORM TRAFFIC CONTROL DEVICES.

ALL SIGNS ARE 48" X 48" UNLESS OTHERWISE NOTED.

"WO" SIGNS ARE THE SAME AS "W" SIGNS EXCEPT THE BACKGROUND IS ORANGE.

THE EXACT NUMBER, LOCATION AND SPACING OF ALL SIGNS, DEVICES, AND LOCATION OF ALL FLAGGERS SHALL BE ADJUSTED TO FIT FIELD CONDITIONS AS APPROVED BY THE ENGINEER.

THE FIRST ADVANCE WARNING SIGN SHOULD TYPICALLY BE LOCATED IN ADVANCE OF THE ANTICIPATED TRAFFIC BACKUP OR QUEUE.

WHEN A SIDE ROAD OR RAMP INTERSECTS THE FACILITY ON WHICH THE WORK IS BEING PERFORMED, ADDITIONAL TRAFFIC CONTROLS SHALL BE PROVIDED AS SPECIFIED IN THE PLANS AND/OR THE SPECIAL PROVISIONS OR AS APPROVED BY THE ENGINEER.

FLAGGING

FLAGGERS SHALL BE IN SIGHT OF EACH OTHER OR IN DIRECT COMMUNICATION AT ALL TIMES. THEY SHALL BE EQUIPPED WITH STOP/SLOW PADDLES FASTENED ON SUPPORT STAFFS. WHEN THE FLAGGING OPERATION IS NOT IN EFFECT REMOVE TEMPORARY PORTABLE RUMBLE STRIPS PRIOR TO COVERING OR REMOVING ALL ADVANCE SIGNING.

(1) FOR MOVING WORK OPERATIONS, POST ADDITIONAL W20-7A FLAGGER SIGNS AT APPROXIMATELY 3,500' INTERVALS IN THE MOVING WORK OPERATION OR AS APPROVED BY THE ENGINEER.

(2) SIGN NOT REQUIRED IF FLAGGING OPERATION OCCURS WITHIN A SIGNED ROAD WORK ZONE AREA.

WHEN THE DISTANCE BETWEEN FLAGGERS EXCEEDS 2 MILES, A PILOT CAR IS REQUIRED. WHEN CURVES REDUCE SIGHT DISTANCE BELOW 400', A PILOT CAR IS REQUIRED.

TEMPORARY PORTABLE RUMBLE STRIPS

UTILIZE TEMPORARY PORTABLE RUMBLE STRIPS ON ALL FLAGGING OPERATIONS.

(3) EACH TEMPORARY PORTABLE RUMBLE STRIP ARRAY CONSISTS OF THREE RUMBLE STRIPS PLACED TRANSVERSE ACROSS THE LANE AT THE LOCATIONS SHOWN. WITHIN EACH ARRAY, SPACING BETWEEN RUMBLE STRIPS SHALL BE 15 FEET ON CENTER

ONLY USE TEMPORARY PORTABLE RUMBLE STRIPS FROM THE APPROVED PRODUCTS LIST.

INSTALL TEMPORARY RUMBLE STRIPS PER MANUFACTURER'S RECOMMENDATIONS.

PLACE ADVANCE SIGNING PRIOR TO INSTALLING TEMPORARY RUMBLE STRIPS.

DO NOT INSTALL TEMPORARY PORTABLE RUMBLE STRIPS ON GRAVEL, MILLED SURFACES, OR ASPHALT THAT HAS BEEN PAVED LESS THAN 12 HOURS.

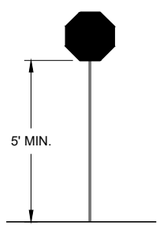

STOP/SLOW PADDLE ON SUPPORT STAFF

SIGN AND TEMPORARY RUMBLE STRIP ARRAY SPACING TABLE

SPEED LIMIT	SPACING "A"
25-30 MPH	200'
35-40 MPH	350'
45-55 MPH	500'

USE OF WO3-4 SIGN IS OPTIONAL. WHEN USED, THIS SIGN SHALL BE LOCATED BETWEEN THE W20-7A AND W20-4A SIGNS, USING SPACING "A".

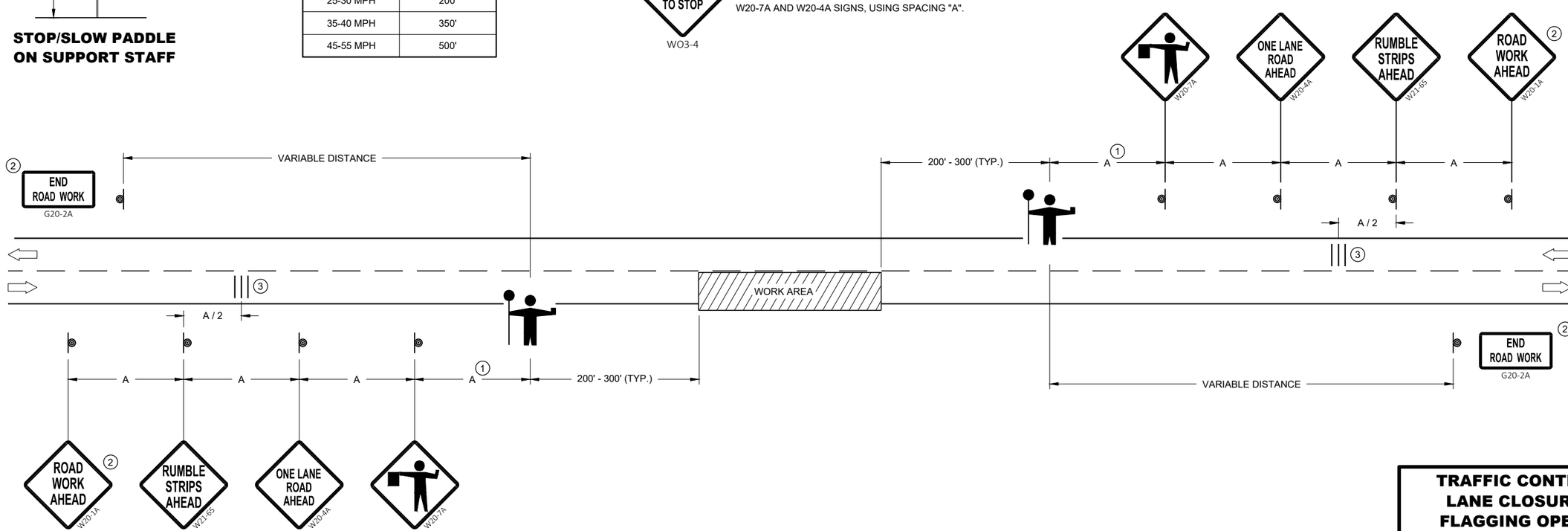

TRAFFIC CONTROL FOR LANE CLOSURE WITH FLAGGING OPERATION

STATE OF WISCONSIN
DEPARTMENT OF TRANSPORTATION

APPROVED
May 2022 — DATE
/S/ Andrew Heidtke — WORK ZONE ENGINEE
FHWA

6

SDD 15C12 - 09a

LEGEND

V1 LEAD VEHICLE

V2 MARKING VEHICLE

V3 SHADOW VEHICLE

TRUCK MOUNTED ATTENUATOR (TMA)

SIGN ON TEMPORARY SUPPORT

DIRECTION OF TRAFFIC

GENERAL NOTES

ALL VEHICLES SHALL BE EQUIPPED WITH TWO 360 DEGREE HIGH INTENSITY YELLOW FLASHING LIGHTS OR STROBE LIGHTS AND OPERATED WITH HEADLIGHTS TURNED ON.

ALL VEHICLES SHALL BE EQUIPPED WITH REAR FACING TYPE B OR C FLASHING ARROW PANEL OPERATING IN CAUTION MODE. SIGNS PLACED ON VEHICLES MUST NOT OBSCURE THE ARROW PANEL.

ALL SIGNS ARE 48" X 48" UNLESS OTHERWISE SPECIFIED.

DISTANCE BETWEEN VEHICLES MAY VARY ACCORDING TO TERRAIN, SIGHT DISTANCE, PAINT DRYING TIME, AND OTHER FACTORS. WHENEVER ADEQUATE STOPPING SIGHT DISTANCE EXISTS TO THE REAR, SHADOW VEHICLES SHOULD MAINTAIN THE MINIMUM DISTANCE FROM THE WORK VEHICLE AND PROCEED AT THE SAME SPEED AS THE WORK VEHICLE. SHADOW VEHICLES SHOULD SLOW DOWN IN ADVANCE OF VERTICAL AND HORIZONTAL CURVES THAT RESTRICT SIGHT DISTANCE.

THE WORK AND SHADOW VEHICLES SHOULD PULL OVER PERIODICALLY TO ALLOW TRAFFIC TO PASS.

WHEN NO WORK ACTIVITY IS TAKING PLACE, REMOVE OR LAY STATIONARY SIGNS AND SUPPORTS FLAT ON THE GRADE WITH UPRIGHTS ORIENTED PARALLEL TO AND DOWNSTREAM FROM TRAFFIC.

CONES SHOULD BE USED BETWEEN THE MARKING AND SHADOW VEHICLE AT 100 FOOT SPACING. CONES MAY BE OMITTED ON PAINTED LINE IF APPROVED BY THE ENGINEER. CONSIDER PAVEMENT MARKING DRY OR CURE TIMES AND TRAFFIC VOLUME.

CONES SHALL BE A MINIMUM OF 28" FOR WET PAVEMENT MARKING .

1. SIGNS SHALL BE REPEATED APPROXIMATELY EVERY THREE MILES AND AFTER EVERY MAJOR INTERSECTION.
2. IF CONSTRUCTION WORK ZONE SIGNS ARE IN PLACE, W20-1A OR W21-63 ARE NOT REQUIRED.
3. V1 AND V2 CAN BE SWITCHED SO THAT THE MARKER IS THE LEAD VEHICLE.

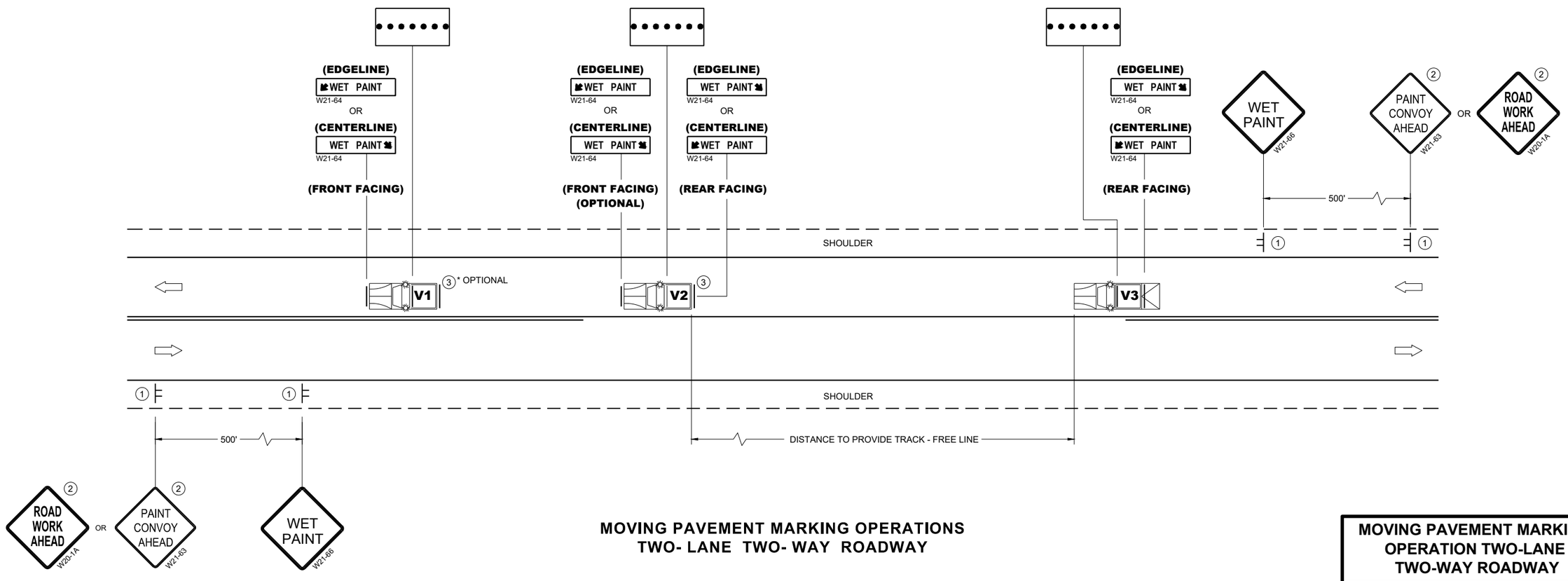

MOVING PAVEMENT MARKING OPERATIONS
TWO- LANE TWO- WAY ROADWAY

MOVING PAVEMENT MARKING OPERATION TWO-LANE TWO-WAY ROADWAY

STATE OF WISCONSIN
DEPARTMENT OF TRANSPORTATION

APPROVED
March 2024 — DATE
/S/ Andrew Heidtke — WORK ZONE ENGINEER
FHWA

6

SDD 15C19-9a

GENERAL NOTES

STOP SIGN SHALL BE PLACED A MINIMUM OF 6 FEET TO A MAXIMUM OF 50 FEET FROM THE EDGELINE LOCATION.

1. 18-INCH STOP LINES MAY BE DELETED OR ADDED BY THE REGION MARKING ENGINEER BASED ON VISIBILITY AND SIGHT LINES.
2. NO STOP LINE IS REQUIRED IF STOP SIGN IS LESS THAN OR EQUAL TO 40 FEET FROM THE EDGELINE.
3. NO STOP LINE IS REQUIRED IF STOP SIGN IS LESS THAN OR EQUAL TO 30 FEET FROM THE FLANGELINE EXTENSION.
4. MOVE CLOSER TO THE EDGE OF TRAVEL LINE AS NEEDED FOR VISIBILITY AND SIGHT LINES (NO CLOSER THAN 4 FEET).
5. LADDER BAR CROSSWALKS SHOULD ONLY BE USED FOR MID BLOCK CROSSINGS. USE 2 - 6" TRANSVERSE LINES INSTEAD.

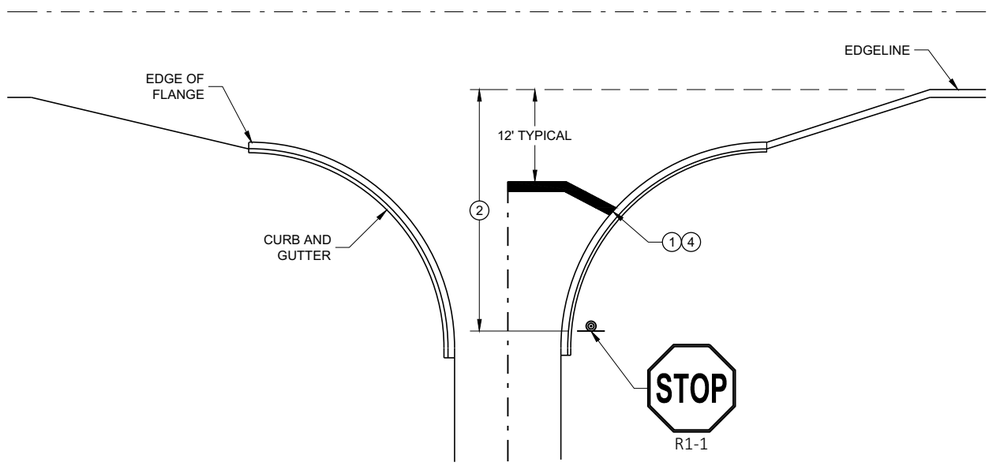

TYPICAL STOP LINE PAVEMENT MARKING WITH CURB AND GUTTER

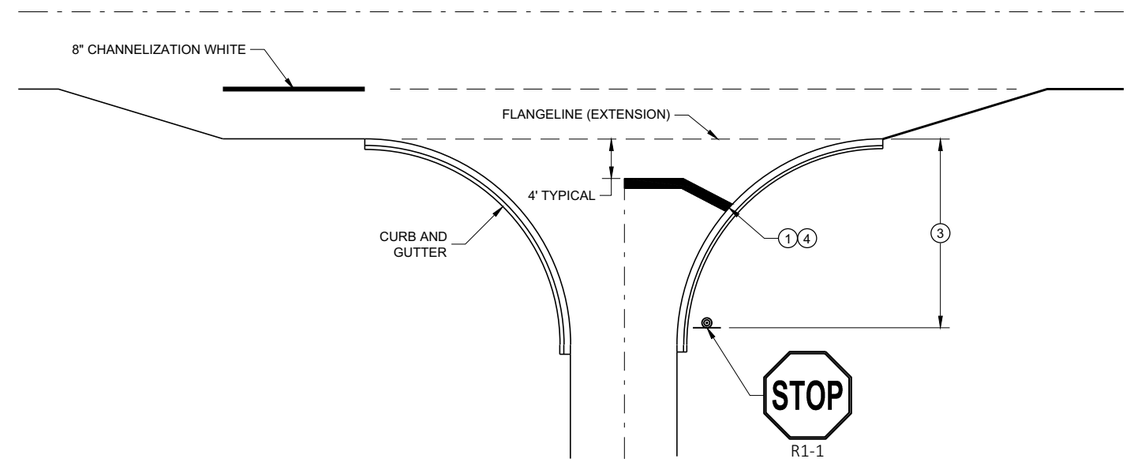

TYPICAL STOP LINE PAVEMENT MARKING FOR SIDEROADS WITH RIGHT TURN LANE

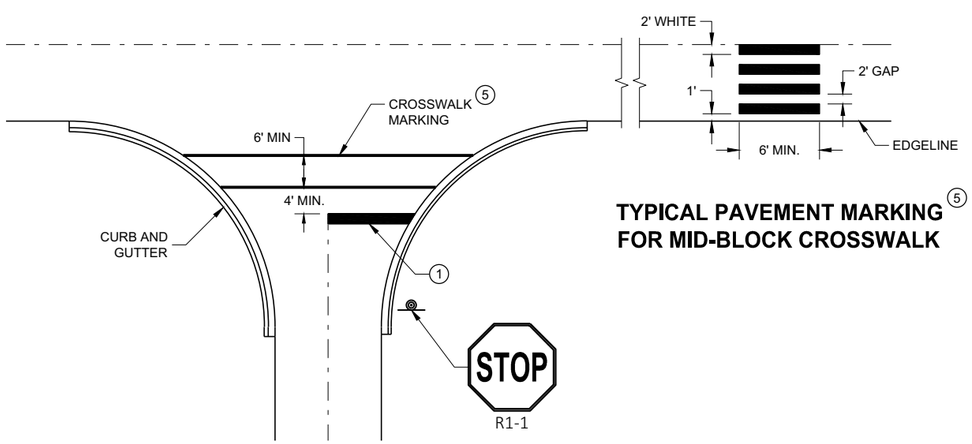

TYPICAL STOP LINE PAVEMENT MARKING FOR SIDEROADS WITH CROSSWALK MARKING

TYPICAL PAVEMENT MARKING 5 FOR MID-BLOCK CROSSWALK

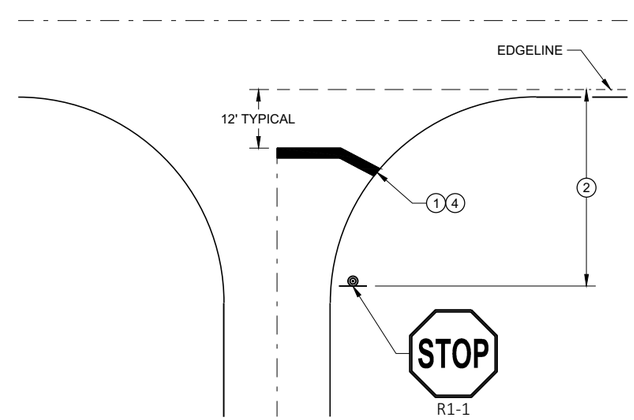

TYPICAL STOP LINE PAVEMENT MARKING WITHOUT CURB AND GUTTER

STOP LINE AND CROSSWALK PAVEMENT MARKING

STATE OF WISCONSIN
DEPARTMENT OF TRANSPORTATION

APPROVED
November 2019 — DATE
/S/ Matthew Rauch — STATE SIGNING AND MAF ENGINEER
FHWA

GENERAL NOTES

STOP SIGN SHALL BE PLACED A MINIMUM OF 6 FEET TO A MAXIMUM OF 50 FEET FROM THE EDGELINE LOCATION.

1. 18-INCH STOP LINES MAY BE DELETED OR ADDED BY THE REGION MARKING ENGINEER BASED ON VISIBILITY AND SIGHT LINES.
2. NO STOP LINE IS REQUIRED IF STOP SIGN IS LESS THAN OR EQUAL TO 40 FEET FROM THE EDGELINE.
3. NO STOP LINE IS REQUIRED IF STOP SIGN IS LESS THAN OR EQUAL TO 30 FEET FROM THE FLANGE LINE EXTENSION.
4. MOVE CLOSER TO THE EDGE OF TRAVEL LINE AS NEEDED FOR VISIBILITY AND SIGHT LINES (NO CLOSER THAN 4 FEET).
5. LADDER BAR CROSSWALKS SHOULD ONLY BE USED FOR MID BLOCK CROSSINGS. USE 2 - 6" TRANSVERSE LINES.
6. POSTED SPEED LIMITS OF 40 MPH OR GREATER USE A MINIMUM WIDTH OF 8' FOR MIDBLOCK CROSSWALKS

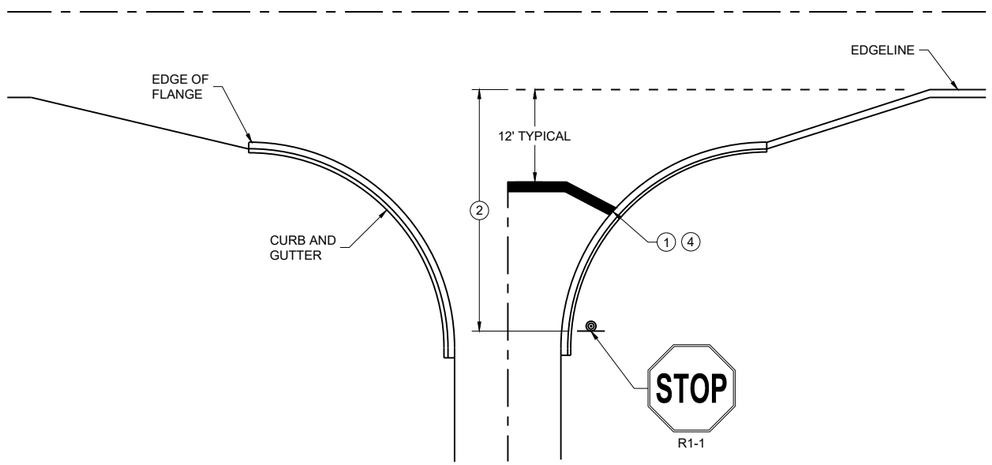

TYPICAL STOP LINE PAVEMENT MARKING WITH CURB AND GUTTER

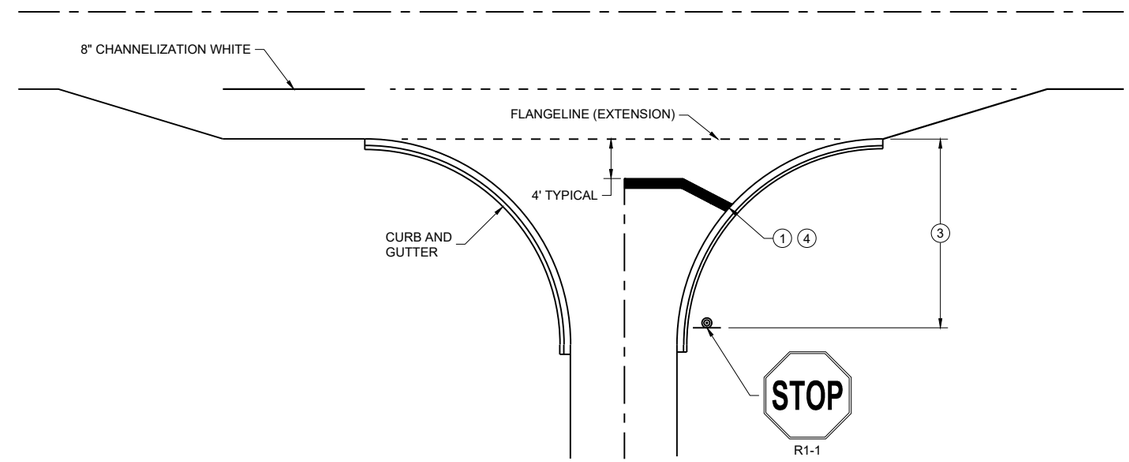

TYPICAL STOP LINE PAVEMENT MARKING FOR SIDE ROADS WITH RIGHT TURN LANE

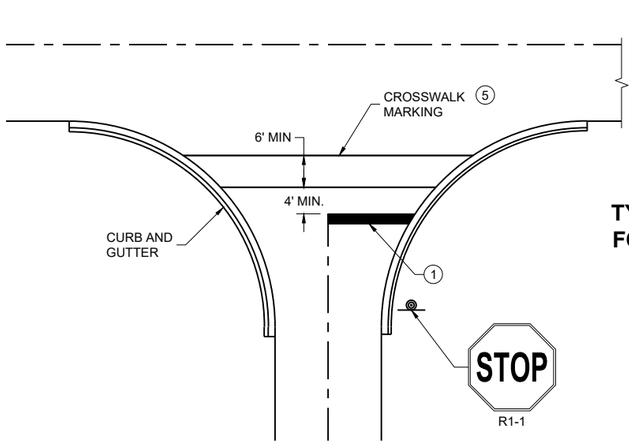

TYPICAL STOP LINE PAVEMENT MARKING FOR SIDE ROADS WITH CROSSWALK MARKING

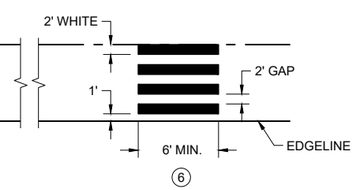

TYPICAL PAVEMENT MARKING FOR MID-BLOCK CROSSWALK 5

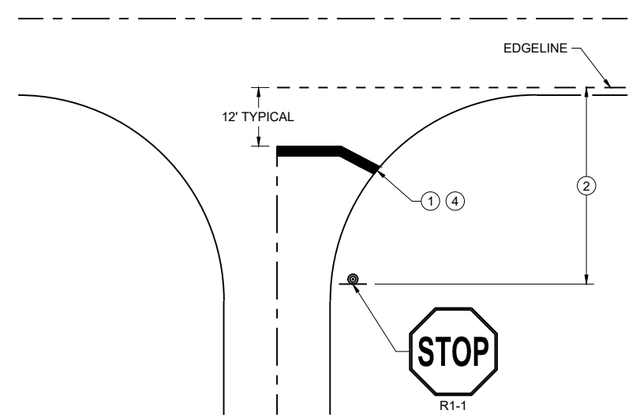

TYPICAL STOP LINE PAVEMENT MARKING WITHOUT CURB AND GUTTER

STOP LINE AND CROSSWALK PAVEMENT MARKING

STATE OF WISCONSIN
DEPARTMENT OF TRANSPORTATION

APPROVED
March 2024 — DATE
/S/ Matthew Rauch — STATE SIGNING AND MARKING ENGINEER

FHWA

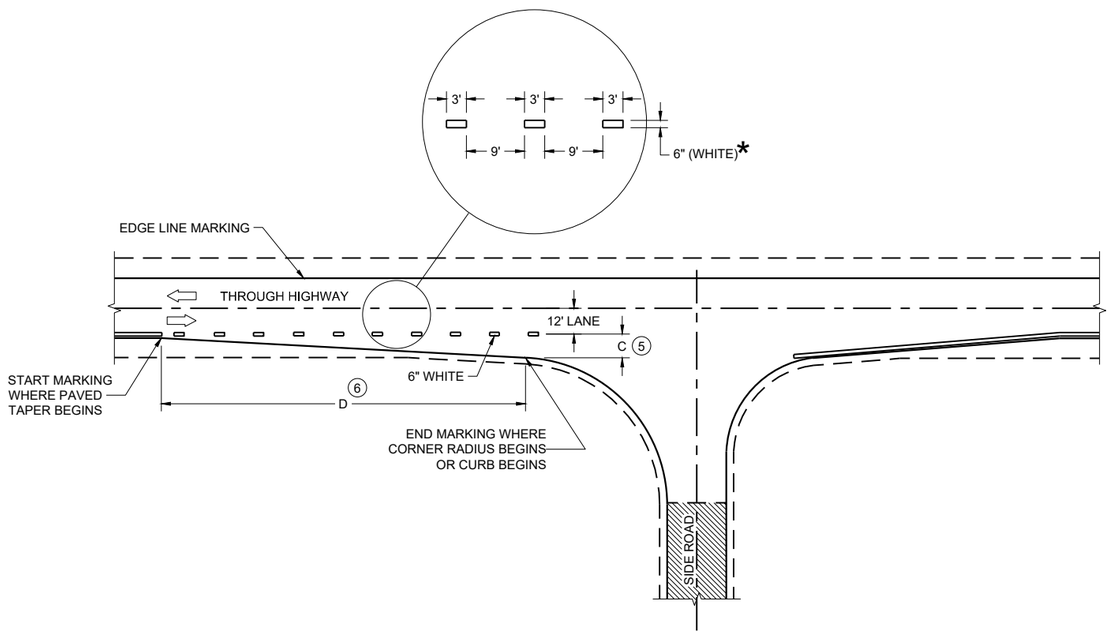

MINOR INTERSECTION

*CONFIRM MARKING LINE WIDTH WITH THE MISCELLANEOUS QUANTITIES

GENERAL NOTES

OMIT EDGE LINES THROUGH INTERSECTIONS. CONTINUE EDGE LINES THROUGH DRIVEWAYS.

1. WHEN DISTANCE "A" IS LESS THAN 250 FEET, OMIT LANE LINE.
2. WHEN DISTANCE "B" IS LESS THAN 100 FEET, OMIT CHANNELIZING LANE LINE.
3. BARRIER LINE ENDS AT SIDE ROAD PAVEMENT / SURFACE EDGE EXTENSION.
4. BARRIER LINE STARTS 500 FEET PRIOR TO THE BYPASS TAPER.
5. WHEN DISTANCE "C" IS LESS THAN 4 FEET, OMIT DOTTED EXTENSION.
6. WHEN DISTANCE "D" IS LESS THAN 50 FEET, OMIT DOTTED EXTENSION.

LEGEND

⇨ DIRECTION OF TRAVEL

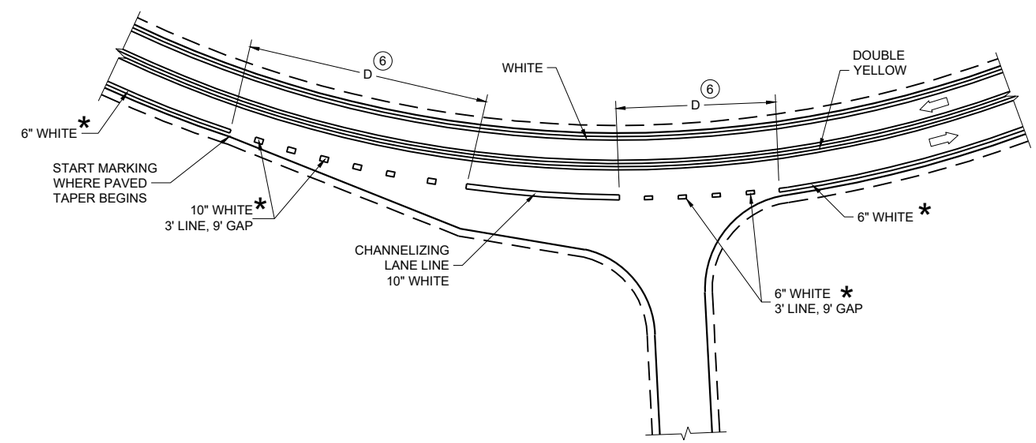

INTERSECTION ON OUTSIDE OF CURVE

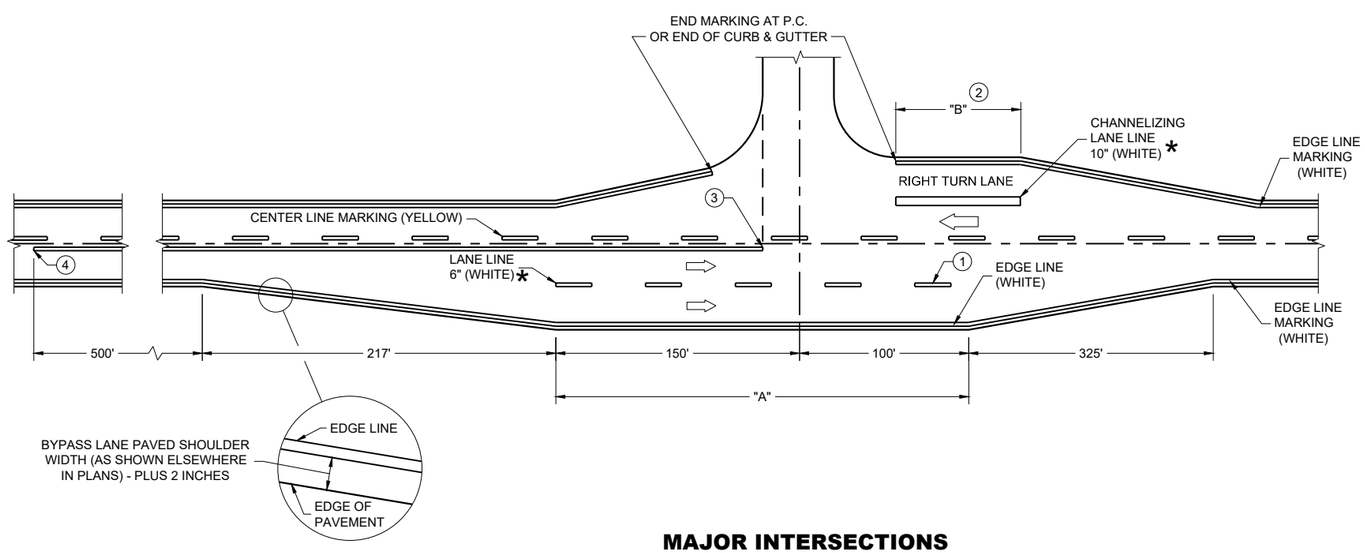

MAJOR INTERSECTIONS

(INTERSECTION WITH FULL RIGHT TURN LANE OR BYPASS LANE)

PAVEMENT MARKING (INTERSECTIONS)

STATE OF WISCONSIN
DEPARTMENT OF TRANSPORTATION

LEGEND

SIGN ON PERMANENT SUPPORT

TRAFFIC CONTROL DRUM

DIRECTION OF TRAFFIC

WORK ZONE

GENERAL NOTES

ALL SIGNS ARE 48"X48" UNLESS OTHERWISE NOTED. IF NECESSARY DUE TO SPACE CONSTRAINTS IN URBAN AREAS, 36" X 36" SIGNS MAY BE USED IF APPROVED BY THE REGIONAL TRAFFIC UNIT.

"WO" SIGN IS THE SAME AS "W" SIGN EXCEPT THE BACKGROUND IS ORANGE.

ANY SIGNS TEMPORARY OR EXISTING, WHICH CONFLICT WITH THE TRAFFIC CONTROL "IN USE" SHALL BE REMOVED OR COVERED AS NEEDED AND AS APPROVED BY THE ENGINEER.

THE EXACT NUMBER, LOCATION, AND SPACING OF ALL SIGNS AND DEVICES SHALL BE ADJUSTED TO FIT FIELD CONDITIONS AS APPROVED BY THE ENGINEER.

CHANNELIZING DEVICES PLACED ADJACENT TO WORK AREA SHALL BE PULLED BACK FROM THE TRAVEL LANE WHEN WORK IS NOT IN PROGRESS.

SIGNS THAT WILL BE IN PLACE LESS THAN 7 CONTINUOUS DAYS AND NIGHTS MAY BE MOUNTED ON PORTABLE SUPPORTS.

W20-1A AND G20-2A SIGNS ARE NOT REQUIRED IF THE WORK AREA IS WITHIN A LARGER WORK ZONE WHERE THESE SIGNS ARE ALREADY PRESENT. G20-2A SIGNS MAY ALSO BE OMITTED IF DURATION OF WORK IS LESS THAN 7 CONTINUOUS DAYS AND NIGHTS.

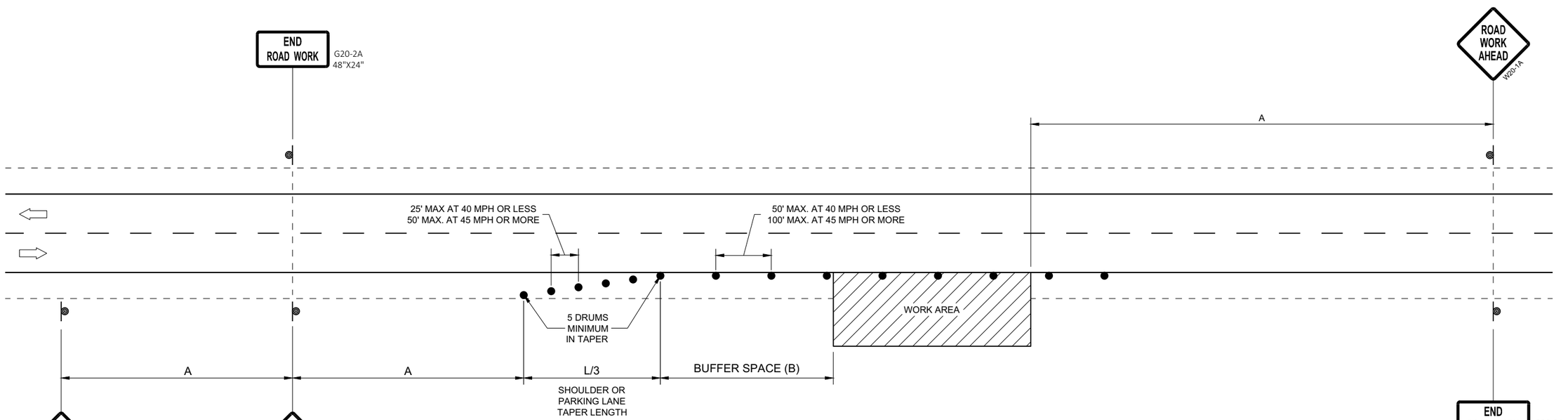

OR
IF TRAFFIC CONTROL DEVICES
ENCROACH ONTO TRAVELED WAY, USE

POSTED SPEED LIMIT PRIOR TO WORK STARTING (MPH)	ADVANCE WARNING SIGN SPACING (A) FEET	SHOULDER TAPER L / 3 W, LATERAL OFFSET (FT)						BUFFER SPACE (B) FEET
		3	4	5	6	7	8	
25	200'	10	14	17	21	24	28	55
30	200'	15	20	25	30	35	40	85
35	350'	20	27	34	40	47	54	120
40	350'	26	35	44	53	62	70	170
45	500'	45	59	74	89	104	119	220
50	500'	50	66	83	99	116	132	280
55	500'	54	73	91	109	127	145	335'

TRAFFIC CONTROL, WORK ON SHOULDER OR PARKING LANE, UNDIVIDED ROADWAY

STATE OF WISCONSIN
DEPARTMENT OF TRANSPORTATION

APPROVED
May 2020
DATE

/S/ Andrew Heidtke
STATEWIDE WORK ZONE T
SAFETY ENGINEER

FHWA

6

SDD 15D28 - 04

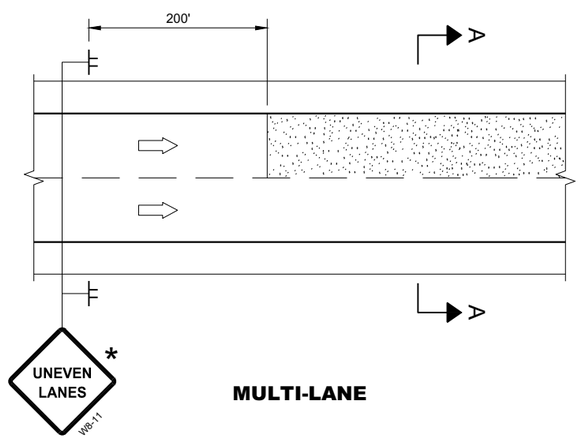

MULTI-LANE

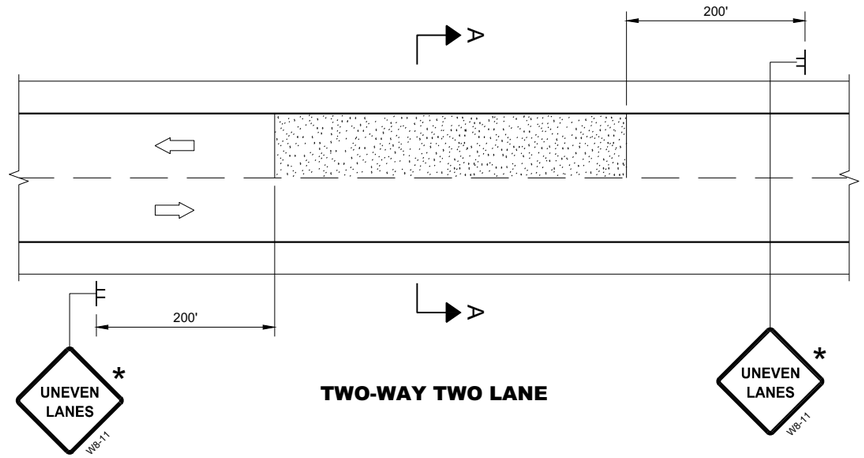

TWO-WAY TWO LANE

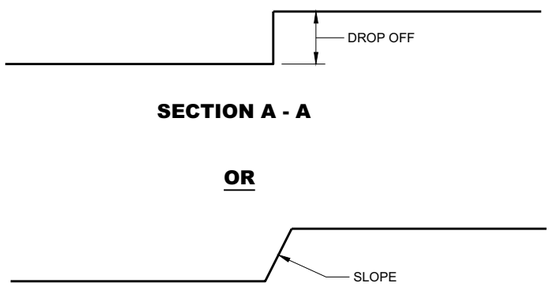

SECTION A - A

OR

SECTION A - A

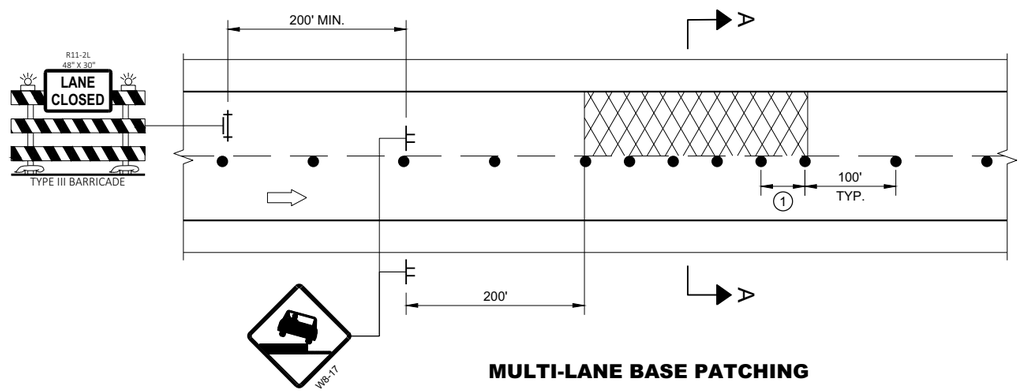

MULTI-LANE BASE PATCHING

ADJACENT LANE DROP-OFFS

GENERAL NOTES

FOR SPOT LOCATIONS USE ENGINEERING JUDGEMENT WHEN PLACING ADDITIONAL SIGNS.

ALL SIGNS ARE 48" X 48" UNLESS OTHERWISE NOTED.

"WO" SIGNS ARE THE SAME AS "W" SIGNS EXCEPT THE BACKGROUND IS ORANGE.

WARNING LIGHTS ARE NOT REQUIRED IF THE LANE CLOSURE IS A DAYTIME ONLY OPERATION.

* IF THE DROP-OFF IS CONTINUOUS ALONG THE PROJECT, PLACE ADDITIONAL SIGNS EVERY 1 MILE AND AFTER EVERY ENTRANCE RAMP.

(1) USE CLOSER SPACING WHEN DELINEATING DROP-OFF.

LEGEND

- SIGN ON TEMPORARY SUPPORT
- TRAFFIC CONTROL DRUM
- TYPE III BARRICADE WITH ATTACHED SIGN
- TYPE "A" WARNING LIGHT (FLASHING)
- DIRECTION OF TRAFFIC
- WORK AREA WITH DROP-OFF
- MILLED SURFACE

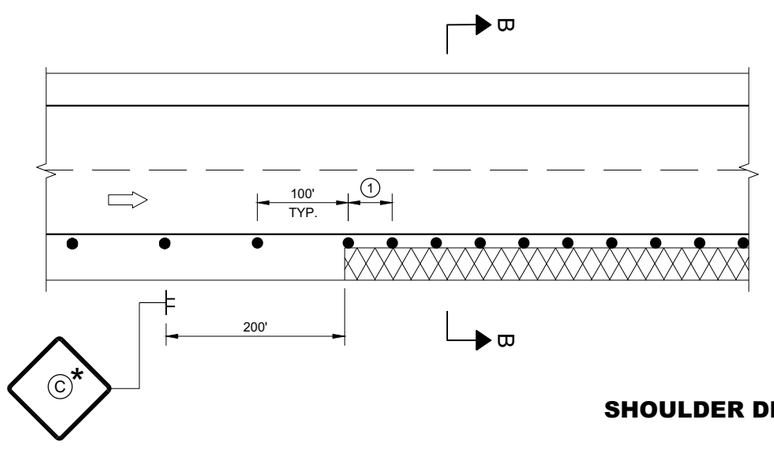

SHOULDER DROP-OFFS

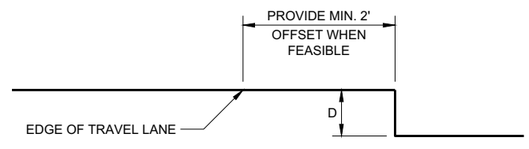

SECTION B - B

D	SIGN (C)
< 2" WITH A SLOPE STEEPER THAN 3:1	LOW SHOULDER WO8-9
2" < 6" WITH A SLOPE STEEPER THAN 3:1	SHOULDER DROP - OFF W8-9A PROVIDE A 3:1 OR FLATTER SLOPE OF MATERIAL ADJACENT TO THE PAVEMENT

TRAFFIC CONTROL, DROP-OFF SIGNING

STATE OF WISCONSIN
DEPARTMENT OF TRANSPORTATION

APPROVED
March 2018 — DATE
/S/ Andrew Heidtke — WORK ZONE ENGINEE
FHWA

LEGEND

- V1 SHADOW VEHICLE 1
- V2 SHADOW VEHICLE 2
- V3 ADVANCE WARNING TRUCK
- TRAFFIC CONTROL DRUM
- TRUCK MOUNTED ATTENUATOR (TMA)
- SIGN ON TEMPORARY SUPPORT
- DIRECTION OF TRAFFIC
- FLASHING ARROW PANEL (MERGE)
- FLASHING ARROW PANEL (CAUTION)
- PCMS PORTABLE CHANGEABLE MESSAGE SIGN
- WORK AREA

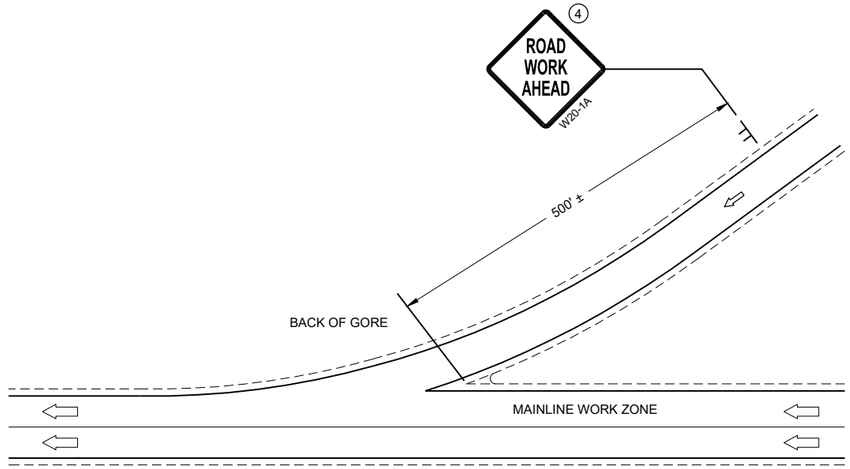

GENERAL NOTES

SHORT DURATION IS WORK THAT OCCUPIES A LOCATION UP TO 1 HOUR.

MOBILE IS WORK THAT MOVES INTERMITTENTLY OR CONTINUOUSLY.

ALL VEHICLES SHALL BE EQUIPPED WITH TWO 360 DEGREE HIGH INTENSITY YELLOW FLASHING LIGHTS OR STROBE LIGHTS AND OPERATED WITH HEADLIGHTS TURNED ON.

ALL VEHICLES SHALL BE EQUIPPED WITH REAR FACING TYPE B OR C FLASHING ARROW PANEL. SIGNS PLACED ON VEHICLES MUST NOT OBSCURE THE ARROW PANEL.

ALL SIGNS ARE 48" X 48" UNLESS OTHERWISE SPECIFIED.

WHEN WORK ACTIVITY BLOCKS THE RIGHT LANE, REVERSE TRAFFIC CONTROL.

WHEN A RAMP INTERSECTS THE FACILITY ON WHICH THE WORK IS BEING PERFORMED, PROVIDE ADDITIONAL TRAFFIC CONTROLS AS SPECIFIED IN THE CONTRACT OR AS APPROVED BY THE ENGINEER.

USE DOUBLE ARROWS WHEN CONVOY IS IN CENTER LANE ONLY.

WHEN NO WORK ACTIVITY IS TAKING PLACE, REMOVE OR LAY STATIONARY SIGNS AND SUPPORTS FLAT ON THE GRADE WITH UPRIGHTS ORIENTED PARALLEL TO AND DOWNSTREAM FROM TRAFFIC

1. DISTANCE BETWEEN VEHICLES MAY VARY ACCORDING TO TERRAIN, SIGHT DISTANCE AND OTHER FACTORS. WHENEVER ADEQUATE STOPPING SIGHT DISTANCE EXISTS TO THE REAR, SHADOW VEHICLES SHOULD MAINTAIN THE MINIMUM DISTANCE FROM THE WORK VEHICLE AND PROCEED AT THE SAME SPEED AS THE WORK VEHICLE. SHADOW VEHICLES SHOULD SLOW DOWN IN ADVANCE OF VERTICAL AND HORIZONTAL CURVES THAT RESTRICT SIGHT DISTANCE.
2. DRUMS ARE TO BE USED FOR BRIDGE DECK SEALING AND OTHER PROJECTS THAT REQUIRE DELINEATION.
3. WITHIN 5 MILES, RELOCATE SIGNS AS WORK PROGRESSES AND NECESSARY OR AS DIRECTED BY THE ENGINEER.
4. SIGN NOT REQUIRED IF MOVING OPERATION OCCURS WITHIN A SIGNED ROAD WORK ZONE AREA.
5. SHADOW VEHICLE 1 (V1) IS OPTIONAL

* PCMS OPTIONAL

PCMS MESSAGING

FRAME 1	FRAME 2
MOVING LANE CLOSURES	NEXT XX MILES

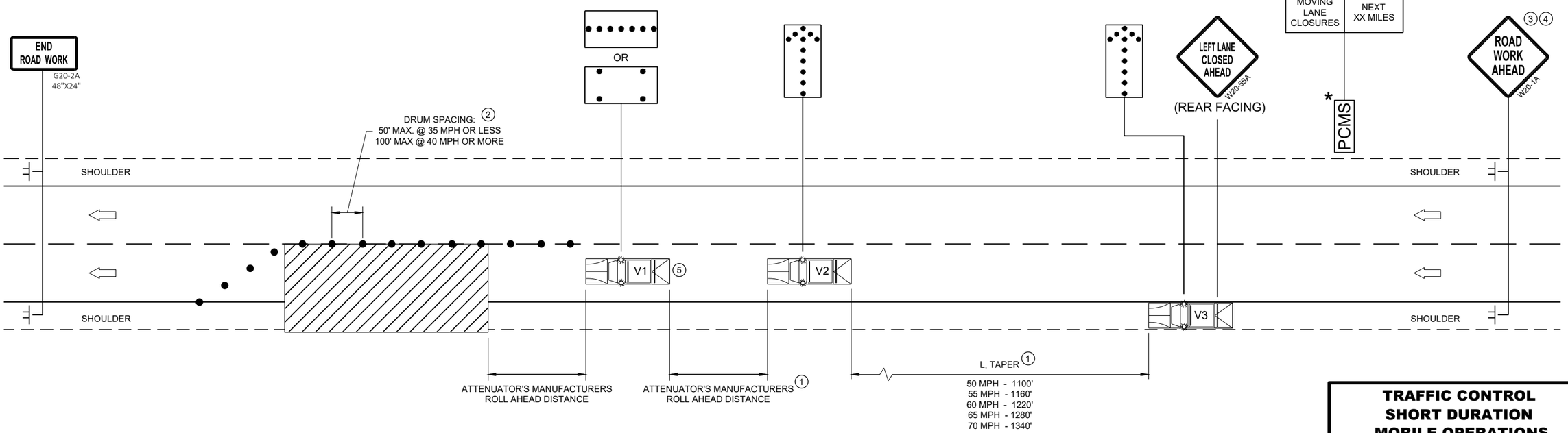

TRAFFIC CONTROL
SHORT DURATION
MOBILE OPERATIONS

STATE OF WISCONSIN
DEPARTMENT OF TRANSPORTATION

APPROVED
August 2021 — DATE
/S/ Andrew Heidtke — WORK ZONE ENGINEE
FHWA

6
SDD 15D43 - 02

GENERAL NOTES

DRAWING NOT TO SCALE. ALL SIGNS AND POSTS ON THIS SHEET SHALL BE PAID FOR WITH 'TRAFFIC CONTROL SIGNS' BID ITEM. ALL SIDE ROADS WHICH ARE UNDER CONSTRUCTION OF CURB AND GUTTER AND/OR GRADING SHALL BE ADEQUATELY SIGNED.

ALL SIGNS AND DEVICES SHALL BE IN CONFORMANCE WITH THE WISCONSIN MANUAL OF UNIFORM TRAFFIC CONTROL DEVICES (WMUTCD). SIGN LAYOUTS SHALL BE IN ACCORDANCE WITH THE WISDOT STANDARD SIGN PLATES.

"WO" SIGNS ARE THE SAME AS "W" SIGNS EXCEPT THAT THE BACKGROUND IS ORANGE.

ALL SIGNS ARE 48" X 48" UNLESS OTHERWISE NOTED.

THE EXACT NUMBER, LOCATION AND SPACING OF ALL SIGNS AND DEVICES SHALL BE ADJUSTED TO FIT FIELD CONDITIONS AS DIRECTED BY THE ENGINEER.

ALL SIGNS INAPPROPRIATE TO THE STATUS OF THE CONTROL ZONE, INCLUDING PRE-EXISTING SIGNS IN THE VICINITY, SHALL BE COVERED OR REMOVED AS DIRECTED BY THE ENGINEER.

SEE 15C34 FOR ADDITIONAL TRAFFIC CONTROL SIGNING WHEN CENTERLINE PAVEMENT MAKINGS ARE MISSING. 'DO NOT PASS' SIGNS MUST BE INSTALLED ON THE SAME DAY AS MILLING OPERATIONS.

(1) PLACE SIGNS 350' IN ADVANCE OF MILLED SURFACES AND AT 1 MILE INTERVALS, OR AS DIRECTED BY THE ENGINEER.

(2) PLACE SIGN 200' MIN. FROM INTERSECTION AND 200' MIN. AFTER ADVANCE WARNING SIGN SHOWN IN SDD 15C04.

LEGEND

SIGN ON TEMPORARY SUPPORT

DIRECTION OF TRAFFIC

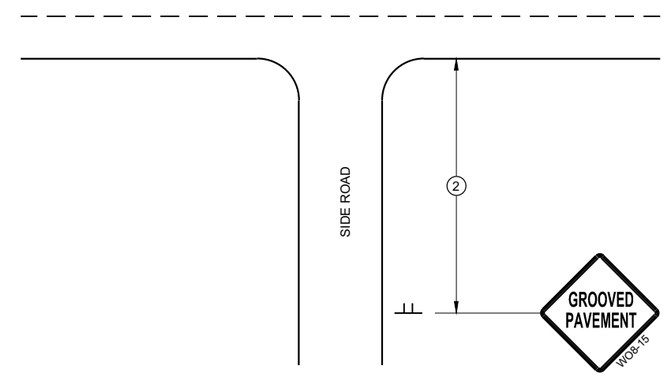

TYPICAL SIDE ROAD APPROACH SIGN DETAIL

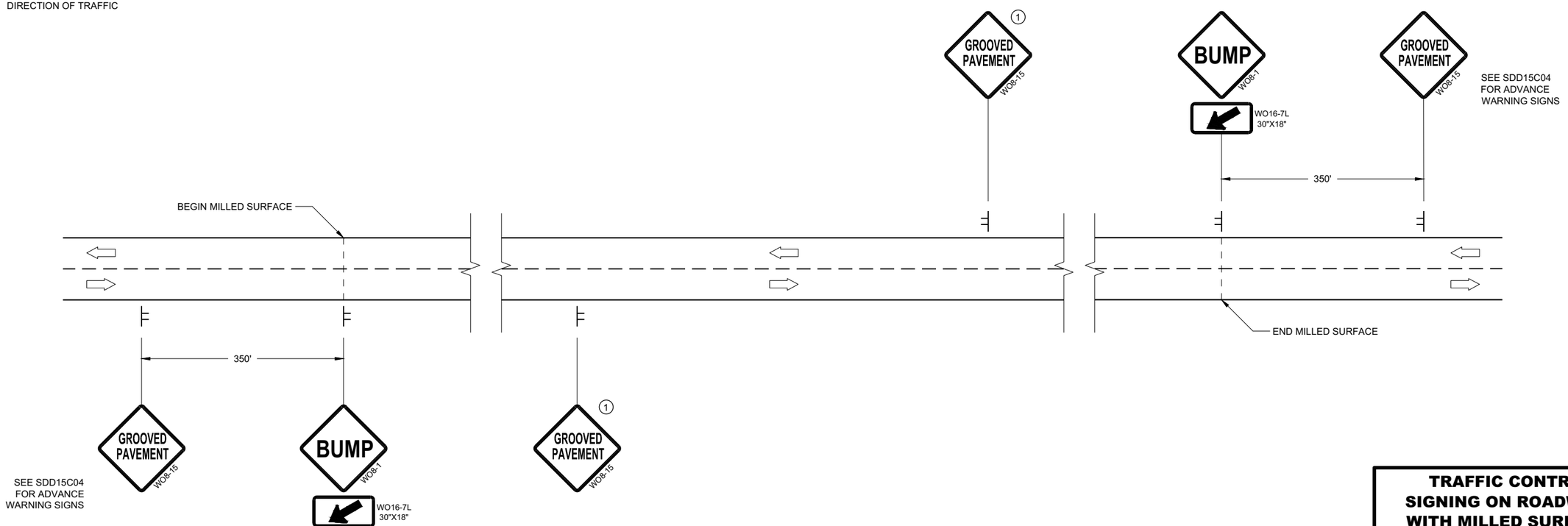

DETAIL FOR SIGNING ON MILLED SURFACES

TRAFFIC CONTROL, SIGNING ON ROADWAYS WITH MILLED SURFACES

STATE OF WISCONSIN
DEPARTMENT OF TRANSPORTATION

APPROVED
February 2020 /S/ Andrew Heidtke
DATE WORK ZONE ENGINEE
FHWA

6

SDD 15D44 - 02

6

SDD 15D44 - 02

GENERAL NOTES

DRAWING NOT TO SCALE. ALL SIGNS AND POSTS ON THIS SHEET SHALL BE PAID FOR WITH 'TRAFFIC CONTROL SIGNS' BID ITEM. ALL SIDE ROADS WHICH ARE UNDER CONSTRUCTION OF CURB AND GUTTER AND/OR GRADING SHALL BE ADEQUATELY SIGNED.

ALL SIGNS AND DEVICES SHALL BE IN CONFORMANCE WITH THE WISCONSIN MANUAL OF UNIFORM TRAFFIC CONTROL DEVICES (WMUTCD). SIGN LAYOUTS SHALL BE IN ACCORDANCE WITH THE WISDOT STANDARD SIGN PLATES.

"WO" SIGNS ARE THE SAME AS "W" SIGNS EXCEPT THAT THE BACKGROUND IS ORANGE.

ALL SIGNS ARE 48" X 48" UNLESS OTHERWISE NOTED.

THE EXACT NUMBER, LOCATION AND SPACING OF ALL SIGNS AND DEVICES SHALL BE ADJUSTED TO FIT FIELD CONDITIONS AS DIRECTED BY THE ENGINEER.

ALL SIGNS INAPPROPRIATE TO THE STATUS OF THE CONTROL ZONE, INCLUDING PRE-EXISTING SIGNS IN THE VICINITY, SHALL BE COVERED OR REMOVED AS DIRECTED BY THE ENGINEER.

SEE 15C34 FOR ADDITIONAL TRAFFIC CONTROL SIGNING WHEN CENTERLINE PAVEMENT MAKINGS ARE MISSING. 'DO NOT PASS' SIGNS MUST BE INSTALLED ON THE SAME DAY AS MILLING OPERATIONS.

1. PLACE SIGNS 350' IN ADVANCE OF CHIP SEALED OR LOOSE GRAVEL SURFACES AND AT 1 MILE INTERVALS, OR AS DIRECTED BY THE ENGINEER.
2. PLACE SIGN 200' MIN. FROM INTERSECTION AND 200' MIN. AFTER ADVANCE WARNING SIGN SHOWN IN SDD 15C04.
3. ADD WO8-1 OR WO8-2 SIGN WHEN THE CONDITION IS PRESENT.

LEGEND

SIGN ON TEMPORARY SUPPORT

DIRECTION OF TRAFFIC

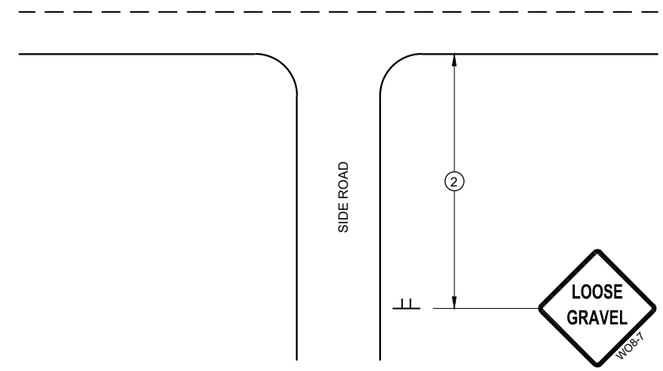

TYPICAL SIDE ROAD APPROACH SIGN DETAIL

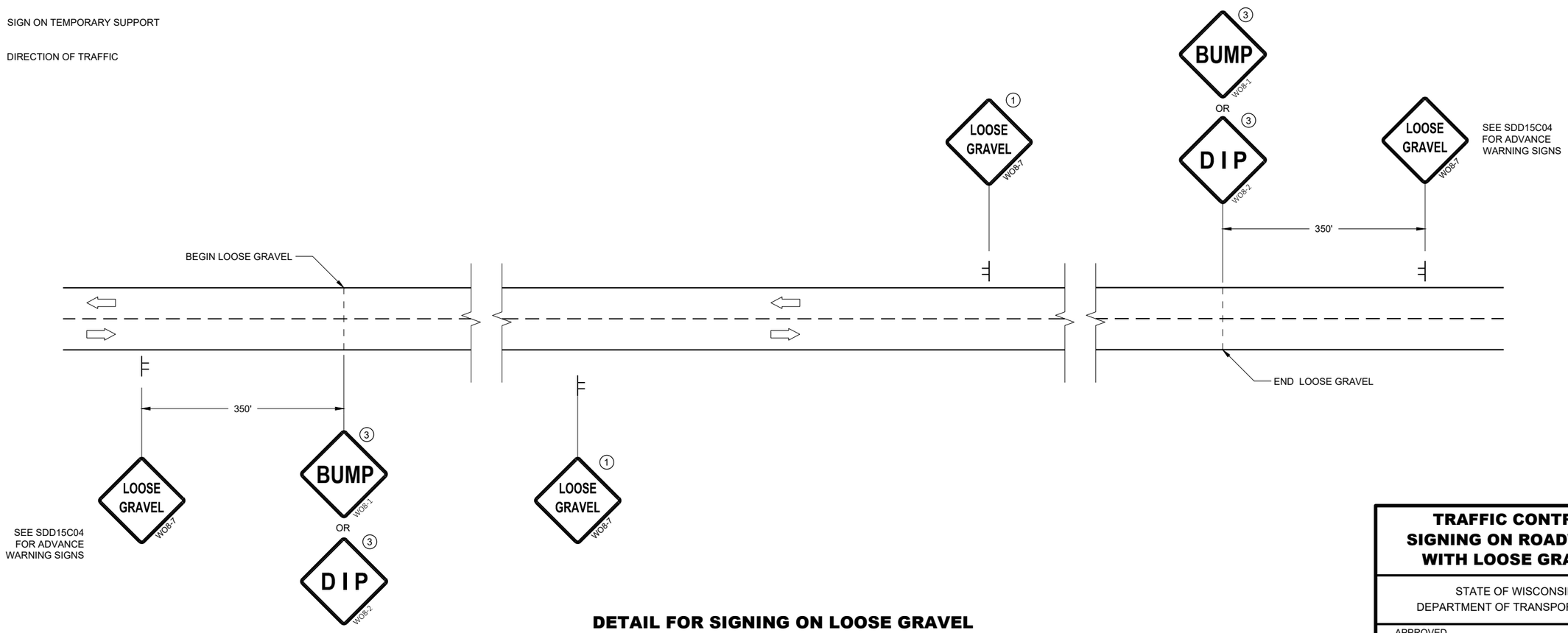

DETAIL FOR SIGNING ON LOOSE GRAVEL OR CHIP SEALED SURFACES

TRAFFIC CONTROL SIGNING ON ROADWAYS WITH LOOSE GRAVEL

STATE OF WISCONSIN
DEPARTMENT OF TRANSPORTATION

APPROVED
February 2021 /S/ Andrew Heidtke
DATE WORK ZONE ENGINEE
FHWA

6

SDD 15D45 - 03

LEGEND

V1 WORK VEHICLE

V2 SHADOW VEHICLE

TRUCK MOUNTED ATTENUATOR (TMA)

FLASHING ARROW PANEL (CAUTION)

WORK AREA

DIRECTION OF TRAFFIC

POSTED SPEED PRIOR TO WORK STARTING (MPH)	DECISION SIGHT DISTANCE (D)
0 - 25	550'
30	550'
35	700'
40	700'
45	900'
50	900'
55	1200'

GENERAL NOTES

ALL SIGNS ARE 48"X48" UNLESS OTHERWISE NOTED.

MOBILE IS WORK THAT MOVES CONTINUOUSLY OR MOVES AT LEAST THE DECISION SIGHT DISTANCE EVERY 15 MINUTES.

ALL VEHICLES SHALL BE EQUIPPED WITH TWO 360 DEGREE HIGH INTENSITY YELLOW FLASHING LIGHTS OR STROBE LIGHTS AND OPERATED WITH HEADLIGHTS TURNED ON.

ALL ARROW PANELS SHALL BE REAR FACING, TYPE "B" OR "C", AND DISPLAYING THE FLASHING CAUTION MODE. SIGNS PLACED ON VEHICLES MUST NOT OBSCURE THE ARROW PANEL.

USE AN ATTENUATOR ON THE REARMOST VEHICLE THAT BLOCKS ALL OR PART OF THE TRAFFIC LANE.

1 DISTANCE BETWEEN VEHICLES MAY INCREASE FROM THE ATTENUATOR'S ROLL AHEAD BASED ON TERRAIN, SIGHT DISTANCE, AND OTHER FACTORS. WHENEVER ADEQUATE STOPPING SIGHT DISTANCE EXISTS TO THE REAR, SHADOW VEHICLES SHOULD MAINTAIN THE MINIMUM DISTANCE FROM THE WORK VEHICLE AND PROCEED AT THE SAME SPEED AS THE WORK VEHICLE. SHADOW VEHICLES SHOULD SLOW DOWN IN ADVANCE OF VERTICAL OR HORIZONTAL CURVES THAT RESTRICT SIGHT DISTANCE.

2 ALIGN LEFT SIDE OF SHADOW VEHICLE WITH EDGE OF WORK AREA.

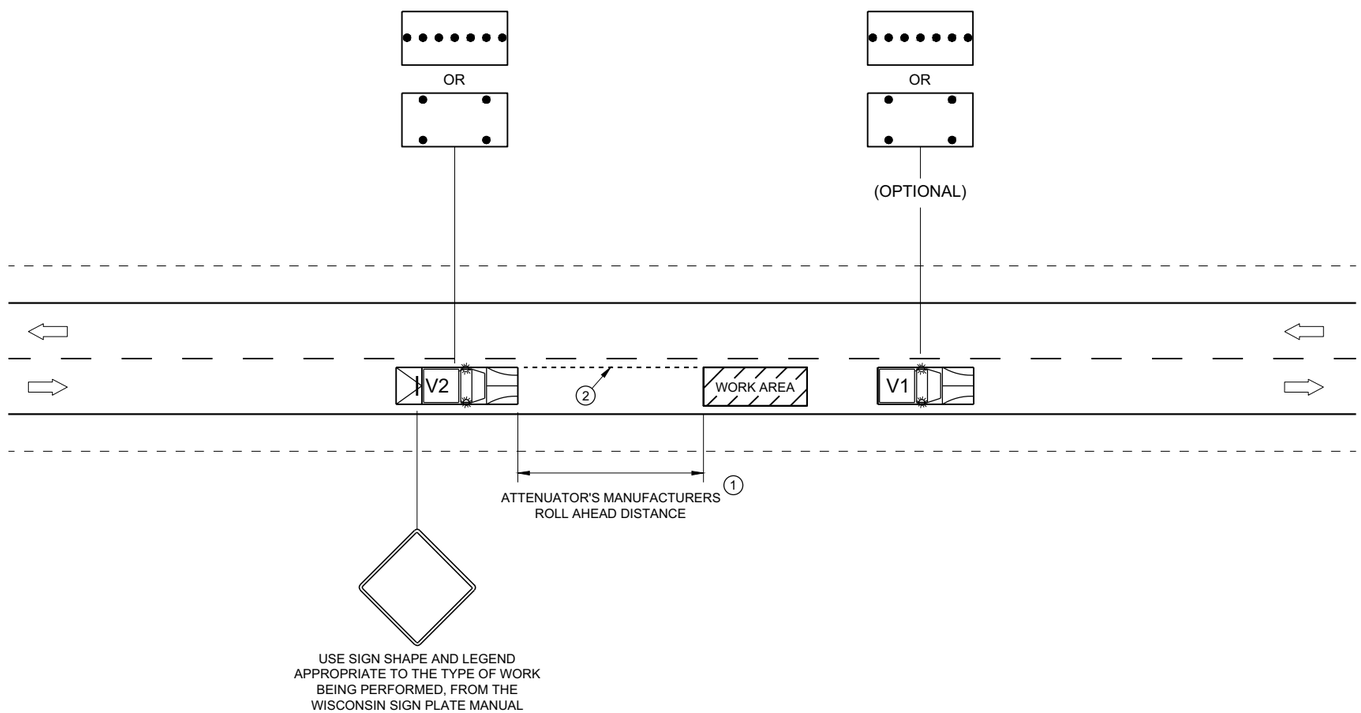

TRAFFIC CONTROL, MOBILE OPERATIONS ON AN UNDIVIDED ROADWAY

STATE OF WISCONSIN
DEPARTMENT OF TRANSPORTATION

APPROVED
February 2021 — DATE
/S/ Andrew Heidtke — STATEWIDE WORK ZONE T SAFETY ENGINEER
FHWA

URBAN AREA

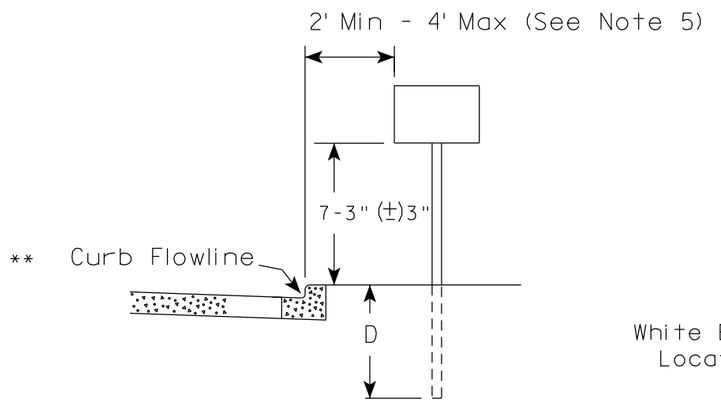

RURAL AREA (See Note 2)

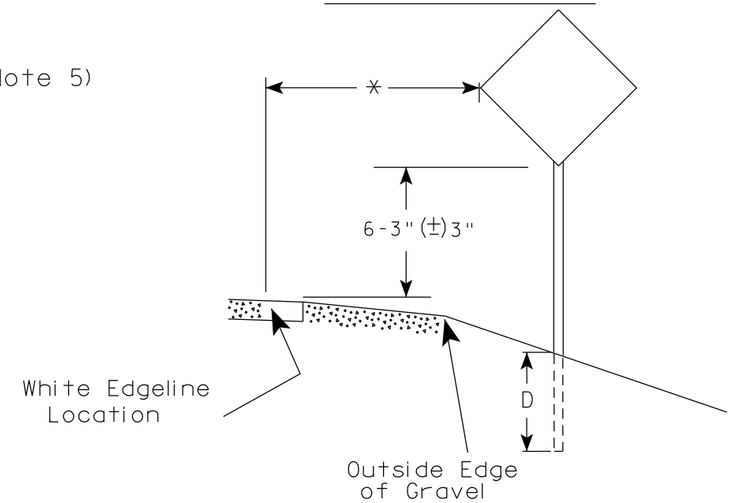

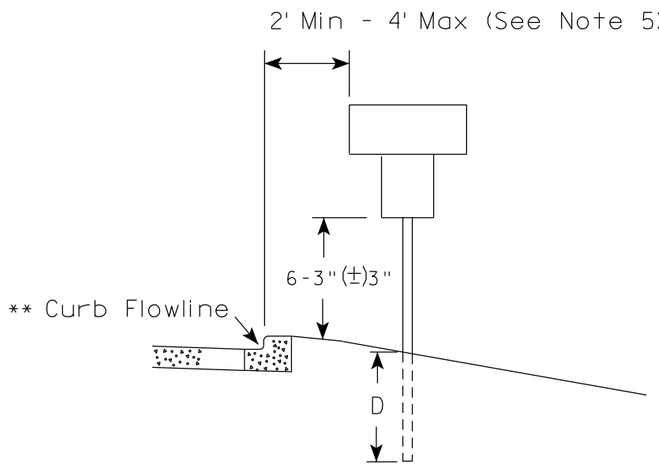

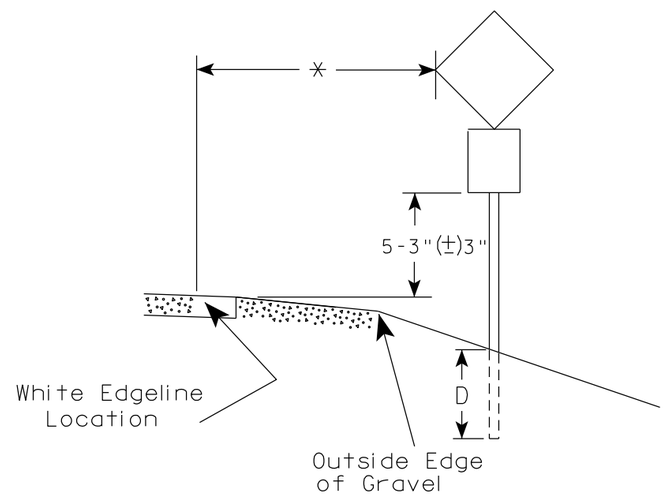

** The existence of curb and gutter does not in itself mandate the vertical clearance illustrated. That height is typically measured where there is sidewalk adjacent to the roadway or parking is permitted. In the absence of sidewalk vertical clearance is measured from the top of the curb. Offset of signs is measured from the flow line.

* 6 feet from edge of a paved shoulder or 12 feet from the edge of pavement (edge line location) or 2 feet from outside edge of gravel, whichever is greater unless directed by project engineer.

GENERAL NOTES

1. Signs wider than 4 feet or 20 sq.ft or larger, shall be mounted on multiple posts. Refer to plate A4-4.
2. If signs are mounted on or behind barrier wall, see A4-10 sign plate.
   The Double Arrow sign (W12-1D) shall be mounted at a height of 2'-3" (±) 3". The Chevron sign (W1-8), Roundabout Chevron panel (R6-4B), Enhanced Reference Markers, Clearance Markers (W5-52), Mile Markers (D10 series), In Road Object Markers (W5-54) & End of Road Markers (W5-56) shall be mounted at a height of 4'-3" (±) 3".
3. For expressways and freeways, mounting height is 7'- 3" (±) 3" or 6'-3" (±) 3" depending upon existence of a sub-sign.
4. Minimum mounting height for signs mounted on traffic signal poles is 5'- 3" (±) 3".
5. Offset distance shall be consistent with existing signs or consistent throughout length of project.
6. Folding signs shall be mounted at a height of 5'-3" (±) 3" or as directd by the Engineer.

POST EMBEDMENT DEPTH

Area of Sign Installation (Sq. Ft.)	D (Min)
20 or Less	4'
Greater than 20	5'

TYPICAL INSTALLATION OF PERMANENT TYPE II SIGNS ON SINGLE POSTS

WISCONSIN DEPT OF TRANSPORTATION

APPROVED Matthew R Rauch
for State Traffic Engineer

DATE 12/6/23 PLATE NO. A4-3.23

7 7

PROJECT NO:	HWY:	COUNTY:		SHEET NO: 115	E

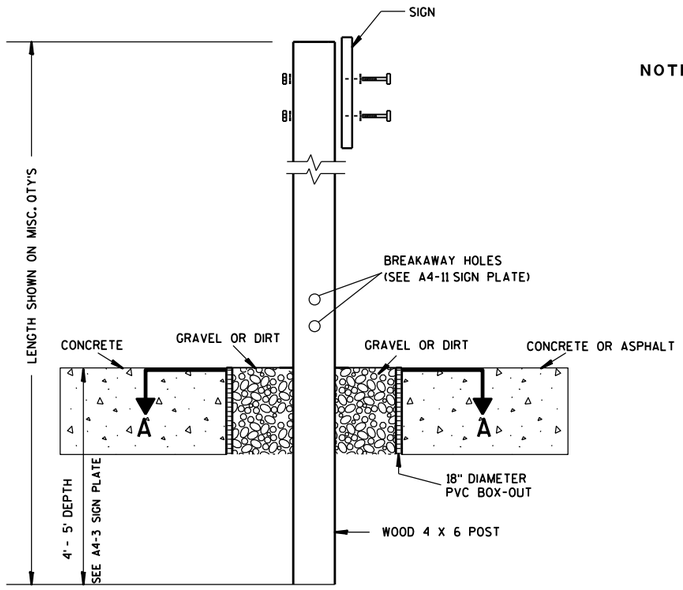

ELEVATION VIEW

DETAIL OF WOOD 4 X 6 SIGN POST IN BOX-OUT

NOTES:
1. ALL MATERIAL TO BE APPROVED BY ENGINEER PRIOR TO INSTALLATION
2. SEE SIGN PLATE A4-8 FOR SIGN HARDWARE REQUIREMENTS
3. 18 INCH X 18 INCH SQUARE BOX-OUTS MAY BE USED FOR INSTALLATIONS IN EXISTING CONCRETE OR ASPHALT LOCATIONS.

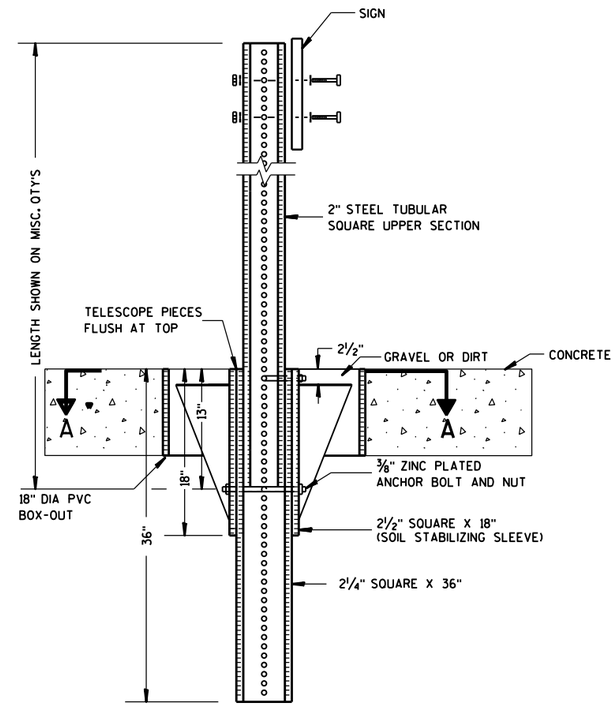

ELEVATION VIEW

DETAIL OF STEEL 2 X 2 SIGN POST IN BOX-OUT

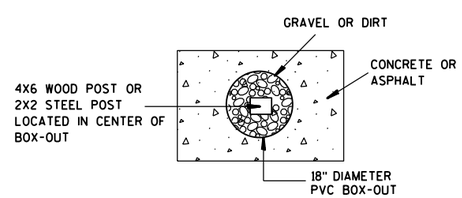

PLAN VIEW

FOR NEW CONCRETE/ASPHALT INSTALLATIONS

SIGN POST
BOX-OUTS
A4-3B

WISCONSIN DEPT OF TRANSPORTATION

APPROVED Matthew R Rauch
for State Traffic Engineer

DATE 1/27/14 PLATE NO. A4-3B.1

PROJECT NO:	HWY:	COUNTY:		SHEET NO:	E

URBAN AREA

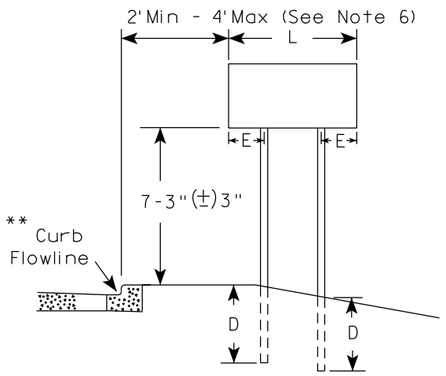

RURAL AREA (See Note 3)

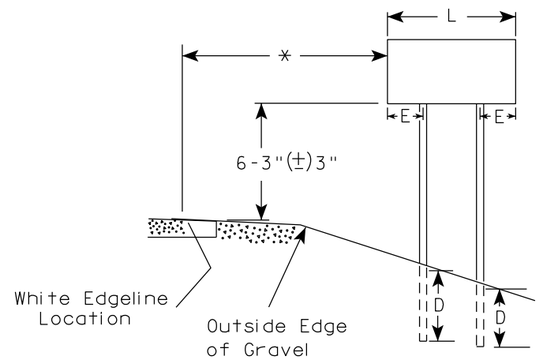

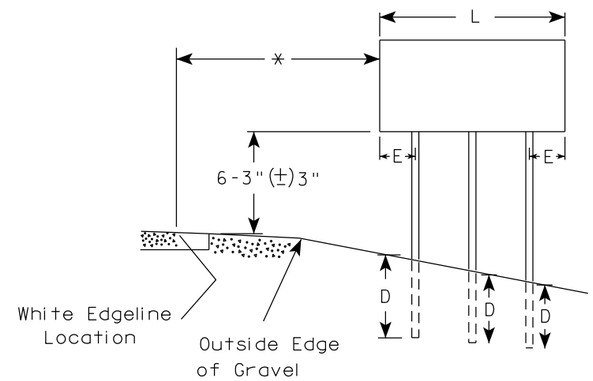

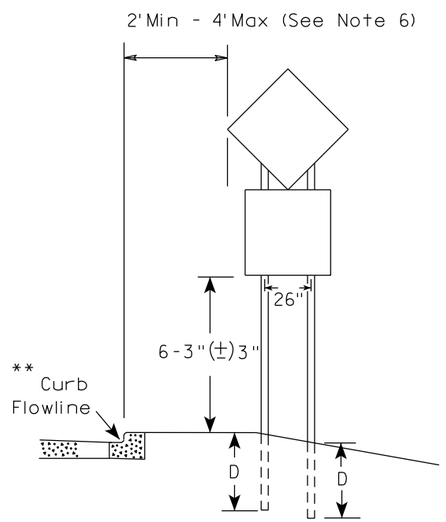

48" DIAMOND WARNING SIGN

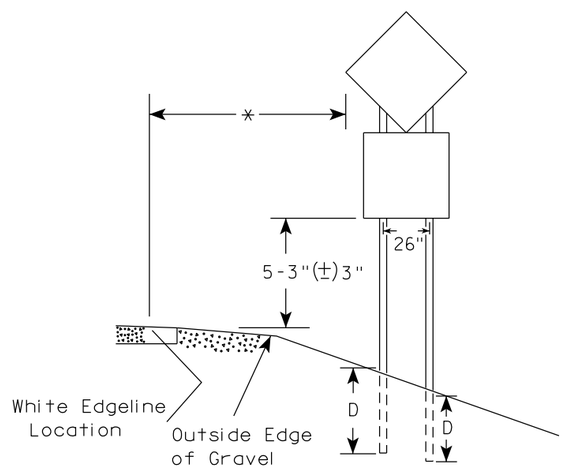

48" DIAMOND WARNING SIGN

GENERAL NOTES

1. For 3 or 4 post installations, individual post spacing shall be greater than 3'-6".
2. See tables below for required number of posts.
3. For expressways and freeways, mounting height is 7'-3" (±) 3" or 6'-3" (±) 3" depending upon existence of sub-sign.
4. The (±) tolerance for mounting height is 3 inches.
5. J-Assemblies are considered to be one sign for mounting height.
6. Offset distance shall be consistent with existing signs or consistent throughout length of project.
7. Folding signs shall be mounted at a height of 5'-3" (±) 3" or as directed by the engineer.
8. The Double Arrow sign (W12-1) shall be mounted at a height of 2'-3" (±) 3". The Chevron sign (W1-8), Roundabout Chevron panel (R6-4B), Clearance Markers (W5-52), Mile Markers (D10 series), In Road Object Markers (W5-54) & End of Road Markers (W5-56) shall be mounted at a height of 4"-3" (±) 3".

* 6 feet from edge of a paved shoulder or 12 feet from the edge of pavement (edge line location) or 2 feet from outside edge of gravel, whichever is greater unless directed by project engineer.

** The existence of curb and gutter does not in itself mandate the vertical clearance illustrated. That height is typically measured where there is sidewalk adjacent to the roadway or parking is permitted. In the absence of sidewalk vertical clearance is measured from the top of the curb. Offset of signs is measured from the flow line.

*** See A4-3 sign plate for signs 4' or less in width and less than 20 S.F. in area.

SIGN SHAPE OTHER THAN DIAMOND (TWO POSTS REQUIRED)	
L	E
*** Greater than 48" Less than 60"	12"
60" to 108"	L/5

SIGN SHAPE OTHER THAN DIAMOND (THREE POSTS REQUIRED)	
L	E
Greater than 108" to 144"	12"

POST EMBEDMENT DEPTH

Area of Sign Installation (Sq. Ft.)	D (Min)
20 or Less	4'
Greater than 20	5'

TYPICAL INSTALLATION OF TYPE II SIGNS ON MULTIPLE POSTS

WISCONSIN DEPT OF TRANSPORTATION

APPROVED Matthew R Rauch
for State Traffic Engineer

DATE 12/6/23 PLATE NO. A4-4.16

7

7

PROJECT NO:	HWY:	COUNTY:		SHEET NO: 117	E

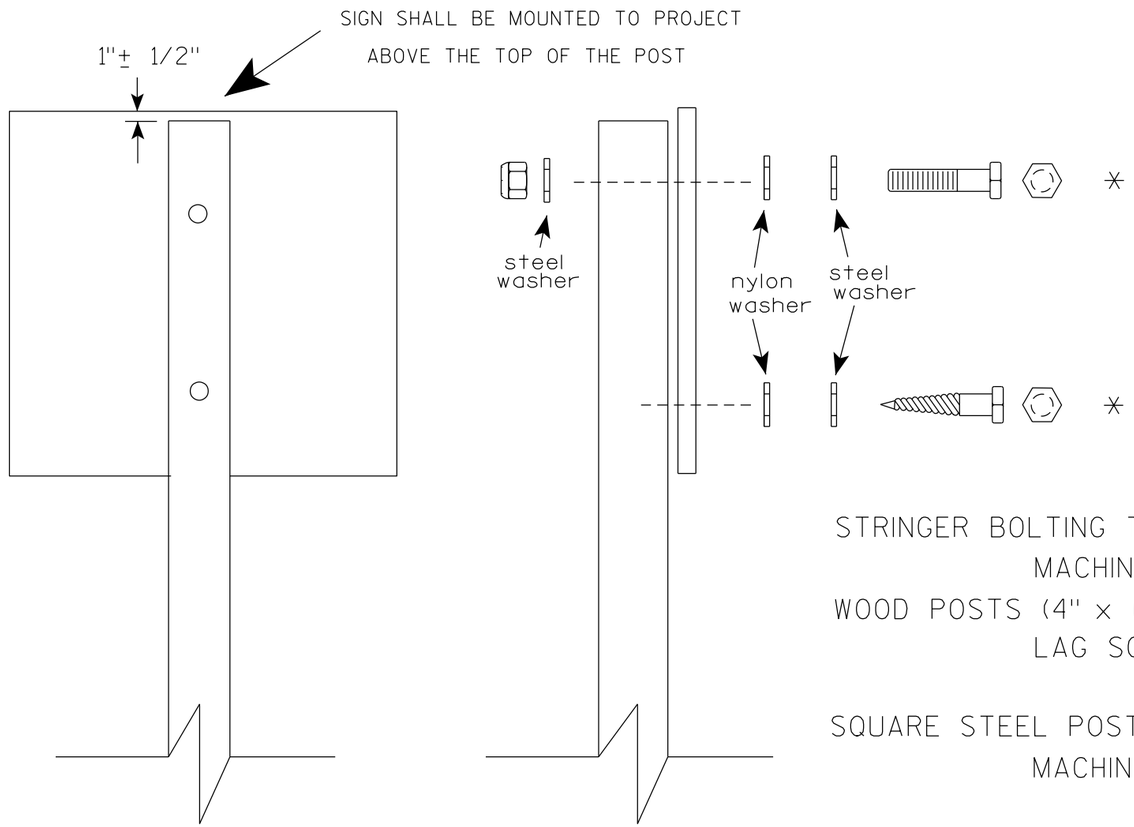

Nuts, bolts and lags used for mounting signs shall have hexagonal heads and shall be either :

a. Hot dip galvanized in accordance with ASTM Designation: A 153, Class D, or SC 3

b. Electro-galvanized in accordance with ASTM Designation : B 633, TYPE III, SC 3.

Threads on bolts and nuts shall be manufactured with sufficient allowance for the cadmium plate or galvanized coating to permit the nuts to run freely on the bolts.

STRINGER BOLTING TO ALUMINUM SIGNS (SEE SIGN PLATE A4-18)

MACHINE BOLTS - 5/16" X 1-3/4" Length w/ lock nuts

WOOD POSTS (4" x 6")

LAG SCREWS - 3/8" X 3" (NO STRINGERS ON BACK OF SIGN)
3/8" X 4" (STRINGERS ON BACK OF SIGN)

SQUARE STEEL POSTS (2" x 2")

MACHINE BOLTS - 3/8" X 3-1/4" Length w/ nuts (NO STRINGER ON BACK OF SIGN)
3/8" X 5" Length w/ nuts (STRINGERS ON BACK OF SIGN)

RIVETS - 9/32 " (6605-9-6) BULB-TITE, TRI-FOLD, ALUMINUM BODY/MANDREL
O.D. FLANGE .720-.765 INCH, GRIP RANGE .042-.375 INCH

WASHERS (ALL POSTS) -

1-1/4" O.D. X 3/8" I.D. X 1/16" STEEL
1-1/4" O.D. X 3/8" I.D. X .080 NYLON

* Two different fastening systems are shown for illustration purposes. On any individual sign, either one or the other system shall be used. Actual number of fasteners per sign varies with the sign area, but normally there are two. For a single post installation, all signs greater than 9 sq. ft. require the use of 3 fasteners.

ATTACHMENT OF SIGNS TO POSTS

WISCONSIN DEPT OF TRANSPORTATION

APPROVED Matthew R Rauch
for State Traffic Engineer

DATE 4/1/2020 PLATE NO. A4-8.9

TELESCOPIC TUBING ANCHORS
TWO PIECE SYSTEM

2 1/4" SQUARE
12 GAUGE
PERFORATED
GALVANIZED FINISH

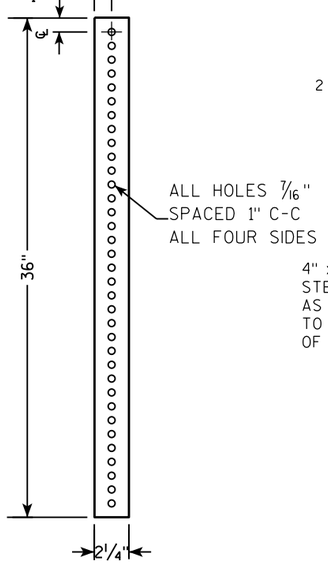

2 1/2" SQUARE
12 GAUGE
OMNI-DIRECTIONAL
PERFORATED
SOIL STABILIZING SLEEVE
GALVANIZED FINISH

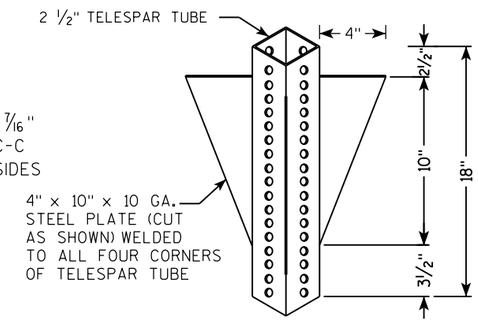

DETAIL OF TUBULAR STEEL SIGN POST
(IN POURED CONCRETE OR ASPHALT)

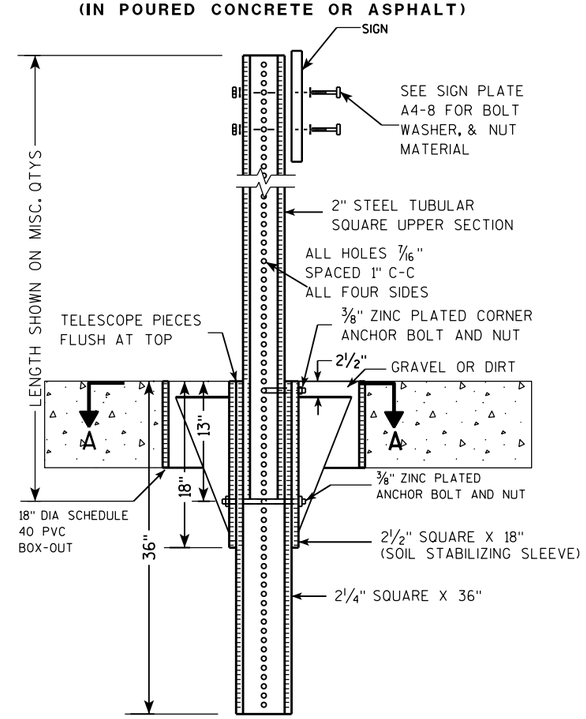

DETAIL OF TUBULAR STEEL SIGN POST
(IN LOCATIONS OTHER THAN POURED CONCRETE OR ASPHALT)

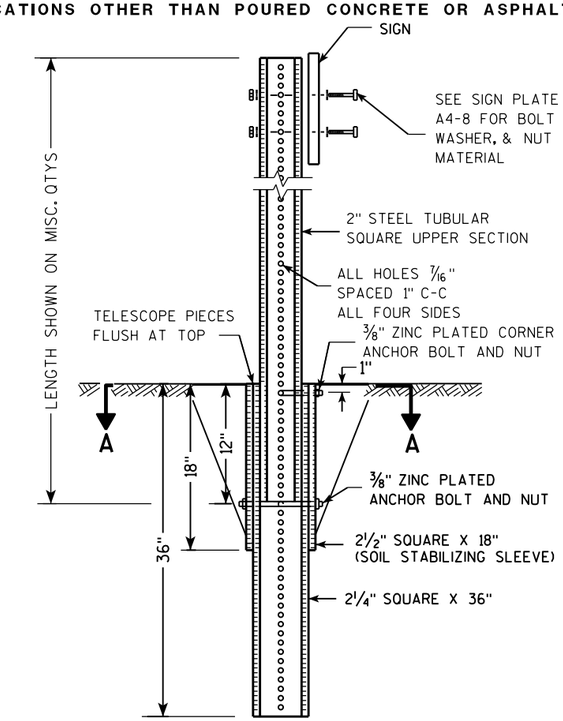

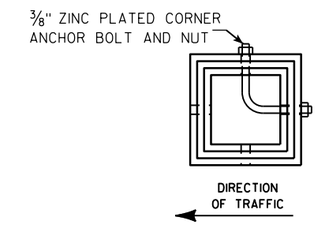

SECTION A-A

Area of Sign Installation (Sq. Ft.)	Number of Required Posts
9 or less	1
Greater than 9 less than or equal to 18	2
Greater than 18 less than or equal to 27	3

Signs wider than 3 feet or larger than 9 sq. ft shall be mounted on multiple posts (see above table).

TUBULAR STEEL
SIGN POST
A4-9

WISCONSIN DEPT OF TRANSPORTATION

APPROVED Matthew R Rauch
for State Traffic Engineer

DATE 2/05/15 PLATE A4-9.9

7

7

PROJECT NO:	HWY:	COUNTY:		SHEET NO:	E

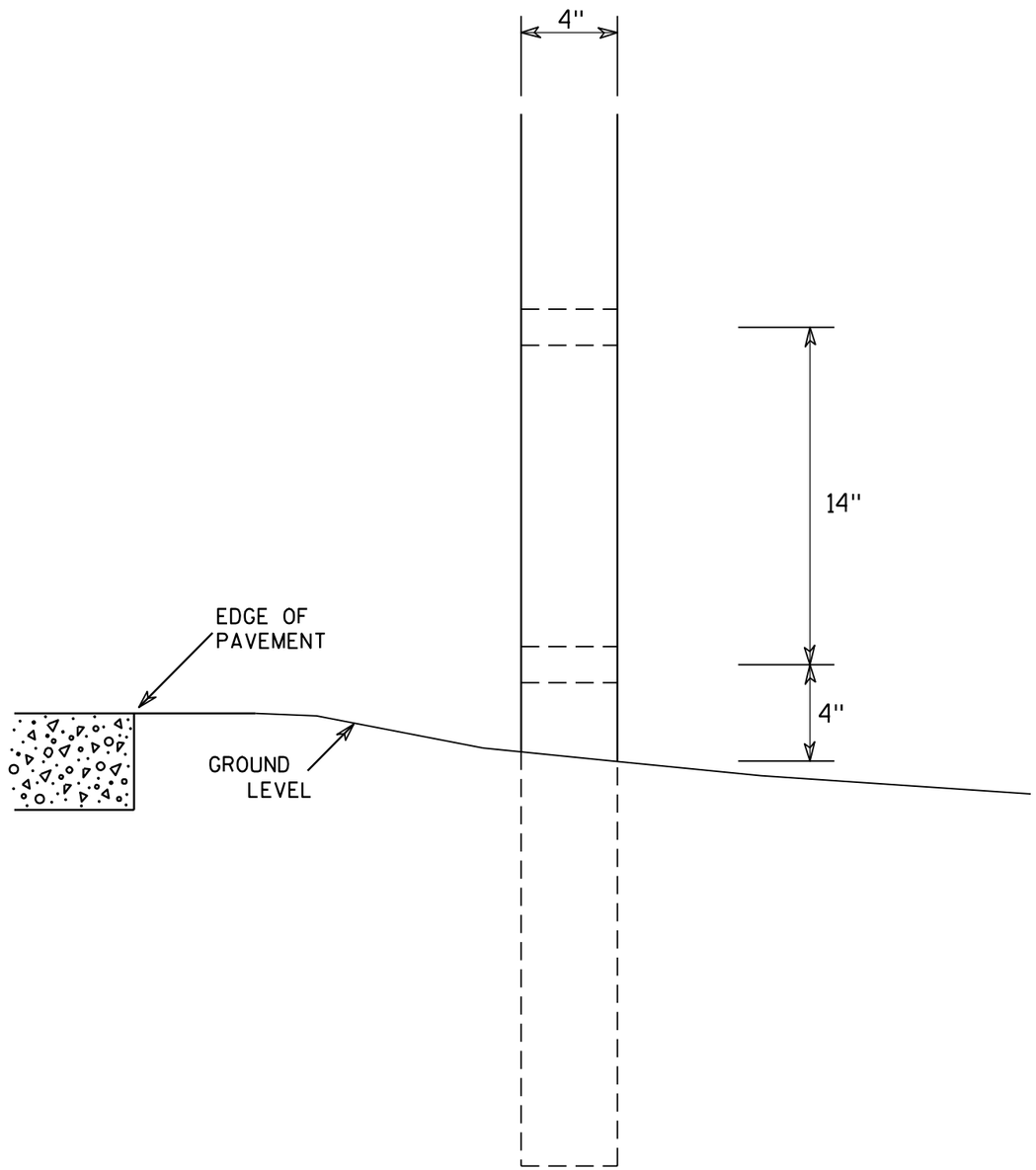

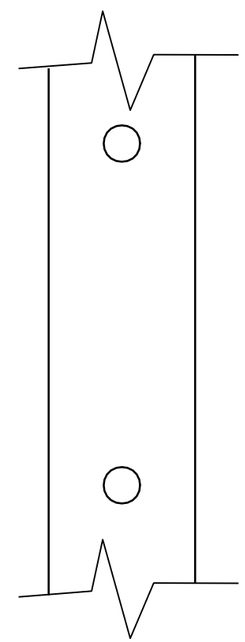

SIDE VIEW

GENERAL NOTES

1. All 4 x 6 Wood Posts shall be modified by having two 1½" diameter holes drilled perpendicular to the roadway centerline.

4 X 6 WOOD POST MODIFICATIONS

WISCONSIN DEPT OF TRANSPORTATION

APPROVED Chester J Spang for State Traffic Engineer

DATE 3/27/97 PLATE NO. A4-11.2

PROJECT NO:	HWY:	COUNTY:		SHEET NO: 120	E

SIGN LAYOUT WITH VARIOUS SIZED MESSAGES

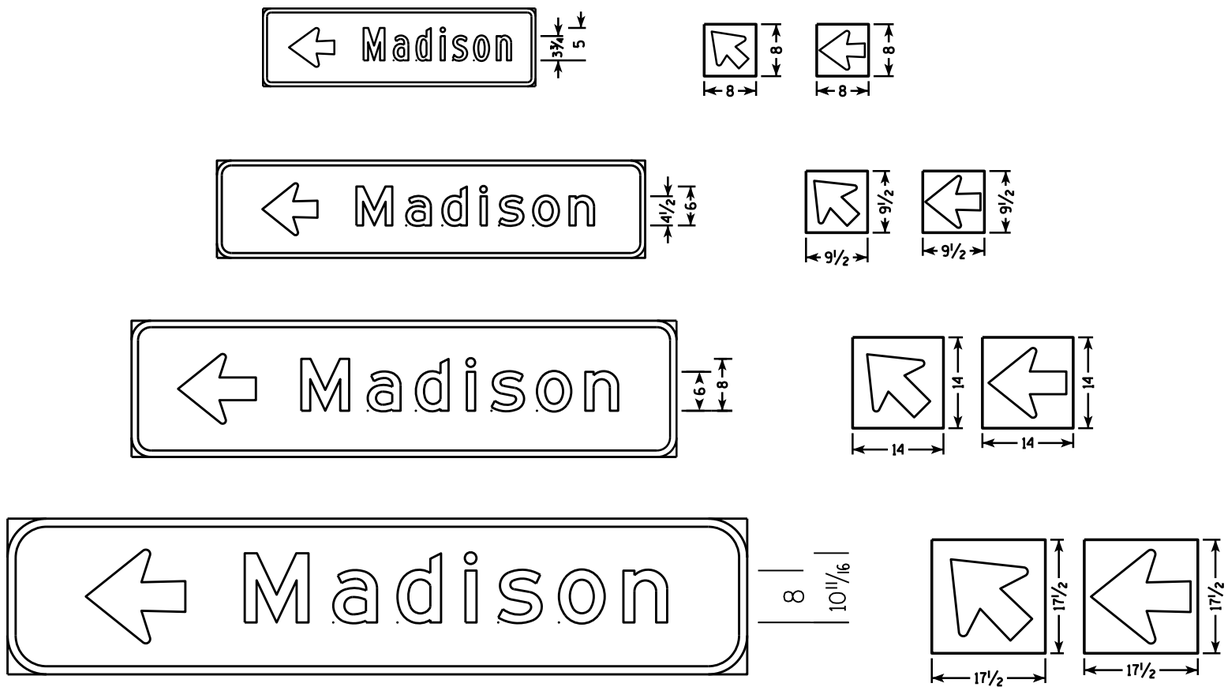

GENERAL NOTES

1. Materials shall conform to Standard Specification Section 637.
   Base - Sheet Aluminum 0.040" Thickness
   Sheeting - Orange Type F Reflective
   Arrow - Black Non-Reflective
2. Arrow signs shall be fastened to permanent sign by either aluminum rivets or aluminum self-tapping sheet metal screws. There shall be a minmum of 2 fasteners used per arrow sign.
3. There shall be a spacer consisting of a 0.08" nylon washer between the back of the arrow sign and the face of the permanent sign.
4. Arrows are per standard plate A1-2
5. Use separate arrow sign for each destination
6. Tilt arrow is always at 45 degrees
7. Arrow is centered on arrow sign

Lower Case Copy Size	Standard Width (Single Arrow)	2 Line Tilt Arrow Cover Width	3 Line Tilt Arrow Cover Width	Height
3¾" Series C	8	9 ½	14 ½	8
4½" Series D & E	9 ½	10	15	9 ½
6" Series D & E	14	16	20 ½	14
8" Series E	17 ½	20 ½	25	17 ½

BEFORE

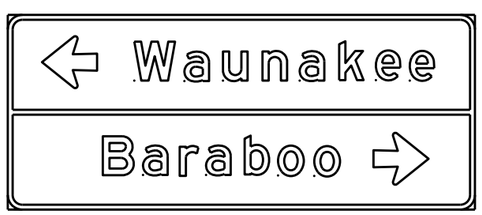

AFTER

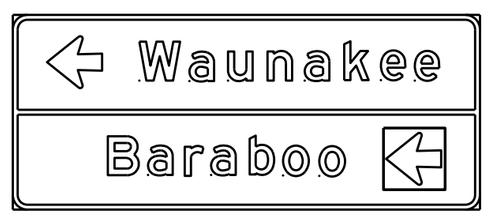

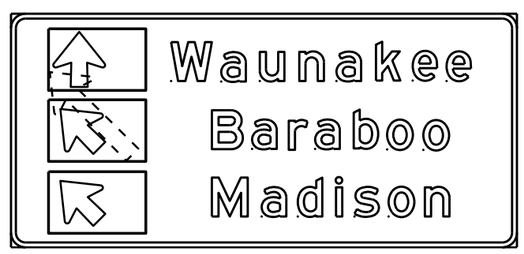

DESTINATION DIRECTIONAL ARROW FOR DETOUR SIGNS

WISCONSIN DEPT OF TRANSPORTATION

APPROVED Matthew R Rauch
for State Traffic Engineer

DATE 10/08/14

A4-12.2

PROJECT NO:

SHEET NO: E

BANDING

SINGLE SIGN

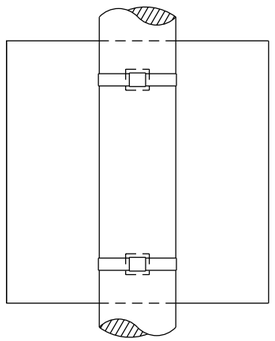

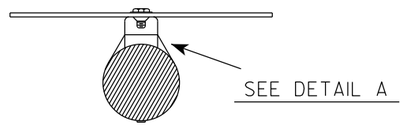

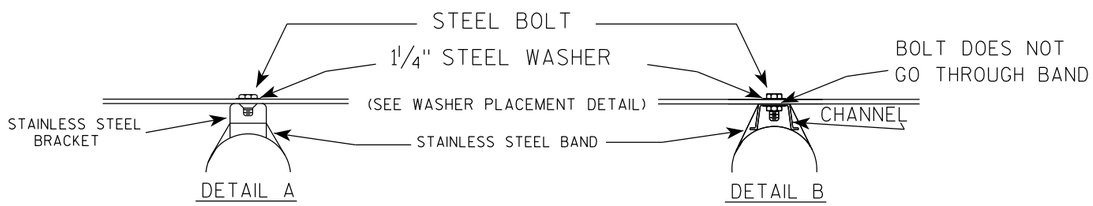

WASHER PLACEMENT

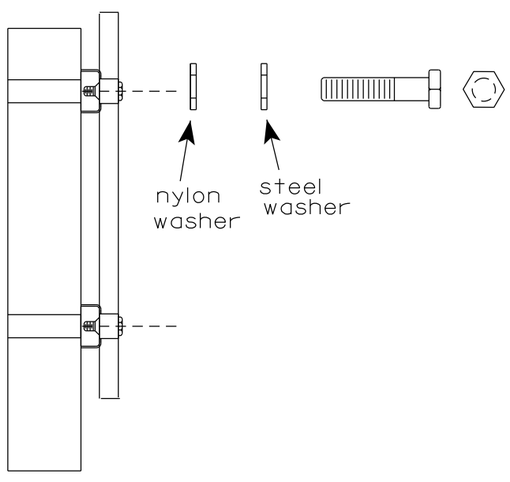

WASHERS (ALL POSTS) -
1-1/4" O.D. X 3/8" I.D. X 1/16" STEEL
1-1/4" O.D. X 3/8" I.D. X .080 NYLON
FOR ALL TYPE H SIGNS

GENERAL NOTES

1. Any sign over 3 feet in width shall use the V-Block banding method. See A5-10 standard plate.
2. Signs 3 feet or greater in height shall have three bracket bands installed. Signs less than 3 feet in height shall have two bracket bands installed.
3. Banding and assembly bracket shall be stainless steel. All bands shall be ¾" in width and 0.025" thickness.
4. ALL SIGN MOUNTING BOLTS AND WASHERS SHALL BE EITHER:
   a. Hot dip or mechanically galvanized in accordance with ASTM Designation: A 153, Class D
   b. Electro-galvanized in accordance with ASTM designation: B 633, Type III, SC 3

"J" ASSEMBLY

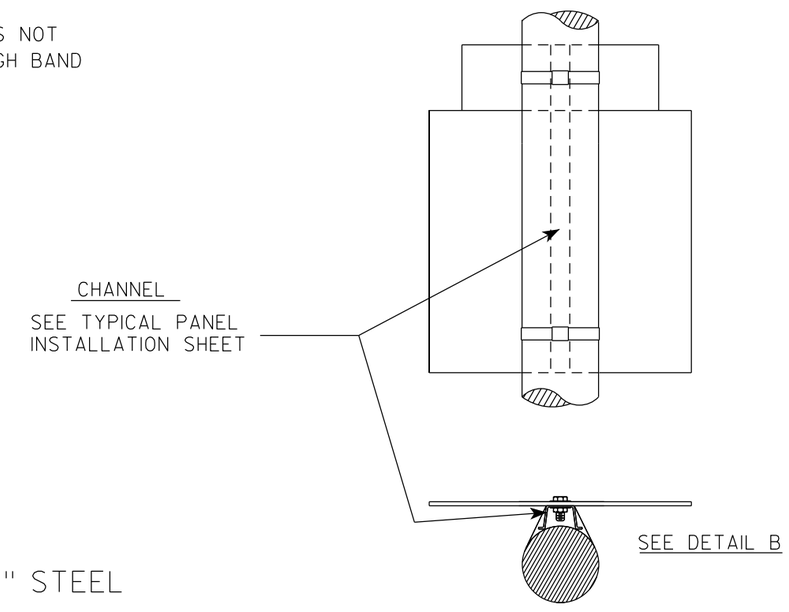

STANDARD SIGN
SIGN BANDING DETAILS

WISCONSIN DEPT OF TRANSPORTATION

APPROVED Matthew R Rauch for State Traffic Engineer

DATE 6/10/19 PLATE NO. A5-9.4

PROJECT NO:	HWY:	COUNTY:		SHEET NO: 122	E

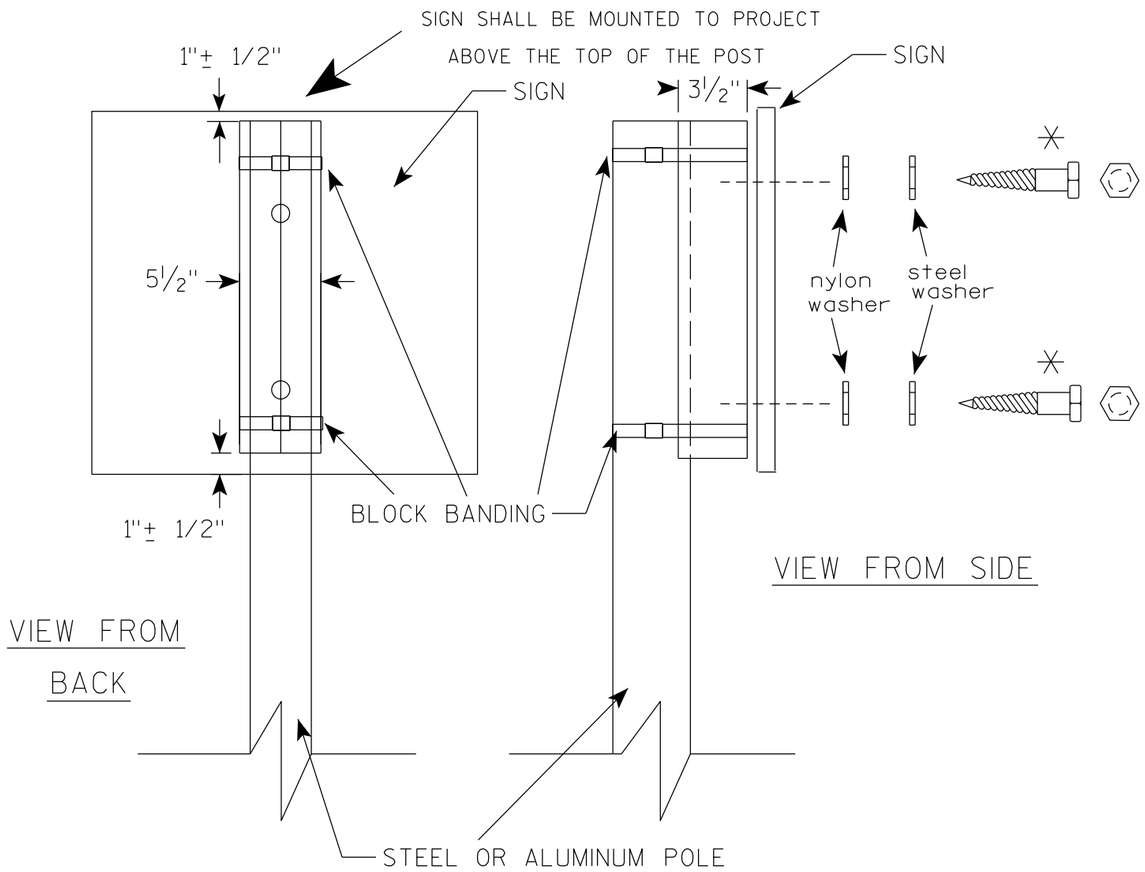

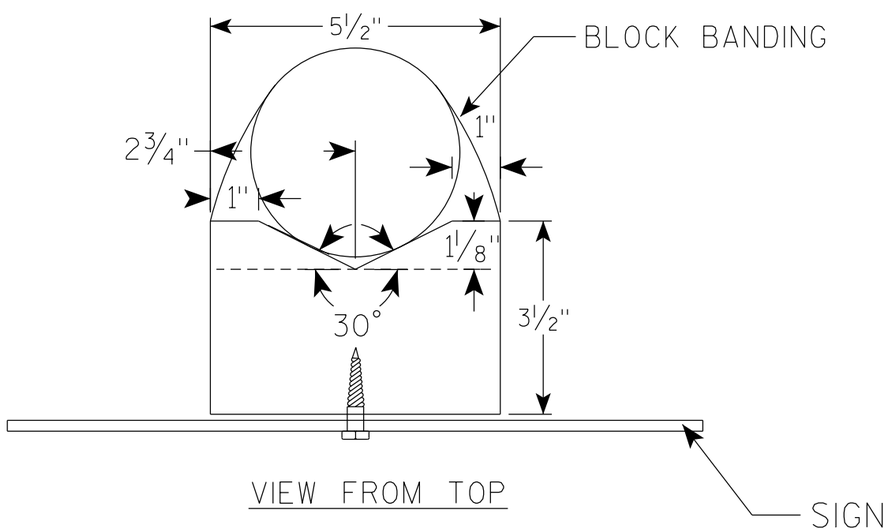

GENERAL NOTES

1. WOOD 4"X6" POST MATERIAL SHALL CONFORM TO 507.2.2 OF THE WisDOT STANDARD SPECIFICATIONS
2. BLOCK BANDING AND CLIPS SHALL BE STAINLESS STEEL, 3/4" WIDTH AND 0.025" THICKNESS
3. SIGNS 3' OR GREATER IN HEIGHT SHALL UTILIZE 3 BLOCK BANDS. SIGNS UNDER 3' IN HEIGHT SHALL UTILIZE 2 BLOCK BANDS
4. ACTUAL NUMBER OF FASTENERS PER SIGN VARIES WITH THE SIGN AREA, BUT NORNALLY THERE ARE TWO. FOR SIGNS GREATER THAN 9 S.F. 3 FASTENERS SHALL BE USED.
5. ALL SIGN MOUNTING BOLTS AND WASHERS SHALL BE EITHER:
   a. Hot dip or mechanically galvanized in accordance with ASTM Designation: A 153, Class D
   b. Electro-galvanized in accordance with ASTM Designation : B 633, TYPE III, SC 3
6. ALL BOLTS SHALL HAVE HEXAGONAL HEADS.
7. STEEL WASHERS SHALL BE 1 1/4" O.D. X 3/8" I.D. X 1/16"
8. NYLON WASHERS SHALL BE 1 1/4" O.D. X 3/8" I.D. X .080 FOR TYPE H OR TYPE F FACE SIGN

✳ LAG BOLTS SHALL BE 3/8" X 2 1/2"

7

7

BLOCK BANDING DETAIL
(V-BLOCK OPTION)

WISCONSIN DEPT OF TRANSPORTATION

APPROVED Matthew R Rauch
for State Traffic Engineer

DATE 4/19/2022 PLATE NO. A5-10.3

PROJECT NO:				SHEET NO: 123	E

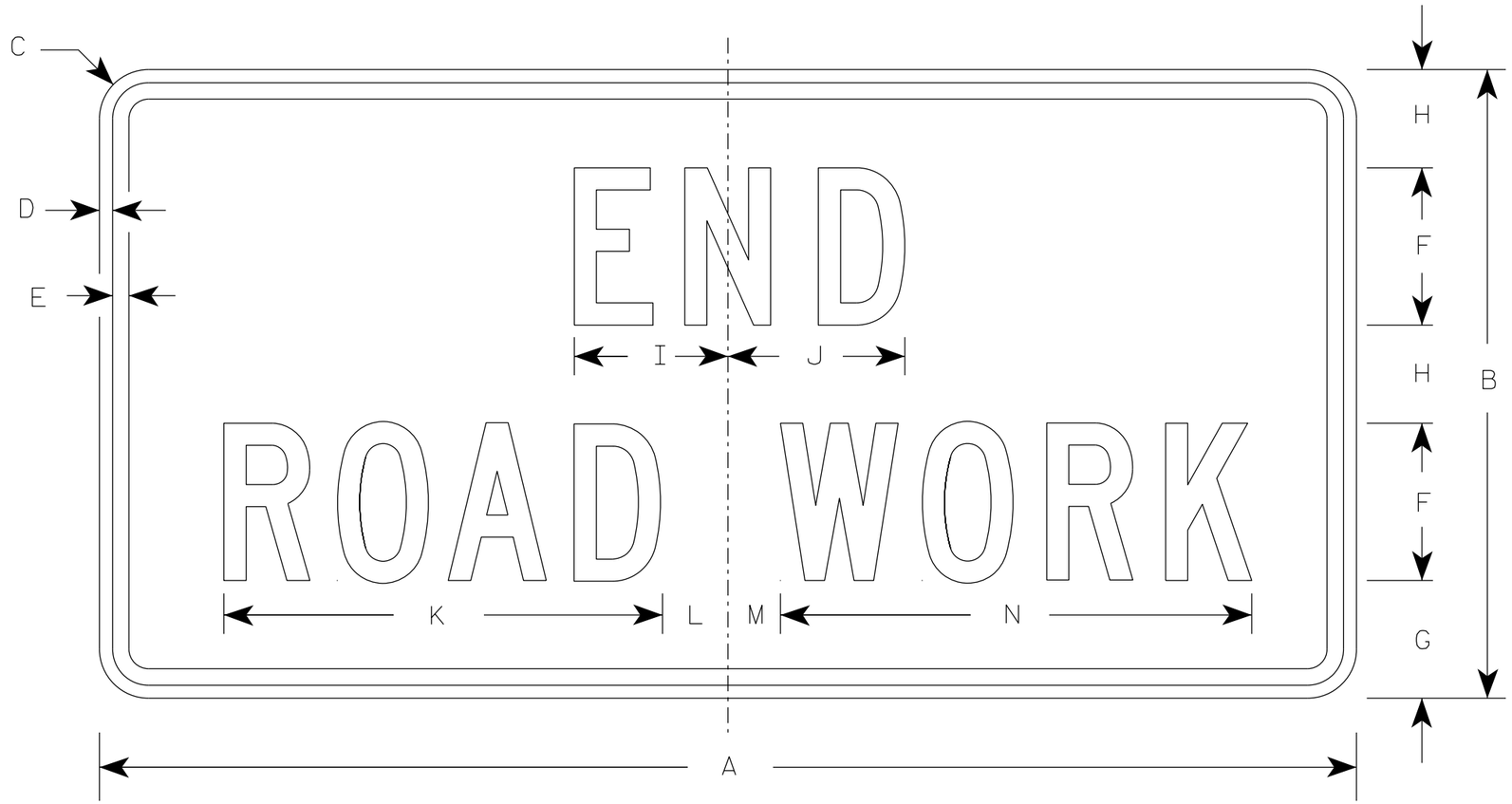

G20-2A

NOTES

1. Sign is Type II - Type F Reflective
2. Color:
   Background - Orange
   Message - Black
3. Message Series - C
4. Corners may be square or rounded when base material is plywood but borders shall be rounded as shown. When base material is metal, the corners and borders shall be rounded.

SIZE	A	B	C	D	E	F	G	H	I	J	K	L	M	N	O	P	Q	R	S	T	U	V	W	X	Y	Z	Area sq. ft.
1	36	18	1 1/2	3/8	1/2	4	3 3/4	2 1/2	4 1/8	4 1/8	11 1/8	2	1	12 1/8													4.5
2	48	24	1 7/8	1/2	5/8	6	4 1/2	3 3/4	5 7/8	6 3/4	16 3/4	2 1/2	1 3/4	18 1/2													8.0
2M	48	24	1 7/8	1/2	5/8	6	4 1/2	3 3/4	5 7/8	6 3/4	16 3/4	2 1/2	1 3/4	18 1/2													8.0
3	48	24	1 7/8	1/2	5/8	6	4 1/2	3 3/4	5 7/8	6 3/4	16 3/4	2 1/2	1 3/4	18 1/2													8.0
4	48	24	1 7/8	1/2	5/8	6	4 1/2	3 3/4	5 7/8	6 3/4	16 3/4	2 1/2	1 3/4	18 1/2													8.0
5	48	24	1 7/8	1/2	5/8	6	4 1/2	3 3/4	5 7/8	6 3/4	16 3/4	2 1/2	1 3/4	18 1/2													8.0

STANDARD SIGN

G20-2A

WISCONSIN DEPT OF TRANSPORTATION

APPROVED Matthew R Rauch
for State Traffic Engineer

DATE 1/26/2023 PLATE NO. G20-2A.10

PROJECT NO: | HWY: | COUNTY: | SHEET NO: 124 | E

NOTES

1. Sign is Type II - Type H Reflective
2. Color:
   Background - White
   Message - Black
3. Message Series - D except 3 number signs Series C

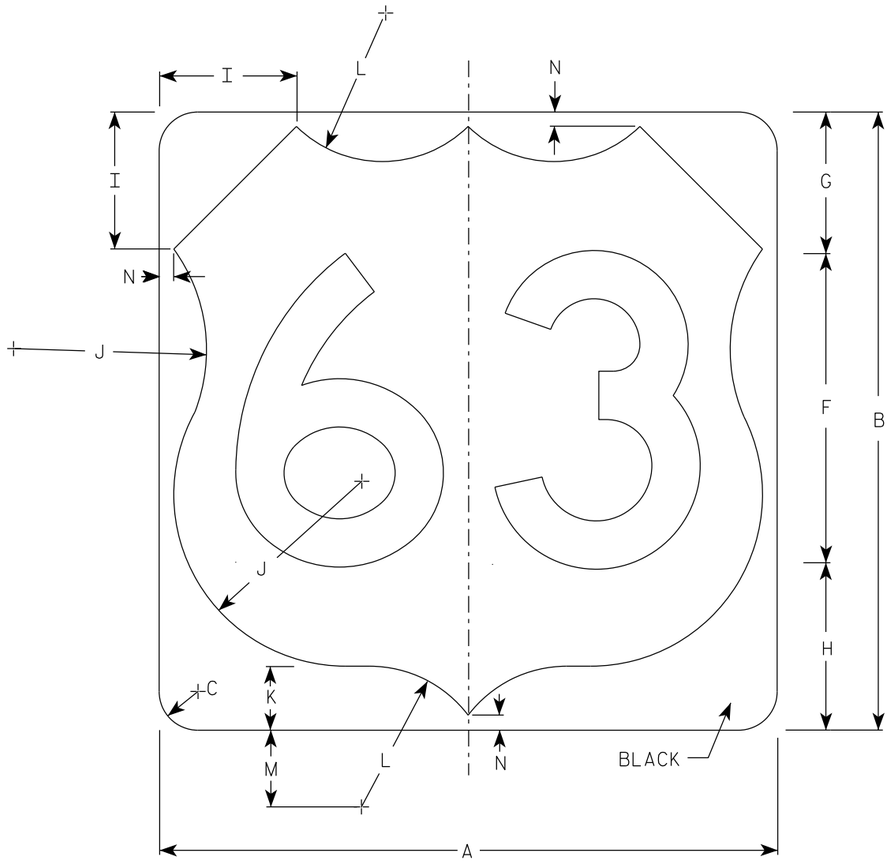

M1-4

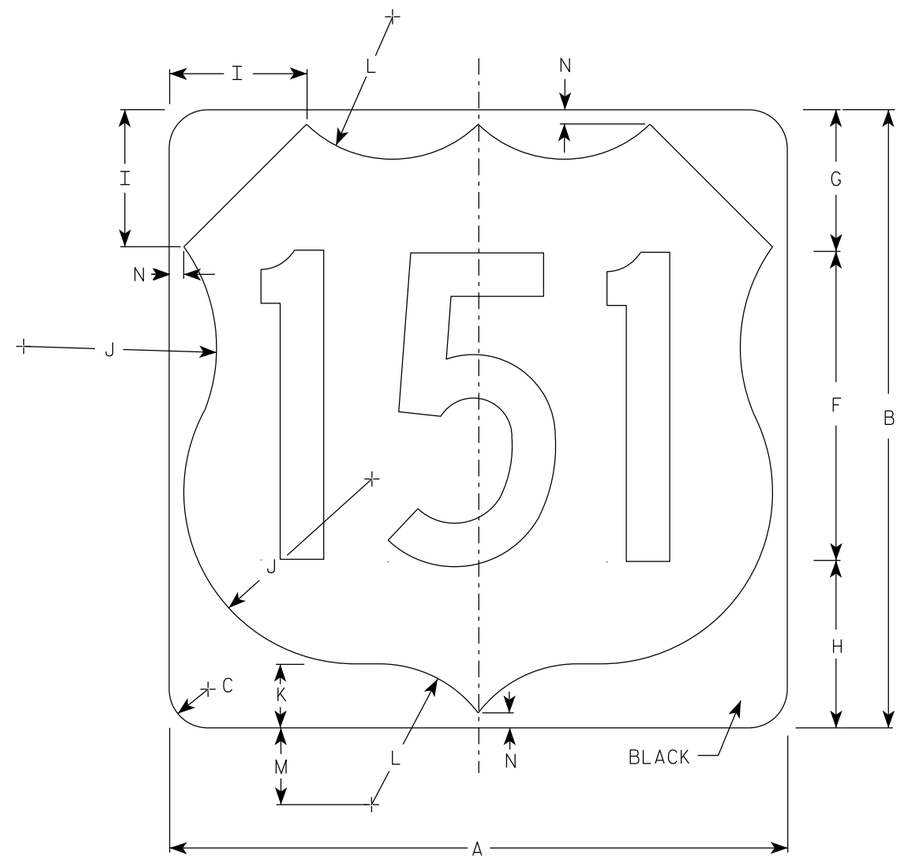

M1-4

SIZE	A	B	C	D	E	F	G	H	I	J	K	L	M	N	O	P	Q	R	S	T	U	V	W	X	Y	Z	Area sq. ft.
1																											
2	24	24	1 1/2			12	5 1/2	6 1/2	5	7 1/2	2 1/2	5 1/2	3	1/2													4.0
2M	24	24	1 1/2			12	5 1/2	6 1/2	5	7 1/2	2 1/2	5 1/2	3	1/2													4.0
3	36	36	2 1/4			18	8 1/4	9 1/4	7 1/4	11 1/4	3 3/4	8 1/4	4 1/2	3/4													9.0
4	36	36	2 1/4			18	8 1/4	9 1/4	7 1/4	11 1/4	3 3/4	8 1/4	4 1/2	3/4													9.0
5	36	36	2 1/4			18	8 1/4	9 1/4	7 1/4	11 1/4	3 3/4	8 1/4	4 1/2	3/4													9.0

USH MARKER
M1-4 FOR ASSEMBLIES

WISCONSIN DEPT OF TRANSPORTATION

APPROVED Matthew R Rauch
for State Traffic Engineer

DATE 12/20/22 PLATE NO. M1-4.11

PROJECT NO: | HWY: | COUNTY: | SHEET NO: 125 | E

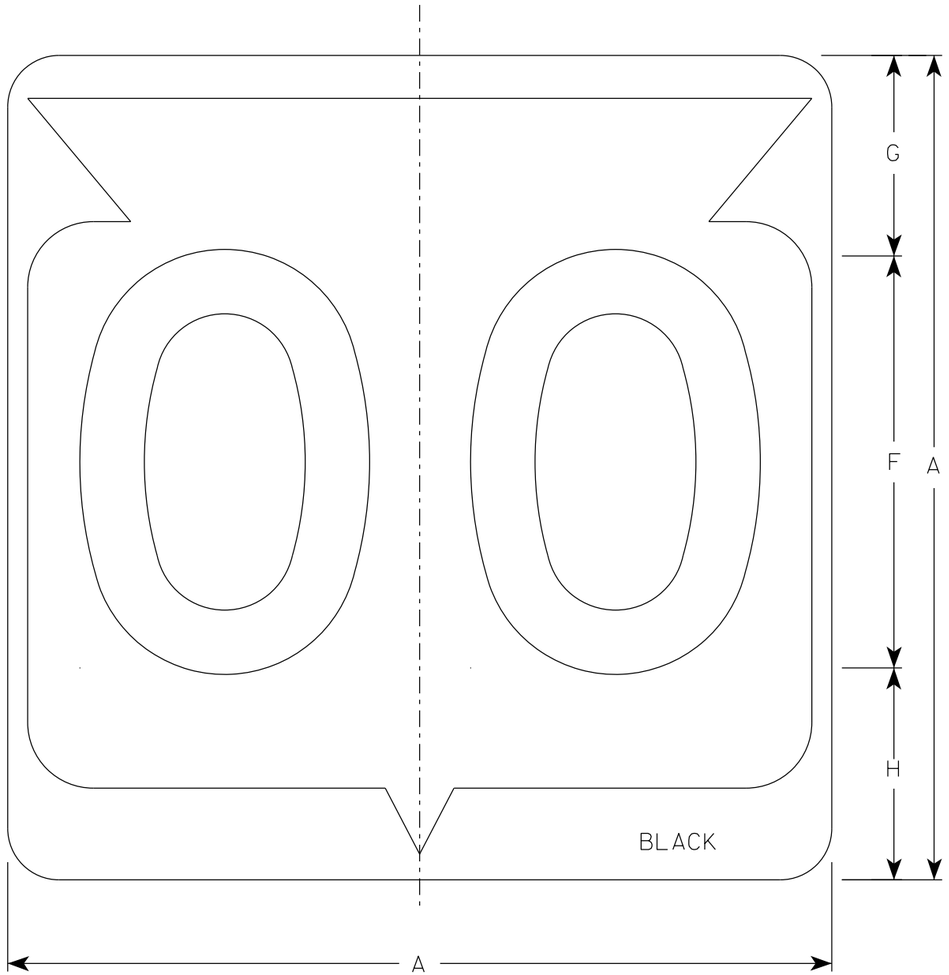

M1-6

NOTES

1. Sign is Type II - Type H Reflective
2. Color:
   Background - White
   Message - Black
3. Message Series - D except 3 number signs Series C

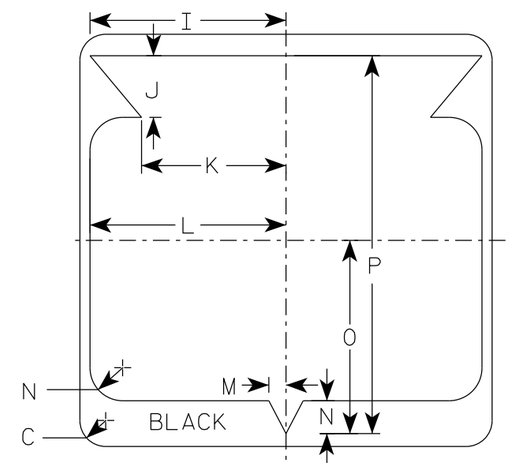

SIZE	A	B	C	D	E	F	G	H	I	J	K	L	M	N	O	P	Q	R	S	T	U	V	W	X	Y	Z	Area sq. ft.
1																											
2	24		1 1/2			12	5 1/2	6 1/2	10 1/4	2 1/2	8 7/8	11 1/2	1	1 7/8	11 1/4	21 7/8											4.0
2M	24		1 1/2			12	5 1/2	6 1/2	10 1/4	2 1/2	8 7/8	11 1/2	1	1 7/8	11 1/4	21 7/8											4.0
3	36		2 1/4			18	8 3/4	9 1/4	15 3/8	5 3/8	12 5/8	17 1/8	1 1/2	2 7/8	16 7/8	33											9.0
4	36		2 1/4			18	8 3/4	9 1/4	15 3/8	5 3/8	12 5/8	17 1/8	1 1/2	2 7/8	16 7/8	33											9.0
5	36		2 1/4			18	8 3/4	9 1/4	15 3/8	5 3/8	12 5/8	17 1/8	1 1/2	2 7/8	16 7/8	33											9.0

STATE ROUTE MARKER
M1-6 FOR ASSEMBLIES

WISCONSIN DEPT OF TRANSPORTATION

APPROVED Matthew R Rauch
for State Traffic Engineer

DATE 11/8/2022 PLATE NO. M1-6.11

PROJECT NO:	HWY:	COUNTY:		SHEET NO: 126	E

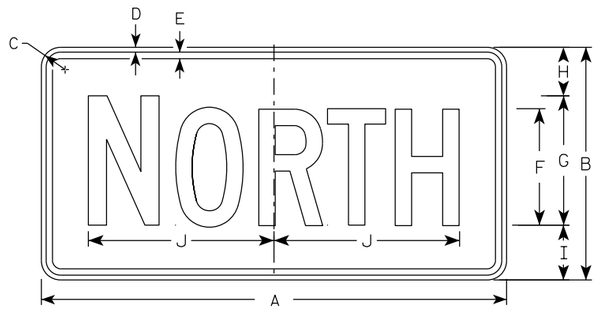

M3-1
MM3-1
MP3-1

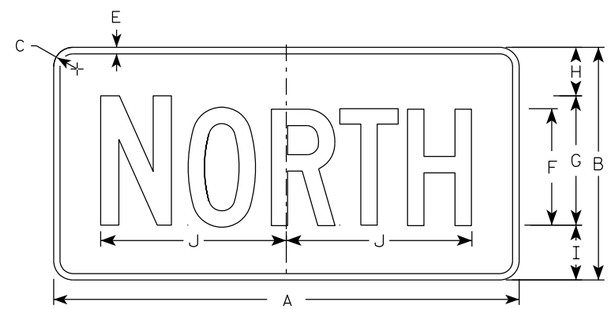

MB3-1
MK3-1
MN3-1

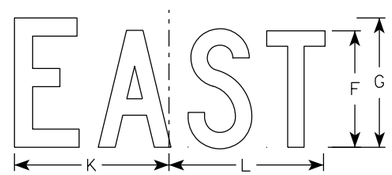

M3-2
MM3-2
MP3-2

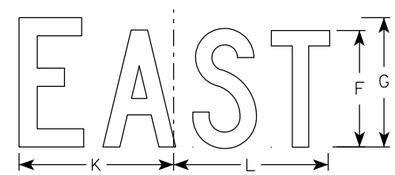

MB3-2
MK3-2
MN3-2

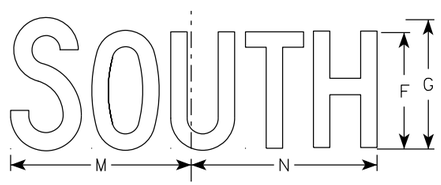

M3-3
MM3-3
MP3-3

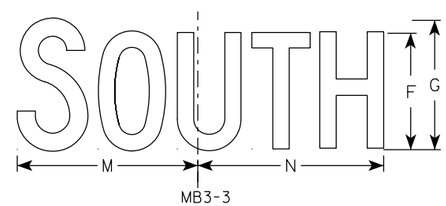

MB3-3
MK3-3
MN3-3

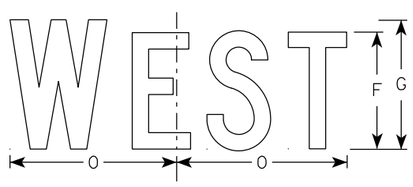

M3-4
MM3-4
MP3-4

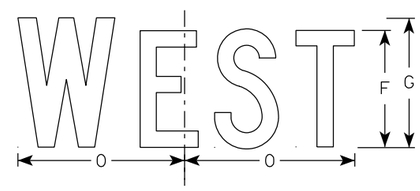

MB3-4
MK3-4
MN3-4

NOTES

1. All Signs Type II - Type H Reflective
2. Color:
   Background - See note 5
   Message - See note 5
3. Message Series - C
4. Corners may be square or rounded when base material is plywood but borders shall be rounded as shown. When base material is metal, the corners and borders shall be rounded.
5. M3-1 thru M3-4 Background - White
   Message - Black
   MB3-1 thru MB3-4 Background - Blue
   Message - White
   MK3-1 thru MK3-4 Background - Green
   Message - White
   MM3-1 thru MM3-4 Background - White
   Message - Green
   MN3-1 thru MN3-4 Background - Brown
   Message - White
   MP3-1 thru MP3-4 Background - White
   Message - Blue
6. Note the first letter of each direction is larger than the remainder of the message.

SIZE	A	B	C	D	E	F	G	H	I	J	K	L	M	N	O	P	Q	R	S	T	U	V	W	X	Y	Z	Area sq. ft.
1																											
2S	24	12	1 1/2	3/8	3/8	6	7	2 1/4	2 3/4	10 1/4	7 7/8	8 3/8	10 1/4	9 3/4	8 3/4												2.00
2M	24	12	1 1/2	3/8	3/8	6	7	2 1/4	2 3/4	10 1/4	7 7/8	8 3/8	10 1/4	9 3/4	8 3/4												2.00
3	36	18	1 1/2	3/8	1/2	9	10	3 3/4	4 1/4	14 3/8	12	12 1/8	14	14 1/8	13												4.5
4	36	18	1 1/2	3/8	1/2	9	10	3 3/4	4 1/4	14 3/8	12	12 1/8	14	14 1/8	13												4.5
5	36	18	1 1/2	3/8	1/2	9	10	3 3/4	4 1/4	14 3/8	12	12 1/8	14	14 1/8	13												4.5

STANDARD SIGNS
M3-1 THRU M3-4
SERIES

WISCONSIN DEPT OF TRANSPORTATION

APPROVED Matthew R Rauch
For State Traffic Engineer

DATE 2/8/2023 PLATE NO. M3-1.15

PROJECT NO: | HWY: | COUNTY: | SHEET NO: 127 | E

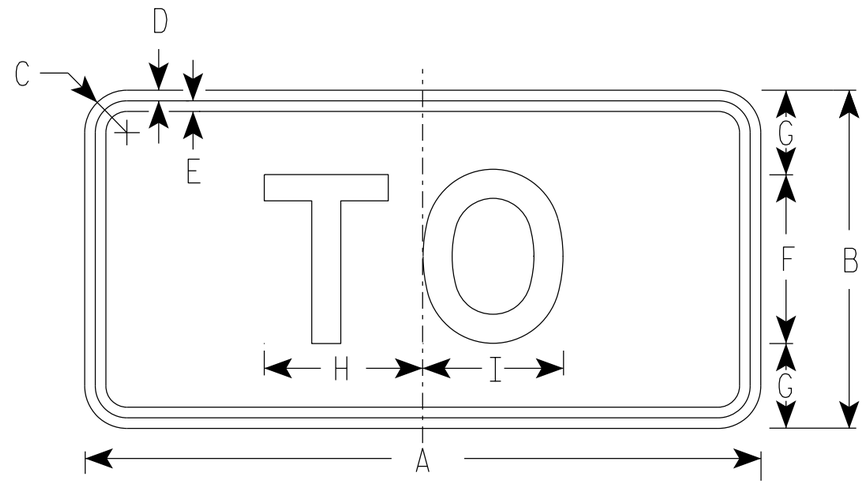

M4-5
MM4-5
MP4-5
M04-5

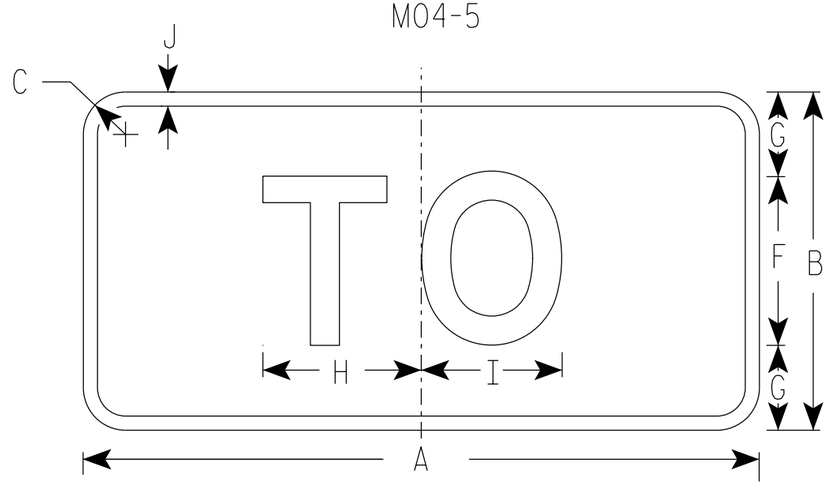

MB4-5
MK4-5
MN4-5

NOTES

1. Sign is Type II - Type H Reflective
2. Color:
   Background - See note 5
   Message - See note 5
3. Message Series - E
4. Corners may be square or rounded when base material is plywood but borders shall be rounded as shown. When base material is metal, the corners and borders shall be rounded.
5. M4-5 Background - White
   Message - Black
   MB4-5 Background - Blue
   Message - White
   MK4-5 Background - Green
   Message - White
   MM4-5 Background - White
   Message - Green
   MN4-5 Background - Brown
   Message - White
   MP4-5 Background - White
   Message - Blue
   M04-5 Background - Orange Type F Reflective
   Message - Black

SIZE	A	B	C	D	E	F	G	H	I	J	K	L	M	N	O	P	Q	R	S	T	U	V	W	X	Y	Z	Area sq. ft.
1																											
2S	24	12	1 1/2	3/8	3/8	6	3	5 3/8	5 1/4	1/2																	2.00
2M	24	12	1 1/2	3/8	3/8	6	3	5 3/8	5 1/4	1/2																	2.00
3	36	18	1 1/2	3/8	1/2	9	4 1/2	8 1/4	8 3/8	1/2																	4.5
4	36	18	1 1/2	3/8	1/2	9	4 1/2	8 1/4	8 3/8	1/2																	4.5
5	36	18	1 1/2	3/8	1/2	9	4 1/2	8 1/4	8 3/8	1/2																	4.5

STANDARD SIGN
M4-5

WISCONSIN DEPT OF TRANSPORTATION

APPROVED Matthew R Rauch
for State Traffic Engineer

DATE 2/8/2023 PLATE NO. M4-5.11

PROJECT NO: | HWY: | COUNTY: | SHEET NO: 128 | E

NOTES

1. Sign is Type II - Type F Reflective
2. Color:
   Background - Orange
   Message - Black
3. Message Series - B
4. Corners may be square or rounded when base material is plywood but borders shall be rounded as shown. When base material is metal, the corners and borders shall be rounded.

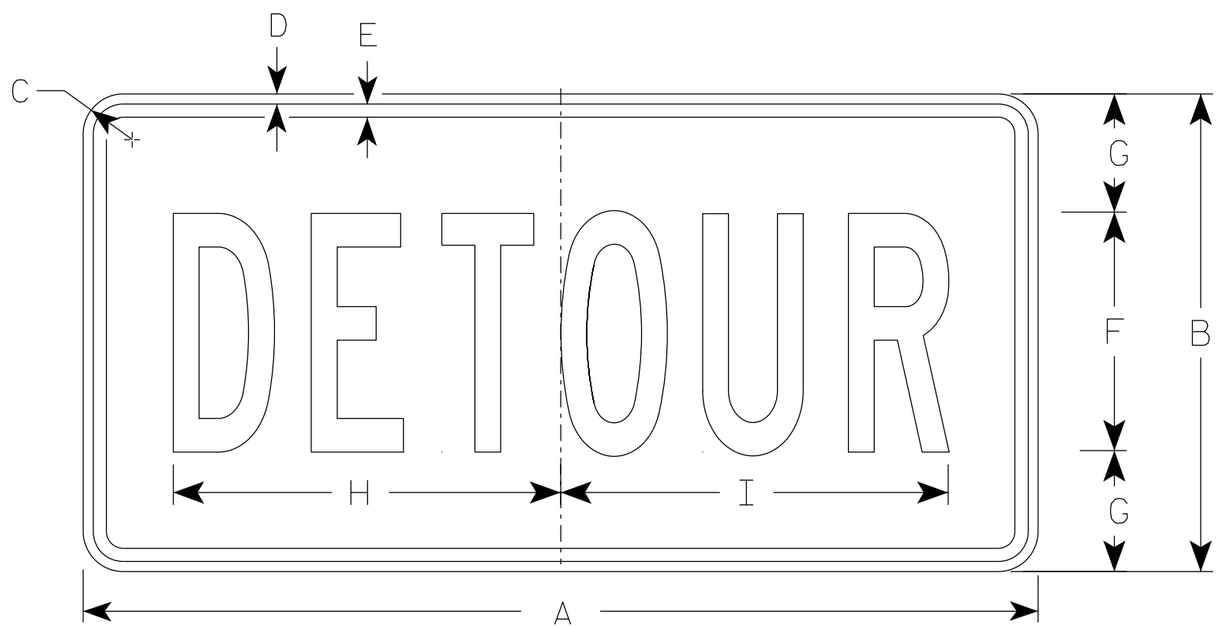

M4-8

SIZE	A	B	C	D	E	F	G	H	I	J	K	L	M	N	O	P	Q	R	S	T	U	V	W	X	Y	Z	Area sq. ft.
1																											
2	24	12	1 1/2	3/8	3/8	6	3	10	10 1/4																		2.0
2M	24	12	1 1/2	3/8	3/8	6	3	10	10 1/4																		2.0
3	36	18	1 1/2	3/8	1/2	9	4 1/2	14 5/8	14 1/2																		4.5
4	36	18	1 1/2	3/8	1/2	9	4 1/2	14 5/8	14 1/2																		4.5
5	36	18	1 1/2	3/8	1/2	9	4 1/2	14 5/8	14 1/2																		4.5

STANDARD SIGN
M4-8

WISCONSIN DEPT OF TRANSPORTATION

APPROVED Matthew R Rauch
for State Traffic Engineer

DATE 2/9/2023 PLATE NO. M4-8.4

PROJECT NO:	HWY:	COUNTY:		SHEET NO: 129	E

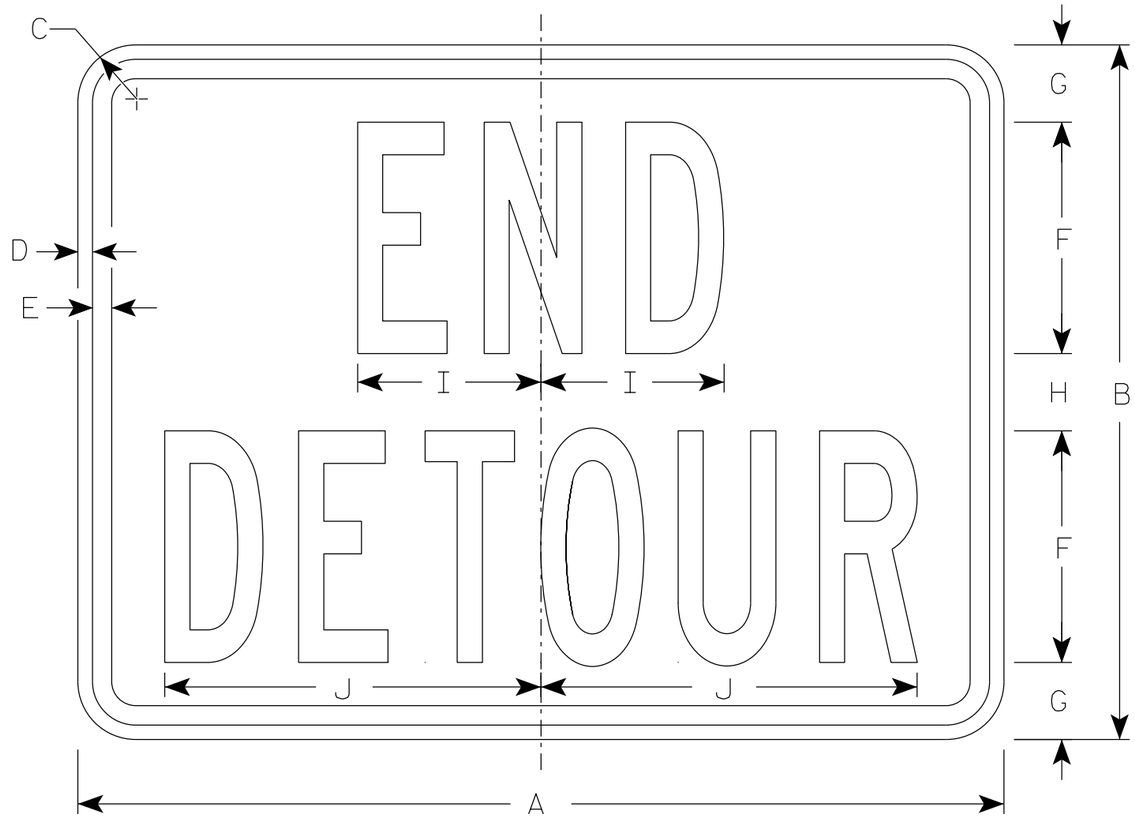

M4-8A

NOTES

1. Sign is Type II - Type F Reflective
2. Color:
   Background - Orange
   Message - Black
3. Message Series - B
4. Corners may be square or rounded when base material is plywood but borders shall be rounded as shown. When base material is metal, the corners and borders shall be rounded.

SIZE	A	B	C	D	E	F	G	H	I	J	K	L	M	N	O	P	Q	R	S	T	U	V	W	X	Y	Z	Area sq. ft.
1																											
2	24	18	1 1/2	3/8	1/2	6	2	2	4 3/4	9 3/4																	3.0
2M	24	18	1 1/2	3/8	1/2	6	2	2	4 3/4	9 3/4																	3.0
3	30	24	1 1/2	3/8	1/2	8	2 1/2	3	6 3/4	13																	5.0
4	30	24	1 1/2	3/8	1/2	8	2 1/2	3	6 3/4	13																	5.0
5	30	24	1 1/2	3/8	1/2	8	2 1/2	3	6 3/4	13																	5.0

STANDARD SIGN
M4-8A

WISCONSIN DEPT OF TRANSPORTATION

APPROVED Matthew R Rauch
for State Traffic Engineer

DATE 2/9/2023 PLATE NO. M4-8A.4

PROJECT NO: | HWY: | COUNTY: | SHEET NO: 130 | E

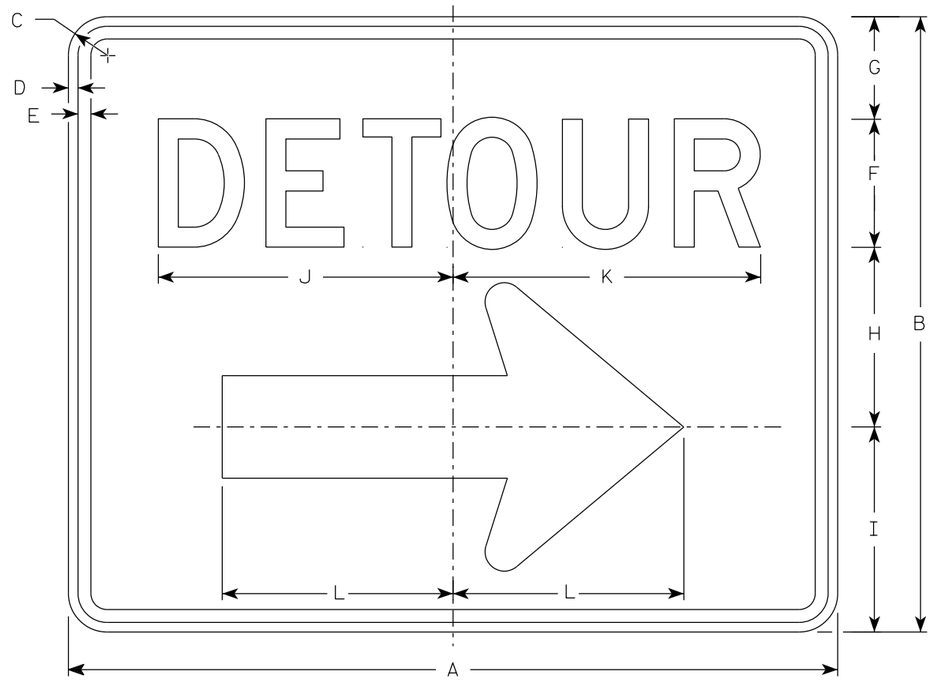

M4-9R

NOTES

1. Sign is Type II - Type F Reflective
2. Color:
   Background - Orange
   Message - Black
3. Message Series - D
4. Corners may be square or rounded when base material is plywood but borders shall be rounded as shown. When base material is metal, the corners and borders shall be rounded.
4. M4-9L is the same as M4-9R except the arrow is reversed.

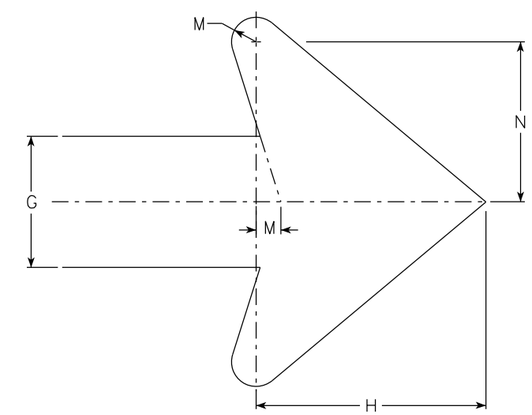

Arrow Detail

SIZE	A	B	C	D	E	F	G	H	I	J	K	L	M	N	O	P	Q	R	S	T	U	V	W	X	Y	Z	Area sq. ft.
1																											
2	30	24	1 1/2	3/8	1/2	5	4	7	8	11 1/2	12	9	3/4	4 7/8													5.00
2M	30	24	1 1/2	3/8	1/2	5	4	7	8	11 1/2	12	9	3/4	4 7/8													5.00
3	30	24	1 1/2	3/8	1/2	5	4	7	8	11 1/2	12	9	3/4	4 7/8													5.00
4	48	36	1 7/8	1/2	5/8	8	6	10 1/2	11 5/8	20 5/8	20 1/2	13 1/4	1 1/8	6 7/8													12.0
5	48	36	1 7/8	1/2	5/8	8	6	10 1/2	11 5/8	20 5/8	20 1/2	13 1/4	1 1/8	6 7/8													12.0

STANDARD SIGN
M4-9 R & L

WISCONSIN DEPT OF TRANSPORTATION

APPROVED Matthew R Rauch
For State Traffic Engineer

DATE 2/9/2023 PLATE NO. M4-9R.6

PROJECT NO: | HWY: | COUNTY: | SHEET NO: E

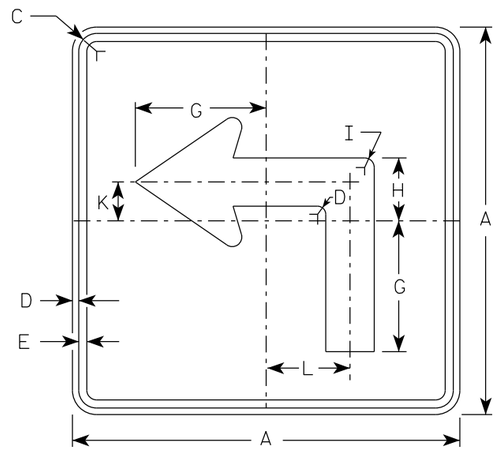

M5-1L
MM5-1L
MO5-1L
MP5-1L

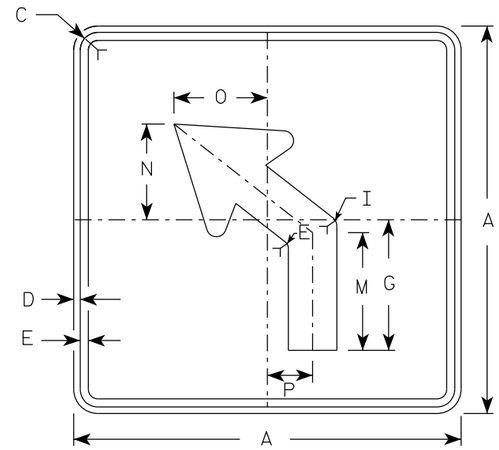

M5-2L
MM5-2L
MO5-2L
MP5-2L

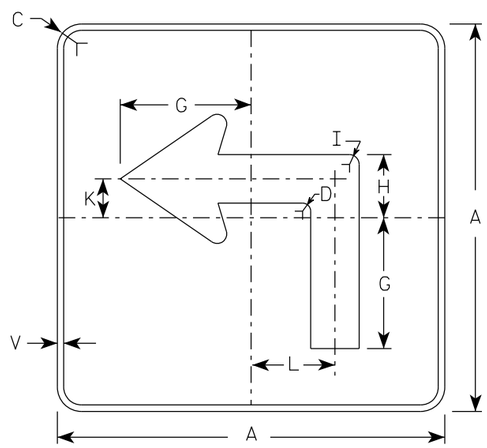

MB5-1L
MK5-1L
MN5-1L
MR5-1L

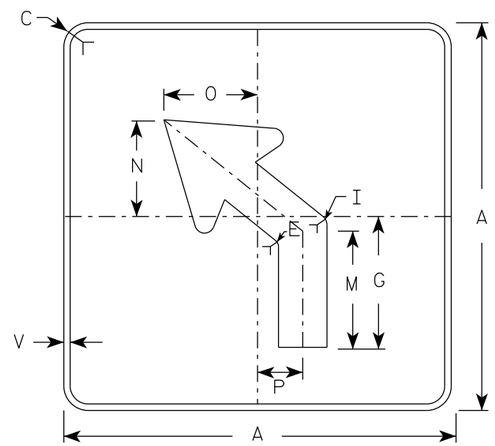

MB5-2L
MK5-2L
MN5-2L
MR5-2L

NOTES

1. Signs are Type II - Type H reflective except as shown
2. Color:
   Background - See note 4
   Message - See note 4
3. Corners may be square or rounded when base material is plywood but borders shall be rounded as shown. When base material is metal, the corners and borders shall be rounded.
4. M5-1 and M5-2 Background - White
   Message - Black
   MB5-1 and MB5-2 Background - Blue
   Message - White
   MK5-1 and MK5-2 Background - Green
   Message - White
   MM5-1 and MM5-2 Background - White
   Message - Green
   MN5-1 and MN5-2 Background - Brown
   Message - White
   MO5-1 and MO5-2 Background - Orange - Type F Reflective
   Message - Black
   MP5-1 and MP5-2 Background - White
   Message - Blue
   MR5-1 and MR5-2 Background - Brown
   Message - Yellow
5. M5-1R same as M5-1L except arrow points right.
6. M5-2R same as M5-2L except arrow tilts right.

ARROW DETAIL

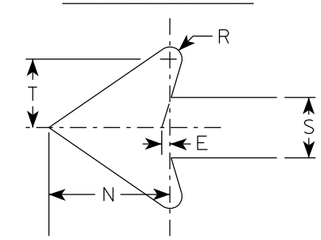

SIZE	A	B	C	D	E	F	G	H	I	J	K	L	M	N	O	P	Q	R	S	T	U	V	W	X	Y	Z	Area sq. ft.
1																											
2S	21		1 1/2	3/8	3/8		7	3 3/8	5/8		2 1/8	4 1/2	6 3/8	5 1/4	5	2 1/2		1/2	2 5/8	3		1/2					3.06
2M	21		1 1/2	3/8	3/8		7	3 3/8	5/8		2 1/8	4 1/2	6 3/8	5 1/4	5	2 1/2		1/2	2 5/8	3		1/2					3.06
3	30		1 7/8	1/2	5/8		10 1/8	4 7/8	7/8		3	6 1/2	9 1/8	7 1/2	7 1/4	3 1/2		3/4	3 3/4	4 1/4		1/2					6.25
4	30		1 7/8	1/2	5/8		10 1/8	4 7/8	7/8		3	6 1/2	9 1/8	7 1/2	7 1/4	3 1/2		3/4	3 3/4	4 1/4		1/2					6.25
5	30		1 7/8	1/2	5/8		10 1/8	4 7/8	7/8		3	6 1/2	9 1/8	7 1/2	7 1/4	3 1/2		3/4	3 3/4	4 1/4		1/2					6.25

STANDARD SIGN
M5-1 & M5-2

WISCONSIN DEPT OF TRANSPORTATION

APPROVED Matthew R Rauch
for State Traffic Engineer

DATE 2/13/2023 PLATE NO. M5-1.15

PROJECT NO: | HWY: | COUNTY: | SHEET NO: 132 | E

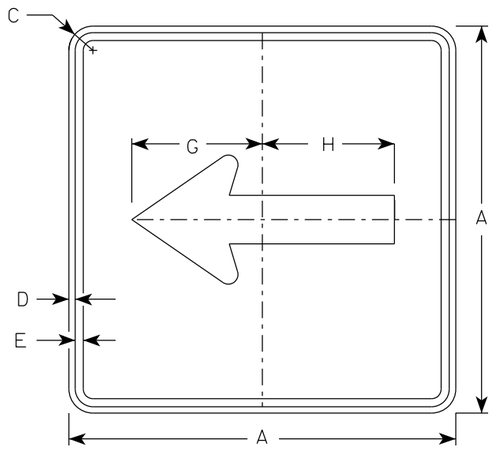

M6-1
MM6-1
MO6-1
MP6-1

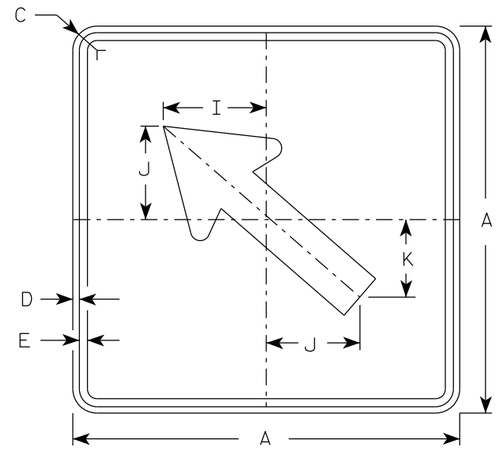

M6-2
MM6-2
MO6-2
MP6-2

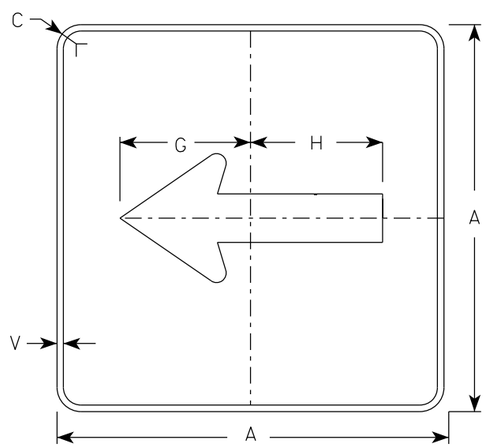

MB6-1
MK6-1
MN6-1
MR6-1

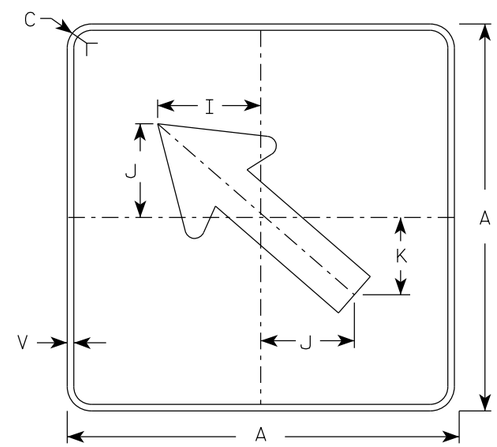

MB6-2
MK6-2
MN6-2
MR6-2

NOTES

1. Signs are Type II - Type H Reflective except as Shown
2. Color:
   Background - See note 4
   Message - See note 4
3. Corners may be square or rounded when base material is plywood but borders shall be rounded as shown. When base material is metal, the corners and borders shall be rounded.
4. M6-1 and M6-2 Background - White
   Message - Black
   MB6-1 and MB6-2 Background - Blue
   Message - White
   MK6-1 and MK6-2 Background - Green
   Message - White
   MM6-1 and MM6-2 Background - White
   Message - Green
   MN6-1 and MN6-2 Background - Brown
   Message - White
   MO6-1 and MO6-2 Background - Orange - Type F Reflective
   Message - Black
   MP6-1 and MP6-2 Background - White
   Message - Blue
   MR6-1 and MR6-2 Background - Brown
   Message - Yellow

ARROW DETAIL

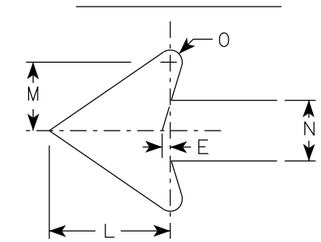

SIZE	A	B	C	D	E	F	G	H	I	J	K	L	M	N	O	P	Q	R	S	T	U	V	W	X	Y	Z	Area sq. ft.
1																											
2S	21		1 1/2	3/8	3/8		7 1/2	7 1/8	5 5/8	5	4 1/4	5 1/4	3	2 5/8	1/2							1/2					3.06
2M	21		1 1/2	3/8	3/8		7 1/2	7 1/8	5 5/8	5	4 1/4	5 1/4	3	2 5/8	1/2							1/2					3.06
3	30		1 7/8	1/2	5/8		10 3/4	10 1/4	8	7 1/4	6	7 1/2	4 1/4	3 3/4	3/4							1/2					6.25
4	30		1 7/8	1/2	5/8		10 3/4	10 1/4	8	7 1/4	6	7 1/2	4 1/4	3 3/4	3/4							1/2					6.25
5	30		1 7/8	1/2	5/8		10 3/4	10 1/4	8	7 1/4	6	7 1/2	4 1/4	3 3/4	3/4							1/2					6.25

STANDARD SIGN
M6-1 & M6-2
SERIES

WISCONSIN DEPT OF TRANSPORTATION

APPROVED Matthew R Rauch
for State Traffic Engineer

DATE 2/13/2023 PLATE NO. M6-1.16

PROJECT NO: | HWY: | COUNTY: | SHEET NO: 133 | E

NOTES

1. Sign is Type II - Type H Reflective
2. Color:
   Background - White
   Message - Black
3. Message Series - C
4. Corners may be square or rounded when base material is plywood but borders shall be rounded as shown. When base material is metal, the corners and borders shall be rounded.
5. Substitute appropriate numerals to nearest quarter mile and optically adjust spacing to achieve proper balance.

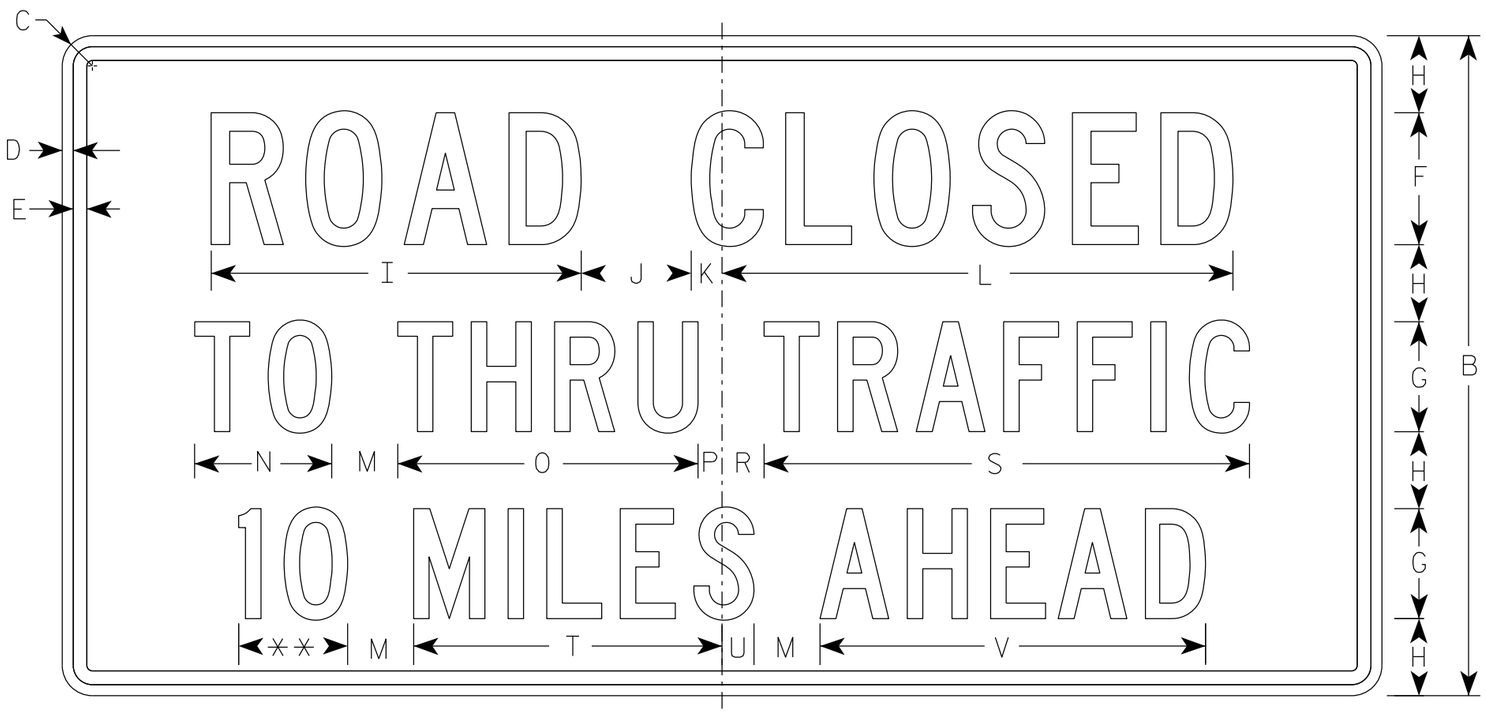

R11-3

** See Note 5

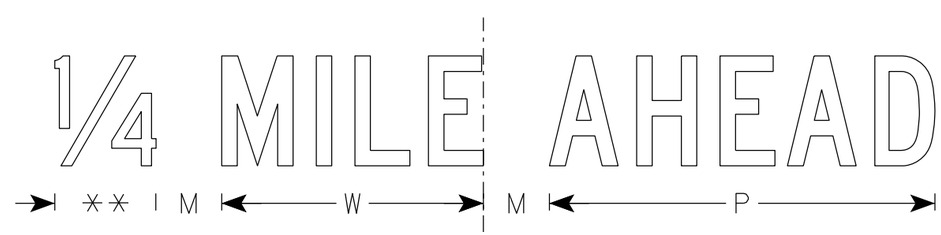

SIZE	A	B	C	D	E	F	G	H	I	J	K	L	M	N	O	P	Q	R	S	T	U	V	W	X	Y	Z	Area sq. ft.
1	36	18	1 1/2	3/8	3/8	4	3	2	11 1/4	3	1 1/8	15 3/8	2	3 3/4	8 1/4	5/8		1 3/8	13 1/4	8 3/8	7/8	10 1/2	7 1/8				4.5
2S	60	30	1 7/8	1/2	5/8	6	5	3 1/2	16 7/8	5	1 3/8	23 1/4	3	6 1/4	13 5/8	1 1/8		1 7/8	22 1/8	14	1 1/2	17 1/2	11 7/8				12.5
2M	60	30	1 7/8	1/2	5/8	6	5	3 1/2	16 7/8	5	1 3/8	23 1/4	3	6 1/4	13 5/8	1 1/8		1 7/8	22 1/8	14	1 1/2	17 1/2	11 7/8				12.5
3																											
4																											
5																											

STANDARD SIGN
R11-3

WISCONSIN DEPT OF TRANSPORTATION

APPROVED Matthew R Rauch
for State Traffic Engineer

DATE 2/5/24 PLATE NO. R11-3.10

PROJECT NO: | HWY: | COUNTY: | SHEET NO: 134 | E

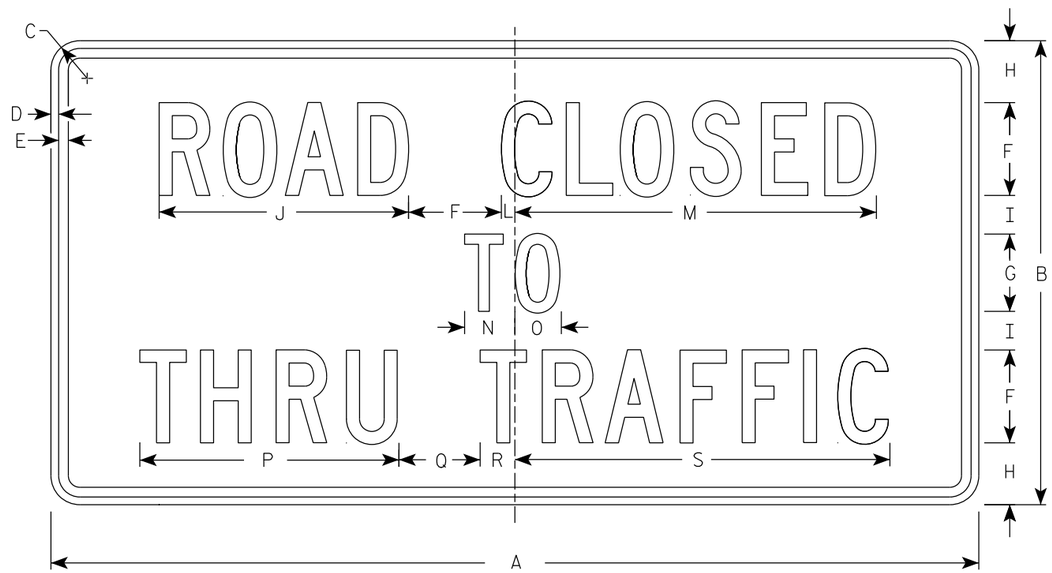

R11-4

NOTES

1. Sign is Type II - Type H Reflective
2. Color:
   Background - White
   Message - Black
3. Message Series - C
4. Corners may be square or rounded when base material is plywood but borders shall be rounded as shown. When base material is metal, the corners and borders shall be rounded.

SIZE	A	B	C	D	E	F	G	H	I	J	K	L	M	N	O	P	Q	R	S	T	U	V	W	X	Y	Z	Area sq. ft.
1																											
2S	60	30	1 7/8	1/2	5/8	6	5	4	2 1/2	16 1/8		7/8	23 3/8	3 1/4	3	16 3/4	5 1/4	2 1/4	24 1/4								12.5
2M	60	30	1 7/8	1/2	5/8	6	5	4	2 1/2	16 1/8		7/8	23 3/8	3 1/4	3	16 3/4	5 1/4	2 1/4	24 1/4								12.5
3																											
4																											
5																											

STANDARD SIGN
R11 - 4

WISCONSIN DEPT OF TRANSPORTATION

APPROVED Matthew R Rauch for State Traffic Engineer

DATE 2/5/24 PLATE NO. R11-4.4

PROJECT NO: | HWY: | COUNTY: | SHEET NO: 135 | E

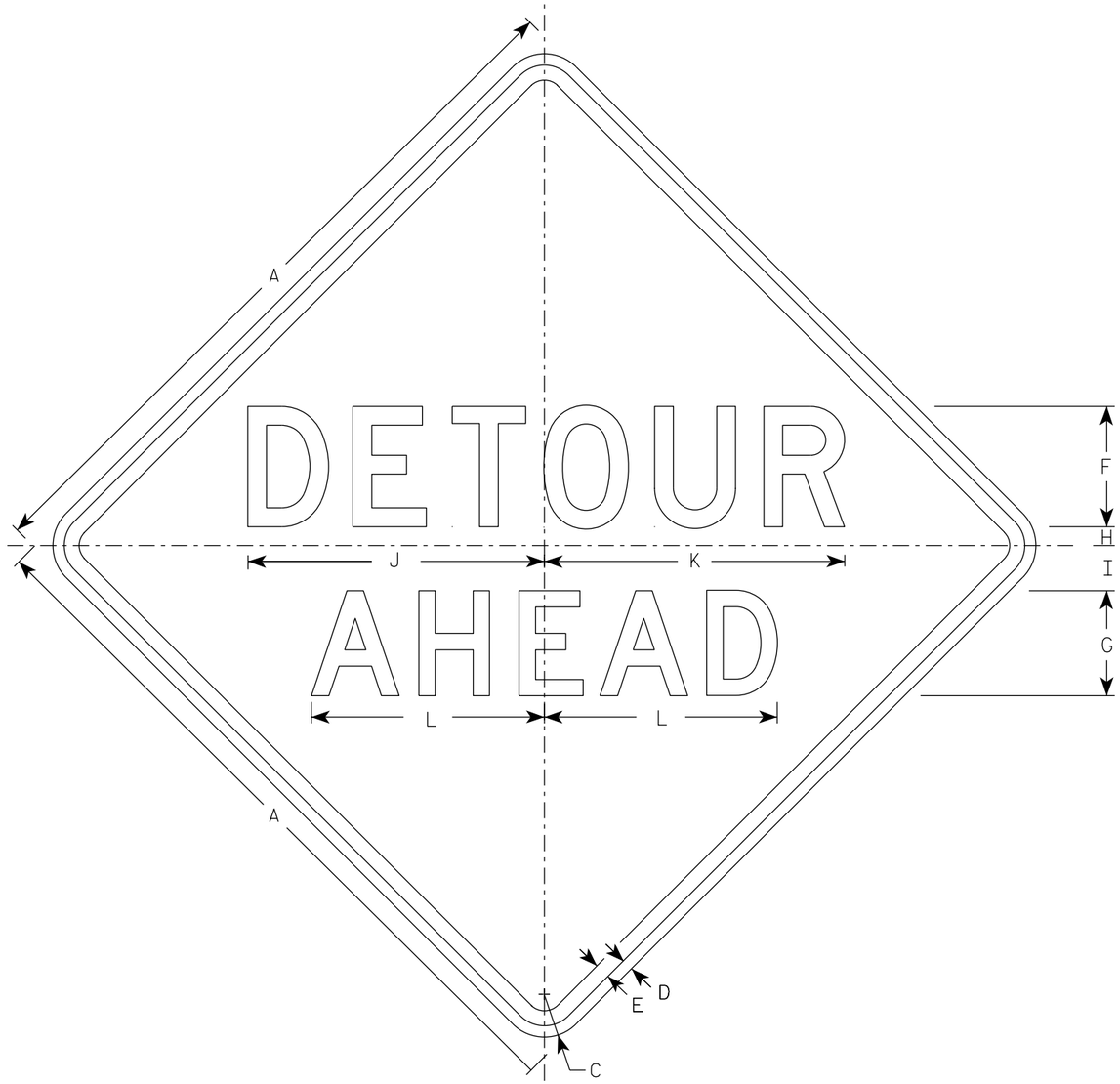

W20-2A

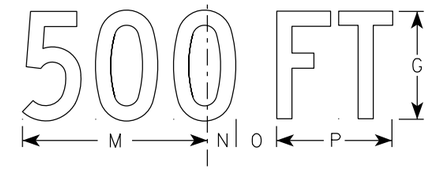

W20-2D

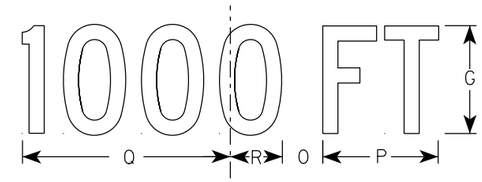

W20-2C

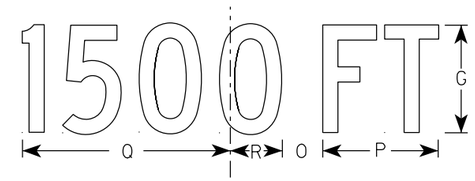

W20-2B

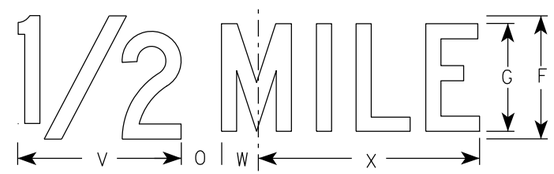

W20-2G

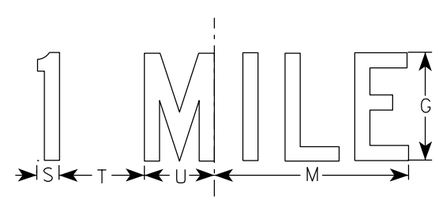

W20-2F

NOTES

1. Sign is Type II - Type F Reflective
2. Color:
   Background - Orange
   Message - Black
3. Message Series - See note 5
4. Corners may be square or rounded when base material is plywood but borders shall be rounded as shown. When base material is metal, the corners and borders shall be rounded.
5. Line 1 is Series D.
   Line 2 is Series D for AHEAD and Series C for all other distances.

SIZE	A	B	C	D	E	F	G	H	I	J	K	L	M	N	O	P	Q	R	S	T	U	V	W	X	Y	Z	Area sq. ft.
1	36		2 1/4	5/8	3/4	6	5	1	2 1/4	14 3/4	15	11 5/8	9	1 3/8	1 7/8	5 5/8	10 1/8	2 1/2	1 1/8	4 1/2	3 1/2	8	1 3/4	10 3/4			9.0
2S	48		3	3/4	1	8	7	1 1/4	3	19 3/4	20	15 1/2	12	1 7/8	2 5/8	7 1/2	13 1/2	3 3/8	1 1/2	6	4 5/8	10 5/8	2 3/8	14 3/8			16.0
2M	48		3	3/4	1	8	7	1 1/4	3	19 3/4	20	15 1/2	12	1 7/8	2 5/8	7 1/2	13 1/2	3 3/8	1 1/2	6	4 5/8	10 5/8	2 3/8	14 3/8			16.0
3	48		3	3/4	1	8	7	1 1/4	3	19 3/4	20	15 1/2	12	1 7/8	2 5/8	7 1/2	13 1/2	3 3/8	1 1/2	6	4 5/8	10 5/8	2 3/8	14 3/8			16.0
4	48		3	3/4	1	8	7	1 1/4	3	19 3/4	20	15 1/2	12	1 7/8	2 5/8	7 1/2	13 1/2	3 3/8	1 1/2	6	4 5/8	10 5/8	2 3/8	14 3/8			16.0
5	48		3	3/4	1	8	7	1 1/4	3	19 3/4	20	15 1/2	12	1 7/8	2 5/8	7 1/2	13 1/2	3 3/8	1 1/2	6	4 5/8	10 5/8	2 3/8	14 3/8			16.0

STANDARD SIGN
W20-2A,B,C,D,F & G

WISCONSIN DEPT OF TRANSPORTATION

APPROVED Matthew R Rauch
For State Traffic Engineer

DATE 1/10/2024 PLATE NO. W20-2.7

PROJECT NO: | HWY: | COUNTY: | SHEET NO: E

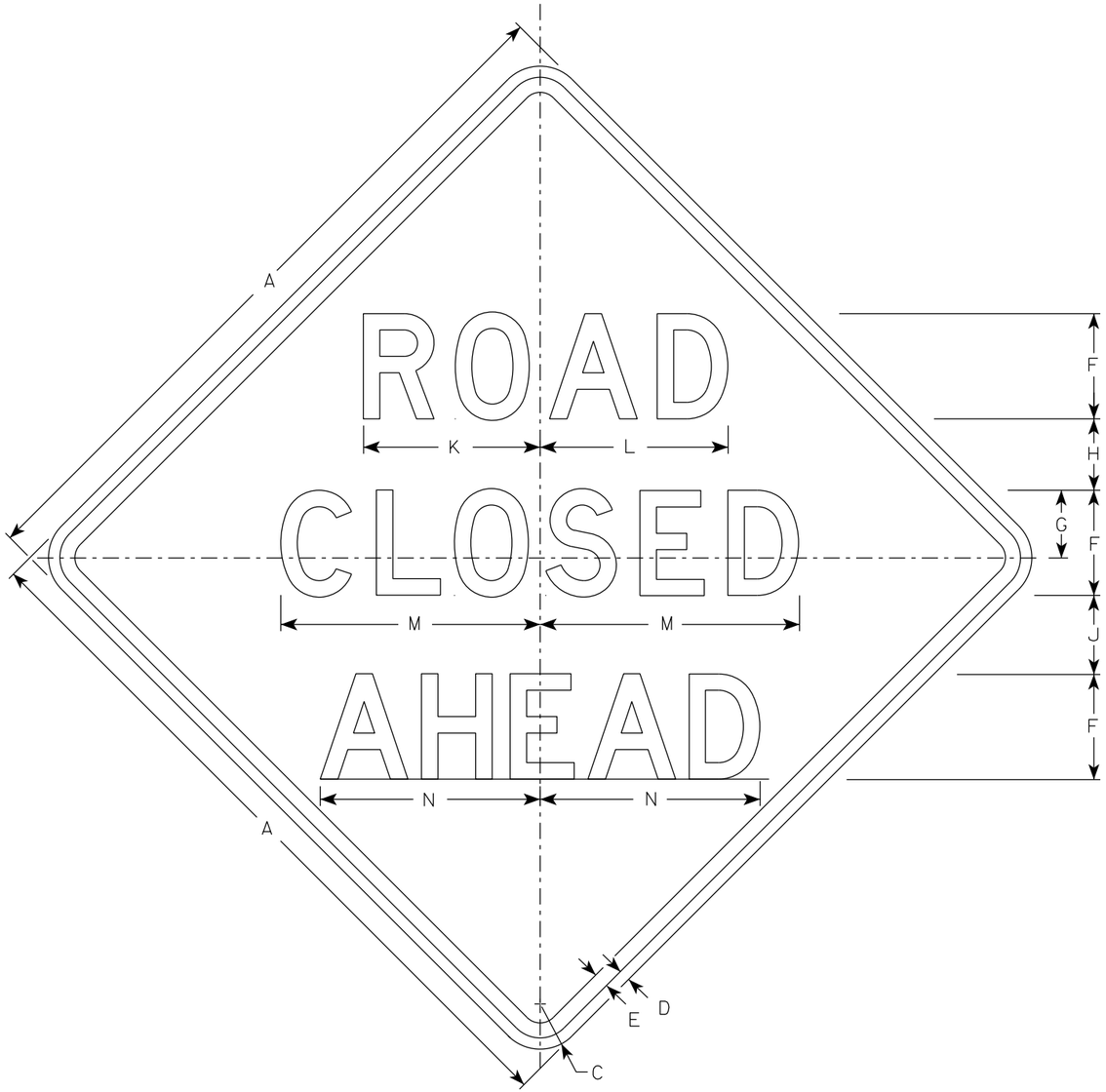

W20-3A

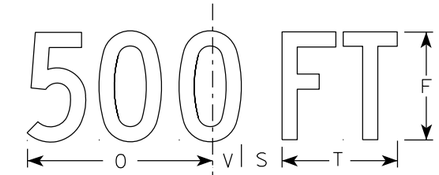

W20-3D

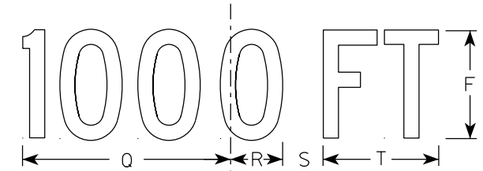

W20-3C

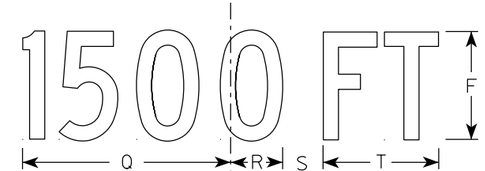

W20-3B

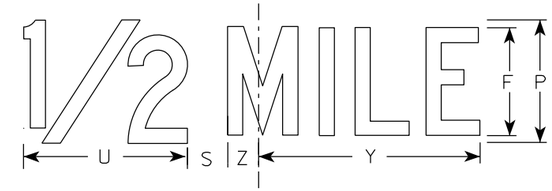

W20-3G

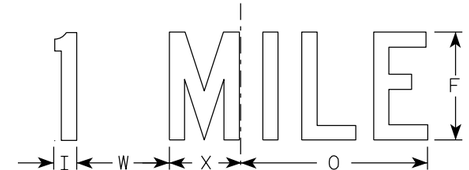

W20-3F

NOTES

1. Sign is Type II - Type F Reflective
2. Color:
   Background - Orange
   Message - Black
3. Message Series - see note 5
4. Corners may be square or rounded when base material is plywood but borders shall be rounded as shown. When base material is metal, the corners and borders shall be rounded.
5. Lines 1 and 2 are Series D.
   Line 3 is Series D for AHEAD and Series C for all other distances.

SIZE	A	B	C	D	E	F	G	H	I	J	K	L	M	N	O	P	Q	R	S	T	U	V	W	X	Y	Z	Area sq. ft.
1	36		2 1/4	5/8	3/4	5	3 3/8	3 1/2	1 1/8	4	8 3/8	8 7/8	12 1/2	11	9	6	10 1/8	2 1/2	1 7/8	5 5/8	8	1 3/8	4 1/2	3 1/2	10 3/4	1 3/4	9.0
2S	48		3	3/4	1	7	4 1/2	4 3/4	1 1/2	5 1/4	11 3/4	12 1/2	17 1/4	14 5/8	12	8	13 1/2	3 3/8	2 5/8	7 1/2	10 5/8	1 7/8	6	4 5/8	14 3/8	2 3/8	16.0
2M	48		3	3/4	1	7	4 1/2	4 3/4	1 1/2	5 1/4	11 3/4	12 1/2	17 1/4	14 5/8	12	8	13 1/2	3 3/8	2 5/8	7 1/2	10 5/8	1 7/8	6	4 5/8	14 3/8	2 3/8	16.0
3	48		3	3/4	1	7	4 1/2	4 3/4	1 1/2	5 1/4	11 3/4	12 1/2	17 1/4	14 5/8	12	8	13 1/2	3 3/8	2 5/8	7 1/2	10 5/8	1 7/8	6	4 5/8	14 3/8	2 3/8	16.0
4	48		3	3/4	1	7	4 1/2	4 3/4	1 1/2	5 1/4	11 3/4	12 1/2	17 1/4	14 5/8	12	8	13 1/2	3 3/8	2 5/8	7 1/2	10 5/8	1 7/8	6	4 5/8	14 3/8	2 3/8	16.0
5	48		3	3/4	1	7	4 1/2	4 3/4	1 1/2	5 1/4	11 3/4	12 1/2	17 1/4	14 5/8	12	8	13 1/2	3 3/8	2 5/8	7 1/2	10 5/8	1 7/8	6	4 5/8	14 3/8	2 3/8	16.0

STANDARD SIGN
W20-3A, B, C, D, F & G

WISCONSIN DEPT OF TRANSPORTATION

APPROVED Matthew R Rauch
for State Traffic Engineer

DATE 1/10/2024 PLATE NO. W20-3.8

PROJECT NO: | HWY: | COUNTY: | SHEET NO: E

NOTES

1. Fixed Message Signs Type II - Type F Reflective
2. Color:
   Background - Orange
   Message - Black
3. Message Series - C

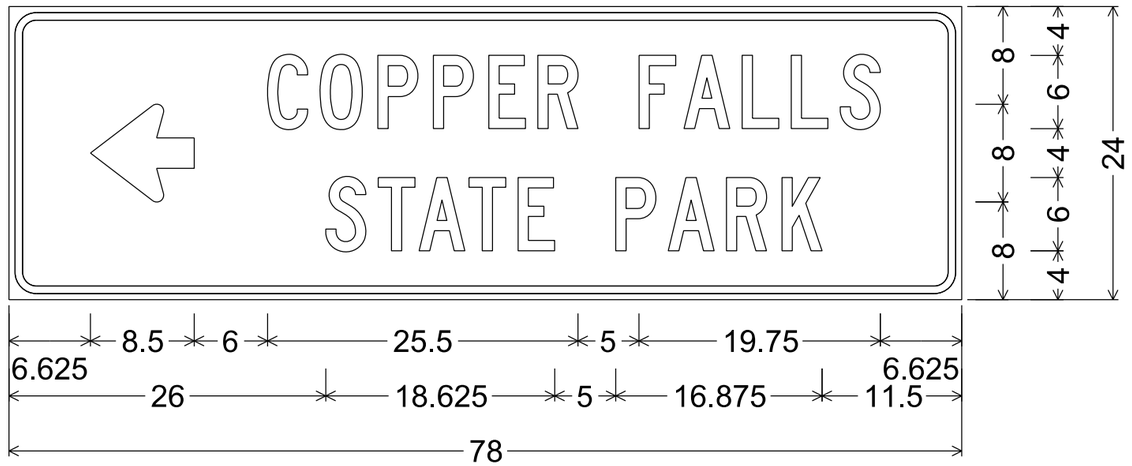

2.250" Radius, 0.625" Border, 0.500" Indent

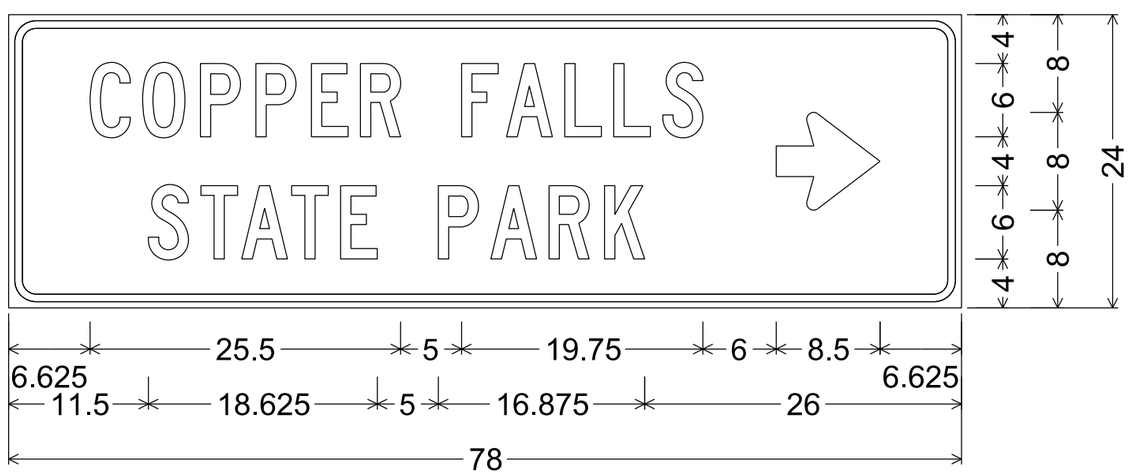

2.250" Radius, 0.625" Border, 0.500" Indent

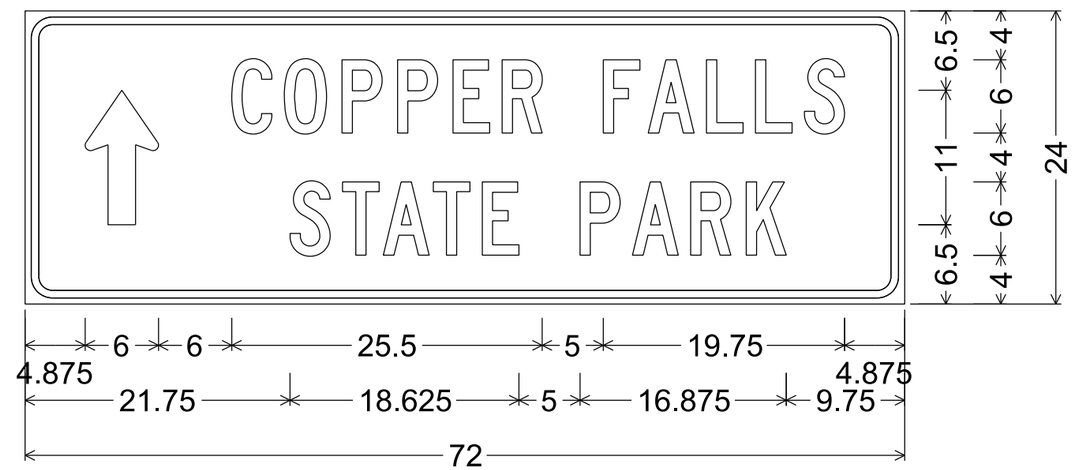

2.250" Radius, 0.625" Border, 0.500" Indent

7

7

NOTES

1. Fixed Message Signs Type II - Type F Reflective
2. Color:
   Background - Orange
   Message - Black
3. Message Series - C

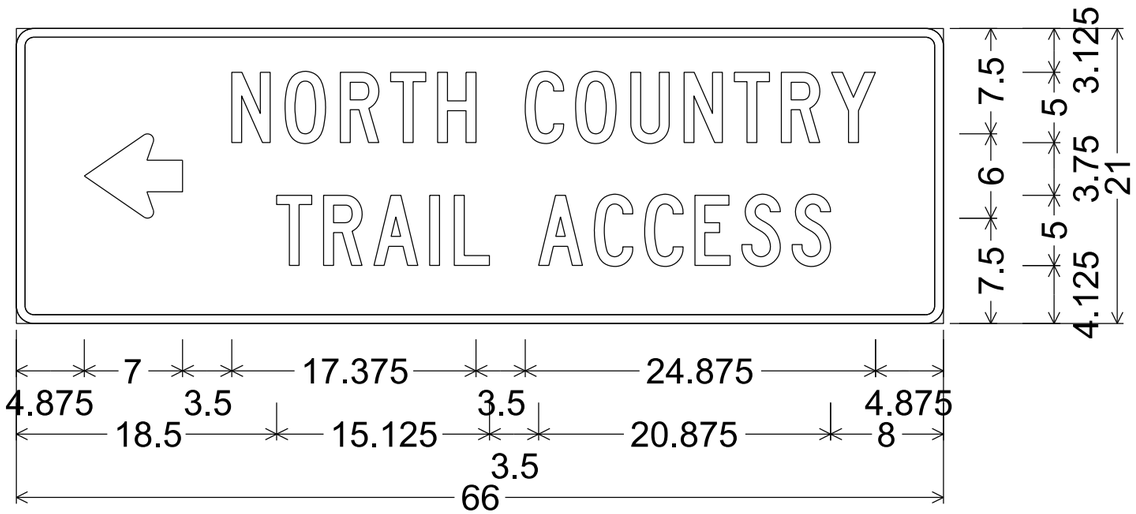

D1-2; 1.250" Radius, 0.625" Border

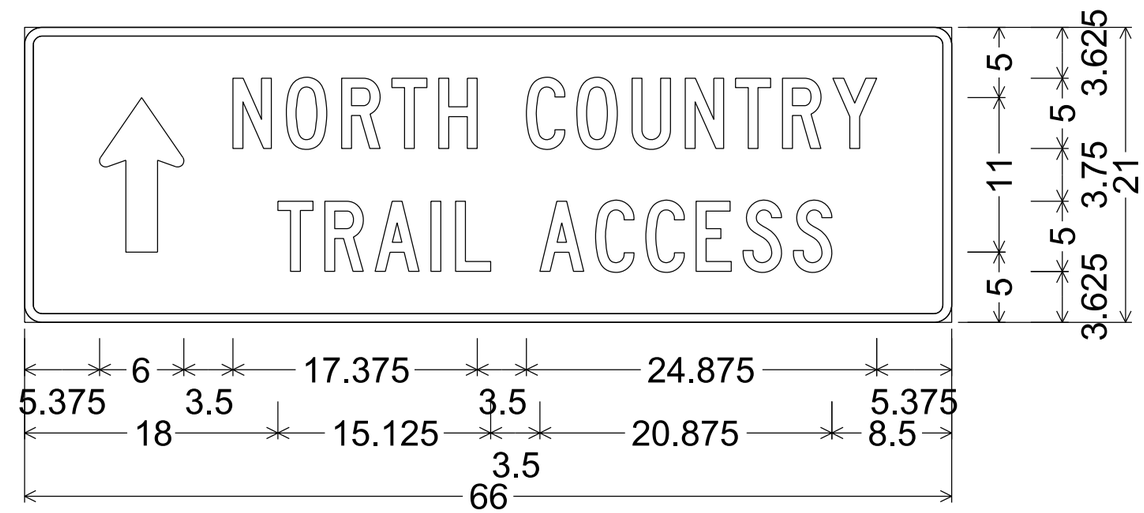

D1-2; 1.250" Radius, 0.625" Border

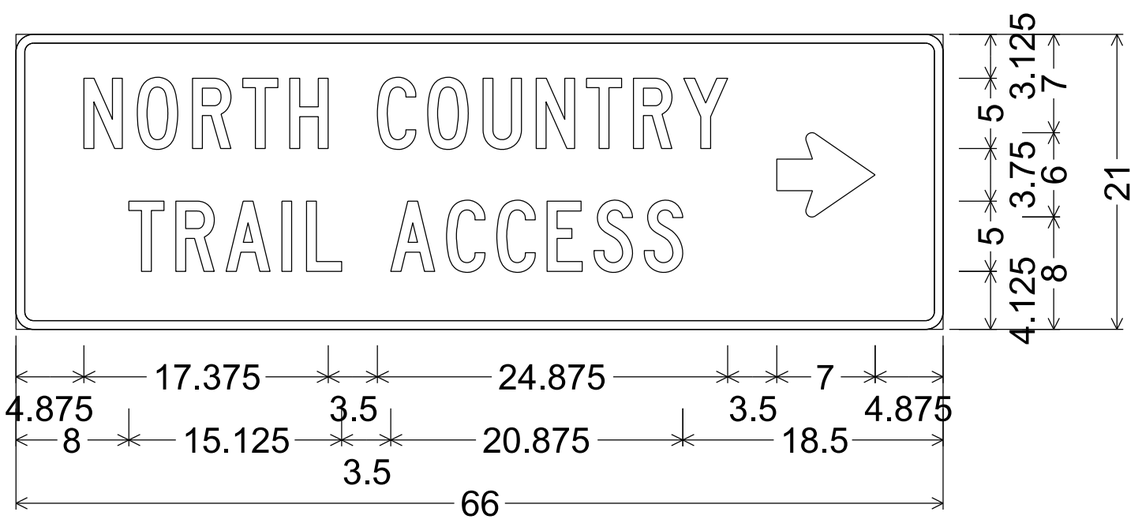

D1-2; 1.250" Radius, 0.625" Border

STATE PROJECT NUMBER
9925-00-70

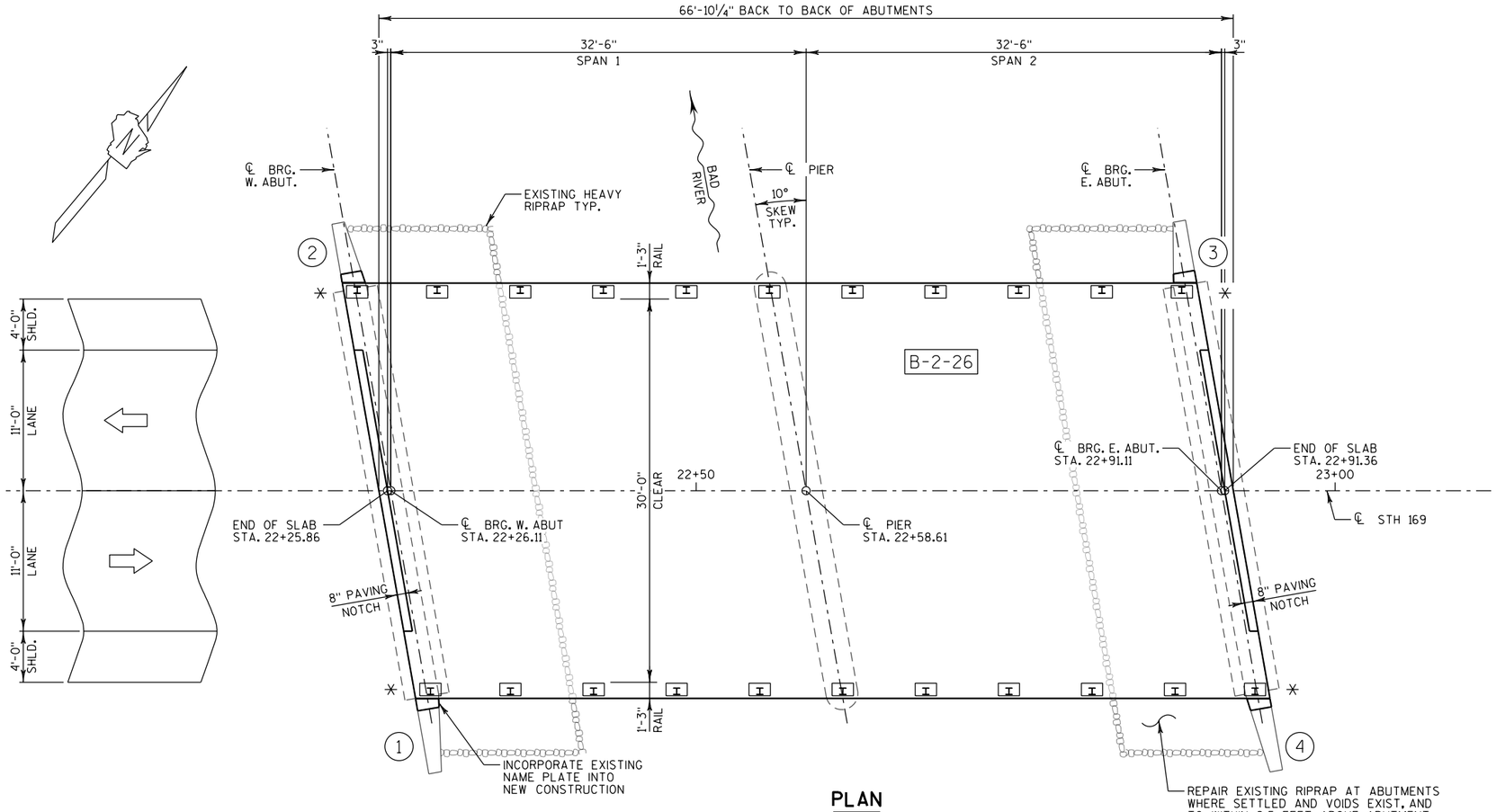

PLAN

(TWO SPAN CONCRETE CONTINUOUS FLAT SLAB BRIDGE)
(SUPERSTRUCTURE REPLACEMENT)

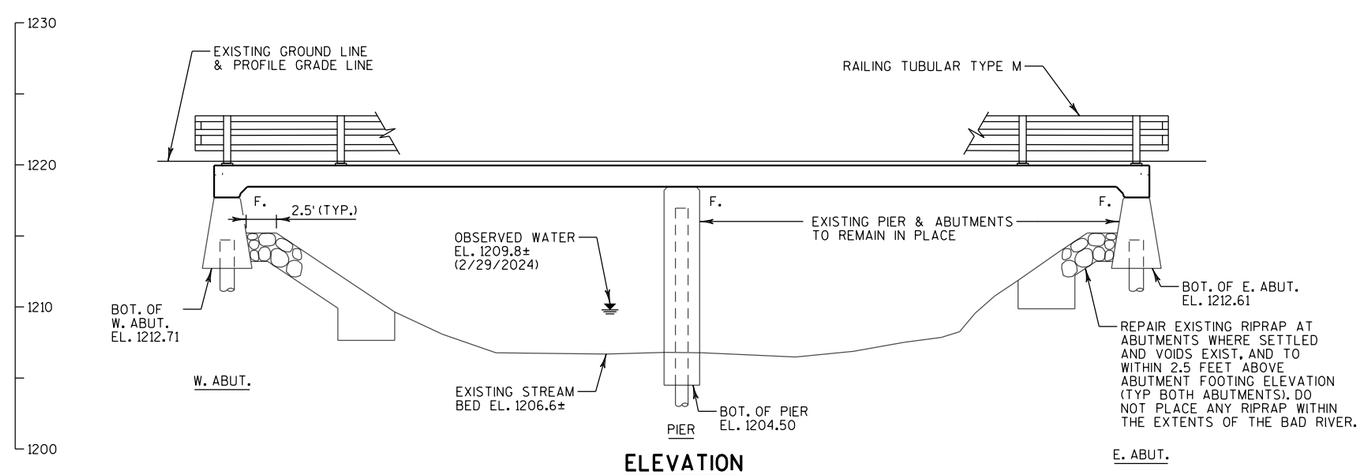

ELEVATION

(LOOKING NORTH)
(NORMAL TO BAD RIVER)

DESIGN DATA

LIVE LOAD:

DESIGN LOADING — HL-93
INVENTORY RATING FACTOR — 1.12
OPERATING RATING FACTOR — 1.45
WISCONSIN STANDARD PERMIT VEHICLE (WIS-SPV) — 250 KIPS

STRUCTURE IS DESIGNED FOR A FUTURE WEARING SURFACE OF 20 PSF.

MATERIAL PROPERTIES

CONCRETE MASONRY:
SUPERSTRUCTURE — f'c = 4,000 PSI
ALL OTHER — f'c = 3,500 PSI

HIGH STRENGTH BAR STEEL REINFORCEMENT:
GRADE 60 — fy = 60,000 PSI

LEGEND

(X) INDICATES WING NUMBER.

✳ MGS THRIE BEAM ATTACHMENT.

SCOPE OF WORK B-2-26

1. REMOVE AND REPLACE ENTIRE SUPERSTRUCTURE.
2. CONCRETE SURFACE REPAIR AT LOCATIONS DESIGNATED BY THE ENGINEER.
3. PLACE RIPRAP AT ABUTMENTS AS DESIGNATED BY THE ENGINEER.

TRAFFIC DATA

ADT (2026) = 320
ADT (2046) = 370
DESIGN SPEED = 55 MPH

LIST OF DRAWINGS

EXISTING CURVE DATA

P.I. = 27+69.23
Δ = 47°40'57"
D = 5°52'35"
T = 430.87'
L = 811.41'
R = 975.00'
S.E. = 0.059%
P.C. = 23+38.36
P.T. = 31+49.78

WISCONSIN PROFESSIONAL ENGINEER
ERIC T. PRICE
E-39027
MADISON
WI

June 1, 2024

BUREAU OF STRUCTURES CONTACT:
AARON BONK, P.E. (608) 261-0261

CONSULTANT CONTACT:
ERIC PRICE, P.E. (608) 826-6146

NO.	DATE	REVISION	BY

CORRE

STATE OF WISCONSIN
DEPARTMENT OF TRANSPORTATION

ACCEPTED SDR 08/22/24
CHIEF STRUCTURES DESIGN ENGINEER DATE

STRUCTURE B-2-26

STH 169 OVER BAD RIVER

COUNTY ASHLAND | TOWN/~~CITY/VILLAGE~~ MORSE

DESIGN SPEC. REHABILITATION N/A

DESIGNED BY	SAE	DESIGN CK'D.	ETP	DRAWN BY	TKB	PLANS CK'D.	ETP

GENERAL PLAN

SHEET 1 OF 9

8

8

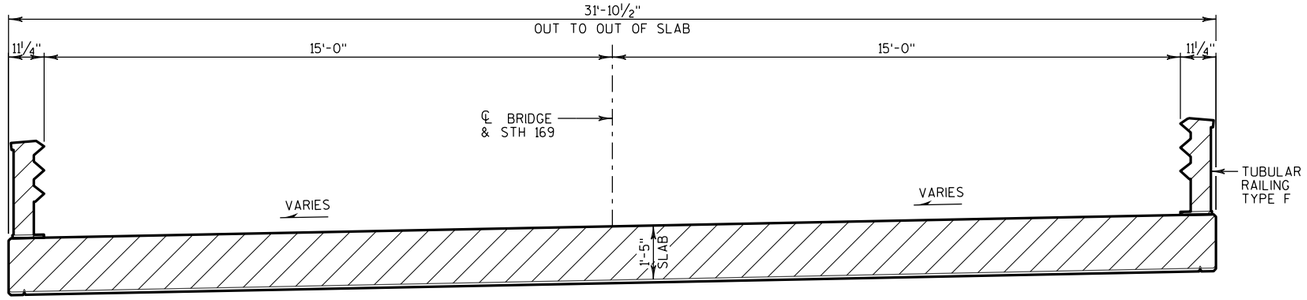

EXISTING CROSS SECTION

(LOOKING EAST)

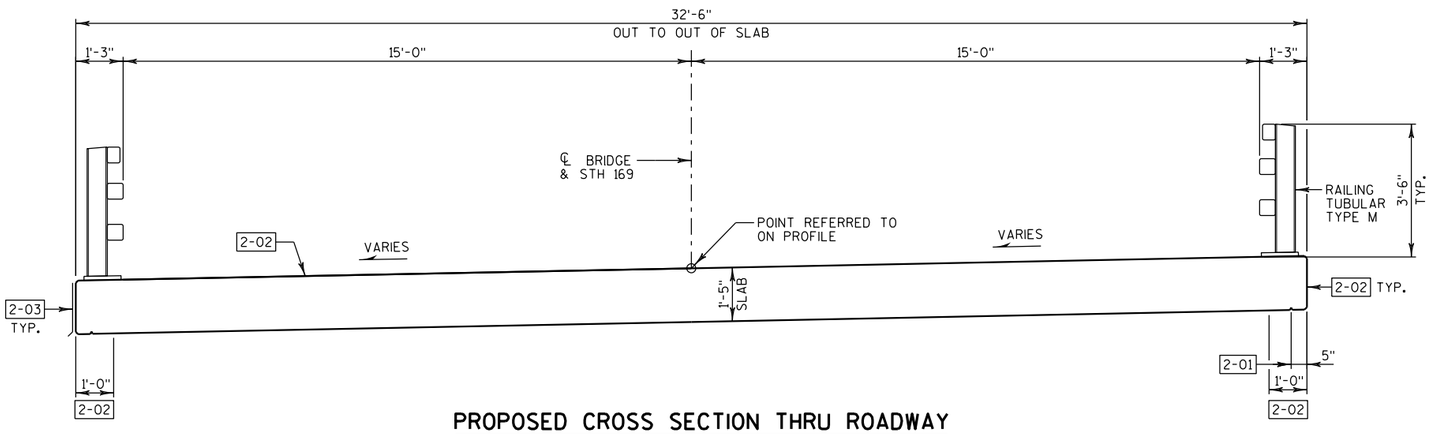

PROPOSED CROSS SECTION THRU ROADWAY

(LOOKING EAST)

LEGEND

2-01 ¾" V-GROOVE. TERMINATE 6" FROM FRONT FACE OF ABUTMENTS.

2-02 COAT WITH "PROTECTIVE SURFACE TREATMENT" AS PER THE WISDOT STANDARD SPECIFICATIONS.

2-03 "FLASHING STAINLESS STEEL" REQUIRED ON NORTH SLAB EDGE ONLY.

ABBREVIATIONS:

ABUT.	-	ABUTMENT
BTWN.	-	BETWEEN
B.F.	-	BACK FACE
BOT.	-	BOTTOM
BRG.	-	BEARING
CL.	-	CLEAR
CONST.	-	CONSTRUCTION
DIA.	-	DIAMETER
E.F.	-	EACH FACE
EXIST.	-	EXISTING
F.F.	-	FRONT FACE
HORIZ.	-	HORIZONTAL
JT.	-	JOINT
LONG.	-	LONGITUDINAL
PPT.	-	PARAPET
PROJ.	-	PROJECTION
S.E.	-	SEMI-EXPANSION
SPA.	-	SPACED
STD.	-	STANDARD
SYMM.	-	SYMMETRICAL
T&B	-	TOP AND BOTTOM
TRANS.	-	TRANSVERSE
TYP.	-	TYPICAL
VERT.	-	VERTICAL
U.N.O.	-	UNLESS NOTED OTHERWISE

GENERAL NOTES:

DRAWINGS SHALL NOT BE SCALED.

THE EXISTING STRUCTURE, B-2-26, TO BE REHABILITATED, IS A TWO SPAN CONTINUOUS CONCRETE FLAT SLAB BRIDGE, 66'-10¼" LONG WITH A 30'-0" CLEAR WIDTH BETWEEN RAILINGS.

DIMENSIONS SHOWN ARE BASED ON THE ORIGINAL STRUCTURE PLANS.

BAR STEEL REINFORCEMENT SHALL BE EMBEDDED 2" CLEAR UNLESS OTHERWISE SHOWN OR NOTED.

THE FIRST OR FIRST TWO DIGITS OF THE BAR MARK SIGNIFIES THE BAR SIZE.

BEVEL EXPOSED EDGES OF CONCRETE ¾" UNLESS OTHERWISE NOTED.

THE UPPER LIMITS OF "EXCAVATION FOR STRUCTURES BRIDGES B-2-26" SHALL BE THE EXISTING GROUNDLINE.

AT THE BACK FACE OF ABUTMENT ALL VOLUME WHICH CANNOT BE PLACED BEFORE ABUTMENT CONSTRUCTION AND IS NOT OCCUPIED BY THE NEW STRUCTURE SHALL BE BACKFILLED WITH STRUCTURE BACKFILL TYPE A.

THE QUANTITY FOR BACKFILL STRUCTURE IS CALCULATED BASED ON THE DETAIL SHOWN IN THE PLANS.

PROTECTIVE SURFACE TREATMENT TO BE APPLIED TO THE SLAB AS SHOWN ON THIS SHEET.

SLAB FALSEWORK SHALL BE SUPPORTED ON PILES OR THE SUBSTRUCTURES, UNLESS AN ALTERNATE METHOD IS APPROVED BY THE ENGINEER.

ALL CONCRETE REMOVAL SHALL BE DEFINED BY A 1" DEEP SAW CUT.

TOTAL ESTIMATED QUANTITIES

BID ITEM NUMBER	BID ITEM	UNIT	WEST ABUTMENT	PIER	EAST ABUTMENT	SUPER.	TOTALS
203.0270	REMOVING STRUCTURE OVER WATERWAY DEBRIS CAPTURE B-2-26	EACH	–	–	–	–	1
206.1001	EXCAVATION FOR STRUCTURES BRIDGES B-2-26	EACH	–	–	–	–	1
210.1500	BACKFILL STRUCTURE TYPE A	TON	35	–	35	–	70
502.0100	CONCRETE MASONRY BRIDGES	CY	0.3	–	0.3	114.8	115
502.3200	PROTECTIVE SURFACE TREATMENT	SY	–	–	–	279	279
502.4204	ADHESIVE ANCHORS NO. 4 BAR	EACH	8	–	8	–	16
502.4205	ADHESIVE ANCHORS NO. 5 BAR	EACH	37	–	37	33	107
505.0600	BAR STEEL REINFORCEMENT HS COATED STRUCTURES	LB	100	–	100	24,740	24,940
509.1500	CONCRETE SURFACE REPAIR	SF	10	10	–	–	20
513.4061	RAILING TUBULAR TYPE M	LF	–	–	–	138	138
516.0500	RUBBERIZED MEMBRANE WATERPROOFING	SY	7	–	7	–	14
606.0300	RIPRAP HEAVY	CY	10	–	10	–	20
SPV.0090.01	FLASHING STAINLESS STEEL	LF	–	–	–	64	64
	NON-BID ITEMS						
	FILLER	SIZE	–	–	–	–	1/2"

ALL ITEMS ARE CATEGORY 0020

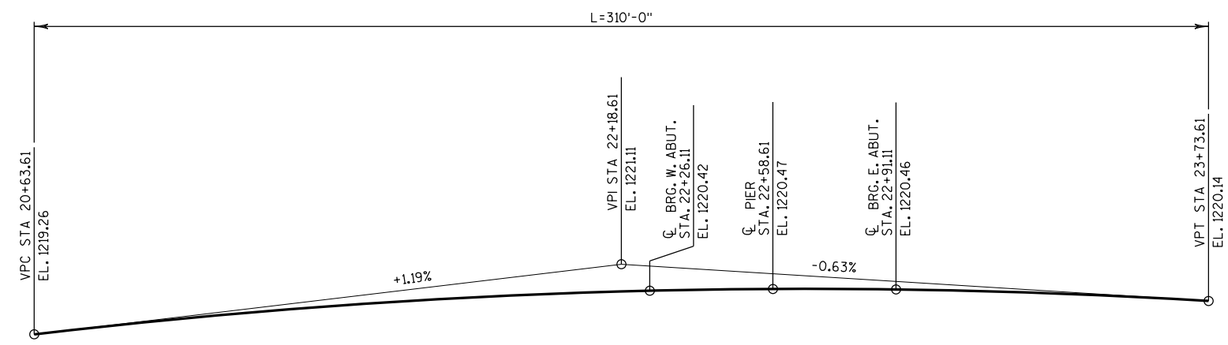

PROFILE

STH 169

NO.	DATE	REVISION	BY

STATE OF WISCONSIN
DEPARTMENT OF TRANSPORTATION

STRUCTURE B-2-26

DRAWN BY TKB | PLANS CK'D. ETP

CROSS SECTION & QUANTITIES

SHEET 2 OF 9

STATE PROJECT NUMBER

9925-00-70

LEGEND

3-01 BACKFILL PAY LIMITS. BACKFILL BEYOND BACKFILL PAY LIMITS SHALL BE INCIDENTAL TO EXCAVATION OF STRUCTURES. LIMITS OF EXCAVATION SHALL BE DETERMINED BY THE CONTRACTOR.

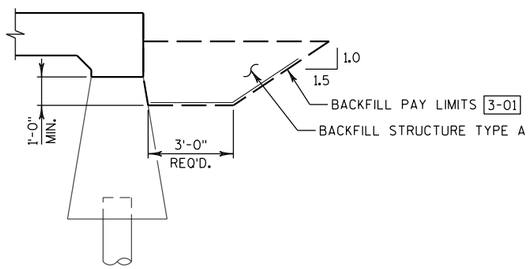

STRUCTURE BACKFILL LIMITS

THE BACKFILL QUANTITIES ARE BASED ON THE PAY LIMITS SHOWN ON THE PLANS AND MAY NOT REFLECT ACTUAL PLACED QUANTITIES. "BACKFILL STRUCTURE TYPE A" REQUIRED DIRECTLY BEHIND ABUTMENTS AND ABUTMENT WINGS FOR 3 FEET. BACKFILL PLACED BEYOND PAY LIMITS OR EXCEEDING PLAN QUANTITIES SHALL BE INCIDENTAL TO EXCAVATION FOR STRUCTURES.

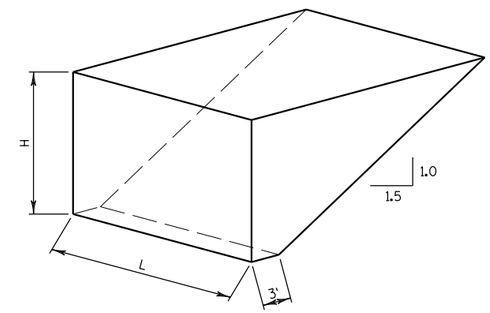

ABUTMENT BACKFILL PAY LIMIT DIAGRAM

L = OUT TO OUT OF ABUTMENT. INCLUDING WINGS (FT)
H = AVERAGE ABUTMENT FILL HEIGHT (FT)
EF = EXPANSION FACTOR (1.20 FOR CY BID ITEMS AND 1.00 FOR TON BID ITEMS)
V_{CF} = (L)(3.0')(H) + (L)(0.5)(1.5H)(H)
V_{CY} = V_{CF} (EF)/27
V_{TON} = V_{CY} (2.0)

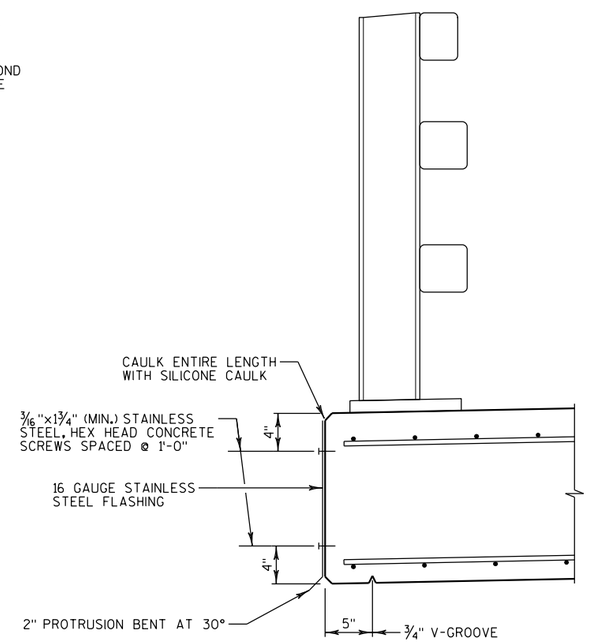

DECK EDGE DETAIL

THE BID ITEM "FLASHING STAINLESS STEEL" SHALL INCLUDE PROVIDING AND INSTALLING THE STAINLESS STEEL FLASHING, SILICONE CAULK, 3/16" AND 1/4" STAINLESS STEEL, HEX HEAD CONCRETE SCREWS, AND CLEANING THE EDGE OF THE DECK PRIOR TO ATTACHMENT OF THE FLASHING. "FLASHING STAINLESS STEEL" REQUIRED ON NORTH SLAB EDGE ONLY.

8

8

NO.	DATE	REVISION	BY

STATE OF WISCONSIN
DEPARTMENT OF TRANSPORTATION

STRUCTURE B-2-26

DRAWN BY TKB | PLANS CK'D. ETP

MISCELLANEOUS DETAILS

SHEET 3 OF 9

STATE PROJECT NUMBER
9925-00-70

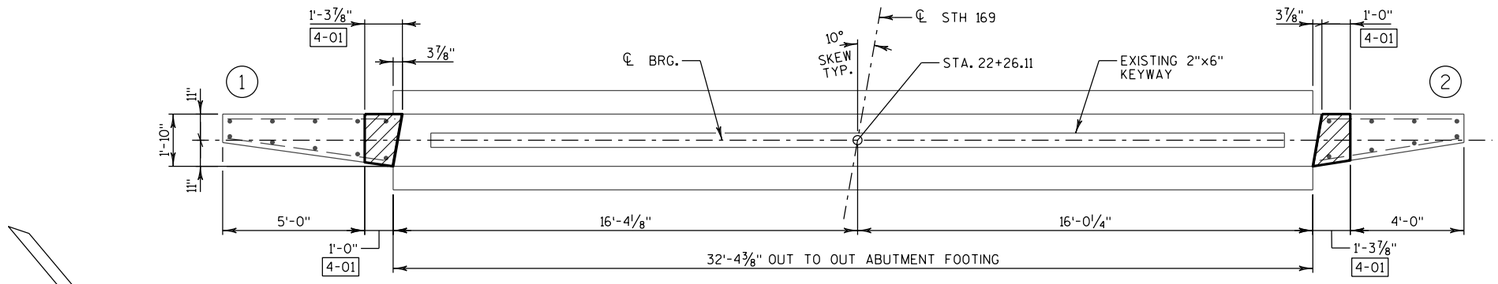

PLAN
(REMOVAL)

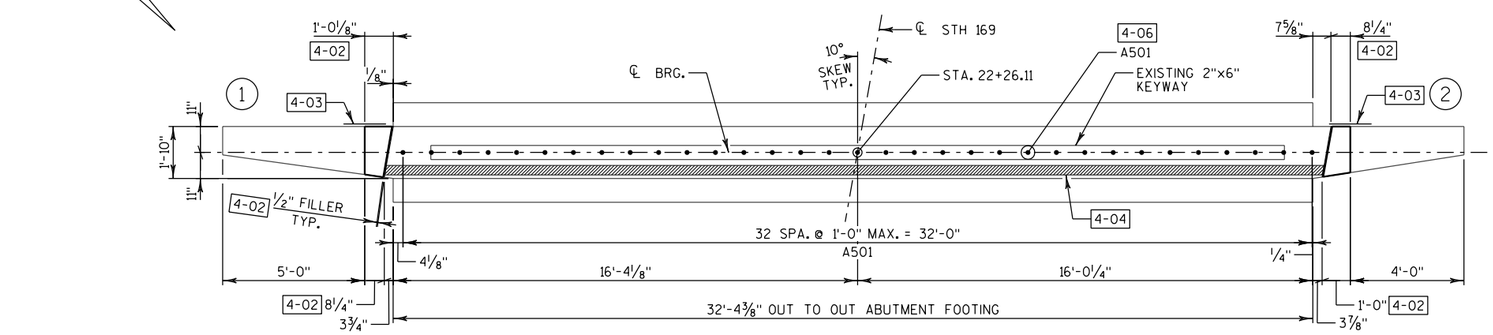

PLAN
(RECONSTRUCT)

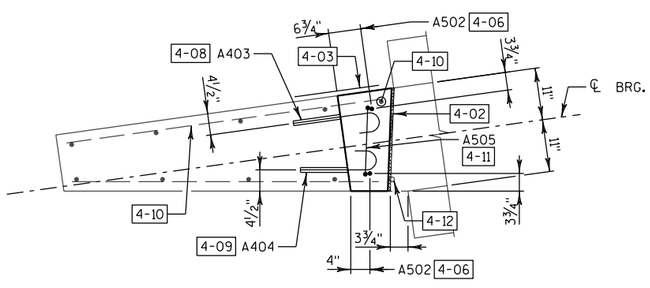

PLAN - WING 1

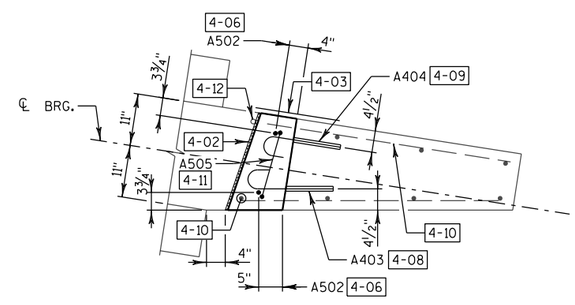

PLAN - WING 2

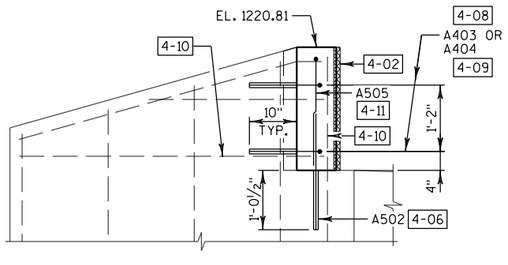

ELEVATION - WING 1
(LOOKING WEST)

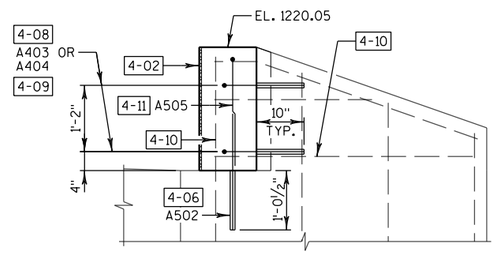

ELEVATION - WING 2
(LOOKING WEST)

BILL OF BARS - WEST ABUTMENT

DIMENSIONS IN BENDING DETAILS ARE OUT-TO-OUT OF BAR.

BAR MARK	NO. REQ'D	LENGTH	BENT	BAR SERIES	LOCATION	
COATED BARS						TOTAL WEIGHT = 100 LBS
A501	33	2'-1"			ABUTMENT - ANCHOR	VERT.
A502	4	2'-1"			WING - ANCHOR	VERT.
A403	4	2'-0"	X		WING - ANCHOR	HORIZ.
A404	4	1'-10"	X		WING - ANCHOR	HORIZ.
A505	2	4'-11"	X		WING - TIE	VERT.

THE FIRST DIGIT OR FIRST TWO DIGITS OF THE BAR MARK SIGNIFIES THE BAR SIZE.

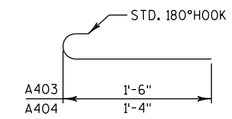

A403, A404

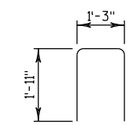

A505

LEGEND

(X) INDICATES WING NUMBER.

4-01 EXISTING ½" FILLER INCLUDED IN REMOVAL LENGTH.

4-02 ½" FILLER (INCLUDED IN LENGTH). SEAL ALL EXPOSED HORIZONTAL AND VERTICAL SURFACES OF ½" FILLER WITH NON-STAINING GRAY NON-BITUMINOUS JOINT SEALER. (1" DEEP AND HOLD ⅛" BELOW SURFACE OF CONCRETE).

4-03 18" RUBBERIZED MEMBRANE WATERPROOFING. SEAL ALL HORIZONTAL AND VERTICAL JOINTS ON BACK FACE.

4-04 ¾"x4" PREFORMED JOINT FILLER TO EXTEND BETWEEN EDGES OF SLAB.

4-05 NOT USED.

4-06 A501 ADHESIVE ANCHOR NO. 5 BAR. EMBED 1'-0½" INTO CONCRETE.

4-07 A502 ADHESIVE ANCHOR NO. 5 BAR. EMBED 1'-0½" INTO CONCRETE.

4-08 A403 ADHESIVE ANCHOR NO. 4 BAR. EMBED 10" INTO CONCRETE. TURN HOOK AS NECESSARY TO FIT.

4-09 A404 ADHESIVE ANCHOR NO. 4 BAR. EMBED 10" INTO CONCRETE. TURN HOOK AS NECESSARY TO FIT.

4-10 PRESERVE AND INCORPORATE EXISTING REINFORCEMENT INTO NEW WORK. CUT TO MAINTAIN 2" CLEAR FROM EDGE OF NEW WORK.

4-11 PULL UP TO 2" CLEAR.

4-12 CUT EXISTING REINFORCING FLUSH WITH SEAT AND GRIND SMOOTH.

8

8

NO.	DATE	REVISION	BY

STATE OF WISCONSIN
DEPARTMENT OF TRANSPORTATION

STRUCTURE B-2-26

DRAWN BY TKB | PLANS CK'D. ETP

WEST ABUTMENT

SHEET 4 OF 9

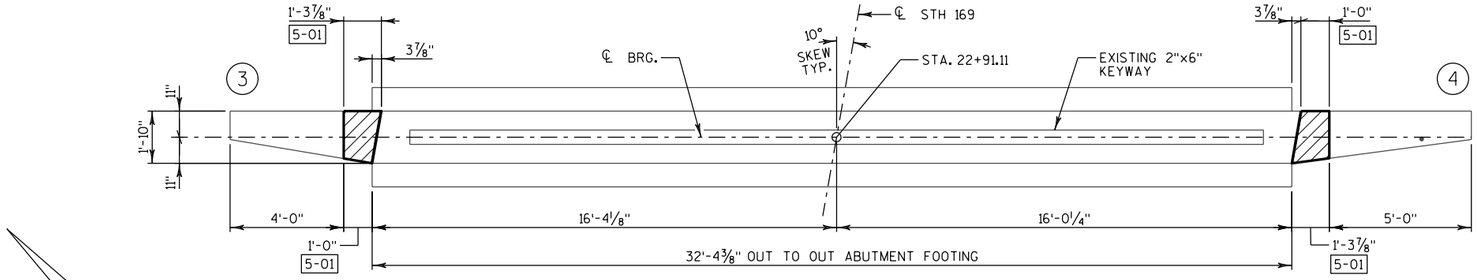

PLAN
(REMOVAL)

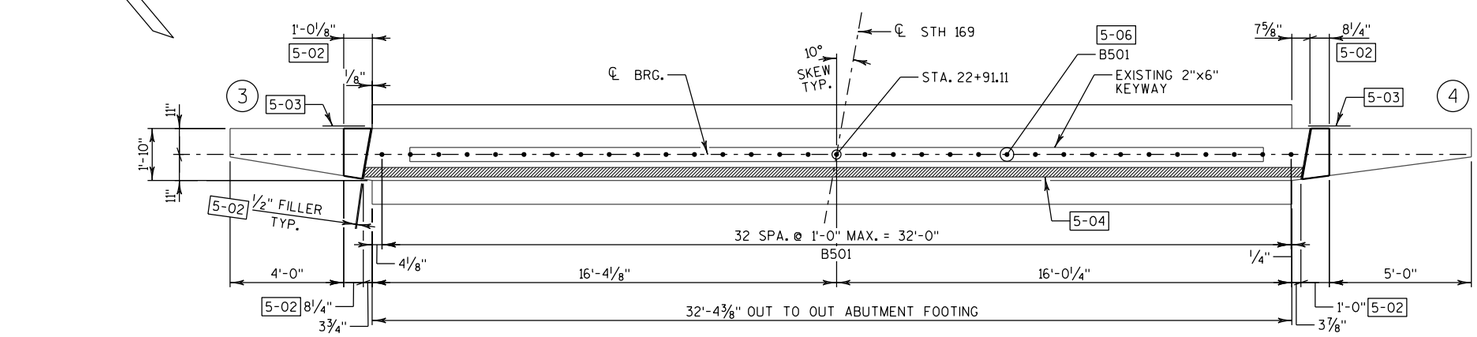

PLAN
(RECONSTRUCT)

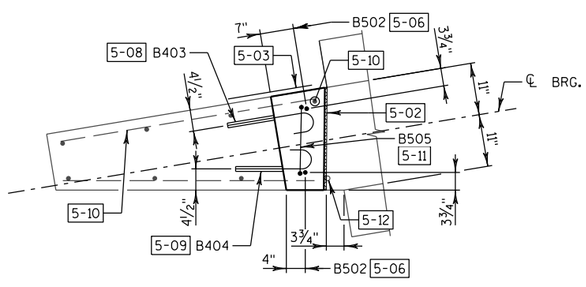

PLAN - WING 3

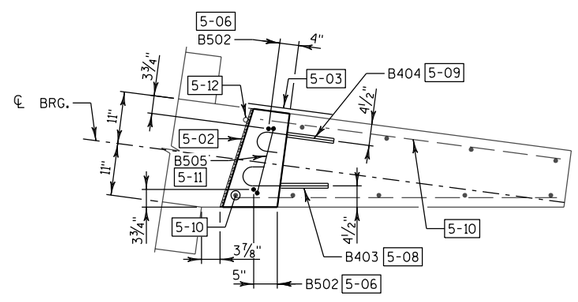

PLAN - WING 4

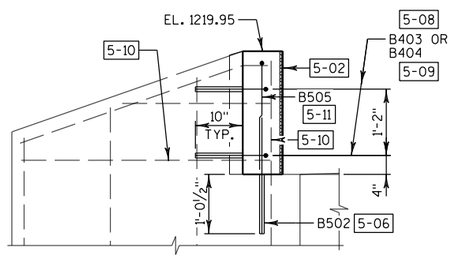

ELEVATION - WING 3
(LOOKING EAST)

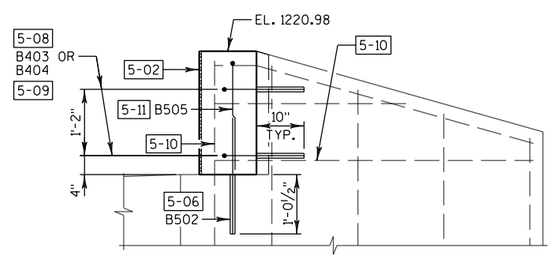

ELEVATION - WING 4
(LOOKING EAST)

BILL OF BARS - EAST ABUTMENT

DIMENSIONS IN BENDING DETAILS ARE OUT-TO-OUT OF BAR.

BAR MARK	NO. REQ'D	LENGTH	BENT	BAR SERIES	LOCATION	
COATED BARS						TOTAL WEIGHT = 100 LBS
B501	33	2'-1"			ABUTMENT - ANCHOR	VERT.
B502	4	2'-1"			WING - ANCHOR	VERT.
B403	4	2'-0"	X		WING - ANCHOR	HORIZ.
B404	4	1'-10"	X		WING - ANCHOR	HORIZ.
B505	2	4'-11"	X		WING - TIE	VERT.

THE FIRST DIGIT OR FIRST TWO DIGITS OF THE BAR MARK SIGNIFIES THE BAR SIZE.

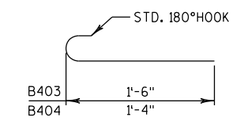

B403, B404

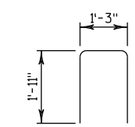

B505

LEGEND

(X) INDICATES WING NUMBER.

5-01 EXISTING ½" FILLER INCLUDED IN REMOVAL LENGTH.

5-02 ½" FILLER (INCLUDED IN LENGTH). SEAL ALL EXPOSED HORIZONTAL AND VERTICAL SURFACES OF ½" FILLER WITH NON-STAINING GRAY NON-BITUMINOUS JOINT SEALER. (1" DEEP AND HOLD ⅛" BELOW SURFACE OF CONCRETE).

5-03 18" RUBBERIZED MEMBRANE WATERPROOFING. SEAL ALL HORIZONTAL AND VERTICAL JOINTS ON BACK FACE.

5-04 ¾"x4" PREFORMED JOINT FILLER TO EXTEND BETWEEN EDGES OF SLAB.

5-05 NOT USED.

5-06 B501 ADHESIVE ANCHOR NO. 5 BAR. EMBED 1'-0½" INTO CONCRETE.

5-07 B502 ADHESIVE ANCHOR NO. 5 BAR. EMBED 1'-0½" INTO CONCRETE.

5-08 B403 ADHESIVE ANCHOR NO. 4 BAR. EMBED 10" INTO CONCRETE. TURN HOOK AS NECESSARY TO FIT.

5-09 B404 ADHESIVE ANCHOR NO. 4 BAR. EMBED 10" INTO CONCRETE. TURN HOOK AS NECESSARY TO FIT.

5-10 PRESERVE AND INCORPORATE EXISTING REINFORCEMENT INTO NEW WORK. CUT TO MAINTAIN 2" CLEAR FROM EDGE OF NEW WORK.

5-11 PULL UP TO 2" CLEAR.

5-12 CUT EXISTING REINFORCING FLUSH WITH SEAT AND GRIND SMOOTH.

8

8

NO.	DATE	REVISION	BY

STATE OF WISCONSIN
DEPARTMENT OF TRANSPORTATION

STRUCTURE B-2-26

DRAWN BY TKB | PLANS CK'D. ETP

EAST ABUTMENT

SHEET 5 OF 9

STATE PROJECT NUMBER

9925-00-70

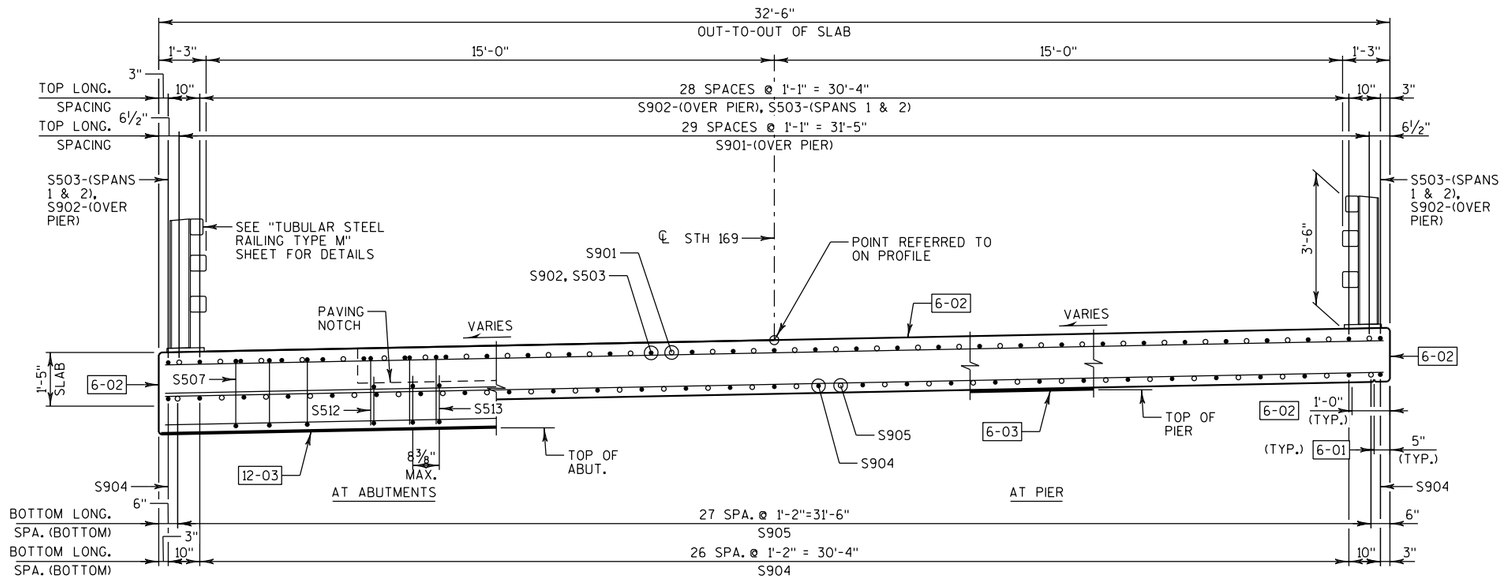

CROSS SECTION THRU SLAB

(LOOKING EAST)

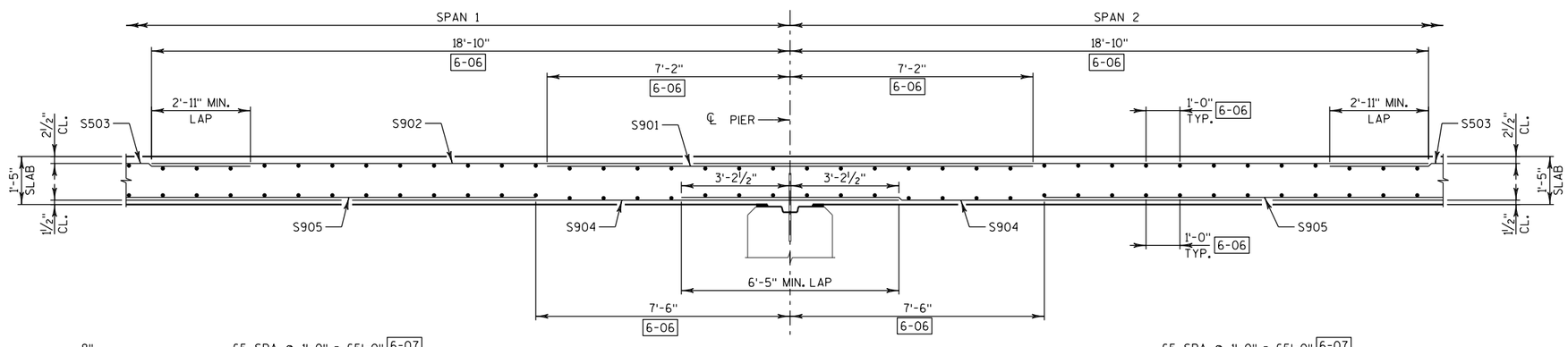

PARTIAL LONGITUDINAL SECTION AT PIER

(DIMENSIONS ARE PERPENDICULAR TO ℄ PIER U.N.O.)

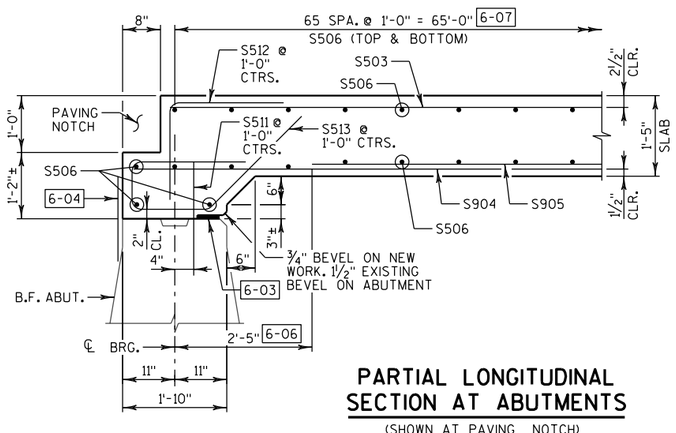

PARTIAL LONGITUDINAL SECTION AT ABUTMENTS

(SHOWN AT PAVING NOTCH)
DIMENSIONS ARE PERPENDICULAR TO ℄ ABUTMENT U.N.O.
BARS PLACED PARALLEL TO ℞ STH 169 U.N.O.

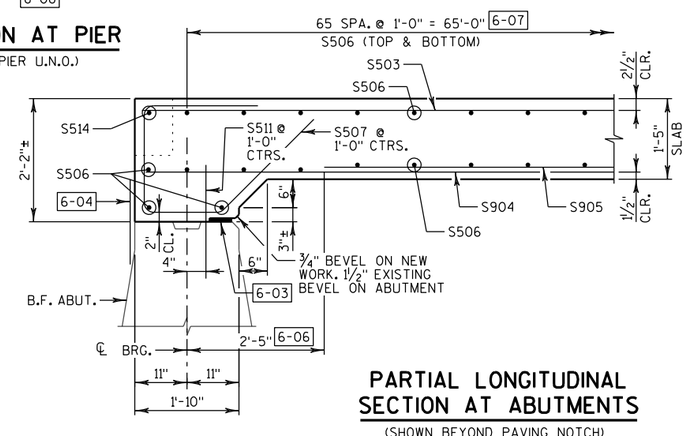

PARTIAL LONGITUDINAL SECTION AT ABUTMENTS

(SHOWN BEYOND PAVING NOTCH)
DIMENSIONS ARE PERPENDICULAR TO ℄ ABUTMENT U.N.O.
BARS PLACED PARALLEL TO ℞ STH 169 U.N.O.

NOTES

THE TOP TRANSVERSE BAR STEEL REINFORCEMENT SHALL BE SUPPORTED BY INDIVIDUAL BAR CHAIRS AT APPROXIMATELY 3'-0" CENTERS EACH WAY.

THE BOTTOM LONGITUDINAL BAR STEEL REINFORCEMENT SHALL BE SUPPORTED BY CONTINUOUS BAR CHAIRS AT APPROXIMATELY 4'-0" CENTERS.

TRANSVERSE BARS SHALL BE PLACED PARALLEL TO SUBSTRUCTURE UNITS.

ALL SLAB THICKNESS DIMENSIONS ARE MINIMUM. ANY TOLERANCES NECESSARY TO CORRECT CONSTRUCTION DISCREPANCIES ARE TO BE PLUS (+).

PRIOR TO RELEASING SLAB FALSEWORK, TAKE TOP OF SLAB ELEVATIONS AT THE ℄ OF ABUTMENTS, THE ℄ PIERS AND AT 5/10 POINTS TO VERIFY CAMBER. TAKE ELEVATIONS ALONG THE EDGE OF SLAB AND ℞ STH 169/CROWN POINT. RECORD THE ELEVATIONS IN THE "SURVEY TOP OF SLAB ELEVATIONS" TABLE ON SHEET 8 FOR THE "AS BUILT" PLANS.

LEGEND

- 6-01 ¾" CONTINUOUS DRIP "V" GROOVE. END 6" FROM FRONT FACE OF ABUTMENTS.
- 6-02 COAT WITH "PROTECTIVE SURFACE TREATMENT" AS PER THE STANDARD SPECIFICATION.
- 6-03 ¾"x4" PREFORMED JOINT FILLER TO EXTEND BETWEEN EDGES OF SLAB OR AROUND ENTIRE OUTSIDE EDGE OF TOP OF PIER.
- 6-04 18" RUBBERIZED MEMBRANE WATERPROOFING. SEAL ALL HORIZONTAL AND VERTICAL JOINTS ON BACKFACE.
- 6-05 DIMENSION IS TAKEN PERPENDICULAR TO ℄ SUBSTRUCTURES.
- 6-06 DIMENSION IS TAKEN PARALLEL TO ℞ STH 169.
- 6-07 BARS PLACED PARALLEL TO SKEW AND SPACED ALONG ℞ STH 169.

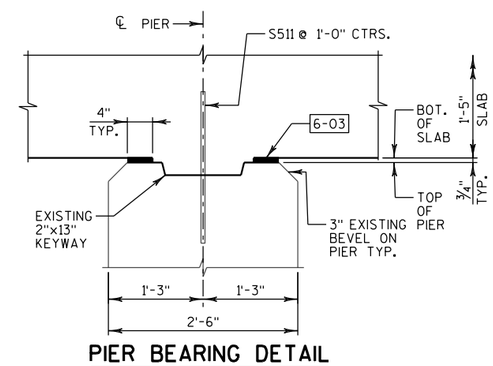

PIER BEARING DETAIL

(DIMENSIONS TAKEN PERPENDICULAR TO ℄ PIER)

8

8

NO.	DATE	REVISION	BY

STATE OF WISCONSIN
DEPARTMENT OF TRANSPORTATION

STRUCTURE B-2-26

DRAWN BY TKB | PLANS CK'D. ETP

SUPERSTRUCTURE DETAILS-1

SHEET 6 OF 9

STATE PROJECT NUMBER
9925-00-70

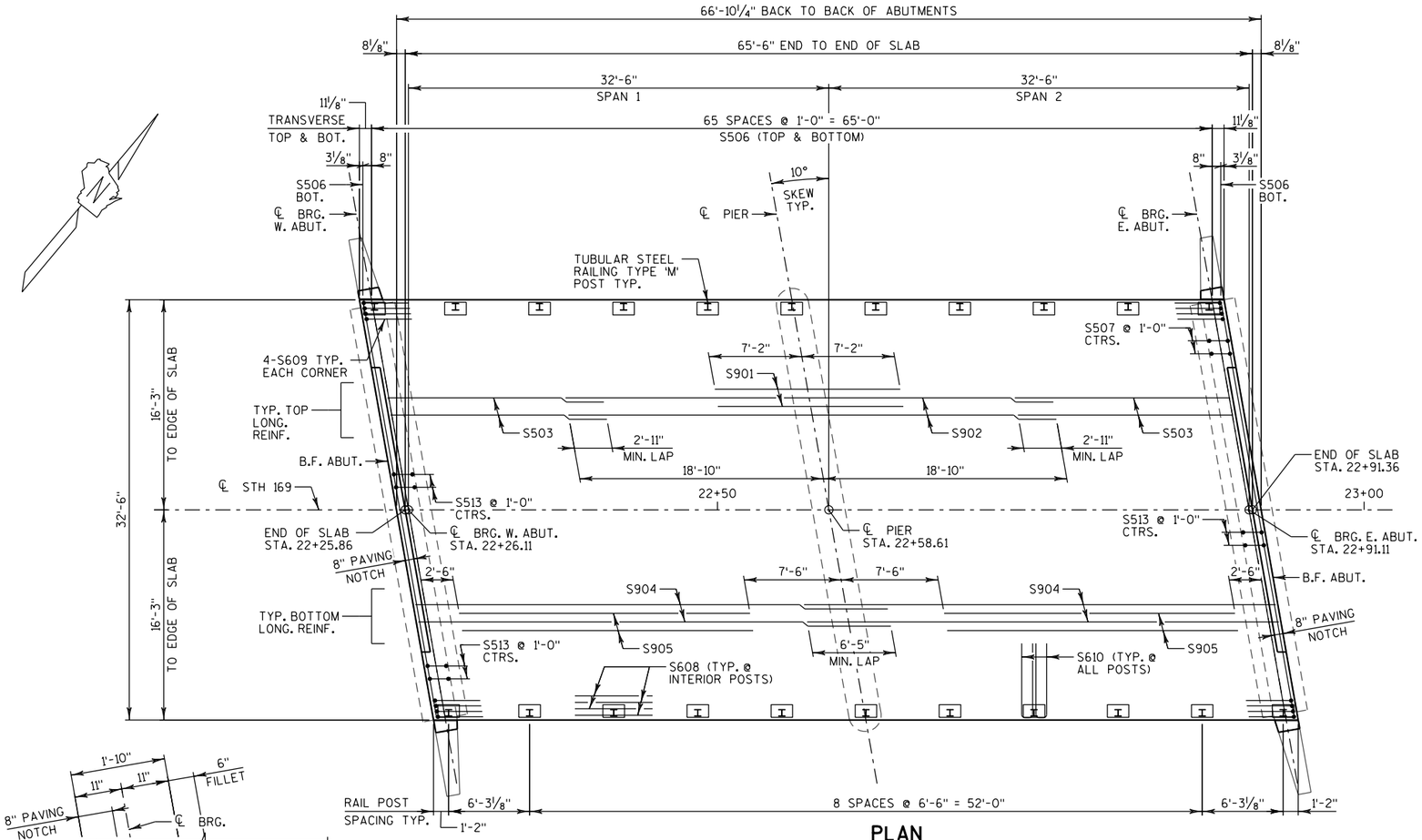

PLAN

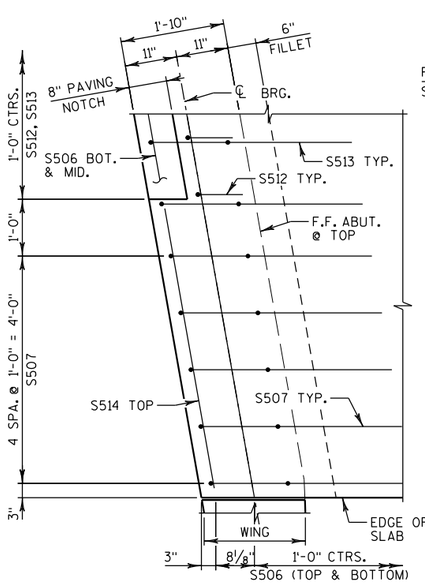

CORNER DETAIL AT WINGS 1 & 3

(WINGS 2 & 4 SIMILAR)
SLAB LONGITUDINAL AND ADDITIONAL TRANSVERSE
REINFORCEMENT NOT SHOWN FOR CLARITY

BILL OF BARS - SUPERSTRUCTURE

DIMENSIONS IN BENDING DETAILS ARE OUT-TO-OUT OF BAR.

BAR MARK	NO. REQ'D	LENGTH	BENT	BAR SERIES	LOCATION	
COATED BARS						TOTAL WEIGHT = 24,740 LBS
S901	30	14'-4"			SLAB - TOP	LONGIT.
S902	31	37'-8"			SLAB - TOP	LONGIT.
S503	62	16'-9"			SLAB - TOP	LONGIT.
S904	58	36'-0"			SLAB - BTM	LONGIT.
S905	56	22'-1"			SLAB - BTM	LONGIT.
S506	138	32'-4"			SLAB - BTM. & TOP	TRANS.
S507	20	6'-5"	X		SLAB - ABUT. DIAPHRAGMS	VERT.
S608	72	6'-6"			SLAB - TOP - AT INT. RAIL POSTS	LONGIT.
S609	16	4'-8"	X		SLAB - TOP - AT END RAIL POSTS	LONGIT.
S610	44	11'-4"	X		SLAB - TOP - AT RAIL POSTS	TRANS.
S511	33	2'-0"			DOWELS @ PIER	VERT.
S512	46	3'-8"	X		SLAB - PAVING NOTCH	VERT.
S513	46	6'-5"	X		SLAB - PAVING NOTCH	VERT.
S514	4	5'-0"			SLAB - AROUND PAVING NOTCH	TRANS.

THE FIRST DIGIT OR FIRST TWO DIGITS OF THE BAR MARK SIGNIFIES THE BAR SIZE.

LEGEND

6-XX SEE "SUPERSTRUCTRE DETAILS-1" SHEET FOR CALLOUTS AND NOTES.

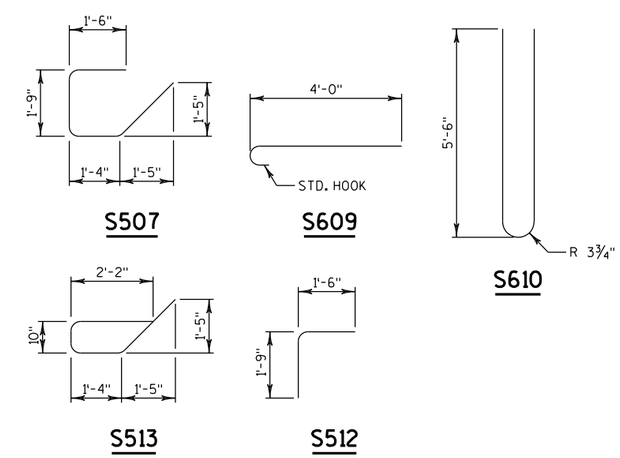

NO.	DATE	REVISION	BY

STATE OF WISCONSIN
DEPARTMENT OF TRANSPORTATION

STRUCTURE B-2-26

DRAWN BY TKB | PLANS CK'D. ETP

SUPERSTRUCTURE DETAILS-2

SHEET 7 OF 9

STATE PROJECT NUMBER

9925-00-70

TOP OF SLAB ELEVATIONS

LOCATION	ABUT.	1.1 PT	1.2 PT	1.3 PT	1.4 PT	1.5 PT	1.6 PT	1.7 PT	1.8 PT	1.9 PT	PIER	2.1 PT	2.2 PT	2.3 PT	2.4 PT	2.5 PT	2.6 PT	2.7 PT	2.8 PT	2.9 PT	E. ABUT.
NORTH EDGE OF SLAB	1220.05	1220.05	1220.05	1220.05	1220.05	1220.05	1220.05	1220.04	1220.04	1220.04	1220.03	1220.03	1220.02	1220.01	1220.01	1220.00	1219.99	1219.98	1219.97	1219.96	1219.95
REFERENCE LINE	1220.42	1220.43	1220.44	1220.44	1220.45	1220.46	1220.46	1220.46	1220.47	1220.47	1220.47	1220.47	1220.47	1220.47	1220.47	1220.47	1220.47	1220.47	1220.46	1220.46	1220.46
SOUTH EDGE OF SLAB	1220.81	1220.82	1220.84	1220.85	1220.86	1220.88	1220.89	1220.90	1220.91	1220.92	1220.92	1220.93	1220.94	1220.95	1220.95	1220.96	1220.96	1220.97	1220.97	1220.97	1220.98

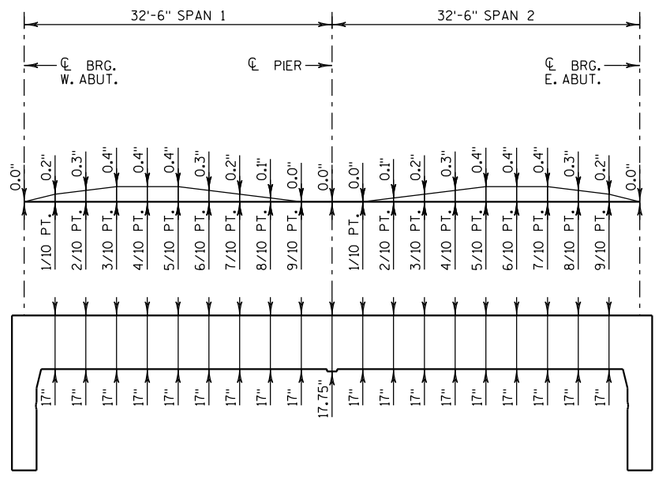

CAMBER AND SLAB THICKNESS DIAGRAM

CAMBER IS BASED ON 3 TIMES DEAD LOAD DEFLECTIONS. CAMBER SPANS AS SHOWN TO PROVIDE FOR DEADLOAD DEFLECTION & FUTURE CREEP. CAMBER DOES NOT INCLUDE ALLOWANCE FOR FORM SETTLEMENT.

TO DETERMINE FALSEWORK ELEVATION AT EDGE OF SLAB, CROWN OR CENTERLINE FOLLOW THIS PROCEDURE:

TOP OF SLAB ELEVATION AT FINAL GRADE
MINUS (-) SLAB THICKNESS
PLUS (+) CAMBER
PLUS (+) FORM SETTLEMENT/DEFLECTION DUE TO PLACEMENT OF SLAB CONCRETE (TO BE COMPUTED BY THE CONTRACTOR)

EQUALS= TOP OF SLAB FALSEWORK ELEVATION.

CAMBER NOTES:

PRIOR TO RELEASING SLAB FALSEWORK, TAKE TOP OF SLAB ELEVATIONS AT THE ℄ OF ABUTMENTS, THE ℄ OF PIERS AND AT 5/10 POINTS, TO VERIFY CAMBER. TAKE ELEVATIONS ALONG EDGE OF SLAB AND CROWN POINT. RECORD THE ELEVATIONS IN THE "SURVEY TOP OF SLAB ELEVATIONS" TABLE FOR THE "AS BUILT" PLANS.

ALL SLAB THICKNESS DIMENSIONS ARE MINIMUM. ANY TOLERANCES NECESSARY TO CORRECT CONSTRUCTION DISCREPANCIES ARE TO BE PLUS (+).

SURVEY TOP OF SLAB ELEVATIONS

LOCATION	W. ABUT.	5/10 PT	PIER	5/10 PT	E. ABUT.
NORTH EDGE OF SLAB					
CROWN					
SOUTH EDGE OF SLAB					

NO.	DATE	REVISION	BY

STATE OF WISCONSIN
DEPARTMENT OF TRANSPORTATION

STRUCTURE B-2-26

DRAWN BY TKB | PLANS CK'D. ETP

SUPERSTRUCTURE DETAILS-3

SHEET 8 OF 9

STATE PROJECT NUMBER

9925-00-70

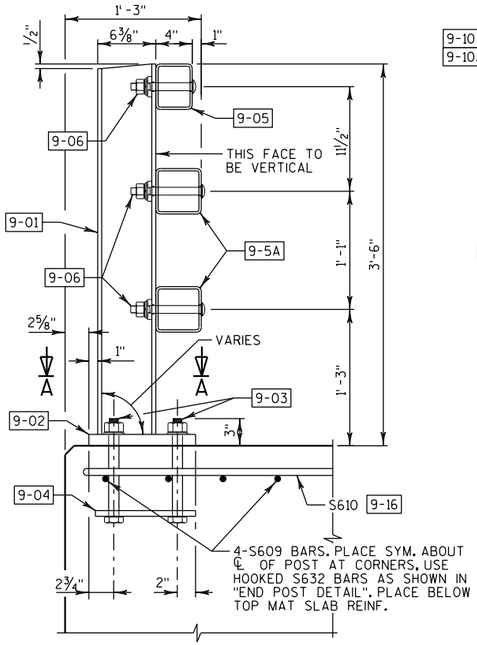

SECTION THRU RAILING ON DECK

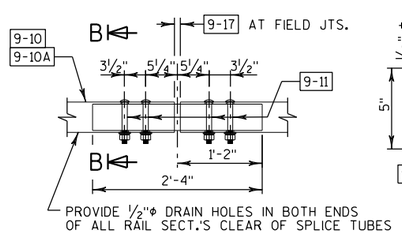

FIELD ERECTION JOINT DETAIL

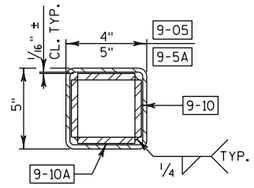

SECTION B-B

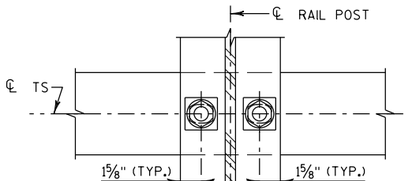

SECTION THRU POST WEB

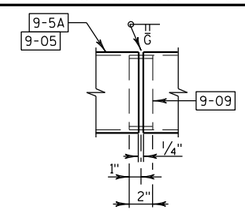

SHOP RAIL SPLICE DETAIL

LOCATION MUST BE SHOWN ON SHOP DRAWINGS

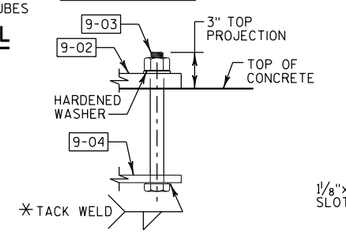

ANCHOR BOLTS

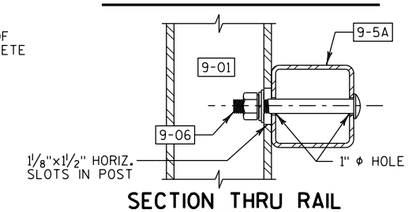

SECTION THRU RAIL

NOTE: CONNECTIONS AT LOWER RAILS SHOWN. CONNECTIONS AT TOP RAIL SIMILAR.

TYPICAL RAIL TO POST CONNECTIONS

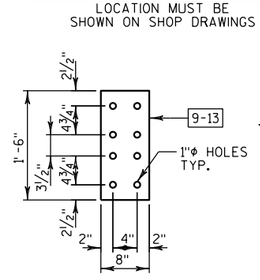

ANCHOR PLATE

AT BEAM GUARD ATTACHMENT

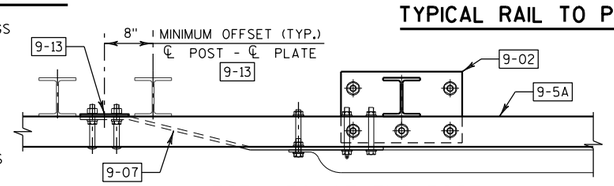

TOP VIEW AT END POST

THRIE BEAM RAIL ATTACHMENT

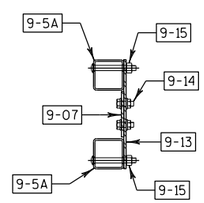

SECTION C-C

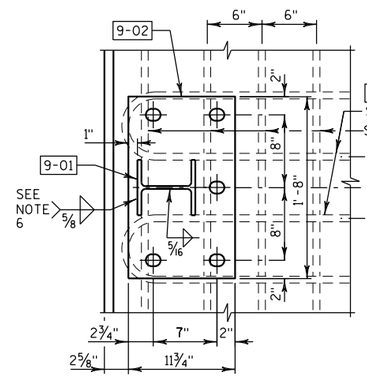

SECTION A-A

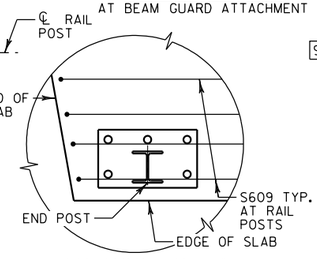

END POST DETAIL

REINFORCEMENT AT CORNERS

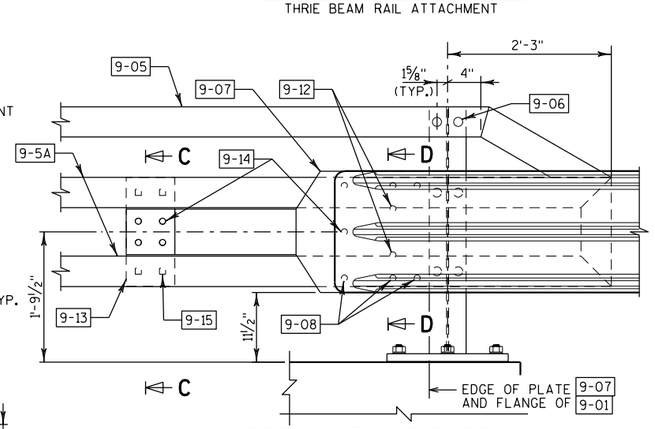

DETAIL AT END POST

THRIE BEAM RAIL ATTACHMENT

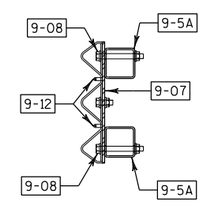

SECTION D-D

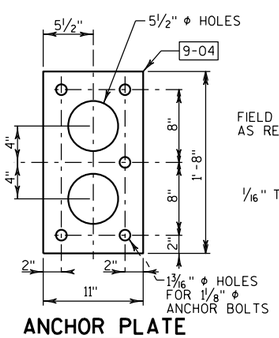

ANCHOR PLATE

AT RAIL TO DECK CONNECTION

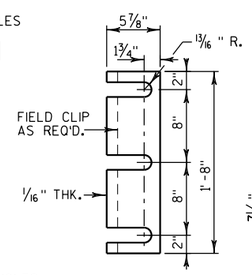

POST SHIM DETAIL

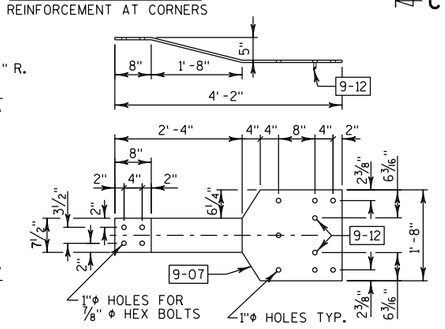

BACK-UP PLATE DETAIL

AT BEAM GUARD ATTACHMENT

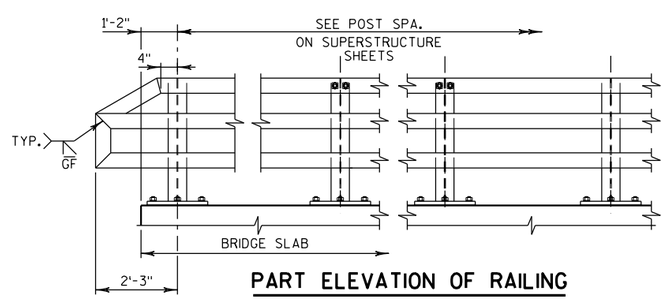

PART ELEVATION OF RAILING

LEGEND

9-01	W6×25 WITH 1 1/8"×1 1/2" HORIZ. SLOTS ON EACH SIDE OF POST FOR BOLT 9-06. CUT BOTTOM OF POST TO MATCH CROSS SLOPE OF ROADWAY. PLACE POST VERTICAL. PLACE POSTS NORMAL TO GRADE LINE.
9-02	PLATE 1 1/4"×11 3/4"×1'-8" WITH 1 7/16" DIA. OVERSIZED HOLES FOR ANCHOR BOLTS 9-03. WELD TO 9-01 AS SHOWN.
9-03	ASTM A449 - 1 1/8" DIA. ANCHOR BOLTS WITH NUT AND HARDENED WASHER (ALL GALVANIZED). 5 REQ'D. PER POST. THREAD 3" AND PLACE NORMAL TO PLATE 9-02. CHAMFER TOP OF BOLTS BEFORE THREADING. USE 1'-9" LONG IN ABUTMENT WINGS. USE 10 3/4" LONG AT ALL OTHER LOCATIONS. (AN EQUIVALENT THREADED ROD WITH NUTS AND HARDENED WASHERS MAY BE SUBSTITUTED FOR ANCHOR BOLTS IN WINGS IF REQ'D. FOR CONSTRUCTABILITY.)
9-04	5/8"×11"×1'-8" ANCHOR PLATE (GALVANIZED) WITH 1 3/16" DIA. HOLES FOR ANCHOR BOLTS 9-03.
9-05	TS 5×4×0.25 STRUCTURAL TUBING. ATTACH TO 9-01 WITH 9-06.
9-5A	TS 5×5×0.25 STRUCTURAL TUBING. ATTACH TO 9-01 WITH 9-06.
9-06	7/8" DIA. A325 SLOTTED ROUND HEAD BOLT WITH NUT, 3/16"×1 5/8"×1 5/8" MIN. WASHER, AND LOCK WASHER (2 REQ'D. AT EACH RAIL TO POST LOCATION.)
9-07	1/2" THK. BACK-UP PLATE WITH 2 - 7/8"×1 1/2" THREADED SHOP WELDED STUDS (9-12). BOLT TO RAIL AS SHOWN IN DETAIL. REQUIRED AT THRIE BEAM GUARD RAIL ATTACHMENTS ONLY. PLACE SYMMETRICALLY ABOUT TUBES 9-5A.
9-08	1" DIA. HOLES IN PLATE 9-07 & TUBES 9-5A FOR 7/8" DIA. A325 BOLTS WITH HEX NUTS AND WASHERS. 6 HOLES IN TUBES AND PLATE 9-07.
9-09	SPLICE SLEEVE FABRICATED FROM 1/4" PLATE. PROVIDE "SLIDING FIT".
9-10	3/8"×3 5/8"×2'-4" PLATE. 2 PER RAIL. USED IN 9-05 & 9-5A.
9-10A	3/8"×2 5/8"×2'-4" PLATE USED IN 9-05, 3/8"×3 5/8"×2'-4" PLATE USED IN 9-5A. 2 PER RAIL.
9-11	7/8" DIA. A325 ROUND HEAD BOLT WITH NUT, WASHER, AND LOCK WASHER. USE 15/16 "×1 1/4" LONGIT. SLOTTED HOLES IN PLATE 9-10A AT FIELD JOINTS AND 15/16 "×2 1/4" MIN. LONGIT. SLOTTED HOLES AT EXP. JOINTS IN PLATE 9-10A. PROVIDE 15/16 " DIA. ROUND HOLES IN TUBES 9-05 AND 9-5A.
9-12	7/8" DIA. × 1 1/2" LONG THREADED SHOP WELDED STUDS (2 REQ'D).
9-13	3/8"×8"×1'-6" PLATE. BOLT TO RAIL AS SHOWN IN DETAIL. REQ'D. AT THRIE BEAM GUARD RAIL ATTACHMENTS ONLY. PLACE SYM. ABOUT TUBES 9-5A.
9-14	7/8" DIA. × 2" LONG A325 HEX BOLT WITH NUT AND WASHER (5 REQ'D.).
9-15	1" DIA. HOLES IN TUBES 9-5A FOR 7/8" DIA. A325 ROUND HEAD BOLT WITH NUT, WASHER AND LOCK WASHER (4 REQ'D.). 4 HOLES IN TUBES.
9-16	TIE BELOW TOP MAT OF STEEL.
9-17	1/4" TO 3/4".

* ANCHOR BOLT ASSEMBLY MAY BE TACK WELDED, EITHER IN THE SHOP, OR IN THE FIELD AFTER THE ANCHOR PLATE IS PLACED.

NOTES

1. BID ITEM SHALL BE "RAILING TUBULAR TYPE M" WHICH INCLUDES ALL ITEMS SHOWN.
2. RAIL POST AND BASE PLATES SHALL CONFORM TO THE REQUIREMENTS OF ASTM A709 GRADE 50. HOLLOW RAILING STRUCTURAL TUBING SHALL CONFORM TO THE REQUIREMENTS OF ASTM A500 GRADE B OR C WITH A CERTIFIED FY = 50 ksi. ANCHOR PLATES, AND SPLICE TUBE PLATES SHALL CONFORM TO THE REQUIREMENTS OF ASTM A709 GRADE 36.
3. THE NUT SECURING THE POST BASE PLATE TO THE CONCRETE SHALL BE TIGHTENED TO A SNUG FIT AND GIVEN AN ADDITIONAL 1/8 TURN.
4. RAILS SHALL BE CONTINUOUS OVER A MINIMUM OF THREE (3) POSTS WITHOUT SPLICES WHERE POSSIBLE. RAILS SHALL BE SPLICED IN A PANEL OVER EXPANSION JOINTS.
5. ENDS OF TUBE SECTIONS SHALL BE SAWED. GRIND SMOOTH EXPOSED EDGES. ALL CUT ENDS SHALL BE TRUE AND SMOOTH.
6. WELD IS THE SAME ON BOTH FLANGES. FLANGE WELD DOES NOT REQUIRE MAGNETIC PARTICLE TESTING.
7. FILL BOLT SLOT OPENINGS IN POST SHIMS AND PLATE 9-02 AND CAULK AROUND PERIMETER OF PLATE 9-02 WITH NON-STAINING GRAY NON-BITUMINOUS JOINT SEALER. STEEL POST SHIMS MAY BE USED UNDER POSTS WHERE REQ'D. FOR ALIGNMENT.
8. POST BASE PLATES SHALL BE FLAT WITH ALL SURFACES SMOOTH AND FREE FROM WARP AND ALL EDGES SMOOTH, STRAIGHT AND VERTICAL. ALL PLATE CUTS SHALL BE MACHINE OR MACHINE FLAME CUT.
9. ALL MATERIAL SHALL BE GALVANIZED AFTER FABRICATION. PRIOR TO GALVANIZING, ALL STEEL RAILING POSTS & STEEL TUBING SHALL BE GIVEN A NO. 6 BLAST CLEANING BY SSPC SPECIFICATIONS.

8

8

NO.	DATE	REVISION	BY

STATE OF WISCONSIN
DEPARTMENT OF TRANSPORTATION

STRUCTURE B-2-26

DRAWN BY TKB | PLANS CK'D. EP

TUBULAR STEEL RAILING TYPE M

SHEET 9 OF 9

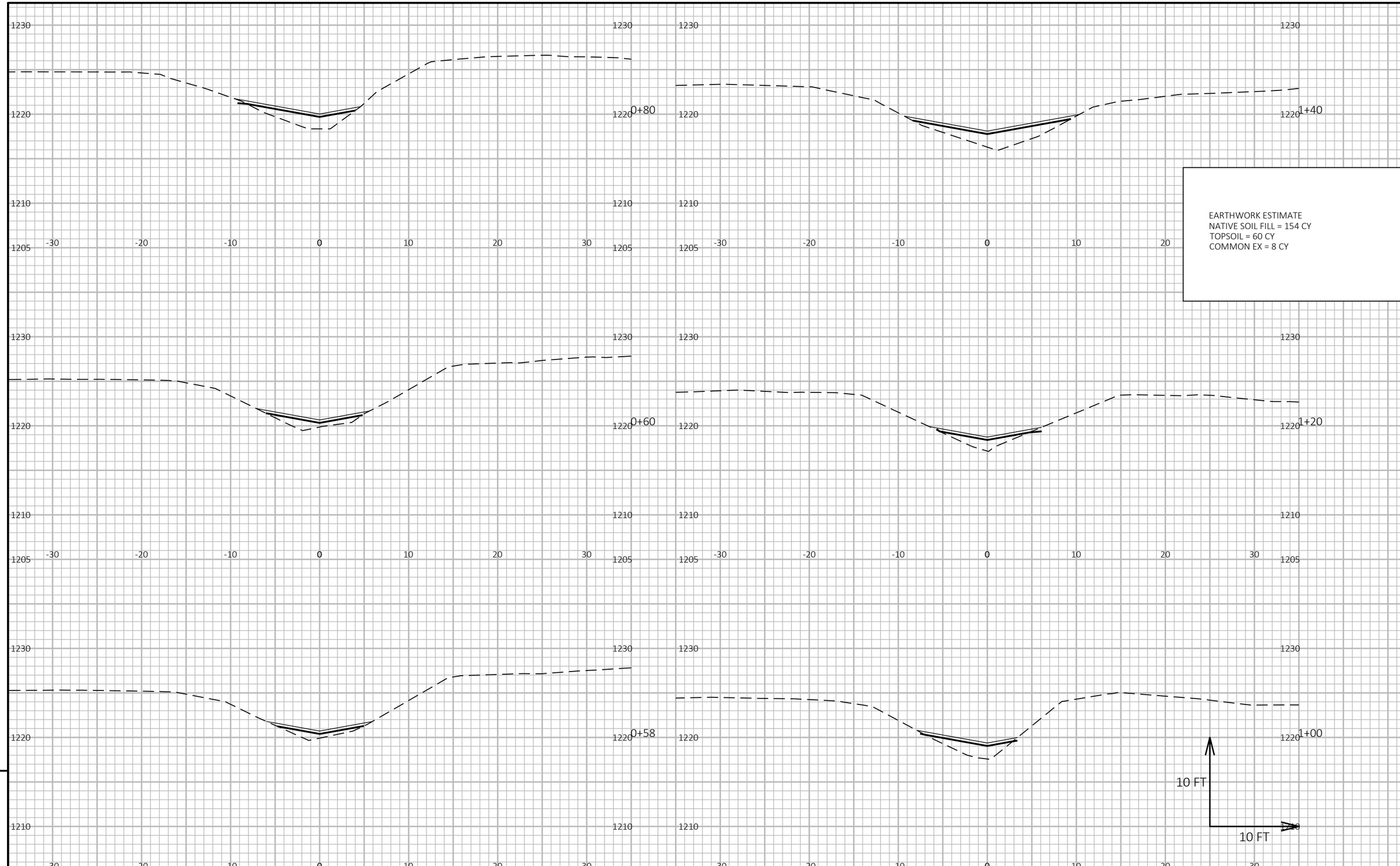

EARTHWORK ESTIMATE
NATIVE SOIL FILL = 154 CY
TOPSOIL = 60 CY
COMMON EX = 8 CY

9

9

PROJECT NO: 9925-00-70	HWY: STH 169	COUNTY: ASHLAND	CROSS SECTIONS: DITCH REPAIR	SHEET 149	E

FILE NAME : C:\CIVIL 3D PROJECTS\99250000\DSGN\CRDR\COR-DTCH-REPAIR.DWG
LAYOUT NAME - 02
PLOT DATE : 6/8/2023 2:31 PM
PLOT BY : PEARSON, MICHAEL R
PLOT NAME :
PLOT SCALE : 1 IN:10 FT HORZ. / 1 IN:10 FT VERT.

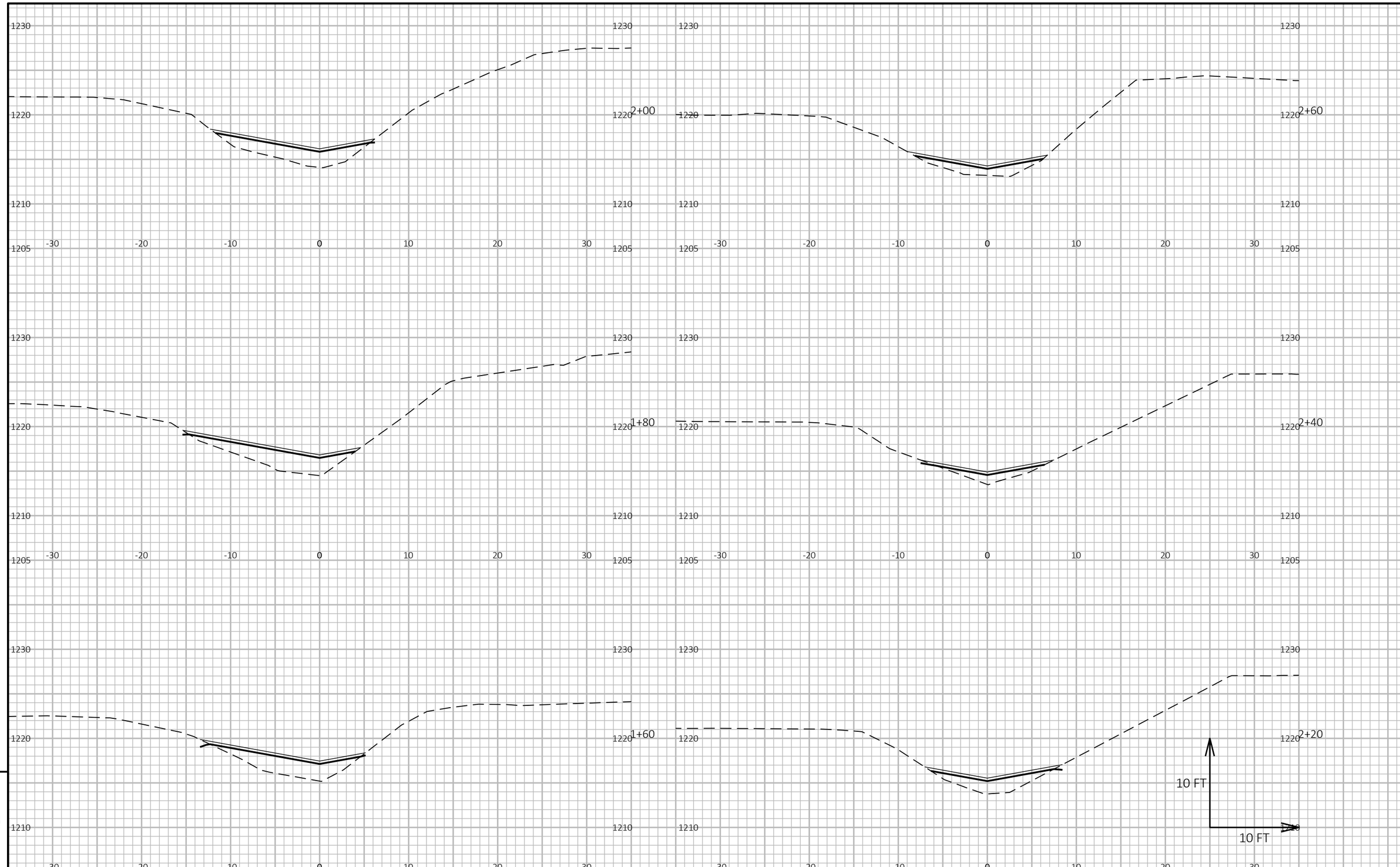

9

9

PROJECT NO: 9925-00-70	HWY: STH 169	COUNTY: ASHLAND	CROSS SECTIONS: DITCH REPAIR	SHEET 150	E

FILE NAME : C:\CIVIL 3D PROJECTS\99250000\DSGN\CRDR\COR-DTCH-REPAIR.DWG
LAYOUT NAME - 03

PLOT DATE : 6/8/2023 2:31 PM PLOT BY : PEARSON, MICHAEL R PLOT NAME : **PLOT SCALE :** 1 IN:10 FT HORZ. / 1 IN:10 FT VERT.

WISDOT/CADDS SHEET 49

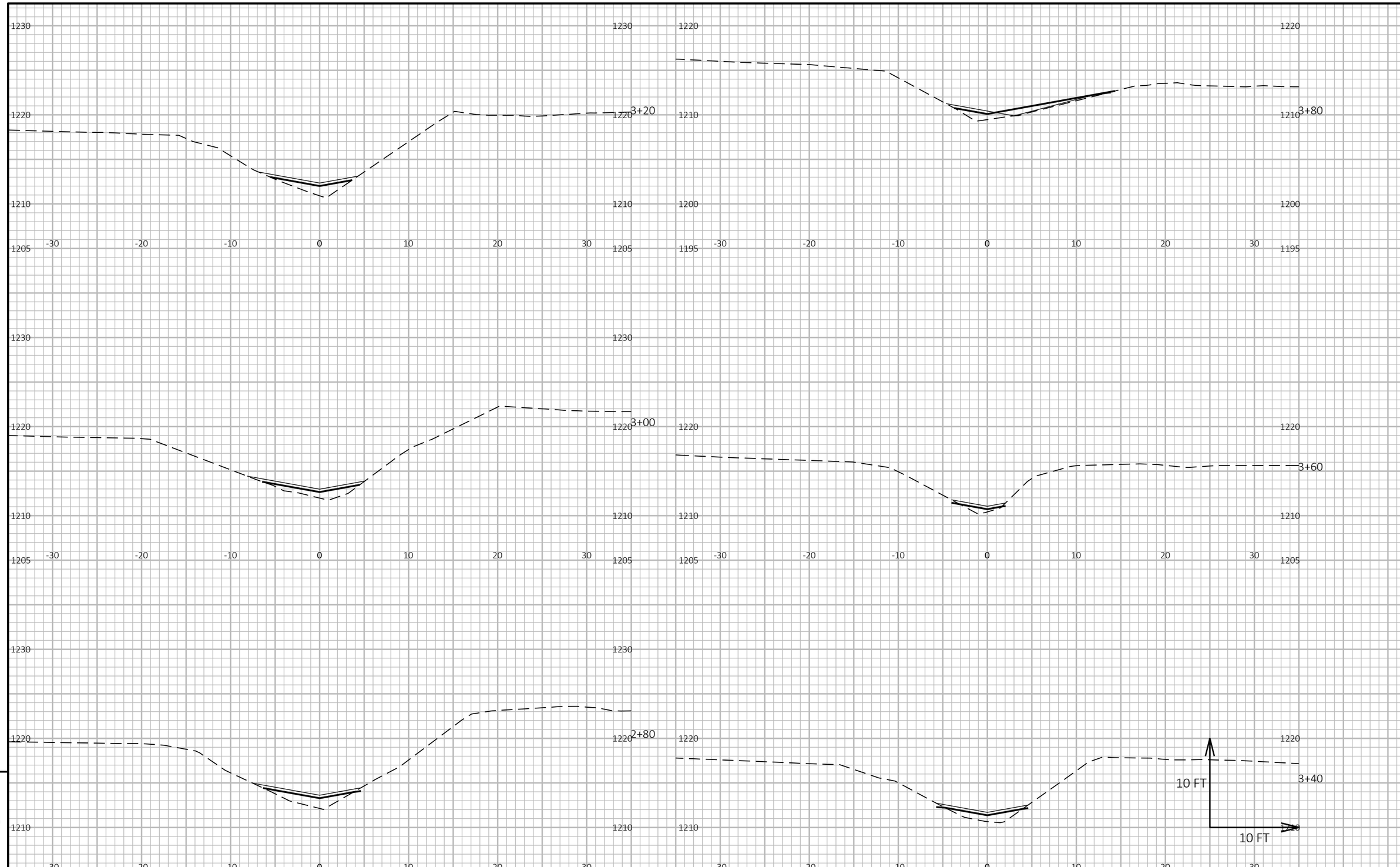

9

9

PROJECT NO: 9925-00-70	HWY: STH 169	COUNTY: ASHLAND	CROSS SECTIONS: DITCH REPAIR	SHEET 151	E

FILE NAME : C:\CIVIL 3D PROJECTS\99250000\DSGN\CRDR\COR-DTCH-REPAIR.DWG
LAYOUT NAME - 04
PLOT DATE : 6/8/2023 2:31 PM
PLOT BY : PEARSON, MICHAEL R
PLOT NAME :
PLOT SCALE : 1 IN:10 FT HORZ. / 1 IN:10 FT VERT.
WISDOT/CADDS SHEET 49

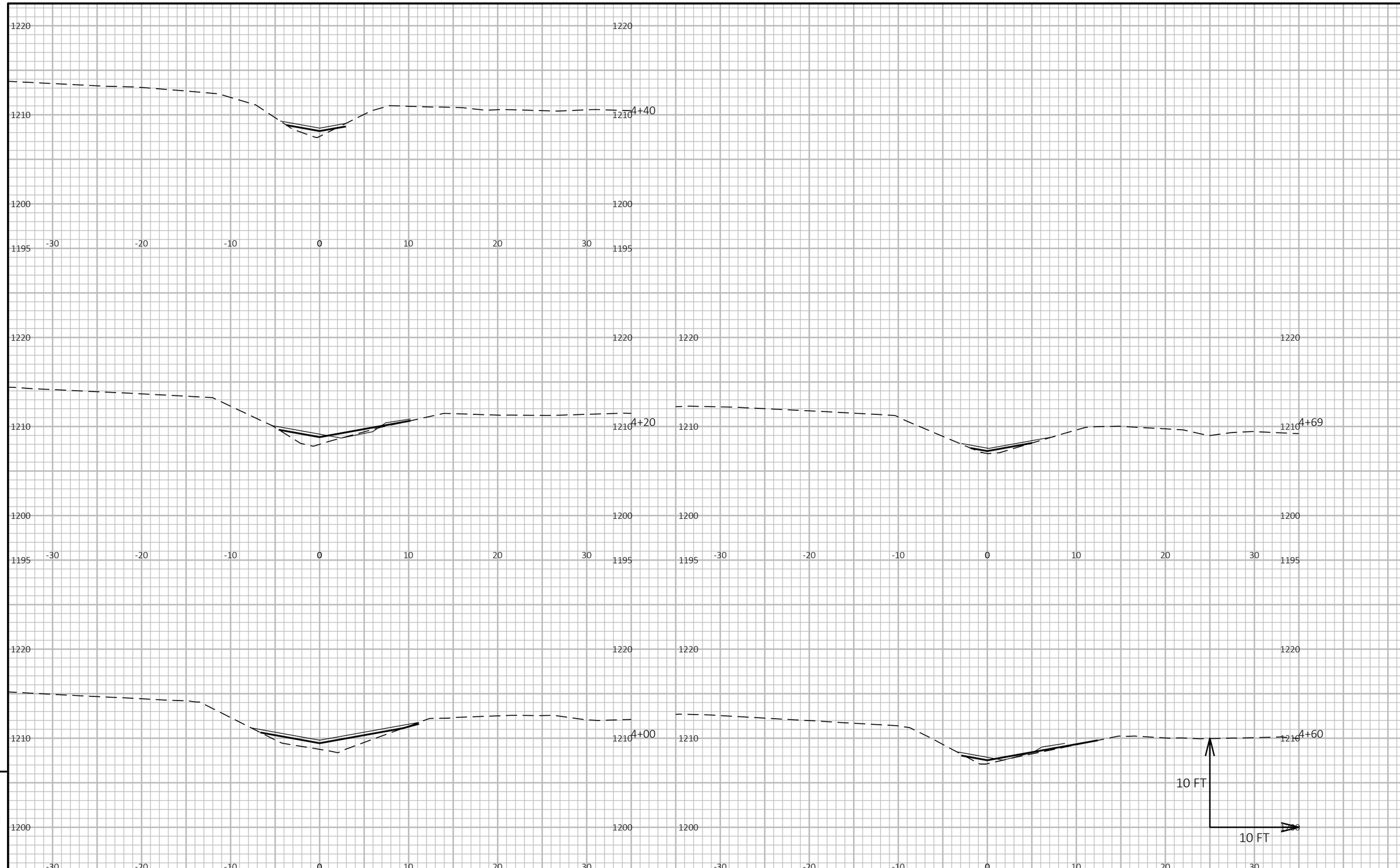

9

9

PROJECT NO: 9925-00-70	HWY: STH 169	COUNTY: ASHLAND	CROSS SECTIONS: DITCH REPAIR	SHEET 152	E

FILE NAME : C:\CIVIL 3D PROJECTS\99250000\DSGN\CRDR\COR-DTCH-REPAIR.DWG
LAYOUT NAME - 05

PLOT DATE : 6/8/2023 2:31 PM PLOT BY : PEARSON, MICHAEL R PLOT NAME : **PLOT SCALE :** 1 IN:10 FT HORZ. / 1 IN:10 FT VERT.

WISDOT/CADDS SHEET 49

EARTHWORK ESTIMATE FOR BIDDING ONLY:
COMMON EXCAVATION = 997 CY
SELECT BORROW = 472 CY
BASE AGG. DENSE 1 $\frac{1}{4}$" = 444 CY
SEED MIX 20 = 8 LB
SEED WATER = 16 MGAL

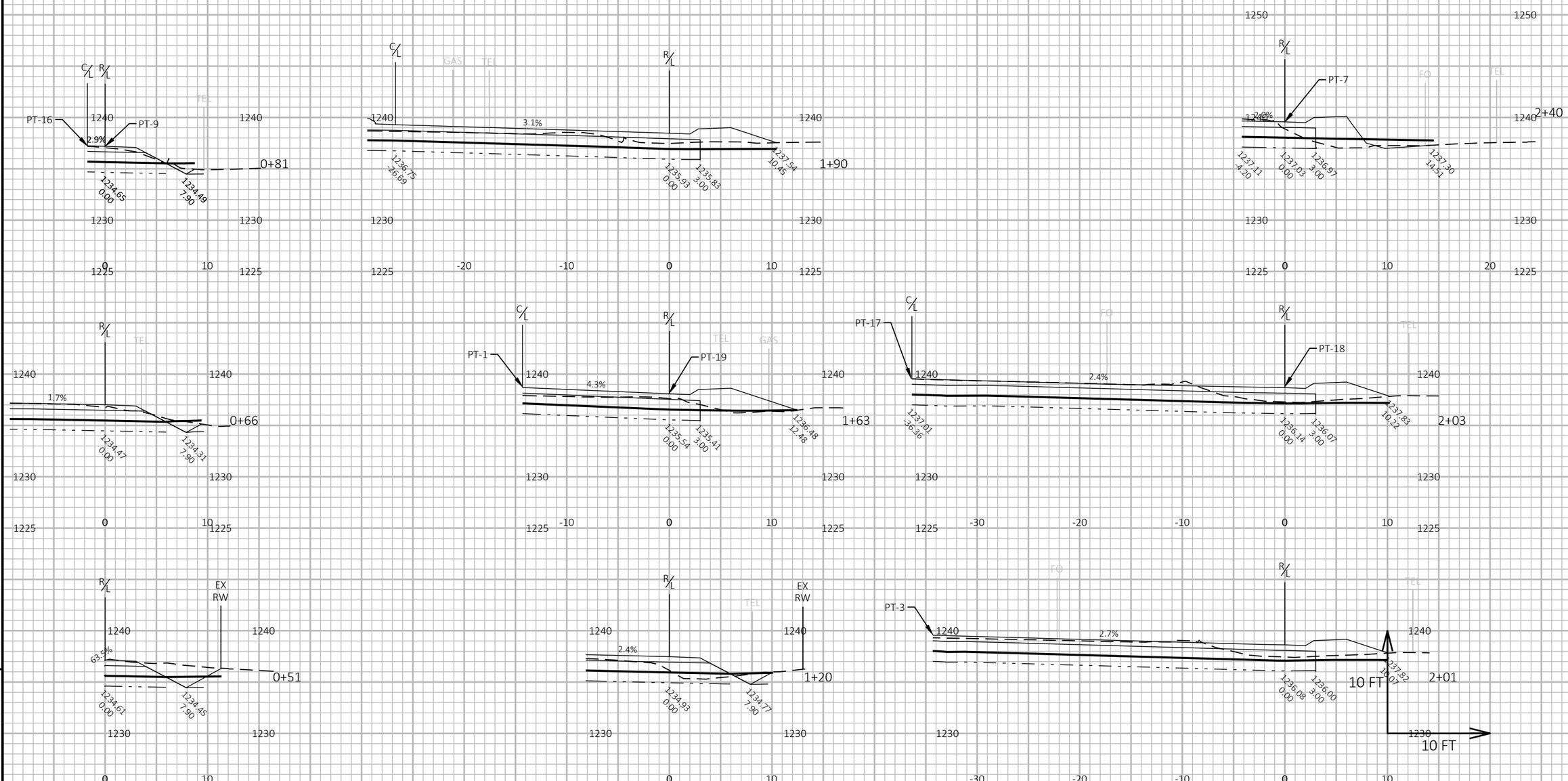

PROJECT NO: 9925-00-70	HWY: STH 169	COUNTY: ASHLAND	CROSS SECTIONS: STH 169 INTERSECTION NORTH TURN LANE XS (VIEW E TO W)	SHEET 153	E

FILE NAME : C:\CIVIL 3D PROJECTS\99250000\DSGN\CRDR\COR-INTERSECT.DWG
LAYOUT NAME - 04
PLOT DATE : 7/3/2024 8:38 AM
PLOT BY : PEARSON, MICHAEL R
PLOT NAME :
PLOT SCALE : 1 IN:10 FT HORZ. / 1 IN:10 FT VERT.
WISDOT/CADDS SHEET 49

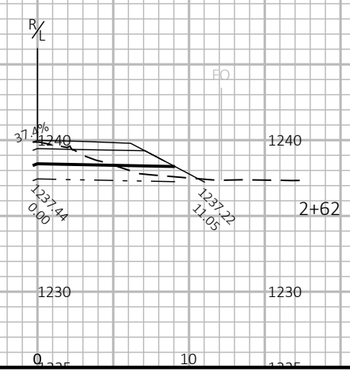

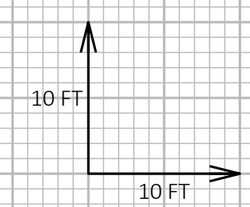

9

9

PROJECT NO: 9925-00-70	HWY: STH 169	COUNTY: ASHLAND	CROSS SECTIONS: STH 169 INTERSECTION NORTH TURN LANE XS (VIEW E TO W)	SHEET 154	E

FILE NAME : C:\CIVIL 3D PROJECTS\99250000\DSGN\CRDR\COR-INTERSECT.DWG
LAYOUT NAME - 05
PLOT DATE : 7/3/2024 8:38 AM
PLOT BY : PEARSON, MICHAEL R
PLOT NAME :
PLOT SCALE : 1 IN:10 FT HORZ. / 1 IN:10 FT VERT.
WISDOT/CADDS SHEET 49

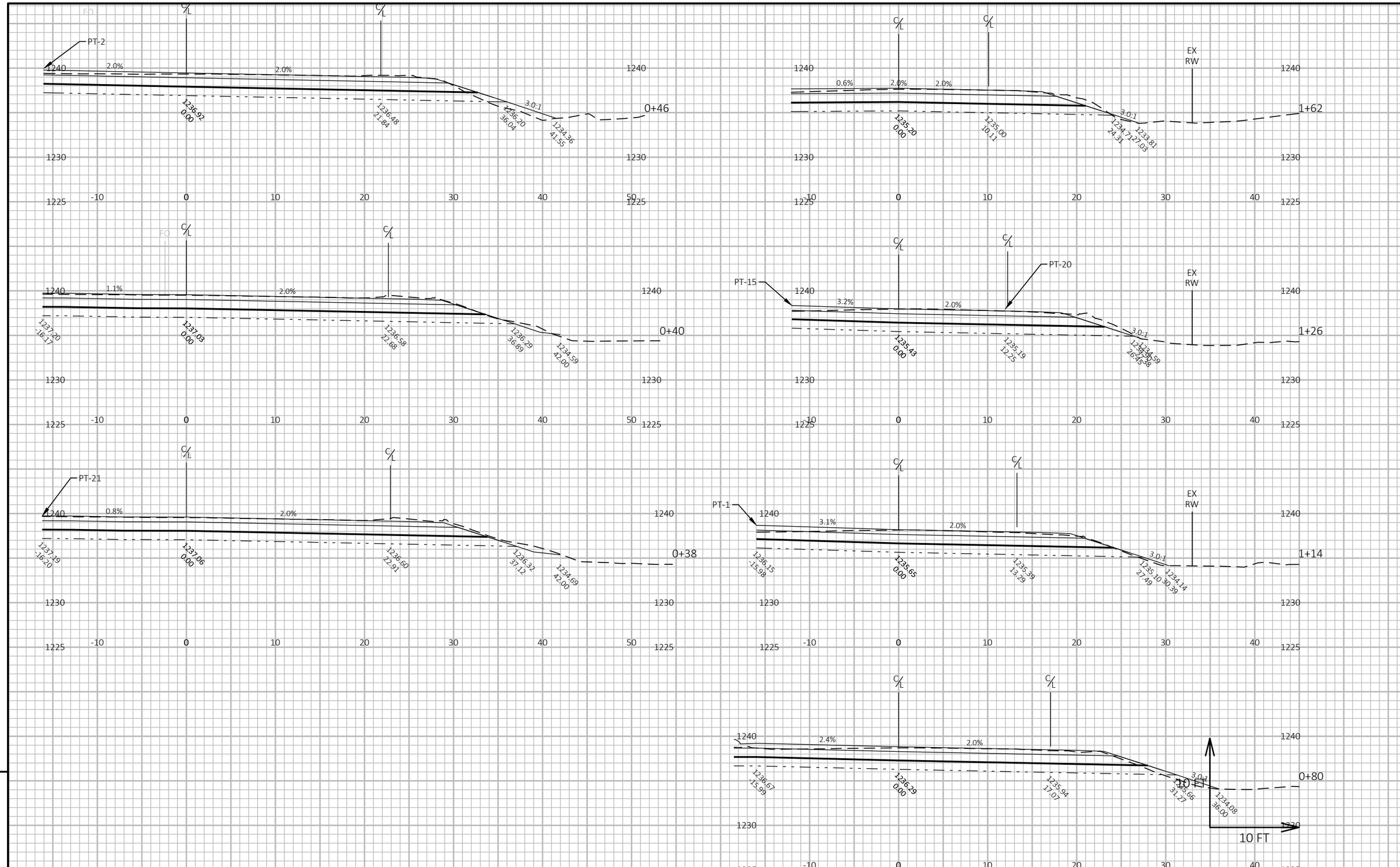

PROJECT NO: 9925-00-70	HWY: STH 169	COUNTY: ASHLAND	CROSS SECTIONS: STH 169 INTERSECTION (VIEW W TO E)	SHEET 155	E

FILE NAME : C:\CIVIL 3D PROJECTS\99250000\DSGN\CRDR\COR-INTERSECT.DWG
LAYOUT NAME - 06
PLOT DATE : 7/3/2024 8:39 AM
PLOT BY : PEARSON, MICHAEL R
PLOT NAME :
PLOT SCALE : 1 IN:10 FT HORZ. / 1 IN:10 FT VERT.
WISDOT/CADDS SHEET 49

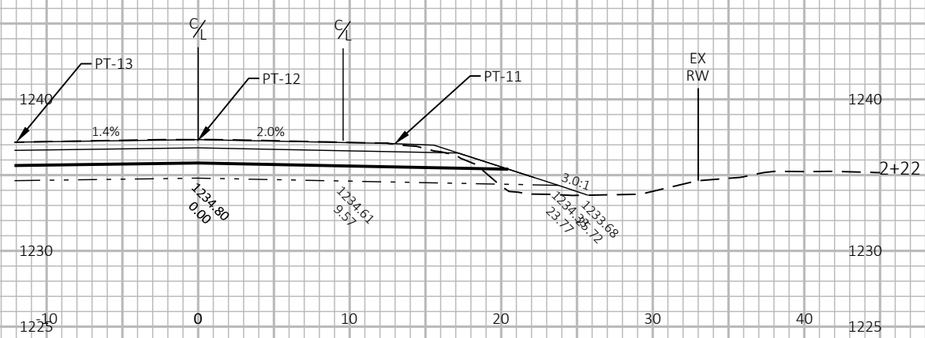

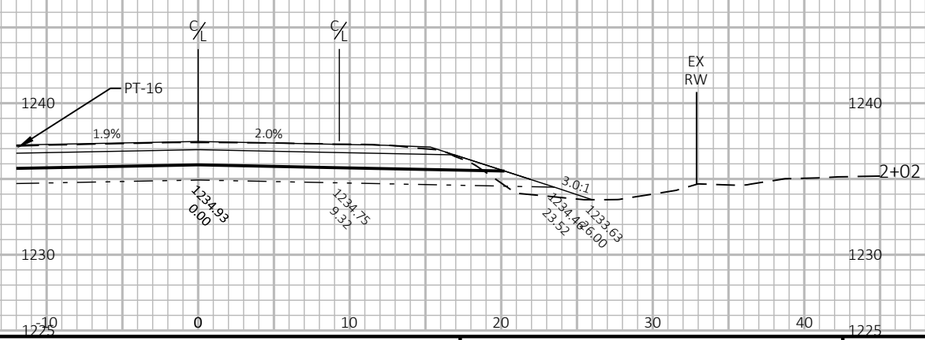

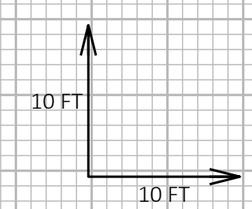

9

9

PROJECT NO: 9925-00-70	HWY: STH 169	COUNTY: ASHLAND	CROSS SECTIONS: STH 169 INTERSECTION (VIEW W TO E)	SHEET 156	E

FILE NAME : C:\CIVIL 3D PROJECTS\99250000\DSGN\CRDR\COR-INTERSECT.DWG
LAYOUT NAME - 07
PLOT DATE : 7/3/2024 8:39 AM
PLOT BY : PEARSON, MICHAEL R
PLOT NAME :
PLOT SCALE : 1 IN:10 FT HORZ. / 1 IN:10 FT VERT.
WISDOT/CADDS SHEET 49

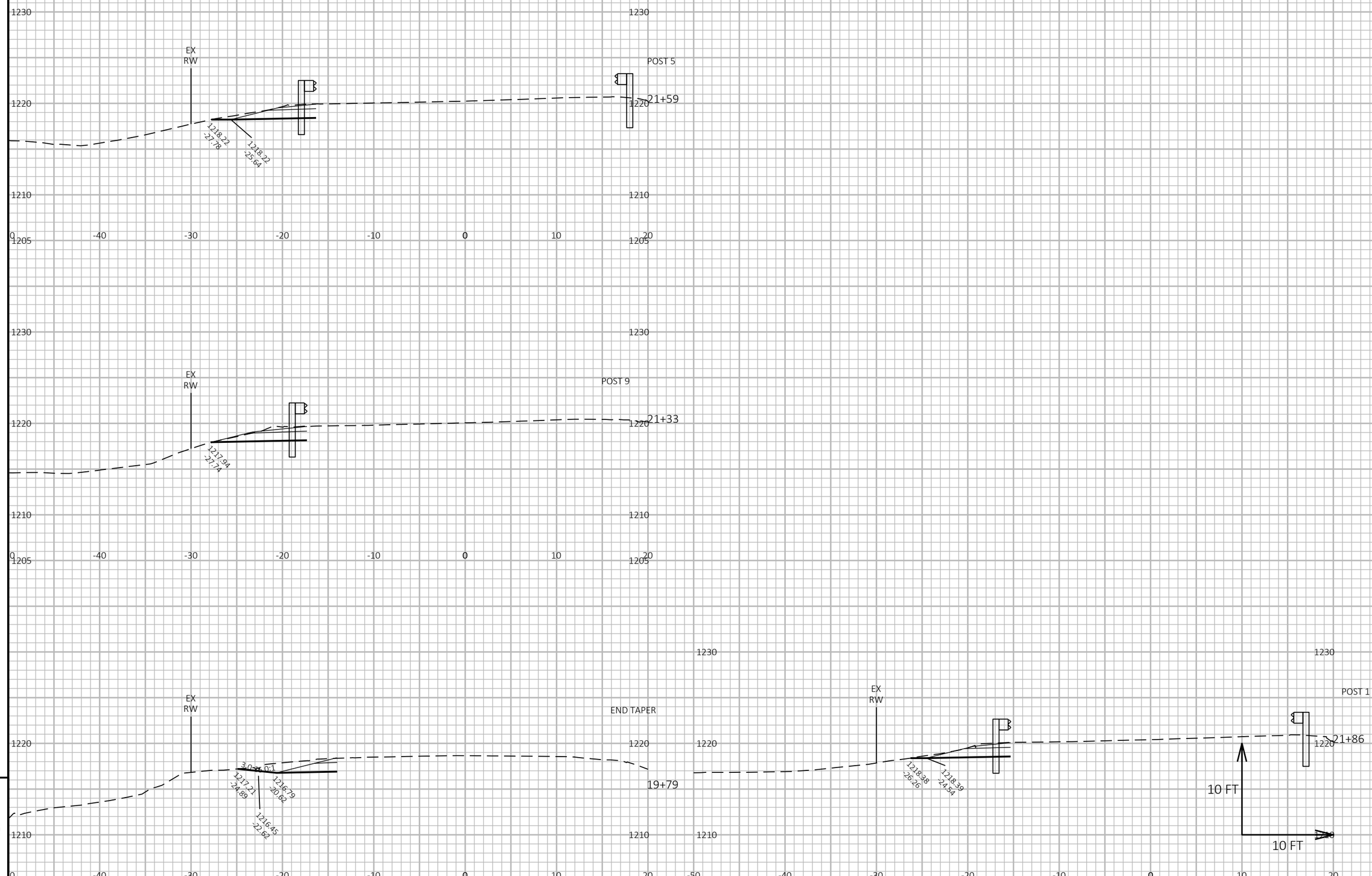

9

9

PROJECT NO: 9925-00-70	HWY: STH 169	COUNTY: ASHLAND	CROSS SECTIONS: BEAMGUARD RIGHT	SHEET 157	E

FILE NAME : C:\CIVIL 3D PROJECTS\99250000\DSGN\CRDR\COR-BAD R BMGRD.DWG
LAYOUT NAME - L1

PLOT DATE : 7/16/2024 2:05 PM PLOT BY : PEARSON, MICHAEL R PLOT NAME : **PLOT SCALE :** 1 IN:10 FT HORZ. / 1 IN:10 FT VERT.

WISDOT/CADDS SHEET 49

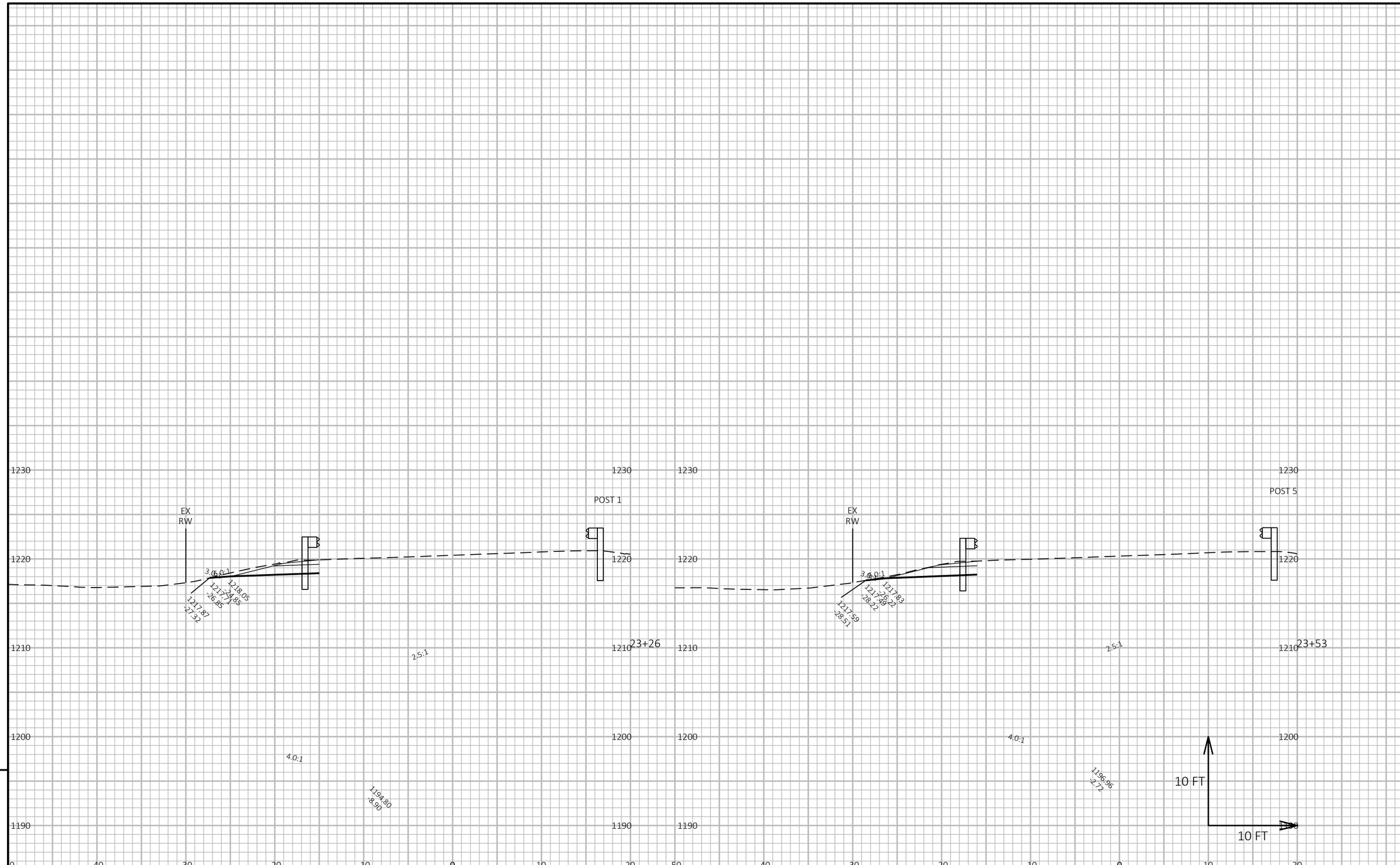

9

9

PROJECT NO: 9925-00-70	HWY: STH 169	COUNTY: ASHLAND	CROSS SECTIONS: BEAMGUARD RIGHT	SHEET 158	E

FILE NAME : C:\CIVIL 3D PROJECTS\99250000\DSGN\CRDR\COR-BAD R BMGRD.DWG
LAYOUT NAME - L2

PLOT DATE : 7/16/2024 2:06 PM PLOT BY : PEARSON, MICHAEL R PLOT NAME : **PLOT SCALE :** 1 IN:10 FT HORZ. / 1 IN:10 FT VERT.

WISDOT/CADDS SHEET 49

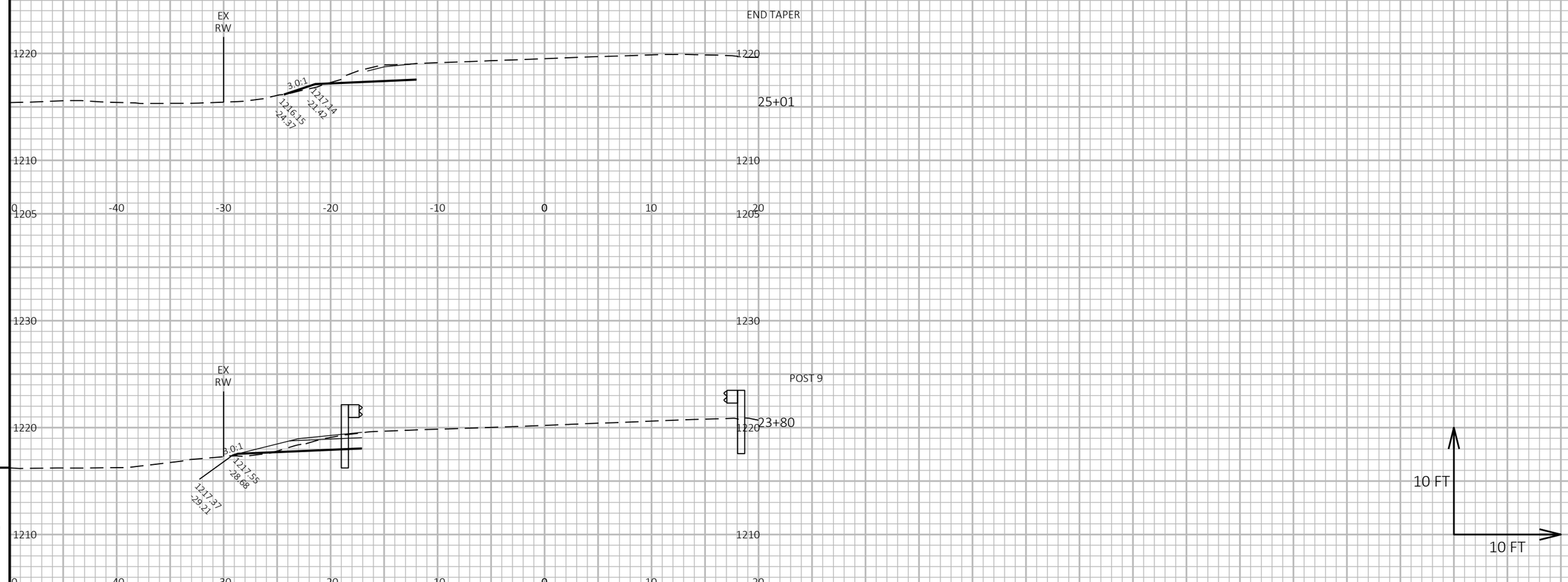

9

9

PROJECT NO: 9925-00-70	HWY: STH 169	COUNTY: ASHLAND	CROSS SECTIONS: BEAMGUARD RIGHT	SHEET 159	E

FILE NAME : C:\CIVIL 3D PROJECTS\99250000\DSGN\CRDR\COR-BAD R BMGRD.DWG
LAYOUT NAME - L3

PLOT DATE : 7/16/2024 2:08 PM PLOT BY : PEARSON, MICHAEL R PLOT NAME : **PLOT SCALE :** 1 IN:10 FT HORZ. / 1 IN:10 FT VERT.

WISDOT/CADDS SHEET 49

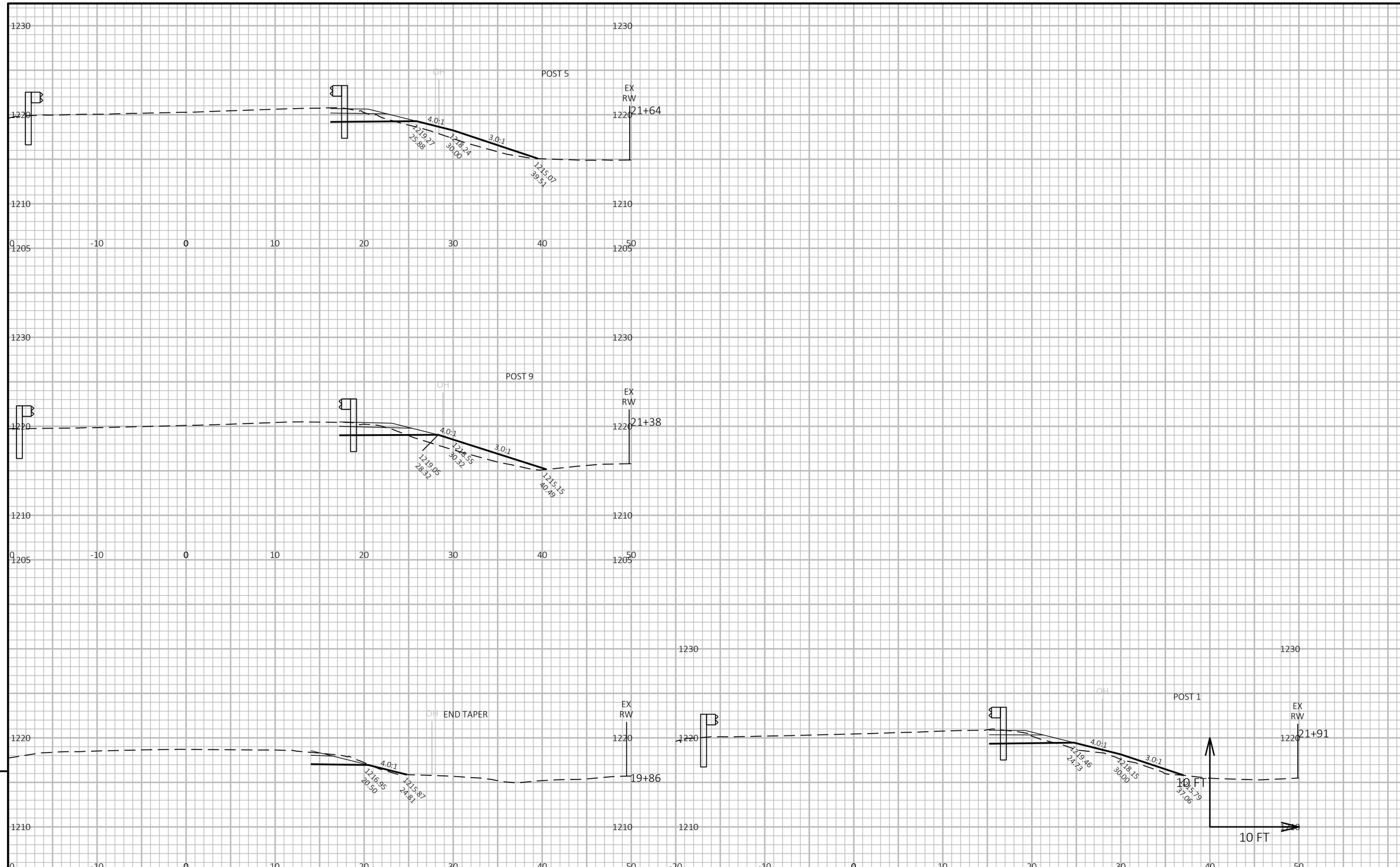

9

9

PROJECT NO: 9925-00-70	HWY: STH 169	COUNTY: ASHLAND	CROSS SECTIONS: BEAMGUARD LEFT	SHEET 160	E

FILE NAME : C:\CIVIL 3D PROJECTS\99250000\DSGN\CRDR\COR-BAD R BMGRD.DWG
LAYOUT NAME - R1

PLOT DATE : 7/16/2024 2:09 PM PLOT BY : PEARSON, MICHAEL R PLOT NAME : **PLOT SCALE :** 1 IN:10 FT HORZ. / 1 IN:10 FT VERT.

WISDOT/CADDS SHEET 49

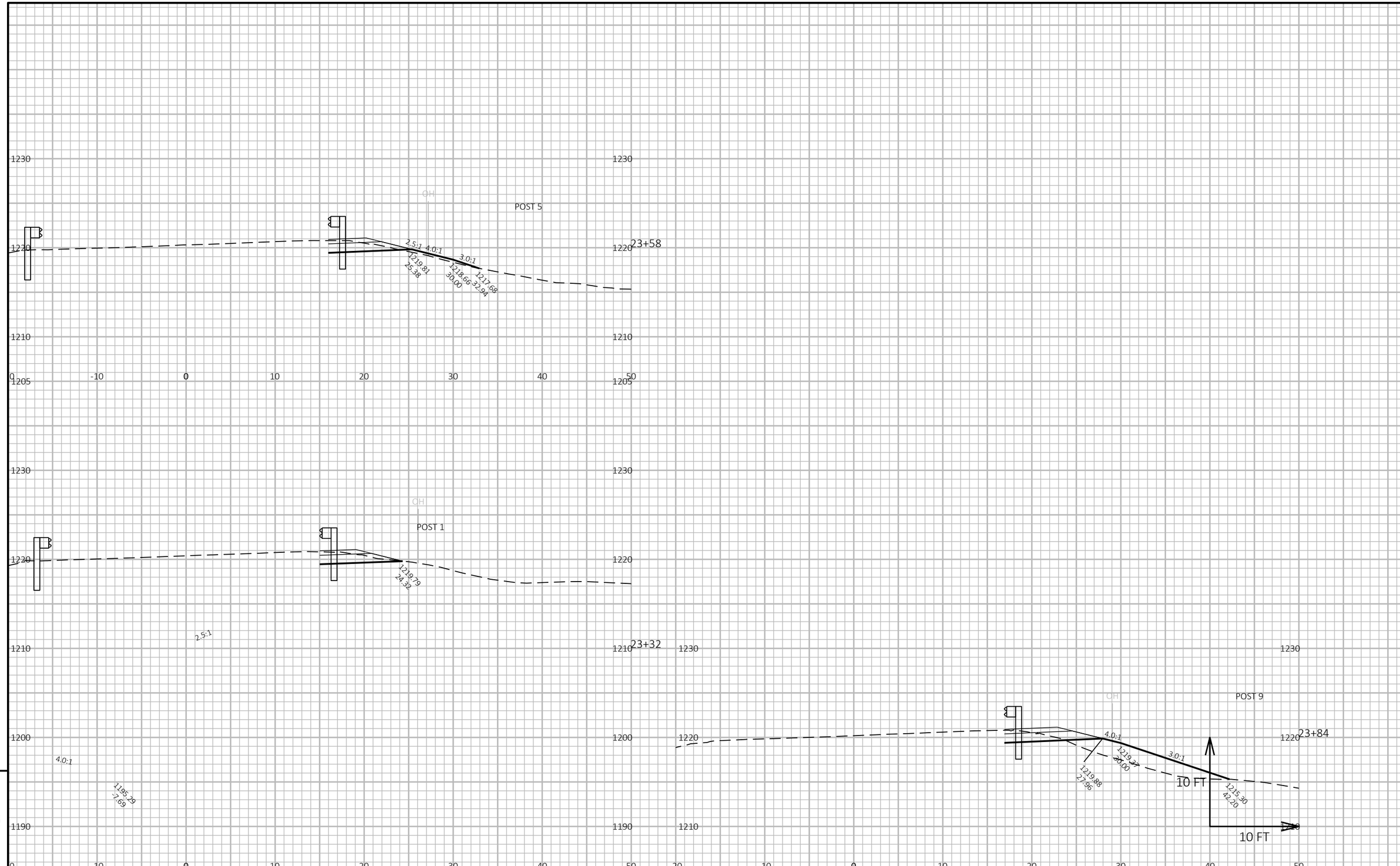

PROJECT NO: 9925-00-70	HWY: STH 169	COUNTY: ASHLAND	CROSS SECTIONS: BEAMGUARD LEFT	SHEET 161	E

FILE NAME : C:\CIVIL 3D PROJECTS\99250000\DSGN\CRDR\COR-BAD R BMGRD.DWG
LAYOUT NAME - R2
PLOT DATE : 7/16/2024 2:10 PM
PLOT BY : PEARSON, MICHAEL R
PLOT NAME :
PLOT SCALE : 1 IN:10 FT HORZ. / 1 IN:10 FT VERT.
WISDOT/CADDS SHEET 49

Wisconsin Department of Transportation

Dedicated people creating transportation solutions through innovation and exceptional service.

http://www.dot.wisconsin.gov