EAU | NOVEMBER 2024

PROJECT ID: 7881-05-73

MATTU: N/A

COUNTY: DUNN

ORDER OF SHEETS

Section No.	1	Title
Section No.	2	Typical Sections and Details
Section No.	3	Estimate of Quantities
Section No.	3	Miscellaneous Quantities
Section No.	4	Right of Way Plat
Section No.	5	Plan and Profile
Section No.	6	Standard Detail Drawings
Section No.	7	Sign Plates
~~Section No.~~	~~8~~	~~Structure Plans~~
Section No.	9	Computer Earthwork Data
Section No.	9	Cross Sections

TOTAL SHEETS = 256

51

N

STATE OF WISCONSIN
DEPARTMENT OF TRANSPORTATION

PLAN OF PROPOSED IMPROVEMENT

SCL - STH 25

CTH K TO 420TH STREET

CTH D

DUNN COUNTY

STATE PROJECT NUMBER
7881-05-73

STATE PROJECT	FEDERAL PROJECT	
	PROJECT	CONTRACT
7881-05-73	WISC 2025047	1

DESIGN DESIGNATION

A.A.D.T.	(2025)	=	530
A.A.D.T.	(2045)	=	700
D.H.V.		=	35
D.D.		=	50/50
T.		=	5.3%
DESIGN SPEED		=	55 MPH
ESALS		=	59,000

BEGIN PROJECT
STA 104+00.00
Y = 153367.90
X = 143684.55

END PROJECT
STA 228+77.00

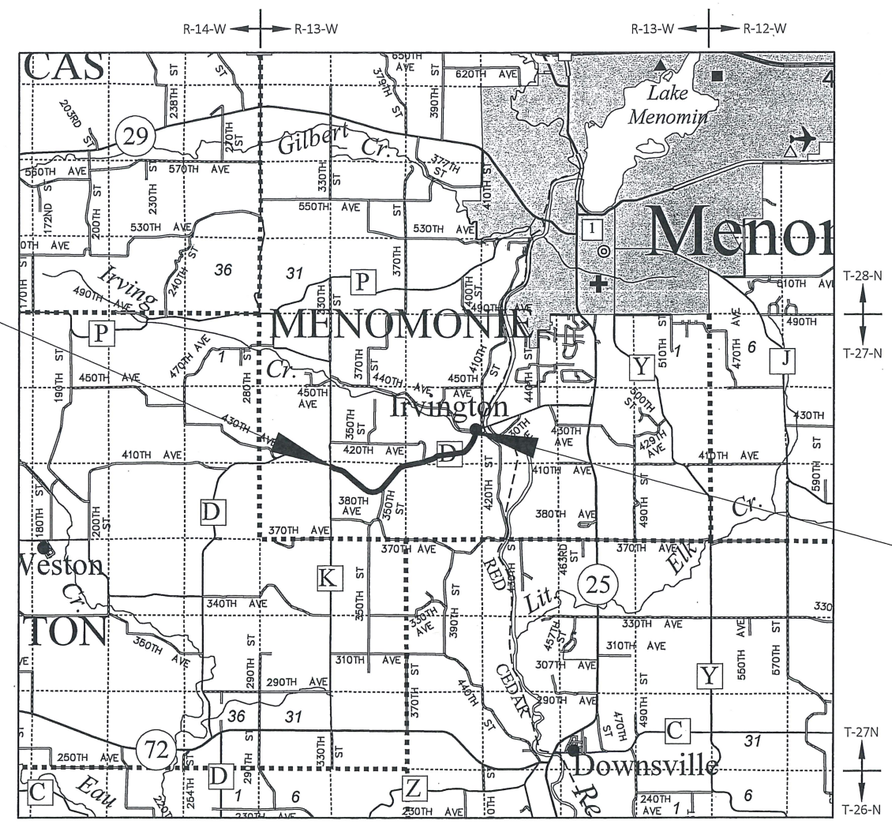

LAYOUT

SCALE 0 2 MI

TOTAL NET LENGTH OF CENTERLINE = 2.363 MI

HORIZONTAL POSITIONS SHOWN ON THIS PLAN ARE WISCONSIN COORDINATE REFERENCE SYSTEM (WISCRS), DUNN COUNTY, NAD83 (2011), IN U.S. SURVEY FEET. POSITIONS SHOWN ARE GRID COORDINATES, GRID BEARINGS, AND GRID DISTANCES. GRID DISTANCES ARE THE SAME AS GROUND DISTANCES.

ELEVATIONS ARE REFERENCED TO NAVD 88 (2011). GPS DERIVED ELEVATIONS ARE BASED ON GEOID 18.

CONVENTIONAL SYMBOLS

PLAN
- CORPORATE LIMITS
- PROPERTY LINE
- LOT LINE
- LIMITED HIGHWAY EASEMENT
- EXISTING RIGHT OF WAY
- PROPOSED OR NEW R/W LINE
- SLOPE INTERCEPT
- REFERENCE LINE (300'EB')
- EXISTING CULVERT
- PROPOSED CULVERT (Box or Pipe)
- COMBUSTIBLE FLUIDS (CAUTION)
- MARSH AREA
- WOODED OR SHRUB AREA

PROFILE
- GRADE LINE
- ORIGINAL GROUND
- MARSH OR ROCK PROFILE (To be noted as such) (ROCK)
- SPECIAL DITCH (LABEL)
- GRADE ELEVATION (95.36)
- CULVERT (Profile View)

UTILITIES
- ELECTRIC (E)
- FIBER OPTIC (FO)
- GAS (G)
- SANITARY SEWER (SAN)
- STORM SEWER (SS)
- TELEPHONE (T)
- WATER (W)
- UTILITY PEDESTAL
- POWER POLE
- TELEPHONE POLE

ACCEPTED FOR

DUNN COUNTY

Date 07/19/2024 (Signature and Title of Official)

HIGHWAY COMMISSIONER

ORIGINAL PLANS PREPARED BY

AYRES

WISCONSIN MARK R. PETERSEN E - 36785 EAU CLAIRE WI PROFESSIONAL ENGINEER

DATE: 7/19/2024 (Professional Engineer Signature)

STATE OF WISCONSIN
DEPARTMENT OF TRANSPORTATION

PREPARED BY

Surveyor	AYRES ASSOCIATES INC
Designer	AYRES ASSOCIATES INC
Project Manager	MATT BERG
Regional Examiner	TOU YANG
Regional Supervisor	TOU YANG

APPROVED FOR THE DEPARTMENT

DATE: 7/23/2024 (Signature)

E

FILE NAME : I:\41\410859 DUNN CTH D\C3D\SHEETSPLAN\010101-TI.DWG PLOT DATE : 7/9/2024 9:00 AM PLOT BY : RESHESKE, CARRIE PLOT NAME :

GENERAL NOTES

THERE ARE UTILITY FACILITIES WITHIN THE PROJECT AREA THAT ARE NOT SHOWN ON THE PLANS. THE CONTRACTOR SHALL COORDINATE THEIR CONSTRUCTION ACTIVITIES WITH A CALL TO DIGGERS HOTLINE AND OR A DIRECT CALL TO THE UTILITIES THAT HAVE FACILITIES IN THE AREA.

THE EXACT LOCATION AND WIDTH OF DRIVEWAY ENTRANCES WILL BE DETERMINED IN THE FIELD BY THE ENGINEER. ALL DRIVEWAYS ARE TO BE REPLACED IN KIND UNLESS OTHERWISE DIRECTED BY THE ENGINEER OR AS SHOWN ON THE PLANS.

INLET AND DISCHARGE ELEVATIONS FOR DRAINAGE STRUCTURES SHOWN ON THE PLAN MAY BE ADJUSTED BY THE ENGINEER TO FIT FIELD CONDITIONS.

PRIOR TO ORDERING DRAINAGE PIPES AND ENDWALLS, VERIFY RELATED DRAINAGE INFORMATION IN THE PLAN AND PROVIDE DOCUMENTATION TO THE ENGINEER.

ALL RADII ARE MEASURED TO EDGE OF PAVEMENT UNLESS OTHERWISE SHOWN OR NOTED ON THE PLAN.

PRIOR TO THE PLACEMENT OF MGS GUARDRAIL, THE SHOULDERS SHALL BE IN PLACE, SHAPED AND COMPACTED UNLESS SHOWN OTHERWISE.

Bore #	Station	Offset	Asphalt	Base
B-1	108+00	6' RT	3"	7"
B-2	125+00	6' LT	3"	5"
B-3	145+00	6' LT	3"	8"
B-4	162+00	6' RT	4"	8"
B-5	179+00	6' LT	3"	7"
B-8	204+00	6' LT	4"	6"
B-9	209+00	6' RT	3"	6"
B-10	215+00	15' LT	6"	8"
B-11	221+00	15' LT	4"	11"
B-12	227+75	15' RT	4"	7"

UTILITY CONTACTS

AT&T
304 SOUTH DEWEY STREET
EAU CLAIRE, WI 54701
ATTN: RICK PODOLAK
OFFICE: 715-839-5565
CELL: 715-410-0656
rp4514@att.com

DUNN ENERGY COOPERATIVE
N5725 600TH STREET
PO BOX 220
MENOMONIE, WI 54751
ATTN: TRICIA BAUER & LOREN LUZINSKI
715-232-6240
tricia@dunnenergy.com
loren@dunnenergy.com

WEST WISCONSIN TELCOM COOPERATIVE
912 CRESCENT STREET
MENOMONIE, WI 54751
ATTN: BRAD SCHMIDTKNECHT
715-231-0504
brads@wwt.net

XCEL ENERGY
414 NICOLLET MALL
MINNEAPOLIS, MN 55401
ATTN: MITCHELL DIENGER
612-321-3109
michell.a.dienger@xcelenergy.com

* DENOTES NOT A DIGGERS HOTLINE MEMBER

DIGGERS HOTLINE
Dial 811 or (800)242-8511
www.DiggersHotline.com

DNR CONTACT

DNR WEST CENTRAL REGION HQ
1300 WEST CLAIREMONT AVENUE
EAU CLAIRE, WI 54701
ATTN: LEAH NICOL
715-934-9014
leah nicol@wisconsin.gov

DESIGN CONTACT

AYRES ASSOCIATES INC
3433 OAKWOOD HILLS PARKWAY
EAU CLAIRE, WI 54701
ATTN: MARK PETERSEN, PE
715-834-3161
petersenm@ayresassociates.com

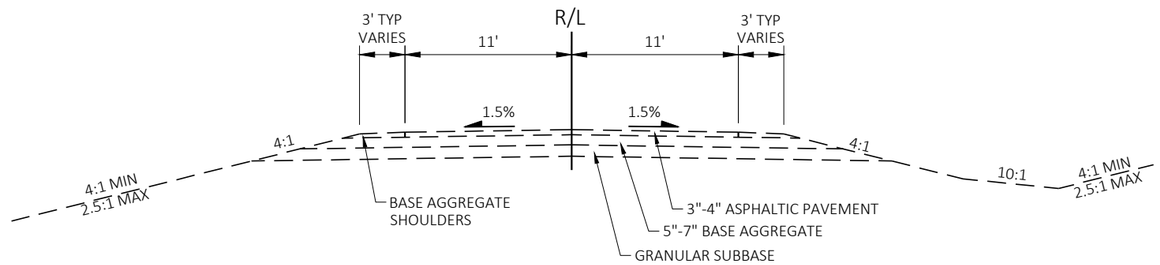

EXISTING TYPICAL SECTION

2

PROJECT NO: 7881-05-73	HWY: CTH D	COUNTY: DUNN	TYPICAL SECTIONS	SHEET 3	E

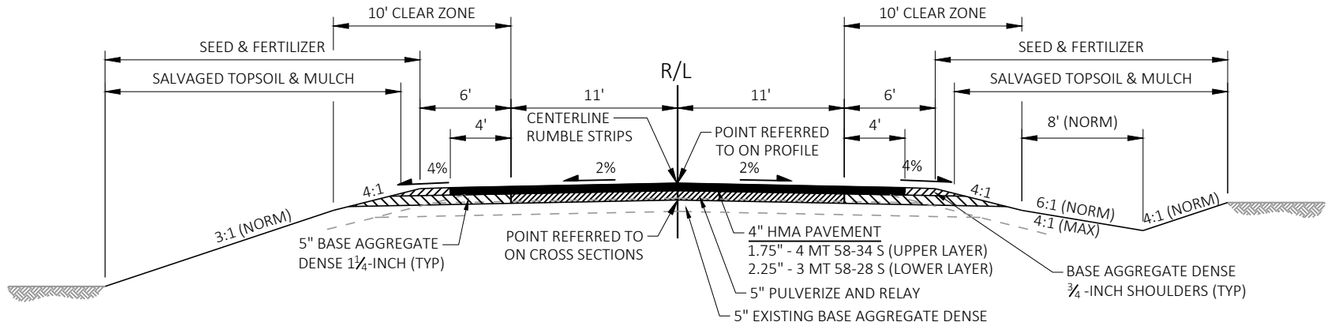

NOTE: SEE TRANSITION BETWEEN PAVEMENT DEPTHS DETAIL FOR WORK BETWEEN STA 104+00 - STA 106+90.

FINISHED TYPICAL SECTION

STA 104+00.00 - STA 188+50.00

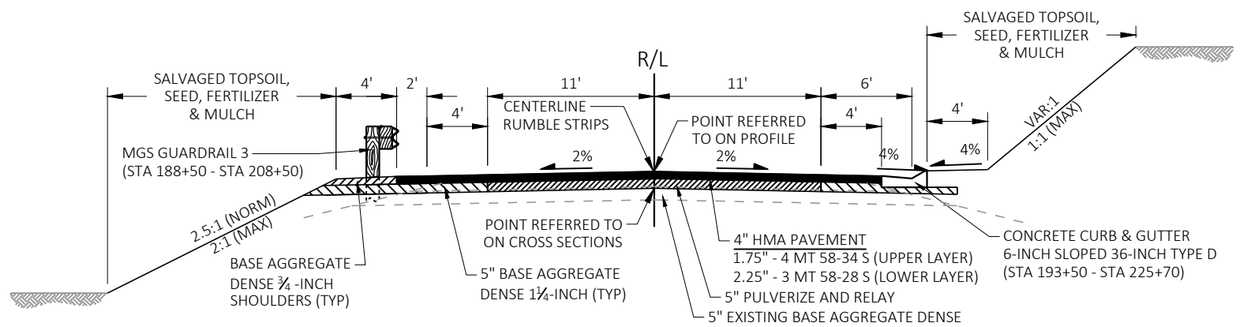

NOTE: ADJUST PULVERIZE DEPTH TO MATCH EXISTING PAVEMENT DEPTH IN AREAS WHERE EXISTING PAVEMENT MAY BE GREATER THAN 5"

FINISHED TYPICAL SECTION

STA 188+50.00 - STA 225+70.00

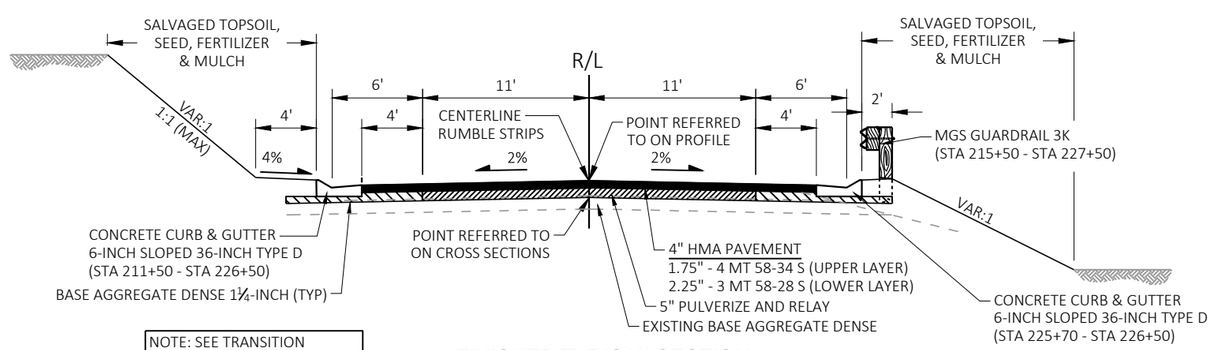

NOTE: SEE TRANSITION BETWEEN PAVEMENT DEPTHS DETAIL FOR WORK BETWEEN STA 225+50 - STA 228+77.

FINISHED TYPICAL SECTION

STA 225+70.00 - STA 228+77.00

2

RUNOFF COEFFICIENT TABLE

LAND USE:	HYDROLOGIC SOIL GROUP A SLOPE RANGE (PERCENT) 0-2	A 2-6	A 6 & OVER	B 0-2	B 2-6	B 6 & OVER	C 0-2	C 2-6	C 6 & OVER	D 0-2	D 2-6	D 6 & OVER
ROW CROPS:	.08 .22	.16 .30	.22 .38	.12 .26	.20 .34	.27 .44	.15 .30	.24 .37	.33 .50	.19 .34	.28 .41	.38 .56
MEDIAN STRIPTURF:	.19 .24	.20 .26	.24 .30	.19 .25	.22 .28	.26 .33	.20 .26	.23 .30	.30 .37	.20 .27	.25 .32	.30 .40
SIDE SLOPETURF:			.25 .32			.27 .34			.28 .36			.30 .38
PAVEMENT:												
ASPHALT:	.70 - .95											
CONCRETE:	.80 - .95											
BRICK:	.70 - .80											
DRIVES, WALKS:	.75 - .85											
ROOFS:	.75 - .95											
GRAVEL ROADS, SHOULDERS:	.40 - .60											

TOTAL PROJECT AREA = 27.51 ACRES
TOTAL AREA EXPECTED TO BE DISTURBED BY CONSTRUCTION ACTIVITIES = 20.34 ACRES

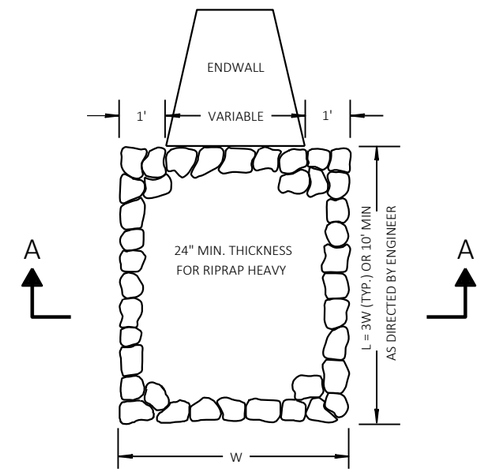

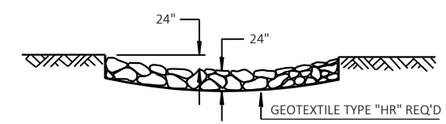

SECTION A-A

RIPRAP HEAVY AND GEOTEXTILE FABRIC DETAIL AT APRON ENDWALL

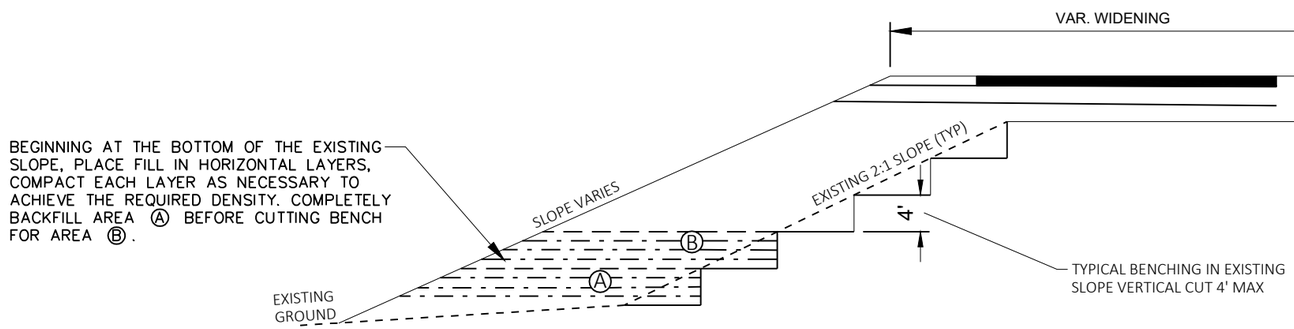

DETAIL SHOWING METHOD FOR BENCHING FILL INTO EXISTING EMBANKMENT

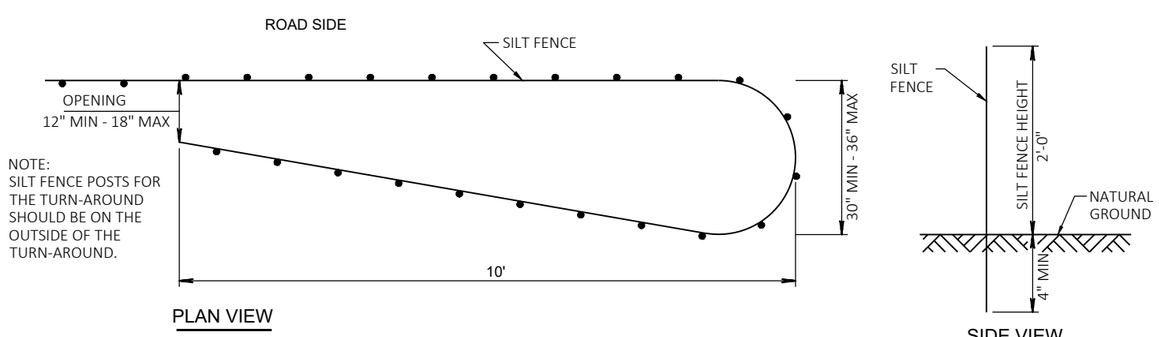

PLAN VIEW

SIDE VIEW

SILT FENCE TURN-AROUND DETAIL

2

PROJECT NO: 7881-05-73	HWY: CTH D	COUNTY: DUNN	CONSTRUCTION DETAILS	SHEET 5	E

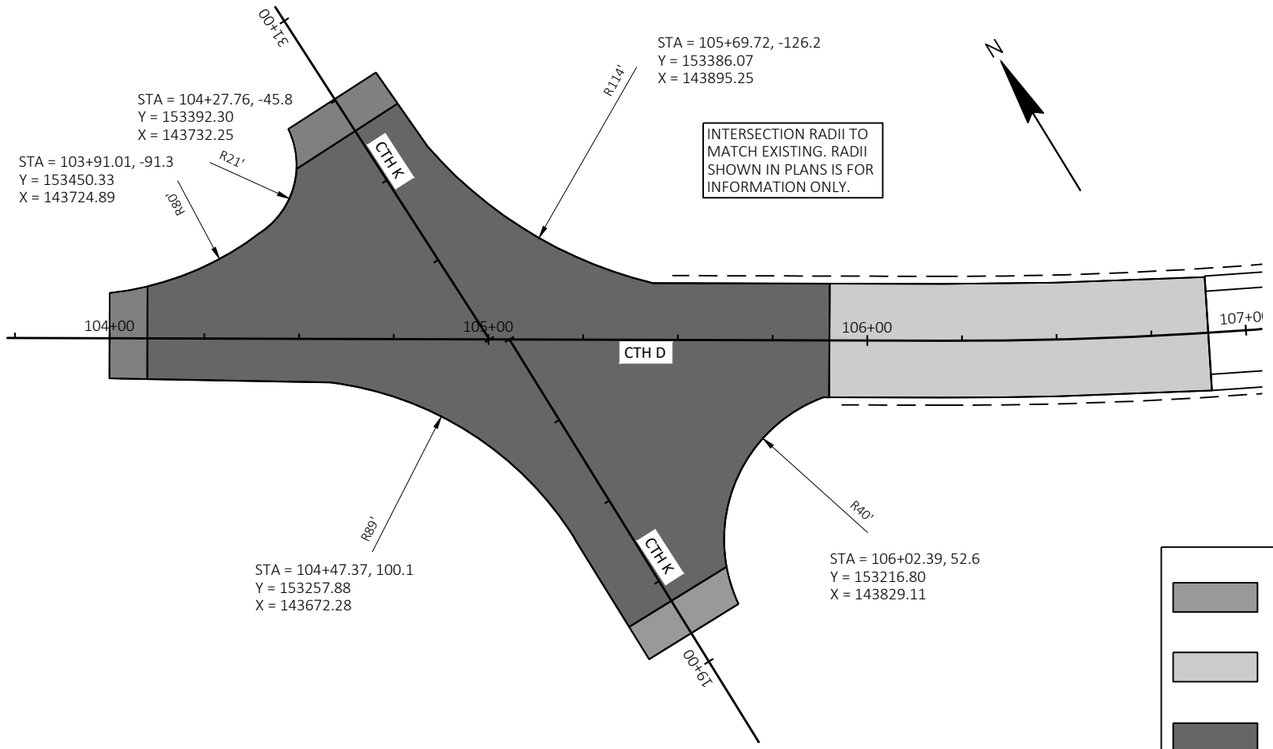

TRANSITION DETAIL FOR CTH D-CTH K

REMOVING ASPHALTIC SURFACE BUTT JOINTS

TRANSITION BETWEEN PAVEMENT DEPTHS (SEE DETAIL)

1.75" REMOVING ASPHALTIC SURFACE MILLING / 1.75" HMA PAVEMENT 4 MT 58-34 S

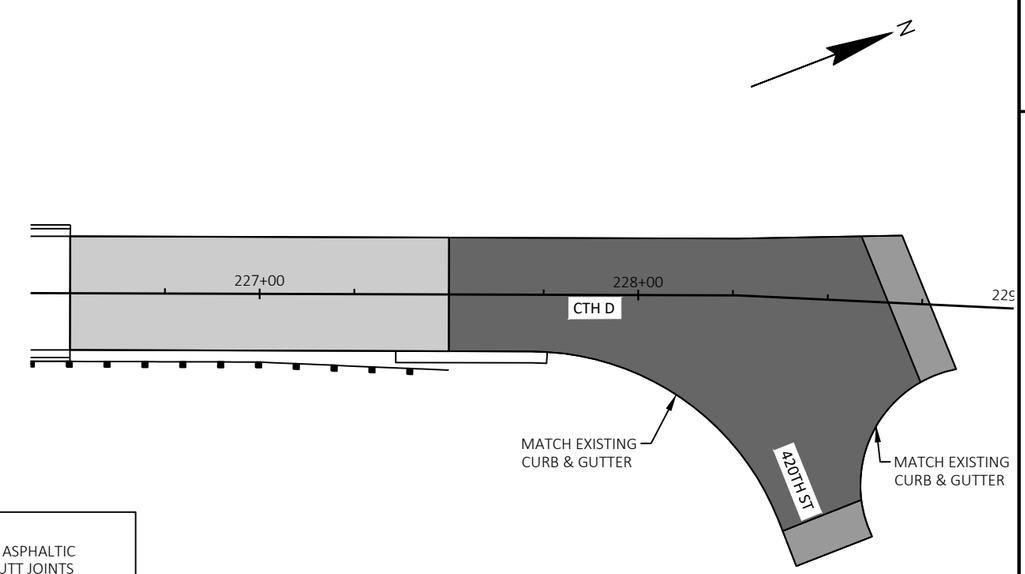

TRANSITION DETAIL FOR CTH D-420TH STREET

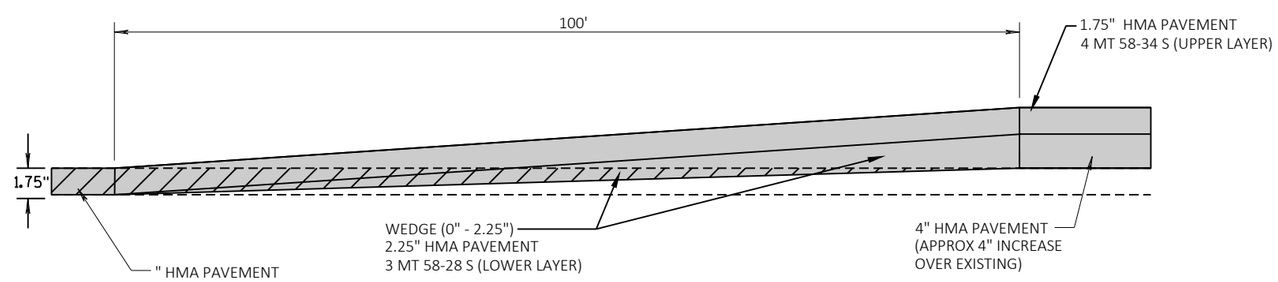

TRANSITION BETWEEN PAVEMENT DEPTHS DETAIL

STA 105+90 - STA 106+90
STA 225+50 - STA 226+50

HMA PAVEMENT

0' - 1.75" MILLING ASPHALTIC SURFACE

PROJECT NO: 7881-05-73	HWY: CTH D	COUNTY: DUNN	CONSTRUCTION DETAILS	SHEET 6	E

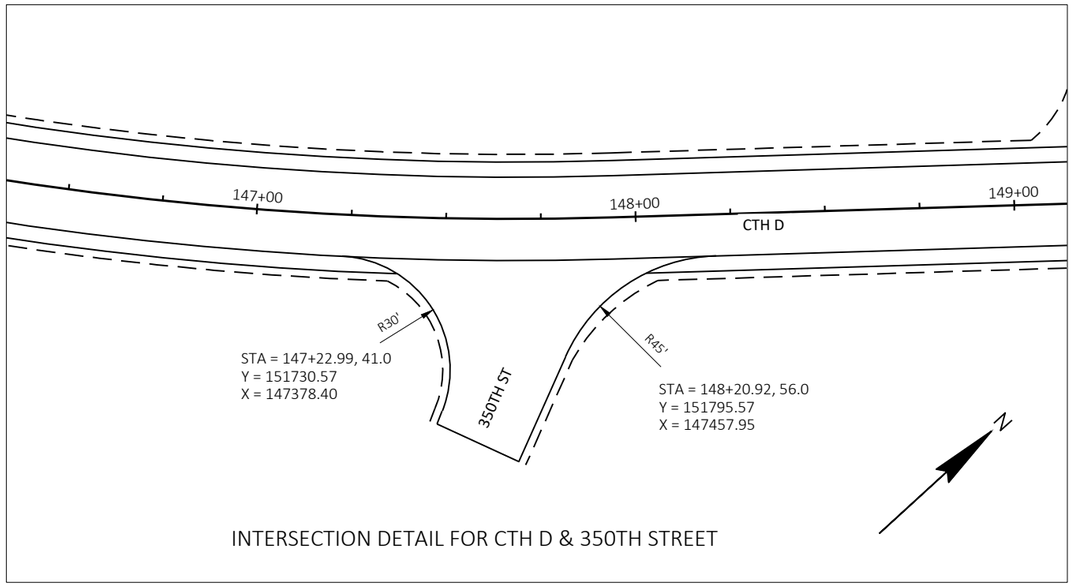

INTERSECTION DETAIL FOR CTH D & 350TH STREET

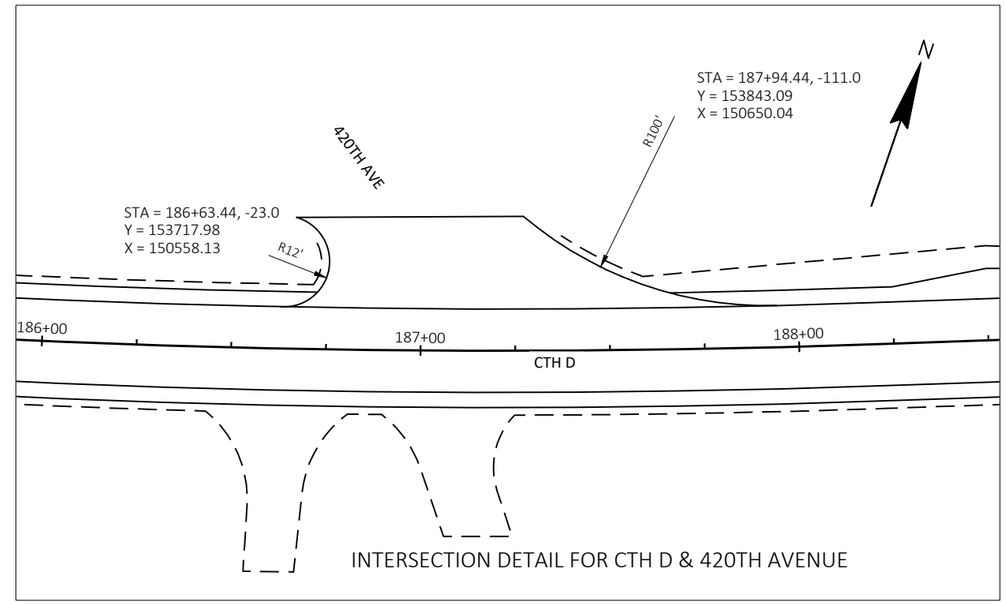

INTERSECTION DETAIL FOR CTH D & 420TH AVENUE

INTERSECTION RADII TO MATCH EXISTING. RADII SHOWN IN PLAN IS FOR INFORMATION ONLY.

SEE MISCELLANEOUS QUANTITIES FOR REMOVING ASPHALTIC SURFACE ITEMS.

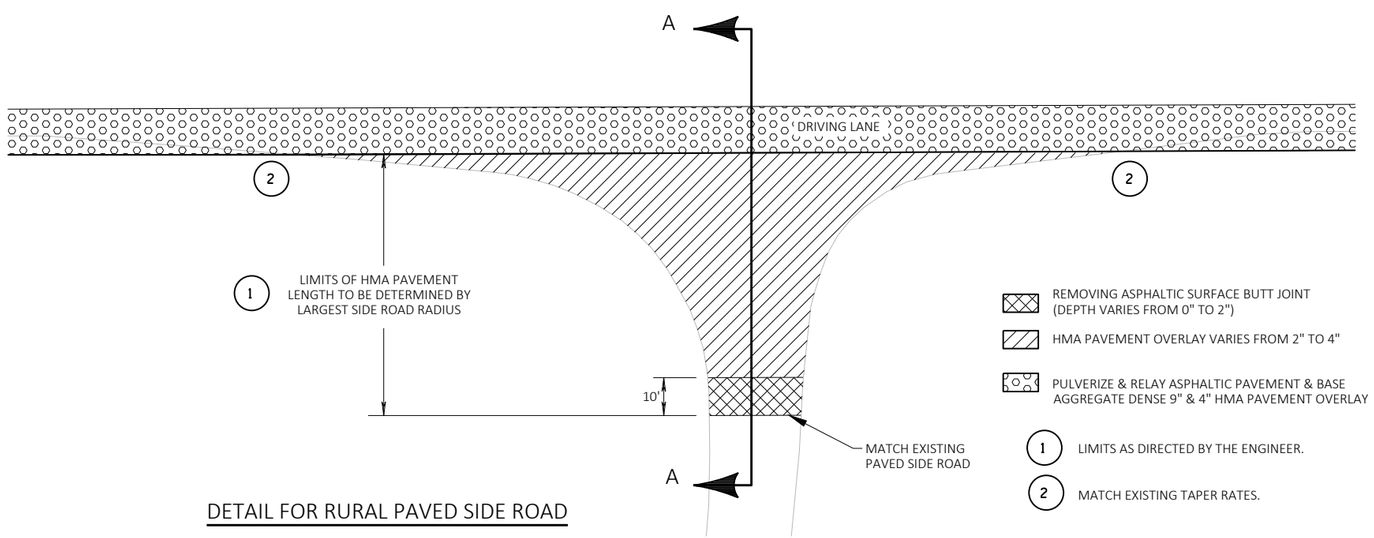

DETAIL FOR RURAL PAVED SIDE ROAD

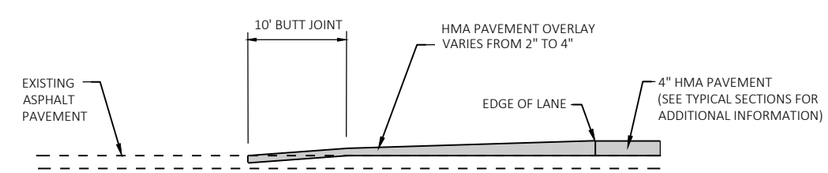

JOINT DETAIL SIDEROAD

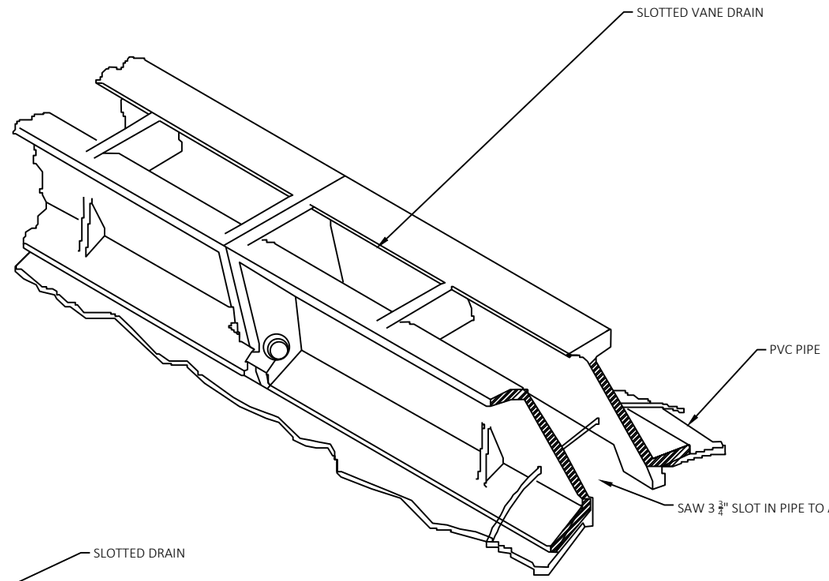

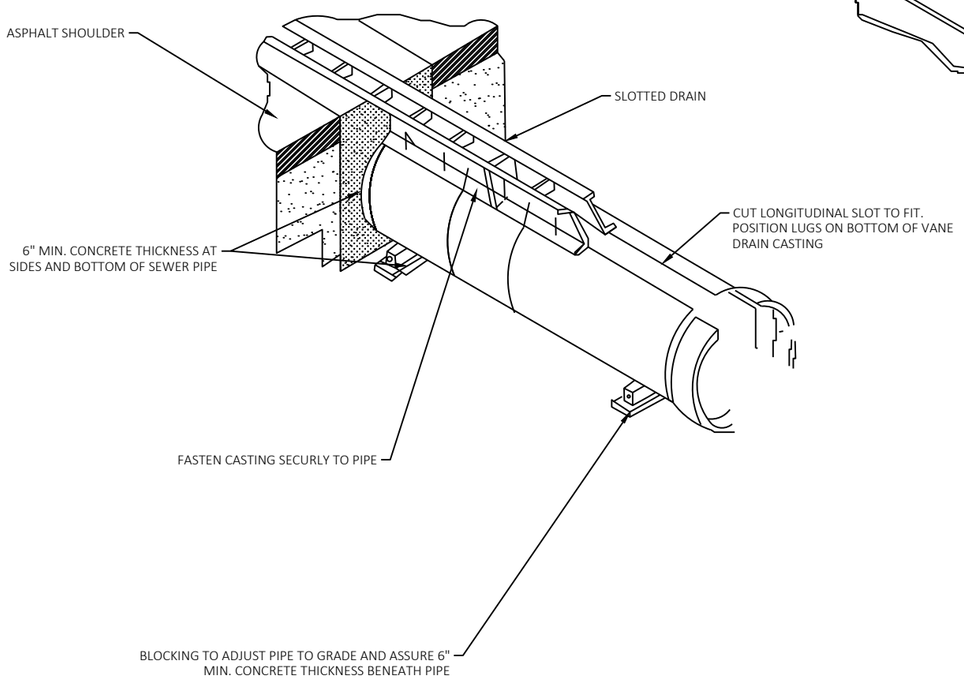

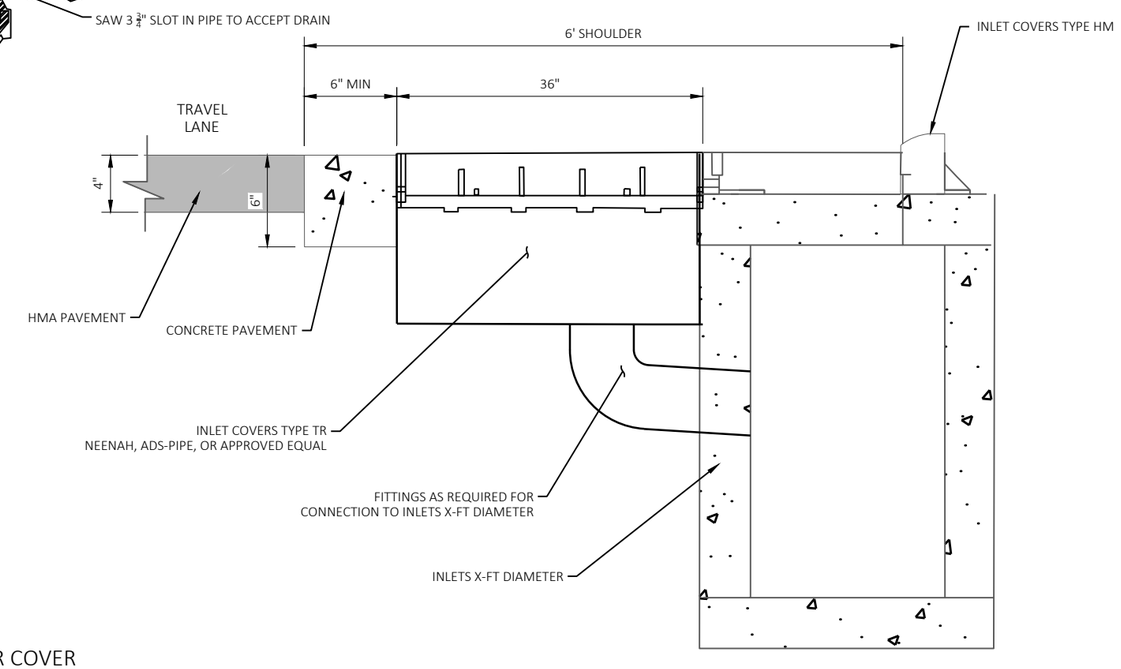

INLET WITH TYPE TR COVER

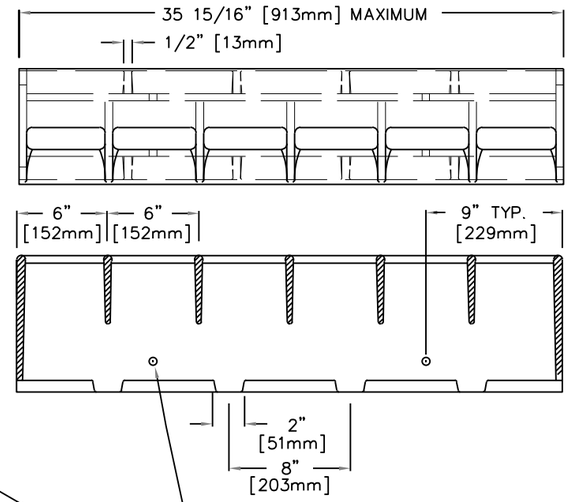

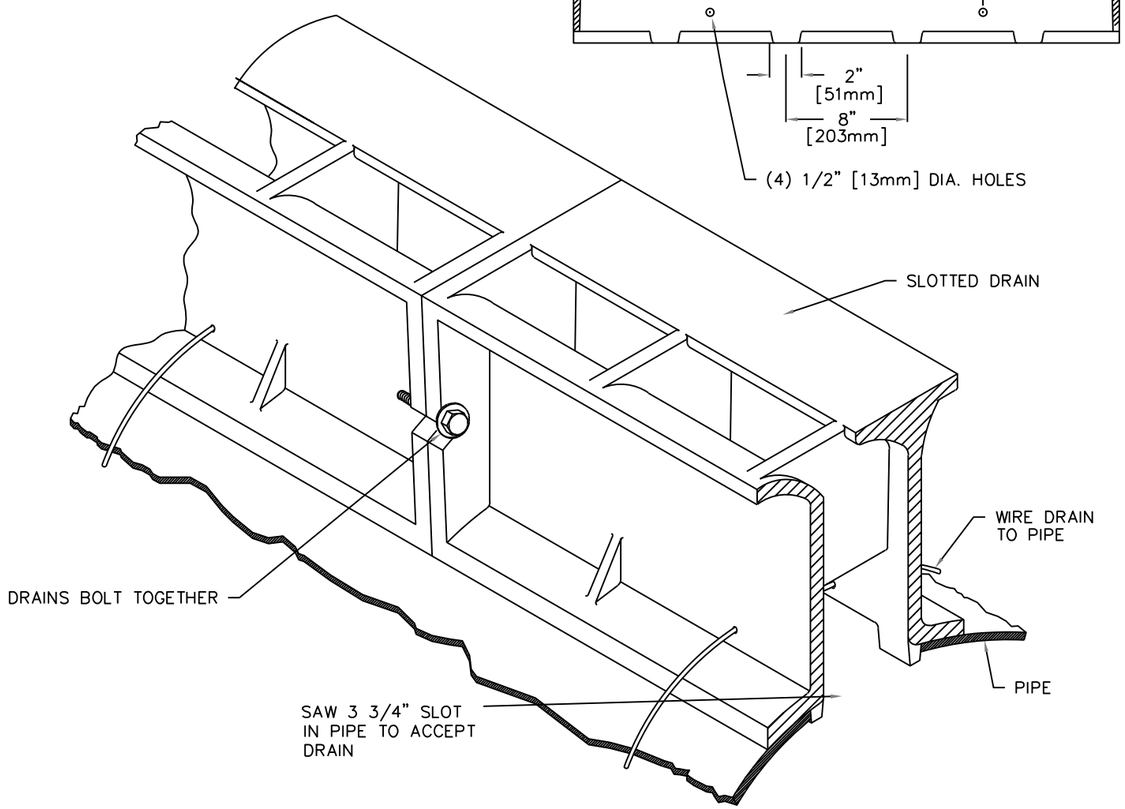

SLOTTED VANE DRAIN
AS PART OF TYPE TR COVER

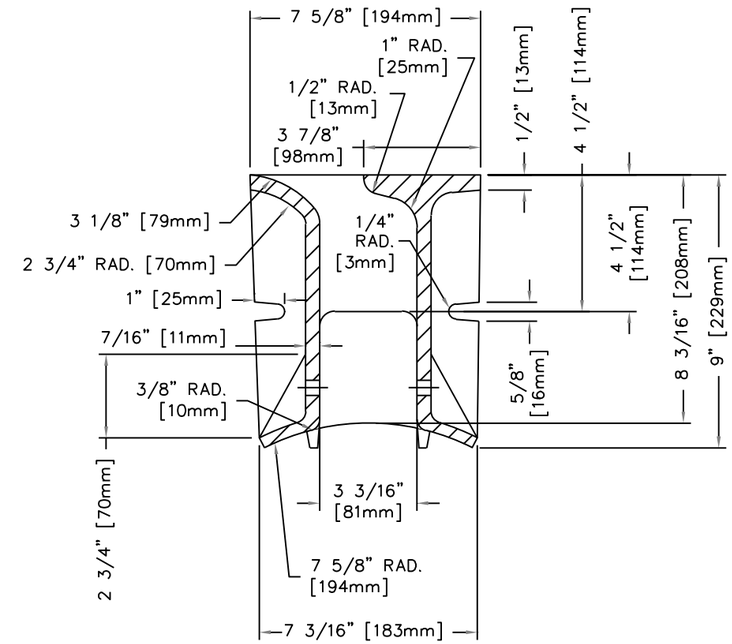

SECTION THRU VANE DRAIN
HALF SCALE

2

NOTE:
ROCK BAGS ARE INCLUDED TO PROVIDE SILT FENCE RELIEF AREAS ON LONG STRETCHES OF SILT FENCE WITH STEEPER CROSS SLOPES. THIS IS DONE TO LIMIT THE POTENTIAL GULLIES FORMING FROM WATER CHANNELIZING AT AND FLOWING PARALLEL TO THE SILT FENCE.

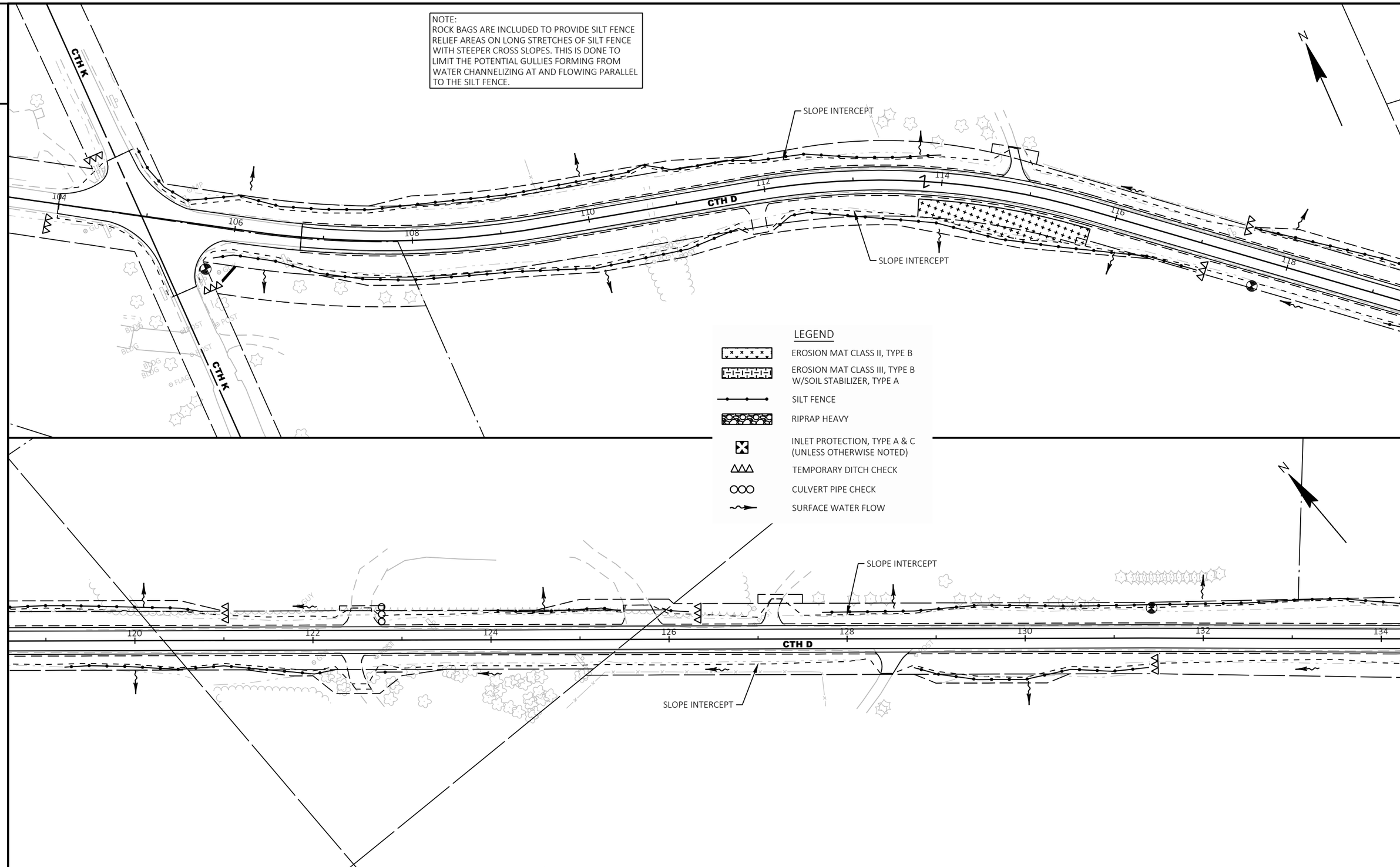

LEGEND

- EROSION MAT CLASS II, TYPE B
- EROSION MAT CLASS III, TYPE B W/SOIL STABILIZER, TYPE A
- SILT FENCE
- RIPRAP HEAVY
- INLET PROTECTION, TYPE A & C (UNLESS OTHERWISE NOTED)
- TEMPORARY DITCH CHECK
- CULVERT PIPE CHECK
- SURFACE WATER FLOW

2

PROJECT NO: 7881-05-73	HWY: CTH D	COUNTY: DUNN	EROSION CONTROL	SHEET 10	E

FILE NAME : I:\41\410859 DUNN CTH D\C3D\SHEETSPLAN\022001-EC.DWG
LAYOUT NAME - 022001-ec
PLOT DATE : 4/22/2024 12:51 PM
PLOT BY : RESHESKE, CARRIE
PLOT NAME :
PLOT SCALE : 1 IN:100 FT
WISDOT/CADDS SHEET 44

2

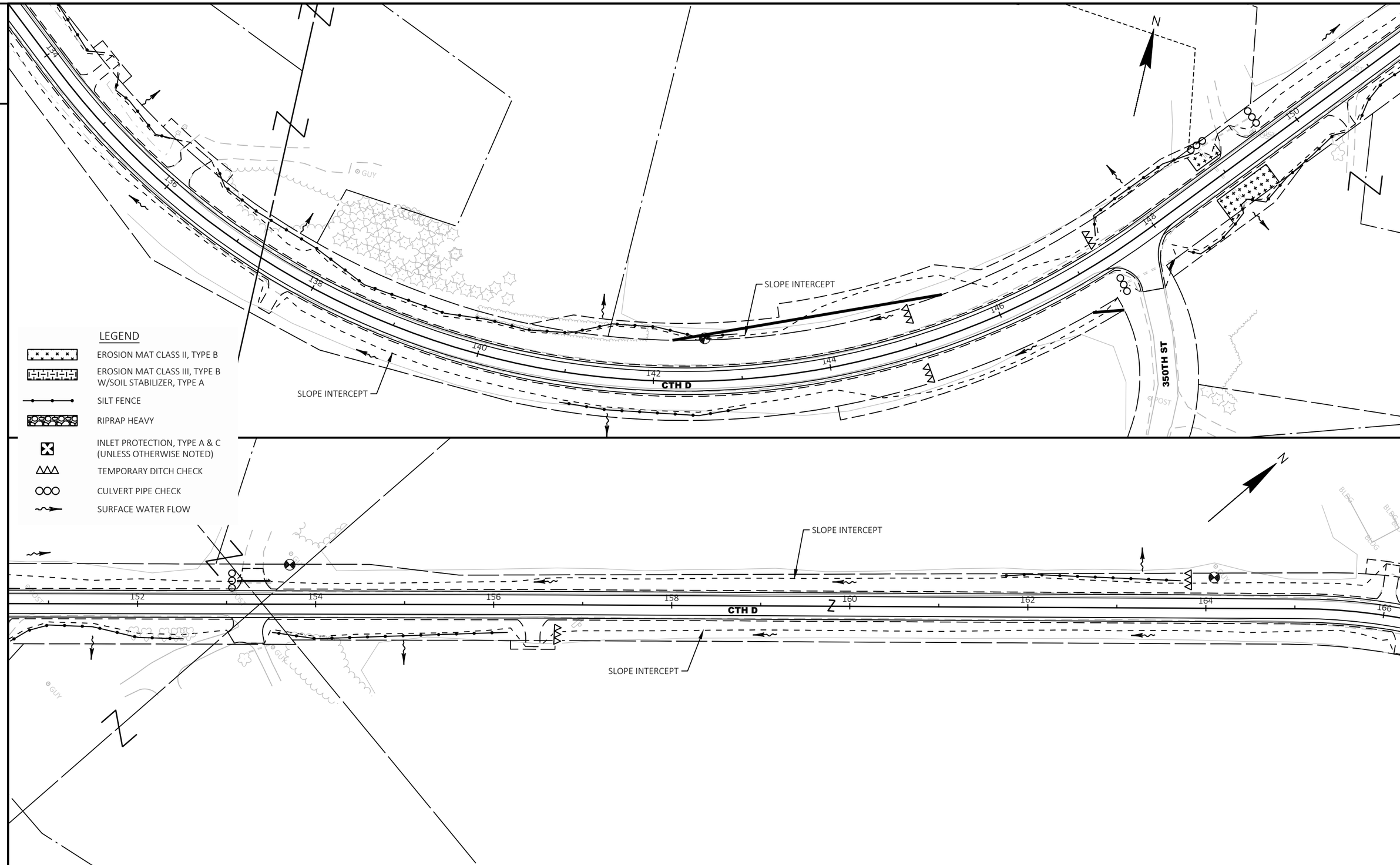

2

PROJECT NO: 7881-05-73	HWY: CTH D	COUNTY: DUNN	EROSION CONTROL	SHEET 11	E

FILE NAME : I:\41\410859 DUNN CTH D\C3D\SHEETSPLAN\022001-EC.DWG
LAYOUT NAME - 022002-ec
PLOT DATE : 4/22/2024 12:51 PM
PLOT BY : RESHESKE, CARRIE
PLOT NAME :
PLOT SCALE : 1 IN:100 FT
WISDOT/CADDS SHEET 44

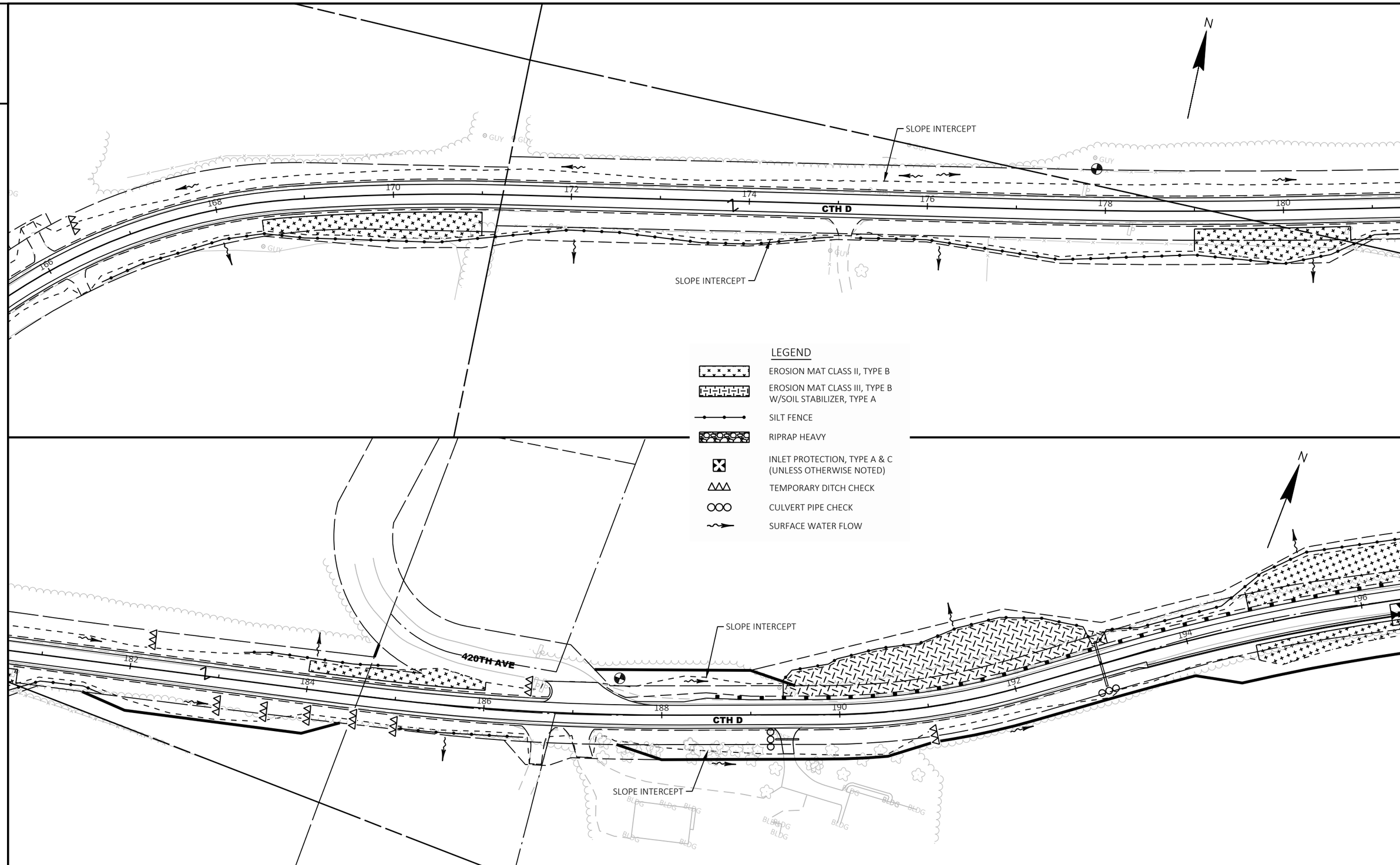

PROJECT NO: 7881-05-73	HWY: CTH D	COUNTY: DUNN	EROSION CONTROL	SHEET 12	E

FILE NAME : I:\41\410859 DUNN CTH D\C3D\SHEETSPLAN\022001-EC.DWG
LAYOUT NAME - 022003-ec
PLOT DATE : 4/22/2024 12:51 PM
PLOT BY : RESHESKE, CARRIE
PLOT NAME :
PLOT SCALE : 1 IN:100 FT

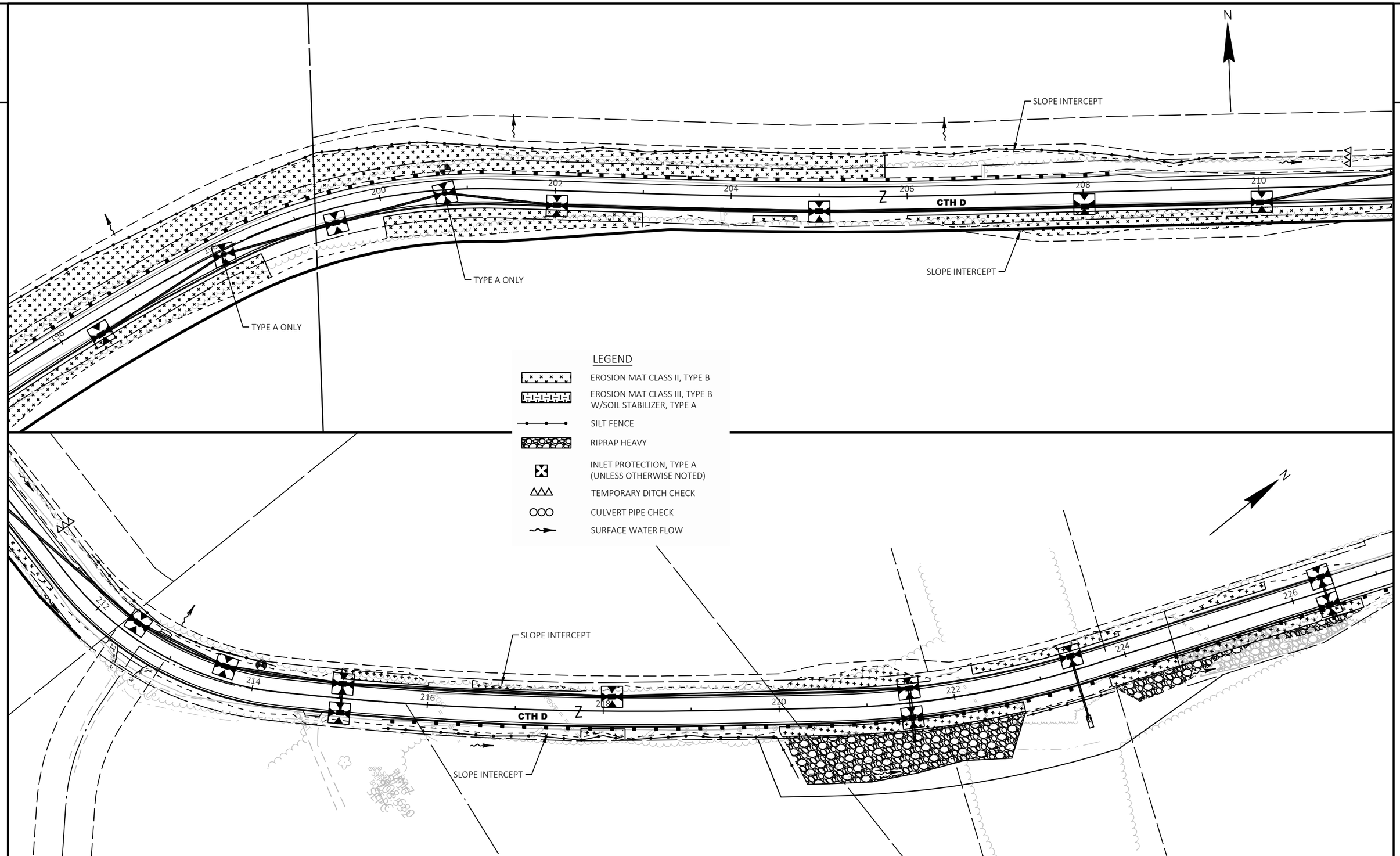

PROJECT NO: 7881-05-73	HWY: CTH D	COUNTY: DUNN	EROSION CONTROL	SHEET 13	E

FILE NAME : I:\41\410859 DUNN CTH D\C3D\SHEETSPLAN\022001-EC.DWG
LAYOUT NAME - 022004-ec
PLOT DATE : 5/16/2024 3:42 PM
PLOT BY : RESHESKE, CARRIE
PLOT NAME :
PLOT SCALE : 1 IN:100 FT
WISDOT/CADDS SHEET 44

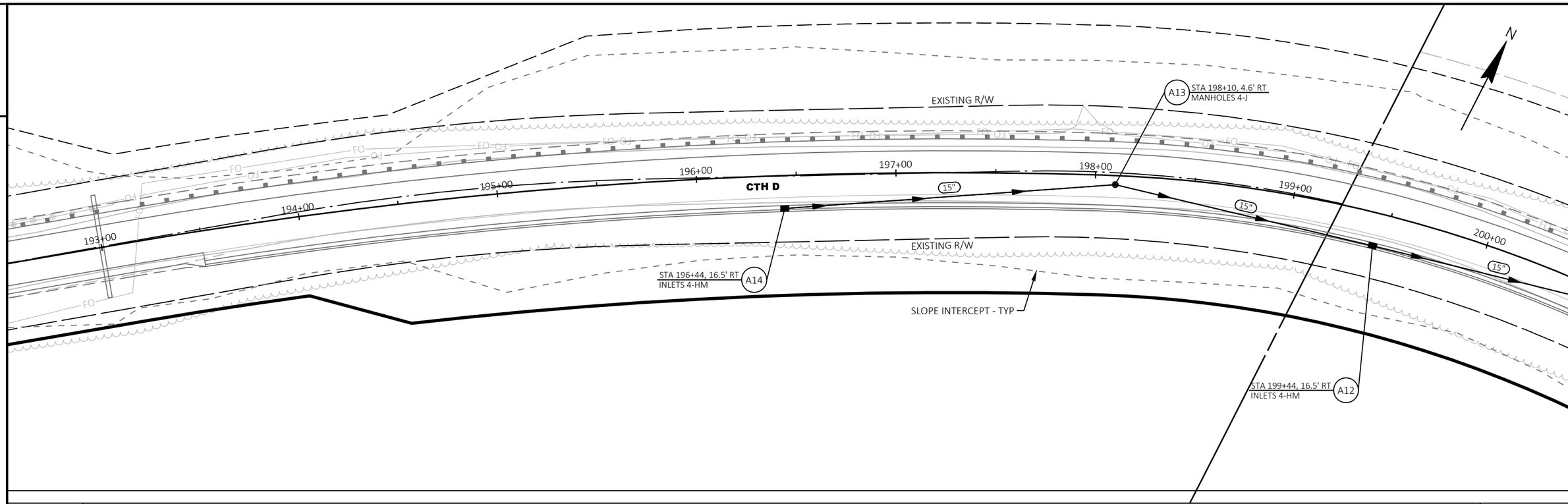

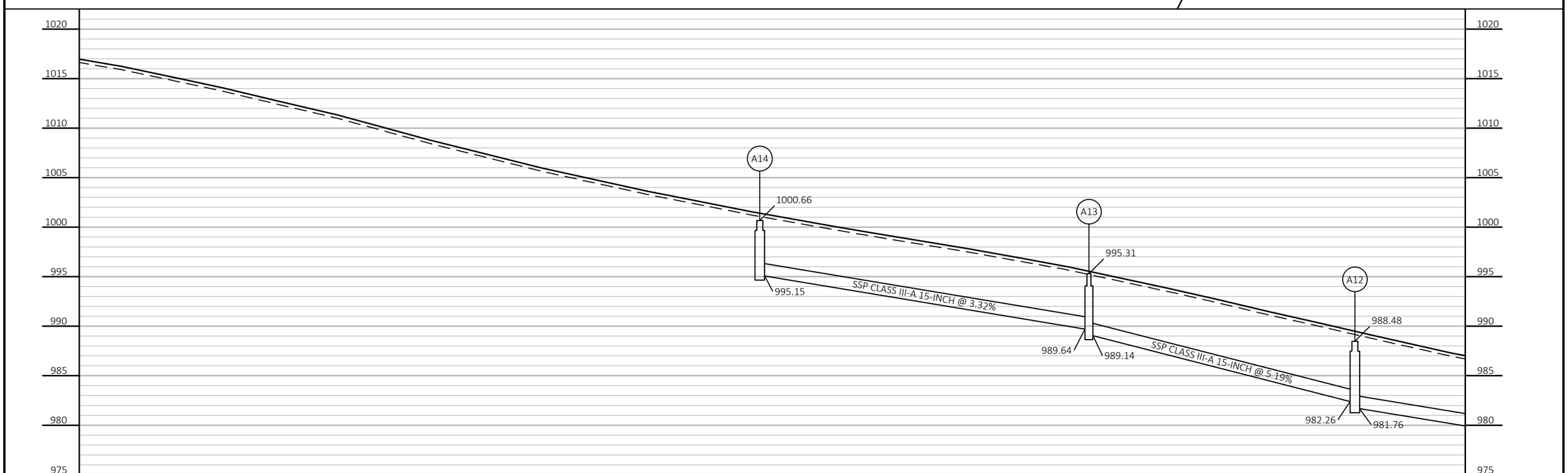

PROJECT NO: 7881-05-73	HWY: CTH D	COUNTY: DUNN	STORM SEWER	SHEET 14	E

FILE NAME : I:\41\410859 DUNN CTH D\C3D\SHEETSPLAN\022501-SS.DWG
LAYOUT NAME - 022501-ss
PLOT DATE : 5/16/2024 1:11 PM
PLOT BY : AYRES
PLOT NAME :
PLOT SCALE : 1 IN:50 FT

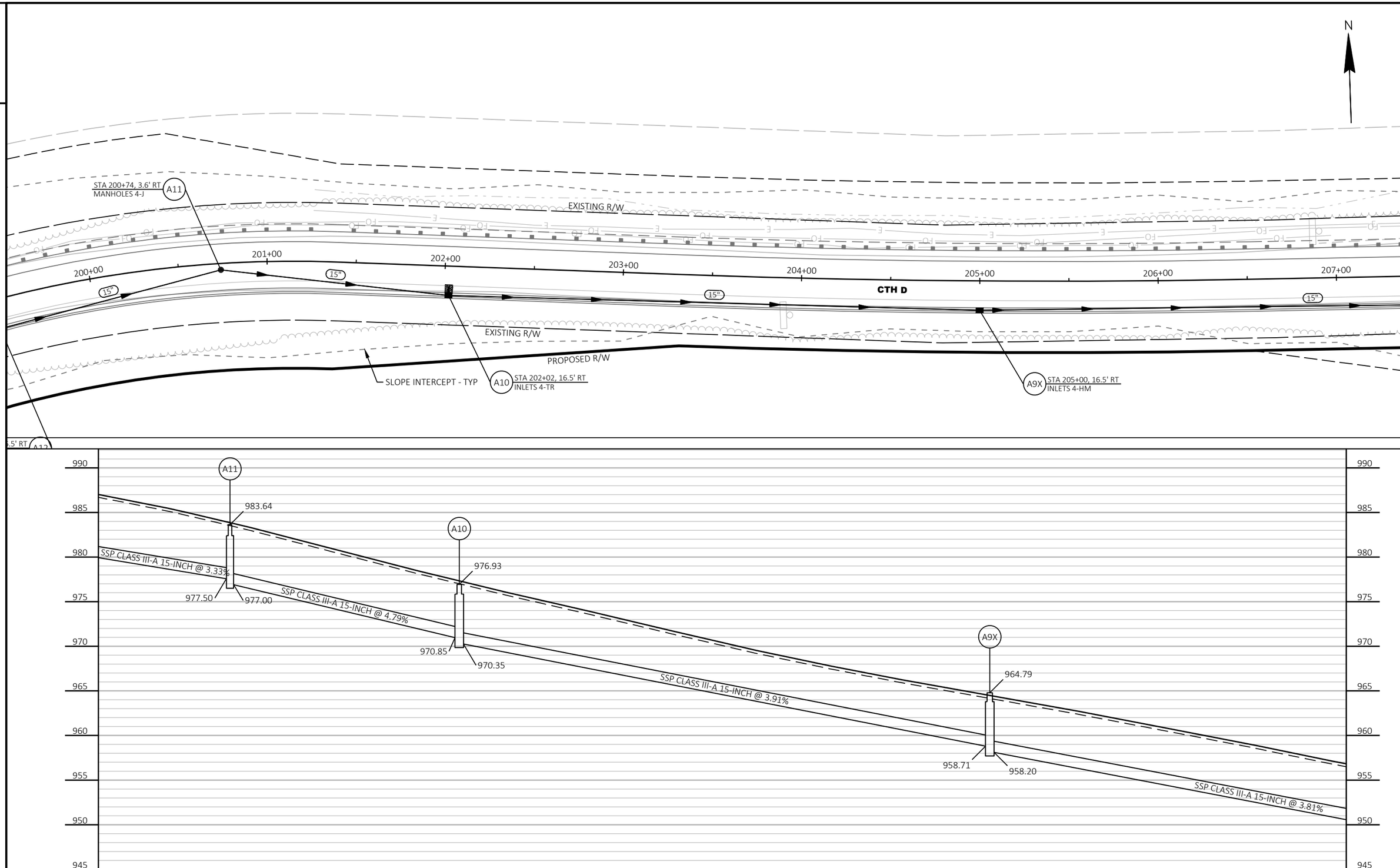
N
STA 200+74, 3.6' RT
MANHOLES 4-J
A11
EXISTING R/W
200+00
201+00
202+00
203+00
204+00
205+00
206+00
207+00
15"
CTH D
EXISTING R/W
PROPOSED R/W
SLOPE INTERCEPT - TYP
A10
STA 202+02, 16.5' RT
INLETS 4-TR
A9X
STA 205+00, 16.5' RT
INLETS 4-HM
990
985
980
975
970
965
960
955
950
945
983.64
976.93
964.79
SSP CLASS III-A 15-INCH @ 3.33%
977.50
977.00
SSP CLASS III-A 15-INCH @ 4.79%
970.85
970.35
SSP CLASS III-A 15-INCH @ 3.91%
958.71
958.20
SSP CLASS III-A 15-INCH @ 3.81%

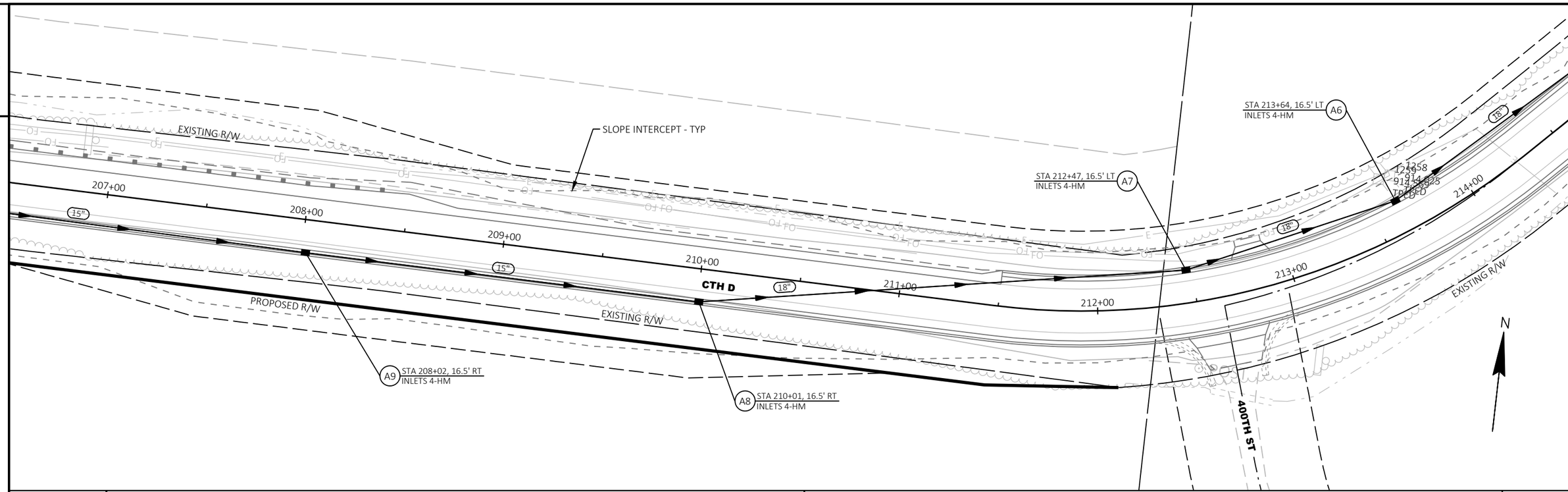

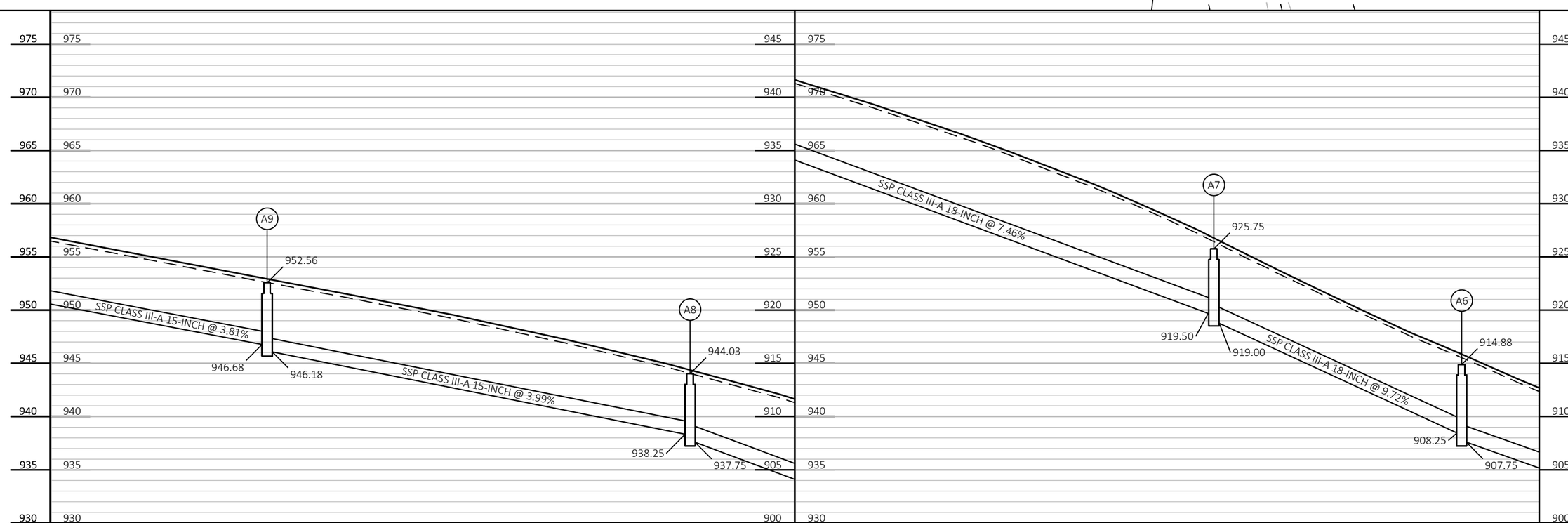

PROJECT NO: 7881-05-73	HWY: CTH D	COUNTY: DUNN	STORM SEWER	SHEET 16	E

FILE NAME : I:\41\410859 DUNN CTH D\C3D\SHEETSPLAN\022501-SS.DWG
LAYOUT NAME - 022503-ss
PLOT DATE : 5/16/2024 1:11 PM PLOT BY : AYRES PLOT NAME : PLOT SCALE : 1 IN:50 FT
WISDOT/CADDS SHEET 41

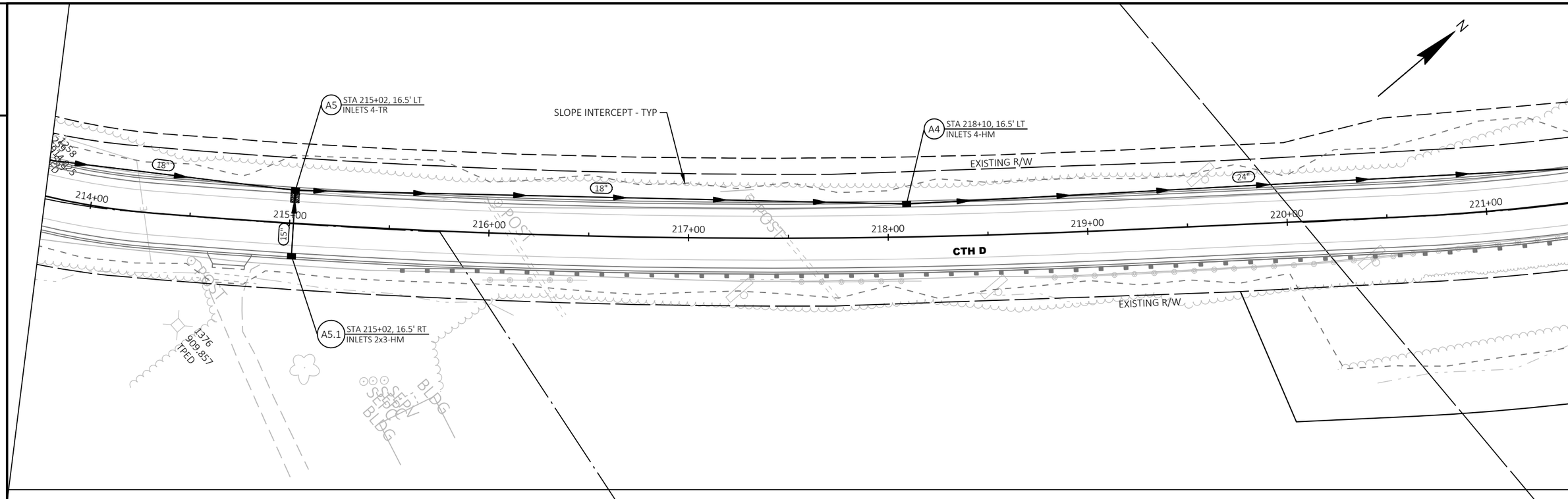

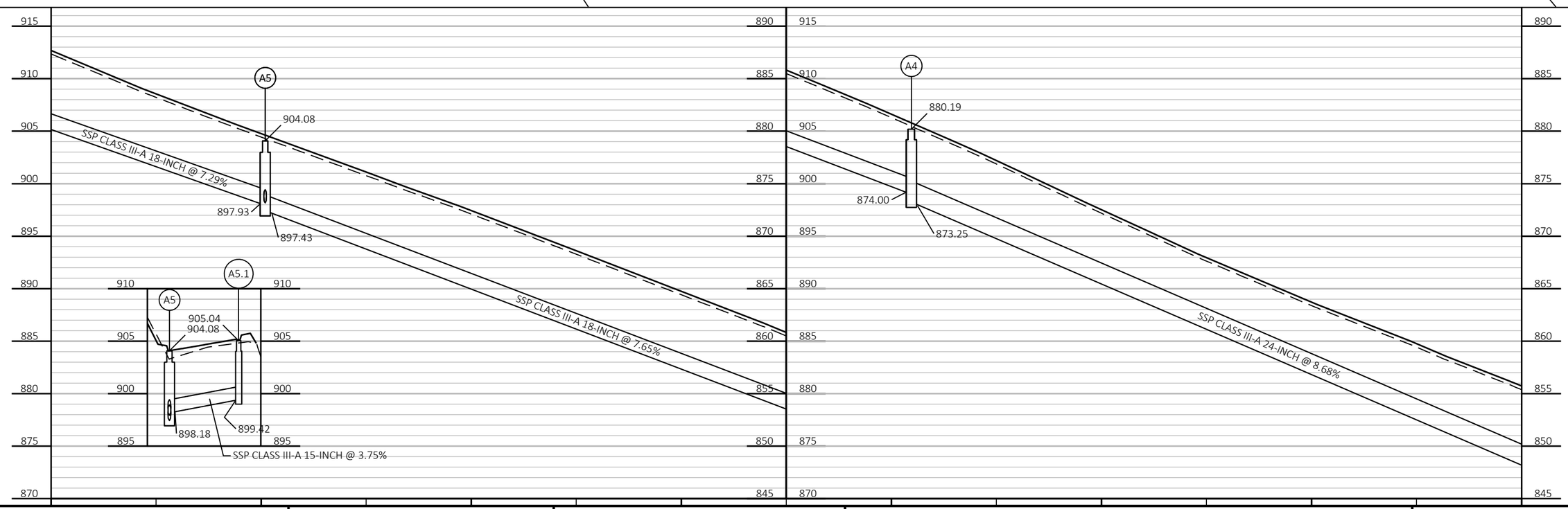

PROJECT NO: 7881-05-73	HWY: CTH D	COUNTY: DUNN	STORM SEWER	SHEET 17	E

FILE NAME : I:\41\410859 DUNN CTH D\C3D\SHEETSPLAN\022501-SS.DWG
LAYOUT NAME - 022504-ss
PLOT DATE : 5/16/2024 1:12 PM
PLOT BY : AYRES
PLOT NAME :
PLOT SCALE : 1 IN:50 FT

2

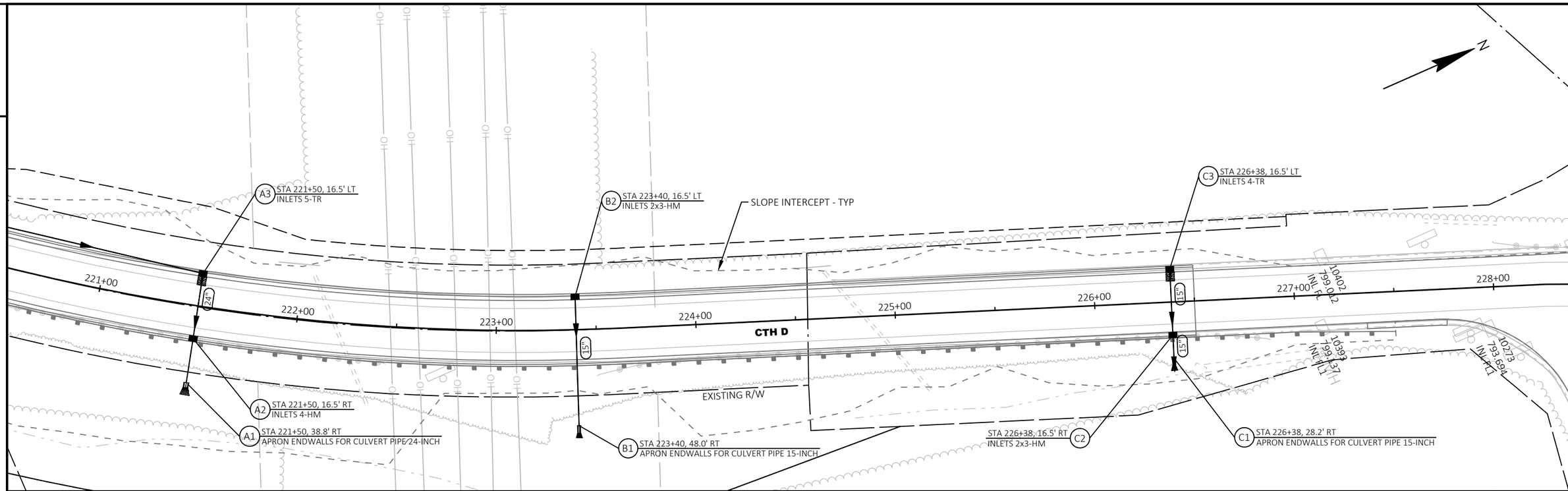

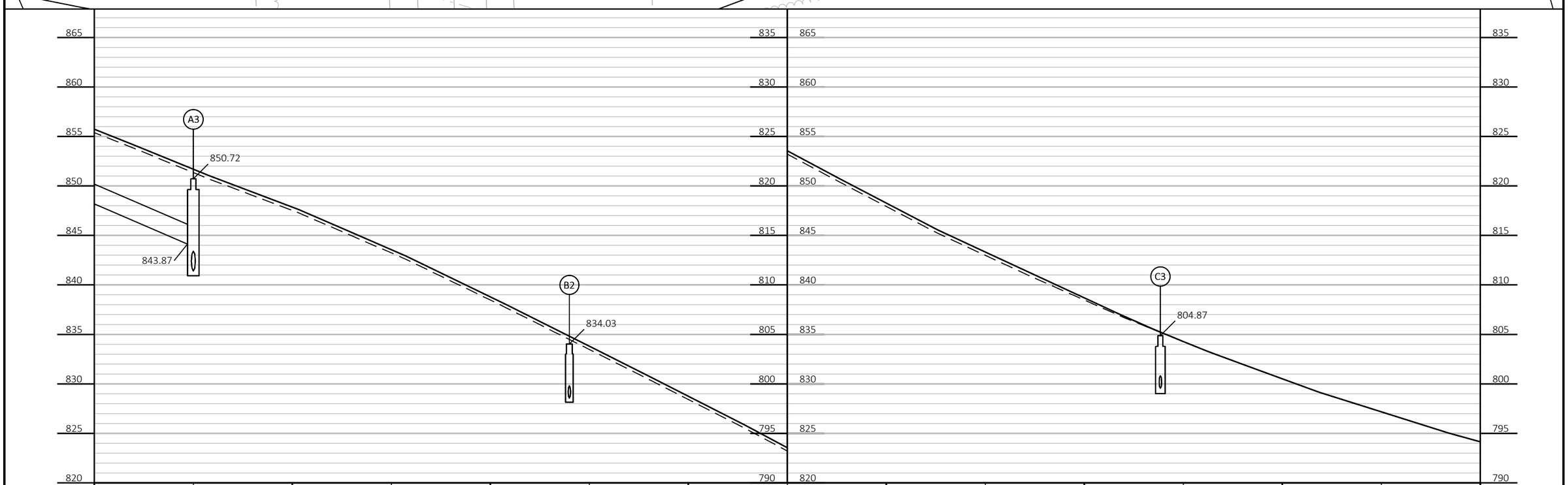

PROJECT NO: 7881-05-73	HWY: CTH D	COUNTY: DUNN	STORM SEWER	SHEET 18	E

FILE NAME : I:\41\410859 DUNN CTH D\C3D\SHEETSPLAN\022501-SS.DWG
LAYOUT NAME - 022505-ss
PLOT DATE : 5/16/2024 1:12 PM PLOT BY : AYRES PLOT NAME : PLOT SCALE : 1 IN:50 FT
WISDOT/CADDS SHEET 41

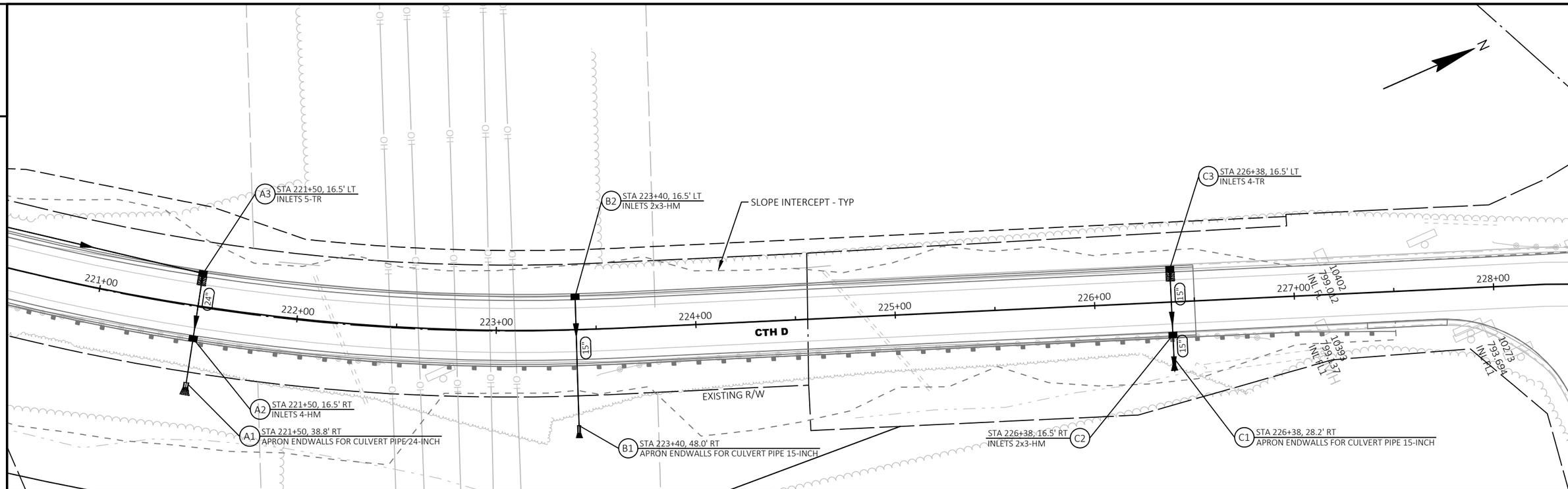

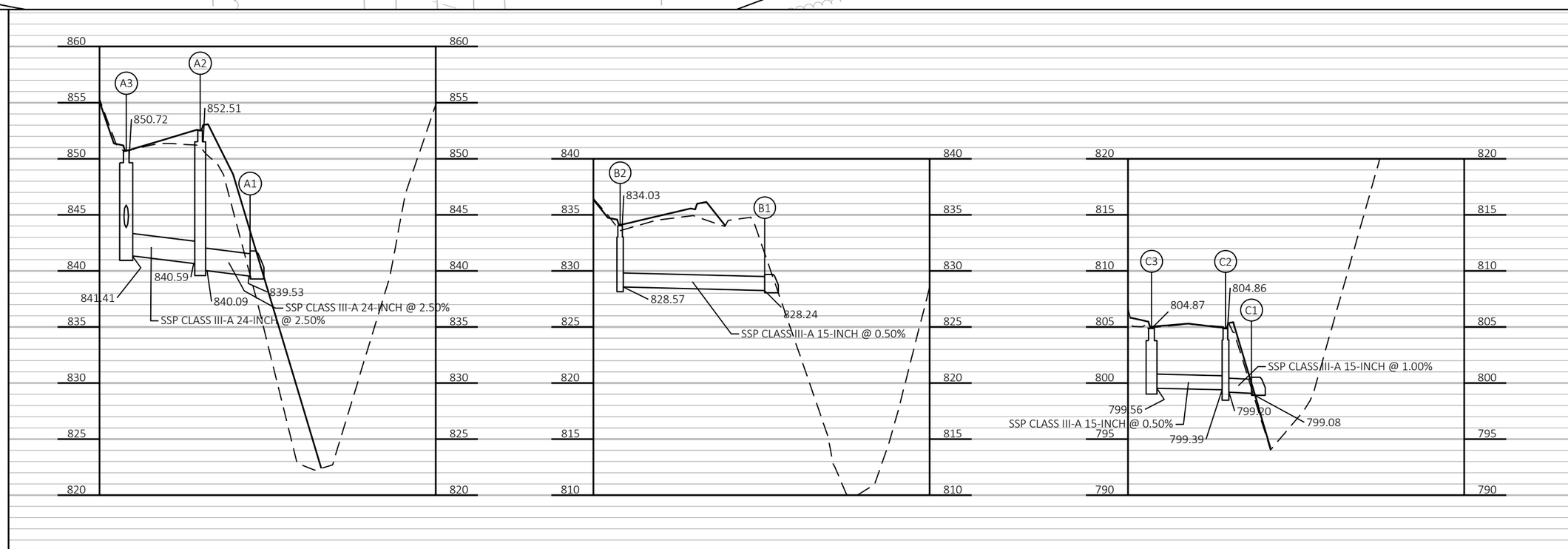

PROJECT NO: 7881-05-73	HWY: CTH D	COUNTY: DUNN	STORM SEWER	SHEET 19	E

FILE NAME : I:\41\410859 DUNN CTH D\C3D\SHEETSPLAN\022501-SS.DWG
LAYOUT NAME - 022506-ss
PLOT DATE : 5/16/2024 1:12 PM PLOT BY : AYRES PLOT NAME : PLOT SCALE : 1 IN:50 FT

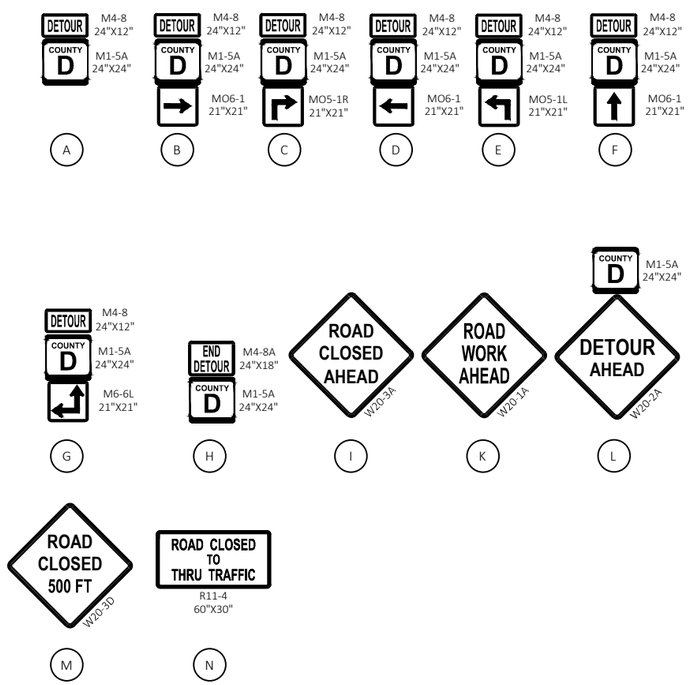

NOTE:
DETOUR ROUTE SIGNS TO BE INSTALLED AND MAINTAINED BY DUNN COUNTY HIGHWAY DEPARTMENT.TRAFFIC CONTROL SIGNS NEEDED WITHIN THE WORK ZONE ARE INSTALLED AND MAINTAINED BY THE CONTRACTOR. THESE ITEMS ARE INCLUDED IN THE MISCELLANEOUS QUANTITIES.

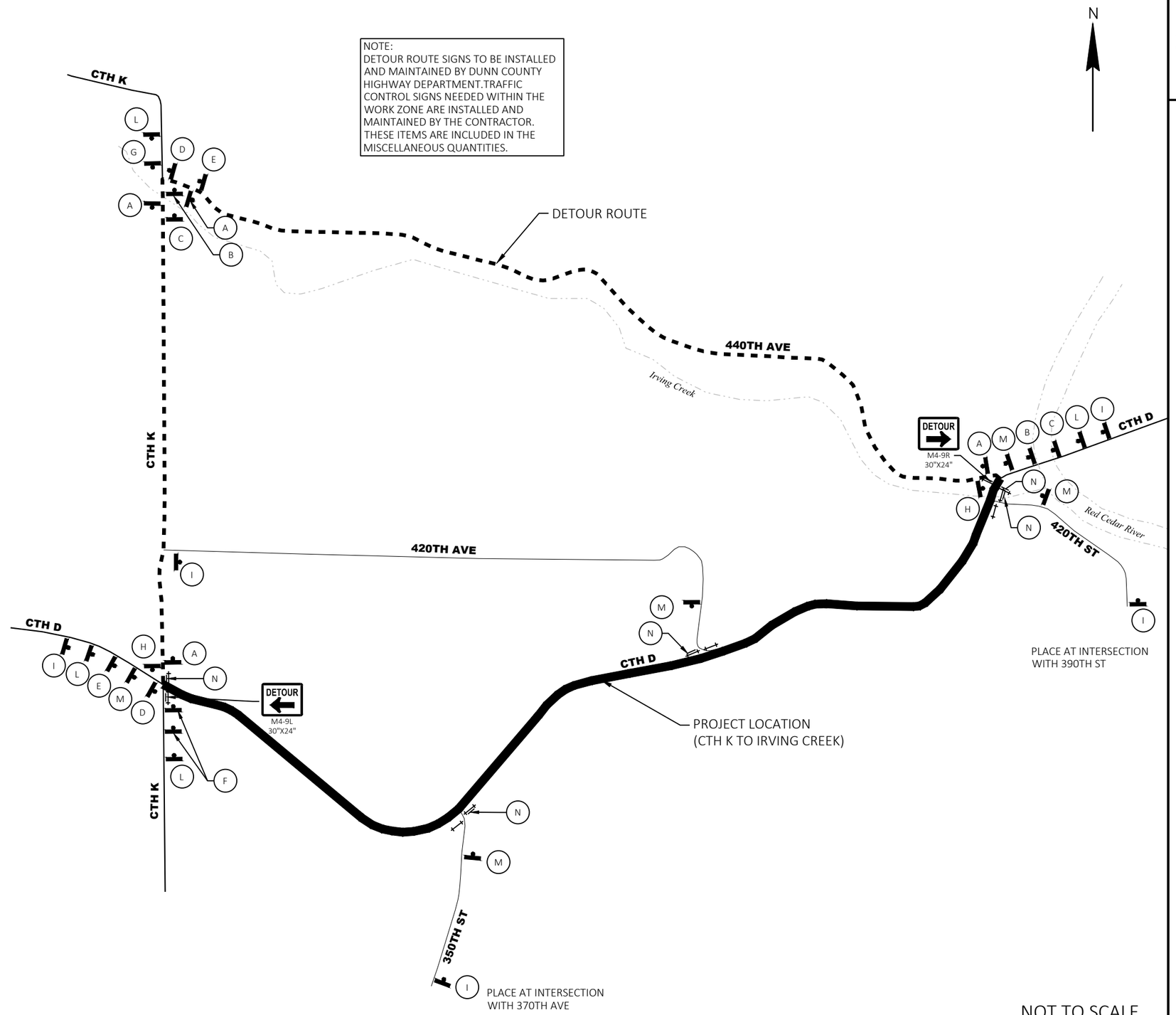

DETOUR NOTES:

THE EXACT NUMBER, LOCATION, AND SPACING OF ALL SIGNS AND DEVICES SHALL BE ADJUSTED TO FIT FIELD CONDITIONS AS APPROVED BY THE ENGINEER.

IF THERE ARE EXISTING ROUTE MARKER ASSEMBLIES THAT WILL REMAIN IN PLACE, ADJUST THE LOCATION OF THE DETOUR ROUTE SIGNS TO CORRESPOND WITH THE EXISTING ASSEMBLIES.

ANY SIGNS TEMPORARY OR EXISTING, WHICH CONFLICT WITH TRAFFIC CONTROL "IN USE" SHALL BE COVERED OR REMOVED AS NEEDED AND AS APPROVED BY THE ENGINEER. THERE IS AN UNDISTRIBUTED AMOUNT IN THE QUANTITIES FOR THESE SIGNS.

ALL SIGNS SHALL BE 48"X48" UNLESS NOTED BY THE ENGINEER.

"WO" SIGNS ARE THE SAME AS "W" SIGNS EXCEPT THE BACKGROUND SHALL BE ORANGE.

FOR DETAILS NOT SHOWN SEE SDD "DETOUR SIGNING FOR MAINLINE CLOSURES", AND "BARRICADES AND SIGNS FOR SIDEROAD CLOSURES" FOR ADDITIONAL INFORMATION.

NOT TO SCALE

PROJECT NO: 7881-05-73	HWY: CTH D	COUNTY: DUNN	DETOUR ROUTE	SHEET 20	E

Estimate Of Quantities

7881-05-73

Line	Item	Item Description	Unit	Total	Qty
0002	201.0105	Clearing	STA	46.000	46.000
0004	201.0205	Grubbing	STA	46.000	46.000
0006	203.0100	Removing Small Pipe Culverts	EACH	5.000	5.000
0008	203.0220	Removing Structure (structure) 01. STA 110+70	EACH	1.000	1.000
0010	204.0110	Removing Asphaltic Surface	SY	288.000	288.000
0012	204.0115	Removing Asphaltic Surface Butt Joints	SY	484.000	484.000
0014	204.0120	Removing Asphaltic Surface Milling	SY	2,453.000	2,453.000
0016	204.0150	Removing Curb & Gutter	LF	301.000	301.000
0018	204.0165	Removing Guardrail	LF	1,114.000	1,114.000
0020	204.0170	Removing Fence	LF	1,012.000	1,012.000
0022	205.0100	Excavation Common	CY	7,594.000	7,594.000
0024	205.0200	Excavation Rock	CY	235.000	235.000
0026	208.0100	Borrow	CY	10,289.000	10,289.000
0028	213.0100	Finishing Roadway (project) 01. 7881-05-73	EACH	1.000	1.000
0030	305.0110	Base Aggregate Dense 3/4-Inch	TON	1,719.000	1,719.000
0032	305.0120	Base Aggregate Dense 1 1/4-Inch	TON	5,850.000	5,850.000
0034	325.0100	Pulverize and Relay	SY	29,236.000	29,236.000
0036	455.0605	Tack Coat	GAL	5,050.000	5,050.000
0038	460.6223	HMA Pavement 3 MT 58-28 S	TON	5,171.000	5,171.000
0040	460.6244	HMA Pavement 4 MT 58-34 S	TON	4,243.000	4,243.000
0042	465.0120	Asphaltic Surface Driveways and Field Entrances	TON	33.000	33.000
0044	465.0560	Asphaltic Rumble Strips, Centerline	LF	11,125.000	11,125.000
0046	520.1015	Apron Endwalls for Culvert Pipe 15-Inch	EACH	4.000	4.000
0048	520.1018	Apron Endwalls for Culvert Pipe 18-Inch	EACH	2.000	2.000
0050	520.1024	Apron Endwalls for Culvert Pipe 24-Inch	EACH	3.000	3.000
0052	520.3315	Culvert Pipe Class III-A 15-Inch	LF	38.000	38.000
0054	520.3318	Culvert Pipe Class III-A 18-Inch	LF	36.000	36.000
0056	520.3324	Culvert Pipe Class III-A 24-Inch	LF	54.000	54.000
0058	601.0557	Concrete Curb & Gutter 6-Inch Sloped 36-Inch Type D	LF	4,815.000	4,815.000
0060	602.0810	Concrete Driveway 6-Inch	SY	42.000	42.000
0062	606.0300	Riprap Heavy	CY	1,475.000	1,475.000
0064	608.0005	Storm Sewer Rock Excavation	CY	870.000	870.000
0066	608.3015	Storm Sewer Pipe Class III-A 15-Inch	LF	1,498.000	1,498.000
0068	608.3018	Storm Sewer Pipe Class III-A 18-Inch	LF	798.000	798.000
0070	608.3024	Storm Sewer Pipe Class III-A 24-Inch	LF	395.000	395.000
0072	611.0530	Manhole Covers Type J	EACH	2.000	2.000
0074	611.0627	Inlet Covers Type HM	EACH	16.000	16.000
0076	611.2004	Manholes 4-FT Diameter	EACH	2.000	2.000
0078	611.3004	Inlets 4-FT Diameter	EACH	12.000	12.000
0080	611.3230	Inlets 2x3-FT	EACH	3.000	3.000
0082	614.2300	MGS Guardrail 3	LF	1,300.000	1,300.000
0084	614.2330	MGS Guardrail 3 K	LF	1,700.000	1,700.000
0086	614.2610	MGS Guardrail Terminal EAT	EACH	4.000	4.000
0088	618.0100	Maintenance and Repair of Haul Roads (project) 01. 7881-05-73	EACH	1.000	1.000
0090	619.1000	Mobilization	EACH	1.000	1.000
0092	624.0100	Water	MGAL	240.000	240.000
0094	625.0500	Salvaged Topsoil	SY	46,030.000	46,030.000
0096	627.0200	Mulching	SY	40,560.000	40,560.000
0098	628.1504	Silt Fence	LF	13,240.000	13,240.000

Estimate Of Quantities

7881-05-73

Line	Item	Item Description	Unit	Total	Qty
0100	628.1520	Silt Fence Maintenance	LF	13,240.000	13,240.000
0102	628.1905	Mobilizations Erosion Control	EACH	6.000	6.000
0104	628.1910	Mobilizations Emergency Erosion Control	EACH	4.000	4.000
0106	628.2023	Erosion Mat Class II Type B	SY	13,295.000	13,295.000
0108	628.2033	Erosion Mat Class III Type B	SY	2,210.000	2,210.000
0110	628.6505	Soil Stabilizer Type A	ACRE	0.450	0.450
0112	628.7005	Inlet Protection Type A	EACH	22.000	22.000
0114	628.7015	Inlet Protection Type C	EACH	20.000	20.000
0116	628.7504	Temporary Ditch Checks	LF	390.000	390.000
0118	628.7555	Culvert Pipe Checks	EACH	16.000	16.000
0120	628.7570	Rock Bags	EACH	30.000	30.000
0122	629.0210	Fertilizer Type B	CWT	35.000	35.000
0124	630.0120	Seeding Mixture No. 20	LB	1,495.000	1,495.000
0126	630.0200	Seeding Temporary	LB	765.000	765.000
0128	630.0500	Seed Water	MGAL	1,295.000	1,295.000
0130	633.5200	Markers Culvert End	EACH	10.000	10.000
0132	634.0614	Posts Wood 4x6-Inch X 14-FT	EACH	8.000	8.000
0134	634.0616	Posts Wood 4x6-Inch X 16-FT	EACH	30.000	30.000
0136	637.2210	Signs Type II Reflective H	SF	102.720	102.720
0138	637.2230	Signs Type II Reflective F	SF	182.500	182.500
0140	638.2602	Removing Signs Type II	EACH	36.000	36.000
0142	638.3000	Removing Small Sign Supports	EACH	36.000	36.000
0144	642.5001	Field Office Type B	EACH	1.000	1.000
0146	643.0420	Traffic Control Barricades Type III	DAY	250.000	250.000
0148	643.0705	Traffic Control Warning Lights Type A	DAY	300.000	300.000
0150	643.0900	Traffic Control Signs	DAY	50.000	50.000
0152	643.3165	Temporary Marking Line Paint 6-Inch	LF	48.000	48.000
0154	645.0120	Geotextile Type HR	SY	2,460.000	2,460.000
0156	646.2020	Marking Line Epoxy 6-Inch	LF	46,047.000	46,047.000
0158	650.4000	Construction Staking Storm Sewer	EACH	21.000	21.000
0160	650.5500	Construction Staking Curb Gutter and Curb & Gutter	LF	4,815.000	4,815.000
0162	650.8000	Construction Staking Resurfacing Reference	LF	12,477.000	12,477.000
0164	650.9911	Construction Staking Supplemental Control (project) 01. 7881-05-73	EACH	1.000	1.000
0166	650.9920	Construction Staking Slope Stakes	LF	11,975.000	11,975.000
0168	690.0150	Sawing Asphalt	LF	156.000	156.000
0170	690.0250	Sawing Concrete	LF	12.000	12.000
0172	740.0440	Incentive IRI Ride	DOL	4,726.000	4,726.000
0174	ASP.1T0A	On-the-Job Training Apprentice at $5.00/HR	HRS	800.000	800.000
0176	ASP.1T0G	On-the-Job Training Graduate at $5.00/HR	HRS	600.000	600.000
0178	SPV.0060	Special 01. Inlet Covers Type TR	EACH	4.000	4.000
0180	SPV.0060	Special 02. Inlets 5-FT Diameter	EACH	1.000	1.000

3

CLEARING & GRUBBING

STATION	TO	STATION	LOCATION	201.0105 CLEARING STA	201.0205 GRUBBING STA
110+00	-	111+00	CTH D	1	1
119+00	-	121+00	CTH D	2	2
126+00	-	127+00	CTH D	1	1
136+00	-	138+00	CTH D	2	2
140+00	-	142+00	CTH D	2	2
151+00	-	153+00	CTH D	2	2
170+00	-	172+00	CTH D	2	2
181+00	-	184+00	CTH D	3	3
188+00	-	213+00	CTH D	25	25
214+00	-	222+00	CTH D	5	5
223+00	-	224+00	CTH D	1	1
			TOTAL 0010	46	46

REMOVING SMALL PIPE CULVERTS

STATION	LOCATION	203.0100 REMOVING SMALL PIPE CULVERTS EACH	SIZE\TYPE
153+29	CTH D	1	39'x12" CMCP
216+10	CTH D	1	70'x24" CMCP
217+49	CTH D	1	70'x24" CMCP
222+18	CTH D	1	70'x18" CMCP
224+85	CTH D	1	80'x18" CMCP
	TOTAL 0010	5	

REMOVING FENCE

STATION	TO	STATION	LOCATION	204.0170 REMOVING FENCE LF
109+47	-	109+89	LT	42
118+00	-	120+00	LT	200
171+14	-	174+93	RT	379
176+69	-	180+60	RT	391
			TOTAL 0010	1,012

REMOVING ASPHALTIC SURFACE

STATION	LOCATION	204.0110 REMOVING ASPHALTIC SURFACE SY
114+80	DRWY, LT	62
128+50	DRWY, RT	60
153+23	DRWY, RT	116
189+43	DRWY, RT	50
	TOTAL 0010	288

REMOVING STRUCTURE

STATION	LOCATION	203.0220.01 (STRUCTURE) (01. STA 110+70) EACH	REMARKS
110+70	CTH D	1	53'x72" CMCP CATTLE PASS
	TOTAL 0010	1	

REMOVING ASPHALTIC SURFACE MILLING

STATION	TO	STATION	LOCATION	204.0115 REMOVING ASPHALTIC SURFACE BUTT JOINTS SY	204.0120 REMOVING ASPHALTIC SURFACE MILLING SY
104+00	-	106+90	CTH D	91	1,516
			350TH ST	172	--
			420TH AVE	153	--
226+50	-	228+77	CTH D	68	937
			TOTAL 0010	484	2,453

DIVISION	FROM/TO STATION	205.0100 COMMON EXCAVATION (1) CUT (2)	EBS EXCAVATION (3)	SALVAGED/UNUSABLE PAVEMENT MATERIAL (4)	AVAILABLE MATERIAL (5)	205.0200 ROCK EXCAVATION (7)	EXPANDED ROCK (12) FACTOR 1.10	UNEXPANDED FILL	EXPANDED FILL (13) FACTOR 1.30	MASS ORDINATE +/- (14)	208.0100 BORROW
DIVISION 1											
CTH D	105+75/226+50	7,594	0	0	7,594	235	259	14,015	17,883	-10,289	10,289
DIVISION 1 SUBTOTAL		7,594	0	0	7,594	235	259	14,015	17,883	-10,289	10,289
GRAND TOTAL		7,594	0	0	7,594	235	259	14,015	17,883	-10,289	10,289
	TOTAL COMMON EXC	7,594									

NOTES:
(1) COMMON EXCAVATION IS THE SUM OF THE CUT AND EBS EXCAVATION COLUMNS. ITEM NUMBER 205.0100
(2) SALVAGED/UNSUABLE PAVEMENT MATERIAL IS INCLUDED IN CUT.
(3) EBS EXCAVATION TO BE BACKFILLED WITH SELECT BORROW MATERIAL. NOTE: THIS IS DESIGNERS CHOICE, CAN BE BACKFILLED WITH BORROW, OR CUT AS WELL.
5) AVAILABLE MATERIAL = CUT - SALVAGED/UNUSUABLE PAVEMENT MATERIAL
(7) ROCK EXCAVATION ITEM NUMBER 205.0200
(12) EXPANDED ROCK FACTOR = 1.10
(13) EXPANDED FILL FACTOR = 1.30 EXPANDED FILL = (UNEXPANDED FILL - EXPANDED ROCK) * FILL FACTOR
(14) THE MASS ORDINATE + OR - QTY CALCULATED FOR THE DIVISION. PLUS QUANTITY INDICATES AN EXCESS OF MATERIAL WITHIN THE DIVISION. MINUS INDICATES A SHORTAGE OF MATERIAL WITHIN THE DIVISION.

REMOVING CURB & GUTTER

STATION	TO	STATION	LOCATION	204.0150 REMOVING CURB & GUTTER LF
224+70	-	226+50	CTH D, LT	180
225+69	-	226+50	CTH D, RT	81
227+36	-	227+76	CTH D, RT	40
			TOTAL 0010	301

REMOVING GUARDRAIL

STATION	TO	STATION	LOCATION	204.0165 REMOVING GUARDRAIL LF
190+25	-	193+10	CTH D, LT	278
216+00	-	216+50	CTH D, RT	53
217+50	-	218+15	CTH D, RT	65
218+75	-	222+45	CTH D, RT	378
223+50	-	226+87	CTH D, RT	340
			TOTAL 0010	1,114

3

ALL ITEMS ON THIS SHEET
ARE CATEGORY 0010
UNLESS OTHERWISE NOTED

3

HMA PAVEMENT

STATION	TO	STATION	LOCATION	455.0605 TACK COAT GAL	460.6223 HMA PAVEMENT 3 MT 58-28 S TON	460.6244 HMA PAVEMENT 4 MT 58-34 S TON	465.0120 ASPHALTIC SURFACE DRIVEWAYS AND FIELD ENTRANCES TON
104+00	-	106+90	CTH D	109	23	158	--
106+90	-	226+50	CTH D	4,847	5,083	3,954	--
		114+80	PE, LT	.	--	--	7
		128+50	PE, RT	--	--	--	7
			350TH ST	12	22	17	--
		153+23	PE, RT	--	--	--	13
			420TH AVE	11	20	15	--
		189+43	PE, RT	--	--	--	6
226+50	-	228+77	CTH D	71	23	99	--
			TOTAL 0010	5,050	5,171	4,243	33

ASPHALTIC RUMBLE STRIPS, CENTERLINE

STATION	TO	STATION	LOCATION	465.0560 ASPHALTIC RUMBLE STRIPS, CENTERLINE LF
107+00	-	226+25	CTH D	11,125
			TOTAL 0010	11,125

3

FINISHING ROADWAY

LOCATION	213.0100.01 FINISHING ROADWAY (PROJECT) (01. 7881-05-73) EACH
PROJECT LIMITS	1
TOTAL 0010	1

CULVERT PIPE CLASS III-A

STATION	LOCATION	520.1015 APRON ENDWALLS FOR CULVERT PIPE 15-INCH EACH	520.1018 APRON ENDWALLS FOR CULVERT PIPE 18-INCH EACH	520.1024 APRON ENDWALLS FOR CULVERT PIPE 24-INCH EACH	520.3315 CULVERT PIPE CLASS III-A 15-INCH LF	520.3318 CULVERT PIPE CLASS III-A 18-INCH LF	520.3324 CULVERT PIPE CLASS III-A 24-INCH LF
153+30	PE, LT	2	--	--	38	--	--
189+43	PE, RT	--	2	--	--	36	--
193+00	CTH D	--	--	2	--	--	54
	TOTAL 0010	*4	2	*3	38	36	54

* ADDITIONAL QUANTITIES LOCATED ELSEWHERE

BASE AGGREGATE DENSE

STATION	TO	STATION	LOCATION	305.0110 BASE AGGREGATE DENSE 3/4-INCH TON	305.0120 BASE AGGREGATE DENSE 1 1/4-INCH TON
105+90	-	193+00	RT	597	2,202
105+90	-	188+50	LT	566	2,088
		114+80	DRWY, LT	--	18
		128+50	DRWY, RT	--	19
		153+23	DRWY, RT	--	36
188+50	-	208+50	LT	137	506
		189+43	DRWY, RT	--	16
208+50	-	211+50	LT	21	38
193+00	-	226+50	RT	--	631
211+50	-	226+50	LT	--	283
		212+63	400TH ST	13	7
			GRAVEL DRWY (18)	345	6
UNDISTRIBUTED				40	--
			TOTAL 0010	1,719	5,850

NOTE: UNDISTRIBUTED FOR MILL AND OVERLAY SECTIONS TO RESORE SHOULDERS.

CONCRETE DRIVEWAY 6-INCH

STATION	LOCATION	602.0810 CONCRETE DRIVEWAY 6-INCH SY
212+63	400TH ST	22
212+81	FE, LT	9
214+71	PE, RT	11
	TOTAL 0010	42

CONCRETE CURB & GUTTER 6-INCH SLOPED 36-INCH TYPE D

STATION	TO	STATION	LOCATION	601.0557 CONCRETE CURB & GUTTER 6-INCH SLOPED 36-INCH TYPE D LF	650.5500 CONSTRUCTION STAKING CURB GUTTER AND CURB & GUTTER LF
193+50	-	212+50	CTH D, RT	1,900	1,900
211+50	-	226+50	CTH D, LT	1,500	1,500
212+75	-	226+50	CTH D, RT	1,375	1,375
227+36	-	227+76	CTH D, RT	40	40
			TOTAL 0010	4,815	4,815

PULVERIZE AND RELAY

STATION	TO	STATION	LOCATION	325.0100 PULVERIZE AND RELAY SY
106+90	-	226+50	CTH D	29,236
			TOTAL 0010	29,236

ALL ITEMS ON THIS SHEET
ARE CATEGORY 0010
UNLESS OTHERWISE NOTED

3

STORM SEWER STRUCTURES

STRUCTURE	STATION	(1) OFFSET	LOCATION	520.1015 APRON ENDWALLS FOR CULVERT PIPE 15-INCH EACH	520.1024 APRON ENDWALLS FOR CULVERT PIPE 24-INCH EACH	611.0530 MANHOLE COVERS TYPE J EACH	611.0627 INLET COVERS TYPE HM EACH	SPV.0060.01 INLET COVERS TYPE TR EACH	611.2004 MANHOLES 4-FT DIAMETER EACH	611.3004 INLETS 4-FT DIAMETER EACH	SPV.0060.02 INLETS 5-FT DIAMETER	611.3230 INLETS 2X3-FT EACH	650.4000 CONSTRUCTION STAKING STORM SEWER EACH	(2) RIM ELEVATION	(3) INVERT ELEVATION	(4) DEPTH FT
A1	221+50	38.8' RT	CTH D	-	1	-	-	-	-	-	-	-	1	-	839.53	-
A2	221+50	16.5' RT	CTH D	-	-	-	1	-	-	1	-	-	1	852.51	840.09	11.67
A3	221+50	16.5' LT	CTH D	-	-	-	1	1	-	-	1	-	1	850.72	841.41	8.56
A4	218+10	16.5' LT	CTH D	-	-	-	1	-	-	1	-	-	1	880.19	873.25	6.19
A5	215+02	16.5' LT	CTH D	-	-	-	1	1	-	1	-	-	1	904.08	897.43	5.90
A5.1	215+02	16.5' RT	CTH D	-	-	-	1	-	-	-	-	1	1	905.10	899.42	4.93
A6	213+64	16.5' LT	CTH D	-	-	-	1	-	-	1	-	-	1	914.88	907.75	6.38
A7	212+47	16.5' LT	CTH D	-	-	-	1	-	-	1	-	-	1	925.75	919.00	6.00
A8	210+01	16.5' RT	CTH D	-	-	-	1	-	-	1	-	-	1	944.03	937.75	5.53
A9	208+02	16.5' RT	CTH D	-	-	-	1	-	-	1	-	-	1	952.56	946.18	5.63
A9X	205+00	16.5' RT	CTH D	-	-	-	1	-	-	1	-	-	1	964.79	958.21	5.83
A10	202+02	16.5' RT	CTH D	-	-	-	1	1	-	1	-	-	1	976.93	970.35	5.83
A11	200+74	3.6' RT	CTH D	-	-	1	-	-	1	-	-	-	1	983.64	977.00	5.89
A12	199+44	16.5' RT	CTH D	-	-	-	1	-	-	1	-	-	1	988.48	981.76	5.97
A13	198+10	4.6' RT	CTH D	-	-	1	-	-	1	-	-	-	1	995.31	989.14	5.42
A14	196+44	16.5' RT	CTH D	-	-	-	1	-	-	1	-	-	1	1000.66	995.15	4.76
B1	223+40	48.0' RT	CTH D	1	-	-	-	-	-	-	-	-	1	-	828.24	-
B2	223+40	16.5' LT	CTH D	-	-	-	1	-	-	-	-	1	1	834.10	828.57	4.78
C1	226+38	28.2' RT	CTH D	1	-	-	-	-	-	-	-	-	1	-	799.08	-
C2	226+38	16.5' RT	CTH D	-	-	-	1	-	-	-	-	1	1	804.86	798.89	5.22
C3	226+38	16.5' LT	CTH D	-	-	-	1	1	-	1	-	-	1	804.99	799.56	4.68
			TOTAL 0010	*4	*3	2	16	4	2	12	1	3	21			

NOTES:
(1) STATIONS AND OFFSETS ARE TO CENTER OF STRUCTURE
(2) RIM ELEV IS AT THE INLET COVER FLOWLINE LOCATION
(3) FOR STRUCTURES WITH SUMPS, THE INVERT ELEVATION IS THE ELEVATION OF THE SUMP. FOR STRUCTURES WITHOUT SUMPS, THE INVERT ELEVATION IS THE ELEVATION OF THE LOWEST PIPE FLOW LINE
(4) DEPTH = RIM ELEV - INVERT ELEV - COVER HEIGHT - 6-INCH ADJUSTMENT RING HEIGHT
* ADDITIONAL QUANTITIES LOCATED ELSEWHERE

ALL ITEMS ON THIS SHEET
ARE CATEGORY 0010
UNLESS OTHERWISE NOTED

3

STORM SEWER PIPES

FROM	-	TO	LOCATION	608.3015 STORM SEWER PIPE CLASS III-A 15-INCH LF	608.3018 STORM SEWER PIPE CLASS III-A 18-INCH LF	608.3024 STORM SEWER PIPE CLASS III-A 24-INCH LF	JOINT TIES** EACH	INLET ELEVATION	DISCHARGE ELEVATION	SLOPE FT/FT
A2	-	A1	CTH D	-	-	22	3	840.09	839.53	0.0250
A3	-	A2	CTH D	-	-	33	3	841.41	840.59	0.0250
A4	-	A3	CTH D	-	-	340	3	873.25	843.87	0.0868
A5	-	A4	CTH D	-	307	-	3	897.43	874.00	0.0765
A5.1	-	A5	CTH D	33	-	-	3	899.42	898.18	0.0375
A6	-	A5	CTH D	-	135	-	3	907.75	897.93	0.0729
A7	-	A6	CTH D	-	111	-	3	919.00	908.25	0.0972
A8	-	A7	CTH D	-	245	-	3	937.75	919.50	0.0746
A9	-	A8	CTH D	199	-	-	3	946.18	938.25	0.0399
A9X	-	A9	CTH D	303	-	-	3	958.20	946.68	0.0381
A10	-	A9X	CTH D	298	-	-	3	970.35	958.71	0.0391
A11	-	A10	CTH D	129	-	-	3	977.00	970.85	0.0479
A12	-	A11	CTH D	128	-	-	3	981.76	977.50	0.0333
A13	-	A12	CTH D	133	-	-	3	989.14	982.26	0.0519
A14	-	A13	CTH D	166	-	-	3	995.15	989.64	0.0332
B2	-	B1	CTH D	64	-	-	3	828.57	828.24	0.0050
C2	-	C1	CTH D	12	-	-	3	799.20	799.08	0.0100
C3	-	C2	CTH D	33	-	-	3	799.56	799.39	0.0049
			TOTAL 0010	1498	798	395				

**NON-BID ITEM: FOR INFORMATION ONLY

STORM SEWER ROCK EXCAVATION

FROM	-	TO	LOCATION	608.0005 STORM SEWER ROCK EXCAVATION CY
196+40		226+40	STORM SEWER	870
			TOTAL 0010	870

ALL ITEMS ON THIS SHEET
ARE CATEGORY 0010
UNLESS OTHERWISE NOTED

3

SIGNING TYPE II & REMOVING SIGNS TYPE II

~ CONTINUED ~

APPROX. STATION	EXISTING STATION	LOCATION	SIGN CODE	SIGN SIZE WxH (INCHES)	634.0614 POSTS WOOD 4X6-INCH X 14-FT EACH	634.0616 POSTS WOOD 4X6-INCH X 16-FT EACH	637.2210 SIGNS TYPE II REFLECTIVE H SF	637.2230 SIGNS TYPE II REFLECTIVE F SF	638.2602 REMOVING SIGNS TYPE II EACH	638.3000 REMOVING SMALL SIGN SUPPORTS EACH	REMARKS
218+53		RT	W3-5	36x36	--	1	--	9.00	1	1	"35"
218+53	219+62	LT	W1-2R	36x36	--	1	--	9.00	1	1	
			W13-1	18x18	--	--	--	2.25	--	--	"35" (SHARES POST)
220+42		RT	MR2-1	21x15	--	1	2.20	--	1	1	
			MR1-99	24x24	--	--	4.00	--	--	--	(SHARES POST)
			MR4-53	24x12	--	--	2.00	--	--	--	"R 89" (SHARES POST)
222+73		RT	W1-1R	36x36	--	1	--	9.00	1	1	
			W13-1	18x18	--	--	--	2.25	--	--	"20" (SHARES POST)
227+68		LT	R2-1	24x30	--	1	5.00	--	1	1	"55"
227+86		RT	R2-1	24x30	1	--	5.00	--	1	1	"35"
227+86		RT	MR1-99	24x24	1	--	4.00	--	1	1	
			MR6-6R	21x21	--	--	3.06	--	--	--	(SHARES POST)
228+43		LT	MR1-99	24x24	--	1	4.00	--	1	1	
			MR6-1L	21x21	--	--	3.06	--	--	--	(SHARES POST)
228+68		LT	W5-52L	12x36	--	1	--	3.00	1	1	
228+72		RT			--	--	--	--	1	1	
228+86		RT	W5-52R	12x36	--	1	--	3.00	1	1	
228+68		RT (420TH ST)	R1-1	30x30	--	1	5.18	--	1	1	
				TOTAL 0010	8	30	102.72	182.50	36	36	

MOBILIZATION EROSION CONTROL

LOCATION	628.1905 MOBILIZATIONS EROSION CONTROL EACH	628.1910 MOBILIZATIONS EMERGENCY EROSION CONTROL EACH
PROJECT LIMITS	6	4
TOTAL 0010	6	4

3

TRAFFIC CONTROL

LOCATION	DAYS	643.0420 TRAFFIC CONTROL BARRICADES TYPE III DAY	643.0705 TRAFFIC CONTROL WARNING LIGHTS TYPE A DAY	643.0900 TRAFFIC CONTROL SIGNS DAY
STORM SEWER INSTALLATION	20	200	240	40
UNDISTRIBUTED		50	60	10
TOTAL 0010		250	300	50

NOTE: DETOUR INSTALLED AND MAINTAINED BY DUNN COUNTY.

MARKING LINE ITEMS

STATION	TO	STATION	LOCATION	DESCRIPTION	COLOR	643.3165 TEMPORARY MARKING LINE PAINT 6-INCH LF	646.2020 MARKING LINE EPOXY 6-INCH LF
105+88	-	227+72	CTH D	RT EDGELINE	WHITE	--	12,184
105+50	-	228+68	CTH D	LT EDGELINE	WHITE	--	12,318
104+00	-	228+77	CTH D	CENTERLINE	YELLOW	--	21,436
			CTH K	CENTERLINE/EDGELINE	YELLOW/WHITE	48	109
					TOTAL 0010	48	46,047

CONSTRUCTION STAKING

STATION	TO	STATION	LOCATION	650.8000 CONSTRUCTION STAKING RESURFACING REFERENCE LF	650.9911.01 CONSTRUCTION STAKING SUPPLEMENTAL CONTROL (PROJECT) (01. 7881-05-73) EACH	650.9920 CONSTRUCTION STAKING SLOPE STAKES LF
106+75	-	226+50	CTH D	--	--	11,975
104+00	-	228+77	CTH D	12,477	1	--
			TOTAL 0010	12,477	1	11,975

SAWING

STATION	LOCATION	690.0150 SAWING ASPHALT LF	690.0250 SAWING CONCRETE LF
114+80	PE, LT	11	--
128+50	PE, RT	14	--
147+68	350TH ST	24	--
153+23	PE, RT	35	--
187+09	420TH AVE	60	--
189+43	PE, RT	12	--
226+50	LT/RT CURB	--	6
227+36	RT	--	3
227+76	RT	--	3
	TOTAL 0010	156	12

ALL ITEMS ON THIS SHEET
ARE CATEGORY 0010
UNLESS OTHERWISE NOTED

3

MGS GUARDRAIL ITEMS

STATION	TO	STATION	LOCATION	614.2300 MGS GUARDRAIL 3 LF	614.2330 MGS GUARDRAIL 3 K LF	614.2610 MGS GUARDRAIL TERMINAL EAT EACH
188+50	-	208+50	CTH D, LT	850	1,050	2
215+50	-	227+50	CTH D, RT	450	650	2
			TOTAL 0010	1,300	1,700	4

WATER

LOCATION	624.0100 WATER MGAL
BASE COMPACTION	140
DUST CONTROL	100
TOTAL 0010	240

INLET PROTECTION

STATION	LOCATION	628.7005 INLET PROTECTION TYPE A EACH	628.7015 INLET PROTECTION TYPE C EACH
221+50.00	RT	1	1
221+50.00	LT	1	1
218+09.51	LT	1	1
215+01.92	LT	1	1
215+01.25	RT	1	1
213+63.54	LT	1	1
212+47.00	LT	1	1
210+00.77	RT	1	1
208+01.97	RT	1	1
205+00.00	RT	1	1
202+02.39	RT	1	1
200+73.83	RT	1	--
199+44.27	RT	1	1
198+09.97	RT	1	--
196+43.72	RT	1	1
223+39.18	LT	1	1
226+38.42	RT	1	1
226+37.01	LT	1	1
UNDISTRIBUTED		4	4
	TOTAL 0010	22	20

MAINTENANCE AND REPAIR OF HAUL ROADS

LOCATION	618.0100.01 MAINTENANCE AND REPAIR OF HAUL ROADS (PROJECT) (01. 7881-05-73) EACH
PROJECT LIMITS	1
TOTAL 0020	1

MOBILIZATION

LOCATION	619.1000 MOBILIZATION EACH
PROJECT LIMITS	1
TOTAL 0010	1

TEMPORARY DITCH CHECKS, CULVERT PIPE CHECKS & ROCK BAGS

STATION	LOCATION	628.7504 TEMPORARY DITCH CHECKS LF	628.7555 CULVERT PIPE CHECKS EACH	628.7570 ROCK BAGS EACH
104+00	RT	12	--	--
	LT, CTH K	12	--	--
	RT, CTH K	12	--	--
117+00	RT	12	--	--
117+50	LT	12	--	--
120+75	LT	12	--	--
122+55	LT	--	1	--
123+00	RT	12	--	--
126+25	LT	12	--	--
130+50	RT	12	--	--
143+00	LT/RT	24	--	--
147+25	LT	12	--	--
147+68	RT	--	2	--
148+95	LT	--	3	--
149+28	LT	--	1	--
153+29	LT	--	1	--
156+75	RT	12	--	--
163+75	LT	12	--	--
166+50	LT	12	--	--
183+00	RT	16	--	--
183+25	LT	12	--	--
183+50	RT	16	--	--
184+00	RT	12	--	--
184+50	RT	12	--	--
185+00	RT	12	--	--
186+50	LT	12	--	--
189+43	RT	--	2	--
191+00	RT	14	--	--
193+00	RT	--	3	--
211+00	LT	12	--	--
211+50	LT	12	--	--
UNDISTRIBUTED		80	3	30
	TOTAL 0010	390	16	30

SILT FENCE

STATION	TO	STATION	LOCATION	628.1504 SILT FENCE LF	628.1520 SILT FENCE MAINTENANCE LF
104+75	-	114+00	LT	940	940
105+75	-	117+00	RT	1,102	1,102
117+50	-	120+75	LT	325	325
119+25	-	123+00	RT	335	335
124+00	-	126+25	LT	178	178
128+25	-	143+00	LT	1,434	1,434
128+75	-	131+25	RT	267	267
141+00	-	143+00	RT	212	212
147+25	-	148+75	LT	157	157
148+25	-	152+50	RT	443	443
153+50		156+00	rt	265	265
161+75	-	163+75	LT	200	200
166+50	-	181+75	RT	1,496	1,496
183+25	-	186+50	LT	173	173
185+00	-	186+50	RT	146	146
189+25	-	209+50	LT	2,082	2,082
211+50	-	214+00	LT	235	235
215+50	-	220+25	RT	502	502
222+75		223+75	RT	100	100
UNDISTRIBUTED				2,648	2,648
			TOTAL 0010	13,240	13,240

EROSION MAT

STATION	TO	STATION	LOCATION	628.2023 EROSION MAT CLASS II TYPE B SY	628.2033 EROSION MAT CLASS III TYPE B SY	628.6505 SOIL STABILIZER TYPE A ACRE
113+75	-	115+75	RT	558	--	--
148+75	-	149+25	RT/LT	248	--	--
168+50	-	171+00	RT	673	--	--
179+00	-	180+75	RT	582	--	--
184+00	-	186+00	LT	315	--	--
189+50	-	193+25	LT	--	1,767	0.36
194+75	-	198+25	RT	942	--	--
194+75	-	205+75	LT	4,016	--	--
200+00	-	203+00	RT	798	--	--
204+25	-	204+75	RT	35	--	--
206+00	-	211+50	RT	1,114	--	--
215+00	-	216+00	LT	129	--	--
216+50	-	217+75	LT	64	--	--
217+75	-	218+25	RT	42	--	--
220+00	-	222+75	RT	350	--	--
220+00	-	221+75	LT	284	--	--
222+25	-	224+00	LT	161	--	--
223+75	-	224+75	RT	125	--	--
224+85	-	225+75	LT	75	--	--
225+75	-	226+75	RT	124	--	--
UNDISTRIBUTED				2,660	443	0.09
			TOTAL 0010	13,295	2,210	0.45

ALL ITEMS ON THIS SHEET
ARE CATEGORY 0010
UNLESS OTHERWISE NOTED

3

SALVAGED TOPSOIL, MULCHING, FERTILIZER, SEEDING & WATER

STATION	TO	STATION	LOCATION	625.0500 SALVAGED TOPSOIL SY	627.0200 MULCHING SY	629.0210 FERTILIZER TYPE B CWT	630.0120 SEEDING MIXTURE NO. 20 LB	630.0200 SEEDING TEMPORARY LB	630.0500 SEED WATER MGAL
104+00	-	228+77	CTH D	46,030	32,448	28	1,195	610	1,034
UNDISTRIBUTED				--	8,112	7	300	155	261
			TOTAL 0010	46,030	40,560	35	1,495	765	1,295

MARKERS CULVERT END

STATION	LOCATION	633.5200 MARKERS CULVERT END EACH
148+95	CTH D	2
196+44	CTH D, LT	1
199+44	CTH D, LT	1
202+03	CTH D, LT	1
208+03	CTH D, LT	1
218+11	CTH D, RT	1
221+48	CTH D, RT	1
223+39	CTH D, RT	1
226+37	CTH D, RT	1
	TOTAL 0010	10

SIGNING TYPE II & REMOVING SIGNS TYPE II

APPROX. STATION	EXISTING STATION	LOCATION	SIGN CODE	SIGN SIZE WxH (INCHES)	634.0614 POSTS WOOD 4X6-INCH X 14-FT EACH	634.0616 POSTS WOOD 4X6-INCH X 16-FT EACH	637.2210 SIGNS TYPE II REFLECTIVE H SF	637.2230 SIGNS TYPE II REFLECTIVE F SF	638.2602 REMOVING SIGNS TYPE II EACH	638.3000 REMOVING SMALL SIGN SUPPORTS EACH	REMARKS
104+40		LT (CTH K)	J13-1	24x45	--	1	7.50	--	1	1	D: BOTH ARROW
104+40		LT (CTH K)	R1-1	30x30	--	1	5.18	--	1	1	
104+60		RT	J13-1	24x45	--	1	7.50	--	1	1	K: BOTH ARROW
105+33		RT (CTH K)	M1-5A	24x24	1	--	4.00	--	1	1	K
105+47		LT	J13-1	24x45	--	1	7.50	--	1	1	K: BOTH ARROW
105+75		RT (CTH K)	R1-1	30x30	--	1	5.18	--	1	1	
105+75		RT (CTH K)	J13-1	24x45	--	1	7.50	--	1	1	D: BOTH ARROW
106+61		RT	M1-5A	24x24	1	--	4.00	--	1	1	D
110+90		RT	W1-2R	36x36	--	1	--	9	--	--	
114+00	117+34	LT	J1-1	24x39	--	1	6.50	--	1	1	JCT, K
116+75		LT	W1-2L	36x36	--	1	--	9	--	--	
	123+37	LT			--	--	--	--	1	1	
	125+00	RT			--	--	--	--	1	1	
133+15		RT	W1-2L	36x36	--	1	--	9.00	--	--	
142+00		RT	W2-2R	30x30	--	1	--	6.25	1	1	
147+94		RT (350TH ST)	R1-1	30x30	--	1	5.18	--	1	1	
149+73	155+22	LT	W1-2R	36x36	--	1	--	9.00	1	1	
162+00	156+95	RT	W1-2R	36x36	--	1	--	9.00	1	1	
			W13-1	18x18	--	--	--	2.25	--	--	"45" (SHARES POST)
172+00	177+82	LT	W1-2L	36x36	--	1	--	9.00	1	1	
			W13-1	18x18	--	--	--	2.25	--	--	"45" (SHARES POST)
	178+30	RT			--	--	--	--	1	1	
180+74		RT	W7-1	30x30	1	--	--	6.25	1	1	
186+67		LT (420TH AVE)	R1-1	30x30	--	1	5.18	--	1	1	
188+85		RT	W1-2L	36x36	--	1	--	9.00	--	--	
193+30		LT	W1-2R	36x36	--	1	--	9.00	1	1	
195+00		RT	W1-2R	36x36	--	1	--	9.00	--	--	
			W13-1	18x18	--	--	--	2.25	--	--	"45" (SHARES POST)
204+40		LT	W1-2L	36x36	--	1	--	9.00	--	--	
			W13-1	18x18	--	--	--	2.25	--	--	"45" (SHARES POST)
	206+92	LT			--	--	--	--	1	1	
207+00	203+95	RT	W1-2L	36x36	--	1	--	9.00	1	1	
			W13-1	18x18	--	--	--	2.25	--	--	"35" (SHARES POST)
212+40		RT	W1-6	48x24	1	--	--	8.00	--	--	RIGHT ARROW
212+88	213+01	RT	W1-6	48x24	1	--	--	8.00	1	1	LEFT ARROW
217+26		RT	W2-2R	30x30	1	--	--	6.25	1	1	

~ CONTINUE ~

FIELD OFFICE TYPE B

LOCATION	642.5001 FIELD OFFICE TYPE B EACH
7881-05-73	1
TOTAL 0010	1

RIPRAP HEAVY & GEOTEXTILE TYPE HR

STATION	TO	STATION	LOCATION	606.0300 RIPRAP HEAVY CY	645.0120 GEOTEXTILE TYPE HR SY
220+00	-	222+75	RT	946	1,559
		223+40	RT	5	16
223+75	-	226+50	RT	230	393
UNDISTRIBUTED				294	492
			TOTAL 0010	1,475	2,460

ALL ITEMS ON THIS SHEET
ARE CATEGORY 0010
UNLESS OTHERWISE NOTED

DUNN COUNTY
HIGHWAY DEPARTMENT
TRANSPORTATION PROJECT PLAT TITLE SHEET
7881-05-23
SCL - STH 25
CTH K TO 420TH STREET
CTH D
DUNN COUNTY

CONVENTIONAL SYMBOLS

SECTION LINE
QUARTER LINE
SIXTEENTH LINE
NEW REFERENCE LINE
NEW R/W LINE
EXISTING R/W OR HE LINE
PROPERTY LINE
LOT, TIE & OTHER MINOR LINES
SLOPE INTERCEPT
CORPORATE LIMITS
UNDERGROUND FACILITY (COMMUNICATIONS, ELECTRIC, ETC)
NEW R/W (FEE OR HE) (HATCHING VARIES BY OWNER)
TEMPORARY LIMITED EASEMENT AREA
EASEMENT AREA (PERMANENT LIMITED OR RESTRICTED DEVELOPMENT)
TRANSMISSION STRUCTURES
BUILDING TO BE REMOVED
BRIDGE CULVERT

SECTION CORNER SYMBOL
SECTION CORNER MONUMENT
GEODETIC SURVEY MONUMENT
SIXTEENTH CORNER MONUMENT
SIGN
OFF-PREMISE SIGN
R/W MONUMENT (TO BE SET)
NON-MONUMENTED R/W POINT
FOUND IRON PIN (1-INCH UNLESS NOTED)

	COMPENSABLE	NON-COMPENSABLE
ELECTRIC POLE		
TELEPHONE POLE		
PEDESTAL (LABEL TYPE) (TV, TEL, ELEC, ETC.)		

ACCESS RESTRICTED BY ACQUISITION
NO ACCESS (BY STATUTORY AUTHORITY)
ACCESS RESTRICTED (BY PREVIOUS PROJECT OR CONTROL)
NO ACCESS (NEW HIGHWAY)
PARCEL NUMBER 25
UTILITY NUMBER 40
PARALLEL OFFSETS

CONVENTIONAL ABBREVIATIONS

ACCESS RIGHTS	AR	POINT OF INTERSECTION	PI
ACRES	AC	PROPERTY LINE	PL
AHEAD	AH	RECORDED AS	(100')
ALUMINUM	ALUM	REEL / IMAGE	R/I
AND OTHERS	ET AL	REFERENCE LINE	R/L
BACK	BK	REMAINING	REM
BLOCK	BLK	RESTRICTIVE DEVELOPMENT EASEMENT	RDE
CENTERLINE	C/L	RIGHT	RT
CERTIFIED SURVEY MAP	CSM	RIGHT OF WAY	R/W
CONCRETE	CONC	SECTION	SEC
COUNTY	CO	SEPTIC VENT	SEPV
COUNTY TRUNK HIGHWAY	CTH	SQUARE FEET	SF
DISTANCE	DIST	STATE TRUNK HIGHWAY	STH
CORNER	COR	STATION	STA
DOCUMENT NUMBER	DOC	TELEPHONE PEDESTAL	TP
EASEMENT	EASE	TEMPORARY LIMITED EASEMENT	TLE
EXISTING	EX	TRANSPORTATION PROJECT PLAT	TPP
GAS VALVE	GV	UNITED STATES HIGHWAY	USH
GRID NORTH	GN	VOLUME	V
HIGHWAY EASEMENT	HE		
IDENTIFICATION	ID		
LAND CONTRACT	LC		
LEFT	LT		
MONUMENT	MON		
NATIONAL GEODETIC SURVEY	NGS		
NUMBER	NO		
OUTLOT	OL		
PAGE	P		
POINT OF TANGENCY	PT		
PERMANENT LIMITED EASEMENT	PLE		
POINT OF BEGINNING	POB		
POINT OF CURVATURE	PC		
POINT OF COMPOUND CURVE	PCC		

CURVE DATA

LONG CHORD	LCH
LONG CHORD BEARING	LCB
RADIUS	R
DEGREE OF CURVE	D
CENTRAL ANGLE	Δ/DELTA
LENGTH OF CURVE	L
TANGENT	T
DIRECTION AHEAD	DA
DIRECTION BACK	DB

CONVENTIONAL UTILITY SYMBOLS

W	WATER
G	GAS
T	TELEPHONE
OH	OVERHEAD TRANSMISSION LINES
E	ELECTRIC
TV	CABLE TELEVISION
FO	FIBER OPTIC
SAN	SANITARY SEWER
SS	STORM SEWER

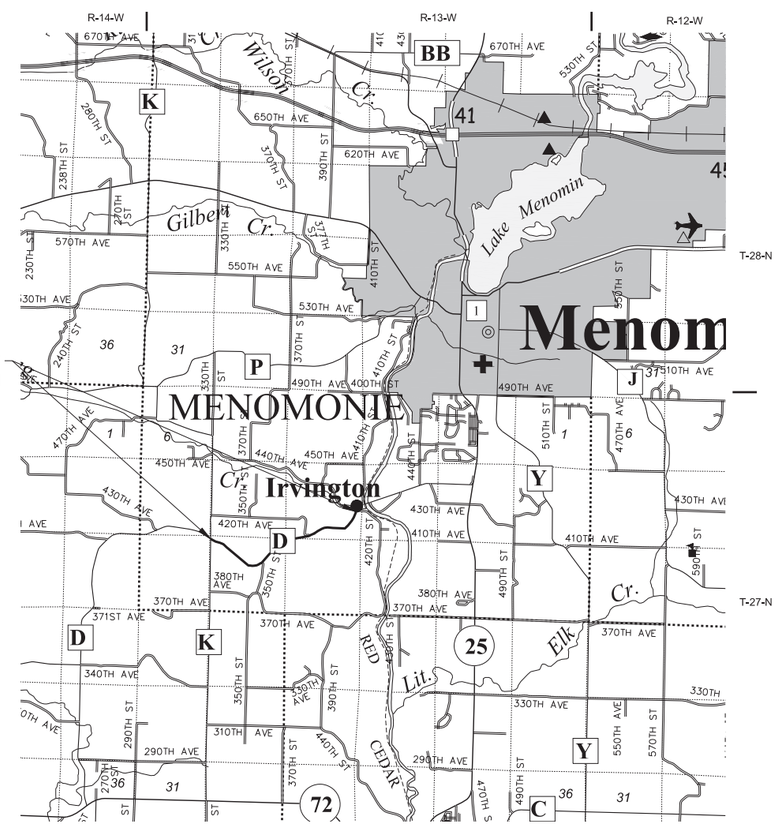

THE NOTES,CONVENTIONAL SIGNS, AND ABBREVIATIONS ARE ASSOCIATED WITH EACH TRANSPORTATION PROJECT PLAT FOR PROJECT 7881-05-23.

NOTES:

POSITIONS SHOWN ON THIS PLAT ARE WISCONSIN COORDINATE REFERENCE SYSTEM COORDINATES (WISCRS), DUNN COUNTY, NAD83(2011), IN U.S. SURVEY FEET. VALUES ARE GRID COORDINATES, GRID BEARINGS, AND GRID DISTANCES. GRID DISTANCES MAY BE USED AS GROUND DISTANCES.

ALL NEW RIGHT-OF-WAY MONUMENTS WILL BE TYPE 2 (TYPICALLY ¾" X 24" IRON REBARS), UNLESS OTHERWISE NOTED, AND WILL BE PLACED PRIOR TO THE COMPLETION OF THE PROJECT.

ALL RIGHT-OF-WAY LINES DEPICTED IN THE NON-ACQUISITION AREAS ARE INTENDED TO RE-ESTABLISH EXISTING RIGHT-OF-WAY LINES AS DETERMINED FROM PREVIOUS PROJECTS, OTHER RECORDED DOCUMENTS, OR FROM CENTERLINE OF EXISTING PAVEMENTS AND/OR EXISTING OCCUPATIONAL LINES.

RIGHT-OF-WAY BOUNDARIES ARE DEFINED WITH COURSES OF THE PERIMETER OF THE HIGHWAY LANDS REFERENCED TO THE U.S. PUBLIC LAND SURVEY SYSTEM OR OTHER "SURVEYS" OF PUBLIC RECORD.

DIMENSIONING FOR THE NEW RIGHT-OF-WAY IS MEASURED ALONG AND PERPENDICULAR TO THE NEW REFERENCE LINES.

A TEMPORARY LIMITED EASEMENT (TLE) IS A RIGHT FOR CONSTRUCTION PURPOSES, AS DEFINED HEREIN, INCLUDING THE RIGHT TO OPERATE NECESSARY EQUIPMENT THEREON, THE RIGHT OF INGRESS AND EGRESS, AS LONG AS REQUIRED FOR SUCH PUBLIC PURPOSE, INCLUDING THE RIGHT TO PRESERVE, PROTECT, REMOVE, OR PLANT THEREON ANY VEGETATION THAT THE HIGHWAY AUTHORITIES MAY DEEM DESIRABLE. ALL TLEs ON THIS PLAT EXPIRE AT THE COMPLETION OF THE CONSTRUCTION PROJECT FOR WHICH THIS INSTRUMENT IS GIVEN.

PROPERTY LINES SHOWN ON THIS PLAT FOR PROPERTIES BEING IMPACTED ARE DRAWN FROM DATA DERIVED FROM FILED/RECORDED MAPS AND DOCUMENTS OF PUBLIC RECORD AND/OR EXISTING OCCUPATIONAL LINES. THIS PLAT MAY NOT BE A TRUE REPRESENTATION OF EXISTING PROPERTY LINES, EXCLUDING RIGHT-OF-WAY, AND SHOULD NOT BE USED AS A SUBSTITUTE FOR AN ACCURATE FIELD SURVEY.

FOR THE LATEST ACCESS/DRIVEWAY INFORMATION, CONTACT THE DUNN COUNTY HIGHWAY DEPARTMENT.

PARCEL AND UTILITY IDENTIFICATION NUMBERS MAY NOT POINT TO ALL AREAS OF ACQUISITION, AS NOTED ON THE TPP DETAIL PAGES.

EXISTING HIGHWAY RIGHT-OF-WAY SHOWN HEREIN IS BASED ON THE FOLLOWING POINT OF REFERENCE:
INFORMATION FOR THE BASIS OF EXISTING HIGHWAY RIGHT-OF-WAY POINTS OF REFERENCE AND ACCESS CONTROL ARE LISTED ON THE TPP DETAIL PAGES.

LAYOUT
SCALE 0 1MI.

PROJECT NUMBER 7881-05-23-4.01
SHEET 2-OF-3

667732

DUNN COUNTY, WI
REGISTER OF DEEDS
HEATHER M. KUHN

RECORDED ON
09/11/2023 03:09 PM

REC FEE: 25.00
PAGES: 3

The above recording information verifies that this document has been electronically recorded and returned to the submitter.

RESERVED FOR REGISTER OF DEEDS
PROJECT NUMBER 7881-05-23-4.01
SHEET 1 OF 3

TRANSPORTATION PROJECT PLAT NO: 7881-05-23-4.01

THAT PART OF LOT 1 OF CSM 4911 RECORDED AS DOCUMENT NUMBER 664191 AND THAT PART OF LOT 1 OF CSM 1644 RECORDED AS DOCUMENT NUMBER 425980, LOCATED IN AND THAT PART OF THE NORTHWEST ¼ OF THE NORTHWEST ¼ OF SECTION 17, AND THAT PART OF LOT 3 OF CSM 188 RECORDED AS DOCUMENT NUMBER 327787 LOCATED IN AND THAT PART OF THE NORTHEAST ¼ OF THE NORTHWEST ¼, SECTION 17, ALL IN TOWNSHIP 27 NORTH, RANGE 13 WEST, TOWN OF MENOMONIE, DUNN COUNTY, WISCONSIN.

RELOCATION ORDER SCL - STH 25, CTH D, DUNN COUNTY

TO PROPERLY ESTABLISH, LAY OUT, WIDEN, ENLARGE, EXTEND, CONSTRUCT, RECONSTRUCT, IMPROVE, OR MAINTAIN A PORTION OF THE HIGHWAY DESIGNATED ABOVE, THE DUNN COUNTY HIGHWAY DEPARTMENT DEEMS IT NECESSARY TO RELOCATE OR CHANGE SAID HIGHWAY AND ACQUIRE CERTAIN LANDS AND INTERESTS OR RIGHTS IN LANDS FOR THE ABOVE PROJECT.

TO EFFECT THIS CHANGE, PURSUANT TO AUTHORITY GRANTED UNDER SECTION 83.07 AND 83.08, WISCONSIN STATUTES, THE DUNN COUNTY HIGHWAY DEPARTMENT HEREBY ORDERS THAT:

1. THAT PORTION OF SAID HIGHWAY AS SHOWN ON THIS PLAT IS LAID OUT AND ESTABLISHED TO THE LINES AND WIDTHS AS SO SHOWN FOR THE ABOVE PROJECT.
2. THE LANDS OR INTERESTS OR RIGHTS IN LANDS AS SHOWN ON THIS PLAT ARE REQUIRED BY THE DEPARTMENT FOR THE ABOVE PROJECT AND SHALL BE ACQUIRED IN THE NAME OF THE DUNN COUNTY HIGHWAY DEPARTMENT, PURSUANT TO THE PROVISIONS OF SECTION 83.07 AND 83.08, WISCONSIN STATUTES.

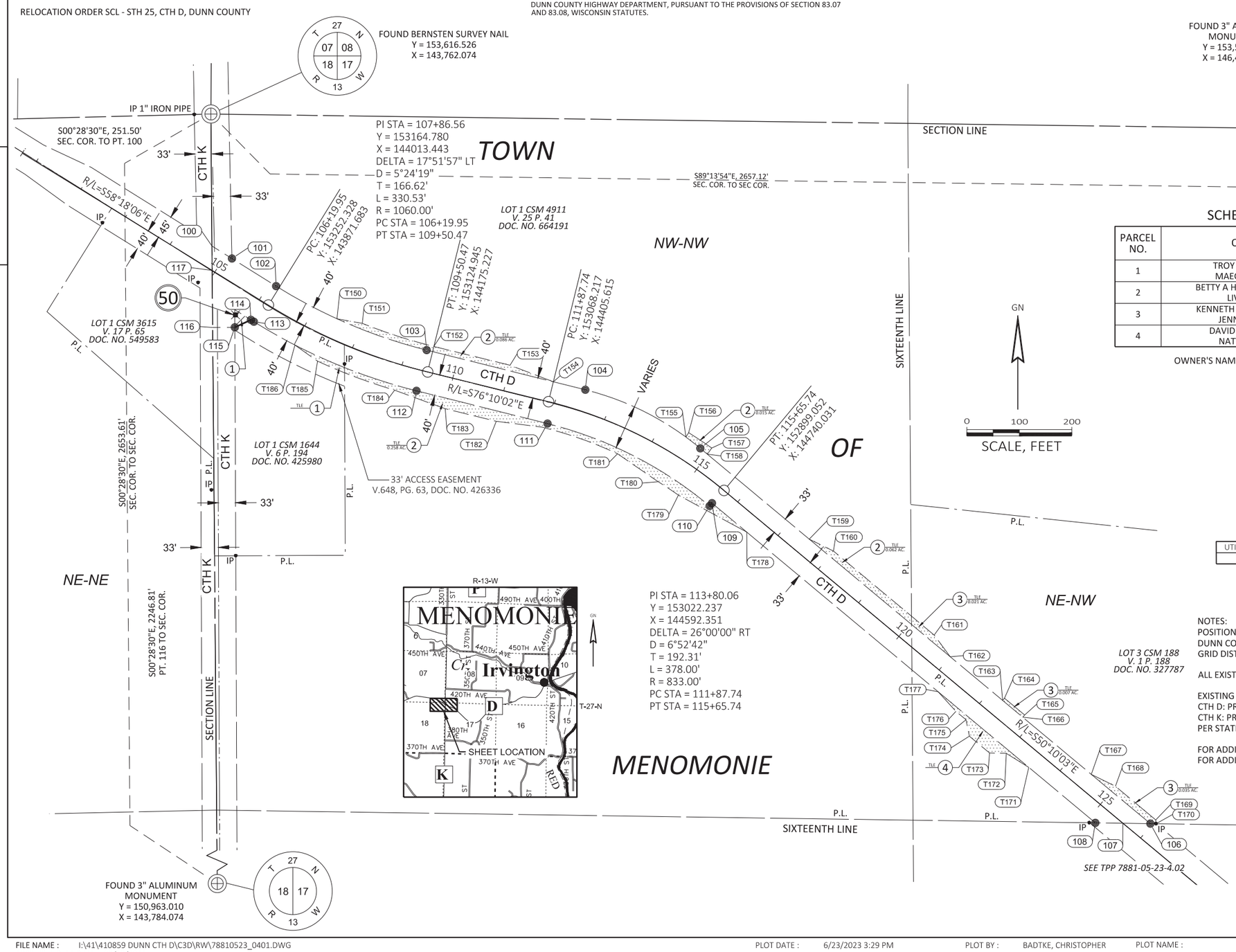

SCHEDULE OF LANDS AND INTERESTS REQUIRED

PARCEL NO.	OWNER(S)	INTEREST REQUIRED	R/W (ACRES)			
			NEW	EXISTING	TOTAL	TLE
1	TROY J. BRYANT AND MAEGAN A. BRYANT	FEE & TLE	0.203	0.724	0.927	0.068
2	BETTY A HOLDEN REVOCABLE LIVING TRUST	TLE	------	------	------	0.446
3	KENNETH A. DRINKMAN AND JENNIE DRINKMAN	TLE	------	------	------	0.063
4	DAVID A. FENNER AND NATTAYA FENNER	TLE	------	------	------	0.062

OWNER'S NAMES ARE SHOWN FOR REFERENCE PURPOSES ONLY AND ARE SUBJECT TO CHANGE PRIOR TO THE TRANSFER OF LAND INTERESTS TO THE DEPARTMENT.

PURPOSE OF ALL THE TLES IS FOR GRADING, UNLESS NOTED.

UTILITY INTERESTS REQUIRED

UTILITY NO.	OWNER(S)	INTEREST REQUIRED
50	WEST WISCONSIN TELCOM COOPERATIVE	RELEASE OF RIGHTS

UTILITY EASEMENTS

UTILITY NO.	OWNER(S)	EASEMENTS
50	WEST WISCONSIN TELCOM COOPERATIVE	NO EASEMENT OF RECORD - PARCEL 1

NOTES:
POSITIONS SHOWN ON THIS PLAT ARE WISCONSIN COORDINATE REFERENCE SYSTEM COORDINATES (WISCRS), DUNN COUNTY, NAD83(2011), IN U.S. SURVEY FEET. VALUES ARE GRID COORDINATES, GRID BEARINGS, AND GRID DISTANCES. GRID DISTANCES MAY BE USED AS GROUND DISTANCES.

ALL EXISTING IRON PINS ARE 0.75" IRON REBAR UNLESS OTHERWISE NOTED.

EXISTING HIGHWAY RIGHT-OF-WAY SHOWN HEREIN IS BASED ON THE FOLLOWING POINTS OF REFERENCE:
CTH D: PREVIOUS PROJECT NUMBER S 087(9).
CTH K: PRESUMED TO BE 66 FEET IN WIDTH CENTERED ON THE EXISTING CENTERLINE OF THE TRAVELED WAY PER STATE STATUE 82.31(2).

FOR ADDITIONAL INFORMATION REFER TO THE TITLE SHEET, RECORDED AS SHEET 2 OF 3.
FOR ADDITIONAL INFORMATION REFER TO THE EXTENSION SHEET, RECORDED AS SHEET 3 OF 3.

WISCONSIN CHRISTOPHER R. BADTKE S-3150 EAU CLAIRE, WI LAND SURVEYOR

I, CHRISTOPHER R. BADTKE, PROFESSIONAL LAND SURVEYOR, HEREBY CERTIFY THAT IN FULL COMPLIANCE WITH THE PROVISIONS OF SECTION 84.095 OF THE WISCONSIN STATUTES AND UNDER THE DIRECTION OF THE DUNN COUNTY HIGHWAY DEPARTMENT, I HAVE SURVEYED AND MAPPED THIS TRANSPORTATION PROJECT PLAT AND THAT SUCH PLAT CORRECTLY REPRESENTS ALL EXTERIOR BOUNDARIES OF THE SURVEYED LAND.

CHRISTOPHER R. BADTKE — DATE 06/23/2023
REGISTRATION NUMBER: S-3150

AYRES

THIS PLAT AND RELOCATION ORDER ARE APPROVED FOR THE DUNN COUNTY HIGHWAY DEPARTMENT.

Dustin S. Binder — DATE 09/11/2023
DUSTIN BINDER

FILE NAME : I:\41\410859 DUNN CTH D\C3D\RW\78810523_0401.DWG
APPRAISAL PLAT DATE : 06/23/2023
PLOT DATE : 6/23/2023 3:29 PM
PLOT BY : BADTKE, CHRISTOPHER
PLOT NAME :
PLOT SCALE : 1 IN:200 FT

TRANSPORTATION PROJECT PLAT NO: 7881-05-73 4.01
EXTENSION SHEET

RELOCATION ORDER SCL - STH 25, CTH D, DUNN COUNTY

4

R/W STATION & OFFSET TABLE		
POINT	STATION	OFFSET
100	104+69.24	39.40' LT
101	105+14.22	39.15' LT
102	106+13.48	38.61' LT
103	109+38.27	39.96' LT
104	112+47.57	41.15' LT
105	114+83.25	37.14' LT
106	125+96.69	32.97' LT
107	125+55.98	0.00' RT
108	125+15.19	33.04' RT

R/W STATION & OFFSET TABLE		
POINT	STATION	OFFSET
109	115+63.66	33.11' RT
110	115+63.65	40.11' RT
111	111+96.33	40.86' RT
112	109+38.87	40.04' RT
113	106+13.05	41.39' RT
114	106+06.36	41.36' RT
115	105+87.76	69.53' RT
116	105+51.94	92.06' RT
117	104+94.02	0.00' RT

TLE STATION & OFFSET TABLE		
POINT	STATION	OFFSET
T150	107+50.00	38.90' LT
T151	108+00.00	50.00' LT
T152	109+50.47	50.00' LT
T153	110+99.86	50.00' LT
T154	111+87.74	39.12' LT
T155	114+50.00	40.23' LT
T156	114+50.00	50.00' LT
T157	115+00.00	50.00' LT
T158	115+00.00	35.58' LT
T159	117+50.00	32.90' LT
T160	118+00.00	45.00' LT
T161	120+50.00	45.00' LT
T162	121+00.00	32.93' LT

TLE STATION & OFFSET TABLE		
POINT	STATION	OFFSET
T163	122+30.00	32.94' LT
T164	122+30.00	38.50' LT
T165	122+80.00	38.50' LT
T166	122+80.00	32.94' LT
T167	124+50.00	32.95' LT
T168	125+00.00	45.00' LT
T169	126+00.00	45.00' LT
T170	126+05.32	39.96' LT
T171	123+50.00	33.05' RT
T172	123+00.00	40.00' RT
T173	122+75.00	60.00' RT
T174	122+25.00	60.00' RT
T175	122+00.00	40.00' RT

TLE STATION & OFFSET TABLE		
POINT	STATION	OFFSET
T176	121+75.00	40.00' RT
T177	121+25.00	33.07' RT
T178	116+50.00	33.11' RT
T179	115+00.00	60.00' RT
T180	114+50.25	60.01' RT
T181	113+50.00	50.00' RT
T182	111+00.00	60.00' RT
T183	109+99.86	60.00' RT
T184	109+00.00	50.00' RT
T185	107+50.00	50.00' RT
T186	107+00.00	41.26' RT

4

COURSE TABLE					
COURSE	BEARING	DISTANCE	COURSE	BEARING	DISTANCE
100-101	S57°59'15"E	44.98'	109-110	S39°49'42"W	7.00'
101-102	S57°59'15"E	99.27'	110-111	SEE CURVE TABLE	
102-103	SEE CURVE TABLE		111-112	N75°57'32"W	257.47'
103-104	S75°57'32"E	311.75'	112-113	SEE CURVE TABLE	
104-105	SEE CURVE TABLE		113-114	N57°59'15"W	6.69'
105-106	S50°10'20"E	1116.98'	114-115	S65°08'08"W	33.76'
106-107	N89°10'14"W	52.38'	115-116	S89°31'30"W	42.32'
107-108	N89°10'14"W	52.49'	116-117	N00°28'30"W	108.76'
108-109	N50°10'20"W	951.44'	117-100	N00°28'30"W	46.54'

CURVE TABLE				
CURVE #	LENGTH	RADIUS	CHORD BEARING	CHORD LENGTH
102-103	313.04'	998.03'	S66°58'24"E	311.76'
106-105	248.06'	549.37'	S61°01'21"E	245.96'
110-111	349.58'	776.72'	N63°03'55"W	346.64'
112-113	338.14'	1078.83'	N66°58'24"W	336.76'

PROJECT NUMBER 7881-05-23 - 4.01
SHEET 3 OF 3

TRANSPORTATION PROJECT PLAT NO: 7881-05-23-4.04
EXTENSION SHEET

RELOCATION ORDER SCL - STH 25, CTH D, DUNN COUNTY

4

R/W STATION & OFFSET TABLE		
POINT	STATION	OFFSET
304	184+71.00	45.41'
305	184+67.96	33.40'
306	184+59.65	0.00'
307	184+51.71	32.68'
400	199+07.10	60.00'
401	198+03.37	60.00'
402	194+50.00	60.00'
403	194+00.00	40.00'
404	193+13.33	40.00'
405	192+11.60	40.00'
406	191+00.00	40.00'
407	190+50.00	50.00'
408	189+82.27	50.00'
409	188+00.00	50.00'
410	187+50.00	33.70'
411	186+73.47	34.39'
412	185+30.33	33.16'
413	184+75.00	60.00'
414	185+74.25	90.09'
415	186+94.80	76.89'

R/W STATION & OFFSET TABLE		
POINT	STATION	OFFSET
416	187+23.04	50.00'
417	189+00.00	50.02'
418	189+50.00	32.68'
419	189+83.69	32.61'
420	192+08.99	33.04'
421	193+88.67	35.09'
422	195+75.44	34.58'
423	197+59.48	33.98'
424	199+32.85	33.45'
425	201+39.85	33.00'
426	204+79.65	31.12'
427	206+65.32	33.00'
428	208+41.92	35.29'
429	210+78.53	34.03'
430	212+13.92	27.41'
431	212+37.70	27.97'
432	212+30.91	0.00'
433	212+23.19	38.39'
434	212+08.60	38.73'
435	211+48.08	40.00'

R/W STATION & OFFSET TABLE		
POINT	STATION	OFFSET
436	206+51.72	40.00'
437	203+32.57	40.00'
438	201+38.75	60.00'

TLE STATION & OFFSET TABLE		
POINT	STATION	OFFSET
T450	187+00.00	50.00'
T451	186+75.00	59.89'
T452	186+50.00	60.00'
T453	186+25.00	34.32'
T454	192+11.60	90.00'
T455	193+13.33	45.00'
T456	194+50.00	45.00'
T457	195+50.00	75.00'
T458	198+03.37	75.00'
T459	200+50.22	75.00'
T460	201+38.75	55.00'
T461	203+32.57	55.00'
T462	206+51.72	55.00'
T463	208+00.00	55.00'
T464	209+00.00	40.00'
T465	211+48.08	40.00'
T466	212+40.99	39.97'
T467	211+00.00	40.00'
T468	210+00.00	55.00'
T469	207+50.00	55.00'

PROJECT NUMBER 7881-05-23 - 4.04
SHEET 2 OF 2

FILE NAME : E:\11\410859 DUNN CTH D\C3D\RW\7881-05-23_0404.DWG
APPRAISAL PLAT DATE : 09/12/2023

PLOT DATE :

PLOT BY :

PLOT NAME :

7881-05-23-4.04

TRANSPORTATION PROJECT PLAT NO: 7881-05-23-4.02

THAT PART OF OUTLOT 1 OF CSM 1373 RECORDED AS DOCUMENT NUMBER 412853, LOCATED IN AND THAT PART OF THE SOUTHEAST ¼ OF THE NORTHWEST ¼, AND THAT PART OF THE SOUTHWEST ¼ OF THE NORTHEAST ¼, AND THAT PART OF THE NORTHWEST ¼ OF THE NORTHEAST ¼, AND THAT PART OF LOT 3 OF CSM 2172 RECORDED AS DOCUMENT NUMBER 454883 AND THAT PART OF LOT 1 OF CSM 1299 RECORDED AS DOCUMENT NUMBER 410160 AND THAT PART OF LOT 1 OF CSM 1366 RECORDED AS DOCUMENT NUMBER 412727, LOCATED IN AND THAT PART OF THE SOUTHEAST ¼ OF THE NORTHWEST ¼ , AND THAT PART OF LOT 1 AND LOT 2 OF CSM 1677 RECORDED AS DOCUMENT NUMBER 427704 AND THAT PART OF LOT 2 OF CSM 1306 RECORDED AS DOCUMENT NUMBER 410181 AND THAT PART OF LOT 2 OF CSM 1368 RECORDED AS DOCUMENT NUMBER 412746, LOCATED IN AND THAT PART OF THE SOUTHWEST ¼ OF THE NORTHEAST ¼, ALL IN SECTION 17, TOWNSHIP 27 NORTH, RANGE 13 WEST, TOWN OF MENOMONIE, DUNN COUNTY, WISCONSIN.

RELOCATION ORDER SCL - STH 25, CTH D, DUNN COUNTY

TO PROPERLY ESTABLISH, LAY OUT, WIDEN, ENLARGE, EXTEND, CONSTRUCT, RECONSTRUCT, IMPROVE, OR MAINTAIN A PORTION OF THE HIGHWAY DESIGNATED ABOVE, THE DUNN COUNTY HIGHWAY DEPARTMENT DEEMS IT NECESSARY TO RELOCATE OR CHANGE SAID HIGHWAY AND ACQUIRE CERTAIN LANDS AND INTERESTS OR RIGHTS IN LANDS FOR THE ABOVE PROJECT.

TO EFFECT THIS CHANGE, PURSUANT TO AUTHORITY GRANTED UNDER SECTION 83.07 AND 83.08, WISCONSIN STATUTES, THE DUNN COUNTY HIGHWAY DEPARTMENT HEREBY ORDERS THAT:

1. THAT PORTION OF SAID HIGHWAY AS SHOWN ON THIS PLAT IS LAID OUT AND ESTABLISHED TO THE LINES AND WIDTHS AS SO SHOWN FOR THE ABOVE PROJECT.
2. THE LANDS OR INTERESTS OR RIGHTS IN LANDS AS SHOWN ON THIS PLAT ARE REQUIRED BY THE DEPARTMENT FOR THE ABOVE PROJECT AND SHALL BE ACQUIRED IN THE NAME OF THE DUNN COUNTY HIGHWAY DEPARTMENT, PURSUANT TO THE PROVISIONS OF SECTION 83.07 AND 83.08, WISCONSIN STATUTES.

SCHEDULE OF LANDS AND INTERESTS REQUIRED

PARCEL NO.	OWNER(S)	INTEREST REQUIRED	R/W (ACRES)			
			NEW	EXISTING	TOTAL	TLE
6	SARAH A. TAYLOR	TLE	------	------	------	0.012
7	GLEN W. PEARSON AND PATRICIA L. PEARSON	FEE & TLE	0.006	------	0.006	0.150
8	PETER VANDERHOFF	TLE	------	------	------	0.045
9	JUSTIN HUHNSTOCK AND JENNIFER HUHNSTOCK	TLE	------	------	------	0.029
11	KEVIN R. OIUM AND TONYA M. WARNER	FEE & TLE	0.067	------	0.067	0.248
12	BARRY JAMES AND APRIL ANN KOCH	FEE & TLE	0.001	------	0.001	0.056

OWNER'S NAMES ARE SHOWN FOR REFERENCE PURPOSES ONLY AND ARE SUBJECT TO CHANGE PRIOR TO THE TRANSFER OF LAND INTERESTS TO THE DEPARTMENT.

PURPOSE OF ALL THE TLES IS FOR GRADING, UNLESS NOTED.

667756

DUNN COUNTY, WI
REGISTER OF DEEDS
HEATHER M. KUHN

RECORDED ON
09/13/2023 10:12 AM

REC FEE: 25.00
PAGES: 2
The above recording information verifies that this document has been electronically recorded and returned to the submitter.

RESERVED FOR REGISTER OF DEEDS
PROJECT NUMBER 7881-05-23-4.02
SHEET 1 OF 2

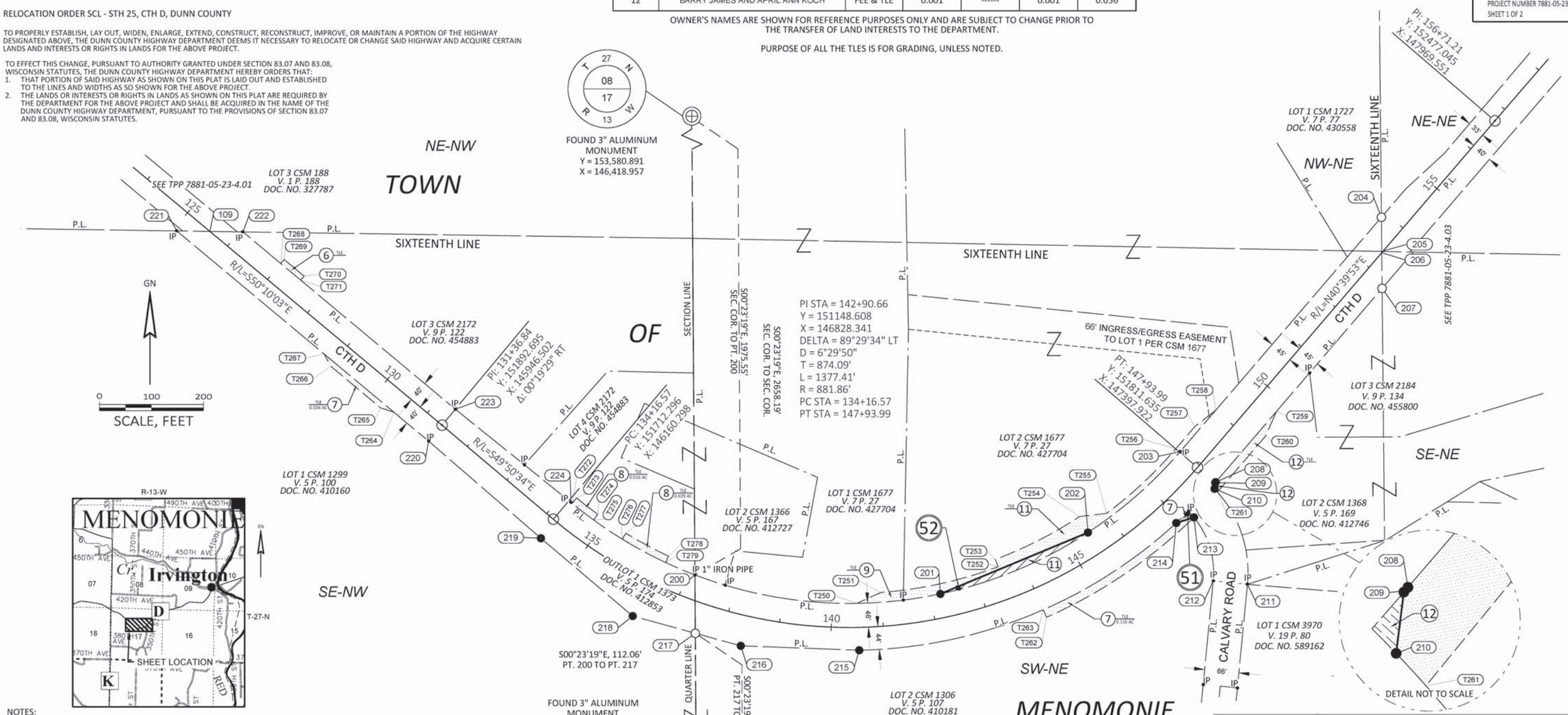

NOTES:
POSITIONS SHOWN ON THIS PLAT ARE WISCONSIN COORDINATE REFERENCE SYSTEM COORDINATES (WISCRS), DUNN COUNTY, NAD83(2011), IN U.S. SURVEY FEET. VALUES ARE GRID COORDINATES, GRID BEARINGS, AND GRID DISTANCES. GRID DISTANCES MAY BE USED AS GROUND DISTANCES.

ALL EXISTING IRON PINS ARE 0.75" IRON REBAR UNLESS OTHERWISE NOTED.

EXISTING HIGHWAY RIGHT-OF-WAY SHOWN HEREIN IS BASED ON THE FOLLOWING POINTS OF REFERENCE:
CTH D: PREVIOUS PROJECT NUMBER S 087(9), CSM 1299, CSM 2172, CSM 1373, CSM 1366, CSM 1677, CSM 1307, CSM 3970, CSM 1368, CSM 2184, CSM 1727
CALVARY ROAD: CSM 3970, PRESUMED TO BE 66 FEET IN WIDTH CENTERED ON THE EXISTING CENTERLINE OF THE TRAVELED WAY PER STATE STATUE 82.31(2).

FOR ADDITIONAL INFORMATION REFER TO THE TITLE SHEET, RECORDED AS SHEET 2 OF 3 OF DOCUMENT NUMBER 667732.
FOR ADDITIONAL INFORMATION REFER TO THE EXTENSION SHEET, RECORDED AS SHEET 2 OF 2.

UTILITY INTERESTS REQUIRED

UTILITY NO.	OWNER(S)	INTEREST REQUIRED
51	AT&T	RELEASE OF RIGHTS
52	DUNN ENERGY COOPERATIVE	RELEASE OF RIGHTS

UTILITY EASEMENTS

UTILITY NO.	OWNER(S)	EASEMENTS
51	AT&T	NO EASEMENT OF RECORD - PARCEL 7
52	DUNN ENERGY COOPERATIVE	NO EASEMENT OF RECORD- PARCEL 11

WISCONSIN CHRISTOPHER R. BADTKE S-3150 EAU CLAIRE, WI LAND SURVEYOR

I, CHRISTOPHER R. BADTKE, PROFESSIONAL LAND SURVEYOR, HEREBY CERTIFY THAT IN FULL COMPLIANCE WITH THE PROVISIONS OF SECTION 84.095 OF THE WISCONSIN STATUTES AND UNDER THE DIRECTION OF THE DUNN COUNTY HIGHWAY DEPARTMENT, I HAVE SURVEYED AND MAPPED THIS TRANSPORTATION PROJECT PLAT AND THAT SUCH PLAT CORRECTLY REPRESENTS ALL EXTERIOR BOUNDARIES OF THE SURVEYED LAND.

CHRISTOPHER R. BADTKE — DATE 09/12/2023
REGISTRATION NUMBER: S-3150

THIS PLAT AND RELOCATION ORDER ARE APPROVED FOR THE DUNN COUNTY HIGHWAY DEPARTMENT.

AYRES

Dustin S. Binder — DATE 09/12/2023
DUSTIN BINDER

TRANSPORTATION PROJECT PLAT NO: 7881-05-23-4.02
EXTENSION SHEET

RELOCATION ORDER SCL - STH 25, CTH D, DUNN COUNTY

4

R/W STATION & OFFSET TABLE		
POINT	STATION	OFFSET
109	125+55.98	0.00'
200	137+14.54	46.53' LT
201	142+20.71	45.98' LT
202	145+46.23	45.45' LT
203	147+95.45	45.00' LT
204	153+88.67	44.88' LT
205	153+39.31	1.64' LT
206	153+37.44	0.00'
207	152+85.97	45.10' RT
208	147+95.44	45.01' RT
209	147+94.23	45.01' RT
210	147+84.88	51.59' RT
211	147+08.21	224.18' RT

R/W STATION & OFFSET TABLE		
POINT	STATION	OFFSET
212	146+72.30	174.99' RT
213	147+21.85	60.44' RT
214	146+91.65	44.78' RT
215	140+52.83	43.76' RT
216	138+37.51	58.53' RT
217	137+52.52	58.83' RT
218	136+37.18	73.40' RT
219	134+21.70	43.35' RT
220	131+36.52	39.99' RT
221	125+06.54	40.04' RT
222	126+05.32	39.96' LT
223	131+36.83	40.00' LT
224	134+21.73	46.64' LT

TLE STATION & OFFSET TABLE		
POINT	STATION	OFFSET
T250	140+50.00	46.22' LT
T251	141+00.00	65.00' LT
T252	143+50.00	65.00' LT
T253	143+50.00	80.00' LT
T254	145+50.00	80.00' LT
T255	146+00.00	55.00' LT
T256	147+93.99	55.00' LT
T257	148+50.00	55.00' LT
T258	149+00.00	44.98' LT
T259	149+75.00	45.04' RT
T260	149+25.00	60.00' RT
T261	147+84.04	60.00' RT
T262	144+00.00	60.00' RT
T263	144+00.00	44.27' RT
T264	130+50.00	39.99' RT

TLE STATION & OFFSET TABLE		
POINT	STATION	OFFSET
T265	130+25.00	50.00' RT
T266	129+00.00	50.00' RT
T267	128+75.00	40.01' RT
T268	127+00.00	39.97' LT
T269	127+00.00	50.00' LT
T270	127+50.00	50.00' LT
T271	127+50.00	39.97' LT
T272	134+25.00	46.64' LT
T273	134+25.00	60.00' LT
T274	134+80.00	60.00' LT
T275	134+80.00	46.63' LT
T276	135+50.00	46.61' LT
T277	135+50.00	60.00' LT
T278	136+50.00	60.00' LT
T279	136+50.00	46.57' LT

CURVE TABLE				
CURVE #	LENGTH	RADIUS	CHORD BEARING	CHORD LENGTH
200-201	479.60'	836.85'	S85°34'53"E	473.06'
202-203	236.52'	836.85'	N48°46'20"E	235.73'
208-209	1.21'	926.85'	S40°42'45"W	1.21'
210-211	199.96'	233.00'	S19°02'50"E	193.88'
212-213	130.86'	167.00'	N16°54'38"W	127.54'
214-215	670.86'	926.85'	S68°08'59"W	656.31'
224-200	277.34'	836.85'	S59°40'09"E	276.07'

R/W COURSE TABLE		
COURSE	BEARING	DISTANCE
200-201	SEE CURVE TABLE	
201-202	N67°26'05"E	306.90'
202-203	SEE CURVE TABLE	
203-204	N40°40'31"E	593.22'
204-205	S00°33'27"E	65.62'
205-206	S00°33'27"E	2.49'
206-207	S00°33'27"E	68.43'
207-208	S40°40'31"W	490.53'
208-209	SEE CURVE TABLE	
209-210	S07°10'12"W	11.84'
210-211	SEE CURVE TABLE	
211-212	N84°26'00"W	66.02'
212-213	SEE CURVE TABLE	
213-214	S72°23'31"W	35.63'
214-215	SEE CURVE TABLE	
215-216	N87°52'44"W	227.72'
216-217	N74°37'00"W	90.61'
217-218	N74°37'00"W	124.75'
218-219	N49°45'36"W	231.10'
219-220	N49°10'15"W	285.23'
220-221	N50°10'20"W	629.98'
221-222	S89°10'14"E	63.62'
222-109	S89°10'14"E	63.49'
109-223	S50°10'20"E	531.51'
223-224	S51°10'48"E	284.93'
224-200	SEE CURVE TABLE	

4

PROJECT NUMBER 7881-05-23-4.02
SHEET 2 OF 2

FILE NAME : I:\41\410859 DUNN CTH D\C3D\RW\78810523_0402.DWG
APPRAISAL PLAT DATE : 09/12/2023
PLOT DATE : 6/8/2023 7:46 AM
PLOT BY : D'JOCK, DOUGLAS
PLOT NAME :

TRANSPORTATION PROJECT PLAT NO: 7881-05-23-4.03

THAT PART OF THE NORTHEAST ¼ OF THE NORTHEAST ¼ OF SECTION 17, AND THAT PART OF THE NORTHWEST ¼ OF THE NORTHWEST ¼ OF SECTION 16, AND THAT PART OF THE SOUTHWEST ¼ OF THE SOUTHWEST ¼ OF SECTION 9, ALL IN TOWNSHIP 27 NORTH, RANGE 13 WEST, TOWN OF MENOMONIE, DUNN COUNTY, WISCONSIN.

RELOCATION ORDER SCL - STH 25, CTH D, DUNN COUNTY

TO PROPERLY ESTABLISH, LAY OUT, WIDEN, ENLARGE, EXTEND, CONSTRUCT, RECONSTRUCT, IMPROVE, OR MAINTAIN A PORTION OF THE HIGHWAY DESIGNATED ABOVE, THE DUNN COUNTY HIGHWAY DEPARTMENT DEEMS IT NECESSARY TO RELOCATE OR CHANGE SAID HIGHWAY AND ACQUIRE CERTAIN LANDS AND INTERESTS OR RIGHTS IN LANDS FOR THE ABOVE PROJECT.

TO EFFECT THIS CHANGE, PURSUANT TO AUTHORITY GRANTED UNDER SECTION 83.07 AND 83.08, WISCONSIN STATUTES, THE DUNN COUNTY HIGHWAY DEPARTMENT HEREBY ORDERS THAT:

1. THAT PORTION OF SAID HIGHWAY AS SHOWN ON THIS PLAT IS LAID OUT AND ESTABLISHED TO THE LINES AND WIDTHS AS SO SHOWN FOR THE ABOVE PROJECT.
2. THE LANDS OR INTERESTS OR RIGHTS IN LANDS AS SHOWN ON THIS PLAT ARE REQUIRED BY THE DEPARTMENT FOR THE ABOVE PROJECT AND SHALL BE ACQUIRED IN THE NAME OF THE DUNN COUNTY HIGHWAY DEPARTMENT, PURSUANT TO THE PROVISIONS OF SECTION 83.07 AND 83.08, WISCONSIN STATUTES.

NOTES:
POSITIONS SHOWN ON THIS PLAT ARE WISCONSIN COORDINATE REFERENCE SYSTEM COORDINATES (WISCRS), DUNN COUNTY, NAD83(2011), IN U.S. SURVEY FEET. VALUES ARE GRID COORDINATES, GRID BEARINGS, AND GRID DISTANCES. GRID DISTANCES MAY BE USED AS GROUND DISTANCES.

ALL EXISTING IRON PINS ARE 0.75" IRON REBAR UNLESS OTHERWISE NOTED.

EXISTING HIGHWAY RIGHT-OF-WAY SHOWN HEREIN IS BASED ON THE FOLLOWING POINTS OF REFERENCE:
CTH D: PREVIOUS PROJECT NUMBER S 087(9), CSM 4443, AND IS PARTIALLY PRESUMED TO BE 66 FEET IN WIDTH CENTERED ON THE EXISTING CENTERLINE OF THE TRAVELED WAY PER STATE STATUE 82.31(2).
420TH AVENUE: CSM 4443, PRESUMED TO BE 66 FEET IN WIDTH CENTERED ON THE EXISTING CENTERLINE OF THE TRAVELED WAY PER STATE STATUE 82.31(2).

FOR ADDITIONAL INFORMATION REFER TO THE TITLE SHEET, RECORDED AS SHEET 2 OF 3 OF DOCUMENT NUMBER 667732.

SCHEDULE OF LANDS AND INTERESTS REQUIRED

PARCEL NO.	OWNER(S)	INTEREST REQUIRED	R/W (ACRES) NEW	EXISTING	TOTAL	TLE
13	BRIAN & TRACIE KNOSPE REVOCABLE TRUST	TLE	------	------	------	0.122
14	JEFFREY A. BOERNER	TLE	------	------	------	0.408
16	MARLIN L. BUSS	FEE & TLE	0.089	1.026	1.115	0.002

OWNER'S NAMES ARE SHOWN FOR REFERENCE PURPOSES ONLY AND ARE SUBJECT TO CHANGE PRIOR TO THE TRANSFER OF LAND INTERESTS TO THE DEPARTMENT.

PURPOSE OF ALL THE TLES IS FOR GRADING, UNLESS NOTED.

UTILITY EASEMENTS

UTILITY NO.	OWNER(S)	EASEMENTS
52	DUNN ENERGY COOPERATIVE	NO EASEMENT OF RECORD- PARCEL 14

UTILITY INTERESTS REQUIRED

UTILITY NO.	OWNER(S)	INTEREST REQUIRED
52	DUNN ENERGY COOPERATIVE	RELEASE OF RIGHTS

667757
DUNN COUNTY, WI
REGISTER OF DEEDS
HEATHER M. KUHN
RECORDED ON
09/13/2023 10:12 AM
REC FEE: 25.00
PAGES: 1
The above recording information verifies that this document has been electronically recorded and returned to the submitter.

RESERVED FOR REGISTER OF DEEDS
PROJECT NUMBER 7881-05-23-4.03
SHEET 1 OF 1

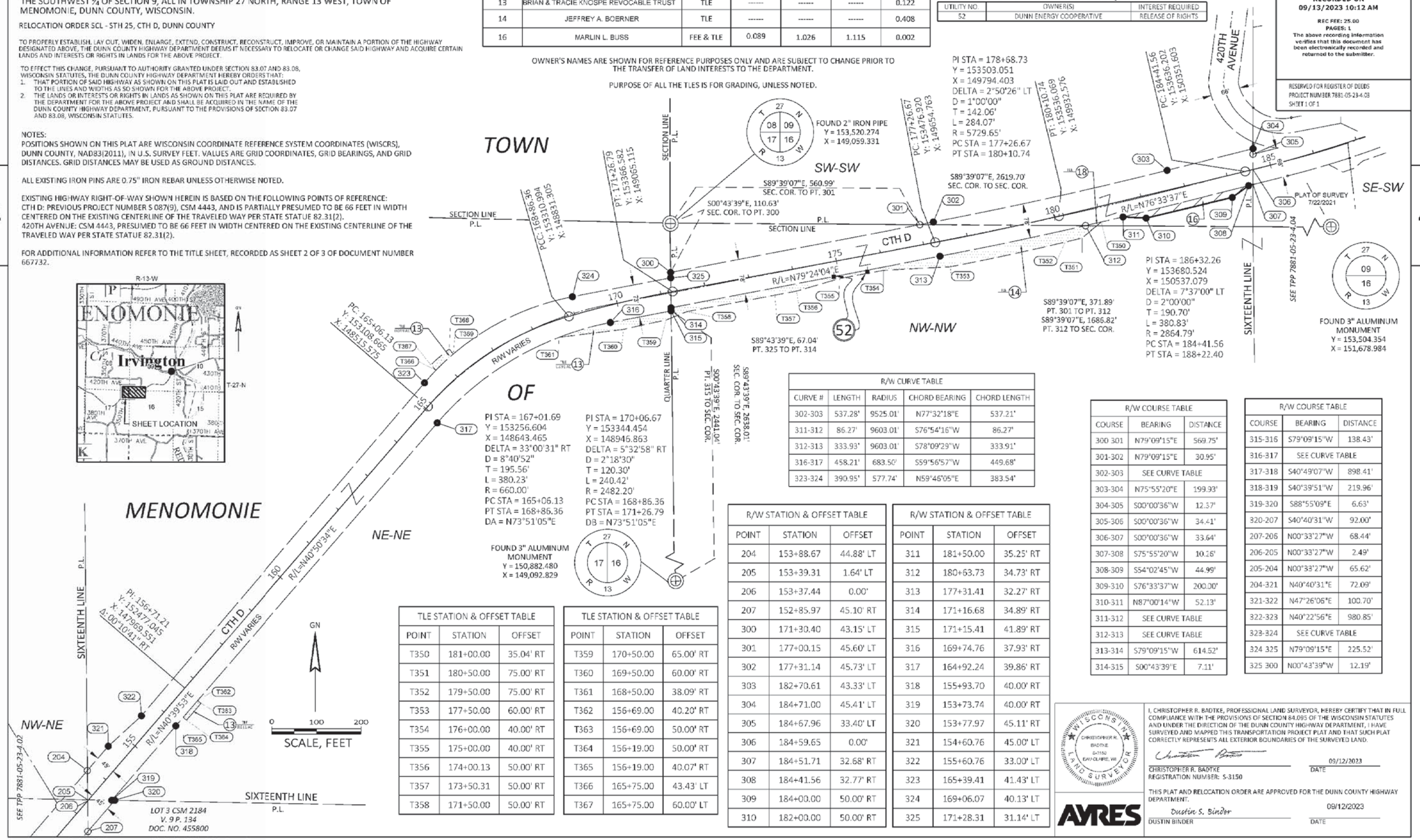

R/W CURVE TABLE

CURVE #	LENGTH	RADIUS	CHORD BEARING	CHORD LENGTH
302-303	537.28'	9525.01'	N77°32'18"E	537.21'
311-312	86.27'	9603.01'	S76°54'16"W	86.27'
312-313	333.93'	9603.01'	S78°09'29"W	333.91'
316-317	458.21'	683.50'	S59°56'57"W	449.68'
323-324	390.95'	577.74'	N59°46'05"E	383.54'

R/W COURSE TABLE

COURSE	BEARING	DISTANCE
300-301	N79°09'15"E	569.75'
301-302	N79°09'15"E	30.95'
302-303	SEE CURVE TABLE	
303-304	N75°55'20"E	199.93'
304-305	S00°00'36"W	12.37'
305-306	S00°00'36"W	34.41'
306-307	S00°00'36"W	33.64'
307-308	S75°55'20"W	10.16'
308-309	S54°02'45"W	44.99'
309-310	S76°33'37"W	200.00'
310-311	N87°00'14"W	52.13'
311-312	SEE CURVE TABLE	
312-313	SEE CURVE TABLE	
313-314	S79°09'15"W	614.52'
314-315	S00°43'39"E	7.11'

R/W COURSE TABLE

COURSE	BEARING	DISTANCE
315-316	S79°09'15"W	138.43'
316-317	SEE CURVE TABLE	
317-318	S40°49'07"W	898.41'
318-319	S40°39'51"W	219.96'
319-320	S88°55'09"E	6.63'
320-207	S40°40'31"W	92.00'
207-206	N00°33'27"W	68.44'
206-205	N00°33'27"W	2.49'
205-204	N00°33'27"W	65.62'
204-321	N40°40'31"E	72.09'
321-322	N47°26'06"E	100.70'
322-323	N40°22'56"E	980.85'
323-324	SEE CURVE TABLE	
324-325	N79°09'15"E	225.52'
325-300	N00°43'39"W	12.19'

R/W STATION & OFFSET TABLE

POINT	STATION	OFFSET
204	153+88.67	44.88' LT
205	153+39.31	1.64' LT
206	153+37.44	0.00'
207	152+85.97	45.10' RT
300	171+30.40	43.15' LT
301	177+00.15	45.60' LT
302	177+31.14	45.73' LT
303	182+70.61	43.33' LT
304	184+71.00	45.41' LT
305	184+67.96	33.40' LT
306	184+59.65	0.00'
307	184+51.71	32.68' RT
308	184+41.56	32.77' RT
309	184+00.00	50.00' RT
310	182+00.00	50.00' RT

R/W STATION & OFFSET TABLE

POINT	STATION	OFFSET
311	181+50.00	35.25' RT
312	180+63.73	34.73' RT
313	177+31.41	32.27' RT
314	171+16.68	34.89' RT
315	171+15.41	41.89' RT
316	169+74.76	37.93' RT
317	164+92.24	39.86' RT
318	155+93.70	40.00' RT
319	153+73.74	40.00' RT
320	153+77.97	45.11' RT
321	154+60.76	45.00' LT
322	155+60.76	33.00' LT
323	165+39.41	41.43' LT
324	169+06.07	40.13' LT
325	171+28.31	31.14' LT

TLE STATION & OFFSET TABLE

POINT	STATION	OFFSET
T350	181+00.00	35.04' RT
T351	180+50.00	75.00' RT
T352	179+50.00	75.00' RT
T353	177+50.00	60.00' RT
T354	176+00.00	40.00' RT
T355	175+00.00	40.00' RT
T356	174+00.13	50.00' RT
T357	173+50.31	50.00' RT
T358	171+50.00	50.00' RT

TLE STATION & OFFSET TABLE

POINT	STATION	OFFSET
T359	170+50.00	65.00' RT
T360	169+50.00	60.00' RT
T361	168+50.00	38.09' RT
T362	156+69.00	40.20' RT
T363	156+69.00	50.00' RT
T364	156+19.00	50.00' RT
T365	156+19.00	40.07' RT
T366	165+75.00	43.43' LT
T367	165+75.00	60.00' LT

I, CHRISTOPHER R. BADTKE, PROFESSIONAL LAND SURVEYOR, HEREBY CERTIFY THAT IN FULL COMPLIANCE WITH THE PROVISIONS OF SECTION 84.095 OF THE WISCONSIN STATUTES AND UNDER THE DIRECTION OF THE DUNN COUNTY HIGHWAY DEPARTMENT, I HAVE SURVEYED AND MAPPED THIS TRANSPORTATION PROJECT PLAT AND THAT SUCH PLAT CORRECTLY REPRESENTS ALL EXTERIOR BOUNDARIES OF THE SURVEYED LAND.

WISCONSIN CHRISTOPHER R. BADTKE S-3150 EAU CLAIRE, WI LAND SURVEYOR

CHRISTOPHER R. BADTKE — 09/12/2023
REGISTRATION NUMBER: S-3150 — DATE

THIS PLAT AND RELOCATION ORDER ARE APPROVED FOR THE DUNN COUNTY HIGHWAY DEPARTMENT.

Dustin S. Binder — 09/12/2023
DUSTIN BINDER — DATE

AYRES

FILE NAME: I:\41\410859 DUNN CTH D\C3D\RW\7881-05-23_0403.DWG
APPRAISAL PLAT DATE: 09/12/2023
PLOT DATE: 9/12/2023 11:47 AM
PLOT BY: BADTKE, CHRISTOPHER
PLOT NAME:
PLOT SCALE: 1 IN:200 FT

7881-05-23-4.03

DOCUMENT NUMBER: 667861 PAGE: 2

TRANSPORTATION PROJECT PLAT NO: 7881-05-23-4.04

THAT PART OF THE SOUTHEAST ¼ OF THE SOUTHWEST ¼ OF SECTION 9, AND THAT PART OF THE SOUTHWEST ¼ OF THE SOUTHEAST ¼ OF SECTION 9, ALL IN TOWNSHIP 27 NORTH, RANGE 13 WEST, TOWN OF MENOMONIE, DUNN COUNTY, WISCONSIN.

RELOCATION ORDER SCL - STH 25, CTH D, DUNN COUNTY

TO PROPERLY ESTABLISH, LAY OUT, WIDEN, ENLARGE, EXTEND, CONSTRUCT, RECONSTRUCT, IMPROVE, OR MAINTAIN A PORTION OF THE HIGHWAY DESIGNATED ABOVE, THE DUNN COUNTY HIGHWAY DEPARTMENT DEEMS IT NECESSARY TO RELOCATE OR CHANGE SAID HIGHWAY AND ACQUIRE CERTAIN LANDS AND INTERESTS OR RIGHTS IN LANDS FOR THE ABOVE PROJECT.

TO EFFECT THIS CHANGE, PURSUANT TO AUTHORITY GRANTED UNDER SECTION 83.07 AND 83.08, WISCONSIN STATUTES, THE DUNN COUNTY HIGHWAY DEPARTMENT HEREBY ORDERS THAT:

1. THAT PORTION OF SAID HIGHWAY AS SHOWN ON THIS PLAT IS LAID OUT AND ESTABLISHED TO THE LINES AND WIDTHS AS SO SHOWN FOR THE ABOVE PROJECT.
2. THE LANDS OR INTERESTS OR RIGHTS IN LANDS AS SHOWN ON THIS PLAT ARE REQUIRED BY THE DEPARTMENT FOR THE ABOVE PROJECT AND SHALL BE ACQUIRED IN THE NAME OF THE DUNN COUNTY HIGHWAY DEPARTMENT, PURSUANT TO THE PROVISIONS OF SECTION 83.07 AND 83.08, WISCONSIN STATUTES.

NOTES:

POSITIONS SHOWN ON THIS PLAT ARE WISCONSIN COORDINATE REFERENCE SYSTEM COORDINATES (WISCRS), DUNN COUNTY, NAD83(2011), IN U.S. SURVEY FEET. VALUES ARE GRID COORDINATES, GRID BEARINGS, AND GRID DISTANCES. GRID DISTANCES MAY BE USED AS GROUND DISTANCES.

ALL EXISTING IRON PINS ARE 0.75" IRON REBAR UNLESS OTHERWISE NOTED.

EXISTING HIGHWAY RIGHT-OF-WAY SHOWN HEREIN IS BASED ON THE FOLLOWING POINTS OF REFERENCE:
CTH D: PREVIOUS PROJECT NUMBER S 087(9), CSM 4443, PLAT OF SURVEY 7/22/2021,
420TH AVENUE: CSM 4443, PRESUMED TO BE 66 FEET IN WIDTH CENTERED ON THE EXISTING CENTERLINE OF THE TRAVELED WAY PER STATE STATUE 82.31(2).

FOR ADDITIONAL INFORMATION REFER TO THE TITLE SHEET, RECORDED AS SHEET 2 OF 3 OF DOCUMENT NUMBER 667732
FOR ADDITIONAL INFORMATION REFER TO THE EXTENSION SHEET, RECORDED AS SHEET 2 OF 2..

These labels should be 52

UTILITY INTERESTS REQUIRED

UTILITY NO.	OWNER(S)	INTEREST REQUIRED
50	WEST WISCONSIN TELCOM COOP	RELEASE OF RIGHTS
51	DUNN ENERGY COOPERATIVE	RELEASE OF RIGHTS

UTILITY EASEMENTS

UTILITY NO.	OWNER(S)	EASEMENTS
50	WEST WISCONSIN TELCOM COOP	NO EASEMENT OF RECORD - PARCEL 16 & 17
51	DUNN ENERGY COOPERATIVE	NO EASEMENT OF RECORD- PARCEL 16 & 18

667758
DUNN COUNTY, WI
REGISTER OF DEEDS
HEATHER M. KUHN
RECORDED ON
09/13/2023 10:12 AM
REC FEE: 25.00
PAGES: 2
The above recording information verifies that this document has been electronically recorded and returned to the submitter.

RESERVED FOR REGISTER OF DEEDS
PROJECT NUMBER 7881-05-23-4.04
SHEET 1 OF 2

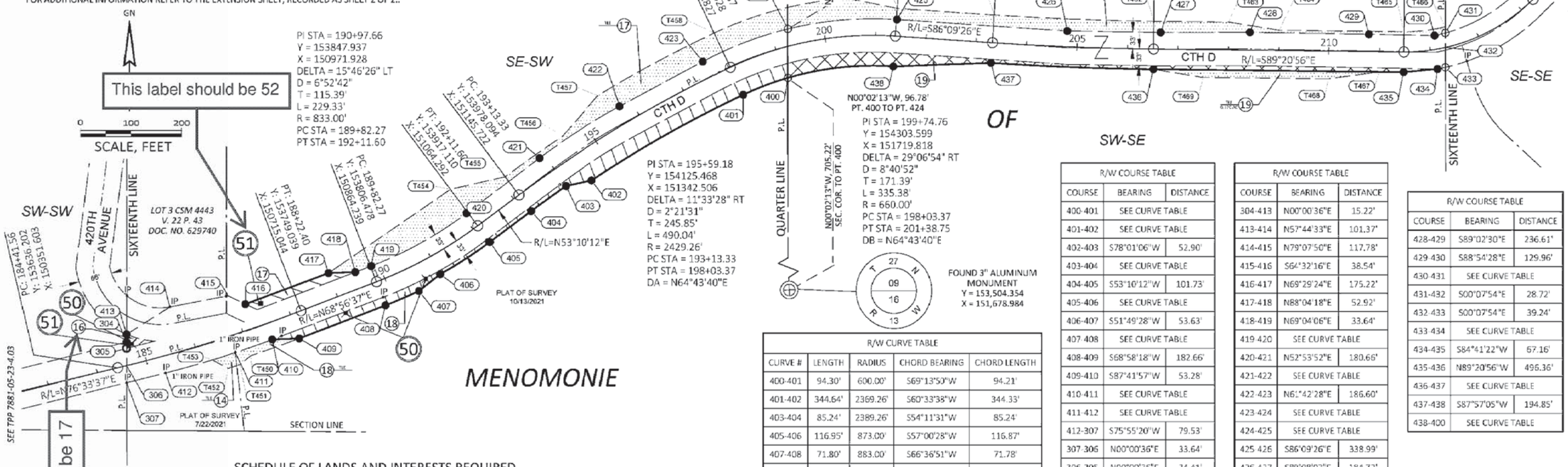

SCHEDULE OF LANDS AND INTERESTS REQUIRED

PARCEL NO.	OWNER(S)	INTEREST REQUIRED	R/W (ACRES) NEW	EXISTING	TOTAL	TLE
14	JEFFREY A. BOERNER	TLE	------	------	------	0.020
17	THOMAS A. LARRABEE	FEE & TLE	0.094	1.265	1.359	0.026
18	CHARLES STOUFF	FEE & TLE	0.485	0.942	1.427	0.043
19	IRVINGTON MOUNTAIN TREE FARM LLC	FEE & TLE	0.355	1.979	2.334	0.717

OWNER'S NAMES ARE SHOWN FOR REFERENCE PURPOSES ONLY AND ARE SUBJECT TO CHANGE PRIOR TO THE TRANSFER OF LAND INTERESTS TO THE DEPARTMENT.

PURPOSE OF ALL THE TLES IS FOR GRADING, UNLESS NOTED.

R/W CURVE TABLE

CURVE #	LENGTH	RADIUS	CHORD BEARING	CHORD LENGTH
400-401	94.30'	600.00'	S69°13'50"W	94.21'
401-402	344.64'	2369.26'	S60°33'38"W	344.33'
403-404	85.24'	2389.26'	S54°11'31"W	85.24'
405-406	116.95'	873.00'	S57°00'28"W	116.87'
407-408	71.80'	883.00'	S66°36'51"W	71.78'
410-411	77.45'	2178.13'	S70°38'52"W	77.44'
411-412	144.85'	2033.42'	S73°50'24"W	144.81'
419-420	216.47'	767.00'	N60°58'59"E	215.76'
421-422	189.59'	1233.00'	N57°18'10"E	189.40'
423-424	180.66'	709.59'	N69°00'05"E	180.18'
424-425	217.32'	709.59'	N85°04'09"E	216.47'
430-431	21.93'	322.00'	N76°37'59"E	21.93'
433-434	16.18'	388.00'	S78°30'24"W	16.18'
436-437	321.38'	5769.65'	N87°45'11"W	321.34'
438-400	210.59'	600.00'	S83°47'17"W	209.51'

R/W COURSE TABLE

COURSE	BEARING	DISTANCE
400-401	SEE CURVE TABLE	
401-402	SEE CURVE TABLE	
402-403	S78°01'06"W	52.90'
403-404	SEE CURVE TABLE	
404-405	S53°10'12"W	101.73'
405-406	SEE CURVE TABLE	
406-407	S51°49'28"W	53.63'
407-408	SEE CURVE TABLE	
408-409	S68°58'18"W	182.66'
409-410	S87°41'57"W	53.28'
410-411	SEE CURVE TABLE	
411-412	SEE CURVE TABLE	
412-307	S75°55'20"W	79.53'
307-306	N00°00'36"E	33.64'
306-305	N00°00'36"E	34.41'
305-304	N00°00'36"E	12.37'

R/W COURSE TABLE

COURSE	BEARING	DISTANCE
304-413	N00°00'36"E	15.22'
413-414	N57°44'33"E	101.37'
414-415	N79°07'50"E	117.78'
415-416	S64°32'16"E	38.54'
416-417	N69°29'24"E	175.22'
417-418	N88°04'18"E	52.92'
418-419	N69°04'06"E	33.64'
419-420	SEE CURVE TABLE	
420-421	N52°53'52"E	180.66'
421-422	SEE CURVE TABLE	
422-423	N61°42'28"E	186.60'
423-424	SEE CURVE TABLE	
424-425	SEE CURVE TABLE	
425-426	S86°09'26"E	338.99'
426-427	S89°08'03"E	184.72'
427-428	N89°54'25"E	176.61'

R/W COURSE TABLE

COURSE	BEARING	DISTANCE
428-429	S89°02'30"E	236.61'
429-430	S88°54'28"E	129.96'
430-431	SEE CURVE TABLE	
431-432	S00°07'54"E	28.72'
432-433	S00°07'54"E	39.24'
433-434	SEE CURVE TABLE	
434-435	S84°41'22"W	67.16'
435-436	N89°20'56"W	496.36'
436-437	SEE CURVE TABLE	
437-438	S87°57'05"W	194.85'
438-400	SEE CURVE TABLE	

WISCONSIN CHRISTOPHER R. BADTKE S-3150 EAU CLAIRE, WI LAND SURVEYOR

I, CHRISTOPHER R. BADTKE, PROFESSIONAL LAND SURVEYOR, HEREBY CERTIFY THAT IN FULL COMPLIANCE WITH THE PROVISIONS OF SECTION 84.095 OF THE WISCONSIN STATUTES AND UNDER THE DIRECTION OF THE DUNN COUNTY HIGHWAY DEPARTMENT, I HAVE SURVEYED AND MAPPED THIS TRANSPORTATION PROJECT PLAT AND THAT SUCH PLAT CORRECTLY REPRESENTS ALL EXTERIOR BOUNDARIES OF THE SURVEYED LAND.

CHRISTOPHER R. BADTKE — DATE 09/12/2023
REGISTRATION NUMBER: S-3150

THIS PLAT AND RELOCATION ORDER ARE APPROVED FOR THE DUNN COUNTY HIGHWAY DEPARTMENT.

DUSTIN BINDER — DATE 09/12/2023

AYRES

FILE NAME : I:\11\410859 DUNN CTH D\C3D\RW\7881-05-23_0404.DWG
APPRAISAL PLAT DATE : 09/12/2023
PLOT DATE : 9/12/2023 12:19 PM PLOT BY : BADTKE, CHRISTOPHER PLOT NAME : PLOT SCALE : 1 IN:200 FT

7881-05-23-4.04

DOCUMENT NUMBER: 667957 PAGE: 2

TRANSPORTATION PROJECT PLAT NO: 7881-05-23-4.04
EXTENSION SHEET

RELOCATION ORDER SCL - STH 25, CTH D, DUNN COUNTY

4

R/W STATION & OFFSET TABLE		
POINT	STATION	OFFSET
304	184+71.00	45.41'
305	184+67.96	33.40'
306	184+59.65	0.00'
307	184+51.71	32.68'
400	199+07.10	60.00'
401	198+03.37	60.00'
402	194+50.00	60.00'
403	194+00.00	40.00'
404	193+13.33	40.00'
405	192+11.60	40.00'
406	191+00.00	40.00'
407	190+50.00	50.00'
408	189+82.27	50.00'
409	188+00.00	50.00'
410	187+50.00	33.70'
411	186+73.47	34.39'
412	185+30.33	33.16'
413	184+75.00	60.00'
414	185+74.25	90.09'
415	186+94.80	76.89'

R/W STATION & OFFSET TABLE		
POINT	STATION	OFFSET
416	187+23.04	50.00'
417	189+00.00	50.02'
418	189+50.00	32.68'
419	189+83.69	32.61'
420	192+08.99	33.04'
421	193+88.67	35.09'
422	195+75.44	34.58'
423	197+59.48	33.98'
424	199+32.85	33.45'
425	201+39.85	33.00'
426	204+79.65	31.12'
427	206+65.32	33.00'
428	208+41.92	35.29'
429	210+78.53	34.03'
430	212+13.92	27.41'
431	212+37.70	27.97'
432	212+30.91	0.00'
433	212+23.19	38.39'
434	212+08.60	38.73'
435	211+48.08	40.00'

R/W STATION & OFFSET TABLE		
POINT	STATION	OFFSET
436	206+51.72	40.00'
437	203+32.57	40.00'
438	201+38.75	60.00'

TLE STATION & OFFSET TABLE		
POINT	STATION	OFFSET
T450	187+00.00	50.00'
T451	186+75.00	59.89'
T452	186+50.00	60.00'
T453	186+25.00	34.32'
T454	192+11.60	90.00'
T455	193+13.33	45.00'
T456	194+50.00	45.00'
T457	195+50.00	75.00'
T458	198+03.37	75.00'
T459	200+50.22	75.00'
T460	201+38.75	55.00'
T461	203+32.57	55.00'
T462	206+51.72	55.00'
T463	208+00.00	55.00'
T464	209+00.00	40.00'
T465	211+48.08	40.00'
T466	212+40.99	39.97'
T467	211+00.00	40.00'
T468	210+00.00	55.00'
T469	207+50.00	55.00'

4

PROJECT NUMBER 7881-05-23 - 4.04
SHEET 2 OF 2

FILE NAME : I:\41\410859 DUNN CTH D\C3D\RW\78810523_0404.DWG
APPRAISAL PLAT DATE : 09/12/2023

PLOT DATE :

PLOT BY :

PLOT NAME :

TRANSPORTATION PROJECT PLAT NO: 7881-05-23-4.05

THAT PART OF THE NORTHEAST ¼ OF THE SOUTHEAST ¼, AND THAT PART OF THE SOUTHEAST ¼ OF THE SOUTHEAST ¼ OF SECTION 9, TOWNSHIP 27 NORTH, RANGE 13 WEST, TOWN OF MENOMONIE, DUNN COUNTY, WISCONSIN.

RELOCATION ORDER SCL - STH 25, CTH D, DUNN COUNTY

TO PROPERLY ESTABLISH, LAY OUT, WIDEN, ENLARGE, EXTEND, CONSTRUCT, RECONSTRUCT, IMPROVE, OR MAINTAIN A PORTION OF THE HIGHWAY DESIGNATED ABOVE, THE DUNN COUNTY HIGHWAY DEPARTMENT DEEMS IT NECESSARY TO RELOCATE OR CHANGE SAID HIGHWAY AND ACQUIRE CERTAIN LANDS AND INTERESTS OR RIGHTS IN LANDS FOR THE ABOVE PROJECT.

TO EFFECT THIS CHANGE, PURSUANT TO AUTHORITY GRANTED UNDER SECTION 83.07 AND 83.08, WISCONSIN STATUTES, THE DUNN COUNTY HIGHWAY DEPARTMENT HEREBY ORDERS THAT:

1. THAT PORTION OF SAID HIGHWAY AS SHOWN ON THIS PLAT IS LAID OUT AND ESTABLISHED TO THE LINES AND WIDTHS AS SO SHOWN FOR THE ABOVE PROJECT.
2. THE LANDS OR INTERESTS OR RIGHTS IN LANDS AS SHOWN ON THIS PLAT ARE REQUIRED BY THE DEPARTMENT FOR THE ABOVE PROJECT AND SHALL BE ACQUIRED IN THE NAME OF THE DUNN COUNTY HIGHWAY DEPARTMENT, PURSUANT TO THE PROVISIONS OF SECTION 83.07 AND 83.08, WISCONSIN STATUTES.

667759
DUNN COUNTY, WI
REGISTER OF DEEDS
HEATHER M. KUHN
RECORDED ON
09/13/2023 10:12 AM
REC FEE: 25.00
PAGES: 1
The above recording information verifies that this document has been electronically recorded and returned to the submitter.

RESERVED FOR REGISTER OF DEEDS
PROJECT NUMBER 7881-05-23-4.05
SHEET 1 OF 1

SCHEDULE OF LANDS AND INTERESTS REQUIRED

PARCEL NO.	OWNER(S)	INTEREST REQUIRED	R/W (ACRES)			
			FEE	EXISTING	TOTAL	TLE
19	IRVINGTON MOUNTAIN TREE FARM LLC	FEE & TLE	------	0.346	0.346	0.145
21	WILLIAM E. LARSEN AND PENNY LARSEN	FEE & TLE	0.108	0.928	1.036	0.409
22	RICHARD A. SHAFER AND MARILYN L. SHAFER	FEE	0.613	0.334	0.947	------

OWNER'S NAMES ARE SHOWN FOR REFERENCE PURPOSES ONLY AND ARE SUBJECT TO CHANGE PRIOR TO THE TRANSFER OF LAND INTERESTS TO THE DEPARTMENT.

PURPOSE OF ALL THE TLES IS FOR GRADING, UNLESS NOTED.

UTILITY INTERESTS REQUIRED

UTILITY NO.	OWNER(S)	INTEREST REQUIRED
52	DUNN ENERGY COOPERATIVE	RELEASE OF RIGHTS
53	NORTHERN STATES POWER COMPANY	RELEASE OF RIGHTS

UTILITY EASEMENTS

UTILITY NO.	OWNER(S)	EASEMENTS
52	DUNN ENERGY COOPERATIVE	NO EASEMENT OF RECORD - PARCEL 21
53	NORTHERN STATES POWER COMPANY	V. 166, P. 343, DOC. NO. 260349 - PARCEL 19 V. 166, P. 344, DOC. NO. 260350 - PARCEL 22 V. 169, P. 383, DOC. NO. 269812 - PARCEL 22

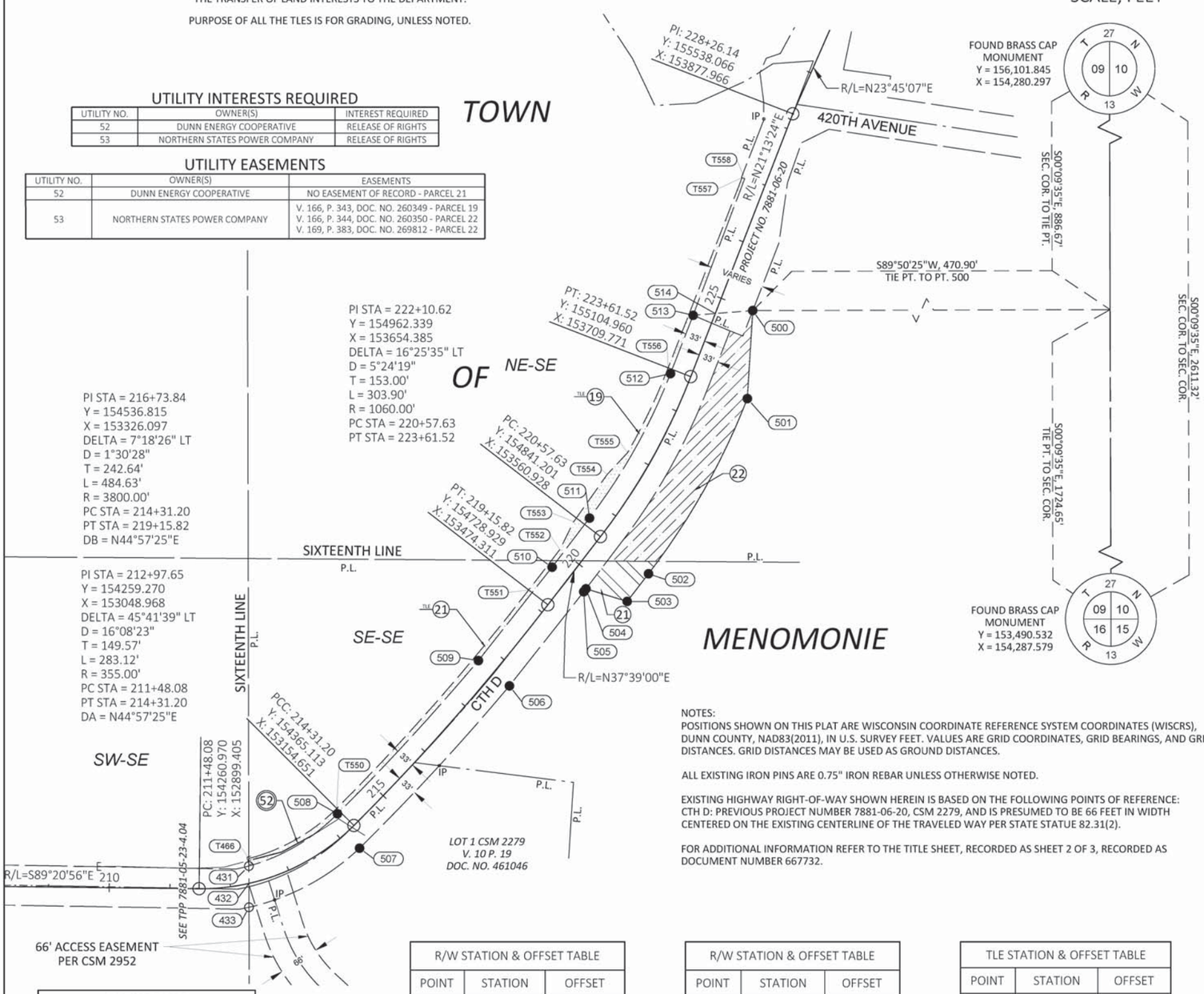

NOTES:
POSITIONS SHOWN ON THIS PLAT ARE WISCONSIN COORDINATE REFERENCE SYSTEM COORDINATES (WISCRS), DUNN COUNTY, NAD83(2011), IN U.S. SURVEY FEET. VALUES ARE GRID COORDINATES, GRID BEARINGS, AND GRID DISTANCES. GRID DISTANCES MAY BE USED AS GROUND DISTANCES.

ALL EXISTING IRON PINS ARE 0.75" IRON REBAR UNLESS OTHERWISE NOTED.

EXISTING HIGHWAY RIGHT-OF-WAY SHOWN HEREIN IS BASED ON THE FOLLOWING POINTS OF REFERENCE: CTH D: PREVIOUS PROJECT NUMBER 7881-06-20, CSM 2279, AND IS PRESUMED TO BE 66 FEET IN WIDTH CENTERED ON THE EXISTING CENTERLINE OF THE TRAVELED WAY PER STATE STATUE 82.31(2).

FOR ADDITIONAL INFORMATION REFER TO THE TITLE SHEET, RECORDED AS SHEET 2 OF 3, RECORDED AS DOCUMENT NUMBER 667732.

COURSE TABLE		
COURSE	BEARING	DISTANCE
500-501	S03°30'12"W	145.37'
501-502	SEE CURVE TABLE	
502-503	S37°39'00"W	57.63'
503-504	N72°58'06"W	70.99'
504-505	S37°19'13"W	6.10'
505-506	S38°16'56"W	197.59'
506-507	SEE CURVE TABLE	
507-433	SEE CURVE TABLE	
433-432	N00°07'54"W	39.24'
432-431	N00°07'54"W	28.72'
431-508	SEE CURVE TABLE	
508-509	SEE CURVE TABLE	
509-510	N38°16'56"E	196.04'
510-511	N37°19'13"E	101.70'
511-512	SEE CURVE TABLE	
512-513	N21°13'00"E	103.16'
513-514	N85°27'18"E	36.66'
514-500	N85°27'18"E	61.91'

R/W STATION & OFFSET TABLE		
POINT	STATION	OFFSET
431	212+37.70	27.97' LT
432	212+30.91	0.00'
433	212+23.19	38.39' RT
500	225+00.00	55.75' RT
501	223+61.52	100.00' RT
502	220+57.63	100.00' RT
503	220+00.00	100.00' RT
504	219+75.00	33.55' RT
505	219+68.90	33.59' RT

R/W STATION & OFFSET TABLE		
POINT	STATION	OFFSET
506	217+72.57	34.13' RT
507	214+13.02	33.39' RT
508	214+25.09	32.97' LT
509	217+71.80	31.87' LT
510	219+69.07	32.41' LT
511	220+71.18	32.92' LT
512	223+53.75	32.97' LT
513	224+57.15	33.01' LT
514	224+73.09	0.00'

TLE STATION & OFFSET TABLE		
POINT	STATION	OFFSET
T466	212+40.99	39.97' LT
T550	214+31.20	40.00' LT
T551	219+15.82	40.00' LT
T552	220+00.00	40.00' LT
T553	220+50.00	50.00' LT
T554	221+50.00	50.00' LT
T555	222+00.00	40.00' LT
T556	223+61.52	40.00' LT
T557	226+97.83	40.00' LT
T558	226+97.83	35.32' LT

CURVE TABLE				
CURVE #	LENGTH	RADIUS	CHORD BEARING	CHORD LENGTH
501-502	332.57'	1160.00'	S29°26'12"W	331.43'
506-507	364.27'	3833.00'	S42°43'14"W	364.13'
507-433	209.12'	388.00'	S61°52'17"W	206.60'
431-508	171.41'	322.00'	N59°25'53"E	169.40'
508-509	343.23'	3767.00'	N42°37'21"E	343.11'
511-512	273.87'	974.44'	N29°16'06"E	272.97'

WISCONSIN CHRISTOPHER R. BADTKE S-3150 EAU CLAIRE, WI LAND SURVEYOR

AYRES

I, CHRISTOPHER R. BADTKE, PROFESSIONAL LAND SURVEYOR, HEREBY CERTIFY THAT IN FULL COMPLIANCE WITH THE PROVISIONS OF SECTION 84.095 OF THE WISCONSIN STATUTES AND UNDER THE DIRECTION OF THE DUNN COUNTY HIGHWAY DEPARTMENT, I HAVE SURVEYED AND MAPPED THIS TRANSPORTATION PROJECT PLAT AND THAT SUCH PLAT CORRECTLY REPRESENTS ALL EXTERIOR BOUNDARIES OF THE SURVEYED LAND.

CHRISTOPHER R. BADTKE — DATE: 09/12/2023
REGISTRATION NUMBER: S-3150

THIS PLAT AND RELOCATION ORDER ARE APPROVED FOR THE DUNN COUNTY HIGHWAY DEPARTMENT.

DUSTIN BINDER — DATE: 09/12/2023

7881-05-23-4.05
PLOT SCALE :
PLOT NAME :
PLOT BY : Badtke, Christopher
PLOT DATE : 9/12/2023 12:26 PM
PLOT DATE :
FILE NAME : I:\41\410859 DUNN CTH D\CSD\RW\78810523_0405.DWG
APPRAISAL PLAT DATE : 09/12/2023

BENCH MARKS			
NO.	STATION	ELEV.	DESCRIPTION
BM 85	105+74	1043.20	49.1' RT, 120D SPK IN PPOL

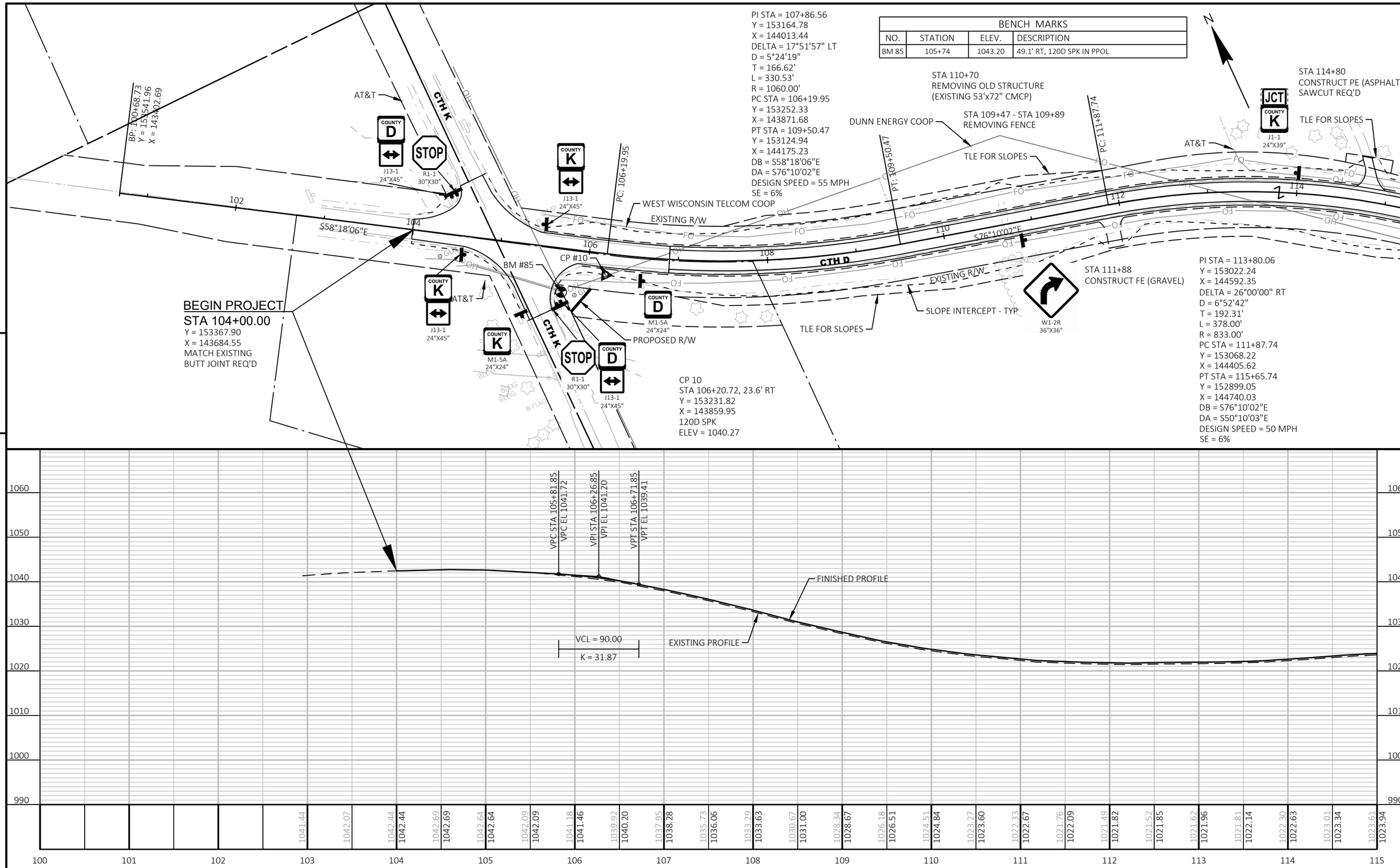

PROJECT NO: 7881-05-73	HWY: CTH D	COUNTY: DUNN	PLAN AND PROFILE: CTH D	SHEET 40	E

FILE NAME : I:\41\410859 DUNN CTH D\C3D\SHEETSPLAN\050101-PP.DWG
LAYOUT NAME - 01
PLOT DATE : 7/9/2024 10:56 AM
PLOT BY : RESHESKE, CARRIE
PLOT NAME :
PLOT SCALE : 1 IN:100 FT
WISDOT/CADDS SHEET 44

BENCH MARKS			
NO.	STATION	ELEV.	DESCRIPTION
BM 84	117+67	1026.76	31.5' RT, 120D SPK IN PPOL

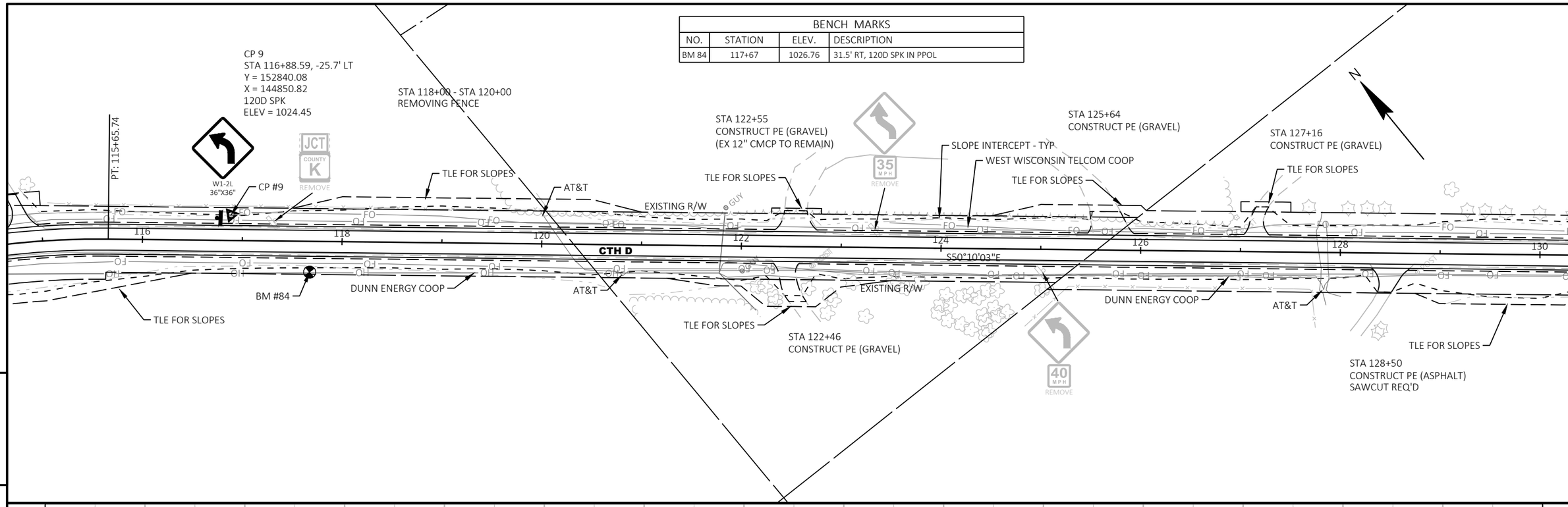

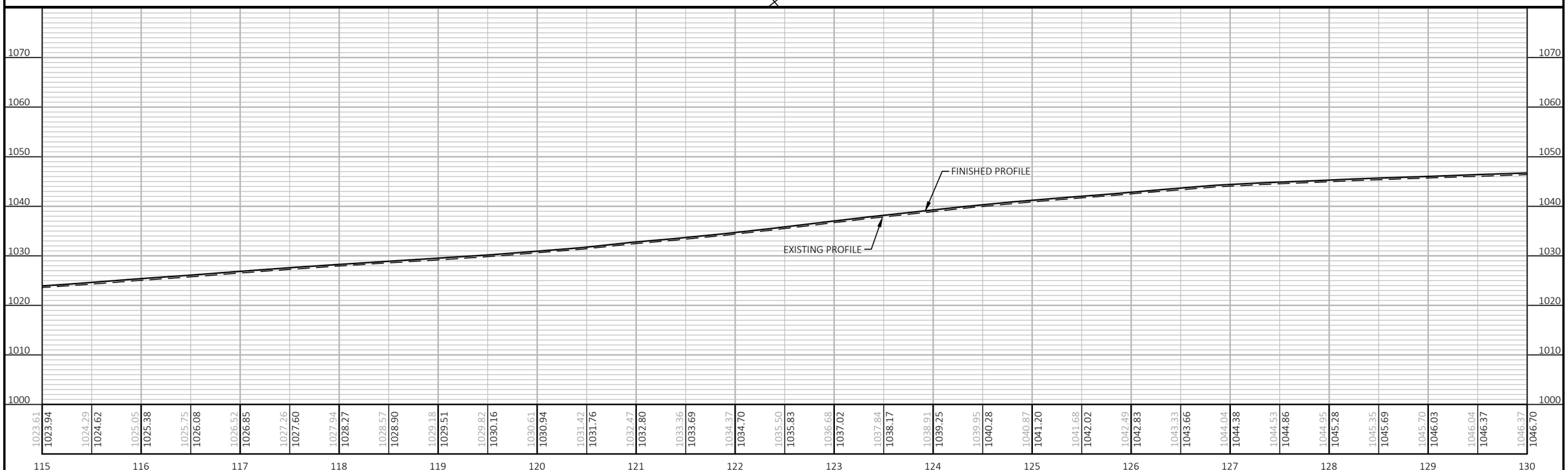

PROJECT NO: 7881-05-73	HWY: CTH D	COUNTY: DUNN	PLAN AND PROFILE: CTH D	SHEET 41	E

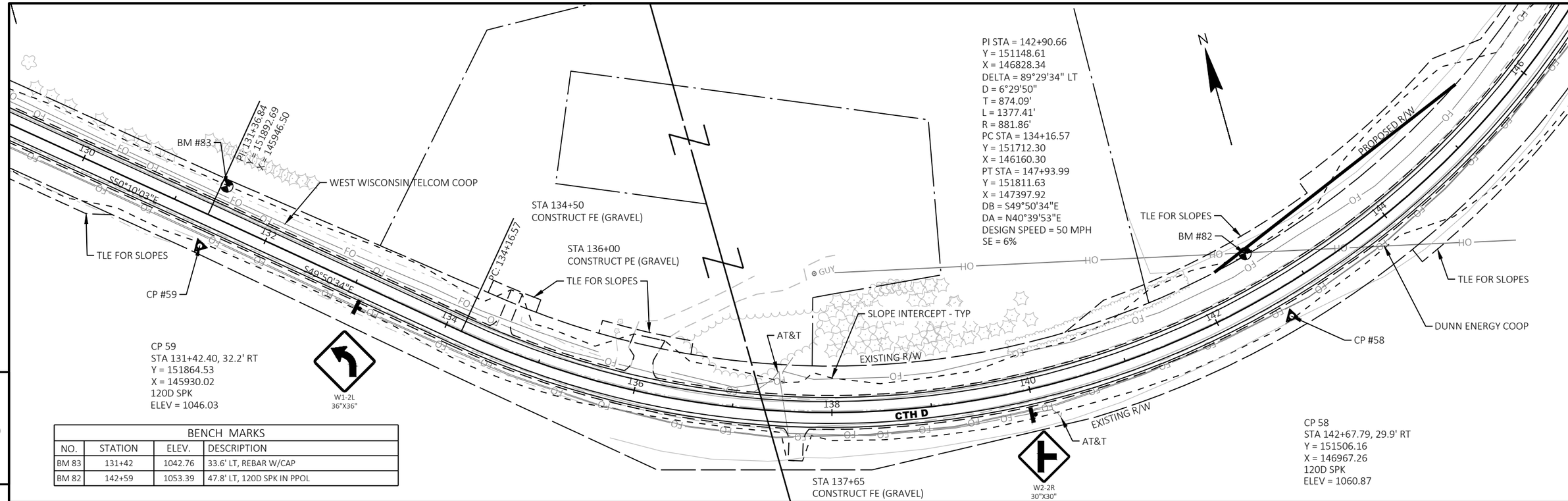

BENCH MARKS			
NO.	STATION	ELEV.	DESCRIPTION
BM 83	131+42	1042.76	33.6' LT, REBAR W/CAP
BM 82	142+59	1053.39	47.8' LT, 120D SPK IN PPOL

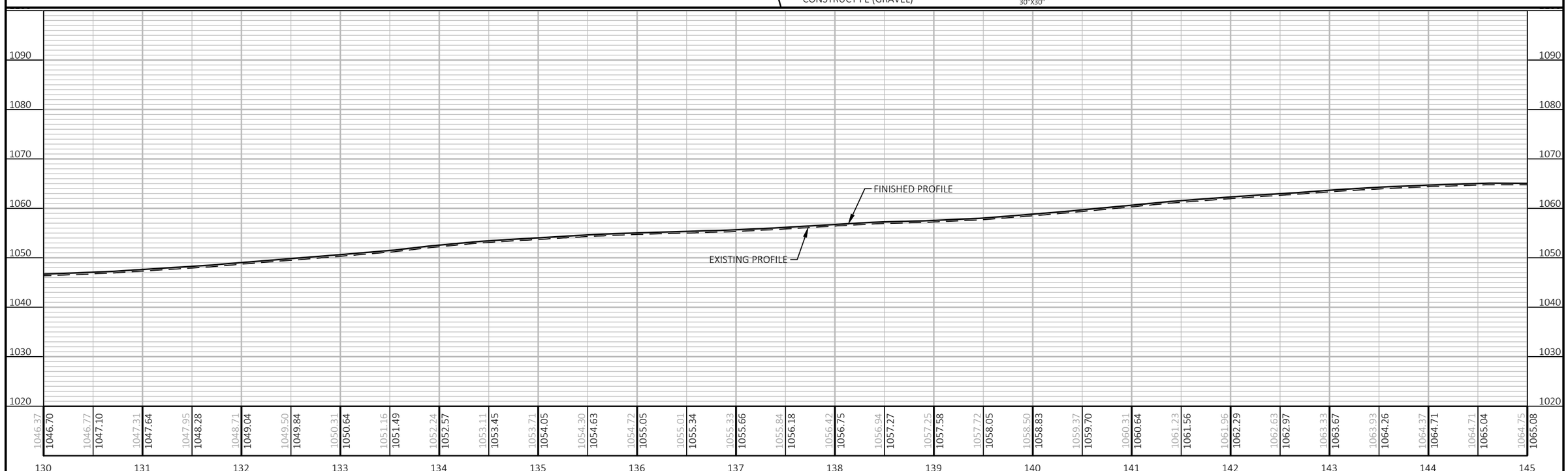

PROJECT NO: 7881-05-73	HWY: CTH D	COUNTY: DUNN	PLAN AND PROFILE: CTH D	SHEET 42	E

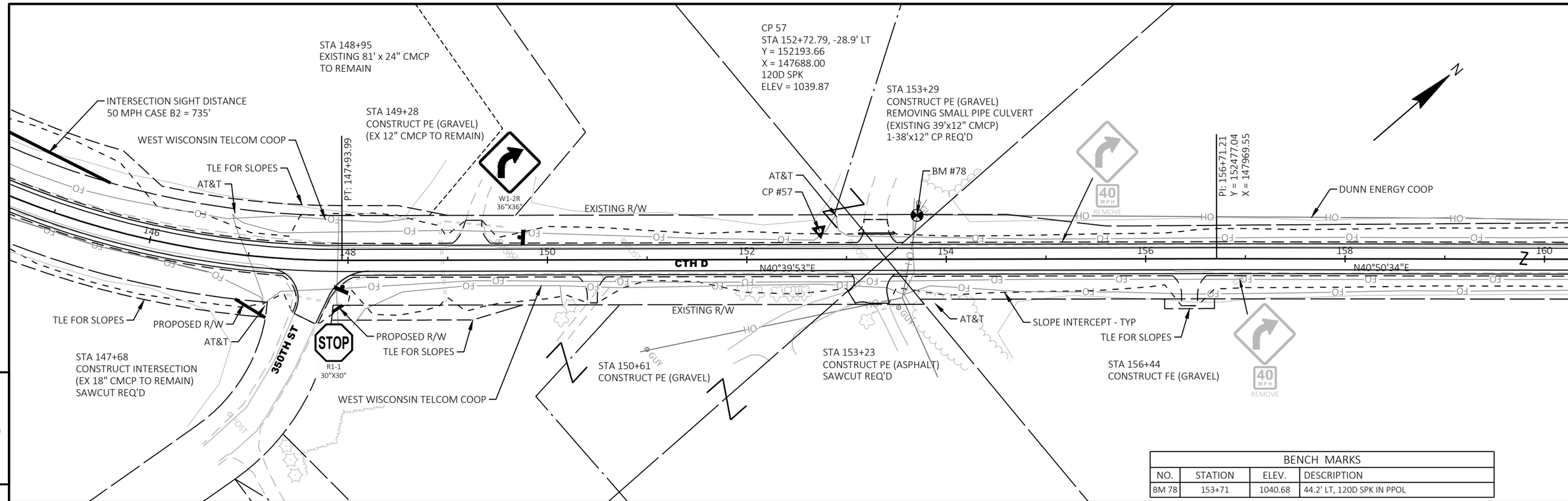

5

5

BENCH MARKS			
NO.	STATION	ELEV.	DESCRIPTION
BM 78	153+71	1040.68	44.2' LT, 120D SPK IN PPOL

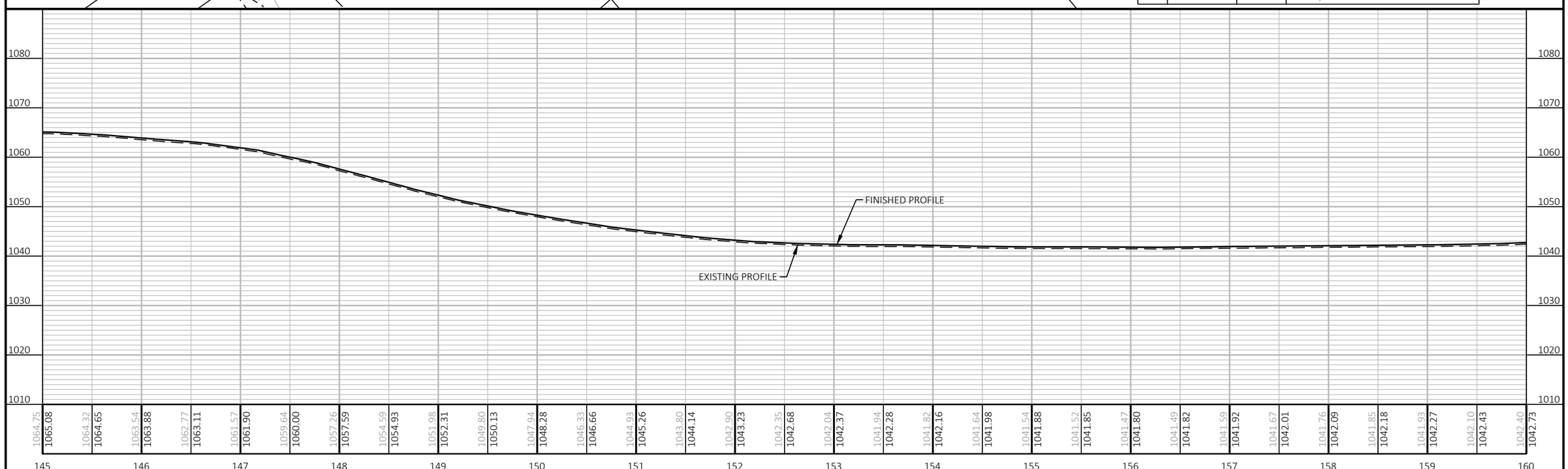

PROJECT NO: 7881-05-73	HWY: CTH D	COUNTY: DUNN	PLAN AND PROFILE: CTH D	SHEET 43	E

BENCH MARKS			
NO.	STATION	ELEV.	DESCRIPTION
BM 81	164+09	1044.91	34.5' LT, 120D SPK INPPOL

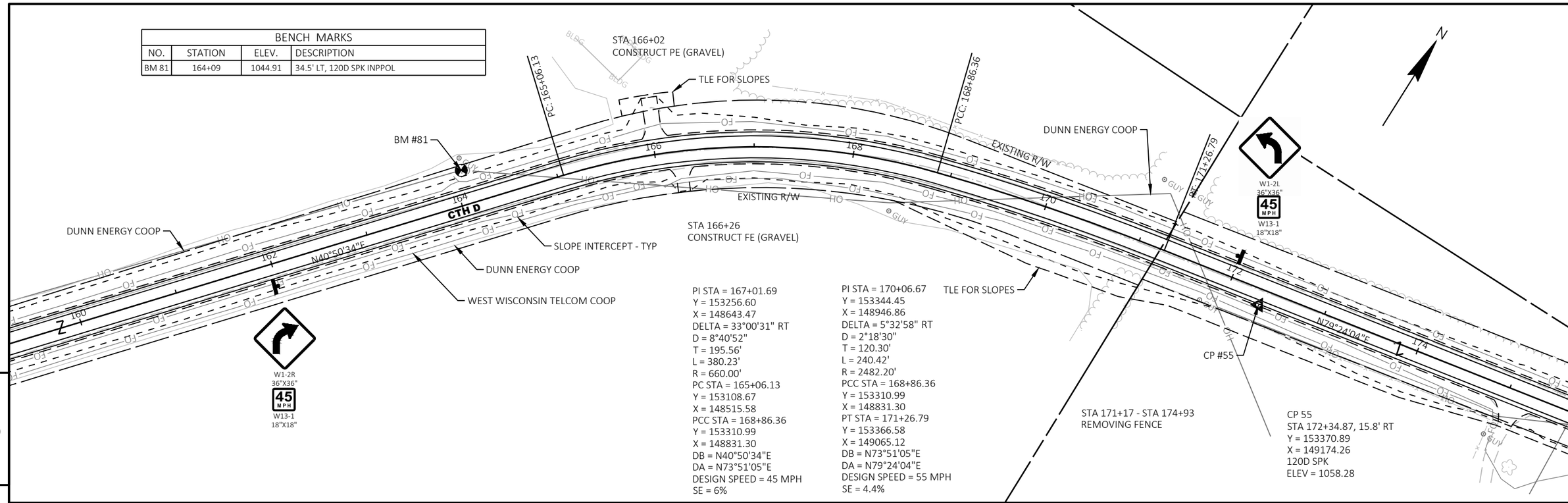

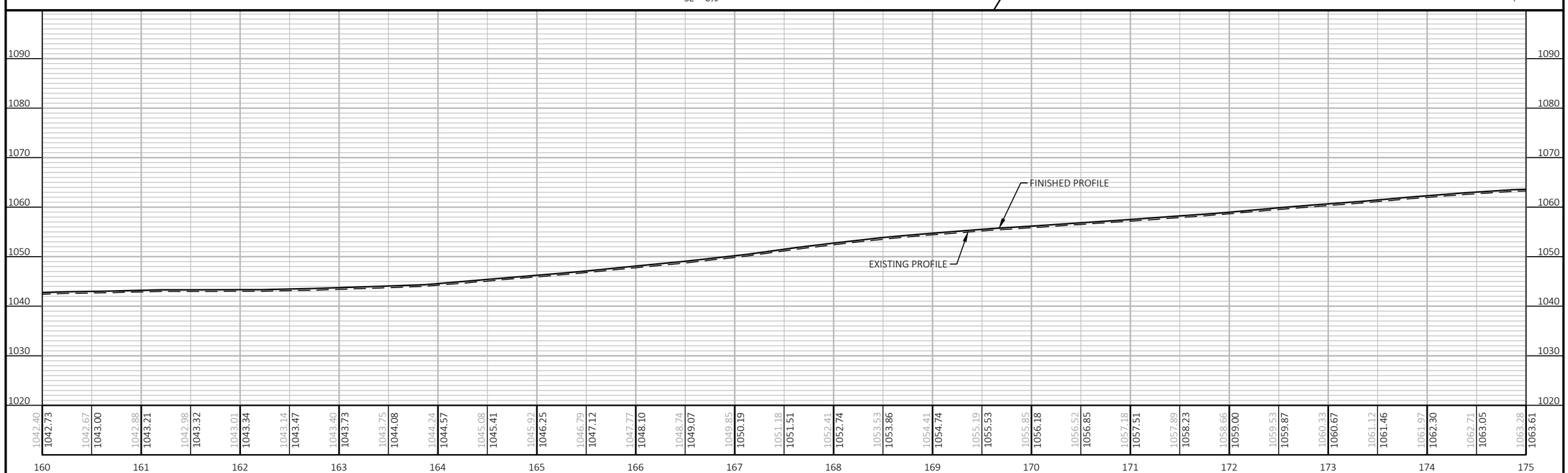

PROJECT NO: 7881-05-73	HWY: CTH D	COUNTY: DUNN	PLAN AND PROFILE: CTH D	SHEET 44	E

BENCH MARKS			
NO.	STATION	ELEV.	DESCRIPTION
BM 77	177+89	1072.42	46.7' LT, 120D SPK IN PPOL
BM 76	187+52	1029.75	40.7' LT, 120D SPK IN PPOL

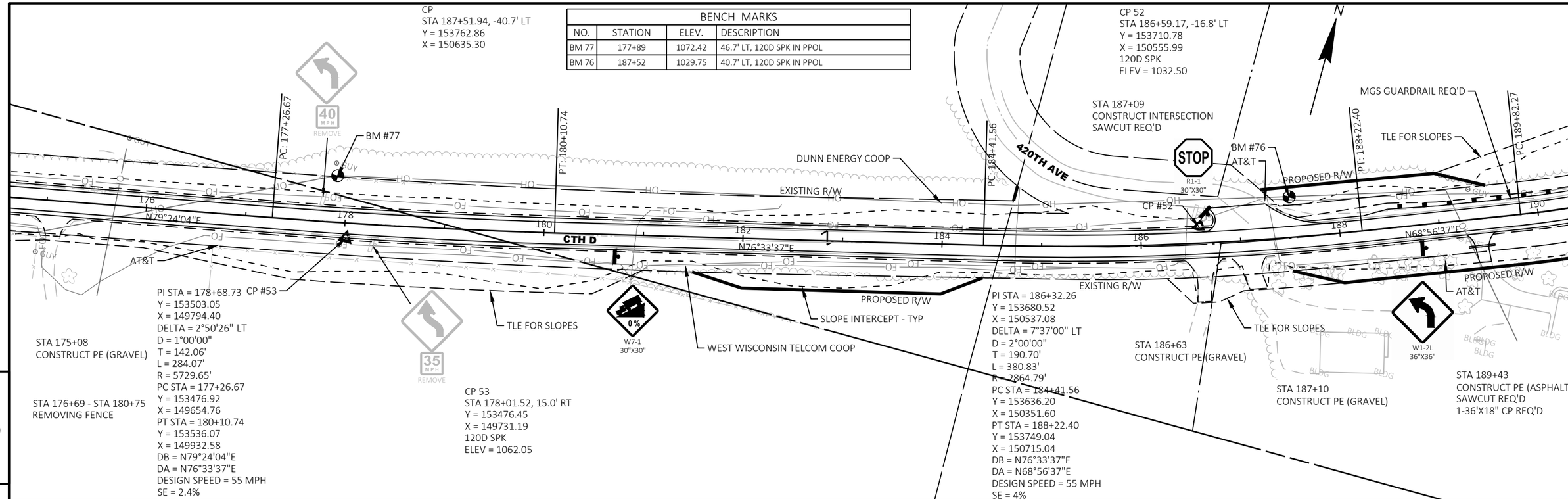

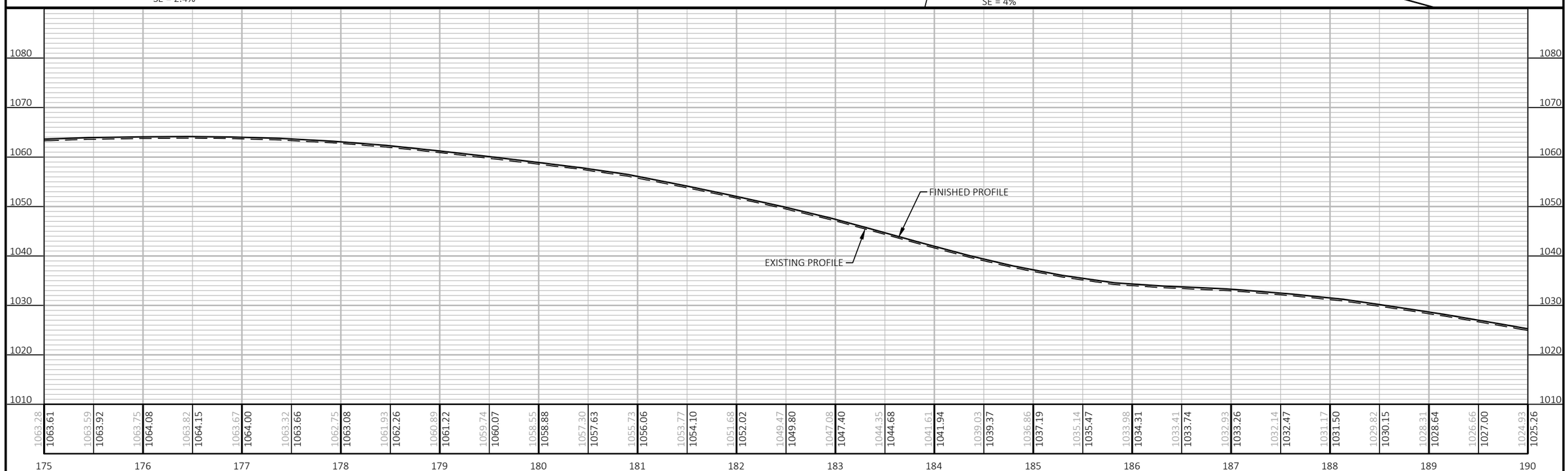

PROJECT NO: 7881-05-73	HWY: CTH D	COUNTY: DUNN	PLAN AND PROFILE: CTH D	SHEET 45	E

PI STA = 190+97.66
Y = 153847.94
X = 150971.93
DELTA = 15°46'26" LT
D = 6°52'42"
T = 115.39'
L = 229.33'
R = 833.00'
PC STA = 189+82.27
Y = 153806.48
X = 150864.24
PT STA = 192+11.60
Y = 153917.11
X = 151064.29
DB = N68°56'37"E
DA = N53°10'12"E
DESIGN SPEED = 50 MPH
SE = 6%

BENCH MARKS			
NO.	STATION	ELEV.	DESCRIPTION
BM 80	200+76	982.41	23' LT, REBAR W/CAP

STA 190+25 - STA 193+10
REMOVING GUARDRAIL

CP 54
STA 198+83.13, -22.6' LT
Y = 154281.46
X = 151631.73
120D SPK
ELEV = 992.75

CP 7
STA 200+32.30, -17.8' LT
Y = 154308.38
X = 151782.83
120D SPK
ELEV = 985.75

PI STA = 204+92.19
Y = 154268.43
X = 152243.47
DELTA = 3°11'29" LT
D = 1°00'00"
T = 159.62'
L = 319.15'
R = 5729.65'
PC STA = 203+32.57
Y = 154279.12
X = 152084.21
PT STA = 206+51.72
Y = 154266.61
X = 152403.08
DB = S86°09'26"E
DA = S89°20'56"E
DESIGN SPEED = 55 MPH
SE = 2.4%

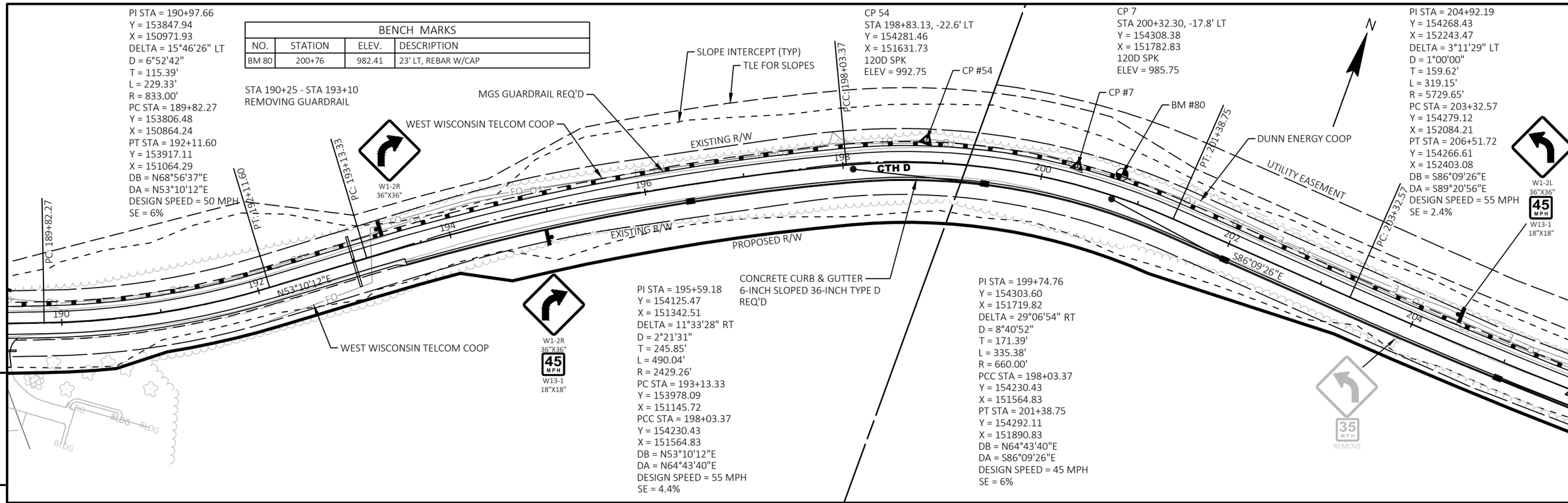

PI STA = 195+59.18
Y = 154125.47
X = 151342.51
DELTA = 11°33'28" RT
D = 2°21'31"
T = 245.85'
L = 490.04'
R = 2429.26'
PC STA = 193+13.33
Y = 153978.09
X = 151145.72
PCC STA = 198+03.37
Y = 154230.43
X = 151564.83
DB = N53°10'12"E
DA = N64°43'40"E
DESIGN SPEED = 55 MPH
SE = 4.4%

PI STA = 199+74.76
Y = 154303.60
X = 151719.82
DELTA = 29°06'54" RT
D = 8°40'52"
T = 171.39'
L = 335.38'
R = 660.00'
PCC STA = 198+03.37
Y = 154230.43
X = 151564.83
PT STA = 201+38.75
Y = 154292.11
X = 151890.83
DB = N64°43'40"E
DA = S86°09'26"E
DESIGN SPEED = 45 MPH
SE = 6%

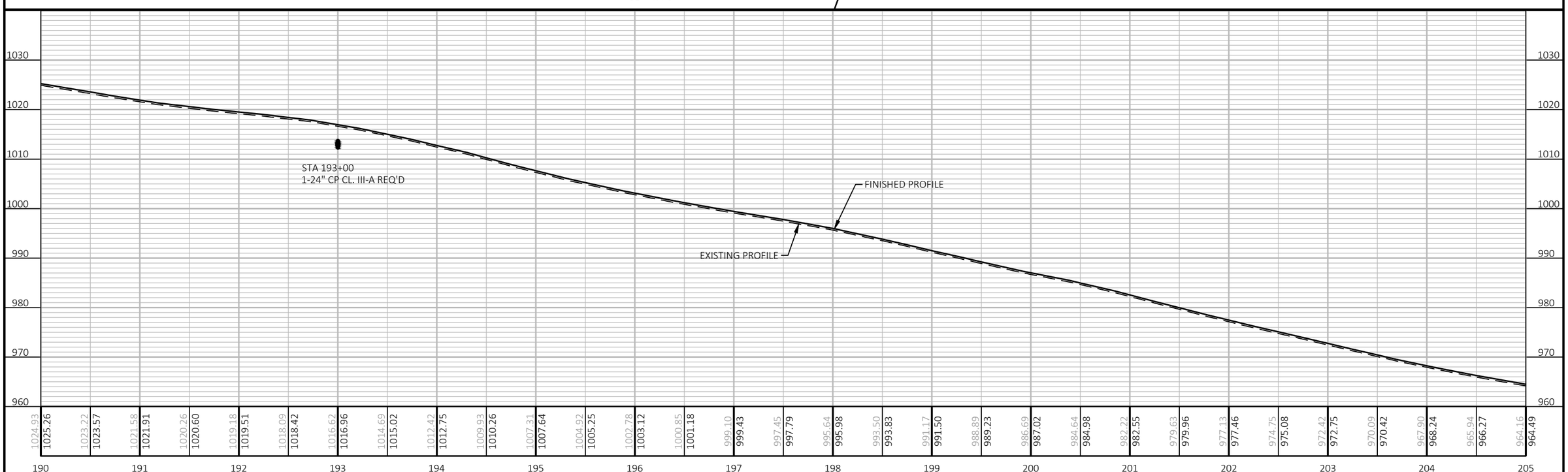

PROJECT NO: 7881-05-73	HWY: CTH D	COUNTY: DUNN	PLAN AND PROFILE: CTH D	SHEET 46	E

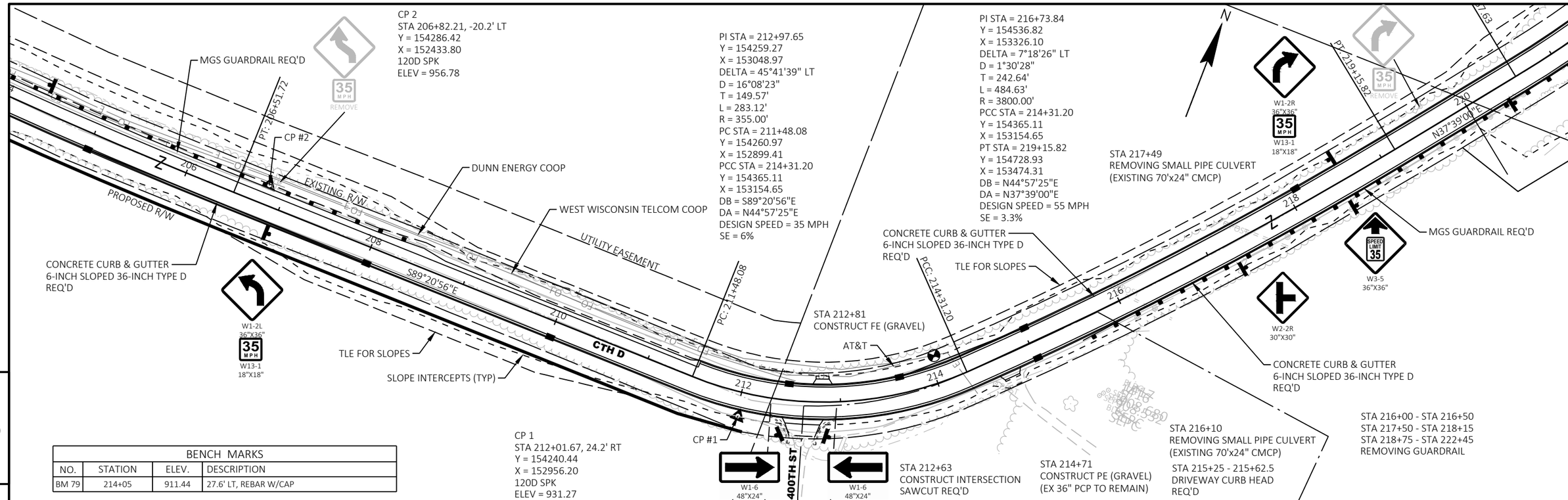

BENCH MARKS			
NO.	STATION	ELEV.	DESCRIPTION
BM 79	214+05	911.44	27.6' LT, REBAR W/CAP

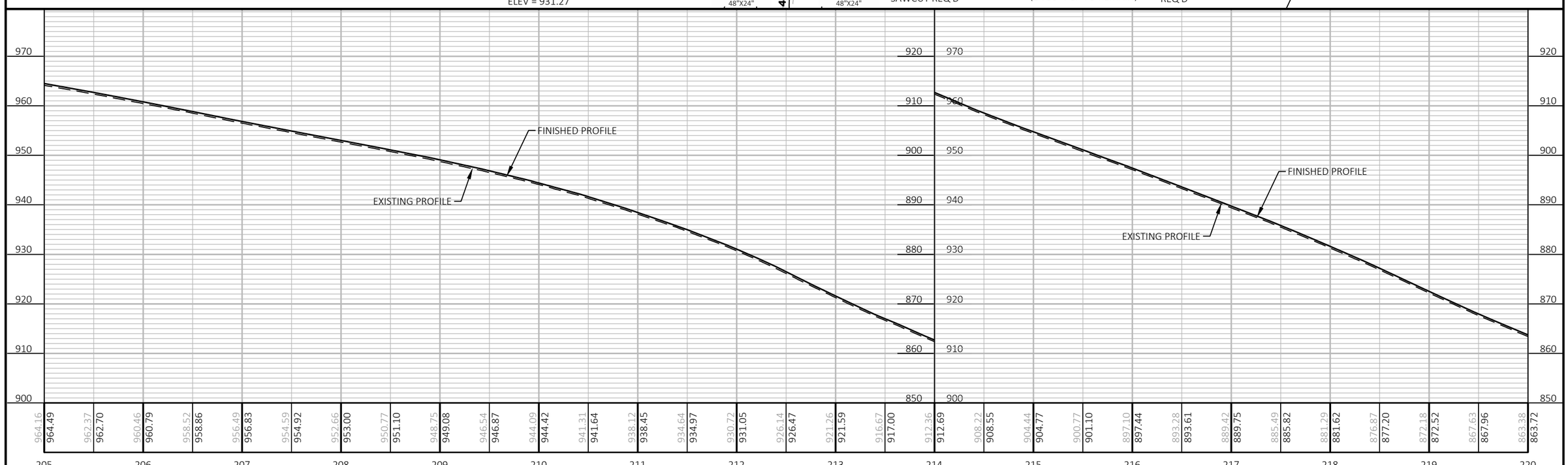

PROJECT NO: 7881-05-73	HWY: CTH D	COUNTY: DUNN	PLAN AND PROFILE: CTH D	SHEET 47	E

BENCH MARKS			
NO.	STATION	ELEV.	DESCRIPTION
BM 75	228+87	789.62	20.3' RT, ALUMN BRIDGE VERTICAL CONTROL

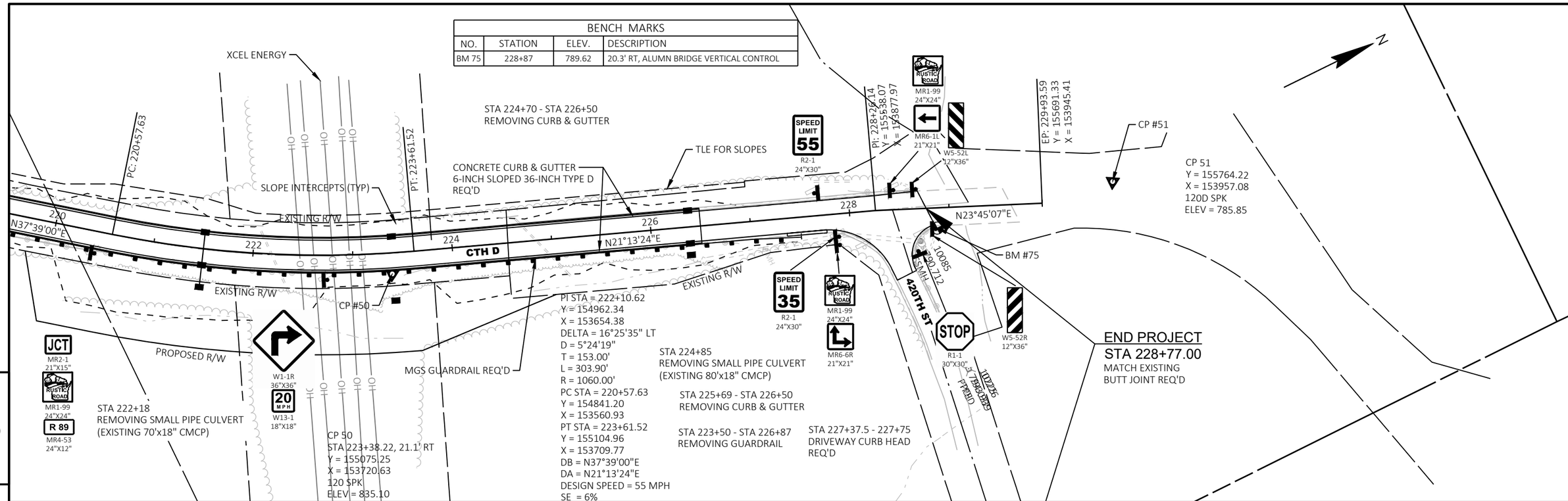

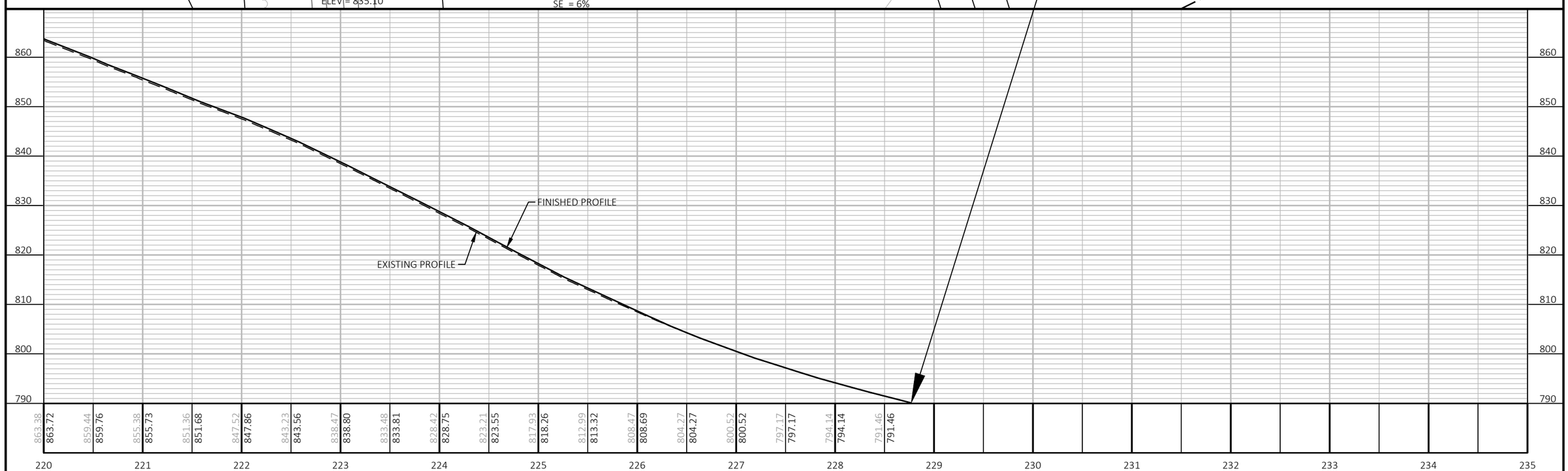

PROJECT NO: 7881-05-73	HWY: CTH D	COUNTY: DUNN	PLAN AND PROFILE: CTH D	SHEET 48	E

FILE NAME : I:\41\410859 DUNN CTH D\C3D\SHEETSPLAN\050101-PP.DWG
LAYOUT NAME - 09
PLOT DATE : 7/9/2024 10:57 AM
PLOT BY : RESHESKE, CARRIE
PLOT NAME :
PLOT SCALE : 1 IN:100 FT
WISDOT/CADDS SHEET 44

Standard Detail Drawing List

08A05-21C	INLET COVERS TYPE F, HM, HM-S, S, T, HM-GJ & HM-GJ-S
08A05-21D	INLET COVERS TYPE V, V-B, & VV-B
08B09-04	MANHOLES 3-FT, 4-FT, 5-FT, 6-FT, 7-FT, 8-FT, 9-FT, 10-FT DIAMETER
08C07-03	INLETS 2X2-FT, 2X2.5-FT, 2X3-FT, 2.5X3-FT & 2X3.5-FT
08D01-23A	CONCRETE CURB & GUTTER
08D01-23B	CONCRETE CURB, TIES AND CURB AND GUTTER APPLICATIONS
08D22-01	DRIVEWAYS WITHOUT CURB & GUTTER RESURFACING PROJECTS RURAL
08E08-03	TYPICAL INSTALLATIONS OF EROSION BALES / TEMPORARY DITCH CHECKS
08E09-06	SILT FENCE
08E10-02	INLET PROTECTION TYPE A, B, C AND D
08E15-01	CULVERT PIPE CHECK
08F01-11	APRON ENDWALLS FOR CULVERT PIPE
08F04-08	JOINT TIES FOR CONCRETE PIPE AND CONCRETE COLLAR DETAIL
13A11-04A	CENTERLINE RUMBLE STRIPS - ASPHALT
13C19-03	HMA LONGITUDINAL JOINTS
14B29-01	SAFETY EDGE
14B42-07A	MIDWEST GUARDRAIL SYSTEM (MGS) GUARDRAIL
14B42-07B	MIDWEST GUARDRAIL SYSTEM (MGS) GUARDRAIL
14B42-07C	MIDWEST GUARDRAIL SYSTEM (MGS) GUARDRAIL
14B42-07D	MIDWEST GUARDRAIL SYSTEM (MGS) GUARDRAIL
14B44-04A	MIDWEST GUARDRAIL SYSTEM ENERGY ABSORBING TERMINAL (MGS)
14B44-04B	MIDWEST GUARDRAIL SYSTEM ENERGY ABSORBING TERMINAL (MGS)
14B44-04C	MIDWEST GUARDRAIL SYSTEM ENERGY ABSORBING TERMINAL (MGS)
15A03-02A	FLEXIBLE MARKER POST FOR CULVERT END
15A03-02B	FLEXIBLE MARKER POST FOR CULVERT END
15C02-09A	BARRICADES AND SIGNS FOR MAINLINE CLOSURES
15C02-09B	BARRICADES AND SIGNS FOR VARIOUS CLOSURES
15C02-09C	DETOUR SIGNING FOR MAINLINE CLOSURES
15C03-05	BARRICADES AND SIGNS FOR SIDEROAD CLOSURES
15C08-23A	PERMANENT LONGITUDINAL PAVEMENT MARKINGS
15C08-23B	TEMPORARY LONGITUDINAL PAVEMENT MARKING
15C11-10B	CHANNELIZING DEVICES DRUMS, CONES, BARRICADES AND VERTICAL PANELS
15C12-09A	TRAFFIC CONTROL FOR LANE CLOSURE WITH FLAGGING OPERATION
15C35-06A	PAVEMENT MARKING (INTERSECTIONS)

6

6

GENERAL NOTES

DETAILS OF CONSTRUCTION, MATERIALS AND WORKMANSHIP NOT SHOWN ON THIS DRAWING SHALL CONFORM TO THE PERTINENT REQUIREMENTS OF THE STANDARD SPECIFICATIONS AND THE APPLICABLE SPECIAL PROVISIONS.

DETAIL DRAWINGS FOR PROPOSED ALTERNATE DESIGNS FOR INLET COVERS SHALL BE SUBMITTED TO THE ENGINEER FOR APPROVAL PROVIDING THAT SUCH ALTERNATE DESIGNS MAKE PROVISION FOR EQUIVALENT CAPACITY AND STRENGTH.

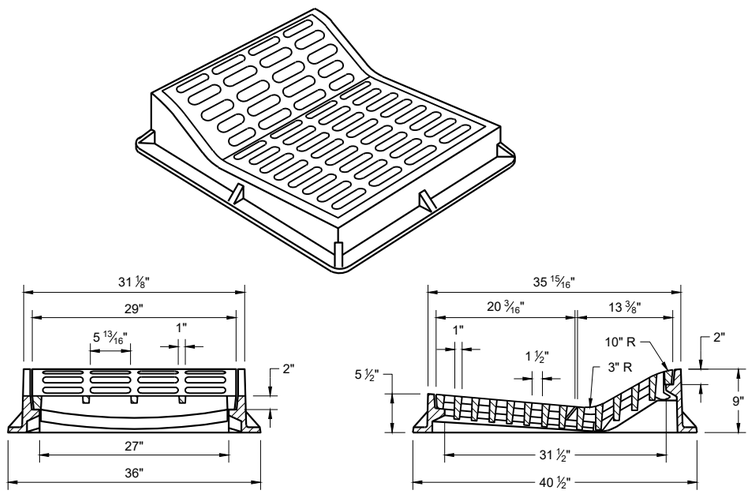

TYPE "F"

USE WITH TYPES "A" AND "D" CONCRETE CURB AND GUTTER, 36"

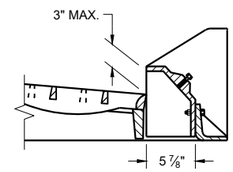

ALTERNATIVE CURB BOX FOR TYPE "HM" COVER

USE WITH TYPES "G" AND "J" CONCRETE CURB AND GUTTER, 30 INCH
NOTED AS TYP "HM-GJ" ON DRAINAGE TABLE

NOTE:
SPECIAL GRATE FOR THE TYPE "H" COVER MAY ALSO BE USED FOR THE TYPE "HM-GJ" COVER.

NOTED AS TYPE HM-GJ-S ON THE DRAINAGE TABLE.

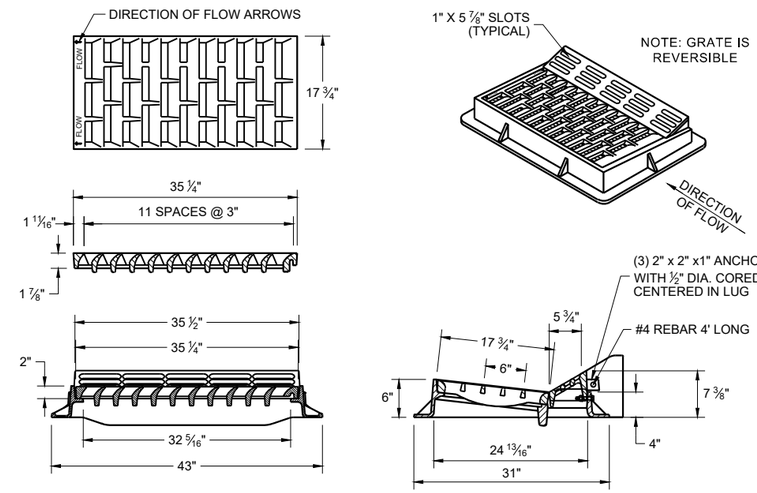

TYPE "HM"

USE WITH TYPES "A" AND "D" CONCRETE CURB AND GUTTER, 36"

NOTE:
SPECIAL GRATE FOR THE TYPE "H" COVER MAY ALSO BE USED FOR THE TYPE "HM-GJ" COVER.

NOTED AS TYPE HM-GJ-S ON THE DRAINAGE TABLE.

6

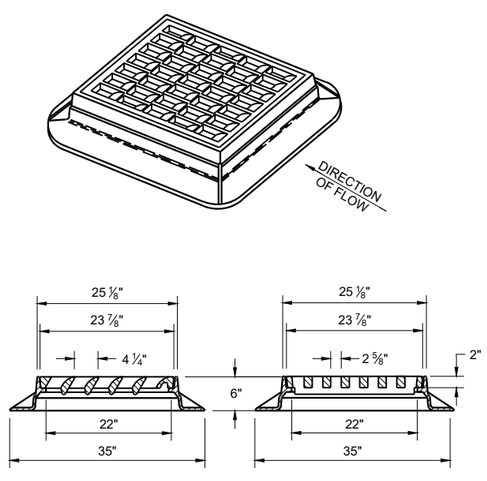

TYPE "S"

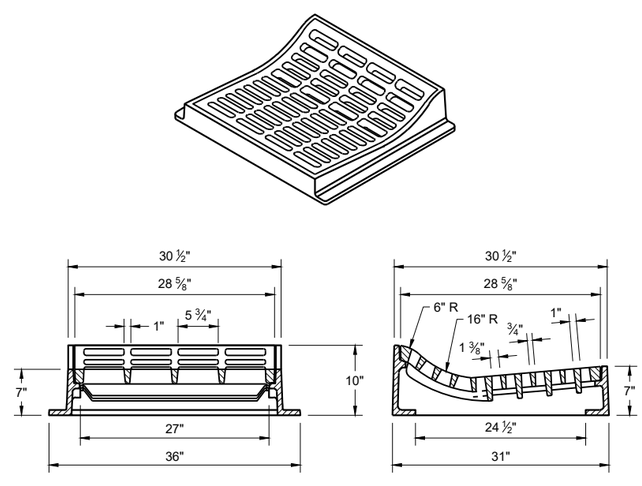

TYPE "T"

USE WITH TYPES "R" AND "T" CONCRETE CURB AND GUTTER, 36"

INLET COVERS
TYPES F, HM, HM-S, S, T, HM-GJ AND HM-GJ-S

STATE OF WISCONSIN
DEPARTMENT OF TRANSPORTATION

APPROVED
December 2023 — DATE
/S/ Rodney Taylor — ROADWAY STANDARDS DEVELOPMENT UNIT SUPERVISOR

FHWA

6

SDD 08A05-21c

GENERAL NOTES

DETAILS OF CONSTRUCTION, MATERIALS AND WORKMANSHIP NOT SHOWN ON THIS DRAWING SHALL CONFORM TO THE PERTINENT REQUIREMENTS OF THE STANDARD SPECIFICATIONS AND THE APPLICABLE SPECIAL PROVISIONS.

DETAIL DRAWINGS FOR PROPOSED ALTERNATE DESIGNS FOR INLET COVERS SHALL BE SUBMITTED TO THE ENGINEER FOR APPROVAL PROVIDING THAT SUCH ALTERNATE DESIGNS MAKE PROVISION FOR EQUIVALENT CAPACITY AND STRENGTH.

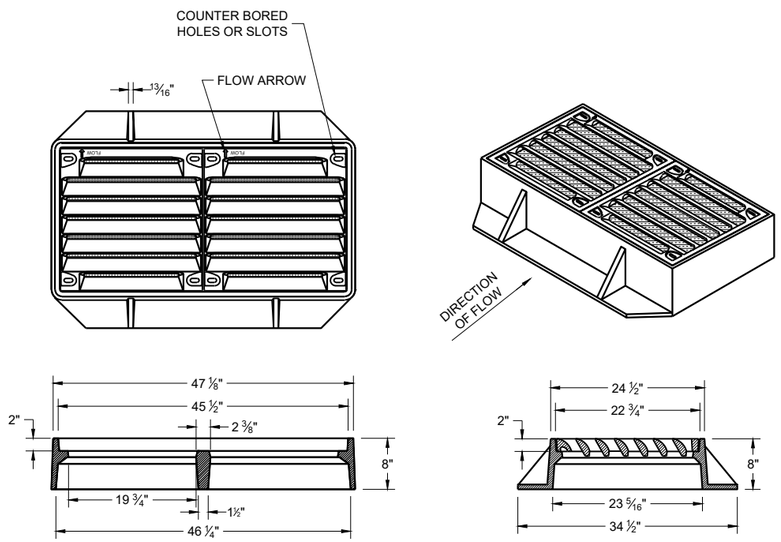

TYPE "VV-B"

NOTES: ALL HARDWARE TO BE SUPPLIED BY CASTING MANUFACTURER
ALL DRILLING AND TAPPING GRATES AND FRAMES BY CASTING MANUFACTURER

TYPE V
FRAME - CAST GRAY IRON ASTM A48 CLASS 35B
3/8" DIA. X 1/16" DRILL START IN 8 LOCATIONS
GRATE - CAST GRAY IRON ASTM A-48, CLASS 35B

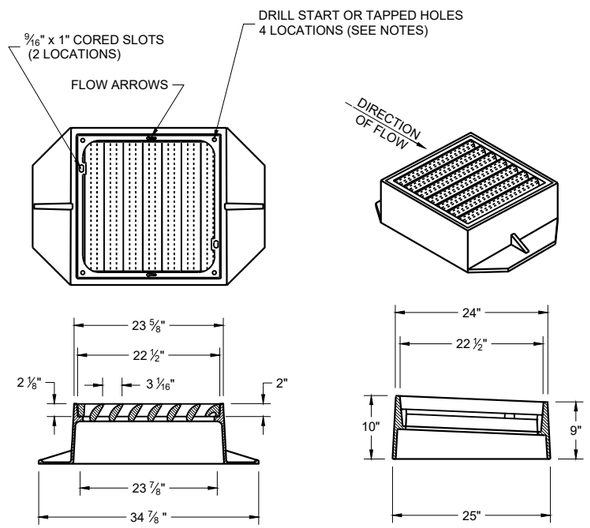

TYPE "V"

NOTES: ALL HARDWARE TO BE SUPPLIED BY CASTING MANUFACTURER ALL DRILLING AND TAPPING GRATES AND FRAMES BY CASTING MANUFACTURER

TYPE V
FRAME - CAST GRAY IRON ASTM A48 CLASS 40A
3/8" DIA. X 1/16" DRILL START IN 4 LOCATIONS
GRATE - CAST GRAY IRON ASTM A-48, CLASS 35B

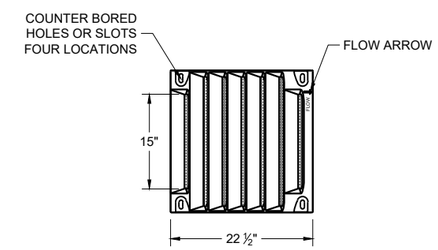

BOLT DOWN GRATE FOR TYPE "V" AND "VV-B" COVER

NOTES: ALL HARDWARE TO BE SUPPLIED BY CASTING MANUFACTURER NOTED AS TYPE "V-B" OR "VV-B" (FOR DOUBLE GRATE) ON DRAINAGE TABLE

TAP 1/2" -13 HOLES IN FOUR LOCATIONS PER GRATE IN FRAME TO BOLT GRATE(S).
FRAME - CAST GRAY IRON ASTM A48 CLASS 40A

GRATE - CAST DUCTILE IRON ASTM A536, 55+KSI YIELD
BOLTS - 1/2" -13 STAINLESS STEEL BOLTS WITH WASHERS
TORQUE BOLTS TO MANUFACTURER SPECIFICATION DO NOT OVERTIGHTEN.

INLET COVERS
TYPES V, V-B, AND VV-B

STATE OF WISCONSIN
DEPARTMENT OF TRANSPORTATION

APPROVED
December 2023 — DATE
/S/ Rodney Taylor — ROADWAY STANDARDS DEVELOPMENT UNIT SUPERVISOR

FHWA

6

SDD 08A05-21d

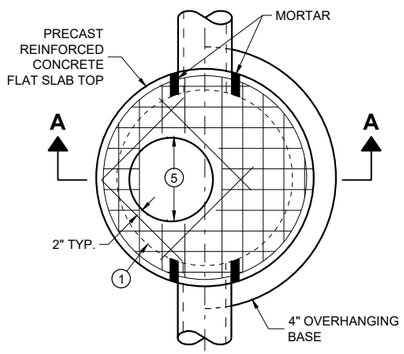

PLAN VIEW
CIRCULAR OPENING

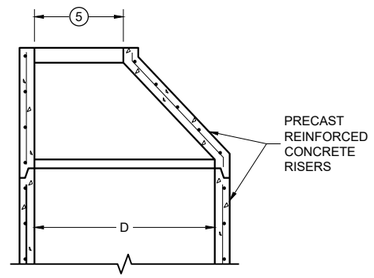

OPTIONAL PRECAST REINFORCED CONCRETE ECCENTRIC TOP

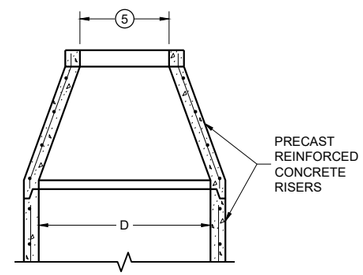

OPTIONAL PRECAST REINFORCED CONCRETE CONCENTRIC TOP

MANHOLE COVER OPENING MATRIX

OPENING SIZE (FT.) (5) \ MANHOLE COVER TYPE	C	ALL J'S	K	L	M
2 DIA.	X	X		X	
3 DIA.			X		X

PIPE MATRIX

MANHOLE SIZE (DIA.)	MAXIMUM INSIDE PIPE DIAMETER FOR TWO PIPES		MINIMUM WALL THICKNESS (IN)	MINIMUM PRECAST FLAT SLAB TOP AND BASE THICKNESS
	180° SEPARATION (IN)	90° SEPARATION (IN)		
3-FT	15	12	4	6
4-FT	24	18	4	6
5-FT	36	24	5	8
6-FT	42	36	6	8
7-FT	48	36/42 *	7	8
8-FT	60	42	8	8
9-FT	66	54	9	10
10-FT	72	60	10	10

*A 36" PIPE AND A 42" PIPE CAN BE PLACED WITHIN 90 DEGREES. SEE MINIMUM HORIZONTAL PIPE SEPARATION DETAIL.

GENERAL NOTES

DETAILS OF CONSTRUCTION, MATERIALS AND WORKMANSHIP NOT SHOWN ON THIS DRAWING SHALL CONFORM TO THE PERTINENT REQUIREMENTS OF THE STANDARD SPECIFICATIONS AND THE APPLICABLE SPECIAL PROVISIONS.

UNLESS OTHERWISE AUTHORIZED IN WRITING BY THE ENGINEER, THE CONTRACTOR SHALL NOT ORDER AND DELIVER PRECAST MANHOLE UNITS REQUIRED FOR THE PROJECT UNTIL A LIST OF SIZES IS FURNISHED BY THE ENGINEER.

DETAILED DRAWINGS FOR PROPOSED ALTERNATE DESIGNS FOR UNDERGROUND DRAINAGE STRUCTURES SHALL BE SUBMITTED TO THE ENGINEER FOR APPROVAL PROVIDING THAT SUCH ALTERNATE DESIGNS MAKE PROVISION FOR EQUIVALENT CAPACITY AND STRENGTH.

ALL DRAINAGE STRUCTURES ARE DESIGNATED ON THE PLANS AS "MANHOLES 3X3-L", "CATCH BASINS 4-B", "INLETS 2X3-H", ETC. THE FIRST NUMBERS DESIGNATE THE SIZE OF THE STRUCTURE, AND THE FOLLOWING LETTER DESIGNATES THE TYPE OF COVER TO BE USED TO COMPRISE THE COMPLETE UNIT.

BASES SHALL BE PLACED ON A BED OF MATERIAL AT LEAST 6 INCHES IN DEPTH, WHICH MEETS THE REQUIREMENTS OF FOUNDATION BACKFILL. THIS BEDDING SHALL BE COMPACTED AND PROVIDE UNIFORM SUPPORT FOR THE ENTIRE AREA OF THE BASE.

PRECAST REINFORCED CONCRETE CONE TOPS (ECCENTRIC OR CONCENTRIC) OR PRECAST REINFORCED CONCRETE FLAT SLAB TOPS MAY BE USED ON CONCRETE BLOCK STRUCTURES.

ECCENTRIC CONE TOPS MAY BE USED ON ALL STRUCTURES. CONCENTRIC CONE TOPS SHALL BE USED ONLY ON STRUCTURES 5 FEET OR LESS IN DEPTH UNLESS OTHERWISE DIRECTED BY THE ENGINEER.

STEPS MEETING AASHTO M199 AND THE FOLLOWING REQUIREMENTS SHALL BE INSTALLED IN ALL STRUCTURES OVER 5 FEET IN DEPTH: 16 INCH C-C MAXIMUM SPACING; PROJECT A MINIMUM CLEAR DISTANCE OF 4 INCHES FROM THE WALL AT THE POINT OF EMBEDMENT; MINIMUM LENGTH OF 10 INCHES; MINIMUM WALL EMBEDMENT OF 3 INCHES. FERROUS METAL STEPS NOT PAINTED OR TREATED TO RESIST CORROSION SHALL HAVE A MINIMUM CROSS SECTIONAL IMENSION OF 1 INCH.

STEPS OF APPROVED POLYPROPYLENE PLASTIC COATED REINFORCEMENT BAR ARE ACCEPTABLE. REINFORCING BAR MUST BE A MINIMUM OF ½ INCH AND MEET THE REQUIREMENTS OF ASTM A615.

CERTIFICATION SHALL BE PROVIDED THAT INSTALLED STEPS WHEN TESTED IN ACCORDANCE WITH SECTION 10 OF AASHTO T280 CAN WITHSTAND A VERTICAL LOAD OF 800 LBS. AND A HORIZONTAL LOAD OF 400 LBS.

ALL BAR STEEL REINFORCEMENT SHALL BE EMBEDDED 2 INCHES CLEAR UNLESS OTHERWISE SHOWN OR NOTED.

ALL PRECAST MANHOLE UNITS SHALL CONFORM TO THE PERTINENT REQUIREMENTS OF AASHTO DESIGNATION M199.

PRECAST REINFORCED RISERS SHALL HAVE A TONGUE AND GROOVE JOINT WITH TONGUE UP OR DOWN.

CONCRETE BLOCK WILL NOT BE PERMITTED FOR STRUCTURES GREATER THAN 4 FEET IN DIAMETER.

4" OVERHANGING BASES ARE REQUIRED FOR ALL CONCRETE BLOCK INSTALLATIONS. 4" OVERHANG IS REQUIRED WHEN SEPARATE PRECAST BASE IS PROVIDED. OVERHANG IS NOT REQUIRED ON PRECAST STRUCTURES WITH AN INTEGRAL OR MONOLITHIC BASE.

FOR ADDITIONAL CONFIGURATIONS, MAINTAIN A MINIMUM OF 12 INCHES AS MEASURED FROM THE INSIDE OF THE STRUCTURE WALL BETWEEN THE OUTSIDE PIPE WALLS OF ADJACENT PIPES. SEE DETAIL "D".

(1) FOR PRECAST MANHOLES AND REINFORCED CONCRETE BASES PROVIDE REINFORCING STEEL IN ACCORDANCE TO AASHTO M199.

(2) SEE PIPE MATRIX TABLE FOR MINIMUM WALL THICKNESS FOR PRECAST MANHOLES

(3) SEE PIPE MATRIX TABLE FOR MINIMUM THICKNESS OF PRECAST FLAT SLAB TOPS AND BASES.

(4) JOINTS TO BE SEALED WITH A BUTYL RUBBER SEAL PER SEALANT MANUFACTURERS RECOMMENDATIONS CONFORMING TO ASTM C 990 OR RUBBER GASKETS CONFORMING TO ASTM C443.

(5) SEE MANHOLE COVER OPENING MATRIX.

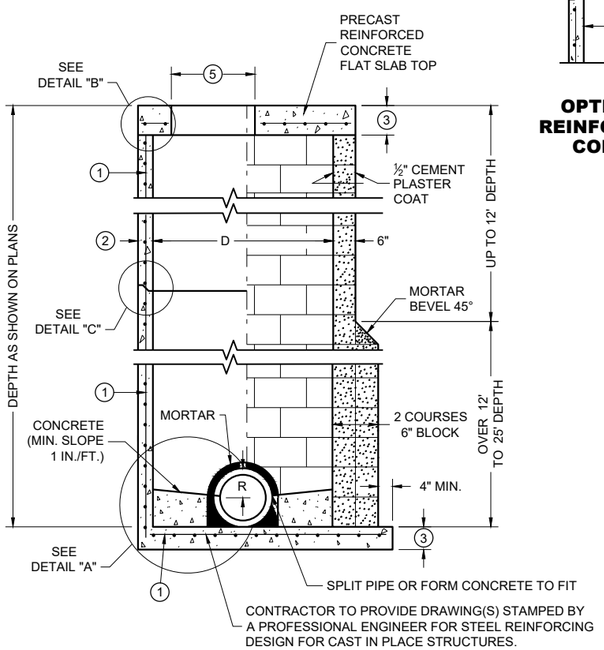

SECTION A - A

PRECAST REINFORCED CONCRETE WITH MONOLITHIC BASE

CONCRETE BLOCK WITH CAST IN PLACE OR PRECAST REINFORCED CONCRETE BASE (1)

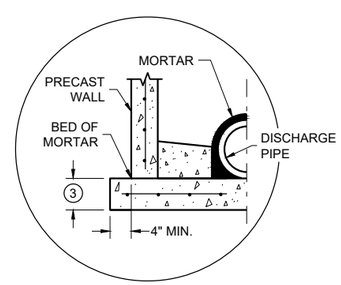

SEPARATE PRECAST REINFORCED CONCRETE BASE OPTION

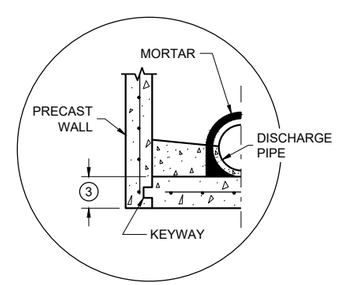

PRECAST REINFORCED CONCRETE WITH INTEGRAL BASE OPTION

DETAIL "A"

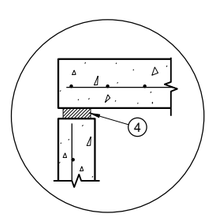

TOP WITH PLAIN END JOINT

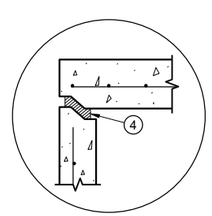

TOP WITH TONGUE AND GROOVE JOINT

DETAIL "B"

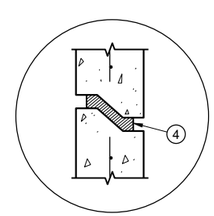

RISER WITH TONGUE AND GROOVE JOINT

DETAIL "C"

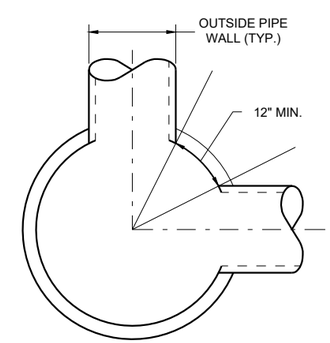

MINIMUM HORIZONTAL PIPE SEPARATION

DETAIL "D"

MANHOLES 3-FT, 4-FT, 5-FT, 6-FT, 7-FT, 8-FT, 9-FT AND 10-FT DIAMETER

MANHOLES, 3-FT, 4-FT 5-FT, 6-FT, 7-FT, 8-FT, 9-FT AND 10-FT DIAMETER

STATE OF WISCONSIN
DEPARTMENT OF TRANSPORTATION

APPROVED
December 2023 — DATE
/S/ Rodney Taylor — ROADWAY STANDARDS DEVELOPMENT UNIT SUPERVISOR
FHWA

6

SDD 08B09-04

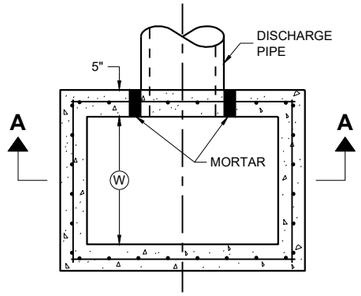

PLAN VIEW

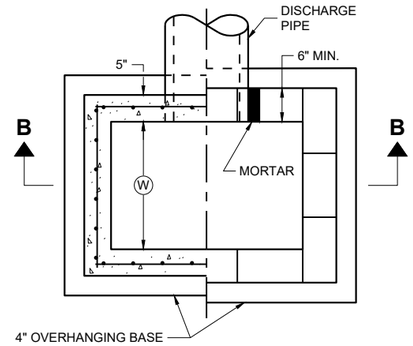

PLAN VIEW

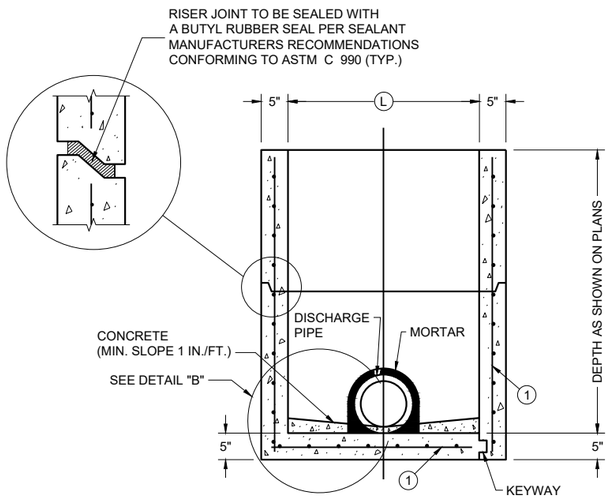

PRECAST REINFORCED CONCRETE WITH MONOLITHIC BASE

PRECAST REINFORCED CONCRETE WITH INTEGRAL BASE

SECTION A - A

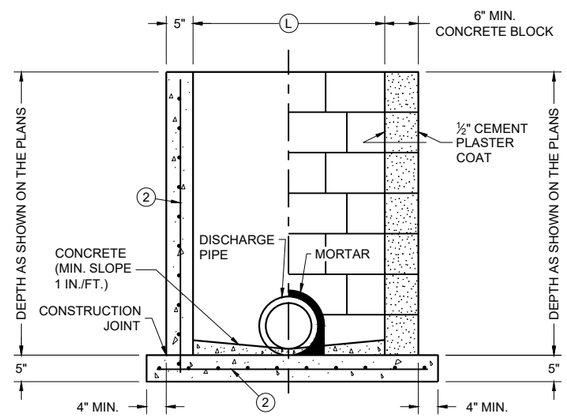

CAST IN PLACE REINFORCED CONCRETE

CONCRETE BLOCK WITH CAST IN PLACE OR PRECAST REINFORCED CONCRETE BASE (1)

SECTION B - B

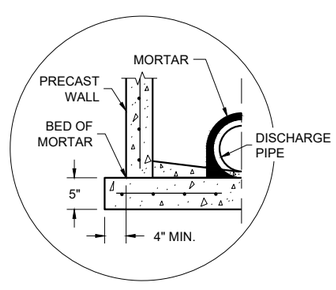

SEPARATE PRECAST REINFORCED CONCRETE BASE OPTION

DETAIL "B"

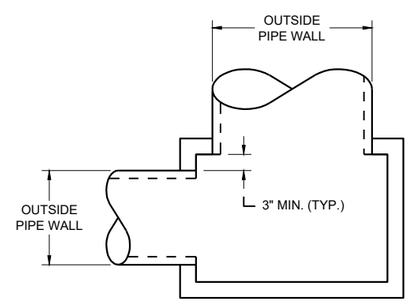

DETAIL "A"

GENERAL NOTES

DETAILS OF CONSTRUCTION, MATERIALS AND WORKMANSHIP N0T SHOWN ON THIS DRAWING SHALL CONFORM TO THE PERTINENT REQUIREMENTS OF THE STANDARD SPECIFICATIONS AND THE APPLICABLE SPECIAL PROVISIONS.

UNLESS OTHERWISE AUTHORIZED IN WRITING BY THE ENGINEER, THE CONTRACTOR SHALL NOT ORDER AND DELIVER PRECAST INLET UNITS REQUIRED FOR THE PROJECT UNTIL A LIST OF SIZES IS FURNISHED BY THE ENGINEER.

DETAILED DRAWINGS FOR PROPOSED ALTERNATE DESIGNS FOR UNDERGROUND DRAINAGE STRUCTURES SHALL BE SUBMITTED TO THE ENGINEER FOR APPROVAL PROVIDING THAT SUCH ALTERNATE DESIGNS MAKE PROVISION FOR EQUIVALENT CAPACITY AND STRENGTH.

ALL PRECAST INLET UNITS SHALL CONFORM TO THE PERTINENT REQUIREMENTS OF ASTM C 913.

ALL DRAINAGE STRUCTURES ARE DESIGNATED ON THE PLANS AS "MANHOLES 3X3-L", "CATCH BASINS 4-B", "INLETS 2X3-H", ETC. THE FIRST NUMBERS DESIGNATES THE SIZE OF THE STRUCTURE, AND THE FOLLOWING LETTER DESIGNATES THE TYPE OF COVER TO BE USED TO COMPRISE THE COMPLETE UNIT.

BASES SHALL BE PLACED ON A BED OF MATERIAL AT LEAST 6 INCHES IN DEPTH, WHICH MEETS THE REQUIREMENTS OF FOUNDATION BACKFILL. THIS BEDDING SHALL BE COMPACTED AND PROVIDE UNIFORM SUPPORT FOR THE ENTIRE AREA OF THE BASE.

ALL BAR STEEL REINFORCEMENT SHALL BE EMBEDDED 2 INCHES CLEAR UNLESS OTHERWISE SHOWN OR NOTED.

PRECAST REINFORCED RISERS SHALL HAVE A TONGUE AND GROOVE JOINT WITH TONGUE UP OR DOWN.

4" OVERHANGING BASES ARE REQUIRED FOR CAST-IN-PLACE REINFORCED CONCRETE AND CONCRETE BLOCK INSTALLATIONS. 4" OVERHANG IS REQUIRED WHEN SEPARATE PRECAST BASE IS PROVIDED. OVERHANG IS NOT REQUIRED ON PRECAST STRUCTURES WITH AN INTEGRAL OR MONOLITHIC BASE.

MAXIMUM INSIDE PIPE DIAMETER DETERMINED BY 3" CLEARANCE ON EACH SIDE OF THE OUTSIDE WALL OF THE PIPE. SEE DETAIL "A". ASSUMES PIPE ENTERS PERPENDICULAR TO THE STRUCTURE.

(1) FOR PRECAST INLETS AND REINFORCED CONCRETE BASES PROVIDE REINFORCING STEEL IN ACCORDANCE TO ASTM C 913
(2) CONTRACTOR TO PROVIDE DRAWING(S) STAMPED BY A PROFESSIONAL ENGINEER FOR STEEL REINFORCING DESIGN FOR CAST-IN-PLACE STRUCTURES.

CATCH BASIN COVER MATRIX

INLET SIZE	WIDTH (W) (FT.)	LENGTH (L) (FT.)	INLET COVER TYPE									
			ALL A'S	ALL B'S	BW	F	ALL H'S	S	T	V	WM	V V-B
2 X 2-FT	2	2	X	X				X				
2 X 2.5-FT	2	2.5			X			X	X	X	X	
2 X 3-FT	2	3					X					
2.5 X 3-FT	2.5	3				X						
2 X 3.5-FT	2	3.5										X

PIPE MATRIX

CATCH BASIN SIZE	MAXIMUM INSIDE PIPE DIAMETER FOR TWO PIPES	
	WIDTH (IN)	LENGTH (IN)
2 X 2-FT	12	12
2 X 2.5-FT	12	18
2 X 3-FT	12	24
2.5 X 3-FT	18	24
2 X 3.5-FT	12	30

INLETS 2 X 2-FT, 2 X 2.5-FT, 2 X 3-FT, 2.5 X 3-FT AND 2X3.5-FT

INLETS 2 X 2-FT, 2 X 2.5-FT, 2 X 3-FT, 2.5 X 3-FT AND 2 X 3.5-FT

STATE OF WISCONSIN
DEPARTMENT OF TRANSPORTATION

APPROVED
December 2023 — DATE
/S/ Rodney Taylor — ROADWAY STANDARDS DEVELOPMENT UNIT SUPERVISOR
FHWA

6

SDD 08C07-03

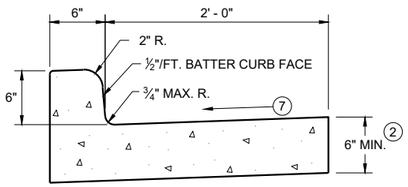

TYPES A (1) & D

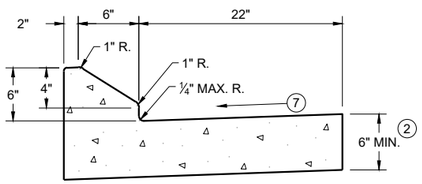

6" SLOPED CURB TYPES G (1) & J

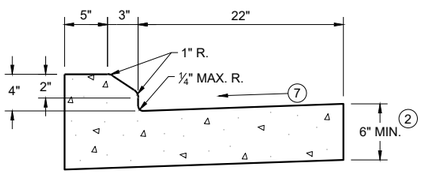

4" SLOPED CURB TYPES G (1) & J

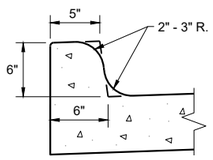

TYPES K (1) & L
(OPTIONAL CURB SHAPE)

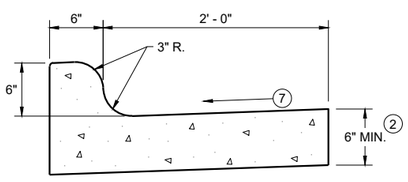

TYPES K (1) & L

CONCRETE CURB AND GUTTER 30"

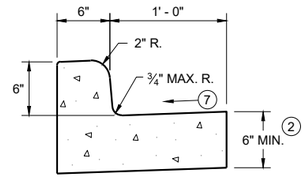

TYPES A (1) & D

CONCRETE CURB AND GUTTER 18"

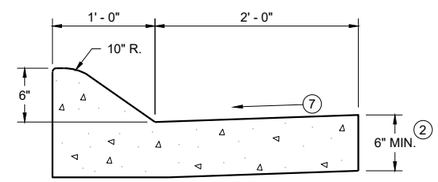

6" SLOPED CURB TYPES A (1) & D

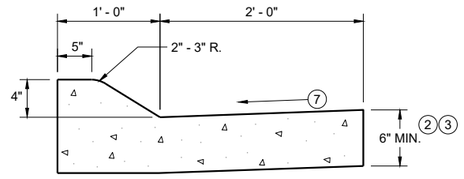

4" SLOPED CURB TYPES A (1) & D

CONCRETE CURB AND GUTTER 36"

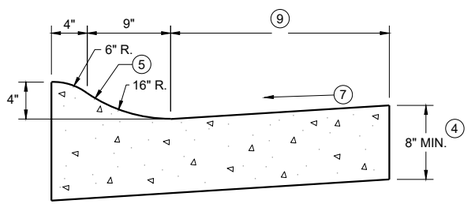

4" SLOPED CURB TYPES R (1) & T

TBT & TBTT	X
30"	22"
36"	28"

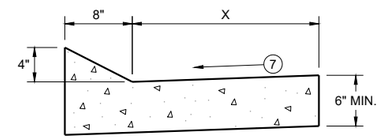

TYPES TBT & TBTT (1)

CONCRETE CURB AND GUTTER

PAVEMENT THICKNESS AND MAXIMUM CONCRETE PANEL WIDTH TABLE

PAVEMENT THICKNESS	MAXIMUM PANEL WIDTH
LESS THAN 10"	12'
10" & ABOVE	15'

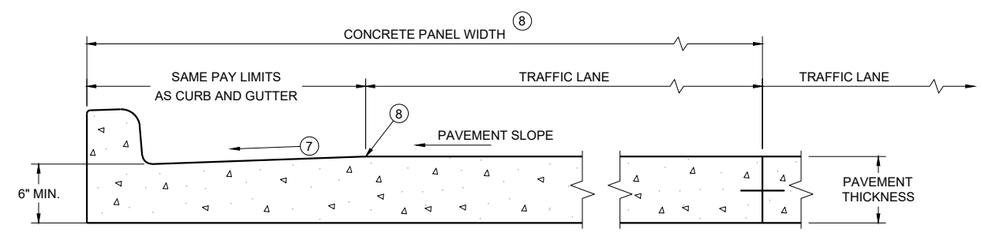

PARTIAL SECTION OF PAVEMENT * WITH INTEGRAL CURB AND GUTTER

* BIKE LANE IS NOT SHOWN

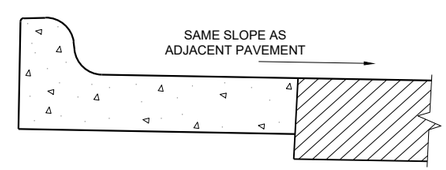

REVERSE SLOPE GUTTER (6)
(TYPICAL FOR ALL CURB & GUTTER TYPES)

GENERAL NOTES

DETAILS OF CONSTRUCTION AND WORKMANSHIP NOT SHOWN ON THIS DRAWING SHALL CONFORM TO THE PERTINENT REQUIREMENTS OF THE CONTRACT.

PAVEMENT TIES AND TIE BARS SHALL BE EPOXY COATED IN CONFORMANCE WITH SUBSECTION 505.2.6.2 OF THE STANDARD SPECIFICATIONS.

INTEGRAL CURB AND GUTTER SHALL CONFORM TO THE DETAILS SHOWN FOR CONCRETE CURB AND GUTTER INCLUDING THE TRANSVERSE GUTTER SLOPE.

UNLESS OTHERWISE SHOWN ON THE TYPICAL CROSS SECTIONS, THE BASE AGGREGATE AND COMMON EXCAVATION LIMITS ARE 2' - 0" BEHIND THE BACK OF CURBS.

(1) TIE BARS ARE REQUIRED FOR CURB AND GUTTERS TYPES A, G, K, R, AND TBTT.

(2) THE BOTTOM OF CURB AND GUTTER MAY BE CONSTRUCTED EITHER LEVEL OR PARALLEL TO THE SLOPE OF THE SUBGRADE OR BASE AGGREGATE PROVIDED A 6" MINIMUM GUTTER THICKNESS IS MAINTAINED.

(3) USE 8" MINIMUM GUTTER THICKNESS WHEN USED WITH AN ADJACENT CONCRETE TRUCK APRON PLACED BEHIND BACK OF CURB.

(4) THE BOTTOM OF CURB AND GUTTER MAY BE CONSTRUCTED EITHER LEVEL OR PARALLEL TO THE SLOPE OF THE SUBGRADE OR BASE AGGREGATE PROVIDED A 8" MINIMUM GUTTER THICKNESS IS MAINTAINED.

(5) UNLESS OTHERWISE NOTED, FOR STAKING PURPOSES THE FACE OF CURB IS 6" FROM THE BACK OF CURB.

(6) WHEN REVERSE SLOPE GUTTER IS REQUIRED, THE LOCATION(S) WILL BE SHOWN ELSEWHERE IN THE PLAN.

(7) USE 4% GUTTER CROSS SLOPE UNLESS OTHERWISE NOTED IN THE PLANS.

(8) INCLUDE LONGITUDINAL JOINT AND TIE BARS ALONG LANE EDGE WHEN CONCRETE PANEL WIDTH EXCEEDS THE MAXIMUM WIDTH PER TABLE BELOW. LONGITUDINAL JOINT(S) ARE NOT ALLOWED WITHIN TRAFFIC LANES AND BIKE LANES. LONGITUDINAL JOINT MAY BE SAWED.

(9) CONCRETE CURB AND GUTTER 4-INCH SLOPED 30-INCH TYPE "R" AND "T" = 17 INCHES
CONCRETE CURB AND GUTTER 4-INCH SLOPED 36-INCH TYPE "R" AND "T" = 23 INCHES

CONCRETE CURB AND GUTTER

STATE OF WISCONSIN
DEPARTMENT OF TRANSPORTATION

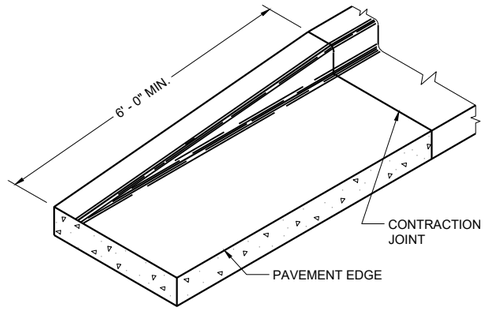

END SECTION CURB AND GUTTER

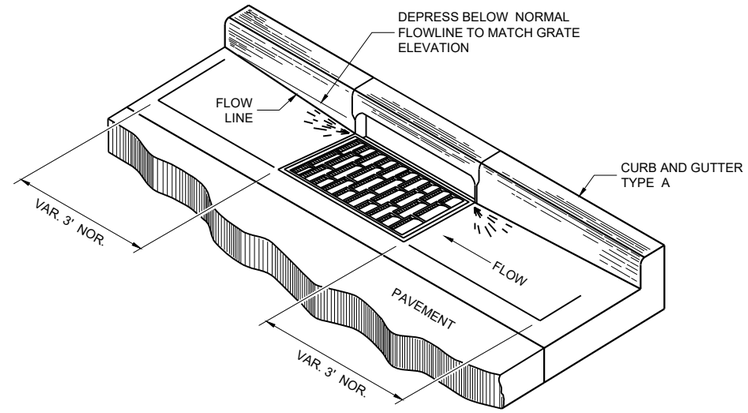

DETAIL OF CURB AND GUTTER AT INLETS

(TYPICAL H INLET COVER SHOWN)

GENERAL NOTES

DETAILS OF CONSTRUCTION AND WORKMANSHIP NOT SHOWN ON THIS DRAWING SHALL CONFORM TO THE PERTINENT REQUIREMENTS OF THE CONTRACT.

PAVEMENT TIES AND TIE BARS SHALL BE EPOXY COATED IN CONFORMANCE WITH SUBSECTION 505.2.6.2 OF THE STANDARD SPECIFICATIONS.

UNLESS OTHERWISE SHOWN ON THE TYPICAL CROSS SECTIONS, THE BASE AGGREGATE AND COMMON EXCAVATION LIMITS ARE 2' - 0" BEHIND THE BACK OF CURBS.

(1) TIE BARS ARE REQUIRED FOR CURB AND GUTTERS TYPES A, G, K, R, AND TBTT.

(2) THE BOTTOM OF CURB AND GUTTER MAY BE CONSTRUCTED EITHER LEVEL OR PARALLEL TO THE SLOPE OF THE SUBGRADE OR BASE AGGREGATE PROVIDED A 6" MINIMUM GUTTER THICKNESS IS MAINTAINED.

(10) REFER TO SDD 08D18 AND 08D19 FOR ADDITIONAL DRIVEWAY ENTRANCE CURB DETAILS.

(11) PLACE 1" THICK EXPANSION JOINT MATERIAL BETWEEN VERTICAL FACE CURB TYPES EXTENDING FROM THE TOP OF CURB TO 1 INCH BELOW THE ADJOINING CONCRETE SURFACE. RIGID CONCRETE STRUCTURES INCLUDE RAISED CONCRETE MEDIANS, CONCRETE SAFETY ISLANDS, SPLITTER ISLANDS, OR LOCATIONS IDENTIFIED ON THE PLANS.

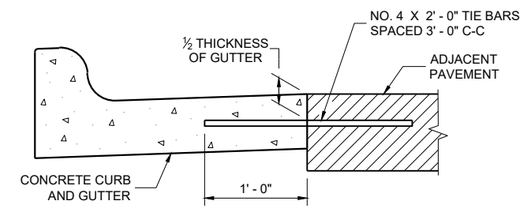

TYPICAL TIE BAR LOCATION (1)

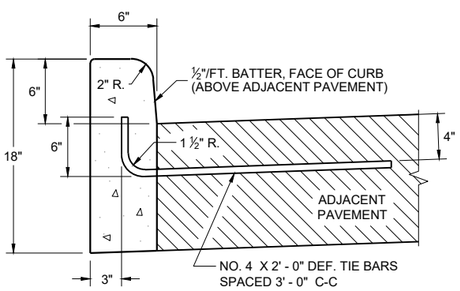

TYPES A (1) & D

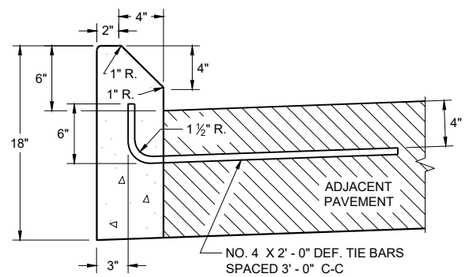

TYPES G (1) & J

CONCRETE CURB

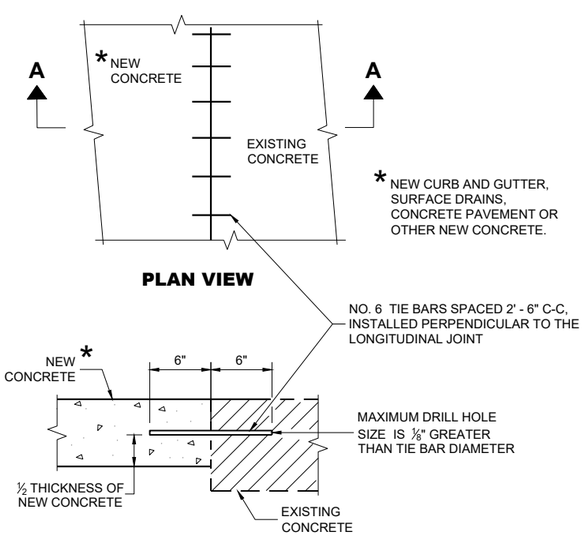

PLAN VIEW

SECTION A - A

TIE BARS DRILLED INTO EXISTING PAVEMENT

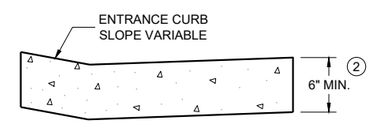

DRIVEWAY ENTRANCE CURB (10)

(WHEN DIRECTED BY THE ENGINEER)

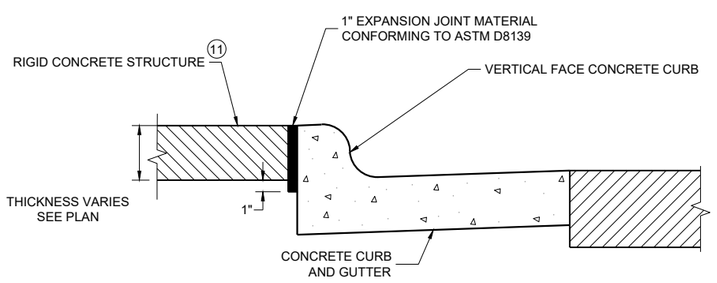

EXPANSION JOINT DETAIL FOR VERTICAL CURB ABUTTING A RIGID STRUCTURE (11)

CONCRETE CURB, TIES AND CURB AND GUTTER APPLICATIONS

STATE OF WISCONSIN
DEPARTMENT OF TRANSPORTATION

APPROVED
May 2023 — DATE
/S/ Rodnery Taylor — ROADWAY STANDARDS DEVELOPMENT UNIT SUPERVISOR

FHWA

6

SDD 08D01-23b

GENERAL NOTES

1. DESIGN WILL DETERMINE FINAL DRIVEWAY ASPHALTIC THICKNESS BASED ON TYPE OF USAGE AND LOADINGS.

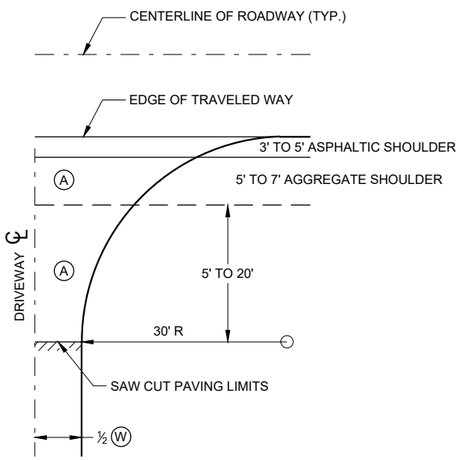

PLAN VIEW

A : PAID FOR AS ASPHALTIC SURFACE DRIVEWAYS AND FIELD ENTRANCES. (TON)

B : PAID FOR AS BASE AGGREGATE DENSE 1 ¼" (TON)

W : DRIVEWAY WIDTH 16' MIN. - 24' MAX.

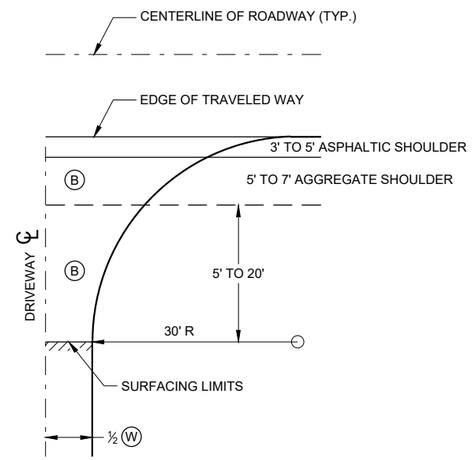

PLAN VIEW

HALF SECTION

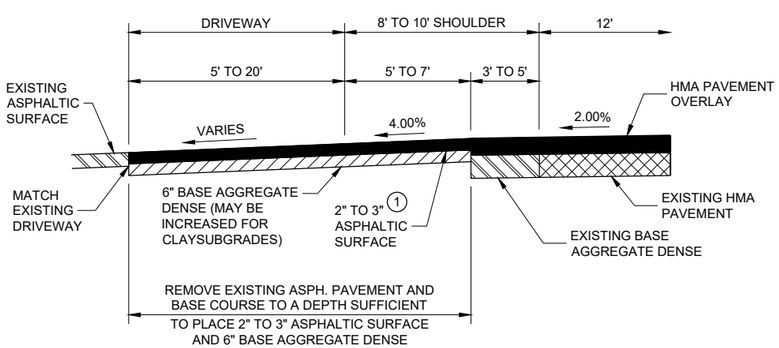

PROFILE VIEW

RURAL ENTRANCE WITH ASPHALTIC SURFACE

RESURFACING PROJECTS

PLAN VIEW

HALF SECTION

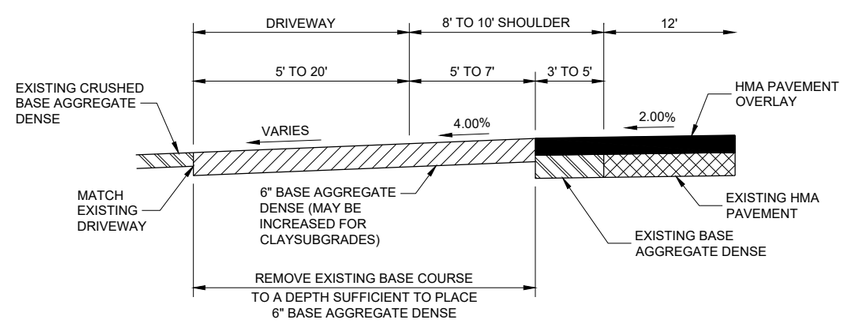

PROFILE VIEW

RURAL ENTRANCE WITH AGGREGATE SURFACE

6" BASE AGGREGATE DENSE RESURFACING PROJECTS

DRIVEWAYS WITHOUT CURB AND GUTTER RESURFACING PROJECTS RURAL

STATE OF WISCONSIN
DEPARTMENT OF TRANSPORTATION

APPROVED
December 2016 — DATE
/S/ Rodney Taylor — ROADWAY STANDARDS DEVE ENGINEER
FHWA

6

SDD 08D22 - 01

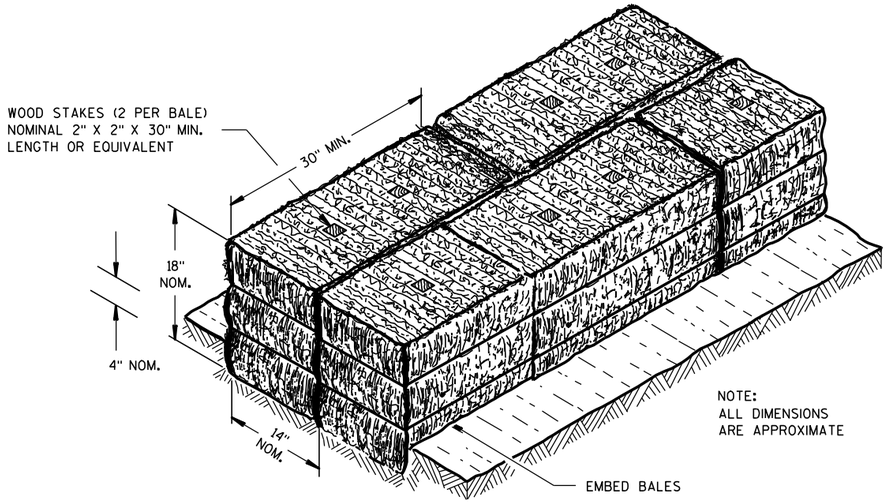

SECTION A-A

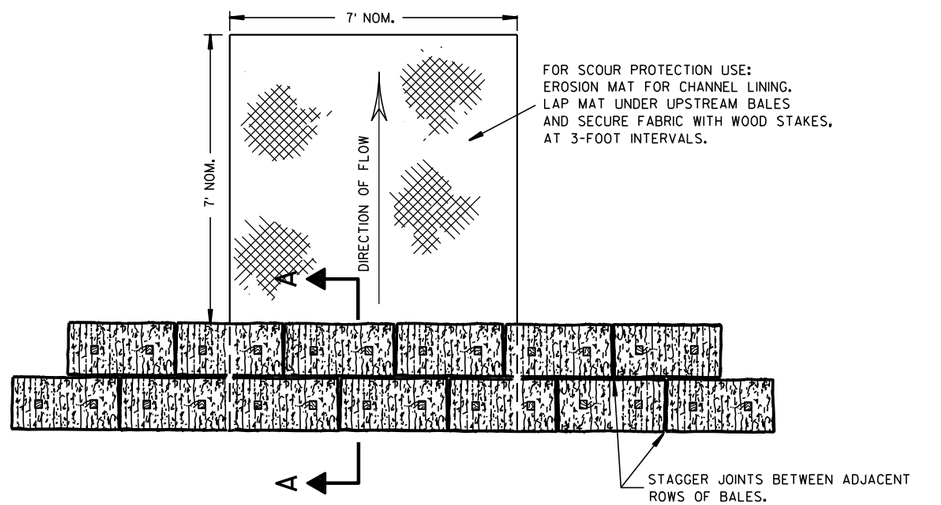

PLAN VIEW

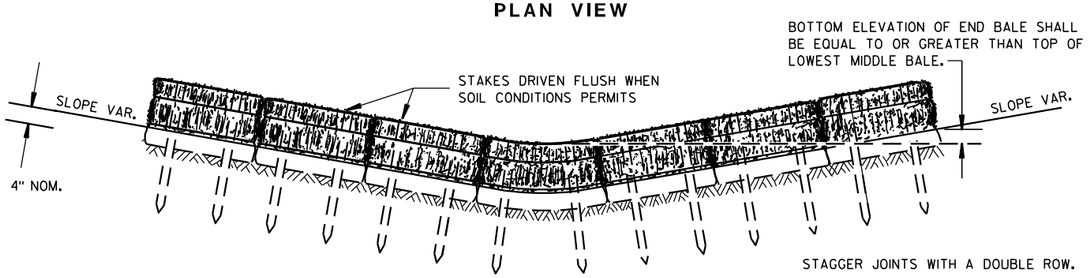

FRONT ELEVATION

TEMPORARY DITCH CHECK USING EROSION BALES ①

GENERAL NOTES

DETAILS OF CONSTRUCTION, MATERIALS AND WORKMANSHIP NOT SHOWN ON THIS DRAWING SHALL CONFORM TO THE PERTINENT REQUIREMENTS OF THE STANDARD SPECIFICATIONS AND THE APPLICABLE SPECIAL PROVISIONS.

① TEMPORARY DITCH CHECKS EITHER EROSION BALES OR MANUFACTURED SHALL BE PAID FOR UNDER THE BID ITEM OF TEMPORARY DITCH CHECK. THE DEPARTMENT WILL NOT PAY FOR TEMPORARY DITCH CHECKS CONSTRUCTED OF A SINGLE ROW OF EROSION BALES.

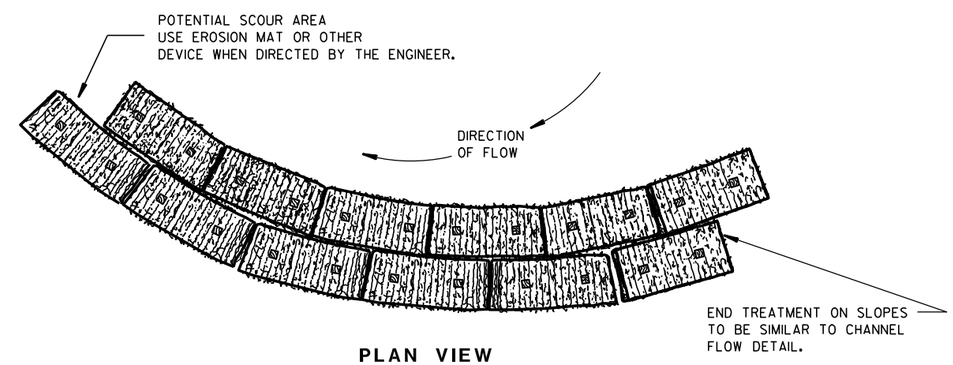

PLAN VIEW

WHEN ALTERING THE DIRECTION OF FLOW

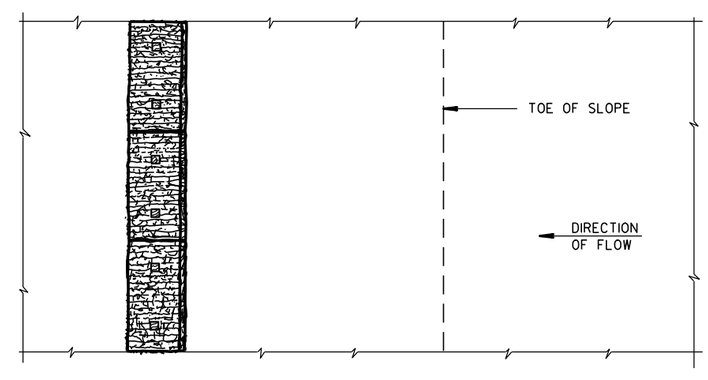

PLAN VIEW

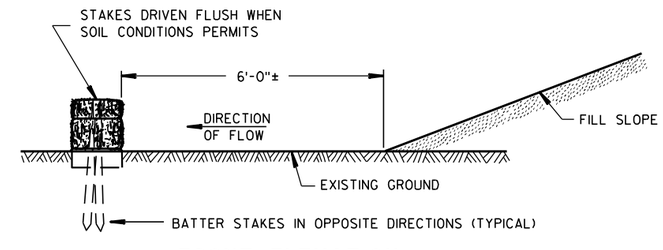

FRONT ELEVATION

WHEN EXISTING GROUND SLOPES AWAY FROM FILL SLOPE

EROSION BALES FOR SHEET FLOW

TYPICAL INSTALLATIONS OF EROSION BALES / TEMPORARY DITCH CHECKS

STATE OF WISCONSIN
DEPARTMENT OF TRANSPORTATION

APPROVED
6/04/02 — DATE
/S/ Beth Cann — CHIEF ROADWAY DEVELOPMENT ENGINEER
FHWA

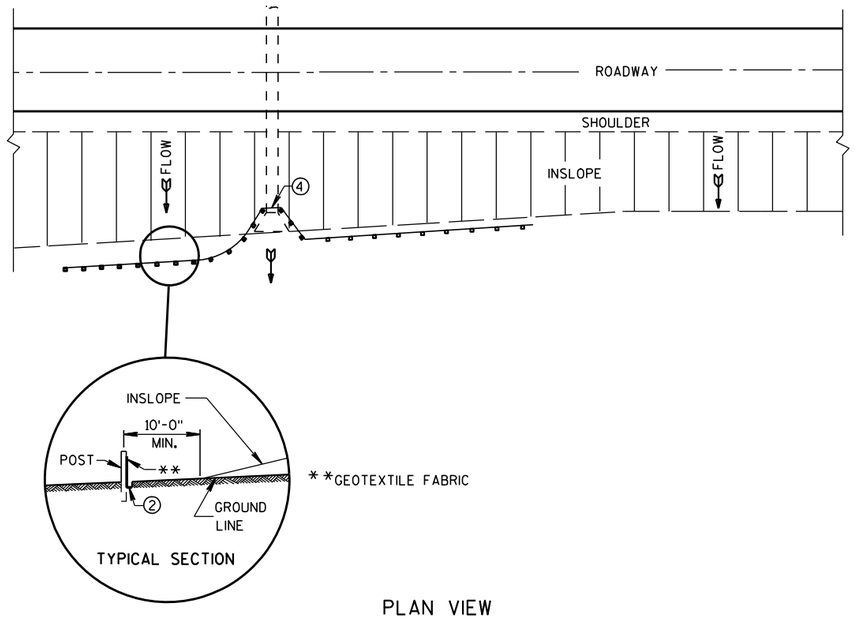

PLAN VIEW

TYPICAL APPLICATION OF SILT FENCE

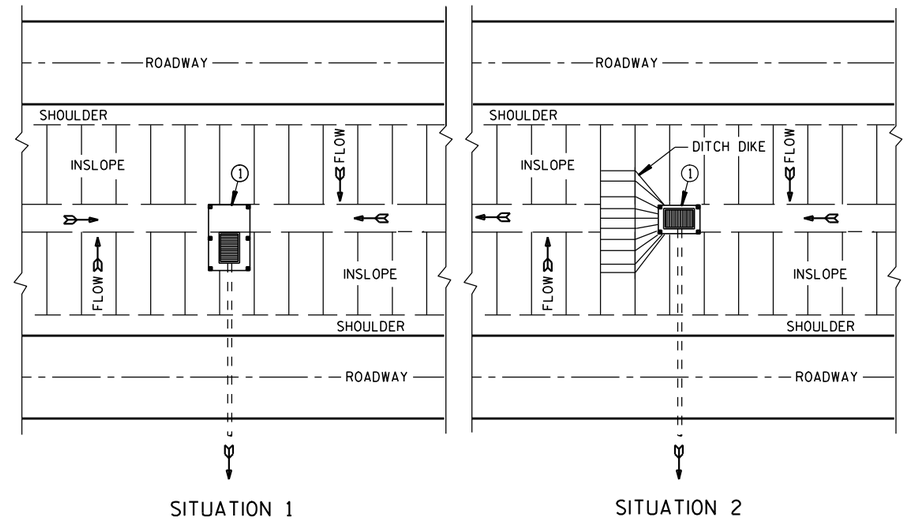

PLAN VIEW

SILT FENCE AT MEDIAN SURFACE DRAINS

GENERAL NOTES

DETAILS OF CONSTRUCTION NOT SHOWN ON THIS DRAWING SHALL CONFORM TO THE PERTINENT REQUIREMENTS OF THE STANDARD SPECIFICATIONS AND APPLICABLE SPECIAL PROVISIONS.

① HORIZONTAL BRACE REQUIRED WITH 2" X 4" WOODEN FRAME OR EQUIVALENT AT TOP OF POSTS.

② FOR MANUAL INSTALLATIONS THE TRENCH SHALL BE A MINIMUM OF 4" WIDE & 6" DEEP TO BURY AND ANCHOR THE GEOTEXTILE FABRIC. FOLD MATERIAL TO FIT TRENCH AND BACKFILL & COMPACT TRENCH WITH EXCAVATED SOIL.

③ WOOD POSTS SHALL BE A MINIMUM SIZE OF 1⅛" X 1⅛" OF OAK OR HICKORY.

④ SILT FENCE TO EXTEND ACROSS THE TOP OF THE PIPE.

⑤ CONSTRUCT SILT FENCE FROM A CONTINUOUS ROLL IF POSSIBLE BY CUTTING LENGTHS TO AVOID JOINTS. IF A JOINT IS NECESSARY USE ONE OF THE FOLLOWING TWO METHODS; A) OVERLAP THE END POSTS AND TWIST, OR ROTATE, AT LEAST 180 DEGREES. B) HOOK THE END OF EACH SILT FENCE LENGTH.

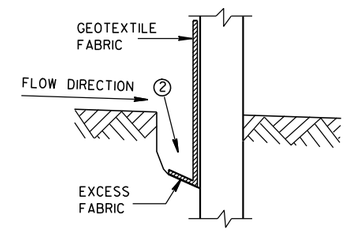

TRENCH DETAIL

NOTE: ADDITIONAL POST DEPTH OR TIE BACKS MAY BE REQUIRED IN UNSTABLE SOILS

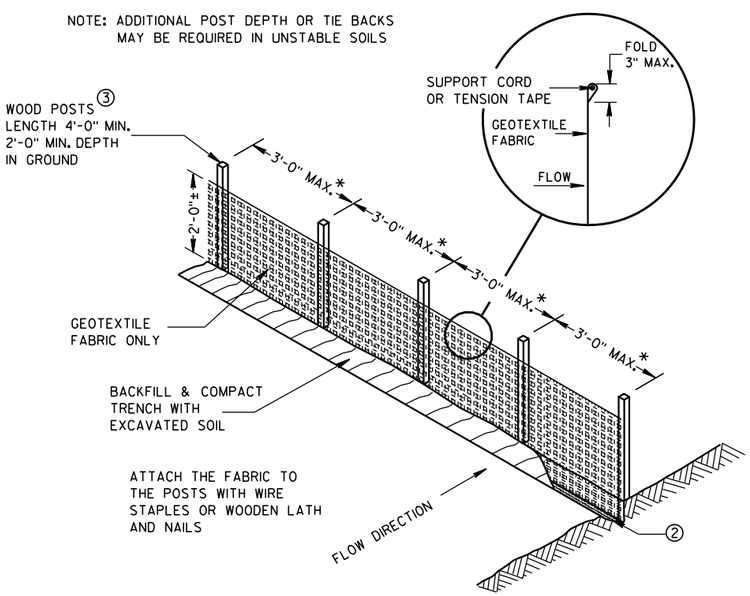

*NOTE: 8'-0" POST SPACING ALLOWED IF A WOVEN GEOTEXTILE FABRIC IS USED.

SILT FENCE

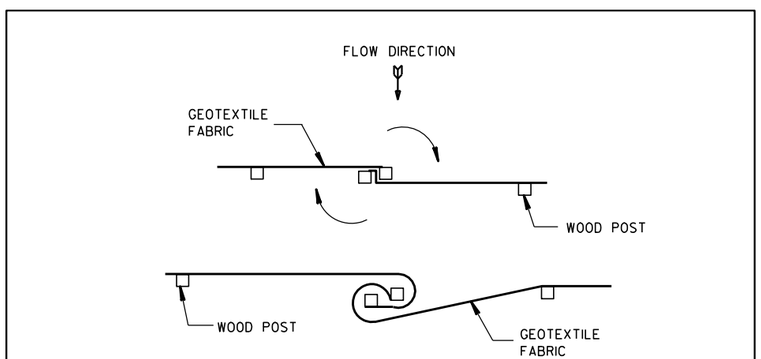

TWIST METHOD

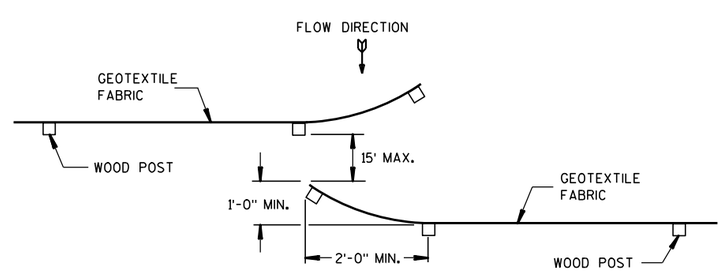

HOOK METHOD

JOINING TWO LENGTHS OF SILT FENCE ⑤

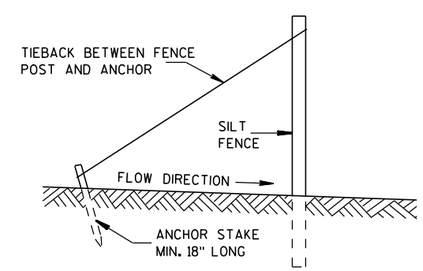

SILT FENCE TIE BACK

(WHEN REQUIRED BY THE ENGINEER)

SILT FENCE
STATE OF WISCONSIN DEPARTMENT OF TRANSPORTATION
APPROVED 4-29-05 DATE — /S/ Beth Cann[illegible] CHIEF ROADWAY DEVELOP[illegible]INEER FHWA

6

6

S.D.D. 8 E 9-6

S.D.D. 8 E 9-6

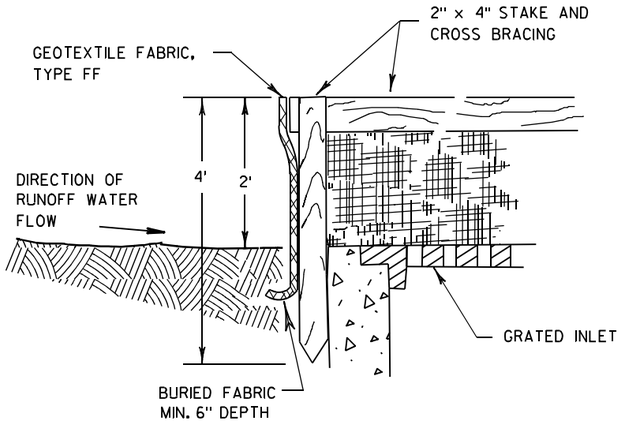

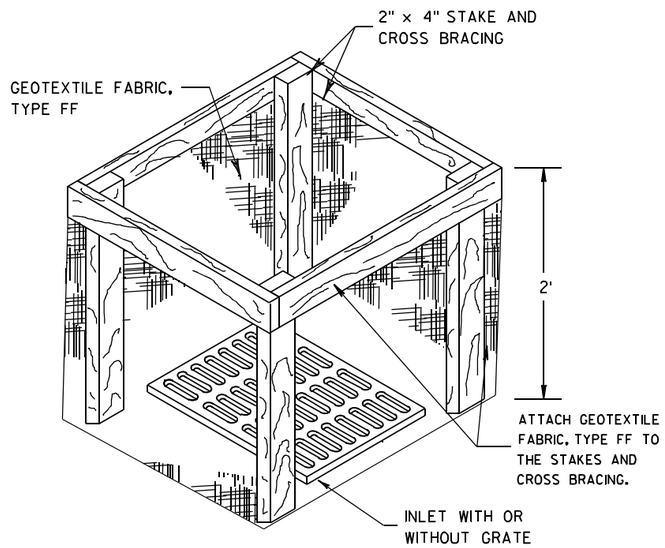

INLET PROTECTION, TYPE A

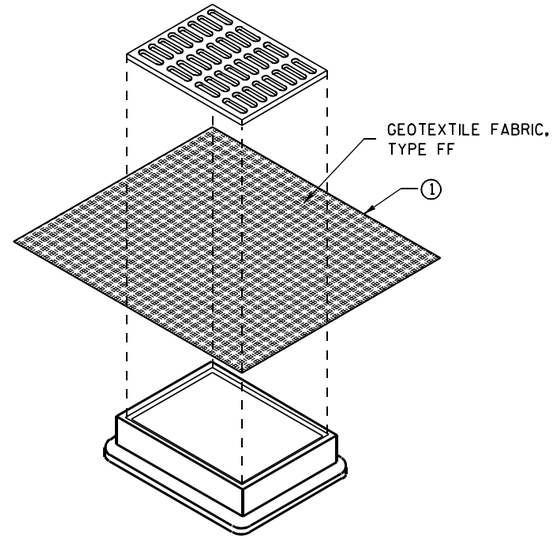

INLET PROTECTION, TYPE B (WITHOUT CURB BOX)

(CAN BE INSTALLED IN ANY INLET WITHOUT A CURB BOX)

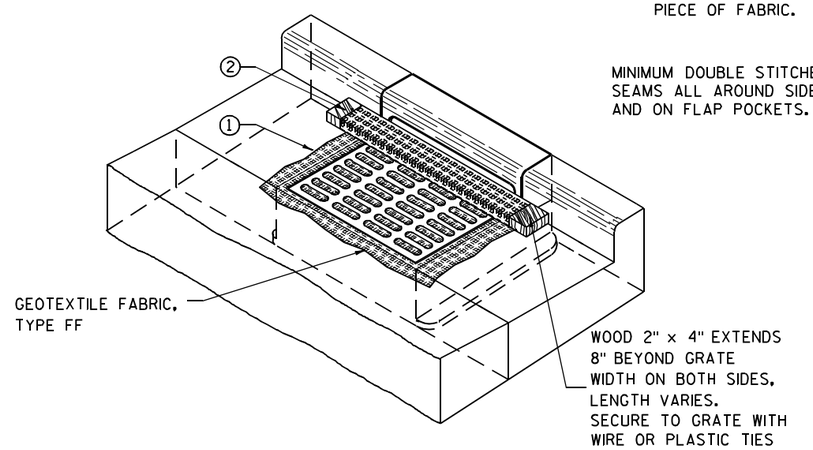

INLET PROTECTION, TYPE C (WITH CURB BOX)

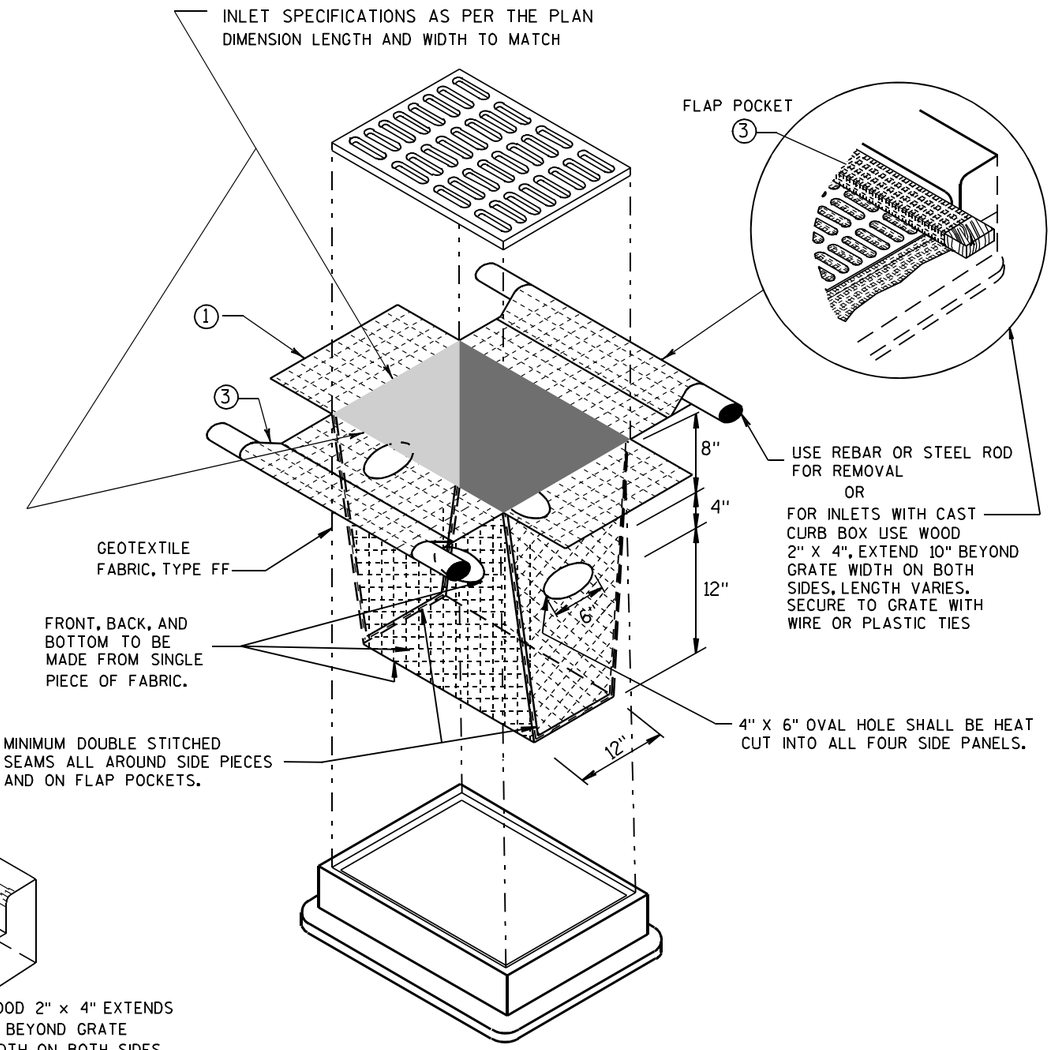

INLET PROTECTION, TYPE D

(CAN BE INSTALLED IN ANY INLET TYPE WITH OR WITHOUT A CURB BOX AS PER NOTE 2)

GENERAL NOTES

INLET PROTECTION DEVICES SHALL BE MAINTAINED OR REPLACED AT THE DIRECTION OF THE ENGINEER.

MANUFACTURED ALTERNATIVES APPROVED AND LISTED ON THE DEPARTMENT'S EROSION CONTROL PRODUCT ACCEPTABILITY LIST MAY BE SUBSTITUTED.

WHEN REMOVING OR MAINTAINING INLET PROTECTION, CARE SHALL BE TAKEN SO THAT THE SEDIMENT TRAPPED ON THE GEOTEXTILE FABRIC DOES NOT FALL INTO THE INLET. ANY MATERIAL FALLING INTO THE INLET SHALL BE REMOVED IMMEDIATELY.

1 FINISHED SIZE, INCLUDING FLAP POCKETS WHERE REQUIRED, SHALL EXTEND A MINIMUM OF 10" AROUND THE PERIMETER TO FACILITATE MAINTENANCE OR REMOVAL.

2 FOR INLET PROTECTION, TYPE C (WITH CURB BOX), AN ADDITIONAL 18" OF FABRIC IS WRAPPED AROUND THE WOOD AND SECURED WITH STAPLES. THE WOOD SHALL NOT BLOCK THE ENTIRE HEIGHT OF THE CURB BOX OPENING.

3 FLAP POCKETS SHALL BE LARGE ENOUGH TO ACCEPT WOOD 2X4.

INSTALLATION NOTES

TYPE B & C

TRIM EXCESS FABRIC IN THE FLOW LINE TO WITHIN 3" OF THE GRATE.

THE CONTRACTOR SHALL DEMONSTRATE A METHOD OF MAINTENANCE, USING A SEWN FLAP, HAND HOLDS OR OTHER METHOD TO PREVENT ACCUMULATED SEDIMENT FROM ENTERING THE INLET.

TYPE D

DO NOT INSTALL INLET PROTECTION TYPE D IN INLETS SHALLOWER THAN 30", MEASURED FROM THE BOTTOM OF THE INLET TO THE TOP OF THE GRATE.

TRIM EXCESS FABRIC IN THE FLOW LINE TO WITHIN 3" OF THE GRATE.

THE INSTALLED BAG SHALL HAVE A MINIMUM SIDE CLEARANCE, BETWEEN THE INLET WALLS AND THE BAG, MEASURED AT THE BOTTOM OF THE OVERFLOW HOLES, OF 3". WHERE NECESSARY THE CONTRACTOR SHALL CINCH THE BAG, USING PLASTIC ZIP TIES, TO ACHIEVE THE 3" CLEARANCE. THE TIES SHALL BE PLACED AT A MAXIMUM OF 4" FROM THE BOTTOM OF THE BAG.

INLET PROTECTION TYPE A, B, C, AND D

STATE OF WISCONSIN
DEPARTMENT OF TRANSPORTATION

APPROVED
10/16/02 — DATE
/S/ Beth Cannestra — CHIEF ROADWAY DEVELOPMENT ENGINEER
FHWA

6

S.D.D. 8 E 10-2

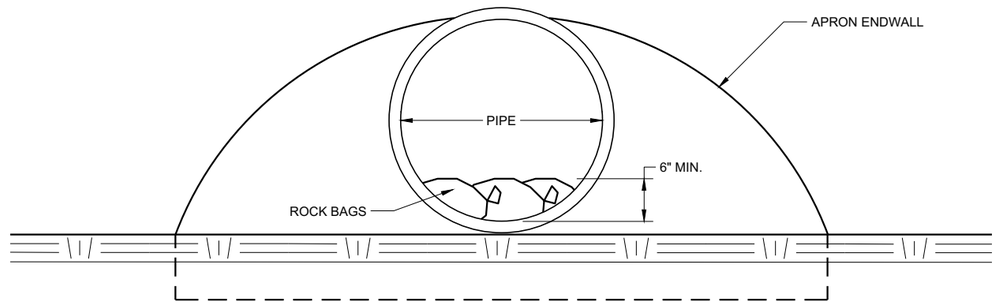

END VIEW

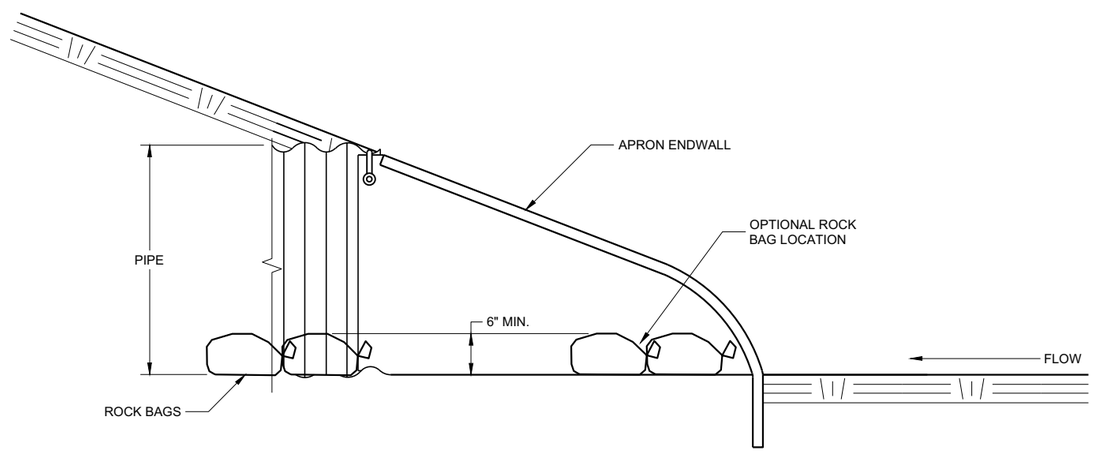

SIDE VIEW

CULVERT PIPE CHECK

(INSTALL ON INLET END ONLY)

CULVERT PIPE CHECK

STATE OF WISCONSIN
DEPARTMENT OF TRANSPORTATION

APPROVED
May 2019 — DATE
/S/ Daniel Schave — EROSION CONTROL ENGI
FHWA

6

6

SDD 08E15 - 01

SDD 08E15 - 01

METAL APRON ENDWALLS

PIPE DIA. (IN.)	MIN. THICK. (Inches) STEEL	MIN. THICK. (Inches) ALUM.	DIMENSIONS (Inches) A (±1")	B (MAX.)	H (±1")	L (±1 1/2")	L1 ①	L2 ①	W (±2")	APPROX. SLOPE	BODY
12	.064	.060	6	6	6	21	12	17 1/2	24	2 1/2 to 1	1 Pc.
15	.064	.060	7	8	6	26	14	21 3/4	30	2 1/2 to 1	1 Pc.
18	.064	.060	8	10	6	31	15	28 1/4	36	2 1/2 to 1	1 Pc.
21	.064	.060	9	12	6	36	18	29 5/8	42	2 1/2 to 1	1 Pc.
24	.064	.075	10	13	6	41	18	37 1/4	48	2 1/2 to 1	1 Pc.
30	.079	.075	12	16	8	51	18	52 1/4	60	2 1/2 to 1	1 Pc.
36	.079	.105	14	19	9	60	24	59 3/4	72	2 1/2 to 1	2 Pc.
42	.109	.105	16	22	11	69	24	75 5/8	84	2 1/2 to 1	2 Pc.
48	.109	.105	18	27	12	78	24	81	90	2 1/4 to 1	3 Pc.
54	.109	.105	18	30	12	84	30	85 1/2	102	2 1/4 to 1	3 Pc.
60	.109×	.105×	18	33	12	87	—	—	114	2 to 1	3 Pc.
66	.109×	.105×	18	36	12	87	—	—	120	2 to 1	3 Pc.
72	.109×	.105×	18	39	12	87	—	—	126	2 to 1	3 Pc.
78	.109×	.105×	18	42	12	87	—	—	132	1 1/2 to 1	3 Pc.
84	.109×	.105×	18	45	12	87	—	—	138	1 1/2 to 1	3 Pc.
90	.109×	.105×	18	37	12	87	—	—	144	1 1/2 to 1	3 Pc.
96	.109×	.105×	18	35	12	87	—	—	150	1 1/2 to 1	3 Pc.

× EXCEPT CENTER PANEL
SEE GENERAL NOTES

REINFORCED CONCRETE APRON ENDWALLS

PIPE DIA. (IN.)	DIMENSIONS (Inches) T	A	B	C	D	E	G	APPROX. SLOPE
12	2	4	24	48 7/8	72 7/8	24	2	3 to 1
15	2 1/4	6	27	46	73	30	2 1/4	3 to 1
18	2 1/2	9	27	46	73	36	2 1/2	3 to 1
21	2 3/4	9	36	37 1/2	73 1/2	42	2 3/4	3 to 1
24	3	9 1/2	43 1/2	30	73 1/2	48	3	3 to 1
27	3 1/4	10 1/2	49 1/2	24	73 1/2	54	3 1/4	3 to 1
30	3 1/2	12	54	19 3/4	73 1/2	60	3 1/2	3 to 1
36	4	15	63	34 3/4	97 3/4	72	4	3 to 1
42	4 1/2	21	63	35	98	78	4 1/2	3 to 1
48	5	24	72	26	98	84	5	3 to 1
54	5 1/2	27	65	*33 1/4-**35	*98 1/4-**100	90	5 1/2	2 2/5 to 1
60	6	*30-**35	60	39	99	96	5	2 to 1
66	6 1/2	*24-**30	*72-**78	*21-**27	99	102	5 1/2	2 to 1
72	7	*24-**36	78	21	99	108	6	2 to 1
78	7 1/2	*24-**36	78	21	99	114	6 1/2	2 to 1
84	8	36	90 1/2	21	111 1/2	120	6 1/2	1 1/2 to 1
90	8 1/2	41	87 1/2	24	111 1/2	132	6 1/2	1 1/2 to 1

*MINIMUM
**MAXIMUM

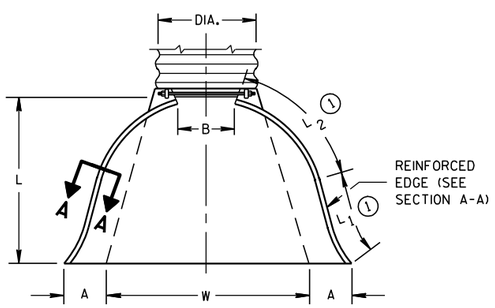

PLAN VIEW

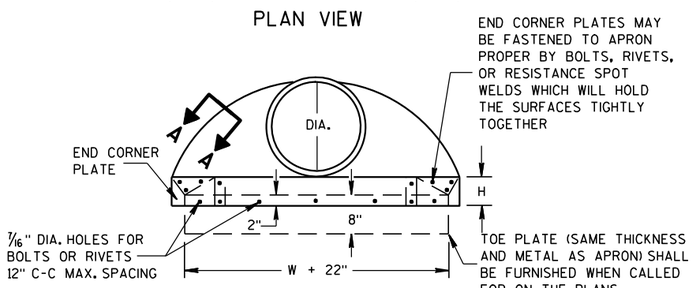

END VIEW

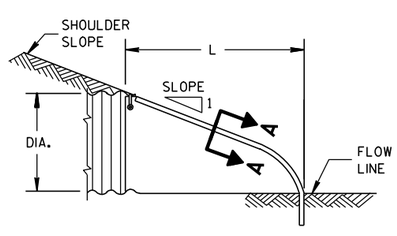

SIDE ELEVATION

METAL ENDWALLS

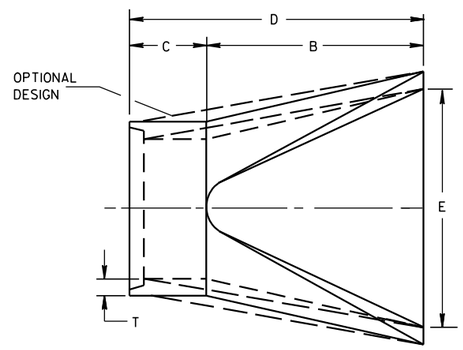

PLAN

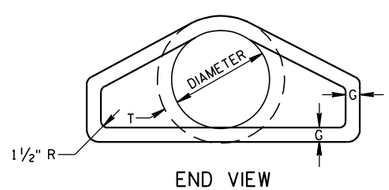

END VIEW

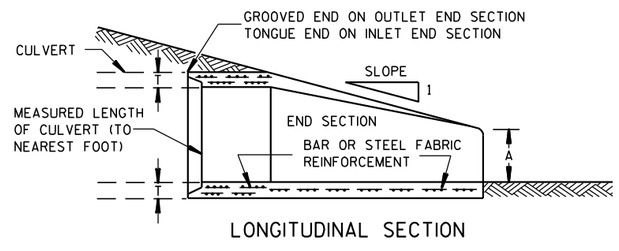

LONGITUDINAL SECTION

CONCRETE ENDWALLS

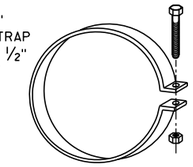

ALTERNATE FOR TYPE 1 CONNECTION

END SECTION CONNECTOR STRAP

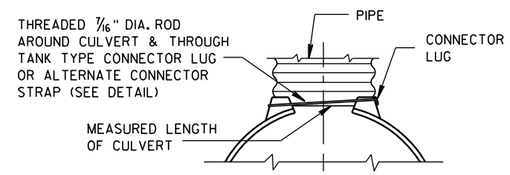

TYPE 1
FOR 12" THRU 24" CORR. PIPE

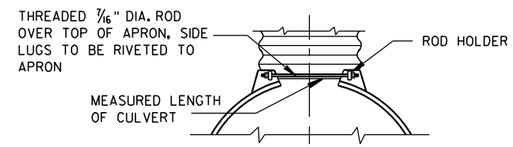

TYPE 2
FOR 30" THRU 96" CORR. PIPE

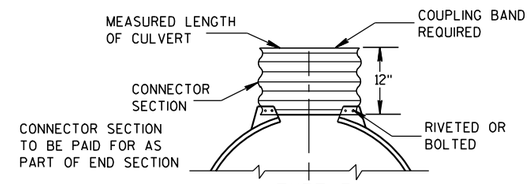

TYPE 3
FOR 42" THRU 96" CORR. PIPE

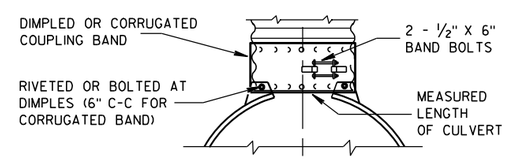

TYPE 5
ALTERNATE FOR:
ALL SIZES CORRUGATED CIRCULAR PIPE

NOTE: DIMPLED BAND FITS OVER OUTSIDE OF ENDWALL, AND CORRUGATED BAND FITS INSIDE ENDWALL. DIMPLED BAND MAY BE USED WITH HELICALLY CORRUGATED PIPE.

FOR CIRCUMFERENTIALLY CORRUGATED PIPE USE ENDWALL CONNECTION DETAILS 1, 2, 3 OR 5 AS APPLICABLE.

FOR HELICALLY CORRUGATED PIPE USE ENDWALL CONNECTION DETAILS 1, 2 OR 5.

FOR HELICALLY CORRUGATED PIPES WITH TWO CIRCUMFERENTIAL CORRUGATIONS AT EACH END USE ENDWALL CONNECTION DETAILS 1, 2 OR 3.

CONNECTION DETAILS

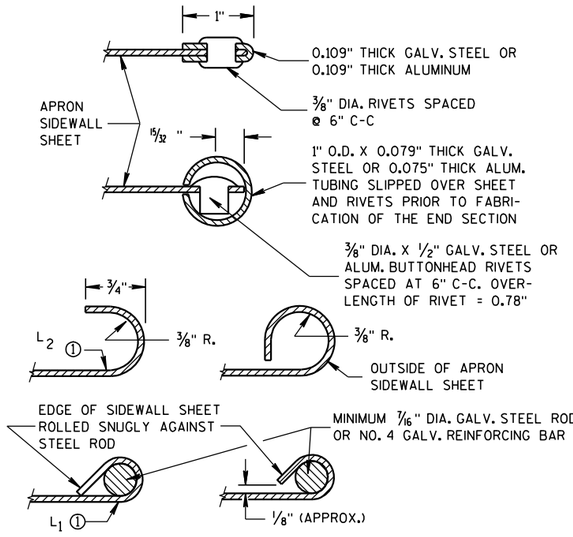

SECTION A-A

GENERAL NOTES

DETAILS OF CONSTRUCTION, MATERIALS AND WORKMANSHIP NOT SHOWN ON THIS DRAWING SHALL CONFORM TO THE PERTINENT REQUIREMENTS OF THE STANDARD SPECIFICATIONS AND THE APPLICABLE SPECIAL PROVISIONS.

CONCRETE CULVERT ENDWALLS MAY NOT BE USED WITH GALVANIZED STEEL OR ALUMINUM CULVERT PIPE OR VISE VERSA. GALVANIZED STEEL OR ALUMINUM ENDWALLS SHALL NORMALLY BE INSTALLED ON CULVERT PIPE OF THE SAME METAL.

ALL THREE PIECE STEEL APRON ENDWALLS FOR 60" DIAMETER PIPE AND LARGER SHALL HAVE 0.109" SIDES AND 0.138" CENTER PANELS. ALL THREE PIECE ALUMINUM APRON ENDWALLS FOR 60" DIAMETER PIPE AND LARGER SHALL HAVE 0.105" SIDES AND 0.134" CENTER PANELS. THE WIDTH OF CENTER PANELS SHALL BE GREATER THAN 20 PERCENT OF THE PIPE PERIMETER.

LAP SEAMS SHALL BE TIGHTLY JOINED BY GALVANIZED RIVETS OR BOLTS FOR STEEL UNITS AND ALUMINUM RIVETS AND BOLTS FOR ALUMINUM UNITS. FOR THE 60" THROUGH 96" DIAMETER APRON ENDWALL SIZES, THE REINFORCED EDGES AND CENTER PANEL SEAMS SHALL BE FURTHER REINFORCED WITH GALVANIZED STEEL OR ALUMINUM STIFFENER ANGLES. THE ANGLES SHALL BE ATTACHED BY GALVANIZED NUTS AND BOLTS FOR STEEL UNITS AND ALUMINUM NUTS AND BOLTS FOR ALUMINUM UNITS.

WHERE TWO OR MORE PIPES WITH APRON ENDWALLS ARE LAID ADJACENT TO EACH OTHER, THEY SHALL BE SEPARATED BY A DISTANCE SUFFICIENT TO PROVIDE A MINIMUM CLEARANCE OF 6 INCHES BETWEEN APRON ENDWALLS.

① FOR PIPE SIZES UP TO 60" DIAMETER, A 180° ROLLED EDGE MAY BE USED INSTEAD OF STEEL ROD REINFORCEMENT. SEE SECTION A-A.

APRON ENDWALLS FOR CULVERT PIPE

STATE OF WISCONSIN
DEPARTMENT OF TRANSPORTATION

APPROVED
11/30/94 — DATE
/S/ Rory L. Rhinesmith — CHIEF ROADWAY DEVELOPMENT ENGINEER
FHWA

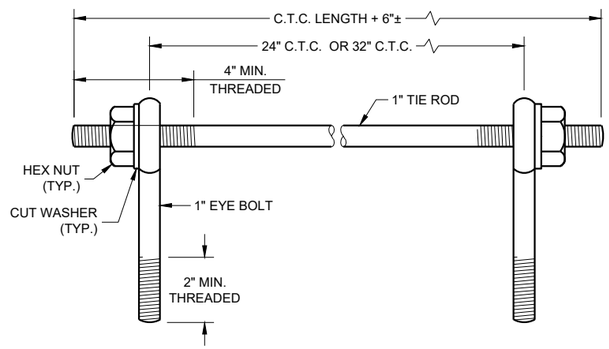

EYE BOLTS AND TIE ROD

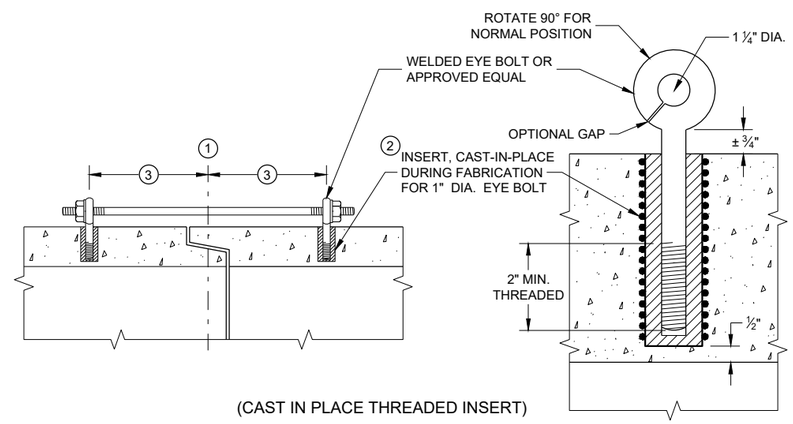

(CAST IN PLACE THREADED INSERT)

LONGITUDINAL SECTIONS

EYE BOLT AND TIE ROD ASSEMBLY (ALTERNATE NO. 1)

GENERAL NOTES

DETAILS OF CONSTRUCTION, MATERIALS, AND WORKMANSHIP NOT SHOWN ON THIS DRAWING SHALL CONFORM TO THE PERTINENT REQUIREMENTS OF THE STANDARD SPECIFICATIONS AND APPLICABLE SPECIAL PROVISIONS.

CONCRETE CULVERT AND STORM SEWER PIPE SHALL BE TIED TOGETHER IN THE MANNER ILLUSTRATED BY THIS DETAIL AT LOCATIONS DESIGNATED IN THE STANDARD SPECIFICATIONS AND THE PLAN. THE CONTRACTOR MAY USE EITHER ALTERNATE 1, 2 OR 3 FOR DRAINAGE STRUCTURES. ONLY ALTERNATE 1 AND 3 MAY BE USED FOR CATTLE PASSES, UNLESS OTHERWISE STATED IN THE CONTRACT. THE MATERIALS, FABRICATION AND WORK NECESSARY TO TIE THE PIPE BY THIS DETAIL WILL BE CONSIDERED INCIDENTAL TO THE PIPE AND APRON ENDWALLS IF REQUIRED.

DETAILED DRAWINGS FOR PROPOSED ALTERNATE DESIGNS FOR JOINT TIES SHALL BE SUBMITTED TO THE ENGINEER FOR APPROVAL.

JOINT TIES TO BE HOT-DIP GALVANIZED PER ASTM A 153.

1. CENTER LINE OF TONGUE AND GROOVE OR BELL AND SPIGOT JOINTS.
2. THE INSIDE OF THE THREADED INSERTS SHALL BE CLEAN TO ALLOW THE INSERTION OF THREADED EYE BOLTS.
3. HOLES SHALL BE CAST-IN-PLACE OR DRILLED PER THE APPLICABLE DETAIL, AND EQUAL DISTANCE FROM THE CENTERLINE OF THE JOINT.
4. BOLT PROJECTION INSIDE OF PIPE SHALL NOT EXCEED 2 INCHES.
5. OPENING TO BE ROD DIAMETER PLUS 1 INCH.
6. LENGTH ADEQUATE TO EXTEND TO WITHIN ½ INCH OF THE INNER SURFACE OF THE PIPE.
7. EYE BOLT LENGTH DETERMINED BY WALL THICKNESS, BELL THICKNESS AND BOLT PROJECTION INSIDE PIPE.

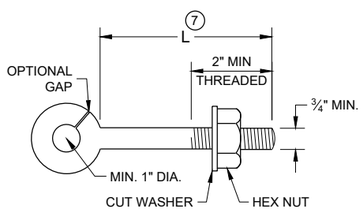

EYE BOLT 7

NOTE: TWO EYE BOLTS MAY BE USED WITH A 30" OR 38" LONG THREADED ROD IN LIEU OF THE 90° BENT TIE ROD.

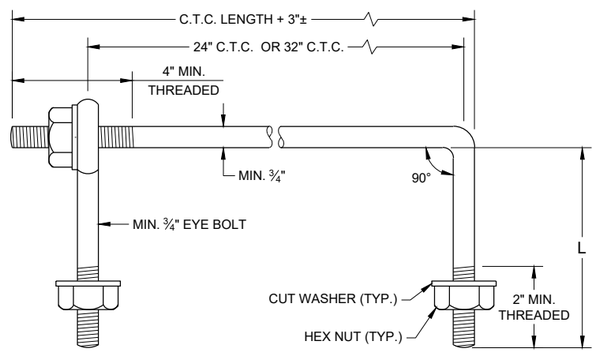

EYE BOLT AND TIE ROD

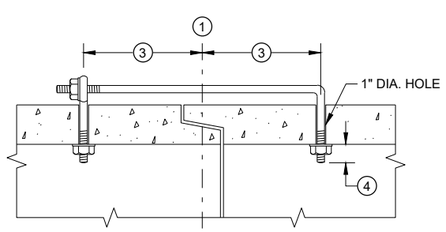

(TONGUE AND GROOVE PIPE)

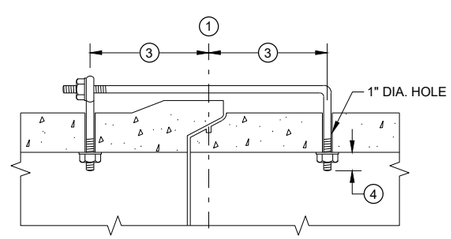

(MODIFIED BELL PIPE)

LONGITUDINAL SECTION

(JOINT TIES FOR 18" TO 66" DIA. CONCRETE PIPE)

EYE BOLT AND TIE ROD ASSEMBLY (ALTERNATE NO. 2)

ADJUSTABLE TIE ROD TABLE

PIPE DIAMETER	TIE ROD DIAMETER	D	L_1	N
12 - 60	⅝	⅝	5	½
66 - 84	¾	¾	5	½
90 - 144	1	1	7	1 7/16

DIMENSIONS SHOWN ARE IN INCHES

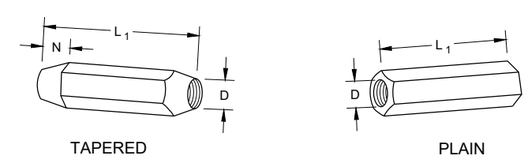

RIGHT AND LEFT THREADS

SLEEVE NUTS

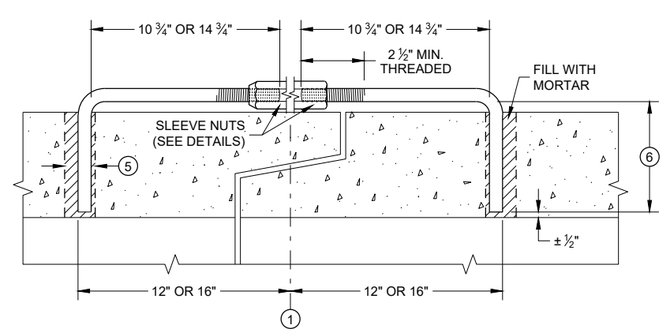

LONGITUDINAL SECTION

ADJUSTABLE TIE ROD (ALTERNATE NO. 3)

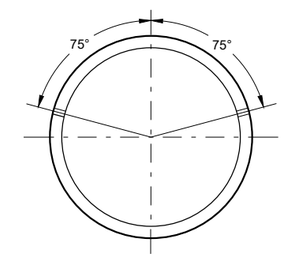

PLACEMENT OF (2) CAST-IN-PLACE INSERTS OR HOLES DURING FABRICATION FOR PIPE SECTIONS REQUIRING TIE RODS

TRANSVERSE SECTION

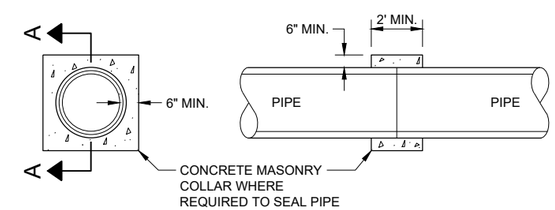

SECTION A - A

CONCRETE COLLAR DETAIL

JOINT TIES FOR CONCRETE PIPE AND CONCRETE COLLAR DETAIL

STATE OF WISCONSIN
DEPARTMENT OF TRANSPORTATION

APPROVED
November 2021 — DATE
/S/ Rodney Taylor — ROADWAY STANDARDS DEVE ENGINEER
FHWA

6

SDD 08F04 - 08

GENERAL NOTES

DO NOT MILL SHOULDER GROOVES THROUGH INTERSECTIONS, MARKED CROSSWALKS, NON-MOTORIZED PATH CROSSINGS, ETC. REFER TO SDD 13A11 SHEETS "d" AND "e".

CENTERLINE GROOVES MAY BE OMITTED IN AREAS WITH HIGH CONCENTRATIONS OF DRIVEWAYS WHEN DIRECTED BY THE ENGINEER.

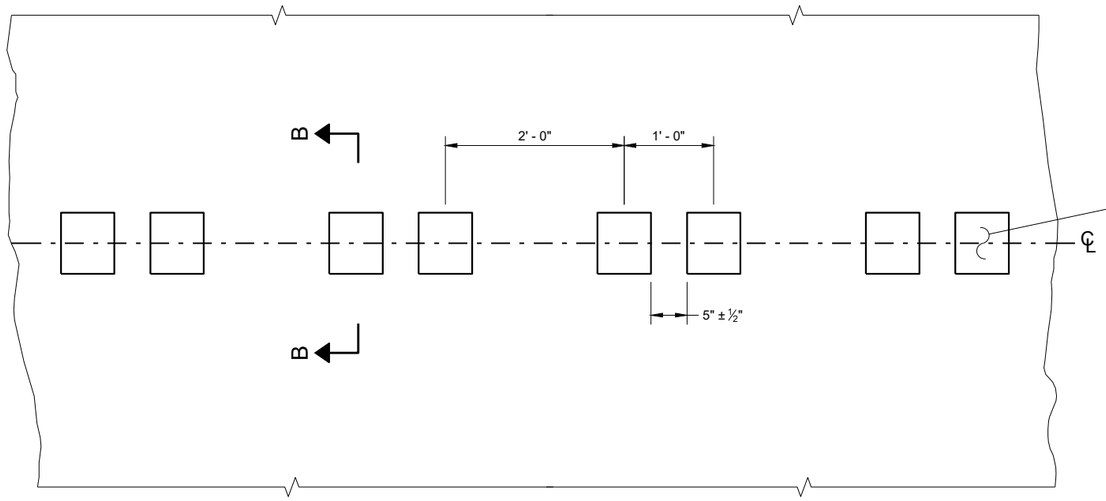

PLAN DETAIL VIEW

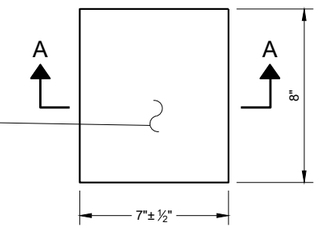

PLAN VIEW
(SINGLE GROOVE)

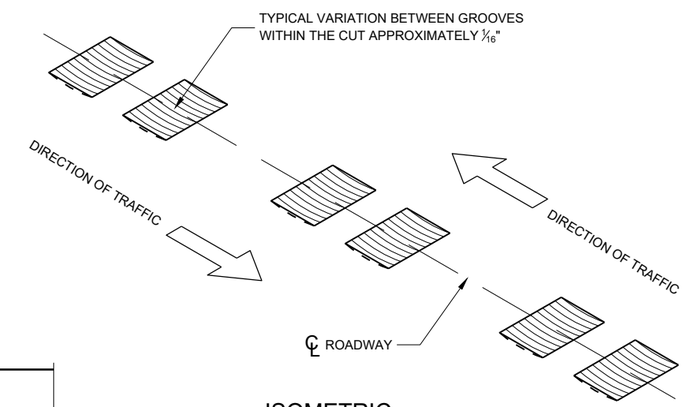

ISOMETRIC

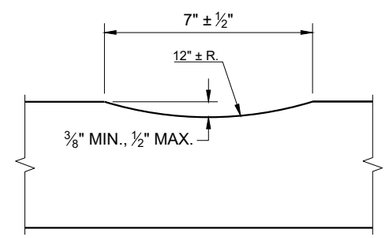

SECTION A - A

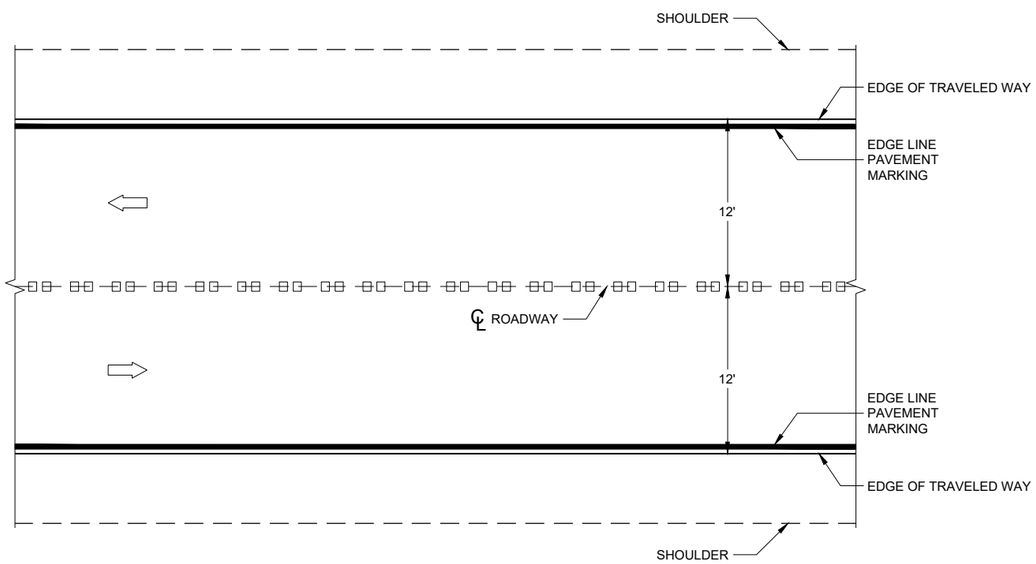

PLAN VIEW

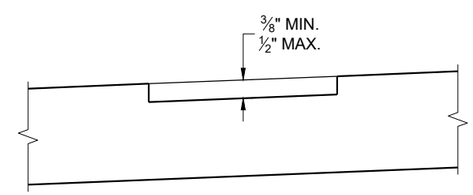

SECTION B - B
SUPERELEVATED ROADWAY

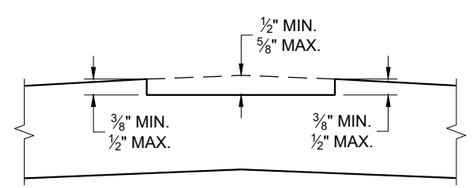

SECTION B - B
CROWNED ROADWAY

CENTERLINE RUMBLE STRIPS - ASPHALT

CENTERLINE RUMBLE STRIPS - ASPHALT

STATE OF WISCONSIN
DEPARTMENT OF TRANSPORTAT

6

SDD 13A11 - 04a

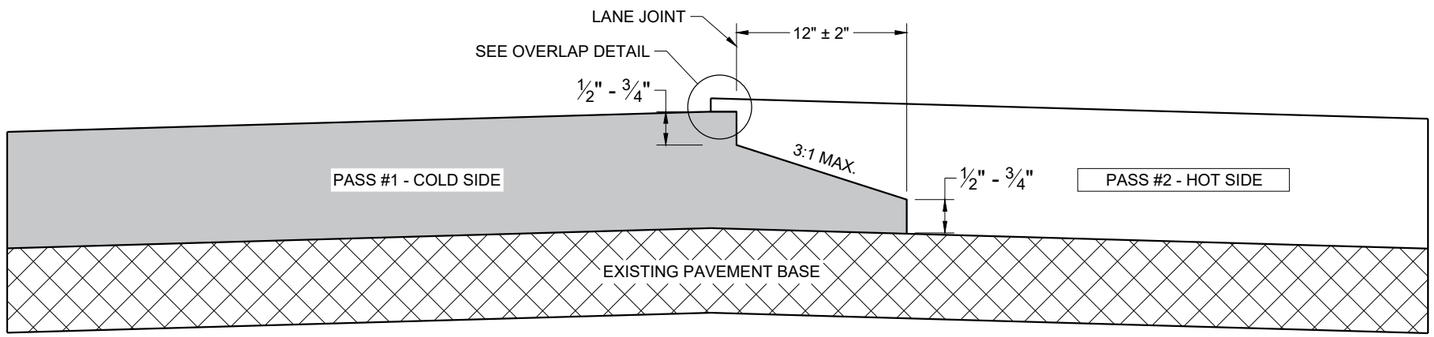

TYPICAL PAVEMENT CROSS SECTION
NOTCHED WEDGE JOINT

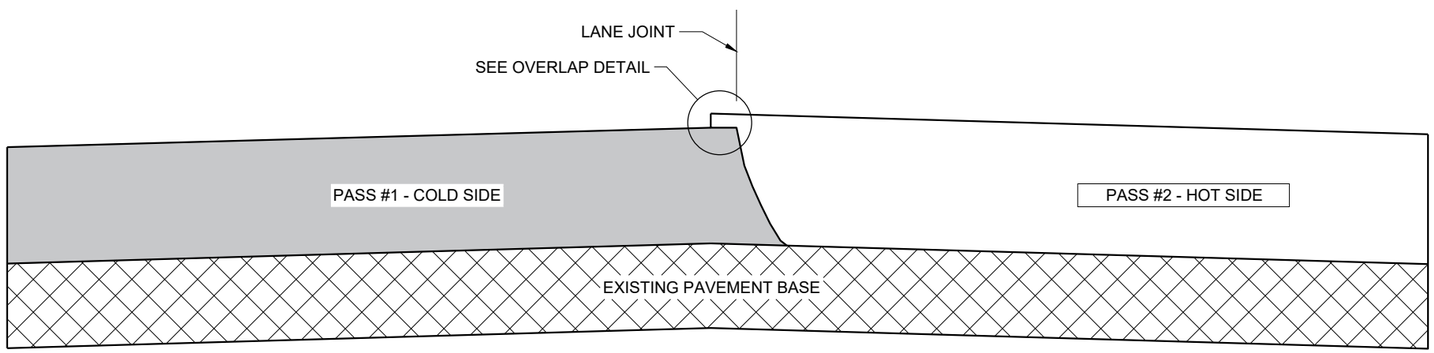

TYPICAL PAVEMENT CROSS SECTION
VERTICAL JOINT

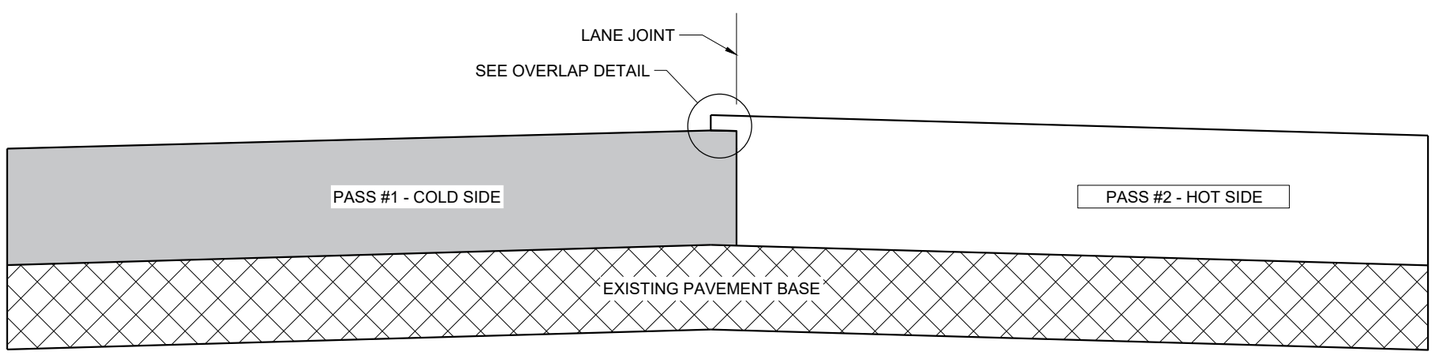

TYPICAL PAVEMENT CROSS SECTION
VERTICAL JOINT (MILLED)

GENERAL NOTES

IN ADDITION TO THE DETAILS PROVIDED IN THIS DRAWING, CONFORM TO STANDARD SPECIFICATION 450.3.2.8 FOR WHEN A NOTCHED WEDGE JOINT IS REQUIRED AND FOR GENERAL JOINT CONSTRUCTION REQUIREMENTS.

FOR ALL LONGITUDINAL JOINTS, ENSURE THE PAVER SCREED OVERLAPS THE PREVIOUSLY PLACED PAVEMENT BY 1" ± 0.5" AND THE HOT SIDE OF THE JOINT REMAINS HIGHER THAN THE COLD SIDE BY APPROXIMATELY 0.1" AFTER FINAL COMPACTION. (IT WILL BE FLUSH WHEN PAVING IN ECHELON.)

ONLY REMOVE THE LONGITUDINAL NOTCHED WEDGE JOINT FOR SMA PAVEMENT OR AS DIRECTED BY THE ENGINEER TO ADDRESS SPECIFIC LENGTHS OF JOINT DAMAGED BY TRAFFIC.

WHEN MILLING BACK OR REMOVING ANY LONGITUDINAL JOINT, LIMIT THE MATERIAL REMOVED TO 2" FROM THE TOP NOTCH OR FROM THE VERTICAL JOINT EDGE ON THE COLD SIDE OF THE JOINT.

USE LONGITUDINAL MILLED JOINT AS PLANS SHOW OR THE AS THE ENGINEER DIRECTS.

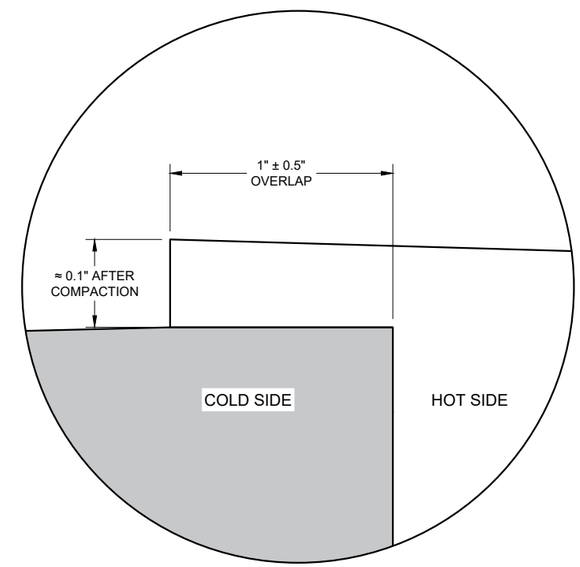

OVERLAP DETAIL (TYPICAL)

6

6

SDD 13C19 - 03

SDD 13C19 - 03

HMA LONGITUDINAL JOINTS

STATE OF WISCONSIN
DEPARTMENT OF TRANSPORTATION

APPROVED
November 2020 /S/ Steven Hefel
DATE HMA PAVEMENT ENGIN
FHWA

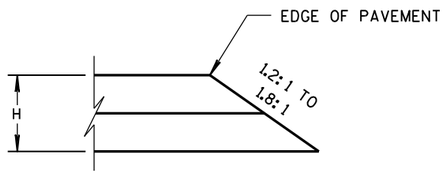

CONSTRUCTED WITH FINAL TWO LAYERS

FOR H 5" OR LESS

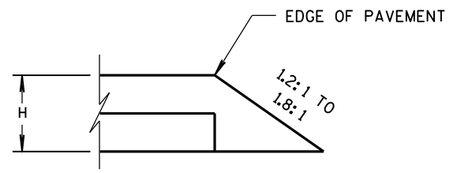

CONSTRUCTED WITH FINAL LAYER

FOR H 5" OR LESS

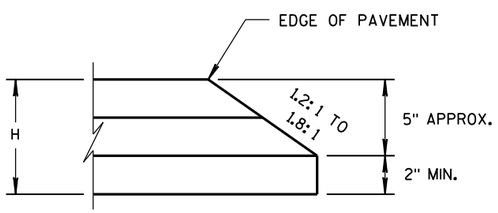

CONSTRUCTED WITH FINAL TWO LAYERS

FOR H GREATER THAN 5"

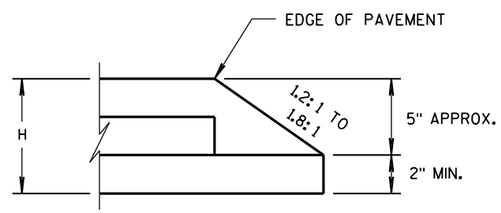

CONSTRUCTED WITH FINAL LAYER

FOR H GREATER THAN 5"

HMA PAVEMENT AND HMA OVERLAYS

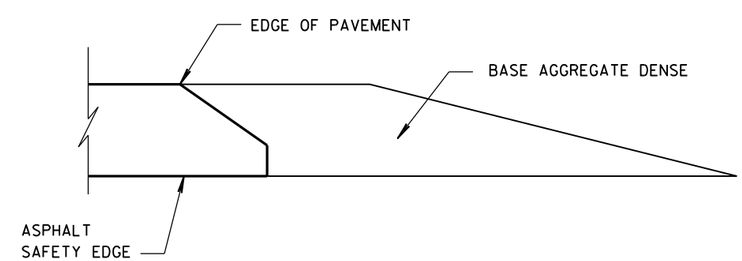

FINISHED SHOULDER AGGREGATE PLACEMENT

6

6

S.D.D. 14 B 29-1

S.D.D. 14 B 29-1

SAFETY EDGE SM

STATE OF WISCONSIN
DEPARTMENT OF TRANSPORTATION

APPROVED

11/30/2012
DATE

/S/ Jerry H. Zogg
ROADWAY STANDARDS DEVELOPMENT ENGINEER

FHWA

1. WOOD OR STEEL POSTS (w6X9 OR w6X8.5) MAY BE USED. DO NOT INTERMIX WOOD AND STEEL POSTS. INSTALL STEEL POSTS WITH HOLES ON APPROACHING TRAFFIC SIDE.
2. USE WOOD OR APPROVED PLASTIC BLOCKOUTS. WOOD BLOCKOUTS MAY BE CONSTRUCTED OUT OF TWO OR MORE WOOD BLOCKOUTS. SEE ALTERNATE WOOD BLOCKOUT DETAIL. DIMENSIONS OF APPROVED PLASTIC BLOCKOUTS MAY VARY.
3. IF ROCK IS ENCOUNTERED DURING EXCAVATION, PROVIDE A HOLE 12 INCHES IN DIAMETER EXTENDING 20 INCHES DEEP INTO THE ROCK. PLACE APPROXIMATELY 2 1/2" INCHES OF GRANULAR MATERIAL IN THE BOTTOM OF THE HOLE. CUT THE POSTS THE TO LENGTH AMD INSTALL. BACKFILL WITH EXCAVATED MATERIAL AND COMPACT. BACKFILL IS TO BE FREE OF LARGE ROCKS.
4. WHEN THE DISTANCE FROM BACK OF POST TO SHOULDER HINGE POINT IS LESS THAN 2 FEET INSTALL LONGER POST AT HALF POST SPACING (K).
5. FOR NEW MGS INSTALLATION TOP OF W-BEAM RAIL TOLERANCE IS ±1". FOR EXISTING MGS INSTALLATION TOP OF W-BEAM IS BETWEEN 27 ¾" TO 32".
6. WHEN USING STEEL POST AND WOOD BLOCKOUTS INSTALL FOUR 16D GALVANIZED NAILS. INSTALL NAILS AT THE BACK CORNERS OF THE BLOCK AND BEND THE NAILS OVER THE FLANGE OF THE STEEL POST.
7. TOTAL POST LENGTH FOR TYPE K IS 7' - 0". TOTAL POST LENGTH FOR OTHER MGS TYPES IS 6' - 0".

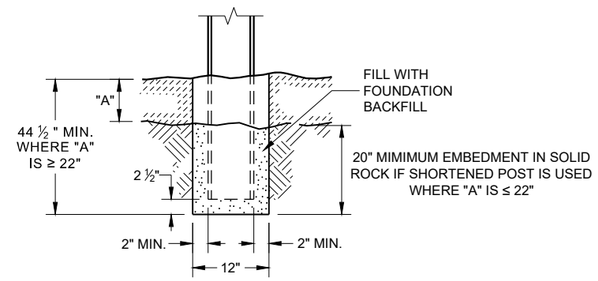

END VIEW
SETTING STEEL OR WOOD POST IN ROCK (3)

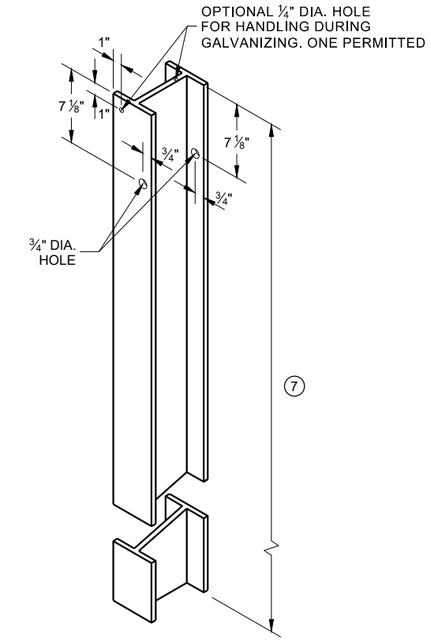

STEEL POST & HOLE PUNCHING DETAIL (W 6 X 9) (1)

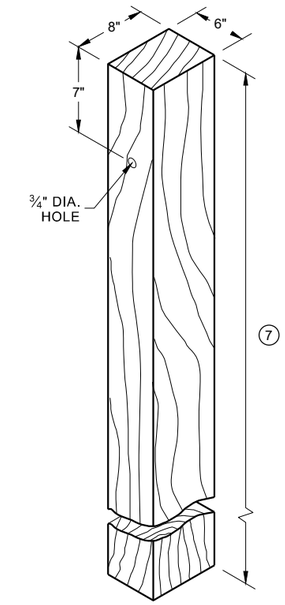

WOOD POST (6" X 8") NOMINAL (1)

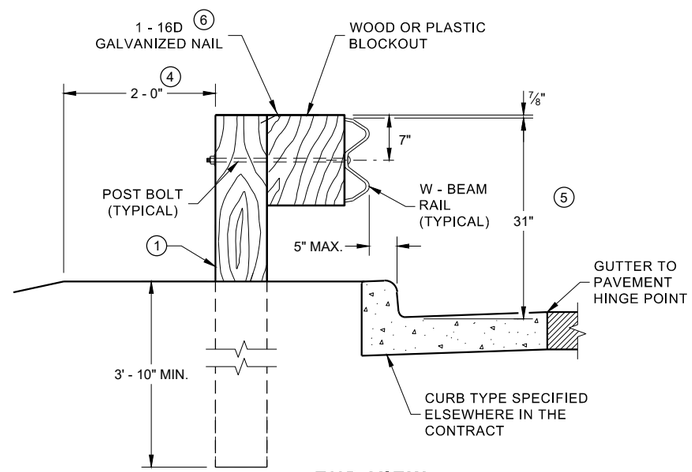

END VIEW
LOCATED ALONG A CURBED ROADWAY

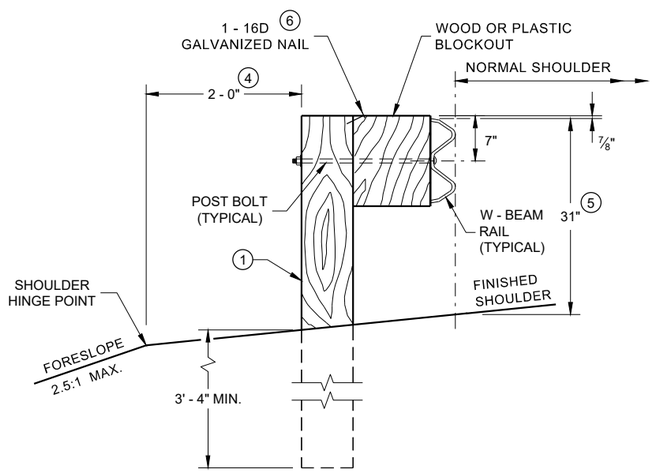

END VIEW
LOCATED ALONG A ROADWAY SHOULDER STANDARD INSTALLATION

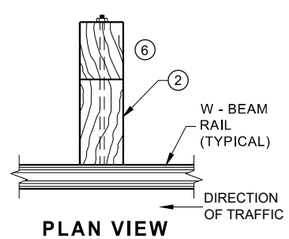

PLAN VIEW
WOOD POST, BLOCKOUT & BEAM

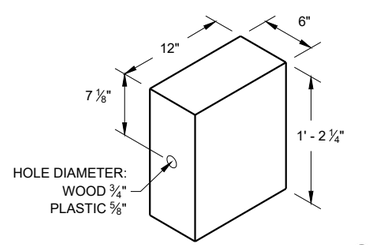

WOOD OR PLASTIC BLOCKOUT (2)

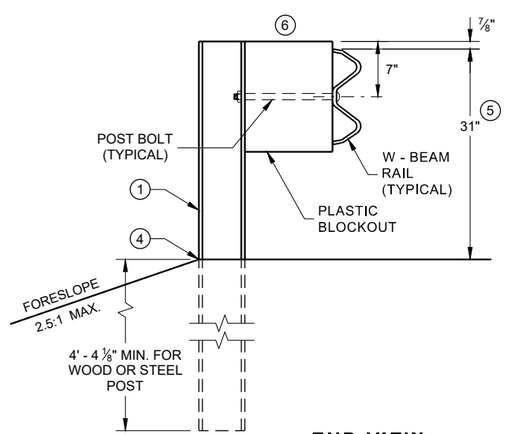

END VIEW
MGS LONGER POST AT HALFPOST SPACING W BEAM (K)

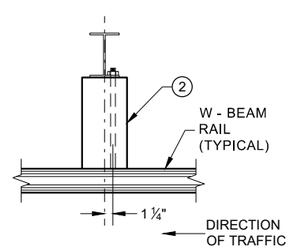

PLAN VIEW
STEEL POST, PLASTIC BLOCKOUT & BEAM

MIDWEST GUARDRAIL SYSTEM (MGS) GUARDRAIL

STATE OF WISCONSIN
DEPARTMENT OF TRANSPORTA

6

SDD 14B42 - 07a

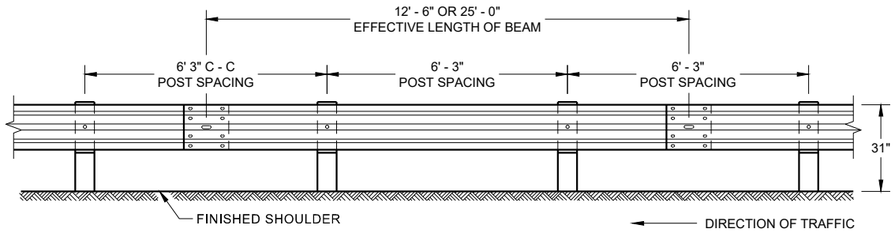

FRONT VIEW
POST SPACING STANDARD INSTALLATION

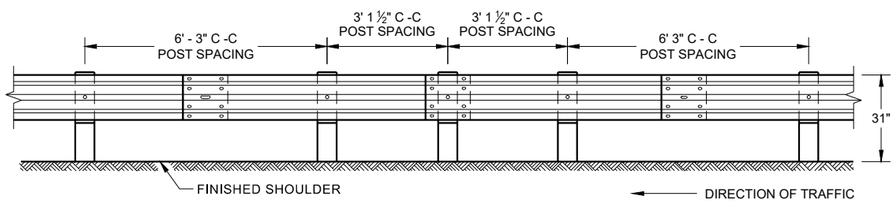

FRONT VIEW
HALF POST SPACING (HS) AND HALF POST SPACING WITH LONGER POSTS (K)

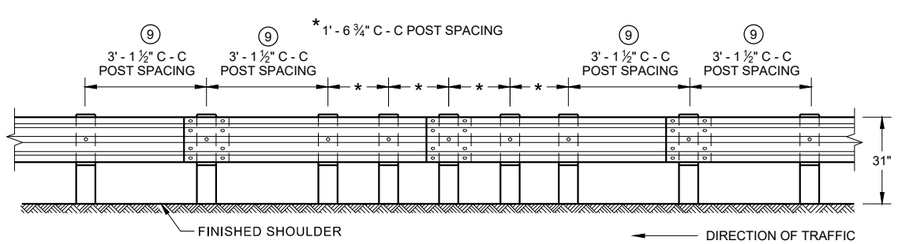

FRONT VIEW
QUARTER POST SPACING (QS)

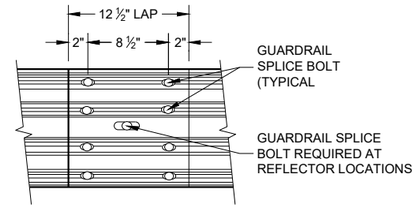

FRONT VIEW
MID-SPAN BEAM SPLICE

GENERAL NOTES

8 DO NOT INSTALL REFLECTORS ON THE FIRST 50 FEET OF THE APPROACH END OF THE ENERGY ABSORBING TERMINAL.

9 25 FEET OF HALF POST SPACING IS REQUIRED ON APPROACH AND DEPARTURE ENDS OF QUARTER POST SPACING.

POST BOLTS ARE A ⅝" DIAMETER ASTM A307 GUARDRAIL BOLT. A POST BOLT REQUIRES ⅝" DIAMETER A563A DOUBLE RECESSED (DR) HEAVY HEX NUT AND ⅝" DIAMETER F844 FLAT WASHER. POST BOLTS MAY BE LONGER IF MULTIPLE BLOCKOUTS ARE BEING USED.

GUARD RAIL SPLICE BOLTS ARE A ⅝" DIAMETER ASTM A307 GUARDRAIL HEAD BOLT. A GUARDRAIL SPLICE BOLT REQUIRES ⅝" DIAMETER A563A DOUBLE RECESSED (DR) HEAVY HEX NUT.

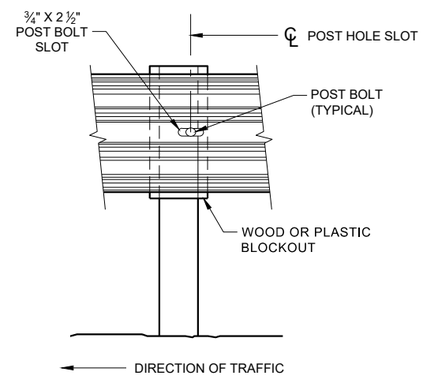

FRONT VIEW AT STEEL POST

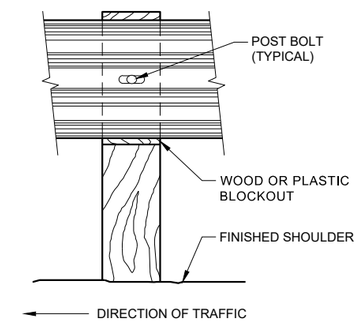

FRONT VIEW AT WOOD POST

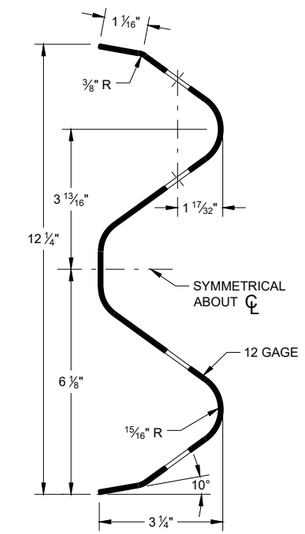

SECTION THRU W-BEAM RAIL

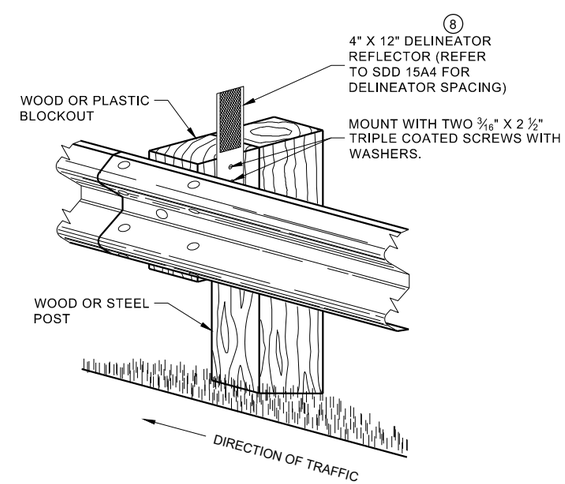

ONE SIDED REFLECTOR DETAIL AND TYPICAL INSTALLATION

MIDWEST GUARDRAIL SYSTEM (MGS) GUARDRAIL

STATE OF WISCONSIN
DEPARTMENT OF TRANSPORTA

6

SDD 14B42 - 07b

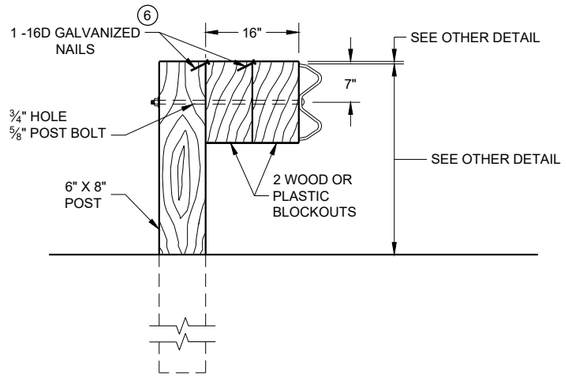

DETAIL FOR 16" BLOCKOUT DEPTH

IT IS ACCEPTABLE TO USE BLOCKOUTS UP TO 16" DEEP TO INCREASE THE POST OFFSET TO AVOID UNDERGROUND OBSTACLES. THERE IS NO LIMIT TO THE NUMBER OF POSTS THAT CAN HAVE ADDITIONAL BLOCKOUTS UP TO 16" DEEP.

NOTE:

1. ALL FILLETS SHALL HAVE A MINIMUM RADIUS OF 3/16".
2. IF THE BOLT EXTENDS MORE THAN ¼" FROM THE NUT THE BOLT SHOULD BE TRIMMED BACK.

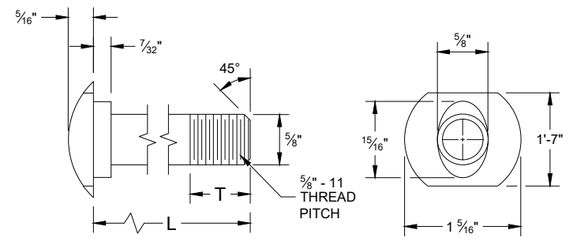

POST BOLT TABLE

L	T (MIN.)
1 ¼"	1 ⅛"
2"	1 ¾"
10"	4"
14"	4 1/16"
18"	4"
21"	4 1/16"
25"	4"

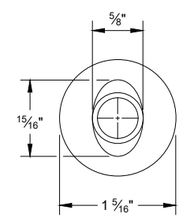

ALTERNATE BOLT HEAD

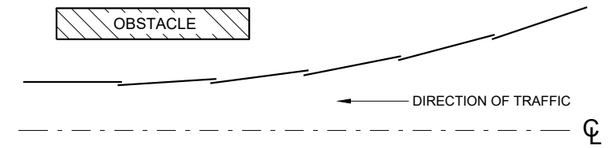

PLAN VIEW
BEAM LAPPING DETAIL

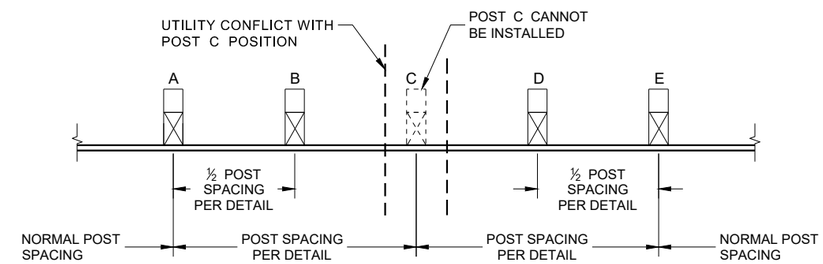

POST DRIVING FOR CONTINUOUS UNDERGROUND OBSTRUCTION

6

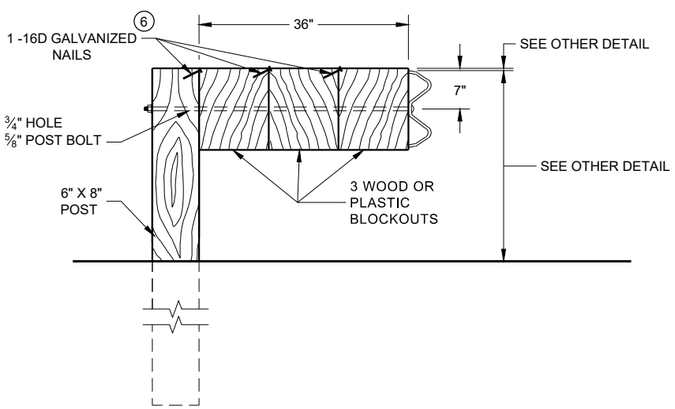

DETAIL FOR 36" BLOCKOUT DEPTH

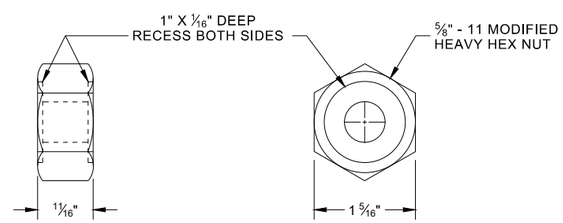

POST BOLT, SPLICE BOLT AND RECESS NUT

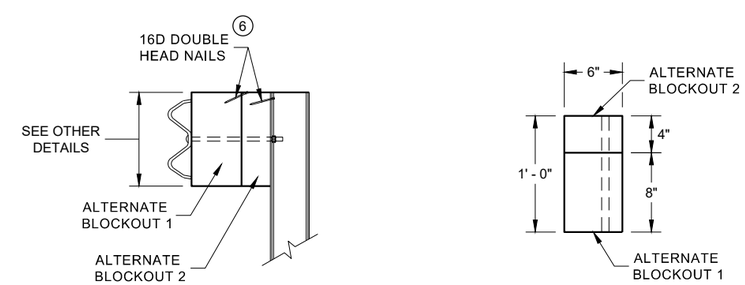

SIDE VIEW

PLAN VIEW

ALTERNATE WOOD BLOCKOUT DETAIL

NOTES: UNDER SPECIAL CIRCUMSTANCES, SUCH AS AVOIDING OBSTACLES THAT ARE NOT RELOCATED, IT IS ACCEPTABLE TO INSTALL ADDITIONAL BLOCKOUTS TO OBTAIN UP TO 36" DEPTH FOR ONE OR TWO POSTS IN A SECTION OF GUARDRAIL.

DO NOT USE 16" OR 36" BLOCKOUTS IF IT CAUSES THE POST TO BE DRIVEN BEYOND SHOULDER HINGE POINT OR CAUSES A FIXED OBJECT TO BE WITHIN THE DEFLECTION DISTANCE OF THE BARRIER.

(6) WHEN USING STEEL POST AD WOOD BLOCKOUTS, INSTALL FOUR 16D GALVANIZED NAILS. INSTALL NAILS AT THE BACK CORNERS OF THE BLOCK AND BEND THE NAILS OVER THE FLANGE OF THE STEEL POST.

MIDWEST GUARDRAIL SYSTEM (MGS) GUARDRAIL

STATE OF WISCONSIN
DEPARTMENT OF TRANSPORTA

SDD 14B42 - 07c

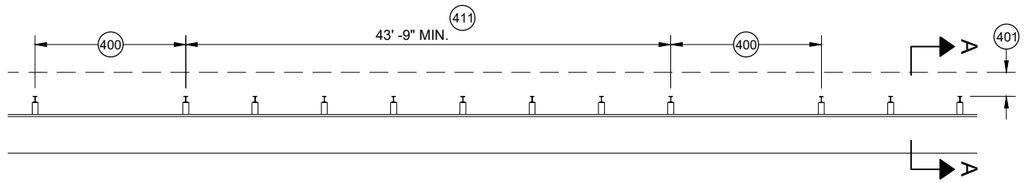

MISSING POST IN MGS GUARDRAIL

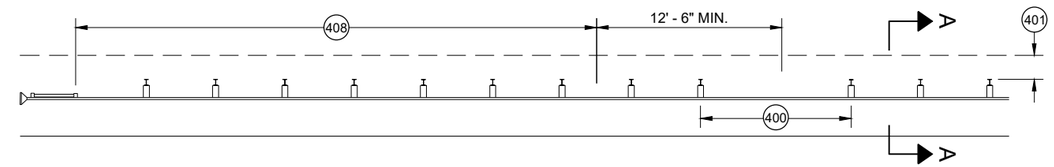

MISSING POST IN MGS GUARDRAIL NEAR EAT

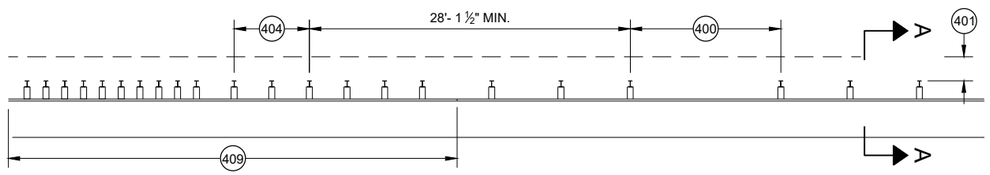

MISSING POST IN MGS GUARDRAIL NEAR AN APPROACH TRANSITION

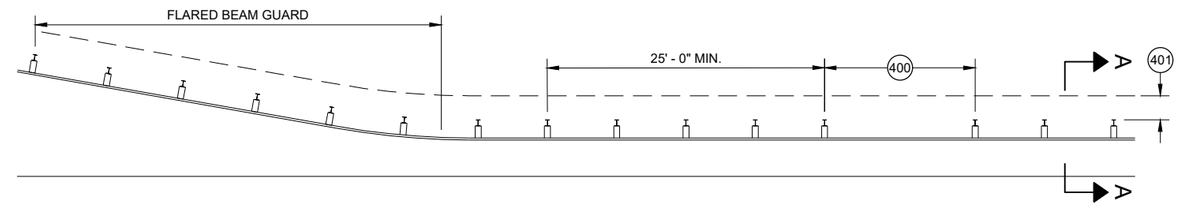

MISSING POST IN MGS GUARDRAIL NEAR FLARED BEAM GUARD

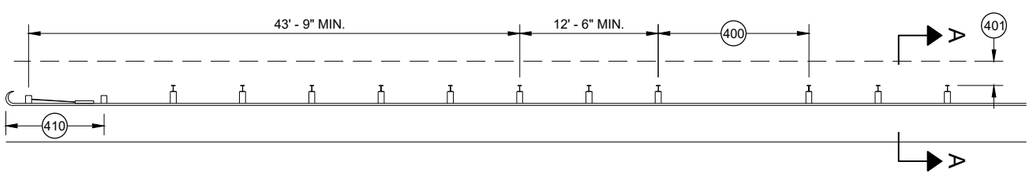

MISSING POST IN MGS GUARDRAIL NEAR A TYPE 2 END TERMINAL

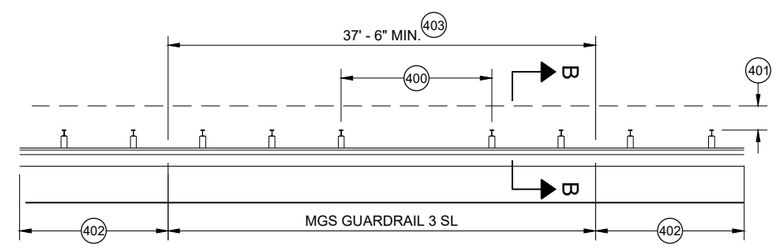

MISSING POST IN SHORT SPAN MGS GUARDRAIL NEAR CURB (SL) 407

400 MAX SPAN 12' - 6"
401 2' MIN.
402 MGS GUARDRAIL 3
403 NESTING BEAM GUARD
404 ASYMMETRIC TRANSITION
405 SOIL WELL DRAINED AND COMPACTED
406 SEE OTHER DRAWINGS IN THIS SDD
407 SEE OTHER DRAWINGS FOR MIN. SPACING BETWEEN SPANS
408 SEE SDD 14B44
409 SEE SDD 14B45
410 SEE SDD 14B47
411 MINIMUM DISTANCE BETWEEN MISSING POST SPANS.

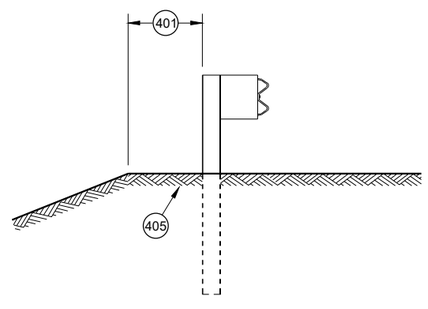

SECTION A - A 406

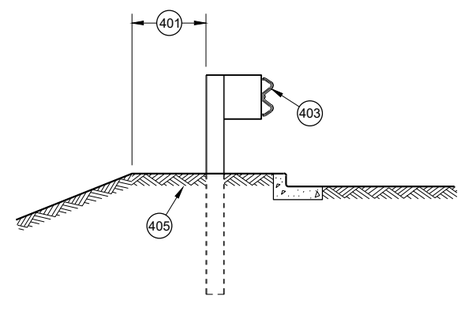

SECTION B - B 406

MIDWEST GUARDRAIL SYSTEM (MGS) GUARDRAIL

STATE OF WISCONSIN
DEPARTMENT OF TRANSPORTATION

APPROVED
May 2021 — DATE
/S/ Rodney Taylor — ROADWAY STANDARDS DEVE UNIT SUPERVISOR
FHWA

6

SDD 14B42 - 07d

GENERAL NOTES

(A) THE SLOPE IN THE AREA BOUNDED BY THE GRADELINE, THE HINGE POINT LINE (HPL) AND THE CLEAR ZONE LIMITS (CZL) SHALL BE 4:1 OR FLATTER.

(B) AFTER FINAL ASSEMBLY, RECHECK CABLE TO BE SURE IT IS TAUT AND HAS NOT RELAXED

(C) DIFFERENT MANUFACTURERS REQUIRE DIFFERENT PERFORATED W - BEAM RAIL END PANELS. SEE MANUFACTURER'S INFORMATION.

(D) ATTACH ALUMINUM SHEET TO E.A.T. HEAD USING 4 STAINLESS STEEL SELF - TAPPING SCREWS. ONE SCREW PER CORNER.

(E) HARDWARE MAY VARY BETWEEN MANUFACTURER. SEE MANUFACTURER'S DRAWING FOR INFORMATION.

DIMENSIONS MAY VARY, MANUFACTURER'S INFORMATION.

SEE SDD 14B42 FOR MORE INFORMATION.

* DO NOT ATTACH BLOCKOUTS TO POST 1 AND 2.

DO NOT INSTALL REFLECTORS ON THE FIRST 50 FEET OF THE APPROACH END OF THE ENERGY ABSORBING TERMINAL.

SEE MANUFACTURER'S DRAWING FOR SPLICE LOCATION, HARDWARE DIMENSIONS AND INSTALLATION INSTRUCTIONS.

THE CENTER OF THE UPPER 3 ½" DIAMETER HOLE ON POST NUMBER 3 THROUGH POST 9 IS TO BE FLUSH WITH THE GROUND LINE UP TO A MAXIMUM OF 2" ABOVE GROUND LINE. WOOD BLOCKS ON POSTS NUMBERED 3 THROUGH 9 MAY BE ADJUSTED UP TO 3" ABOVE THE TOP OF POST.

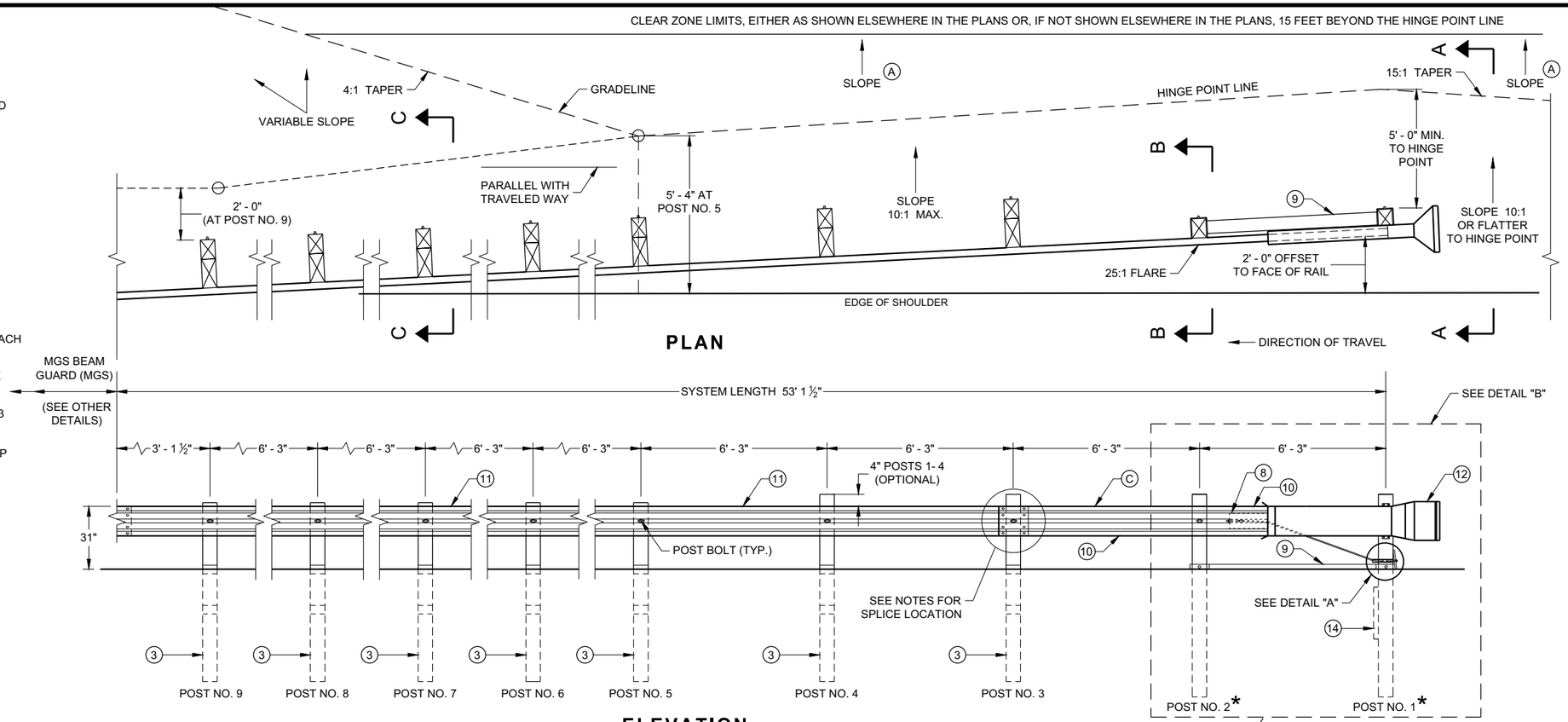

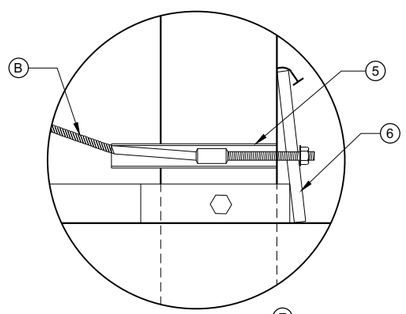

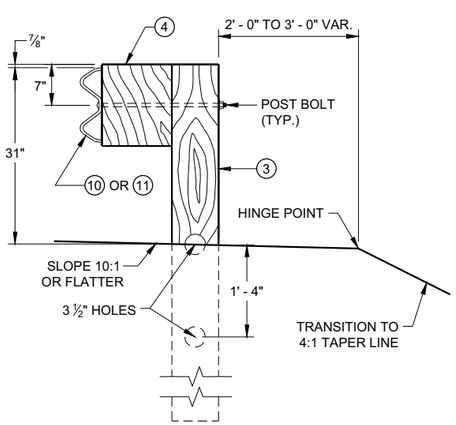

SECTION C - C
TYPICAL AT POST NOS. 3 - 9

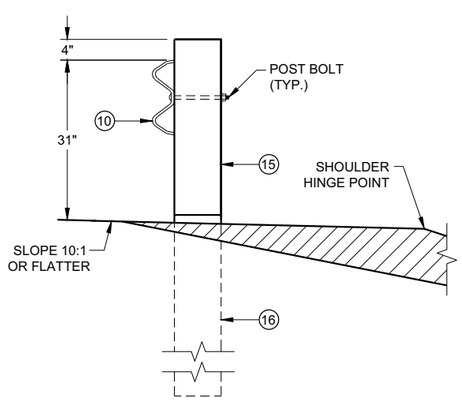

SECTION B - B
TYPICAL AT POST NO. 2*

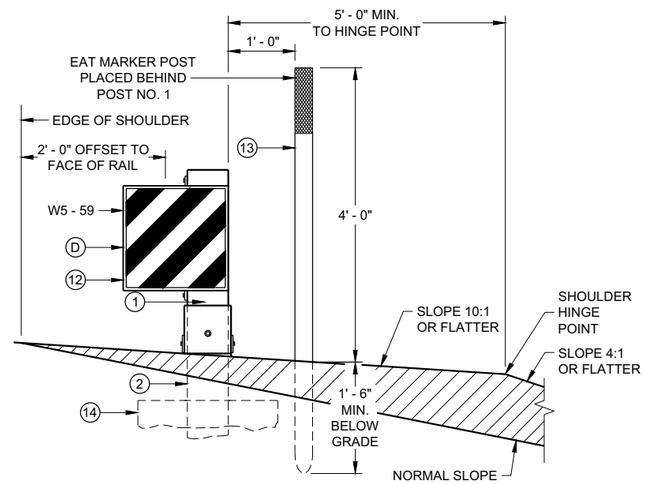

SECTION A - A
TYPICAL AT POST NO. 1*

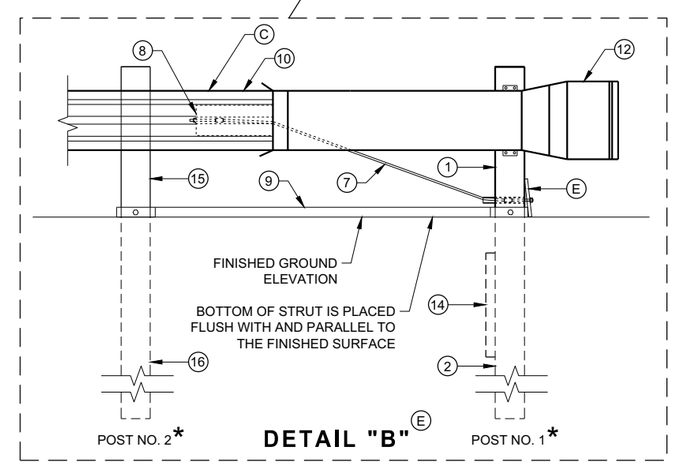

MIDWEST GUARDRAIL SYSTEM ENERGY ABSORBING TERMINAL (MGS)

STATE OF WISCONSIN
DEPARTMENT OF TRANSPORTATION

6

6

SDD 14B44 - 04a

SDD 14B44 - 04a

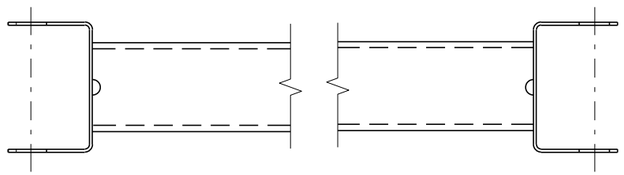

GENERIC GROUND STRUT 9 E

BILL OF MATERIALS

PART NO.	DESCRIPTION MATERIALS PROVIDED BY MGS EAT MANUFACTURER. SEE MANUGACTURER'S DETAILS FOR MORE INFORMATION.
1	UPPER POST NO. 1 6" X 6" TUBE
2	LOWER POST NO. 1
3	WOOD CRT
4	WOOD BLOCKOUT
5	PIPE SLEEVE
6	BEARING PLATE
7	BCT CABLE ASSEMBLY
8	ANCHOR CABLE BOX
9	GROUND STRUT
10	PERFORATED W-BEAM RAIL END PANEL, 12'-6" LONG.
11	STANDARD W-BEAM RAIL. MULTIPLE SECTIONS REQUIRED. SECTIONS VARY IN LENGTH.
12	IMPACT HEAD
13	EAT MARKER POST - YELLOW (SEE APPROVED PRODUCTS LIST)
14	SOIL PLATE
15	UPPER POST NO. 2
16	LOWER POST NO. 2

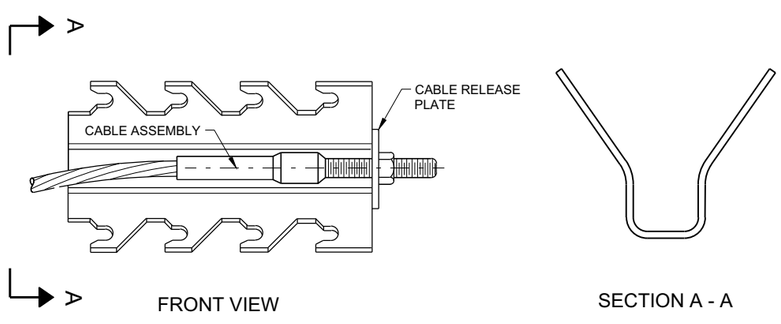

GENERIC ANCHOR CABLE BOX 9 E

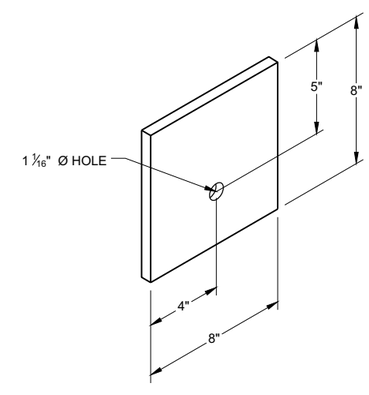

BEARING PLATE 6 E

6

6

SDD 14B44 - 04b

SDD 14B44 - 04b

MIDWEST GUARDRAIL SYSTEM ENERGY ABSORBING TERMINAL (MGS)

STATE OF WISCONSIN
DEPARTMENT OF TRANSPORTAT

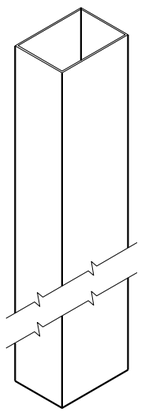

UPPER POST NO. 1 (1) (E)

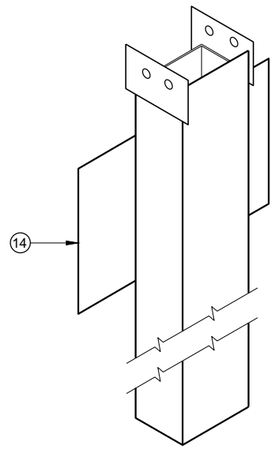

LOWER POST NO. 1 (2) (E)

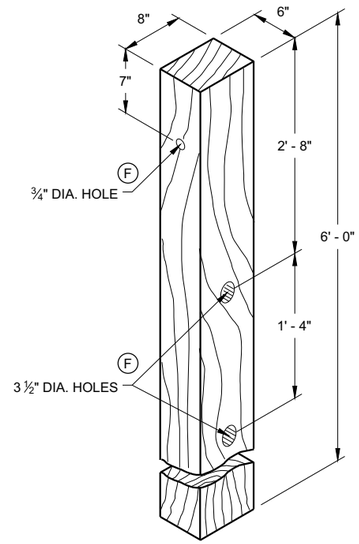

WOOD CRT POST (3) (E)

POSTS NUMBER 3-9

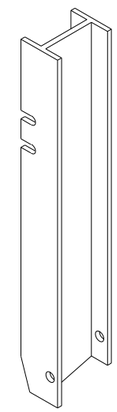

UPPER POST NO. 2 (15) (E)

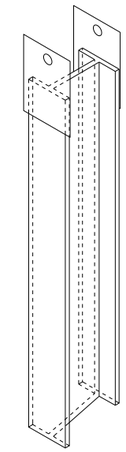

LOWER POST NO. 2 (16) (E)

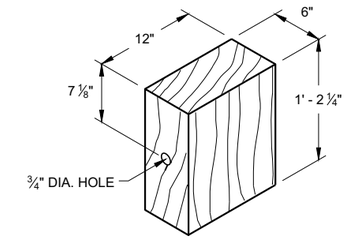

WOOD BLOCKOUT (4)

REQ'D. AT ALL POSTS EXCEPT POST NO'S 1 & 2

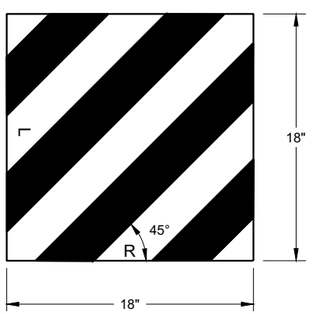

W5 - 59

REFLECTIVE SHEETING DETAIL (E)

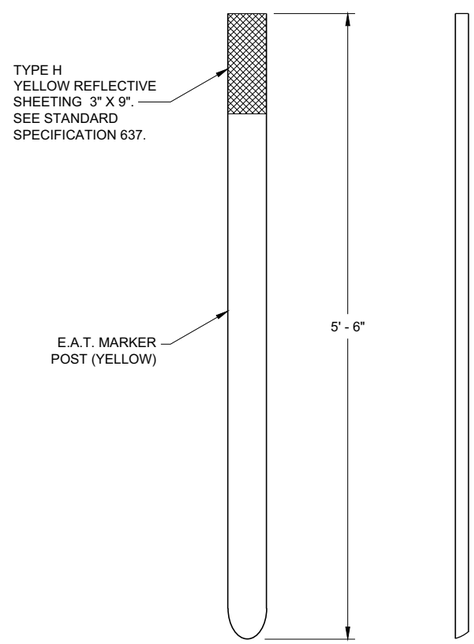

FRONT VIEW SIDE VIEW

E.A.T. MARKER POST (13)

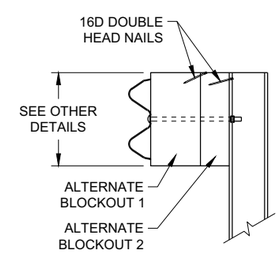

SIDE VIEW

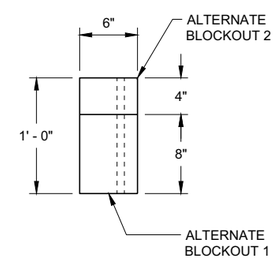

TOP VIEW

ALTERNATE WOOD BLOCKOUT DETAIL

6

6

MIDWEST GUARDRAIL SYSTEM ENERGY ABSORBING TERMINAL (MGS)

STATE OF WISCONSIN
DEPARTMENT OF TRANSPORTATION

APPROVED
7/2018 — DATE
/S/ Rodney Taylor — ROADWAY STANDARDS DEVE UNIT SUPERVISOR
FHWA

SDD 14B44 - 04c

SDD 14B44 - 04c

GENERAL NOTES

DETAILS OF CONSTRUCTION, MATERIALS AND WORKMANSHIP NOT SHOWN ON THIS DRAWING SHALL CONFORM TO THE PERTINENT REQUIREMENTS OF THE STANDARD SPECIFICATIONS AND THE APPLICABLE SPECIAL PROVISIONS.

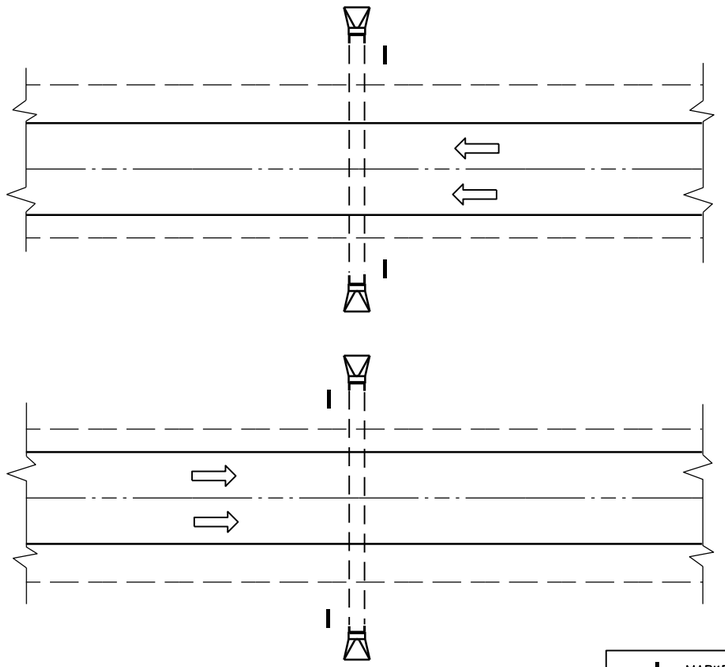

PLAN VIEW

DIVIDED HIGHWAY

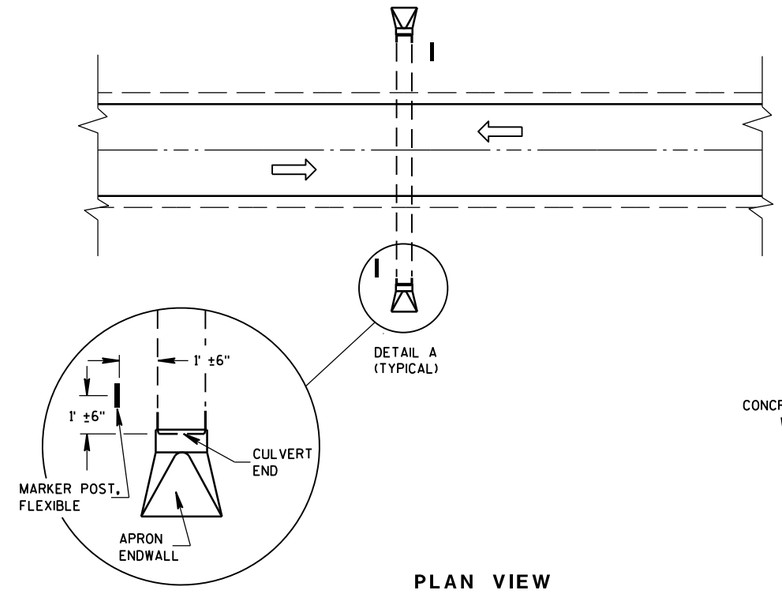

DETAIL A
(TYPICAL)

PLAN VIEW

UNDIVIDED HIGHWAY

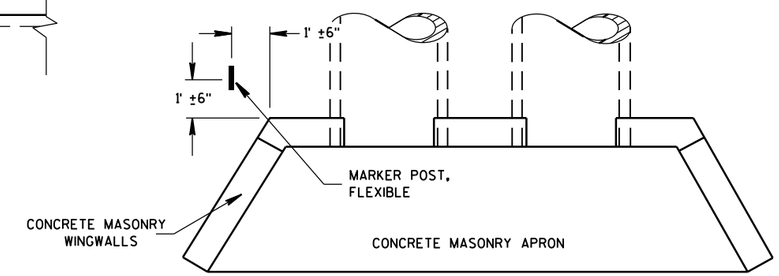

PLAN VIEW

CONCRETE MASONRY ENDWALLS FOR CULVERT PIPE AND PIPE ARCH

MARKER POST, FLEXIBLE

DIRECTION OF TRAFFIC FLOW

FLEXIBLE MARKER POST LOCATION

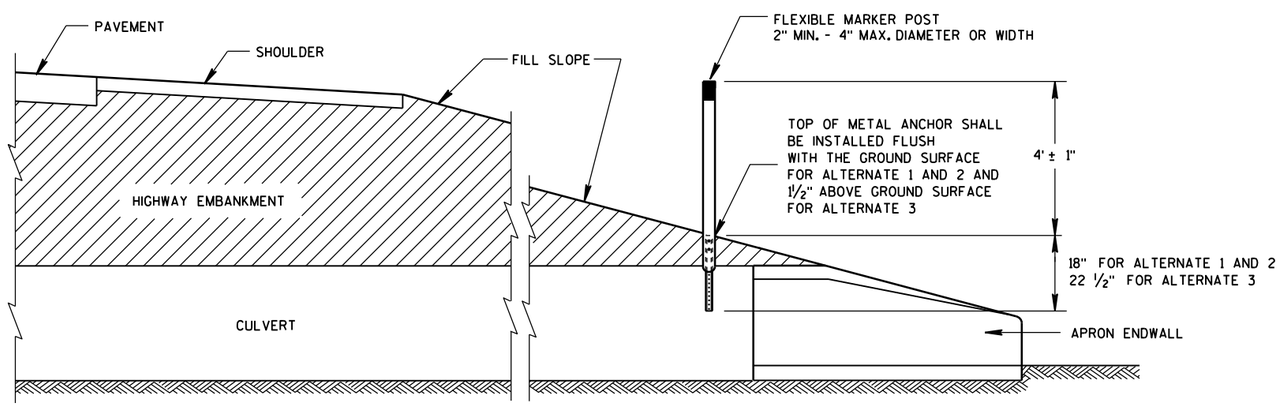

CROSS SECTION

FLEXIBLE MARKER POST

FLEXIBLE MARKER POST FOR CULVERT END

STATE OF WISCONSIN
DEPARTMENT OF TRANSPORTATION

6

S.D.D. 15 A 3-2a

6

S.D.D. 15 A 3-2a

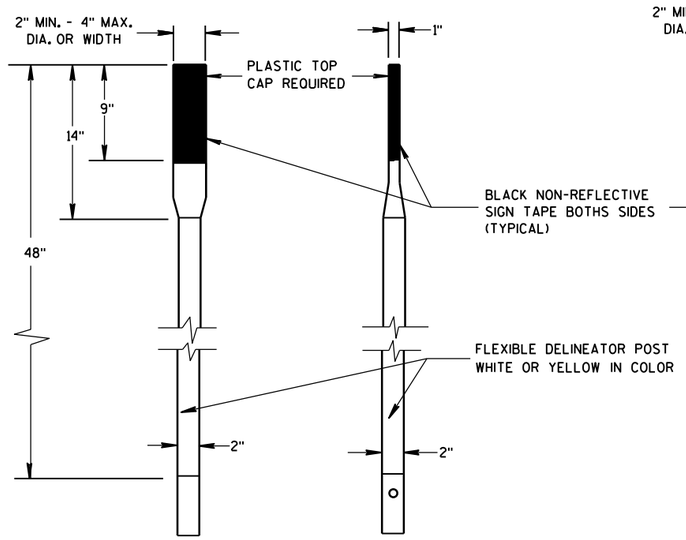

FRONT VIEW SIDE VIEW

ALTERNATE 1

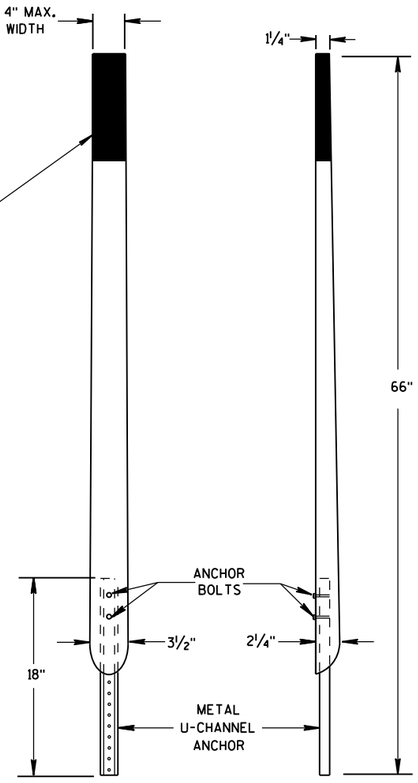

FRONT VIEW SIDE VIEW

ALTERNATE 2

FLEXIBLE MARKER POSTS

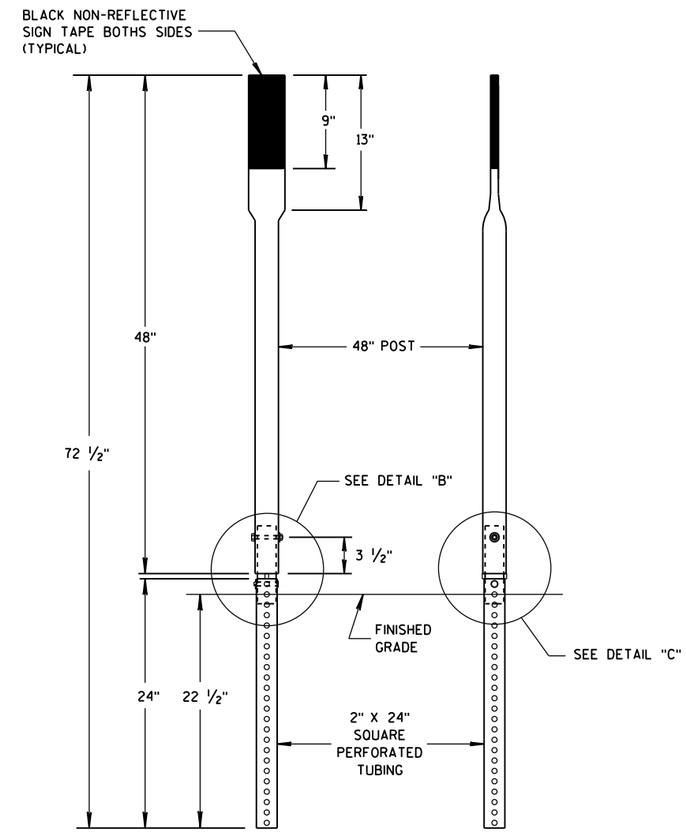

FRONT VIEW SIDE VIEW

ALTERNATE 3

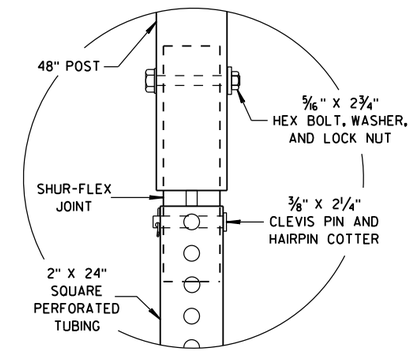

DETAIL B

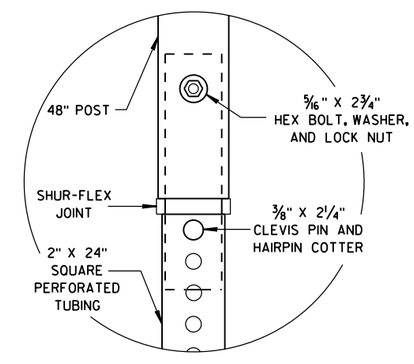

DETAIL C

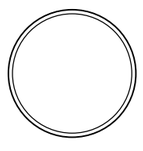

SECTION A-A

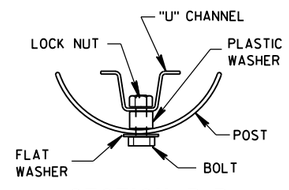

SECTION B-B

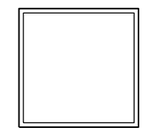

SECTION C-C

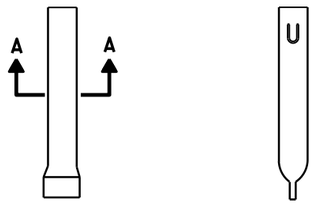

FRONT VIEW SIDE VIEW

ALTERNATE 1

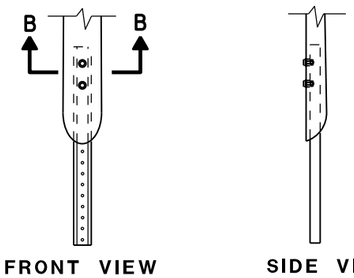

FRONT VIEW SIDE VIEW

ALTERNATE 2

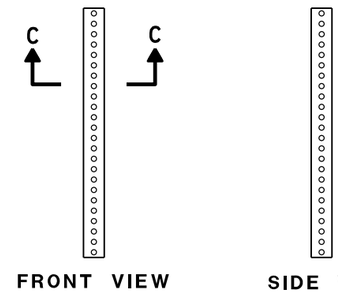

FRONT VIEW SIDE VIEW

ALTERNATE 3

FLEXIBLE MARKER POST ANCHORS

FLEXIBLE MARKER POST
FOR CULVERT END

STATE OF WISCONSIN
DEPARTMENT OF TRANSPORTATION

APPROVED
10/1/2012 /S/ Travis Feltes
DATE STATE TRAFFIC ENGINEER
FHWA

6

6

S.D.D. 15 A 3-2b

S.D.D. 15 A 3-2b

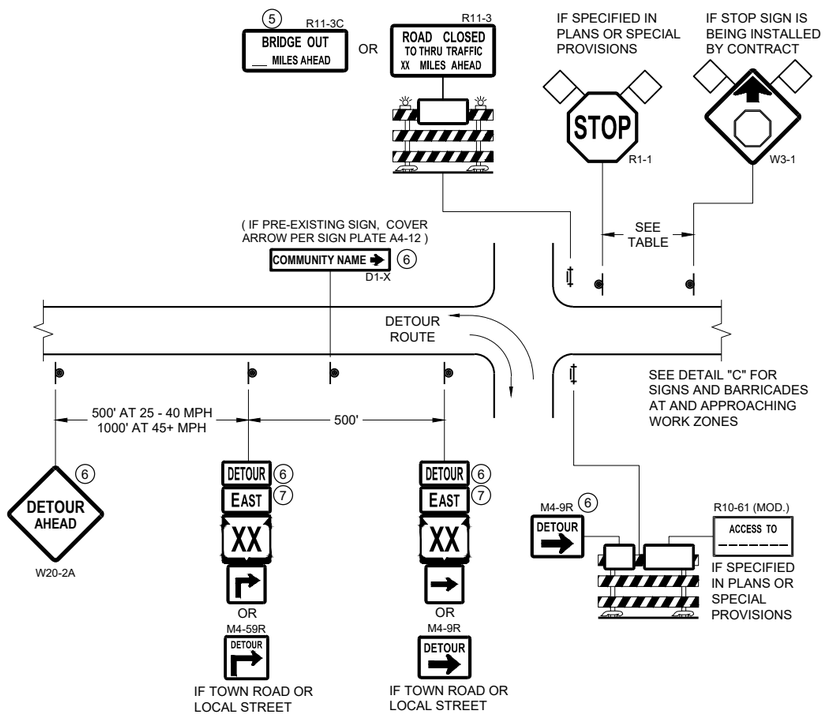

DETAIL A
MAINLINE CLOSURE WITH POSTED DETOUR
WORK ZONE GREATER THAN OR EQUAL TO ½ MILE FROM DETOUR ROUTE (1000 FEET IF URBAN)

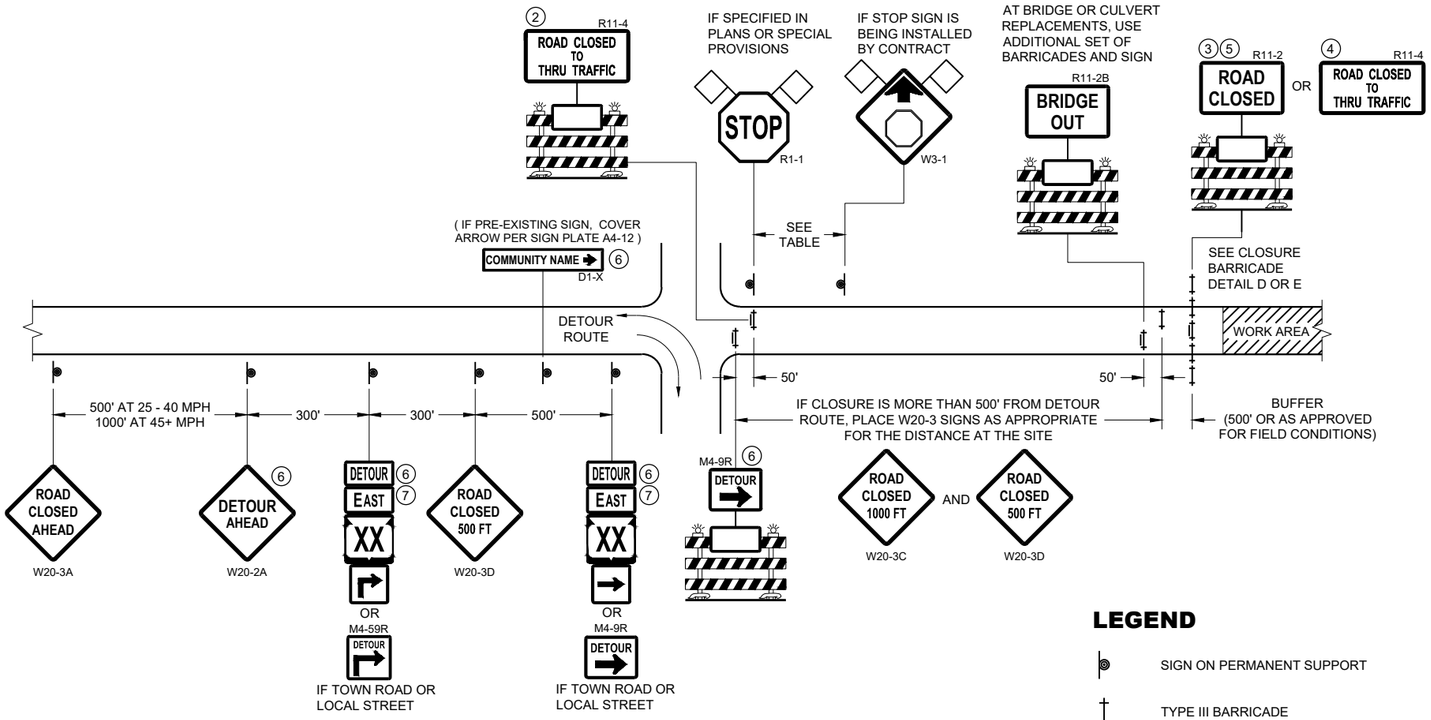

DETAIL B
MAINLINE CLOSURE WITH POSTED DETOUR
WORK ZONE LESS THAN ½ MILE FROM DETOUR ROUTE (1000 FEET IF URBAN)

LEGEND

- SIGN ON PERMANENT SUPPORT
- TYPE III BARRICADE
- TYPE III BARRICADE WITH ATTACHED SIGN
- TYPE "A" WARNING LIGHT (FLASHING)
- WORK AREA
- FLAGS, 16" X 16" MIN. (ORANGE)
- DETOUR — M4 - 8
- EAST — M3 - X
- XX (M1 - 4) OR XX (M1 - 6) OR COUNTY X (M1 - 5A)
- M05 - 1 OR M06 - 1

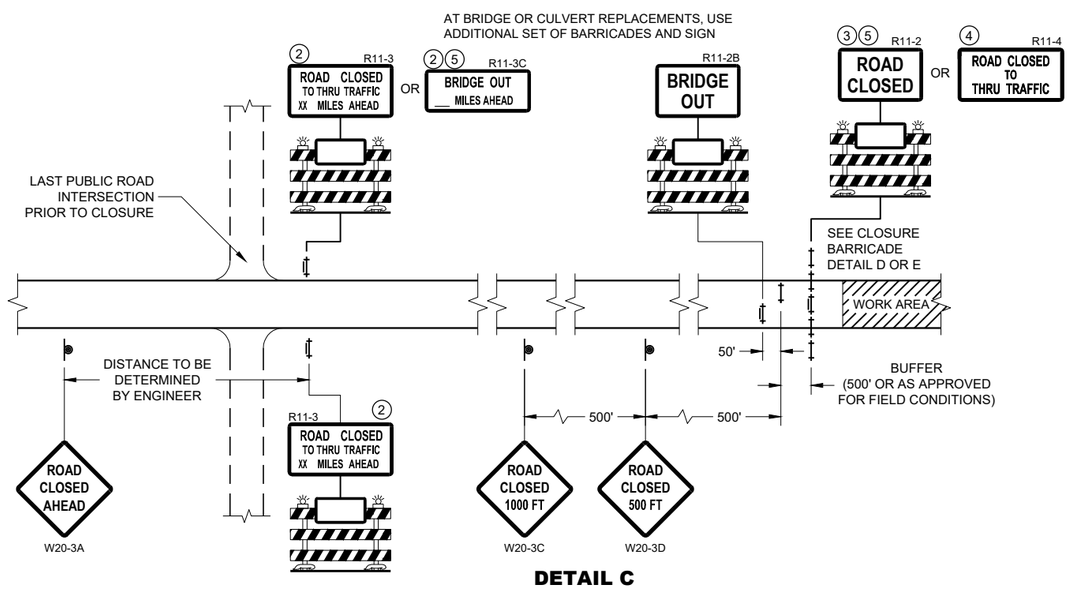

DETAIL C
MAINLINE CLOSURE, NO POSTED DETOUR

SPEED LIMIT (MPH)	"STOP AHEAD" ADVANCE WARNING DISTANCE (FT)
25	200
30	200
35	350
40	350
45	500
50	550
55	750

SEE SDD 15C2-SHEET "b" FOR GENERAL NOTES AND FOOTNOTES 1 THROUGH 7

BARRICADES AND SIGNS FOR MAINLINE CLOSURES

STATE OF WISCONSIN
DEPARTMENT OF TRANSPORTATION

APPROVED
May 2023 — DATE
/S/ Andrew Heidtke — WORK ZONE ENGINEER

FHWA

6

SDD 15C02 - 09a

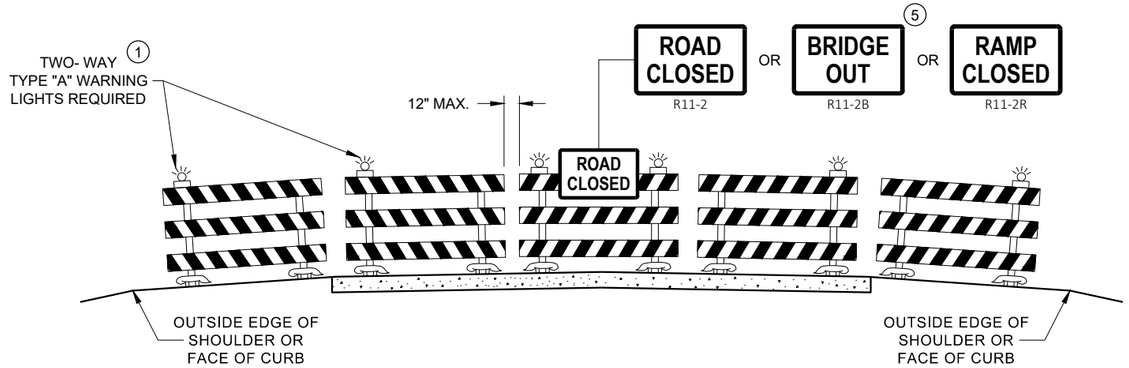

DETAIL D
ROAD CLOSURE BARRICADE DETAIL
APPROACH VIEW

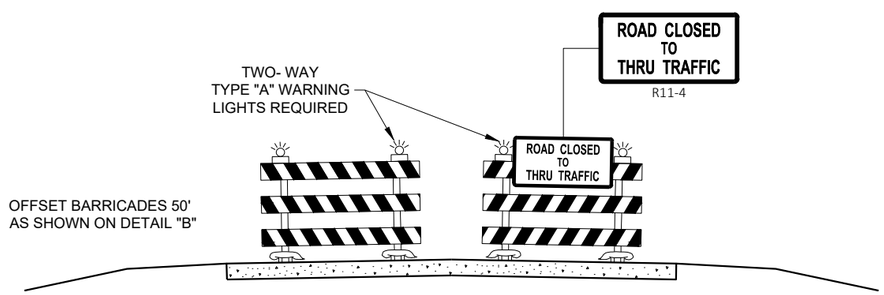

DETAIL E
LANE CLOSURE BARRICADE DETAIL
APPROACH VIEW

SEE SDD 15C2 - SHEET "a" FOR LEGEND

GENERAL NOTES

THE EXACT NUMBER, LOCATION, AND SPACING OF ALL SIGNS AND BARRICADES SHALL BE ADJUSTED TO FIT FIELD CONDITIONS AS APPROVED BY THE ENGINEER.

ANY SIGNS TEMPORARY OR EXISTING, WHICH CONFLICT WITH TRAFFIC CONTROL "IN USE", SHALL BE REMOVED OR COVERED AS NEEDED AND AS APPROVED BY THE ENGINEER.

THE SPACING BETWEEN TRAFFIC CONTROL SIGNS SHOULD BE ADJUSTED TO NOT CONFLICT WITH AND SHOULD PROVIDE A DESIRABLE MINIMUM OF 200 FEET CLEARANCE TO EXISTING SIGNS THAT WILL REMAIN IN PLACE.

BARRICADES THAT MUST BE MOVED FOR A WORK OPERATION SHALL BE IMMEDIATELY RE-ESTABLISHED UPON COMPLETION OF THE OPERATION, OR FOR CONTINUING OPERATIONS, AT THE END OF EACH WORKING DAY.

SIGNS THAT WILL BE IN PLACE LESS THAN 7 CONTINUOUS DAYS AND NIGHTS MAY BE MOUNTED ON PORTABLE SUPPORTS.

ALL TYPE III BARRICADES SHALL HAVE RAILS REFLECTORIZED ON BOTH FACES. STRIPES SHALL BE PROPERLY SLOPED DOWN TOWARD THE TRAFFIC SIDE OR AS SHOWN IN THE ROAD CLOSURE BARRICADE DETAIL "D" FOR FULL ROAD CLOSURES.

TYPE "A" LOW - INTENSITY FLASHING WARNING LIGHTS SHALL BE VISIBLE ON BOTH SIDES OF THE BARRICADE.

THE R11 - 2, R11 - 3, M4 - 9, R11 - 4, AND R10 - 61 SIGNS PLACED ON THE BARRICADES SHALL COVER NO MORE THAN THE TOP RAIL. THE SIGNS SHALL NOT COVER ANY PORTION OF THE MIDDLE RAIL OR BOTTOM RAILS.

"WO" AND "MO" SIGNS ARE THE SAME AS "W" AND "M" SIGNS EXCEPT THE BACKGROUND IS ORANGE.

ALL SIGNS SHALL BE 48" X 48" UNLESS OTHERWISE NOTED BELOW:
- R11 - 2 SHALL BE 48" X 30"
- R11 - 3 SHALL, R11 - 4 AND R10 - 61 SHALL BE 60 " X 30"
- M4 - 9 SHALL BE 30" X 24"
- M3 - X SHALL BE 24" X 12" (36" X 18" IF NEEDED TO MATCH EXISTING SIGNS)
- M4 - 8 SHALL BE 24" X 12" (36" X 18" IF NEEDED TO MATCH EXISTING SIGNS)
- M1 - 4, M1 - 5A AND M1 - 6 SHALL BE 24" X 24" (36" X 36" IF NEEDED TO MATCH EXISTING SIGNS)
- MO5 - 1 AND MO6 - 1 SHALL BE 21" X 21" (30" X 30" IF NEEDED TO MATCH EXISTING SIGNS)
- D1 - X SHALL BE AS SHOWN ON SPECIFIC PROJECT SIGNING DETAIL SHEETS.
- R1 - 1 SHALL BE 36" X 36"

1. TWO WARNING LIGHTS SHALL BE PROVIDED ON THE CENTER BARRICADE AND A MINIMUM OF ONE WARNING LIGHT SHALL BE PROVIDED ON EACH OF THE OTHER BARRICADES WITHIN THE ROADWAY LIMITS. SPACING OF THE WARNING LIGHTS SHALL BE UNIFORM TO THE EDGE OF ROADWAY AS SHOWN (APPROX. 8 FOOT LIGHT SPACING.
2. THESE SIGNS AND BARRICADES ARE NOT REQUIRED IF ROAD CLOSURE BEGINS AT AN INTERSECTION.
3. FOR ROAD CLOSURE WITHOUT LOCAL ACCESS TO PROJECT, SEE ROAD CLOSURE BARRICADE DETAIL "D".
4. FOR ROAD CLOSURE WITH LOCAL ACCESS TO PROJECT, SEE ROAD CLOSURE BARRICADE DETAIL "E".
5. FOR BRIDGE OR CULVERT REPLACEMENTS, SUBSTITUTE "BRIDGE OUT" INSTEAD OF "ROAD CLOSED" ON R11 - 2 AND R11 - 3 SIGNS.
6. INSTALL DETOUR AND COMMUNITY GUIDE SIGNS AND ARROWS ONLY IF SPECIFIED IN THE CONTRACT. IF THERE ARE EXISTING ROUTE MARKER ASSEMBLIES THAT WILL REMAIN IN PLACE, ADJUST THE LOCATION OF THE DETOUR ROUTE SIGNS TO CORRESPOND WITH THE EXISTING ASSEMBLIES. MODIFY EXISTING SIGNS WHERE POSSIBLE. SEE SPECIFIC PROJECT DETOUR SIGNING DETAIL SHEETS. IF DETOUR SIGNS ARE BEING INSTALLED BY OTHERS, PLACE THE CONTRACTED TRAFFIC CONTROL SIGNS TO ALLOW FOR PLACEMENT OF ALL WARNING, DETOUR AND GUIDE SIGNS AS SHOWN.
7. "EAST" CARDINAL DIRECTION MARKERS AND RIGHT TURN ARROWS ARE SHOWN. USE OTHER CARDINAL DIRECTIONS AND ARROWS AS APPROPRIATE.

BARRICADES AND SIGNS FOR VARIOUS CLOSURES

STATE OF WISCONSIN
DEPARTMENT OF TRANSPORTATION

APPROVED
May 2023 — DATE
/S/ Andrew Heidtke — WORK ZONE ENGINEE
FHWA

6
SDD 15C02 - 09b

THIS DRAWING PROVIDES GENERAL GUIDANCE ON TYPICAL DETOUR SIGN LAYOUT AND SPACING. SEE PROJECT DETOUR SIGNING SHEETS FOR SPECIFIC DETAILS FOR EACH PROJECT.

LEGEND

- SIGN ON PERMANENT SUPPORT
- WORK AREA
- DETOUR — M4 - 8
- EAST — M3 - X
- XX — M1 - 4 OR XX — M1 - 6 OR COUNTY X — M1 - 5A
- M05 - 1 OR M06 - 1 OR M06 - 1

GENERAL NOTES

THE EXACT NUMBER, LOCATION AND SPACING OF ALL SIGNS SHALL BE ADJUSTED TO FIT FIELD CONDITIONS AS APPROVED BY THE ENGINEER.

IF THERE ARE EXISTING ROUTE MARKER ASSEMBLIES THAT WILL REMAIN IN PLACE, ADJUST THE LOCATION OF THE DETOUR ROUTE SIGNS TO CORRESPOND WITH THE EXISTING ASSEMBLIES. SEE SPECIFIC PROJECT DETOUR SIGNING DETAIL SHEETS. MODIFY EXISTING SIGNS WHERE POSSIBLE.

THE SPACING BETWEEN TRAFFIC CONTROL AND DETOUR SIGNS SHOULD BE ADJUSTED TO NOT CONFLICT WITH AND TO PROVIDE A DESIRABLE MINIMUM OF 200 FEET CLEARANCE TO EXISTING SIGNS THAT WILL REMAIN IN PLACE.

ANY SIGNS TEMPORARY OR EXISTING, WHICH CONFLICT WITH TRAFFIC CONTROL "IN USE" SHALL BE REMOVED OR COVERED AS NEEDED AND AS APPROVED BY THE ENGINEER.

SIGNS THAT WILL BE IN PLACE LESS THAN 7 CONTINUOUS DAYS AND NIGHTS MAY BE MOUNTED ON PORTABLE SUPPORTS.

"MO" SIGNS ARE THE SAME AS "M" SIGNS EXCEPT THE BACKGROUND IS ORANGE.

SIGN SIZES SHALL BE AS FOLLOWS:

M3-X SHALL BE 24" X 12" (36" X 18" IF NEEDED TO MATCH EXISTING SIGNS)
M4-8 SHALL BE 24" X 12" (36" X 18" IF NEEDED TO MATCH EXISTING SIGNS)
M1-4, M1-5A AND M1-6 SHALL BE 24" X 24" (36" X 36" IF NEEDED TO MATCH EXISTING SIGNS)
M05-1 AND M06-1 SHALL BE 21" X 21" (30" X 30" IF NEEDED TO MATCH EXISTING SIGNS)
M4-9 AND M4-59 SHALL BE 30" X 24"
M4-8a SHALL BE 24" X 18"
G20-51 SHALL BE 60" X 24"
W20-2A SHALL BE 48" X 48"
D1-X SHALL BE AS SHOWN ON SPECIFIC PROJECT SIGNING DETAIL SHEETS.

* OPTIONAL SIGNS. SEE SPECIFIC PROJECT DETOUR SIGNING DETAIL SHEETS.

** FOR A TOWN ROAD OR LOCAL STREET DETOURED ONTO A STATE TRUNK HIGHWAY, PLACE A ROAD NAME PLAQUE ABOVE THE M4-9 SIGN AS SPECIFIED IN THE CONTRACT.

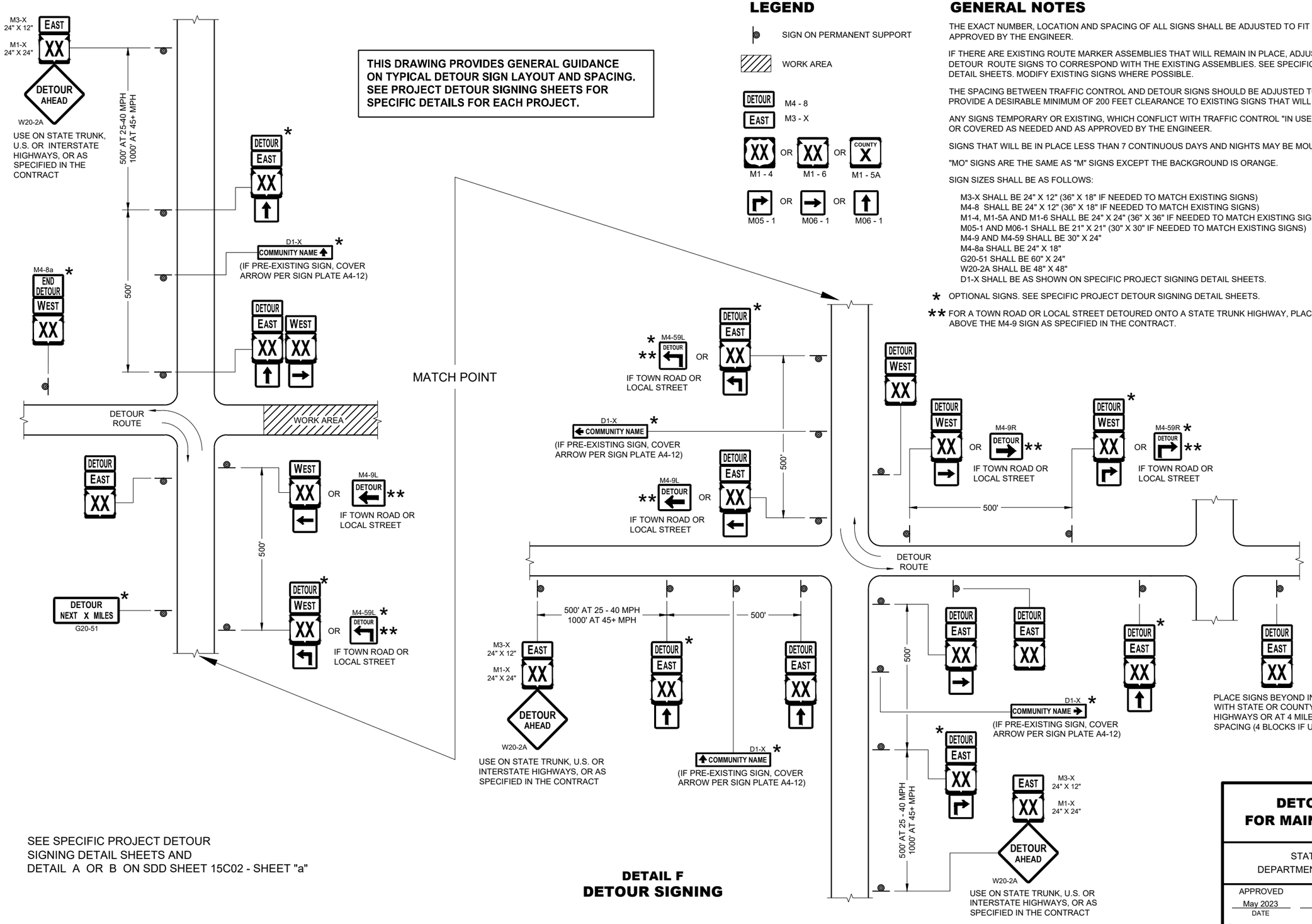

SEE SPECIFIC PROJECT DETOUR SIGNING DETAIL SHEETS AND DETAIL A OR B ON SDD SHEET 15C02 - SHEET "a"

DETAIL F
DETOUR SIGNING

DETOUR SIGNING FOR MAINLINE CLOSURES

STATE OF WISCONSIN
DEPARTMENT OF TRANSPORTATION

APPROVED
May 2023 — DATE
/S/ Andrew Heidtke — WORK ZONE ENGINEER
FHWA

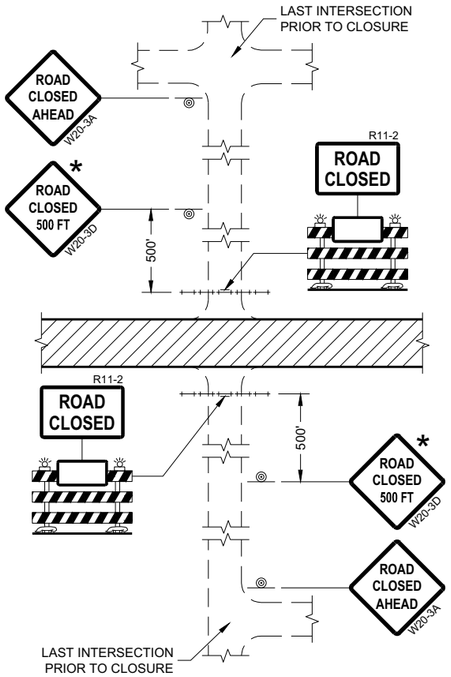

DETAIL 1
(NO ACCESS TO PROJECT)

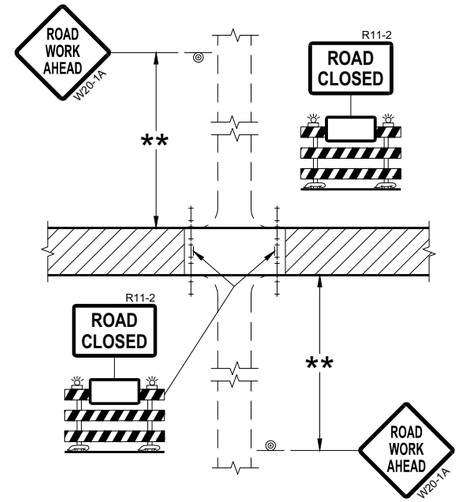

DETAIL 2
(PUBLIC CROSS-TRAFFIC MAINTAINED.
NO ACCESS TO PROJECT)

GENERAL NOTES

THE EXACT NUMBER, LOCATION, AND SPACING OF ALL SIGNS AND BARRICADES SHALL BE ADJUSTED TO FIT FIELD CONDITIONS AS APPROVED BY THE ENGINEER.

ANY SIGNS TEMPORARY OR EXISTING, WHICH CONFLICT WITH TRAFFIC CONTROL "IN USE" SHALL BE REMOVED OR COVERED AS NEEDED AND AS APPROVED BY THE ENGINEER.

THE SPACING BETWEEN TRAFFIC CONTROL SIGNS SHOULD BE ADJUSTED TO NOT CONFLICT WITH AND SHOULD PROVIDE A DESIRABLE MINIMUM OF 200 FEET CLEARANCE (500 FEET DESIRABLE) TO EXISTING SIGNS THAT WILL REMAIN IN PLACE.

IF A "STOP" SIGN MUST BE REMOVED FOR A WORK OPERATION, A TEMPORARY "STOP" SIGN SHALL BE PLACED PRIOR TO THE SIGN REMOVAL, OR A FLAGGER SHALL BE PROVIDED UNTIL THE SIGN IS REESTABLISHED.

BARRICADES THAT MUST BE MOVED FOR A WORK OPERATION SHALL BE IMMEDIATELY REESTABLISHED UPON COMPLETION OF THE OPERATION OR FOR CONTINUING OPERATIONS, AT THE END OF EACH WORKING DAY.

SIGNS THAT WILL BE IN PLACE LESS THAN SEVEN CONTINUOUS DAYS AND NIGHTS MAY BE MOUNTED ON PORTABLE SUPPORTS.

ALL TYPE III BARRICADES SHALL HAVE RAILS REFLECTORIZED ON BOTH FACES. STRIPES SHALL BE PROPERLY SLOPED DOWN TOWARD THE TRAFFIC SIDE OR AS SHOWN IN THE ROAD CLOSURE BARRICADE DETAIL "D" FOR FULL ROAD CLOSURES.

TYPE "A" LOW-INTENSITY FLASHING WARNING LIGHTS SHALL BE VISIBLE ON BOTH SIDES OF THE BARRICADE.

THE R11-2, R11-3, AND R11-4 SIGNS PLACED ON BARRICADES SHALL COVER NO MORE THAN THE TOP RAIL. THE SIGNS SHALL NOT COVER ANY PORTION OF THE MIDDLE OR BOTTOM RAILS.

ALL SIGNS SHALL BE 48" X 48" UNLESS OTHERWISE NOTED BELOW:
R11-2 SHALL BE 48" X 30".
R11-4 AND R11-3 SHALL BE 60" X 30".

* OMIT THE "ROAD CLOSED 500 FT." SIGN IF THE LAST INTERSECTION IS 500 FEET OR LESS FROM THE WORK ZONE.

** 500' MAX. OR AT LAST INTERSECTION, WHICHEVER IS CLOSEST.

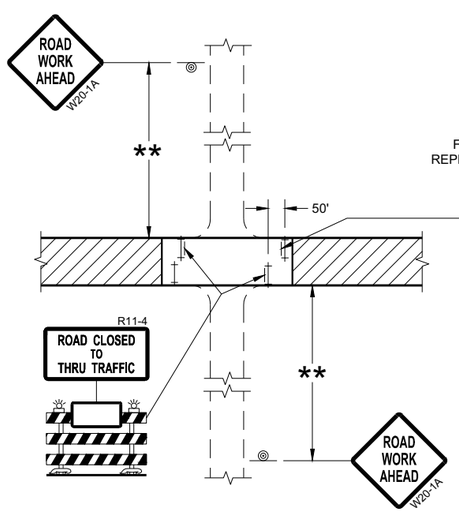

DETAIL 3
(PUBLIC CROSS-TRAFFIC MAINTAINED.
CONTRACTOR, LOCAL BUSINESS AND
RESIDENT ACCESS TO PROJECT)

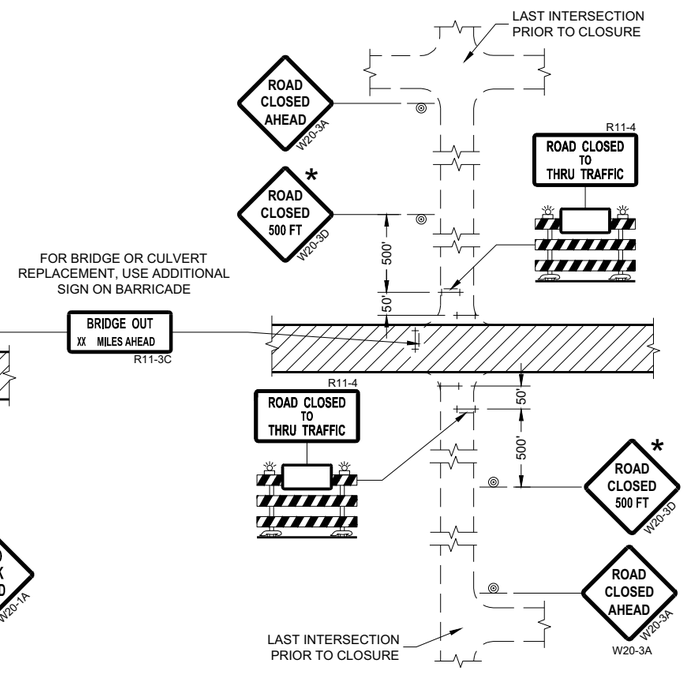

DETAIL 4
(CONTRACTOR, LOCAL BUSINESS AND
RESIDENT ACCESS TO PROJECT)

LEGEND

- SIGN ON PERMANENT SUPPORT
- TYPE III BARRICADE
- TYPE III BARRICADE WITH ATTACHED SIGN
- TYPE "A" WARNING LIGHT (FLASHING)
- WORK AREA

BARRICADES AND SIGNS FOR SIDEROAD CLOSURES

STATE OF WISCONSIN
DEPARTMENT OF TRANSPORTATION

APPROVED
July 2018 — DATE
/S/ Andrew Heidtke — WORK ZONE ENGINEE
FHWA

6
SDD 15C03 - 05

GENERAL NOTES

DETAILS OF CONSTRUCTION NOT SHOWN ON THIS DRAWING SHALL CONFORM TO STANDARD SPECIFICATIONS AND SPECIAL PROVISIONS.

1. LOCATE THE NO PASSING ZONE W14-3 SIGN WITHIN 50 FEET OF THE "T" MARKING
2. MEASURE FROM EDGE OF MARKING TO JOINT LINE. THIS DOES NOT INCLUDE SPACE NEEDED FOR GROOVING OPERATIONS.

*CONFIRM MARKING LINE WIDTH WITH THE MISCELLANEOUS QUANTITIES

LEGEND

"T" MARKING

SIGN ON PERMANENT SUPPORT

DIRECTION OF TRAFFIC

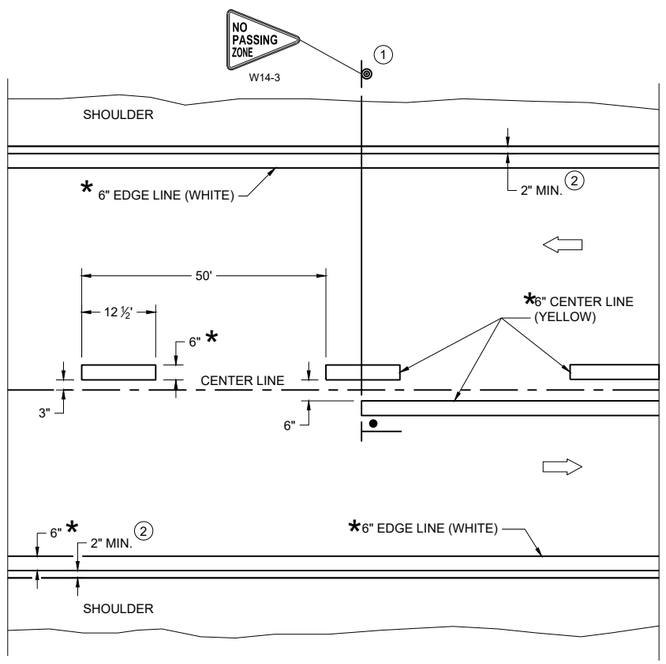

TWO WAY TRAFFIC

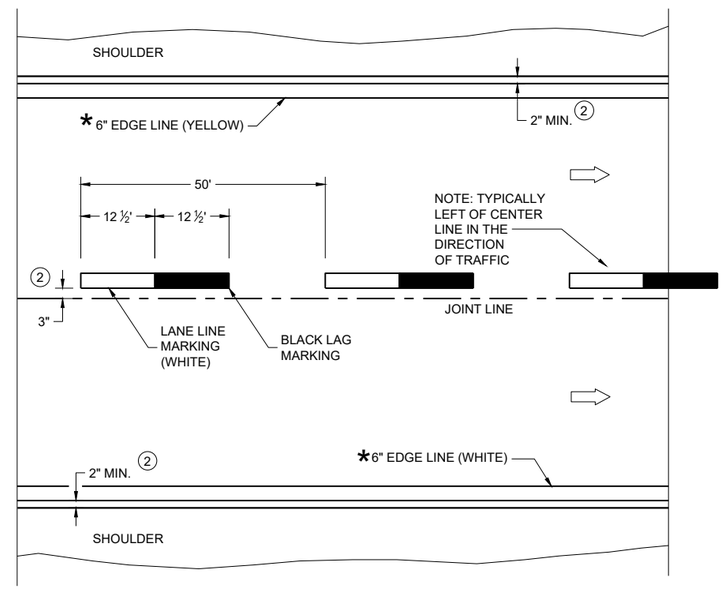

ONE WAY TRAFFIC

PERMANENT PAVEMENT MARKING

6

SDD 15C08-23a

PERMANENT LONGITUDINAL PAVEMENT MARKINGS

STATE OF WISCONSIN
DEPARTMENT OF TRANSPORTATION

APPROVED

May 2023 — DATE

/S/ Jeannie Silver — Statewide Pavement Marking Engineer

FHWA

6

SDD 15C08-23a

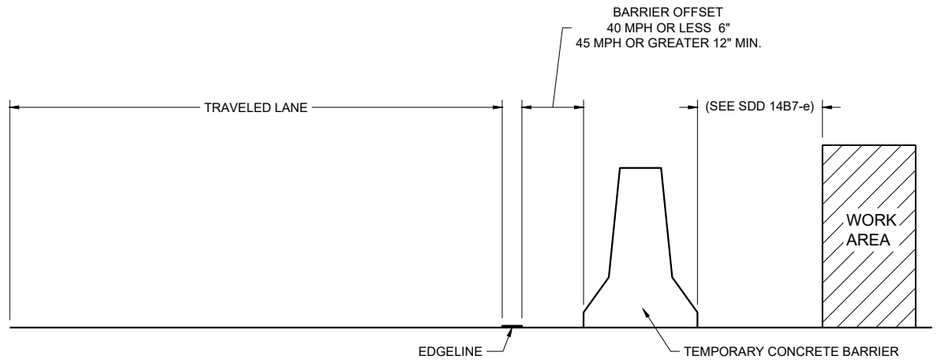

TEMPORARY BARRIER OFFSET FROM EDGELINE

GENERAL NOTES

DETAILS OF CONSTRUCTION NOT SHOWN ON THIS DRAWING SHALL CONFORM TO STANDARD SPECIFICATIONS AND SPECIAL PROVISIONS.

LEGEND

⇨ DIRECTION OF TRAFFIC

*CONFIRM MARKING LINE WIDTH WITH THE MISCELLANEOUS QUANTITIES

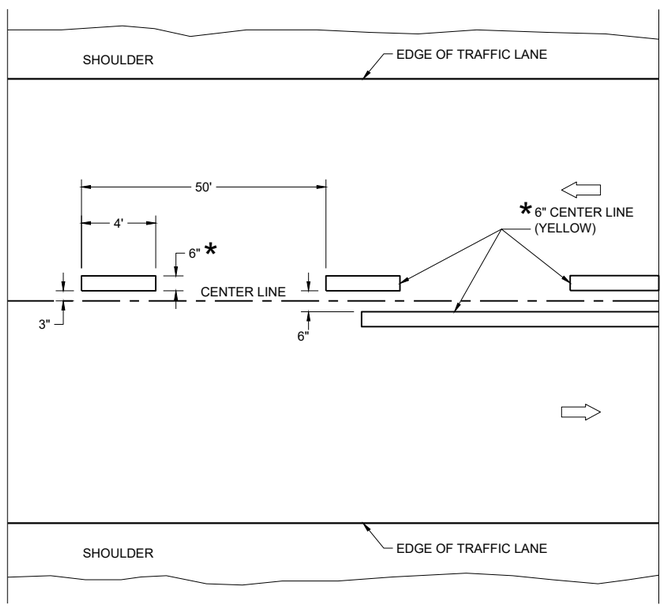

TWO WAY TRAFFIC

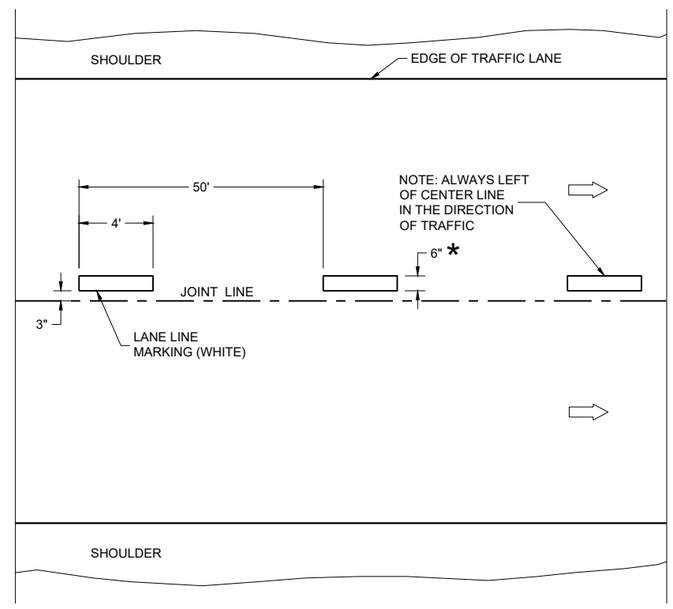

ONE WAY TRAFFIC

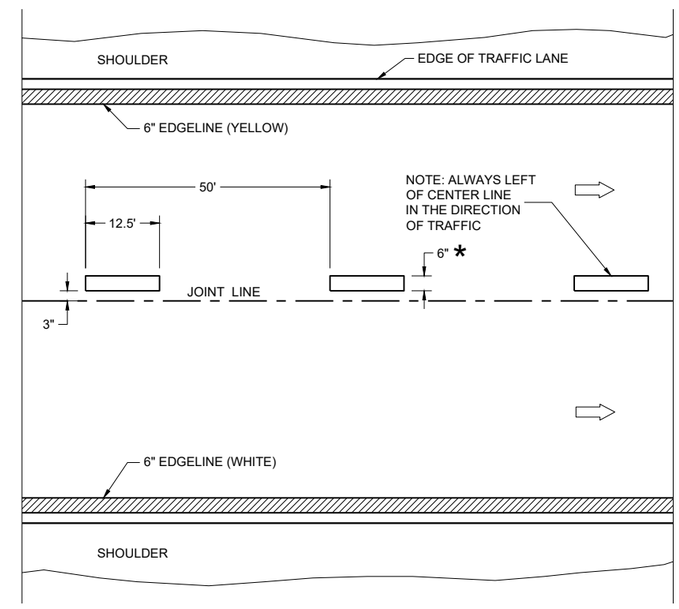

FREEWAYS AND EXPRESSWAYS

TEMPORARY PAVEMENT MARKING

TEMPORARY LONGITUDINAL PAVEMENT MARKING
STATE OF WISCONSIN DEPARTMENT OF TRANSPORTATION
APPROVED May 2023 — DATE /S/ Jeannie Silver — Statewide Pavement Marking Engineer FHWA

6

SDD 15C08-23b

6

SDD 15C08-23b

GENERAL NOTES

1. REFLECTIVE SHEETING SHALL FOLLOW THE REQUIREMENTS IN THE APPROVED PRODUCTS LISTING FOR SIGN SHEETING.
2. LOCATION OF WARNING LIGHTS WHEN SHOWN ON THE PLAN.

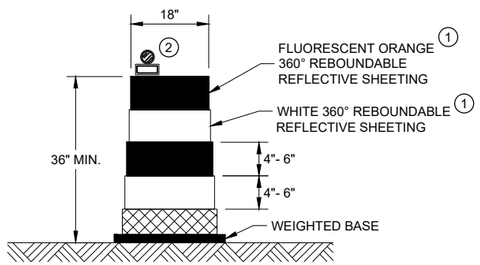

DRUM

BALLAST WIDTHS
RANGE FROM 24"-36"

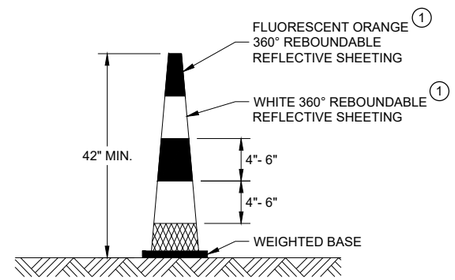

42" CONE

DO NOT USE IN TAPERS
½ SPACING OF DRUMS

BALLAST WIDTHS
RANGE FROM 14"-20"

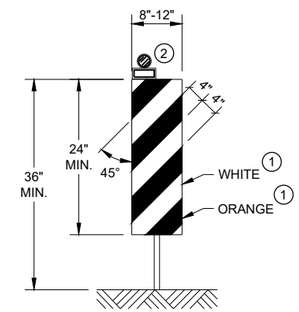

VERTICAL PANEL

THE STRIPES SHALL SLOPE DOWNWARD TO
THE TRAFFIC SIDE FOR CHANNELIZATION.

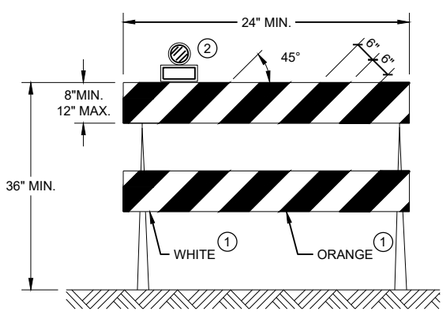

TYPE II BARRICADE

FOR RAILS LESS THAN 36" LONG, 4" WIDE STRIPES
MAY BE USED. ALL STRIPES SHALL SLOPE DOWNWARD
TO THE TRAFFIC SIDE FOR CHANNELIZATION.

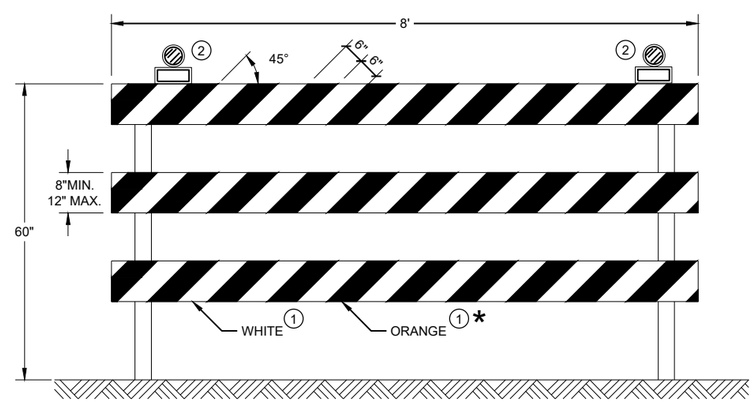

TYPE III BARRICADE

IF SIGN MOUNTED, DO NOT COVER MORE THAN 50% OF THE TOP
TWO RAILS OR 33% OF THE TOTAL AREA OF THE THREE RAILS.

* IF USED FOR A PERMANENT APPLICATION USE RED SHEETING.

CHANNELIZING DEVICES
DRUMS, CONES, BARRICADES
AND VERTICAL PANELS

STATE OF WISCONSIN
DEPARTMENT OF TRANSPORTATION

APPROVED
November 2022 — /S/ Andrew Heidtke
DATE — WORK ZONE ENGINEE
FHWA

6
SDD 15C11 - 10b

LEGEND

SIGN ON PORTABLE OR PERMANENT SUPPORT

TEMPORARY PORTABLE RUMBLE STRIP ARRAY

DIRECTION OF TRAFFIC

WORK AREA

FLAGGER, EQUIPPED WITH STOP/SLOW PADDLE FASTENED ON SUPPORT STAFF

GENERAL NOTES

DETAILS OF TRAFFIC CONTROL DEVICES AND INSTALLATION NOT SHOWN ON THIS DRAWING SHALL CONFORM TO THE PERTINENT REQUIREMENTS OF THE STANDARD SPECIFICATIONS, THE SPECIAL PROVISIONS, AND THE MANUAL ON UNIFORM TRAFFIC CONTROL DEVICES.

ALL SIGNS ARE 48" X 48" UNLESS OTHERWISE NOTED.

"WO" SIGNS ARE THE SAME AS "W" SIGNS EXCEPT THE BACKGROUND IS ORANGE.

THE EXACT NUMBER, LOCATION AND SPACING OF ALL SIGNS, DEVICES, AND LOCATION OF ALL FLAGGERS SHALL BE ADJUSTED TO FIT FIELD CONDITIONS AS APPROVED BY THE ENGINEER.

THE FIRST ADVANCE WARNING SIGN SHOULD TYPICALLY BE LOCATED IN ADVANCE OF THE ANTICIPATED TRAFFIC BACKUP OR QUEUE.

WHEN A SIDE ROAD OR RAMP INTERSECTS THE FACILITY ON WHICH THE WORK IS BEING PERFORMED, ADDITIONAL TRAFFIC CONTROLS SHALL BE PROVIDED AS SPECIFIED IN THE PLANS AND/OR THE SPECIAL PROVISIONS OR AS APPROVED BY THE ENGINEER.

FLAGGING

FLAGGERS SHALL BE IN SIGHT OF EACH OTHER OR IN DIRECT COMMUNICATION AT ALL TIMES. THEY SHALL BE EQUIPPED WITH STOP/SLOW PADDLES FASTENED ON SUPPORT STAFFS. WHEN THE FLAGGING OPERATION IS NOT IN EFFECT REMOVE TEMPORARY PORTABLE RUMBLE STRIPS PRIOR TO COVERING OR REMOVING ALL ADVANCE SIGNING.

(1) FOR MOVING WORK OPERATIONS, POST ADDITIONAL W20-7A FLAGGER SIGNS AT APPROXIMATELY 3,500' INTERVALS IN THE MOVING WORK OPERATION OR AS APPROVED BY THE ENGINEER.

(2) SIGN NOT REQUIRED IF FLAGGING OPERATION OCCURS WITHIN A SIGNED ROAD WORK ZONE AREA.

WHEN THE DISTANCE BETWEEN FLAGGERS EXCEEDS 2 MILES, A PILOT CAR IS REQUIRED. WHEN CURVES REDUCE SIGHT DISTANCE BELOW 400', A PILOT CAR IS REQUIRED.

TEMPORARY PORTABLE RUMBLE STRIPS

UTILIZE TEMPORARY PORTABLE RUMBLE STRIPS ON ALL FLAGGING OPERATIONS.

(3) EACH TEMPORARY PORTABLE RUMBLE STRIP ARRAY CONSISTS OF THREE RUMBLE STRIPS PLACED TRANSVERSE ACROSS THE LANE AT THE LOCATIONS SHOWN. WITHIN EACH ARRAY, SPACING BETWEEN RUMBLE STRIPS SHALL BE 15 FEET ON CENTER

ONLY USE TEMPORARY PORTABLE RUMBLE STRIPS FROM THE APPROVED PRODUCTS LIST.

INSTALL TEMPORARY RUMBLE STRIPS PER MANUFACTURER'S RECOMMENDATIONS.

PLACE ADVANCE SIGNING PRIOR TO INSTALLING TEMPORARY RUMBLE STRIPS.

DO NOT INSTALL TEMPORARY PORTABLE RUMBLE STRIPS ON GRAVEL, MILLED SURFACES, OR ASPHALT THAT HAS BEEN PAVED LESS THAN 12 HOURS.

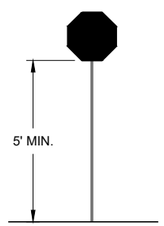

STOP/SLOW PADDLE ON SUPPORT STAFF

SIGN AND TEMPORARY RUMBLE STRIP ARRAY SPACING TABLE

SPEED LIMIT	SPACING "A"
25-30 MPH	200'
35-40 MPH	350'
45-55 MPH	500'

WO3-4

USE OF WO3-4 SIGN IS OPTIONAL. WHEN USED, THIS SIGN SHALL BE LOCATED BETWEEN THE W20-7A AND W20-4A SIGNS, USING SPACING "A".

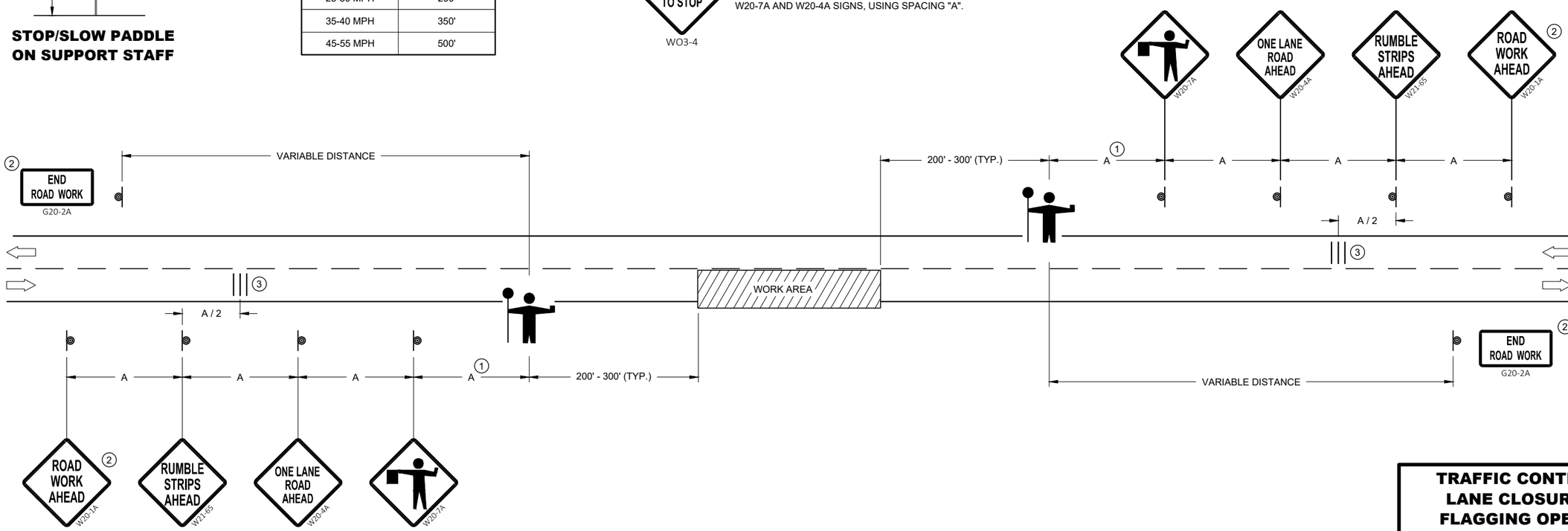

TRAFFIC CONTROL FOR LANE CLOSURE WITH FLAGGING OPERATION

STATE OF WISCONSIN
DEPARTMENT OF TRANSPORTATION

APPROVED
May 2022 — DATE
/S/ Andrew Heidtke — WORK ZONE ENGINEE
FHWA

6

SDD 15C12 - 09a

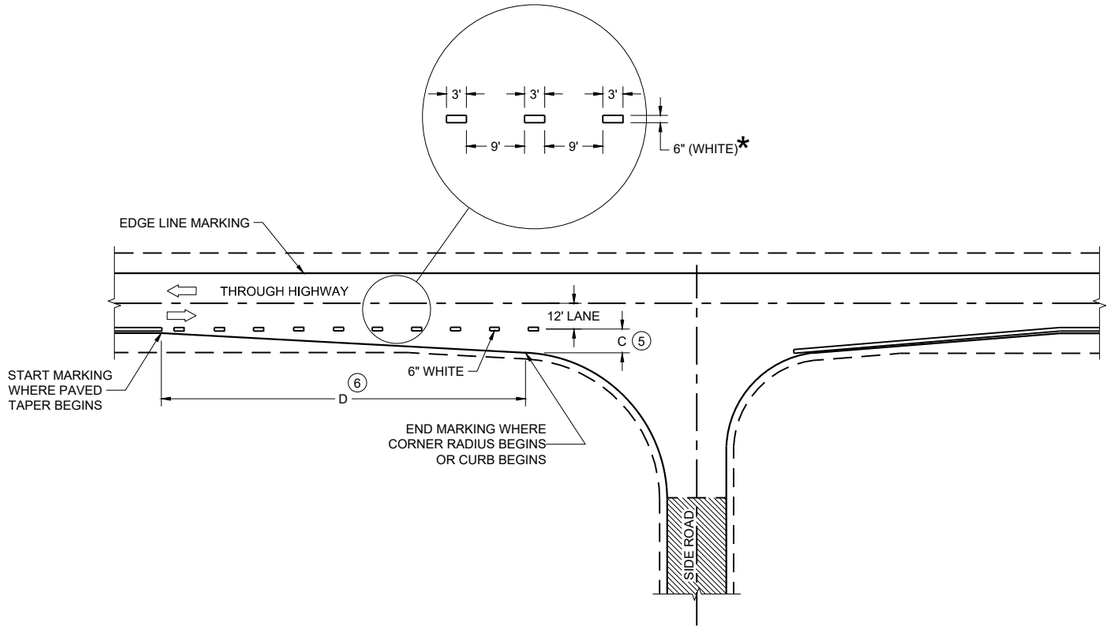

MINOR INTERSECTION

*CONFIRM MARKING LINE WIDTH WITH THE MISCELLANEOUS QUANTITIES

GENERAL NOTES

OMIT EDGE LINES THROUGH INTERSECTIONS. CONTINUE EDGE LINES THROUGH DRIVEWAYS.

1. WHEN DISTANCE "A" IS LESS THAN 250 FEET, OMIT LANE LINE.
2. WHEN DISTANCE "B" IS LESS THAN 100 FEET, OMIT CHANNELIZING LANE LINE.
3. BARRIER LINE ENDS AT SIDE ROAD PAVEMENT / SURFACE EDGE EXTENSION.
4. BARRIER LINE STARTS 500 FEET PRIOR TO THE BYPASS TAPER.
5. WHEN DISTANCE "C" IS LESS THAN 4 FEET, OMIT DOTTED EXTENSION.
6. WHEN DISTANCE "D" IS LESS THAN 50 FEET, OMIT DOTTED EXTENSION.

LEGEND

DIRECTION OF TRAVEL

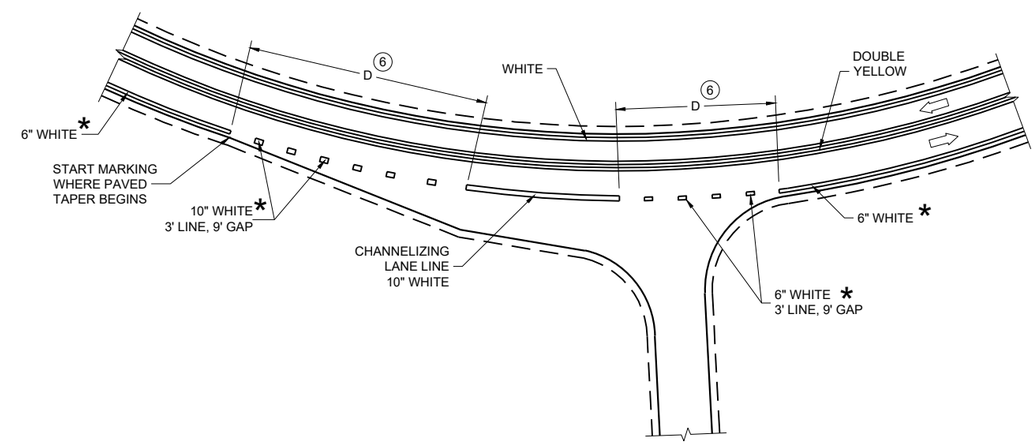

INTERSECTION ON OUTSIDE OF CURVE

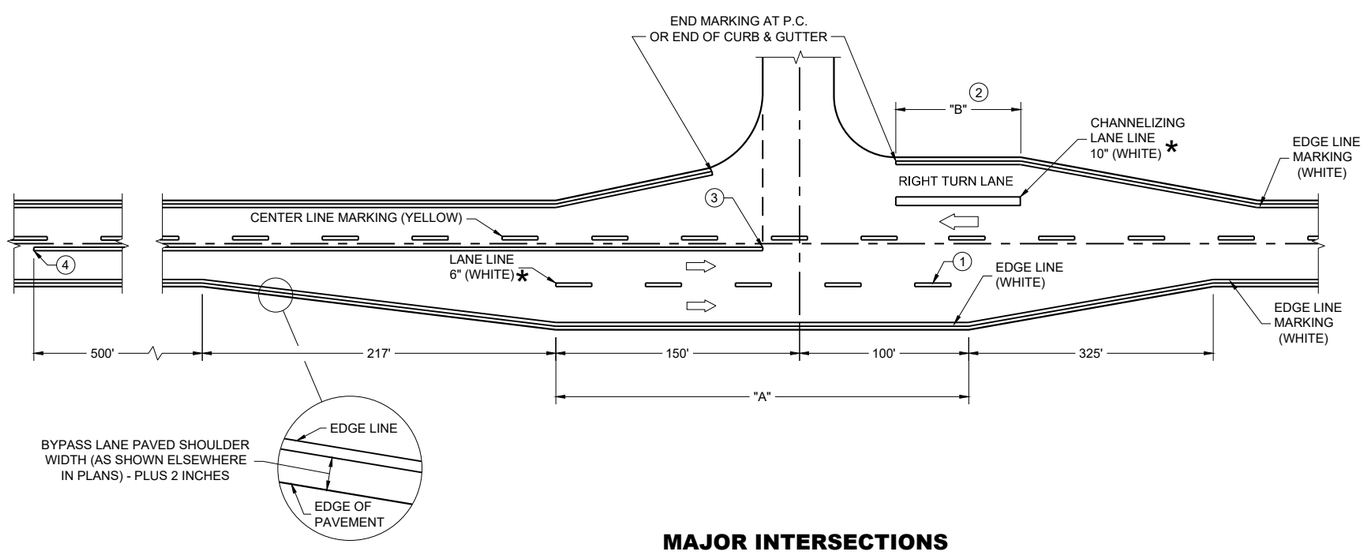

MAJOR INTERSECTIONS

(INTERSECTION WITH FULL RIGHT TURN LANE OR BYPASS LANE)

PAVEMENT MARKING (INTERSECTIONS)

STATE OF WISCONSIN
DEPARTMENT OF TRANSPORTATION

6
SDD 15C35-06a

URBAN AREA

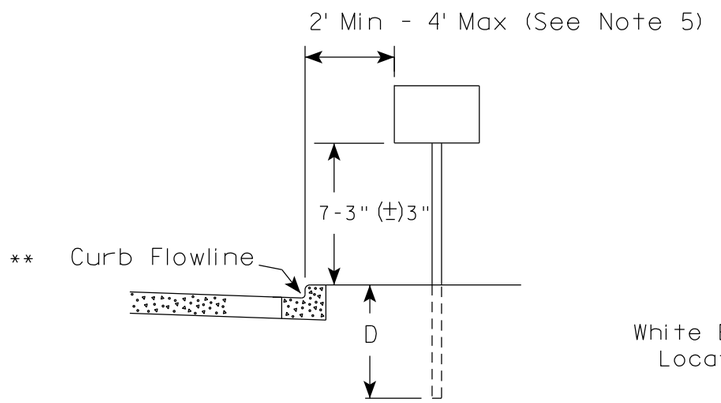

RURAL AREA (See Note 2)

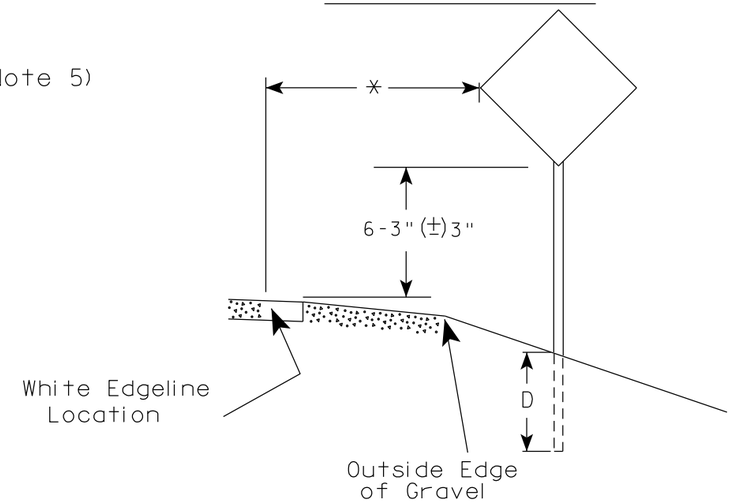

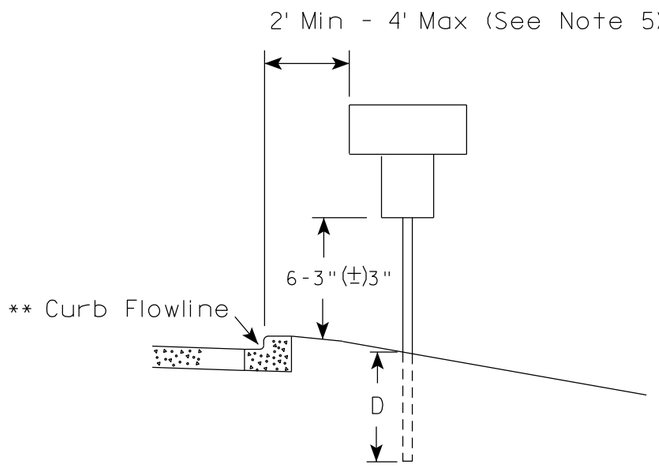

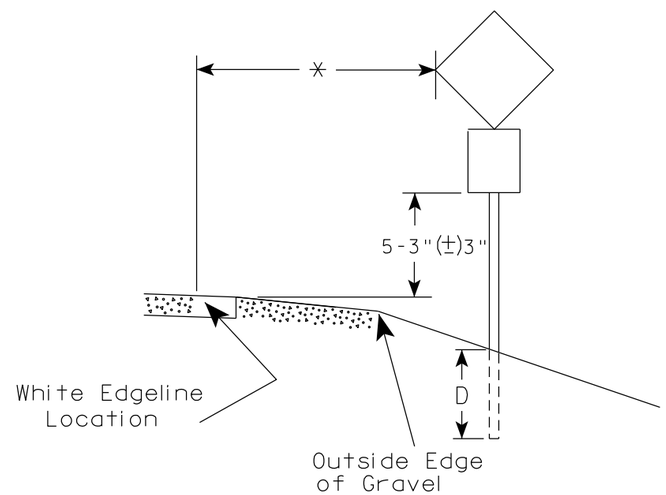

** The existence of curb and gutter does not in itself mandate the vertical clearance illustrated. That height is typically measured where there is sidewalk adjacent to the roadway or parking is permitted. In the absence of sidewalk vertical clearance is measured from the top of the curb. Offset of signs is measured from the flow line.

* 6 feet from edge of a paved shoulder or 12 feet from the edge of pavement (edge line location) or 2 feet from outside edge of gravel, whichever is greater unless directed by project engineer.

GENERAL NOTES

1. Signs wider than 4 feet or 20 sq.ft or larger, shall be mounted on multiple posts. Refer to plate A4-4.
2. If signs are mounted on or behind barrier wall, see A4-10 sign plate.
   The Double Arrow sign (W12-1D) shall be mounted at a height of 2'-3" (±) 3". The Chevron sign (W1-8), Roundabout Chevron panel (R6-4B), Enhanced Reference Markers, Clearance Markers (W5-52), Mile Markers (D10 series), In Road Object Markers (W5-54) & End of Road Markers (W5-56) shall be mounted at a height of 4'-3" (±) 3".
3. For expressways and freeways, mounting height is 7'- 3" (±) 3" or 6'-3" (±) 3" depending upon existence of a sub-sign.
4. Minimum mounting height for signs mounted on traffic signal poles is 5'- 3" (±) 3".
5. Offset distance shall be consistent with existing signs or consistent throughout length of project.
6. Folding signs shall be mounted at a height of 5'-3" (±) 3" or as directd by the Engineer.

POST EMBEDMENT DEPTH

Area of Sign Installation (Sq. Ft.)	D (Min)
20 or Less	4'
Greater than 20	5'

TYPICAL INSTALLATION OF PERMANENT TYPE II SIGNS ON SINGLE POSTS

WISCONSIN DEPT OF TRANSPORTATION

APPROVED Matthew R Rauch for State Traffic Engineer

DATE 12/6/23 PLATE NO. A4-3.23

7 7

PROJECT NO:	HWY:	COUNTY:		SHEET NO: 84	E

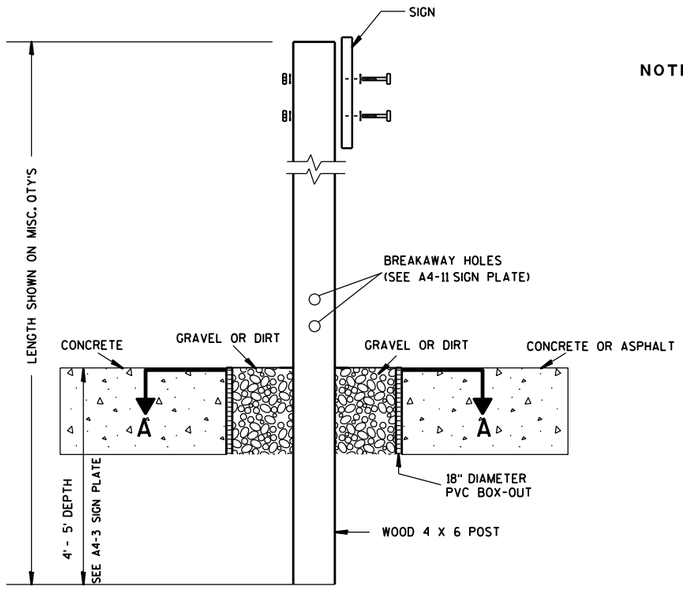

ELEVATION VIEW

DETAIL OF WOOD 4 X 6 SIGN POST IN BOX-OUT

NOTES:
1. ALL MATERIAL TO BE APPROVED BY ENGINEER PRIOR TO INSTALLATION
2. SEE SIGN PLATE A4-8 FOR SIGN HARDWARE REQUIREMENTS
3. 18 INCH X 18 INCH SQUARE BOX-OUTS MAY BE USED FOR INSTALLATIONS IN EXISTING CONCRETE OR ASPHALT LOCATIONS.

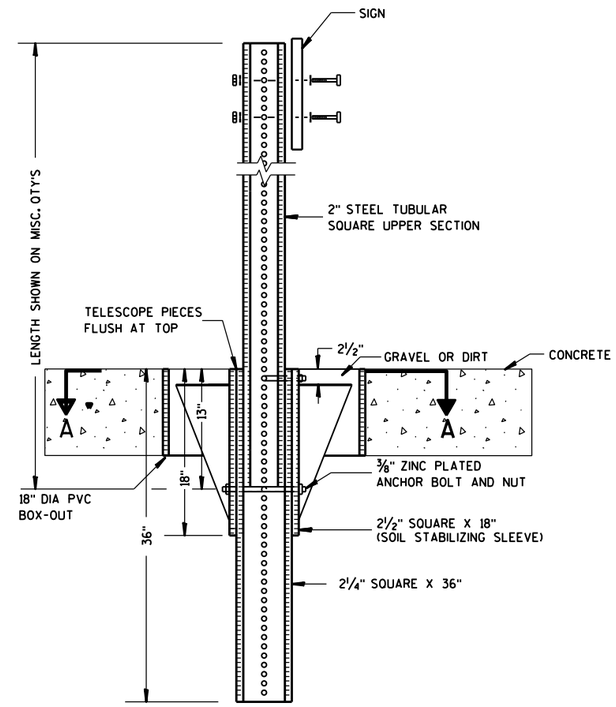

ELEVATION VIEW

DETAIL OF STEEL 2 X 2 SIGN POST IN BOX-OUT

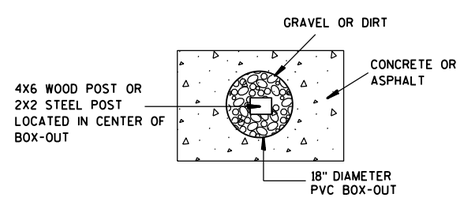

PLAN VIEW

FOR NEW CONCRETE/ASPHALT INSTALLATIONS

SIGN POST
BOX-OUTS
A4-3B

WISCONSIN DEPT OF TRANSPORTATION

APPROVED Matthew R Rauch
for State Traffic Engineer

DATE 1/27/14 PLATE NO. A4-3B.1

PROJECT NO:	HWY:	COUNTY:		SHEET NO:	E

URBAN AREA

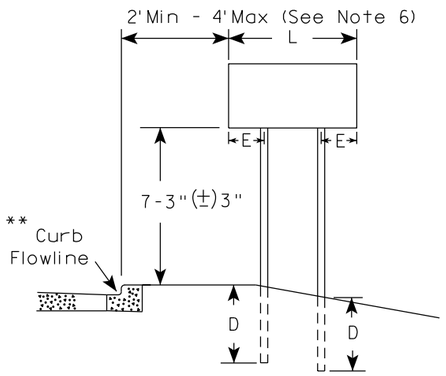

RURAL AREA (See Note 3)

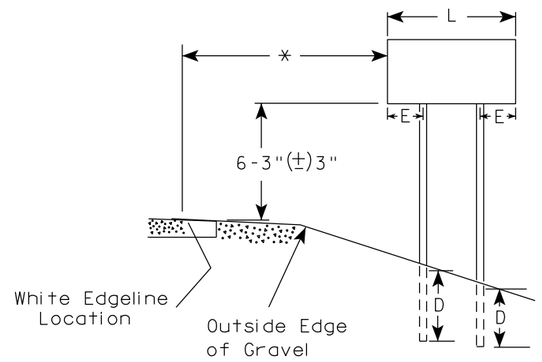

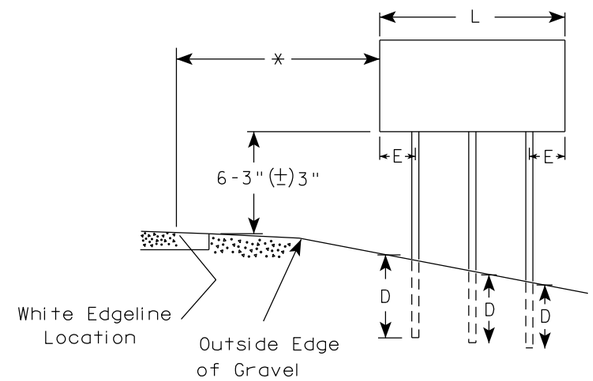

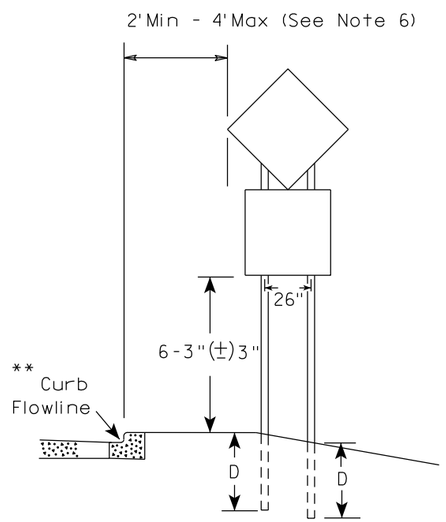

48" DIAMOND WARNING SIGN

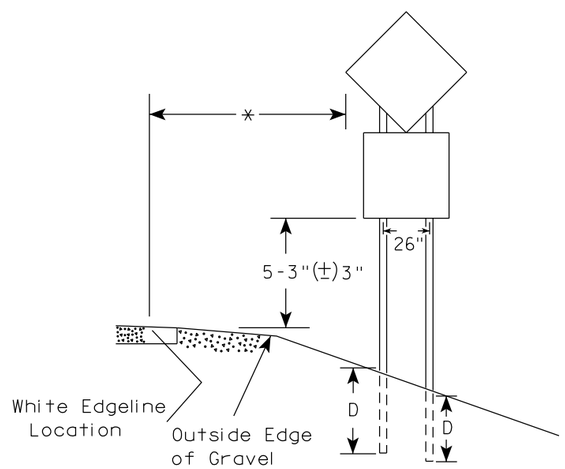

48" DIAMOND WARNING SIGN

GENERAL NOTES

1. For 3 or 4 post installations, individual post spacing shall be greater than 3'-6".
2. See tables below for required number of posts.
3. For expressways and freeways, mounting height is 7'-3" (±) 3" or 6'-3" (±) 3" depending upon existence of sub-sign.
4. The (±) tolerance for mounting height is 3 inches.
5. J-Assemblies are considered to be one sign for mounting height.
6. Offset distance shall be consistent with existing signs or consistent throughout length of project.
7. Folding signs shall be mounted at a height of 5'-3" (±) 3" or as directed by the engineer.
8. The Double Arrow sign (W12-1) shall be mounted at a height of 2'-3" (±) 3". The Chevron sign (W1-8), Roundabout Chevron panel (R6-4B), Clearance Markers (W5-52), Mile Markers (D10 series), In Road Object Markers (W5-54) & End of Road Markers (W5-56) shall be mounted at a height of 4"-3" (±) 3".

* 6 feet from edge of a paved shoulder or 12 feet from the edge of pavement (edge line location) or 2 feet from outside edge of gravel, whichever is greater unless directed by project engineer.

** The existence of curb and gutter does not in itself mandate the vertical clearance illustrated. That height is typically measured where there is sidewalk adjacent to the roadway or parking is permitted. In the absence of sidewalk vertical clearance is measured from the top of the curb. Offset of signs is measured from the flow line.

*** See A4-3 sign plate for signs 4' or less in width and less than 20 S.F. in area.

SIGN SHAPE OTHER THAN DIAMOND (TWO POSTS REQUIRED)	
L	E
*** Greater than 48" Less than 60"	12"
60" to 108"	L/5

SIGN SHAPE OTHER THAN DIAMOND (THREE POSTS REQUIRED)	
L	E
Greater than 108" to 144"	12"

POST EMBEDMENT DEPTH

Area of Sign Installation (Sq. Ft.)	D (Min)
20 or Less	4'
Greater than 20	5'

TYPICAL INSTALLATION OF TYPE II SIGNS ON MULTIPLE POSTS

WISCONSIN DEPT OF TRANSPORTATION

APPROVED Matthew R Rauch
for State Traffic Engineer

DATE 12/6/23 PLATE NO. A4-4.16

PROJECT NO:	HWY:	COUNTY:		SHEET NO: 86	E

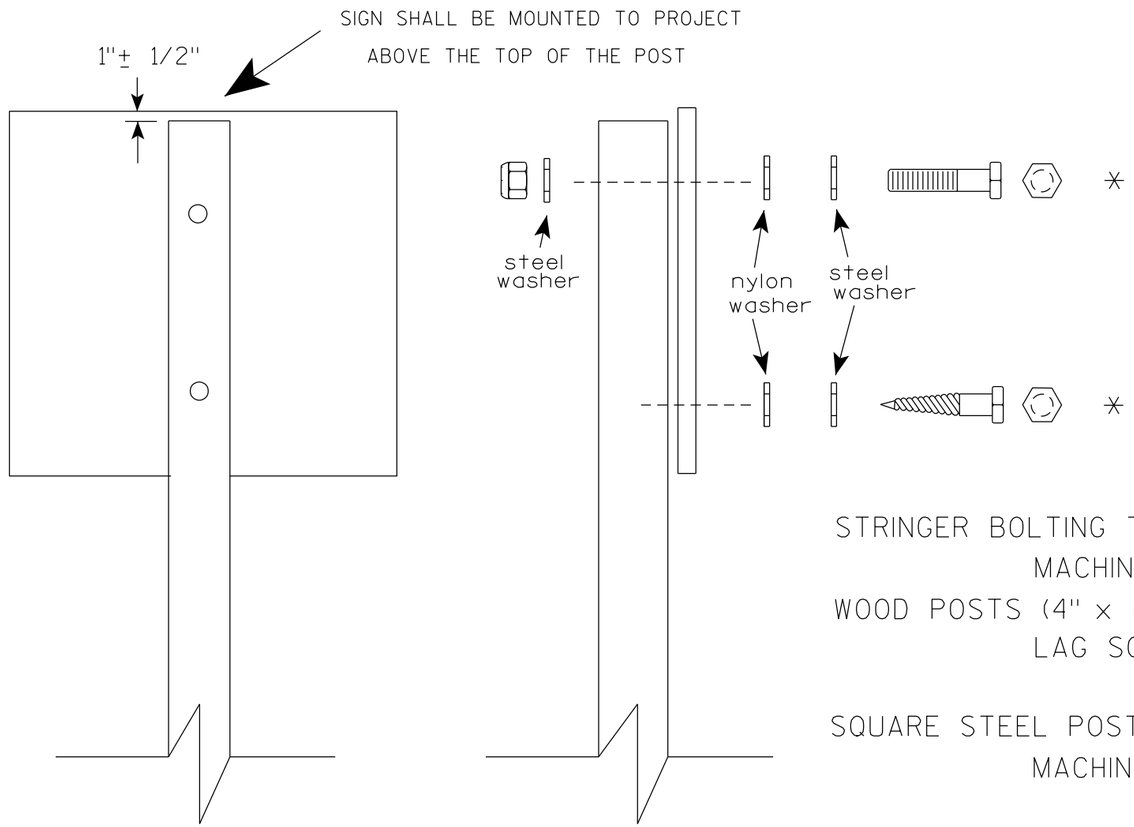

Nuts, bolts and lags used for mounting signs shall have hexagonal heads and shall be either :

a. Hot dip galvanized in accordance with ASTM Designation: A 153, Class D, or SC 3

b. Electro-galvanized in accordance with ASTM Designation : B 633, TYPE III, SC 3.

Threads on bolts and nuts shall be manufactured with sufficient allowance for the cadmium plate or galvanized coating to permit the nuts to run freely on the bolts.

STRINGER BOLTING TO ALUMINUM SIGNS (SEE SIGN PLATE A4-18)

MACHINE BOLTS - 5/16" X 1-3/4" Length w/ lock nuts

WOOD POSTS (4" x 6")

LAG SCREWS - 3/8" X 3" (NO STRINGERS ON BACK OF SIGN)
3/8" X 4" (STRINGERS ON BACK OF SIGN)

SQUARE STEEL POSTS (2" x 2")

MACHINE BOLTS - 3/8" X 3-1/4" Length w/ nuts (NO STRINGER ON BACK OF SIGN)
3/8" X 5" Length w/ nuts (STRINGERS ON BACK OF SIGN)

RIVETS - 9/32 " (6605-9-6) BULB-TITE, TRI-FOLD, ALUMINUM BODY/MANDREL
O.D. FLANGE .720-.765 INCH, GRIP RANGE .042-.375 INCH

WASHERS (ALL POSTS) -

1-1/4" O.D. X 3/8" I.D. X 1/16" STEEL
1-1/4" O.D. X 3/8" I.D. X .080 NYLON

* Two different fastening systems are shown for illustration purposes. On any individual sign, either one or the other system shall be used. Actual number of fasteners per sign varies with the sign area, but normally there are two. For a single post installation, all signs greater than 9 sq. ft. require the use of 3 fasteners.

ATTACHMENT OF SIGNS TO POSTS

WISCONSIN DEPT OF TRANSPORTATION

APPROVED Matthew R Rauch
for State Traffic Engineer

DATE 4/1/2020 PLATE NO. A4-8.9

TELESCOPIC TUBING ANCHORS
TWO PIECE SYSTEM

2 1/4" SQUARE
12 GAUGE
PERFORATED
GALVANIZED FINISH

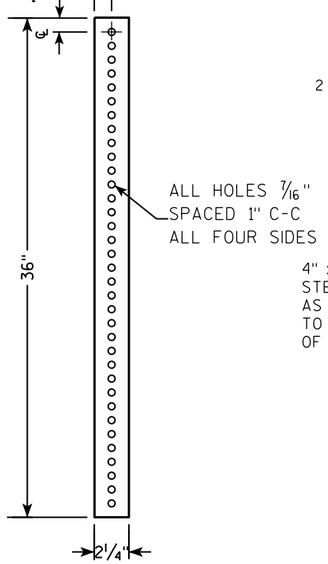

2 1/2" SQUARE
12 GAUGE
OMNI-DIRECTIONAL
PERFORATED
SOIL STABILIZING SLEEVE
GALVANIZED FINISH

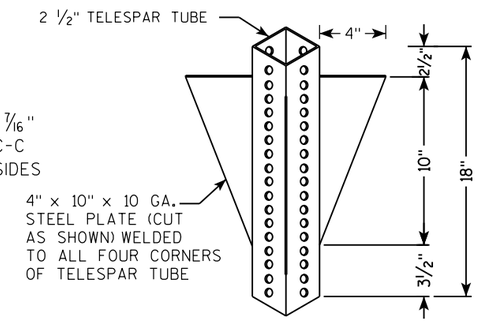

DETAIL OF TUBULAR STEEL SIGN POST
(IN POURED CONCRETE OR ASPHALT)

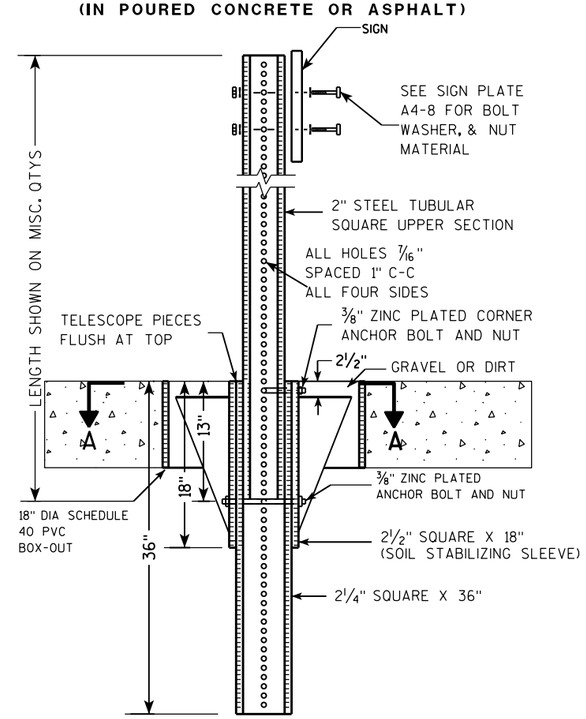

DETAIL OF TUBULAR STEEL SIGN POST
(IN LOCATIONS OTHER THAN POURED CONCRETE OR ASPHALT)

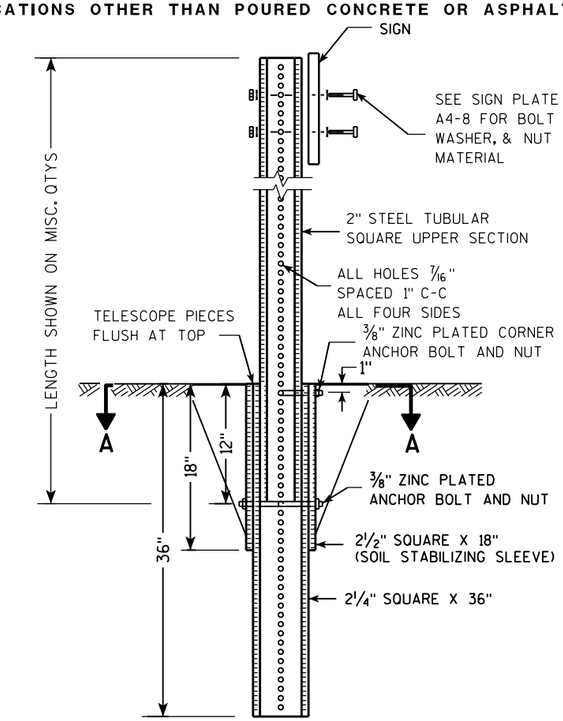

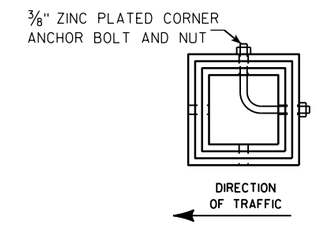

SECTION A-A

Area of Sign Installation (Sq. Ft.)	Number of Required Posts
9 or less	1
Greater than 9 less than or equal to 18	2
Greater than 18 less than or equal to 27	3

Signs wider than 3 feet or larger than 9 sq. ft shall be mounted on multiple posts (see above table).

TUBULAR STEEL
SIGN POST
A4-9

WISCONSIN DEPT OF TRANSPORTATION

APPROVED *Matthew R Rauch*
for State Traffic Engineer

DATE 2/05/15 PLATE 88 A4-9.9

PROJECT NO:	HWY:	COUNTY:		SHEET NO:	E

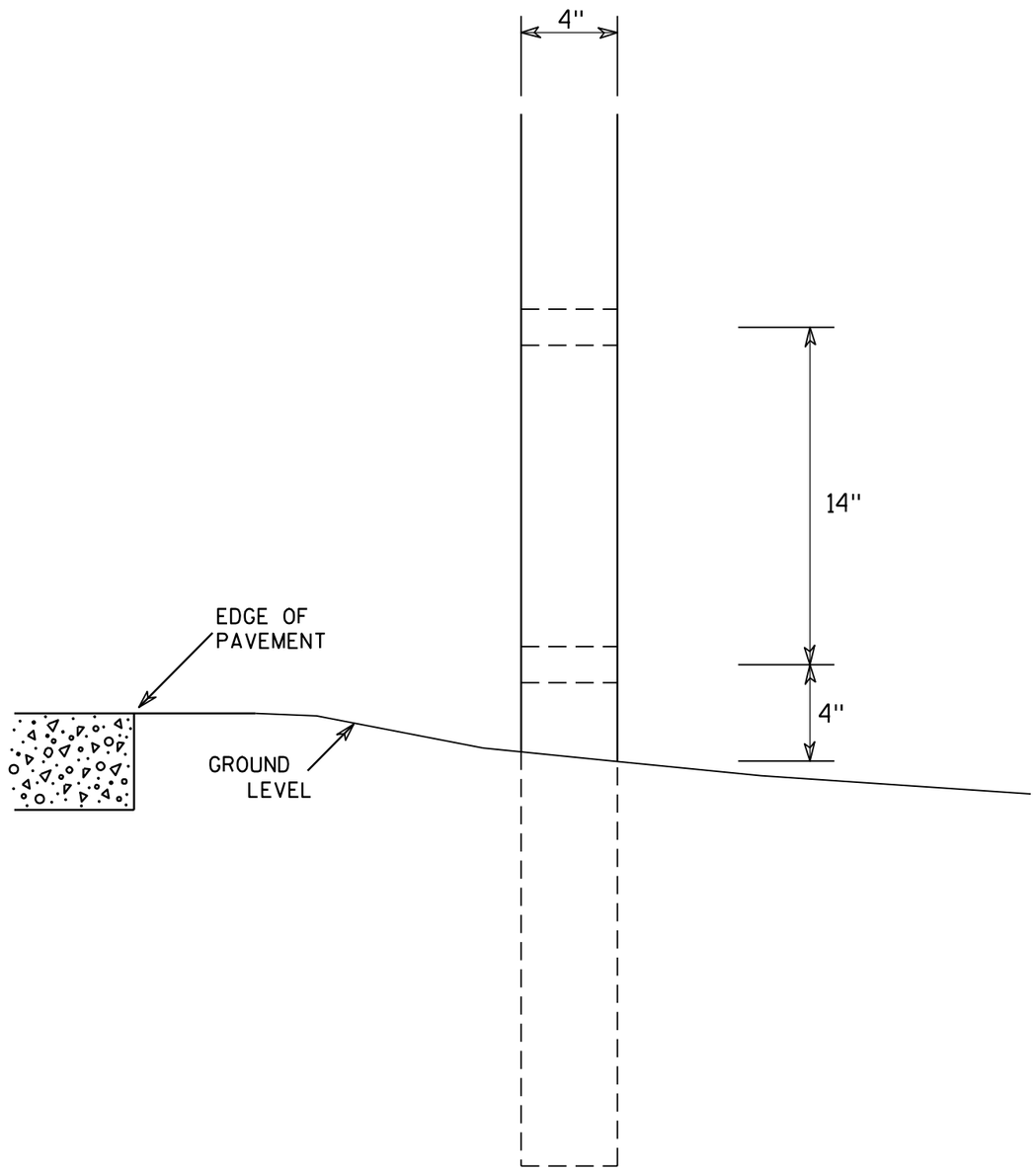

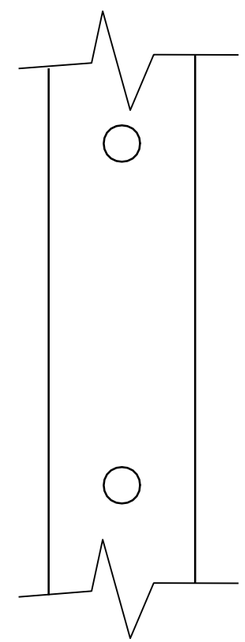

SIDE VIEW

GENERAL NOTES

1. All 4 x 6 Wood Posts shall be modified by having two 1½" diameter holes drilled perpendicular to the roadway centerline.

7

7

4 X 6 WOOD POST MODIFICATIONS

WISCONSIN DEPT OF TRANSPORTATION

APPROVED Chester J Spang for State Traffic Engineer

DATE 3/27/97 PLATE NO. A4-11.2

PROJECT NO:	HWY:	COUNTY:		SHEET NO: 89	E

BANDING

SINGLE SIGN

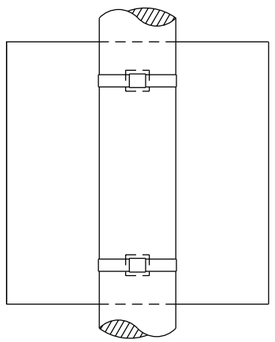

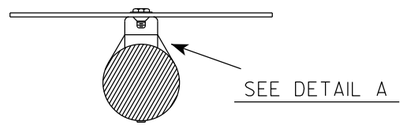

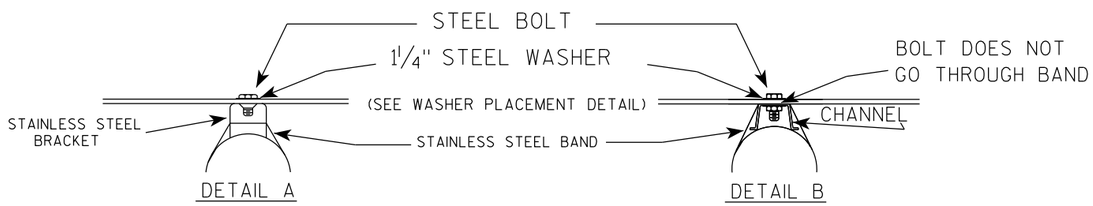

WASHER PLACEMENT

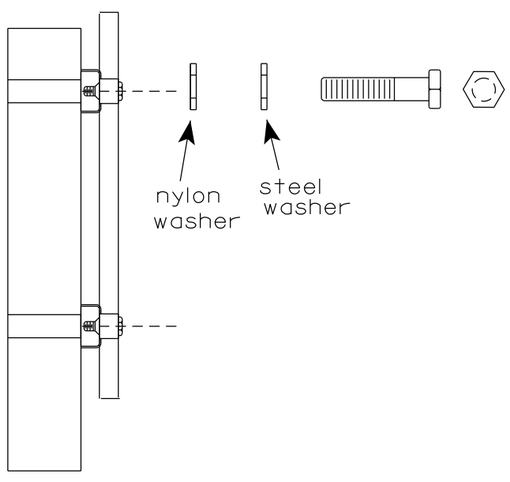

WASHERS (ALL POSTS) -
1-1/4" O.D. X 3/8" I.D. X 1/16" STEEL
1-1/4" O.D. X 3/8" I.D. X .080 NYLON
FOR ALL TYPE H SIGNS

GENERAL NOTES

1. Any sign over 3 feet in width shall use the V-Block banding method. See A5-10 standard plate.
2. Signs 3 feet or greater in height shall have three bracket bands installed. Signs less than 3 feet in height shall have two bracket bands installed.
3. Banding and assembly bracket shall be stainless steel. All bands shall be ¾" in width and 0.025" thickness.
4. ALL SIGN MOUNTING BOLTS AND WASHERS SHALL BE EITHER:
   a. Hot dip or mechanically galvanized in accordance with ASTM Designation: A 153, Class D
   b. Electro-galvanized in accordance with ASTM designation: B 633, Type III, SC 3

"J" ASSEMBLY

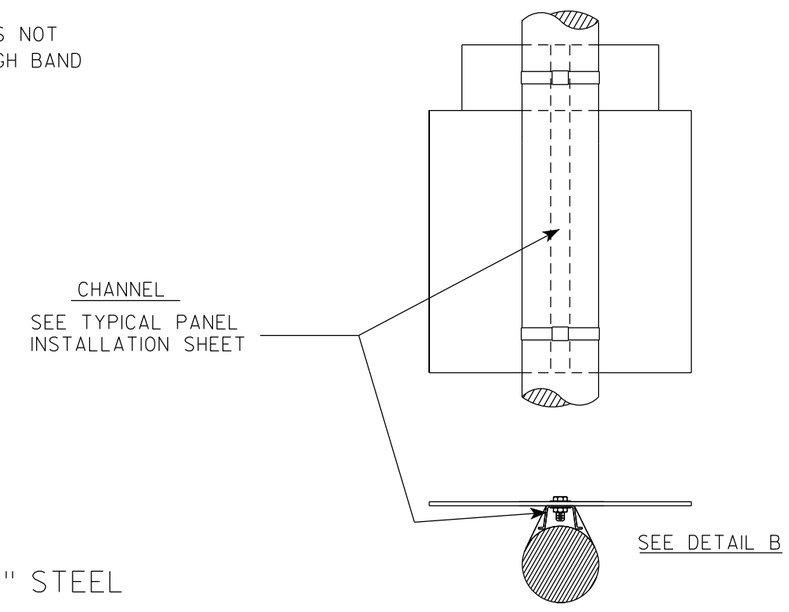

STANDARD SIGN
SIGN BANDING DETAILS

WISCONSIN DEPT OF TRANSPORTATION

APPROVED Matthew R Rauch for State Traffic Engineer

DATE 6/10/19 PLATE NO. A5-9.4

PROJECT NO:	HWY:	COUNTY:		SHEET NO: 90	E

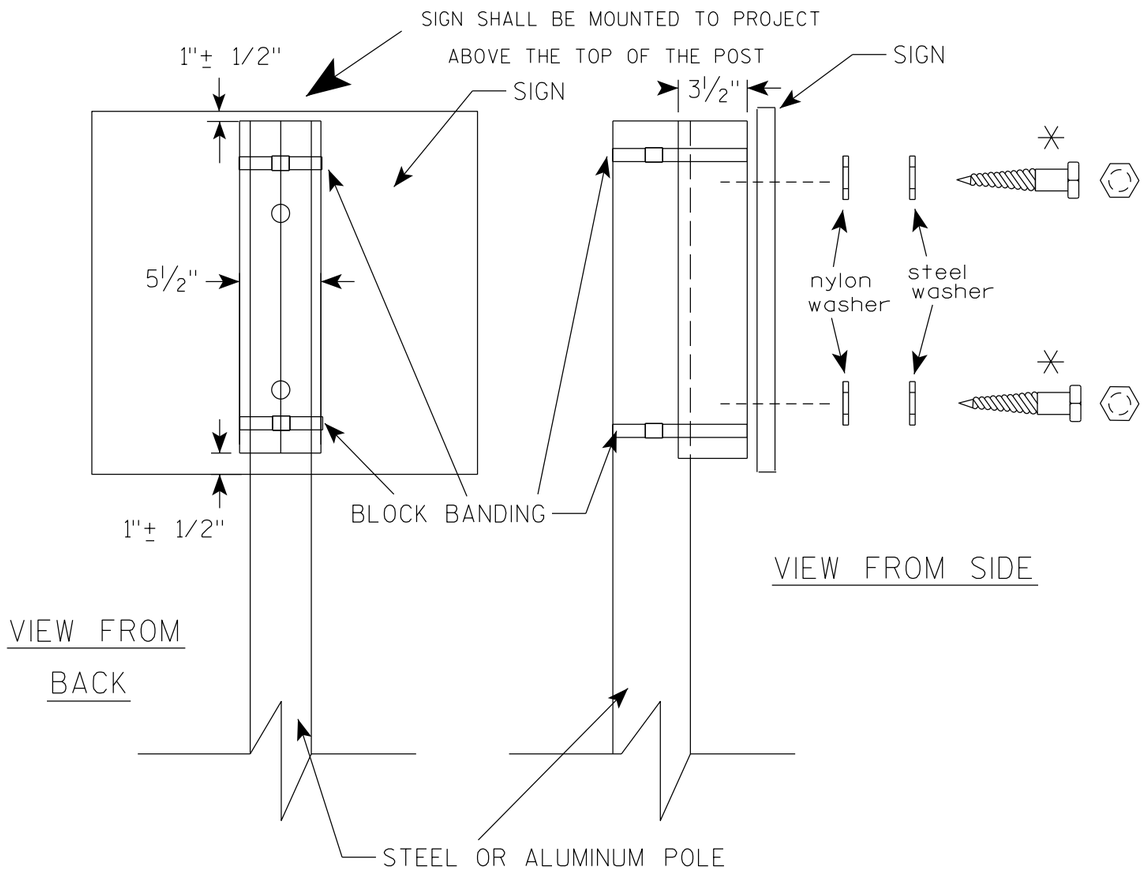

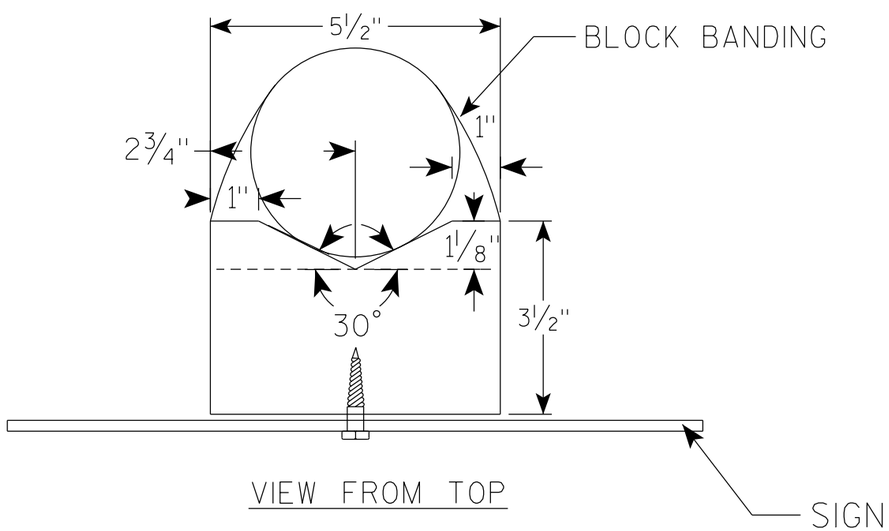

GENERAL NOTES

1. WOOD 4"X6" POST MATERIAL SHALL CONFORM TO 507.2.2 OF THE WisDOT STANDARD SPECIFICATIONS
2. BLOCK BANDING AND CLIPS SHALL BE STAINLESS STEEL, 3/4" WIDTH AND 0.025" THICKNESS
3. SIGNS 3' OR GREATER IN HEIGHT SHALL UTILIZE 3 BLOCK BANDS. SIGNS UNDER 3' IN HEIGHT SHALL UTILIZE 2 BLOCK BANDS
4. ACTUAL NUMBER OF FASTENERS PER SIGN VARIES WITH THE SIGN AREA, BUT NORNALLY THERE ARE TWO. FOR SIGNS GREATER THAN 9 S.F. 3 FASTENERS SHALL BE USED.
5. ALL SIGN MOUNTING BOLTS AND WASHERS SHALL BE EITHER:
   a. Hot dip or mechanically galvanized in accordance with ASTM Designation: A 153, Class D
   b. Electro-galvanized in accordance with ASTM Designation : B 633, TYPE III, SC 3
6. ALL BOLTS SHALL HAVE HEXAGONAL HEADS.
7. STEEL WASHERS SHALL BE 1 1/4" O.D. X 3/8" I.D. X 1/16"
8. NYLON WASHERS SHALL BE 1 1/4" O.D. X 3/8" I.D. X .080 FOR TYPE H OR TYPE F FACE SIGN

✳ LAG BOLTS SHALL BE 3/8" X 2 1/2"

7

7

BLOCK BANDING DETAIL
(V-BLOCK OPTION)

WISCONSIN DEPT OF TRANSPORTATION

APPROVED Matthew R Rauch
for State Traffic Engineer

DATE 4/19/2022 PLATE NO. A5-10.3

PROJECT NO:				SHEET NO: 91	E

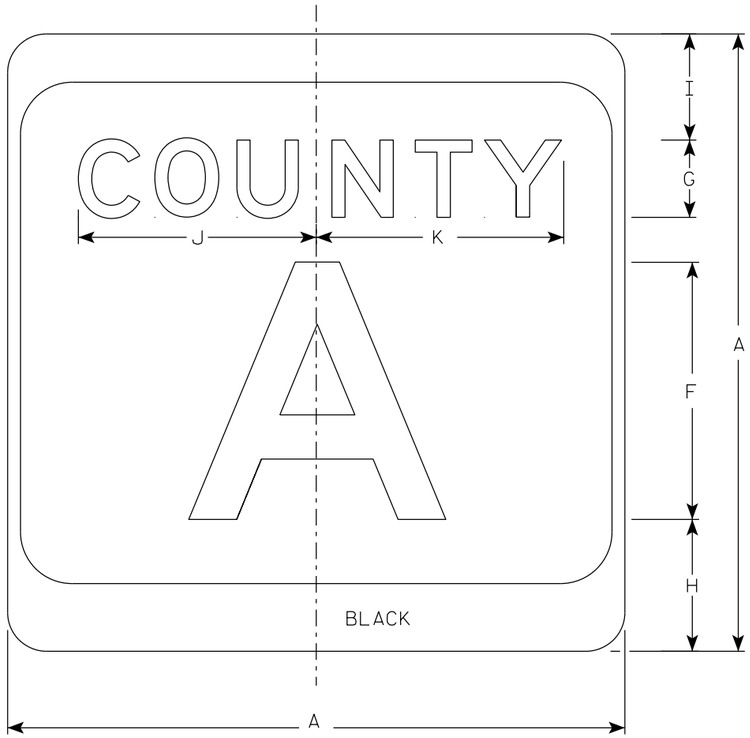

M1-5A

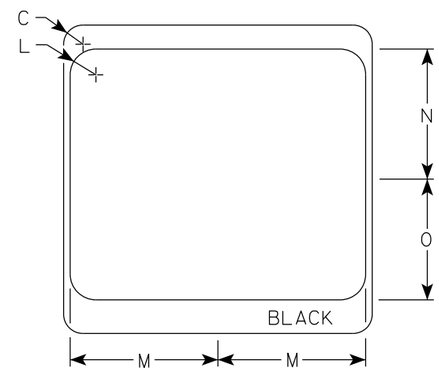

NOTES

1. Sign is Type II - Type H Reflective
2. Color:
   Background - White & Black
   Message - Black
3. Message Series - see Note 4
4. Message Series E for 1 letter.
   Message Series D for 2 letters unless message is too big then Series C.
   Message Series C for 3 letters unless message is too big then Series B.
5. Substitute appropriate letters & optically center to achieve proper balance.

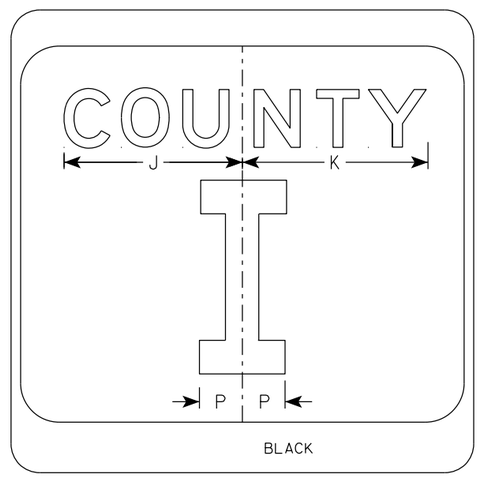

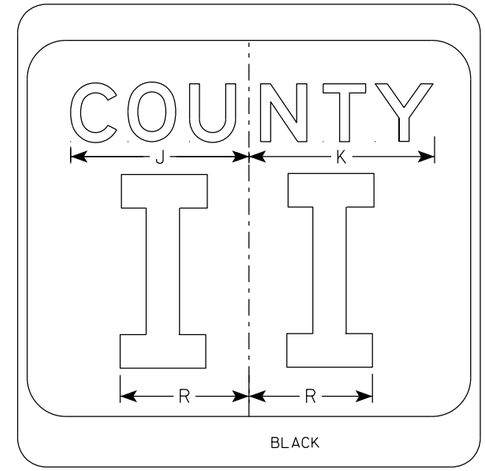

SIZE	A	B	C	D	E	F	G	H	I	J	K	L	M	N	O	P	Q	R	S	T	U	V	W	X	Y	Z	Area sq. ft.
1																											
2	24		1 1/2			10	3	5 1/8	4 1/8	9 1/4	9 5/8	2	11 1/2	10 1/8	9 3/8	2 1/4		6 5/8									4.0
2M	24		1 1/2			10	3	5 1/8	4 1/8	9 1/4	9 5/8	2	11 1/2	10 1/8	9 3/8	2 1/4		6 5/8									4.0
3	36		2 1/4			16	4	7 5/8	5 5/8	12 1/4	12 7/8	3	17 1/8	15 1/4	14	3 3/8		10									9.0
4	36		2 1/4			16	4	7 5/8	5 5/8	12 1/4	12 7/8	3	17 1/8	15 1/4	14	3 3/8		10									9.0
5	36		2 1/4			16	4	7 5/8	5 5/8	12 1/4	12 7/8	3	17 1/8	15 1/4	14	3 3/8		10									9.0

CTH MARKER
M1-5A FOR ASSEMBLIES

WISCONSIN DEPT OF TRANSPORTATION

APPROVED Matthew R Rauch
for State Traffic Engineer

DATE 11/8/2022 PLATE NO. M1-5A.9

PROJECT NO: | HWY: | COUNTY: | SHEET NO: | E

NOTES

1. Sign is Type II - Type F Reflective
2. Color:
   Background - Orange
   Message - Black
3. Message Series - B
4. Corners may be square or rounded when base material is plywood but borders shall be rounded as shown. When base material is metal, the corners and borders shall be rounded.

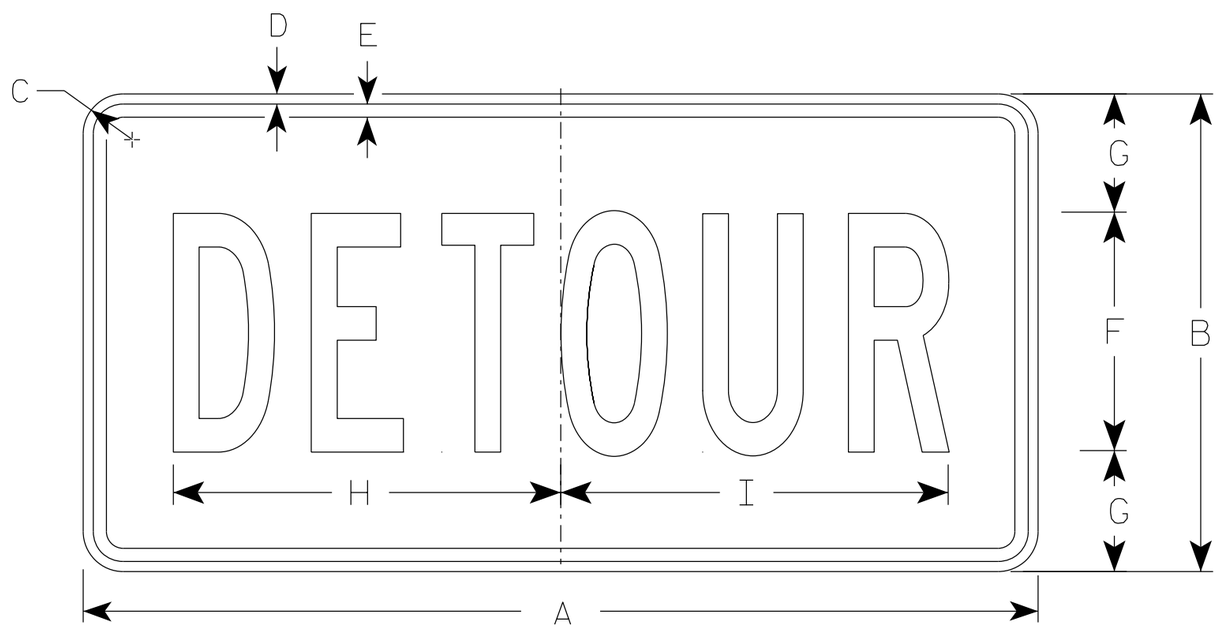

M4-8

SIZE	A	B	C	D	E	F	G	H	I	J	K	L	M	N	O	P	Q	R	S	T	U	V	W	X	Y	Z	Area sq. ft.
1																											
2	24	12	1 1/2	3/8	3/8	6	3	10	10 1/4																		2.0
2M	24	12	1 1/2	3/8	3/8	6	3	10	10 1/4																		2.0
3	36	18	1 1/2	3/8	1/2	9	4 1/2	14 5/8	14 1/2																		4.5
4	36	18	1 1/2	3/8	1/2	9	4 1/2	14 5/8	14 1/2																		4.5
5	36	18	1 1/2	3/8	1/2	9	4 1/2	14 5/8	14 1/2																		4.5

STANDARD SIGN
M4-8

WISCONSIN DEPT OF TRANSPORTATION

APPROVED Matthew R Rauch
for State Traffic Engineer

DATE 2/9/2023 PLATE NO. M4-8.4

PROJECT NO:	HWY:	COUNTY:		SHEET NO: 93	E

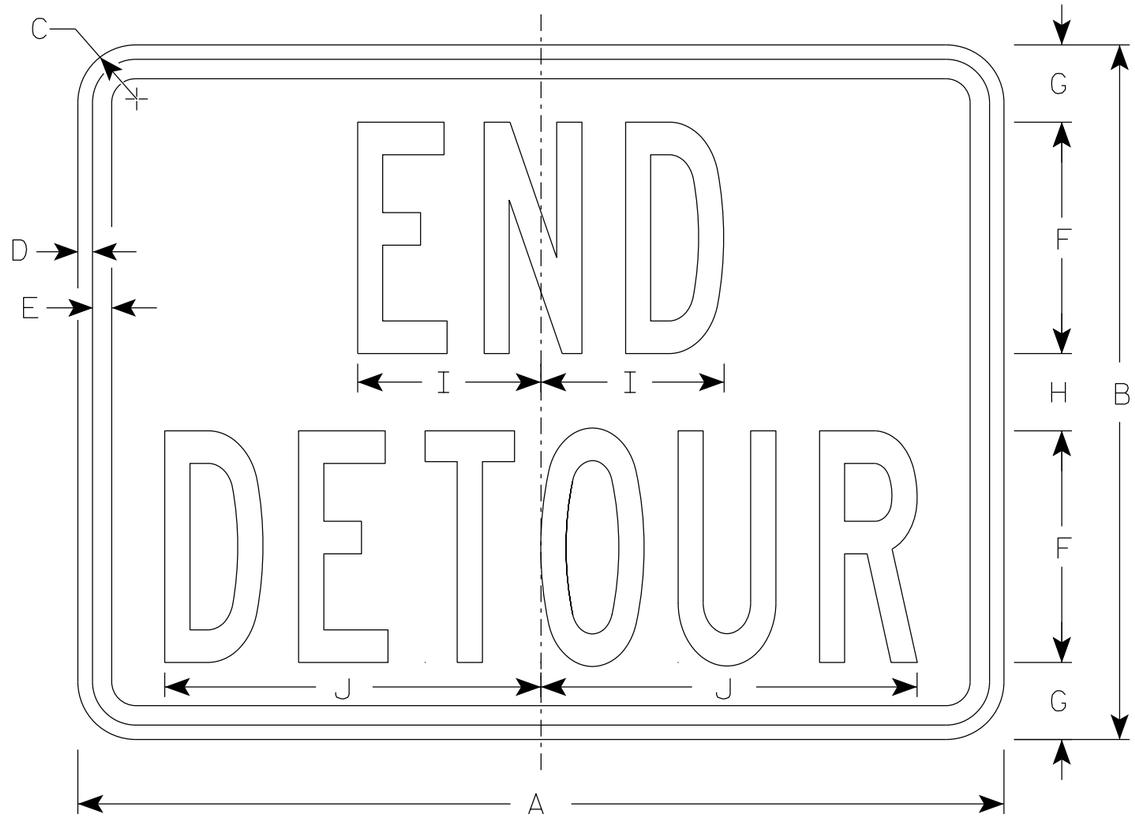

M4-8A

NOTES

1. Sign is Type II - Type F Reflective
2. Color:
   Background - Orange
   Message - Black
3. Message Series - B
4. Corners may be square or rounded when base material is plywood but borders shall be rounded as shown. When base material is metal, the corners and borders shall be rounded.

SIZE	A	B	C	D	E	F	G	H	I	J	K	L	M	N	O	P	Q	R	S	T	U	V	W	X	Y	Z	Area sq. ft.
1																											
2	24	18	1 1/2	3/8	1/2	6	2	2	4 3/4	9 3/4																	3.0
2M	24	18	1 1/2	3/8	1/2	6	2	2	4 3/4	9 3/4																	3.0
3	30	24	1 1/2	3/8	1/2	8	2 1/2	3	6 3/4	13																	5.0
4	30	24	1 1/2	3/8	1/2	8	2 1/2	3	6 3/4	13																	5.0
5	30	24	1 1/2	3/8	1/2	8	2 1/2	3	6 3/4	13																	5.0

STANDARD SIGN
M4-8A

WISCONSIN DEPT OF TRANSPORTATION

APPROVED Matthew R Rauch
for State Traffic Engineer

DATE 2/9/2023 PLATE NO. M4-8A.4

PROJECT NO: | HWY: | COUNTY: | SHEET NO: 94 | E

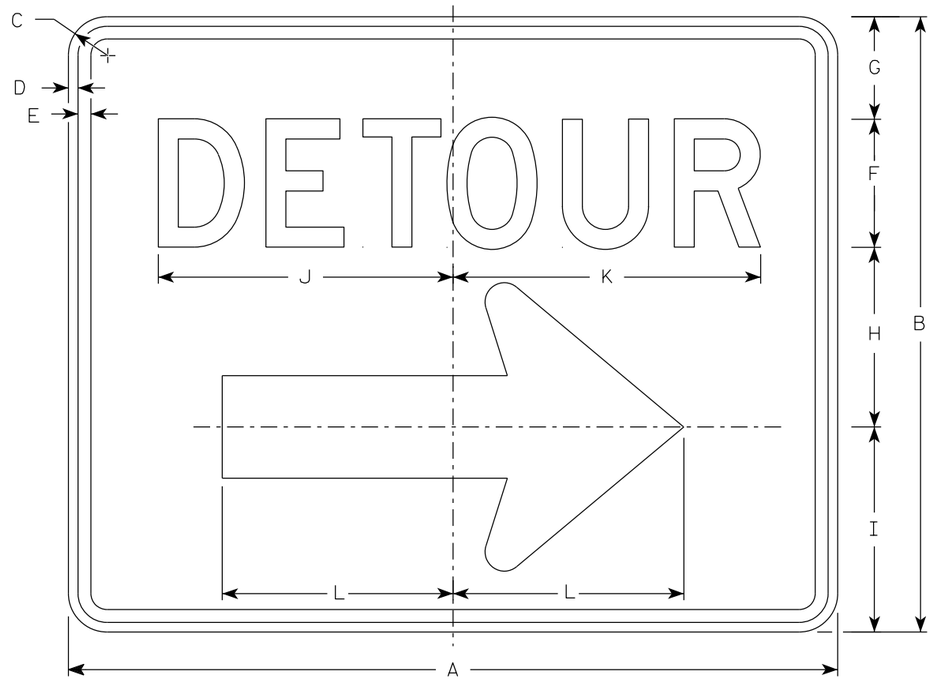

M4-9R

NOTES

1. Sign is Type II - Type F Reflective
2. Color:
   Background - Orange
   Message - Black
3. Message Series - D
4. Corners may be square or rounded when base material is plywood but borders shall be rounded as shown. When base material is metal, the corners and borders shall be rounded.
4. M4-9L is the same as M4-9R except the arrow is reversed.

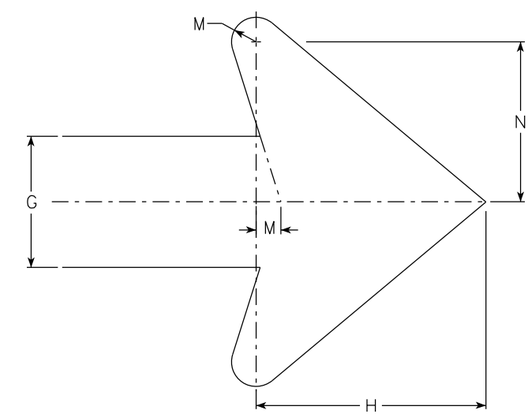

Arrow Detail

SIZE	A	B	C	D	E	F	G	H	I	J	K	L	M	N	O	P	Q	R	S	T	U	V	W	X	Y	Z	Area sq. ft.
1																											
2	30	24	1 1/2	3/8	1/2	5	4	7	8	11 1/2	12	9	3/4	4 7/8													5.00
2M	30	24	1 1/2	3/8	1/2	5	4	7	8	11 1/2	12	9	3/4	4 7/8													5.00
3	30	24	1 1/2	3/8	1/2	5	4	7	8	11 1/2	12	9	3/4	4 7/8													5.00
4	48	36	1 7/8	1/2	5/8	8	6	10 1/2	11 5/8	20 5/8	20 1/2	13 1/4	1 1/8	6 7/8													12.0
5	48	36	1 7/8	1/2	5/8	8	6	10 1/2	11 5/8	20 5/8	20 1/2	13 1/4	1 1/8	6 7/8													12.0

STANDARD SIGN
M4-9 R & L

WISCONSIN DEPT OF TRANSPORTATION

APPROVED Matthew R Rauch
For State Traffic Engineer

DATE 2/9/2023 PLATE NO. M4-9R.6

PROJECT NO: | HWY: | COUNTY: | SHEET NO: E

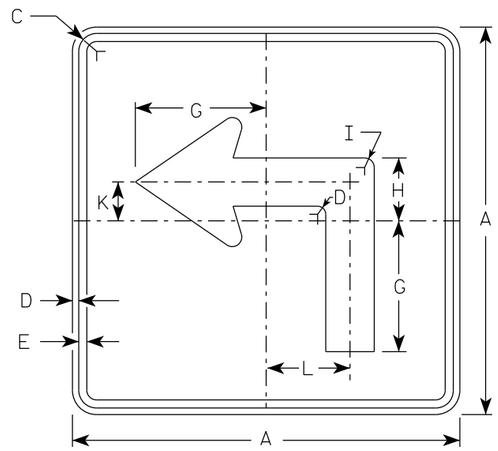

M5-1L
MM5-1L
MO5-1L
MP5-1L

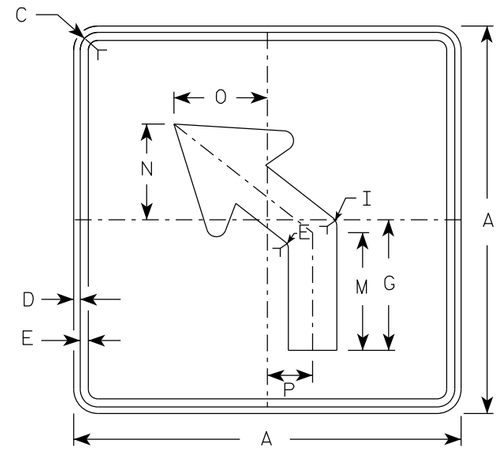

M5-2L
MM5-2L
MO5-2L
MP5-2L

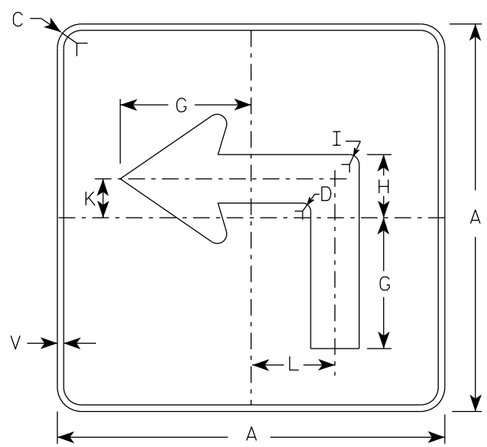

MB5-1L
MK5-1L
MN5-1L
MR5-1L

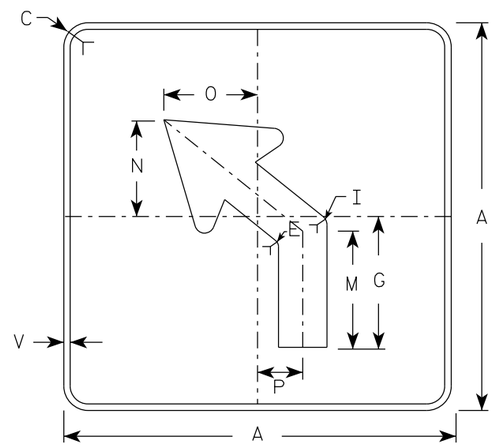

MB5-2L
MK5-2L
MN5-2L
MR5-2L

NOTES

1. Signs are Type II - Type H reflective except as shown
2. Color:
   Background - See note 4
   Message - See note 4
3. Corners may be square or rounded when base material is plywood but borders shall be rounded as shown. When base material is metal, the corners and borders shall be rounded.
4. M5-1 and M5-2 Background - White
   Message - Black
   MB5-1 and MB5-2 Background - Blue
   Message - White
   MK5-1 and MK5-2 Background - Green
   Message - White
   MM5-1 and MM5-2 Background - White
   Message - Green
   MN5-1 and MN5-2 Background - Brown
   Message - White
   MO5-1 and MO5-2 Background - Orange - Type F Reflective
   Message - Black
   MP5-1 and MP5-2 Background - White
   Message - Blue
   MR5-1 and MR5-2 Background - Brown
   Message - Yellow
5. M5-1R same as M5-1L except arrow points right.
6. M5-2R same as M5-2L except arrow tilts right.

ARROW DETAIL

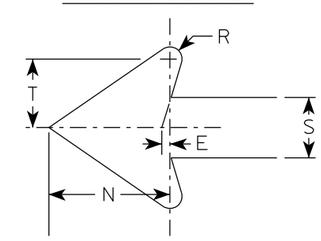

SIZE	A	B	C	D	E	F	G	H	I	J	K	L	M	N	O	P	Q	R	S	T	U	V	W	X	Y	Z	Area sq. ft.
1																											
2S	21		1 1/2	3/8	3/8		7	3 3/8	5/8		2 1/8	4 1/2	6 3/8	5 1/4	5	2 1/2		1/2	2 5/8	3		1/2					3.06
2M	21		1 1/2	3/8	3/8		7	3 3/8	5/8		2 1/8	4 1/2	6 3/8	5 1/4	5	2 1/2		1/2	2 5/8	3		1/2					3.06
3	30		1 7/8	1/2	5/8		10 1/8	4 7/8	7/8		3	6 1/2	9 1/8	7 1/2	7 1/4	3 1/2		3/4	3 3/4	4 1/4		1/2					6.25
4	30		1 7/8	1/2	5/8		10 1/8	4 7/8	7/8		3	6 1/2	9 1/8	7 1/2	7 1/4	3 1/2		3/4	3 3/4	4 1/4		1/2					6.25
5	30		1 7/8	1/2	5/8		10 1/8	4 7/8	7/8		3	6 1/2	9 1/8	7 1/2	7 1/4	3 1/2		3/4	3 3/4	4 1/4		1/2					6.25

STANDARD SIGN
M5-1 & M5-2

WISCONSIN DEPT OF TRANSPORTATION

APPROVED Matthew R Rauch
for State Traffic Engineer

DATE 2/13/2023 PLATE NO. M5-1.15

PROJECT NO: | HWY: | COUNTY: | SHEET NO: 96 | E

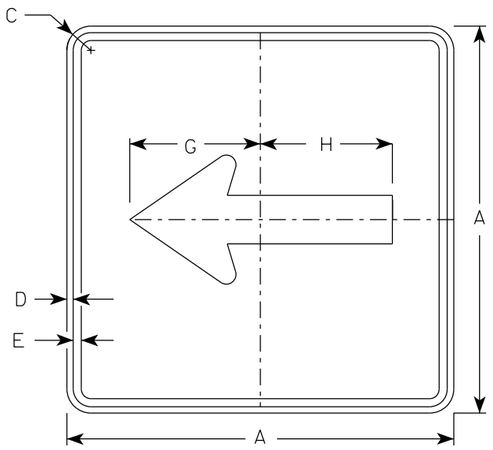

M6-1
MM6-1
MO6-1
MP6-1

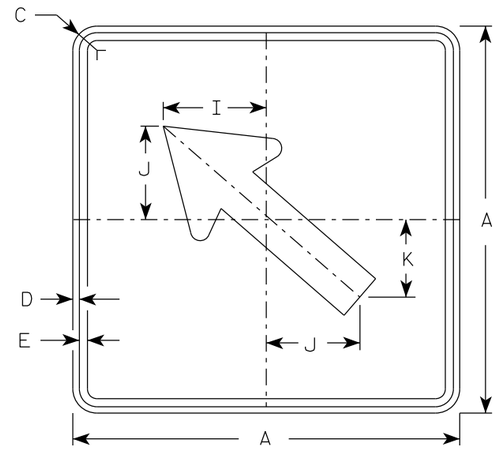

M6-2
MM6-2
MO6-2
MP6-2

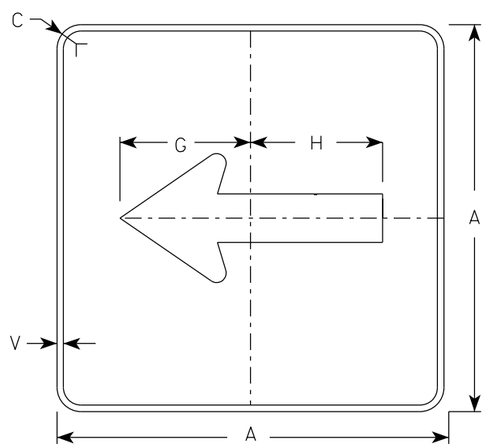

MB6-1
MK6-1
MN6-1
MR6-1

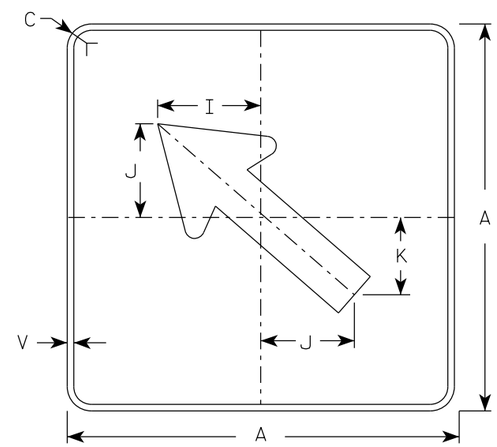

MB6-2
MK6-2
MN6-2
MR6-2

NOTES

1. Signs are Type II - Type H Reflective except as Shown
2. Color:
   Background - See note 4
   Message - See note 4
3. Corners may be square or rounded when base material is plywood but borders shall be rounded as shown. When base material is metal, the corners and borders shall be rounded.
4. M6-1 and M6-2 Background - White
   Message - Black
   MB6-1 and MB6-2 Background - Blue
   Message - White
   MK6-1 and MK6-2 Background - Green
   Message - White
   MM6-1 and MM6-2 Background - White
   Message - Green
   MN6-1 and MN6-2 Background - Brown
   Message - White
   MO6-1 and MO6-2 Background - Orange - Type F Reflective
   Message - Black
   MP6-1 and MP6-2 Background - White
   Message - Blue
   MR6-1 and MR6-2 Background - Brown
   Message - Yellow

ARROW DETAIL

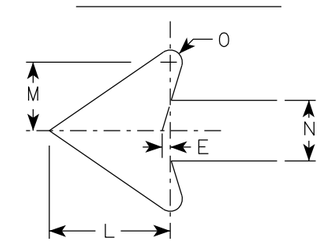

SIZE	A	B	C	D	E	F	G	H	I	J	K	L	M	N	O	P	Q	R	S	T	U	V	W	X	Y	Z	Area sq. ft.
1																											
2S	21		1 1/2	3/8	3/8		7 1/2	7 1/8	5 5/8	5	4 1/4	5 1/4	3	2 5/8	1/2							1/2					3.06
2M	21		1 1/2	3/8	3/8		7 1/2	7 1/8	5 5/8	5	4 1/4	5 1/4	3	2 5/8	1/2							1/2					3.06
3	30		1 7/8	1/2	5/8		10 3/4	10 1/4	8	7 1/4	6	7 1/2	4 1/4	3 3/4	3/4							1/2					6.25
4	30		1 7/8	1/2	5/8		10 3/4	10 1/4	8	7 1/4	6	7 1/2	4 1/4	3 3/4	3/4							1/2					6.25
5	30		1 7/8	1/2	5/8		10 3/4	10 1/4	8	7 1/4	6	7 1/2	4 1/4	3 3/4	3/4							1/2					6.25

STANDARD SIGN
M6-1 & M6-2
SERIES

WISCONSIN DEPT OF TRANSPORTATION

APPROVED Matthew R Rauch
for State Traffic Engineer

DATE 2/13/2023 PLATE NO. M6-1.16

PROJECT NO: | HWY: | COUNTY: | SHEET NO: 97 | E

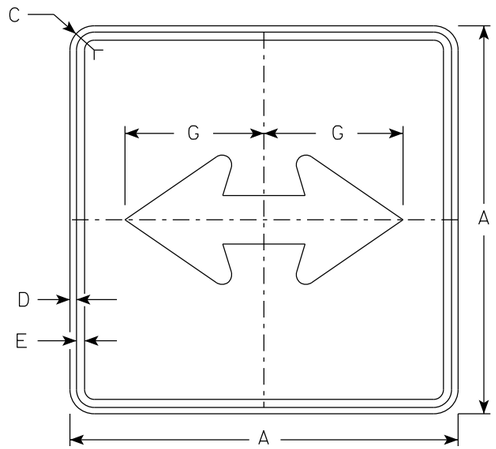

M6-4
MM6-4
MO6-4
MP6-4

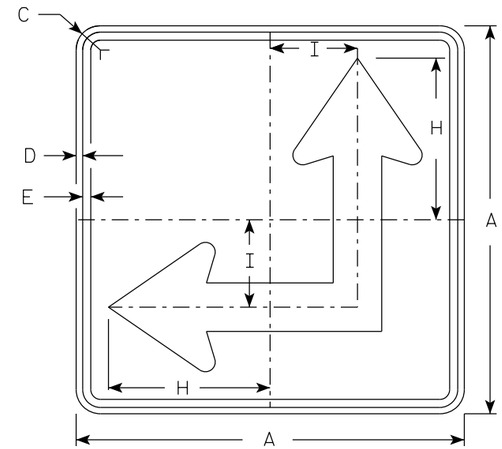

M6-6
MM6-6
MO6-6
MP6-6

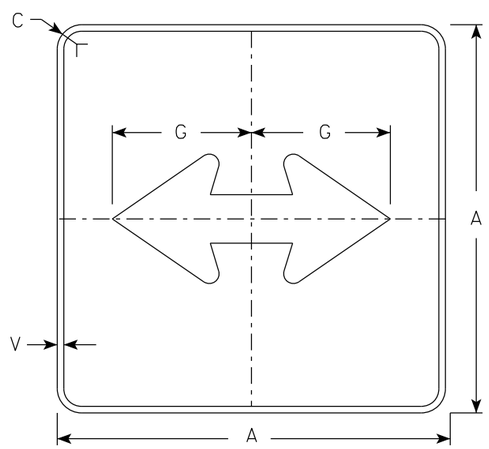

MB6-4
MK6-4
MN6-4
MR6-4

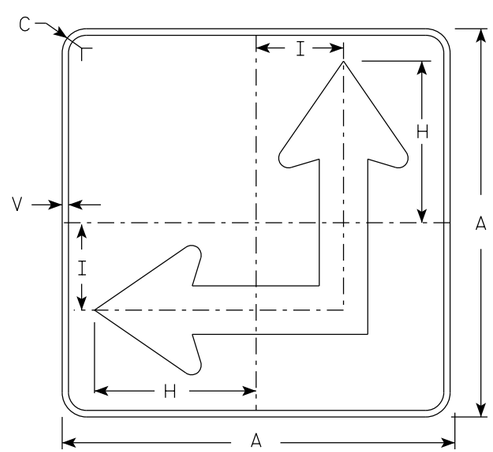

MB6-6
MK6-6
MN6-6
MR6-6

NOTES

1. Signs are Type II - Type H Reflective except as Shown
2. Color:
   Background - See Note 4
   Message - See Note 4
3. Corners may be square or rounded when base material is plywood but borders shall be rounded as shown. When base material is metal, the corners and borders shall be rounded.
4. M6-4 and M6-6 Background - White
   Message - Black
   MB6-4 and MB6-6 Background - Blue
   Message - White
   MK6-4 and MK6-6 Background - Green
   Message - White
   MM6-4 and MM6-6 Background - White
   Message - Green
   MN6-4 and MN6-6 Background - Brown
   Message - White
   MO6-4 and MO6-6 Background - Orange - Type F Reflective
   Message - Black
   MP6-4 and MP6-6 Background - White
   Message - Blue
   MR6-4 and MR6-6 Background - Brown
   Message - Yellow
5. M6-6R same as M6-6L except arrow points ahead and right.

ARROW DETAIL

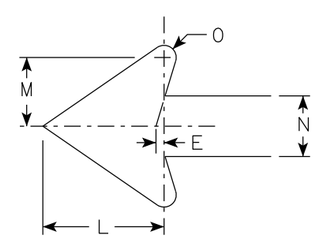

SIZE	A	B	C	D	E	F	G	H	I	J	K	L	M	N	O	P	Q	R	S	T	U	V	W	X	Y	Z	Area sq. ft.
1																											
2S	21		1 1/2	3/8	3/8		7 1/2	8 3/4	4 1/4			5 1/4	3	2 5/8	1/2							1/2					3.06
2M	21		1 1/2	3/8	3/8		7 1/2	8 3/4	4 1/4			5 1/4	3	2 5/8	1/2							1/2					3.06
3	30		1 7/8	1/2	5/8		10 3/4	12 1/2	6 3/4			7 1/2	4 1/4	3 3/4	3/4							1/2					6.25
4	30		1 7/8	1/2	5/8		10 3/4	12 1/2	6 3/4			7 1/2	4 1/4	3 3/4	3/4							1/2					6.25
5	30		1 7/8	1/2	5/8		10 3/4	12 1/2	6 3/4			7 1/2	4 1/4	3 3/4	3/4							1/2					6.25

STANDARD SIGN
M6-4 & M6-6
SERIES

WISCONSIN DEPT OF TRANSPORTATION

APPROVED Matthew R Rauch
for State Traffic Engineer

DATE 2/13/2023 PLATE NO. M6-4.11

PROJECT NO: | HWY: | COUNTY: | SHEET NO: 98 | E

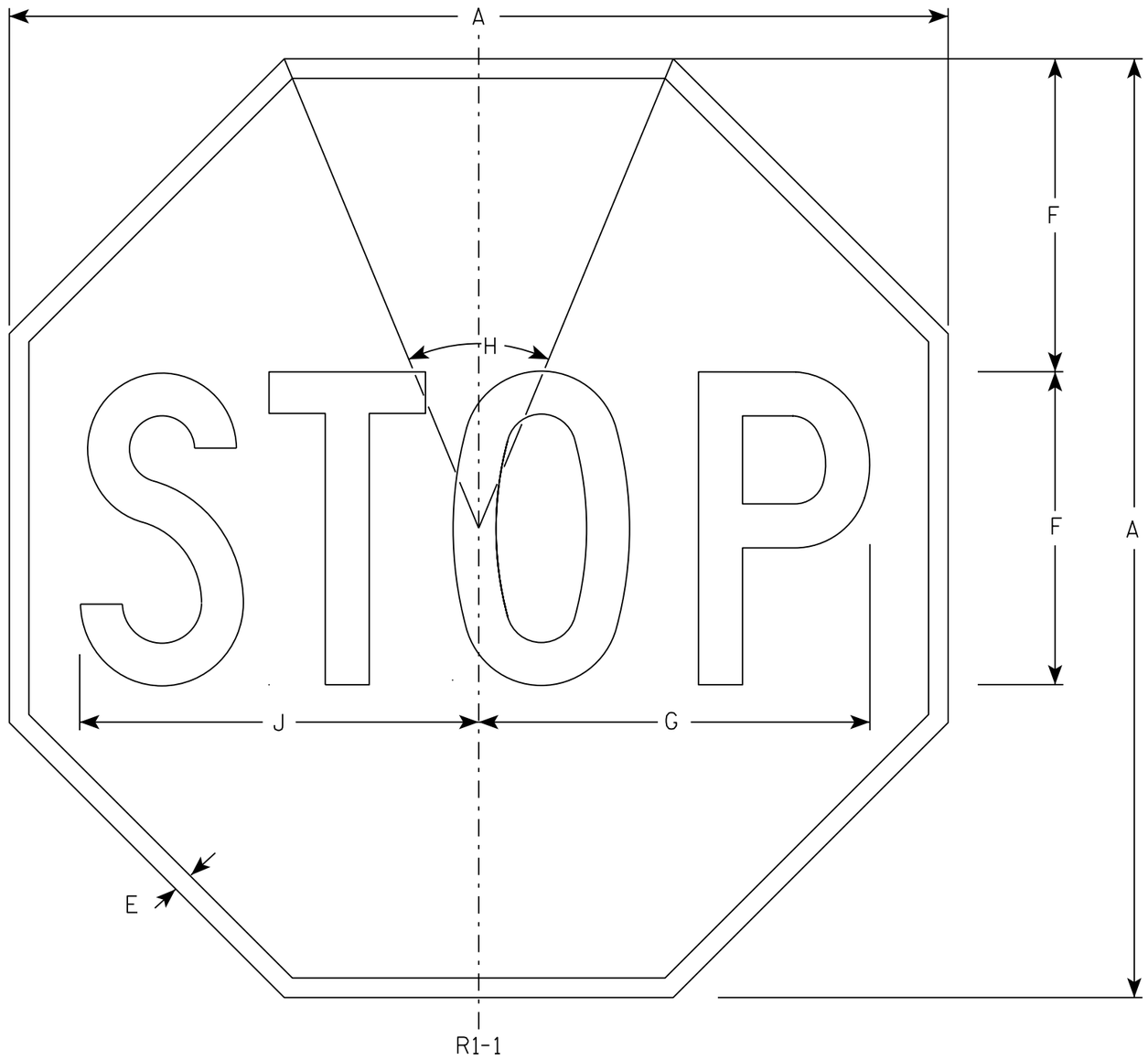

NOTES

1. Sign is Type II - Type H Reflective - reference WIS DOT Standard Specification for HIGHWAY and STRUCTURE CONSTRUCTION latest edition.
2. Color:
   Background - Red
   Message - White
3. Message Series - C

SIZE	A	B	C	D	E	F	G	H	I	J	K	L	M	N	O	P	Q	R	S	T	U	V	W	X	Y	Z	Area sq. ft.
1	30				5/8	10	12 1/2	45°		12 3/4																	5.18
2S	30				5/8	10	12 1/2	45°		12 3/4																	5.18
2M	36				3/4	12	15	45°		15 3/8																	7.46
3	36				3/4	12	15	45°		15 3/8																	7.46
4	48				1	16	20	45°		20 1/2																	13.25
5	48				1	16	20	45°		20 1/2																	13.25
6	18				3/8	6	7 3/4	45°		7 3/4																	1.86
7	12				1/4	4	5	45°		5 1/8																	0.78

STANDARD SIGN
R1-1

WISCONSIN DEPT OF TRANSPORTATION

APPROVED Matthew R Rauch
for State Traffic Engineer

DATE 11/12/15 PLATE NO. R1-1.13

PROJECT NO: | HWY: | COUNTY: | SHEET NO: 99 | E

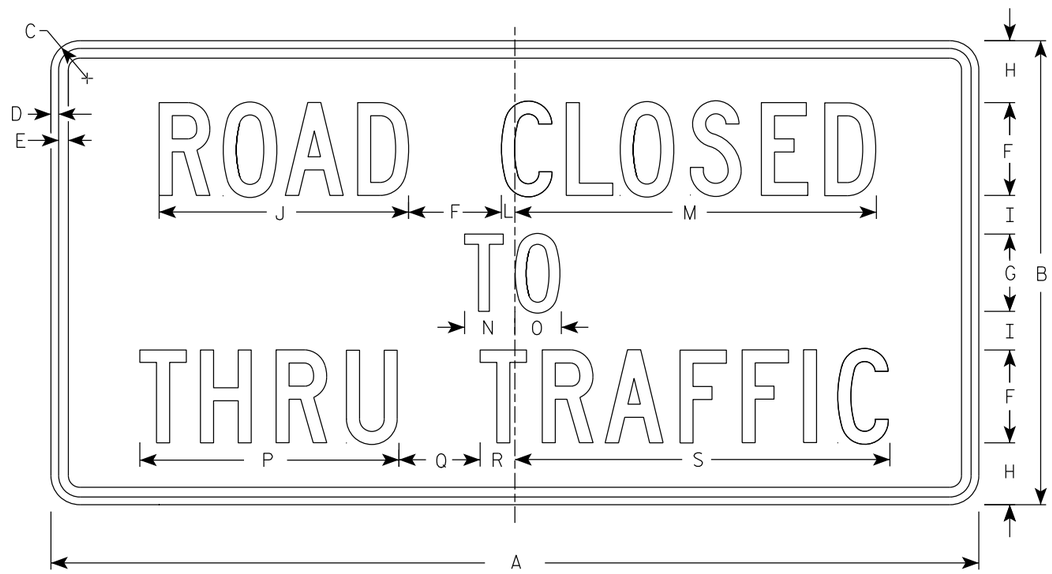

R11-4

NOTES

1. Sign is Type II - Type H Reflective
2. Color:
   Background - White
   Message - Black
3. Message Series - C
4. Corners may be square or rounded when base material is plywood but borders shall be rounded as shown. When base material is metal, the corners and borders shall be rounded.

SIZE	A	B	C	D	E	F	G	H	I	J	K	L	M	N	O	P	Q	R	S	T	U	V	W	X	Y	Z	Area sq. ft.
1																											
2S	60	30	1 7/8	1/2	5/8	6	5	4	2 1/2	16 1/8		7/8	23 3/8	3 1/4	3	16 3/4	5 1/4	2 1/4	24 1/4								12.5
2M	60	30	1 7/8	1/2	5/8	6	5	4	2 1/2	16 1/8		7/8	23 3/8	3 1/4	3	16 3/4	5 1/4	2 1/4	24 1/4								12.5
3																											
4																											
5																											

STANDARD SIGN
R11 - 4

WISCONSIN DEPT OF TRANSPORTATION

APPROVED Matthew R Rauch for State Traffic Engineer

DATE 2/5/24 PLATE NO. R11-4.4

PROJECT NO: | HWY: | COUNTY: | SHEET NO: 100 | E

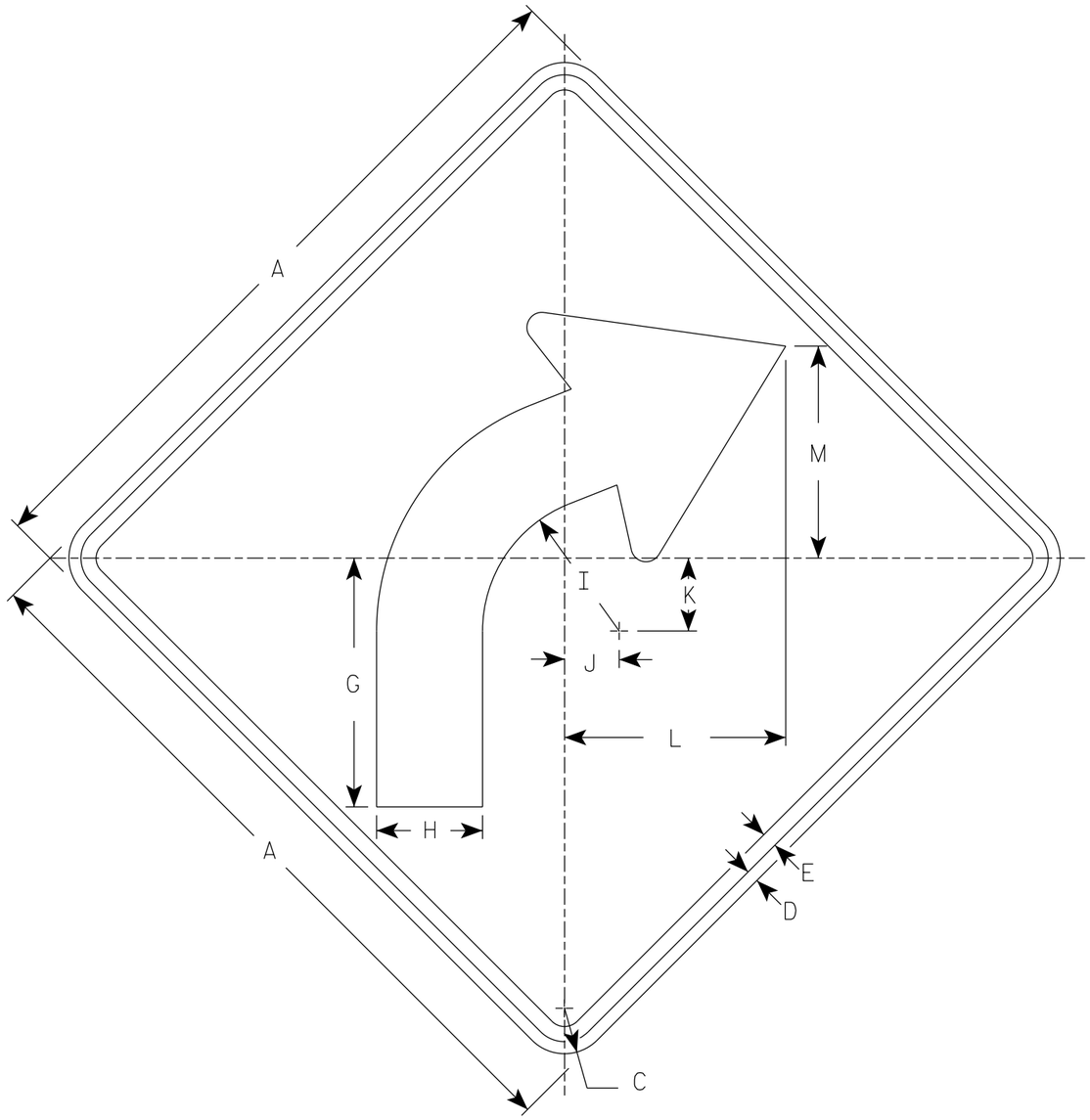

W1-2R

NOTES

1. Sign is Type II - Type F Reflective
2. Color:
   Background - Yellow
   Message - Black
3. W1-2L is the same as W1-2R except the arrow is reversed along the vertical centerline.

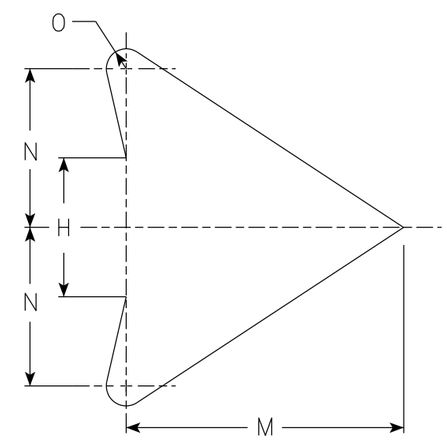

ARROW DETAIL

SIZE	A	B	C	D	E	F	G	H	I	J	K	L	M	N	O	P	Q	R	S	T	U	V	W	X	Y	Z	Area sq. ft.
1	24		1 1/2	3/8	1/2		8 1/4	3 1/2	4 1/2	1 3/4	2 3/8	7 1/4	7	4	1/2												4.0
2S	30		1 7/8	1/2	5/8		10 1/4	4 3/8	5 5/8	2 1/4	3	9 1/8	8 3/4	5	5/8												6.25
2M	36		2 1/4	5/8	3/4		12 3/8	5 1/4	6 3/4	2 5/8	3 1/2	10 7/8	10 1/2	6	3/4												9.0
3	36		2 1/4	5/8	3/4		12 3/8	5 1/4	6 3/4	2 5/8	3 1/2	10 7/8	10 1/2	6	3/4												9.0
4	36		2 1/4	5/8	3/4		12 3/8	5 1/4	6 3/4	2 5/8	3 1/2	10 7/8	10 1/2	6	3/4												9.0
5	48		3	3/4	1		16 1/2	7	9	3 1/2	4 5/8	14 1/2	14	8	1												16.0

STANDARD SIGN
W1-2

WISCONSIN DEPT OF TRANSPORTATION

APPROVED Matthew R Rauch
for State Traffic Engineer

DATE 3/23/2023 PLATE NO. W1-2.11

PROJECT NO:	HWY:	COUNTY:		SHEET NO: 101	E

NOTES

1. Sign is Type II - Type F Reflective
2. Color:
   Background - Yellow
   Message - Black

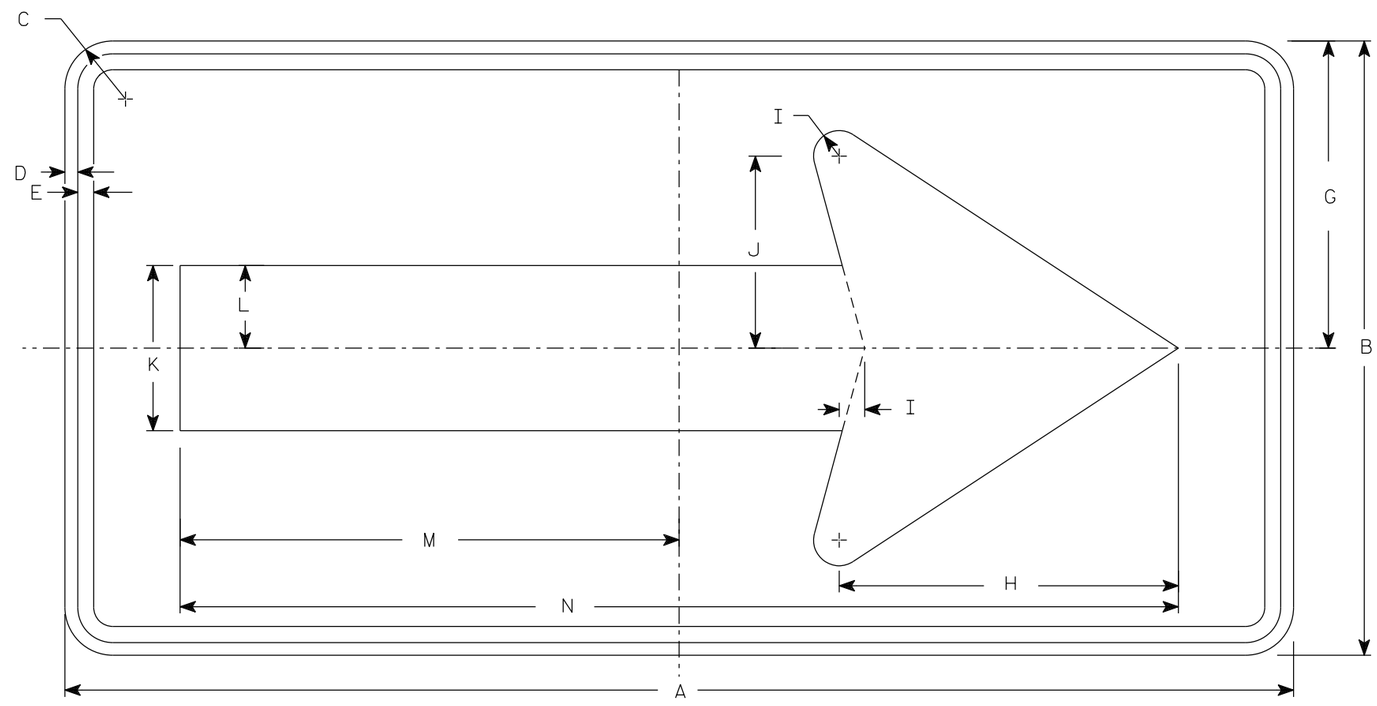

W1-6

SIZE	A	B	C	D	E	F	G	H	I	J	K	L	M	N	O	P	Q	R	S	T	U	V	W	X	Y	Z	Area sq. ft.
1	36	18	1 1/2	3/8	3/8		9	10	3/4	5 5/8	4 3/4	2 3/8	14 5/8	29 1/4													4.5
2S	48	24	1 7/8	1/2	5/8		12	13 1/4	1	7 1/2	6 1/2	3 1/4	19 1/2	39													8.0
2M	48	24	1 7/8	1/2	5/8		12	13 1/4	1	7 1/2	6 1/2	3 1/4	19 1/2	39													8.0
3	60	30	1 7/8	1/2	5/8		15	16 1/4	1 1/4	9 1/4	8	4	24 3/8	48 3/4													12.5
4	60	30	1 7/8	1/2	5/8		15	16 1/4	1 1/4	9 1/4	8	4	24 3/8	48 3/4													12.5
5	96	48	3	3/4	1		24	26 1/2	2	15	13	6 1/2	39	78													32.0

STANDARD SIGN

W1-6

WISCONSIN DEPT OF TRANSPORTATION

APPROVED Matthew R Rauch
for State Traffic Engineer

DATE 4/13/2023 PLATE NO. W1-6.9

PROJECT NO: | HWY: | COUNTY: | SHEET NO: | E

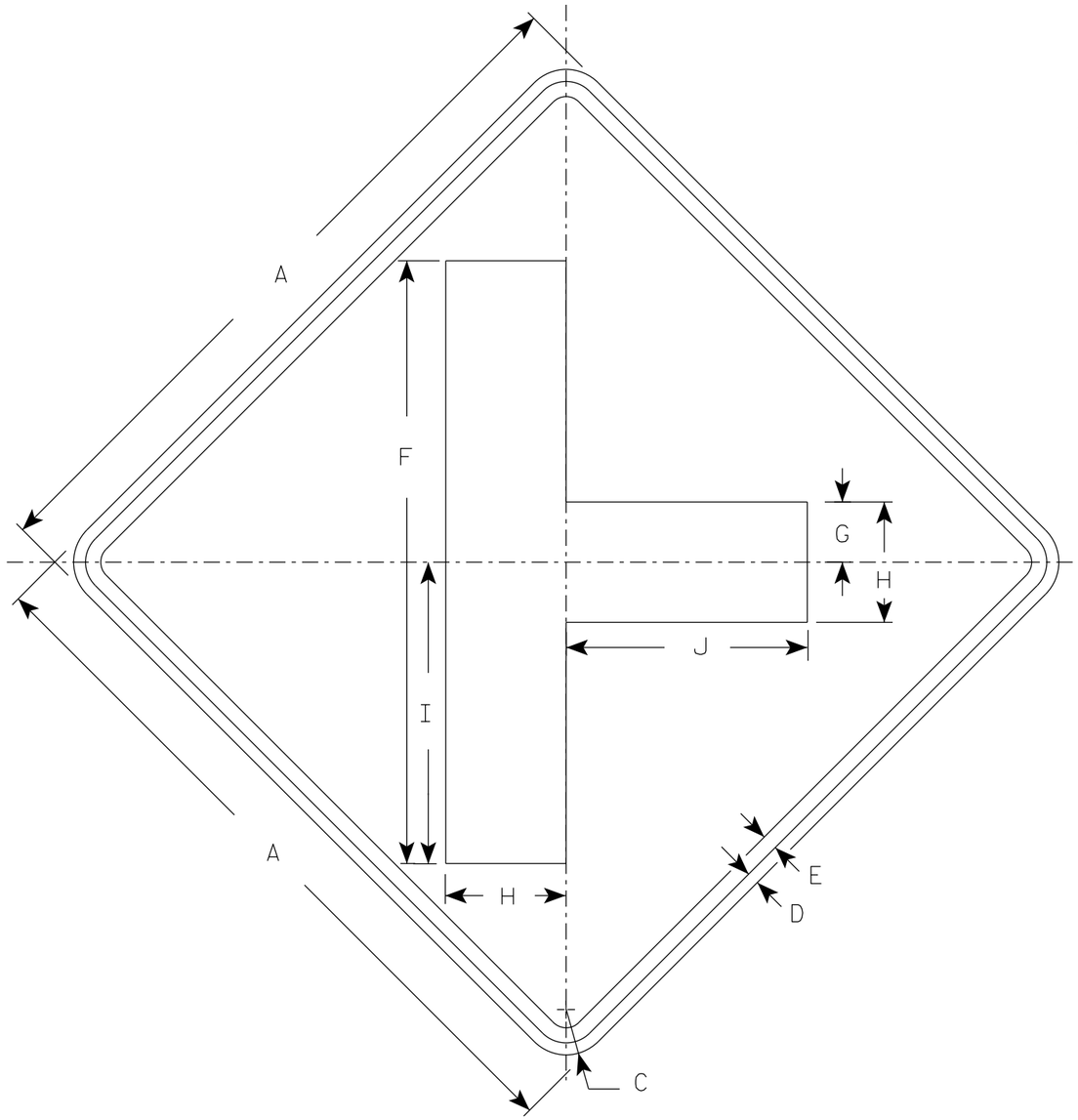

W2-2R

NOTES

1. Sign is Type II - Type F Reflective
2. Color:
   Background - Yellow
   Message - Black
3. W2-2L same as W2-2R but is rotated 180° when mounted.

SIZE	A	B	C	D	E	F	G	H	I	J	K	L	M	N	O	P	Q	R	S	T	U	V	W	X	Y	Z	Area sq. ft.
1	24		1 1/2	3/8	1/2	20	2	4	10	8																	4.0
2S	30		1 7/8	1/2	5/8	25	2 1/2	5	12 1/2	10																	6.25
2M	30		1 7/8	1/2	5/8	25	2 1/2	5	12 1/2	10																	6.25
3	36		2 1/4	5/8	3/4	30	3	6	15	12																	9.0
4	48		3	3/4	1	40	4	8	20	16																	16.0
5																											

STANDARD SIGN

W2-2 L&R

WISCONSIN DEPT OF TRANSPORTATION

APPROVED Matthew R Rauch
For State Traffic Engineer

DATE 8/16/2023 PLATE NO. W2-2.8

PROJECT NO: | HWY: | COUNTY: | SHEET NO: 103 | E

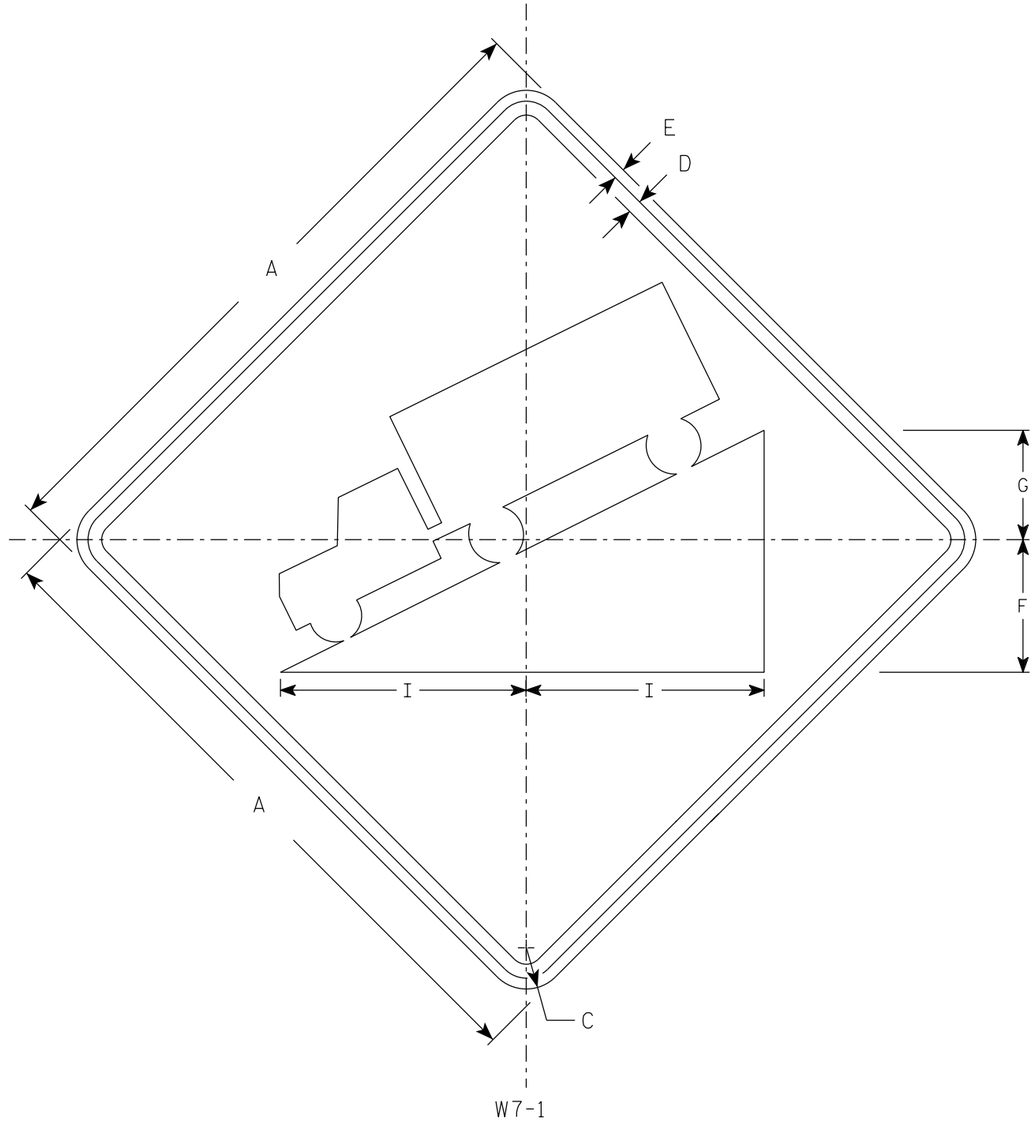

NOTES

1. Sign is Type II - Type F Reflective
2. Color:
   Background - Yellow
   Message - Black
3. Message Series - D

SIZE	A	B	C	D	E	F	G	H	I	J	K	L	M	N	O	P	Q	R	S	T	U	V	W	X	Y	Z	Area sq. ft.
1	24		1 1/2	3/8	3/8	5	4		8 3/4																		4.0
2S	30		1 7/8	1/2	5/8	6	5		11																		6.25
2M	36		2 1/4	5/8	3/4	7 1/4	6		13 1/4																		9.0
3	36		2 1/4	5/8	3/4	7 1/4	6		13 1/4																		9.0
4	36		2 1/4	5/8	3/4	7 1/4	6		13 1/4																		9.0
5	48		3	3/4	1	9 3/4	8		17 1/2																		16.0

STANDARD SIGN
W7-1

WISCONSIN DEPT OF TRANSPORTATION

APPROVED Matthew R Rauch
for State Traffic Engineer

DATE 9/6/2023 PLATE NO. W7-1.14

PROJECT NO: | HWY: | COUNTY: | SHEET NO: 104 | E

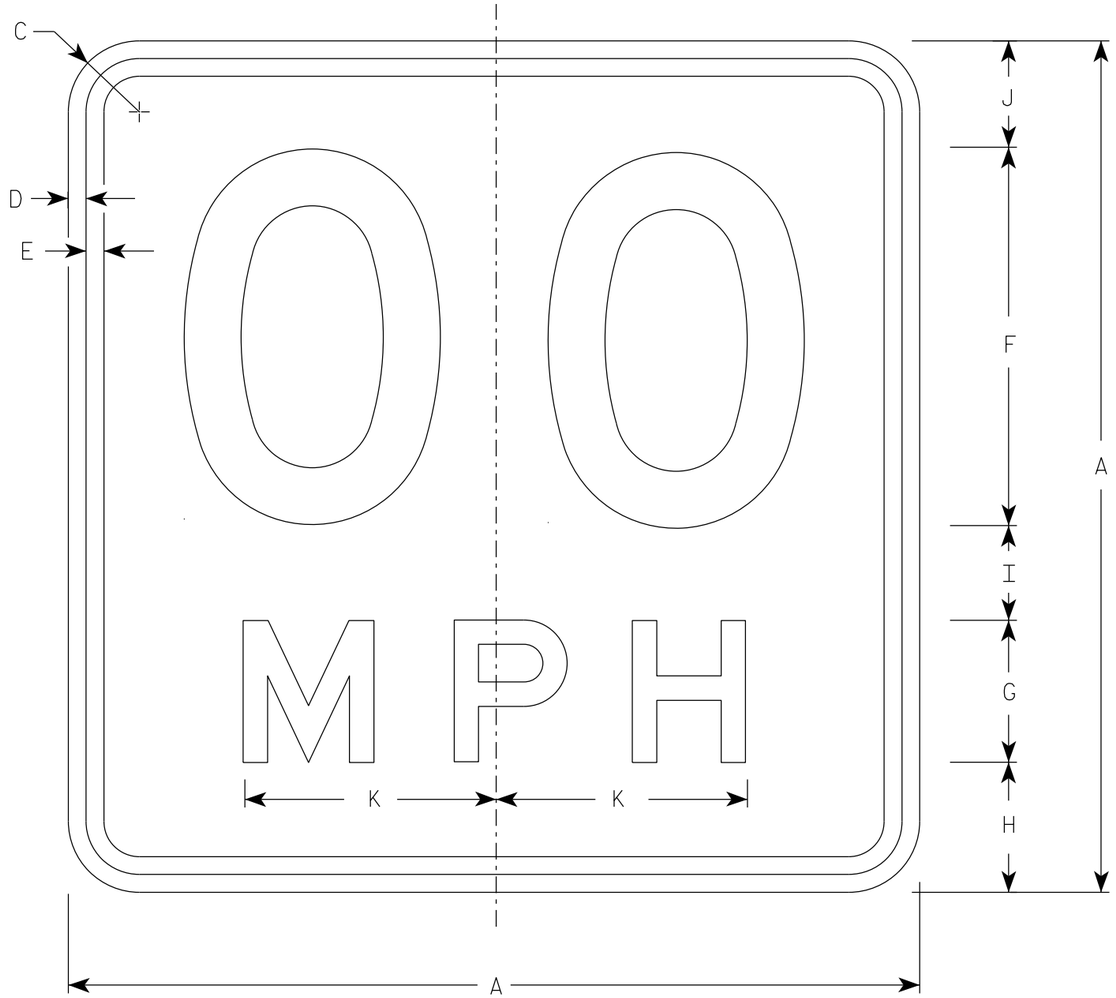

W13-1

* For 30" x 30" Warning Signs, use 18" x 18" W13-1 signs.
For 36" x 36" Warning Signs, use 24" x 24" W13-1 signs.

NOTES

1. Sign is Type II - Type F Reflective
2. Color:
   Background - Yellow
   Message - Black
3. Message Series - See Note 5
4. Substitute appropriate numerals and optically space about centerline to achieve proper balance.
5. Line 1 is Series D
   Line 2 is Series E

	SIZE	A	B	C	D	E	F	G	H	I	J	K	L	M	N	O	P	Q	R	S	T	U	V	W	X	Y	Z	Area sq. ft.
	1	18		1 1/2	3/8	3/8	8	3	2 3/4	2	2 1/4	5 3/8																2.25
*	2S	18		1 1/2	3/8	3/8	8	3	2 3/4	2	2 1/4	5 3/8																2.25
*	2M	18		1 1/2	3/8	3/8	8	3	2 3/4	2	2 1/4	5 3/8																2.25
	3	24		1 1/2	3/8	1/2	10	4	4	2 3/4	3 1/4	6 5/8																4.00
	4	36		2 1/4	5/8	3/4	16	6	5 1/2	4	4 1/2	10 5/8																9.00
	5	36		2 1/4	5/8	3/4	16	6	5 1/2	4	4 1/2	10 5/8																9.00

STANDARD SIGN
W13-1

WISCONSIN DEPT OF TRANSPORTATION

APPROVED Matthew R Rauch
For State Traffic Engineer

DATE 1/8/2024 PLATE NO. W13-1.17

PROJECT NO: | HWY: | COUNTY: | SHEET NO: E

NOTES

1. Sign is Type II - Type F Reflective
2. Color:
   Background - Orange
   Message - Black
3. Message Series - C
4. Corners may be square or rounded when base material is plywood but borders shall be rounded as shown. When base material is metal, the corners and borders shall be rounded.

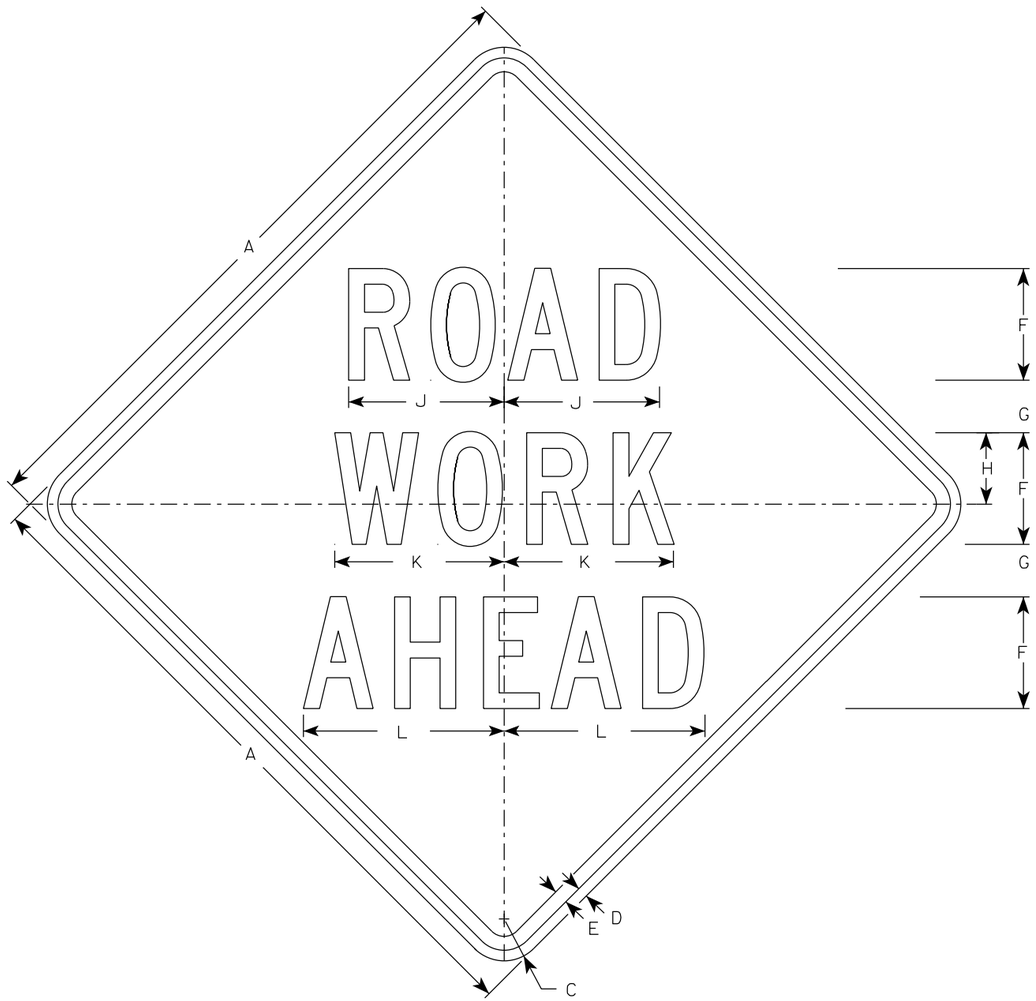

W20-1A

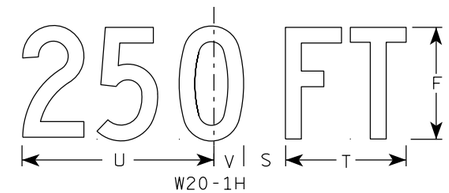

W20-1H

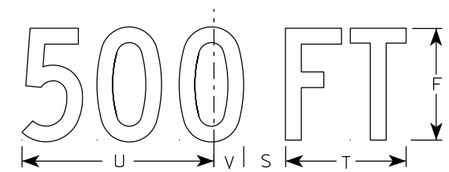

W20-1D

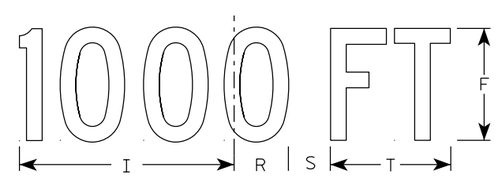

W20-1C

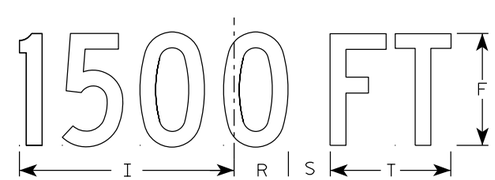

W20-1B

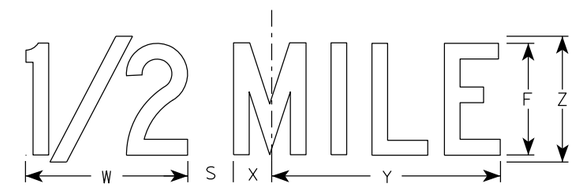

W20-1G

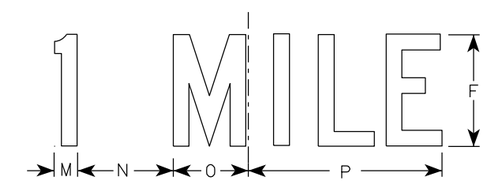

W20-1F

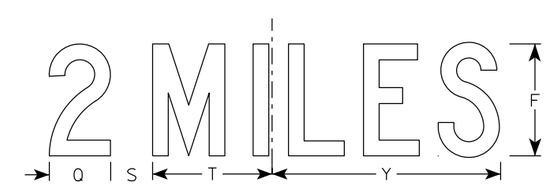

W20-1E

SIZE	A	B	C	D	E	F	G	H	I	J	K	L	M	N	O	P	Q	R	S	T	U	V	W	X	Y	Z	Area sq. ft.
1	36		2 1/4	5/8	3/4	5	2 5/8	3 1/4	10 1/8	7	7 5/8	8 7/8	1 1/8	4 1/2	3 1/2	9	3 1/4	2 1/2	2 1/4	5 5/8	9	1 3/8	8	1 3/4	10 3/4	6	9.0
2S	48		3	3/4	1	8	3 3/4	5 1/8	15 3/8	11 1/8	12 1/8	14 3/8	1 5/8	6 7/8	5 3/8	13 7/8	4 3/8	3 7/8	3	8 5/8	13 3/4	2 1/8	11 7/8	2 3/4	16 3/8	9	16.0
2M	48		3	3/4	1	8	3 3/4	5 1/8	15 3/8	11 1/8	12 1/8	14 3/8	1 5/8	6 7/8	5 3/8	13 7/8	4 3/8	3 7/8	3	8 5/8	13 3/4	2 1/8	11 7/8	2 3/4	16 3/8	9	16.0
3	48		3	3/4	1	8	3 3/4	5 1/8	15 3/8	11 1/8	12 1/8	14 3/8	1 5/8	6 7/8	5 3/8	13 7/8	4 3/8	3 7/8	3	8 5/8	13 3/4	2 1/8	11 7/8	2 3/4	16 3/8	9	16.0
4	48		3	3/4	1	8	3 3/4	5 1/8	15 3/8	11 1/8	12 1/8	14 3/8	1 5/8	6 7/8	5 3/8	13 7/8	4 3/8	3 7/8	3	8 5/8	13 3/4	2 1/8	11 7/8	2 3/4	16 3/8	9	16.0
5	48		3	3/4	1	8	3 3/4	5 1/8	15 3/8	11 1/8	12 1/8	14 3/8	1 5/8	6 7/8	5 3/8	13 7/8	4 3/8	3 7/8	3	8 5/8	13 3/4	2 1/8	11 7/8	2 3/4	16 3/8	9	16.0

STANDARD SIGN
W20-1A, B, C, D, E, F, G & H

WISCONSIN DEPT OF TRANSPORTATION

APPROVED Matthew R Rauch
For State Traffic Engineer

DATE 1/10/2024 PLATE NO. W20-1.12

PROJECT NO:

SHEET NO: E

FILE NAME : C:\CAEfiles\Projects\tr_stdplate\W201.DGN PLOT DATE : 10-JAN 2024 11:16 PLOT BY : dotc4c

WISDOT/CADDS SHEET 42

7

7

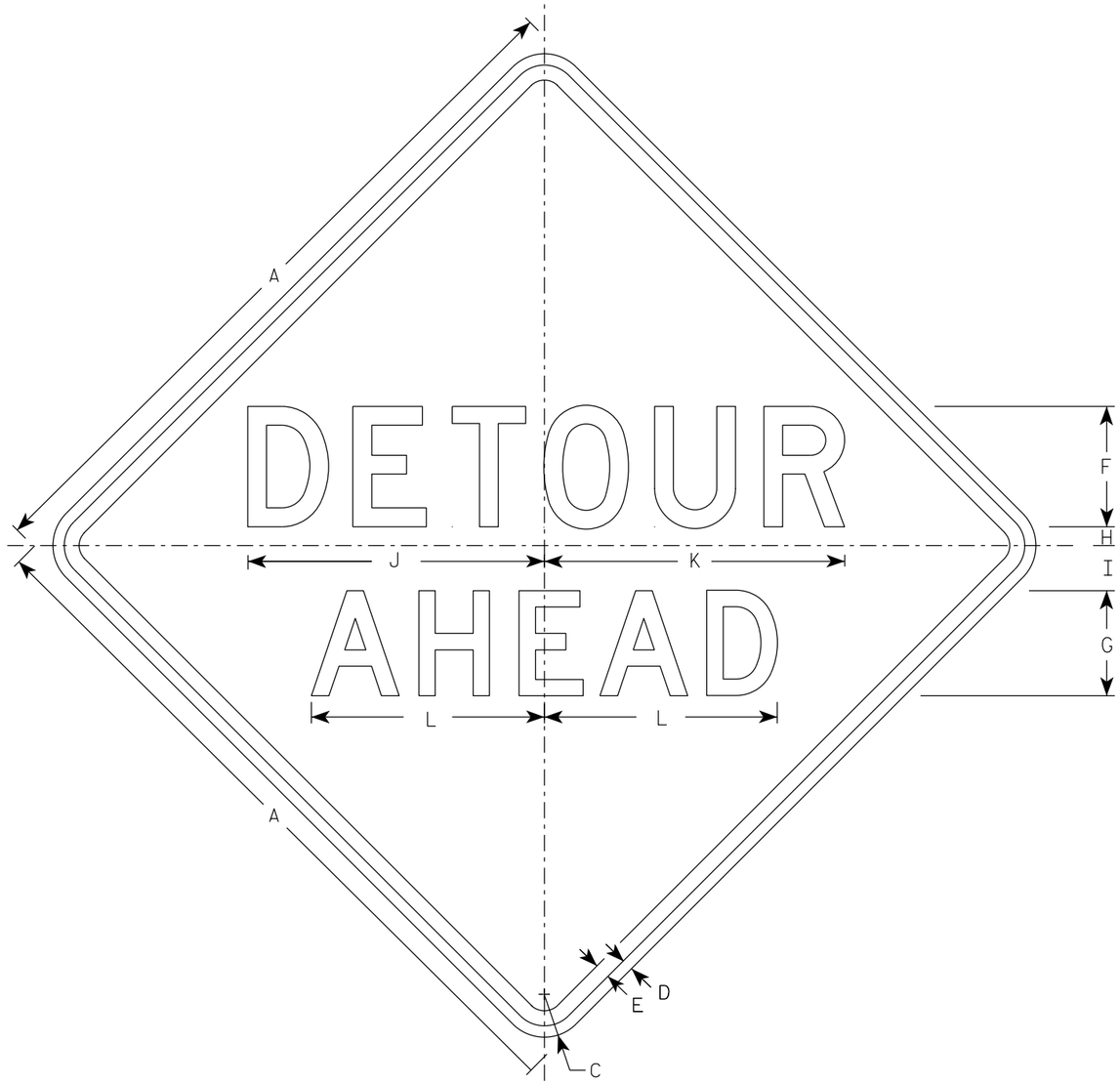

W20-2A

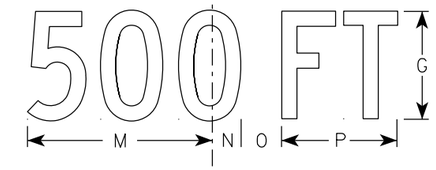

W20-2D

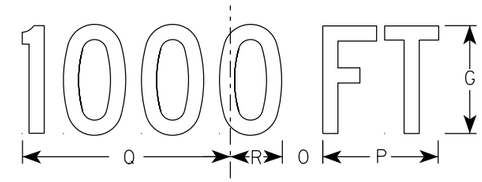

W20-2C

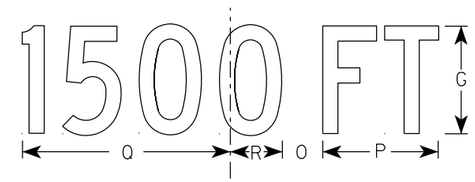

W20-2B

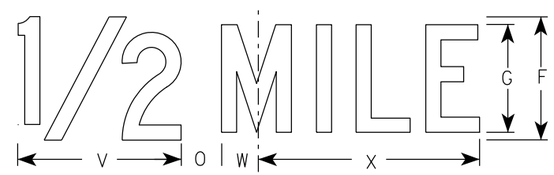

W20-2G

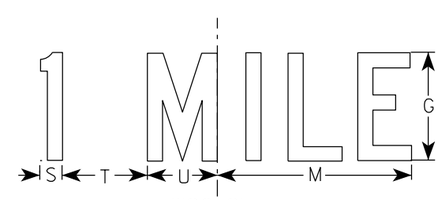

W20-2F

NOTES

1. Sign is Type II - Type F Reflective
2. Color:
   Background - Orange
   Message - Black
3. Message Series - See note 5
4. Corners may be square or rounded when base material is plywood but borders shall be rounded as shown. When base material is metal, the corners and borders shall be rounded.
5. Line 1 is Series D.
   Line 2 is Series D for AHEAD and Series C for all other distances.

SIZE	A	B	C	D	E	F	G	H	I	J	K	L	M	N	O	P	Q	R	S	T	U	V	W	X	Y	Z	Area sq. ft.
1	36		2 1/4	5/8	3/4	6	5	1	2 1/4	14 3/4	15	11 5/8	9	1 3/8	1 7/8	5 5/8	10 1/8	2 1/2	1 1/8	4 1/2	3 1/2	8	1 3/4	10 3/4			9.0
2S	48		3	3/4	1	8	7	1 1/4	3	19 3/4	20	15 1/2	12	1 7/8	2 5/8	7 1/2	13 1/2	3 3/8	1 1/2	6	4 5/8	10 5/8	2 3/8	14 3/8			16.0
2M	48		3	3/4	1	8	7	1 1/4	3	19 3/4	20	15 1/2	12	1 7/8	2 5/8	7 1/2	13 1/2	3 3/8	1 1/2	6	4 5/8	10 5/8	2 3/8	14 3/8			16.0
3	48		3	3/4	1	8	7	1 1/4	3	19 3/4	20	15 1/2	12	1 7/8	2 5/8	7 1/2	13 1/2	3 3/8	1 1/2	6	4 5/8	10 5/8	2 3/8	14 3/8			16.0
4	48		3	3/4	1	8	7	1 1/4	3	19 3/4	20	15 1/2	12	1 7/8	2 5/8	7 1/2	13 1/2	3 3/8	1 1/2	6	4 5/8	10 5/8	2 3/8	14 3/8			16.0
5	48		3	3/4	1	8	7	1 1/4	3	19 3/4	20	15 1/2	12	1 7/8	2 5/8	7 1/2	13 1/2	3 3/8	1 1/2	6	4 5/8	10 5/8	2 3/8	14 3/8			16.0

STANDARD SIGN
W20-2A,B,C,D,F & G

WISCONSIN DEPT OF TRANSPORTATION

APPROVED Matthew R Rauch
For State Traffic Engineer

DATE 1/10/2024 PLATE NO. W20-2.7

PROJECT NO: | HWY: | COUNTY: | SHEET NO: E

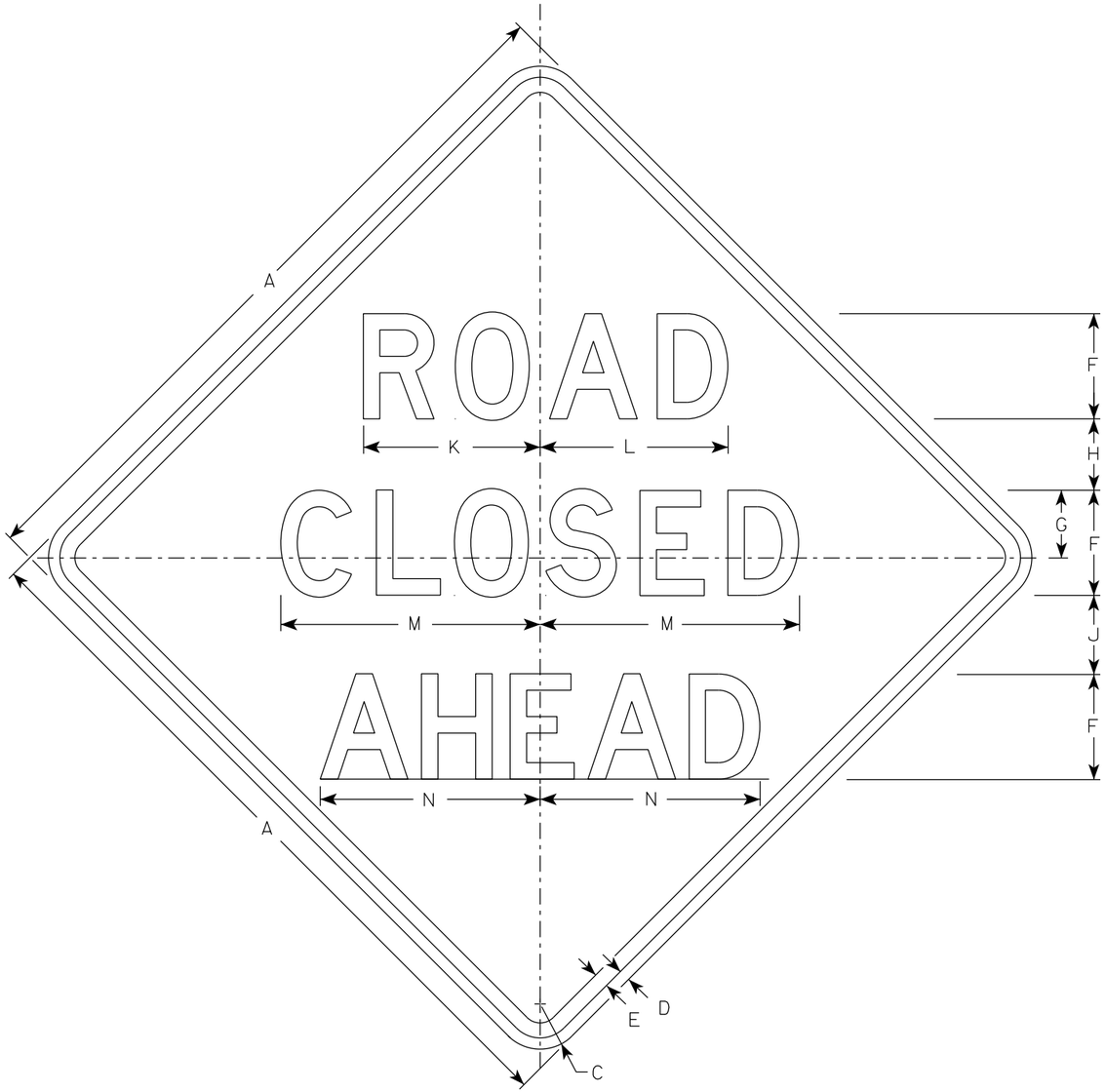

W20-3A

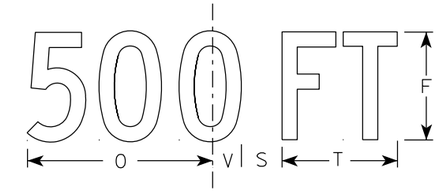

W20-3D

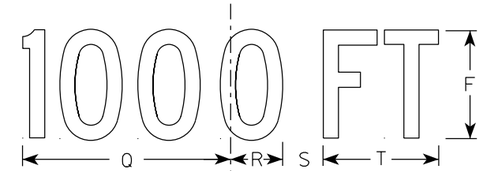

W20-3C

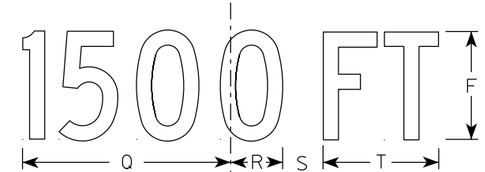

W20-3B

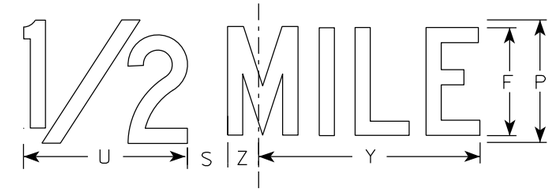

W20-3G

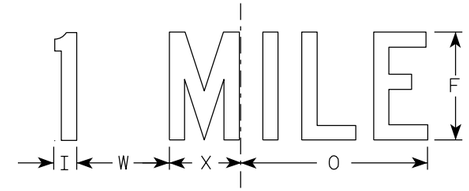

W20-3F

NOTES

1. Sign is Type II - Type F Reflective
2. Color:
   Background - Orange
   Message - Black
3. Message Series - see note 5
4. Corners may be square or rounded when base material is plywood but borders shall be rounded as shown. When base material is metal, the corners and borders shall be rounded.
5. Lines 1 and 2 are Series D.
   Line 3 is Series D for AHEAD and Series C for all other distances.

SIZE	A	B	C	D	E	F	G	H	I	J	K	L	M	N	O	P	Q	R	S	T	U	V	W	X	Y	Z	Area sq. ft.
1	36		2 1/4	5/8	3/4	5	3 3/8	3 1/2	1 1/8	4	8 3/8	8 7/8	12 1/2	11	9	6	10 1/8	2 1/2	1 7/8	5 5/8	8	1 3/8	4 1/2	3 1/2	10 3/4	1 3/4	9.0
2S	48		3	3/4	1	7	4 1/2	4 3/4	1 1/2	5 1/4	11 3/4	12 1/2	17 1/4	14 5/8	12	8	13 1/2	3 3/8	2 5/8	7 1/2	10 5/8	1 7/8	6	4 5/8	14 3/8	2 3/8	16.0
2M	48		3	3/4	1	7	4 1/2	4 3/4	1 1/2	5 1/4	11 3/4	12 1/2	17 1/4	14 5/8	12	8	13 1/2	3 3/8	2 5/8	7 1/2	10 5/8	1 7/8	6	4 5/8	14 3/8	2 3/8	16.0
3	48		3	3/4	1	7	4 1/2	4 3/4	1 1/2	5 1/4	11 3/4	12 1/2	17 1/4	14 5/8	12	8	13 1/2	3 3/8	2 5/8	7 1/2	10 5/8	1 7/8	6	4 5/8	14 3/8	2 3/8	16.0
4	48		3	3/4	1	7	4 1/2	4 3/4	1 1/2	5 1/4	11 3/4	12 1/2	17 1/4	14 5/8	12	8	13 1/2	3 3/8	2 5/8	7 1/2	10 5/8	1 7/8	6	4 5/8	14 3/8	2 3/8	16.0
5	48		3	3/4	1	7	4 1/2	4 3/4	1 1/2	5 1/4	11 3/4	12 1/2	17 1/4	14 5/8	12	8	13 1/2	3 3/8	2 5/8	7 1/2	10 5/8	1 7/8	6	4 5/8	14 3/8	2 3/8	16.0

STANDARD SIGN
W20-3A, B, C, D, F & G

WISCONSIN DEPT OF TRANSPORTATION

APPROVED Matthew R Rauch
for State Traffic Engineer

DATE 1/10/2024 PLATE NO. W20-3.8

PROJECT NO: | HWY: | COUNTY: | SHEET NO: | E

DIVISION 1 - CTH D

STATION	AREA (SF)			INCREMENTAL VOL (CY) (UNADJUSTED)			CUMULATIVE VOL (CY)			
	CUT	FILL	ROCK EXC	CUT	FILL	ROCK EXC	CUT 1.00	EXPANDED FILL 1.30	EXPANDED ROCK 1.10	MASS ORDINATE
105+75	2.87	2.33	0.00	0.00	0.00	0.00	0.00	0.00	0.00	0.00
106+00	1.29	11.15	0.00	2.00	6.00	0.00	2.00	7.80	0.00	-5.80
106+50	0.89	12.63	0.00	2.00	22.00	0.00	4.00	36.40	0.00	-32.40
107+00	1.39	23.46	0.00	2.00	33.00	0.00	6.00	79.30	0.00	-73.30
107+50	0.63	35.37	0.00	2.00	54.00	0.00	8.00	149.50	0.00	-141.50
108+00	0.42	56.98	0.00	1.00	86.00	0.00	9.00	261.30	0.00	-252.30
108+50	2.16	62.06	0.00	2.00	110.00	0.00	11.00	404.30	0.00	-393.30
109+00	2.20	56.81	0.00	4.00	110.00	0.00	15.00	547.30	0.00	-532.30
109+50	0.16	81.37	0.00	2.00	128.00	0.00	17.00	713.70	0.00	-696.70
110+00	0.21	91.39	0.00	0.00	160.00	0.00	17.00	921.70	0.00	-904.70
110+50	0.22	79.61	0.00	0.00	158.00	0.00	17.00	1127.10	0.00	-1110.10
110+71	0.45	180.34	0.00	0.00	101.00	0.00	17.00	1258.40	0.00	-1241.40
111+00	0.79	45.67	0.00	1.00	121.00	0.00	18.00	1415.70	0.00	-1397.70
111+50	0.84	38.97	0.00	2.00	78.00	0.00	20.00	1517.10	0.00	-1497.10
111+88	1.16	54.17	0.00	1.00	66.00	0.00	21.00	1602.90	0.00	-1581.90
112+00	1.44	22.17	0.00	1.00	17.00	0.00	22.00	1625.00	0.00	-1603.00
112+50	1.11	22.27	0.00	2.00	41.00	0.00	24.00	1678.30	0.00	-1654.30
113+00	0.05	20.45	0.00	1.00	40.00	0.00	25.00	1730.30	0.00	-1705.30
113+50	0.26	24.09	0.00	0.00	41.00	0.00	25.00	1783.60	0.00	-1758.60
114+00	0.07	40.19	0.00	0.00	60.00	0.00	25.00	1861.60	0.00	-1836.60
114+50	0.01	63.62	0.00	0.00	96.00	0.00	25.00	1986.40	0.00	-1961.40
114+78	0.05	68.59	0.00	0.00	69.00	0.00	25.00	2076.10	0.00	-2051.10
115+00	0.14	55.10	0.00	0.00	50.00	0.00	25.00	2141.10	0.00	-2116.10
115+50	0.07	37.46	0.00	0.00	86.00	0.00	25.00	2252.90	0.00	-2227.90
116+00	0.09	28.85	0.00	0.00	61.00	0.00	25.00	2332.20	0.00	-2307.20
116+50	1.19	18.18	0.00	1.00	44.00	0.00	26.00	2389.40	0.00	-2363.40
117+00	3.60	9.01	0.00	4.00	25.00	0.00	30.00	2421.90	0.00	-2391.90
117+50	2.84	9.58	0.00	6.00	17.00	0.00	36.00	2444.00	0.00	-2408.00
118+00	3.15	8.87	0.00	6.00	17.00	0.00	42.00	2466.10	0.00	-2424.10
118+50	2.53	15.54	0.00	5.00	23.00	0.00	47.00	2496.00	0.00	-2449.00
119+00	1.27	23.87	0.00	4.00	36.00	0.00	51.00	2542.80	0.00	-2491.80
119+50	1.82	19.74	0.00	3.00	40.00	0.00	54.00	2594.80	0.00	-2540.80
120+00	1.16	20.58	0.00	3.00	37.00	0.00	57.00	2642.90	0.00	-2585.90
120+50	1.17	24.88	0.00	2.00	42.00	0.00	59.00	2697.50	0.00	-2638.50
121+00	0.92	17.66	0.00	2.00	39.00	0.00	61.00	2748.20	0.00	-2687.20
121+50	0.71	17.65	0.00	2.00	33.00	0.00	63.00	2791.10	0.00	-2728.10
122+00	1.09	20.96	0.00	2.00	36.00	0.00	65.00	2837.90	0.00	-2772.90
122+50	1.73	23.41	0.00	3.00	41.00	0.00	68.00	2891.20	0.00	-2823.20
122+55	1.90	27.58	0.00	0.00	5.00	0.00	68.00	2897.70	0.00	-2829.70
123+00	1.67	18.97	0.00	3.00	39.00	0.00	71.00	2948.40	0.00	-2877.40
123+50	0.84	18.84	0.00	2.00	35.00	0.00	73.00	2993.90	0.00	-2920.90
124+00	1.31	18.20	0.00	2.00	34.00	0.00	75.00	3038.10	0.00	-2963.10
124+50	1.80	19.99	0.00	3.00	35.00	0.00	78.00	3083.60	0.00	-3005.60
125+00	1.29	23.38	0.00	3.00	40.00	0.00	81.00	3135.60	0.00	-3054.60
125+50	0.76	20.17	0.00	2.00	40.00	0.00	83.00	3187.60	0.00	-3104.60
125+64	0.91	17.90	0.00	0.00	10.00	0.00	83.00	3200.60	0.00	-3117.60
126+00	1.24	16.67	0.00	1.00	23.00	0.00	84.00	3230.50	0.00	-3146.50
126+50	1.53	15.79	0.00	3.00	30.00	0.00	87.00	3269.50	0.00	-3182.50
127+00	2.10	9.25	0.00	3.00	23.00	0.00	90.00	3299.40	0.00	-3209.40
127+21	1.81	23.82	0.00	2.00	13.00	0.00	92.00	3316.30	0.00	-3224.30
127+50	1.62	11.75	0.00	2.00	19.00	0.00	94.00	3341.00	0.00	-3247.00
128+00	0.96	11.13	0.00	2.00	21.00	0.00	96.00	3368.30	0.00	-3272.30
128+44	1.17	14.50	0.00	2.00	21.00	0.00	98.00	3395.60	0.00	-3297.60
128+50	1.31	13.94	0.00	0.00	3.00	0.00	98.00	3399.50	0.00	-3301.50

DIVISION 1 - CTH D

STATION	AREA (SF)			INCREMENTAL VOL (CY) (UNADJUSTED)			CUMULATIVE VOL (CY)			
	CUT	FILL	ROCK EXC	CUT	FILL	ROCK EXC	CUT 1.00	EXPANDED FILL 1.30	EXPANDED ROCK 1.10	MASS ORDINATE
129+00	1.15	21.67	0.00	2.00	33.00	0.00	100.00	3442.40	0.00	-3342.40
129+50	0.77	33.33	0.00	2.00	51.00	0.00	102.00	3508.70	0.00	-3406.70
130+00	1.14	33.23	0.00	2.00	62.00	0.00	104.00	3589.30	0.00	-3485.30
130+50	0.98	22.09	0.00	2.00	51.00	0.00	106.00	3655.60	0.00	-3549.60
131+00	1.53	23.61	0.00	2.00	42.00	0.00	108.00	3710.20	0.00	-3602.20
131+50	2.94	23.07	0.00	4.00	43.00	0.00	112.00	3766.10	0.00	-3654.10
132+00	2.30	27.07	0.00	5.00	46.00	0.00	117.00	3825.90	0.00	-3708.90
132+50	2.67	32.17	0.00	5.00	55.00	0.00	122.00	3897.40	0.00	-3775.40
133+00	3.27	40.59	0.00	5.00	67.00	0.00	127.00	3984.50	0.00	-3857.50
133+50	3.51	40.25	0.00	6.00	75.00	0.00	133.00	4082.00	0.00	-3949.00
134+00	1.46	28.34	0.00	5.00	64.00	0.00	138.00	4165.20	0.00	-4027.20
134+50	0.18	41.13	0.00	2.00	64.00	0.00	140.00	4248.40	0.00	-4108.40
135+00	0.23	24.97	0.00	0.00	61.00	0.00	140.00	4327.70	0.00	-4187.70
135+50	0.48	26.64	0.00	1.00	48.00	0.00	141.00	4390.10	0.00	-4249.10
136+00	1.70	29.31	0.00	2.00	52.00	0.00	143.00	4457.70	0.00	-4314.70
136+50	2.63	26.81	0.00	4.00	52.00	0.00	147.00	4525.30	0.00	-4378.30
137+00	2.67	35.07	0.00	5.00	57.00	0.00	152.00	4599.40	0.00	-4447.40
137+50	0.73	11.93	0.00	3.00	44.00	0.00	155.00	4656.60	0.00	-4501.60
137+65	1.05	22.88	0.00	0.00	10.00	0.00	155.00	4669.60	0.00	-4514.60
138+00	0.05	22.53	0.00	1.00	29.00	0.00	156.00	4707.30	0.00	-4551.30
138+50	0.13	20.42	0.00	0.00	40.00	0.00	156.00	4759.30	0.00	-4603.30
139+00	0.29	18.87	0.00	0.00	36.00	0.00	156.00	4806.10	0.00	-4650.10
139+50	0.13	24.21	0.00	0.00	40.00	0.00	156.00	4858.10	0.00	-4702.10
140+00	0.15	31.03	0.00	0.00	51.00	0.00	156.00	4924.40	0.00	-4768.40
140+50	0.16	33.53	0.00	0.00	60.00	0.00	156.00	5002.40	0.00	-4846.40
141+00	0.15	38.88	0.00	0.00	67.00	0.00	156.00	5089.50	0.00	-4933.50
141+50	0.16	62.02	0.00	0.00	93.00	0.00	156.00	5210.40	0.00	-5054.40
142+00	0.16	63.30	0.00	0.00	116.00	0.00	156.00	5361.20	0.00	-5205.20
142+50	0.15	40.80	0.00	0.00	96.00	0.00	156.00	5486.00	0.00	-5330.00
143+00	0.08	36.62	0.00	0.00	72.00	0.00	156.00	5579.60	0.00	-5423.60
143+50	15.61	25.75	0.00	15.00	58.00	0.00	171.00	5655.00	0.00	-5484.00
144+00	153.00	15.27	0.00	156.00	38.00	0.00	327.00	5704.40	0.00	-5377.40
144+50	272.09	11.87	0.00	394.00	25.00	0.00	721.00	5736.90	0.00	-5015.90
145+00	310.94	11.59	0.00	540.00	22.00	0.00	1261.00	5765.50	0.00	-4504.50
145+50	243.20	9.93	0.00	513.00	20.00	0.00	1774.00	5791.50	0.00	-4017.50
146+00	70.96	8.43	0.00	291.00	17.00	0.00	2065.00	5813.60	0.00	-3748.60
146+50	22.23	17.64	0.00	86.00	24.00	0.00	2151.00	5844.80	0.00	-3693.80
147+00	14.09	23.48	0.00	34.00	38.00	0.00	2185.00	5894.20	0.00	-3709.20
147+60	8.73	15.21	0.00	25.00	43.00	0.00	2210.00	5950.10	0.00	-3740.10
148+00	9.73	38.44	0.00	14.00	40.00	0.00	2224.00	6002.10	0.00	-3778.10
148+50	0.54	154.46	0.00	10.00	179.00	0.00	2234.00	6234.80	0.00	-4000.80
148+92	2.06	46.03	0.00	2.00	156.00	0.00	2236.00	6437.60	0.00	-4201.60
149+00	2.51	19.64	0.00	1.00	10.00	0.00	2237.00	6450.60	0.00	-4213.60
149+26	4.27	46.77	0.00	3.00	32.00	0.00	2240.00	6492.20	0.00	-4252.20
149+50	6.11	16.76	0.00	5.00	28.00	0.00	2245.00	6528.60	0.00	-4283.60
150+00	5.62	21.69	0.00	11.00	36.00	0.00	2256.00	6575.40	0.00	-4319.40
150+50	5.22	21.18	0.00	10.00	40.00	0.00	2266.00	6627.40	0.00	-4361.40
151+00	6.29	2.73	0.00	11.00	22.00	0.00	2277.00	6656.00	0.00	-4379.00
151+50	4.70	2.99	0.00	10.00	5.00	0.00	2287.00	6662.50	0.00	-4375.50
152+00	2.69	13.50	0.00	7.00	15.00	0.00	2294.00	6682.00	0.00	-4388.00
152+50	2.12	19.61	0.00	4.00	31.00	0.00	2298.00	6722.30	0.00	-4424.30
153+00	2.30	7.93	0.00	4.00	26.00	0.00	2302.00	6756.10	0.00	-4454.10
153+25	2.53	14.10	0.00	2.00	10.00	0.00	2304.00	6769.10	0.00	-4465.10
153+50	3.51	3.86	0.00	3.00	8.00	0.00	2307.00	6779.50	0.00	-4472.50

DIVISION 1 - CTH D

STATION	AREA (SF)			INCREMENTAL VOL (CY) (UNADJUSTED)			CUMULATIVE VOL (CY)			
	CUT	FILL	ROCK EXC	CUT	FILL	ROCK EXC	CUT 1.00	EXPANDED FILL 1.30	EXPANDED ROCK 1.10	MASS ORDINATE
154+00	3.09	14.87	0.00	6.00	17.00	0.00	2313.00	6801.60	0.00	-4488.60
154+50	4.23	10.96	0.00	7.00	24.00	0.00	2320.00	6832.80	0.00	-4512.80
155+00	3.70	10.52	0.00	7.00	20.00	0.00	2327.00	6858.80	0.00	-4531.80
155+50	3.59	6.70	0.00	7.00	16.00	0.00	2334.00	6879.60	0.00	-4545.60
156+00	4.50	3.88	0.00	7.00	10.00	0.00	2341.00	6892.60	0.00	-4551.60
156+50	3.36	23.25	0.00	7.00	25.00	0.00	2348.00	6925.10	0.00	-4577.10
157+00	2.72	8.42	0.00	6.00	29.00	0.00	2354.00	6962.80	0.00	-4608.80
157+50	2.23	9.56	0.00	5.00	17.00	0.00	2359.00	6984.90	0.00	-4625.90
158+00	2.07	11.97	0.00	4.00	20.00	0.00	2363.00	7010.90	0.00	-4647.90
158+50	1.94	13.45	0.00	4.00	24.00	0.00	2367.00	7042.10	0.00	-4675.10
159+00	1.92	10.88	0.00	4.00	23.00	0.00	2371.00	7072.00	0.00	-4701.00
159+50	2.79	10.52	0.00	4.00	20.00	0.00	2375.00	7098.00	0.00	-4723.00
160+00	3.30	11.15	0.00	6.00	20.00	0.00	2381.00	7124.00	0.00	-4743.00
160+50	3.19	11.74	0.00	6.00	21.00	0.00	2387.00	7151.30	0.00	-4764.30
161+00	2.48	12.79	0.00	5.00	23.00	0.00	2392.00	7181.20	0.00	-4789.20
161+50	1.68	13.12	0.00	4.00	24.00	0.00	2396.00	7212.40	0.00	-4816.40
162+00	1.23	12.14	0.00	3.00	23.00	0.00	2399.00	7242.30	0.00	-4843.30
162+50	1.49	8.87	0.00	3.00	19.00	0.00	2402.00	7267.00	0.00	-4865.00
163+00	2.15	6.93	0.00	3.00	15.00	0.00	2405.00	7286.50	0.00	-4881.50
163+50	2.27	6.90	0.00	4.00	13.00	0.00	2409.00	7303.40	0.00	-4894.40
164+00	0.23	14.76	0.00	2.00	20.00	0.00	2411.00	7329.40	0.00	-4918.40
164+50	0.00	24.66	0.00	0.00	36.00	0.00	2411.00	7376.20	0.00	-4965.20
165+00	0.54	28.38	0.00	1.00	49.00	0.00	2412.00	7439.90	0.00	-5027.90
165+50	2.47	34.57	0.00	3.00	58.00	0.00	2415.00	7515.30	0.00	-5100.30
166+00	0.15	38.78	0.00	2.00	68.00	0.00	2417.00	7603.70	0.00	-5186.70
166+25	0.01	41.59	0.00	0.00	37.00	0.00	2417.00	7651.80	0.00	-5234.80
166+50	0.00	33.64	0.00	0.00	35.00	0.00	2417.00	7697.30	0.00	-5280.30
167+00	0.57	20.99	0.00	1.00	51.00	0.00	2418.00	7763.60	0.00	-5345.60
167+50	0.98	23.25	0.00	1.00	41.00	0.00	2419.00	7816.90	0.00	-5397.90
168+00	0.36	16.53	0.00	1.00	37.00	0.00	2420.00	7865.00	0.00	-5445.00
168+50	0.00	24.36	0.00	0.00	38.00	0.00	2420.00	7914.40	0.00	-5494.40
169+00	0.17	32.60	0.00	0.00	53.00	0.00	2420.00	7983.30	0.00	-5563.30
169+50	0.24	40.35	0.00	0.00	68.00	0.00	2420.00	8071.70	0.00	-5651.70
170+00	0.07	59.63	0.00	0.00	93.00	0.00	2420.00	8192.60	0.00	-5772.60
170+50	0.00	58.96	0.00	0.00	110.00	0.00	2420.00	8335.60	0.00	-5915.60
171+00	0.00	67.21	0.00	0.00	117.00	0.00	2420.00	8487.70	0.00	-6067.70
171+50	0.16	43.91	0.00	0.00	103.00	0.00	2420.00	8621.60	0.00	-6201.60
172+00	1.21	20.46	0.00	1.00	60.00	0.00	2421.00	8699.60	0.00	-6278.60
172+50	3.61	16.58	0.00	4.00	34.00	0.00	2425.00	8743.80	0.00	-6318.80
173+00	4.84	23.79	0.00	8.00	37.00	0.00	2433.00	8791.90	0.00	-6358.90
173+50	5.33	31.37	0.00	9.00	51.00	0.00	2442.00	8858.20	0.00	-6416.20
174+00	2.02	31.69	0.00	7.00	58.00	0.00	2449.00	8933.60	0.00	-6484.60
174+50	1.71	21.49	0.00	3.00	49.00	0.00	2452.00	8997.30	0.00	-6545.30
175+00	2.95	8.17	0.00	4.00	27.00	0.00	2456.00	9032.40	0.00	-6576.40
175+08	3.04	8.40	0.00	1.00	2.00	0.00	2457.00	9035.00	0.00	-6578.00
175+50	4.42	14.34	0.00	6.00	18.00	0.00	2463.00	9058.40	0.00	-6595.40
176+00	6.27	11.68	0.00	10.00	24.00	0.00	2473.00	9089.60	0.00	-6616.60
176+50	5.77	24.92	0.00	11.00	34.00	0.00	2484.00	9133.80	0.00	-6649.80
177+00	7.22	41.22	0.00	12.00	61.00	0.00	2496.00	9213.10	0.00	-6717.10
177+50	8.85	68.37	0.00	15.00	101.00	0.00	2511.00	9344.40	0.00	-6833.40
178+00	8.62	50.43	0.00	16.00	110.00	0.00	2527.00	9487.40	0.00	-6960.40
178+50	8.71	47.31	0.00	16.00	91.00	0.00	2543.00	9605.70	0.00	-7062.70
179+00	5.85	46.84	0.00	13.00	87.00	0.00	2556.00	9718.80	0.00	-7162.80
179+50	2.38	87.98	0.00	8.00	125.00	0.00	2564.00	9881.30	0.00	-7317.30
180+00	1.38	88.49	0.00	3.00	163.00	0.00	2567.00	10093.20	0.00	-7526.20

DIVISION 1 - CTH D

STATION	AREA (SF)			INCREMENTAL VOL (CY) (UNADJUSTED)			CUMULATIVE VOL (CY)			
	CUT	FILL	ROCK EXC	CUT	FILL	ROCK EXC	CUT 1.00	EXPANDED FILL 1.30	EXPANDED ROCK 1.10	MASS ORDINATE
180+50	2.80	29.61	0.00	4.00	109.00	0.00	2571.00	10234.90	0.00	-7663.90
181+00	4.77	1.74	0.00	7.00	29.00	0.00	2578.00	10272.60	0.00	-7694.60
181+50	6.70	1.44	0.00	11.00	3.00	0.00	2589.00	10276.50	0.00	-7687.50
182+00	13.88	2.89	0.00	19.00	4.00	0.00	2608.00	10281.70	0.00	-7673.70
182+50	34.91	4.03	0.00	45.00	6.00	0.00	2653.00	10289.50	0.00	-7636.50
183+00	37.67	7.86	0.00	67.00	11.00	0.00	2720.00	10303.80	0.00	-7583.80
183+50	15.82	10.66	0.00	50.00	17.00	0.00	2770.00	10325.90	0.00	-7555.90
184+00	1.47	14.72	0.00	16.00	24.00	0.00	2786.00	10357.10	0.00	-7571.10
184+50	1.39	17.92	0.00	3.00	30.00	0.00	2789.00	10396.10	0.00	-7607.10
185+00	1.92	21.20	0.00	3.00	36.00	0.00	2792.00	10442.90	0.00	-7650.90
185+50	1.06	18.64	0.00	3.00	37.00	0.00	2795.00	10491.00	0.00	-7696.00
186+00	1.96	7.23	0.00	3.00	24.00	0.00	2798.00	10522.20	0.00	-7724.20
186+50	3.40	8.64	0.00	5.00	15.00	0.00	2803.00	10541.70	0.00	-7738.70
186+62	4.05	43.95	0.00	2.00	12.00	0.00	2805.00	10557.30	0.00	-7752.30
187+00	7.10	9.81	0.00	8.00	38.00	0.00	2813.00	10606.70	0.00	-7793.70
187+15	8.64	34.42	0.00	4.00	12.00	0.00	2817.00	10622.30	0.00	-7805.30
187+50	15.53	8.15	0.00	16.00	28.00	0.00	2833.00	10658.70	0.00	-7825.70
188+00	30.56	6.96	0.00	43.00	14.00	0.00	2876.00	10676.90	0.00	-7800.90
188+50	55.83	6.63	0.00	80.00	13.00	0.00	2956.00	10693.80	0.00	-7737.80
188+75	49.30	6.57	0.00	49.00	6.00	0.00	3005.00	10701.60	0.00	-7696.60
189+00	43.89	6.78	0.00	43.00	6.00	0.00	3048.00	10709.40	0.00	-7661.40
189+43	3.10	22.85	0.00	37.00	24.00	0.00	3085.00	10740.60	0.00	-7655.60
189+50	25.58	18.71	0.00	4.00	5.00	0.00	3089.00	10747.10	0.00	-7658.10
190+00	27.36	72.32	0.00	49.00	84.00	0.00	3138.00	10856.30	0.00	-7718.30
190+50	19.08	102.83	0.00	43.00	162.00	0.00	3181.00	11066.90	0.00	-7885.90
191+00	3.95	134.22	0.00	21.00	219.00	0.00	3202.00	11351.60	0.00	-8149.60
191+50	2.77	159.13	0.00	6.00	272.00	0.00	3208.00	11705.20	0.00	-8497.20
192+00	0.98	197.99	0.00	3.00	331.00	0.00	3211.00	12135.50	0.00	-8924.50
192+50	0.62	96.72	0.00	1.00	273.00	0.00	3212.00	12490.40	0.00	-9278.40
193+00	10.92	19.38	0.00	11.00	108.00	0.00	3223.00	12630.80	0.00	-9407.80
193+50	3.91	15.94	0.00	14.00	33.00	0.00	3237.00	12673.70	0.00	-9436.70
194+00	8.31	2.44	0.00	11.00	17.00	0.00	3248.00	12695.80	0.00	-9447.80
194+50	14.76	1.52	0.00	21.00	4.00	0.00	3269.00	12701.00	0.00	-9432.00
195+00	106.00	17.15	0.00	112.00	17.00	0.00	3381.00	12723.10	0.00	-9342.10
195+50	101.04	86.16	0.00	192.00	96.00	0.00	3573.00	12847.90	0.00	-9274.90
196+00	63.15	118.68	0.00	152.00	190.00	0.00	3725.00	13094.90	0.00	-9369.90
196+50	31.78	130.50	0.00	88.00	231.00	0.00	3813.00	13395.20	0.00	-9582.20
197+00	12.82	116.63	0.00	41.00	229.00	0.00	3854.00	13692.90	0.00	-9838.90
197+50	39.22	66.97	0.00	48.00	170.00	0.00	3902.00	13913.90	0.00	-10011.90
198+00	89.78	47.42	0.00	119.00	106.00	0.00	4021.00	14051.70	0.00	-10030.70
198+50	128.09	15.98	2.49	202.00	59.00	2.00	4223.00	14125.54	2.20	-9902.54
199+00	181.90	22.81	45.60	287.00	36.00	45.00	4510.00	14107.99	51.70	-9597.99
199+50	224.92	42.68	74.05	377.00	61.00	111.00	4887.00	14028.56	173.80	-9141.56
200+00	126.02	54.24	4.57	325.00	90.00	73.00	5212.00	14041.17	254.10	-8829.17
200+50	94.43	43.89	0.00	204.00	91.00	4.00	5416.00	14153.75	258.50	-8737.75
201+00	109.11	48.94	0.00	188.00	86.00	0.00	5604.00	14265.55	258.50	-8661.55
201+50	80.73	41.73	0.00	176.00	84.00	0.00	5780.00	14374.75	258.50	-8594.75
202+00	71.33	34.81	0.00	141.00	71.00	0.00	5921.00	14467.05	258.50	-8546.05
202+50	50.39	46.92	0.00	113.00	76.00	0.00	6034.00	14565.85	258.50	-8531.85
203+00	17.26	34.66	0.00	63.00	76.00	0.00	6097.00	14664.65	258.50	-8567.65
203+50	2.55	44.96	0.00	18.00	74.00	0.00	6115.00	14760.85	258.50	-8645.85
204+00	3.05	81.51	0.00	5.00	117.00	0.00	6120.00	14912.95	258.50	-8792.95
204+50	4.28	56.92	0.00	7.00	128.00	0.00	6127.00	15079.35	258.50	-8952.35
205+00	2.50	56.10	0.00	6.00	105.00	0.00	6133.00	15215.85	258.50	-9082.85
205+50	2.03	54.39	0.00	4.00	102.00	0.00	6137.00	15348.45	258.50	-9211.45

DIVISION 1 - CTH D

STATION	AREA (SF)			INCREMENTAL VOL (CY) (UNADJUSTED)			CUMULATIVE VOL (CY)			
	CUT	FILL	ROCK EXC	CUT	FILL	ROCK EXC	CUT 1.00	EXPANDED FILL 1.30	EXPANDED ROCK 1.10	MASS ORDINATE
206+00	4.27	36.54	0.00	6.00	84.00	0.00	6143.00	15457.65	258.50	-9314.65
206+50	10.87	11.56	0.00	14.00	45.00	0.00	6157.00	15516.15	258.50	-9359.15
207+00	17.89	11.22	0.00	27.00	21.00	0.00	6184.00	15543.45	258.50	-9359.45
207+50	56.17	12.40	0.00	69.00	22.00	0.00	6253.00	15572.05	258.50	-9319.05
208+00	61.06	0.90	0.00	109.00	12.00	0.00	6362.00	15587.65	258.50	-9225.65
208+25	50.53	1.82	0.00	52.00	1.00	0.00	6414.00	15588.95	258.50	-9174.95
208+50	48.09	1.90	0.00	46.00	2.00	0.00	6460.00	15591.55	258.50	-9131.55
209+00	58.57	0.02	0.00	99.00	2.00	0.00	6559.00	15594.15	258.50	-9035.15
209+50	88.43	0.00	0.00	136.00	0.00	0.00	6695.00	15594.15	258.50	-8899.15
210+00	80.95	0.08	0.00	157.00	0.00	0.00	6852.00	15594.15	258.50	-8742.15
210+50	50.97	1.61	0.00	122.00	2.00	0.00	6974.00	15596.75	258.50	-8622.75
211+00	6.08	4.07	0.00	53.00	5.00	0.00	7027.00	15603.25	258.50	-8576.25
211+50	2.26	13.65	0.00	8.00	16.00	0.00	7035.00	15624.05	258.50	-8589.05
212+00	2.67	13.65	0.00	5.00	25.00	0.00	7040.00	15656.55	258.50	-8616.55
212+50	5.50	10.45	0.00	8.00	22.00	0.00	7048.00	15685.15	258.50	-8637.15
212+63	15.25	6.83	0.00	5.00	4.00	0.00	7053.00	15690.35	258.50	-8637.35
212+82	9.18	2.71	0.00	9.00	3.00	0.00	7062.00	15694.25	258.50	-8632.25
213+00	7.79	8.23	0.00	6.00	4.00	0.00	7068.00	15699.45	258.50	-8631.45
213+50	5.47	9.69	0.00	12.00	17.00	0.00	7080.00	15721.55	258.50	-8641.55
214+00	3.26	11.61	0.00	8.00	20.00	0.00	7088.00	15747.55	258.50	-8659.55
214+50	3.63	7.87	0.00	6.00	18.00	0.00	7094.00	15770.95	258.50	-8676.95
214+71	10.57	2.77	0.00	6.00	4.00	0.00	7100.00	15776.15	258.50	-8676.15
215+00	12.62	4.47	0.00	12.00	4.00	0.00	7112.00	15781.35	258.50	-8669.35
215+50	18.25	7.54	0.00	29.00	11.00	0.00	7141.00	15795.65	258.50	-8654.65
215+75	11.05	7.79	0.00	14.00	7.00	0.00	7155.00	15804.75	258.50	-8649.75
216+00	2.36	20.85	0.00	6.00	13.00	0.00	7161.00	15821.65	258.50	-8660.65
216+50	10.20	6.15	0.00	12.00	25.00	0.00	7173.00	15854.15	258.50	-8681.15
217+00	5.64	7.88	0.00	15.00	13.00	0.00	7188.00	15871.05	258.50	-8683.05
217+50	8.73	5.20	0.00	13.00	12.00	0.00	7201.00	15886.65	258.50	-8685.65
218+00	3.86	6.55	0.00	12.00	11.00	0.00	7213.00	15900.95	258.50	-8687.95
218+50	6.97	7.50	0.00	10.00	13.00	0.00	7223.00	15917.85	258.50	-8694.85
219+00	6.70	7.52	0.00	13.00	14.00	0.00	7236.00	15936.05	258.50	-8700.05
219+50	4.80	15.27	0.00	11.00	21.00	0.00	7247.00	15963.35	258.50	-8716.35
220+00	6.12	6.41	0.00	10.00	20.00	0.00	7257.00	15989.35	258.50	-8732.35
220+50	22.95	66.64	0.00	27.00	68.00	0.00	7284.00	16077.75	258.50	-8793.75
221+00	37.56	127.85	0.00	56.00	180.00	0.00	7340.00	16311.75	258.50	-8971.75
221+50	12.40	212.38	0.00	46.00	315.00	0.00	7386.00	16721.25	258.50	-9335.25
222+00	7.19	149.69	0.00	18.00	335.00	0.00	7404.00	17156.75	258.50	-9752.75
222+50	12.79	41.60	0.00	18.00	177.00	0.00	7422.00	17386.85	258.50	-9964.85
223+00	11.32	16.66	0.00	22.00	54.00	0.00	7444.00	17457.05	258.50	-10013.05
223+40	6.05	12.80	0.00	13.00	22.00	0.00	7457.00	17485.65	258.50	-10028.65
223+50	9.22	13.51	0.00	3.00	5.00	0.00	7460.00	17492.15	258.50	-10032.15
224+00	4.56	45.61	0.00	13.00	55.00	0.00	7473.00	17563.65	258.50	-10090.65
224+50	2.39	74.61	0.00	6.00	111.00	0.00	7479.00	17707.95	258.50	-10228.95
225+00	16.57	3.73	0.00	18.00	73.00	0.00	7497.00	17802.85	258.50	-10305.85
225+50	18.97	2.72	0.00	33.00	6.00	0.00	7530.00	17810.65	258.50	-10280.65
226+00	13.74	23.99	0.00	30.00	25.00	0.00	7560.00	17843.15	258.50	-10283.15
226+38.5	21.10	10.68	0.00	25.00	25.00	0.00	7585.00	17875.65	258.50	-10290.65
226+50	22.17	18.95	0.00	9.00	6.00	0.00	7594.00	17883.45	258.50	-10289.45

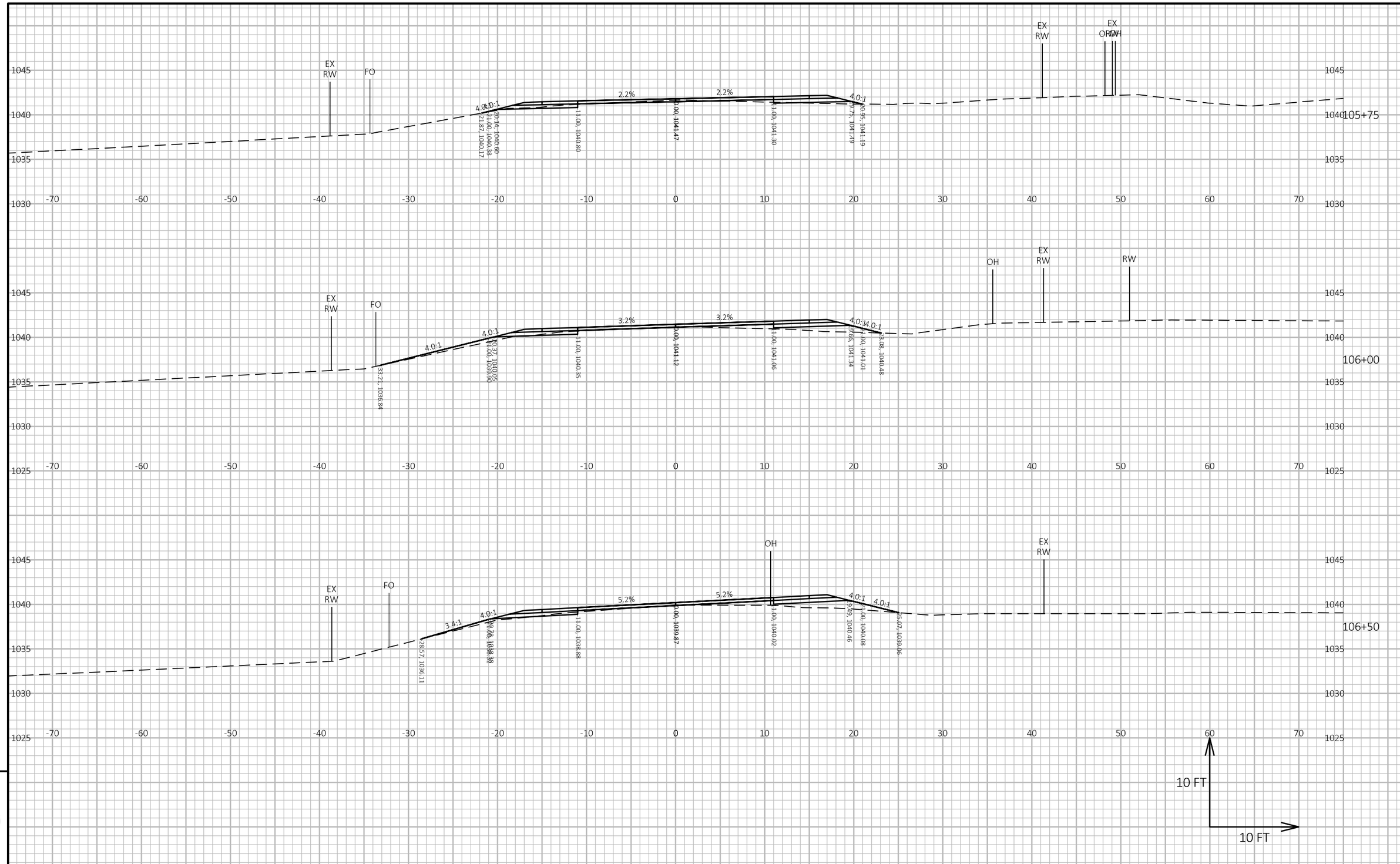

9

9

PROJECT NO: 7881-05-73	HWY: CTH D	COUNTY: DUNN	CROSS SECTIONS: CTH D	SHEET 112	E

FILE NAME : I:\41\410859 DUNN CTH D\C3D\DESIGN\CORRIDORS\CORRIDOR-CTH D 4-INCH RAISE.DWG
LAYOUT NAME - 901
PLOT DATE : 5/16/2024 10:30 AM
PLOT BY : HEDRINGTON, MARK
PLOT NAME :
PLOT SCALE : 1 IN:10 FT HORZ. / 1 IN:10 FT VERT.
WISDOT/CADDS SHEET 49

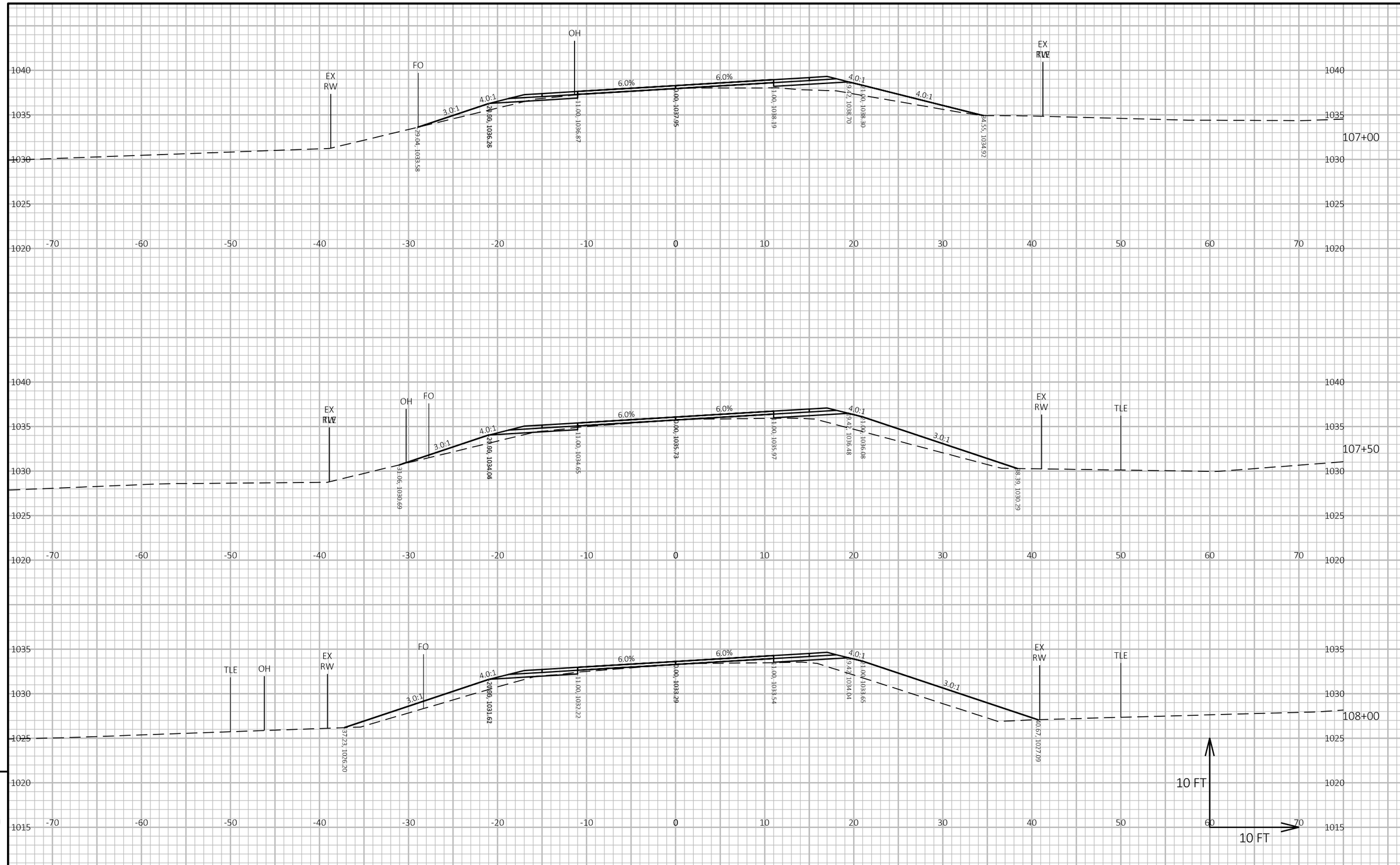

PROJECT NO: 7881-05-73	HWY: CTH D	COUNTY: DUNN	CROSS SECTIONS: CTH D	SHEET 113	E

FILE NAME : I:\41\410859 DUNN CTH D\C3D\DESIGN\CORRIDORS\CORRIDOR-CTH D 4-INCH RAISE.DWG
LAYOUT NAME - 902
PLOT DATE : 5/16/2024 10:30 AM
PLOT BY : HEDRINGTON, MARK
PLOT NAME :
PLOT SCALE : 1 IN:10 FT HORZ. / 1 IN:10 FT VERT.

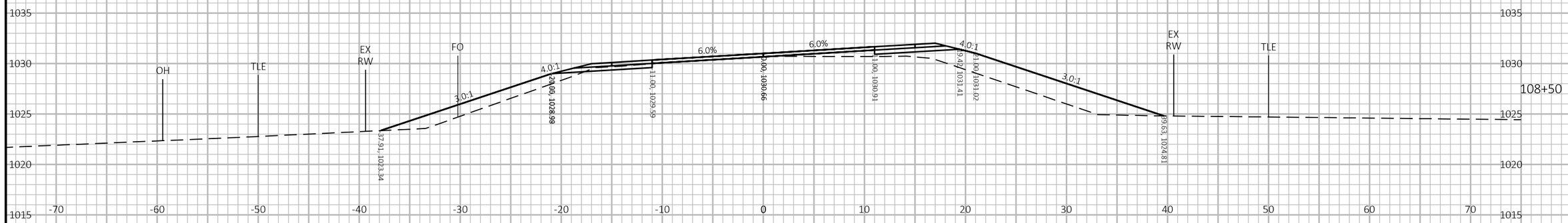

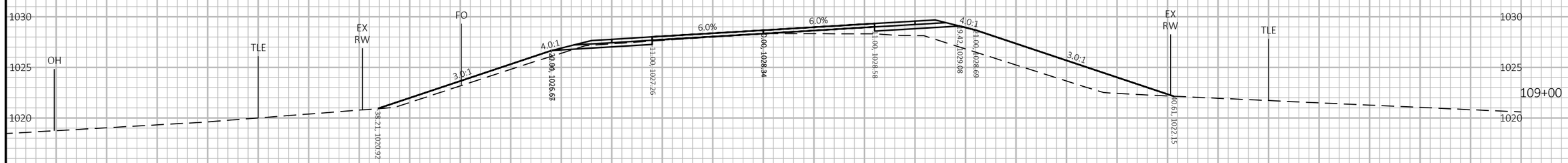

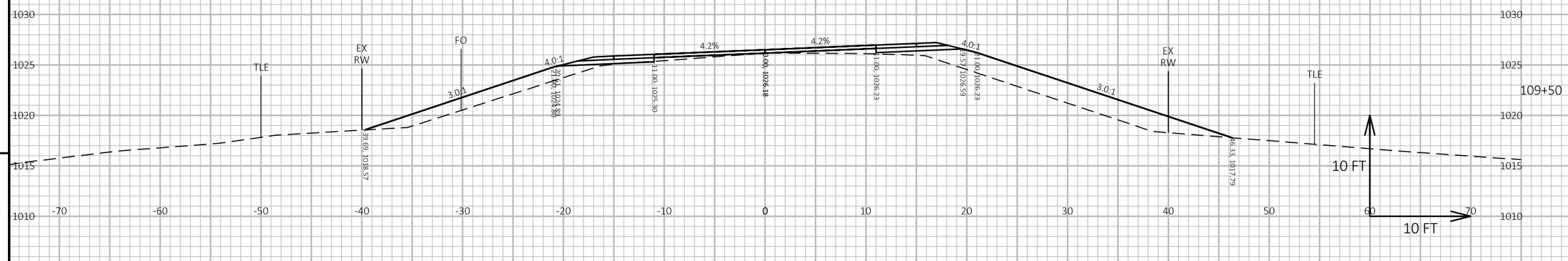

9 9

PROJECT NO: 7881-05-73	HWY: CTH D	COUNTY: DUNN	CROSS SECTIONS: CTH D	SHEET 114	E

FILE NAME : I:\41\410859 DUNN CTH D\C3D\DESIGN\CORRIDORS\CORRIDOR-CTH D 4-INCH RAISE.DWG
LAYOUT NAME - 903
PLOT DATE : 5/16/2024 10:30 AM PLOT BY : HEDRINGTON, MARK PLOT NAME : **PLOT SCALE :** 1 IN:10 FT HORZ. / 1 IN:10 FT VERT.

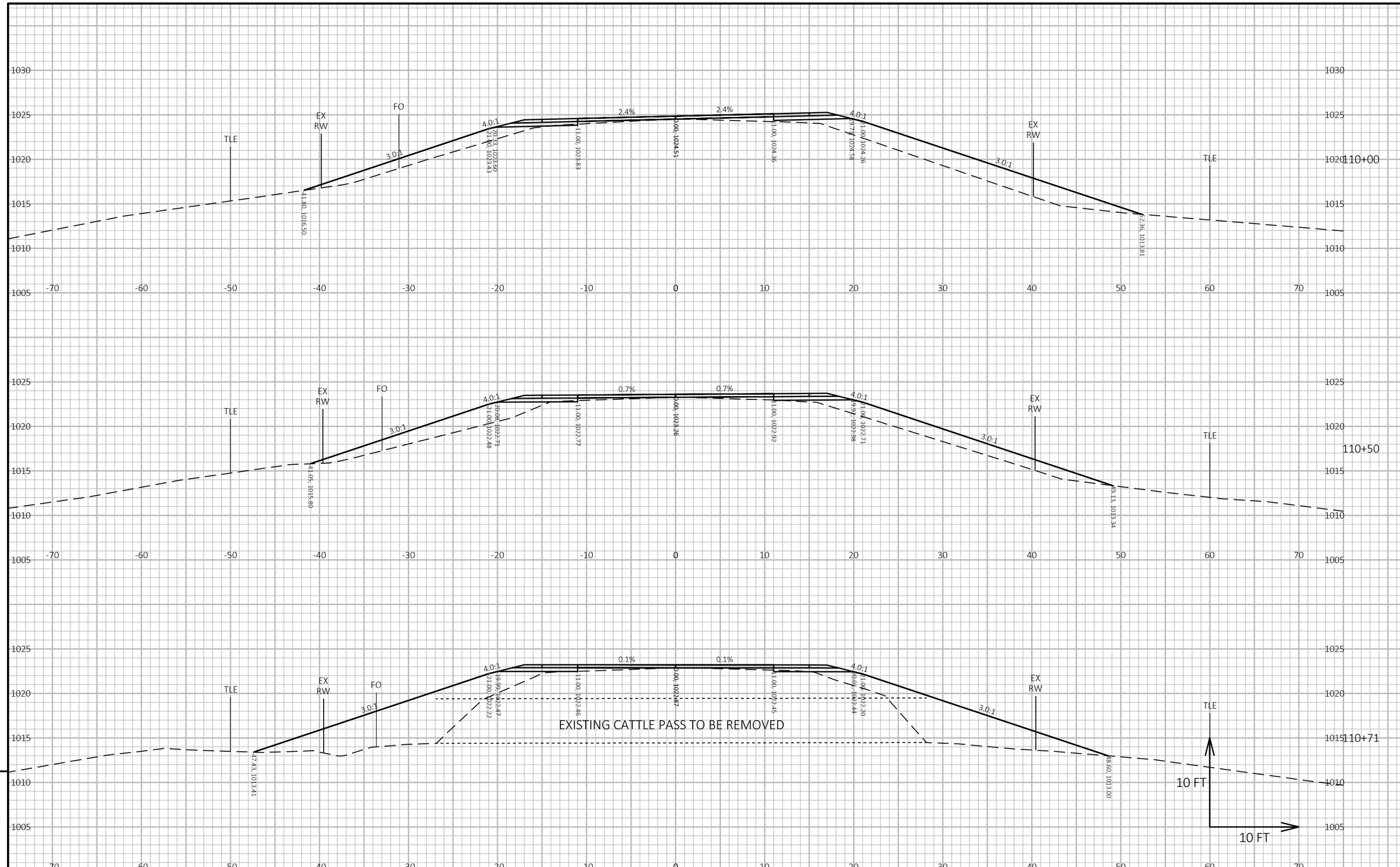

9

9

PROJECT NO: 7881-05-73	HWY: CTH D	COUNTY: DUNN	CROSS SECTIONS: CTH D	SHEET 115	E

FILE NAME : I:\41\410859 DUNN CTH D\C3D\DESIGN\CORRIDORS\CORRIDOR-CTH D 4-INCH RAISE.DWG
LAYOUT NAME - 904
PLOT DATE : 5/16/2024 10:30 AM
PLOT BY : HEDRINGTON, MARK
PLOT NAME :
PLOT SCALE : 1 IN:10 FT HORZ. / 1 IN:10 FT VERT.
WISDOT/CADDS SHEET 49

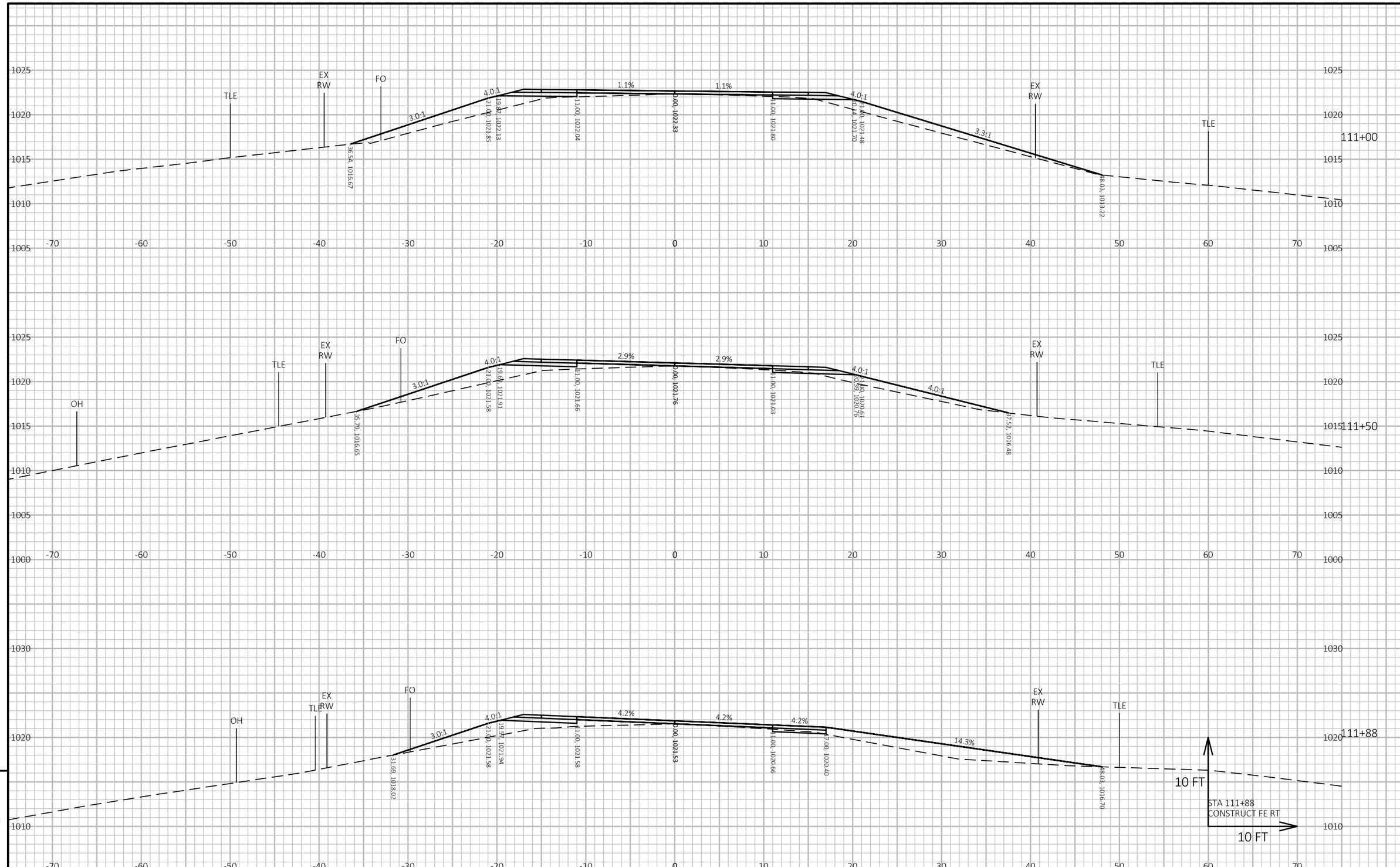

PROJECT NO: 7881-05-73	HWY: CTH D	COUNTY: DUNN	CROSS SECTIONS: CTH D	SHEET 116	E

FILE NAME : I:\41\410859 DUNN CTH D\C3D\DESIGN\CORRIDORS\CORRIDOR-CTH D 4-INCH RAISE.DWG
LAYOUT NAME - 905
PLOT DATE : 5/16/2024 10:30 AM PLOT BY : HEDRINGTON, MARK PLOT NAME : **PLOT SCALE :** 1 IN:10 FT HORZ. / 1 IN:10 FT VERT.

WISDOT/CADDS SHEET 49

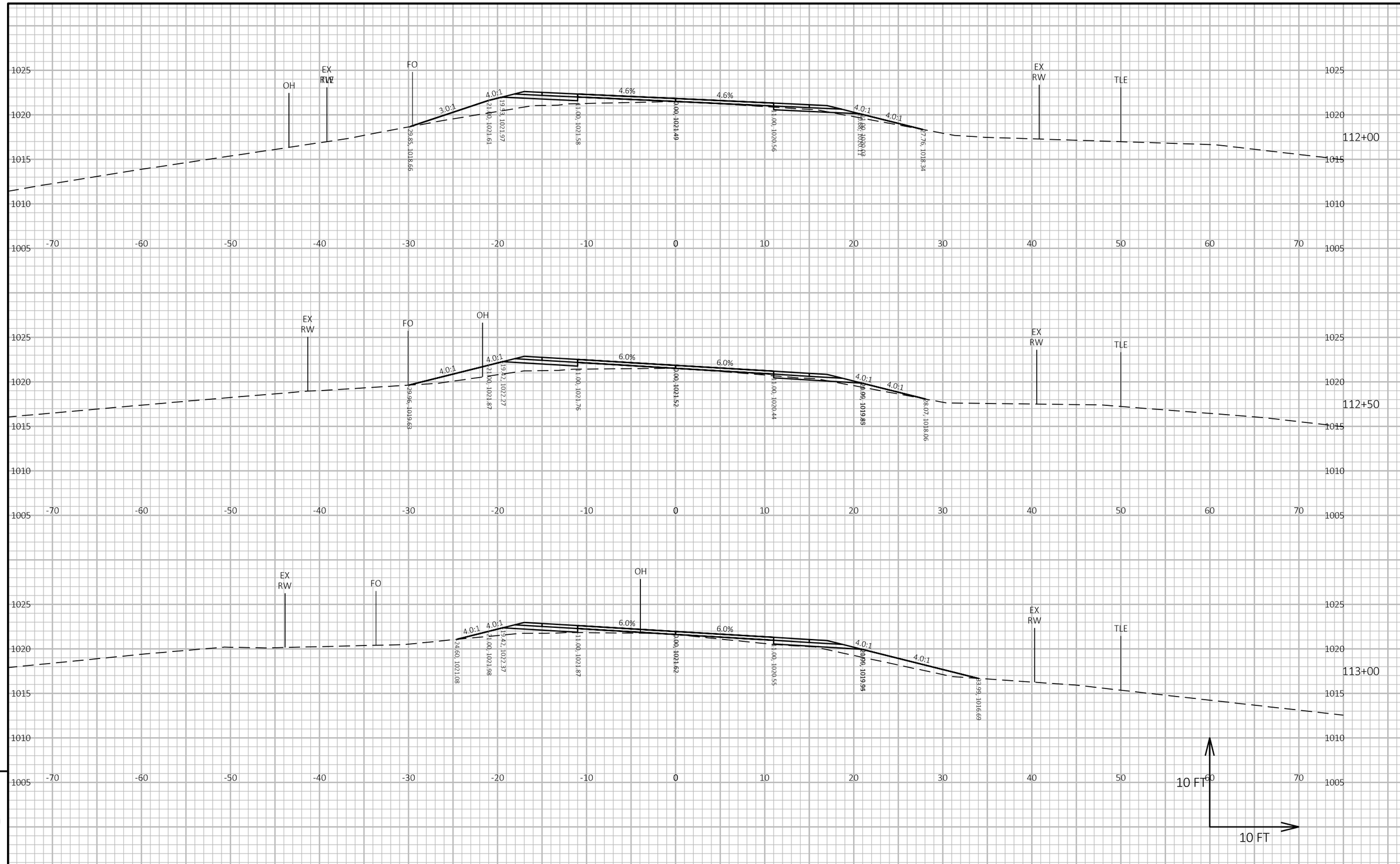

9

9

PROJECT NO: 7881-05-73	HWY: CTH D	COUNTY: DUNN	CROSS SECTIONS: CTH D	SHEET 117	E

FILE NAME : I:\41\410859 DUNN CTH D\C3D\DESIGN\CORRIDORS\CORRIDOR-CTH D 4-INCH RAISE.DWG
LAYOUT NAME - 906
PLOT DATE : 5/16/2024 10:30 AM
PLOT BY : HEDRINGTON, MARK
PLOT NAME :
PLOT SCALE : 1 IN:10 FT HORZ. / 1 IN:10 FT VERT.
WISDOT/CADDS SHEET 49

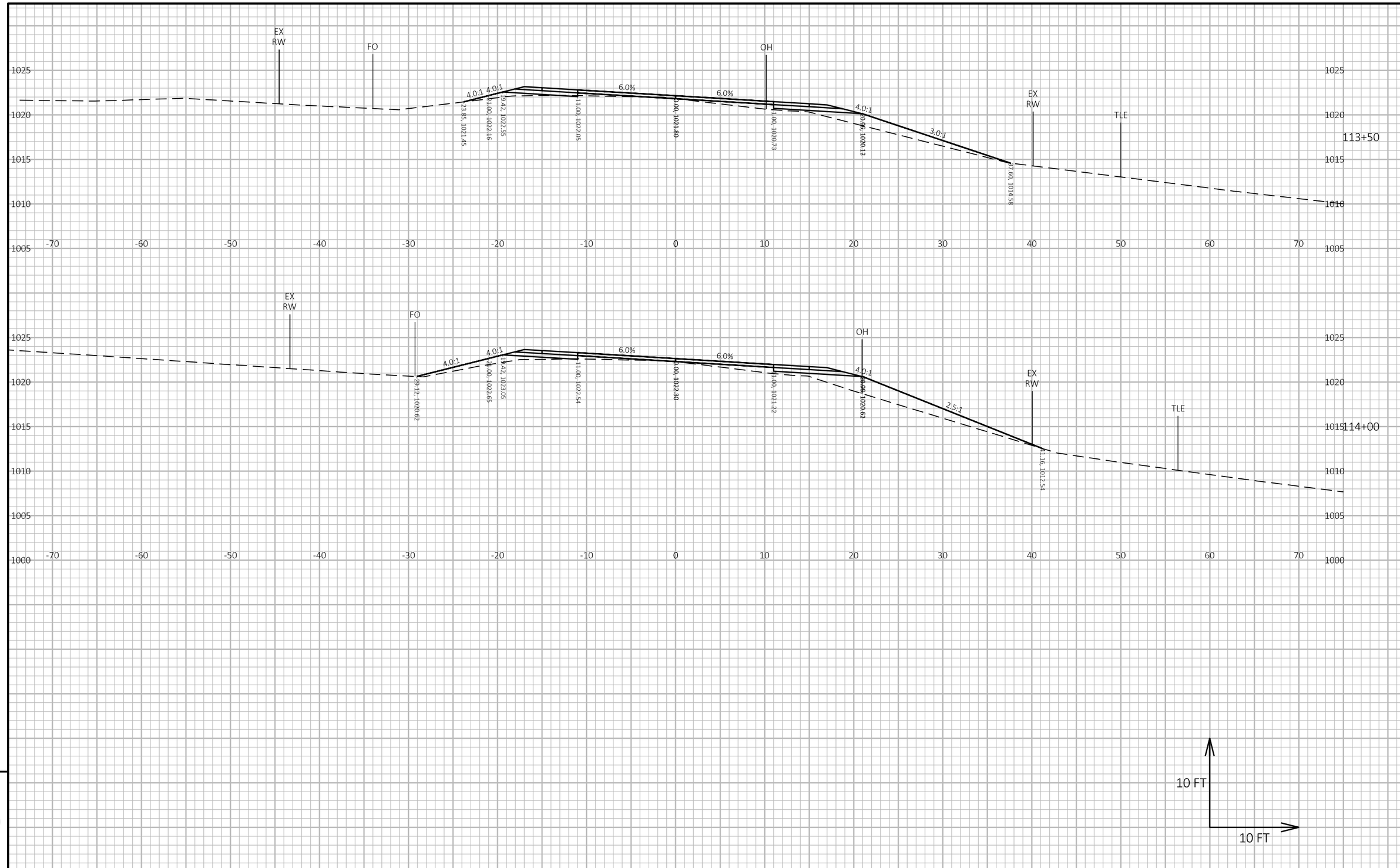

9

9

PROJECT NO: 7881-05-73	HWY: CTH D	COUNTY: DUNN	CROSS SECTIONS: CTH D	SHEET 118	E

FILE NAME : I:\41\410859 DUNN CTH D\C3D\DESIGN\CORRIDORS\CORRIDOR-CTH D 4-INCH RAISE.DWG
LAYOUT NAME - 907
PLOT DATE : 5/16/2024 10:29 AM
PLOT BY : HEDRINGTON, MARK
PLOT NAME :
PLOT SCALE : 1 IN:10 FT HORZ. / 1 IN:10 FT VERT.
WISDOT/CADDS SHEET 49

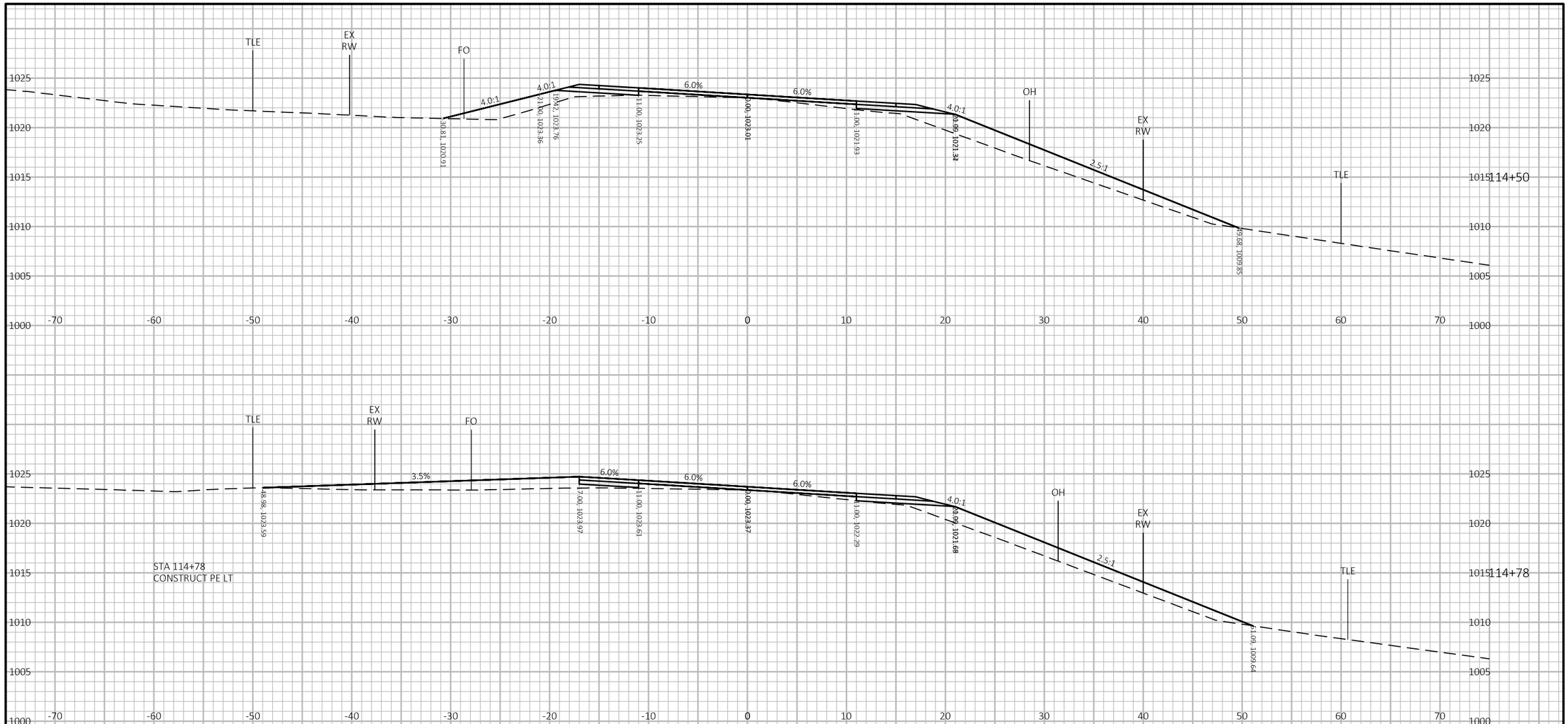

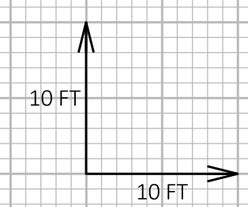

9

9

PROJECT NO: 7881-05-73	HWY: CTH D	COUNTY: DUNN	CROSS SECTIONS: CTH D	SHEET 119	E

FILE NAME : I:\41\410859 DUNN CTH D\C3D\DESIGN\CORRIDORS\CORRIDOR-CTH D 4-INCH RAISE.DWG
LAYOUT NAME - 908
PLOT DATE : 5/16/2024 10:29 AM
PLOT BY : HEDRINGTON, MARK
PLOT NAME :
PLOT SCALE : 1 IN:10 FT HORZ. / 1 IN:10 FT VERT.

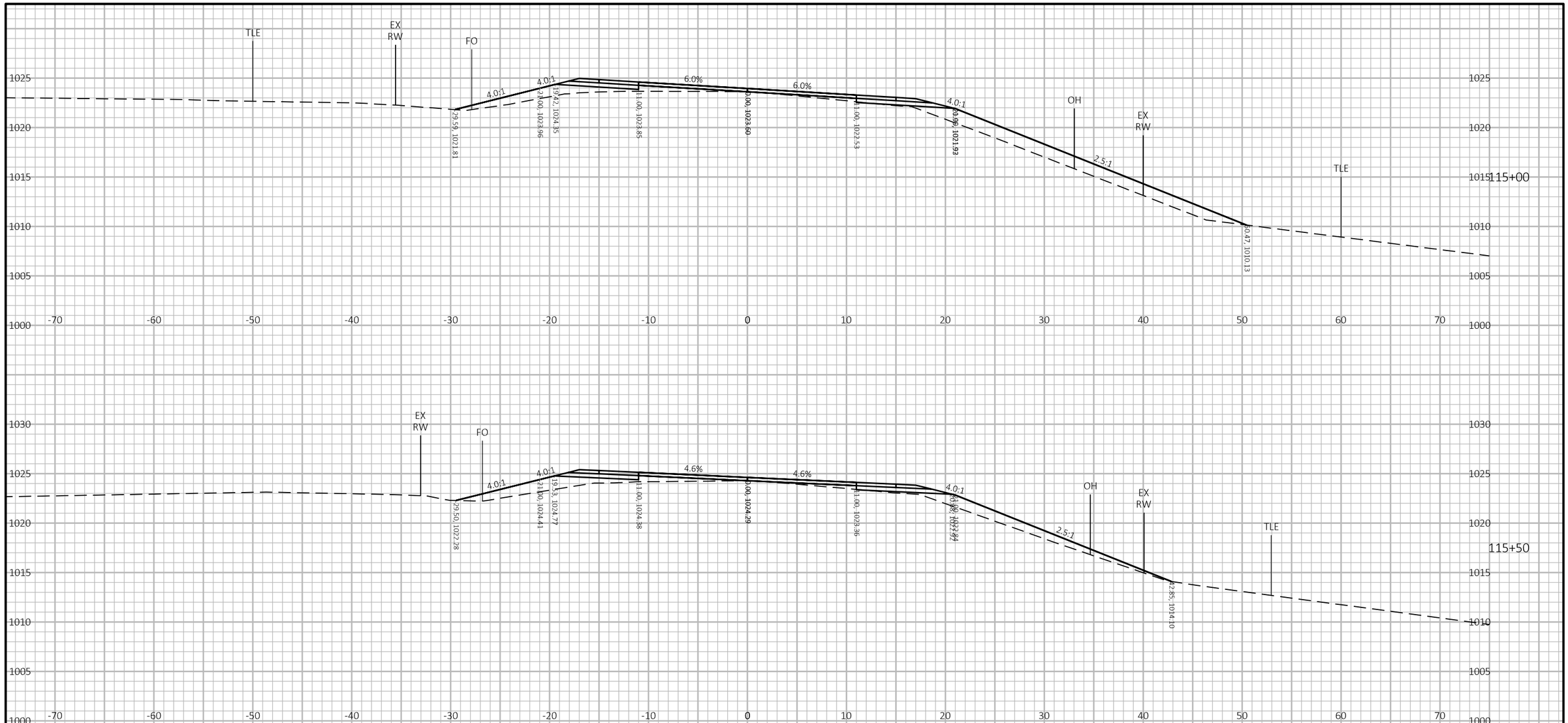

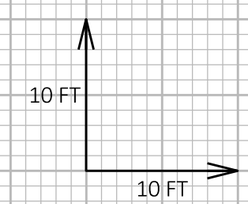

9

9

PROJECT NO: 7881-05-73	HWY: CTH D	COUNTY: DUNN	CROSS SECTIONS: CTH D	SHEET 120	E

FILE NAME : I:\41\410859 DUNN CTH D\C3D\DESIGN\CORRIDORS\CORRIDOR-CTH D 4-INCH RAISE.DWG
LAYOUT NAME - 909

PLOT DATE : 5/16/2024 10:29 AM PLOT BY : HEDRINGTON, MARK PLOT NAME : **PLOT SCALE :** 1 IN:10 FT HORZ. / 1 IN:10 FT VERT.

WISDOT/CADDS SHEET 49

9

9

PROJECT NO: 7881-05-73	HWY: CTH D	COUNTY: DUNN	CROSS SECTIONS: CTH D	SHEET 121	E

FILE NAME : I:\41\410859 DUNN CTH D\C3D\DESIGN\CORRIDORS\CORRIDOR-CTH D 4-INCH RAISE.DWG
LAYOUT NAME - 910

PLOT DATE : 5/16/2024 10:29 AM PLOT BY : HEDRINGTON, MARK PLOT NAME : **PLOT SCALE :** 1 IN:10 FT HORZ. / 1 IN:10 FT VERT.

WISDOT/CADDS SHEET 49

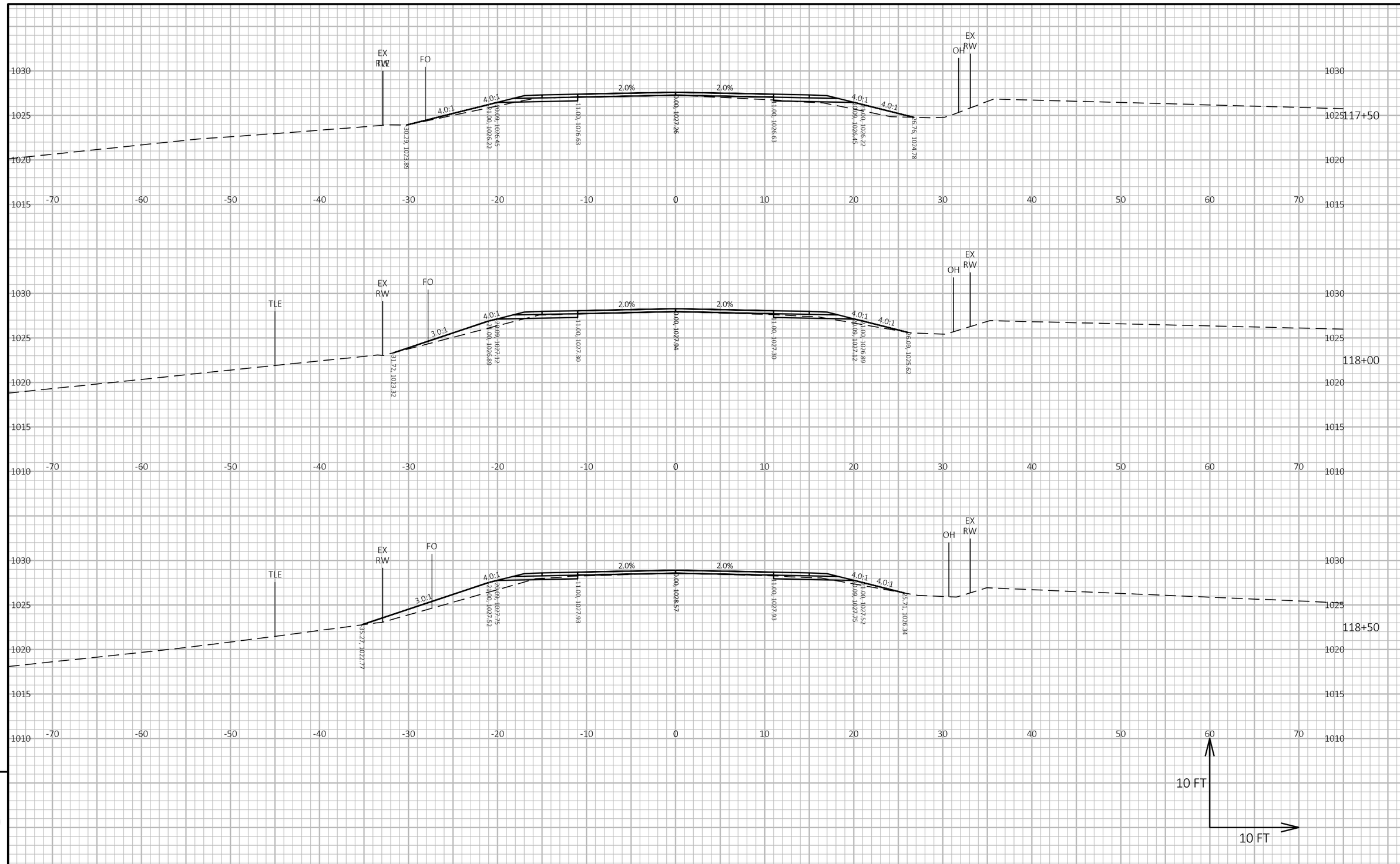

9

9

PROJECT NO: 7881-05-73	HWY: CTH D	COUNTY: DUNN	CROSS SECTIONS: CTH D	SHEET 122	E

FILE NAME : I:\41\410859 DUNN CTH D\C3D\DESIGN\CORRIDORS\CORRIDOR-CTH D 4-INCH RAISE.DWG
LAYOUT NAME - 911
PLOT DATE : 5/16/2024 10:29 AM
PLOT BY : HEDRINGTON, MARK
PLOT NAME :
PLOT SCALE : 1 IN:10 FT HORZ. / 1 IN:10 FT VERT.
WISDOT/CADDS SHEET 49

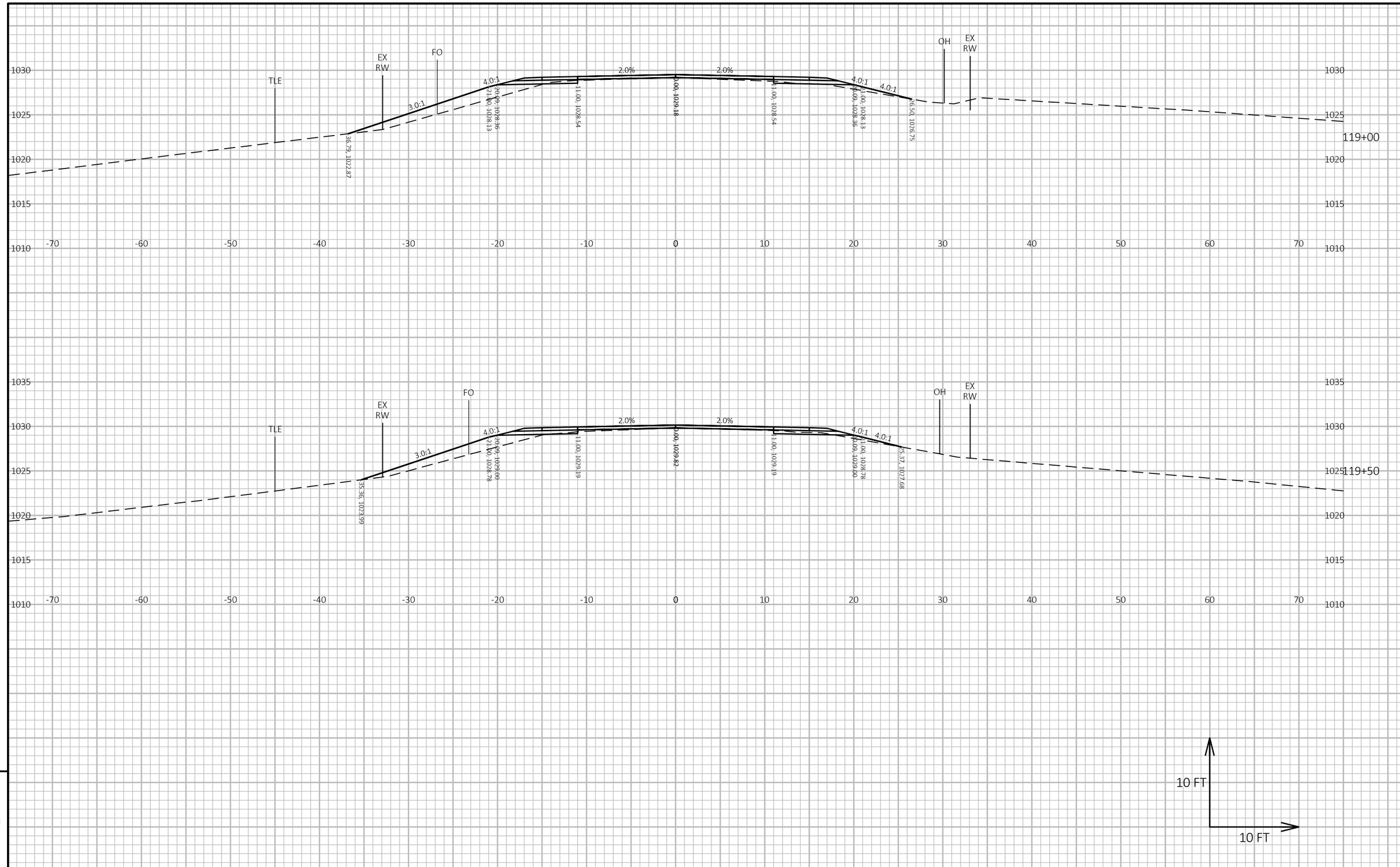

9

9

PROJECT NO: 7881-05-73	HWY: CTH D	COUNTY: DUNN	CROSS SECTIONS: CTH D	SHEET 123	E

FILE NAME : I:\41\410859 DUNN CTH D\C3D\DESIGN\CORRIDORS\CORRIDOR-CTH D 4-INCH RAISE.DWG
LAYOUT NAME - 912
PLOT DATE : 5/16/2024 10:29 AM
PLOT BY : HEDRINGTON, MARK
PLOT NAME :
PLOT SCALE : 1 IN:10 FT HORZ. / 1 IN:10 FT VERT.
WISDOT/CADDS SHEET 49

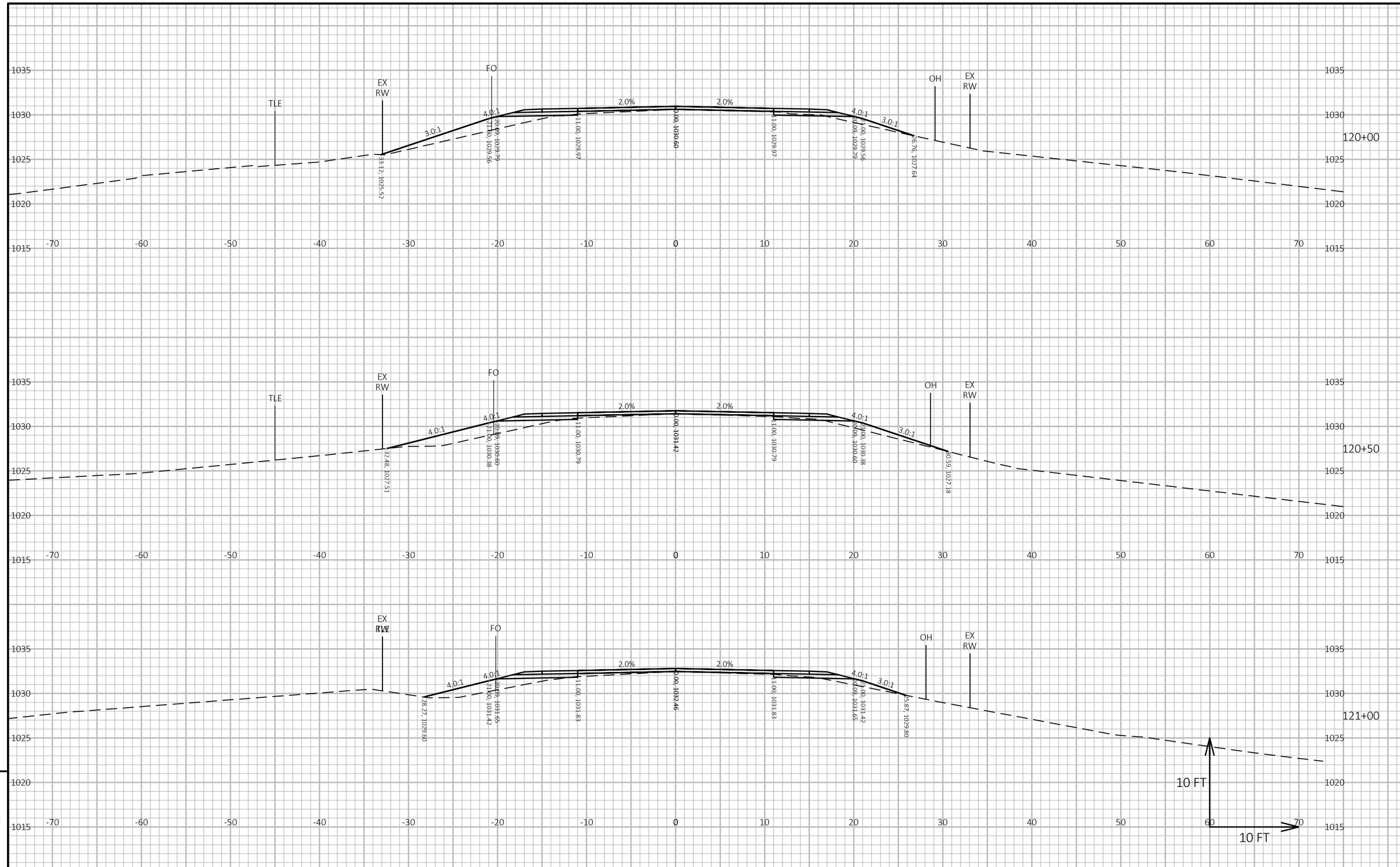

PROJECT NO: 7881-05-73	HWY: CTH D	COUNTY: DUNN	CROSS SECTIONS: CTH D	SHEET 124	E

FILE NAME : I:\41\410859 DUNN CTH D\C3D\DESIGN\CORRIDORS\CORRIDOR-CTH D 4-INCH RAISE.DWG
LAYOUT NAME - 913
PLOT DATE : 5/16/2024 10:29 AM
PLOT BY : HEDRINGTON, MARK
PLOT NAME :
PLOT SCALE : 1 IN:10 FT HORZ. / 1 IN:10 FT VERT.
WISDOT/CADDS SHEET 49

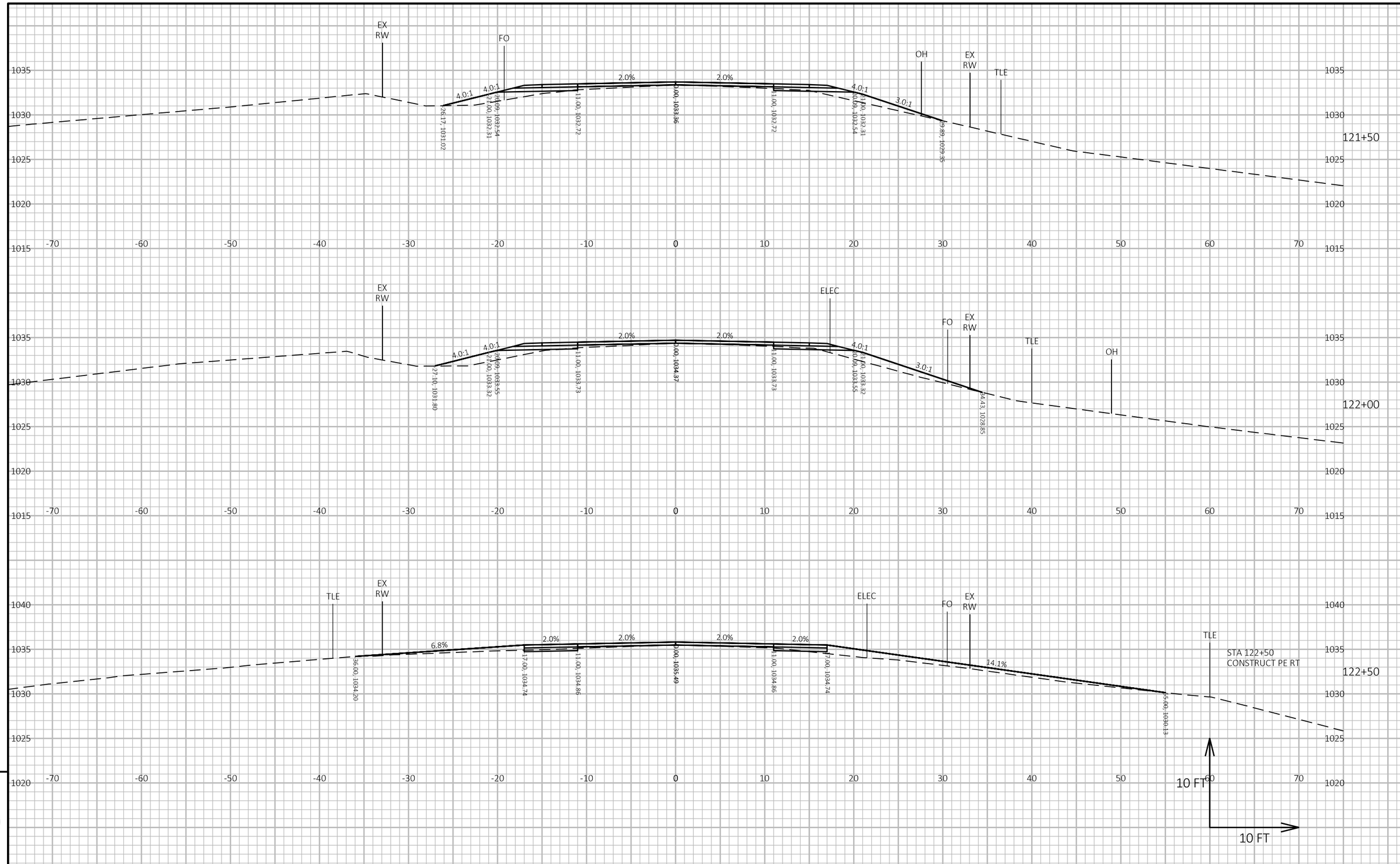

PROJECT NO: 7881-05-73	HWY: CTH D	COUNTY: DUNN	CROSS SECTIONS: CTH D	SHEET 125	E

FILE NAME : I:\41\410859 DUNN CTH D\C3D\DESIGN\CORRIDORS\CORRIDOR-CTH D 4-INCH RAISE.DWG
LAYOUT NAME - 914
PLOT DATE : 5/16/2024 10:29 AM
PLOT BY : HEDRINGTON, MARK
PLOT NAME :
PLOT SCALE : 1 IN:10 FT HORZ. / 1 IN:10 FT VERT.
WISDOT/CADDS SHEET 49

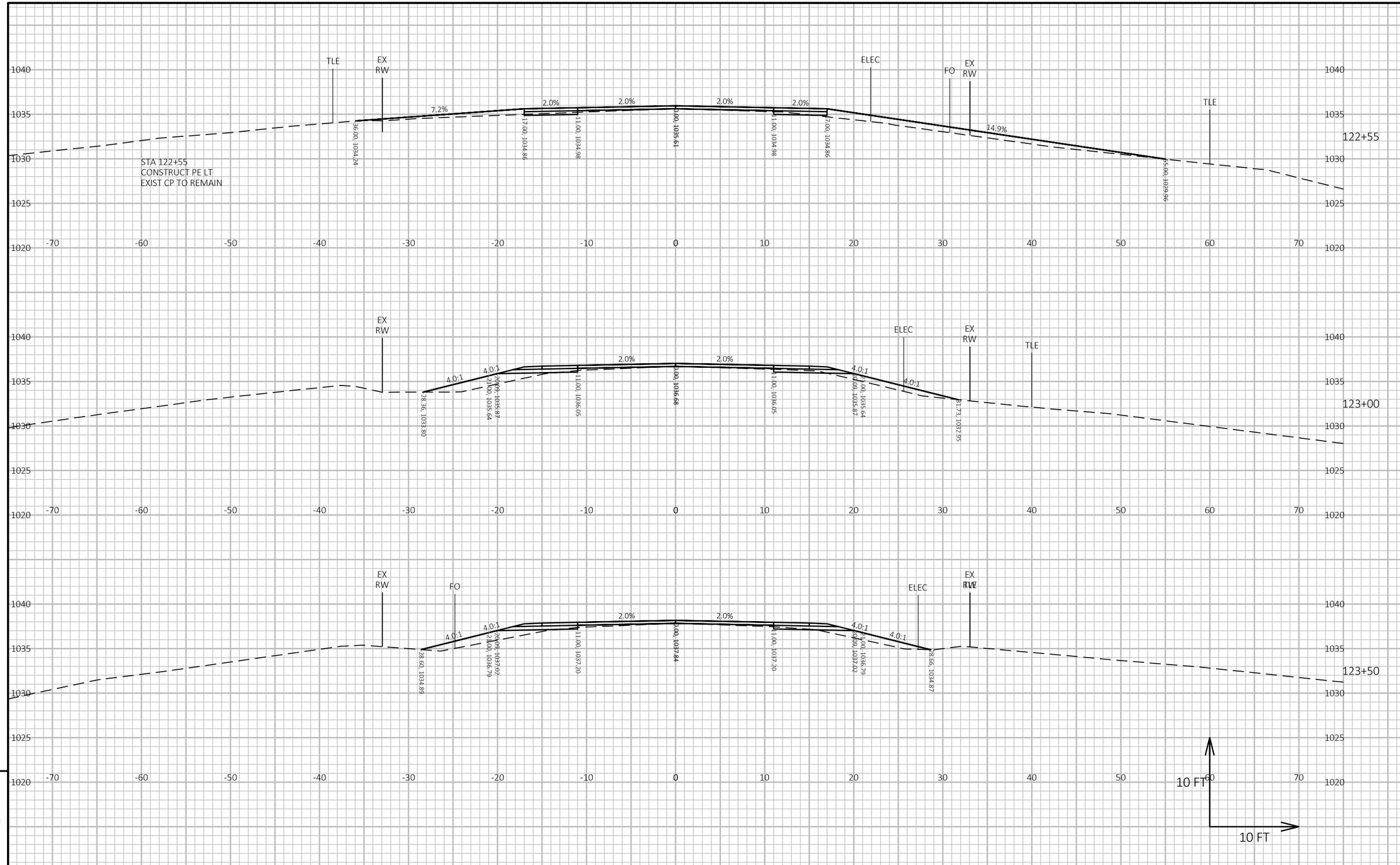

9

9

PROJECT NO: 7881-05-73	HWY: CTH D	COUNTY: DUNN	CROSS SECTIONS: CTH D	SHEET 126	E

FILE NAME : I:\41\410859 DUNN CTH D\C3D\DESIGN\CORRIDORS\CORRIDOR-CTH D 4-INCH RAISE.DWG
LAYOUT NAME - 915
PLOT DATE : 5/16/2024 10:29 AM
PLOT BY : HEDRINGTON, MARK
PLOT NAME :
PLOT SCALE : 1 IN:10 FT HORZ. / 1 IN:10 FT VERT.
WISDOT/CADDS SHEET 49

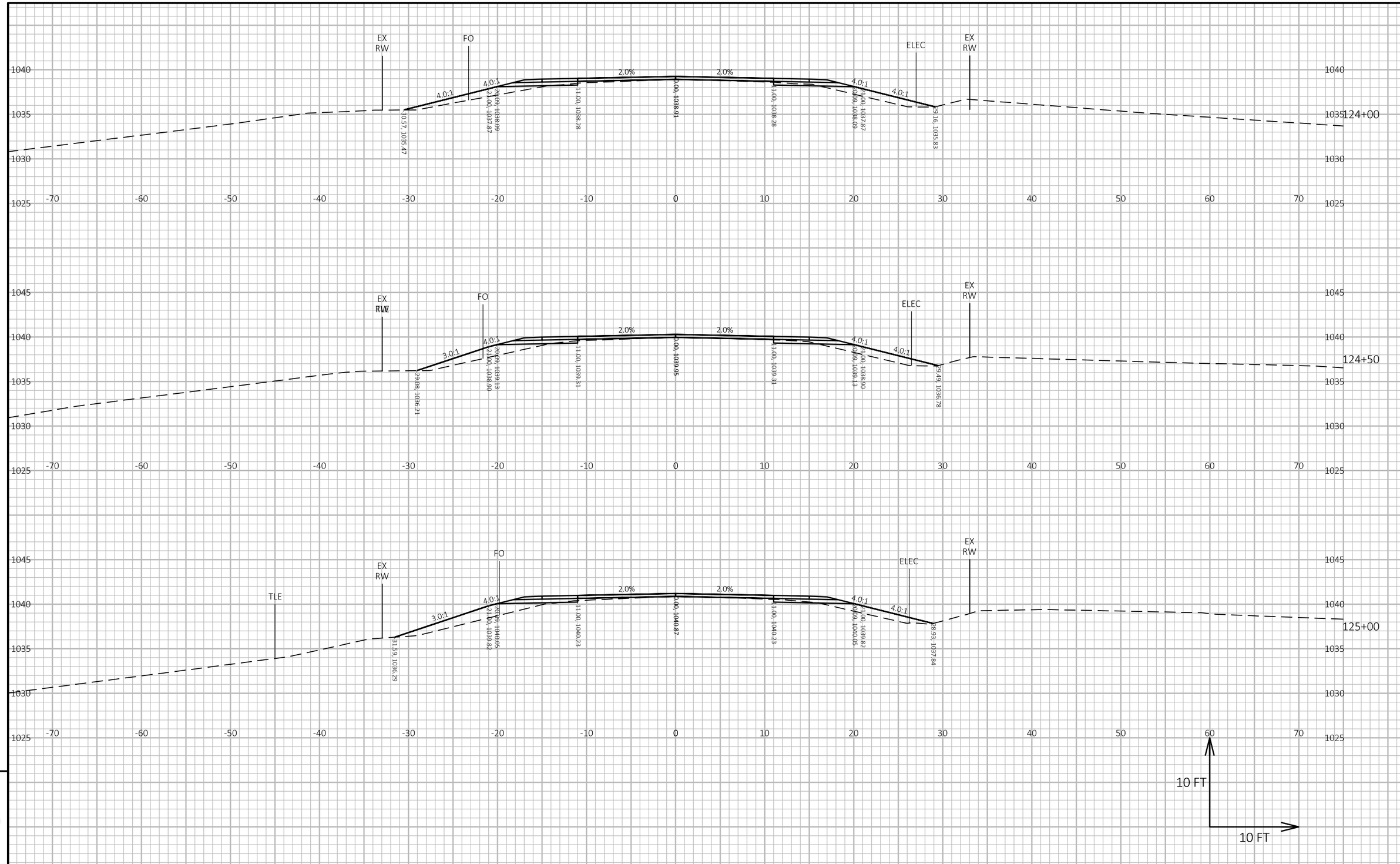

9

9

PROJECT NO: 7881-05-73	HWY: CTH D	COUNTY: DUNN	CROSS SECTIONS: CTH D	SHEET 127	E

FILE NAME : I:\41\410859 DUNN CTH D\C3D\DESIGN\CORRIDORS\CORRIDOR-CTH D 4-INCH RAISE.DWG
LAYOUT NAME - 916

PLOT DATE : 5/16/2024 10:29 AM PLOT BY : HEDRINGTON, MARK PLOT NAME : **PLOT SCALE :** 1 IN:10 FT HORZ. / 1 IN:10 FT VERT.

WISDOT/CADDS SHEET 49

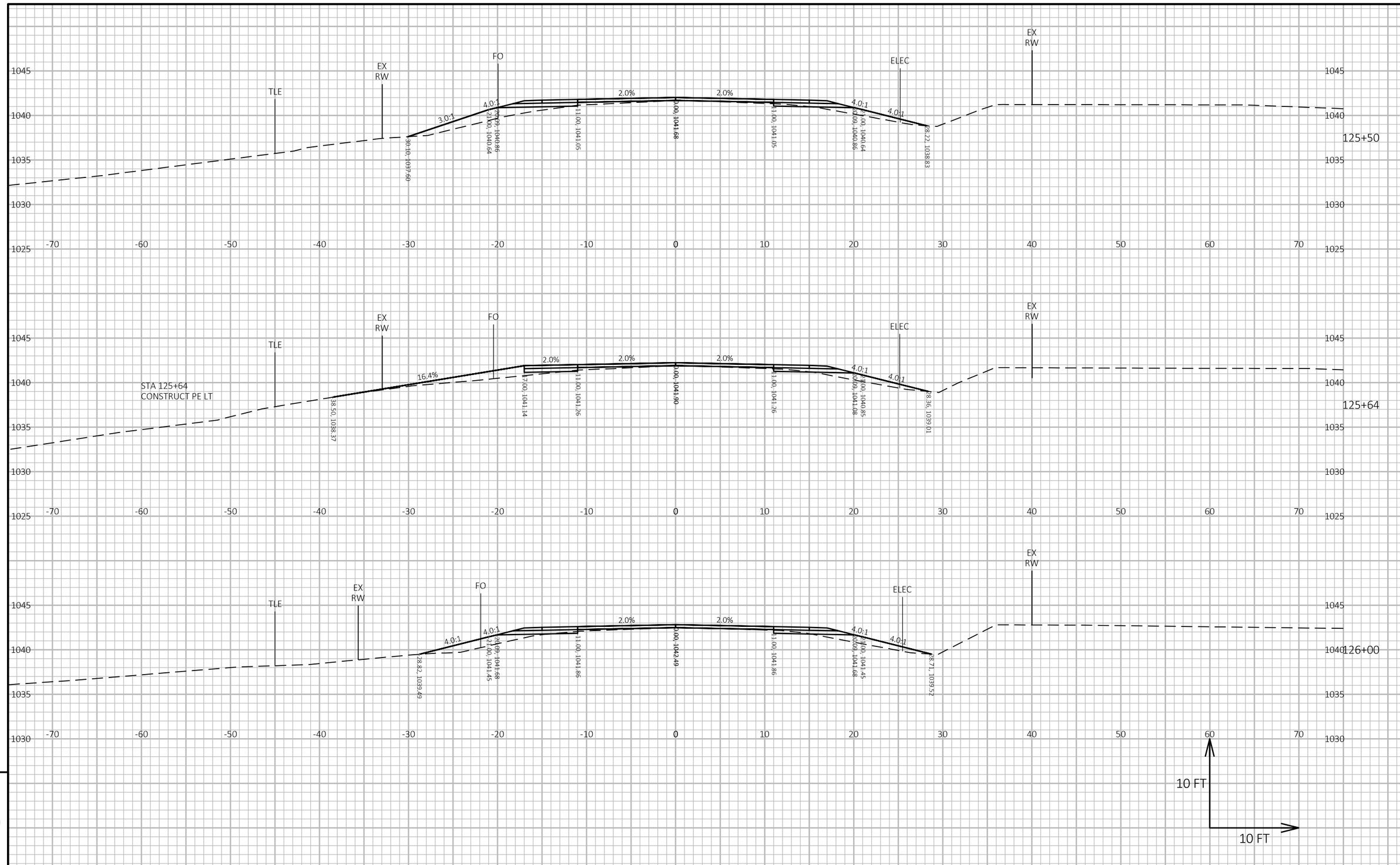

9

9

PROJECT NO: 7881-05-73	HWY: CTH D	COUNTY: DUNN	CROSS SECTIONS: CTH D	SHEET 128	E

FILE NAME : I:\41\410859 DUNN CTH D\C3D\DESIGN\CORRIDORS\CORRIDOR-CTH D 4-INCH RAISE.DWG
LAYOUT NAME - 917
PLOT DATE : 5/16/2024 10:29 AM
PLOT BY : HEDRINGTON, MARK
PLOT NAME :
PLOT SCALE : 1 IN:10 FT HORZ. / 1 IN:10 FT VERT.
WISDOT/CADDS SHEET 49

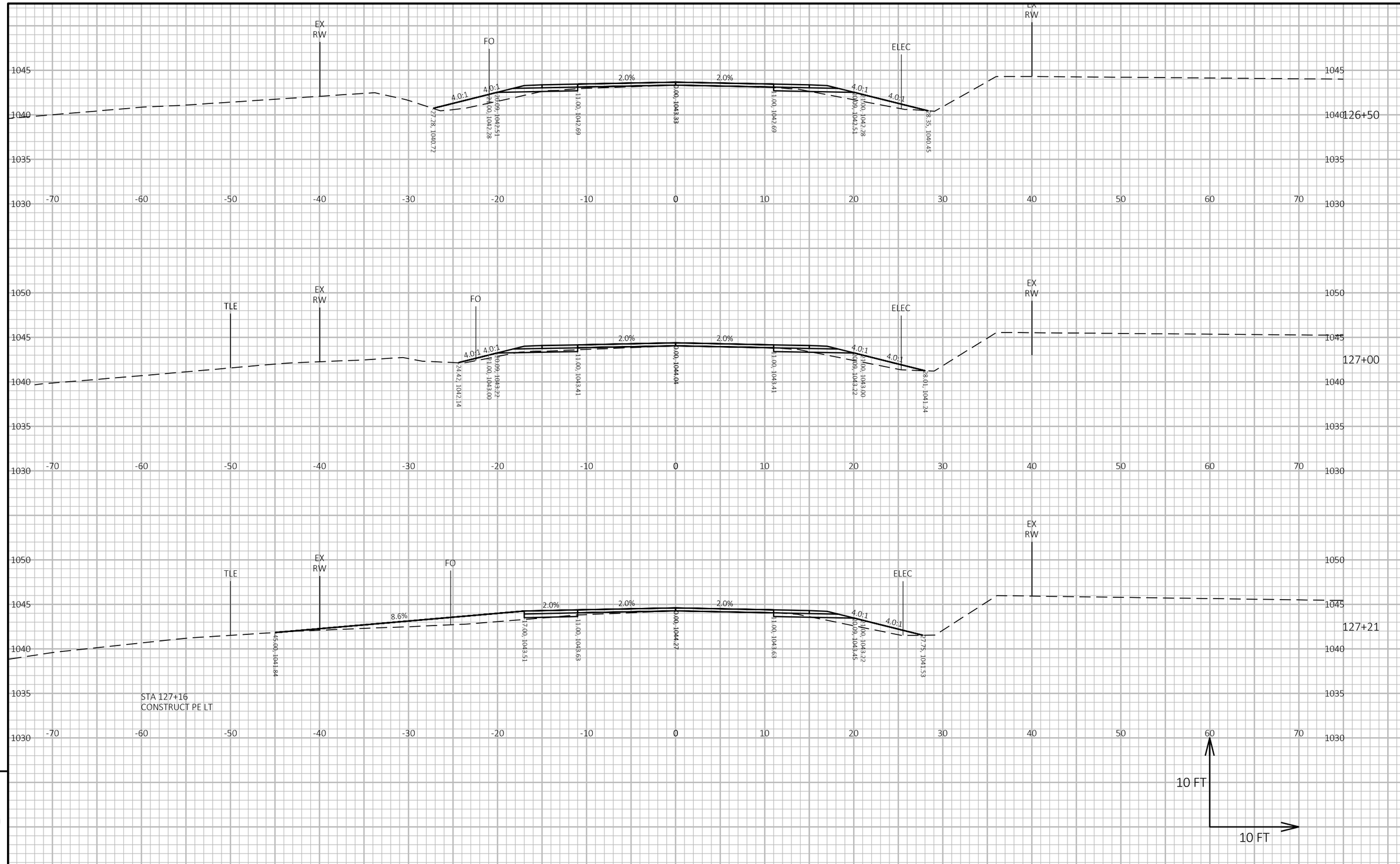

PROJECT NO: 7881-05-73	HWY: CTH D	COUNTY: DUNN	CROSS SECTIONS: CTH D	SHEET 129	E

FILE NAME : I:\41\410859 DUNN CTH D\C3D\DESIGN\CORRIDORS\CORRIDOR-CTH D 4-INCH RAISE.DWG
LAYOUT NAME - 918
PLOT DATE : 5/16/2024 10:28 AM
PLOT BY : HEDRINGTON, MARK
PLOT NAME :
PLOT SCALE : 1 IN:10 FT HORZ. / 1 IN:10 FT VERT.
WISDOT/CADDS SHEET 49

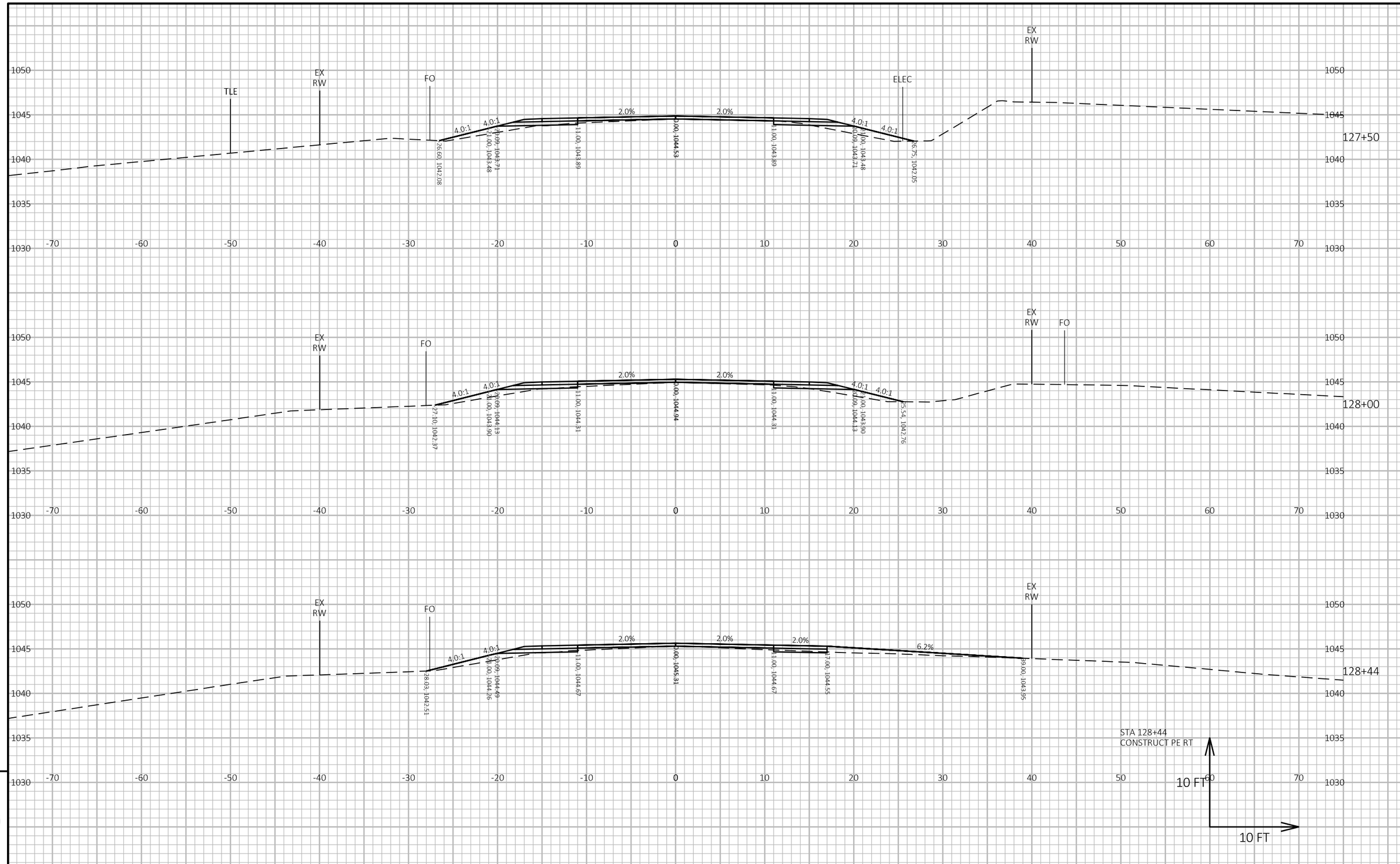

9

9

PROJECT NO: 7881-05-73	HWY: CTH D	COUNTY: DUNN	CROSS SECTIONS: CTH D	SHEET 130	E

FILE NAME : I:\41\410859 DUNN CTH D\C3D\DESIGN\CORRIDORS\CORRIDOR-CTH D 4-INCH RAISE.DWG
LAYOUT NAME - 919
PLOT DATE : 5/16/2024 10:28 AM
PLOT BY : HEDRINGTON, MARK
PLOT NAME :
PLOT SCALE : 1 IN:10 FT HORZ. / 1 IN:10 FT VERT.
WISDOT/CADDS SHEET 49

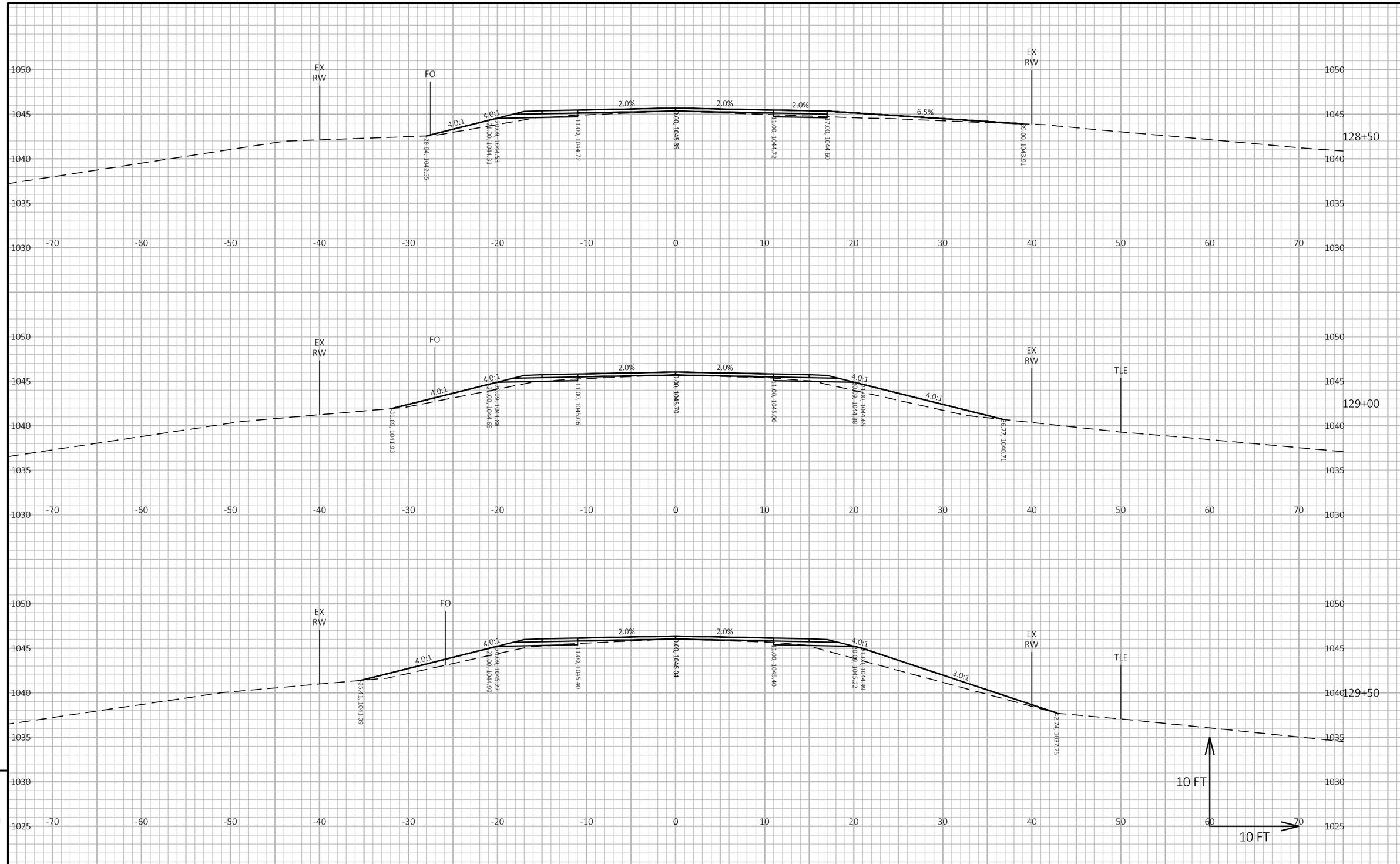

9

9

PROJECT NO: 7881-05-73	HWY: CTH D	COUNTY: DUNN	CROSS SECTIONS: CTH D	SHEET 131	E

FILE NAME : I:\41\410859 DUNN CTH D\C3D\DESIGN\CORRIDORS\CORRIDOR-CTH D 4-INCH RAISE.DWG
LAYOUT NAME - 920
PLOT DATE : 5/16/2024 10:28 AM
PLOT BY : HEDRINGTON, MARK
PLOT NAME :
PLOT SCALE : 1 IN:10 FT HORZ. / 1 IN:10 FT VERT.
WISDOT/CADDS SHEET 49

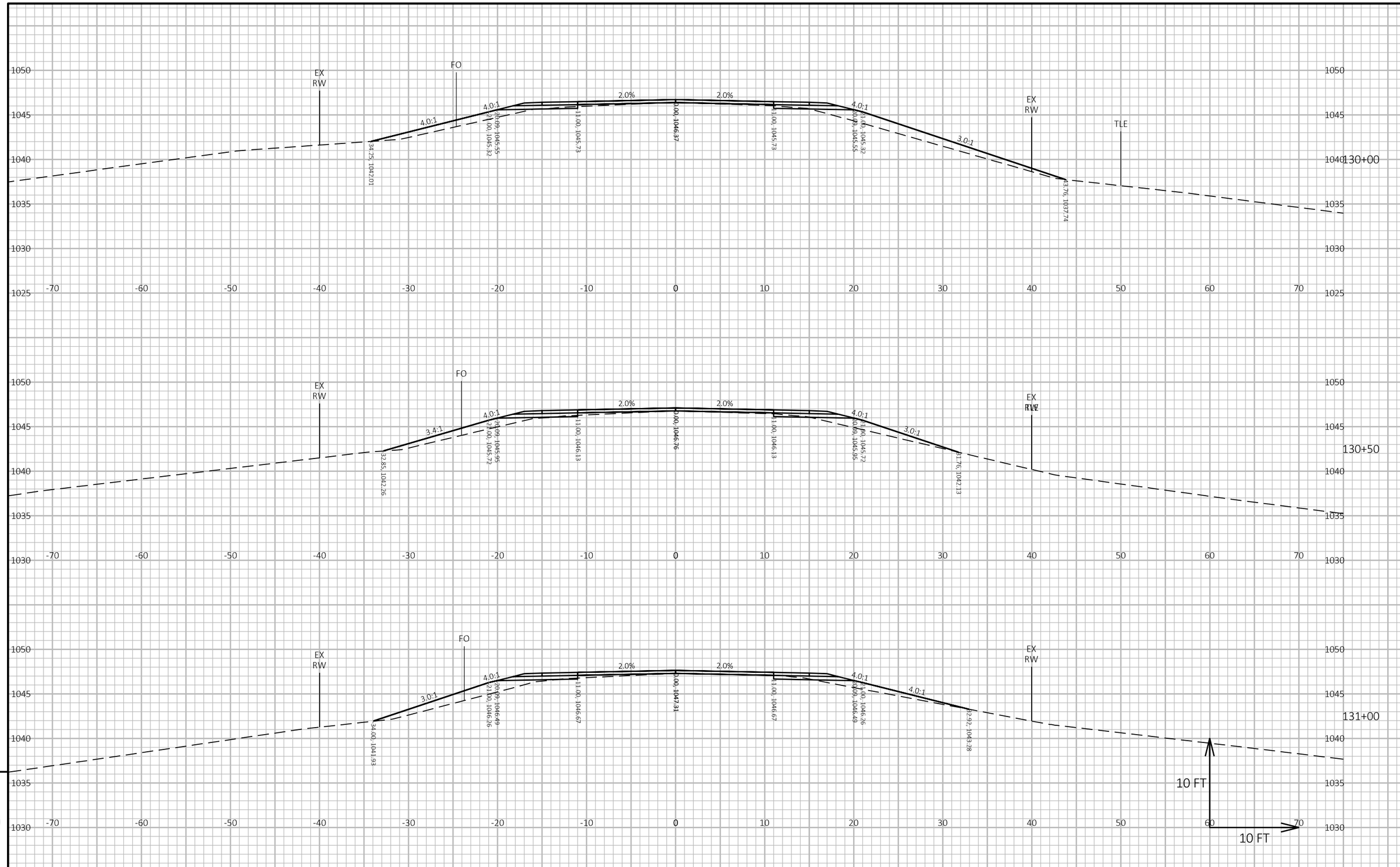

9

9

PROJECT NO: 7881-05-73	HWY: CTH D	COUNTY: DUNN	CROSS SECTIONS: CTH D	SHEET 132	E

FILE NAME : I:\41\410859 DUNN CTH D\C3D\DESIGN\CORRIDORS\CORRIDOR-CTH D 4-INCH RAISE.DWG
LAYOUT NAME - 921

PLOT DATE : 5/16/2024 10:28 AM PLOT BY : HEDRINGTON, MARK PLOT NAME : **PLOT SCALE :** 1 IN:10 FT HORZ. / 1 IN:10 FT VERT.

WISDOT/CADDS SHEET 49

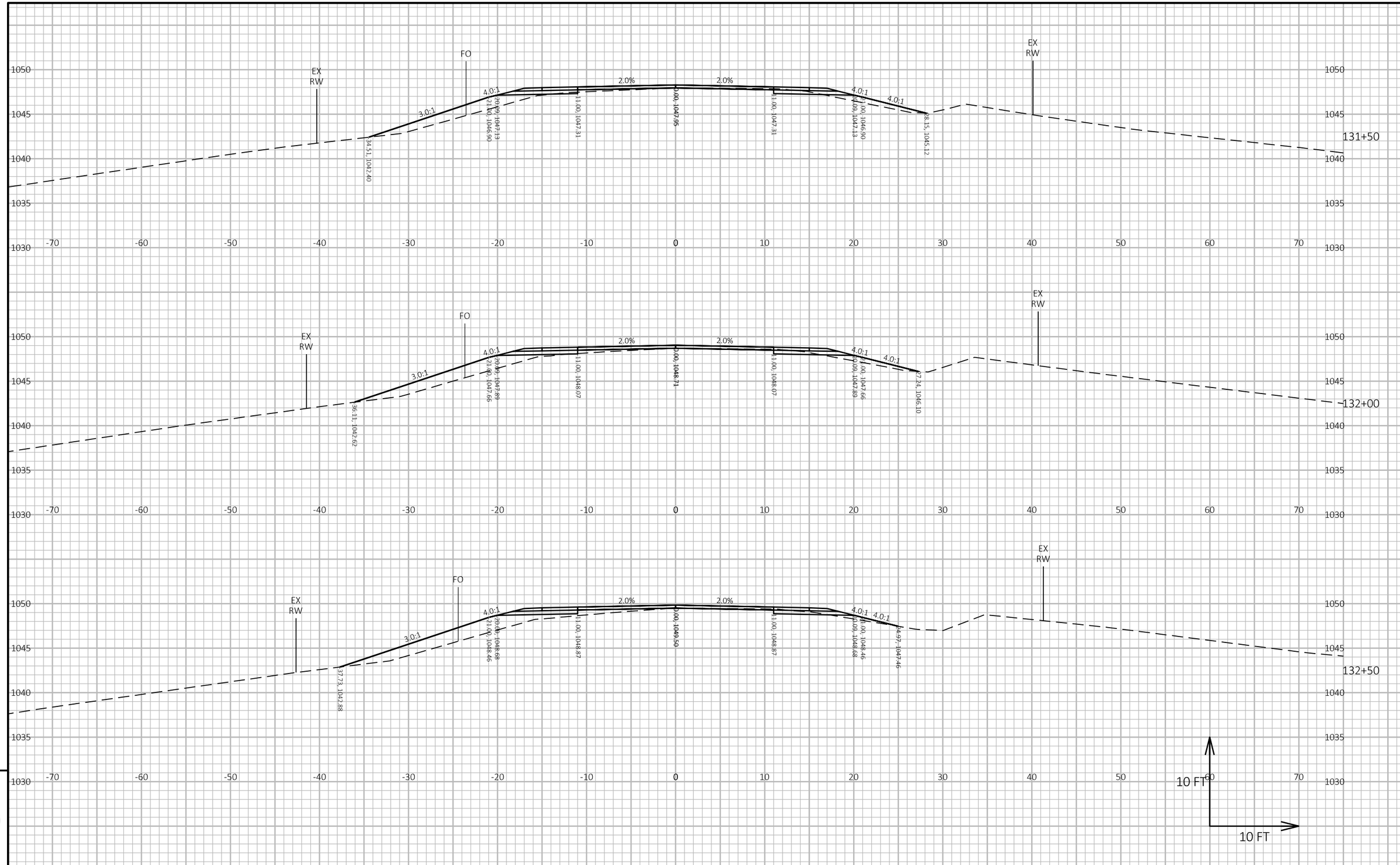

9

9

PROJECT NO: 7881-05-73	HWY: CTH D	COUNTY: DUNN	CROSS SECTIONS: CTH D	SHEET 133	E

FILE NAME : I:\41\410859 DUNN CTH D\C3D\DESIGN\CORRIDORS\CORRIDOR-CTH D 4-INCH RAISE.DWG
LAYOUT NAME - 922
PLOT DATE : 5/16/2024 10:28 AM
PLOT BY : HEDRINGTON, MARK
PLOT NAME :
PLOT SCALE : 1 IN:10 FT HORZ. / 1 IN:10 FT VERT.
WISDOT/CADDS SHEET 49

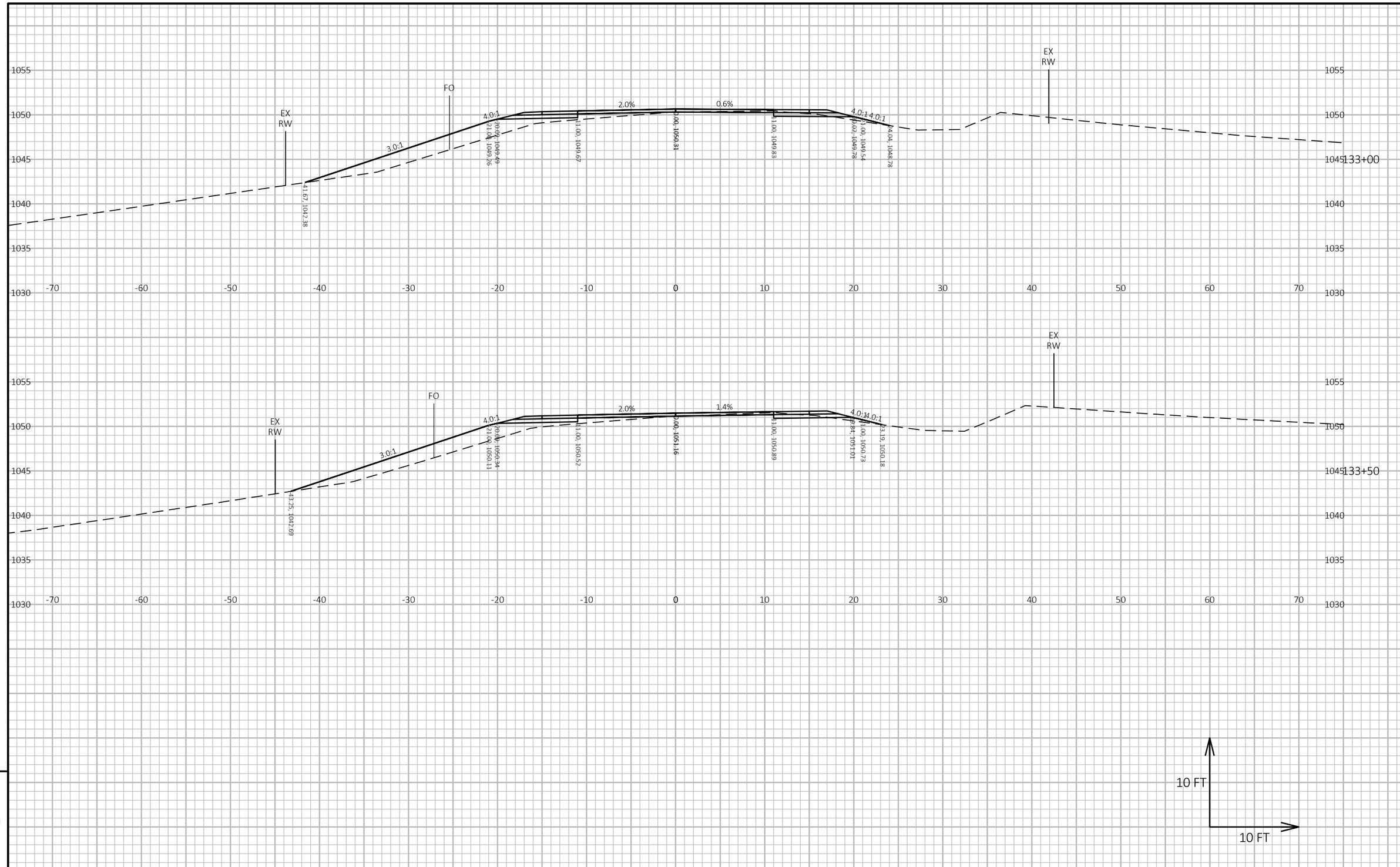

9

9

PROJECT NO: 7881-05-73	HWY: CTH D	COUNTY: DUNN	CROSS SECTIONS: CTH D	SHEET 134	E

FILE NAME : I:\41\410859 DUNN CTH D\C3D\DESIGN\CORRIDORS\CORRIDOR-CTH D 4-INCH RAISE.DWG
LAYOUT NAME - 923

PLOT DATE : 5/16/2024 10:28 AM PLOT BY : HEDRINGTON, MARK PLOT NAME : **PLOT SCALE :** 1 IN:10 FT HORZ. / 1 IN:10 FT VERT.

WISDOT/CADDS SHEET 49

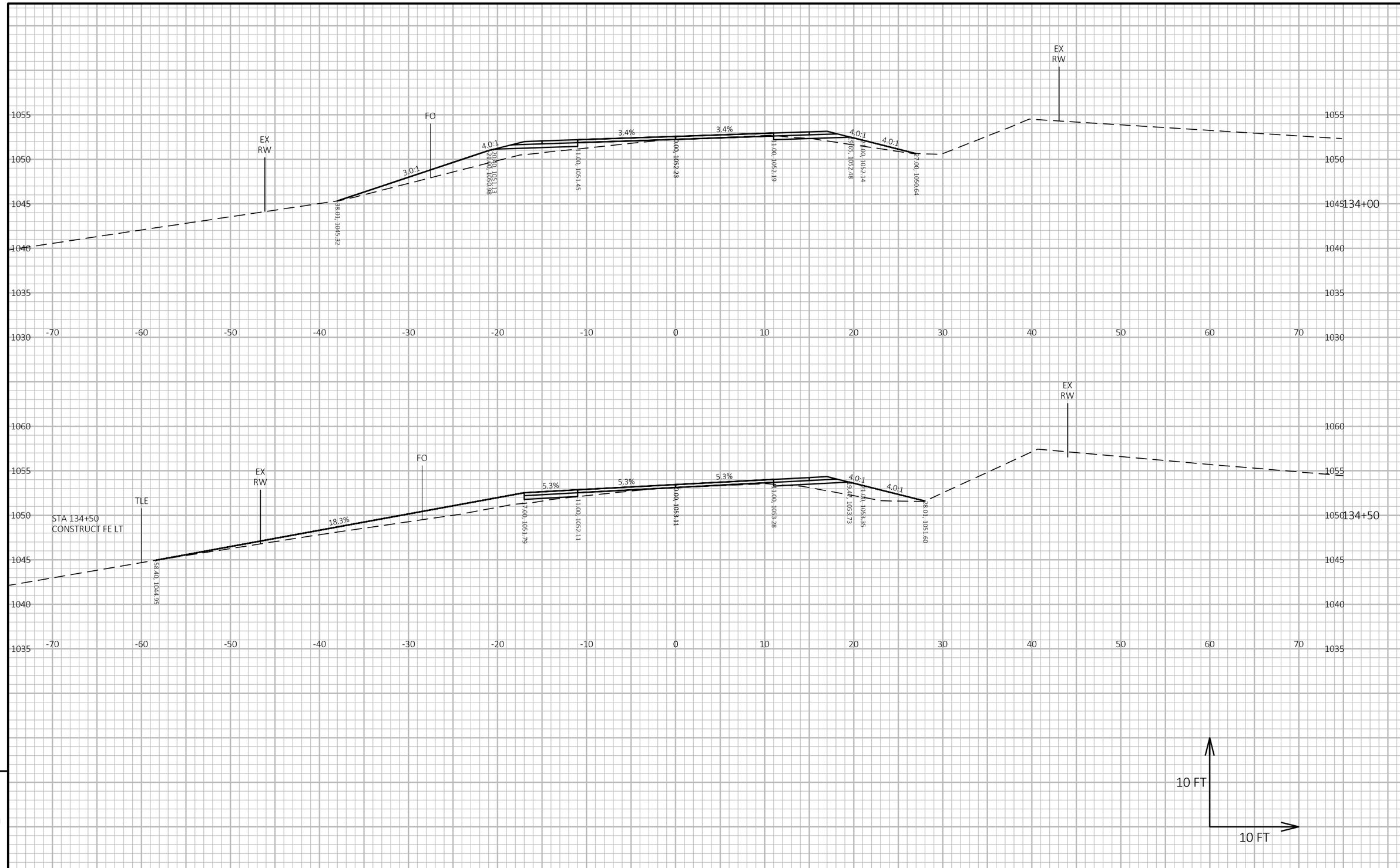

9

9

PROJECT NO: 7881-05-73	HWY: CTH D	COUNTY: DUNN	CROSS SECTIONS: CTH D	SHEET 135	E

FILE NAME : I:\41\410859 DUNN CTH D\C3D\DESIGN\CORRIDORS\CORRIDOR-CTH D 4-INCH RAISE.DWG
LAYOUT NAME - 924
PLOT DATE : 5/16/2024 10:28 AM
PLOT BY : HEDRINGTON, MARK
PLOT NAME :
PLOT SCALE : 1 IN:10 FT HORZ. / 1 IN:10 FT VERT.
WISDOT/CADDS SHEET 49

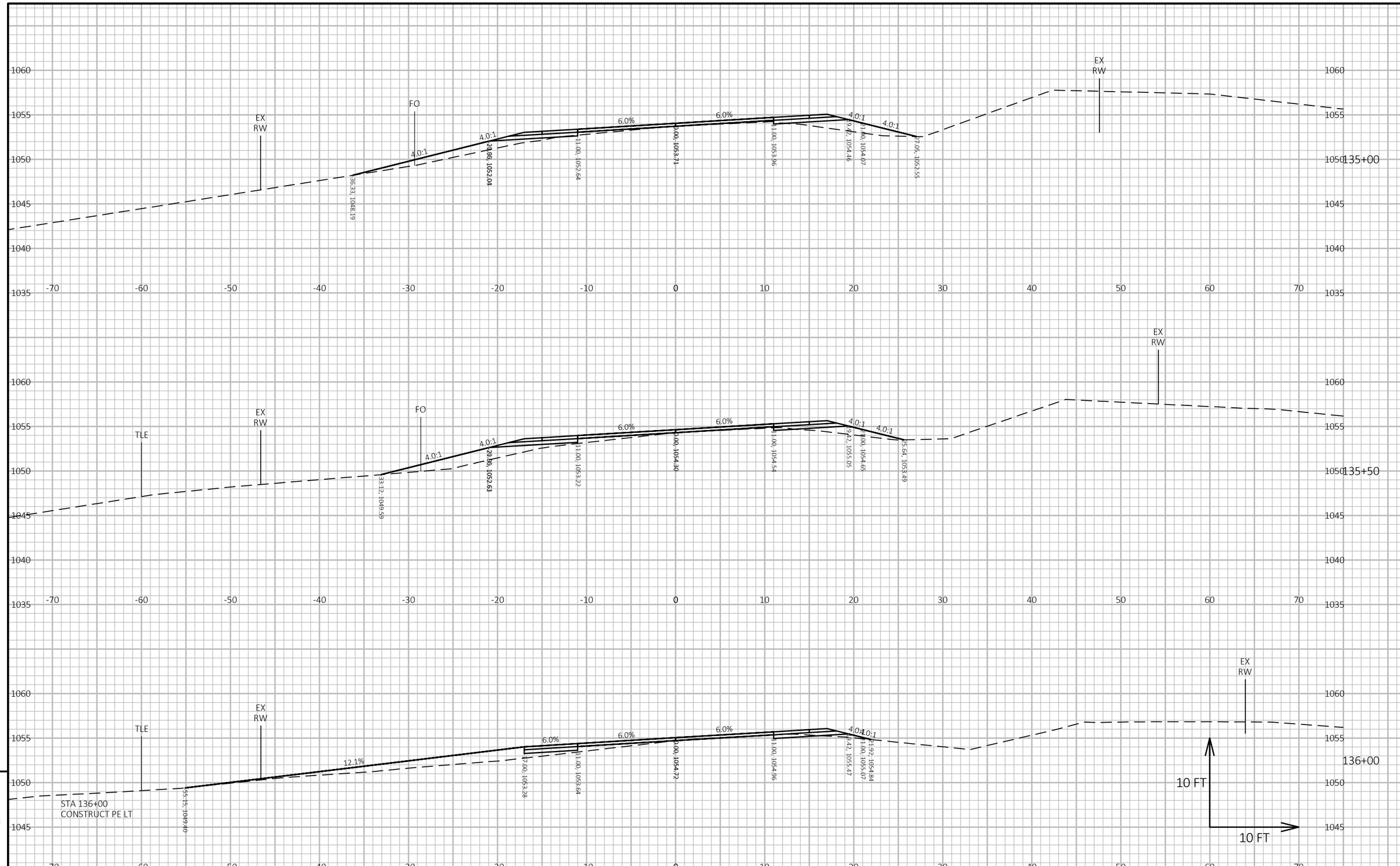

9

9

PROJECT NO: 7881-05-73	HWY: CTH D	COUNTY: DUNN	CROSS SECTIONS: CTH D	SHEET 136	E

FILE NAME : I:\41\410859 DUNN CTH D\C3D\DESIGN\CORRIDORS\CORRIDOR-CTH D 4-INCH RAISE.DWG
LAYOUT NAME - 925

PLOT DATE : 5/16/2024 10:28 AM PLOT BY : HEDRINGTON, MARK PLOT NAME : PLOT SCALE : 1 IN:10 FT HORZ. / 1 IN:10 FT VERT.

WISDOT/CADDS SHEET 49

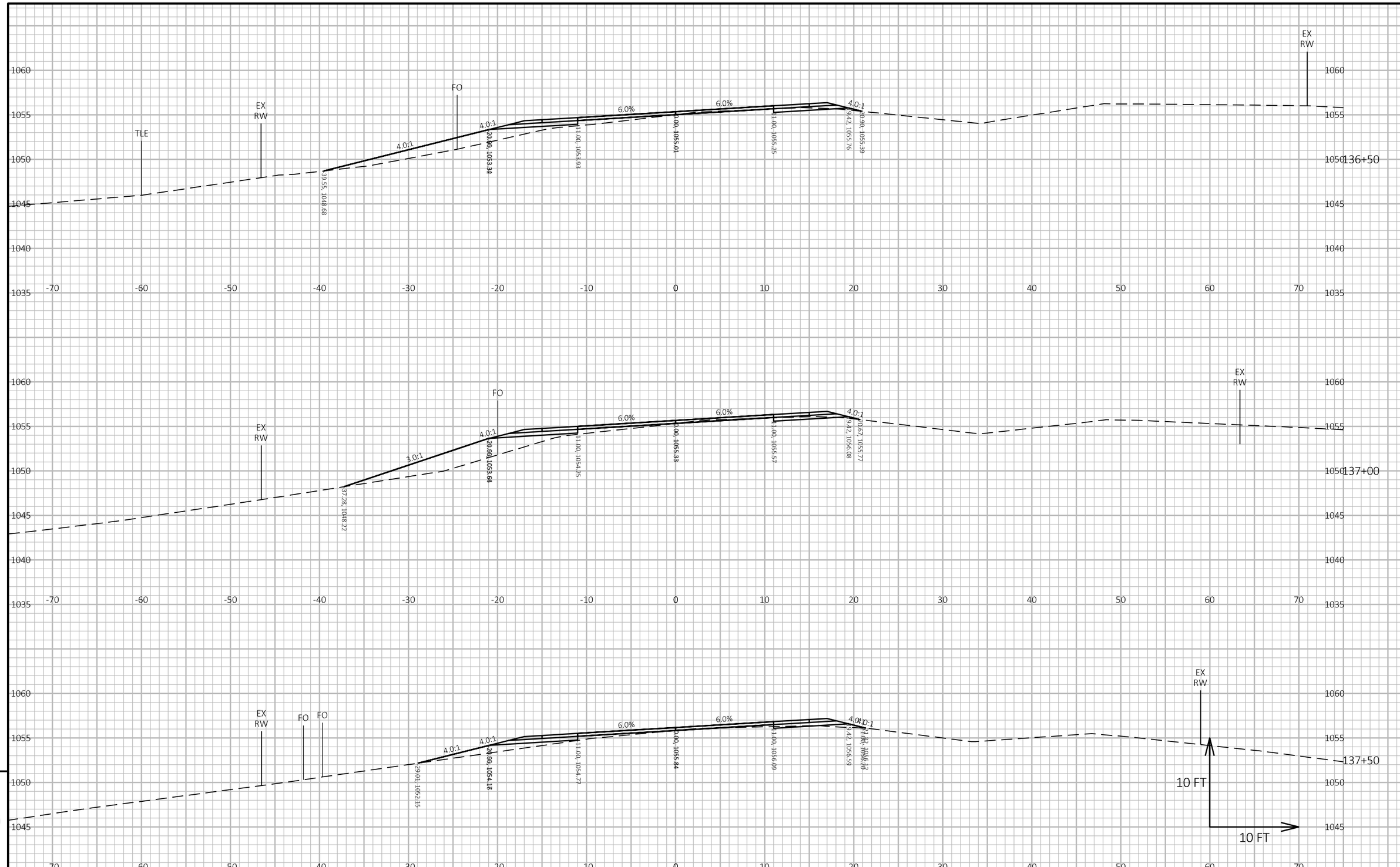

PROJECT NO: 7881-05-73	HWY: CTH D	COUNTY: DUNN	CROSS SECTIONS: CTH D	SHEET 137	E

FILE NAME : I:\41\410859 DUNN CTH D\C3D\DESIGN\CORRIDORS\CORRIDOR-CTH D 4-INCH RAISE.DWG
LAYOUT NAME - 926
PLOT DATE : 5/16/2024 10:28 AM
PLOT BY : HEDRINGTON, MARK
PLOT NAME :
PLOT SCALE : 1 IN:10 FT HORZ. / 1 IN:10 FT VERT.
WISDOT/CADDS SHEET 49

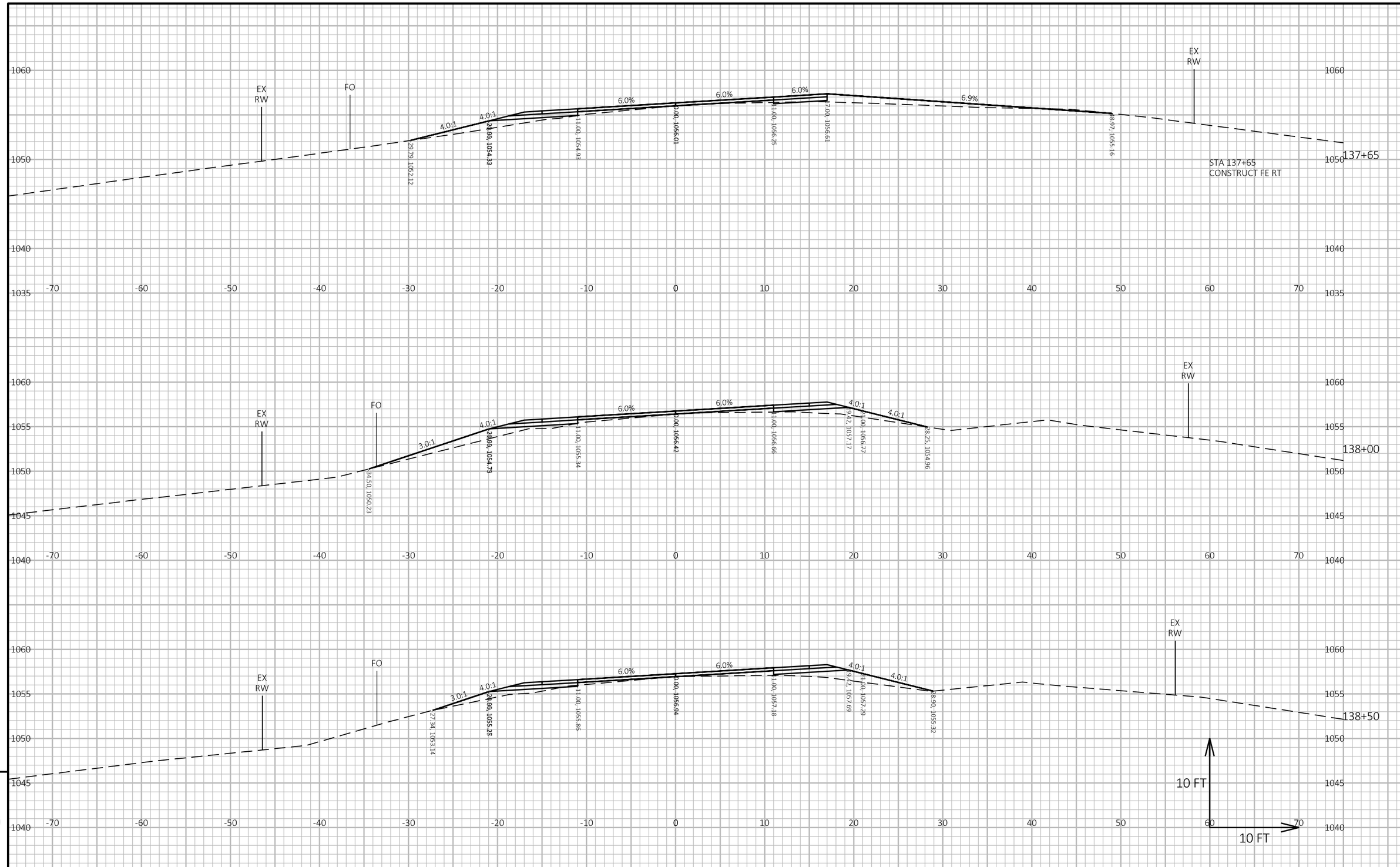

PROJECT NO: 7881-05-73	HWY: CTH D	COUNTY: DUNN	CROSS SECTIONS: CTH D	SHEET 138	E

FILE NAME : I:\41\410859 DUNN CTH D\C3D\DESIGN\CORRIDORS\CORRIDOR-CTH D 4-INCH RAISE.DWG
LAYOUT NAME - 927
PLOT DATE : 5/16/2024 10:28 AM
PLOT BY : HEDRINGTON, MARK
PLOT NAME :
PLOT SCALE : 1 IN:10 FT HORZ. / 1 IN:10 FT VERT.
WISDOT/CADDS SHEET 49

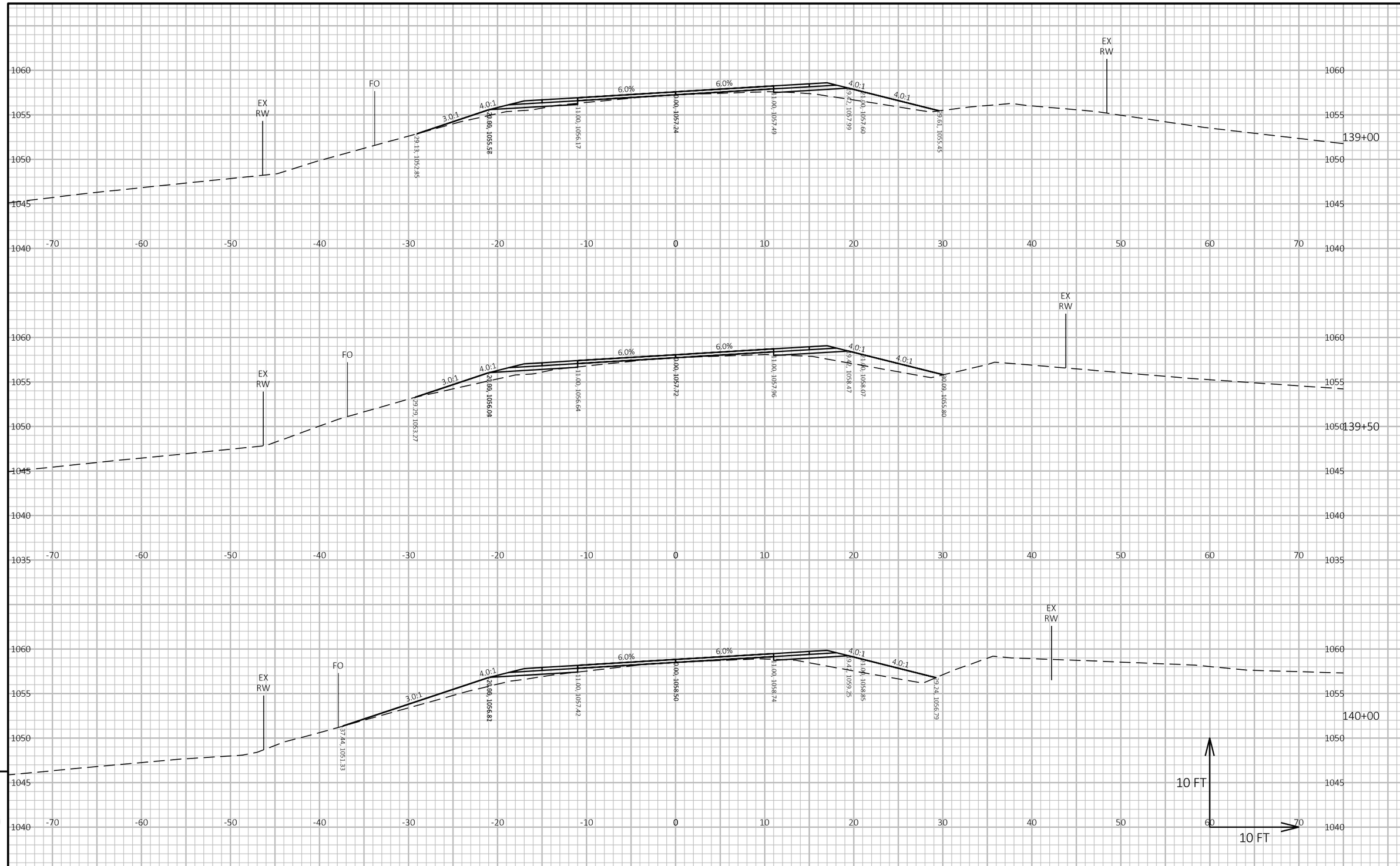

PROJECT NO: 7881-05-73	HWY: CTH D	COUNTY: DUNN	CROSS SECTIONS: CTH D	SHEET 139	E

FILE NAME : I:\41\410859 DUNN CTH D\C3D\DESIGN\CORRIDORS\CORRIDOR-CTH D 4-INCH RAISE.DWG
LAYOUT NAME - 928
PLOT DATE : 5/16/2024 10:28 AM
PLOT BY : HEDRINGTON, MARK
PLOT NAME :
PLOT SCALE : 1 IN:10 FT HORZ. / 1 IN:10 FT VERT.
WISDOT/CADDS SHEET 49

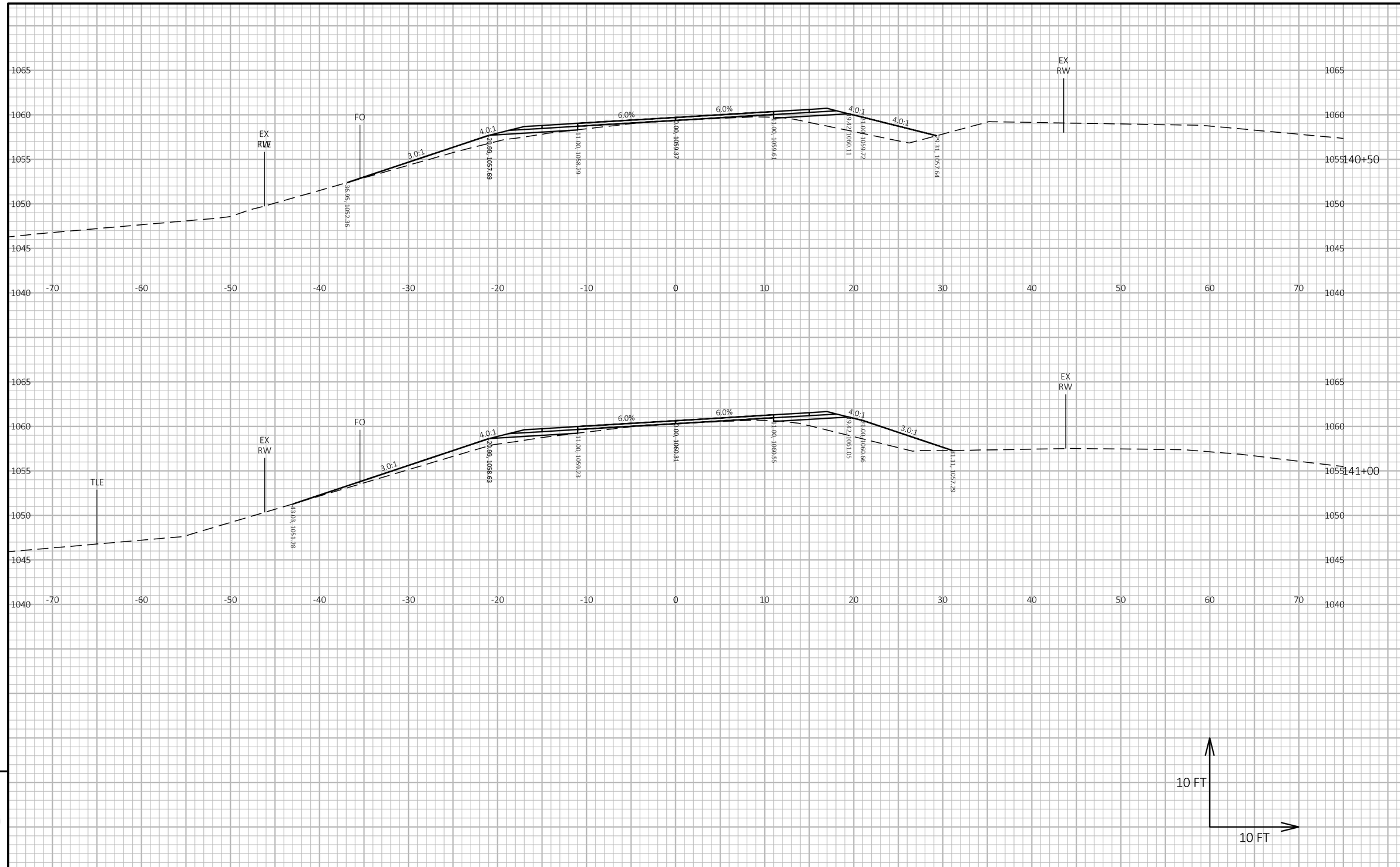

9

9

PROJECT NO: 7881-05-73	HWY: CTH D	COUNTY: DUNN	CROSS SECTIONS: CTH D	SHEET 140	E

FILE NAME : I:\41\410859 DUNN CTH D\C3D\DESIGN\CORRIDORS\CORRIDOR-CTH D 4-INCH RAISE.DWG
LAYOUT NAME - 929

PLOT DATE : 5/16/2024 10:27 AM PLOT BY : HEDRINGTON, MARK PLOT NAME : **PLOT SCALE :** 1 IN:10 FT HORZ. / 1 IN:10 FT VERT.

WISDOT/CADDS SHEET 49

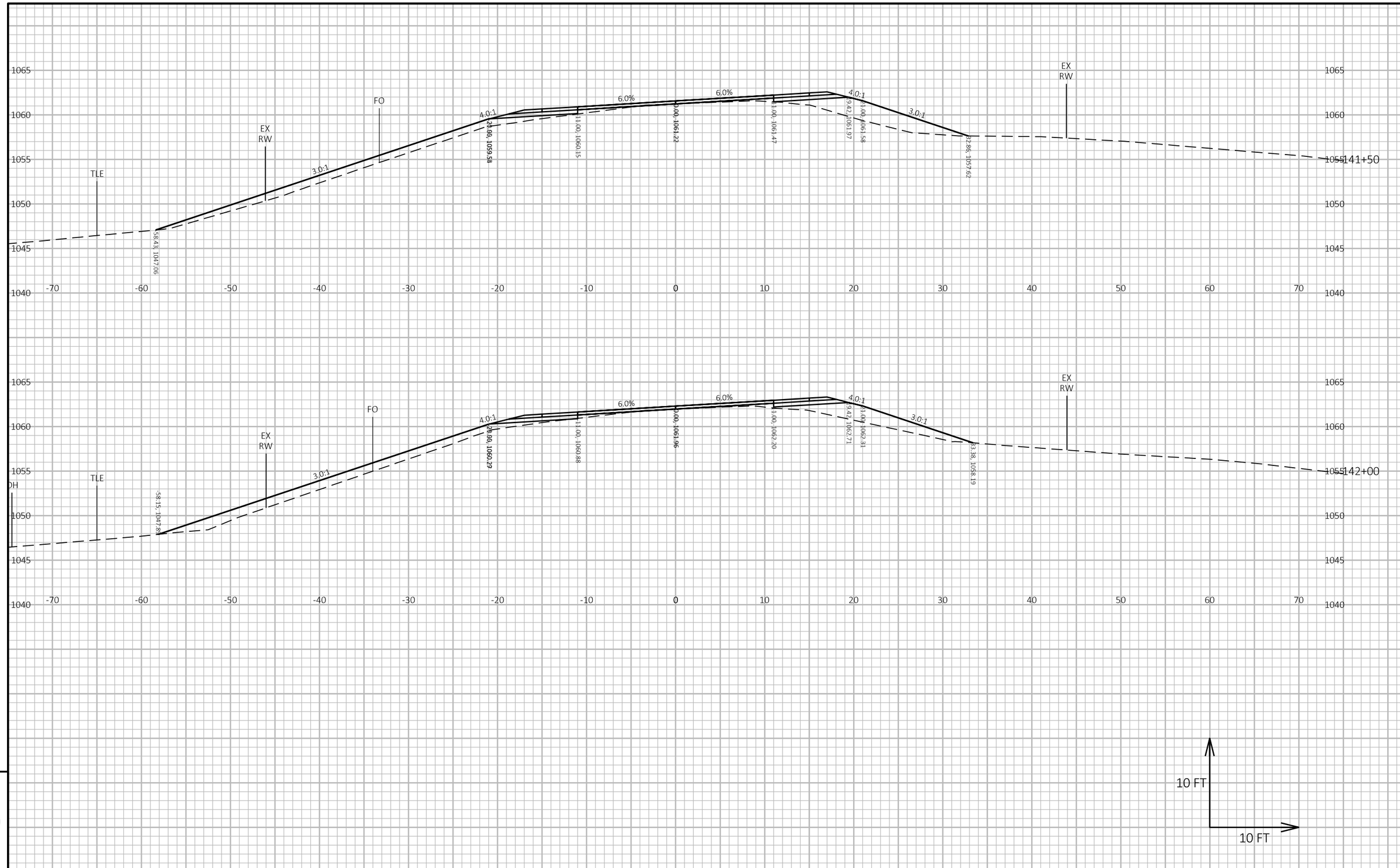

9

9

PROJECT NO: 7881-05-73	HWY: CTH D	COUNTY: DUNN	CROSS SECTIONS: CTH D	SHEET 141	E

FILE NAME : I:\41\410859 DUNN CTH D\C3D\DESIGN\CORRIDORS\CORRIDOR-CTH D 4-INCH RAISE.DWG
LAYOUT NAME - 930
PLOT DATE : 5/16/2024 10:27 AM
PLOT BY : HEDRINGTON, MARK
PLOT NAME :
PLOT SCALE : 1 IN:10 FT HORZ. / 1 IN:10 FT VERT.
WISDOT/CADDS SHEET 49

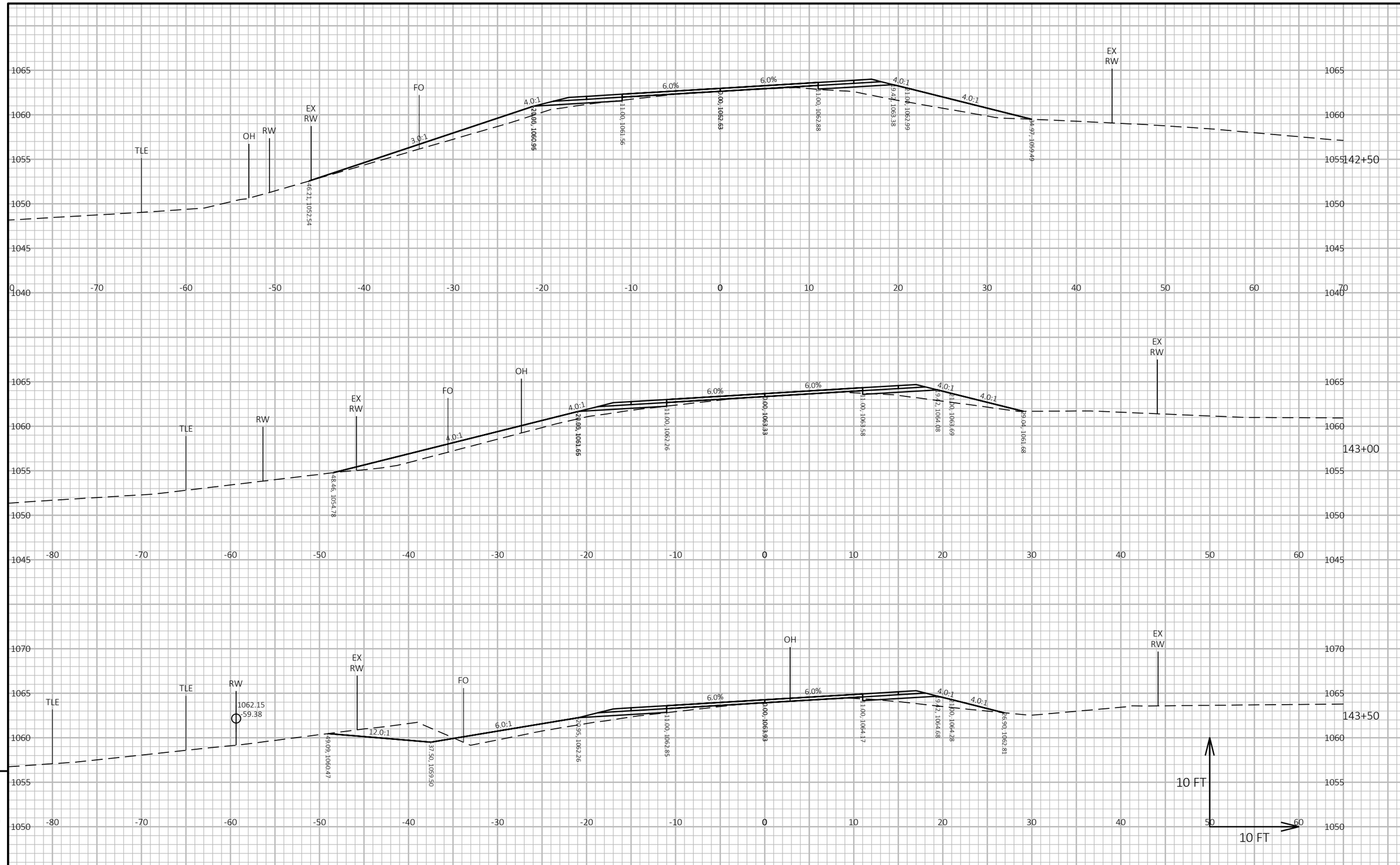

9

9

PROJECT NO: 7881-05-73	HWY: CTH D	COUNTY: DUNN	CROSS SECTIONS: CTH D	SHEET 142	E

FILE NAME : I:\41\410859 DUNN CTH D\C3D\DESIGN\CORRIDORS\CORRIDOR-CTH D 4-INCH RAISE.DWG
LAYOUT NAME - 931
PLOT DATE : 5/21/2024 11:02 AM
PLOT BY : HEDRINGTON, MARK
PLOT NAME :
PLOT SCALE : 1 IN:10 FT HORZ. / 1 IN:10 FT VERT.
WISDOT/CADDS SHEET 49

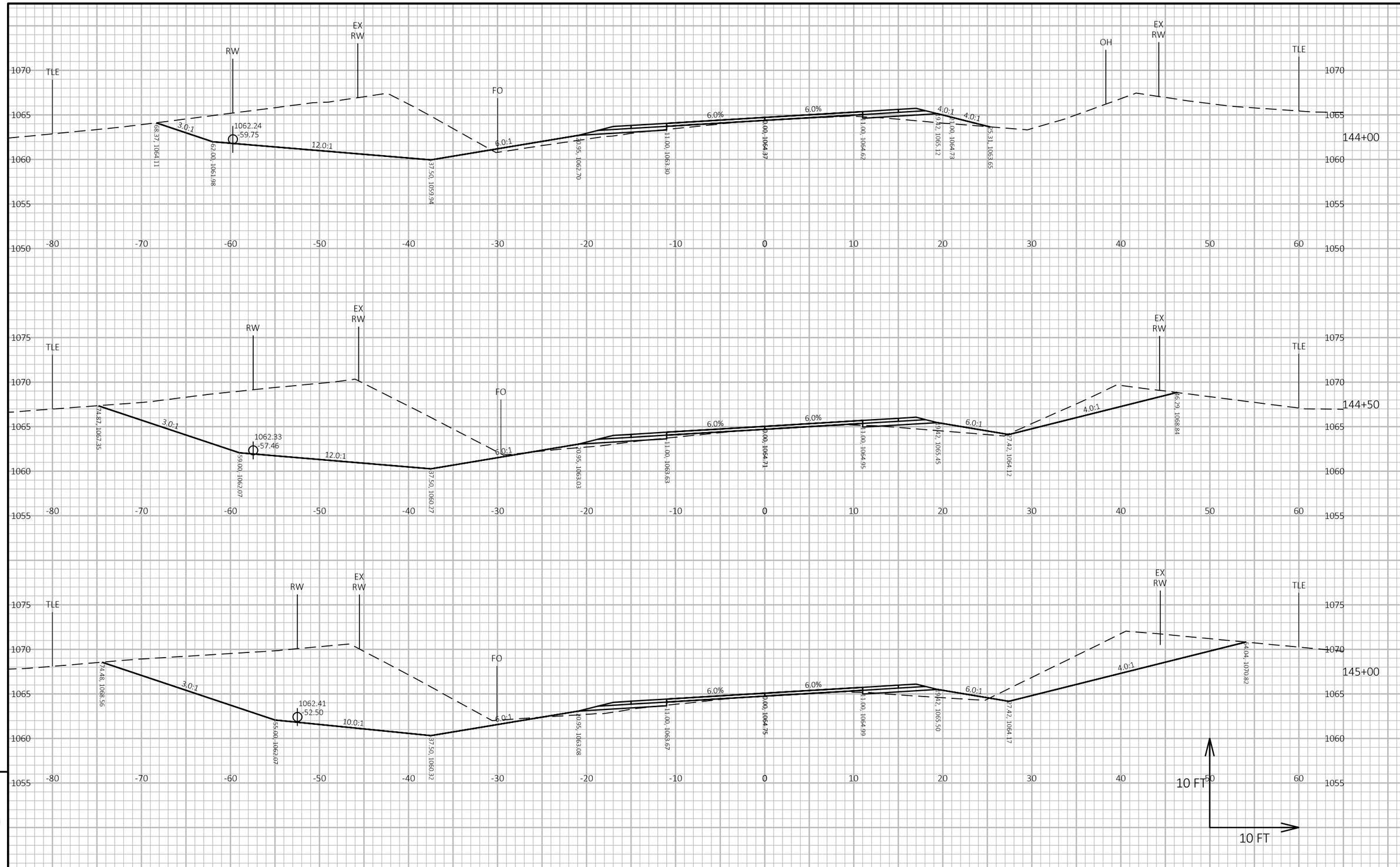

9

9

PROJECT NO: 7881-05-73	HWY: CTH D	COUNTY: DUNN	CROSS SECTIONS: CTH D	SHEET 143	E

FILE NAME : I:\41\410859 DUNN CTH D\C3D\DESIGN\CORRIDORS\CORRIDOR-CTH D 4-INCH RAISE.DWG
LAYOUT NAME - 932

PLOT DATE : 5/16/2024 10:27 AM PLOT BY : HEDRINGTON, MARK PLOT NAME : **PLOT SCALE :** 1 IN:10 FT HORZ. / 1 IN:10 FT VERT.

WISDOT/CADDS SHEET 49

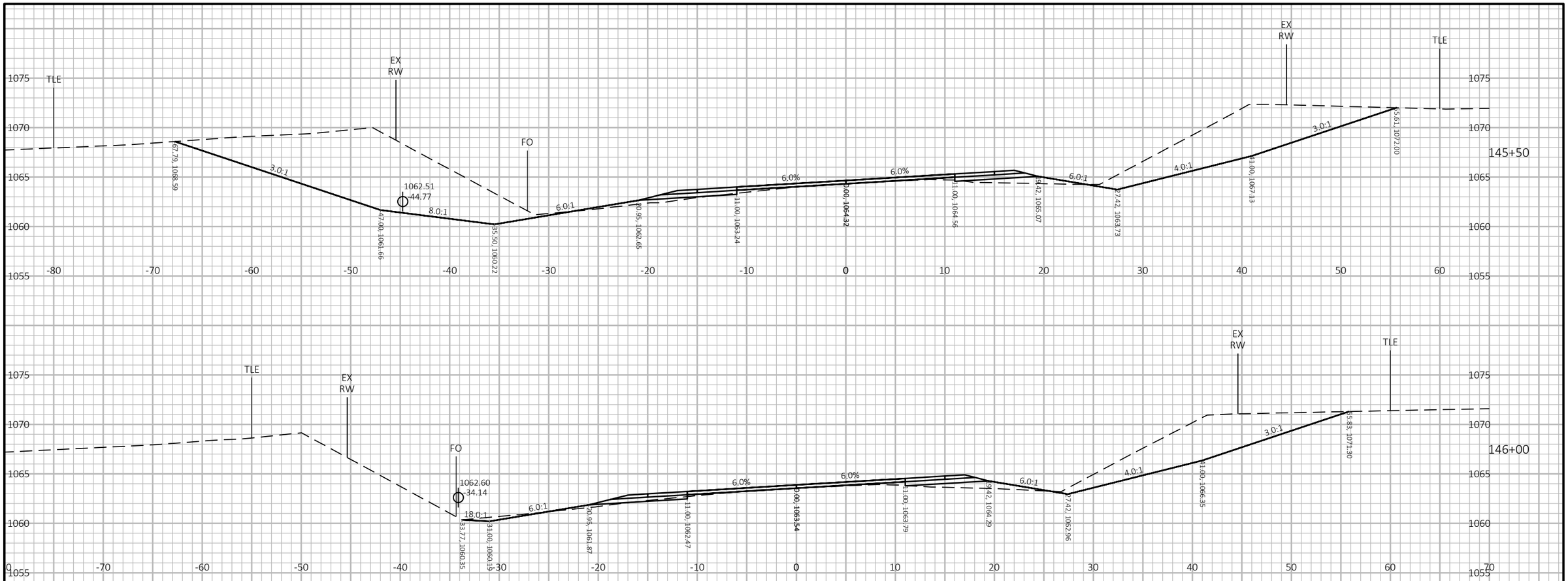

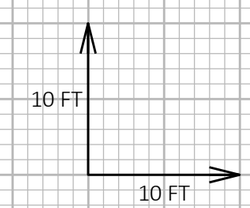

9

9

PROJECT NO: 7881-05-73	HWY: CTH D	COUNTY: DUNN	CROSS SECTIONS: CTH D	SHEET 144	E

FILE NAME : I:\41\410859 DUNN CTH D\C3D\DESIGN\CORRIDORS\CORRIDOR-CTH D 4-INCH RAISE.DWG
LAYOUT NAME - 933

PLOT DATE : 5/21/2024 11:02 AM PLOT BY : HEDRINGTON, MARK PLOT NAME : **PLOT SCALE :** 1 IN:10 FT HORZ. / 1 IN:10 FT VERT.

WISDOT/CADDS SHEET 49

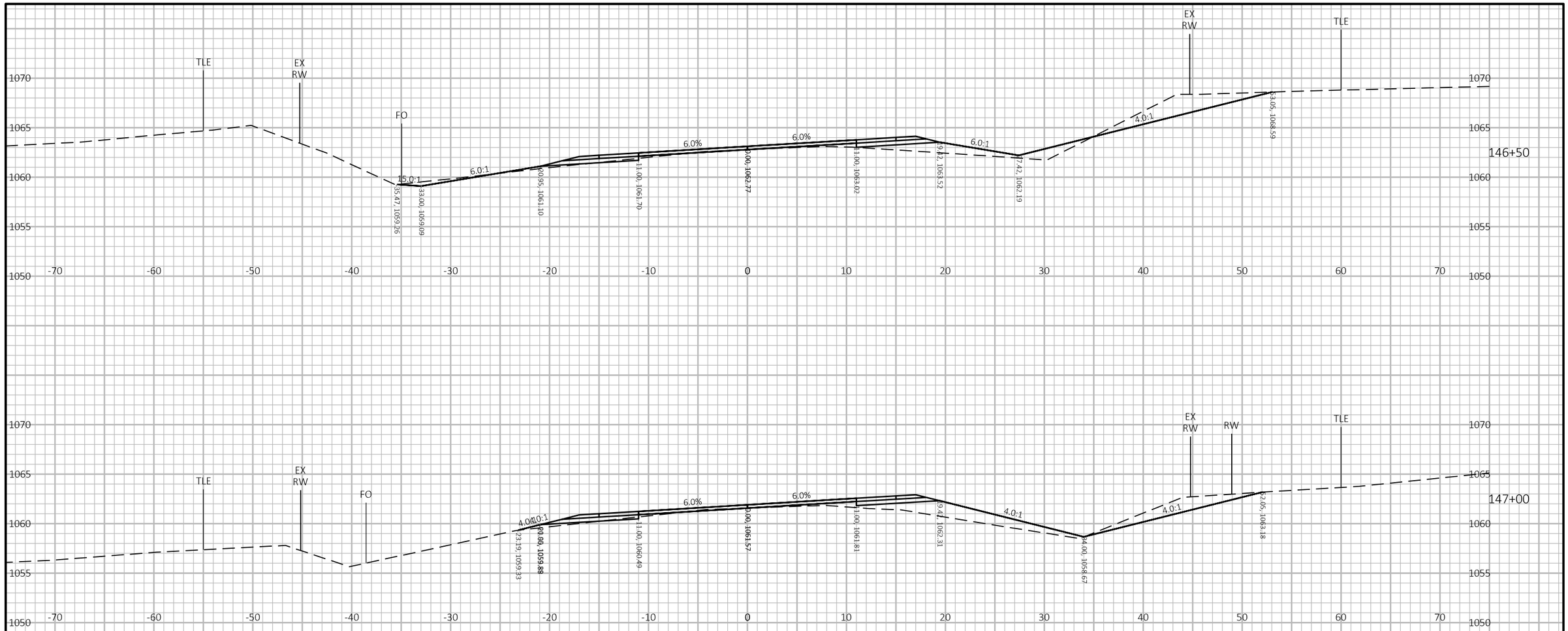

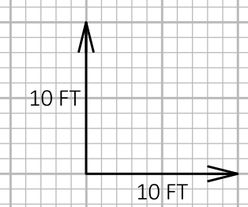

9

9

PROJECT NO: 7881-05-73	HWY: CTH D	COUNTY: DUNN	CROSS SECTIONS: CTH D	SHEET 145	E

FILE NAME : I:\41\410859 DUNN CTH D\C3D\DESIGN\CORRIDORS\CORRIDOR-CTH D 4-INCH RAISE.DWG
LAYOUT NAME - 934
PLOT DATE : 5/16/2024 10:27 AM
PLOT BY : HEDRINGTON, MARK
PLOT NAME :
PLOT SCALE : 1 IN:10 FT HORZ. / 1 IN:10 FT VERT.
WISDOT/CADDS SHEET 49

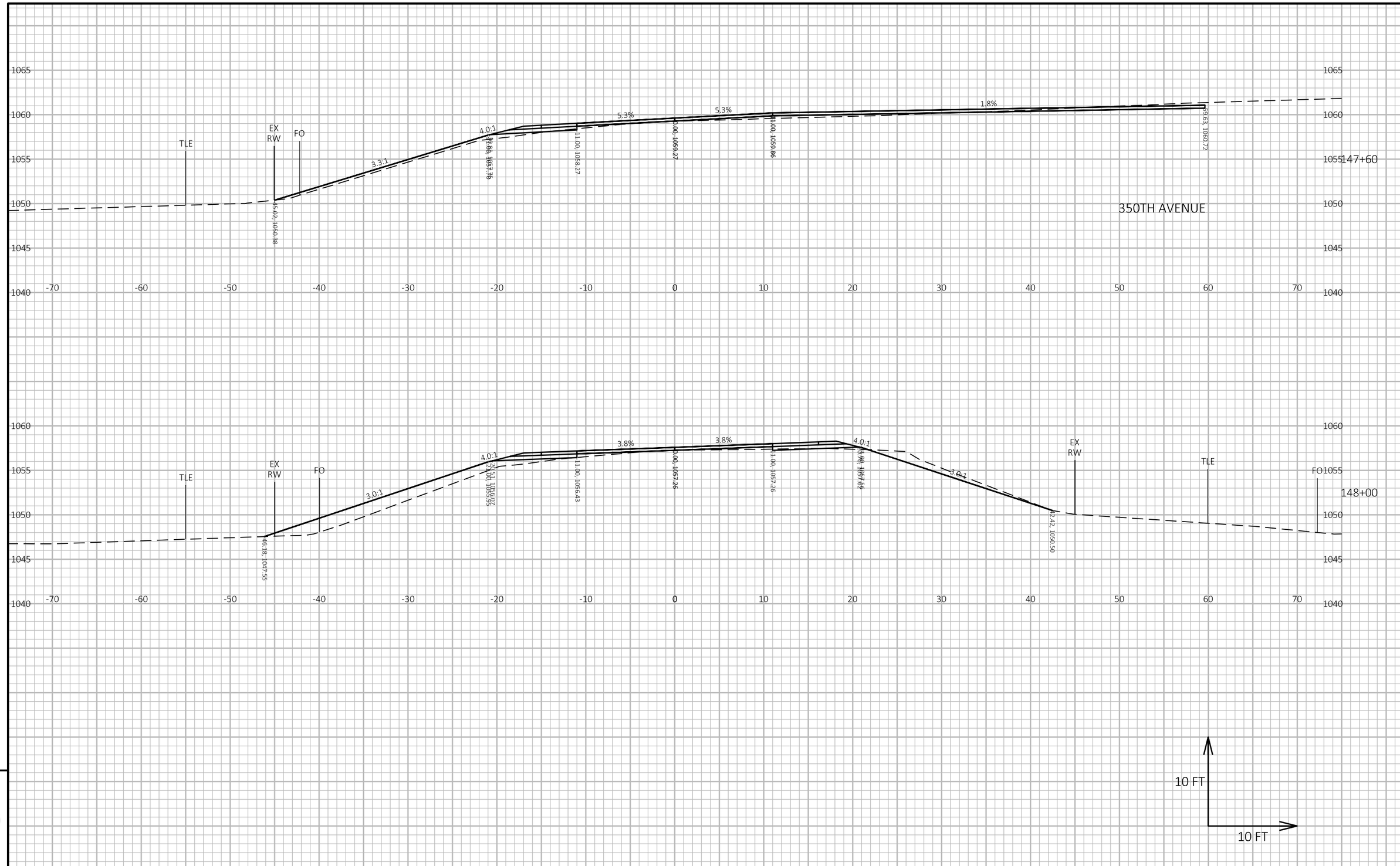

9

9

PROJECT NO: 7881-05-73	HWY: CTH D	COUNTY: DUNN	CROSS SECTIONS: CTH D	SHEET 146	E

FILE NAME : I:\41\410859 DUNN CTH D\C3D\DESIGN\CORRIDORS\CORRIDOR-CTH D 4-INCH RAISE.DWG
LAYOUT NAME - 935

PLOT DATE : 5/16/2024 10:27 AM PLOT BY : HEDRINGTON, MARK PLOT NAME : **PLOT SCALE :** 1 IN:10 FT HORZ. / 1 IN:10 FT VERT.

WISDOT/CADDS SHEET 49

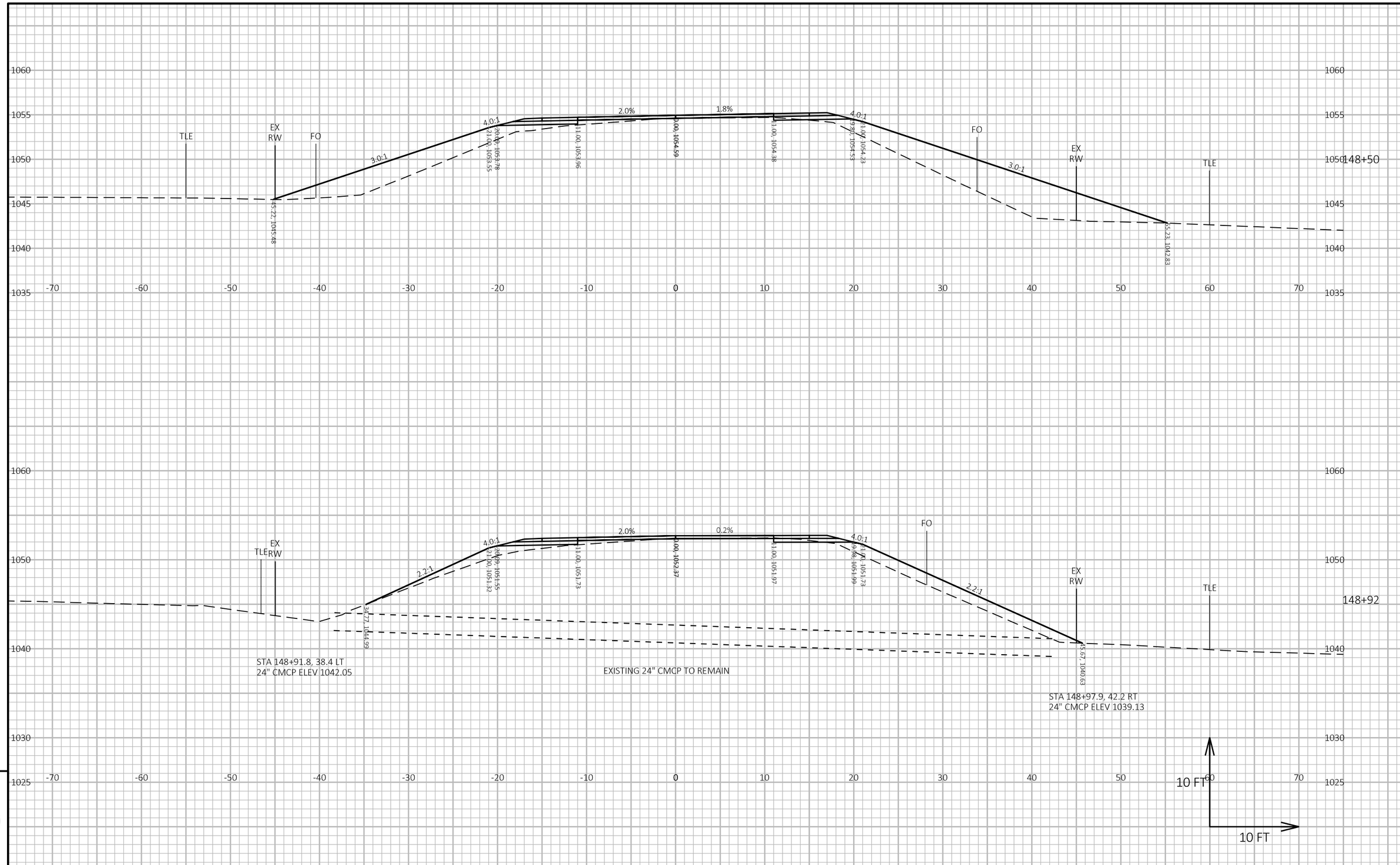

PROJECT NO: 7881-05-73	HWY: CTH D	COUNTY: DUNN	CROSS SECTIONS: CTH D	SHEET 147	E

FILE NAME : I:\41\410859 DUNN CTH D\C3D\DESIGN\CORRIDORS\CORRIDOR-CTH D 4-INCH RAISE.DWG
LAYOUT NAME - 936
PLOT DATE : 5/16/2024 10:27 AM
PLOT BY : HEDRINGTON, MARK
PLOT NAME :
PLOT SCALE : 1 IN:10 FT HORZ. / 1 IN:10 FT VERT.
WISDOT/CADDS SHEET 49

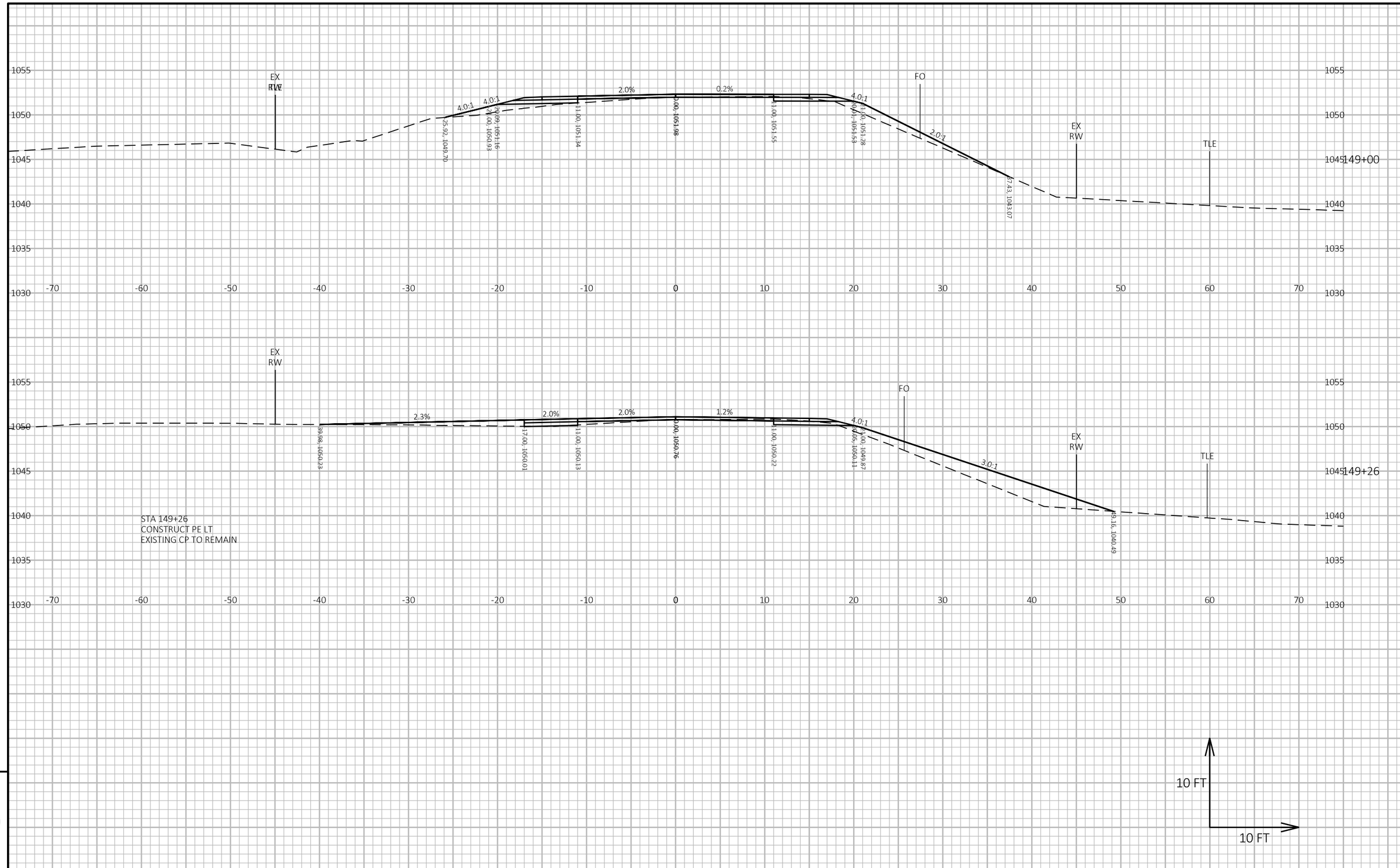

9

9

PROJECT NO: 7881-05-73	HWY: CTH D	COUNTY: DUNN	CROSS SECTIONS: CTH D	SHEET 148	E

FILE NAME : I:\41\410859 DUNN CTH D\C3D\DESIGN\CORRIDORS\CORRIDOR-CTH D 4-INCH RAISE.DWG
LAYOUT NAME - 937
PLOT DATE : 5/16/2024 10:27 AM PLOT BY : HEDRINGTON, MARK PLOT NAME : PLOT SCALE : 1 IN:10 FT HORZ. / 1 IN:10 FT VERT.

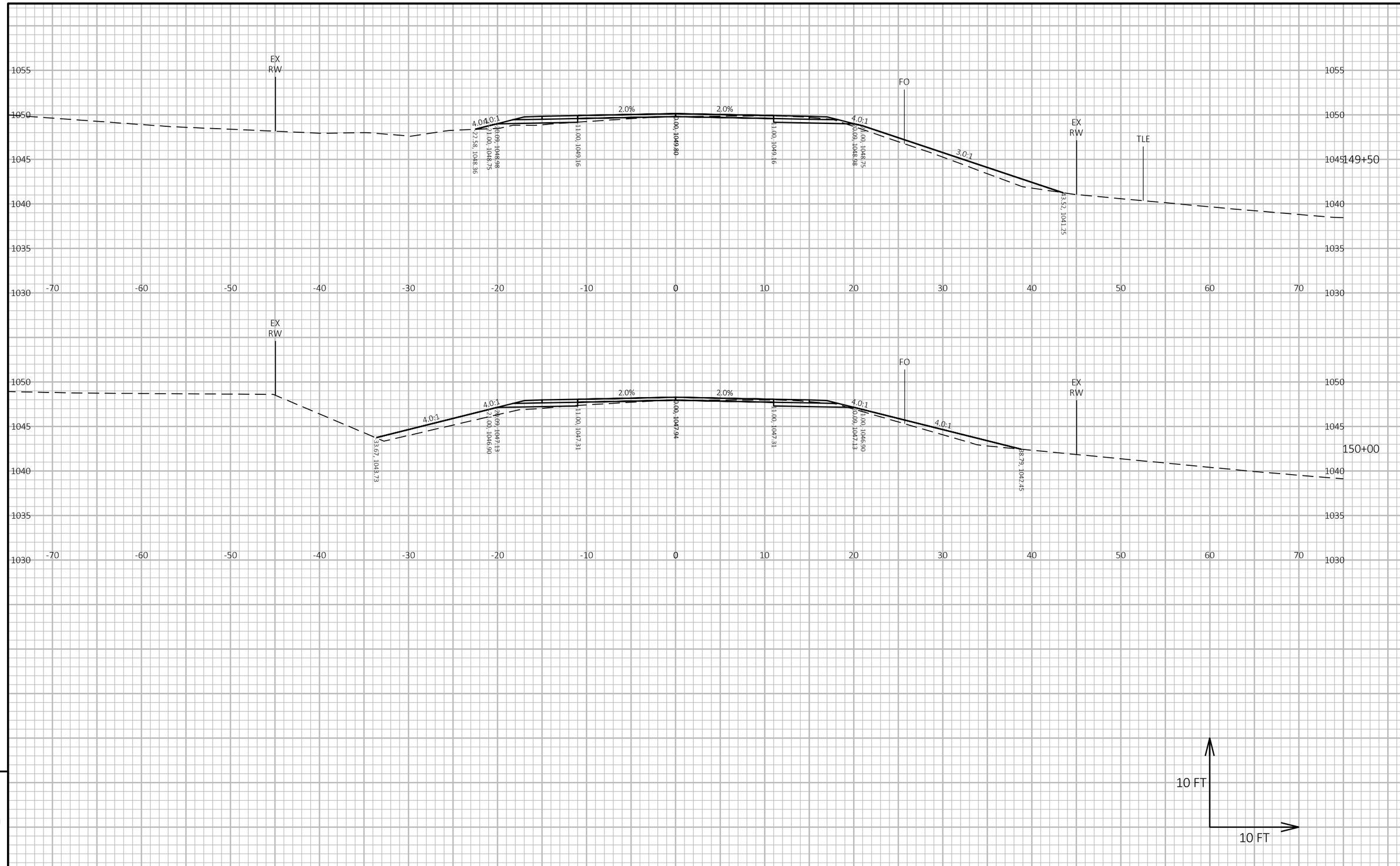

9

9

PROJECT NO: 7881-05-73	HWY: CTH D	COUNTY: DUNN	CROSS SECTIONS: CTH D	SHEET 149	E

FILE NAME : I:\41\410859 DUNN CTH D\C3D\DESIGN\CORRIDORS\CORRIDOR-CTH D 4-INCH RAISE.DWG
LAYOUT NAME - 938

PLOT DATE : 5/16/2024 10:27 AM PLOT BY : HEDRINGTON, MARK PLOT NAME : **PLOT SCALE :** 1 IN:10 FT HORZ. / 1 IN:10 FT VERT.

WISDOT/CADDS SHEET 49

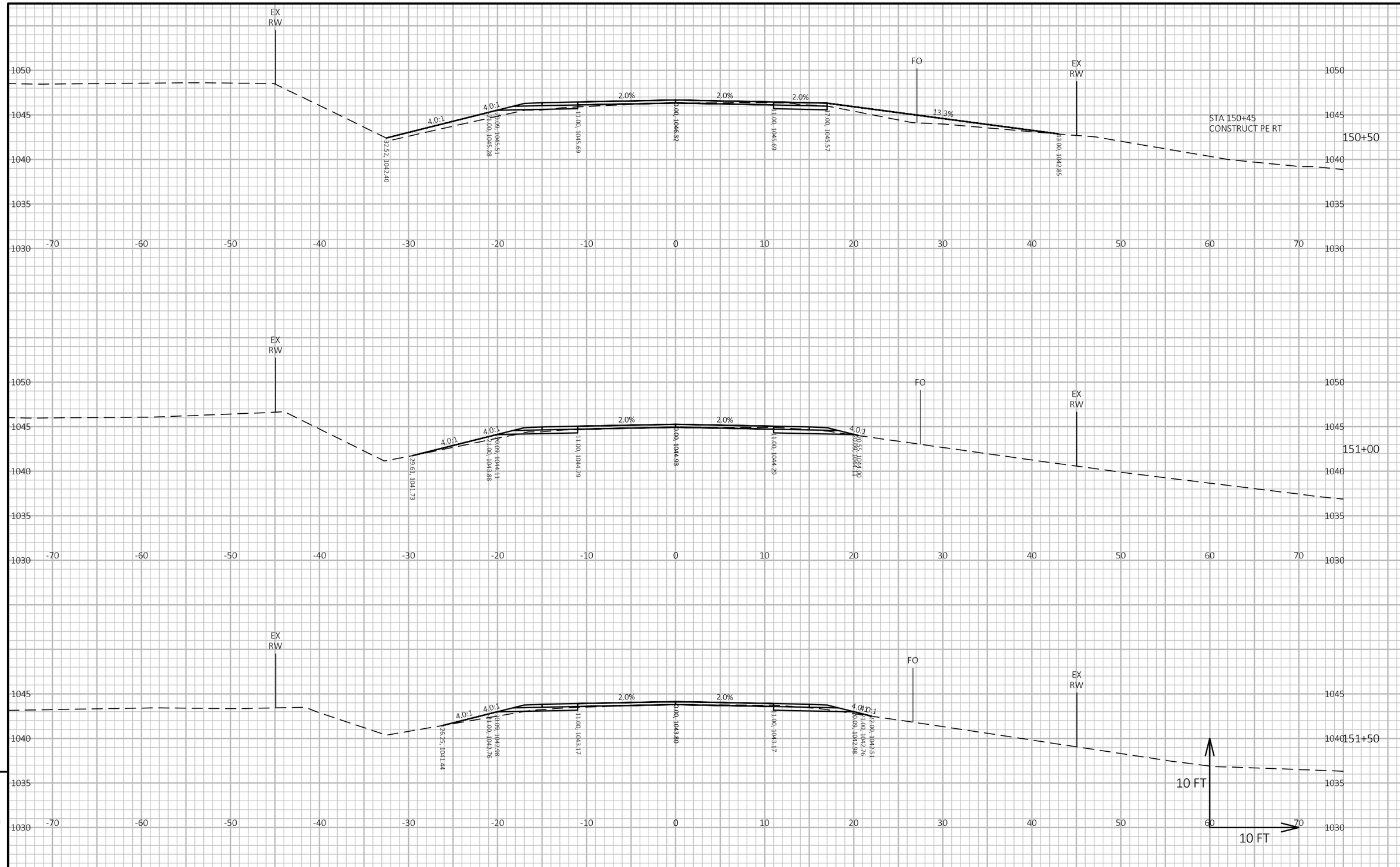

9

9

PROJECT NO: 7881-05-73	HWY: CTH D	COUNTY: DUNN	CROSS SECTIONS: CTH D	SHEET 150	E

FILE NAME : I:\41\410859 DUNN CTH D\C3D\DESIGN\CORRIDORS\CORRIDOR-CTH D 4-INCH RAISE.DWG
LAYOUT NAME - 939
PLOT DATE : 5/16/2024 10:27 AM
PLOT BY : HEDRINGTON, MARK
PLOT NAME :
PLOT SCALE : 1 IN:10 FT HORZ. / 1 IN:10 FT VERT.
WISDOT/CADDS SHEET 49

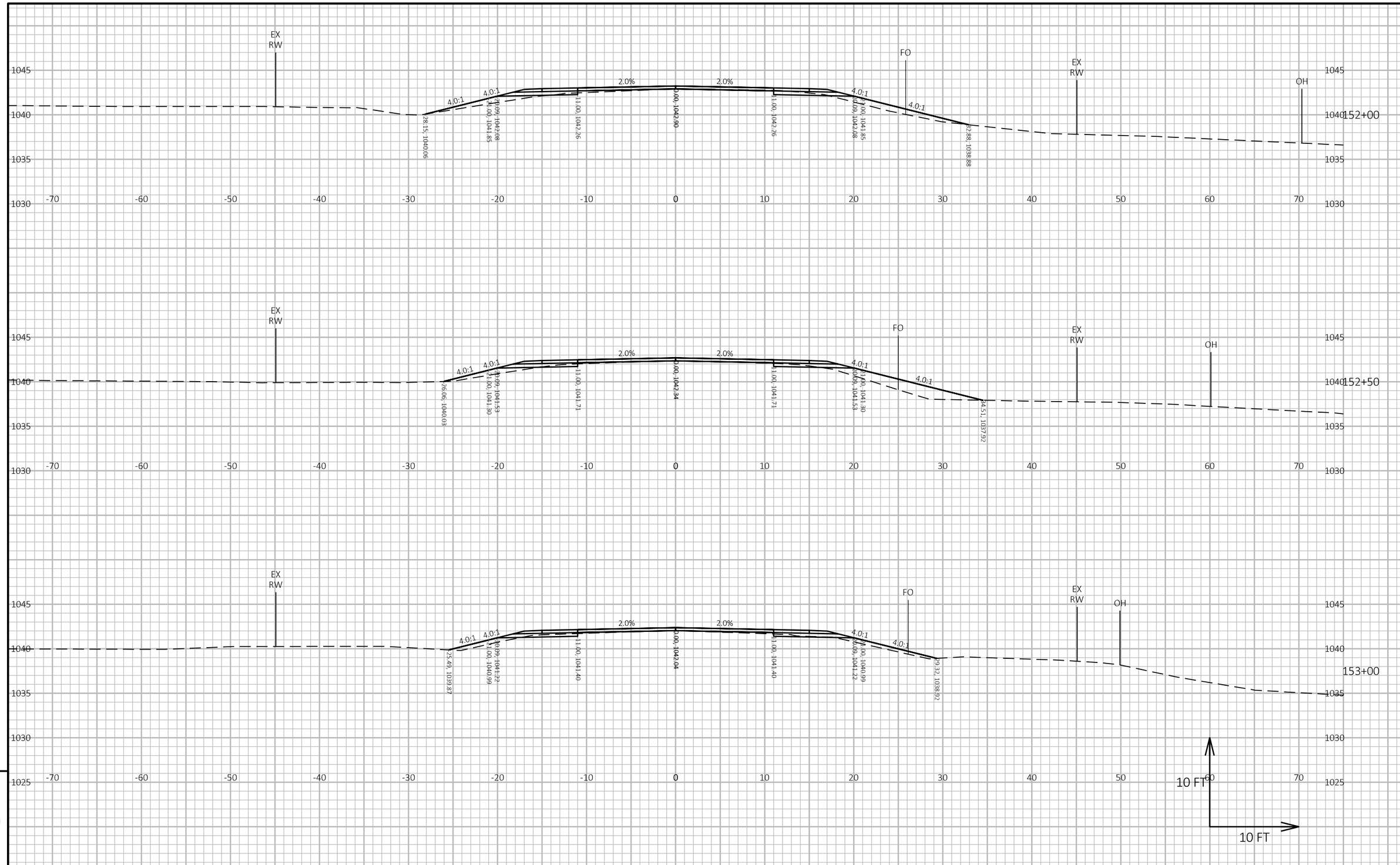

PROJECT NO: 7881-05-73	HWY: CTH D	COUNTY: DUNN	CROSS SECTIONS: CTH D	SHEET 151	E

FILE NAME : I:\41\410859 DUNN CTH D\C3D\DESIGN\CORRIDORS\CORRIDOR-CTH D 4-INCH RAISE.DWG
LAYOUT NAME - 940
PLOT DATE : 5/16/2024 10:26 AM
PLOT BY : HEDRINGTON, MARK
PLOT NAME :
PLOT SCALE : 1 IN:10 FT HORZ. / 1 IN:10 FT VERT.
WISDOT/CADDS SHEET 49

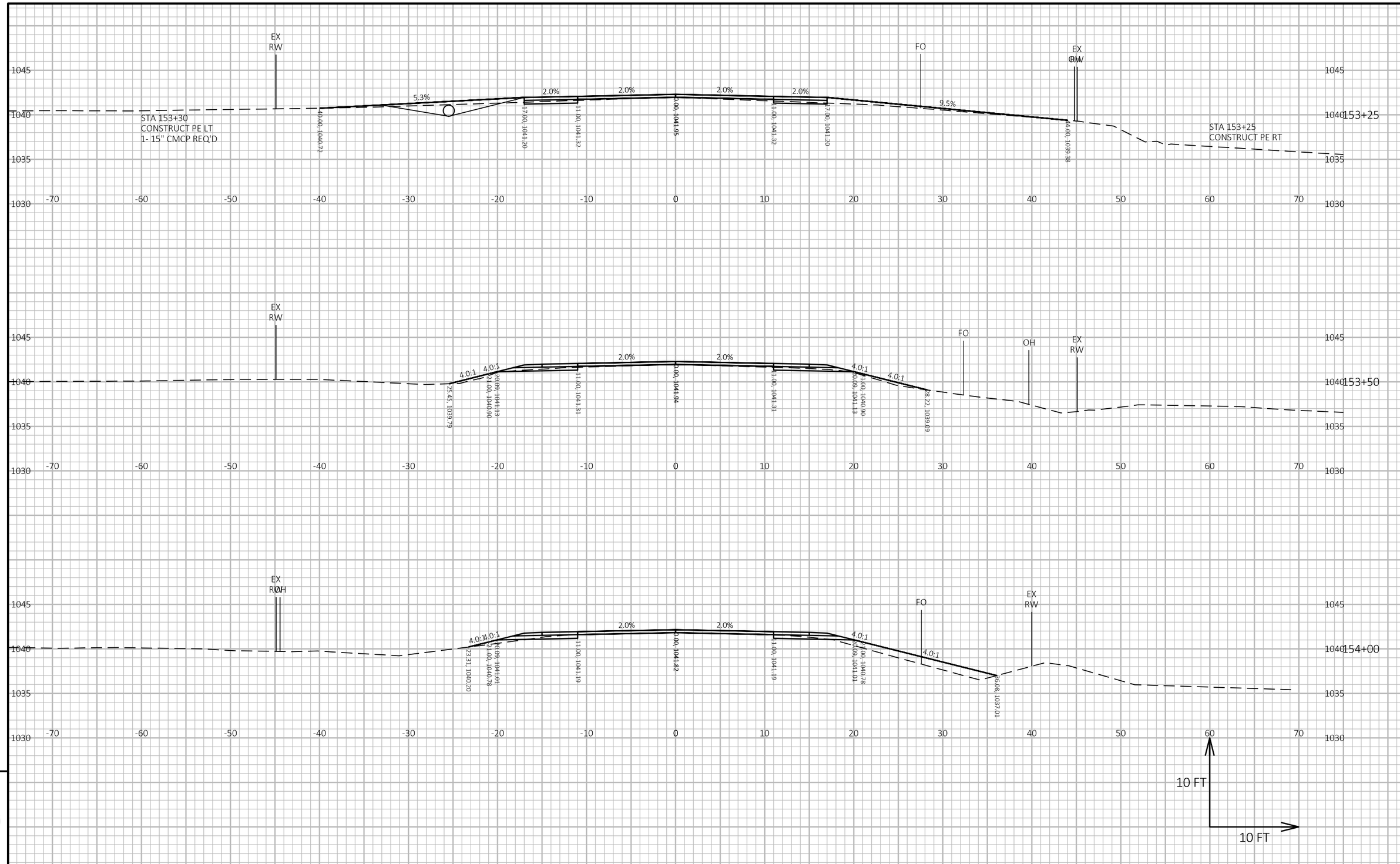

9

9

PROJECT NO: 7881-05-73	HWY: CTH D	COUNTY: DUNN	CROSS SECTIONS: CTH D	SHEET 152	E

FILE NAME : I:\41\410859 DUNN CTH D\C3D\DESIGN\CORRIDORS\CORRIDOR-CTH D 4-INCH RAISE.DWG
LAYOUT NAME - 941
PLOT DATE : 5/16/2024 10:26 AM
PLOT BY : HEDRINGTON, MARK
PLOT NAME :
PLOT SCALE : 1 IN:10 FT HORZ. / 1 IN:10 FT VERT.
WISDOT/CADDS SHEET 49

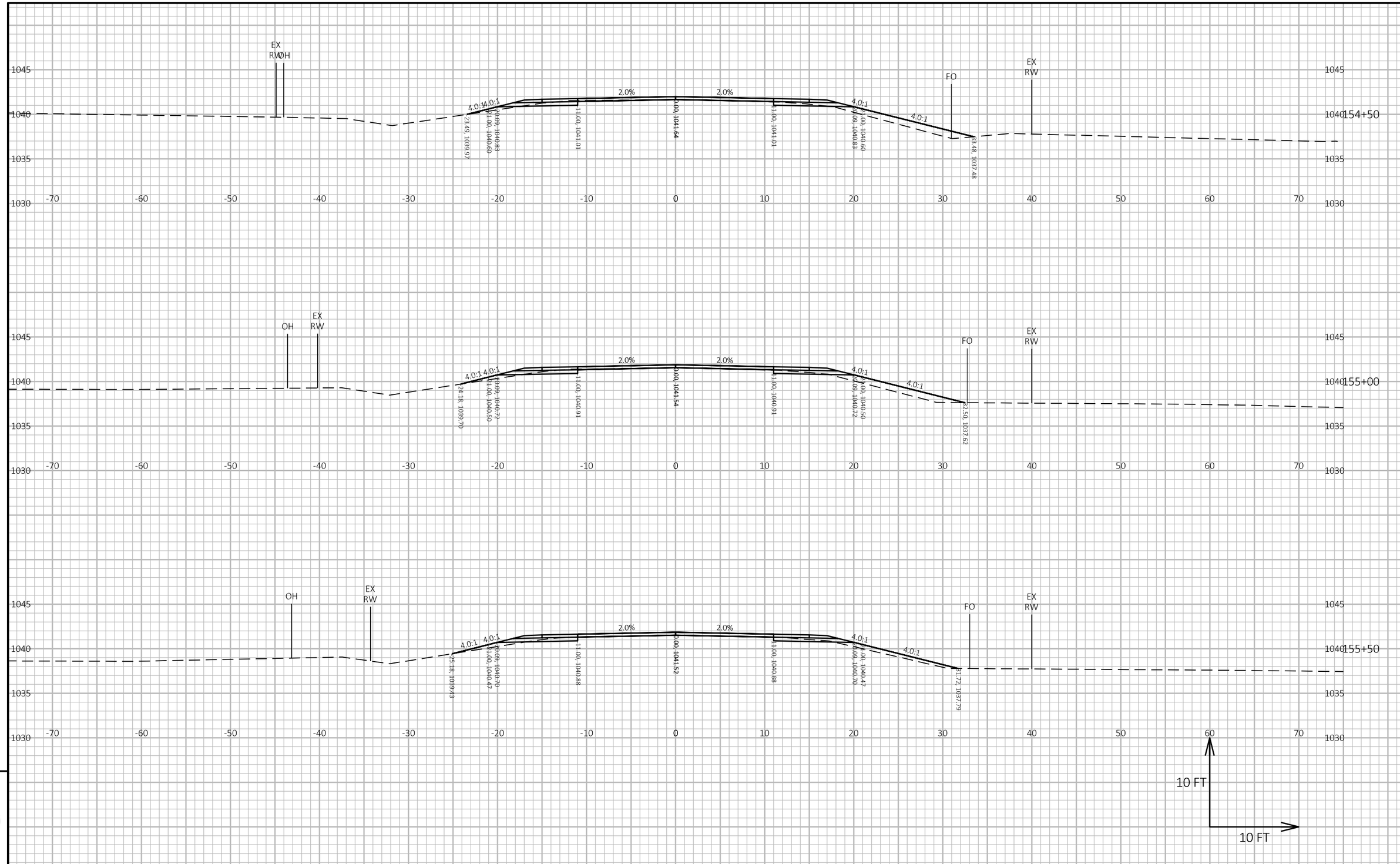

9

9

PROJECT NO: 7881-05-73	HWY: CTH D	COUNTY: DUNN	CROSS SECTIONS: CTH D	SHEET 153	E

FILE NAME : I:\41\410859 DUNN CTH D\C3D\DESIGN\CORRIDORS\CORRIDOR-CTH D 4-INCH RAISE.DWG
LAYOUT NAME - 942

PLOT DATE : 5/16/2024 10:26 AM PLOT BY : HEDRINGTON, MARK PLOT NAME : PLOT SCALE : 1 IN:10 FT HORZ. / 1 IN:10 FT VERT.

WISDOT/CADDS SHEET 49

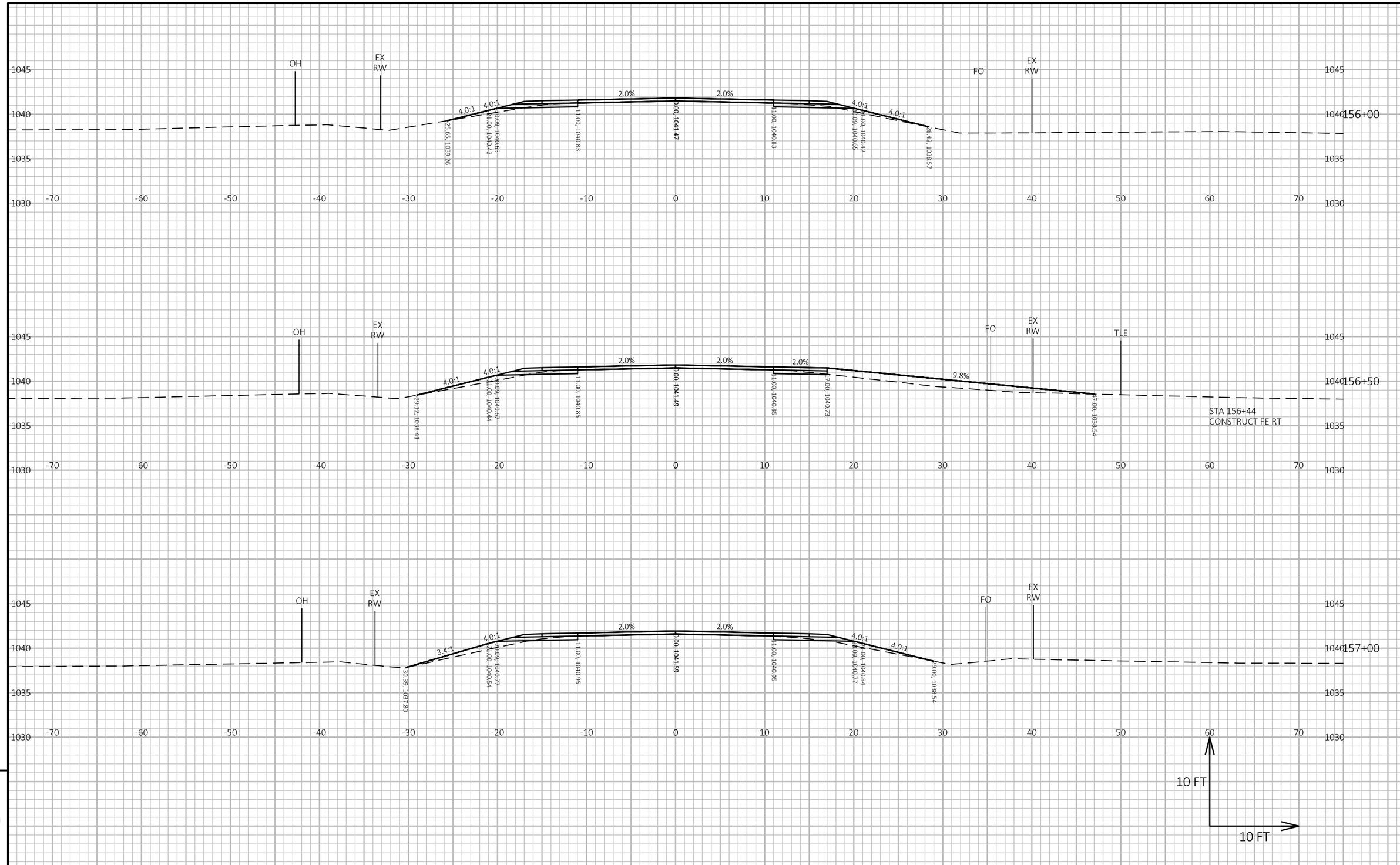

PROJECT NO: 7881-05-73	HWY: CTH D	COUNTY: DUNN	CROSS SECTIONS: CTH D	SHEET 154	E

FILE NAME : I:\41\410859 DUNN CTH D\C3D\DESIGN\CORRIDORS\CORRIDOR-CTH D 4-INCH RAISE.DWG
LAYOUT NAME - 943
PLOT DATE : 5/16/2024 10:26 AM
PLOT BY : HEDRINGTON, MARK
PLOT NAME :
PLOT SCALE : 1 IN:10 FT HORZ. / 1 IN:10 FT VERT.

WISDOT/CADDS SHEET 49

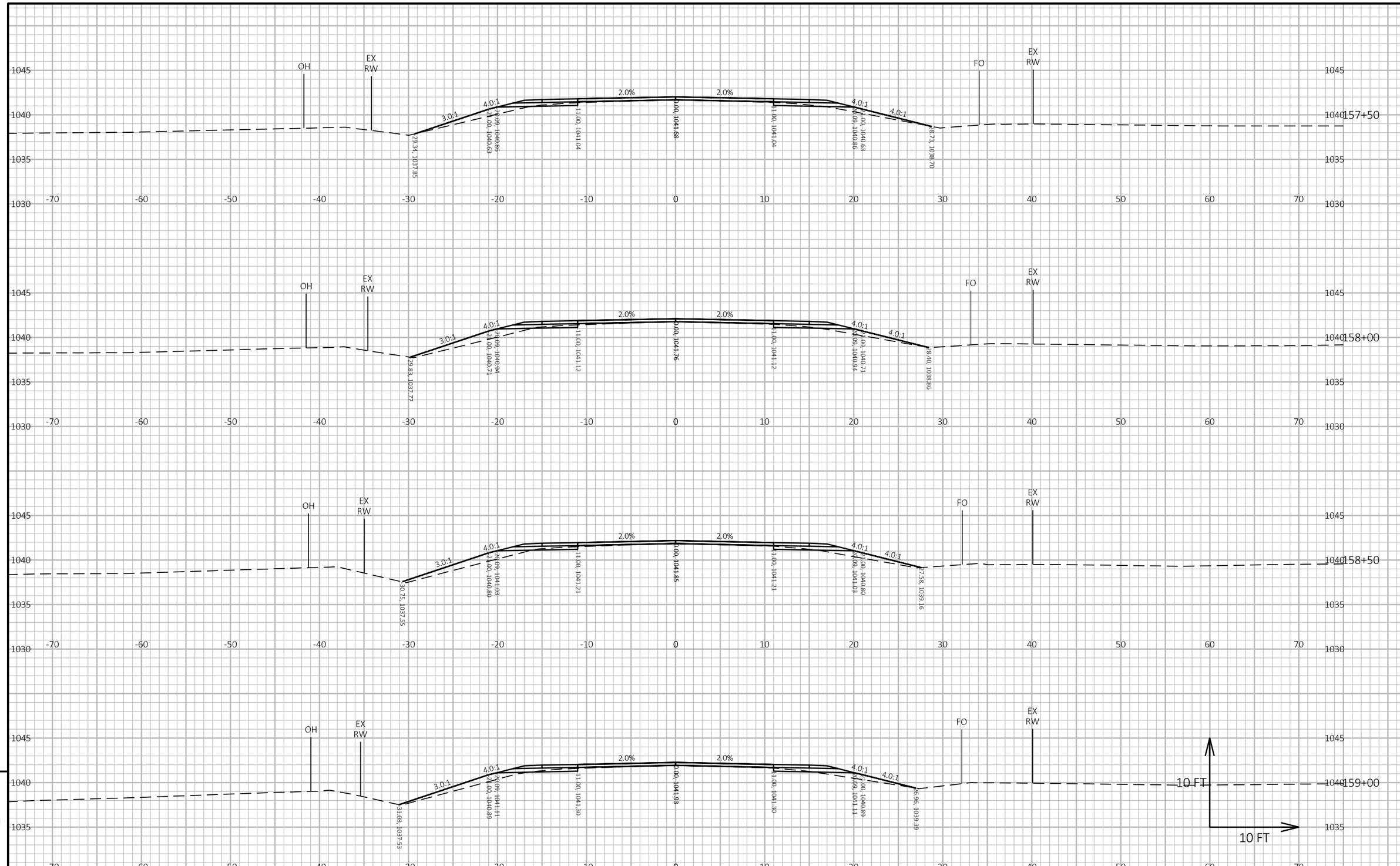

PROJECT NO: 7881-05-73	HWY: CTH D	COUNTY: DUNN	CROSS SECTIONS: CTH D	SHEET 155	E

FILE NAME : I:\41\410859 DUNN CTH D\C3D\DESIGN\CORRIDORS\CORRIDOR-CTH D 4-INCH RAISE.DWG
LAYOUT NAME - 944
PLOT DATE : 5/16/2024 10:26 AM
PLOT BY : HEDRINGTON, MARK
PLOT NAME :
PLOT SCALE : 1 IN:10 FT HORZ. / 1 IN:10 FT VERT.

WISDOT/CADDS SHEET 49

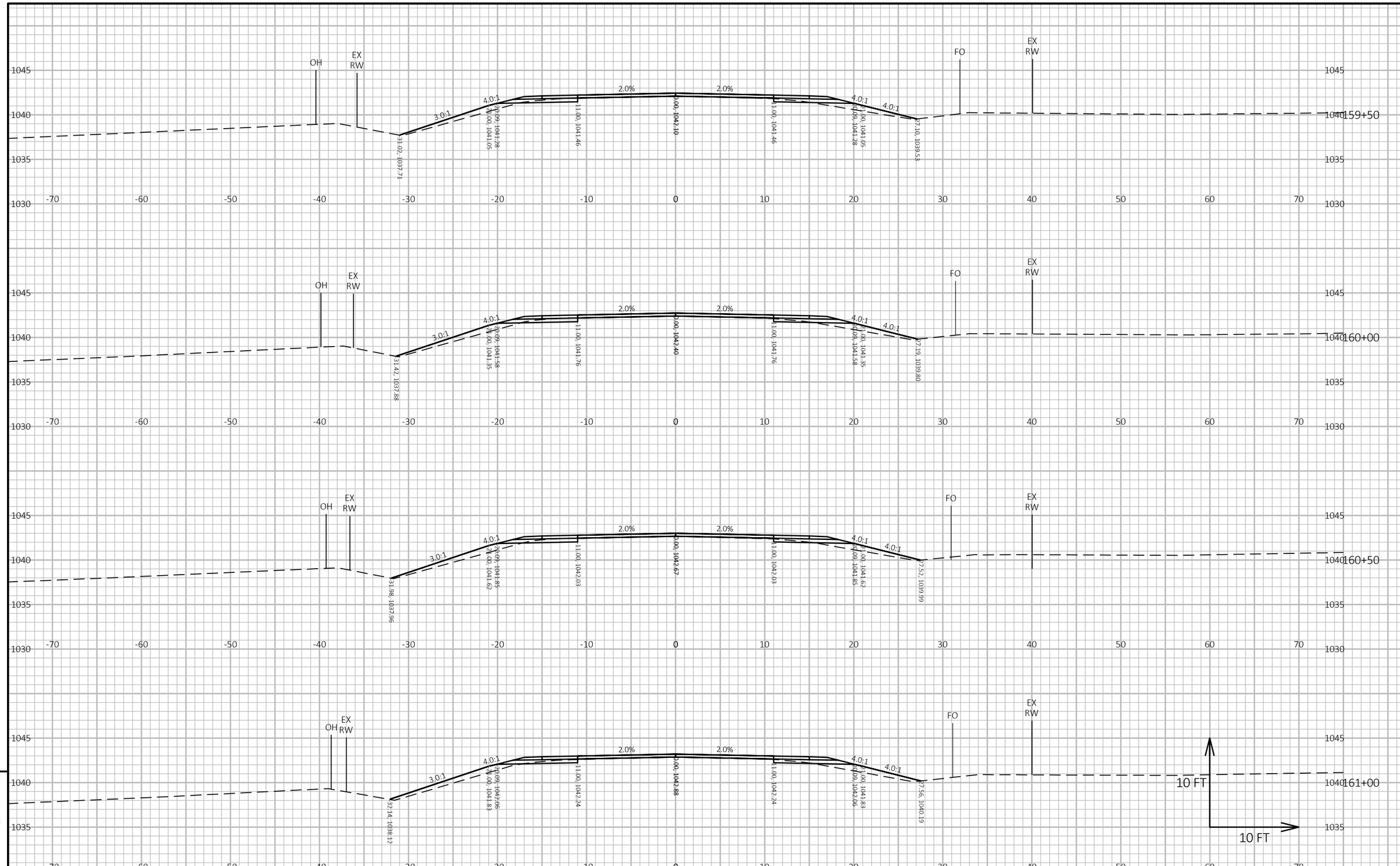

PROJECT NO: 7881-05-73	HWY: CTH D	COUNTY: DUNN	CROSS SECTIONS: CTH D	SHEET 156	E

FILE NAME : I:\41\410859 DUNN CTH D\C3D\DESIGN\CORRIDORS\CORRIDOR-CTH D 4-INCH RAISE.DWG
LAYOUT NAME - 945
PLOT DATE : 5/16/2024 10:26 AM
PLOT BY : HEDRINGTON, MARK
PLOT NAME :
PLOT SCALE : 1 IN:10 FT HORZ. / 1 IN:10 FT VERT.
WISDOT/CADDS SHEET 49

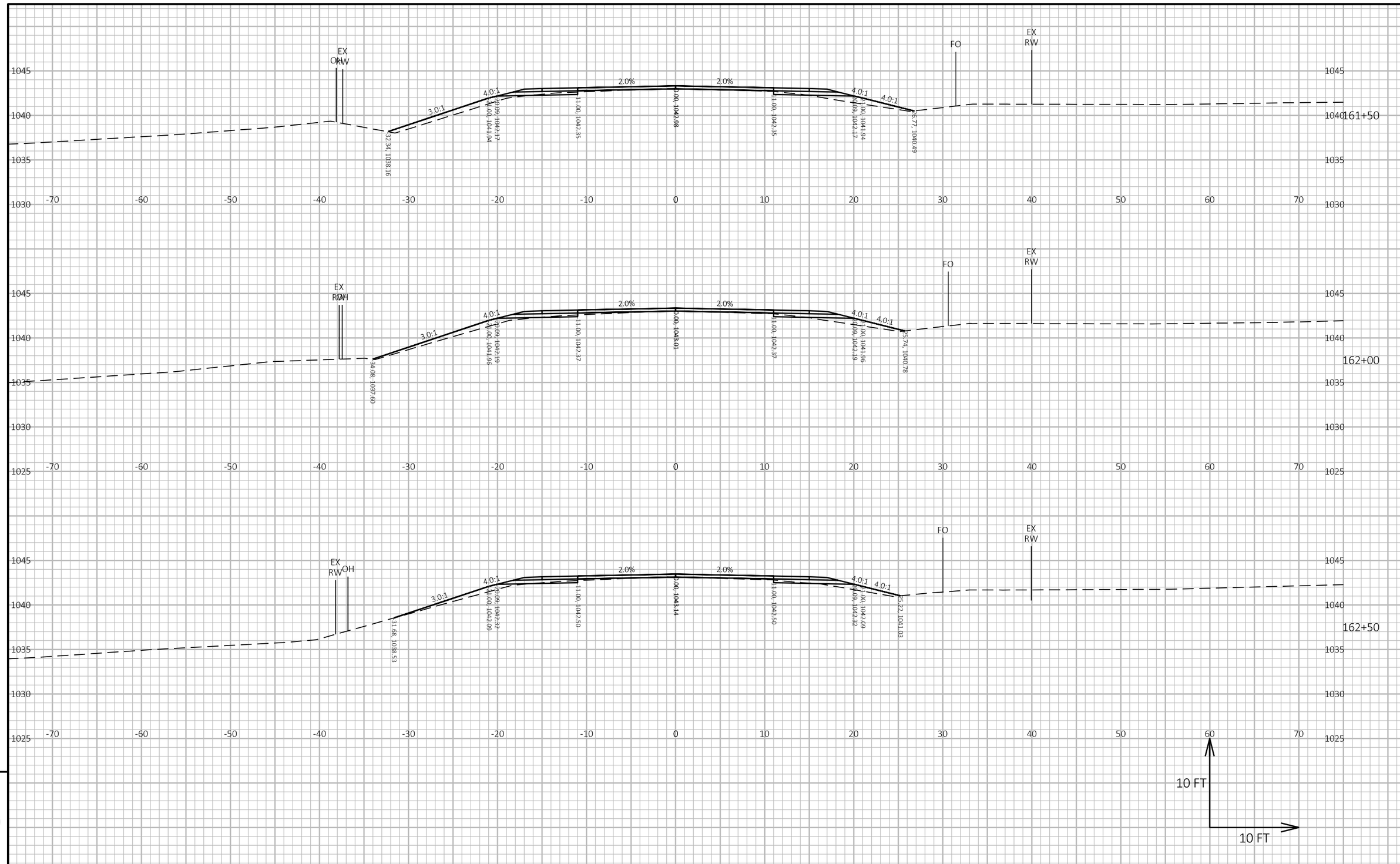

9

9

PROJECT NO: 7881-05-73	HWY: CTH D	COUNTY: DUNN	CROSS SECTIONS: CTH D	SHEET 157	E

FILE NAME : I:\41\410859 DUNN CTH D\C3D\DESIGN\CORRIDORS\CORRIDOR-CTH D 4-INCH RAISE.DWG
LAYOUT NAME - 946
PLOT DATE : 5/16/2024 10:26 AM
PLOT BY : HEDRINGTON, MARK
PLOT NAME :
PLOT SCALE : 1 IN:10 FT HORZ. / 1 IN:10 FT VERT.
WISDOT/CADDS SHEET 49

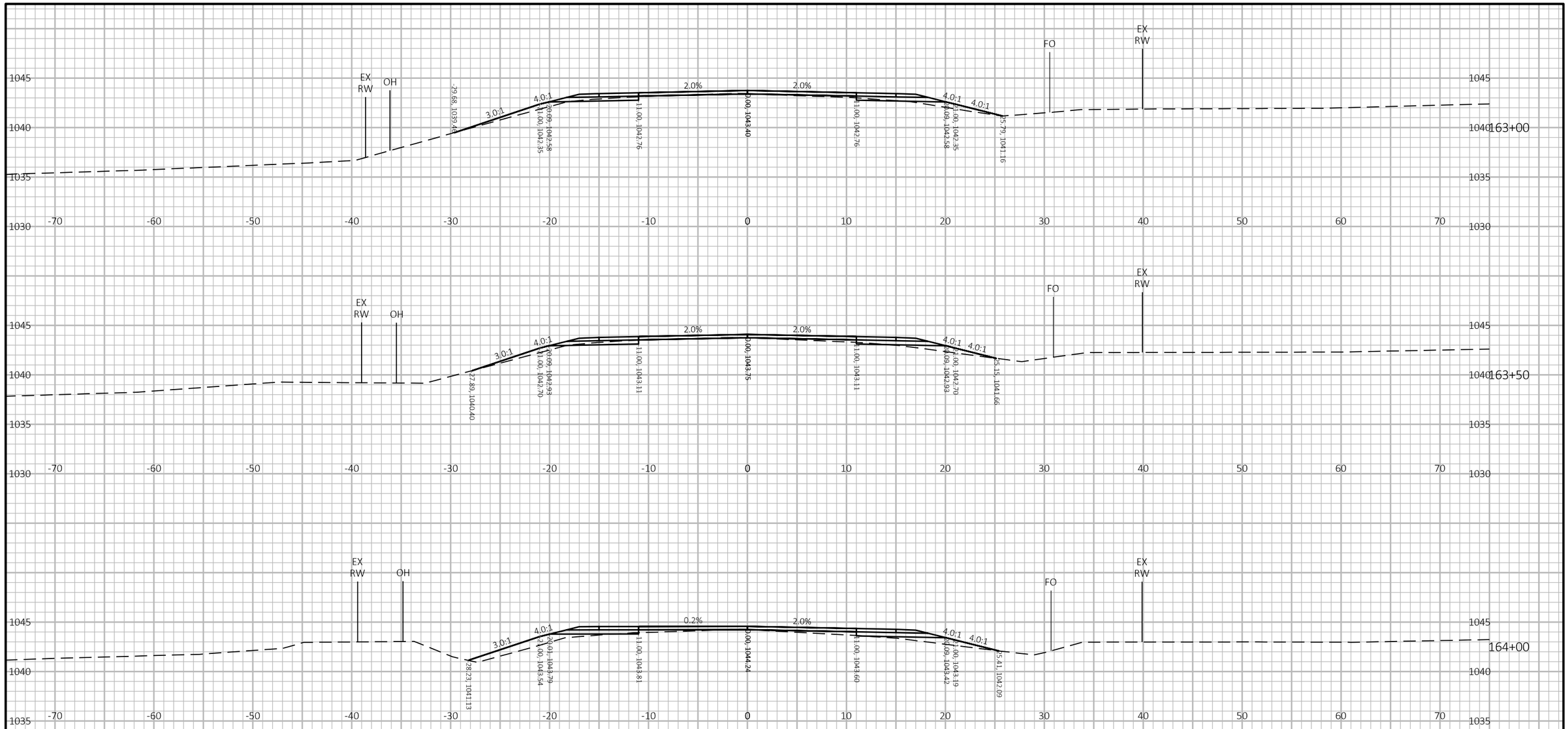

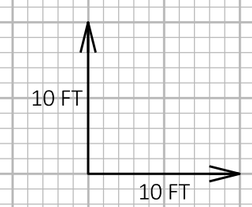

9

9

PROJECT NO: 7881-05-73	HWY: CTH D	COUNTY: DUNN	CROSS SECTIONS: CTH D	SHEET 158	E

FILE NAME : I:\41\410859 DUNN CTH D\C3D\DESIGN\CORRIDORS\CORRIDOR-CTH D 4-INCH RAISE.DWG
LAYOUT NAME - 947
PLOT DATE : 5/16/2024 10:26 AM
PLOT BY : HEDRINGTON, MARK
PLOT NAME :
PLOT SCALE : 1 IN:10 FT HORZ. / 1 IN:10 FT VERT.
WISDOT/CADDS SHEET 49

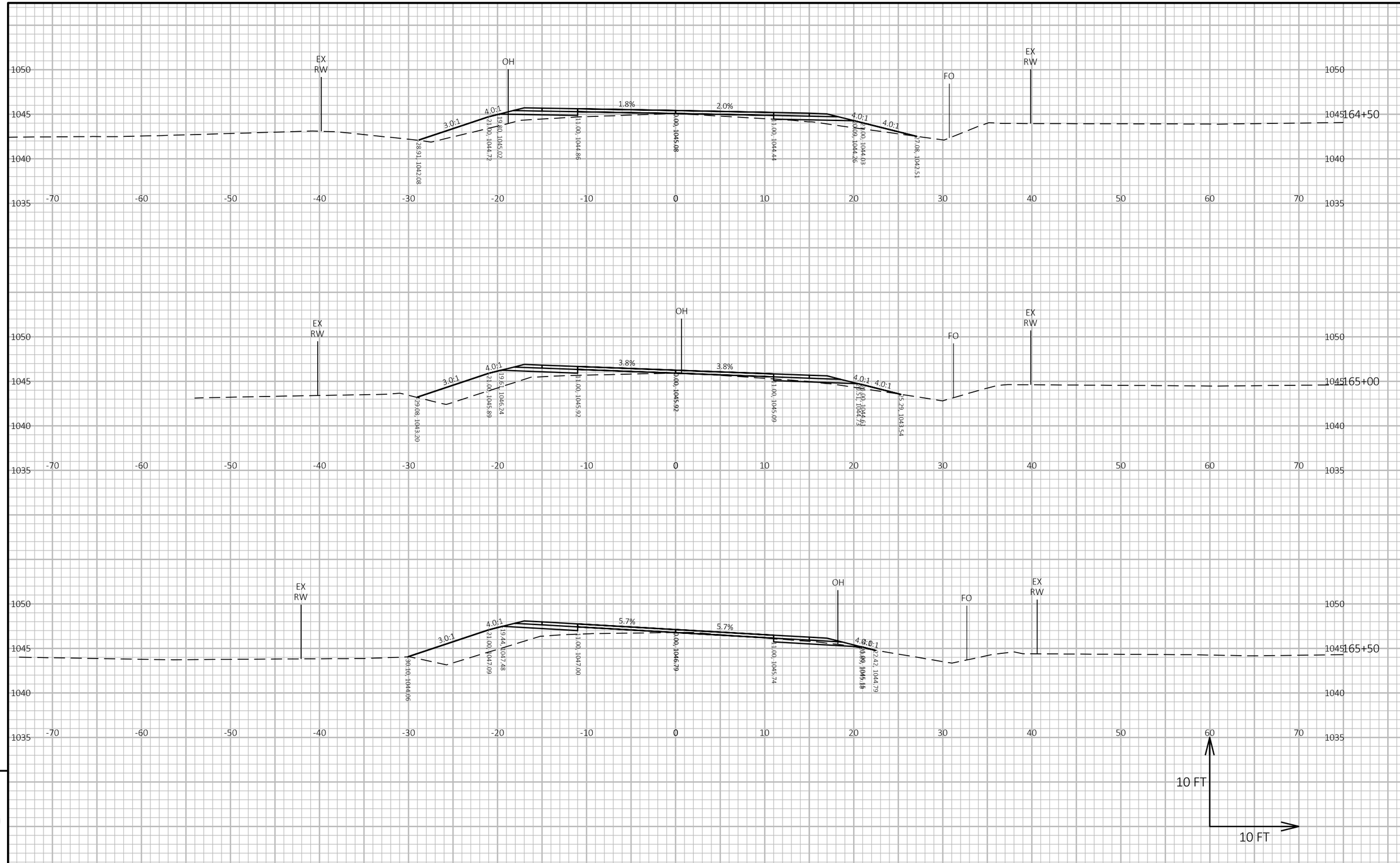

9

9

PROJECT NO: 7881-05-73	HWY: CTH D	COUNTY: DUNN	CROSS SECTIONS: CTH D	SHEET 159	E

FILE NAME : I:\41\410859 DUNN CTH D\C3D\DESIGN\CORRIDORS\CORRIDOR-CTH D 4-INCH RAISE.DWG
LAYOUT NAME - 948

PLOT DATE : 5/16/2024 10:26 AM

PLOT BY : HEDRINGTON, MARK

PLOT NAME :

PLOT SCALE : 1 IN:10 FT HORZ. / 1 IN:10 FT VERT.

WISDOT/CADDS SHEET 49

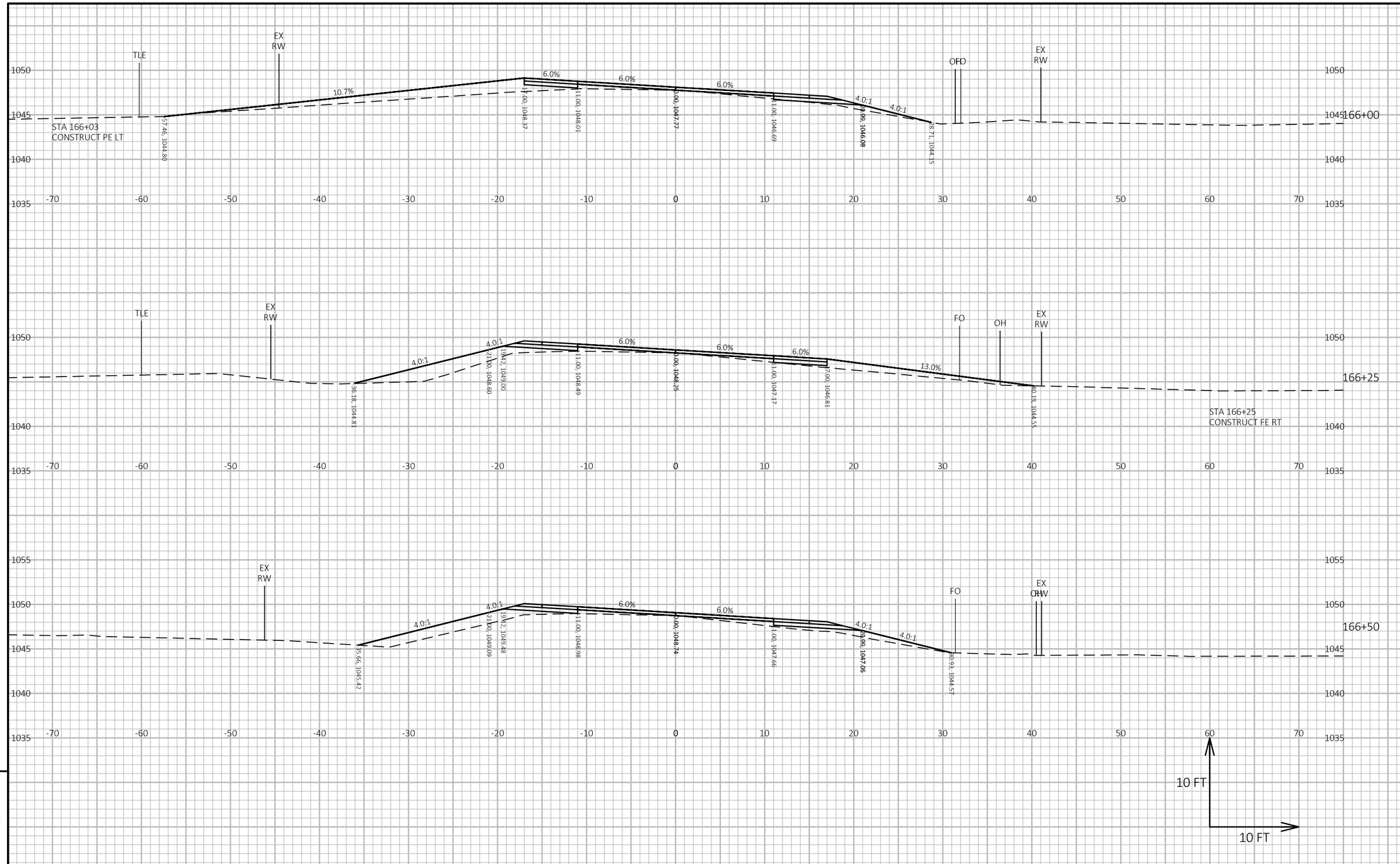

9

9

PROJECT NO: 7881-05-73	HWY: CTH D	COUNTY: DUNN	CROSS SECTIONS: CTH D	SHEET 160	E

FILE NAME : I:\41\410859 DUNN CTH D\C3D\DESIGN\CORRIDORS\CORRIDOR-CTH D 4-INCH RAISE.DWG
LAYOUT NAME - 949
PLOT DATE : 5/16/2024 10:26 AM
PLOT BY : HEDRINGTON, MARK
PLOT NAME :
PLOT SCALE : 1 IN:10 FT HORZ. / 1 IN:10 FT VERT.
WISDOT/CADDS SHEET 49

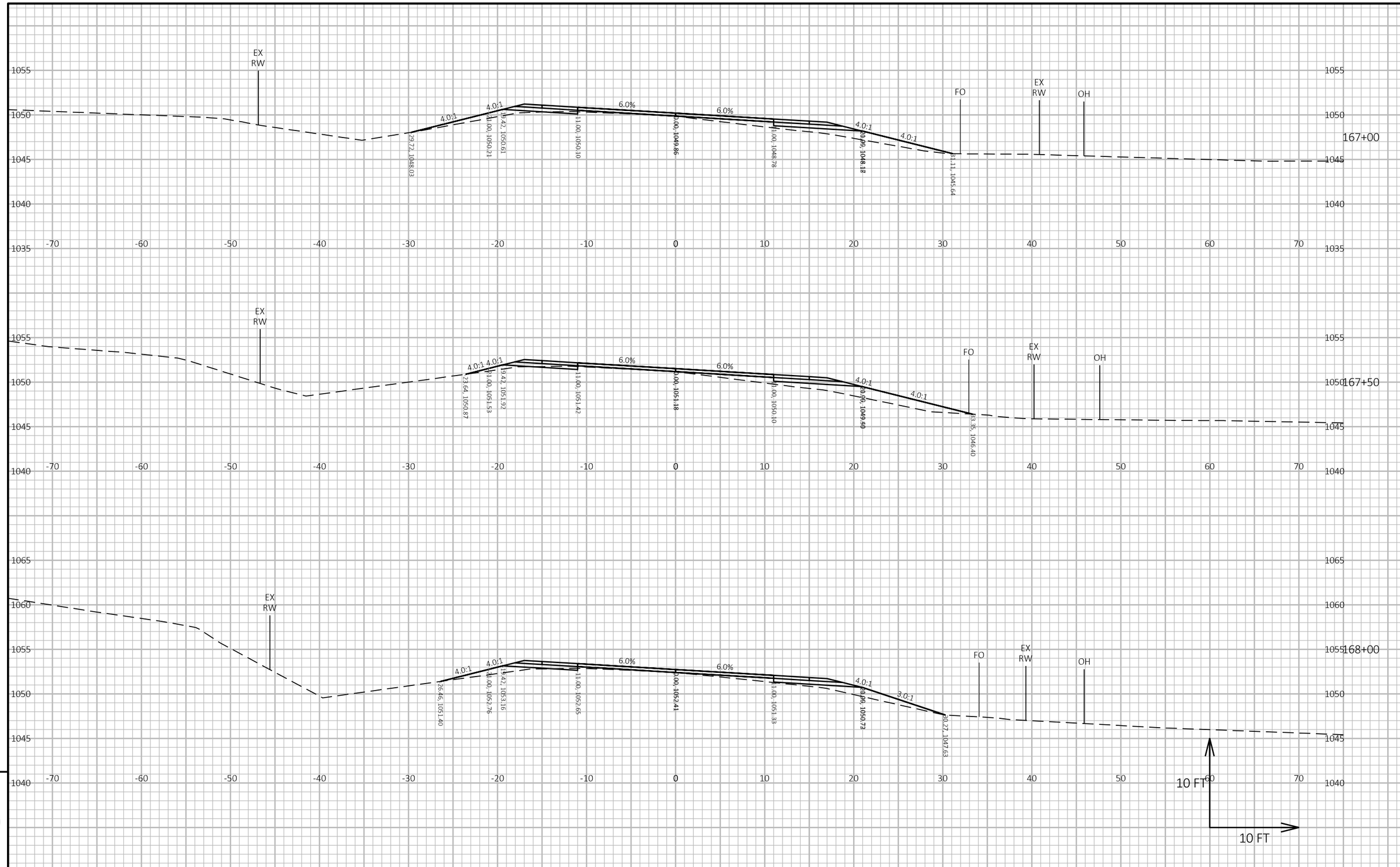

9

9

PROJECT NO: 7881-05-73	HWY: CTH D	COUNTY: DUNN	CROSS SECTIONS: CTH D	SHEET 161	E

FILE NAME : I:\41\410859 DUNN CTH D\C3D\DESIGN\CORRIDORS\CORRIDOR-CTH D 4-INCH RAISE.DWG
LAYOUT NAME - 950

PLOT DATE : 5/16/2024 10:26 AM PLOT BY : HEDRINGTON, MARK PLOT NAME : PLOT SCALE : 1 IN:10 FT HORZ. / 1 IN:10 FT VERT.

WISDOT/CADDS SHEET 49

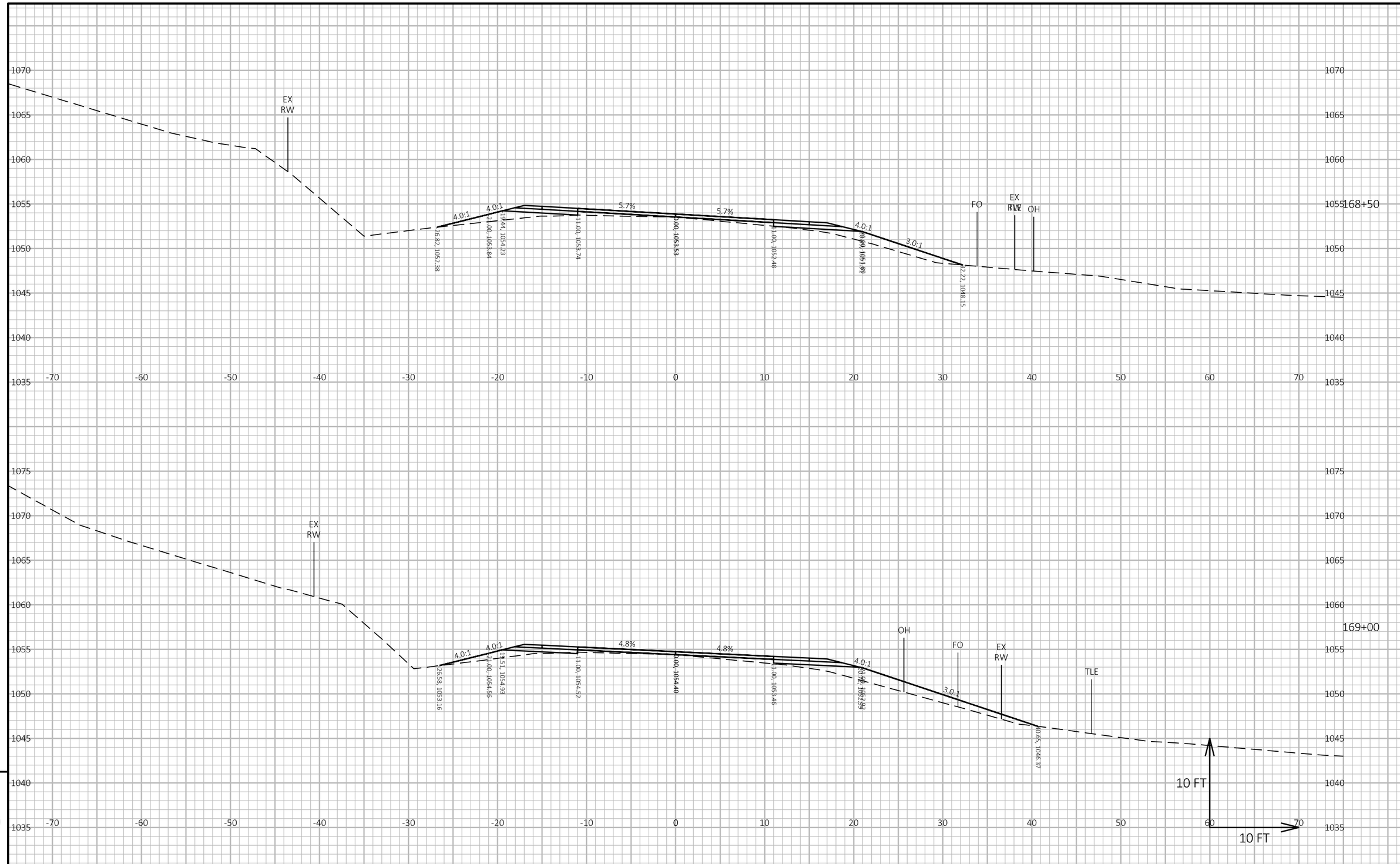

9

9

PROJECT NO: 7881-05-73	HWY: CTH D	COUNTY: DUNN	CROSS SECTIONS: CTH D	SHEET 162	E

FILE NAME : I:\41\410859 DUNN CTH D\C3D\DESIGN\CORRIDORS\CORRIDOR-CTH D 4-INCH RAISE.DWG
LAYOUT NAME - 951
PLOT DATE : 5/16/2024 10:26 AM
PLOT BY : HEDRINGTON, MARK
PLOT NAME :
PLOT SCALE : 1 IN:10 FT HORZ. / 1 IN:10 FT VERT.
WISDOT/CADDS SHEET 49

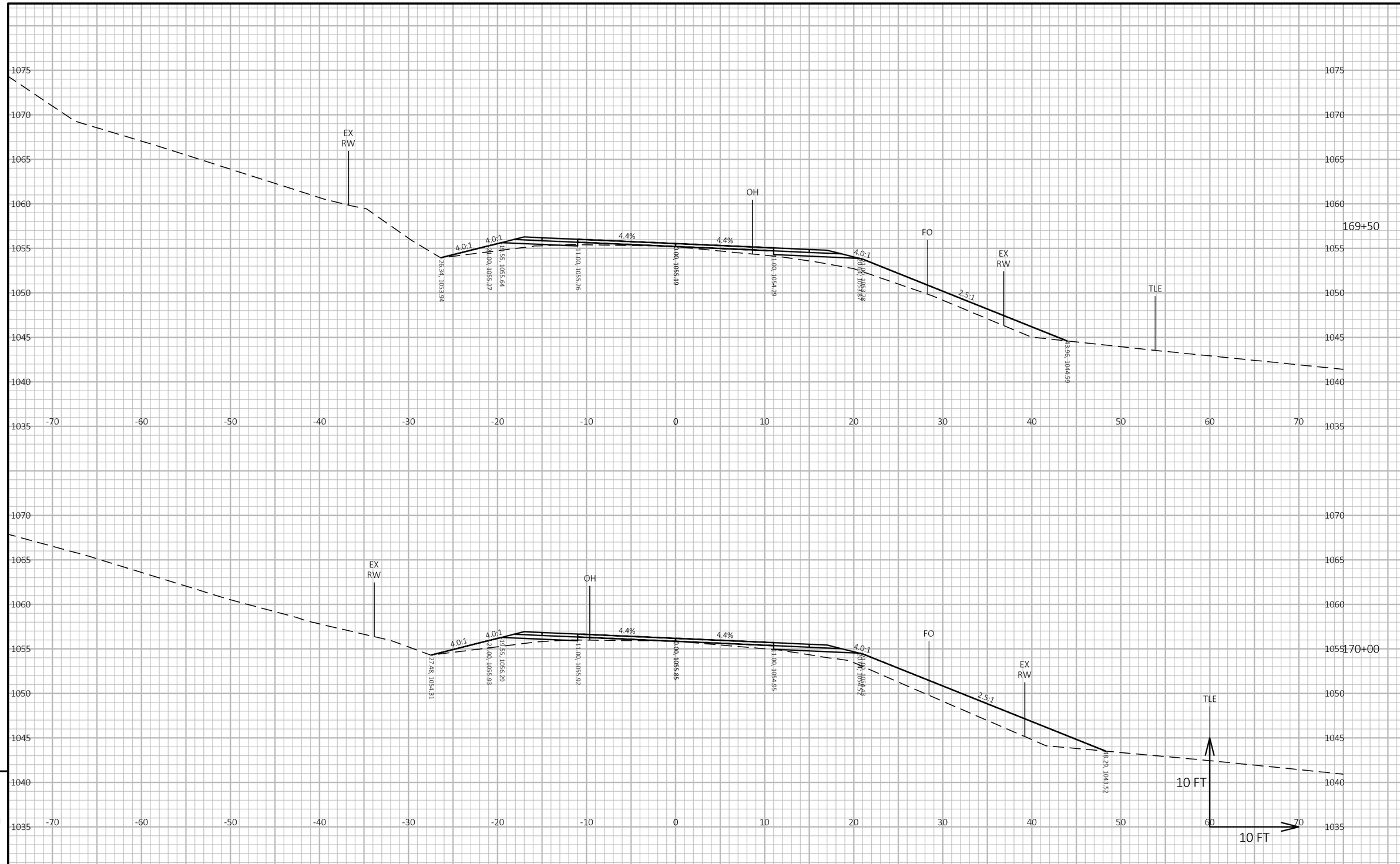

9

9

PROJECT NO: 7881-05-73	HWY: CTH D	COUNTY: DUNN	CROSS SECTIONS: CTH D	SHEET 163	E

FILE NAME : I:\41\410859 DUNN CTH D\C3D\DESIGN\CORRIDORS\CORRIDOR-CTH D 4-INCH RAISE.DWG
LAYOUT NAME - 952
PLOT DATE : 5/16/2024 10:25 AM
PLOT BY : HEDRINGTON, MARK
PLOT NAME :
PLOT SCALE : 1 IN:10 FT HORZ. / 1 IN:10 FT VERT.

WISDOT/CADDS SHEET 49

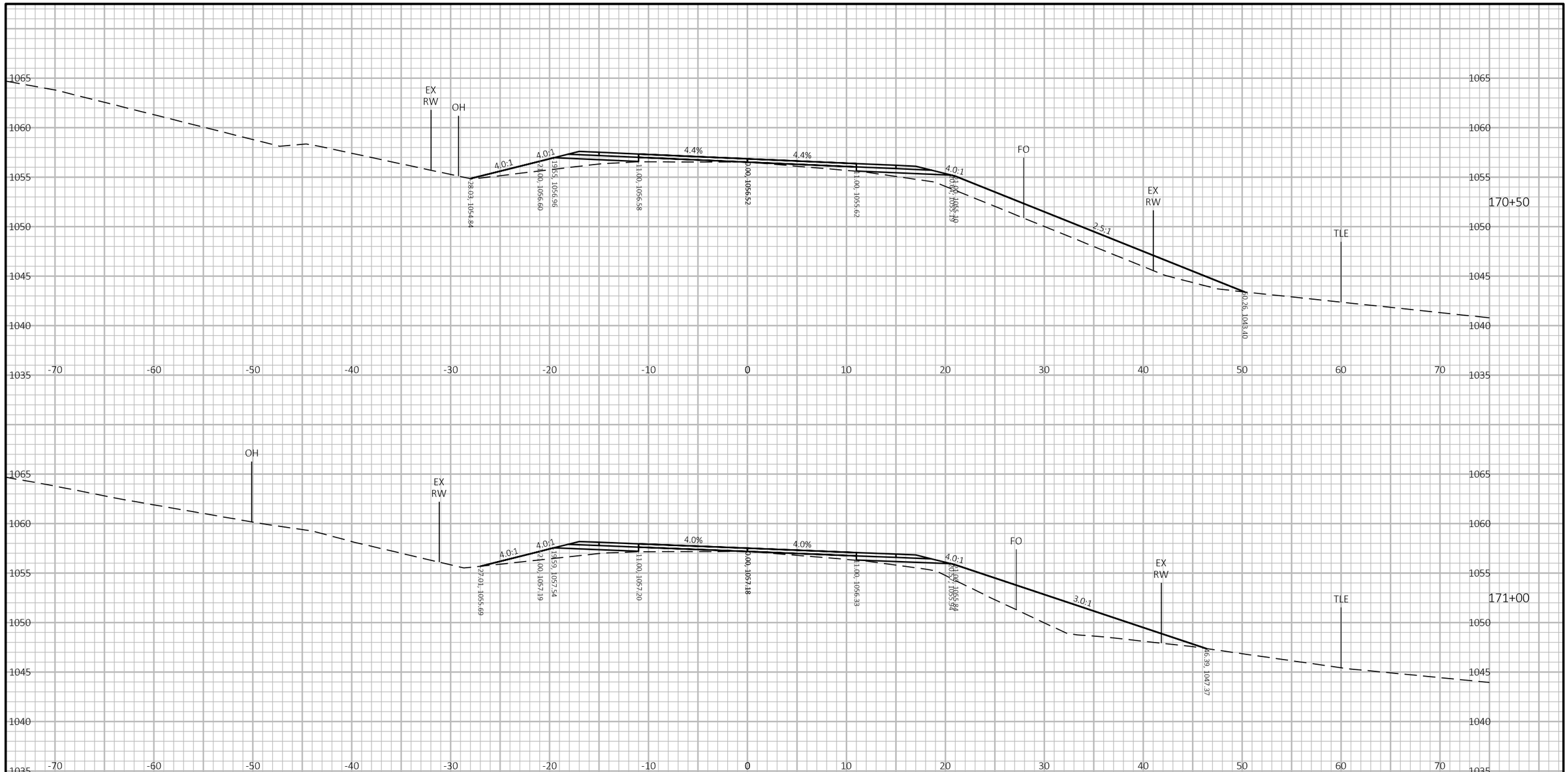

9

9

PROJECT NO: 7881-05-73	HWY: CTH D	COUNTY: DUNN	CROSS SECTIONS: CTH D	SHEET 164	E

FILE NAME : I:\41\410859 DUNN CTH D\C3D\DESIGN\CORRIDORS\CORRIDOR-CTH D 4-INCH RAISE.DWG
LAYOUT NAME - 953
PLOT DATE : 5/16/2024 10:25 AM
PLOT BY : HEDRINGTON, MARK
PLOT NAME :
PLOT SCALE : 1 IN:10 FT HORZ. / 1 IN:10 FT VERT.
WISDOT/CADDS SHEET 49

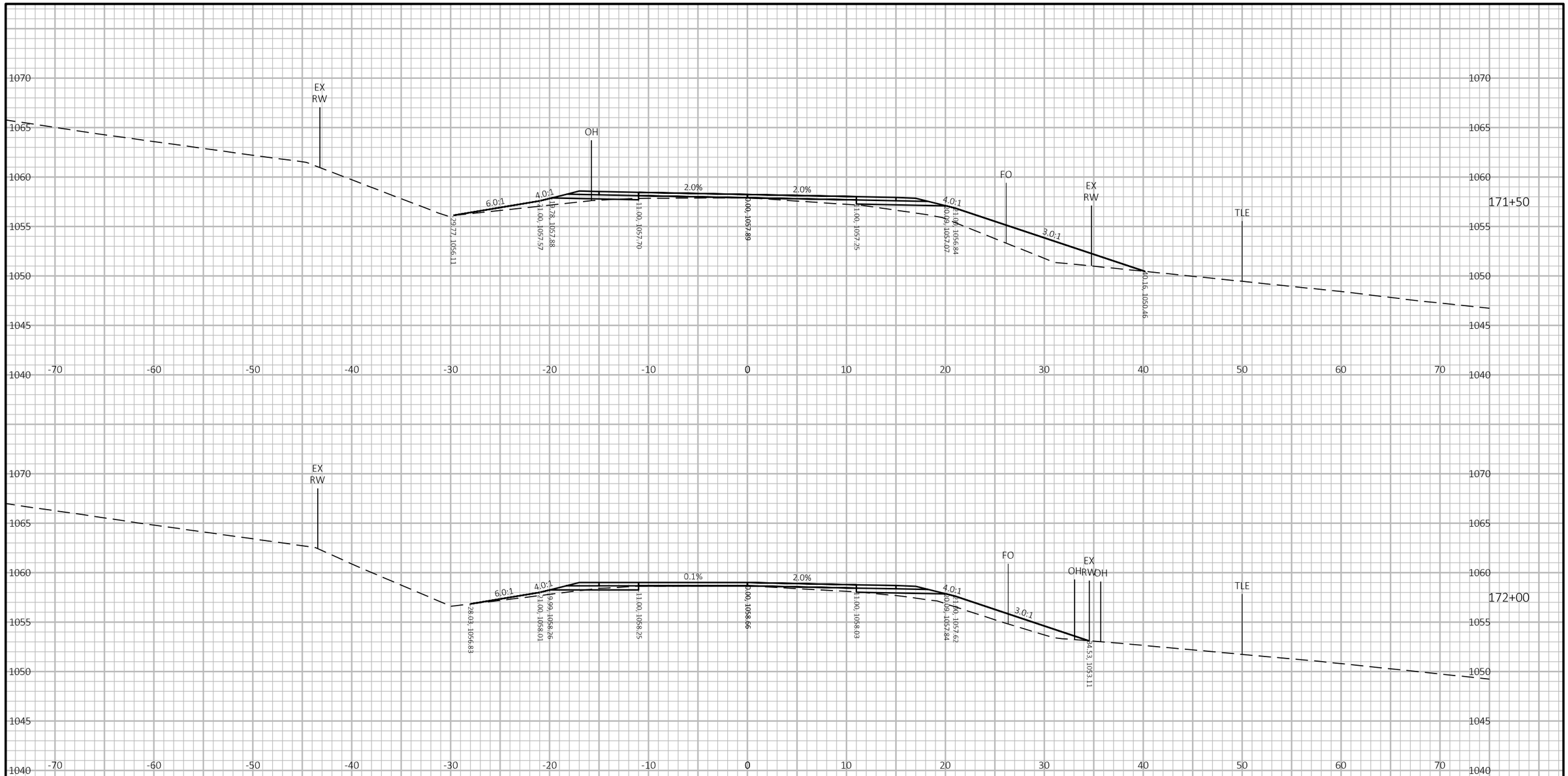

9

9

PROJECT NO: 7881-05-73	HWY: CTH D	COUNTY: DUNN	CROSS SECTIONS: CTH D	SHEET 165	E

FILE NAME : I:\41\410859 DUNN CTH D\C3D\DESIGN\CORRIDORS\CORRIDOR-CTH D 4-INCH RAISE.DWG
LAYOUT NAME - 954

PLOT DATE : 5/16/2024 10:25 AM PLOT BY : HEDRINGTON, MARK PLOT NAME : PLOT SCALE : 1 IN:10 FT HORZ. / 1 IN:10 FT VERT.

WISDOT/CADDS SHEET 49

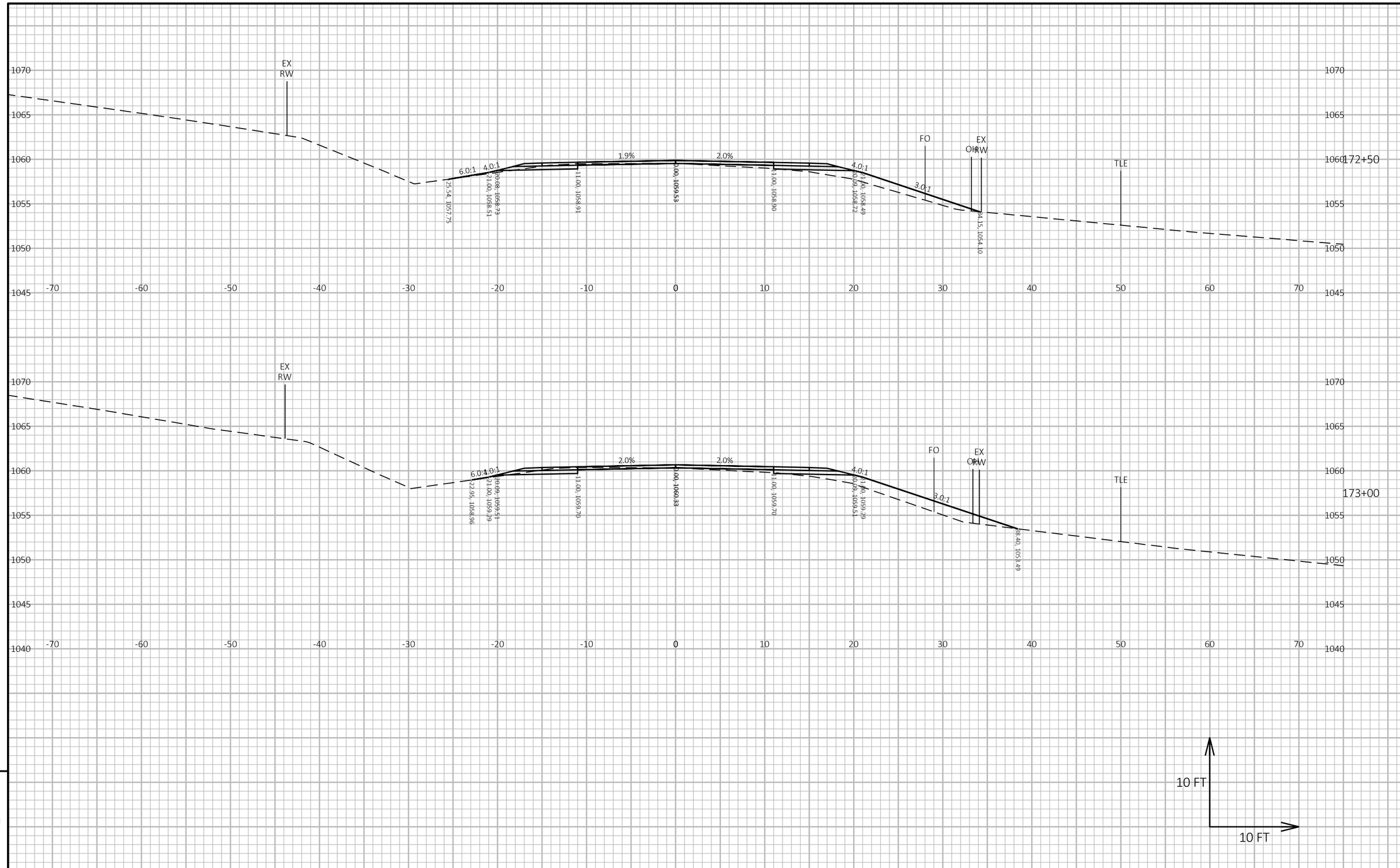

PROJECT NO: 7881-05-73	HWY: CTH D	COUNTY: DUNN	CROSS SECTIONS: CTH D	SHEET 166	E

FILE NAME : I:\41\410859 DUNN CTH D\C3D\DESIGN\CORRIDORS\CORRIDOR-CTH D 4-INCH RAISE.DWG
LAYOUT NAME - 955
PLOT DATE : 5/16/2024 10:25 AM
PLOT BY : HEDRINGTON, MARK
PLOT NAME :
PLOT SCALE : 1 IN:10 FT HORZ. / 1 IN:10 FT VERT.
WISDOT/CADDS SHEET 49

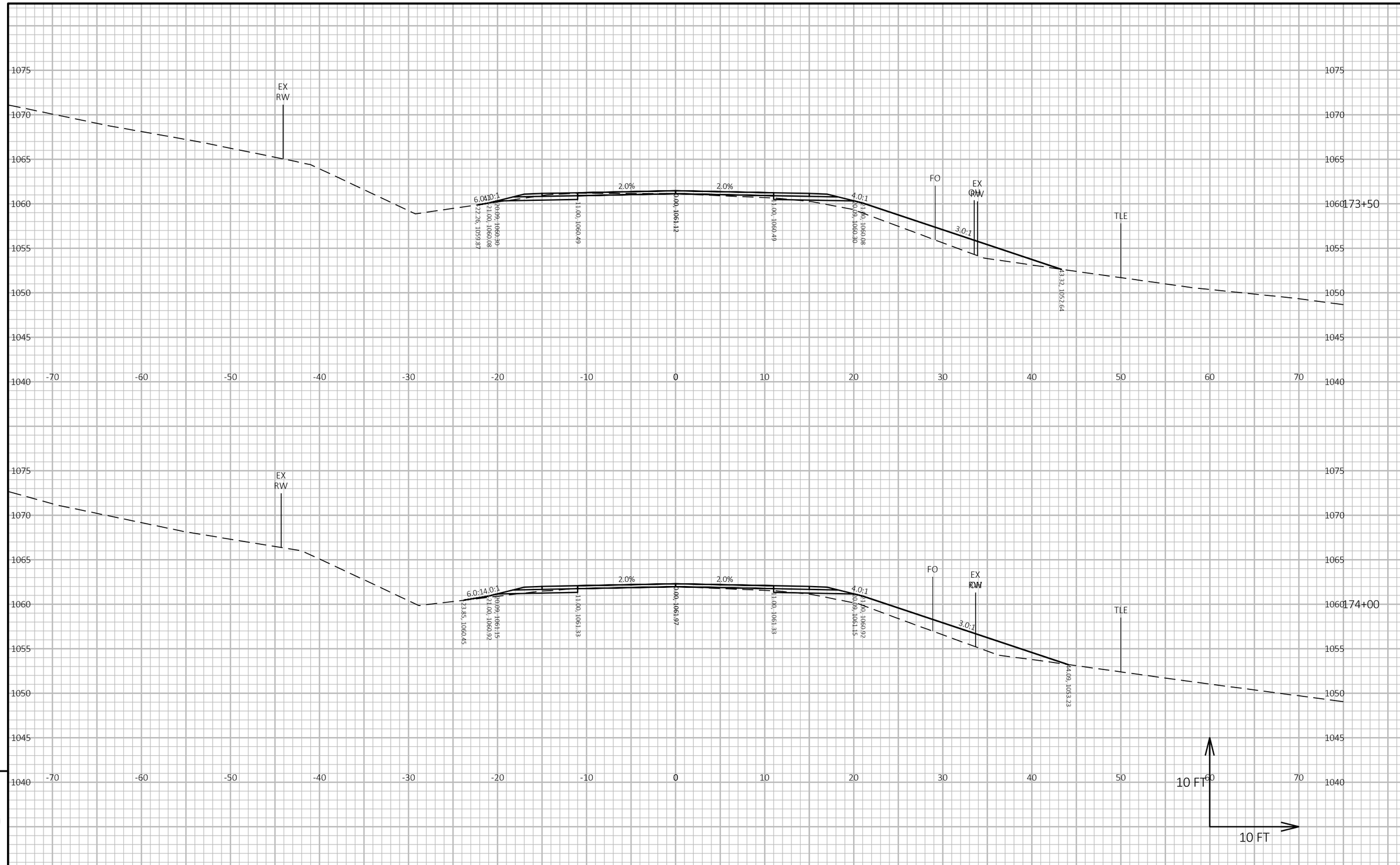

PROJECT NO: 7881-05-73	HWY: CTH D	COUNTY: DUNN	CROSS SECTIONS: CTH D	SHEET 167	E

FILE NAME : I:\41\410859 DUNN CTH D\C3D\DESIGN\CORRIDORS\CORRIDOR-CTH D 4-INCH RAISE.DWG
LAYOUT NAME - 956
PLOT DATE : 5/16/2024 10:25 AM
PLOT BY : HEDRINGTON, MARK
PLOT NAME :
PLOT SCALE : 1 IN:10 FT HORZ. / 1 IN:10 FT VERT.
WISDOT/CADDS SHEET 49

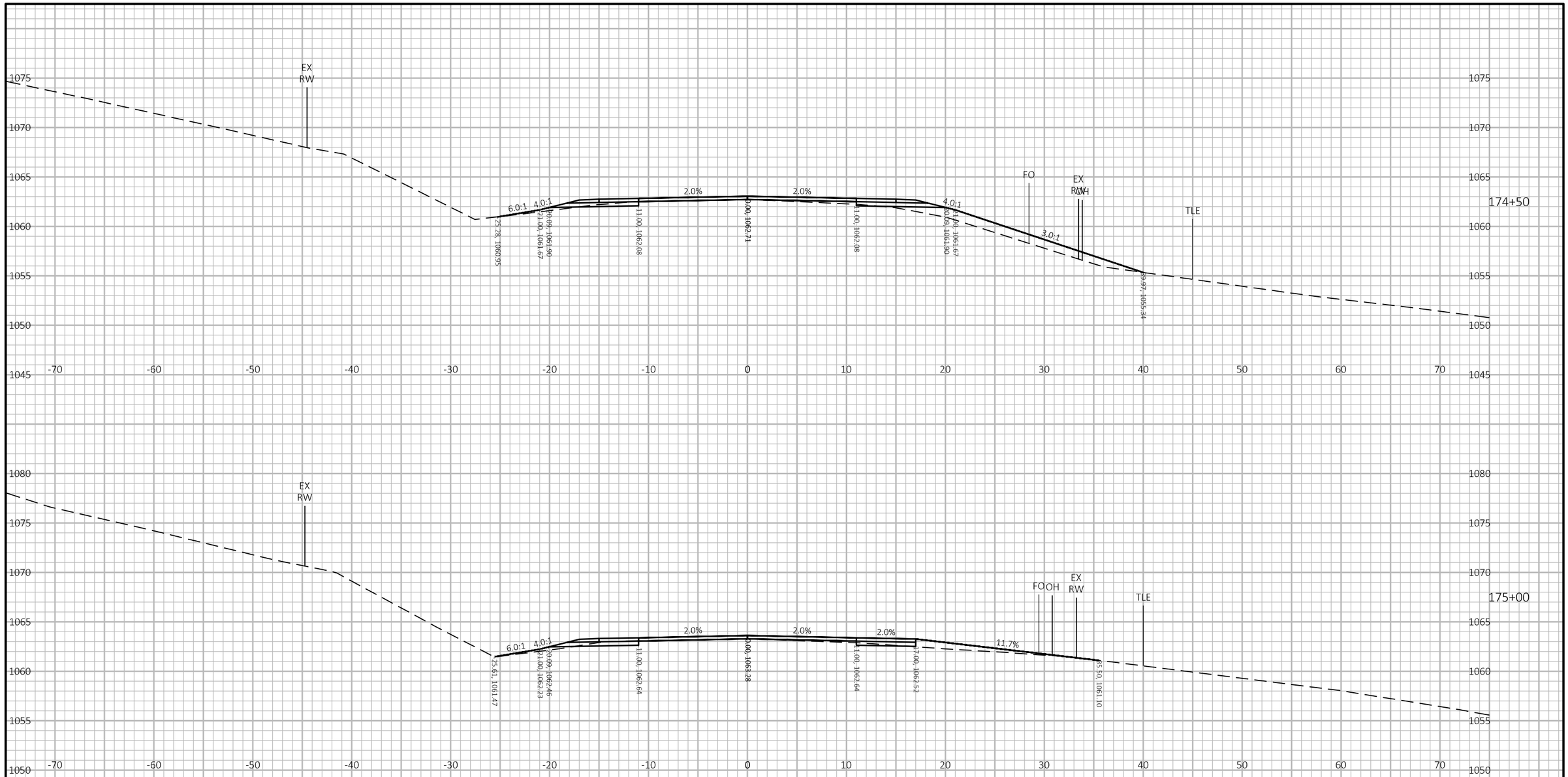

9

9

PROJECT NO: 7881-05-73	HWY: CTH D	COUNTY: DUNN	CROSS SECTIONS: CTH D	SHEET 168	E

FILE NAME : I:\41\410859 DUNN CTH D\C3D\DESIGN\CORRIDORS\CORRIDOR-CTH D 4-INCH RAISE.DWG
LAYOUT NAME - 957
PLOT DATE : 5/16/2024 10:25 AM
PLOT BY : HEDRINGTON, MARK
PLOT NAME :
PLOT SCALE : 1 IN:10 FT HORZ. / 1 IN:10 FT VERT.
WISDOT/CADDS SHEET 49

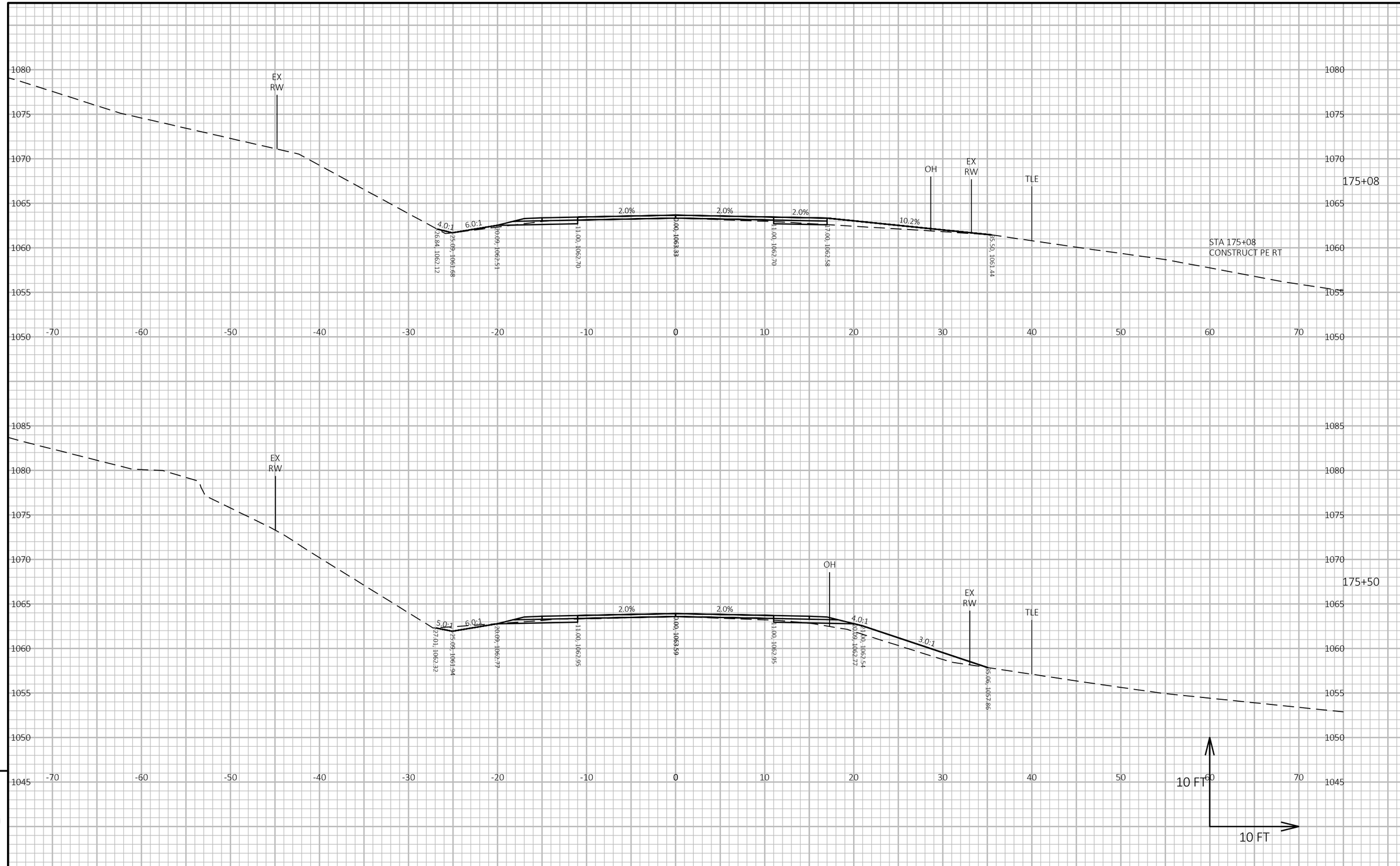

PROJECT NO: 7881-05-73	HWY: CTH D	COUNTY: DUNN	CROSS SECTIONS: CTH D	SHEET 169	E

FILE NAME : I:\41\410859 DUNN CTH D\C3D\DESIGN\CORRIDORS\CORRIDOR-CTH D 4-INCH RAISE.DWG
LAYOUT NAME - 958
PLOT DATE : 5/16/2024 10:25 AM
PLOT BY : HEDRINGTON, MARK
PLOT NAME :
PLOT SCALE : 1 IN:10 FT HORZ. / 1 IN:10 FT VERT.
WISDOT/CADDS SHEET 49

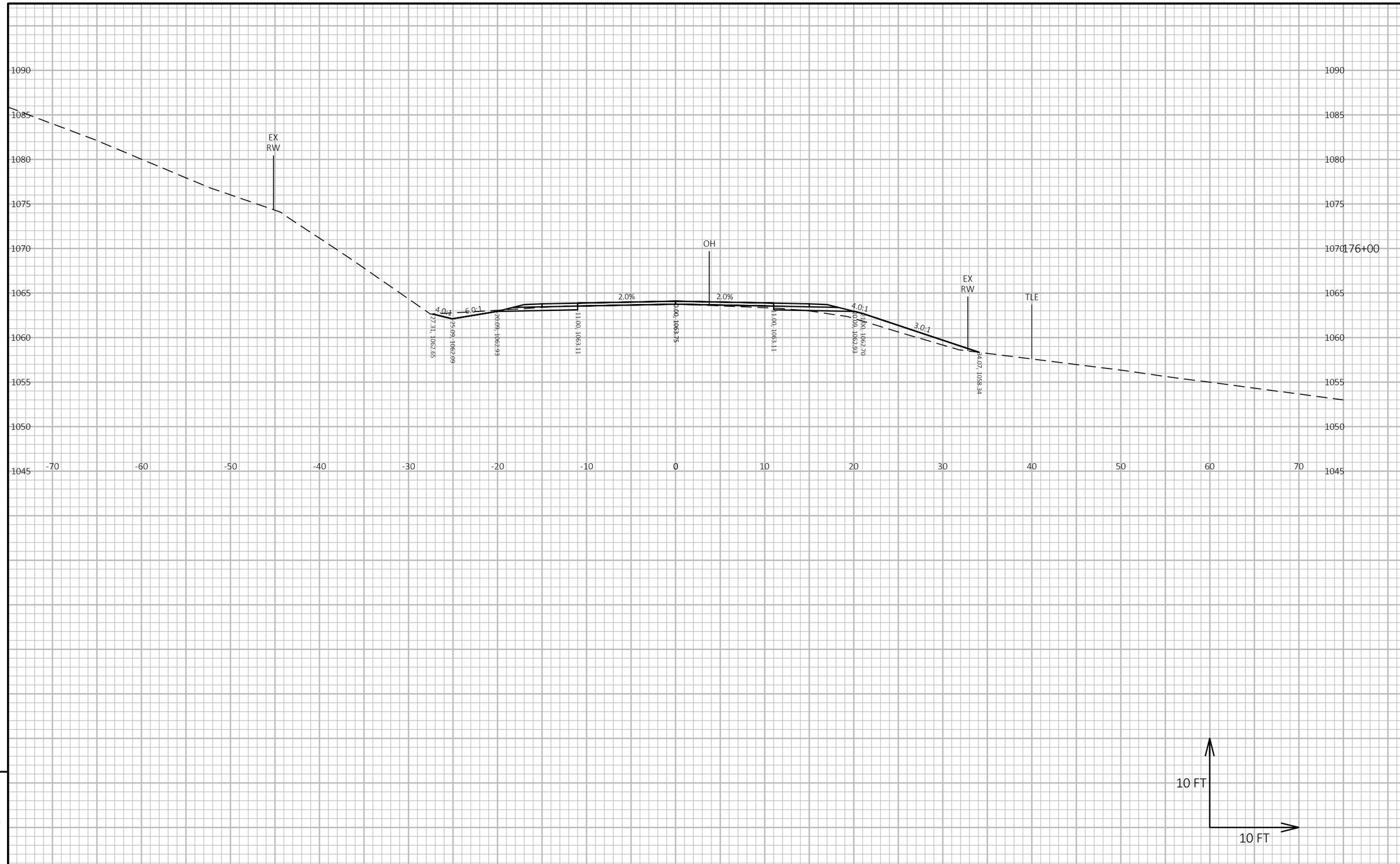

9

9

PROJECT NO: 7881-05-73	HWY: CTH D	COUNTY: DUNN	CROSS SECTIONS: CTH D	SHEET 170	E

FILE NAME : I:\41\410859 DUNN CTH D\C3D\DESIGN\CORRIDORS\CORRIDOR-CTH D 4-INCH RAISE.DWG
LAYOUT NAME - 959

PLOT DATE : 5/16/2024 10:25 AM PLOT BY : HEDRINGTON, MARK PLOT NAME : **PLOT SCALE :** 1 IN:10 FT HORZ. / 1 IN:10 FT VERT.

WISDOT/CADDS SHEET 49

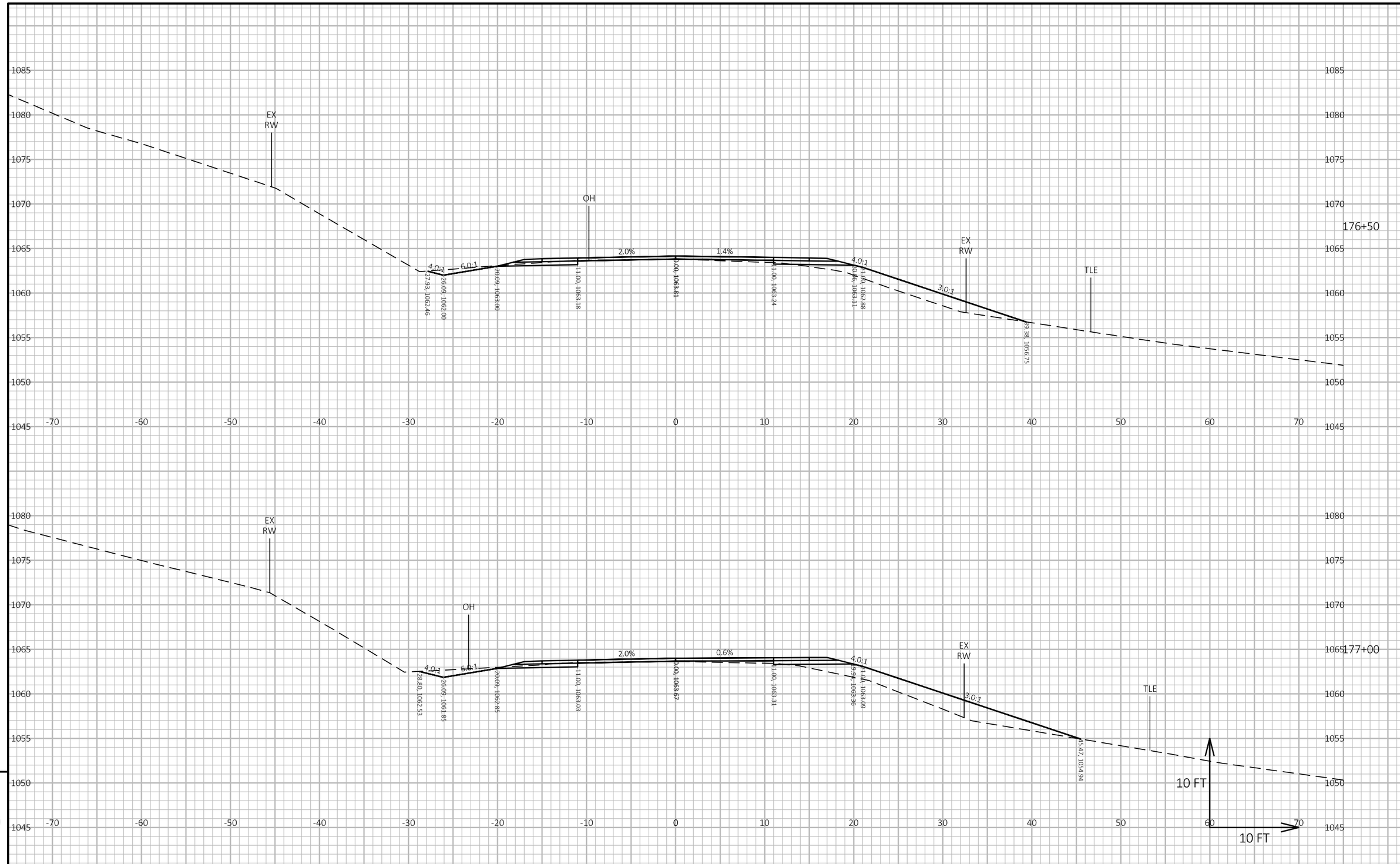

9

9

PROJECT NO: 7881-05-73	HWY: CTH D	COUNTY: DUNN	CROSS SECTIONS: CTH D	SHEET 171	E

FILE NAME : I:\41\410859 DUNN CTH D\C3D\DESIGN\CORRIDORS\CORRIDOR-CTH D 4-INCH RAISE.DWG
LAYOUT NAME - 960
PLOT DATE : 5/16/2024 10:25 AM
PLOT BY : HEDRINGTON, MARK
PLOT NAME :
PLOT SCALE : 1 IN:10 FT HORZ. / 1 IN:10 FT VERT.

WISDOT/CADDS SHEET 49

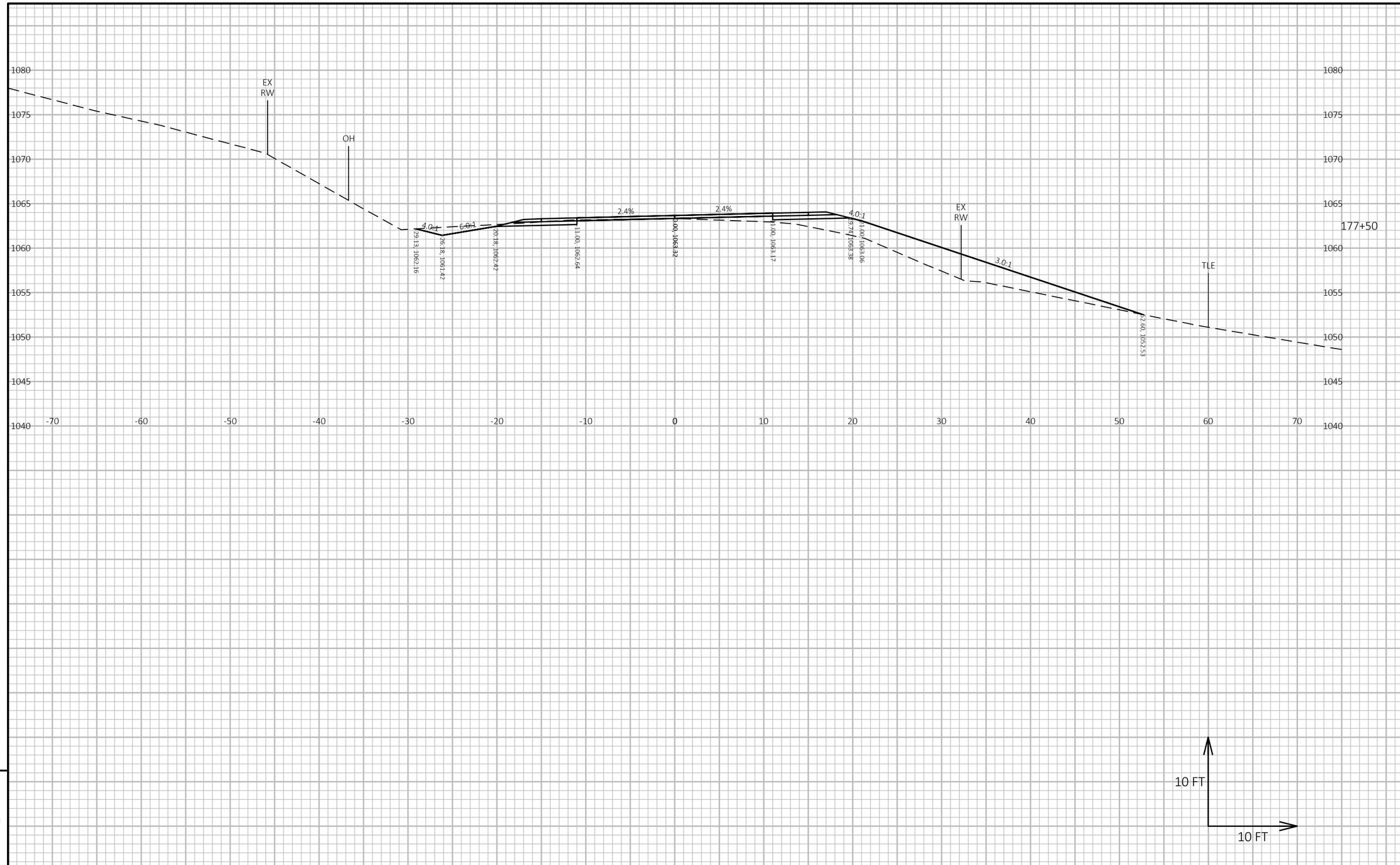

9

9

PROJECT NO: 7881-05-73	HWY: CTH D	COUNTY: DUNN	CROSS SECTIONS: CTH D	SHEET 172	E

FILE NAME : I:\41\410859 DUNN CTH D\C3D\DESIGN\CORRIDORS\CORRIDOR-CTH D 4-INCH RAISE.DWG
LAYOUT NAME - 961

PLOT DATE : 5/16/2024 10:25 AM PLOT BY : HEDRINGTON, MARK PLOT NAME : **PLOT SCALE :** 1 IN:10 FT HORZ. / 1 IN:10 FT VERT.

WISDOT/CADDS SHEET 49

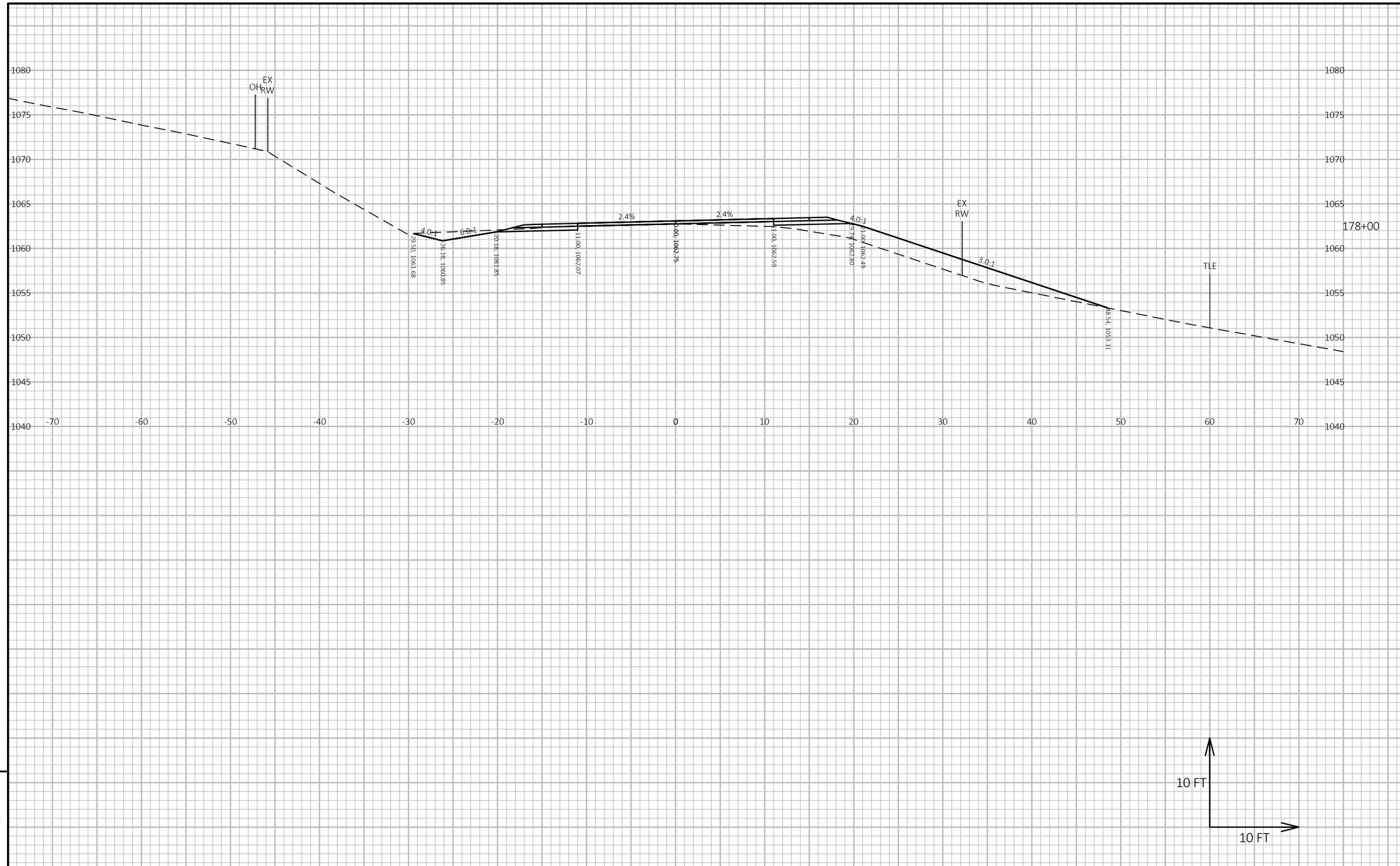

9

9

PROJECT NO: 7881-05-73	HWY: CTH D	COUNTY: DUNN	CROSS SECTIONS: CTH D	SHEET 173	E

FILE NAME : I:\41\410859 DUNN CTH D\C3D\DESIGN\CORRIDORS\CORRIDOR-CTH D 4-INCH RAISE.DWG
LAYOUT NAME - 962

PLOT DATE : 5/16/2024 10:25 AM PLOT BY : HEDRINGTON, MARK PLOT NAME : **PLOT SCALE :** 1 IN:10 FT HORZ. / 1 IN:10 FT VERT.

WISDOT/CADDS SHEET 49

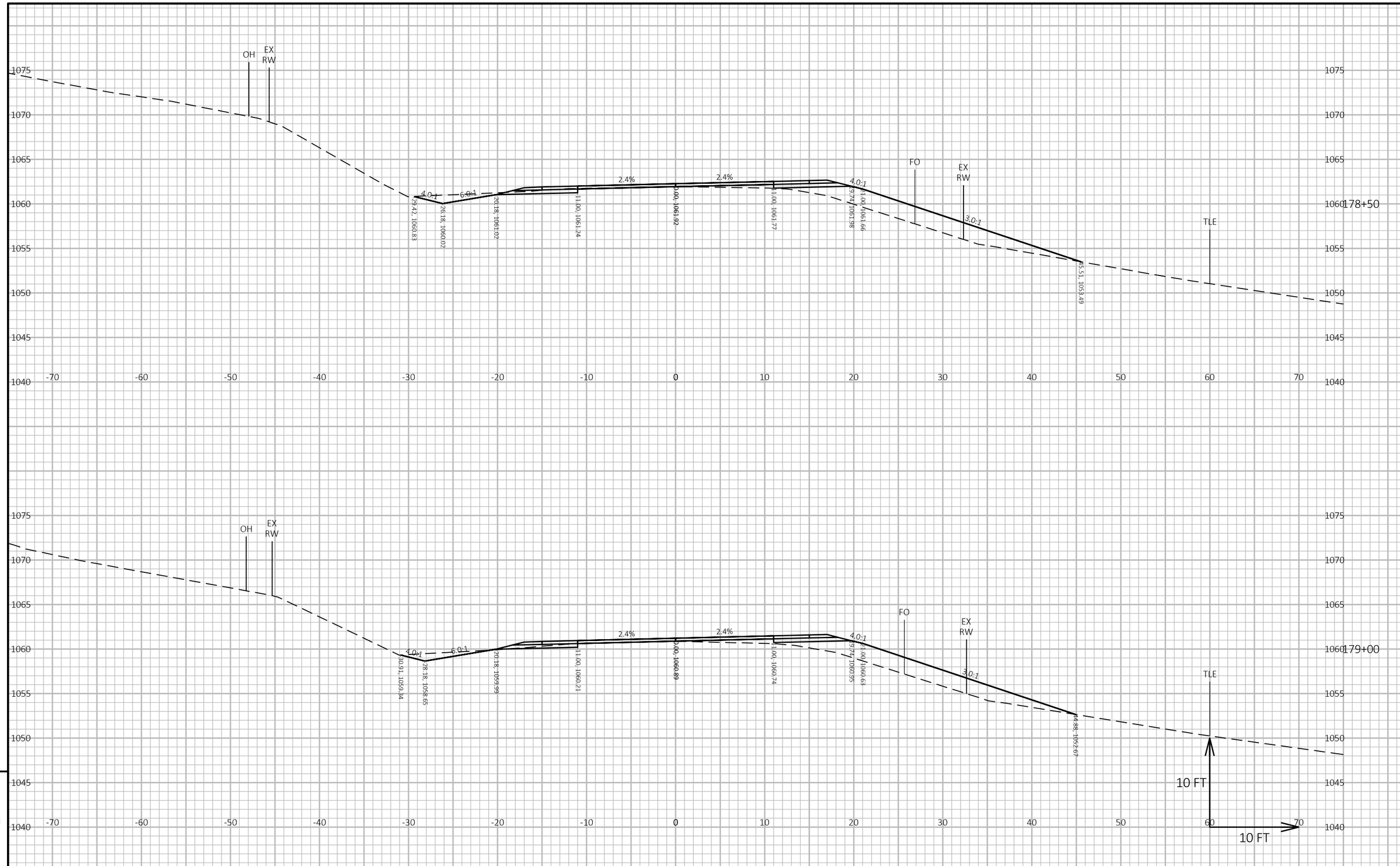

PROJECT NO: 7881-05-73	HWY: CTH D	COUNTY: DUNN	CROSS SECTIONS: CTH D	SHEET 174	E

FILE NAME : I:\41\410859 DUNN CTH D\C3D\DESIGN\CORRIDORS\CORRIDOR-CTH D 4-INCH RAISE.DWG
LAYOUT NAME - 963
PLOT DATE : 5/16/2024 10:25 AM
PLOT BY : HEDRINGTON, MARK
PLOT NAME :
PLOT SCALE : 1 IN:10 FT HORZ. / 1 IN:10 FT VERT.
WISDOT/CADDS SHEET 49

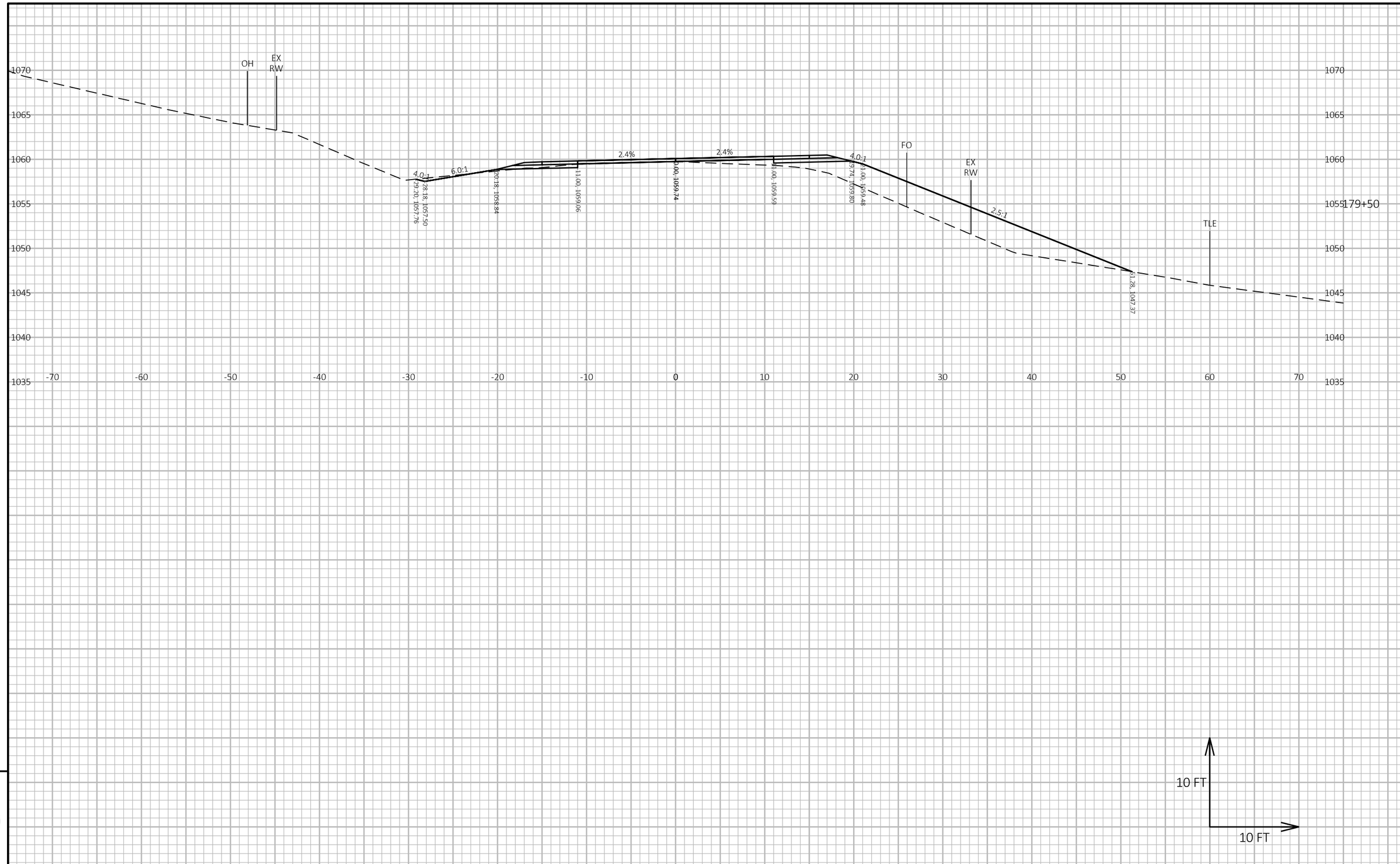

9

9

PROJECT NO: 7881-05-73	HWY: CTH D	COUNTY: DUNN	CROSS SECTIONS: CTH D	SHEET 175	E

FILE NAME : I:\41\410859 DUNN CTH D\C3D\DESIGN\CORRIDORS\CORRIDOR-CTH D 4-INCH RAISE.DWG
LAYOUT NAME - 964

PLOT DATE : 5/16/2024 10:24 AM PLOT BY : HEDRINGTON, MARK PLOT NAME : PLOT SCALE : 1 IN:10 FT HORZ. / 1 IN:10 FT VERT.

WISDOT/CADDS SHEET 49

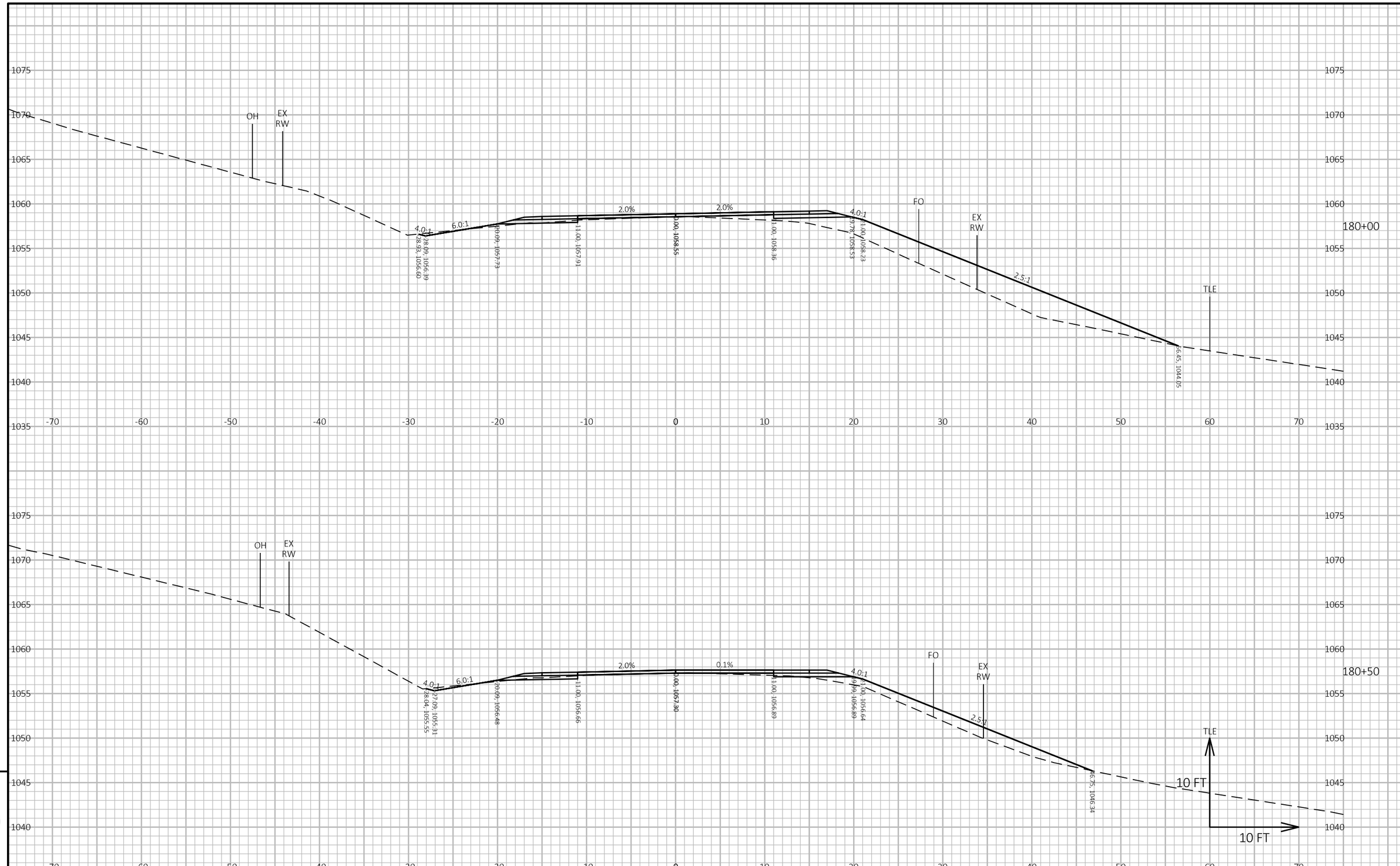

9

9

PROJECT NO: 7881-05-73	HWY: CTH D	COUNTY: DUNN	CROSS SECTIONS: CTH D	SHEET 176	E

FILE NAME : I:\41\410859 DUNN CTH D\C3D\DESIGN\CORRIDORS\CORRIDOR-CTH D 4-INCH RAISE.DWG
LAYOUT NAME - 965
PLOT DATE : 5/16/2024 10:24 AM
PLOT BY : HEDRINGTON, MARK
PLOT NAME :
PLOT SCALE : 1 IN:10 FT HORZ. / 1 IN:10 FT VERT.
WISDOT/CADDS SHEET 49

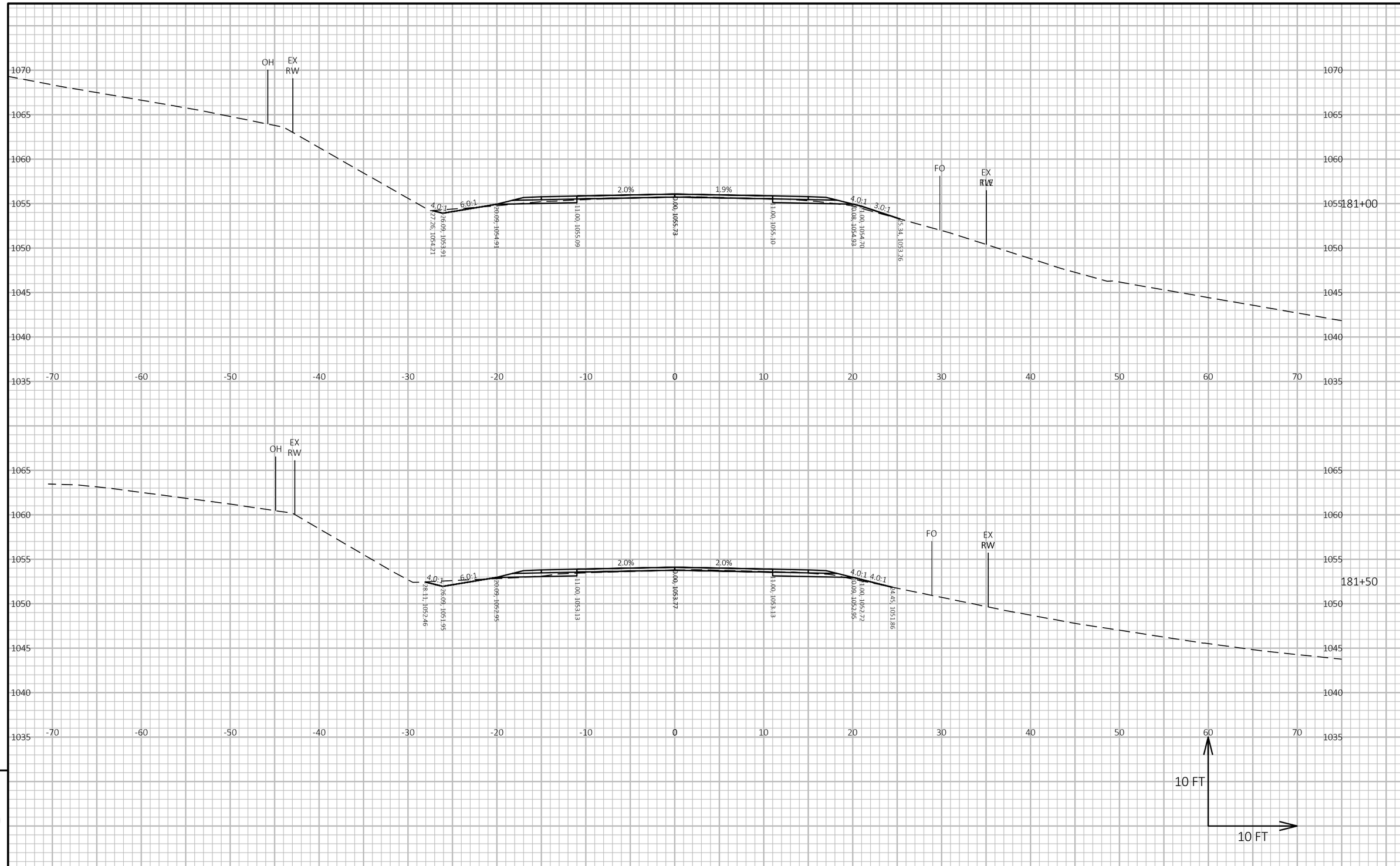

PROJECT NO: 7881-05-73	HWY: CTH D	COUNTY: DUNN	CROSS SECTIONS: CTH D	SHEET 177	E

FILE NAME : I:\41\410859 DUNN CTH D\C3D\DESIGN\CORRIDORS\CORRIDOR-CTH D 4-INCH RAISE.DWG
LAYOUT NAME - 966
PLOT DATE : 5/16/2024 10:24 AM
PLOT BY : HEDRINGTON, MARK
PLOT NAME :
PLOT SCALE : 1 IN:10 FT HORZ. / 1 IN:10 FT VERT.
WISDOT/CADDS SHEET 49

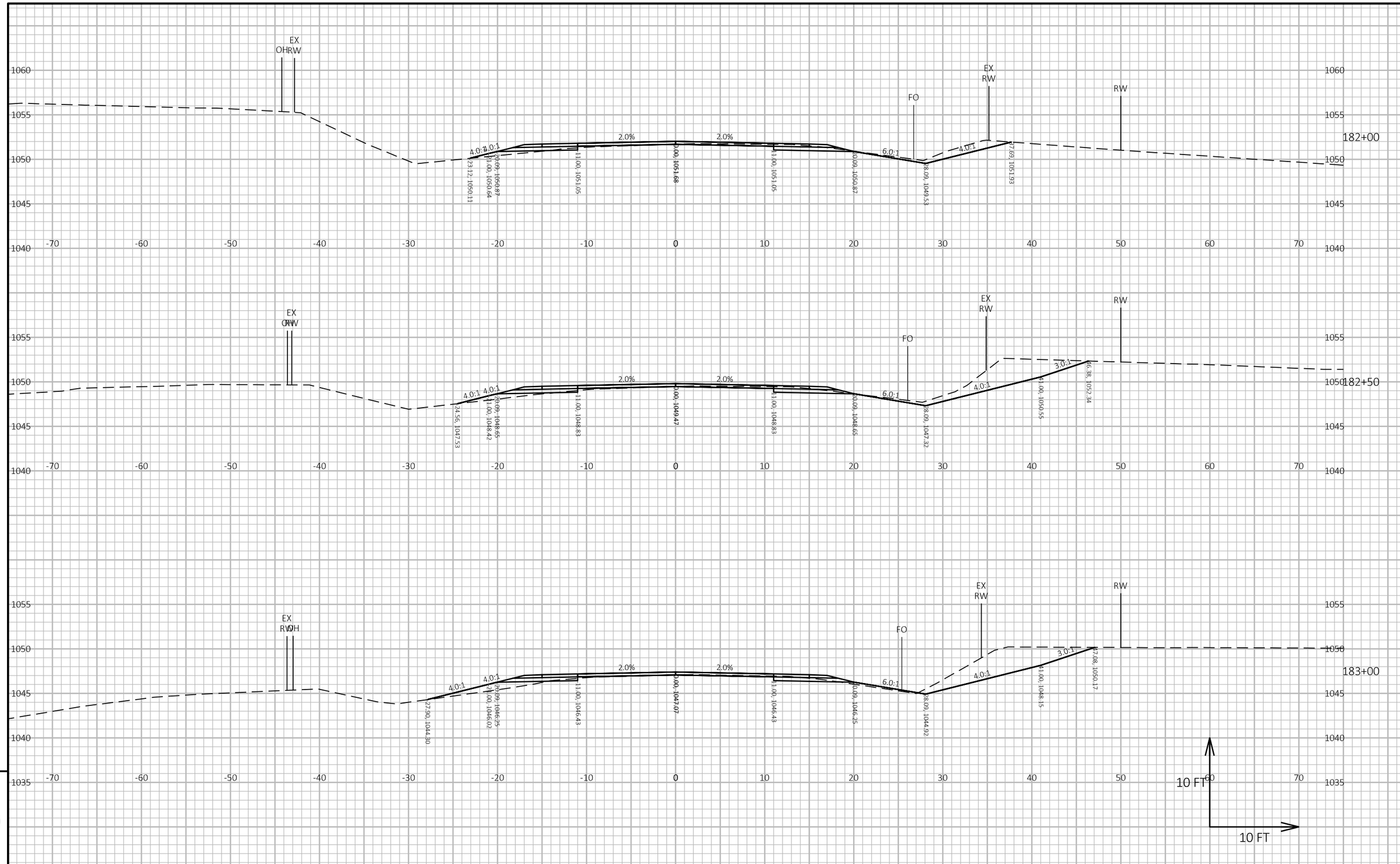

9

9

PROJECT NO: 7881-05-73	HWY: CTH D	COUNTY: DUNN	CROSS SECTIONS: CTH D	SHEET 178	E

FILE NAME : I:\41\410859 DUNN CTH D\C3D\DESIGN\CORRIDORS\CORRIDOR-CTH D 4-INCH RAISE.DWG
LAYOUT NAME - 967
PLOT DATE : 5/16/2024 10:24 AM
PLOT BY : HEDRINGTON, MARK
PLOT NAME :
PLOT SCALE : 1 IN:10 FT HORZ. / 1 IN:10 FT VERT.
WISDOT/CADDS SHEET 49

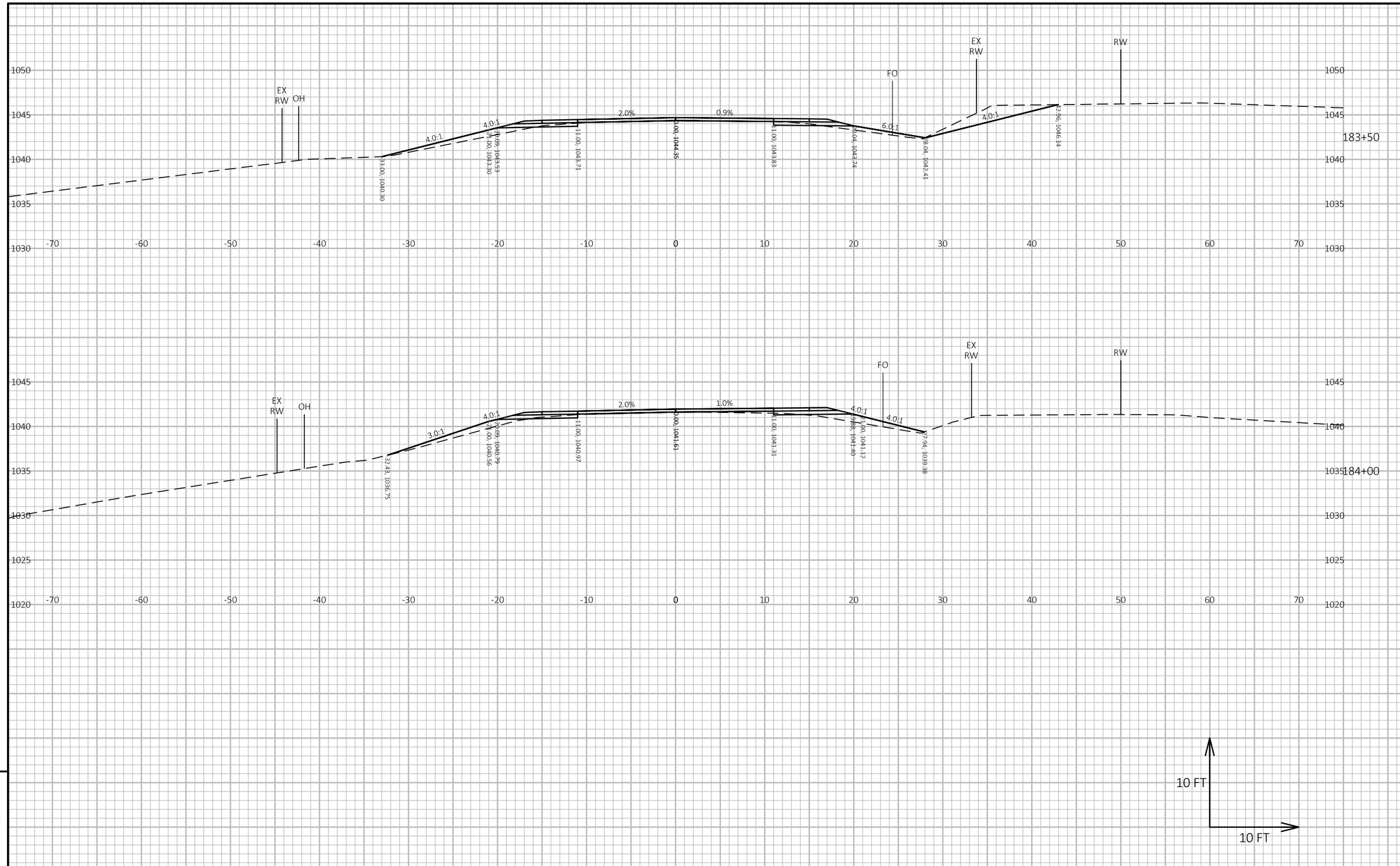

9

9

PROJECT NO: 7881-05-73	HWY: CTH D	COUNTY: DUNN	CROSS SECTIONS: CTH D	SHEET 179	E

FILE NAME : I:\41\410859 DUNN CTH D\C3D\DESIGN\CORRIDORS\CORRIDOR-CTH D 4-INCH RAISE.DWG
LAYOUT NAME - 968

PLOT DATE : 5/16/2024 10:24 AM PLOT BY : HEDRINGTON, MARK PLOT NAME : **PLOT SCALE :** 1 IN:10 FT HORZ. / 1 IN:10 FT VERT.

WISDOT/CADDS SHEET 49

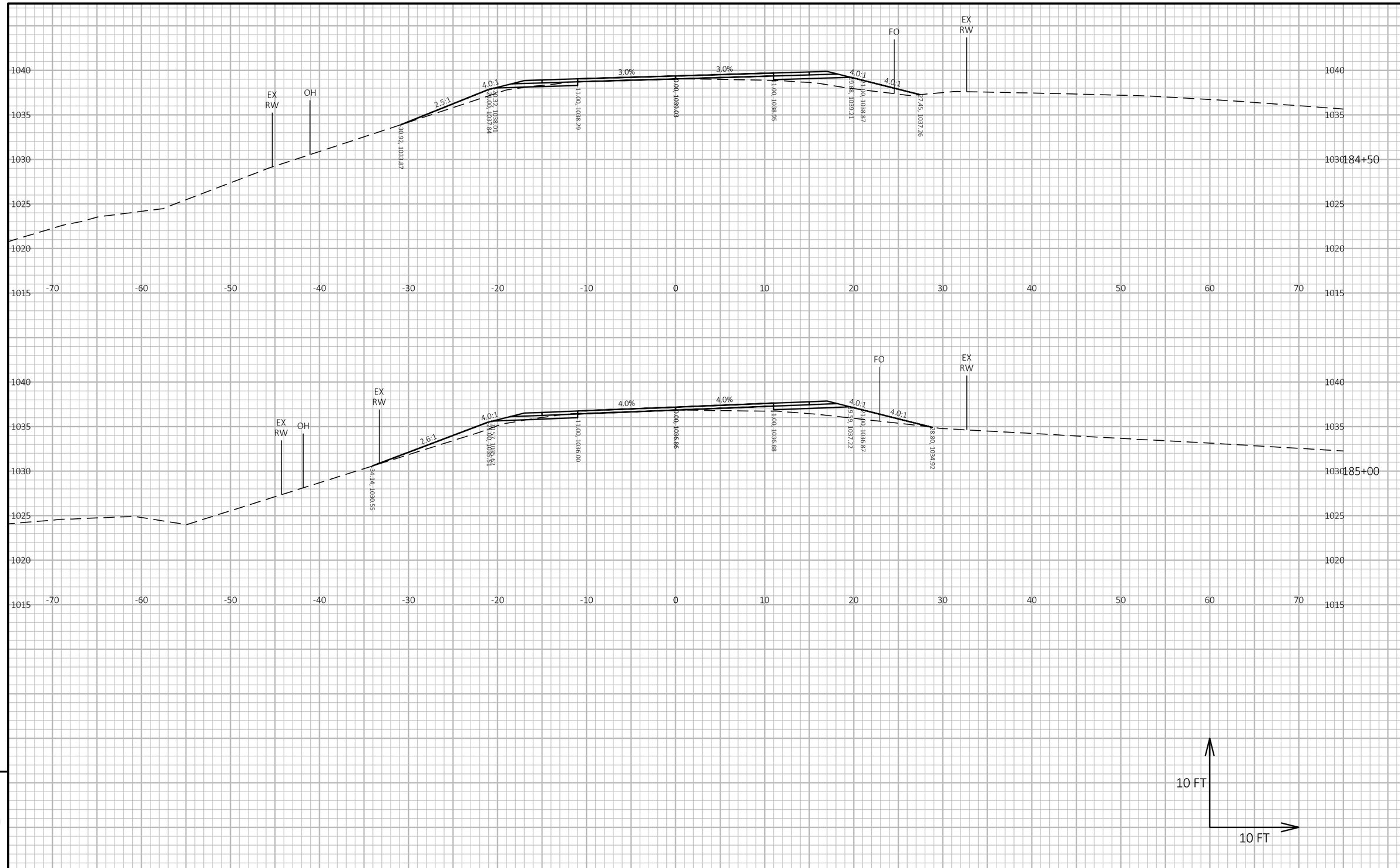

PROJECT NO: 7881-05-73	HWY: CTH D	COUNTY: DUNN	CROSS SECTIONS: CTH D	SHEET 180	E

FILE NAME : I:\41\410859 DUNN CTH D\C3D\DESIGN\CORRIDORS\CORRIDOR-CTH D 4-INCH RAISE.DWG
LAYOUT NAME - 969
PLOT DATE : 5/16/2024 10:24 AM PLOT BY : HEDRINGTON, MARK PLOT NAME : **PLOT SCALE :** 1 IN:10 FT HORZ. / 1 IN:10 FT VERT.

WISDOT/CADDS SHEET 49

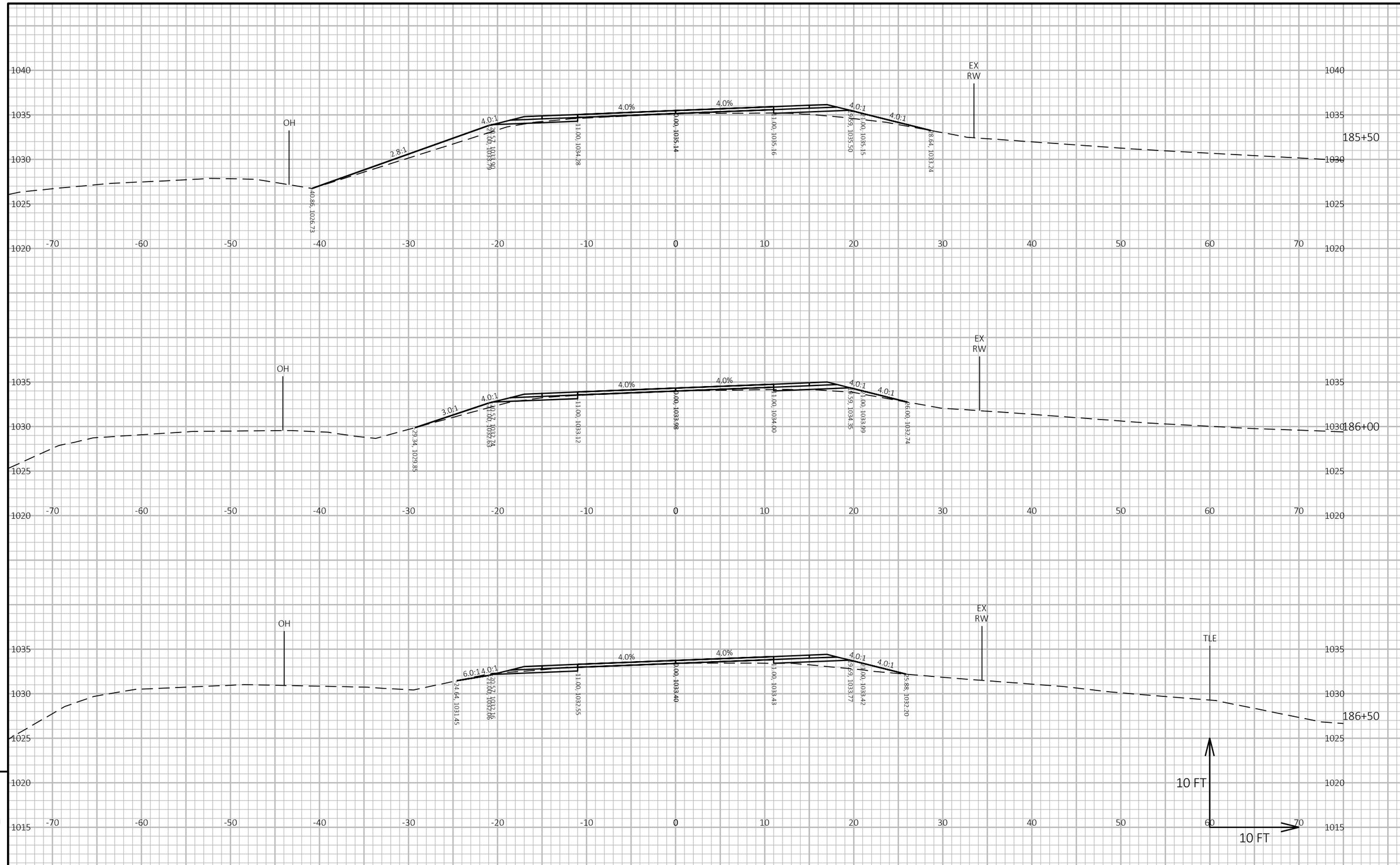

9

9

PROJECT NO: 7881-05-73	HWY: CTH D	COUNTY: DUNN	CROSS SECTIONS: CTH D	SHEET 181	E

FILE NAME : I:\41\410859 DUNN CTH D\C3D\DESIGN\CORRIDORS\CORRIDOR-CTH D 4-INCH RAISE.DWG
LAYOUT NAME - 970

PLOT DATE : 5/16/2024 10:24 AM PLOT BY : HEDRINGTON, MARK PLOT NAME : **PLOT SCALE :** 1 IN:10 FT HORZ. / 1 IN:10 FT VERT.

WISDOT/CADDS SHEET 49

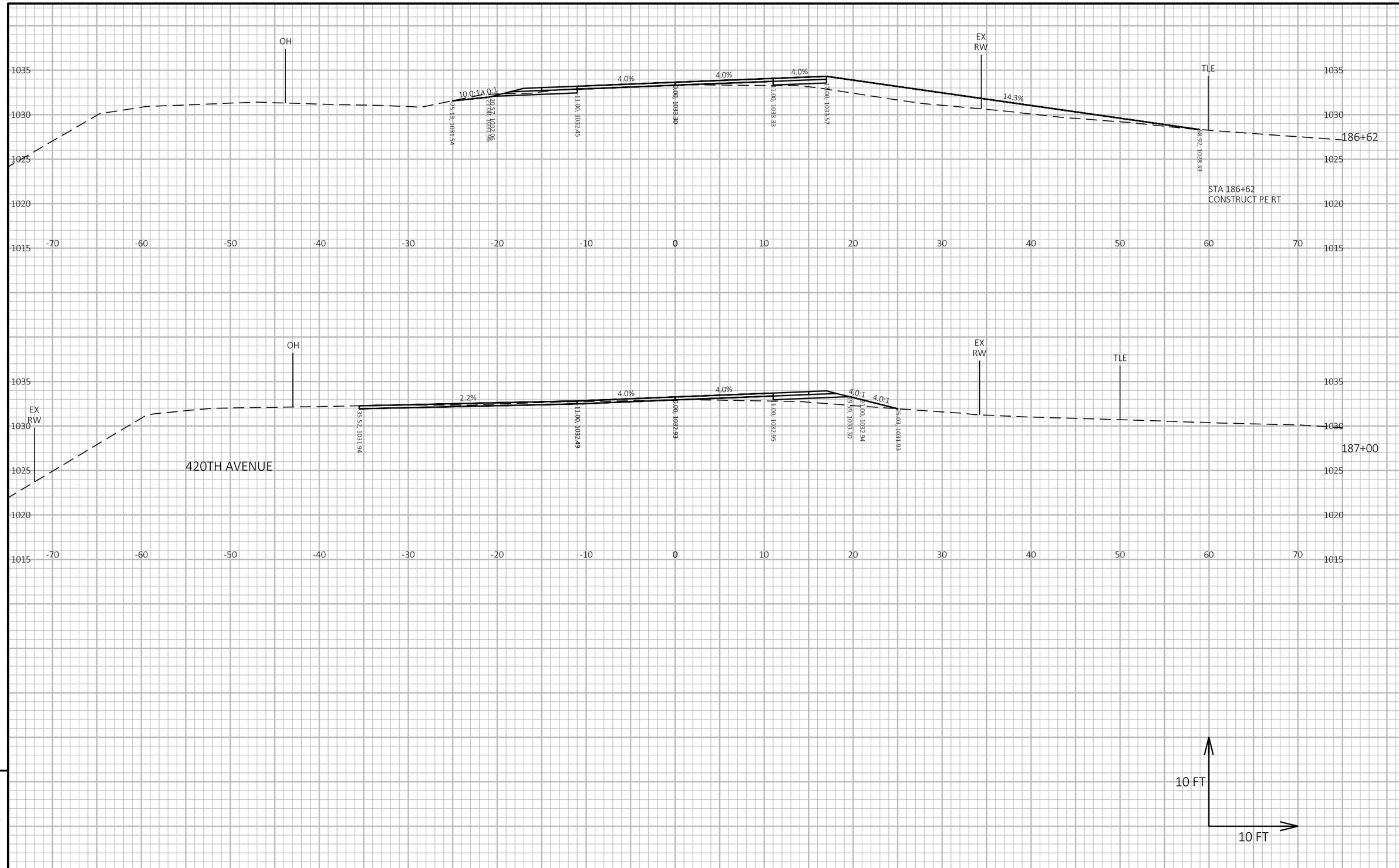

9

9

PROJECT NO: 7881-05-73	HWY: CTH D	COUNTY: DUNN	CROSS SECTIONS: CTH D	SHEET 182	E

FILE NAME : I:\41\410859 DUNN CTH D\C3D\DESIGN\CORRIDORS\CORRIDOR-CTH D 4-INCH RAISE.DWG
LAYOUT NAME - 971
PLOT DATE : 5/16/2024 10:24 AM
PLOT BY : HEDRINGTON, MARK
PLOT NAME :
PLOT SCALE : 1 IN:10 FT HORZ. / 1 IN:10 FT VERT.
WISDOT/CADDS SHEET 49

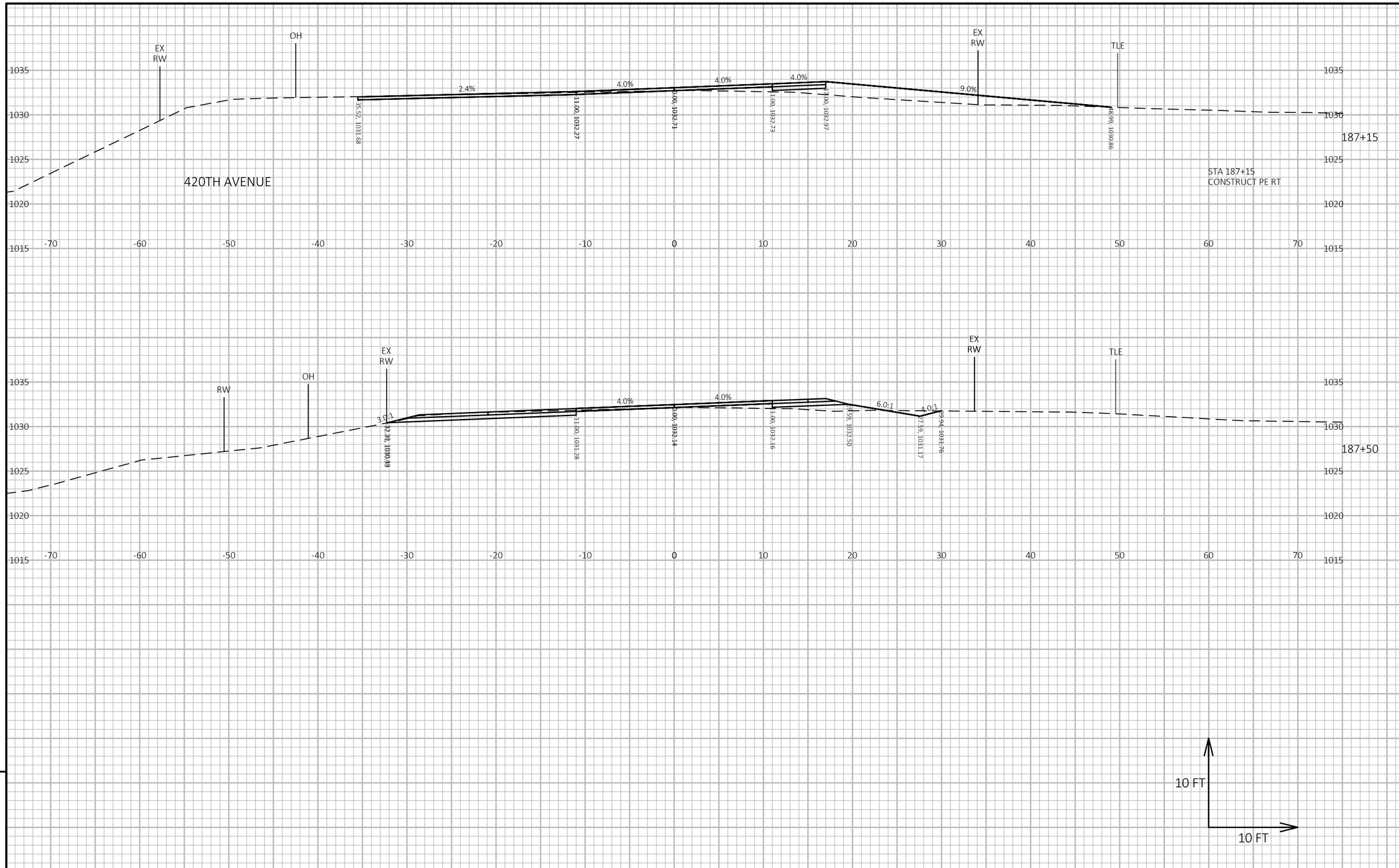

PROJECT NO: 7881-05-73	HWY: CTH D	COUNTY: DUNN	CROSS SECTIONS: CTH D	SHEET 183	E

FILE NAME : I:\41\410859 DUNN CTH D\C3D\DESIGN\CORRIDORS\CORRIDOR-CTH D 4-INCH RAISE.DWG
LAYOUT NAME - 972
PLOT DATE : 5/16/2024 10:24 AM
PLOT BY : HEDRINGTON, MARK
PLOT NAME :
PLOT SCALE : 1 IN:10 FT HORZ. / 1 IN:10 FT VERT.
WISDOT/CADDS SHEET 49

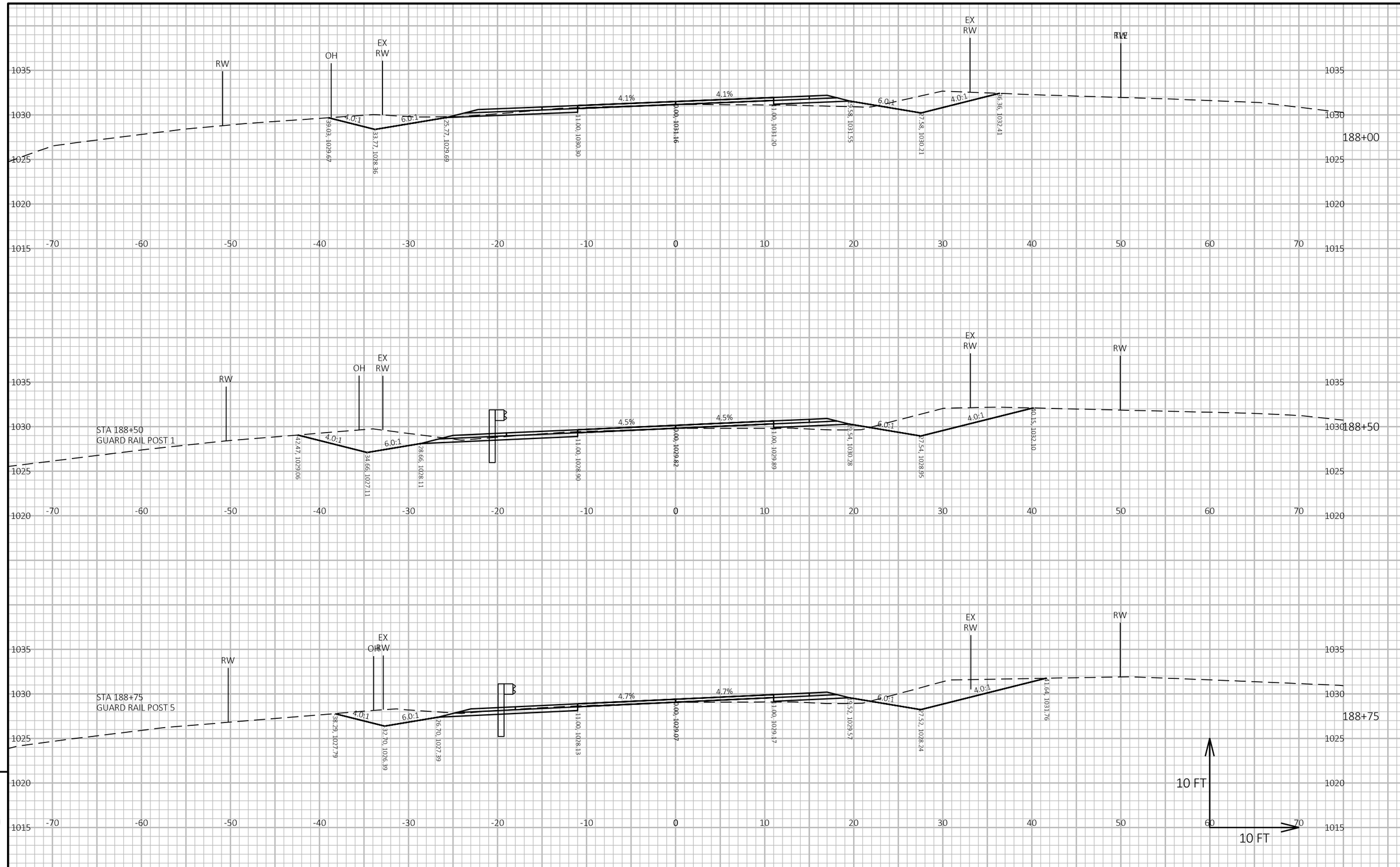

9

9

PROJECT NO: 7881-05-73	HWY: CTH D	COUNTY: DUNN	CROSS SECTIONS: CTH D	SHEET 184	E

FILE NAME : I:\41\410859 DUNN CTH D\C3D\DESIGN\CORRIDORS\CORRIDOR-CTH D 4-INCH RAISE.DWG
LAYOUT NAME - 973

PLOT DATE : 5/16/2024 10:24 AM PLOT BY : HEDRINGTON, MARK PLOT NAME : **PLOT SCALE :** 1 IN:10 FT HORZ. / 1 IN:10 FT VERT.

WISDOT/CADDS SHEET 49

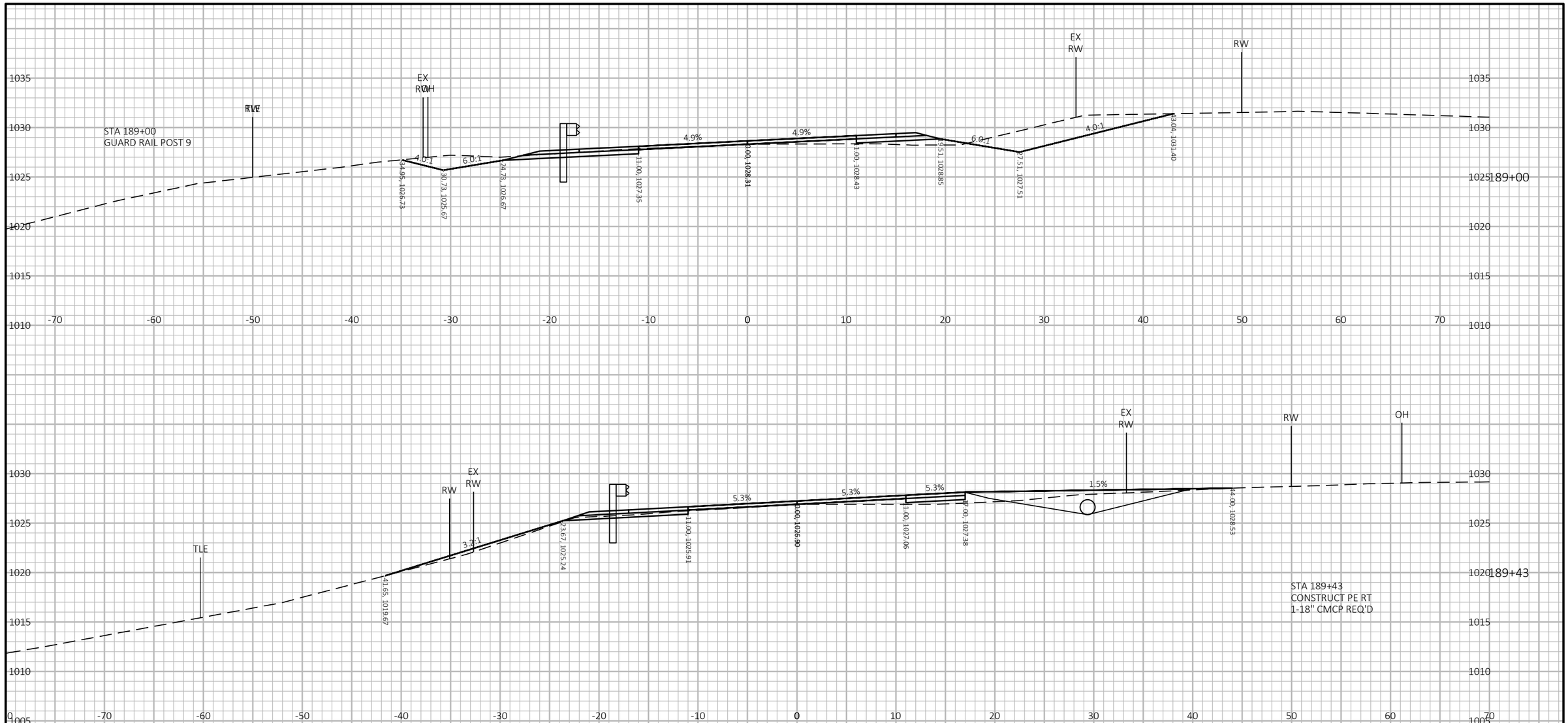

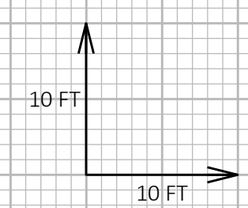

9

9

PROJECT NO: 7881-05-73	HWY: CTH D	COUNTY: DUNN	CROSS SECTIONS: CTH D	SHEET 185	E

FILE NAME : I:\41\410859 DUNN CTH D\C3D\DESIGN\CORRIDORS\CORRIDOR-CTH D 4-INCH RAISE.DWG
LAYOUT NAME - 974
PLOT DATE : 5/21/2024 11:02 AM
PLOT BY : HEDRINGTON, MARK
PLOT NAME :
PLOT SCALE : 1 IN:10 FT HORZ. / 1 IN:10 FT VERT.
WISDOT/CADDS SHEET 49

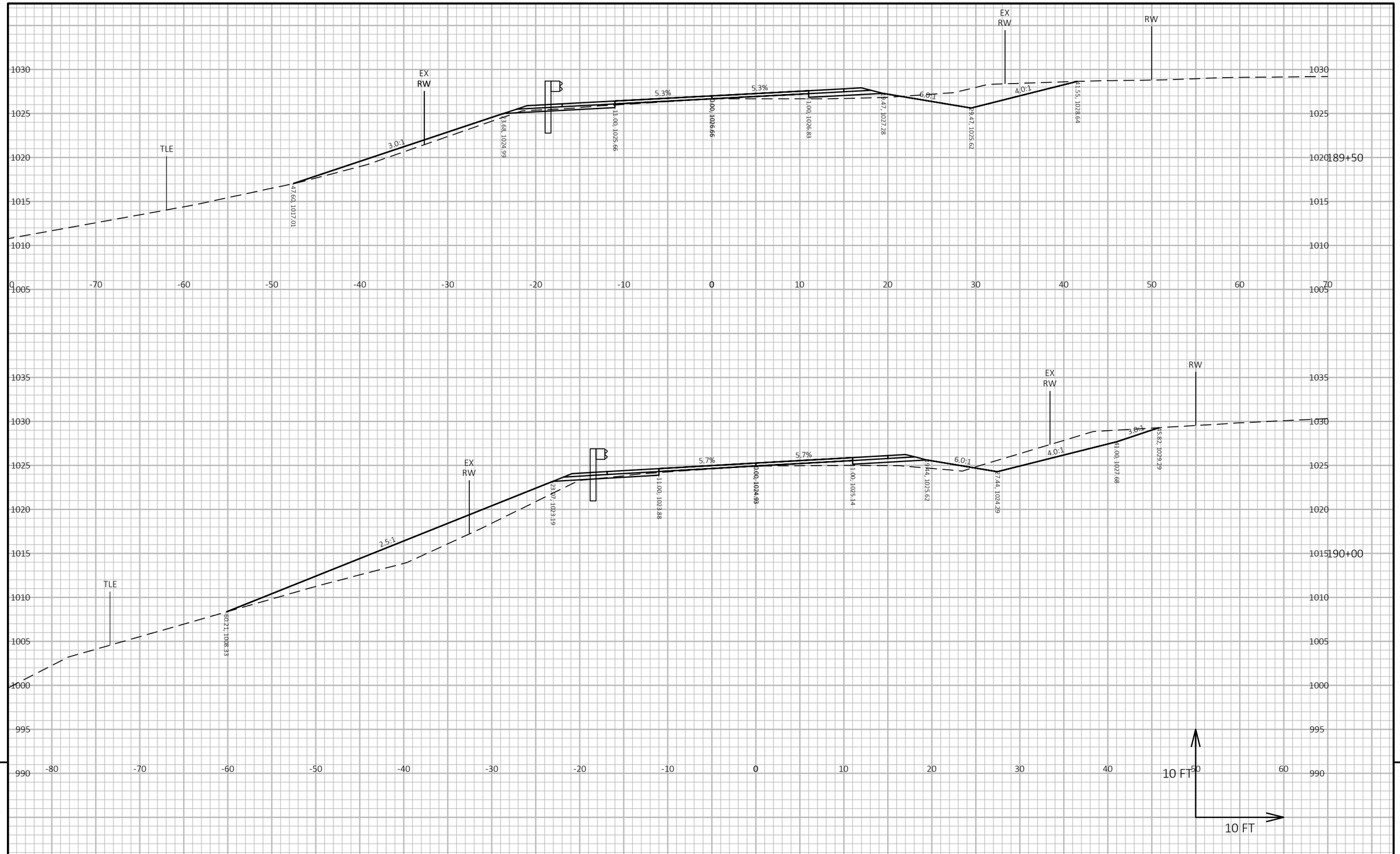

PROJECT NO: 7881-05-73	HWY: CTH D	COUNTY: DUNN	CROSS SECTIONS: CTH D	SHEET 186	E

FILE NAME : I:\41\410859 DUNN CTH D\C3D\DESIGN\CORRIDORS\CORRIDOR-CTH D 4-INCH RAISE.DWG
LAYOUT NAME - 975
PLOT DATE : 5/21/2024 11:02 AM PLOT BY : HEDRINGTON, MARK PLOT NAME : PLOT SCALE : 1 IN:10 FT HORZ. / 1 IN:10 FT VERT.

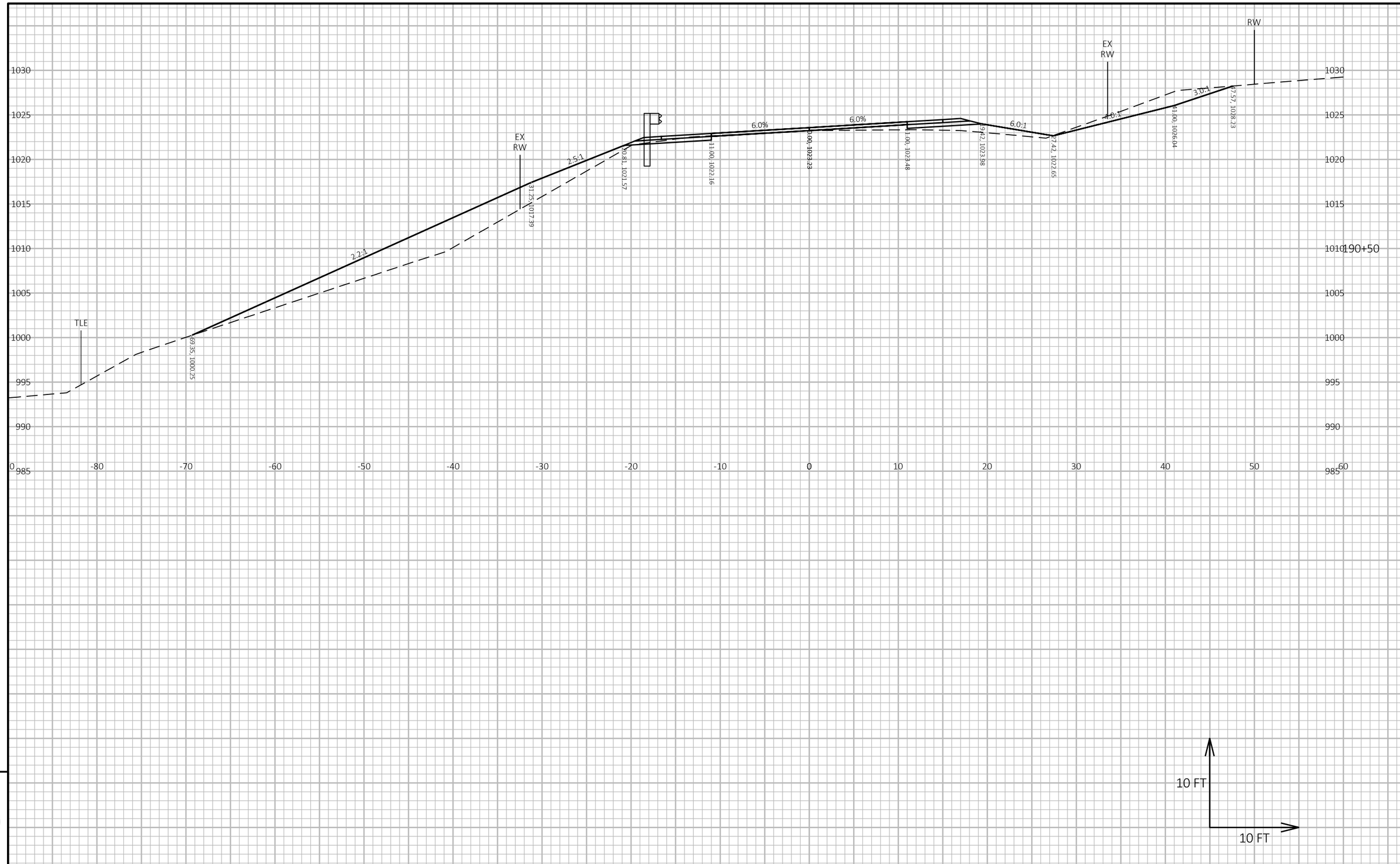

9

9

PROJECT NO: 7881-05-73	HWY: CTH D	COUNTY: DUNN	CROSS SECTIONS: CTH D	SHEET 187	E

FILE NAME : I:\41\410859 DUNN CTH D\C3D\DESIGN\CORRIDORS\CORRIDOR-CTH D 4-INCH RAISE.DWG
LAYOUT NAME - 976

PLOT DATE : 5/16/2024 10:23 AM PLOT BY : HEDRINGTON, MARK PLOT NAME : **PLOT SCALE :** 1 IN:10 FT HORZ. / 1 IN:10 FT VERT.

WISDOT/CADDS SHEET 49

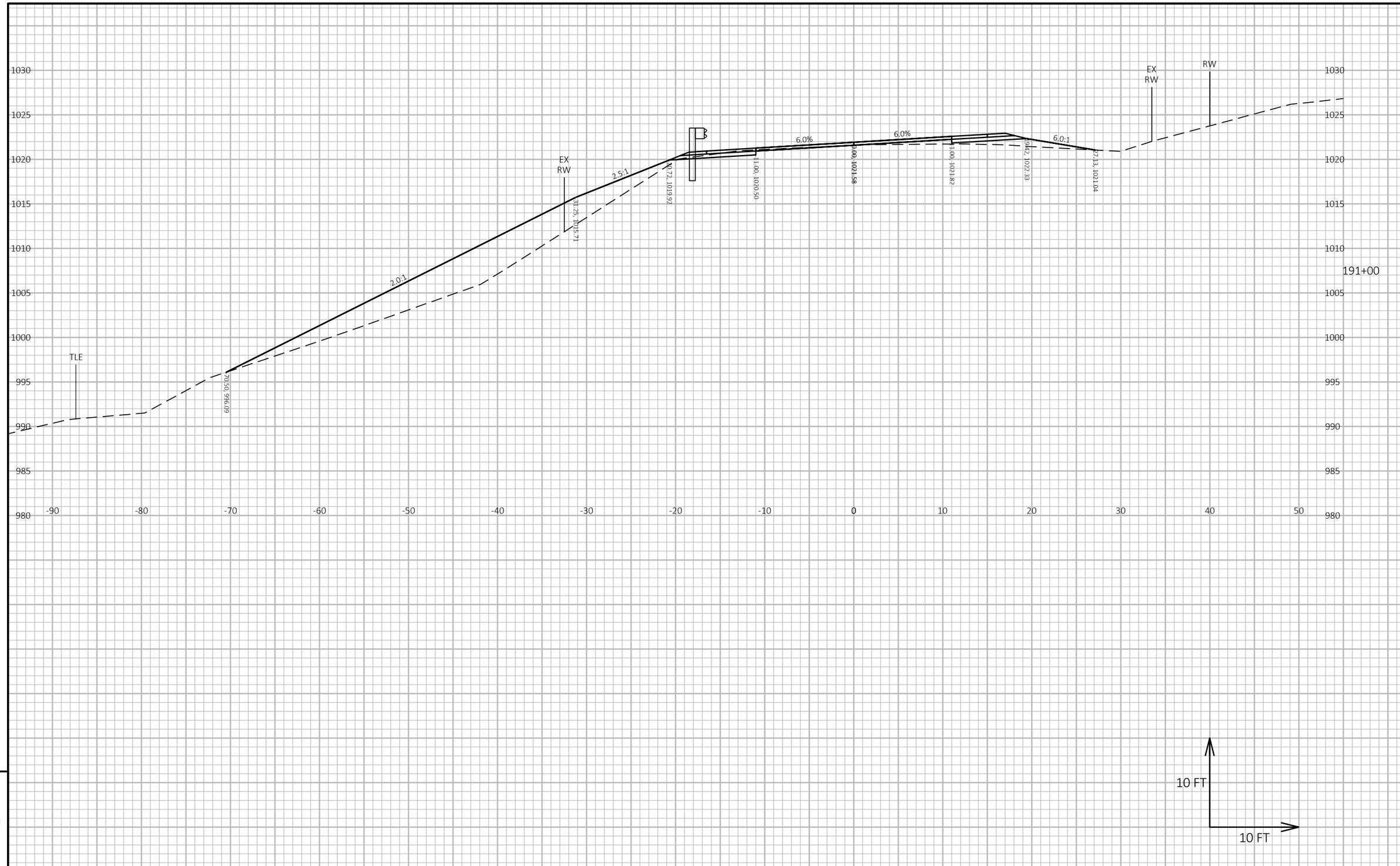

PROJECT NO: 7881-05-73	HWY: CTH D	COUNTY: DUNN	CROSS SECTIONS: CTH D	SHEET 188	E

FILE NAME : I:\41\410859 DUNN CTH D\C3D\DESIGN\CORRIDORS\CORRIDOR-CTH D 4-INCH RAISE.DWG
LAYOUT NAME - 977
PLOT DATE : 5/16/2024 10:23 AM
PLOT BY : HEDRINGTON, MARK
PLOT NAME :
PLOT SCALE : 1 IN:10 FT HORZ. / 1 IN:10 FT VERT.
WISDOT/CADDS SHEET 49

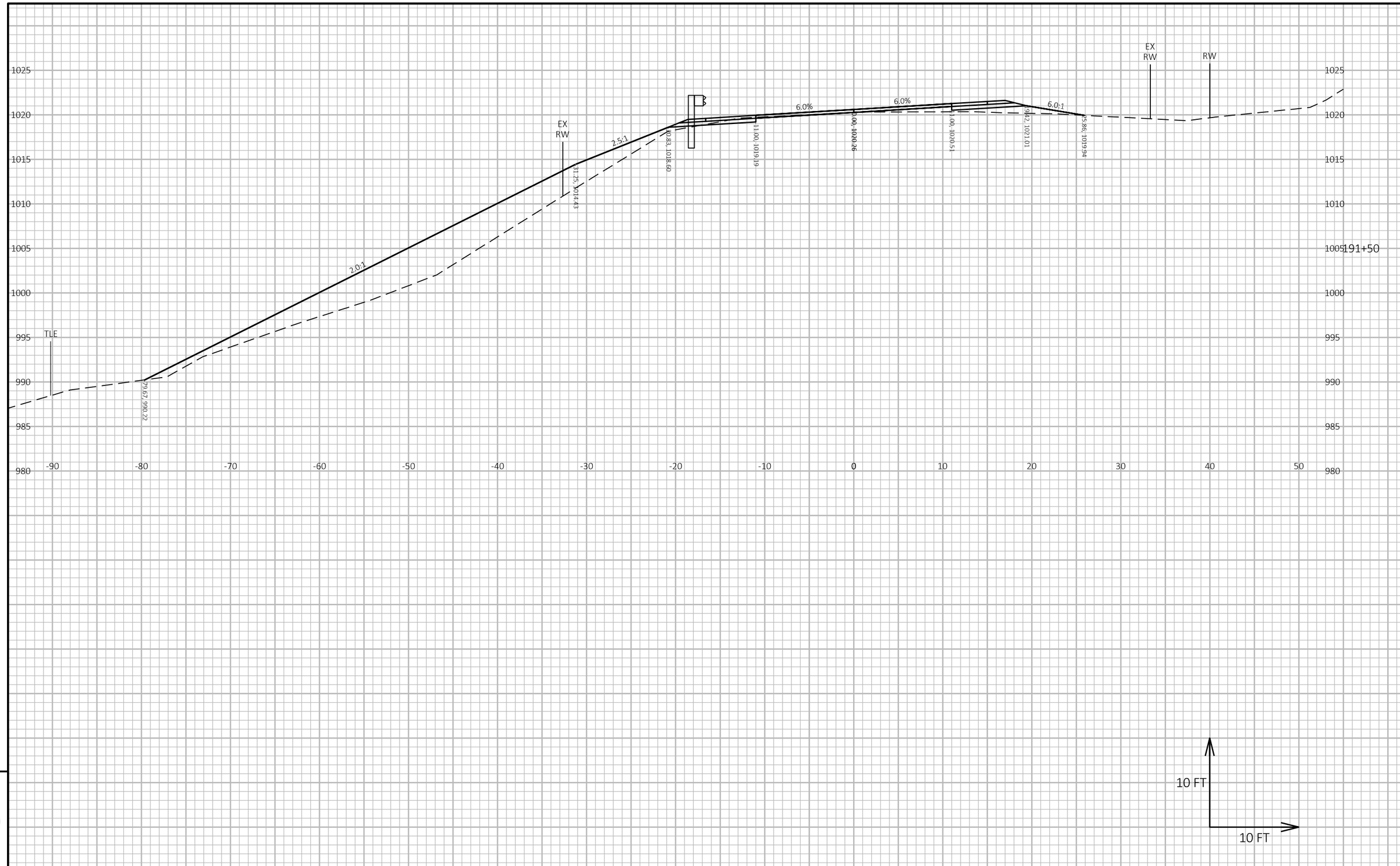

9

9

PROJECT NO: 7881-05-73	HWY: CTH D	COUNTY: DUNN	CROSS SECTIONS: CTH D	SHEET 189	E

FILE NAME : I:\41\410859 DUNN CTH D\C3D\DESIGN\CORRIDORS\CORRIDOR-CTH D 4-INCH RAISE.DWG
LAYOUT NAME - 978

PLOT DATE : 5/16/2024 10:23 AM PLOT BY : HEDRINGTON, MARK PLOT NAME : PLOT SCALE : 1 IN:10 FT HORZ. / 1 IN:10 FT VERT.

WISDOT/CADDS SHEET 49

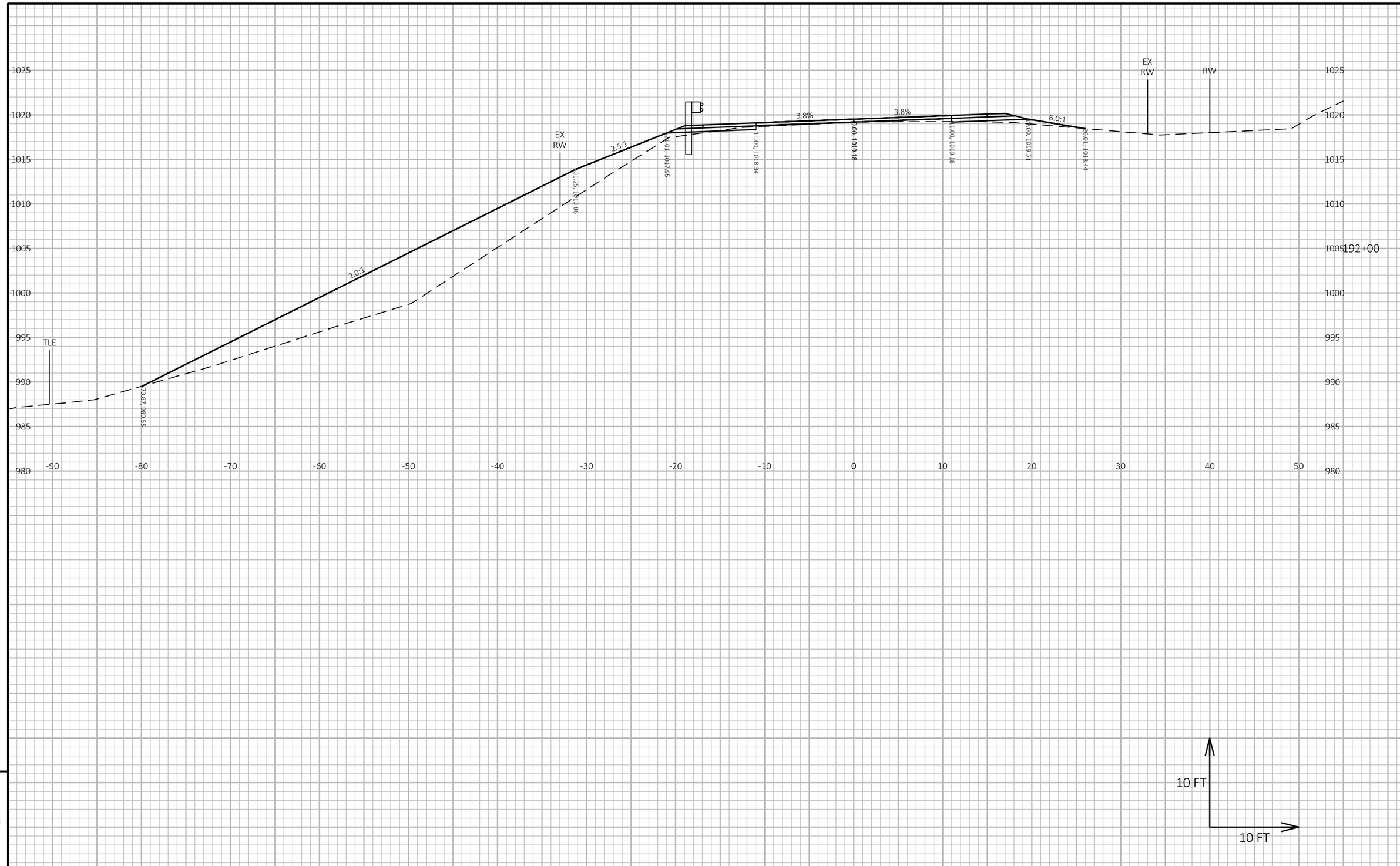

9

9

PROJECT NO: 7881-05-73	HWY: CTH D	COUNTY: DUNN	CROSS SECTIONS: CTH D	SHEET 190	E

FILE NAME : I:\41\410859 DUNN CTH D\C3D\DESIGN\CORRIDORS\CORRIDOR-CTH D 4-INCH RAISE.DWG
LAYOUT NAME - 979

PLOT DATE : 5/16/2024 10:23 AM PLOT BY : HEDRINGTON, MARK PLOT NAME : PLOT SCALE : 1 IN:10 FT HORZ. / 1 IN:10 FT VERT.

WISDOT/CADDS SHEET 49

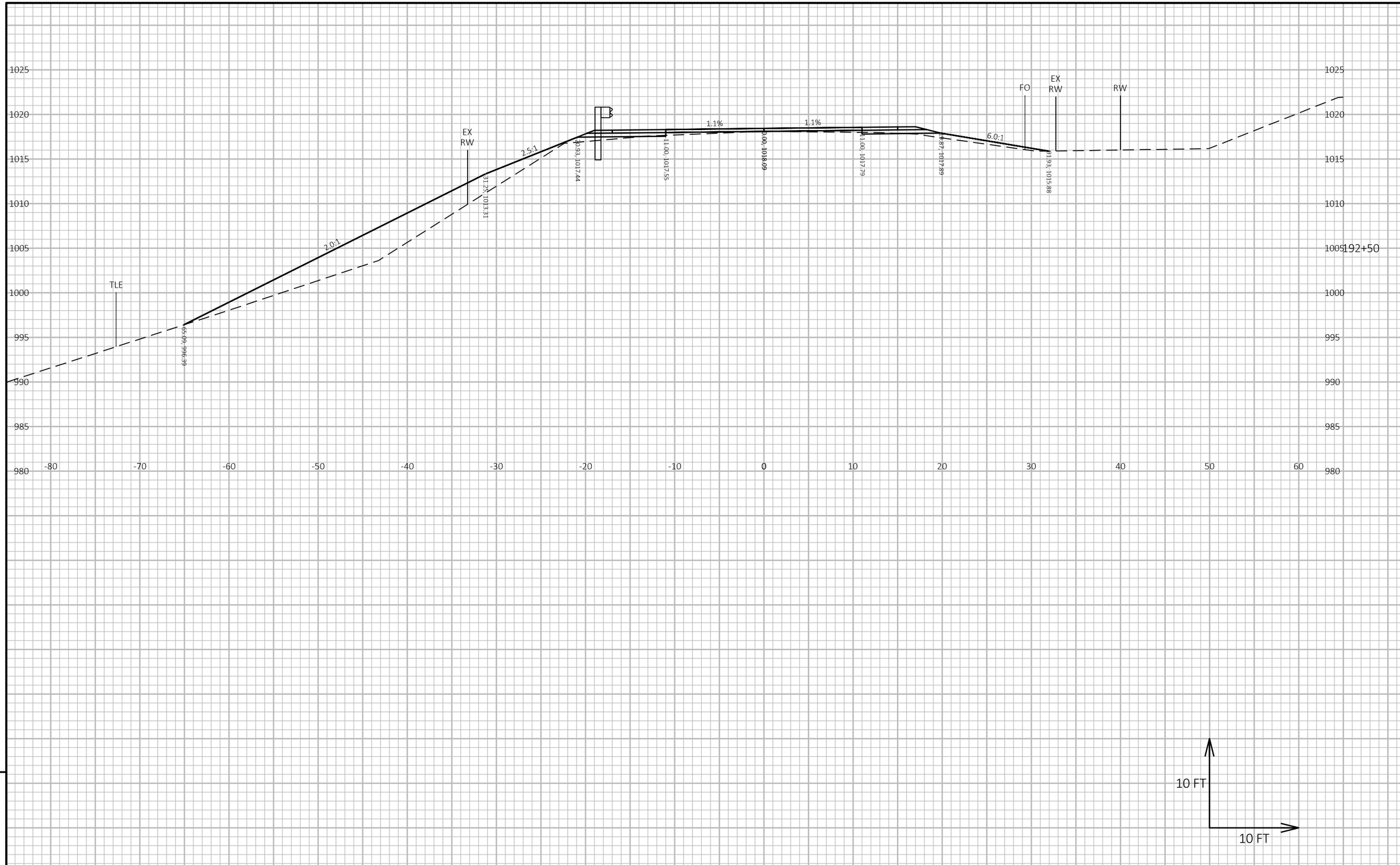

9

9

PROJECT NO: 7881-05-73	HWY: CTH D	COUNTY: DUNN	CROSS SECTIONS: CTH D	SHEET 191	E

FILE NAME : I:\41\410859 DUNN CTH D\C3D\DESIGN\CORRIDORS\CORRIDOR-CTH D 4-INCH RAISE.DWG
LAYOUT NAME - 980

PLOT DATE : 5/16/2024 10:23 AM PLOT BY : HEDRINGTON, MARK PLOT NAME : **PLOT SCALE :** 1 IN:10 FT HORZ. / 1 IN:10 FT VERT.

WISDOT/CADDS SHEET 49

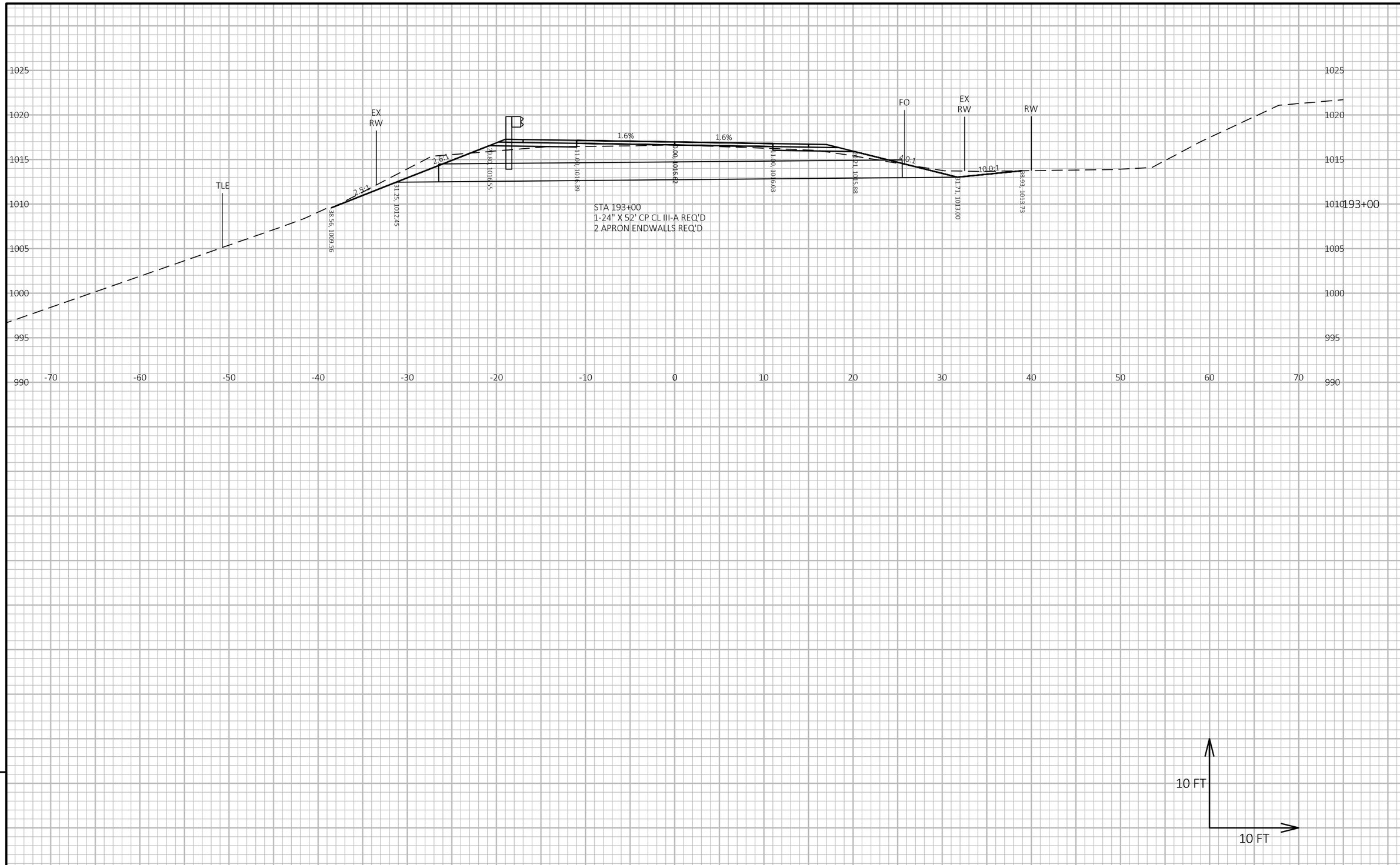

9

9

PROJECT NO: 7881-05-73	HWY: CTH D	COUNTY: DUNN	CROSS SECTIONS: CTH D	SHEET 192	E

FILE NAME : I:\41\410859 DUNN CTH D\C3D\DESIGN\CORRIDORS\CORRIDOR-CTH D 4-INCH RAISE.DWG
LAYOUT NAME - 981

PLOT DATE : 5/16/2024 10:23 AM PLOT BY : HEDRINGTON, MARK PLOT NAME : **PLOT SCALE :** 1 IN:10 FT HORZ. / 1 IN:10 FT VERT.

WISDOT/CADDS SHEET 49

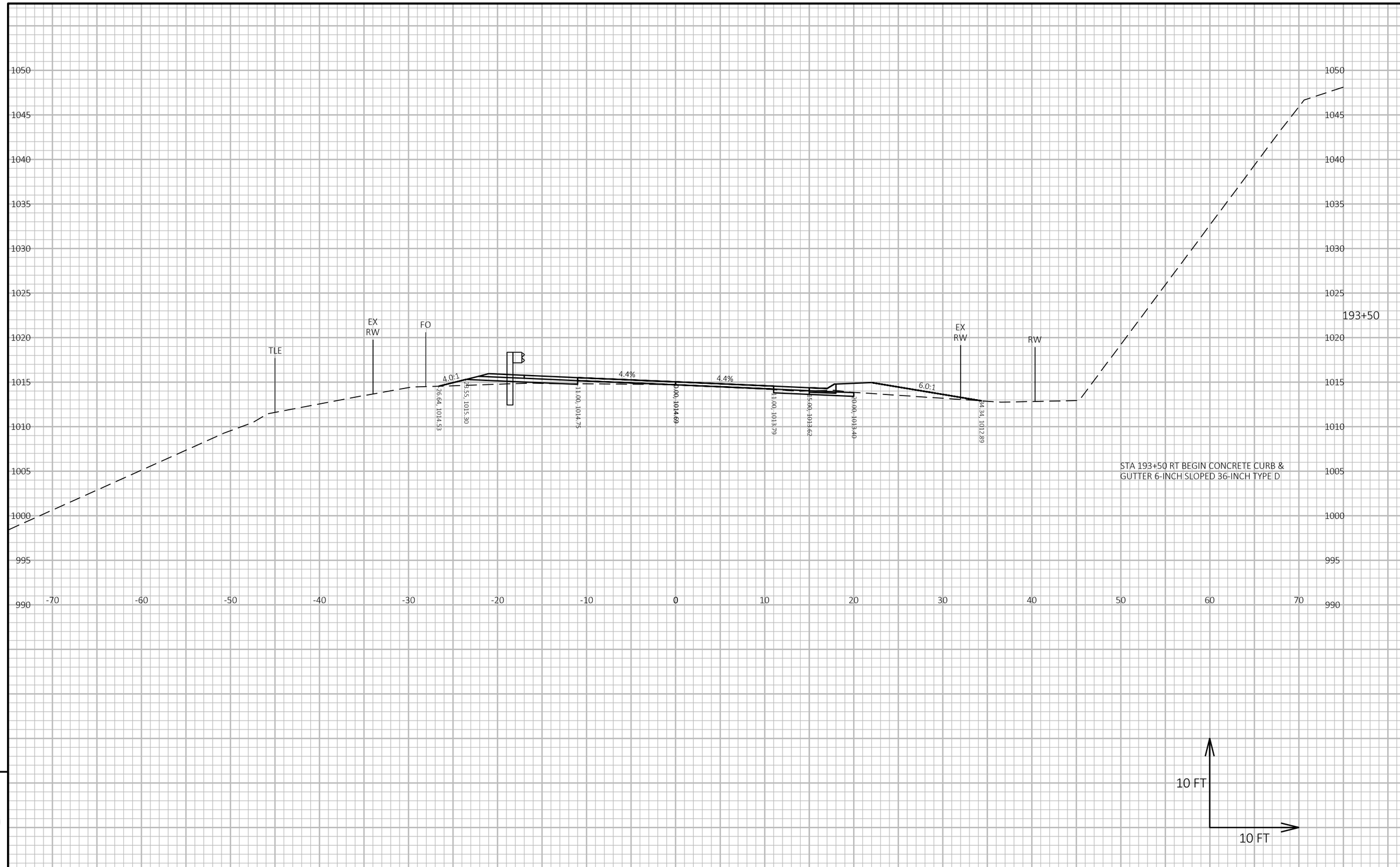

9

9

PROJECT NO: 7881-05-73	HWY: CTH D	COUNTY: DUNN	CROSS SECTIONS: CTH D	SHEET 193	E

FILE NAME : I:\41\410859 DUNN CTH D\C3D\DESIGN\CORRIDORS\CORRIDOR-CTH D 4-INCH RAISE.DWG
LAYOUT NAME - 982

PLOT DATE : 5/16/2024 10:23 AM PLOT BY : HEDRINGTON, MARK PLOT NAME : **PLOT SCALE :** 1 IN:10 FT HORZ. / 1 IN:10 FT VERT.

WISDOT/CADDS SHEET 49

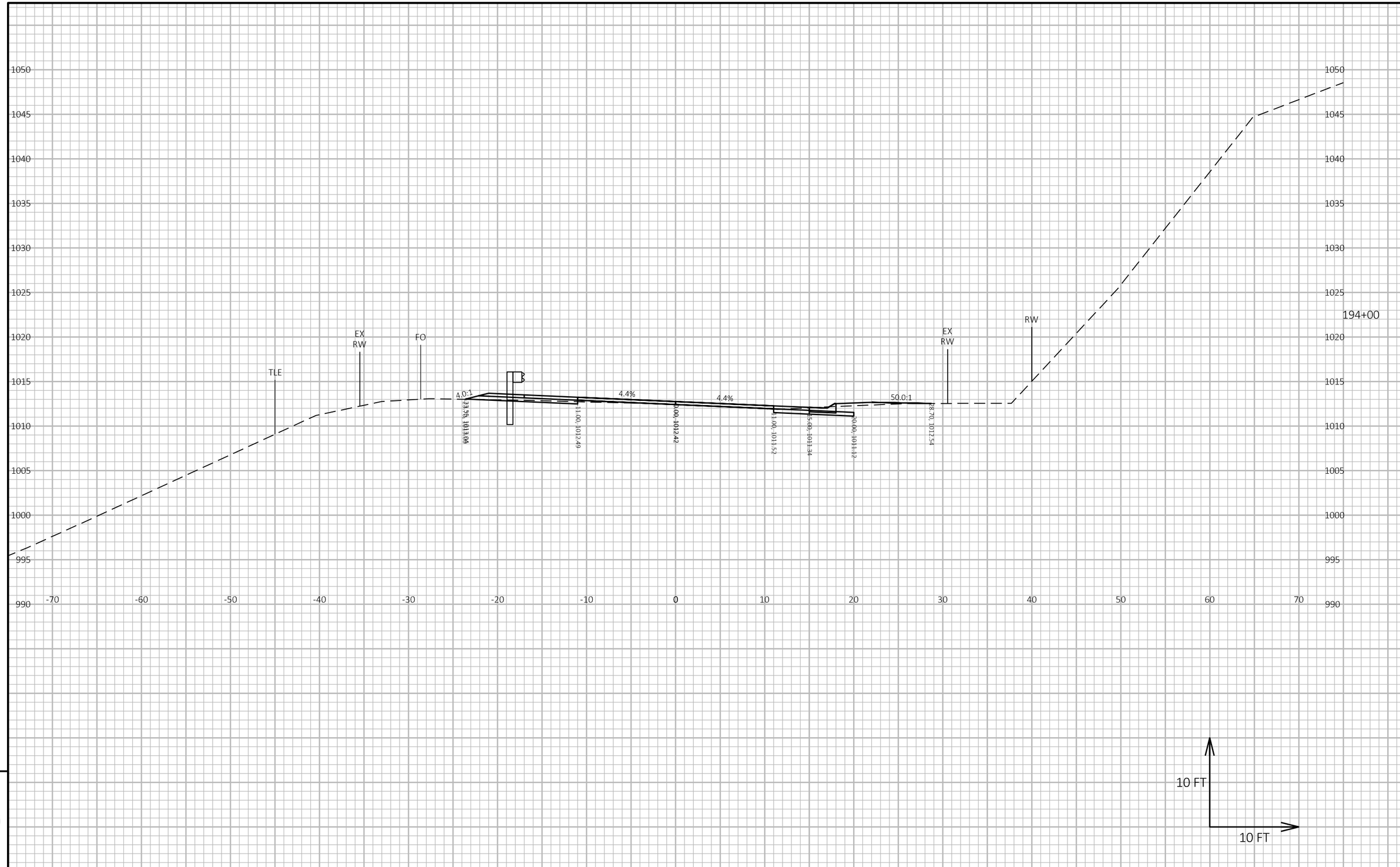

9

9

PROJECT NO: 7881-05-73	HWY: CTH D	COUNTY: DUNN	CROSS SECTIONS: CTH D	SHEET 194	E

FILE NAME : I:\41\410859 DUNN CTH D\C3D\DESIGN\CORRIDORS\CORRIDOR-CTH D 4-INCH RAISE.DWG
LAYOUT NAME - 983

PLOT DATE : 5/16/2024 10:23 AM PLOT BY : HEDRINGTON, MARK PLOT NAME : **PLOT SCALE :** 1 IN:10 FT HORZ. / 1 IN:10 FT VERT.

WISDOT/CADDS SHEET 49

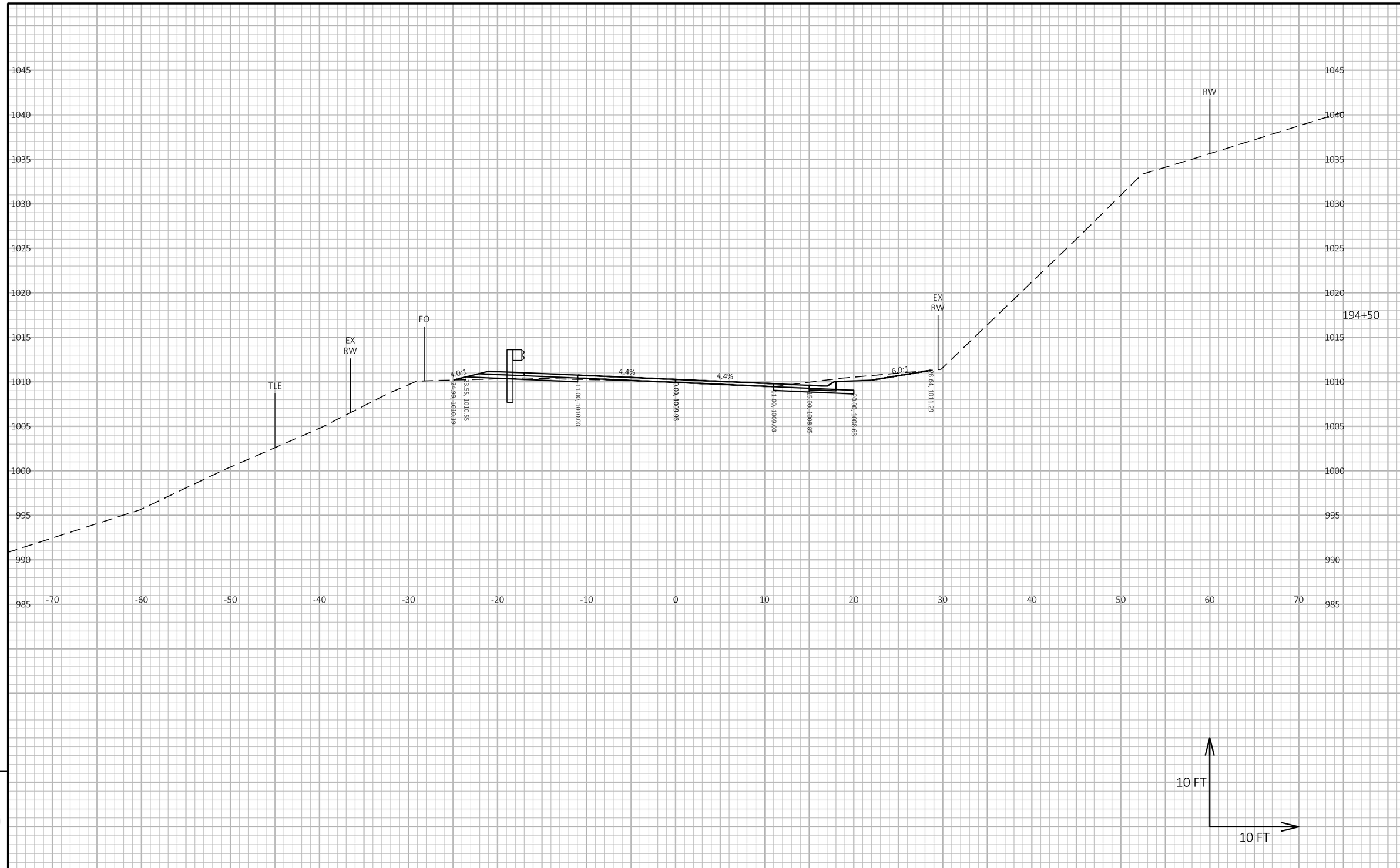

9

9

PROJECT NO: 7881-05-73	HWY: CTH D	COUNTY: DUNN	CROSS SECTIONS: CTH D	SHEET 195	E

FILE NAME : I:\41\410859 DUNN CTH D\C3D\DESIGN\CORRIDORS\CORRIDOR-CTH D 4-INCH RAISE.DWG
LAYOUT NAME - 984

PLOT DATE : 5/16/2024 10:23 AM PLOT BY : HEDRINGTON, MARK PLOT NAME : **PLOT SCALE :** 1 IN:10 FT HORZ. / 1 IN:10 FT VERT.

WISDOT/CADDS SHEET 49

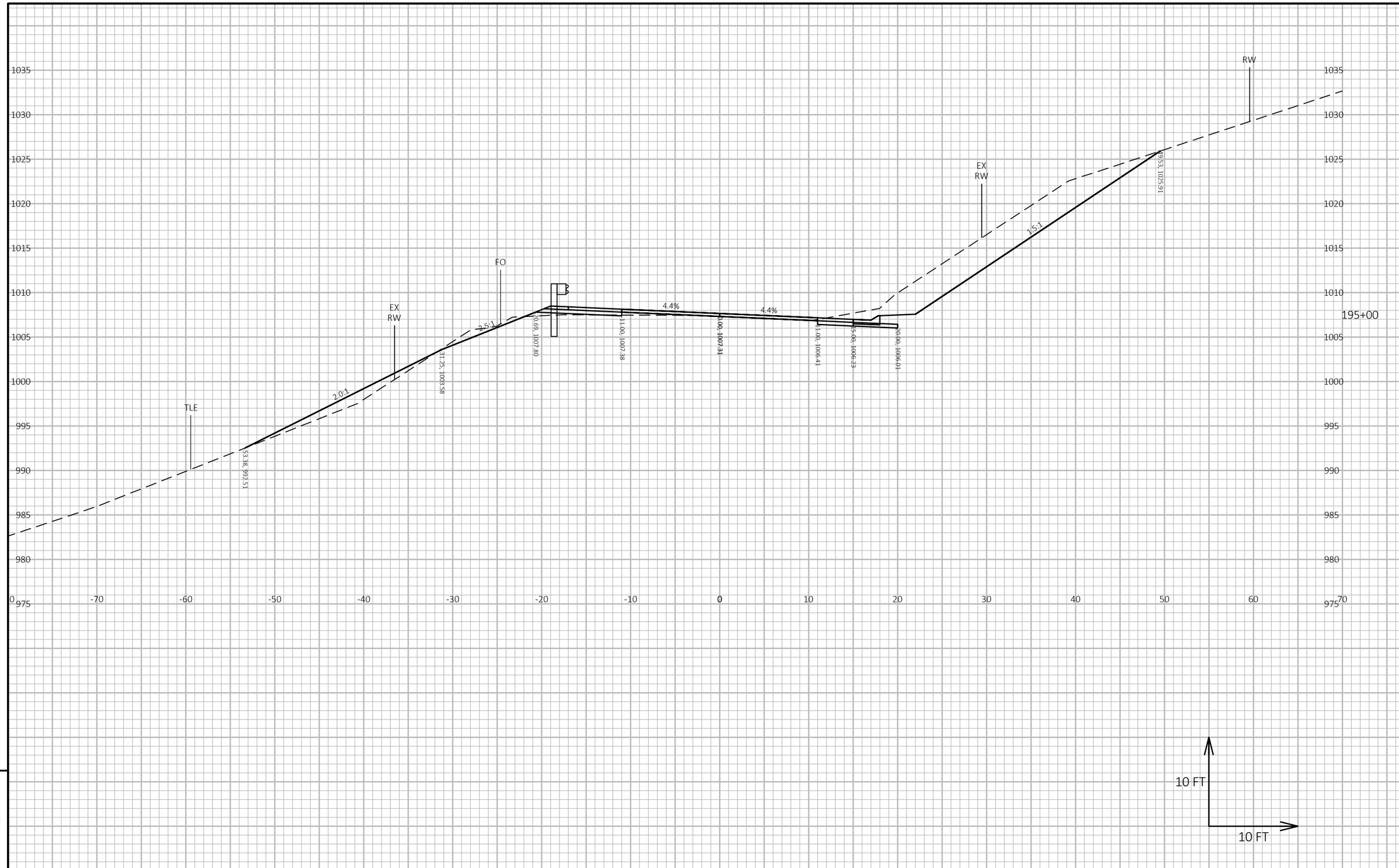

9

9

PROJECT NO: 7881-05-73	HWY: CTH D	COUNTY: DUNN	CROSS SECTIONS: CTH D	SHEET 196	E

FILE NAME : I:\41\410859 DUNN CTH D\C3D\DESIGN\CORRIDORS\CORRIDOR-CTH D 4-INCH RAISE.DWG
LAYOUT NAME - 985

PLOT DATE : 5/16/2024 10:23 AM PLOT BY : HEDRINGTON, MARK PLOT NAME : **PLOT SCALE :** 1 IN:10 FT HORZ. / 1 IN:10 FT VERT.

WISDOT/CADDS SHEET 49

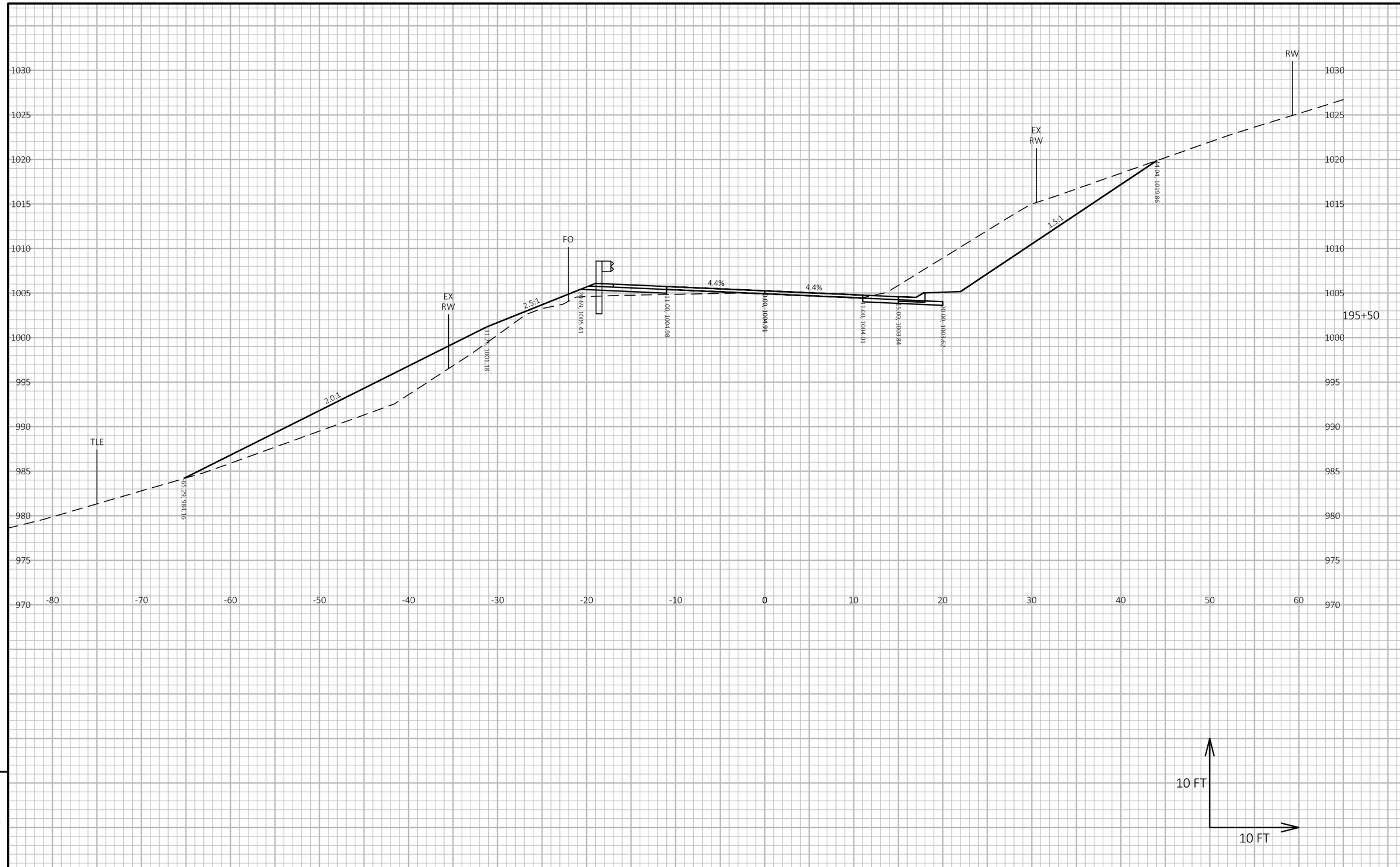

9

9

PROJECT NO: 7881-05-73	HWY: CTH D	COUNTY: DUNN	CROSS SECTIONS: CTH D	SHEET 197	E

FILE NAME : I:\41\410859 DUNN CTH D\C3D\DESIGN\CORRIDORS\CORRIDOR-CTH D 4-INCH RAISE.DWG
LAYOUT NAME - 986

PLOT DATE : 5/16/2024 10:23 AM PLOT BY : HEDRINGTON, MARK PLOT NAME : **PLOT SCALE :** 1 IN:10 FT HORZ. / 1 IN:10 FT VERT.

WISDOT/CADDS SHEET 49

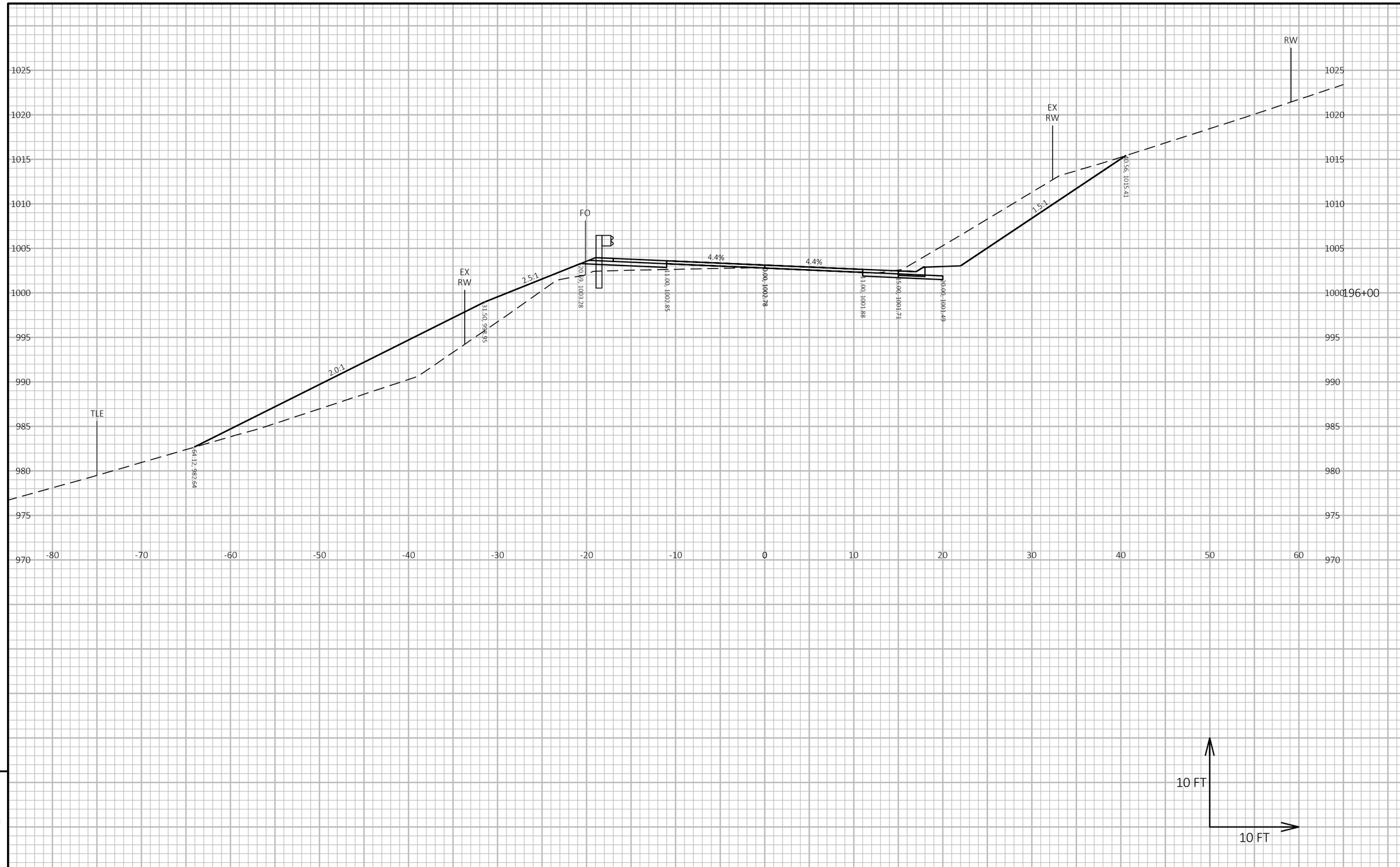

9

9

PROJECT NO: 7881-05-73	HWY: CTH D	COUNTY: DUNN	CROSS SECTIONS: CTH D	SHEET 198	E

FILE NAME : I:\41\410859 DUNN CTH D\C3D\DESIGN\CORRIDORS\CORRIDOR-CTH D 4-INCH RAISE.DWG
LAYOUT NAME - 987

PLOT DATE : 5/16/2024 10:22 AM PLOT BY : HEDRINGTON, MARK PLOT NAME : **PLOT SCALE :** 1 IN:10 FT HORZ. / 1 IN:10 FT VERT.

WISDOT/CADDS SHEET 49

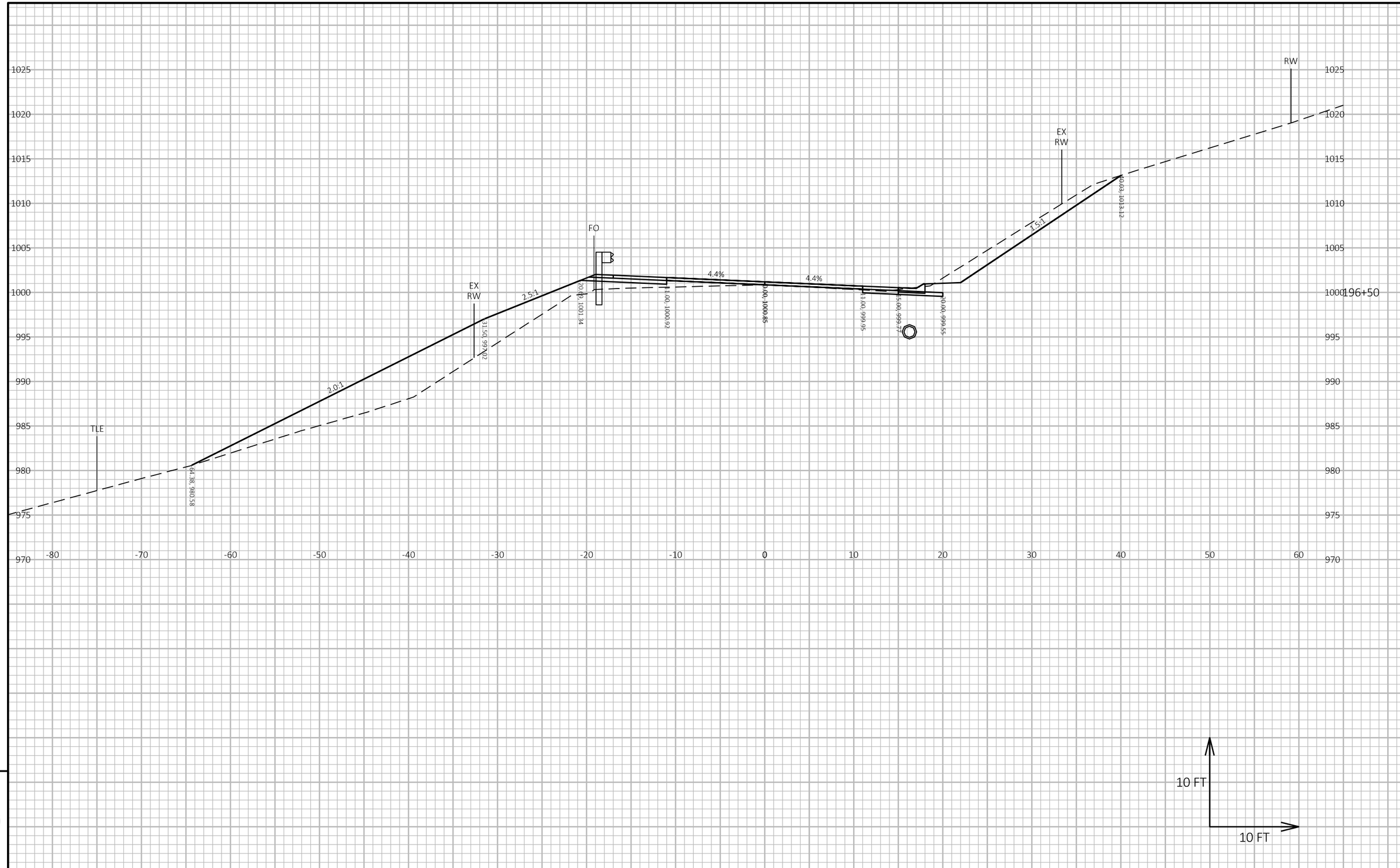

9

9

PROJECT NO: 7881-05-73	HWY: CTH D	COUNTY: DUNN	CROSS SECTIONS: CTH D	SHEET 199	E

FILE NAME : I:\41\410859 DUNN CTH D\C3D\DESIGN\CORRIDORS\CORRIDOR-CTH D 4-INCH RAISE.DWG
LAYOUT NAME - 988

PLOT DATE : 5/16/2024 10:22 AM PLOT BY : HEDRINGTON, MARK PLOT NAME : PLOT SCALE : 1 IN:10 FT HORZ. / 1 IN:10 FT VERT.

WISDOT/CADDS SHEET 49

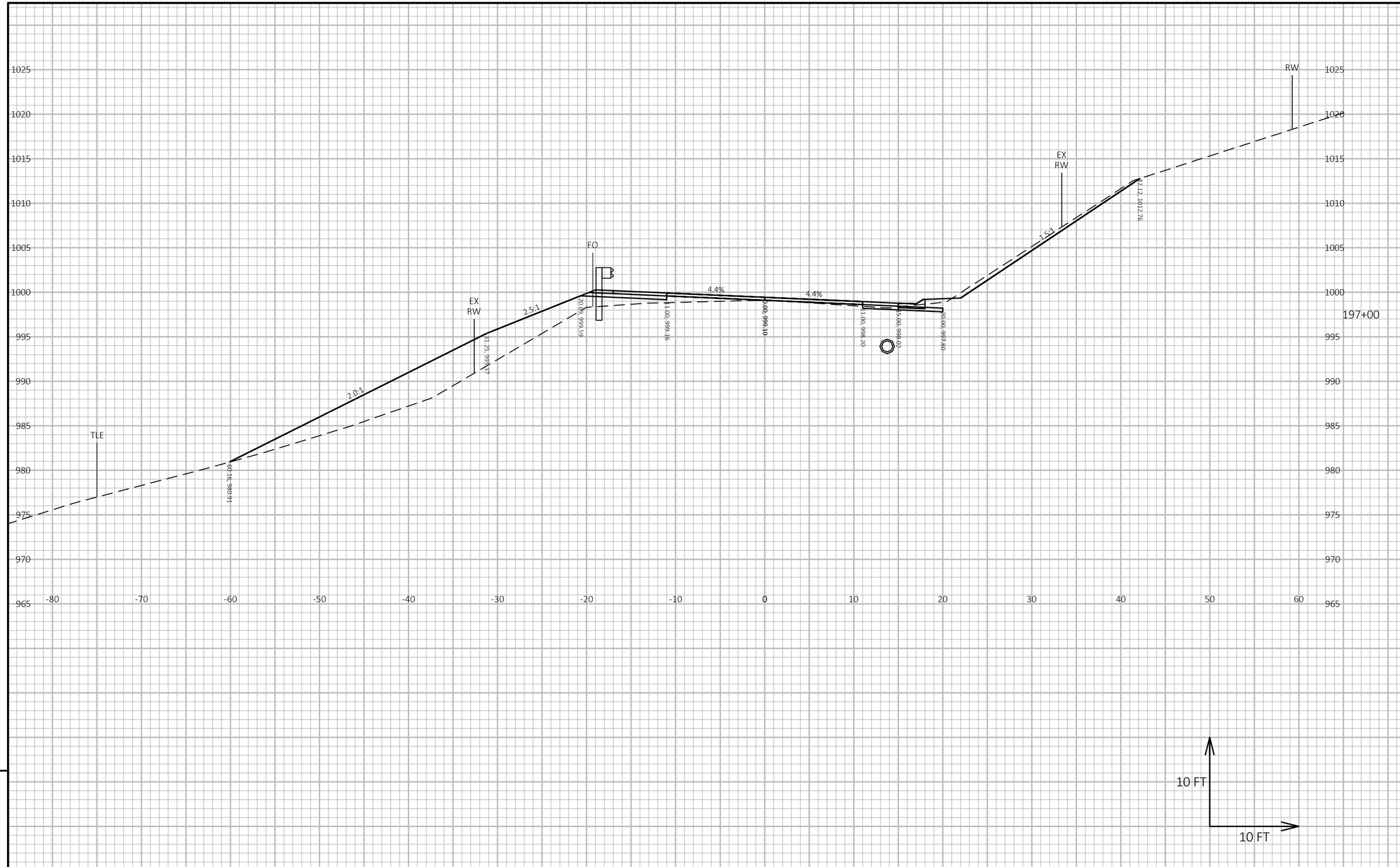

9

9

PROJECT NO: 7881-05-73	HWY: CTH D	COUNTY: DUNN	CROSS SECTIONS: CTH D	SHEET 200	E

FILE NAME : I:\41\410859 DUNN CTH D\C3D\DESIGN\CORRIDORS\CORRIDOR-CTH D 4-INCH RAISE.DWG
LAYOUT NAME - 989

PLOT DATE : 5/16/2024 10:22 AM PLOT BY : HEDRINGTON, MARK PLOT NAME : **PLOT SCALE :** 1 IN:10 FT HORZ. / 1 IN:10 FT VERT.

WISDOT/CADDS SHEET 49

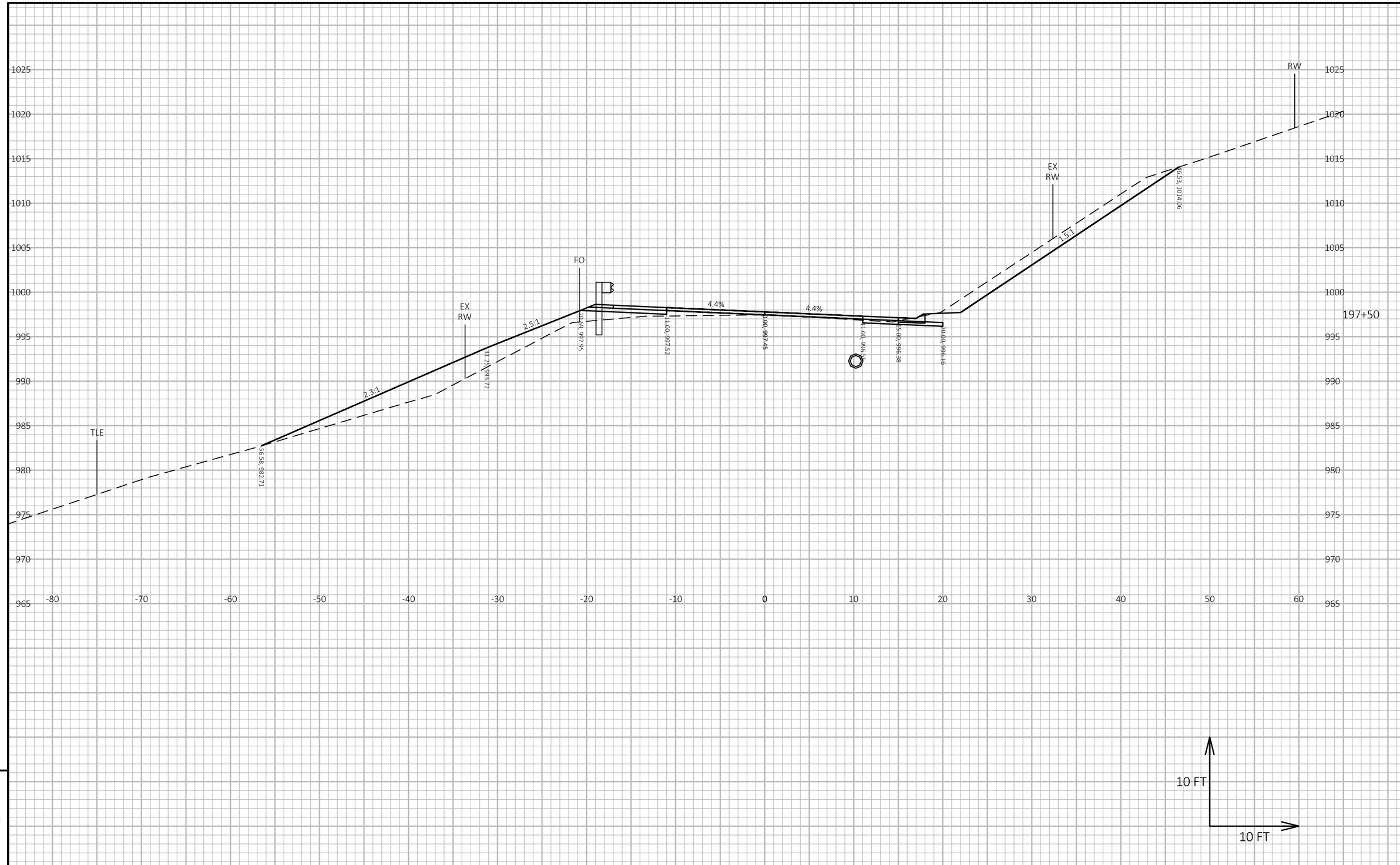

9

9

PROJECT NO: 7881-05-73	HWY: CTH D	COUNTY: DUNN	CROSS SECTIONS: CTH D	SHEET 201	E

FILE NAME : I:\41\410859 DUNN CTH D\C3D\DESIGN\CORRIDORS\CORRIDOR-CTH D 4-INCH RAISE.DWG
LAYOUT NAME - 990

PLOT DATE : 5/16/2024 10:22 AM PLOT BY : HEDRINGTON, MARK PLOT NAME : **PLOT SCALE :** 1 IN:10 FT HORZ. / 1 IN:10 FT VERT.

WISDOT/CADDS SHEET 49

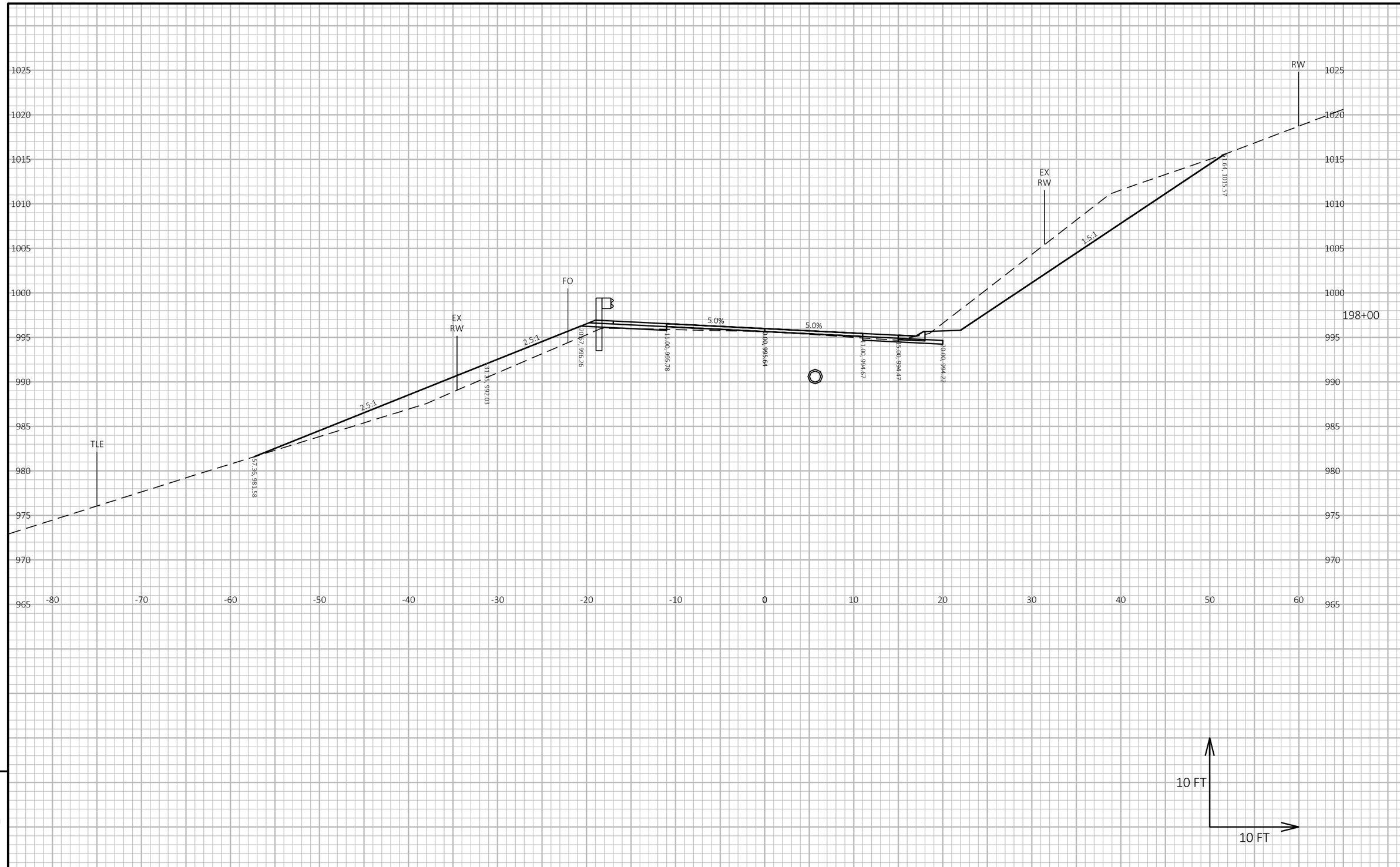

9

9

PROJECT NO: 7881-05-73	HWY: CTH D	COUNTY: DUNN	CROSS SECTIONS: CTH D	SHEET 202	E

FILE NAME : I:\41\410859 DUNN CTH D\C3D\DESIGN\CORRIDORS\CORRIDOR-CTH D 4-INCH RAISE.DWG
LAYOUT NAME - 991

PLOT DATE : 5/16/2024 10:22 AM PLOT BY : HEDRINGTON, MARK PLOT NAME : **PLOT SCALE :** 1 IN:10 FT HORZ. / 1 IN:10 FT VERT.

WISDOT/CADDS SHEET 49

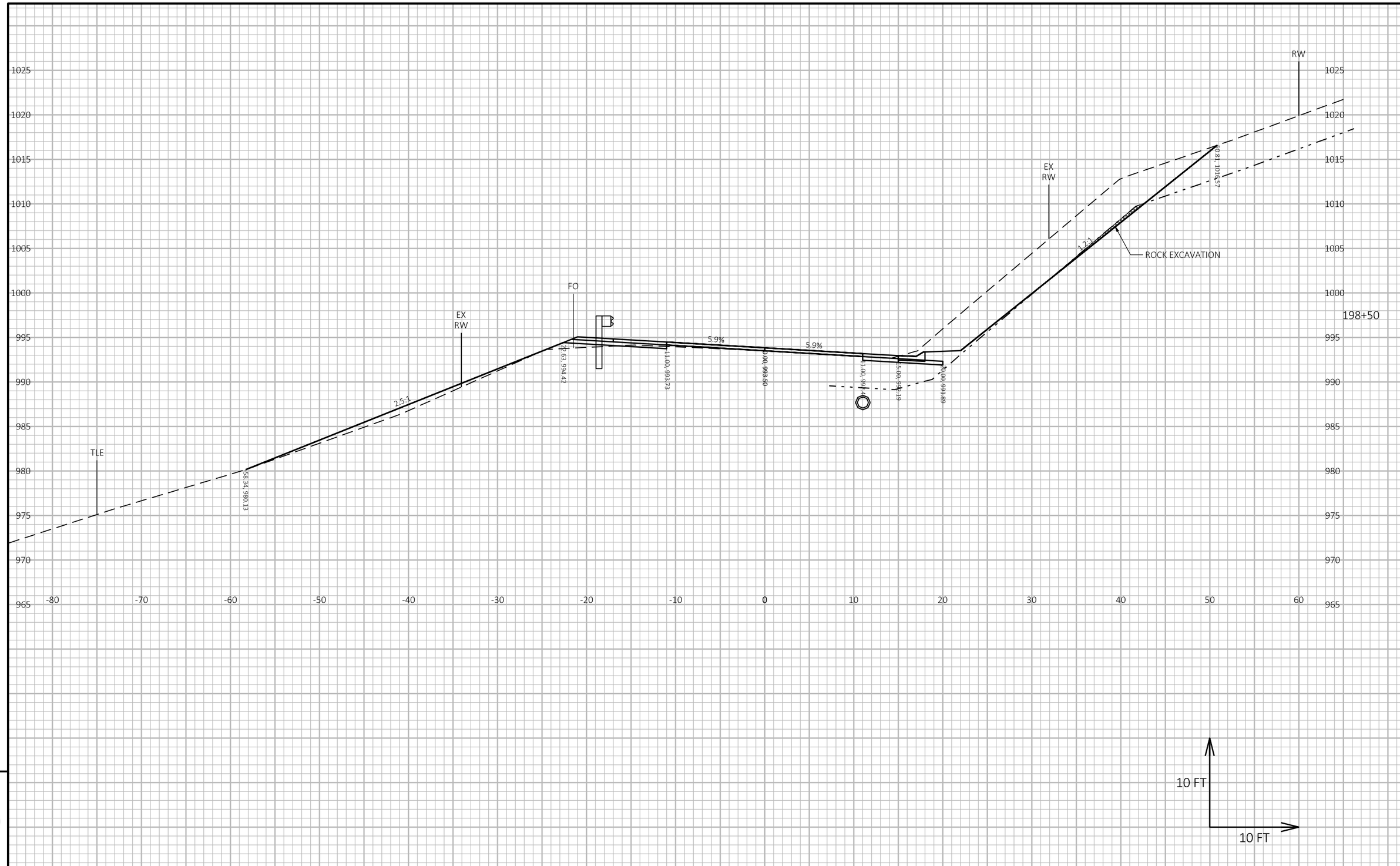

PROJECT NO: 7881-05-73	HWY: CTH D	COUNTY: DUNN	CROSS SECTIONS: CTH D	SHEET 203	E

FILE NAME : I:\41\410859 DUNN CTH D\C3D\DESIGN\CORRIDORS\CORRIDOR-CTH D 4-INCH RAISE.DWG
LAYOUT NAME - 992
PLOT DATE : 5/16/2024 10:22 AM PLOT BY : HEDRINGTON, MARK PLOT NAME : **PLOT SCALE :** 1 IN:10 FT HORZ. / 1 IN:10 FT VERT.

WISDOT/CADDS SHEET 49

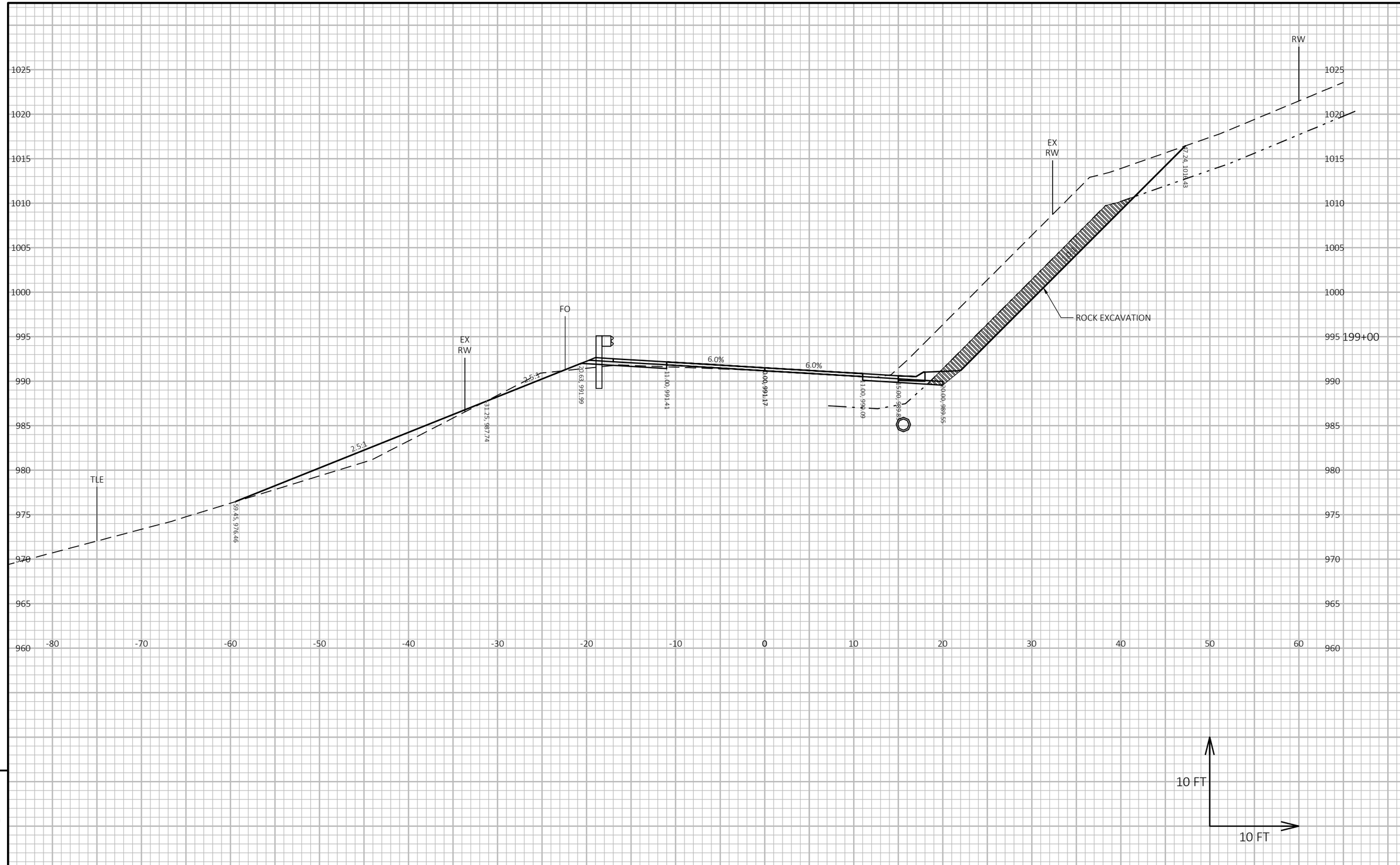

9

9

PROJECT NO: 7881-05-73	HWY: CTH D	COUNTY: DUNN	CROSS SECTIONS: CTH D	SHEET 204	E

FILE NAME : I:\41\410859 DUNN CTH D\C3D\DESIGN\CORRIDORS\CORRIDOR-CTH D 4-INCH RAISE.DWG
LAYOUT NAME - 993
PLOT DATE : 5/16/2024 10:59 AM
PLOT BY : HEDRINGTON, MARK
PLOT NAME :
PLOT SCALE : 1 IN:10 FT HORZ. / 1 IN:10 FT VERT.
WISDOT/CADDS SHEET 49

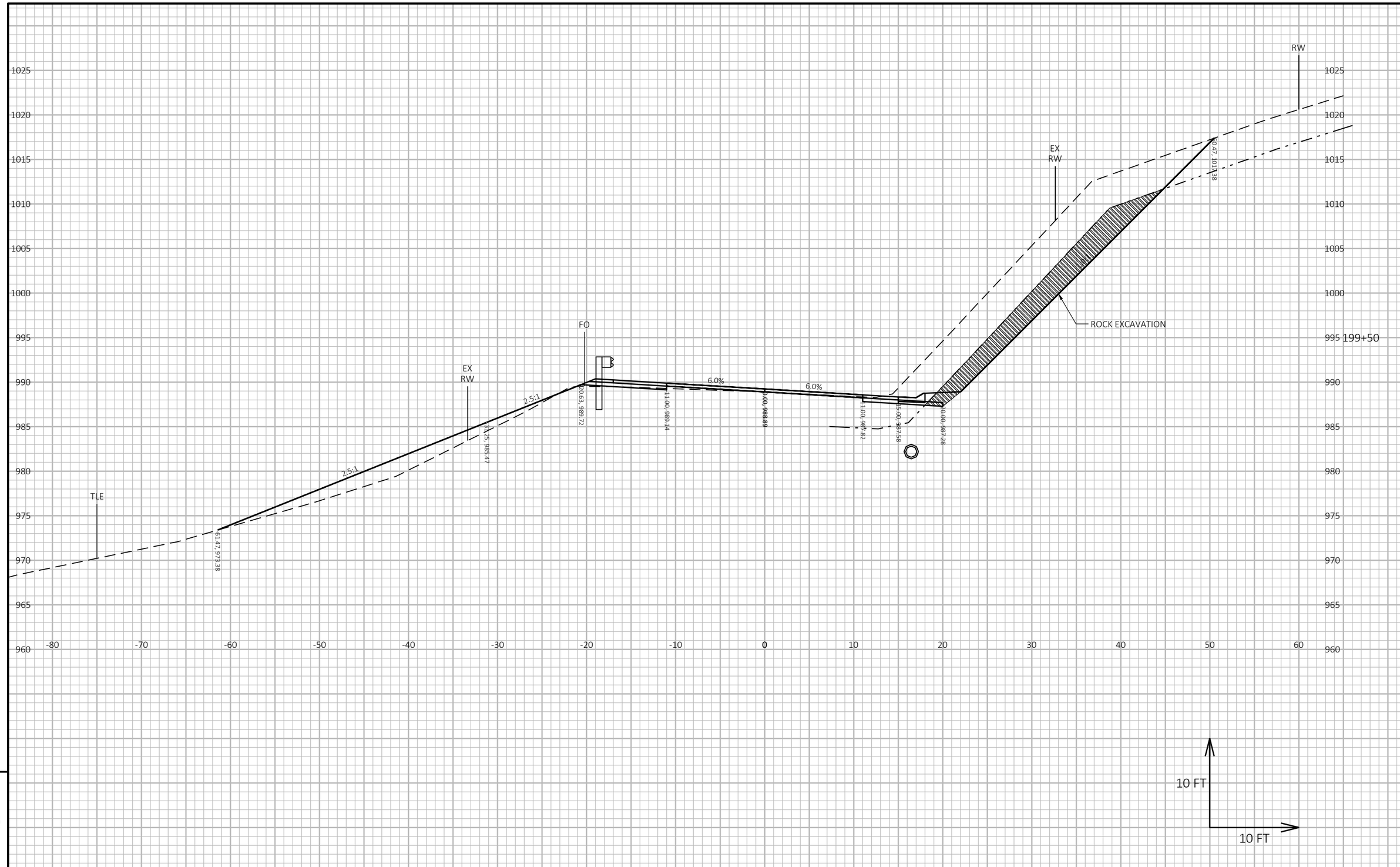

9

9

PROJECT NO: 7881-05-73	HWY: CTH D	COUNTY: DUNN	CROSS SECTIONS: CTH D	SHEET 205	E

FILE NAME : I:\41\410859 DUNN CTH D\C3D\DESIGN\CORRIDORS\CORRIDOR-CTH D 4-INCH RAISE.DWG
LAYOUT NAME - 994

PLOT DATE : 5/16/2024 10:59 AM PLOT BY : HEDRINGTON, MARK PLOT NAME : **PLOT SCALE :** 1 IN:10 FT HORZ. / 1 IN:10 FT VERT.

WISDOT/CADDS SHEET 49

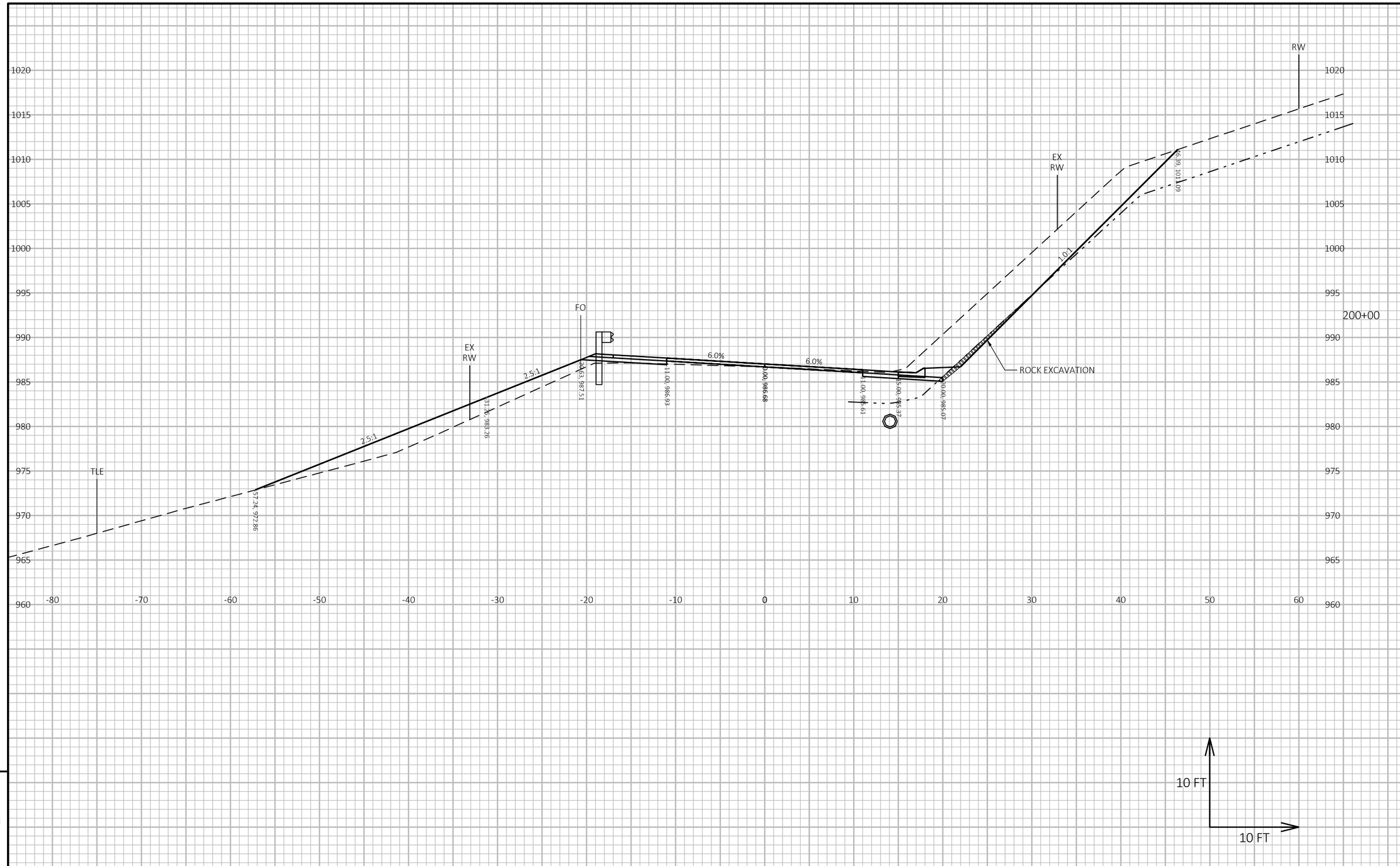

9

9

PROJECT NO: 7881-05-73	HWY: CTH D	COUNTY: DUNN	CROSS SECTIONS: CTH D	SHEET 206	E

FILE NAME : I:\41\410859 DUNN CTH D\C3D\DESIGN\CORRIDORS\CORRIDOR-CTH D 4-INCH RAISE.DWG
LAYOUT NAME - 995

PLOT DATE : 5/16/2024 10:22 AM PLOT BY : HEDRINGTON, MARK PLOT NAME : **PLOT SCALE :** 1 IN:10 FT HORZ. / 1 IN:10 FT VERT.

WISDOT/CADDS SHEET 49

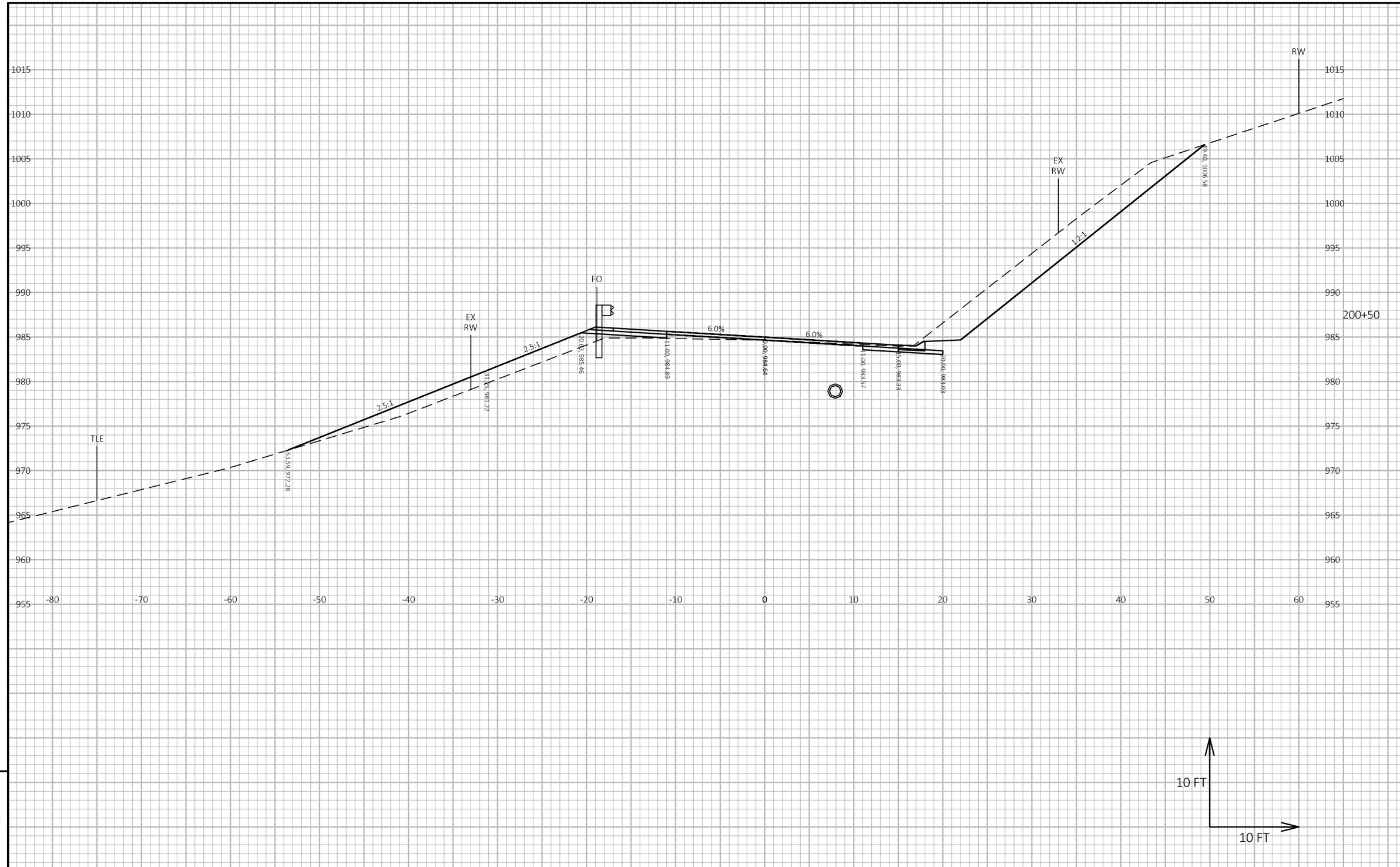

9

9

PROJECT NO: 7881-05-73	HWY: CTH D	COUNTY: DUNN	CROSS SECTIONS: CTH D	SHEET 207	E

FILE NAME : I:\41\410859 DUNN CTH D\C3D\DESIGN\CORRIDORS\CORRIDOR-CTH D 4-INCH RAISE.DWG
LAYOUT NAME - 996
PLOT DATE : 5/16/2024 10:22 AM
PLOT BY : HEDRINGTON, MARK
PLOT NAME :
PLOT SCALE : 1 IN:10 FT HORZ. / 1 IN:10 FT VERT.

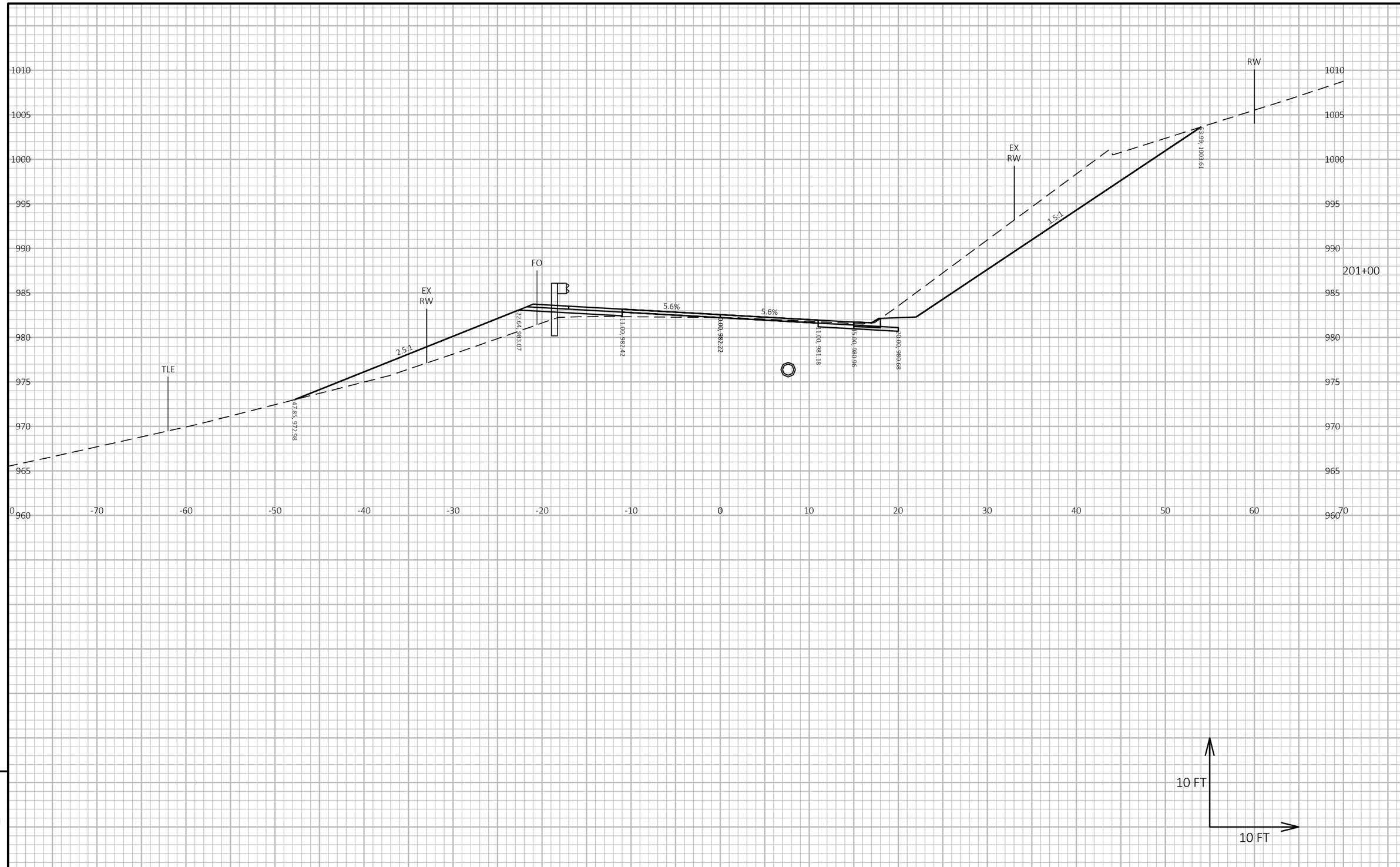

9

9

PROJECT NO: 7881-05-73	HWY: CTH D	COUNTY: DUNN	CROSS SECTIONS: CTH D	SHEET 208	E

FILE NAME : I:\41\410859 DUNN CTH D\C3D\DESIGN\CORRIDORS\CORRIDOR-CTH D 4-INCH RAISE.DWG
LAYOUT NAME - 997

PLOT DATE : 5/16/2024 10:22 AM PLOT BY : HEDRINGTON, MARK PLOT NAME : **PLOT SCALE :** 1 IN:10 FT HORZ. / 1 IN:10 FT VERT.

WISDOT/CADDS SHEET 49

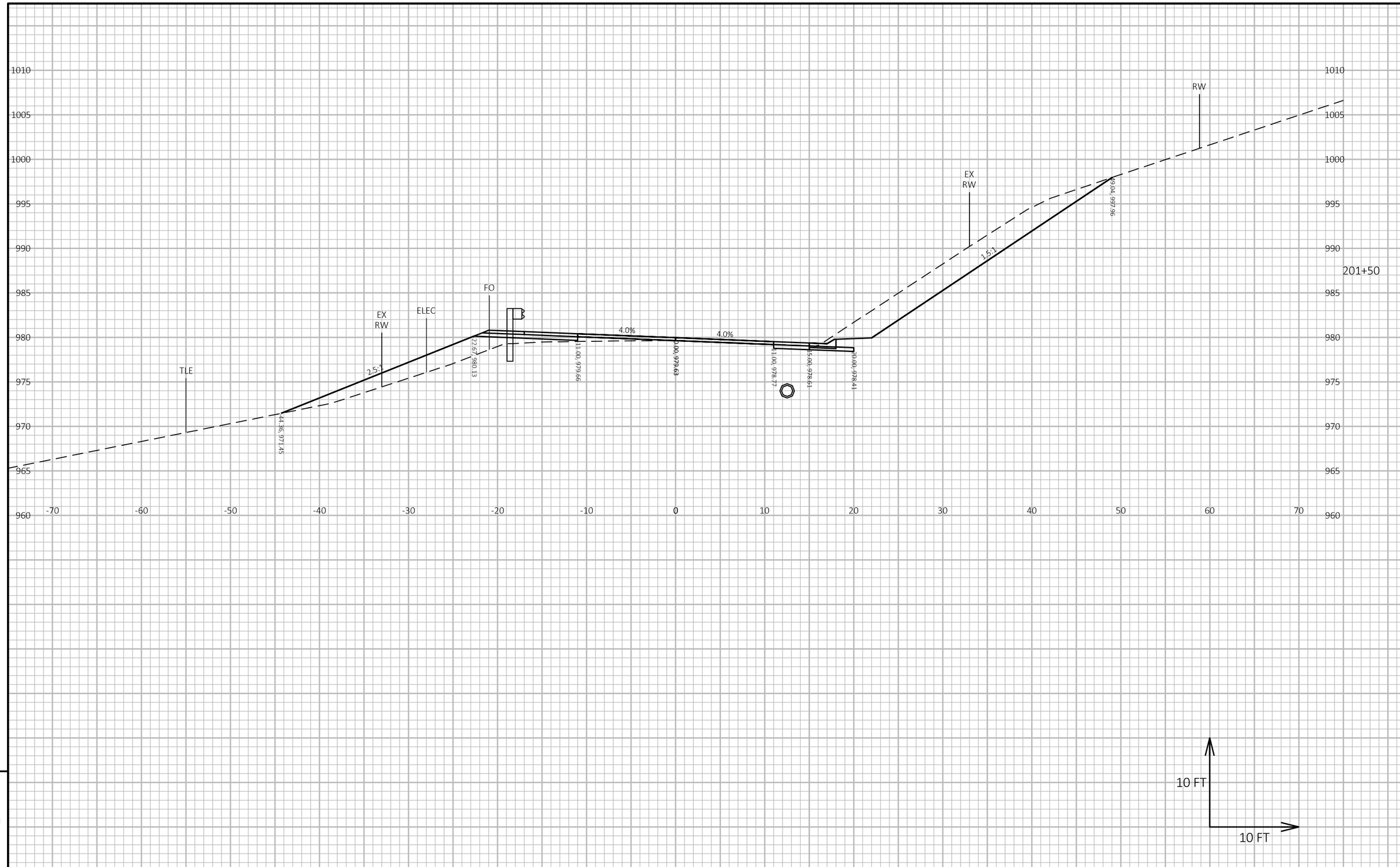

9

9

PROJECT NO: 7881-05-73	HWY: CTH D	COUNTY: DUNN	CROSS SECTIONS: CTH D	SHEET 209	E

FILE NAME : I:\41\410859 DUNN CTH D\C3D\DESIGN\CORRIDORS\CORRIDOR-CTH D 4-INCH RAISE.DWG
LAYOUT NAME - 998

PLOT DATE : 5/16/2024 10:22 AM PLOT BY : HEDRINGTON, MARK PLOT NAME : **PLOT SCALE :** 1 IN:10 FT HORZ. / 1 IN:10 FT VERT.

WISDOT/CADDS SHEET 49

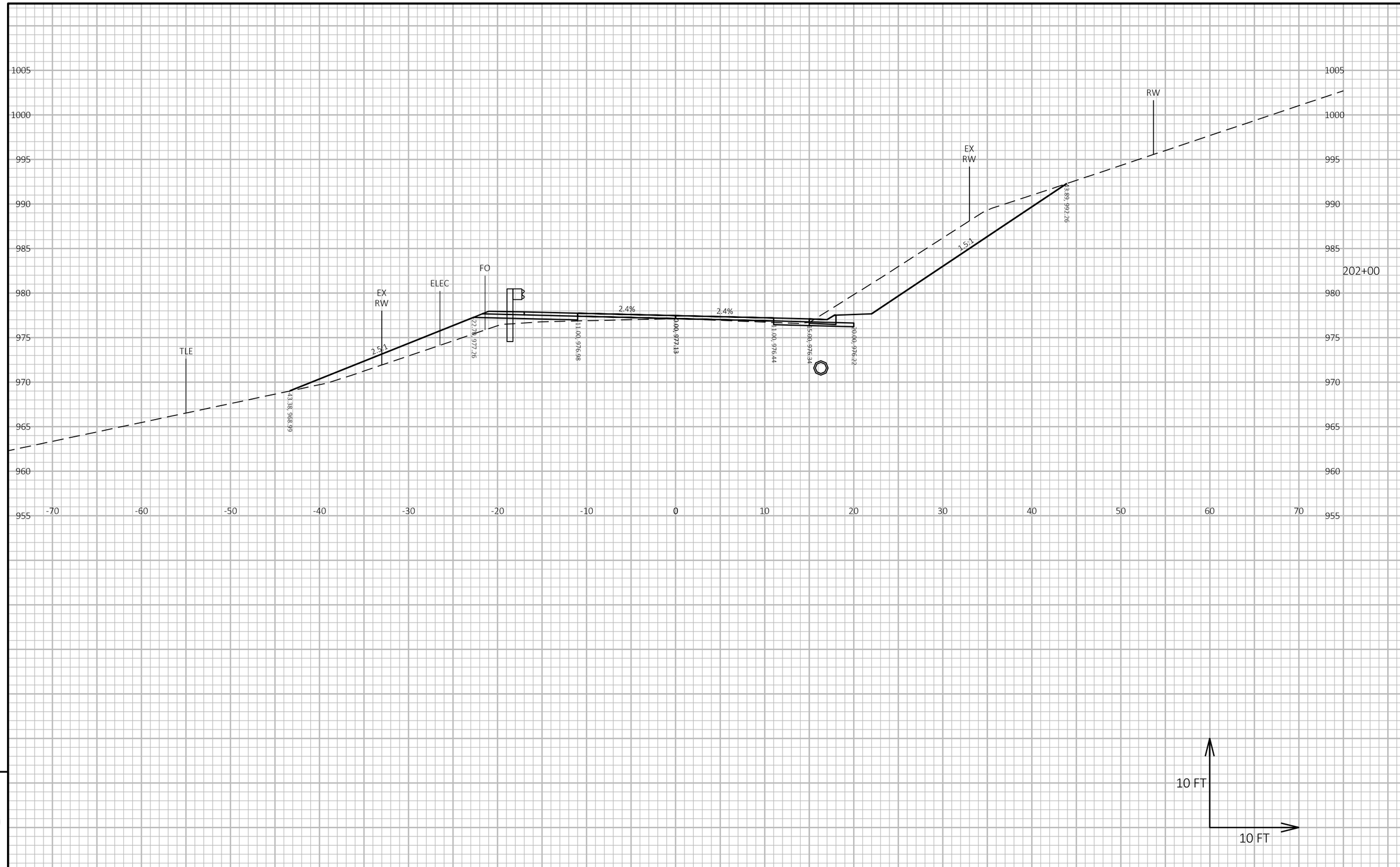

9

9

PROJECT NO: 7881-05-73	HWY: CTH D	COUNTY: DUNN	CROSS SECTIONS: CTH D	SHEET 210	E

FILE NAME : I:\41\410859 DUNN CTH D\C3D\DESIGN\CORRIDORS\CORRIDOR-CTH D 4-INCH RAISE.DWG
LAYOUT NAME - 999

PLOT DATE : 5/16/2024 10:21 AM PLOT BY : HEDRINGTON, MARK PLOT NAME : **PLOT SCALE :** 1 IN:10 FT HORZ. / 1 IN:10 FT VERT.

WISDOT/CADDS SHEET 49

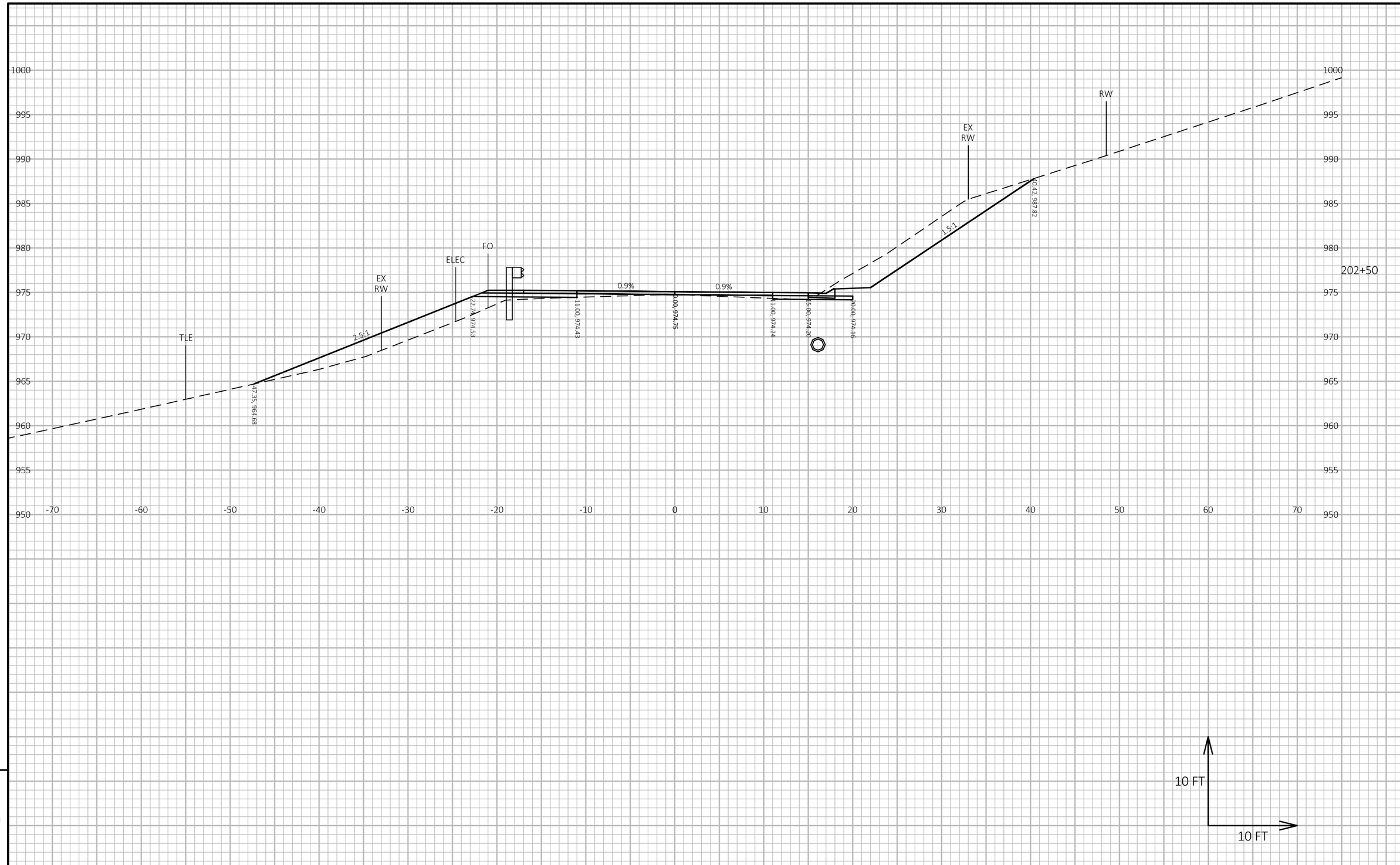

9

9

PROJECT NO: 7881-05-73	HWY: CTH D	COUNTY: DUNN	CROSS SECTIONS: CTH D	SHEET 211	E

FILE NAME : I:\41\410859 DUNN CTH D\C3D\DESIGN\CORRIDORS\CORRIDOR-CTH D 4-INCH RAISE.DWG
LAYOUT NAME - 9100
PLOT DATE : 5/16/2024 10:21 AM
PLOT BY : HEDRINGTON, MARK
PLOT NAME :
PLOT SCALE : 1 IN:10 FT HORZ. / 1 IN:10 FT VERT.
WISDOT/CADDS SHEET 49

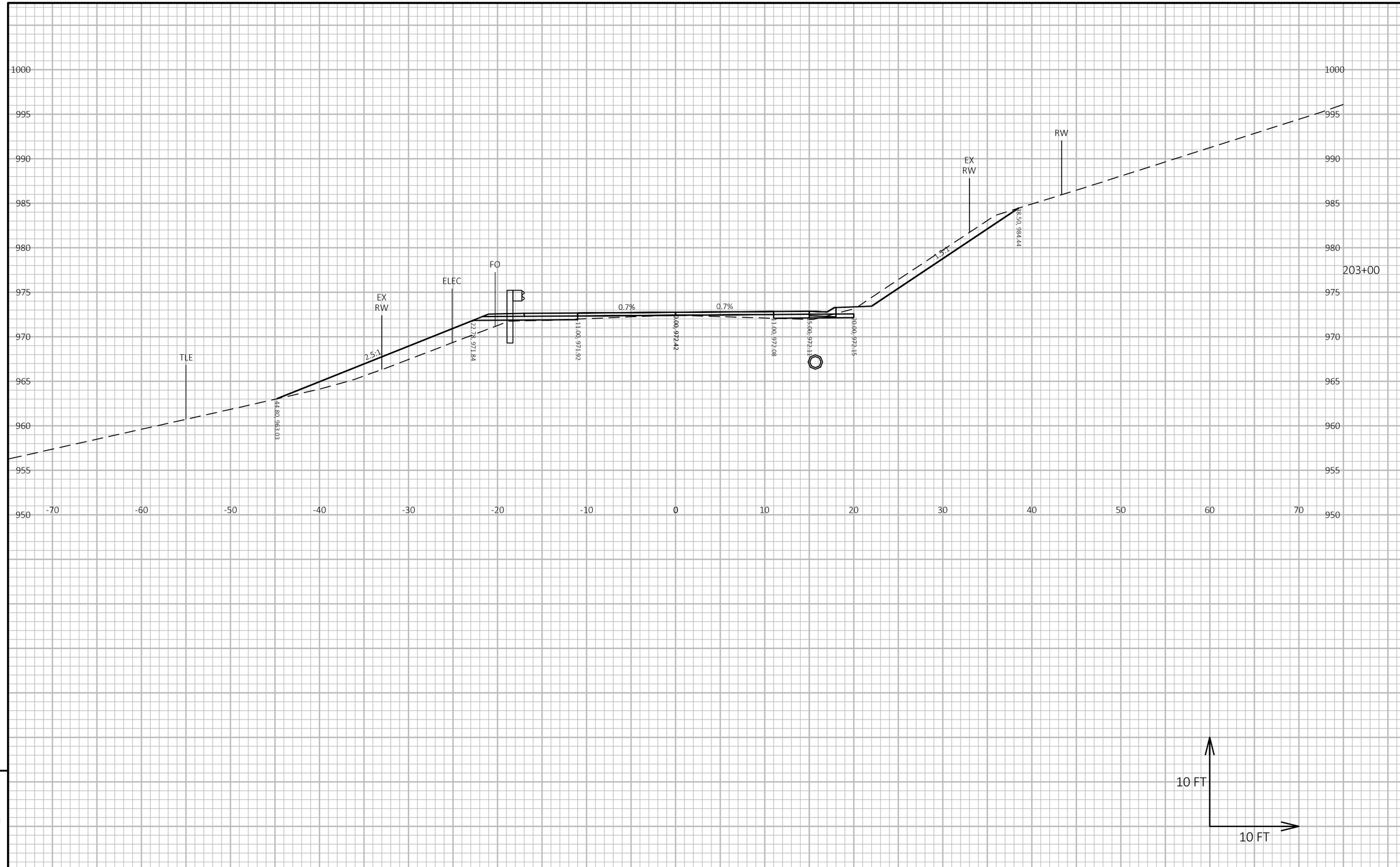

9

9

PROJECT NO: 7881-05-73	HWY: CTH D	COUNTY: DUNN	CROSS SECTIONS: CTH D	SHEET 212	E

FILE NAME : I:\41\410859 DUNN CTH D\C3D\DESIGN\CORRIDORS\CORRIDOR-CTH D 4-INCH RAISE.DWG
LAYOUT NAME - 9101

PLOT DATE : 5/16/2024 10:21 AM PLOT BY : HEDRINGTON, MARK PLOT NAME : **PLOT SCALE :** 1 IN:10 FT HORZ. / 1 IN:10 FT VERT.

WISDOT/CADDS SHEET 49

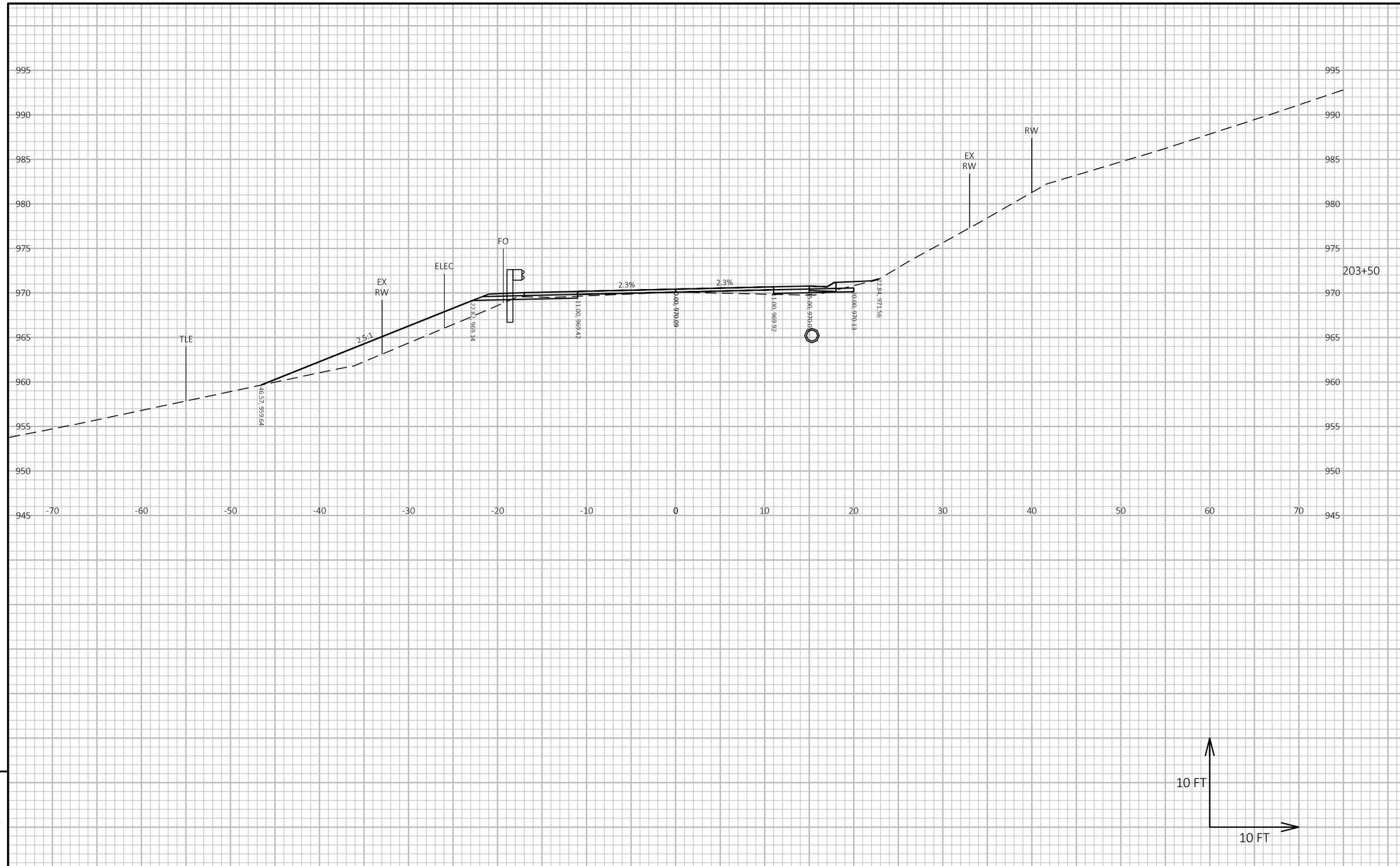

9

9

PROJECT NO: 7881-05-73	HWY: CTH D	COUNTY: DUNN	CROSS SECTIONS: CTH D	SHEET 213	E

FILE NAME : I:\41\410859 DUNN CTH D\C3D\DESIGN\CORRIDORS\CORRIDOR-CTH D 4-INCH RAISE.DWG
LAYOUT NAME - 9102
PLOT DATE : 5/16/2024 10:21 AM
PLOT BY : HEDRINGTON, MARK
PLOT NAME :
PLOT SCALE : 1 IN:10 FT HORZ. / 1 IN:10 FT VERT.
WISDOT/CADDS SHEET 49

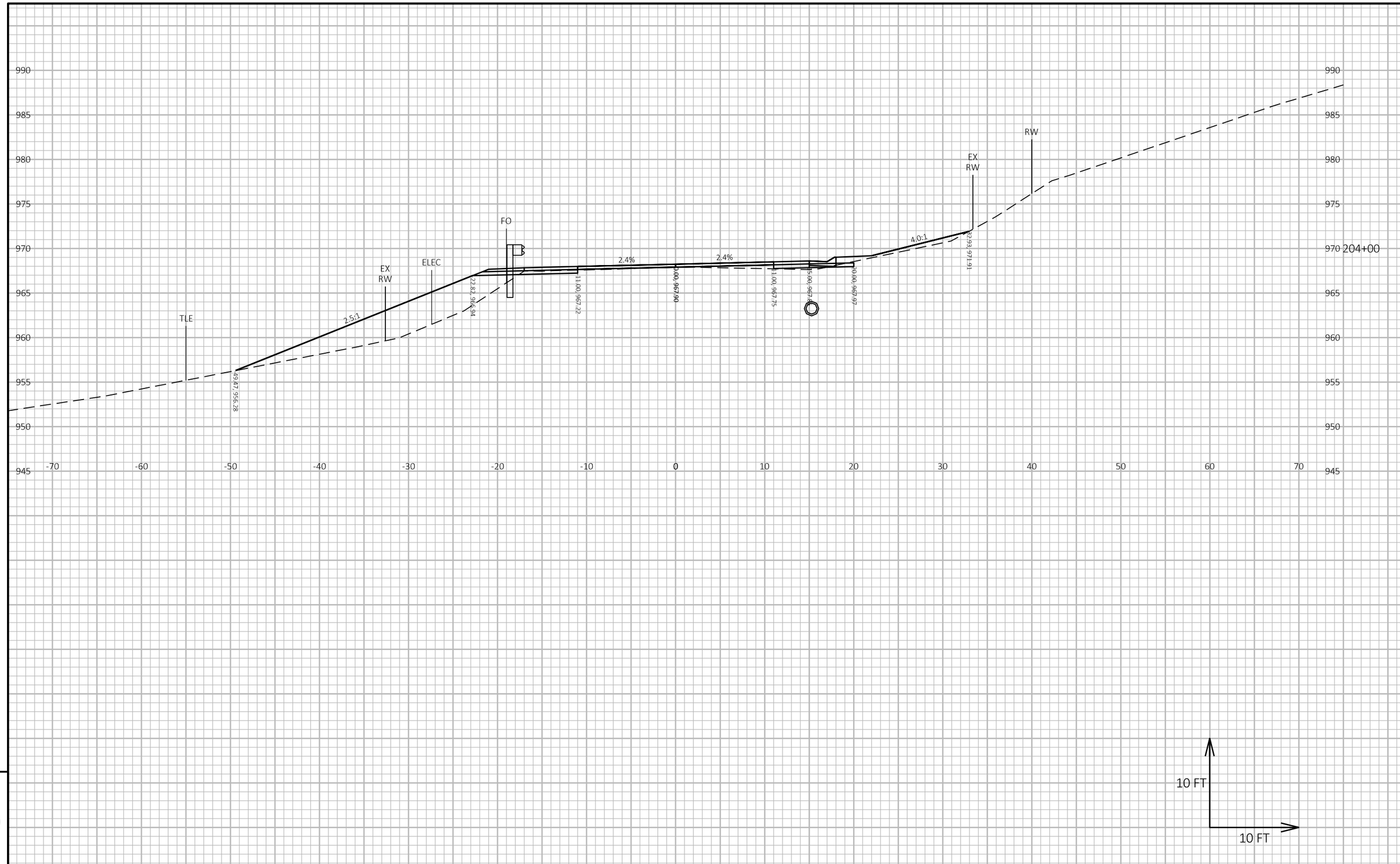

9

9

PROJECT NO: 7881-05-73	HWY: CTH D	COUNTY: DUNN	CROSS SECTIONS: CTH D	SHEET 214	E

FILE NAME : I:\41\410859 DUNN CTH D\C3D\DESIGN\CORRIDORS\CORRIDOR-CTH D 4-INCH RAISE.DWG
LAYOUT NAME - 9103
PLOT DATE : 5/16/2024 10:21 AM
PLOT BY : HEDRINGTON, MARK
PLOT NAME :
PLOT SCALE : 1 IN:10 FT HORZ. / 1 IN:10 FT VERT.
WISDOT/CADDS SHEET 49

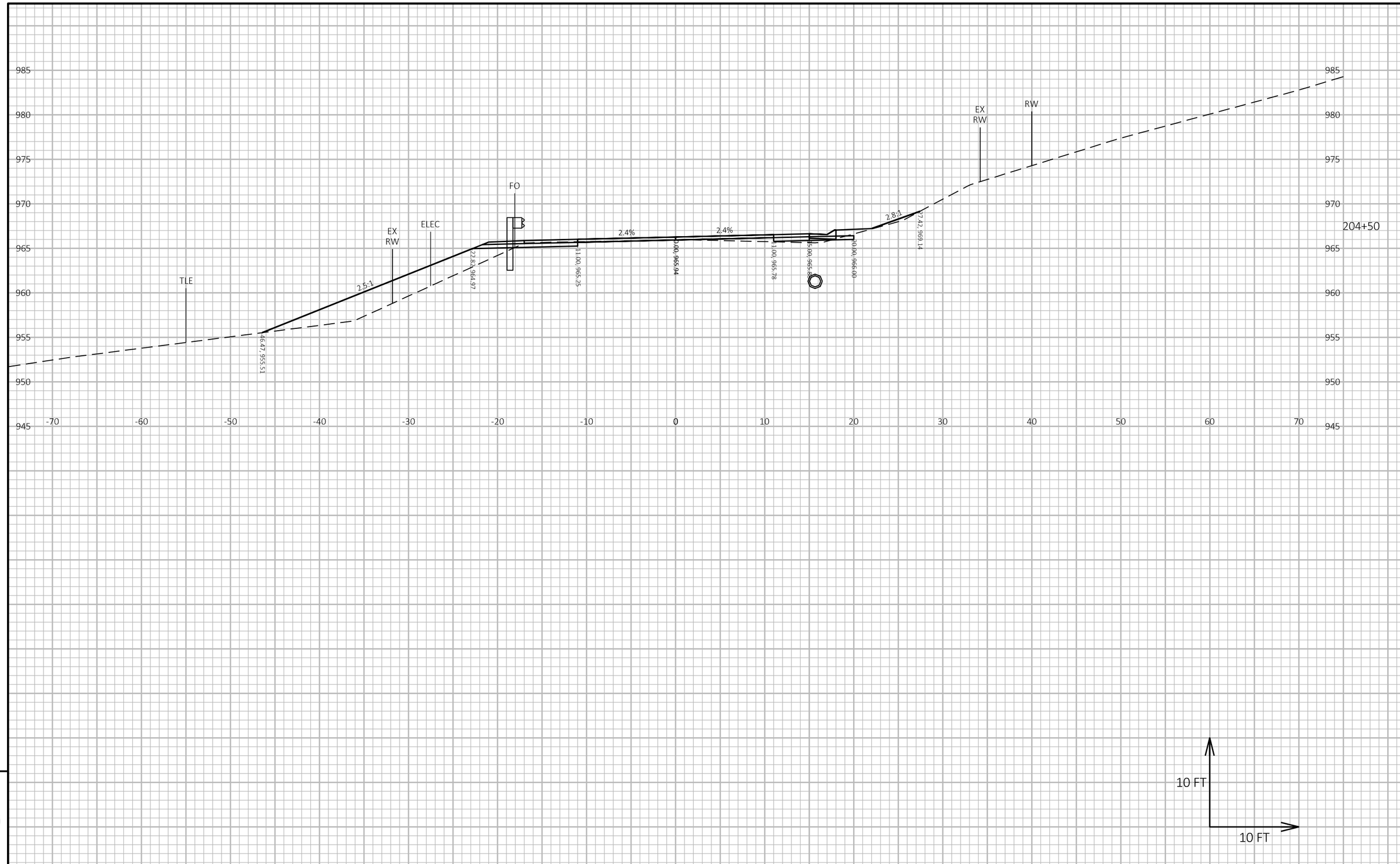

9

9

PROJECT NO: 7881-05-73	HWY: CTH D	COUNTY: DUNN	CROSS SECTIONS: CTH D	SHEET 215	E

FILE NAME : I:\41\410859 DUNN CTH D\C3D\DESIGN\CORRIDORS\CORRIDOR-CTH D 4-INCH RAISE.DWG
LAYOUT NAME - 9104
PLOT DATE : 5/16/2024 10:21 AM
PLOT BY : HEDRINGTON, MARK
PLOT NAME :
PLOT SCALE : 1 IN:10 FT HORZ. / 1 IN:10 FT VERT.
WISDOT/CADDS SHEET 49

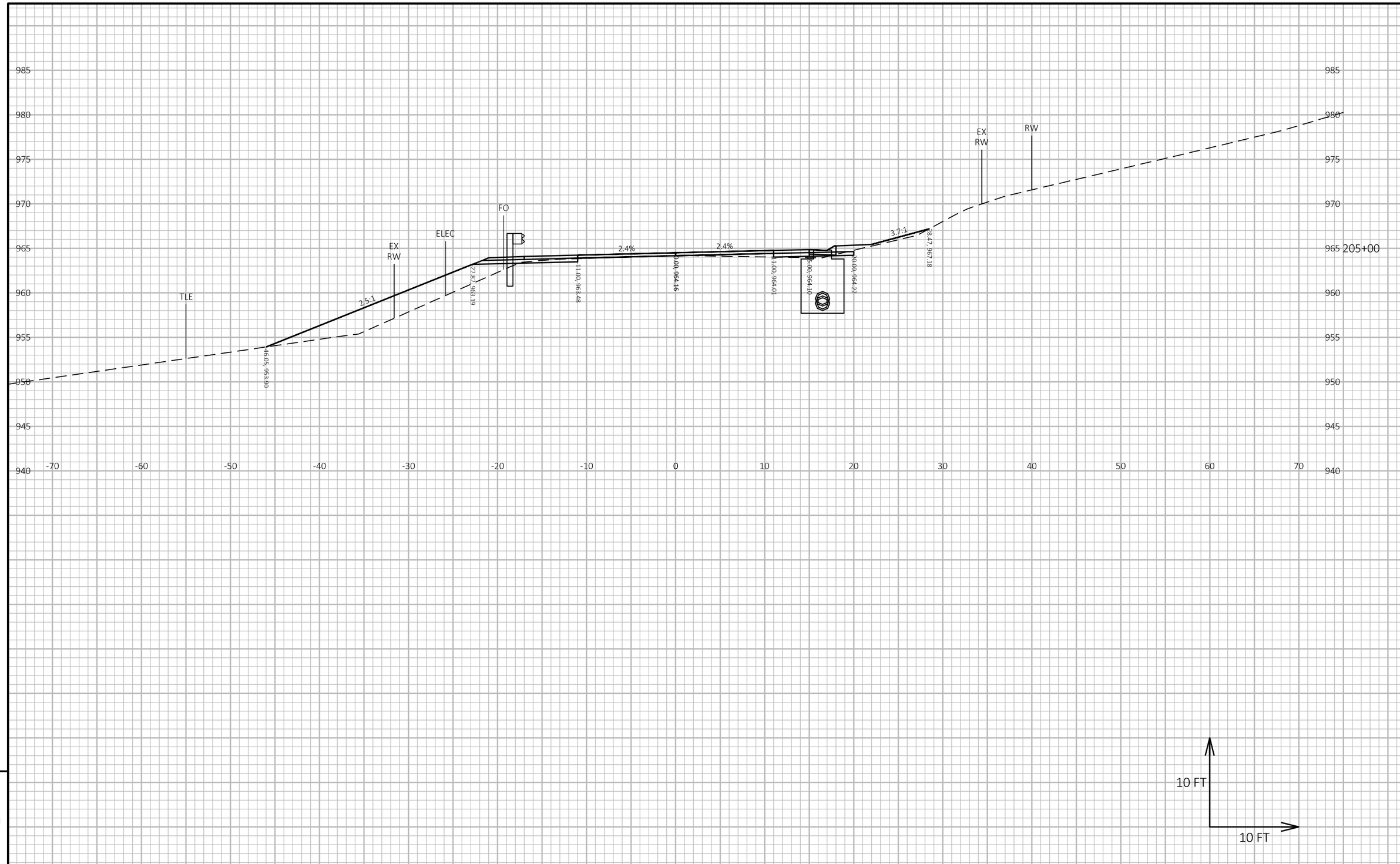

9

9

PROJECT NO: 7881-05-73	HWY: CTH D	COUNTY: DUNN	CROSS SECTIONS: CTH D	SHEET 216	E

FILE NAME : I:\41\410859 DUNN CTH D\C3D\DESIGN\CORRIDORS\CORRIDOR-CTH D 4-INCH RAISE.DWG
LAYOUT NAME - 9105
PLOT DATE : 5/16/2024 10:21 AM
PLOT BY : HEDRINGTON, MARK
PLOT NAME :
PLOT SCALE : 1 IN:10 FT HORZ. / 1 IN:10 FT VERT.
WISDOT/CADDS SHEET 49

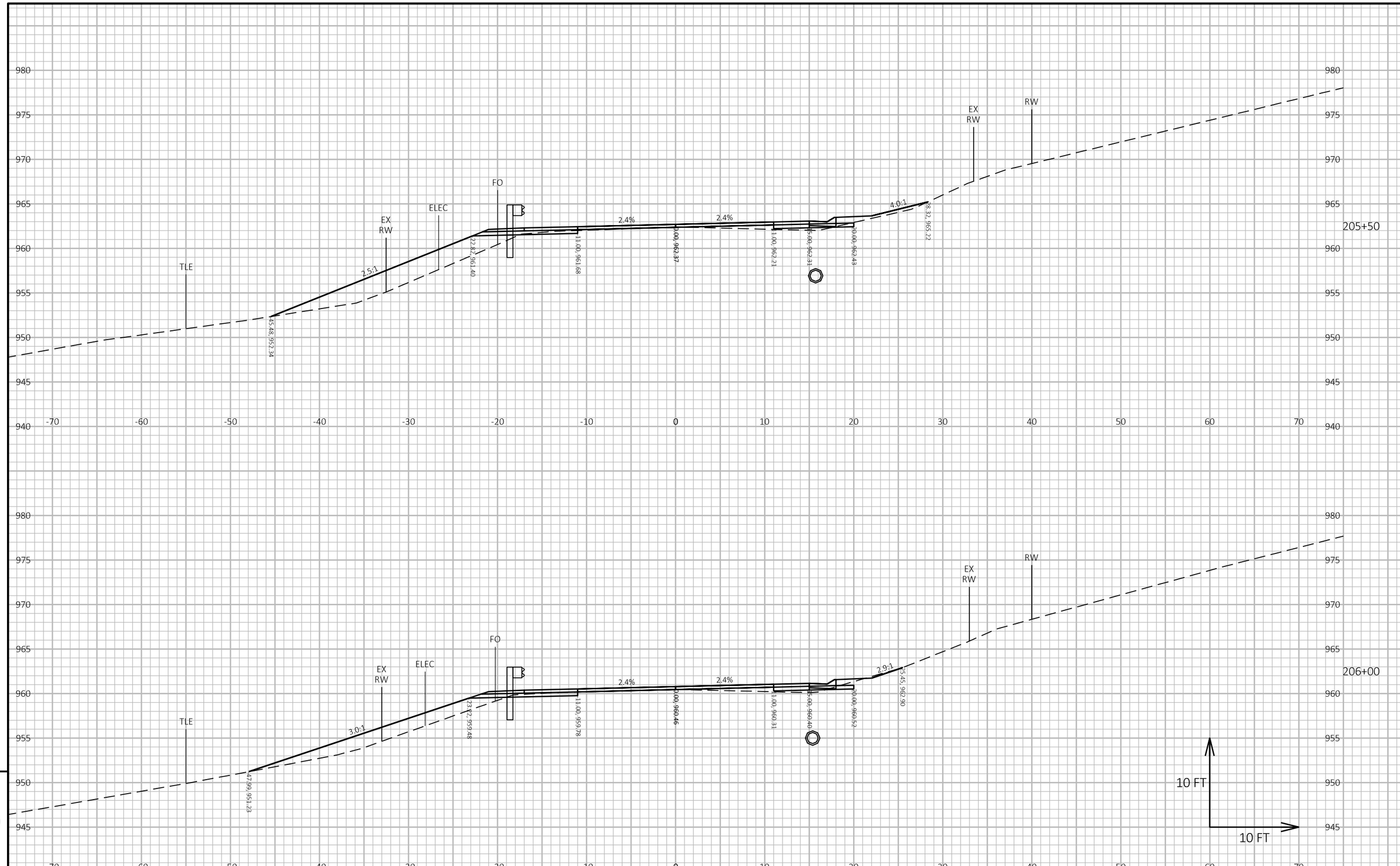

9

9

PROJECT NO: 7881-05-73	HWY: CTH D	COUNTY: DUNN	CROSS SECTIONS: CTH D	SHEET 217	E

FILE NAME : I:\41\410859 DUNN CTH D\C3D\DESIGN\CORRIDORS\CORRIDOR-CTH D 4-INCH RAISE.DWG
LAYOUT NAME - 9106
PLOT DATE : 5/16/2024 10:21 AM
PLOT BY : HEDRINGTON, MARK
PLOT NAME :
PLOT SCALE : 1 IN:10 FT HORZ. / 1 IN:10 FT VERT.
WISDOT/CADDS SHEET 49

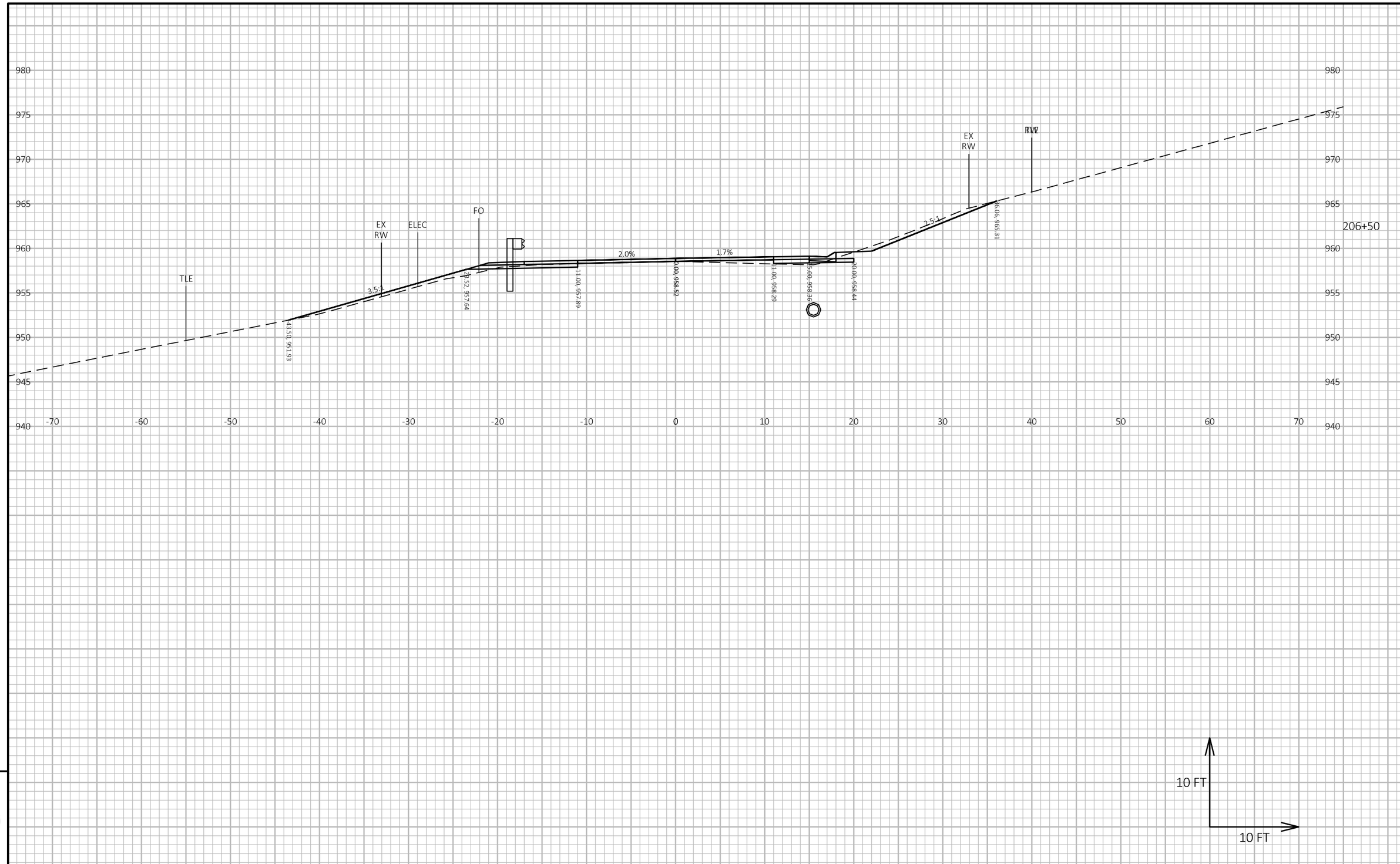

9

9

PROJECT NO: 7881-05-73	HWY: CTH D	COUNTY: DUNN	CROSS SECTIONS: CTH D	SHEET 218	E

FILE NAME : I:\41\410859 DUNN CTH D\C3D\DESIGN\CORRIDORS\CORRIDOR-CTH D 4-INCH RAISE.DWG
LAYOUT NAME - 9107

PLOT DATE : 5/16/2024 10:21 AM PLOT BY : HEDRINGTON, MARK PLOT NAME : **PLOT SCALE :** 1 IN:10 FT HORZ. / 1 IN:10 FT VERT.

WISDOT/CADDS SHEET 49

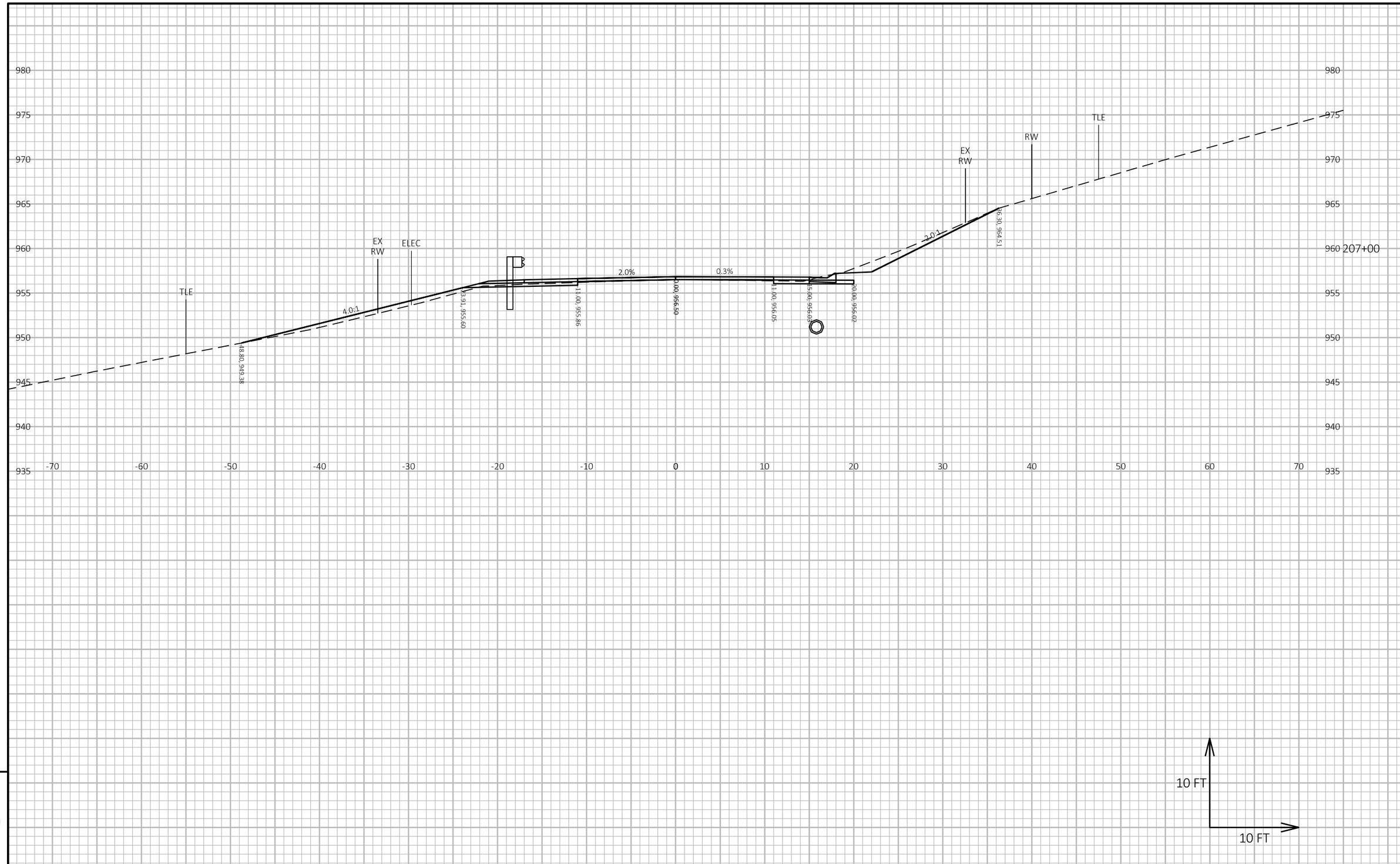

9

9

PROJECT NO: 7881-05-73	HWY: CTH D	COUNTY: DUNN	CROSS SECTIONS: CTH D	SHEET 219	E

FILE NAME : I:\41\410859 DUNN CTH D\C3D\DESIGN\CORRIDORS\CORRIDOR-CTH D 4-INCH RAISE.DWG
LAYOUT NAME - 9108

PLOT DATE : 5/16/2024 10:21 AM PLOT BY : HEDRINGTON, MARK PLOT NAME : PLOT SCALE : 1 IN:10 FT HORZ. / 1 IN:10 FT VERT.

WISDOT/CADDS SHEET 49

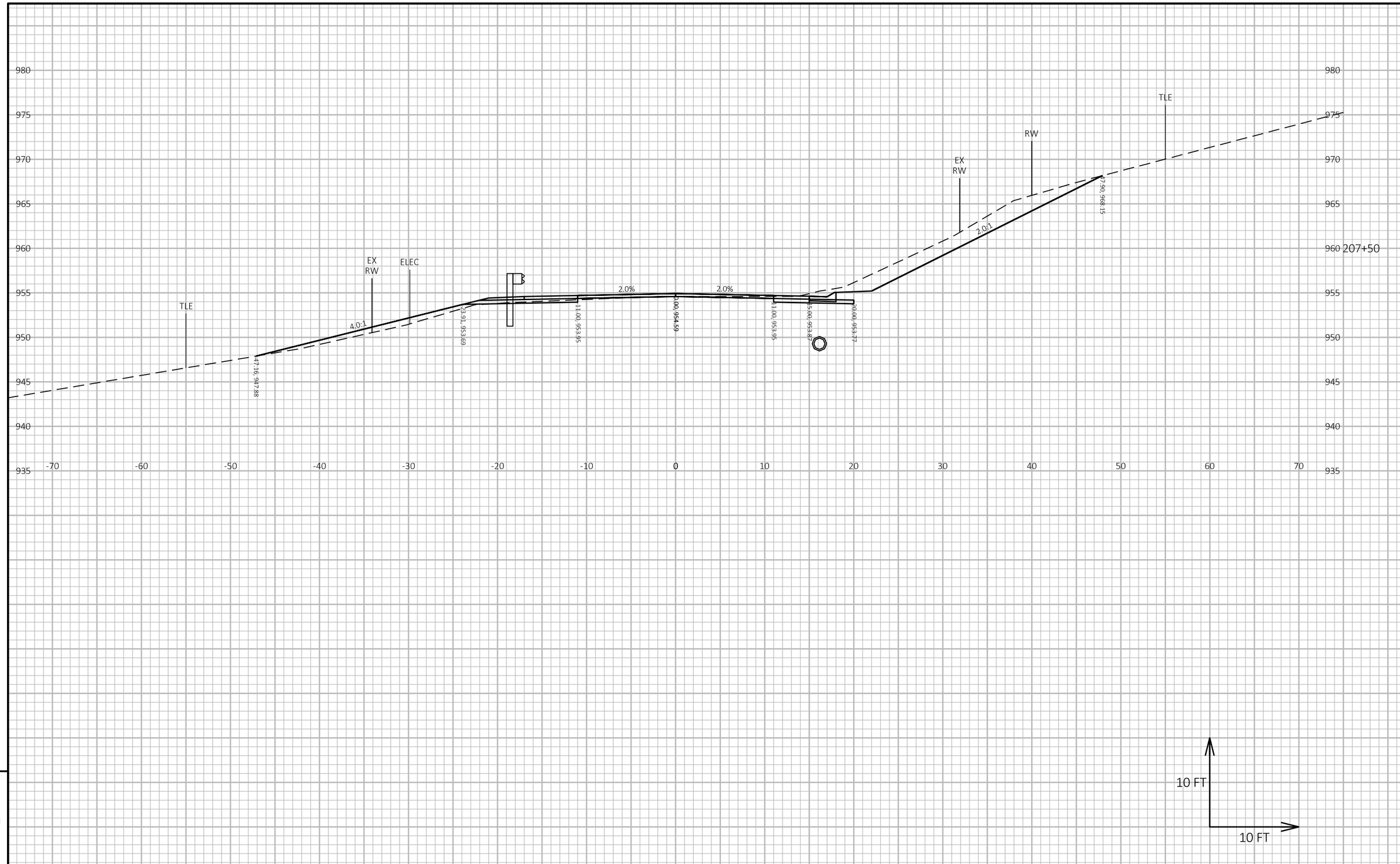

9

9

PROJECT NO: 7881-05-73	HWY: CTH D	COUNTY: DUNN	CROSS SECTIONS: CTH D	SHEET 220	E

FILE NAME : I:\41\410859 DUNN CTH D\C3D\DESIGN\CORRIDORS\CORRIDOR-CTH D 4-INCH RAISE.DWG
LAYOUT NAME - 9109

PLOT DATE : 5/16/2024 10:21 AM PLOT BY : HEDRINGTON, MARK PLOT NAME : PLOT SCALE : 1 IN:10 FT HORZ. / 1 IN:10 FT VERT.

WISDOT/CADDS SHEET 49

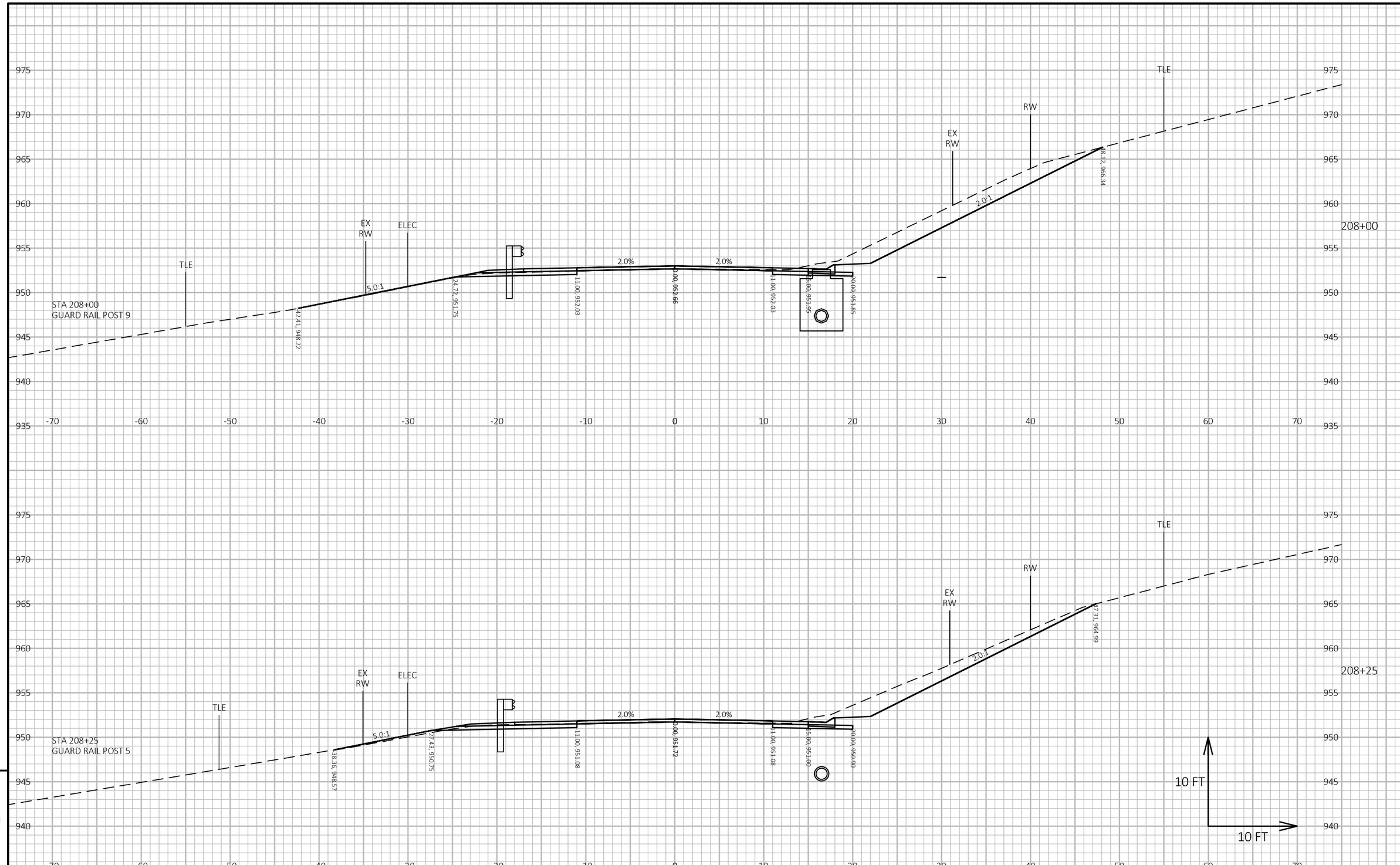

PROJECT NO: 7881-05-73	HWY: CTH D	COUNTY: DUNN	CROSS SECTIONS: CTH D	SHEET 221	E

FILE NAME : I:\41\410859 DUNN CTH D\C3D\DESIGN\CORRIDORS\CORRIDOR-CTH D 4-INCH RAISE.DWG
LAYOUT NAME - 9110
PLOT DATE : 5/16/2024 10:20 AM
PLOT BY : HEDRINGTON, MARK
PLOT NAME :
PLOT SCALE : 1 IN:10 FT HORZ. / 1 IN:10 FT VERT.
WISDOT/CADDS SHEET 49

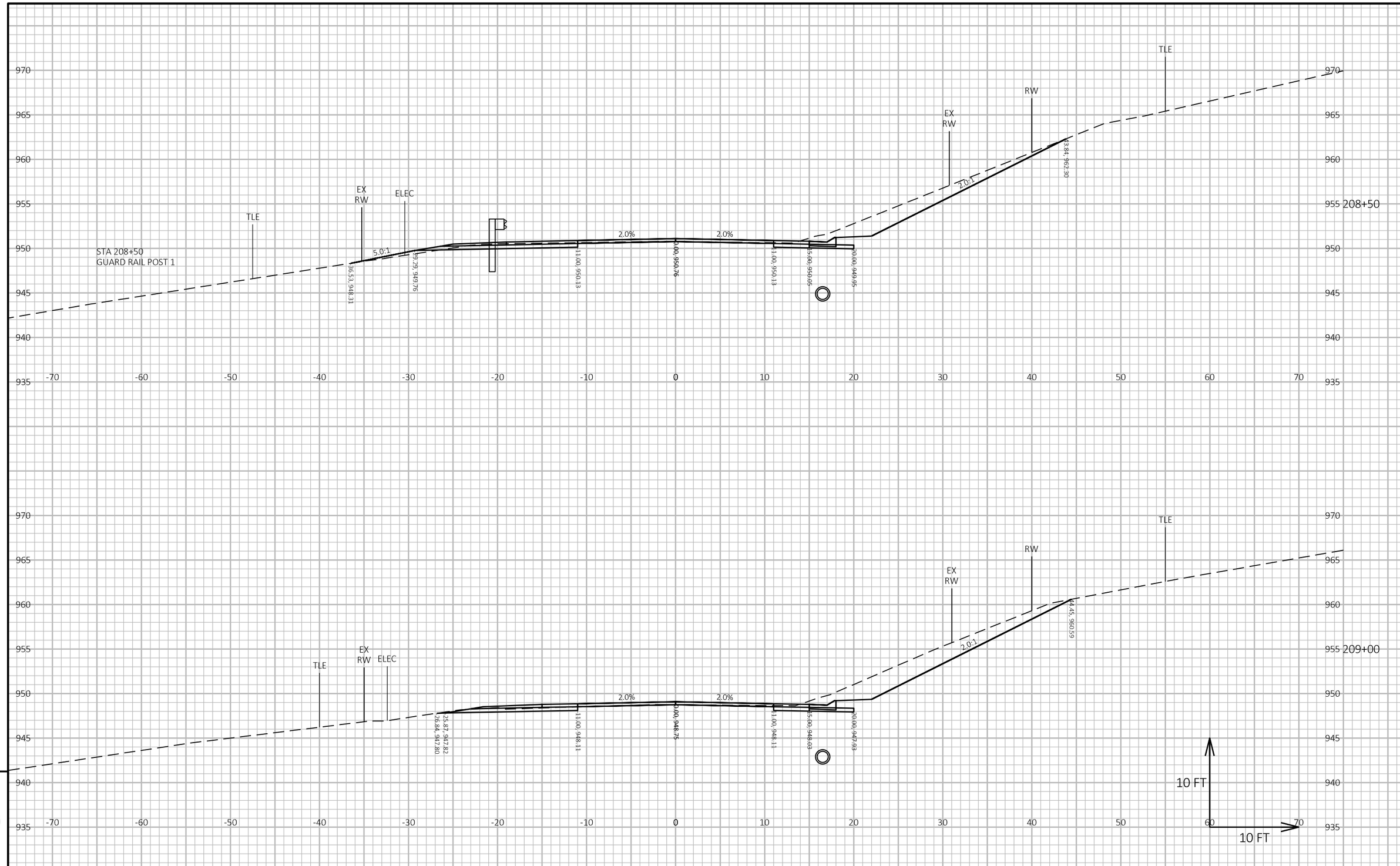

PROJECT NO: 7881-05-73	HWY: CTH D	COUNTY: DUNN	CROSS SECTIONS: CTH D	SHEET 222	E

FILE NAME : I:\41\410859 DUNN CTH D\C3D\DESIGN\CORRIDORS\CORRIDOR-CTH D 4-INCH RAISE.DWG
LAYOUT NAME - 9111
PLOT DATE : 5/16/2024 10:20 AM
PLOT BY : HEDRINGTON, MARK
PLOT NAME :
PLOT SCALE : 1 IN:10 FT HORZ. / 1 IN:10 FT VERT.

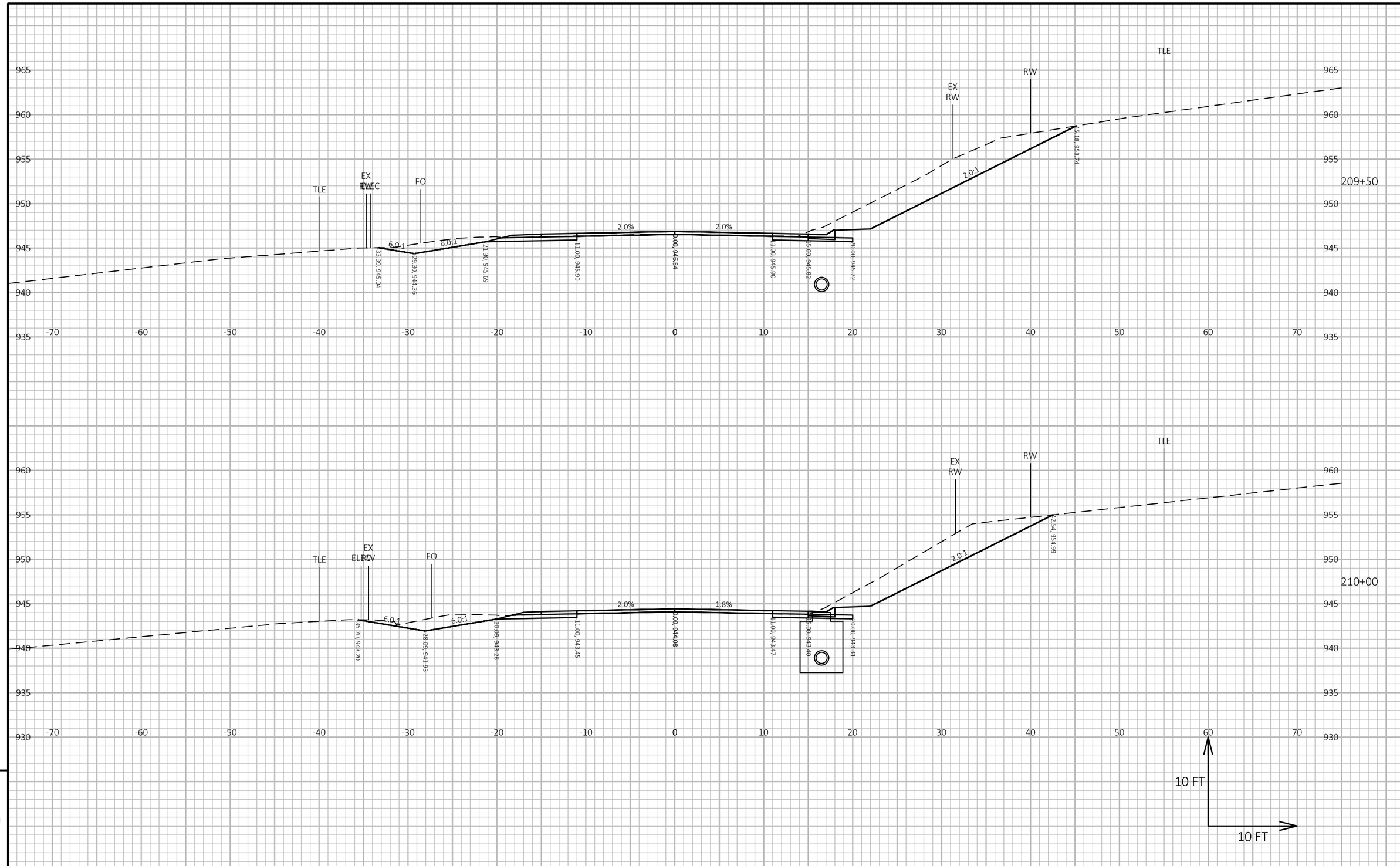

9

9

PROJECT NO: 7881-05-73	HWY: CTH D	COUNTY: DUNN	CROSS SECTIONS: CTH D	SHEET 223	E

FILE NAME : I:\41\410859 DUNN CTH D\C3D\DESIGN\CORRIDORS\CORRIDOR-CTH D 4-INCH RAISE.DWG
LAYOUT NAME - 9112

PLOT DATE : 5/16/2024 10:20 AM PLOT BY : HEDRINGTON, MARK PLOT NAME : **PLOT SCALE :** 1 IN:10 FT HORZ. / 1 IN:10 FT VERT.

WISDOT/CADDS SHEET 49

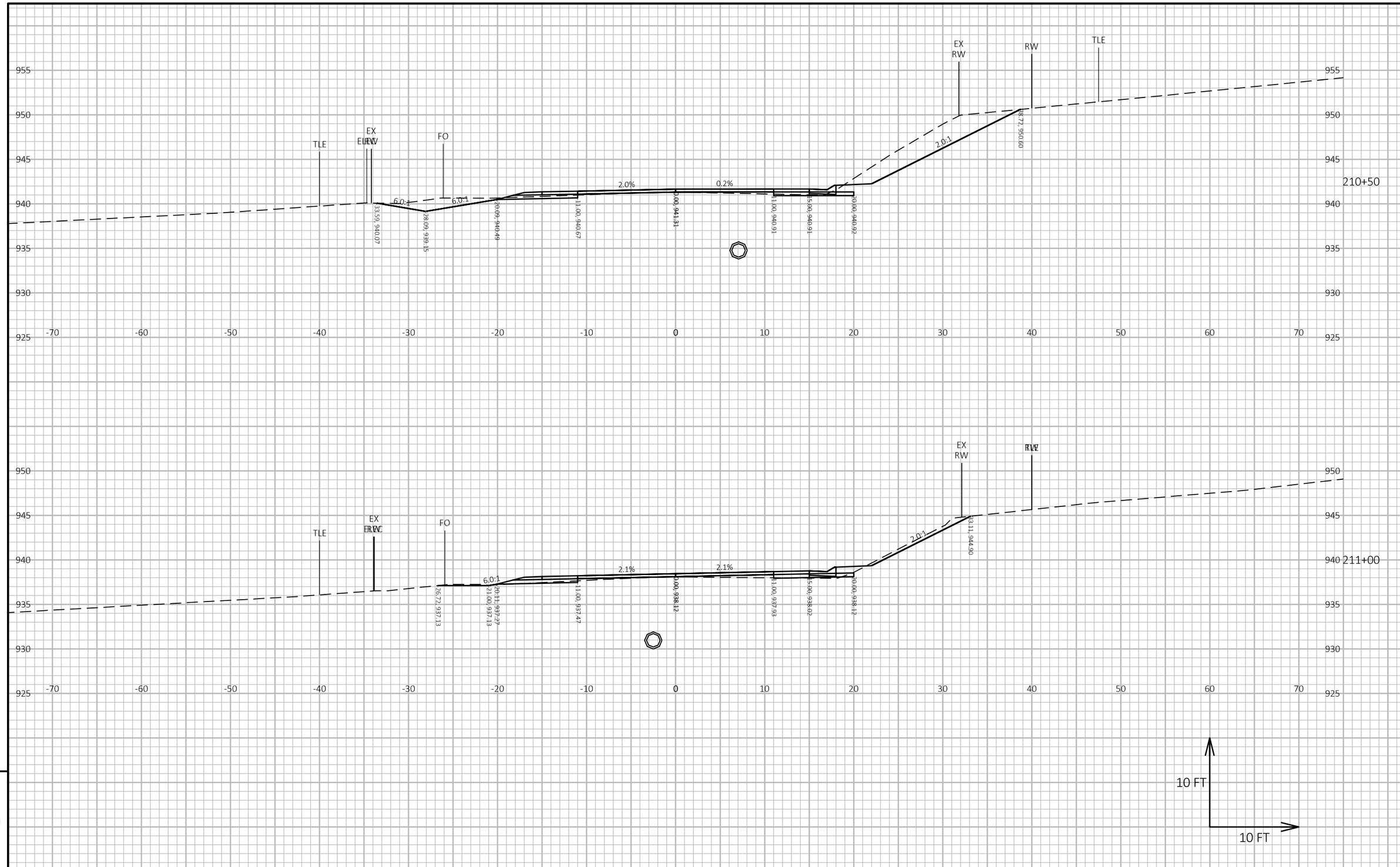

PROJECT NO: 7881-05-73	HWY: CTH D	COUNTY: DUNN	CROSS SECTIONS: CTH D	SHEET 224	E

FILE NAME : I:\41\410859 DUNN CTH D\C3D\DESIGN\CORRIDORS\CORRIDOR-CTH D 4-INCH RAISE.DWG
LAYOUT NAME - 9113
PLOT DATE : 5/16/2024 10:20 AM
PLOT BY : HEDRINGTON, MARK
PLOT NAME :
PLOT SCALE : 1 IN:10 FT HORZ. / 1 IN:10 FT VERT.

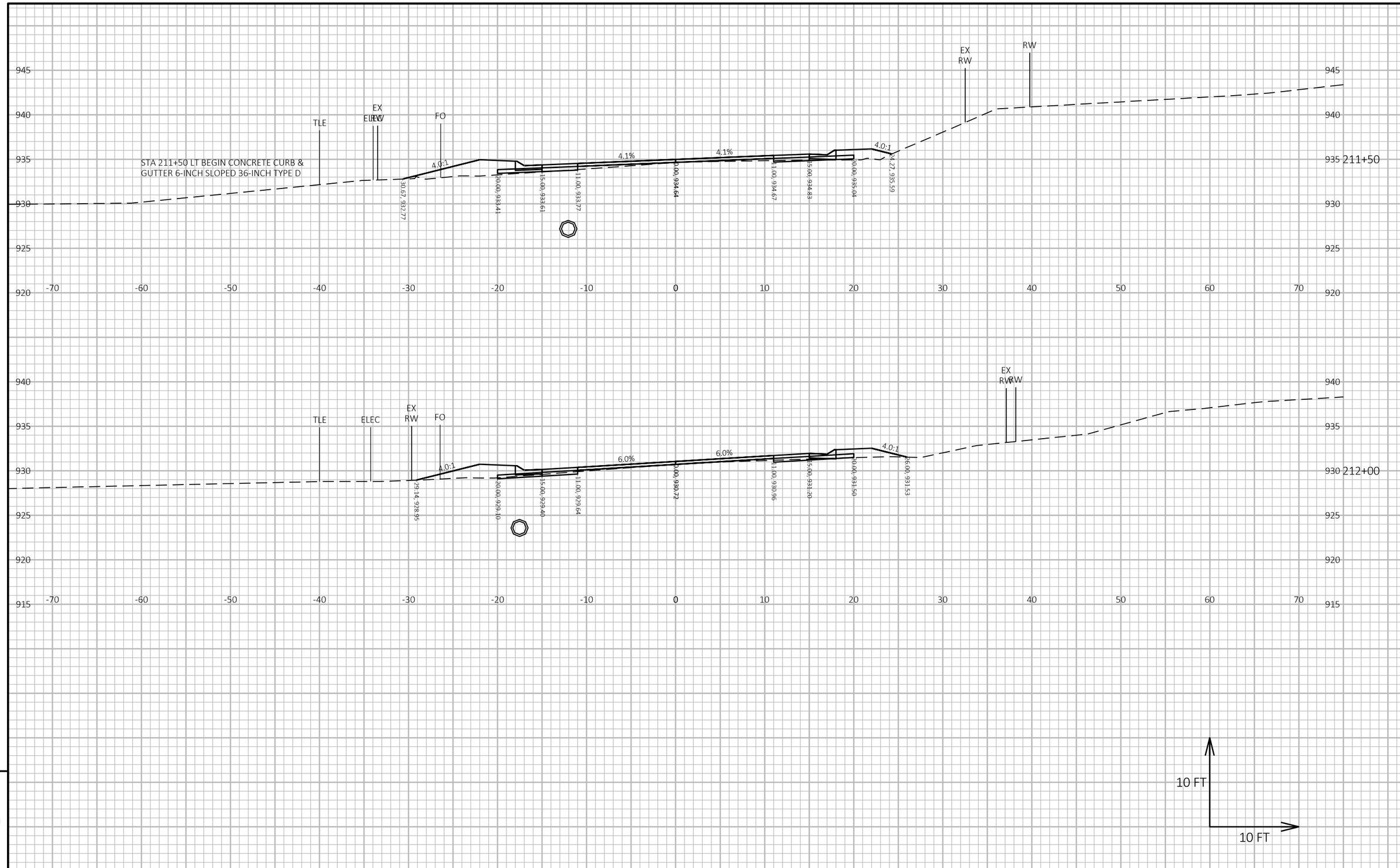

9

9

PROJECT NO: 7881-05-73	HWY: CTH D	COUNTY: DUNN	CROSS SECTIONS: CTH D	SHEET 225	E

FILE NAME : I:\41\410859 DUNN CTH D\C3D\DESIGN\CORRIDORS\CORRIDOR-CTH D 4-INCH RAISE.DWG
LAYOUT NAME - 9114
PLOT DATE : 5/16/2024 10:20 AM
PLOT BY : HEDRINGTON, MARK
PLOT NAME :
PLOT SCALE : 1 IN:10 FT HORZ. / 1 IN:10 FT VERT.
WISDOT/CADDS SHEET 49

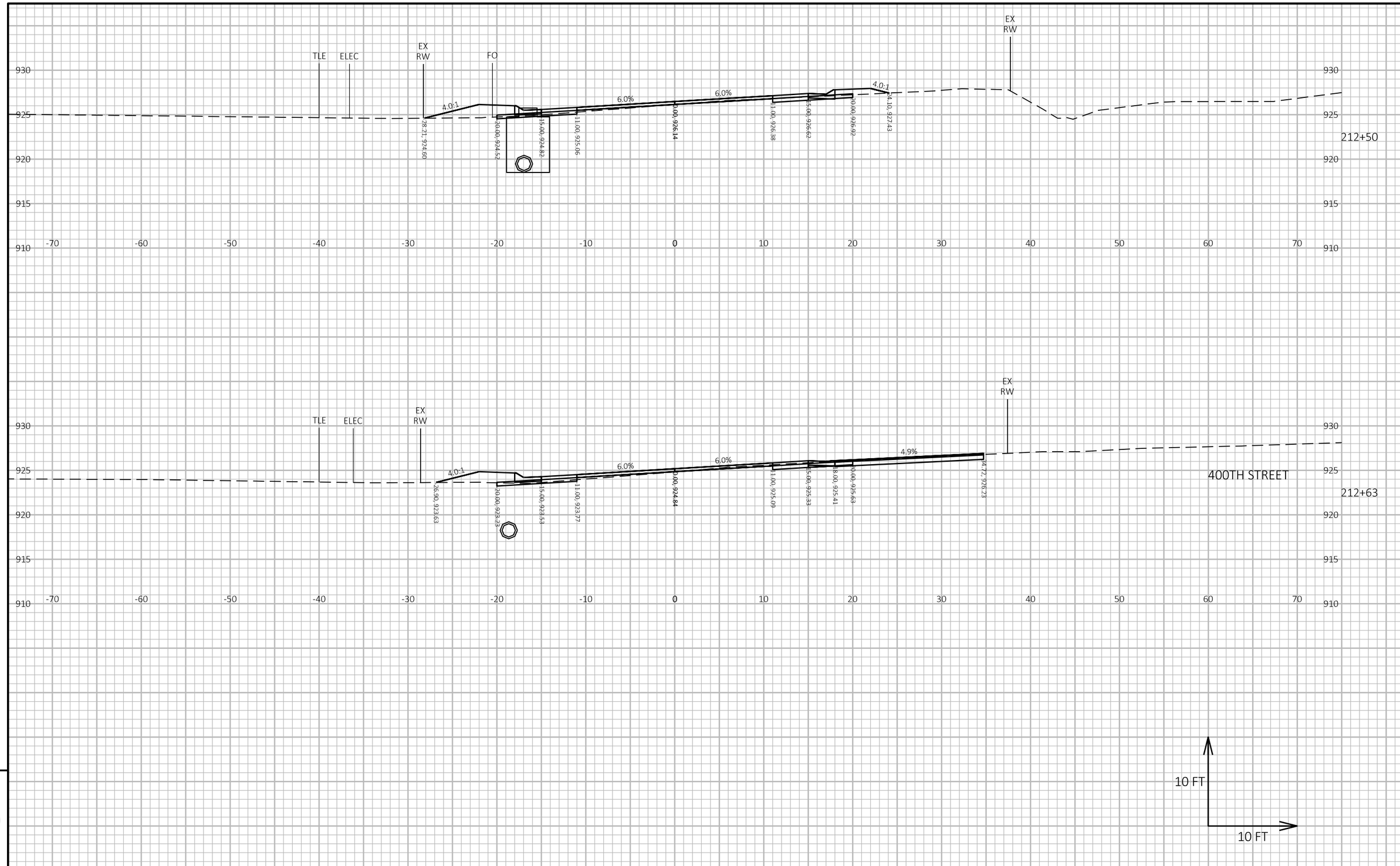

9

9

PROJECT NO: 7881-05-73	HWY: CTH D	COUNTY: DUNN	CROSS SECTIONS: CTH D	SHEET 226	E

FILE NAME : I:\41\410859 DUNN CTH D\C3D\DESIGN\CORRIDORS\CORRIDOR-CTH D 4-INCH RAISE.DWG
LAYOUT NAME - 9115

PLOT DATE : 5/16/2024 10:20 AM PLOT BY : HEDRINGTON, MARK PLOT NAME : PLOT SCALE : 1 IN:10 FT HORZ. / 1 IN:10 FT VERT.

WISDOT/CADDS SHEET 49

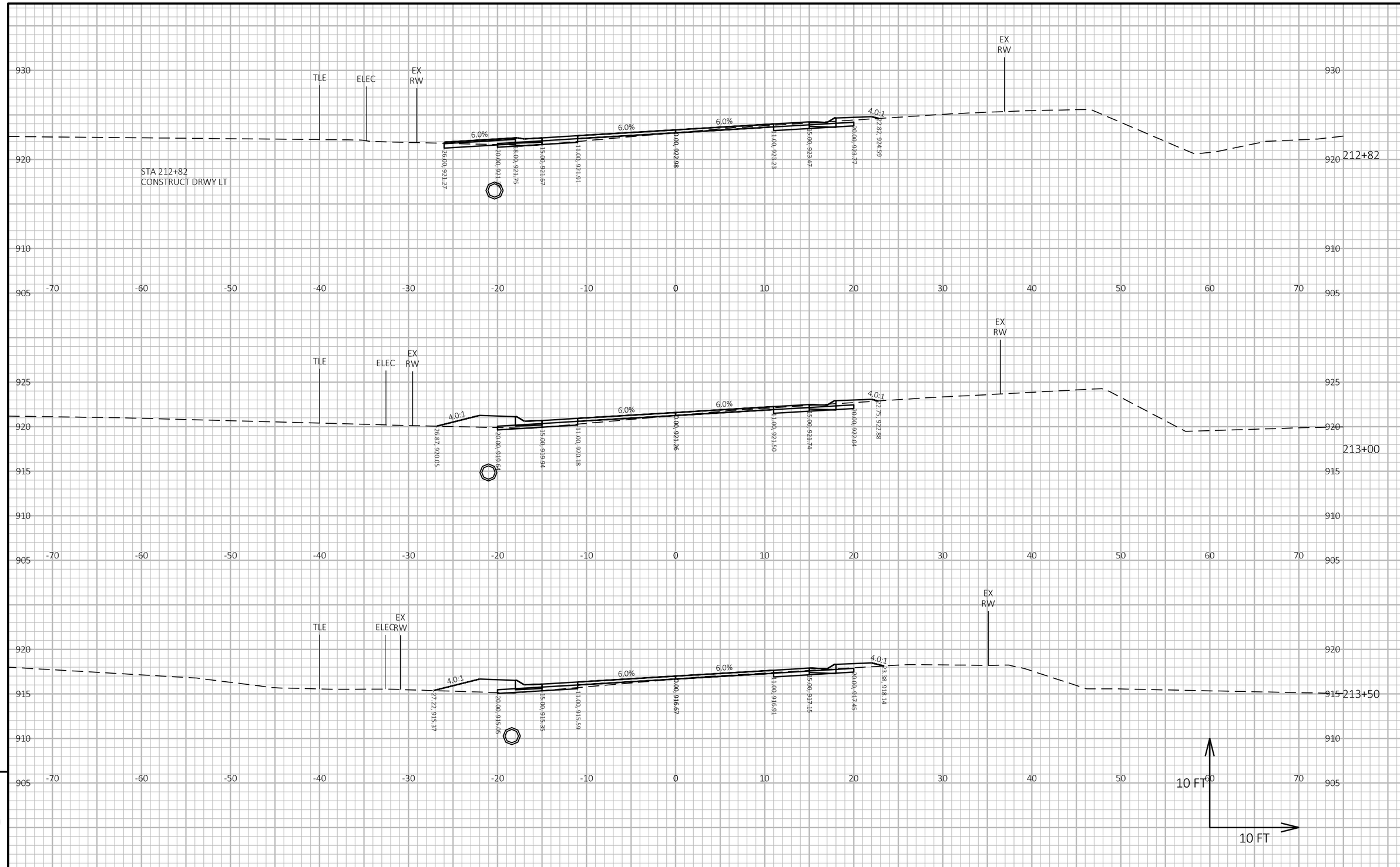

9

9

PROJECT NO: 7881-05-73	HWY: CTH D	COUNTY: DUNN	CROSS SECTIONS: CTH D	SHEET 227	E

FILE NAME : I:\41\410859 DUNN CTH D\C3D\DESIGN\CORRIDORS\CORRIDOR-CTH D 4-INCH RAISE.DWG
LAYOUT NAME - 9116

PLOT DATE : 5/16/2024 10:20 AM PLOT BY : HEDRINGTON, MARK PLOT NAME : **PLOT SCALE :** 1 IN:10 FT HORZ. / 1 IN:10 FT VERT.

WISDOT/CADDS SHEET 49

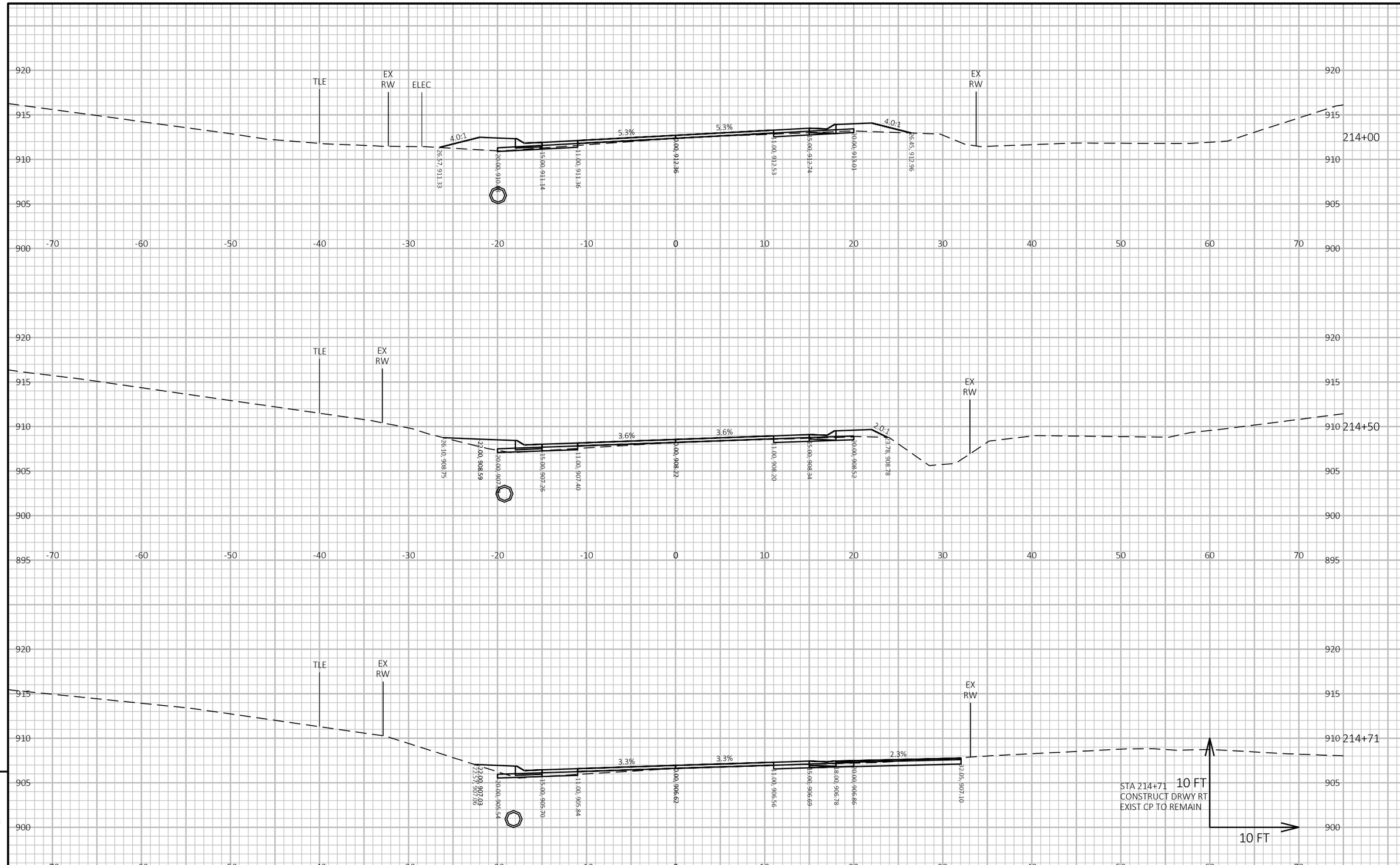

9

9

PROJECT NO: 7881-05-73	HWY: CTH D	COUNTY: DUNN	CROSS SECTIONS: CTH D	SHEET 228	E

FILE NAME : I:\41\410859 DUNN CTH D\C3D\DESIGN\CORRIDORS\CORRIDOR-CTH D 4-INCH RAISE.DWG
LAYOUT NAME - 9117

PLOT DATE : 5/16/2024 10:20 AM PLOT BY : HEDRINGTON, MARK PLOT NAME : PLOT SCALE : 1 IN:10 FT HORZ. / 1 IN:10 FT VERT.

WISDOT/CADDS SHEET 49

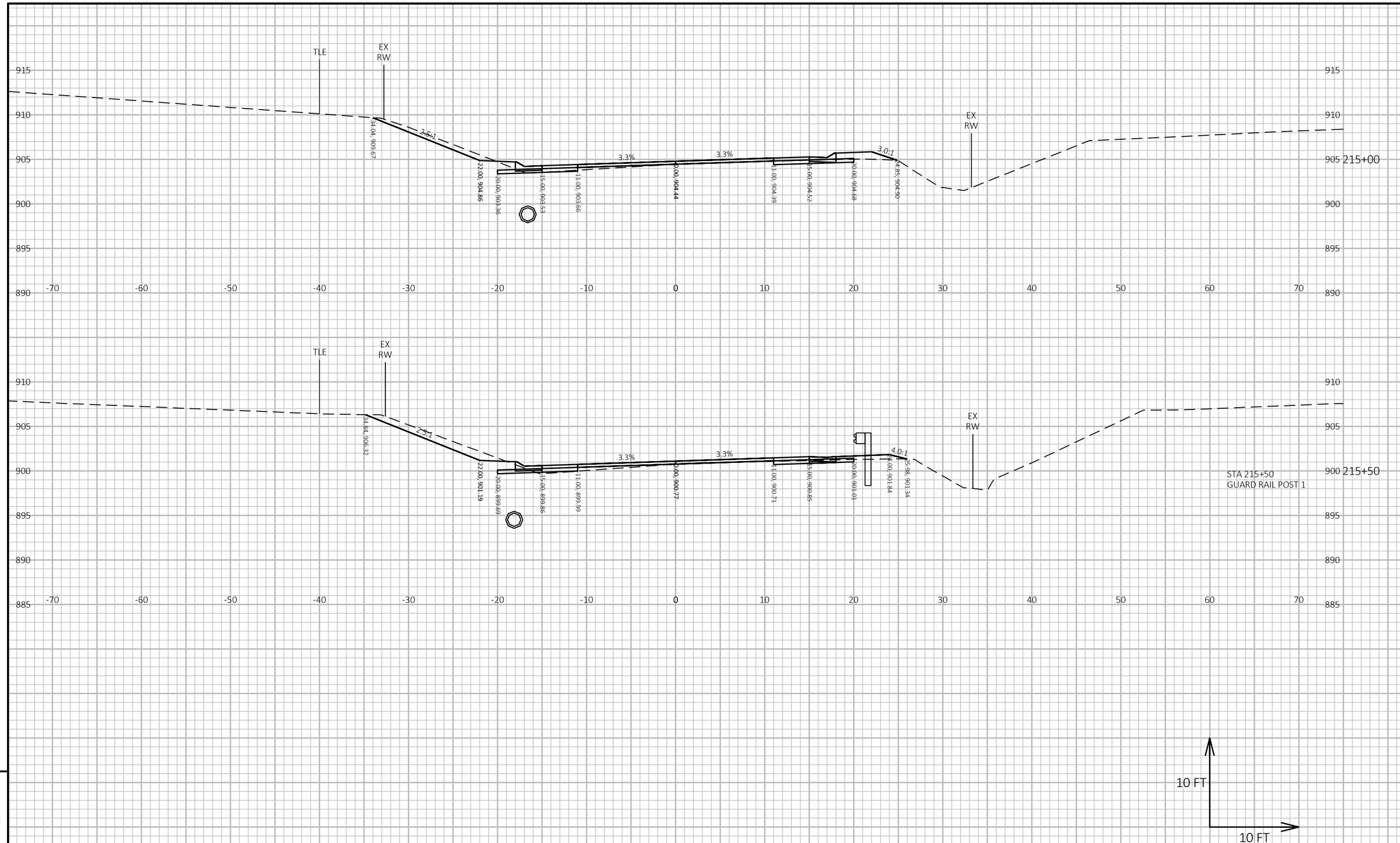

PROJECT NO: 7881-05-73	HWY: CTH D	COUNTY: DUNN	CROSS SECTIONS: CTH D	SHEET 229	E

FILE NAME : I:\41\410859 DUNN CTH D\C3D\DESIGN\CORRIDORS\CORRIDOR-CTH D 4-INCH RAISE.DWG
LAYOUT NAME - 9118
PLOT DATE : 5/16/2024 10:20 AM
PLOT BY : HEDRINGTON, MARK
PLOT NAME :
PLOT SCALE : 1 IN:10 FT HORZ. / 1 IN:10 FT VERT.
WISDOT/CADDS SHEET 49

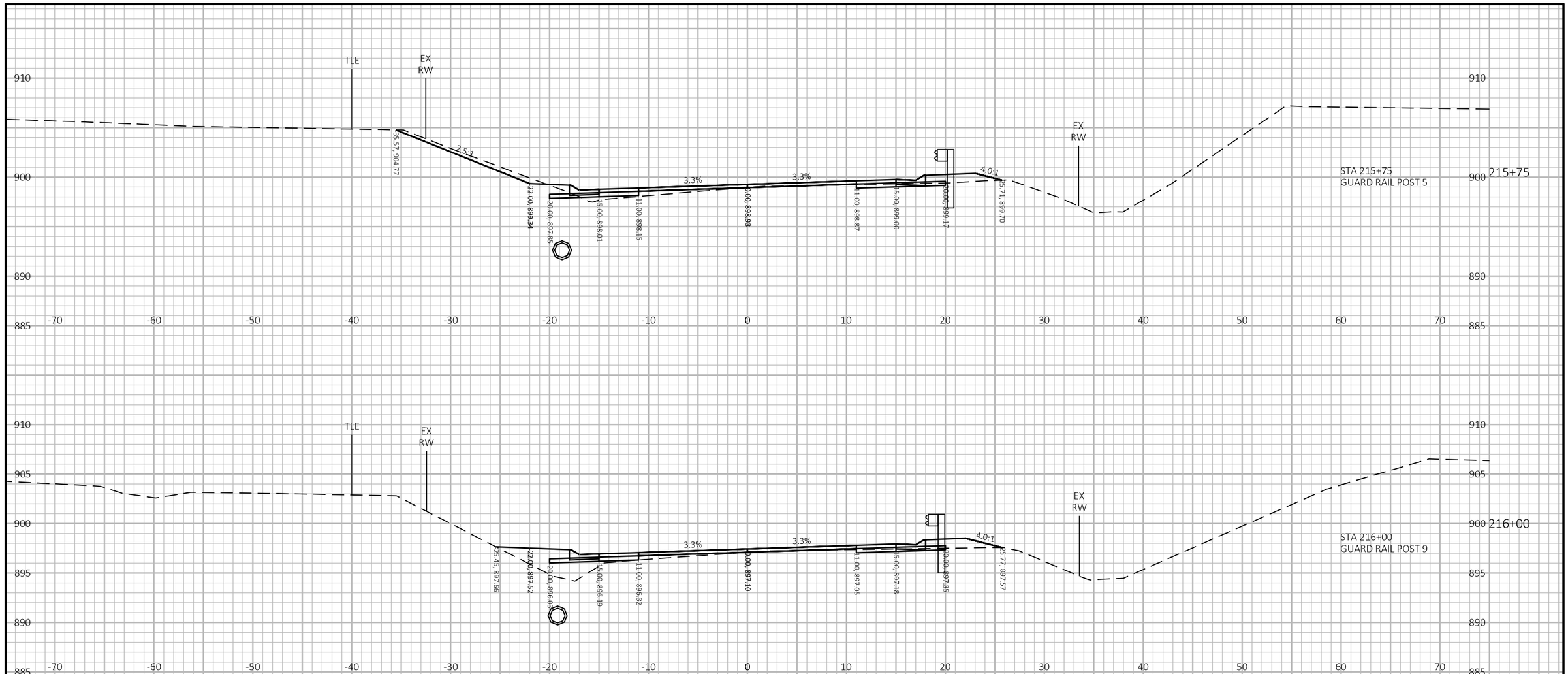

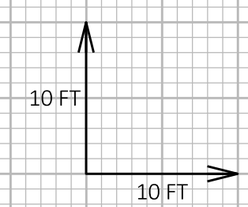

9

9

PROJECT NO: 7881-05-73	HWY: CTH D	COUNTY: DUNN	CROSS SECTIONS: CTH D	SHEET 230	E

FILE NAME : I:\41\410859 DUNN CTH D\C3D\DESIGN\CORRIDORS\CORRIDOR-CTH D 4-INCH RAISE.DWG
LAYOUT NAME - 9119
PLOT DATE : 5/16/2024 10:20 AM
PLOT BY : HEDRINGTON, MARK
PLOT NAME :
PLOT SCALE : 1 IN:10 FT HORZ. / 1 IN:10 FT VERT.

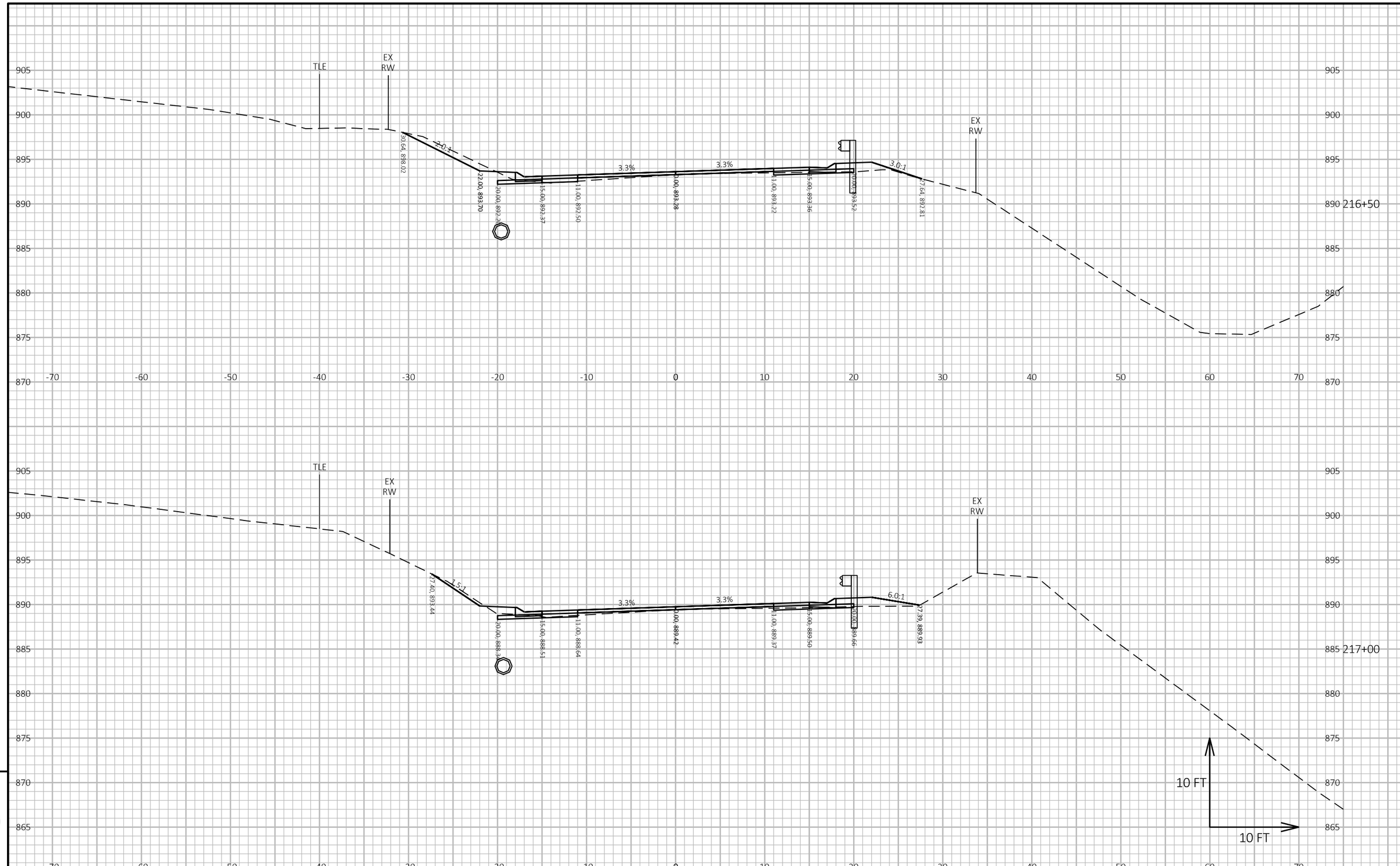

PROJECT NO: 7881-05-73	HWY: CTH D	COUNTY: DUNN	CROSS SECTIONS: CTH D	SHEET 231	E

FILE NAME : I:\41\410859 DUNN CTH D\C3D\DESIGN\CORRIDORS\CORRIDOR-CTH D 4-INCH RAISE.DWG
LAYOUT NAME - 9120
PLOT DATE : 5/16/2024 10:20 AM
PLOT BY : HEDRINGTON, MARK
PLOT NAME :
PLOT SCALE : 1 IN:10 FT HORZ. / 1 IN:10 FT VERT.
WISDOT/CADDS SHEET 49

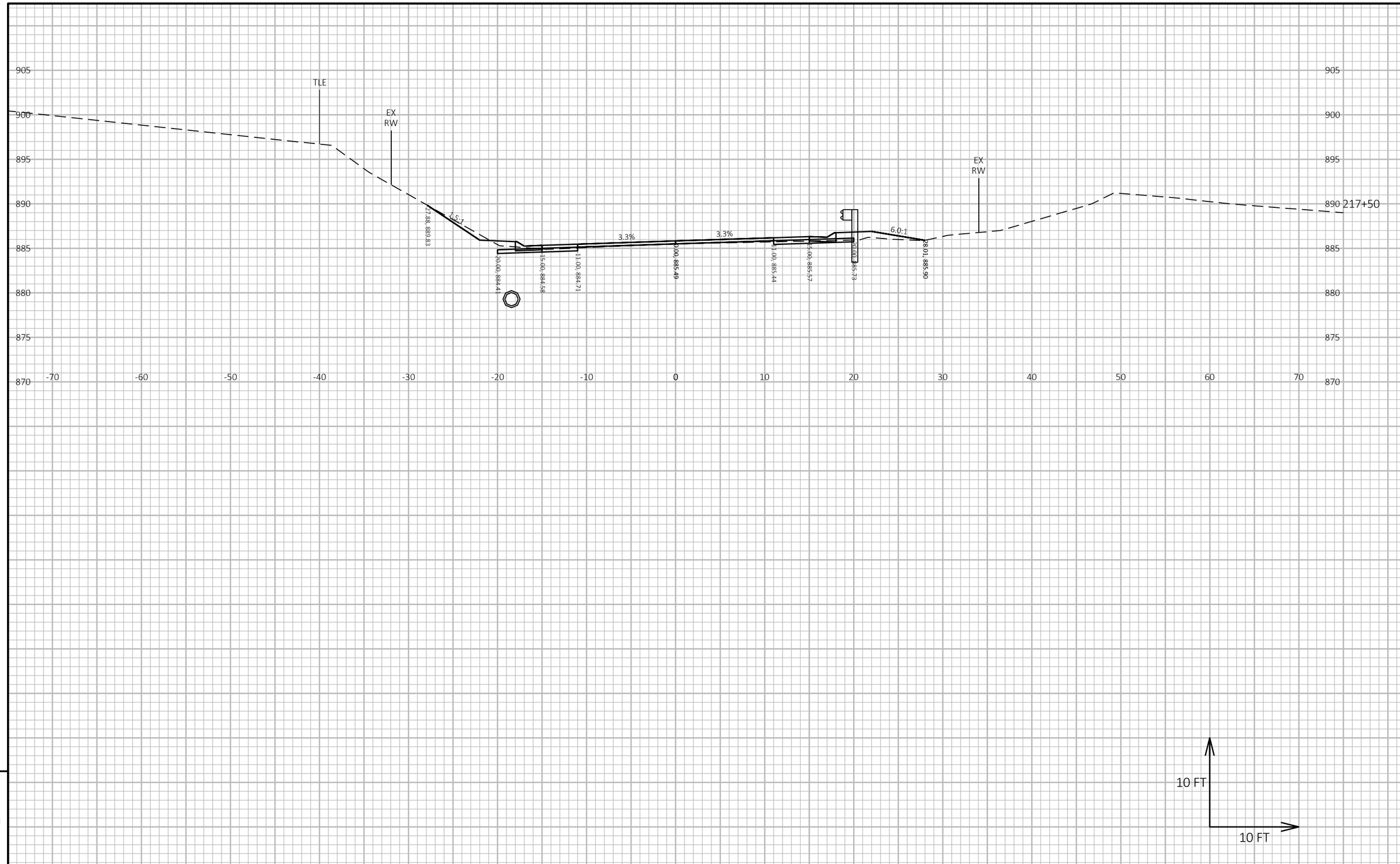

9

9

PROJECT NO: 7881-05-73	HWY: CTH D	COUNTY: DUNN	CROSS SECTIONS: CTH D	SHEET 232	E

FILE NAME : I:\41\410859 DUNN CTH D\C3D\DESIGN\CORRIDORS\CORRIDOR-CTH D 4-INCH RAISE.DWG
LAYOUT NAME - 9121
PLOT DATE : 5/16/2024 10:20 AM
PLOT BY : HEDRINGTON, MARK
PLOT NAME :
PLOT SCALE : 1 IN:10 FT HORZ. / 1 IN:10 FT VERT.
WISDOT/CADDS SHEET 49

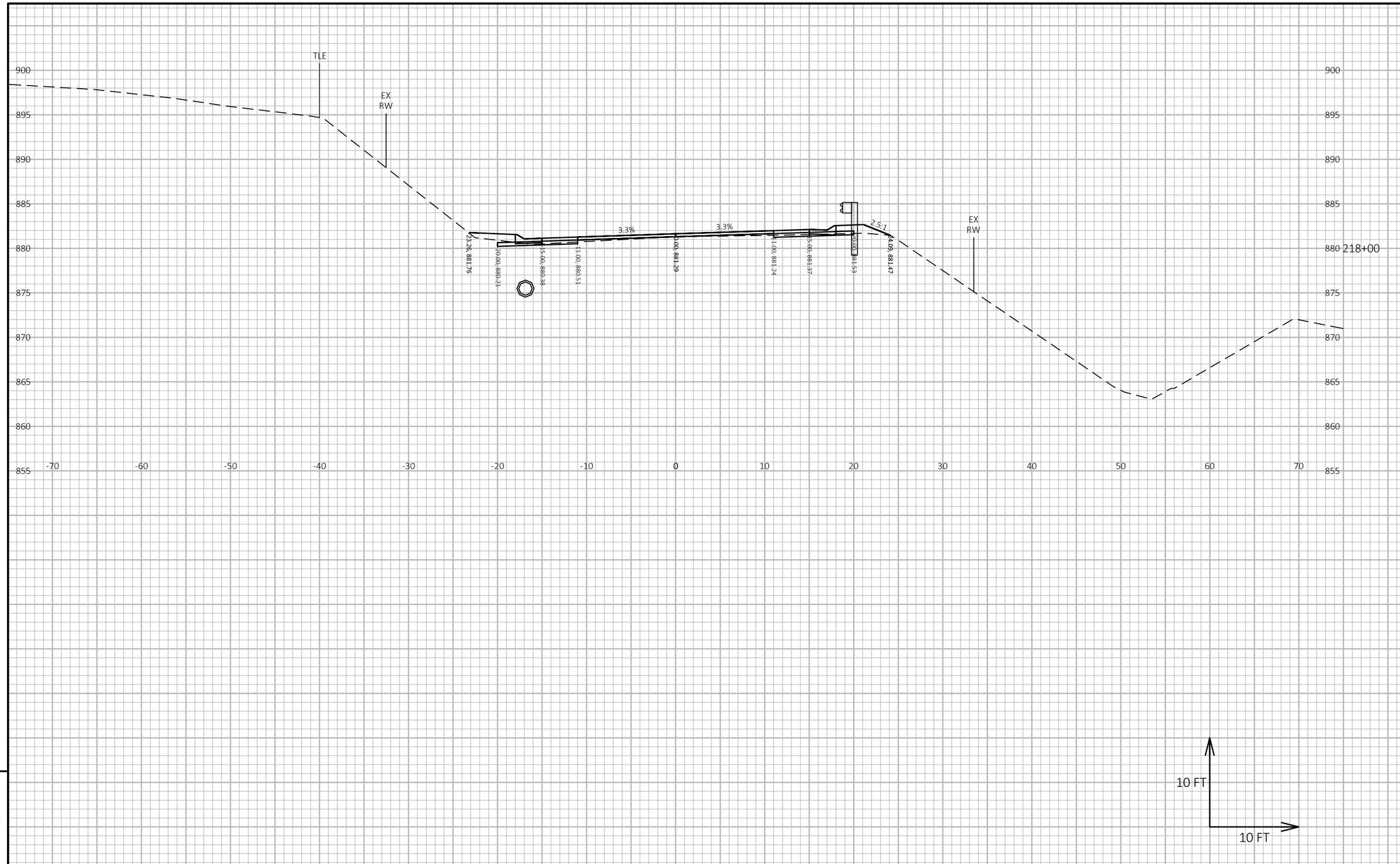

9

9

PROJECT NO: 7881-05-73	HWY: CTH D	COUNTY: DUNN	CROSS SECTIONS: CTH D	SHEET 233	E

FILE NAME : I:\41\410859 DUNN CTH D\C3D\DESIGN\CORRIDORS\CORRIDOR-CTH D 4-INCH RAISE.DWG
LAYOUT NAME - 9122

PLOT DATE : 5/16/2024 10:19 AM PLOT BY : HEDRINGTON, MARK PLOT NAME : **PLOT SCALE :** 1 IN:10 FT HORZ. / 1 IN:10 FT VERT.

WISDOT/CADDS SHEET 49

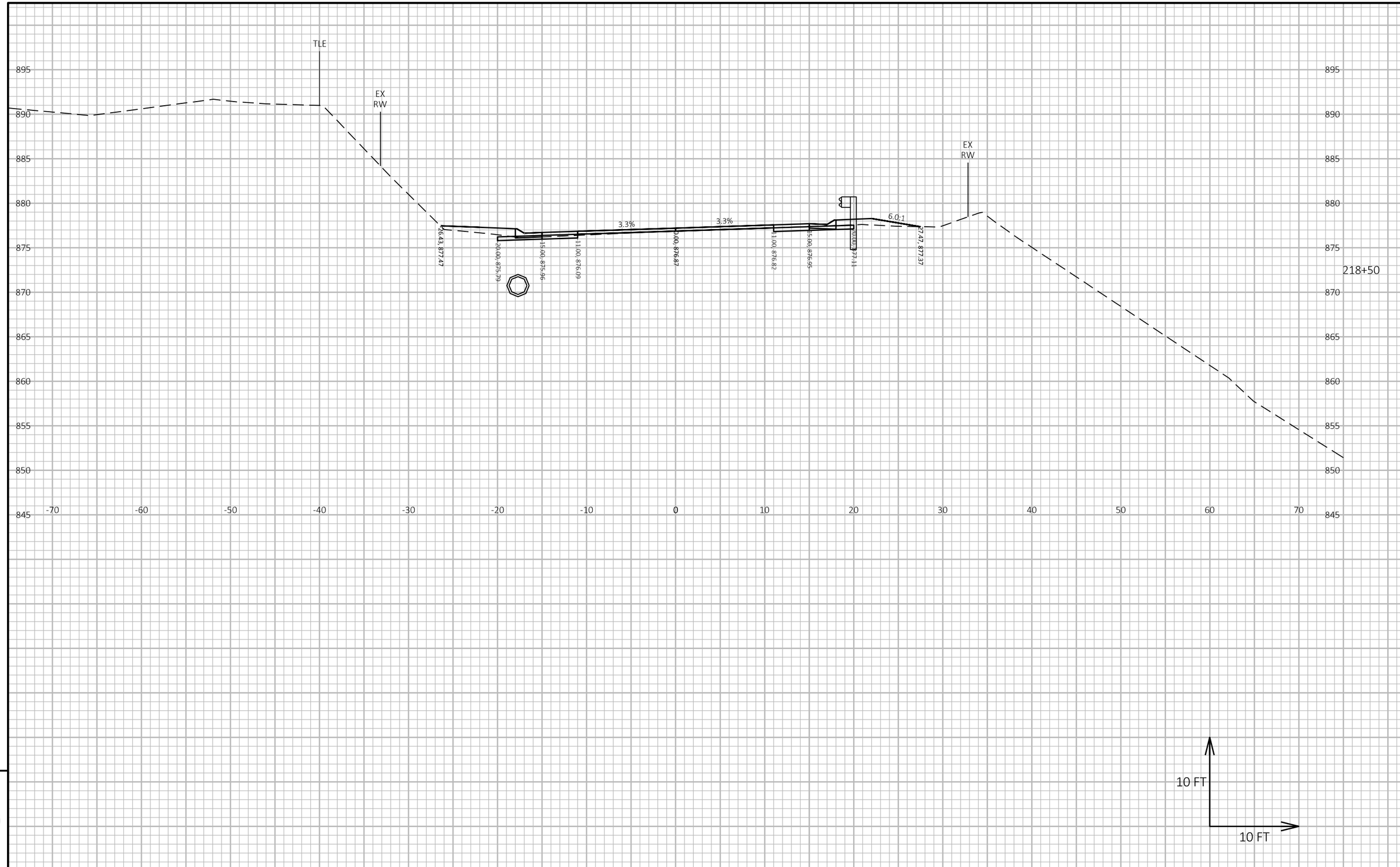

9

9

PROJECT NO: 7881-05-73	HWY: CTH D	COUNTY: DUNN	CROSS SECTIONS: CTH D	SHEET 234	E

FILE NAME : I:\41\410859 DUNN CTH D\C3D\DESIGN\CORRIDORS\CORRIDOR-CTH D 4-INCH RAISE.DWG
LAYOUT NAME - 9123

PLOT DATE : 5/16/2024 10:19 AM PLOT BY : HEDRINGTON, MARK PLOT NAME : **PLOT SCALE :** 1 IN:10 FT HORZ. / 1 IN:10 FT VERT.

WISDOT/CADDS SHEET 49

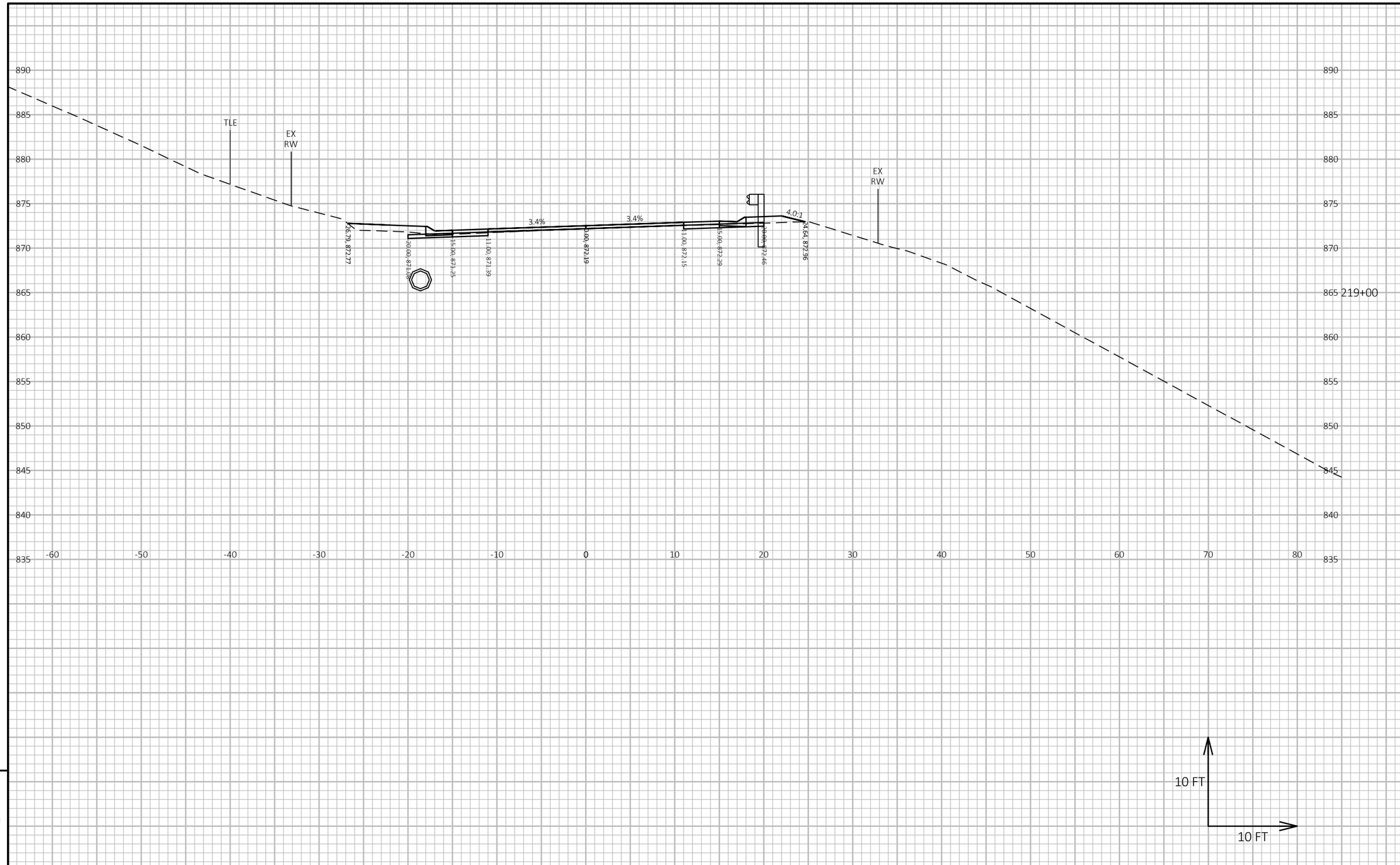

9

9

PROJECT NO: 7881-05-73	HWY: CTH D	COUNTY: DUNN	CROSS SECTIONS: CTH D	SHEET 235	E

FILE NAME : I:\41\410859 DUNN CTH D\C3D\DESIGN\CORRIDORS\CORRIDOR-CTH D 4-INCH RAISE.DWG
LAYOUT NAME - 9124

PLOT DATE : 5/16/2024 10:19 AM PLOT BY : HEDRINGTON, MARK PLOT NAME : **PLOT SCALE :** 1 IN:10 FT HORZ. / 1 IN:10 FT VERT.

WISDOT/CADDS SHEET 49

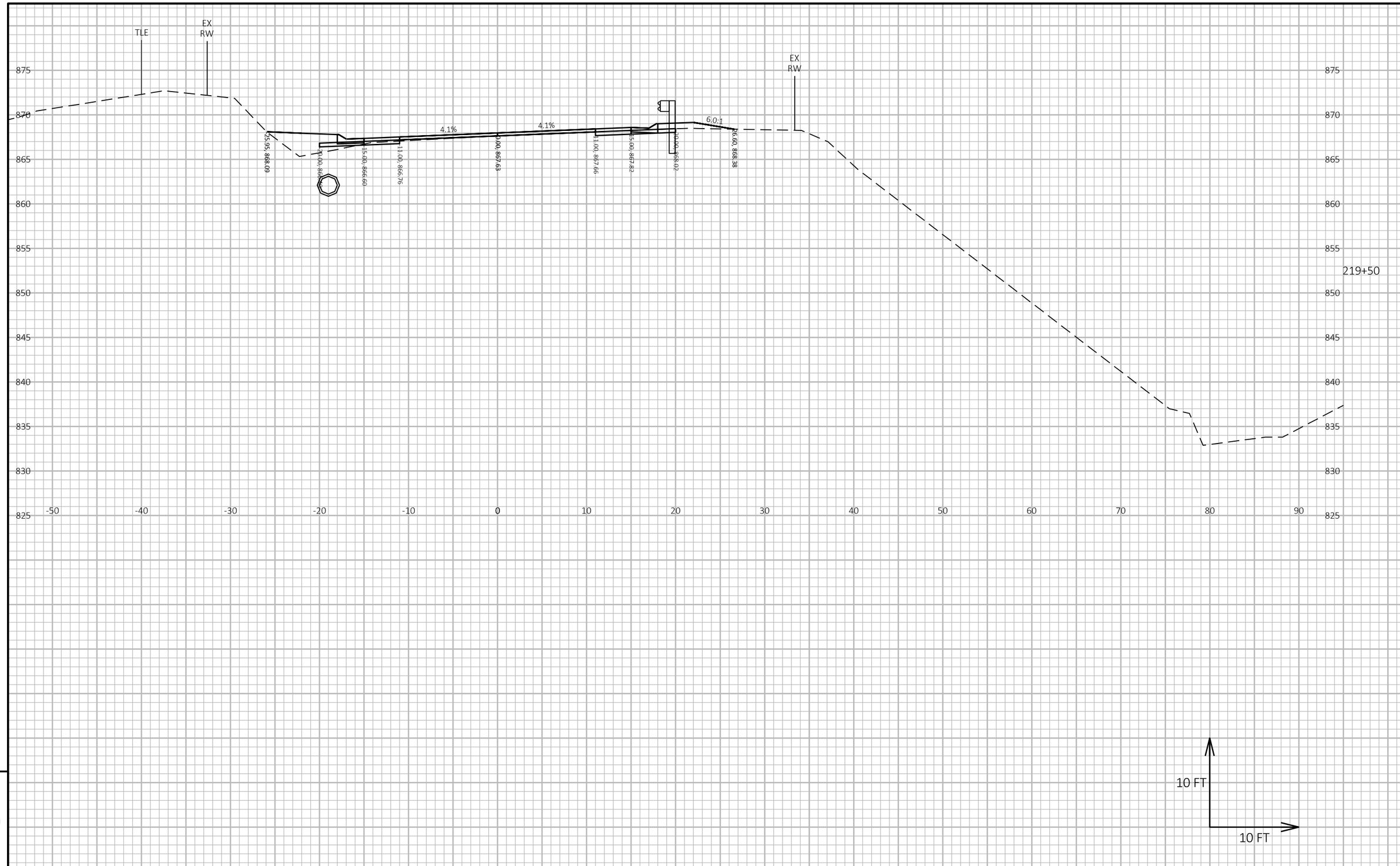

9

9

PROJECT NO: 7881-05-73	HWY: CTH D	COUNTY: DUNN	CROSS SECTIONS: CTH D	SHEET 236	E

FILE NAME : I:\41\410859 DUNN CTH D\C3D\DESIGN\CORRIDORS\CORRIDOR-CTH D 4-INCH RAISE.DWG
LAYOUT NAME - 9125
PLOT DATE : 5/16/2024 10:19 AM
PLOT BY : HEDRINGTON, MARK
PLOT NAME :
PLOT SCALE : 1 IN:10 FT HORZ. / 1 IN:10 FT VERT.
WISDOT/CADDS SHEET 49

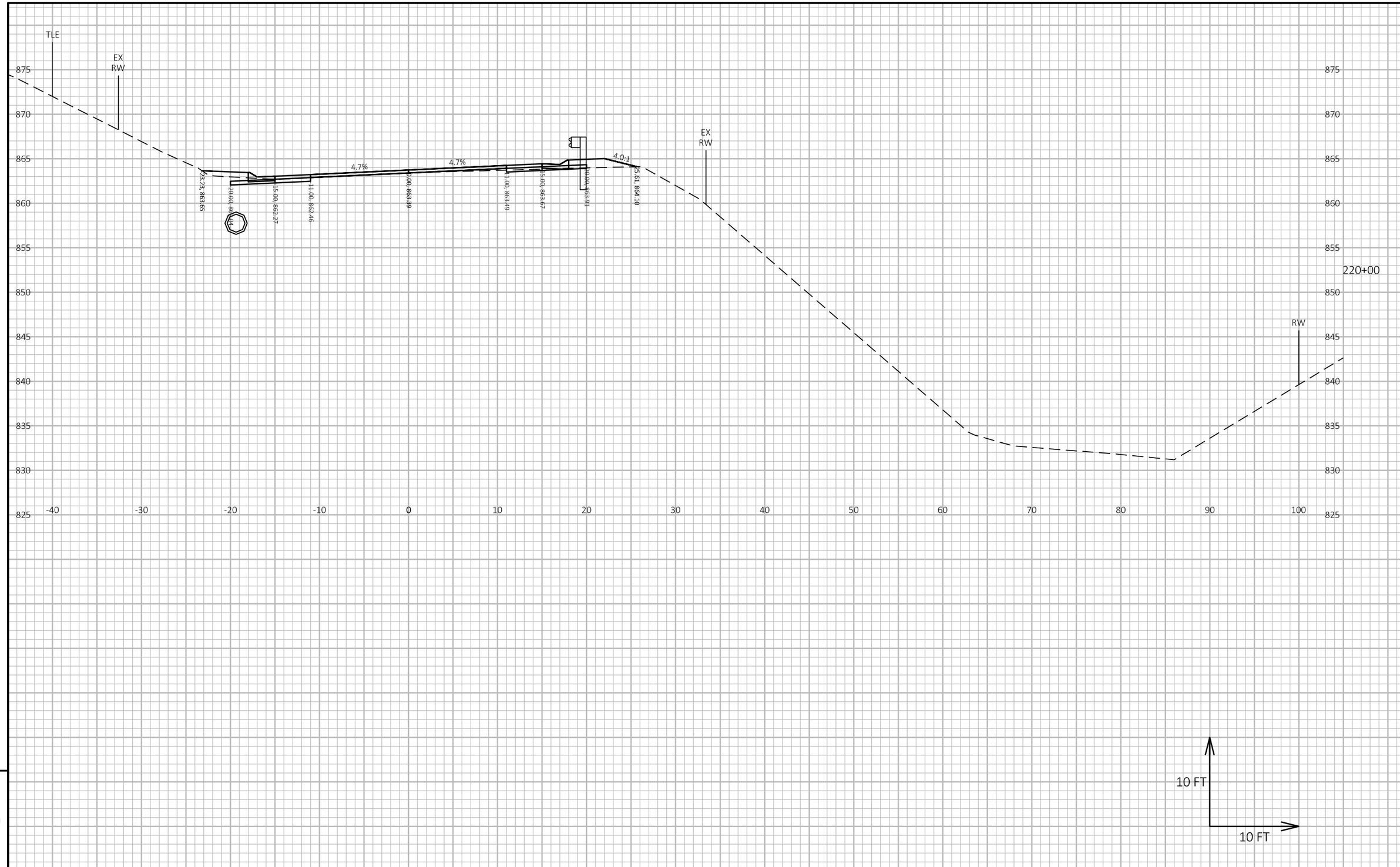

9

9

PROJECT NO: 7881-05-73	HWY: CTH D	COUNTY: DUNN	CROSS SECTIONS: CTH D	SHEET 237	E

FILE NAME : I:\41\410859 DUNN CTH D\C3D\DESIGN\CORRIDORS\CORRIDOR-CTH D 4-INCH RAISE.DWG
LAYOUT NAME - 9126
PLOT DATE : 5/16/2024 10:19 AM
PLOT BY : HEDRINGTON, MARK
PLOT NAME :
PLOT SCALE : 1 IN:10 FT HORZ. / 1 IN:10 FT VERT.
WISDOT/CADDS SHEET 49

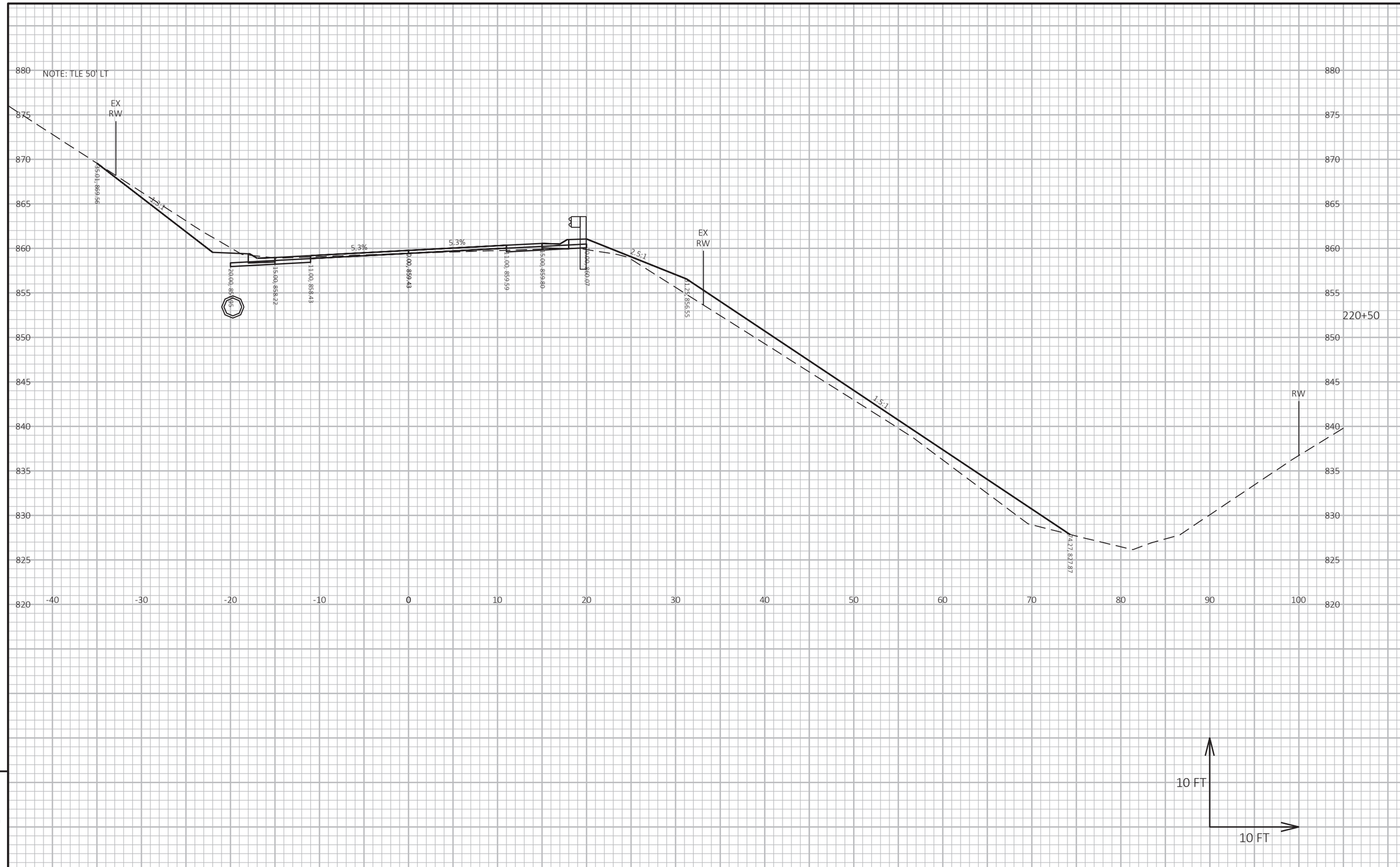

9

9

PROJECT NO: 7881-05-73	HWY: CTH D	COUNTY: DUNN	CROSS SECTIONS: CTH D	SHEET 238	E

FILE NAME : I:\41\410859 DUNN CTH D\C3D\DESIGN\CORRIDORS\CORRIDOR-CTH D 4-INCH RAISE.DWG
LAYOUT NAME - 9127
PLOT DATE : 7/9/2024 1:44 PM
PLOT BY : HEDRINGTON, MARK
PLOT NAME :
PLOT SCALE : 1 IN:10 FT HORZ. / 1 IN:10 FT VERT.
WISDOT/CADDS SHEET 49

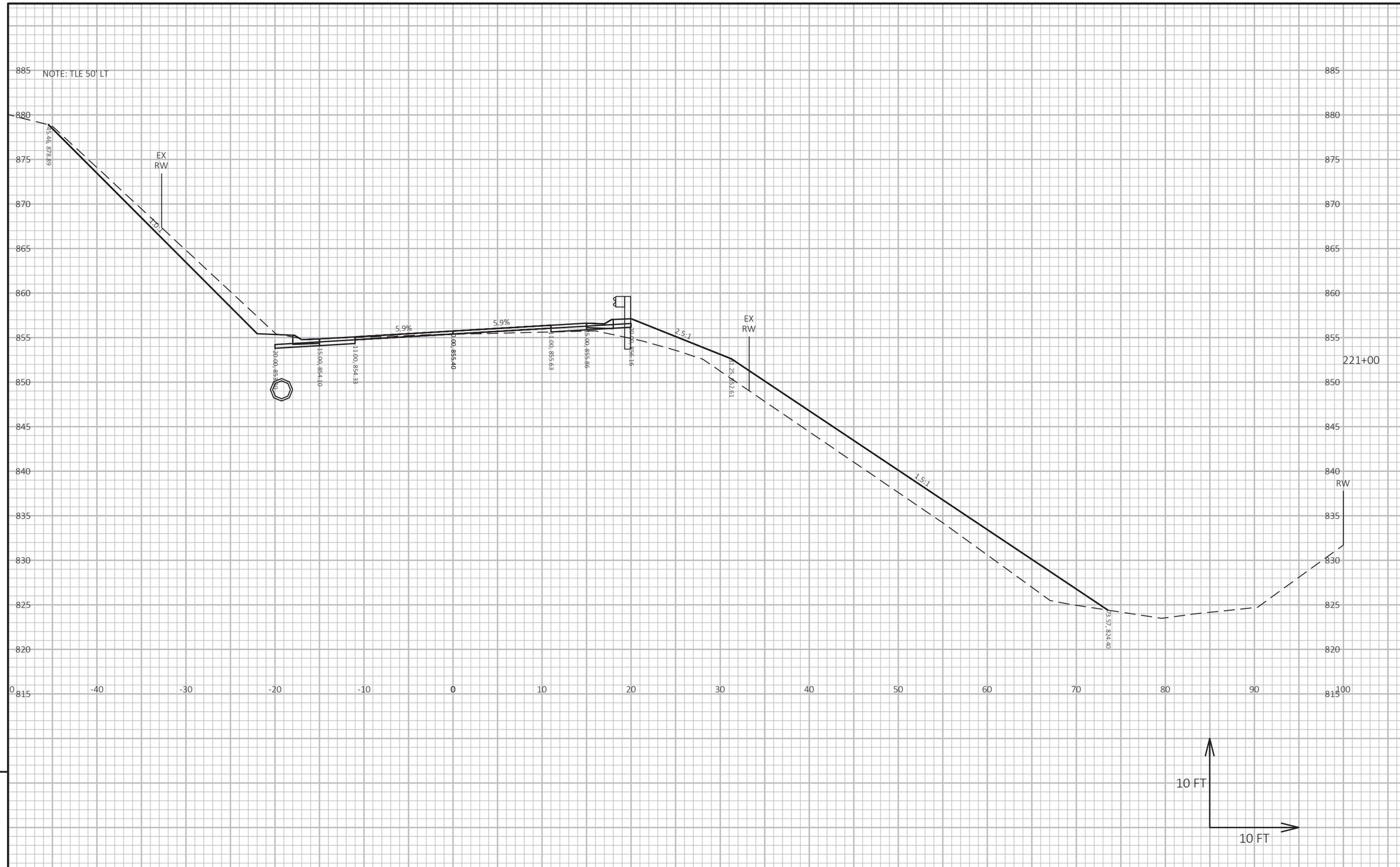

9

9

PROJECT NO: 7881-05-73	HWY: CTH D	COUNTY: DUNN	CROSS SECTIONS: CTH D	SHEET 239	E

FILE NAME : I:\41\410859 DUNN CTH D\C3D\DESIGN\CORRIDORS\CORRIDOR-CTH D 4-INCH RAISE.DWG
LAYOUT NAME - 9128

PLOT DATE : 7/9/2024 1:44 PM PLOT BY : HEDRINGTON, MARK PLOT NAME : **PLOT SCALE :** 1 IN:10 FT HORZ. / 1 IN:10 FT VERT.

WISDOT/CADDS SHEET 49

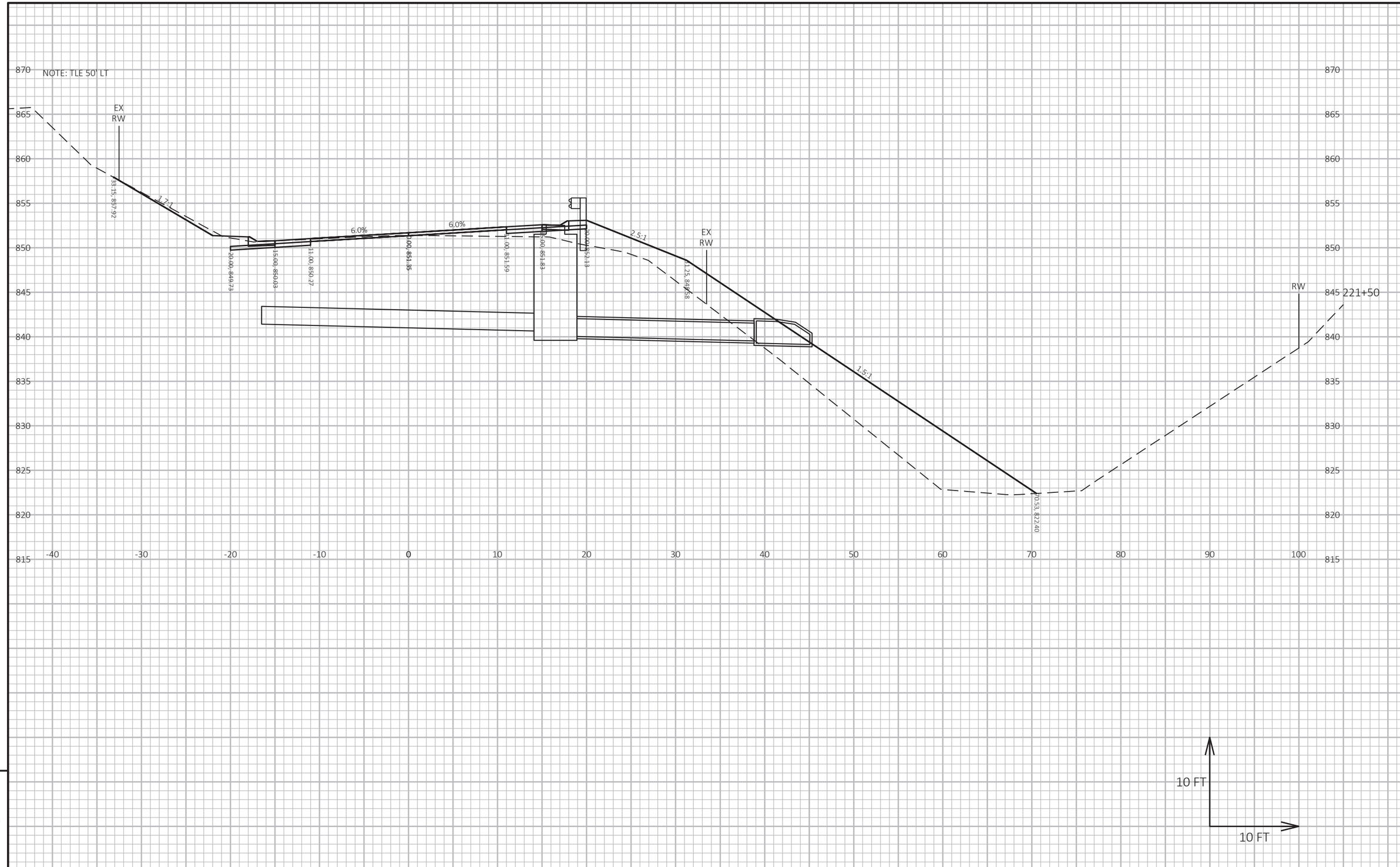

9

9

PROJECT NO: 7881-05-73	HWY: CTH D	COUNTY: DUNN	CROSS SECTIONS: CTH D	SHEET 240	E

FILE NAME : I:\41\410859 DUNN CTH D\C3D\DESIGN\CORRIDORS\CORRIDOR-CTH D 4-INCH RAISE.DWG
LAYOUT NAME - 9129
PLOT DATE : 7/9/2024 1:44 PM
PLOT BY : HEDRINGTON, MARK
PLOT NAME :
PLOT SCALE : 1 IN:10 FT HORZ. / 1 IN:10 FT VERT.
WISDOT/CADDS SHEET 49

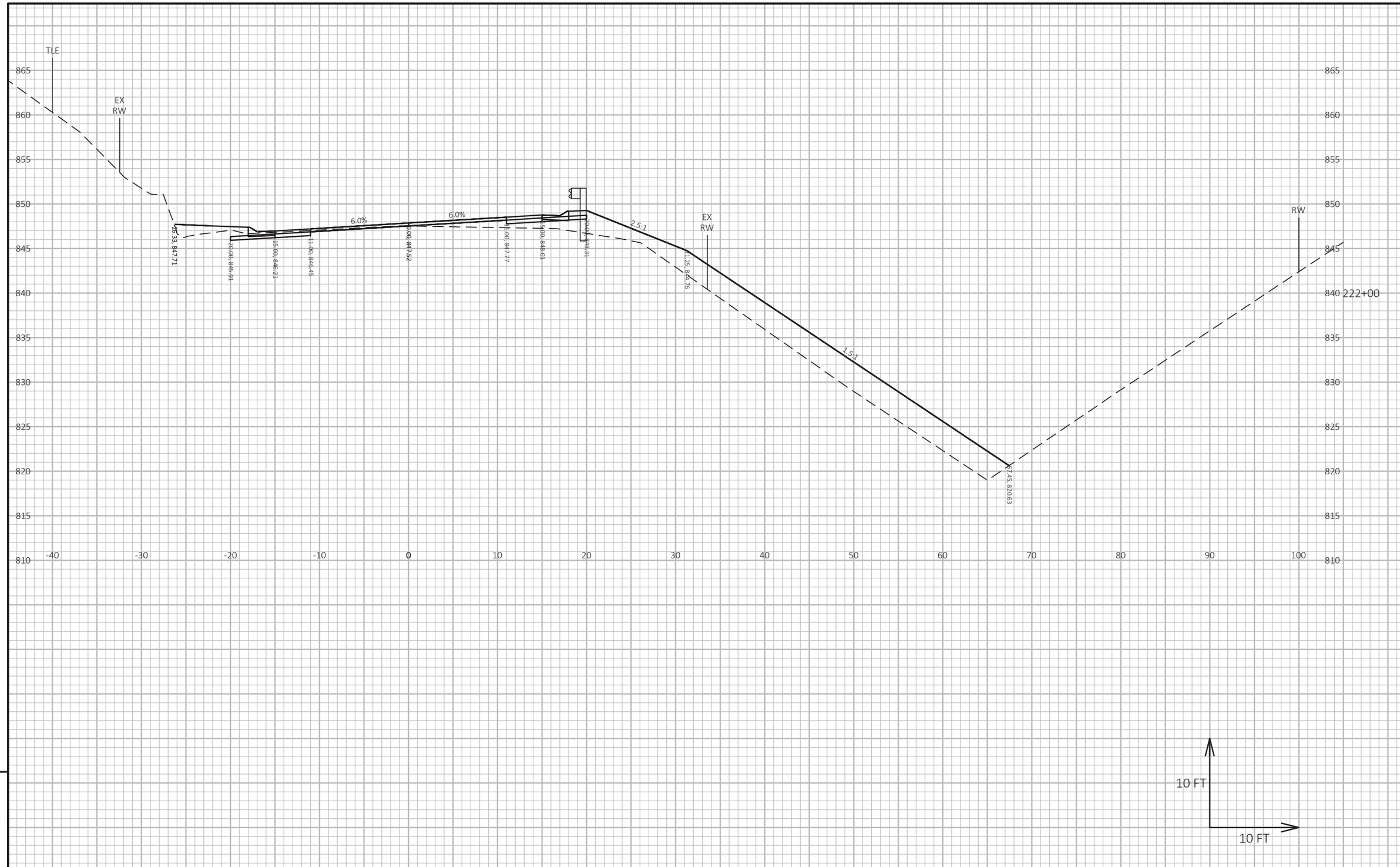

9

9

PROJECT NO: 7881-05-73	HWY: CTH D	COUNTY: DUNN	CROSS SECTIONS: CTH D	SHEET 241	E

FILE NAME : I:\41\410859 DUNN CTH D\C3D\DESIGN\CORRIDORS\CORRIDOR-CTH D 4-INCH RAISE.DWG
LAYOUT NAME - 9130

PLOT DATE : 7/9/2024 1:44 PM PLOT BY : HEDRINGTON, MARK PLOT NAME : **PLOT SCALE :** 1 IN:10 FT HORZ. / 1 IN:10 FT VERT.

WISDOT/CADDS SHEET 49

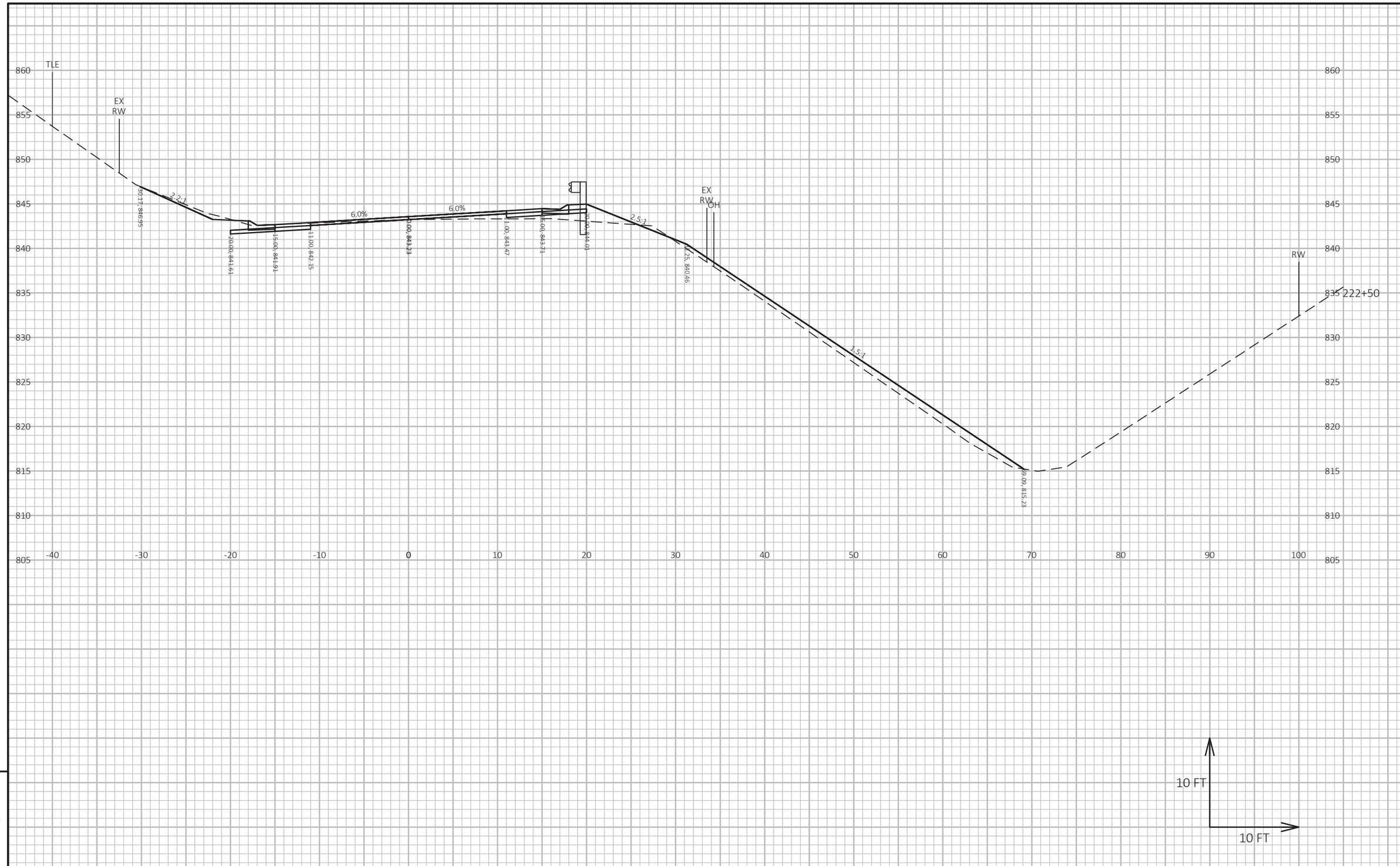

9

9

PROJECT NO: 7881-05-73	HWY: CTH D	COUNTY: DUNN	CROSS SECTIONS: CTH D	SHEET 242	E

FILE NAME : I:\41\410859 DUNN CTH D\C3D\DESIGN\CORRIDORS\CORRIDOR-CTH D 4-INCH RAISE.DWG
LAYOUT NAME - 9131

PLOT DATE : 7/9/2024 1:44 PM PLOT BY : HEDRINGTON, MARK PLOT NAME : PLOT SCALE : 1 IN:10 FT HORZ. / 1 IN:10 FT VERT.

WISDOT/CADDS SHEET 49

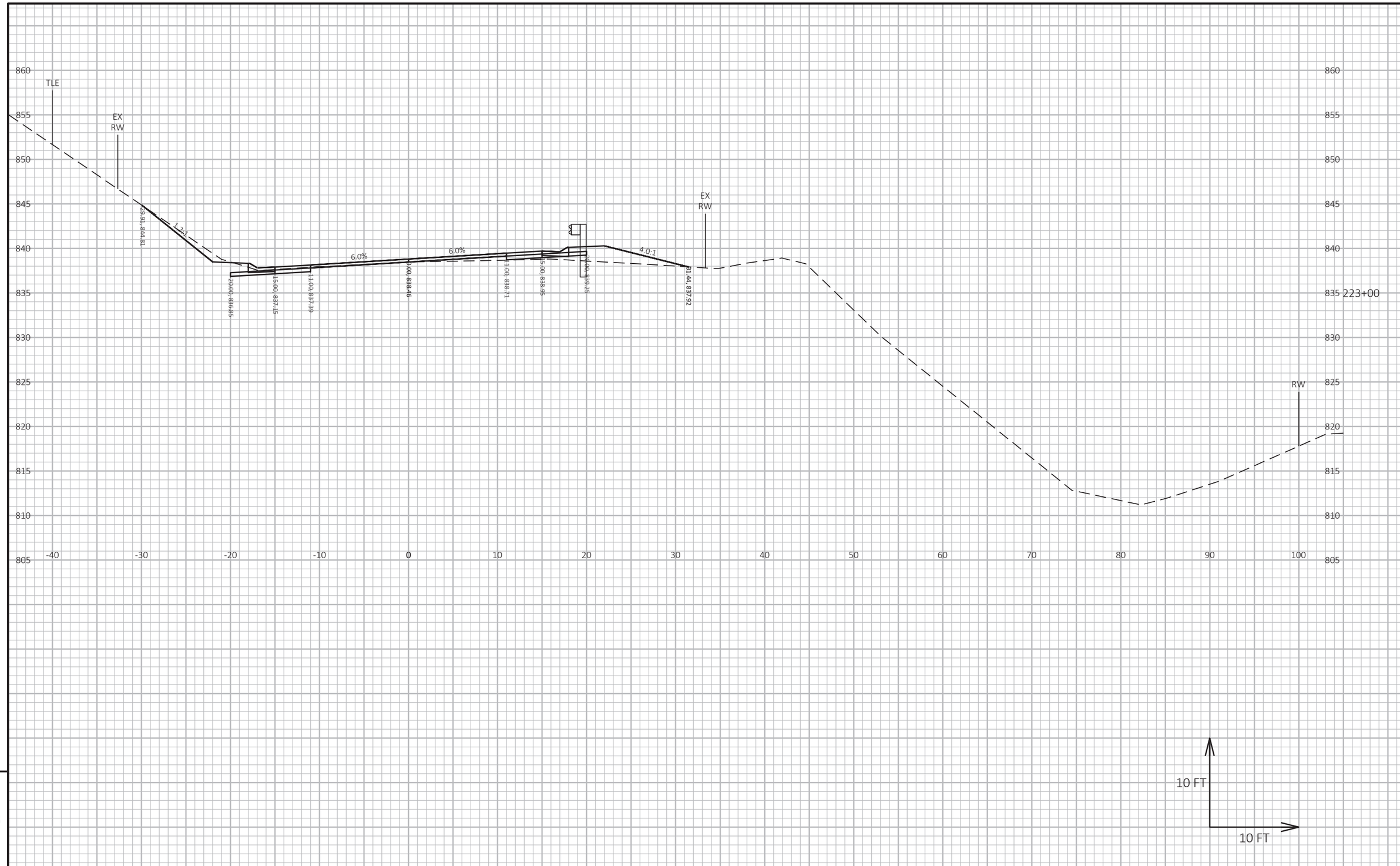

9

9

PROJECT NO: 7881-05-73	HWY: CTH D	COUNTY: DUNN	CROSS SECTIONS: CTH D	SHEET 243	E

FILE NAME : I:\41\410859 DUNN CTH D\C3D\DESIGN\CORRIDORS\CORRIDOR-CTH D 4-INCH RAISE.DWG
LAYOUT NAME - 9132
PLOT DATE : 7/9/2024 1:43 PM
PLOT BY : HEDRINGTON, MARK
PLOT NAME :
PLOT SCALE : 1 IN:10 FT HORZ. / 1 IN:10 FT VERT.
WISDOT/CADDS SHEET 49

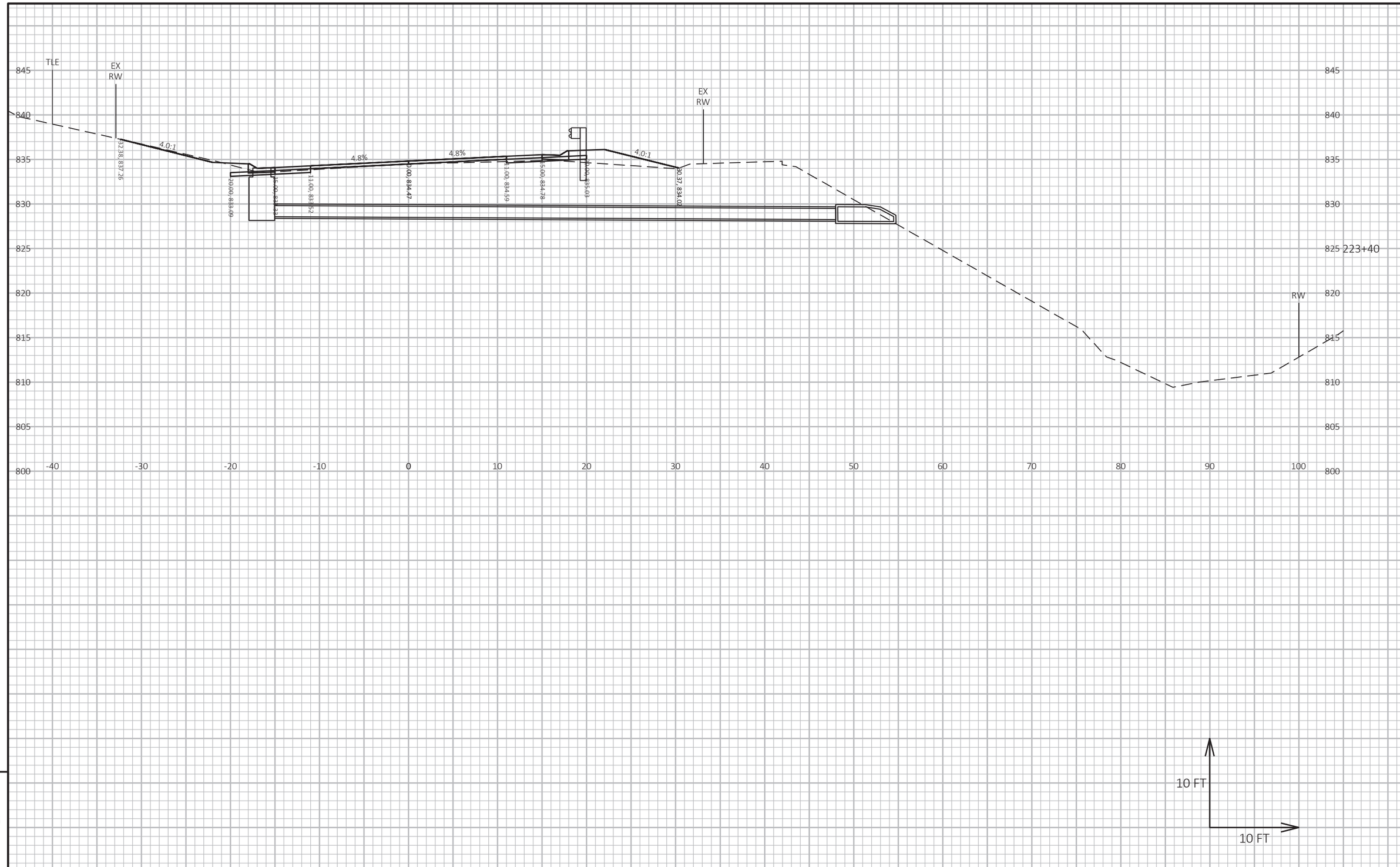

9

9

PROJECT NO: 7881-05-73	HWY: CTH D	COUNTY: DUNN	CROSS SECTIONS: CTH D	SHEET 244	E

FILE NAME : I:\41\410859 DUNN CTH D\C3D\DESIGN\CORRIDORS\CORRIDOR-CTH D 4-INCH RAISE.DWG
LAYOUT NAME - 9133
PLOT DATE : 7/9/2024 1:43 PM
PLOT BY : HEDRINGTON, MARK
PLOT NAME :
PLOT SCALE : 1 IN:10 FT HORZ. / 1 IN:10 FT VERT.
WISDOT/CADDS SHEET 49

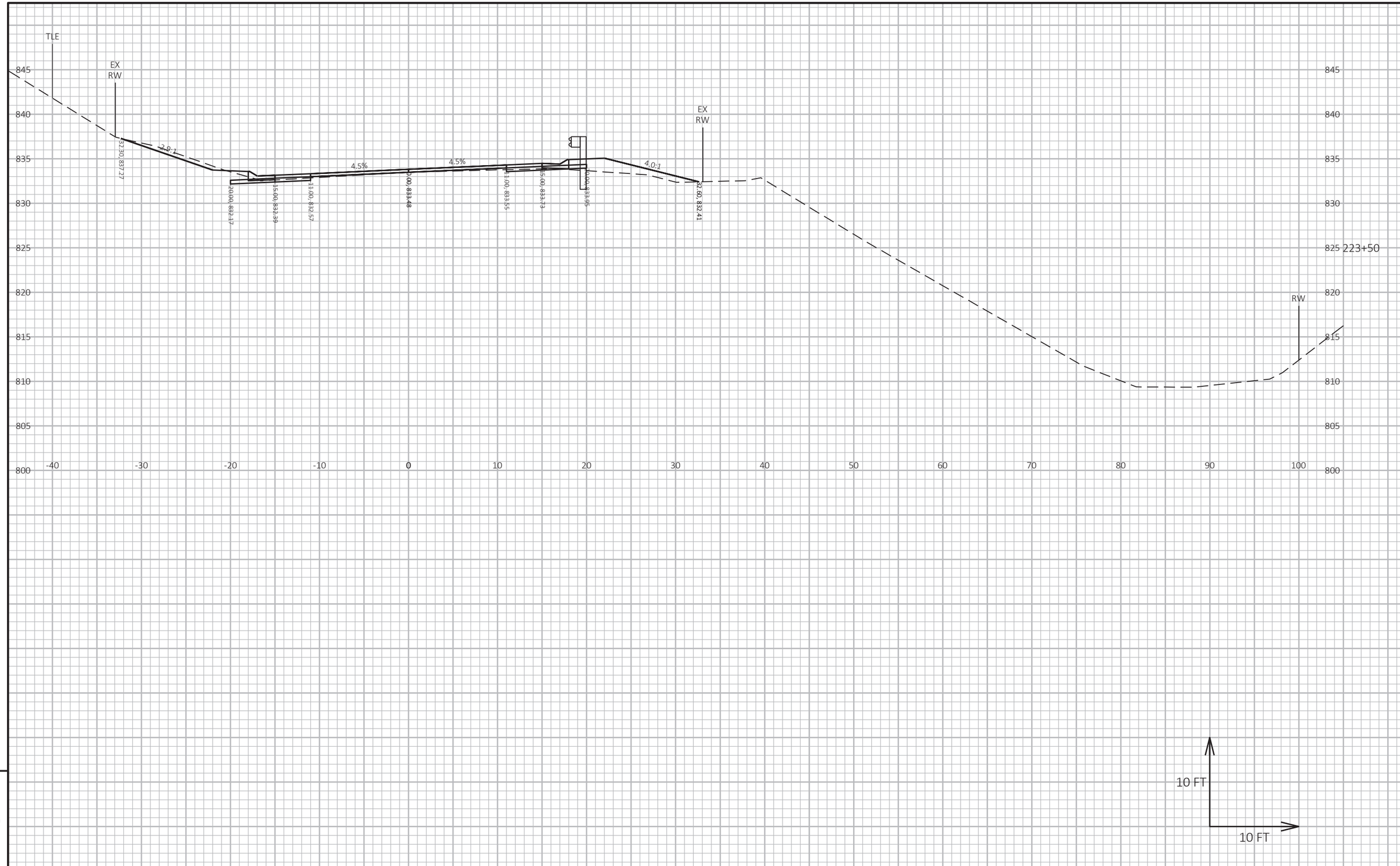

9

9

PROJECT NO: 7881-05-73	HWY: CTH D	COUNTY: DUNN	CROSS SECTIONS: CTH D	SHEET 245	E

FILE NAME : I:\41\410859 DUNN CTH D\C3D\DESIGN\CORRIDORS\CORRIDOR-CTH D 4-INCH RAISE.DWG
LAYOUT NAME - 9134
PLOT DATE : 7/9/2024 1:43 PM
PLOT BY : HEDRINGTON, MARK
PLOT NAME :
PLOT SCALE : 1 IN:10 FT HORZ. / 1 IN:10 FT VERT.
WISDOT/CADDS SHEET 49

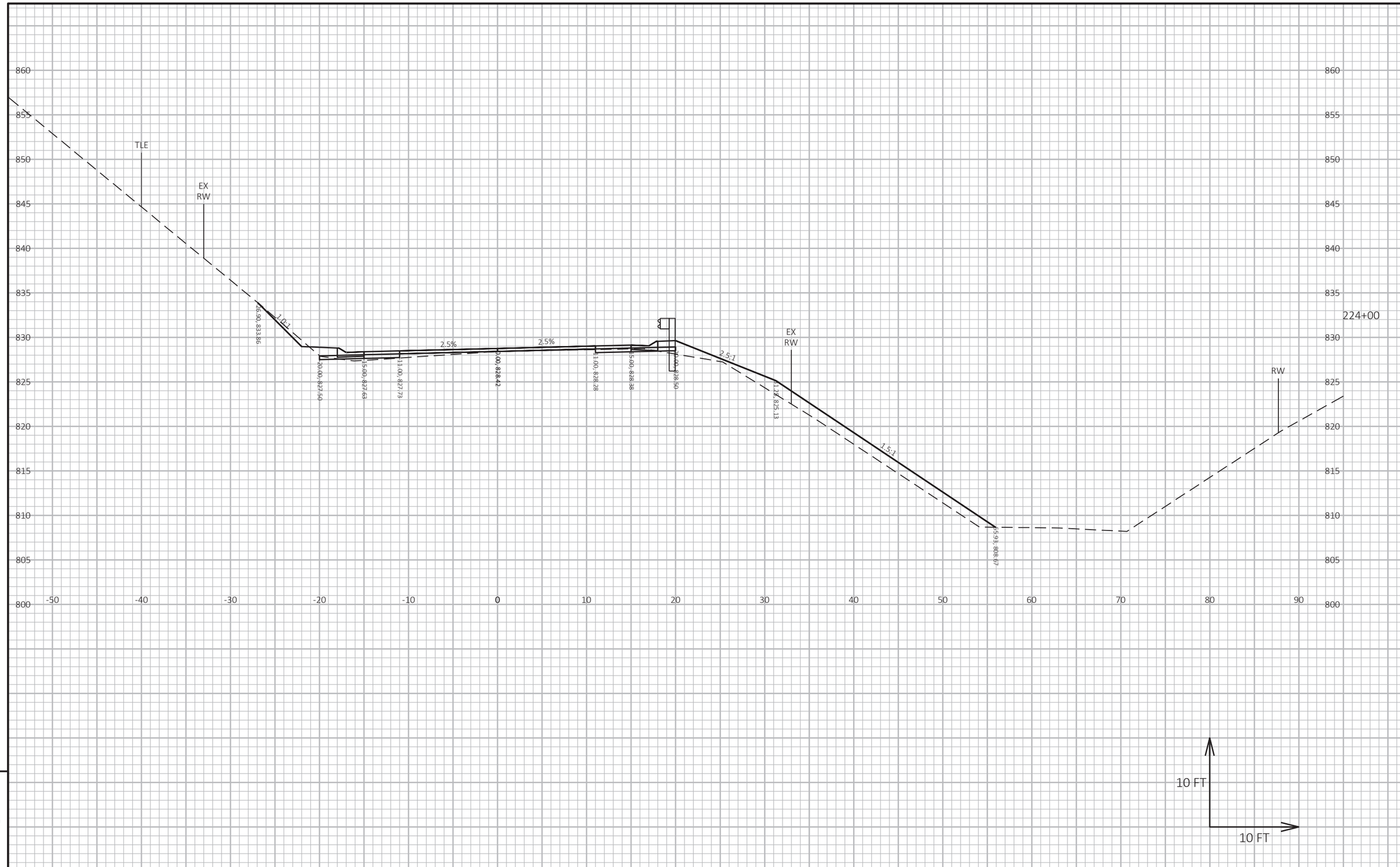

9

9

PROJECT NO: 7881-05-73	HWY: CTH D	COUNTY: DUNN	CROSS SECTIONS: CTH D	SHEET 246	E

FILE NAME : I:\41\410859 DUNN CTH D\C3D\DESIGN\CORRIDORS\CORRIDOR-CTH D 4-INCH RAISE.DWG
LAYOUT NAME - 9135

PLOT DATE : 7/9/2024 1:43 PM PLOT BY : HEDRINGTON, MARK PLOT NAME : PLOT SCALE : 1 IN:10 FT HORZ. / 1 IN:10 FT VERT.

WISDOT/CADDS SHEET 49

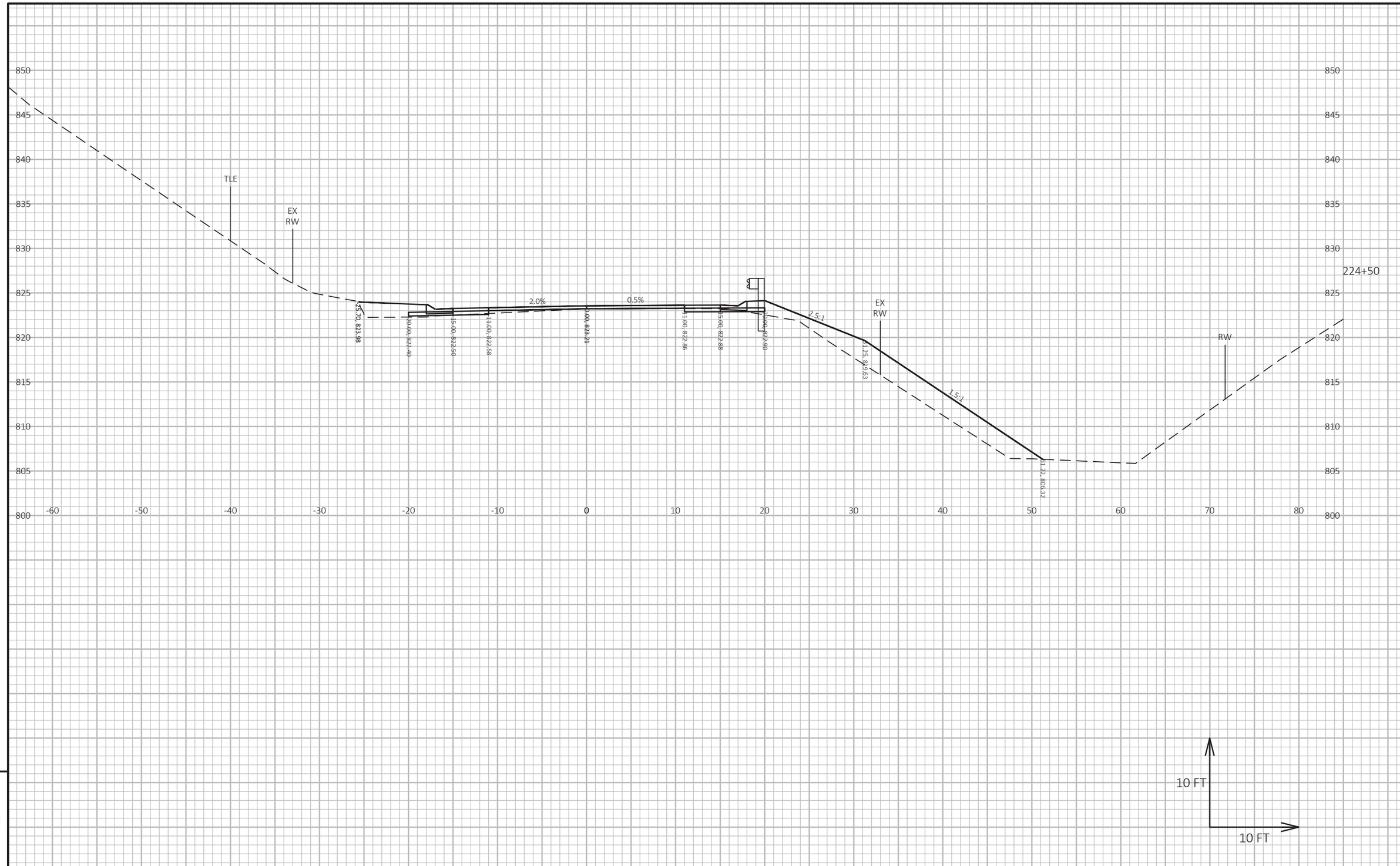

9

9

PROJECT NO: 7881-05-73	HWY: CTH D	COUNTY: DUNN	CROSS SECTIONS: CTH D	SHEET 247	E

FILE NAME : I:\41\410859 DUNN CTH D\C3D\DESIGN\CORRIDORS\CORRIDOR-CTH D 4-INCH RAISE.DWG
LAYOUT NAME - 9136

PLOT DATE : 7/9/2024 1:43 PM PLOT BY : HEDRINGTON, MARK PLOT NAME : PLOT SCALE : 1 IN:10 FT HORZ. / 1 IN:10 FT VERT.

WISDOT/CADDS SHEET 49

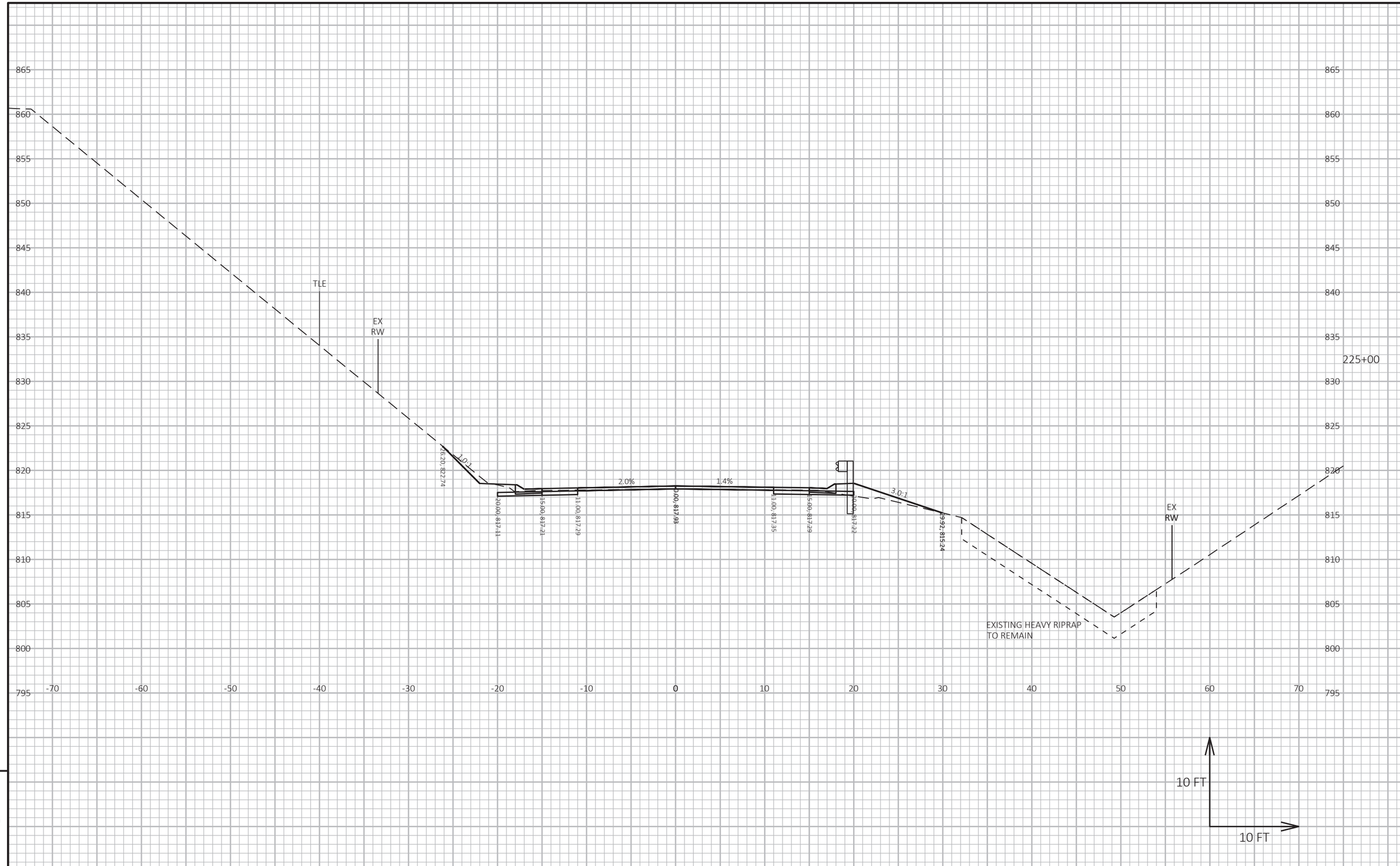

9

9

PROJECT NO: 7881-05-73	HWY: CTH D	COUNTY: DUNN	CROSS SECTIONS: CTH D	SHEET 248	E

FILE NAME : I:\41\410859 DUNN CTH D\C3D\DESIGN\CORRIDORS\CORRIDOR-CTH D 4-INCH RAISE.DWG
LAYOUT NAME - 9137

PLOT DATE : 7/9/2024 1:43 PM PLOT BY : HEDRINGTON, MARK PLOT NAME : PLOT SCALE : 1 IN:10 FT HORZ. / 1 IN:10 FT VERT.

WISDOT/CADDS SHEET 49

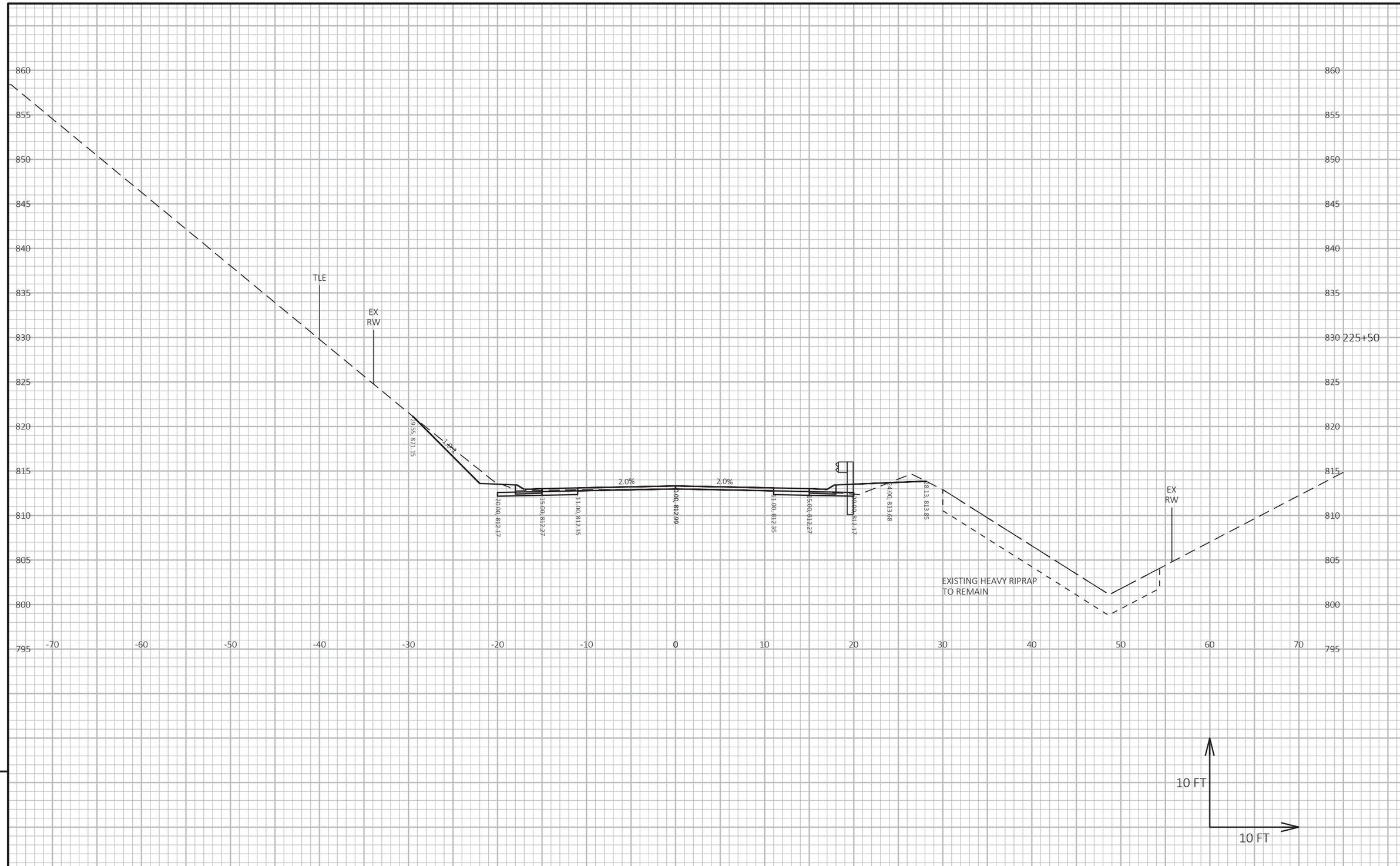

9

9

PROJECT NO: 7881-05-73	HWY: CTH D	COUNTY: DUNN	CROSS SECTIONS: CTH D	SHEET 249	E

FILE NAME : I:\41\410859 DUNN CTH D\C3D\DESIGN\CORRIDORS\CORRIDOR-CTH D 4-INCH RAISE.DWG
LAYOUT NAME - 9138

PLOT DATE : 7/9/2024 1:43 PM PLOT BY : HEDRINGTON, MARK PLOT NAME : PLOT SCALE : 1 IN:10 FT HORZ. / 1 IN:10 FT VERT.

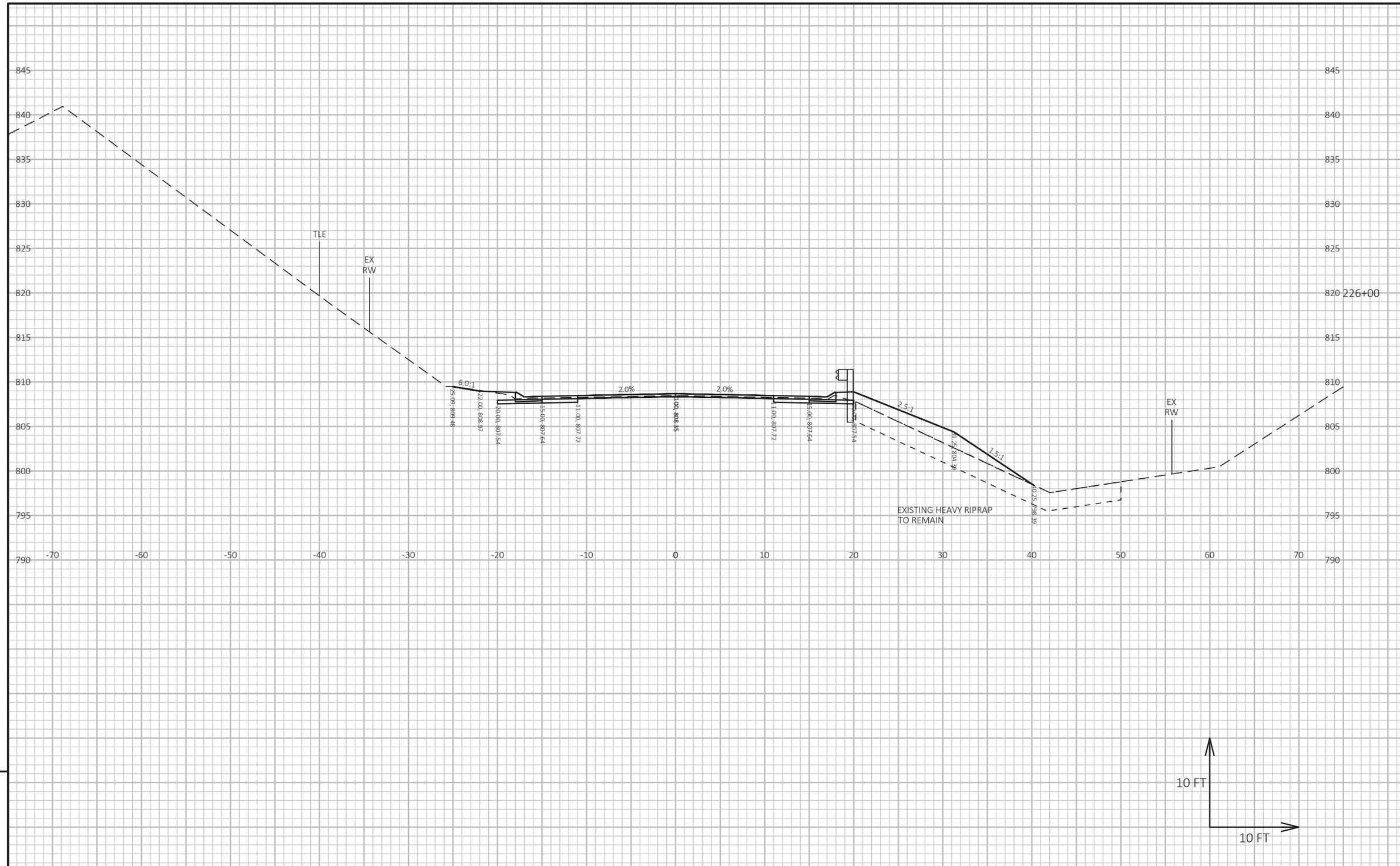

9

9

PROJECT NO: 7881-05-73	HWY: CTH D	COUNTY: DUNN	CROSS SECTIONS: CTH D	SHEET 250	E

FILE NAME : I:\41\410859 DUNN CTH D\C3D\DESIGN\CORRIDORS\CORRIDOR-CTH D 4-INCH RAISE.DWG
LAYOUT NAME - 9139

PLOT DATE : 7/9/2024 1:43 PM PLOT BY : HEDRINGTON, MARK PLOT NAME : PLOT SCALE : 1 IN:10 FT HORZ. / 1 IN:10 FT VERT.

WISDOT/CADDS SHEET 49

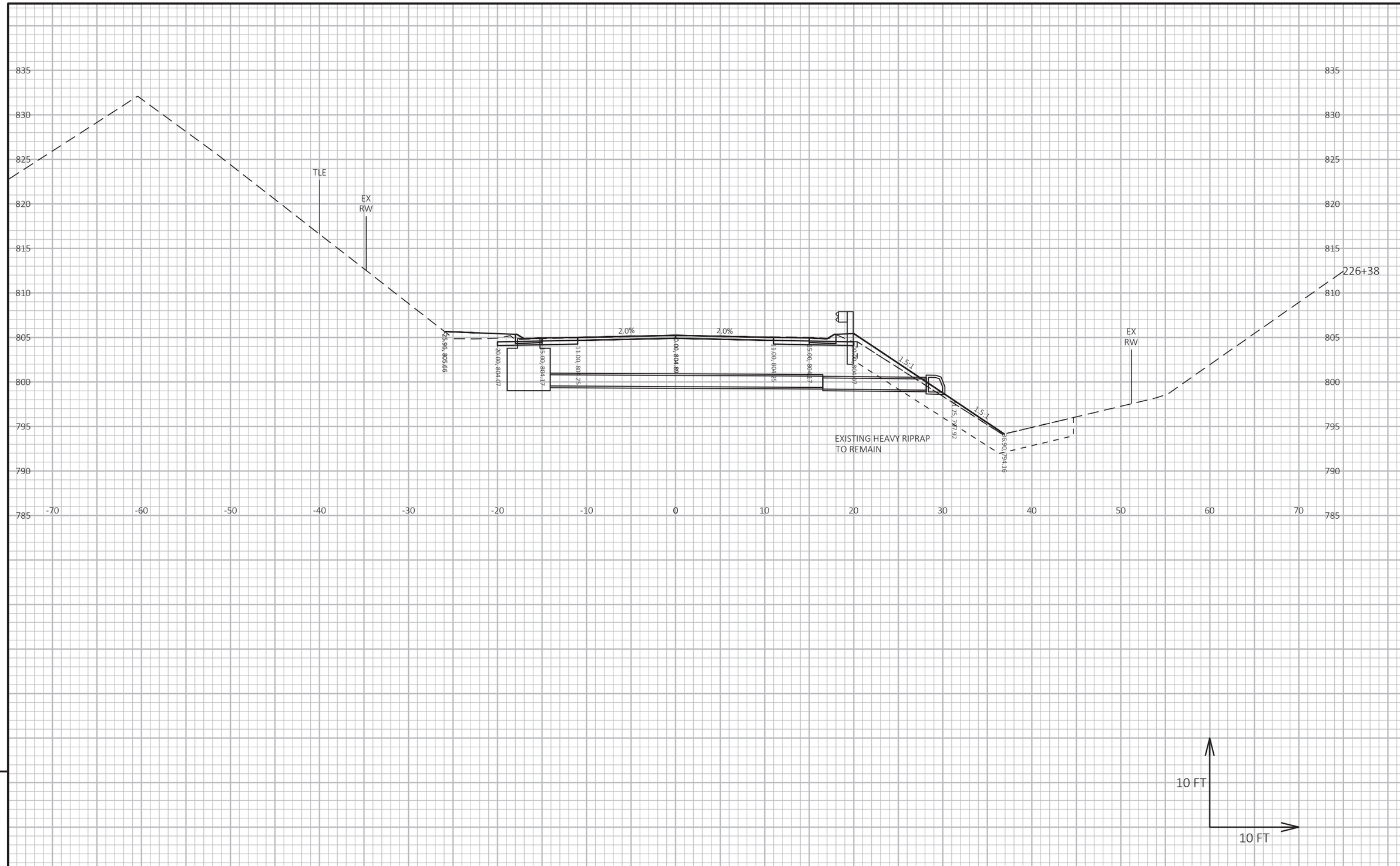

9

9

PROJECT NO: 7881-05-73	HWY: CTH D	COUNTY: DUNN	CROSS SECTIONS: CTH D	SHEET 251	E

FILE NAME : I:\41\410859 DUNN CTH D\C3D\DESIGN\CORRIDORS\CORRIDOR-CTH D 4-INCH RAISE.DWG
LAYOUT NAME - 9140

PLOT DATE : 7/9/2024 1:43 PM PLOT BY : HEDRINGTON, MARK PLOT NAME : PLOT SCALE : 1 IN:10 FT HORZ. / 1 IN:10 FT VERT.

WISDOT/CADDS SHEET 49

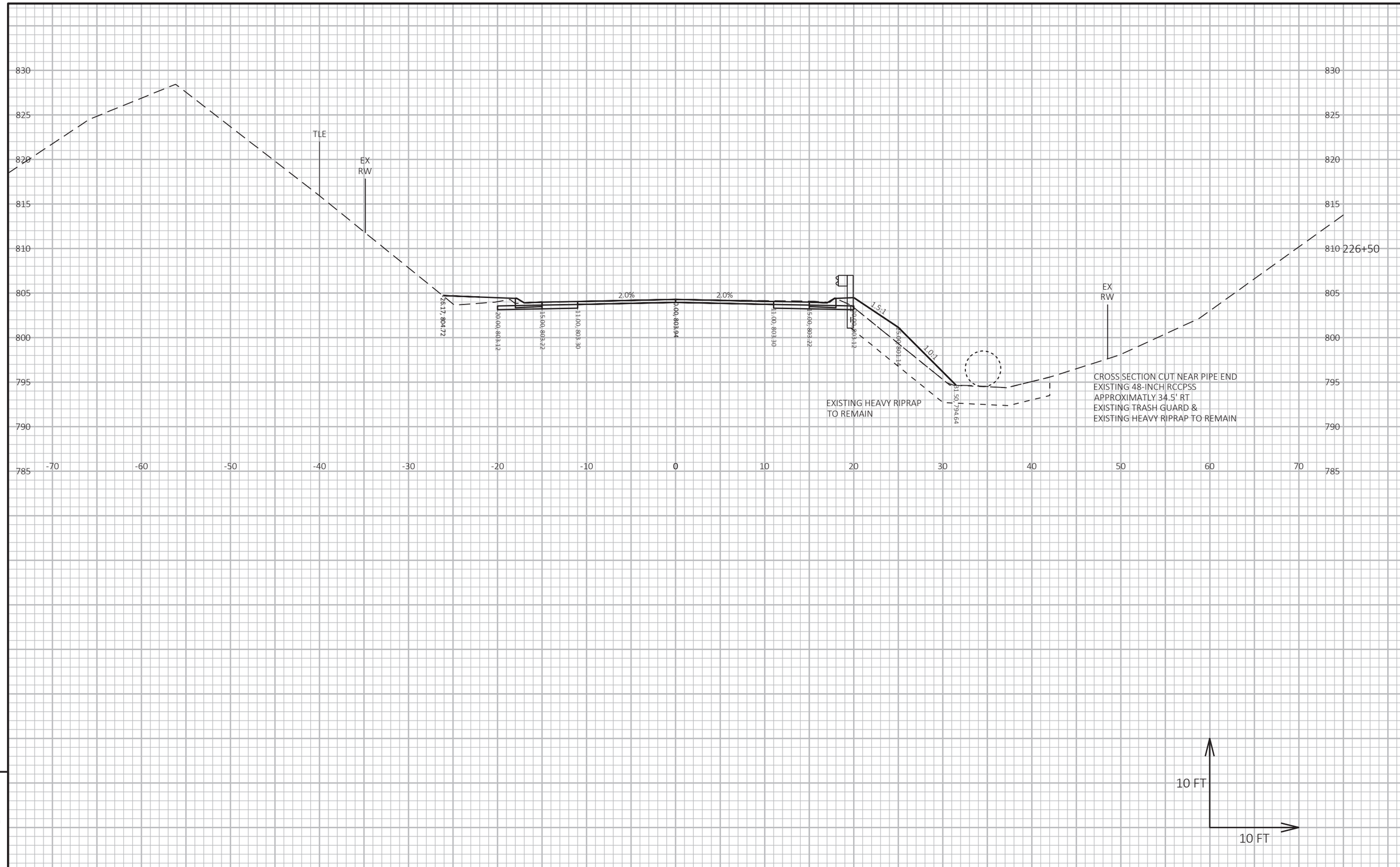

9

9

PROJECT NO: 7881-05-73	HWY: CTH D	COUNTY: DUNN	CROSS SECTIONS: CTH D	SHEET 252	E

FILE NAME : I:\41\410859 DUNN CTH D\C3D\DESIGN\CORRIDORS\CORRIDOR-CTH D 4-INCH RAISE.DWG
LAYOUT NAME - 9141
PLOT DATE : 7/9/2024 1:43 PM
PLOT BY : HEDRINGTON, MARK
PLOT NAME :
PLOT SCALE : 1 IN:10 FT HORZ. / 1 IN:10 FT VERT.
WISDOT/CADDS SHEET 49

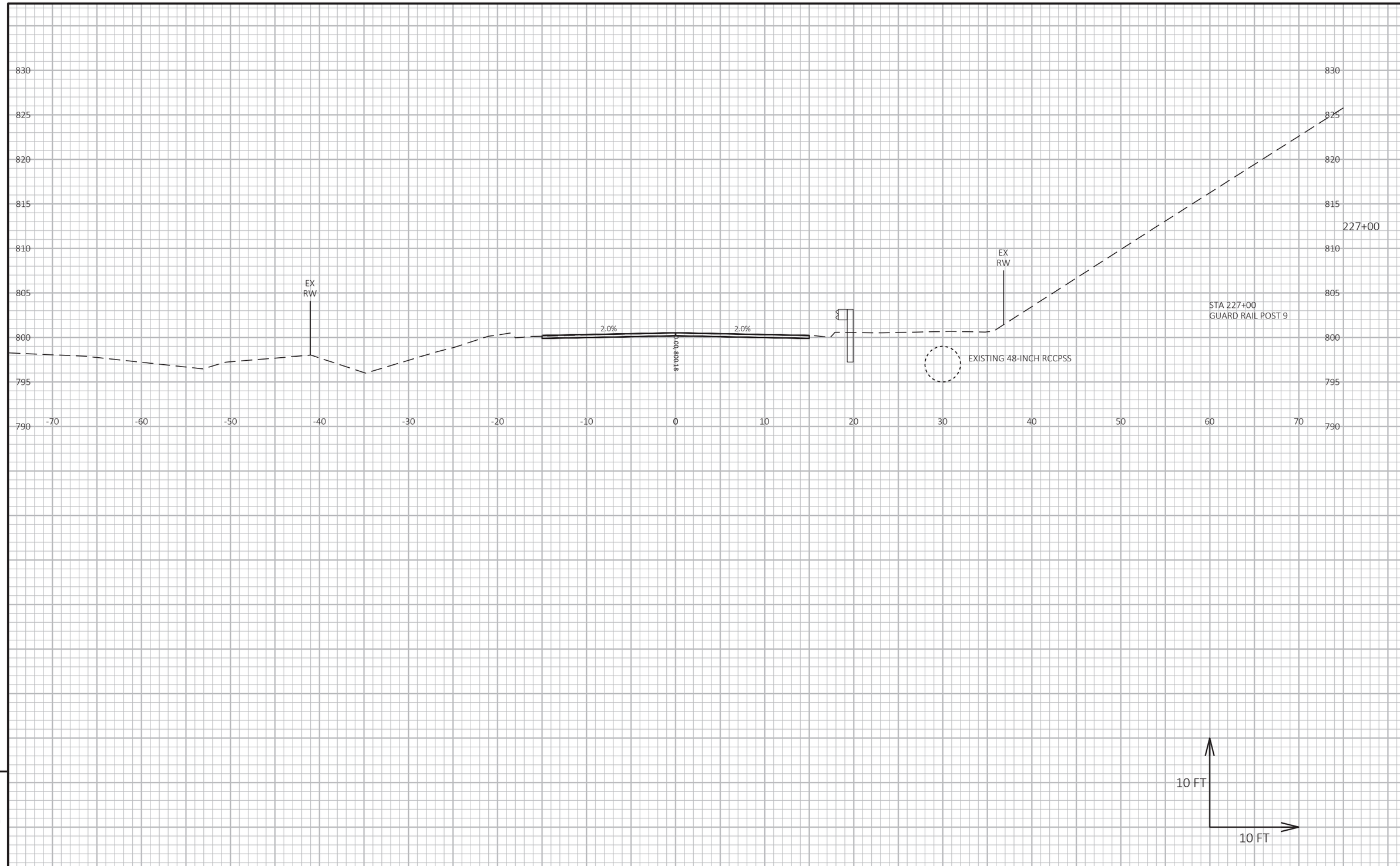

9

9

PROJECT NO: 7881-05-73	HWY: CTH D	COUNTY: DUNN	CROSS SECTIONS: CTH D	SHEET 253	E

FILE NAME : I:\41\410859 DUNN CTH D\C3D\DESIGN\CORRIDORS\CORRIDOR-CTH D 4-INCH RAISE.DWG
LAYOUT NAME - 9142

PLOT DATE : 7/9/2024 1:43 PM PLOT BY : HEDRINGTON, MARK PLOT NAME : PLOT SCALE : 1 IN:10 FT HORZ. / 1 IN:10 FT VERT.

WISDOT/CADDS SHEET 49

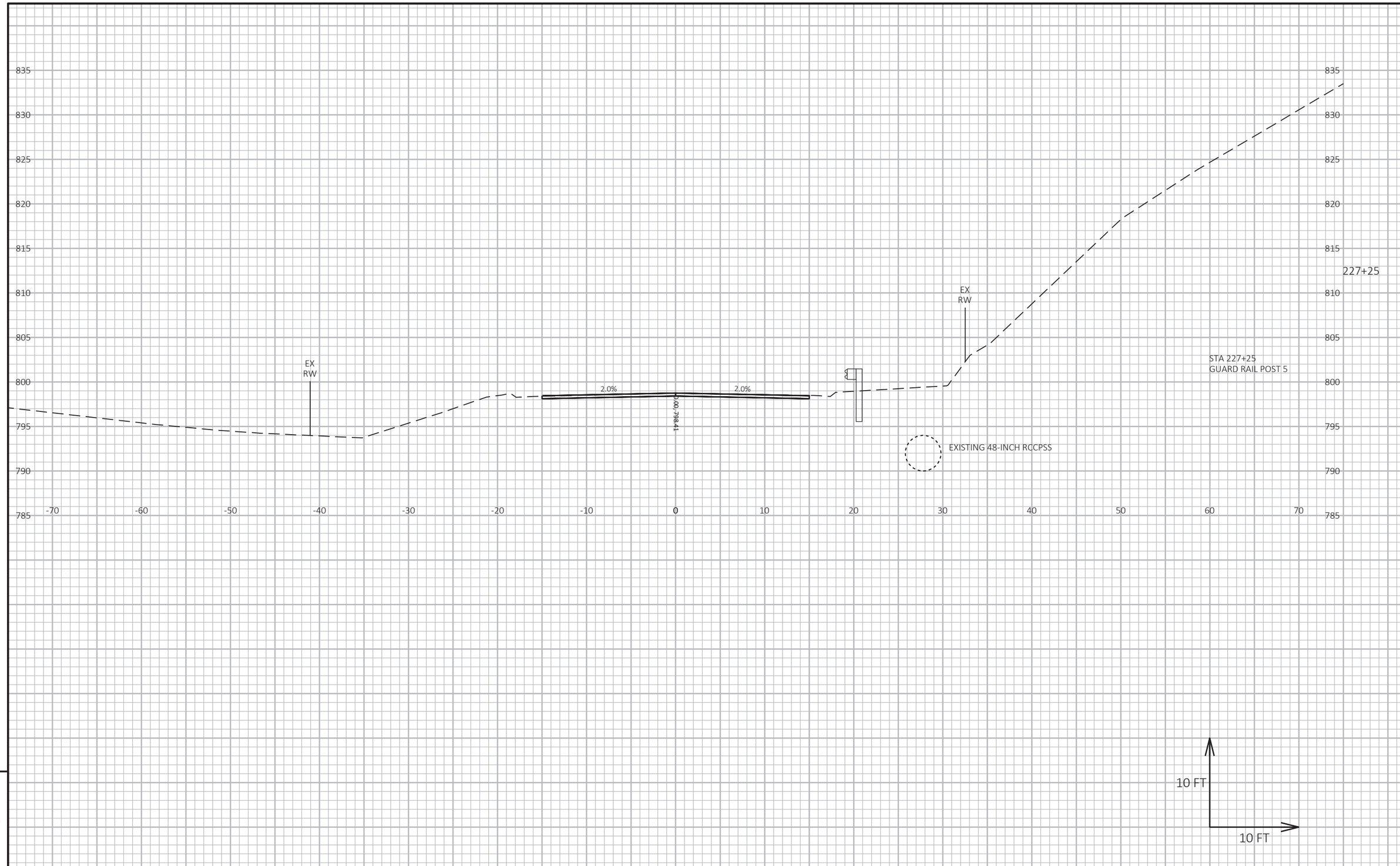

9

9

PROJECT NO: 7881-05-73	HWY: CTH D	COUNTY: DUNN	CROSS SECTIONS: CTH D	SHEET 254	E

FILE NAME : I:\41\410859 DUNN CTH D\C3D\DESIGN\CORRIDORS\CORRIDOR-CTH D 4-INCH RAISE.DWG
LAYOUT NAME - 9143

PLOT DATE : 7/9/2024 1:43 PM PLOT BY : HEDRINGTON, MARK PLOT NAME : PLOT SCALE : 1 IN:10 FT HORZ. / 1 IN:10 FT VERT.

WISDOT/CADDS SHEET 49

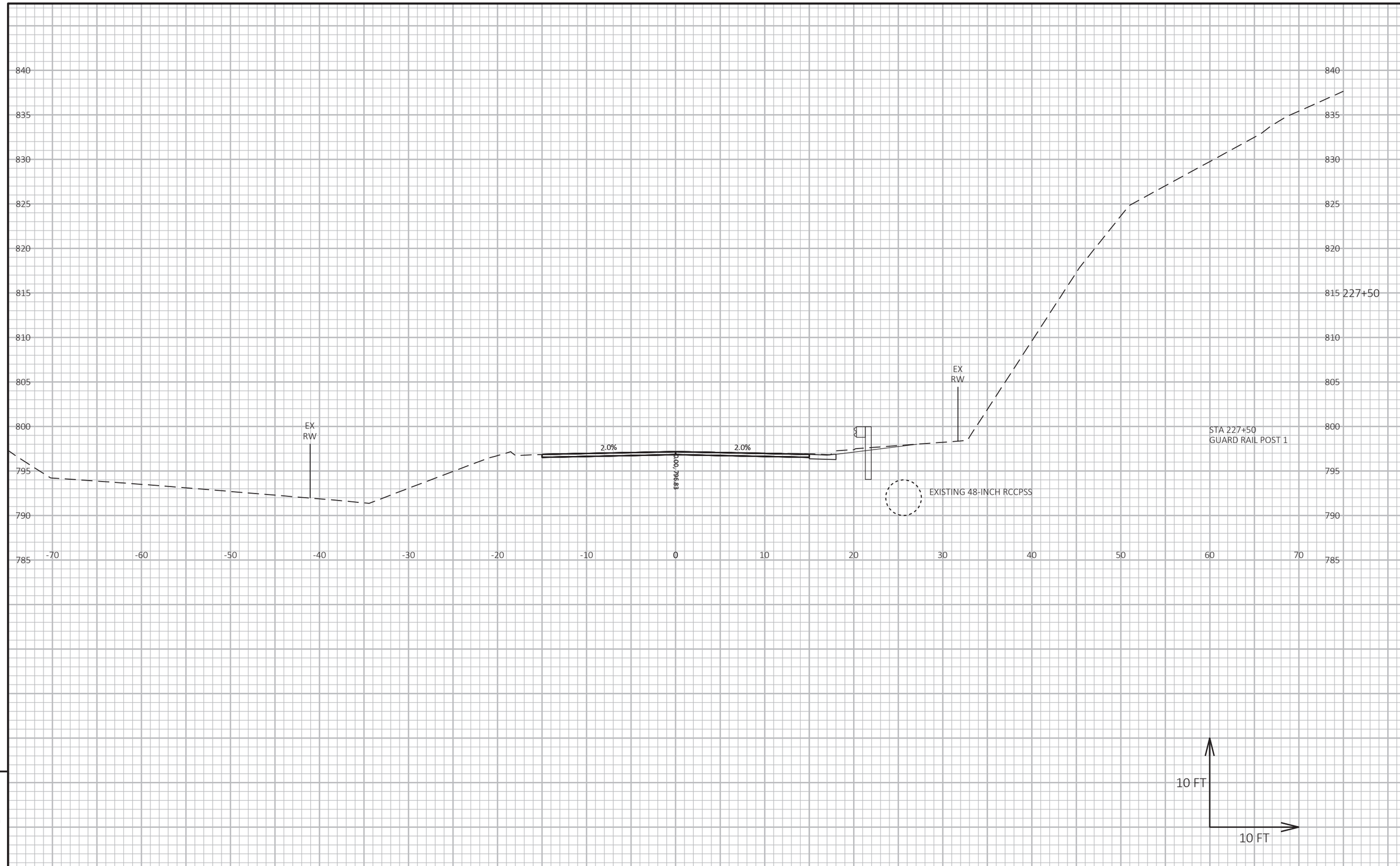

9

9

PROJECT NO: 7881-05-73	HWY: CTH D	COUNTY: DUNN	CROSS SECTIONS: CTH D	SHEET 255	E

FILE NAME : I:\41\410859 DUNN CTH D\C3D\DESIGN\CORRIDORS\CORRIDOR-CTH D 4-INCH RAISE.DWG
LAYOUT NAME - 9144
PLOT DATE : 7/9/2024 1:42 PM
PLOT BY : HEDRINGTON, MARK
PLOT NAME :
PLOT SCALE : 1 IN:10 FT HORZ. / 1 IN:10 FT VERT.
WISDOT/CADDS SHEET 49

Wisconsin Department of Transportation

Dedicated people creating transportation solutions through innovation and exceptional service.

http://www.dot.wisconsin.gov