LAX

NOVEMBER 2024

PROJECT ID: 5991-07-78 / 5991-07-79

WITH: N/A

COUNTY: LA CROSSE

15

ORDER OF SHEETS

TOTAL SHEETS = 132

STATE OF WISCONSIN
DEPARTMENT OF TRANSPORTATION

PLAN OF PROPOSED IMPROVEMENT

CITY OF LA CROSSE, GREEN BAY STREET

22ND ST S TO LOSEY BLVD

LOC STR

LA CROSSE COUNTY

STATE PROJECT	FEDERAL PROJECT	
	PROJECT	CONTRACT
5991-07-78	WISC 2025082	1
5991-07-79	N/A	

STATE PROJECT NUMBER	STATE PROJECT NUMBER
5991-07-78	5991-07-79

N

BEGIN PROJECT 5991-07-78 & 5991-07-79
STA 28+22.33
Y = 656,328.79
X = 1,645,585.14

END PROJECT
STA 36+35.12

R-7-W

T-15-N

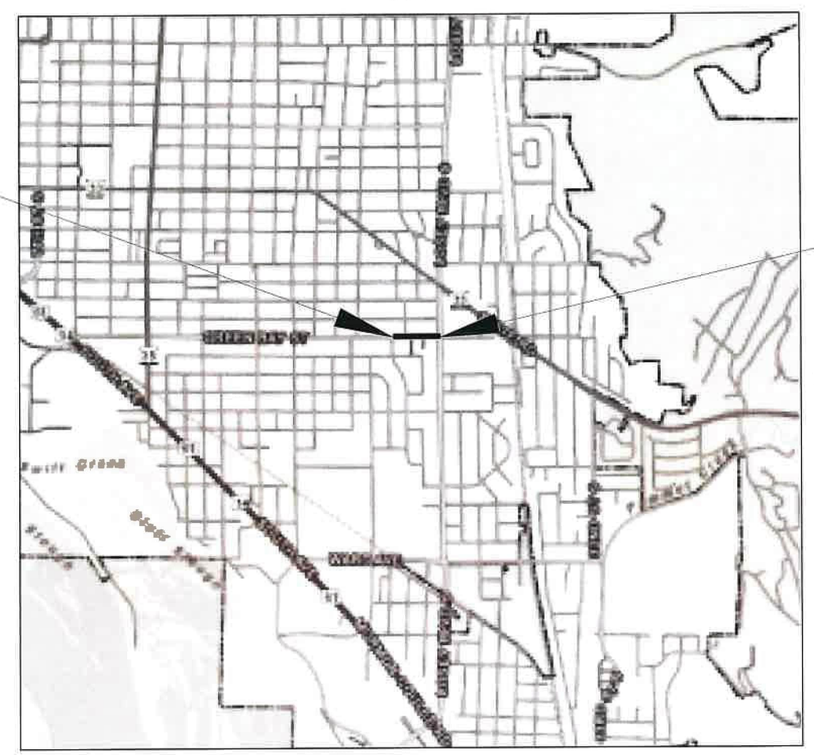

DESIGN DESIGNATION 5991-07-77

A.A.D.T.	2025	=	5,900
A.A.D.T.	2045	=	6,500
D.H.V.		=	680
D.D.		=	50/50
T.		=	2.4%
DESIGN SPEED		=	30 MPH
ESALS		=	300,000

LAYOUT

SCALE 0 0.5 MI

TOTAL NET LENGTH OF CENTERLINE = 0.154 MI

HORIZONTAL POSITIONS SHOWN ON THIS PLAN ARE WISCONSIN STATE PLANE COORDINATE SYSTEM (WSPCS), SOUTH ZONE, NAD83 (2011), IN U.S. SURVEY FEET. POSITIONS SHOWN ARE GRID COORDINATES, GRID BEARINGS, AND GRID DISTANCES. GRID DISTANCES ARE THE SAME AS GROUND DISTANCES.

ELEVATIONS ARE REFERENCED TO NAVD 88 (2012). GPS DERIVED ELEVATIONS ARE BASED ON GEOID 12A

CONVENTIONAL SYMBOLS

PLAN

CORPORATE LIMITS
PROPERTY LINE
LOT LINE
LIMITED HIGHWAY EASEMENT
EXISTING RIGHT OF WAY
PROPOSED OR NEW R/W LINE
SLOPE INTERCEPT
REFERENCE LINE (SOC CE)
EXISTING CULVERT
PROPOSED CULVERT (Box or Pipe)
COMBUSTIBLE FLUIDS (CAUTION)
MARSH AREA
WOODED OR SHRUB AREA

PROFILE

GRADE LINE
ORIGINAL GROUND
MARSH OR ROCK PROFILE (To be noted as such) (ROCK)
SPECIAL DITCH (LABEL)
GRADE ELEVATION (95.36)
CULVERT (Profile View)

UTILITIES

ELECTRIC (E)
FIBER OPTIC (FO)
GAS (G)
SANITARY SEWER (SAN)
STORM SEWER (SS)
TELEPHONE (T)
WATER (W)
UTILITY PEDESTAL
POWER POLE
TELEPHONE POLE

ACCEPTED FOR

CITY OF LA CROSSE

Date 7/24/24 (Signature and Title of Official)

ORIGINAL PLANS PREPARED BY

wsp
831 Crutter Court
Suite 400
Oconiosko, WI 54650
Phone: (608) 519-1455

WISCONSIN RYAN B. McKANE E-37669 HOLMEN, WI PROFESSIONAL ENGINEER

DATE: 07/11/2024 (Professional Engineer Signature)

STATE OF WISCONSIN
DEPARTMENT OF TRANSPORTATION

PREPARED BY

Surveyor	WSP USA
Designer	WSP USA
Project Manager	DELLA KOENIG, PE
Regional Examiner	REGIONAL EXAMINER
Regional Supervisor	KYLE HEMP, PE

APPROVED FOR THE DEPARTMENT

DATE: Digitally signed by Della Koenig P.E. Date: 2024.07.24 10:24:41-05'00' (Signature)

E

2

STANDARD ABBREVIATIONS

AC	ACRE	INL	INLET
AGG	AGGREGATE	INV	INVERT
AH	AHEAD	JCT	JUNCTION
AADT	ANNUAL AVERAGE DAILY TRAFFIC	LT	LEFT
ASPH	ASPHALTIC	L	LENGTH OF CURVE
AVG	AVERAGE	LF or LIN FT	LINEAR FOOT
BK	BACK	LS	LUMP SUM
BAD	BASE AGGREGATE DENSE	NC	NORMAL CROWN
BM	BENCH MARK	N	NORTH
BR	BRIDGE	NB	NORTHBOUND
CL or C/L	CENTER LINE	NO	NUMBER
CE	COMMERCIAL ENTRANCE	PT	POINT
CONC	CONCRETE	PC	POINT OF CURVATURE
CO	COUNTY	PI	POINT OF INTERSECTION
CTH	COUNTY TRUNK HIGHWAY	PT	POINT OF TANGENCY
CR	CREEK	PCC	PORTLAND CEMENT CONCRETE
CABC	CRUSHED AGGREGATE BASE COURSE	LB	POUND
CSD	COMMUNITY SENSITIVE DESIGN	PE	PRIVATE ENTRANCE
CY or CUYD	CUBIC YARD	R	RADIUS
CULV	CULVERT	RL or R/L	REFERENCE LINE
CP	CULVERT PIPE	RT	RIGHT
C & G	CURB AND GUTTER	R/W	RIGHT-OF-WAY
D	DEGREE OF CURVE	RD	ROAD
DIA	DIAMETER	SHLDR	SHOULDER
DISCH	DISCHARGE	SB	SOUTHBOUND
E	EAST	SF or SQ FT	SQUARE FEET
EB	EASTBOUND	SY or SQ YD	SQUARE YARD
EL or ELEV	ELEVATION	SDD	STANDARD DETAIL DRAWINGS
EW	ENDWALL	STH	STATE TRUNK HIGHWAYS
ENT	ENTRANCE	SE	SUPERELEVATION
EXC	EXCAVATION	T	TANGENT
EX	EXISTING	TEMP	TEMPORARY
FERT	FERTILIZER	TWLTL	TWO-WAY LEFT-TURN LANE
FE	FIELD ENTRANCE	UG	UNDERGROUND
FL or F/L	FLOW LINE	USH	UNITED STATES HIGHWAY
FT	FOOT	V	VELOCITY OR DESIGN SPEED
HE	HIGHWAY EASEMENT	VC	VERTICAL CURVE
HMA	HOT MIX ASPHALT	WB	WESTBOUND
CWT	HUNDREDWEIGHT	YD	YARD

GENERAL NOTES

- ALL RADII ARE MEASURED TO EDGE OF PAVEMENT UNLESS OTHERWISE SHOWN OR NOTED ON THE PLAN.
- TYPICAL SECTIONS SHOW THE GENERAL FEATURES THROUGHOUT THE PROJECT. PAVEMENT SLOPES, TERRACE SLOPES, ETC., MAY VARY WITHIN THE LIMITS OF THE SECTION.
- NO TREES OR SHRUBS SHALL BE REMOVED UNLESS SUCH TREES OR SHRUBS HAVE BEEN DESIGNATED FOR REMOVAL BY THE ENGINEER.
- DISTURBED AREAS WITHIN THE RIGHT OF WAY ARE TO BE SALVAGED TOPSOILED, FERTILIZED, SEEDED, AND MULCHED OR E-MAT AS DIRECTED BY THE ENGINEER.
- CONTRACTOR SHALL MAINTAIN ACCESS TO ALL DRIVEWAYS AT ALL TIMES. IN SITUATIONS WHEN SIGNIFICANT WORK OPERATIONS ARE IMMEDIATELY IN FRONT OF DRIVEWAY, OWNER SHOULD BE CONTACTED PRIOR TO REMOVAL SO ARRANGEMENTS CAN BE MADE.
- WHEN PORTIONS OF EXISTING ASPHALTIC SURFACES ARE TO BE REMOVED TO ACCOMMODATE NEW CONSTRUCTION, THE LINE OF SUCH REMOVAL SHALL BE NEATLY DELINEATED WITH A SAW CUT JOINT THROUGH THE ASPHALTIC SURFACE SO THAT REMOVAL OF THE ASPHALT SHALL BE ACCOMPLISHED WITHOUT DAMAGE TO REMAINING PORTIONS. THE LOCATION OF SAW JOINTS AND THE AMOUNT REMOVED AT SIDE ROADS WILL BE DETERMINED IN THE FIELD BY THE ENGINEER.
- PAVING LIMITS ARE TO BE DETERMINED BY THE ENGINEER.
- SURFACE WEIGHT CALCULATIONS FOR ASPHALT PAVING ARE BASED ON 112 LB/SY/IN.
- TACK COAT TO BE APPLIED AT A RATE OF 0.05 GAL/SY BETWEEN LAYERS OF HMA PAVEMENT.
- MATERIAL CALCULATIONS FOR BASE AGGREGATE 1 1/4-INCH ARE BASED ON 2.0 TON/CY.
- CROSS SLOPES AS SHOWN ON THE TYPICAL SECTION WILL VARY AT THE INTERSECTIONS.
- EXACT LOCATIONS OF ENTRANCES SHALL BE AS DIRECTED BY THE ENGINEER IN THE FIELD.
- THE LOCATIONS OF EXISTING AND PROPOSED UTILITY INSTALLATIONS AS SHOWN ON THE PLANS ARE APPROXIMATE. THERE MAY BE OTHER UTILITY INSTALLATIONS WITHIN THE PROJECT AREA THAT ARE NOT SHOWN.
- PRIOR TO ORDERING DRAINAGE PIPES, THE CONTRACTOR SHALL FIELD VERIFY RELATED DRAINAGE INFORMATION IN THE PLAN WITH THE ENGINEER.
- WHEN THE QUANTITY OF BASE AGGREGATE IS MEASURED FOR PAYMENT BY THE TON OR CUBIC YARD, THE DEPTH OR THICKNESS OF THE LAYER SHOWN ON THE PLANS IS APPROXIMATE AND THE ACTUAL THICKNESS WILL DEPEND ON THE DISTRIBUTION OF THE MATERIAL AS DIRECTED BY THE ENGINEER.
- RIGHT OF WAY SHOWN ON PLAN IS APPROXIMATE AND BASED OFF OF THE LA CROSSE COUNTY GIS WEBSITE.
- CONTRACTOR IS RESPONSIBLE FOR ANY DISTURBANCE OUTSIDE OF NORMAL CONSTRUCTION LIMITS.
- METRONET INSTALLED UNDERGROUND FIBER OPTIC LINE ALONG PROJECT CORRIDOR FOLLOWING TOPOGRAPHIC SURVEY. BASED ON MAPS PROVIDED, FACILITIES ARE UNDER NORTH SIDE TERRACE AND CROSSES AT WEST LOSEY BLVD APPROACH AND EAST 22ND ST S APPROACH. THEIR FACILITIES ARE NOT DEPICTED ON THE PLAN.

2

BORINGS			
	1	2	3
APPROX. LOCATION	28+70 +/-	32+50 +/-	35+10 +/-
DEPTH	8" ASPHALT 5" CLAYEY SAND 4.5' POORLY GRADED SAND	3" ASPHALT 10" POORLY GRADED SAND WITH GRAVEL 5' POORLY GRADED SAND	5" ASPHALT 9.5" POORLY GRADED SAND WITH GRAVEL 4.5' POORLY GRADED SAND

ORDER OF TYPICAL SECTION & DETAIL SHEETS

1. GENERAL NOTES
2. PROJECT OVERVIEW
3. TYPICAL SECTIONS
4. CONSTRUCTION DETAILS
5. REMOVAL PLAN
6. PAVING DETAILS
7. CURB RAMP DETAILS
8. EROSION CONTROL
9. STORM SEWER PLAN AND PROFILE
10. UTILITY PLAN
11. PERMANENT SIGNING & PAVEMENT MARKING
12. TRAFFIC CONTROL & STAGING
13. DETOUR PLAN
14. ALIGNMENT DETAIL

DIGGERS HOTLINE
Dial 811 or (800) 242-8511
www.DiggersHotline.com

RUNOFF COEFFICIENT TABLE

A	HYDROLOGIC SOIL GROUP											
	B		C							D		
	SLOPE RANGE (PERCENT)			SLOPE RANGE (PERCENT)			SLOPE RANGE (PERCENT)			SLOPE RANGE (PERCENT)		
LAND USE:	0-2	2-6	6 & OVER	0-2	2-6	6 & OVER	0-2	2-6	6 & OVER	0-2	2-6	6 & OVER
ROW CROPS	.08 .22	.16 .30	.22 .38	.12 .26	.20 .34	.27 .44	.15 .30	.24 .37	.33 .50	.19 .34	.28 .41	.38 .56
MEDIAN STRIP-TURF	.19 .24	.20 .26	.24 .30	.19 .25	.22 .28	.26 .33	.20 .26	.23 .30	.30 .37	.20 .27	.25 .32	.30 .40
SIDE SLOPE: TURF			.25 .32			.27 .34			.28 .36			.30 .38
PAVEMENT:												
ASPHALT	.70 - .95											
CONCRETE	.80 - .95											
BRICK	.70 - .80											
DRIVES, WALKS	.75 - .85											
ROOFS	.75 - .95											
GRAVEL ROADS, SHOULDERS	.40 - .60											

TOTAL PROJECT AREA = 1.23 ACRES
TOTAL AREA EXPECTED TO BE DISTURBED BY CONSTRUCTION ACTIVITIES = 0.99 ACRES

AREA CONTACTS

CITY ENGINEER
STEPHANIE SWARD
400 LA CROSSE ST
LA CROSSE, WI 54601
PHONE: (608) 789-7505
SWARDS@CITYOFLACROSSE.ORG

WISDOT PROJECT MANAGER
DELLA KOENIG
2101 WRIGHT ST
MADISON, WI 53704
(608) 246-7963
DELLA.KOENIG@DOT.WI.GOV

DESIGN CONTACT
RYAN MCKANE
WSP USA
831 CRITTER CT, SUITE 400
ONALASKA, WI 54650
PHONE: (608) 667-4371
RYAN.MCKANE@WSP.COM

WDNR: LA CROSSE COUNTY
KAREN KALVELAGE
DNR SERVICE CENTER
3550 MORMON COULEE RD
LA CROSSE, WI 54601
PHONE: (608) 785-9115
KAREN.KALVELAGE@WISCONSIN.GOV

UTILITY CONTACTS

CITY OF LA CROSSE
SEWER, WATER & COMMUNICATION LINE
MATTHEW GALLAGER
400 LA CROSSE ST.
LA CROSSE, WI 54601
GALLAGERM@CITYOFLACROSSE.ORG

SPECTRUM - COMMUNICATION LINE
PERRY MCCLELLAN
1228 12TH AVE. SOUTH
ONALASKA, WI 54650
(608) 317-6213
PERRY.MCCLELLAN@CHARTER.COM

XCEL ENERGY - ELECTRICITY
JASON MCROBERTS
3215 COMMERCE ST.
LA CROSSE, WI. 54603
(608) 789-3689
JASON.L.MCROBERTS@XCELENERGY.COM

XCEL ENERGY - GAS
JOHN KELSER
1414 W HAMILTON AVE
P.O. BOX 8
EAU CLAIRE, WI 54702-0008
(715) 737-1431
JOHN.KELSER@XCELENERGY.COM

BRIGHTSPEED - COMMUNICATION LINE
TOM MURRAY
1905 WARD AVENUE S
LA CROSSE, WI 54601
(608) 780-0895
TOM.L.MURRAY@BRIGHTSPEED.COM

METRONET - COMMUNICATION LINE
GLENN LEFEBVRE
3701 COMMUNICATIONS WAY
EVANSVILLE, IN 47715
(231) 387-0823
GLENN.LEFEBVRE@METRONET.COM

NOTE:
AERIAL IMAGERY IS FROM 2023.

PROJECT NO: 5991-07-78 & 79	HWY: GREEN BAY STREET	COUNTY: LA CROSSE	PROJECT OVERVIEW	SHEET 4	E

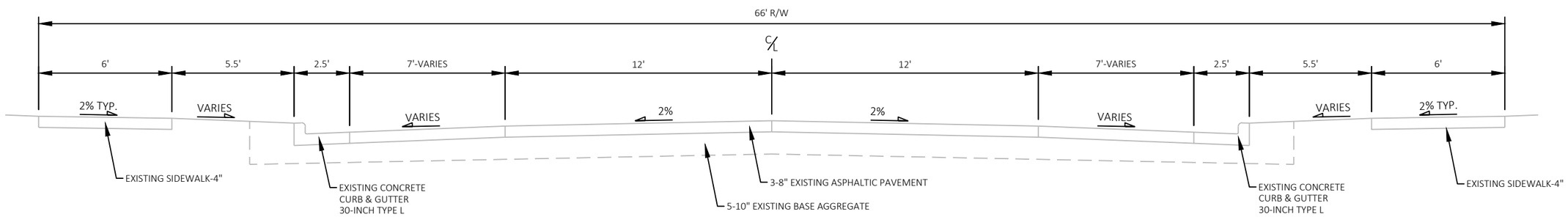

TYPICAL EXISTING SECTION - GREEN BAY STREET

STA. 28+22.33 - STA. 36+35.12

NOTES: SEE GENERAL NOTES FOR BORING TABLE
AND APPROXIMATE MATERIAL DEPTHS.

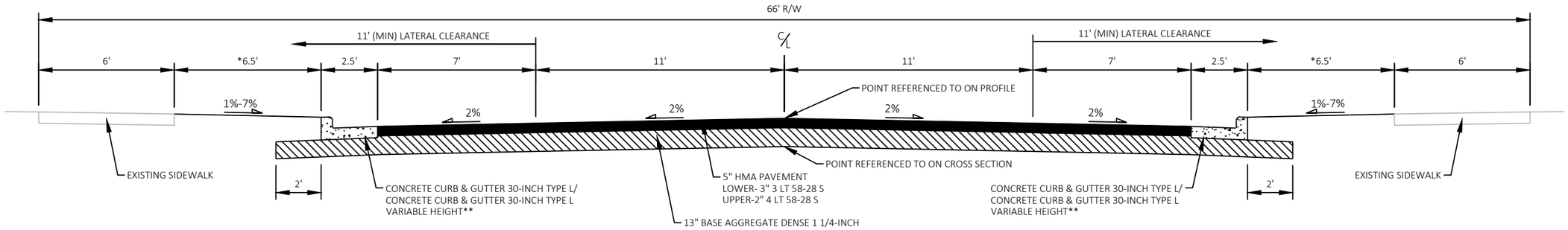

TYPICAL PROPOSED SECTION - GREEN BAY STREET

STA. 28+22.33- STA. 34+43

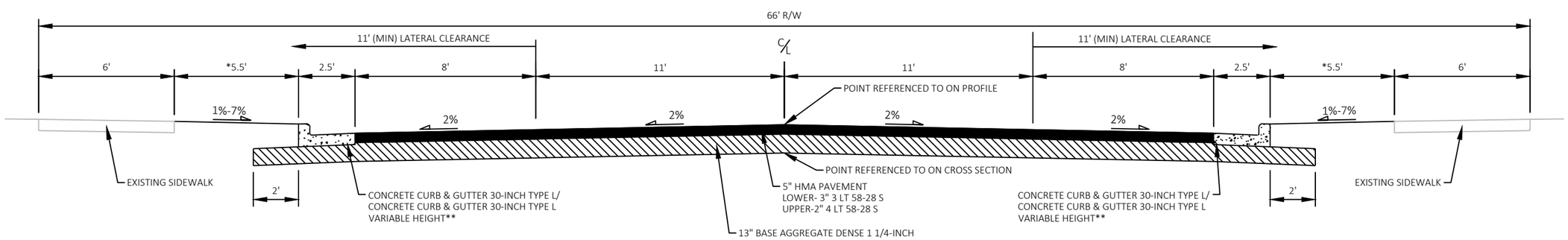

TYPICAL PROPOSED SECTION - GREEN BAY STREET (WIDENED)

STA. 34+43 - STA. 36+35.12

*USE SALVAGED TOPSOIL, EROSION MAT URBAN CLASS I TYPE B, SEEDING MIXTURE NO. 40, SEED WATER & FERTILIZER TYPE B WHERE REQUIRED BY ENGINEER. PAID FOR AS FINISHING FOR CURB AND GUTTER.

**SEE PLAN FOR VARIABLE HEIGHT CURB LOCATIONS

DRAWINGS NOT TO SCALE

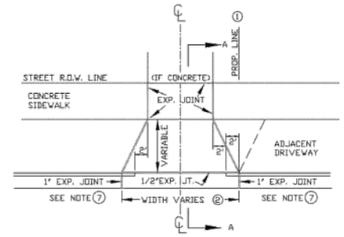

PLAN VIEW

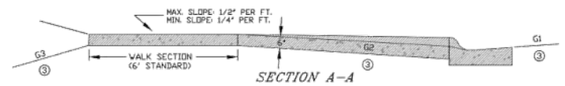

SECTION A–A

1. DRIVE SECTION SHALL NOT OVERLAP PROPERTY LINE EXTENDED, EXCEPT WHERE PERMITTED BY THE ENGINEER, OR WHEN A JOINT DRIVEWAY AGREEMENT IS EXECUTED BY OWNERS OF ADJACENT PROPERTIES.
2. MAX. DRIVEWAY WIDTH AT THE CURB AND SIDEWALK IS SET FORTH IN CITY ORDINANCE 5.03.
3. THE BREAKOVER ANGLE (CAUSE OF CARS BOTTOMING) BECOMES CRITICAL WHEN THE ALGEBRAIC DIFFERENCE OF GRADES (G1, G2, & G3) EXCEEDS 11%.
4. A REINFORCED DRIVE SECTION IS **REQUIRED FOR CURB & GUTTER IN AREAS ZONED INDUSTRIAL OR COMMERCIAL.**
5. BACK OF CURB TO FRONT OF CONC. SIDEWALK MUST BE CONCRETE, BRICK OR ASPHALTIC BITUMINOUS.
6. **MECHANICAL COMPACTION** OF SUBSOIL IN LAYERS LESS THAN 12" TO ACHIEVE MINIMUM COMPACTION OF 95% OF MAXIMUM DENSITY FROM MODIFIED PROCTOR **IS REQUIRED**. (INCLUDING STREET SIDE AFTER FORMS ARE REMOVED)
7. EXPANSION JOINT IS REQUIRED AT BOTH ENDS OF DRIVEWAY WHEN ONLY DRIVEWAY IS INSTALLED OR REPLACED. WHEN ENTIRE BLOCK OF CURB & GUTTER IS INSTALLED THE EXPANSION JOINT AT DRIVEWAY ENDS MAY BE OMITTED.

NOTE: TURNING OF 2" DIAMETER DRIVEWAY RETURNS IN LIEU OF DIMINISHING HEAD AS SHOWN IS PERMITTED IF DESIRED BY PROPERTY OWNER. INSTALLATION OF A DRIVEWAY BY REMOVING EXISTING CURB HEAD ONLY IS NOT ALLOWED. ENTIRE EXISTING C&G MUST BE REMOVED FOR NEW DRIVEWAYS. REMOVAL OF A MINIMUM 12" WIDTH OF BITUMINOUS TO INSTALL FRONT FORMS IS REQUIRED.

STANDARD DRIVEWAY DETAIL

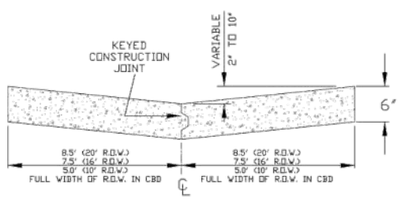

TYPICAL SECTION OF ALLEY PAVEMENT

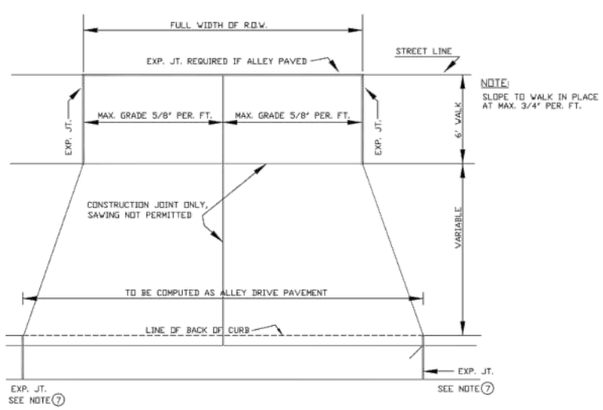

STANDARD ALLEY DRIVEWAY 7" THICK

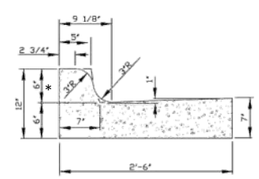

CONCRETE CURB & GUTTER 30-INCH, TYPE L

CITY OF LA CROSSE DETAIL FOR CURB & GUTTER

*CONCRETE CURB & GUTTER 30-INCH TYPE L VARIABLE HEIGHT (4" MIN. CURB HEIGHT). SEE PLAN FOR LOCATIONS

NOTE:
WITH REFERENCE TO SAWING OF CONTRACTION JOINTS ON SLIP FORM CURB & GUTTER, & CURB, PAGE 9.3, STANDARD SPEC'S THE SAW CUT SHALL BE A MINIMUM 1/8" WIDE X 1" DEEP.

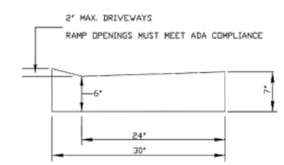

CONCRETE CURB & GUTTER 30-INCH, TYPE L

MOUNTABLE CURB AT DRIVEWAYS

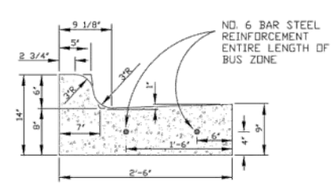

REINFORCED CONCRETE CURB & GUTTER

CITY OF LA CROSSE DETAIL FOR REINFORCED CONCRETE CURB & GUTTER FOR BUS STOP LOCATIONS.
SEE PLAN FOR LOCATIONS

PROJECT No.
LOCATION
CONCRETE–PAVEMENT DETAILS
RESOLUTION
DATE

ENGINEERING DEPT.
City of LaCrosse, Wis.

FIELD BOOK		BY	DATE
NUMBER	SURVEYED		
	DRAWN PRELIMINARY / FINAL		
	CHECKED		
PAGE	APPROVED		
	REVISIONS		01/21

SCALE: NONE
SHEET NO. TOTAL SHEETS

PROJECT NO: 5991-07-78 & 79	HWY: GREEN BAY STREET	COUNTY: LA CROSSE	CONSTRUCTION DETAILS	SHEET 7	E

2

DRAWING
NOT TO SCALE

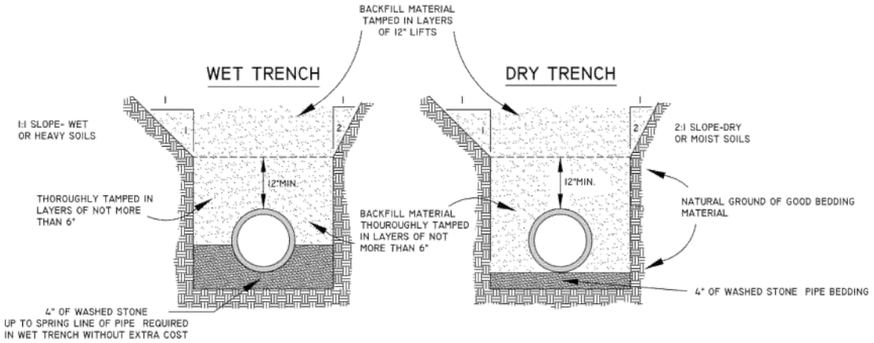

DETAILS OF SEWER TRENCHES (A / D-2)

SEWER PIPE JOINT MATERIALS
CONCRETE PIPE-RUBBER GASKET (ASTM C-443)
PVC PIPE- ELASTOMETRIC GASKET (ASTM D-3212 & F-477)

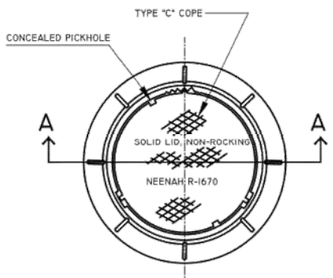

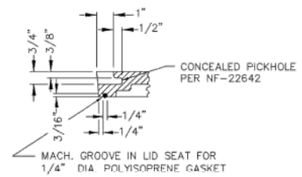

SELF-SEAL DETAIL

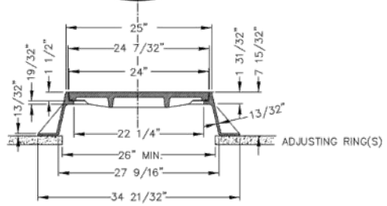

A – A

DETAIL OF MANHOLE FRAME & COVER
(MINIMUM WEIGHT 324 LBS. TOTAL)
NEENAH R-1670 OR EQUAL

NOTE
OPENING FOR FRAME & COVER SHALL BE CENTERED ON MANHOLES WITH FLAT TOPS.

(B / D-2)

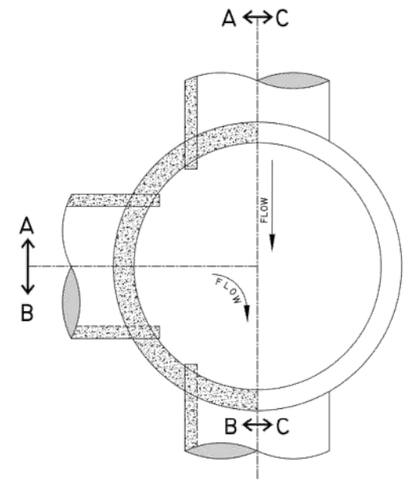

NOTE (1)
TOP OF MANHOLE TO BE 12" BELOW FINISHED GRADE. ADJUSTMENT TO BE OF PRE-CAST CONCRETE RINGS WITH BUTYL GASKETS (ROPE) BETWEEN RINGS AND MORTER BETWEEN CASTING & TOP RING ONLY. (3/4" MORTER MAX.)

NOTE (2)
NO STEPS ARE TO BE INSTALLED IN MANHOLES

NOTE (3)
MANHOLE TO BE CONSTRUCTED OF PRE-CAST CONCRETE (ASTM C-478).

NOTE (4)
LIFT HOLES TO BE MANUFACTURED WATER PROOF

NOTE (5)
INVERT TO BE FACTORY MOLDED TO PIPE DIA. OR FILLED TO DIRECT FLOW WITH 3/4" MAXIMUM AGGREGATE, 3500 P.S.I. CONCRETE IF M.H. IS NOT REPLACED

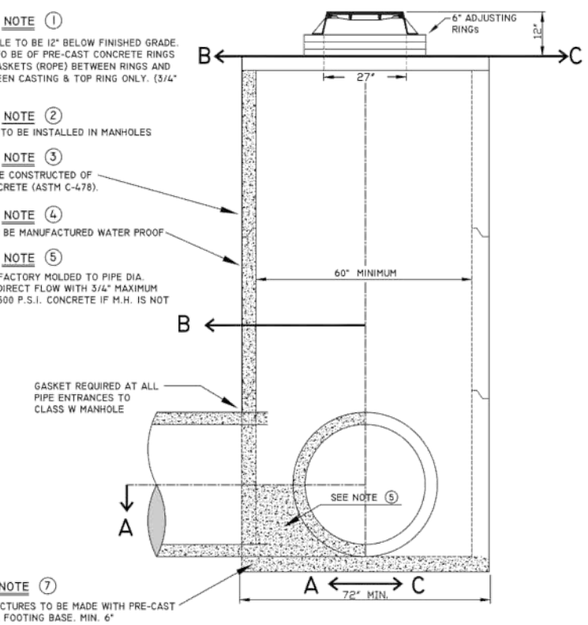

NOTE (7)
ALL STRUCTURES TO BE MADE WITH PRE-CAST INTEGRAL FOOTING BASE. MIN. 6"

(D / D-2) DETAILS OF STANDARD MANHOLE FOR 36" PIPE OR LARGER

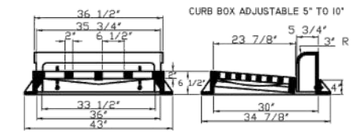

DETAILS OF TYPE "A" CATCH BASIN CASTING
NEENAH R-3246-A OR EQUAL
MINIMUM WEIGHT 649 LBS. TOTAL

(F / D-2)

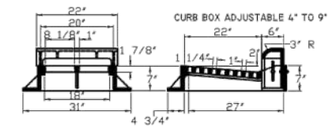

DETAILS OF TYPE "B" CATCH BASIN CASTING
NEENAH R-3234-B1 OR EQUAL
MINIMUM WEIGHT 400 LBS. TOTAL

NOTE: " DUMP NO WASTE DRAINS TO RIVER"
SHALL BE MOLDED IN ALL CASTINGS FACE

NOTE (8)
RECTANGULAR OPENING IN TOP
"B" TYPE CASTING - 27" X 22"
"A" TYPE CASTING - 36" X 30"

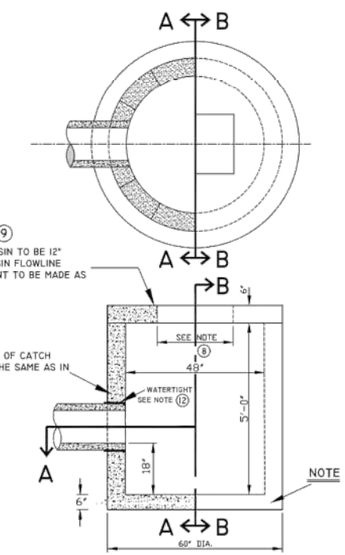

NOTE (9)
TOP OF CATCH BASIN TO BE 12" BELOW CATCH BASIN FLOWLINE GRADE ADJUSTMENT TO BE MADE AS IN NOTE (1)

CONSTRUCTION OF CATCH BASIN TO BE THE SAME AS IN NOTE (5)

(E / D-2) DETAIL OF TYPE "A" OR "B" CATCH BASIN

PROJECT No.	STORM SEWER DETAILS
LOCATION	D-2
RESOLUTION	DATE

ENGINEERING DEPT.
City of LaCrosse, Wis.

				BY	DATE
FIELD BOOK	SURVEYED				
NUMBER	DRAWN	PRELIMINARY			
		FINAL			
	CHECKED				
	APPROVED				
PAGE	REVISIONS	M.D.F.	3/83	J.M.C.	6/2015
		J.M.C.	9/83	BFM	2/2019
		M.D.F.	4/86	J.M.C.	8/2019
SCALE: NONE		M.D.F.	12/10	J.M.C.	11/2023
		M.D.F.	4/13		
SHEET NO.		TOTAL SHEETS			

2

PROJECT NO: 5991-07-78 & 79	HWY: GREEN BAY STREET	COUNTY: LA CROSSE	CONSTRUCTION DETAILS	SHEET 8	E

FILE NAME : W:\30902576.000; 5991-07-77 78 79 GREEN BAY ST\CAD\59910777\SHEETS\021001-CD.DWG
LAYOUT NAME - 03
PLOT DATE : 7/24/2024 2:41 PM PLOT BY : MARZOLF, ROBBI PLOT NAME : PLOT SCALE : 1 IN:10 FT
WISDOT/CADDS SHEET 42

DETAIL OF SERVICE SHUT-OFF

SERVICE PIPE	CORP. STOP	CURB STOP	SERVICE BOX
1"	1"	1"	2 1/2"
1 1/4"	1 1/4"	1 1/4"	3"
1 1/2"	1 1/4"X 1 1/2"	1 1/2"	3"
2"	1 1/2"X 2"	2"	3"

CURB BOX : SEVEN FOOT BOX WITHOUT ROD-MUELLER # H10314, MC DONALD # 5601 OR EQUAL

54" or 57" ROD : MUELLER # 82868, MC DONALD # 5660 OR EQUAL

LID : MUELLER # 87081, MC DONALD # 5601-L OR EQUAL

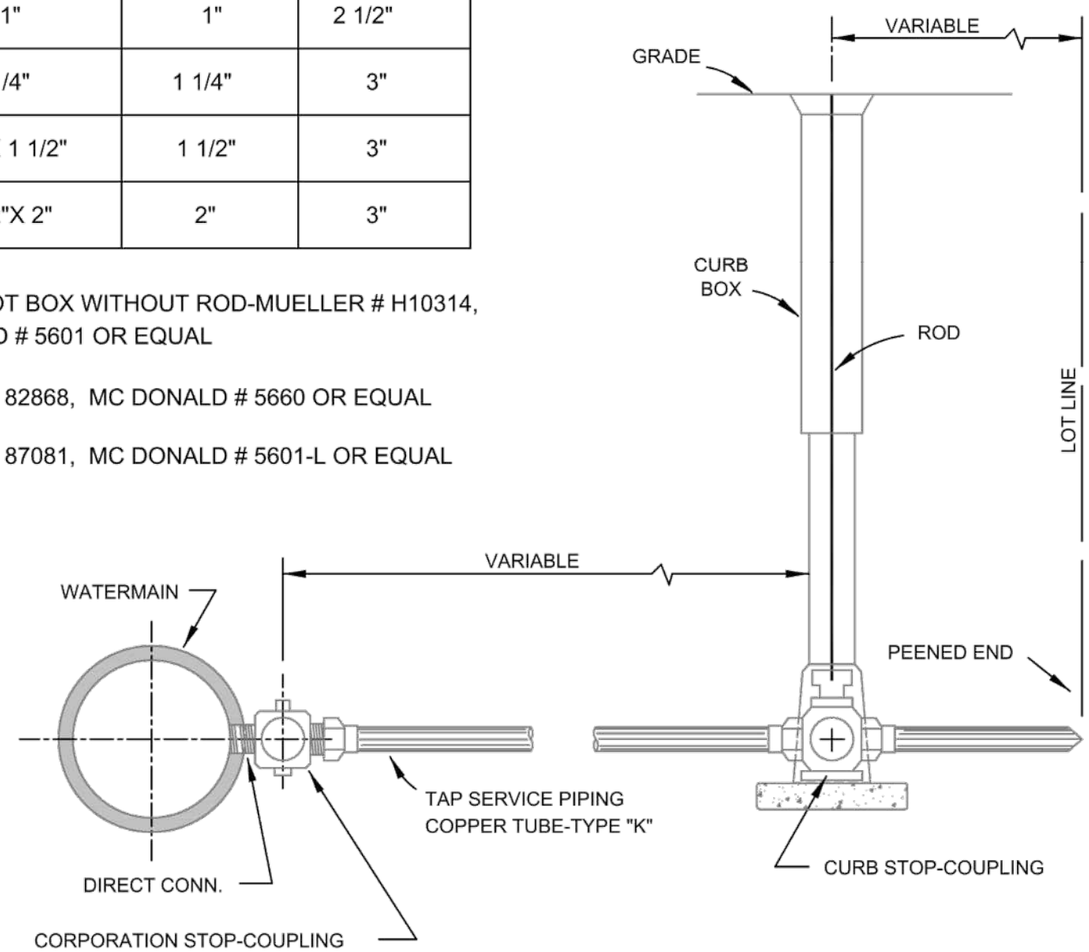

NOTE:

SERVICES SMALLER THAN 1" ARE TO BE TAPPED 45° TO VERTICAL ON WATERMAIN

PROJECT No.

LOCATION

WATERMAIN DETAILS

RESOLUTION DATE

ENGINEERING DEPT.
City of La Crosse, WI.

FIELD BOOK	SURVEYED	BY	DATE
NUMBER	DRAWN PRELIMINARY FINAL		
	CHECKED		
	APPROVED		
PAGE	REVISIONS		01/2021

SHEET NO. D-3 TOTAL SHEETS

PROJECT NO: 5991-07-78 & 79	HWY: GREEN BAY STREET	COUNTY: LA CROSSE	CONSTRUCTION DETAILS	SHEET 9	E

FILE NAME : W:\30902576.000; 5991-07-77 78 79 GREEN BAY ST\CAD\59910777\SHEETS\021001-CD.DWG
LAYOUT NAME - 04
PLOT DATE : 7/24/2024 2:41 PM PLOT BY : MARZOLF, ROBBI PLOT NAME : PLOT SCALE : 1 IN:10 FT

WISDOT/CADDS SHEET 42

2

DRAWING NOT TO SCALE

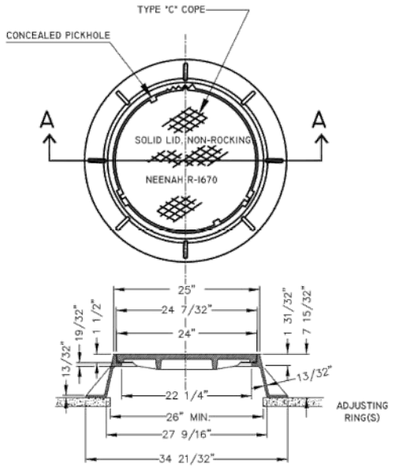

A – A

DETAIL OF MANHOLE FRAME & COVER

(MINIMUM WEIGHT 324 LBS. TOTAL)
NEENAH R-1670 OR EQUAL

B / D-6

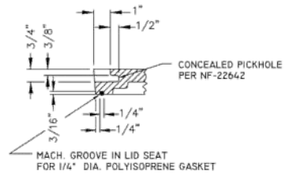

SELF-SEAL DETAIL

NOTE

OPENING FOR FRAME & COVER SHALL BE CENTERED ON MANHOLES WITH FLAT TOPS.

SEWER PIPE JOINT MATERIALS

CONCRETE PIPE-RUBBER GASKET (ASTM C-443)
PVC PIPE- ELASTOMETRIC GASKET (ASTM D-3212 & F-477)

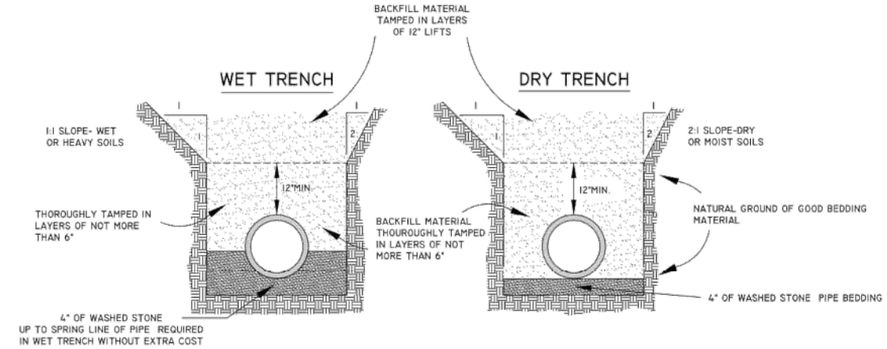

DETAILS OF SEWER TRENCHES

A / D-6

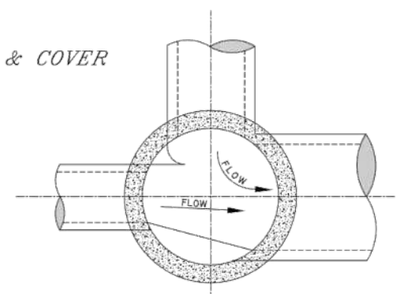

A – A

NOTE ⑥

NO ECCENTRIC MANHOLE CONE SECTIONS PERMITTED

NOTE ①

TOP OF MANHOLE TO BE 12" BELOW FINISHED GRADE. ADJUSTMENT TO BE OF PRE-CAST CONCRETE RINGS WITH BUTYL GASKETS (ROPE) BETWEEN RINGS AND MORTER BETWEEN CASTING & TOP RING ONLY. (3/4" MORTER MAX.)

NOTE ②

NO STEPS ARE TO BE INSTALLED IN MANHOLES

NOTE ③

MANHOLE TO BE CONSTRUCTED OF PRE-CAST CONCRETE (ASTM C-478).

NOTE ④

LIFT HOLES TO BE MANUFACTURED WATER PROOF

NOTE ⑤

INVERT TO BE FACTORY MOLDED TO PIPE DIA. OR FILLED TO DIRECT FLOW WITH 3/4" MAXIMUM AGGREGATE, 3500 P.S.I. CONCRETE IF M.H. IS NOT REPLACED

NOTE ⑫

THE CONNECTION OF ALL PVC SANITARY SEWER PIPE, SIZE 6" TO 30", TO PRECAST MANHOLES OR OTHER STRUCTURES SHALL EMPLOY A WATERTIGHT, FLEXABLE PIPE-TO-MANHOLE CONNECTOR

THE CONNECTOR SHALL CONSIST OF A SINGLE RUBBER GASKET, SHALL BE CONSTRUCTED SOLELY OF SYNTHETIC OR NATURAL RUBBER, SHALL MEET/EXCEED THE REQUIREMENTS OF ASTM C 923, AND SHALL HAVE A MINIMUM TENSILE STREGHTH OF 1600 PSI

THE CONNECTOR SHALL BE THE SOLE ELEMENT RELIED ON TO ASSURE A FLEXIBLE, WATERTIGHT SEAL OF THE PIPE TO THE STRUCTURE

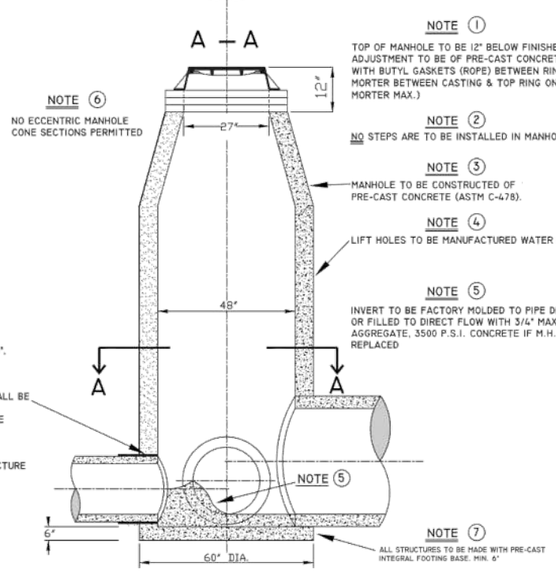

NOTE ⑦

ALL STRUCTURES TO BE MADE WITH PRE-CAST INTEGRAL FOOTING BASE. MIN. 6"

C / D-6 DETAILS OF STANDARD MANHOLE FOR 30" PIPE OR SMALLER

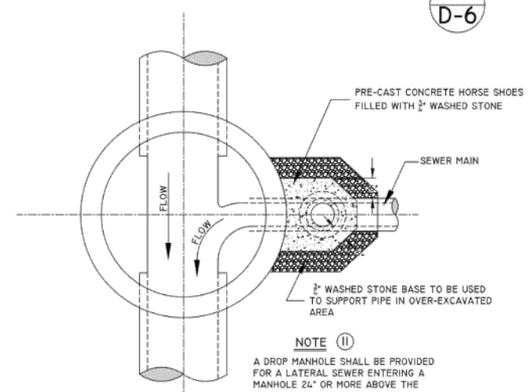

NOTE ⑪

A DROP MANHOLE SHALL BE PROVIDED FOR A LATERAL SEWER ENTERING A MANHOLE 24" OR MORE ABOVE THE MANHOLE INVERT.

A–A

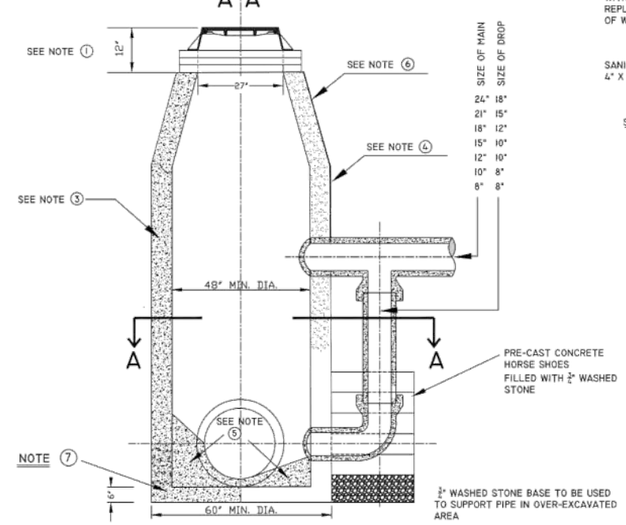

E / D-6 DETAILS OF DROP MANHOLE FOR 30" PIPE OR SMALLER

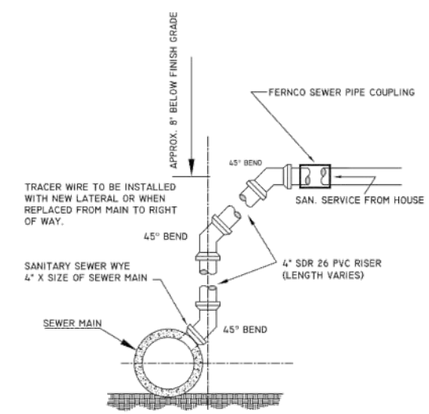

DETAILS OF RISER FOR HOUSE CONNECTION

F / D-6

PROJECT No.

SANITARY SEWER DETAILS

LOCATION

D-6

RESOLUTION DATE

ENGINEERING DEPT.
City of LaCrosse, Wis.

				BY	DATE
FIELD BOOK	SURVEYED				
	DRAWN	PRELIMINARY			
NUMBER		FINAL			
	CHECKED				
	APPROVED				
PAGE	REVISIONS	M.D.F.	3/03	J.M.C.	6/2015
		J.M.C.	9/03	BFM	8/2019
		M.D.F.	4/06	J.M.C.	8/2019
SCALE: NONE		M.D.F.	12/10	BFM	11/2019
		M.D.F.	4/13	J.M.C.	11/2023

SHEET NO. TOTAL SHEETS

2

PROJECT NO: 5991-07-78 & 79	HWY: GREEN BAY STREET	COUNTY: LA CROSSE	CONSTRUCTION DETAILS	SHEET 10	E

FILE NAME : W:\30902576.000; 5991-07-77 78 79 GREEN BAY ST\CAD\59910777\SHEETS\021001-CD.DWG
LAYOUT NAME - 05
PLOT DATE : 7/24/2024 2:44 PM PLOT BY : MARZOLF, ROBBI PLOT NAME : PLOT SCALE : 1 IN:10 FT

WISDOT/CADDS SHEET 42

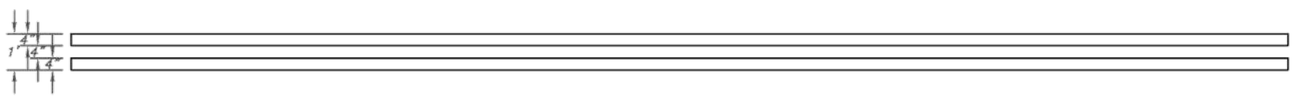

J / D-9-3 TYP. DOUBLE LINE
NOT TO SCALE

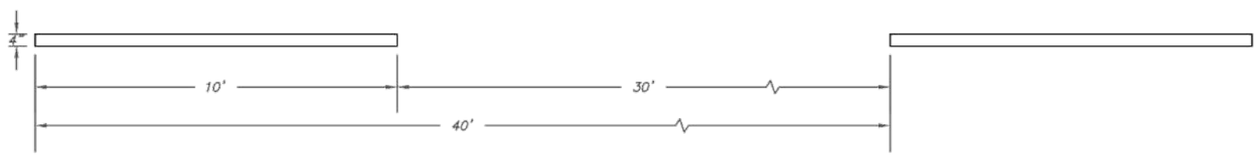

K / D-9-3 TYP. SKIP DASH
NOT TO SCALE

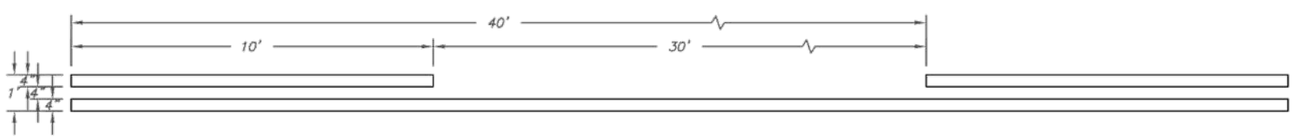

L / D-9-3 TYP. TWITAL LINE
NOT TO SCALE

MARKING LINE

CITY OF LA CROSSE DETAIL FOR MARKING LINE, PAID FOR AS MARKING LINE GROOVED WET REF EPOXY

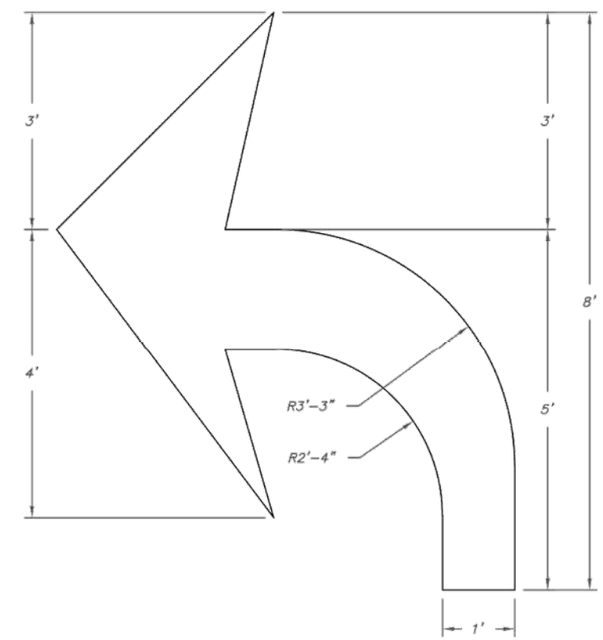

P / D-9-3 TYP. TURN ARROW
SCALE: 1" = 2'

MARKING ARROW

CITY OF LA CROSSE DETAIL FOR TURN ARROW, PAID FOR AS MARKING ARROW GROOVED EPOXY

2

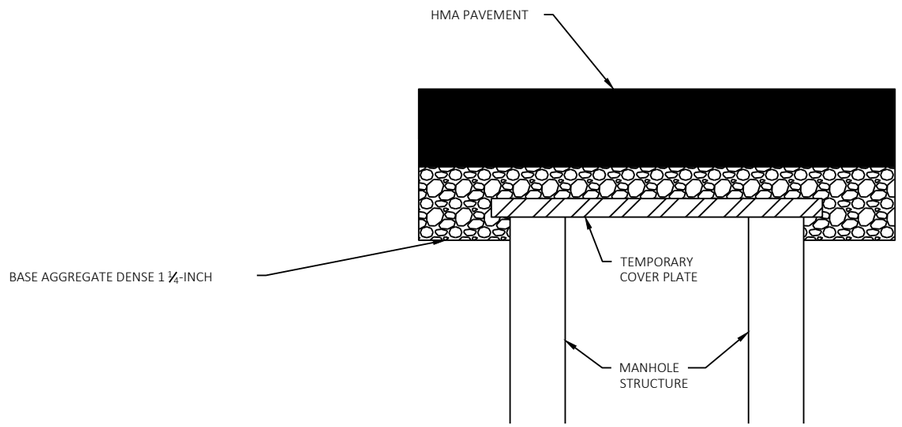

STEP 1

A. CONSTRUCT MANHOLE AND INSTALL TEMPORARY COVER PLATE

B. PLACE BASE AGGREGATE DENSE AND HMA PAVEMENT

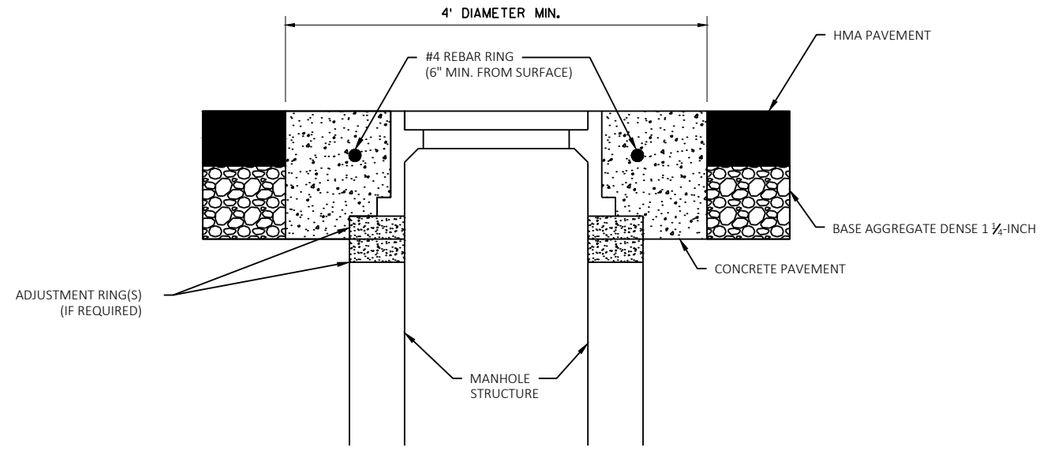

STEP 2

A. SAWCUT, EXCAVATE, AND REMOVE TEMPORARY COVER PLATE

B. INSTALL MANHOLE COVER TO FINISH GRADE

C. INSTALL REBAR RING PRIOR TO POURING CONCRETE

D. POUR CONCRETE TO MATCH FINISHED PAVEMENT GRADE

NOTES: DRAWING NOT TO SCALE.

SEE STORM SEWER PLAN AND UTILITY PLAN FOR LOCATIONS.

MATERIALS AND CONSTRUCTION METHODS TO CONFORM TO CITY OF LA CROSSE STANDARD SPECIFICATIONS AND PROCEDURE (LATEST EDITION) SECTION 150 CORE & POUR FINISHING.

CONCRETE MANHOLE COLLAR

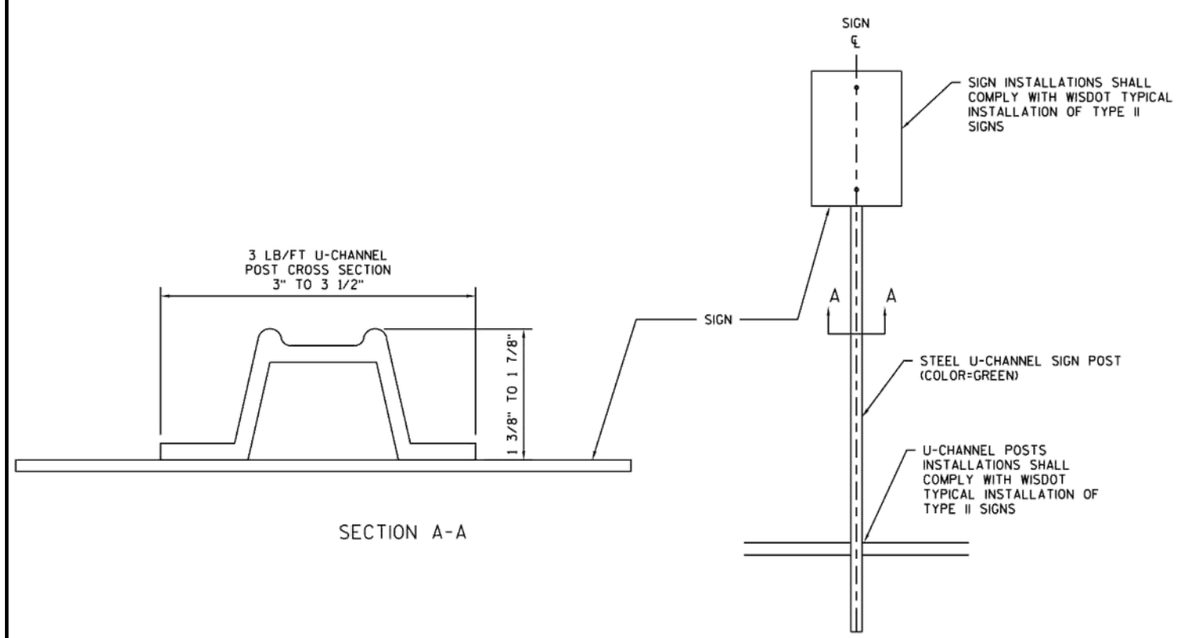

POSTS STEEL U-CHANNEL (SIZE)

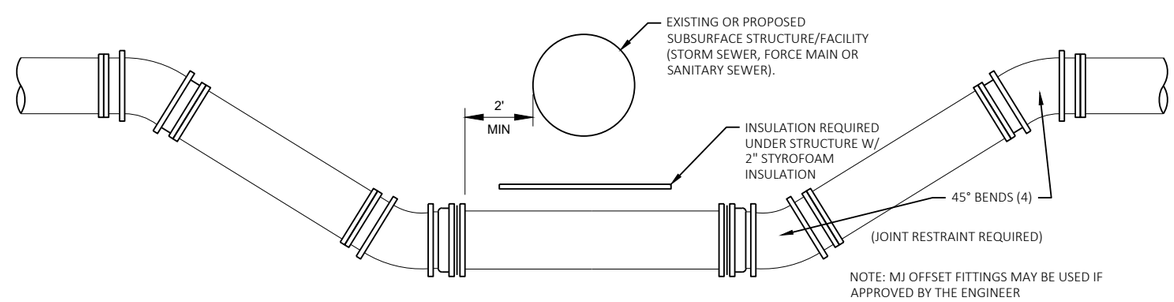

LOWERING WATER MAIN UNDER STORM/SANITARY

2

NOTE: SEE STORM SEWER PLAN AND UTILITY PLAN FOR MORE DETAILS.

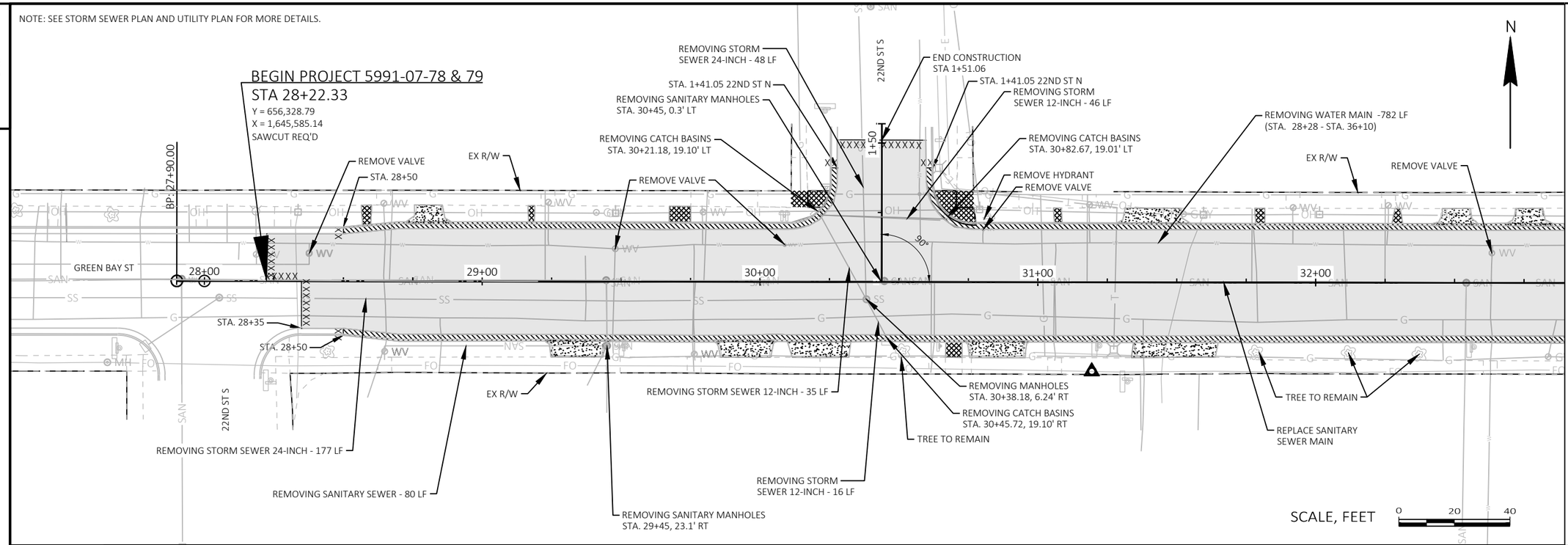

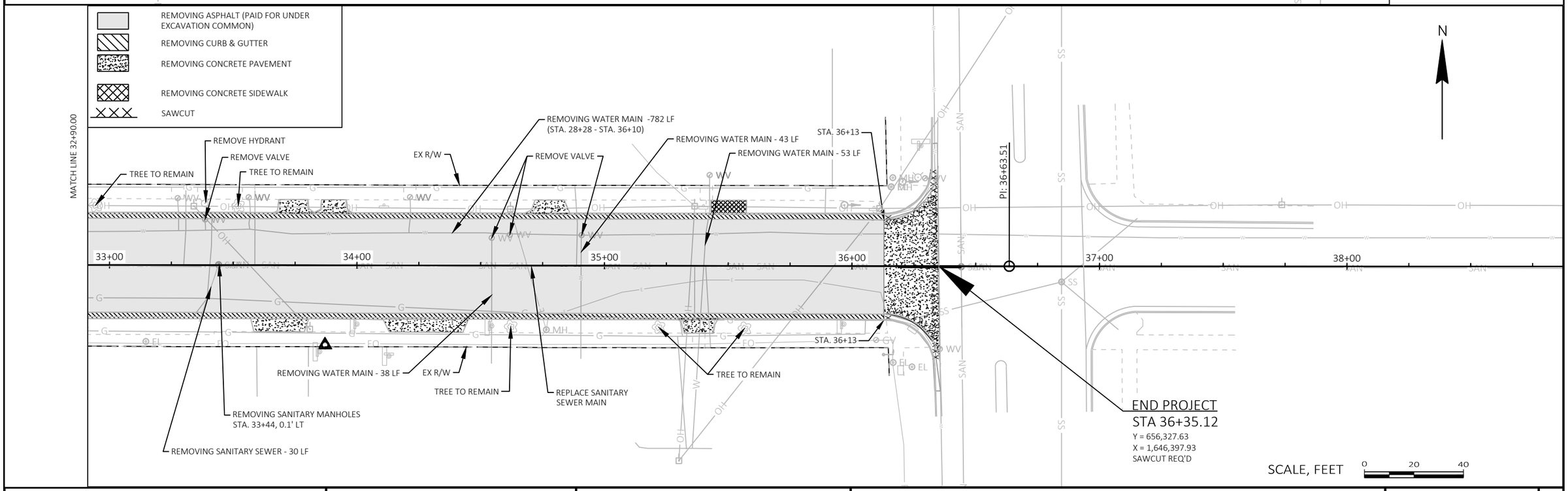

PROJECT NO: 5991-07-78 & 79	HWY: GREEN BAY STREET	COUNTY: LA CROSSE	REMOVAL PLAN	SHEET 13	E

2

CONCRETE SIDEWALK 4-INCH
CONCRETE SIDEWALK 5-INCH
CONCRETE DRIVEWAY 6-INCH
CONCRETE ALLEY

NOTES:
ALL SIDEROAD CURB RADII SHALL BE 15' TO FACE OF CURB.

ALL CURB & GUTTER IS CONCRETE CURB & GUTTER 30-INCH TYPE L UNLESS OTHERWISE SHOWN.

SIDEWALK IN TERRACE REPLACE IN KIND.

ELEVATIONS ARE AT FLAG OF CURB.

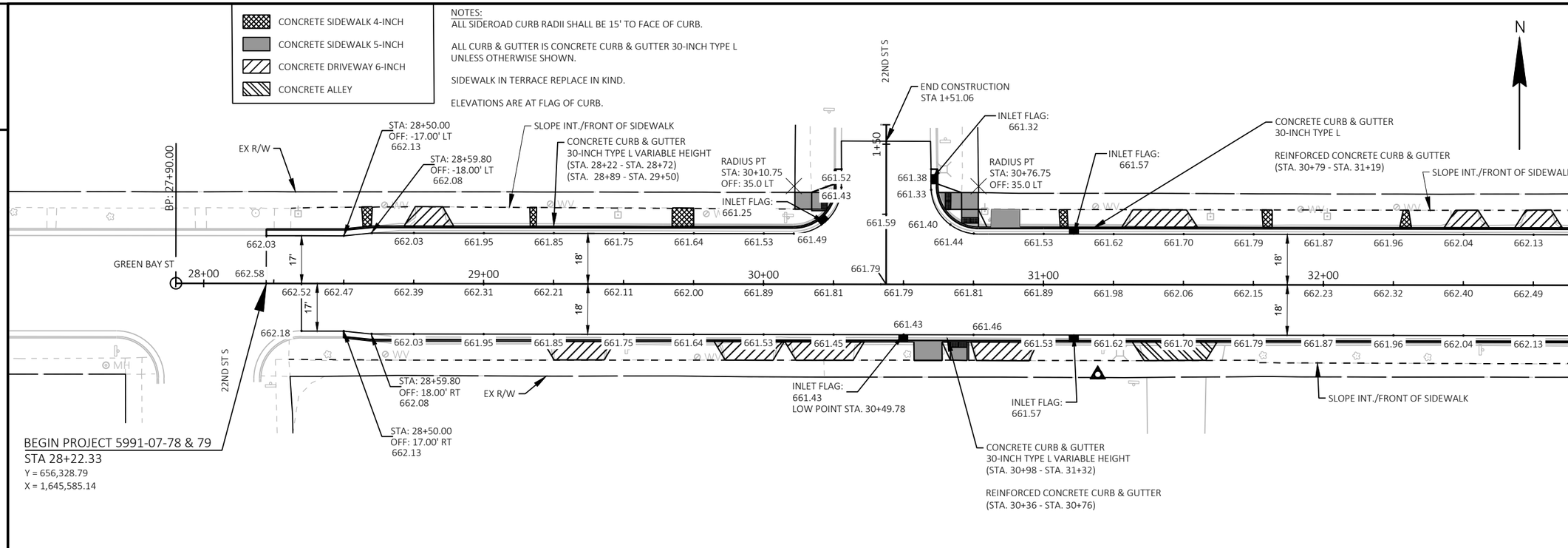

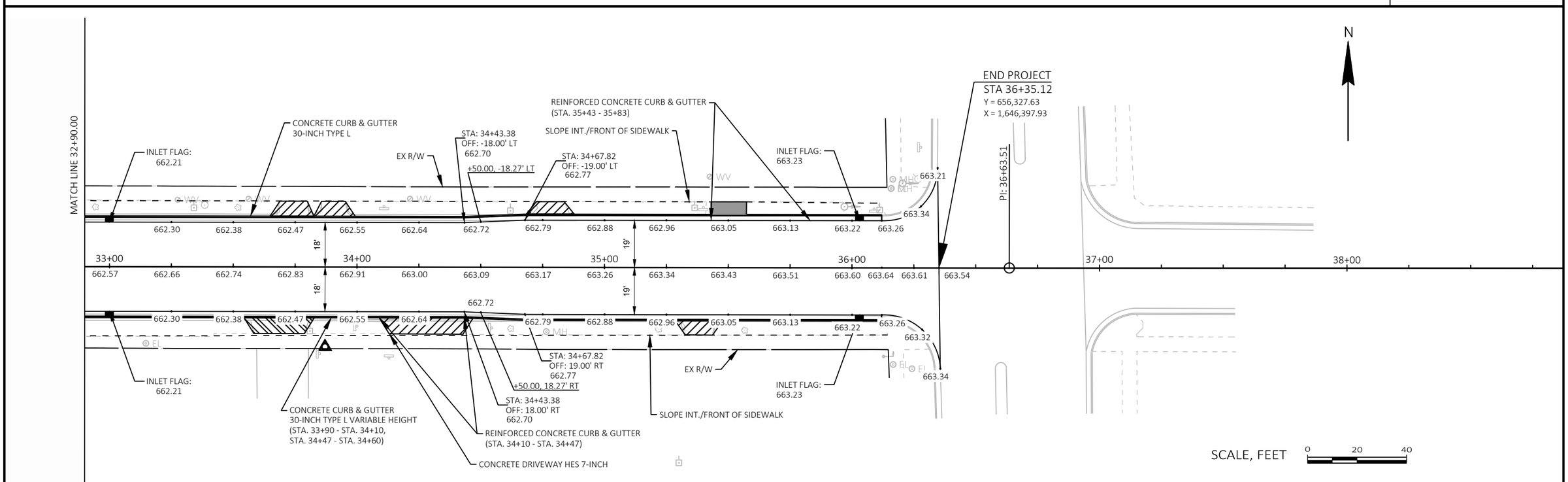

2

PROJECT NO: 5991-07-78 & 79	HWY: GREEN BAY STREET	COUNTY: LA CROSSE	PAVING DETAIL	SHEET 14	E

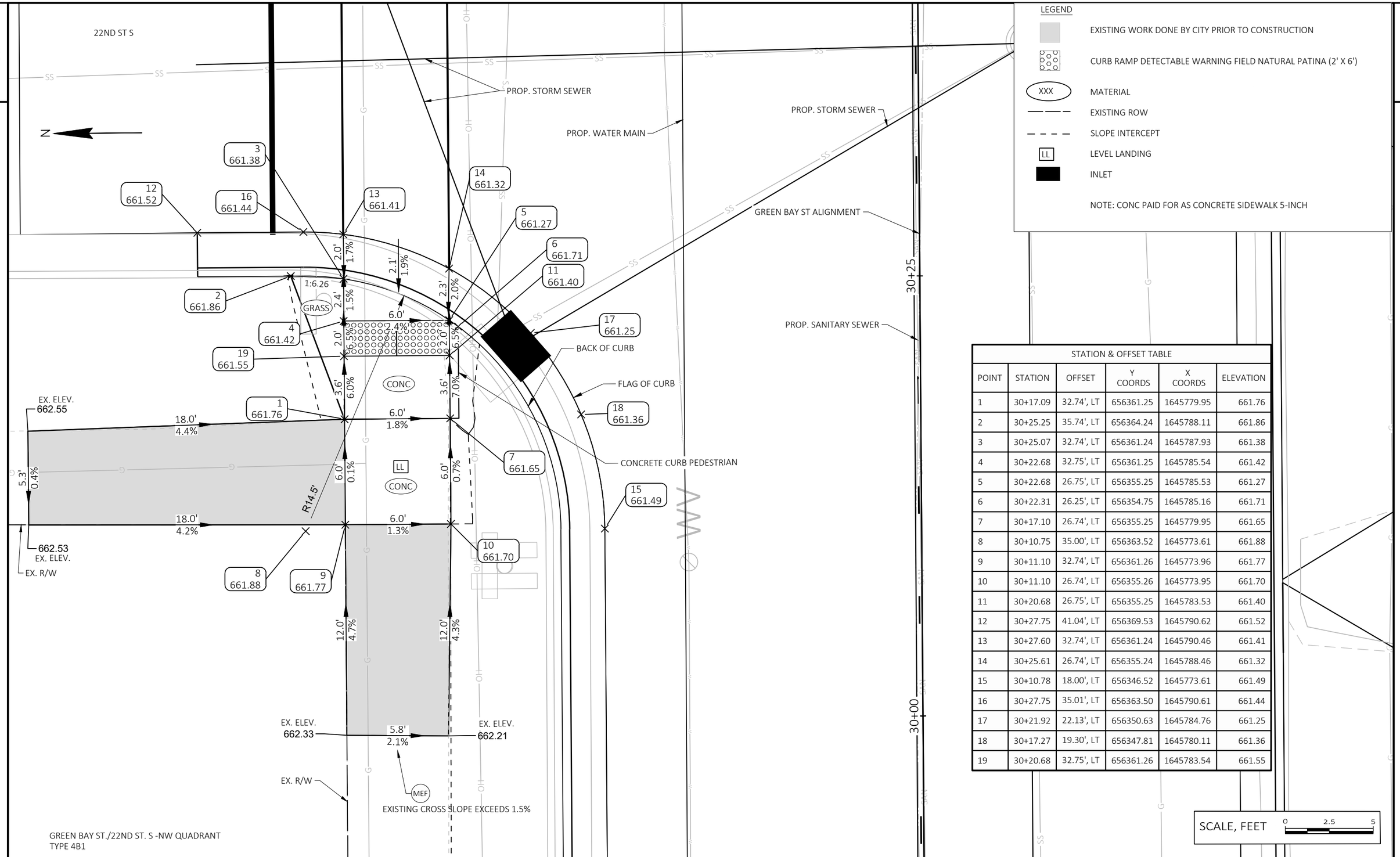

LEGEND

- EXISTING WORK DONE BY CITY PRIOR TO CONSTRUCTION
- CURB RAMP DETECTABLE WARNING FIELD NATURAL PATINA (2' X 6')
- XXX — MATERIAL
- EXISTING ROW
- SLOPE INTERCEPT
- LL — LEVEL LANDING
- INLET

NOTE: CONC PAID FOR AS CONCRETE SIDEWALK 5-INCH

STATION & OFFSET TABLE

POINT	STATION	OFFSET	Y COORDS	X COORDS	ELEVATION
1	30+17.09	32.74', LT	656361.25	1645779.95	661.76
2	30+25.25	35.74', LT	656364.24	1645788.11	661.86
3	30+25.07	32.74', LT	656361.24	1645787.93	661.38
4	30+22.68	32.75', LT	656361.25	1645785.54	661.42
5	30+22.68	26.75', LT	656355.25	1645785.53	661.27
6	30+22.31	26.25', LT	656354.75	1645785.16	661.71
7	30+17.10	26.74', LT	656355.25	1645779.95	661.65
8	30+10.75	35.00', LT	656363.52	1645773.61	661.88
9	30+11.10	32.74', LT	656361.26	1645773.96	661.77
10	30+11.10	26.74', LT	656355.26	1645773.95	661.70
11	30+20.68	26.75', LT	656355.25	1645783.53	661.40
12	30+27.75	41.04', LT	656369.53	1645790.62	661.52
13	30+27.60	32.74', LT	656361.24	1645790.46	661.41
14	30+25.61	26.74', LT	656355.24	1645788.46	661.32
15	30+10.78	18.00', LT	656346.52	1645773.61	661.49
16	30+27.75	35.01', LT	656363.50	1645790.61	661.44
17	30+21.92	22.13', LT	656350.63	1645784.76	661.25
18	30+17.27	19.30', LT	656347.81	1645780.11	661.36
19	30+20.68	32.75', LT	656361.26	1645783.54	661.55

PROJECT NO: 5991-07-78 & 79	HWY: GREEN BAY STREET	COUNTY: LA CROSSE	CURB RAMP DETAILS	SHEET 15	E

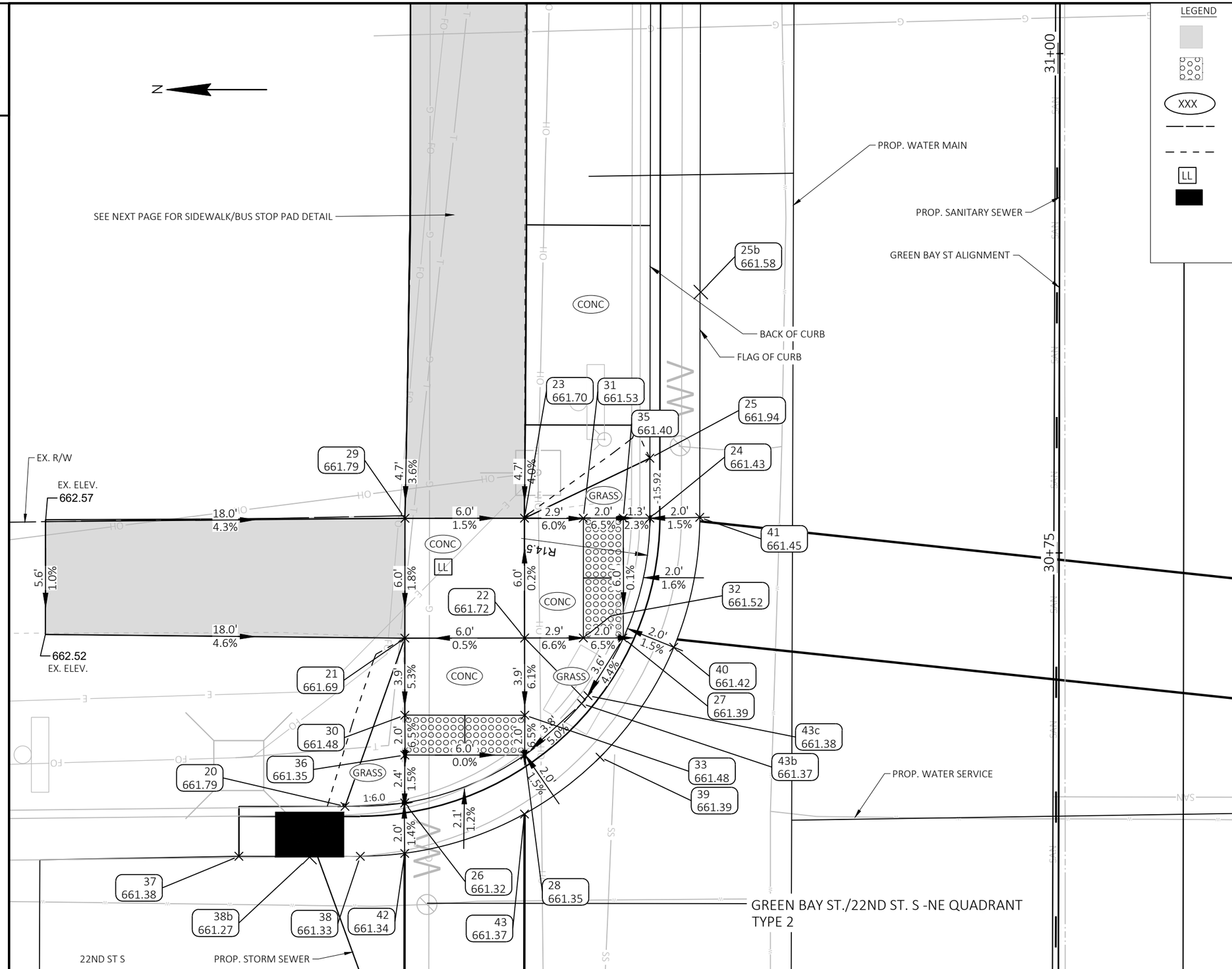

LEGEND

- EXISTING WORK DONE BY CITY PRIOR TO CONSTRUCTION
- CURB RAMP DETECTABLE WARNING FIELD NATURAL PATINA (2' X 6')
- XXX — MATERIAL
- EXISTING ROW
- SLOPE INTERCEPT
- LL — LEVEL LANDING
- INLET

NOTE: CONC PAID FOR AS CONCRETE SIDEWALK 5-INCH

STATION & OFFSET TABLE

POINT	STATION	OFFSET	Y COORDS	X COORDS	ELEVATION
20	30+62.25	35.75', LT	656364.19	1645825.11	661.79
21	30+70.68	32.76', LT	656361.19	1645833.54	661.69
22	30+70.70	26.76', LT	656355.19	1645833.55	661.72
23	30+76.70	26.78', LT	656355.20	1645839.55	661.70
24	30+76.71	20.50', LT	656348.92	1645839.55	661.43
25B	30+88.04	17.96', LT	656346.37	1645850.87	661.58
25	30+79.71	20.50', LT	656348.92	1645842.55	661.94
26	30+62.43	32.75', LT	656361.20	1645825.29	661.32
27	30+70.71	21.85', LT	656350.28	1645833.55	661.39
28	30+64.83	26.75', LT	656355.19	1645827.68	661.35
29	30+76.68	32.76', LT	656361.19	1645839.54	661.79
30	30+66.82	32.75', LT	656361.19	1645829.68	661.48
31	30+76.70	23.83', LT	656352.26	1645839.55	661.53
32	30+70.70	23.82', LT	656352.25	1645833.55	661.52
33	30+66.83	26.75', LT	656355.19	1645829.68	661.48
35	30+76.71	21.83', LT	656350.26	1645839.55	661.40
36	30+64.82	32.75', LT	656361.19	1645827.68	661.35
37	30+59.75	41.05', LT	656369.50	1645822.62	661.38
38B	30+59.71	37.52', LT	656365.97	1645822.58	661.27
38	30+59.75	34.98', LT	656363.42	1645822.61	661.33
39	30+64.73	22.98', LT	656351.42	1645827.58	661.39
40	30+70.25	19.29', LT	656347.73	1645833.09	661.42
41	30+76.75	18.00', LT	656346.42	1645839.59	661.45
42	30+59.90	32.75', LT	656361.20	1645822.76	661.34
43C	30+67.81	23.58', LT	656352.02	1645830.66	661.38

SCALE, FEET 0 2.5 5

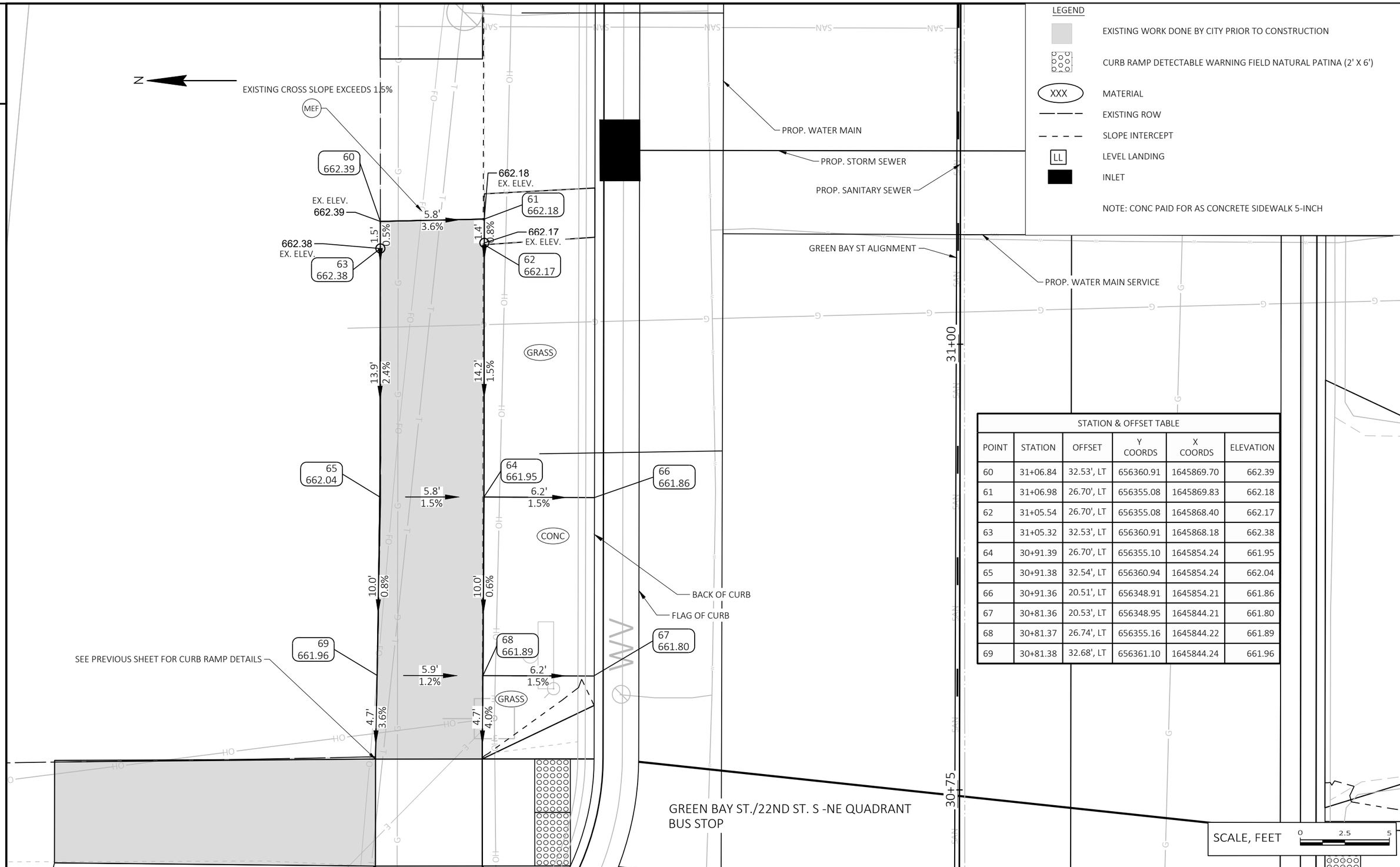

LEGEND

- EXISTING WORK DONE BY CITY PRIOR TO CONSTRUCTION
- CURB RAMP DETECTABLE WARNING FIELD NATURAL PATINA (2' X 6')
- XXX — MATERIAL
- EXISTING ROW
- SLOPE INTERCEPT
- LL — LEVEL LANDING
- INLET

NOTE: CONC PAID FOR AS CONCRETE SIDEWALK 5-INCH

STATION & OFFSET TABLE

POINT	STATION	OFFSET	Y COORDS	X COORDS	ELEVATION
60	31+06.84	32.53', LT	656360.91	1645869.70	662.39
61	31+06.98	26.70', LT	656355.08	1645869.83	662.18
62	31+05.54	26.70', LT	656355.08	1645868.40	662.17
63	31+05.32	32.53', LT	656360.91	1645868.18	662.38
64	30+91.39	26.70', LT	656355.10	1645854.24	661.95
65	30+91.38	32.54', LT	656360.94	1645854.24	662.04
66	30+91.36	20.51', LT	656348.91	1645854.21	661.86
67	30+81.36	20.53', LT	656348.95	1645844.21	661.80
68	30+81.37	26.74', LT	656355.16	1645844.22	661.89
69	30+81.38	32.68', LT	656361.10	1645844.24	661.96

PROJECT NO: 5991-07-78 & 79	HWY: GREEN BAY STREET	COUNTY: LA CROSSE	CURB RAMP DETAILS	SHEET 17	E

FILE NAME : W:\30902576.000; 5991-07-77 78 79 GREEN BAY ST\CAD\59910777\SHEETS\021301-CR.DWG
LAYOUT NAME - 2 (2)
PLOT DATE : 7/30/2024 4:05 PM PLOT BY : MARZOLF, ROBBI PLOT NAME : PLOT SCALE : ##########
WISDOT/CADDS SHEET 42

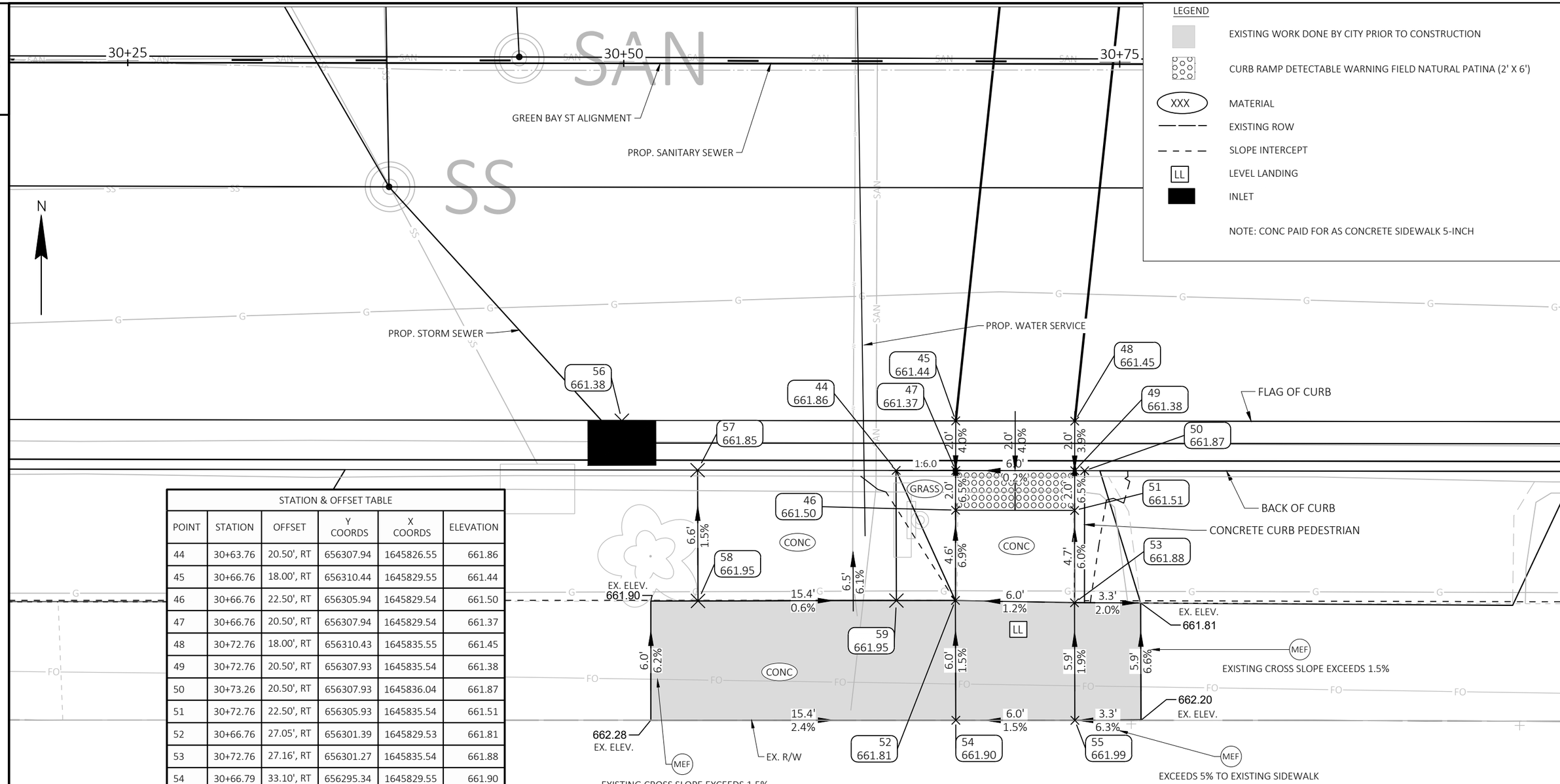

STATION & OFFSET TABLE

POINT	STATION	OFFSET	Y COORDS	X COORDS	ELEVATION
44	30+63.76	20.50', RT	656307.94	1645826.55	661.86
45	30+66.76	18.00', RT	656310.44	1645829.55	661.44
46	30+66.76	22.50', RT	656305.94	1645829.54	661.50
47	30+66.76	20.50', RT	656307.94	1645829.54	661.37
48	30+72.76	18.00', RT	656310.43	1645835.55	661.45
49	30+72.76	20.50', RT	656307.93	1645835.54	661.38
50	30+73.26	20.50', RT	656307.93	1645836.04	661.87
51	30+72.76	22.50', RT	656305.93	1645835.54	661.51
52	30+66.76	27.05', RT	656301.39	1645829.53	661.81
53	30+72.76	27.16', RT	656301.27	1645835.54	661.88
54	30+66.79	33.10', RT	656295.34	1645829.55	661.90
55	30+72.79	33.09', RT	656295.34	1645835.55	661.99
56	30+49.93	18.01', RT	656310.45	1645812.72	661.38
57	30+53.75	20.50', RT	656307.96	1645816.54	661.85
58	30+53.78	27.09', RT	656301.36	1645816.56	661.95
59	30+63.78	27.06', RT	656301.38	1645826.56	661.95

GREEN BAY ST./22ND ST. S -SE QUADRANT
TYPE 7B

PROJECT NO: 5991-07-78 & 79	HWY: GREEN BAY STREET	COUNTY: LA CROSSE	CURB RAMP DETAILS	SHEET 18	E

FILE NAME : W:\30902576.000; 5991-07-77 78 79 GREEN BAY ST\CAD\59910777\SHEETS\021301-CR.DWG
LAYOUT NAME - 3
PLOT DATE : 7/30/2024 4:05 PM PLOT BY : MARZOLF, ROBBI PLOT NAME : PLOT SCALE : ##########
WISDOT/CADDS SHEET 42

2

DIRECTION OF DRAINAGE FLOW

FINISHING FOR CURB & GUTTER

INLET PROTECTION TYPE C

NOTES: ADDITIONAL INLET PROTECTION TO BE PLACED AT CLOSEST INLETS OFF PROJECT LIMITS WITH WATER DRAINING AWAY FROM PROJECT SITE.

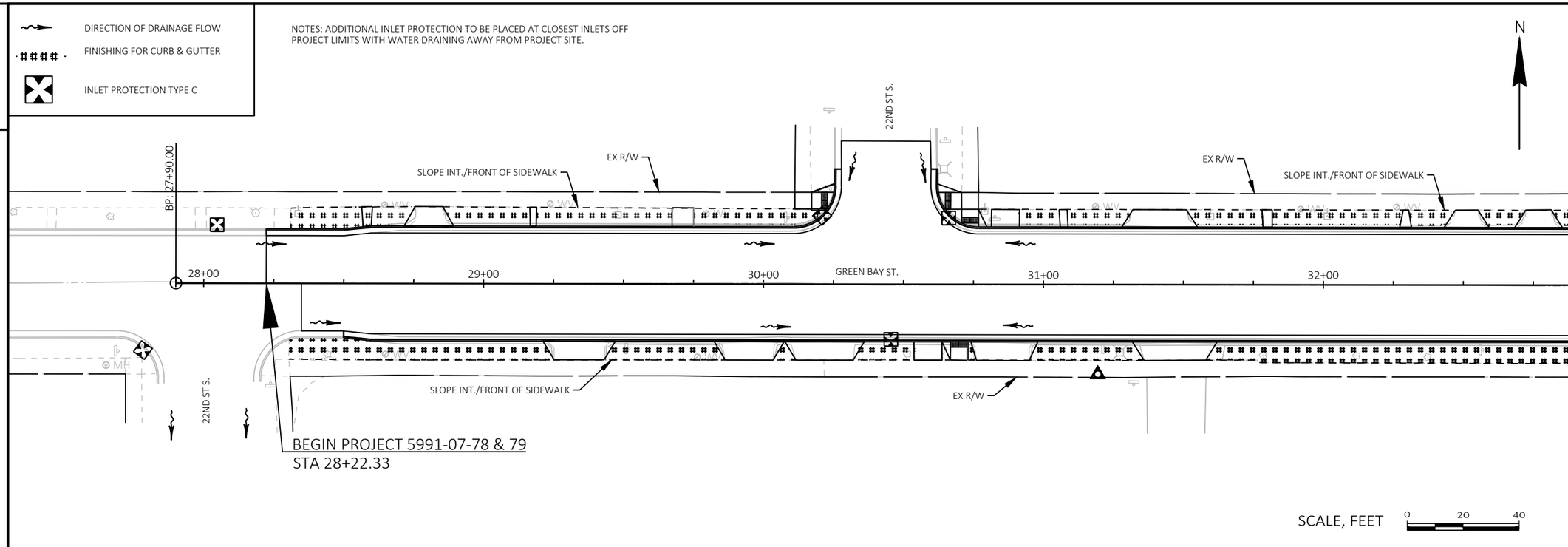

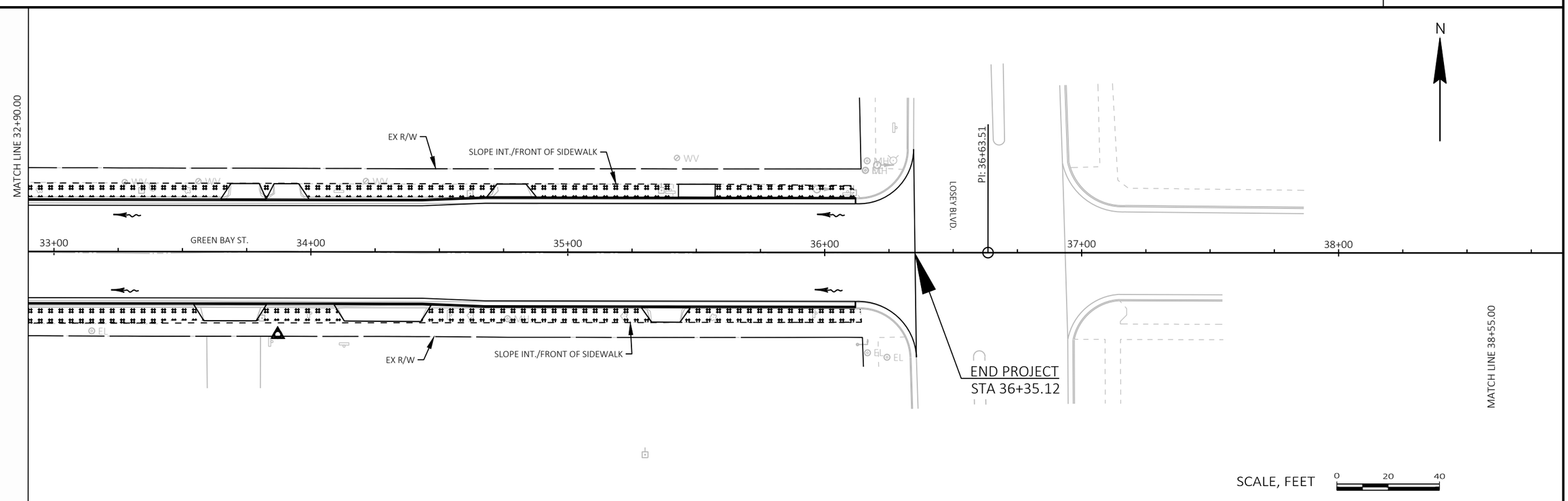

PROJECT NO: 5991-07-78 & 79	HWY: GREEN BAY STREET	COUNTY: LA CROSSE	EROSION CONTROL PLAN	SHEET 19	E

NOTES:
ALL MANHOLE & CATCH BASIN COVERS ARE TO BE SUPPLIED BY OTHERS.

CONNECTIONS FOR TIE-INS TO EXISTING FACILITIES ARE INCIDENTAL TO THE REPLACEMENT PER CITY SPEC.

SEE STORM SEWER PROFILES FOR DETAILED INFORMATION ON CONNECTIONS FOR CATCH BASINS TO MANHOLES.

SEE MUNICIPAL UTILITY PLAN FOR WATER IMPROVEMENTS.

CONCRETE MANHOLE COLLARS REQUIRED AT ALL STORM SEWER MANHOLE LOCATIONS, SEE DETAILS.

STATION/OFFSETS ARE TO THE CENTER OF THE STRUCTURE.

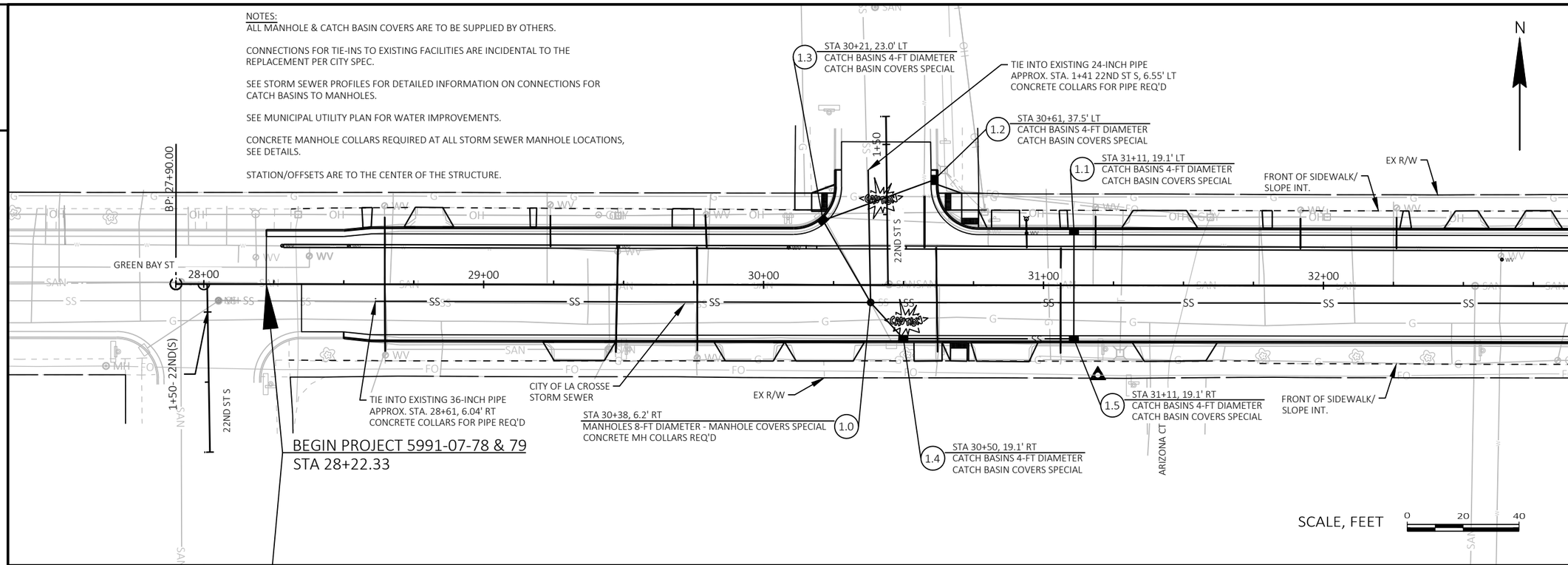

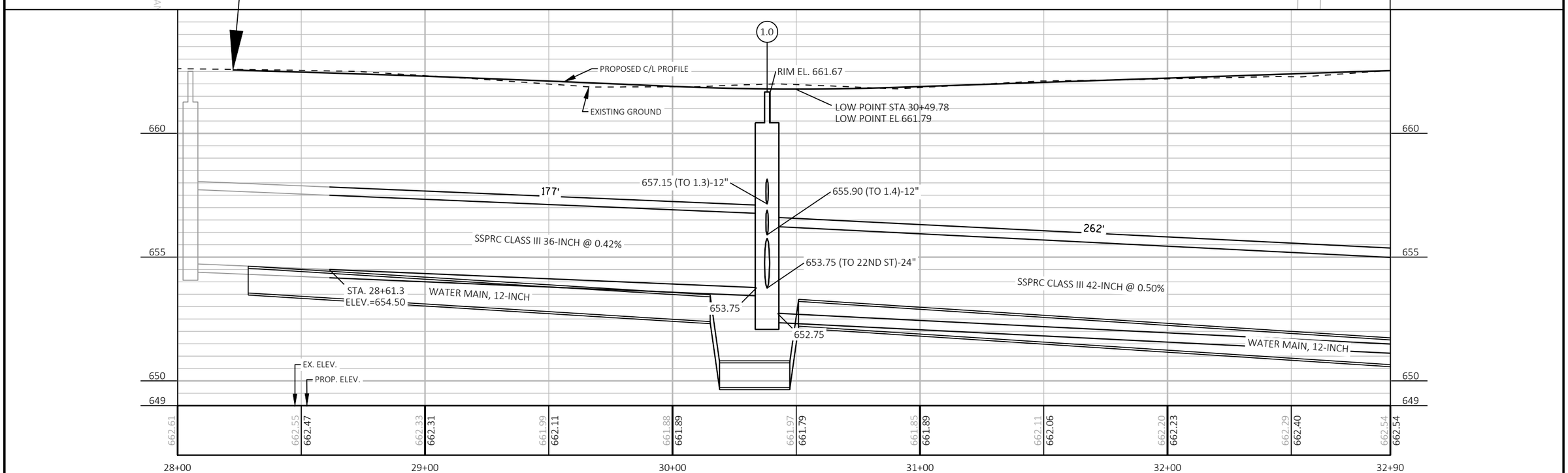

PROJECT NO: 5991-07-78 & 79	HWY: GREEN BAY STREET	COUNTY: LA CROSSE	STORM SEWER PLAN AND PROFILE	SHEET 20	E

2

NOTES:
ALL MANHOLE & CATCH BASIN COVERS ARE TO BE SUPPLIED BY OTHERS.

CONNECTIONS FOR TIE-INS TO EXISTING FACILITIES ARE INCIDENTAL TO THE REPLACEMENT PER CITY SPEC.

SEE STORM SEWER PROFILES FOR DETAILED INFORMATION ON CONNECTIONS FOR CATCH BASINS TO MANHOLES.

SEE MUNICIPAL UTILITY PLAN FOR WATER IMPROVEMENTS.

CONCRETE MANHOLE COLLARS REQUIRED AT ALL STORM SEWER MANHOLE LOCATIONS, SEE DETAILS.

STATION/OFFSETS ARE TO THE CENTER OF THE STRUCTURE.

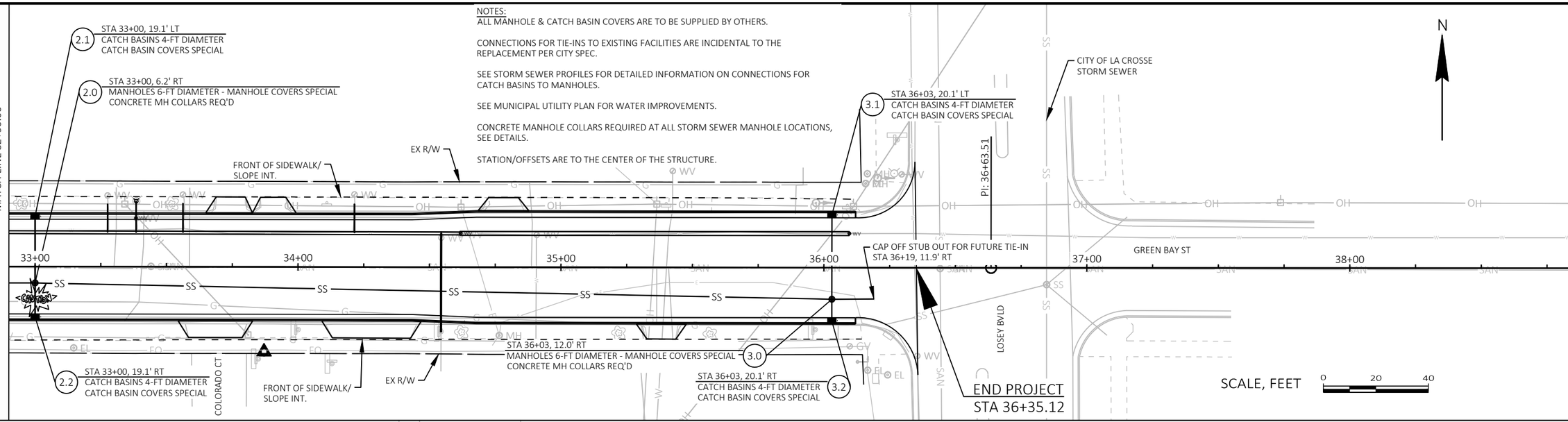

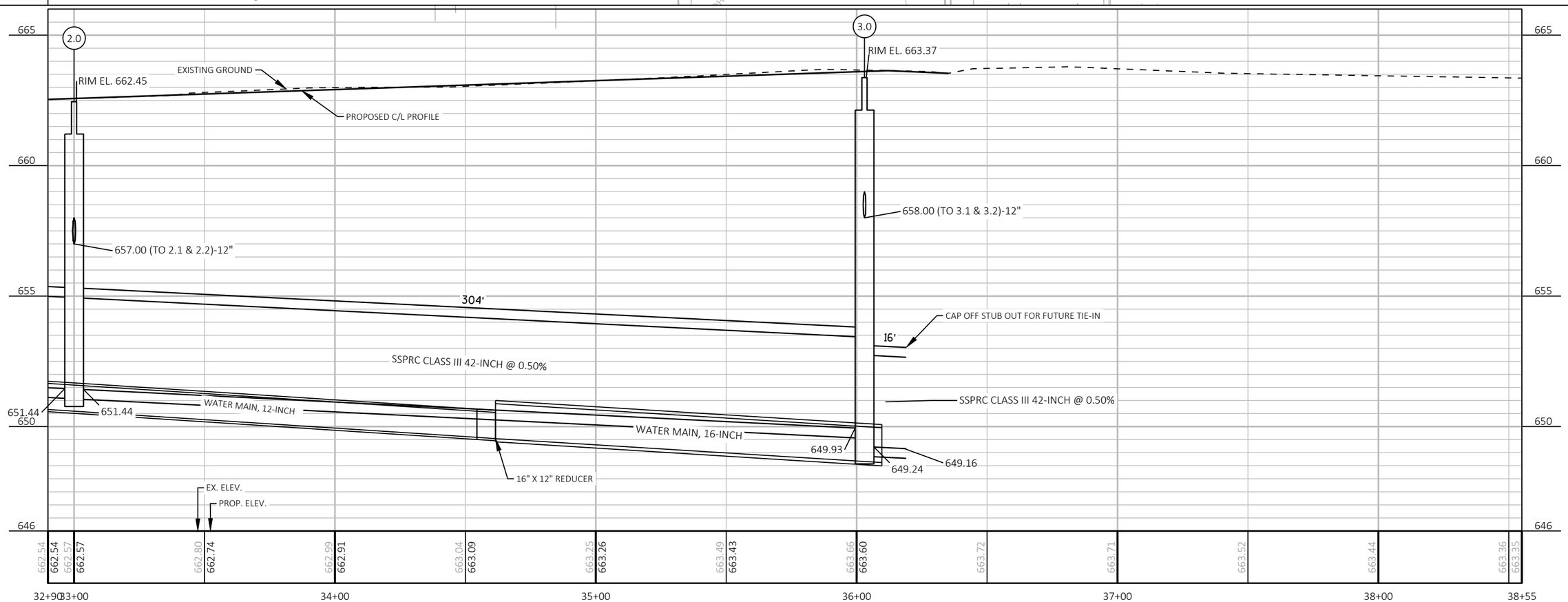

PROJECT NO: 5991-07-78 & 79	HWY: GREEN BAY STREET	COUNTY: LA CROSSE	STORM SEWER PLAN AND PROFILE	SHEET 21	E

FILE NAME : W:\30902576.000; 5991-07-77 78 79 GREEN BAY ST\CAD\59910777\SHEETS\022501-SS.DWG
LAYOUT NAME - 2
PLOT DATE : 8/1/2024 10:49 AM
PLOT BY : MARZOLF, ROBBI
PLOT NAME :
PLOT SCALE : 1 IN:40 FT
WISDOT/CADDS SHEET 44

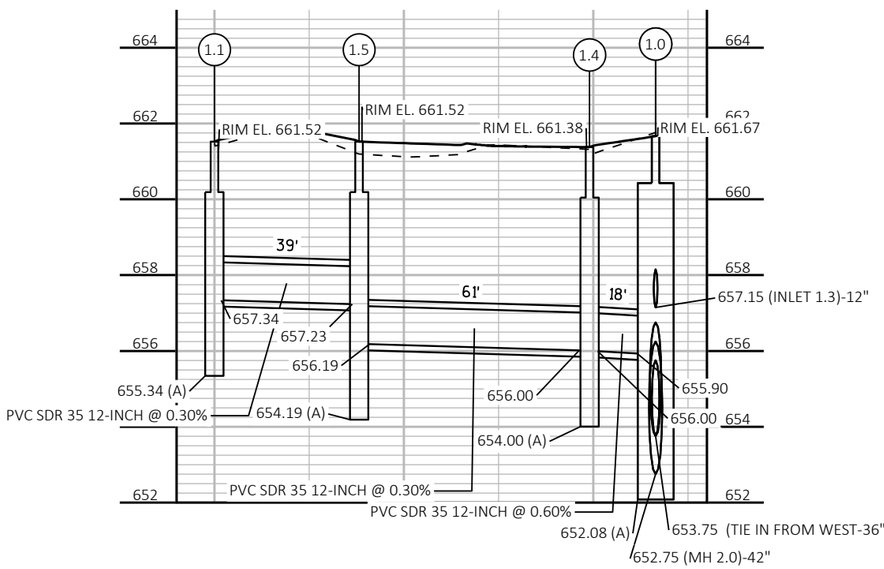

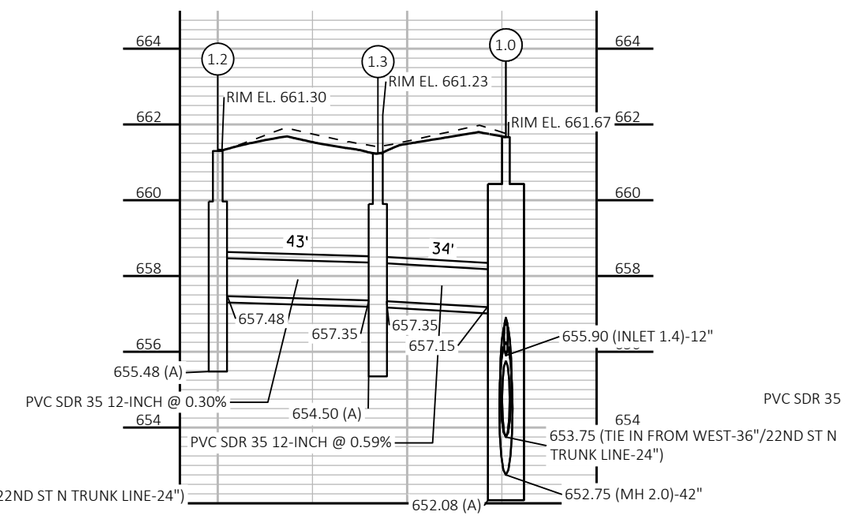

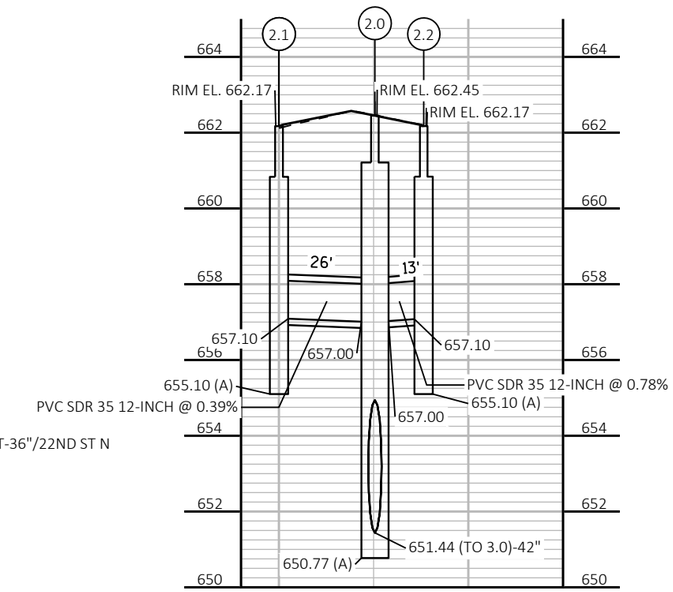

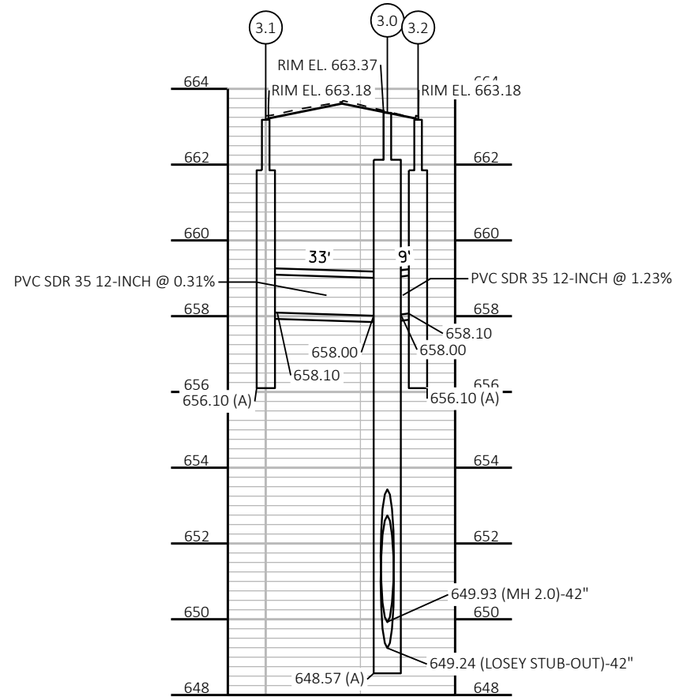

NOTES:
(A) BOTTOM OF STRUCTURE ELEVATION

PROJECT NO: 5991-07-78 & 79	HWY: GREEN BAY STREET	COUNTY: LA CROSSE	STORM SEWER PROFILE	SHEET 22	E

NOTES:
- ALL MANHOLE COVERS ARE TO BE SUPPLIED BY OTHERS.
- CONNECTIONS FOR TIE-INS TO EXISTING FACILITIES ARE INCIDENTAL TO THE REPLACEMENT PER CITY SPEC.
- REMOVAL OF SANITARY SEWER MAIN IS INCIDENTAL TO THE REPLACEMENT OF THE PIPE PER CITY SPEC.
- SEE STORM SEWER PLANS FOR STORM SEWER IMPROVEMENTS.
- ELEVATIONS OF WATER MAIN BASED ON CITY NOTES AND ARE APPROXIMATE, ACTUAL ELEVATIONS TO BE FIELD VERIFIED BY CONTRACTOR.

Ω INSTALL WYE AND SAN. SEWER LATERAL PVC SDR 26 4-INCH. LAY AT MINIMUM GRADE AND TIE INTO EXISTING AT TRENCH WIDTH (TYP).

INSULATION BOARD POLYSTYRENE, 2-INCH

TAP 12" MAIN WITH 1" CORPORATION. RUN NEW 1" COPPER TO NEW 1" CURB STOP AND BOX.
- ■ NEW SHORT WATER SERVICES.
- ▲ NEW LONG WATER SERVICES.
- ┼ NEW FLARED WATER SERVICES.

N

2

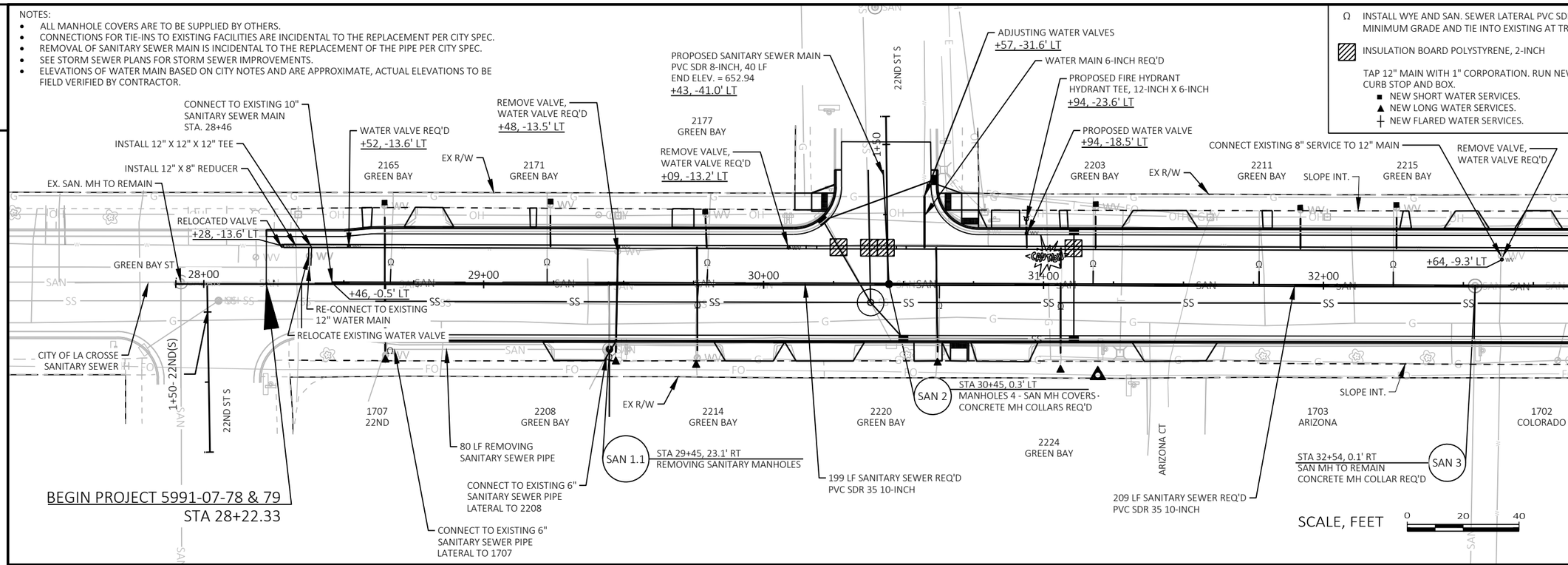

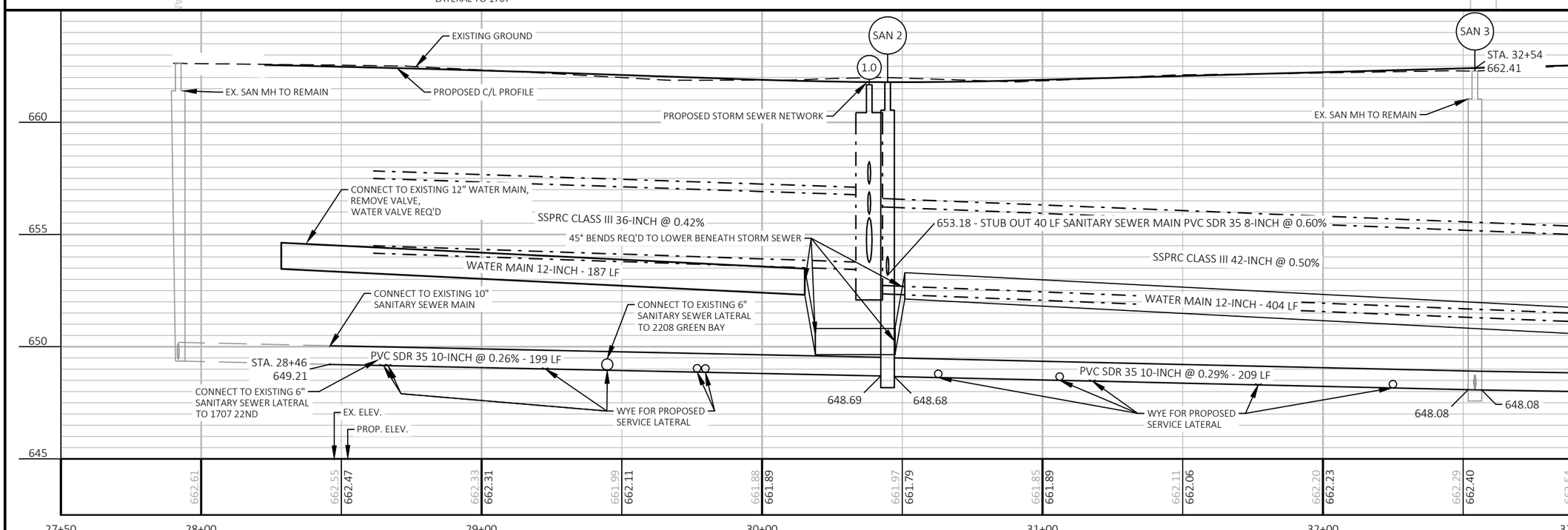

PROJECT NO: 5991-07-78 & 79	HWY: GREEN BAY STREET	COUNTY: LA CROSSE	MUNICIPAL UTILITY PLAN	SHEET 23	E

NOTES:
- ALL MANHOLE COVERS ARE TO BE SUPPLIED BY OTHERS.
- CONNECTIONS FOR TIE-INS TO EXISTING FACILITIES ARE INCIDENTAL TO THE REPLACEMENT PER CITY SPEC.
- REMOVAL OF SANITARY SEWER MAIN IS INCIDENTAL TO THE REPLACEMENT OF THE PIPE PER CITY SPEC.
- SEE STORM SEWER PLANS FOR STORM SEWER IMPROVEMENTS.
- ELEVATIONS OF WATER MAIN BASED ON CITY NOTES AND ARE APPROXIMATE, ACTUAL ELEVATIONS TO BE FIELD VERIFIED BY CONTRACTOR.

Ω INSTALL WYE AND SAN. SEWER LATERAL PVC SDR 26 4-INCH. LAY AT MINIMUM GRADE AND TIE INTO EXISTING AT TRENCH WIDTH (TYP).

INSULATION BOARD POLYSTYRENE, 2-INCH

TAP 12" MAIN WITH 1" CORPORATION. RUN NEW 1" COPPER TO NEW 1" CURB STOP AND BOX.
- ■ NEW SHORT WATER SERVICES.
- ▲ NEW LONG WATER SERVICES.
- ┼ NEW FLARED WATER SERVICES.

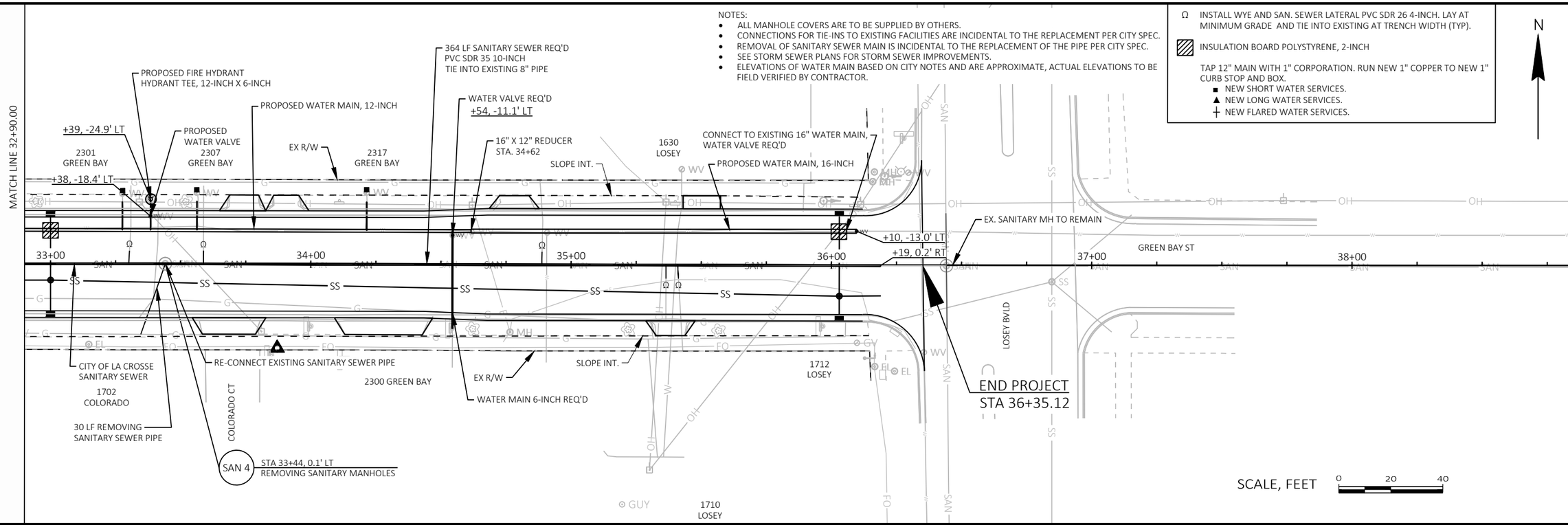

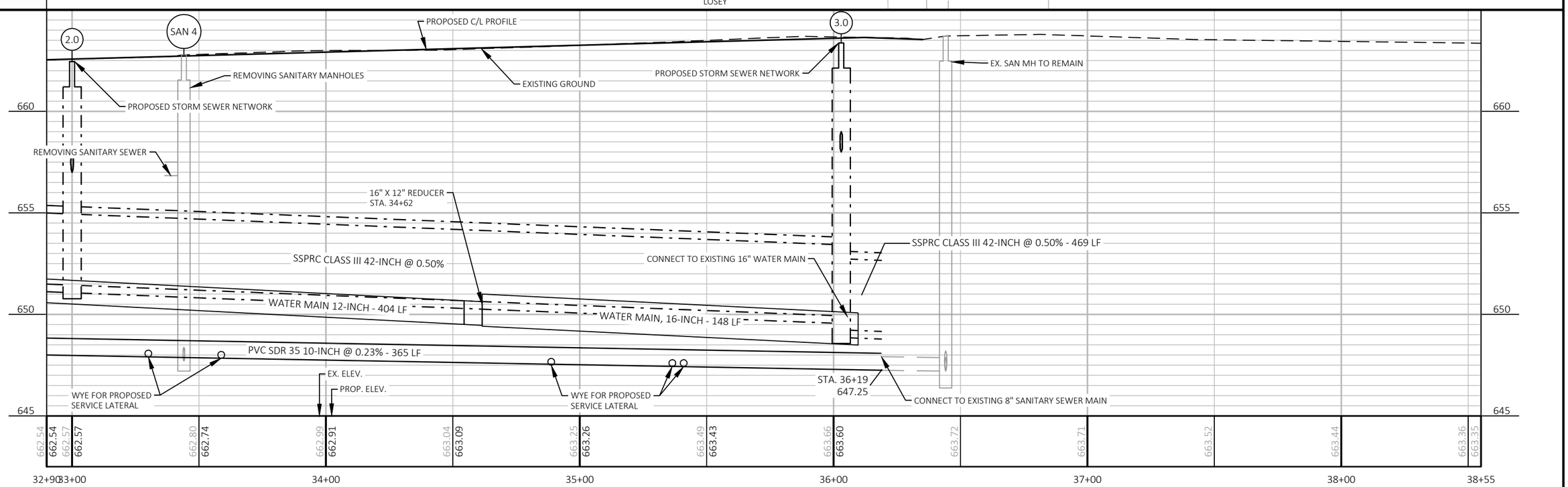

PROJECT NO: 5991-07-78 & 79	HWY: GREEN BAY STREET	COUNTY: LA CROSSE	MUNICIPAL UTILITY PLAN	SHEET 24	E

FILE NAME : W:\30902576.000; 5991-07-77 78 79 GREEN BAY ST\CAD\59910777\SHEETS\023001-UP.DWG
LAYOUT NAME - 2
PLOT DATE : 7/31/2024 8:51 AM
PLOT BY : MARZOLF, ROBBI
PLOT NAME :
PLOT SCALE : 1 IN:40 FT
WISDOT/CADDS SHEET 44

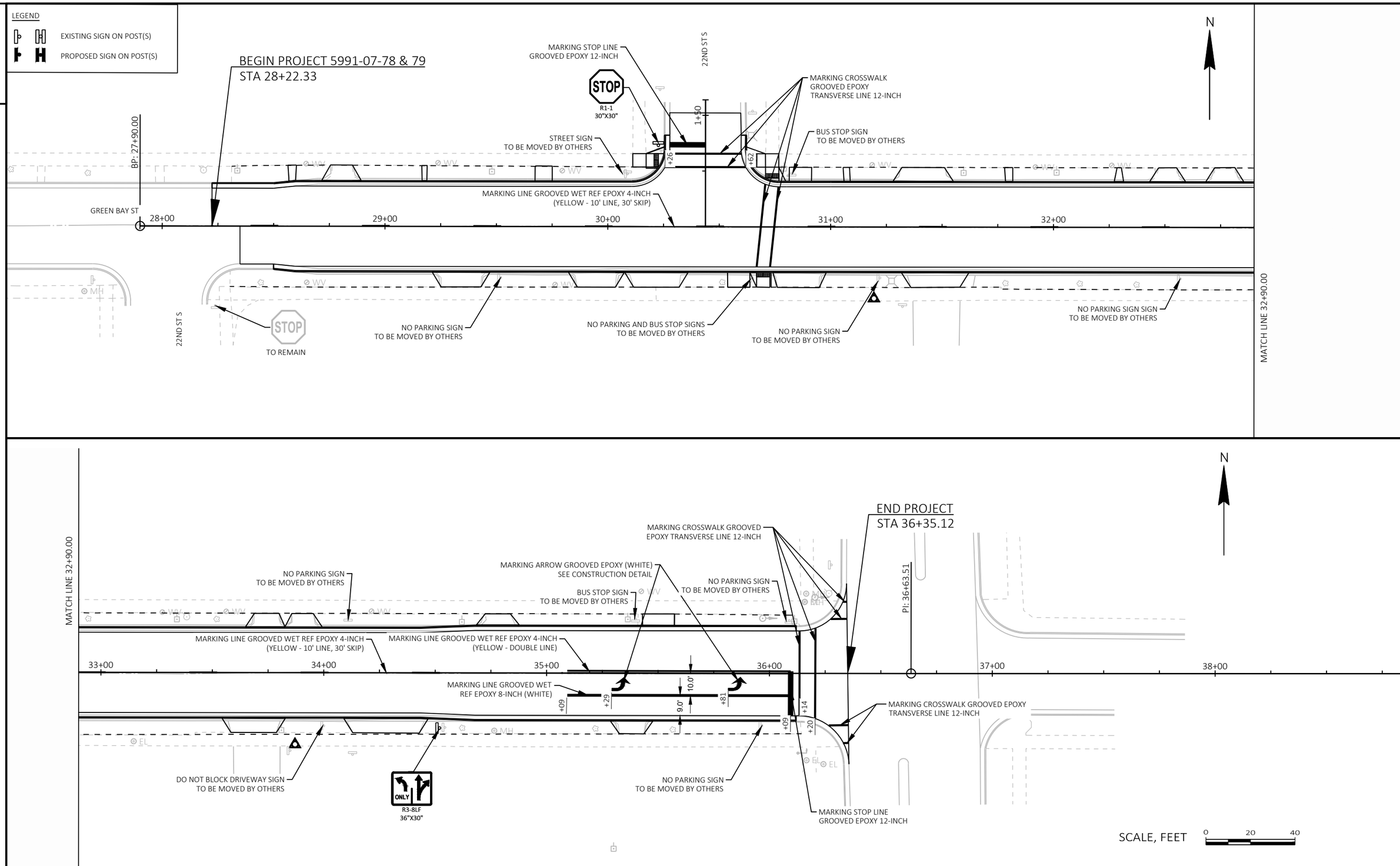

PROJECT NO: 5991-07-78 & 79	HWY: GREEN BAY STREET	COUNTY: LA CROSSE	PAVEMENT MARKING AND PERMANENT SIGNING	SHEET 25	E

FILE NAME : W:\30902576.000; 5991-07-77 78 79 GREEN BAY ST\CAD\59910777\SHEETS\024501-PM.DWG
LAYOUT NAME - 1
PLOT DATE : 7/30/2024 9:52 AM
PLOT BY : MARZOLF, ROBBI
PLOT NAME :
PLOT SCALE : ##########
WISDOT/CADDS SHEET 44

2

(1) 5-TYPE III BARRICADES
6-TYPE A LIGHTS
1-ROAD CLOSED MOUNTED ON A TYPE III BARRICADE.
SEE S.D.D. "BARRICADES AND SIGNS FOR SIDEROAD CLOSURES" DETAIL 1 WHEN CROSS TRAFFIC IS NOT ALLOWED.

(2) 1-ROAD CLOSED AHEAD SIGN ON TEMPORARY SUPPORT
SEE S.D.D. "BARRICADES AND SIGNS FOR SIDEROAD CLOSURES" DETAIL 1 WHEN CROSS TRAFFIC IS NOT ALLOWED.

(3) 1-ROAD CLOSED AHEAD SIGN ON TEMPORARY SUPPORT
SEE S.D.D. "BARRICADES AND SIGNS FOR MAINLINE CLOSURES" DETAIL B.

(4) 5-TYPE III BARRICADES
6-TYPE A LIGHTS
1-ROAD CLOSED MOUNTED ON A TYPE III BARRICADE.
SEE S.D.D. "BARRICADES AND SIGNS FOR MAINLINE CLOSURES" DETAIL B.

NOTES: SEE DETOUR PLAN FOR ADDITIONAL SIGNING/ADVANCED WARNING

DRAWING NOT TO SCALE

2

PROJECT NO: 5991-07-78 & 79	HWY: GREEN BAY STREET	COUNTY: LA CROSSE	TRAFFIC CONTROL OVERVIEW	SHEET 26	E

FILE NAME : W:\30902576.000; 5991-07-77 78 79 GREEN BAY ST\CAD\59910777\SHEETS\025100-TC.DWG
LAYOUT NAME - 1
PLOT DATE : 7/30/2024 10:01 AM
PLOT BY : MARZOLF, ROBBI
PLOT NAME :
PLOT SCALE : ##########
WISDOT/CADDS SHEET 42

2

LEGEND

- WORK ZONE
- TRAFFIC CONTROL DRUM
- TRAFFIC CONTROL DRUM WITH TYPE "C" STEADY BURN LIGHT
- TRAFFIC CONTROL SIGN
- TYPE III BARRICADE WITH ATTACHED SIGN
- TYPE III BARRICADE
- TRAFFIC CONTROL ARROW BOARD

NOTES

SEE SDD "TRAFFIC CONTROL, SINGLE LANE CLOSURE, DIVIDED NON-FREEWAY/EXPRESSWAY

EXACT LOCATIONS OF SIGNS AND DEVICES TO BE DETERMINED BY ENGINEER IN FIELD.

SEE DETOUR PLAN FOR ADDITIONAL SIGNING/ADVANCED WARNING.

1. ACCESS TO LOCAL TRAFFIC TO BE MAINTAINED.
2. SB LANE CLOSURE ON LOSEY REQ'D ONLY WHEN WORK IS BEING PERFORMED AT INTERSECTION. ACCESS TO LOCAL TRAFFIC TO BE MAINTAINED.

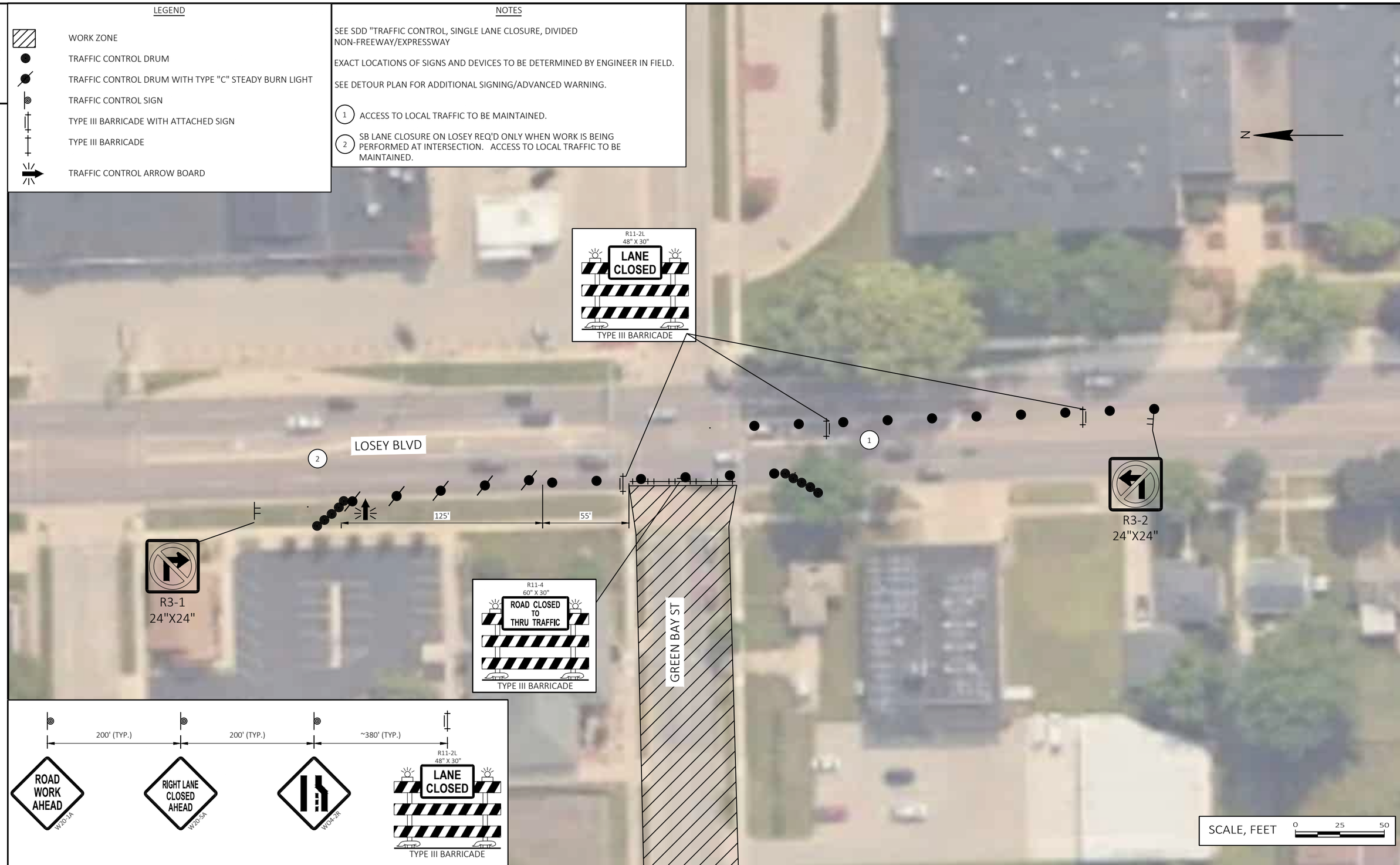

2

PROJECT NO: 5991-07-78 & 79	HWY: GREEN BAY STREET	COUNTY: LA CROSSE	TRAFFIC CONTROL OVERVIEW (LOSEY BLVD)	SHEET 27	E

2

LEGEND

- TEMPORARY PEDESTRIAN CURB RAMP/DETECTABLE WARNING FIELD
- TEMPORARY SIGN SUPPORT
- WORK ZONE
- PEDESTRIAN ROUTE/DIRECTION

NOTES

SEE SDD "TRAFFIC CONTROL, PEDESTRIAN ACCOMMODATION" FOR ADDITIONAL DEVICES AND INFORMATION

EXACT LOCATIONS OF SIGNS AND DEVICES TO BE DETERMINED BY ENGINEER IN FIELD

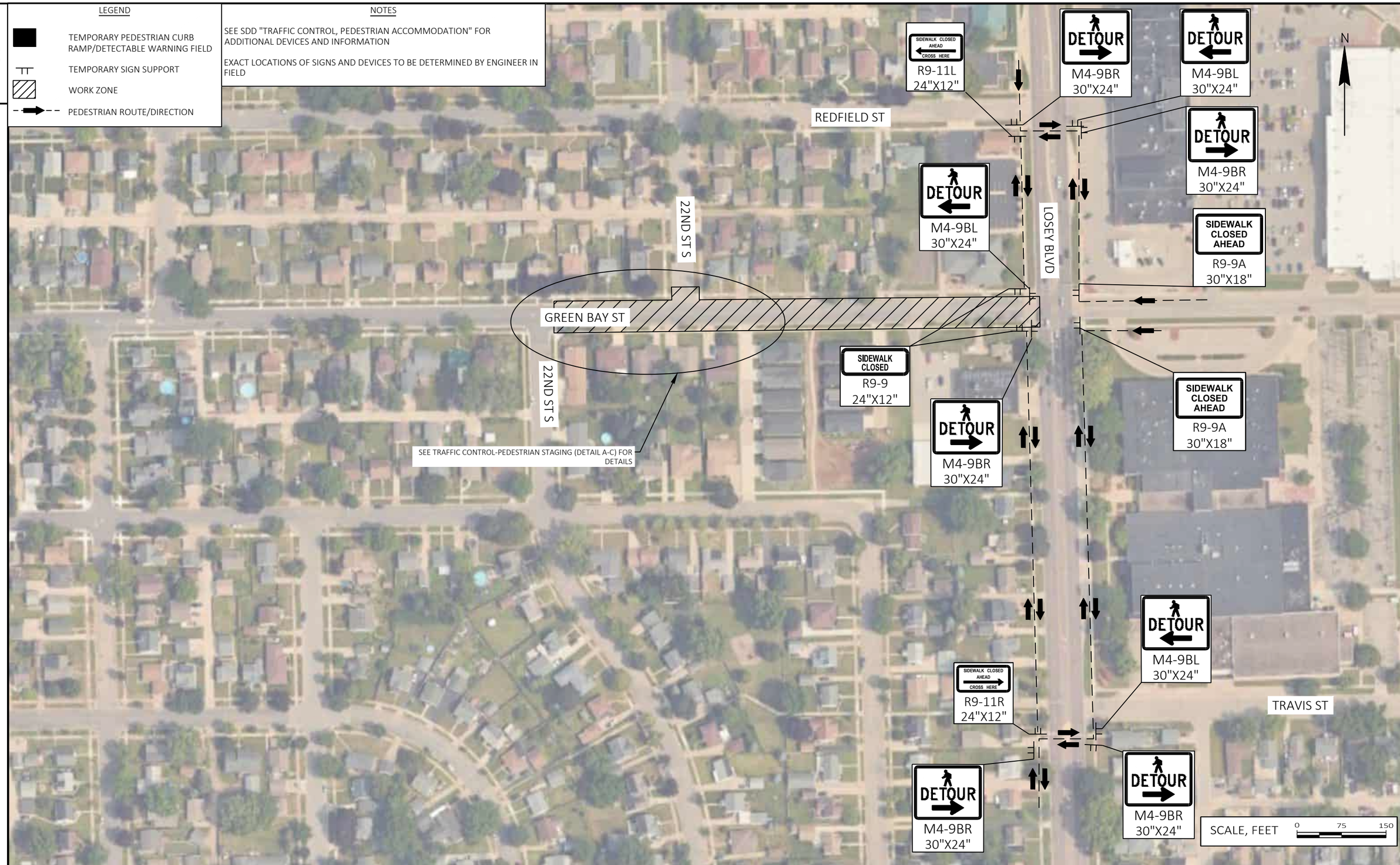

2

PROJECT NO: 5991-07-78 & 79	HWY: GREEN BAY STREET	COUNTY: LA CROSSE	TRAFFIC CONTROL-PEDESTRIAN STAGING OVERVIEW	SHEET 28	E

FILE NAME : W:\30902576.000; 5991-07-77 78 79 GREEN BAY ST\CAD\59910777\SHEETS\025100-TC.DWG
LAYOUT NAME - 3
PLOT DATE : 7/30/2024 10:01 AM
PLOT BY : MARZOLF, ROBBI
PLOT NAME :
PLOT SCALE : ##########
WISDOT/CADDS SHEET 42

2

LEGEND

- TEMPORARY PEDESTRIAN CURB RAMP/DETECTABLE WARNING FIELD
- TEMPORARY SIGN SUPPORT
- WORK ZONE
- PEDESTRIAN ROUTE/DIRECTION

NOTES

SEE SDD "TRAFFIC CONTROL, PEDESTRIAN ACCOMMODATION" FOR ADDITIONAL DEVICES AND INFORMATION

EXACT LOCATIONS OF SIGNS AND DEVICES TO BE DETERMINED BY ENGINEER IN FIELD

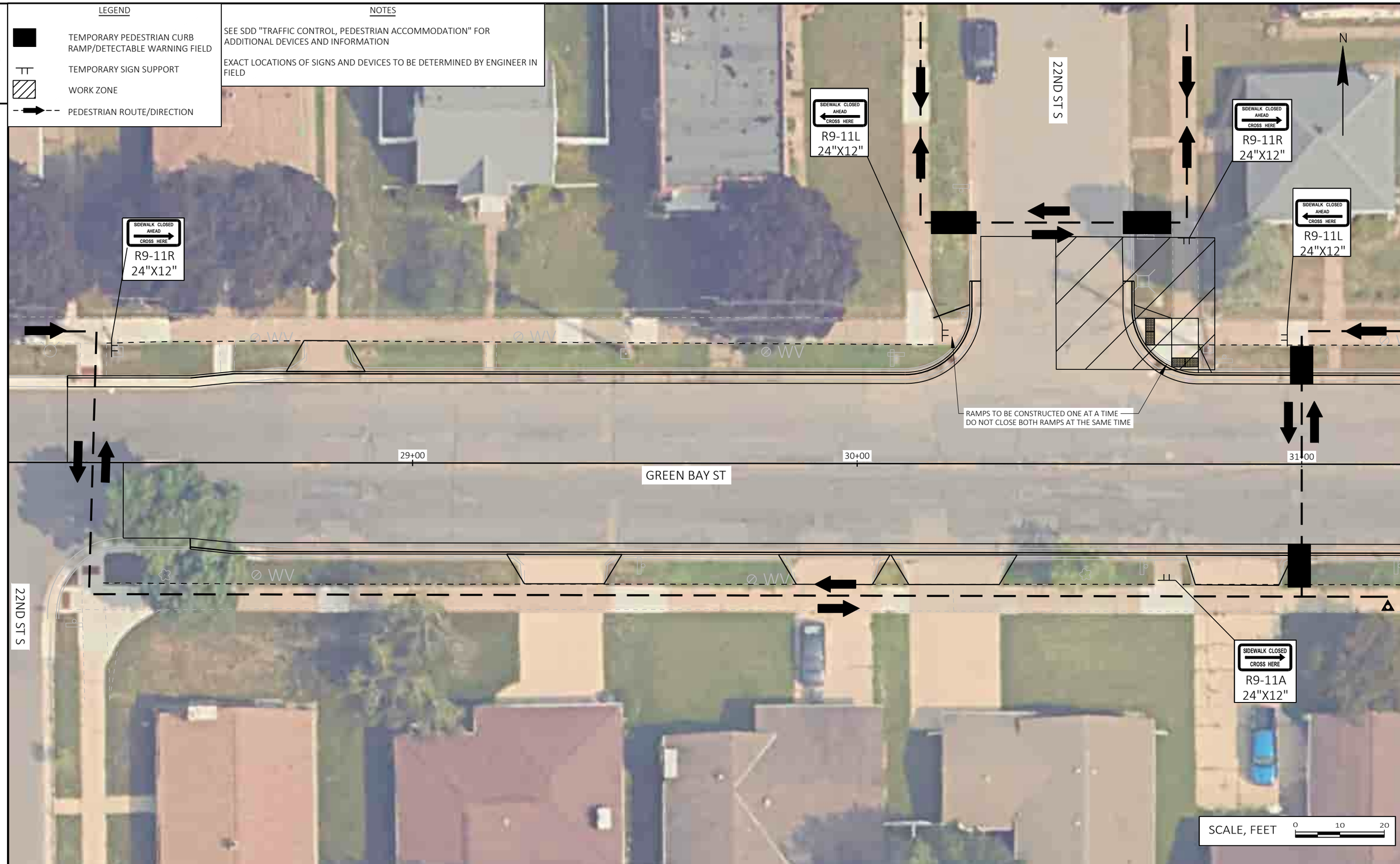

2

PROJECT NO: 5991-07-78 & 79	HWY: GREEN BAY STREET	COUNTY: LA CROSSE	TRAFFIC CONTROL-PEDESTRIAN STAGING (DETAIL A)-NORTHEAST RAMP CONSTRUCTION	SHEET 29	E

2

LEGEND

- TEMPORARY PEDESTRIAN CURB RAMP/DETECTABLE WARNING FIELD
- TEMPORARY SIGN SUPPORT
- WORK ZONE
- PEDESTRIAN ROUTE/DIRECTION

NOTES

SEE SDD "TRAFFIC CONTROL, PEDESTRIAN ACCOMMODATION" FOR ADDITIONAL DEVICES AND INFORMATION

EXACT LOCATIONS OF SIGNS AND DEVICES TO BE DETERMINED BY ENGINEER IN FIELD

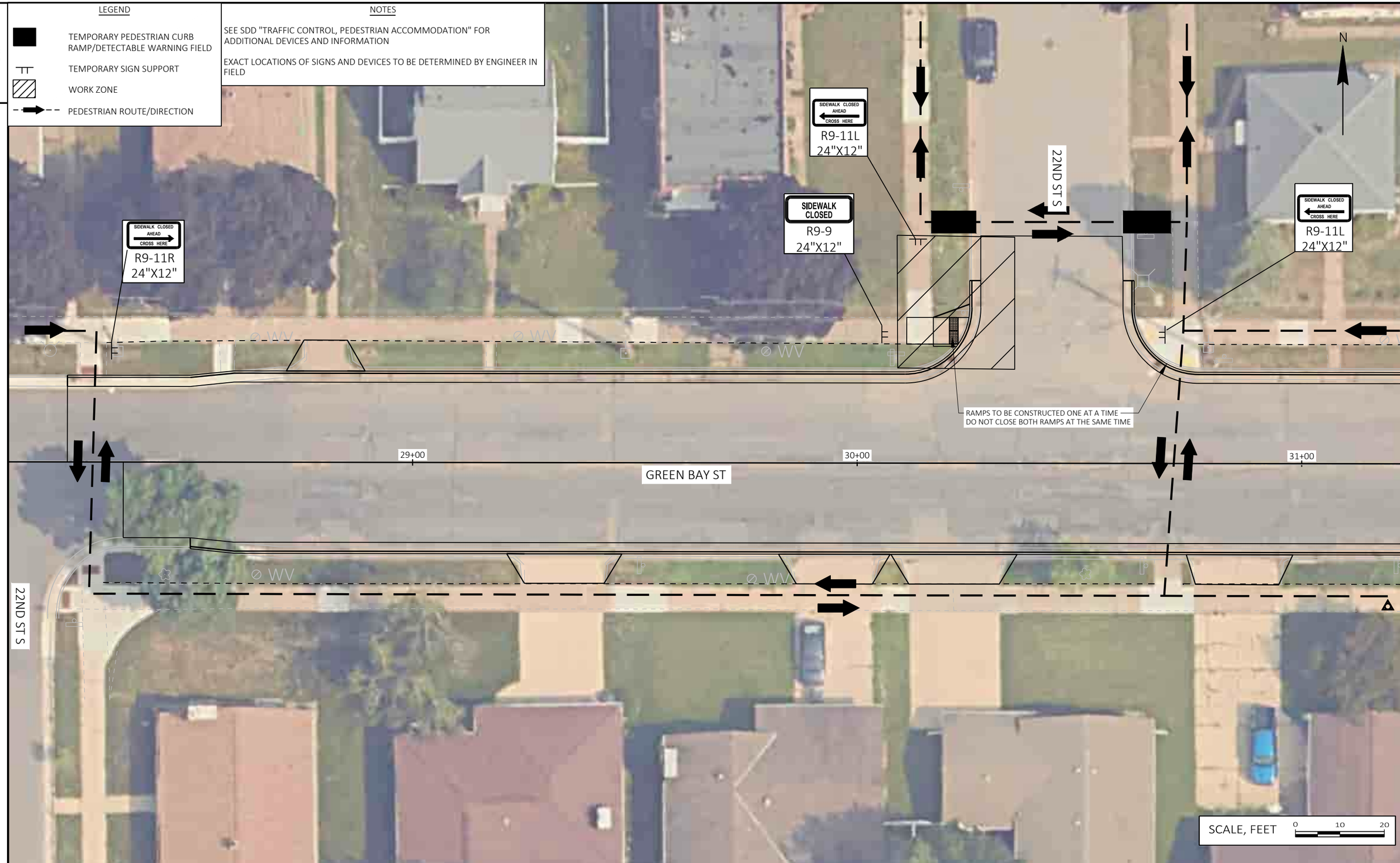

2

PROJECT NO: 5991-07-78 & 79	HWY: GREEN BAY STREET	COUNTY: LA CROSSE	TRAFFIC CONTROL-PEDESTRIAN STAGING (DETAIL B)-NORTHWEST RAMP CONSTRUCTION	SHEET 30	E

FILE NAME : W:\30902576.000; 5991-07-77 78 79 GREEN BAY ST\CAD\59910777\SHEETS\025100-TC.DWG
LAYOUT NAME - 5

PLOT DATE : 7/30/2024 10:01 AM PLOT BY : MARZOLF, ROBBI PLOT NAME : PLOT SCALE : ##########

WISDOT/CADDS SHEET 42

2

LEGEND

- TEMPORARY PEDESTRIAN CURB RAMP/DETECTABLE WARNING FIELD
- TEMPORARY SIGN SUPPORT
- WORK ZONE
- PEDESTRIAN ROUTE/DIRECTION

NOTES

SEE SDD "TRAFFIC CONTROL, PEDESTRIAN ACCOMMODATION" FOR ADDITIONAL DEVICES AND INFORMATION

EXACT LOCATIONS OF SIGNS AND DEVICES TO BE DETERMINED BY ENGINEER IN FIELD

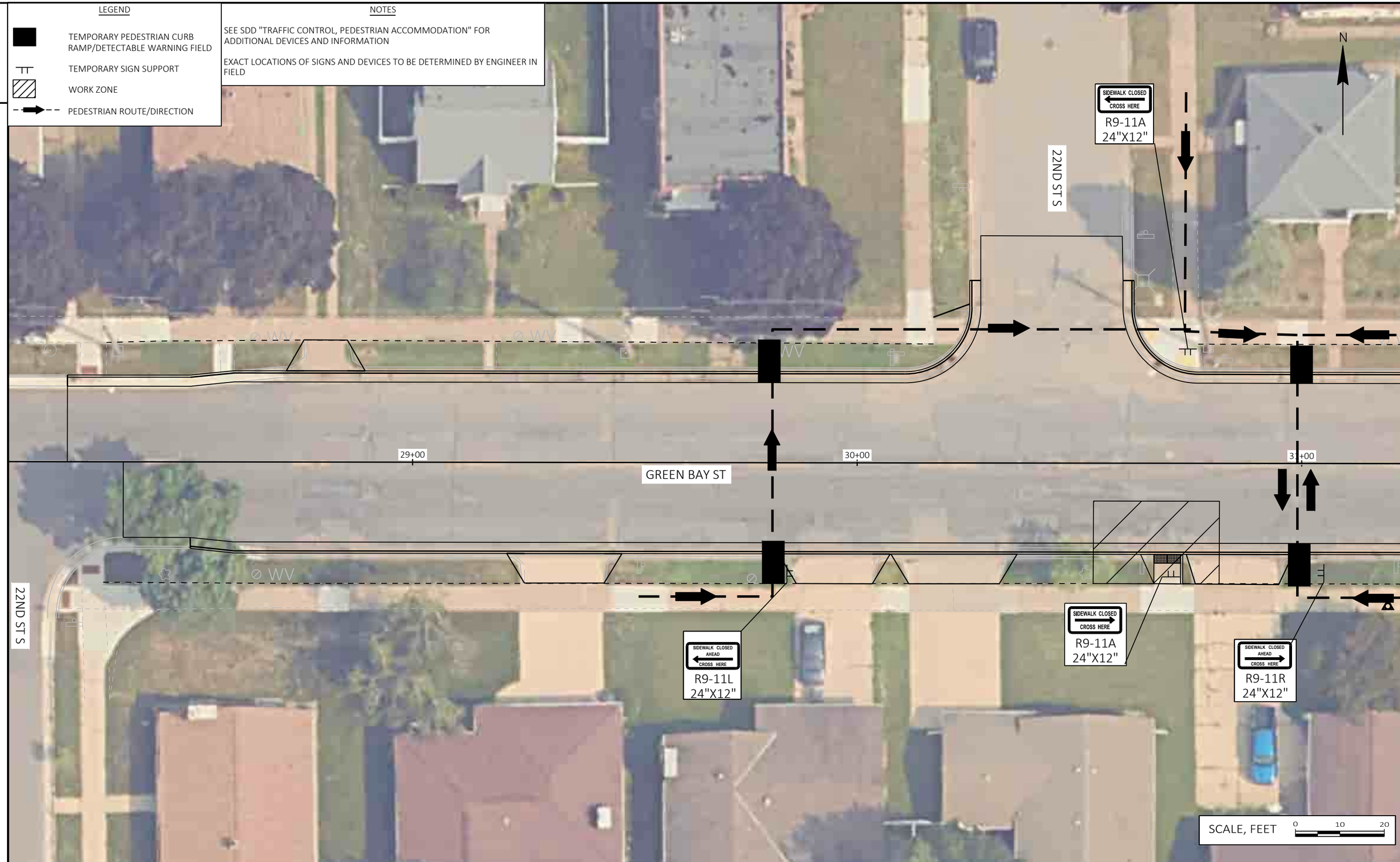

2

PROJECT NO: 5991-07-78 & 79	HWY: GREEN BAY STREET	COUNTY: LA CROSSE	TRAFFIC CONTROL-PEDESTRIAN STAGING (DETAIL C)-SOUTH RAMP CONSTRUCTION	SHEET 31	E

2

POST WITH ATTACHED SIGN

COVER EXISTING SIGN

DETOUR ROUTE

TYPE III BARRICADE WITH/WITHOUT SIGN

NOTES: THE EXACT NUMBER, LOCATION AND SPACING OF ALL SIGNS AND DEVICES SHALL BE IN ACCORDANCE WITH THE LATEST EDITION OF THE MUTCD. ADJUSTMENTS TO FIT FIELD CONDITIONS SHALL BE APPROVED BY THE ENGINEER.

"WO" SIGNS ARE THE SAME AS "W" SIGNS AND "MO" SIGNS ARE THE SAME AS "M" SIGNS EXCEPT THE BACKGROUND IS ORANGE.

ANY SIGNS TEMPORARY OR EXISTING WHICH CONFLICT WITH TRAFFIC CONTROL "IN USE" SHALL BE REMOVED OR COVERED AS NEEDED AND AS APPROVED BY THE ENGINEER. THIS WORK WILL BE INCIDENTAL TO THE TRAFFIC CONTROL ITEM.

THE SPACING BETWEEN TRAFFIC CONTROL AND DETOUR SIGNS SHOULD BE ADJUSTED TO PROVIDE A DESIRABLE MINIMUM OF 200 FEET CLEARANCE TO EXISTING SIGNS THAT WILL REMAIN IN PLACE.

SEE TRAFFIC CONTROL PLAN FOR ADDITIONAL SIGNING.

MAP SHOWN IS NOT TO SCALE.

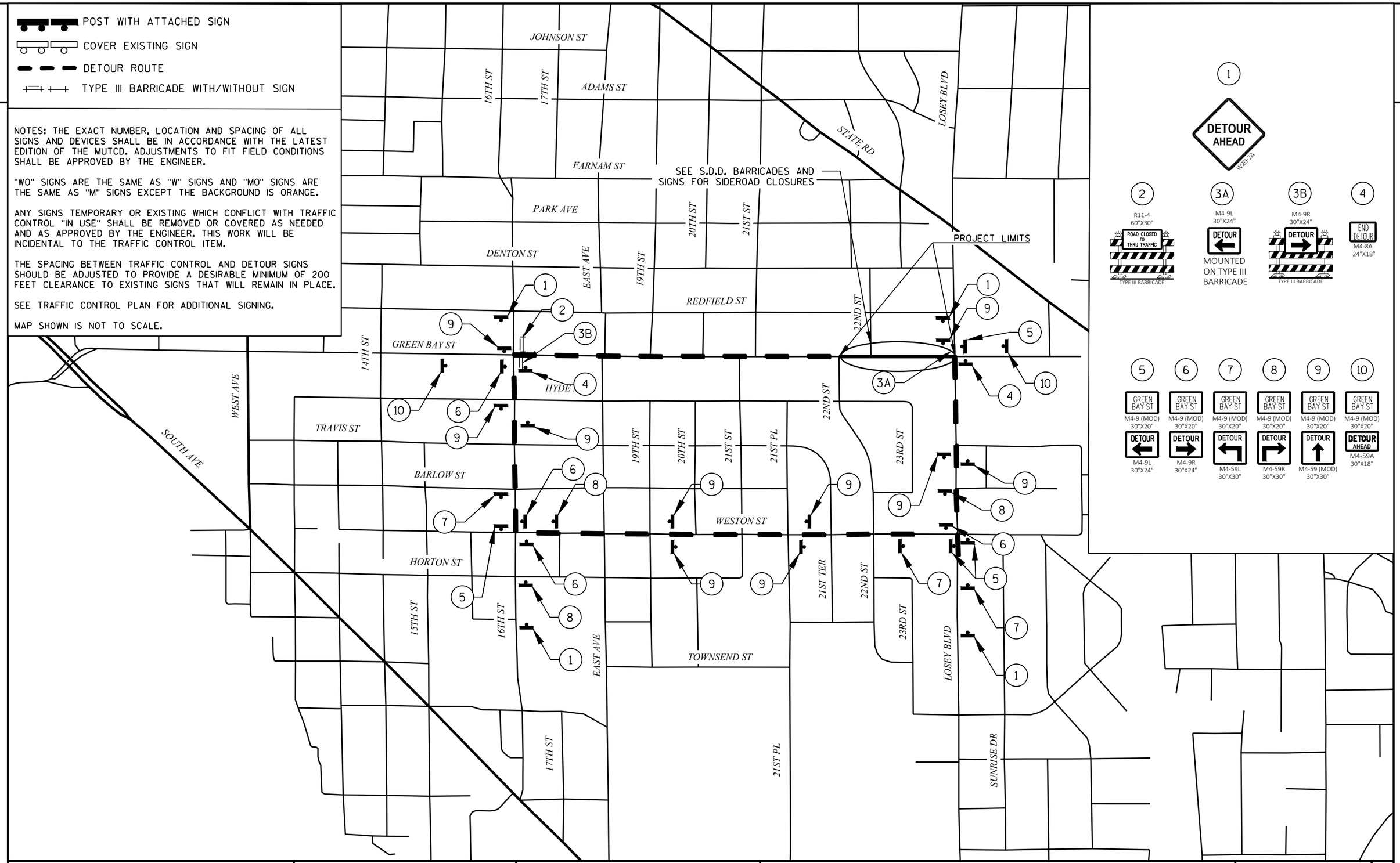

2

PROJECT NO: 5991-07-78 & 79	HWY: GREEN BAY STREET	COUNTY: LA CROSSE	DETOUR PLAN	SHEET 32	E

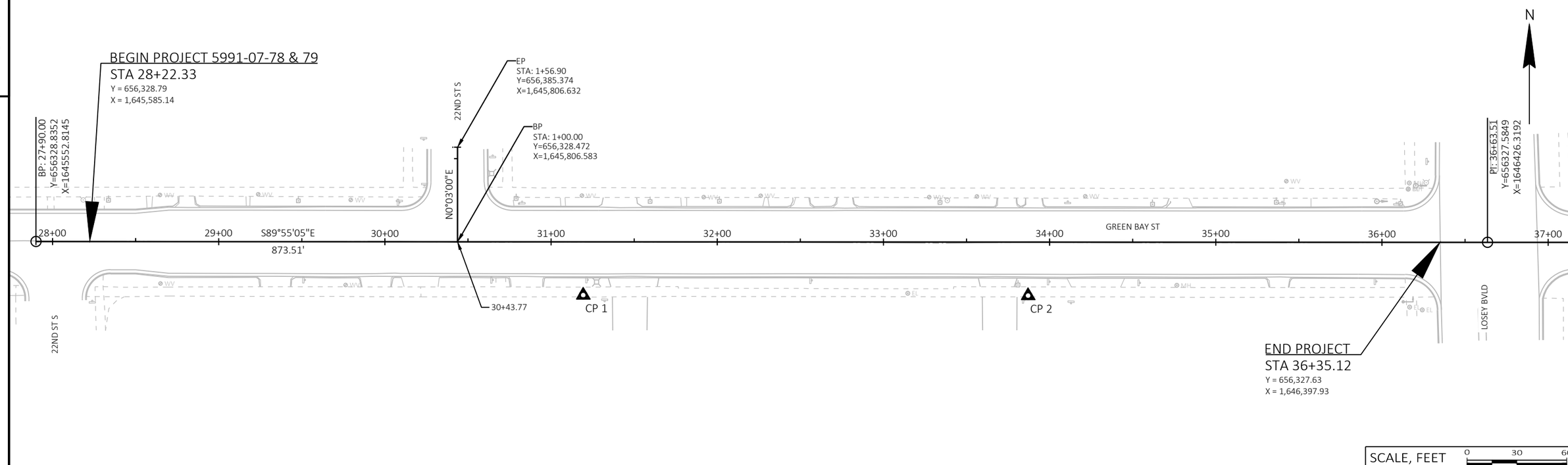

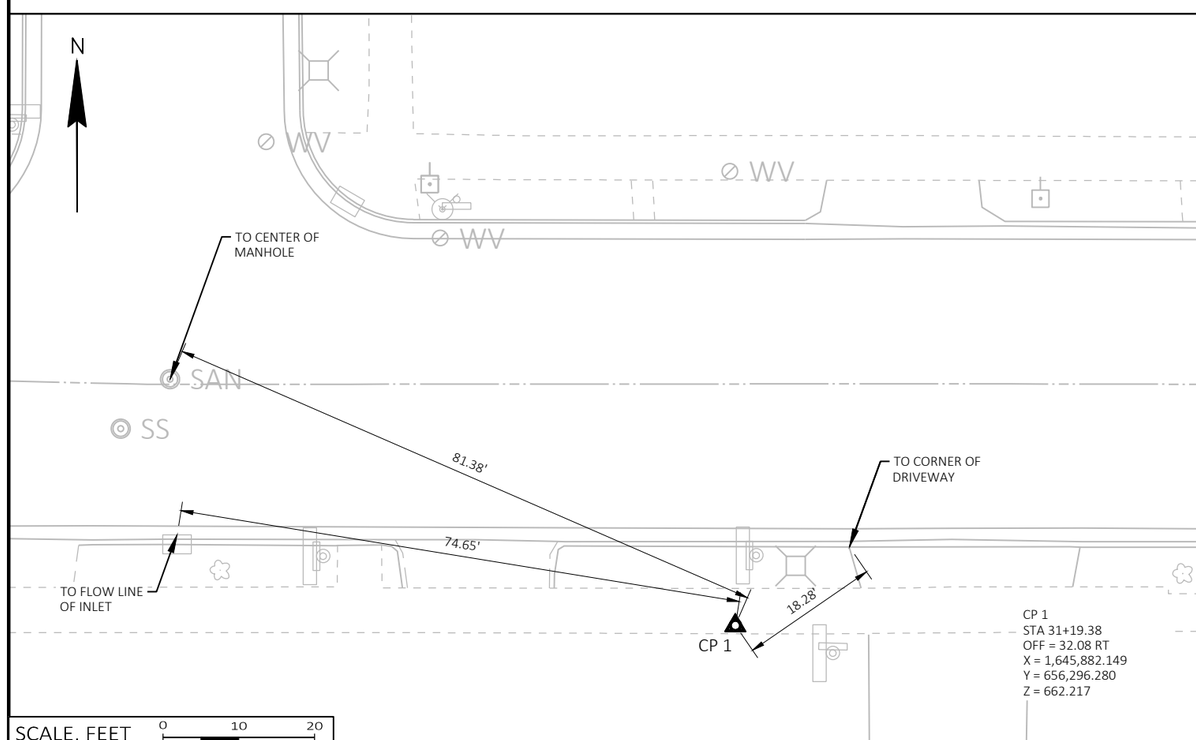

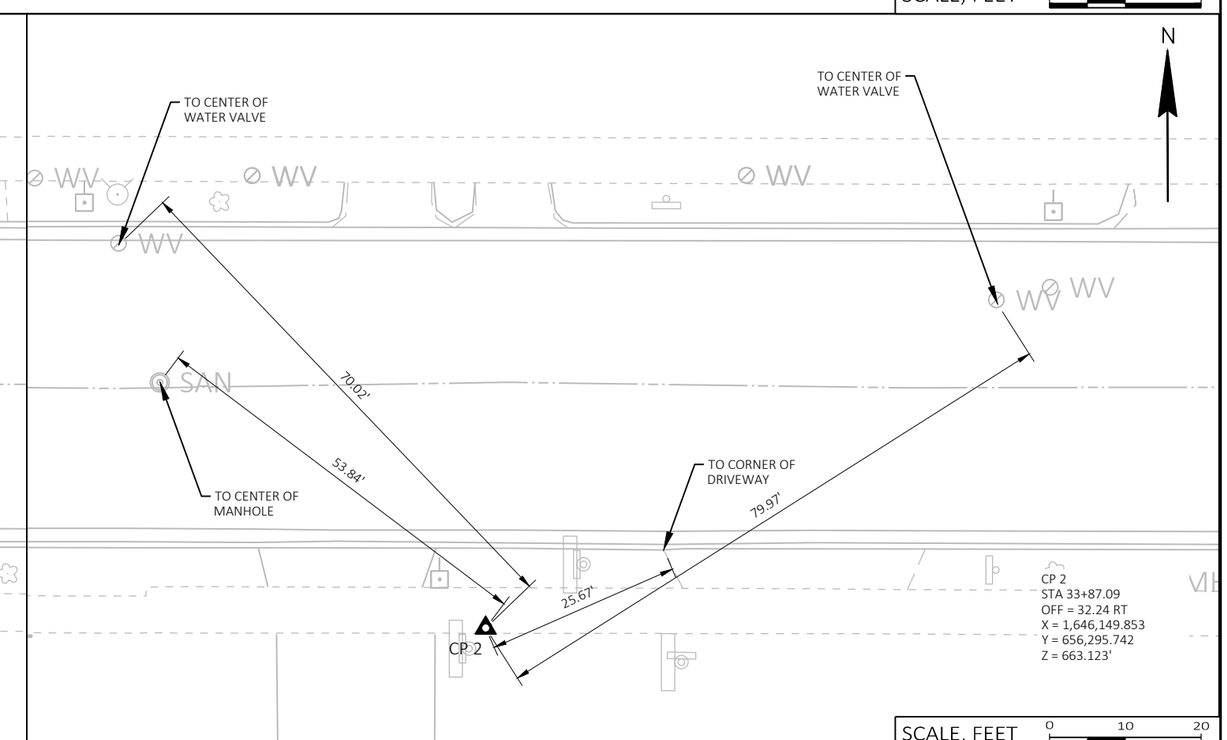

PROJECT NO: 5991-07-78 & 79	HWY: GREEN BAY STREET	COUNTY: LA CROSSE	ALIGNMENT DETAIL	SHEET 33	E

Estimate Of Quantities

Line	Item	Item Description	Unit	Total	5991-07-78 Qty	5991-07-79 Qty
0002	204.0100	Removing Concrete Pavement	SY	303.000	303.000	
0004	204.0150	Removing Curb & Gutter	LF	1,552.000	1,552.000	
0006	204.0155	Removing Concrete Sidewalk	SY	55.000	55.000	
0008	204.0210	Removing Manholes	EACH	1.000	1.000	
0010	204.0215	Removing Catch Basins	EACH	3.000	3.000	
0012	204.0245	Removing Storm Sewer (size) 01. 12-Inch	LF	97.000	97.000	
0014	204.0245	Removing Storm Sewer (size) 02. 24-Inch	LF	225.000	225.000	
0016	204.9090.S	Removing (item description) 01. Removing Water Main	LF	916.000		916.000
0018	205.0100	Excavation Common	CY	2,257.000	2,257.000	
0020	211.0101	Prepare Foundation for Asphaltic Paving (project) 01. 5991-07-78	EACH	1.000	1.000	
0022	213.0100	Finishing Roadway (project) 01. 5991-07-78	EACH	1.000	1.000	
0024	305.0120	Base Aggregate Dense 1 1/4-Inch	TON	3,046.000	3,046.000	
0026	415.0310	Concrete Alley	SY	54.000	54.000	
0028	455.0605	Tack Coat	GAL	195.000	195.000	
0030	460.2000	Incentive Density HMA Pavement	DOL	600.000	600.000	
0032	460.5223	HMA Pavement 3 LT 58-28 S	TON	575.000	575.000	
0034	460.5224	HMA Pavement 4 LT 58-28 S	TON	383.000	383.000	
0036	520.8000	Concrete Collars for Pipe	EACH	2.000	2.000	
0038	601.0419	Concrete Curb & Gutter 30-Inch Type L	LF	1,159.000	1,159.000	
0040	601.0600	Concrete Curb Pedestrian	LF	12.000	12.000	
0042	602.0405	Concrete Sidewalk 4-Inch	SF	133.000	133.000	
0044	602.0410	Concrete Sidewalk 5-Inch	SF	438.000	438.000	
0046	602.0515	Curb Ramp Detectable Warning Field Natural Patina	SF	36.000	36.000	
0048	602.0810	Concrete Driveway 6-Inch	SY	153.000	153.000	
0050	602.0865	Concrete Driveway HES 7-Inch	SY	25.000	25.000	
0052	608.0336	Storm Sewer Pipe Reinforced Concrete Class III 36-Inch	LF	177.000	177.000	
0054	608.0342	Storm Sewer Pipe Reinforced Concrete Class III 42-Inch	LF	581.000	581.000	
0056	611.8120.S	Cover Plates Temporary	EACH	13.000	12.000	1.000
0058	612.0902.S	Insulation Board Polystyrene (inch) 01. 2-Inch	SY	24.000		24.000
0060	619.1000	Mobilization	EACH	1.000	1.000	
0062	624.0100	Water	MGAL	46.000	46.000	
0064	628.1905	Mobilizations Erosion Control	EACH	4.000	4.000	
0066	628.1910	Mobilizations Emergency Erosion Control	EACH	2.000	2.000	
0068	628.7015	Inlet Protection Type C	EACH	8.000	8.000	
0070	628.7560	Tracking Pads	EACH	2.000	2.000	
0072	637.2210	Signs Type II Reflective H	SF	12.680	12.680	
0074	638.2602	Removing Signs Type II	EACH	2.000	2.000	
0076	638.3000	Removing Small Sign Supports	EACH	2.000	2.000	
0078	642.5001	Field Office Type B	EACH	1.000	1.000	
0080	643.0300	Traffic Control Drums	DAY	850.000	850.000	
0082	643.0420	Traffic Control Barricades Type III	DAY	855.000	855.000	
0084	643.0705	Traffic Control Warning Lights Type A	DAY	1,310.000	1,310.000	
0086	643.0715	Traffic Control Warning Lights Type C	DAY	50.000	50.000	
0088	643.0800	Traffic Control Arrow Boards	DAY	10.000	10.000	
0090	643.0900	Traffic Control Signs	DAY	2,610.000	2,610.000	
0092	643.5000	Traffic Control	EACH	1.000	1.000	
0094	644.1430	Temporary Pedestrian Surface Plate	SF	80.000	80.000	
0096	644.1601	Temporary Pedestrian Curb Ramp	DAY	20.000	20.000	
0098	644.1605	Temporary Pedestrian Detectable Warning Field	SF	40.000	40.000	

Line	Item	Item Description	Unit	Total	5991-07-78 Qty	5991-07-79 Qty
0100	644.1810	Temporary Pedestrian Barricade	LF	20.000	20.000	
0102	646.1040	Marking Line Grooved Wet Ref Epoxy 4-Inch	LF	372.000	372.000	
0104	646.3040	Marking Line Grooved Wet Ref Epoxy 8-Inch	LF	100.000	100.000	
0106	650.4000	Construction Staking Storm Sewer	EACH	12.000	12.000	
0108	650.4500	Construction Staking Subgrade	LF	813.000	813.000	
0110	650.5000	Construction Staking Base	LF	813.000	813.000	
0112	650.5500	Construction Staking Curb Gutter and Curb & Gutter	LF	1,494.000	1,494.000	
0114	650.9000	Construction Staking Curb Ramps	EACH	3.000	3.000	
0116	650.9500	Construction Staking Sidewalk (project) 01. 5991-07-78	EACH	1.000	1.000	
0118	650.9911	Construction Staking Supplemental Control (project) 01. 5991-07-78	EACH	1.000	1.000	
0120	650.9920	Construction Staking Slope Stakes	LF	813.000	813.000	
0122	690.0150	Sawing Asphalt	LF	159.000	159.000	
0124	690.0250	Sawing Concrete	LF	83.000	83.000	
0126	715.0720	Incentive Compressive Strength Concrete Pavement	DOL	500.000	500.000	
0128	ASP.1T0A	On-the-Job Training Apprentice at $5.00/HR	HRS	1,200.000	1,200.000	
0130	ASP.1T0G	On-the-Job Training Graduate at $5.00/HR	HRS	600.000	600.000	
0132	SPV.0060	Special 01. Manhole Covers Special	EACH	3.000	3.000	
0134	SPV.0060	Special 02. Catch Basin Covers Special	EACH	9.000	9.000	
0136	SPV.0060	Special 03. Catch Basins 4-FT Diameter	EACH	9.000	9.000	
0138	SPV.0060	Special 04. Manholes 6-FT Diameter	EACH	2.000	2.000	
0140	SPV.0060	Special 05. Manholes 8-FT Diameter	EACH	1.000	1.000	
0142	SPV.0060	Special 06. Concrete Manhole Collars	EACH	5.000	3.000	2.000
0144	SPV.0060	Special 07. Removing Sanitary Manholes	EACH	2.000		2.000
0146	SPV.0060	Special 08. Sanitary Manholes 4-FT Diameter	EACH	1.000		1.000
0148	SPV.0060	Special 09. Sanitary Manhole Covers	EACH	2.000		2.000
0150	SPV.0060	Special 10. Connecting to Existing Sanitary Sewer	EACH	2.000		2.000
0152	SPV.0060	Special 11. Construction Staking Sanitary Manholes	EACH	1.000		1.000
0154	SPV.0060	Special 12. Adjusting Water Valves	EACH	1.000		1.000
0156	SPV.0060	Special 13. Remove Valves	EACH	8.000		8.000
0158	SPV.0060	Special 14. Water Valves	EACH	8.000		8.000
0160	SPV.0060	Special 15. Curb Stop and Box, 1-Inch	EACH	14.000		14.000
0162	SPV.0060	Special 16. Remove Hydrants	EACH	1.000		1.000
0164	SPV.0060	Special 17. New Hydrants	EACH	2.000		2.000
0166	SPV.0060	Special 18. Hydrant Tees, 12-Inch X 6-Inch	EACH	2.000		2.000
0168	SPV.0060	Special 19. Posts Steel U-Channel 14-FT	EACH	2.000	2.000	
0170	SPV.0060	Special 20. Relocate Water Valves	EACH	1.000		1.000
0172	SPV.0060	Special 21. Marking Arrow Grooved Epoxy	EACH	2.000	2.000	
0174	SPV.0090	Special 01. Reinforced Concrete Curb & Gutter	LF	157.000	157.000	
0176	SPV.0090	Special 02. Concrete Curb & Gutter 30-Inch Type L Variable Height	LF	178.000	178.000	
0178	SPV.0090	Special 03. Storm Sewer Pipe PVC SDR 35 12-Inch	LF	318.000	318.000	
0180	SPV.0090	Special 04. Sanitary Sewer Main PVC SDR 35 10-Inch	LF	773.000		773.000
0182	SPV.0090	Special 05. Sanitary Sewer Lateral PVC SDR 35 6-Inch	LF	38.000		38.000
0184	SPV.0090	Special 06. Removing Sanitary Sewer Pipe	LF	110.000		110.000
0186	SPV.0090	Special 07. Water Main, 12-Inch	LF	634.000		634.000
0188	SPV.0090	Special 08. Water Main, 16-Inch	LF	148.000		148.000
0190	SPV.0090	Special 09. Water Service Copper, 1-Inch	LF	371.000		371.000
0192	SPV.0090	Special 10. Finishing for Curb and Gutter	LF	1,582.000	1,582.000	
0194	SPV.0090	Special 11. Sanitary Sewer Main PVC SDR 35 8-Inch	LF	652.000		652.000
0196	SPV.0090	Special 12. Marking Stop Line Grooved Epoxy 12-Inch	LF	37.000	37.000	

Estimate Of Quantities

Line	Item	Item Description	Unit	Total	5991-07-78 Qty	5991-07-79 Qty
0198	SPV.0090	Special 13. Marking Crosswalk Transverse Line Grooved Epoxy 12-Inch	LF	228.000	228.000	
0200	SPV.0090	Special 14. Water Main, 6-Inch	LF	88.000		88.000

ID 5991-07-78

3

REMOVING CONCRETE PAVEMENT

CATEGORY	STATION	TO	STATION	LOCATION	204.0100 SY	REMARKS
0010	28+73	-	28+89	GREEN BAY ST	10	DWY LT
0010	29+23	-	29+46	GREEN BAY ST	15	DWY RT
0010	29+84	-	30+06	GREEN BAY ST	14	DWY RT
0010	30+10	-	30+33	GREEN BAY ST	14	DWY RT
0010	30+74	-	30+97	GREEN BAY ST	15	DWY RT
0010	31+29	-	31+55	GREEN BAY ST	13	DWY LT
0010	31+34	-	31+65	GREEN BAY ST	18	DWY RT
0010	32+42	-	32+58	GREEN BAY ST	9	DWY LT
0010	32+69	-	32+85	GREEN BAY ST	9	DWY LT
0010	33+57	-	33+81	GREEN BAY ST	13	DWY RT
0010	33+66	-	33+83	GREEN BAY ST	9	DWY LT
0010	33+83	-	33+99	GREEN BAY ST	8	DWY LT
0010	34+11	-	34+45	GREEN BAY ST	19	DWY RT
0010	34+68	-	34+86	GREEN BAY ST	10	DWY LT
0010	35+30	-	35+47	GREEN BAY ST	10	DWY RT
0010	36+13	-	36+35	GREEN BAY ST	117	MAINLINE
				PROJECT TOTALS =	303	

REMOVING CONCRETE SIDEWALK

CATEGORY	STATION	LOCATION	204.0155 SY	REMARKS
0010	28+58	GREEN BAY ST LT	3	TERRACE SIDEWALK
0010	29+18	GREEN BAY ST LT	2	TERRACE SIDEWALK
0010	29+71	GREEN BAY ST LT	5	TERRACE SIDEWALK
0010	30+17	GREEN BAY ST LT	9	NW CURB RAMP
0010	30+62	GREEN BAY ST LT	16	NE CURB RAMP
0010	30+70	GREEN BAY ST RT	4	SE CURB RAMP
0010	31+07	GREEN BAY ST LT	2	TERRACE SIDEWALK
0010	31+80	GREEN BAY ST LT	3	TERRACE SIDEWALK
0010	32+29	GREEN BAY ST LT	2	TERRACE SIDEWALK
0010	35+50	GREEN BAY ST LT	9	BUS STOP PAD
		PROJECT TOTALS =	55	

3

CURB & GUTTER SUMMARY

CATEGORY	STATION	TO	STATION	LOCATION	REMOVING CURB & GUTTER 204.0150 LF	(1) CONCRETE CURB & GUTTER 30-INCH TYPE L 601.0419 LF	(2) REINFORCED CONCRETE CURB & GUTTER SPV.0090.01 LF	(3) CONCRETE CURB & GUTTER 30-INCH TYPE L VARIABLE HEIGHT SPV.0090.02 LF	REMARKS
0010	28+22	-	28+72	LT	50	-	-	50	
0010	28+72	-	28+89	LT	17	17	-	-	
0010	28+89	-	29+50	LT	61	-	-	61	
0010	29+50	-	30+27	LT	94	94	-	-	
0010	30+62	-	30+79	LT	33	33	-	-	
0010	30+79	-	31+19	LT	40	-	40	-	
0010	31+19	-	35+43	LT	424	424	-	-	
0010	35+43	-	35+83	LT	40	-	40	-	
0010	35+83	-	36+13	LT	30	30	-	-	
0010	28+50	-	30+36	RT	186	186	-	-	
0010	30+36	-	30+76	RT	40	-	40	-	
0010	30+76	-	30+98	RT	22	22	-	-	
0010	30+98	-	31+32	RT	34	-	-	34	
0010	31+32	-	33+54	RT	222	192	-	-	
0010	33+54	-	33+90	RT	36	8	-	-	
0010	33+90	-	34+10	RT	20	-	-	20	
0010	34+10	-	34+47	RT	37	-	37	-	
0010	34+47	-	34+60	RT	13	-	-	13	
0010	34+60	-	36+13	RT	153	153	-	-	
				PROJECT TOTALS =	1,552	1,159	157	178	

NOTES:

(1) SEE CONSTRUCTION DETAIL 'STANDARD CURB & GUTTER SECTION' FOR CITY OF LA CROSSE REQUIREMENTS

(2) SEE CONSTRUCTION DETAIL 'REINFORCED CONCRETE CURB & GUTTER BUS STOP LOCATIONS' FOR CITY OF LA CROSSE REQUIREMENTS

(3) SEE CONSTRUCTION DETAIL 'STANDARD CURB & GUTTER SECTION' FOR CITY OF LA CROSSE REQUIREMENTS, 4" MINIMUM C&G INSTALLED AT ALLEY LOCATIONS (STA. 31+32-31+62, STA.33+54-33+82) IS PLACED INTEGRALLY WITH ALLEY CONCRETE AND IS INCIDENTAL TO CONCRETE ALLEY ITEM.

3

REMOVING STORM SEWER PIPES SUMMARY

CATEGORY	LOCATION	REMOVING STORM SEWER 12-INCH 204.0245.01 LF	REMOVING STORM SEWER 24-INCH 204.0245.02 LF	REMARKS
0010	GREEN BAY ST	-	177	
0010	GREEN BAY ST	-	48	22ND ST
0010	GREEN BAY ST	46	-	
0010	GREEN BAY ST	35	-	
0010	GREEN BAY ST	16	-	
	PROJECT TOTALS =	97	225	

3

DIVISION	FROM/TO STATION	LOCATION	205.0100 COMMON EXCAVATION (1) CUT (2)	205.0100 COMMON EXCAVATION (1) EBS EXCAVATION (3)	SALVAGED/UNUSABLE PAVEMENT MATERIAL (4)	AVAILABLE MATERIAL (5)	205.0500 MARSH EXCAVATION (6)	205.0200 ROCK EXCAVATION (7)	UNEXPANDED FILL	EXPANDED FILL (6) FACTOR 1.25	MASS ORDINATE +/- (7)	WASTE	208.0100 BORROW	COMMENT
DIVISION 1														
GREEN BAY ST.	STA 28+22 - STA 36+35	MAINLINE	2,257	0	553	1,704	-	-	0	0	1,704	1,704	0	
DIVISION 1 SUBTOTAL	SUBTOTAL		2,257	0	553	1,704	0	0	0	0	1,704			
GRAND TOTAL	GRAND TOTAL		2,257	0	553	1,704	0	0	0	0	1,704	1,704	0	
	TOTAL COMMON EXC		2,257											

NOTES:
(1) COMMON EXCAVATION IS THE SUM OF THE CUT AND EBS EXCAVATION COLUMNS. ITEM NUMBER 205.0100
(2) SALVAGED/UNUSABLE PAVEMENT MATERIAL IS INCLUDED IN CUT.
(4) SALVAGED/UNUSABLE PAVEMENT MATERIAL
(5) AVAILABLE MATERIAL = CUT - SALVAGED/UNUSABLE PAVEMENT MATERIAL
(6) EXPANDED FILL FACTOR = 1.25
(7) THE MASS ORDINATE + OR - QTY CALCULATED FOR THE DIVISION. PLUS QUANTITY INDICATES AN EXCESS OF MATERIAL WITHIN THE DIVISION. MINUS INDICATES A SHORTAGE OF MATERIAL WITHIN THE DIVISION.

*FACTORS USED TO COMPUTE ANTICIPATED WASTE AND THE COMPUTED WASTE VOLUME IDENTIFIED ARE FOR GENERAL INFORMATION ONLY.
*SALVAGED/UNUSABLE PAVEMENT MATERIAL APPROXIMATED BASED ON BORING INFORMATION. SEE GENERAL NOTES FOR BORING TABLE.

ID 5991-07-78

3

BASE AGGREGATE DENSE 1 1/4-INCH

CATEGORY	STATION	TO	STATION	LOCATION	305.0120 TON
0010	28+22	-	36+35	GREEN BAY ST	3,015
0010	28+22	-	36+35	DRIVEWAYS/BUS STOPS	25
0010	28+22	-	36+35	SIDWALK RAMPS	6
				PROJECT TOTALS =	3,046

3

CONCRETE DRIVEWAY & ALLEY

CATEGORY	STATION	TO	STATION	LOCATION		CONCRETE ALLEY 415.0310 SY	CONCRETE DRIVEWAY 6-INCH 602.0810 SY	CONCRETE DRIVEWAY HES 7-INCH 602.0865 SY	REMARKS
0010	28+71	-	28+89	GREEN BAY ST	LT	-	11	-	
0010	29+21	-	29+47	GREEN BAY ST	RT	-	17	-	
0010	29+82	-	30+07	GREEN BAY ST	RT	-	16	-	
0010	30+07	-	30+36	GREEN BAY ST	RT	-	19	-	
0010	30+74	-	30+99	GREEN BAY ST	RT	-	17	-	
0010	31+28	-	31+55	GREEN BAY ST	LT	-	16	-	
0010	31+32	-	31+62	ARIZONA CT	RT	28	-	-	7-INCH CONCRETE
0010	32+43	-	32+59	GREEN BAY ST	LT	-	9	-	
0010	32+68	-	32+85	GREEN BAY ST	LT	-	10	-	
0010	33+54	-	33+82	COLORADO CT	RT	26	-	-	7-INCH CONCRETE
0010	33+65	-	33+83	GREEN BAY ST	LT	-	10	-	
0010	33+83	-	33+99	GREEN BAY ST	LT	-	9	-	
0010	34+09	-	34+47	GREEN BAY ST	RT	-	-	25	
0010	34+68	-	34+88	GREEN BAY ST	LT	-	9	-	
0010	35+29	-	35+48	GREEN BAY ST	RT	-	10	-	
				PROJECT TOTALS =		54	153	25	

NOTE: THE C&G INSTALLED AT ALLEY LOCATIONS (STA. 31+32-31+62, STA.33+54-33+82) IS PLACED INTEGRALLY WITH ALLEY CONCRETE AND IS INCIDENTAL TO CONCRETE ALLEY ITEM.

ASPHALT ITEMS SUMMARY

CATEGORY	STATION	TO	STATION	LOCATION	TACK COAT 455.0605 GAL	HMA PAVEMENT 3 LT 58-28 S 460.5223 TON	HMA PAVEMENT 4 LT 58-28 S 460.5224 TON	REMARKS
0010	28+22	-	36+35	GREEN BAY ST	-	575	-	BINDER LAYER
0010	28+22	-	36+35	GREEN BAY ST	195	-	383	SURFACE LAYER
				PROJECT TOTALS =	195	575	383	

ID 5991-07-78

3

SIDEWALK SUMMARY

CATEGORY	STATION	LOCATION	CONCRETE CURB PEDESTRIAN 601.0600 LF	CONCRETE SIDEWALK 4-INCH 602.0405 SF	CONCRETE SIDEWALK 5-INCH 602.0410 SF	CURB RAMP DETECTABLE WARNING FIELD NATRUAL PATINA 602.0515 SF	REMARKS
0010	28+58	GREEN BAY ST LT	-	24	-	-	TERRACE SIDEWALK
0010	29+18	GREEN BAY ST LT	-	14	-	-	TERRACE SIDEWALK
0010	29+71	GREEN BAY ST LT	-	45	-	-	TERRACE SIDEWALK
0010	30+17	GREEN BAY ST LT	5	-	77	12	22ND ST NW CURB RAMP
0010	30+59	GREEN BAY ST RT	-	-	66	-	BUS STOP PAD
0010	30+62	GREEN BAY ST LT	-	-	116	12	22ND ST NE CURB RAMP
0010	30+69	GREEN BAY ST RT	7	-	40	12	22ND ST SE CURB RAMP
0010	30+86	GREEN BAY ST LT	-	-	63	-	BUS STOP PAD
0010	31+07	GREEN BAY ST LT	-	15	-	-	TERRACE SIDEWALK
0010	31+80	GREEN BAY ST LT	-	19	-	-	TERRACE SIDEWALK
0010	32+29	GREEN BAY ST LT	-	16	-	-	TERRACE SIDEWALK
0010	35+50	GREEN BAY ST LT	-	-	76	-	BUS STOP PAD
		PROJECT TOTALS =	12	133	438	36	

STORM SEWER PIPES SUMMARY

CATEGORY	FROM	-	TO	CONCRETE COLLARS FOR PIPE 520.8000 EACH	STORM SEWER PIPE REINFORCED CONCRETE CLASS III 36-INCH 608.0336 LF	STORM SEWER PIPE REINFORCED CONCRETE CLASS III 42-INCH 608.0342 LF	STORM SEWER PIPE PVC SDR 35 12-INCH SPV.0090.03 LF	INLET ELEVATION	DISCHARGE ELEVATION	SLOPE FT/FT	REMARKS
0010	STUB	-	1.0	1.0	177	-	-	654.50	653.75	0.0042	TRUNK LINE TIE-IN
0010	1.0	-	2.0	-	-	262	-	652.75	651.44	0.0050	
0010	1.0	-	STUB	1	-	-	48	653.75	-	-	22ND ST S TIE-IN
0010	1.1	-	1.5	-	-	-	38	657.34	657.23	0.0030	
0010	1.2	-	1.3	-	-	-	42	657.48	657.35	0.0030	
0010	1.3	-	1.0	-	-	-	34	657.35	657.15	0.0059	
0010	1.4	-	1.0	-	-	-	17	656.00	655.90	0.0060	
0010	1.5	-	1.4	-	-	-	61	656.19	656.00	0.0030	
0010	2.0	-	3.0	-	-	303	-	651.44	649.92	0.0050	
0010	2.1	-	2.0	-	-	-	25	657.10	657.00	0.0039	
0010	2.2	-	2.0	-	-	-	13	657.10	657.00	0.0078	
0010	3.0	-	STUB	-	-	16	-	649.24	649.16	0.0050	
0010	3.1	-	3.0	-	-	-	32	658.10	658.00	0.0031	
0010	3.2	-	3.0	-	-	-	8	658.10	658.00	0.0123	
	PROJECT TOTALS =			2	177	581	318				

3

STORM SEWER STRUCTURES SUMMARY

CATEGORY	STRUCTURE	(A) STATION	(A) OFFSET	REMOVING MANHOLES 204.0210 EACH	REMOVING CATCH BASINS 204.0215 EACH	CATCH BASINS 4-FT DIAMETER SPV.0060.03 EACH	MANHOLES 6-FT DIAMETER SPV.0060.04 EACH	MANHOLES 8-FT DIAMETER SPV.0060.05 EACH	MANHOLE COVERS SPECIAL SPV.0060.01 EACH	(G) CATCH BASIN COVERS SPECIAL SPV.0060.02 EACH	(F) CONCRETE MANHOLE COLLARS SPV.0060.06 EACH	(F) COVER PLATES TEMPORARY 611.8120.S EACH	CONSTRUCTION STAKING STORM SEWER 650.4000 EACH	(E) RIM ELEVATION	(B) INVERT ELEVATION	(C) SUMP ELEVATION	(D) DEPTH FT
0010	1.0	30+38.18	6.24' RT	1	-	-	-	1	1	-	1	1	1	661.67	652.75	-	8.29
0010	1.1	31+10.85	19.10' LT	-	1	1	-	-	-	1	-	1	1	661.52	657.34	655.84	5.14
0010	1.2	30+60.84	37.52' LT	-	-	1	-	-	-	1	-	1	1	661.29	657.48	655.98	4.77
0010	1.3	30+21.18	22.98' LT	-	1	1	-	-	-	1	-	1	1	661.24	657.35	655.85	4.85
0010	1.4	30+50.00	19.10' RT	-	1	1	-	-	-	1	-	1	1	661.38	656.00	654.50	6.34
0010	1.5	31+10.85	19.10' RT	-	-	1	-	-	-	1	-	1	1	661.52	656.19	654.69	6.29
0010	2.0	33+00.00	6.23' RT	-	-	-	1	-	1	-	1	1	1	662.45	651.44	-	10.39
0010	2.1	32+99.94	19.10' LT	-	-	1	-	-	-	1	-	1	1	662.17	657.10	655.60	6.03
0010	2.2	33+00.00	19.10' RT	-	-	1	-	-	-	1	-	1	1	662.17	657.10	655.60	6.03
0010	3.0	36+03.00	12.00' RT	-	-	-	1	-	1	-	1	1	1	663.37	649.24	-	13.51
0010	3.1	36+03.00	20.10' LT	-	-	1	-	-	-	1	-	1	1	663.18	658.10	656.60	6.04
0010	3.2	36+03.00	20.10' RT	-	-	1	-	-	-	1	-	1	1	663.18	658.10	656.60	6.04
			PROJECT TOTALS =	1	3	9	2	1	3	9	3	12	12				

REMARKS

(A) STATIONS AND OFFSETS ARE TO CENTER OF STRUCTURE
(B) THE INVERT ELEVATION IS THE ELEVATION OF THE LOWEST PIPE FLOW LINE
(C) THE SUMP ELEVATION IS FOR STRUCTURES REQUIRING SUMP.
(D) DEPTH = RIM ELEV - TOP OF STRUCTURE BASE ELEV - COVER HEIGHT - 6 -INCH ADJUSTMENT RING HEIGHT
(E) RIM ELEVATION IS AT FLAG OF CURB
(F) CONTRACT ITEM SHOWN ELSEWHERE IN PLANS
(G) TYPE A CATCH BASIN CASTING REQUIRED FOR 36" X 30" OPENING

NOTES:
MANHOLE COVERS SPECIAL- COVER HEIGHT = 7-15/32"
CATCH BASIN COVERS SPECIAL- COVER HEIGHT = 6.5"

WATER

CATEGORY	LOCATION	624.0100 MGAL	REMARKS
0010	GREEN BAY ST	46	1 1/4-IN BAD
	PROJECT TOTAL =	46	

MOBILIZATION EROSION CONTROL

CATEGORY	LOCATION	MOBILIZATIONS EROSION CONTROL 628.1905 EACH	MOBILIZATIONS EMERGENCY EROSION CONTROL 628.1910 EACH	REMARKS
0010	PROJECT LIMITS	4	2	
	PROJECT TOTALS =	4	2	

3

ID 5991-07-78

3

INLET PROTECTION TYPE C

CATEGORY	STRUCTURE	STATION	LOCATION	628.7015 EACH
0010	1.1	30+82.67	GREEN BAY ST	1
0010	1.2	30+60.88	GREEN BAY ST	1
0010	1.3	30+21.18	GREEN BAY ST	1
0010	1.4	30+45.72	GREEN BAY ST	1
0010	1.5	30+53.96	GREEN BAY ST	1
0010	2.1	32+99.94	GREEN BAY ST	1
0010	2.2	33+00.00	GREEN BAY ST	1
0010	3.1	36+03.34	GREEN BAY ST	1
			PROJECT TOTAL =	8

TRACKING PADS

CATEGORY	STATION	TO	STATION	628.7560 EACH
0010	BOP	-	EOP	2
			PROJECT TOTAL =	2

3

PERMANENT SIGN SUMMARY

CATEGORY	STA	LOC.	SIZE in	X	in	SIGN CODE	DESCRIPTION	SIGNS TYPE II REFLECTIVE H 637.2210 SF	POSTS STEEL U-CHANNEL 14-FT SPV.0060.19 EACH	REMOVING SIGNS TYPE II 638.2602 EACH	REMOVING SMALL SIGN SUPPORTS 638.3000 EACH	REMARKS
0010	30+22	GREEN BAY LT	30	x	30	R1-1	STOP SIGN	5.18	1	1	1	
0010	34+54	GREEN BAY RT	36	X	30	R3-8	LEFT ONLY/STRAIGHT RIGHT TURN ARROWS	7.5	1	1	1	
							PROJECT TOTALS =	12.68	2	2	2	

TRAFFIC CONTROL SUMMARY

CATEGORY	LOCATION	TRAFFIC CONTROL DRUMS 643.0300 DAY	TRAFFIC CONTROL BARRICADES TYPE III 643.0420 DAY	TRAFFIC CONTROL WARNING LIGHTS TYPE A 643.0705 DAY	TRAFFIC CONTROL WARNING LIGHTS TYPE C 643.0715 DAY	TRAFFIC CONTROL ARROW BOARDS 643.0800 DAY	TRAFFIC CONTROL SIGNS 643.0900 DAY	TOTAL DAYS	# SIGNS	REMARKS
0010	GREEN BAY DETOUR	750	850	1,300	-	-	2,450	50	49	
0010	SIDEWALK CLOSURES	-	-	-	-	-	140	5	28	PEDESTRIAN ACCOMODATIONS
0010	LOSEY INT	100	5	10	50	10	20	5	4	SB SINGLE LANE CLOSURE
0010	VARIES	-	-	-	-	-	-	5	3	1-GREEN BAY, 2-LOSEY BLVD
	PROJECT TOTALS =	850	855	1,310	50	10	2,610			

TEMPORARY PEDESTRIAN SUMMARY

CATEGORY	LOCATION	TEMPORARY PEDESTRIAN SURFACE PLATE 644.1430 SF	TEMPORARY PEDESTRIAN CURB RAMP 644.1601 DAY	TEMPORARY PEDESTRIAN DETECTABLE WARNING FIELD 644.1605 SF	TEMPORARY PEDESTRIAN BARRICADE 644.1810 LF	RAMP QUANTITY	DAYS
0010	22ND ST	80	20	40	20	4	5
	PROJECT TOTALS =	80	20	40	20		

ID 5991-07-78

3

PAVEMENT MARKING SUMMARY

CATEGORY	STATION	TO	STATION	LOCATION	MARKING LINE GROOVED WET REF EPOXY 4-INCH 646.1040 LF	MARKING LINE GROOVED WET REF EPOXY 8-INCH 646.3040 LF	MARKING ARROW GROOVED EPOXY SPV.0060.21 EACH	MARKING STOP LINE GROOVED EPOXY 12-INCH SPV.0090.12 LF	MARKING CROSSWALK TRANSVERSE LINE GROOVED EPOXY 12-INCH SPV.0090.13 LF	REMARKS
0010	28+50	-	35+09	GREEN BAY ST	172	-	-	-	-	CENTERLINE - DASHED - YELLOW
0010	35+09	-	36+09	GREEN BAY ST	200	-	-	-	-	CENTERLINE - SOLID - DOUBLE YELLOW
0010	35+09	-	36+09	GREEN BAY ST	-	100	-	-	-	TURN LANE - WHITE
0010	36+09			GREEN BAY ST	-	-	-	21	-	STOP BAR - WHITE
0010	30+25	-	30+62	GREEN BAY ST	-	-	-	16	69	22ND ST N CROSSWALK - WHITE
0010	30+66	-	30+77	GREEN BAY ST	-	-	-	-	73	GREEN BAY ST CROSSWALK - WHITE
0010	35+29			GREEN BAY ST	-	-	1	-	-	TYPE 2- WHITE
0010	35+81			GREEN BAY ST	-	-	1	-	-	TYPE 2- WHITE
0010	36+14			GREEN BAY ST	-	-	-	-	42	GREEN BAY ST CROSSWALK - WHITE
0010	36+21			GREEN BAY ST	-	-	-	-	44	GREEN BAY ST CROSSWALK - WHITE
0010	36+26	-	36+35	GREEN BAY ST	-	-	-	-	22	LOSEY BLVD CROSSWALKS - WHITE
				PROJECT TOTALS =	372	100	2	37	228	

CONSTRUCTION STAKING SUMMARY

CATEGORY	STATION	STATION	LOCATION	CONSTRUCTION STAKING SUBGRADE 650.4500 LF	CONSTRUCTION STAKING BASE 650.5000 EACH	CONSTRUCTION STAKING CURB GUTTER AND CURB & GUTTER 650.5500 EACH	CONSTRUCTION STAKING CURB RAMPS 650.9000 EACH	CONSTRUCTION STAKING SUPPLEMENTAL CONTROL (5991-07-37) 650.9911 EACH	CONSTRUCTION STAKING SLOPE STAKES 650.9920 LF	REMARKS
0010	28+22	- 36+35	PROJECT LIMITS	813	813	1,494	3	1	813	
			PROJECT TOTAL =	813	813	1,494	3	1	813	

SAWING ASPHALT

CATEGORY	STATION	TO	STATION	LOCATION	690.0150 LF	REMARKS
0010	28+22	-	28+35	GREEN BAY ST	47	BOP
0010	30+28	-	30+60	GREEN BAY ST	32	22ND ST
0010	36+35	-	-	GREEN BAY ST	80	EOP
				PROJECT TOTAL =	159	

SAWING CONCRETE

CATEGORY	STATION	TO	STATION	LOCATION	690.0250 LF	REMARKS
0010	28+50	-	28+50	GREEN BAY ST	5	BOP CG
0010	30+28	-	30+60	GREEN BAY ST	5	22ND ST SOUTH CG
0010	36+13	-	36+35	GREEN BAY ST	73	LOSEY BLVD RADII
				PROJECT TOTAL =	83	

FINISHING FOR CURB AND GUTTER

CATEGORY	STATION	TO	STATION	LOCATION	SPV.0090.10 LF	REMARKS
0010	28+22	-	36+13	GREEN BAY ST - LT & RT	1,582	
				PROJECT TOTAL =	1,582	

3

WATER MAIN SUMMARY

CATEGORY	STATION	OFFSET	LOCATION	REMOVING WATER MAIN 204.9090.S LF	ADJUSTING WATER VALVES SPV.0060.12 EACH	REMOVE VALVES SPV.0060.13 EACH	WATER VALVES SPV.0060.14 EACH	CURB STOP AND BOX, 1-INCH SPV.0060.15 EACH	RELOCATE WATER VALVES SPV.0060.20 EACH	WATER MAIN, 6-INCH SPV.0090.14 LF	WATER MAIN, 12-INCH SPV.0090.07 LF	WATER MAIN, 16-INCH SPV.0090.08 LF	WATER SERVICE COPPER, 1-INCH SPV.0090.09 LF	REMARKS
0010	PROJECT LIMITS		GREEN BAY ST	916	-	-	-	-	-	-	634	148	-	
0010	28+38	10.0' LT	GREEN BAY ST	-	-	-	-	-	1	-	-	-	-	RELOCATE TO STA. 28+28, 13.6' LT
0010	28+52	13.6' LT	GREEN BAY ST	-	-	-	1	-	-	-	-	-	-	12" VALVE
0010	28+65	-	2165 GREEN BAY	-	-	-	-	1	-	-	-	-	18	
0010	28+65	-	1707 22ND ST	-	-	-	-	1	-	-	-	-	35	
0010	29+24	-	2171 GREEN BAY	-	-	-	-	1	-	-	-	-	19	
0010	29+48	13.5' LT	2208 GREEN BAY	-	-	1	1	1	-	-	-	-	36	12" VALVE
0010	29+76	-	2214 GREEN BAY	-	-	-	-	1	-	-	-	-	37	
0010	29+80	-	2177 GREEN BAY	-	-	-	-	1	-	-	-	-	15	
0010	30+09	13.2' LT	GREEN BAY ST	-	-	1	1	-	-	-	-	-	-	12" VALVE
0010	30+57	31.6' LT	22ND ST S	-	1	-	-	-	-	19	-	-	-	
0010	30+62	-	2220 GREEN BAY	-	-	-	-	1	-	-	-	-	37	
0010	30+94	18.5' LT	FIRE HYDRANT	-	-	1	1	-	-	13	-	-	-	6" VALVE
0010	31+06	-	2224 GREEN BAY	-	-	-	-	1	-	-	-	-	39	
0010	31+18	-	2203 GREEN BAY	-	-	-	-	1	-	-	-	-	17	
0010	31+92	-	2211 GREEN BAY	-	-	-	-	1	-	-	-	-	15	
0010	32+26	-	2215 GREEN BAY	-	-	-	-	1	-	-	-	-	16	
0010	32+64	9.3' LT	GREEN BAY ST	-	-	1	1	-	-	-	-	-	-	8" VALVE
0010	33+28	-	2301 GREEN BAY ST	-	-	-	-	1	-	-	-	-	15	
0010	33+38	18.4' LT	FIRE HYDRANT	-	-	1	1	-	-	13	-	-	-	6" VALVE
0010	33+56	-	2307 GREEN BAY	-	-	-	-	1	-	-	-	-	15	
0010	34+21	-	2317 GREEN BAY	-	-	-	-	1	-	-	-	-	15	
0010	34+54	9.8' LT	2300 GREEN BAY	-	-	1	1	-	-	43	-	-	42	FIRE STATION- 6" VALVE
0010	34+62	12.8' LT	GREEN BAY ST	-	-	1	-	-	-	-	-	-	-	
0010	34+91	12.2' LT	GREEN BAY ST	-	-	1	-	-	-	-	-	-	-	
0010	36+10	13.0' LT	GREEN BAY ST	-	-	-	1	-	-	-	-	-	-	16" VALVE
			PROJECT TOTALS =	916	1	8	8	14	1	88	634	148	371	

3

3

SANITARY SEWER STRUCTURE SUMMARY

CATEGORY	STRUCTURE NUMBER	(A) STATION	(A) OFFSET	REMOVING SANITARY MANHOLES SPV.0060.07 EACH	SANITARY MANHOLES 4-FT DIAMETER SPV.0060.08 EACH	SANITARY MANHOLE COVERS SPV.0060.09 EACH	CONSTRUCTION STAKING SANITARY MANHOLES SPV.0060.11 EACH	(D) CONCRETE MANHOLE COLLARS SPV.0060.06 EACH	(D) COVER PLATES TEMPORARY 611.8120.S EACH	RIM ELEVATION	(B) SUMP ELEVATION	(C) DEPTH	REMARKS
0020	SAN 2	30+45	0.3 LT	1	1	1	1	1	1	661.78	648.68	12.98	
0020	SAN 3	32+54	0.1' RT	-	-	1	-	1	-	662.41	-	-	
0020	SAN 4	33+44	0.1' LT	1	-	-	-	-	-	-	-	-	
		PROJECT TOTALS =		2	1	2	1	2	1				

REMARKS
(A) STATIONS AND OFFSETS ARE TO CENTER OF STRUCTURE
(B) THE INVERT ELEVATION IS THE ELEVATION OF THE LOWEST PIPE FLOW LINE
(c) DEPTH = RIM ELEV - TOP OF STRUCTURE BASE ELEV - COVER HEIGHT - 6 INCH ADJUSTMENT RING HEIGHT
(D) CONTRACT ITEM SHOWN ELSEWHERE IN PLANS

SANITARY SEWER PIPE SUMMARY

CATEGORY	FROM	-	TO	SANITARY SEWER MAIN PVC SDR 35 10-INCH SPV.0090.04 LF	SANITARY SEWER LATERAL PVC SDR 6-INCH SPV.0090.05 LF	REMOVING SANITARY SEWER PIPE SPV.0090.06 LF	CONNECTING TO EXISTING SANITARY SEWER SPV.0060.10 EACH	SANITARY SEWER MAIN PVC SDR 35 8-INCH SPV.0090.11 LF	INLET ELEVATION	DISCHARGE ELEVATION	SLOPE FT/FT	COMMENTS
0020	28+45	-	SAN 2	199	-	-	1	-	649.21	648.69	0.00261	REPLACE
0020	28+65	-	29+45	-	38	80	-	-	-	-	-	
0020	SAN 2	-	SAN 3	209	-	-	-	-	648.68	648.08	0.00287	
0020	SAN 3	-	36+19	365	-	-	1	-	648.08	647.25	0.00227	
0020	33+35	-	SAN 4	-	-	30	-	-	-	-	-	-
0020	SAN 2	-	NORTH STUB	-	-	-	-	40	653.18	652.94	0.0060	
	PROJECT TOTALS =			773	38	110	2	652				

NOTE 1: ASSUME 10' TRENCH WIDTH FOR SANITARY MAIN REPLACEMENT.
NOTE 2: SANITARY SEWER LATERAL REPLACEMENT WITHIN THE 10' TRENCH WIDTH IS INCIDENTAL TO SANITARY MAIN REPLACEMENT.
INDICATED LATERAL LENGTH DOES NOT INCLUDE THE INCIDENTAL LENGTH WITHIN THE TRENCH BOX.

3

HYDRANT SUMMARY

CATEGORY	STATION	OFFSET	LOCATION	REMOVE HYDRANTS SPV.0060.16 EACH	NEW HYDRANTS SPV.0060.17 EACH	HYDRANT TEES, 12-INCH X 6-INCH SPV.0060.18 EACH	REMARKS
0010	30+96	22.6' LT	GREEN BAY ST LT	1	1	1	
0010	33+39	24.9' LT	GREEN BAY ST LT	-	1	1	
			PROJECT TOTALS =	1	2	2	

INSULATION BOARD POLYSTYRENE, 2-INCH

CATEGORY	STATION	612.0902.S SY	REMARKS
0020	30+28	4	
0020	30+38	4	
0020	30+44	4	
0020	31+10	4	
0020	33+00	4	
0020	36+03	4	
	PROJECT TOTAL=	24	

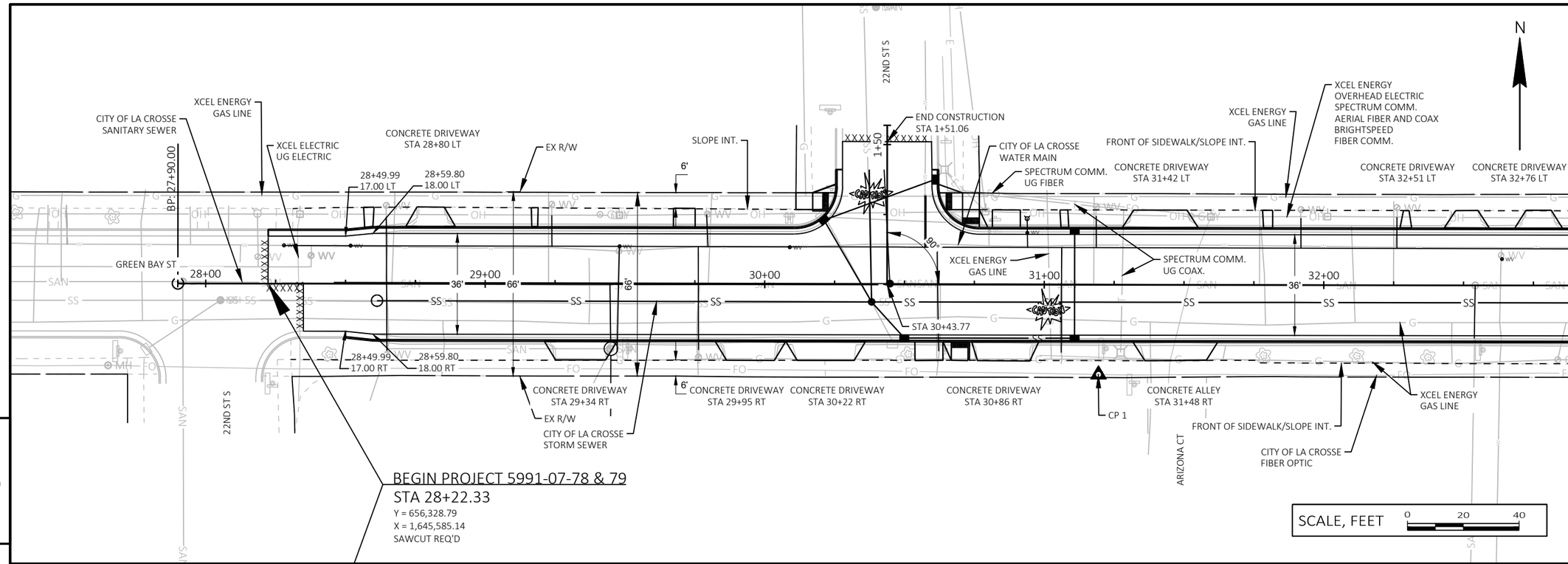

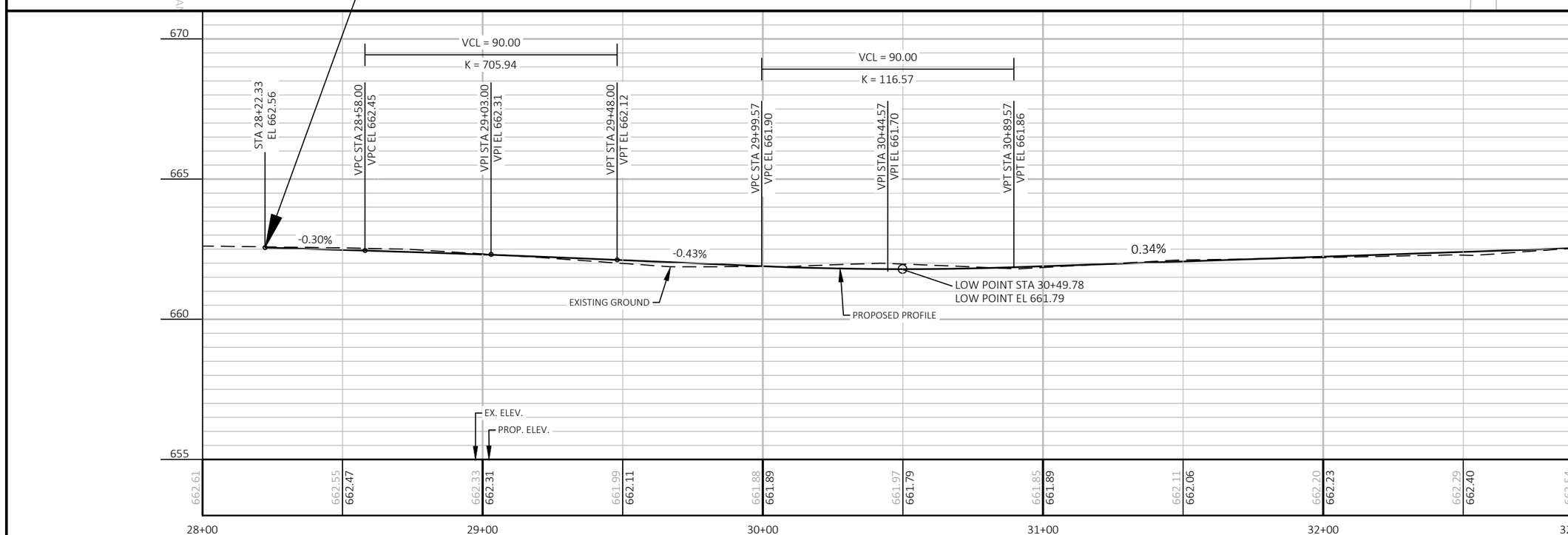

PROJECT NO: 5991-07-78 & 79	HWY: GREEN BAY STREET	COUNTY: LA CROSSE	PLAN AND PROFILE: GREEN BAY STREET	SHEET 47	E

FILE NAME : W:\30902576.000; 5991-07-77 78 79 GREEN BAY ST\CAD\59910777\SHEETS\050101-PP.DWG
LAYOUT NAME - 1
PLOT DATE : 7/30/2024 10:13 AM PLOT BY : MARZOLF, ROBBI PLOT NAME : PLOT SCALE : 1 IN:40 FT

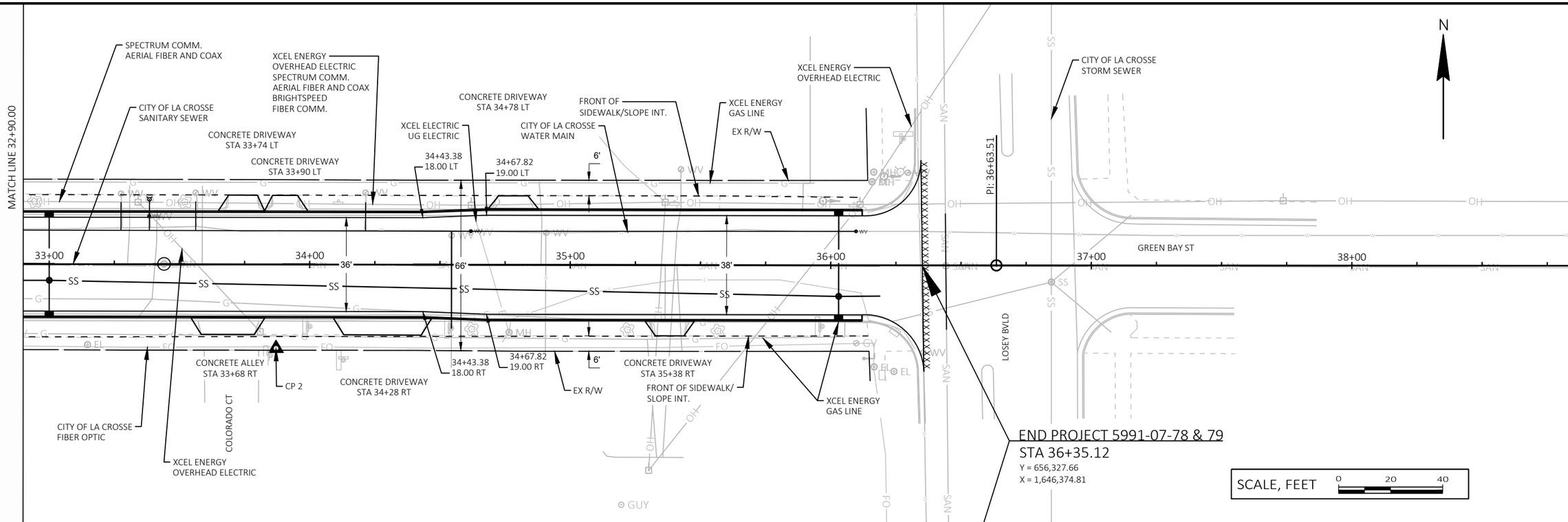

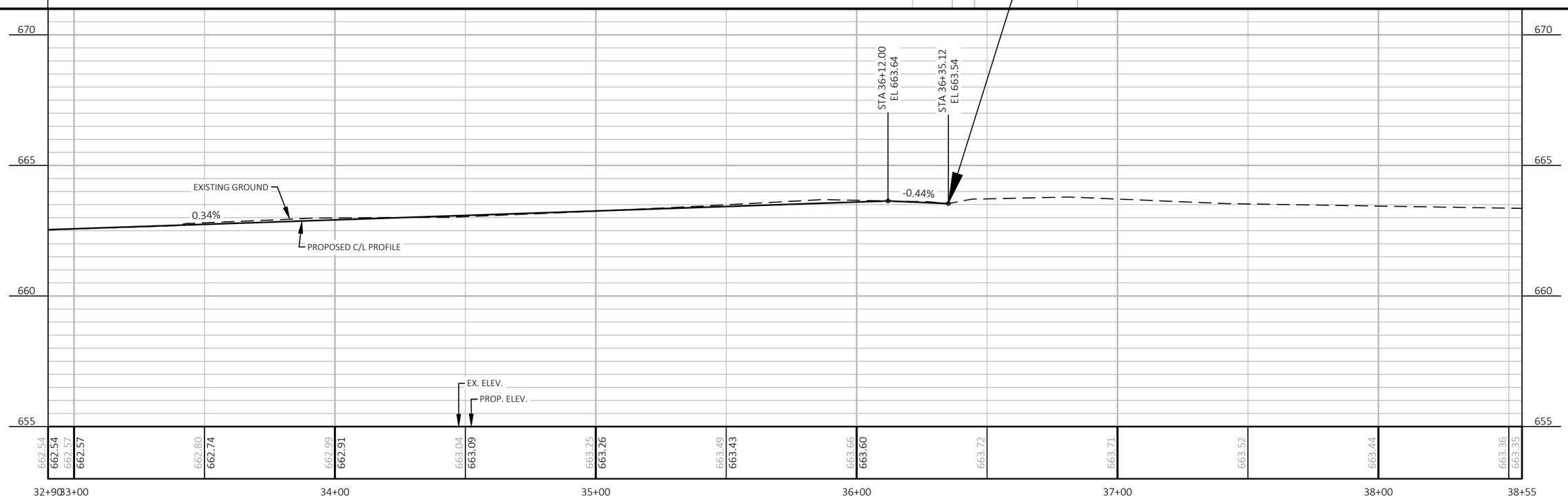

PROJECT NO: 5991-07-78 & 79	HWY: GREEN BAY STREET	COUNTY: LA CROSSE	PLAN AND PROFILE: GREEN BAY STREET	SHEET 48	E

FILE NAME : W:\30902576.000; 5991-07-77 78 79 GREEN BAY ST\CAD\5991077\SHEETS\050101-PP.DWG
LAYOUT NAME - 2
PLOT DATE : 7/30/2024 10:13 AM PLOT BY : MARZOLF, ROBBI PLOT NAME : PLOT SCALE : 1 IN:40 FT

Standard Detail Drawing List

08D01-23B	CONCRETE CURB, TIES AND CURB AND GUTTER APPLICATIONS
08D05-21A	CURB RAMPS TYPES 1 AND 1-A
08D05-21B	CURB RAMPS TYPES 2 AND 3
08D05-21C	CURB RAMPS TYPES 4A AND 4A1
08D05-21D	CURB RAMPS TYPE 4B AND 4B1
08D05-21E	CURB RAMPS TYPES 5, 6, 7A, 7B & 8
08D05-21F	CURB RAMPS RADIAL DETECTABLE WARNING FIELD APPLICATIONS
08D05-21G	CURB RAMPS RECTANGULAR AND RADIAL DETECTABLE WARNING PLATES
08D18-04	DRIVEWAY AND SIDEWALK RAMPS TYPES X & Y
08E10-02	INLET PROTECTION TYPE A, B, C AND D
08E14-01	TRACKING PAD
08F04-08	JOINT TIES FOR CONCRETE PIPE AND CONCRETE COLLAR DETAIL
13C19-03	HMA LONGITUDINAL JOINTS
15C02-09A	BARRICADES AND SIGNS FOR MAINLINE CLOSURES
15C02-09B	BARRICADES AND SIGNS FOR VARIOUS CLOSURES
15C02-09C	DETOUR SIGNING FOR MAINLINE CLOSURES
15C03-05	BARRICADES AND SIGNS FOR SIDEROAD CLOSURES
15C33-05	STOP LINE AND CROSSWALK PAVEMENT MARKING
15D20-07A	TRAFFIC CONTROL, SINGLE LANE CLOSURE, DIVIDED NON-FREEWAY/EXPRESSWAY
15D30-09A	TRAFFIC CONTROL, PEDESTRIAN ACCOMMODATION
15D30-09B	TRAFFIC CONTROL, PEDESTRIAN ACCOMMODATION
15D30-09C	TRAFFIC CONTROL, PEDESTRIAN ACCOMMODATION
15D30-09D	TRAFFIC CONTROL, PEDESTRIAN ACCOMMODATION
15D30-09E	TRAFFIC CONTROL, PEDESTRIAN ACCOMMODATION
15D30-09F	TRAFFIC CONTROL, PEDESTRIAN ACCOMMODATION
15D30-09G	TRAFFIC CONTROL, PEDESTRIAN ACCOMMODATION
15D30-09H	TRAFFIC CONTROL, PEDESTRIAN ACCOMMODATION
15D30-09I	TRAFFIC CONTROL, PEDESTRIAN ACCOMMODATION
15D30-09J	TRAFFIC CONTROL, PEDESTRIAN ACCOMMODATION
15D30-09K	TRAFFIC CONTROL, PEDESTRIAN ACCOMMODATION
15D30-09L	TRAFFIC CONTROL, PEDESTRIAN ACCOMMODATION

6

6

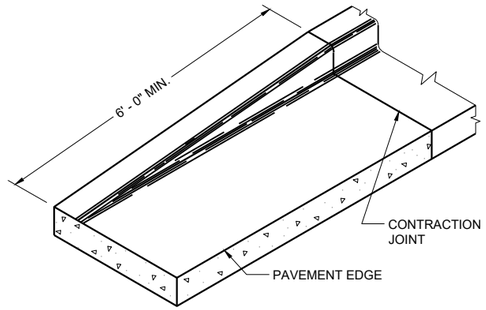

END SECTION CURB AND GUTTER

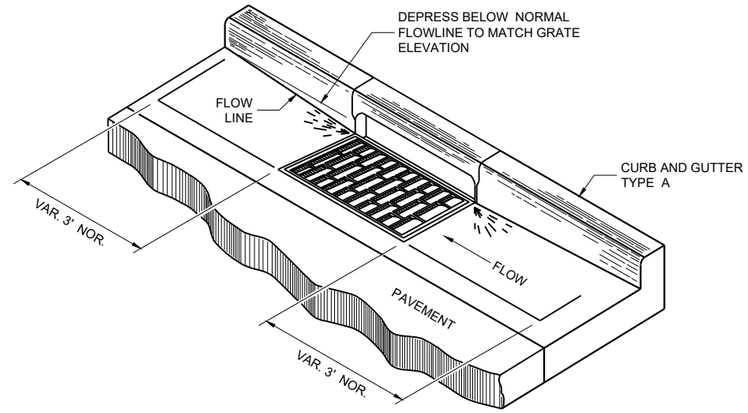

DETAIL OF CURB AND GUTTER AT INLETS

(TYPICAL H INLET COVER SHOWN)

GENERAL NOTES

DETAILS OF CONSTRUCTION AND WORKMANSHIP NOT SHOWN ON THIS DRAWING SHALL CONFORM TO THE PERTINENT REQUIREMENTS OF THE CONTRACT.

PAVEMENT TIES AND TIE BARS SHALL BE EPOXY COATED IN CONFORMANCE WITH SUBSECTION 505.2.6.2 OF THE STANDARD SPECIFICATIONS.

UNLESS OTHERWISE SHOWN ON THE TYPICAL CROSS SECTIONS, THE BASE AGGREGATE AND COMMON EXCAVATION LIMITS ARE 2' - 0" BEHIND THE BACK OF CURBS.

(1) TIE BARS ARE REQUIRED FOR CURB AND GUTTERS TYPES A, G, K, R, AND TBTT.

(2) THE BOTTOM OF CURB AND GUTTER MAY BE CONSTRUCTED EITHER LEVEL OR PARALLEL TO THE SLOPE OF THE SUBGRADE OR BASE AGGREGATE PROVIDED A 6" MINIMUM GUTTER THICKNESS IS MAINTAINED.

(10) REFER TO SDD 08D18 AND 08D19 FOR ADDITIONAL DRIVEWAY ENTRANCE CURB DETAILS.

(11) PLACE 1" THICK EXPANSION JOINT MATERIAL BETWEEN VERTICAL FACE CURB TYPES EXTENDING FROM THE TOP OF CURB TO 1 INCH BELOW THE ADJOINING CONCRETE SURFACE. RIGID CONCRETE STRUCTURES INCLUDE RAISED CONCRETE MEDIANS, CONCRETE SAFETY ISLANDS, SPLITTER ISLANDS, OR LOCATIONS IDENTIFIED ON THE PLANS.

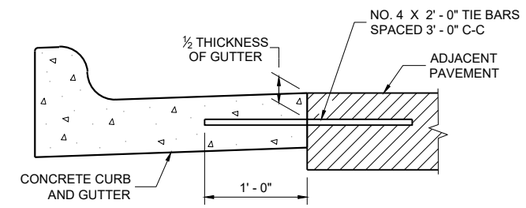

TYPICAL TIE BAR LOCATION (1)

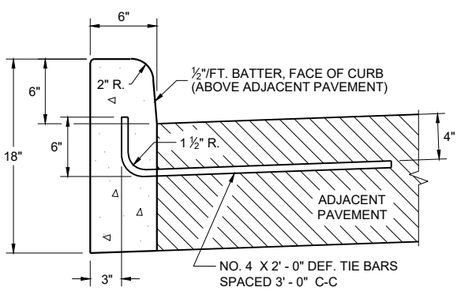

TYPES A (1) & D

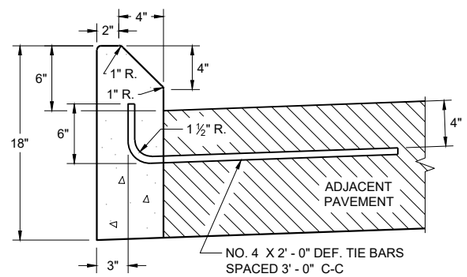

TYPES G (1) & J

CONCRETE CURB

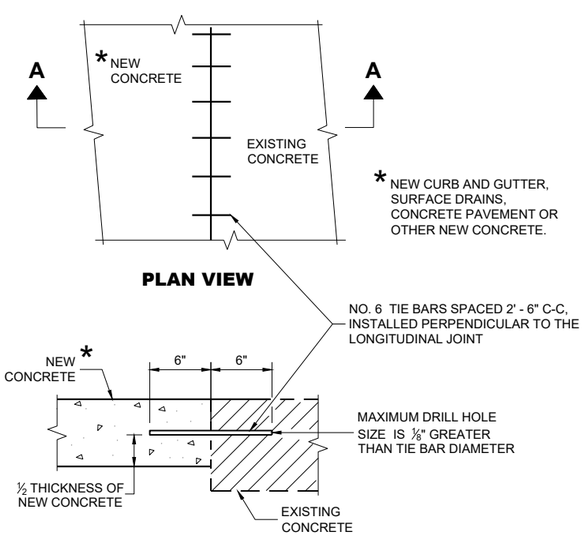

PLAN VIEW

SECTION A - A

TIE BARS DRILLED INTO EXISTING PAVEMENT

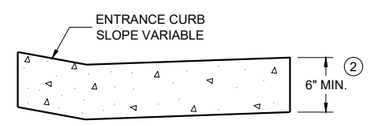

DRIVEWAY ENTRANCE CURB (10)

(WHEN DIRECTED BY THE ENGINEER)

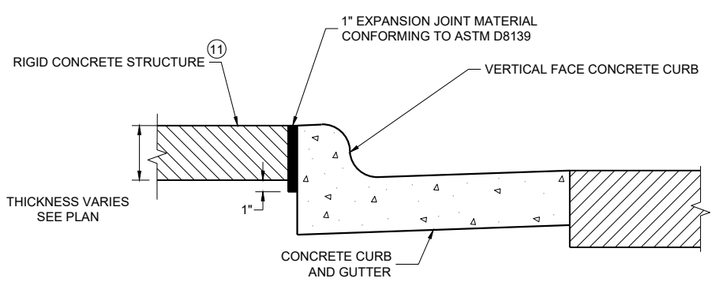

EXPANSION JOINT DETAIL FOR VERTICAL CURB ABUTTING A RIGID STRUCTURE (11)

CONCRETE CURB, TIES AND CURB AND GUTTER APPLICATIONS

STATE OF WISCONSIN
DEPARTMENT OF TRANSPORTATION

APPROVED
May 2023 — DATE
/S/ Rodnery Taylor — ROADWAY STANDARDS DEVELOPMENT UNIT SUPERVISOR

FHWA

6
SDD 08D01-23b

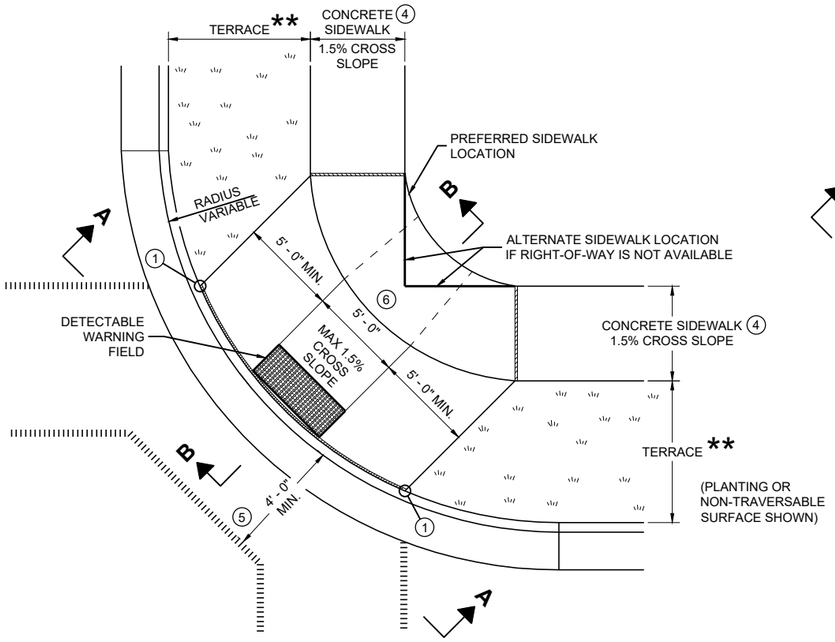

PLAN VIEW

CURB RAMP TYPE 1

(CENTER OF CORNER RADIUS)

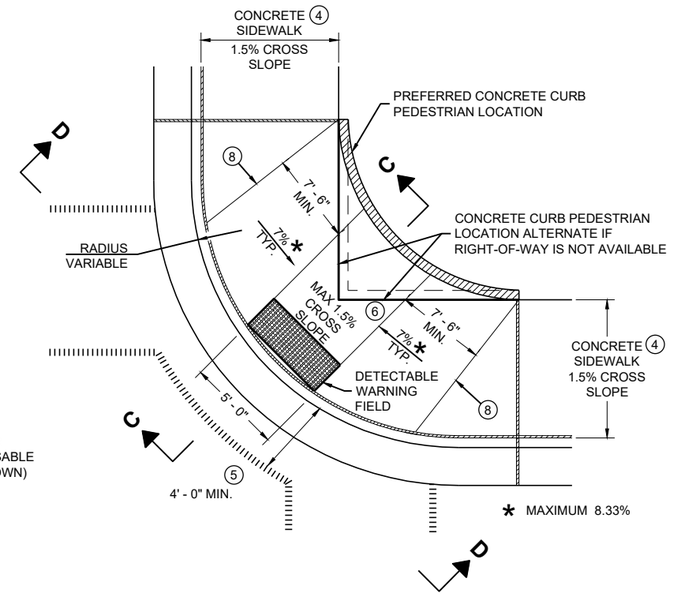

PLAN VIEW

CURB RAMP TYPE 1 - A

(NO TERRACE)

GENERAL NOTES

AVOID PLACING DRAINAGE STRUCTURES, JUNCTION BOXES OR OTHER OBSTRUCTIONS IN FRONT OF RAMP ACCESS AREAS.

DETAILS OF CONSTRUCTION, MATERIALS AND WORKMANSHIP NOT SHOWN ON THIS DRAWING SHALL CONFORM TO THE PERTINENT REQUIREMENTS OF THE STANDARD SPECIFICATIONS AND THE APPLICABLE SPECIAL PROVISIONS.

WHEN NECESSARY, THE SIDEWALK ELEVATION MAY BE LOWERED TO MEET THE HIGH POINT ON THE RAMP.

TYPE 1 CURB RAMPS SHALL HAVE A NORMAL SIDEWALK APRON AND CURB ON BOTH SIDES OF RAMP.

DETECTABLE WARNING FILED SHALL BE MEASURED AND PAID BY THE SQUARE FOOT AS "CURB RAMP DETECTABLE WARNING FIELD". THE CONCRETE PEDESTRIAN CURB, IF NEEDED, SHALL BE MEASURED AND PAID BY THE LINEAR FOOT AS "CONCRETE CURB PEDESTRIAN". CONCRETE SIDEWALK IN THE CURB RAMP AREA SHALL BE MEASURED AND PAID BY THE SQUARE FOOT AS CONCRETE SIDEWALK, INCLUDING THE AREA UNDER THE DETECTABLE WARNING FIELD.

SELECT CURB RAMP DETECTABLE WARNING FIELD MATERIALS AND DEVICES FROM THE DEPARTMENT'S APPROVED MATERIALS LIST. THE COLOR OF THE DETECTABLE WARNING FIELD IS SPECIFIED ELSEWHERE AND IS INCIDENTAL TO THE BID ITEM OF "CURB RAMP DETECTABLE WARNING FIELD"

DETECTABLE WARNING FIELDS THAT ARE INSTALLED AS A GROUP OR SIDE BY SIDE, SHALL BE FROM THE SAME MANUFACTURER.

SURFACE TEXTURE OF THE RAMP SHALL BE OBTAINED BY COARSE BROOMING TRANSVERSE TO THE SLOPE OF THE RAMP.

1. THIS POINT IS AN EXTENSION OF OUTSIDE EDGE OF APPROACHING SIDEWALK WHERE IT MEETS THE BACK OF CONCRETE CURB. POINT LOCATION MAY BE ADJUSTED TO ALIGN WITH BEGINNING OF FULL-HEIGHT CURB IF THIS DISTANCE IS SHORT.

2. GRADE CHANGE BETWEEN GUTTER FLAG SLOPE AND THE CURB RAMP SLOPE SHALL NOT EXCEED 11%. MAXIMUM GUTTER FLAG SLOPE IS 4%. PROVIDE LONGITUDINAL DRAINAGE AROUND CURB AND AWAY FROM CURB RAMP. NO VERTICAL LIPS OR DISCONTINUITIES GREATER THAN ¼ - INCH ARE ALLOWED. SLOPE OF CURB HEAD OPENING SHALL MATCH THE RAMP SLOPE, MINIMALLY 1.5% AND NOT TO EXCEED 7%. WHEN ADJACENT TO 1.5% LANDING, CONSTRUCT CURB HEAD OPENING AT 1.5% IN THE DIRECTION OF PEDESTRIAN TRAVEL.

3. MAXIMUM 8.33% CURB RAMP SLOPE IS ALLOWABLE WITH FLATTENED GUTTER FLAG SLOPE AND NOT TO EXCEED 11% GRADE CHANGE.

4. ±0.5% CONSTRUCTION TOLERANCE IN SIDEWALK CROSS SLOPE. THE SIDEWALK CROSS SLOPE SHALL NOT EXCEED 2% WITHOUT PRIOR APPROVAL FROM THE ENGINEER.

5. PROVIDE A LEVEL LANDING IN THE STREET AND GUTTER AREA (2% MAXIMUM SLOPE IN ANY DIRECTION). WHEN THE GUTTER SLOPE EXCEEDS 2%, CONSTRUCT THE LEVEL LANDING IN THE STREET AREA. 4 FOOT WIDTH IS MEASURED FROM THE FLANGE LINE

6. PROVIDE A LEVEL LANDING (MAXIMUM 2% SLOPE) IN ANY DIRECTION OF PEDESTRIAN TRAVEL. STANDARD LEVEL LANDING SIZE IS 5 FEET BY 5 FEET.

8. PROVIDE GRADE BREAK PERPENDICULAR TO DIRECTION OF WHEELCHAIR TRAVEL.

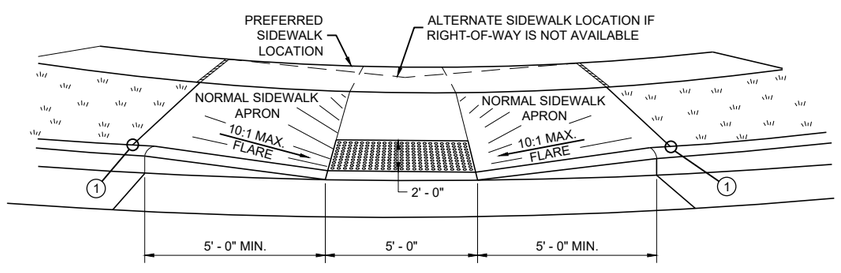

VIEW A - A FOR TYPE 1

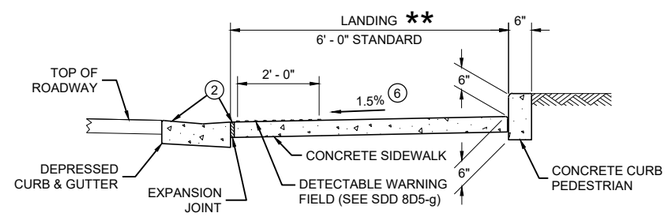

SECTION C - C FOR TYPE 1 - A

LEGEND

- ½" EXPANSION JOINT SIDEWALK
- CONTRACTION JOINT FIELD LOCATED
- PAVEMENT MARKING CROSSWALK (WHITE)

** WIDTH SHOWN ELSEWHERE IN THE PLANS

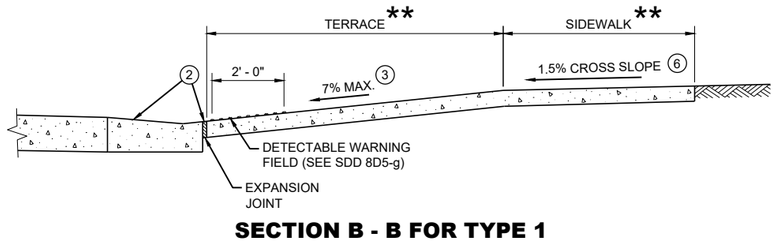

SECTION B - B FOR TYPE 1

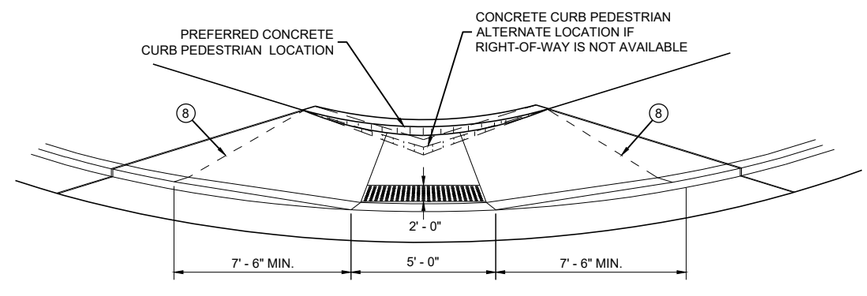

VIEW D - D FOR TYPE 1 - A

CURB RAMPS TYPE 1 AND 1-A

STATE OF WISCONSIN
DEPARTMENT OF TRANSPORTATION

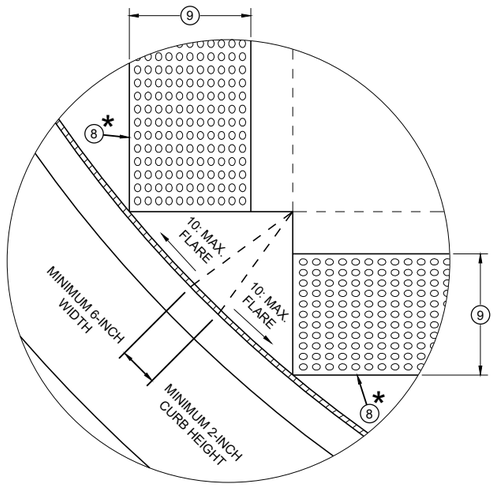

DETAIL A

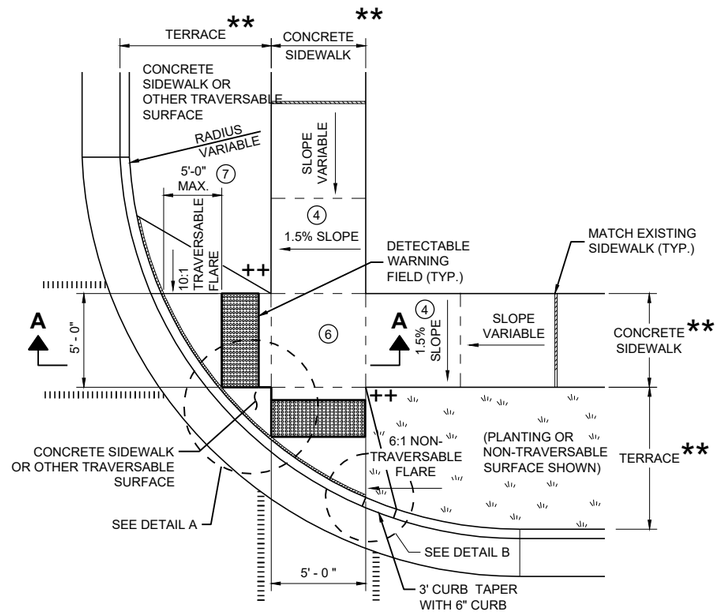

PLAN VIEW

CURB RAMP TYPE 2

(CENTER OF CORNER RADIUS)

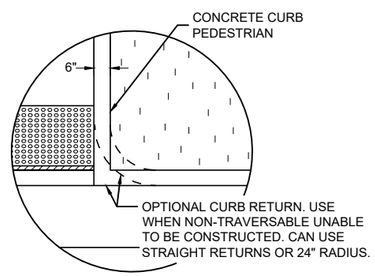

DETAIL B

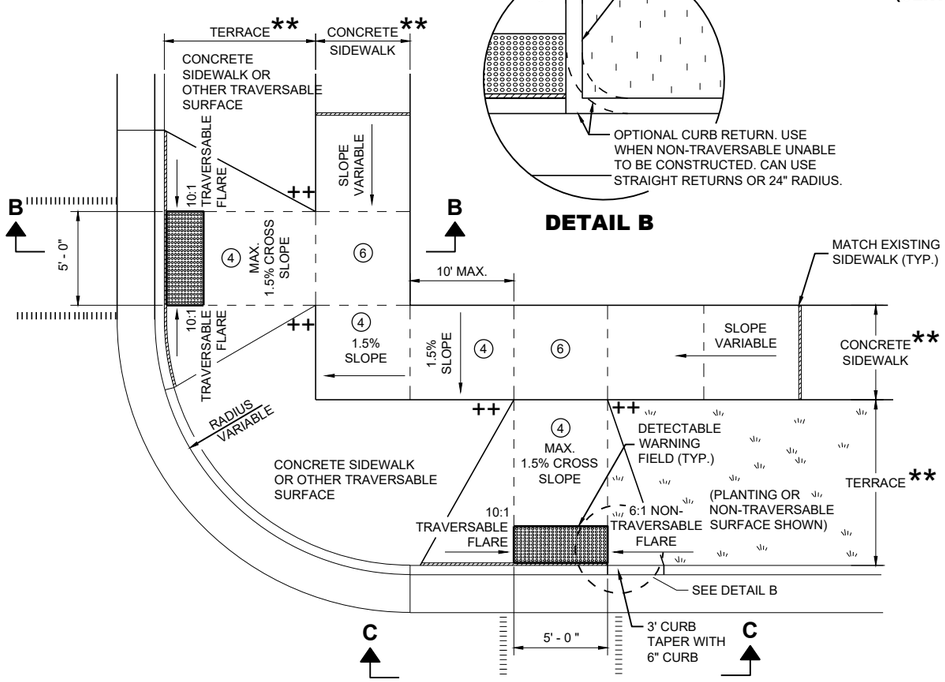

PLAN VIEW

CURB RAMP TYPE 3

(OUTSIDE OF CROSSWALK AREA)

GENERAL NOTES

AVOID PLACING DRAINAGE STRUCTURES, JUNCTION BOXES OR OTHER OBSTRUCTIONS IN FRONT OF RAMP ACCESS AREAS.

DETAILS OF CONSTRUCTION, MATERIALS AND WORKMANSHIP NOT SHOWN ON THIS DRAWING SHALL CONFORM TO THE PERTINENT REQUIREMENTS OF THE STANDARD SPECIFICATIONS AND THE APPLICABLE SPECIAL PROVISIONS.

DETECTABLE WARNING FIELDS THAT ARE INSTALLED AS A GROUP OR SIDE BY SIDE SHALL BE FROM THE SAME MANUFACTURER.

(2) GRADE CHANGE BETWEEN GUTTER FLAG SLOPE AND THE CURB RAMP SLOPE SHALL NOT EXCEED 11%. MAXIMUM GUTTER FLAG SLOPE IS 4%. PROVIDE LONGITUDINAL DRAINAGE AROUND CURB AND AWAY FROM CURB RAMP. NO VERTICAL LIPS OR DISCONTINUITIES GREATER THAN ¼ - INCH ARE ALLOWED. SLOPE OF CURB HEAD OPENING SHALL MATCH THE RAMP SLOPE, MINIMALLY 1.5% AND NOT TO EXCEED 7%. WHEN ADJACENT TO 1.5% LANDING, CONSTRUCT CURB HEAD OPENING AT 1.5% IN THE DIRECTION OF PEDESTRIAN TRAVEL.

(3) AN 8.33% CURB RAMP SLOPE IS ALLOWABLE WITH FLATTENED GUTTER FLAG SLOPE (2.67% OR LESS) AND NOT TO EXCEED 11% GRADE CHANGE.

(4) ±0.5% CONSTRUCTION TOLERANCE IN SIDEWALK CROSS SLOPE. THE SIDEWALK CROSS SLOPE SHALL NOT EXCEED 2% WITHOUT PRIOR APPROVAL FROM THE ENGINEER.

(6) PROVIDE A LEVEL LANDING (MAXIMUM 2% SLOPE) IN ANY DIRECTION OF PEDESTRIAN TRAVEL. STANDARD LEVEL LANDING SIZE IS 5 FEET X 5 FEET.

(7) WHEN GRADE BREAK DISTANCE EXCEEDS 5 FEET, USE RADIAL DETECTABLE WARNING FIELD PER SDD 8D5-f.

(8) PROVIDE GRADE BREAK PERPENDICULAR TO DIRECTION OF WHEELCHAIR TRAVEL.

(9) WHEN DISTANCE IS LESS THAN 6' - 0", IT MAY BE DIFFICULT TO ACHIEVE A 7% SLOPE OR FLATTER ALONG THE RAMP. REDUCE CURB HEIGHT IN TRIANGLE AREA TO ACHIEVE 7% SLOPE OR FLATTER ON RAMP. CONSTRUCT 2-INCH MINIMUM CURB HEIGHT BETWEEN 10:1 FLARES.

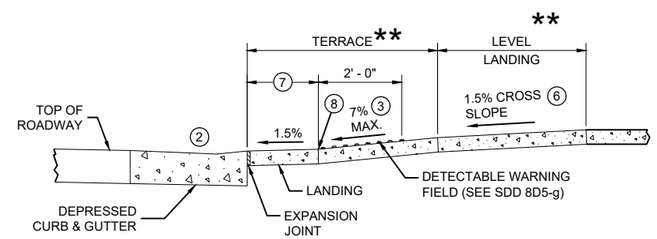

SECTION A - A FOR TYPE 2

* MAXIMUM 2.0% SLOPE IN ALL DIRECTIONS IN FRONT OF GRADE BREAK

** WIDTH SHOWN ELSEWHERE IN THE PLANS

++ CONSTRUCT 6" WEDGE TO AVOID CONCRETE BREAKAGE

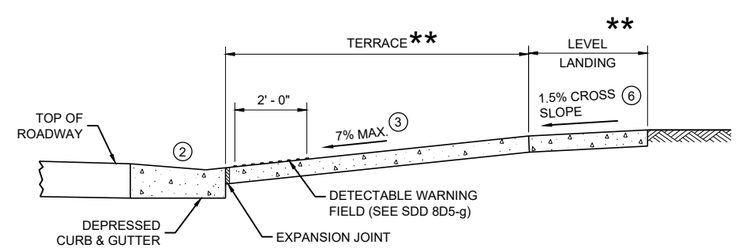

SECTION B - B FOR TYPE 3

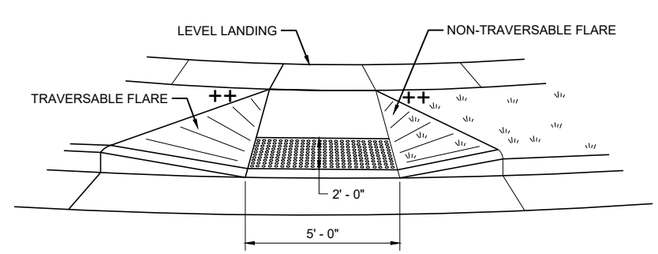

VIEW C - C FOR TYPE 3

LEGEND

- ½" EXPANSION JOINT SIDEWALK
- CONTRACTION JOINT SIDEWALK
- PAVEMENT MARKING CROSSWALK (WHITE)

CURB RAMPS TYPE 2 AND 3

STATE OF WISCONSIN
DEPARTMENT OF TRANSPORTATION

6

SDD 08D05-21b

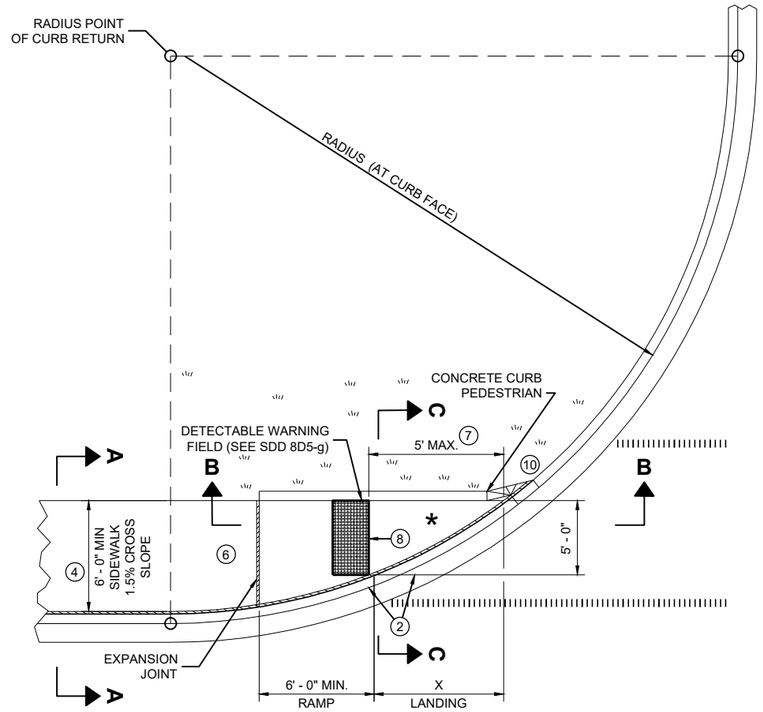

PLAN VIEW

CURB RAMP TYPE 4A

RADIUS (AT CURB FACE)	X
10 FEET	4' - 7"

INTERMEDIATE RADII CAN BE INTERPOLATED

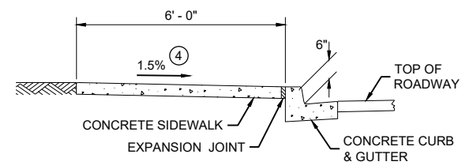

SECTION A - A FOR TYPE 4A

GENERAL NOTES

AVOID PLACING DRAINAGE STRUCTURES, JUNCTION BOXES OR OTHER OBSTRUCTIONS IN FRONT OF RAMP ACCESS AREAS.

DETAILS OF CONSTRUCTION, MATERIALS AND WORKMANSHIP NOT SHOWN ON THIS DRAWING SHALL CONFORM TO THE PERTINENT REQUIREMENTS OF THE STANDARD SPECIFICATIONS AND THE APPLICABLE SPECIAL PROVISIONS.

DETECTABLE WARNING FIELDS THAT ARE INSTALLED AS A GROUP OR SIDE BY SIDE, SHALL BE FROM THE SAME MANUFACTURER.

(2) GRADE CHANGE BETWEEN GUTTER FLAG SLOPE AND THE CURB RAMP SLOPE SHALL NOT EXCEED 11%. MAXIMUM GUTTER FLAG SLOPE IS 4%. PROVIDE LONGITUDINAL DRAINAGE AROUND CURB AND AWAY FROM CURB RAMP. NO VERTICAL LIPS OR DISCONTINUITIES GREATER THAN ¼ - INCH ARE ALLOWED. SLOPE OF CURB HEAD OPENING SHALL MATCH THE RAMP SLOPE, MINIMALLY 1.5% AND NOT TO EXCEED 7%. WHEN ADJACENT TO 1.5% LANDING, CONSTRUCT CURB HEAD OPENING AT 1.5% IN THE DIRECTION OF PEDESTRIAN TRAVEL.

(3) AN 8.33% CURB RAMP SLOPE IS ALLOWABLE WITH FLATTENED GUTTER FLAG SLOPE AND NOT TO EXCEED 11% GRADE CHANGE.

(4) ±0.5% CONSTRUCTION TOLERANCE IN SIDEWALK CROSS SLOPE. THE SIDEWALK CROSS SLOPE SHALL NOT EXCEED 2% WITHOUT PRIOR APPROVAL FROM THE ENGINEER.

(6) PROVIDE A LEVEL LANDING (MAXIMUM 2% SLOPE) IN ANY DIRECTION OF PEDESTRIAN TRAVEL. STANDARD LEVEL LANDING SIZE IS 5 FEET BY 5 FEET.

(7) WHEN THIS GRADE BREAK DISTANCE EXCEEDS 5 FEET, USE RADIAL DETECTABLE WARNING FIELD PER SDD 8D5-f.

(8) PROVIDE GRADE BREAK PERPENDICULAR TO DIRECTION OF WHEELCHAIR TRAVEL.

(10) INSTALL TRANSITION NOSE (INCIDENTAL TO OTHER PAY ITEMS). DO NOT MARK TRANSITION NOSE.

LEGEND

½" EXPANSION JOINT SIDEWALK

CONTRACTION JOINT SIDEWALK

PAVEMENT MARKING CROSSWALK (WHITE)

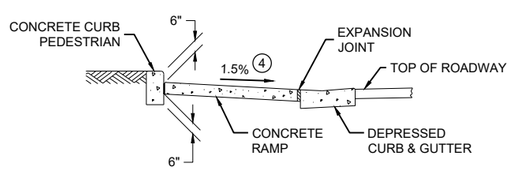

SECTION C - C FOR TYPE 4A

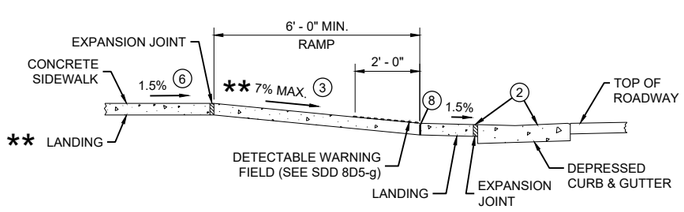

** IF RAMP SLOPE IS LESS THAN 5.0%, THEN NO ADJACENT UPHILL LANDING IS REQUIRED

SECTION B - B FOR TYPE 4A AND TYPE 4A1

* MAXIMUM 2.0% SLOPE IN ALL DIRECTIONS IF FRONT OF GRADE BREAK

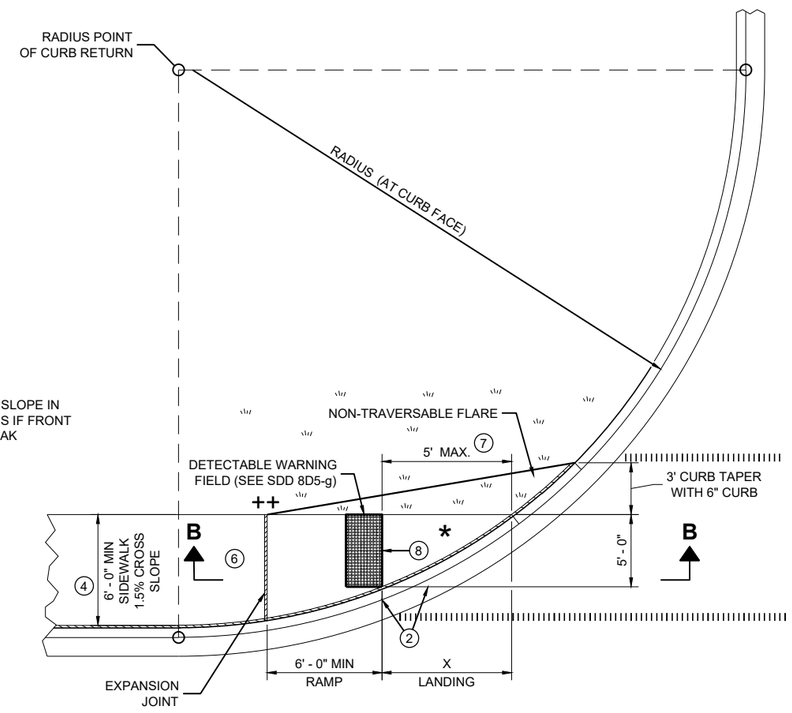

PLAN VIEW

CURB RAMP TYPE 4A1

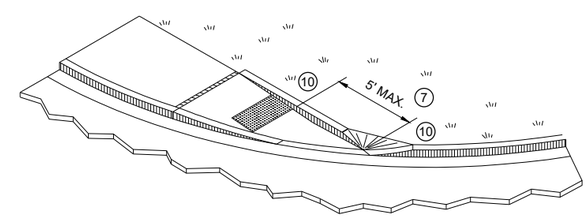

ISOMETRIC VIEW FOR TYPE 4A

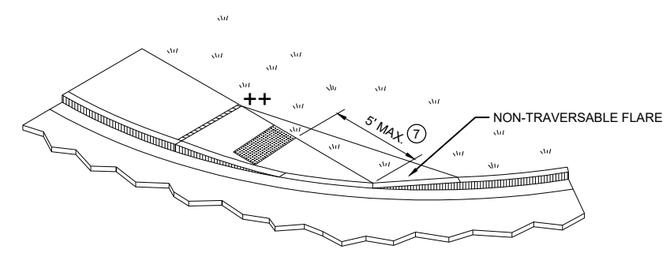

ISOMETRIC VIEW FOR TYPE 4A1

++ CONSTRUCT 6" WEDGE TO AVOID CONCRETE BREAKAGE

CURB RAMPS TYPE 4A AND 4A1

STATE OF WISCONSIN
DEPARTMENT OF TRANSPORTATION

6

6

SDD 08D05-21c

SDD 08D05-21c

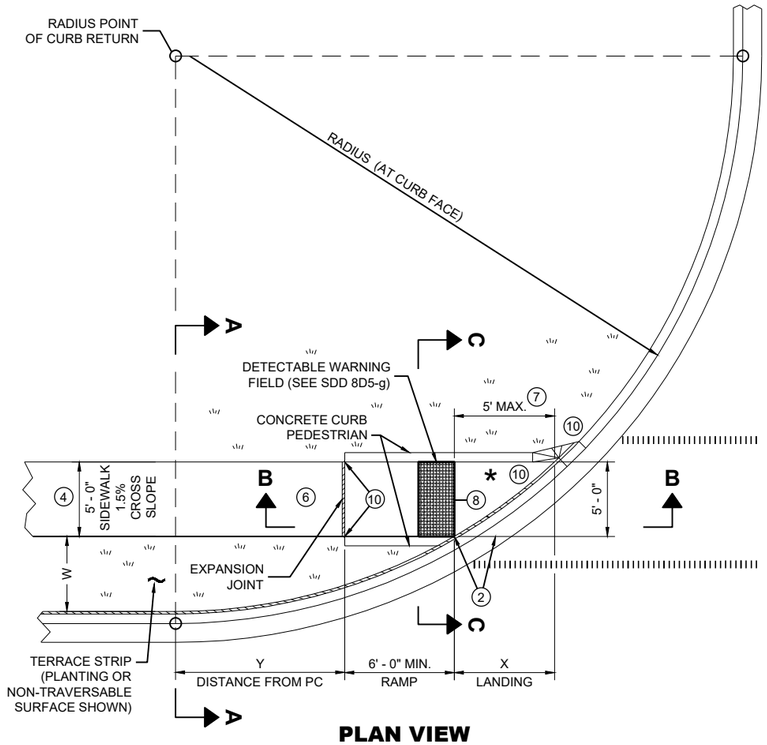

PLAN VIEW
CURB RAMP TYPE 4B

RADIUS (AT CURB FACE)	W = 3' - 0"		W = 4' - 0"		W = 5' - 0"		W = 6' - 0"		W = 7' - 0"		W = 8' - 0"		W = 9' - 0"		W = 10' - 0"	
	X	Y	X	Y	X	Y	X	Y	X	Y	X	Y	X	Y	X	Y
10 FEET	2' - 10 ¼"	0' - 5"	2' - 1"	1' - 4 ½"	1' - 5"	2' - 1"	0' - 10"	2' - 7 ½"	0' - 3 ¼"	3' - 0 ¼"						
15 FEET	4' - 6 ¾"	2' - 1 ¾"	3' - 9"	3' - 5 ¾"	3' - 1 ¼"	4' - 6"	2' - 6 ¾"	5' - 4 ½"	2' - 1"	6' - 1"	1' - 8"	6' - 8 ½"	1' - 3 ¼"	7' - 2 ½"	0' - 10 ¾"	7' - 7 ¼"
20 FEET			4' - 11 ½"	5' - 1 ¾"	4' - 3 ¼"	6' - 5 ½"	3' - 8 ¾"	7' - 7"	3' - 3"	8' - 6 ½"	2' - 10"	9' - 4 ½"	2' - 5 ½"	10' - 1 ¼"	2' - 1 ¼"	10' - 9"
30 FEET									4' - 10 ¾"	12' - 5 ¾"	4' - 5 ½"	13' - 7 ¾"	4' - 0 ¾"	14' - 8 ½"	3' - 8 ½"	15' - 8 ¼"
40 FEET															4' - 10 ¾"	19' - 8 ¼"

INTERMEDIATE RADII CAN BE INTERPOLATED
DIMENSION "Y" IS CALCULATED BASED ON 6'-0" RAMP LENGTH
DIMENSION "X" IS CALCULATED BASED ON 5'-0" SIDEWALK WIDTH

LEGEND

- ½" EXPANSION JOINT SIDEWALK
- CONTRACTION JOINT SIDEWALK
- PAVEMENT MARKING CROSSWALK (WHITE)

GENERAL NOTES

AVOID PLACING DRAINAGE STRUCTURES, JUNCTION BOXES OR OTHER OBSTRUCTIONS IN FRONT OF RAMP ACCESS AREAS.

DETAILS OF CONSTRUCTION, MATERIALS AND WORKMANSHIP NOT SHOWN ON THIS DRAWING SHALL CONFORM TO THE PERTINENT REQUIREMENTS OF THE STANDARD SPECIFICATIONS AND THE APPLICABLE SPECIAL PROVISIONS.

DETECTABLE WARNING FIELDS THAT ARE INSTALLED AS A GROUP OR SIDE BY SIDE, SHALL BE FROM THE SAME MANUFACTURER.

2. GRADE CHANGE BETWEEN GUTTER FLAG SLOPE AND THE CURB RAMP SLOPE SHALL NOT EXCEED 11%. MAXIMUM GUTTER FLAG SLOPE IS 4%. PROVIDE LONGITUDINAL DRAINAGE AROUND CURB AND AWAY FROM CURB RAMP. NO VERTICAL LIPS OR DISCONTINUITIES GREATER THAN ¼ - INCH ARE ALLOWED. SLOPE OF CURB HEAD OPENING SHALL MATCH THE RAMP SLOPE, MINIMALLY 1.5% AND NOT TO EXCEED 7%. WHEN ADJACENT TO 1.5% LANDING, CONSTRUCT CURB HEAD OPENING AT 1.5% IN THE DIRECTION OF PEDESTRIAN TRAVEL.
3. AN 8.33% CURB RAMP SLOPE IS ALLOWABLE WITH FLATTENED GUTTER FLAG SLOPE AND NOT TO EXCEED 11% GRADE CHANGE.
4. ±0.5% CONSTRUCTION TOLERANCE IN SIDEWALK CROSS SLOPE. THE SIDEWALK CROSS SLOPE SHALL NOT EXCEED 2% WITHOUT PRIOR APPROVAL FROM THE ENGINEER.
6. PROVIDE A LEVEL LANDING (MAXIMUM 2% SLOPE) IN ANY DIRECTION OF PEDESTRIAN TRAVEL. STANDARD LEVEL LANDING SIZE IS 5 FEET BY 5 FEET.
7. WHEN THIS GRADE BREAK DISTANCE EXCEEDS 5 FEET, USE RADIAL DETECTABLE WARNING FIELD PER SDD 8D5-f.
8. PROVIDE GRADE BREAK PERPENDICULAR TO DIRECTION OF WHEELCHAIR TRAVEL.
10. INSTALL TRANSITION NOSE (INCIDENTAL TO OTHER PAY ITEMS). DO NOT MARK TRANSITION NOSE.

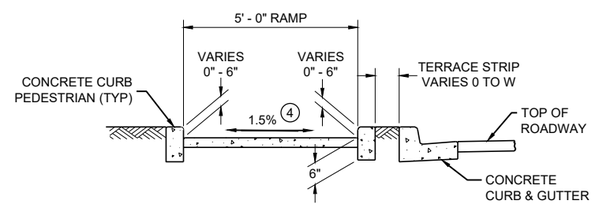

SECTION C - C FOR TYPE 4B

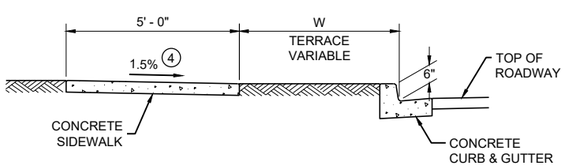

SECTION A - A FOR TYPE 4B

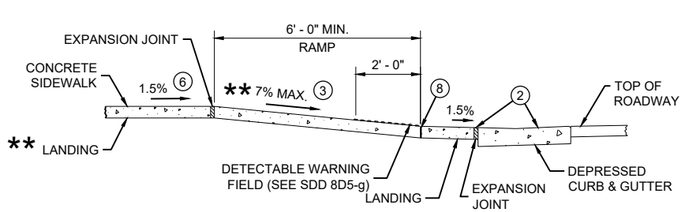

** IF RAMP SLOPE IS LESS THAN 5.0%, THEN NO ADJACENT UPHILL LANDING IS REQUIRED

SECTION B - B FOR TYPE 4B AND TYPE 4B1

* MAXIMUM 2.0% SLOPE IN ALL DIRECTIONS IF FRONT OF GRADE BREAK

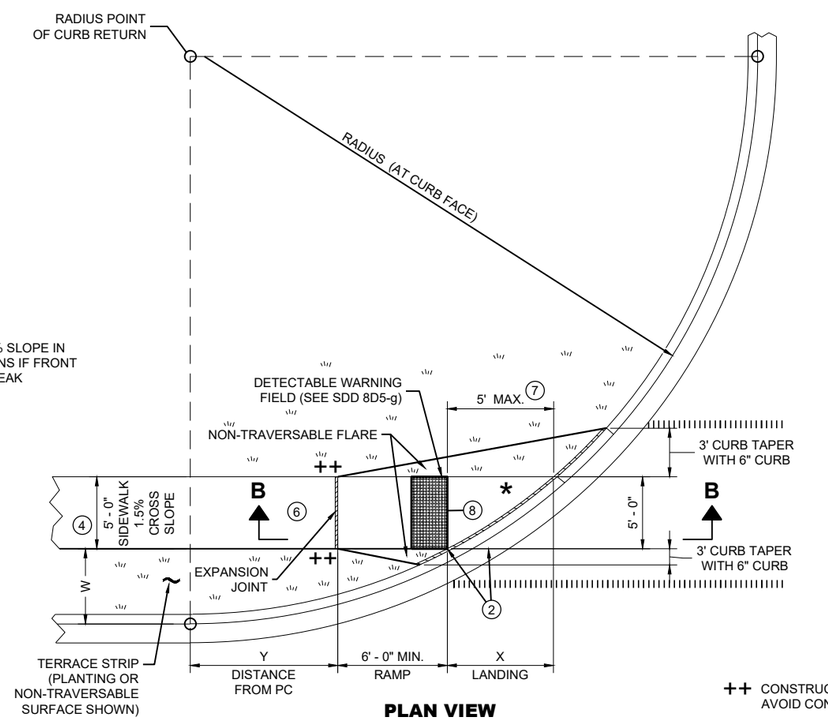

PLAN VIEW
CURB RAMP TYPE 4B1

++ CONSTRUCT 6" WEDGE TO AVOID CONCRETE BREAKAGE

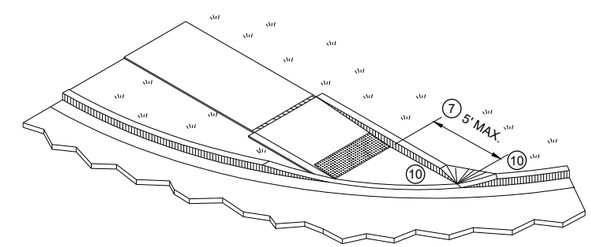

ISOMETRIC VIEW FOR TYPE 4B

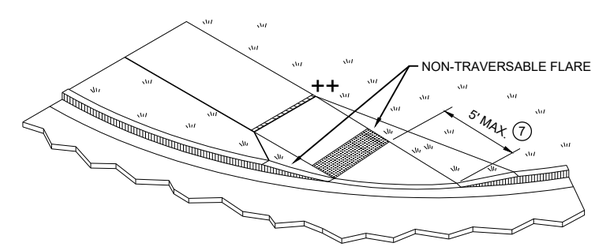

ISOMETRIC VIEW FOR TYPE 4B1

CURB RAMPS TYPE 4B AND 4B1

STATE OF WISCONSIN
DEPARTMENT OF TRANSPORTATION

6

SDD 08D05-21d

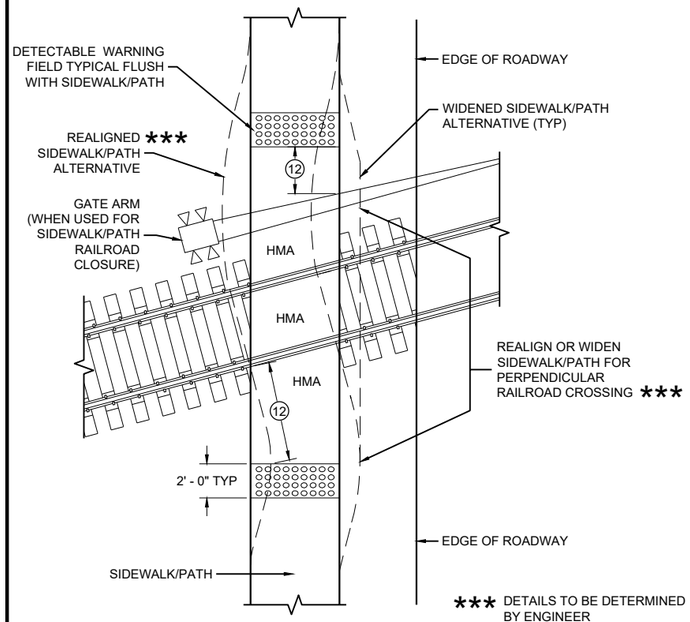

CURB RAMP TYPE 8

DETECTABLE WARNINGS FOR SIDEWALKS OR SHARED USE PATHS AT RAILROAD CROSSINGS

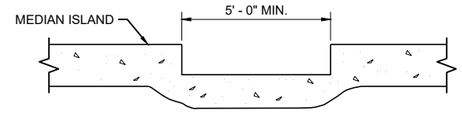

SECTION A - A FOR TYPE 5

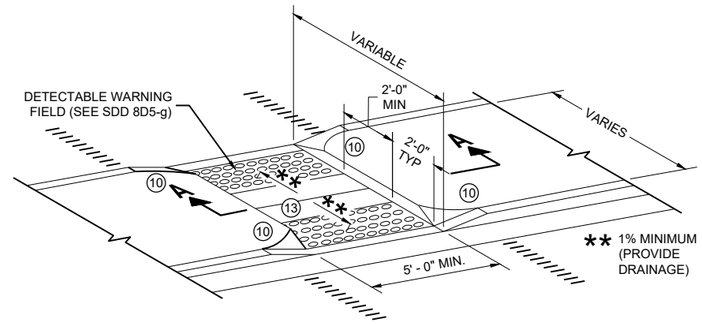

CURB RAMP TYPE 5

MEDIAN ISLAND NON-ELEVATED PEDESTRIAN CROSSING

GENERAL NOTES

AVOID PLACING DRAINAGE STRUCTURES, JUNCTION BOXES OR OTHER OBSTRUCTIONS IN FRONT OF RAMP ACCESS AREAS.

DETAILS OF CONSTRUCTION, MATERIALS AND WORKMANSHIP NOT SHOWN ON THIS DRAWING SHALL CONFORM TO THE PERTINENT REQUIREMENTS OF THE STANDARD SPECIFICATIONS AND THE APPLICABLE SPECIAL PROVISIONS.

SIDEWALK CROSS SLOPE SHALL NOT EXCEED 2%.

DETECTABLE WARNING FIELDS THAT ARE INSTALLED AS A GROUP OR SIDE BY SIDE, SHALL BE FROM THE SAME MANUFACTURER.

(2) GRADE CHANGE BETWEEN GUTTER FLAG SLOPE AND THE CURB RAMP SLOPE SHALL NOT EXCEED 11%. MAXIMUM GUTTER FLAG SLOPE IS 4%. PROVIDE LONGITUDINAL DRAINAGE AROUND CURB AND AWAY FROM CURB RAMP. NO VERTICAL LIPS OR DISCONTINUITIES GREATER THAN ¼ - INCH ARE ALLOWED. SLOPE OF CURB HEAD OPENING SHALL MATCH THE RAMP SLOPE, MINIMALLY 1.5% AND NOT TO EXCEED 7%. WHEN ADJACENT TO 1.5% LANDING, CONSTRUCT CURB HEAD OPENING AT 1.5% IN THE DIRECTION OF PEDESTRIAN TRAVEL.

(3) AN 8.33% CURB RAMP SLOPE IS ALLOWABLE WITH FLATTENED GUTTER FLAG SLOPE AND NOT TO EXCEED 11% GRADE CHANGE.

(4) ±0.5% CONSTRUCTION TOLERANCE IN SIDEWALK CROSS SLOPE. THE SIDEWALK CROSS SLOPE SHALL NOT EXCEED 2% WITHOUT PRIOR APPROVAL FROM THE ENGINEER.

(6) PROVIDE A LEVEL LANDING (MAXIMUM 2% SLOPE) IN ANY DIRECTION OF PEDESTRIAN TRAVEL. STANDARD LEVEL LANDING SIZE IS 5 FEET BY 5 FEET.

(10) INSTALL TRANSITION NOSE (INCIDENTAL TO OTHER PAY ITEMS). DO NOT MARK TRANSITION NOSE.

(11) SLOPE SIDEWALK TOWARD LANDING AS SHOWN WHERE THERE IS NO TERRACE OR WHERE THE TERRACE WIDTH IS LESS THAN 6 FEET WIDE.

(12) THE EDGE OF THE DETECTABLE WARNING FIELD NEAREST TO A RAILROAD CROSSING SHALL BE 1.5 FEET ±0.1' FROM THE FACE OF THE GATE ARM IF THE GATE ARM EXTENDS ACROSS THE SIDEWALK/PATH. WHERE THERE IS NO PEDESTRIAN GATE, THE EDGE OF THE DETECTABLE WARNING FIELD NEAREST TO THE RAILROAD TRACK IS 15 FEET MAXIMUM AND 12 FEET MINIMUM, 15 FEET TYPICAL FROM THE NEAREST RAIL.

(13) DO NOT INSTALL DETECTABLE WARNING FIELDS AT THE EDGES OF STEET-LEVEL PEDESTRIAN REFUGE ISLANDS IF A MINIMUM 2 FOOT CONCRETE SURFACE WITHOUT DETECTABLE WARNINGS (MEASURED IN THE DIRECTION OF PEDESTRIAN TRAVEL) CANNOT BE ACHIEVED.

LEGEND

- ½" EXPANSION JOINT SIDEWALK
- CONTRACTION JOINT FIELD LOCATED
- PAVEMENT MARKING CROSSWALK (WHITE)

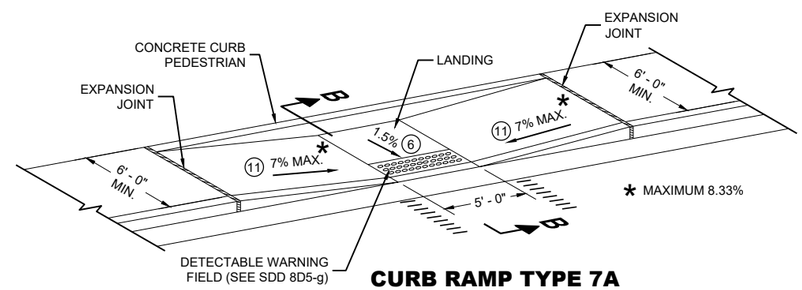

CURB RAMP TYPE 7A

FOR INTERSECTIONS AND MID BLOCK CROSSINGS

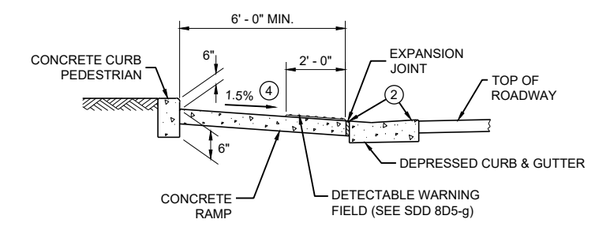

SECTION B - B FOR TYPE 7A

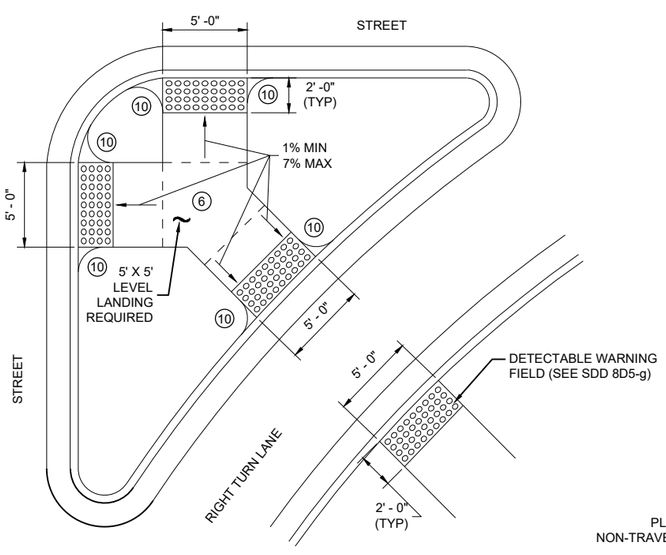

CURB RAMP TYPE 6

DETECTABLE WARNING AT ISLANDS

REFER TO GENERAL NOTES (2) AND (3) FOR ALL ISLAND CURB RAMPS

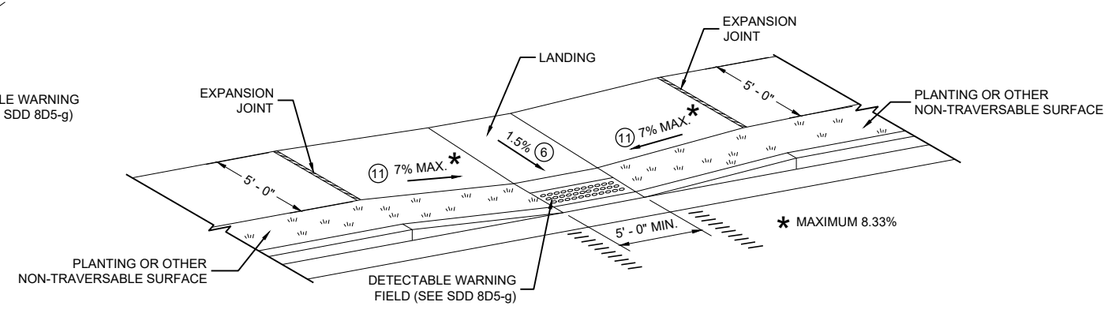

CURB RAMP TYPE 7B

FOR INTERSECTIONS AND MID BLOCK CROSSINGS

CURB RAMPS TYPE 5, 6, 7A, 7B & 8

STATE OF WISCONSIN
DEPARTMENT OF TRANSPORTATION

6

6

SDD 08D05-21e

SDD 08D05-21e

RADIAL DETECTABLE WARNING FIELD PLACEMENT WHEN 5 FOOT GRADE BREAK DISTANCE PER SDD 8D5-c IS EXCEEDED

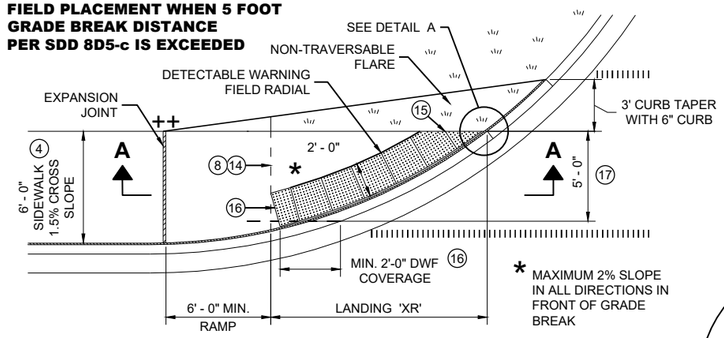

PLAN VIEW

CURB RAMP TYPE 4A1

(GRADE BREAK DISTANCE GREATER THAN 5 FEET)

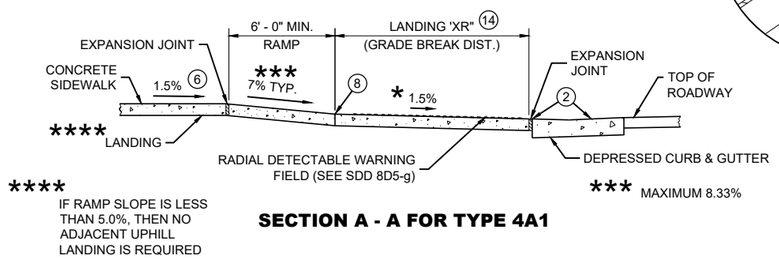

SECTION A - A FOR TYPE 4A1

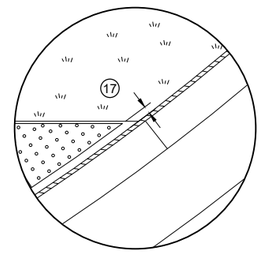

DETAIL A

LEGEND

- ½" EXPANSION JOINT SIDEWALK
- CONTRACTION JOINT SIDEWALK
- PAVEMENT MARKING CROSSWALK (WHITE)

GENERAL NOTES

AVOID PLACING DRAINAGE STRUCTURES, JUNCTION BOXES OR OTHER OBSTRUCTIONS IN FRONT OF RAMP ACCESS AREAS.

DETAILS OF CONSTRUCTION, MATERIALS AND WORKMANSHIP NOT SHOWN ON THIS DRAWING SHALL CONFORM TO THE PERTINENT REQUIREMENTS OF THE STANDARD SPECIFICATIONS AND THE APPLICABLE SPECIAL PROVISIONS.

DETECTABLE WARNING FIELDS THAT ARE INSTALLED AS A GROUP OR SIDE BY SIDE, SHALL BE FROM THE SAME MANUFACTURER.

APPLY RADIAL DETECTABLE WARNING PLACEMENT SIMILARLY FOR TYPE 4A AND 4A1 CURB RAMPS AND SIMILARLY FOR TYPE 4B AND 4B1 CURB RAMPS. TYPE 4A AND 4B CURB RAMPS ARE NOT SHOWN.

REFER TO SDD 8D5-g FOR ADDITIONAL RADIAL PLATE REQUIREMENTS.

FIELD CUTS AT INTERMEDIATE JOINTS WITHIN THE RADIAL DETECTABLE WARNING FILED ARE PROHIBITED.

DETERMINE FINAL RADIAL WARNING FIELD CONFIGURATION AD ITS INDIVIDUAL PLATE LOCATIONS. PERFORM PRE-LAYOUT PRIOR TO PLACEMENT IN PLASTIC CONCRETE. FOLLOW MANUFACTURER'S PRODUCT LIST AND INSTALLATION RECOMMENDATIONS.

(2) GRADE CHANGE BETWEEN GUTTER FLAG SLOPE AND THE CURB RAMP SLOPE SHALL NOT EXCEED 11%. MAXIMUM GUTTER FLAG SLOPE IS 4%. PROVIDE LONGITUDINAL DRAINAGE AROUND CURB AND AWAY FROM CURB RAMP. NO VERTICAL LIPS OR DISCONTINUITIES GREATER THAN ¼ - INCH ARE ALLOWED. SLOPE OF CURB HEAD OPENING SHALL MATCH THE RAMP SLOPE, MINIMALLY 1.5% AND NOT TO EXCEED 7%. WHEN ADJACENT TO 1.5% LANDING, CONSTRUCT CURB HEAD OPENING AT 1.5% IN THE DIRECTION OF PEDESTRIAN TRAVEL.

(3) AN 8.33% CURB RAMP SLOPE IS ALLOWABLE WITH FLATTENED GUTTER FLAG SLOPE AND NOT TO EXCEED 11% GRADE CHANGE.

(4) ±0.5% CONSTRUCTION TOLERANCE IN SIDEWALK CROSS SLOPE. THE SIDEWALK CROSS SLOPE SHALL NOT EXCEED 2% WITHOUT PRIOR APPROVAL FROM THE ENGINEER.

(6) PROVIDE A LEVEL LANDING (MAXIMUM 2% SLOPE) IN ANY DIRECTION OF PEDESTRIAN TRAVEL. STANDARD LANDING SIZE IS 5 FEET BY 5 FEET.

(8) PROVIDE GRADE BREAK PERPENDICULAR TO DIRECTION OF WHEELCHAIR TRAVEL.

(14) CONSULT ENGINEER IF GRADE BREAK LOCATION (END OF LANDING DIMENSION "XR") REQUIRES FIELD ADJUSTMENT WHEN ESTABLISHING FINAL RADIAL DETECTABLE WARNING FIELD LOCATION.

(15) FIELD SAW CUTS ALONG RADIAL DETECTABLE WARNING PLATES WILL BE NECESSARY TO MATCH EACH CURB RAMP EDGE. AVOID CUTTING THROUGH DOMES WHENEVER POSSIBLE. MAKE FIELD CUTS TRUE TO LINE AND WITHIN ⅛" DEVIATION. SMOOTH EDGES OF FIELD CUT PLATES.

(16) USE 1' X 2" RECTANGULAR END PLATE AT END OF TYPE 4A1 RAMP AND PROVIDE MINIMUM 2' - 0" DETECTABLE WARNING FIELD COVERAGE (IN DIRECTION OF PEDESTRIAN TRAVEL) ALONG THE ENTIRE CURB RAMP WIDTH.

(17) A MAXIMUM 3 INCH CONCRETE BORDER WIDTH IS ALLOWABLE IN FRONT OF RADIAL DETECTABLE WARNING FIELD FOR CONSTRUCTABILITY PURPOSES. CONCRETE BORDER WIDTH MAY VARY UP TO 1 INCH.

RADIAL DETECTABLE WARNING FIELD PLACEMENT WHEN 5 FOOT GRADE BREAK DISTANCE PER SDD 8D5-d IS EXCEEDED

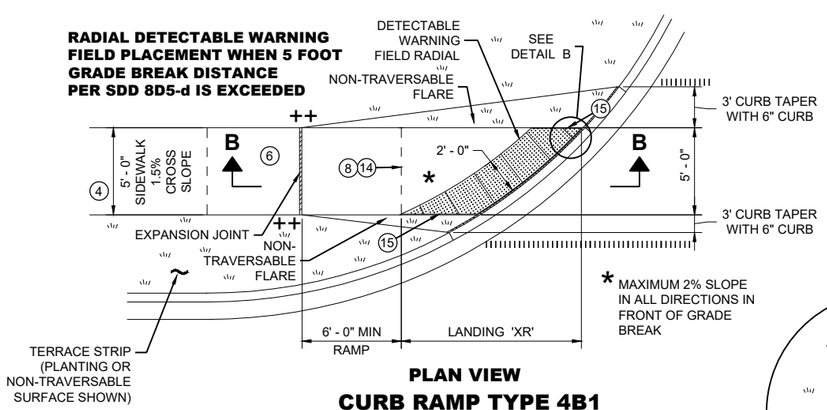

PLAN VIEW

CURB RAMP TYPE 4B1

(GRADE BREAK DISTANCE GREATER THAN 5 FEET)

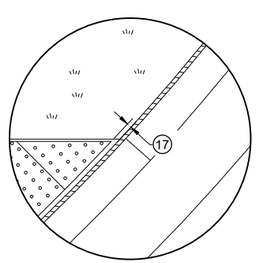

DETAIL B

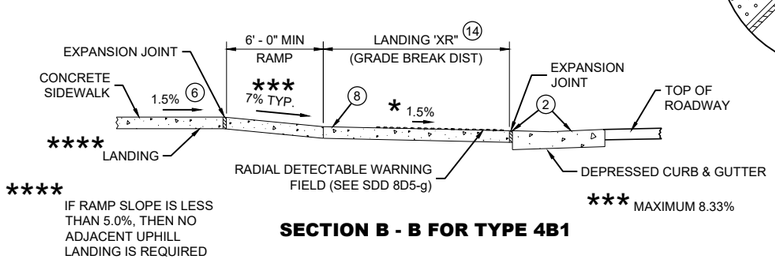

SECTION B - B FOR TYPE 4B1

RADIAL DETECTABLE WARNING FIELD PLACEMENT WHEN 5 FOOT GRADE BREAK DISTANCE PER SDD 8D5-b IS EXCEEDED

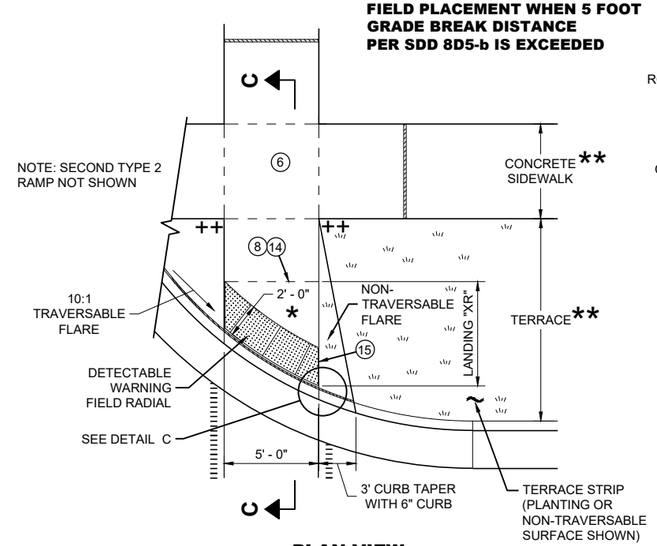

PLAN VIEW

CURB RAMP TYPE 2

(GRADE BREAK DISTANCE GREATER THAN 5 FEET)

(ON LINE WITH SIDEWALK)

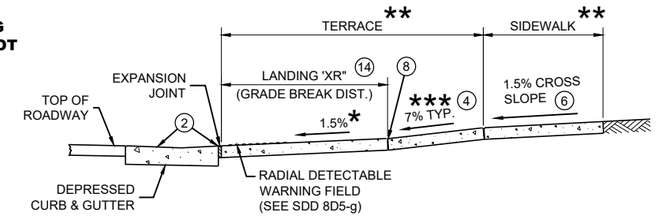

SECTION C - C FOR TYPE 2

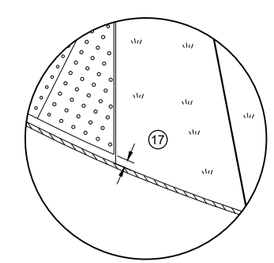

DETAIL C

* MAXIMUM 2% SLOPE IN ALL DIRECTIONS IN FRONT OF GRADE BREAK

** WIDTH SHOWN ELSEWHERE IN THE PLANS

*** MAXIMUM 8.33%

++ CONSTRUCT 6" WEDGE TO AVOID CONCRETE BREAKAGE

CURB RAMPS
RADIAL DETECTABLE WARNING

STATE OF WISCONSIN
DEPARTMENT OF TRANSPORTATION

6

6

SDD 08D05-21f

SDD 08D05-21f

	MIN.	MAX.
A	1.6"	2.4"
B	0.65"	1.5"
C	*	*
D	0.9"	1.4"

* THE C DIMENSION IS 50% TO 65% OF THE D DIMENSION.

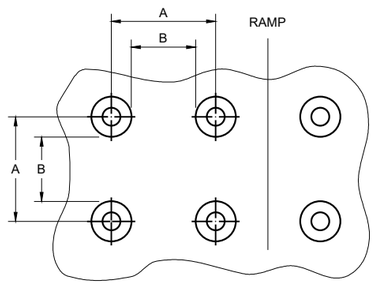

PLAN VIEW

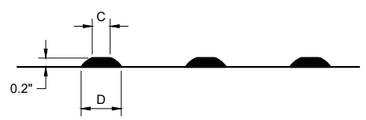

ELEVATION VIEW

TRUNCATED DOMES
DETECTABLE WARNING PATTERN DETAIL

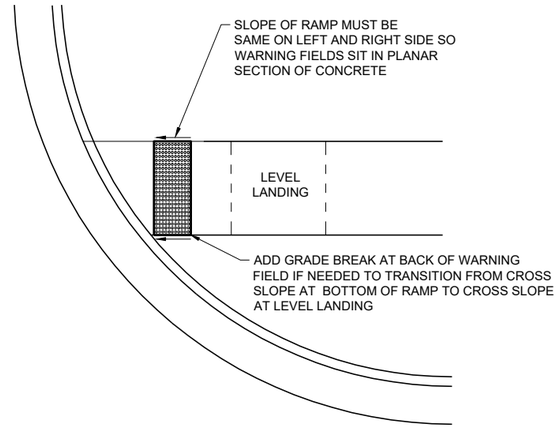

DETECTABLE WARNING FIELD
PLANAR INSTALLATION

GENERAL NOTES

DETECTABLE WARNING FIELDS THAT ARE INSTALLED AT A CURB RAMP SHALL BE FROM THE SAME MANUFACTURER.

PLACE ALL DETECTABLE WARNING FIELD SYSTEMS IN ACCORDANCE TO THE MANUFACTURER'S RECOMMENDATION.

FIELD CUTS AT INTERMEDIATE JOINTS WITHIN THE RADIAL DETECTABLE WARNING FILED ARE PROHIBITED.

DETERMINE FINAL RADIAL WARNING FIELD CONFIGURATION AND ITS INDIVIDUAL PLATE LOCATIONS. PERFORM PRE-LAYOUT PRIOR TO PLACEMENT IN PLASTIC CONCRETE. FOLLOW MANUFACTURER'S PRODUCT LIST AND INSTALLATION RECOMMENDATIONS.

FOR RADIAL DETECTABLE WARNING FIELD APPLICATIONS WHERE STANDARD RADIAL PLATES ARE NOT AVAILABLE AT AN INTERSECTION CURB RADIUS, A COMBINATION OF SQUARE OR RECTANGULAR PLATES AND RADIAL PLATES MAY BE USED TO FORM RADIAL CONFIGURATION. RADIAL WEDGE PLATES IN COMBINATION WITH SQUARE PLATES ARE ALSO ACCEPTABLE. FOLLOW MANUFACTURER'S RECOMMENDATIONS.

REFER TO CONTRACT AND STANDARD SPECIFICATIONS FOR FIELD CUTTING REQUIREMENTS.

DO NOT EMBED IN CONCRETE ANY FIELD-CUT PLATES WITH CUT EDGES SHORTER THAN 6 INCHES. CONSULT WITH MANUFACTURER FOR RE-DRILLING AND ANCHORING REQUIREMENTS OF FIELD-CUT PLATES.

(15) FIELD SAW CUTS ALONG RADIAL DETECTABLE WARNING PLATES WILL BE NECESSARY TO MATCH EACH CURB RAMP EDGE. AVOID CUTTING THROUGH DOMES WHENEVER POSSIBLE. MAKE FIELD CUTS TRUE TO LINE AND WITHIN ⅛" DEVIATION. SMOOTH EDGES OF FIELD CUT PLATES.

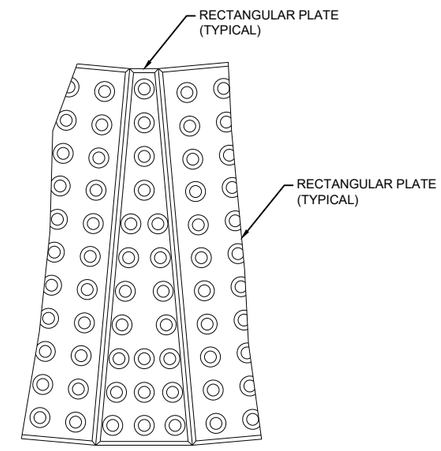

PLAN VIEW
RADIAL WEDGE PLATE CONNECTION DETAIL

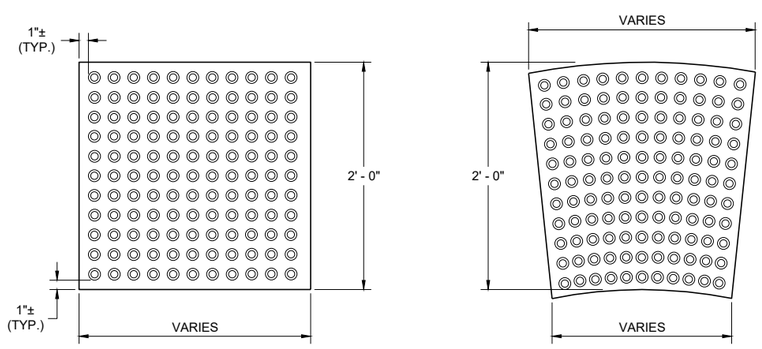

RECTANGULAR PLATES **RADIAL PLATES**

PLAN VIEW
DETECTABLE WARNING FIELDS (TYPICAL)

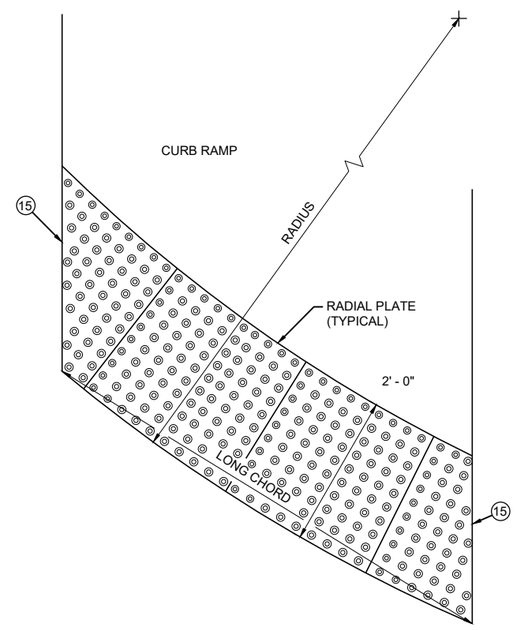

PLAN VIEW
RADIAL DETECTABLE WARNING FIELD ATTRIBUTES

6

6

SDD 08D05-21g

SDD 08D05-21g

CURB RAMPS RECTANGULAR AND RADIAL DETECTABLE WARNING PLATES

STATE OF WISCONSIN
DEPARTMENT OF TRANSPORTATION

APPROVED
July 2023 — DATE
/S/ Rodney Taylor — ROADWAY STANDARDS DEVELOPMENT UNIT SUPERVISOR

FHWA

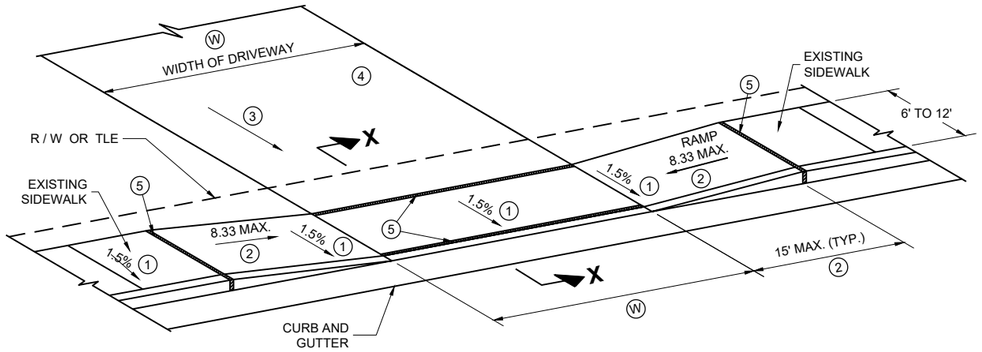

TYPE X
SIDEWALK ABUTS CURB AND GUTTER
TERRACE VARIES 0 TO 3 FEET

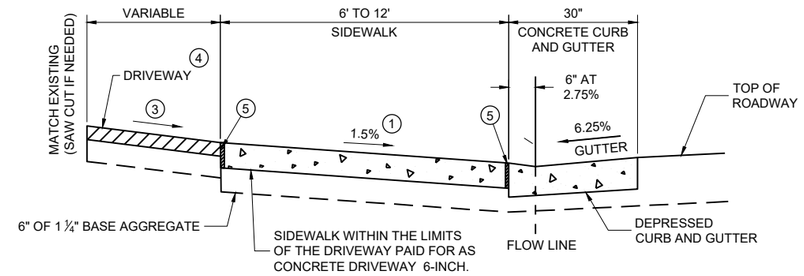

SECTION X - X

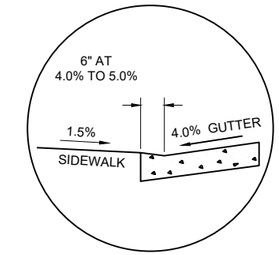

SECTION X - X
4% GUTTER SLOPE

Ⓦ: 12' MIN. - 24' MAX. RESIDENTIAL AND NON-COMMERCIAL (PE & FE)

16' MIN. - 35' MAX. COMMERCIAL (CE)

TABLE Y

Ⓐ FEET	Ⓒ FEET
3.5'	2.0'
4.5'	3.0'
5.5'	3.5'

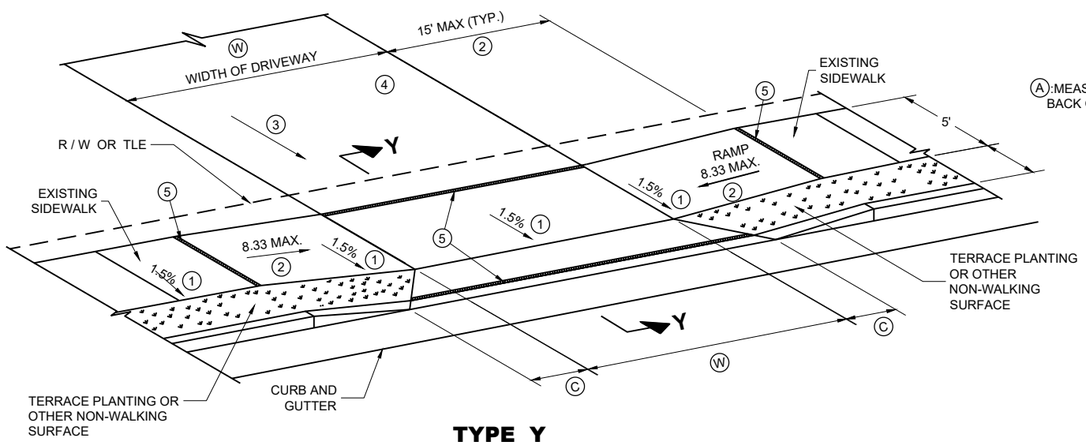

TYPE Y
SIDEWALK WITH NARROWER TERRACE
TERRACE VARIES 4 TO 6 FEET

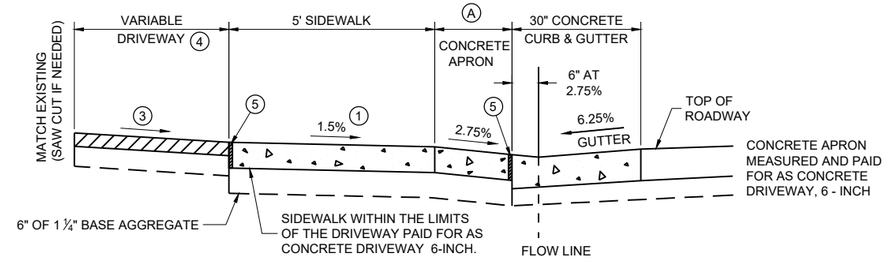

NOTE: SIDEWALK MY BE DEPRESSED IN DRIVEWAY AREAS

SECTION Y - Y
DRIVEWAY DETAIL WITH CONCRETE CURB AND GUTTER
(URBAN AND SUBURBAN)

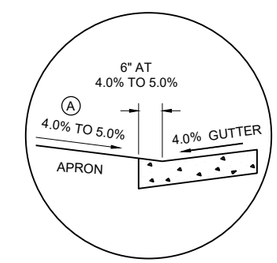

SECTION Y - Y
4% GUTTER SLOPE

GENERAL NOTES

PROVIDE CONSTRUCTION JOINTS ALONG THE CENTER OF THE CONCRETE FOR DRIVEWAYS UNDER 20 FEET IN WIDTH AND AT THE THIRD POINTS OVER 20 FEET IN WIDTH.

Ⓦ IS SHOWN ON PLAN AND PROFILE SHEETS.

OFFSETS, ELEVATIONS, AND PERCENT GRADE ARE SHOWN ON THE CROSS SECTIONS.

① CONSTRUCTION TOLERANCE OF 0.5%± FOR SIDEWALK CROSS SLOPE. THE SIDEWALK CROSS SLOPE SHALL NOT EXCEED 2%.

② THE SIDEWALK RAMP MAXIMUM RUNNING SLOPE SHALL NOT REQUIRE THE RAMP LENGTH TO EXCEED 15 FEET TO AVOID CHASING THE SLOPE INDEFINITELY WHEN CONNECTING TO STEEP GRADES. WHEN APPLYING THE 15 FOOT MAXIMUM LENGTH, THE RUNNING SLOPE OF THE SIDEWALK SHALL BE AS FLAT AS FEASIBLE AND NOT EXCEED THE LONGITUDINAL GRADE OF THE ROADWAY. SLOPE SIDEWALK RAMP TOWARD APRON AS SHOWN WHERE THERE IS NO TERRACE OR WHERE THE TERRACE WIDTH IS LESS THAN 6 FEET WIDE.

③ DRIVEWAY SLOPES: DESIRABLE MAXIMUM
10.5% UP AWAY FROM SIDEWALK (SAG)
8.5% DOWN AWAY FROM SIDEWALK (CREST)
ABSOLUTE MAXIMUM 15% FOR BOTH CREST AND SAG

④ DRIVEWAY TYPES
- 6-INCH CONCRETE DRIVEWAY PAVEMENT OVER 6-INCH BASE AGGREGATE
- 2-INCH TO 3-INCH ASPHALTIC SURFACE OVER 6-INCH BASE AGGREGATE
- 6-INCH BASE AGGREGATE (MAY BE INCREASED FOR CLAY SUBGRADES.)

⑤ ½" EXPANSION JOINT FILLER

DRIVEWAY AND SIDEWALK RAMPS TYPES X AND Y

STATE OF WISCONSIN
DEPARTMENT OF TRANSPORTATION

APPROVED
July 2023 — DATE
/S/ Rodney Taylor — ROADWAY STANDARDS DEVELOPMENT UNIT SUPERVISOR

FHWA

6

6

SDD 08D18-04

SDD 08D18-04

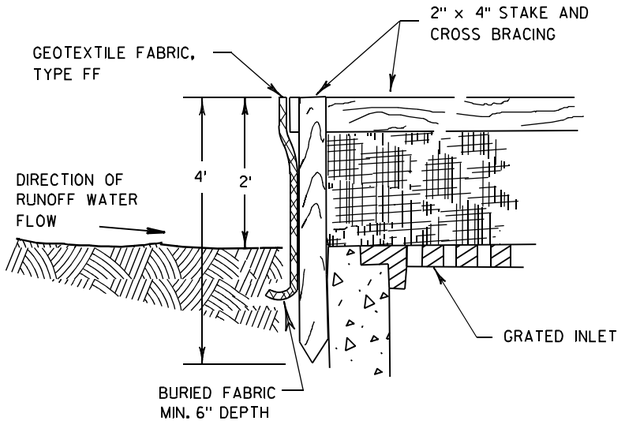

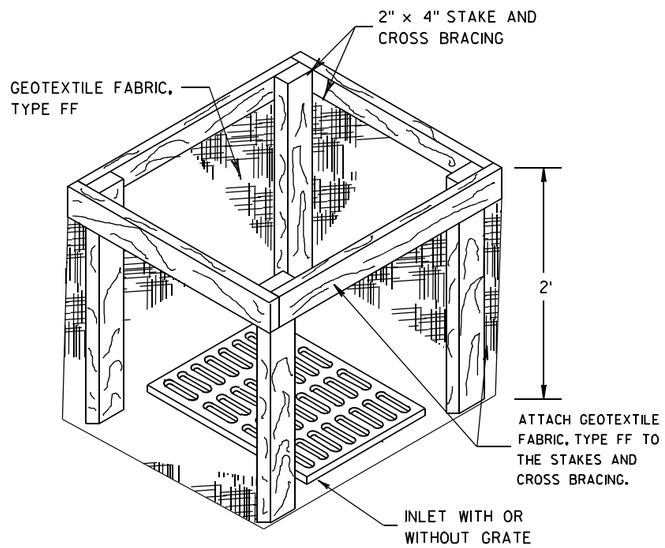

INLET PROTECTION, TYPE A

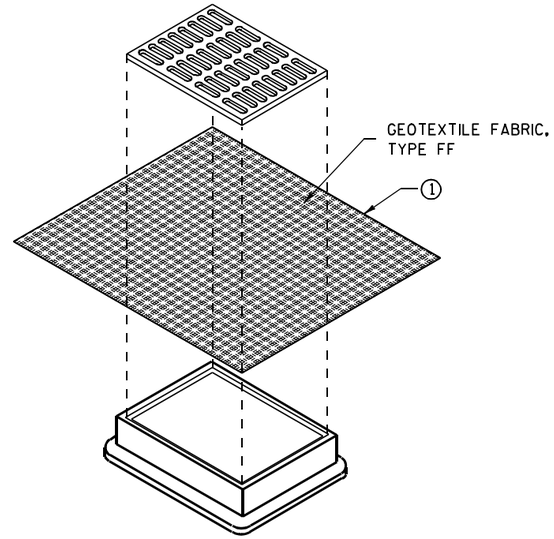

INLET PROTECTION, TYPE B (WITHOUT CURB BOX)

(CAN BE INSTALLED IN ANY INLET WITHOUT A CURB BOX)

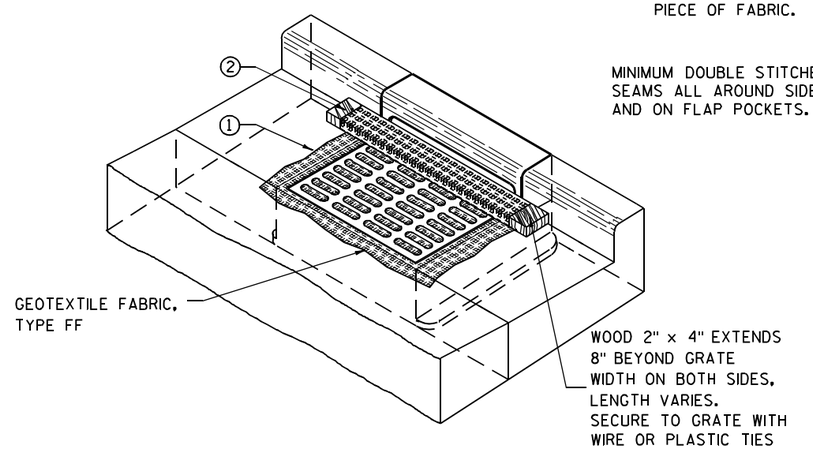

INLET PROTECTION, TYPE C (WITH CURB BOX)

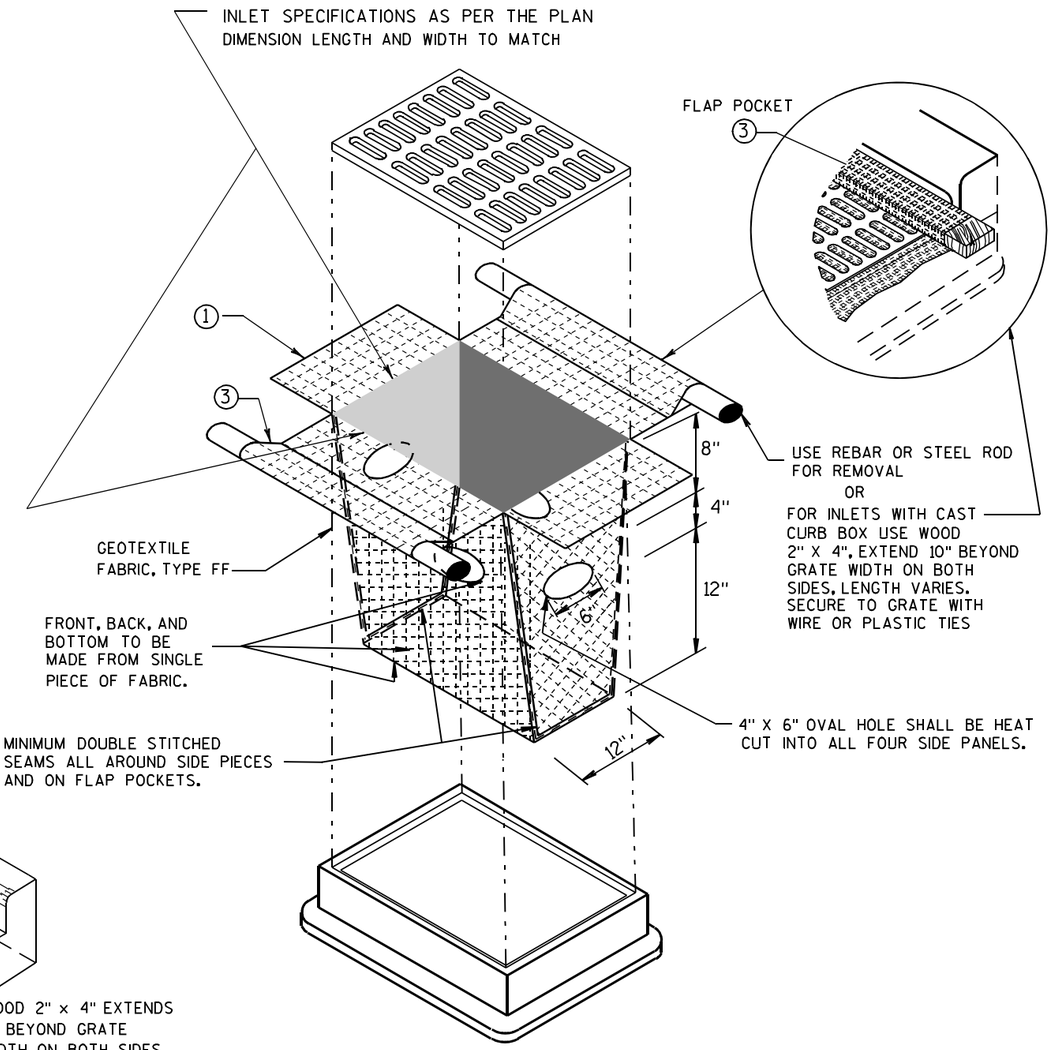

INLET PROTECTION, TYPE D

(CAN BE INSTALLED IN ANY INLET TYPE WITH OR WITHOUT A CURB BOX AS PER NOTE 2)

GENERAL NOTES

INLET PROTECTION DEVICES SHALL BE MAINTAINED OR REPLACED AT THE DIRECTION OF THE ENGINEER.

MANUFACTURED ALTERNATIVES APPROVED AND LISTED ON THE DEPARTMENT'S EROSION CONTROL PRODUCT ACCEPTABILITY LIST MAY BE SUBSTITUTED.

WHEN REMOVING OR MAINTAINING INLET PROTECTION, CARE SHALL BE TAKEN SO THAT THE SEDIMENT TRAPPED ON THE GEOTEXTILE FABRIC DOES NOT FALL INTO THE INLET. ANY MATERIAL FALLING INTO THE INLET SHALL BE REMOVED IMMEDIATELY.

1 FINISHED SIZE, INCLUDING FLAP POCKETS WHERE REQUIRED, SHALL EXTEND A MINIMUM OF 10" AROUND THE PERIMETER TO FACILITATE MAINTENANCE OR REMOVAL.

2 FOR INLET PROTECTION, TYPE C (WITH CURB BOX), AN ADDITIONAL 18" OF FABRIC IS WRAPPED AROUND THE WOOD AND SECURED WITH STAPLES. THE WOOD SHALL NOT BLOCK THE ENTIRE HEIGHT OF THE CURB BOX OPENING.

3 FLAP POCKETS SHALL BE LARGE ENOUGH TO ACCEPT WOOD 2X4.

INSTALLATION NOTES

TYPE B & C

TRIM EXCESS FABRIC IN THE FLOW LINE TO WITHIN 3" OF THE GRATE.

THE CONTRACTOR SHALL DEMONSTRATE A METHOD OF MAINTENANCE, USING A SEWN FLAP, HAND HOLDS OR OTHER METHOD TO PREVENT ACCUMULATED SEDIMENT FROM ENTERING THE INLET.

TYPE D

DO NOT INSTALL INLET PROTECTION TYPE D IN INLETS SHALLOWER THAN 30", MEASURED FROM THE BOTTOM OF THE INLET TO THE TOP OF THE GRATE.

TRIM EXCESS FABRIC IN THE FLOW LINE TO WITHIN 3" OF THE GRATE.

THE INSTALLED BAG SHALL HAVE A MINIMUM SIDE CLEARANCE, BETWEEN THE INLET WALLS AND THE BAG, MEASURED AT THE BOTTOM OF THE OVERFLOW HOLES, OF 3". WHERE NECESSARY THE CONTRACTOR SHALL CINCH THE BAG, USING PLASTIC ZIP TIES, TO ACHIEVE THE 3" CLEARANCE. THE TIES SHALL BE PLACED AT A MAXIMUM OF 4" FROM THE BOTTOM OF THE BAG.

INLET PROTECTION TYPE A, B, C, AND D

STATE OF WISCONSIN
DEPARTMENT OF TRANSPORTATION

APPROVED
10/16/02 — DATE
/S/ Beth Cannestra — CHIEF ROADWAY DEVELOPMENT ENGINEER
FHWA

6

S.D.D. 8 E 10-2

GENERAL NOTES

DETAILS OF CONSTRUCTION, MATERIALS AND WORKMANSHIP NOT SHOWN ON THIS DRAWING SHALL CONFORM TO THE PERTINENT REQUIREMENTS OF THE STANDARD SPECIFICATIONS AND THE APPLICABLE SPECIAL PROVISIONS.

TRACKING PAD SHALL BE INSPECTED DAILY. DEFICIENT AREAS SHALL BE REPAIRED OR REPLACED IMMEDIATELY.

TRACKING PAD TO BE REMOVED AFTER CONSTRUCTION IS COMPLETED.

TRACKING PAD SHALL BE THE FULL WIDTH OF THE EGRESS POINT.

SURFACE WATER MUST BE PREVENTED FROM PASSING THROUGH THE TRACKING PAD. FLOWS SHALL BE DIVERTED AWAY, AROUND OR CONVEYED UNDER THE TRACKING PAD.

CULVERT PIPE OR OTHER BMP USED TO DIVERT WATER AWAY, AROUND OR UNDER THE TRACKING PAD SHALL BE DESIGNED TO CONVEY THE 2 YEAR - 24 HOUR EVENT.

THE COST OF ADDITIONAL BMP TO DIVERT WATER ARE INCIDENTAL TO THE TRACKING PAD BID ITEM.

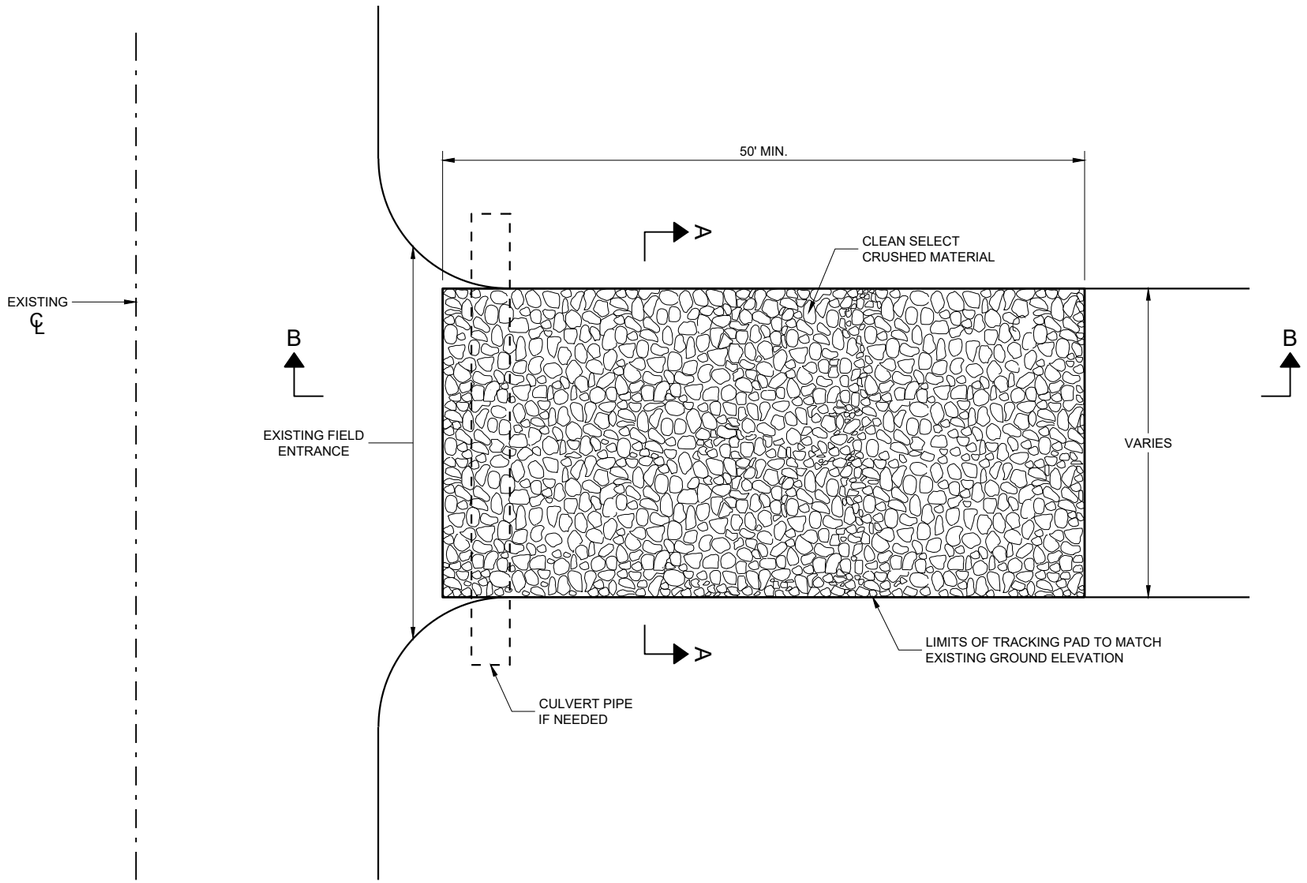

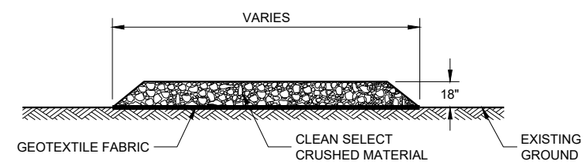

SECTION A - A

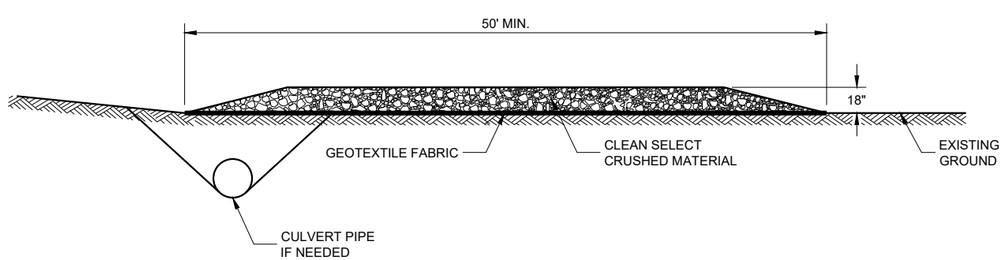

SECTION B - B

TRACKING PAD

STATE OF WISCONSIN
DEPARTMENT OF TRANSPORTATION

APPROVED
3/24/2011 — DATE
/S/ Jerry H. Zogg — ROADWAY STANDARDS DEVE ENGINEER
FHWA

6

SDD 08E14 - 01

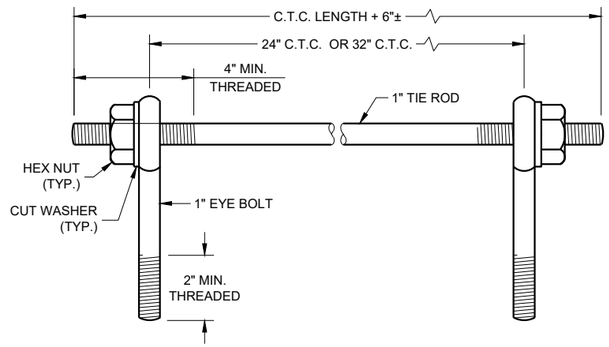

EYE BOLTS AND TIE ROD

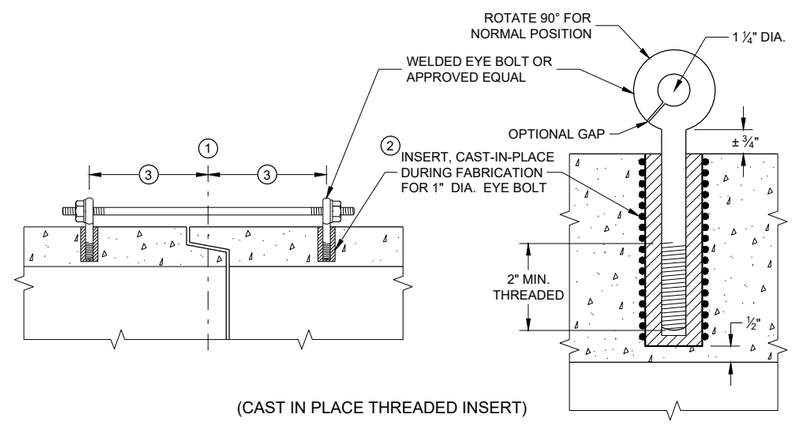

(CAST IN PLACE THREADED INSERT)

LONGITUDINAL SECTIONS

EYE BOLT AND TIE ROD ASSEMBLY (ALTERNATE NO. 1)

GENERAL NOTES

DETAILS OF CONSTRUCTION, MATERIALS, AND WORKMANSHIP NOT SHOWN ON THIS DRAWING SHALL CONFORM TO THE PERTINENT REQUIREMENTS OF THE STANDARD SPECIFICATIONS AND APPLICABLE SPECIAL PROVISIONS.

CONCRETE CULVERT AND STORM SEWER PIPE SHALL BE TIED TOGETHER IN THE MANNER ILLUSTRATED BY THIS DETAIL AT LOCATIONS DESIGNATED IN THE STANDARD SPECIFICATIONS AND THE PLAN. THE CONTRACTOR MAY USE EITHER ALTERNATE 1, 2 OR 3 FOR DRAINAGE STRUCTURES. ONLY ALTERNATE 1 AND 3 MAY BE USED FOR CATTLE PASSES, UNLESS OTHERWISE STATED IN THE CONTRACT. THE MATERIALS, FABRICATION AND WORK NECESSARY TO TIE THE PIPE BY THIS DETAIL WILL BE CONSIDERED INCIDENTAL TO THE PIPE AND APRON ENDWALLS IF REQUIRED.

DETAILED DRAWINGS FOR PROPOSED ALTERNATE DESIGNS FOR JOINT TIES SHALL BE SUBMITTED TO THE ENGINEER FOR APPROVAL.

JOINT TIES TO BE HOT-DIP GALVANIZED PER ASTM A 153.

1. CENTER LINE OF TONGUE AND GROOVE OR BELL AND SPIGOT JOINTS.
2. THE INSIDE OF THE THREADED INSERTS SHALL BE CLEAN TO ALLOW THE INSERTION OF THREADED EYE BOLTS.
3. HOLES SHALL BE CAST-IN-PLACE OR DRILLED PER THE APPLICABLE DETAIL, AND EQUAL DISTANCE FROM THE CENTERLINE OF THE JOINT.
4. BOLT PROJECTION INSIDE OF PIPE SHALL NOT EXCEED 2 INCHES.
5. OPENING TO BE ROD DIAMETER PLUS 1 INCH.
6. LENGTH ADEQUATE TO EXTEND TO WITHIN ½ INCH OF THE INNER SURFACE OF THE PIPE.
7. EYE BOLT LENGTH DETERMINED BY WALL THICKNESS, BELL THICKNESS AND BOLT PROJECTION INSIDE PIPE.

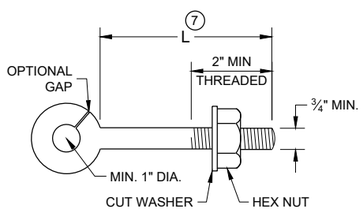

EYE BOLT 7

NOTE: TWO EYE BOLTS MAY BE USED WITH A 30" OR 38" LONG THREADED ROD IN LIEU OF THE 90° BENT TIE ROD.

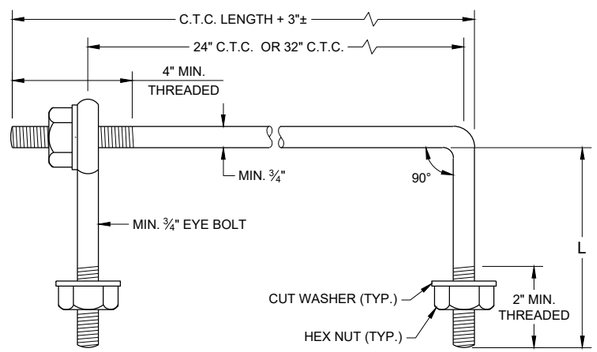

EYE BOLT AND TIE ROD

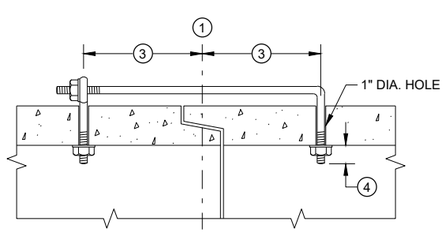

(TONGUE AND GROOVE PIPE)

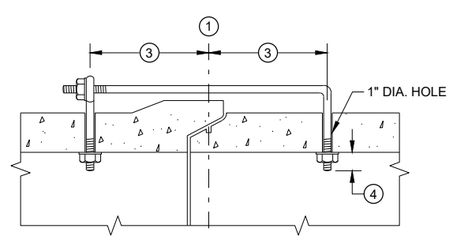

(MODIFIED BELL PIPE)

LONGITUDINAL SECTION

(JOINT TIES FOR 18" TO 66" DIA. CONCRETE PIPE)

EYE BOLT AND TIE ROD ASSEMBLY (ALTERNATE NO. 2)

ADJUSTABLE TIE ROD TABLE

PIPE DIAMETER	TIE ROD DIAMETER	D	L_1	N
12 - 60	⅝	⅝	5	½
66 - 84	¾	¾	5	½
90 - 144	1	1	7	1 7/16

DIMENSIONS SHOWN ARE IN INCHES

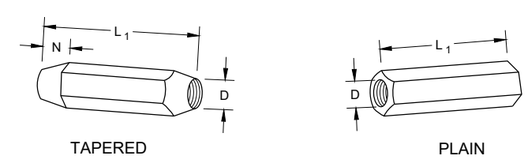

RIGHT AND LEFT THREADS

SLEEVE NUTS

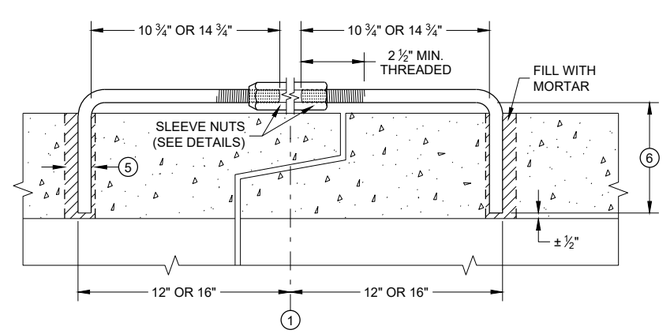

LONGITUDINAL SECTION

ADJUSTABLE TIE ROD (ALTERNATE NO. 3)

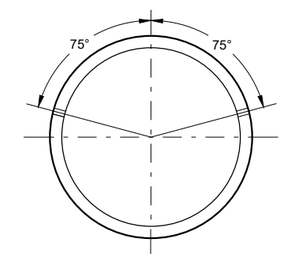

PLACEMENT OF (2) CAST-IN-PLACE INSERTS OR HOLES DURING FABRICATION FOR PIPE SECTIONS REQUIRING TIE RODS

TRANSVERSE SECTION

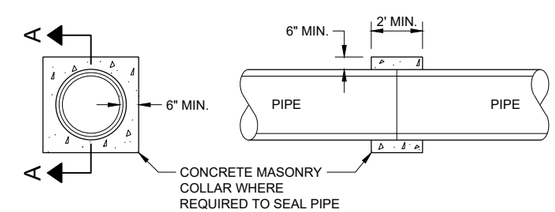

SECTION A - A

CONCRETE COLLAR DETAIL

JOINT TIES FOR CONCRETE PIPE AND CONCRETE COLLAR DETAIL

STATE OF WISCONSIN
DEPARTMENT OF TRANSPORTATION

APPROVED
November 2021 — DATE
/S/ Rodney Taylor — ROADWAY STANDARDS DEVE ENGINEER
FHWA

6

SDD 08F04 - 08

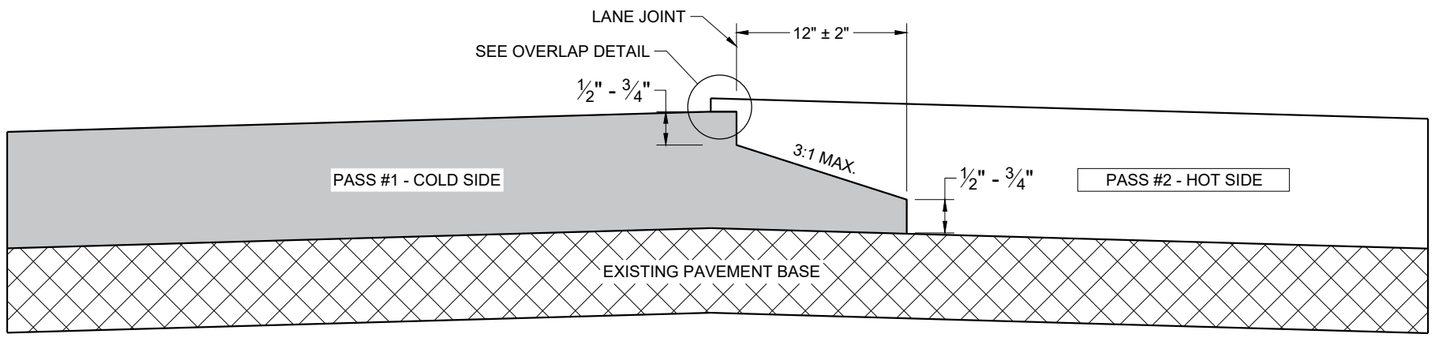

TYPICAL PAVEMENT CROSS SECTION
NOTCHED WEDGE JOINT

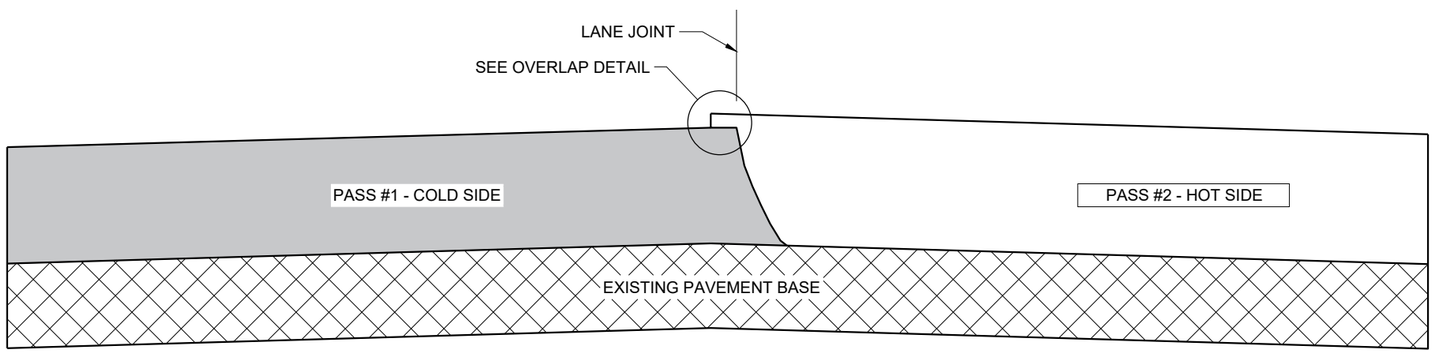

TYPICAL PAVEMENT CROSS SECTION
VERTICAL JOINT

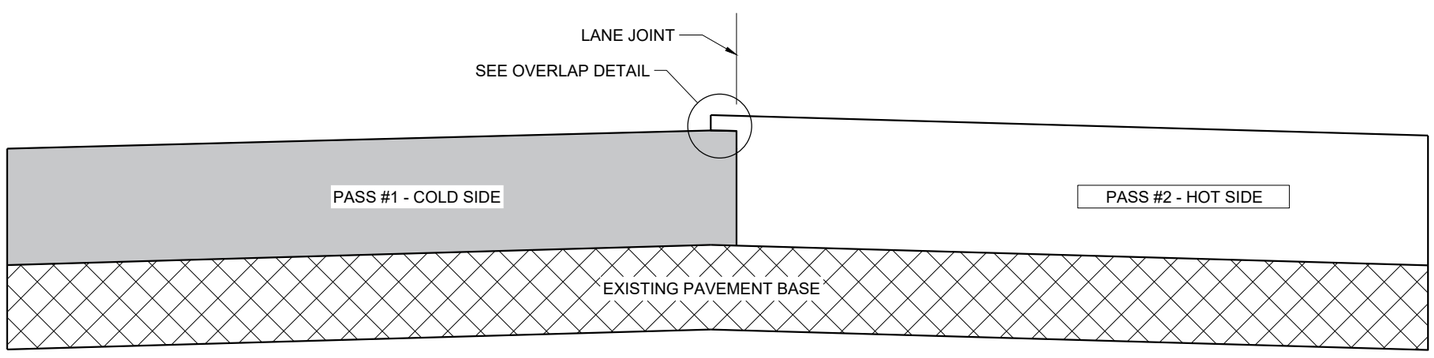

TYPICAL PAVEMENT CROSS SECTION
VERTICAL JOINT (MILLED)

GENERAL NOTES

IN ADDITION TO THE DETAILS PROVIDED IN THIS DRAWING, CONFORM TO STANDARD SPECIFICATION 450.3.2.8 FOR WHEN A NOTCHED WEDGE JOINT IS REQUIRED AND FOR GENERAL JOINT CONSTRUCTION REQUIREMENTS.

FOR ALL LONGITUDINAL JOINTS, ENSURE THE PAVER SCREED OVERLAPS THE PREVIOUSLY PLACED PAVEMENT BY 1" ± 0.5" AND THE HOT SIDE OF THE JOINT REMAINS HIGHER THAN THE COLD SIDE BY APPROXIMATELY 0.1" AFTER FINAL COMPACTION. (IT WILL BE FLUSH WHEN PAVING IN ECHELON.)

ONLY REMOVE THE LONGITUDINAL NOTCHED WEDGE JOINT FOR SMA PAVEMENT OR AS DIRECTED BY THE ENGINEER TO ADDRESS SPECIFIC LENGTHS OF JOINT DAMAGED BY TRAFFIC.

WHEN MILLING BACK OR REMOVING ANY LONGITUDINAL JOINT, LIMIT THE MATERIAL REMOVED TO 2" FROM THE TOP NOTCH OR FROM THE VERTICAL JOINT EDGE ON THE COLD SIDE OF THE JOINT.

USE LONGITUDINAL MILLED JOINT AS PLANS SHOW OR THE AS THE ENGINEER DIRECTS.

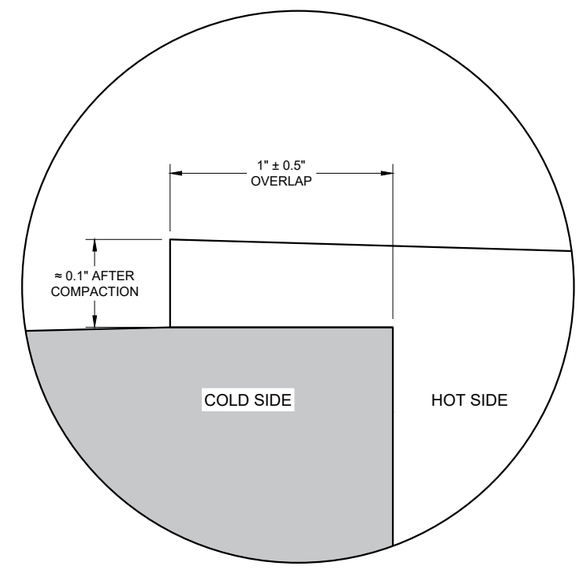

OVERLAP DETAIL (TYPICAL)

6

6

SDD 13C19 - 03

SDD 13C19 - 03

HMA LONGITUDINAL JOINTS

STATE OF WISCONSIN
DEPARTMENT OF TRANSPORTATION

APPROVED
November 2020 /S/ Steven Hefel
DATE HMA PAVEMENT ENGIN
FHWA

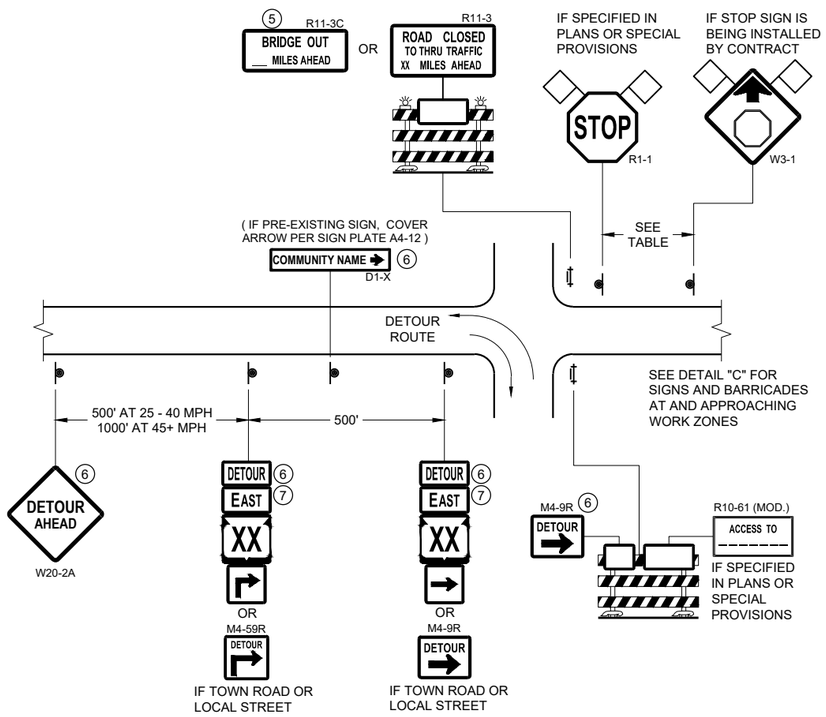

DETAIL A
MAINLINE CLOSURE WITH POSTED DETOUR

WORK ZONE GREATER THAN OR EQUAL TO ½ MILE FROM DETOUR ROUTE (1000 FEET IF URBAN)

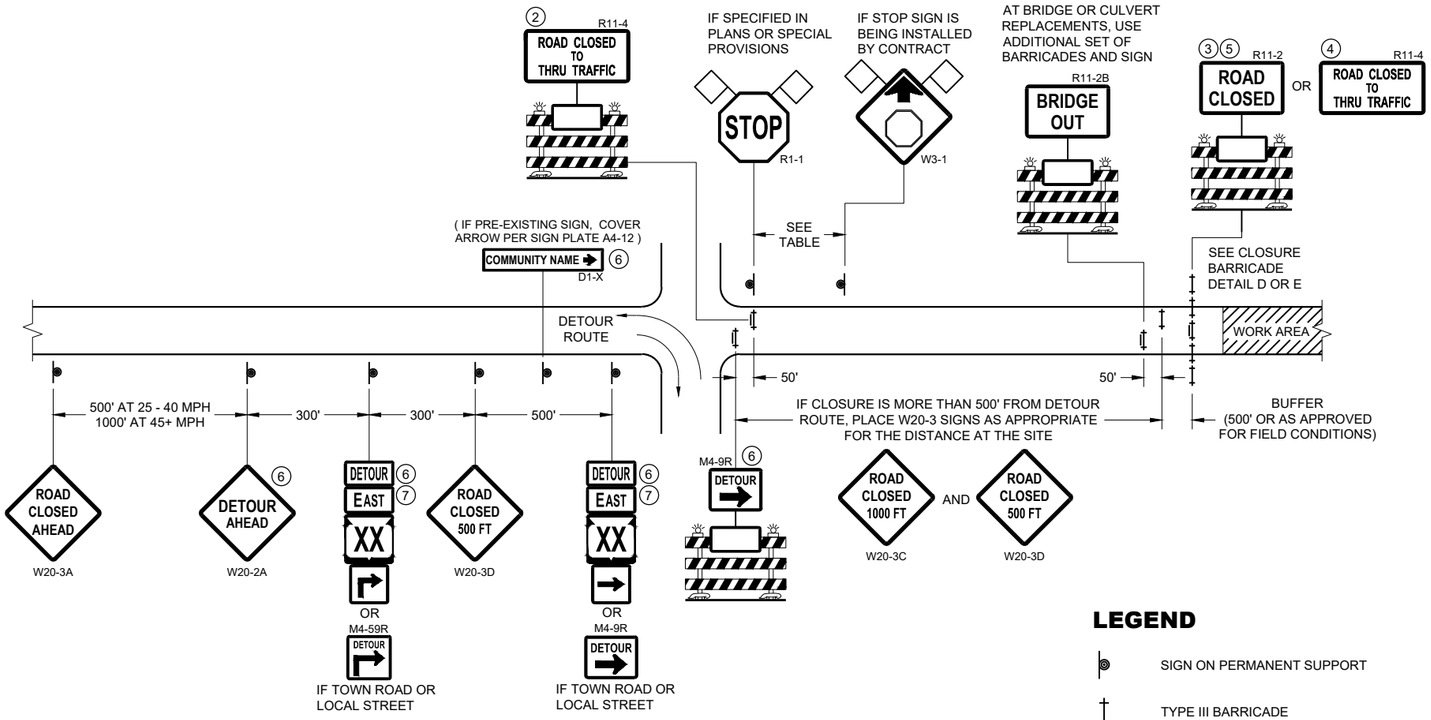

DETAIL B
MAINLINE CLOSURE WITH POSTED DETOUR

WORK ZONE LESS THAN ½ MILE FROM DETOUR ROUTE (1000 FEET IF URBAN)

LEGEND

- SIGN ON PERMANENT SUPPORT
- TYPE III BARRICADE
- TYPE III BARRICADE WITH ATTACHED SIGN
- TYPE "A" WARNING LIGHT (FLASHING)
- WORK AREA
- FLAGS, 16" X 16" MIN. (ORANGE)
- DETOUR — M4 - 8
- EAST — M3 - X
- XX (M1 - 4) OR XX (M1 - 6) OR COUNTY X (M1 - 5A)
- M05 - 1 OR M06 - 1

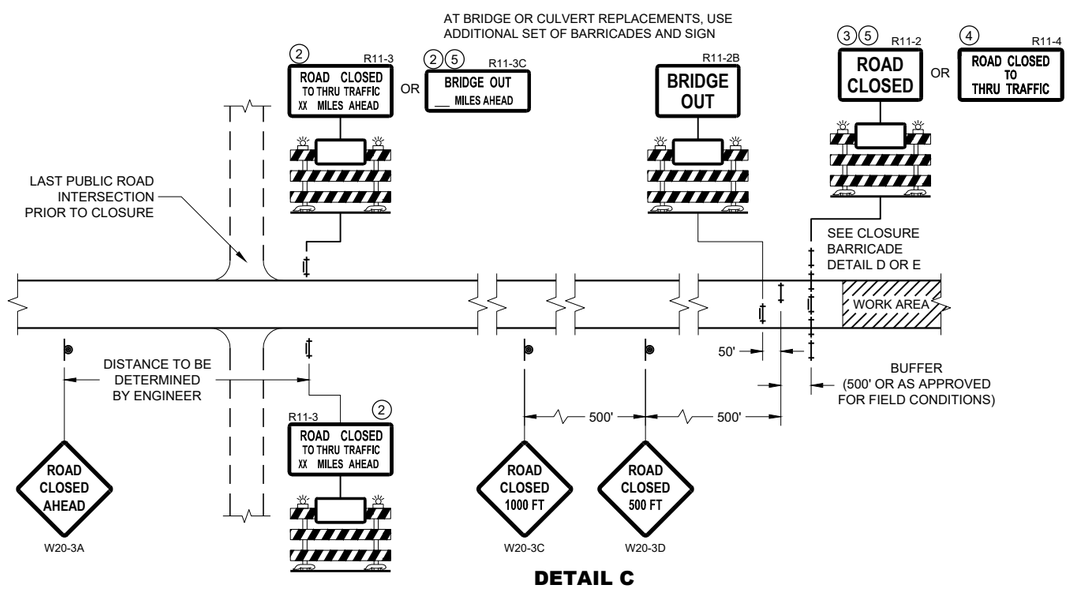

DETAIL C
MAINLINE CLOSURE, NO POSTED DETOUR

SPEED LIMIT (MPH)	"STOP AHEAD" ADVANCE WARNING DISTANCE (FT)
25	200
30	200
35	350
40	350
45	500
50	550
55	750

SEE SDD 15C2-SHEET "b" FOR GENERAL NOTES AND FOOTNOTES 1 THROUGH 7

BARRICADES AND SIGNS FOR MAINLINE CLOSURES

STATE OF WISCONSIN
DEPARTMENT OF TRANSPORTATION

APPROVED
May 2023 — DATE
/S/ Andrew Heidtke — WORK ZONE ENGINEER

FHWA

6

SDD 15C02 - 09a

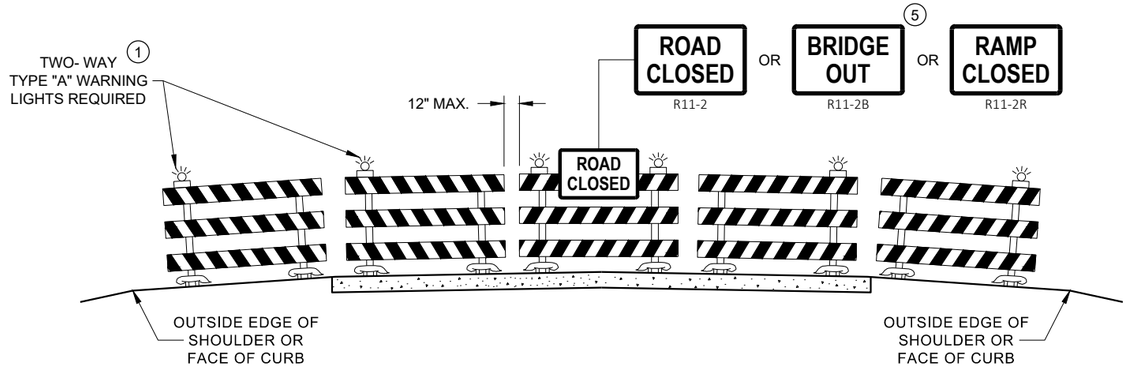

DETAIL D
ROAD CLOSURE BARRICADE DETAIL
APPROACH VIEW

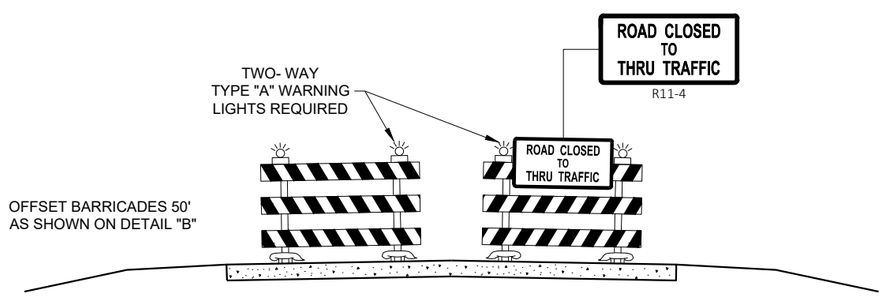

DETAIL E
LANE CLOSURE BARRICADE DETAIL
APPROACH VIEW

SEE SDD 15C2 - SHEET "a" FOR LEGEND

GENERAL NOTES

THE EXACT NUMBER, LOCATION, AND SPACING OF ALL SIGNS AND BARRICADES SHALL BE ADJUSTED TO FIT FIELD CONDITIONS AS APPROVED BY THE ENGINEER.

ANY SIGNS TEMPORARY OR EXISTING, WHICH CONFLICT WITH TRAFFIC CONTROL "IN USE", SHALL BE REMOVED OR COVERED AS NEEDED AND AS APPROVED BY THE ENGINEER.

THE SPACING BETWEEN TRAFFIC CONTROL SIGNS SHOULD BE ADJUSTED TO NOT CONFLICT WITH AND SHOULD PROVIDE A DESIRABLE MINIMUM OF 200 FEET CLEARANCE TO EXISTING SIGNS THAT WILL REMAIN IN PLACE.

BARRICADES THAT MUST BE MOVED FOR A WORK OPERATION SHALL BE IMMEDIATELY RE-ESTABLISHED UPON COMPLETION OF THE OPERATION, OR FOR CONTINUING OPERATIONS, AT THE END OF EACH WORKING DAY.

SIGNS THAT WILL BE IN PLACE LESS THAN 7 CONTINUOUS DAYS AND NIGHTS MAY BE MOUNTED ON PORTABLE SUPPORTS.

ALL TYPE III BARRICADES SHALL HAVE RAILS REFLECTORIZED ON BOTH FACES. STRIPES SHALL BE PROPERLY SLOPED DOWN TOWARD THE TRAFFIC SIDE OR AS SHOWN IN THE ROAD CLOSURE BARRICADE DETAIL "D" FOR FULL ROAD CLOSURES.

TYPE "A" LOW - INTENSITY FLASHING WARNING LIGHTS SHALL BE VISIBLE ON BOTH SIDES OF THE BARRICADE.

THE R11 - 2, R11 - 3, M4 - 9, R11 - 4, AND R10 - 61 SIGNS PLACED ON THE BARRICADES SHALL COVER NO MORE THAN THE TOP RAIL. THE SIGNS SHALL NOT COVER ANY PORTION OF THE MIDDLE RAIL OR BOTTOM RAILS.

"WO" AND "MO" SIGNS ARE THE SAME AS "W" AND "M" SIGNS EXCEPT THE BACKGROUND IS ORANGE.

ALL SIGNS SHALL BE 48" X 48" UNLESS OTHERWISE NOTED BELOW:
- R11 - 2 SHALL BE 48" X 30"
- R11 - 3 SHALL, R11 - 4 AND R10 - 61 SHALL BE 60 " X 30"
- M4 - 9 SHALL BE 30" X 24"
- M3 - X SHALL BE 24" X 12" (36" X 18" IF NEEDED TO MATCH EXISTING SIGNS)
- M4 - 8 SHALL BE 24" X 12" (36" X 18" IF NEEDED TO MATCH EXISTING SIGNS)
- M1 - 4, M1 - 5A AND M1 - 6 SHALL BE 24" X 24" (36" X 36" IF NEEDED TO MATCH EXISTING SIGNS)
- MO5 - 1 AND MO6 - 1 SHALL BE 21" X 21" (30" X 30" IF NEEDED TO MATCH EXISTING SIGNS)
- D1 - X SHALL BE AS SHOWN ON SPECIFIC PROJECT SIGNING DETAIL SHEETS.
- R1 - 1 SHALL BE 36" X 36"

1. TWO WARNING LIGHTS SHALL BE PROVIDED ON THE CENTER BARRICADE AND A MINIMUM OF ONE WARNING LIGHT SHALL BE PROVIDED ON EACH OF THE OTHER BARRICADES WITHIN THE ROADWAY LIMITS. SPACING OF THE WARNING LIGHTS SHALL BE UNIFORM TO THE EDGE OF ROADWAY AS SHOWN (APPROX. 8 FOOT LIGHT SPACING.
2. THESE SIGNS AND BARRICADES ARE NOT REQUIRED IF ROAD CLOSURE BEGINS AT AN INTERSECTION.
3. FOR ROAD CLOSURE WITHOUT LOCAL ACCESS TO PROJECT, SEE ROAD CLOSURE BARRICADE DETAIL "D".
4. FOR ROAD CLOSURE WITH LOCAL ACCESS TO PROJECT, SEE ROAD CLOSURE BARRICADE DETAIL "E".
5. FOR BRIDGE OR CULVERT REPLACEMENTS, SUBSTITUTE "BRIDGE OUT" INSTEAD OF "ROAD CLOSED" ON R11 - 2 AND R11 - 3 SIGNS.
6. INSTALL DETOUR AND COMMUNITY GUIDE SIGNS AND ARROWS ONLY IF SPECIFIED IN THE CONTRACT. IF THERE ARE EXISTING ROUTE MARKER ASSEMBLIES THAT WILL REMAIN IN PLACE, ADJUST THE LOCATION OF THE DETOUR ROUTE SIGNS TO CORRESPOND WITH THE EXISTING ASSEMBLIES. MODIFY EXISTING SIGNS WHERE POSSIBLE. SEE SPECIFIC PROJECT DETOUR SIGNING DETAIL SHEETS. IF DETOUR SIGNS ARE BEING INSTALLED BY OTHERS, PLACE THE CONTRACTED TRAFFIC CONTROL SIGNS TO ALLOW FOR PLACEMENT OF ALL WARNING, DETOUR AND GUIDE SIGNS AS SHOWN.
7. "EAST" CARDINAL DIRECTION MARKERS AND RIGHT TURN ARROWS ARE SHOWN. USE OTHER CARDINAL DIRECTIONS AND ARROWS AS APPROPRIATE.

BARRICADES AND SIGNS FOR VARIOUS CLOSURES

STATE OF WISCONSIN
DEPARTMENT OF TRANSPORTATION

APPROVED
May 2023 — DATE
/S/ Andrew Heidtke — WORK ZONE ENGINEE
FHWA

THIS DRAWING PROVIDES GENERAL GUIDANCE ON TYPICAL DETOUR SIGN LAYOUT AND SPACING. SEE PROJECT DETOUR SIGNING SHEETS FOR SPECIFIC DETAILS FOR EACH PROJECT.

LEGEND

- SIGN ON PERMANENT SUPPORT
- WORK AREA
- DETOUR — M4 - 8
- EAST — M3 - X
- XX — M1 - 4 OR XX — M1 - 6 OR COUNTY X — M1 - 5A
- M05 - 1 OR M06 - 1 OR M06 - 1

GENERAL NOTES

THE EXACT NUMBER, LOCATION AND SPACING OF ALL SIGNS SHALL BE ADJUSTED TO FIT FIELD CONDITIONS AS APPROVED BY THE ENGINEER.

IF THERE ARE EXISTING ROUTE MARKER ASSEMBLIES THAT WILL REMAIN IN PLACE, ADJUST THE LOCATION OF THE DETOUR ROUTE SIGNS TO CORRESPOND WITH THE EXISTING ASSEMBLIES. SEE SPECIFIC PROJECT DETOUR SIGNING DETAIL SHEETS. MODIFY EXISTING SIGNS WHERE POSSIBLE.

THE SPACING BETWEEN TRAFFIC CONTROL AND DETOUR SIGNS SHOULD BE ADJUSTED TO NOT CONFLICT WITH AND TO PROVIDE A DESIRABLE MINIMUM OF 200 FEET CLEARANCE TO EXISTING SIGNS THAT WILL REMAIN IN PLACE.

ANY SIGNS TEMPORARY OR EXISTING, WHICH CONFLICT WITH TRAFFIC CONTROL "IN USE" SHALL BE REMOVED OR COVERED AS NEEDED AND AS APPROVED BY THE ENGINEER.

SIGNS THAT WILL BE IN PLACE LESS THAN 7 CONTINUOUS DAYS AND NIGHTS MAY BE MOUNTED ON PORTABLE SUPPORTS.

"MO" SIGNS ARE THE SAME AS "M" SIGNS EXCEPT THE BACKGROUND IS ORANGE.

SIGN SIZES SHALL BE AS FOLLOWS:

M3-X SHALL BE 24" X 12" (36" X 18" IF NEEDED TO MATCH EXISTING SIGNS)
M4-8 SHALL BE 24" X 12" (36" X 18" IF NEEDED TO MATCH EXISTING SIGNS)
M1-4, M1-5A AND M1-6 SHALL BE 24" X 24" (36" X 36" IF NEEDED TO MATCH EXISTING SIGNS)
M05-1 AND M06-1 SHALL BE 21" X 21" (30" X 30" IF NEEDED TO MATCH EXISTING SIGNS)
M4-9 AND M4-59 SHALL BE 30" X 24"
M4-8a SHALL BE 24" X 18"
G20-51 SHALL BE 60" X 24"
W20-2A SHALL BE 48" X 48"
D1-X SHALL BE AS SHOWN ON SPECIFIC PROJECT SIGNING DETAIL SHEETS.

* OPTIONAL SIGNS. SEE SPECIFIC PROJECT DETOUR SIGNING DETAIL SHEETS.

** FOR A TOWN ROAD OR LOCAL STREET DETOURED ONTO A STATE TRUNK HIGHWAY, PLACE A ROAD NAME PLAQUE ABOVE THE M4-9 SIGN AS SPECIFIED IN THE CONTRACT.

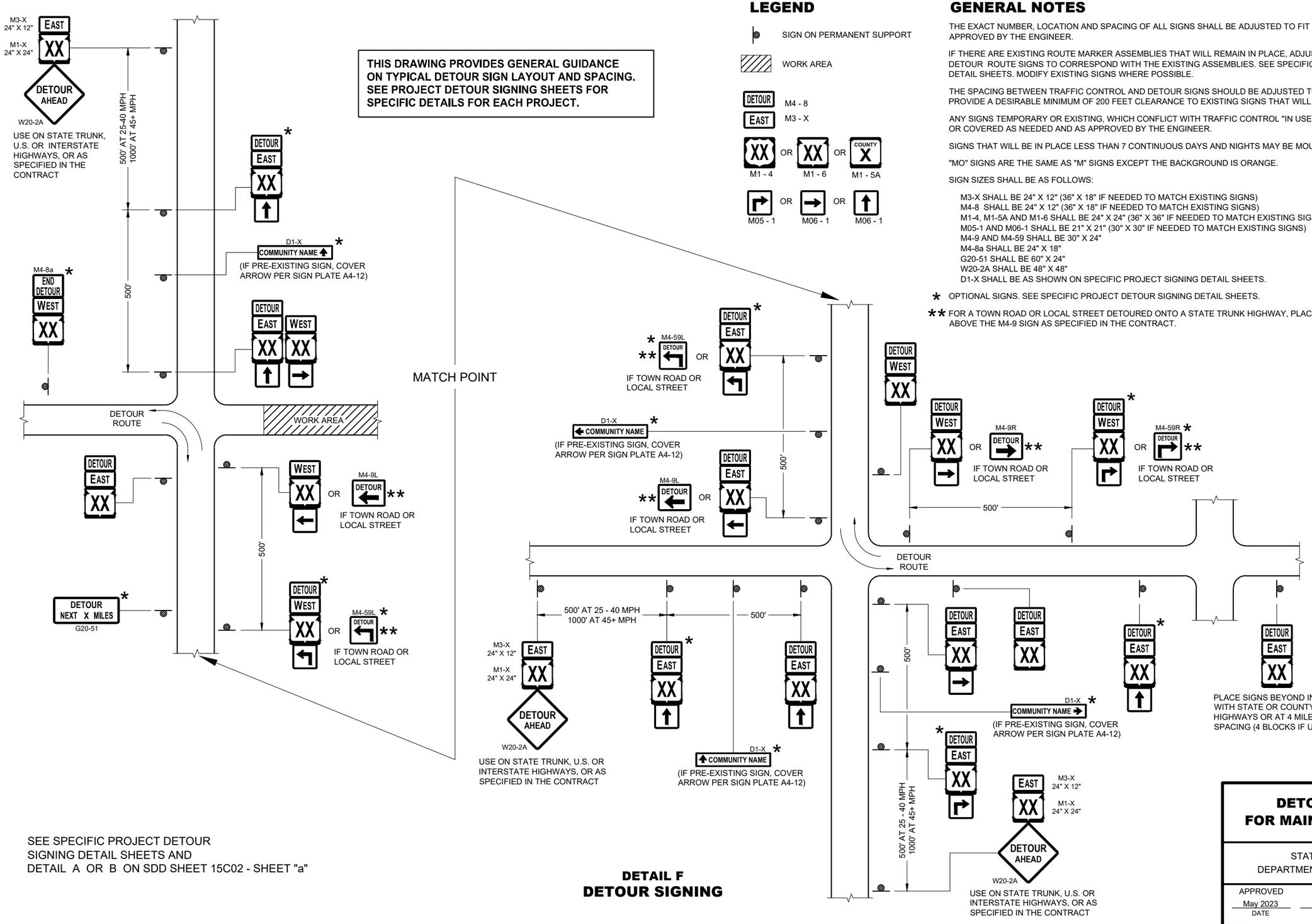

SEE SPECIFIC PROJECT DETOUR SIGNING DETAIL SHEETS AND DETAIL A OR B ON SDD SHEET 15C02 - SHEET "a"

DETAIL F
DETOUR SIGNING

DETOUR SIGNING FOR MAINLINE CLOSURES

STATE OF WISCONSIN
DEPARTMENT OF TRANSPORTATION

APPROVED
May 2023 — DATE
/S/ Andrew Heidtke — WORK ZONE ENGINEER
FHWA

6
SDD 15C02 - 09c

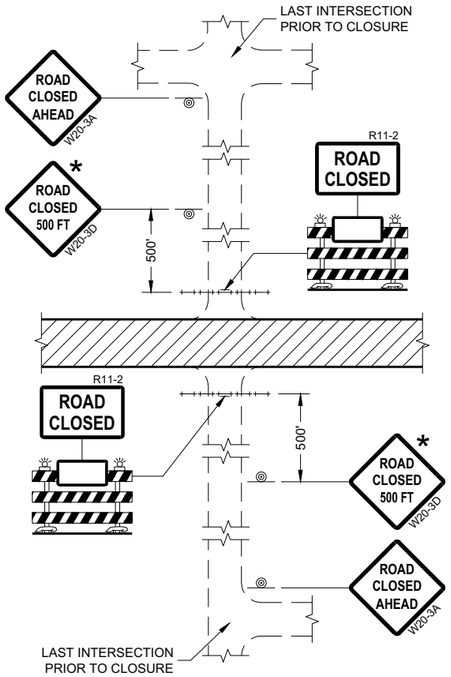

DETAIL 1
(NO ACCESS TO PROJECT)

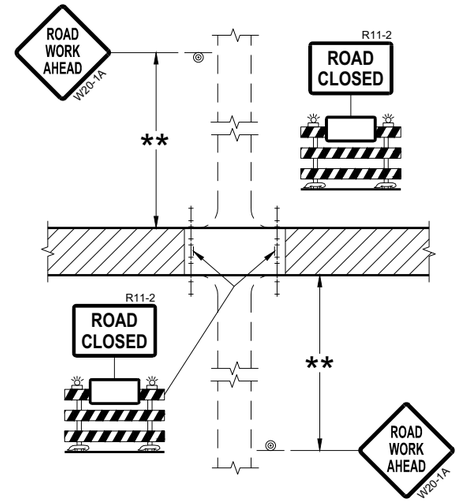

DETAIL 2
(PUBLIC CROSS-TRAFFIC MAINTAINED.
NO ACCESS TO PROJECT)

GENERAL NOTES

THE EXACT NUMBER, LOCATION, AND SPACING OF ALL SIGNS AND BARRICADES SHALL BE ADJUSTED TO FIT FIELD CONDITIONS AS APPROVED BY THE ENGINEER.

ANY SIGNS TEMPORARY OR EXISTING, WHICH CONFLICT WITH TRAFFIC CONTROL "IN USE" SHALL BE REMOVED OR COVERED AS NEEDED AND AS APPROVED BY THE ENGINEER.

THE SPACING BETWEEN TRAFFIC CONTROL SIGNS SHOULD BE ADJUSTED TO NOT CONFLICT WITH AND SHOULD PROVIDE A DESIRABLE MINIMUM OF 200 FEET CLEARANCE (500 FEET DESIRABLE) TO EXISTING SIGNS THAT WILL REMAIN IN PLACE.

IF A "STOP" SIGN MUST BE REMOVED FOR A WORK OPERATION, A TEMPORARY "STOP" SIGN SHALL BE PLACED PRIOR TO THE SIGN REMOVAL, OR A FLAGGER SHALL BE PROVIDED UNTIL THE SIGN IS REESTABLISHED.

BARRICADES THAT MUST BE MOVED FOR A WORK OPERATION SHALL BE IMMEDIATELY REESTABLISHED UPON COMPLETION OF THE OPERATION OR FOR CONTINUING OPERATIONS, AT THE END OF EACH WORKING DAY.

SIGNS THAT WILL BE IN PLACE LESS THAN SEVEN CONTINUOUS DAYS AND NIGHTS MAY BE MOUNTED ON PORTABLE SUPPORTS.

ALL TYPE III BARRICADES SHALL HAVE RAILS REFLECTORIZED ON BOTH FACES. STRIPES SHALL BE PROPERLY SLOPED DOWN TOWARD THE TRAFFIC SIDE OR AS SHOWN IN THE ROAD CLOSURE BARRICADE DETAIL "D" FOR FULL ROAD CLOSURES.

TYPE "A" LOW-INTENSITY FLASHING WARNING LIGHTS SHALL BE VISIBLE ON BOTH SIDES OF THE BARRICADE.

THE R11-2, R11-3, AND R11-4 SIGNS PLACED ON BARRICADES SHALL COVER NO MORE THAN THE TOP RAIL. THE SIGNS SHALL NOT COVER ANY PORTION OF THE MIDDLE OR BOTTOM RAILS.

ALL SIGNS SHALL BE 48" X 48" UNLESS OTHERWISE NOTED BELOW:
R11-2 SHALL BE 48" X 30".
R11-4 AND R11-3 SHALL BE 60" X 30".

* OMIT THE "ROAD CLOSED 500 FT." SIGN IF THE LAST INTERSECTION IS 500 FEET OR LESS FROM THE WORK ZONE.

** 500' MAX. OR AT LAST INTERSECTION, WHICHEVER IS CLOSEST.

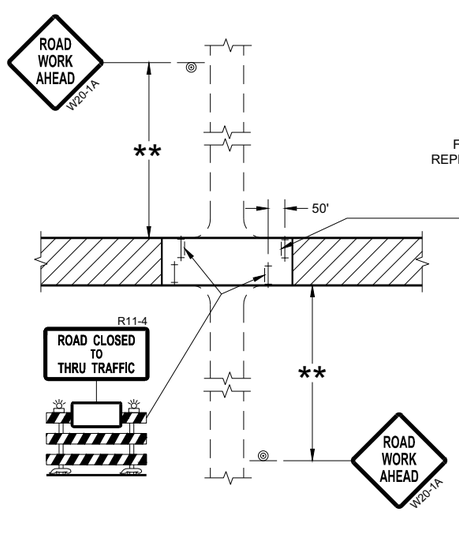

DETAIL 3
(PUBLIC CROSS-TRAFFIC MAINTAINED.
CONTRACTOR, LOCAL BUSINESS AND
RESIDENT ACCESS TO PROJECT)

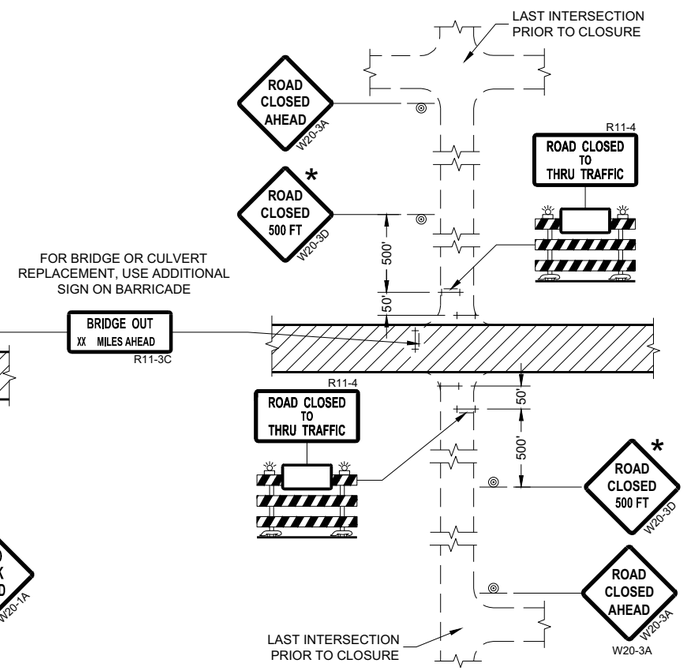

DETAIL 4
(CONTRACTOR, LOCAL BUSINESS AND
RESIDENT ACCESS TO PROJECT)

LEGEND

- SIGN ON PERMANENT SUPPORT
- TYPE III BARRICADE
- TYPE III BARRICADE WITH ATTACHED SIGN
- TYPE "A" WARNING LIGHT (FLASHING)
- WORK AREA

BARRICADES AND SIGNS FOR SIDEROAD CLOSURES

STATE OF WISCONSIN
DEPARTMENT OF TRANSPORTATION

APPROVED
July 2018 — DATE
/S/ Andrew Heidtke — WORK ZONE ENGINEE
FHWA

6

SDD 15C03 - 05

GENERAL NOTES

STOP SIGN SHALL BE PLACED A MINIMUM OF 6 FEET TO A MAXIMUM OF 50 FEET FROM THE EDGELINE LOCATION.

1. 18-INCH STOP LINES MAY BE DELETED OR ADDED BY THE REGION MARKING ENGINEER BASED ON VISIBILITY AND SIGHT LINES.
2. NO STOP LINE IS REQUIRED IF STOP SIGN IS LESS THAN OR EQUAL TO 40 FEET FROM THE EDGELINE.
3. NO STOP LINE IS REQUIRED IF STOP SIGN IS LESS THAN OR EQUAL TO 30 FEET FROM THE FLANGE LINE EXTENSION.
4. MOVE CLOSER TO THE EDGE OF TRAVEL LINE AS NEEDED FOR VISIBILITY AND SIGHT LINES (NO CLOSER THAN 4 FEET).
5. LADDER BAR CROSSWALKS SHOULD ONLY BE USED FOR MID BLOCK CROSSINGS. USE 2 - 6" TRANSVERSE LINES.
6. POSTED SPEED LIMITS OF 40 MPH OR GREATER USE A MINIMUM WIDTH OF 8' FOR MIDBLOCK CROSSWALKS

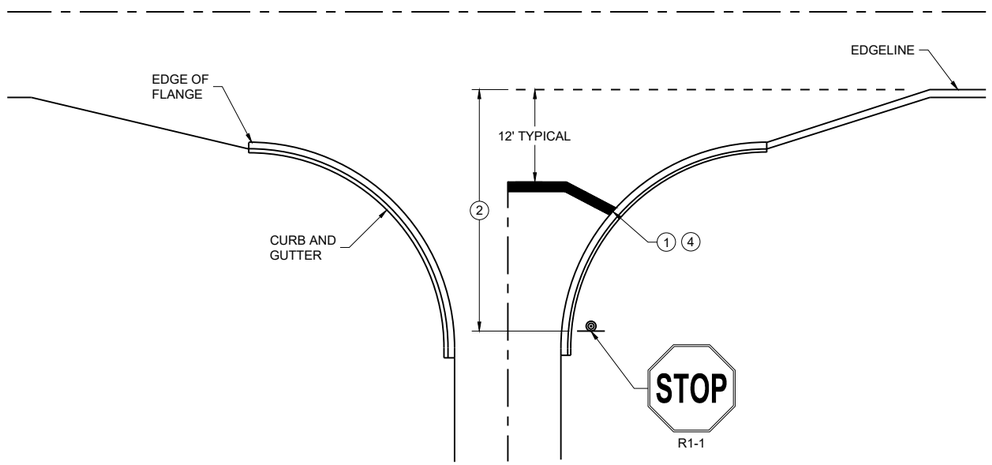

TYPICAL STOP LINE PAVEMENT MARKING WITH CURB AND GUTTER

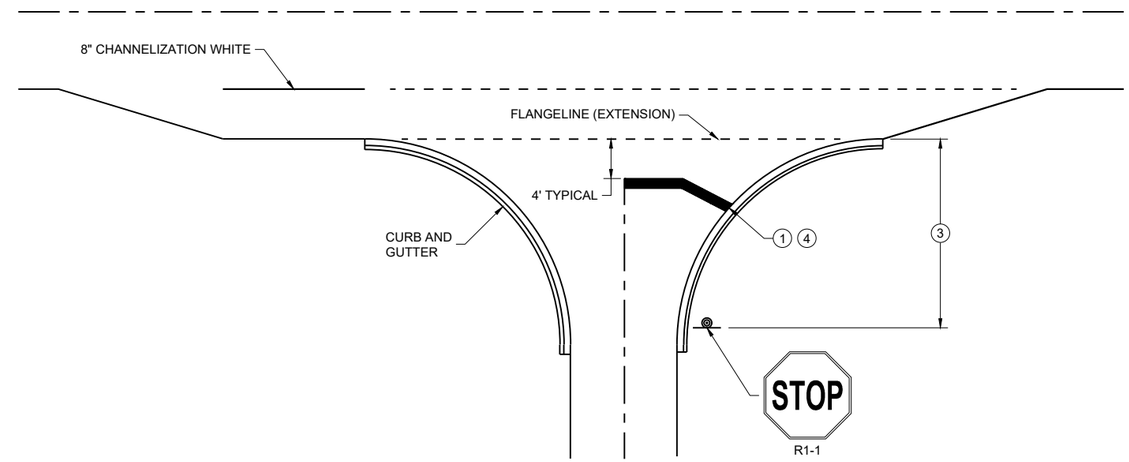

TYPICAL STOP LINE PAVEMENT MARKING FOR SIDE ROADS WITH RIGHT TURN LANE

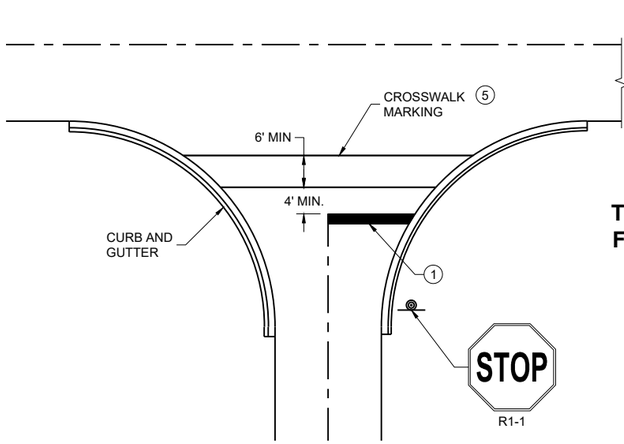

TYPICAL STOP LINE PAVEMENT MARKING FOR SIDE ROADS WITH CROSSWALK MARKING

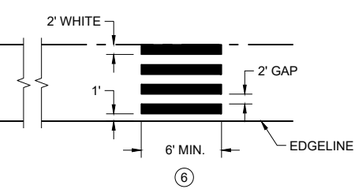

TYPICAL PAVEMENT MARKING FOR MID-BLOCK CROSSWALK 5

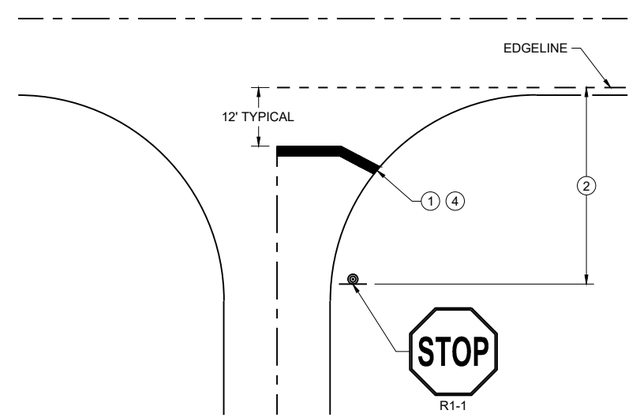

TYPICAL STOP LINE PAVEMENT MARKING WITHOUT CURB AND GUTTER

STOP LINE AND CROSSWALK PAVEMENT MARKING

STATE OF WISCONSIN
DEPARTMENT OF TRANSPORTATION

APPROVED
March 2024 — DATE
/S/ Matthew Rauch — STATE SIGNING AND MARKING ENGINEER

FHWA

6
SDD 15C33-05

LEGEND

- SIGN ON PERMANENT SUPPORT
- TRAFFIC CONTROL DRUM
- TRAFFIC CONTROL DRUM WITH TYPE "C" STEADY BURN LIGHT
- TYPE III BARRICADE WITH ATTACHED SIGN
- TYPE "A" WARNING LIGHT (FLASHING)
- FLASHING ARROW BOARD
- DIRECTION OF TRAFFIC
- REMOVE PAVEMENT MARKING (SEE GENERAL NOTES)
- WORK AREA

GENERAL NOTES

FOR WORK ON ROADWAYS WITH SPEEDS GREATER THAN 45MPH, USE SDD 15D12.

THIS LANE CLOSURE DETAIL IS TYPICAL FOR CLOSING THE LEFT LANE. FOR A RIGHT LANE CLOSURE, REVERSE THE TRAFFIC CONTROL.

THIS DETAIL MAY BE USED FOR ROADWAYS WITH EITHER TWO OR THREE LANES IN EACH DIRECTION.

ALL SIGNS ARE 48"X48" UNLESS OTHERWISE NOTED. IF NECESSARY DUE TO SPACE CONSTRAINTS IN URBAN AREAS, 36"X 36" SIGNS MAY BE USED IF APPROVED BY REGIONAL TRAFFIC UNIT.

"WO" SIGN IS THE SAME AS "W" SIGN EXCEPT THE BACKGROUND IS ORANGE.

ANY SIGNS TEMPORARY OR EXISTING, WHICH CONFLICT WITH THE TRAFFIC CONTROL "IN USE" SHALL BE REMOVED OR COVERED AS NEEDED AND AS APPROVED BY THE ENGINEER. NO WARNING LIGHTS SHALL BE WORKING ON COVERED OR "DOWNED" SIGNS.

SIGNS THAT WILL BE IN PLACE LESS THAN 7 CONTINUOUS DAYS AND NIGHTS OR THAT WILL BE PLACED IN A CLOSED LANE MAY BE MOUNTED ON TEMPORARY SUPPORTS.

THE EXACT NUMBER, LOCATION, AND SPACING OF ALL SIGNS AND DEVICES SHALL BE ADJUSTED TO FIT FIELD CONDITIONS AS APPROVED BY THE ENGINEER.

THE SPACING BETWEEN TRAFFIC CONTROL SIGNS SHOULD BE ADJUSTED TO NOT CONFLICT WITH AND TO PROVIDE A MINIMUM OF 200 FEET (500' DESIRABLE) DISTANCE TO EXISTING SIGNS THAT WILL REMAIN IN PLACE

W20-1A, G20-1 AND G20-2A SIGNS ARE NOT REQUIRED IF THE LANE CLOSURE IS WITHIN A LARGER WORK ZONE WHERE THESE SIGNS ARE ALREADY PRESENT.

REMOVE PAVEMENT MARKINGS AND PLACE TEMPORARY PAVEMENT MARKING LINE IF LANE CLOSURE IS TO BE IN PLACE FOR 4 OR MORE CONTINUOUS DAYS AND NIGHTS.

CONSIDER GEOMETRICS WHEN LOCATING SIGNS AND ARROW BOARDS SO THE APPROACHING DRIVER HAS A CLEAR VIEW OF THE ARROW BOARDS AND LANE CLOSURE DRUMS FOR A MINIMUM 1500 FEET IN FRONT OF DRUMS.

BARRICADES IN A CLOSED LANE THAT MUST BE MOVED FOR A WORK OPERATION SHALL BE IMMEDIATELY REESTABLISHED UPON COMPLETION OF THE OPERATION, OR FOR CONTINUING OPERATIONS, AT THE END OF EACH WORKING DAY.

CHANNELIZING DEVICES PLACED ADJACENT TO WORK AREA SHALL BE PULLED BACK FROM THE TRAVEL LANE WHEN WORK IS NOT IN PROGRESS.

WARNING LIGHTS ARE NOT REQUIRED IF THE LANE CLOSURE IS A DAYTIME ONLY OPERATION.

(1) OMIT G20-1 SIGNS IF LENGTH OF WORK AREA IS 2 MILES OR LESS.

(2) WHERE THE SHOULDER OR TERRACE HAS INSUFFICIENT SPACE TO PLACE THE ARROW BOARD AS SHOWN, PLACE THE ARROW BOARD AT THE END OF THE TAPER.

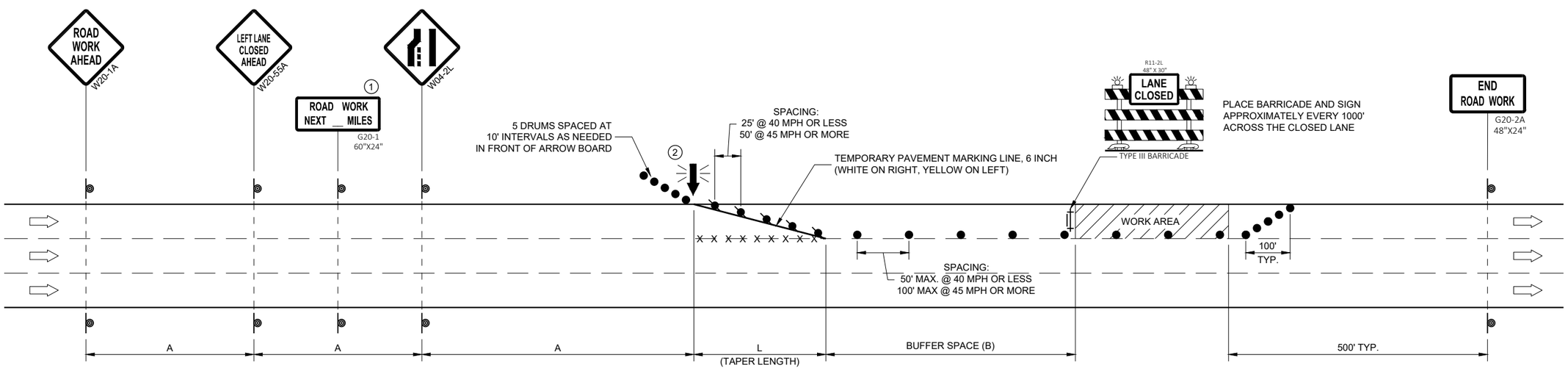

POSTED SPEED LIMIT PRIOR TO WORK STARTING (MPH)	ADVANCE WARNING SIGN SPACING (A) FEET	TAPER LENGTH (12 FT. LANE) (L) FEET	BUFFER SPACE (B) FEET
25	200'	125'	55'
30	200'	180'	85'
35	350'	245'	120'
40	350'	320'	170'
45	500'	540'	220'

TRAFFIC CONTROL, SINGLE LANE CLOSURE, DIVIDED NON-FREEWAY/EXPRESSWAY

STATE OF WISCONSIN
DEPARTMENT OF TRANSPORTATION

APPROVED
May 2023 — DATE
/S/ Andrew Heidtke — WORK ZONE ENGINEE
FHWA

6

SDD 15D20-07a

GENERAL NOTES

BARRICADE DEVICE SELECTED FROM APPROVED PRODUCT LIST

1. REFLECTIVE SHEETING SHALL FOLLOW THE REQUIREMENTS IN THE APPROVED PRODUCTS LISTING FOR SIGN SHEETING.
2. SHEETING REQUIRED ON MORE THAN 50% OF BARRICADE WIDTH.
3. PLACE SHEETING ON BOTH SIDES OF THE BARRICADE.

* USE THIS DETAIL FOR SHEETING PLACEMENT REFERENCE.

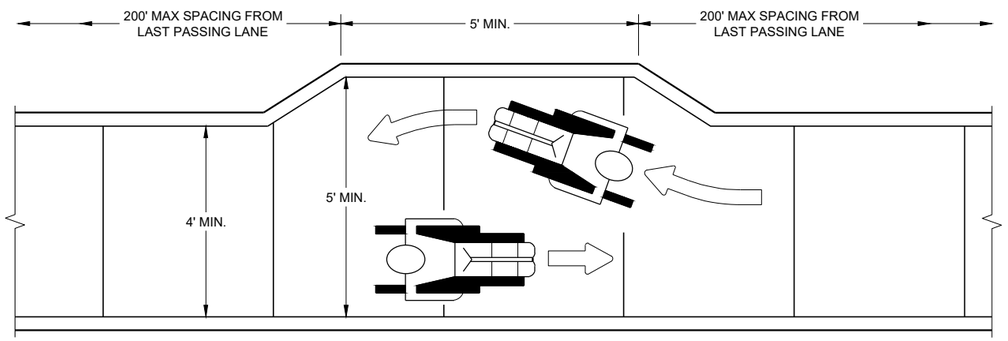

NARROW SIDEWALK PASSING DETAIL

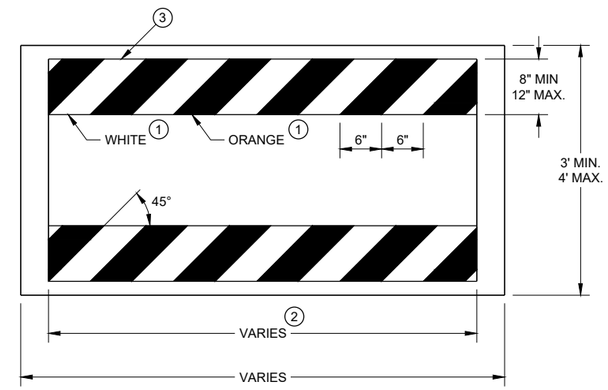

TEMPORARY PEDESTRIAN BARRICADE*

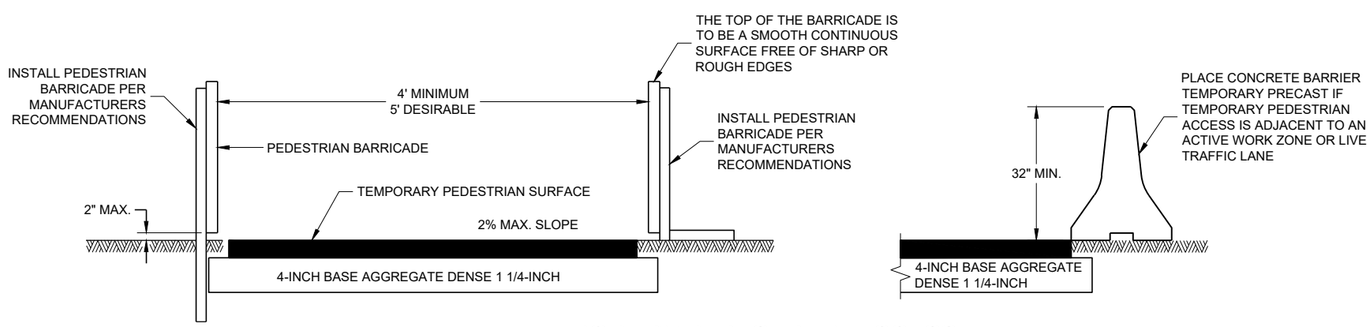

TEMPORARY PEDESTRIAN ACCESS

6

SDD 15D30 - 09a

TRAFFIC CONTROL, PEDESTRIAN ACCOMMODATION

STATE OF WISCONSIN
DEPARTMENT OF TRANSPORTAT

6

SDD 15D30 - 09a

GENERAL NOTES

CURB RAMPS SHALL BE 48" MIN. WIDTH WITH A FIRM, STABLE AND SLIP RESISTANT SURFACE.

CURB RAMPS AND LANDINGS SHALL HAVE A 1:50 (2%) MAX. CROSS-SLOPE.

CLEAR SPACE OF 48" X 48" SHALL BE PROVIDED ABOVE AND BELOW THE CURB RAMP.
LATERAL JOINTS OR GAPS BETWEEN SURFACES SHALL BE LESS THAN ½" WIDTH.

CHANGES BETWEEN SURFACE HEIGHTS SHALL NOT EXCEED ½". LATERAL EDGES MAY BE VERTICAL UP TO ¼" HIGH AND SHALL BE BEVELED AT 1:2 BETWEEN ¼" AND ½".

1. INSTALL CONTRASTING TEMPORARY DETECTABLE WARNING FIELD AT PEDESTRIAN STREET CROSSINGS, AS SHOWN IN THE PLANS.
2. PROTECTIVE EDGING WITH A 2" MIN. HEIGHT SHALL BE INSTALLED WHEN A CURB RAMP OR LANDING PLATFORM HAS A VERTICAL DROP OF 6" OR GREATER OR HAS A SIDE APRON SLOPE STEEPER THAN 1:3 (33%). PROTECTIVE EDGING SHOULD BE CONSIDERED WHEN CURB RAMPS OR LANDING PLATFORMS HAVE A VERTICAL DROP OF 3" OR MORE.
3. DETECTABLE EDGING WITH 6" MIN. HEIGHT AND CONTRASTING COLOR SHALL BE INSTALLED ON ALL CURB RAMP LANDINGS WHERE THE WALKWAY CHANGES DIRECTION (TURNS).
4. DO NOT RESTRICT WATER FLOW IN THE GUTTER SYSTEM.
5. ENSURE CURB RAMP IS OUT OF THE GUTTER PAN.
6. IF ONLY PART OF THE END PANEL OF TEMPORARY PEDESTRIAN BARRICADE PANEL IS NEEDED, EXTEND EXCESS PORTION OF TEMPORARY PEDESTRIAN BARRICADE PANEL HERE.

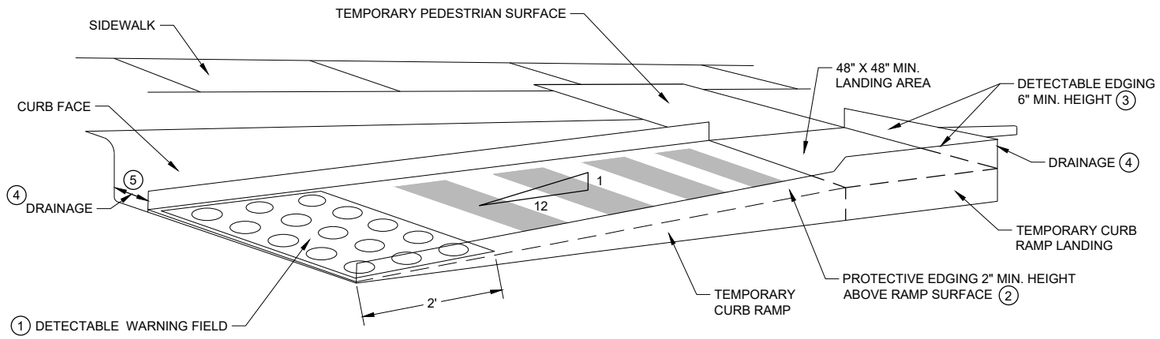

PERSPECTIVE VIEW

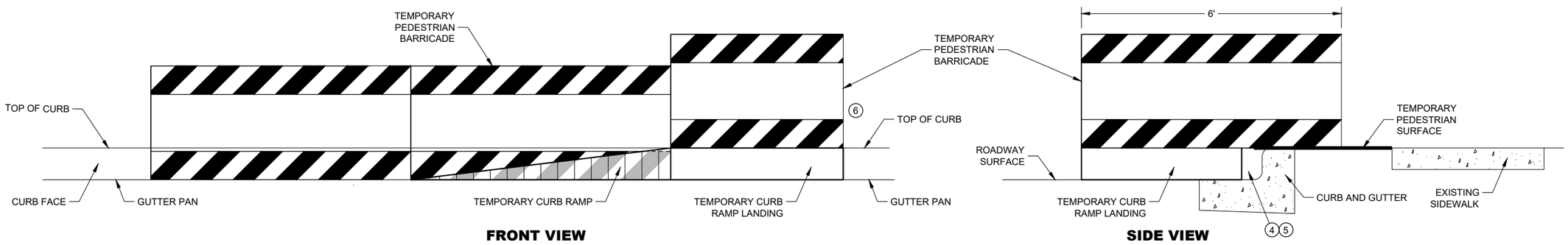

FRONT VIEW **SIDE VIEW**

TEMPORARY CURB RAMP PARALLEL TO CURB

TRAFFIC CONTROL, PEDESTRIAN ACCOMMODATION

STATE OF WISCONSIN
DEPARTMENT OF TRANSPORTAT

6

SDD 15D30 - 09b

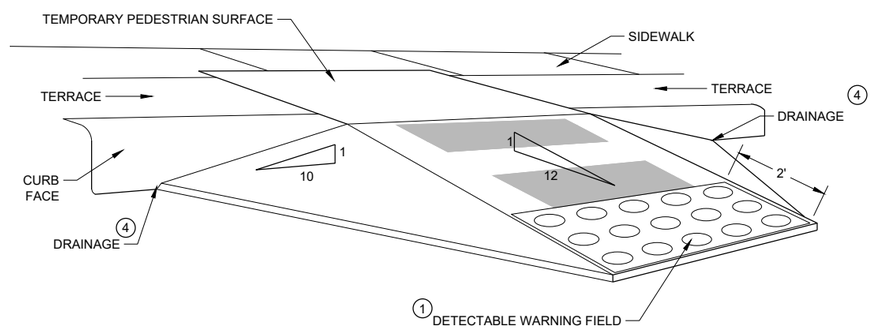

WITH SIDE APRON 5

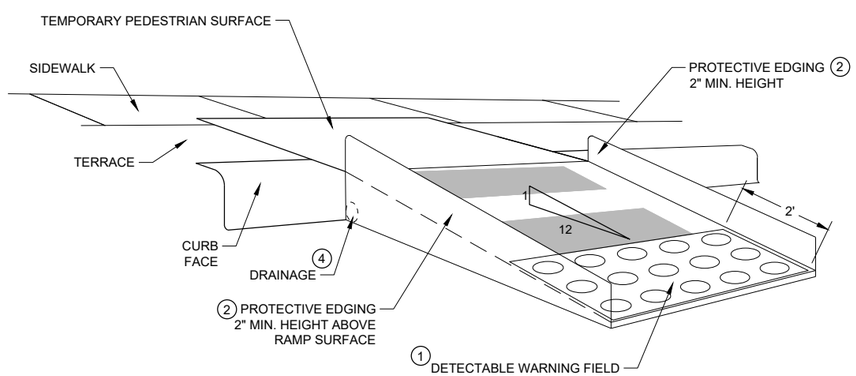

WITH PROTECTIVE EDGE

TEMPORARY CURB RAMP PERPENDICULAR TO CURB

GENERAL NOTES

CURB RAMPS SHALL BE 48" MINIMUM WIDTH WITH A FIRM, STABLE AND SLIP RESISTANT SURFACE.

ALTERNATE SIDEWALK WORK BETWEEN LEFT AND RIGHT SIDE OF ROADWAY TO MAINTAIN PEDESTRIAN ACCESS.

CURB RAMPS AND LANDINGS SHALL HAVE A 1:50 (2%) MAX. CROSS-SLOPE.

CLEAR SPACE OF 48" X 48" SHALL BE PROVIDED ABOVE AND BELOW THE CURB RAMP.

LATERAL JOINTS OR GAPS BETWEEN SURFACES SHALL BE LESS THAN ½" WIDTH.

CHANGES BETWEEN SURFACE HEIGHTS SHALL NOT EXCEED ½". LATERAL EDGES MAY BE VERTICAL UP TO ¼" HIGH AND SHALL BE BEVELED AT 1:2 BETWEEN ¼" AND ½".

1. INSTALL CONTRASTING TEMPORARY DETECTABLE WARNING FIELD AT PEDESTRIAN STREET CROSSINGS, AS SHOWN IN THE PLANS
2. PROTECTIVE EDGING WITH A 2" MIN. HEIGHT SHALL BE INSTALLED WHEN A CURB RAMP OR LANDING PLATFORM HAS A VERTICAL DROP OF 6" OR GREATER OR HAS A SIDE APRON SLOPE STEEPER THAN 1:3 (33%). PROTECTIVE EDGING SHOULD BE CONSIDERED WHEN CURB RAMPS OR LANDING PLATFORMS HAVE A VERTICAL DROP OF 3" OR MORE.
3. DETECTABLE EDGING WITH 6" MIN. HEIGHT AND CONTRASTING COLOR SHALL BE INSTALLED ON ALL CURB RAMP LANDINGS WHERE THE WALKWAY CHANGES DIRECTION (TURNS).
4. DO NOT RESTRICT WATER FLOW IN THE GUTTER SYSTEM.
5. CAN ONLY BE USED FOR RAMPS WITH 6" OR LESS OF VERTICAL CHANGE.

TRAFFIC CONTROL, PEDESTRIAN ACCOMMODATION

STATE OF WISCONSIN
DEPARTMENT OF TRANSPORTAT

6

SDD 15D30 - 09c

GENERAL NOTES

BARRICADE DEVICE SELECTED FROM APPROVED PRODUCT LIST

1. REFLECTIVE SHEETING SHALL FOLLOW THE REQUIREMENTS IN THE APPROVED PRODUCTS LISTING FOR SIGN SHEETING.
2. SHEETING REQUIRED ON MORE THAN 50% OF BARRICADE WIDTH.
3. PLACE SHEETING ON BOTH SIDES OF THE BARRICADE.

* USE THIS DETAIL FOR SHEETING PLACEMENT REFERENCE.

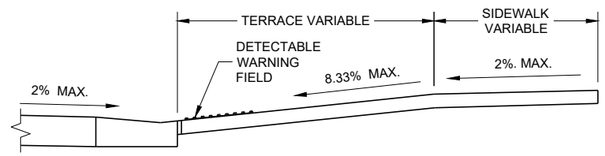

SECTION A - A

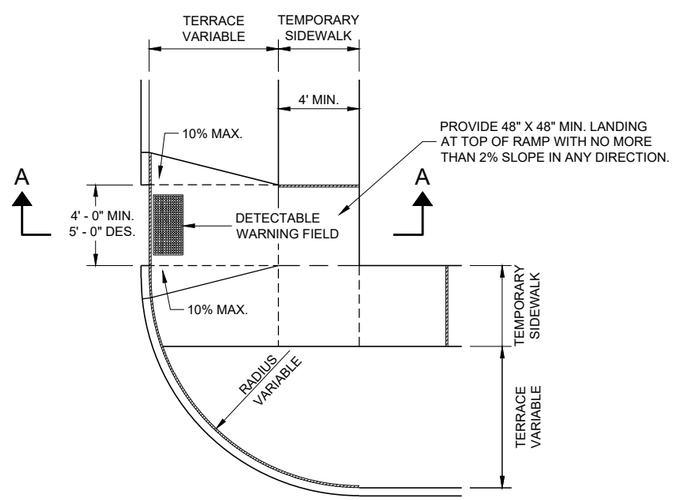

PLAN VIEW

TEMPORARY TYPE 3 RAMP

(OUTSIDE OF CROSSWALK AREA)

6

6

SDD 15D30-09d

SDD 15D30-09d

TRAFFIC CONTROL, PEDESTRIAN ACCOMMODATION

STATE OF WISCONSIN
DEPARTMENT OF TRANSPORTATION

APPROVED

May 2023 — DATE

/S/ Andrew Heidtke — WORK ZONE ENGINEE

FHWA

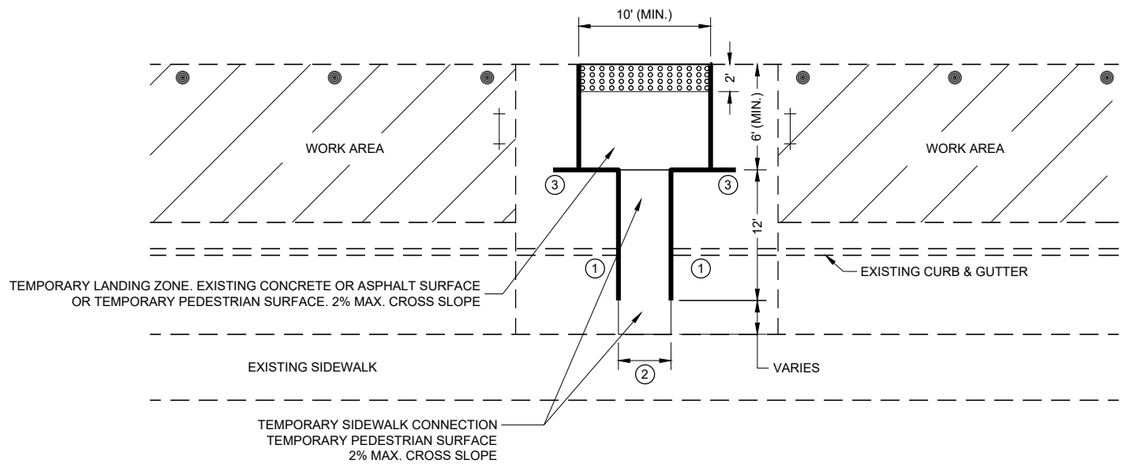

PLAN VIEW

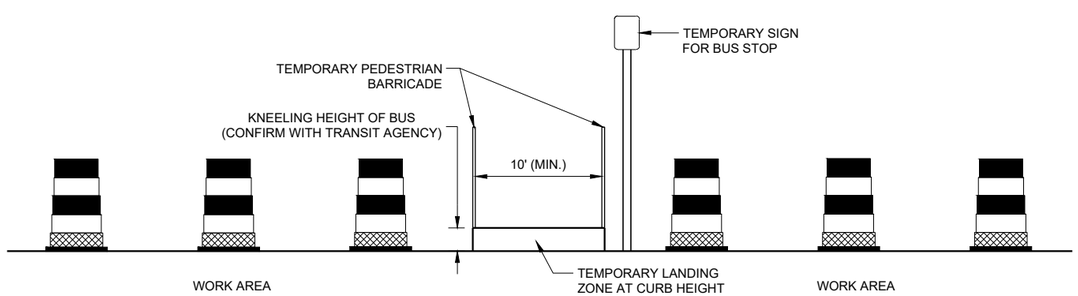

PROFILE VIEW

TEMPORARY BUS STOP PAD

GENERAL NOTES

TYPICAL TEMPORARY PEDESTRIAN BARRICADE PANEL IS 6 FEET LONG.

NOTIFY THE BUS COMPANY 7 DAYS IN ADVANCE OF THE BUS STOP RELOCATION.

PROTECTIVE EDGING WITH A 2" MIN. HEIGHT SHALL BE INSTALLED WHEN A CURB RAMP OR LANDING PLATFORM HAS A VERTICAL DROP OF 6" OR GREATER OR HAS A SIDE APRON SLOPE STEEPER THAN 1:3 (33%). PROTECTIVE EDGING SHOULD BE CONSIDERED WHEN CURB RAMPS OR LANDING PLATFORMS HAVE A VERTICAL DROP OF 3" OR MORE.

DETECTABLE EDGING WITH 6" MIN. HEIGHT AND CONTRASTING COLOR SHALL BE INSTALLED ON ALL CURB RAMP LANDINGS WHERE THE WALKWAY CHANGES DIRECTION (TURNS).

LATERAL JOINTS OR GAPS BETWEEN SURFACES SHALL BE LESS THAN ½" WIDTH.

CHANGES BETWEEN SURFACE HEIGHTS SHALL NOT EXCEED ½". LATERAL EDGES MAY BE VERTICAL UP TO ¼" HIGH AND SHALL BE BEVELED AT 1:2 BETWEEN ¼" AND ½".

CURB RAMPS AND LANDINGS SHALL HAVE A 1:50 (2%) MAX. CROSS-SLOPE.

1. DO NOT RESTRICT WATER FLOW IN THE GUTTER SYSTEM.
2. 5' WIDE MIN. WITH TEMPORARY PEDESTRIAN BARRICADE, 10' WIDE MIN. WITHOUT TEMPORARY PEDESTRIAN BARRICADE.
3. PLACE EXCESS PORTION OF TEMPORARY PEDESTRIAN BARRICADE INTO THIS SPACE.

LEGEND

- TRAFFIC CONTROL DRUM
- TYPE III BARRICADE
- TEMPORARY PEDESTRIAN BARRICADE
- TEMPORARY DETECTABLE WARNING FIELD
- WORK AREA

6

6

SDD 15D30 - 09e

SDD 15D30 - 09e

TRAFFIC CONTROL, PEDESTRIAN ACCOMMODATION

STATE OF WISCONSIN
DEPARTMENT OF TRANSPORTAT

LEGEND

- SIGN ON PERMANENT SUPPORT
- SIGN ON TEMPORARY SUPPORT
- UNDER PEDESTRIAN TRAFFIC
- WORK AREA
- TEMPORARY PEDESTRIAN BARRICADE
- DIRECTION OF TRAFFIC

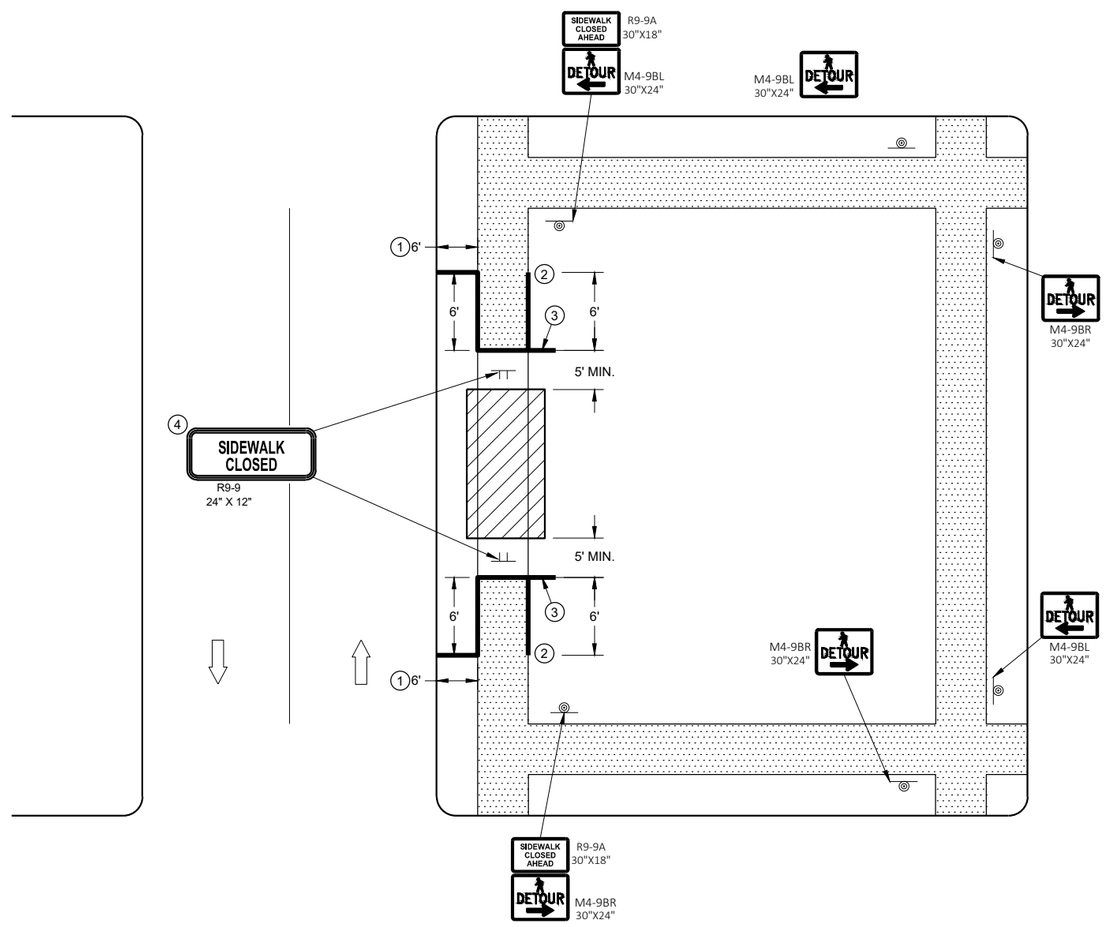

SIDEWALK DETOUR, SIDEWALK ONLY ON ONE SIDE

GENERAL NOTES

SIGN LAYOUTS SHALL BE IN ACCORDANCE WITH THE WISCONSIN STANDARD SIGN PLATES.

WHERE TEMPORARY BARRICADE RUNS PARALLEL ALONG SIDEWALK, PLACE THE FACE OF THE BARRICADE AT THE EDGE OF THE SIDEWALK.

SIGNS THAT REMAIN IN PLACE LESS THAN SEVEN CONTINUOUS DAYS AND NIGHTS MAY BE MOUNTED ON PORTABLE SUPPORTS.

PLACE TEMPORARY PEDESTRIAN BARRICADE TO FIT FIELD CONDITIONS, AVOIDING CONFLICTS WITH DRIVEWAYS AND OTHER EXISTING FEATURES.

1. IF TERRACE IS LESS THAN 6 FEET WIDE, OMIT TEMPORARY PEDESTRIAN BARRICADE FROM THE SIDEWALK TO THE CURB.
2. PLACE BARRICADE CLOSURE SO THAT THE TEMPORARY PEDESTRIAN BARRICADE END IS AT THE LAST OPEN SIDEWALK ACCESS TO RESIDENCES OR BUSINESSES BEFORE THE SIDEWALK CLOSURE.
3. IF TEMPORARY PEDESTRIAN BARRICADE PANEL IS WIDER THAN THE SIDEWALK WIDTH, THE PORTION OF EXCESS PANEL SHOULD EXTEND INTO THE TERRACE.
4. MOUNTING HEIGHT OF 5 FEET FROM THE SURFACE TO THE BOTTOM OF SIGN.

TRAFFIC CONTROL, PEDESTRIAN ACCOMMODATION

STATE OF WISCONSIN
DEPARTMENT OF TRANSPORTAT

6

SDD 15D30 - 09f

LEGEND

- SIGN ON TEMPORARY SUPPORT
- WORK AREA
- UNDER PEDESTRIAN TRAFFIC
- TEMPORARY PEDESTRIAN SURFACE
- TEMPORARY PEDESTRIAN BARRICADE
- OPTIONAL TEMPORARY PEDESTRIAN BARRICADE
- DIRECTION OF TRAFFIC

GENERAL NOTES

TYPICAL TEMPORARY PEDESTRIAN BARRICADE PANEL IS 6 FEET LONG.

SIGN LAYOUTS SHALL BE IN ACCORDANCE WITH THE WISCONSIN STANDARD SIGN PLATES.

WHERE TEMPORARY BARRICADE RUNS PARALLEL ALONG SIDEWALK, PLACE THE FACE OF THE BARRICADE AT THE EDGE OF THE SIDEWALK.

SIGNS THAT REMAIN IN PLACE LESS THAN SEVEN CONTINUOUS DAYS AND NIGHTS MAY BE MOUNTED ON PORTABLE SUPPORTS.

1. USE TEMPORARY PEDESTRIAN BARRICADE TO SEPARATE PEDESTRIANS FROM DROP OFFS OR FOR ADDITIONAL PEDESTRIAN CHANNELIZATION.
2. IF TEMPORARY PEDESTRIAN BARRICADE PANEL IS WIDER THAN THE SIDEWALK WIDTH, THE PORTION OF EXCESS PANEL SHOULD EXTEND INTO THE TERRACE.
3. MOUNTING HEIGHT OF 5 FEET FROM THE SURFACE TO THE BOTTOM OF SIGN.

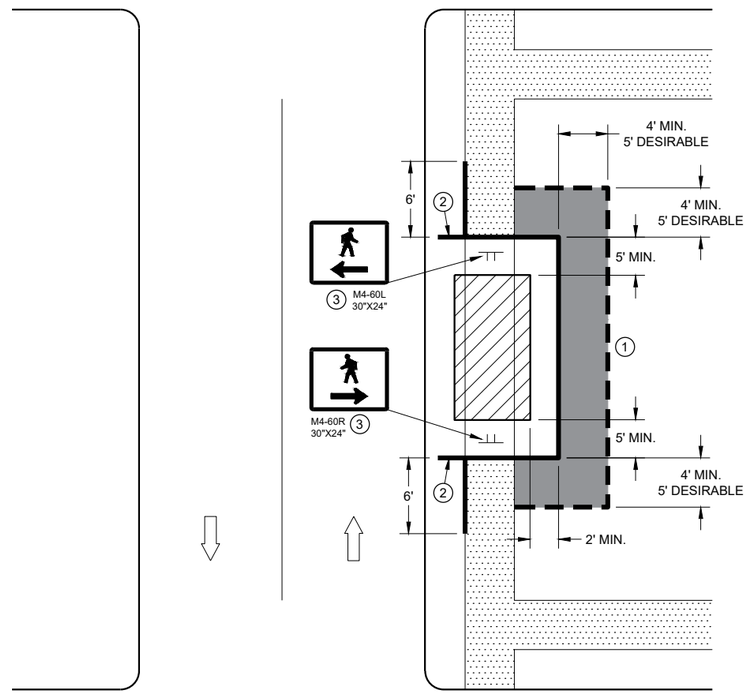

SIDEWALK DIVERSION
SINGLE SIDE

6

SDD 15D30 - 09g

TRAFFIC CONTROL,
PEDESTRIAN ACCOMMODATION

STATE OF WISCONSIN
DEPARTMENT OF TRANSPORTAT

6

SDD 15D30 - 09g

LEGEND

- SIGN ON TEMPORARY SUPPORT
- TRAFFIC CONTROL DRUM
- WORK AREA
- UNDER PEDESTRIAN TRAFFIC
- TEMPORARY CURB RAMP
- TEMPORARY PEDESTRIAN SURFACE "A"
- TEMPORARY PEDESTRIAN SURFACE "B"
- TEMPORARY PEDESTRIAN BARRICADE
- DIRECTION OF TRAFFIC

GENERAL NOTES

TYPICAL TEMPORARY PEDESTRIAN BARRICADE PANEL IS 6 FEET LONG.

SIGN LAYOUTS SHALL BE IN ACCORDANCE WITH THE WISCONSIN STANDARD SIGN PLATES.

WHERE TEMPORARY BARRICADE RUNS PARALLEL ALONG SIDEWALK, PLACE THE FACE OF THE BARRICADE AT THE EDGE OF THE SIDEWALK.

1. SHOULDER OR LANE CLOSURE ADVANCE WARNING AND BUFFER SPACE REQUIRED.
2. PLACE EXCESS PORTION OF TEMPORARY PEDESTRIAN BARRICADE PANEL PAST THE SIDEWALK ON THE SIDE AWAY FROM THE ROAD.
3. MOUNTING HEIGHT OF 5 FEET FROM THE SURFACE TO THE BOTTOM OF SIGN.
4. USE EXISTING PAVEMENT SURFACE. IF EXISTING PAVEMENT SURACE HAS BEEN REMOVED, USE A TEMPORARY PEDESTRIAN SURFACE.

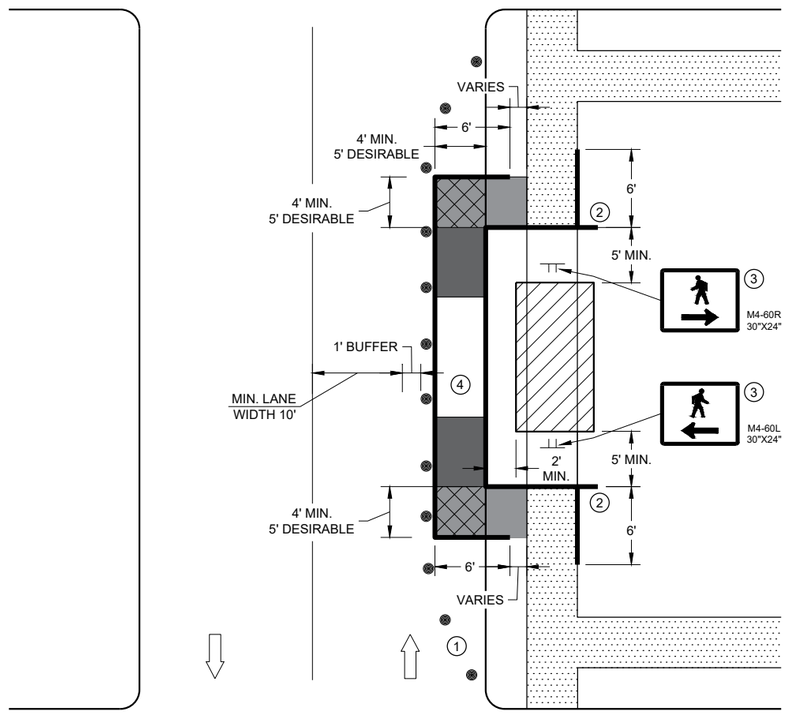

SIDEWALK DIVERSION, SINGLE SIDE

6

SDD 15D30 - 09h

TRAFFIC CONTROL, PEDESTRIAN ACCOMMODATION

STATE OF WISCONSIN
DEPARTMENT OF TRANSPORTAT

6

SDD 15D30 - 09h

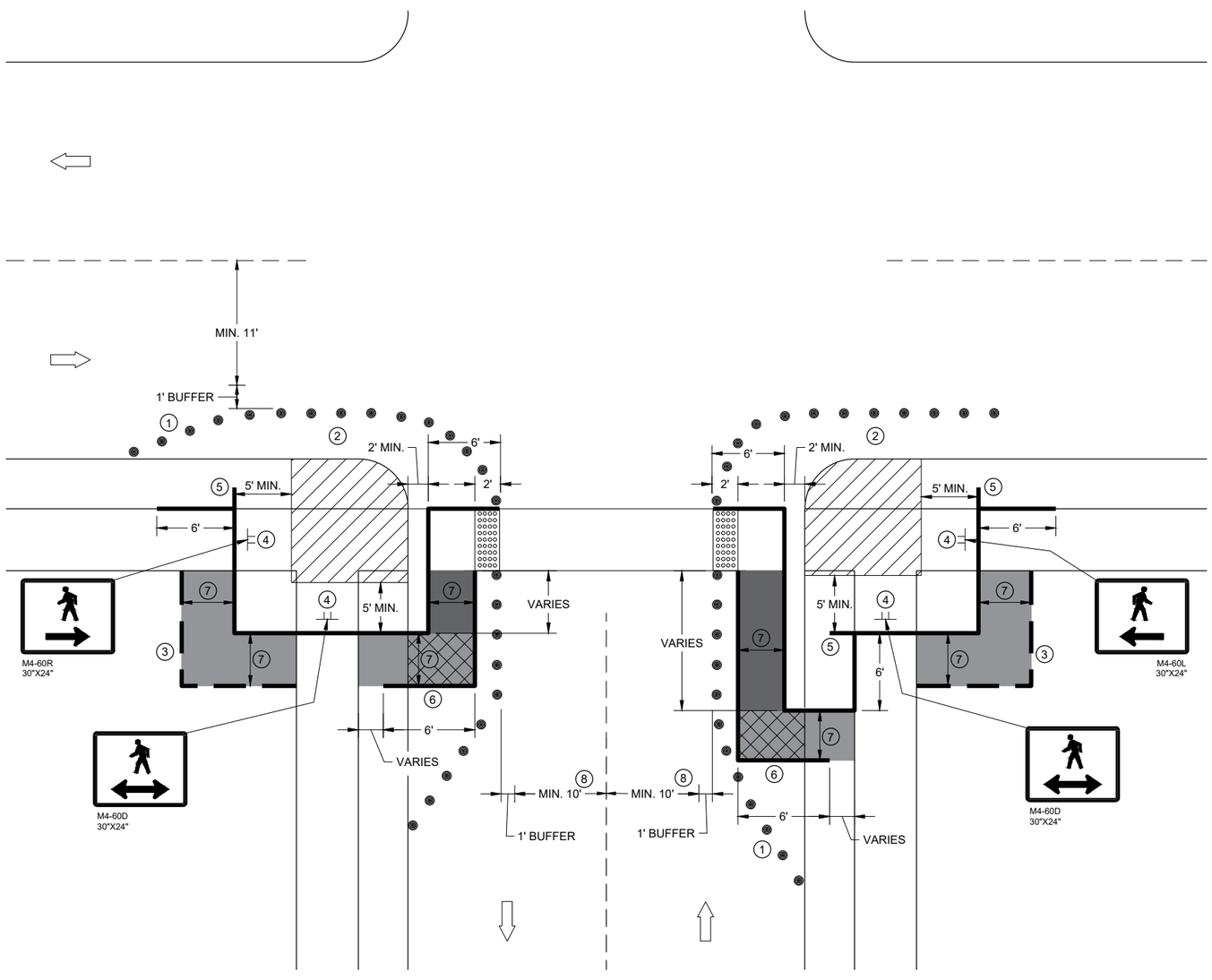

CURB RAMP PEDESTRIAN TRAFFIC CONTROL
SIDEWALK ON SINGLE SIDE

GENERAL NOTES

IF PEDESTRIAN PUSH BUTTONS ARE PRESENT ON THE EXISTING FACILITY, ENSURE THEY ARE MAINTAINED/ACCESSIBLE FOR PEDESTRIAN USE THROUGHOUT THE TEMPORARY PEDESTRIAN ACCOMMODATIONS.

SIGN LAYOUTS SHALL BE IN ACCORDANCE WITH THE WISCONSIN STANDARD SIGN PLATES.

TYPICAL TEMPORARY PEDESTRIAN BARRICADE PANEL IS 6 FEET LONG

WHEN TEMPORARY PEDESTRIAN BARRICADE RUNS PARALLEL ALONG THE SIDEWALK, PLACE THE FACE OF THE BARRICADE AT THE EDGE OF THE SIDEWALK.

1. SHOULDER OR LANE CLOSURE ADVANCE WARNING AND PROPER BUFFER SPACE REQUIRED.
2. PROVIDE ADEQUATE SPACE FOR CONTRACTOR OPERATIONS
3. USE TEMPORARY PEDESTRIAN BARRICADE TO SEPARATE PEDESTRIANS FROM DROP OFFS OR FOR ADDITIONAL PEDESTRIAN CHANNELIZATION.
4. MOUNTING HEIGHT OF 5 FEET FROM SIDEWALK SURFACE TO BOTTOM OF SIGN.
5. PLACE EXCESS PORTION OF TEMPORARY PEDESTRIAN BARRICADE PANEL IN THE SIDEWALK TERRACE.
6. IF TEMPORARY PEDESTRIAN BARRICADE DOES NOT REACH THE FACE OF THE CURB, USE AN ADDITIONAL PANEL AND EXTEND INTO THE TERRACE.
7. 4 FEET MINIMUM, 5 FEET DESIRABLE
8. IF MINIMUM LANE WIDTHS CAN'T BE ATTAINED, CURB RAMPS MAY NEED TO BE CONSTRUCTED AT SEPARATE TIMES.

LEGEND

- SIGN ON TEMPORARY SUPPORT
- TRAFFIC CONTROL DRUM
- WORK AREA
- TEMPORARY CURB RAMP
- TEMPORARY PEDESTRIAN SURFACE "A"
- TEMPORARY PEDESTRIAN SURFACE "B"
- TEMPORARY DETECTABLE WARNING FIELD
- TEMPORARY PEDESTRIAN BARRICADE
- OPTIONAL TEMPORARY PEDESTRIAN BARRICADE
- DIRECTION OF TRAFFIC

TRAFFIC CONTROL, PEDESTRIAN ACCOMMODATION

STATE OF WISCONSIN
DEPARTMENT OF TRANSPORTATION

6

SDD 15D30 - 09i

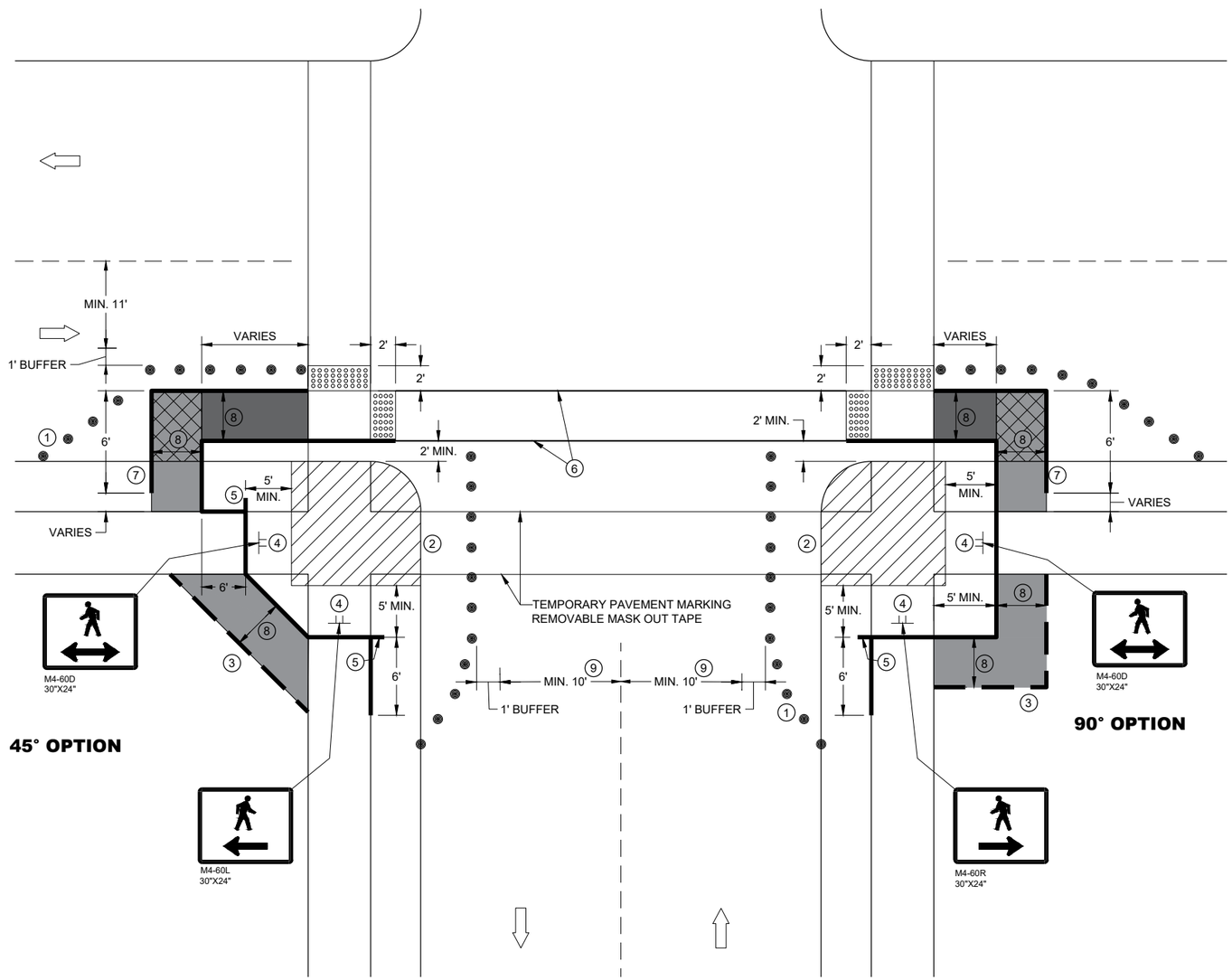

CURB RAMP PEDESTRIAN TRAFFIC CONTROL

GENERAL NOTES

IF PEDESTRIAN PUSH BUTTONS ARE PRESENT ON THE EXISTING FACILITY, ENSURE THEY ARE MAINTAINED/ACCESSIBLE FOR PEDESTRIAN USE THROUGHOUT THE TEMPORARY PEDESTRIAN ACCOMMODATIONS.

SIGN LAYOUTS SHALL BE IN ACCORDANCE WITH THE WISCONSIN STANDARD SIGN PLATES.

TYPICAL TEMPORARY PEDESTRIAN BARRICADE PANEL IS 6 FEET LONG

WHEN TEMPORARY PEDESTRIAN BARRICADE RUNS PARALLEL ALONG THE SIDEWALK, PLACE THE FACE OF THE BARRICADE AT THE EDGE OF THE SIDEWALK.

1. SHOULDER OR LANE CLOSURE ADVANCE WARNING AND PROPER BUFFER SPACE REQUIRED.
2. PROVIDE ADEQUATE SPACE FOR CONTRACTOR OPERATIONS
3. USE TEMPORARY PEDESTRIAN BARRICADE TO SEPARATE PEDESTRIANS FROM DROP OFFS OR FOR ADDITIONAL PEDESTRIAN CHANNELIZATION.
4. MOUNTING HEIGHT OF 5 FEET FROM SIDEWALK SURFACE TO BOTTOM OF SIGN.
5. PLACE EXCESS PORTION OF TEMPORARY PEDESTRIAN BARRICADE PANEL IN THE SIDEWALK TERRACE.
6. WHITE 6" TEMPORARY PAVEMENT MARKING
7. IF TEMPORARY PEDESTRIAN BARRICADE DOES NOT REACH THE FACE OF THE CURB, USE AN ADDITIONAL PANEL AND EXTEND INTO THE TERRACE.
8. 4 FEET MINIMUM, 5 FEET DESIRABLE
9. IF MINIMUM LANE WIDTHS CAN'T BE ATTAINED, CURB RAMPS MAY NEED TO BE CONSTRUCTED AT SEPARATE TIMES.

LEGEND

- SIGN ON TEMPORARY SUPPORT
- TRAFFIC CONTROL DRUM
- WORK AREA
- TEMPORARY CURB RAMP
- TEMPORARY PEDESTRIAN SURFACE "A"
- TEMPORARY PEDESTRIAN SURFACE "B"
- TEMPORARY DETECTABLE WARNING FIELD
- TEMPORARY PEDESTRIAN BARRICADE
- OPTIONAL TEMPORARY PEDESTRIAN BARRICADE
- DIRECTION OF TRAFFIC

TRAFFIC CONTROL, PEDESTRIAN ACCOMMODATION

STATE OF WISCONSIN
DEPARTMENT OF TRANSPORTAT

6
SDD 15D30 - 09j

LEGEND

- SIGN ON PERMANENT SUPPORT
- SIGN ON TEMPORARY SUPPORT
- UNDER PEDESTRIAN TRAFFIC
- WORK AREA
- TEMPORARY PEDESTRIAN BARRICADE
- DIRECTION OF TRAFFIC

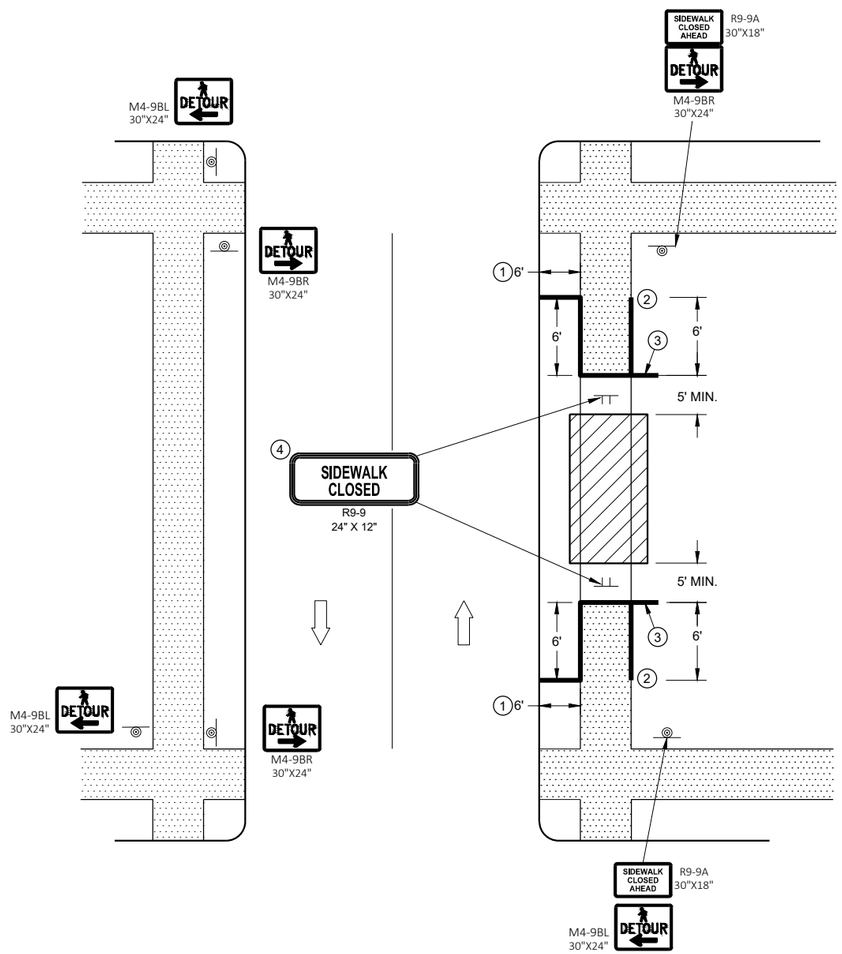

SIDEWALK DETOUR, SIDEWALK ON BOTH SIDES

GENERAL NOTES

SIGN LAYOUTS SHALL BE IN ACCORDANCE WITH THE WISCONSIN STANDARD SIGN PLATES.

WHERE TEMPORARY BARRICADE RUNS PARALLEL ALONG SIDEWALK, PLACE THE FACE OF THE BARRICADE AT THE EDGE OF THE SIDEWALK.

SIGNS THAT REMAIN IN PLACE LESS THAN SEVEN CONTINUOUS DAYS AND NIGHTS MAY BE MOUNTED ON PORTABLE SUPPORTS.

PLACE TEMPORARY PEDESTRIAN BARRICADE TO FIT FIELD CONDITIONS, AVOIDING CONFLICT WITH DRIVEWAYS AND OTHER EXISTING FEATURES.

1. IF TERRACE IS LESS THAN 6 FEET WIDE, OMIT TEMPORARY PEDESTRIAN BARRICADE FROM THE SIDEWALK TO THE CURB.
2. PLACE BARRICADE CLOSURE SO THAT THE TEMPORARY PEDESTRIAN BARRICADE END IS AT THE LAST OPEN SIDEWALK ACCESS TO RESIDENCES OR BUSINESSES BEFORE THE SIDEWALK CLOSURE.
3. IF TEMPORARY PEDESTRIAN BARRICADE PANEL IS WIDER THAN THE SIDEWALK WIDTH, THE PORTION OF EXCESS PANEL SHOULD EXTEND INTO THE TERRACE.
4. MOUNTING HEIGHT OF 5 FEET FROM THE SURFACE TO THE BOTTOM OF SIGN.

TRAFFIC CONTROL, PEDESTRIAN ACCOMMODATION

STATE OF WISCONSIN
DEPARTMENT OF TRANSPORTAT

6

SDD 15D30 - 09k

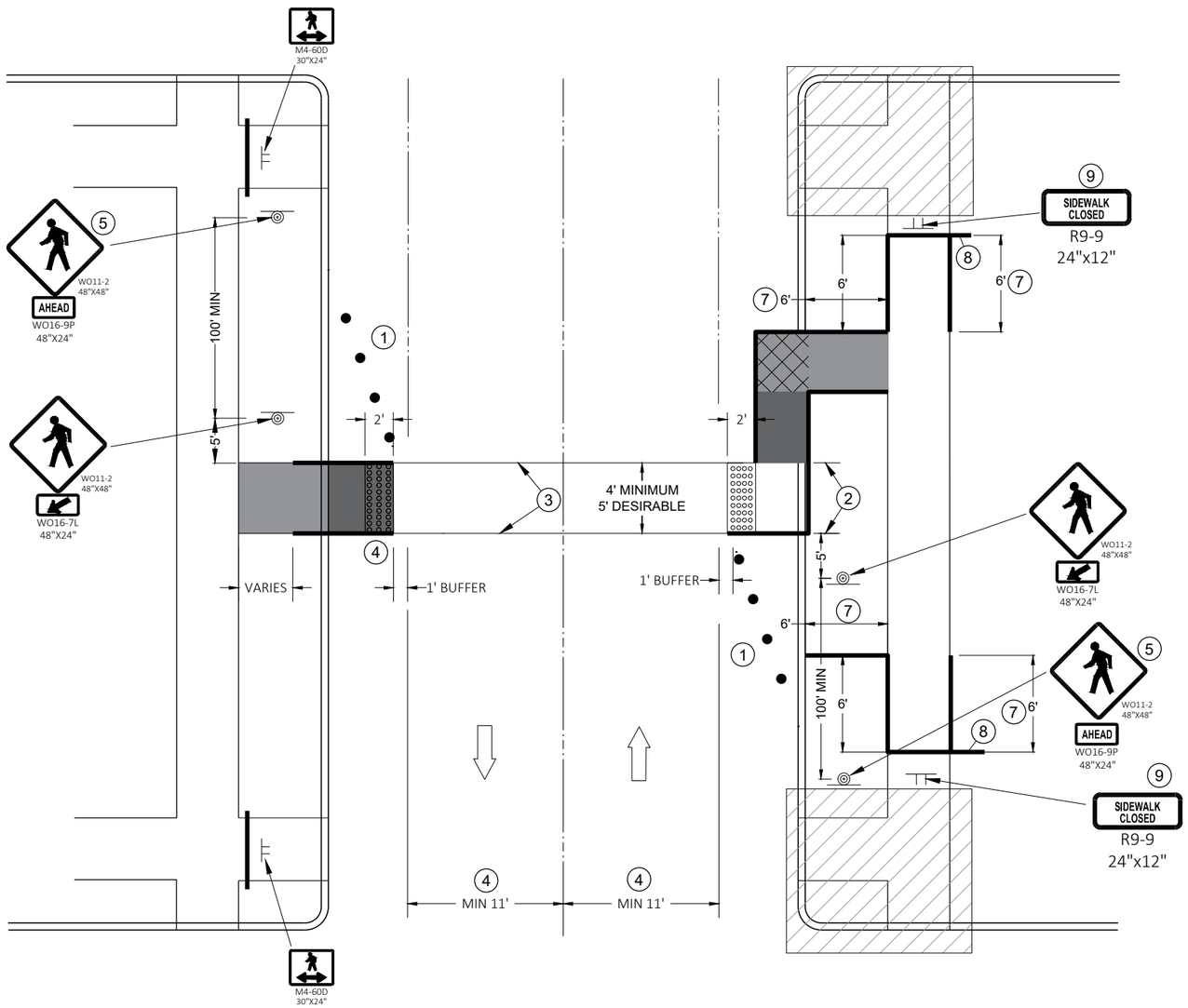

TEMPORARY PEDESTRIAN CROSSING

GENERAL NOTES

TYPICAL TEMPORARY PEDESTRIAN BARRICADE PANEL IS 6 FEET LONG.

SIGN LAYOUTS SHALL BE IN ACCORDANCE WITH THE WISCONSIN STANDARD SIGN PLATES.

SEE OTHER PEDESTRIAN ACCOMMODATION DETAILS FOR SIGNING AND DEVICES FOR DIFFERENT PEDESTRIAN FACILITIES CLOSURES.

1. SHOULDER OR LANE CLOSURE ADVANCED WARNING AND PROPER BUFFER SPACE REQUIRED.
2. 4 FEET MINIMUM, 5 FEET DESIRABLE.
3. WHITE 6" TEMPORARY PAVEMENT MARKING.
4. IF MINIMUM LANE WIDTHS CAN'T BE ATTAINED, PERPENDICULAR CURB RAMPS MAY NEED TO BE UTILIZED.
5. IF MINIMUM 100' SPACING FROM THE MID-BLOCK CROSSING CANNOT BE ATTAINED BEFORE THE INTERSECTION, REMOVE THIS SIGN ASSEMBLY.
6. IF TERRACE IS LESS THAN 6 FEET WIDE, OMIT TEMPORARY PEDESTRIAN BARRICADE FROM THE SIDEWALK TO THE CURB.
7. PLACE BARRICADE CLOSURE SO THAT THE TEMPORARY PEDESTRIAN BARRICADE END IS AT THE LAST OPEN SIDEWALK ACCESS TO RESIDENCES OR BUSINESSES BEFORE THE SIDEWALK CLOSURE.
8. IF TEMPORARY PEDESTRIAN BARRICADE PANEL IS WIDER THAN THE SIDEWALK WIDTH, THE PORTION OF THE EXCESS PANEL SHOULD EXTEND INTO THE TERRACE.
9. MOUNTING HEIGHT OF 5 FEET FROM THE SURFACE TO THE BOTTOM OF THE SIGN.

LEGEND

- TRAFFIC CONTROL DRUM
- SIGN ON TEMPORARY SUPPORT
- TEMPORARY CURB RAMP
- TEMPORARY DETECTABLE WARNING FIELD
- TEMPORARY PEDESTRIAN SURFACE "A"
- TEMPORARY PEDESTRIAN SURFACE "B"
- WORK AREA
- TEMPORARY PEDESTRIAN BARRICADE
- DIRECTION OF TRAFFIC

TRAFFIC CONTROL, PEDESTRIAN ACCOMMODATION

STATE OF WISCONSIN
DEPARTMENT OF TRANSPORTAT

6

SDD 15D30 - 09L

URBAN AREA

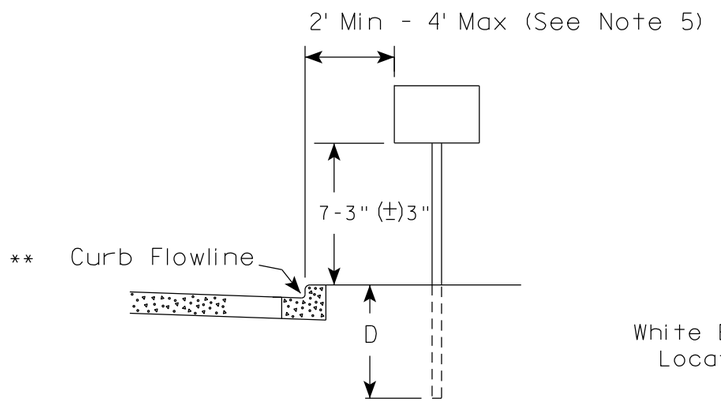

RURAL AREA (See Note 2)

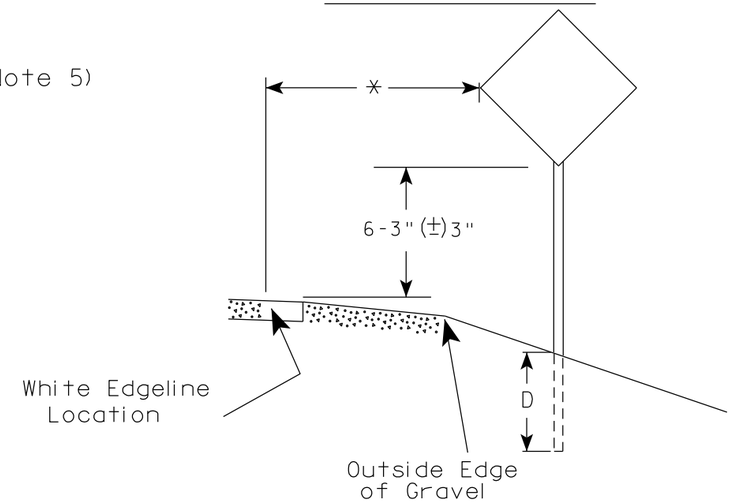

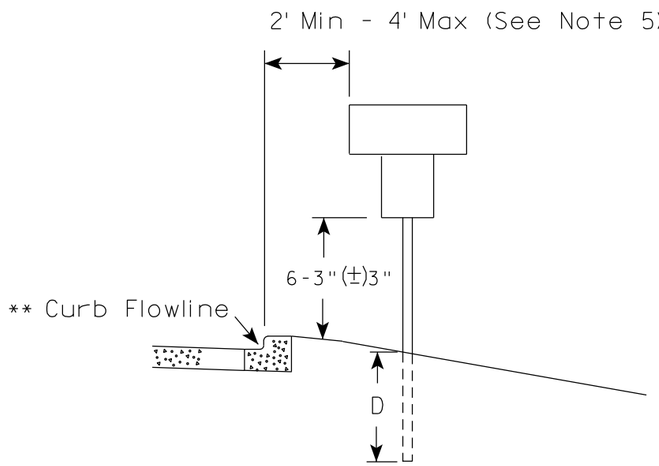

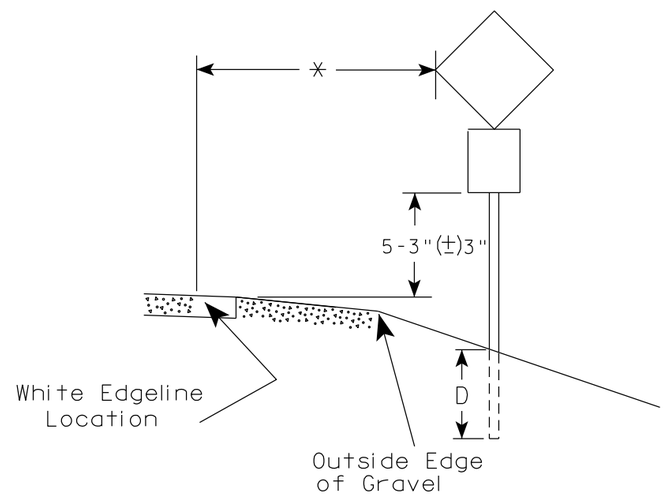

** The existence of curb and gutter does not in itself mandate the vertical clearance illustrated. That height is typically measured where there is sidewalk adjacent to the roadway or parking is permitted. In the absence of sidewalk vertical clearance is measured from the top of the curb. Offset of signs is measured from the flow line.

* 6 feet from edge of a paved shoulder or 12 feet from the edge of pavement (edge line location) or 2 feet from outside edge of gravel, whichever is greater unless directed by project engineer.

GENERAL NOTES

1. Signs wider than 4 feet or 20 sq.ft or larger, shall be mounted on multiple posts. Refer to plate A4-4.
2. If signs are mounted on or behind barrier wall, see A4-10 sign plate.
   The Double Arrow sign (W12-1D) shall be mounted at a height of 2'-3" (±) 3". The Chevron sign (W1-8), Roundabout Chevron panel (R6-4B), Enhanced Reference Markers, Clearance Markers (W5-52), Mile Markers (D10 series), In Road Object Markers (W5-54) & End of Road Markers (W5-56) shall be mounted at a height of 4'-3" (±) 3".
3. For expressways and freeways, mounting height is 7'- 3" (±) 3" or 6'-3" (±) 3" depending upon existence of a sub-sign.
4. Minimum mounting height for signs mounted on traffic signal poles is 5'- 3" (±) 3".
5. Offset distance shall be consistent with existing signs or consistent throughout length of project.
6. Folding signs shall be mounted at a height of 5'-3" (±) 3" or as directd by the Engineer.

POST EMBEDMENT DEPTH

Area of Sign Installation (Sq. Ft.)	D (Min)
20 or Less	4'
Greater than 20	5'

TYPICAL INSTALLATION OF PERMANENT TYPE II SIGNS ON SINGLE POSTS

WISCONSIN DEPT OF TRANSPORTATION

APPROVED Matthew R Rauch
for State Traffic Engineer

DATE 12/6/23 PLATE NO. A4-3.23

PROJECT NO:	HWY:	COUNTY:		SHEET NO: 81	E

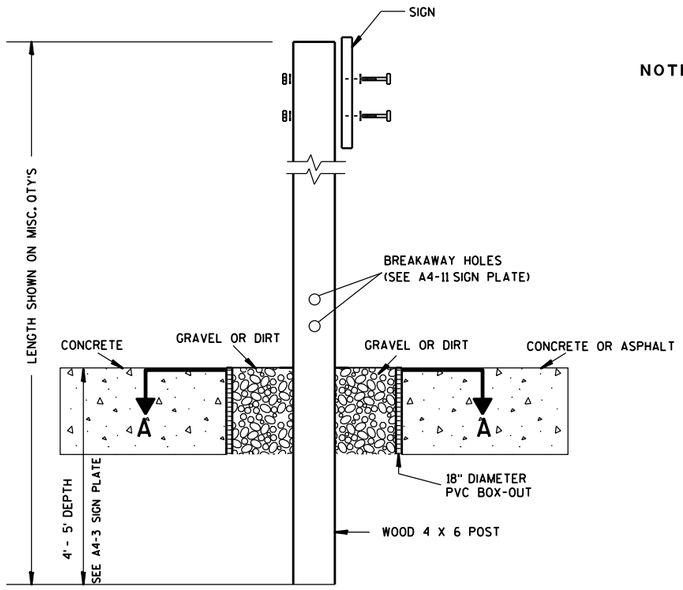

ELEVATION VIEW

DETAIL OF WOOD 4 X 6 SIGN POST IN BOX-OUT

NOTES:
1. ALL MATERIAL TO BE APPROVED BY ENGINEER PRIOR TO INSTALLATION
2. SEE SIGN PLATE A4-8 FOR SIGN HARDWARE REQUIREMENTS
3. 18 INCH X 18 INCH SQUARE BOX-OUTS MAY BE USED FOR INSTALLATIONS IN EXISTING CONCRETE OR ASPHALT LOCATIONS.

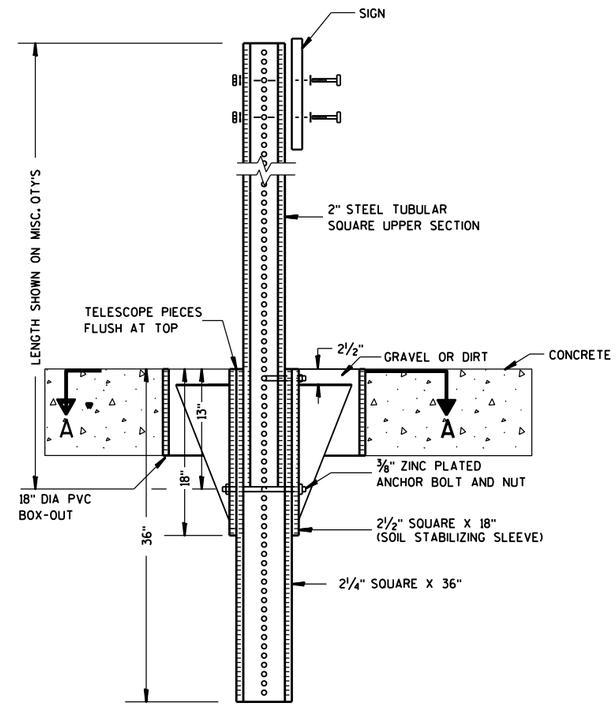

ELEVATION VIEW

DETAIL OF STEEL 2 X 2 SIGN POST IN BOX-OUT

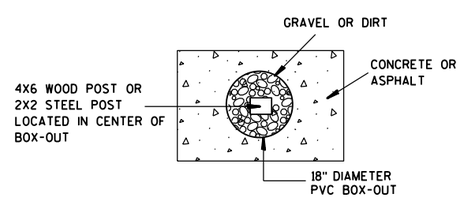

PLAN VIEW

FOR NEW CONCRETE/ASPHALT INSTALLATIONS

SIGN POST
BOX-OUTS
A4-3B

WISCONSIN DEPT OF TRANSPORTATION

APPROVED Matthew R Rauch
for State Traffic Engineer

DATE 1/27/14 PLATE NO. A4-3B.1

PROJECT NO:	HWY:	COUNTY:		SHEET NO:	E

URBAN AREA

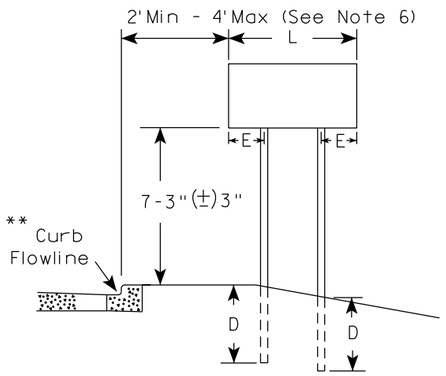

RURAL AREA (See Note 3)

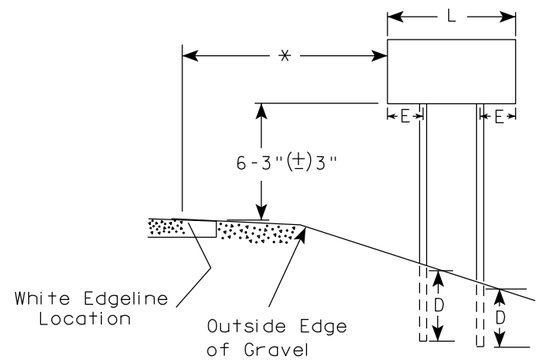

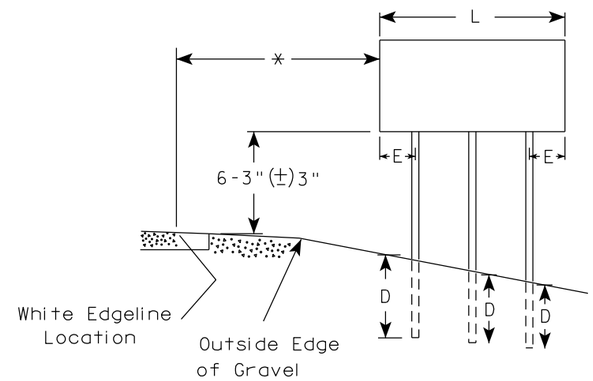

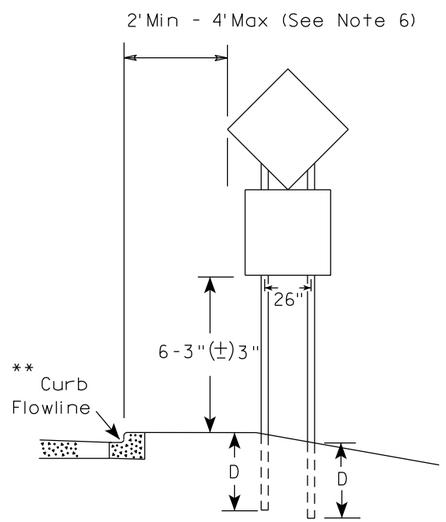

48" DIAMOND WARNING SIGN

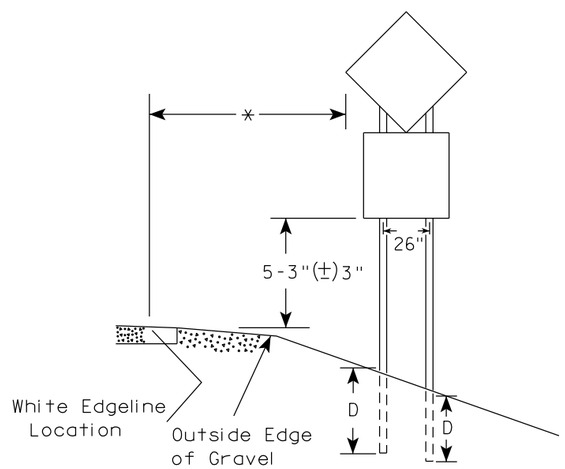

48" DIAMOND WARNING SIGN

GENERAL NOTES

1. For 3 or 4 post installations, individual post spacing shall be greater than 3'-6".
2. See tables below for required number of posts.
3. For expressways and freeways, mounting height is 7'-3" (±) 3" or 6'-3" (±) 3" depending upon existence of sub-sign.
4. The (±) tolerance for mounting height is 3 inches.
5. J-Assemblies are considered to be one sign for mounting height.
6. Offset distance shall be consistent with existing signs or consistent throughout length of project.
7. Folding signs shall be mounted at a height of 5'-3" (±) 3" or as directed by the engineer.
8. The Double Arrow sign (W12-1) shall be mounted at a height of 2'-3" (±) 3". The Chevron sign (W1-8), Roundabout Chevron panel (R6-4B), Clearance Markers (W5-52), Mile Markers (D10 series), In Road Object Markers (W5-54) & End of Road Markers (W5-56) shall be mounted at a height of 4"-3" (±) 3".

* 6 feet from edge of a paved shoulder or 12 feet from the edge of pavement (edge line location) or 2 feet from outside edge of gravel, whichever is greater unless directed by project engineer.

** The existence of curb and gutter does not in itself mandate the vertical clearance illustrated. That height is typically measured where there is sidewalk adjacent to the roadway or parking is permitted. In the absence of sidewalk vertical clearance is measured from the top of the curb. Offset of signs is measured from the flow line.

*** See A4-3 sign plate for signs 4' or less in width and less than 20 S.F. in area.

SIGN SHAPE OTHER THAN DIAMOND (TWO POSTS REQUIRED)	
L	E
*** Greater than 48" Less than 60"	12"
60" to 108"	L/5

SIGN SHAPE OTHER THAN DIAMOND (THREE POSTS REQUIRED)	
L	E
Greater than 108" to 144"	12"

POST EMBEDMENT DEPTH

Area of Sign Installation (Sq. Ft.)	D (Min)
20 or Less	4'
Greater than 20	5'

TYPICAL INSTALLATION OF TYPE II SIGNS ON MULTIPLE POSTS

WISCONSIN DEPT OF TRANSPORTATION

APPROVED Matthew R Rauch
for State Traffic Engineer

DATE 12/6/23 PLATE NO. A4-4.16

PROJECT NO:	HWY:	COUNTY:		SHEET NO: 83	E

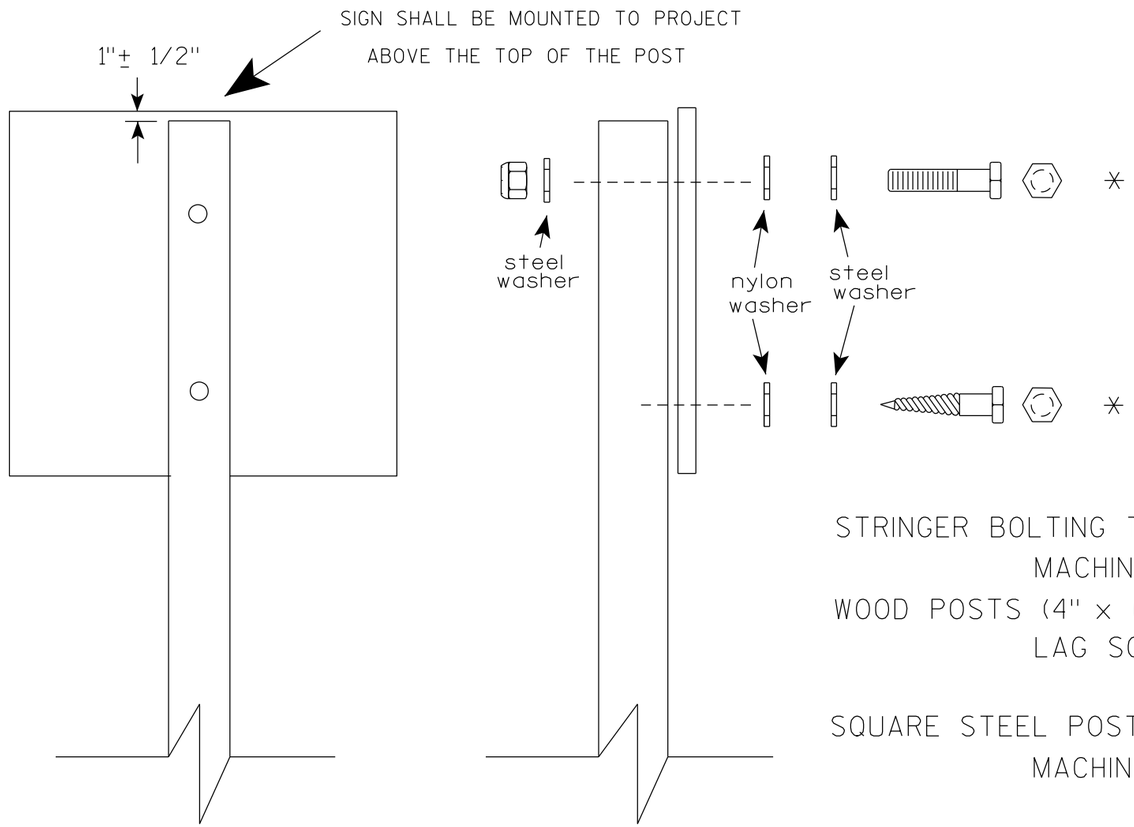

Nuts, bolts and lags used for mounting signs shall have hexagonal heads and shall be either :

a. Hot dip galvanized in accordance with ASTM Designation: A 153, Class D, or SC 3

b. Electro-galvanized in accordance with ASTM Designation : B 633, TYPE III, SC 3.

Threads on bolts and nuts shall be manufactured with sufficient allowance for the cadmium plate or galvanized coating to permit the nuts to run freely on the bolts.

STRINGER BOLTING TO ALUMINUM SIGNS (SEE SIGN PLATE A4-18)

MACHINE BOLTS - 5/16" X 1-3/4" Length w/ lock nuts

WOOD POSTS (4" x 6")

LAG SCREWS - 3/8" X 3" (NO STRINGERS ON BACK OF SIGN)
3/8" X 4" (STRINGERS ON BACK OF SIGN)

SQUARE STEEL POSTS (2" x 2")

MACHINE BOLTS - 3/8" X 3-1/4" Length w/ nuts (NO STRINGER ON BACK OF SIGN)
3/8" X 5" Length w/ nuts (STRINGERS ON BACK OF SIGN)

RIVETS - 9/32 " (6605-9-6) BULB-TITE, TRI-FOLD, ALUMINUM BODY/MANDREL
O.D. FLANGE .720-.765 INCH, GRIP RANGE .042-.375 INCH

WASHERS (ALL POSTS) -

1-1/4" O.D. X 3/8" I.D. X 1/16" STEEL
1-1/4" O.D. X 3/8" I.D. X .080 NYLON

* Two different fastening systems are shown for illustration purposes. On any individual sign, either one or the other system shall be used. Actual number of fasteners per sign varies with the sign area, but normally there are two. For a single post installation, all signs greater than 9 sq. ft. require the use of 3 fasteners.

ATTACHMENT OF SIGNS TO POSTS

WISCONSIN DEPT OF TRANSPORTATION

APPROVED Matthew R Rauch
for State Traffic Engineer

DATE 4/1/2020 PLATE NO. A4-8.9

TELESCOPIC TUBING ANCHORS
TWO PIECE SYSTEM

2 1/4" SQUARE
12 GAUGE
PERFORATED
GALVANIZED FINISH

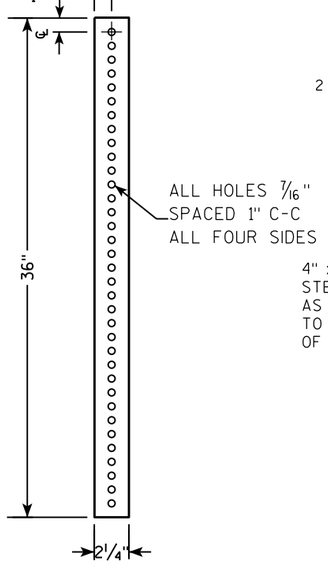

2 1/2" SQUARE
12 GAUGE
OMNI-DIRECTIONAL
PERFORATED
SOIL STABILIZING SLEEVE
GALVANIZED FINISH

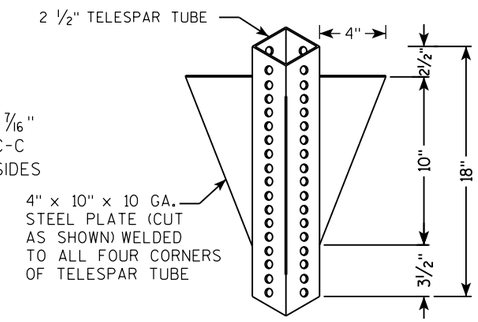

DETAIL OF TUBULAR STEEL SIGN POST
(IN POURED CONCRETE OR ASPHALT)

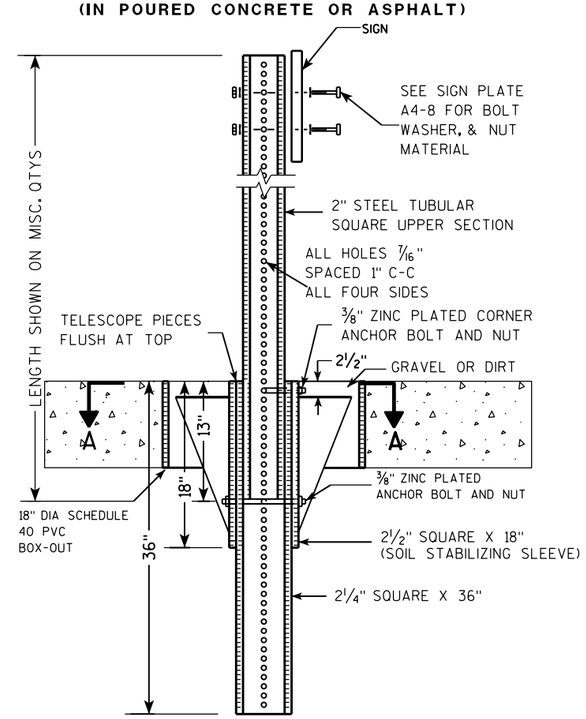

DETAIL OF TUBULAR STEEL SIGN POST
(IN LOCATIONS OTHER THAN POURED CONCRETE OR ASPHALT)

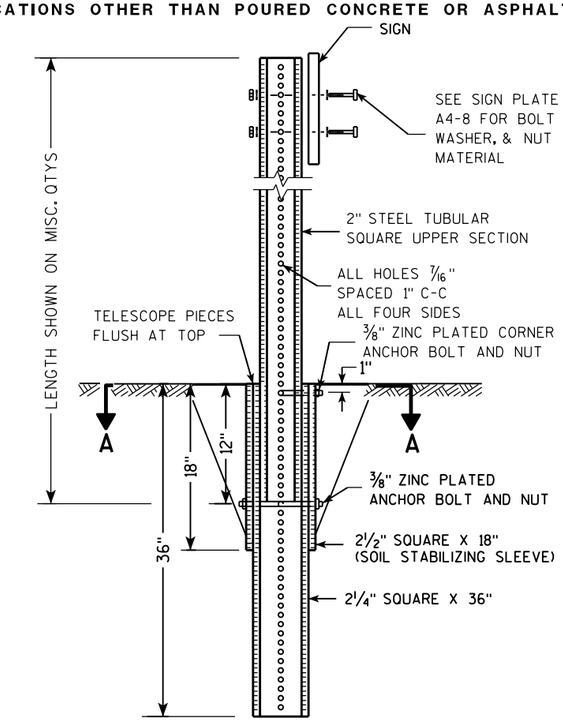

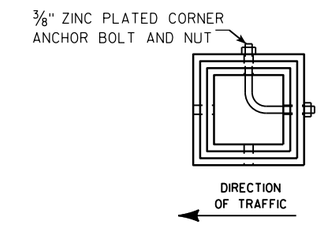

SECTION A-A

Area of Sign Installation (Sq. Ft.)	Number of Required Posts
9 or less	1
Greater than 9 less than or equal to 18	2
Greater than 18 less than or equal to 27	3

Signs wider than 3 feet or larger than 9 sq. ft shall be mounted on multiple posts (see above table).

TUBULAR STEEL
SIGN POST
A4-9

WISCONSIN DEPT OF TRANSPORTATION

APPROVED Matthew R Rauch
for State Traffic Engineer

DATE 2/05/15 PLATE A4-9.9

7

7

PROJECT NO:	HWY:	COUNTY:		SHEET NO:	E

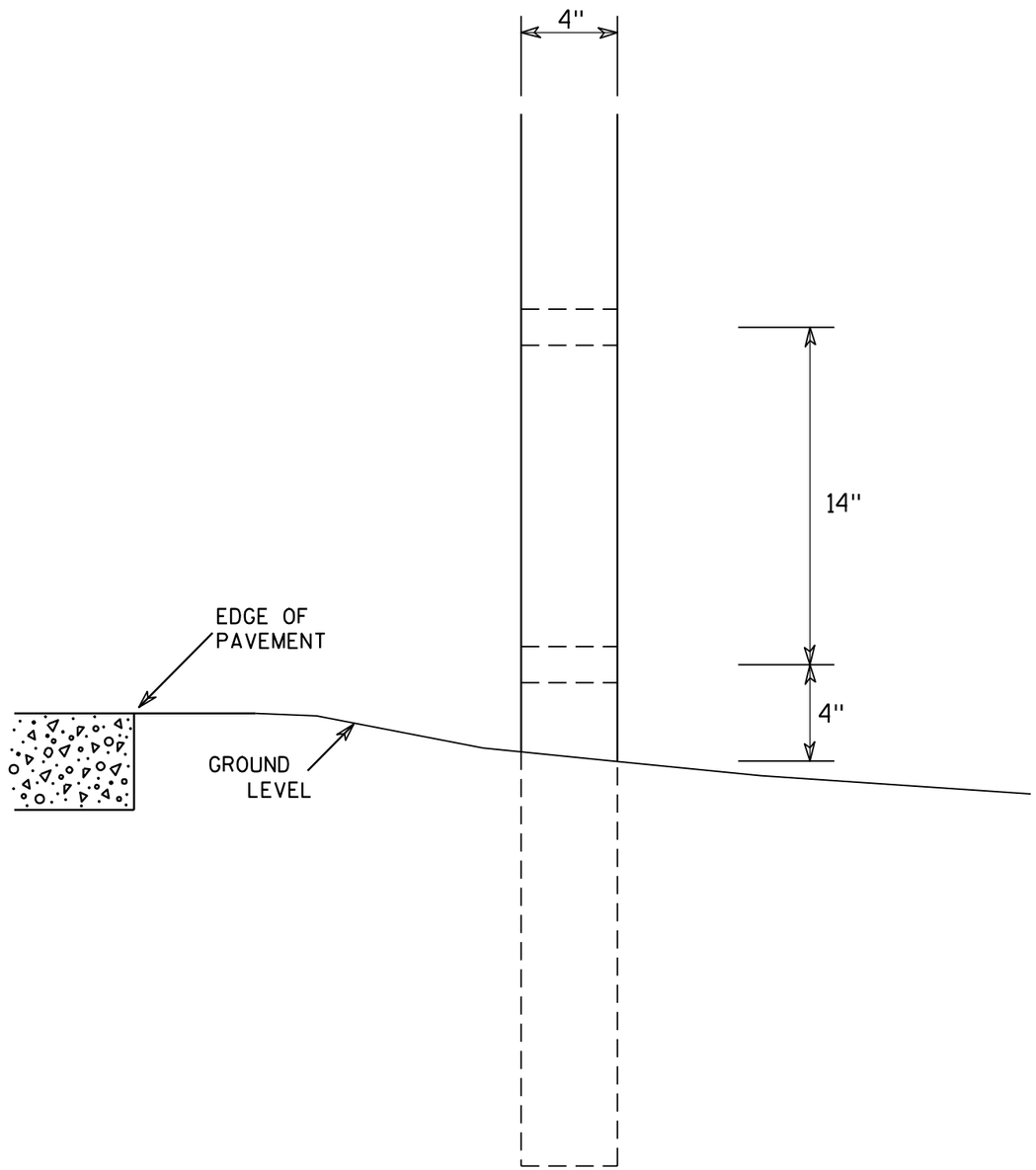

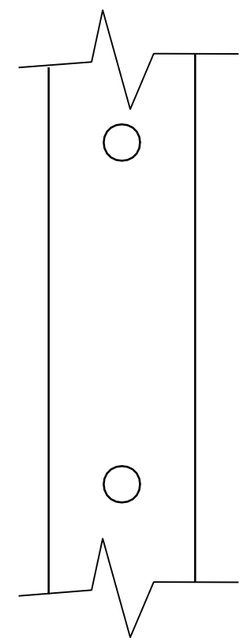

SIDE VIEW

GENERAL NOTES

1. All 4 x 6 Wood Posts shall be modified by having two 1½" diameter holes drilled perpendicular to the roadway centerline.

7

7

4 X 6 WOOD POST MODIFICATIONS

WISCONSIN DEPT OF TRANSPORTATION

APPROVED Chester J Spang for State Traffic Engineer

DATE 3/27/97 PLATE NO. A4-11.2

PROJECT NO:	HWY:	COUNTY:		SHEET NO: 86	E

BANDING

SINGLE SIGN

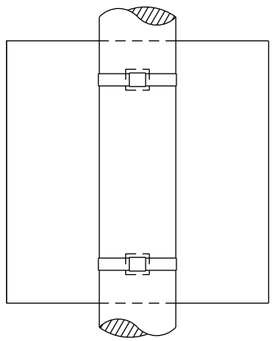

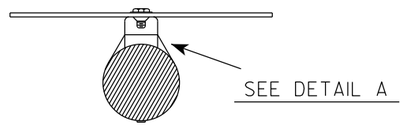

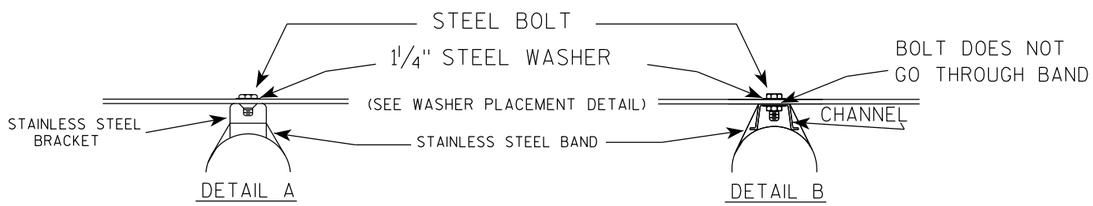

WASHER PLACEMENT

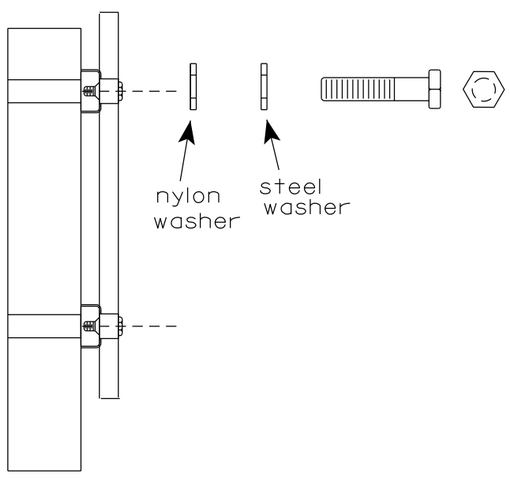

WASHERS (ALL POSTS) -
1-1/4" O.D. X 3/8" I.D. X 1/16" STEEL
1-1/4" O.D. X 3/8" I.D. X .080 NYLON
FOR ALL TYPE H SIGNS

GENERAL NOTES

1. Any sign over 3 feet in width shall use the V-Block banding method. See A5-10 standard plate.
2. Signs 3 feet or greater in height shall have three bracket bands installed. Signs less than 3 feet in height shall have two bracket bands installed.
3. Banding and assembly bracket shall be stainless steel. All bands shall be ¾" in width and 0.025" thickness.
4. ALL SIGN MOUNTING BOLTS AND WASHERS SHALL BE EITHER:
   a. Hot dip or mechanically galvanized in accordance with ASTM Designation: A 153, Class D
   b. Electro-galvanized in accordance with ASTM designation: B 633, Type III, SC 3

"J" ASSEMBLY

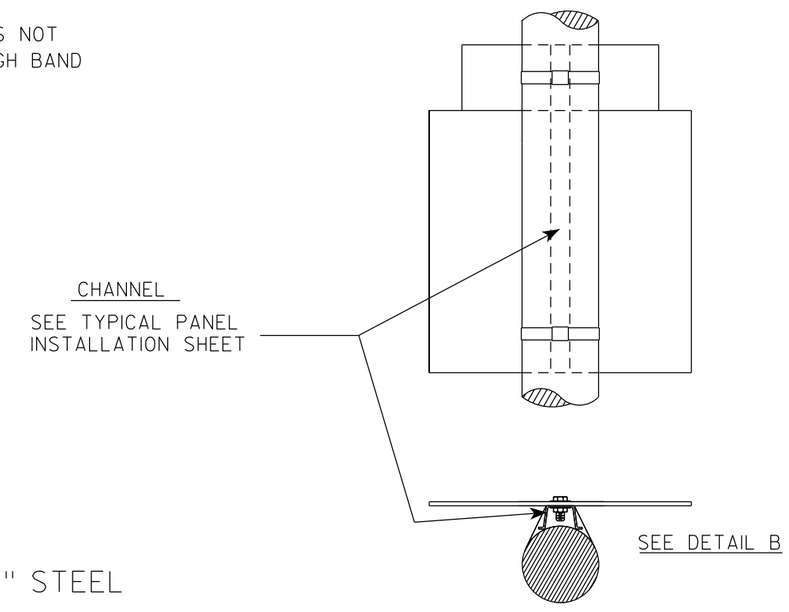

STANDARD SIGN
SIGN BANDING DETAILS

WISCONSIN DEPT OF TRANSPORTATION

APPROVED Matthew R Rauch for State Traffic Engineer

DATE 6/10/19 PLATE NO. A5-9.4

PROJECT NO:	HWY:	COUNTY:		SHEET NO: 87	E

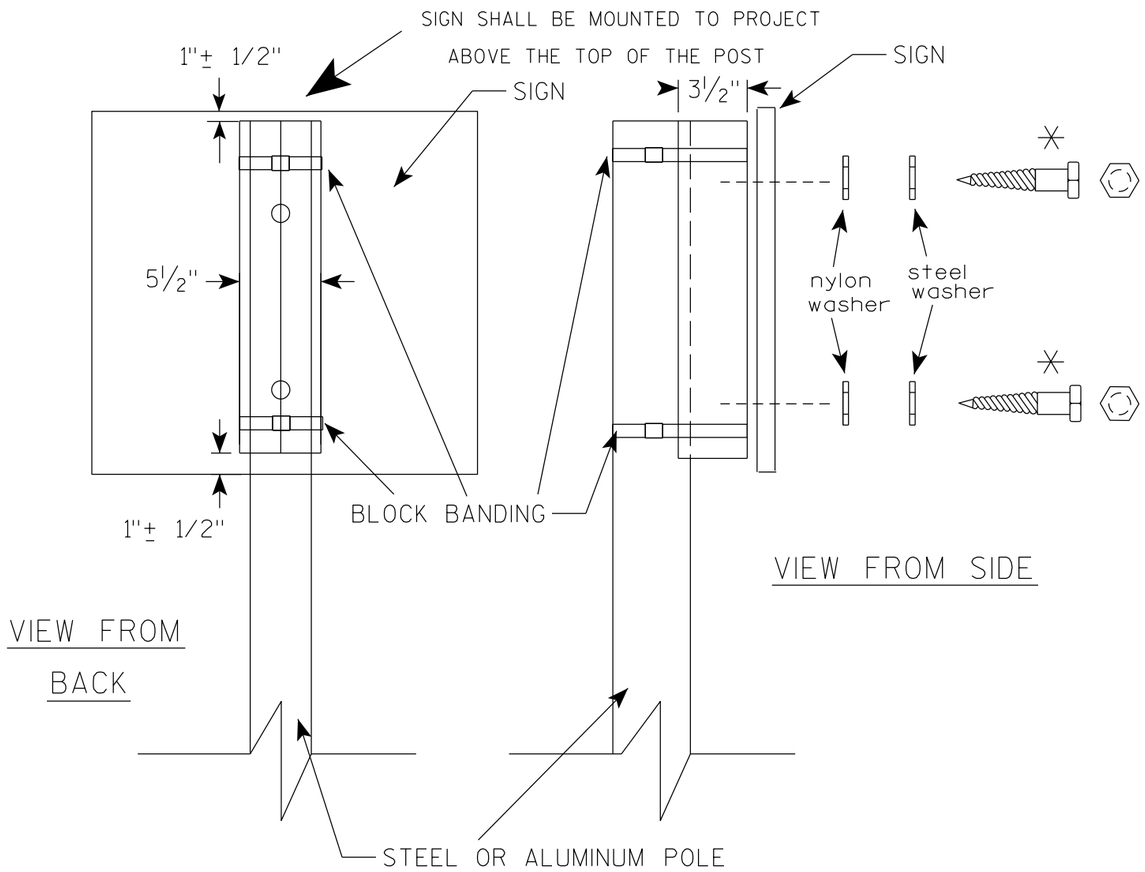

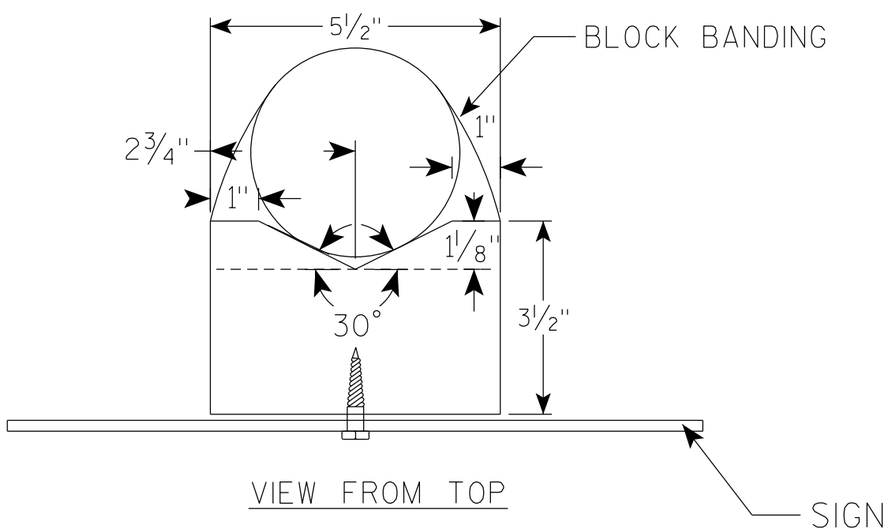

GENERAL NOTES

1. WOOD 4"X6" POST MATERIAL SHALL CONFORM TO 507.2.2 OF THE WisDOT STANDARD SPECIFICATIONS
2. BLOCK BANDING AND CLIPS SHALL BE STAINLESS STEEL, 3/4" WIDTH AND 0.025" THICKNESS
3. SIGNS 3' OR GREATER IN HEIGHT SHALL UTILIZE 3 BLOCK BANDS. SIGNS UNDER 3' IN HEIGHT SHALL UTILIZE 2 BLOCK BANDS
4. ACTUAL NUMBER OF FASTENERS PER SIGN VARIES WITH THE SIGN AREA, BUT NORNALLY THERE ARE TWO. FOR SIGNS GREATER THAN 9 S.F. 3 FASTENERS SHALL BE USED.
5. ALL SIGN MOUNTING BOLTS AND WASHERS SHALL BE EITHER:
   a. Hot dip or mechanically galvanized in accordance with ASTM Designation: A 153, Class D
   b. Electro-galvanized in accordance with ASTM Designation : B 633, TYPE III, SC 3
6. ALL BOLTS SHALL HAVE HEXAGONAL HEADS.
7. STEEL WASHERS SHALL BE 1 1/4" O.D. X 3/8" I.D. X 1/16"
8. NYLON WASHERS SHALL BE 1 1/4" O.D. X 3/8" I.D. X .080 FOR TYPE H OR TYPE F FACE SIGN

✳ LAG BOLTS SHALL BE 3/8" X 2 1/2"

7

7

BLOCK BANDING DETAIL
(V-BLOCK OPTION)

WISCONSIN DEPT OF TRANSPORTATION

APPROVED Matthew R Rauch
for State Traffic Engineer

DATE 4/19/2022 PLATE NO. A5-10.3

PROJECT NO:				SHEET NO: 88	E

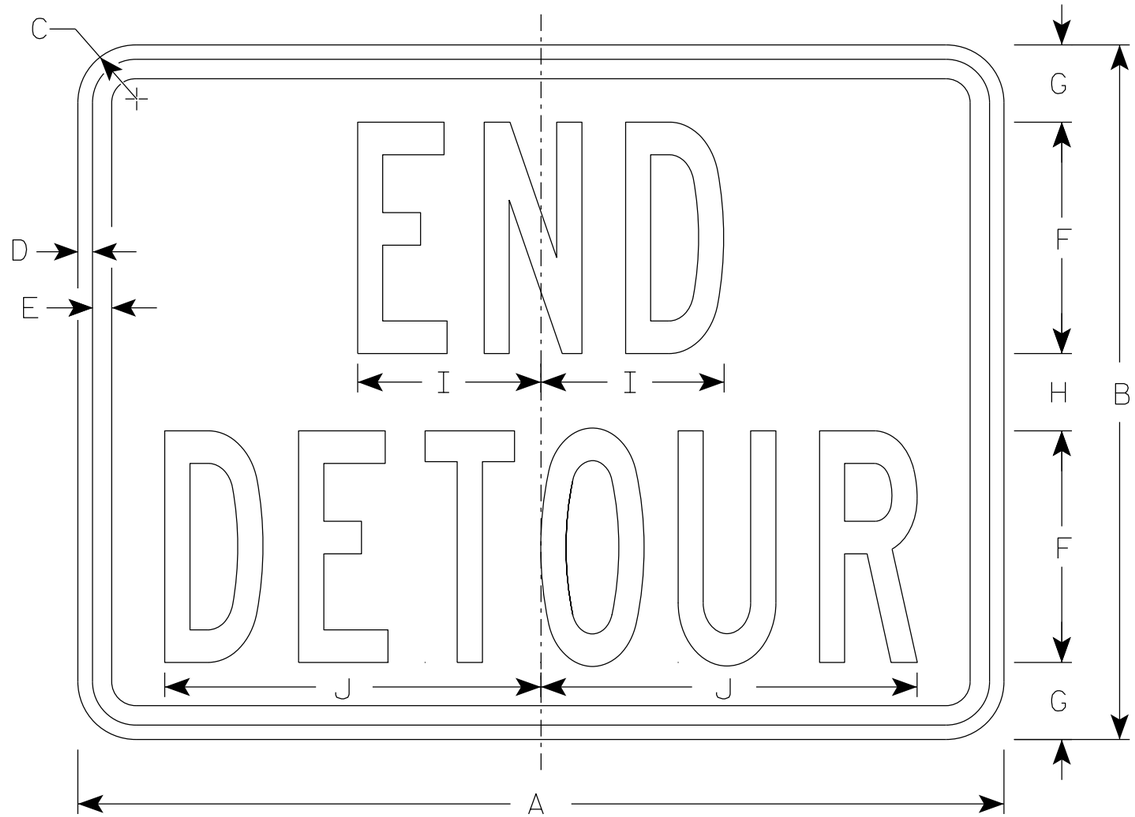

M4-8A

NOTES

1. Sign is Type II - Type F Reflective
2. Color:
   Background - Orange
   Message - Black
3. Message Series - B
4. Corners may be square or rounded when base material is plywood but borders shall be rounded as shown. When base material is metal, the corners and borders shall be rounded.

SIZE	A	B	C	D	E	F	G	H	I	J	K	L	M	N	O	P	Q	R	S	T	U	V	W	X	Y	Z	Area sq. ft.
1																											
2	24	18	1 1/2	3/8	1/2	6	2	2	4 3/4	9 3/4																	3.0
2M	24	18	1 1/2	3/8	1/2	6	2	2	4 3/4	9 3/4																	3.0
3	30	24	1 1/2	3/8	1/2	8	2 1/2	3	6 3/4	13																	5.0
4	30	24	1 1/2	3/8	1/2	8	2 1/2	3	6 3/4	13																	5.0
5	30	24	1 1/2	3/8	1/2	8	2 1/2	3	6 3/4	13																	5.0

STANDARD SIGN
M4-8A

WISCONSIN DEPT OF TRANSPORTATION

APPROVED Matthew R Rauch
for State Traffic Engineer

DATE 2/9/2023 PLATE NO. M4-8A.4

PROJECT NO: | HWY: | COUNTY: | SHEET NO: 89 | E

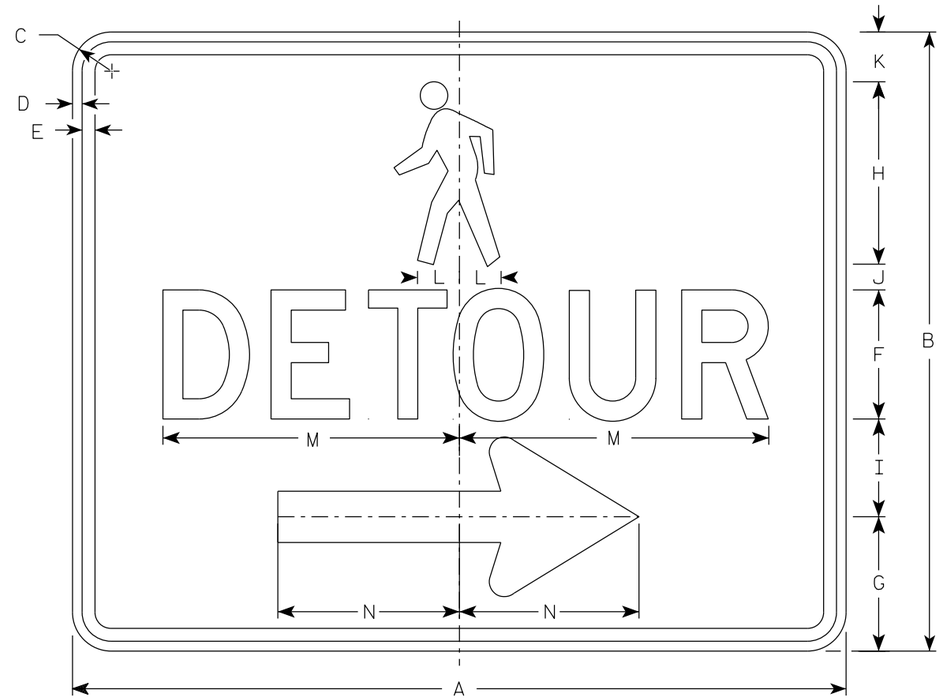

M4-9BR

NOTES

1. Sign is Type II-Type F Reflective
2. Color:
   Background - Orange
   Message - Black
3. Message Series - D
4. Corners may be square or rounded when base material is plywood but borders shall be rounded as shown. When base material is metal, the corners and borders shall be rounded.
5. M4-9BL is the same as M4-9BR except the arrow is reversed.

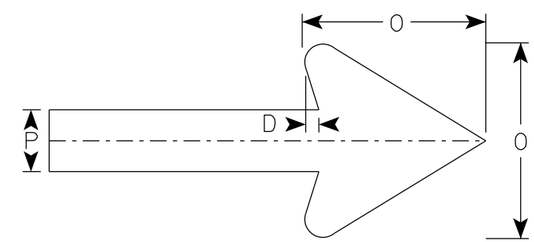

Arrow Detail

SIZE	A	B	C	D	E	F	G	H	I	J	K	L	M	N	O	P	Q	R	S	T	U	V	W	X	Y	Z	Area sq. ft.
1																											
2S	30	24	1 1/2	3/8	1/2	5	5 1/4	7 1/8	3 3/4	1	1 1/8	1 5/8	11 3/4	7	6	2											5.0
2M	30	24	1 1/2	3/8	1/2	5	5 1/4	7 1/8	3 3/4	1	1 1/8	1 5/8	11 3/4	7	6	2											5.0
3																											
4																											
5																											

STANDARD SIGN
M4-9B L&R

WISCONSIN DEPT OF TRANSPORTATION

APPROVED Matthew R Rauch
for State Traffic Engineer

DATE 2/9/2023 PLATE NO. M4-9B.4

PROJECT NO: | HWY: | COUNTY: | SHEET NO: 90 | E

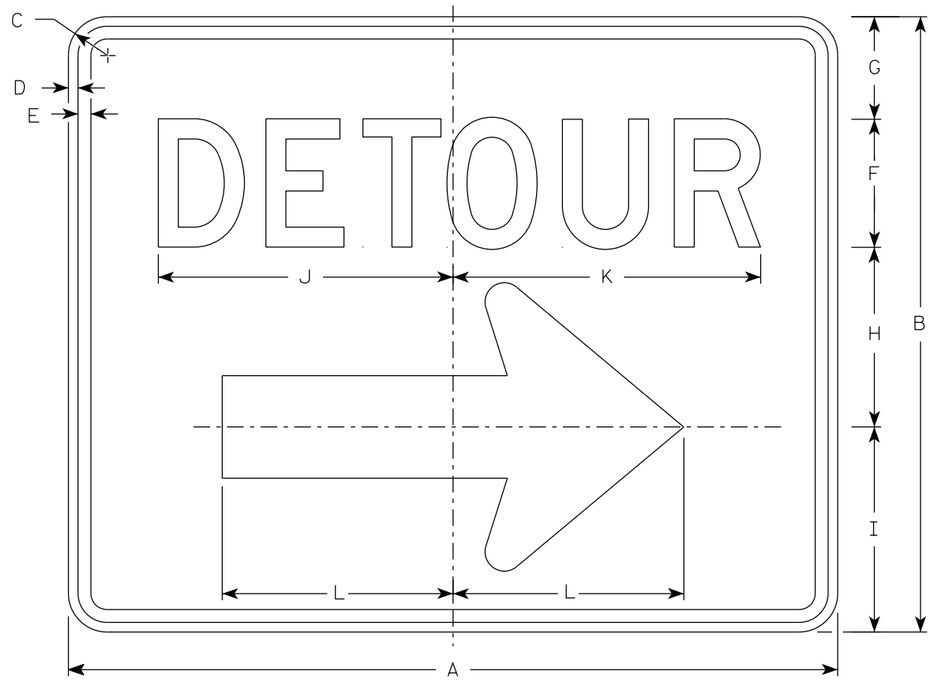

M4-9R

NOTES

1. Sign is Type II - Type F Reflective
2. Color:
   Background - Orange
   Message - Black
3. Message Series - D
4. Corners may be square or rounded when base material is plywood but borders shall be rounded as shown. When base material is metal, the corners and borders shall be rounded.
4. M4-9L is the same as M4-9R except the arrow is reversed.

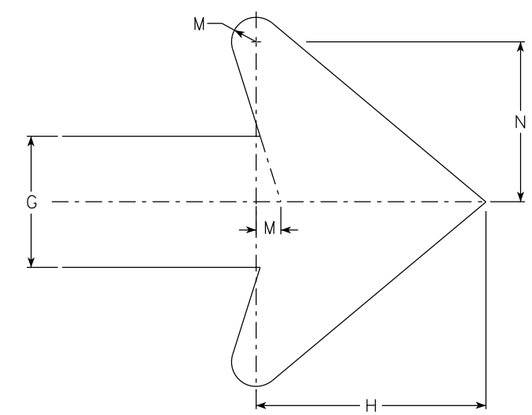

Arrow Detail

SIZE	A	B	C	D	E	F	G	H	I	J	K	L	M	N	O	P	Q	R	S	T	U	V	W	X	Y	Z	Area sq. ft.
1																											
2	30	24	1 1/2	3/8	1/2	5	4	7	8	11 1/2	12	9	3/4	4 7/8													5.00
2M	30	24	1 1/2	3/8	1/2	5	4	7	8	11 1/2	12	9	3/4	4 7/8													5.00
3	30	24	1 1/2	3/8	1/2	5	4	7	8	11 1/2	12	9	3/4	4 7/8													5.00
4	48	36	1 7/8	1/2	5/8	8	6	10 1/2	11 5/8	20 5/8	20 1/2	13 1/4	1 1/8	6 7/8													12.0
5	48	36	1 7/8	1/2	5/8	8	6	10 1/2	11 5/8	20 5/8	20 1/2	13 1/4	1 1/8	6 7/8													12.0

STANDARD SIGN
M4-9 R & L

WISCONSIN DEPT OF TRANSPORTATION

APPROVED Matthew R Rauch
For State Traffic Engineer

DATE 2/9/2023 PLATE NO. M4-9R.6

PROJECT NO: | HWY: | COUNTY: | SHEET NO: E

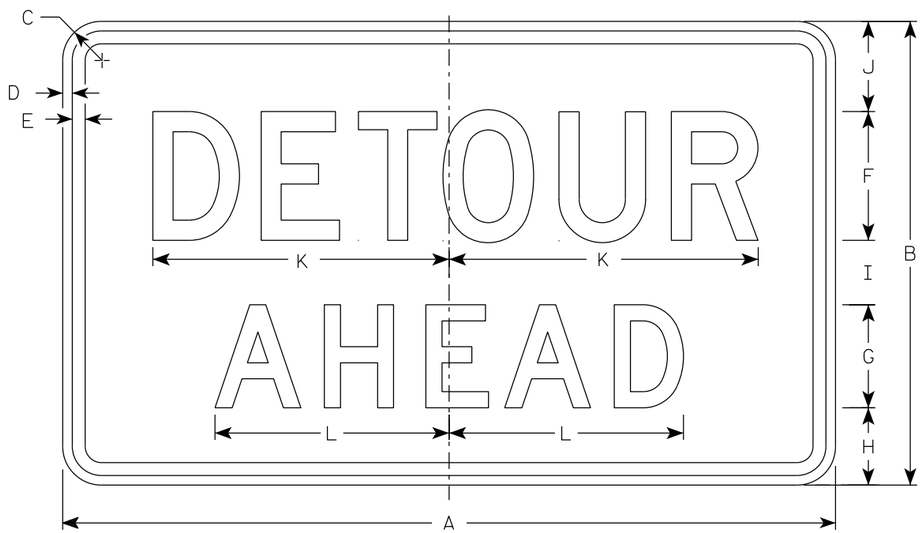

M4-59A

NOTES

1. Sign is Type II - Type F Reflective
2. Color:
   Background - Orange
   Message - Black
3. Message Series - D
4. Corners may be square or rounded when base material is plywood but borders shall be rounded as shown. When base material is metal, the corners and borders shall be rounded.

SIZE	A	B	C	D	E	F	G	H	I	J	K	L	M	N	O	P	Q	R	S	T	U	V	W	X	Y	Z	Area sq. ft.
1																											
2S	30	18	1 1/2	3/8	1/2	5	4	3	2 1/2	3 1/2	11 3/4	9 1/8															3.75
2M	30	18	1 1/2	3/8	1/2	5	4	3	2 1/2	3 1/2	11 3/4	9 1/8															3.75
3																											
4																											
5																											

STANDARD SIGN
M4-59A

WISCONSIN DEPT OF TRANSPORTATION

APPROVED Matthew R Rauch
For State Traffic Engineer

DATE 2/13/2023 PLATE NO. M4-59A.2

PROJECT NO: | HWY: | COUNTY: | SHEET NO: 92 | E

NOTES

1. Sign is Type II - Type F Reflective
2. Color:
   Background - Orange
   Message - Black
3. Message Series - D
4. Corners may be square or rounded when base material is plywood but borders shall be rounded as shown when base material is metal.
5. M4-59L is the same as M4-59R except the arrow is reversed.

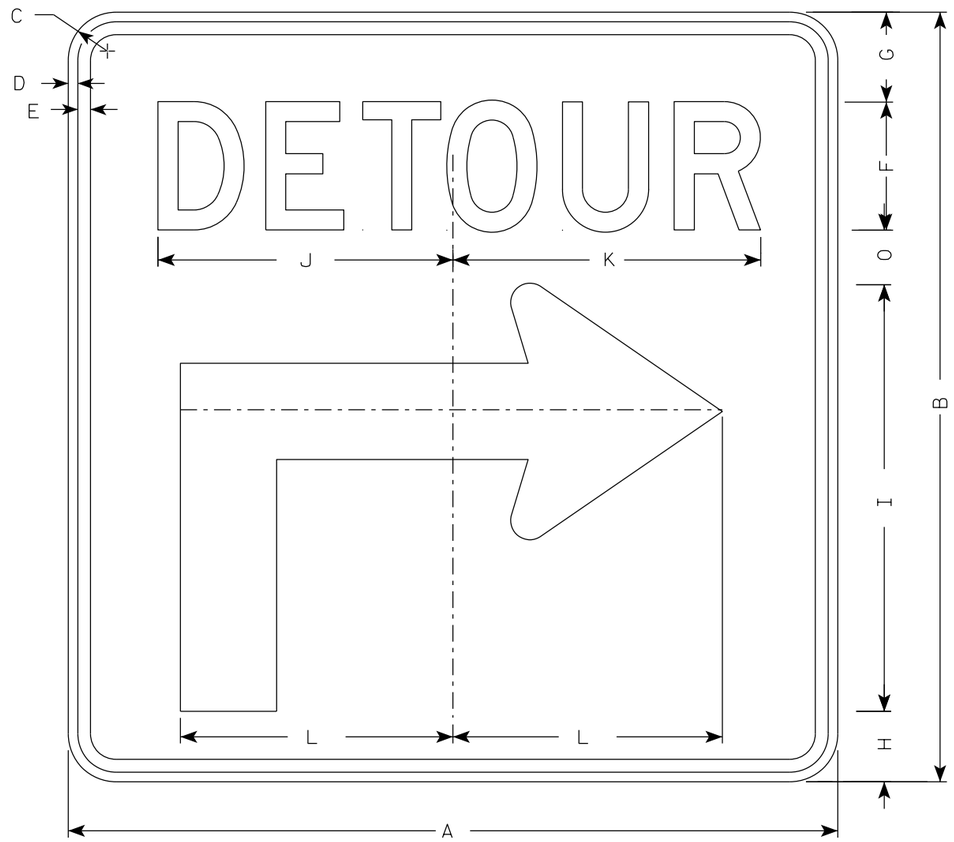

M4-59R

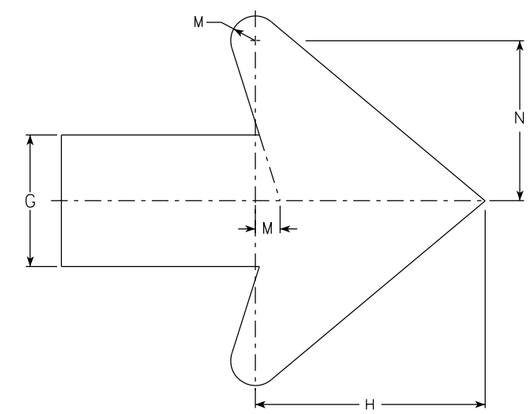

Arrow Detail

SIZE	A	B	C	D	E	F	G	H	I	J	K	L	M	N	O	P	Q	R	S	T	U	V	W	X	Y	Z	Area sq. ft.
1																											
2S	30	30	1 7/8	3/8	1/2	5	3 1/2	2 3/4	16 5/8	11 1/2	12	10 1/2	3/4	4 7/8	2 1/8												6.25
2M	30	30	1 7/8	3/8	1/2	5	3 1/2	2 3/4	16 5/8	11 1/2	12	10 1/2	3/4	4 7/8	2 1/8												6.25
3	30	30	1 7/8	3/8	1/2	5	3 1/2	2 3/4	16 5/8	11 1/2	12	10 1/2	3/4	4 7/8	2 1/8												6.25
4	48	48	2 1/4	1/2	5/8	8	5 5/8	4 3/8	26 5/8	20 5/8	20 1/2	17	1 1/8	6 7/8	3 3/8												16.0
5	48	48	2 1/4	1/2	5/8	8	5 5/8	4 3/8	26 5/8	20 5/8	20 1/2	17	1 1/8	6 7/8	3 3/8												16.0

STANDARD SIGN
M4-59 L&R

WISCONSIN DEPT OF TRANSPORTATION

APPROVED Matthew R Rauch
for State Traffic Engineer

DATE 2/13/2023 PLATE NO. M4-59.2

PROJECT NO: | HWY: | COUNTY: | SHEET NO: | E

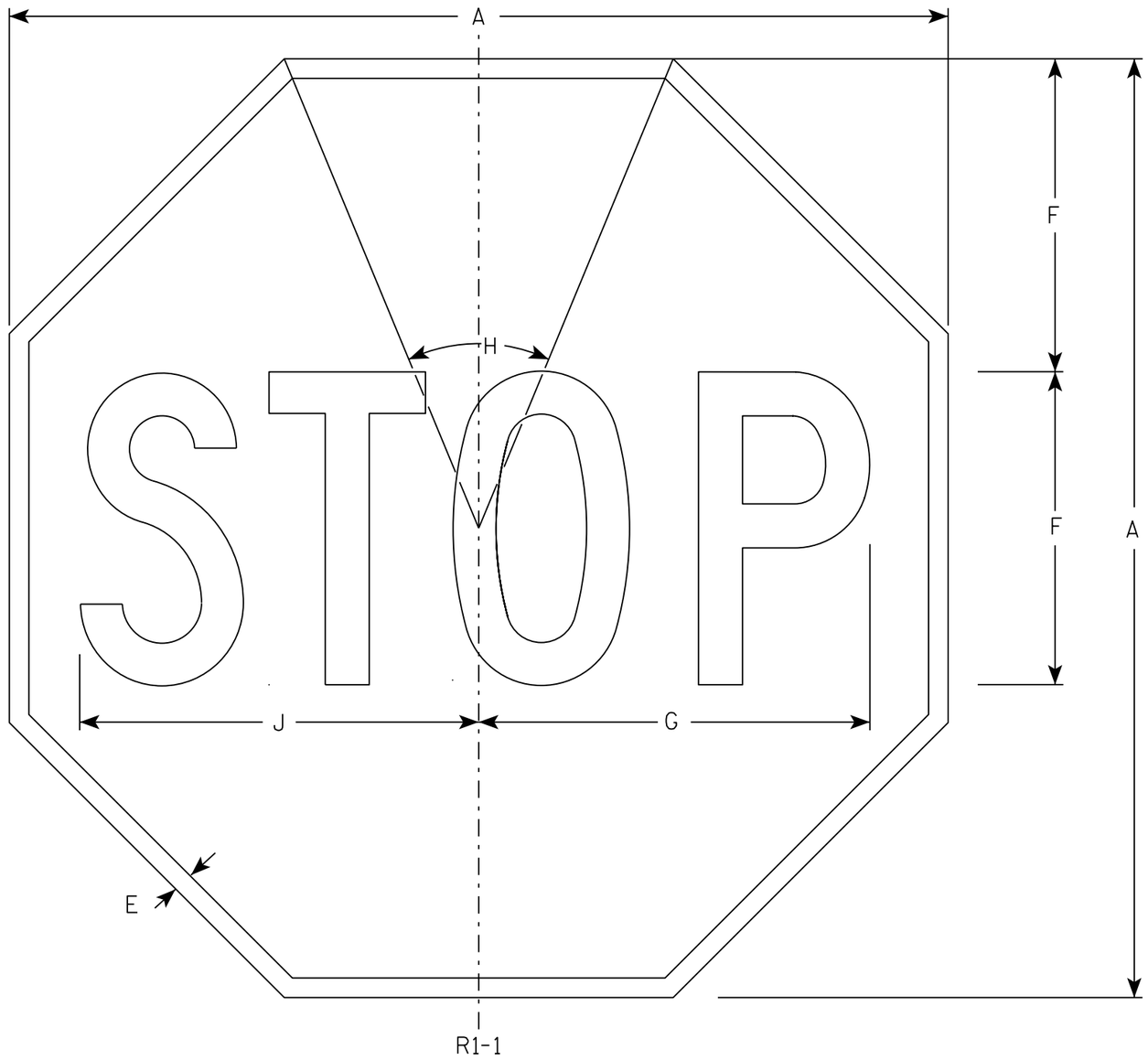

NOTES

1. Sign is Type II - Type H Reflective - reference WIS DOT Standard Specification for HIGHWAY and STRUCTURE CONSTRUCTION latest edition.
2. Color:
   Background - Red
   Message - White
3. Message Series - C

SIZE	A	B	C	D	E	F	G	H	I	J	K	L	M	N	O	P	Q	R	S	T	U	V	W	X	Y	Z	Area sq. ft.
1	30				5/8	10	12 1/2	45°		12 3/4																	5.18
2S	30				5/8	10	12 1/2	45°		12 3/4																	5.18
2M	36				3/4	12	15	45°		15 3/8																	7.46
3	36				3/4	12	15	45°		15 3/8																	7.46
4	48				1	16	20	45°		20 1/2																	13.25
5	48				1	16	20	45°		20 1/2																	13.25
6	18				3/8	6	7 3/4	45°		7 3/4																	1.86
7	12				1/4	4	5	45°		5 1/8																	0.78

STANDARD SIGN
R1-1

WISCONSIN DEPT OF TRANSPORTATION

APPROVED Matthew R Rauch
for State Traffic Engineer

DATE 11/12/15 PLATE NO. R1-1.13

PROJECT NO: | HWY: | COUNTY: | SHEET NO: 94 | E

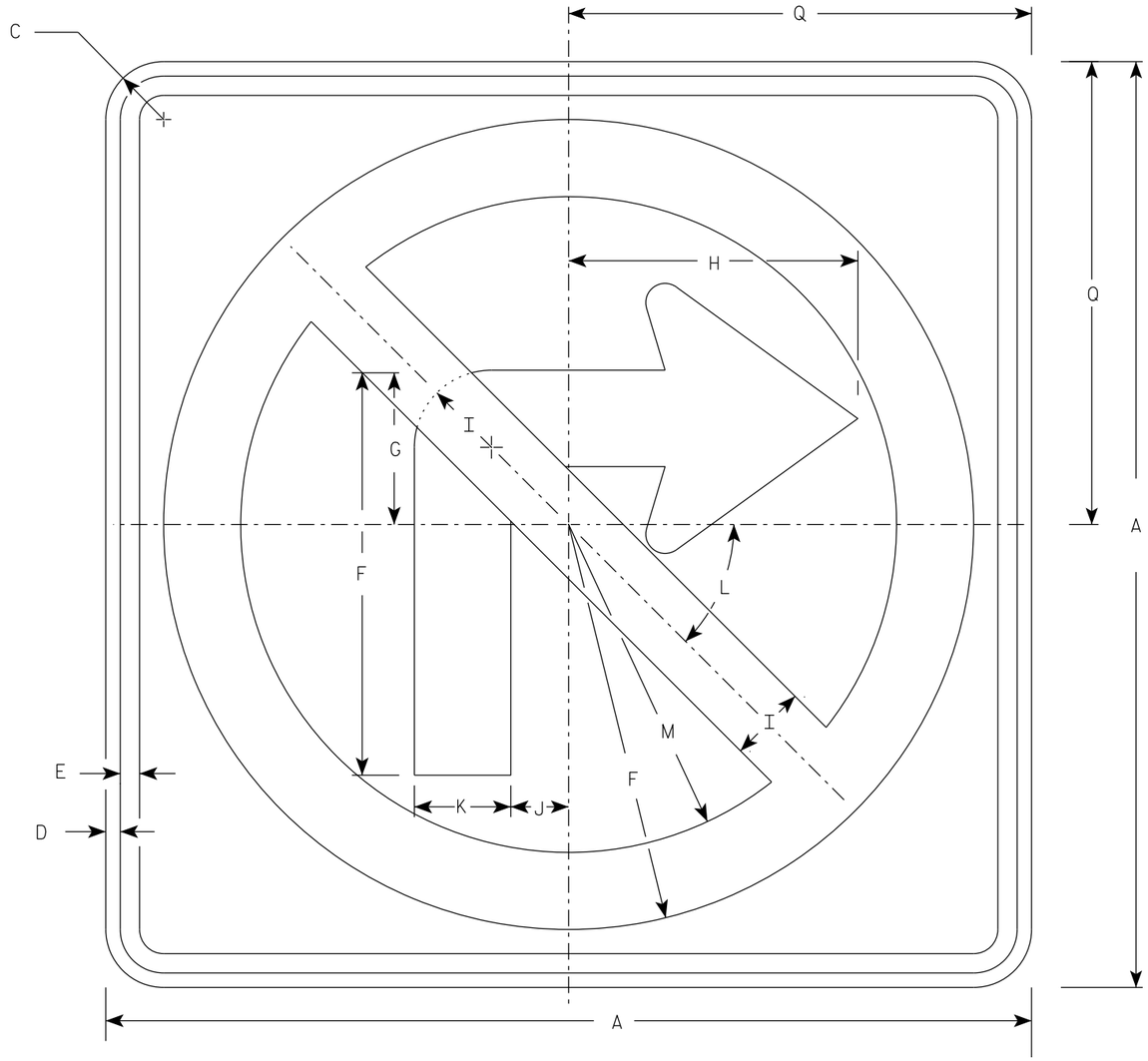

R3-1

NOTES

1. Sign is Type II - Type H Reflective
2. Color:
   Background - White
   Message - See note 3
3. Border & Arrow are non reflective black, the circle with diagonal bar is reflective red.

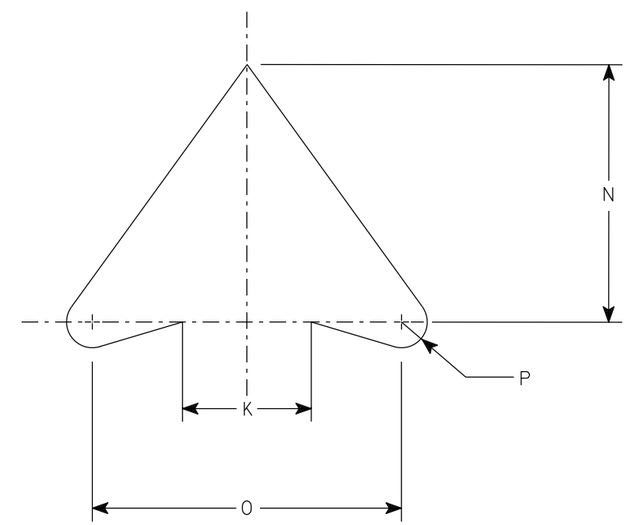

ARROW DETAIL

SIZE	A	B	C	D	E	F	G	H	I	J	K	L	M	N	O	P	Q	R	S	T	U	V	W	X	Y	Z	Area sq. ft.
1	24		1 1/2	3/8	1/2	10 1/2	4	7 1/2	2	1 1/2	2 1/2	45	8 1/2	5	6	1/2	12										4.0
2S	24		1 1/2	3/8	1/2	10 1/2	4	7 1/2	2	1 1/2	2 1/2	45°	8 1/2	5	6	1/2	12										4.0
2M	36		2 1/4	5/8	3/4	15 3/4	6	11 1/4	3	2 1/4	3 3/4	45	12 3/4	7 1/2	9	3/4	18										9.0
3	36		2 1/4	5/8	3/4	15 3/4	6	11 1/4	3	2 1/4	3 3/4	45	12 3/4	7 1/2	9	3/4	18										9.0
4	36		2 1/4	5/8	3/4	15 3/4	6	11 1/4	3	2 1/4	3 3/4	45°	12 3/4	7 1/2	9	3/4	18										9.0
5	48		2 1/4	3/4	1	21	8	15	4	3	5	45°	17	10	12	1	24										16.0

STANDARD SIGN

R3-1

WISCONSIN DEPT OF TRANSPORTATION

APPROVED Matthew R Rauch
for State Traffic Engineer

DATE 2/2/23 PLATE NO. R3-1.6

PROJECT NO: | HWY: | COUNTY: | SHEET NO: 95 | E

NOTES

1. Sign is Type II - Type H Reflective
2. Color:
   Background - White
   Message - See note 3
3. Border & Arrow are non reflective black, the circle with diagonal bar is reflective red.

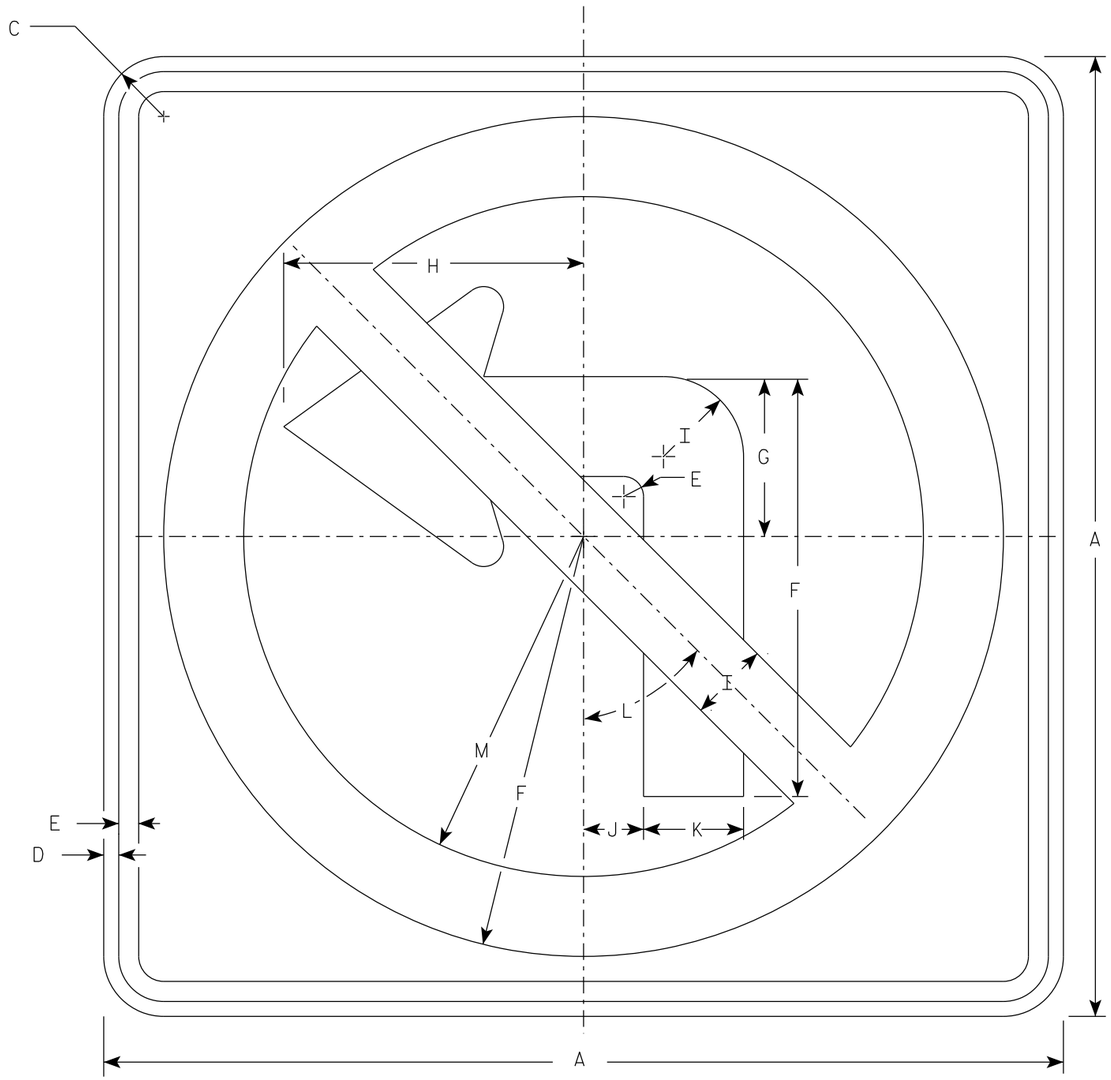

R3-2

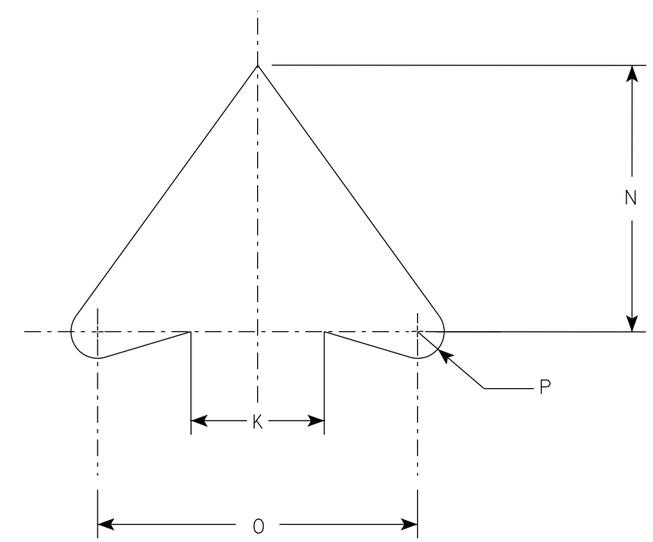

ARROW DETAIL

SIZE	A	B	C	D	E	F	G	H	I	J	K	L	M	N	O	P	Q	R	S	T	U	V	W	X	Y	Z	Area sq. ft.
1	24		1 1/2	3/8	1/2	10 1/2	4	7 1/2	2	1 1/2	2 1/2	45°	8 1/2	5	6	1/2											4.0
2S	24		1 1/2	3/8	1/2	10 1/2	4	7 1/2	2	1 1/2	2 1/2	45°	8 1/2	5	6	1/2											4.0
2M	36		2 1/4	5/8	3/4	15 3/4	6	11 1/4	3	2 1/4	3 3/4	45°	12 3/4	7 1/2	9	3/4											9.0
3	36		2 1/4	5/8	3/4	15 3/4	6	11 1/4	3	2 1/4	3 3/4	45°	12 3/4	7 1/2	9	3/4											9.0
4	36		2 1/4	5/8	3/4	15 3/4	6	11 1/4	3	2 1/4	3 3/4	45°	12 3/4	7 1/2	9	3/4											9.0
5	48		2 1/4	3/4	1	21	8	15	4	3	5	45°	17	10	12	1											16.0

STANDARD SIGN
R3-2

WISCONSIN DEPT OF TRANSPORTATION

APPROVED Matthew R Rauch
For State Traffic Engineer

DATE 2/2/23 PLATE NO. R3-2.11

PROJECT NO: | HWY: | COUNTY: | SHEET NO: 96 | E

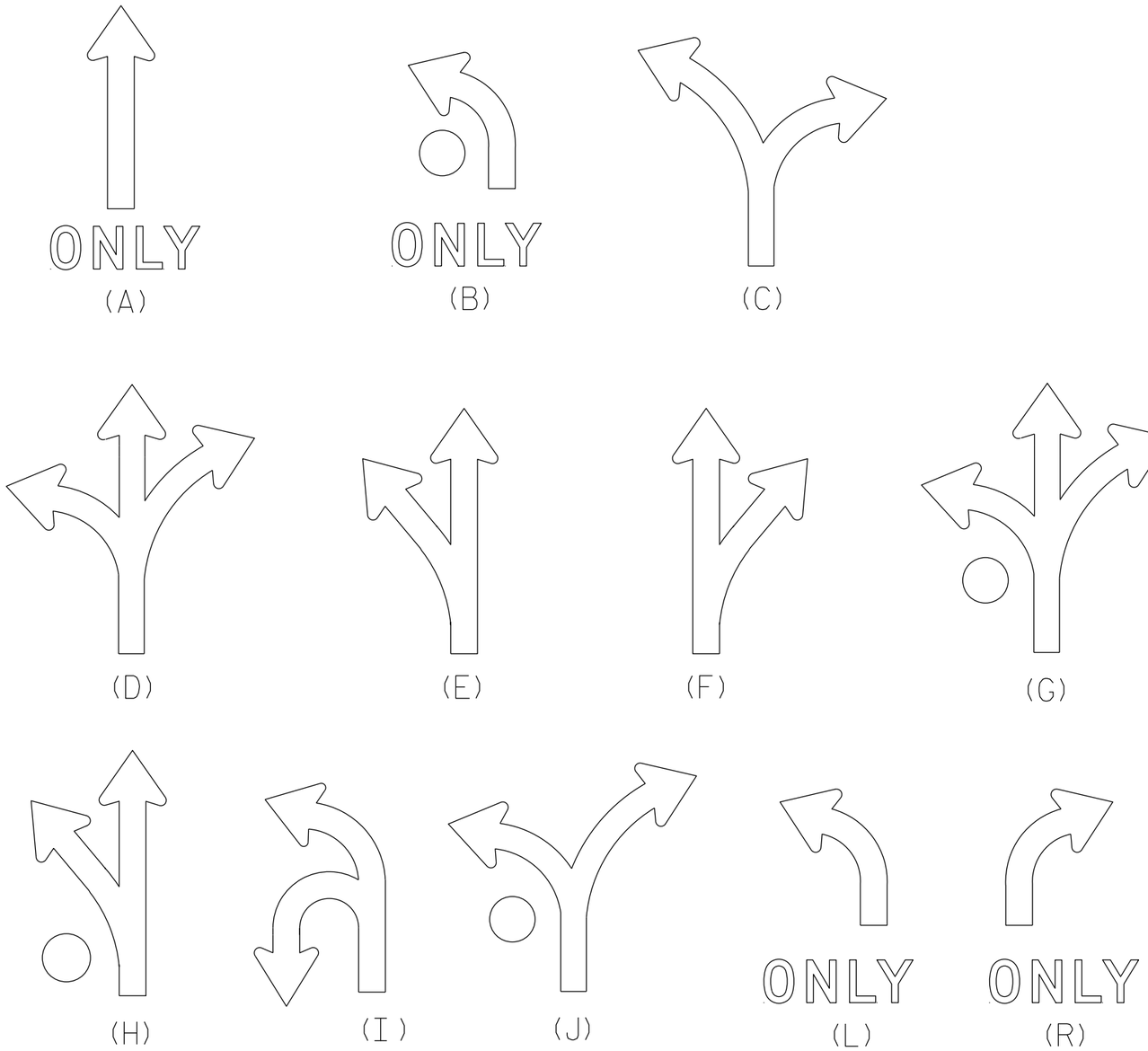

NOTES

1. Sigs are Type II - Type H Reflective
2. Color:
   Background - White
   Message - Black
3. Message Series - D
4. Use appropriate Letter for Sign Code
   Each letter added makes sign wider. Example R3-8EAR
5. Square footage of sign varies by letters

1 Letter =	3.75 sq ft for Size 2	
	6.0 sq ft for Size 3	
	10.0 sq ft for Size 4 or 5	
2 Letters =	7.5 sq ft for Size 2	
	12.0 sq ft for Size 3	
	20.0 sq ft for Size 4 or 5	
3 Letters =	11.25 sq ft for Size 2	
	18.0 sq ft for Size 3	
	30.0 sq ft for Size 4 or 5	
4 Letters =	15.0 sq ft for Size 2	
	24.0 sq ft for Size 3	
	40.0 sq ft for Size 4 or 5	
5 Letters =	18.75 sq ft for Size 2	
	30.0 sq ft for Size 3	
	50.0 sq ft for Size 4 or 5	
6 Letters =	22.5 sq ft for Size 2	
	36.0 sq ft for Size 3	
	60.0 sq ft for Size 4 or 5	

6. When letters C,D,G,J are used on the Left or Right end of the sign the Sq. Ft. changes.
   Add the amounts when these letters are used:
   1.25 sq ft for Size 2
   1.5 sq ft for Size 3
   2.0 sq ft for Size 4 or 5

STANDARD SIGN
R3-8 Series

WISCONSIN DEPT OF TRANSPORTATION

APPROVED Matthew R Rauch
for State Traffic Engineer

DATE 2/14/23 PLATE NO. R3-8.2

7

7

PROJECT NO:

SHEET NO: 97 E

NOTES

1. Sign is Type II - Type H Reflective
2. Color:
   Background - White
   Message - Black
3. Message Series - D

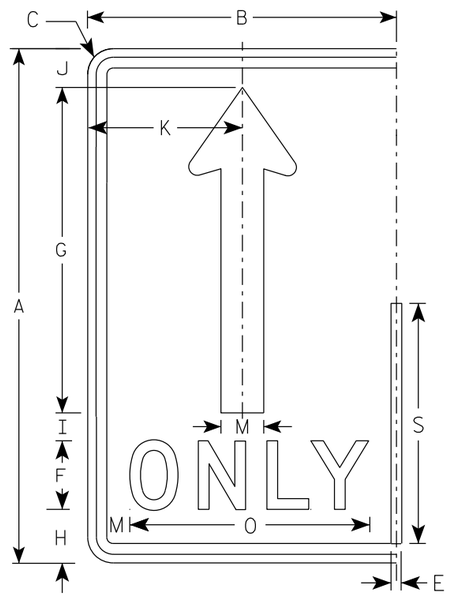

(A)

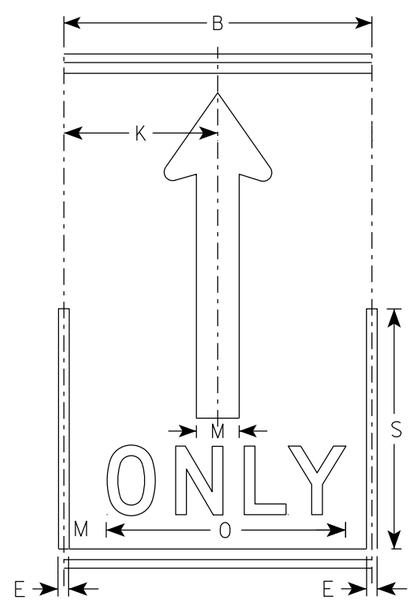

(A)

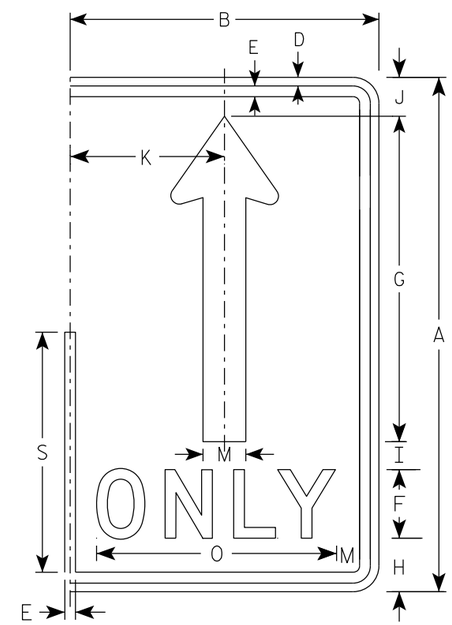

(A)

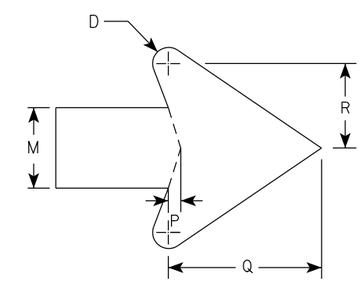

ARROW DETAIL

SIZE	A	B	C	D	E	F	G	H	I	J	K	L	M	N	O	P	Q	R	S	T	U	V	W	X	Y	Z	Area sq. ft.
1																											
2S	30	18	1 1/2	1/2	5/8	4	19	3 1/8	1 5/8	2 1/4	9		2 1/2		14	3/8	4 3/4	2 5/8	14								3.75
2M	30	18	1 1/2	1/2	5/8	4	19	3 1/8	1 5/8	2 1/4	9		2 1/2		14	3/8	4 3/4	2 5/8	14								3.75
3	36	24	1 1/2	1/2	5/8	5	22 3/4	3 3/4	1 3/4	2 3/4	12		3		17 5/8	1/2	5 3/4	3 1/8	16 3/4								6.0
4	48	30	2 1/4	3/4	1	6	30 3/8	5 1/8	2 7/8	3 5/8	15		4		21 3/4	5/8	7 5/8	4 1/4	22 3/8								10.0
5	48	30	2 1/4	3/4	1	6	30 3/8	5 1/8	2 7/8	3 5/8	15		4		21 3/4	5/8	7 5/8	4 1/4	22 3/8								10.0

STANDARD SIGN
R3-8 (A) Arrow

WISCONSIN DEPT OF TRANSPORTATION

APPROVED Matthew R Rauch
for State Traffic Engineer

DATE 2/14/23 PLATE NO. R3-8.2

PROJECT NO: | HWY: | COUNTY: | SHEET NO: 98 | E

NOTES

1. Sign is Type II - Type H Reflective
2. Color:
   Background - White
   Message - Black
   Message Series - D

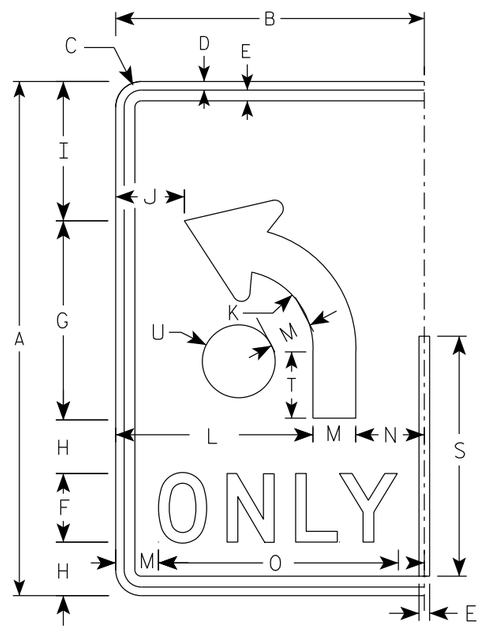

(B)

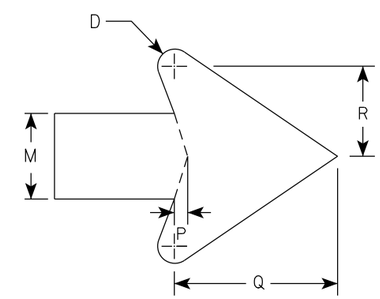

ARROW DETAIL

SIZE	A	B	C	D	E	F	G	H	I	J	K	L	M	N	O	P	Q	R	S	T	U	V	W	X	Y	Z	Area sq. ft.
1																											
2S	30	18	1 1/2	1/2	5/8	4	11 5/8	3 1/8	8 1/8	4	4 1/2	11 1/2	2 1/2	4	14	3/8	4 3/4	2 5/8	14	3 7/8	2 1/8						3.75
2M	30	18	1 1/2	1/2	5/8	4	11 5/8	3 1/8	8 1/8	4	4 1/2	11 1/2	2 1/2	4	14	3/8	4 3/4	2 5/8	14	3 7/8	2 1/8						3.75
3	36	24	1 1/2	1/2	5/8	5	14	3 1/2	9 3/4	6	5 3/8	15	3	6	17 5/8	1/2	5 3/4	3 1/8	16 3/4	4 5/8	2 1/2						6.0
4	48	30	2 1/4	3/4	1	6	18 5/8	5 1/8	13 1/8	6 1/8	7 1/4	18	4	8	21 3/4	5/8	7 5/8	4 1/4	22 3/8	6 1/4	3 3/8						10.0
5	48	30	2 1/4	3/4	1	6	18 5/8	5 1/8	13 1/8	6 1/8	7 1/4	18	4	8	21 3/4	5/8	7 5/8	4 1/4	22 3/8	6 1/4	3 3/8						10.0

STANDARD SIGN

R3-8 (B) Arrow

WISCONSIN DEPT OF TRANSPORTATION

APPROVED Matthew R Rauch
for State Traffic Engineer

DATE 2/14/23 PLATE NO. R3-8.2

PROJECT NO:

SHEET NO: 99 E

NOTES

1. Sign is Type II - Type H Reflective
2. Color:
   Background - White
   Message - Black
3. Message Series - None

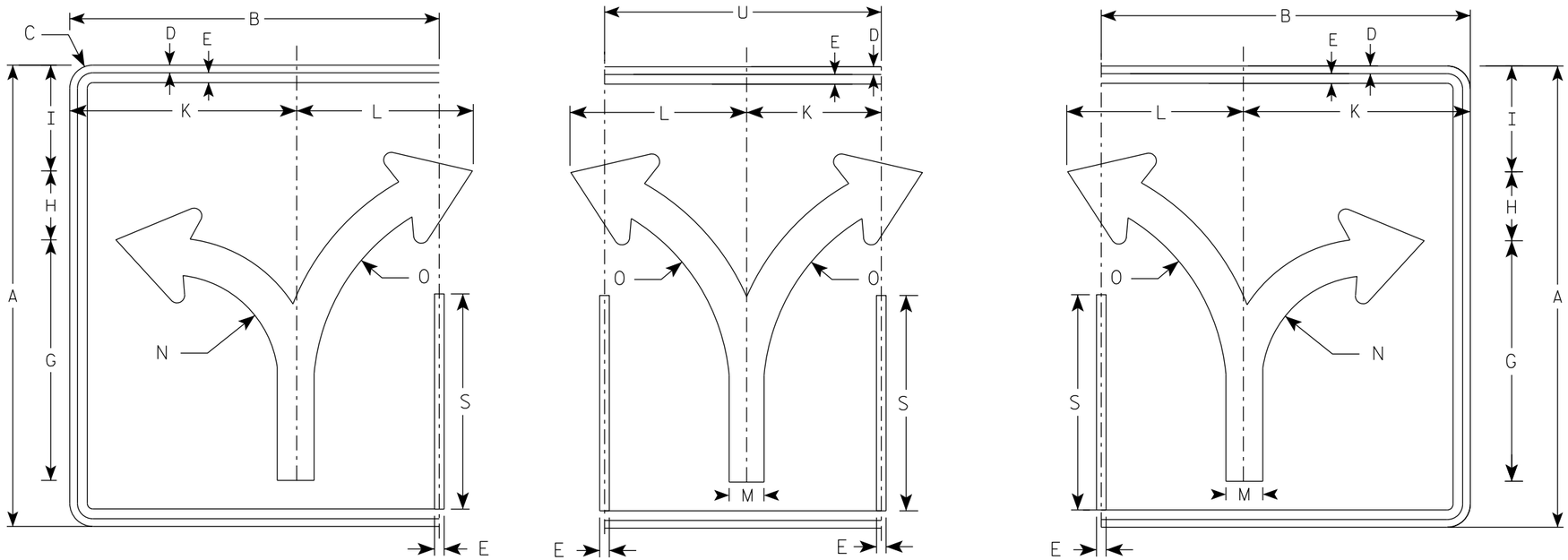

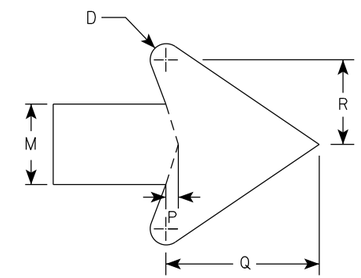

ARROW DETAIL

SIZE	A	B	C	D	E	F	G	H	I	J	K	L	M	N	O	P	Q	R	S	T	U	V	W	X	Y	Z	ENDS Area sq. ft.	MIDDLE Area sq. ft.
1																												
2S	30	24	1 1/2	1/2	5/8		15 5/8	4 1/2	6 7/8		14 3/4	11 1/2	2 3/8	7	13 1/4	3/8	4 1/2	2 1/2	14		18						5.0	3.75
2M	30	24	1 1/2	1/2	5/8		15 5/8	4 1/2	6 7/8		14 3/4	11 1/2	2 3/8	7	13 1/4	3/8	4 1/2	2 1/2	14		18						5.0	3.75
3	36	30	1 1/2	1/2	5/8		18 3/4	5 1/2	8 1/4		17 1/4	17 1/4	2 7/8	8 3/8	16	1/2	5 1/2	3	16 3/4		24						7.5	6.0
4	48	36	2 1/4	3/4	1		24 7/8	7 1/4	11		23 1/8	18	3 3/4	11 1/8	21 1/4	5/8	7 1/8	4	22 3/8		30						12.0	10.0
5	48	36	2 1/4	3/4	1		24 7/8	7 1/4	11		23 1/8	18	3 3/4	11 1/8	21 1/4	5/8	7 1/8	4	22 3/8		30						12.0	10.0

STANDARD SIGN
R3-8 (C) Arrow

WISCONSIN DEPT OF TRANSPORTATION

APPROVED Matthew R Rauch
for State Traffic Engineer

DATE 2/14/23 PLATE NO. R3-8.2

PROJECT NO: | HWY: | COUNTY: | SHEET NO: 100 | E

7

NOTES

1. Sign is Type II - Type H Reflective
2. Color:
   Background - White
   Message - Black
3. Message Series - None

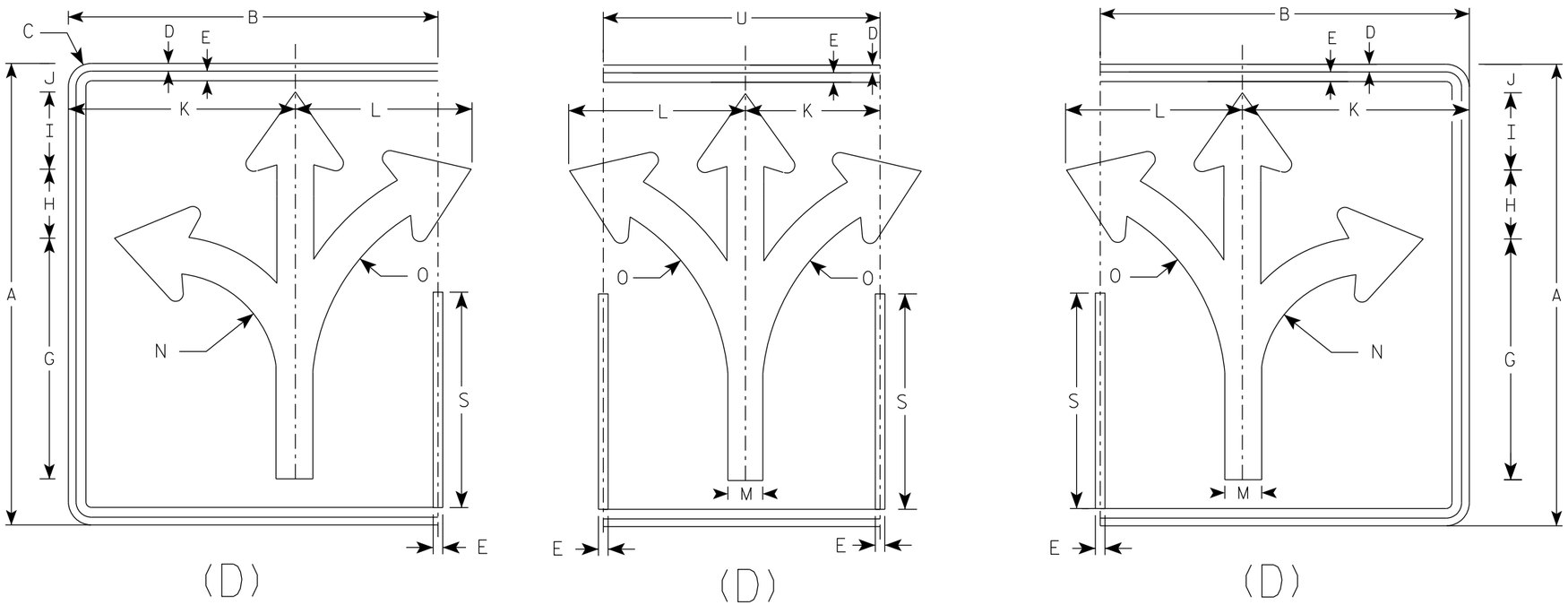

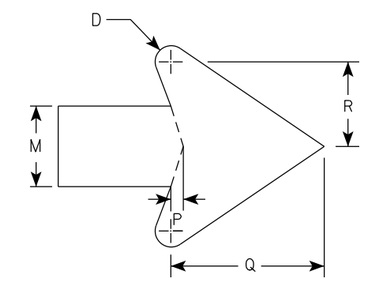

ARROW DETAIL

SIZE	A	B	C	D	E	F	G	H	I	J	K	L	M	N	O	P	Q	R	S	T	U	V	W	X	Y	Z	ENDS Area sq. ft.	MIDDLE Area sq. ft.
1																												
2S	30	24	1 1/2	1/2	5/8		15 5/8	4 1/2	5	1 7/8	14 3/4	11 1/2	2 3/8	7	13 1/4	3/8	4 1/2	2 1/2	14		18						5.0	3.75
2M	30	24	1 1/2	1/2	5/8		15 5/8	4 1/2	5	1 7/8	14 3/4	11 1/2	2 3/8	7	13 1/4	3/8	4 1/2	2 1/2	14		18						5.0	3.75
3	36	30	1 1/2	1/2	5/8		18 3/4	5 1/2	6	2 1/4	17 1/4	17 1/4	2 7/8	8 3/8	16	1/2	5 1/2	3	16 3/4		24						7.5	6.0
4	48	36	2 1/4	3/4	1		24 7/8	7 1/4	7 7/8	3 1/8	23 1/8	18	3 3/4	11 1/8	21 1/4	5/8	7 1/8	4	22 3/8		30						12.0	10.0
5	48	36	2 1/4	3/4	1		24 7/8	7 1/4	7 7/8	3 1/8	23 1/8	18	3 3/4	11 1/8	21 1/4	5/8	7 1/8	4	22 3/8		30						12.0	10.0

STANDARD SIGN
R3-8 (D) Arrow

WISCONSIN DEPT OF TRANSPORTATION

APPROVED Matthew R Rauch
for State Traffic Engineer

DATE 2/14/23 PLATE NO. R3-8.2

PROJECT NO: | HWY: | COUNTY: | SHEET NO: 101 | E

NOTES

1. Sign is Type II - Type H Reflective
2. Color:
   Background - White
   Message - Black
3. Message Series - None

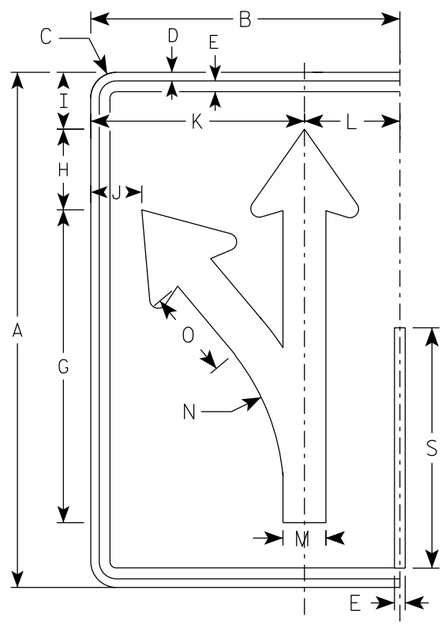

(E)

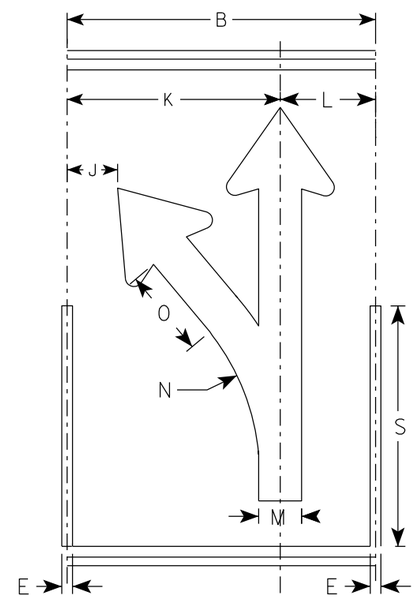

(E)

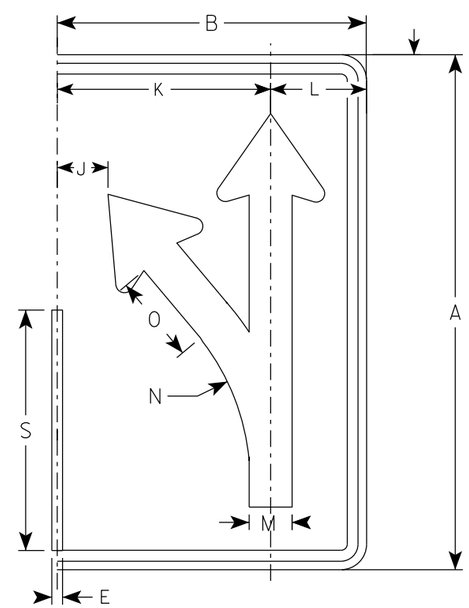

(E)

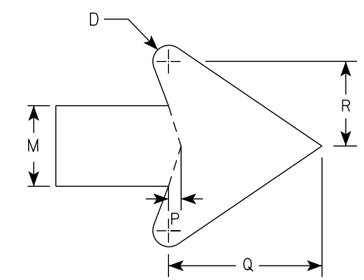

ARROW DETAIL

SIZE	A	B	C	D	E	F	G	H	I	J	K	L	M	N	O	P	Q	R	S	T	U	V	W	X	Y	Z	Area sq. ft.
1																											
2S	30	18	1 1/2	1/2	5/8		18 1/4	4 3/4	3 1/4	3	12 1/2	5 1/2	2 1/2	13 1/4	5 1/8	3/8	4 3/4	2 5/8	14								3.75
2M	30	18	1 1/2	1/2	5/8		18 1/4	4 3/4	3 1/4	3	12 1/2	5 1/2	2 1/2	13 1/4	5 1/8	3/8	4 3/4	2 5/8	14								3.75
3	36	24	1 1/2	1/2	5/8		21 7/8	5 5/8	4	4 7/8	16 1/8	7 3/4	3	15 7/8	6 1/8	1/2	5 3/4	3 1/8	16 3/4								6.0
4	48	30	2 1/4	3/4	1		29 1/8	7 1/2	5 1/4	5 3/8	20 1/2	9 1/2	4	21 1/4	8 1/4	5/8	7 5/8	4 1/4	22 3/8								10.0
5	48	30	2 1/4	3/4	1		29 1/8	7 1/2	5 1/4	5 3/8	20 1/2	9 1/2	4	21 1/4	8 1/4	5/8	7 5/8	4 1/4	22 3/8								10.0

STANDARD SIGN
R3-8 (E) Arrow

WISCONSIN DEPT OF TRANSPORTATION

APPROVED Matthew R Rauch
for State Traffic Engineer

DATE 2/14/23 PLATE NO. R3-8.2

PROJECT NO: | HWY: | COUNTY: | SHEET NO: 102 | E

NOTES

1. Sign is Type II - Type H Reflective
2. Color:
   Background - White
   Message - Black
3. Message Series - None

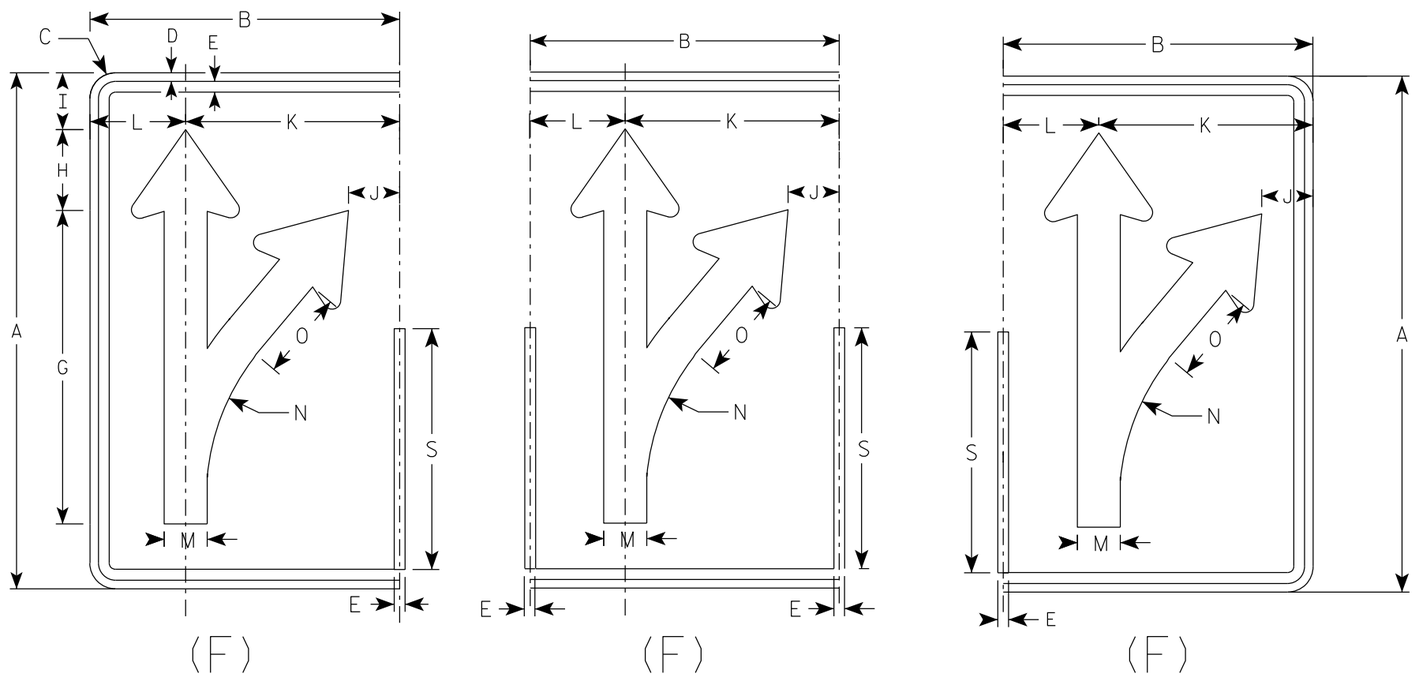

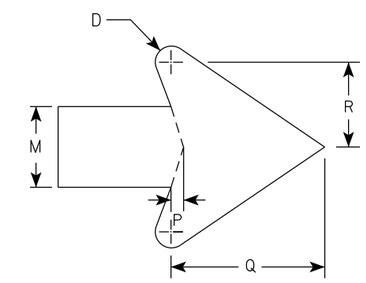

ARROW DETAIL

SIZE	A	B	C	D	E	F	G	H	I	J	K	L	M	N	O	P	Q	R	S	T	U	V	W	X	Y	Z	Area sq. ft.
1																											
2S	30	18	1 1/2	1/2	5/8		18 1/4	4 3/4	3 1/4	3	12 1/2	5 1/2	2 1/2	13 1/4	5 1/8	3/8	4 3/4	2 5/8	14								3.75
2M	30	18	1 1/2	1/2	5/8		18 1/4	4 3/4	3 1/4	3	12 1/2	5 1/2	2 1/2	13 1/4	5 1/8	3/8	4 3/4	2 5/8	14								3.75
3	36	24	1 1/2	1/2	5/8		21 7/8	5 5/8	4	4 7/8	16 1/8	7 3/4	3	15 7/8	6 1/8	1/2	5 3/4	3 1/8	16 3/4								6.0
4	48	30	2 1/4	3/4	1		29 1/8	7 1/2	5 1/4	5 3/8	20 1/2	9 1/2	4	21 1/4	8 1/4	5/8	7 5/8	4 1/4	22 3/8								10.0
5	48	30	2 1/4	3/4	1		29 1/8	7 1/2	5 1/4	5 3/8	20 1/2	9 1/2	4	21 1/4	8 1/4	5/8	7 5/8	4 1/4	22 3/8								10.0

STANDARD SIGN
R3-8 (F) Arrow

WISCONSIN DEPT OF TRANSPORTATION

APPROVED Matthew R Rauch
For State Traffic Engineer

DATE 2/14/23 PLATE NO. R3-8.2

PROJECT NO: | HWY: | COUNTY: | SHEET NO: 103 | E

NOTES

1. Sign is Type II - Type H Reflective
2. Color:
   Background - White
   Message - Black
3. Message Series - None

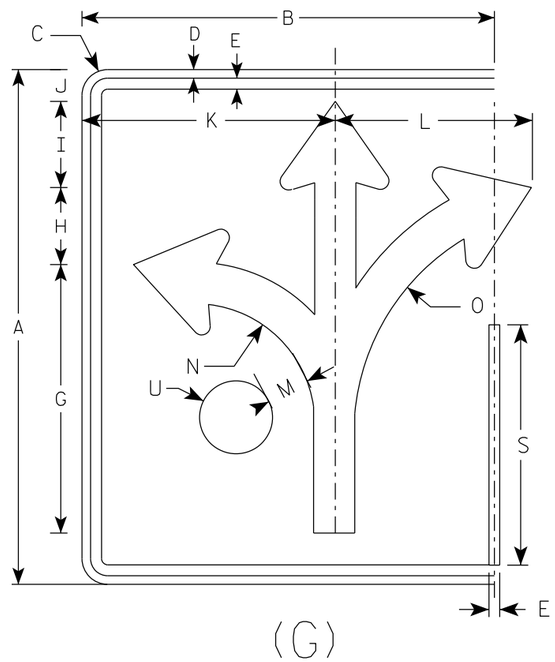

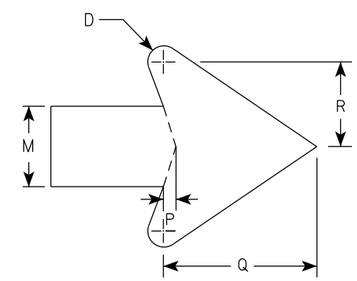

ARROW DETAIL

SIZE	A	B	C	D	E	F	G	H	I	J	K	L	M	N	O	P	Q	R	S	T	U	V	W	X	Y	Z	Area sq. ft.
1																											
2S	30	24	1 1/2	1/2	5/8		15 5/8	4 1/2	5	1 7/8	14 3/4	11 1/2	2 3/8	7	13 1/4	3/8	4 1/2	2 1/2	14		2 1/8						5.0
2M	30	24	1 1/2	1/2	5/8		15 5/8	4 1/2	5	1 7/8	14 3/4	11 1/2	2 3/8	7	13 1/4	3/8	4 1/2	2 1/2	14		2 1/8						5.0
3	36	30	1 1/2	1/2	5/8		18 3/4	5 1/2	6	3 1/8	17 1/4	17 1/4	2 7/8	8 3/8	16	1/2	5 1/2	3	16 3/4		2 1/2						7.5
4	48	36	2 1/4	3/4	1		24 7/8	7 1/4	7 7/8	3 1/8	23 1/8	18	3 3/4	11 1/8	21 1/4	5/8	7 1/8	4	22 3/8		3 3/8						12.0
5	48	36	2 1/4	3/4	1		24 7/8	7 1/4	7 7/8	3 1/8	23 1/8	18	3 3/4	11 1/8	21 1/4	5/8	7 1/8	4	22 3/8		3 3/8						12.0

STANDARD SIGN
R3-8 (G) Arrow

WISCONSIN DEPT OF TRANSPORTATION

APPROVED Matthew R Rauch
for State Traffic Engineer

DATE 2/14/23 PLATE NO. R3-8.2

PROJECT NO: | HWY: | COUNTY: | SHEET NO: 104 | E

NOTES

1. Sign is Type II - Type H Reflective
2. Color:
   Background - White
   Message - Black
3. Message Series - None

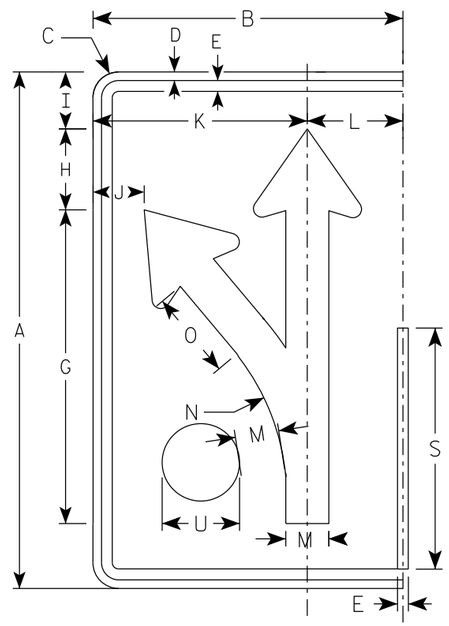

(H)

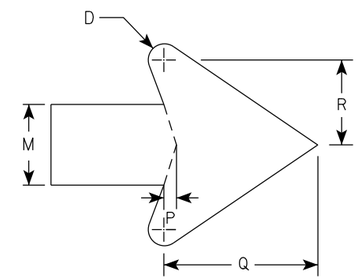

ARROW DETAIL

SIZE	A	B	C	D	E	F	G	H	I	J	K	L	M	N	O	P	Q	R	S	T	U	V	W	X	Y	Z	Area sq. ft.
1																											
2S	30	18	1 1/2	1/2	5/8		18 1/4	4 3/4	3 1/4	3	12 1/2	5 1/2	2 1/2	13 1/4	5 1/8	3/8	4 3/4	2 5/8	14		2 1/8						3.75
2M	30	18	1 1/2	1/2	5/8		18 1/4	4 3/4	3 1/4	3	12 1/2	5 1/2	2 1/2	13 1/4	5 1/8	3/8	4 3/4	2 5/8	14		2 1/8						3.75
3	36	24	1 1/2	1/2	5/8		21 7/8	5 5/8	4	4 7/8	16 1/8	7 3/4	3	15 7/8	6 1/8	1/2	5 3/4	3 1/8	16 3/4		2 1/2						6.0
4	48	30	2 1/4	3/4	1		29 1/8	7 1/2	5 1/4	5 3/8	20 1/2	9 1/2	4	21 1/4	8 1/4	5/8	7 5/8	4 1/4	22 3/8		3 3/8						10.0
5	48	30	2 1/4	3/4	1		29 1/8	7 1/2	5 1/4	5 3/8	20 1/2	9 1/2	4	21 1/4	8 1/4	5/8	7 5/8	4 1/4	22 3/8		3 3/8						10.0

STANDARD SIGN
R3-8 (H) Arrow

WISCONSIN DEPT OF TRANSPORTATION

APPROVED Matthew R Rauch
for State Traffic Engineer

DATE 2/14/23 PLATE NO. R3-8.2

PROJECT NO: | HWY: | COUNTY: | SHEET NO: 105 | E

7

NOTES

1. Sign is Type II - Type H Reflective
2. Color:
   Background - White
   Message - Black
3. Message Series - None

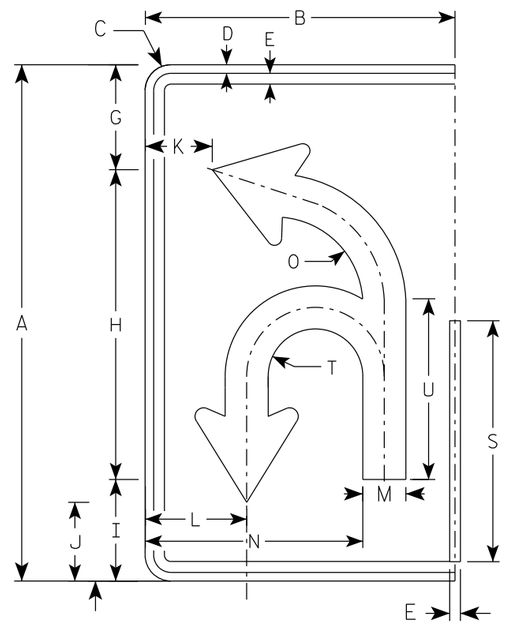

(I)

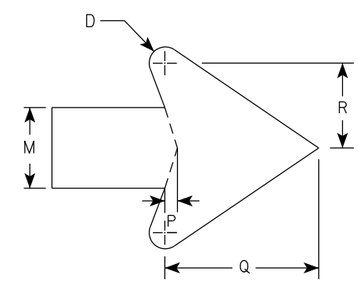

ARROW DETAIL

SIZE	A	B	C	D	E	F	G	H	I	J	K	L	M	N	O	P	Q	R	S	T	U	V	W	X	Y	Z	Area sq. ft.
1																											
2S	30	18	1 1/2	1/2	5/8		6 1/8	18	5 7/8	4 5/8	3 7/8	5 7/8	2 1/2	12 5/8	5 1/8	3/8	4 3/4	2 5/8	14	2 3/4	10 1/2						3.75
2M	30	18	1 1/2	1/2	5/8		6 1/8	18	5 7/8	4 5/8	3 7/8	5 7/8	2 1/2	12 5/8	5 1/8	3/8	4 3/4	2 5/8	14	2 3/4	10 1/2						3.75
3	36	24	1 1/2	1/2	5/8		21 7/8	21 5/8	7 1/8	5 1/2	5 7/8	8 1/4	3	16 3/8	6 1/8	1/2	5 3/4	3 1/8	16 3/4	3 1/4	12 5/8						6.0
4	48	30	2 1/4	3/4	1		29 1/8	28 3/4	9 3/8	7 1/4	6 7/8	10	4	20 7/8	8 1/8	5/8	7 5/8	4 1/4	22 3/8	4 3/8	16 3/4						10.0
5	48	30	2 1/4	3/4	1		29 1/8	28 3/4	9 3/8	7 1/4	6 7/8	10	4	20 7/8	8 1/8	5/8	7 5/8	4 1/4	22 3/8	4 3/8	16 3/4						10.0

STANDARD SIGN
R3-8 (I) Arrow

WISCONSIN DEPT OF TRANSPORTATION

APPROVED Matthew R Rauch
For State Traffic Engineer

DATE 2/14/23 PLATE NO. R3-8.2

PROJECT NO: | HWY: | COUNTY: | SHEET NO: 106 | E

NOTES

1. Sign is Type II - Type H Reflective
2. Color:
   Background - White
   Message - Black
3. Message Series - None

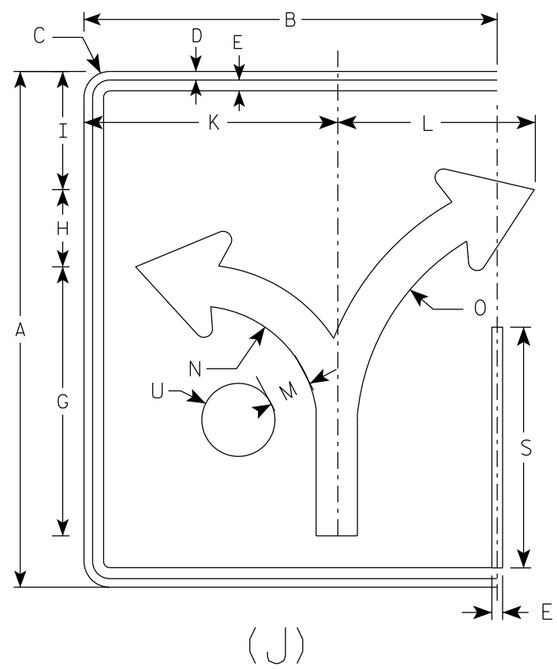

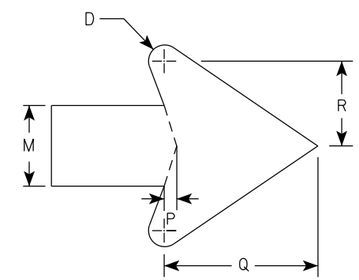

ARROW DETAIL

SIZE	A	B	C	D	E	F	G	H	I	J	K	L	M	N	O	P	Q	R	S	T	U	V	W	X	Y	Z	Area sq. ft.
1																											
2S	30	24	1 1/2	1/2	5/8		15 5/8	4 1/2	6 7/8		14 3/4	11 1/2	2 3/8	7	13 1/4	3/8	4 1/2	2 1/2	14		2 1/8						5.0
2M	30	24	1 1/2	1/2	5/8		15 5/8	4 1/2	6 7/8		14 3/4	11 1/2	2 3/8	7	13 1/4	3/8	4 1/2	2 1/2	14		2 1/8						5.0
3	36	30	1 1/2	1/2	5/8		18 3/4	5 1/2	8 1/4		17 1/4	17 1/4	2 7/8	8 3/8	16	1/2	5 1/2	3	16 3/4		2 1/2						7.5
4	48	36	2 1/4	3/4	1		24 7/8	7 1/4	11		23 1/8	18	3 3/4	11 1/8	21 1/4	5/8	7 1/8	4	22 3/8		3 3/8						12.0
5	48	36	2 1/4	3/4	1		24 7/8	7 1/4	11		23 1/8	18	3 3/4	11 1/8	21 1/4	5/8	7 1/8	4	22 3/8		3 3/8						12.0

STANDARD SIGN
R3-8 (J) Arrow

WISCONSIN DEPT OF TRANSPORTATION

APPROVED Matthew R Rauch
for State Traffic Engineer

DATE 2/14/23 PLATE NO. R3-8.2

PROJECT NO: | HWY: | COUNTY: | SHEET NO: 107 | E

NOTES

1. Sign is Type II - Type H Reflective
2. Color:
   Background - White
   Message - Black
3. Message Series - D

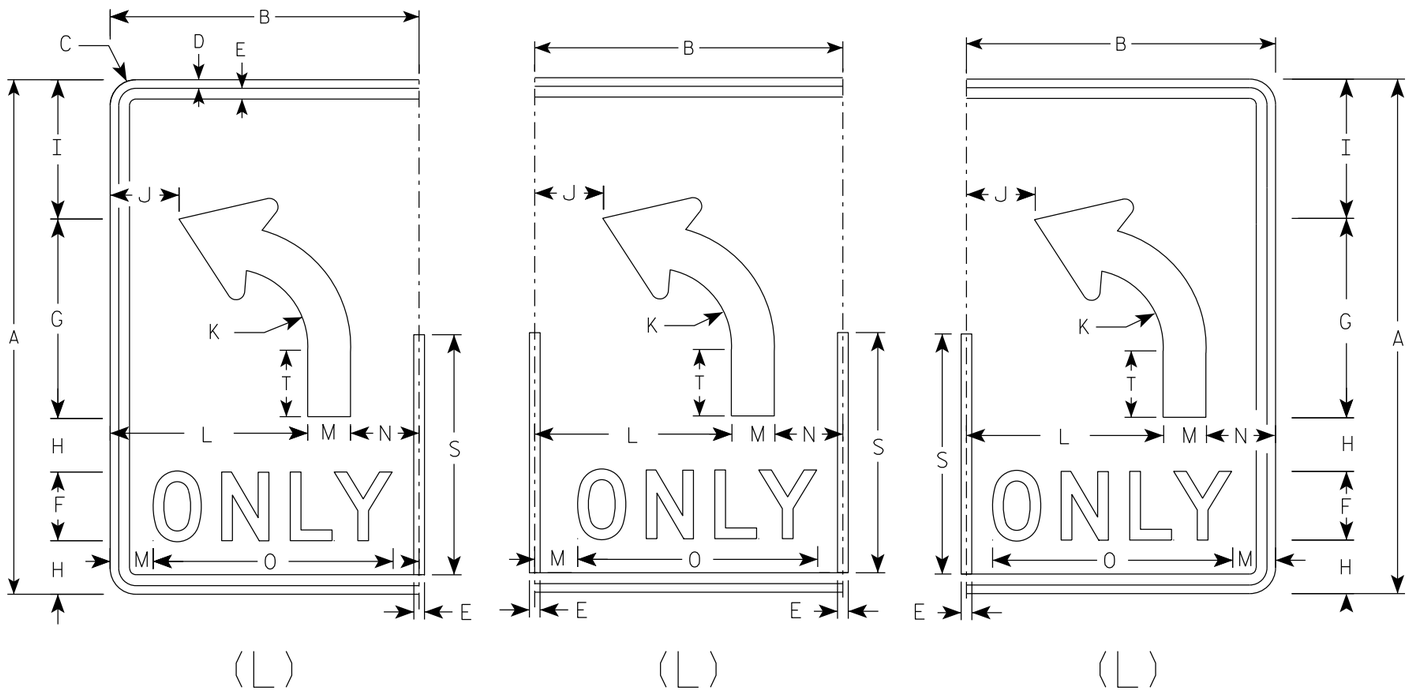

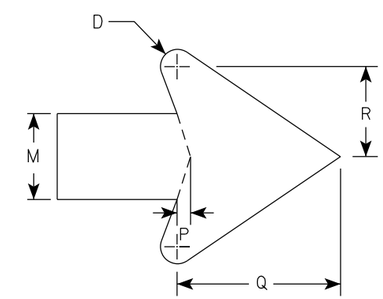

ARROW DETAIL

SIZE	A	B	C	D	E	F	G	H	I	J	K	L	M	N	O	P	Q	R	S	T	U	V	W	X	Y	Z	Area sq. ft.
1																											
2S	30	18	1 1/2	1/2	5/8	4	11 5/8	3 1/8	8 1/8	4	4 1/2	11 1/2	2 1/2	4	14	3/8	4 3/4	2 5/8	14	3 7/8							3.75
2M	30	18	1 1/2	1/2	5/8	4	11 5/8	3 1/8	8 1/8	4	4 1/2	11 1/2	2 1/2	4	14	3/8	4 3/4	2 5/8	14	3 7/8							3.75
3	36	24	1 1/2	1/2	5/8	5	14	3 1/2	9 3/4	6	5 3/8	15	3	6	17 5/8	1/2	5 3/4	3 1/8	16 3/4	4 5/8							6.0
4	48	30	2 1/4	3/4	1	6	18 5/8	5 1/8	13 1/8	6 1/8	7 1/4	18	4	8	21 3/4	5/8	7 5/8	4 1/4	22 3/8	6 1/4							10.0
5	48	30	2 1/4	3/4	1	6	18 5/8	5 1/8	13 1/8	6 1/8	7 1/4	18	4	8	21 3/4	5/8	7 5/8	4 1/4	22 3/8	6 1/4							10.0

STANDARD SIGN
R3-8 (L) Arrow

WISCONSIN DEPT OF TRANSPORTATION

APPROVED Matthew R Rauch
for State Traffic Engineer

DATE 2/14/23 PLATE NO. R3-8.2

PROJECT NO:

SHEET NO: 108 E

NOTES

1. Sign is Type II - Type H Reflective
2. Color:
   Background - White
   Message - Black
3. Message Series - D

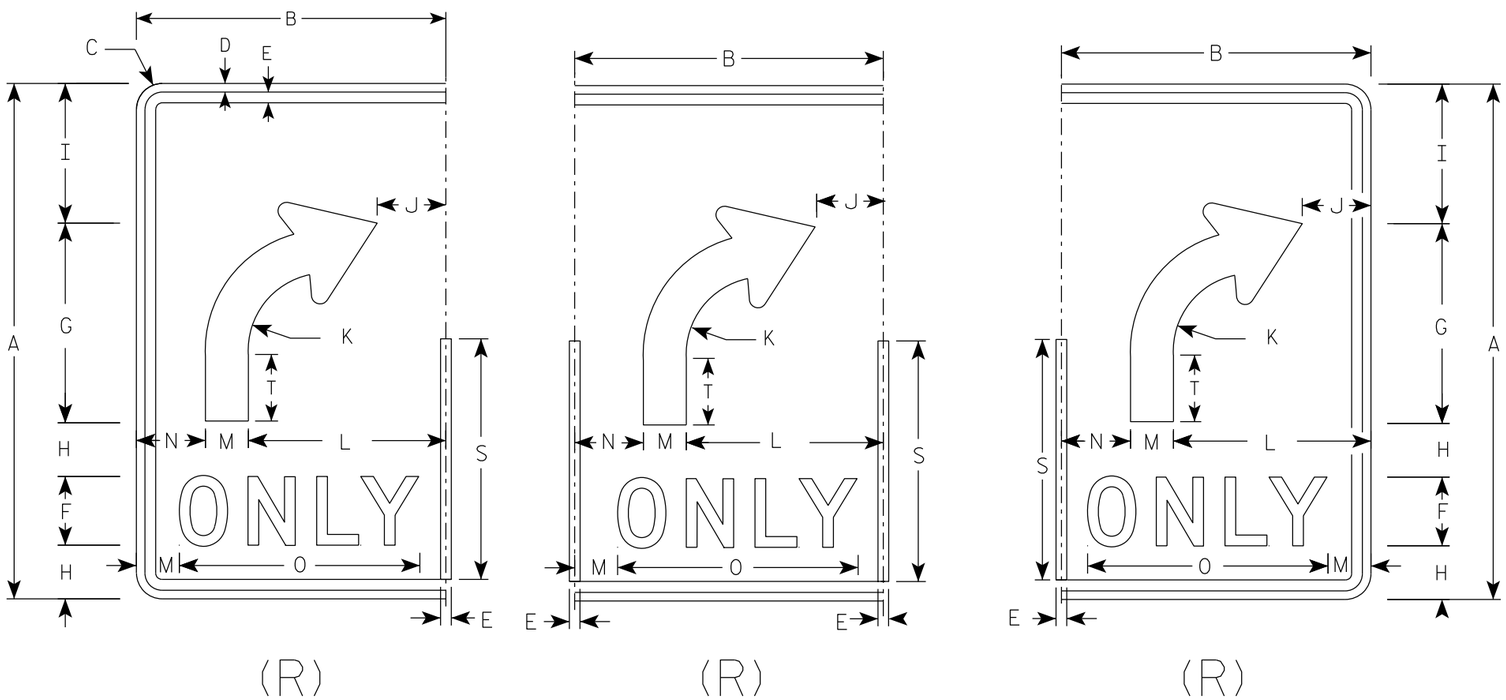

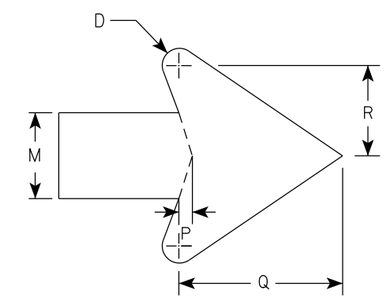

ARROW DETAIL

SIZE	A	B	C	D	E	F	G	H	I	J	K	L	M	N	O	P	Q	R	S	T	U	V	W	X	Y	Z	Area sq. ft.
1																											
2S	30	18	1 1/2	1/2	5/8	4	11 5/8	3 1/8	8 1/8	4	4 1/2	11 1/2	2 1/2	4	14	3/8	4 3/4	2 5/8	14	3 7/8							3.75
2M	30	18	1 1/2	1/2	5/8	4	11 5/8	3 1/8	8 1/8	4	4 1/2	11 1/2	2 1/2	4	14	3/8	4 3/4	2 5/8	14	3 7/8							3.75
3	36	24	1 1/2	1/2	5/8	5	14	3 1/2	9 3/4	6	5 3/8	15	3	6	17 5/8	1/2	5 3/4	3 1/8	16 3/4	4 5/8							6.0
4	48	30	2 1/4	3/4	1	6	18 5/8	5 1/8	13 1/8	6 1/8	7 1/4	18	4	8	21 3/4	5/8	7 5/8	4 1/4	22 3/8	6 1/4							10.0
5	48	30	2 1/4	3/4	1	6	18 5/8	5 1/8	13 1/8	6 1/8	7 1/4	18	4	8	21 3/4	5/8	7 5/8	4 1/4	22 3/8	6 1/4							10.0

STANDARD SIGN

R3-8 (R) Arrow

WISCONSIN DEPT OF TRANSPORTATION

APPROVED Matthew R Rauch
for State Traffic Engineer

DATE 2/14/23 PLATE NO. R3-8.2

PROJECT NO:

SHEET NO: 109 E

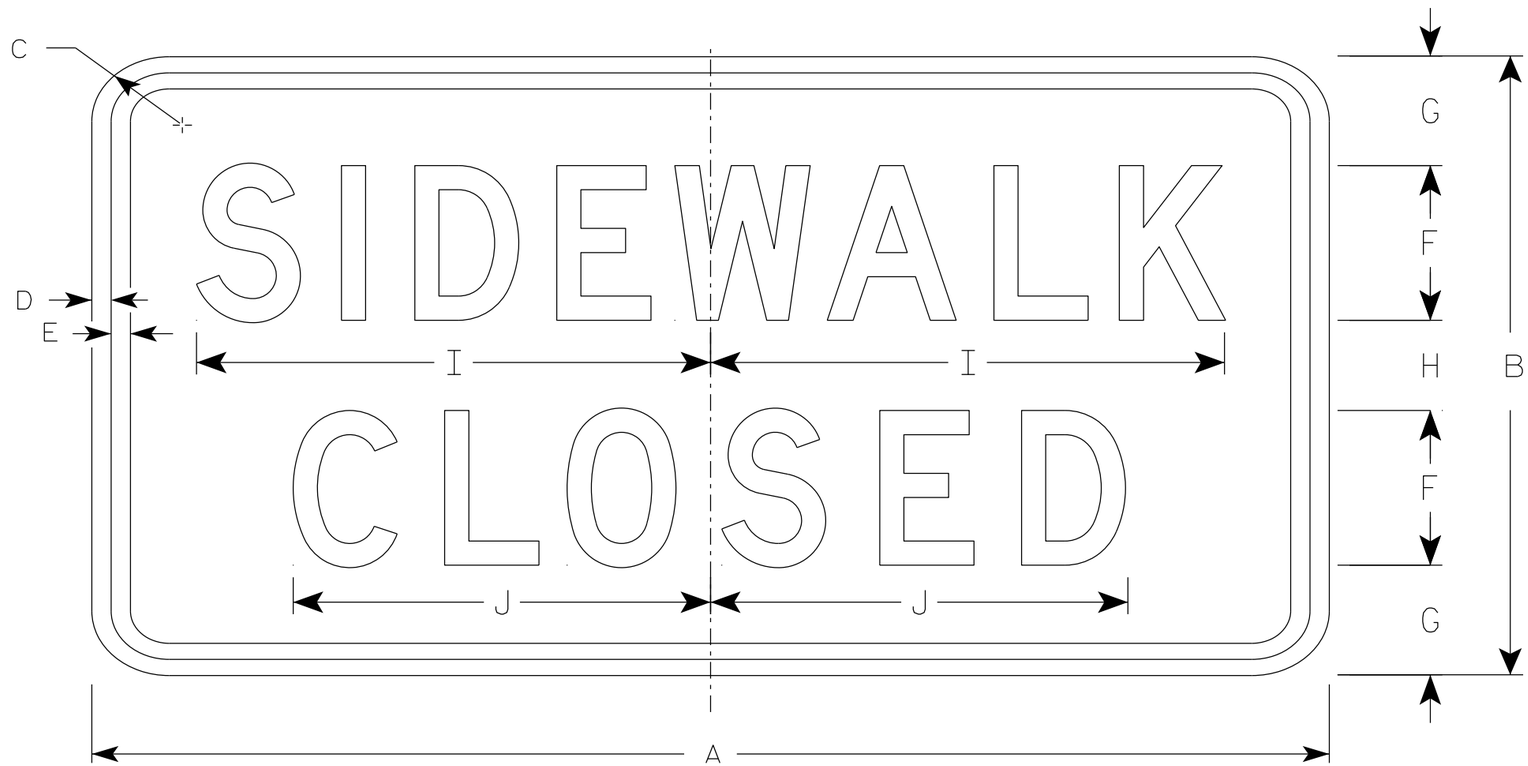

R9-9

NOTES

1. Sign is Type II - Type H Reflective
2. Color:
   Background - White
   Message - Black
3. Message Series - C
4. Use Size 2 for Sidewalks. Use Size 3 for Paths and Trails.

SIZE	A	B	C	D	E	F	G	H	I	J	K	L	M	N	O	P	Q	R	S	T	U	V	W	X	Y	Z	Area sq. ft.
1																											
2S	24	12	1 1/2	1/2	1/2	3	2 1/8	1 3/4	10	8 1/8																	2.0
2M	24	12	1 1/2	1/2	1/2	3	2 1/8	1 3/4	10	8 1/8																	2.0
3	30	18	1 1/2	1/2	1/2	4	3 1/2	3	12 1/2	10 1/4																	3.75
4																											
5																											

STANDARD SIGN
R9-9

WISCONSIN DEPT OF TRANSPORTATION

APPROVED Matthew R Rauch
for State Traffic Engineer

DATE 1/24/24 PLATE NO. R9-9.7

PROJECT NO: | HWY: | COUNTY: | SHEET NO: 110 | E

NOTES

1. Sign is Type II - Type H Reflective
2. Color:
   Background - White
   Message - Black
3. Message Series - D

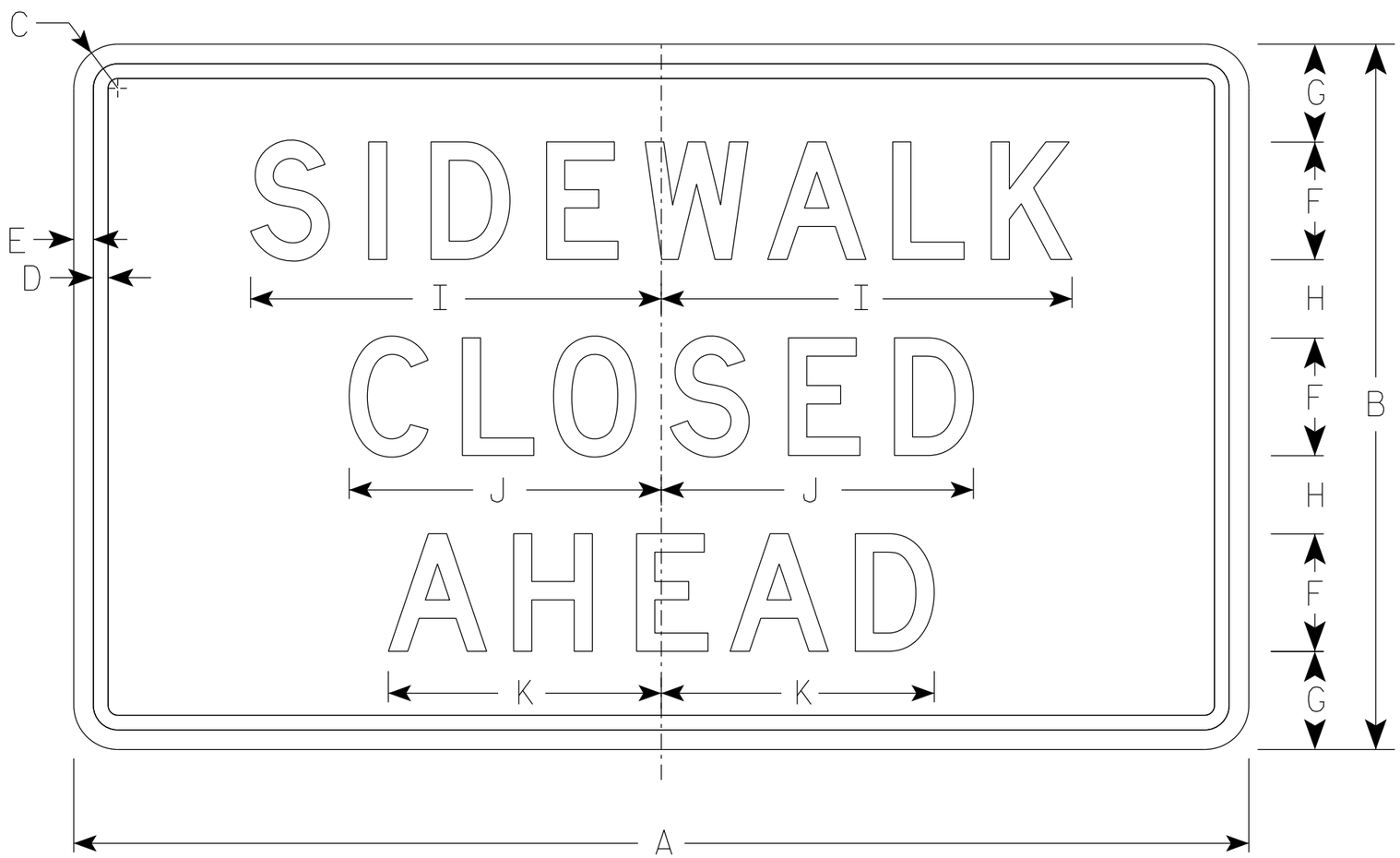

R9-9A

SIZE	A	B	C	D	E	F	G	H	I	J	K	L	M	N	O	P	Q	R	S	T	U	V	W	X	Y	Z	Area sq. ft.
1																											
2S	30	18	1 ½	⅜	½	3	2 ½	2	10 ½	8	7																3.75
2M	30	18	1 ½	⅜	½	3	2 ½	2	10 ½	8	7																3.75
3																											
4																											
5																											

STANDARD SIGN
R9-9A

WISCONSIN DEPT OF TRANSPORTATION

APPROVED Matthew R Rauch
for State Traffic Engineer

DATE 1/24/24 PLATE NO. R9-9A.2

PROJECT NO:	HWY:	COUNTY:		SHEET NO: 111	E

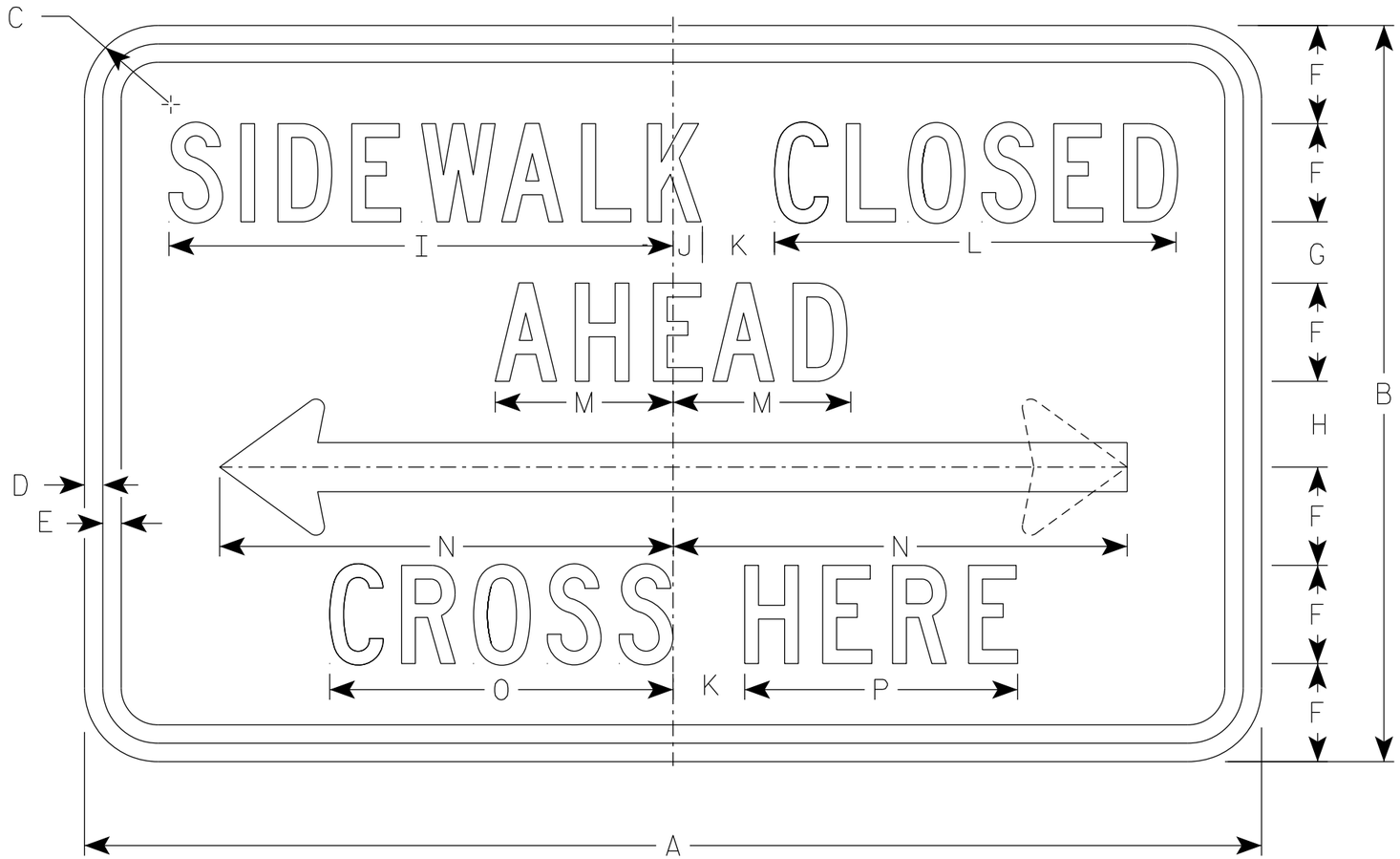

R9-11

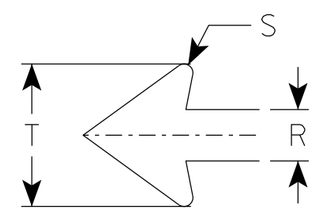

NOTES

1. Sign is Type II - Type H Reflective
2. Color:
   Background - White
   Message - Black
3. Message Series - C except Size 1 is Series D
4. Use Size 2 for Sidewalks. Use Size 3 for Paths and Trails.
5. R9-11 D (double arrow)
   R9-11 L (left arrow)
   R9-11 R (right arrow)

SIZE	A	B	C	D	E	F	G	H	I	J	K	L	M	N	O	P	Q	R	S	T	U	V	W	X	Y	Z	Area sq. ft.
1																											
2S	24	12	1 1/2	3/8	3/8	1 1/2	1 1/2	1 1/2	9 3/4	5/8	1 1/2	7 5/8	3 1/2	9 1/4	6 5/8	5 1/8		1	1/8	2 3/4							2.0
2M	24	12	1 1/2	3/8	3/8	1 1/2	1 1/2	1 1/2	9 3/4	5/8	1 1/2	7 5/8	3 1/2	9 1/4	6 5/8	5 1/8		1	1/8	2 3/4							2.0
3	30	15	1 1/2	3/8	1/2	2	1 1/2	1 1/2	13	3/4	2	10 1/4	4 5/8	12 3/8	8 7/8	6 7/8		1 1/4	1/4	3 5/8							3.125
4																											
5																											

STANDARD SIGN
R9-11

WISCONSIN DEPT OF TRANSPORTATION

APPROVED Matthew R Rauch
for State Traffic Engineer

DATE 1/24/24 PLATE NO. R9-11.5

PROJECT NO: | HWY: | COUNTY: | SHEET NO: 112 | E

NOTES

1. Sign is Type II - Type H Reflective
2. Color:
   Background - White
   Message - Black
3. Message Series - C
4. Use Size 2 for Sidewalks. Use Size 3 for paths and Trails.
5. R9-11AD (double arrow)
   R9-11AL (left arrow)
   R9-11AR (right arrow)

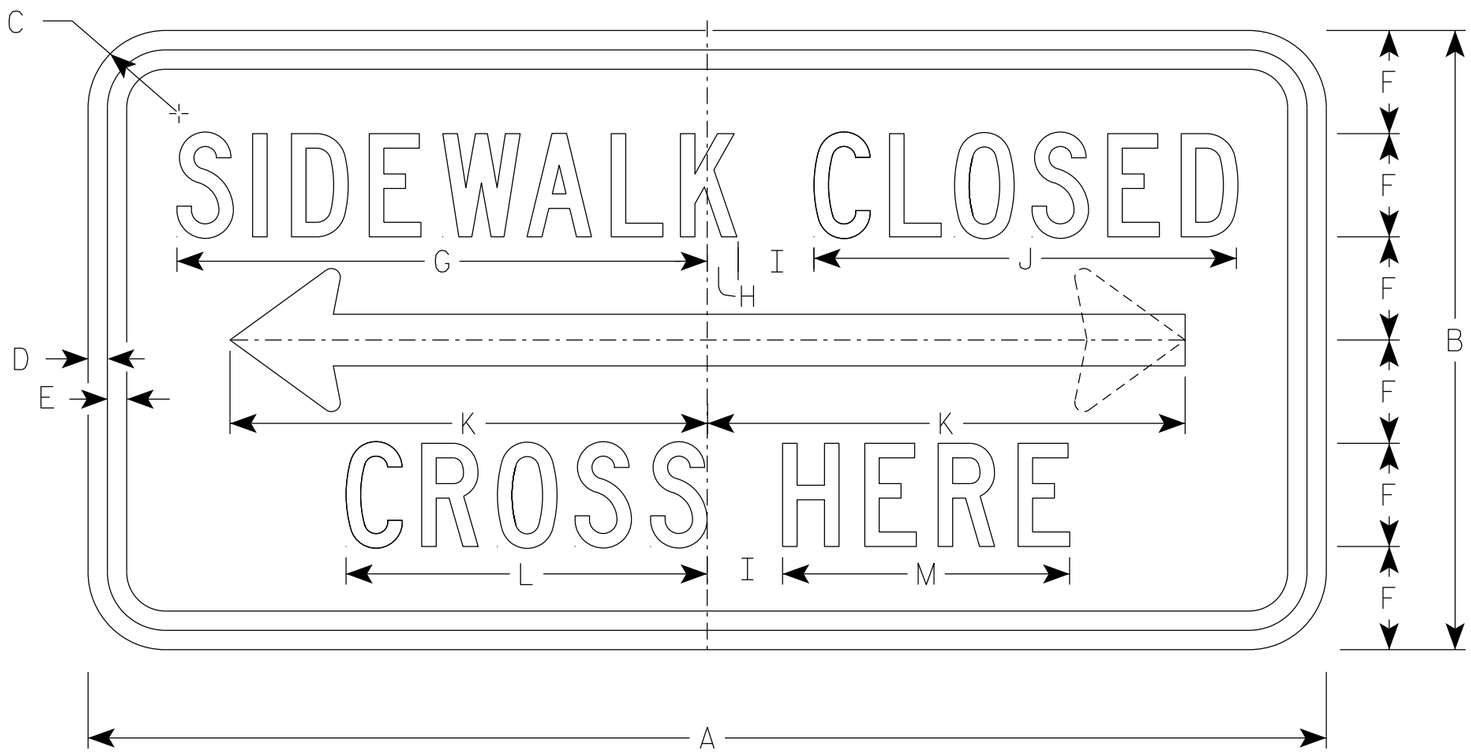

R9-11A

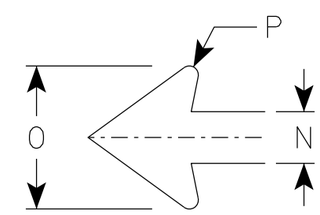

ARROW DETAIL

SIZE	A	B	C	D	E	F	G	H	I	J	K	L	M	N	O	P	Q	R	S	T	U	V	W	X	Y	Z	Area sq. ft.
1																											
2S	24	12	1 1/2	3/8	3/8	2	10 1/4	5/8	1 1/2	8 1/4	9 1/4	7	5 5/8	1	2 3/4	1/8											2.0
2M	24	12	1 1/2	3/8	3/8	2	10 1/4	5/8	1 1/2	8 1/4	9 1/4	7	5 5/8	1	2 3/4	1/8											2.0
3	30	15	1 1/2	3/8	1/2	2 1/2	12 3/4	1/2	2	10 1/4	12 3/8	8 5/8	6 3/4	1 1/4	3 5/8	1/4											3.125
4																											
5																											

STANDARD SIGN
R9-11A

WISCONSIN DEPT OF TRANSPORTATION

APPROVED Matthew R Rauch for State Traffic Engineer

DATE 1/24/24 PLATE NO. R9-11A.6

PROJECT NO: | HWY: | COUNTY: | SHEET NO: 113 | E

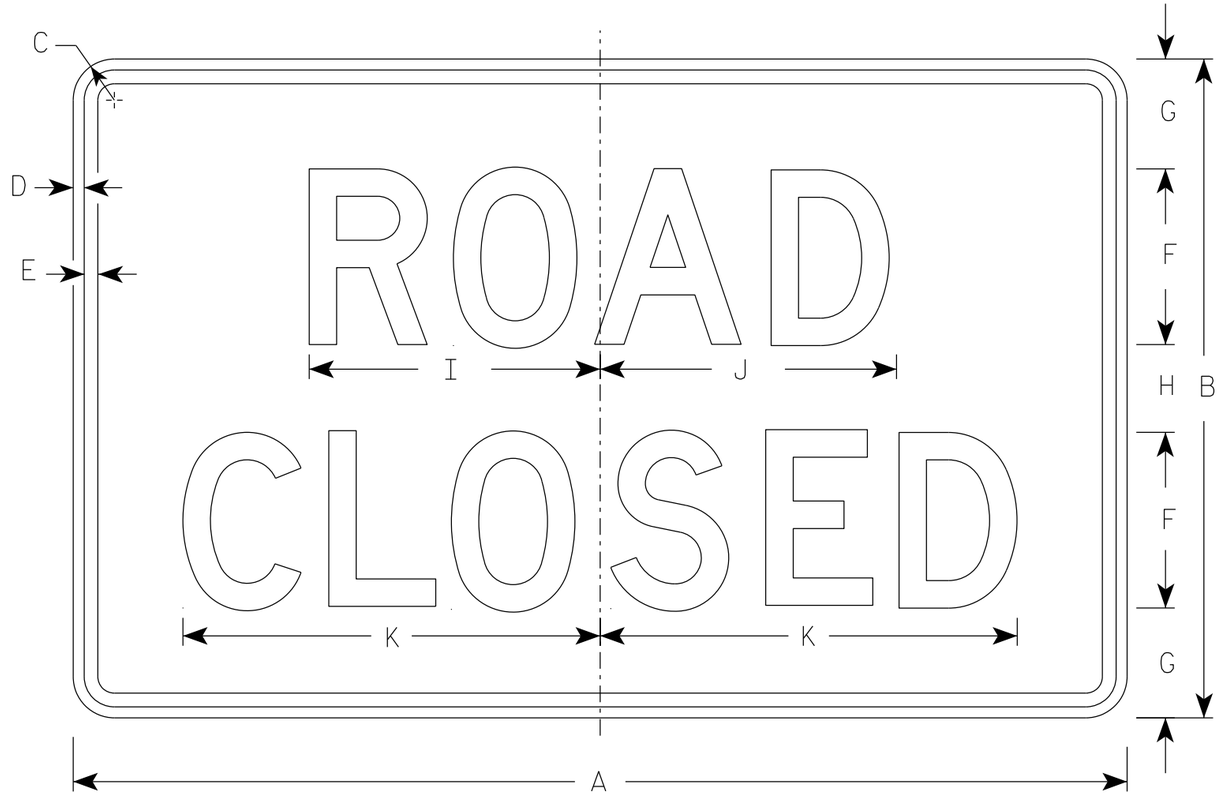

R11-2

NOTES

1. Sign is Type II - Type H Reflective
2. Color:
   Background - White
   Message - Black
3. Message Series - D
4. Corners may be square or rounded when base material is plywood but borders shall be rounded as shown. When base material is metal, the corners and borders shall be rounded.
5. Modify the message as required.

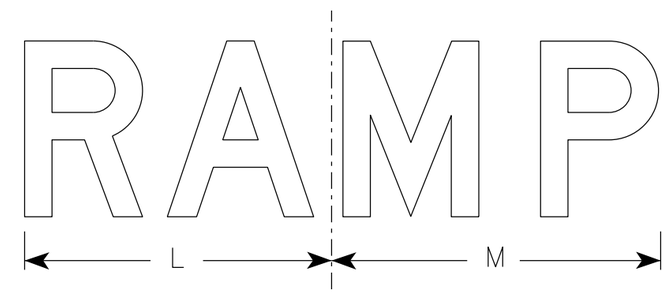

R11-2R

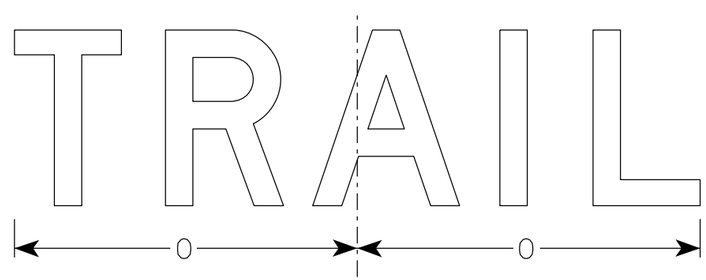

R11-2T

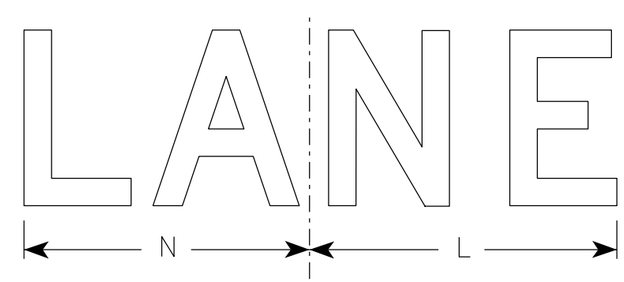

R11-2L

SIZE	A	B	C	D	E	F	G	H	I	J	K	L	M	N	O	P	Q	R	S	T	U	V	W	X	Y	Z	Area sq. ft.
1																											
2S	48	30	1 7/8	1/2	5/8	8	5	4	13 1/4	13 1/2	19	14	15	13	15 5/8												10.0
2M	48	30	1 7/8	1/2	5/8	8	5	4	13 1/4	13 1/2	19	14	15	13	15 5/8												10.0
3	48	30	1 7/8	1/2	5/8	8	5	4	13 1/4	13 1/2	19	14	15	13	15 5/8												10.0
4	48	30	1 7/8	1/2	5/8	8	5	4	13 1/4	13 1/2	19	14	15	13	15 5/8												10.0
5	48	30	1 7/8	1/2	5/8	8	5	4	13 1/4	13 1/2	19	14	15	13	15 5/8												10.0

STANDARD SIGN
R11-2

WISCONSIN DEPT OF TRANSPORTATION

APPROVED Matthew R Rauch
for State Traffic Engineer

DATE 2/5/24 PLATE NO. R11-2.12

PROJECT NO: | HWY: | COUNTY: | SHEET NO: E

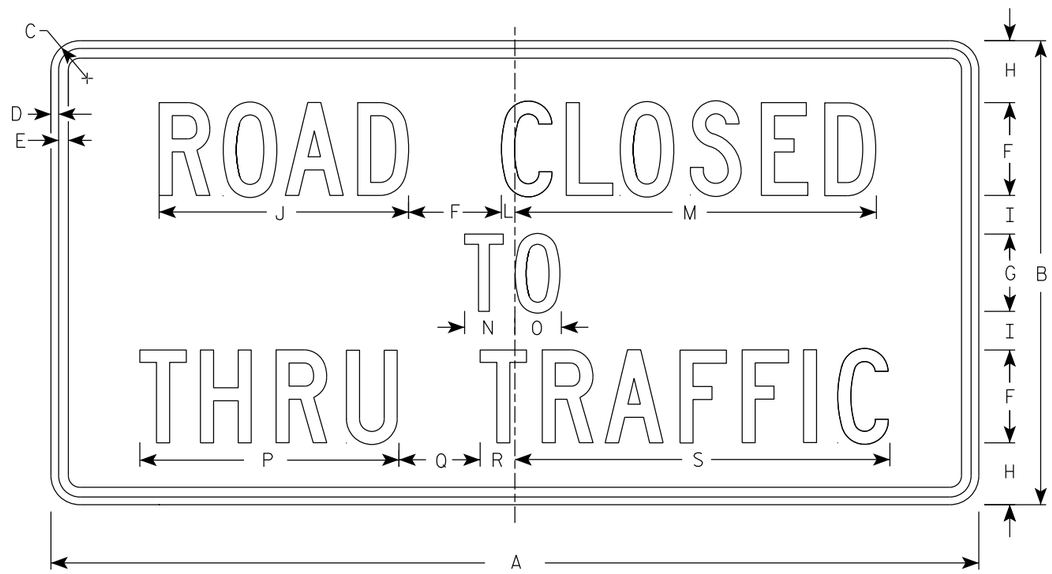

R11-4

NOTES

1. Sign is Type II - Type H Reflective
2. Color:
   Background - White
   Message - Black
3. Message Series - C
4. Corners may be square or rounded when base material is plywood but borders shall be rounded as shown. When base material is metal, the corners and borders shall be rounded.

SIZE	A	B	C	D	E	F	G	H	I	J	K	L	M	N	O	P	Q	R	S	T	U	V	W	X	Y	Z	Area sq. ft.
1																											
2S	60	30	1 7/8	1/2	5/8	6	5	4	2 1/2	16 1/8		7/8	23 3/8	3 1/4	3	16 3/4	5 1/4	2 1/4	24 1/4								12.5
2M	60	30	1 7/8	1/2	5/8	6	5	4	2 1/2	16 1/8		7/8	23 3/8	3 1/4	3	16 3/4	5 1/4	2 1/4	24 1/4								12.5
3																											
4																											
5																											

STANDARD SIGN
R11 - 4

WISCONSIN DEPT OF TRANSPORTATION

APPROVED Matthew R Rauch for State Traffic Engineer

DATE 2/5/24 PLATE NO. R11-4.4

PROJECT NO: | HWY: | COUNTY: | SHEET NO: 115 | E

NOTES

1. Sign is Type II - Type F Reflective
2. Color:
   Background - Orange
   Message - Black
3. Message Series - C
4. Corners may be square or rounded when base material is plywood but borders shall be rounded as shown. When base material is metal, the corners and borders shall be rounded.

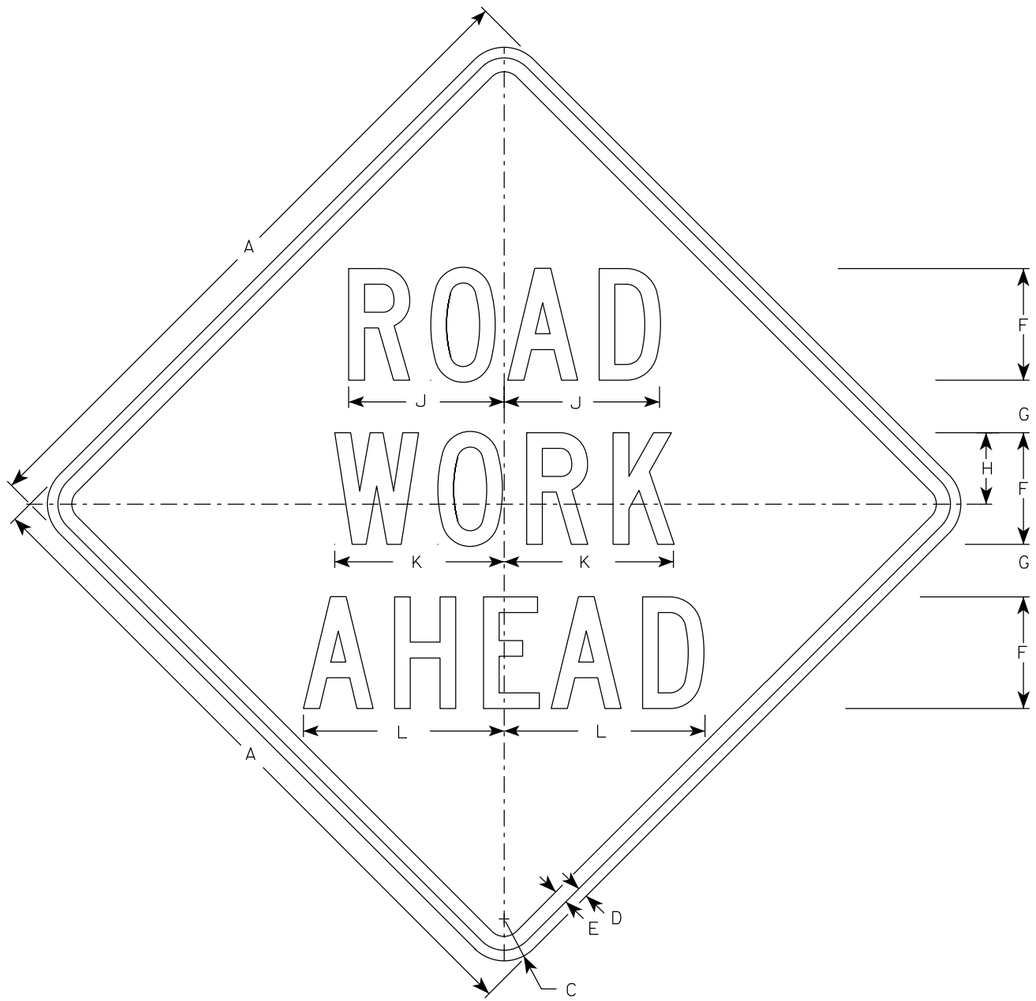

W20-1A

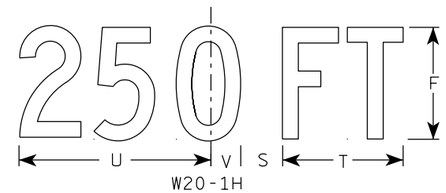

W20-1H

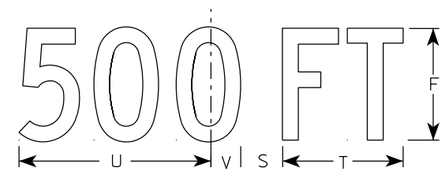

W20-1D

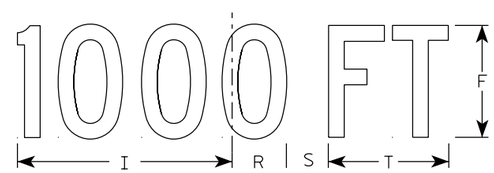

W20-1C

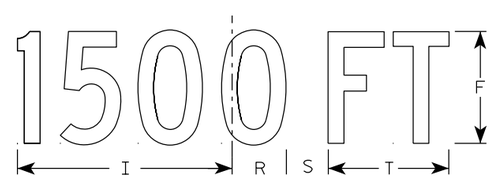

W20-1B

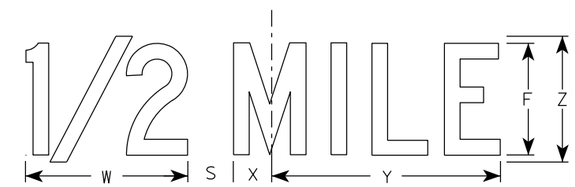

W20-1G

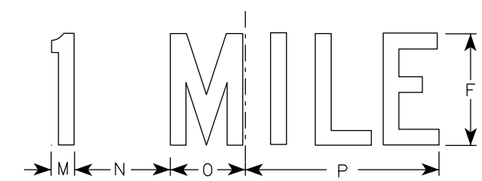

W20-1F

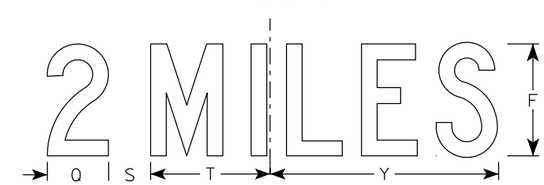

W20-1E

SIZE	A	B	C	D	E	F	G	H	I	J	K	L	M	N	O	P	Q	R	S	T	U	V	W	X	Y	Z	Area sq. ft.
1	36		2 1/4	5/8	3/4	5	2 5/8	3 1/4	10 1/8	7	7 5/8	8 7/8	1 1/8	4 1/2	3 1/2	9	3 1/4	2 1/2	2 1/4	5 5/8	9	1 3/8	8	1 3/4	10 3/4	6	9.0
2S	48		3	3/4	1	8	3 3/4	5 1/8	15 3/8	11 1/8	12 1/8	14 3/8	1 5/8	6 7/8	5 3/8	13 7/8	4 3/8	3 7/8	3	8 5/8	13 3/4	2 1/8	11 7/8	2 3/4	16 3/8	9	16.0
2M	48		3	3/4	1	8	3 3/4	5 1/8	15 3/8	11 1/8	12 1/8	14 3/8	1 5/8	6 7/8	5 3/8	13 7/8	4 3/8	3 7/8	3	8 5/8	13 3/4	2 1/8	11 7/8	2 3/4	16 3/8	9	16.0
3	48		3	3/4	1	8	3 3/4	5 1/8	15 3/8	11 1/8	12 1/8	14 3/8	1 5/8	6 7/8	5 3/8	13 7/8	4 3/8	3 7/8	3	8 5/8	13 3/4	2 1/8	11 7/8	2 3/4	16 3/8	9	16.0
4	48		3	3/4	1	8	3 3/4	5 1/8	15 3/8	11 1/8	12 1/8	14 3/8	1 5/8	6 7/8	5 3/8	13 7/8	4 3/8	3 7/8	3	8 5/8	13 3/4	2 1/8	11 7/8	2 3/4	16 3/8	9	16.0
5	48		3	3/4	1	8	3 3/4	5 1/8	15 3/8	11 1/8	12 1/8	14 3/8	1 5/8	6 7/8	5 3/8	13 7/8	4 3/8	3 7/8	3	8 5/8	13 3/4	2 1/8	11 7/8	2 3/4	16 3/8	9	16.0

STANDARD SIGN
W20-1A, B, C, D, E, F, G & H

WISCONSIN DEPT OF TRANSPORTATION

APPROVED Matthew R Rauch
For State Traffic Engineer

DATE 1/10/2024 PLATE NO. W20-1.12

PROJECT NO:

SHEET NO: E

FILE NAME : C:\CAEfiles\Projects\tr_stdplate\W201.DGN PLOT DATE : 10-JAN 2024 11:16 PLOT BY : dotc4c

WISDOT/CADDS SHEET 42

7

7

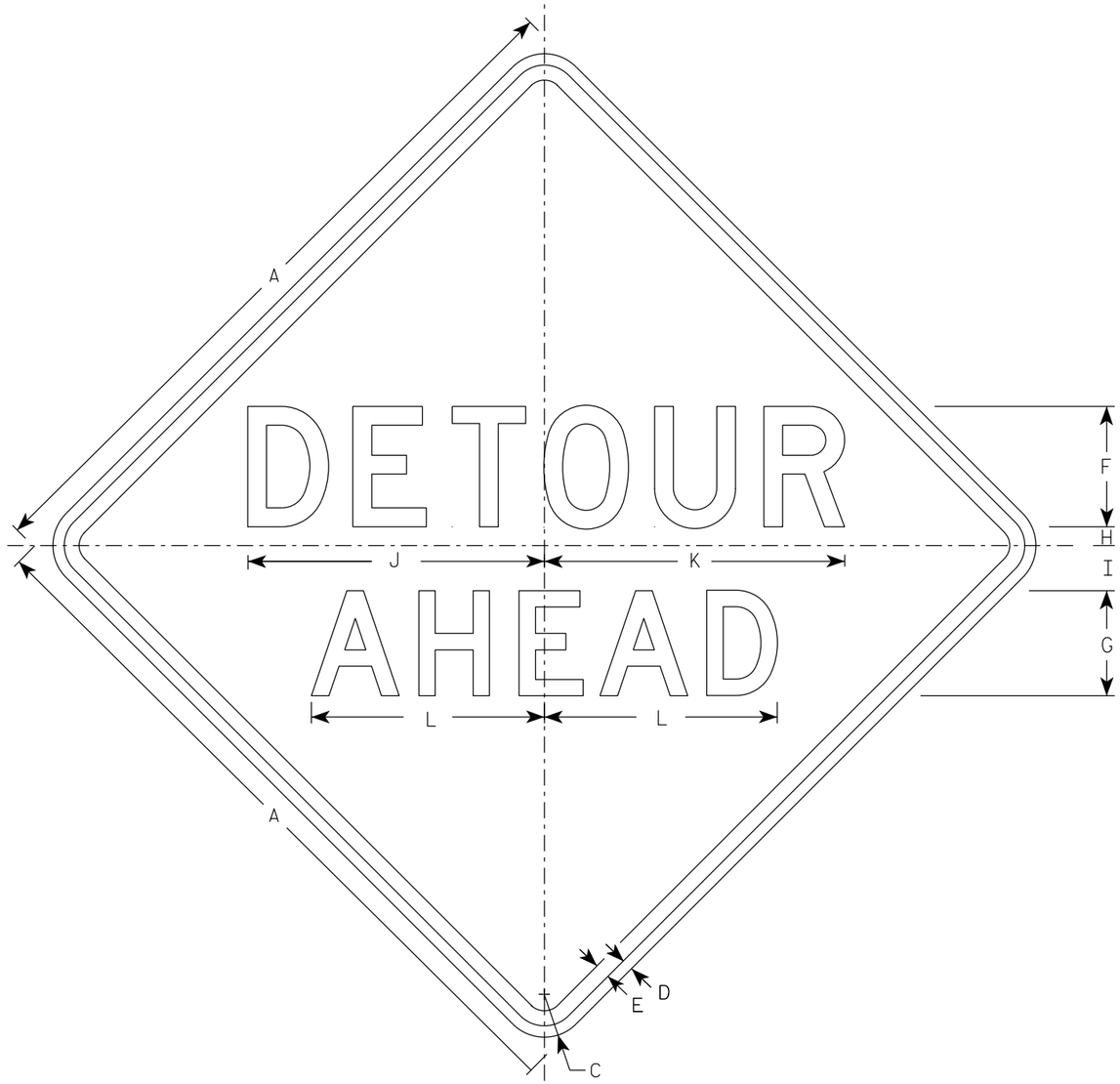

W20-2A

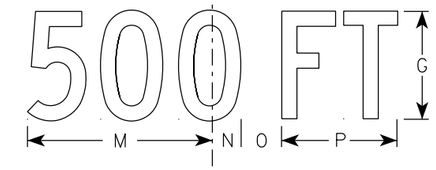

W20-2D

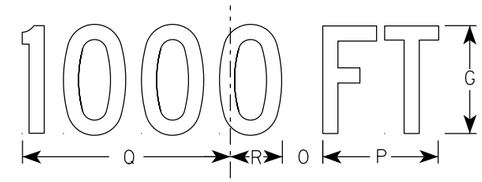

W20-2C

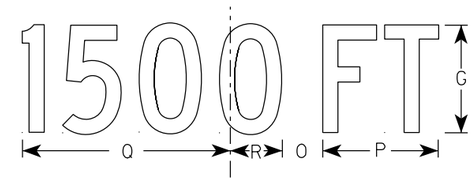

W20-2B

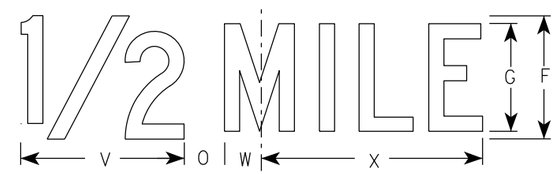

W20-2G

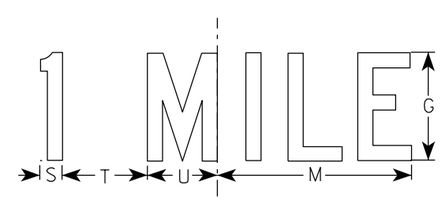

W20-2F

NOTES

1. Sign is Type II - Type F Reflective
2. Color:
   Background - Orange
   Message - Black
3. Message Series - See note 5
4. Corners may be square or rounded when base material is plywood but borders shall be rounded as shown. When base material is metal, the corners and borders shall be rounded.
5. Line 1 is Series D.
   Line 2 is Series D for AHEAD and Series C for all other distances.

SIZE	A	B	C	D	E	F	G	H	I	J	K	L	M	N	O	P	Q	R	S	T	U	V	W	X	Y	Z	Area sq. ft.
1	36		2 1/4	5/8	3/4	6	5	1	2 1/4	14 3/4	15	11 5/8	9	1 3/8	1 7/8	5 5/8	10 1/8	2 1/2	1 1/8	4 1/2	3 1/2	8	1 3/4	10 3/4			9.0
2S	48		3	3/4	1	8	7	1 1/4	3	19 3/4	20	15 1/2	12	1 7/8	2 5/8	7 1/2	13 1/2	3 3/8	1 1/2	6	4 5/8	10 5/8	2 3/8	14 3/8			16.0
2M	48		3	3/4	1	8	7	1 1/4	3	19 3/4	20	15 1/2	12	1 7/8	2 5/8	7 1/2	13 1/2	3 3/8	1 1/2	6	4 5/8	10 5/8	2 3/8	14 3/8			16.0
3	48		3	3/4	1	8	7	1 1/4	3	19 3/4	20	15 1/2	12	1 7/8	2 5/8	7 1/2	13 1/2	3 3/8	1 1/2	6	4 5/8	10 5/8	2 3/8	14 3/8			16.0
4	48		3	3/4	1	8	7	1 1/4	3	19 3/4	20	15 1/2	12	1 7/8	2 5/8	7 1/2	13 1/2	3 3/8	1 1/2	6	4 5/8	10 5/8	2 3/8	14 3/8			16.0
5	48		3	3/4	1	8	7	1 1/4	3	19 3/4	20	15 1/2	12	1 7/8	2 5/8	7 1/2	13 1/2	3 3/8	1 1/2	6	4 5/8	10 5/8	2 3/8	14 3/8			16.0

STANDARD SIGN
W20-2A,B,C,D,F & G

WISCONSIN DEPT OF TRANSPORTATION

APPROVED Matthew R Rauch
For State Traffic Engineer

DATE 1/10/2024 PLATE NO. W20-2.7

PROJECT NO: | HWY: | COUNTY: | SHEET NO: E

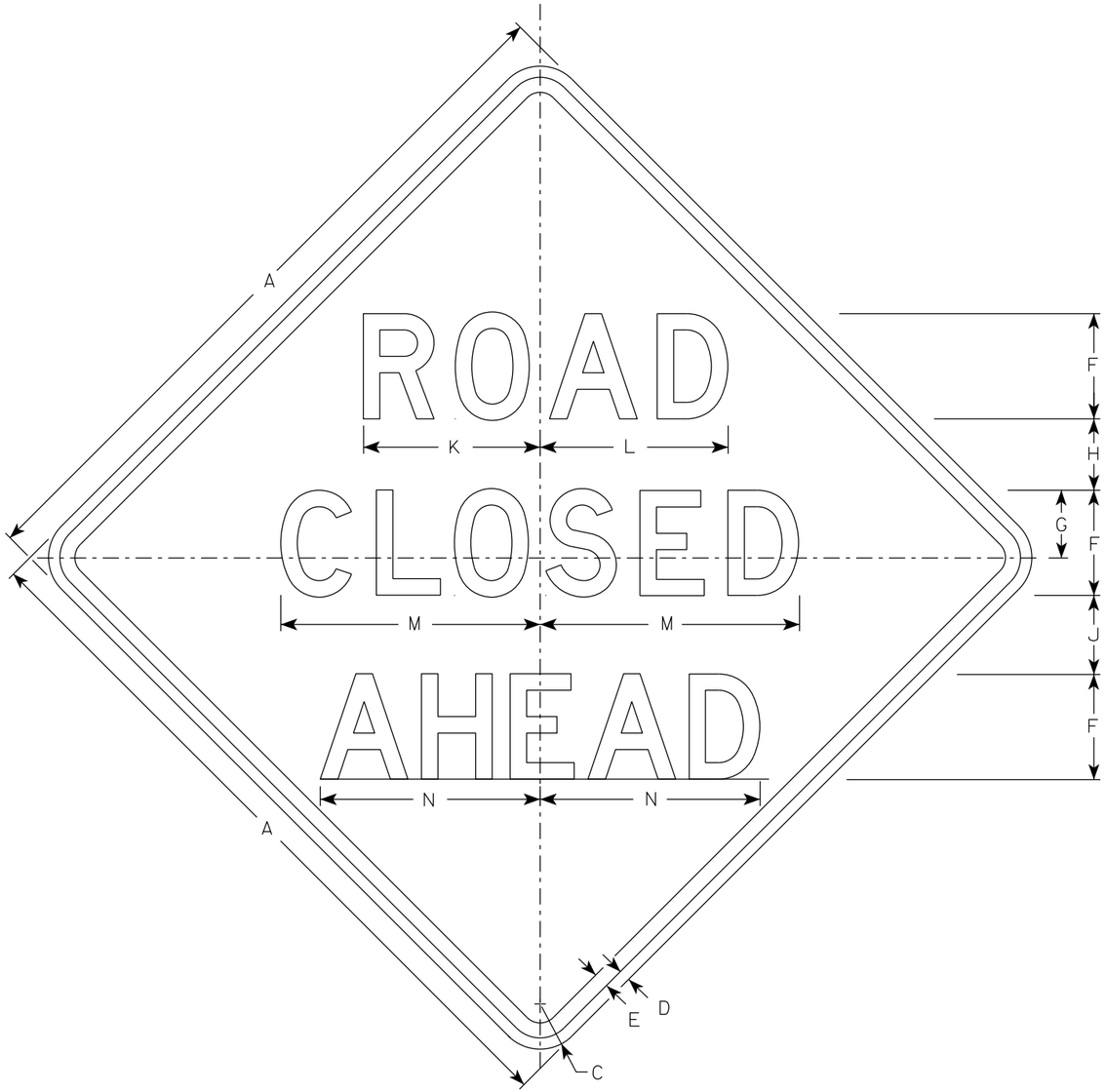

W20-3A

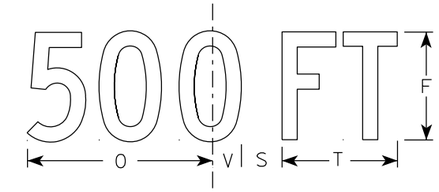

W20-3D

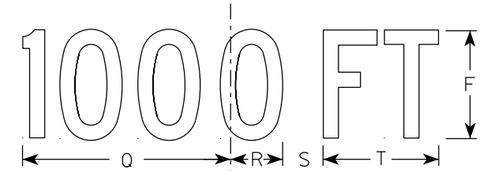

W20-3C

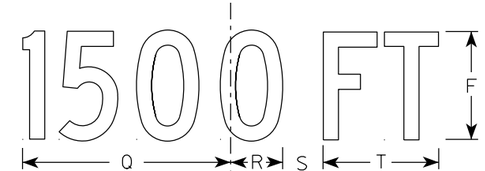

W20-3B

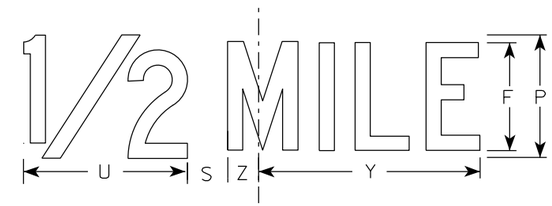

W20-3G

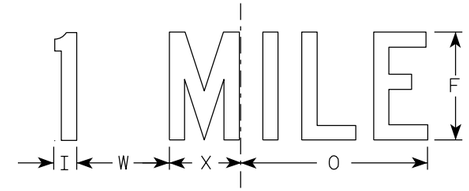

W20-3F

NOTES

1. Sign is Type II - Type F Reflective
2. Color:
   Background - Orange
   Message - Black
3. Message Series - see note 5
4. Corners may be square or rounded when base material is plywood but borders shall be rounded as shown. When base material is metal, the corners and borders shall be rounded.
5. Lines 1 and 2 are Series D.
   Line 3 is Series D for AHEAD and Series C for all other distances.

SIZE	A	B	C	D	E	F	G	H	I	J	K	L	M	N	O	P	Q	R	S	T	U	V	W	X	Y	Z	Area sq. ft.
1	36		2 1/4	5/8	3/4	5	3 3/8	3 1/2	1 1/8	4	8 3/8	8 7/8	12 1/2	11	9	6	10 1/8	2 1/2	1 7/8	5 5/8	8	1 3/8	4 1/2	3 1/2	10 3/4	1 3/4	9.0
2S	48		3	3/4	1	7	4 1/2	4 3/4	1 1/2	5 1/4	11 3/4	12 1/2	17 1/4	14 5/8	12	8	13 1/2	3 3/8	2 5/8	7 1/2	10 5/8	1 7/8	6	4 5/8	14 3/8	2 3/8	16.0
2M	48		3	3/4	1	7	4 1/2	4 3/4	1 1/2	5 1/4	11 3/4	12 1/2	17 1/4	14 5/8	12	8	13 1/2	3 3/8	2 5/8	7 1/2	10 5/8	1 7/8	6	4 5/8	14 3/8	2 3/8	16.0
3	48		3	3/4	1	7	4 1/2	4 3/4	1 1/2	5 1/4	11 3/4	12 1/2	17 1/4	14 5/8	12	8	13 1/2	3 3/8	2 5/8	7 1/2	10 5/8	1 7/8	6	4 5/8	14 3/8	2 3/8	16.0
4	48		3	3/4	1	7	4 1/2	4 3/4	1 1/2	5 1/4	11 3/4	12 1/2	17 1/4	14 5/8	12	8	13 1/2	3 3/8	2 5/8	7 1/2	10 5/8	1 7/8	6	4 5/8	14 3/8	2 3/8	16.0
5	48		3	3/4	1	7	4 1/2	4 3/4	1 1/2	5 1/4	11 3/4	12 1/2	17 1/4	14 5/8	12	8	13 1/2	3 3/8	2 5/8	7 1/2	10 5/8	1 7/8	6	4 5/8	14 3/8	2 3/8	16.0

STANDARD SIGN
W20-3A, B, C, D, F & G

WISCONSIN DEPT OF TRANSPORTATION

APPROVED Matthew R Rauch
for State Traffic Engineer

DATE 1/10/2024 PLATE NO. W20-3.8

PROJECT NO: | HWY: | COUNTY: | SHEET NO: E

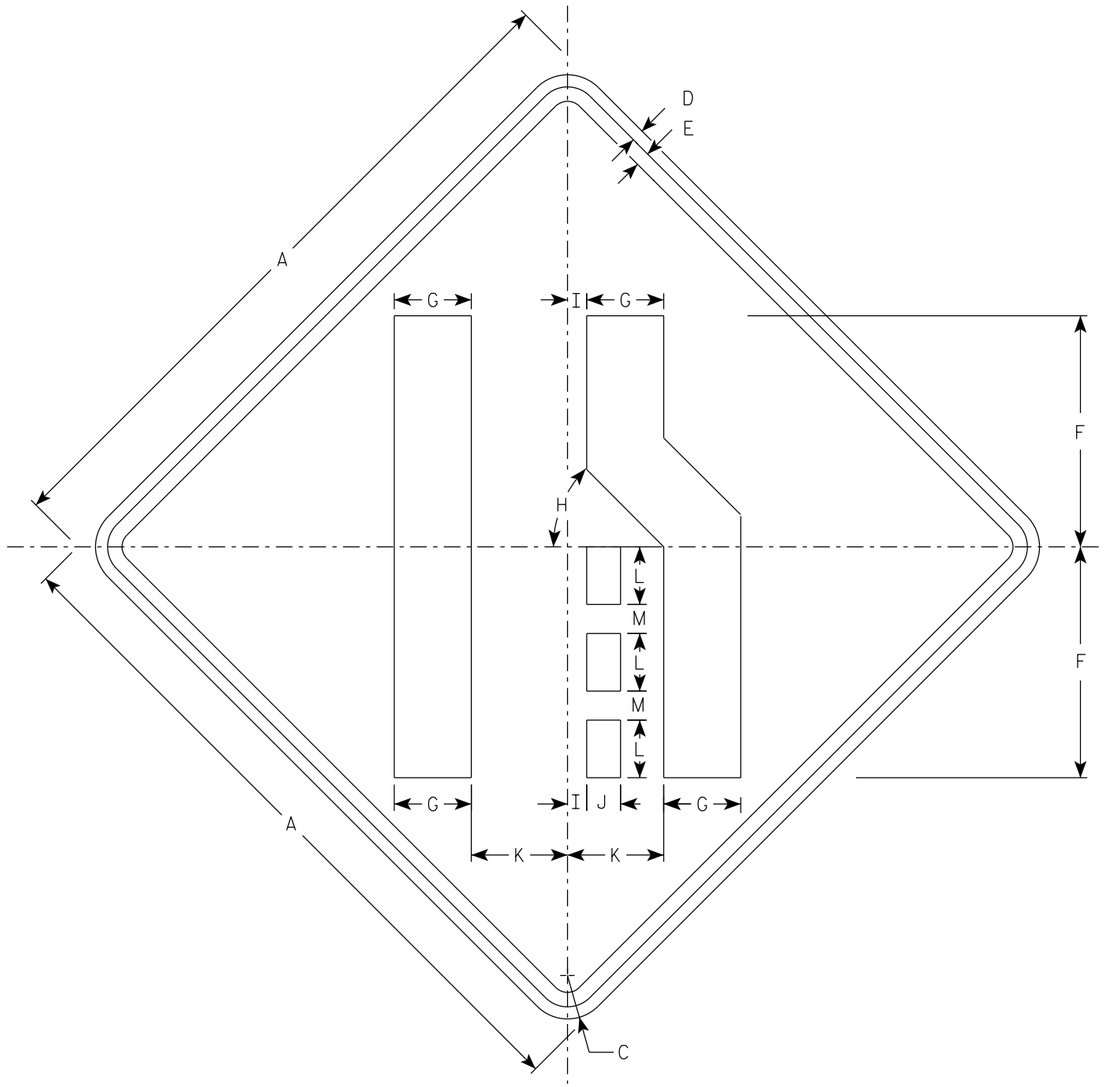

W04-2R

NOTES

1. Sign is Type II - Type F Reflective
2. Color:
   Background - Orange
   Message - Black
3. Corners may be square or rounded when base material is plywood but borders shall be rounded as shown. When base material is metal, the corners and borders shall be rounded.
4. W04-2L is the same as W04-2R except the symbol is reversed along the vertical centerline.

SIZE	A	B	C	D	E	F	G	H	I	J	K	L	M	N	O	P	Q	R	S	T	U	V	W	X	Y	Z	Area sq. ft.
1	36		2 1/4	5/8	3/4	12	4	45°	1	1 3/4	5	3	1 1/2														9.0
2S	48		3	3/4	1	16	5 3/8	45°	1 1/4	2 3/8	6 3/4	4	2														16.0
2M	48		3	3/4	1	16	5 3/8	45°	1 1/4	2 3/8	6 3/4	4	2														16.0
3	48		3	3/4	1	16	5 3/8	45°	1 1/4	2 3/8	6 3/4	4	2														16.0
4	48		3	3/4	1	16	5 3/8	45°	1 1/4	2 3/8	6 3/4	4	2														16.0
5	48		3	3/4	1	16	5 3/8	45°	1 1/4	2 3/8	6 3/4	4	2														16.0

STANDARD SIGN
W04-2

WISCONSIN DEPT OF TRANSPORTATION

APPROVED Matthew R Rauch
for State Traffic Engineer

DATE 1/25/2024 PLATE NO. W04-2.2

PROJECT NO:

SHEET NO: 119 E

STATION	REAL STATION	DISTANCE	AREA (SF)		INCREMENTAL VOL (CY) (UNADJUSTED)		CUMULATIVE VOL (CY)	
			CUT	SALVAGED/UNUSABLE PAVEMENT MATERIAL	CUT NOTE 1	SALVAGED/UNUSABLE PAVEMENT MATERIAL NOTE 2	CUT 1.00 NOTE 1	MASS ORDINATE NOTE 8
28+22.33	2822.33	0.00	36.02	30.00	0	0	0	0
28+34.92	2834.92	12.59	75.84	30.00	26	14	26	12
28+50.00	2850.00	15.08	77.50	30.00	43	17	69	38
28+80.42	2880.42	30.42	70.74	30.00	84	34	153	88
29+00.00	2900.00	19.58	71.41	30.00	52	22	205	118
29+34.14	2934.14	34.14	67.28	30.00	88	38	293	168
29+50.00	2950.00	15.86	68.66	30.00	40	18	333	190
29+94.27	2994.27	44.27	71.18	30.00	115	49	448	256
30+00.00	3000.00	5.73	72.73	30.00	15	6	463	265
30+21.82	3021.82	21.82	85.32	30.00	64	24	527	305
30+50.00	3050.00	28.18	121.76	11.25	108	22	635	391
30+85.47	3085.47	35.47	67.79	11.25	125	15	760	501
31+00.00	3100.00	14.53	69.95	11.25	37	6	797	532
31+41.47	3141.47	41.47	70.09	11.25	108	17	905	623
31+50.00	3150.00	8.53	71.04	11.25	22	4	927	641
32+00.00	3200.00	50.00	76.25	11.25	136	21	1,063	756
32+50.00	3250.00	50.00	75.46	11.25	140	21	1,203	875
32+77.00	3277.00	27.00	77.49	11.25	76	11	1,279	940
33+00.00	3300.00	23.00	79.36	11.25	67	10	1,346	997
33+50.00	3350.00	50.00	77.19	11.25	145	21	1,491	1,121
33+68.00	3368.00	18.00	75.15	11.25	51	8	1,542	1,164
33+74.38	3374.38	6.38	75.09	18.75	18	4	1,560	1,178
33+90.98	3390.98	16.60	76.29	18.75	47	12	1,607	1,213
34+00.00	3400.00	9.02	75.76	18.75	25	6	1,632	1,232
34+27.93	3427.93	27.93	73.01	18.75	77	19	1,709	1,290
34+50.00	3450.00	22.07	77.35	19.58	61	16	1,770	1,335
34+78.33	3478.33	28.33	78.52	19.58	82	21	1,852	1,396
35+00.00	3500.00	21.67	81.04	19.58	64	16	1,916	1,444
35+37.60	3537.60	37.60	79.76	19.58	112	27	2,028	1,529
35+50.00	3550.00	12.40	84.25	19.58	38	9	2,066	1,558
36+00.00	3600.00	50.00	83.40	19.58	155	36	2,221	1,677
36+12.00	3612.00	12.00	78.68	19.58	36	9	2,257	1,704

NOTES:	
1 - CUT	CUT INCLUDES SALVAGED/UNUSABLE PAVEMENT MATERIAL.
2 - SALVAGED/UNUSABLE PAVEMENT MATERIAL	CROSS SECTIONS DO NOT SHOW SALVAGED/UNUSABLE PAVEMENT MATERIAL.
8 - MASS ORDINATE	[CUT - SALVAGED PAVT]

* FACTORS USED TO COMPUTE ANTICIPATED WASTE AND THE COMPUTED WASTE VOLUME IDENTIFIED ARE FOR GENERAL INFORMATION ONLY.
* UNUSEABLE MATERIAL ESTIMATED FROM BORING INFORMATION. SEE GENERAL NOTES FOR BORING TABLE.

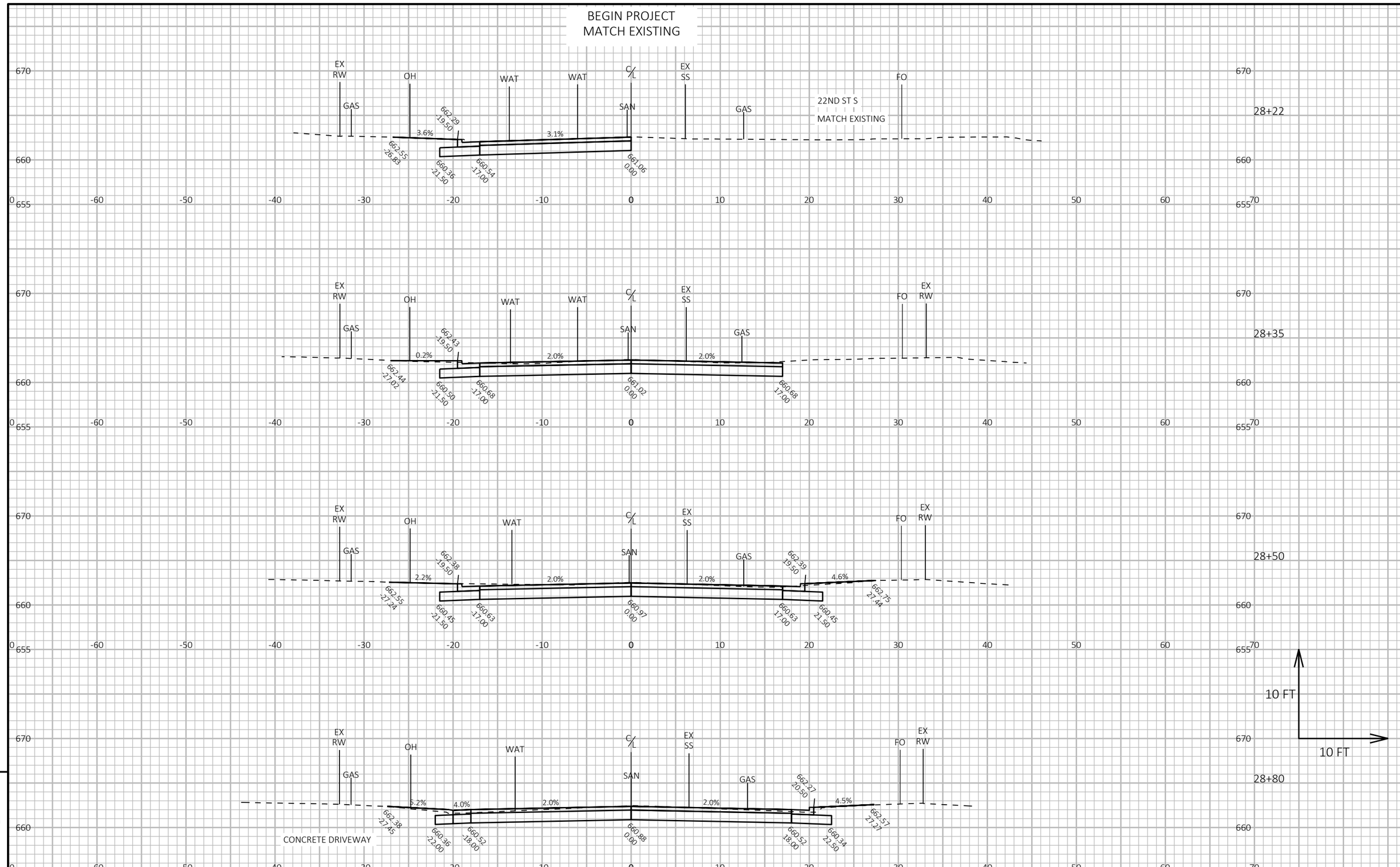

9

9

PROJECT NO: 5991-07-78 & 79	HWY: GREEN BAY STREET	COUNTY: LA CROSSE	CROSS SECTIONS - GREEN BAY ST.	SHEET 121	E

FILE NAME : W:\30902576.000; 5991-07-77 78 79 GREEN BAY ST\CAD\59910777\SHEETS\090201-XS.DWG
LAYOUT NAME - 01
PLOT DATE : 7/30/2024 3:50 PM
PLOT BY : MARZOLF, ROBBI
PLOT NAME :
PLOT SCALE : 1 IN:10 FT HORZ. / 1 IN:10 FT VERT.
WISDOT/CADDS SHEET 49

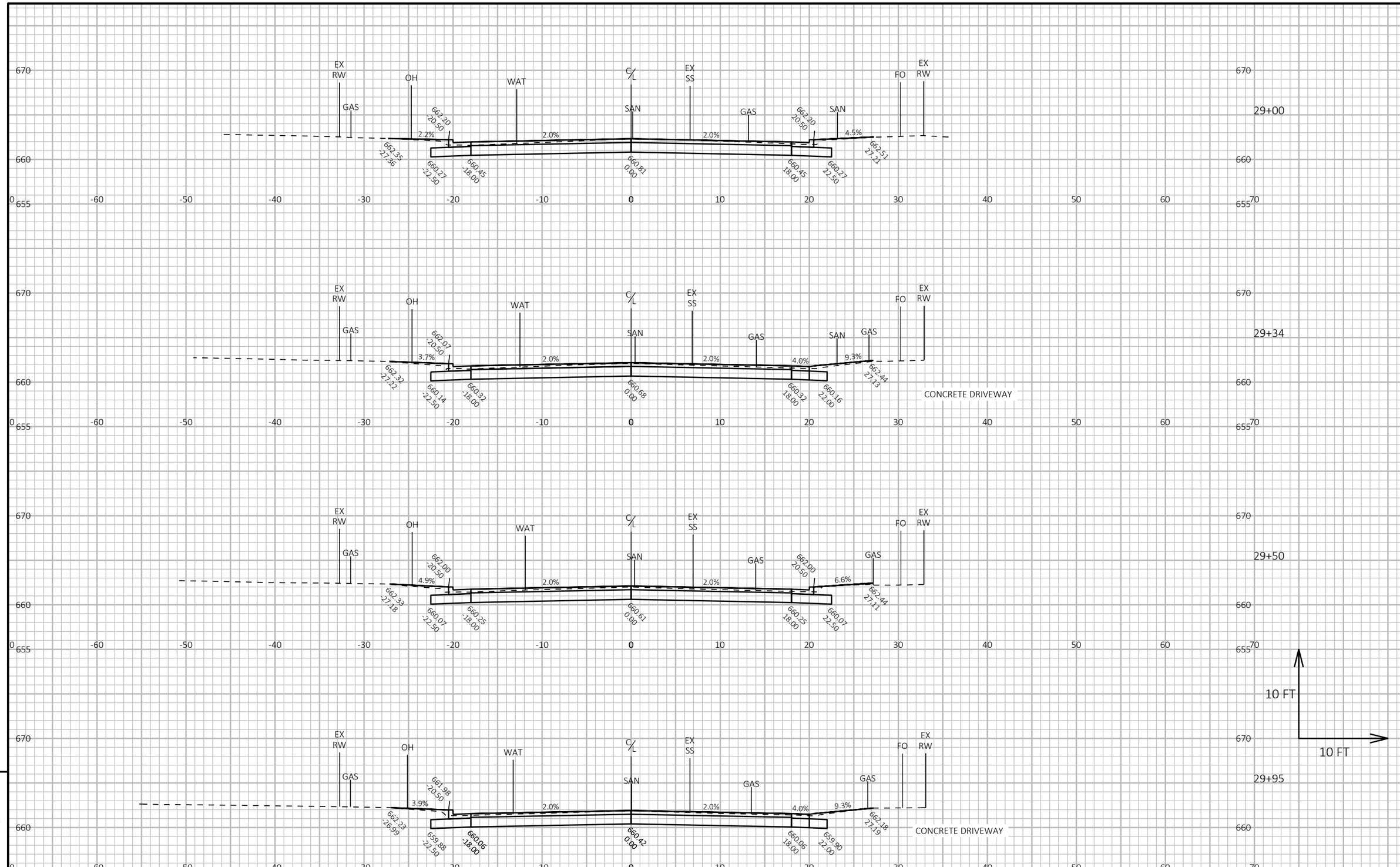

PROJECT NO: 5991-07-78 & 79	HWY: GREEN BAY STREET	COUNTY: LA CROSSE	CROSS SECTIONS - GREEN BAY ST.	SHEET 122	E

FILE NAME : W:\30902576.000; 5991-07-77 78 79 GREEN BAY ST\CAD\59910777\SHEETS\090201-XS.DWG
LAYOUT NAME - 02
PLOT DATE : 7/30/2024 3:50 PM
PLOT BY : MARZOLF, ROBBI
PLOT NAME :
PLOT SCALE : 1 IN:10 FT HORZ. / 1 IN:10 FT VERT.
WISDOT/CADDS SHEET 49

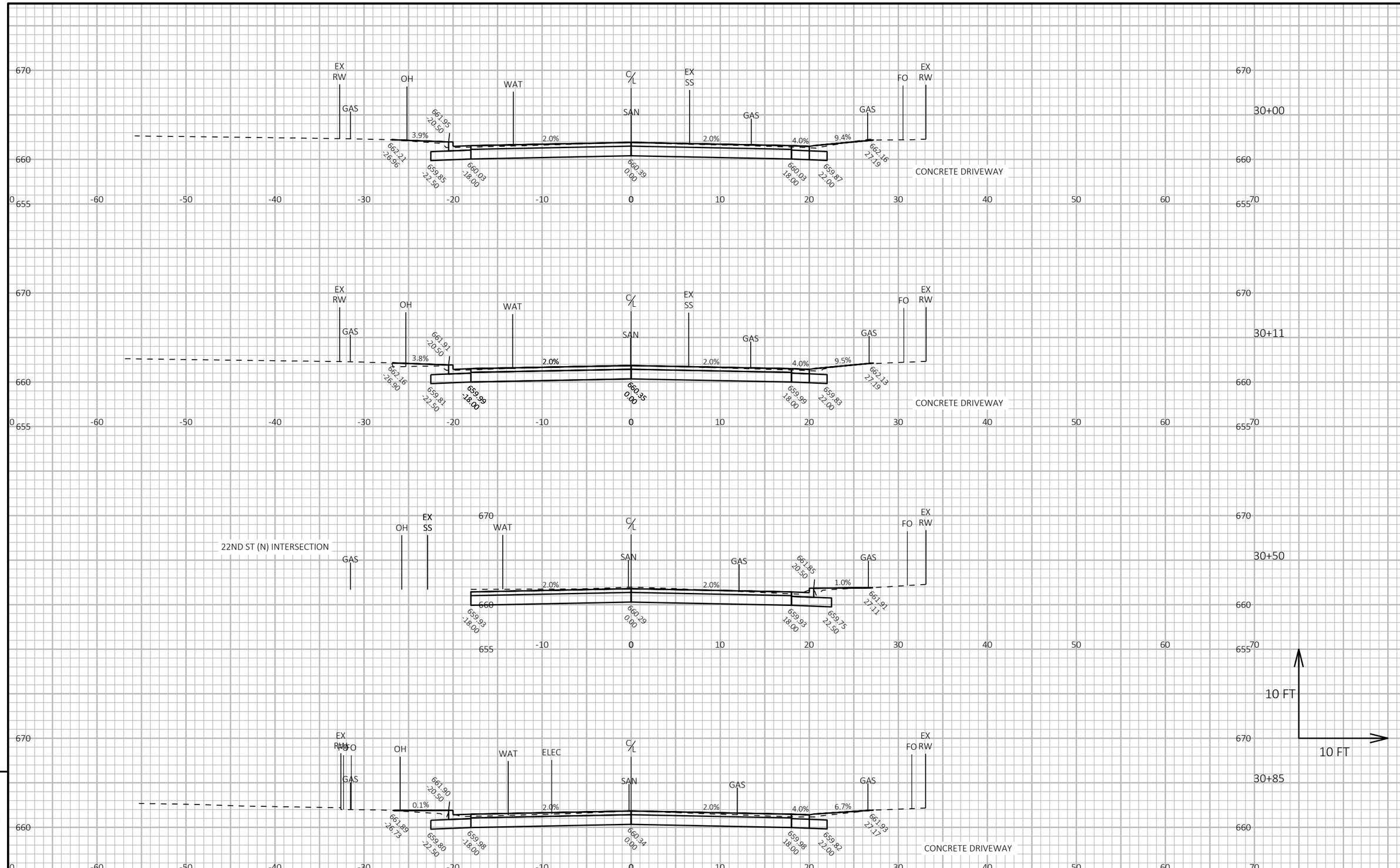

PROJECT NO: 5991-07-78 & 79	HWY: GREEN BAY STREET	COUNTY: LA CROSSE	CROSS SECTIONS - GREEN BAY ST.	SHEET 123	E

FILE NAME : W:\30902576.000; 5991-07-77 78 79 GREEN BAY ST\CAD\59910777\SHEETS\090201-XS.DWG
LAYOUT NAME - 03
PLOT DATE : 7/30/2024 3:50 PM
PLOT BY : MARZOLF, ROBBI
PLOT NAME :
PLOT SCALE : 1 IN:10 FT HORZ. / 1 IN:10 FT VERT.
WISDOT/CADDS SHEET 49

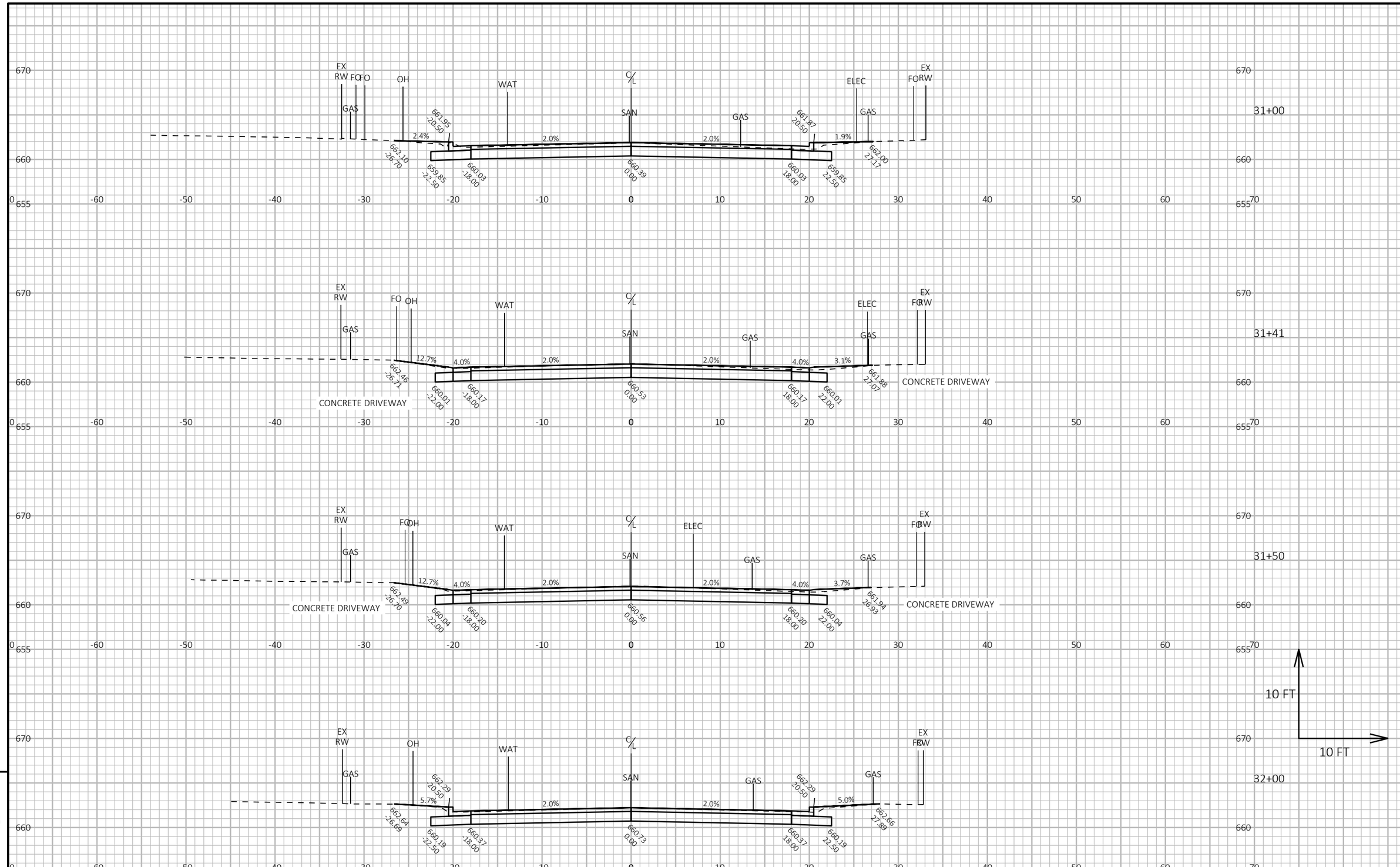

PROJECT NO: 5991-07-78 & 79	HWY: GREEN BAY STREET	COUNTY: LA CROSSE	CROSS SECTIONS - GREEN BAY ST.	SHEET 124	E

FILE NAME : W:\30902576.000; 5991-07-77 78 79 GREEN BAY ST\CAD\59910777\SHEETS\090201-XS.DWG
LAYOUT NAME - 04
PLOT DATE : 7/30/2024 3:50 PM
PLOT BY : MARZOLF, ROBBI
PLOT NAME :
PLOT SCALE : 1 IN:10 FT HORZ. / 1 IN:10 FT VERT.
WISDOT/CADDS SHEET 49

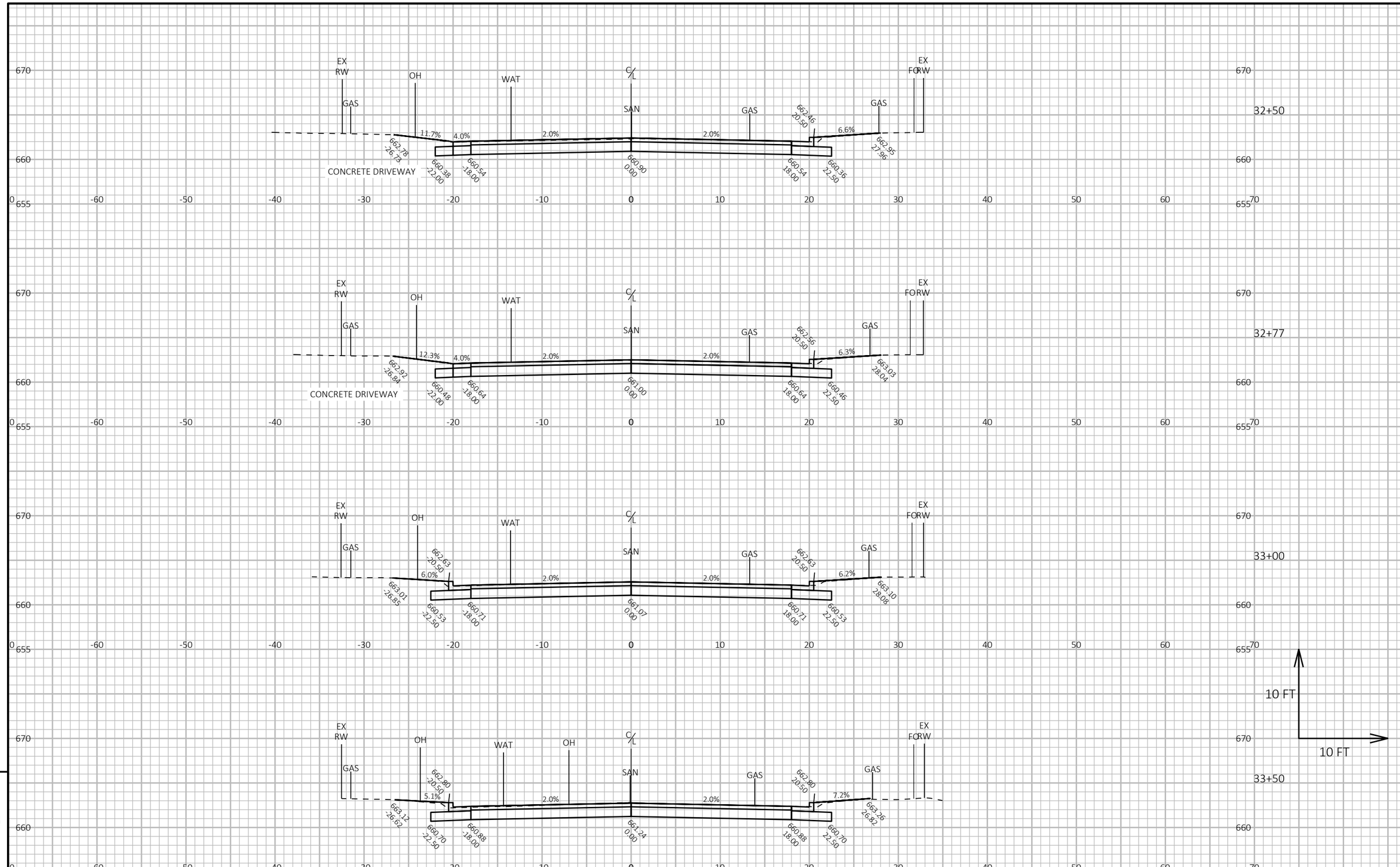

PROJECT NO: 5991-07-78 & 79	HWY: GREEN BAY STREET	COUNTY: LA CROSSE	CROSS SECTIONS - GREEN BAY ST.	SHEET 125	E

FILE NAME : W:\30902576.000; 5991-07-77 78 79 GREEN BAY ST\CAD\59910777\SHEETS\090201-XS.DWG
LAYOUT NAME - 05
PLOT DATE : 7/30/2024 3:50 PM
PLOT BY : MARZOLF, ROBBI
PLOT NAME :
PLOT SCALE : 1 IN:10 FT HORZ. / 1 IN:10 FT VERT.
WISDOT/CADDS SHEET 49

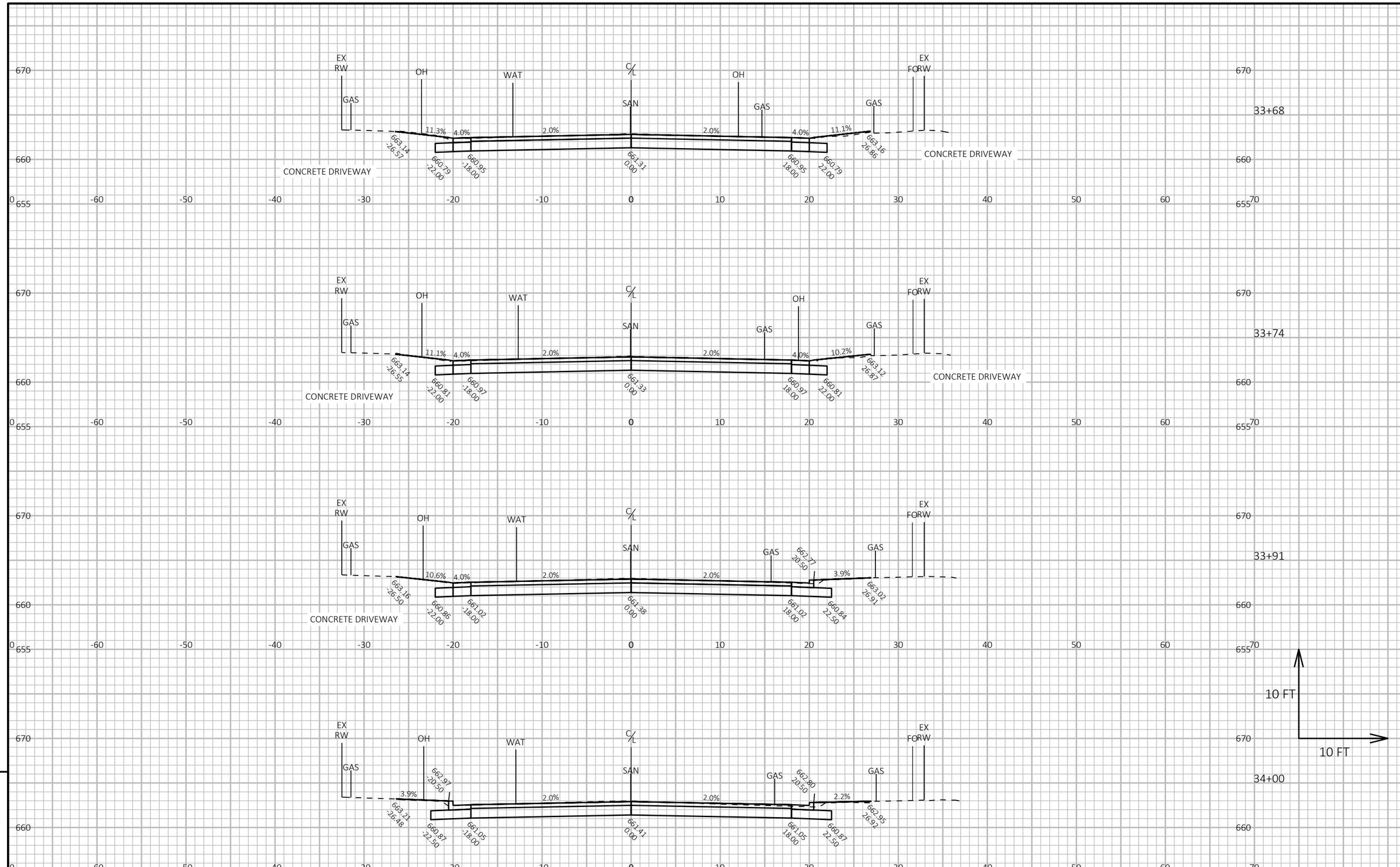

PROJECT NO: 5991-07-78 & 79	HWY: GREEN BAY STREET	COUNTY: LA CROSSE	CROSS SECTIONS - GREEN BAY ST.	SHEET 126	E

FILE NAME : W:\30902576.000; 5991-07-77 78 79 GREEN BAY ST\CAD\59910777\SHEETS\090201-XS.DWG
LAYOUT NAME - 06
PLOT DATE : 7/30/2024 3:50 PM
PLOT BY : MARZOLF, ROBBI
PLOT NAME :
PLOT SCALE : 1 IN:10 FT HORZ. / 1 IN:10 FT VERT.

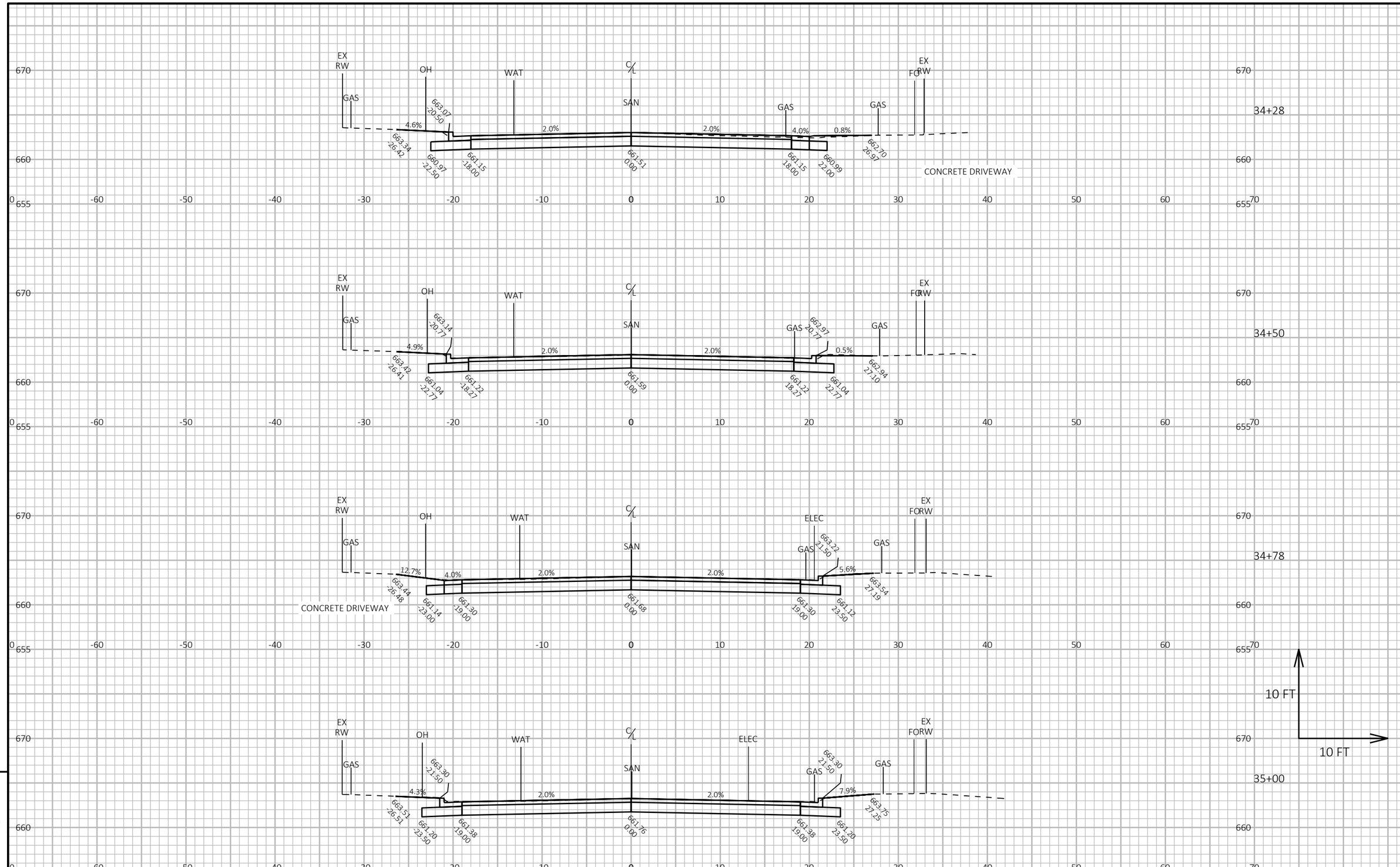

PROJECT NO: 5991-07-78 & 79	HWY: GREEN BAY STREET	COUNTY: LA CROSSE	CROSS SECTIONS - GREEN BAY ST.	SHEET 127	E

FILE NAME : W:\30902576.000; 5991-07-77 78 79 GREEN BAY ST\CAD\59910777\SHEETS\090201-XS.DWG
LAYOUT NAME - 07
PLOT DATE : 7/30/2024 3:50 PM
PLOT BY : MARZOLF, ROBBI
PLOT NAME :
PLOT SCALE : 1 IN:10 FT HORZ. / 1 IN:10 FT VERT.
WISDOT/CADDS SHEET 49

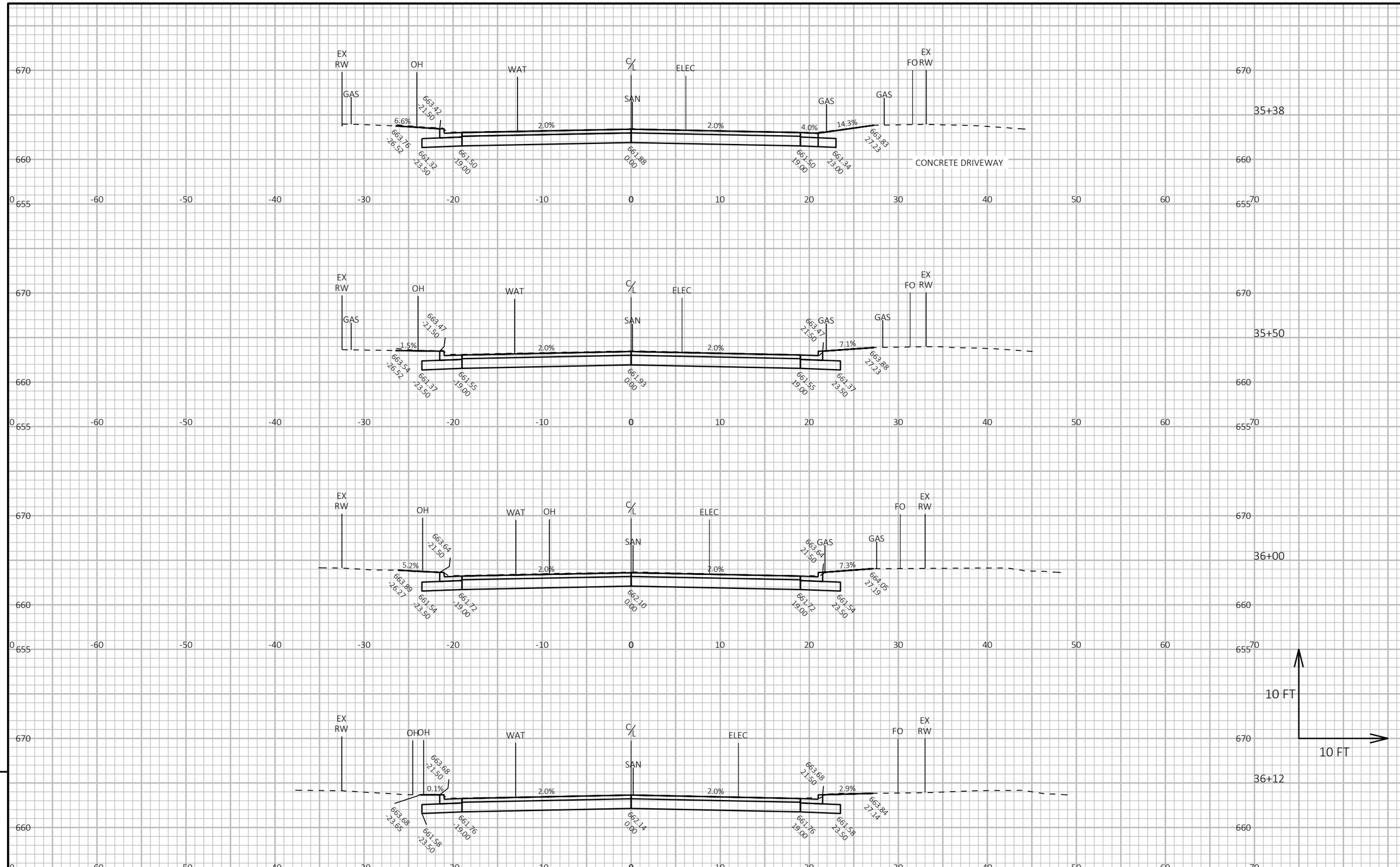

PROJECT NO: 5991-07-78 & 79	HWY: GREEN BAY STREET	COUNTY: LA CROSSE	CROSS SECTIONS - GREEN BAY ST.	SHEET 128	E

FILE NAME : W:\30902576.000; 5991-07-77 78 79 GREEN BAY ST\CAD\59910777\SHEETS\090201-XS.DWG
LAYOUT NAME - 08
PLOT DATE : 7/30/2024 3:50 PM
PLOT BY : MARZOLF, ROBBI
PLOT NAME :
PLOT SCALE : 1 IN:10 FT HORZ. / 1 IN:10 FT VERT.
WISDOT/CADDS SHEET 49

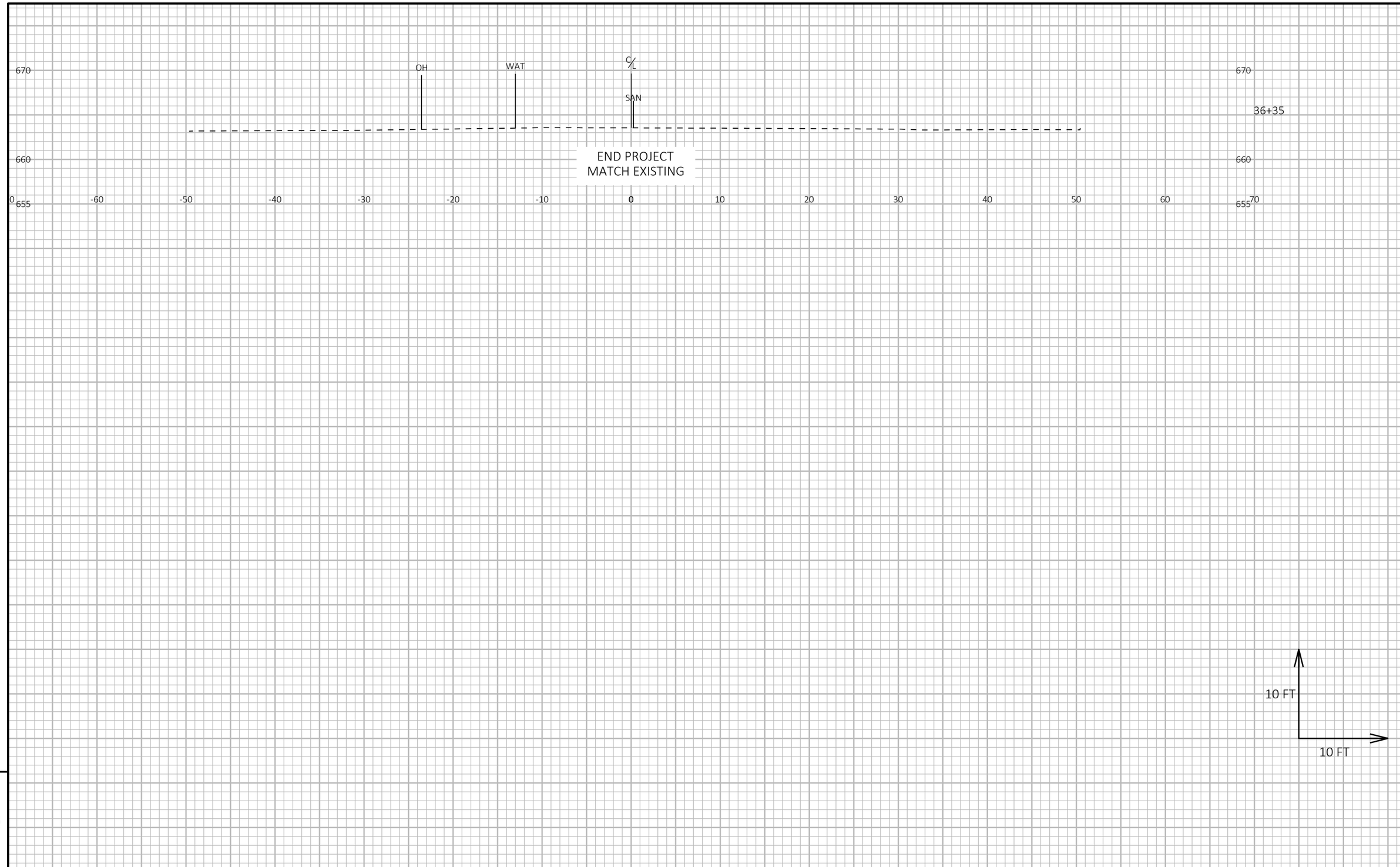

9

9

PROJECT NO: 5991-07-78 & 79	HWY: GREEN BAY STREET	COUNTY: LA CROSSE	CROSS SECTIONS - GREEN BAY ST.	SHEET 129	E

FILE NAME : W:\30902576.000; 5991-07-77 78 79 GREEN BAY ST\CAD\59910777\SHEETS\090201-XS.DWG
LAYOUT NAME - 09

PLOT DATE : 7/30/2024 3:50 PM PLOT BY : MARZOLF, ROBBI PLOT NAME : **PLOT SCALE :** 1 IN:10 FT HORZ. / 1 IN:10 FT VERT.

WISDOT/CADDS SHEET 49

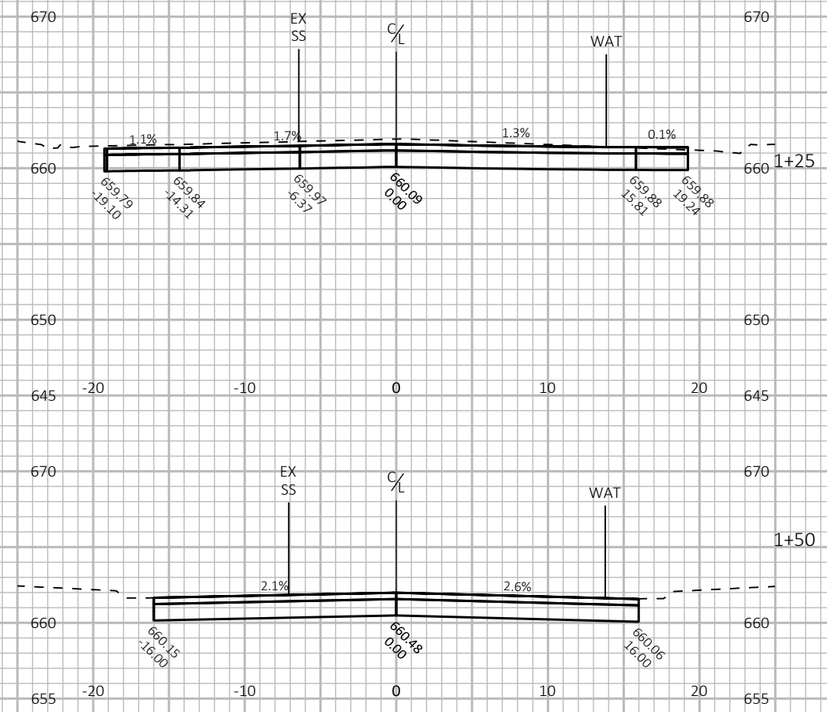

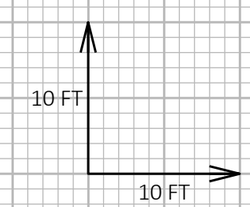

9

9

PROJECT NO: 5991-07-78 & 79	HWY: GREEN BAY STREET	COUNTY: LA CROSSE	CROSS SECTIONS - 22ND ST S	SHEET 130	E

FILE NAME : W:\30902576.000; 5991-07-77 78 79 GREEN BAY ST\CAD\59910777\SHEETS\090201-XS.DWG
LAYOUT NAME - 10

PLOT DATE : 7/30/2024 3:50 PM PLOT BY : MARZOLF, ROBBI PLOT NAME : **PLOT SCALE :** 1 IN:10 FT HORZ. / 1 IN:10 FT VERT.

WISDOT/CADDS SHEET 49

Notes

Wisconsin Department of Transportation

Dedicated people creating transportation solutions through innovation and exceptional service.

http://www.dot.wisconsin.gov