EAU

SEPT 2024

PROJECT ID: 1550-02-73, 1550-02-77

WITH: 1550-02-77

COUNTY: ST. CROIX

ORDER OF SHEETS

TOTAL SHEETS = 206

STATE OF WISCONSIN
DEPARTMENT OF TRANSPORTATION

PLAN OF PROPOSED IMPROVEMENT

STATE PROJECT	FEDERAL PROJECT	
	PROJECT	CONTRACT
1550-02-73	—	—
1550-02-77	WISC 2024442	1

BALDWIN - CLEAR LAKE

BRANCH RUSH RIVER BRIDGE B-55-0289

USH 63

ST. CROIX COUNTY

STATE PROJECT NUMBER

1550-02-73

BALDWIN - CLEAR LAKE

SPRUCE STREET INTERSECTION

USH 63

ST. CROIX COUNTY

STATE PROJECT NUMBER

1550-02-77

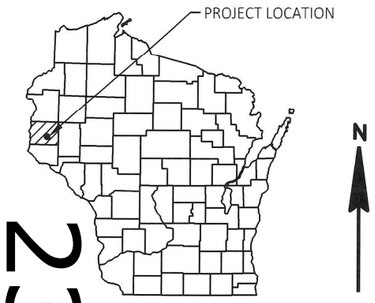

23

N

DESIGN DESIGNATION

A.A.D.T.	2025	=	11,900
A.A.D.T.	2045	=	14,400
D.H.V.		=	1,506
D.D.		=	60/40
T.		=	14.9%
DESIGN SPEED		=	45 MPH
ESALS		=	5,700,000

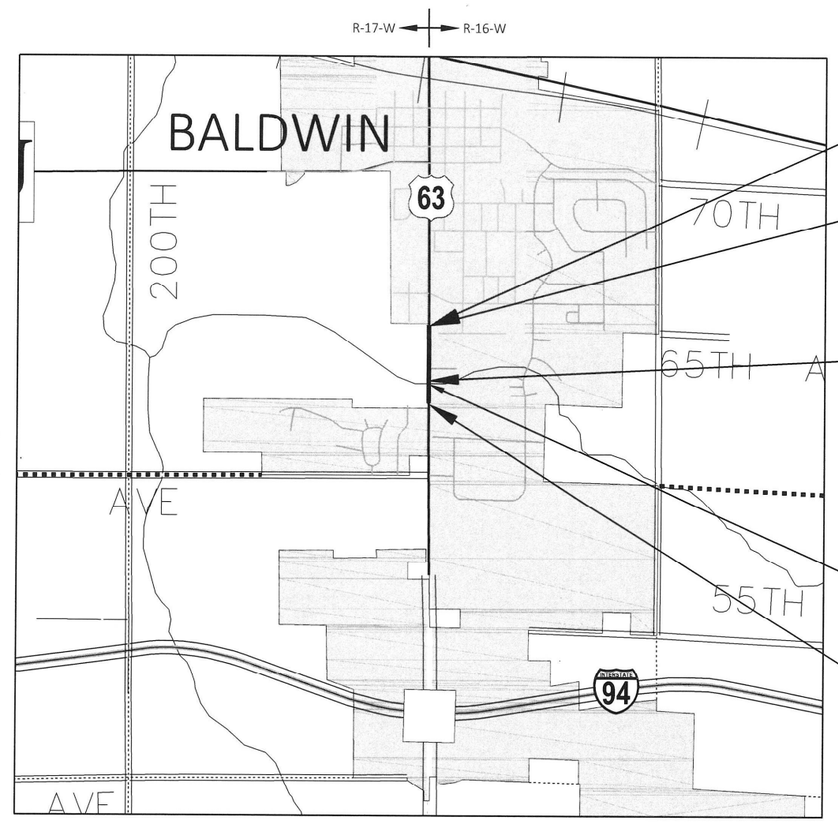

END PROJECT 1550-02-73
STA 131+58.00

END PROJECT 1550-02-77
STA 131+58.00

BEGIN PROJECT 1550-02-77
STA 123+15.00
Y=334712.4996
X=609902.8443

STRUCTURE B-55-0289

BEGIN PROJECT 1550-02-73
STA 117+75.00
Y=334172.5007
X=609902.9970

LAYOUT

SCALE 0 0.5 MI

TOTAL NET LENGTH OF CENTERLINE = 0.262 MILES

HORIZONTAL POSITIONS SHOWN ON THIS PLAN ARE WISCONSIN COORDINATE REFERENCE SYSTEM (WISCRS), ST. CROIX COUNTY, NAD83 (2011), IN U.S. SURVEY FEET. POSITIONS SHOWN ARE GRID COORDINATES, GRID BEARINGS, AND GRID DISTANCES. GRID DISTANCES ARE THE SAME AS GROUND DISTANCES.

ELEVATIONS ARE REFERENCED TO NAVD 88 (2012). GPS DERIVED ELEVATIONS ARE BASED ON GEOID 12A.

CONVENTIONAL SYMBOLS

PLAN

- CORPORATE LIMITS
- PROPERTY LINE
- LOT LINE
- LIMITED HIGHWAY EASEMENT
- EXISTING RIGHT OF WAY
- PROPOSED OR NEW R/W LINE
- SLOPE INTERCEPT
- REFERENCE LINE (300'FB')
- EXISTING CULVERT
- PROPOSED CULVERT (Box or Pipe)
- COMBUSTIBLE FLUIDS (CAUTION)
- MARSH AREA
- WOODED OR SHRUB AREA

PROFILE

- GRADE LINE
- ORIGINAL GROUND
- MARSH OR ROCK PROFILE (To be noted as such) (ROCK)
- SPECIAL DITCH (LABEL)
- GRADE ELEVATION (95.36)
- CULVERT (Profile View)

UTILITIES

- ELECTRIC (E)
- FIBER OPTIC (FO)
- GAS (G)
- SANITARY SEWER (SAN)
- STORM SEWER (SS)
- TELEPHONE (T)
- WATER (W)
- UTILITY PEDESTAL
- POWER POLE
- TELEPHONE POLE

ORIGINAL PLANS PREPARED BY

cbs²

WISCONSIN ROSS T. JOHNSON E-27897 EAU CLAIRE, WI PROFESSIONAL ENGINEER

DATE: 4-22-2024

STATE OF WISCONSIN
DEPARTMENT OF TRANSPORTATION

PREPARED BY

Surveyor	CBS SQUARED INC
Designer	CBS SQUARED INC
Project Manager	TOU YANG, PE
Regional Examiner	NW REGION
Regional Supervisor	TOU YANG, PE

APPROVED FOR THE DEPARTMENT

DATE: 4/29/2024 Tou Yang (Signature)

Digitally signed by Tou Yang
Location: NW Region - Eau Claire
Contact Info: tou.yang@dot.wi.gov
Date: 2024.04.29 09:45:42-05'00'

E

GENERAL NOTES

WHEN THE QUANTITY OF BASE AGGREGATE IS MEASURED BY THE TON OR CUBIC YARD, THE DEPTH OR THICKNESS OF THE LAYER SHOWN ON THE PLANS IS APPROXIMATE AND THE ACTUAL THICKNESS WILL DEPEND ON THE DISTRIBUTION OF THE MATERIAL AS DIRECTED BY THE ENGINEER.

NO TREES OR SHRUBS ARE TO BE REMOVED WITHOUT THE APPROVAL OF THE ENGINEER.

THE EXACT LOCATION OF THE EROSION CONTROL DEVICES SHALL BE DETERMINED IN THE FIELD.

PIPE ELEVATIONS, LENGTHS AND LOCATIONS AS SHOWN ON THE PLANS, MAY BE ADJUSTED TO FIT EXISTING FIELD CONDITIONS AS APPROVED BY THE ENGINEER.

ALL CURB AND GUTTER RADII, PAVEMENT DIMENSIONS AND STATIONS ARE SHOWN TO THE EDGE OF THE PAVEMENT UNLESS NOTED OTHERWISE.

A SAWED JOINT WILL BE REQUIRED WHERE NEW PAVEMENT IS TO MEET AN EXISTING PAVED SURFACE.

DISTURBED AREAS WITHIN THE RIGHT OF WAY EXCEPT THE AREAS WITHIN THE FINISHED SHOULDER POINTS, SHALL BE FERTILIZED, SEEDED, AND MULCHED OR EROSION MAT UNLESS OTHERWISE SPECIFIED.

THE LOCATIONS OF EXISTING AND PROPOSED UTILITY INSTALLATIONS AS SHOWN ON THE PLANS ARE APPROXIMATE. THERE MAY BE OTHER UTILITY INSTALLATIONS WITHIN THE PROJECT AREA THAT ARE NOT SHOWN.

TEMPORARY SHORING REQUIRED FOR THE TEMPORARY STRUCTURE AS SHOWN ON THE CROSS SECTIONS IS FOR INFORMATION ONLY. TEMPORARY SHORING FOR THE TEMPORARY STRUCTURE IS CONTRACTOR-DESIGNED AND LOCATED, AND IS INCIDENTAL TO TEMPORARY STRUCTURE.

RUNOFF COEFFICIENT TABLE

A	HYDROLOGIC SOIL GROUP											
	B		C							D		
	SLOPE RANGE (PERCENT)			SLOPE RANGE (PERCENT)			SLOPE RANGE (PERCENT)			SLOPE RANGE (PERCENT)		
LAND USE:	0-2	2-6	6 & OVER	0-2	2-6	6 & OVER	0-2	2-6	6 & OVER	0-2	2-6	6 & OVER
ROW CROPS	.08 .22	.16 .30	.22 .38	.12 .26	.20 .34	.27 .44	.15 .30	.24 .37	.33 .50	.19 .34	.28 .41	.38 .56
MEDIAN STRIP-TURF	.19 .24	.20 .26	.24 .30	.19 .25	.22 .28	.26 .33	.20 .26	.23 .30	.30 .37	.20 .27	.25 .32	.30 .40
SIDE SLOPE: TURF			.25 .32			.27 .34			.28 .36			.30 .38
PAVEMENT:												
ASPHALT	.70 - .95											
CONCRETE	.80 - .95											
BRICK	.70 - .80											
DRIVES, WALKS	.75 - .85											
ROOFS	.75 - .95											
GRAVEL ROADS, SHOULDERS	.40 - .60											

TOTAL PROJECT AREA = 6.1 ACRES
TOTAL AREA EXPECTED TO BE DISTURBED BY CONSTRUCTION ACTIVITIES = 3.8 ACRES

BORING LOG

NO.	STA	OFFSET	ASPHALT THICKNESS (INCHES)	BASE FILL (INCHES)
B-1	120+90.5	15.5' LT	4.75	8.25
B-2	121+56.5	8.0' RT	5.00	6.50

BALDWIN MUNICIPAL WATER UTILITY
1980 4TH AVE
BALDWIN, WI 54002
BRAD BOLDT
DIRECTOR OF PUBLIC WORKS
(715) 684-2535
BRAD@VILLAGEOFBALDWIN.COM

BALDWIN TELECOM INC. - COMMUNICATION
930 MAPLE STREET
BALDWIN, WI 54002
MATT KNEGENDORF
(715) 688-1034 (OFFICE)
(715) 760-0968 (CELL)
MKNEGENDORF@LSWI.NET

WE ENERGIES - GAS / PETROLEUM
104 W. SOUTH STREET
RICE LAKE, WI 54868
STEVEN CHAVERS
(715) 234-9605 (OFFICE)
(715) 213-4327 (CELL)
STEVEN.CHAVERS@WE-ENERGIES.COM

XCEL ENERGY - ELECTRICITY
2001 OLD HWY 35 A
HUDSON, WI 54016
ASHLEY LARSON
(612) 346-5766
ASHLEY.N.LARSON@XCELENERGY.COM

DIGGERS HOTLINE
Dial 811 or (800)242-8511
www.DiggersHotline.com

DESIGN CONSULTANT
ROSS JOHNSON
CBS SQUARED, INC.
770 TECHNOLOGY WAY
CHIPPEWA, WI 54729
(715) 861-2236 OFFICE
(715) 579-4175 CELL
RJOHNSON@CBSSQUAREDINC.COM

ORDER OF SECTION 2 DETAIL SHEETS

VILLAGE OF BALDWIN
400 CEDAR STREET
BALDWIN, WI 54002
LANCE VAN DAMME
VILLAGE PRESIDENT
(715) 684-2535
LVANDAMME@VILLAGEOFBALDWIN.COM

TOWN OF HAMMOND
1816 COUNTY ROAD E
HAMMOND, WI 54015
PAUL HUEG
CHAIRMAN
(715) 977-1378
PAUL.HUEG@HOTMAIL.COM

WISDOT CONTACT (REGION)
TOU YANG
SUPERVISOR
718 WEST CLAIREMONT AVE
EAU CLAIRE, WI 54701
(715) 833-5570
TOU.YANG@DOT.WI.GOV

WISCONSIN DNR
AMY LESIK
DNR LIAISON
1300 WEST CLAIREMONT AVE
EAU CLAIRE, WI 54701
(715) 495-1903 OFFICE
AMY.LESIK@WISCONSIN.GOV

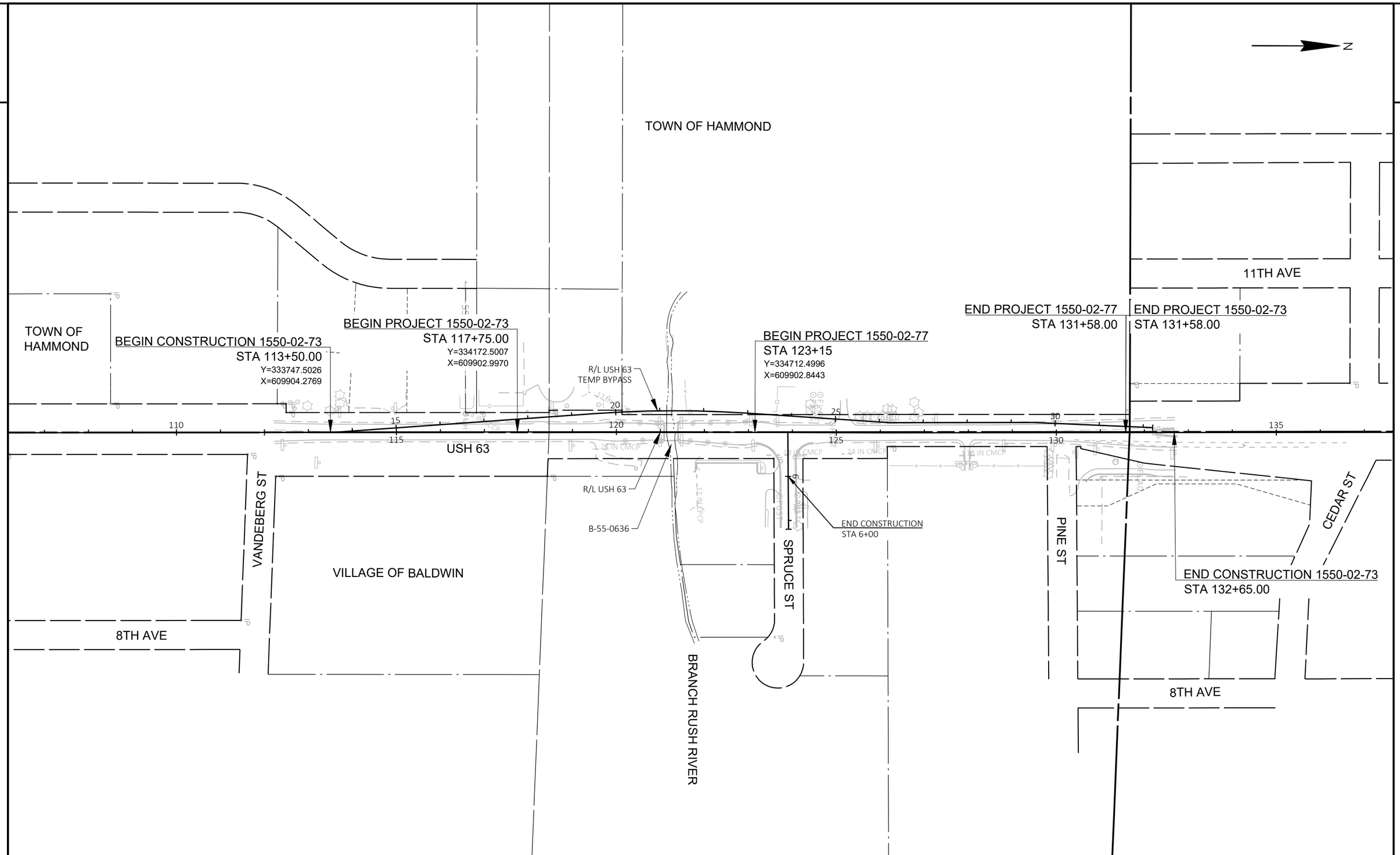

PROJECT NO: 1550-02-73, 1550-02-77	HWY: USH 63	COUNTY: ST. CROIX	PROJECT OVERVIEW	SHEET 3	E

FILE NAME : N:\PDS\C3D\15500203\SHEETSPLAN\020201-PO.DWG
LAYOUT NAME - 020201-po
PLOT DATE : 7/10/2023 12:03 PM
PLOT BY : MATT PAYNE
PLOT NAME :
PLOT SCALE : 1 IN:200 FT
WISDOT/CADDS SHEET 42

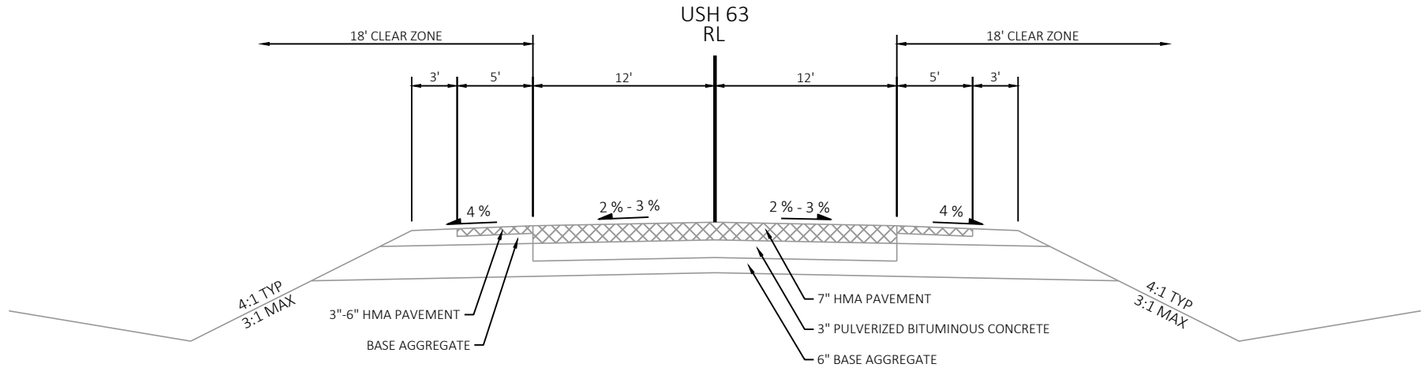

EXISTING TYPICAL SECTION
USH 63
STA 113+50 - STA 121+09
STA 121+39 - STA 129+00

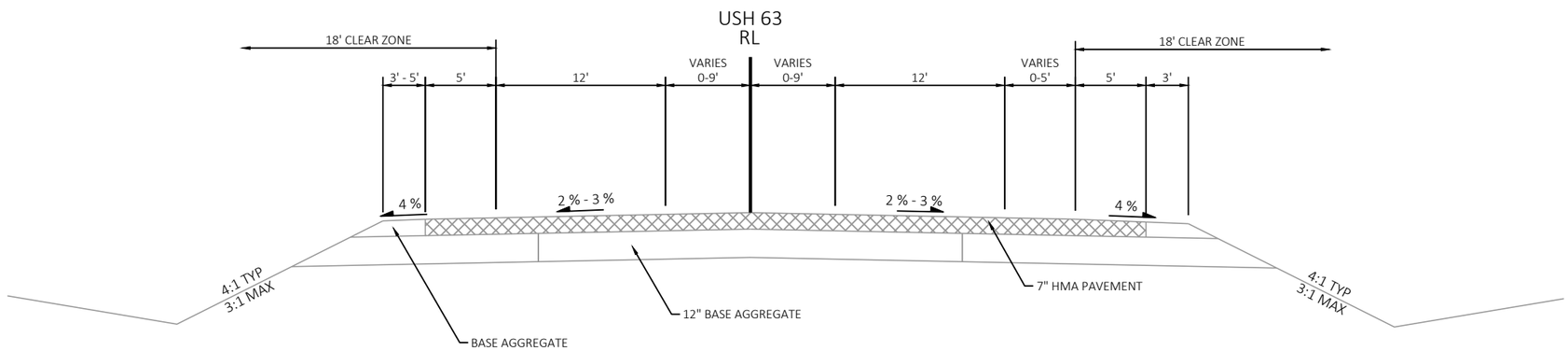

EXISTING TYPICAL SECTION
USH 63
STA 129+00 - STA 131+58

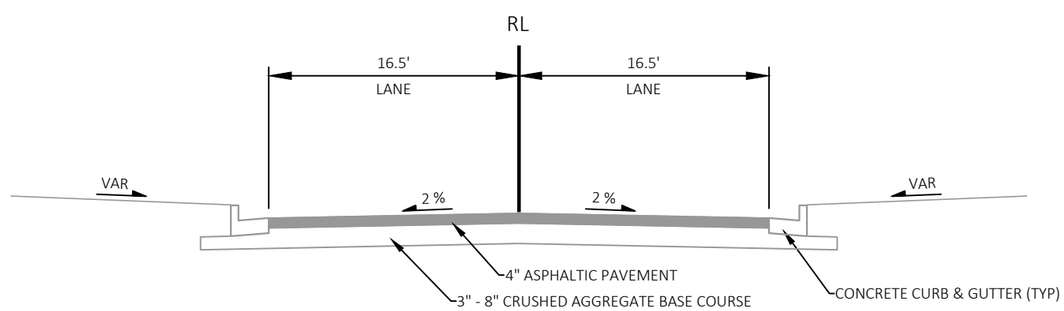

EXISTING TYPICAL SECTION
SPRUCE STREET

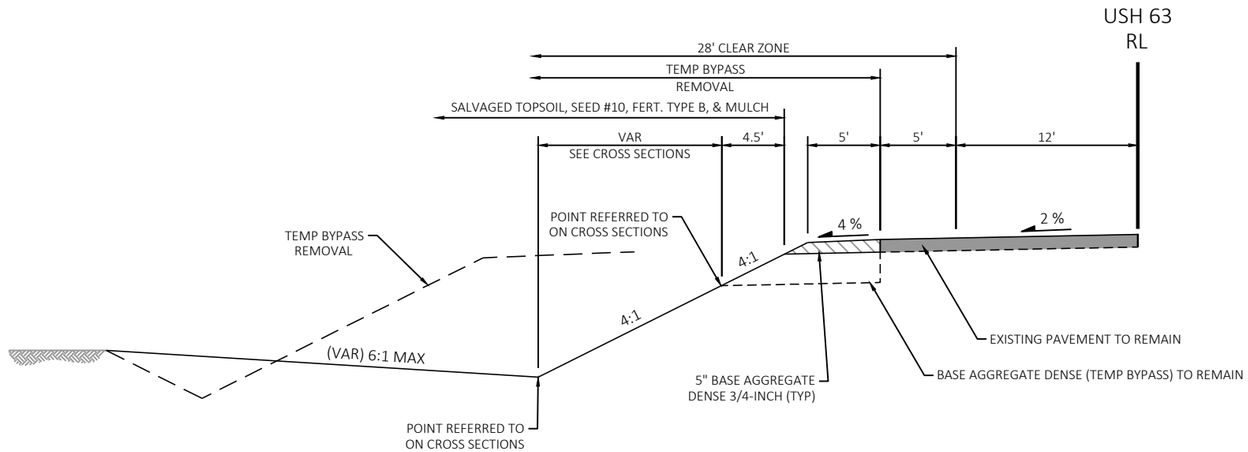

FINISHED TYPICAL SECTION

USH 63
STA 113+77 - STA 117+75 LT

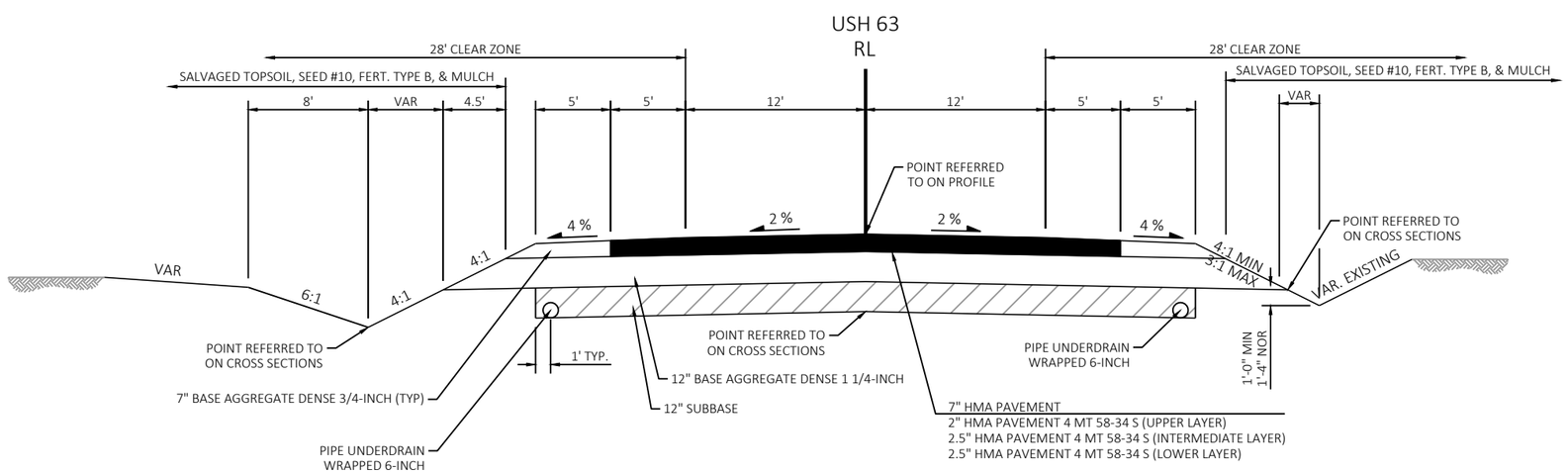

FINISHED TYPICAL SECTION

STA 117+75 - STA 118+25

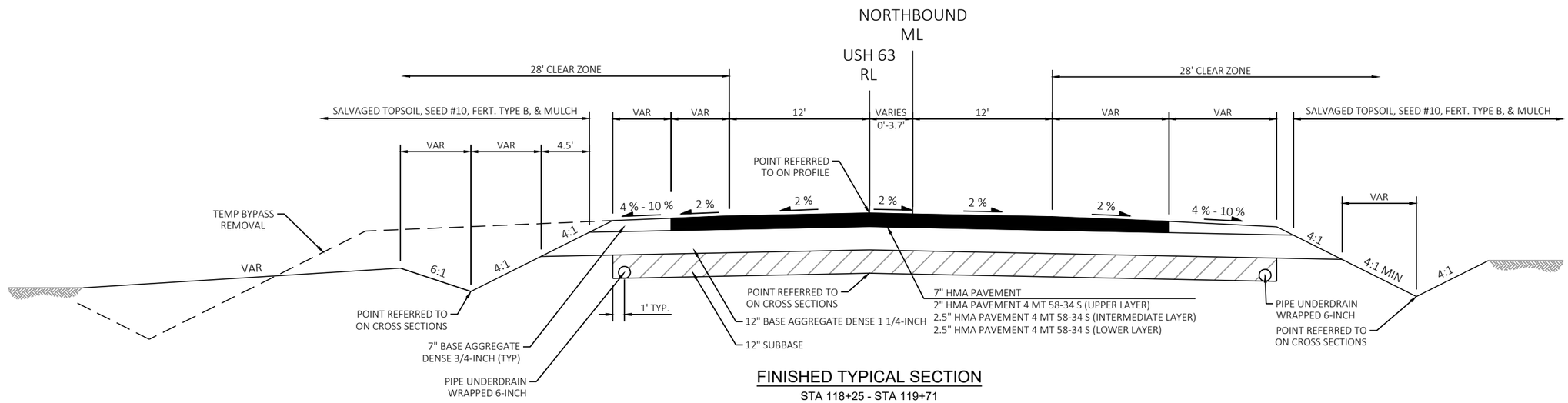

FINISHED TYPICAL SECTION

STA 118+25 - STA 119+71

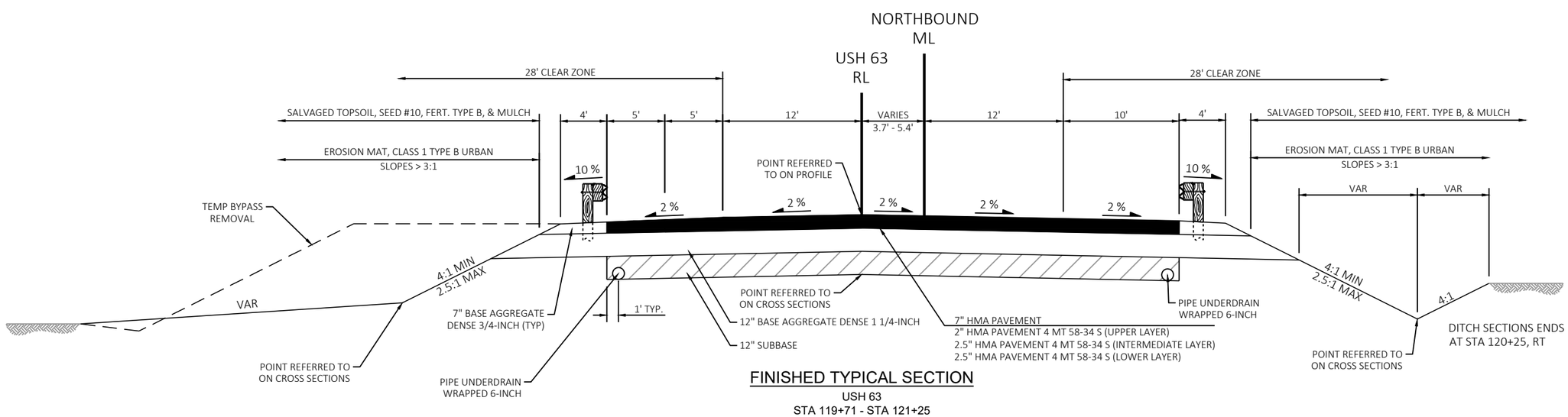

FINISHED TYPICAL SECTION

USH 63
STA 119+71 - STA 121+25

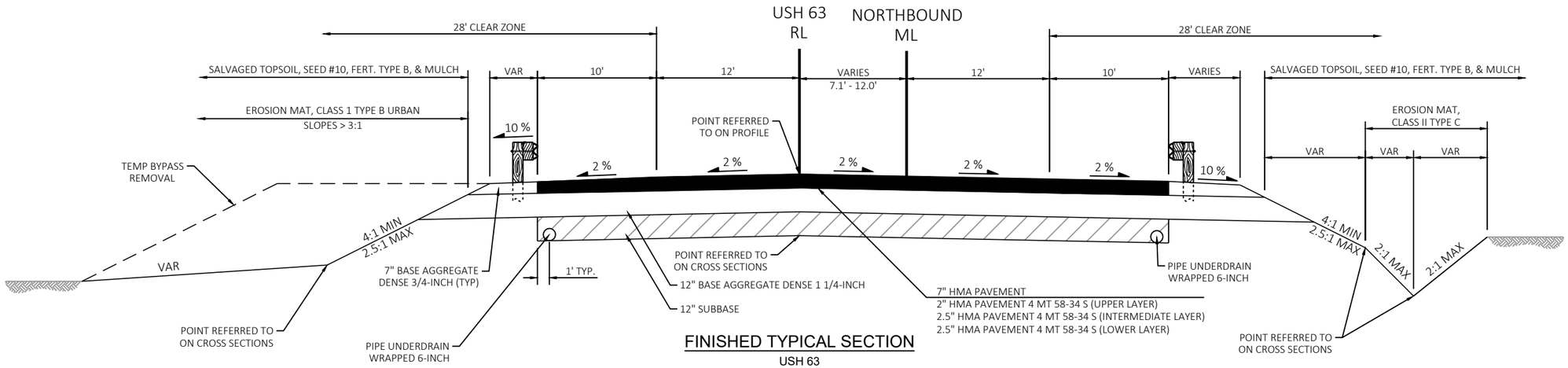

FINISHED TYPICAL SECTION

USH 63
STA 121+25 - STA 122+79

DITCH SECTION ENDS AT STA 123+32

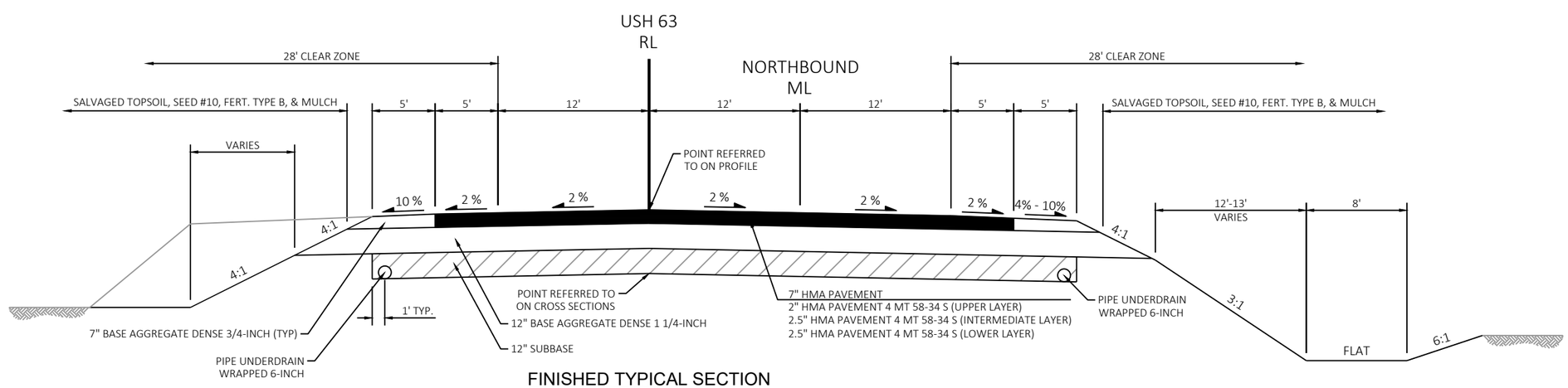

FINISHED TYPICAL SECTION

STA 122+79 - STA 125+50

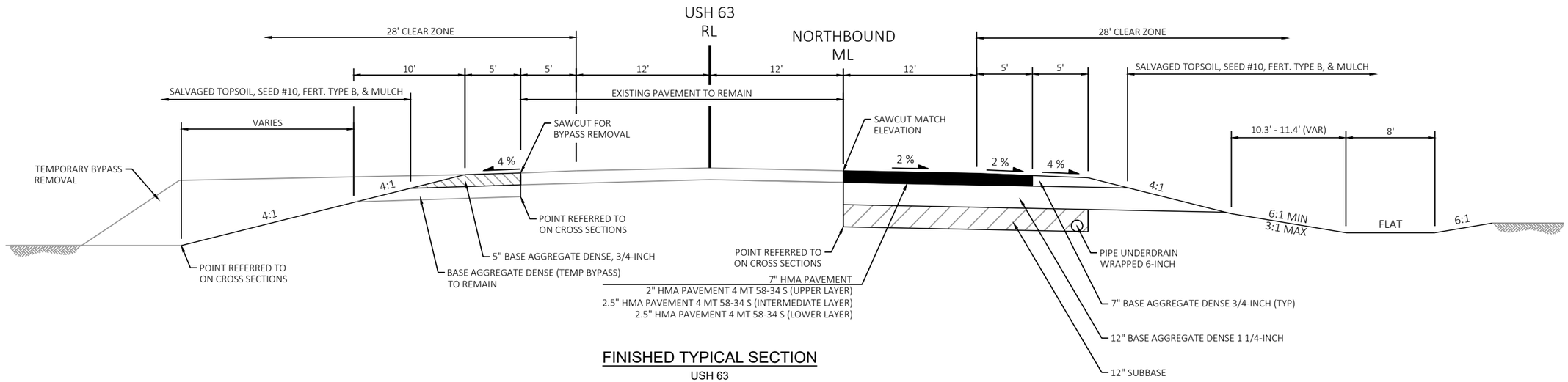

FINISHED TYPICAL SECTION

USH 63
STA 125+50 - STA 129+00

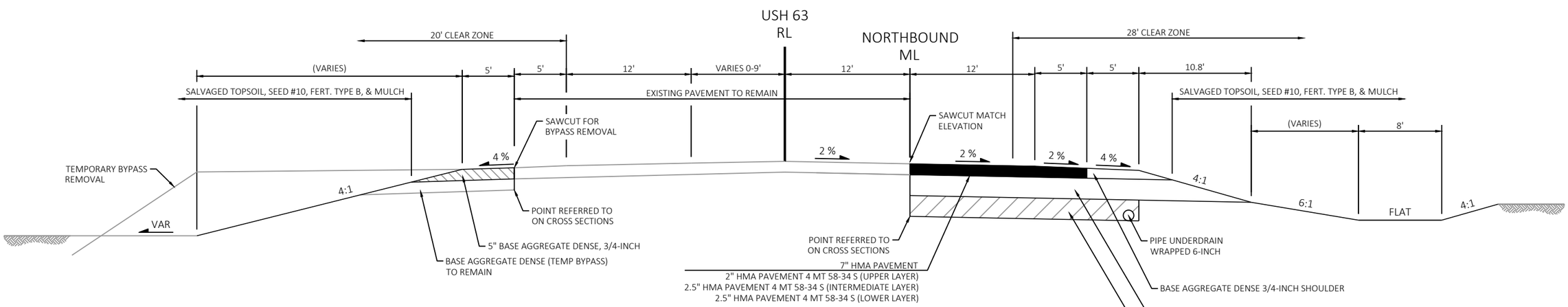

FINISHED TYPICAL SECTION

USH 63
STA 129+00 - STA 131+58

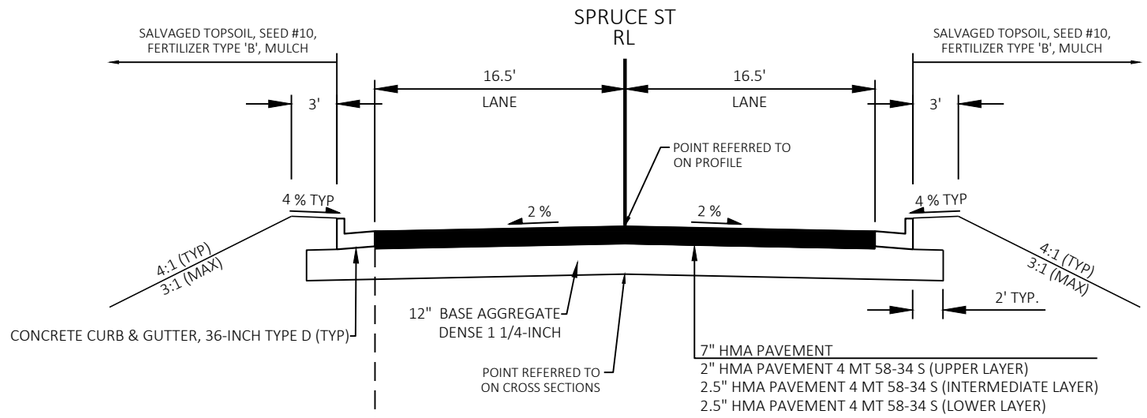

FINISHED TYPICAL SECTION
SPRUCE STREET

NOTE 1
TEMPORARY ASPHALT TO MATCH INTERMEDIATE HMA LAYER OR AS OTHERWISE DETERMINED BY CONTRACTORS PAVING OPERATIONS.

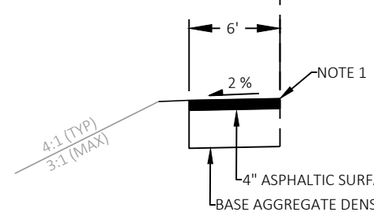

FINISHED PARTIAL SECTION - TEMPORARY WIDENING
SPRUCE STREET
STAGE 2 TRAFFIC CONTROL

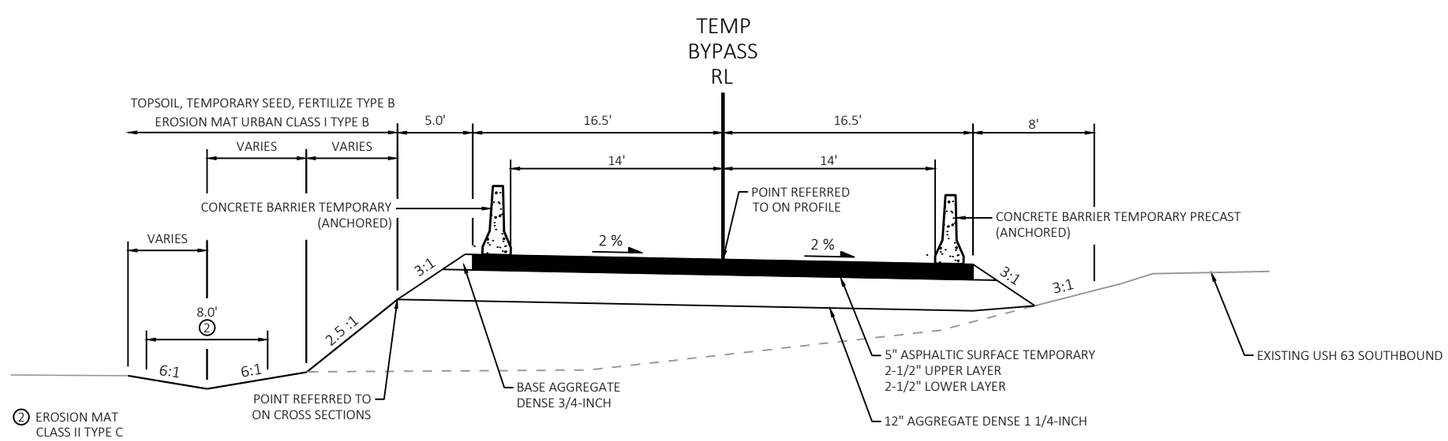

FINISHED TYPICAL SECTION
TEMPORARY BYPASS
SUPERELEVATION SECTION

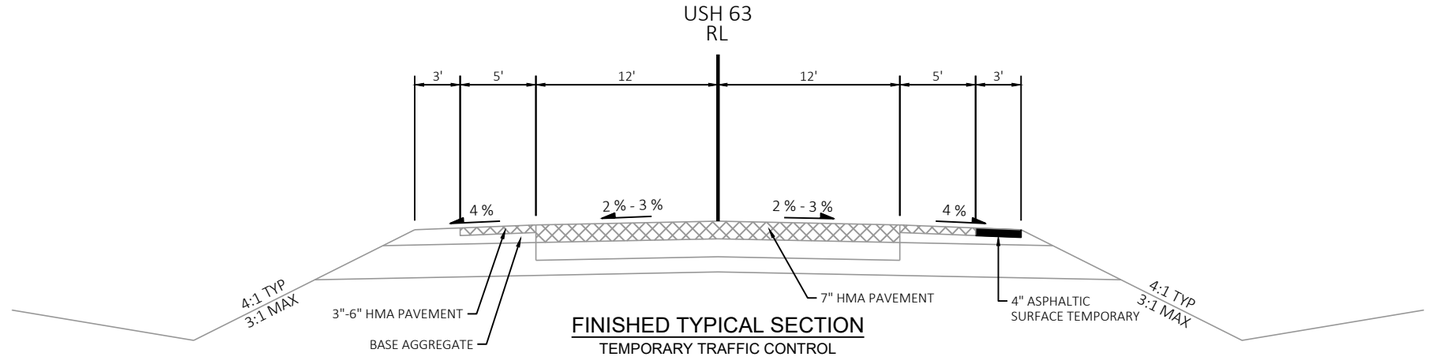

FINISHED TYPICAL SECTION
TEMPORARY TRAFFIC CONTROL
STA 114+50 - STA 119+10, RT
USH 63
STAGE 3

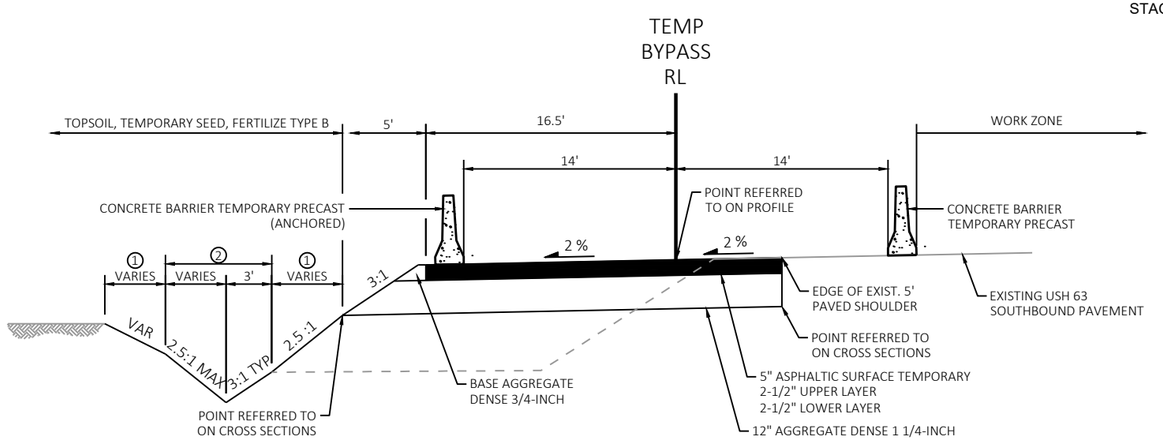

1 EROSION MAT URBAN CLASS I TYPE B
2 EROSION MAT CLASS II TYPE C

FINISHED TYPICAL SECTION
TEMPORARY BYPASS

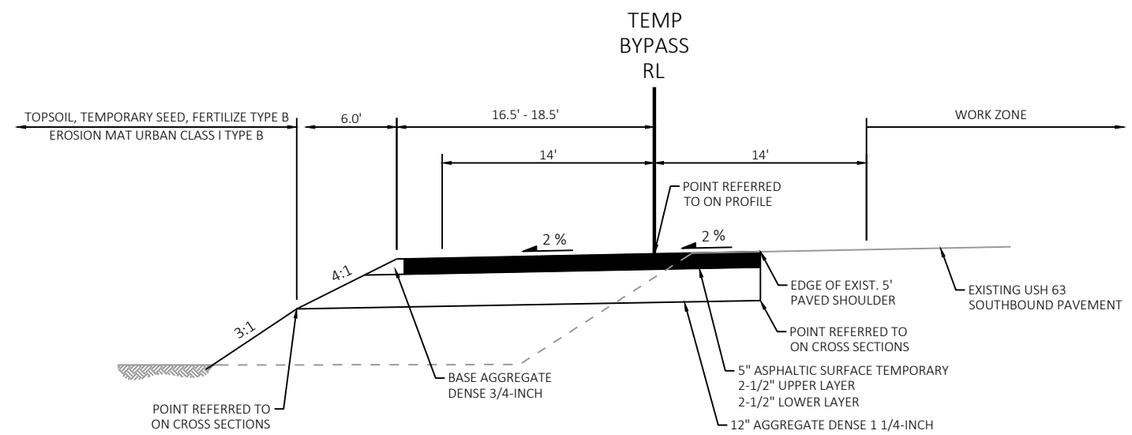

FINISHED TYPICAL SECTION
STA 25+16 - STA 26+50
TEMPORARY BYPASS

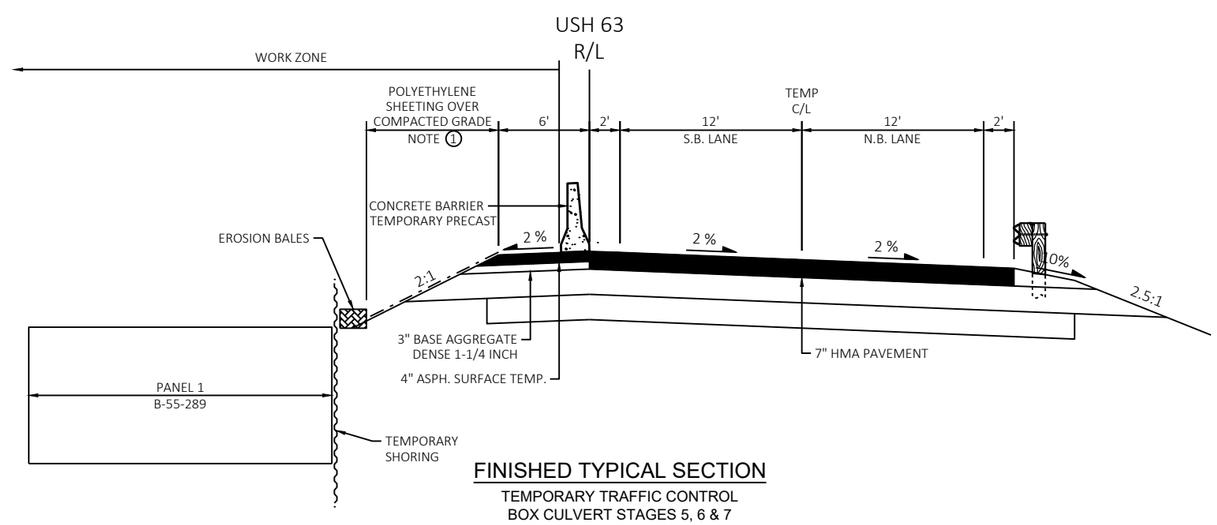

NOTE 1 :
POLYETHYLENE SHEETING IS INCIDENTAL TO THE BID ITEM
"TEMPORARY STREAM DIVERSION (STRUCTURE B-55-0289)

FINISHED TYPICAL SECTION
TEMPORARY TRAFFIC CONTROL
BOX CULVERT STAGES 5, 6 & 7
TRAFFIC CONTROL STAGE 3

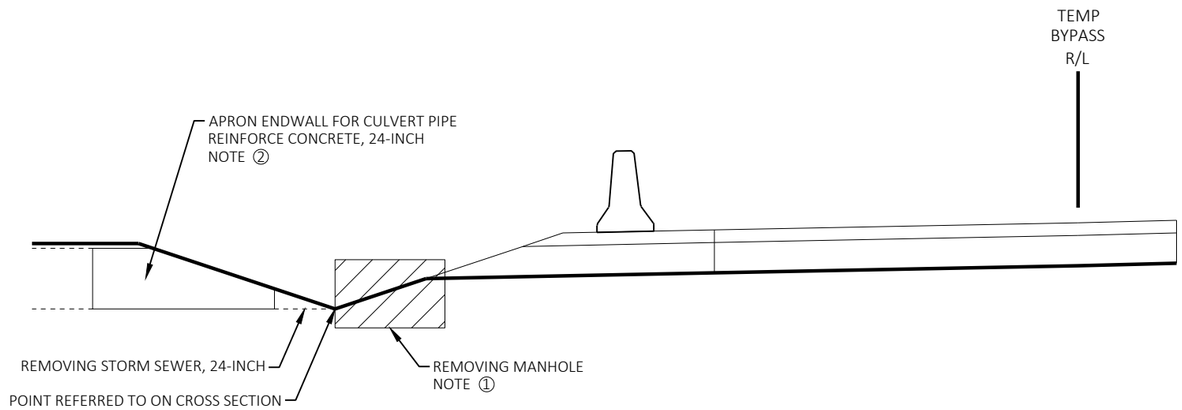

STORM SEWER MODIFICATION
TEMPORARY BYPASS DITCH
STA 16+57 LT

NOTE ① :
THE EXISTING MANHOLE IS DESIGNATED FOR SALVAGE, TO BE SAVED AND RECONSTRUCTED AT STA 116+57, 50' LT UNDER THE BID ITEM RECONSTRUCTING MANHOLES.

NOTE ② :
THE ENDWALL IS DESIGNATED FOR SALVAGE. SEE CONSTRUCTION DETAIL: 'STORM SEWER MANHOLE RESTORATION'

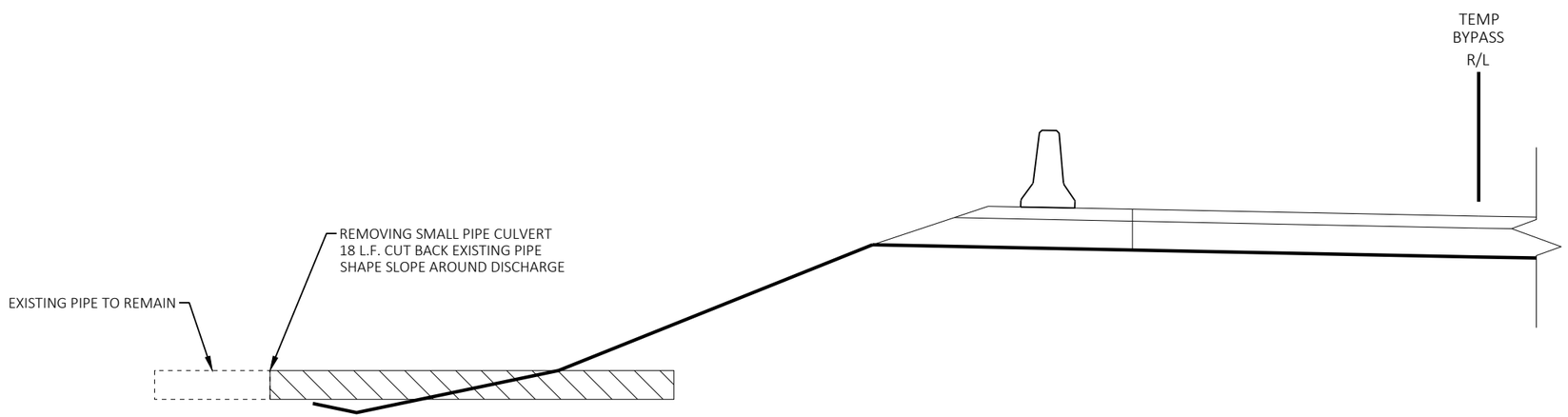

PIPE CULVERT MODIFICATION
TEMPORARY BYPASS
STA 19+75 LT

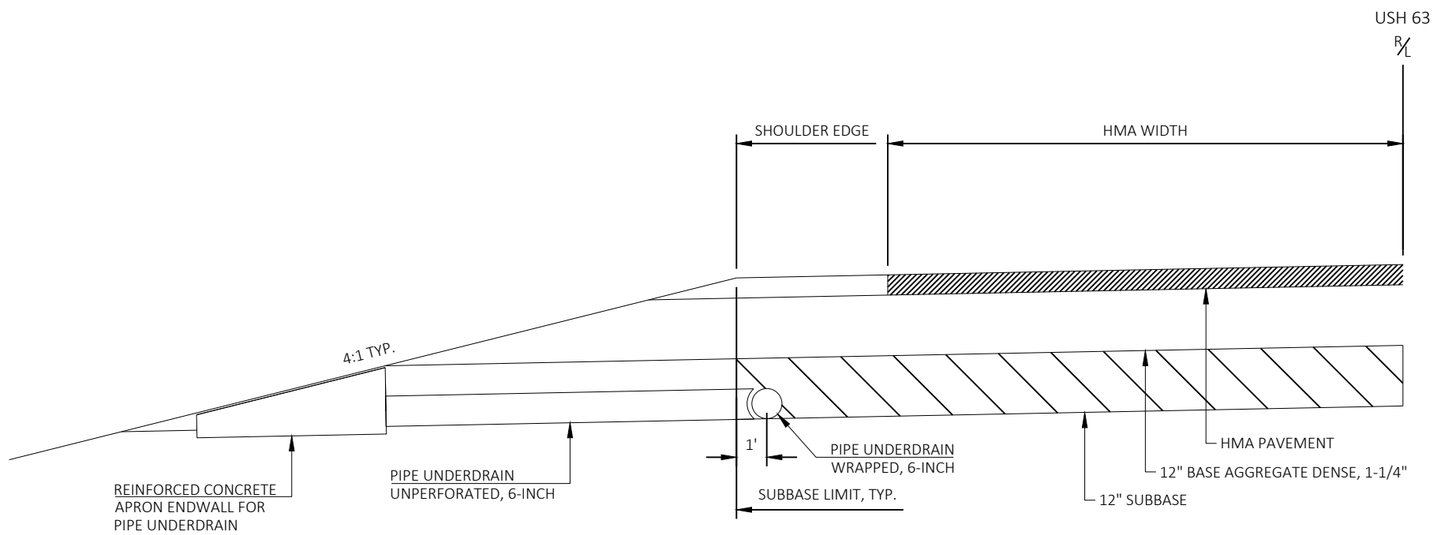

UNDERDRAIN DETAIL

USH 63

STA 117+75 TO STA 131+58
SPACED AT 250' MAX, AND LOW POINTS
SEE PLAN SHEETS

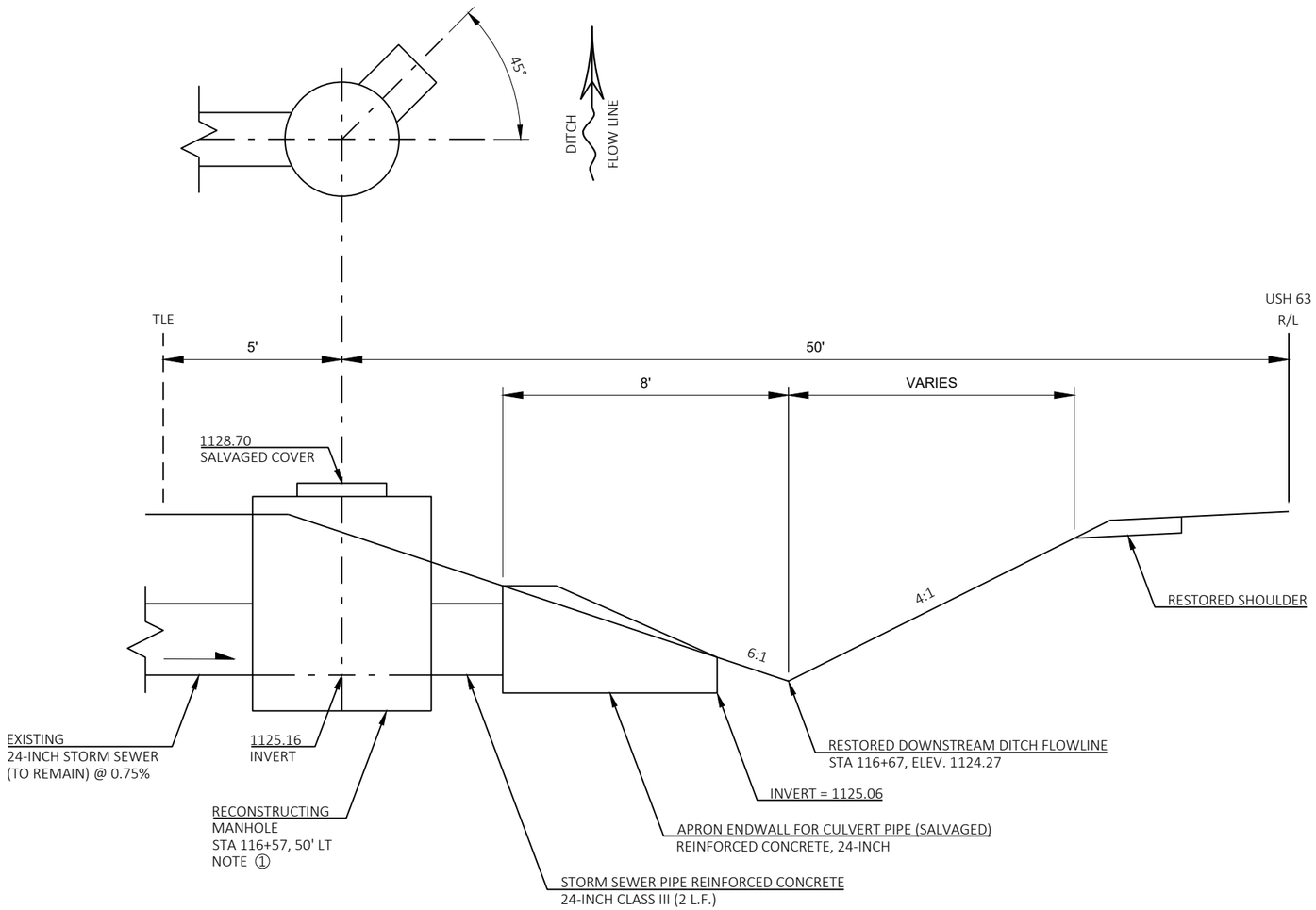

STORM SEWER MANHOLE RESTORATION

STA 116+57, 50' LT

NOTE ① :
RECONSTRUCT SALVAGED EXISTING MANHOLE
REMOVED FROM STA 116+57, LT

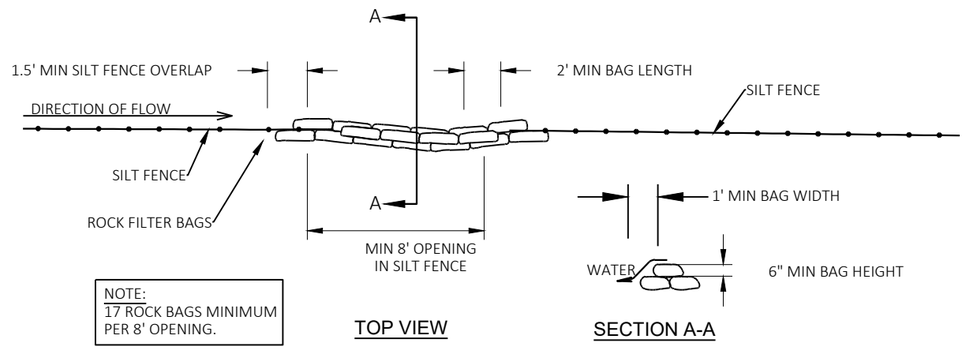

ROCK BAGS USED FOR SILT FENCE RELIEF

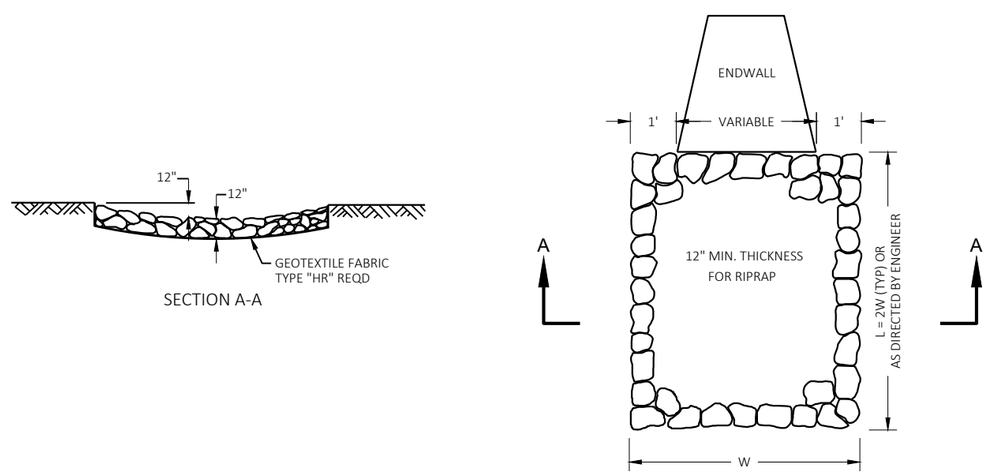

RIPRAP TREATMENT AT CULVERTS

2

NOTES:

- PIPE UNDERDRAIN WRAPPED
- PULL BOX
- PIPE UNDERDRAIN UNPERFORATED W/ APRON ENDWALL FOR UNDERDRAIN
- DIRECTION OF UNDERDRAIN FLOW

MGS GUARDRAIL

POST #1	POST #5	QUADRANT
STA 120+22.9	STA 120+47.9	SOUTHWEST
STA 119+71.0	STA 119+96.0	SOUTHEAST
STA 122+26.9	STA 122+01.9	NORTHEAST
STA 122+79.0	STA 122+54.0	NORTHWEST

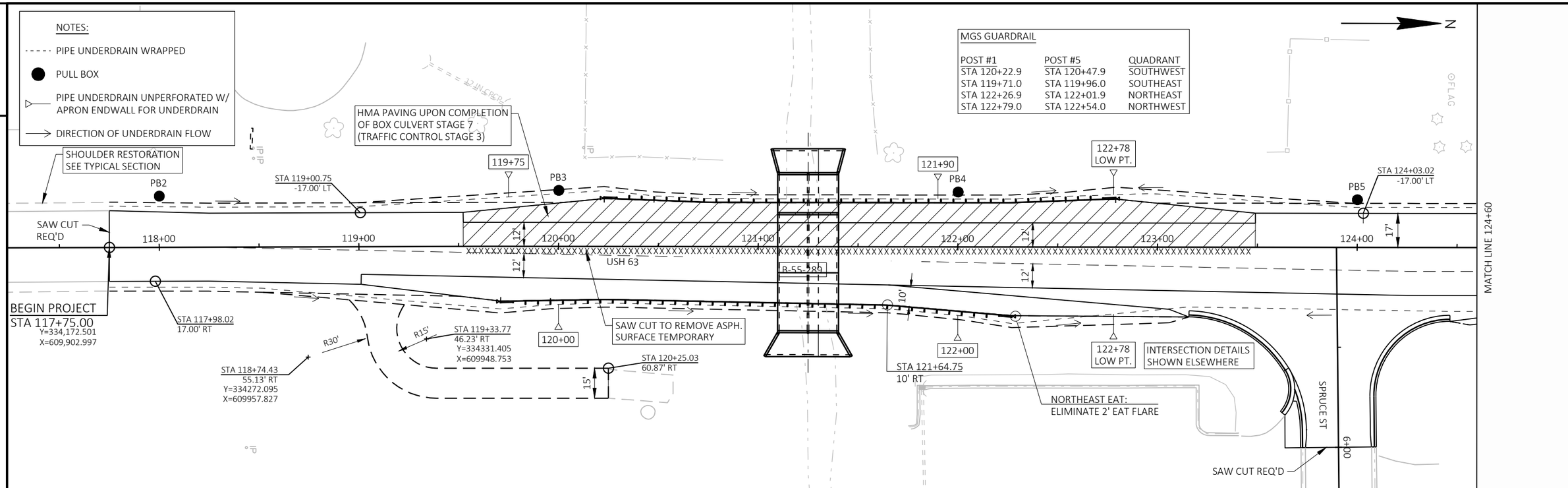

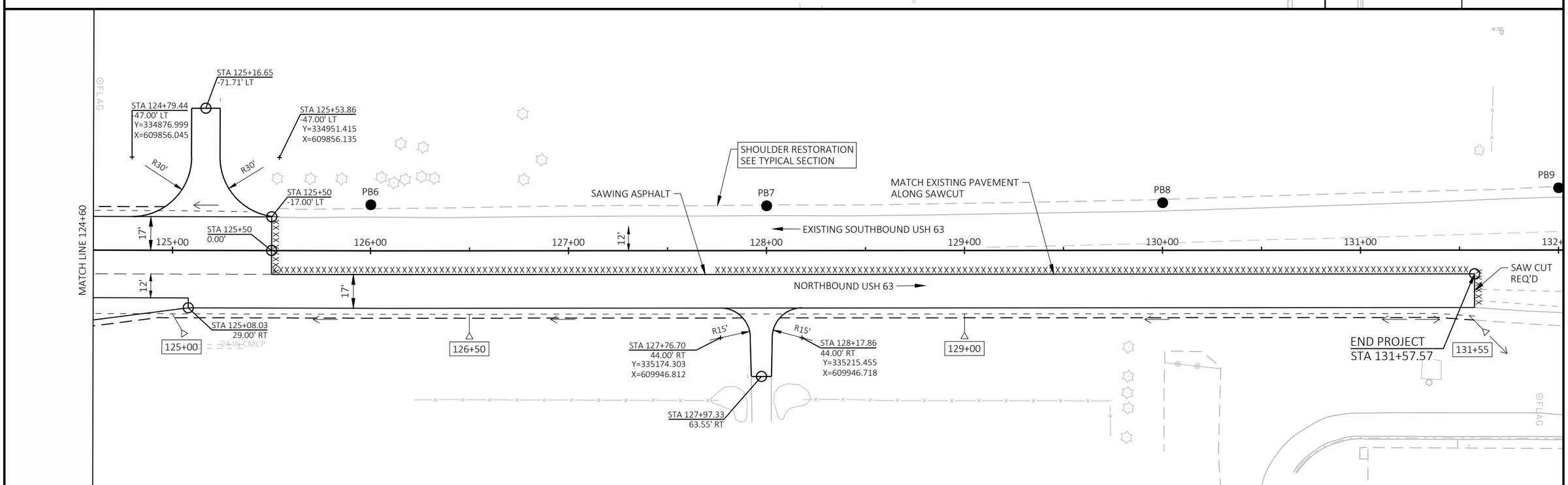

2

PROJECT NO: 1550-02-73, 1550-02-77	HWY: USH 63	COUNTY: ST. CROIX	PAVING DETAILS AND UNDERDRAIN	SHEET 15	E

FILE NAME : N:\PDS\C3D\15500203\SHEETSPLAN\021002-CD.DWG
LAYOUT NAME - CD-02
PLOT DATE : 4/4/2024 8:03 AM
PLOT BY : CHRIS BURNS
PLOT NAME :
PLOT SCALE : 1 IN:50 FT

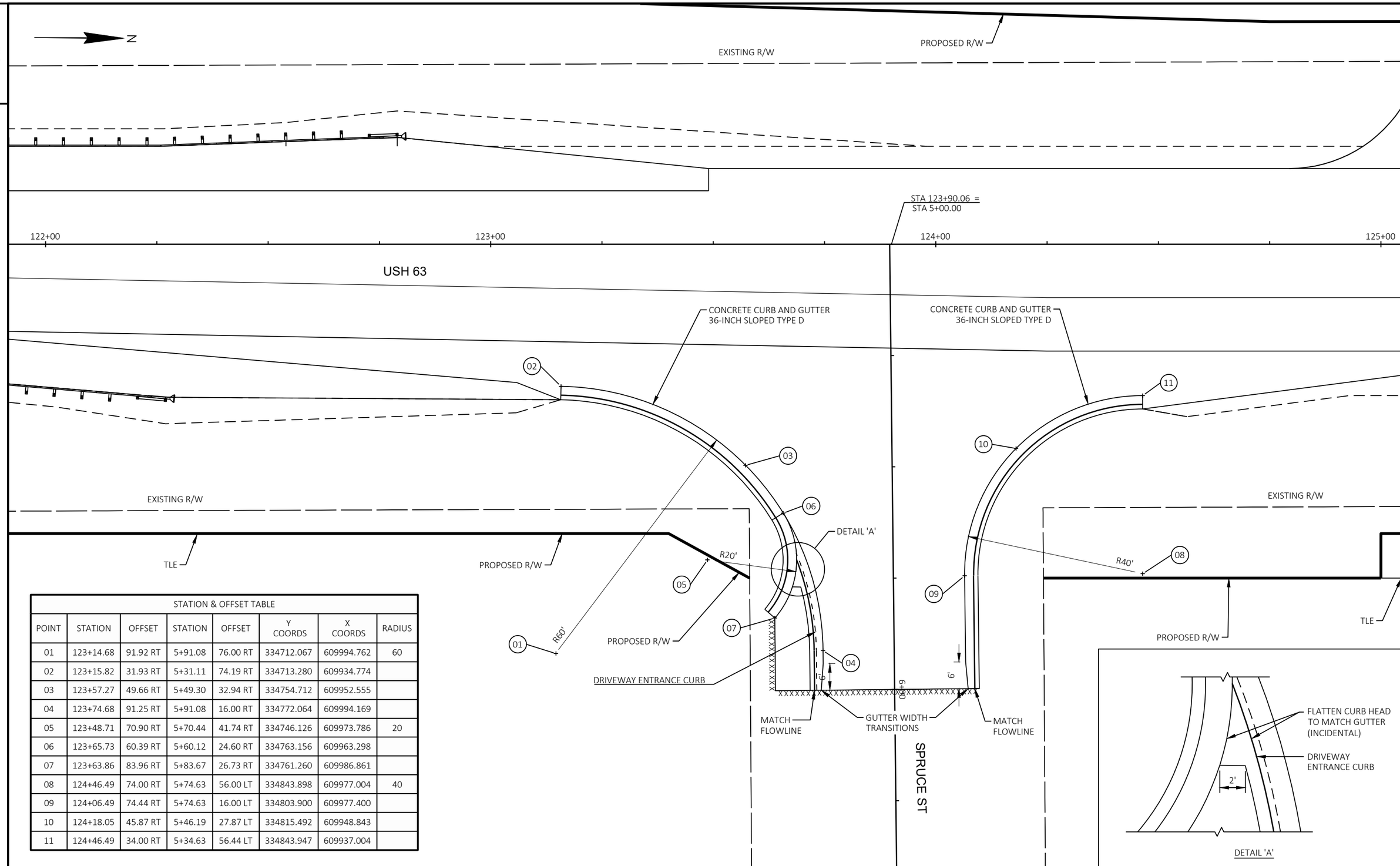

STATION & OFFSET TABLE							
POINT	STATION	OFFSET	STATION	OFFSET	Y COORDS	X COORDS	RADIUS
01	123+14.68	91.92 RT	5+91.08	76.00 RT	334712.067	609994.762	60
02	123+15.82	31.93 RT	5+31.11	74.19 RT	334713.280	609934.774	
03	123+57.27	49.66 RT	5+49.30	32.94 RT	334754.712	609952.555	
04	123+74.68	91.25 RT	5+91.08	16.00 RT	334772.064	609994.169	
05	123+48.71	70.90 RT	5+70.44	41.74 RT	334746.126	609973.786	20
06	123+65.73	60.39 RT	5+60.12	24.60 RT	334763.156	609963.298	
07	123+63.86	83.96 RT	5+83.67	26.73 RT	334761.260	609986.861	
08	124+46.49	74.00 RT	5+74.63	56.00 LT	334843.898	609977.004	40
09	124+06.49	74.44 RT	5+74.63	16.00 LT	334803.900	609977.400	
10	124+18.05	45.87 RT	5+46.19	27.87 LT	334815.492	609948.843	
11	124+46.49	34.00 RT	5+34.63	56.44 LT	334843.947	609937.004	

PROJECT NO: 1550-02-73, 1550-02-77	HWY: USH 63	COUNTY: ST. CROIX	INTERSECTION DETAILS - SPRUCE ST	SHEET 16	E

FILE NAME : N:\PDS\C3D\15500203\SHEETSPLAN\021101-ID.DWG
LAYOUT NAME - ID-01
PLOT DATE : 4/4/2024 8:27 AM
PLOT BY : CHRIS BURNS
PLOT NAME :
PLOT SCALE : 1 IN:20 FT
WISDOT/CADDS SHEET 42

2

EARTHWORK AND EBS APPORTIONMENT

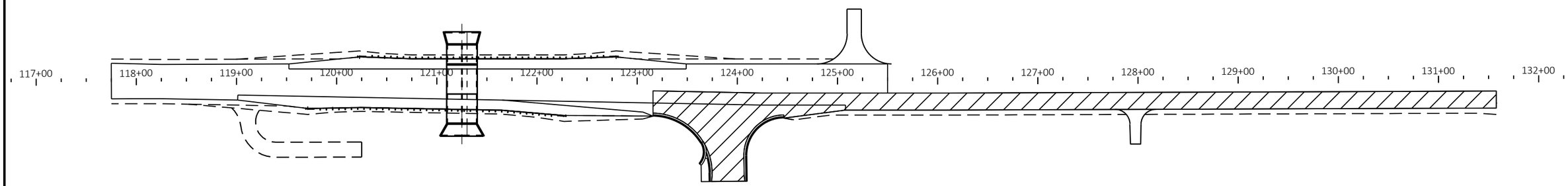

1550-02-77

NOTE: TEMPORARY BYPASS IS 1550-02-73

PROJECT NO: 1550-02-73, 1550-02-77	HWY: USH 63	COUNTY: ST. CROIX	EARTHWORK AND EBS	SHEET 17	E

2

STORM SEWER DISCHARGE INTO
TEMPORARY BYPASS DITCH
SEE CONSTRUCTION DETAIL

TLE

EXISTING R/W

112+00 13+00 113+00 14+00 114+00 15+00 115+00 16+00 116+00 17+00 117+00 18+00 118+00 19+00 119+00

USH 63

MATCH LINE 19+30

EXISTING R/W

LEGEND

- EROSION MAT URBAN CLASS I TYPE B
- EROSION MAT CLASS II TYPE C
- MULCH
- TEMPORARY SHORING
- SILT FENCE
- SLOPE INTERCEPT
- TEMPORARY DITCH CHECK
- SURFACE WATER FLOW
- ROCK BAGS FOR SILT FENCE RELIEF
- ASPHALTIC FLUME

REMOVE 18 LF OF EXISTING
CULVERT DISCHARGE END
SEE CONSTRUCTION DETAIL

TLE

TEMPORARY STRUCTURE

PROPOSED R/W

EXISTING R/W

MATCH LINE 19+30

20+00 21+00 22+00 23+00 24+00 25+00 26+00

120+00 121+00 122+00 123+00 124+00 125+00 126+00

USH 63

24 IN CMCP

18 IN CMCP

SPRUCE ST

EXISTING R/W

PROPOSED R/W

PROPOSED R/W

TLE

MATCH LINE 26+60

2

PROJECT NO: 1550-02-73, 1550-02-77	HWY: USH 63	COUNTY: ST. CROIX	EROSION CONTROL - TEMPORARY BYPASS	SHEET 18	E

FILE NAME : N:\PDS\C3D\15500203\SHEETSPLAN\022002-EC-TEMP.DWG
LAYOUT NAME - 022002-01

PLOT DATE : 4/8/2024 3:23 PM PLOT BY : MATT PAYNE PLOT NAME : PLOT SCALE : 1 IN:50 FT

WISDOT/CADDS SHEET 44

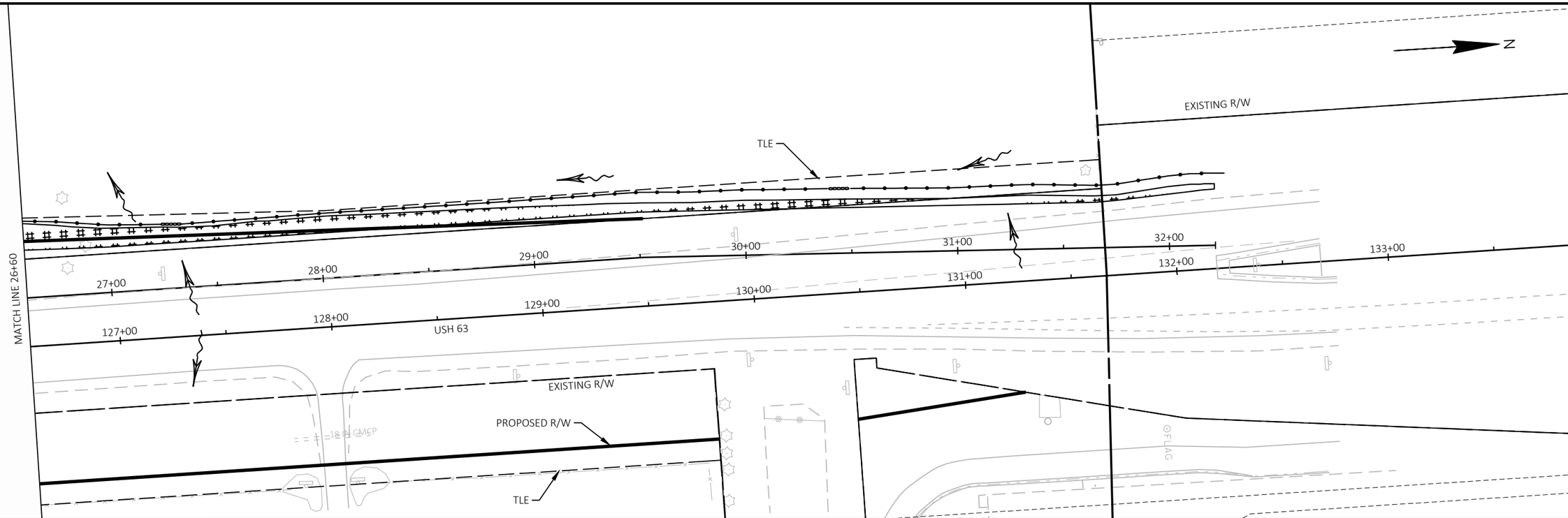

LEGEND

- EROSION MAT URBAN CLASS I TYPE B
- EROSION MAT CLASS II TYPE C
- MULCH
- TEMPORARY SHORING
- SILT FENCE
- SLOPE INTERCEPT
- TEMPORARY DITCH CHECK
- SURFACE WATER FLOW
- ROCK BAGS FOR SILT FENCE RELIEF

2

N

TEMPORARY STRUCTURE

R/W

TEMPORARY BYPASS

20+00

21+00

22+00

PROVIDE OPENING IN TEMP. SHORING TO DRAIN GORE

PROVIDE OPENING IN TEMP. SHORING TO DRAIN GORE

SANDBAGS AND SEAL (INFORMATION ONLY)

USH 63 R/L

121+00

122+00

TEMPORARY STREAM DIVERSION SEE SPECIAL PROVISIONS

STABILIZE TEMPORARY EXCAVATION SLOPES ABOVE THE TEMPORARY CHANNEL WITH POLYETHYLENE SHEETING

CAUTION

CAUTION

R/W

BOX CULVERT STAGE 2

R/W

LEGEND

- EROSION MAT URBAN CLASS I TYPE B
- EROSION MAT CLASS II TYPE C
- MULCH
- TEMPORARY SHORING
- SILT FENCE
- SLOPE INTERCEPT
- TEMPORARY DITCH CHECK
- SURFACE WATER FLOW
- SAND BAGS

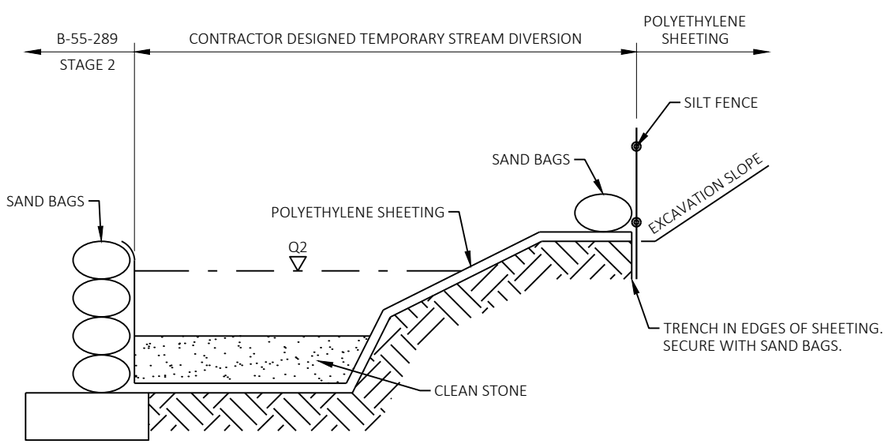

TEMPORARY STREAM DIVERSION
DETAIL FOR INFORMATION ONLY
SEE SPECIAL PROVISIONS

TEMPORARY STREAM DIVERSION NOTES

THE TEMPORARY STREAM DIVERSION MUST BE CAPABLE OF DIVERTING THE 2-YEAR RAINFALL EVENT STREAM FLOW (Q2). Q2 IS ESTIMATED TO BE 280 CFS.

FISH AND AQUATIC SPECIES THAT BECOME STRANDED IN DEWATERED AREAS OR TEMPORARY CHANNELS SHOULD BE CAPTURED AND RETURNED TO THE ACTIVE STREAM IMMEDIATELY.

EXCAVATION, BACKFILL, POLYETHYLENE SHEETING, TEMPORARY SAND BAGS, AND BASE AGGREGATE OPEN GRADED, OR CLEAN STONE IF REQUIRED, ARE INCIDENTAL TO THE BID ITEM TEMPORARY STREAM DIVERSION.

TEMPORARY SAND BAGS AND SEAL IF REQUIRED ARE INCIDENTAL TO THE BID ITEM TEMPORARY STREAM DIVERSION.

TEMPORARY SHORING IF REQUIRED IS INCIDENTAL TO THE BID ITEM TEMPORARY STREAM DIVERSION.

PROJECT NO: 1550-02-73, 1550-02-77	HWY: USH 63	COUNTY: ST. CROIX	EROSION CONTROL - BOX CULVERT AND TEMPORARY STREAM DIVERSION	SHEET 20	E

2

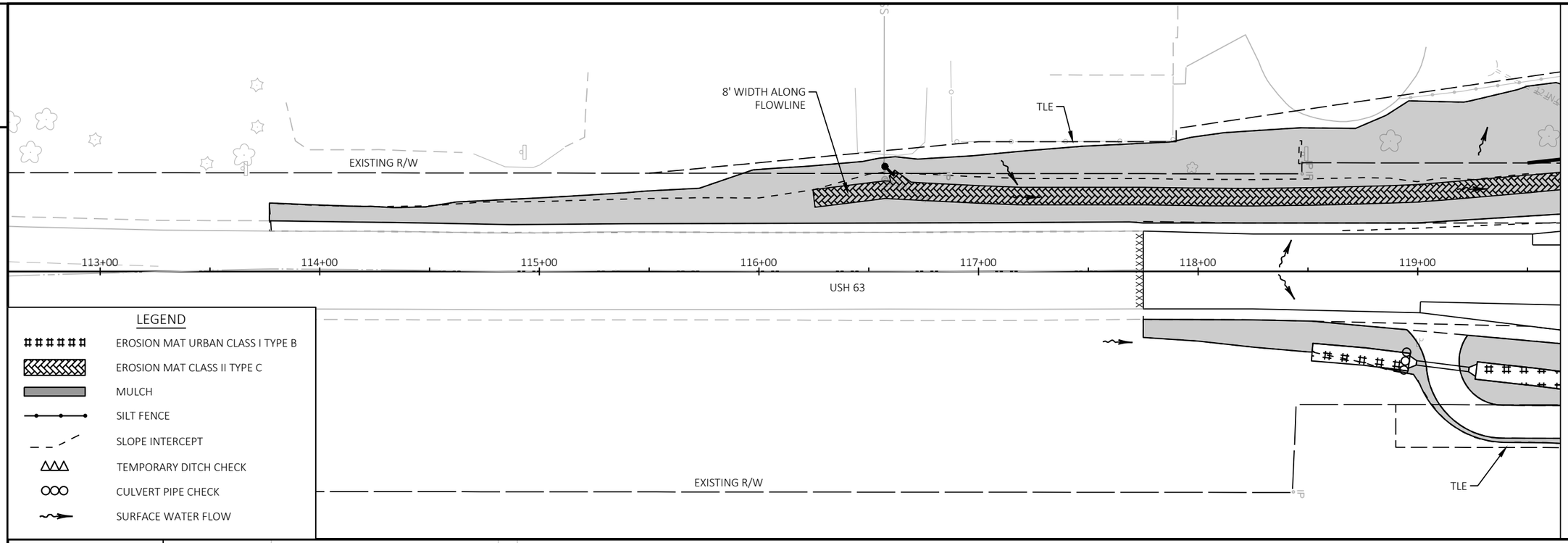

LEGEND

- EROSION MAT URBAN CLASS I TYPE B
- EROSION MAT CLASS II TYPE C
- MULCH
- SILT FENCE
- SLOPE INTERCEPT
- TEMPORARY DITCH CHECK
- CULVERT PIPE CHECK
- SURFACE WATER FLOW

2

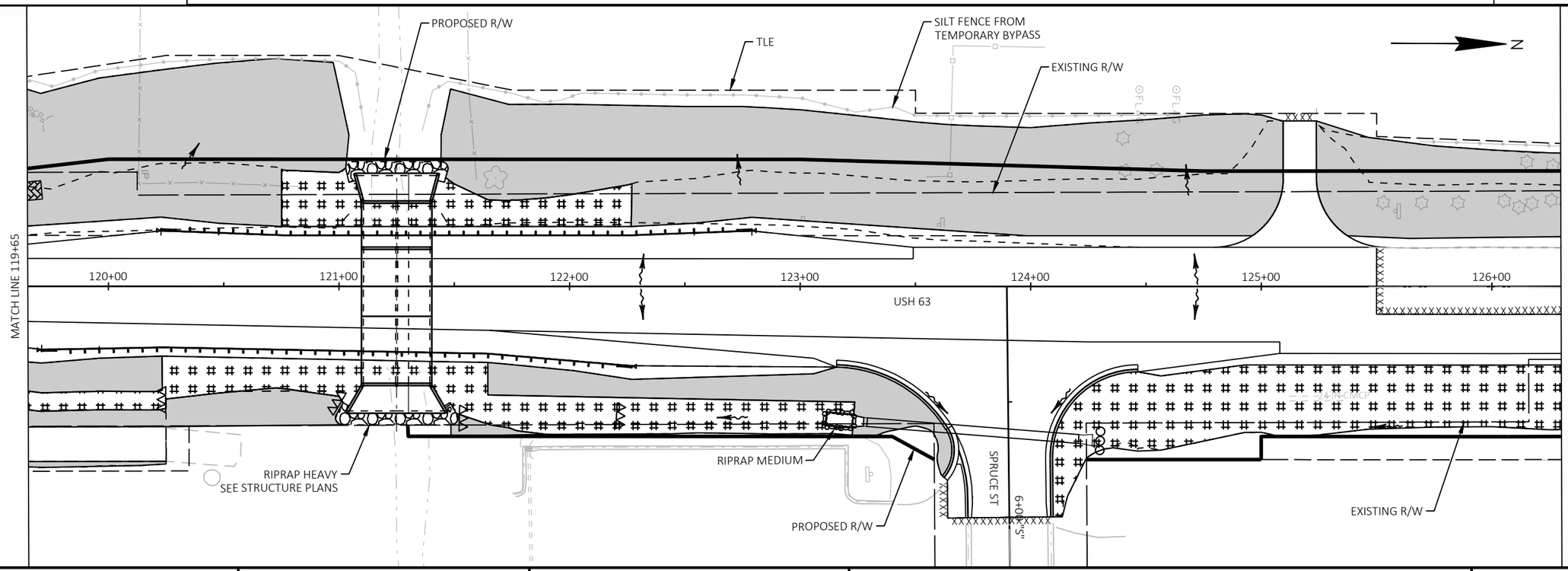

PROJECT NO: 1550-02-73, 1550-02-77	HWY: USH 63	COUNTY: ST. CROIX	EROSION CONTROL	SHEET 21	E

FILE NAME : N:\PDS\C3D\15500203\SHEETSPLAN\022001-EC.DWG
LAYOUT NAME - 022001-01
PLOT DATE : 2/28/2024 7:28 AM
PLOT BY : CHRIS BURNS
PLOT NAME :
PLOT SCALE : 1 IN:50 FT

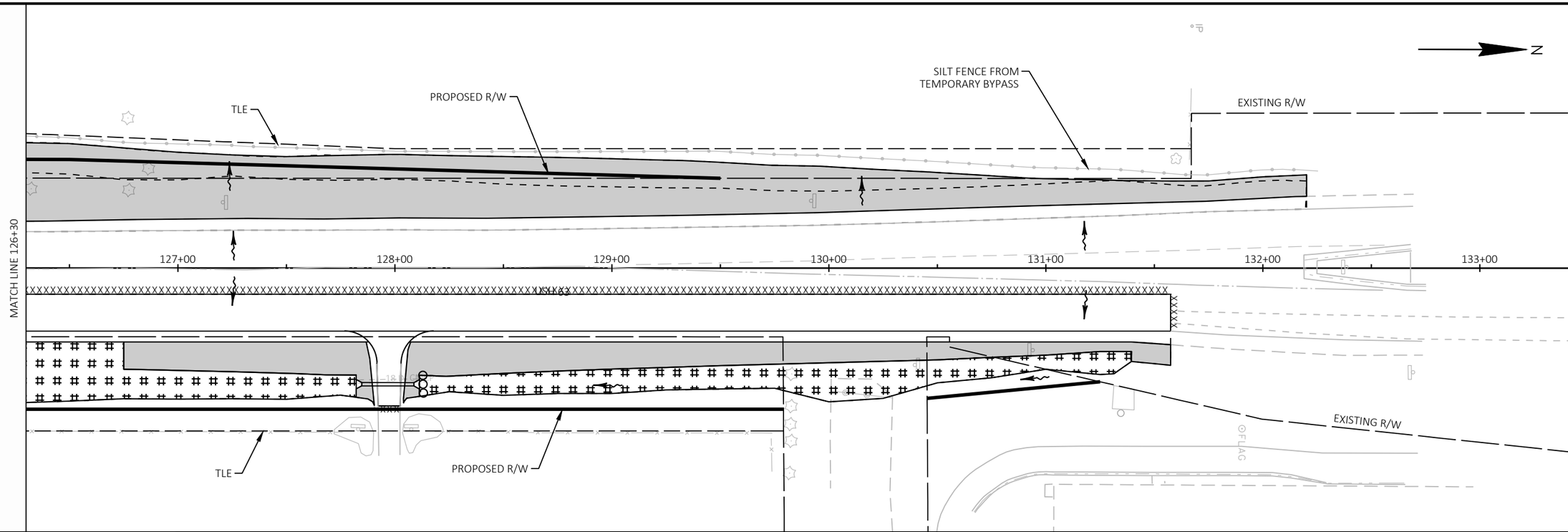

2

LEGEND

- EROSION MAT URBAN CLASS I TYPE B
- MULCH
- SILT FENCE
- SLOPE INTERCEPT
- TEMPORARY DITCH CHECK
- CULVERT PIPE CHECK
- SURFACE WATER FLOW

PROJECT NO: 1550-02-73, 1550-02-77	HWY: USH 63	COUNTY: ST. CROIX	EROSION CONTROL	SHEET 22	E

2

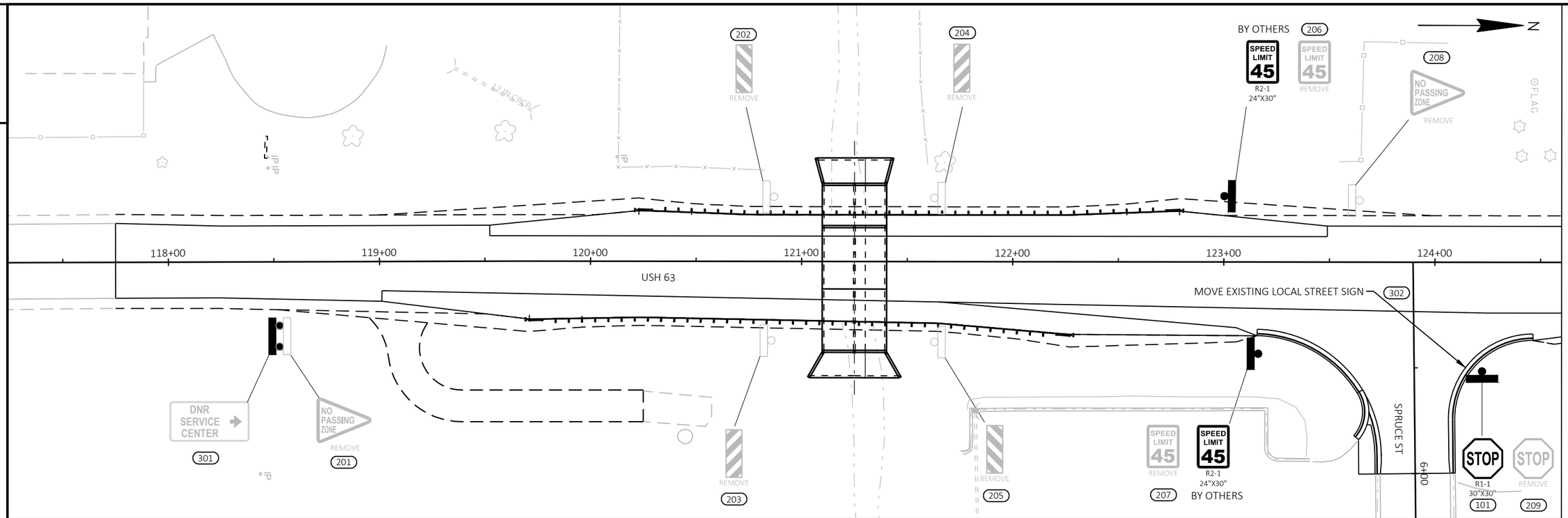

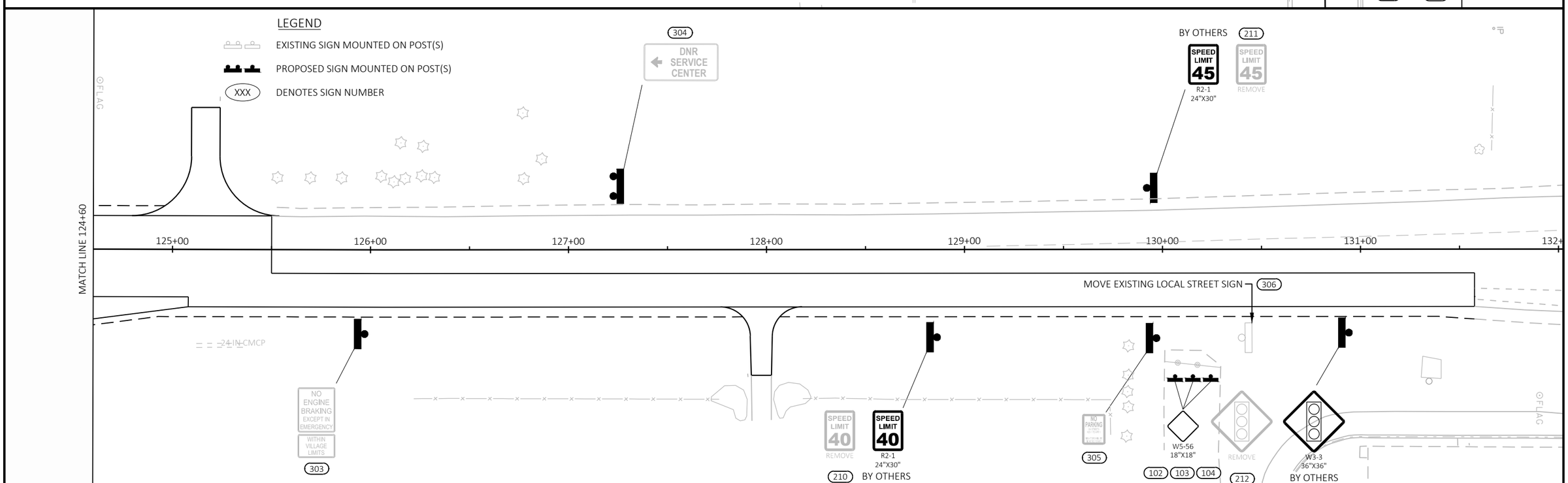

PROJECT NO: 1550-02-73, 1550-02-77	HWY: USH 63	COUNTY: ST. CROIX	PERMANENT SIGNING	SHEET 23	E

FILE NAME : N:\PDS\C3D\15500203\SHEETSPLAN\023201-PS.DWG
LAYOUT NAME - ps-1
PLOT DATE : 2/28/2024 2:22 PM
PLOT BY : CHRIS BURNS
PLOT NAME :
PLOT SCALE : 1 IN:50 FT

2

REMOVE EXISTING FO CABLE TO THE FERN DRIVE SIGNAL CABINET
SEE BID ITEM: 'REMOVING FIBER OPTIC CABLE'

INSTALL FO CABLE BETWEEN FERN DRIVE AND CEDAR STREET SIGNAL CABINETS
SEE BID ITEM: 'INSTALLING STATE-FURNISHED FIBER OPTIC CABLE'

REMOVE EXISTING FO CABLE
LEAVE EXISTING CONDUIT IN PLACE
SEE BID ITEM: 'REMOVING FIBER OPTIC CABLE'

TIE INTO EXISTING PB
SEE BID ITEM: 'INSTALL CONDUIT INTO EXISTING ITEM'

WISDOT

1 - 2" CONDUIT

INSTALL PULL BOXES AND CONDUIT BEYOND EDGE OF GRAVEL SHOULDER TO AVOID UNDERDRAIN PIPE IN SUBBASE

TLE

PROPOSED RW

2 - CONDUIT SPECIAL 2-INCH BORED UNDER THE STREAM AT A MINIMUM DEPTH OF 4 FT. BELOW BOTTOM OF STREAM BED.

N

PROPOSED RW

TOWN OF HAMMOND

EXISTING RW

PB1 PB2 PB3 PB4 PB5

110 112 114 116 118 120 122 124

USH 63

VANDEBERG ST

R/L USH 63

REMOVING CONDUIT: 4 L.F.

NOTE: LOCATE AND AVOID PIPE UNDERDRAIN DISCHARGE PIPES

EXISTING RW

LIFT STATION

TLE

BRANCH RUSH RIVER

PROPOSED RW

SPRUCE ST

EXISTING RW

TLE

PROPOSED RW

X - REMOVING PULL BOXES

- PULL BOX NON-CONDUCTIVE, 24"x36"

- PULL BOX NON-CONDUCTIVE, 24"x42"

- NONMETALLIC CONDUIT, 2"

- CONDUIT SPECIAL, 2"

- PIPE UNDERDRAIN UNPERFORATED W/ APRON ENDWALL FOR UNDERDRAIN

REMOVE EXISTING FO CABLE
LEAVE EXISTING CONDUIT IN PLACE
SEE BID ITEM: 'REMOVING FIBER OPTIC CABLE'

INSTALL PULL BOXES AND CONDUIT BEYOND EDGE OF GRAVEL SHOULDER TO AVOID UNDERDRAIN PIPE IN SUBBASE

LOCATE AND EXPOSE EXISTING CONDUIT AND SPLICE 4' LENGTH OF NEW CONDUIT ONTO EXISTING CONDUIT

N

PROPOSED RW

TLE

WISDOT

1 - 2" CONDUIT

REMOVING CONDUIT: 8 L.F.

EXISTING RW

PB5 PB6 PB7 PB8 PB9

124 126 128 130 132 134 136 138

EXISTING RW

EXISTING RW

TLE

PROPOSED RW

PINE ST

PROPOSED RW

REMOVE EXISTING FO CABLE TO THE CEDAR STREET SIGNAL CABINET
SEE BID ITEM: 'REMOVING FIBER OPTIC CABLE'

INSTALL FO CABLE BETWEEN FERN DRIVE AND CEDAR STREET SIGNAL CABINETS
SEE BID ITEM: 'INSTALLING STATE-FURNISHED FIBER OPTIC CABLE'

CEDAR ST

2

PROJECT NO: 1550-02-73, 1550-02-77	HWY: USH 63	COUNTY: ST. CROIX	TRAFFIC SIGNAL INTERCONNECT	SHEET 24	E

2

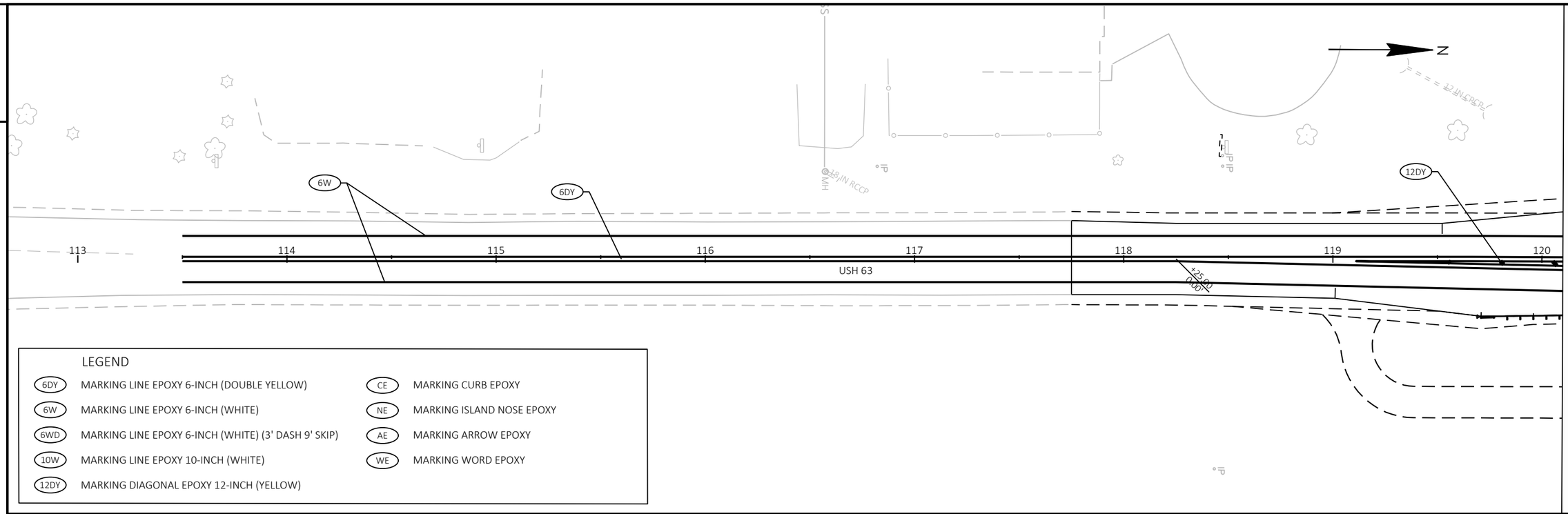

2

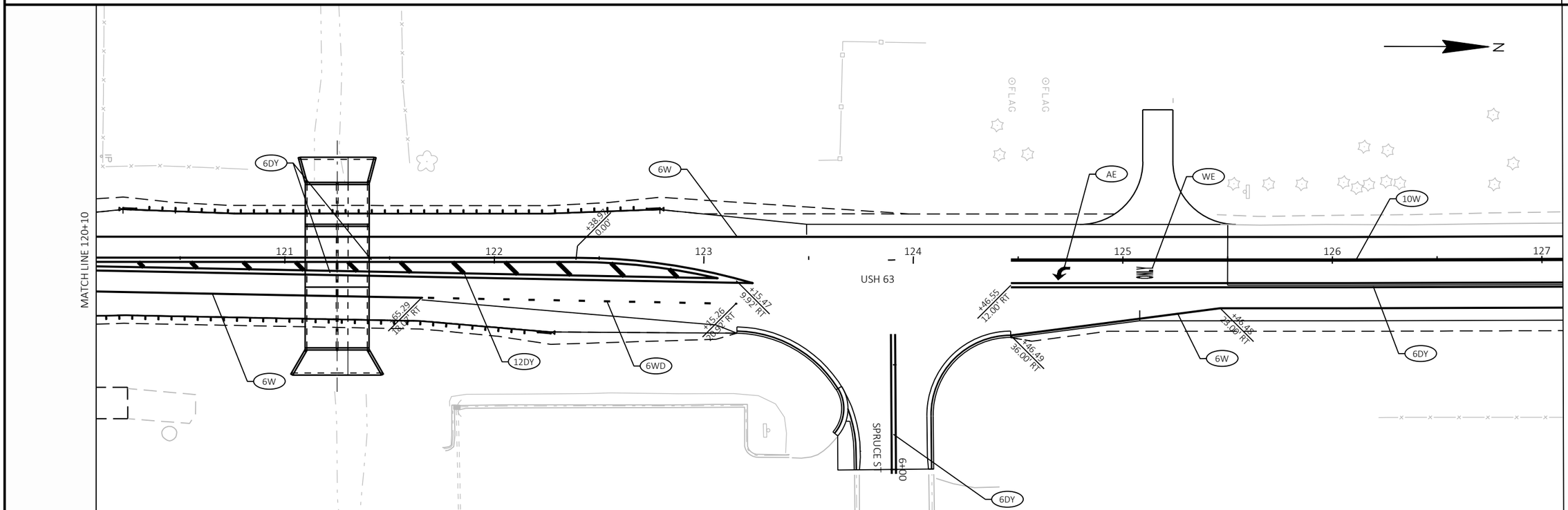

PROJECT NO: 1550-02-73, 1550-02-77	HWY: USH 63	COUNTY: ST. CROIX	PAVEMENT MARKING	SHEET 25	E

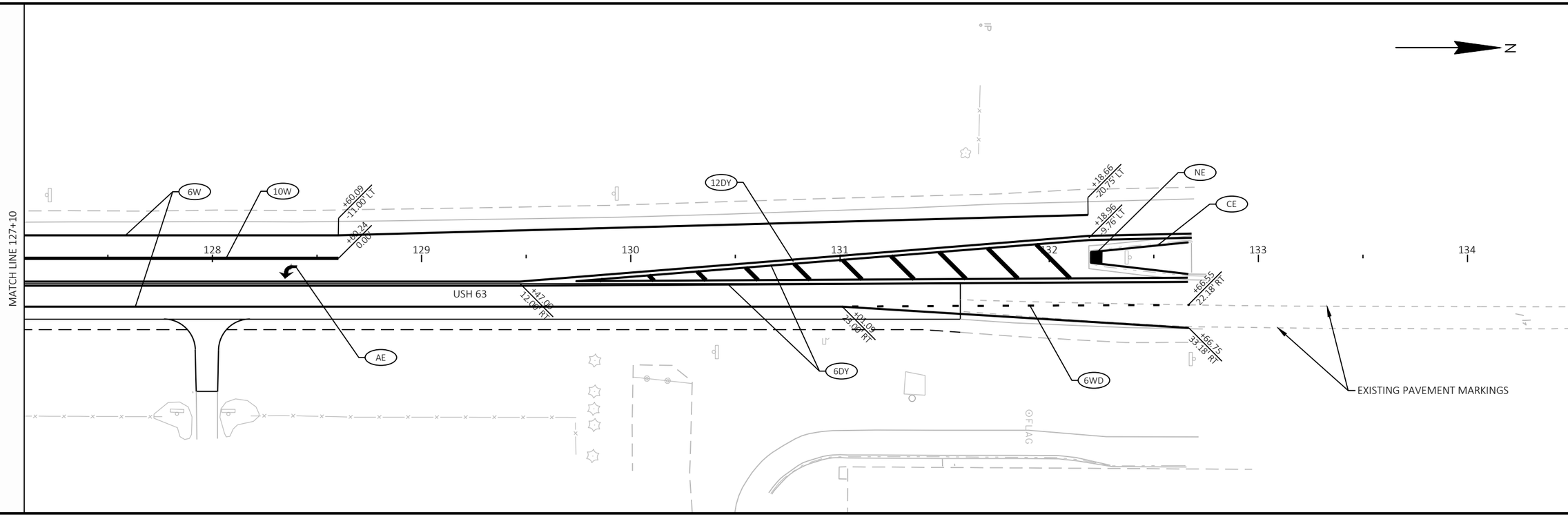

2

LEGEND

6DY	MARKING LINE EPOXY 6-INCH (DOUBLE YELLOW)	CE	MARKING CURB EPOXY
6W	MARKING LINE EPOXY 6-INCH (WHITE)	NE	MARKING ISLAND NOSE EPOXY
6WD	MARKING LINE EPOXY 6-INCH (WHITE) (3' DASH 9' SKIP)	AE	MARKING ARROW EPOXY
10W	MARKING LINE EPOXY 10-INCH (WHITE)	WE	MARKING WORD EPOXY
12DY	MARKING DIAGONAL EPOXY 12-INCH (YELLOW)		

2

STAGE 1
TEMPORARY BYPASS CONSTRUCTION

STAGE 3
SHOULDER RESTORATION

SHOULDER CLOSURE, SOUTHBOUND USH 63
USE SDD: TRAFFIC CONTROL, WORK ON SHOULDER OR PARKING LANE, UNDIVIDED ROADWAY'

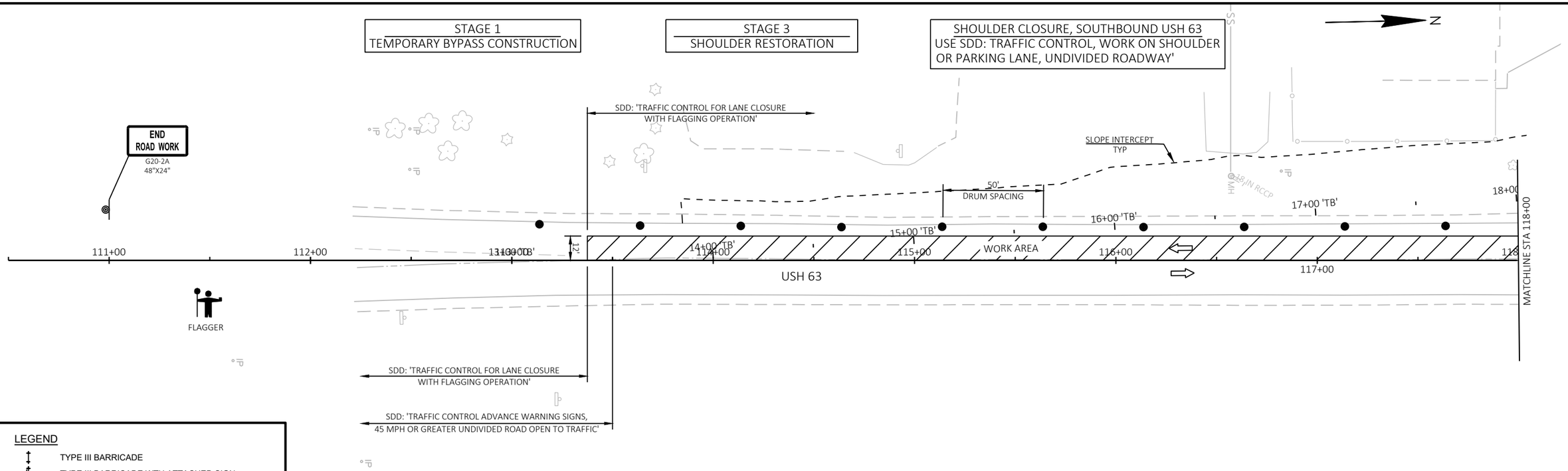

2

LEGEND

- TYPE III BARRICADE
- TYPE III BARRICADE WTH ATTACHED SIGN
- TRAFFIC CONTROL DRUM
- TRAFFIC CONTROL DRUM W/ TYPE "C" STEADY BURN LIGHT
- SIGN ON PERMANENT SUPPORT
- DELINEATOR TEMPORARY
- DELINEATOR FLEXIBLE/TUBULAR MARKER
- CONCRETE BARRIER TEMPORARY PRECAST
- FLAGGER, EQUIPPED WITH STOP/SLOW PADDLE FASTENED ON SUPPORT STAFF
- DIRECTION OF TRAFFIC

TRAFFIC CONTROL STAGING SUMMARY

STAGE 1

THE TEMPORARY BYPASS IS CONSTRUCTED. SHOULDER CLOSURES USING SDD ARE USED FOR WORK ALONG THE EXISTING WEST SHOULDER OF USH 63. PAVEMENT MARKING WORK ALONG USH 63 IS ACCOMPLISHED WITH MOBILE OPERATIONS AND FLAGGER CONTROL.

STAGE 2

THE TRAFFIC IS DIVERTED ONTO THE TEMPORARY BYPASS. SPRUCE STREET IS CONSTRUCTED IN TWO STAGES, EACH STAGE ACCOMMODATES A 2-WAY CONNECTION ACROSS THE MAINLINE WORK ZONE TO CONNECT THE TEMPORARY BYPASS. THE NEW CULVERT UNDER SPRUCE STREET IS PLACED IN ITS ENTIRETY USING FLAGGER CONTROL DURING TRENCHING AND BACKFILL.

STAGE 3

TRAFFIC IS DIVERTED BACK ONTO USH 63 ONCE THE BOX CULVERT AND NORTHBOUND SIDE OF USH 63 OVER B-55-289 ARE FINISHED. THE TEMPORARY BYPASS IS REMOVED AND THE WEST SHOULDER RESTORED. PAVEMENT MARKING WORK ALONG USH 63 IS ACCOMPLISHED WITH MOBILE OPERATIONS AND FLAGGER CONTROL. FINAL HMA PAVING OVER THE SOUTHBOUND SIDE OF USH 63 OVER B-55-289 IS CONTROLLED BY FLAGGERS.

2

STAGE 1
TEMPORARY BYPASS CONSTRUCTION

SHOULDER CLOSURE, SOUTHBOUND USH 63
USE SDD: TRAFFIC CONTROL, WORK ON SHOULDER OR PARKING LANE, UNDIVIDED ROADWAY'

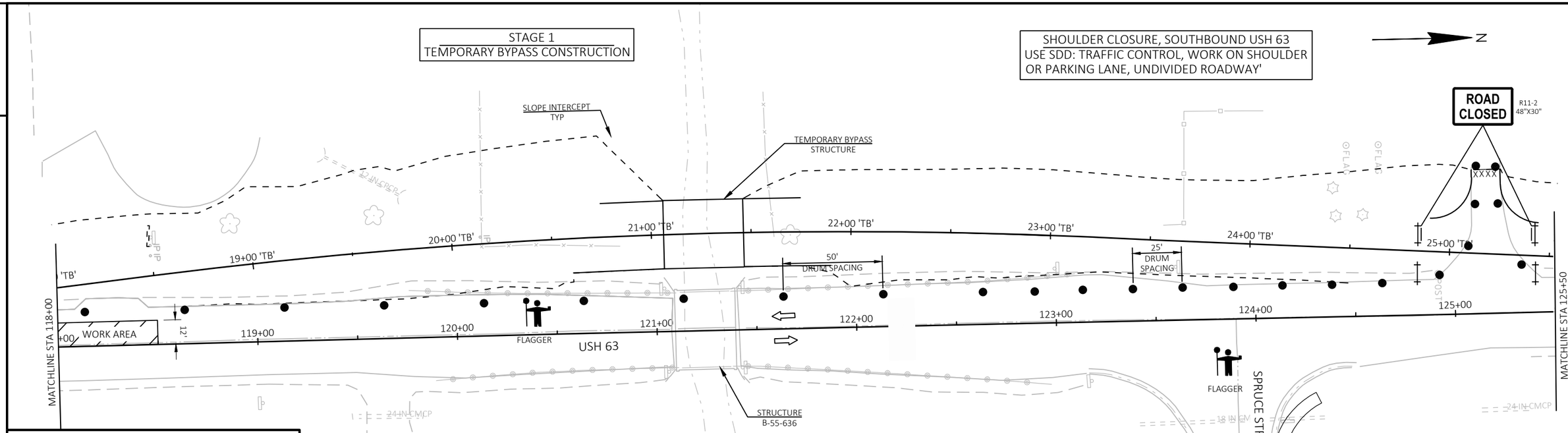

LEGEND

- TYPE III BARRICADE
- TYPE III BARRICADE WTH ATTACHED SIGN
- TRAFFIC CONTROL DRUM
- TRAFFIC CONTROL DRUM W/ TYPE "C" STEADY BURN LIGHT
- SIGN ON PERMANENT SUPPORT
- DELINEATOR TEMPORARY
- DELINEATOR FLEXIBLE/TUBULAR MARKER
- CONCRETE BARRIER TEMPORARY PRECAST
- FLAGGER, EQUIPPED WITH STOP/SLOW PADDLE FASTENED ON SUPPORT STAFF
- DIRECTION OF TRAFFIC

STAGE 1
TEMPORARY BYPASS CONSTRUCTION

STAGE 3
SHOULDER RESTORATION

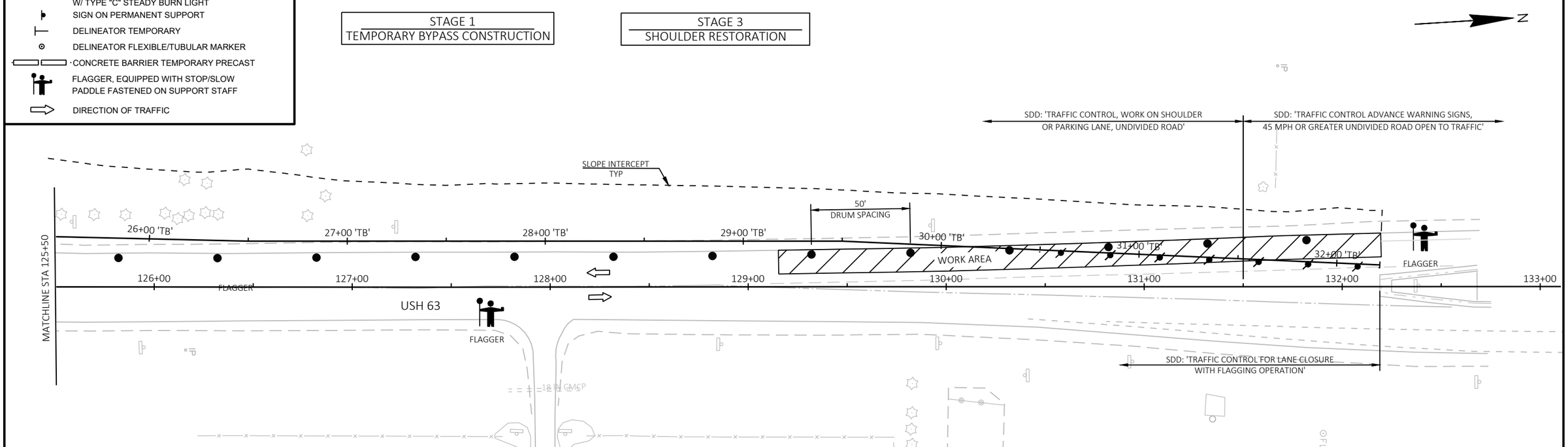

PROJECT NO: 1550-02-73, 1550-02-77	HWY: USH 63	COUNTY: ST. CROIX	TRAFFIC CONTROL	SHEET PRE_2	E

FILE NAME : N:\PDS\C3D\15500203\SHEETSPLAN\025100-TC.DWG
LAYOUT NAME - 63-2
PLOT DATE : 4/23/2024 5:42 PM
PLOT BY : CHRIS BURNS
PLOT NAME :
PLOT SCALE : 1 IN:50 FT

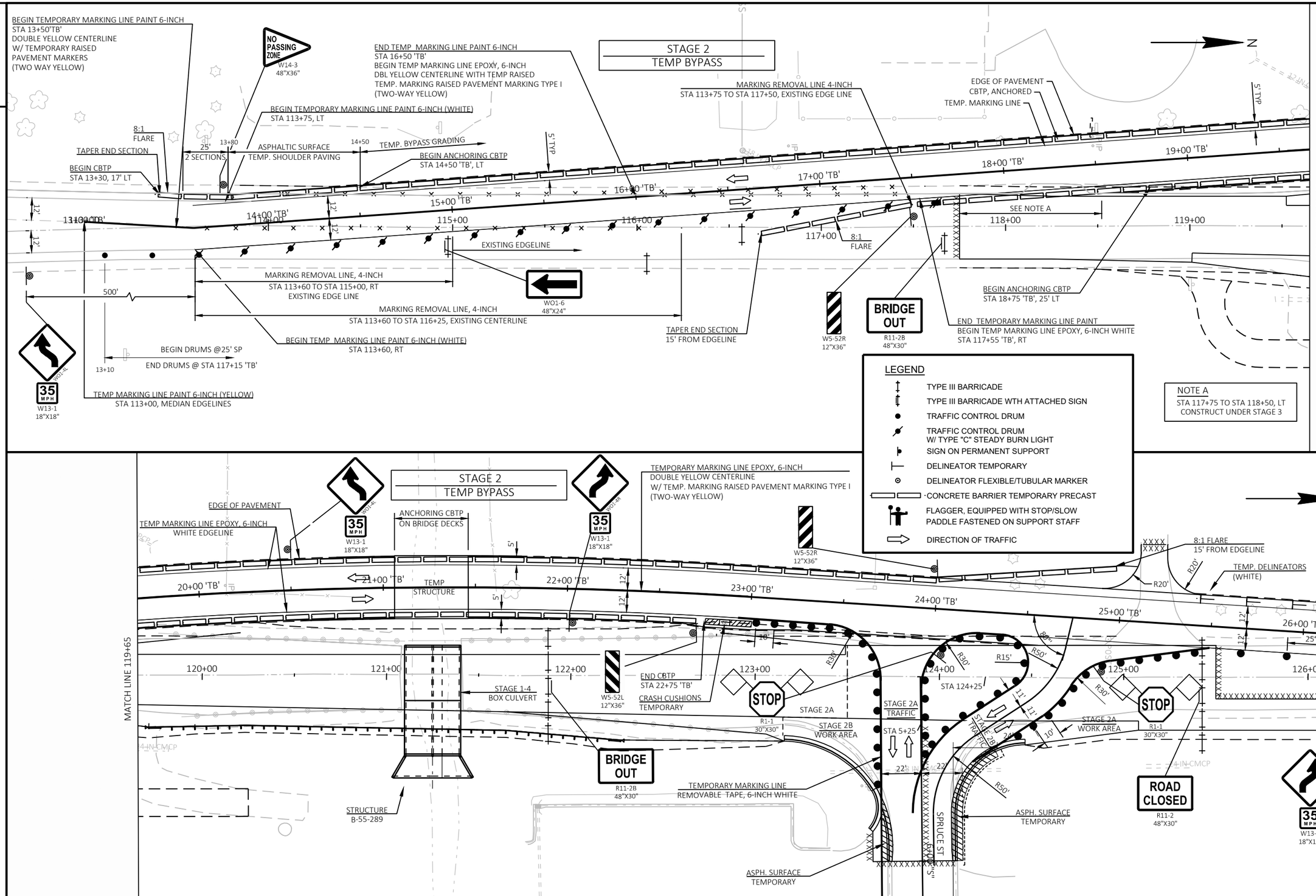

PROJECT NO: 1550-02-73, 1550-02-77	HWY: USH 63	COUNTY: ST. CROIX	TRAFFIC CONTROL	SHEET PRE_2_29	E

FILE NAME : N:\PDS\C3D\15500203\SHEETSPLAN\025100-TC.DWG
LAYOUT NAME - 63-3
PLOT DATE : 4/23/2024 5:42 PM
PLOT BY : CHRIS BURNS
PLOT NAME :
PLOT SCALE : 1 IN:50 FT
WISDOT/CADDS SHEET 44

2

BEGIN CBTP, ANCHORED
STA 26+50, 16'LT
FACE OF BARRIER, TAPERED END

W5-52L
12"X36"

STA 27+00, 14' LT
FACE OF BARRIER

EDGE OF PAVEMENT

TEMPORARY MARKING LINE 6-INCH (WHITE)
EPOXY EDGELINE

EXISTING EDGE OF PAVED SHOULDER

MARKING REMOVAL LINE 4-INCH (SOUTHBOUND)
STA 125+50 TO STA 132+25, LT

NO PASSING ZONE
W14-3
48"X36"

TEMPORARY MARKING LINE
6-INCH YELLOW EPOXY CENTERLINE
W/ TEMP. MARKING RAISED
PAVEMENT MARKING TYPE I
(TWO-WAY YELLOW)

+35

TEMPORARY MARKING LINE 6-INCH (YELLOW)
REMOVABLE TAPE, MEDIAN EDGELINES

MARKING REMOVAL LINE 4-INCH
EXISTING MEDIAN MARKINGS
STA 129+00 TO STA 132+50

STA 29+35 'TB', 12' RT
BEGIN LANE SHIFT
END PAINT EDGELINE
BEGIN TEMPORARY MARKING LINE REMOVABLE
TAPE, 6-INCH (WHITE)

TEMPORARY MARKING LINE 6-INCH (WHITE)
EPOXY

STA 32+00 'TB' - STA 32+20 'TB', LT
4" ASPHALTIC SURFACE TEMPORARY
PAVE TO EDGE OF GRAVEL SHOULDER

W5-52R
12"X36"

NOTE ①: SET TWO BARRIER SECTIONS
IN LINE WITH CRASH CUSHION

NOTE ②: MIN. 3' LATERAL OFFSET TO
CRASH CUSION

500'

STA 32+20 'TB', LT
END TEMP. EDGELINE

NOTE ①

CRASH CUSHIONS
TEMPORARY

NOTE ②

W02-4R

35 MPH
W13-1
18"X18"

END MEDIAN
YELLOW TAPE

CRASH CUSHION C/L

EDGE OF EXISTING
SHOULDER PAVEMENT

EXISTING
EDGELINES

EXISTING
LANE MARKING

END MEDIAN
TAPE (YELLOW)

CLEAR ZONE, 10' MIN.

STA 132+65
22' RT (APPROX.)
END TAPE, 6-INCH
END LANE SHIFT

MATCH LINE 126+30

27+00 'TB' 28+00 'TB' 29+00 'TB' 30+00 'TB' 31+00 'TB' 32+00 'TB'

127+00 128+00 129+00 130+00 131+00 132+00 133+00

12' 12' 12' 12' 12' 12'

25' TYP

CLEAR ZONE, 10' MIN.

EXISTING NORTHBOUND LANE

PAVED HMA WIDTH (NEW N/B LANE AND 5' SHOULDER)

12' 17' 5'

TEMPORARY MARKING LINE 6-INCH (WHITE)
PAINT (EDGELINE)

MAINTAIN MIN. 10' CLEARZONE, NORTHBOUND
FREE OF EQUIPMENT AND MATERIAL STORAGE.

TUBULAR MARKERS (10) @ 25' SP

18" CMCP

STAGE 2
TEMP BYPASS

N

LEGEND

- TYPE III BARRICADE
- TYPE III BARRICADE WTH ATTACHED SIGN
- TRAFFIC CONTROL DRUM
- TRAFFIC CONTROL DRUM W/ TYPE "C" STEADY BURN LIGHT
- SIGN ON PERMANENT SUPPORT
- DELINEATOR TEMPORARY
- DELINEATOR FLEXIBLE/TUBULAR MARKER
- CONCRETE BARRIER TEMPORARY PRECAST
- FLAGGER, EQUIPPED WITH STOP/SLOW PADDLE FASTENED ON SUPPORT STAFF
- DIRECTION OF TRAFFIC

SPRUCE STREET

ROAD CLOSED
R11-2
48"X30"

STAGE 3 CONSTRUCTION
CURB & GUTTER

STAGE 2 TEMPORARY WIDENING
PLACE IN STAGE 2A

6'

END TAPE
7+00, 16' LT

BEGIN TAPE
6+40, 4' LT

A

STAGE 2A SHOWN (2-WAY SOUTH SIDE)
STAGE 2B SIMILAR (2-WAY NORTH SIDE)

SAWCUT

22'

6+00 "S"

7+00 "S"

NOTE B
REMOVE EXISTING
CURB & GUTTER

22'

STAGE 1

STAGE 2
TEMP BYPASS

END TAPE
STA 6+36, 22' RT

BEGIN TAPE
STA 5+50, 22' RT

STAGE 2
CONSTRUCTION

A

NOTE B = PATCH WITH ASPHALTIC SURFACE
TEMPORARY, 4-INCH THICKNESS

A = TEMPORARY MARKING LINE
REMOVABLE TAPE 6-INCH (WHITE)

25+00 'TB' 24+00 'TB' 23+00 'TB'

125+00 124+00 123+00

FLAG
FLAG
POST

N

PROJECT NO: 1550-02-73, 1550-02-77	HWY: USH 63	COUNTY: ST. CROIX	TRAFFIC CONTROL	SHEET PRE_3 30	E

FILE NAME : N:\PDS\C3D\15500203\SHEETSPLAN\025100-TC.DWG
LAYOUT NAME - 63-4

PLOT DATE : 4/23/2024 5:42 PM PLOT BY : CHRIS BURNS PLOT NAME : PLOT SCALE : 1 IN:50 FT

WISDOT/CADDS SHEET 44

STAGE 3
TEMP BYPASS REMOVAL

ROAD CLOSED
R11-2
48"X30"

NO PASSING ZONE
W14-3
48"X36"

STA 119+50
BEGIN ASPHALTIC SURFACE TEMP.
6' WIDTH ALONG REFERENCE LINE
MATCH N.B. HMA

5' TYP

14+00 'TB'
15+00 'TB'
16+00 'TB'
17+00 'TB'
18+00 'TB'
19+00 'TB'
114+00
115+00
116+00
117+00
118+00
119+00
+50
12'
3'
+40
7.00' RT

MATCHLINE STA 119+65

EXISTING EDGELINE

W1-4R
36"X36"

35 MPH
W13-1
18"X18"

ASPH. SURFACE TEMPORARY

BEGIN TEMP MARKING LINE PAINT 6-INCH DBL. YELLOW CENTERLINE
W/ TEMP. MARKING RAISED PAVEMENT MARKING TYPE I
(TWO-WAY YELLOW)

BEGIN TEMP MARKING LINE
PAINT 6-INCH (WHITE EDGELINE)

TEMP DELINEATOR (WHITE)
@ 25' SP.

EXISTING EDGE
5' PAVED SHOULDER

END TEMP PAINT EDGELINE
BEGIN TEMP MARKING LINE
REMOVABLE TAPE, 6-INCH
(WHITE EDGELINE)

END TEMP PAINT CENTERLINE
BEGIN TEMP MARKING LINE
REMOVABLE TAPE, 6-INCH
(DBL YELLOW CENTERLINE)
W/ TEMP. RAISED PAVEMENT MARKERS
(TWO-WAY YELLOW)

END TEMP PAINT EDGELINE
BEGIN TEMP MARKING LINE
REMOVABLE TAPE, 6-INCH
(WHITE EDGELINE)

END ASPH. SURFACE
TEMPORARY
STA 119+10

LEGEND

- TYPE III BARRICADE
- TYPE III BARRICADE WTH ATTACHED SIGN
- TRAFFIC CONTROL DRUM
- TRAFFIC CONTROL DRUM W/ TYPE "C" STEADY BURN LIGHT
- SIGN ON PERMANENT SUPPORT
- DELINEATOR TEMPORARY
- DELINEATOR FLEXIBLE/TUBULAR MARKER
- CONCRETE BARRIER TEMPORARY PRECAST
- FLAGGER, EQUIPPED WITH STOP/SLOW PADDLE FASTENED ON SUPPORT STAFF
- DIRECTION OF TRAFFIC

STAGE 3
TEMP BYPASS REMOVAL

STAGE 5-7
BOX CULVERT

WHITE EDGELINE
TAPE

ROAD CLOSED
R11-2
48"X30"

ROAD CLOSED
R11-2
48"X30"

ROAD CLOSED
R11-2
48"X30"

ROAD CLOSED
R11-2
48"X30"

LANE CLOSED
R11-2L
48"X30"

20+00 'TB'
21+00 'TB'
22+00 'TB'
23+00 'TB'
24+00 'TB'
25+00 'TB'
26+00 'TB'
123+00
124+00
125+00
126+00

TAPER END SECTION
8:1 FLARE, 2 SECTIONS

TAPER END SECTION
8:1 FLARE

15'
12'
+25
+50
END TAPE

MATCHLINE STA 119+65

MATCHLINE STA 126+30

119+75

WHITE EDGELINE
TAPE

STRUCTURE
B-55-289

W5-52L
12"X36"

STAGE 3
ROAD OPEN

121+25, 14' RT

STA 123+50
END ASPHALTIC SURFACE TEMP.
6' WIDTH ALONG REFERENCE LINE
MATCH N.B. HMA

W1-7
48"X24"

TYPE III BARRICADE

W5-52R
12"X36"

SPRUCE ST
FINISHED
& OPEN

6+00 "S"

STOP
R1-1
30"X30"

DRUMS
@ 25' SP.

BEGIN TEMP MARKING LINE PAINT
6-INCH WHITE EDGELINE

BEGIN TEMP MARKING LINE PAINT
6-INCH DBL. YELLOW CENTERLINE
W/ 2-WAY YELLOW TEMP. MARKING
RAISED PAVEMENT MARKING TYPE I
END @STA 129+65

MARKING LINE EPOXY 6-INCH
DBL. YELLOW CENTERLINE
50 L.F.

PROJECT NO: 1550-02-73, 1550-02-77	HWY: USH 63	COUNTY: ST. CROIX	TRAFFIC CONTROL	SHEET PRE_3	E

FILE NAME : N:\PDS\C3D\15500203\SHEETSPLAN\025100-TC.DWG
LAYOUT NAME - 63-5
PLOT DATE : 5/1/2024 10:12 AM
PLOT BY : MATT PAYNE
PLOT NAME :
PLOT SCALE : 1 IN:50 FT

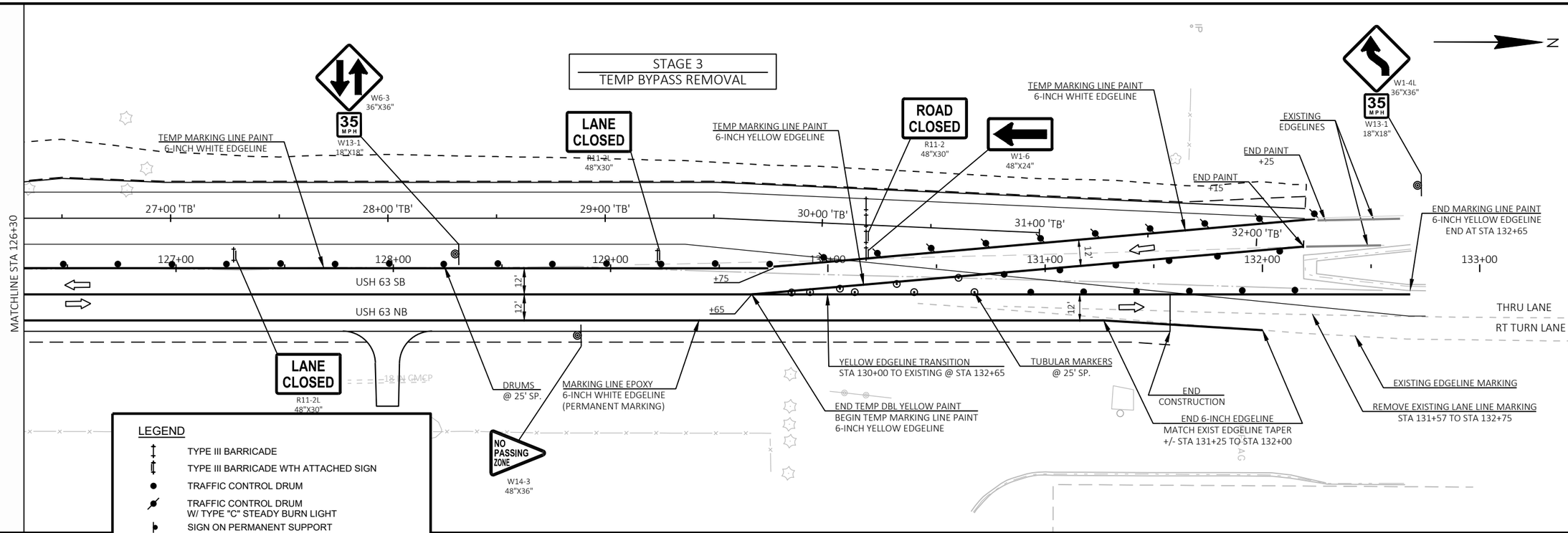
STAGE 3
TEMP BYPASS REMOVAL
N
W6-3
36"X36"
35
MPH
W13-1
18"X18"
LANE CLOSED
R11-2L
48"X30"
ROAD CLOSED
R11-2
48"X30"
W1-6
48"X24"
W1-4L
36"X36"
TEMP MARKING LINE PAINT
6-INCH WHITE EDGELINE
TEMP MARKING LINE PAINT
6-INCH YELLOW EDGELINE
EXISTING
EDGELINES
END PAINT
+25
END PAINT
+15
END MARKING LINE PAINT
6-INCH YELLOW EDGELINE
END AT STA 132+65
MATCHLINE STA 126+30
27+00 'TB'
28+00 'TB'
29+00 'TB'
30+00 'TB'
31+00 'TB'
32+00 'TB'
127+00
128+00
129+00
130+00
131+00
132+00
133+00
12'
USH 63 SB
USH 63 NB
+75
+65
THRU LANE
RT TURN LANE
LANE CLOSED
R11-2L
48"X30"
DRUMS
@ 25' SP.
MARKING LINE EPOXY
6-INCH WHITE EDGELINE
(PERMANENT MARKING)
NO PASSING ZONE
W14-3
48"X36"
YELLOW EDGELINE TRANSITION
STA 130+00 TO EXISTING @ STA 132+65
END TEMP DBL YELLOW PAINT
BEGIN TEMP MARKING LINE PAINT
6-INCH YELLOW EDGELINE
TUBULAR MARKERS
@ 25' SP.
END
CONSTRUCTION
END 6-INCH EDGELINE
MATCH EXIST EDGELINE TAPER
+/- STA 131+25 TO STA 132+00
EXISTING EDGELINE MARKING
REMOVE EXISTING LANE LINE MARKING
STA 131+57 TO STA 132+75
LEGEND
TYPE III BARRICADE
TYPE III BARRICADE WTH ATTACHED SIGN
TRAFFIC CONTROL DRUM
TRAFFIC CONTROL DRUM
W/ TYPE "C" STEADY BURN LIGHT
SIGN ON PERMANENT SUPPORT
DELINEATOR TEMPORARY
DELINEATOR FLEXIBLE/TUBULAR MARKER
CONCRETE BARRIER TEMPORARY PRECAST
FLAGGER, EQUIPPED WITH STOP/SLOW
PADDLE FASTENED ON SUPPORT STAFF
DIRECTION OF TRAFFIC

2

NOTE:
LOCATE SIGNS IN ACCORDANCE WITH:
S.D.D. 15C02-09f, 'ADVANCED WIDTH RESTRICTION SIGNING'

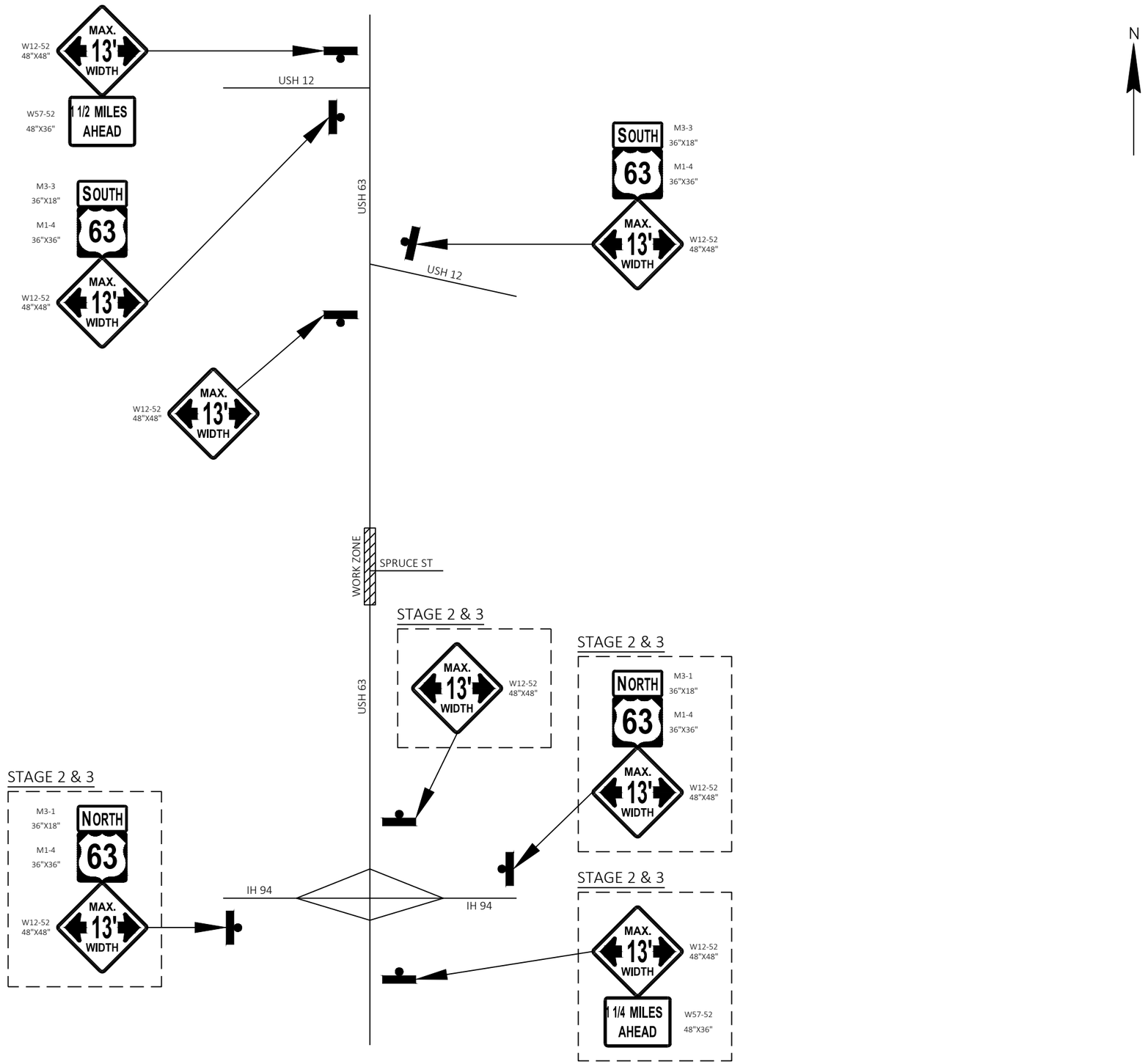

2

PROJECT NO: 1550-02-73, 1550-02-77	HWY: USH 63	COUNTY: ST. CROIX	TRAFFIC CONTROL - ADVANCED SIGNING	SHEET 33	E

FILE NAME : N:\PDS\C3D\15500203\SHEETSPLAN\025101-TC.DWG
LAYOUT NAME - 025101-tc
PLOT DATE : 4/18/2024 8:49 AM
PLOT BY : CHRIS BURNS
PLOT NAME :
PLOT SCALE : 1 IN:2000 FT
WISDOT/CADDS SHEET 42

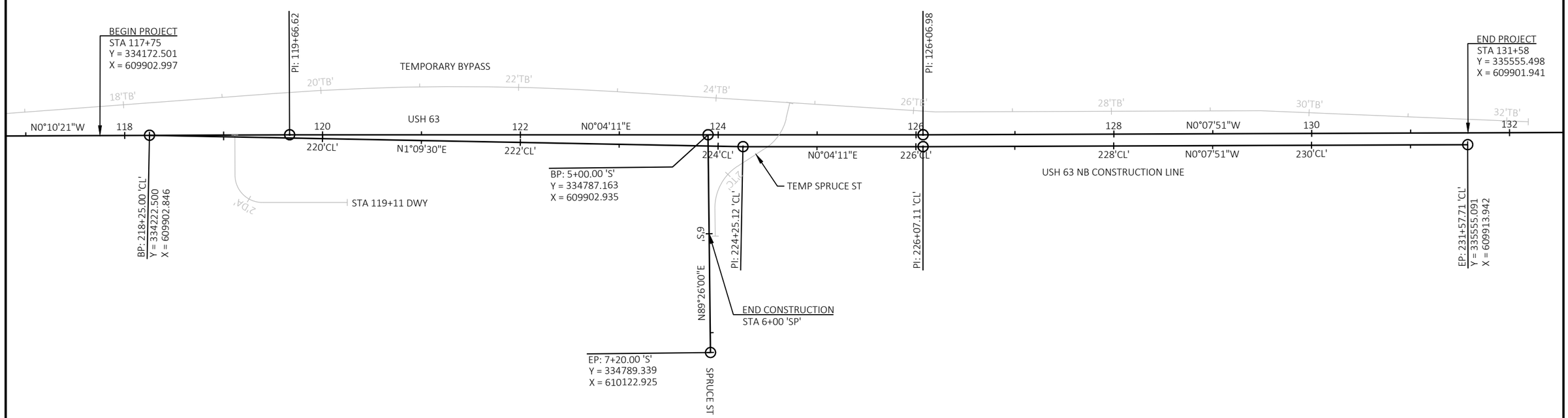

PROJECT NO: 1550-02-73, 1550-02-77	HWY: USH 63	COUNTY: ST. CROIX	ALIGNMENT DETAILS	SHEET 34	E

2

PI STA = 21+26.47 'TB'
Y = 334521.917
X = 609848.056
DELTA = 7°54'47" RT
D = 2°18'04"
T = 172.22'
L = 343.89'
R = 2490.00'
PC STA = 19+54.25 'TB'
Y = 334350.159
X = 609860.671
PT STA = 22+98.15 'TB'
Y = 334693.776
X = 609859.207
DB = N04°12'03"W
DA = N03°42'45"E

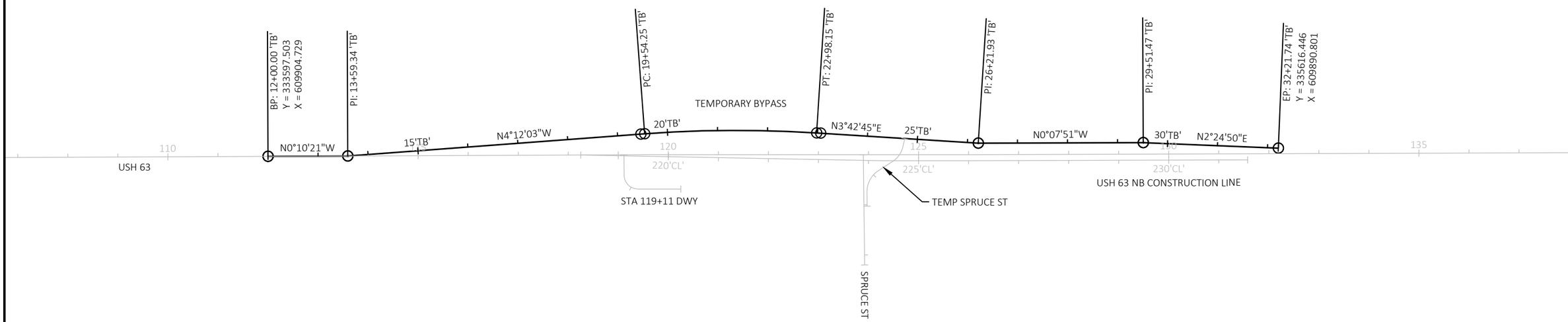

PROJECT NO: 1550-02-73, 1550-02-77	HWY: USH 63	COUNTY: ST. CROIX	ALIGNMENT DETAILS	SHEET 35	E

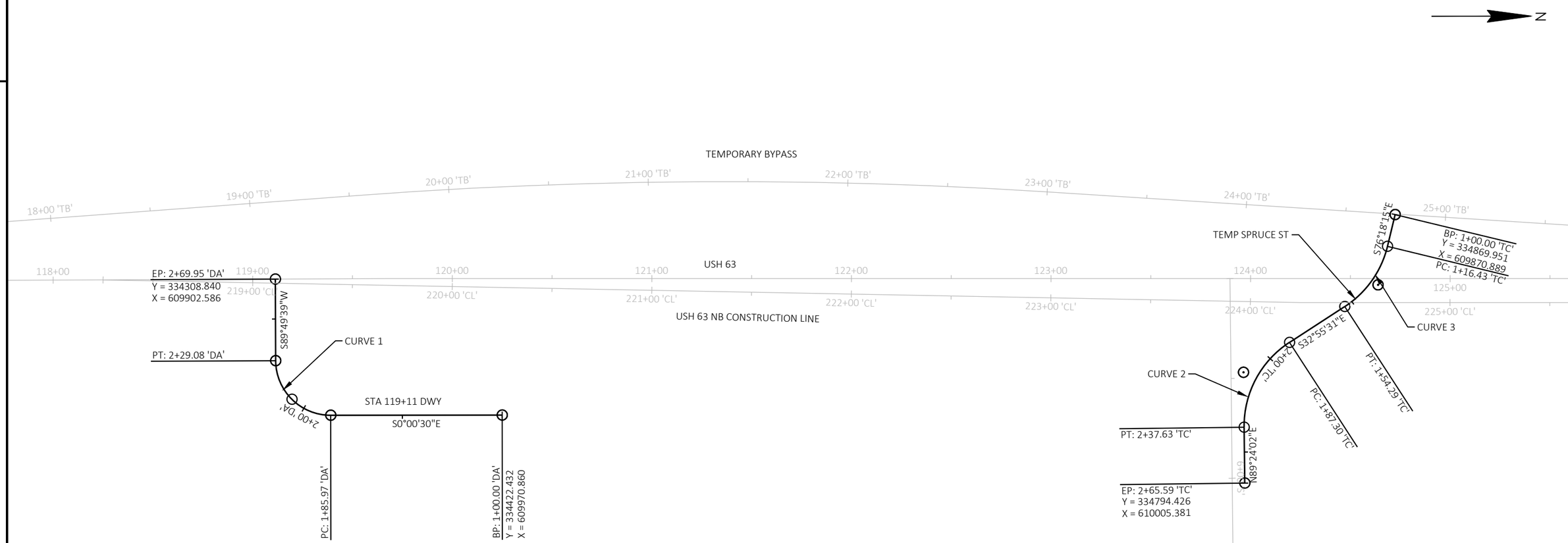

CURVE 1
PI STA = 2+13.39 'DA'
Y = 334309.045
X = 609970.876
DELTA = 89°50'08" RT
D = 208°20'54"
T = 27.42'
L = 43.12'
R = 27.50'
PC STA = 1+85.97 'DA'
Y = 334336.467
X = 609970.872
PT STA = 2+29.08 'DA'
Y = 334308.963
X = 609943.455
DB = S00°00'30"E
DA = S89°49'39"W

CURVE 2
PI STA = 2+14.83 'TC'
Y = 334793.846
X = 609949.891
DELTA = 57°40'27" LT
D = 114°35'30"
T = 27.53'
L = 50.33'
R = 50.00'
PC STA = 1+87.30 'TC'
Y = 334816.954
X = 609934.928
PT STA = 2+37.63 'TC'
Y = 334794.134
X = 609977.420
DB = S32°55'31"E
DA = N89°24'02"E

CURVE 3
PI STA = 1+36.32 'TC'
Y = 334861.351
X = 609906.178
DELTA = 43°22'44" RT
D = 114°35'30"
T = 19.89'
L = 37.86'
R = 50.00'
PC STA = 1+16.43 'TC'
Y = 334866.060
X = 609886.856
PT STA = 1+54.29 'TC'
Y = 334844.659
X = 609916.987
DB = S76°18'15"E
DA = S32°55'31"E

Estimate Of Quantities

Line	Item	Item Description	Unit	Total	1550-02-73 Qty	1550-02-77 Qty
0002	201.0105	Clearing	STA	2.000	2.000	
0004	201.0120	Clearing	ID	240.000	216.000	24.000
0006	201.0205	Grubbing	STA	2.000	2.000	
0008	201.0220	Grubbing	ID	240.000	216.000	24.000
0010	203.0100	Removing Small Pipe Culverts	EACH	5.000	2.000	3.000
0012	203.0211.S	Abatement of Asbestos Containing Material (structure) 01. B-55-636	EACH	1.000	1.000	
0014	203.0260	Removing Structure Over Waterway Minimal Debris (structure) 01. B-55-636	EACH	1.000	1.000	
0016	204.0110	Removing Asphaltic Surface	SY	472.000	409.000	63.000
0018	204.0150	Removing Curb & Gutter	LF	212.000		212.000
0020	204.0165	Removing Guardrail	LF	618.000	589.000	29.000
0022	204.0210	Removing Manholes	EACH	1.000	1.000	
0024	204.0245	Removing Storm Sewer (size) 01. 24-Inch	LF	10.000	10.000	
0026	204.9090.S	Removing (item description) 01. Conduit	LF	12.000	12.000	
0028	204.9090.S	Removing (item description) 02. Fiber Optic Cable	LF	3,200.000	3,200.000	
0030	205.0100	Excavation Common	CY	10,462.000	8,754.000	1,708.000
0032	205.0506.S	Excavation, Hauling, and Disposal of Creosote Contaminated Soil	TON	400.000	400.000	
0034	206.2001	Excavation for Structures Culverts (structure) 01. B-55-289	EACH	1.000	1.000	
0036	208.0100	Borrow	CY	4,685.000	4,685.000	
0038	210.2500	Backfill Structure Type B	TON	2,207.000	2,207.000	
0040	211.0101	Prepare Foundation for Asphaltic Paving (project) 01. 1550-02-73	EACH	1.000	1.000	
0042	213.0100	Finishing Roadway (project) 01. 1550-02-73	EACH	1.000	1.000	
0044	213.0100	Finishing Roadway (project) 02. 1550-02-77	EACH	1.000		1.000
0046	305.0110	Base Aggregate Dense 3/4-Inch	TON	645.000	473.000	172.000
0048	305.0120	Base Aggregate Dense 1 1/4-Inch	TON	8,789.000	6,860.000	1,929.000
0050	311.0110	Breaker Run	TON	172.000	172.000	
0052	350.0145	Subbase 12-Inch	SY	6,382.000	4,308.000	2,074.000
0054	455.0605	Tack Coat	GAL	1,132.000	845.000	287.000
0056	460.2000	Incentive Density HMA Pavement	DOL	1,420.000	900.000	520.000
0058	460.6244	HMA Pavement 4 MT 58-34 S	TON	2,195.000	1,393.000	802.000
0060	465.0120	Asphaltic Surface Driveways and Field Entrances	TON	34.000	22.000	12.000
0062	465.0125	Asphaltic Surface Temporary	TON	1,438.000	1,420.000	18.000
0064	465.0315	Asphaltic Flumes	SY	50.000	50.000	
0066	504.0100	Concrete Masonry Culverts	CY	314.000	314.000	
0068	505.0400	Bar Steel Reinforcement HS Structures	LB	40,170.000	40,170.000	
0070	505.0600	Bar Steel Reinforcement HS Coated Structures	LB	4,540.000	4,540.000	
0072	511.1200	Temporary Shoring (structure) 01. B-55-289	SF	210.000	210.000	
0074	516.0500	Rubberized Membrane Waterproofing	SY	93.000	93.000	
0076	520.1018	Apron Endwalls for Culvert Pipe 18-Inch	EACH	2.000		2.000
0078	520.1024	Apron Endwalls for Culvert Pipe 24-Inch	EACH	2.000	2.000	
0080	520.3418	Culvert Pipe Class III-A Non-metal 18-Inch	LF	24.000		24.000
0082	520.3424	Culvert Pipe Class III-A Non-metal 24-Inch	LF	24.000	24.000	
0084	522.1024	Apron Endwalls for Culvert Pipe Reinforced Concrete 24-Inch	EACH	1.000	1.000	
0086	522.2424	Culvert Pipe Reinforced Concrete Horizontal Elliptical Class HE-IV 24x38-Inch	LF	92.000		92.000
0088	522.2624	Apron Endwalls for Culvert Pipe Reinforced Concrete Horizontal Elliptical 24x38-Inch	EACH	2.000		2.000
0090	524.0624	Apron Endwalls for Culvert Pipe Salvaged 24-Inch	EACH	1.000	1.000	
0092	526.0101	Temporary Structure (station) 01. STA 121+25, 50' LT	EACH	1.000	1.000	
0094	601.0557	Concrete Curb & Gutter 6-Inch Sloped 36-Inch Type D	LF	196.000		196.000
0096	603.8000	Concrete Barrier Temporary Precast Delivered	LF	2,229.000	2,229.000	
0098	603.8125	Concrete Barrier Temporary Precast Installed	LF	2,475.000	2,475.000	

Estimate Of Quantities

Line	Item	Item Description	Unit	Total	1550-02-73 Qty	1550-02-77 Qty
0100	603.8500	Anchoring Concrete Barrier Temporary Precast	LF	2,149.000	2,149.000	
0102	603.8505	Anchoring Concrete Barrier Temporary Precast on Bridge Decks	LF	80.000	80.000	
0104	606.0200	Riprap Medium	CY	4.000		4.000
0106	606.0300	Riprap Heavy	CY	61.000	61.000	
0108	608.0324	Storm Sewer Pipe Reinforced Concrete Class III 24-Inch	LF	2.000	2.000	
0110	611.0420	Reconstructing Manholes	EACH	2.000	2.000	
0112	612.0206	Pipe Underdrain Unperforated 6-Inch	LF	76.000	42.000	34.000
0114	612.0406	Pipe Underdrain Wrapped 6-Inch	LF	2,153.000	1,311.000	842.000
0116	612.0600	Underdrain Trench	LF	10.000		10.000
0118	612.0806	Apron Endwalls for Underdrain Reinforced Concrete 6-Inch	EACH	10.000	6.000	4.000
0120	614.0905	Crash Cushions Temporary	EACH	2.000	2.000	
0122	614.2300	MGS Guardrail 3	LF	300.000	300.000	
0124	614.2610	MGS Guardrail Terminal EAT	EACH	4.000	4.000	
0126	616.0700.S	Fence Safety	LF	200.000	200.000	
0128	618.0100	Maintenance and Repair of Haul Roads (project) 01. 1550-02-73	EACH	1.000	1.000	
0130	618.0100	Maintenance and Repair of Haul Roads (project) 02. 1550-02-77	EACH	1.000		1.000
0132	619.1000	Mobilization	EACH	1.000	0.800	0.200
0134	624.0100	Water	MGAL	141.000	109.000	32.000
0136	625.0100	Topsoil	SY	2,015.000	2,015.000	
0138	625.0500	Salvaged Topsoil	SY	10,393.000	8,290.000	2,103.000
0140	627.0200	Mulching	SY	9,741.000	8,872.000	869.000
0142	628.1104	Erosion Bales	EACH	48.000	48.000	
0144	628.1504	Silt Fence	LF	1,707.000	1,707.000	
0146	628.1520	Silt Fence Maintenance	LF	1,707.000	1,707.000	
0148	628.1905	Mobilizations Erosion Control	EACH	7.000	5.000	2.000
0150	628.1910	Mobilizations Emergency Erosion Control	EACH	7.000	5.000	2.000
0152	628.2008	Erosion Mat Urban Class I Type B	SY	4,593.000	2,833.000	1,760.000
0154	628.2027	Erosion Mat Class II Type C	SY	1,178.000	1,178.000	
0156	628.7504	Temporary Ditch Checks	LF	16.000	16.000	
0158	628.7555	Culvert Pipe Checks	EACH	11.000	3.000	8.000
0160	628.7570	Rock Bags	EACH	119.000	119.000	
0162	629.0210	Fertilizer Type B	CWT	9.790	8.140	1.650
0164	630.0110	Seeding Mixture No. 10	LB	175.000	140.000	35.000
0166	630.0200	Seeding Temporary	LB	68.000	68.000	
0168	630.0300	Seeding Borrow Pit	LB	50.000	50.000	
0170	630.0500	Seed Water	MGAL	292.000	232.000	60.000
0172	633.1100	Delineators Temporary	EACH	19.000	19.000	
0174	634.0612	Posts Wood 4x6-Inch X 12-FT	EACH	3.000		3.000
0176	634.0616	Posts Wood 4x6-Inch X 16-FT	EACH	3.000		3.000
0178	634.0618	Posts Wood 4x6-Inch X 18-FT	EACH	4.000	4.000	
0180	637.2210	Signs Type II Reflective H	SF	11.930		11.930
0182	638.2102	Moving Signs Type II	EACH	7.000	2.000	5.000
0184	638.2602	Removing Signs Type II	EACH	12.000	9.000	3.000
0186	638.3000	Removing Small Sign Supports	EACH	13.000	10.000	3.000
0188	642.5001	Field Office Type B	EACH	1.000	0.800	0.200
0190	643.0300	Traffic Control Drums	DAY	17,752.000	9,404.000	8,348.000
0192	643.0420	Traffic Control Barricades Type III	DAY	3,073.000	884.000	2,189.000
0194	643.0500	Traffic Control Flexible Tubular Marker Posts	EACH	18.000	10.000	8.000
0196	643.0600	Traffic Control Flexible Tubular Marker Bases	EACH	18.000	10.000	8.000

Line	Item	Item Description	Unit	Total	1550-02-73 Qty	1550-02-77 Qty
0198	643.0705	Traffic Control Warning Lights Type A	DAY	2,526.000	698.000	1,828.000
0200	643.0715	Traffic Control Warning Lights Type C	DAY	2,820.000	1,844.000	976.000
0202	643.0900	Traffic Control Signs	DAY	28,409.000	15,252.000	13,157.000
0204	643.3165	Temporary Marking Line Paint 6-Inch	LF	5,428.000	2,777.000	2,651.000
0206	643.3170	Temporary Marking Line Epoxy 6-Inch	LF	4,977.000	4,307.000	670.000
0208	643.3180	Temporary Marking Line Removable Tape 6-Inch	LF	7,338.000	2,676.000	4,662.000
0210	643.3760	Temporary Marking Raised Pavement Marker Type I	EACH	128.000	63.000	65.000
0212	643.5000	Traffic Control	EACH	1.000	0.800	0.200
0214	645.0105	Geotextile Type C	SY	464.000	464.000	
0216	645.0120	Geotextile Type HR	SY	125.000	111.000	14.000
0218	646.2020	Marking Line Epoxy 6-Inch	LF	8,689.000	4,793.000	3,896.000
0220	646.4020	Marking Line Epoxy 10-Inch	LF	414.000		414.000
0222	646.5020	Marking Arrow Epoxy	EACH	2.000		2.000
0224	646.5120	Marking Word Epoxy	EACH	1.000		1.000
0226	646.7120	Marking Diagonal Epoxy 12-Inch	LF	201.000	80.000	121.000
0228	646.8120	Marking Curb Epoxy	LF	99.000		99.000
0230	646.8220	Marking Island Nose Epoxy	EACH	1.000		1.000
0232	646.9000	Marking Removal Line 4-Inch	LF	3,139.000	1,248.000	1,891.000
0234	650.4000	Construction Staking Storm Sewer	EACH	4.000	4.000	
0236	650.4500	Construction Staking Subgrade	LF	4,371.000	3,453.000	918.000
0238	650.5000	Construction Staking Base	LF	4,371.000	3,453.000	918.000
0240	650.5500	Construction Staking Curb Gutter and Curb & Gutter	LF	196.000		196.000
0242	650.6000	Construction Staking Pipe Culverts	EACH	3.000	1.000	2.000
0244	650.6501	Construction Staking Structure Layout (structure) 01. B-55-289	EACH	1.000	1.000	
0246	650.8501	Construction Staking Electrical Installations (project) 01. 1550-02-73	EACH	1.000	1.000	
0248	650.9911	Construction Staking Supplemental Control (project) 01. 1550-02-73	EACH	1.000	1.000	
0250	650.9911	Construction Staking Supplemental Control (project) 02. 1550-02-77	EACH	1.000		1.000
0252	650.9920	Construction Staking Slope Stakes	LF	4,371.000	3,453.000	918.000
0254	652.0225	Conduit Rigid Nonmetallic Schedule 40 2-Inch	LF	1,612.000	1,612.000	
0256	652.0605	Conduit Special 2-Inch	LF	204.000	204.000	
0258	652.0700.S	Install Conduit into Existing Item	EACH	1.000	1.000	
0260	653.0154	Pull Boxes Non-Conductive 24x36-Inch	EACH	7.000	7.000	
0262	653.0164	Pull Boxes Non-Conductive 24x42-Inch	EACH	2.000	2.000	
0264	653.0905	Removing Pull Boxes	EACH	9.000	9.000	
0266	690.0150	Sawing Asphalt	LF	850.000	78.000	772.000
0268	715.0502	Incentive Strength Concrete Structures	DOL	1,884.000	1,884.000	
0270	999.2000.S	Installing and Maintaining Bird Deterrent System (station) 01. STA 121+22	EACH	1.000	1.000	
0272	ASP.1T0A	On-the-Job Training Apprentice at $5.00/HR	HRS	800.000		800.000
0274	ASP.1T0G	On-the-Job Training Graduate at $5.00/HR	HRS	600.000		600.000
0276	SPV.0060	Special 01. Temporary Stream Diversion Structure B-55-289	EACH	1.000	1.000	
0278	SPV.0060	Special 02. Adjust Water Valve Box	EACH	2.000	2.000	
0280	SPV.0090	Special 01. Installing State-Furnished Fiber Optic Cable	LF	3,600.000	3,600.000	

3

DIVISION	FROM/TO STATION	LOCATION	205.0100 COMMON EXCAVATION (1) CUT (2)	EBS EXCAVATION (3)	SALVAGED/UNUSABLE PAVEMENT MATERIAL (4)	AVAILABLE MATERIAL (5)	REDUCED EBS IN FILL (9) FACTOR 0.80	EXPANDED EBS BACKFILL (11) FACTOR 1.15	UNEXPANDED FILL	EXPANDED FILL (13) FACTOR 1.30	MASS ORDINATE +/- (14)	WASTE	208.0100 BORROW	COMMENT
DIVISION 1														
15500273 - TEMPORARY BYPASS	13+86.02/32+21.74		665	0	0	665	0	0	4,115	5,350	-4,685	0	4,685	
DIVISION 1 SUBTOTAL			665	0	0	665	0	0	4,115	5,350	-4,685	0	4,685	
DIVISION 2														
15500273 - USH 63	113+77.02/132+20.21		6,779	1,261	1,465	5,314	1,009	1,450	540	-609	5,923	5,923	0	
15500273 - STA 119+11 DWY	1+00.00/2+12.00		49	0	0	49	0	0	18	23	26	26	0	
DIVISION 2 SUBTOTAL			6,828	1,261	1,465	5,363	1,009	1,450	558	-586	5,949	5,949	0	
DIVISION 3														
15500277 - USH 63	123+15.75/131+57.57		959	569	321	638	455	654	675	286	352	352	0	
15500277 - SPRUCE ST	5+23.34/6+00.00		178	2	90	88	2	2	0	-2	90	90	0	
DIVISION 3 SUBTOTAL			1,137	571	411	726	457	657	675	284	442	442	0	
GRAND TOTAL			8,630	1,832	1,876	6,754	1,466	2,107	5,348	5,047	1,707	6,391	4,685	
TOTAL COMMON EXC			10,462											

NOTES:
(1) COMMON EXCAVATION IS THE SUM OF THE CUT AND EBS EXCAVATION COLUMNS. ITEM NUMBER 205.0100
(2) SALVAGED/UNSUABLE PAVEMENT MATERIAL IS INCLUDED IN CUT.
(3) EBS EXCAVATION TO BE BACKFILLED WITH SUBBASE MATERIAL.
(4) SALVAGED/UNUSABLE PAVEMENT MATERIAL
(5) AVAILABLE MATERIAL = CUT - SALVAGED/UNUSUABLE PAVEMENT MATERIAL
(9) REDUCED EBS IN FILL - EXCAVATED EBS MATERIAL IS USUABLE IN FILLS OUTSIDE THE 1:1 SLOPE. EBS IN FILL REDUCTION FACTOR = .80
(11) EXPANDED EBS BACKFILL - THIS IS TO BE FILLED WITH SUBBASE MATERIAL. EBS BACKFILL FACTOR = 1.15. ITEM NUMBER 208.1100
(13) EXPANDED FILL FACTOR = 1.30
DEPENDING ON SELECTIONS: EXPANDED FILL = (UNEXPANDED FILL - REDUCED EBS) * FILL FACTOR
(14) THE MASS ORDINATE + OR - QTY CALCULATED FOR THE DIVISION. PLUS QUANTITY INDICATES AN EXCESS OF MATERIAL WITHIN THE DIVISION. MINUS INDICATES A SHORTAGE OF MATERIAL WITHIN THE DIVISION.
(15) FACTORS USED TO COMPUTE ANTICIPATED WASTE AND THE COMPUTED WASTE VOLUME IDENTIFIED ARE FOR GENERAL INFORMATION ONLY.

NOTE:
THIS PAGE CONTAINS 1550-02-73 ITEMS.
1550-02-77 ITEMS SHOWN ELSEWHERE

3

CLEARING AND GRUBBING

CATEGORY	STATION	TO	STATION	LOCATION	201.0105 CLEARING STA	201.0120 CLEARING ID	201.0205 GRUBBING STA	201.0220 GRUBBING ID
0010	19+00'TB'	-	21+00'TB'	TEMP BYPASS, LT	2	-	2	-
0010	24+50'TB'	-	27+50'TB'	TEMP BYPASS , LT	-	216	-	216
				TOTAL 0010	2	216	2	216

REMOVALS

CATEGORY	STATION	TO	STATION	LOCATION	DESCRIPTION	203.0100 REMOVING SMALL PIPE CULVERTS EACH	204.0110 REMOVING ASPHALTIC SURFACE SY	204.0165 REMOVING GUARDRAIL LF	REMARKS
0010	119+76	-	123+10	USH 63	-	-	-	589	
0010		19+75'TB'		TEMP BYPASS	12-INCH CORRUGATED POLYETHYLENE	1	-	-	18 LF SEE CONSTRUCTION DETAIL
0010		119+58		USH 63, RT	24-INCH CORRUGATED METAL	1	-	-	F.E.
0010	114+50	-	119+10	USH 63, RT	-	-	144	-	STAGE 3 TEMP SHLDR PAVING REMOVAL
0010	119+52	-	123+49	USH 63, LT	-	-	265	-	STAGE 3 TEMP PAVING FOR BARRIER
					TOTAL 0010	2	409	589	

CATEGORY	STATION	TO	STATION	LOCATION	205.0506.S EXCAVATION, HAULING, AND DISPOSAL OF CREOSOTE CONTAMINATED SOIL TON	REMARKS
0010	121+00	-	121+50	B-55-0636	400.00	ABUTMENT AREAS
				TOTAL 0010	400.00	

BASE ITEMS

CATEGORY	STATION	TO	STATION	LOCATION	305.0110 BASE AGGREGATE DENSE 3/4-INCH TON	305.0120 BASE AGGREGATE DENSE 1 1/4-INCH TON	350.0145 SUBBASE 12-INCH SY	624.0100 WATER MGAL	REMARKS
0010	13+79'TB'	-	32+23'TB'	TEMP BYPASS	114	3,585	-	55	
0010	119+52	-	123+49	USH 63, LT	-	44	-	-	STAGE 3 TEMP PAVING FOR BARRIER
0010	113+77	-	132+20	USH 63	359	3,231	4,308	54	
				TOTAL 0010	473	6,860	4,308	109	

3

NOTE:
THIS PAGE CONTAINS 1550-02-73 ITEMS.
1550-02-77 ITEMS SHOWN ELSEWHERE

3

HMA ITEMS

CATEGORY	STATION	TO	STATION	LOCATION	211.0101.01 PREPARE FOUNDATION FOR ASPHALTIC PAVING (PROJECT) (01. 1550-02-73) EACH	455.0605 TACK COAT GAL	460.6244 HMA PAVEMENT 4 MT 58-34 S TON	465.0120 ASPHALTIC SURFACE DRIVEWAYS AND FIELD ENTRANCES TON	465.0125 ASPHALTIC SURFACE TEMPORARY TON	465.0315 ASPHALTIC FLUMES SY	REMARKS
0010	13+50'TB'	-	32+50'TB'	TEMP BYPASS	-	337	-	-	1,320	-	
0010	114+50	-	118+50	USH 63, RT	1	10	-	-	40	-	TEMP SHLDER PAVING - TC STAGE 3
0010	119+52	-	123+49	USH 63, LT	-	-	-	-	60	-	
0010	117+75	-	125+50	USH 63	-	498	1,393	22	-	50	FLUMES FOR TEMP BYPASS
				TOTAL 0010	1	845	1,393	22	1,420	50	

CULVERTS

CATEGORY	STATION	LOCATION	520.1024 APRON ENDWALLS FOR CULVERT PIPE 24-INCH EACH	520.3424 CULVERT PIPE CLASS III-A NON-METAL 24-INCH LF	REMARKS	INLET ELEVATION FT	OUTLET ELEVATION FT
0010	119+11	USH 63, RT	2	24	F.E.	1119.63	1119.22
		TOTAL 0010	2	24			

PIPE UNDERDRAIN

CATEGORY	STATION	TO	STATION	LOCATION	612.0206 PIPE UNDERDRAIN UNPERFORATED 6-INCH LF	612.0406 PIPE UNDERDRAIN WRAPPED 6-INCH LF	612.0806 APRON ENDWALLS FOR UNDERDRAIN REINFORCED CONCRETE 6-INCH EACH
0010	117+75	-	125+40	USH 63, LT	-	770	-
0010	117+75	-	123+16	USH 63, RT	-	541	-
0010		119+75		USH 63, LT	6	-	1
0010		120+00		USH 63, RT	8	-	1
0010		121+90		USH 63, LT	4	-	1
0010		122+00		USH 63, RT	8	-	1
0010		122+78		USH 63, LT	8	-	1
0010		122+78		USH 63, RT	8	-	1
				TOTAL 0010	42	1,311	6

CONCRETE BARRIER TEMPORARY

CATEGORY	STATION	TO	STATION	LOCATION	603.8000 CONCRETE BARRIER TEMPORARY PRECAST DELIVERED LF	603.8125 CONCRETE BARRIER TEMPORARY PRECAST INSTALLED LF	603.8500 ANCHORING CONCRETE BARRIER TEMPORARY PRECAST LF	603.8505 ANCHORING CONCRETE BARRIER TEMPORARY PRECAST ON BRIDGE DECKS LF	REMARKS
0010	13+79'TB'	-	25+00'TB'	TEMP BYPASS, LT	1,124	1,124	1,084	40	STAGE 2
0010	26+50'TB'	-	32+20'TB'	TEMP BYPASS, LT	572	572	572	-	STAGE 2
0010	17+50'TB'	-	22+75'TB'	TEMP BYPASS, RT	533	533	493	40	STAGE 2
0010	120+27	-	122+71	USH 63, LT	-	246	-	-	STAGE 3
				TOTAL 0010	2,229	2,475	2,149	80	

MGS GUARDRAIL

CATEGORY	STATION	TO	STATION	LOCATION	614.0905 CRASH CUSHIONS TEMPORARY EACH	614.2300 MGS GUARDRAIL 3 LF	614.2610 MGS GUARDRAIL TERMINAL EAT EACH	BACK WIDTH FT	OBJECT MARKING PATTERN	CRASH TEST LEVEL	TRAFFIC DIRECTION	TRAFFIC LOCATION	CRASH CUSHION SHIELDS	REMARKS
0010		22+75'TB'		TEMP BYPASS, RT	1	-	-	2	OM-3L (WO5-58L)	TL-3	UNIDIRECTIONAL	RT	TEMP BARRIER	PINNED
0010		32+20'TB'		TEMP BYPASS, LT	1	-	-	2	OM-3R (WO5-58R)	TL-3	UNIDIRECTIONAL	LT	TEMP BARRIER	PINNED
0010	119+81	-	122+67	USH 63	-	300	4	-	-	-	-	-	-	B-55-0289
				TOTAL 0010	2	300	4							

NOTE:
THIS PAGE CONTAINS 1550-02-73 ITEMS.
1550-02-77 ITEMS SHOWN ELSEWHERE

3

EROSION CONTROL

CATEGORY	STATION	TO	STATION	LOCATION	625.0100 TOPSOIL SY	625.0500 SALVAGED TOPSOIL SY	627.0200 MULCHING SY	628.1104 EROSION BALES EACH	628.1504 SILT FENCE LF	628.1520 SILT FENCE MAINTENANCE LF	628.1905 MOBILIZATIONS EROSION CONTROL EACH	628.1910 MOBILIZATIONS EMERGENCY EROSION CONTROL EACH	628.2008 EROSION MAT URBAN CLASS I TYPE B SY	628.2027 EROSION MAT CLASS II TYPE C SY	628.7504 TEMPORARY DITCH CHECKS LF	628.7555 CULVERT PIPE CHECKS EACH	628.7570 ROCK BAGS EACH	629.0210 FERTILIZER TYPE B CWT	630.0110 SEEDING MIXTURE NO. 10 LB	630.0200 SEEDING TEMPORARY LB	630.0300 SEEDING BORROW PIT LB	630.0500 SEED WATER MGAL	REMARKS
0010	113+50	-	132+50	PROJECT	-	-	-	-	-	-	5	5	-	-	-	-	-	-	-	-	-	-	
0010	113+78	-	121+50	USH 63, LT	-	2,933	2,517	-	-	-	-	-	105	311	-	-	-	1.85	40	-	-	66	
0010	117+75	-	121+50	USH 63, RT	-	847	557	-	-	-	-	-	290	-	-	3	-	0.54	11	-	-	19	
0010	121+50	-	131+58	USH 63, LT	-	3,999	3,842	-	-	-	-	-	157	-	-	-	-	2.52	54	-	-	90	
0010	121+50	-	123+16	USH 63, RT	-	511	181	-	-	-	-	-	330	-	-	-	-	0.33	7	-	-	12	
0010	13+72'TB'	-	32+22'TB'	TEMP BYPASS, LT	2,015	-	-	10	1,251	1,251	-	-	1,384	631	16	-	119	1.27	-	54	40	45	
0010	120+83	-	121+67	USH 63	-	-	-	28	114	114	-	-	-	-	-	-	-	-	-	-	-	-	BOX CULVERT STAGING
				UNDISTRIBUTED	-	-	1,775	10	342	342	-	-	567	236	-	-	-	1.63	28	14	10	-	
				TOTAL 0010	2,015	8,290	8,872	48	1,707	1,707	5	5	2,833	1,178	16	3	119	8.14	140	68	50	232	

PERMANENT SIGNING

CATEGORY	STATION	LOCATION	SIGN #	DESCRIPTION	634.0618 POSTS WOOD 4X6-INCH X 18-FT EACH	638.2102 MOVING SIGNS TYPE II EACH	638.2602 REMOVING SIGNS TYPE II EACH	638.3000 REMOVING SMALL SIGN SUPPORTS EACH
0010	118+53	RT	201	NO PASSING	-	-	1	2
0010	118+53	RT	301	DNR SERVICE CENTER [RA]	2	1	-	-
0010	120+85	LT	202	BRIDGE HASH MARKS-RIGHT	-	-	1	1
0010	120+84	RT	203	BRIDGE HASH MARKS-LEFT	-	-	1	1
0010	121+64	LT	204	BRIDGE HASH MARKS-RIGHT	-	-	1	1
0010	121+65	RT	205	BRIDGE HASH MARKS-LEFT	-	-	1	1
0010	123+02	LT	206	SPEED LIMIT [45 MPH]	-	-	1	1
0010	123+14	RT	207	SPEED LIMIT [45 MPH]	-	-	1	1
0010	123+62	LT	208	NO PASSING	-	-	1	1
0010	127+24	LT	304	DNR SERVICE CENTER [LA]	2	1	-	-
0010	129+94	LT	211	SPEED LIMIT [45 MPH]	-	-	1	1
				TOTAL 0010	4	2	9	10

TRAFFIC CONTROL

CATEGORY	STATION	TO	STATION	LOCATION	633.1100 DELINEATORS TEMPORARY EACH	643.0300 TRAFFIC CONTROL DRUMS DAY	643.0420 TRAFFIC CONTROL BARRICADES TYPE III DAY	643.0500 TRAFFIC CONTROL FLEXIBLE TUBULAR MARKER POSTS EACH	643.0600 TRAFFIC CONTROL FLEXIBLE TUBULAR MARKER BASES EACH	643.0705 TRAFFIC CONTROL WARNING LIGHTS TYPE A DAY	643.0715 TRAFFIC CONTROL WARNING LIGHTS TYPE C DAY	643.0900 TRAFFIC CONTROL SIGNS DAY	643.3165 TEMPORARY MARKING LINE PAINT 6-INCH WHITE LF	643.3165 YELLOW LF	643.3170 TEMPORARY MARKING LINE EPOXY 6-INCH WHITE LF	643.3170 YELLOW LF	643.3180 TEMPORARY MARKING LINE REMOVABLE TAPE 6-INCH WHITE LF	643.3180 YELLOW LF	643.3760 TEMPORARY MARKING RAISED PAVEMENT MARKER TYPE I EACH	643.5000 TRAFFIC CONTROL EACH	REMARKS
0010	-	-	-	I-94M US 63, US12	-	-	-	-	-	-	-	2916	-	-	-	-	-	-	-	-	WIDTH SIGNING
0010	113+00	-	132+50	PROJECT	-	-	-	-	-	-	-	-	-	-	-	-	-	-	-	0.80	
0010	113+00	-	132+50	USH 63	-	2,310	168	-	-	168	294	1,176	-	-	-	-	-	-	-	-	STAGE1
0010	13+00'TB'	-	32+20'TB'	TEMP BYPASS	4	4,092	558	10	10	372	1,550	8,331	395	700	1732	2575	-	-	63	-	STAGE 2
0010	113+00	-	132+50	USH 63	15	3,002	158	-	-	158	-	2,829	850	832	-	-	1326	1350	-	-	STAGE 3
				SUBTOTAL 0010									1245	1532	1732	2575	1326	1350			
				TOTAL 0010	19	9,404	884	10	10	698	1,844	15,252	2,777		4,307		2,676		63	0.80	

3

NOTE:
THIS PAGE CONTAINS 1550-02-73 ITEMS.
1550-02-77 ITEMS SHOWN ELSEWHERE

3

PAVEMENT MARKINGS

CATEGORY	STATION	TO	STATION	LOCATION	646.2020 MARKING LINE EPOXY 6-INCH LF	646.7120 MARKING DIAGONAL EPOXY 12-INCH LF	646.9000 MARKING REMOVAL LINE 4-INCH LF	REMARKS
0010	113+50	-	125+50	USH 63	2,015	-	832	WHITE EDGELINE
0010	113+50	-	123+25	USH 63	2,740	-	416	DBL YELLOW C/L & MEDIAN
0010	121+65	-	123+16	USH 63, RT	38	-	-	LANE LINE
0010	118+25	-	123+25	USH 63	-	80	-	MEDIAN MARKINGS
				TOTAL 0010	4,793	80	1,248	

CONSTRUCTION STAKING

CATEGORY	STATION	TO	STATION	LOCATION	650.4500 CONSTRUCTION STAKING SUBGRADE LF	650.5000 CONSTRUCTION STAKING BASE LF	650.6000 CONSTRUCTION STAKING PIPE CULVERTS EACH	650.6501.01 CONSTRUCTION STAKING STRUCTURE LAYOUT (STRUCTURE) (01. B-55-289) EACH	650.8501.01 CONSTRUCTION STAKING ELECTRICAL INSTALLATIONS (PROJECT) (01. 1550-02-73) EACH	650.9911.01 CONSTRUCTION STAKING SUPPLEMENTAL CONTROL (PROJECT) (01. 1550-02-73) EACH	650.9920 CONSTRUCTION STAKING SLOPE STAKES LF
0010	113+50	-	132+20	USH 63	1,660	1,660	1	-	1	1	1,660
0010	121+22	-	121+22	USH 63	-	-	-	1	-	-	-
0010	13+79'TB'	-	32+22'TB'	TEMP BYPASS	1,793	1,793	-	-	-	-	1,793
				TOTAL 0010	3,453	3,453	1	1	1	1	3,453

ELECTRICAL

CATEGORY	STATION	TO	STATION	OFFSET FT	LOCATION	204.9090.S.01 REMOVING (ITEM DESCRIPTION) (01. CONDUIT) LF	652.0225 CONDUIT RIGID NONMETALLIC SCHEDULE 40 2-INCH LF	652.0605 CONDUIT SPECIAL 2-INCH LF	652.0700.S INSTALL CONDUIT INTO EXISTING ITEM EACH	653.0154 PULL BOXES NON-CONDUCTIVE 24X36-INCH EACH	653.0164 PULL BOXES NON-CONDUCTIVE 24X42-INCH EACH	REMARKS
0010		113+86		27	USH 63, LT	4	-	-	1	-	-	EXIST. PB
0010	113+86	-	116+00	24	USH 63, LT	-	212	-	-	1	-	PB1
0010	116+00	-	118+00	25	USH 63, LT	-	200	-	-	1	-	PB2
0010	118+00	-	120+00	28	USH 63, LT	-	200	-	-	-	1	PB3
0010	120+00	-	122+00	28	USH 63, LT	-	-	204	-	-	1	PB4
0010	122+00	-	124+00	25	USH 63, LT	-	200	-	-	1	-	PB5
0010	124+00	-	126+00	25	USH 63, LT	-	200	-	-	1	-	PB6
0010	126+00	-	128+00	25	USH 63, LT	-	200	-	-	1	-	PB7
0010	128+00	-	130+00	27	USH 63, LT	-	200	-	-	1	-	PB8
0010	130+00	-	132+00	35	USH 63, LT	8	200	-	-	1	-	PB9
					TOTAL 0010	12	1,612	204	1	7	2	

NOTE:
THIS PAGE CONTAINS 1550-02-73 ITEMS.
1550-02-77 ITEMS SHOWN ELSEWHERE

3

CATEGORY	STATION	OFFSET	LOCATION	653.0905 REMOVING PULL BOXES EACH
0010	115+86	24	USH 63, LT	1
0010	117+78	25	USH 63, LT	1
0010	119+73	26	USH 63, LT	1
0010	121+92	27	USH 63, LT	1
0010	123+66	23	USH 63, LT	1
0010	125+63	20	USH 63, LT	1
0010	127+54	22	USH 63, LT	1
0010	129+53	25	USH 63, LT	1
0010	131+42	33	USH 63, LT	1
			TOTAL 0010	9

SAWING ASPHALT

CATEGORY	STATION	LOCATION	690.0150 SAWING ASPHALT LF	REMARKS
0010	117+75	USH 63	35	
0010	125+17	USH 63, LT	14	P.E.
0010	125+50	USH 63	29	
		TOTAL 0010	78	

FIBER OPTIC

CATEGORY	LOCATION	204.9090.S.02 REMOVING (ITEM DESCRIPTION) (02. FIBER OPTIC CABLE) LF	SPV.0090.01 SPECIAL (01. INSTALLING STATE-FURNISHED FIBER OPTIC CABLE) LF	REMARKS
0010	FERN DR. - CEDAR ST. USH 63, LT	3,200	3,600	BETWEEN SIGNAL CABINETS
	TOTAL 0010	3,200	3,600	

CATEGORY	STATION	TO	STATION	LOCATION	616.0700.S FENCE SAFETY LF	REMARKS
0010	18+00'TB'	-	20+00'TB"	TEMP BYPASS, LT	200	ALONG TLE LINE
				TOTAL 0010	200	

STORM SEWER

CATEGORY	STATION	LOCATION	204.0210 REMOVING MANHOLES EACH	204.0245.01 REMOVING STORM SEWER (SIZE) (01. 24-INCH) LF	522.1024 APRON ENDWALLS FOR CULVERT PIPE REINFORCED CONCRETE 24-INCH EACH	524.0624 APRON ENDWALLS FOR CULVERT PIPE SALVAGED 24-INCH EACH	608.0324 STORM SEWER PIPE REINFORCED CONCRETE CLASS III 24-INCH LF	611.0420 RECONSTRUCTING MANHOLES EACH	650.4000 CONSTRUCTION STAKING STORM SEWER EACH	SPV.0060.02 SPECIAL (02. ADJUST WATER VALVE BOX) EACH	REMARKS
0030	116+57	USH 63, LT	1	10	1	1	2	1	3	-	
0030	120+02	USH 63, RT	-	-	-	-	-	1	1	-	SANITARY MANHOLE COVER ADJUSTMENT
0030	124+34	USH 63, RT	-	-	-	-	-	-	-	1	
0030	126+23	USH 63, RT	-	-	-	-	-	-	-	1	
		TOTAL 0030	1	10	1	1	2	2	4	2	

NOTE:
THIS PAGE CONTAINS 1550-02-77 ITEMS.
1550-02-73 ITEMS SHOWN ELSEWHERE

3

CLEARING AND GRUBBING

CATEGORY	STATION	LOCATION	201.0120 CLEARING ID	201.0220 GRUBBING ID	REMARKS
0010	129+75	USH 63, RT	24	24	1 TREE ALONG OLD PINE ST
		TOTAL 0010	24	24	

REMOVALS

CATEGORY	STATION	TO	STATION	LOCATION	DESCRIPTION	203.0100 REMOVING SMALL PIPE CULVERTS EACH	204.0110 REMOVING ASPHALTIC SURFACE SY	204.0150 REMOVING CURB & GUTTER LF	204.0165 REMOVING GUARDRAIL LF	REMARKS
0010		125+25		USH 63, RT	24-INCH CORRUGATED METAL	1	-	-	-	
0010		127+97		USH 63, RT	18-INCH CORRUGATED METAL	1	-	-	-	CEMETERY ENTRANCE
0010	130+00	-	130+29	USH 63, RT		-	-	-	29	END OF PINE ST
0010	5+25'S'	-	6+00'S'	SPRUCE ST		-	63	-	-	TEMP WIDENING
0010	5+25'S'	-	6+00'S'	SPRUCE ST	18-INCH CORRUGATED METAL	1	-	212	-	
					TOTAL 0010	3	63	212	29	

BASE ITEMS

CATEGORY	STATION	TO	STATION	LOCATION	305.0110 BASE AGGREGATE DENSE 3/4-INCH TON	305.0120 BASE AGGREGATE DENSE 1 1/4-INCH TON	350.0145 SUBBASE 12-INCH SY	624.0100 WATER MGAL
0010	123+16	-	131+58	USH 63	172	1,929	2,074	32
				TOTAL 0010	172	1,929	2,074	32

HMA ITEMS

CATEGORY	STATION	TO	STATION	LOCATION	455.0605 TACK COAT GAL	460.6244 HMA PAVEMENT 4 MT 58-34 S TON	465.0120 ASPHALTIC SURFACE DRIVEWAYS AND FIELD ENTRANCES TON	465.0125 ASPHALTIC SURFACE TEMPORARY TON	REMARKS
0010	123+16	-	131+58	USH 63, RT	287	802	9	-	
0010	5+75'S'	-	6+00'S'	SPRUCE ST, RT	-	-	3	-	DOLLAR GENERAL PATCH
0010	5+38'S'	-	6+00'S'	SPRUCE ST	-	-	-	18	TEMP WIDENING
				TOTAL 0010	287	802	12	18	

NOTE:
THIS PAGE CONTAINS 1550-02-77 ITEMS.
1550-02-73 ITEMS SHOWN ELSEWHERE

3

CULVERTS

CATEGORY	STATION	LOCATION	520.1018 APRON ENDWALLS FOR CULVERT PIPE 18-INCH EACH	520.3418 CULVERT PIPE CLASS III-A NON-METAL 18-INCH LF	522.2424 CULVERT PIPE REINFORCED CONCRETE HORIZONTAL ELLIPTICAL CLASS HE-IV 24X38-INCH LF	522.2624 APRON ENDWALLS FOR CULVERT PIPE REINFORCED CONCRETE HORIZONTAL ELLIPTICAL 24X38-INCH EACH	REMARKS	INLET ELEVATION FT	OUTLET ELEVATION FT
0010	127+95	USH 63, RT	2	24	-	-	CEMETERY P.E.	1118.93	1118.73
0010	5+62'S'	SPRUCE ST	-	-	92	2		1115.87	1115.61
		TOTAL 0010	2	24	92	2			

PIPE UNDERDRAIN

CATEGORY	STATION	TO	STATION	LOCATION	612.0206 PIPE UNDERDRAIN UNPERFORATED 6-INCH LF	612.0406 PIPE UNDERDRAIN WRAPPED 6-INCH LF	612.0600 UNDERDRAIN TRENCH LF	612.0806 APRON ENDWALLS FOR UNDERDRAIN REINFORCED CONCRETE 6-INCH EACH
0010	123+16	-	131+58	USH 63, RT	-	842	-	-
0010		125+00		USH 63, RT	8	-	-	1
0010		126+50		USH 63, RT	8	-	-	1
0010		129+00		USH 63, RT	8	-	-	1
0010		131+55		USH 63, RT	10	-	10	1
				TOTAL 0010	34	842	10	4

EROSION CONTROL

CATEGORY	STATION	TO	STATION	LOCATION	606.0200 RIPRAP MEDIUM CY	625.0500 SALVAGED TOPSOIL SY	627.0200 MULCHING SY	628.1905 MOBILIZATIONS EROSION CONTROL EACH	628.1910 MOBILIZATIONS EMERGENCY EROSION CONTROL EACH	628.2008 EROSION MAT URBAN CLASS I TYPE B SY	628.7555 CULVERT PIPE CHECKS EACH	629.0210 FERTILIZER TYPE B CWT	630.0110 SEEDING MIXTURE NO. 10 LB	630.0500 SEED WATER MGAL	645.0120 GEOTEXTILE TYPE HR SY
0010	123+16	-	131+58	PROJECT	-	-	-	2	2	-	-	-	-	-	-
0010	123+16	-	131+58	USH 63, RT	4	2,103	695	-	-	1,408	6	1.32	28	48	14
				UNDISTRIBUTED	-	-	174	-	-	352	2	0.33	7	12	-
				TOTAL 0010	4	2,103	869	2	2	1,760	8	1.65	35	60	14

CATEGORY	STATION	TO	STATION	LOCATION	601.0557 CONCRETE CURB & GUTTER 6-INCH SLOPED 36-INCH TYPE D LF
0010	5+25'S'	-	6+00'S'	SPRUCE ST	196
				TOTAL 0010	196

3

NOTE:
THIS PAGE CONTAINS 1550-02-77 ITEMS.
1550-02-73 ITEMS SHOWN ELSEWHERE

3

PERMANENT SIGNING

CATEGORY	STATION	LOCATION	SIGN #	SIGN CODE	DESCRIPTION	634.0612 POSTS WOOD 4X6-INCH X 12-FT EACH	634.0616 POSTS WOOD 4X6-INCH X 16-FT EACH	637.2210 SIGNS TYPE II REFLECTIVE H SF	638.2102 MOVING SIGNS TYPE II EACH	638.2602 REMOVING SIGNS TYPE II EACH	638.3000 REMOVING SMALL SIGN SUPPORTS EACH
0010	124+22	RT	101	R1-1	STOP SIGN	-	1	5.18	-	-	-
0010	124+22	RT	209	-	STOP SIGN	-	-	-	-	1	1
0010	124+15	RT	302	-	LOCAL STREET SIGN	-	-	-	1	-	-
0010	125+95	RT	303	-	NO ENGINE BRAKING	-	1	-	2	-	-
0010	128+84	RT	210	-	SPEED LIMIT [40 MPH]	-	-	-	-	1	1
0010	129+95	RT	305	-	NO PARKING	-	1	-	1	-	-
0010	130+06	RT	102	W5-56	END OF ROAD MARKER	1	-	2.25	-	-	-
0010	130+15	RT	103	W5-56	END OF ROAD MARKER	1	-	2.25	-	-	-
0010	130+24	RT	104	W5-56	END OF ROAD MARKER	1	-	2.25	-	-	-
0010	130+42	RT	306	-	LOCAL STREET SIGN	-	-	-	1	-	-
0010	130+92	RT	212	-	SIGNAL AHEAD	-	-	-	-	1	1
		TOTAL 0010				3	3	11.93	5	3	3

PAVEMENT MARKINGS

CATEGORY	STATION	TO	STATION	LOCATION	646.2020 MARKING LINE EPOXY 6-INCH LF	646.4020 MARKING LINE EPOXY 10-INCH LF	646.5020 MARKING ARROW EPOXY EACH	646.5120 MARKING WORD EPOXY EACH	646.7120 MARKING DIAGONAL EPOXY 12-INCH LF	646.8120 MARKING CURB EPOXY LF	646.8220 MARKING ISLAND NOSE EPOXY EACH	646.9000 MARKING REMOVAL LINE 4-INCH LF	REMARKS
0010	124+50	-	128+60	USH 63, LT	-	414	2	1	-	-	-	-	TURN LANE
0010	124+46	-	132+65	USH 63	1,491	-	-	-	-	-	-	850	EDGELINE
0010	124+50	-	129+50	USH 63	2,230	-	-	-	-	-	-	1,041	DBL YELLOW C/L & MEDIAN
0010	131+00	-	132+50	USH 63, RT	42	-	-	-	-	-	-	-	LANE LINE
0010	129+50	-	132+65	USH 63	-	-	-	-	121	99	1	-	MEDIAN MARKING
0010	5+35'S'	-	6+00'S'	SPRUCE ST	133	-	-	-	-	-	-	-	
				TOTAL 0010	3,896	414	2	1	121	99	1	1,891	

TRAFFIC CONTROL

CATEGORY	STATION	TO	STATION	LOCATION	643.0300 TRAFFIC CONTROL DRUMS DAY	643.0420 TRAFFIC CONTROL BARRICADES TYPE III DAY	643.0500 TRAFFIC CONTROL FLEXIBLE TUBULAR MARKER POSTS EACH	643.0600 TRAFFIC CONTROL FLEXIBLE TUBULAR MARKER BASES EACH	643.0705 TRAFFIC CONTROL WARNING LIGHTS TYPE A DAY	643.0715 TRAFFIC CONTROL WARNING LIGHTS TYPE C DAY	643.0900 TRAFFIC CONTROL SIGNS DAY	643.3760 TEMPORARY MARKING RAISED PAVEMENT MARKER TYPE I EACH	643.5000 TRAFFIC CONTROL EACH	643.3165 TEMPORARY MARKING LINE PAINT 6-INCH WHITE LF	643.3165 YELLOW LF	643.3170 TEMPORARY MARKING LINE EPOXY 6-INCH WHITE LF	643.3180 TEMPORARY MARKING LINE REMOVABLE TAPE 6-INCH WHITE LF	643.3180 YELLOW LF	REMARKS
0010	123+16	-	131+58	PROJECT	-	-	-	-	-	-	-	-	0.20	-	-	-	-	-	
0010	123+15	-	131+58	USH 63	2976	372	-	-	248	186	1860	-	-	388	-	670	1018	619	STAGE 2
0010	123+15	-	131+58	USH 63	5372	1817	8	8	1580	790	11297	65	-	675	1588	-	-	3025	STAGE 3
				SUBTOTAL 0010										1,063	1,588	670	1018	3,644	
				TOTAL 0010	8,348	2,189	8	8	1,828	976	13,157	65	0.20	2,651		670	4,662		

NOTE:
THIS PAGE CONTAINS 1550-02-77 ITEMS.
1550-02-73 ITEMS SHOWN ELSEWHERE

3

3

CONSTRUCTION STAKING

CATEGORY	STATION	TO	STATION	LOCATION	650.4500 CONSTRUCTION STAKING SUBGRADE LF	650.5000 CONSTRUCTION STAKING BASE LF	650.5500 CONSTRUCTION STAKING CURB GUTTER AND CURB & GUTTER LF	650.6000 CONSTRUCTION STAKING PIPE CULVERTS EACH	650.9911.01 CONSTRUCTION STAKING SUPPLEMENTAL CONTROL (PROJECT) (02. 1550-02-77) EACH	650.9920 CONSTRUCTION STAKING SLOPE STAKES LF
0010	123+15	-	131+58	USH 63	843	843	-	1	1	843
0010	5+25'S'	-	6+00'S'	SPRUCE ST	75	75	196	1	-	75
				TOTAL 0010	918	918	196	2	1	918

CATEGORY	STATION	TO	STATION	LOCATION	690.0150 SAWING ASPHALT LF	REMARKS
0010		6+00'S'		SPRUCE ST	36	
0010		6+00'S'		SPRUCE ST, RT	24	DOLLAR GENERAL ENTRANCE
0010	5+25'S'	-	6+00'S'	SPRUCE ST	77	FOR TRAFFIC STAGING
0010	125+50	-	131+58	USH 63, RT	608	
0010		127+97		USH 63, RT	10	CEMETERY ENTRANCE
0010		131+58		USH 63, RT	17	
				TOTAL 0010	772	

TRANSPORTATION PROJECT PLAT NO: 1550-02-23-4.01 AMENDMENT NO: 1
AMENDS UTILITY NUMBERS 83 & 84 OF TRANSPORTATION PROJECT PLAT 1550-02-23-4.01 RECORDED AS DOCUMENT NO: 1166106

THAT PART OF LOT 5, HIELKEMA'S DUTCH HERITAGE VILLAGE, AND PART OF LOT 1, CSM 6036, V 26, P 6036, DOC 1000795, LOCATED IN PART OF THE SE 1/4 OF THE SE 1/4, ALL IN SECTION 36, TOWNSHIP 29 NORTH, RANGE 17 WEST, VILLAGE OF BALDWIN, ST. CROIX COUNTY, WISCONSIN.

RELOCATION ORDER USH 63 BALDWIN - CLEAR LAKE, BRANCH RUSH RIVER BRIDGE B-55-0636, ST. CROIX COUNTY

TO PROPERLY ESTABLISH, LAY OUT, WIDEN, ENLARGE, EXTEND, CONSTRUCT, RECONSTRUCT, IMPROVE, OR MAINTAIN A PORTION OF THE HIGHWAY DESIGNATED ABOVE, THE STATE OF WISCONSIN DEPARTMENT OF TRANSPORTATION DEEMS IT NECESSARY TO RELOCATE OR CHANGE SAID HIGHWAY AND ACQUIRE CERTAIN LANDS AND INTERESTS OR RIGHTS IN LANDS FOR THE ABOVE NAMED PROJECT.

TO EFFECT THIS CHANGE, PURSUANT TO AUTHORITY GRANTED UNDER SECTION 84.02 (3), 84.09 AND 84.30, WISCONSIN STATUTES, THE DEPARTMENT OF TRANSPORTATION HEREBY ORDERS THAT:

1. THAT PORTION OF SAID HIGHWAY AS SHOWN ON THIS PLAT IS LAID OUT AND ESTABLISHED TO THE LINES AND WIDTHS AS SO SHOWN FOR THE ABOVE PROJECT.
2. THE LANDS OR INTERESTS OR RIGHTS IN LANDS AS SHOWN ON THIS PLAT ARE REQUIRED BY THE DEPARTMENT FOR THE ABOVE PROJECT AND SHALL BE ACQUIRED IN THE NAME OF THE STATE OF WISCONSIN, PURSUANT TO THE PROVISIONS OF SECTION 84.09 (1) OR (2), WISCONSIN STATUTES.

LOCATION SKETCH
NOT TO SCALE

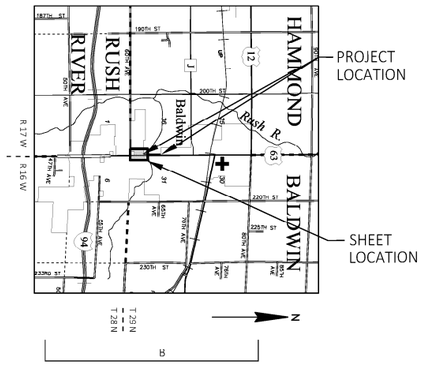

FOR ADDITIONAL INFORMATION REFER TO THE TITLE SHEET, RECORDED AS SHEET 2 OF 2 DOCUMENT NO: 1166106.

POSITIONS SHOWN ON THIS PLAT ARE WISCONSIN COORDINATE REFERENCE SYSTEM COORDINATES (WISCRS), ST CROIX COUNTY, NAD83 (2011), IN U.S. SURVEY FEET. VALUES SHOWN ARE GRID COORDINATES, GRID BEARINGS, AND GRID DISTANCES. GRID DISTANCES MAY BE USED AS GROUND DISTANCES. NGS POINT UTILIZED WAS DL4148.

ALL NEW RIGHT-OF-WAY MONUMENTS WILL BE TYPE 2 (TYPICALLY ¾" X 24" IRON REBARS), UNLESS OTHERWISE NOTED, AND WILL BE PLACED PRIOR TO THE COMPLETION OF THE PROJECT.

FOR THE CURRENT ACCESS/DRIVEWAY INFORMATION, CONTACT THE PLANNING UNIT OF THE WISCONSIN DEPARTMENT OF TRANSPORTATION OFFICE IN THE NW REGION-EAU CLAIRE.

EXISTING ACCESS CONTROL ALONG USH 63 HAS BEEN ESTABLISHED FROM PREVIOUS PLAT 8071-0-01(8071-00-29).

ROAD NAME	BASIS OF EXISTING R/W	YEAR
FERN DR, USH 63/10TH AVE, VANDENBERG ST	CSM 29-6649, V 29, P 6649, DOC 1082973	2019
USH 63/10TH AVE	CSM 6036, V 26, P 6036, DOC 1000795	2014
USH 63/10TH AVE, 60TH AVE	R/W PLAT 8070-00-21	2006
USH 63/10TH AVE	HIELKEMA'S DUTCH HERITAGE VILLAGE	1997
USH 63/10TH AVE	CSM 10-2939, V 10, P 2939, DOC 530197	1995
USH 63/10TH AVE	CSM 5-1395, V 5, P 1395, DOC 390793	1984

OWNER'S NAMES ARE SHOWN FOR REFERENCE PURPOSES ONLY AND ARE SUBJECT TO CHANGE PRIOR TO TRANSFER OF LAND INTERESTS TO THE DEPARTMENT.

SCHEDULE OF LANDS & INTERESTS REQUIRED

PARCEL NUMBER	OWNER(S)	INTERESTS REQUIRED	R/W SQUARE FEET REQUIRED			TLE SQUARE FEET
			NEW	EXISTING	TOTAL	
1	NEIL J AND JOHANNA L SCHAITEL	TLE	-	-	-	840
2	KIDZ PLAZA III LLC	TLE	-	-	-	2965

UTILITY INTERESTS REQUIRED		
UTILITY NUMBER	OWNER (S)	INTEREST REQUIRED
80	XCEL ENERGY (ELECTRIC)	RELEASE OF RIGHTS
81	BALDWIN TELECOM	RELEASE OF RIGHTS
82	WISCONSIN GAS	RELEASE OF RIGHTS
83	VILLAGE OF BALDWIN (WATER)	RELEASE OF RIGHTS
84	VILLAGE OF BALDWIN (SANITARY)	RELEASE OF RIGHTS

UTILITY EASEMENT TABLE			
UTILITY NUMBER	PARCEL	RECORDING INFORMATION	NAME
80	1	DOC 559068, V 6, P 88	NORTHERN STATES POWER CO.
82	1	DOC 559068, V 6, P 88	WISCONSIN GAS
83	1	DOC 559068, V 6, P 88	VILLAGE OF BALDWIN
81	2	DOC 438392, BOOK 813, P 559	BALDWIN TELECOM
		DOC 169966A, V 220, P 217	
84	1	HIELKEMA'S DUTCH HERITAGE VILLAGE	VILLAGE OF BALDWIN(SANITARY)

1174389
BETH PABST
REGISTER OF DEEDS
ST. CROIX CO., WI
RECEIVED FOR RECORD
12/18/2023 01:31 PM
EXEMPT #
PLAT FEE 25.00
VOLUME: TPP1
PAGES: 221
PAGES: 1
**The above recording information verifies that this document has been electronically recorded & returned to the submitter

RESERVED FOR REGISTER OF DEEDS
PROJECT NUMBER 1550-02-23-4.01
AMENDMENT NO: 1

4

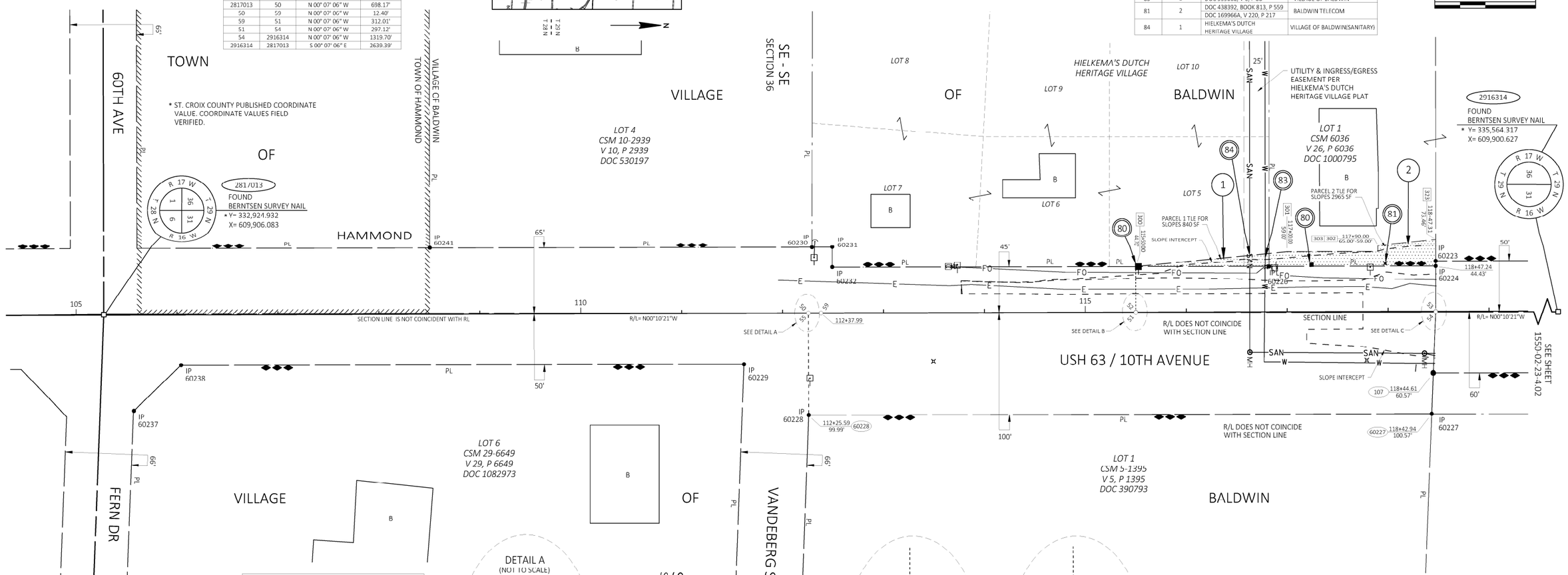

RECOVERED MONUMENTS			
POINT	Y	X	DESCRIPTION
60223	334244.600	609853.355	1" IRON PIPE
60224	334244.603	609858.355	1" IRON PIPE
60226	334079.511	609858.969	1" IRON PIPE
60227	334240.743	610003.363	1" IRON PIPE
60228	333623.397	610004.639	1" IRON PIPE
60229	333559.213	609954.684	1" IRON PIPE
60230	333626.586	609839.742	1" IRON PIPE
60231	333646.653	609839.413	1" IRON PIPE
60232	333646.660	609859.473	1" IRON PIPE
60237	332954.727	610000.633	1" IRON PIPE
60238	333001.524	609955.679	1" IRON PIPE
60241	333247.939	609840.295	1" IRON PIPE

COURSE TABLE			
FROM	TO	DIRECTION	DISTANCE
51	300	S 89° 49' 39" W	45.00'
300	60224	N 00° 07' 06" W	297.24'
60224	54	N 89° 58' 20" E	45.00'
54	60227	S 87° 46' 39" E	100.08'
60227	60228	S 00° 07' 06" E	617.35'
		(N 00° 00' 00" E)	(617.73')
60228	50	S 89° 49' 39" W	100.00'

COURSE TABLE - SEGMENTS			
FROM	TO	DIRECTION	DISTANCE
60228	55	S 89° 49' 39" W	99.99'
52	300	S 89° 49' 39" W	44.71'
60224	53	N 89° 58' 20" E	44.42'
54	107	S87° 46' 39" E	60.05'
107	60227	S87° 46' 39" E	40.03'

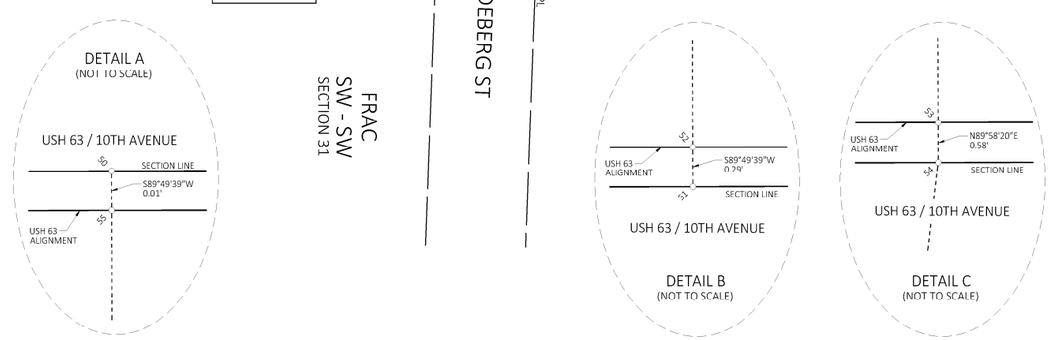

I, NEIL C. BOWE, PROFESSIONAL LAND SURVEYOR, HEREBY CERTIFY THAT IN FULL COMPLIANCE WITH THE PROVISIONS OF SECTION 84.095 OF THE WISCONSIN STATUTES AND UNDER THE DIRECTION OF THE DEPARTMENT, I HAVE SURVEYED AND MAPPED THIS TRANSPORTATION PROJECT PLAT AND SUCH PLAT CORRECTLY REPRESENTS ALL EXTERIOR BOUNDARIES OF THE SURVEYED LAND.

SIGNATURE: Neil C. Bowe DATE: 12/18/2023
PRINT NAME: NEIL C. BOWE
REGISTRATION NUMBER: S-2827

THIS PLAT IS APPROVED FOR THE WISCONSIN DEPARTMENT OF TRANSPORTATION - NW REGION-EAU CLAIRE

SIGNATURE: Aaron Gustafson DATE: 12/18/2023
PRINT NAME: AARON GUSTAFSON

WISCONSIN NEIL C. BOWE S-2827 CHIPPEWA FALLS WI LAND SURVEYOR

cbs²
770 TECHNOLOGY WAY
CHIPPEWA FALLS, WI 54729

STATE OF WISCONSIN
DEPARTMENT OF TRANSPORTATION
TRANSPORTATION PROJECT PLAT TITLE SHEET
1550-02-23
BALDWIN - CLEAR LAKE
BRANCH RUSH RIVER BRIDGE B-55-0636
USH 63
ST. CROIX COUNTY

4

CONVENTIONAL SYMBOLS

SECTION LINE
QUARTER LINE
SIXTEENTH LINE
NEW REFERENCE LINE
NEW R/W LINE
EXISTING R/W OR HE LINE
PROPERTY LINE — P.L. —
LOT, TIE & OTHER MINOR LINES
SLOPE INTERCEPT
CORPORATE LIMITS
UNDERGROUND FACILITY (COMMUNICATIONS, ELECTRIC, ETC) — W — (TYPE)
NEW R/W (FEE OR HE) (HATCHING VARIES BY OWNER)
TEMPORARY LIMITED EASEMENT AREA
EASEMENT AREA (PERMANENT LIMITED OR RESTRICTED DEVELOPMENT)
TRANSMISSION STRUCTURES
BUILDING — TO BE REMOVED
BRIDGE — CULVERT

SECTION CORNER SYMBOL (18, 23, 24, 26, 25, 9)
SECTION CORNER MONUMENT
GEODETIC SURVEY MONUMENT
SIXTEENTH CORNER MONUMENT
SIGN — SIGN
OFF-PREMISE SIGN — 81-25 — SIGN

R/W MONUMENT (TO BE SET)
NON-MONUMENTED R/W POINT
FOUND IRON PIN (1-INCH UNLESS NOTED) — IP

	COMPENSABLE	NON-COMPENSABLE
ELECTRIC POLE		
TELEPHONE POLE		
PEDESTAL (LABEL TYPE) (TV, TEL, ELEC, ETC.)		
VAULT(COMMUNICATION)	C	C

ACCESS RESTRICTED BY ACQUISITION
NO ACCESS (BY STATUTORY AUTHORITY)
ACCESS RESTRICTED (BY PREVIOUS PROJECT OR CONTROL)
NO ACCESS (NEW HIGHWAY)

PARCEL NUMBER 25
UTILITY NUMBER 40
PARALLEL OFFSETS

CONVENTIONAL ABBREVIATIONS

ACCESS RIGHTS	AR	POINT OF BEGINNING	POB
ACRES	AC	POINT OF CURVATURE	PC
AHEAD	AH	POINT OF COMPOUND CURVE	PCC
ALUMINUM	ALUM	POINT OF INTERSECTION	PI
AND OTHERS	ET AL	PROPERTY LINE	PL
BACK	BK	RECORDED AS	(100')
BLOCK	BLK	REEL / IMAGE	R/I
CENTERLINE	C/L	REFERENCE LINE	R/L
CERTIFIED SURVEY MAP	CSM	REMAINING	REM
CONCRETE	CONC	RESTRICTIVE DEVELOPMENT EASEMENT	RDE
COUNTY	CO	RIGHT	RT
COUNTY TRUNK HIGHWAY	CTH	RIGHT OF WAY	R/W
DISTANCE	DIST	SECTION	SEC
CORNER	COR	SEPTIC VENT	SEPV
DOCUMENT NUMBER	DOC	SQUARE FEET	SF
EASEMENT	EASE	STATE TRUNK HIGHWAY	STH
EXISTING	EX	STATION	STA
GAS VALVE	GV	TELEPHONE PEDESTAL	TP
GOVERNMENT	GOV	TEMPORARY LIMITED EASEMENT	TLE
GRID NORTH	GN	TRANSPORTATION PROJECT PLAT	TPP
HIGHWAY EASEMENT	HE	UNITED STATES HIGHWAY	USH
IDENTIFICATION	ID	VOLUME	V
LAND CONTRACT	LC		
LEFT	LT		
MEANDER CORNER	MC		
MONUMENT	MON		
NATIONAL GEODETIC SURVEY	NGS		
NUMBER	NO		
OUTLOT	OL		
PAGE	P		
POINT OF TANGENCY	PT		
PERMANENT LIMITED EASEMENT	PLE		

CURVE DATA ABBREVIATIONS

LONG CHORD	LCH
LONG CHORD BEARING	LCB
RADIUS	R
DEGREE OF CURVE	D
CENTRAL ANGLE	Δ/DELTA
LENGTH OF CURVE	L
TANGENT	T
DIRECTION AHEAD	DA
DIRECTION BACK	DB

CONVENTIONAL UTILITY SYMBOLS

WATER — W —
GAS — G —
TELEPHONE — T —
OVERHEAD TRANSMISSION LINES — OH —
ELECTRIC — E —
CABLE TELEVISION — TV —
FIBER OPTIC — FO —
SANITARY SEWER — SAN —
STORM SEWER — SS —
ELECTRIC TOWER

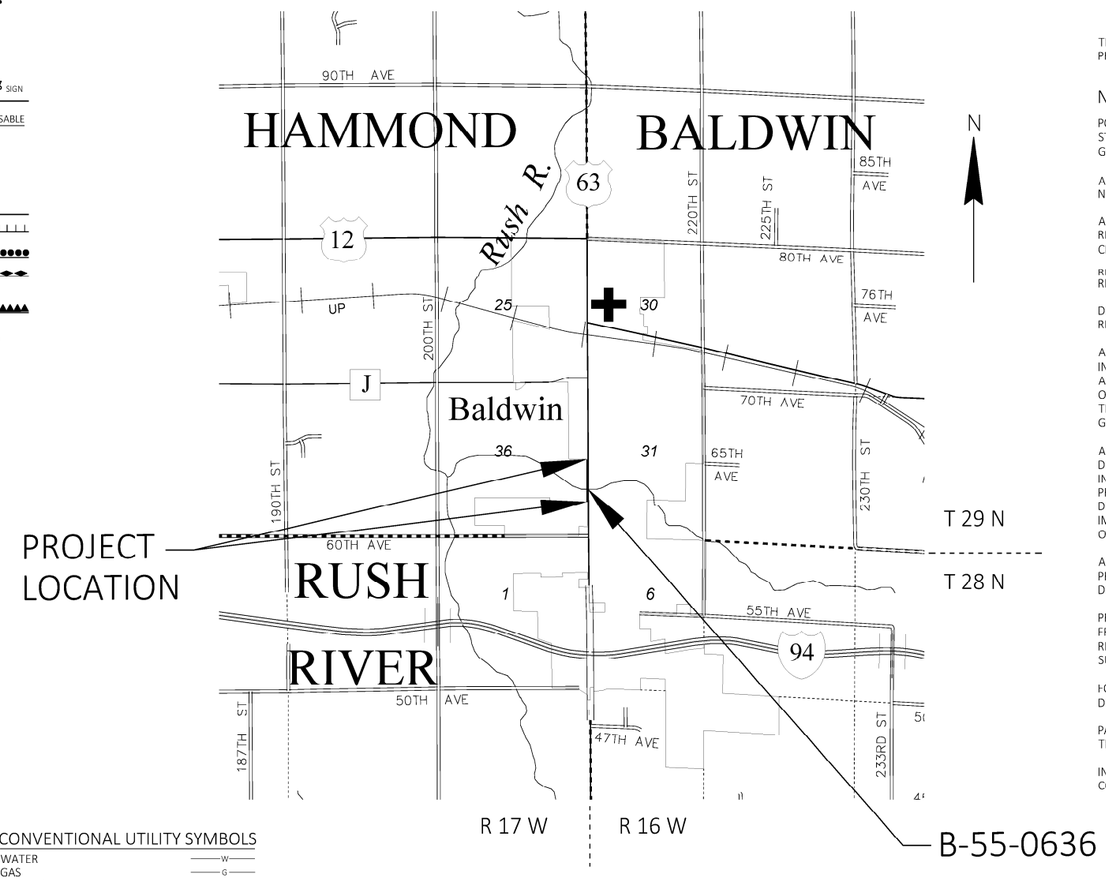

LAYOUT
SCALE 0 0.5 MI.

THE NOTES,CONVENTIONAL SIGNS, AND ABBREVIATIONS ARE ASSOCIATED WITH EACH TRANSPORTATION PROJECT PLAT FOR PROJECT 1550-02-23.

NOTES:

POSITIONS SHOWN ON THIS PLAT ARE WISCONSIN COORDINATE REFERENCE SYSTEM COORDINATES (WISCRS), ST. CROIX COUNTY, NAD83(2011), IN U.S. SURVEY FEET. VALUES ARE GRID COORDINATES, GRID BEARINGS, AND GRID DISTANCES. GRID DISTANCES MAY BE USED AS GROUND DISTANCES. NGS POINT UTILIZED WAS DL4148.

ALL NEW RIGHT-OF-WAY MONUMENTS WILL BE TYPE 2 (TYPICALLY ¾" X 24" IRON REBARS), UNLESS OTHERWISE NOTED, AND WILL BE PLACED PRIOR TO THE COMPLETION OF THE PROJECT.

ALL RIGHT-OF-WAY LINES DEPICTED IN THE NON-ACQUISITION AREAS ARE INTENDED TO RE-ESTABLISH EXISTING RIGHT-OF-WAY LINES AS DETERMINED FROM PREVIOUS PROJECTS, OTHER RECORDED DOCUMENTS, CENTERLINE OF EXISTING PAVEMENTS AND/OR EXISTING OCCUPATIONAL LINES.

RIGHT-OF-WAY BOUNDARIES ARE DEFINED WITH COURSES OF THE PERIMETER OF THE HIGHWAY LANDS REFERENCED TO THE U.S. PUBLIC LAND SURVEY SYSTEM OR OTHER "SURVEYS" OF PUBLIC RECORD.

DIMENSIONING FOR THE NEW RIGHT-OF-WAY IS MEASURED ALONG AND PERPENDICULAR TO THE NEW REFERENCE LINES.

A TEMPORARY LIMITED EASEMENT (TLE) IS A RIGHT FOR CONSTRUCTION PURPOSES, AS DEFINED HEREIN, INCLUDING THE RIGHT TO OPERATE NECESSARY EQUIPMENT THEREON, THE RIGHT OF INGRESS AND EGRESS, AS LONG AS REQUIRED FOR SUCH PUBLIC PURPOSE, INCLUDING THE RIGHT TO PRESERVE, PROTECT, REMOVE, OR PLANT THEREON ANY VEGETATION THAT THE HIGHWAY AUTHORITIES MAY DEEM DESIRABLE. ALL (TLEs) ON THIS PLAT EXPIRE AT THE COMPLETION OF THE CONSTRUCTION PROJECT FOR WHICH THIS INSTRUMENT IS GIVEN.

A PERMANENT LIMITED EASEMENT (PLE) IS A RIGHT FOR CONSTRUCTION AND MAINTENANCE PURPOSES, AS DEFINED HEREIN, INCLUDING THE RIGHT TO OPERATE NECESSARY EQUIPMENT THEREON AND THE RIGHT OF INGRESS AND EGRESS, AS LONG AS REQUIRED FOR SUCH PUBLIC PURPOSE, INCLUDING THE RIGHT TO PRESERVE, PROTECT, REMOVE, OR PLANT THEREON ANY VEGETATION THAT THE HIGHWAY AUTHORITIES MAY DEEM DESIRABLE, BUT WITHOUT PREJUDICE TO THE OWNER'S RIGHTS TO MAKE OR CONSTRUCT IMPROVEMENTS ON SAID LANDS OR TO FLATTEN THE SLOPES, PROVIDING SAID ACTIVITIES WILL NOT IMPAIR OR OTHERWISE ADVERSELY AFFECT THE HIGHWAY FACILITIES.

AN EASEMENT FOR HIGHWAY PURPOSES (HE), AS LONG AS SO USED, INCLUDING THE RIGHT TO PRESERVE, PROTECT, REMOVE, OR PLANT THEREON ANY VEGETATION THAT THE HIGHWAY AUTHORITIES MAY DEEM DESIRABLE.

PROPERTY LINES SHOWN ON THIS PLAT FOR PROPERTIES BEING IMPACTED ARE DRAWN FROM DATA DERIVED FROM FILED/RECORDED MAPS AND DOCUMENTS OF PUBLIC RECORD. THIS PLAT MAY NOT BE A TRUE REPRESENTATION OF EXISTING PROPERTY LINES, EXCLUDING RIGHT-OF-WAY, AND SHOULD NOT BE USED AS A SUBSTITUTE FOR AN ACCURATE FIELD SURVEY.

FOR THE CURRENT ACCESS/DRIVEWAY INFORMATION, CONTACT THE PLANNING UNIT OF THE WISCONSIN DEPARTMENT OF TRANSPORTATION OFFICE IN THE NW REGION-EAU CLAIRE.

PARCEL AND UTILITY IDENTIFICATION NUMBERS MAY NOT POINT TO ALL AREAS OF ACQUISITION, AS NOTED ON THE TPP DETAIL PAGES.

INFORMATION FOR THE BASIS OF EXISTING HIGHWAY RIGHT-OF-WAY POINTS OF REFERENCE AND ACCESS CONTROL ARE LISTED ON THE TPP DETAIL PAGES.

4

PROJECT NUMBER	1550-02-23-4.01
SHEET	2 OF 2
AMENDMENT NO:	51

TRANSPORTATION PROJECT PLAT NO: 1550-02-23-4.02 AMENDMENT NO: 2
AMENDS UTILITY NUMBERS 83 & 84 OF TRANSPORTATION PROJECT
PLAT 1550-02-23-4.02 RECORDED AS DOCUMENT NO: 1167062

THAT PART OF LOT 1, CSM 6036, V 26, P 6036, DOC 1000795, VILLAGE OF BALDWIN, AND PART OF THE NE 1/4 OF THE SE 1/4, TOWN OF HAMMOND, ALL IN SECTION 36, TOWNSHIP 29 NORTH, RANGE 17 WEST, AND PART OF LOT 1, CSM 5781, V 25, P 5781, DOC 939544, PART OF LOT 3, CSM 4008, V 14, P 4008, DOC 635282, LOCATED IN AND INCLUDING PART OF THE FRACTIONAL NW 1/4 OF THE SW 1/4, ALL IN SECTION 31, TOWNSHIP 29 NORTH, RANGE 16 WEST, VILLAGE OF BALDWIN, ST. CROIX COUNTY, WISCONSIN

RELOCATION ORDER USH 63 BALDWIN - CLEAR LAKE, BRANCH RUSH RIVER BRIDGE B-55-0636, ST. CROIX COUNTY

TO PROPERLY ESTABLISH, LAY OUT, WIDEN, ENLARGE, EXTEND, CONSTRUCT, RECONSTRUCT, IMPROVE, OR MAINTAIN A PORTION OF THE HIGHWAY DESIGNATED ABOVE, THE STATE OF WISCONSIN DEPARTMENT OF TRANSPORTATION DEEMS IT NECESSARY TO RELOCATE OR CHANGE SAID HIGHWAY AND ACQUIRE CERTAIN LANDS AND INTERESTS OR RIGHTS IN LANDS FOR THE ABOVE NAMED PROJECT.

TO EFFECT THIS CHANGE, PURSUANT TO AUTHORITY GRANTED UNDER SECTION 84.02 (3), 84.09 AND 84.30, WISCONSIN STATUTES, THE DEPARTMENT OF TRANSPORTATION HEREBY ORDERS THAT:

1. THAT PORTION OF SAID HIGHWAY AS SHOWN ON THIS PLAT IS LAID OUT AND ESTABLISHED TO THE LINES AND WIDTHS AS SO SHOWN FOR THE ABOVE PROJECT.
2. THE LANDS OR INTERESTS OR RIGHTS IN LANDS AS SHOWN ON THIS PLAT ARE REQUIRED BY THE DEPARTMENT FOR THE ABOVE PROJECT AND SHALL BE ACQUIRED IN THE NAME OF THE STATE OF WISCONSIN, PURSUANT TO THE PROVISIONS OF SECTION 84.09 (1) OR (2), WISCONSIN STATUTES.

LOCATION SKETCH
NOT TO SCALE

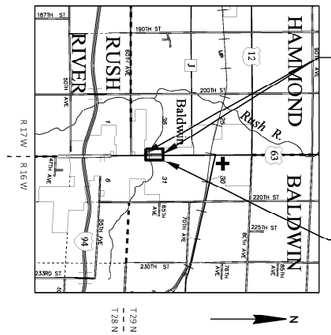

FOR ADDITIONAL INFORMATION REFER TO THE TITLE SHEET, RECORDED IN THE OFFICE OF THE REGISTER OF DEEDS IN ST. CROIX COUNTY AS SHEET 2 OF 2 DOCUMENT NUMBER 1166106.

POSITIONS SHOWN ON THIS PLAT ARE WISCONSIN COORDINATE REFERENCE SYSTEM COORDINATES (WISCRS), ST. CROIX COUNTY, NAD83 (2011), IN U.S. SURVEY FEET. VALUES SHOWN ARE GRID COORDINATES, GRID BEARINGS, AND GRID DISTANCES. GRID DISTANCES MAY BE USED AS GROUND DISTANCES. NGS POINT UTILIZED WAS DL4148.

ALL NEW RIGHT-OF-WAY MONUMENTS WILL BE TYPE 2 (TYPICALLY ¾" X 24" IRON REBARS), UNLESS OTHERWISE NOTED, AND WILL BE PLACED PRIOR TO THE COMPLETION OF THE PROJECT.

FOR THE CURRENT ACCESS/DRIVEWAY INFORMATION, CONTACT THE PLANNING UNIT OF THE WISCONSIN DEPARTMENT OF TRANSPORTATION OFFICE IN THE NW REGION-EAU CLAIRE

EXISTING ACCESS CONTROL ALONG USH 63 HAS BEEN ESTABLISHED FROM PREVIOUS PLAT 8071-0-01(8071-00-29).

N

SCALE, FEET
0 50 100

ROAD NAME	BASIS OF EXISTING R/W	YEAR
USH 63,	CSM 6036, V 26, P 6036, DOC 1000795	2014
USH 63, 10TH AVE	R/W PLAT 8070-00-21	2006
USH 63, SPRUCE ST	CSM 4008, V 14, P 4008, DOC 635282	2014
PINE STREET	WI_STATUTE_82.31_(2)	

OWNER'S NAMES ARE SHOWN FOR REFERENCE PURPOSES ONLY AND ARE SUBJECT TO CHANGE PRIOR TO TRANSFER OF LAND INTERESTS TO THE DEPARTMENT.

SCHEDULE OF LANDS & INTERESTS REQUIRED

PARCEL NUMBER	OWNER(S)	INTERESTS REQUIRED	R/W SQUARE FEET REQUIRED			TLE SQUARE FEET
			NEW	EXISTING	TOTAL	
2	KIDZ PLAZA III LLC	FEE/TLE	209	-	209	5802
3	JUNE A GEURKINK TRUST	FEE/TLE	9226	-	9226	24328
4	DISCOUNT RETAIL VENTURE I DST	FEE	1282	-	1282	-
-	-	-	-	-	-	-
6	BADGER HOUSING ASSOC VI	FEE/TLE	1935	-	1935	1160
7	VILLAGE OF BALDWIN	FEE/TLE	12127	-	12127	6450
8	NILSSEN SUPER VALU LLC	FEE	1075	-	1075	-

1174399
BETH PADST
REGISTER OF DEEDS
ST. CROIX CO., WI
RECEIVED FOR RECORD
12/18/2023 02:31 PM
EXEMPT #
PLAT FEE 25.00
VOLUME: TPP1
PAGES: 222
PAGES: 1
**The above recording information verifies that this document has been electronically recorded & returned to the submitter

RESERVED FOR REGISTER OF DEEDS
PROJECT NUMBER 1550-02-23-4.02
AMENDMENT NO: 2

UTILITY INTERESTS REQUIRED		
UTILITY NUMBER	OWNER (S)	INTEREST REQUIRED
80	XCEL ENERGY (ELECTRIC)	RELEASE OF RIGHTS
81	BALDWIN TELECOM	RELEASE OF RIGHTS
82	WE ENERGIES	RELEASE OF RIGHTS
83	VILLAGE OF BALDWIN (WATER)	RELEASE OF RIGHTS
84	VILLAGE OF BALDWIN (SANITARY)	RELEASE OF RIGHTS

UTILITY EASEMENT TABLE			
UTILITY NUMBER	PARCEL	RECORDING INFORMATION	NAME
80	3	NO RECORD OF EASEMENT	XCEL ENERGY (ELECTRIC)
81	3	DOC 189941A, V 252, P 134	BALDWIN TELECOM
		DOC 169966A, V 220, P 217	
	6	NO RECORD OF EASEMENT	
	7	NO RECORD OF EASEMENT	
82	7	DOC 435402, V 805, P 435	WE ENERGIES (GAS)
	4, 8	NO RECORD OF EASEMENT	
83	4	NO RECORD OF EASEMENT	VILLAGE OF BALDWIN (WATER)
84	8	DOC 883582	VILLAGE OF BALDWIN(SANITARY)

COURSE TABLE - SEGMENTS			
FROM	TO	DIRECTION	DISTANCE
57	119	S 87° 44' 28" E	61.47'
53	60224	S 89° 58' 20" W	44.43'
60224	60223	S 89° 58' 20" W (N 89° 58' 20" E)	5.00' (5.00')

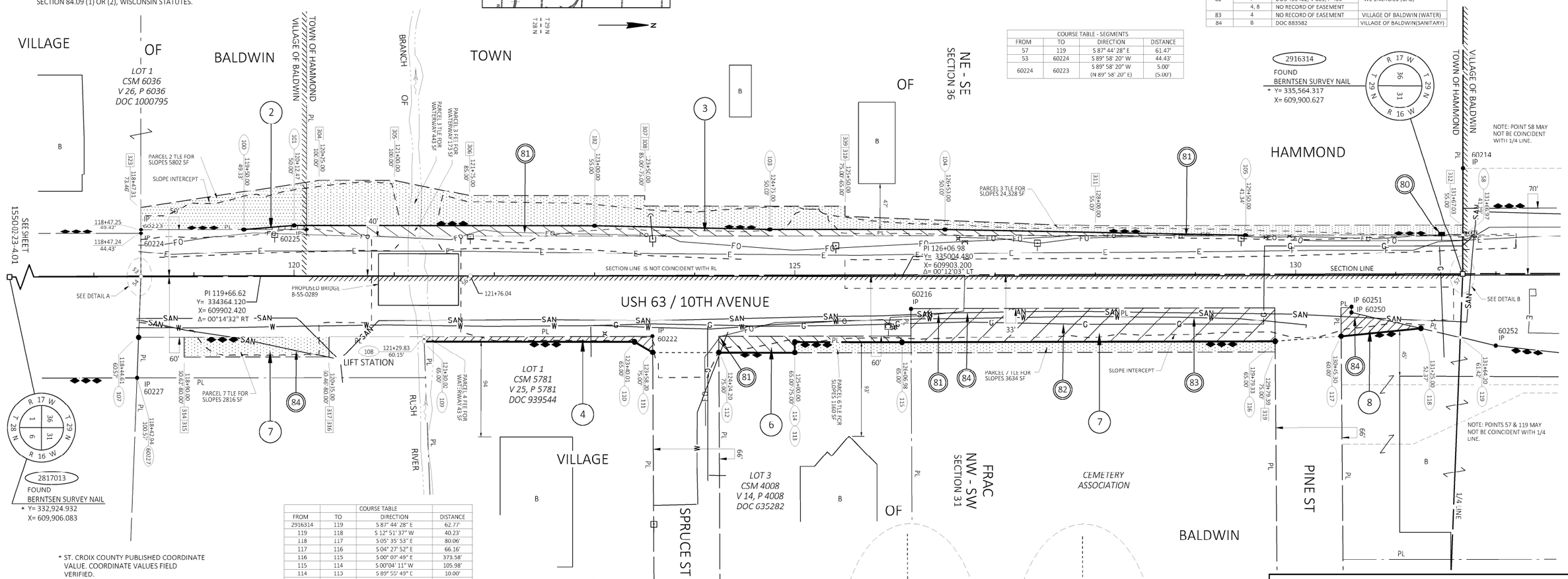

COURSE TABLE			
FROM	TO	DIRECTION	DISTANCE
2916314	119	S 87° 44' 28" E	62.77'
119	118	S 12° 51' 37" W	40.23'
118	117	S 05° 35' 53" E	80.06'
117	116	S 04° 27' 52" E	66.16'
116	115	S 00° 07' 49" E	373.58'
115	114	S 00°04' 11" W	105.98'
114	113	S 89° 55' 49" E	10.00'
113	112	S 00° 04' 11" W	75.80'
112	111	S 00° 04' 11" W	66.00'
111	110	S 28° 52' 11" W	20.76'
110	109	S 00° 04' 11" W	210.00'
109	108	S 87° 49' 35" W	4.85'
108	107	S 00° 07' 06" E	284.96'
107	54	N 87° 46' 39" W	60.05'
54	60223	S 89° 58' 20" W	50.00'
60223	100	N 00° 07' 06" W	102.75'
100	101	N 06° 27' 20" W	50.54'
101	102	N 00° 04' 11" E	300.00'
102	103	N 01° 42' 23" E	175.07'
103	104	N 00° 01' 14" E	174.83'
104	105	N 01° 31' 21" E	300.13'
105	58	N 00° 07' 06" W	216.98'
58	2916314	S 89° 54' 43" E	40.00'

COURSE TABLE - SECTION LINE			
FROM	TO	DIRECTION	DISTANCE
2817013	54	N 00° 07' 06" W	1319.69'
54	56	N 00° 07' 06" W	328.92'
56	2916314	N 00° 07' 06" W	990.78'
2916314	2817013	S 00° 07' 06" E	2639.39'

* ST. CROIX COUNTY PUBLISHED COORDINATE VALUE. COORDINATE VALUES FIELD VERIFIED.

RECOVERED MONUMENTS			
POINT	Y	X	DESCRIPTION
60214	335564.570	609790.476	1" IRON PIPE
60216	335013.423	609935.122	1" IRON PIPE
60222	334755.277	609962.140	3/4" IRON REBAR
60223	334244.600	609853.355	1" IRON PIPE
60224	334244.603	609858.355	1" IRON PIPE
60225	334410.032	609853.013	1" IRON PIPE
60227	334240.743	610003.363	1" IRON PIPE
60250	335453.181	609938.535	1" IRON PIPE
60251	335453.192	609933.538	1" IRON PIPE
60252	335597.253	609971.428	1" IRON PIPE

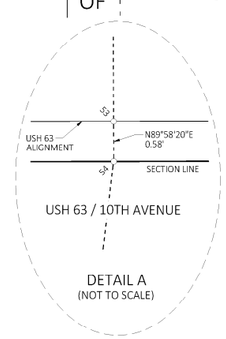

DETAIL A
(NOT TO SCALE)

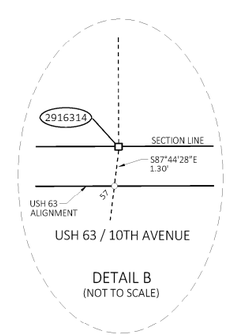

DETAIL B
(NOT TO SCALE)

I, NEIL C. BOWE, PROFESSIONAL LAND SURVEYOR, HEREBY CERTIFY THAT IN FULL COMPLIANCE WITH THE PROVISIONS OF SECTION 84.095 OF THE WISCONSIN STATUTES AND UNDER THE DIRECTION OF THE DEPARTMENT, I HAVE SURVEYED AND MAPPED THIS TRANSPORTATION PROJECT PLAT AND SUCH PLAT CORRECTLY REPRESENTS ALL EXTERIOR BOUNDARIES OF THE SURVEYED LAND.

SIGNATURE: Neil C. Bowe DATE: 12/18/2023
PRINT NAME: NEIL C. BOWE
REGISTRATION NUMBER: S-2827

WISCONSIN NEIL C. BOWE S-2827 CHIPPEWA FALLS, WI LAND SURVEYOR

THIS PLAT IS APPROVED FOR THE WISCONSIN DEPARTMENT OF TRANSPORTATION - NW REGION-EAU CLAIRE

SIGNATURE: Aaron Gustafson DATE: 12/18/2023
PRINT NAME: AARON GUSTAFSON

cbs²
770 TECHNOLOGY WAY
CHIPPEWA FALLS, WI 54729

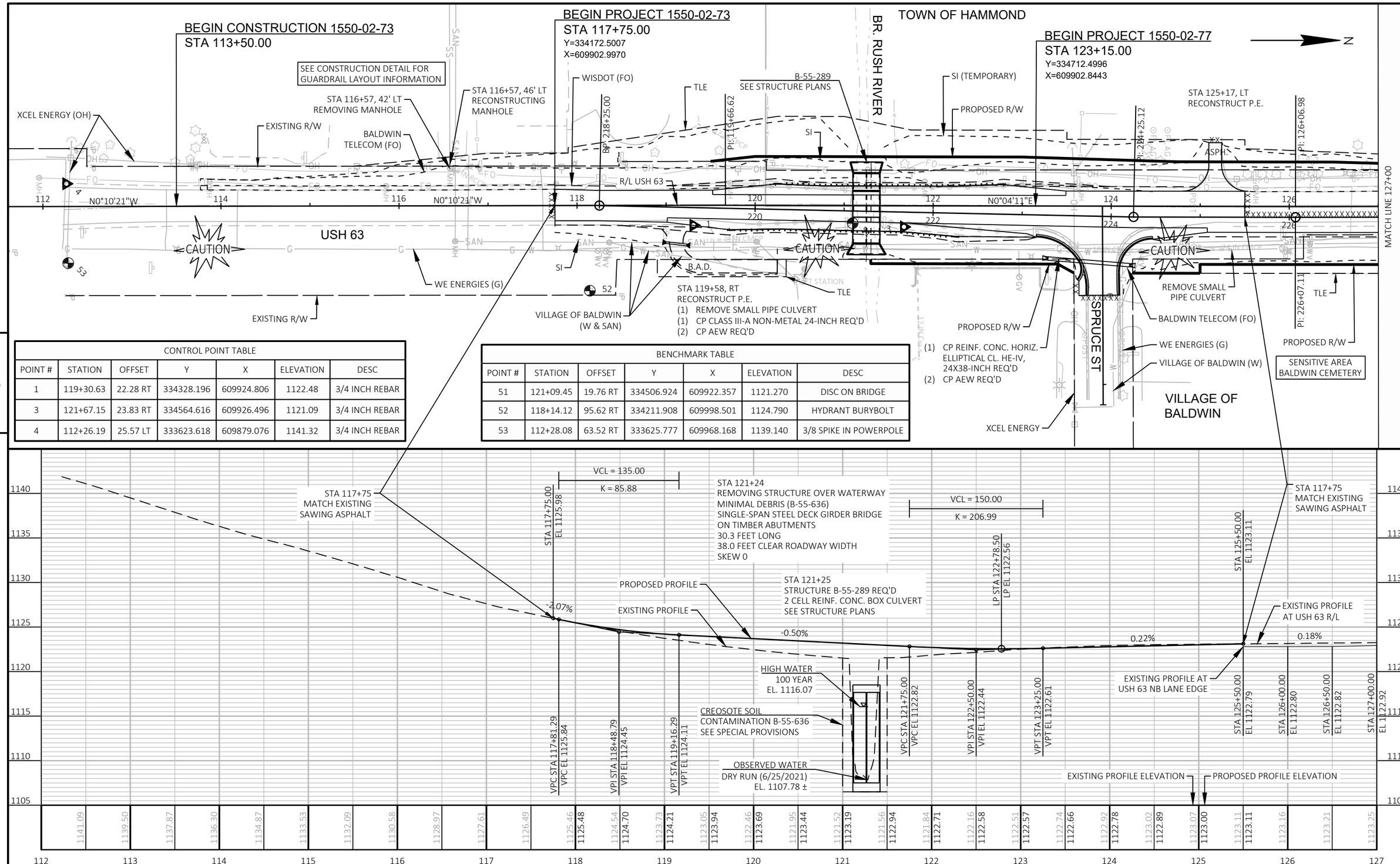

5

CONTROL POINT TABLE						
POINT #	STATION	OFFSET	Y	X	ELEVATION	DESC
1	119+30.63	22.28 RT	334328.196	609924.806	1122.48	3/4 INCH REBAR
3	121+67.15	23.83 RT	334564.616	609926.496	1121.09	3/4 INCH REBAR
4	112+26.19	25.57 LT	333623.618	609879.076	1141.32	3/4 INCH REBAR

BENCHMARK TABLE						
POINT #	STATION	OFFSET	Y	X	ELEVATION	DESC
51	121+09.45	19.76 RT	334506.924	609922.357	1121.270	DISC ON BRIDGE
52	118+14.12	95.62 RT	334211.908	609998.501	1124.790	HYDRANT BURYBOLT
53	112+28.08	63.52 RT	333625.777	609968.168	1139.140	3/8 SPIKE IN POWERPOLE

5

PROJECT NO: 1550-02-73, 1550-02-77	HWY: USH 63	COUNTY: ST. CROIX	PLAN AND PROFILE: USH 63	SHEET 53	E

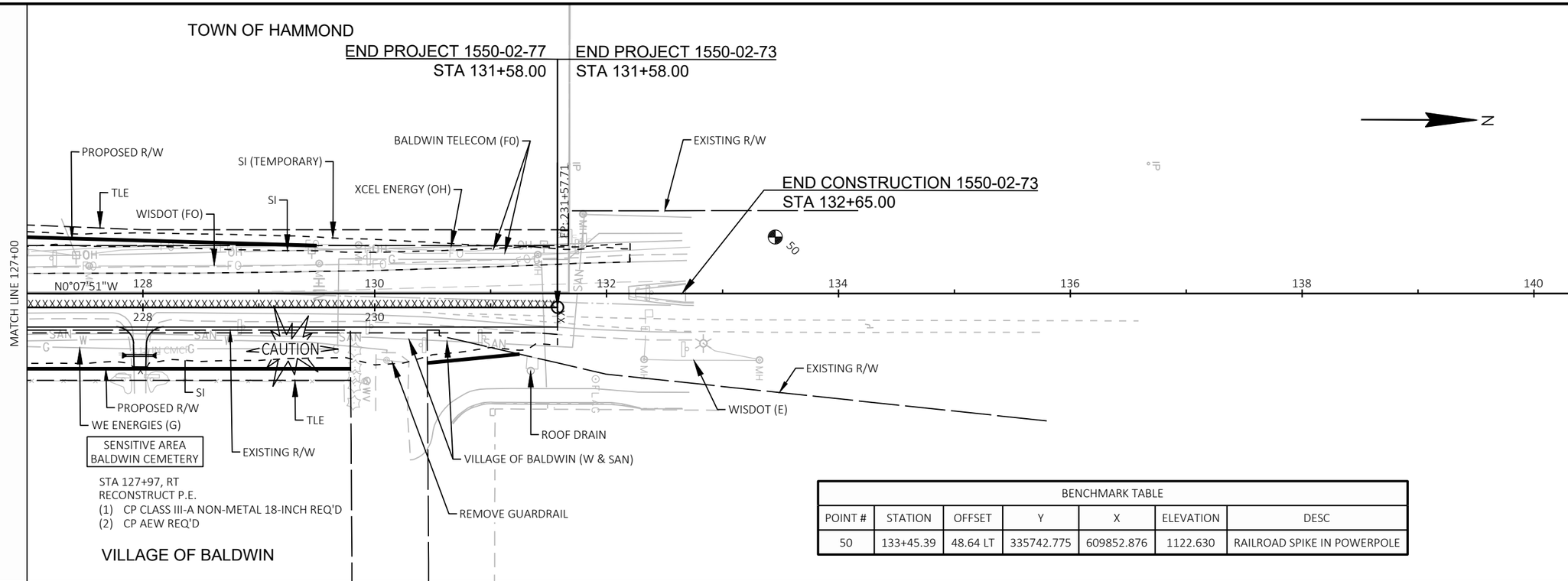

BENCHMARK TABLE						
POINT #	STATION	OFFSET	Y	X	ELEVATION	DESC
50	133+45.39	48.64 LT	335742.775	609852.876	1122.630	RAILROAD SPIKE IN POWERPOLE

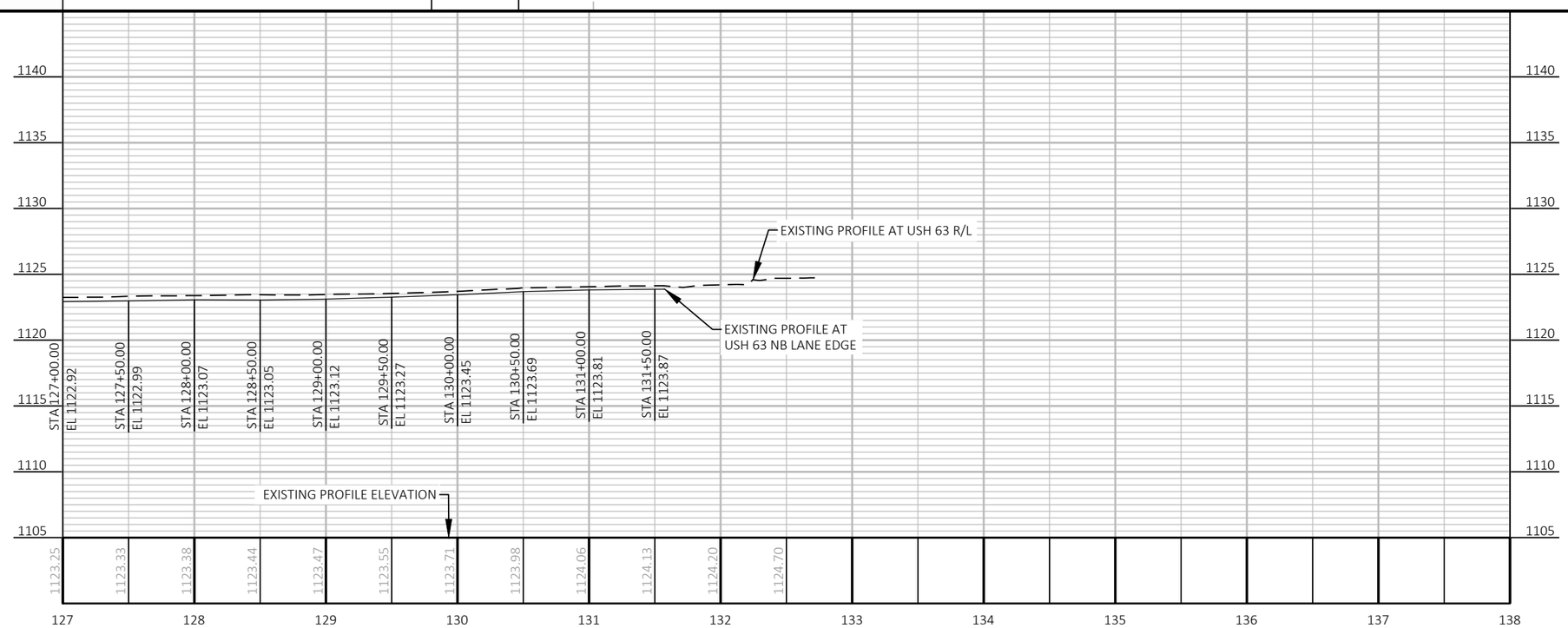

PROJECT NO: 1550-02-73, 1550-02-77	HWY: USH 63	COUNTY: ST. CROIX	PLAN AND PROFILE: USH 63	SHEET 54	E

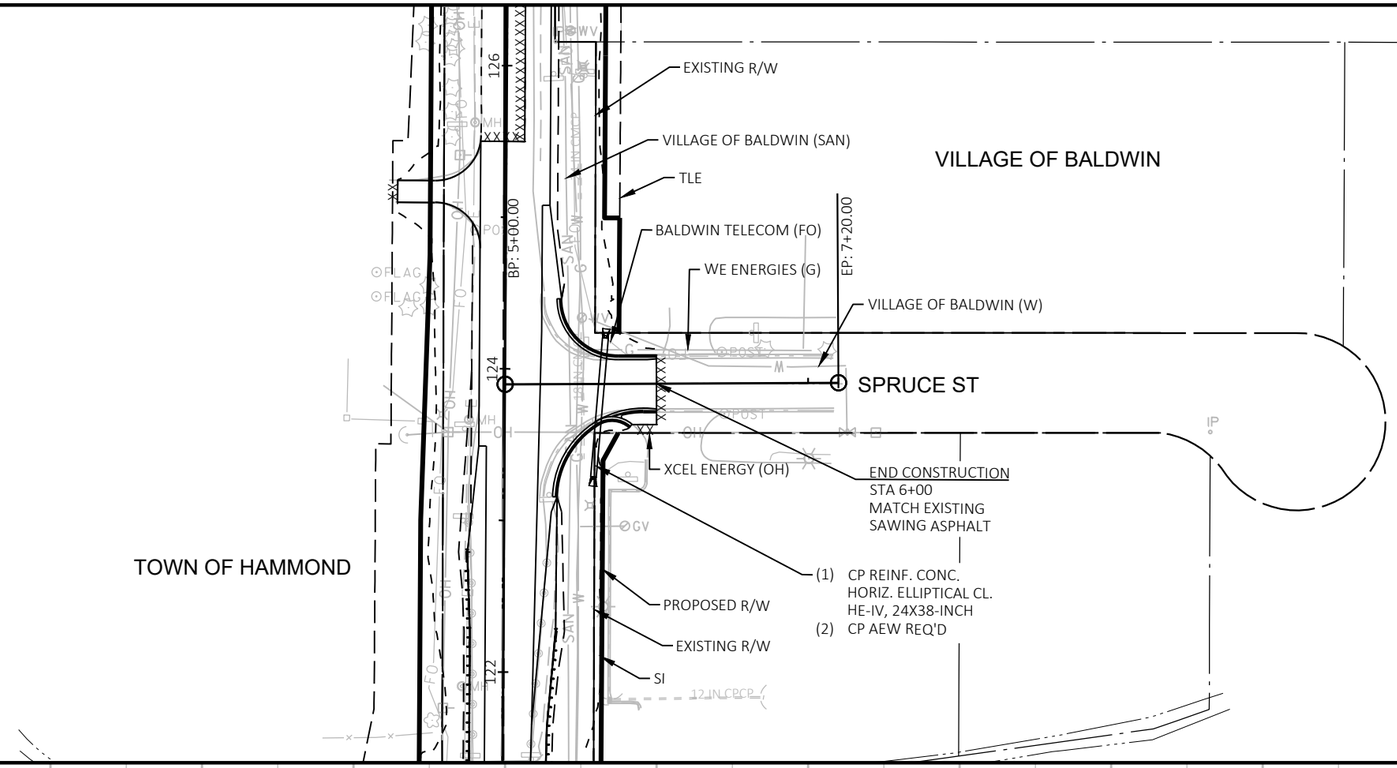

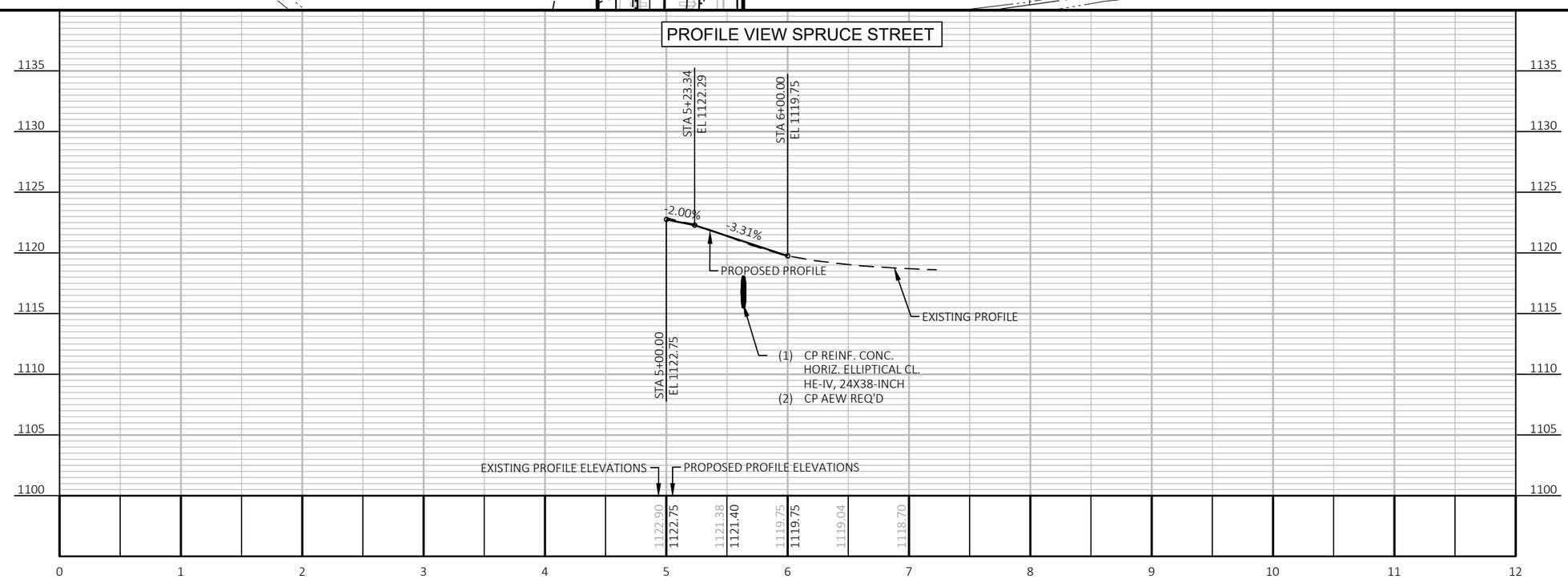

PROJECT NO: 1550-02-73, 1550-02-77	HWY: USH 63	COUNTY: ST. CROIX	PLAN AND PROFILE: SPRUCE ST	SHEET 55	E

FILE NAME : N:\PDS\C3D\15500203\SHEETSPLAN\050103-PP.DWG
LAYOUT NAME - 050103-pp
PLOT DATE : 2/28/2024 8:52 AM
PLOT BY : CHRIS BURNS
PLOT NAME :
PLOT SCALE : 1 IN:100 FT
WISDOT/CADDS SHEET 44

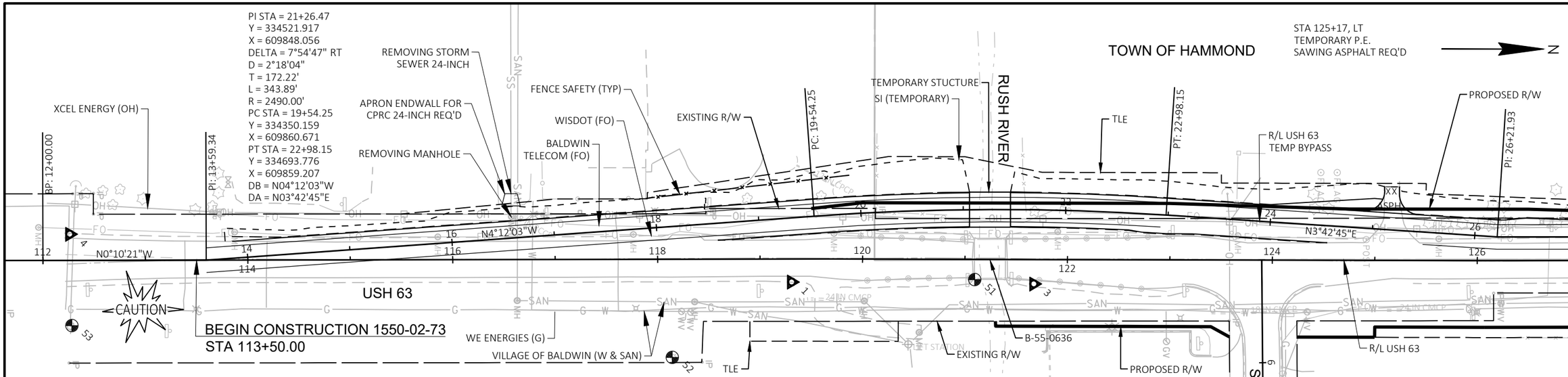

5

CONTROL POINT TABLE						
POINT #	STATION	OFFSET	Y	X	ELEVATION	DESC
1	119+30.63	22.28 RT	334328.196	609924.806	1122.48	3/4 INCH REBAR
3	121+67.15	23.83 RT	334564.616	609926.496	1121.09	3/4 INCH REBAR
4	112+26.19	25.57 LT	333623.618	609879.076	1141.32	3/4 INCH REBAR

BENCHMARK TABLE						
POINT #	STATION	OFFSET	Y	X	ELEVATION	DESC
51	121+09.45	19.76 RT	334506.924	609922.357	1121.270	DISC ON BRIDGE
52	118+14.12	95.62 RT	334211.908	609998.501	1124.790	HYDRANT BURYBOLT
53	112+28.08	63.52 RT	333625.777	609968.168	1139.140	3/8 SPIKE IN POWERPOLE

5

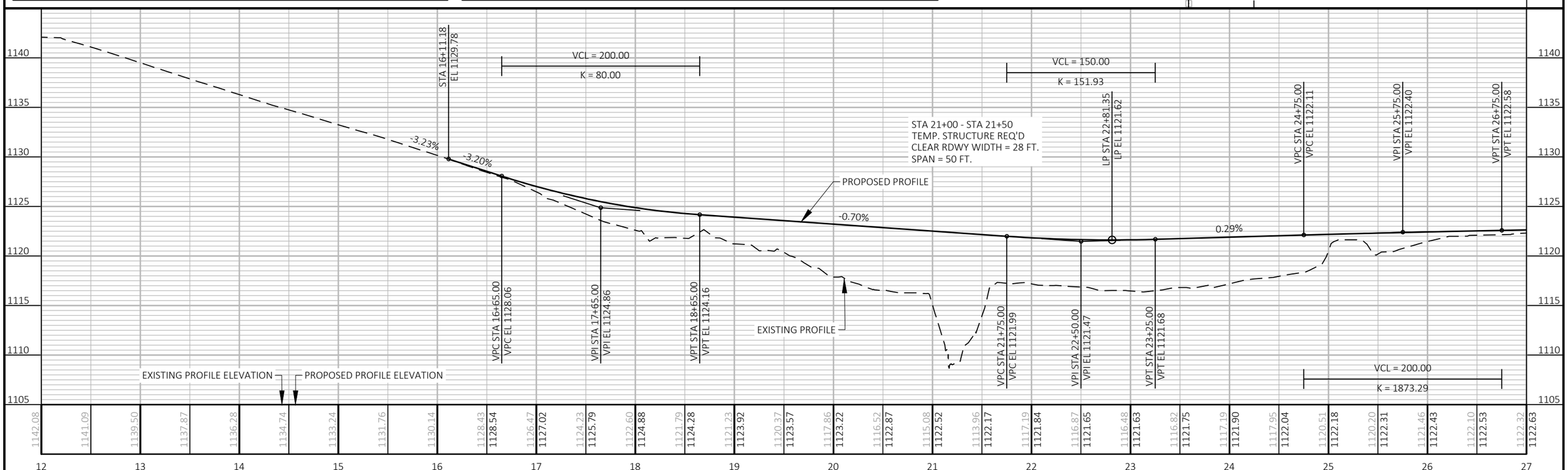

PROJECT NO: 1550-02-73, 1550-02-77	HWY: USH 63	COUNTY: ST. CROIX	PLAN AND PROFILE: TEMPORARY BYPASS	SHEET 56	E

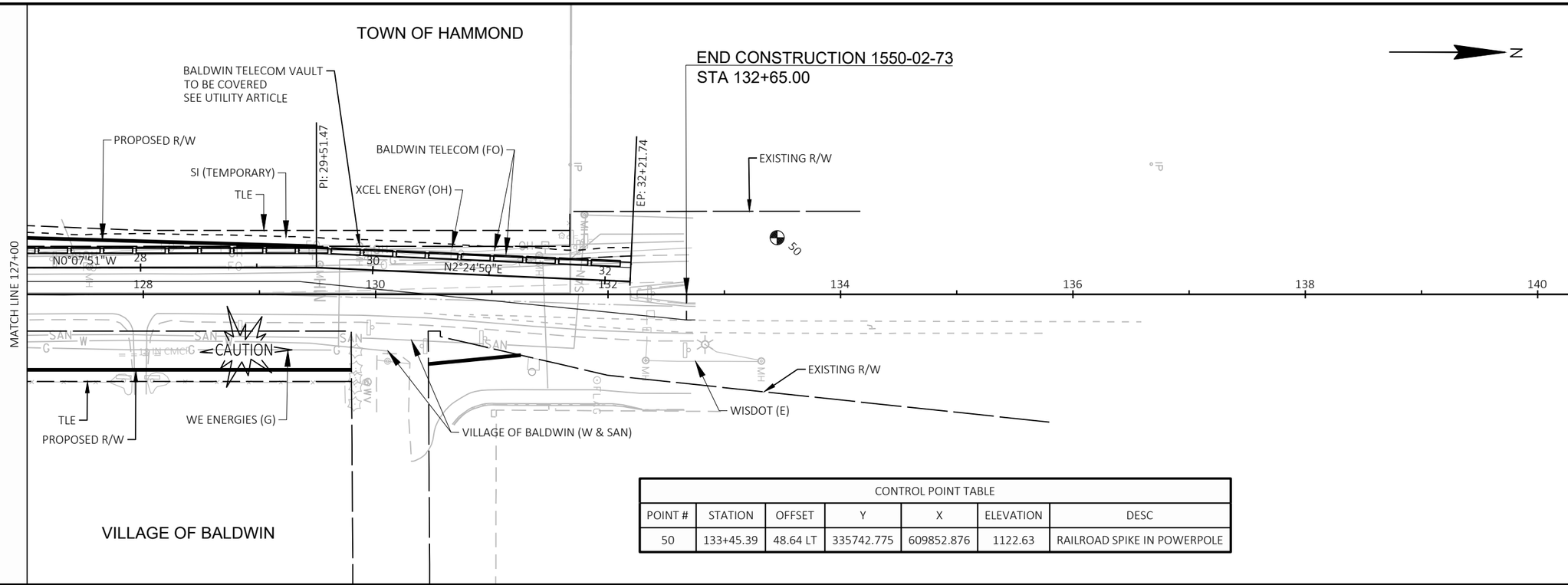

CONTROL POINT TABLE						
POINT #	STATION	OFFSET	Y	X	ELEVATION	DESC
50	133+45.39	48.64 LT	335742.775	609852.876	1122.63	RAILROAD SPIKE IN POWERPOLE

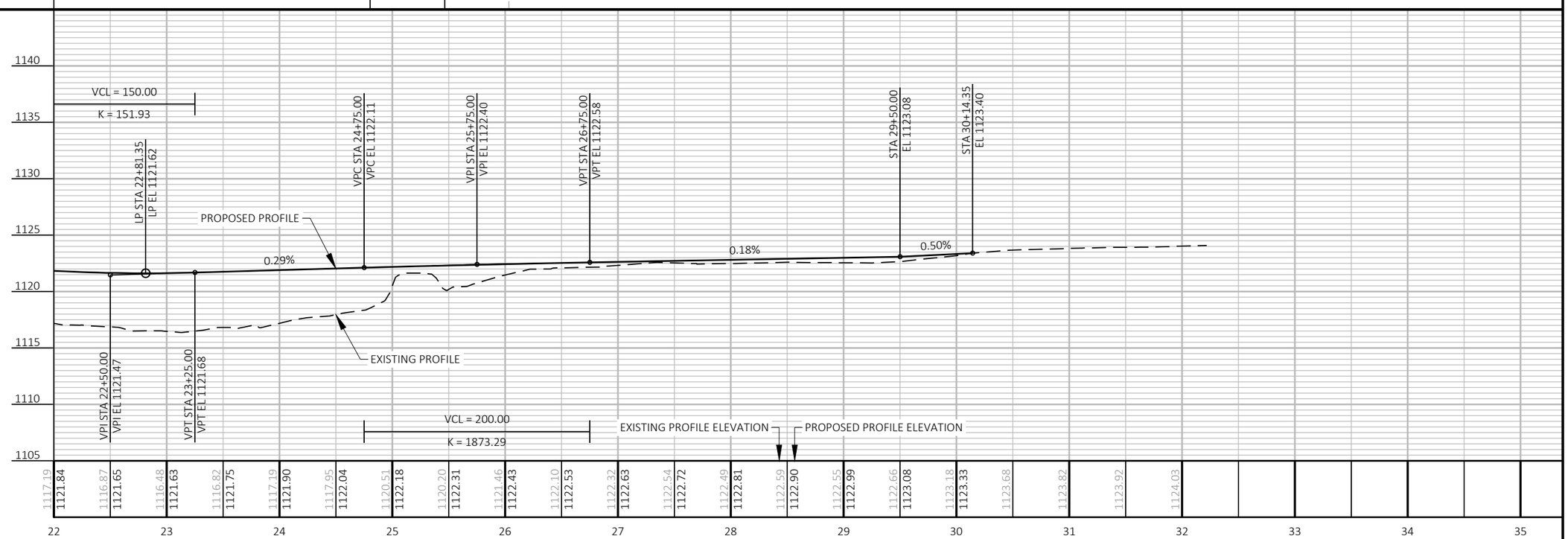

PROJECT NO: 1550-02-73, 1550-02-77	HWY: USH 63	COUNTY: ST. CROIX	PLAN AND PROFILE: TEMPORARY BYPASS	SHEET 57	E

Standard Detail Drawing List

08B09-04	MANHOLES 3-FT, 4-FT, 5-FT, 6-FT, 7-FT, 8-FT, 9-FT, 10-FT DIAMETER
08D01-23A	CONCRETE CURB & GUTTER
08D01-23B	CONCRETE CURB, TIES AND CURB AND GUTTER APPLICATIONS
08D04-07	CONCRETE SURFACE DRAINS & ASPHALTIC FLUMES
08D15-05A	EDGEDRAIN OUTLET AND OUTFALL MARKERS
08D15-05B	EDGEDRAIN AND BASE AGGREGATE OPEN GRADED
08D15-05C	EDGEDRAIN AND BASE AGGREGATE OPEN GRADED
08D21-01	DRIVEWAYS WITHOUT CURB & GUTTER
08E08-03	TYPICAL INSTALLATIONS OF EROSION BALES / TEMPORARY DITCH CHECKS
08E09-06	SILT FENCE
08E15-01	CULVERT PIPE CHECK
08F01-11	APRON ENDWALLS FOR CULVERT PIPE
08F02-01	APRON ENDWALLS FOR PIPE ARCH AND ELLIPTICAL PIPE
08F04-08	JOINT TIES FOR CONCRETE PIPE AND CONCRETE COLLAR DETAIL
08F06-04	REINFORCED CONCRETE APRON ENDWALL FOR PIPE UNDERDRAIN
09B02-10	CONDUIT
09B16-02	PULL BOX NON-CONDUCTIVE
12A03-10	NAME PLATE (STRUCTURES)
13C19-03	HMA LONGITUDINAL JOINTS
14B07-16A	CONCRETE BARRIER TEMPORARY PRECAST, 12'-6"
14B07-16B	CONCRETE BARRIER TEMPORARY PRECAST, 12'-6"
14B07-16C	CONCRETE BARRIER TEMPORARY PRECAST, 12'-6"
14B07-16D	CONCRETE BARRIER TEMPORARY PRECAST, 12'-6"
14B07-16E	CONCRETE BARRIER TEMPORARY PRECAST, 12'-6"
14B07-16F	CONCRETE BARRIER TEMPORARY PRECAST, 12'-6"
14B07-16G	CONCRETE BARRIER TEMPORARY PRECAST, 12'-6"
14B07-16H	CONCRETE BARRIER TEMPORARY PRECAST, 12'-6"
14B07-16I	CONCRETE BARRIER TEMPORARY PRECAST, 12'-6"
14B07-16J	CONCRETE BARRIER TEMPORARY PRECAST, 12'-6"
14B07-16K	CONCRETE BARRIER TEMPORARY PRECAST, 12'-6"
14B07-16L	CONCRETE BARRIER TEMPORARY PRECAST, 12'-6"
14B07-16M	CONCRETE BARRIER TEMPORARY PRECAST, 12'-6"
14B07-16N	CONCRETE BARRIER TEMPORARY PRECAST, 12'-6"
14B08-02A	CRASH CUSHION/SAND BARREL ARRAY AND OTHER TEMPORARY BARRIER LAYOUT DETAILS
14B08-02B	CRASH CUSHION/SAND BARREL ARRAY AND OTHER TEMPORARY BARRIER LAYOUT DETAILS
14B08-02C	CRASH CUSHION/SAND BARREL ARRAY AND OTHER TEMPORARY BARRIER LAYOUT DETAILS
14B08-02D	CRASH CUSHION/SAND BARREL ARRAY AND OTHER TEMPORARY BARRIER LAYOUT DETAILS
14B08-02E	CRASH CUSHION/SAND BARREL ARRAY AND OTHER TEMPORARY BARRIER LAYOUT DETAILS
14B42-07A	MIDWEST GUARDRAIL SYSTEM (MGS) GUARDRAIL
14B42-07B	MIDWEST GUARDRAIL SYSTEM (MGS) GUARDRAIL
14B42-07C	MIDWEST GUARDRAIL SYSTEM (MGS) GUARDRAIL
14B42-07D	MIDWEST GUARDRAIL SYSTEM (MGS) GUARDRAIL
14B44-04A	MIDWEST GUARDRAIL SYSTEM ENERGY ABSORBING TERMINAL (MGS)
14B44-04B	MIDWEST GUARDRAIL SYSTEM ENERGY ABSORBING TERMINAL (MGS)
14B44-04C	MIDWEST GUARDRAIL SYSTEM ENERGY ABSORBING TERMINAL (MGS)
15C02-09A	BARRICADES AND SIGNS FOR MAINLINE CLOSURES
15C02-09B	BARRICADES AND SIGNS FOR VARIOUS CLOSURES
15C02-09F	ADVANCED WIDTH RESTRICTION SIGNING
15C04-05	TRAFFIC CONTROL, ADVANCE WARNING SIGNS 45 M.P.H. OR GREATER TWO-WAY UNDIVIDED ROAD OPEN TO TRAFFIC
15C07-15B	PAVEMENT MARKING WORDS
15C07-15C	PAVEMENT MARKING ARROWS
15C08-23A	PERMANENT LONGITUDINAL PAVEMENT MARKINGS
15C08-23B	TEMPORARY LONGITUDINAL PAVEMENT MARKING
15C08-23C	PAVEMENT MARKING (TURN LANES)
15C08-23D	PAVEMENT MARKING (TURN LANES)
15C11-10A	CHANNELIZING DEVICES FLEXIBLE TUBULAR MARKER POST
15C11-10B	CHANNELIZING DEVICES DRUMS, CONES, BARRICADES AND VERTICAL PANELS
15C12-09A	TRAFFIC CONTROL FOR LANE CLOSURE WITH FLAGGING OPERATION
15C18-08A	MEDIAN ISLAND MARKING PAVEMENT MARKINGS
15C18-08B	MEDIAN ISLAND MARKING MEDIAN ISLAND NOSE
15C19-08A	MOVING PAVEMENT MARKING OPERATION TWO-LANE TWO-WAY ROADWAY
15C26-04	END-OF-ROADWAY SIGNING
15C34-04	STANDARD APPLICATION FOR TEMPORARY RAISED PAVEMENT MARKER, TYPE 2
15C35-06A	PAVEMENT MARKING (INTERSECTIONS)
15D06-06	TRAFFIC CONTROL, TWO LANE TWO WAY OPERATION
15D28-04	TRAFFIC CONTROL, WORK ON SHOULDER OR PARKING LANE, UNDIVIDED ROADWAY
15D29-06	TRAFFIC CONTROL, VEHICLE ENTRANCE/EXIT OR HAUL ROAD

6

6

Standard Detail Drawing List

15D31-05	TRAFFIC CONTROL, TEMPORARY BYPASS ROADWAY
15D39-02	TRAFFIC CONTROL, DROP-OFF SIGNING
15D45-03	TRAFFIC CONTROL, SIGNING ON ROADWAYS WITH LOOSE GRAVEL

6

6

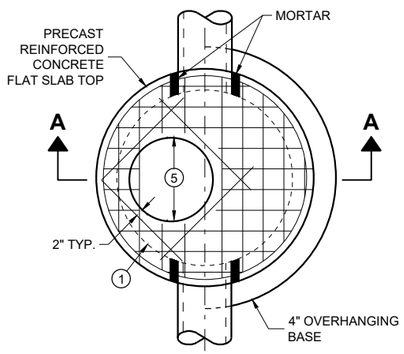

PLAN VIEW
CIRCULAR OPENING

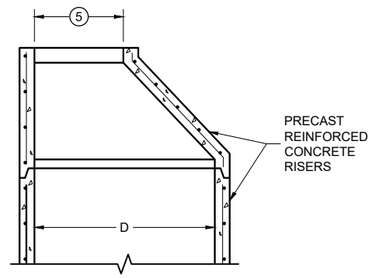

OPTIONAL PRECAST REINFORCED CONCRETE ECCENTRIC TOP

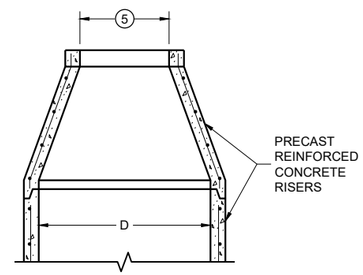

OPTIONAL PRECAST REINFORCED CONCRETE CONCENTRIC TOP

MANHOLE COVER OPENING MATRIX

OPENING SIZE (FT.) (5) \ MANHOLE COVER TYPE	C	ALL J'S	K	L	M
2 DIA.	X	X		X	
3 DIA.			X		X

PIPE MATRIX

MANHOLE SIZE (DIA.)	MAXIMUM INSIDE PIPE DIAMETER FOR TWO PIPES		MINIMUM WALL THICKNESS (IN)	MINIMUM PRECAST FLAT SLAB TOP AND BASE THICKNESS
	180° SEPARATION (IN)	90° SEPARATION (IN)		
3-FT	15	12	4	6
4-FT	24	18	4	6
5-FT	36	24	5	8
6-FT	42	36	6	8
7-FT	48	36/42 *	7	8
8-FT	60	42	8	8
9-FT	66	54	9	10
10-FT	72	60	10	10

*A 36" PIPE AND A 42" PIPE CAN BE PLACED WITHIN 90 DEGREES. SEE MINIMUM HORIZONTAL PIPE SEPARATION DETAIL.

GENERAL NOTES

DETAILS OF CONSTRUCTION, MATERIALS AND WORKMANSHIP NOT SHOWN ON THIS DRAWING SHALL CONFORM TO THE PERTINENT REQUIREMENTS OF THE STANDARD SPECIFICATIONS AND THE APPLICABLE SPECIAL PROVISIONS.

UNLESS OTHERWISE AUTHORIZED IN WRITING BY THE ENGINEER, THE CONTRACTOR SHALL NOT ORDER AND DELIVER PRECAST MANHOLE UNITS REQUIRED FOR THE PROJECT UNTIL A LIST OF SIZES IS FURNISHED BY THE ENGINEER.

DETAILED DRAWINGS FOR PROPOSED ALTERNATE DESIGNS FOR UNDERGROUND DRAINAGE STRUCTURES SHALL BE SUBMITTED TO THE ENGINEER FOR APPROVAL PROVIDING THAT SUCH ALTERNATE DESIGNS MAKE PROVISION FOR EQUIVALENT CAPACITY AND STRENGTH.

ALL DRAINAGE STRUCTURES ARE DESIGNATED ON THE PLANS AS "MANHOLES 3X3-L", "CATCH BASINS 4-B", "INLETS 2X3-H", ETC. THE FIRST NUMBERS DESIGNATE THE SIZE OF THE STRUCTURE, AND THE FOLLOWING LETTER DESIGNATES THE TYPE OF COVER TO BE USED TO COMPRISE THE COMPLETE UNIT.

BASES SHALL BE PLACED ON A BED OF MATERIAL AT LEAST 6 INCHES IN DEPTH, WHICH MEETS THE REQUIREMENTS OF FOUNDATION BACKFILL. THIS BEDDING SHALL BE COMPACTED AND PROVIDE UNIFORM SUPPORT FOR THE ENTIRE AREA OF THE BASE.

PRECAST REINFORCED CONCRETE CONE TOPS (ECCENTRIC OR CONCENTRIC) OR PRECAST REINFORCED CONCRETE FLAT SLAB TOPS MAY BE USED ON CONCRETE BLOCK STRUCTURES.

ECCENTRIC CONE TOPS MAY BE USED ON ALL STRUCTURES. CONCENTRIC CONE TOPS SHALL BE USED ONLY ON STRUCTURES 5 FEET OR LESS IN DEPTH UNLESS OTHERWISE DIRECTED BY THE ENGINEER.

STEPS MEETING AASHTO M199 AND THE FOLLOWING REQUIREMENTS SHALL BE INSTALLED IN ALL STRUCTURES OVER 5 FEET IN DEPTH: 16 INCH C-C MAXIMUM SPACING; PROJECT A MINIMUM CLEAR DISTANCE OF 4 INCHES FROM THE WALL AT THE POINT OF EMBEDMENT; MINIMUM LENGTH OF 10 INCHES; MINIMUM WALL EMBEDMENT OF 3 INCHES. FERROUS METAL STEPS NOT PAINTED OR TREATED TO RESIST CORROSION SHALL HAVE A MINIMUM CROSS SECTIONAL IMENSION OF 1 INCH.

STEPS OF APPROVED POLYPROPYLENE PLASTIC COATED REINFORCEMENT BAR ARE ACCEPTABLE. REINFORCING BAR MUST BE A MINIMUM OF ½ INCH AND MEET THE REQUIREMENTS OF ASTM A615.

CERTIFICATION SHALL BE PROVIDED THAT INSTALLED STEPS WHEN TESTED IN ACCORDANCE WITH SECTION 10 OF AASHTO T280 CAN WITHSTAND A VERTICAL LOAD OF 800 LBS. AND A HORIZONTAL LOAD OF 400 LBS.

ALL BAR STEEL REINFORCEMENT SHALL BE EMBEDDED 2 INCHES CLEAR UNLESS OTHERWISE SHOWN OR NOTED.

ALL PRECAST MANHOLE UNITS SHALL CONFORM TO THE PERTINENT REQUIREMENTS OF AASHTO DESIGNATION M199.

PRECAST REINFORCED RISERS SHALL HAVE A TONGUE AND GROOVE JOINT WITH TONGUE UP OR DOWN.

CONCRETE BLOCK WILL NOT BE PERMITTED FOR STRUCTURES GREATER THAN 4 FEET IN DIAMETER.

4" OVERHANGING BASES ARE REQUIRED FOR ALL CONCRETE BLOCK INSTALLATIONS. 4" OVERHANG IS REQUIRED WHEN SEPARATE PRECAST BASE IS PROVIDED. OVERHANG IS NOT REQUIRED ON PRECAST STRUCTURES WITH AN INTEGRAL OR MONOLITHIC BASE.

FOR ADDITIONAL CONFIGURATIONS, MAINTAIN A MINIMUM OF 12 INCHES AS MEASURED FROM THE INSIDE OF THE STRUCTURE WALL BETWEEN THE OUTSIDE PIPE WALLS OF ADJACENT PIPES. SEE DETAIL "D".

(1) FOR PRECAST MANHOLES AND REINFORCED CONCRETE BASES PROVIDE REINFORCING STEEL IN ACCORDANCE TO AASHTO M199.

(2) SEE PIPE MATRIX TABLE FOR MINIMUM WALL THICKNESS FOR PRECAST MANHOLES

(3) SEE PIPE MATRIX TABLE FOR MINIMUM THICKNESS OF PRECAST FLAT SLAB TOPS AND BASES.

(4) JOINTS TO BE SEALED WITH A BUTYL RUBBER SEAL PER SEALANT MANUFACTURERS RECOMMENDATIONS CONFORMING TO ASTM C 990 OR RUBBER GASKETS CONFORMING TO ASTM C443.

(5) SEE MANHOLE COVER OPENING MATRIX.

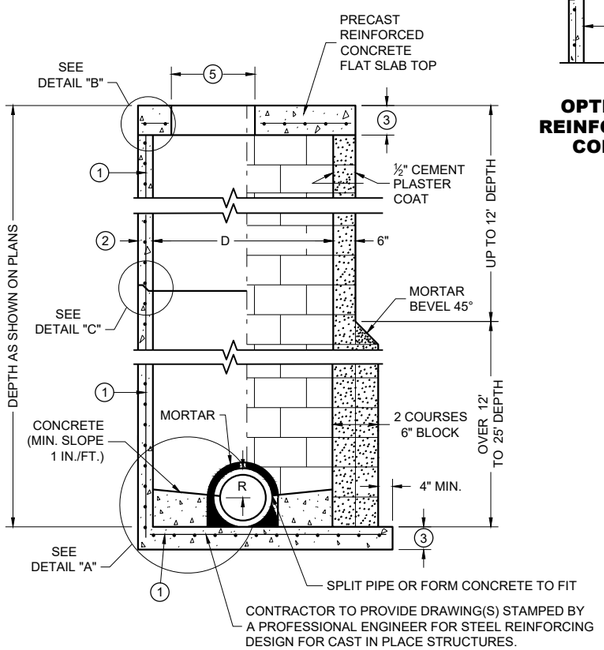

SECTION A - A

PRECAST REINFORCED CONCRETE WITH MONOLITHIC BASE

CONCRETE BLOCK WITH CAST IN PLACE OR PRECAST REINFORCED CONCRETE BASE (1)

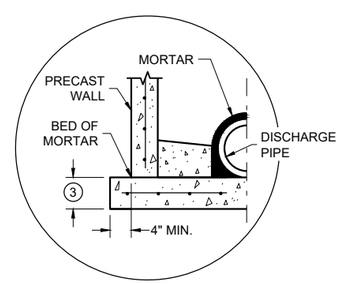

SEPARATE PRECAST REINFORCED CONCRETE BASE OPTION

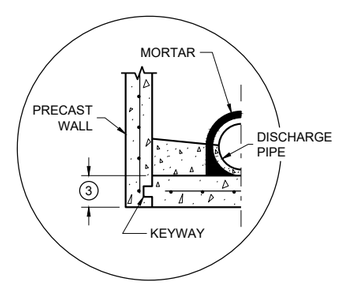

PRECAST REINFORCED CONCRETE WITH INTEGRAL BASE OPTION

DETAIL "A"

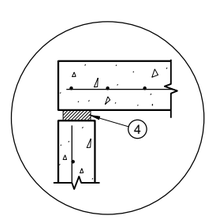

TOP WITH PLAIN END JOINT

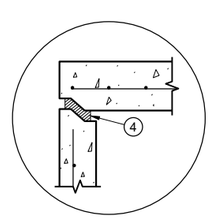

TOP WITH TONGUE AND GROOVE JOINT

DETAIL "B"

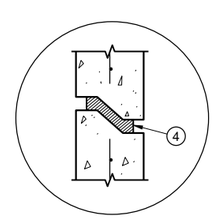

RISER WITH TONGUE AND GROOVE JOINT

DETAIL "C"

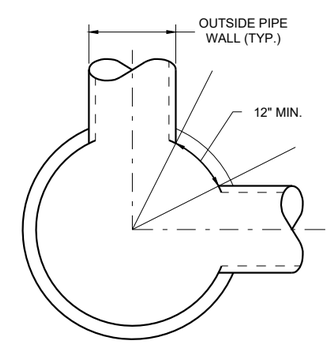

MINIMUM HORIZONTAL PIPE SEPARATION

DETAIL "D"

MANHOLES 3-FT, 4-FT, 5-FT, 6-FT, 7-FT, 8-FT, 9-FT AND 10-FT DIAMETER

MANHOLES, 3-FT, 4-FT 5-FT, 6-FT, 7-FT, 8-FT, 9-FT AND 10-FT DIAMETER

STATE OF WISCONSIN
DEPARTMENT OF TRANSPORTATION

APPROVED
December 2023 — /S/ Rodney Taylor
DATE — ROADWAY STANDARDS DEVELOPMENT UNIT SUPERVISOR
FHWA

6

SDD 08B09-04

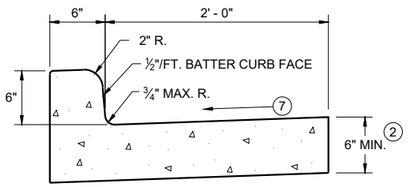

TYPES A (1) & D

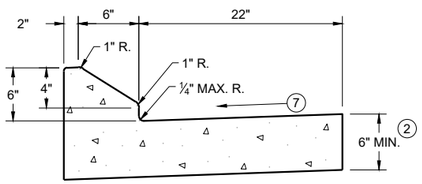

6" SLOPED CURB TYPES G (1) & J

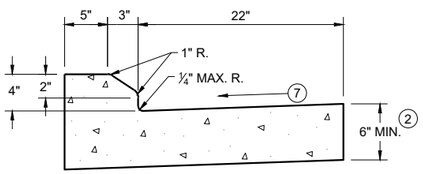

4" SLOPED CURB TYPES G (1) & J

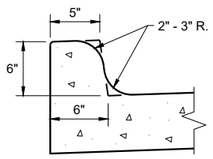

TYPES K (1) & L
(OPTIONAL CURB SHAPE)

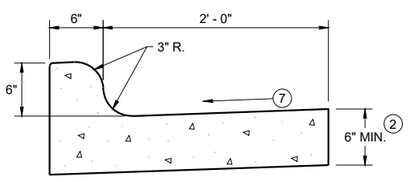

TYPES K (1) & L

CONCRETE CURB AND GUTTER 30"

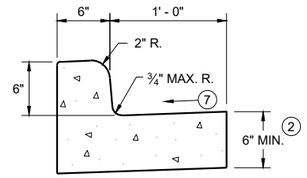

TYPES A (1) & D

CONCRETE CURB AND GUTTER 18"

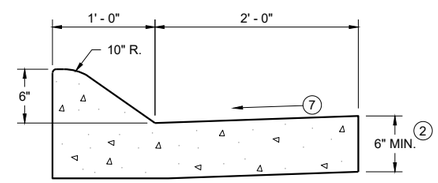

6" SLOPED CURB TYPES A (1) & D

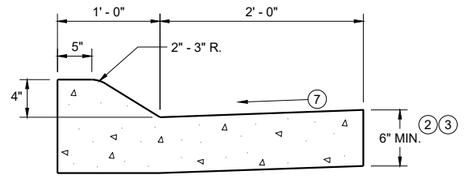

4" SLOPED CURB TYPES A (1) & D

CONCRETE CURB AND GUTTER 36"

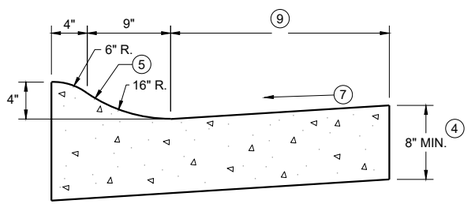

4" SLOPED CURB TYPES R (1) & T

TBT & TBTT	X
30"	22"
36"	28"

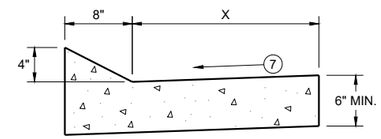

TYPES TBT & TBTT (1)

CONCRETE CURB AND GUTTER

PAVEMENT THICKNESS AND MAXIMUM CONCRETE PANEL WIDTH TABLE

PAVEMENT THICKNESS	MAXIMUM PANEL WIDTH
LESS THAN 10"	12'
10" & ABOVE	15'

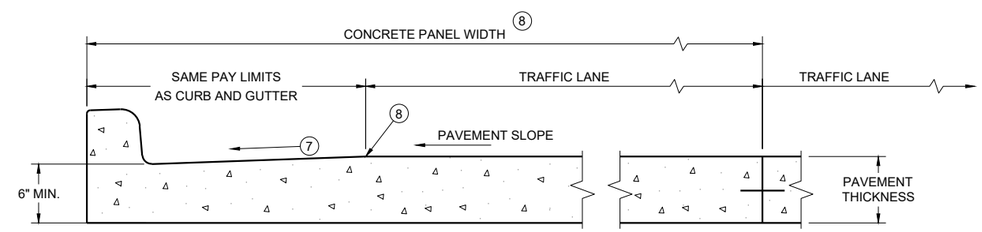

PARTIAL SECTION OF PAVEMENT * WITH INTEGRAL CURB AND GUTTER

* BIKE LANE IS NOT SHOWN

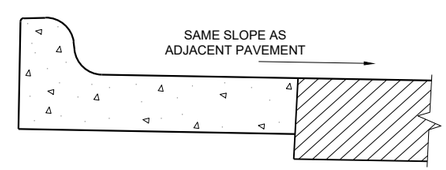

REVERSE SLOPE GUTTER (6)
(TYPICAL FOR ALL CURB & GUTTER TYPES)

GENERAL NOTES

DETAILS OF CONSTRUCTION AND WORKMANSHIP NOT SHOWN ON THIS DRAWING SHALL CONFORM TO THE PERTINENT REQUIREMENTS OF THE CONTRACT.

PAVEMENT TIES AND TIE BARS SHALL BE EPOXY COATED IN CONFORMANCE WITH SUBSECTION 505.2.6.2 OF THE STANDARD SPECIFICATIONS.

INTEGRAL CURB AND GUTTER SHALL CONFORM TO THE DETAILS SHOWN FOR CONCRETE CURB AND GUTTER INCLUDING THE TRANSVERSE GUTTER SLOPE.

UNLESS OTHERWISE SHOWN ON THE TYPICAL CROSS SECTIONS, THE BASE AGGREGATE AND COMMON EXCAVATION LIMITS ARE 2' - 0" BEHIND THE BACK OF CURBS.

(1) TIE BARS ARE REQUIRED FOR CURB AND GUTTERS TYPES A, G, K, R, AND TBTT.

(2) THE BOTTOM OF CURB AND GUTTER MAY BE CONSTRUCTED EITHER LEVEL OR PARALLEL TO THE SLOPE OF THE SUBGRADE OR BASE AGGREGATE PROVIDED A 6" MINIMUM GUTTER THICKNESS IS MAINTAINED.

(3) USE 8" MINIMUM GUTTER THICKNESS WHEN USED WITH AN ADJACENT CONCRETE TRUCK APRON PLACED BEHIND BACK OF CURB.

(4) THE BOTTOM OF CURB AND GUTTER MAY BE CONSTRUCTED EITHER LEVEL OR PARALLEL TO THE SLOPE OF THE SUBGRADE OR BASE AGGREGATE PROVIDED A 8" MINIMUM GUTTER THICKNESS IS MAINTAINED.

(5) UNLESS OTHERWISE NOTED, FOR STAKING PURPOSES THE FACE OF CURB IS 6" FROM THE BACK OF CURB.

(6) WHEN REVERSE SLOPE GUTTER IS REQUIRED, THE LOCATION(S) WILL BE SHOWN ELSEWHERE IN THE PLAN.

(7) USE 4% GUTTER CROSS SLOPE UNLESS OTHERWISE NOTED IN THE PLANS.

(8) INCLUDE LONGITUDINAL JOINT AND TIE BARS ALONG LANE EDGE WHEN CONCRETE PANEL WIDTH EXCEEDS THE MAXIMUM WIDTH PER TABLE BELOW. LONGITUDINAL JOINT(S) ARE NOT ALLOWED WITHIN TRAFFIC LANES AND BIKE LANES. LONGITUDINAL JOINT MAY BE SAWED.

(9) CONCRETE CURB AND GUTTER 4-INCH SLOPED 30-INCH TYPE "R" AND "T" = 17 INCHES
CONCRETE CURB AND GUTTER 4-INCH SLOPED 36-INCH TYPE "R" AND "T" = 23 INCHES

CONCRETE CURB AND GUTTER

STATE OF WISCONSIN
DEPARTMENT OF TRANSPORTATION

6

SDD 08D01-23a

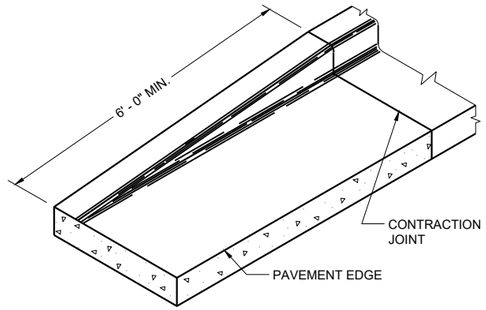

END SECTION CURB AND GUTTER

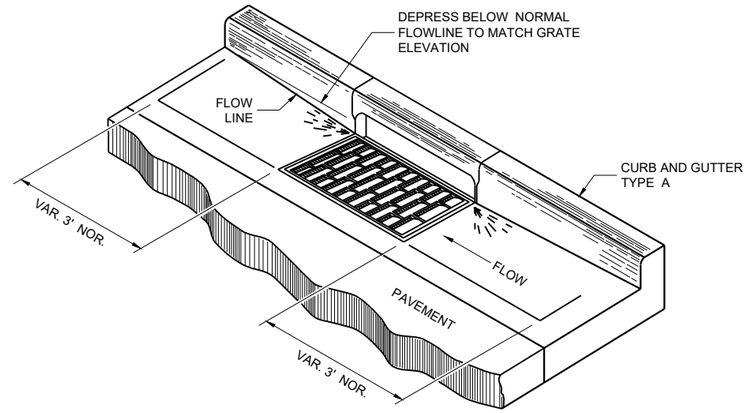

DETAIL OF CURB AND GUTTER AT INLETS

(TYPICAL H INLET COVER SHOWN)

GENERAL NOTES

DETAILS OF CONSTRUCTION AND WORKMANSHIP NOT SHOWN ON THIS DRAWING SHALL CONFORM TO THE PERTINENT REQUIREMENTS OF THE CONTRACT.

PAVEMENT TIES AND TIE BARS SHALL BE EPOXY COATED IN CONFORMANCE WITH SUBSECTION 505.2.6.2 OF THE STANDARD SPECIFICATIONS.

UNLESS OTHERWISE SHOWN ON THE TYPICAL CROSS SECTIONS, THE BASE AGGREGATE AND COMMON EXCAVATION LIMITS ARE 2' - 0" BEHIND THE BACK OF CURBS.

(1) TIE BARS ARE REQUIRED FOR CURB AND GUTTERS TYPES A, G, K, R, AND TBTT.

(2) THE BOTTOM OF CURB AND GUTTER MAY BE CONSTRUCTED EITHER LEVEL OR PARALLEL TO THE SLOPE OF THE SUBGRADE OR BASE AGGREGATE PROVIDED A 6" MINIMUM GUTTER THICKNESS IS MAINTAINED.

(10) REFER TO SDD 08D18 AND 08D19 FOR ADDITIONAL DRIVEWAY ENTRANCE CURB DETAILS.

(11) PLACE 1" THICK EXPANSION JOINT MATERIAL BETWEEN VERTICAL FACE CURB TYPES EXTENDING FROM THE TOP OF CURB TO 1 INCH BELOW THE ADJOINING CONCRETE SURFACE. RIGID CONCRETE STRUCTURES INCLUDE RAISED CONCRETE MEDIANS, CONCRETE SAFETY ISLANDS, SPLITTER ISLANDS, OR LOCATIONS IDENTIFIED ON THE PLANS.

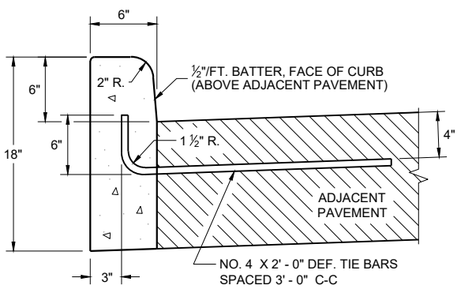

TYPES A (1) & D

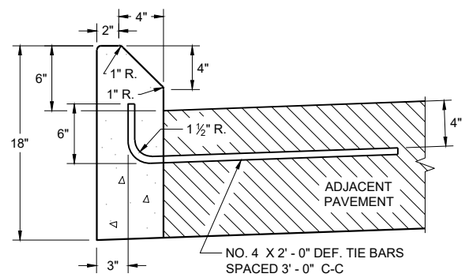

TYPES G (1) & J

CONCRETE CURB

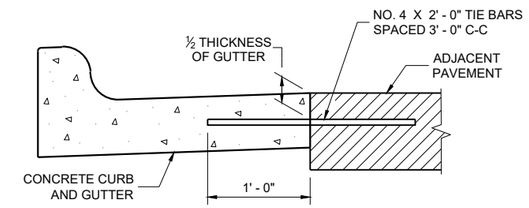

TYPICAL TIE BAR LOCATION (1)

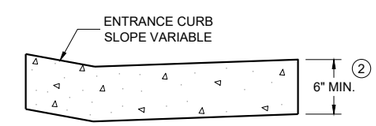

DRIVEWAY ENTRANCE CURB (10)

(WHEN DIRECTED BY THE ENGINEER)

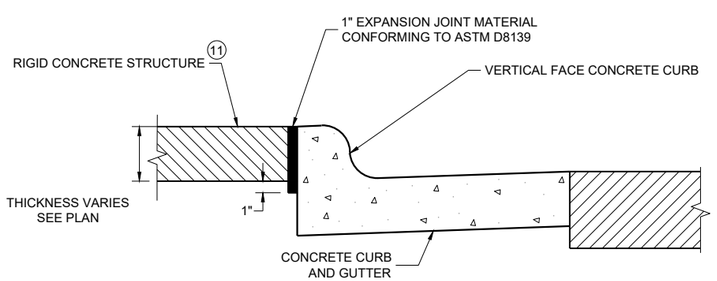

EXPANSION JOINT DETAIL FOR VERTICAL CURB ABUTTING A RIGID STRUCTURE (11)

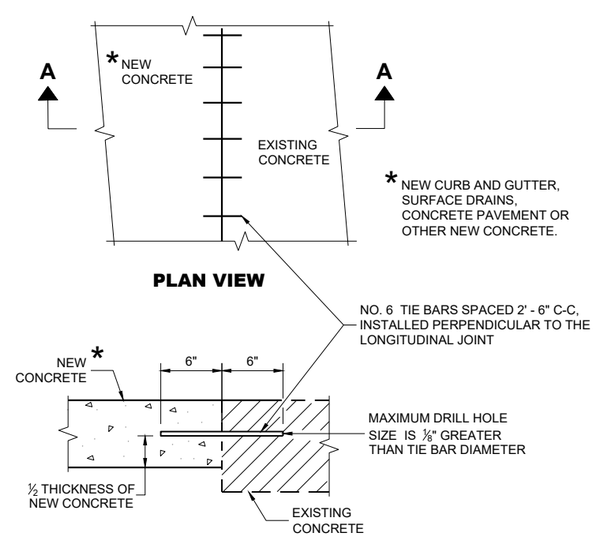

PLAN VIEW

SECTION A - A

TIE BARS DRILLED INTO EXISTING PAVEMENT

CONCRETE CURB, TIES AND CURB AND GUTTER APPLICATIONS

STATE OF WISCONSIN
DEPARTMENT OF TRANSPORTATION

APPROVED
May 2023 — DATE
/S/ Rodnery Taylor — ROADWAY STANDARDS DEVELOPMENT UNIT SUPERVISOR

FHWA

6
SDD 08D01-23b

NOTE: TAPER CURB ENDS TO GUTTER IN 1' - 0"

ASPHALTIC FLUME

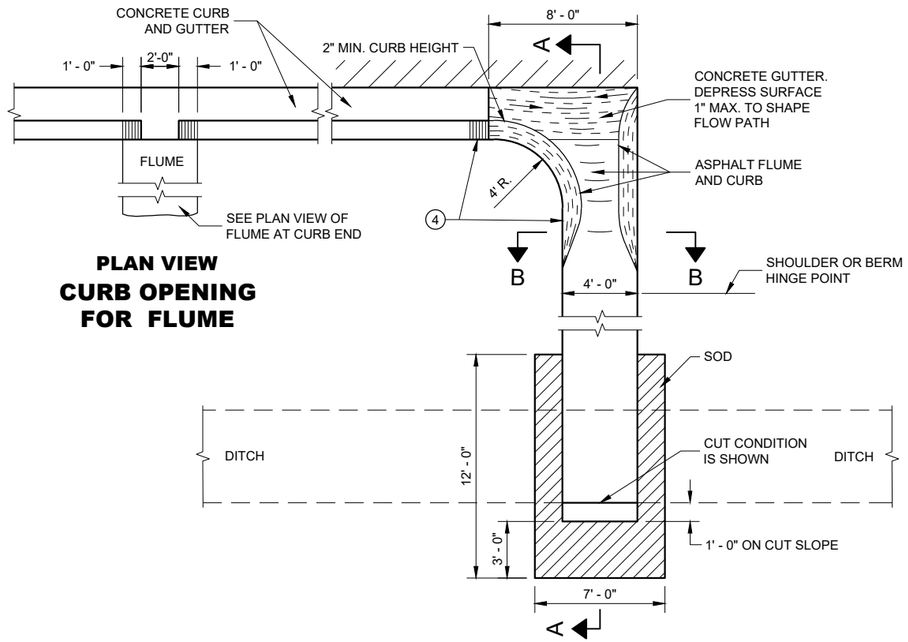

PLAN VIEW
CURB OPENING FOR FLUME

PLAN VIEW
FLUME AT CURB END

GENERAL NOTES

DETAILS OF CONSTRUCTION, MATERIALS AND WORKMANSHIP NOT SHOWN ON THIS DRAWING SHALL CONFORM TO PERTINENT REQUIREMENTS OF THE STANDARD SPECIFICATIONS AND APPLICABLE SPECIAL PROVISIONS.

4" X 4" - W3.0 X W3.0 CONCRETE REINFORCEMENT SHALL BE IN ACCORDANCE WITH AASHTO SPECIFICATION M55.

1. JOINTS SHALL BE ⅛" TO ¼" WIDE BY 1½" DEEP AND SPACED AT UNIFORM INTERVALS OF APPROXIMATELY 4 FEET.
2. GEOTEXTILE TYPE "R" SHALL UNDERLAY THE FULL LENGTH AND WIDTH OF THE CONCRETE SURFACE DRAIN AND RIPRAP.
3. CONCRETE SURFACE DRAIN WITHOUT CURB AND GUTTER MAY BE USED ON BACKSLOPES WHEN SPECIFIED.
4. ANGLE OF FLUME IN RELATION TO BACK OF CURB TO BE CONSTRUCTED PER THE PLAN DETAILS OR AS DIRECTED BY THE ENGINEER. ANGLE OF FLUME MAY BE OTHER THAN 90 DEGREES AS SHOWN.

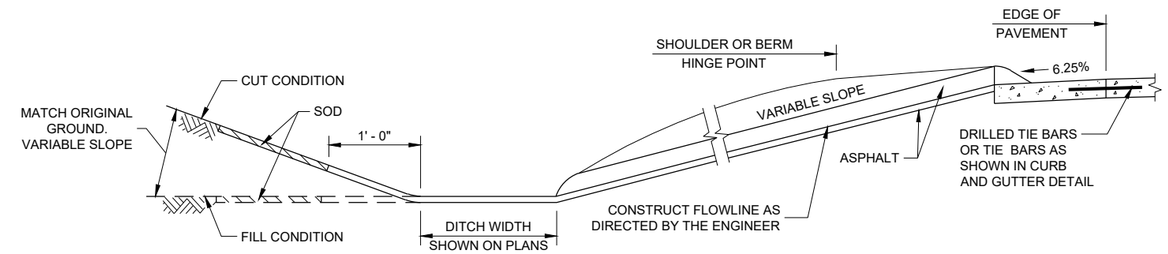

SECTION A - A

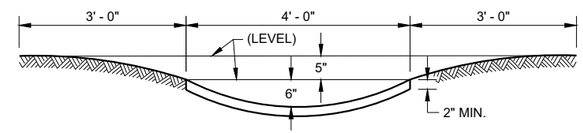

SECTION B - B

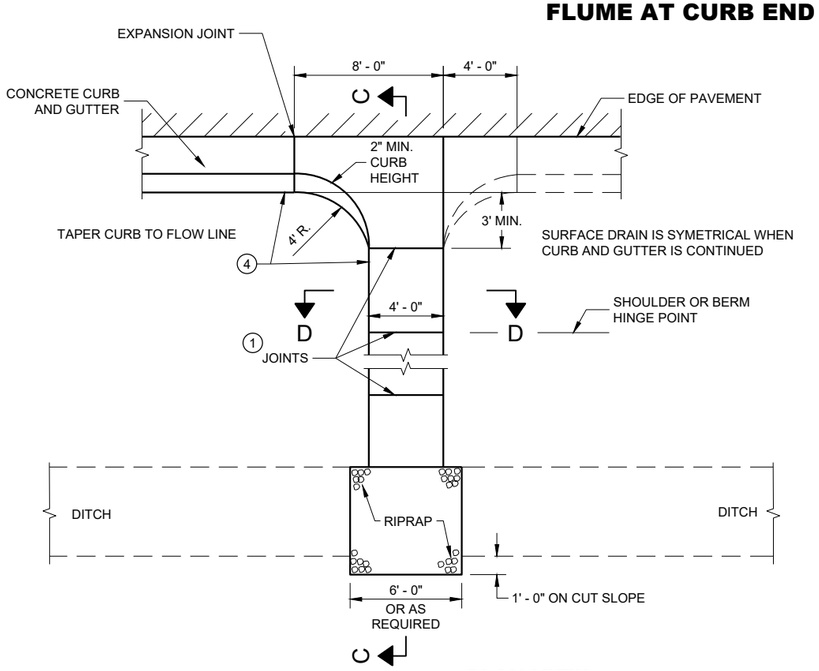

PLAN VIEW
CONCRETE SURFACE DRAIN

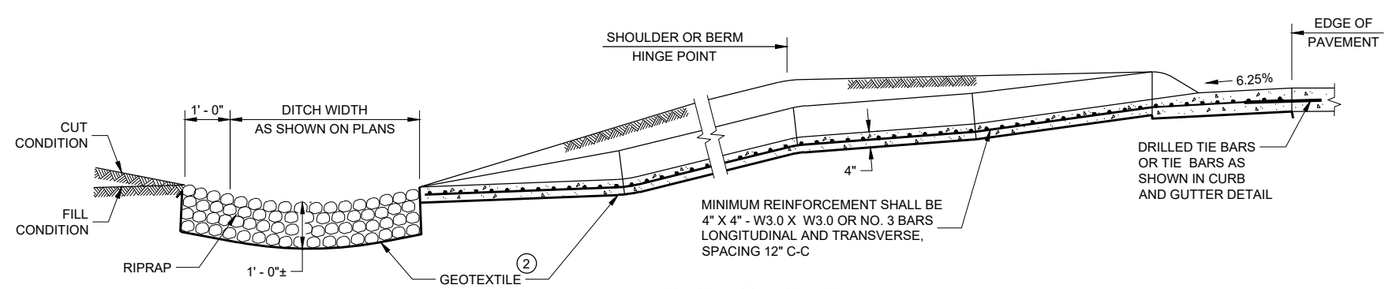

SECTION C - C

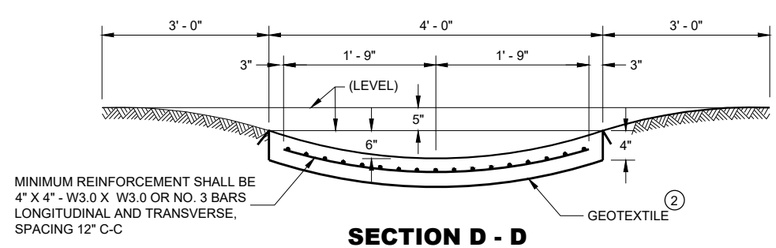

SECTION D - D

CONCRETE SURFACE DRAINS AND ASPHALTIC FLUMES

STATE OF WISCONSIN
DEPARTMENT OF TRANSPORTATION

APPROVED
May 2023 — DATE
/S/ Rodney Taylor — ROADWAY STANDARDS DEVE ENGINEER

FHWA

6

SDD 08D04 - 07

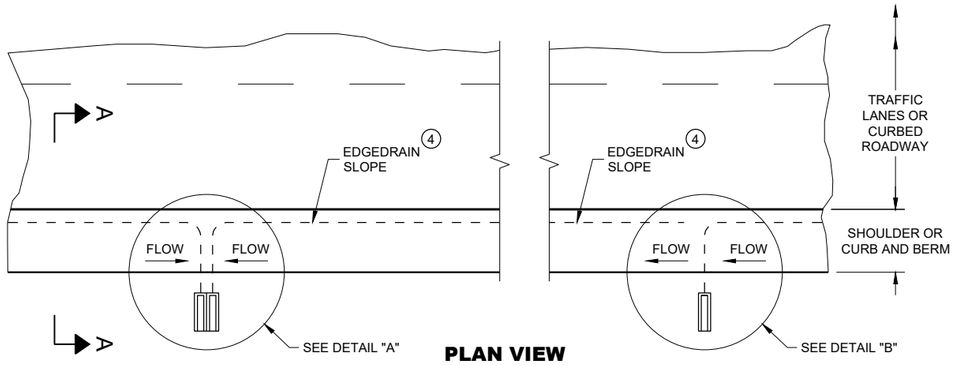

PLAN VIEW

ROADWAY WITH SHOULDERS OR CURBS
(EDGEDRAIN CONNECTS TO ROADSIDE) 2

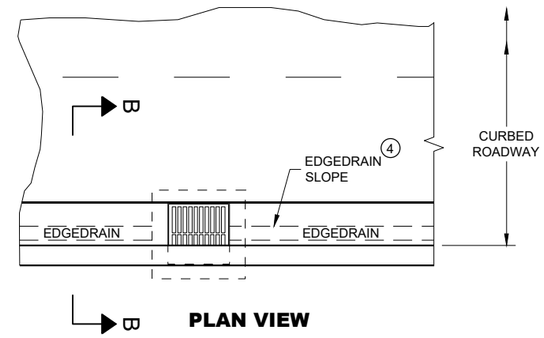

PLAN VIEW

ROADWAY WITH CURBS
(EDGEDRAIN CONNECTS INTO INLET STRUCTURE)

GENERAL NOTES

DETAILS OF CONSTRUCTION, MATERIALS AND WORKMANSHIP NOT SHOWN ON THIS DRAWING SHALL CONFORM TO THE PERTINENT REQUIREMENTS OF THE STANDARD SPECIFICATIONS AND THE APPLICABLE SPECIAL PROVISIONS.

1. UNPERFORATED PIPE UNDERDRAIN AND FITTINGS FURNISHED FOR OUTFALL PIPE SHALL MEET THE REQUIREMENTS OF ONE OF THE FOLLOWING SPECIFICATIONS:

   POLYVINYL CHLORIDE (PVC) PLASTIC DRAIN, WASTE, AND VENT PIPE AND FITTINGS, ASTM D 2665, SCHEDULE 40 PVC.

   TYPE PSM POLYVINYL CHLORIDE (PVC) SEWER PIPE AND FITTINGS, ASTM D 3034, SDR 23.5 PVC SEWER PIPE.

2. MAXIMUM SPACING OF EDGEDRAIN OUTLETS SHALL BE 250 FEET UNLESS OTHERWISE SPECIFIED IN THE CONTRACT OR DIRECTED BY THE ENGINEER.

3. EDGEDRAIN SHALL BE CONNECTED TO INLETS REGARDLESS OF FLOW DIRECTION FOR DRAINAGE AND MAINTENANCE ACCESS.

4. EDGEDRAIN SHALL BE LAID PARALLEL TO THE GRADE OF ROADWAY.

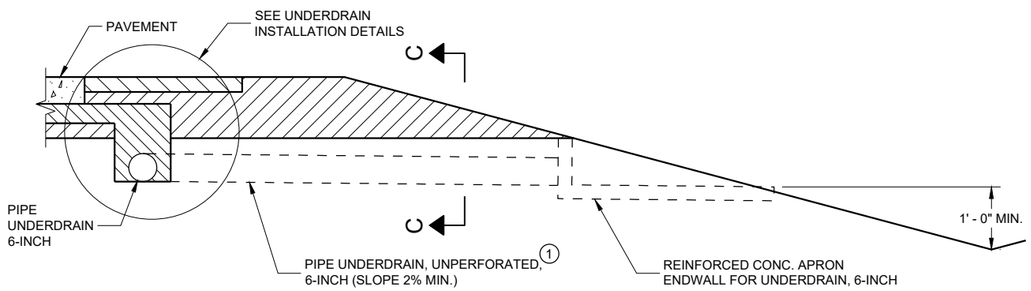

SECTION A - A

RURAL CROSS SECTION

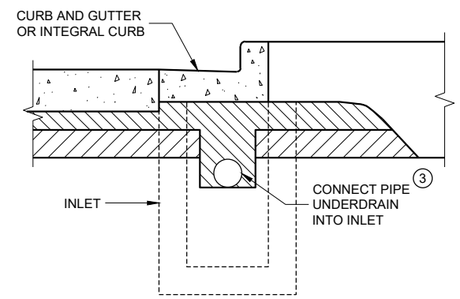

SECTION B - B

URBAN CROSS SECTION

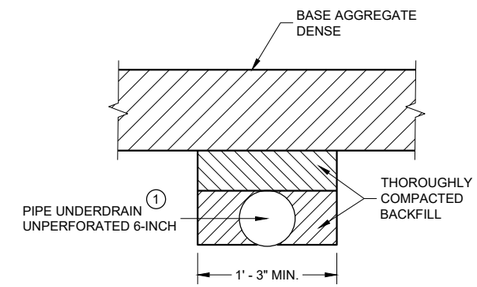

SECTION C - C

TRENCH FOR OUTFALL PIPE

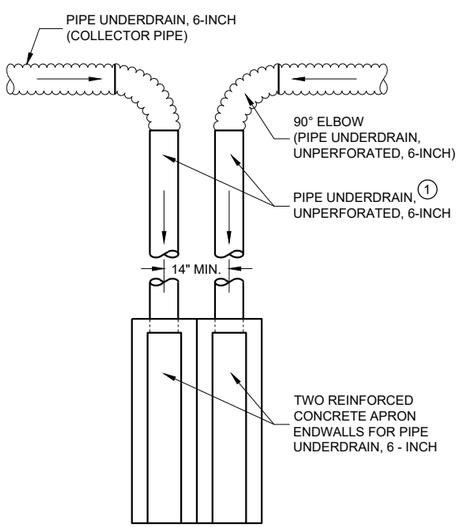

DETAIL "A"

TO BE USED AT LOW POINT LOCATIONS

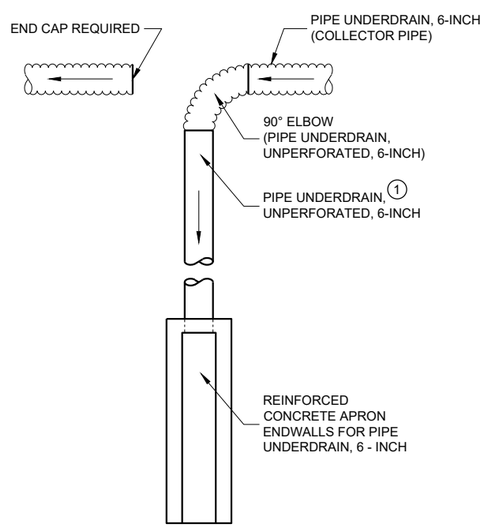

DETAIL "B"

TO BE USED AT INTERMEDIATE LOCATIONS

TYPICAL DRAIN OUT DETAILS

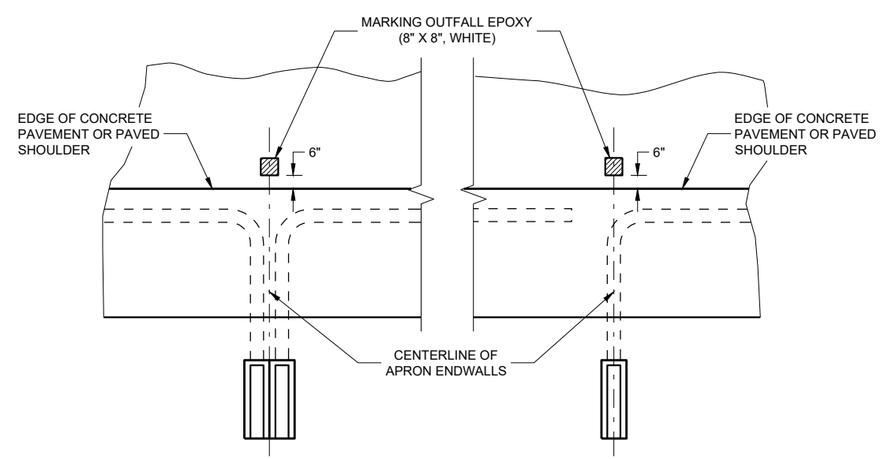

LOW POINT LOCATIONS

INTERMEDIATE LOCATIONS

PAVEMENT MARKINGS FOR OUTFALL MARKERS

EDGEDRAIN OUTLET AND OUTFALL MARKERS

STATE OF WISCONSIN
DEPARTMENT OF TRANSPORTATION

6

SDD 08D15 - 05a

6

SDD 08D15 - 05a

GENERAL NOTES

THE DIMENSIONS SHOWN ON THE TYPICAL CROSS SECTIONS WILL GOVERN IN THE EVENT THERE IS A CONFLICT WITH THE DETAILS SHOWN ON THIS DRAWING.

PIPE UNDERDRAIN SHALL BE LAID PARALLEL TO THE GRADE OF THE ROADWAY.

(1) FOLD OVER EXCESS GEOTEXTILE AT THIS LOCATION.

(2) TOTAL GEOTEXTILE WIDTH IS 6'-3" FOR PAYMENT.

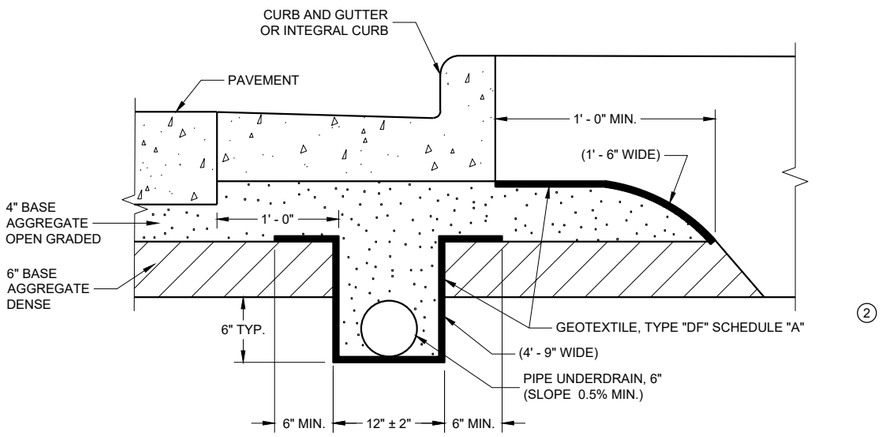

(2)

EDGEDRAIN IN URBAN ROADWAY

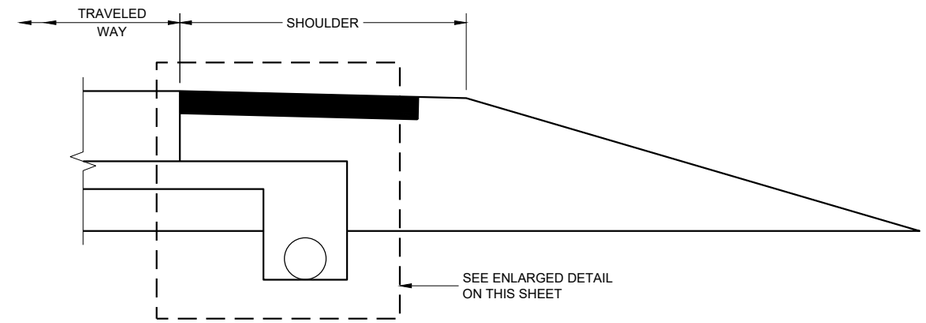

RURAL CROSS SECTION

6

6

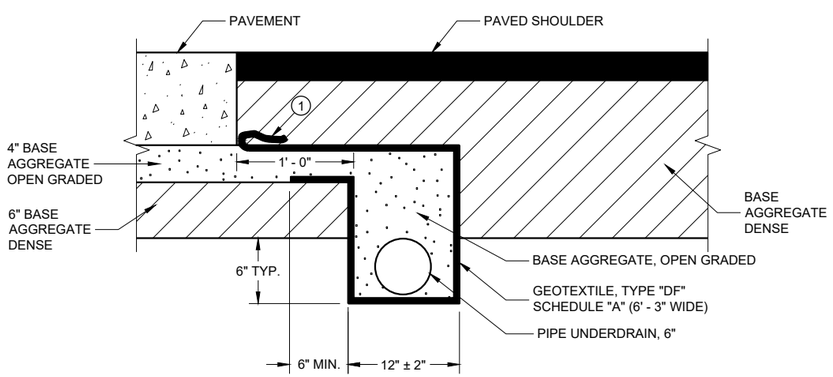

POST PAVING INSTALLATION

(QUANTITIES ARE BASED ON THIS DETAIL)

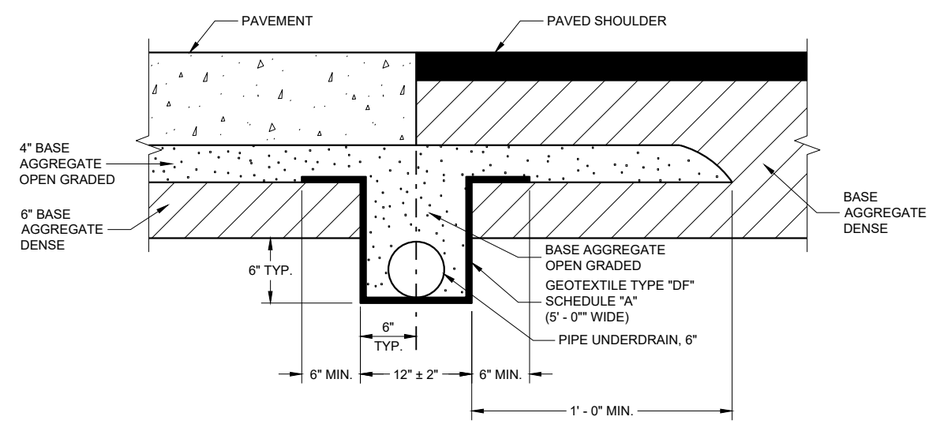

PRE-PAVING INSTALLATION ALTERNATIVE

EDGEDRAIN IN RURAL ROADWAY

EGEDRAIN AND BASE AGGREGATE OPEN GRADED

STATE OF WISCONSIN
DEPARTMENT OF TRANSPORTAT

SDD 08D15 - 05b

GENERAL NOTES

THE DIMENSIONS SHOWN ON THE TYPICAL CROSS SECTIONS WILL GOVERN IN THE EVENT THERE IS A CONFLICT WITH THE DETAILS SHOWN ON THIS DRAWING.

PIPE UNDERDRAIN SHALL BE LAID PARALLEL TO THE GRADE OF THE ROADWAY.

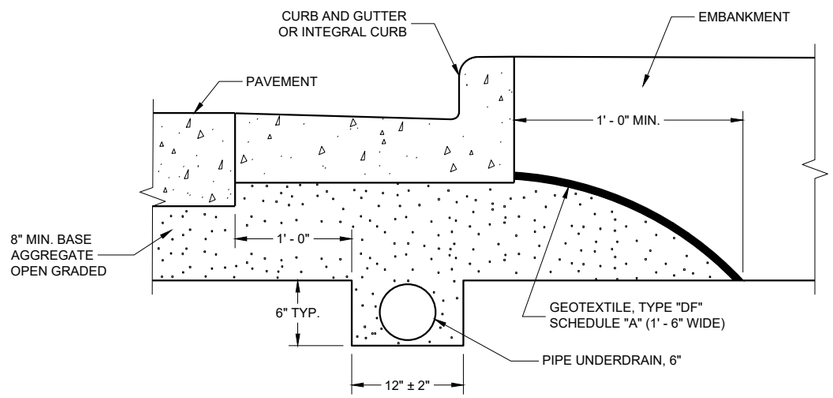

EDGEDRAIN IN URBAN ROADWAY

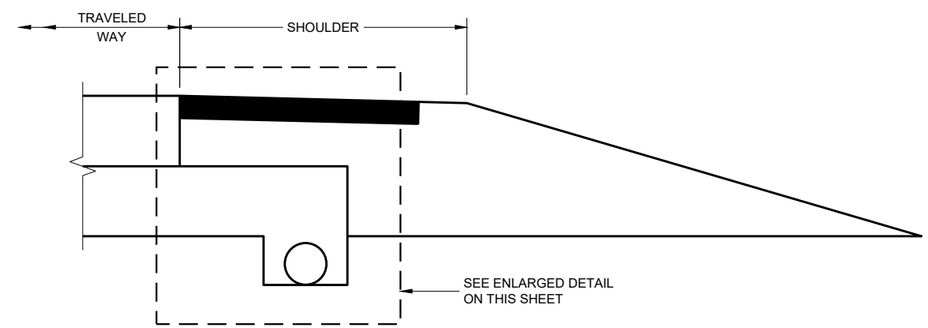

RURAL CROSS SECTION

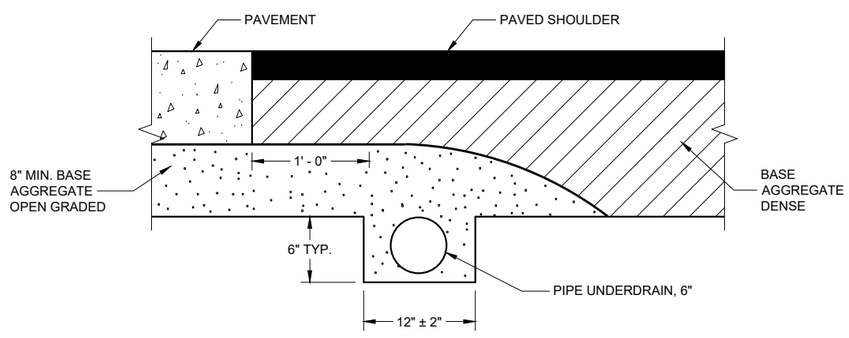

POST PAVING INSTALLATION

(QUANTITIES ARE BASED ON THIS DETAIL)

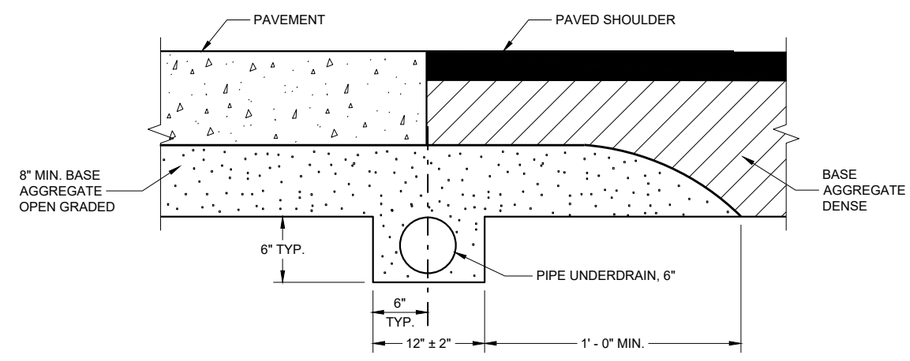

PRE-PAVING INSTALLATION ALTERNATIVE

EDGEDRAIN IN RURAL ROADWAY

EDGEDRAIN AND BASE AGGREGATE OPEN GRADED

STATE OF WISCONSIN
DEPARTMENT OF TRANSPORTATION

APPROVED
September 2015 /S/ Peter Kemp, P.E.
DATE PAVEMENT SUPERVISO
FHWA

6

6

SDD 08D15 - 05c

SDD 08D15 - 05c

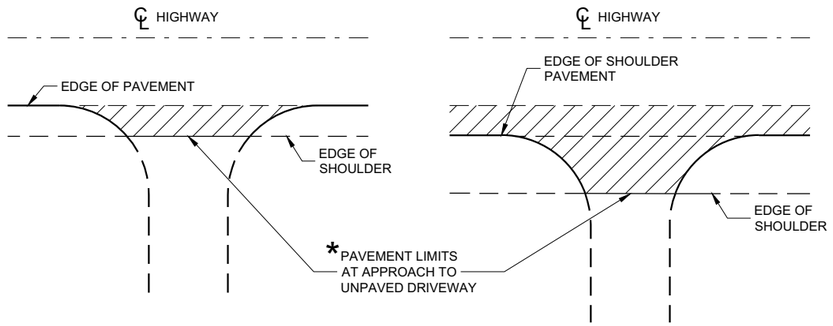

* WHERE DRIVEWAY IS PAVED, APPROACH PAVEMENT SHOULD BE EXTENDED TO MATCH DRIVEWAY PAVEMENT.

PLAN VIEW
(UNPAVED SHOULDER ON HIGHWAY)

PLAN VIEW
(PAVED SHOULDER ON HIGHWAY)

RURAL DRIVEWAY INTERSECTION DETAIL
(NO CURB AND GUTTER OR SIDEWALK)

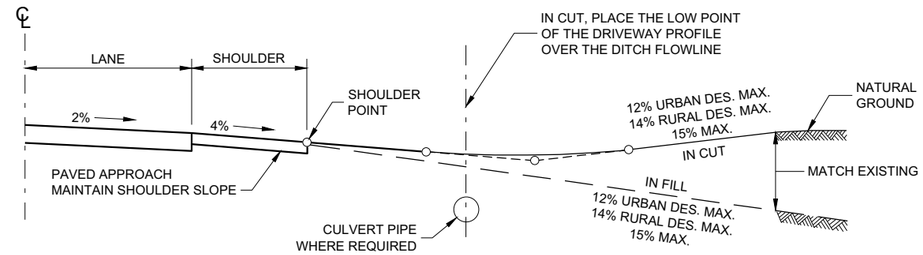

TYPICAL DRIVEWAY PROFILES

6

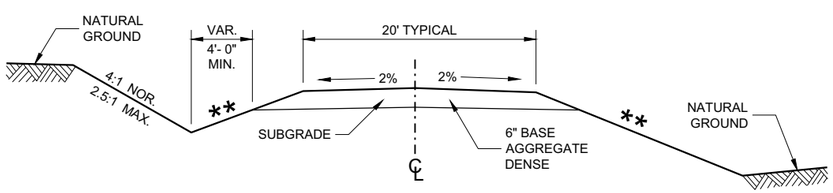

IN CUT **IN FILL**

TYPICAL CROSS SECTION FOR PRIVATE DRIVE OR FIELD ENTRANCE AGGREGATE SURFACE

** SLOPE CAN VARY WITH SPEED. SEE 11-45-30.6.2

POSTED SPEED MPH	MAX. SLOPE
<35	4:1
≥ 35 TO < 60	6:1
≥60	10:1

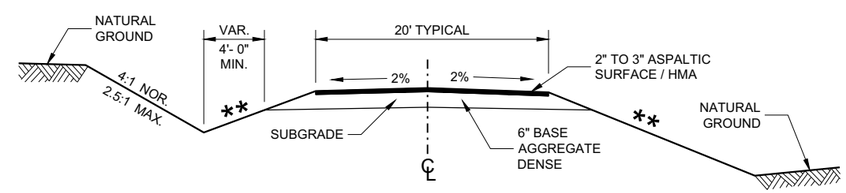

IN CUT **IN FILL**

TYPICAL CROSS SECTION FOR PRIVATE DRIVE OR FIELD ENTRANCE ASPHALTIC SURFACE

6

SDD 08D21 - 01

DRIVEWAYS WITHOUT CURB AND GUTTER

STATE OF WISCONSIN
DEPARTMENT OF TRANSPORTATION

APPROVED
December 2017 — DATE
/S/ Rodney Taylor — ROADWAY STANDARDS DEVE UNIT SUPERVISOR
FHWA

SDD 08D21 - 01

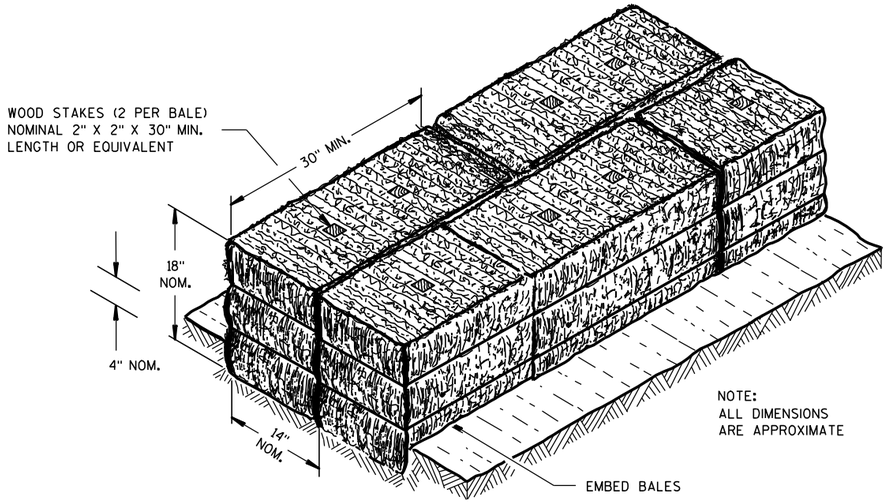

SECTION A-A

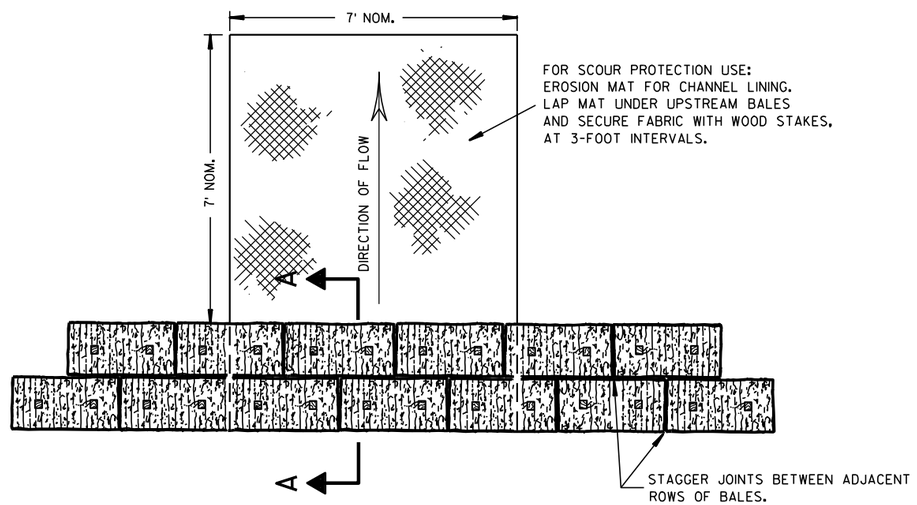

PLAN VIEW

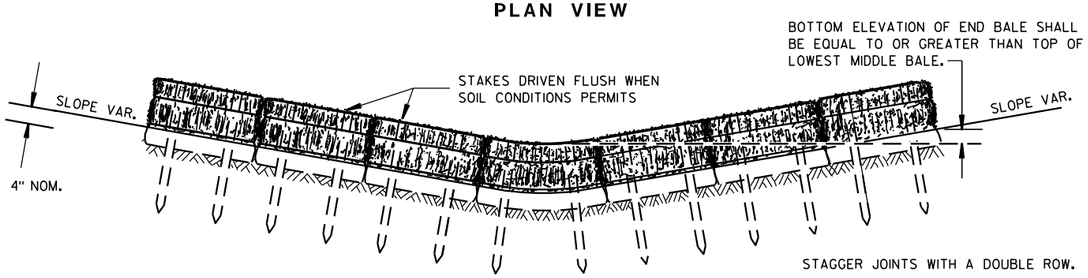

FRONT ELEVATION

TEMPORARY DITCH CHECK USING EROSION BALES ①

GENERAL NOTES

DETAILS OF CONSTRUCTION, MATERIALS AND WORKMANSHIP NOT SHOWN ON THIS DRAWING SHALL CONFORM TO THE PERTINENT REQUIREMENTS OF THE STANDARD SPECIFICATIONS AND THE APPLICABLE SPECIAL PROVISIONS.

① TEMPORARY DITCH CHECKS EITHER EROSION BALES OR MANUFACTURED SHALL BE PAID FOR UNDER THE BID ITEM OF TEMPORARY DITCH CHECK. THE DEPARTMENT WILL NOT PAY FOR TEMPORARY DITCH CHECKS CONSTRUCTED OF A SINGLE ROW OF EROSION BALES.

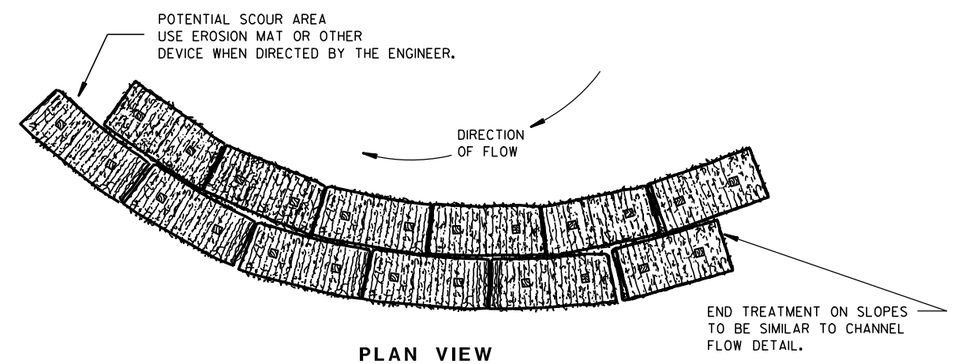

PLAN VIEW

WHEN ALTERING THE DIRECTION OF FLOW

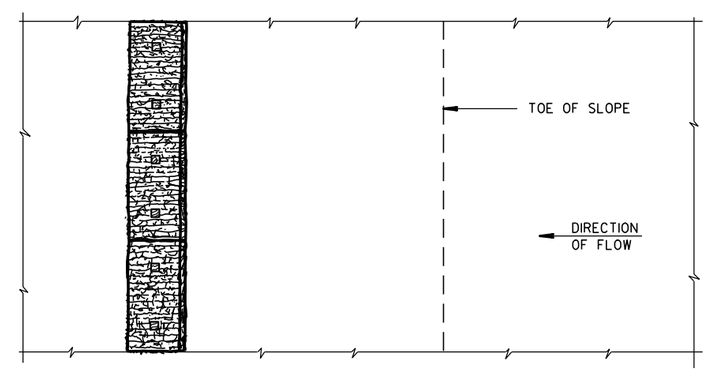

PLAN VIEW

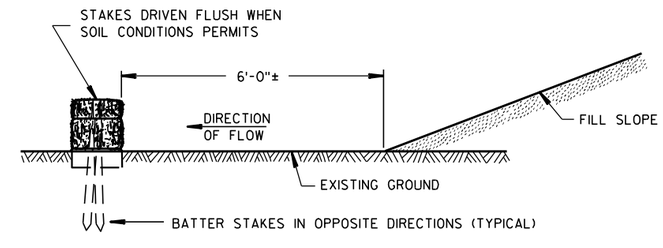

FRONT ELEVATION

WHEN EXISTING GROUND SLOPES AWAY FROM FILL SLOPE

EROSION BALES FOR SHEET FLOW

TYPICAL INSTALLATIONS OF EROSION BALES / TEMPORARY DITCH CHECKS

STATE OF WISCONSIN
DEPARTMENT OF TRANSPORTATION

APPROVED
6/04/02 — DATE
/S/ Beth Cann — CHIEF ROADWAY DEVELOPMENT ENGINEER
FHWA

6

6

S.D.D. 8 E 8-3

S.D.D. 8 E 8-3

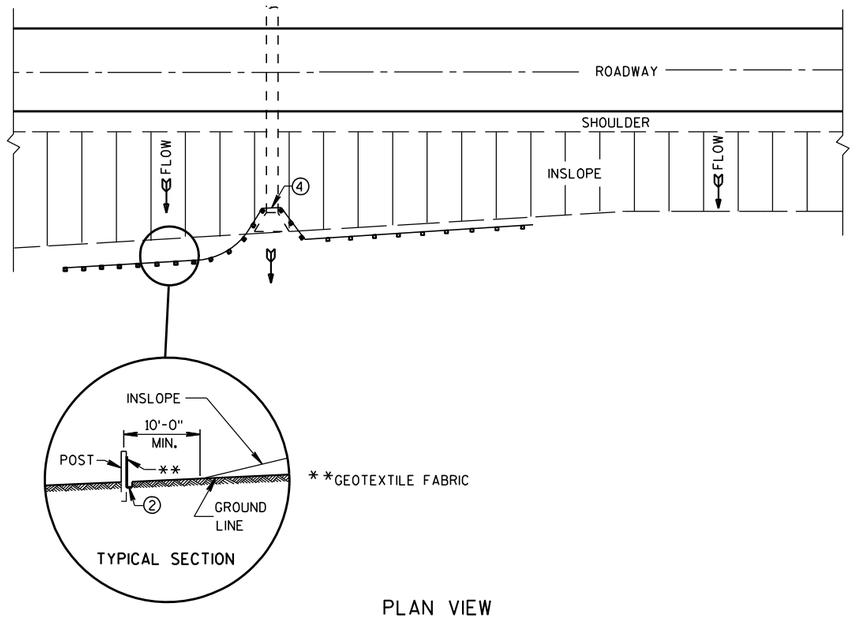

PLAN VIEW

TYPICAL APPLICATION OF SILT FENCE

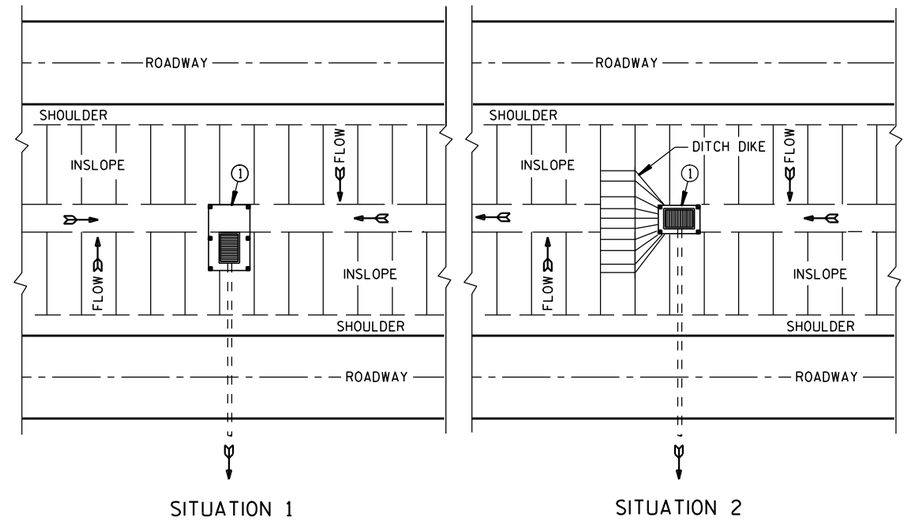

PLAN VIEW

SILT FENCE AT MEDIAN SURFACE DRAINS

GENERAL NOTES

DETAILS OF CONSTRUCTION NOT SHOWN ON THIS DRAWING SHALL CONFORM TO THE PERTINENT REQUIREMENTS OF THE STANDARD SPECIFICATIONS AND APPLICABLE SPECIAL PROVISIONS.

① HORIZONTAL BRACE REQUIRED WITH 2" X 4" WOODEN FRAME OR EQUIVALENT AT TOP OF POSTS.

② FOR MANUAL INSTALLATIONS THE TRENCH SHALL BE A MINIMUM OF 4" WIDE & 6" DEEP TO BURY AND ANCHOR THE GEOTEXTILE FABRIC. FOLD MATERIAL TO FIT TRENCH AND BACKFILL & COMPACT TRENCH WITH EXCAVATED SOIL.

③ WOOD POSTS SHALL BE A MINIMUM SIZE OF 1⅛" X 1⅛" OF OAK OR HICKORY.

④ SILT FENCE TO EXTEND ACROSS THE TOP OF THE PIPE.

⑤ CONSTRUCT SILT FENCE FROM A CONTINUOUS ROLL IF POSSIBLE BY CUTTING LENGTHS TO AVOID JOINTS. IF A JOINT IS NECESSARY USE ONE OF THE FOLLOWING TWO METHODS; A) OVERLAP THE END POSTS AND TWIST, OR ROTATE, AT LEAST 180 DEGREES. B) HOOK THE END OF EACH SILT FENCE LENGTH.

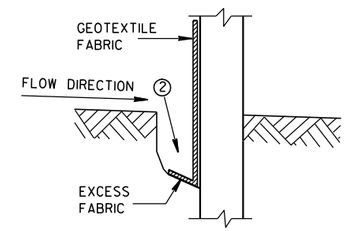

TRENCH DETAIL

NOTE: ADDITIONAL POST DEPTH OR TIE BACKS MAY BE REQUIRED IN UNSTABLE SOILS

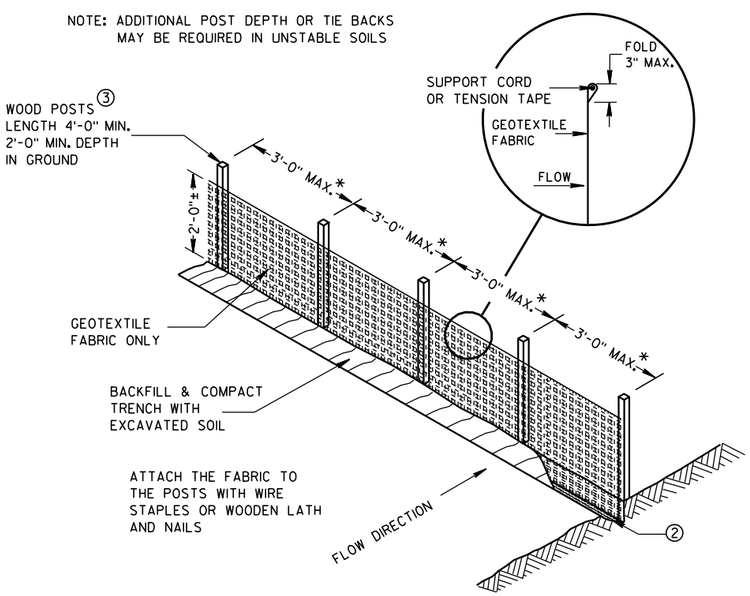

*NOTE: 8'-0" POST SPACING ALLOWED IF A WOVEN GEOTEXTILE FABRIC IS USED.

SILT FENCE

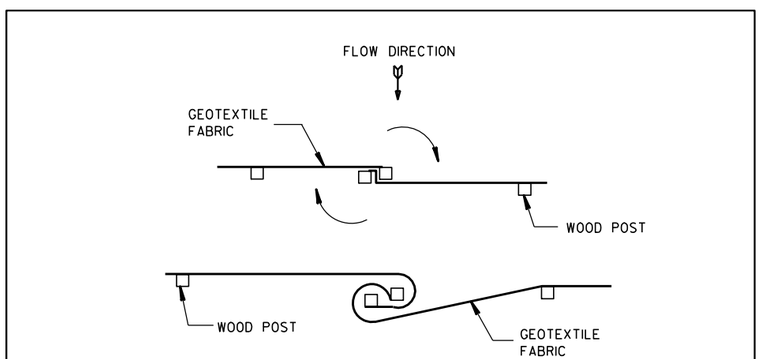

TWIST METHOD

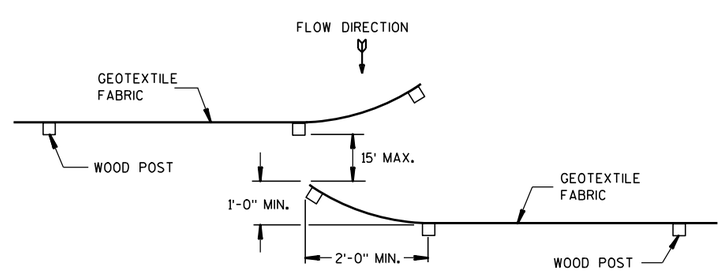

HOOK METHOD

JOINING TWO LENGTHS OF SILT FENCE ⑤

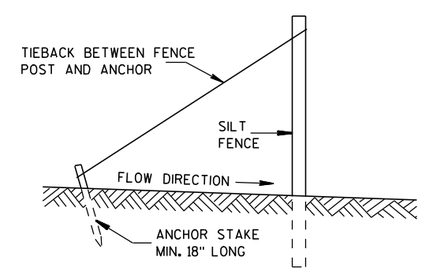

SILT FENCE TIE BACK

(WHEN REQUIRED BY THE ENGINEER)

SILT FENCE
STATE OF WISCONSIN DEPARTMENT OF TRANSPORTATION
APPROVED 4-29-05 /S/ Beth Cann----- DATE CHIEF ROADWAY DEVELOP ENGINEER FHWA

6

6

S.D.D. 8 E 9-6

S.D.D. 8 E 9-6

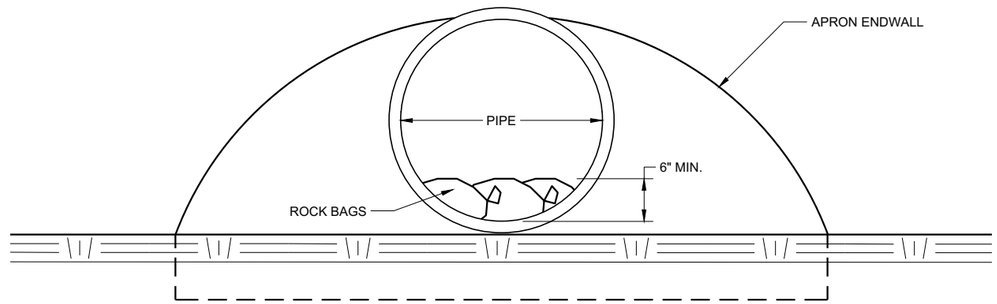

END VIEW

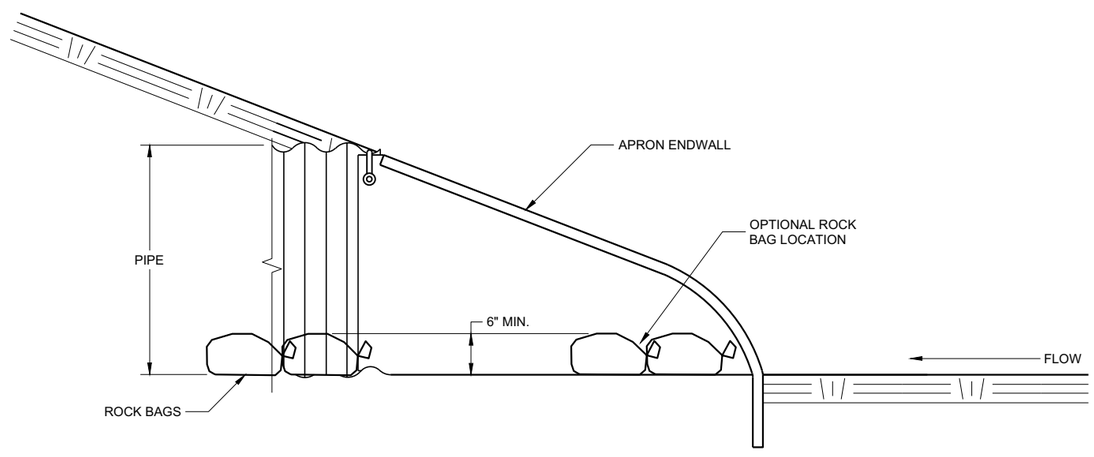

SIDE VIEW

CULVERT PIPE CHECK

(INSTALL ON INLET END ONLY)

CULVERT PIPE CHECK

STATE OF WISCONSIN
DEPARTMENT OF TRANSPORTATION

APPROVED
May 2019 — DATE
/S/ Daniel Schave — EROSION CONTROL ENGI
FHWA

6

6

SDD 08E15 - 01

SDD 08E15 - 01

METAL APRON ENDWALLS

PIPE DIA. (IN.)	MIN. THICK. (Inches) STEEL	MIN. THICK. (Inches) ALUM.	DIMENSIONS (Inches) A (±1")	B (MAX.)	H (±1")	L (±1 1/2")	L1 ①	L2 ①	W (±2")	APPROX. SLOPE	BODY
12	.064	.060	6	6	6	21	12	17 1/2	24	2 1/2 to 1	1 Pc.
15	.064	.060	7	8	6	26	14	21 3/4	30	2 1/2 to 1	1 Pc.
18	.064	.060	8	10	6	31	15	28 1/4	36	2 1/2 to 1	1 Pc.
21	.064	.060	9	12	6	36	18	29 5/8	42	2 1/2 to 1	1 Pc.
24	.064	.075	10	13	6	41	18	37 1/4	48	2 1/2 to 1	1 Pc.
30	.079	.075	12	16	8	51	18	52 1/4	60	2 1/2 to 1	1 Pc.
36	.079	.105	14	19	9	60	24	59 3/4	72	2 1/2 to 1	2 Pc.
42	.109	.105	16	22	11	69	24	75 5/8	84	2 1/2 to 1	2 Pc.
48	.109	.105	18	27	12	78	24	81	90	2 1/4 to 1	3 Pc.
54	.109	.105	18	30	12	84	30	85 1/2	102	2 1/4 to 1	3 Pc.
60	.109×	.105×	18	33	12	87	—	—	114	2 to 1	3 Pc.
66	.109×	.105×	18	36	12	87	—	—	120	2 to 1	3 Pc.
72	.109×	.105×	18	39	12	87	—	—	126	2 to 1	3 Pc.
78	.109×	.105×	18	42	12	87	—	—	132	1 1/2 to 1	3 Pc.
84	.109×	.105×	18	45	12	87	—	—	138	1 1/2 to 1	3 Pc.
90	.109×	.105×	18	37	12	87	—	—	144	1 1/2 to 1	3 Pc.
96	.109×	.105×	18	35	12	87	—	—	150	1 1/2 to 1	3 Pc.

× EXCEPT CENTER PANEL
SEE GENERAL NOTES

REINFORCED CONCRETE APRON ENDWALLS

PIPE DIA. (IN.)	DIMENSIONS (Inches) T	A	B	C	D	E	G	APPROX. SLOPE
12	2	4	24	48 7/8	72 7/8	24	2	3 to 1
15	2 1/4	6	27	46	73	30	2 1/4	3 to 1
18	2 1/2	9	27	46	73	36	2 1/2	3 to 1
21	2 3/4	9	36	37 1/2	73 1/2	42	2 3/4	3 to 1
24	3	9 1/2	43 1/2	30	73 1/2	48	3	3 to 1
27	3 1/4	10 1/2	49 1/2	24	73 1/2	54	3 1/4	3 to 1
30	3 1/2	12	54	19 3/4	73 1/2	60	3 1/2	3 to 1
36	4	15	63	34 3/4	97 3/4	72	4	3 to 1
42	4 1/2	21	63	35	98	78	4 1/2	3 to 1
48	5	24	72	26	98	84	5	3 to 1
54	5 1/2	27	65	*33 1/4-**35	*98 1/4-**100	90	5 1/2	2 2/5 to 1
60	6	*30-**35	60	39	99	96	5	2 to 1
66	6 1/2	*24-**30	*72-**78	*21-**27	99	102	5 1/2	2 to 1
72	7	*24-**36	78	21	99	108	6	2 to 1
78	7 1/2	*24-**36	78	21	99	114	6 1/2	2 to 1
84	8	36	90 1/2	21	111 1/2	120	6 1/2	1 1/2 to 1
90	8 1/2	41	87 1/2	24	111 1/2	132	6 1/2	1 1/2 to 1

*MINIMUM
**MAXIMUM

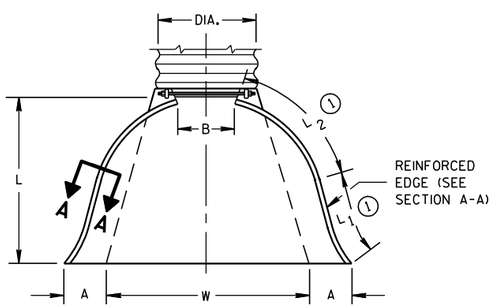

PLAN VIEW

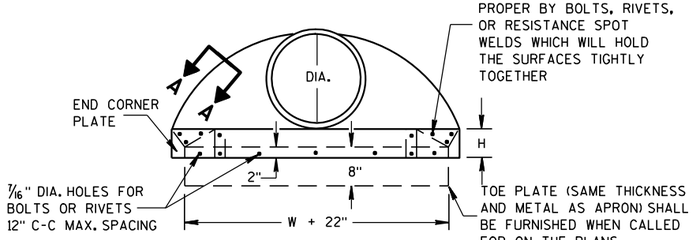

END VIEW

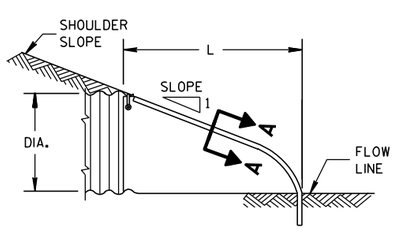

SIDE ELEVATION

METAL ENDWALLS

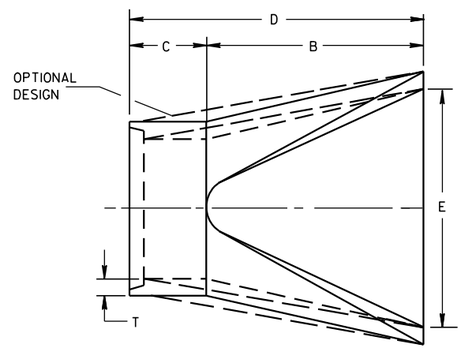

PLAN

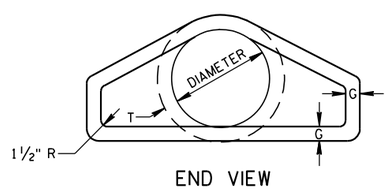

END VIEW

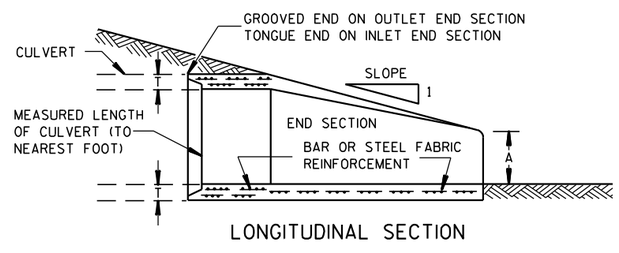

LONGITUDINAL SECTION

CONCRETE ENDWALLS

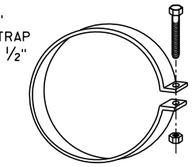

ALTERNATE FOR TYPE 1 CONNECTION

END SECTION CONNECTOR STRAP

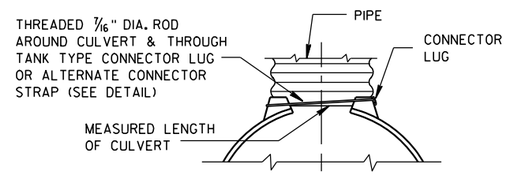

TYPE 1
FOR 12" THRU 24" CORR. PIPE

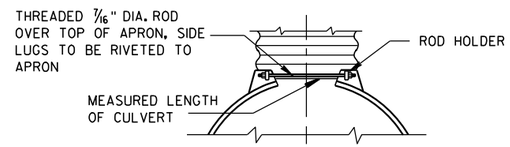

TYPE 2
FOR 30" THRU 96" CORR. PIPE

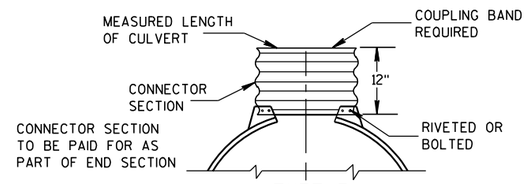

TYPE 3
FOR 42" THRU 96" CORR. PIPE

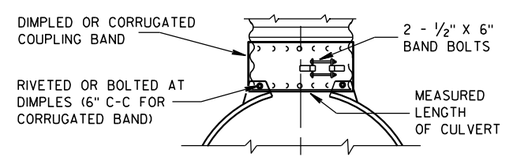

TYPE 5
ALTERNATE FOR:
ALL SIZES CORRUGATED CIRCULAR PIPE

NOTE: DIMPLED BAND FITS OVER OUTSIDE OF ENDWALL, AND CORRUGATED BAND FITS INSIDE ENDWALL. DIMPLED BAND MAY BE USED WITH HELICALLY CORRUGATED PIPE.

FOR CIRCUMFERENTIALLY CORRUGATED PIPE USE ENDWALL CONNECTION DETAILS 1, 2, 3 OR 5 AS APPLICABLE.

FOR HELICALLY CORRUGATED PIPE USE ENDWALL CONNECTION DETAILS 1, 2 OR 5.

FOR HELICALLY CORRUGATED PIPES WITH TWO CIRCUMFERENTIAL CORRUGATIONS AT EACH END USE ENDWALL CONNECTION DETAILS 1, 2 OR 3.

CONNECTION DETAILS

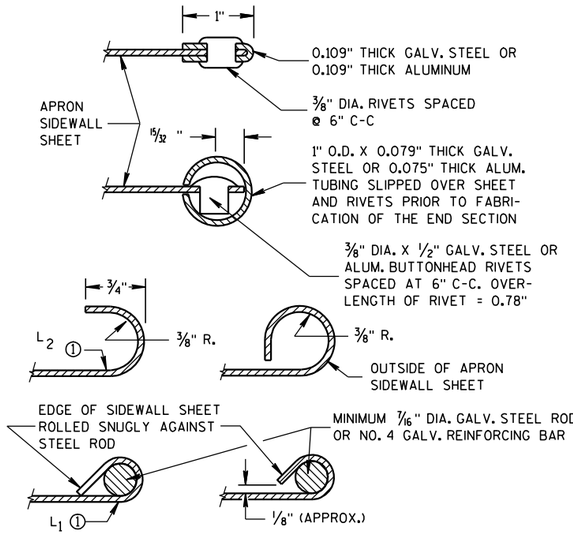

SECTION A-A

GENERAL NOTES

DETAILS OF CONSTRUCTION, MATERIALS AND WORKMANSHIP NOT SHOWN ON THIS DRAWING SHALL CONFORM TO THE PERTINENT REQUIREMENTS OF THE STANDARD SPECIFICATIONS AND THE APPLICABLE SPECIAL PROVISIONS.

CONCRETE CULVERT ENDWALLS MAY NOT BE USED WITH GALVANIZED STEEL OR ALUMINUM CULVERT PIPE OR VISE VERSA. GALVANIZED STEEL OR ALUMINUM ENDWALLS SHALL NORMALLY BE INSTALLED ON CULVERT PIPE OF THE SAME METAL.

ALL THREE PIECE STEEL APRON ENDWALLS FOR 60" DIAMETER PIPE AND LARGER SHALL HAVE 0.109" SIDES AND 0.138" CENTER PANELS. ALL THREE PIECE ALUMINUM APRON ENDWALLS FOR 60" DIAMETER PIPE AND LARGER SHALL HAVE 0.105" SIDES AND 0.134" CENTER PANELS. THE WIDTH OF CENTER PANELS SHALL BE GREATER THAN 20 PERCENT OF THE PIPE PERIMETER.

LAP SEAMS SHALL BE TIGHTLY JOINED BY GALVANIZED RIVETS OR BOLTS FOR STEEL UNITS AND ALUMINUM RIVETS AND BOLTS FOR ALUMINUM UNITS. FOR THE 60" THROUGH 96" DIAMETER APRON ENDWALL SIZES, THE REINFORCED EDGES AND CENTER PANEL SEAMS SHALL BE FURTHER REINFORCED WITH GALVANIZED STEEL OR ALUMINUM STIFFENER ANGLES. THE ANGLES SHALL BE ATTACHED BY GALVANIZED NUTS AND BOLTS FOR STEEL UNITS AND ALUMINUM NUTS AND BOLTS FOR ALUMINUM UNITS.

WHERE TWO OR MORE PIPES WITH APRON ENDWALLS ARE LAID ADJACENT TO EACH OTHER, THEY SHALL BE SEPARATED BY A DISTANCE SUFFICIENT TO PROVIDE A MINIMUM CLEARANCE OF 6 INCHES BETWEEN APRON ENDWALLS.

① FOR PIPE SIZES UP TO 60" DIAMETER, A 180° ROLLED EDGE MAY BE USED INSTEAD OF STEEL ROD REINFORCEMENT. SEE SECTION A-A.

APRON ENDWALLS FOR CULVERT PIPE

STATE OF WISCONSIN
DEPARTMENT OF TRANSPORTATION

APPROVED
11/30/94 — DATE
/S/ Rory L. Rhinesmith — CHIEF ROADWAY DEVELOPMENT ENGINEER
FHWA

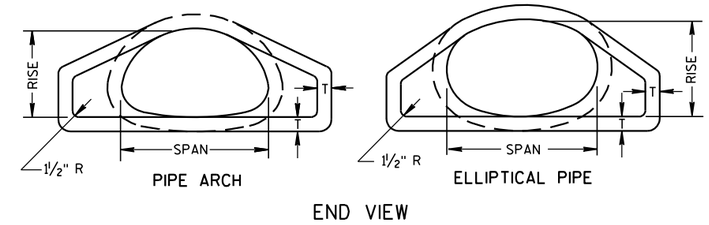

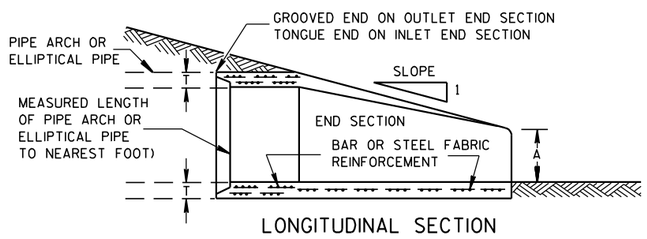

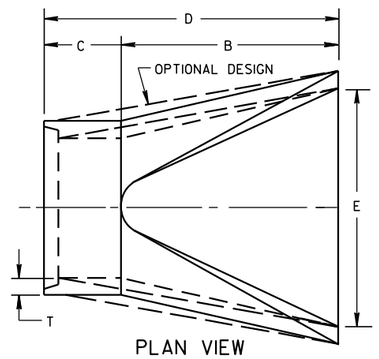

CONCRETE ENDWALLS

2- ⅔" X ½" CORRUGATIONS														
EQUIV. DIA. (Inches)	(Inches)		MIN. THICK. (Inches)		DIMENSIONS (Inches)							APPROX. SLOPE	BODY
	SPAN	RISE	STEEL	ALUM.	A (±1")	B (MAX.)	H (±1")	L (±1½")	L1 ①	L2 ①	W (±2")		
15	17	13	.064	.060	7	9	6	19	14	16	30	2½ to 1	1 Pc.
18	21	15	.064	.060	7	10	6	23	14	19⅜	36	2½ to 1	1 Pc.
21	24	18	.064	.060	8	12	6	28	18	21¾	42	2½ to 1	1 Pc.
24	28	20	.064	.060	9	14	6	32	18	27½	48	2½ to 1	1 Pc.
30	35	24	.079	.075	10	16	6	39	18	37⅝	60	2½ to 1	1 Pc.
36	42	29	.079	.075	12	18	8	46	24	45⅜	75	2½ to 1	1 Pc.
42	49	33	.109	.105	13	21	9	53	24	54¾	85	2½ to 1	2 Pc.
48	57	38	.109	.105	18	26	12	63	24	68	90	2½ to 1	3 Pc.
54	64	43	.109	.105	18	30	12	70	24	72¾	102	2¼ to 1	3 Pc.
60	71	47	.109*	.105*	18	33	12	77	30	82¼	114	2¼ to 1	3 Pc.
66	77	52	.109*	.105*	18	36	12	77	—	—	126	2 to 1	3 Pc.
72	83	57	.109*	.105*	18	39	12	77	—	—	138	2 to 1	3 Pc.

3" X 1" CORRUGATIONS														
EQUIV. DIA. (Inches)	(Inches)		MIN. THICK. (Inches)		DIMENSIONS (Inches)							APPROX. SLOPE	BODY
	SPAN	RISE	STEEL	ALUM.	A (±1")	B (MAX.)	H (±1")	L (±1½")	L1 ①	L2 ①	W (±2")		
48	53	41	.109	.105	18	26	12	63	24	72¾	90	2½ to 1	2 Pc.
54	60	46	.109	.105	18	30	12	70	30	82¼	102	2 to 1	2 Pc.
60	66	51	.109*	.105*	18	33	12	77	—	—	114	1½ to 1	3 Pc.
66	73	55	.109*	.105*	18	36	12	77	—	—	126	1½ to 1	3 Pc.
72	81	59	.109*	.105*	18	39	12	77	—	—	138	2 to 1	3 Pc.
78	87	63	.109*	.105*	22	38	12	77	—	—	148	1½ to 1	3 Pc.
84	95	67	.109*	.105*	22	34	12	77	—	—	162	1½ to 1	3 Pc.
90	103	71	.109*	.105*	22	38	12	77	—	—	174	1½ to 1	3 Pc.
96	112	75	.109*	.105*	24	40	12	77	—	—	174	1½ to 1	3 Pc.

NOTE: ALL SPLICES TO BE LAP RIVETED OR BOLTED.

* EXCEPT CENTER PANEL SEE GENERAL NOTES

REINFORCED CONCRETE PIPE ARCH									
EQUIV. DIA. (Inches)	DIMENSIONS (Inches)								APPROX. SLOPE
	** SPAN	** RISE	T	A	B	C	D	E	
24	29	18	3	8½	39	33	72	48	3 to 1
30	36	22	3½	9½	50	46	96	60	3 to 1
36	44	27	4	11⅛	60	36	96	72	3 to 1
42	51	31	4½	15 13/16	60	36	96	78	3 to 1
48	58	36	5	21	60	36	96	84	3 to 1
54	65	40	5½	25½	60	36	96	90	3 to 1
60	73	45	6	31	60	36	96	96	3 to 1
72	88	54	7	31	60	39	99	120	2 to 1
84	102	62	8	28½	83	19	102	144	2 to 1

REINFORCED CONCRETE ELLIPTICAL PIPE									
EQUIV. DIA. (Inches)	DIMENSIONS (Inches)								APPROX. SLOPE
	** SPAN	** RISE	T	A	B	C	D	E	
24	30	19	3¼	8½	39	33	72	48	3 to 1
30	38	24	3¾	9½	54	18	72	60	3 to 1
36	45	29	4½	11⅛	60	24	84	72	2½ to 1
42	53	34	5	15¾	60	36	96	78	2½ to 1
48	60	38	5½	21	60	36	96	84	2½ to 1
54	68	43	6	25½	60	36	96	90	2½ to 1
60	76	48	6½	30	60	36	96	96	2½ to 1

**NOMINAL SIZE

GENERAL NOTES

DETAILS OF CONSTRUCTION, MATERIALS AND WORKMANSHIP NOT SHOWN ON THIS DRAWING SHALL CONFORM TO THE PERTINENT REQUIREMENTS OF THE STANDARD SPECIFICATIONS AND THE APPLICABLE SPECIAL PROVISIONS.

CONCRETE APRON ENDWALLS MAY NOT BE USED WITH GALVANIZED STEEL OR ALUMINUM CULVERT PIPE OR VISE VERSA. GALVANIZED STEEL OR ALUMINUM APRON ENDWALLS SHALL NORMALLY BE INSTALLED ON CULVERT PIPE OF THE SAME METAL.

ALL THREE PIECE STEEL APRON ENDWALLS FOR 66" X 51" PIPE ARCH AND LARGER SHALL HAVE 0.109" SIDES AND 0.138" CENTER PANELS. ALL THREE PIECE ALUMINUM APRON ENDWALLS FOR 66" X 51" PIPE ARCH AND LARGER SHALL HAVE 0.105" SIDES AND 0.134" CENTER PANELS. THE WIDTH OF CENTER PANELS SHALL BE GREATER THAN 20 PERCENT OF THE PIPE ARCH PERIMETER.

LAP SEAMS SHALL BE TIGHTLY JOINED BY GALVANIZED RIVETS OR BOLTS FOR STEEL UNITS AND ALUMINUM RIVETS AND BOLTS FOR ALUMINUM UNITS. FOR THE 77" X 52" THROUGH 112" X 75" APRON ENDWALL SIZES, THE REINFORCED EDGES AND CENTER PANEL SEAMS SHALL BE FURTHER REINFORCED WITH GALVANIZED STEEL OR ALUMINUM STIFFENER ANGLES. THE ANGLES SHALL BE ATTACHED BY GALVANIZED NUTS AND BOLTS FOR STEEL UNITS AND ALUMINUM NUTS AND BOLTS FOR ALUMINUM UNITS.

WHERE TWO OR MORE PIPES WITH APRON ENDWALLS ARE LAID ADJACENT TO EACH OTHER, THEY SHALL BE SEPARATED BY A DISTANCE SUFFICIENT TO PROVIDE A MINIMUM CLEARANCE OF 6 INCHES BETWEEN APRON ENDWALLS.

① FOR PIPE ARCH SIZES UP TO 73" X 55" A 180° ROLLED EDGE MAY BE USED INSTEAD OF STEEL ROD REINFORCEMENT. SEE SECTION A-A.

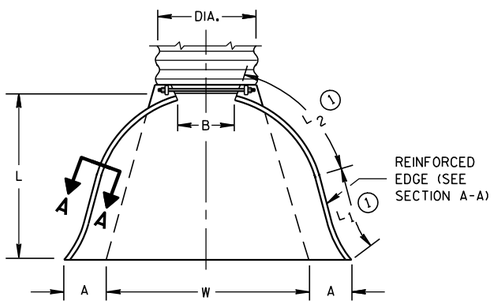

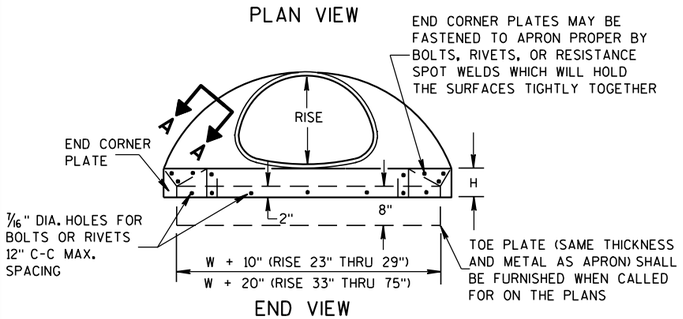

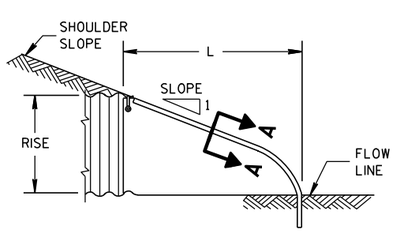

SIDE ELEVATION

METAL ENDWALLS

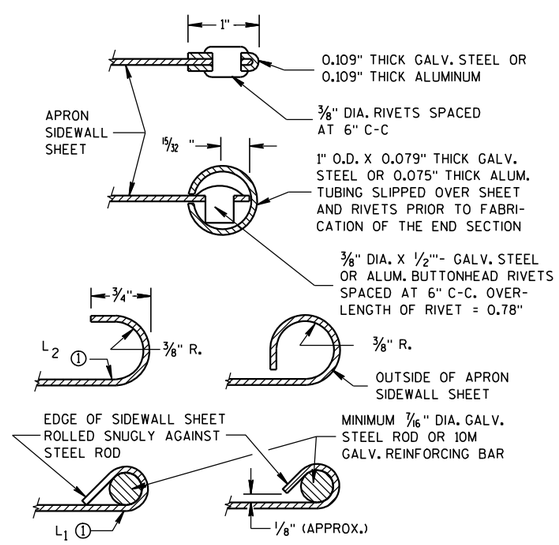

SECTION A-A

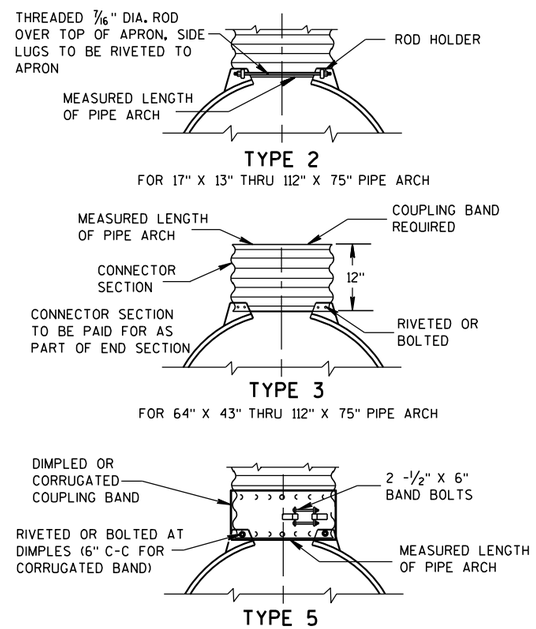

NOTE: DIMPLED BAND FITS OVER OUTSIDE OF ENDWALL, AND CORRUGATED BAND FITS INSIDE ENDWALL.

CONNECTION DETAILS

APRON ENDWALLS FOR PIPE ARCH AND ELLIPTICAL PIPE

STATE OF WISCONSIN
DEPARTMENT OF TRANSPORTATION

APPROVED

11/30/94 — DATE

/S/ Rory L. Rhinesmith — CHIEF ROADWAY DEVELOPMENT ENGINEER

FHWA

6

S.D.D. 8 F 2-1

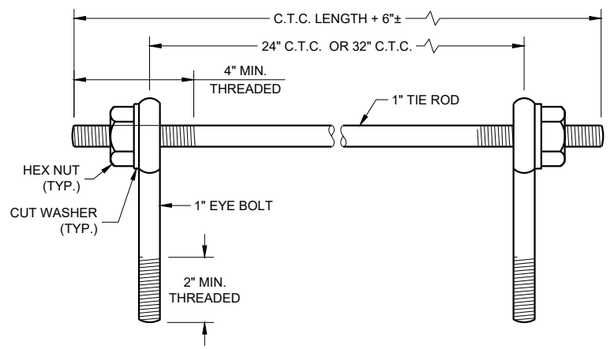

EYE BOLTS AND TIE ROD

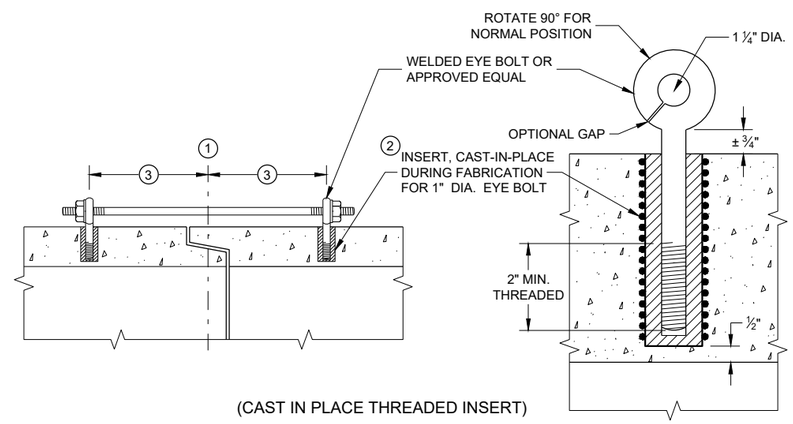

(CAST IN PLACE THREADED INSERT)

LONGITUDINAL SECTIONS

EYE BOLT AND TIE ROD ASSEMBLY (ALTERNATE NO. 1)

GENERAL NOTES

DETAILS OF CONSTRUCTION, MATERIALS, AND WORKMANSHIP NOT SHOWN ON THIS DRAWING SHALL CONFORM TO THE PERTINENT REQUIREMENTS OF THE STANDARD SPECIFICATIONS AND APPLICABLE SPECIAL PROVISIONS.

CONCRETE CULVERT AND STORM SEWER PIPE SHALL BE TIED TOGETHER IN THE MANNER ILLUSTRATED BY THIS DETAIL AT LOCATIONS DESIGNATED IN THE STANDARD SPECIFICATIONS AND THE PLAN. THE CONTRACTOR MAY USE EITHER ALTERNATE 1, 2 OR 3 FOR DRAINAGE STRUCTURES. ONLY ALTERNATE 1 AND 3 MAY BE USED FOR CATTLE PASSES, UNLESS OTHERWISE STATED IN THE CONTRACT. THE MATERIALS, FABRICATION AND WORK NECESSARY TO TIE THE PIPE BY THIS DETAIL WILL BE CONSIDERED INCIDENTAL TO THE PIPE AND APRON ENDWALLS IF REQUIRED.

DETAILED DRAWINGS FOR PROPOSED ALTERNATE DESIGNS FOR JOINT TIES SHALL BE SUBMITTED TO THE ENGINEER FOR APPROVAL.

JOINT TIES TO BE HOT-DIP GALVANIZED PER ASTM A 153.

1. CENTER LINE OF TONGUE AND GROOVE OR BELL AND SPIGOT JOINTS.
2. THE INSIDE OF THE THREADED INSERTS SHALL BE CLEAN TO ALLOW THE INSERTION OF THREADED EYE BOLTS.
3. HOLES SHALL BE CAST-IN-PLACE OR DRILLED PER THE APPLICABLE DETAIL, AND EQUAL DISTANCE FROM THE CENTERLINE OF THE JOINT.
4. BOLT PROJECTION INSIDE OF PIPE SHALL NOT EXCEED 2 INCHES.
5. OPENING TO BE ROD DIAMETER PLUS 1 INCH.
6. LENGTH ADEQUATE TO EXTEND TO WITHIN ½ INCH OF THE INNER SURFACE OF THE PIPE.
7. EYE BOLT LENGTH DETERMINED BY WALL THICKNESS, BELL THICKNESS AND BOLT PROJECTION INSIDE PIPE.

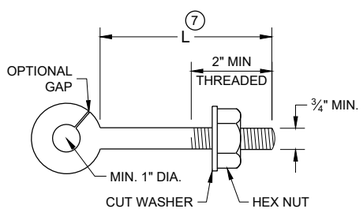

EYE BOLT 7

NOTE: TWO EYE BOLTS MAY BE USED WITH A 30" OR 38" LONG THREADED ROD IN LIEU OF THE 90° BENT TIE ROD.

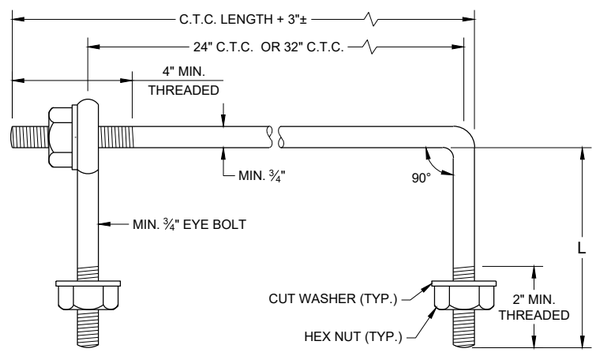

EYE BOLT AND TIE ROD

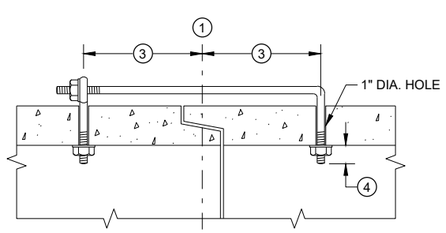

(TONGUE AND GROOVE PIPE)

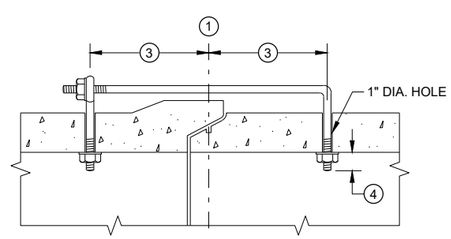

(MODIFIED BELL PIPE)

LONGITUDINAL SECTION

(JOINT TIES FOR 18" TO 66" DIA. CONCRETE PIPE)

EYE BOLT AND TIE ROD ASSEMBLY (ALTERNATE NO. 2)

ADJUSTABLE TIE ROD TABLE

PIPE DIAMETER	TIE ROD DIAMETER	D	L_1	N
12 - 60	⅝	⅝	5	½
66 - 84	¾	¾	5	½
90 - 144	1	1	7	1 7/16

DIMENSIONS SHOWN ARE IN INCHES

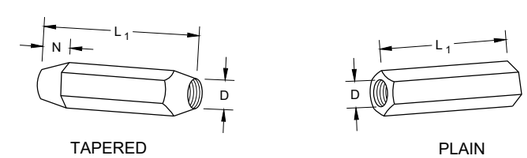

RIGHT AND LEFT THREADS

SLEEVE NUTS

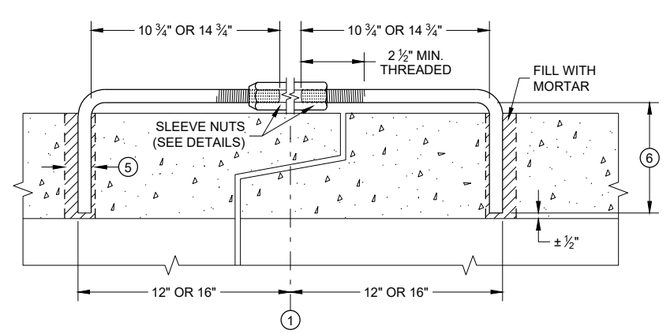

LONGITUDINAL SECTION

ADJUSTABLE TIE ROD (ALTERNATE NO. 3)

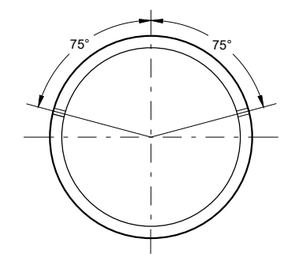

PLACEMENT OF (2) CAST-IN-PLACE INSERTS OR HOLES DURING FABRICATION FOR PIPE SECTIONS REQUIRING TIE RODS

TRANSVERSE SECTION

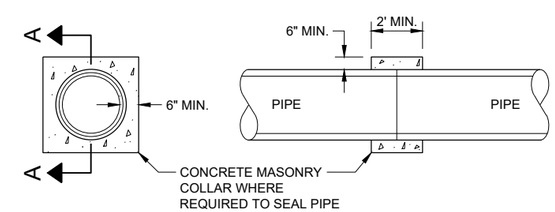

SECTION A - A

CONCRETE COLLAR DETAIL

JOINT TIES FOR CONCRETE PIPE AND CONCRETE COLLAR DETAIL

STATE OF WISCONSIN
DEPARTMENT OF TRANSPORTATION

APPROVED
November 2021 — DATE
/S/ Rodney Taylor — ROADWAY STANDARDS DEVE ENGINEER
FHWA

6

SDD 08F04 - 08

DIMENSIONS IN INCHES											
PIPE DIA.	A	B	C	D	E	F	G	H	J	L	Z
**4	6	12	5¼	9	8	32	36	11	2⅜	6½	4
6	8	14	7¼	11	10	42	44	13	3⅝	8½	6

**APRON ENDWALL FOR 6 INCH DIAMETER PIPE MAY BE SUBSTITUTED FOR THIS SIZE PROVIDED THE HOLE IN THE HEADWALL IS SIZED AND LOCATED TO CONFORM TO THE 4 INCH DIAMETER PIPE DIMENSIONS (C & J)

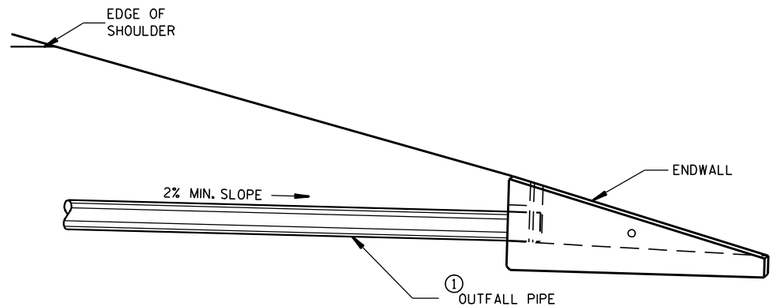

INSTALLATION DETAIL

GENERAL NOTES

DETAILS OF CONSTRUCTION, MATERIALS AND WORKMANSHIP NOT SHOWN ON THIS DRAWING SHALL CONFORM TO THE PERTINENT REQUIREMENTS OF THE STANDARD SPECIFICATIONS AND THE APPLICABLE SPECIAL PROVISIONS.

ALTERNATIVE DESIGNS WHICH PROVIDE EQUIVALENT CAPACITY AND STRENGTH MAY BE USED WHEN APPROVED BY THE ENGINEER. ENDWALL MAY BE EITHER PRECAST OR CAST-IN-PLACE CONCRETE.

THE UNDERDRAIN PIPE SHALL BE FULLY INSERTED AND SEALED INTO THE ENDWALL WITH CEMENT MORTAR PRIOR TO BACKFILLING AROUND THE STRUCTURE.

THE UPPERMOST POINT OF THE ENDWALL SHALL BE PLACED FLUSH WITH THE ROADWAY SLOPE. ADJACENT EMBANKMENT SLOPES SHALL BE SHAPED TO FIT THE SIDES AND TOE OF THE ENDWALL. EXACT PLACEMENT OF THE OUTFALL PIPE AND ENDWALL SHALL BE DETERMINED BY THE ENGINEER TO MATCH THE ELEVATIONS AND FLOW DIRECTION OF THE ROADSIDE DITCH.

① THE OUTFALL PIPE UNDERDRAIN AND FITTINGS SHALL CONFORM TO THE REQUIREMENTS OF THE SPECIFICATION FOR POLY (VINYL CHORIDE) (PVC) PLASTIC DRAIN, WASTE AND VENT PIPE AND FITTINGS, ASTM DESIGNATION: D 2665, SCHEDULE 40 PVC OR THE STANDARD SPECIFICATION FOR TYPE PSM POLY (VINYL CHORIDE) (PVC) SEWER PIPE AND FITTINGS, ASTM DESIGNATION: D 3034, TYPE PSM SDR 23.5 PVC SEWER PIPE, ALL JOINTS SHALL BE SOLVENT WELDED.

THE OUTFALL PIPE INCLUDING ALL FITTINGS AND THE RODENT SHIELD SHALL BE MEASURED AND PAID FOR AS PIPE UNDERDRAIN UNPERFORATED.

② THE RODENT SHIELD SHALL BE A PVC GRATE SIMILAR TO THIS DETAIL. THE GRATE IS COMMERCIALLY AVAILABLE AS A FLOOR STRAINER. A PIPE COUPLING IS REQUIRED FOR THE ATTACHMENT OF THIS SHIELD TO THE OUTFALL PIPE. THE SHIELD SHALL BE FASTENED TO THE PIPE COUPLING WITH TWO OR MORE NO. 10 X 1-INCH STAINLESS STEEL SHEET METAL SCREWS.

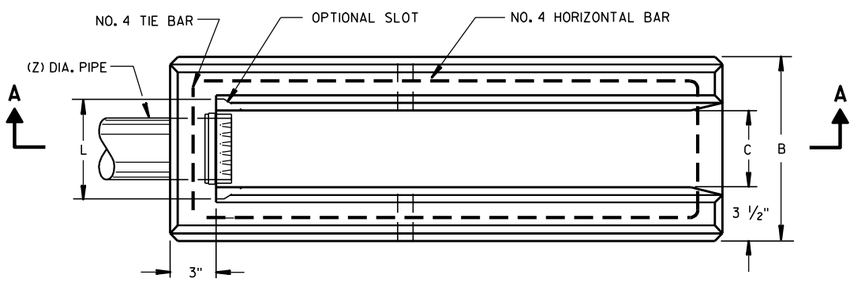

PLAN VIEW

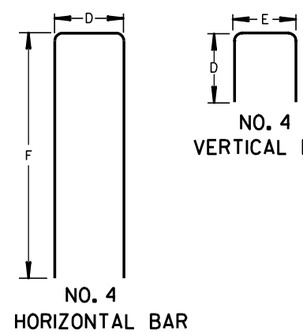

BAR STEEL REINFORCEMENT DETAILS

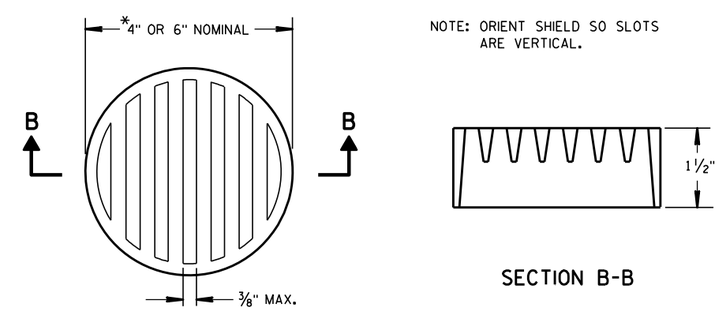

SECTION B-B

② RODENT SHIELD

*NOTE: DIMENSIONS ARE APPROXIMATE. THE GRATE IS SIZED TO FIT INTO A PIPE COUPLING.

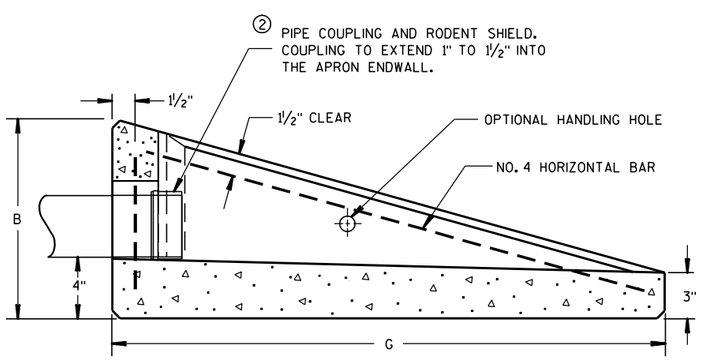

SECTION A-A

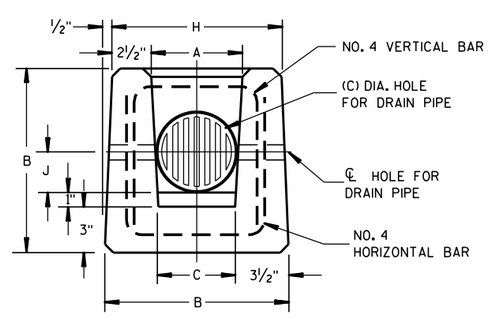

END VIEW

CONCRETE APRON ENDWALL FOR UNDERDRAIN

REINFORCED CONCRETE APRON ENDWALL FOR PIPE UNDERDRAIN	
STATE OF WISCONSIN DEPARTMENT OF TRANSPORTATION	
APPROVED 3/10/98 DATE	/S/ Rory L. Rhinehart CHIEF ROADWAY DEVELOPMENT ENGINEER
FHWA	

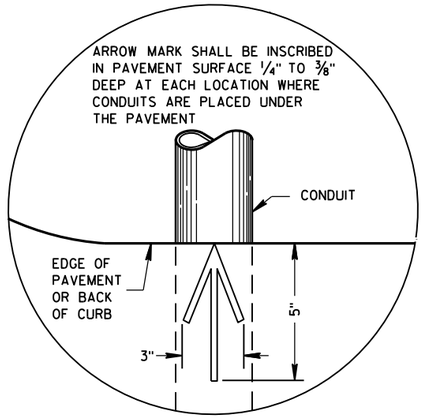

PLAN VIEW

ARROW MARK

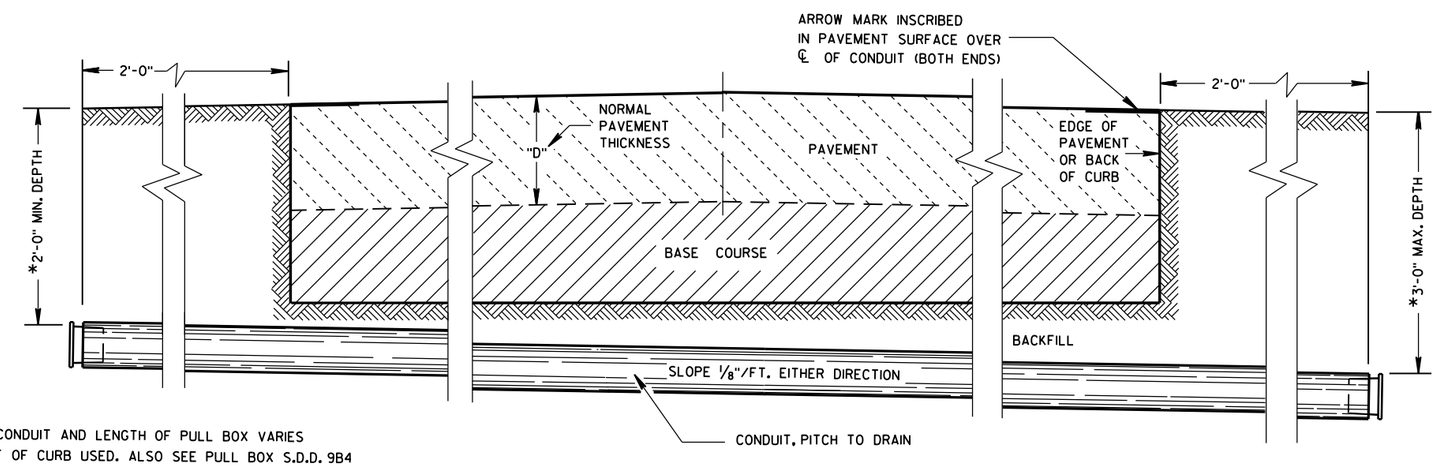

*DEPTH OF CONDUIT AND LENGTH OF PULL BOX VARIES WITH HEIGHT OF CURB USED. ALSO SEE PULL BOX S.D.D. 9B4

SIDE ELEVATION

DETAIL FOR CONDUIT UNDER PAVED HIGHWAYS

GENERAL NOTES

DETAILS OF CONSTRUCTION, MATERIALS AND WORKMANSHIP NOT SHOWN ON THIS DRAWING SHALL CONFORM TO THE PERTINENT REQUIREMENTS OF THE CONTRACT.

METALLIC (STANDARD SPECIFICATION 652.2.2) OR NONMETALLIC (STANDARD SPECIFICATION 652.2.3) CONDUIT SHALL BE FURNISHED AND PLACED AS SHOWN.

DEPTH OF CONDUIT INSTALLED BELOW THE TRAVELED WAY SHALL BE 24 INCHES MINIMUM AND 36 INCHES MAXIMUM.

DEPTH OF CONDUIT INSTALLED THAT IS NOT BELOW THE TRAVELED WAY SHALL BE 18 INCHES MINIMUM AND 36 INCHES MAXIMUM.

ANY EXCEPTION TO THE MAXIMUM DEPTH SHALL BE ONLY WITH THE WRITTEN APPROVAL OF THE ENGINEER.

THE TRENCH SHALL NOT BE BACKFILLED PRIOR TO INSPECTION OF THE CONDUIT.

ALL METALLIC CONDUIT RACEWAY ENDS SHALL BE REAMED AND THREADED.

ALL METALLIC CONDUIT IN WHICH WIRE OR CABLE IS TO BE INSTALLED SHALL BE BUSHED WITH APPROVED THREADED BUSHINGS BEFORE INSTALLATION OF THE WIRE OR CABLE.

ALL METALLIC CONDUITS IN WHICH WIRE OR CABLE IS NOT TO BE INSTALLED SHALL BE CAPPED WITH THREADED PROTECTIVE CAPS, AS APPROVED BY THE ENGINEER.

ALL NONMETALLIC CONDUIT SHALL BE CAPPED OR PLUGGED IMMEDIATELY AFTER INSTALLATION AND SHALL REMAIN CAPPED OR PLUGGED UNTIL WIRE/CABLES ARE INSTALLED.

NONMETALLIC CONDUITS IN WHICH WIRE OR CABLE IS NOT BEING INSTALLED SHALL REMAIN CAPPED OR PLUGGED.

BENDING OF PVC ELECTRICAL CONDUIT SHALL BE ACCOMPLISHED BY USING A BLANKET OR EMERSION TYPE TANK DESIGNED FOR THE PURPOSE OF BENDING PVC ELECTRICAL CONDUIT.

ALL CUT ENDS SHALL BE TRIMMED INSIDE AND OUTSIDE TO REMOVE ALL ROUGH EDGES ON NONMETALLIC CONDUIT. (SEE NEC 347.5)

WHEN REQUIRED TO CONNECT NONMETALLIC CONDUIT TO METALLIC CONDUIT, ONLY U.L. LISTED ADAPTER FITTINGS SHALL BE USED.

PRIOR TO CONDUIT ACCEPTANCE, CONDUIT CAPS OR PLUGS SHALL BE REMOVED, AND THE CAPS, PLUGS AND CONDUIT ENDS SHALL BE THOROUGHLY CLEANED AND THEN THE CAPS OR PLUGS REINSTALLED TO ENSURE THAT THE CAPS OR PLUGS CAN BE EASILY REMOVED IN THE FUTURE.

ALL CONDUIT BEING FURNISHED AND INSTALLED SHALL HAVE THE U.L. LABEL FIRMLY ATTACHED.

CONDUIT RUNS SHALL BE THE SAME SIZE OF CONDUIT FROM ONE END TO THE OTHER (FROM PULL BOX TO PULL BOX-OR-JUNCTION BOX TO JUNCTION BOX-OR-BASE TO BASE, ETC.).

TRACER WIRE SHALL BE INSTALLED AS STATED IN THE STANDARD SPECIFICATION, ITEM 652.3.1.1.

ALL CONDUIT RUNS SHALL BE STRAIGHT (WITHOUT BENDS) FROM PULL BOX TO PULL BOX, PULL BOX TO BASE AND BASE TO BASE AS SHOWN ON THE PLANS.

CONDUIT

STATE OF WISCONSIN
DEPARTMENT OF TRANSPORTATION

APPROVED
March, 2017 — /S/ Ahmet Demirbilek
DATE — STATE ELECTRICAL
FHWA

TABLE OF NOMINAL DIMENSIONS AND WEIGHTS

DIMENSION IN INCHES		NON- CONDUCTIVE PULL BOX	
BOX DIAMETER ** (INSIDE)	A	24	24
BOX OVERALL OUTSIDE DIAMETER	B	27	27
BOX LENGTH	C	36	42
FRAME OPENING	D	22 ½	22 ½
WEIGHT IN POUNDS *			
COVER		50	50
BOX ONLY		75	85

* THE ACTUAL WEIGHT OF THE COVER OR BOX ONLY MAY VARY NOT TO EXCEED 100 LBS INDIVIDUALLY.

** DIAMETER VARIES FROM TOP TO BOTTOM WITH THE DIAMETER LARGER AT THE BOTTOM TO PREVENT FROST HEAVE.

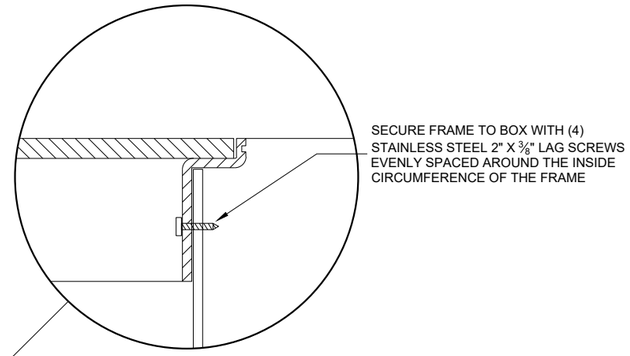

INSTALLED IN SOD OR CRUSHED AGGREGATE

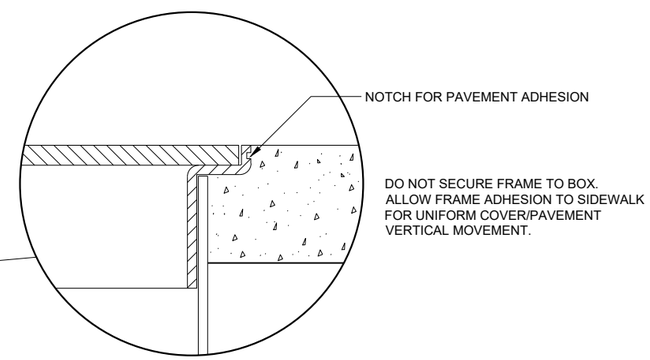

INSTALLED IN SIDEWALK

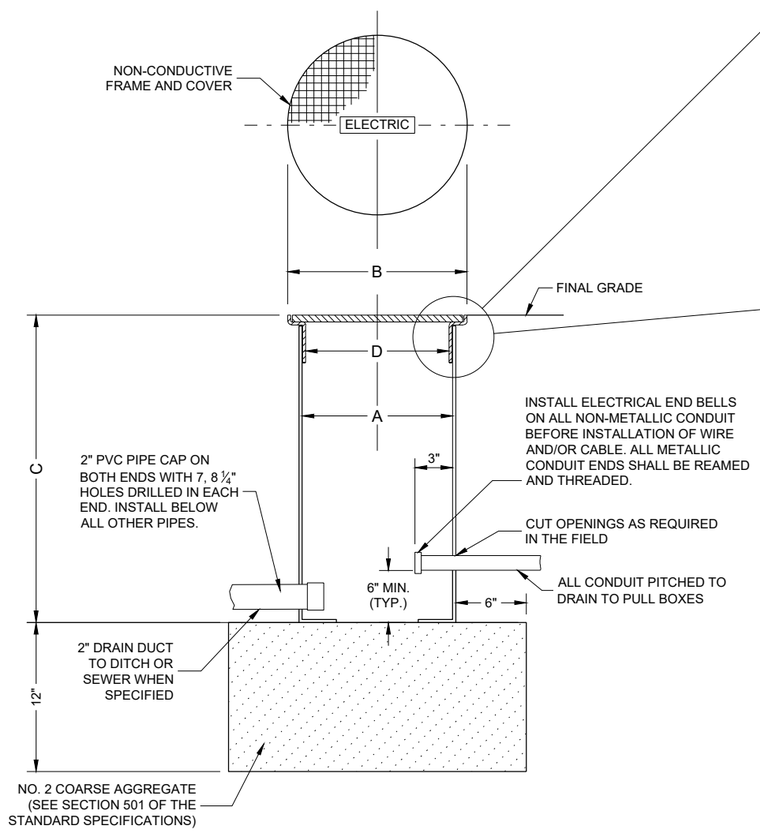

NON-CONDUCTIVE PULL BOX

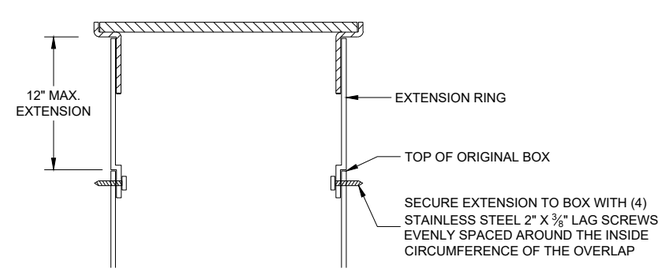

BOX EXTENSION

GENERAL NOTES

DETAILS OF CONSTRUCTION, MATERIALS AND WORKMANSHIP NOT SHOWN ON THIS DRAWING SHALL CONFORM TO THE PERTINENT REQUIREMENTS OF THE CONTRACT.

ALL BOXES, FRAMES AND COVERS SHALL BE SUITABLE FOR TIER 15 LOADING AS SPECIFIED IN ANSI/SCTE 77.

PROVIDE AN OPENING FOR TOOL ASSISTED COVER REMOVAL NOT LARGE ENOUGH TO PERMIT PASSAGE OF A SPHERE MORE THAN ½" DIAMETER

ENSURE COVER SURFACE IS SKID RESISTANT WITH A COEFFICIENT OF FRICTION OF AT LEAST 0.5 AND VERTICAL SURFACE DICONTINUITIES LESS THAN ¼".

COVER SHALL BE MAGNETICALLY LOCATABLE.

BOXES AND EXTENSIONS ARE TRIMMABLE FOR CUSTOM LENGTHS. TRIMMED PIECES SHALL MAINTAIN A UNIFORM LENGTH.

ENTRANCE HOLES INTO PULL BOXES SHALL BE CUT WITH A CIRCULAR HOLE SAW OR HYDRAULIC CONDUIT PUNCH. HOLE SIZE SHALL BE THE OUTSIDE DIAMETER OF THE CONDUIT THAT IS TO FIT IN THE OPENING PLUS NO MORE THAN ¼".

THE CONTRACTOR SHALL NOT INSTALL WIRE IN ANY PULL BOX UNTIL ITS INSTALLATION HAS BEEN INSPECTED AND ACCEPTED BY THE ENGINEER.

ALL METALLIC CONDUIT IN WHICH WIRE AND/OR CABLE IS TO BE INSTALLED, SHALL BE BUSHED BEFORE INSTALLATION OF THE WIRE AND/OR CABLE.

ENTIRE BOX MUST BE CONSTRUCTED OF NON-CONDUCTIVE MATERIALS WITH THE EXCEPTION OF STAINLESS STEEL FASTENERS AND MAGNETIC LOCATABLE DEVICE.

WHEN A PULL BOX IS INSTALLED IN CRUSHED AGGREGATE SHOULDERS, PLACE IT 2-3 INCHES BELOW GRADE AND COVER IT WITH 2-3 INCHES OF CRUSHED AGGREGATE.

LABEL ON COVER SHALL READ "ELECTRIC" FOR SIGNAL AND LIGHTING SYSTEMS, "WISDOT ITS" FOR COMMUNICATIONS AND ITS EQUIPMENT SYSTEMS.

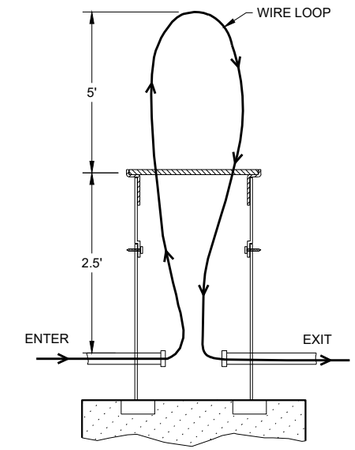

MEASUREMENT DETAIL FOR WIRE/CABLE IN THE PULL BOX

PULL BOXES NON-CONDUCTIVE

STATE OF WISCONSIN
DEPARTMENT OF TRANSPORTATION

APPROVED
May 2022 — DATE
/S/ Ahmet Demirbilek — STATE ELECTRICAL ENGI
FHWA

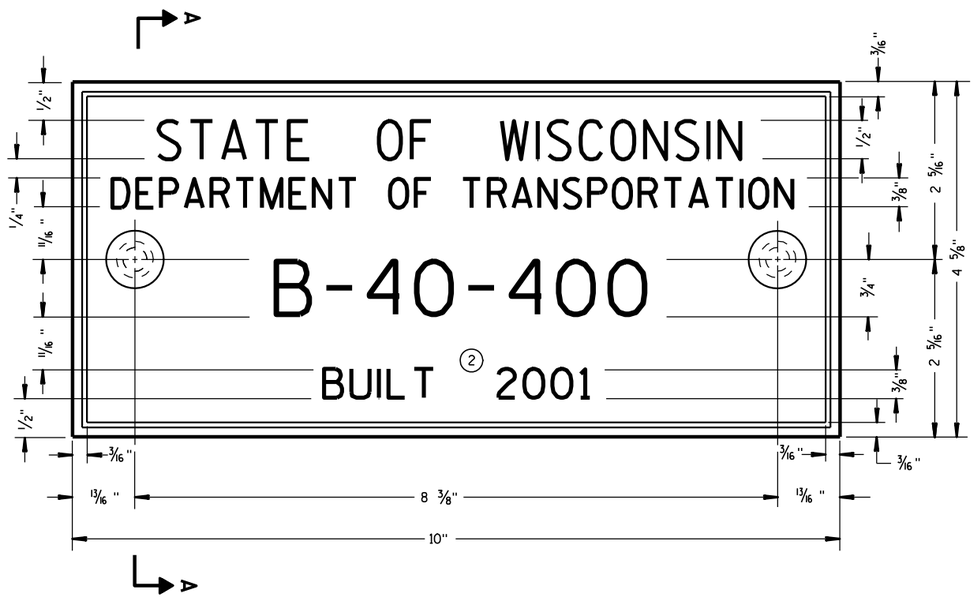

TYPICAL NAME PLATE

(BRIDGES, CULVERTS, AND RETAINING WALLS)

GENERAL NOTES

NAME PLATES TO BE INSTALLED ON BRIDGES, CULVERTS, AND RETAINING WALLS SHALL CONFORM TO THE REQUIREMENTS OF SECTION 502.3.11 OF THE STANDARD SPECIFICATIONS.

THE BRIDGE NUMBER AND YEAR BUILT SHOWN ON THIS DRAWING ARE EXAMPLES ONLY. SEE CONSTRUCTION PLANS FOR INDIVIDUAL NUMBERING AND YEAR BUILT.

① EPOXY RESIN SHALL BE FROM AN APPROVED MANUFACTURER AND USED IN ACCORDANCE WITH MANUFACTURER'S RECOMMENDATIONS.

② REHABILITATION OF AN EXISTING STRUCTURE SHOULD USE THE DATE OF ORIGINAL STRUCTURE CONSTRUCTION.

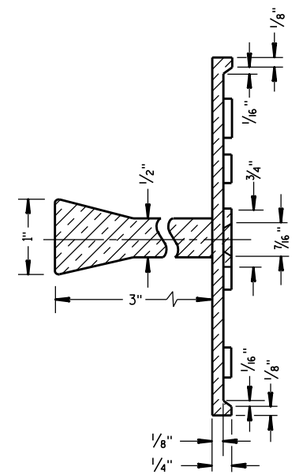

SECTION A-A

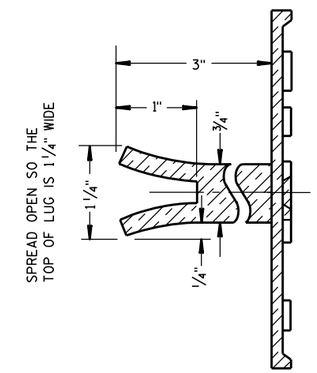

ALTERNATE LUG

6

FOR MULTI-UNIT STRUCTURES
LINE 3 ABOVE SHALL READ

B = BRIDGE
C = CULVERT
R = RETAINING WALL

COUNTY NO.

BRIDGE NO.

UNIT NO. FOR MULTIPLE
UNIT BRIDGE

B-40-400-1A

NUMBERING DESIGNATION
MULTI-UNIT STRUCTURES

① ADHERE ANCHOR LUG TO PRECAST RETAINING WALL WITH EPOXY RESIN.

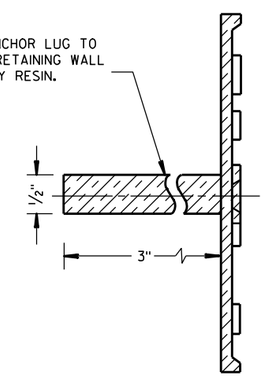

ALTERNATE LUG

(FOR ATTACHMENT TO PRECAST STRUCTURES)

6

NAME PLATE (STRUCTURES)		
STATE OF WISCONSIN DEPARTMENT OF TRANSPORTATION		
APPROVED		
3/26/10 DATE	/S/ Scot Beck-- CHIEF STRUCTURAL DEVELOP	ENGINEER
FHWA		

S.D.D. 12 A 3-10

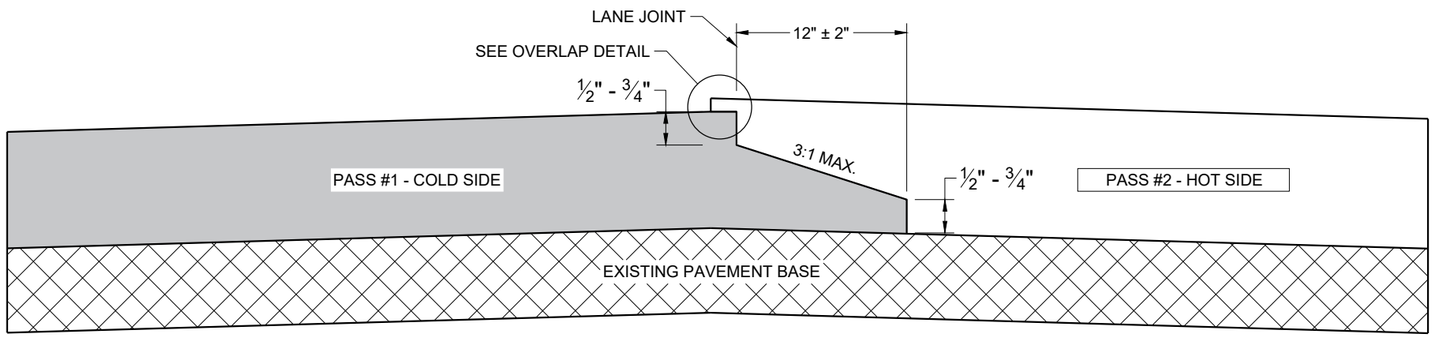

TYPICAL PAVEMENT CROSS SECTION
NOTCHED WEDGE JOINT

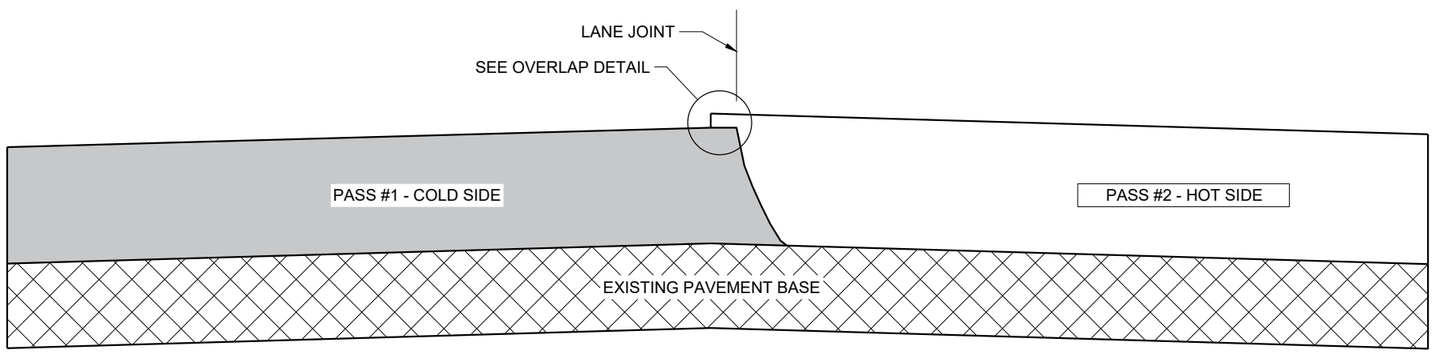

TYPICAL PAVEMENT CROSS SECTION
VERTICAL JOINT

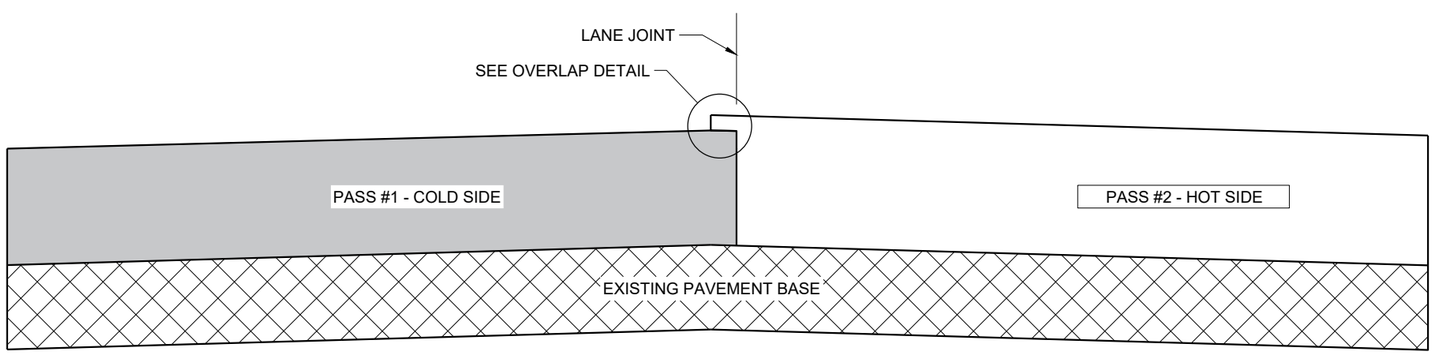

TYPICAL PAVEMENT CROSS SECTION
VERTICAL JOINT (MILLED)

GENERAL NOTES

IN ADDITION TO THE DETAILS PROVIDED IN THIS DRAWING, CONFORM TO STANDARD SPECIFICATION 450.3.2.8 FOR WHEN A NOTCHED WEDGE JOINT IS REQUIRED AND FOR GENERAL JOINT CONSTRUCTION REQUIREMENTS.

FOR ALL LONGITUDINAL JOINTS, ENSURE THE PAVER SCREED OVERLAPS THE PREVIOUSLY PLACED PAVEMENT BY 1" ± 0.5" AND THE HOT SIDE OF THE JOINT REMAINS HIGHER THAN THE COLD SIDE BY APPROXIMATELY 0.1" AFTER FINAL COMPACTION. (IT WILL BE FLUSH WHEN PAVING IN ECHELON.)

ONLY REMOVE THE LONGITUDINAL NOTCHED WEDGE JOINT FOR SMA PAVEMENT OR AS DIRECTED BY THE ENGINEER TO ADDRESS SPECIFIC LENGTHS OF JOINT DAMAGED BY TRAFFIC.

WHEN MILLING BACK OR REMOVING ANY LONGITUDINAL JOINT, LIMIT THE MATERIAL REMOVED TO 2" FROM THE TOP NOTCH OR FROM THE VERTICAL JOINT EDGE ON THE COLD SIDE OF THE JOINT.

USE LONGITUDINAL MILLED JOINT AS PLANS SHOW OR THE AS THE ENGINEER DIRECTS.

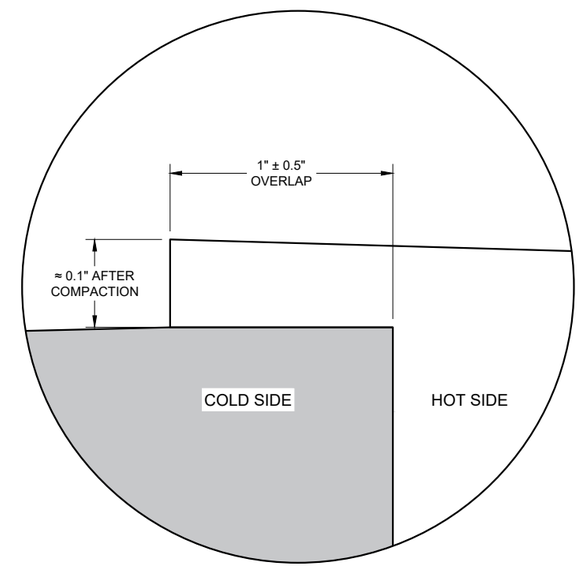

OVERLAP DETAIL (TYPICAL)

6

6

SDD 13C19 - 03

SDD 13C19 - 03

HMA LONGITUDINAL JOINTS

STATE OF WISCONSIN
DEPARTMENT OF TRANSPORTATION

APPROVED
November 2020 /S/ Steven Hefel
DATE HMA PAVEMENT ENGIN
FHWA

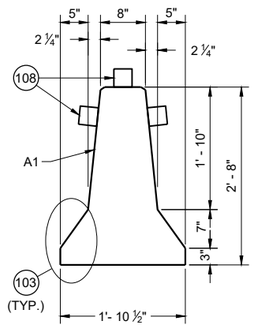

CROSS SECTION

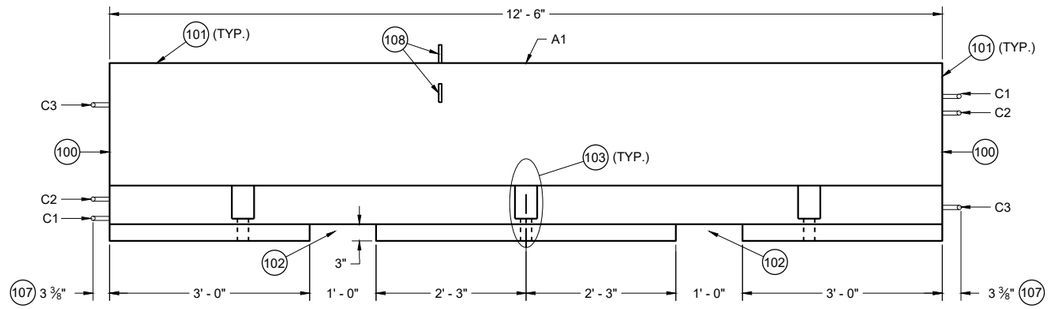

PROFILE VIEW

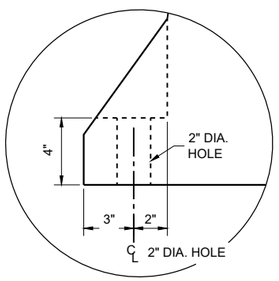

ANCHOR BLOCK DETAIL

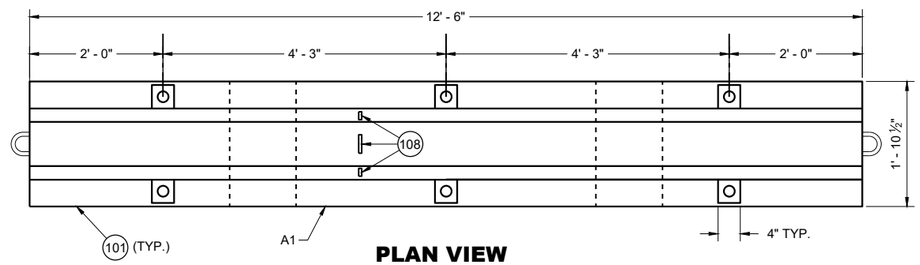

PLAN VIEW

TEMPORARY BARRIER

GENERAL NOTES

PLACE BARRIER ON PAVED SURFACE. BEFORE PLACEMENT OF TEMPORARY BARRIER, REMOVE ALL LOOSE MATERIAL FROM PAVED SURFACE.

LOOP BARS C1, C2 AND C3 ARE NOT FOR PLACEMENT OR MOVEMENT OF BARRIER.

100 PERMANENTLY FORM INTO ONE END OF BARRIER THE FOLLOWING INFORMATION:
- A. TYPE OF BARRIER: WI-CBTP
- B. MANUFACTURER
- C. DATE OF MANUFACTURE (MONTH AND YEAR)

101 1" OPTIONAL CHAMFER

102 SEE LIFTING SLOT DETAIL

103 SEE ANCHOR BLOCK DETAIL

104 1 ¾" MIN. CLEAR COVER

105 2" MIN. CLEAR COVER

106 1" MIN. CLEAR COVER

107 ± ⅛" MEASURED FROM FACE OF CONCRETE BARRIER TO OUTSIDE OF LOOP BAR (TYP.)

108 USE DELINEATORS CONFORMING TO SECTION 633 OF THE STANDARD SPECIFICATIONS. CONTRACTOR MY USE ALTERNATE SHAPES AND HOUSING. INSTALL DELINEATORS ACCORDING TO MANUFACTURERS INSTRUCTION. INSTALL YELLOW REFLECTORS WHEN BARRIER IS LOCATED LEFT OF TRAFFIC AND WHITE WHEN BARRIER IS LOCATED RIGHT OF TRAFFIC. SPACE DELINEATORS A MAXIMUM OF 25 FEET APART, PROVIDE TOP MOUNTED DELINEATORS IN ADDITION TO SIDE MOUNTED DELINEATORS ON BARRIER INSTALLATIONS LOCATED ON A CURVED ALIGNMENT LONGER THAT 200 FEET AND ON BARRIERS USED TO SEPARATE OPPOSING TRAFFIC.

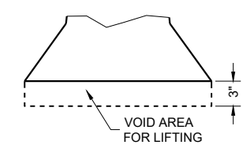

LIFTING SLOT DETAIL (TYP.)

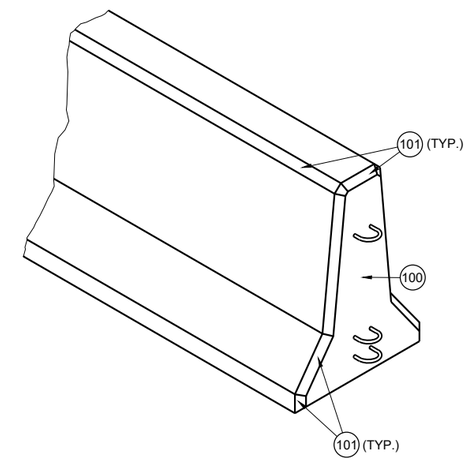

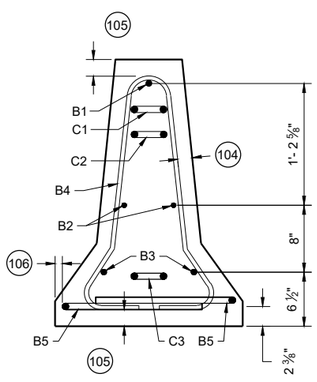

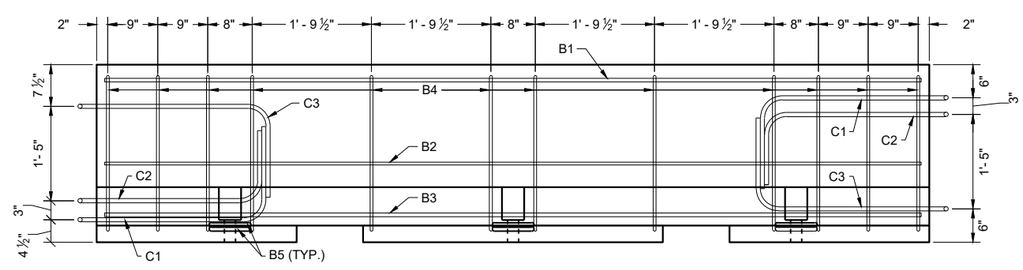

PROFILE VIEW

TEMPORARY BARRIER REINFORCEMENT

CONCRETE BARRIER TEMPORARY PRECAST, 12' - 6"

STATE OF WISCONSIN
DEPARTMENT OF TRANSPORTATION

6

SDD 14B07-16a

6

SDD 14B07-16a

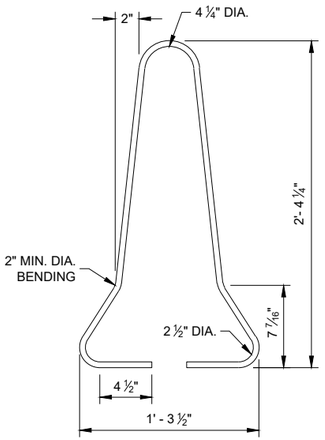

B4 BAR DETAIL

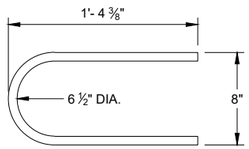

B5 BAR DETAIL

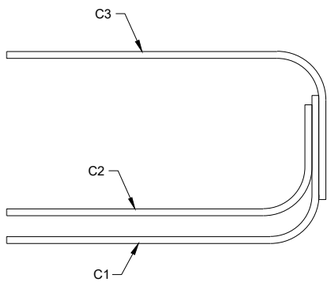

PROFILE VIEW

LOOP BAR ASSEMBLY

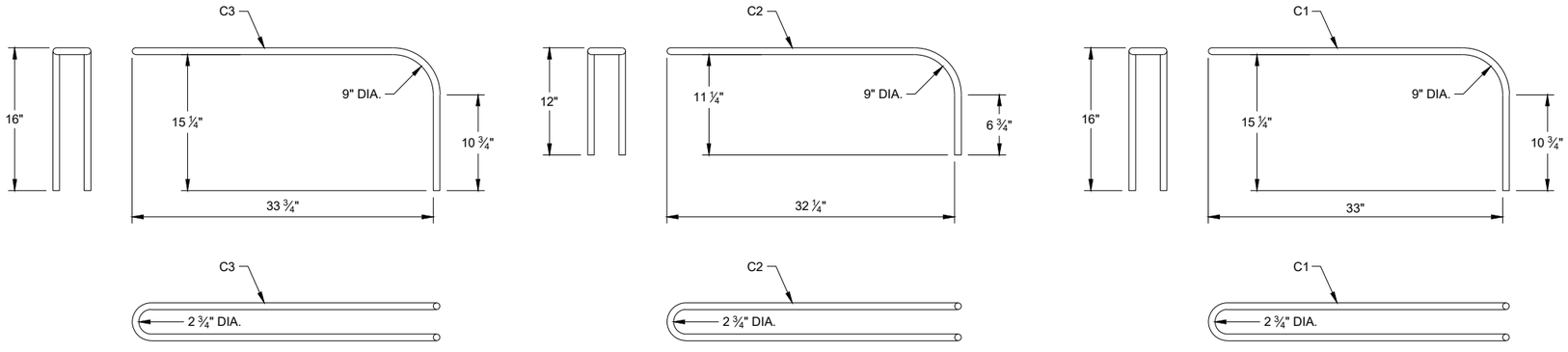

C BAR DETAILS

CONCRETE BARRIER TEMPORARY PRECAST, 12' - 6"

STATE OF WISCONSIN
DEPARTMENT OF TRANSPORTAT

6

SDD 14B07-16b

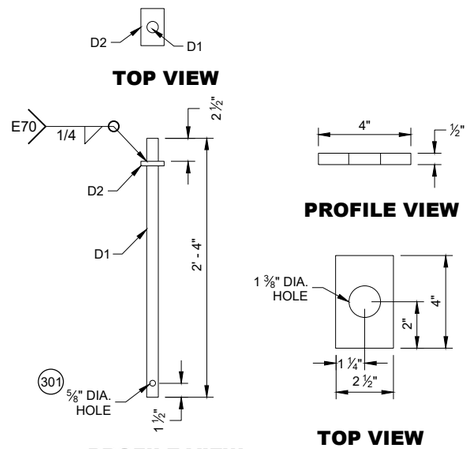

CONNECTOR PIN ASSEMBLY

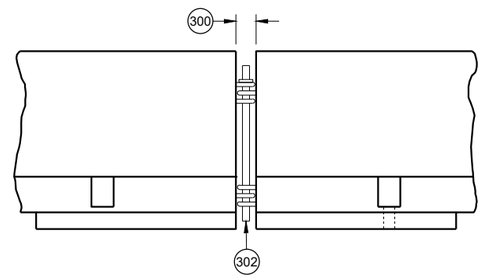

CONNECTING TEMPORARY BARRIER SECTIONS

GENERAL NOTES

300 SET WITH 3 ⅝" WOOD BLOCK.

301 HOLE IS OPTIONAL.

302 CONNECTOR PIN ASSEMBLY.

303 CONCRETE PAVEMENT, APPROACH SLAB, OR DECK.

304 CONCRETE DECK.

305 DO NOT USE ON CONCRETE BRIDGE DECK WITH ASPHALT OVERLAY OR CONCRETE PAVEMENT WITH ASPHALT OVERLAY.

306 MINIMUM OF 2" OF ASPHALT.

307 ASPHALT ANCHOR PIN ASSEMBLY

308 IF DRILLING A PILOT HOLE, THE MAX, DIA. OF THE HOLE IS 3/4"

309 WHEN THERE IS ASPHALT OVERLAYING CONCRETE PAVEMENT, A 1 5/8" DIA. PILOT HOLE CAN BE DRILLED INTO THE OVERLAY AND CONCRETE. IF NEEDED DRILL A 3/4" PILOT HOLE IN BASE COURSE.

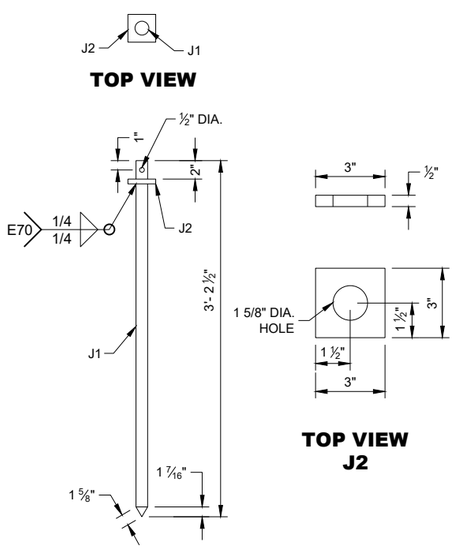

PROFILE VIEW

ASPHALT ANCHOR PIN ASSEMBLY

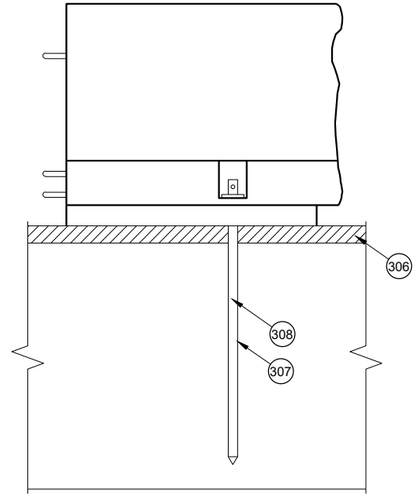

SIDE VIEW

ASPHALT ANCHOR INSTALLATION THROUGH ASPHALT PAVEMENT

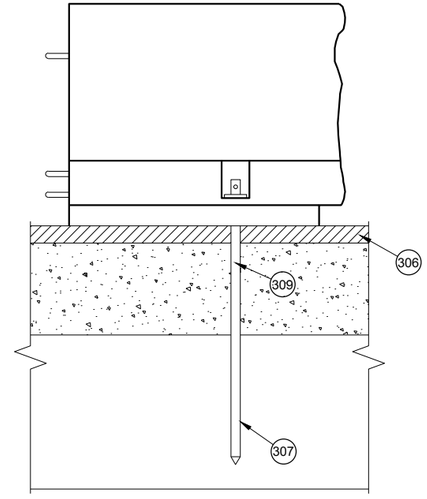

SIDE VIEW

ASPHALT ANCHOR INSTALLATION THROUGH ASPHALT OVERLAY ON TOP OF CONCRETE PAVEMENT

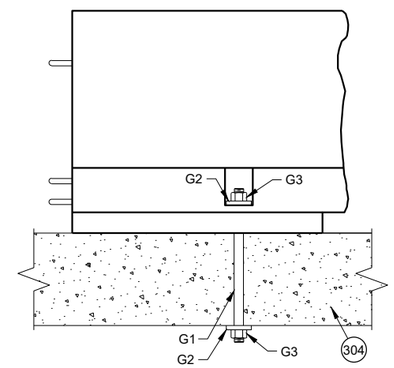

SIDE VIEW

THROUGH BOLT ANCHOR INSTALLATION 305

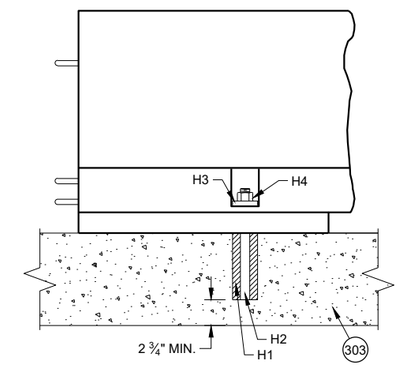

SIDE VIEW

ADHESIVE ANCHOR INSTALLATION 305

CONCRETE BARRIER TEMPORARY PRECAST, 12' - 6"

STATE OF WISCONSIN
DEPARTMENT OF TRANSPORTATION

6

SDD 14B07-16c

6

SDD 14B07-16c

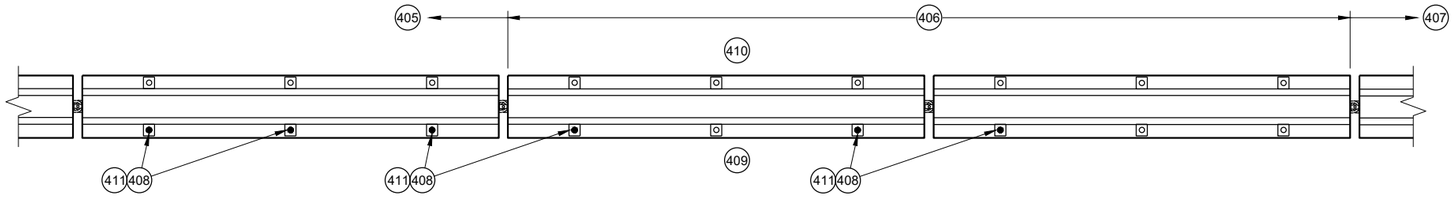

PLAN VIEW

TRANSITION FROM FREE STANDING TO ANCHORED BARRIER

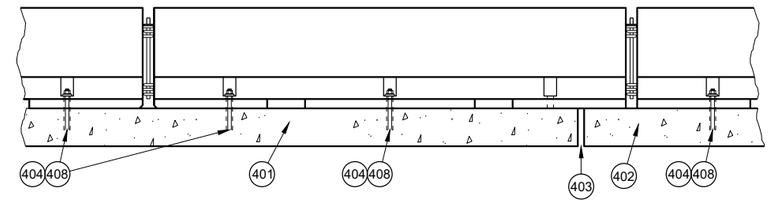

PROFILE VIEW

ANCHORED BARRIER NEAR EXPANSION JOINT (400)

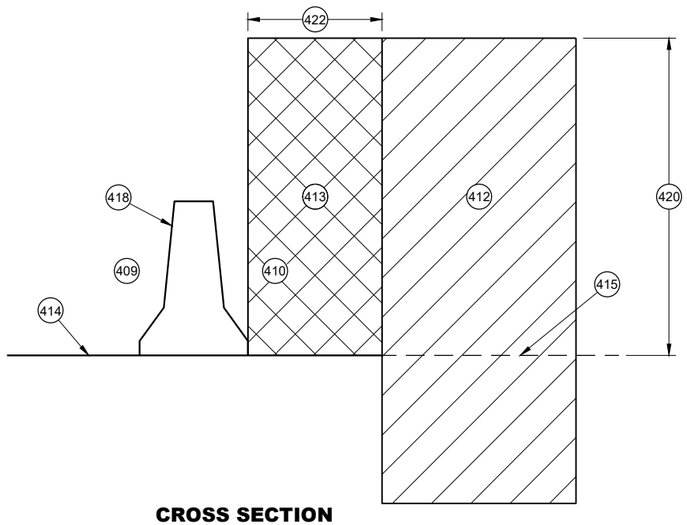

CROSS SECTION

FREE STANDING BARRIER

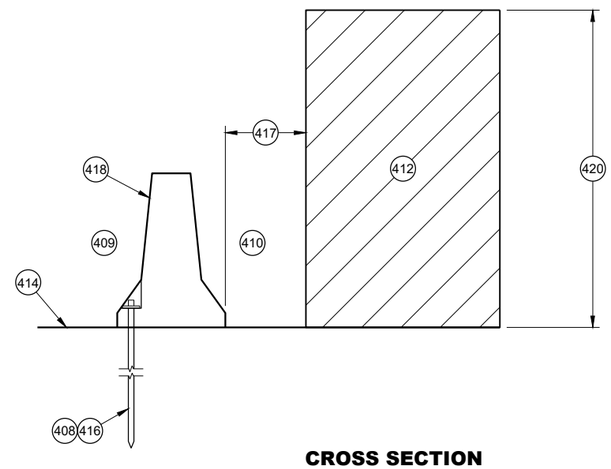

CROSS SECTION

ANCHORED BARRIER FOR OBJECTS ABOVE THE GRADE LINE AND NEAR THE BARRIER

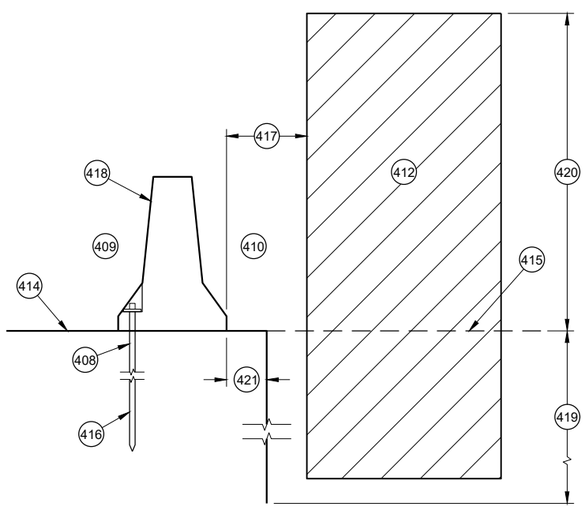

CROSS SECTION

ANCHORED BARRIER NEAR VERTICAL DROP OFF

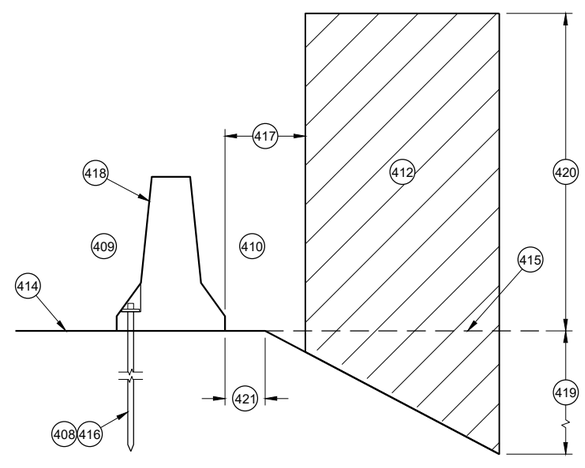

CROSS SECTION

ANCHORED BARRIER NEAR A SLOPE

GENERAL NOTES

(400) NO SINGLE CONCRETE BARRIER SECTION SHALL BE ANCHORED TO BOTH THE BRIDGE DECK AND THE APPROACH SLAB. ALL ANCHOR BOLT LOCATIONS SHALL BE ANCHORED TO THE DECK IN ACCORDANCE WITH THE DETAIL. NO MORE THAN ONE ANCHOR BOLT SHALL BE ELIMINATED FROM A BARRIER SECTION WHEN SPANNING AN EXPANSION JOINT.

(401) CONCRETE DECK

(402) CONCRETE DECK OR APPROACH SLAB.

(403) EXPANSION JOINT

(404) ADHESIVE ANCHOR SHOWN. SEE ANCHOR DETAILS.

(405) ANCHORED TEMPORARY BARRIER

(406) TRANSITION FROM ANCHORED TEMPORARY BARRIER TO FREE STANDING

(407) FREE STANDING BARRIER

(408) REMOVE ALL ANCHORS WHEN NO LONGER NEEDED. FILL CONCRETE PAVEMENTS, DECKS AND APPROACH SLABS WITH NON-SHRINK COMMERCIAL GROUT FROM THE APPROVED PRODUCT LIST. FILL ASPHALT PAVEMENTS WITH ASTM D6690 TYPE II RUBBERIZED CRACK FILLER.

(409) TRAFFIC SIDE

(410) NON-TRAFFIC SIDE

(411) ANCHOR LOCATION. SEE ANCHORING DETAILS.

(412) WORK AREA

(413) AREA FREE OF OBJECTS AND WORKERS

(414) GRADE LINE

(415) EXTENDED GRADE LINE

(416) ANCHORED TEMPORARY BARRIER. SEE BOLT THROUGH DECK, REMOVABLE ADHESIVE ANCHOR, OR AN ASPHALT ANCHOR ROD DETAILS FOR MORE INFORMATION. ASPHALT ANCHOR ROD SHOWN.

(417) WHEN OBJECTS EXTEND ABOVE THE GRADE. A MINIMUM OF 1 FOOT IS REQUIRED FROM BACK OF BARRIER TO OBJECT.

(418) OBJECTS ARE NOT TO BE PLACED ON, MOUNTED TO, OR ALLOWED TO LEAN AGAINST THE BARRIER WITHOUT WRITTEN PERMISSION OF THE PROJECT ENGINEER.

(419) DEPTHS OF 3 FEET OR MORE.

(420) Y = 6.5'

(421) OFFSET FROM BACK OF BARRIER EDGE:

CONCRETE PAVEMENT	0.5'
ASPHALT	0.5'

(422) POSTED SPEED (MPH):

45 OR GREATER	4.0'
40 OR LOWER	2.0'

CONCRETE BARRIER TEMPORARY PRECAST, 12' - 6"

STATE OF WISCONSIN
DEPARTMENT OF TRANSPORTATION

6

SDD 14B07-16d

GENERAL NOTES

500 EXISTING RIGID BARRIERS (VARIES)

501 TEMPORARY BARRIER

502 SEE OTHER DETAIL ON HOW TO ANCHOR TEMPORARY BARRIER (BARRIER ASPHALT ANCHOR SHOWN).

503 ANCHORS ARE REQUIRED ON BOTH SIDE OF THE TEMPORARY BARRIER.

504 NESTED RAILS ARE REQUIRED ON BOTH SIDES OF THE TEMPORARY BARRIER FOR ALL INSTALLATIONS.

505 TRAFFIC TRAVELS FROM PERMANENT BARRIER TO TEMPORARY BARRIER.

506 TRAFFIC TRAVELS FROM TEMPORARY BARRIER TO PERMANENT BARRIER.

507 VERTICAL BARRIER

508 SAFETY SHAPE BARRIER

509 SINGLE SLOPE BARRIER

510 CAP END PLATE PLACED FLUSH WITH UPSTREAM END OF RIGID BARRIER.

511 BENT THRIE BEAM TO FIT.

512 THRIE BEAM PIECES ARE OFFSET 15 ¼" TO PREVENT INTERFERENCE FROM THE ANCHORS ON OPPOSING SIDES.

513 TWO (2) P1, P2 AND P3 ARE REQUIRED

514 FIVE (5) N1, N2 AND N3 ARE REQUIRED

515 TWO (2) R1, R2 AND R3 ARE REQUIRED

516 CUT WOOD BLOCK TO FIT.

517 SEE THRIE BEAM RAIL TERMINAL CONNECTOR DETAIL ASSEMBLY.

518 CAP ASSEMBLY

519 4" MAX. GAP BETWEEN TEMPORARY BARRIER AND RIGID BARRIER.

520 ALL TWELVE SPLICE HOLES REQUIRE M1 AND M2

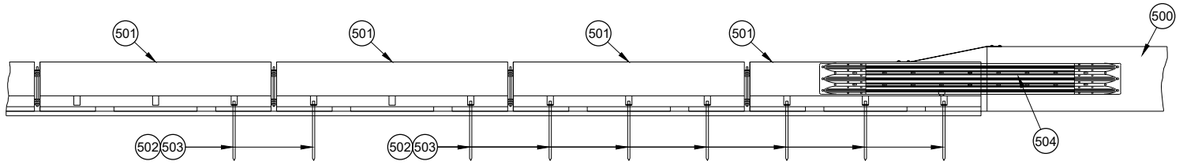

PROFILE VIEW

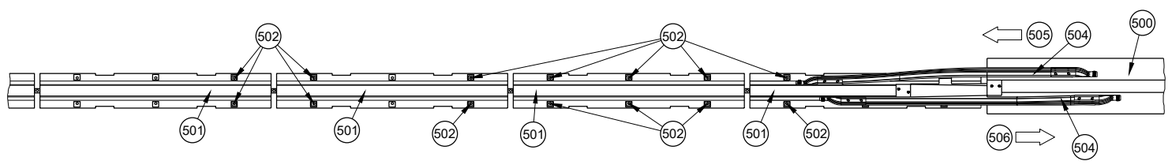

PLAN VIEW
TRANSITION TO RIGID BARRIER

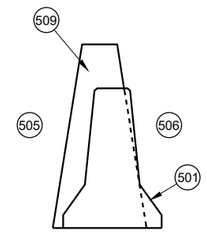

CROSS SECTION TEMPORARY BARRIER PLACEMENT SINGLE SLOPE

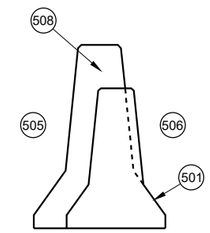

CROSS SECTION TEMPORARY BARRIER PLACEMENT SAFETY SHAPE

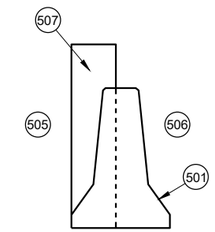

CROSS SECTION TEMPORARY BARRIER PLACEMENT VERTICAL

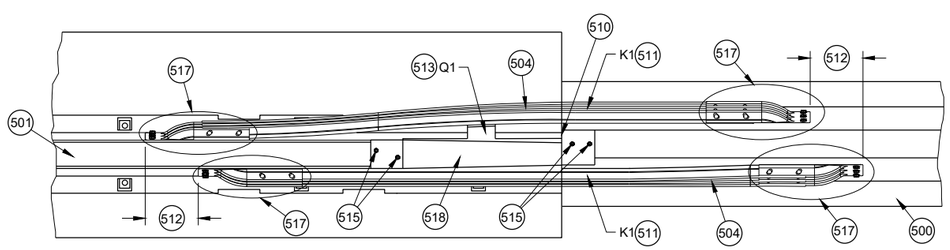

PLAN DETAIL VIEW
TRANSITION TO RIGID BARRIER

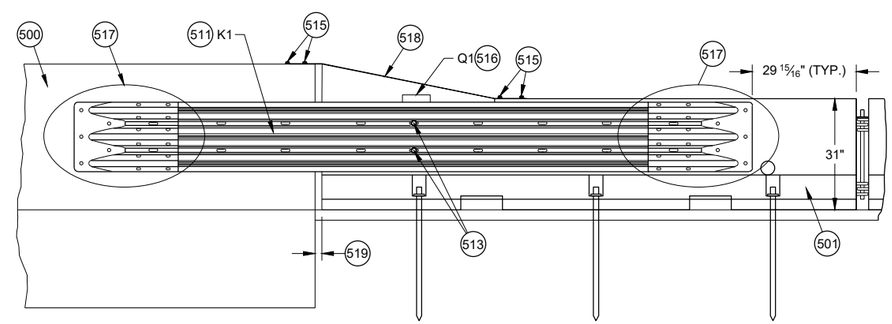

BACK DETAIL VIEW
TRANSITION TO RIGID BARRIER

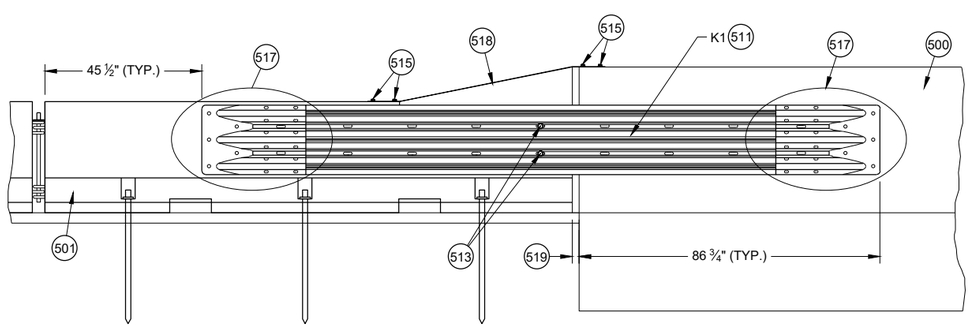

FRONT DETAIL VIEW
TRANSITION TO RIGID BARRIER

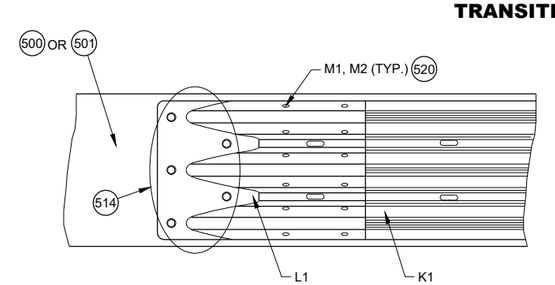

517 DETAIL PLAN VIEW
THRIE BEAM RAIL TERMINAL CONNECTOR ASSEMBLY

CONCRETE BARRIER TEMPORARY PRECAST, 12' - 6"

STATE OF WISCONSIN
DEPARTMENT OF TRANSPORTAT

6
SDD 14B07-16e

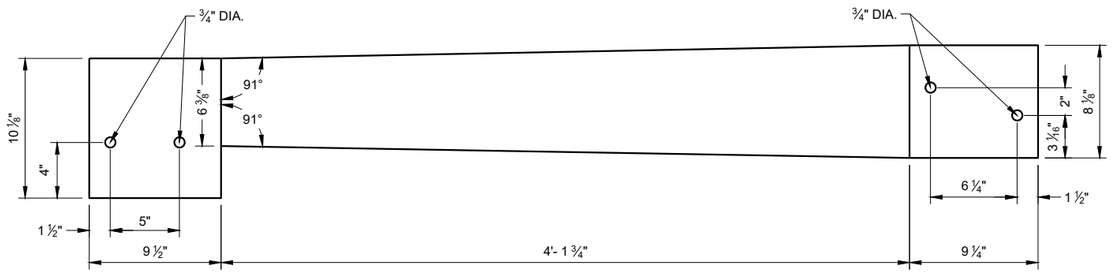

TOP VIEW
S1

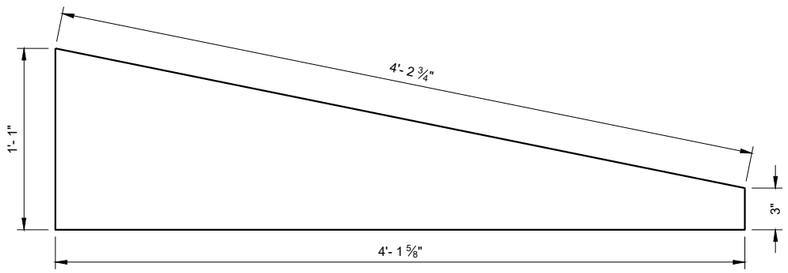

SIDE VIEW
S3

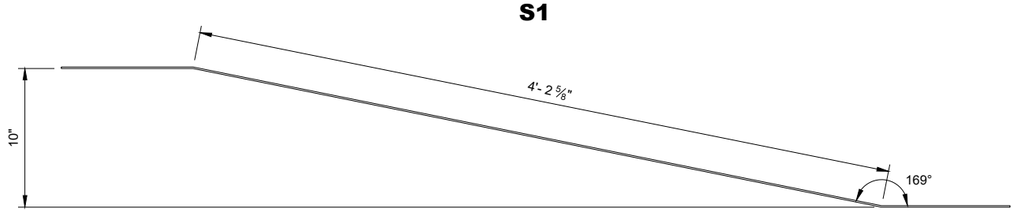

ELEVATION VIEW
S1

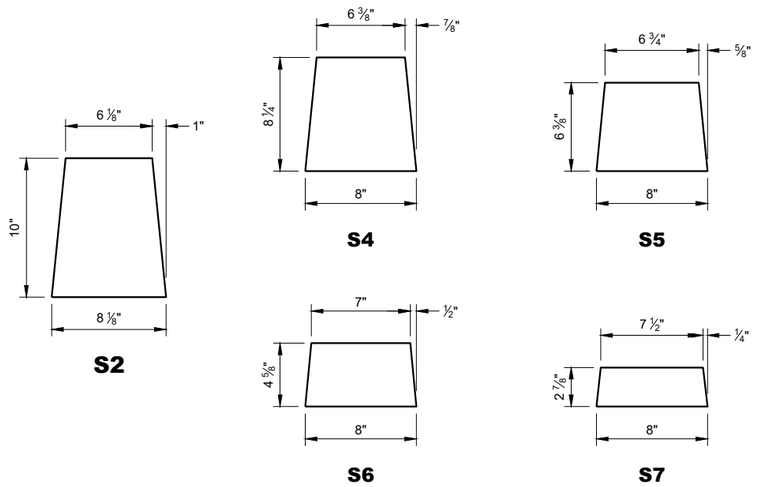

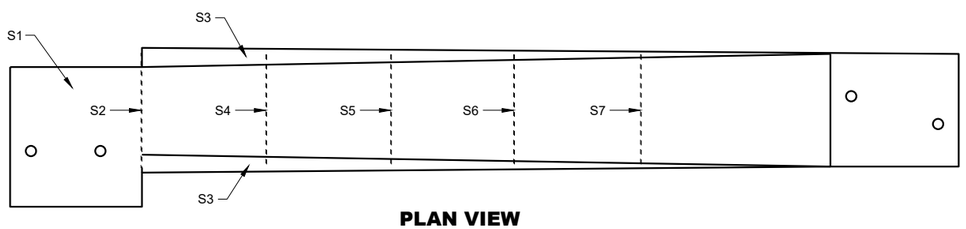

PLAN VIEW

GENERAL NOTES

STITCH WELD GUSSET PLATES AND END PLATES ON THREE SIDES

STITCH WELD TWO SIDE PLATES TO TOP PLATE, END PLATE AND GUSSETS.

600 SIDE PLATES (S3) NOT SHOWN FOR CLARITY.

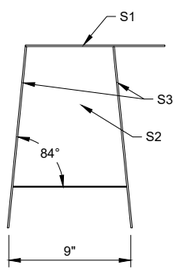

BACK VIEW

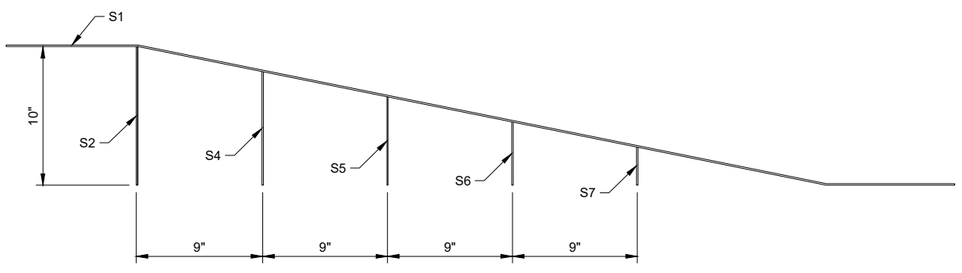

SIDE VIEW 600

42" TOP CAP ASSEMBLY

CONCRETE BARRIER TEMPORARY PRECAST, 12' - 6"

STATE OF WISCONSIN
DEPARTMENT OF TRANSPORTAT

6

SDD 14B07-16f

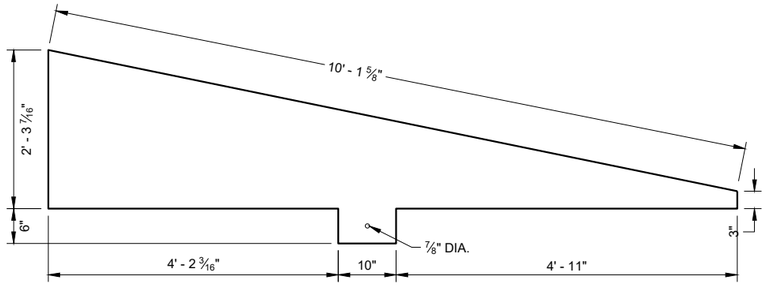

SIDE VIEW
T4

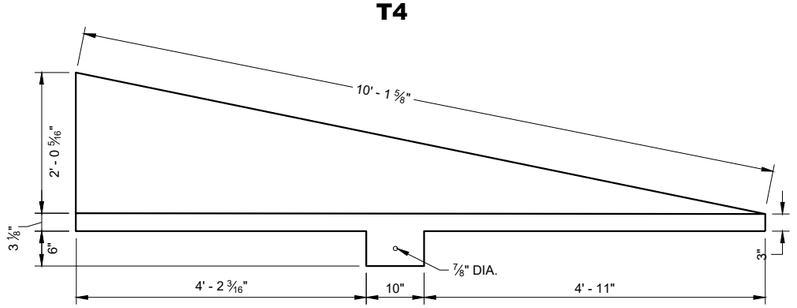

SIDE VIEW
T3

END VIEW

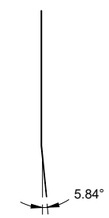

END VIEW

GENERAL NOTES

STITCH WELD GUSSET PLATES AND END PLATES ON THRIE SIDES

STITCH WELD TWO SIDE PLATES TO TOP PLATE, END PLATE AND GUSSETS.

SIDE PLATES, TOP PLATE, END PLATE AND GUSSETS ARE 12 GAUGE ASTM A36 GALVANIZED STEEL.

700 SIDE PLATES (T3 AND T4) NOT SHOWN FOR CLARITY.

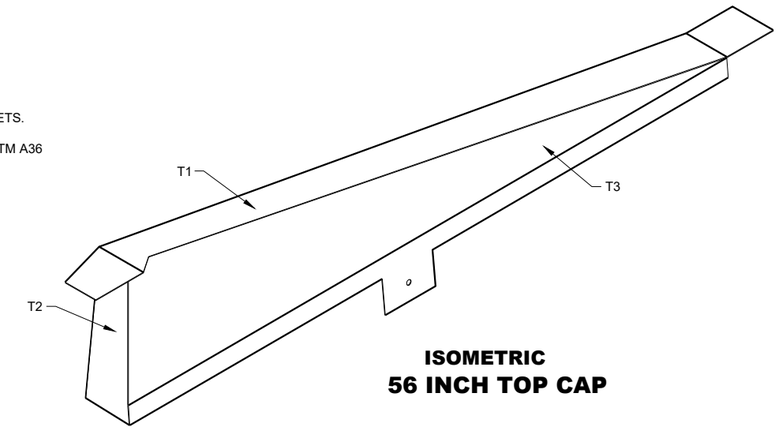

ISOMETRIC
56 INCH TOP CAP

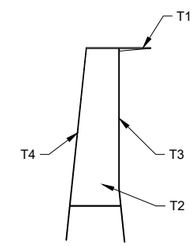

END VIEW
56 INCH TOP CAP

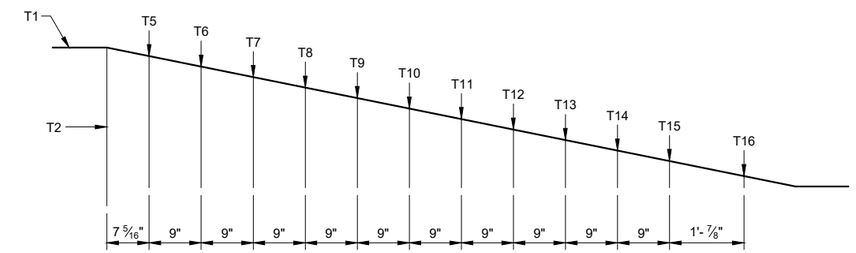

SIDE VIEW
56 INCH TOP CAP 700

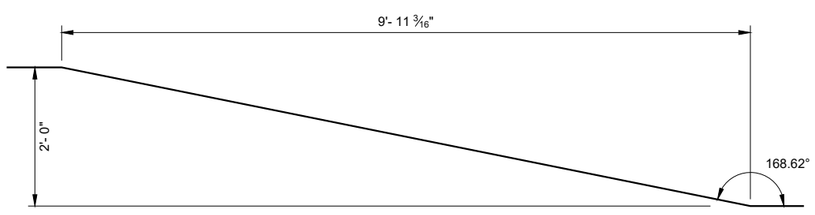

SIDE VIEW
TOP PLATE T1

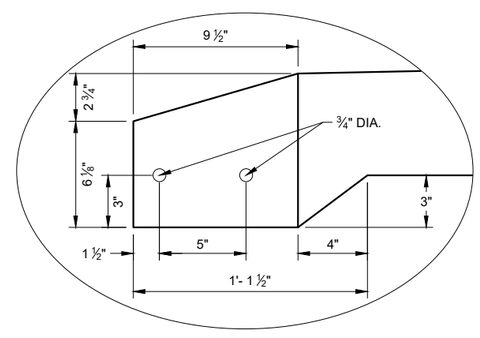

DETAIL "A"

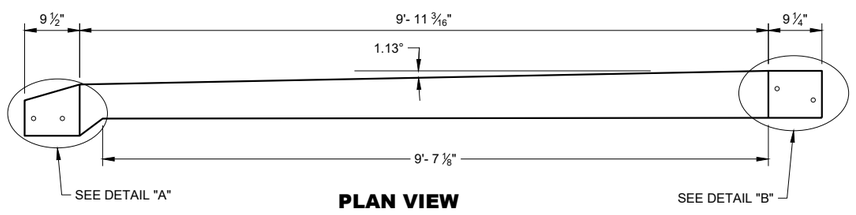

PLAN VIEW
TOP PLATE T1

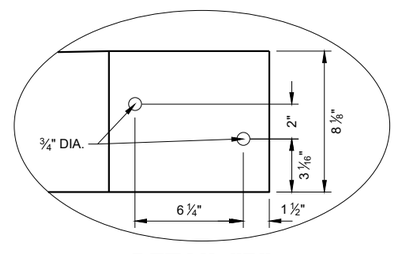

DETAIL "B"

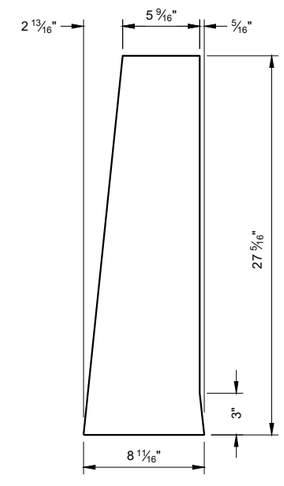

END PLATE T2

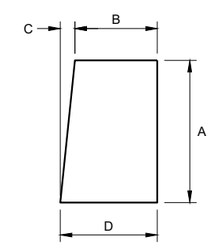

GUSSET PLATES
T5 - T16

GUSSET DIMENSIONS				
GUSSET NO.	A	B	C	D
T5	22 13/16"	5 11/16"	2 5/16"	8 1/16"
T6	21"	5 7/8"	2 3/16"	8 1/16"
T7	19 3/16"	6 1/16"	1 15/16"	8 1/16"
T8	17 3/8"	6 1/4"	1 13/16"	8 1/16"
T9	15 5/16"	6 7/16"	1 9/16"	8 1/16"
T10	13 3/4"	6 5/8"	1 7/16"	8 1/16"
T11	11 15/16"	6 13/16"	1 1/4"	8 1/16"
T12	10 1/8"	7"	1 1/16"	8 1/16"
T13	8 5/16"	7 3/16"	7/8"	8 1/16"
T14	6 1/2"	7 3/8"	11/16"	8 1/16"
T15	4 11/16"	7 9/16"	1/2"	8"
T16	2 7/8"	7 3/4"	1/4"	8"

CONCRETE BARRIER TEMPORARY PRECAST, 12' - 6"

STATE OF WISCONSIN
DEPARTMENT OF TRANSPORTATION

6

SDD 14B07-16g

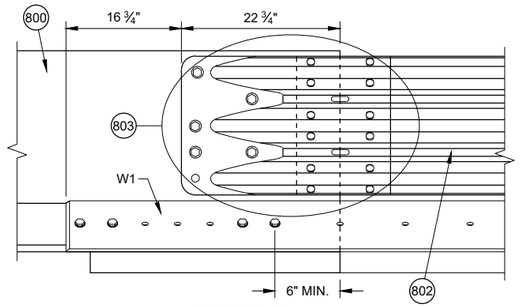

DETAIL D

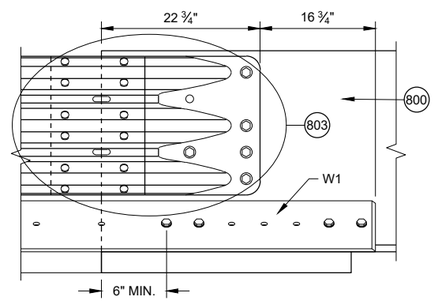

DETAIL E

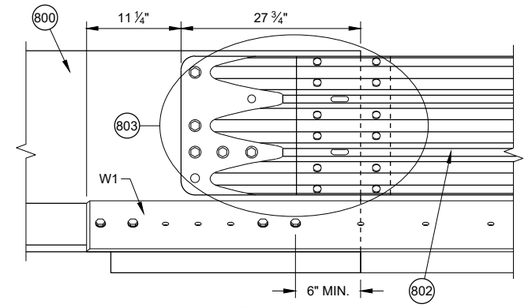

DETAIL F

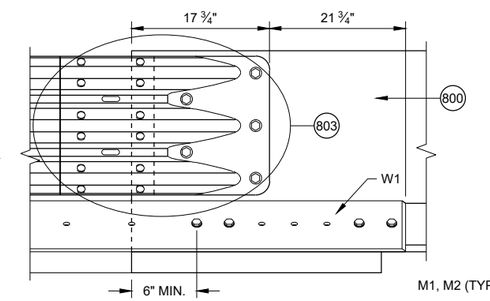

DETAIL G

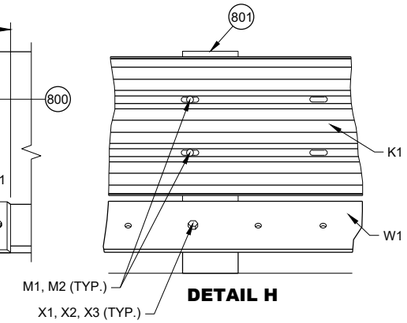

DETAIL H

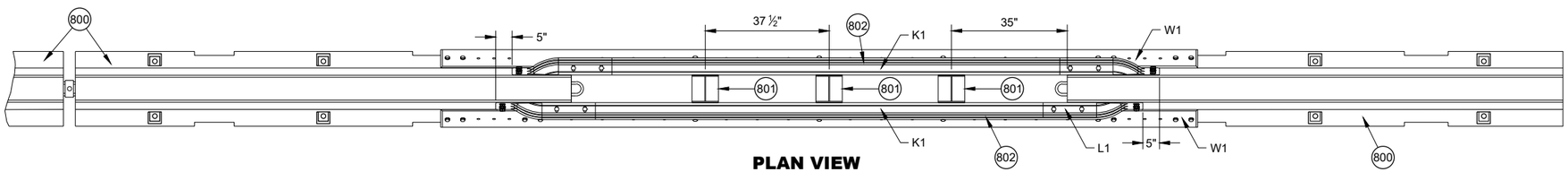

PLAN VIEW

GENERAL NOTES

(800) FREE STANDING TEMPORARY BARRIER

(801) GAP STIFFENER ASSEMBLY

(802) THRIE BEAMS ARE NESTED ON BOTH SIDES OF THE TEMPORARY BARRIER.

(803) SEE THRIE BEAM RAIL TERMINAL CONNECTOR DETAIL

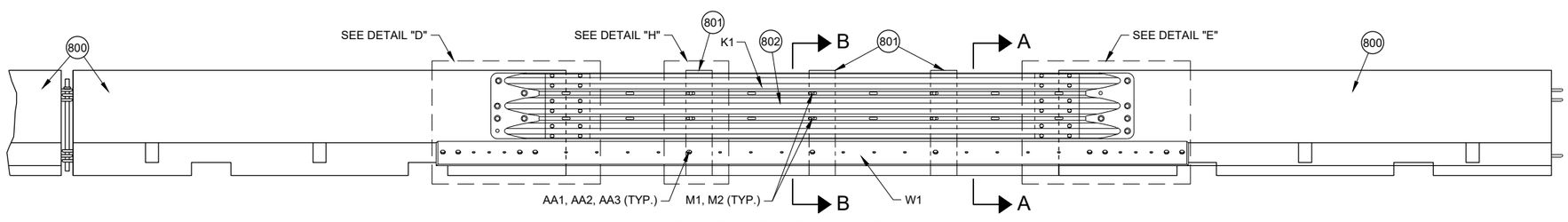

FRONT ELEVATION VIEW

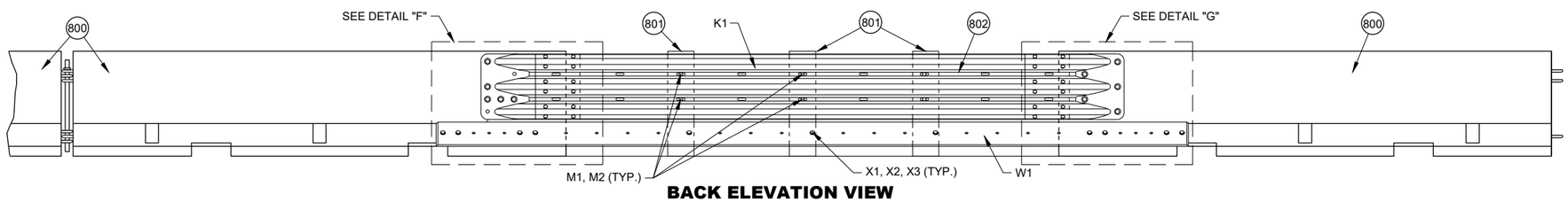

BACK ELEVATION VIEW

PORTABLE CONCRETE BARRIER GAP THRIE BEAM COVER

CONCRETE BARRIER TEMPORARY PRECAST, 12' - 6"

STATE OF WISCONSIN
DEPARTMENT OF TRANSPORTA

6

SDD 14B07-16h

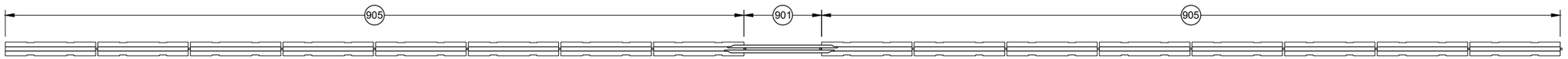

PLAN VIEW
GAP WITHIN SPACING

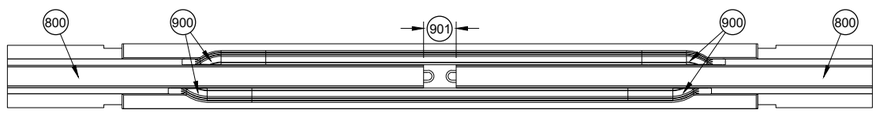

PLAN VIEW
TEMPORARY BARRIER GAP OVER 4" TO 1' MAX. (904)

GENERAL NOTES

(900) SEE OTHER DETAILS FOR TEMPORARY GAP HARDWARE (TYP.)

(901) TEMPORARY BARRIER GAP

(902) GAP STIFFENER ASSEMBLY CENTERED IN THE GAP.

(903) GAP STIFFENER ASSEMBLY IS OFFSET 18 ¾" FROM CENTER

(904) MINIMUM NUMBER OF GAP STIFFENERS SHOWN FOR THE GAP RANGE SHOWN.

(905) MINIMUM OF 8 CONTINUOUS FREE STANDING TEMPORARY BARRIERS

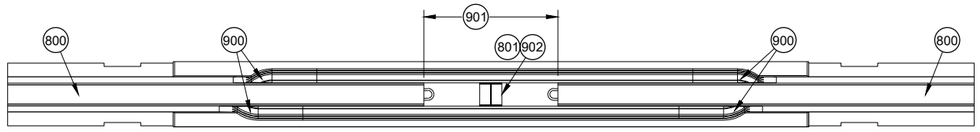

PLAN VIEW
TEMPORARY BARRIER GAP OVER 1' TO 4' MAX. (904)

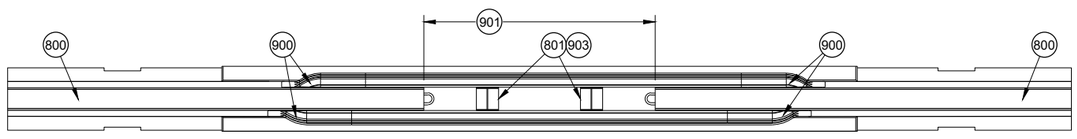

PLAN VIEW
TEMPORARY BARRIER GAP OVER 4' TO 7' MAX. (904)

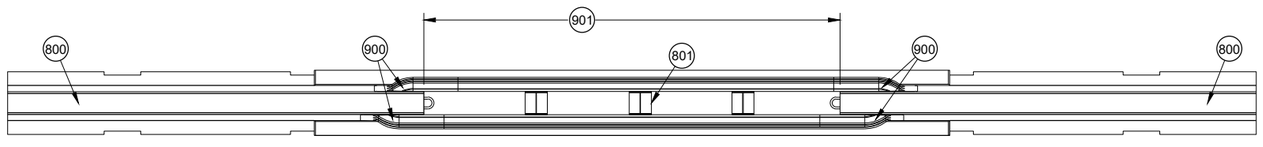

PLAN VIEW
TEMPORARY BARRIER GAP OVER 7' TO 12.5' MAX. (904)

CONCRETE BARRIER TEMPORARY PRECAST, 12' - 6"

STATE OF WISCONSIN
DEPARTMENT OF TRANSPORTAT

6
SDD 14B07-16i

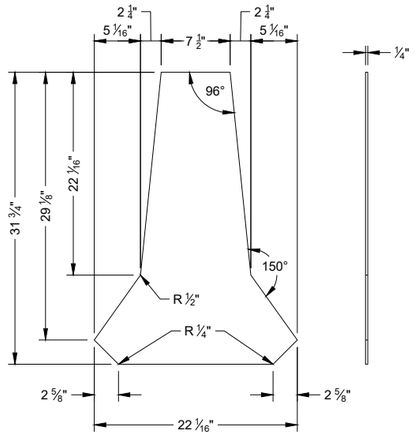

PROFILE VIEW

SIDE VIEW

STIFFENER ASSEMBLY CENTER PANEL U1

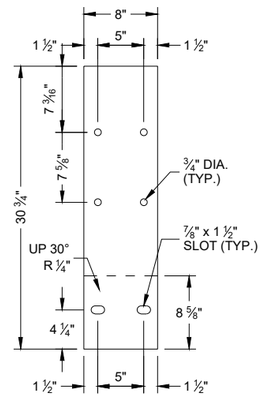

FLAT PATTERN

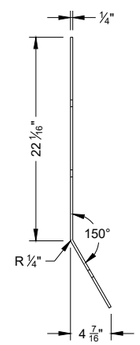

SIDE VIEW

STIFFENER ASSEMBLY SIDE PANEL U2

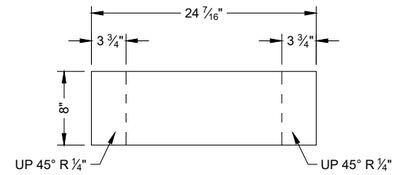

FLAT PATTERN

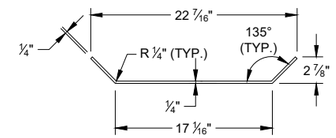

PROFILE VIEW

STIFFENER ASSEMBLY BOTTOM PANEL U3

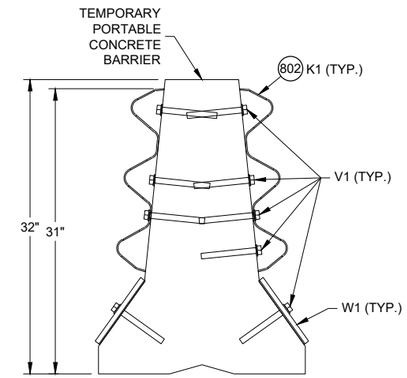

SECTION A - A

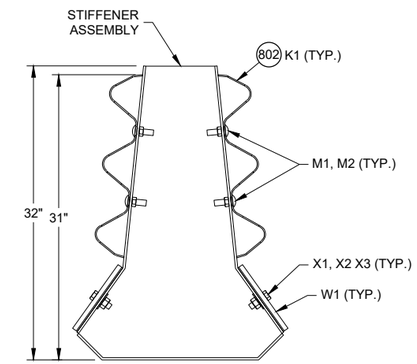

SECTION B - B

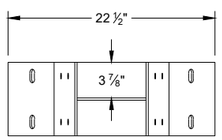

PLAN VIEW

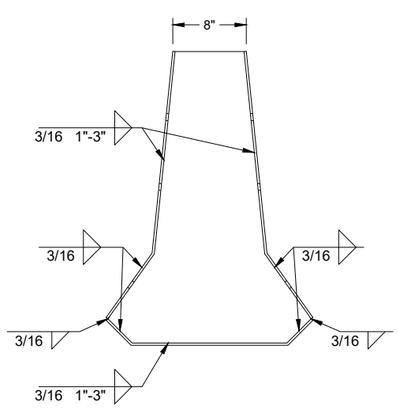

PROFILE VIEW

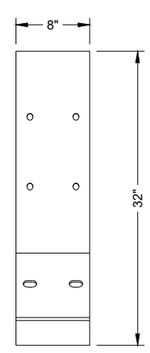

SIDE VIEW

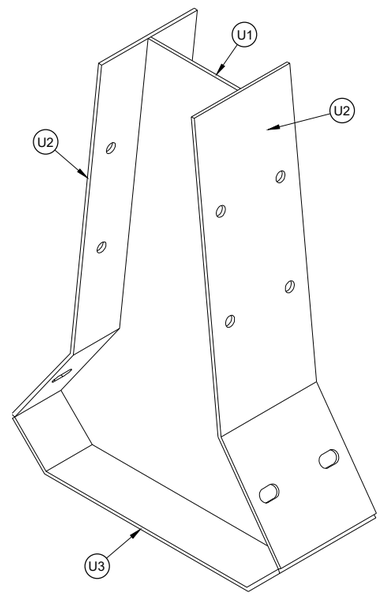

ISOMETRIC

GAP STIFFENER ASSEMBLY

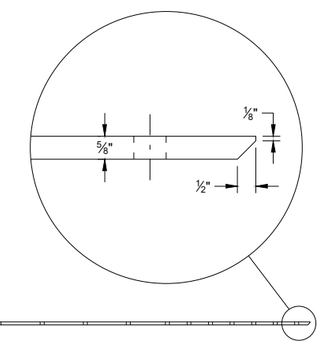

PLAN VIEW

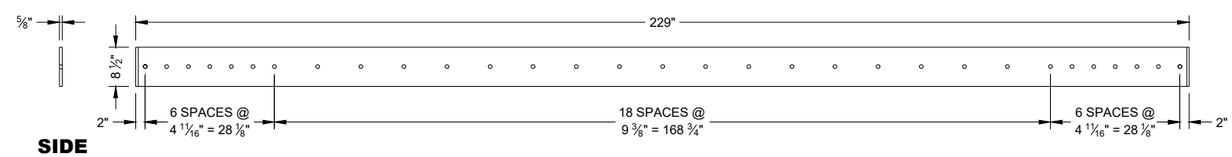

SIDE VIEW

ELEVATION VIEW

W1 TOE PLATE

CONCRETE BARRIER TEMPORARY PRECAST, 12' - 6"

STATE OF WISCONSIN
DEPARTMENT OF TRANSPORTAT

6

SDD 14B07-16j

GENERAL NOTES

(1100) 1" DIA. HOLE

(1101) ¾" DIA. HOLE

(1102) PROVIDE HOLES IN THRIE BEAM TERMINAL CONNECTOR TO LIMIT STEEL REINFORCEMENT OR LOOP BAR CONFLICT. CONTRACTOR MAY FIELD DRILL ADDITIONAL HOLE OR PROVIDE THRIE BEAM TERMINAL CONNECTOR WITH ADDITIONAL HOLES FROM SUPPLIER.

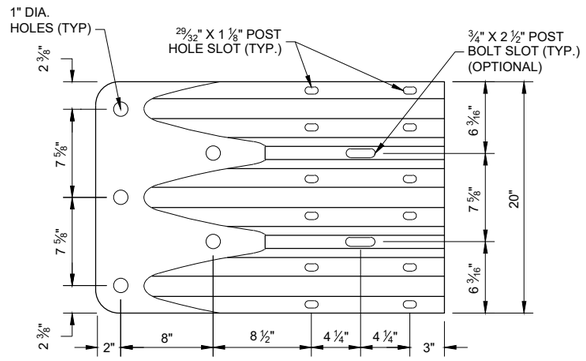

ELEVATION VIEW

THRIE BEAM TERMINAL CONNECTOR

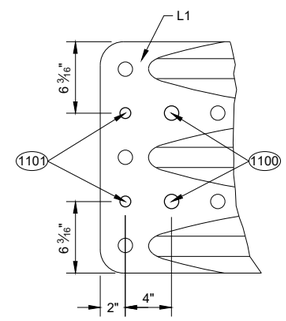

ELEVATION VIEW

ADDITIONAL THRIE BEAM (1102) TERMINAL CONNECTOR HOLE DETAIL

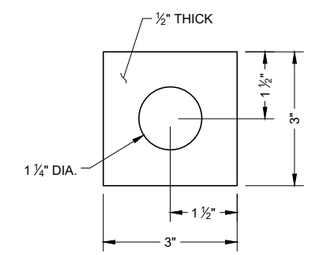

PLATE WASHER DETAIL G2, H3

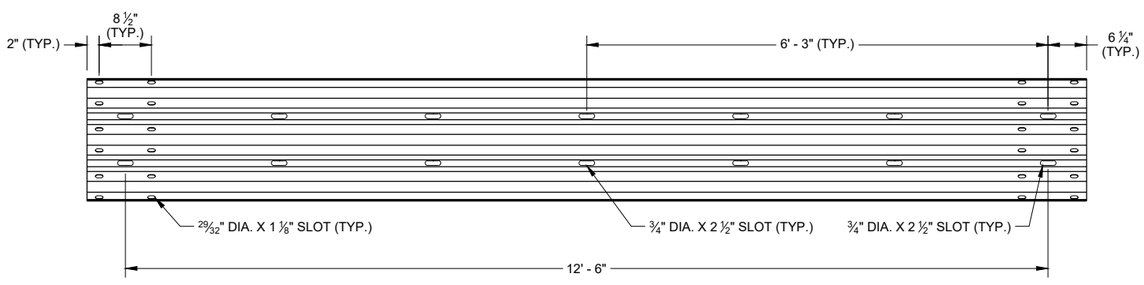

SLOTTED THRIE BEAM RAIL K1

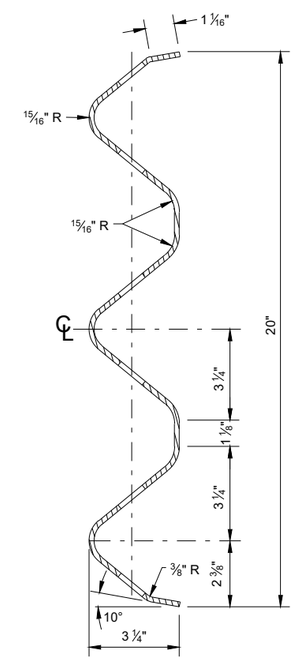

SECTION THROUGH BEAM K1

CONCRETE BARRIER TEMPORARY PRECAST, 12' - 6"

STATE OF WISCONSIN
DEPARTMENT OF TRANSPORTAT

6
SDD 14B07-16k

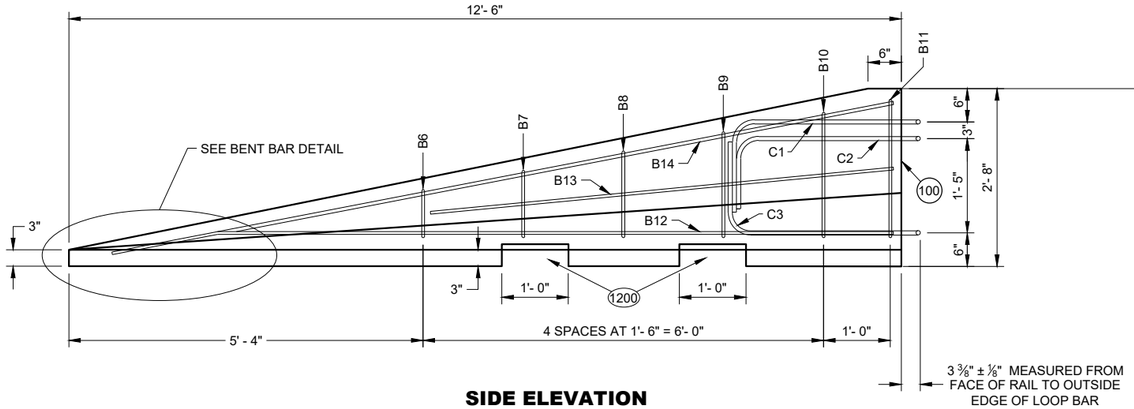

SIDE ELEVATION
(FOR CONNECTION TO LEFT END OF BARRIER)

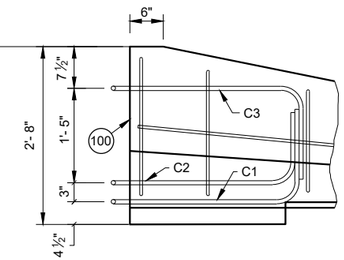

SIDE ELEVATION
LOOP BAR ASSEMBLY INVERTED FOR OPPOSITE END
(FOR CONNECTION TO RIGHT END OF BARRIER)

GENERAL NOTES

1200 SEE LIFTING SLOT DETAIL. LOCATION OF LIFTING SLOTS DETERMINED BY CONTRACTOR.

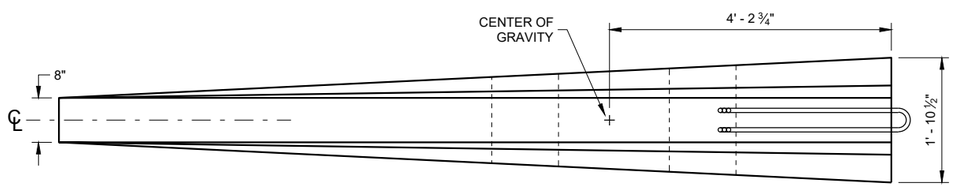

PLAN VIEW

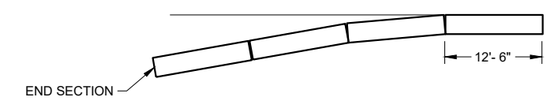

FLARE AT BARRIER END

POSTED SPEED, (MPH)	FLARE RATE
40 OR LESS	6:1
45 OR GREATER	8:1

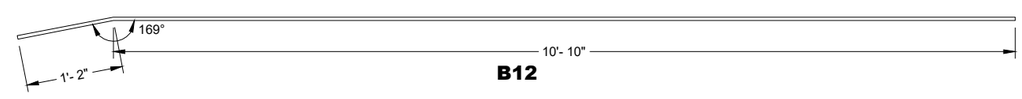

B12

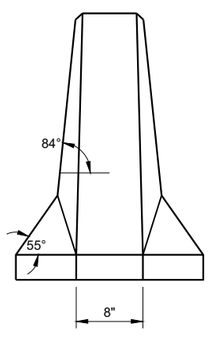

FRONT ELEVATION

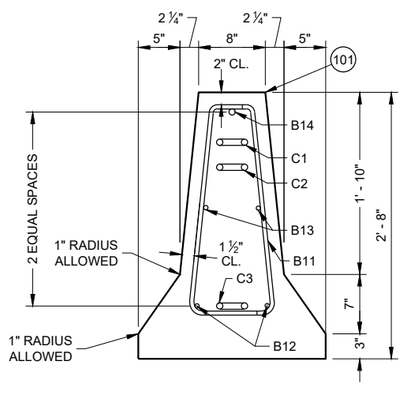

END SECTION

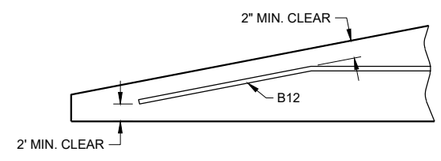

BENT BAR DETAIL

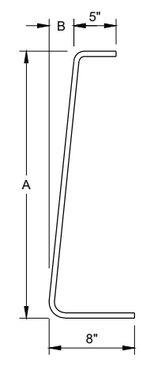

BAR	A	B
B6	10"	1"
B7	1'- 1"	1 ¼"
B8	1'- 5"	1 ⅝"
B9	1'- 8"	1 ⅞"
B10	2'- 0 ½"	2 ⅜"
B11	2'- 3"	2 ¾"

B BARS
2 OF EACH SIZE REQUIRED FOR STIRRUP ASSEMBLY

DETAILS OF BARRIER TAPER SECTION

CONCRETE BARRIER TEMPORARY PRECAST, 12' - 6"

STATE OF WISCONSIN
DEPARTMENT OF TRANSPORTAT

6

SDD 14B07-16I

BILL OF MATERIALS - CONCRETE BARRIER PRECAST

PART	DESCRIPTION	MATERIALS SPECIFICATIONS	NOTES
A1	PRECAST TEMPORARY BARRIER - CONCRETE	MIN. = f'c 5000 PSI	
B1	REBAR	STANDARD SPEC. 505.2 GRADE 60 UNCOATED REBAR	#5 REBAR, LENGTH 12'-2"
B2	REBAR	STANDARD SPEC. 505.2 GRADE 60 UNCOATED REBAR	#4 REBAR, LENGTH 12'-2"
B3	REBAR	STANDARD SPEC. 505.2 GRADE 60 UNCOATED REBAR	#5 REBAR, LENGTH 12'-2"
B4	REBAR	STANDARD SPEC. 505.2 GRADE 60 UNCOATED REBAR	#4 REBAR, LENGTH 6'-0"
B5	REBAR	STANDARD SPEC. 505.2 GRADE 60 UNCOATED REBAR	#6 REBAR, LENGTH 2'-11"
B6	REBAR	STANDARD SPEC. 505.2 GRADE 60 UNCOATED REBAR	#4 REBAR, LENGTH 1'-11"
B7	REBAR	STANDARD SPEC. 505.2 GRADE 60 UNCOATED REBAR	#4 REBAR, LENGTH 2'-2"
B8	REBAR	STANDARD SPEC. 505.2 GRADE 60 UNCOATED REBAR	#4 REBAR, LENGTH 2'-6"
B9	REBAR	STANDARD SPEC. 505.2 GRADE 60 UNCOATED REBAR	#4 REBAR, LENGTH 2'-9"
B10	REBAR	STANDARD SPEC. 505.2 GRADE 60 UNCOATED REBAR	#4 REBAR, LENGTH 3'-2"
B11	REBAR	STANDARD SPEC. 505.2 GRADE 60 UNCOATED REBAR	#4 REBAR, LENGTH 3'-4"
B12	REBAR	STANDARD SPEC. 505.2 GRADE 60 UNCOATED REBAR	#4 REBAR, LENGTH 12'-0"
B13	REBAR	STANDARD SPEC. 505.2 GRADE 60 UNCOATED REBAR	#4 REBAR, LENGTH 7'-9"
B14	REBAR	STANDARD SPEC. 505.2 GRADE 60 UNCOATED REBAR	#5 REBAR, LENGTH 11'-9"
C1	LOOP BAR	ASTM A709 GRADE 70 SMOOTH BAR OR ASTM A706 GRADE 60 REBAR UNCOATED	¾" DIA.
C2	LOOP BAR	ASTM A709 GRADE 70 SMOOTH BAR OR ASTM A706 GRADE 60 REBAR UNCOATED	¾" DIA.
C3	LOOP BAR	ASTM A709 GRADE 70 SMOOTH BAR OR ASTM A706 GRADE 60 REBAR UNCOATED	¾" DIA.
D1	CONNECTION PIN - ROD	ASTM A36 MIN. STRENGTH 36 KSI / ASTM A529 MAX. STRENGTH 50 KSI / ASTM A572 MAX STRENGTH 50 KSI / ASTM A709 MAX STRENGTH 50 KSI / ASTM A992 MAX STRENGTH 50 KSI	1 ¼" DIA.
D2	CONNECTION PIN - TOP PLATE	ASTM A36 MIN. STRENGTH 36 KSI / ASTM A529 MAX. STRENGTH 50 KSI / ASTM A572 MAX STRENGTH 50 KSI / ASTM A709 MAX STRENGTH 50 KSI / ASTM A992 MAX STRENGTH 50 KSI	
G1	BOLT THROUGH ANCHOR - THREADED ROD	HOT DIP AASHTO M232 CLASS / ASTM A153 CLASS C / ASTM F2329 C OR MECHANICAL GALVANIZE TO AASHTO M298 CLASS 55 TYPE 2 / ASTM B695 CLASS 55 TYPE 2 A307 GRADE A OR SAE J429 GRADE 2 UNC	1 ⅛" DIA.
G2	BOLT THROUGH ANCHOR - WASHER, SQUARE	ASTM A36 MIN. STRENGTH 36 KSI / ASTM A529 MAX. STRENGTH 50 KSI / ASTM A572 MAX STRENGTH 50 KSI / ASTM A709 MAX STRENGTH 50 KSI / ASTM A992 MAX STRENGTH 50 KSI	
G3	BOLT THROUGH ANCHOR - NUT	HOT DIP AASHTO M232 CLASS / ASTM A153 CLASS C / ASTM F2329 C OR MECHANICAL GALVANIZE TO AASHTO M298 CLASS 55 TYPE 2 / ASTM B695 CLASS 55 UNC OVER TAP NUTS AS SPECIFIED IN AASHTO 291 / ASTM A 563 HEAVY HEX HEAD ASTM A563DH OR SAE J995 GRADE 5	
H1	ADHESIVE ANCHOR - ADHESIVE	ICC-ES-AC308 5 ¼" EMBEDMENT WITH A MIN. BOND STRENGTH OF 1,650 PSI. SEE 603.2 AND 603.3.1.2 OF THE WISCONSIN STANDARD SPECIFICATIONS FOR MORE INFORMATION ON ADHESIVE ANCHORS.	
H2	ADHESIVE ANCHOR - THREADED ROD	HOT DIP AASHTO M232 CLASS / ASTM A153 CLASS C / ASTM F2329 C OR MECHANICAL GALVANIZE TO AASHTO M298 CLASS 55 TYPE 2 / ASTM B695 CLASS 55 TYPE 2 A307 GRADE A / SAE J429 GRADE 2 UNC	1 ⅛" DIA.
H3	ADHESIVE ANCHOR - WASHER, SQUARE	ASTM A36 MIN. STRENGTH 36 KSI / ASTM A529 MAX. STRENGTH 50 KSI / ASTM A572 MAX STRENGTH 50 KSI / ASTM A709 MAX STRENGTH 50 KSI / ASTM A992 MAX STRENGTH 50 KSI	
H4	ADHESIVE ANCHOR - NUT	HOT DIP AASHTO M232 CLASS / ASTM A153 CLASS C / ASTM F2329 C OR MECHANICAL GALVANIZE TO AASHTO M298 CLASS 55 TYPE 2 / ASTM B695 CLASS 55 UNC OVER TAP NUTS AS SPECIFIED IN AASHTO 291 / ASTM A 563 HEAVY HEX HEAD ASTM A563DH OR SAE J995 GRADE 5	
J1	ASPHALT ANCHOR PIN - ROD	ASTM A36 MIN. STRENGTH 36 KSI / ASTM A529 MAX. STRENGTH 50 KSI / ASTM A572 MAX STRENGTH 50 KSI / ASTM A709 MAX STRENGTH 50 KSI / ASTM A992 MAX STRENGTH 50 KSI	1 ½" DIA.
J2	ASPHALT ANCHOR PIN - STOP PLATE	ASTM A36 MIN. STRENGTH 36 KSI / ASTM A529 MAX. STRENGTH 50 KSI / ASTM A572 MAX STRENGTH 50 KSI / ASTM A709 MAX STRENGTH 50 KSI / ASTM A992 MAX STRENGTH 50 KSI	
K1	THRIE BEAM RAIL	AASHTO M180 CLASS A TYPE 2 APPROVED PRODUCER	12 GAUGE
L1	THRIE BEAM RAIL - TERMINAL	AASHTO M180 CLASS A TYPE 2 APPROVED PRODUCER	12 GAUGE

PART	DESCRIPTION	MATERIALS SPECIFICATIONS	NOTES
M1	SPLICE BOLT	HOT DIP AASHTO M232 CLASS / ASTM A153 CLASS C / ASTM F2329 C OR MECHANICAL GAL. TO AASHTO M298 CLASS 55 TYPE 2 / ASTM B695 CLASS 55 TYPE 2 UNC AASHTO M180 HEAD ASTM A307 GRADE B OR SAE J429 GRADE 2 OR ASTM F1554 GRADE 36	⅝" DIA.
M2	SPLICE BOLT - NUT	HOT DIP AASHTO M232 CLASS / ASTM A153 CLASS C / ASTM F2329 C OR MECHANICAL GALVANIZE TO AASHTO M298 CLASS 55 TYPE 2 / ASTM B695 CLASS 55 UNC OVER TAP NUTS AS SPECIFIED IN AASHTO 291 / ASTM A 563 AASHTO M180 RECESSED HEAVY HEX HEAD ASTM A563DH OR SAE J995 GRADE 5	
N1	THRIE BEAM RAIL TERMINAL - MECHANICAL ANCHOR	HOT DIP AASHTO M232 CLASS / ASTM A153 CLASS C / ASTM F2329 C OR MECHANICAL GALVANIZE TO AASHTO M298 CLASS 55 TYPE 2 / ASTM B695 CLASS 55 UNC OVER TAP NUTS AS SPECIFIED IN AASHTO 291 / ASTM A 563 AASHTO M180 RECESSED HEAVY HEX HEAD ASTM A563DH OR SAE J995 GRADE 5	¾" DIA. LENGTH 6"
N2	THRIE BEAM RAIL TERMINAL - WASHER	HOT DIP AASHTO M232 CLASS / ASTM A153 CLASS C / ASTM F2329 C OR MECHANICAL GALVANIZE TO AASHTO M298 CLASS 55 TYPE 2 / ASTM B695 CLASS 55 TYPE 2 F436 TYPE 1	
N3	THRIE BEAM RAIL TERMINAL MECHANICAL OR ADHESIVE ANCHOR	MINIMUM MECHANICAL OR ADHESIVE ANCHOR STRENGTH REQUIREMENTS: ULTIMATE TENSILE LOAD 17.9 KIPS AND ULTIMATE SHEAR LOAD 21.96 KIPS. SEE 603.2 AND 603.3.1.2 OF THE WISCONSIN STANDARD SPECIFICATIONS FOR MORE INFORMATION ON ADHESIVE ANCHORS.	
P1	THRIE BEAM RAIL CONNECTION 1-BOLT	HOT DIP AASHTO M232 CLASS / ASTM A153 CLASS C / ASTM F2329 C OR MECHANICAL GALVANIZE TO AASHTO M298 CLASS 55 TYPE 2 / ASTM B695 CLASS 55 UNC OVER TAP NUTS AS SPECIFIED IN AASHTO 291 / ASTM A 563 AASHTO M180 RECESSED HEAVY HEX HEAD ASTM A563DH OR SAE J995 GRADE 5	¾" DIA.
P2	THRIE BEAM RAIL CONNECTION 1-WASHER	HOT DIP AASHTO M232 CLASS / ASTM A153 CLASS C / ASTM F2329 C OR MECHANICAL GAL. TO AASHTO M298 CLASS 55 TYPE 2 / ASTM B695 CLASS 55 TYPE 2 F436 TYPE 1	
P3	THRIE BEAM RAIL CONNETION 1- MECHANICAL OR ADHESIVE ANCHOR	MINIMUM MECHANICAL OR ADHESIVE ANCHOR STRENGTH REQUIREMENTS: ULTIMATE TENSILE LOAD 9.48 KIPS AND ULTIMATE SHEAR LOAD 10.48 KIPS. SEE 603.2 AND 603.3.1.2 OF THE WISCONSIN STANDARD SPECIFICATIONS FOR MORE INFORMATION ON ADHESIVE ANCHORS.	
Q1	BLOCK WOOD	SEE STANDARD SPEC. 614	
R1	CAP - BOLT	HOT DIP AASHTO M232 CLASS / ASTM A153 CLASS C / ASTM F2329 C OR MECHANICAL GALVANIZE TO AASHTO M298 CLASS 55 TYPE 2 / ASTM B695 CLASS 55 UNC OVER TAP NUTS AS SPECIFIED IN AASHTO 291 / ASTM A 563 AASHTO M180 RECESSED HEAVY HEX HEAD ASTM A563DH OR SAE J995 GRADE 5	⅝" DIA.
R2	CAP- BOLT - WASHER	HOT DIP AASHTO M232 CLASS / ASTM A153 CLASS C / ASTM F2329 C OR MECHANICAL GAL. TO AASHTO M298 CLASS 55 TYPE 2 / ASTM B695 CLASS 55 TYPE 2 F436 TYPE 1	
R3	CAP - BOLT - MECHANICAL ANCHOR	MINIMUM MECHANICAL OR ADHESIVE ANCHOR STRENGTH REQUIREMENTS ULTIMATE TENSILE LOAD 12.14 KIPS AND ULTIMATE SHEAR LOAD 17.5 KIPS.SEE 603.2 AND 603.3.1.2 OF THE WISCONSIN STANDARD SPECIFICATIONS FOR MORE INFORMATION ON ADHESIVE ANCHORS.	12 GAUGE
S1	CAP 42-INCH TOP PLATE	AASHTO M111 / ASTM A123 ASTM A36 MIN. STRENGTH 36 KSI, OR ASTM A529 MAX. STRENGTH 50 KSI, OR ASTM A572 MAX. STRENGTH 50 KSI, OR ASTM A709 MAX. STRENGTH 50 KSI, OR ASTM A992 MAX. STRENGTH 50 KSI	12 GAUGE
S2	CAP 42-INCH END PLATE	AASHTO M111 / ASTM A123 ASTM A36 MIN. STRENGTH 36 KSI, OR ASTM A529 MAX. STRENGTH 50 KSI, OR ASTM A572 MAX. STRENGTH 50 KSI, OR ASTM A709 MAX. STRENGTH 50 KSI, OR ASTM A992 MAX. STRENGTH 50 KSI	12 GAUGE
S3	CAP 42-INCH SIDE PLATE	AASHTO M111 / ASTM A123 ASTM A36 MIN. STRENGTH 36 KSI, OR ASTM A529 MAX. STRENGTH 50 KSI, OR ASTM A572 MAX. STRENGTH 50 KSI, OR ASTM A709 MAX. STRENGTH 50 KSI, OR ASTM A992 MAX. STRENGTH 50 KSI	12 GAUGE
S4	CAP 42-INCH GUSSET 1	AASHTO M111 / ASTM A123 ASTM A36 MIN. STRENGTH 36 KSI, OR ASTM A529 MAX. STRENGTH 50 KSI, OR ASTM A572 MAX. STRENGTH 50 KSI, OR ASTM A709 MAX. STRENGTH 50 KSI, OR ASTM A992 MAX. STRENGTH 50 KSI	12 GAUGE
S5	CAP 42-INCH GUSSET 2	AASHTO M111 / ASTM A123 ASTM A36 MIN. STRENGTH 36 KSI, OR ASTM A529 MAX. STRENGTH 50 KSI, OR ASTM A572 MAX. STRENGTH 50 KSI, OR ASTM A709 MAX. STRENGTH 50 KSI, OR ASTM A992 MAX. STRENGTH 50 KSI	12 GAUGE
S6	CAP 42-INCH GUSSET 3	AASHTO M111 / ASTM A123 ASTM A36 MIN. STRENGTH 36 KSI, OR ASTM A529 MAX. STRENGTH 50 KSI, OR ASTM A572 MAX. STRENGTH 50 KSI, OR ASTM A709 MAX. STRENGTH 50 KSI, OR ASTM A992 MAX. STRENGTH 50 KSI	12 GAUGE
S7	CAP 42-INCH GUSSET 4	AASHTO M111 / ASTM A123 ASTM A36 MIN. STRENGTH 36 KSI, OR ASTM A529 MAX. STRENGTH 50 KSI, OR ASTM A572 MAX. STRENGTH 50 KSI, OR ASTM A709 MAX. STRENGTH 50 KSI, OR ASTM A992 MAX. STRENGTH 50 KSI	12 GAUGE

CONCRETE BARRIER TEMPORARY PRECAST, 12' - 6"

STATE OF WISCONSIN
DEPARTMENT OF TRANSPORTATION

6
SDD 14B07-16m

BILL OF MATERIALS - CONCRETE BARRIER PRECAST

PART	DESCRIPTION	MATERIALS SPECIFICATIONS	NOTES
T1	CAP 56-INCH TOP PLATE	AASHTO M111 / ASTM A123 ASTM A36 MIN. STRENGTH 36 KSI, OR ASTM A529 MAX. STRENGTH 50 KSI, OR ASTM A572 MAX. STRENGTH 50 KSI, OR ASTM A709 MAX. STRENGTH 50 KSI, OR ASTM A992 MAX. STRENGTH 50 KSI	12 GAUGE
T2	CAP 56-INCH END PLATE	AASHTO M111 / ASTM A123 ASTM A36 MIN. STRENGTH 36 KSI, OR ASTM A529 MAX. STRENGTH 50 KSI, OR ASTM A572 MAX. STRENGTH 50 KSI, OR ASTM A709 MAX. STRENGTH 50 KSI, OR ASTM A992 MAX. STRENGTH 50 KSI	12 GAUGE
T3	CAP 56-INCH SIDE PLATE 1	AASHTO M111 / ASTM A123 ASTM A36 MIN. STRENGTH 36 KSI, OR ASTM A529 MAX. STRENGTH 50 KSI, OR ASTM A572 MAX. STRENGTH 50 KSI, OR ASTM A709 MAX. STRENGTH 50 KSI, OR ASTM A992 MAX. STRENGTH 50 KSI	12 GAUGE
T4	CAP 56-INCH SIDE PLATE 2	AASHTO M111 / ASTM A123 ASTM A36 MIN. STRENGTH 36 KSI, OR ASTM A529 MAX. STRENGTH 50 KSI, OR ASTM A572 MAX. STRENGTH 50 KSI, OR ASTM A709 MAX. STRENGTH 50 KSI, OR ASTM A992 MAX. STRENGTH 50 KSI	12 GAUGE
T5	CAP 56-INCH GUSSET 1	AASHTO M111 / ASTM A123 ASTM A36 MIN. STRENGTH 36 KSI, OR ASTM A529 MAX. STRENGTH 50 KSI, OR ASTM A572 MAX. STRENGTH 50 KSI, OR ASTM A709 MAX. STRENGTH 50 KSI, OR ASTM A992 MAX. STRENGTH 50 KSI	12 GAUGE
T6	CAP 56-INCH GUSSET 2	AASHTO M111 / ASTM A123 ASTM A36 MIN. STRENGTH 36 KSI, OR ASTM A529 MAX. STRENGTH 50 KSI, OR ASTM A572 MAX. STRENGTH 50 KSI, OR ASTM A709 MAX. STRENGTH 50 KSI, OR ASTM A992 MAX. STRENGTH 50 KSI	12 GAUGE
T7	CAP 56-INCH GUSSET 3	AASHTO M111 / ASTM A123 ASTM A36 MIN. STRENGTH 36 KSI, OR ASTM A529 MAX. STRENGTH 50 KSI, OR ASTM A572 MAX. STRENGTH 50 KSI, OR ASTM A709 MAX. STRENGTH 50 KSI, OR ASTM A992 MAX. STRENGTH 50 KSI	12 GAUGE
T8	CAP 42-INCH GUSSET 4	AASHTO M111 / ASTM A123 ASTM A36 MIN. STRENGTH 36 KSI, OR ASTM A529 MAX. STRENGTH 50 KSI, OR ASTM A572 MAX. STRENGTH 50 KSI, OR ASTM A709 MAX. STRENGTH 50 KSI, OR ASTM A992 MAX. STRENGTH 50 KSI	12 GAUGE
T9	CAP 42-INCH GUSSET 5	AASHTO M111 / ASTM A123 ASTM A36 MIN. STRENGTH 36 KSI, OR ASTM A529 MAX. STRENGTH 50 KSI, OR ASTM A572 MAX. STRENGTH 50 KSI, OR ASTM A709 MAX. STRENGTH 50 KSI, OR ASTM A992 MAX. STRENGTH 50 KSI	12 GAUGE
T10	CAP 42-INCH GUSSET 6	AASHTO M111 / ASTM A123 ASTM A36 MIN. STRENGTH 36 KSI, OR ASTM A529 MAX. STRENGTH 50 KSI, OR ASTM A572 MAX. STRENGTH 50 KSI, OR ASTM A709 MAX. STRENGTH 50 KSI, OR ASTM A992 MAX. STRENGTH 50 KSI	12 GAUGE
T11	CAP 42-INCH GUSSET 7	AASHTO M111 / ASTM A123 ASTM A36 MIN. STRENGTH 36 KSI, OR ASTM A529 MAX. STRENGTH 50 KSI, OR ASTM A572 MAX. STRENGTH 50 KSI, OR ASTM A709 MAX. STRENGTH 50 KSI, OR ASTM A992 MAX. STRENGTH 50 KSI	12 GAUGE
T12	CAP 42-INCH GUSSET 8	AASHTO M111 / ASTM A123 ASTM A36 MIN. STRENGTH 36 KSI, OR ASTM A529 MAX. STRENGTH 50 KSI, OR ASTM A572 MAX. STRENGTH 50 KSI, OR ASTM A709 MAX. STRENGTH 50 KSI, OR ASTM A992 MAX. STRENGTH 50 KSI	12 GAUGE
T13	CAP 42-INCH GUSSET 9	AASHTO M111 / ASTM A123 ASTM A36 MIN. STRENGTH 36 KSI, OR ASTM A529 MAX. STRENGTH 50 KSI, OR ASTM A572 MAX. STRENGTH 50 KSI, OR ASTM A709 MAX. STRENGTH 50 KSI, OR ASTM A992 MAX. STRENGTH 50 KSI	12 GAUGE
T14	CAP 42-INCH GUSSET 10	AASHTO M111 / ASTM A123 ASTM A36 MIN. STRENGTH 36 KSI, OR ASTM A529 MAX. STRENGTH 50 KSI, OR ASTM A572 MAX. STRENGTH 50 KSI, OR ASTM A709 MAX. STRENGTH 50 KSI, OR ASTM A992 MAX. STRENGTH 50 KSI	12 GAUGE
T15	CAP 42-INCH GUSSET 11	AASHTO M111 / ASTM A123 ASTM A36 MIN. STRENGTH 36 KSI, OR ASTM A529 MAX. STRENGTH 50 KSI, OR ASTM A572 MAX. STRENGTH 50 KSI, OR ASTM A709 MAX. STRENGTH 50 KSI, OR ASTM A992 MAX. STRENGTH 50 KSI	12 GAUGE
T16	CAP 42-INCH GUSSET 12	AASHTO M111 / ASTM A123 ASTM A36 MIN. STRENGTH 36 KSI, OR ASTM A529 MAX. STRENGTH 50 KSI, OR ASTM A572 MAX. STRENGTH 50 KSI, OR ASTM A709 MAX. STRENGTH 50 KSI, OR ASTM A992 MAX. STRENGTH 50 KSI	12 GAUGE
U1	GAP STIFFENER	AASHTO M111 / ASTM A123 ASTM A36 MIN. STRENGTH 36 KSI, OR ASTM A529 MAX. STRENGTH 50 KSI, OR ASTM A572 MAX. STRENGTH 50 KSI, OR ASTM A709 MAX. STRENGTH 50 KSI, OR ASTM A992 MAX. STRENGTH 50 KSI	
U2	GAP STIFFENER - CONNECTOR PLATE 1	AASHTO M111 / ASTM A123 ASTM A36 MIN. STRENGTH 36 KSI, OR ASTM A529 MAX. STRENGTH 50 KSI, OR ASTM A572 MAX. STRENGTH 50 KSI, OR ASTM A709 MAX. STRENGTH 50 KSI, OR ASTM A992 MAX. STRENGTH 50 KSI	
U3	GAP STIFFENER - CONNECTOR PLATE 2	AASHTO M111 / ASTM A123 ASTM A36 MIN. STRENGTH 36 KSI, OR ASTM A529 MAX. STRENGTH 50 KSI, OR ASTM A572 MAX. STRENGTH 50 KSI, OR ASTM A709 MAX. STRENGTH 50 KSI, OR ASTM A992 MAX. STRENGTH 50 KSI	

PART	DESCRIPTION	MATERIALS SPECIFICATIONS	NOTES
V1	THRIE BEAM RAIL TERMINAL MECHANICAL OR ADHESIVE ANCHOR	MINIMUM MECHANICAL OR ADHESIVE ANCHOR STRENGTH REQUIREMENTS ULTIMATE TENSILE LOAD 24.0 KIPS AND ULTIMATE SHEAR LOAD 21.5 KIPS. SEE 603.2 AND 603.3.1.2 OF THE WISCONSIN STANDARD SPECIFICATIONS FOR MORE INFORMATION ON ADHESIVE ANCHORS.	¾" DIA.
V2	GAP STIFFENER - BOLT - NUT	HOT DIP AASHTO M232 CLASS / ASTM A153 CLASS C / ASTM F2329 C O R MECHANICAL GALVANIZE TO AASHTO M298 CLASS 50 TYPE 1 / ASTM B695 CLASS 50 TYPE 1 UNC OVER TAP NUTS AS SPECIFIED IN AASHTO 291/ASTM A 563 HEAVY HEX HEAD ASTM A563DH OR SAE J995 GRADE 5	
W1	TOE PLATE	AASHTO M111/ASTM A123 ASTM A36 MIN STRENGTH 36 KSI, OR ASTM A529 MAX. STRENGTH 50 KSI, OR ASTM A572 MAX. STRENGTH 50 KSI, OR ASTM A709 MAX. STRENGTH 50 KSI, OR ASTM A992 MAX. STRENGTH 50 KSI	
X1	TOE PLATE - CONNECTION BOLT	HOT DIP AASHTO M232 CLASS / ASTM A153 CLASS C / ASTM F2329 C OR MECHANICAL GALVANIZE TO AASHTO M298 CLASS 55 TYPE 2 / ASTM B695 CLASS 55 TYPE 2 UNC HEAVY HEX HEAD OR AASTHO M180 HEAD, ASTM F3125 GRADE A325 TYPE 1 HEAVY HEX HEAD OR SAE J429 GRADE 5 HEAVY HEX HEAD / ASTM A449 TYPE 1 HEAVY HEX HEAD. BOLTS MAY BE FULLY THREADED. PROVIDE ENOUGH THREADING FOR PROPER TIGHTENING OF BOLT.	¾" DIA.
X2	TOE PLATE - CONNECTION BOLT - WASHER	HOT DIP AASHTO M232 CLASS / ASTM A153 CLASS C / ASTM F2329 C OR MECHANICAL GALVANIZE TO AASHTO M298 CLASS 55 TYPE 2 / ASTM B695 CLASS 55 TYPE 2 F436 TYPE 1 (HARDEN WASHER ONLY)	
X3	TOE PLATE - CONNECTION BOLT - NUT	HOT DIP AASHTO M232 CLASS / ASTM A153 CLASS C / ASTM F2329 C OR MECHANICAL GALVANIZE TO AASHTO M298 CLASS 55 TYPE 2 / ASTM B695 CLASS 55 UNC OVER TAP NUTS AS SPECIFIED IN AASHTO 291 / ASTM A 563 HEAVY HEX HEAD ASTM A563DH OR SAE J995 GRADE 5	

CONCRETE BARRIER TEMPORARY PRECAST, 12' - 6"

STATE OF WISCONSIN
DEPARTMENT OF TRANSPORTATION

APPROVED
February 2023 — DATE
/S/ Rodney Taylor — ROADWAY STANDARDS DEVE ENGINEER
FHWA

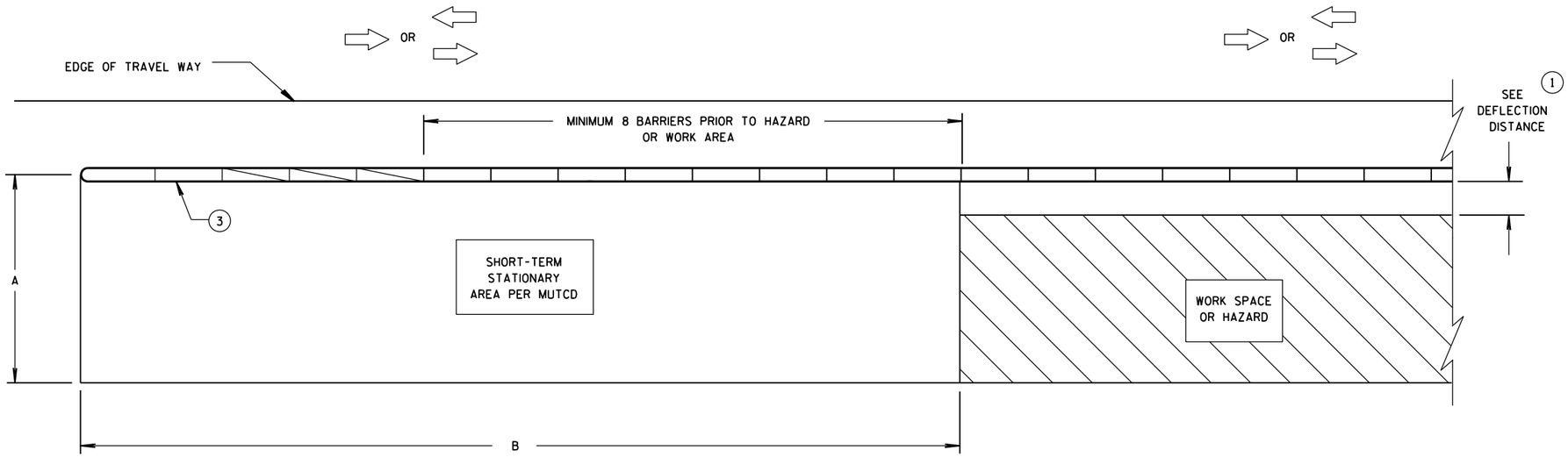

CRASH CUSHION/SAND BARREL ARRAY AND TEMPORARY BARRIER INSTALLATION FOR TRAFFIC ON ONE SIDE OF BARRIER

DIMENSION A TABLE (2)

FACILITY	POSTED SPEED MPH	DIMENSION A MIN. FT	DIMENSION A MAX. FT
FREEWAY/EXPRESSWAY	ALL	15	20
NON-FREEWAY/EXPRESSWAY	GREATER THAN OR EQUAL TO 45	10	15
NON-FREEWAY/EXPRESSWAY	LESS THAN 45	8	10
AADT LESS THAN 1,500	ALL	8	10

DIMENSION B TABLE (2)

POSTED SPEEDS MPH	DIMENSION B FT
20	115
25	155
30	200
35	250
40	305
45	360
50	425
55	495
60	570
65	645

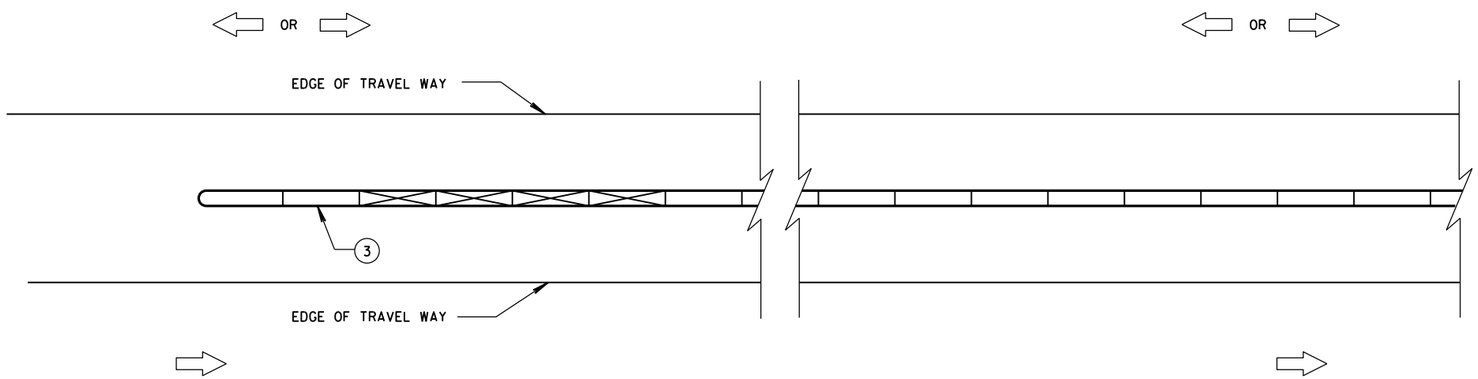

CRASH CUSHION/SAND BARREL ARRAY AND TEMPORARY BARRIER INSTALLATION FOR TRAFFIC ON BOTH SIDES OF BARRIER

LEGEND

- DIRECTION OF TRAVEL
- CRASH CUSHION OR SAND BARREL ARRAY
- SEE FREE STANDING TRANSITION TO TIED-DOWN SYSTEM DETAILS
- SEE BI-DIRECTIONAL TRANSITION TO TIED-DOWN SYSTEM DETAILS
- 3 PINS PLACED ON TRAFFIC SIDE OF BARRIER
- PERMANENT CONCRETE BARRIER OR CONCRETE PARAPET
- FREE STANDING TEMPORARY BARRIER

GENERAL NOTES

SEE STANDARD DETAIL DRAWING 14B7 FOR MORE INFORMATION.

DETAILS PROVIDE A GENERAL LAYOUT OF TEMPORARY CONCRETE BARRIER, CRASH CUSHIONS, SAND BARREL ARRAYS AND TIE DOWN TRANSITIONS. DETAILS PROVIDED MAY NOT FIT ALL POSSIBLE SITUATIONS OR SITE CONDITIONS. SEE OTHER SECTIONS OF THE CONTRACT OR PROJECT ENGINEER FOR MORE DETAILS.

ADDITIONAL TEMPORARY BARRIER MAY BE REQUIRED TO PROTECT TRAVELING PUBLIC FROM HAZARDS, CONTRACTOR'S OPERATIONS OR TO CONTROL TRAFFIC.

TEMPORARY BARRIER MAY BE REQUIRED TO BE ANCHORED TO PAVEMENT OR BRIDGE DECK.

FOR DETAILS ON CRASH CUSHION OR SAND BARREL ARRAYS SEE OTHER SECTIONS OF THE PLAN AND MANUFACTURE'S DETAILS.

SLOPES LEADING TO TEMPORARY BARRIER, CRASH CUSHION OR SAND BARREL ARRAY ARE 10:1 OR LESS.

(1) FOR DEFLECTION INFORMATION SEE STANDARD DETAIL DRAWING 14B7.

(2) VALUES PROVIDED MAY NOT FIT ALL POSSIBLE SITUATIONS OR SITE CONDITIONS. SEE OTHER SECTIONS OF THE CONTRACT OR PROJECT ENGINEER FOR MORE DETAILS.

(3) ANCHOR TEMPORARY BARRIER ACCORDING TO CRASH CUSHION OR SAND BARREL MANUFACTURER'S RECOMMENDATIONS. IF MANUFACTURER'S RECOMMENDATIONS ARE NOT PROVIDED, ANCHOR 3 PINS ON TRAFFIC SIDE.

CRASH CUSHION/SAND BARREL ARRAY AND OTHER TEMPORARY BARRIER LAYOUT DETAILS

STATE OF WISCONSIN
DEPARTMENT OF TRANSPOR

6

S.D.D. 14 B 8-2a

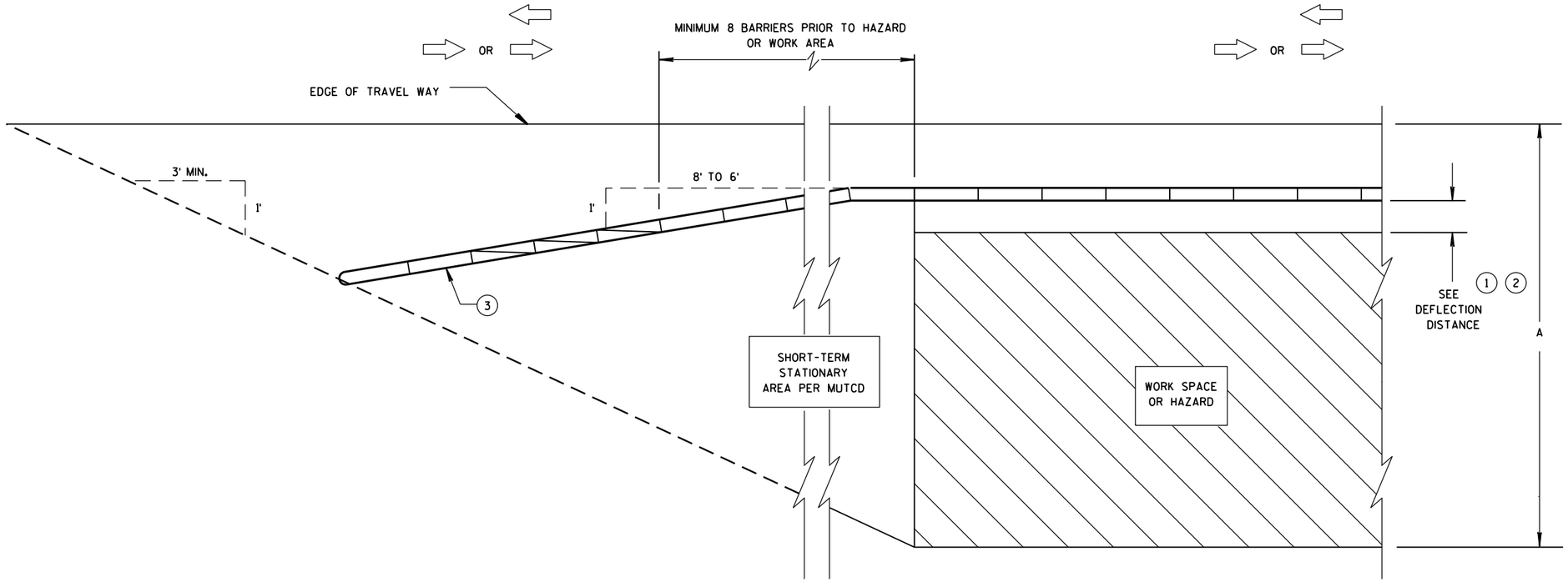

CRASH CUSHION/SAND BARREL ARRAY AND TEMPORARY BARRIER INSTALLATION FOR TRAFFIC ON ONE SIDE - FLARED INSTALLATION

6

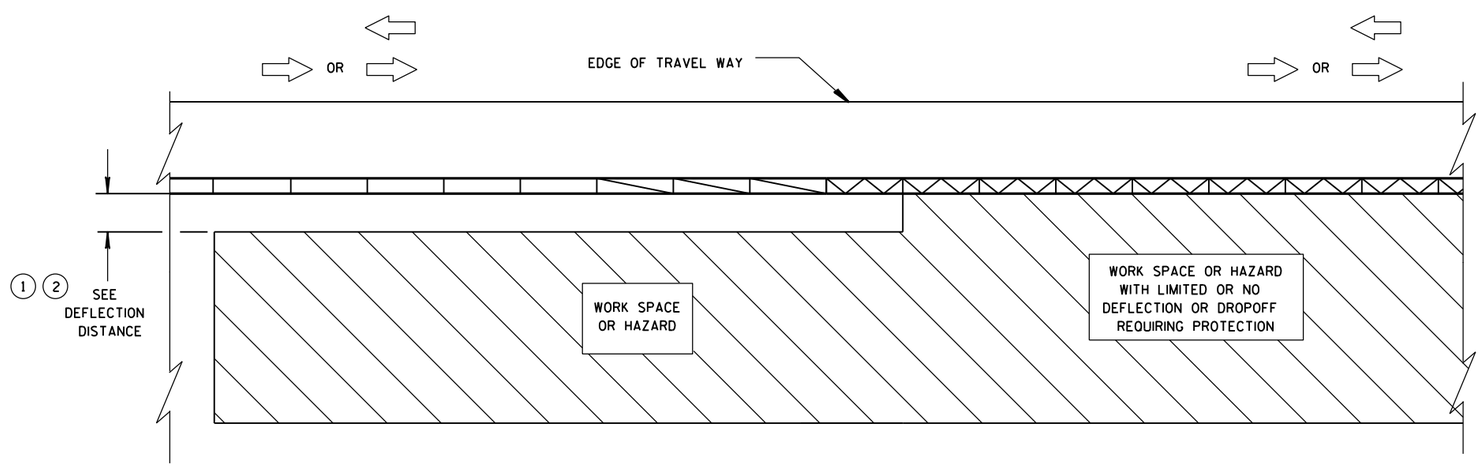

TRANSITION FROM FREE STANDING TEMPORARY BARRIER TO ANCHORED BARRIER

LEGEND

- DIRECTION OF TRAVEL
- CRASH CUSHION OR SAND BARREL ARRAY
- SEE FREE STANDING TRANSITION TO TIED-DOWN SYSTEM DETAILS
- SEE BI-DIRECTIONAL TRANSITION TO TIED-DOWN SYSTEM DETAILS
- 3 PINS PLACED ON TRAFFIC SIDE OF BARRIER
- PERMANENT CONCRETE BARRIER OR CONCRETE PARAPET
- FREE STANDING TEMPORARY BARRIER

CRASH CUSHION/SAND BARREL ARRAY AND OTHER TEMPORARY BARRIER LAYOUT DETAILS

STATE OF WISCONSIN
DEPARTMENT OF TRANSPOR

S.D.D. 14 B 8-2b

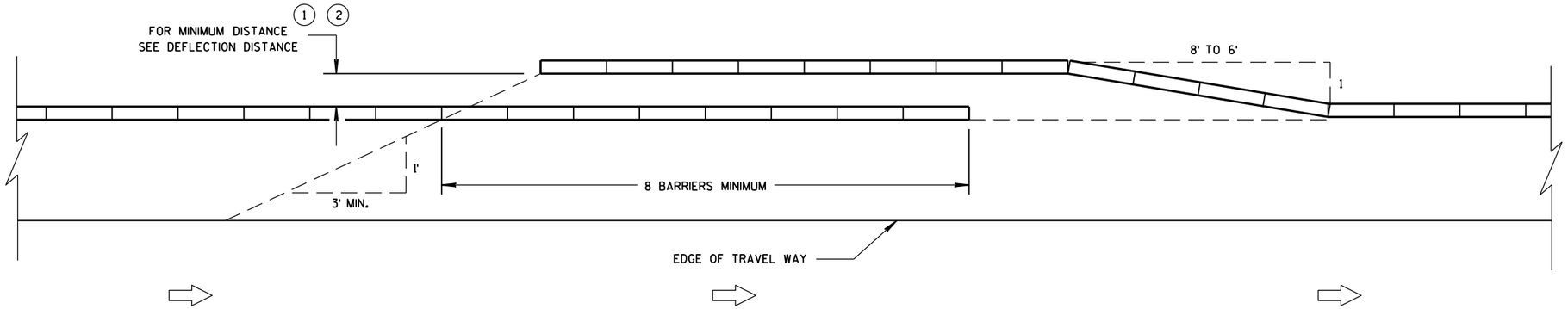

TEMPORARY BARRIER OVERLAP - ONE-WAY TRAFFIC

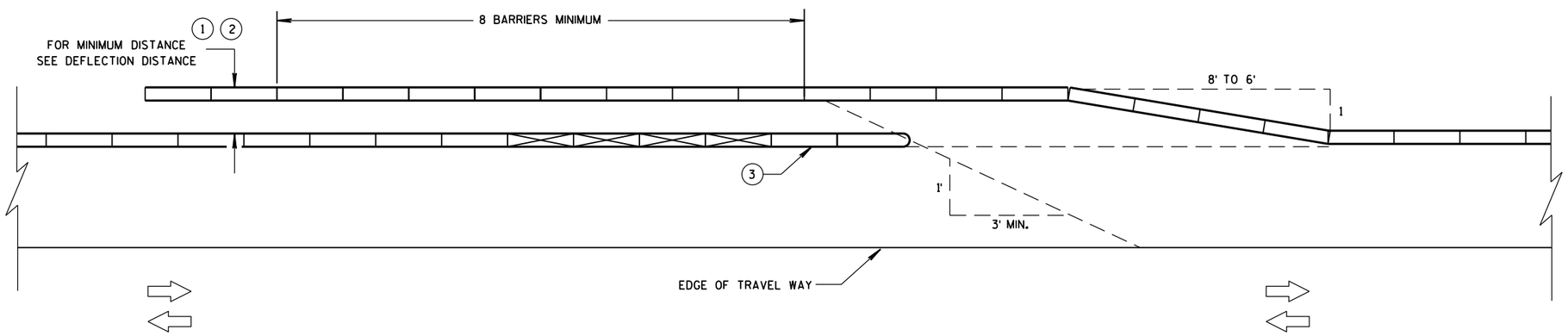

TEMPORARY BARRIER OVERLAP - TWO-WAY TRAFFIC

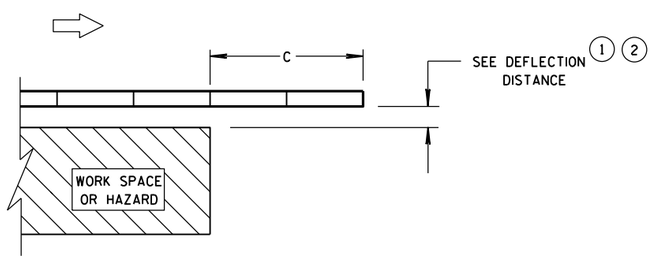

ENDING TEMPORARY BARRIER DOWNSTREAM - UNANCHORED

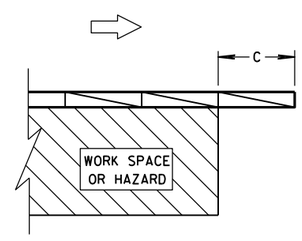

ENDING TEMPORARY BARRIER DOWNSTREAM - ANCHORED

LEGEND

- DIRECTION OF TRAVEL
- CRASH CUSHION OR SAND BARREL ARRAY
- SEE FREE STANDING TRANSITION TO TIED-DOWN SYSTEM DETAILS
- SEE BI-DIRECTIONAL TRANSITION TO TIED-DOWN SYSTEM DETAILS
- 3 PINS PLACED ON TRAFFIC SIDE OF BARRIER
- PERMANENT CONCRETE BARRIER OR CONCRETE PARAPET
- FREE STANDING TEMPORARY BARRIER

CRASH CUSHION/SAND BARREL ARRAY AND OTHER TEMPORARY BARRIER LAYOUT DETAILS

STATE OF WISCONSIN
DEPARTMENT OF TRANSPOR

6

S.D.D. 14 B 8-2c

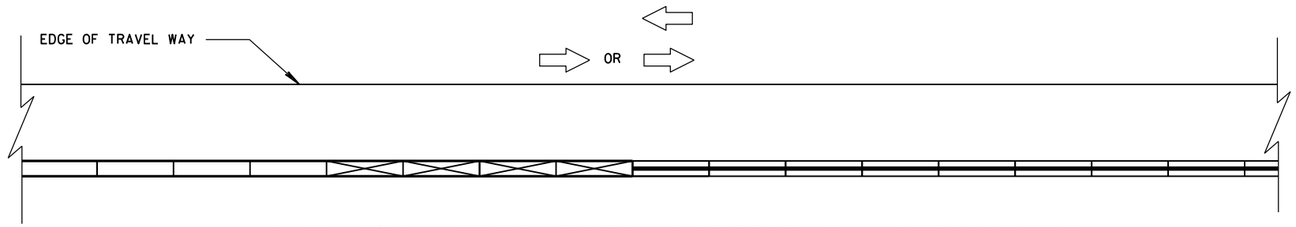

CONNECTING TEMPORARY BARRIER TO PERMANENT
CONCRETE BARRIER-TRAFFIC ON ONE SIDE

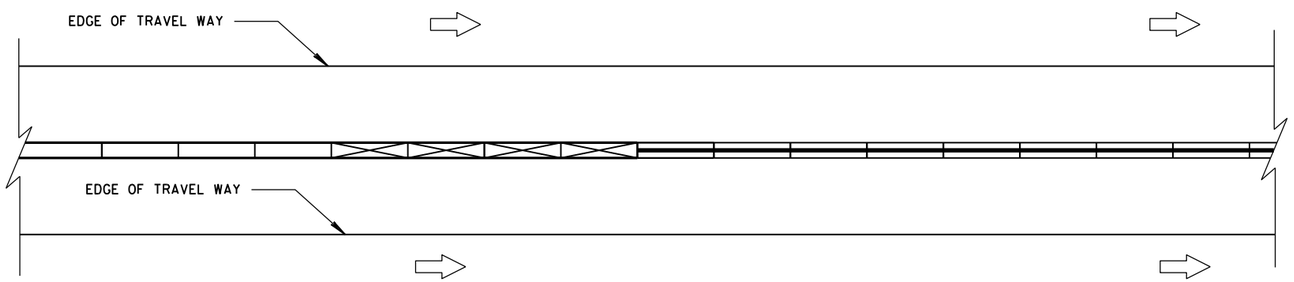

CONNECTING TEMPORARY BARRIER TO PERMANENT
CONCRETE BARRIER-TRAFFIC ON BOTH SIDES

LEGEND

DIRECTION OF TRAVEL

CRASH CUSHION OR
SAND BARREL ARRAY

SEE FREE STANDING TRANSITION
TO TIED-DOWN SYSTEM DETAILS

SEE BI-DIRECTIONAL TRANSITION
TO TIED-DOWN SYSTEM DETAILS

3 PINS PLACED ON
TRAFFIC SIDE OF BARRIER

PERMANENT CONCRETE BARRIER
OR CONCRETE PARAPET

FREE STANDING TEMPORARY
BARRIER

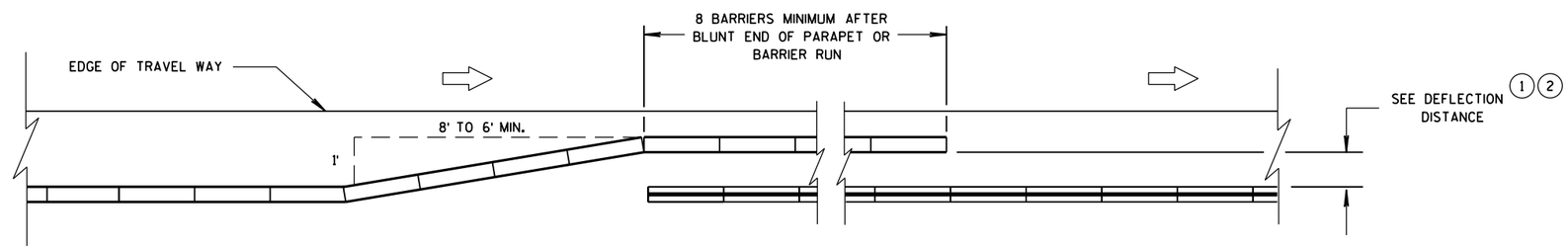

OVERLAPPING TEMPORARY BARRIER AND PERMANENT BARRIER -
ONE WAY TRAFFIC

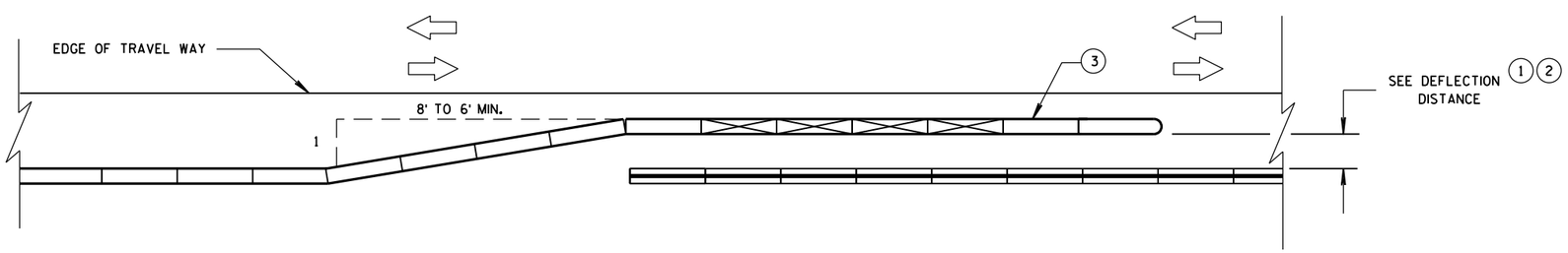

OVERLAPPING TEMPORARY BARRIER AND PERMANENT BARRIER -
TWO WAY TRAFFIC

CRASH CUSHION/SAND BARREL
ARRAY AND OTHER TEMPORARY
BARRIER LAYOUT DETAILS

STATE OF WISCONSIN
DEPARTMENT OF TRANSPOR

6

S.D.D. 14 B 8-2d

LEGEND

DIRECTION OF TRAVEL

CRASH CUSHION OR SAND BARREL ARRAY

SEE FREE STANDING TRANSITION TO TIED-DOWN SYSTEM DETAILS

SEE BI-DIRECTIONAL TRANSITION TO TIED-DOWN SYSTEM DETAILS

3 PINS PLACED ON TRAFFIC SIDE OF BARRIER

PERMANENT CONCRETE BARRIER OR CONCRETE PARAPET

FREE STANDING TEMPORARY BARRIER

DIMENSION C TABLE (2)

AVAILABLE DEFLECTION DISTANCE	MINIMUM LENGTH OF BARRIER BEYOND HAZARD FT
GREATER THAN 8'	12.5
LESS THAN OR EQUAL TO 8' BUT GREATER THAN 4'	50
LESS THAN OR EQUAL TO 4'	100

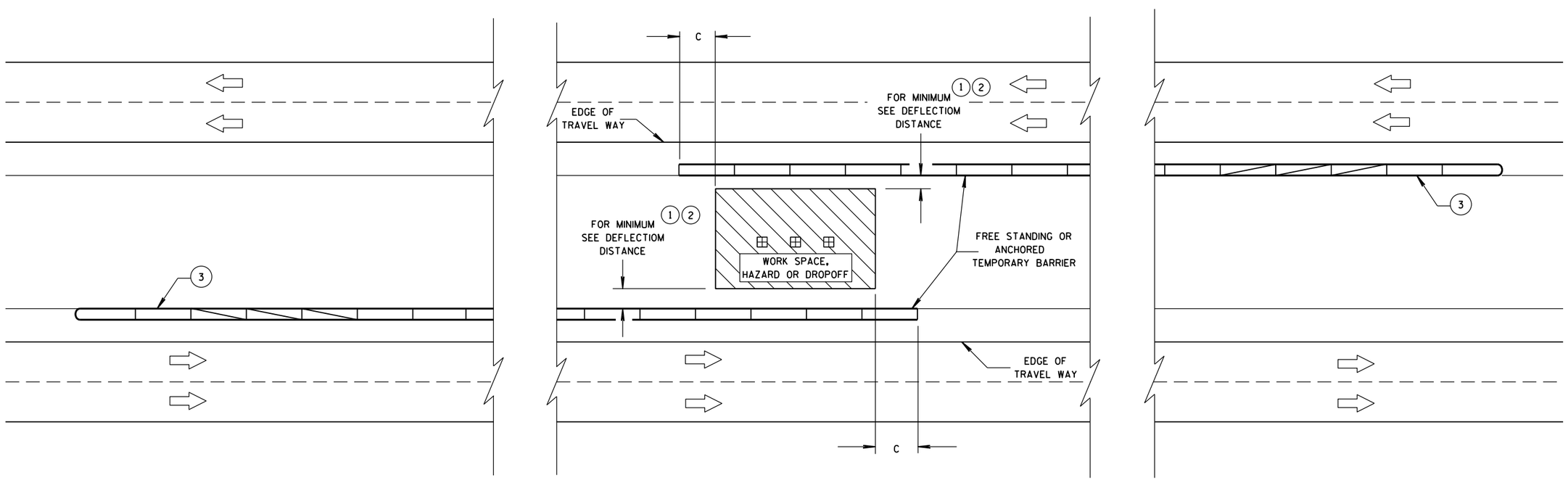

CRASH CUSHION/SAND BARREL ARRAY AND OTHER TEMPORARY BARRIER LAYOUT DETAILS

STATE OF WISCONSIN
DEPARTMENT OF TRANSPORTATION

APPROVED
June, 2015 — DATE
/S/ Jerry H. Zogg — ROADWAY STANDARDS DEVELOPMENT ENGINEER
FHWA

1. WOOD OR STEEL POSTS (w6X9 OR w6X8.5) MAY BE USED. DO NOT INTERMIX WOOD AND STEEL POSTS. INSTALL STEEL POSTS WITH HOLES ON APPROACHING TRAFFIC SIDE.
2. USE WOOD OR APPROVED PLASTIC BLOCKOUTS. WOOD BLOCKOUTS MAY BE CONSTRUCTED OUT OF TWO OR MORE WOOD BLOCKOUTS. SEE ALTERNATE WOOD BLOCKOUT DETAIL. DIMENSIONS OF APPROVED PLASTIC BLOCKOUTS MAY VARY.
3. IF ROCK IS ENCOUNTERED DURING EXCAVATION, PROVIDE A HOLE 12 INCHES IN DIAMETER EXTENDING 20 INCHES DEEP INTO THE ROCK. PLACE APPROXIMATELY 2 1/2" INCHES OF GRANULAR MATERIAL IN THE BOTTOM OF THE HOLE. CUT THE POSTS THE TO LENGTH AMD INSTALL. BACKFILL WITH EXCAVATED MATERIAL AND COMPACT. BACKFILL IS TO BE FREE OF LARGE ROCKS.
4. WHEN THE DISTANCE FROM BACK OF POST TO SHOULDER HINGE POINT IS LESS THAN 2 FEET INSTALL LONGER POST AT HALF POST SPACING (K).
5. FOR NEW MGS INSTALLATION TOP OF W-BEAM RAIL TOLERANCE IS ±1". FOR EXISTING MGS INSTALLATION TOP OF W-BEAM IS BETWEEN 27 ¾" TO 32".
6. WHEN USING STEEL POST AND WOOD BLOCKOUTS INSTALL FOUR 16D GALVANIZED NAILS. INSTALL NAILS AT THE BACK CORNERS OF THE BLOCK AND BEND THE NAILS OVER THE FLANGE OF THE STEEL POST.
7. TOTAL POST LENGTH FOR TYPE K IS 7' - 0". TOTAL POST LENGTH FOR OTHER MGS TYPES IS 6' - 0".

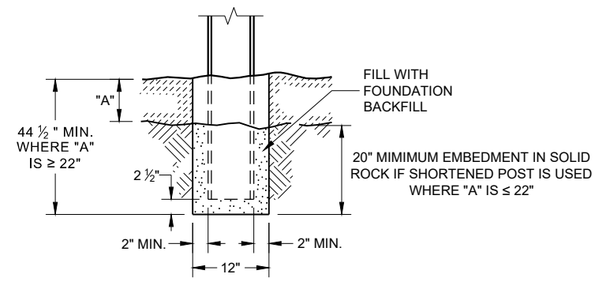

END VIEW
SETTING STEEL OR WOOD POST IN ROCK (3)

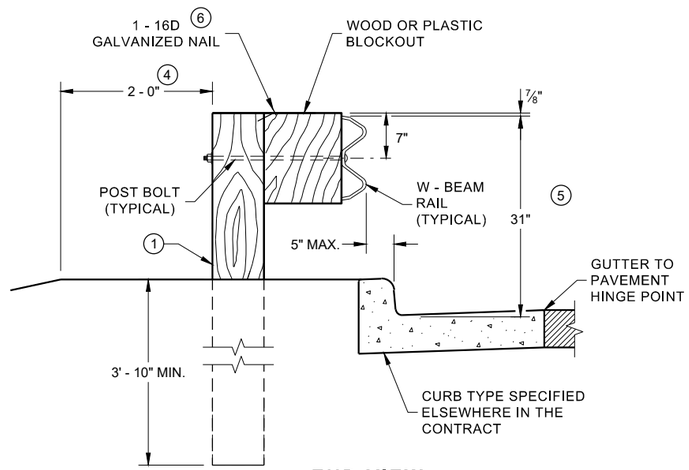

END VIEW
LOCATED ALONG A CURBED ROADWAY

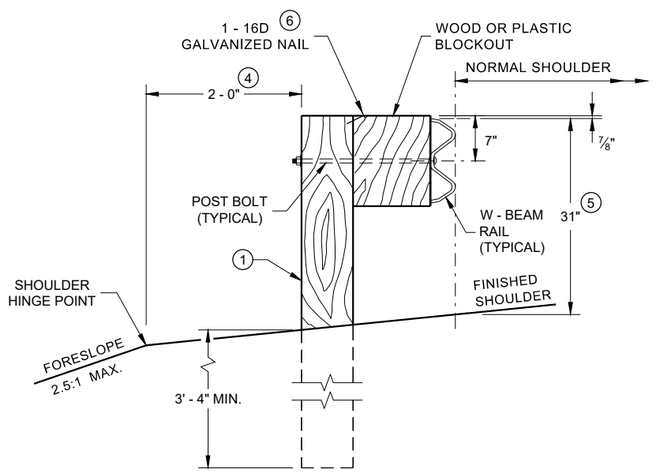

END VIEW
LOCATED ALONG A ROADWAY SHOULDER STANDARD INSTALLATION

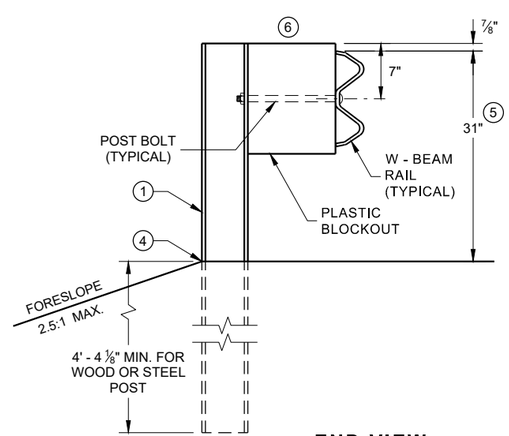

END VIEW
MGS LONGER POST AT HALFPOST SPACING W BEAM (K)

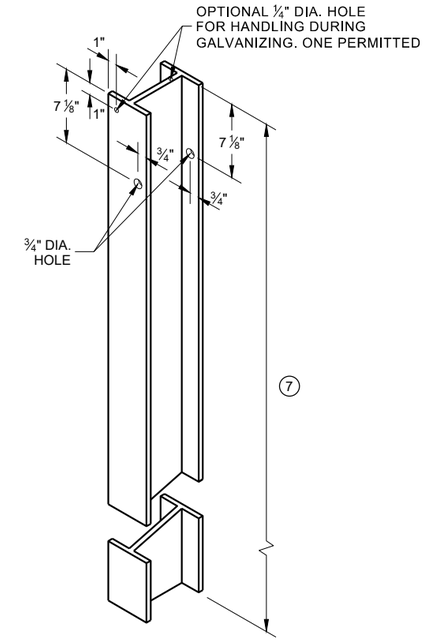

STEEL POST & HOLE PUNCHING DETAIL (W 6 X 9) (1)

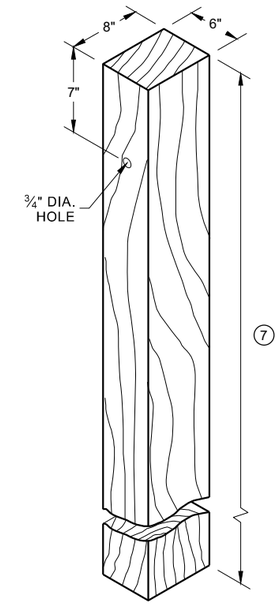

WOOD POST (6" X 8") NOMINAL (1)

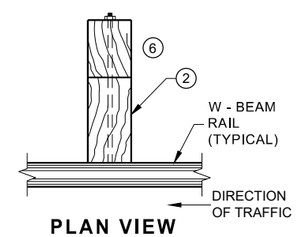

PLAN VIEW WOOD POST, BLOCKOUT & BEAM

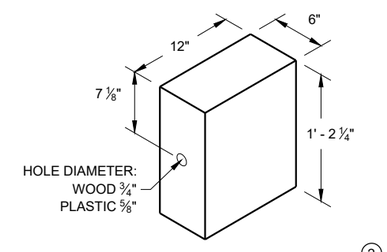

WOOD OR PLASTIC BLOCKOUT (2)

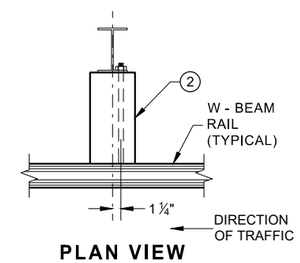

PLAN VIEW STEEL POST, PLASTIC BLOCKOUT & BEAM

MIDWEST GUARDRAIL SYSTEM (MGS) GUARDRAIL

STATE OF WISCONSIN
DEPARTMENT OF TRANSPORTATION

6

SDD 14B42 - 07a

6

SDD 14B42 - 07a

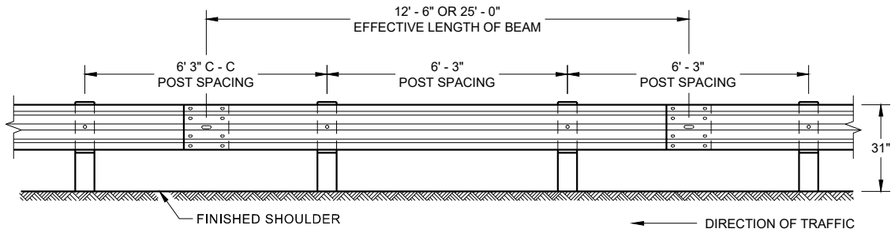

FRONT VIEW
POST SPACING STANDARD INSTALLATION

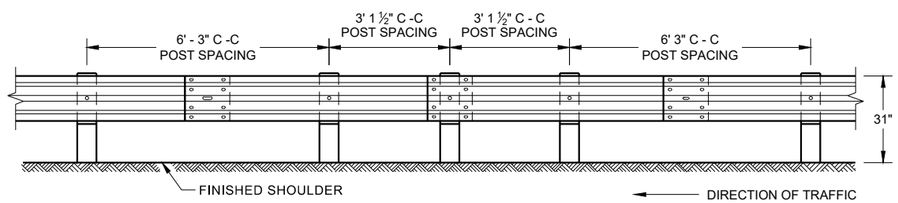

FRONT VIEW
HALF POST SPACING (HS) AND HALF POST SPACING WITH LONGER POSTS (K)

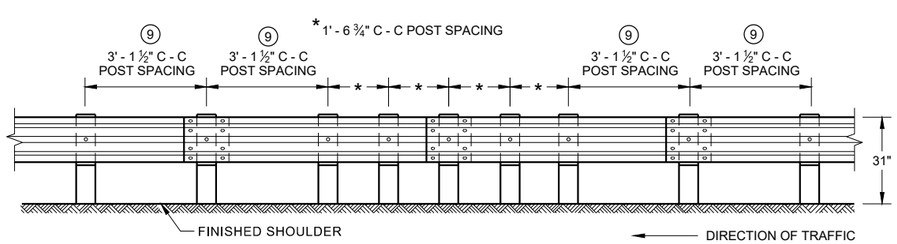

FRONT VIEW
QUARTER POST SPACING (QS)

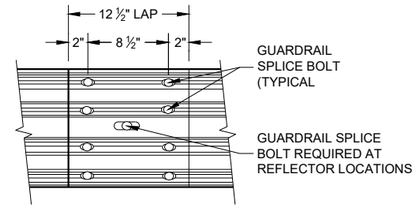

FRONT VIEW
MID-SPAN BEAM SPLICE

GENERAL NOTES

8 DO NOT INSTALL REFLECTORS ON THE FIRST 50 FEET OF THE APPROACH END OF THE ENERGY ABSORBING TERMINAL.

9 25 FEET OF HALF POST SPACING IS REQUIRED ON APPROACH AND DEPARTURE ENDS OF QUARTER POST SPACING.

POST BOLTS ARE A ⅝" DIAMETER ASTM A307 GUARDRAIL BOLT. A POST BOLT REQUIRES ⅝" DIAMETER A563A DOUBLE RECESSED (DR) HEAVY HEX NUT AND ⅝" DIAMETER F844 FLAT WASHER. POST BOLTS MAY BE LONGER IF MULTIPLE BLOCKOUTS ARE BEING USED.

GUARD RAIL SPLICE BOLTS ARE A ⅝" DIAMETER ASTM A307 GUARDRAIL HEAD BOLT. A GUARDRAIL SPLICE BOLT REQUIRES ⅝" DIAMETER A563A DOUBLE RECESSED (DR) HEAVY HEX NUT.

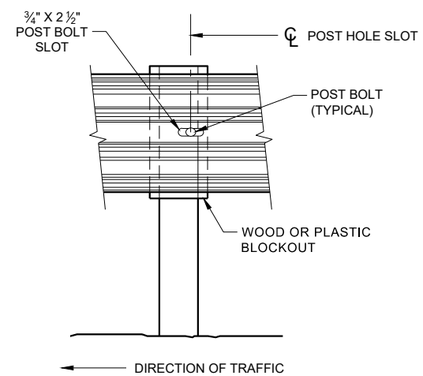

FRONT VIEW AT STEEL POST

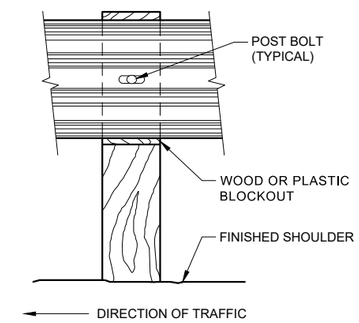

FRONT VIEW AT WOOD POST

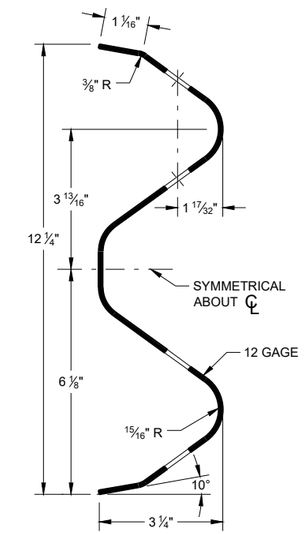

SECTION THRU W-BEAM RAIL

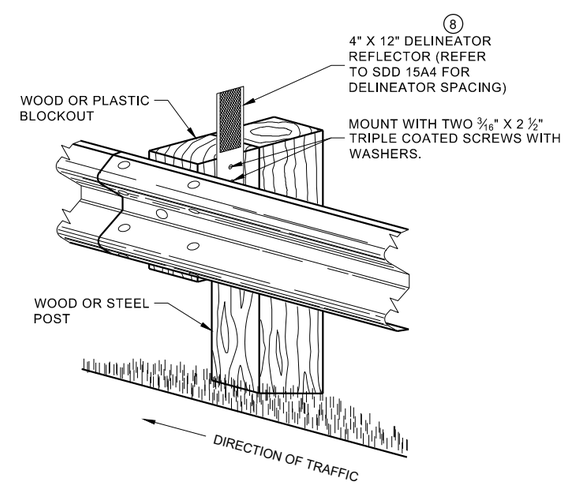

ONE SIDED REFLECTOR DETAIL AND TYPICAL INSTALLATION

MIDWEST GUARDRAIL SYSTEM (MGS) GUARDRAIL

STATE OF WISCONSIN
DEPARTMENT OF TRANSPORTAT

6

SDD 14B42 - 07b

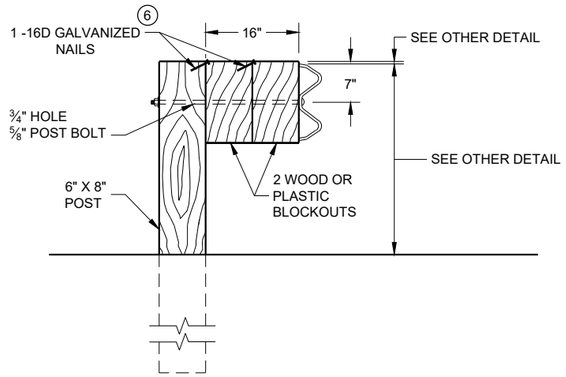

DETAIL FOR 16" BLOCKOUT DEPTH

IT IS ACCEPTABLE TO USE BLOCKOUTS UP TO 16" DEEP TO INCREASE THE POST OFFSET TO AVOID UNDERGROUND OBSTACLES. THERE IS NO LIMIT TO THE NUMBER OF POSTS THAT CAN HAVE ADDITIONAL BLOCKOUTS UP TO 16" DEEP.

NOTE:

1. ALL FILLETS SHALL HAVE A MINIMUM RADIUS OF 3/16".
2. IF THE BOLT EXTENDS MORE THAN ¼" FROM THE NUT THE BOLT SHOULD BE TRIMMED BACK.

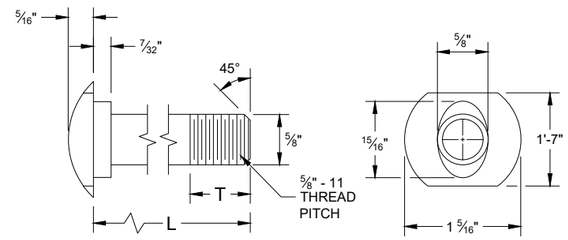

POST BOLT TABLE

L	T (MIN.)
1 ¼"	1 ⅛"
2"	1 ¾"
10"	4"
14"	4 1/16"
18"	4"
21"	4 1/16"
25"	4"

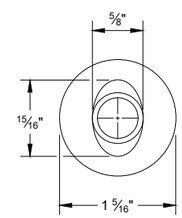

ALTERNATE BOLT HEAD

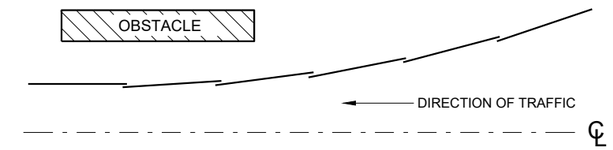

PLAN VIEW
BEAM LAPPING DETAIL

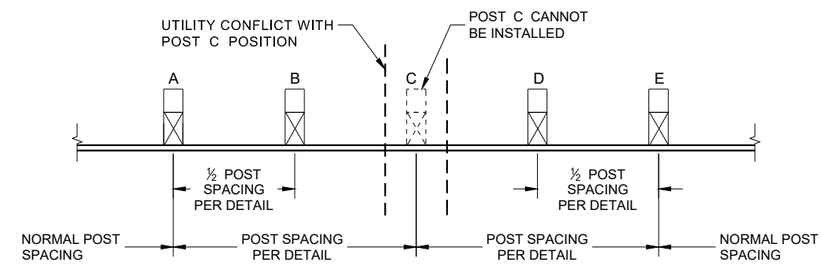

POST DRIVING FOR CONTINUOUS UNDERGROUND OBSTRUCTION

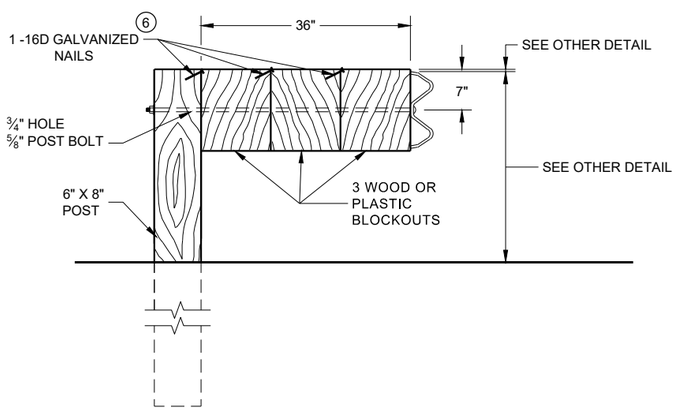

DETAIL FOR 36" BLOCKOUT DEPTH

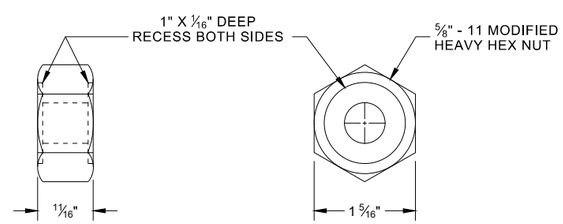

POST BOLT, SPLICE BOLT AND RECESS NUT

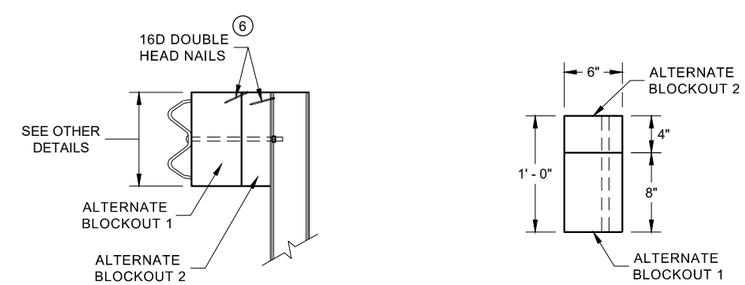

SIDE VIEW

PLAN VIEW

ALTERNATE WOOD BLOCKOUT DETAIL

NOTES: UNDER SPECIAL CIRCUMSTANCES, SUCH AS AVOIDING OBSTACLES THAT ARE NOT RELOCATED, IT IS ACCEPTABLE TO INSTALL ADDITIONAL BLOCKOUTS TO OBTAIN UP TO 36" DEPTH FOR ONE OR TWO POSTS IN A SECTION OF GUARDRAIL.

DO NOT USE 16" OR 36" BLOCKOUTS IF IT CAUSES THE POST TO BE DRIVEN BEYOND SHOULDER HINGE POINT OR CAUSES A FIXED OBJECT TO BE WITHIN THE DEFLECTION DISTANCE OF THE BARRIER.

(6) WHEN USING STEEL POST AD WOOD BLOCKOUTS, INSTALL FOUR 16D GALVANIZED NAILS. INSTALL NAILS AT THE BACK CORNERS OF THE BLOCK AND BEND THE NAILS OVER THE FLANGE OF THE STEEL POST.

MIDWEST GUARDRAIL SYSTEM (MGS) GUARDRAIL

STATE OF WISCONSIN
DEPARTMENT OF TRANSPORTA

6

SDD 14B42 - 07c

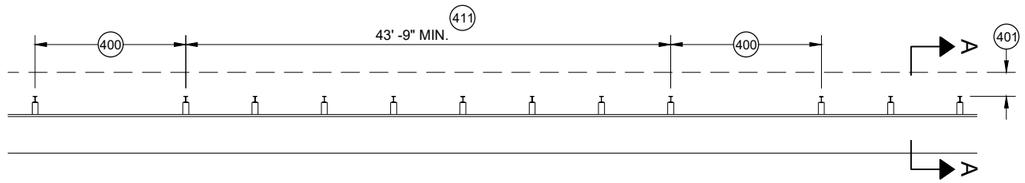

MISSING POST IN MGS GUARDRAIL

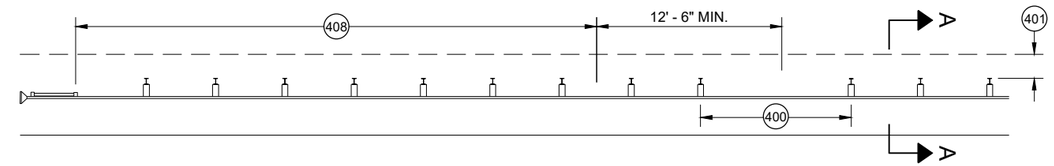

MISSING POST IN MGS GUARDRAIL NEAR EAT

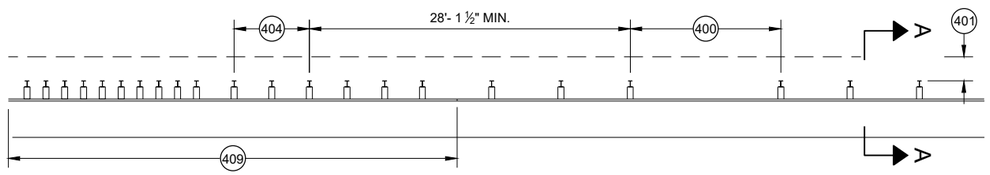

MISSING POST IN MGS GUARDRAIL NEAR AN APPROACH TRANSITION

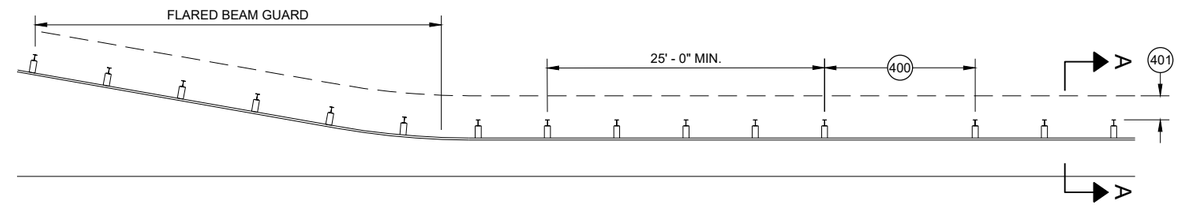

MISSING POST IN MGS GUARDRAIL NEAR FLARED BEAM GUARD

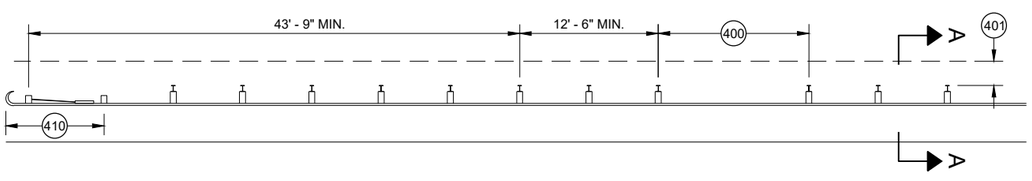

MISSING POST IN MGS GUARDRAIL NEAR A TYPE 2 END TERMINAL

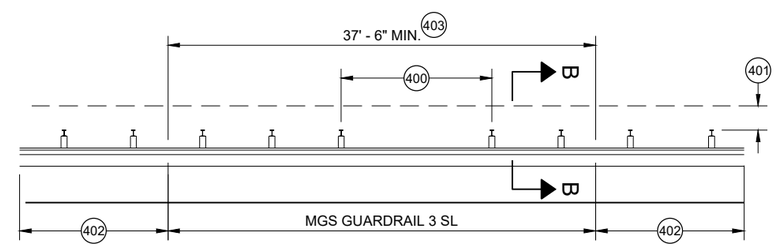

MISSING POST IN SHORT SPAN MGS GUARDRAIL NEAR CURB (SL) 407

400 MAX SPAN 12' - 6"
401 2' MIN.
402 MGS GUARDRAIL 3
403 NESTING BEAM GUARD
404 ASYMMETRIC TRANSITION
405 SOIL WELL DRAINED AND COMPACTED
406 SEE OTHER DRAWINGS IN THIS SDD
407 SEE OTHER DRAWINGS FOR MIN. SPACING BETWEEN SPANS
408 SEE SDD 14B44
409 SEE SDD 14B45
410 SEE SDD 14B47
411 MINIMUM DISTANCE BETWEEN MISSING POST SPANS.

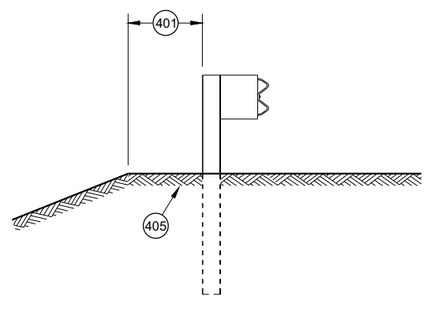

SECTION A - A 406

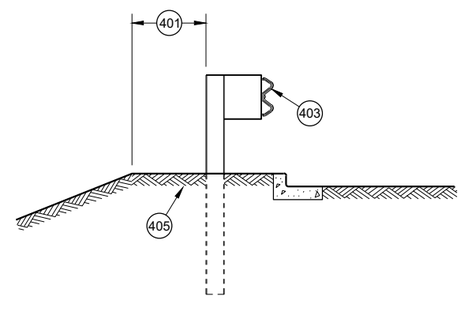

SECTION B - B 406

MIDWEST GUARDRAIL SYSTEM (MGS) GUARDRAIL

STATE OF WISCONSIN
DEPARTMENT OF TRANSPORTATION

APPROVED
May 2021 — DATE
/S/ Rodney Taylor — ROADWAY STANDARDS DEVE UNIT SUPERVISOR
FHWA

6

SDD 14B42 - 07d

GENERAL NOTES

(A) THE SLOPE IN THE AREA BOUNDED BY THE GRADELINE, THE HINGE POINT LINE (HPL) AND THE CLEAR ZONE LIMITS (CZL) SHALL BE 4:1 OR FLATTER.

(B) AFTER FINAL ASSEMBLY, RECHECK CABLE TO BE SURE IT IS TAUT AND HAS NOT RELAXED

(C) DIFFERENT MANUFACTURERS REQUIRE DIFFERENT PERFORATED W - BEAM RAIL END PANELS. SEE MANUFACTURER'S INFORMATION.

(D) ATTACH ALUMINUM SHEET TO E.A.T. HEAD USING 4 STAINLESS STEEL SELF - TAPPING SCREWS. ONE SCREW PER CORNER.

(E) HARDWARE MAY VARY BETWEEN MANUFACTURER. SEE MANUFACTURER'S DRAWING FOR INFORMATION.

DIMENSIONS MAY VARY, MANUFACTURER'S INFORMATION.

SEE SDD 14B42 FOR MORE INFORMATION.

* DO NOT ATTACH BLOCKOUTS TO POST 1 AND 2.

DO NOT INSTALL REFLECTORS ON THE FIRST 50 FEET OF THE APPROACH END OF THE ENERGY ABSORBING TERMINAL.

SEE MANUFACTURER'S DRAWING FOR SPLICE LOCATION, HARDWARE DIMENSIONS AND INSTALLATION INSTRUCTIONS.

THE CENTER OF THE UPPER 3 ½" DIAMETER HOLE ON POST NUMBER 3 THROUGH POST 9 IS TO BE FLUSH WITH THE GROUND LINE UP TO A MAXIMUM OF 2" ABOVE GROUND LINE. WOOD BLOCKS ON POSTS NUMBERED 3 THROUGH 9 MAY BE ADJUSTED UP TO 3" ABOVE THE TOP OF POST.

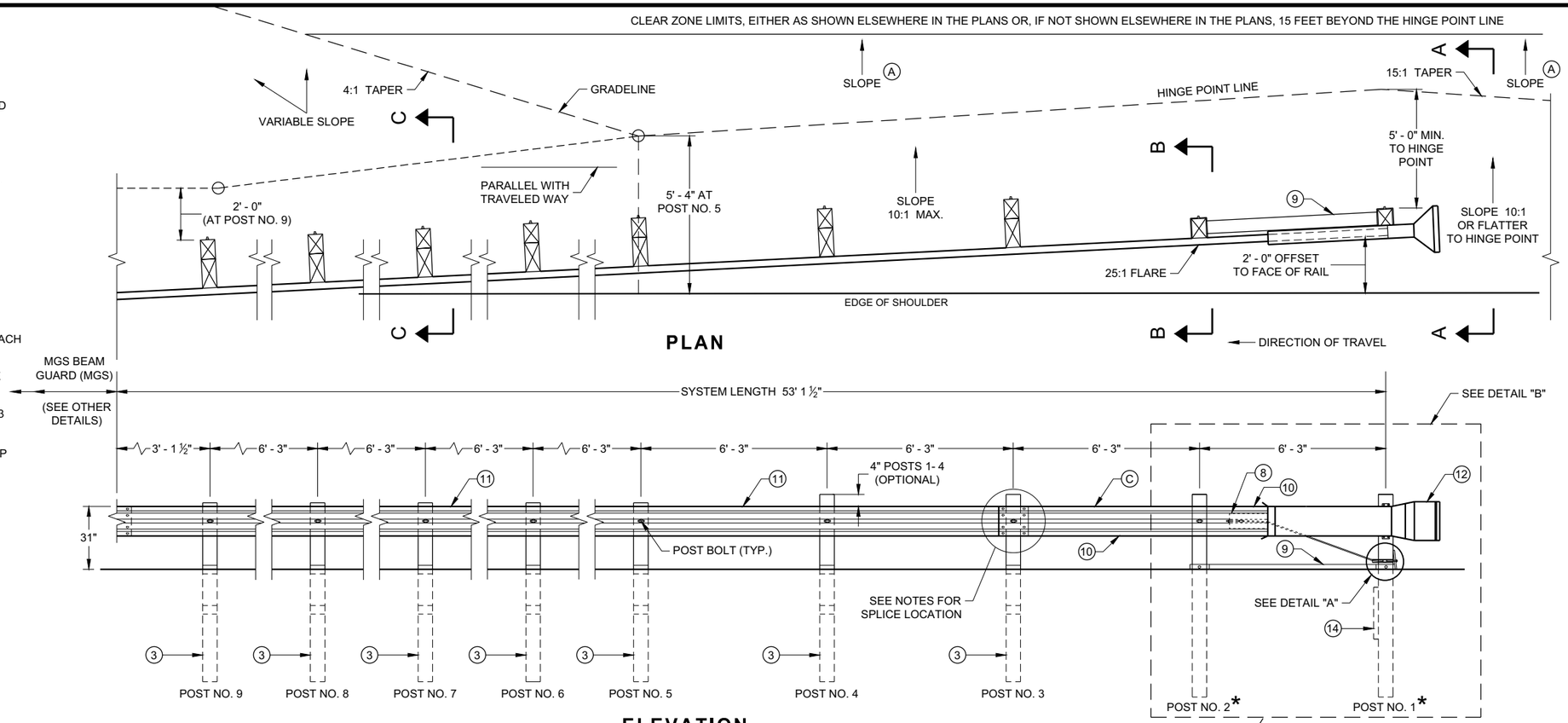

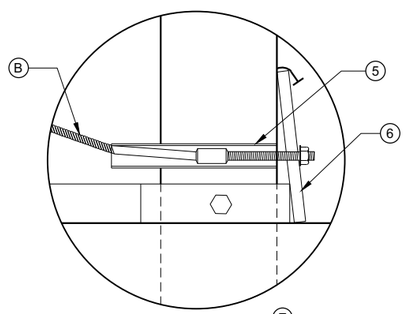

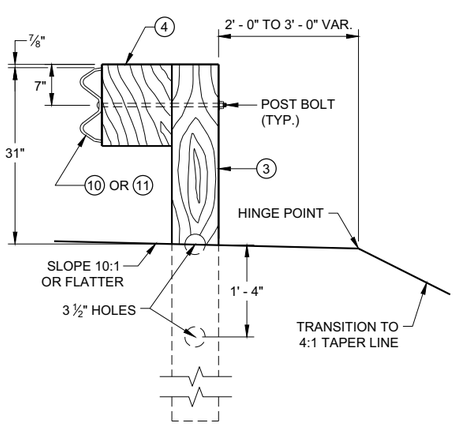

SECTION C - C
TYPICAL AT POST NOS. 3 - 9

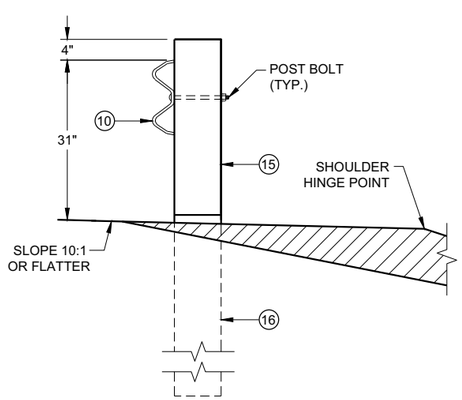

SECTION B - B
TYPICAL AT POST NO. 2*

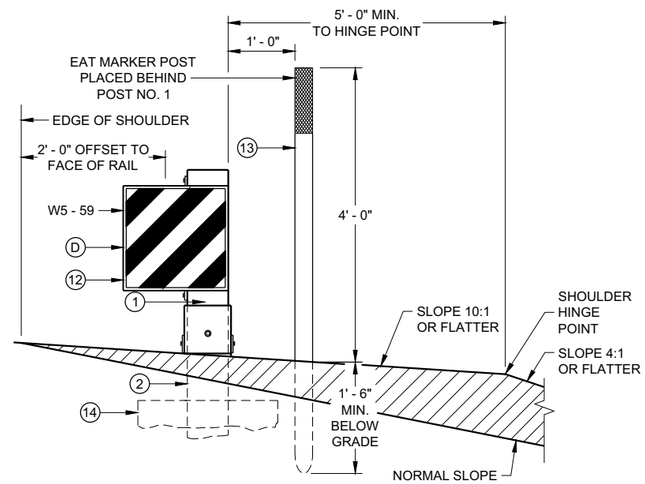

SECTION A - A
TYPICAL AT POST NO. 1*

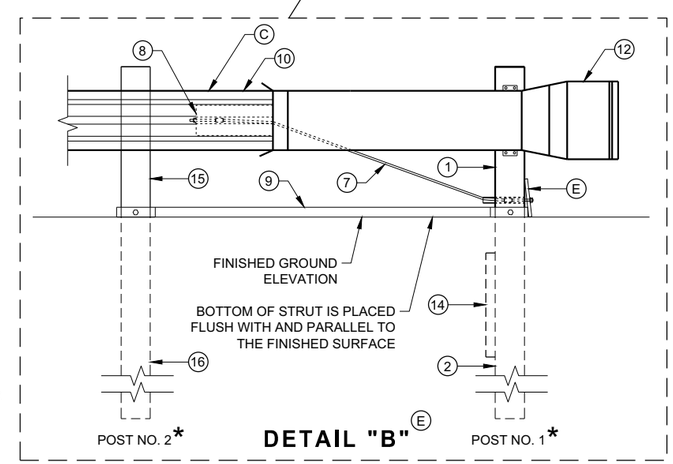

MIDWEST GUARDRAIL SYSTEM ENERGY ABSORBING TERMINAL (MGS)

STATE OF WISCONSIN
DEPARTMENT OF TRANSPORTATION

6

6

SDD 14B44 - 04a

SDD 14B44 - 04a

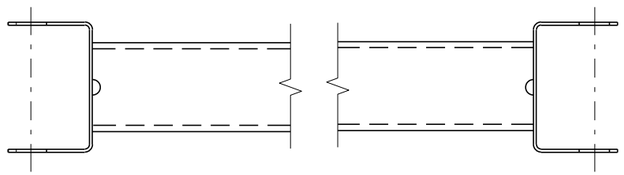

GENERIC GROUND STRUT 9 E

BILL OF MATERIALS

PART NO.	DESCRIPTION MATERIALS PROVIDED BY MGS EAT MANUFACTURER. SEE MANUGACTURER'S DETAILS FOR MORE INFORMATION.
1	UPPER POST NO. 1 6" X 6" TUBE
2	LOWER POST NO. 1
3	WOOD CRT
4	WOOD BLOCKOUT
5	PIPE SLEEVE
6	BEARING PLATE
7	BCT CABLE ASSEMBLY
8	ANCHOR CABLE BOX
9	GROUND STRUT
10	PERFORATED W-BEAM RAIL END PANEL, 12'-6" LONG.
11	STANDARD W-BEAM RAIL. MULTIPLE SECTIONS REQUIRED. SECTIONS VARY IN LENGTH.
12	IMPACT HEAD
13	EAT MARKER POST - YELLOW (SEE APPROVED PRODUCTS LIST)
14	SOIL PLATE
15	UPPER POST NO. 2
16	LOWER POST NO. 2

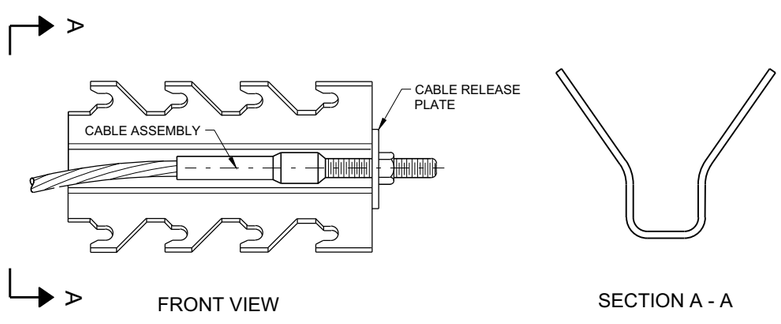

GENERIC ANCHOR CABLE BOX 9 E

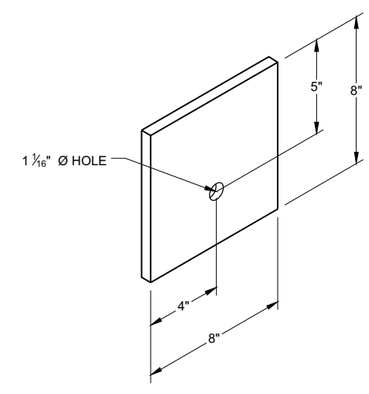

BEARING PLATE 6 E

6

6

SDD 14B44 - 04b

SDD 14B44 - 04b

MIDWEST GUARDRAIL SYSTEM ENERGY ABSORBING TERMINAL (MGS)

STATE OF WISCONSIN
DEPARTMENT OF TRANSPORTAT

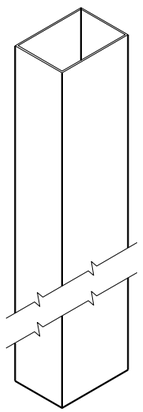

UPPER POST NO. 1 (1) (E)

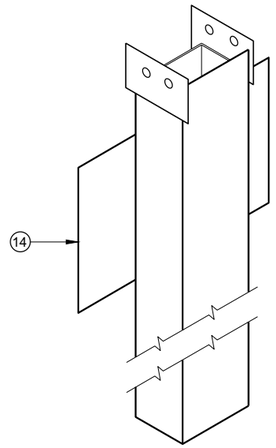

LOWER POST NO. 1 (2) (E)

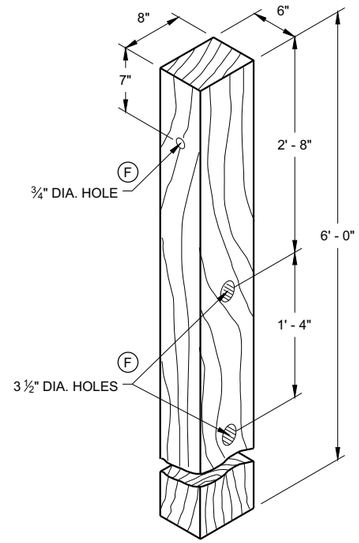

WOOD CRT POST (3) (E)

POSTS NUMBER 3-9

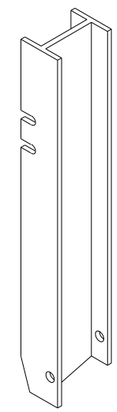

UPPER POST NO. 2 (15) (E)

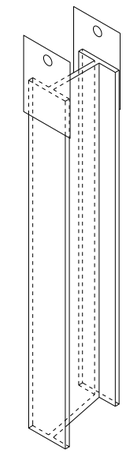

LOWER POST NO. 2 (16) (E)

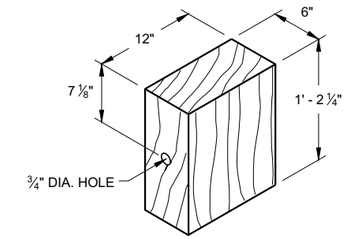

WOOD BLOCKOUT (4)

REQ'D. AT ALL POSTS EXCEPT POST NO'S 1 & 2

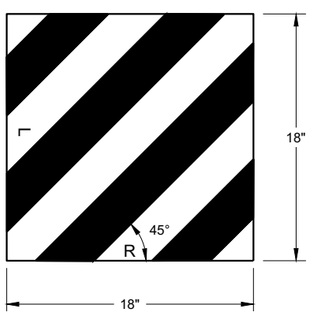

W5 - 59

REFLECTIVE SHEETING DETAIL (E)

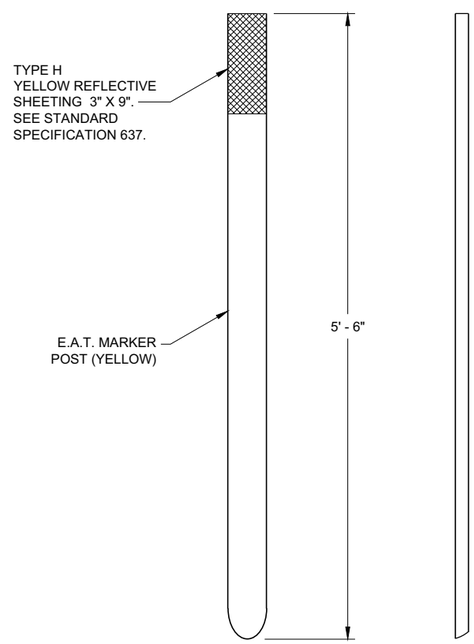

FRONT VIEW SIDE VIEW

E.A.T. MARKER POST (13)

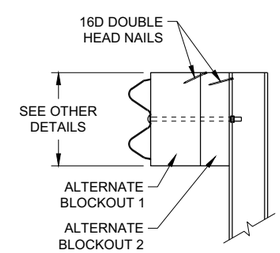

SIDE VIEW

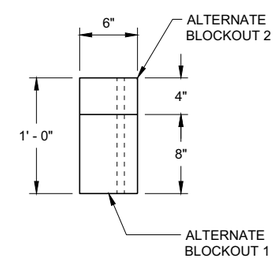

TOP VIEW

ALTERNATE WOOD BLOCKOUT DETAIL

MIDWEST GUARDRAIL SYSTEM ENERGY ABSORBING TERMINAL (MGS)

STATE OF WISCONSIN
DEPARTMENT OF TRANSPORTATION

APPROVED
7/2018 — DATE
/S/ Rodney Taylor — ROADWAY STANDARDS DEVE UNIT SUPERVISOR
FHWA

6

6

SDD 14B44 - 04c

SDD 14B44 - 04c

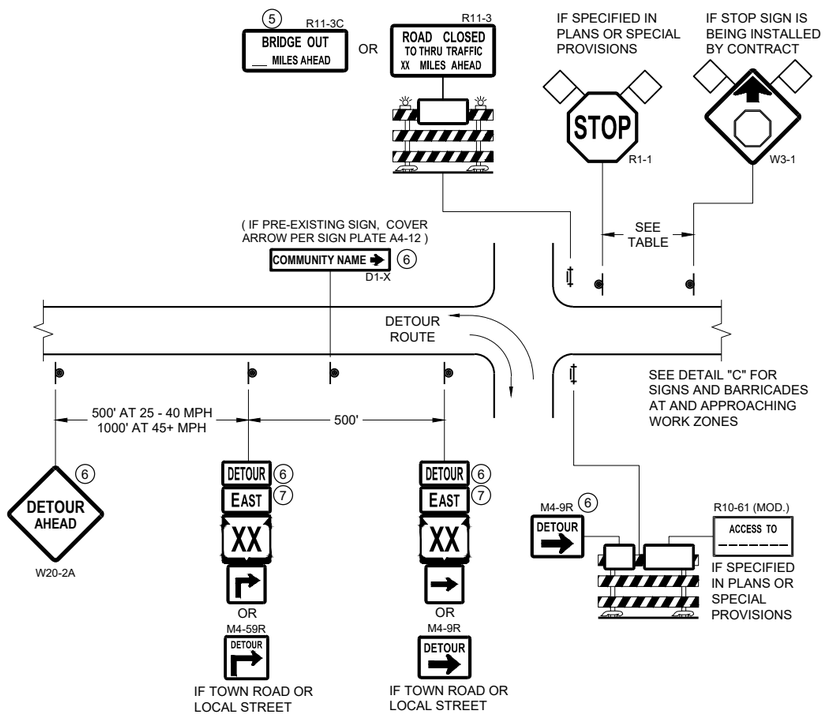

DETAIL A
MAINLINE CLOSURE WITH POSTED DETOUR
WORK ZONE GREATER THAN OR EQUAL TO ½ MILE FROM DETOUR ROUTE (1000 FEET IF URBAN)

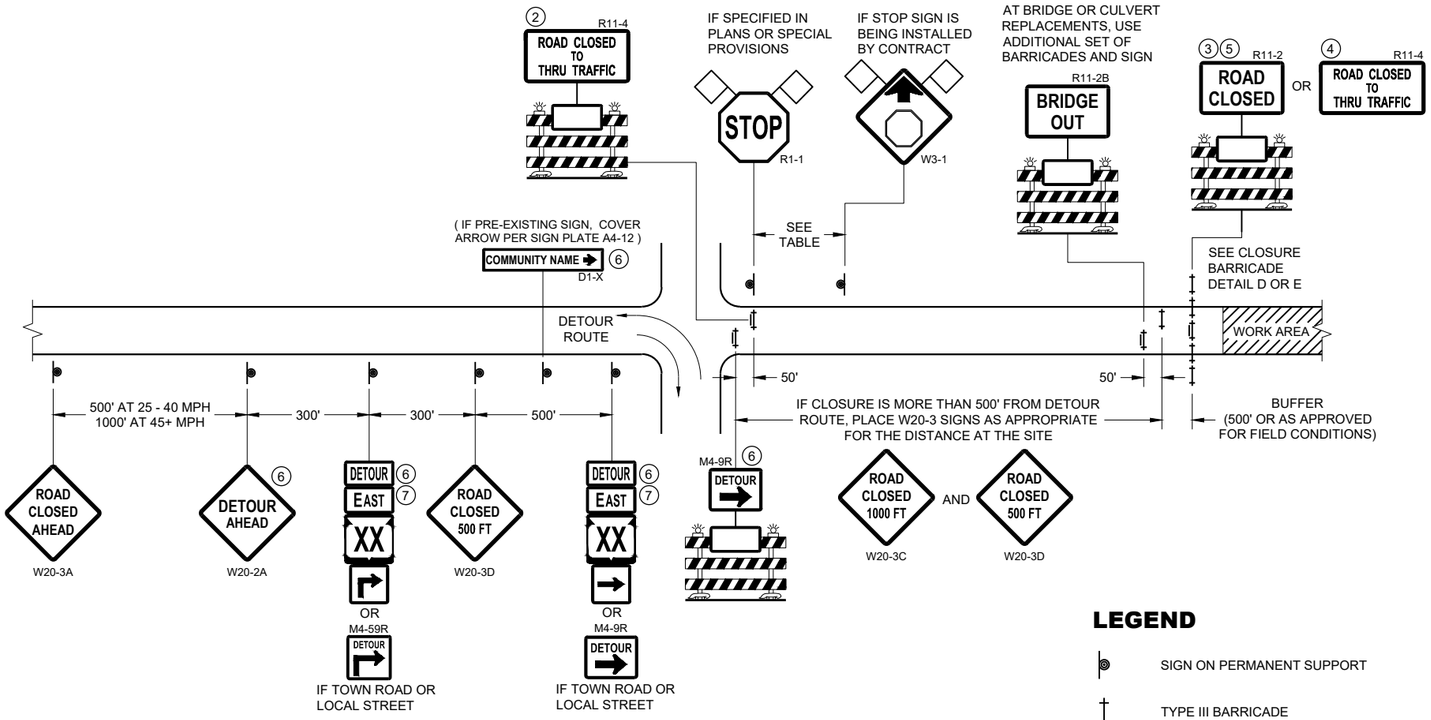

DETAIL B
MAINLINE CLOSURE WITH POSTED DETOUR
WORK ZONE LESS THAN ½ MILE FROM DETOUR ROUTE (1000 FEET IF URBAN)

LEGEND

- SIGN ON PERMANENT SUPPORT
- TYPE III BARRICADE
- TYPE III BARRICADE WITH ATTACHED SIGN
- TYPE "A" WARNING LIGHT (FLASHING)
- WORK AREA
- FLAGS, 16" X 16" MIN. (ORANGE)
- DETOUR M4 - 8
- EAST M3 - X
- XX M1 - 4 OR XX M1 - 6 OR COUNTY X M1 - 5A
- M05 - 1 OR M06 - 1

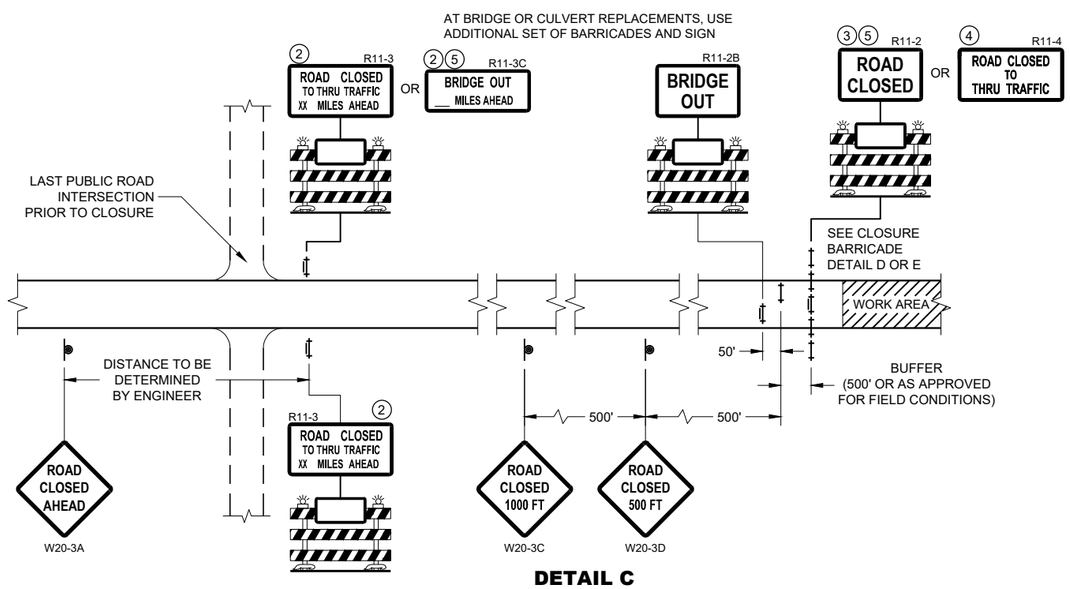

DETAIL C
MAINLINE CLOSURE, NO POSTED DETOUR

SPEED LIMIT (MPH)	"STOP AHEAD" ADVANCE WARNING DISTANCE (FT)
25	200
30	200
35	350
40	350
45	500
50	550
55	750

SEE SDD 15C2-SHEET "b" FOR GENERAL NOTES AND FOOTNOTES ① THROUGH ⑦

BARRICADES AND SIGNS FOR MAINLINE CLOSURES

STATE OF WISCONSIN
DEPARTMENT OF TRANSPORTATION

APPROVED
May 2023 — DATE
/S/ Andrew Heidtke — WORK ZONE ENGINEER

FHWA

6

SDD 15C02 - 09a

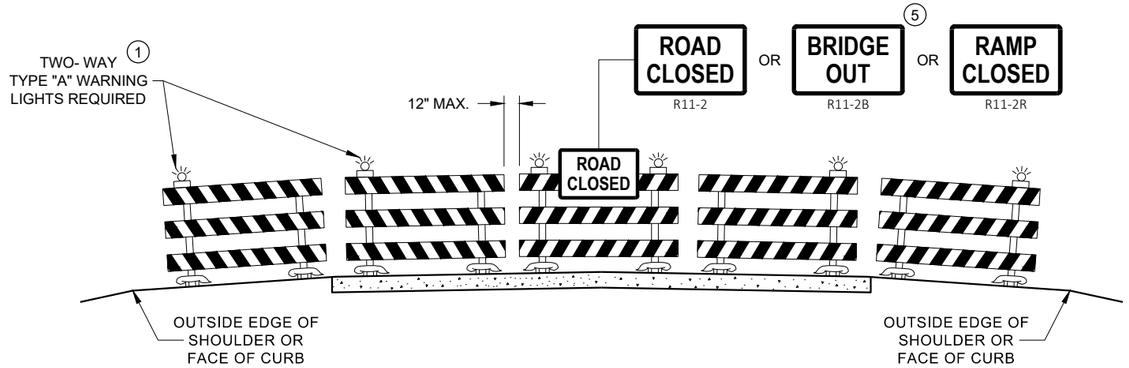

DETAIL D
ROAD CLOSURE BARRICADE DETAIL
APPROACH VIEW

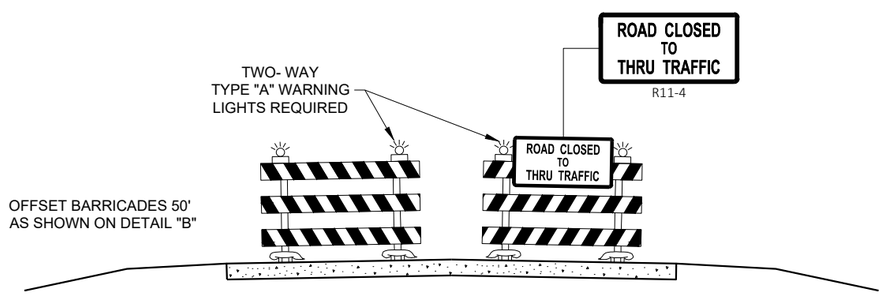

DETAIL E
LANE CLOSURE BARRICADE DETAIL
APPROACH VIEW

SEE SDD 15C2 - SHEET "a" FOR LEGEND

GENERAL NOTES

THE EXACT NUMBER, LOCATION, AND SPACING OF ALL SIGNS AND BARRICADES SHALL BE ADJUSTED TO FIT FIELD CONDITIONS AS APPROVED BY THE ENGINEER.

ANY SIGNS TEMPORARY OR EXISTING, WHICH CONFLICT WITH TRAFFIC CONTROL "IN USE", SHALL BE REMOVED OR COVERED AS NEEDED AND AS APPROVED BY THE ENGINEER.

THE SPACING BETWEEN TRAFFIC CONTROL SIGNS SHOULD BE ADJUSTED TO NOT CONFLICT WITH AND SHOULD PROVIDE A DESIRABLE MINIMUM OF 200 FEET CLEARANCE TO EXISTING SIGNS THAT WILL REMAIN IN PLACE.

BARRICADES THAT MUST BE MOVED FOR A WORK OPERATION SHALL BE IMMEDIATELY RE-ESTABLISHED UPON COMPLETION OF THE OPERATION, OR FOR CONTINUING OPERATIONS, AT THE END OF EACH WORKING DAY.

SIGNS THAT WILL BE IN PLACE LESS THAN 7 CONTINUOUS DAYS AND NIGHTS MAY BE MOUNTED ON PORTABLE SUPPORTS.

ALL TYPE III BARRICADES SHALL HAVE RAILS REFLECTORIZED ON BOTH FACES. STRIPES SHALL BE PROPERLY SLOPED DOWN TOWARD THE TRAFFIC SIDE OR AS SHOWN IN THE ROAD CLOSURE BARRICADE DETAIL "D" FOR FULL ROAD CLOSURES.

TYPE "A" LOW - INTENSITY FLASHING WARNING LIGHTS SHALL BE VISIBLE ON BOTH SIDES OF THE BARRICADE.

THE R11 - 2, R11 - 3, M4 - 9, R11 - 4, AND R10 - 61 SIGNS PLACED ON THE BARRICADES SHALL COVER NO MORE THAN THE TOP RAIL. THE SIGNS SHALL NOT COVER ANY PORTION OF THE MIDDLE RAIL OR BOTTOM RAILS.

"WO" AND "MO" SIGNS ARE THE SAME AS "W" AND "M" SIGNS EXCEPT THE BACKGROUND IS ORANGE.

ALL SIGNS SHALL BE 48" X 48" UNLESS OTHERWISE NOTED BELOW:
- R11 - 2 SHALL BE 48" X 30"
- R11 - 3 SHALL, R11 - 4 AND R10 - 61 SHALL BE 60 " X 30"
- M4 - 9 SHALL BE 30" X 24"
- M3 - X SHALL BE 24" X 12" (36" X 18" IF NEEDED TO MATCH EXISTING SIGNS)
- M4 - 8 SHALL BE 24" X 12" (36" X 18" IF NEEDED TO MATCH EXISTING SIGNS)
- M1 - 4, M1 - 5A AND M1 - 6 SHALL BE 24" X 24" (36" X 36" IF NEEDED TO MATCH EXISTING SIGNS)
- MO5 - 1 AND MO6 - 1 SHALL BE 21" X 21" (30" X 30" IF NEEDED TO MATCH EXISTING SIGNS)
- D1 - X SHALL BE AS SHOWN ON SPECIFIC PROJECT SIGNING DETAIL SHEETS.
- R1 - 1 SHALL BE 36" X 36"

1. TWO WARNING LIGHTS SHALL BE PROVIDED ON THE CENTER BARRICADE AND A MINIMUM OF ONE WARNING LIGHT SHALL BE PROVIDED ON EACH OF THE OTHER BARRICADES WITHIN THE ROADWAY LIMITS. SPACING OF THE WARNING LIGHTS SHALL BE UNIFORM TO THE EDGE OF ROADWAY AS SHOWN (APPROX. 8 FOOT LIGHT SPACING.
2. THESE SIGNS AND BARRICADES ARE NOT REQUIRED IF ROAD CLOSURE BEGINS AT AN INTERSECTION.
3. FOR ROAD CLOSURE WITHOUT LOCAL ACCESS TO PROJECT, SEE ROAD CLOSURE BARRICADE DETAIL "D".
4. FOR ROAD CLOSURE WITH LOCAL ACCESS TO PROJECT, SEE ROAD CLOSURE BARRICADE DETAIL "E".
5. FOR BRIDGE OR CULVERT REPLACEMENTS, SUBSTITUTE "BRIDGE OUT" INSTEAD OF "ROAD CLOSED" ON R11 - 2 AND R11 - 3 SIGNS.
6. INSTALL DETOUR AND COMMUNITY GUIDE SIGNS AND ARROWS ONLY IF SPECIFIED IN THE CONTRACT. IF THERE ARE EXISTING ROUTE MARKER ASSEMBLIES THAT WILL REMAIN IN PLACE, ADJUST THE LOCATION OF THE DETOUR ROUTE SIGNS TO CORRESPOND WITH THE EXISTING ASSEMBLIES. MODIFY EXISTING SIGNS WHERE POSSIBLE. SEE SPECIFIC PROJECT DETOUR SIGNING DETAIL SHEETS. IF DETOUR SIGNS ARE BEING INSTALLED BY OTHERS, PLACE THE CONTRACTED TRAFFIC CONTROL SIGNS TO ALLOW FOR PLACEMENT OF ALL WARNING, DETOUR AND GUIDE SIGNS AS SHOWN.
7. "EAST" CARDINAL DIRECTION MARKERS AND RIGHT TURN ARROWS ARE SHOWN. USE OTHER CARDINAL DIRECTIONS AND ARROWS AS APPROPRIATE.

BARRICADES AND SIGNS FOR VARIOUS CLOSURES

STATE OF WISCONSIN
DEPARTMENT OF TRANSPORTATION

APPROVED
May 2023 — DATE
/S/ Andrew Heidtke — WORK ZONE ENGINEE
FHWA

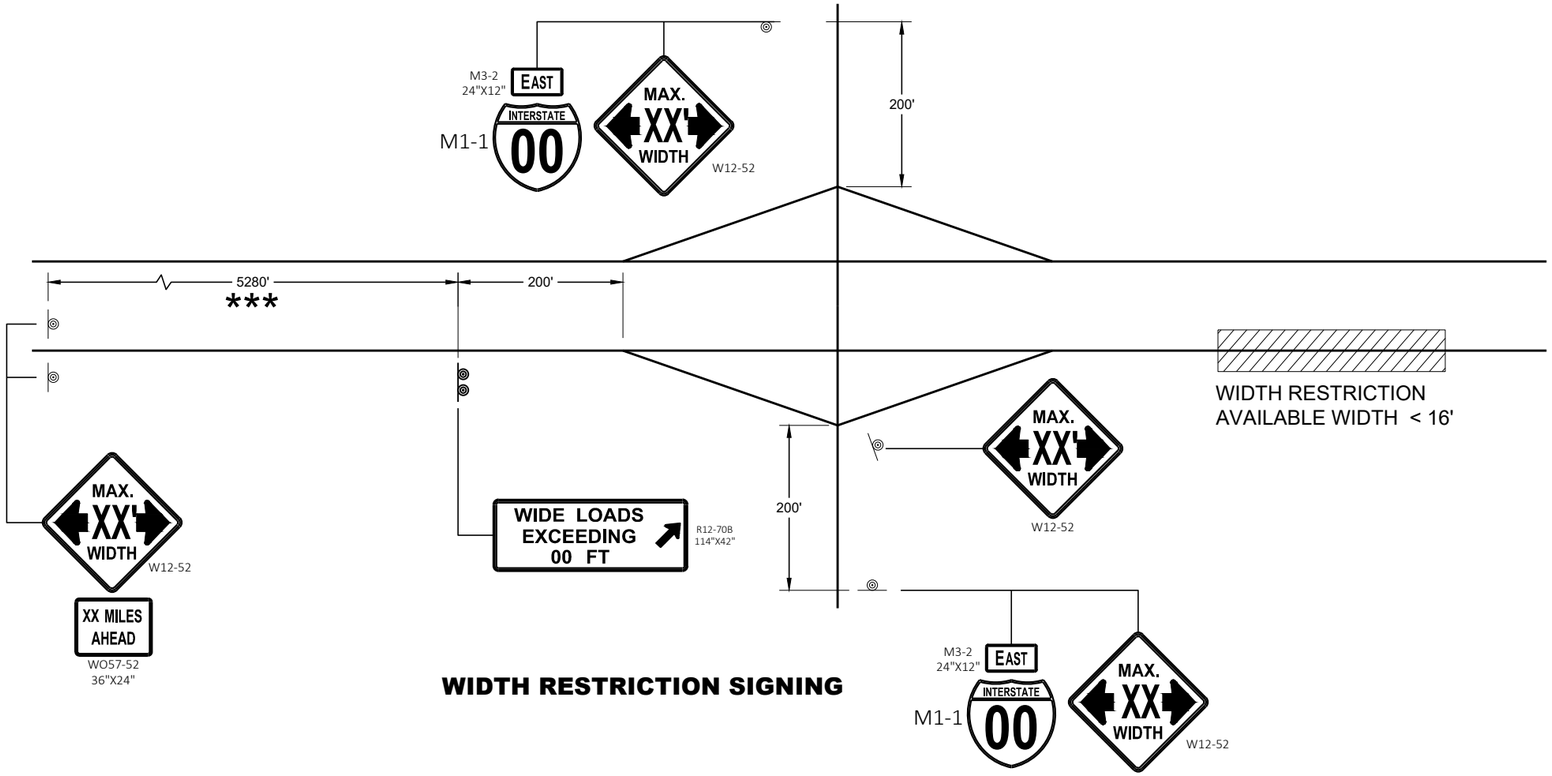

WIDTH RESTRICTION SIGNING

LEGEND

◎ SIGN ON PERMANENT SUPPORT

GENERAL NOTES

THE EXACT NUMBER, LOCATION AND SPACING OF ALL SIGNS SHALL BE ADJUSTED TO FIT FIELD CONDITIONS AS APPROVED BY THE ENGINEER.

THE SPACING BETWEEN SIGNS SHOULD BE ADJUSTED TO NOT CONFLICT WITH AND TO PROVIDE A DESIRABLE MINIMUM OF 200 FEET CLEARANCE TO EXISTING SIGNS THAT WILL REMAIN IN PLACE.

ANY SIGNS TEMPORARY OR EXISTING, WHICH CONFLICT WITH TRAFFIC CONTROL " IN USE" SHALL BE REMOVED OR COVERED AS NEEDED AND AS APPROVED BY THE ENGINEER.

ALL SIGNS ARE 48" X 48" UNLESS OTHERWISE NOTED.

"WO" SIGNS ARE THE SAME AS "W" SIGNS EXCEPT THE BACKGROUND IS ORANGE.

WIDTH ON SIGN TO BE APPROXIMATELY ONE FOOT LESS THAN AVAILABLE WIDTH.

* PLACE 500 FEET AFTER THE W20 - 1A AND 500 FEET BEFORE ADDITIONAL SIGNS FOR ROADWAYS WITH A PRE - CONSTRUCTION SPEED LIMIT OF 45 MPH OR MORE. FOR 35-40 MPH, USE 350 FOOT TYPICAL SPACING. FOR 25-30 MPH, USE 200 FOOT TYPICAL SPACING.

** SIGN SHALL BE VISIBLE FROM ROADWAY.

*** ADDITIONAL SIGNS NEEDED IF THERE IS AN ON RAMP BETWEEN SIGNS.

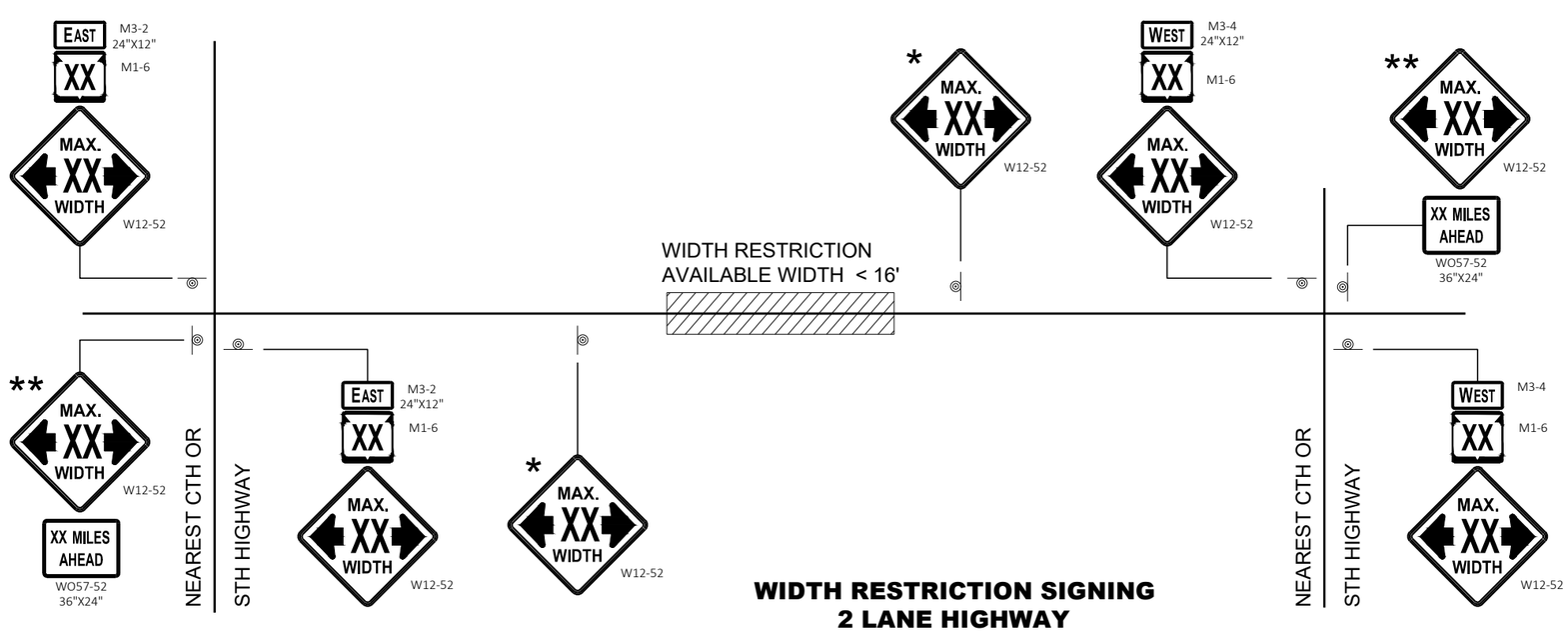

WIDTH RESTRICTION SIGNING
2 LANE HIGHWAY

WIDTH ON SIGN TO BE APPROX. 1 - FOOT LESS THAN AVAILABLE WIDTH

ADVANCED WIDTH RESTRICTION SIGNING

STATE OF WISCONSIN
DEPARTMENT OF TRANSPORTATION

APPROVED
May 2023 — DATE
/S/ Andrew Heidtke — WORK ZONE ENGINEER
FHWA

6
SDD 15C02 - 09f

GENERAL NOTES

THE EXACT NUMBER, LOCATION, AND SPACING OF ALL SIGNS AND DEVICES SHALL BE ADJUSTED TO FIT FIELD CONDITIONS.

THE SPACING BETWEEN TRAFFIC CONTROL SIGNS SHOULD BE ADJUSTED TO NOT CONFLICT WITH AND SHOULD PROVIDE A MINIMUM OF 200 FEET (500 FEET DESIRABLE) CLEARANCE TO EXISTING SIGNS THAT WILL REMAIN IN PLACE.

ALL SIGNS ARE 48" X 48" UNLESS OTHERWISE NOTED.

SIGNS THAT WILL BE IN PLACE LESS THAN SEVEN CONTINUOUS DAYS AND NIGHTS MAY BE MOUNTED ON PORTABLE SUPPORTS.

IF A "STOP" SIGN MUST BE REMOVED FOR A WORK OPERATION, A TEMPORARY "STOP" SIGN SHALL BE PLACED PRIOR TO THE SIGN REMOVAL, OR A FLAGGER SHALL BE PROVIDED UNTIL THE SIGN IS REESTABLISHED.

* OMIT G20-1 SIGNS IF LENGTH OF WORK AREA IS 2 MILES OR LESS

** PLACE AN ADDITIONAL W20-1A "ROAD WORK AHEAD" SIGN IF WORK AREA WITHIN THE PROJECT IS SEPARATED BY MORE THAN 2 MILES FROM PREVIOUS WORK AREA.

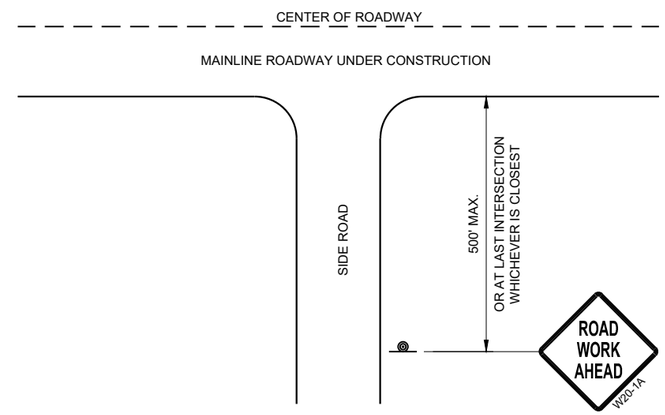

TYPICAL SIDE ROAD APPROACH WARNING SIGN DETAIL

LEGEND

- SIGN ON PERMANENT SUPPORT
- DIRECTION OF TRAFFIC
- WORK AREA

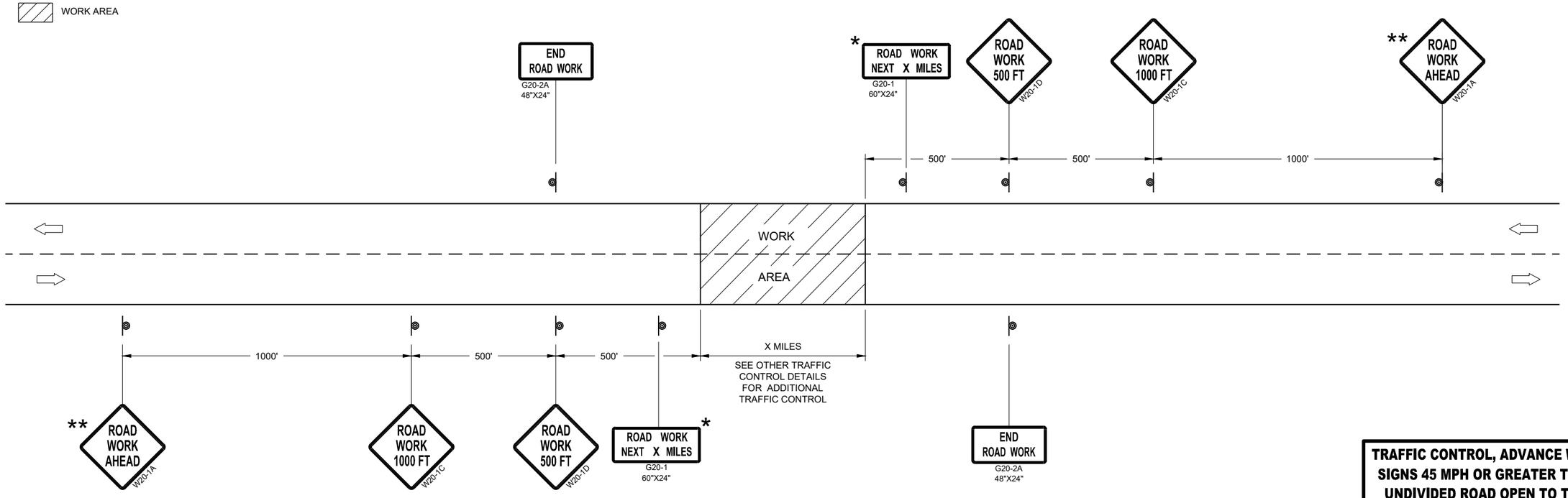

TRAFFIC CONTROL, ADVANCE WARNING SIGNS 45MPH OR GREATER

TRAFFIC CONTROL, ADVANCE WARNING SIGNS 45 MPH OR GREATER TWO-WAY UNDIVIDED ROAD OPEN TO TRAFFIC

STATE OF WISCONSIN
DEPARTMENT OF TRANSPORTATION

APPROVED
July 2018 — DATE
/S/ Andrew Heidtke — WORK ZONE ENGINEE
FHWA

6
SDD 15C04 - 05

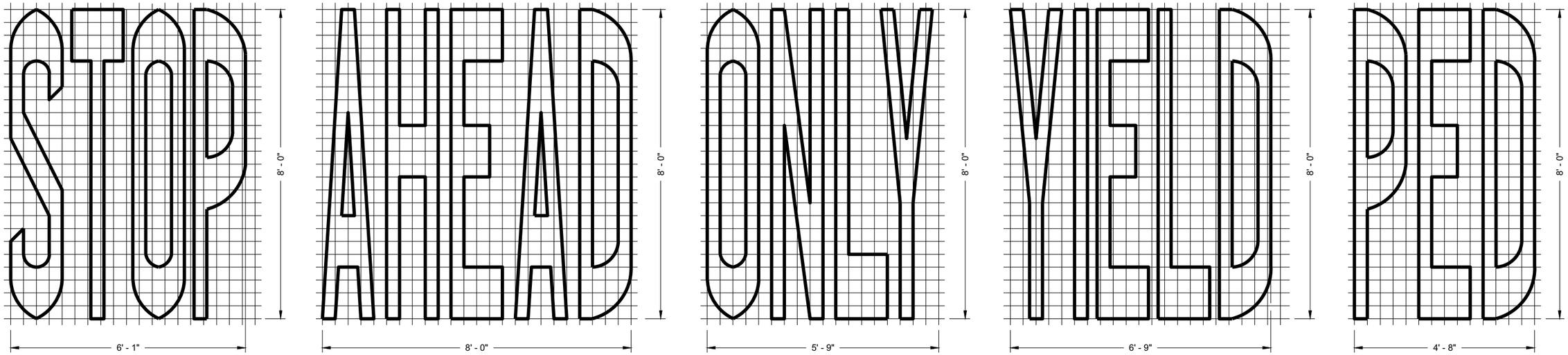

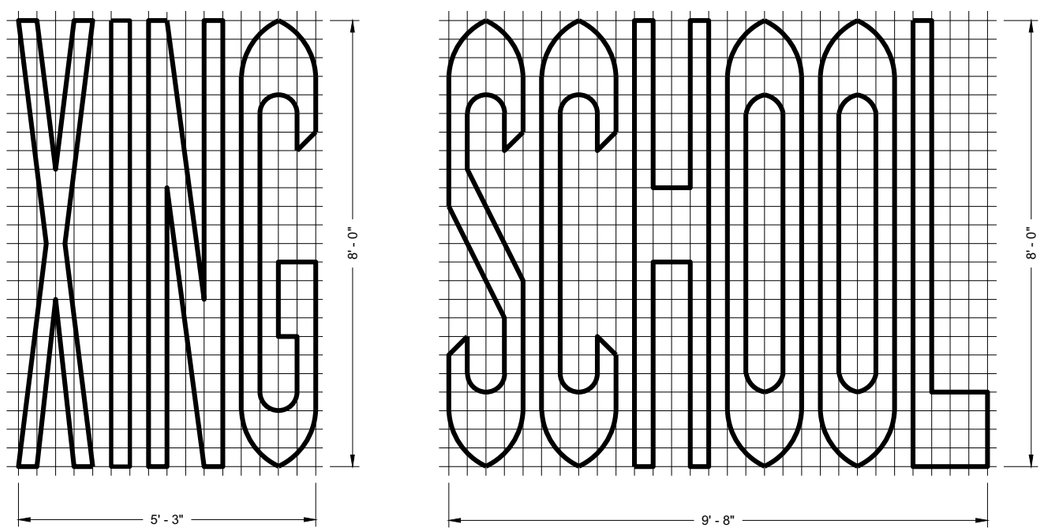

SINGLE LANE

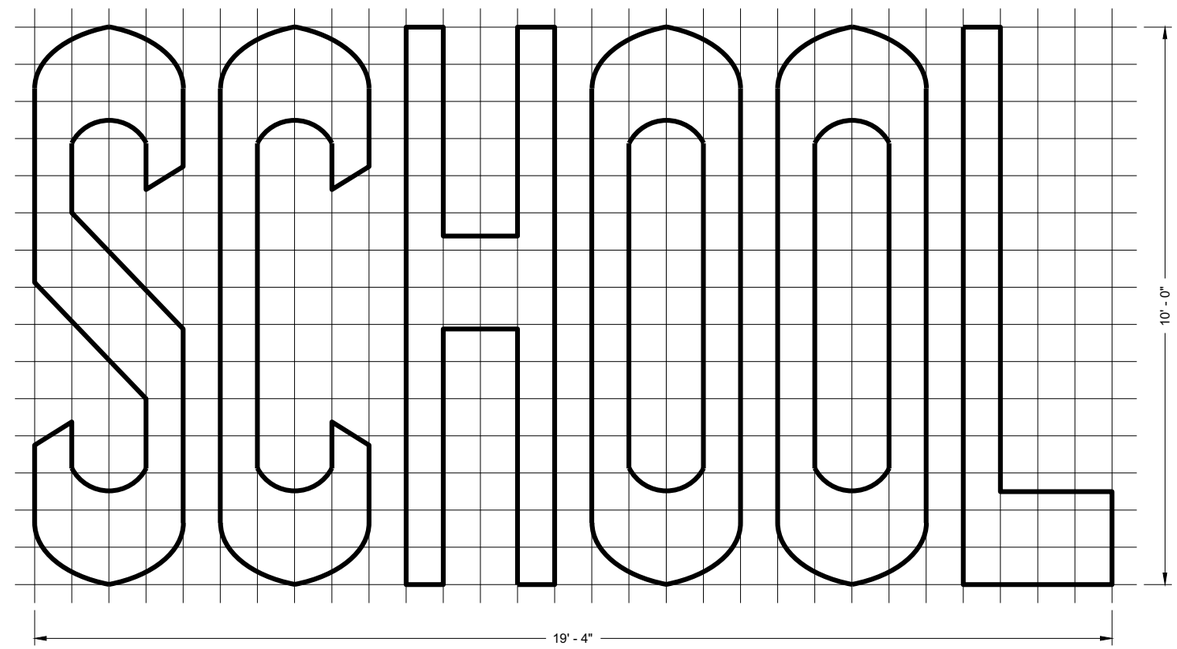

TWO - LANE

6

6

GENERAL NOTES

DETAILS OF INSTALLATION, MATERIALS AND WORKMANSHIP NOT SHOWN ON THIS DRAWING SHALL CONFORM TO THE PERTINENT REQUIREMENTS OF THE STANDARD SPECIFICATIONS AND APPLICABLE SPECIAL PROVISIONS.

PAVEMENT MARKING WORDS

STATE OF WISCONSIN
DEPARTMENT OF TRANSPORTATION

APPROVED

November 2019 — DATE

/S/ Matthew Rauch — STATE SIGNING AND MAF ENGINEER

FHWA

SDD 15C07 - 15b

SDD 15C07 - 15b

GENERAL NOTES

DETAILS OF INSTALLATION, MATERIALS AND WORKMANSHIP NOT SHOWN ON THIS DRAWING SHALL CONFORM TO THE PERTINENT REQUIREMENTS OF THE STANDARD SPECIFICATIONS AND APPLICABLE SPECIAL PROVISIONS.

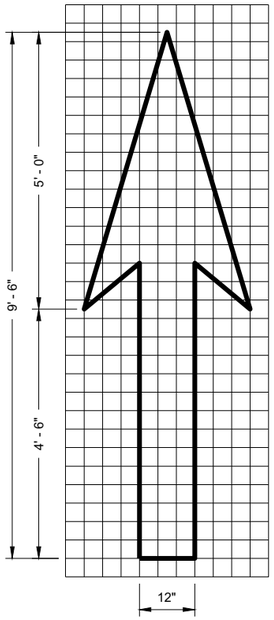

TYPE 1

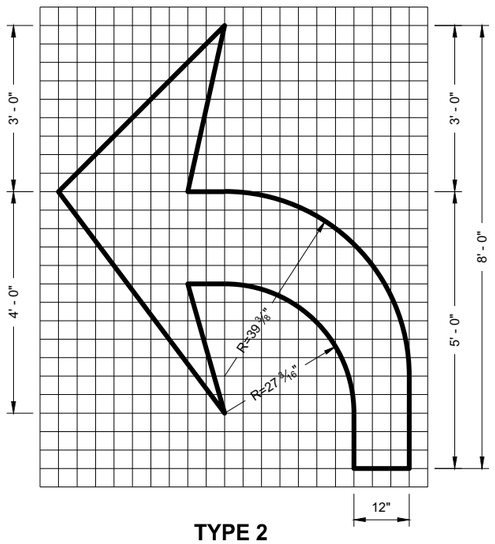

TYPE 2

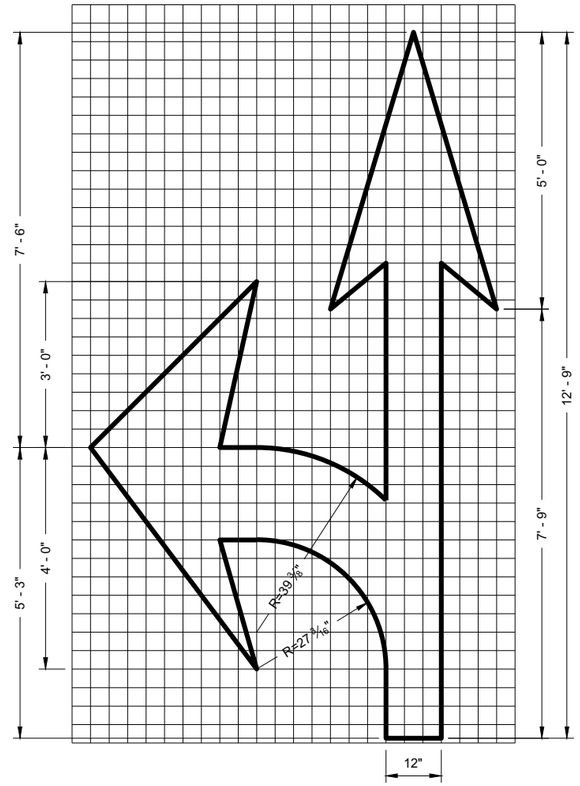

TYPE 3

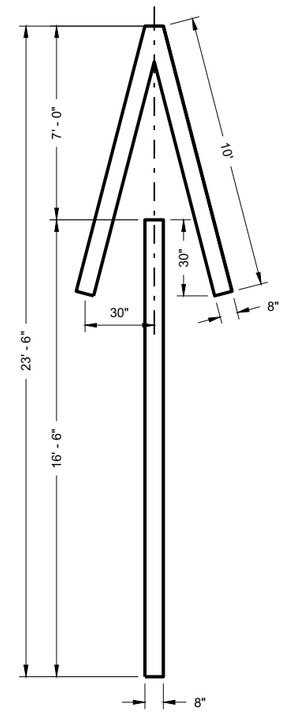

TYPE 4

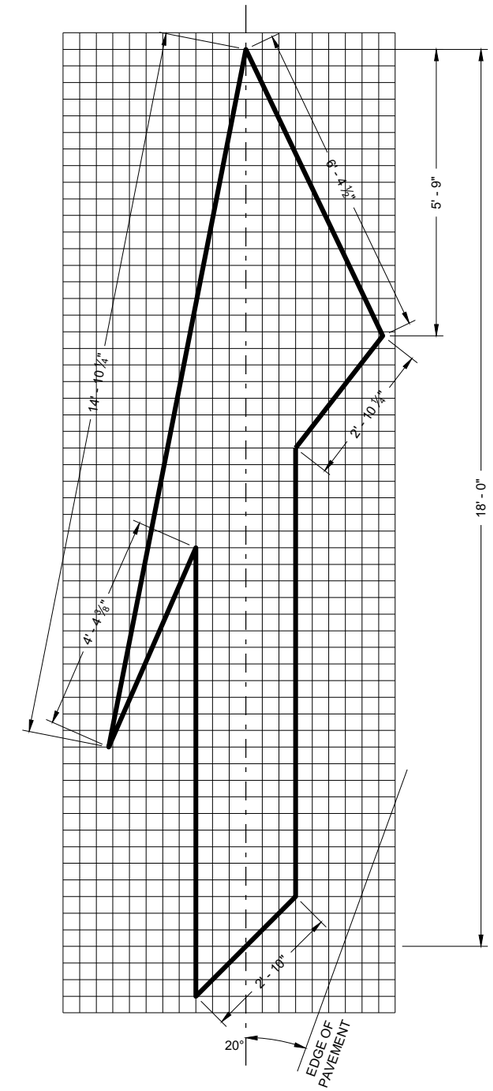

TYPE 5 LANE DROP ARROW

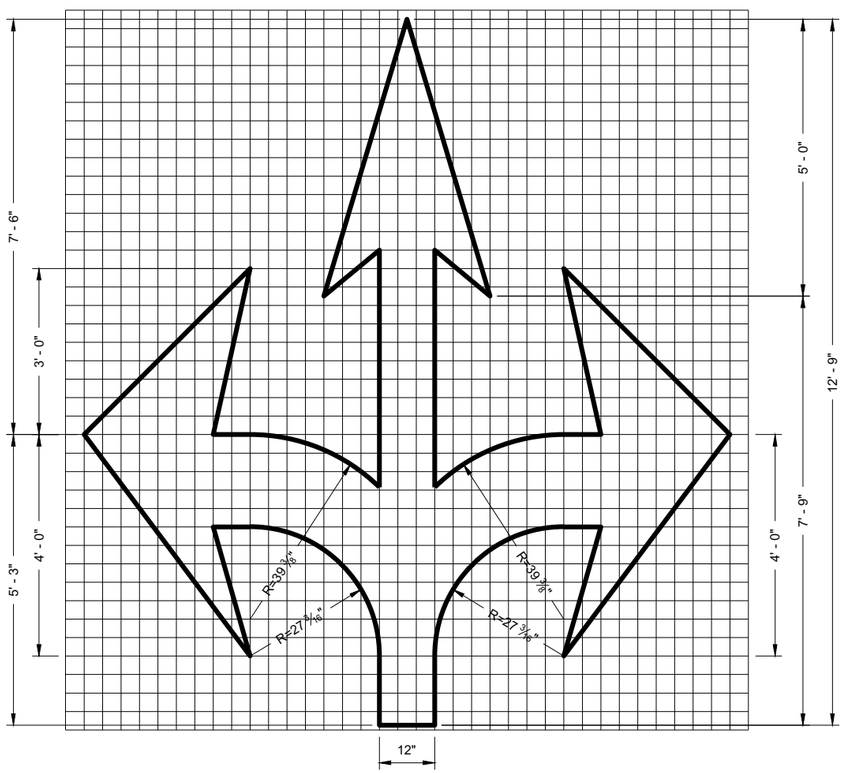

TYPE 6

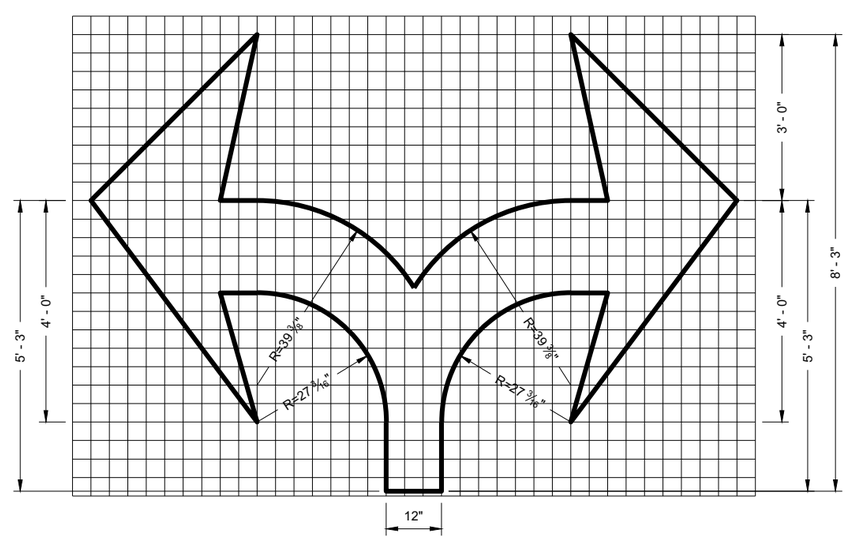

TYPE 7

6

6

PAVEMENT MARKING ARROWS

STATE OF WISCONSIN
DEPARTMENT OF TRANSPORTATION

APPROVED
November 2019 — DATE
/S/ Matthew Rauch — STATE SIGNING AND MAR ENGINEER
FHWA

SDD 15C07 - 15c

SDD 15C07 - 15c

*CONFIRM MARKING LINE WIDTH WITH THE MISCELLANEOUS QUANTITIES

GENERAL NOTES

DETAILS OF CONSTRUCTION NOT SHOWN ON THIS DRAWING SHALL CONFORM TO STANDARD SPECIFICATIONS AND SPECIAL PROVISIONS.

1. LOCATE THE NO PASSING ZONE W14-3 SIGN WITHIN 50 FEET OF THE "T" MARKING
2. MEASURE FROM EDGE OF MARKING TO JOINT LINE. THIS DOES NOT INCLUDE SPACE NEEDED FOR GROOVING OPERATIONS.

LEGEND

"T" MARKING

SIGN ON PERMANENT SUPPORT

DIRECTION OF TRAFFIC

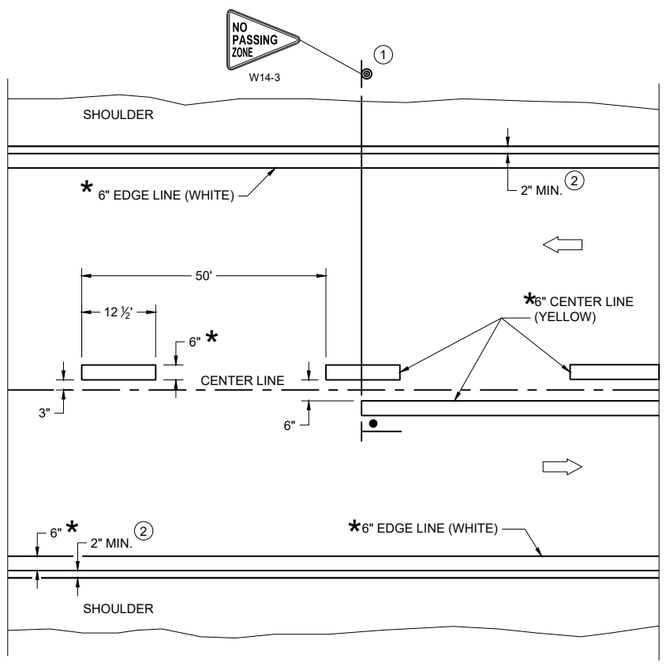

TWO WAY TRAFFIC

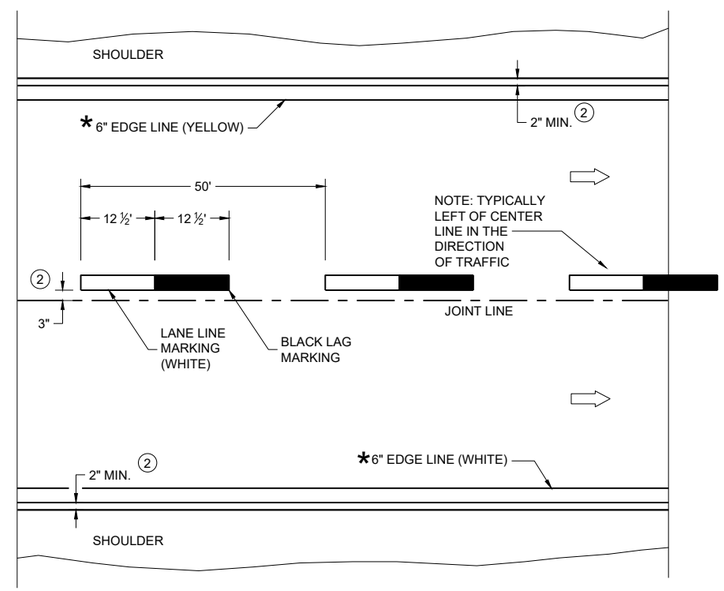

ONE WAY TRAFFIC

PERMANENT PAVEMENT MARKING

6

SDD 15C08-23a

PERMANENT LONGITUDINAL PAVEMENT MARKINGS

STATE OF WISCONSIN
DEPARTMENT OF TRANSPORTATION

APPROVED
May 2023 — DATE
/S/ Jeannie Silver — Statewide Pavement Marking Engineer
FHWA

6

SDD 15C08-23a

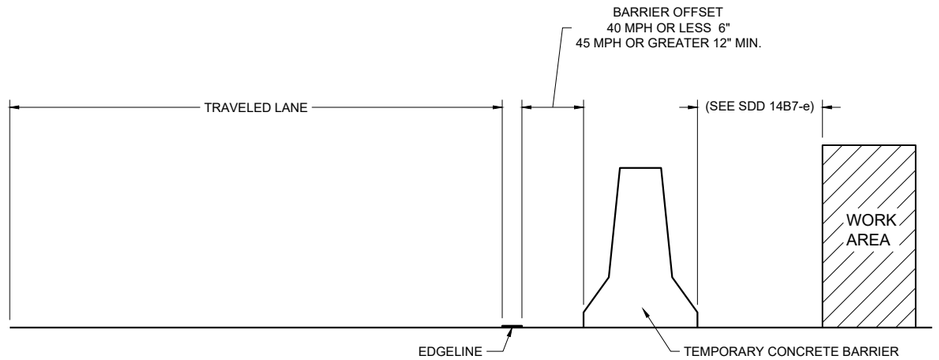

TEMPORARY BARRIER OFFSET FROM EDGELINE

GENERAL NOTES

DETAILS OF CONSTRUCTION NOT SHOWN ON THIS DRAWING SHALL CONFORM TO STANDARD SPECIFICATIONS AND SPECIAL PROVISIONS.

LEGEND

⇨ DIRECTION OF TRAFFIC

*CONFIRM MARKING LINE WIDTH WITH THE MISCELLANEOUS QUANTITIES

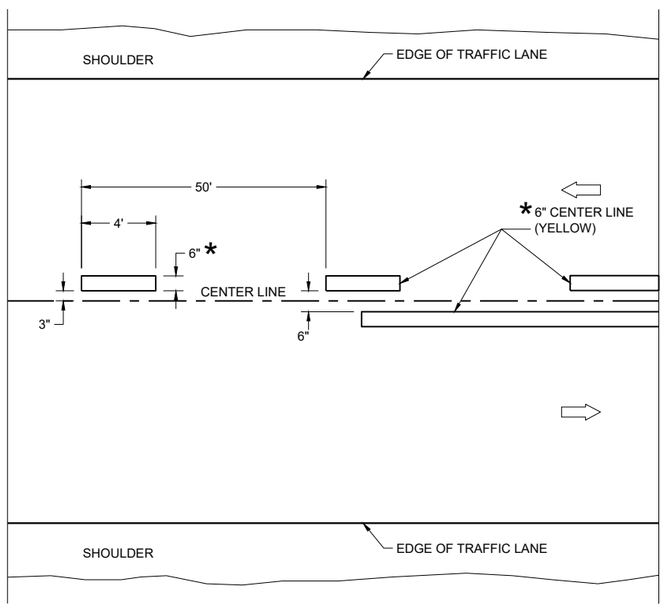

TWO WAY TRAFFIC

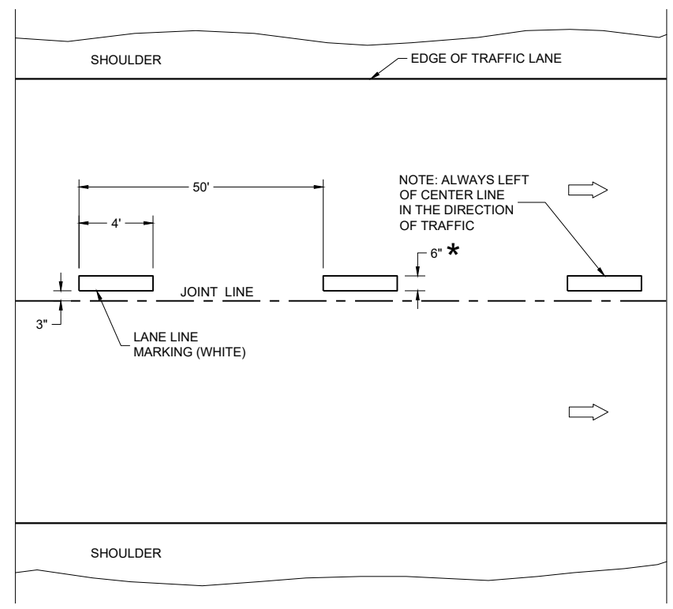

ONE WAY TRAFFIC

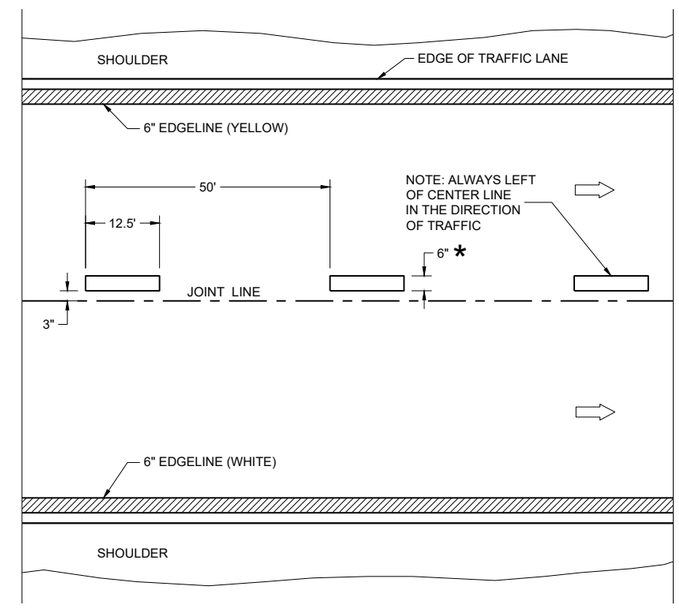

FREEWAYS AND EXPRESSWAYS

TEMPORARY PAVEMENT MARKING

TEMPORARY LONGITUDINAL PAVEMENT MARKING
STATE OF WISCONSIN DEPARTMENT OF TRANSPORTATION
APPROVED May 2023 — DATE /S/ Jeannie Silver — Statewide Pavement Marking Engineer FHWA

6

SDD 15C08-23b

6

SDD 15C08-23b

GENERAL NOTES

1. A SET OF ARROWS IS REQUIRED EVERY 400 FEET OR NEAR INTERSECTIONS OR DRIVEWAYS WITH TURNING TRAFFIC.
2. 10" WHITE
3. TURN BAY LENGTH OF LESS THAN 48' DOES NOT REQUIRE PAVEMENT ARROWS OR TEXT.

⇨ DIRECTION OF TRAFFIC

* CONFIRM MARKING LINE WIDTH WITH THE MISCELLANEOUS QUANTITIES

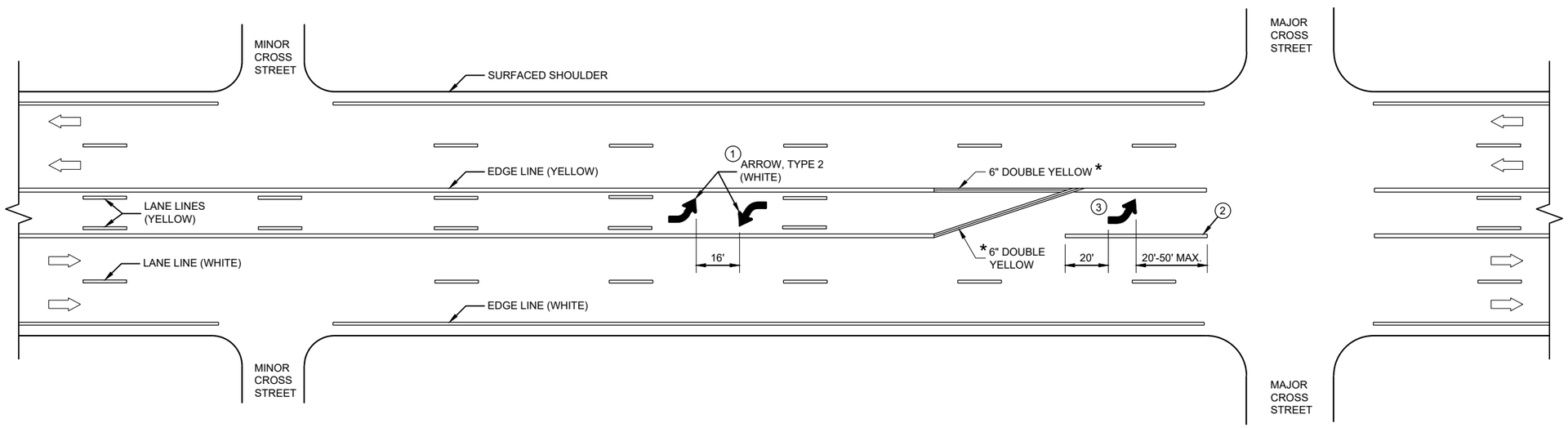

TWO WAY LEFT TURN LANE

PAVEMENT MARKING (TURN LANES)

STATE OF WISCONSIN
DEPARTMENT OF TRANSPORTA

6

SDD 15C08-23c

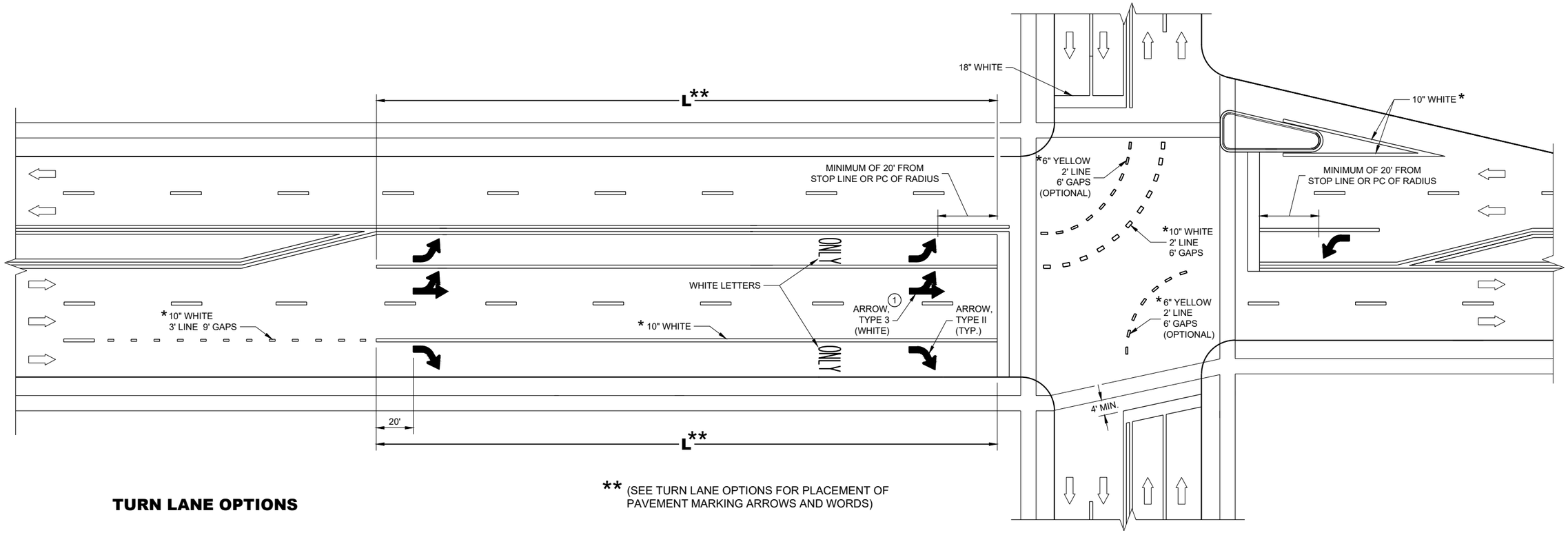

** (SEE TURN LANE OPTIONS FOR PLACEMENT OF PAVEMENT MARKING ARROWS AND WORDS)

TURN LANE OPTIONS

LENGTH OF TURN BAY (L) OF 0 - 47' DOES NOT REQUIRE PAVEMENT MARKING ARROWS OR WORDS

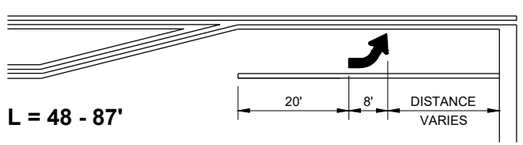

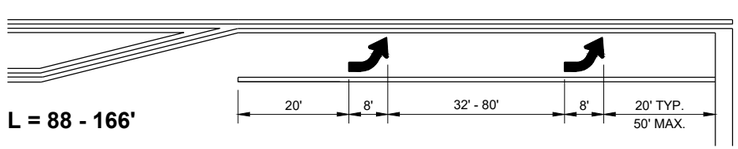

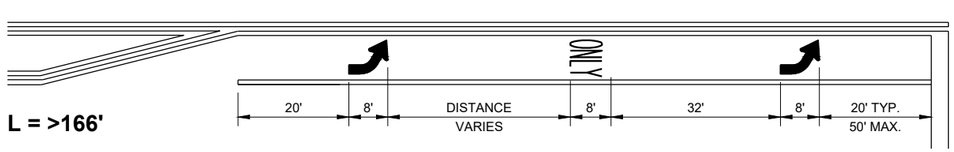

GENERAL NOTES

1. QUANTITY AND LOCATION OF TYPE 3 ARROWS ARE THE SAME AS THE TYPE II ARROWS IN THE ADJACENT TURN LANE. FOR TURN LANES WITH A PHYSICAL SEPARATION IN THE SAME DIRECTION OF TRAVEL, THE ARROWS AND "ONLY" MARKING MAY BE ELIMINATED.

⇨ DIRECTION OF TRAFFIC

L = LENGTH OF TURN BAY

* CONFIRM MARKING LINE WIDTH WITH THE MISCELLANEOUS QUANTITIES

PAVEMENT MARKING (TURN LANES)

STATE OF WISCONSIN
DEPARTMENT OF TRANSPORTAT

6

SDD 15C08-23d

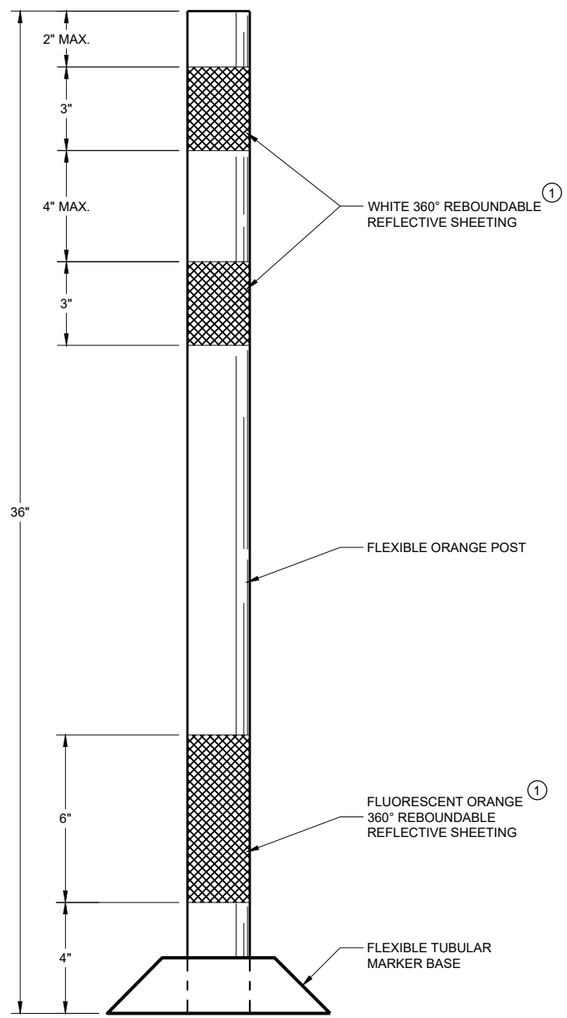

FLEXIBLE TUBULAR MARKER POST WORK ZONE

GENERAL NOTES

DETAILS OF CONSTRUCTION NOT SHOWN ON THIS DRAWING SHALL CONFORM TO THE PERTINENT REQUIREMENTS OF THE STANDARD SPECIFICATIONS AND THE APPLICABLE SPECIAL PROVISIONS.

SURFACE MOUNTED BASES SHALL BE FURNISHED IN ACCORDANCE WITH MANUFACTURERS RECOMMENDATIONS TO BE COMPATIBLE WITH FLEXIBLE TUBULAR MARKER POSTS TO A SIZE AND SHAPE THAT WILL PROVIDE A STABLE POST FOUNDATION WHEN SECURED TO THE PAVEMENT.

THE ASPHALTIC ADHESIVE OR BUTYL PAD FURNISHED SHALL BE IN ACCORDANCE WITH MANUFACTURERS RECOMMENDATIONS, UNLESS DIRECTED BY THE ENGINEER TO USE BOLTS.

(1) REFLECTIVE SHEETING SHALL FOLLOW THE REQUIREMENTS IN THE APPROVED PRODUCTS LISTING FOR SIGN SHEETING.

6

SDD 15C11 - 10a

CHANNELIZING DEVICES FLEXIBLE TUBULAR MARKER POST

STATE OF WISCONSIN
DEPARTMENT OF TRANSPORTATION

APPROVED
November 2022 — DATE
/S/ Andrew Heidtke — WORK ZONE ENGINEE
FHWA

6

SDD 15C11 - 10a

GENERAL NOTES

1. REFLECTIVE SHEETING SHALL FOLLOW THE REQUIREMENTS IN THE APPROVED PRODUCTS LISTING FOR SIGN SHEETING.
2. LOCATION OF WARNING LIGHTS WHEN SHOWN ON THE PLAN.

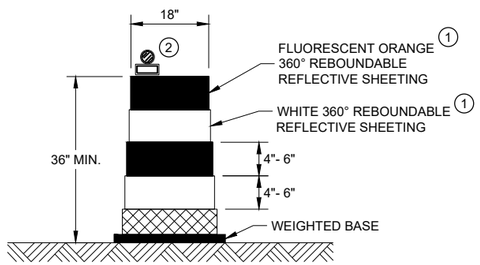

DRUM

BALLAST WIDTHS
RANGE FROM 24"-36"

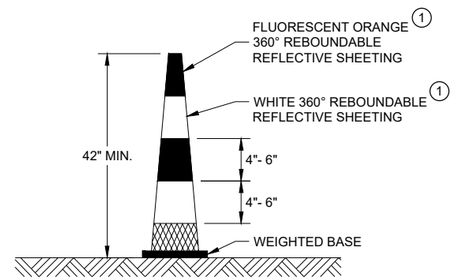

42" CONE

DO NOT USE IN TAPERS
½ SPACING OF DRUMS

BALLAST WIDTHS
RANGE FROM 14"-20"

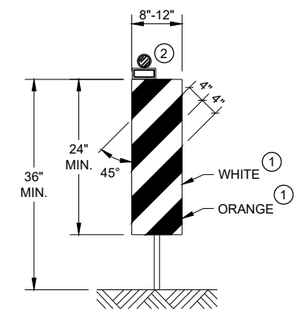

VERTICAL PANEL

THE STRIPES SHALL SLOPE DOWNWARD TO
THE TRAFFIC SIDE FOR CHANNELIZATION.

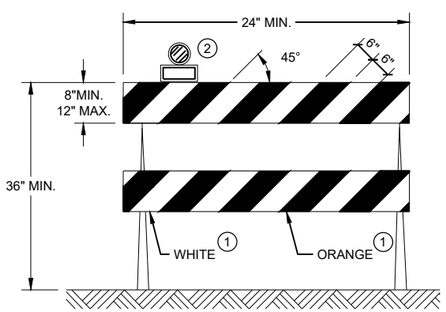

TYPE II BARRICADE

FOR RAILS LESS THAN 36" LONG, 4" WIDE STRIPES
MAY BE USED. ALL STRIPES SHALL SLOPE DOWNWARD
TO THE TRAFFIC SIDE FOR CHANNELIZATION.

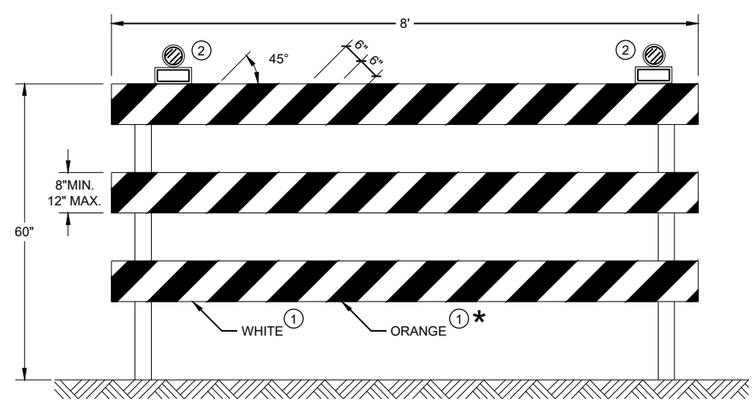

TYPE III BARRICADE

IF SIGN MOUNTED, DO NOT COVER MORE THAN 50% OF THE TOP
TWO RAILS OR 33% OF THE TOTAL AREA OF THE THREE RAILS.

* IF USED FOR A PERMANENT APPLICATION USE RED SHEETING.

CHANNELIZING DEVICES
DRUMS, CONES, BARRICADES
AND VERTICAL PANELS

STATE OF WISCONSIN
DEPARTMENT OF TRANSPORTATION

APPROVED
November 2022 /S/ Andrew Heidtke
DATE WORK ZONE ENGINEE
FHWA

6

6

SDD 15C11 - 10b

SDD 15C11 - 10b

LEGEND

SIGN ON PORTABLE OR PERMANENT SUPPORT

TEMPORARY PORTABLE RUMBLE STRIP ARRAY

DIRECTION OF TRAFFIC

WORK AREA

FLAGGER, EQUIPPED WITH STOP/SLOW PADDLE FASTENED ON SUPPORT STAFF

GENERAL NOTES

DETAILS OF TRAFFIC CONTROL DEVICES AND INSTALLATION NOT SHOWN ON THIS DRAWING SHALL CONFORM TO THE PERTINENT REQUIREMENTS OF THE STANDARD SPECIFICATIONS, THE SPECIAL PROVISIONS, AND THE MANUAL ON UNIFORM TRAFFIC CONTROL DEVICES.

ALL SIGNS ARE 48" X 48" UNLESS OTHERWISE NOTED.

"WO" SIGNS ARE THE SAME AS "W" SIGNS EXCEPT THE BACKGROUND IS ORANGE.

THE EXACT NUMBER, LOCATION AND SPACING OF ALL SIGNS, DEVICES, AND LOCATION OF ALL FLAGGERS SHALL BE ADJUSTED TO FIT FIELD CONDITIONS AS APPROVED BY THE ENGINEER.

THE FIRST ADVANCE WARNING SIGN SHOULD TYPICALLY BE LOCATED IN ADVANCE OF THE ANTICIPATED TRAFFIC BACKUP OR QUEUE.

WHEN A SIDE ROAD OR RAMP INTERSECTS THE FACILITY ON WHICH THE WORK IS BEING PERFORMED, ADDITIONAL TRAFFIC CONTROLS SHALL BE PROVIDED AS SPECIFIED IN THE PLANS AND/OR THE SPECIAL PROVISIONS OR AS APPROVED BY THE ENGINEER.

FLAGGING

FLAGGERS SHALL BE IN SIGHT OF EACH OTHER OR IN DIRECT COMMUNICATION AT ALL TIMES. THEY SHALL BE EQUIPPED WITH STOP/SLOW PADDLES FASTENED ON SUPPORT STAFFS. WHEN THE FLAGGING OPERATION IS NOT IN EFFECT REMOVE TEMPORARY PORTABLE RUMBLE STRIPS PRIOR TO COVERING OR REMOVING ALL ADVANCE SIGNING.

(1) FOR MOVING WORK OPERATIONS, POST ADDITIONAL W20-7A FLAGGER SIGNS AT APPROXIMATELY 3,500' INTERVALS IN THE MOVING WORK OPERATION OR AS APPROVED BY THE ENGINEER.

(2) SIGN NOT REQUIRED IF FLAGGING OPERATION OCCURS WITHIN A SIGNED ROAD WORK ZONE AREA.

WHEN THE DISTANCE BETWEEN FLAGGERS EXCEEDS 2 MILES, A PILOT CAR IS REQUIRED. WHEN CURVES REDUCE SIGHT DISTANCE BELOW 400', A PILOT CAR IS REQUIRED.

TEMPORARY PORTABLE RUMBLE STRIPS

UTILIZE TEMPORARY PORTABLE RUMBLE STRIPS ON ALL FLAGGING OPERATIONS.

(3) EACH TEMPORARY PORTABLE RUMBLE STRIP ARRAY CONSISTS OF THREE RUMBLE STRIPS PLACED TRANSVERSE ACROSS THE LANE AT THE LOCATIONS SHOWN. WITHIN EACH ARRAY, SPACING BETWEEN RUMBLE STRIPS SHALL BE 15 FEET ON CENTER

ONLY USE TEMPORARY PORTABLE RUMBLE STRIPS FROM THE APPROVED PRODUCTS LIST.

INSTALL TEMPORARY RUMBLE STRIPS PER MANUFACTURER'S RECOMMENDATIONS.

PLACE ADVANCE SIGNING PRIOR TO INSTALLING TEMPORARY RUMBLE STRIPS.

DO NOT INSTALL TEMPORARY PORTABLE RUMBLE STRIPS ON GRAVEL, MILLED SURFACES, OR ASPHALT THAT HAS BEEN PAVED LESS THAN 12 HOURS.

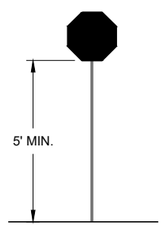

STOP/SLOW PADDLE ON SUPPORT STAFF

SIGN AND TEMPORARY RUMBLE STRIP ARRAY SPACING TABLE

SPEED LIMIT	SPACING "A"
25-30 MPH	200'
35-40 MPH	350'
45-55 MPH	500'

USE OF WO3-4 SIGN IS OPTIONAL. WHEN USED, THIS SIGN SHALL BE LOCATED BETWEEN THE W20-7A AND W20-4A SIGNS, USING SPACING "A".

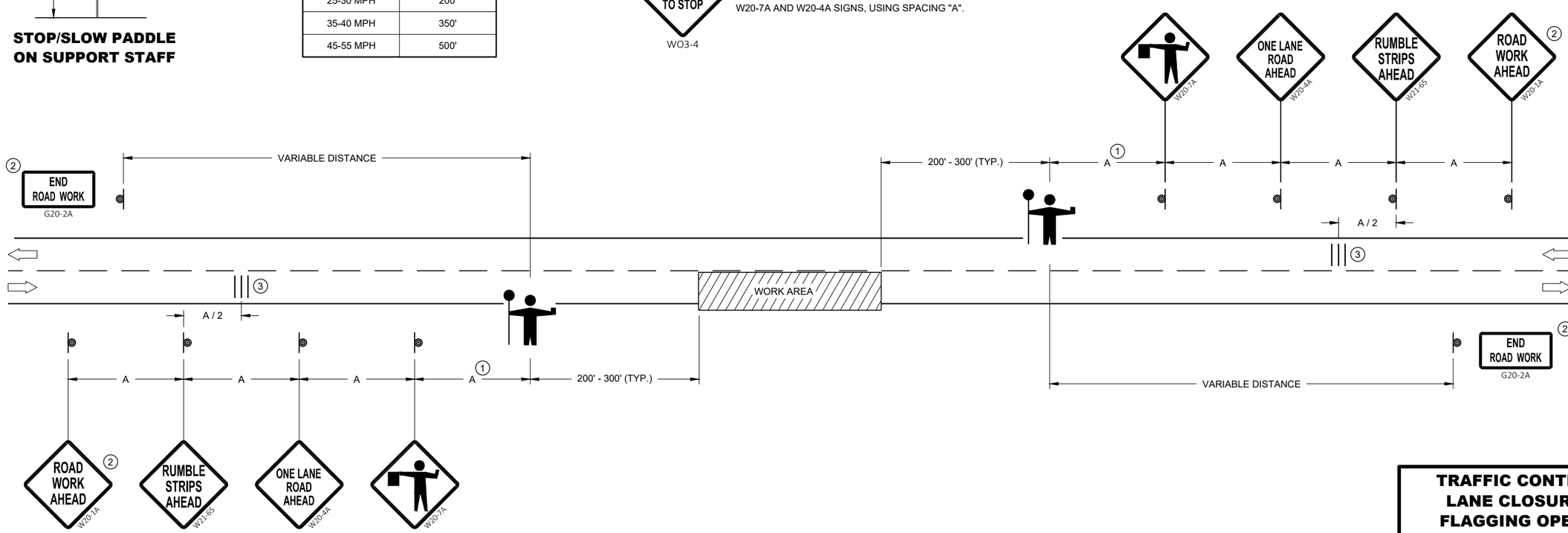

TRAFFIC CONTROL FOR LANE CLOSURE WITH FLAGGING OPERATION

STATE OF WISCONSIN
DEPARTMENT OF TRANSPORTATION

APPROVED
May 2022 — DATE
/S/ Andrew Heidtke — WORK ZONE ENGINEE
FHWA

6

SDD 15C12 - 09a

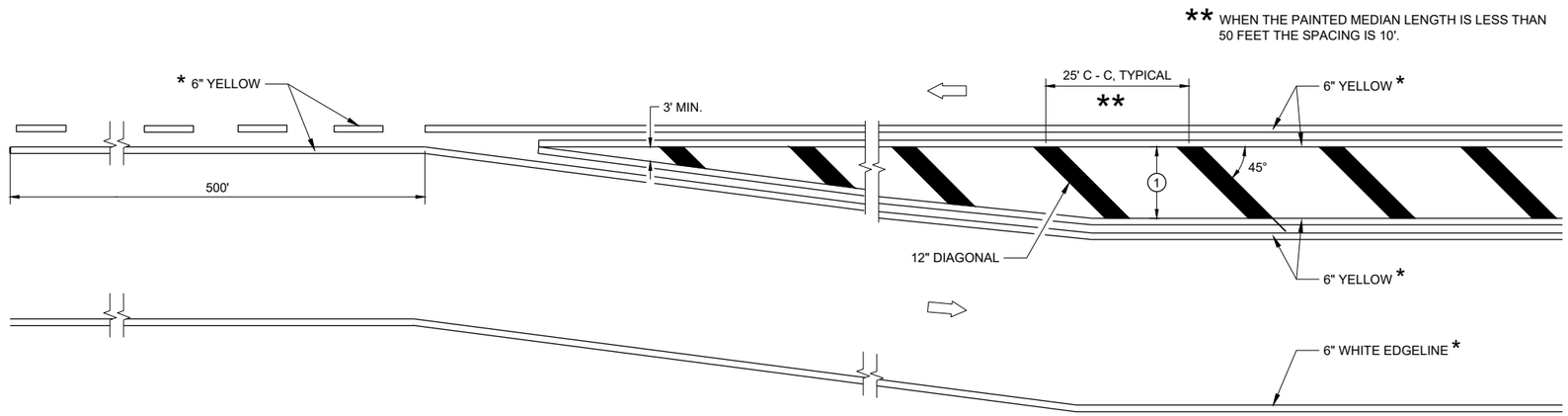

MEDIAN ISLAND DETAIL

GENERAL NOTES

1. DIAGONALS ARE OPTIONAL WHEN PAINTED ISLAND IS LESS THAN 6 FEET AT THE WIDEST POINT. OMIT DIAGONALS IF WIDTH IS LESS THAN 4 FEET.

DIRECTION OF TRAVEL

* CONFIRM MARKING LINE WIDTH WITH THE MISCELLANEOUS QUANTITIES

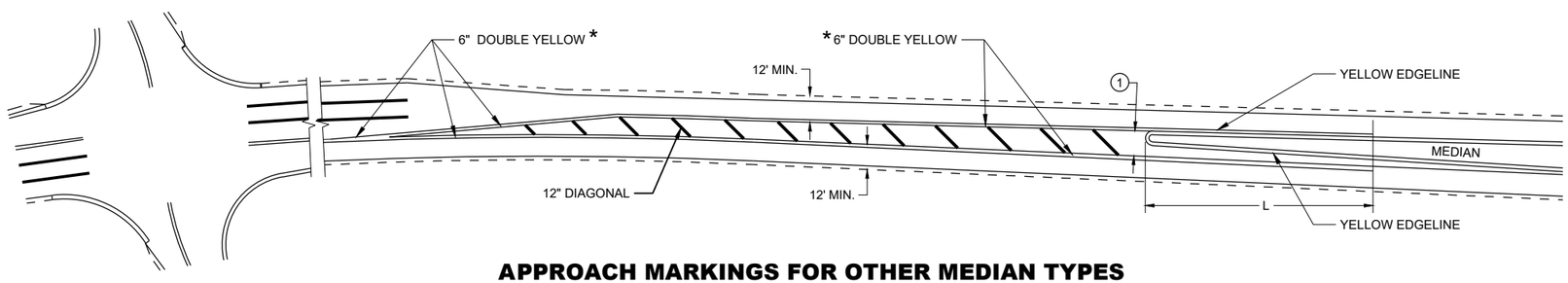

APPROACH MARKINGS FOR OTHER MEDIAN TYPES

SPEED LIMIT	L
<35 MPH	5'
35> MPH	50'

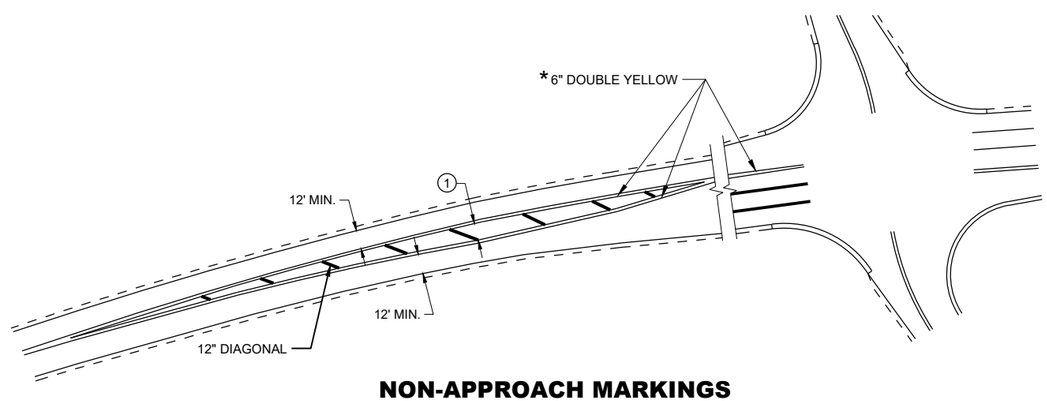

NON-APPROACH MARKINGS

MEDIAN ISLAND PAVEMENT MARKINGS

STATE OF WISCONSIN
DEPARTMENT OF TRANSPORTATION

APPROVED
May 2023 — DATE
/S/ Jeannie Silver — ROADWAY STANDARDS DEVELOPMENT UNIT SUPERVISOR

FHWA

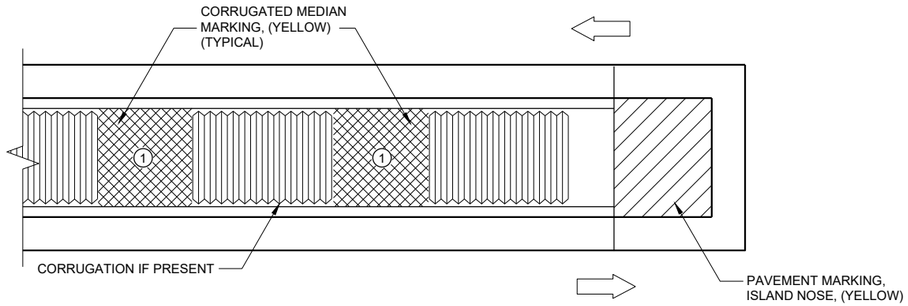

MEDIAN ISLAND WITH SQUARE BLUNT NOSE

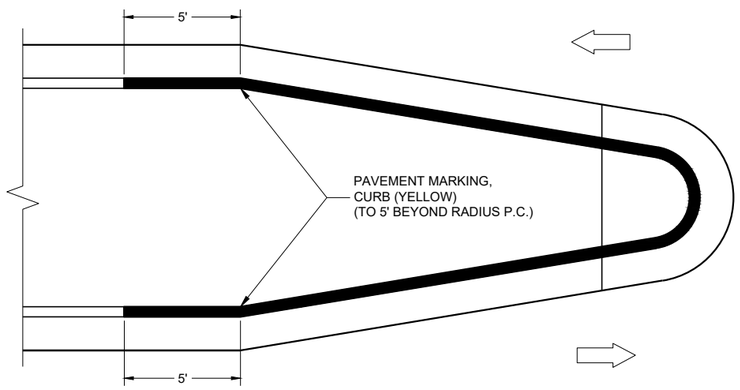

MEDIAN ISLAND WITH ROUND BLUNT NOSE

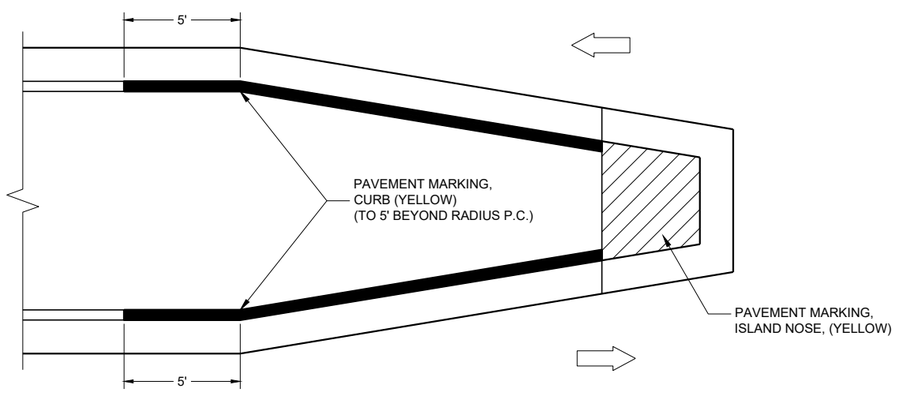

MEDIAN ISLAND WITH SLOPED NOSE

TYPICAL PLACEMENT OF PAVEMENT MARKING ON MEDIAN ISLANDS

GENERAL NOTES

WHEN CONCRETE CORRUGATED MEDIAN IS CONSTRUCTED TO SEPARATE TRAFFIC OPERATING IN THE OPPOSING DIRECTION, YELLOW PAVEMENT MARKING SHALL BE APPLIED TO THE FLAT PORTION OF THE CONCRETE CORRUGATED MEDIAN. THE ITEM OF PAVEMENT MARKING, CONCRETE CORRUGATED MEDIAN, WILL BE MEASURED IN PLACE AND ACCEPTED IN ACCORDANCE WITH THE CONTRACT AND PAID FOR AT THE CONTRACT UNIT PRICE PER SQUARE FOOT.

(1) APPLY PAVEMENT MARKING TO THE FLAT PORTION OF CORRUGATED MEDIAN.

ISLAND NOSE MARKING

CURB MARKING

CORRUGATED MEDIAN MARKING

DIRECTION OF TRAVEL

PAVEMENT MARKINGS, MEDIAN ISLAND NOSE

STATE OF WISCONSIN
DEPARTMENT OF TRANSPORTATION

APPROVED
May 2023 — DATE
/S/ Jeannie Silver — ROADWAY STANDARDS DEVELOPMENT UNIT SUPERVISOR

FHWA

6

SDD 15C18-08b

6

SDD 15C18-08b

LEGEND

V1 LEAD VEHICLE

V2 MARKING VEHICLE

V3 SHADOW VEHICLE

TRUCK MOUNTED ATTENUATOR (TMA)

SIGN ON TEMPORARY SUPPORT

DIRECTION OF TRAFFIC

FLASHING ARROW PANEL (CAUTION)

GENERAL NOTES

ALL VEHICLES SHALL BE EQUIPPED WITH TWO 360 DEGREE HIGH INTENSITY YELLOW FLASHING LIGHTS OR STROBE LIGHTS AND OPERATED WITH HEADLIGHTS TURNED ON.

ALL VEHICLES SHALL BE EQUIPPED WITH REAR FACING TYPE B OR C FLASHING ARROW PANEL OPERATING IN CAUTION MODE. SIGNS PLACED ON VEHICLES MUST NOT OBSCURE THE ARROW PANEL.

ALL SIGNS ARE 48" X 48" UNLESS OTHERWISE SPECIFIED.

DISTANCE BETWEEN VEHICLES MAY VARY ACCORDING TO TERRAIN, SIGHT DISTANCE, PAINT DRYING TIME, AND OTHER FACTORS. WHENEVER ADEQUATE STOPPING SIGHT DISTANCE EXISTS TO THE REAR, SHADOW VEHICLES SHOULD MAINTAIN THE MINIMUM DISTANCE FROM THE WORK VEHICLE AND PROCEED AT THE SAME SPEED AS THE WORK VEHICLE. SHADOW VEHICLES SHOULD SLOW DOWN IN ADVANCE OF VERTICAL AND HORIZONTAL CURVES THAT RESTRICT SIGHT DISTANCE.

THE WORK AND SHADOW VEHICLES SHOULD PULL OVER PERIODICALLY TO ALLOW TRAFFIC TO PASS.

WHEN NO WORK ACTIVITY IS TAKING PLACE, REMOVE OR LAY STATIONARY SIGNS AND SUPPORTS FLAT ON THE GRADE WITH UPRIGHTS ORIENTED PARALLEL TO AND DOWNSTREAM FROM TRAFFIC.

CONES SHOULD BE USED BETWEEN THE MARKING AND SHADOW VEHICLE AT 100 FOOT SPACING. CONES MAY BE OMITTED ON PAINTED LINE IF APPROVED BY THE ENGINEER. CONSIDER PAVEMENT MARKING DRY OR CURE TIMES AND TRAFFIC VOLUME.

CONES SHALL BE A MINIMUM OF 28" FOR WET PAVEMENT MARKING .

1. SIGNS SHALL BE REPEATED APPROXIMATELY EVERY THREE MILES.
2. IF CONSTRUCTION WORK ZONE SIGNS ARE IN PLACE, W20-1A OR W21-63 ARE NOT REQUIRED.
3. V1 AND V2 CAN BE SWITCHED SO THAT THE MARKER IS THE LEAD VEHICLE.

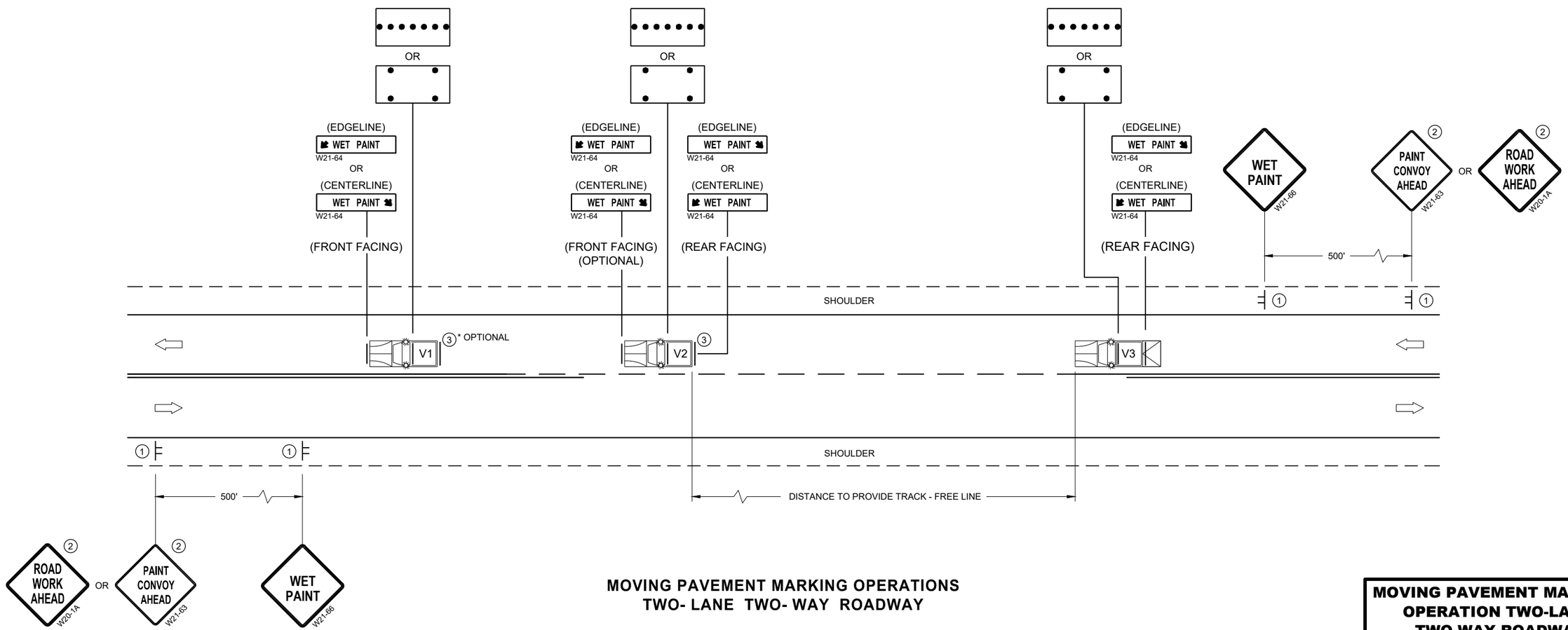

MOVING PAVEMENT MARKING OPERATIONS
TWO- LANE TWO- WAY ROADWAY

MOVING PAVEMENT MARKING OPERATION TWO-LANE TWO-WAY ROADWAY

STATE OF WISCONSIN
DEPARTMENT OF TRANSPORTATION

APPROVED
February 2023 /S/ Andrew
DATE WORK ZONE EN
FHWA

6

SDD 15C19-08a

GENERAL NOTES

SIGN LOCATIONS SHOWN ARE TYPICAL PLACEMENT AND MAY BE ADJUSTED BY THE ENGINEER AS FIELD CONDITIONS DICTATE.

THE MINIMUM NUMBER OF END-OF-ROADWAY SIGNS ARE THREE (AS SHOWN). ADDITIONAL END-OF-ROADWAY SIGNS MAY BE INSTALLED AS FIELD CONDITIONS DICTATE. (SEE SIGNING PLAN).

WHEN BEAMGUARD IS REQUIRED, PLACE END-OF-ROADWAY SIGNING BEHIND BEAMGUARD.

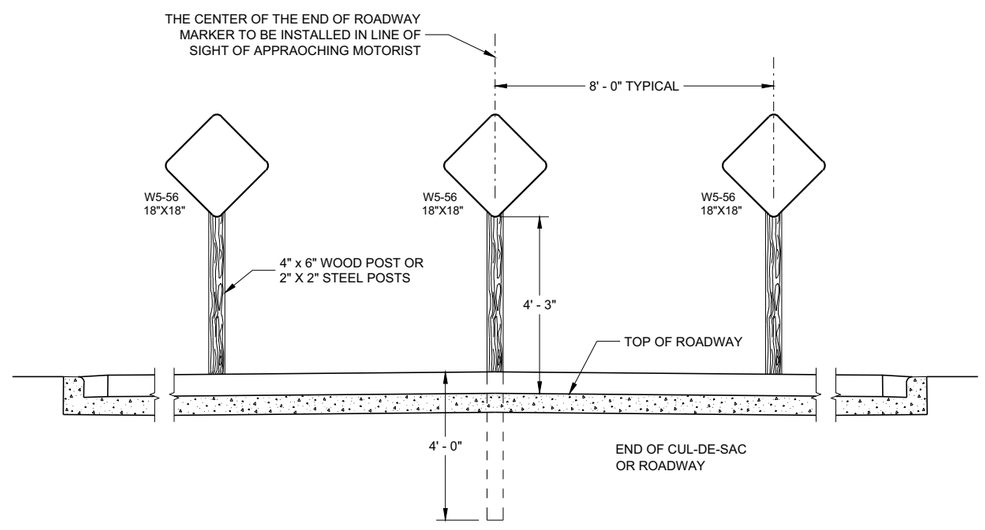

TYPICAL SIGN INSTALLATION

6

6

SDD 15C26 - 04

SDD 15C26 - 04

END-OF-ROADWAY SIGNING

STATE OF WISCONSIN
DEPARTMENT OF TRANSPORTATION

APPROVED

May 2019
DATE

/S/ Matthew Rauch
STATE SIGNING AND MAR
ENGINEER

FHWA

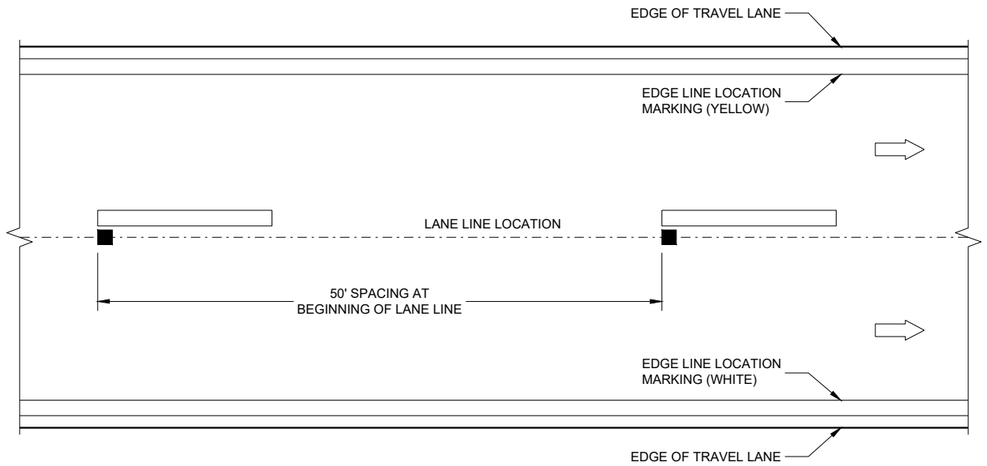

LONGITUDINAL PLACEMENT 6 - INCH LANE LINE

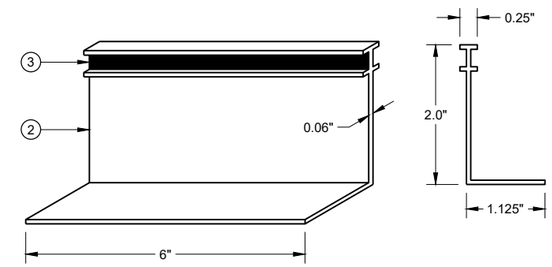

ISOMETRIC VIEW **SIDE VIEW**

TEMPORARY RAISED PAVEMENT MARKER, TYPE II

GENERAL NOTES

DETAILS OF CONSTRUCTION NOT SHOWN ON THIS DRAWING SHALL CONFORM TO THE STANDARD SPECIFICATIONS AND SPECIAL PROVISIONS.

COLOR OF TEMPORARY RAISED PAVEMENT MARKERS, TYPE II, SHALL MATCH THE COLOR OF THE MARKING THEY SUPPLEMENT.

PLACEMENT OF TEMPORARY RAISED PAVEMENT MARKERS ON EDGE LINES IS OPTIONAL. IF PLACED ON EDGE LINES, MAXIMUM SPACING SHALL BE 50 FEET.

PROVIDE SINGLE OR MULTI-COVER TEMPORARY RAISED PAVEMENT MARKERS AS SHOWN ON PLAN.

MARK "T"s ON PAVEMENT FOR REESTABLISHING NO PASSING ZONES.

SAME DAY TEMPORARY PAVEMENT MARKING MAY BE USED IN LIEU OF TEMPORARY RAISED PAVEMENT MARKERS, TYPE II.

SIGNS THAT WILL BE IN PLACE LESS THAN SEVEN CONTINUOUS DAYS AND NIGHTS OR THAT WILL BE PLACED IN A CLOSED LANE MAY BE MOUNTED ON PORTABLE SUPPORTS.

IF TEMPORARY SAME DAY PAVEMENT MARKING IS USED, ENSURE PROPOSED PAVEMENT MARKING ARE PLACED IN THE EXACT LOCATIONS AS THE EXISTING MARKINGS, USING A MINIMAL AMOUNT OF TEMPORARY RAISED MARKERS, TYPE II OR OTHER METHODS AS APPROVED BY THE ENGINEER.

IF ROADWAY IS DETOURED DURING CONSTRUCTION, THE "DO NOT PASS, "PASS WITH CARE" AND "NO CENTERLINE" SIGNS MAY BE OMITTED, PROVIDING A LIQUID MARKING IS INSTALLED BEFORE THE ROADWAY IS REOPENED TO TRAFFIC.

* CONFIRM MARKING LINE WIDTH WITH THE MISCELLANEOUS QUANTITIES

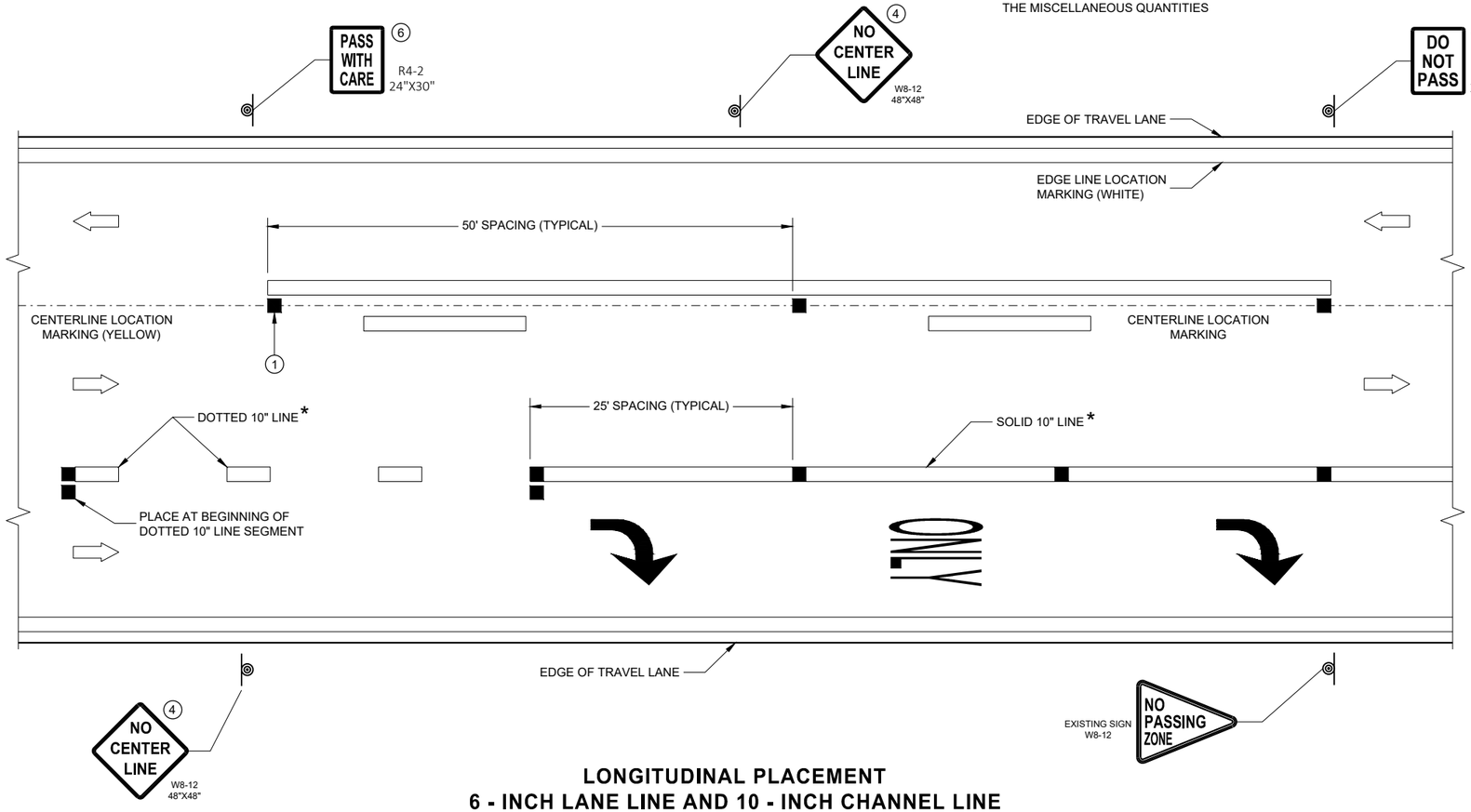

LONGITUDINAL PLACEMENT
6 - INCH LANE LINE AND 10 - INCH CHANNEL LINE

1. FOR DOUBLE SOLID YELLOW, PLACE THE MARKERS BETWEEN THE LINES.
2. MARKERS SHALL BE OF POLYURETHANE MATERIAL.
3. MARKERS SHALL HAVE A MINIMUM SIZE REFLECTIVE SURFACE OF 6-INCH WIDTH X 0.25 INCH HEIGHT.
4. "NO CENTER LINE" SIGNS SHALL BE PLACED AT THE BEGINNING OF PROJECT, AT TWO MILE INTERVALS AND AFTER STATE AND COUNTY HIGHWAY INTERSECTIONS.
5. "DO NOT PASS" SIGNS SHALL BE INSTALLED AT THE BEGINNING OF NO PASSING ZONES. ADDITIONAL "DO NOT PASS" SIGNS SHALL BE INSTALLED AT ONE MILE INTERVALS AND AFTER STATE AND COUNTY HIGHWAY INTERSECTIONS WITHIN THE NO PASSING ZONE.
6. "PASS WITH CARE" SIGNS SHALL BE PLACED AT THE DOWNSTREAM END OF NO PASSING ZONES.

LEGEND

- TEMPORARY RAISED PAVEMENT MARKER, TYPE II
- SIGN ON PORTABLE OR PERMANENT SUPPORT
- DIRECTION OF TRAFFIC.

STANDARD APPLICATION FOR TEMPORARY RAISED PAVEMENT MARKERS, TYPE II

STATE OF WISCONSIN
DEPARTMENT OF TRANSPORTATION

APPROVED
May 2023 — DATE
/S/ Matthew Rauch — STATE SIGNING AND MAR ENGINEER
FHWA

6

SDD 15C34-04

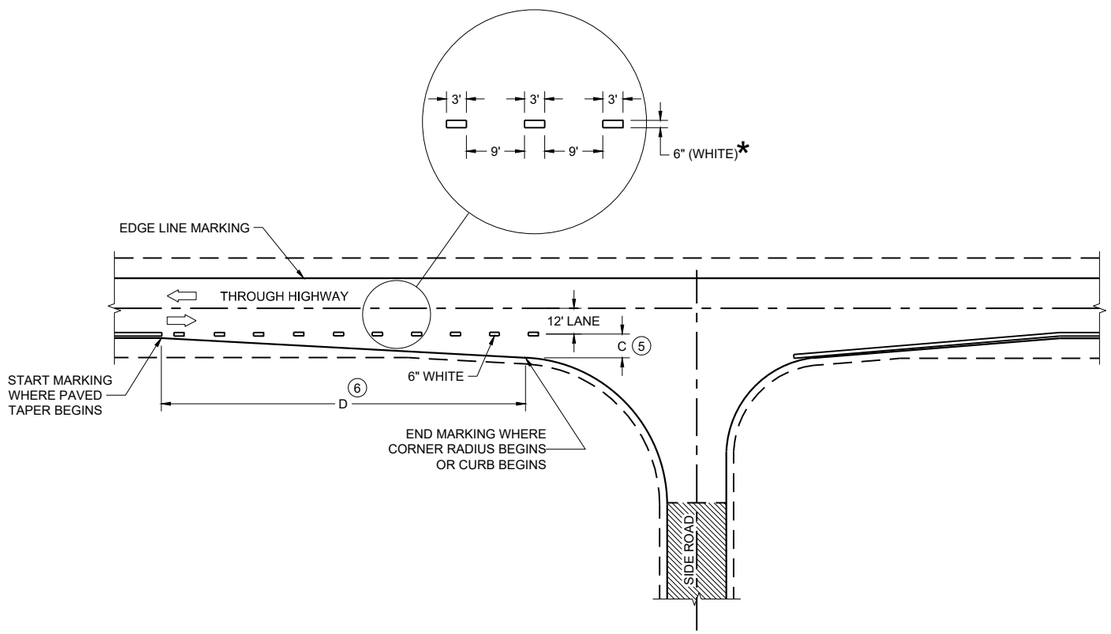

MINOR INTERSECTION

*CONFIRM MARKING LINE WIDTH WITH THE MISCELLANEOUS QUANTITIES

GENERAL NOTES

OMIT EDGE LINES THROUGH INTERSECTIONS. CONTINUE EDGE LINES THROUGH DRIVEWAYS.

1. WHEN DISTANCE "A" IS LESS THAN 250 FEET, OMIT LANE LINE.
2. WHEN DISTANCE "B" IS LESS THAN 100 FEET, OMIT CHANNELIZING LANE LINE.
3. BARRIER LINE ENDS AT SIDE ROAD PAVEMENT / SURFACE EDGE EXTENSION.
4. BARRIER LINE STARTS 500 FEET PRIOR TO THE BYPASS TAPER.
5. WHEN DISTANCE "C" IS LESS THAN 4 FEET, OMIT DOTTED EXTENSION.
6. WHEN DISTANCE "D" IS LESS THAN 50 FEET, OMIT DOTTED EXTENSION.

LEGEND

DIRECTION OF TRAVEL

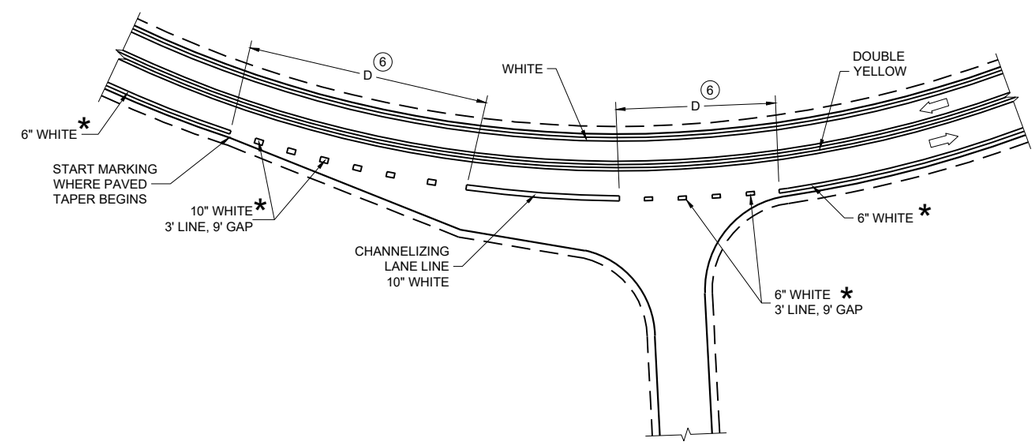

INTERSECTION ON OUTSIDE OF CURVE

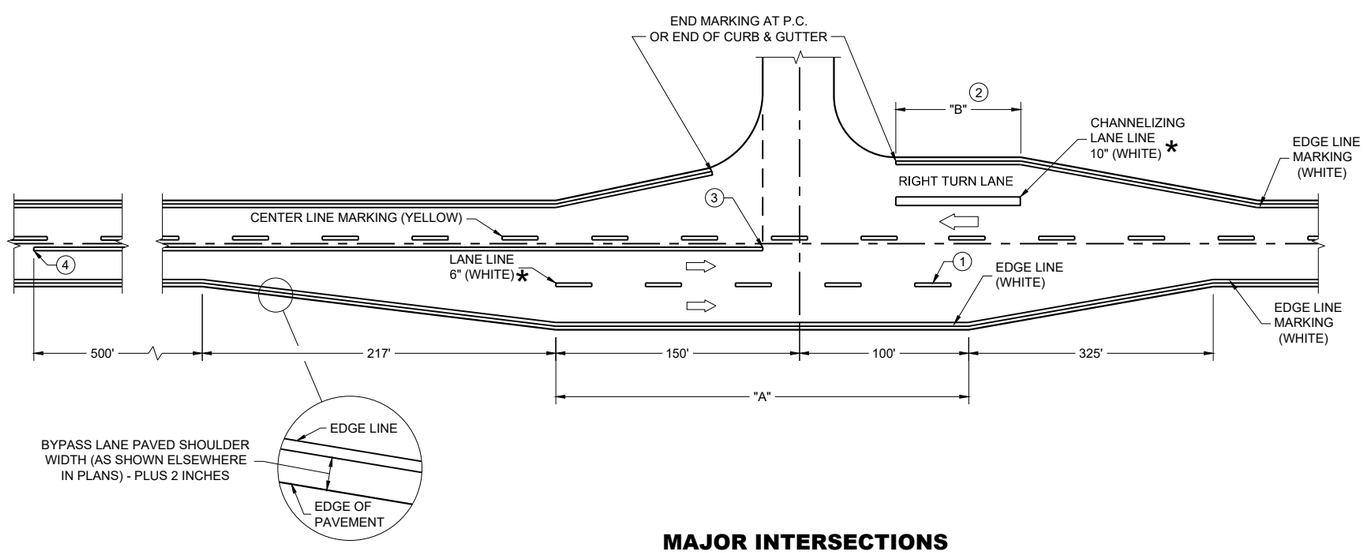

MAJOR INTERSECTIONS

(INTERSECTION WITH FULL RIGHT TURN LANE OR BYPASS LANE)

PAVEMENT MARKING (INTERSECTIONS)

STATE OF WISCONSIN
DEPARTMENT OF TRANSPORTATION

6
SDD 15C35-06a

LEGEND

SIGN ON PERMANENT SUPPORT

DELINEATOR, FLEXIBLE/TUBULAR MARKER

DIRECTION OF TRAFFIC

GENERAL NOTES

ALL SIGNS ARE 48"X48" UNLESS OTHERWISE NOTED.

"WO" SIGN IS THE SAME AS "W" SIGN EXCEPT THE BACKGROUND IS ORANGE.

ANY SIGNS TEMPORARY OR EXISTING, WHICH CONFLICT WITH THE TRAFFIC CONTROL "IN USE" SHALL BE REMOVED OR COVERED AS NEEDED AND AS APPROVED BY THE ENGINEER. NO WARNING LIGHTS SHALL BE WORKING ON COVERED OR "DOWNED" SIGNS.

THE EXACT NUMBER, LOCATION, AND SPACING OF ALL SIGNS AND DEVICES SHALL BE ADJUSTED TO FIT FIELD CONDITIONS AS APPROVED BY THE ENGINEER.

THE SPACING BETWEEN SIGNS SHOULD BE ADJUSTED TO NOT CONFLICT WITH AND TO PROVIDE A MINIMUM OF 200 FEET (500' DESIRABLE) DISTANCE TO EXISTING SIGNS.

A SINGLE ROW OF FLEXIBLE TUBULAR MARKERS ON CENTERLINE EXTEND FOR THE ENTIRE LENGTH OF TWO-WAY TRAFFIC AT 50 FOOT SPACING.

COVER EXISTING CENTERLINE STRIPE WITH TEMPORARY PAVEMENT MARKING LINE, 6 INCH DOUBLE YELLOW.

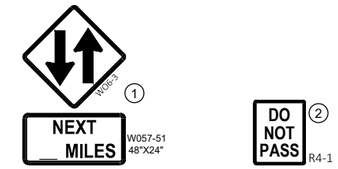

1 THE WO6-3 AND WO57-51 SHALL BE LOCATED 200 FEET BEYOND THE END OF THE ACCELERATION LANE OF EACH ENTRANCE RAMP AND / OR 500 FEET BEYOND ANY SIDE ROAD. THE R4-1 SHALL BE LOCATED 1000 FEET BEYOND THE WO6-3 AND THE WO57-51 AND THE SIGNS SHALL BE ALTERNATED WITH ONE MILE INTERVALS BETWEEN THE SIGNS.

2 CONVENTIONAL: 24" X 30"
FREEWAY AND EXPRESSWAY: 36" X 48"

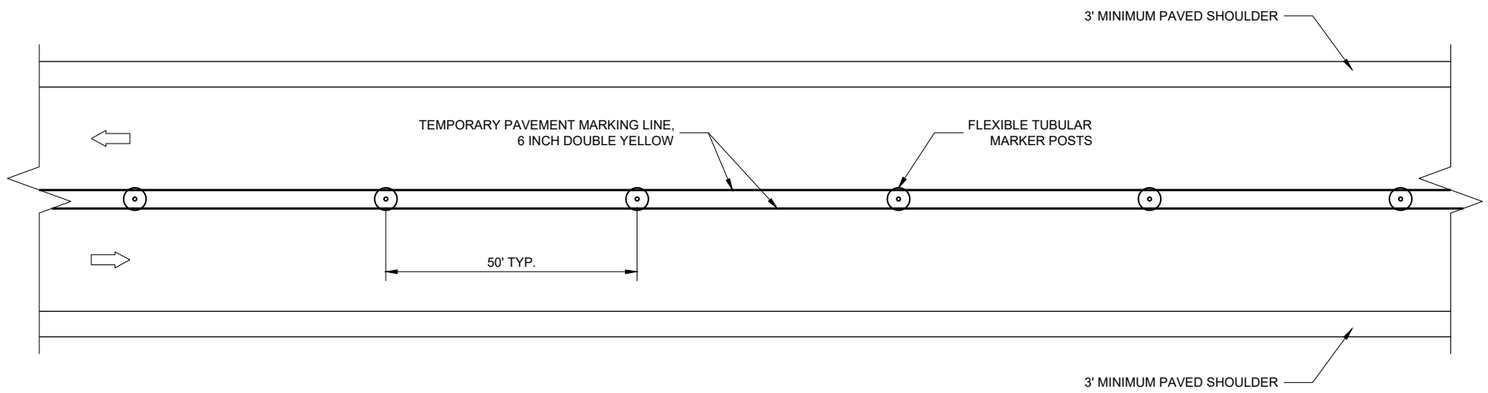

TWO LANE, TWO WAY OPERATION

6

SDD 15D06-06

TRAFFIC CONTROL
TWO LANE TWO WAY
OPERATION

STATE OF WISCONSIN
DEPARTMENT OF TRANSPORTATION

APPROVED
May 2023 /S/ Andrew Heidtke
DATE WORK ZONE ENGINEE
FHWA

6

SDD 15D06-06

LEGEND

- SIGN ON PERMANENT SUPPORT
- TRAFFIC CONTROL DRUM
- DIRECTION OF TRAFFIC
- WORK ZONE

GENERAL NOTES

ALL SIGNS ARE 48"X48" UNLESS OTHERWISE NOTED. IF NECESSARY DUE TO SPACE CONSTRAINTS IN URBAN AREAS, 36" X 36" SIGNS MAY BE USED IF APPROVED BY THE REGIONAL TRAFFIC UNIT.

"WO" SIGN IS THE SAME AS "W" SIGN EXCEPT THE BACKGROUND IS ORANGE.

ANY SIGNS TEMPORARY OR EXISTING, WHICH CONFLICT WITH THE TRAFFIC CONTROL "IN USE" SHALL BE REMOVED OR COVERED AS NEEDED AND AS APPROVED BY THE ENGINEER.

THE EXACT NUMBER, LOCATION, AND SPACING OF ALL SIGNS AND DEVICES SHALL BE ADJUSTED TO FIT FIELD CONDITIONS AS APPROVED BY THE ENGINEER.

CHANNELIZING DEVICES PLACED ADJACENT TO WORK AREA SHALL BE PULLED BACK FROM THE TRAVEL LANE WHEN WORK IS NOT IN PROGRESS.

SIGNS THAT WILL BE IN PLACE LESS THAN 7 CONTINUOUS DAYS AND NIGHTS MAY BE MOUNTED ON PORTABLE SUPPORTS.

W20-1A AND G20-2A SIGNS ARE NOT REQUIRED IF THE WORK AREA IS WITHIN A LARGER WORK ZONE WHERE THESE SIGNS ARE ALREADY PRESENT. G20-2A SIGNS MAY ALSO BE OMITTED IF DURATION OF WORK IS LESS THAN 7 CONTINUOUS DAYS AND NIGHTS.

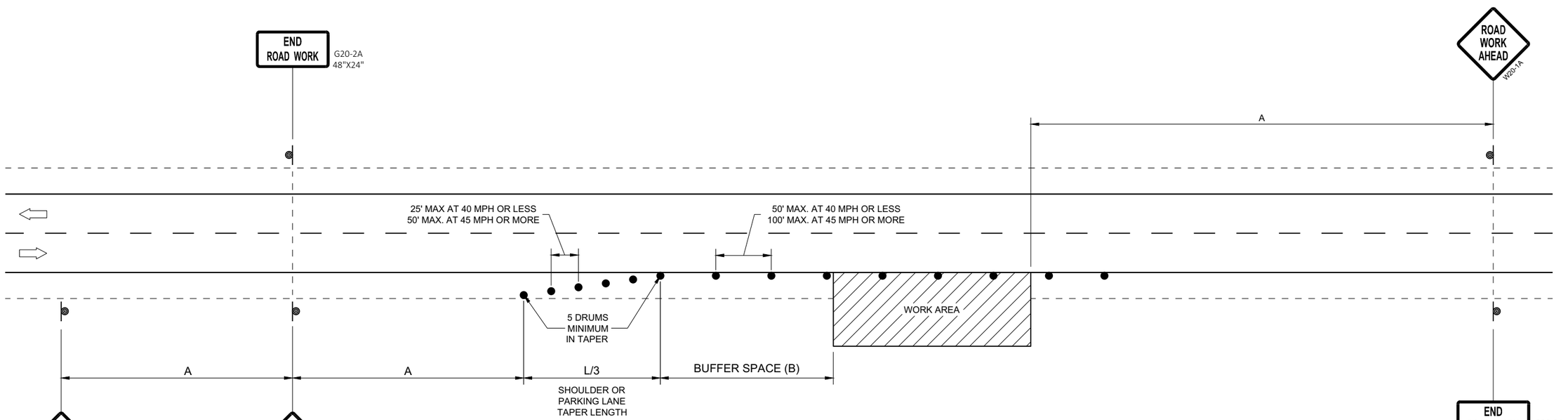

OR
IF TRAFFIC CONTROL DEVICES
ENCROACH ONTO TRAVELED WAY, USE

POSTED SPEED LIMIT PRIOR TO WORK STARTING (MPH)	ADVANCE WARNING SIGN SPACING (A) FEET	SHOULDER TAPER L / 3 W, LATERAL OFFSET (FT)						BUFFER SPACE (B) FEET
		3	4	5	6	7	8	
25	200'	10	14	17	21	24	28	55
30	200'	15	20	25	30	35	40	85
35	350'	20	27	34	40	47	54	120
40	350'	26	35	44	53	62	70	170
45	500'	45	59	74	89	104	119	220
50	500'	50	66	83	99	116	132	280
55	500'	54	73	91	109	127	145	335'

TRAFFIC CONTROL, WORK ON SHOULDER OR PARKING LANE, UNDIVIDED ROADWAY

STATE OF WISCONSIN
DEPARTMENT OF TRANSPORTATION

APPROVED
May 2020 — DATE
/S/ Andrew Heidtke — STATEWIDE WORK ZONE T SAFETY ENGINEER
FHWA

6

SDD 15D28 - 04

LEGEND

SIGN ON TEMPORARY SUPPORT

SIGN ON PERMANENT SUPPORT

TYPE III BARRICADE

TYPE III BARRICADE WITH ATTACHED SIGN

TYPE "A" WARNING LIGHT (FLASHING)

DIRECTION OF TRAFFIC

FLAGGER, EQUIPPED WITH STOP/SLOW PADDLE FASTENED ON SUPPORT STAFF

POSTED SPEED LIMIT PRIOR TO WORK STARTING (MPH)	ADVANCE WARNING SIGN SPACING (A) FEET
0-30	200'
35-40	350'
45-55	500'

GENERAL NOTES

ALL SIGNS ARE 48"X48" UNLESS OTHERWISE NOTED.

"WO" SIGN IS THE SAME AS "W" SIGN EXCEPT THE BACKGROUND IS ORANGE.

THE EXACT NUMBER, LOCATION, AND SPACING OF ALL SIGNS AND DEVICES SHALL BE ADJUSTED TO FIT FIELD CONDITIONS AS APPROVED BY THE ENGINEER.

WARNING SIGNS THAT WILL BE IN PLACE LESS THAN 7 CONTINUOUS DAYS AND NIGHTS MAY BE MOUNTED ON PORTABLE SUPPORTS.

WHEN ACTIVITY REFLECTED BY THE SIGN IS NOT CURRENTLY TAKING PLACE, THE HIGHWAY SHALL BE RESTORED TO NORMAL CONDITION AND THE SIGNS SHALL BE REMOVED, COVERED OR TURNED AWAY FROM TRAFFIC.

WHEN A SIDE ROAD OR RAMP INTERSECTS WITHIN THE ADVANCE SIGNING AREA, ADDITIONAL TRAFFIC CONTROLS SHALL BE PROVIDED AS SPECIFIED IN THE PLANS AND / OR THE SPECIAL PROVISIONS OR AS APPROVED BY THE ENGINEER.

PLACE SIGNS ON BOTH SIDES IF USED ON DIVIDED HIGHWAY.

(1) THESE SIGNS ARE TO BE USED ONLY WHEN VEHICLE ENTRANCE / EXIT CONDITIONS ARE SEPARATED BY MORE THAN TWO MILES FROM PREVIOUS WORK AREA OR SIGNING OR AS DIRECTED BY THE ENGINEER.

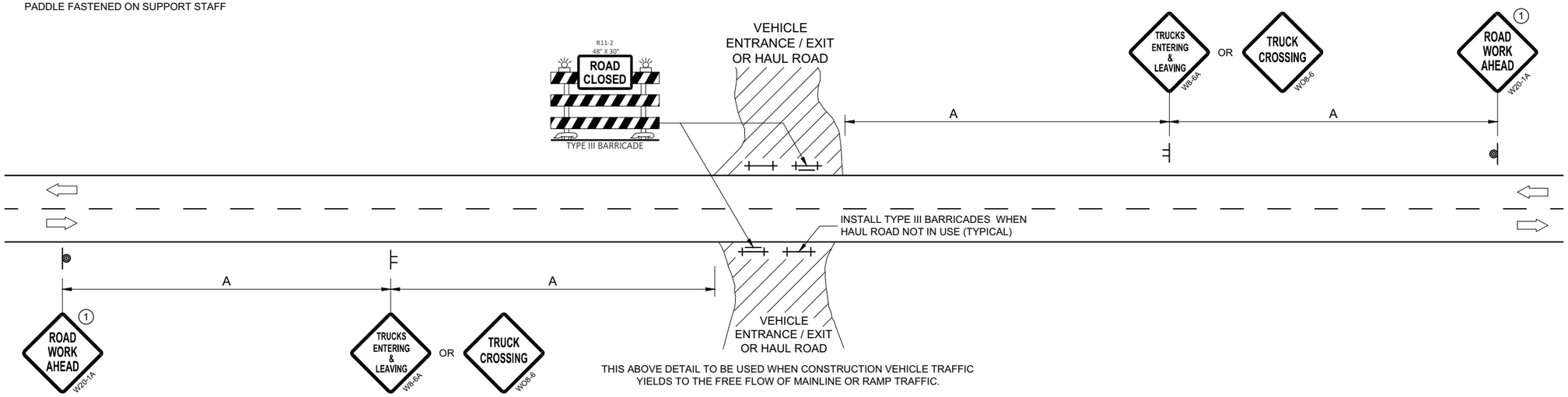

THIS ABOVE DETAIL TO BE USED WHEN CONSTRUCTION VEHICLE TRAFFIC YIELDS TO THE FREE FLOW OF MAINLINE OR RAMP TRAFFIC.

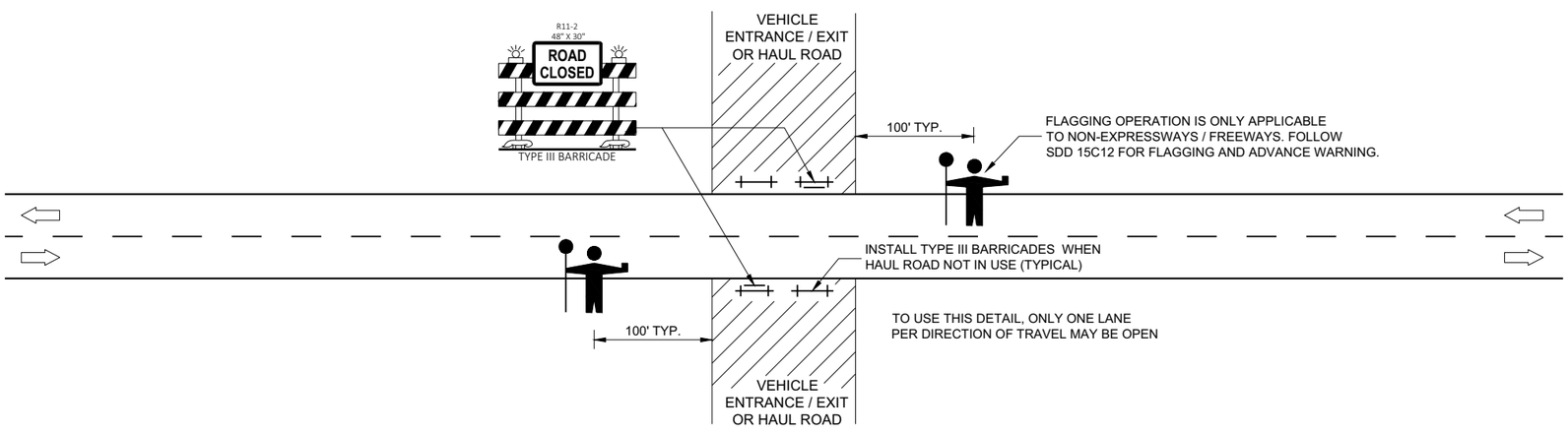

TO USE THIS DETAIL, ONLY ONE LANE PER DIRECTION OF TRAVEL MAY BE OPEN

THIS DETAIL TO BE USED WHEN CONSTRUCTION WORK INCLUDING TRUCKING ACTIVITY REQUIRES MAINLINE TRAFFIC TO BE TEMPORARILY STOPPED IN ONE OR BOTH DIRECTIONS. DELAY TO HIGHWAY TRAFFIC SHALL BE MINIMIZED.

TRAFFIC CONTROL, VEHICLE ENTRANCE/EXIT OR HAUL ROAD

STATE OF WISCONSIN
DEPARTMENT OF TRANSPORTATION

APPROVED
May 2020 — DATE
/S/ Andrew Heidtke — WORK ZONE ENGINEE
FHWA

6

SDD 15D29 - 06

LEGEND

- SIGN ON PERMANENT SUPPORT
- TRAFFIC CONTROL DRUM
- TRAFFIC CONTROL DRUM WITH TYPE "C" STEADY BURN LIGHT
- TEMPORARY DELINEATOR (WHITE, SINGLE DELINEATOR)
- TYPE III BARRICADE
- TYPE III BARRICADE WITH ATTACHED SIGN
- TYPE "A" WARNING LIGHT (FLASHING)
- TEMPORARY RAISED PAVEMENT MARKERS (TWO WAY YELLOW)
- TEMPORARY STEEL PLATE BEAM GUARD AND END TREATMENT
- DIRECTION OF TRAFFIC
- REMOVE PAVEMENT MARKINGS
- WORK AREA

GENERAL NOTES

ALL SIGNS ARE 48"X48" UNLESS OTHERWISE NOTED.

"WO" IS THE SAME AS "W" EXCEPT THE BACKGROUND IS ORANGE.

ANY SIGNS TEMPORARY OR EXISTING, WHICH CONFLICT WITH THE TRAFFIC CONTROL "IN USE" SHALL BE REMOVED OR COVERED AS NEEDED AND AS APPROVED BY THE ENGINEER.

THE EXACT NUMBER, LOCATION, AND SPACING OF ALL SIGNS AND DEVICES SHALL BE ADJUSTED TO FIT FIELD CONDITIONS AS APPROVED BY THE ENGINEER.

THE SPACING BETWEEN SIGNS SHOULD BE ADJUSTED TO NOT CONFLICT WITH AND TO PROVIDE A MINIMUM OF 200 FEET (500' DESIRABLE) DISTANCE TO EXISTING SIGNS.

SIGN LAYOUTS SHALL BE IN ACCORDANCE WITH THE FHWA'S MANUAL ON STANDARD HIGHWAY SIGNS OR THE WISCONSIN STANDARD SIGN PLATES.

EQUIPMENT, VEHICLES, OR MATERIAL SHOULD NOT BE STORED IN BUFFER SPACE.

1. IF ADVISORY SPEED IS GREATER THAN 30 MPH, USE THE WO1-4 SIGN. IF ADVISORY SPEED IS 30 MPH OR LESS, USE THE WO1-3 SIGN.
2. WHEN THE DISTANCE TO / FROM THE NEXT CLOSEST NO-PASSING ZONE IS LESS THAN THE MINIMUM DISTANCE BETWEEN ZONES AS INDICATED IN THE SPECIFICATIONS, THE TWO ZONES SHALL BE CONNECTED.
3. OMIT THESE W01-6 SIGNS IF THE ADVISORY SPEED OF THE CURVE IS GREATER THAN 30 MPH.
4. TEMPORARY STEEL PLATE BEAM GUARD AND END TREATMENT WHEN INCLUDED IN THE CONTRACT. FOR LAYOUT, SEE DETAILS ELSEWHERE IN THE PLAN.

S (MPH)	BUFFER SPACE (DESIRABLE)
25	55'
30	85'
35	120'
40	170'
45	220'
50	280'
55	335'

S = NON-CONSTRUCTION SPEED LIMIT (MPH)

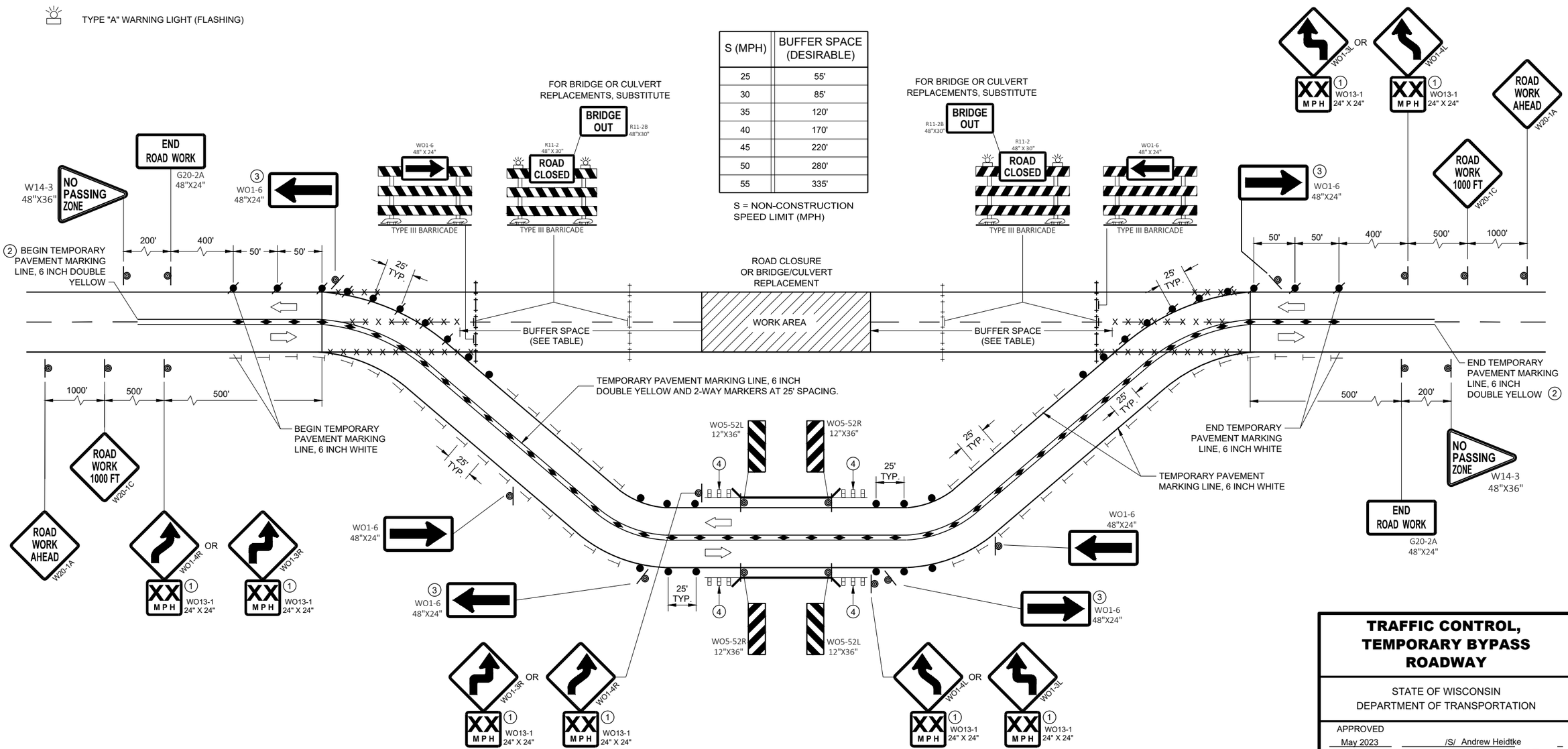

TRAFFIC CONTROL, TEMPORARY BYPASS ROADWAY

STATE OF WISCONSIN
DEPARTMENT OF TRANSPORTATION

APPROVED
May 2023 — DATE
/S/ Andrew Heidtke — WORK ZONE ENGINEER
FHWA

6
SDD 15D31-05

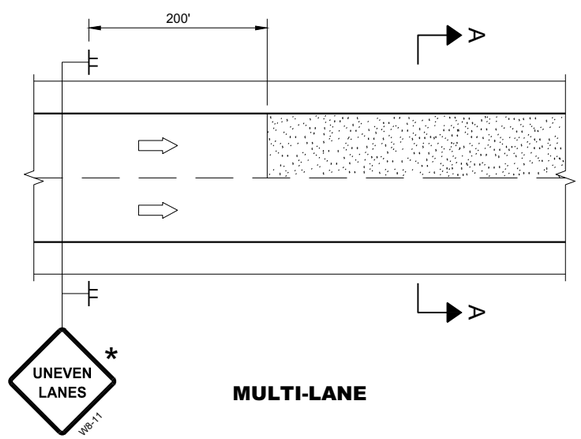

MULTI-LANE

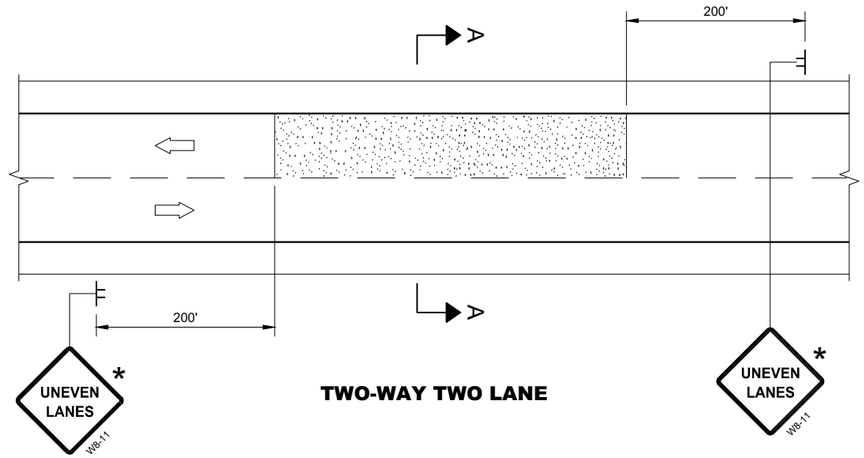

TWO-WAY TWO LANE

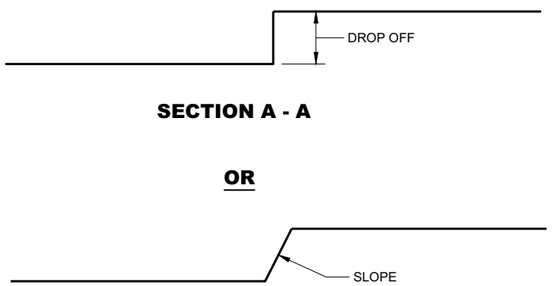

SECTION A - A

OR

SECTION A - A

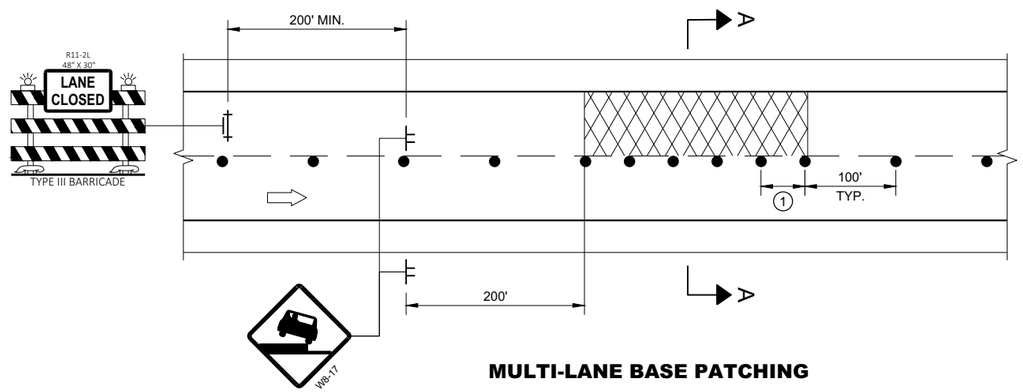

MULTI-LANE BASE PATCHING

ADJACENT LANE DROP-OFFS

GENERAL NOTES

FOR SPOT LOCATIONS USE ENGINEERING JUDGEMENT WHEN PLACING ADDITIONAL SIGNS.

ALL SIGNS ARE 48" X 48" UNLESS OTHERWISE NOTED.

"WO" SIGNS ARE THE SAME AS "W" SIGNS EXCEPT THE BACKGROUND IS ORANGE.

WARNING LIGHTS ARE NOT REQUIRED IF THE LANE CLOSURE IS A DAYTIME ONLY OPERATION.

* IF THE DROP-OFF IS CONTINUOUS ALONG THE PROJECT, PLACE ADDITIONAL SIGNS EVERY 1 MILE AND AFTER EVERY ENTRANCE RAMP.

(1) USE CLOSER SPACING WHEN DELINEATING DROP-OFF.

LEGEND

- SIGN ON TEMPORARY SUPPORT
- TRAFFIC CONTROL DRUM
- TYPE III BARRICADE WITH ATTACHED SIGN
- TYPE "A" WARNING LIGHT (FLASHING)
- DIRECTION OF TRAFFIC
- WORK AREA WITH DROP-OFF
- MILLED SURFACE

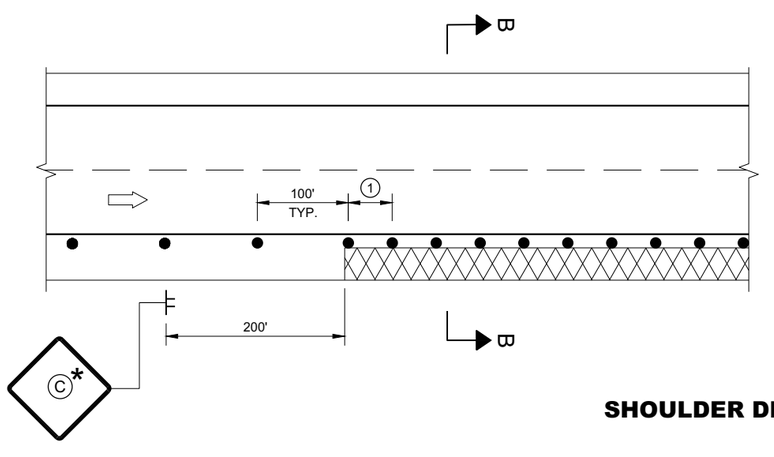

SHOULDER DROP-OFFS

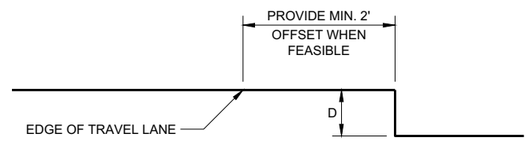

SECTION B - B

D	SIGN (C)
< 2" WITH A SLOPE STEEPER THAN 3:1	LOW SHOULDER WO8-9
2" < 6" WITH A SLOPE STEEPER THAN 3:1	SHOULDER DROP - OFF W8-9A PROVIDE A 3:1 OR FLATTER SLOPE OF MATERIAL ADJACENT TO THE PAVEMENT

TRAFFIC CONTROL, DROP-OFF SIGNING

STATE OF WISCONSIN
DEPARTMENT OF TRANSPORTATION

APPROVED
March 2018 — DATE
/S/ Andrew Heidtke — WORK ZONE ENGINEE
FHWA

GENERAL NOTES

DRAWING NOT TO SCALE. ALL SIGNS AND POSTS ON THIS SHEET SHALL BE PAID FOR WITH 'TRAFFIC CONTROL SIGNS' BID ITEM. ALL SIDE ROADS WHICH ARE UNDER CONSTRUCTION OF CURB AND GUTTER AND/OR GRADING SHALL BE ADEQUATELY SIGNED.

ALL SIGNS AND DEVICES SHALL BE IN CONFORMANCE WITH THE WISCONSIN MANUAL OF UNIFORM TRAFFIC CONTROL DEVICES (WMUTCD). SIGN LAYOUTS SHALL BE IN ACCORDANCE WITH THE WISDOT STANDARD SIGN PLATES.

"WO" SIGNS ARE THE SAME AS "W" SIGNS EXCEPT THAT THE BACKGROUND IS ORANGE.

ALL SIGNS ARE 48" X 48" UNLESS OTHERWISE NOTED.

THE EXACT NUMBER, LOCATION AND SPACING OF ALL SIGNS AND DEVICES SHALL BE ADJUSTED TO FIT FIELD CONDITIONS AS DIRECTED BY THE ENGINEER.

ALL SIGNS INAPPROPRIATE TO THE STATUS OF THE CONTROL ZONE, INCLUDING PRE-EXISTING SIGNS IN THE VICINITY, SHALL BE COVERED OR REMOVED AS DIRECTED BY THE ENGINEER.

SEE 15C34 FOR ADDITIONAL TRAFFIC CONTROL SIGNING WHEN CENTERLINE PAVEMENT MAKINGS ARE MISSING. 'DO NOT PASS' SIGNS MUST BE INSTALLED ON THE SAME DAY AS MILLING OPERATIONS.

1. PLACE SIGNS 350' IN ADVANCE OF CHIP SEALED OR LOOSE GRAVEL SURFACES AND AT 1 MILE INTERVALS, OR AS DIRECTED BY THE ENGINEER.
2. PLACE SIGN 200' MIN. FROM INTERSECTION AND 200' MIN. AFTER ADVANCE WARNING SIGN SHOWN IN SDD 15C04.
3. ADD WO8-1 OR WO8-2 SIGN WHEN THE CONDITION IS PRESENT.

LEGEND

SIGN ON TEMPORARY SUPPORT

DIRECTION OF TRAFFIC

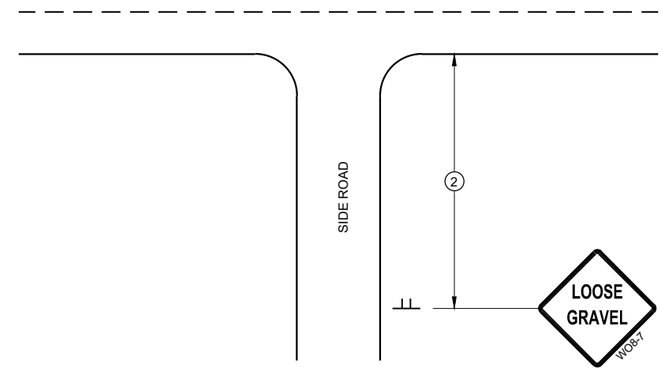

TYPICAL SIDE ROAD APPROACH SIGN DETAIL

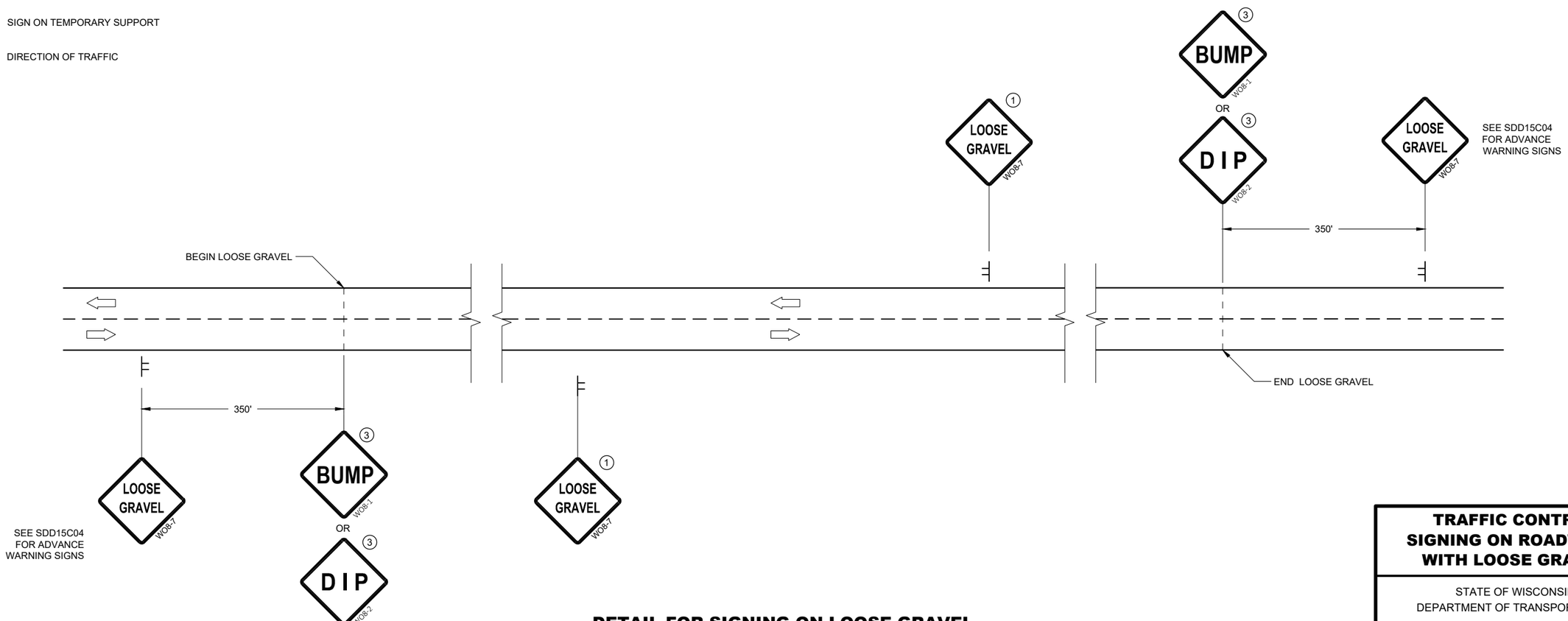

DETAIL FOR SIGNING ON LOOSE GRAVEL OR CHIP SEALED SURFACES

TRAFFIC CONTROL SIGNING ON ROADWAYS WITH LOOSE GRAVEL

STATE OF WISCONSIN
DEPARTMENT OF TRANSPORTATION

APPROVED
February 2021 — DATE
/S/ Andrew Heidtke — WORK ZONE ENGINEE
FHWA

6
SDD 15D45 - 03

URBAN AREA

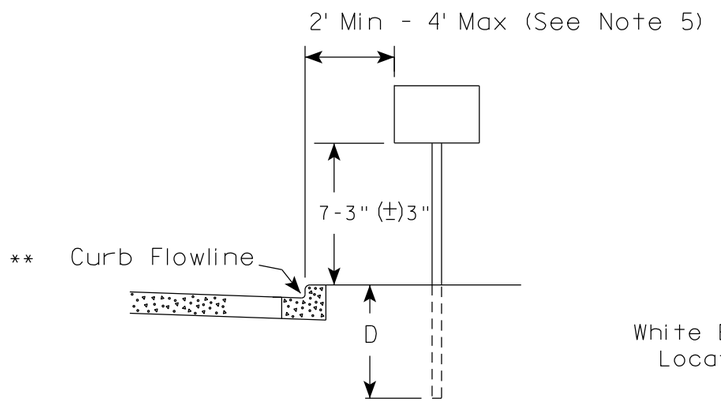

RURAL AREA (See Note 2)

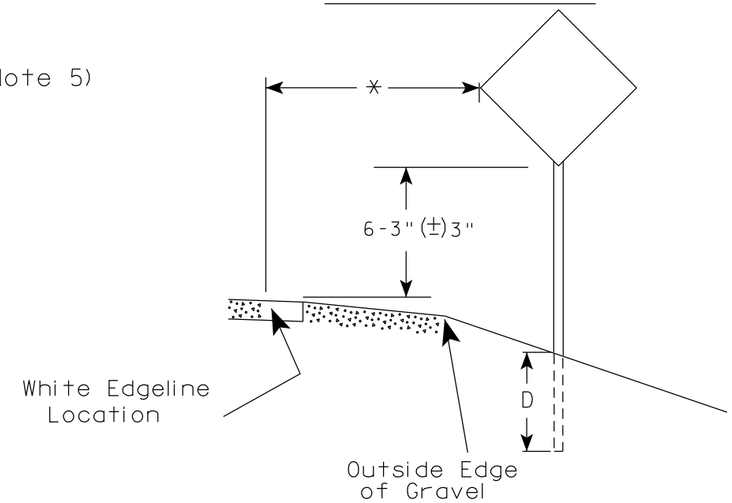

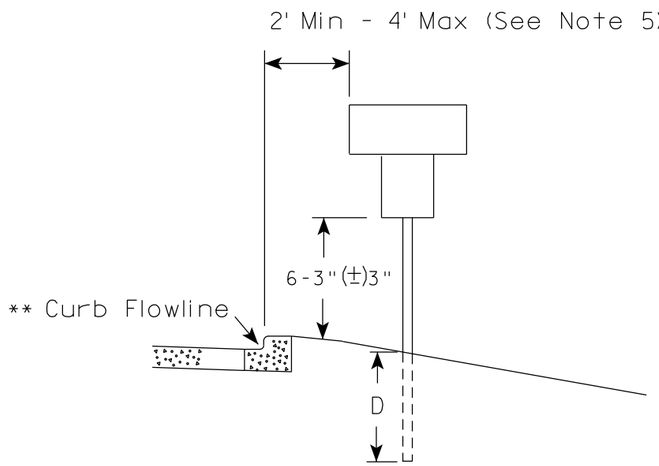

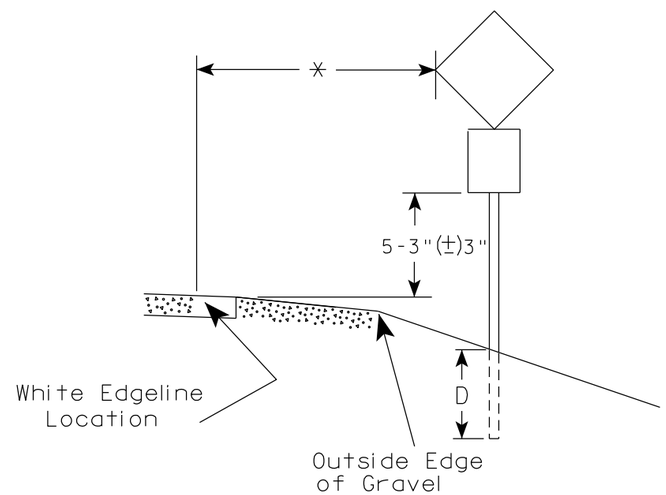

** The existence of curb and gutter does not in itself mandate the vertical clearance illustrated. That height is typically measured where there is sidewalk adjacent to the roadway or parking is permitted. In the absence of sidewalk vertical clearance is measured from the top of the curb. Offset of signs is measured from the flow line.

* 6 feet from edge of a paved shoulder or 12 feet from the edge of pavement (edge line location) or 2 feet from outside edge of gravel, whichever is greater unless directed by project engineer.

GENERAL NOTES

1. Signs wider than 4 feet or 20 sq.ft or larger, shall be mounted on multiple posts. Refer to plate A4-4.
2. If signs are mounted on or behind barrier wall, see A4-10 sign plate.
   The Double Arrow sign (W12-1D) shall be mounted at a height of 2'-3" (±) 3". The Chevron sign (W1-8), Roundabout Chevron panel (R6-4B), Enhanced Reference Markers, Clearance Markers (W5-52), Mile Markers (D10 series), In Road Object Markers (W5-54) & End of Road Markers (W5-56) shall be mounted at a height of 4'-3" (±) 3".
3. For expressways and freeways, mounting height is 7'- 3" (±) 3" or 6'-3" (±) 3" depending upon existence of a sub-sign.
4. Minimum mounting height for signs mounted on traffic signal poles is 5'- 3" (±) 3".
5. Offset distance shall be consistent with existing signs or consistent throughout length of project.
6. Folding signs shall be mounted at a height of 5'-3" (±) 3" or as directd by the Engineer.

POST EMBEDMENT DEPTH

Area of Sign Installation (Sq. Ft.)	D (Min)
20 or Less	4'
Greater than 20	5'

TYPICAL INSTALLATION OF PERMANENT TYPE II SIGNS ON SINGLE POSTS

WISCONSIN DEPT OF TRANSPORTATION

APPROVED Matthew R Rauch
for State Traffic Engineer

DATE 12/6/23 PLATE NO. A4-3.23

7 7

PROJECT NO:	HWY:	COUNTY:		SHEET NO: 130	E

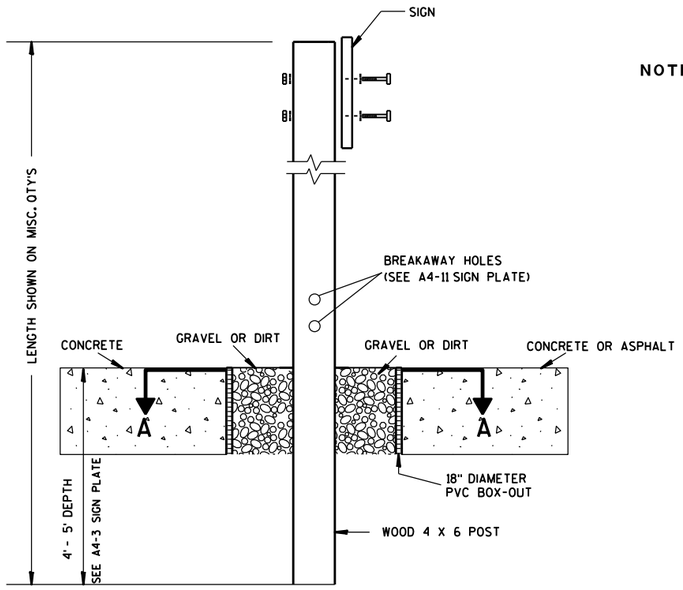

ELEVATION VIEW

DETAIL OF WOOD 4 X 6 SIGN POST IN BOX-OUT

NOTES:
1. ALL MATERIAL TO BE APPROVED BY ENGINEER PRIOR TO INSTALLATION
2. SEE SIGN PLATE A4-8 FOR SIGN HARDWARE REQUIREMENTS
3. 18 INCH X 18 INCH SQUARE BOX-OUTS MAY BE USED FOR INSTALLATIONS IN EXISTING CONCRETE OR ASPHALT LOCATIONS.

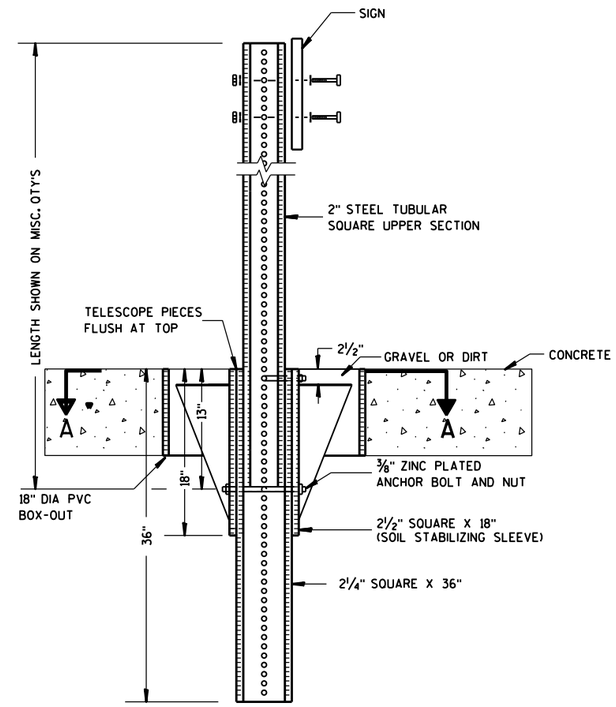

ELEVATION VIEW

DETAIL OF STEEL 2 X 2 SIGN POST IN BOX-OUT

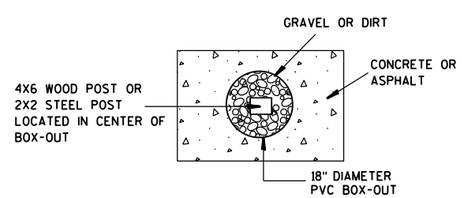

PLAN VIEW

FOR NEW CONCRETE/ASPHALT INSTALLATIONS

SIGN POST
BOX-OUTS
A4-3B

WISCONSIN DEPT OF TRANSPORTATION

APPROVED Matthew R Rauch
for State Traffic Engineer

DATE 1/27/14 PLATE NO. A4-3B.1

PROJECT NO:	HWY:	COUNTY:		SHEET NO:	E

URBAN AREA

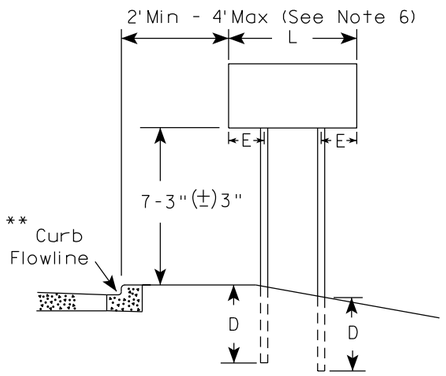

RURAL AREA (See Note 3)

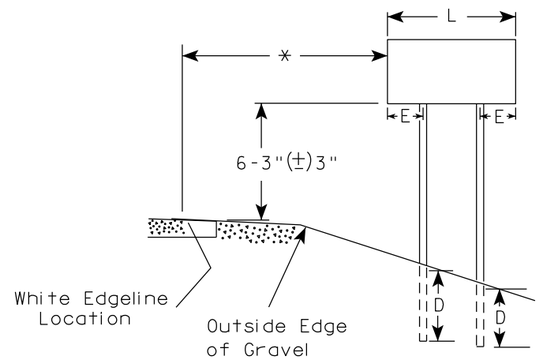

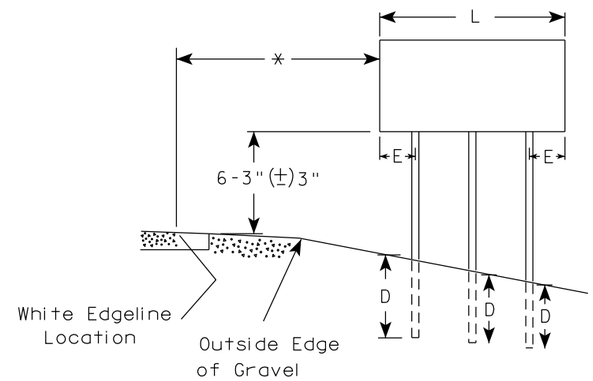

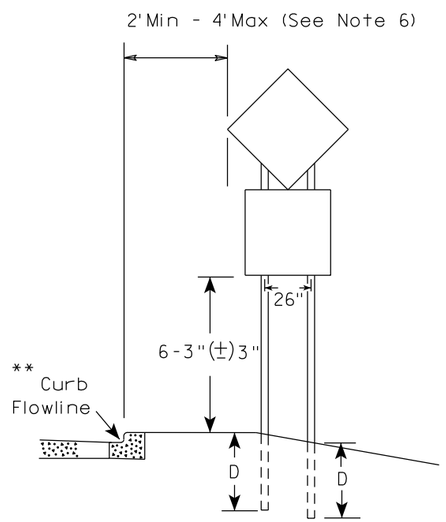

48" DIAMOND WARNING SIGN

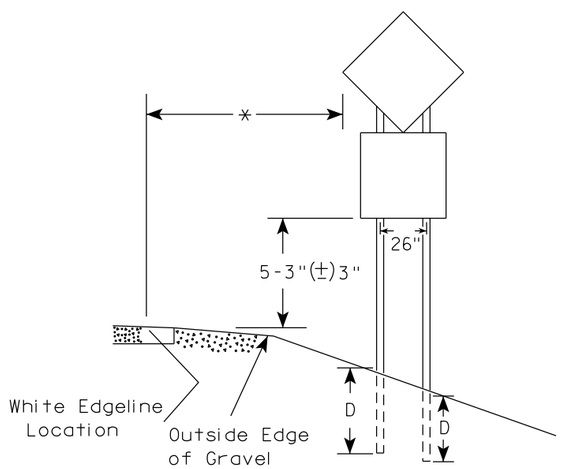

48" DIAMOND WARNING SIGN

GENERAL NOTES

1. For 3 or 4 post installations, individual post spacing shall be greater than 3'-6".
2. See tables below for required number of posts.
3. For expressways and freeways, mounting height is 7'-3" (±) 3" or 6'-3" (±) 3" depending upon existence of sub-sign.
4. The (±) tolerance for mounting height is 3 inches.
5. J-Assemblies are considered to be one sign for mounting height.
6. Offset distance shall be consistent with existing signs or consistent throughout length of project.
7. Folding signs shall be mounted at a height of 5'-3" (±) 3" or as directed by the engineer.
8. The Double Arrow sign (W12-1) shall be mounted at a height of 2'-3" (±) 3". The Chevron sign (W1-8), Roundabout Chevron panel (R6-4B), Clearance Markers (W5-52), Mile Markers (D10 series), In Road Object Markers (W5-54) & End of Road Markers (W5-56) shall be mounted at a height of 4"-3" (±) 3".

* 6 feet from edge of a paved shoulder or 12 feet from the edge of pavement (edge line location) or 2 feet from outside edge of gravel, whichever is greater unless directed by project engineer.

** The existence of curb and gutter does not in itself mandate the vertical clearance illustrated. That height is typically measured where there is sidewalk adjacent to the roadway or parking is permitted. In the absence of sidewalk vertical clearance is measured from the top of the curb. Offset of signs is measured from the flow line.

*** See A4-3 sign plate for signs 4' or less in width and less than 20 S.F. in area.

SIGN SHAPE OTHER THAN DIAMOND (TWO POSTS REQUIRED)	
L	E
*** Greater than 48" Less than 60"	12"
60" to 108"	L/5

SIGN SHAPE OTHER THAN DIAMOND (THREE POSTS REQUIRED)	
L	E
Greater than 108" to 144"	12"

POST EMBEDMENT DEPTH

Area of Sign Installation (Sq. Ft.)	D (Min)
20 or Less	4'
Greater than 20	5'

TYPICAL INSTALLATION OF TYPE II SIGNS ON MULTIPLE POSTS

WISCONSIN DEPT OF TRANSPORTATION

APPROVED Matthew R Rauch
for State Traffic Engineer

DATE 12/6/23 PLATE NO. A4-4.16

PROJECT NO:	HWY:	COUNTY:		SHEET NO: 132	E

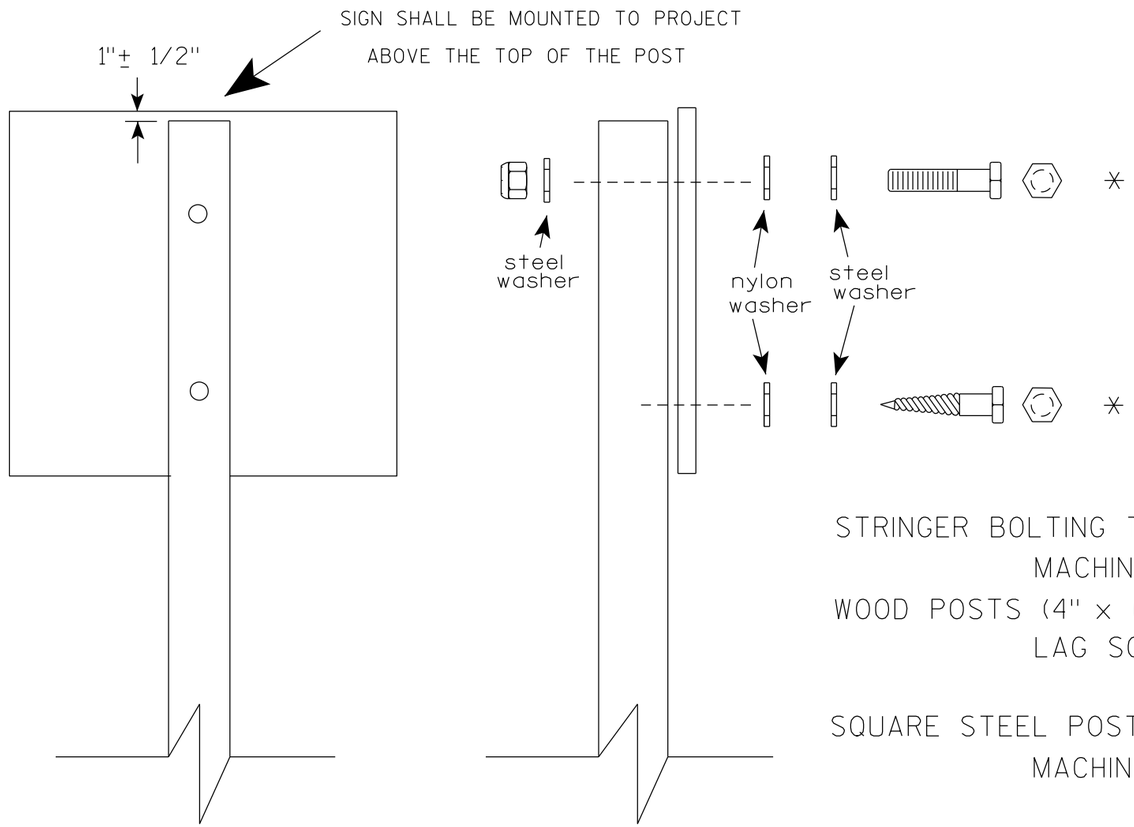

Nuts, bolts and lags used for mounting signs shall have hexagonal heads and shall be either :

a. Hot dip galvanized in accordance with ASTM Designation: A 153, Class D, or SC 3

b. Electro-galvanized in accordance with ASTM Designation : B 633, TYPE III, SC 3.

Threads on bolts and nuts shall be manufactured with sufficient allowance for the cadmium plate or galvanized coating to permit the nuts to run freely on the bolts.

STRINGER BOLTING TO ALUMINUM SIGNS (SEE SIGN PLATE A4-18)

MACHINE BOLTS - 5/16" X 1-3/4" Length w/ lock nuts

WOOD POSTS (4" x 6")

LAG SCREWS - 3/8" X 3" (NO STRINGERS ON BACK OF SIGN)

3/8" X 4" (STRINGERS ON BACK OF SIGN)

SQUARE STEEL POSTS (2" x 2")

MACHINE BOLTS - 3/8" X 3-1/4" Length w/ nuts (NO STRINGER ON BACK OF SIGN)

3/8" X 5" Length w/ nuts (STRINGERS ON BACK OF SIGN)

RIVETS - 9/32 " (6605-9-6) BULB-TITE, TRI-FOLD, ALUMINUM BODY/MANDREL

O.D. FLANGE .720-.765 INCH, GRIP RANGE .042-.375 INCH

WASHERS (ALL POSTS) -

1-1/4" O.D. X 3/8" I.D. X 1/16" STEEL

1-1/4" O.D. X 3/8" I.D. X .080 NYLON

* Two different fastening systems are shown for illustration purposes. On any individual sign, either one or the other system shall be used. Actual number of fasteners per sign varies with the sign area, but normally there are two. For a single post installation, all signs greater than 9 sq. ft. require the use of 3 fasteners.

ATTACHMENT OF SIGNS TO POSTS

WISCONSIN DEPT OF TRANSPORTATION

APPROVED Matthew R Rauch
for State Traffic Engineer

DATE 4/1/2020 PLATE NO. A4-8.9

TELESCOPIC TUBING ANCHORS
TWO PIECE SYSTEM

2 1/4 " SQUARE
12 GAUGE
PERFORATED
GALVANIZED FINISH

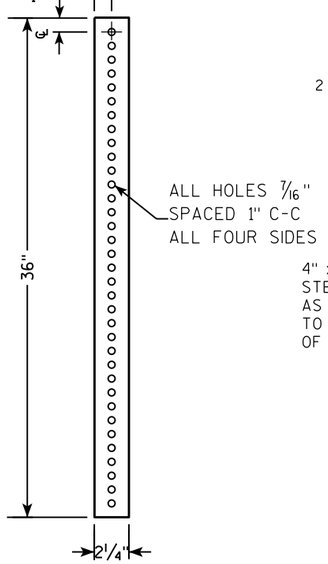

2 1/2 " SQUARE
12 GAUGE
OMNI-DIRECTIONAL
PERFORATED
SOIL STABILIZING SLEEVE
GALVANIZED FINISH

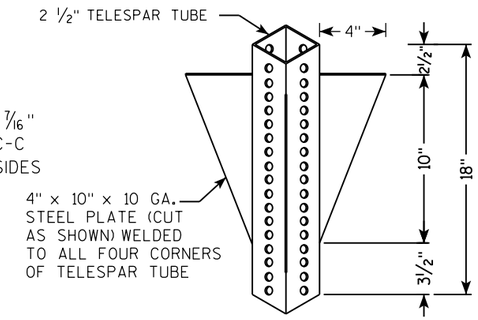

DETAIL OF TUBULAR STEEL SIGN POST
(IN POURED CONCRETE OR ASPHALT)

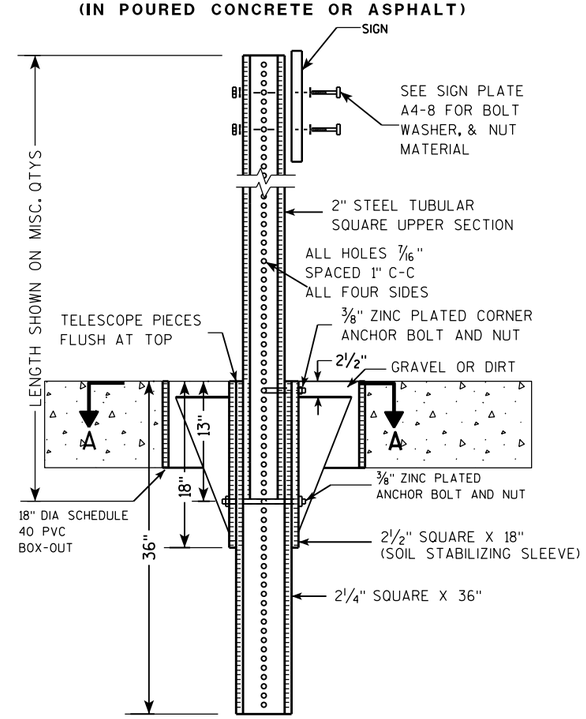

DETAIL OF TUBULAR STEEL SIGN POST
(IN LOCATIONS OTHER THAN POURED CONCRETE OR ASPHALT)

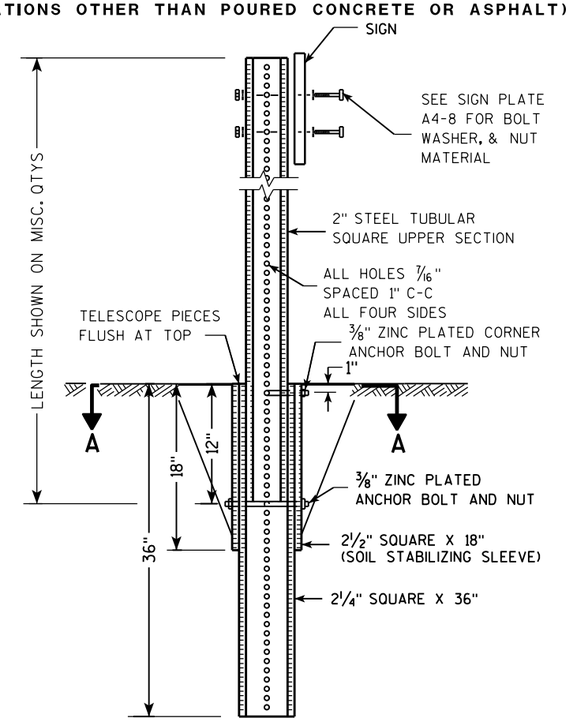

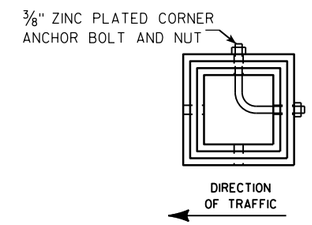

SECTION A-A

Area of Sign Installation (Sq. Ft.)	Number of Required Posts
9 or less	1
Greater than 9 less than or equal to 18	2
Greater than 18 less than or equal to 27	3

Signs wider than 3 feet or larger than 9 sq. ft shall be mounted on multiple posts (see above table).

TUBULAR STEEL
SIGN POST
A4-9

WISCONSIN DEPT OF TRANSPORTATION

APPROVED Matthew R Rauch
for State Traffic Engineer

DATE 2/05/15 PLATE A4-9.9

PROJECT NO:	HWY:	COUNTY:		SHEET NO:	E

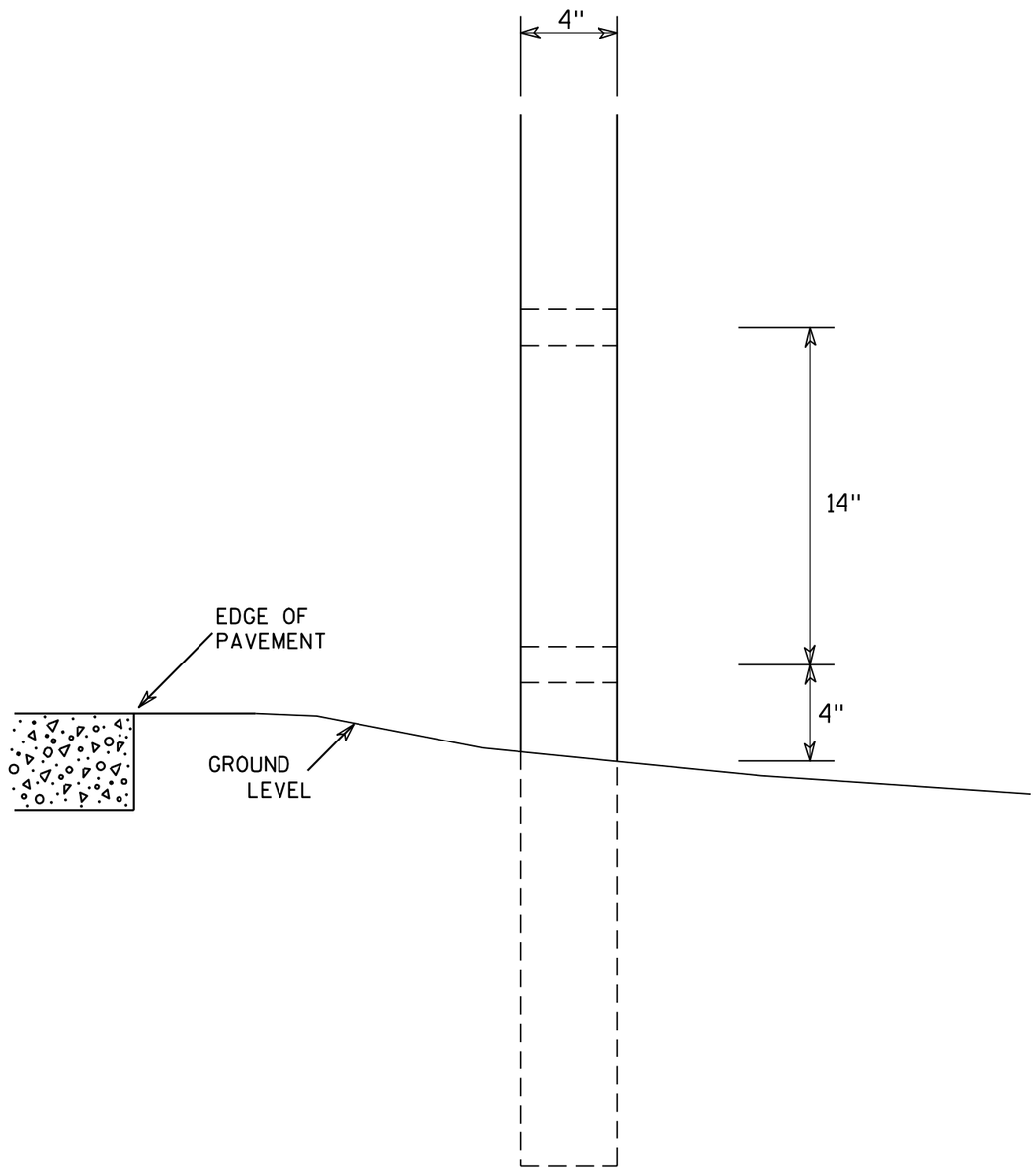

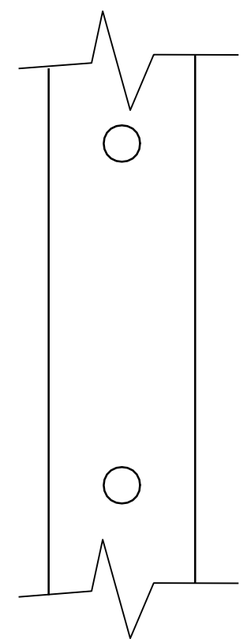

SIDE VIEW

GENERAL NOTES

1. All 4 x 6 Wood Posts shall be modified by having two 1½" diameter holes drilled perpendicular to the roadway centerline.

4 X 6 WOOD POST MODIFICATIONS

WISCONSIN DEPT OF TRANSPORTATION

APPROVED Chester J Spang for State Traffic Engineer

DATE 3/27/97 PLATE NO. A4-11.2

PROJECT NO:	HWY:	COUNTY:		SHEET NO: 135	E

BANDING

SINGLE SIGN

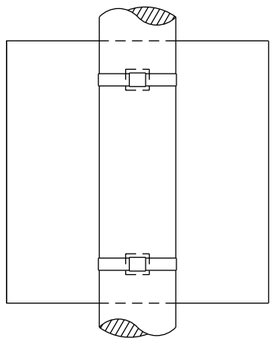

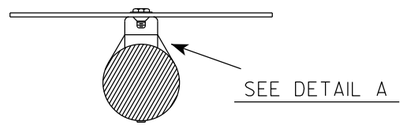

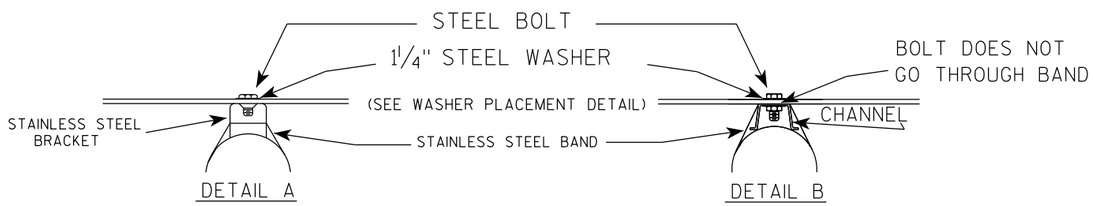

WASHER PLACEMENT

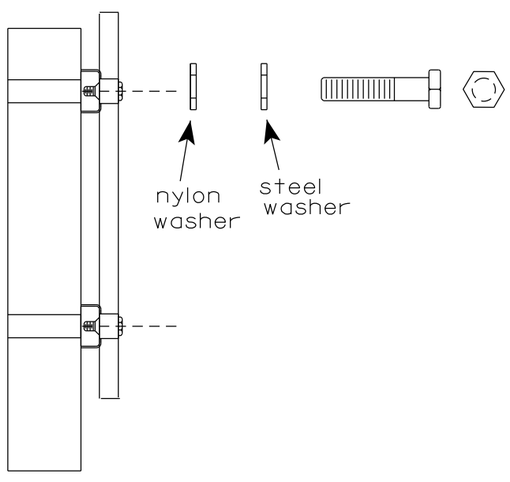

WASHERS (ALL POSTS) -
1-1/4" O.D. X 3/8" I.D. X 1/16" STEEL
1-1/4" O.D. X 3/8" I.D. X .080 NYLON
FOR ALL TYPE H SIGNS

GENERAL NOTES

1. Any sign over 3 feet in width shall use the V-Block banding method. See A5-10 standard plate.
2. Signs 3 feet or greater in height shall have three bracket bands installed. Signs less than 3 feet in height shall have two bracket bands installed.
3. Banding and assembly bracket shall be stainless steel. All bands shall be ¾" in width and 0.025" thickness.
4. ALL SIGN MOUNTING BOLTS AND WASHERS SHALL BE EITHER:
   a. Hot dip or mechanically galvanized in accordance with ASTM Designation: A 153, Class D
   b. Electro-galvanized in accordance with ASTM designation: B 633, Type III, SC 3

"J" ASSEMBLY

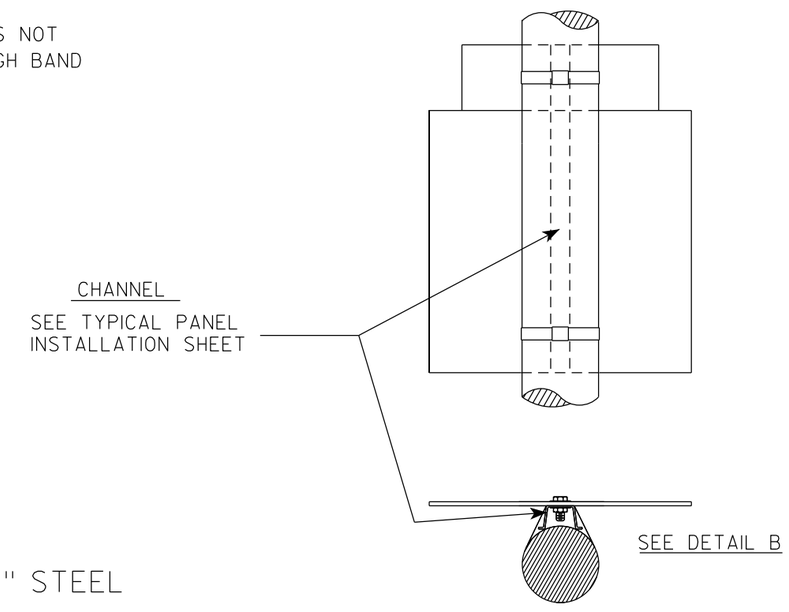

STANDARD SIGN
SIGN BANDING DETAILS

WISCONSIN DEPT OF TRANSPORTATION

APPROVED Matthew R Rauch for State Traffic Engineer

DATE 6/10/19 PLATE NO. A5-9.4

PROJECT NO:	HWY:	COUNTY:		SHEET NO: 136	E

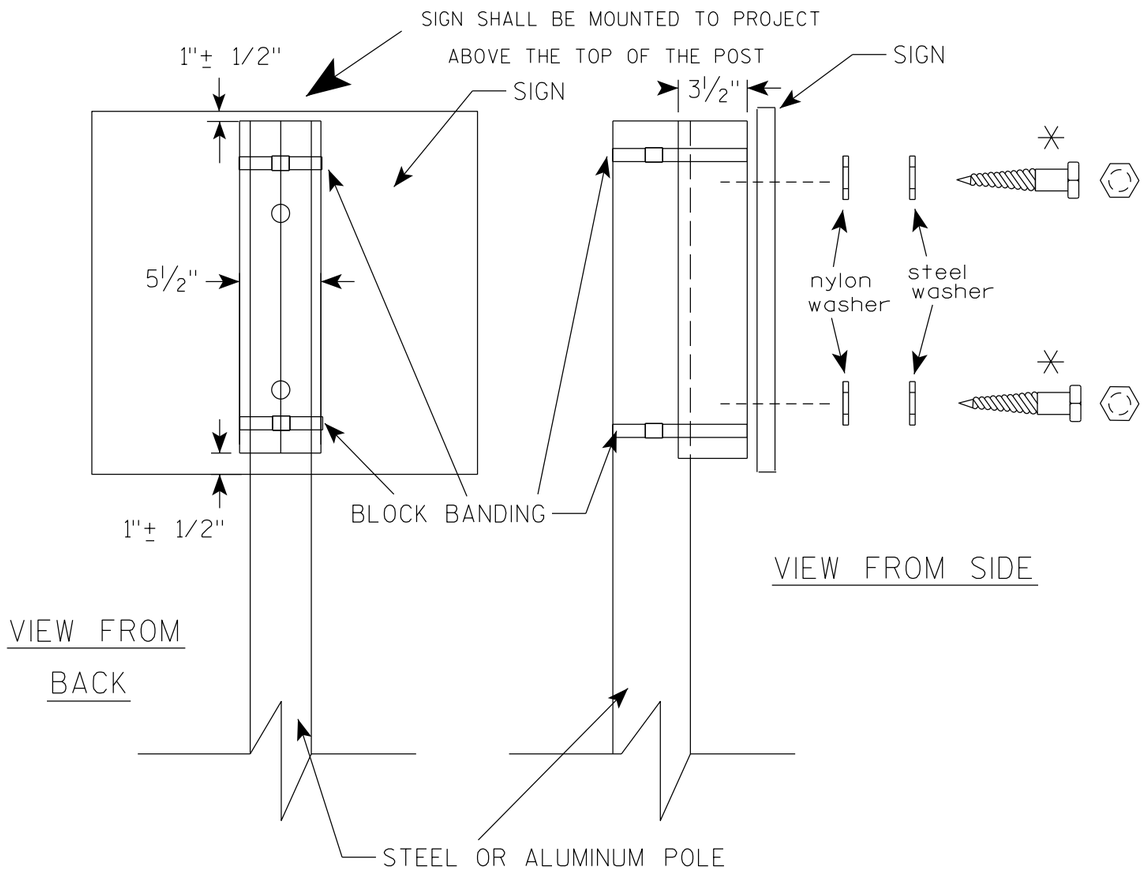

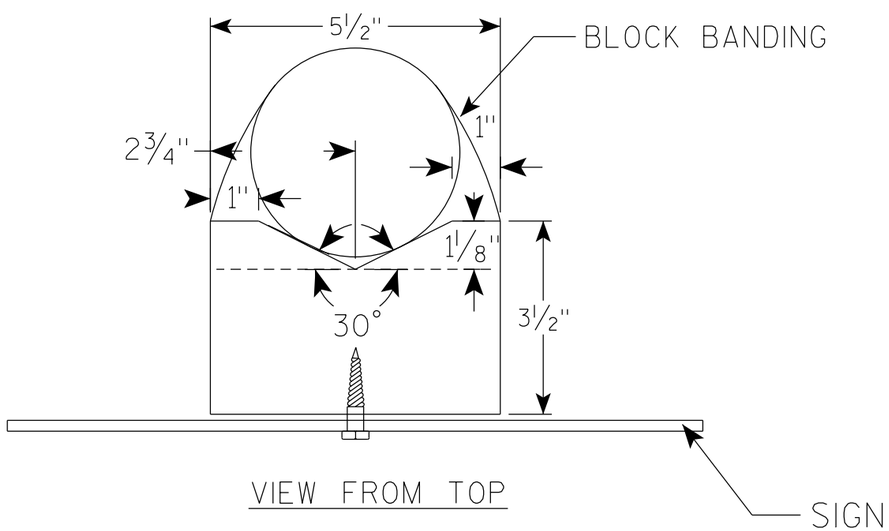

GENERAL NOTES

1. WOOD 4"X6" POST MATERIAL SHALL CONFORM TO 507.2.2 OF THE WisDOT STANDARD SPECIFICATIONS
2. BLOCK BANDING AND CLIPS SHALL BE STAINLESS STEEL, 3/4" WIDTH AND 0.025" THICKNESS
3. SIGNS 3' OR GREATER IN HEIGHT SHALL UTILIZE 3 BLOCK BANDS. SIGNS UNDER 3' IN HEIGHT SHALL UTILIZE 2 BLOCK BANDS
4. ACTUAL NUMBER OF FASTENERS PER SIGN VARIES WITH THE SIGN AREA, BUT NORNALLY THERE ARE TWO. FOR SIGNS GREATER THAN 9 S.F. 3 FASTENERS SHALL BE USED.
5. ALL SIGN MOUNTING BOLTS AND WASHERS SHALL BE EITHER:
   a. Hot dip or mechanically galvanized in accordance with ASTM Designation: A 153, Class D
   b. Electro-galvanized in accordance with ASTM Designation : B 633, TYPE III, SC 3
6. ALL BOLTS SHALL HAVE HEXAGONAL HEADS.
7. STEEL WASHERS SHALL BE 1 1/4" O.D. X 3/8" I.D. X 1/16"
8. NYLON WASHERS SHALL BE 1 1/4" O.D. X 3/8" I.D. X .080 FOR TYPE H OR TYPE F FACE SIGN

✳ LAG BOLTS SHALL BE 3/8" X 2 1/2"

7

7

BLOCK BANDING DETAIL
(V-BLOCK OPTION)

WISCONSIN DEPT OF TRANSPORTATION

APPROVED Matthew R Rauch
for State Traffic Engineer

DATE 4/19/2022 PLATE NO. A5-10.3

PROJECT NO:				SHEET NO: 137	E

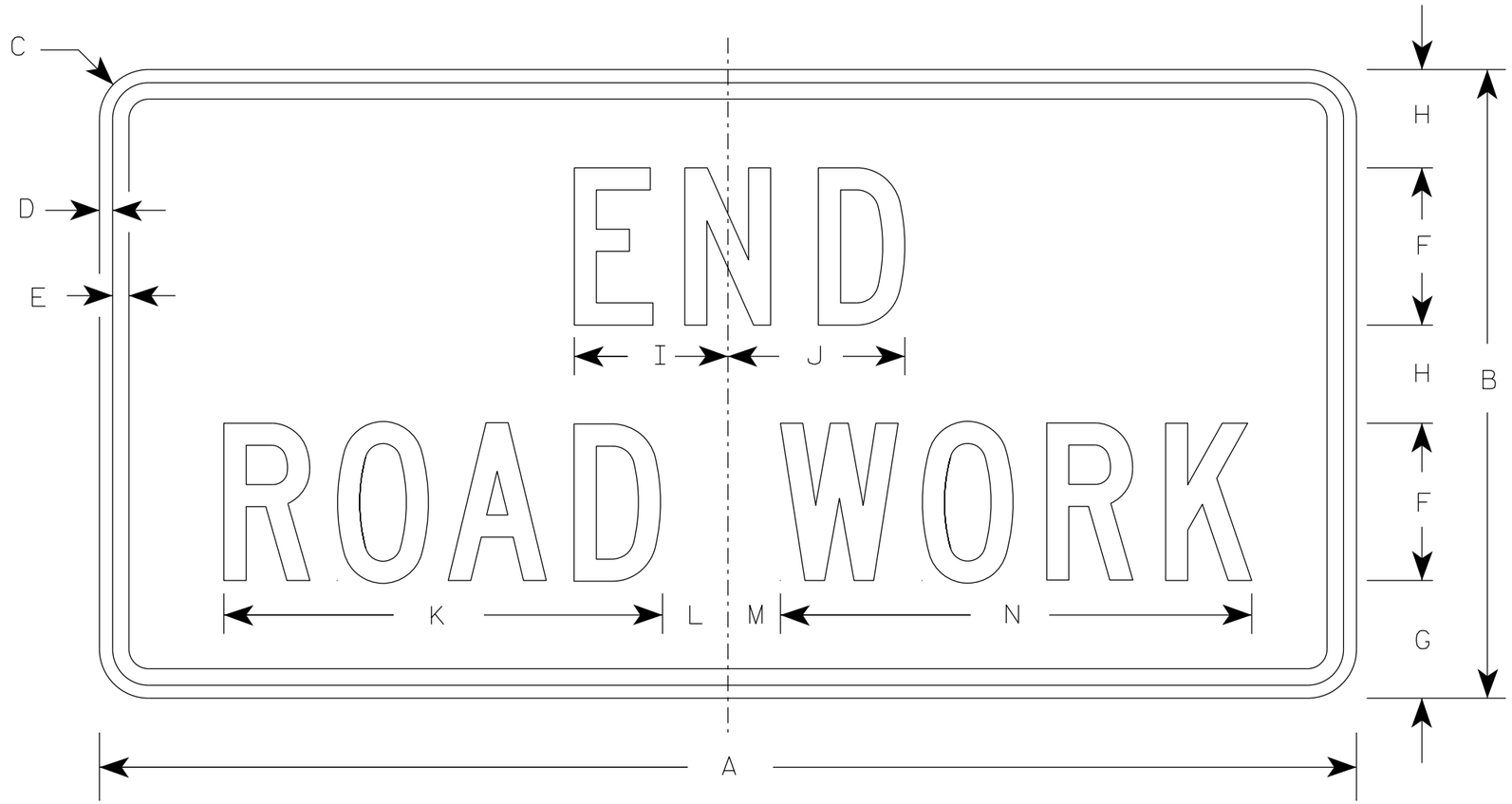

G20-2A

NOTES

1. Sign is Type II - Type F Reflective
2. Color:
   Background - Orange
   Message - Black
3. Message Series - C
4. Corners may be square or rounded when base material is plywood but borders shall be rounded as shown. When base material is metal, the corners and borders shall be rounded.

SIZE	A	B	C	D	E	F	G	H	I	J	K	L	M	N	O	P	Q	R	S	T	U	V	W	X	Y	Z	Area sq. ft.
1	36	18	1 1/2	3/8	1/2	4	3 3/4	2 1/2	4 1/8	4 1/8	11 1/8	2	1	12 1/8													4.5
2	48	24	1 7/8	1/2	5/8	6	4 1/2	3 3/4	5 7/8	6 3/4	16 3/4	2 1/2	1 3/4	18 1/2													8.0
2M	48	24	1 7/8	1/2	5/8	6	4 1/2	3 3/4	5 7/8	6 3/4	16 3/4	2 1/2	1 3/4	18 1/2													8.0
3	48	24	1 7/8	1/2	5/8	6	4 1/2	3 3/4	5 7/8	6 3/4	16 3/4	2 1/2	1 3/4	18 1/2													8.0
4	48	24	1 7/8	1/2	5/8	6	4 1/2	3 3/4	5 7/8	6 3/4	16 3/4	2 1/2	1 3/4	18 1/2													8.0
5	48	24	1 7/8	1/2	5/8	6	4 1/2	3 3/4	5 7/8	6 3/4	16 3/4	2 1/2	1 3/4	18 1/2													8.0

STANDARD SIGN

G20-2A

WISCONSIN DEPT OF TRANSPORTATION

APPROVED Matthew R Rauch
for State Traffic Engineer

DATE 1/26/2023 PLATE NO. G20-2A.10

PROJECT NO: | HWY: | COUNTY: | SHEET NO: 138 | E

NOTES

1. Sign is Type II - Type H Reflective
2. Color:
   Background - White
   Message - Black
3. Message Series - D except 3 number signs Series C

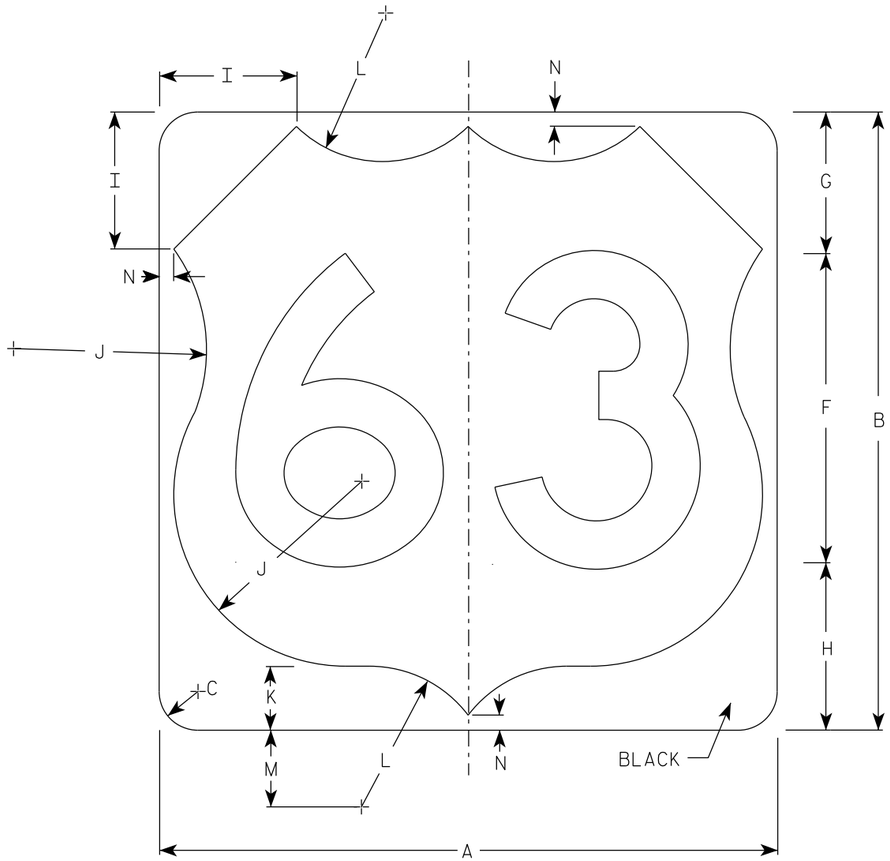

M1-4

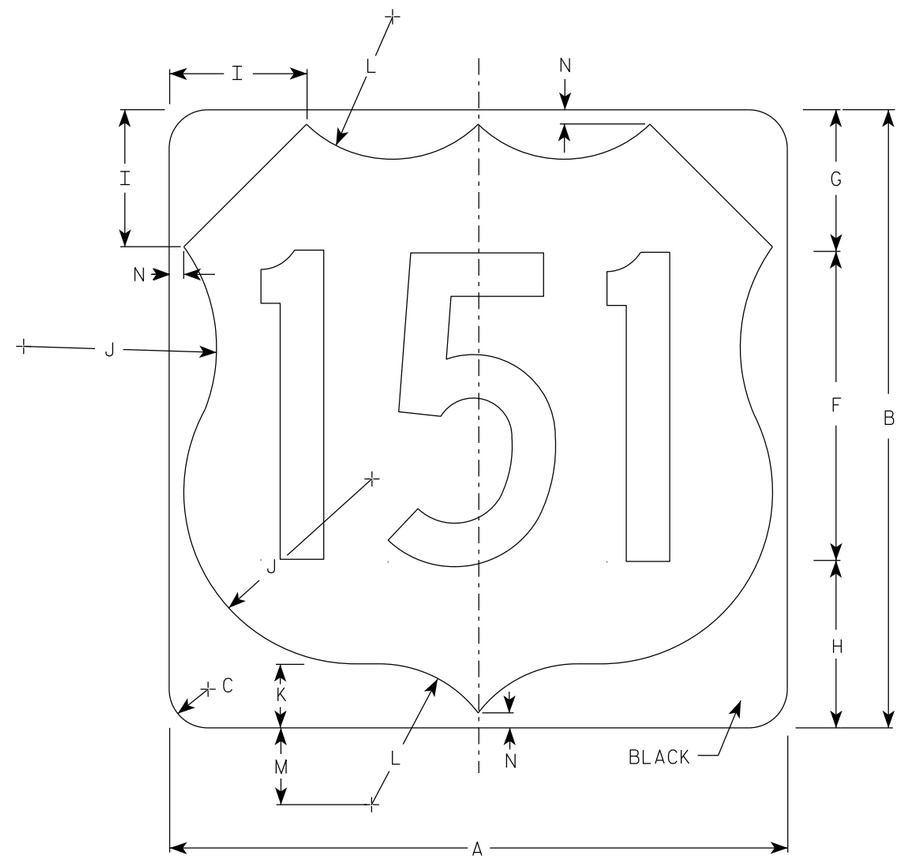

M1-4

SIZE	A	B	C	D	E	F	G	H	I	J	K	L	M	N	O	P	Q	R	S	T	U	V	W	X	Y	Z	Area sq. ft.
1																											
2	24	24	1 1/2			12	5 1/2	6 1/2	5	7 1/2	2 1/2	5 1/2	3	1/2													4.0
2M	24	24	1 1/2			12	5 1/2	6 1/2	5	7 1/2	2 1/2	5 1/2	3	1/2													4.0
3	36	36	2 1/4			18	8 1/4	9 1/4	7 1/4	11 1/4	3 3/4	8 1/4	4 1/2	3/4													9.0
4	36	36	2 1/4			18	8 1/4	9 1/4	7 1/4	11 1/4	3 3/4	8 1/4	4 1/2	3/4													9.0
5	36	36	2 1/4			18	8 1/4	9 1/4	7 1/4	11 1/4	3 3/4	8 1/4	4 1/2	3/4													9.0

USH MARKER
M1-4 FOR ASSEMBLIES

WISCONSIN DEPT OF TRANSPORTATION

APPROVED Matthew R Rauch
for State Traffic Engineer

DATE 12/20/22 PLATE NO. M1-4.11

PROJECT NO: | HWY: | COUNTY: | SHEET NO: 139 | E

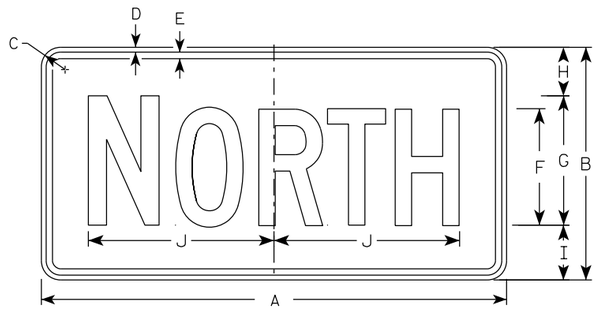

M3-1
MM3-1
MP3-1

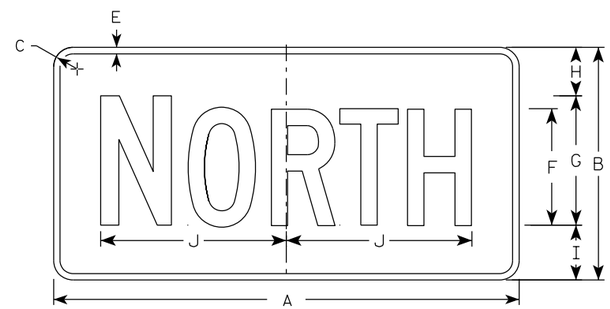

MB3-1
MK3-1
MN3-1

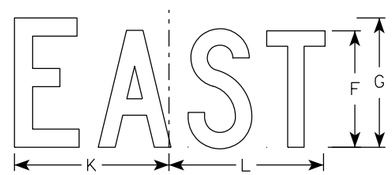

M3-2
MM3-2
MP3-2

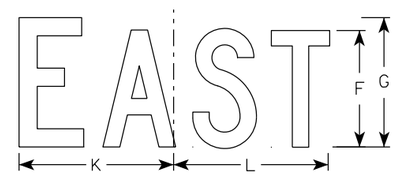

MB3-2
MK3-2
MN3-2

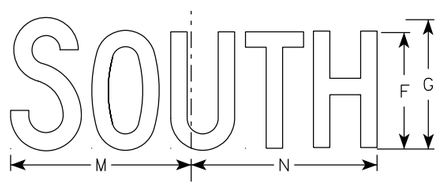

M3-3
MM3-3
MP3-3

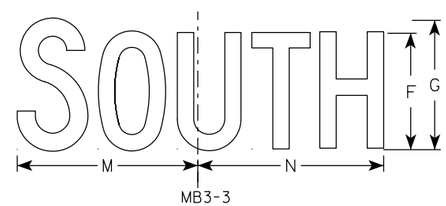

MB3-3
MK3-3
MN3-3

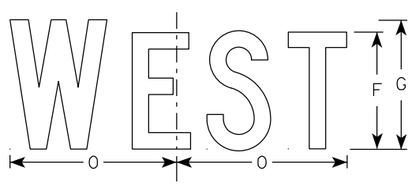

M3-4
MM3-4
MP3-4

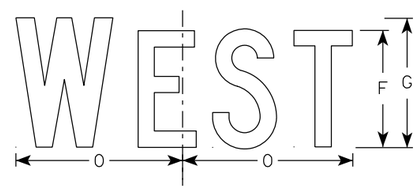

MB3-4
MK3-4
MN3-4

NOTES

1. All Signs Type II - Type H Reflective
2. Color:
   Background - See note 5
   Message - See note 5
3. Message Series - C
4. Corners may be square or rounded when base material is plywood but borders shall be rounded as shown. When base material is metal, the corners and borders shall be rounded.
5. M3-1 thru M3-4 Background - White
   Message - Black
   MB3-1 thru MB3-4 Background - Blue
   Message - White
   MK3-1 thru MK3-4 Background - Green
   Message - White
   MM3-1 thru MM3-4 Background - White
   Message - Green
   MN3-1 thru MN3-4 Background - Brown
   Message - White
   MP3-1 thru MP3-4 Background - White
   Message - Blue
6. Note the first letter of each direction is larger than the remainder of the message.

SIZE	A	B	C	D	E	F	G	H	I	J	K	L	M	N	O	P	Q	R	S	T	U	V	W	X	Y	Z	Area sq. ft.
1																											
2S	24	12	1 1/2	3/8	3/8	6	7	2 1/4	2 3/4	10 1/4	7 7/8	8 3/8	10 1/4	9 3/4	8 3/4												2.00
2M	24	12	1 1/2	3/8	3/8	6	7	2 1/4	2 3/4	10 1/4	7 7/8	8 3/8	10 1/4	9 3/4	8 3/4												2.00
3	36	18	1 1/2	3/8	1/2	9	10	3 3/4	4 1/4	14 3/8	12	12 1/8	14	14 1/8	13												4.5
4	36	18	1 1/2	3/8	1/2	9	10	3 3/4	4 1/4	14 3/8	12	12 1/8	14	14 1/8	13												4.5
5	36	18	1 1/2	3/8	1/2	9	10	3 3/4	4 1/4	14 3/8	12	12 1/8	14	14 1/8	13												4.5

STANDARD SIGNS
M3-1 THRU M3-4
SERIES

WISCONSIN DEPT OF TRANSPORTATION

APPROVED Matthew R Rauch
For State Traffic Engineer

DATE 2/8/2023 PLATE NO. M3-1.15

PROJECT NO: | HWY: | COUNTY: | SHEET NO: 140 | E

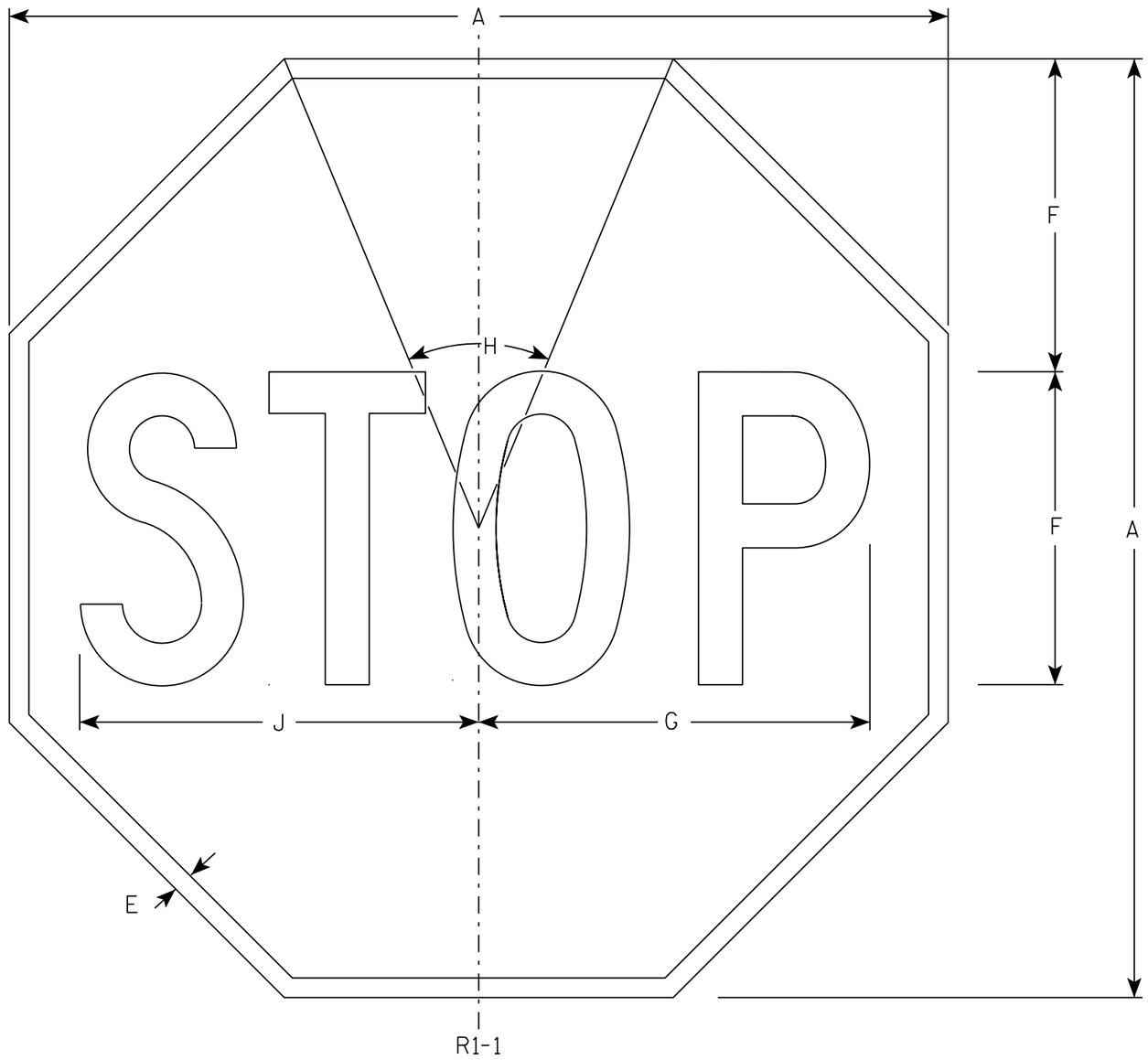

NOTES

1. Sign is Type II - Type H Reflective - reference WIS DOT Standard Specification for HIGHWAY and STRUCTURE CONSTRUCTION latest edition.
2. Color:
   Background - Red
   Message - White
3. Message Series - C

SIZE	A	B	C	D	E	F	G	H	I	J	K	L	M	N	O	P	Q	R	S	T	U	V	W	X	Y	Z	Area sq. ft.
1	30				5/8	10	12 1/2	45°		12 3/4																	5.18
2S	30				5/8	10	12 1/2	45°		12 3/4																	5.18
2M	36				3/4	12	15	45°		15 3/8																	7.46
3	36				3/4	12	15	45°		15 3/8																	7.46
4	48				1	16	20	45°		20 1/2																	13.25
5	48				1	16	20	45°		20 1/2																	13.25
6	18				3/8	6	7 3/4	45°		7 3/4																	1.86
7	12				1/4	4	5	45°		5 1/8																	0.78

STANDARD SIGN
R1-1

WISCONSIN DEPT OF TRANSPORTATION

APPROVED Matthew R Rauch
for State Traffic Engineer

DATE 11/12/15 PLATE NO. R1-1.13

PROJECT NO: | HWY: | COUNTY: | SHEET NO: 141 | E

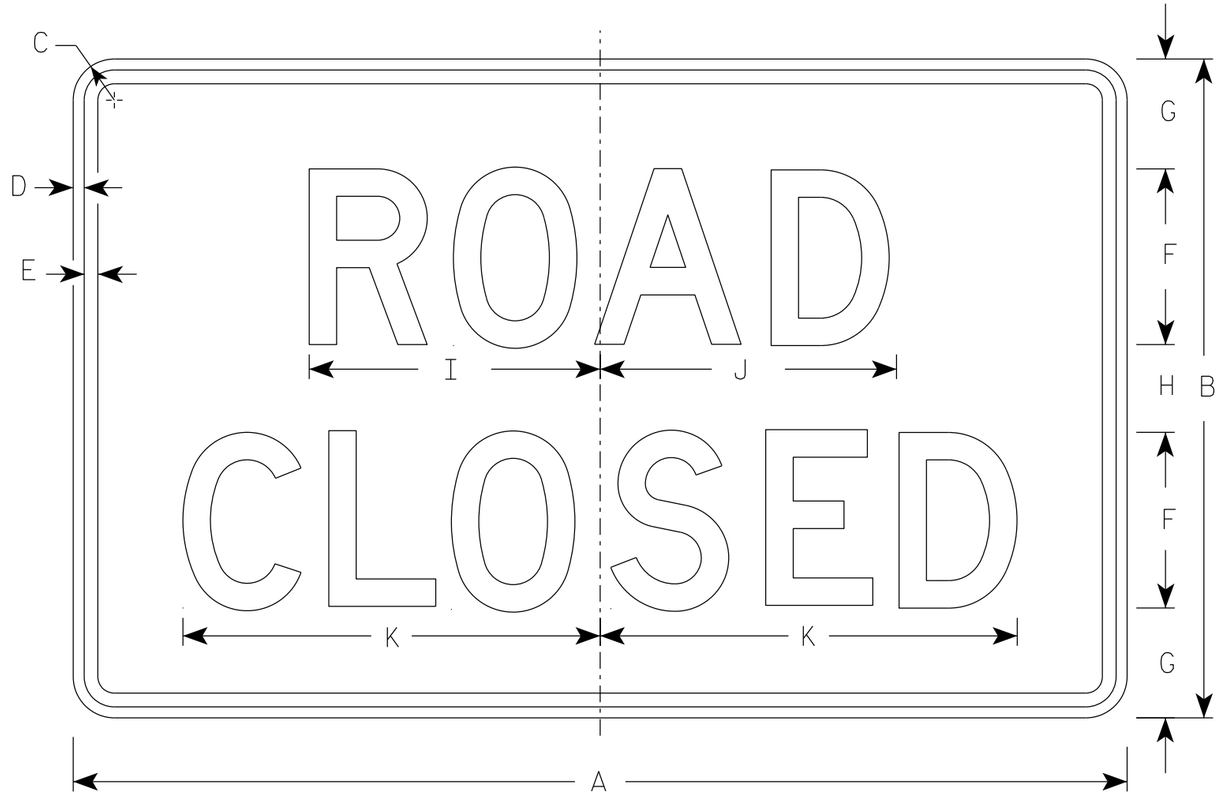

R11-2

NOTES

1. Sign is Type II - Type H Reflective
2. Color:
   Background - White
   Message - Black
3. Message Series - D
4. Corners may be square or rounded when base material is plywood but borders shall be rounded as shown. When base material is metal, the corners and borders shall be rounded.
5. Modify the message as required.

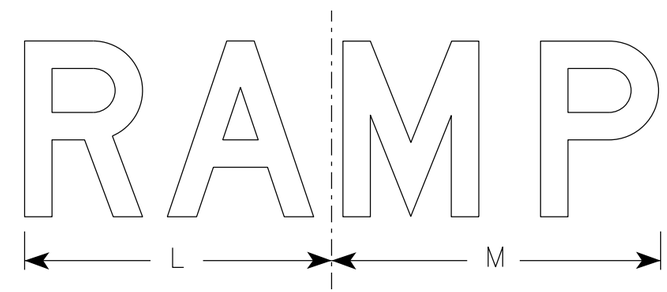

R11-2R

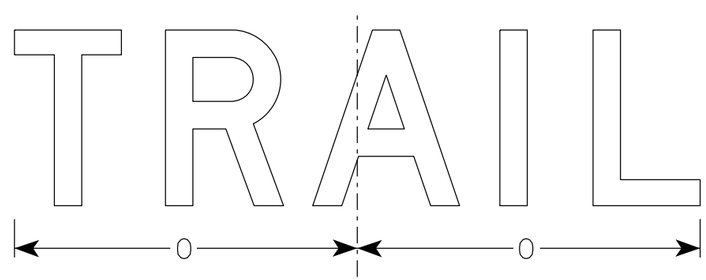

R11-2T

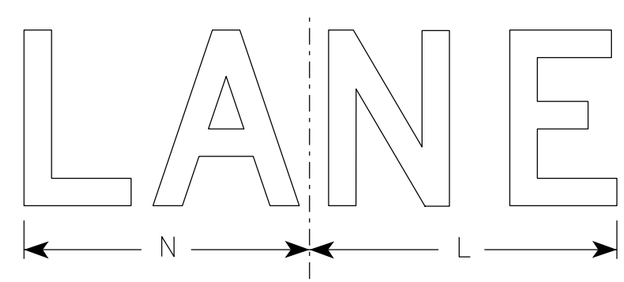

R11-2L

SIZE	A	B	C	D	E	F	G	H	I	J	K	L	M	N	O	P	Q	R	S	T	U	V	W	X	Y	Z	Area sq. ft.
1																											
2S	48	30	1 7/8	1/2	5/8	8	5	4	13 1/4	13 1/2	19	14	15	13	15 5/8												10.0
2M	48	30	1 7/8	1/2	5/8	8	5	4	13 1/4	13 1/2	19	14	15	13	15 5/8												10.0
3	48	30	1 7/8	1/2	5/8	8	5	4	13 1/4	13 1/2	19	14	15	13	15 5/8												10.0
4	48	30	1 7/8	1/2	5/8	8	5	4	13 1/4	13 1/2	19	14	15	13	15 5/8												10.0
5	48	30	1 7/8	1/2	5/8	8	5	4	13 1/4	13 1/2	19	14	15	13	15 5/8												10.0

STANDARD SIGN
R11-2

WISCONSIN DEPT OF TRANSPORTATION

APPROVED Matthew R Rauch
for State Traffic Engineer

DATE 2/5/24 PLATE NO. R11-2.12

PROJECT NO: | HWY: | COUNTY: | SHEET NO: E

7

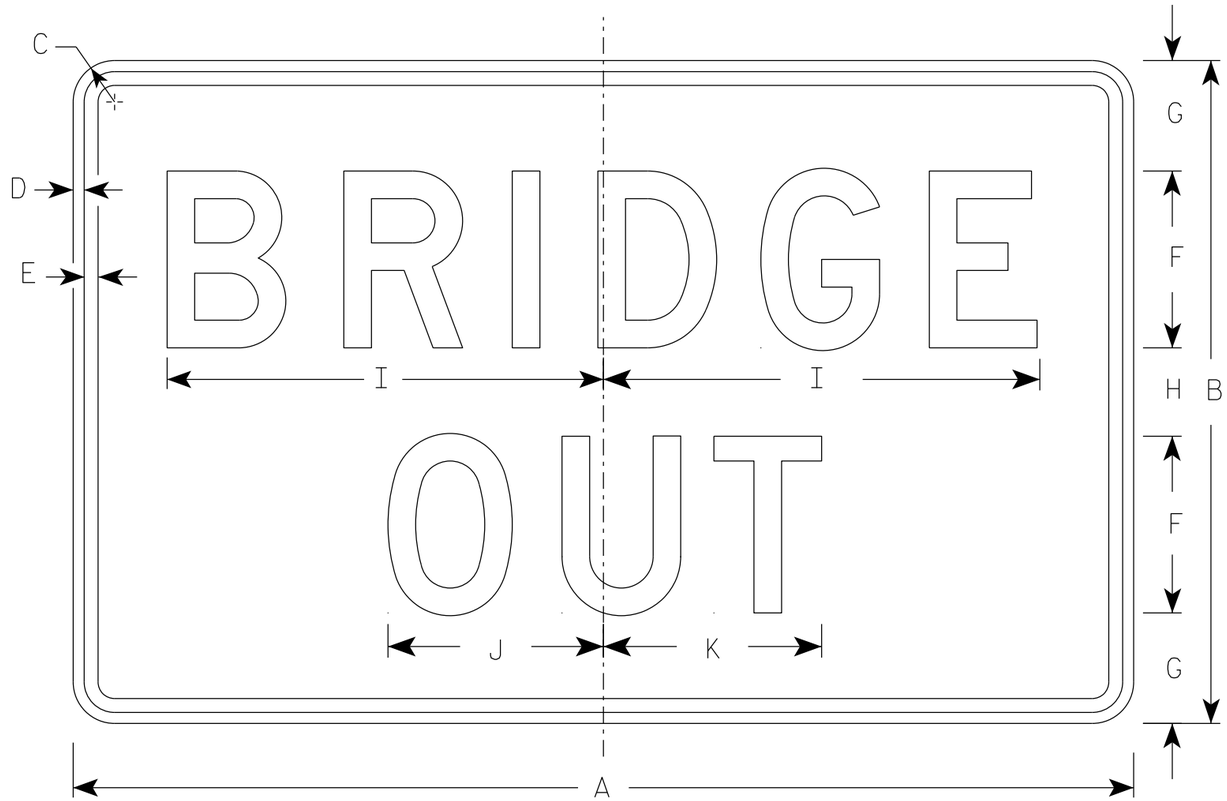

R11-2B

NOTES

1. Sign is Type II - Type H Reflective
2. Color:
   Background - White
   Message - Black
3. Message Series - D
4. Corners may be square or rounded when base material is plywood but borders shall be rounded as shown. When base material is metal, the corners and borders shall be rounded.

SIZE	A	B	C	D	E	F	G	H	I	J	K	L	M	N	O	P	Q	R	S	T	U	V	W	X	Y	Z	Area sq. ft.
1																											
2S	48	30	1 7/8	1/2	5/8	8	5	4	19 3/4	9 3/4	9 7/8																10.0
2M	48	30	1 7/8	1/2	5/8	8	5	4	19 3/4	9 3/4	9 7/8																10.0
3	48	30	1 7/8	1/2	5/8	8	5	4	19 3/4	9 3/4	9 7/8																10.0
4	48	30	1 7/8	1/2	5/8	8	5	4	19 3/4	9 3/4	9 7/8																10.0
5	48	30	1 7/8	1/2	5/8	8	5	4	19 3/4	9 3/4	9 7/8																10.0

STANDARD SIGN
R11-2B

WISCONSIN DEPT OF TRANSPORTATION

APPROVED Matthew R Rauch
For State Traffic Engineer

DATE 2/5/24 PLATE NO. R11-2B.3

PROJECT NO:

SHEET NO: 143 E

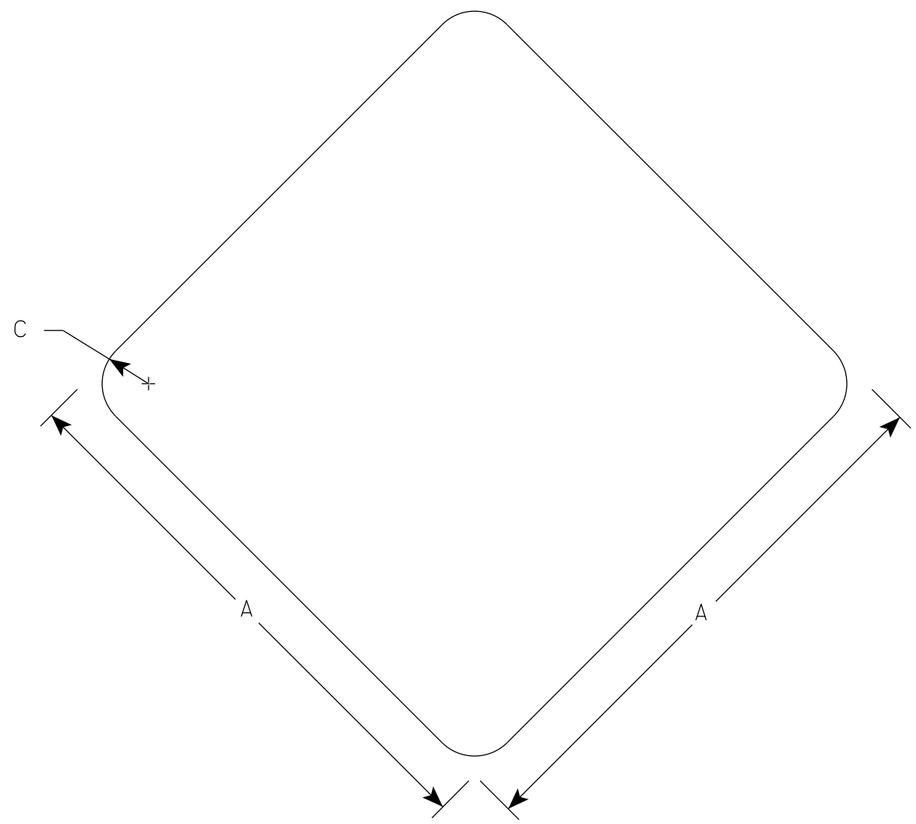

W5-56

NOTES

1. Sign is Type II - Type SH Reflective
2. Color:
   Background - Red

SIZE	A	B	C	D	E	F	G	H	I	J	K	L	M	N	O	P	Q	R	S	T	U	V	W	X	Y	Z	Area sq. ft.
1	12		1 ½																								1.0
2S	18		1 ½																								2.25
2M	18		1 ½																								2.25
3																											
4																											
5																											

STANDARD SIGN
W5-56

WISCONSIN DEPT OF TRANSPORTATION

APPROVED Matthew R Rauch
For State Traffic Engineer

DATE 3/5/2024 PLATE NO. W5-56.7

PROJECT NO: | HWY: | COUNTY: | SHEET NO: E

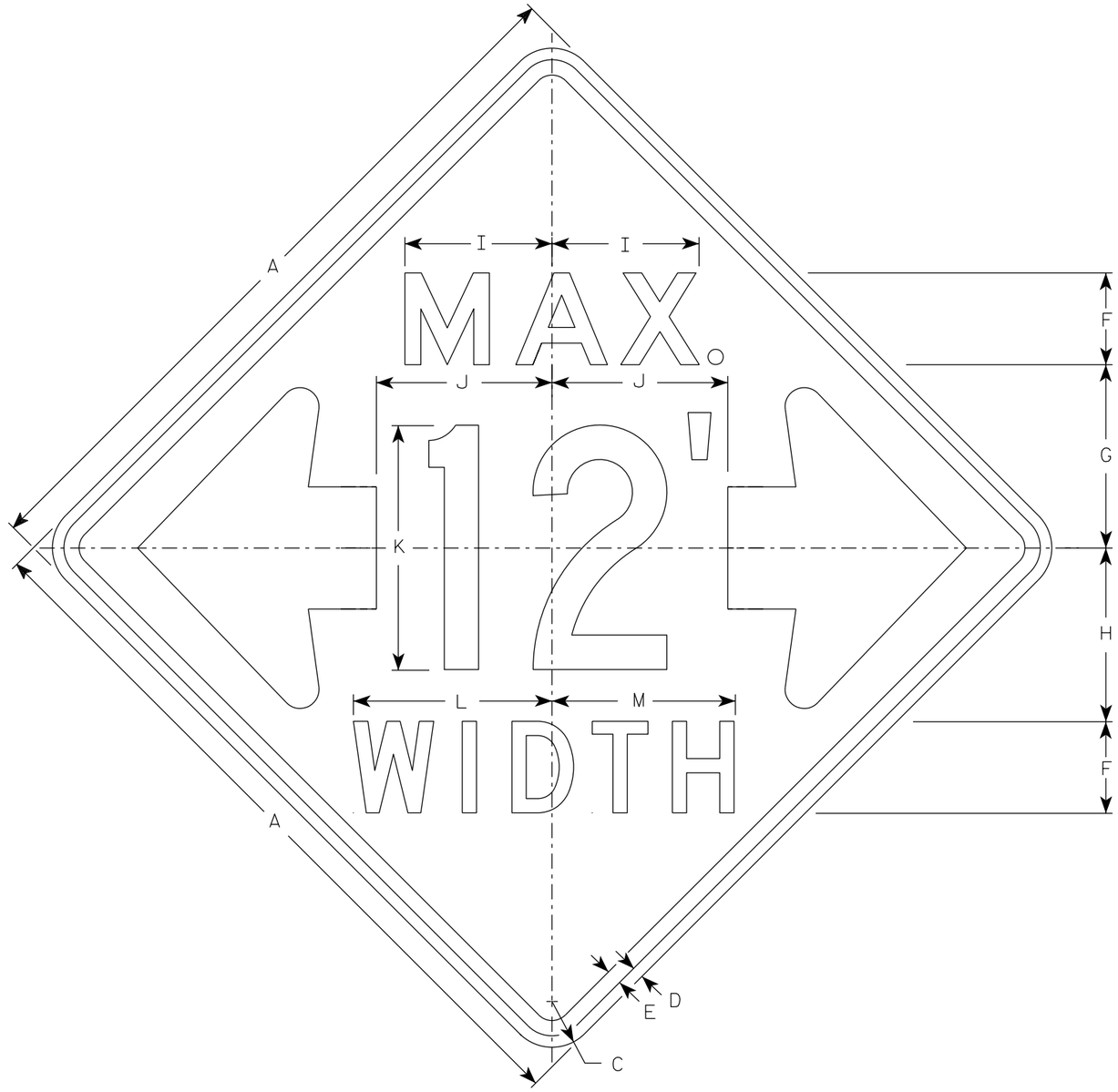

W12-52

NOTES

1. Sign is Type II - Type F Reflective
2. Color:
   Background - Orange
   Message - Black
3. Message Series - See note 5
4. The top line is series E, the numerals are series C, and the bottom line is series D.
5. Substitute appropriate numerals and adjust spacing as required.

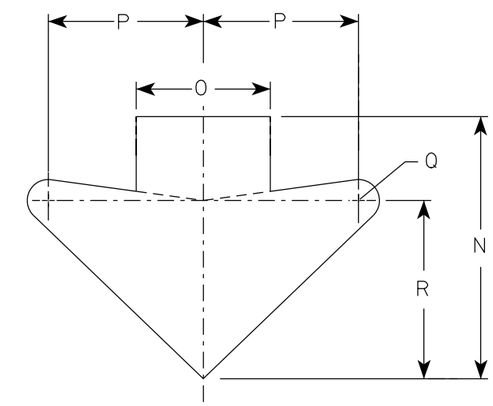

ARROW DETAIL

SIZE	A	B	C	D	E	F	G	H	I	J	K	L	M	N	O	P	Q	R	S	T	U	V	W	X	Y	Z	Area sq. ft.
1																											
2S	48		3	¾	1	6	12	11 ⅜	9 ⅝	11 ½	16	13	12	15 ⅝	8	9 ¼	1 ¼	10 ⅝									16.0
2M	48		3	¾	1	6	12	11 ⅜	9 ⅝	11 ½	16	13	12	15 ⅝	8	9 ¼	1 ¼	10 ⅝									16.0
3																											
4																											
5																											

STANDARD SIGN
W12-52

WISCONSIN DEPT OF TRANSPORTATION

APPROVED Matthew R Rauch
for State Traffic Engineer

DATE 3/10/2024 PLATE NO. W12-52.8

PROJECT NO: | HWY: | COUNTY: | SHEET NO: 145 | E

NOTES

1. Sign is Type II- Type F Reflective
2. Color:
   Background - Yellow
   Message - Black
3. Message Series - Lines 1 and 2 are Series D.
   Line 3 is series C.
4. Corners and borders shall be rounded on all base materials for this sign.

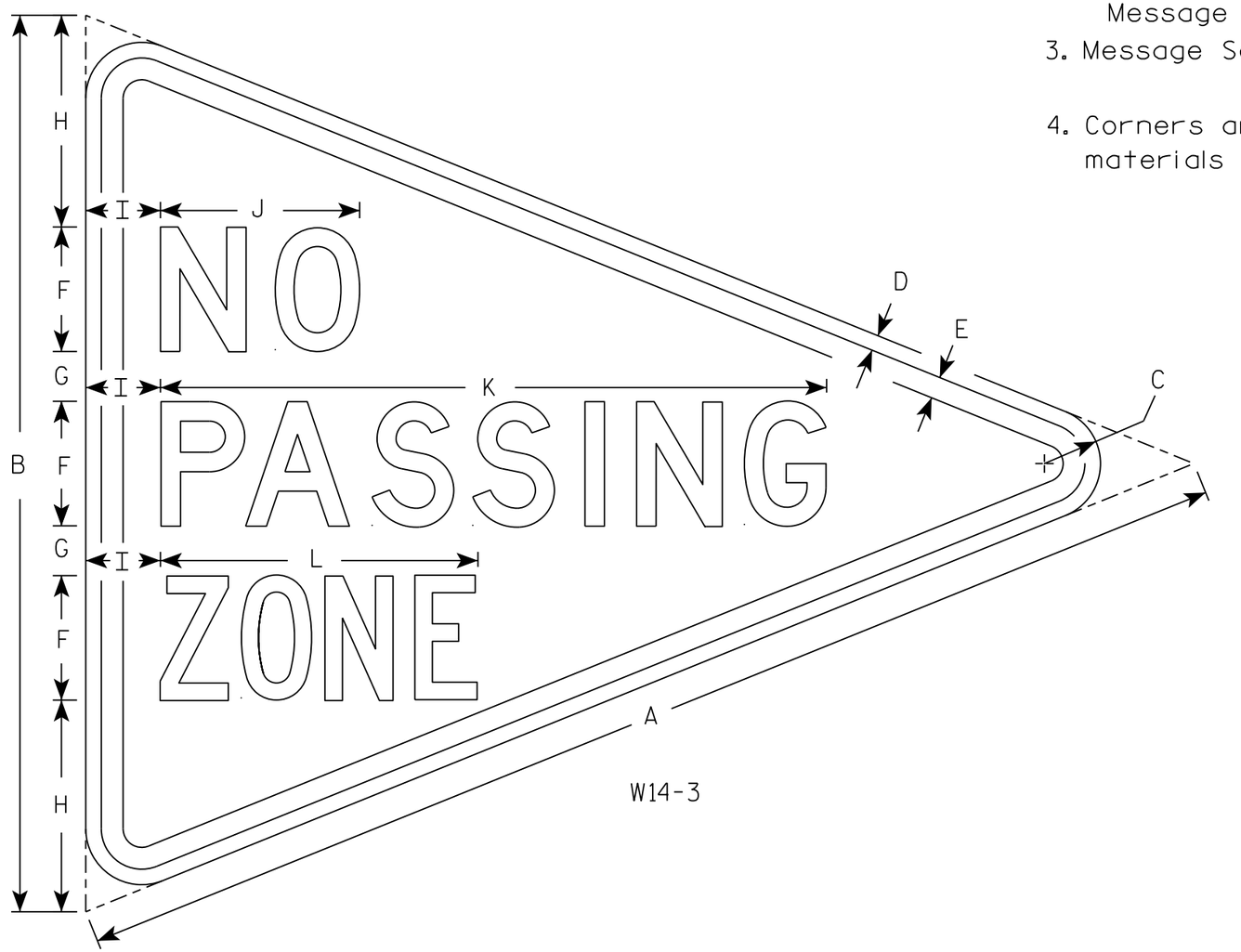

W14-3

SIZE	A	B	C	D	E	F	G	H	I	J	K	L	M	N	O	P	Q	R	S	T	U	V	W	X	Y	Z	Area sq. ft.
1																											
2S	48	36	2 1/4	5/8	7/8	5	2	8 1/2	3	8	26 3/4	12 3/4															5.56
2M																											
3																											
4																											
5																											

STANDARD SIGN
W14-3

WISCONSIN DEPT OF TRANSPORTATION

APPROVED Matthew R Rauch
for State Traffic Engineer
DATE 3/21/17 PLATE NO. W14-3.10

PROJECT NO: | HWY: | COUNTY: | SHEET NO: 146 | E

7

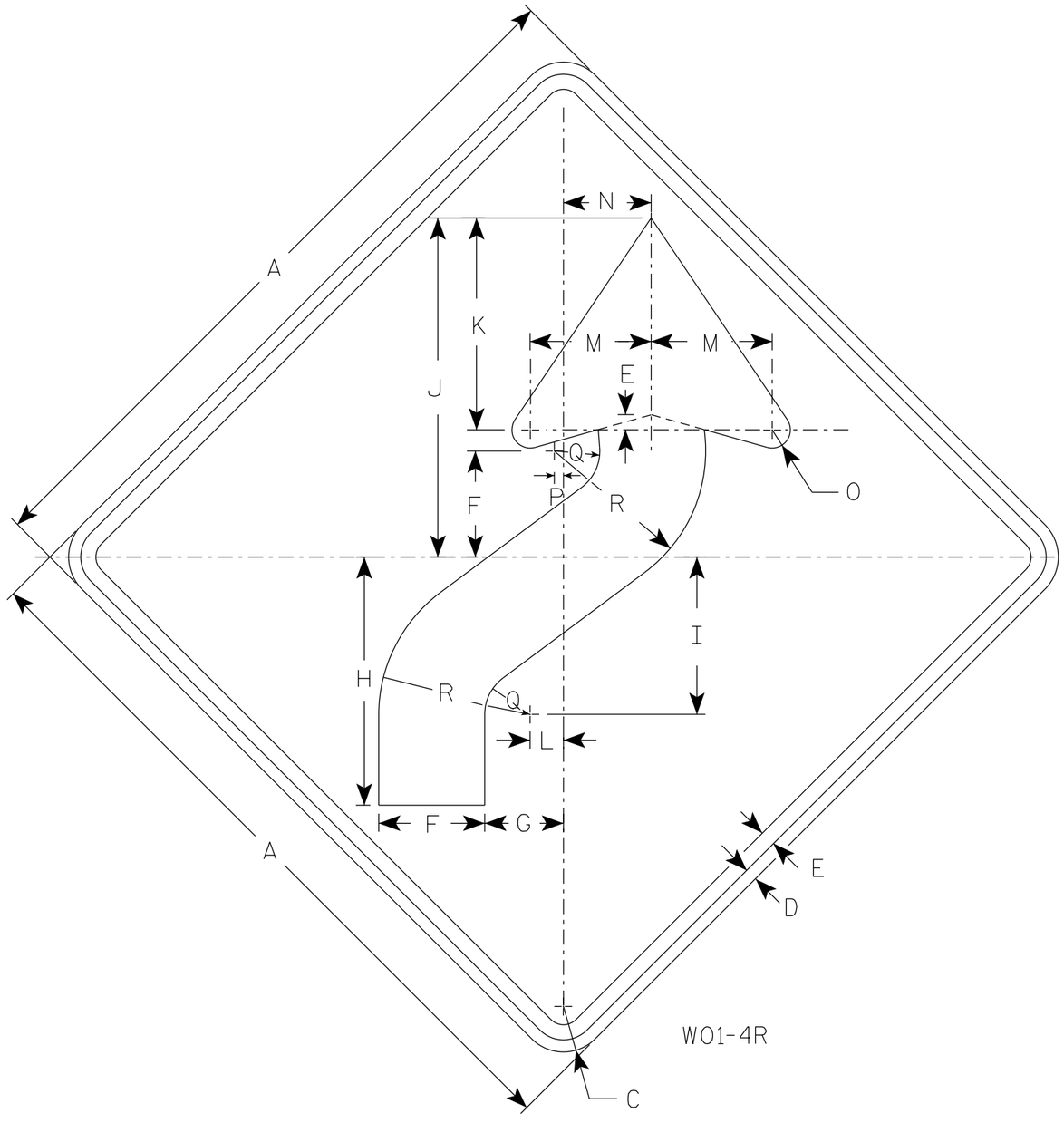

W01-4R

NOTES

1. Sign is Type II - Type F Reflective
2. Color:
   Background - Orange
   Message - Black
3. Corners may be square or rounded when base material is plywood but borders shall be rounded as shown. When base material is metal, the corners and borders shall be rounded.
4. W01-4L is the same as W01-4R except the arrow is reversed along the vertical centerline.

SIZE	A	B	C	D	E	F	G	H	I	J	K	L	M	N	O	P	Q	R	S	T	U	V	W	X	Y	Z	Area sq. ft.
1	36		2 1/4	5/8	3/4	5 1/4	4	12 3/8	7 7/8	16 7/8	10 1/2	1 5/8	6	4 1/2	1	1/2	2 1/4	7 1/2									9.0
2S	48		3	3/4	1	7	5 1/4	16 1/2	10 1/2	22 1/2	14	2 1/4	8	6	1 1/4	5/8	3	10									16.0
2M	48		3	3/4	1	7	5 1/4	16 1/2	10 1/2	22 1/2	14	2 1/4	8	6	1 1/4	5/8	3	10									16.0
3	48		3	3/4	1	7	5 1/4	16 1/2	10 1/2	22 1/2	14	2 1/4	8	6	1 1/4	5/8	3	10									16.0
4	48		3	3/4	1	7	5 1/4	16 1/2	10 1/2	22 1/2	14	2 1/4	8	6	1 1/4	5/8	3	10									16.0
5	48		3	3/4	1	7	5 1/4	16 1/2	10 1/2	22 1/2	14	2 1/4	8	6	1 1/4	5/8	3	10									16.0

STANDARD SIGN
W01-4

WISCONSIN DEPT OF TRANSPORTATION

APPROVED Matthew R Rauch
For State Traffic Engineer

DATE 1/24/2024 PLATE NO. W01-4.2

PROJECT NO: | HWY: | COUNTY: | SHEET NO: 147 | E

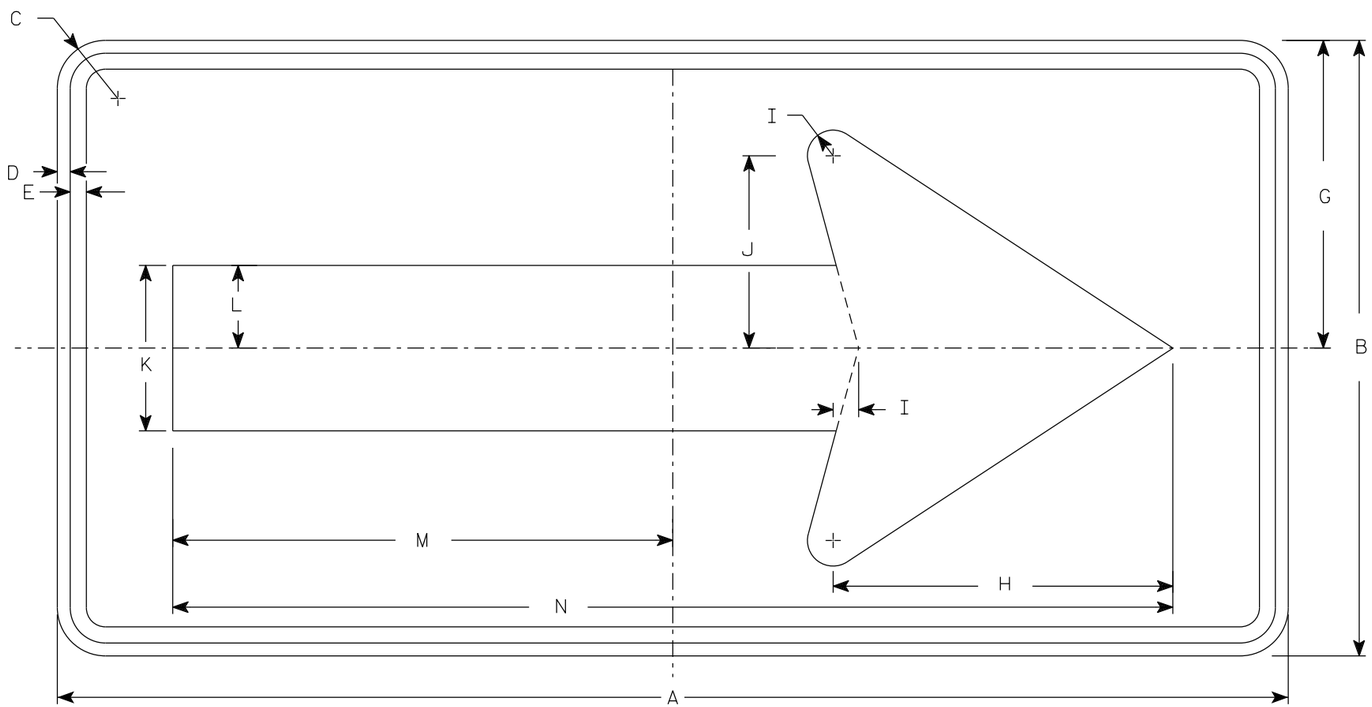

W01-6

NOTES

1. Sign is Type II - Type F Reflective
2. Color:
   Background - Orange
   Message - Black
3. Corners may be square or rounded when base material is plywood but borders shall be rounded as shown. When base material is metal, the corners and borders shall be rounded.

SIZE	A	B	C	D	E	F	G	H	I	J	K	L	M	N	O	P	Q	R	S	T	U	V	W	X	Y	Z	Area sq. ft.
1																											
2S	48	24	1 7/8	1/2	5/8		12	13 1/4	1	7 1/2	6 1/2	3 1/4	19 1/2	39													8.0
2M	48	24	1 7/8	1/2	5/8		12	13 1/4	1	7 1/2	6 1/2	3 1/4	19 1/2	39													8.0
3	60	30	1 7/8	1/2	5/8		15	16 1/4	1 1/4	9 1/4	8	4	24 3/8	48 3/4													12.5
4	60	30	1 7/8	1/2	5/8		15	16 1/4	1 1/4	9 1/4	8	4	24 3/8	48 3/4													12.5
5	60	30	1 7/8	1/2	5/8		15	16 1/4	1 1/4	9 1/4	8	4	24 3/8	48 3/4													12.5

STANDARD SIGN
W01-6

WISCONSIN DEPT OF TRANSPORTATION

APPROVED Matthew R Rauch
for State Traffic Engineer

DATE 1/24/2024 PLATE NO. W01-6.2

PROJECT NO: | HWY: | COUNTY: | SHEET NO: E

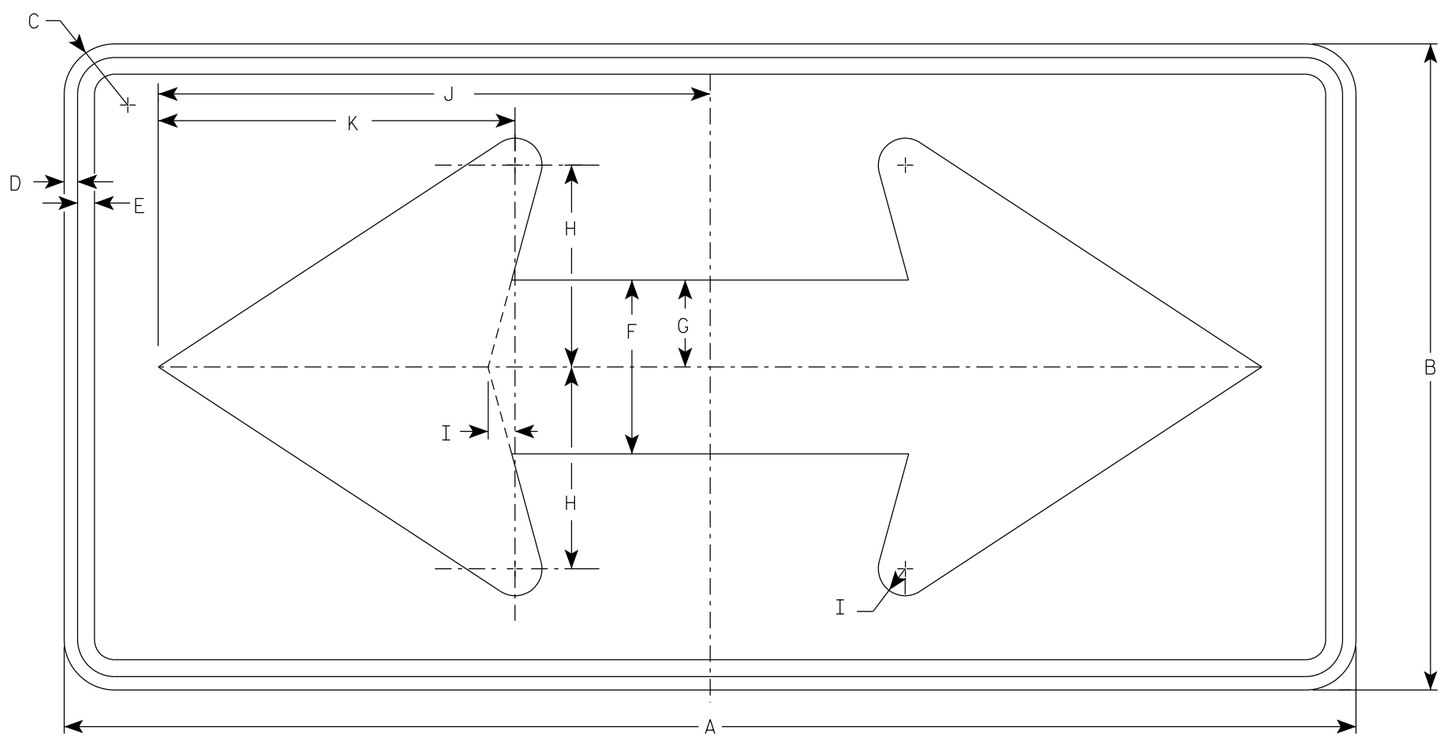

W01-7

NOTES

1. Sign is Type II - Type F Reflective
2. Color:
   Background - Orange
   Message - Black
3. Corners may be square or rounded when base material is plywood but borders shall be rounded as shown. When base material is metal, the corners and borders shall be rounded.

SIZE	A	B	C	D	E	F	G	H	I	J	K	L	M	N	O	P	Q	R	S	T	U	V	W	X	Y	Z	Area sq. ft.
1																											
2S	48	24	1 7/8	1/2	5/8	6 1/2	3 1/4	7 1/2	1	20 1/2	13 1/4																8.0
2M	48	24	1 7/8	1/2	5/8	6 1/2	3 1/4	7 1/2	1	20 1/2	13 1/4																8.0
3	60	30	1 7/8	1/2	5/8	8	4	9 1/4	1 1/4	25 3/8	16 1/4																12.5
4	60	30	1 7/8	1/2	5/8	8	4	9 1/4	1 1/4	25 3/8	16 1/4																12.5
5	60	30	1 7/8	1/2	5/8	8	4	9 1/4	1 1/4	25 3/8	16 1/4																12.5

STANDARD SIGN
W01-7

WISCONSIN DEPT OF TRANSPORTATION

APPROVED Matthew R Rauch
for State Traffic Engineer

DATE 1/24/2024 PLATE NO. W01-7.2

PROJECT NO: | HWY: | COUNTY: | SHEET NO: 149 | E

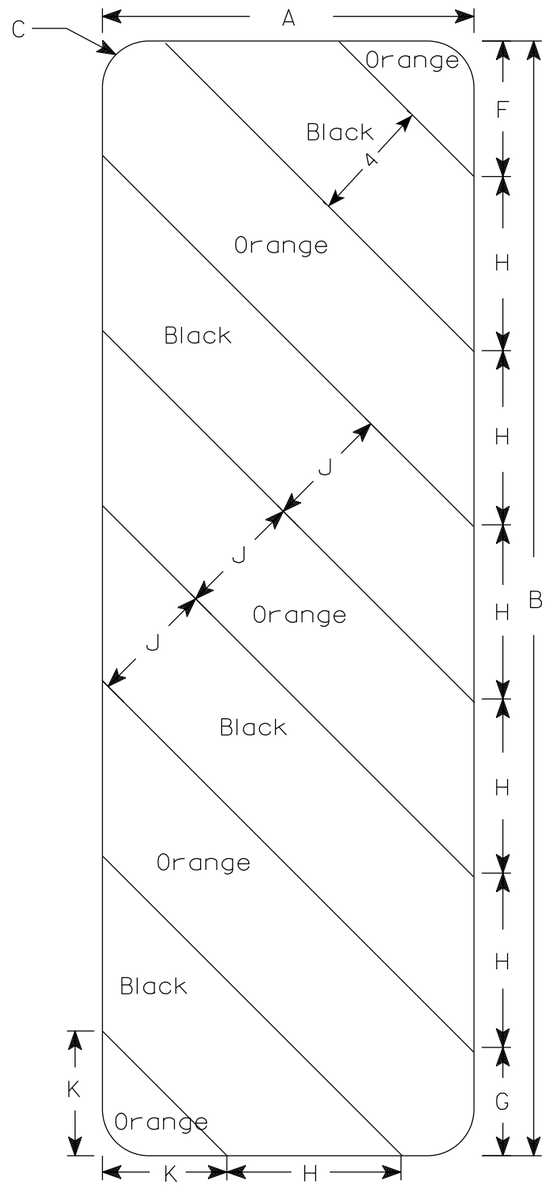

W05-52L

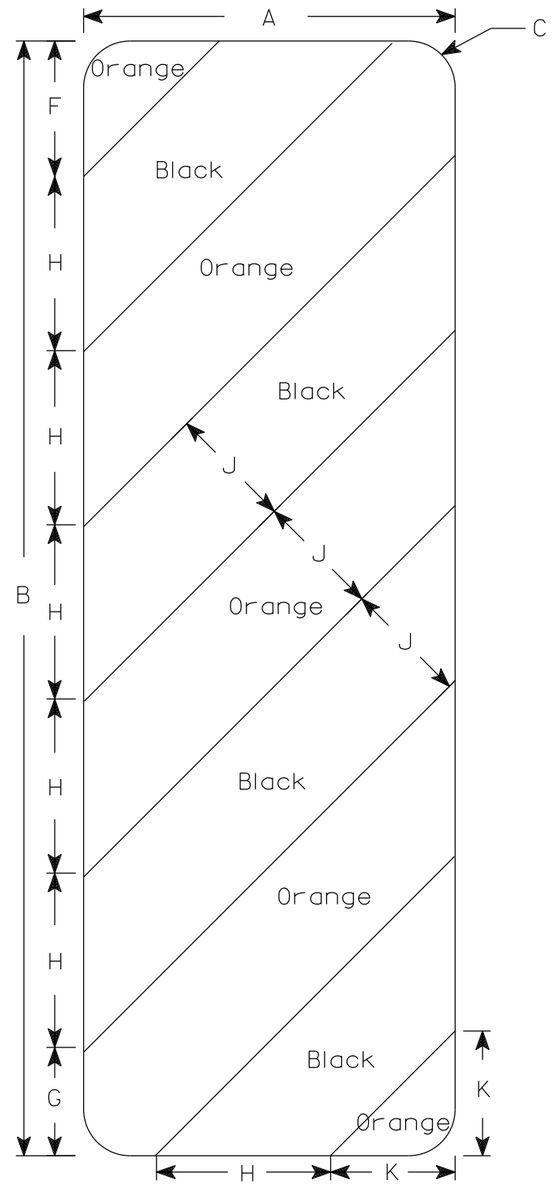

W05-52R

NOTES

1. Sign is Type II - Type F Reflective
2. Color:
   Background - Orange
   Message - Black
4. Alternate colors of stripes as shown.

SIZE	A	B	C	D	E	F	G	H	I	J	K	L	M	N	O	P	Q	R	S	T	U	V	W	X	Y	Z	Area sq. ft.
1																											
2S	12	36	1 1/2			4 3/8	3 1/2	5 5/8	45°	4	4																3.0
2M	12	36	1 1/2			4 3/8	3 1/2	5 5/8	45°	4	4																3.0
3	18	54	1 1/2			6	5 1/2	8 1/2	45°	6	6 9/16																6.75
4																											
5																											

STANDARD SIGN

W05-52L & W05-52R

WISCONSIN DEPT OF TRANSPORTATION

APPROVED Matthew R Rauch
for State Traffic Engineer

DATE 3/13/2024 PLATE NO. W05-52.2

PROJECT NO: | HWY: | COUNTY: | SHEET NO: 150 | E

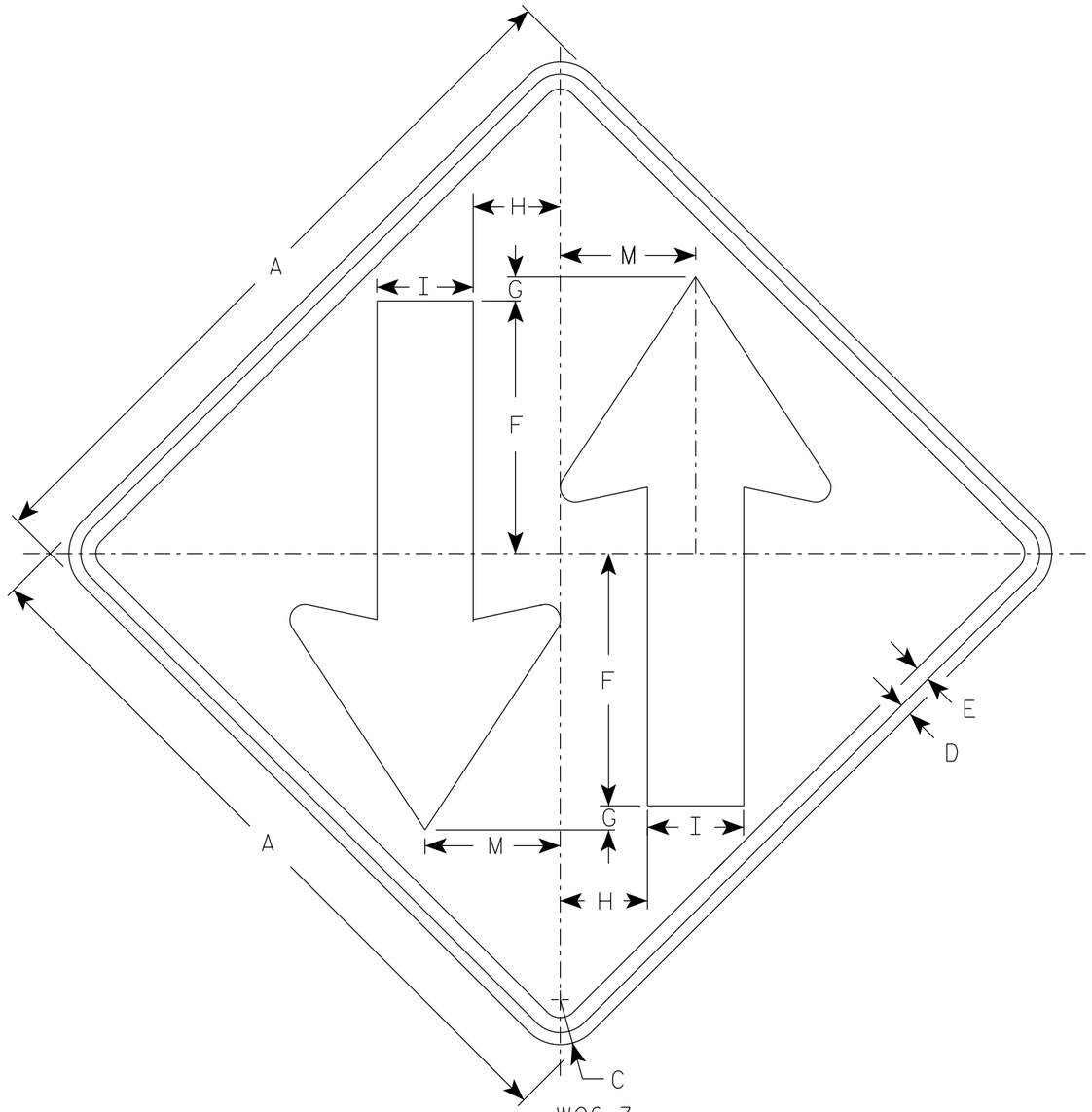

W06-3

NOTES

1. Sign is Type II - Type F Reflective
2. Color:
   Background - Orange
   Message - Black
3. Corners may be square or rounded when base material is plywood but borders shall be rounded as shown. When base material is metal, the corners and borders shall be rounded.

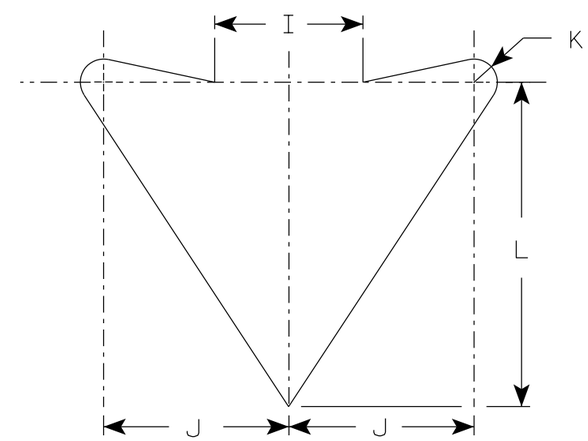

ARROW DETAIL

SIZE	A	B	C	D	E	F	G	H	I	J	K	L	M	N	O	P	Q	R	S	T	U	V	W	X	Y	Z	Area sq. ft.
1	36		2 1/4	5/8	3/4	12	1	4 1/4	5	6	3/4	10 1/2	6 3/4														9.0
2S	48		3	3/4	1	15 1/2	1	6	6	8	1	14	9														16.0
2M	48		3	3/4	1	15 1/2	1	6	6	8	1	14	9														16.0
3	48		3	3/4	1	15 1/2	1	6	6	8	1	14	9														16.0
4	48		3	3/4	1	15 1/2	1	6	6	8	1	14	9														16.0
5	48		3	3/4	1	15 1/2	1	6	6	8	1	14	9														16.0

STANDARD SIGN
W06-3

WISCONSIN DEPT OF TRANSPORTATION

APPROVED Matthew R Rauch
for State Traffic Engineer

DATE 1/30/2024 PLATE NO. W06-3.2

PROJECT NO:	HWY:	COUNTY:		SHEET NO: 151	E

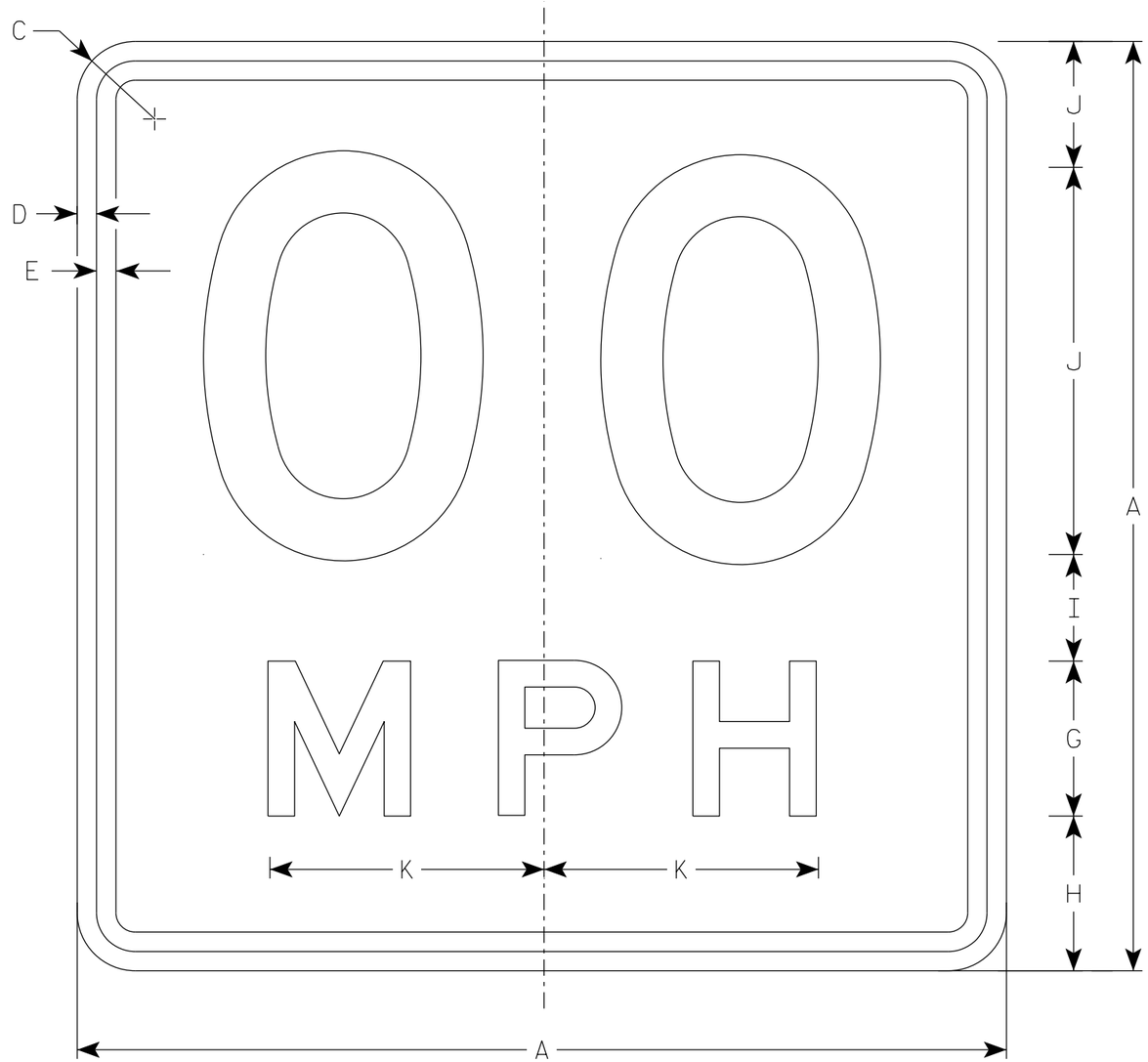

W013-1

NOTES

1. Sign is Type II - Type F Reflective
2. Color:
   Background - Orange
   Message - Black
3. Message Series - See Note 6
4. Corners may be square or rounded when base material is plywood but borders shall be rounded as shown. When base material is metal, the corners and borders shall be rounded.
5. Substitute appropriate numerals and optically space about centerline to achieve proper balance.
6. Line 1 is Series D
   Line 2 is Series E

SIZE	A	B	C	D	E	F	G	H	I	J	K	L	M	N	O	P	Q	R	S	T	U	V	W	X	Y	Z	Area sq. ft.
1	24		1 1/2	3/8	1/2	10	4	4	2 3/4	3 1/4	7 1/8																4.0
2S	36		2 1/4	5/8	3/4	16	6	5 1/2	4	4 1/2	10 5/8																9.0
2M	36		2 1/4	5/8	3/4	16	6	5 1/2	4	4 1/2	10 5/8																9.0
3	36		2 1/4	5/8	3/4	16	6	5 1/2	4	4 1/2	10 5/8																9.0
4	36		2 1/4	5/8	3/4	16	6	5 1/2	4	4 1/2	10 5/8																9.0
5	36		2 1/4	5/8	3/4	16	6	5 1/2	4	4 1/2	10 5/8																9.0

STANDARD SIGN
W013-1

WISCONSIN DEPT OF TRANSPORTATION

APPROVED Matthew R Rauch
for State Traffic Engineer

DATE 2/1/2024 PLATE NO. W013-1.2

PROJECT NO: | HWY: | COUNTY: | SHEET NO: E

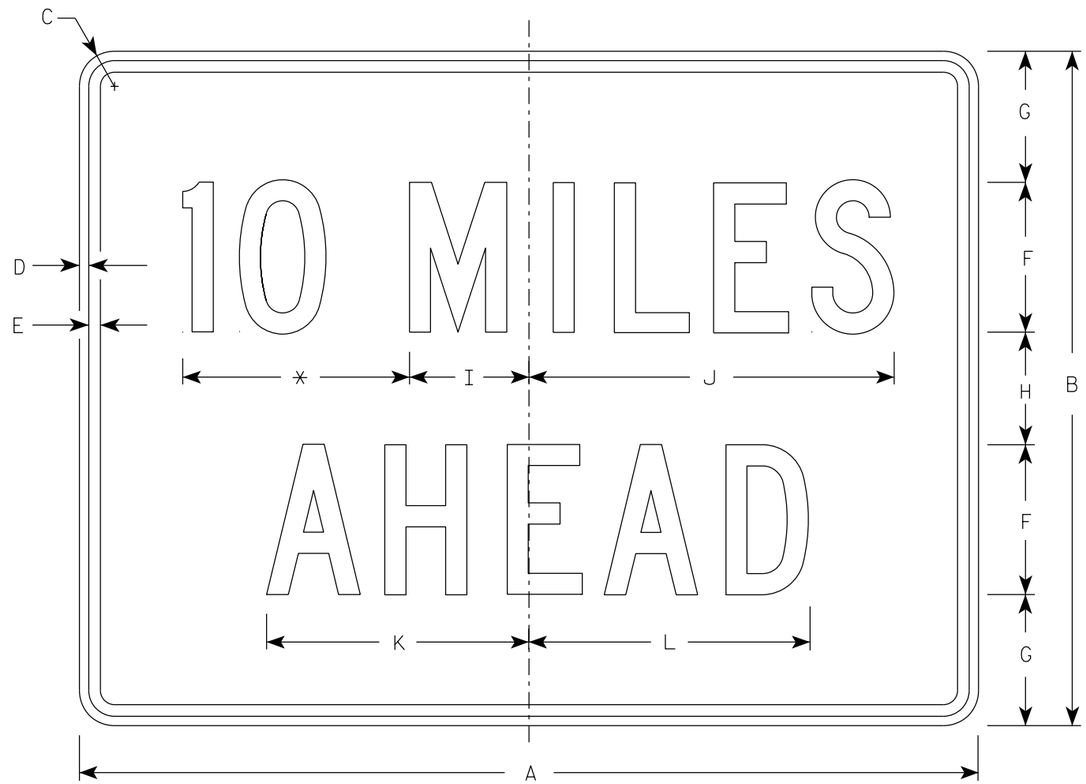

W057-52

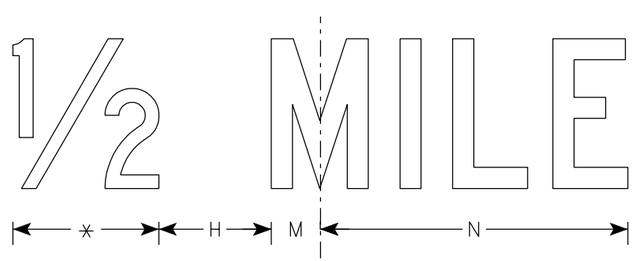

* See note 5

NOTES

1. Sign is Type II - Type F Reflective
2. Color:
   Background - Orange
   Message - Black
3. Message Series - C
4. Corners may be square or rounded when base material is plywood but borders shall be rounded as shown. When base material is metal, the corners and borders shall be rounded.
5. Substitute appropriate numerals to the nearest quarter mile and optically adjust spacing to achieve proper balance.

SIZE	A	B	C	D	E	F	G	H	I	J	K	L	M	N	O	P	Q	R	S	T	U	V	W	X	Y	Z	Area sq. ft.
1	36	24	1 1/2	3/8	1/2	6	4 1/2	3	4 3/4	14 5/8	10 5/8	11 3/8	2	12													6.0
2S	48	36	2 1/4	1/2	5/8	8	7	6	6 3/8	19 1/2	14	15	2 3/4	16 3/8													12.0
2M	48	36	2 1/4	1/2	5/8	8	7	6	6 3/8	19 1/2	14	15	2 3/4	16 3/8													12.0
3	48	36	2 1/4	1/2	5/8	8	7	6	6 3/8	19 1/2	14	15	2 3/4	16 3/8													12.0
4	48	36	2 1/4	1/2	5/8	8	7	6	6 3/8	19 1/2	14	15	2 3/4	16 3/8													12.0
5	48	36	2 1/4	1/2	5/8	8	7	6	6 3/8	19 1/2	14	15	2 3/4	16 3/8													12.0

STANDARD SIGN
W057-52

WISCONSIN DEPT OF TRANSPORTATION

APPROVED Matthew R Rauch
for State Traffic Engineer

DATE 2/1/2024 PLATE NO. W057-52.3

PROJECT NO: | HWY: | COUNTY: | SHEET NO: 153 | E

NOTE: STRUCTURE BACKFILL REQUIRED BEHIND ALL WING WALLS

- ◭ SEE CORNER DETAILS ON 'DETAILS' SHEET
- ■ NAME PLATE LOCATION (SEE 'DETAILS' SHEET)
- ✳ BUILD APRON AND END OF BOX LEVEL
- INDICATES WING NUMBER
- ▲ VERT. CONST. JT.
- ☆ AVOID DAMAGE TO THE APRON DURING PLACEMENT OF RIPRAP HEAVY

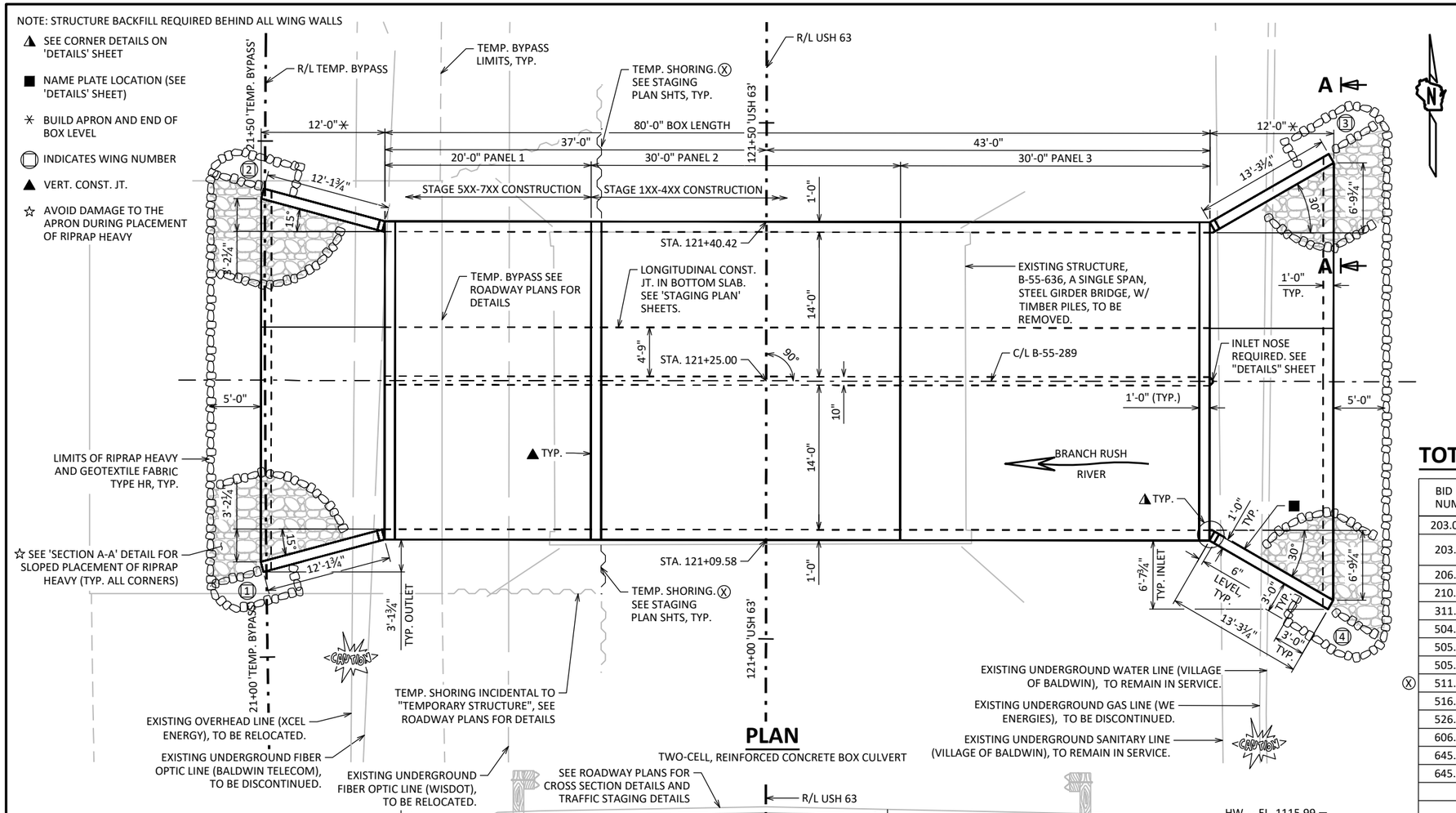

PLAN

TWO-CELL, REINFORCED CONCRETE BOX CULVERT

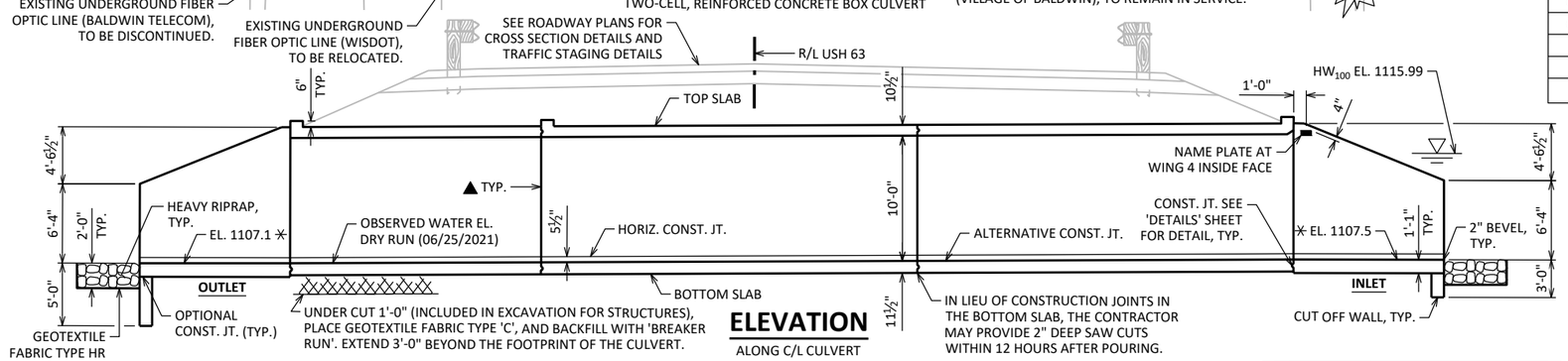

ELEVATION

ALONG C/L CULVERT

DESIGN DATA

STATE PROJECT NUMBER

1550-02-73

LIVE LOAD:

DESIGN LOADING: HL-93
INVENTORY RATING: RF = 1.10
OPERATING RATING: RF = 1.43
WISCONSIN STANDARD PERMIT VEHICLE (WIS-SPV): 255 (KIPS)

EARTH LOAD:

DESIGNED FOR 3.5 TO 5.0 FT. OF FILL.

MATERIAL PROPERTIES:

CONCRETE MASONRY ——— f'_c = 3,500 PSI
BAR STEEL REINFORCEMENT ——— f_y = 60,000 PSI

TRAFFIC DATA

USH 63
ADT = 14,400 (2045)
R.D.S. = 45 MPH

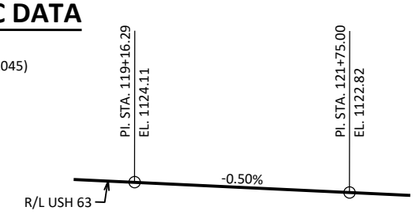

PROFILE GRADE LINE - USH 63

TOTAL ESTIMATED QUANTITIES

BID ITEM NUMBER	BID ITEMS	UNIT	TOTALS
203.0211.S	ABATEMENT OF ASBESTOS CONTAINING MATERIAL (B-55-636)	EACH	1
203.0260	REMOVING STRUCTURE OVER WATERWAY MINIMAL DEBRIS (B-55-636)	EACH	1
206.2001	EXCAVATION FOR STRUCTURES CULVERTS (B-55-289)	EACH	1
210.2500	BACKFILL STRUCTURE TYPE B	TON	2,207
311.0115	BREAKER RUN	CY	172
504.0100	CONCRETE MASONRY CULVERTS	CY	314
505.0400	BAR STEEL REINFORCEMENT HS STRUCTURES	LB	40,170
505.0600	BAR STEEL REINFORCEMENT HS COATED STRUCTURES	LB	4,540
ⓧ 511.1200	TEMPORARY SHORING B-55-289	SF	210
516.0500	RUBBERIZED MEMBRANE WATERPROOFING	SY	93
526.0101	TEMPORARY STRUCTURE (STA. 121+25, 50' LT)	EACH	1
606.0300	RIPRAP HEAVY	CY	61
645.0105	GEOTEXTILE TYPE C	SY	464
645.0120	GEOTEXTILE TYPE HR	SY	111
	NON-BID ITEMS		
	FILLER	SIZE	¾"

LIST OF DRAWINGS

1. GENERAL PLAN
2. STAGING PLAN 1
3. STAGING PLAN 2
4. BOX DETAILS
5. APRON DETAILS
6. DETAILS
7. SUBSURFACE EXPLORATION

STRUCTURE DESIGN CONTACTS:
RYAN HARRIS 608-266-2963
KYLE BUSCH 608-267-0465

GENERAL NOTES

DRAWINGS SHALL NOT BE SCALED.

BAR STEEL REINFORCEMENT SHALL BE EMBEDDED 2" CLEAR UNLESS OTHERWISE SHOWN OR NOTED.

THE FIRST OR FIRST TWO DIGITS OF THE BAR MARK SIGNIFIES THE BAR SIZE.

BEVEL EXPOSED EDGES OF CONCRETE ¾" UNLESS OTHERWISE NOTED.

THE QUANTITY FOR BACKFILL STRUCTURE IS CALCULATED BASED ON THE DETAIL SHOWN IN THE PLANS.

THE UPPER LIMITS OF "EXCAVATION FOR STRUCTURES CULVERTS B-55-289" SHALL BE THE EXISTING GROUNDLINE.

GENERAL NOTES CONT.

ALL VOLUME WHICH CANNOT BE PLACED BEFORE CULVERT CONSTRUCTION AND NOT OCCUPIED BY THE NEW STRUCTURE SHALL BE BACKFILLED WITH STRUCTURE BACKFILL WITHIN THE LENGTH OF THE CULVERT INCLUDING THE APRON WING WALLS.

THE CONCRETE IN THE CUTOFF WALLS MAY BE PLACED UNDERWATER IF THE EXCAVATION CANNOT BE DEWATERED.

PLACE 18" (MIN.) WIDE SHEET OF "RUBBERIZED MEMBRANE WATERPROOFING" ON TOP SLAB OVER ALL CONSTRUCTION JOINTS AND EXTEND 6" MIN. BELOW TOP OF BOTTOM SLAB.

THE "ALTERNATE CUT OFF WALL" DETAIL SHOWN ON THE "APRON DETAILS" SHEET MAY BE USED IN LIEU OF THE CAST-IN-PLACE CONCRETE CUT OFF WALLS. PAYMENT SHALL BE BASED ON CONCRETE CUT OFF WALLS.

GENERAL NOTES CONT.

SEE ROADWAY PLANS AND SPECIAL PROVISIONS FOR TEMPORARY STREAM DIVERSION DETAILS.

THE CONTRACTOR MAY ELECT TO SUBSTITUTE #1 OR #2 CONCRETE COARSE AGGREGATE, SELECT CRUSHED MATERIAL OR OTHER GRANULAR MATERIAL AS APPROVED BY THE FIELD ENGINEER, IN LIEU OF THE BREAKER RUN, TO BE UTILIZED AS A CONSTRUCTION PLATFORM FOR THE BOX. THE CONTRACTOR IS RESPONSIBLE FOR BASE STABILITY WITH ANY SUBSTITUTED MATERIAL. THE REGION GEOTECHNICAL ENGINEER MAY BE CONTACTED TO DETERMINE IF "OTHER GRANULAR MATERIAL" IS ACCEPTABLE.

SEE ROADWAY PLANS FOR R/W LIMITS.

ABATEMENT OF ASBESTOS CONTAINING MATERIAL REQUIRED DURING REMOVAL OF EXISTING STRUCTURE B-55-636. SEE SPECIAL PROVISIONS FOR DETAILS.

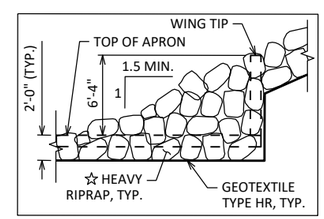

SECTION A-A

(TYP. ALL WINGS)

HYDRAULIC DATA

100-YEAR FREQUENCY:
Q_{100}= 1,210 C.F.S.
V_{100}= 5.58 F.P.S.
HW_{100}= EL. 1115.99
WATERWAY AREA = 216.8 SQ. FT.
DRAINAGE AREA = 2.44 SQ. MI.
ROADWAY OVERTOPPING = N/A
SCOUR CRITICAL CODE = 8

2-YEAR FREQUENCY:
Q_2= 280 C.F.S.
V_2= 3.6 F.P.S.
HW_2= EL. 1112.57

TEMPORARY STRUCTURES:
Q_5= 500 C.F.S.
HW_5= EL. 1114.2
MIN. CLEAR OPENING AREA OF TEMPORARY STRUCTURE = 100 SQ. FT.

NO.	DATE	REVISION	BY

BUREAU OF STRUCTURES
ACCEPTED KHB 7/12/24
CHIEF STRUCTURES DESIGN ENGINEER DATE

STRUCTURE B-55-289

USH 63 OVER BRANCH RUSH RIVER

COUNTY ST. CROIX | VILLAGE BALDWIN

DESIGN SPEC. AASHTO LRFD BRIDGE DESIGN SPECIFICATION

DESIGNED BY RRH | DESIGNED CK'D ARC | DRAWN BY RRH | PLANS CK'D ARC

GENERAL PLAN

SHEET 1 OF 7
154

I.D. 1550-02-03A DATE: JULY 2024

✳ SAND BAGS ARE SHOWN FOR INFORMATIONAL PURPOSES ONLY. TEMPORARY STREAM DIVERSION IS CONTRACTOR-DESIGNED FOR THE Q_2 FLOOD EVENT AND WORK IS INCIDENTAL TO BID ITEM 'TEMPORARY STREAM DIVERSION'. ANY EXCAVATION REQUIRED FOR STREAM DIVERSION IS INCIDENTAL TO BID ITEM 'TEMPORARY STREAM DIVERSION'.

◧ THE CONTRACTOR IS RESPONSIBLE FOR ENSURING THE STABILITY OF TEMPORARY BYPASS BRIDGE DURING CONSTRUCTION AND Q_5 FLOOD EVENT.

△ SEE 'GENERAL PLAN' AND 'DETAILS' SHT. FOR LIMITS OF UNDERCUT.

◓ DO NOT PLACE STRUCTURE BACKFILL TYPE B ABOVE TOP OF BOTTOM SLAB UNTIL TOP SLAB IS PLACED AND CURED. SEE STAGE 5XX FOR REQUIRED SHORING. BRACING OF WALLS FOR STABILITY AND Q_2 FLOOD IS NOT SHOWN FOR CLARITY. BRACING OF THE WALLS IS THE RESPONSIBILITY OF THE CONTRACTOR AND INCIDENTAL TO THE CONTRACT.

NOTE: SEE ROADWAY PLANS FOR ADDITIONAL INFORMATION ABOUT CONSTRUCTION STAGING AND EROSION CONTROL.

STATE PROJECT NUMBER

1550-02-73

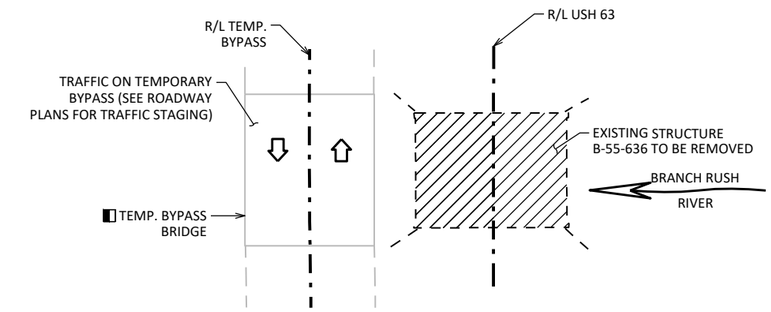

STAGE 1XX REMOVAL

(UTILITIES NOT SHOWN FOR CLARITY)

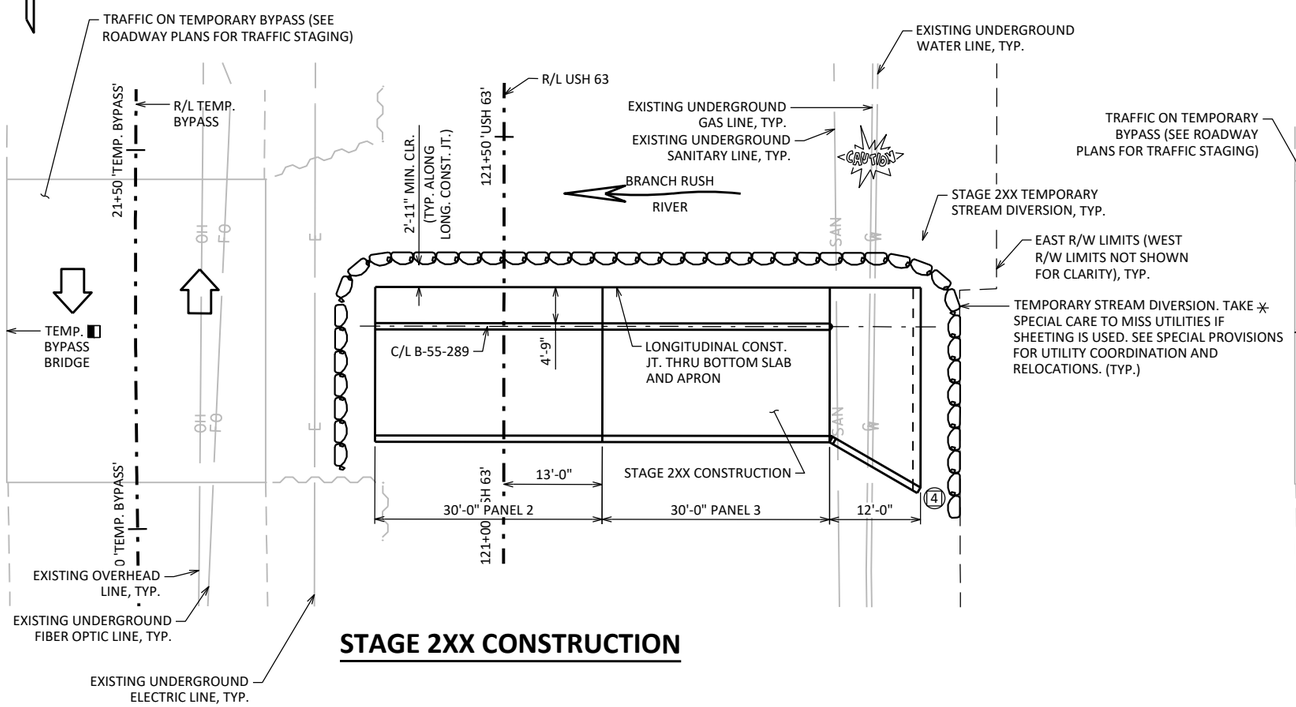

STAGE 2XX CONSTRUCTION

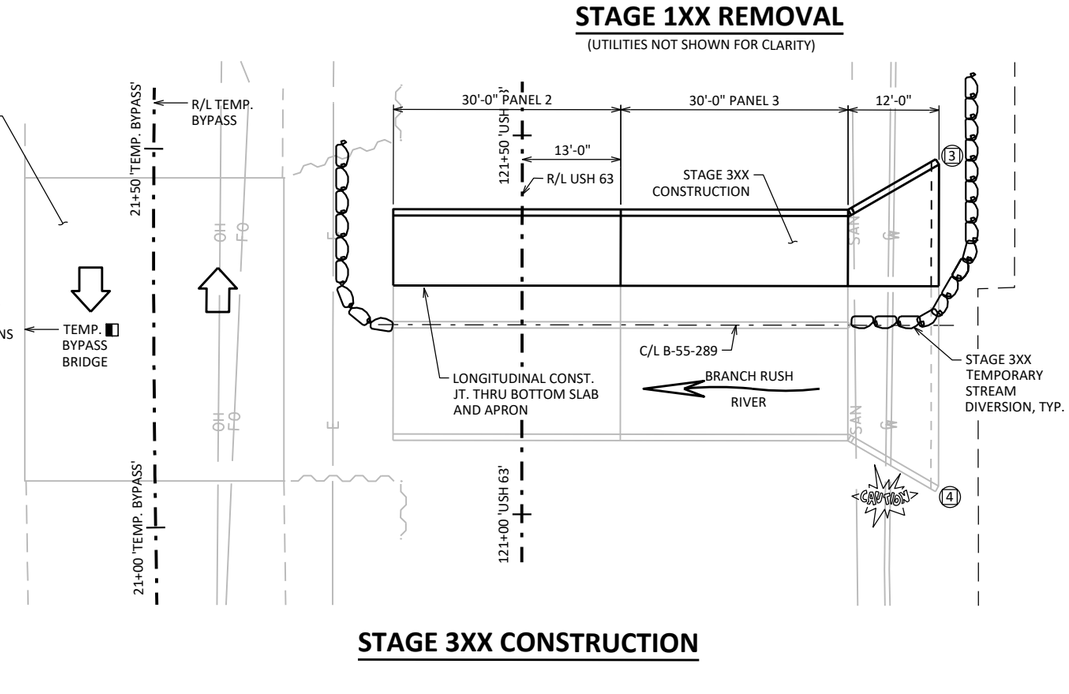

STAGE 3XX CONSTRUCTION

8

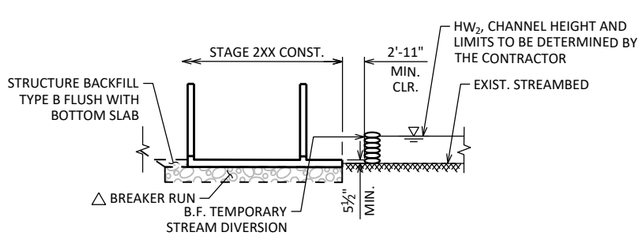

STAGE 2XX CONSTRUCTION

(SECTION THRU BOX LOOKING WEST)

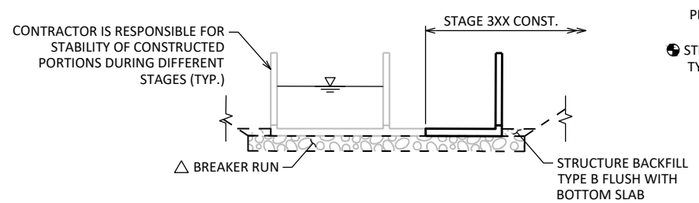

STAGE 3XX CONSTRUCTION

(SECTION THRU BOX LOOKING WEST)

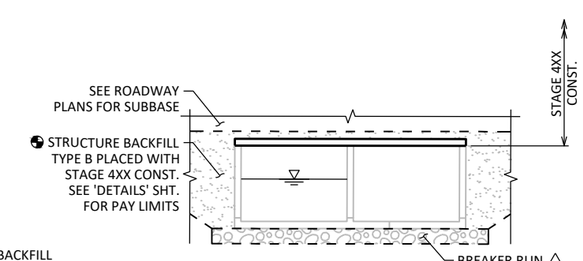

STAGE 4XX CONSTRUCTION

(SECTION THRU BOX LOOKING WEST)

8

NO.	DATE	REVISION	BY

STATE OF WISCONSIN
DEPARTMENT OF TRANSPORTATION
STRUCTURES DESIGN SECTION

STRUCTURE B-55-289

DRAWN BY RRH PLANS CK'D ARC

STAGING PLAN 1

SHEET 2

✳ SAND BAGS ARE SHOWN FOR INFORMATIONAL PURPOSES ONLY. TEMPORARY STREAM DIVERSION IS CONTRACTOR-DESIGNED FOR THE Q_2 FLOOD EVENT AND WORK IS INCIDENTAL TO BID ITEM 'TEMPORARY STREAM DIVERSION'. ANY EXCAVATION REQUIRED FOR STREAM DIVERSION IS INCIDENTAL TO BID ITEM 'TEMPORARY STREAM DIVERSION'.

◧ THE CONTRACTOR IS RESPONSIBLE FOR ENSURING THE STABILITY OF TEMPORARY BYPASS BRIDGE DURING CONSTRUCTION AND Q_5 FLOOD EVENT.

△ SEE 'GENERAL PLAN' AND 'DETAILS' SHT. FOR LIMITS OF UNDERCUT.

◓ DO NOT PLACE STRUCTURE BACKFILL TYPE B ABOVE TOP OF BOTTOM SLAB UNTIL TOP SLAB IS PLACED AND CURED. BRACING OF WALLS FOR STABILITY AND Q_2 FLOOD IS NOT SHOWN FOR CLARITY. BRACING OF THE WALLS IS THE RESPONSIBILITY OF THE CONTRACTOR AND INCIDENTAL TO THE CONTRACT.

NOTE: SEE ROADWAY PLANS FOR ADDITIONAL INFORMATION ABOUT CONSTRUCTION STAGING AND EROSION CONTROL.

STATE PROJECT NUMBER

1550-02-73

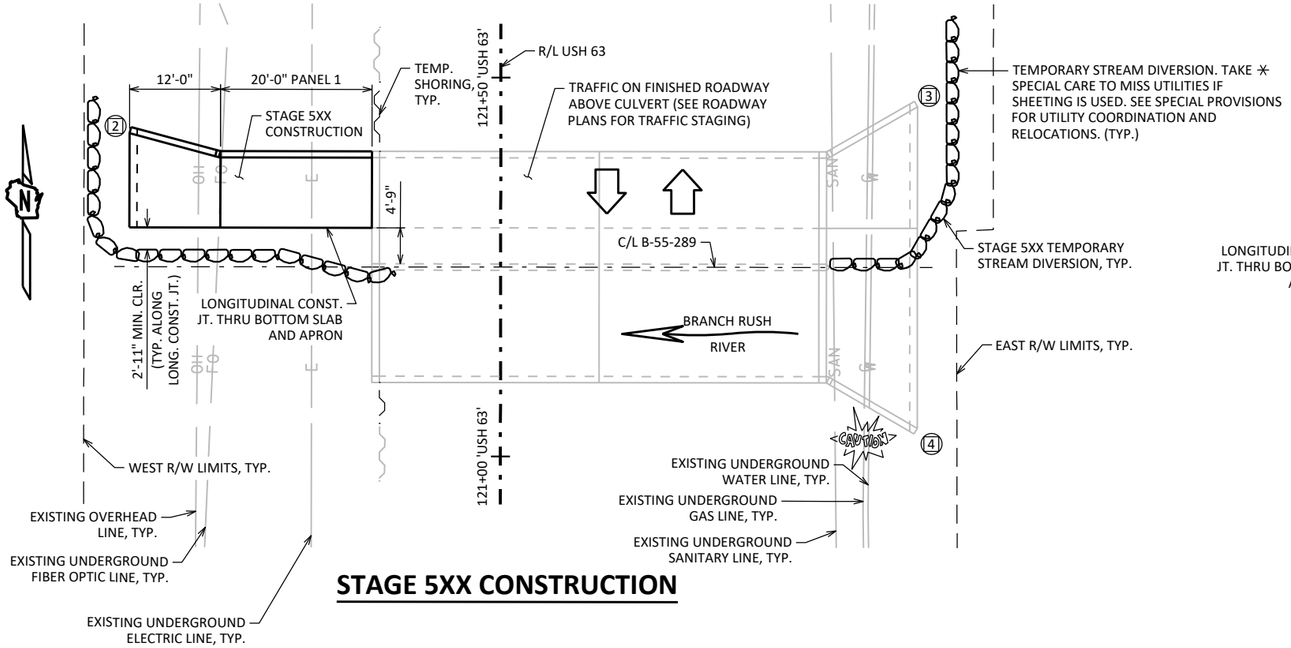

STAGE 5XX CONSTRUCTION

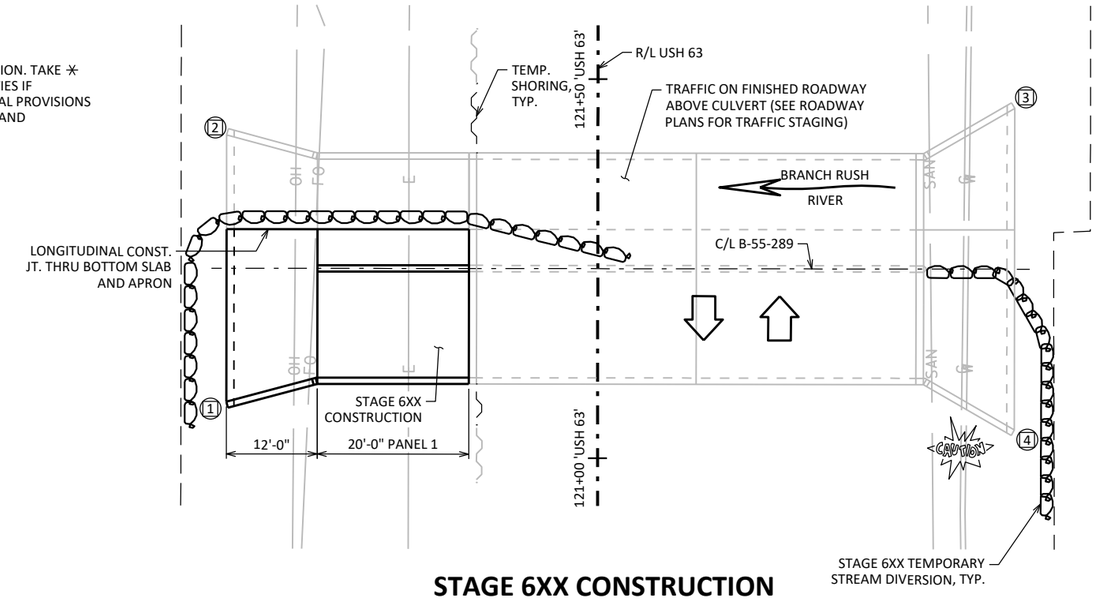

STAGE 6XX CONSTRUCTION

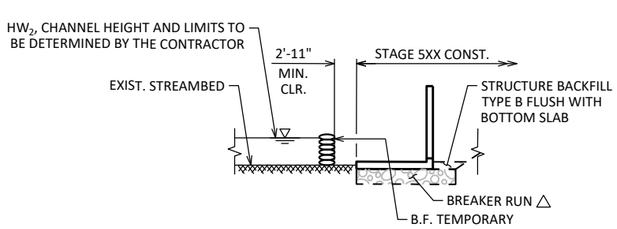

STAGE 5XX CONSTRUCTION

(SECTION THRU BOX LOOKING WEST)

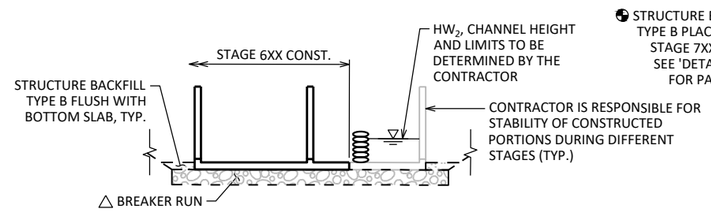

STAGE 6XX CONSTRUCTION

(SECTION THRU BOX LOOKING WEST)

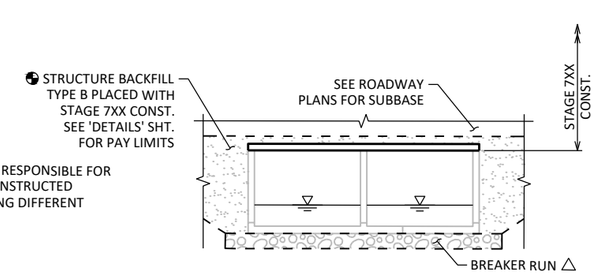

STAGE 7XX CONSTRUCTION

(SECTION THRU BOX LOOKING WEST)

8

8

NO.	DATE	REVISION	BY

STATE OF WISCONSIN
DEPARTMENT OF TRANSPORTATION
STRUCTURES DESIGN SECTION

STRUCTURE B-55-289

DRAWN BY RRH | PLANS CK'D ARC

STAGING PLAN 2

SHEET 3

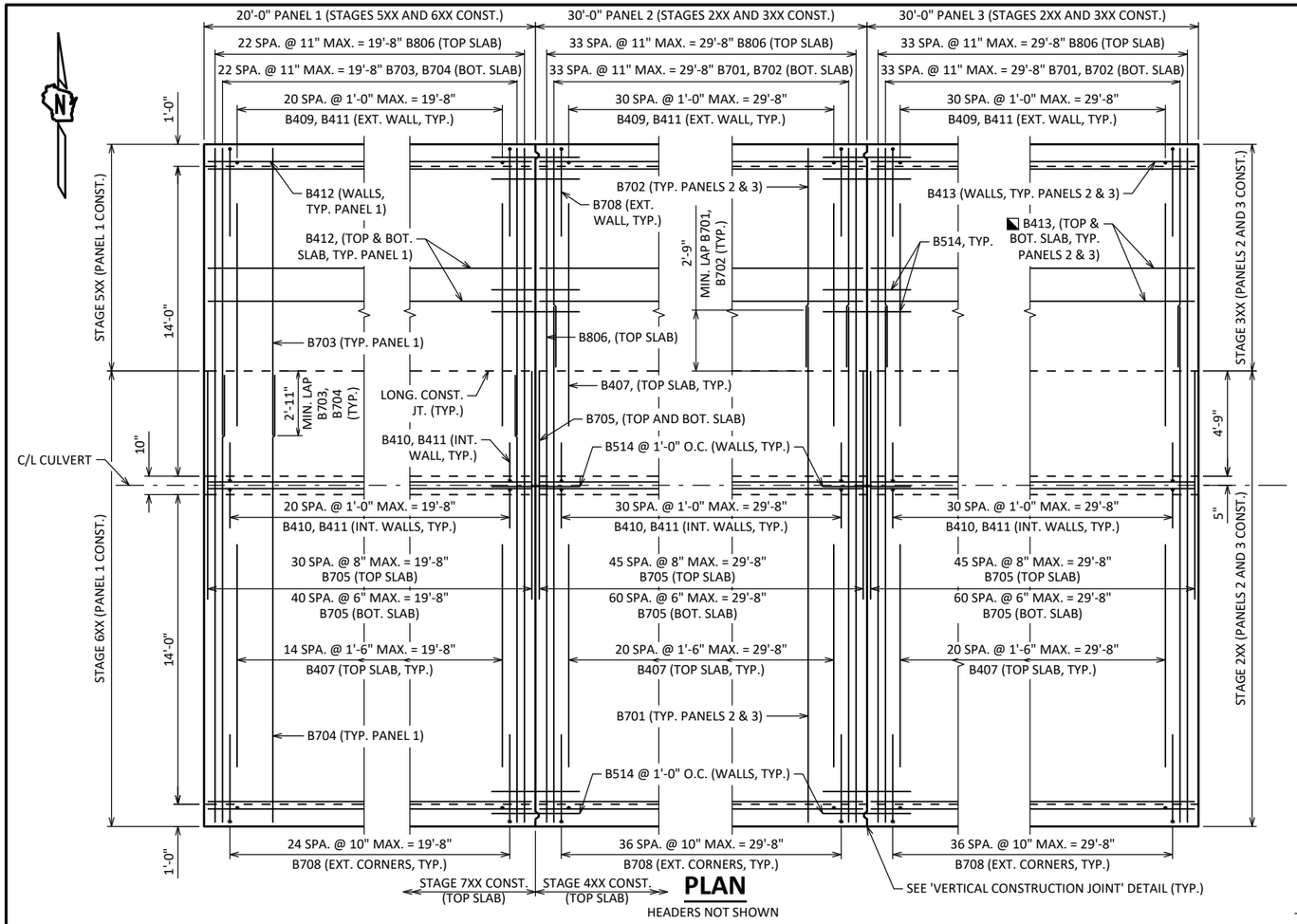

PLAN

HEADERS NOT SHOWN

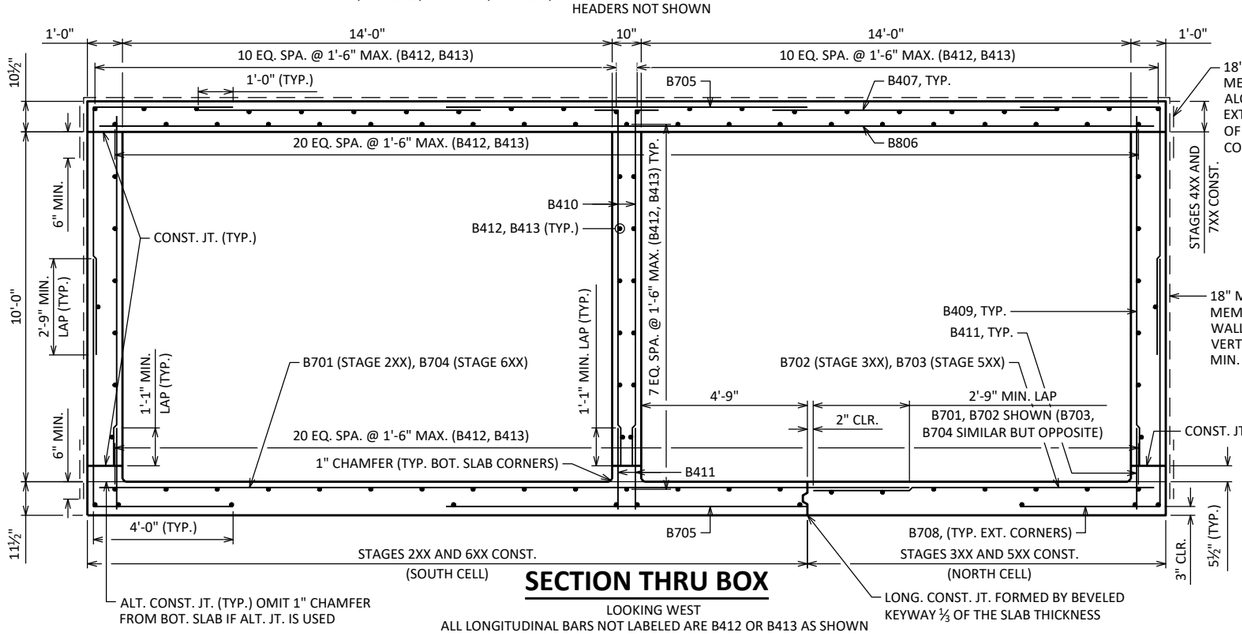

SECTION THRU BOX

LOOKING WEST

ALL LONGITUDINAL BARS NOT LABELED ARE B412 OR B413 AS SHOWN

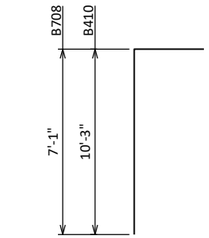

B708, B410

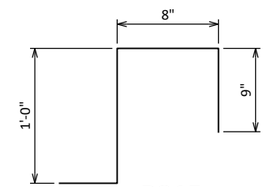

B315

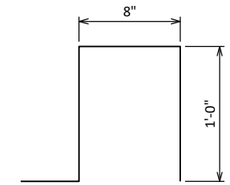

B316

STATE PROJECT NUMBER

1550-02-73

BILL OF BARS

NOTE: THE FIRST OR FIRST TWO DIGITS OF THE BAR MARK SIGNIFIES THE BAR SIZE.

BAR MARK	COAT	NO. REQ'D.	LENGTH	BENT	BAR SERIES	LOCATION
B701		68	23'-4"			BOT. SLAB - HORIZONTAL - STAGE 2XX - TOP FACE
B702		68	9'-11"			BOT. SLAB - HORIZONTAL - STAGE 3XX - TOP FACE
B703		23	13'-0"			BOT. SLAB - HORIZONTAL - STAGE 5XX - TOP FACE
B704		23	20'-3"			BOT. SLAB - HORIZONTAL - STAGE 6XX - TOP FACE
B705		286	10'-4"			TOP & BOT. SLAB - HORIZONTAL - OUTSIDE FACE
B806		91	30'-6"			TOP SLAB - HORIZONTAL - BOT. FACE
B407		114	8'-1"			TOP SLAB - HORIZONTAL - TOP FACE
B708		396	10'-11"	X		EXT. CORNERS - VERTICAL
B409		166	10'-0"			EXT. WALLS - VERTICAL
B410		166	10'-10"	X		INT. WALLS - VERTICAL
B411		332	2'-3"			INT. & EXT. WALLS - DOWELS - VERTICAL
B412		100	19'-8"			PANEL 1 - TOP & BOT. SLAB & WALLS - LONGITUDINAL
B413		200	29'-8"			PANEL 2 & 3 - TOP & BOT. SLAB & WALLS - LONGITUDINAL
B514		184	4'-0"			VERT. CONST. JOINT - DOWELS
B315		42	2'-8"	X		INLET HEADER - VERTICAL
B316		84	2'-11"	X		PANEL 2 & OUTLET HEADERS - VERTICAL
B417		6	30'-6"			HEADERS - HORIZONTAL

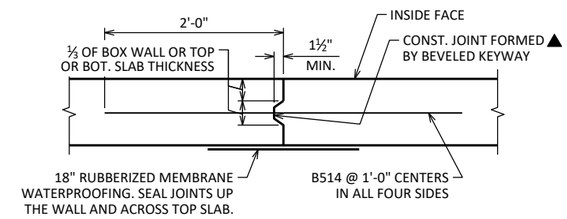

VERTICAL CONSTRUCTION JOINT

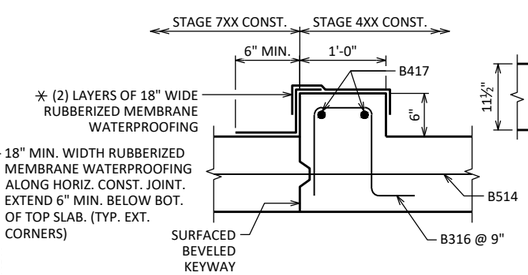

SECTION THRU PANEL 2 HEADER

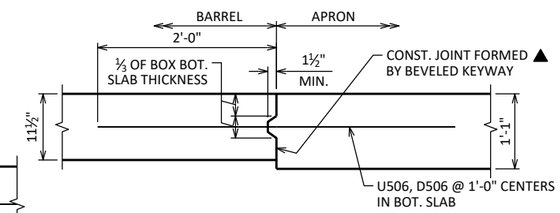

APRON CONNECTION DETAIL

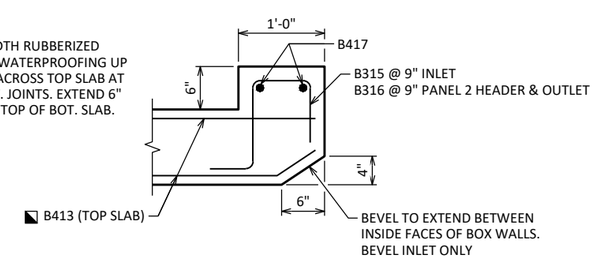

SECTION THRU HEADER

(PRIMARY TOP SLAB REINFORCEMENT NOT SHOWN FOR CLARITY)

▲ 2" DEEP SAW CUT WITHIN 12 HOURS AFTER POURING MAY BE USED IN LIEU OF CONST. JT. IN BOT. SLAB.

◥ FIELD BEND B413 BAR ENDS OVER PANEL 3 INLET CHAMFER TO MAINTAIN 2" CLR. COVER

✳ (2) LAYERS OF 18" WIDE RUBBERIZED MEMBRANE WATERPROOFING WITH 6" MIN. LAP. BOTTOM LAYER TO EXTEND TO 6" MIN. BELOW TOP OF BOTTOM SLAB AND TOP LAYER TO EXTEND TO 6" MIN. BELOW BOTTOM OF TOP SLAB.

NO.	DATE	REVISION	BY

STATE OF WISCONSIN
DEPARTMENT OF TRANSPORTATION
STRUCTURES DESIGN SECTION

STRUCTURE B-55-289

DRAWN BY RRH | PLANS CK'D ARC

BOX DETAILS

SHEET 4

8

8

STATE PROJECT NUMBER

1550-02-73

LEGEND

- INDICATES WING NUMBER
- LAP NO. 4 BARS 1'-8" MIN. AS SHOWN.
- LAP NO. 7 BARS 4'-2" MIN. AS SHOWN.
- ▲ 18" WIDE RUBBERIZED MEMBRANE WATERPROOFING. PLACE ALONG HORIZ. CONST. JOINT FOR ENTIRE LENGTH OF WING.

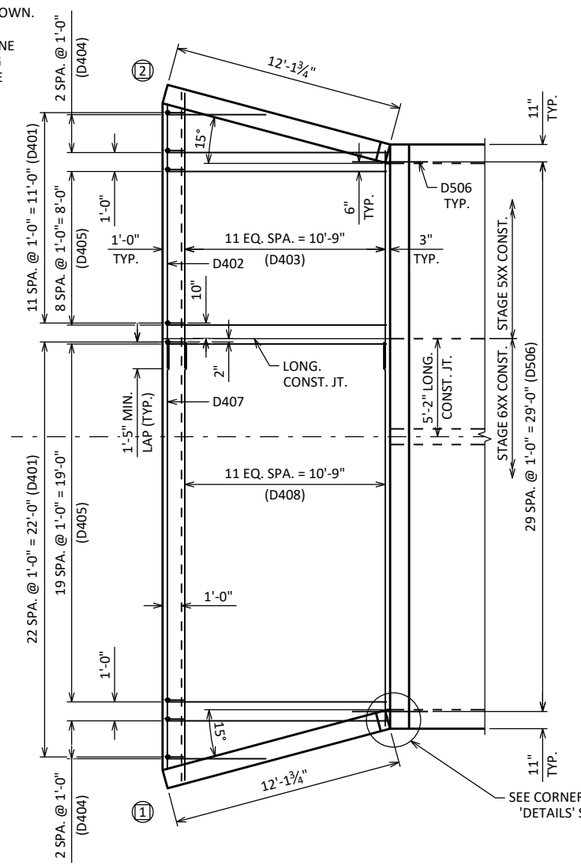

OUTLET APRON PLAN

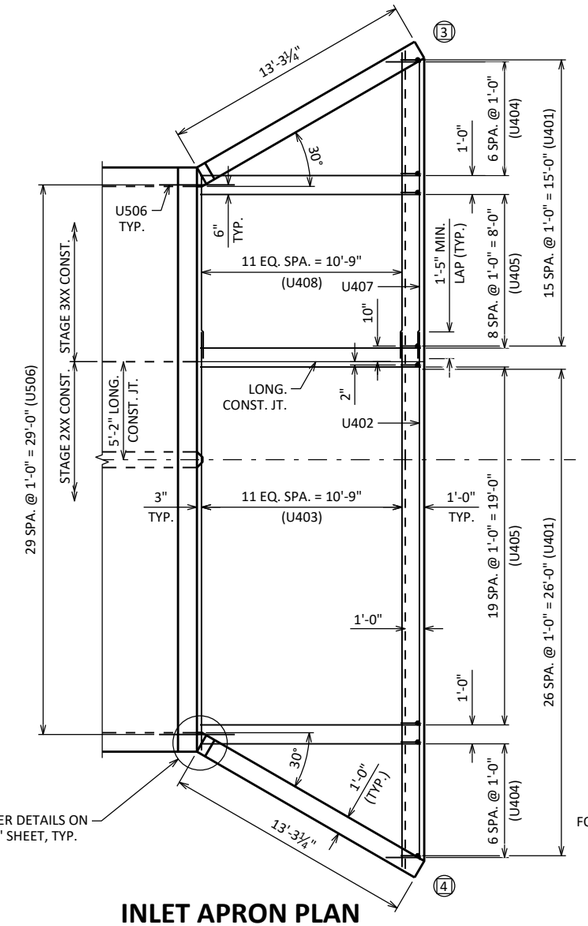

INLET APRON PLAN

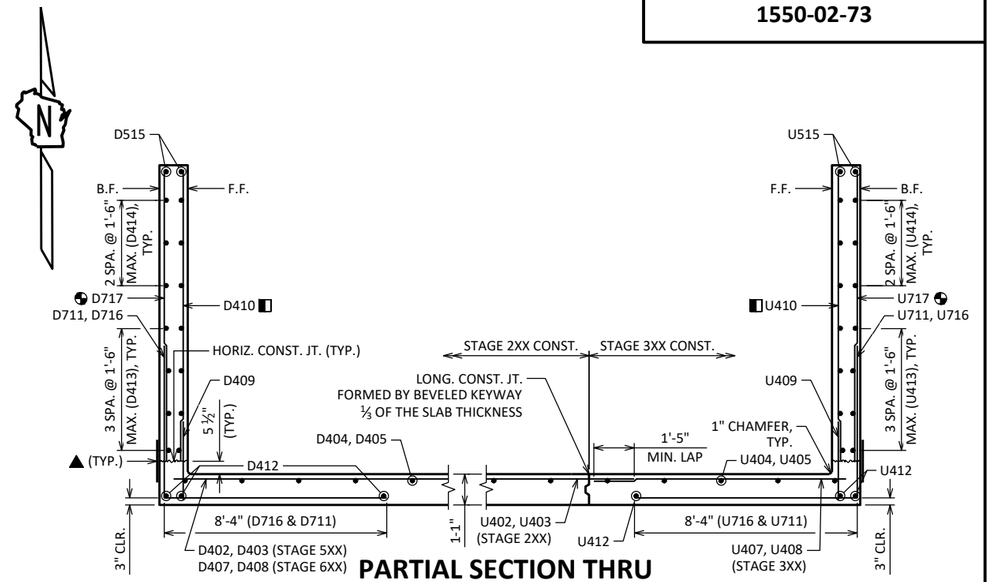

PARTIAL SECTION THRU WINGS LOOKING WEST

LONG. CONST. JT. AT INLET APRON SHOWN
LONG. CONST. JT. AT OUTLET APRON SIMILAR

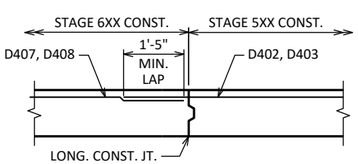

LONGITUDINAL CONSTRUCTION JOINT

LONG. CONST. JT. AT OUTLET APRON SHOWN
LONG. CONST. JT. AT INLET APRON SIMILAR
(LOOKING WEST)

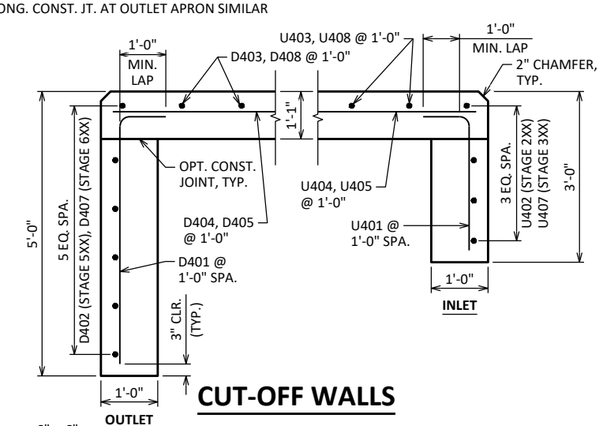

CUT-OFF WALLS

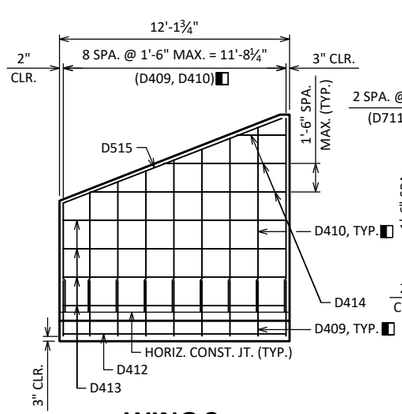

WING 2

SHOWING F.F. REINFORCEMENT
WING 1 SIMILAR

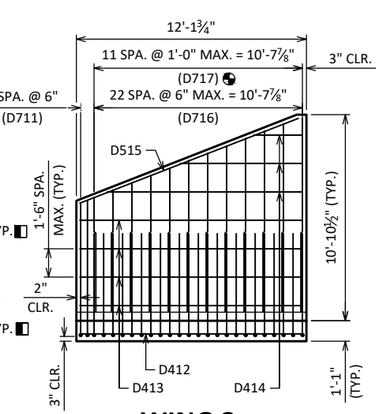

WING 2

SHOWING B.F. REINFORCEMENT
WING 1 SIMILAR

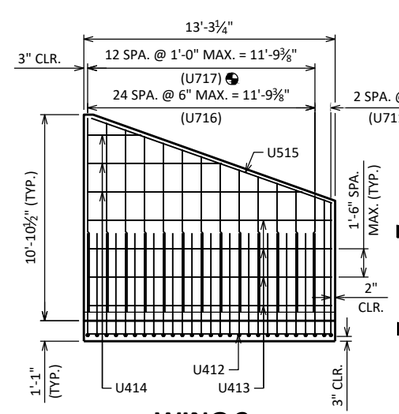

WING 3

SHOWING B.F. REINFORCEMENT
WING 4 SIMILAR

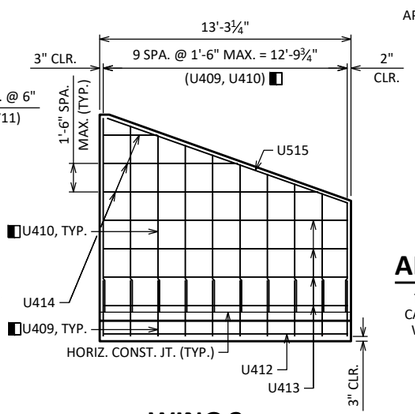

WING 3

SHOWING F.F. REINFORCEMENT
WING 4 SIMILAR

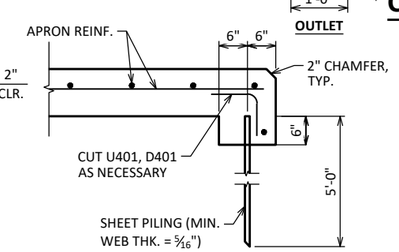

ALTERNATE CUT-OFF WALLS

THE ABOVE ALTERNATIVE MAY BE USED IN LIEU OF CAST-IN-PLACE CONCRETE CUT-OFF WALLS. PAYMENT WILL BE BASED ON THE CONCRETE CUT-OFF WALLS.

NO.	DATE	REVISION	BY

STATE OF WISCONSIN
DEPARTMENT OF TRANSPORTATION
STRUCTURES DESIGN SECTION

STRUCTURE B-55-289

DRAWN BY RRH PLANS CK'D ARC

APRON DETAILS

SHEET 5
158

8

8

STATE PROJECT NUMBER

1550-02-73

BILL OF BARS

NOTE: THE FIRST OR FIRST TWO DIGITS OF THE BAR MARK SIGNIFIES THE BAR SIZE.

BAR MARK	COAT	NO. REQ'D.	LENGTH	BENT	BAR SERIES	LOCATION
U401		43	3'-7"	X		INLET APRON & CUT OFF WALL - VERT.
U402		4	27'-11"			INLET APRON & CUT OFF WALL - HORIZ. TRANS. - STAGE 2XX
U403		12	25'-3"		◭	INLET APRON - HORIZ. TRANS. - STAGE 2XX
U404		14	6'-5"		◭	INLET APRON - HORIZ. LONG.
U405		29	11'-8"			INLET APRON CORNERS - HORIZ. LONG.
U506		30	4'-0"			INLET APRON & BARREL - HORIZ. - DOWEL
U407		4	15'-10"			INLET APRON & CUT OFF WALL - HORIZ. TRANS. - STAGE 3XX
U408		12	12'-10"		◭	INLET APRON - HORIZ. TRANS. - STAGE 3XX
U409	X	20	3'-0"			WINGS 3 & 4 - F.F. - VERT. - JOINT
U410	X	20	8'-0"		◭	WINGS 3 & 4 - F.F. - VERT.
U711	X	4	15'-4"	X	◭	WINGS 3 & 4 - B.F. - VERT. - WING TIPS
U412		6	13'-0"			WINGS 3 & 4 - HORIZ. - APRON
U413	X	16	12'-10"			WINGS 3 & 4 - HORIZ. - LOWER
U414	X	12	7'-5"		◭	WINGS 3 & 4 - HORIZ. - UPPER
U515	X	4	13'-7"			WINGS 3 & 4 - HORIZ. - TOP
U716	X	50	13'-8"	X		WINGS 3 & 4 - B.F. - VERT.
U717	X	26	8'-3"		◭	WINGS 3 & 4 - B.F. - VERT.
D401		35	5'-7"	X		OUTLET APRON & CUT OFF WALL - VERT.
D402		6	14'-0"			OUTLET APRON & CUT OFF WALL - HORIZ. TRANS. - STAGE 5XX
D403		12	13'-3"		◭	OUTLET APRON - HORIZ. TRANS. - STAGE 5XX
D404		6	7'-10"		◭	OUTLET APRON - HORIZ. LONG.
D405		29	11'-8"			OUTLET APRON CORNERS - HORIZ. LONG.
D506		30	4'-0"			OUTLET APRON & BARREL - HORIZ. - DOWEL
D407		6	22'-7"			OUTLET APRON & CUT OFF WALL - HORIZ. TRANS. - STAGE 6XX
D408		12	21'-6"		◭	OUTLET APRON - HORIZ. TRANS. - STAGE 6XX
D409	X	18	3'-0"			WINGS 1 & 2 - F.F. - VERT. - JOINT
D410	X	18	8'-0"		◭	WINGS 1 & 2 - F.F. - VERT.
D711	X	4	15'-4"	X	◭	WINGS 1 & 2 - B.F. - VERT. - WING TIPS
D412		6	11'-10"			WINGS 1 & 2 - HORIZ. - APRON
D413	X	16	11'-9"			WINGS 1 & 2 - HORIZ. - LOWER
D414	X	12	6'-9"		◭	WINGS 1 & 2 - HORIZ. - UPPER
D515	X	4	12'-6"			WINGS 1 & 2 - HORIZ. - TOP
D716	X	46	13'-8"	X		WINGS 1 & 2 - B.F. - VERT.
D717	X	24	8'-3"		◭	WINGS 1 & 2 - B.F. - VERT.

◭ LENGTH SHOWN FOR BAR IS AN AVERAGE AND SHOULD ONLY BE USED FOR BAR WEIGHT CALCULATIONS. SEE BAR SERIES TABLE FOR ACTUAL LENGTHS.

BAR SERIES TABLE

BUNDLE AND TAG EACH SERIES SEPARATELY.

BAR MARK	NO. REQ'D.	LENGTH
U403	1 SERIES OF 12	22'-1" TO 28'-4"
U404	2 SERIES OF 7	1'-2" TO 11'-8"
U408	1 SERIES OF 12	9'-8" TO 15'-11"
U410	2 SERIES OF 10	5'-9" TO 10'-3"
U711	2 SERIES OF 2	15'-3" TO 15'-5"
U414	4 SERIES OF 3	3'-2" TO 11'-7"
U717	2 SERIES OF 13	6'-2" TO 10'-3"
D403	1 SERIES OF 12	11'-9" TO 14'-8"
D404	2 SERIES OF 3	4'-0" TO 11'-8"
D408	1 SERIES OF 12	20'-0" TO 22'-11"
D410	2 SERIES OF 9	5'-9" TO 10'-3"
D711	2 SERIES OF 2	15'-3" TO 15'-5"
D414	4 SERIES OF 3	2'-11" TO 10'-7"
D717	2 SERIES OF 12	6'-2" TO 10'-3"

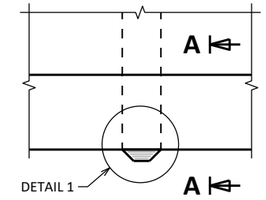

PLAN

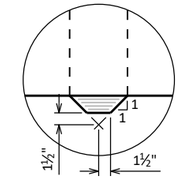

DETAIL 1

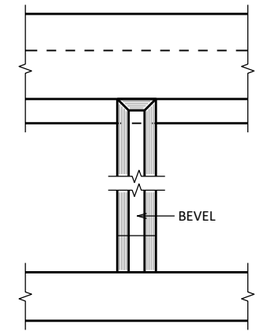

ELEVATION

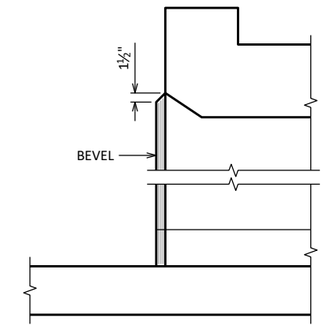

SECTION A-A

INLET NOSE DETAILS

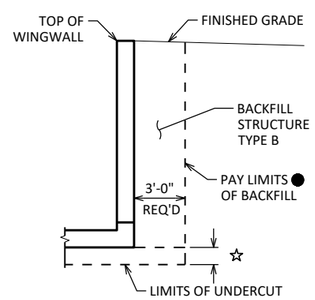

TYPICAL SECTION THRU BOX CULVERT WINGWALL

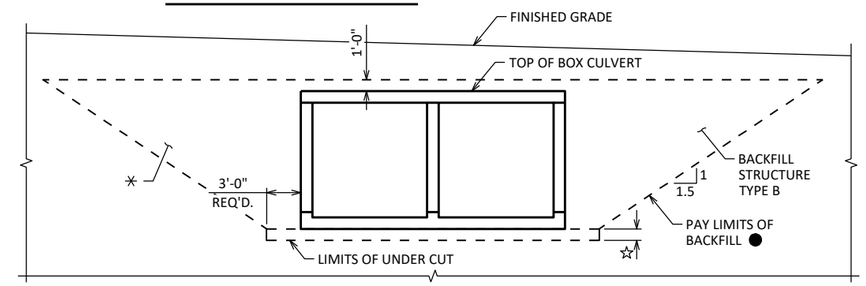

TYPICAL SECTION THRU BOX CULVERT

● BACKFILL PAY LIMITS. BACKFILL BEYOND BACKFILL PAY LIMITS SHALL BE INCIDENTAL TO EXCAVATION FOR STRUCTURES. LIMITS OF EXCAVATION SHALL BE DETERMINED BY THE CONTRACTOR.

☆ UNDER CUT 1'-0". EXCAVATION FOR UNDER CUT TO BE INCLUDED IN EXCAVATION FOR STRUCTURES. PLACE "GEOTEXTILE TYPE C" AND BACKFILL WITH "BREAKER RUN".

✳ THE REGION SOILS ENGINEER SHALL BE PRESENT TO EVALUATE THE SUBSURFACE CONDITIONS AT TIME OF BOX CULVERT CONSTRUCTION.

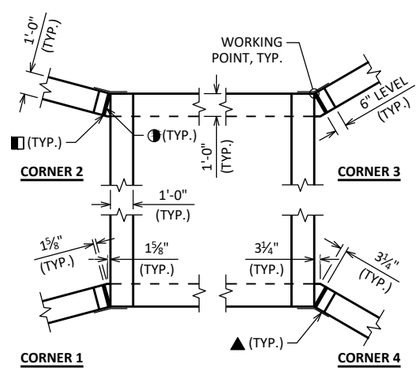

◑ ¾" FILLER (TYP.) EXTEND FROM HORIZ. CONST. JOINT TO TOP OF WING.

◧ 1" BEVEL (TYP.)

▲ 18" WIDE RUBBERIZED MEMBRANE WATERPROOFING. EXTEND FROM HORIZ. CONST. JOINT TO TOP OF WALL.

CORNER DETAILS

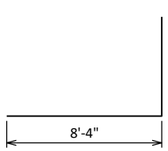

U711, U716, D711, D716

D401, U401

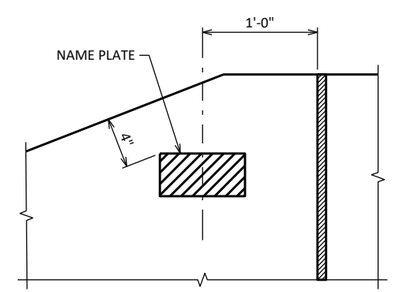

NAME PLATE DETAIL

WING 4

8

8

NO.	DATE	REVISION	BY

STATE OF WISCONSIN
DEPARTMENT OF TRANSPORTATION
STRUCTURES DESIGN SECTION

STRUCTURE B-55-289

DRAWN BY RRH | PLANS CK'D ARC

DETAILS

SHEET 6

159

SCALE =

BORING #	DATE COMPLETED	NORTHING (Y)	EASTING (X)
1	09/07/2023	334554.8	609911.7
1A	10/10/2023	334561.1	609933.9
2	09/08/2023	334488.4	609888.3
2A	10/10/2023	334487.8	609937
BORINGS COMPLETED BY: AET			
REPORT COMPLETED BY: WISDOT			
ALL COORDINATES REFERENCED TO WCCS NAD 83 (91) ST. CROIX COUNTY			
COORDINATES COLLECTED USING NON-SURVEY GRADE EQUIPMENT			

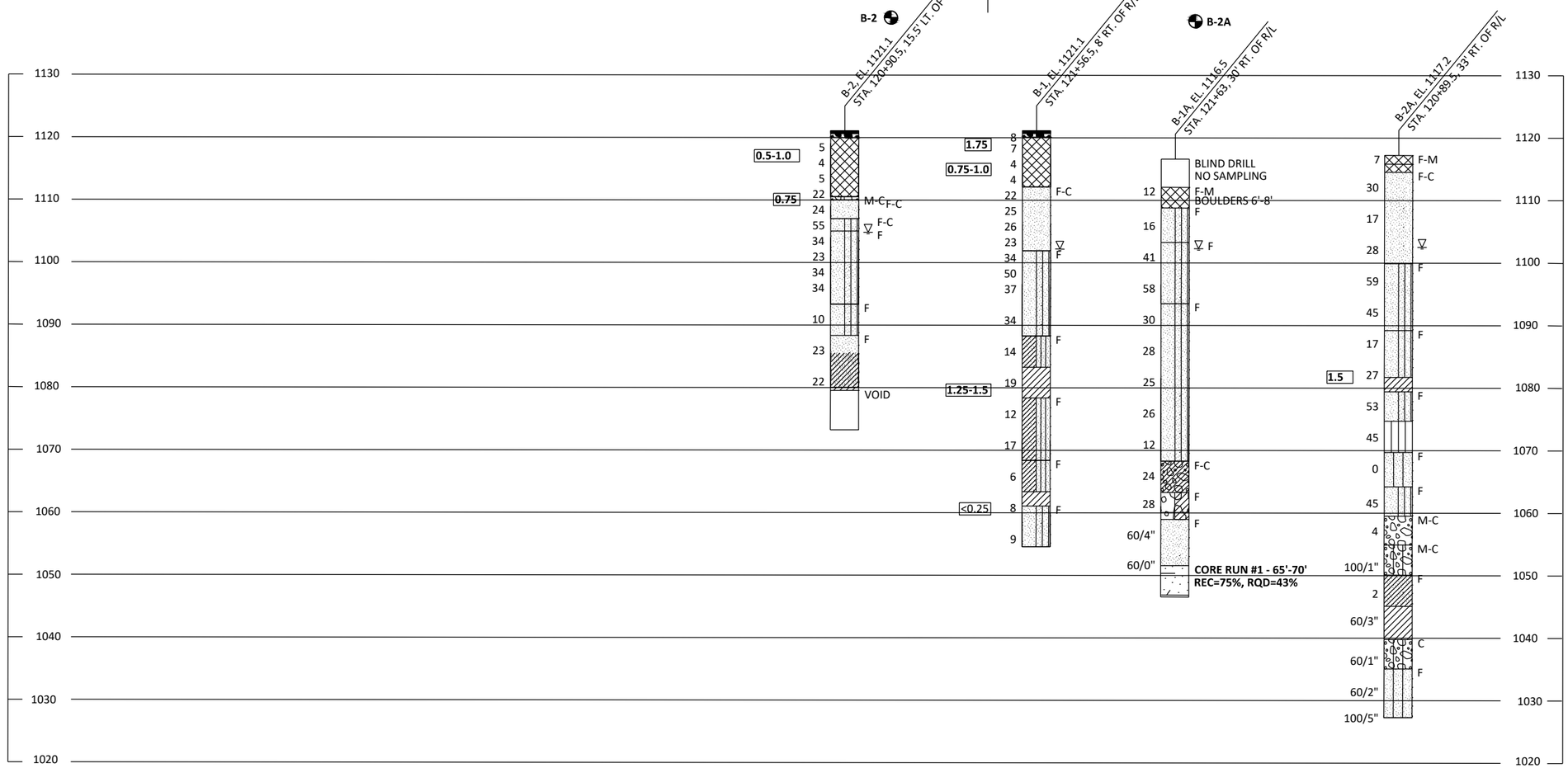

STATE PROJECT NUMBER

1550-02-73

MATERIAL SYMBOLS

ASPHALT, TOPSOIL, PEAT, CONCRETE, FILL, GRAVEL, SAND, CLAY, SILT, BOULDERS OR COBBLES, LIMESTONE, BEDROCK (UNKNOWN), SHALE, SANDSTONE, IGNEOUS/ META

LEGEND OF BORING

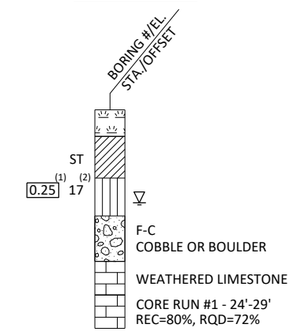

(1) UNCONFINED STRENGTH, AS DETERMINED BY A POCKET PENETROMETER (TSF)

(2) UNLESS OTHERWISE, SPECIFIED THE SPT 'N' VALUE IS BASED ON AASHTO T-206, STANDARD PENETRATION TEST. THE SPT 'N' VALUE PRESENTED HAS NOT BEEN CORRECTED FOR OVERBURDEN PRESSURE OR HAMMER EFFICIENCY.

GROUND WATER ELEVATION

- AT TIME OF DRILLING
- END OF DRILLING
- AFTER DRILLING

ABBREVIATIONS

F-FINE M-MEDIUM C-COARSE ST-SHELBY TUBE

SUBSURFACE EXPLORATION FOR FOUNDATION DESIGN AND BIDDERS INFORMATION

BORINGS WERE COMPLETED AT POINTS APPROXIMATELY AS INDICATED ON THIS DRAWING TO OBTAIN INFORMATION CONCERNING THE CHARACTER OF SUBSURFACE MATERIALS FOUND AT THE SITE. BECAUSE THE INVESTIGATED DEPTHS ARE LIMITED AND THE AREA OF THE BORINGS IS VERY SMALL IN RELATION TO THE ENTIRE SITE, THE WISCONSIN DEPARTMENT OF TRANSPORTATION DOES NOT WARRANT SIMILAR SUBSURFACE CONDITIONS BELOW, BETWEEN, OR BEYOND THESE BORINGS. VARIATIONS IN SOIL CONDITIONS SHOULD BE EXPECTED AND FLUCTUATIONS IN GROUNDWATER LEVELS MAY OCCUR.

NO.	DATE	REVISION	BY

STATE OF WISCONSIN
DEPARTMENT OF TRANSPORTATION
STRUCTURES DESIGN SECTION

STRUCTURE B-55-289

DRAWN BY JJ/RRH PLANS CK'D ARC

SUBSURFACE EXPLORATION

SHEET 7

8

8

DIVISION 1 - TEMPORARY BYPASS

STATION	REAL STATION	DISTANCE	AREA (SF)			INCREMENTAL VOL (CY) (UNADJUSTED)			CUMULATIVE VOL (CY)		
			CUT	SALVAGED/UNUSABLE PAVEMENT MATERIAL	FILL	CUT	SALVAGED/UNUSABLE PAVEMENT MATERIAL	FILL	CUT	EXPANDED FILL	MASS ORDINATE
									1.00	1.30	
						NOTE 1	NOTE 2	NOTE 3	NOTE 1		NOTE 8
13+86.02	1386.02	0.00	8.63	0.00	0.07	0	0	0	0	0	0
14+00.00	1400.00	13.98	8.71	0.00	0.04	4	0	0	4	0	4
14+50.00	1450.00	50.00	7.53	0.00	1.19	15	0	1	19	1	18
15+00.00	1500.00	50.00	6.78	0.00	7.49	13	0	8	32	12	20
15+50.00	1550.00	50.00	6.12	0.00	12.02	12	0	18	44	35	9
16+00.00	1600.00	50.00	11.95	0.00	14.05	17	0	24	61	66	-5
16+50.00	1650.00	50.00	16.39	0.00	9.71	26	0	22	87	95	-8
16+59.50	1659.50	9.50	27.88	0.00	6.71	8	0	3	95	99	-4
17+00.00	1700.00	40.50	15.82	0.00	3.28	33	0	7	128	108	20
17+50.00	1750.00	50.00	21.11	0.00	2.75	34	0	6	162	116	46
18+00.00	1800.00	50.00	21.38	0.00	8.49	39	0	10	201	129	72
18+50.00	1850.00	50.00	30.17	0.00	7.13	48	0	14	249	147	102
19+00.00	1900.00	50.00	20.20	0.00	34.73	47	0	39	296	198	98
19+50.00	1950.00	50.00	15.01	0.00	81.76	33	0	108	329	338	-9
19+75.00	1975.00	25.00	3.50	0.00	140.96	9	0	103	338	472	-134
20+00.00	2000.00	25.00	5.11	0.00	191.10	4	0	154	342	672	-330
20+50.00	2050.00	50.00	7.17	0.00	243.01	11	0	402	353	1,195	-842
21+00.00	2100.00	50.00	0.00	0.00	190.67	7	0	402	360	1,717	-1,357
					TEMPORARY STRUCTURE						
21+50.00	2150.00	0.00	0.00	0.00	222.61	0	0	0	360	1,717	-1,357
22+00.00	2200.00	50.00	4.78	0.00	138.46	4	0	334	364	2,152	-1,788
22+50.00	2250.00	50.00	3.22	0.00	138.36	7	0	256	371	2,484	-2,113
22+75.00	2275.00	25.00	4.00	0.00	149.68	3	0	133	374	2,657	-2,283
23+00.00	2300.00	25.00	3.76	0.00	146.92	4	0	137	378	2,835	-2,457
23+50.00	2350.00	50.00	3.31	0.00	121.67	7	0	249	385	3,159	-2,774
24+00.00	2400.00	50.00	5.76	0.00	124.21	8	0	228	393	3,455	-3,062
24+50.00	2450.00	50.00	8.51	0.00	144.31	13	0	249	406	3,779	-3,373
25+00.00	2500.00	50.00	11.89	0.00	116.41	19	0	241	425	4,092	-3,667
25+16.23	2516.23	16.23	19.04	0.00	4.94	9	0	36	434	4,139	-3,705
25+50.00	2550.00	33.77	9.21	0.00	102.92	18	0	67	452	4,226	-3,774
26+00.00	2600.00	50.00	9.11	0.00	80.32	17	0	170	469	4,447	-3,978
26+30.00	2630.00	30.00	9.41	0.00	72.93	10	0	85	479	4,558	-4,079
26+50.00	2650.00	20.00	9.99	0.00	73.56	7	0	54	486	4,628	-4,142
27+00.00	2700.00	50.00	10.46	0.00	38.56	19	0	104	505	4,763	-4,258
27+50.00	2750.00	50.00	11.03	0.00	31.40	20	0	65	525	4,848	-4,323
28+00.00	2800.00	50.00	8.77	0.00	49.83	18	0	75	543	4,945	-4,402
28+50.00	2850.00	50.00	9.08	0.00	43.45	17	0	86	560	5,057	-4,497
29+00.00	2900.00	50.00	7.82	0.00	34.81	16	0	72	576	5,151	-4,575
29+50.00	2950.00	50.00	7.65	0.00	27.06	14	0	57	590	5,225	-4,635
30+00.00	3000.00	50.00	7.61	0.00	17.19	14	0	41	604	5,278	-4,674
30+50.00	3050.00	50.00	8.34	0.00	9.86	15	0	25	619	5,311	-4,692
31+00.00	3100.00	50.00	7.31	0.00	7.20	14	0	16	633	5,331	-4,698
31+50.00	3150.00	50.00	6.94	0.00	3.15	13	0	10	646	5,344	-4,698
32+00.00	3200.00	50.00	7.44	0.00	0.85	13	0	4	659	5,350	-4,691
32+21.74	3221.74	21.74	8.44	0.00	0.09	6	0	0	665	5,350	-4,685

NOTES:	
1 - CUT	CUT INCLUDES SALVAGED/UNUSABLE PAVEMENT MATERIAL
2 - SALVAGED/UNUSABLE PAVEMENT MATERIAL	THIS DOES NOT SHOW UP IN CROSS SECTIONS
3 - FILL	DOES NOT INCLUDE UNUSABLE PAVEMENT EXC VOLUME
5 - EXPANDED EBS	WILL BE BACKFILLED WITH GRANULAR BACKFILL (OR CUT, OR BORROW)
7 - REDUCED EBS IN FILL	REDUCED EBS EXCAVATION THAT CAN BE USED IN FILL
8 - MASS ORDINATE	IF EBS TO BE BACKFILLED WITH GRANULAR: [CUT - SALVAGED PAVT - ((FILL - REDUCED EBS IN FILL) * FILL FACTOR)]

DIVISION 2 - 15500273 - USH63

STATION	REAL STATION	DISTANCE	AREA (SF)				INCREMENTAL VOL (CY) (UNADJUSTED)				CUMULATIVE VOL (CY)				
			CUT	SALVAGED/UNUSABLE PAVEMENT MATERIAL	FILL	EBS	CUT	SALVAGED/UNUSABLE PAVEMENT MATERIAL	FILL	EBS	CUT	EXPANDED FILL	EXPANDED EBS BACKFILL	REDUCED EBS IN FILL	MASS ORDINATE
							NOTE 1	NOTE 2	NOTE 3		1.00 NOTE 1	1.30	1.15 NOTE 5	0.80 NOTE 7	NOTE 8
113+77.02	11377.02	0.00	1.06	0.00	0.96	0.00	0	0	0	0	0	0	0	0	0
114+00.00	11400.00	22.98	1.97	0.67	0.02	0.00	1	0	0	0	1	0	0	0	1
114+50.00	11450.00	50.00	3.13	2.27	0.14	0.00	5	3	0	0	6	0	0	0	3
115+00.00	11500.00	50.00	11.88	3.91	0.00	0.00	14	6	0	0	20	0	0	0	11
115+50.00	11550.00	50.00	19.48	5.21	0.00	0.00	29	8	0	0	49	0	0	0	32
116+00.00	11600.00	50.00	26.79	6.79	3.22	0.00	43	11	3	0	92	4	0	0	60
116+50.00	11650.00	50.00	39.30	8.23	2.42	0.00	61	14	5	0	153	10	0	0	101
116+57.00	11657.00	7.00	42.76	8.43	1.76	0.00	11	2	1	0	164	12	0	0	108
117+00.00	11700.00	43.00	41.44	9.60	4.56	0.00	67	14	5	0	231	18	0	0	155
117+50.00	11750.00	50.00	39.66	10.96	8.48	0.00	75	19	12	0	306	34	0	0	195
117+75.00	11775.00	25.00	114.26	41.17	10.25	44.52	71	24	9	21	377	24	24	17	252
118+00.00	11800.00	25.00	113.33	42.08	14.02	44.26	105	39	11	41	482	-5	71	50	347
118+25.00	11825.00	25.00	112.58	42.86	18.12	44.01	105	39	15	41	587	-28	118	82	436
118+50.00	11850.00	25.00	115.54	43.52	17.95	44.61	106	40	17	41	693	-48	166	115	522
118+51.89	11851.89	1.89	115.85	43.57	17.73	44.64	8	3	1	3	701	-50	169	118	529
119+00.00	11900.00	48.11	140.25	43.60	32.99	47.54	228	78	45	82	929	-77	263	183	706
119+01.06	11901.06	1.06	140.72	43.59	32.83	47.54	6	2	1	2	935	-78	266	185	711
119+11.34	11911.34	10.28	149.34	43.56	27.72	48.11	55	17	12	18	990	-81	286	199	752
119+50.00	11950.00	38.66	159.35	44.35	22.70	55.13	221	63	36	74	1,211	-111	371	258	940
119+50.93	11950.93	0.93	162.83	44.47	18.59	56.14	6	2	1	2	1,217	-112	374	260	945
119+52.29	11952.29	1.36	168.44	44.65	14.67	56.94	8	2	1	3	1,225	-114	377	262	953
119+66.62	11966.62	14.33	213.88	46.52	0.78	59.05	101	24	4	31	1,326	-141	413	287	1,057
119+70.99	11970.99	4.37	217.70	47.09	1.04	59.61	35	8	0	10	1,361	-151	424	295	1,094
119+95.99	11995.99	25.00	231.65	48.47	34.15	55.93	208	44	16	53	1,569	-185	485	338	1,292
120+00.00	12000.00	4.01	229.03	48.64	36.57	55.71	34	7	5	8	1,603	-187	495	344	1,321
120+02.82	12002.82	2.82	226.52	48.76	38.17	55.61	24	5	4	6	1,627	-188	501	349	1,341
120+20.99	12020.99	18.17	228.18	48.07	47.85	55.11	153	33	29	37	1,780	-189	544	378	1,462
120+22.82	12022.82	1.83	227.89	47.99	47.26	55.00	15	3	3	4	1,795	-189	549	382	1,474
120+47.81	12047.81	24.99	248.17	46.81	46.53	50.48	220	44	43	49	2,015	-184	605	421	1,645
120+50.00	12050.00	2.19	247.91	46.66	46.58	50.29	20	4	4	4	2,035	-183	610	424	1,660
120+72.79	12072.79	22.79	241.75	45.14	50.90	47.20	207	39	41	41	2,242	-173	657	457	1,818
120+83.00	12083.00	10.21	214.00	44.44	46.07	45.53	86	17	18	18	2,328	-168	677	471	1,882
								STRUCTURE EXCAVATION							
121+67.00	12167.00	0.00	183.08	48.23	61.38	52.80	0	0	0	0	2,328	-168	677	471	1,882
121+77.17	12177.17	10.17	211.97	48.63	60.54	54.73	74	18	23	20	2,402	-159	700	487	1,929
122+00.00	12200.00	22.83	230.33	50.12	41.84	56.98	187	42	43	47	2,589	-152	754	525	2,067
122+02.07	12202.07	2.07	232.27	50.29	41.22	57.55	18	4	3	4	2,607	-152	759	528	2,081
122+26.98	12226.98	24.91	234.40	52.14	38.38	61.42	215	47	37	55	2,822	-161	822	572	2,258
122+29.04	12229.04	2.06	234.75	52.29	37.40	61.78	18	4	3	5	2,840	-163	828	576	2,274
122+50.00	12250.00	20.96	242.73	53.66	27.84	65.18	185	41	25	49	3,025	-181	884	615	2,436
122+54.02	12254.02	4.02	244.82	53.95	26.80	65.69	36	8	4	10	3,061	-186	896	623	2,469
122+79.00	12279.00	24.98	257.00	55.68	20.99	68.56	232	51	22	62	3,293	-222	967	673	2,686
122+99.00	12299.00	20.00	261.07	55.84	20.24	66.69	192	41	15	50	3,485	-255	1,025	713	2,870
123+00.00	12300.00	1.00	261.12	55.81	20.31	66.59	10	2	1	2	3,495	-255	1,027	714	2,878
123+15.75	12315.75	15.75	258.60	55.55	34.40	65.09	152	32	16	38	3,647	-274	1,071	745	3,017
123+20.00	12320.00	4.25	218.35	42.14	0.00	37.21	38	8	3	8	3,685	-278	1,080	751	3,051
123+25.00	12325.00	5.00	216.62	42.04	0.00	36.98	40	8	0	7	3,725	-286	1,088	757	3,091
123+30.00	12330.00	5.00	215.31	41.62	0.00	36.74	40	8	0	7	3,765	-293	1,096	762	3,130
123+35.00	12335.00	5.00	213.41	41.20	0.00	36.50	40	8	0	7	3,805	-300	1,104	768	3,169
123+40.00	12340.00	5.00	211.98	40.78	0.00	36.26	39	8	0	7	3,844	-308	1,112	774	3,208

NOTES:	
1 - CUT	CUT INCLUDES SALVAGED/UNUSABLE PAVEMENT MATERIAL
2 - SALVAGED/UNUSABLE PAVEMENT MATERIAL	THIS DOES NOT SHOW UP IN CROSS SECTIONS
3 - FILL	DOES NOT INCLUDE UNUSABLE PAVEMENT EXC VOLUME
5 - EXPANDED EBS	WILL BE BACKFILLED WITH GRANULAR BACKFILL (OR CUT, OR BORROW)
7 - REDUCED EBS IN FILL	REDUCED EBS EXCAVATION THAT CAN BE USED IN FILL
8 - MASS ORDINATE	IF EBS TO BE BACKFILLED WITH GRANULAR: [CUT - SALVAGED PAVT - ((FILL - REDUCED EBS IN FILL) * FILL FACTOR)]

DIVISION 2 - 15500273 - USH63 (CONTINUED FROM PREVIOUS PAGE)

STATION	REAL STATION	DISTANCE	AREA (SF)				INCREMENTAL VOL (CY) (UNADJUSTED)				CUMULATIVE VOL (CY)				
			CUT	SALVAGED/UNUSABLE PAVEMENT MATERIAL	FILL	EBS	CUT	SALVAGED/UNUSABLE PAVEMENT MATERIAL	FILL	EBS	CUT	EXPANDED FILL	EXPANDED EBS BACKFILL	REDUCED EBS IN FILL	MASS ORDINATE
							NOTE 1	NOTE 2	NOTE 3		1.00 NOTE 1	1.30	1.15 NOTE 5	0.80 NOTE 7	NOTE 8
123+45.00	12345.00	5.00	210.34	40.36	0.00	36.02	39	8	0	7	3,883	-315	1,120	779	3,246
123+50.00	12350.00	5.00	208.71	39.94	0.00	35.78	39	7	0	7	3,922	-322	1,128	785	3,285
123+55.00	12355.00	5.00	207.69	39.52	0.00	35.55	39	7	0	7	3,961	-329	1,136	790	3,324
123+60.00	12360.00	5.00	207.32	39.00	0.00	35.31	38	7	0	7	3,999	-337	1,144	796	3,363
123+65.00	12365.00	5.00	207.04	38.48	0.00	35.07	38	7	0	7	4,037	-344	1,152	802	3,401
123+70.00	12370.00	5.00	207.11	37.95	0.00	34.83	38	7	0	6	4,075	-350	1,159	806	3,438
123+75.00	12375.00	5.00	207.04	37.43	0.00	34.59	38	7	0	6	4,113	-356	1,166	811	3,475
123+80.00	12380.00	5.00	207.78	37.46	0.00	34.35	38	7	0	6	4,151	-363	1,173	816	3,513
123+85.00	12385.00	5.00	208.44	37.58	0.00	34.12	39	7	0	6	4,190	-369	1,180	821	3,551
123+90.00	12390.00	5.00	209.10	37.69	0.00	33.88	39	7	0	6	4,229	-375	1,187	826	3,589
123+95.00	12395.00	5.00	209.92	37.79	0.00	33.64	39	7	0	6	4,268	-381	1,194	830	3,627
124+00.00	12400.00	5.00	211.04	37.93	0.00	33.53	39	7	0	6	4,307	-388	1,201	835	3,666
124+05.00	12405.00	5.00	213.21	38.27	0.00	33.62	39	7	0	6	4,346	-394	1,208	840	3,704
124+10.00	12410.00	5.00	215.27	38.61	0.00	33.72	40	7	0	6	4,386	-400	1,214	845	3,743
124+15.00	12415.00	5.00	217.33	38.95	0.00	33.81	40	7	0	6	4,426	-406	1,221	850	3,782
124+20.00	12420.00	5.00	219.32	39.29	0.00	33.91	40	7	0	6	4,466	-413	1,228	854	3,822
124+25.00	12425.00	5.00	221.09	39.63	0.00	34.00	41	7	0	6	4,507	-419	1,235	859	3,862
124+30.00	12430.00	5.00	221.29	39.89	0.00	34.00	41	7	0	6	4,548	-425	1,242	864	3,902
124+35.00	12435.00	5.00	222.06	40.15	0.00	34.00	41	7	0	6	4,589	-431	1,249	869	3,942
124+40.00	12440.00	5.00	222.96	40.45	0.00	34.00	41	7	0	6	4,630	-438	1,256	874	3,983
124+45.00	12445.00	5.00	223.72	40.75	0.00	34.00	41	8	0	6	4,671	-444	1,263	878	4,022
124+46.50	12446.50	1.50	223.96	40.83	0.00	34.00	12	2	0	2	4,683	-446	1,265	880	4,034
124+50.00	12450.00	3.50	225.86	40.94	0.00	34.00	29	5	0	4	4,712	-450	1,270	883	4,062
124+92.76	12492.76	42.76	234.69	42.10	0.00	34.00	365	66	0	54	5,077	-506	1,332	926	4,417
125+00.00	12500.00	7.24	229.06	42.25	0.00	34.00	62	11	0	9	5,139	-516	1,342	934	4,478
125+08.03	12508.03	8.03	188.69	42.65	0.00	34.00	62	13	0	10	5,201	-526	1,354	942	4,537
125+16.73	12516.73	8.70	186.96	47.02	0.00	34.00	61	14	0	11	5,262	-537	1,366	950	4,595
125+50.00	12550.00	33.27	173.63	35.60	0.00	34.00	222	51	0	42	5,484	-581	1,415	984	4,810
126+00.00	12600.00	50.00	92.12	10.12	0.00	0.00	246	42	0	31	5,730	-613	1,450	1,009	5,046
126+06.98	12606.98	6.98	89.71	9.95	0.00	0.00	24	3	0	0	5,754	-613	1,450	1,009	5,067
126+50.00	12650.00	43.02	91.87	9.64	0.00	0.00	145	16	0	0	5,899	-613	1,450	1,009	5,196
127+00.00	12700.00	50.00	65.17	9.47	0.00	0.00	145	18	0	0	6,044	-613	1,450	1,009	5,323
127+50.00	12750.00	50.00	60.79	9.39	0.00	0.00	117	17	0	0	6,161	-613	1,450	1,009	5,423
127+97.33	12797.33	47.33	65.17	9.33	0.00	0.00	110	16	0	0	6,271	-613	1,450	1,009	5,517
128+00.00	12800.00	2.67	65.23	9.32	0.00	0.00	6	1	0	0	6,277	-613	1,450	1,009	5,522
128+50.00	12850.00	50.00	62.26	9.36	0.00	0.00	118	17	0	0	6,395	-613	1,450	1,009	5,623
129+00.00	12900.00	50.00	55.07	9.08	0.00	0.00	109	17	0	0	6,504	-613	1,450	1,009	5,715
129+50.00	12950.00	50.00	45.69	8.74	0.00	0.00	93	17	0	0	6,597	-613	1,450	1,009	5,791
130+00.00	13000.00	50.00	34.20	7.45	0.00	0.00	74	15	0	0	6,671	-613	1,450	1,009	5,850
130+50.00	13050.00	50.00	23.18	5.92	0.00	0.00	53	12	0	0	6,724	-613	1,450	1,009	5,891
131+00.00	13100.00	50.00	12.90	4.28	0.00	0.00	33	9	0	0	6,757	-613	1,450	1,009	5,915
131+39.43	13139.43	39.43	5.05	2.97	0.10	0.00	13	5	0	0	6,770	-613	1,450	1,009	5,923
131+50.00	13150.00	10.57	3.38	2.58	0.70	0.00	2	1	0	0	6,772	-613	1,450	1,009	5,924
131+57.57	13157.57	7.57	2.65	2.30	1.47	0.00	1	1	0	0	6,773	-613	1,450	1,009	5,924
132+20.21	13220.21	62.64	2.41	0.34	1.50	0.00	6	3	3	0	6,779	-609	1,450	1,009	5,923

NOTES:	
1 - CUT	CUT INCLUDES SALVAGED/UNUSABLE PAVEMENT MATERIAL
2 - SALVAGED/UNUSABLE PAVEMENT MATERIAL	THIS DOES NOT SHOW UP IN CROSS SECTIONS
3 - FILL	DOES NOT INCLUDE UNUSABLE PAVEMENT EXC VOLUME
5 - EXPANDED EBS	WILL BE BACKFILLED WITH GRANULAR BACKFILL (OR CUT, OR BORROW)
7 - REDUCED EBS IN FILL	REDUCED EBS EXCAVATION THAT CAN BE USED IN FILL
8 - MASS ORDINATE	IF EBS TO BE BACKFILLED WITH GRANULAR: [CUT - SALVAGED PAVT - ((FILL - REDUCED EBS IN FILL) * FILL FACTOR)]

DIVISION 2 - 15500273 - STA 119+11 DWY

STATION	REAL STATION	DISTANCE	AREA (SF)			INCREMENTAL VOL (CY) (UNADJUSTED)			CUMULATIVE VOL (CY)		
			CUT	SALVAGED/UNUSABLE PAVEMENT MATERIAL	FILL	CUT	SALVAGED/UNUSABLE PAVEMENT MATERIAL	FILL	CUT	EXPANDED FILL	MASS ORDINATE
						NOTE 1	NOTE 2	NOTE 3	1.00 NOTE 1	1.30	NOTE 8
1+00.00	100.00	0.00	0.65	0.00	3.04	0	0	0	0	0	0
1+25.00	125.00	25.00	12.94	0.00	1.59	6	0	2	6	3	3
1+50.00	150.00	25.00	17.99	0.00	4.41	14	0	3	20	7	14
1+75.00	175.00	25.00	11.19	0.00	5.15	14	0	4	34	12	22
2+00.00	200.00	25.00	12.04	0.00	6.50	11	0	5	45	18	27
2+12.00	212.00	12.00	7.73	0.00	9.32	4	0	4	49	23	26

NOTES:	
1 - CUT	CUT INCLUDES SALVAGED/UNUSABLE PAVEMENT MATERIAL
2 - SALVAGED/UNUSABLE PAVEMENT MATERIAL	THIS DOES NOT SHOW UP IN CROSS SECTIONS
3 - FILL	DOES NOT INCLUDE UNUSABLE PAVEMENT EXC VOLUME
5 - EXPANDED EBS	WILL BE BACKFILLED WITH GRANULAR BACKFILL (OR CUT, OR BORROW)
7 - REDUCED EBS IN FILL	REDUCED EBS EXCAVATION THAT CAN BE USED IN FILL
8 - MASS ORDINATE	IF EBS TO BE BACKFILLED WITH GRANULAR: [CUT - SALVAGED PAVT - ((FILL - REDUCED EBS IN FILL) * FILL FACTOR)]

DIVISION 3 - 15500277 - USH63

STATION	REAL STATION	DISTANCE	AREA (SF)				INCREMENTAL VOL (CY) (UNADJUSTED)				CUMULATIVE VOL (CY)				
			CUT	SALVAGED/UNUSABLE PAVEMENT MATERIAL	FILL	EBS	CUT	SALVAGED/UNUSABLE PAVEMENT MATERIAL	FILL	EBS	CUT	EXPANDED FILL	EXPANDED EBS BACKFILL	REDUCED EBS IN FILL	MASS ORDINATE
							NOTE 1	NOTE 2	NOTE 3		1.00 NOTE 1	1.30	1.15 NOTE 5	0.80 NOTE 7	NOTE 8
123+15.75	12315.75	0.00	38.19	13.46	34.41	22.00	0	0	0	0	0	0	0	0	0
123+20.00	12320.00	4.25	40.71	13.78	38.16	21.48	6	2	6	3	6	5	3	2	-1
123+25.00	12325.00	5.00	38.72	14.35	37.84	20.98	7	3	7	4	13	10	8	6	-2
123+30.00	12330.00	5.00	39.14	15.47	48.29	20.65	7	3	8	4	20	16	13	9	-4
123+35.00	12335.00	5.00	40.05	16.76	53.13	20.42	7	3	9	4	27	23	17	12	-7
123+40.00	12340.00	5.00	42.88	18.34	35.30	20.29	8	3	8	4	35	30	22	15	-9
123+45.00	12345.00	5.00	46.03	20.55	23.06	20.24	8	4	5	4	43	32	26	18	-7
123+50.00	12350.00	5.00	52.24	23.51	10.20	20.25	9	4	3	4	52	32	31	22	-2
123+55.00	12355.00	5.00	60.10	27.46	0.44	20.29	10	5	1	4	62	29	36	25	6
123+60.00	12360.00	5.00	53.12	33.10	0.00	20.38	10	6	0	4	72	25	40	28	14
123+65.00	12365.00	5.00	51.20	29.60	0.00	20.45	10	6	0	4	82	21	45	31	22
123+70.00	12370.00	5.00	46.84	25.66	0.00	20.51	9	5	0	4	91	16	49	34	31
123+75.00	12375.00	5.00	41.14	21.73	0.00	20.51	8	4	0	4	99	12	54	38	39
123+80.00	12380.00	5.00	34.62	17.80	0.00	20.06	7	4	0	4	106	8	59	41	46
123+85.00	12385.00	5.00	27.06	13.87	0.00	16.32	6	3	0	3	112	5	62	43	52
123+90.00	12390.00	5.00	19.81	10.08	0.00	12.09	4	2	0	3	116	2	66	46	57
123+95.00	12395.00	5.00	28.67	14.94	0.00	17.42	4	2	0	3	120	-1	69	48	62
124+00.00	12400.00	5.00	36.99	19.80	0.00	20.50	6	3	0	4	126	-5	74	51	69
124+05.00	12405.00	5.00	43.89	24.67	0.00	20.49	7	4	0	4	133	-10	78	54	77
124+10.00	12410.00	5.00	49.66	29.53	0.00	20.48	9	5	0	4	142	-14	83	58	85
124+15.00	12415.00	5.00	60.04	25.61	0.00	20.43	10	5	0	4	152	-18	87	61	94
124+20.00	12420.00	5.00	55.37	20.56	6.42	20.38	11	4	1	4	163	-21	92	64	104
124+25.00	12425.00	5.00	47.19	17.20	15.90	20.37	9	3	2	4	172	-22	97	67	111
124+30.00	12430.00	5.00	47.73	14.93	27.91	20.50	9	3	4	4	181	-21	101	70	116
124+35.00	12435.00	5.00	44.08	13.03	38.83	20.77	9	3	6	4	190	-18	106	74	119
124+40.00	12440.00	5.00	38.28	11.95	47.48	21.21	8	2	8	4	198	-11	110	77	118
124+45.00	12445.00	5.00	35.79	11.58	52.55	21.72	7	2	9	4	205	-4	115	80	116
124+46.50	12446.50	1.50	35.76	11.55	44.20	21.97	2	1	3	1	207	-1	116	81	114
124+50.00	12450.00	3.50	33.84	11.33	49.13	22.47	5	1	6	3	212	4	120	83	113
124+92.76	12492.76	42.76	22.97	7.10	49.95	18.21	45	15	78	32	257	72	156	109	75
125+00.00	12500.00	7.24	22.18	6.39	49.19	18.10	6	2	13	5	263	83	162	113	68
125+08.03	12508.03	8.03	24.19	5.60	42.00	17.98	7	2	14	5	270	96	168	117	60
125+16.73	12516.73	8.70	36.01	4.75	9.42	21.25	10	2	8	6	280	101	175	122	63
125+50.00	12550.00	33.27	19.18	4.97	48.46	15.21	34	6	36	22	314	125	200	139	67
126+00.00	12600.00	50.00	17.81	4.75	39.54	14.36	34	9	81	27	348	202	231	161	15
126+06.98	12606.98	6.98	22.13	4.69	32.35	17.95	5	1	9	4	353	209	236	164	12
126+50.00	12650.00	43.02	19.96	4.35	35.88	13.39	34	7	54	25	387	254	265	184	-6
127+00.00	12700.00	50.00	18.05	4.07	40.69	13.06	35	8	71	24	422	321	292	203	-46
127+50.00	12750.00	50.00	16.00	3.85	41.74	13.04	32	7	76	24	454	395	320	222	-95
127+97.33	12797.33	47.33	65.18	42.96	0.00	22.00	71	41	37	31	525	411	355	247	-81
128+00.00	12800.00	2.67	63.38	42.96	0.00	22.00	6	4	0	2	531	408	358	249	-76
128+50.00	12850.00	50.00	16.10	3.99	27.41	15.61	74	43	25	35	605	405	398	277	-42
129+00.00	12900.00	50.00	19.86	4.39	18.71	16.48	33	8	43	30	638	429	432	301	-41
129+50.00	12950.00	50.00	20.16	4.74	12.71	17.25	37	8	29	31	675	435	468	326	-18
130+00.00	13000.00	50.00	48.90	5.47	1.61	20.59	64	9	13	35	739	415	508	354	57
130+50.00	13050.00	50.00	34.14	7.25	0.08	21.93	77	12	2	39	816	377	553	385	160
131+00.00	13100.00	50.00	35.30	10.53	0.03	22.00	64	16	0	41	880	335	600	418	250
131+39.43	13139.43	39.43	37.49	13.12	0.32	22.00	53	17	0	32	933	301	637	443	320
131+50.00	13150.00	10.57	38.60	13.73	0.23	22.77	15	5	0	9	948	292	647	450	339
131+57.57	13157.57	7.57	39.40	14.17	0.11	23.33	11	4	0	6	959	286	654	455	352

NOTES:	
1 - CUT	CUT INCLUDES SALVAGED/UNUSABLE PAVEMENT MATERIAL
2 - SALVAGED/UNUSABLE PAVEMENT MATERIAL	THIS DOES NOT SHOW UP IN CROSS SECTIONS
3 - FILL	DOES NOT INCLUDE UNUSABLE PAVEMENT EXC VOLUME
5 - EXPANDED EBS	WILL BE BACKFILLED WITH GRANULAR BACKFILL (OR CUT, OR BORROW)
7 - REDUCED EBS IN FILL	REDUCED EBS EXCAVATION THAT CAN BE USED IN FILL
8 - MASS ORDINATE	IF EBS TO BE BACKFILLED WITH GRANULAR: [CUT - SALVAGED PAVT - ((FILL - REDUCED EBS IN FILL) * FILL FACTOR)]

DIVISION 3 - 15500277 - SPRUCE ST

STATION	REAL STATION	DISTANCE	AREA (SF)				INCREMENTAL VOL (CY) (UNADJUSTED)				CUMULATIVE VOL (CY)				
			CUT	SALVAGED/UNUSABLE PAVEMENT MATERIAL	FILL	EBS	CUT NOTE 1	SALVAGED/UNUSABLE PAVEMENT MATERIAL NOTE 2	FILL NOTE 3	EBS	CUT 1.00 NOTE 1	EXPANDED FILL 1.30	EXPANDED EBS BACKFILL 1.15 NOTE 5	REDUCED EBS IN FILL 0.80 NOTE 7	MASS ORDINATE NOTE 8
5+23.34	523.34	0.00	0.03	0.02	0.00	0.02	0	0	0	0	0	0	0	0	0
5+25.00	525.00	1.66	5.22	2.68	0.00	3.10	0	0	0	0	0	0	0	0	0
5+30.00	530.00	5.00	21.12	10.72	0.00	11.06	2	1	0	1	2	-1	1	1	2
5+35.00	535.00	5.00	36.19	18.76	0.00	0.00	5	3	0	1	7	-2	2	2	5
5+40.00	540.00	5.00	49.41	26.80	0.00	0.00	8	4	0	0	15	-2	2	2	9
5+45.00	545.00	5.00	61.75	34.84	0.00	0.00	10	6	0	0	25	-2	2	2	13
5+50.00	550.00	5.00	74.24	42.39	0.00	0.00	13	7	0	0	38	-2	2	2	19
5+55.00	555.00	5.00	90.48	39.05	0.14	0.00	15	8	0	0	53	-2	2	2	26
5+60.00	560.00	5.00	81.92	36.03	2.84	0.00	16	7	0	0	69	-2	2	2	35
5+65.00	565.00	5.00	75.38	34.19	1.21	0.00	15	7	0	0	84	-2	2	2	43
5+70.00	570.00	5.00	75.92	33.23	1.70	0.00	14	6	0	0	98	-2	2	2	51
5+75.00	575.00	5.00	70.98	34.19	2.02	0.00	14	6	0	0	112	-2	2	2	59
5+80.00	580.00	5.00	72.84	35.84	1.23	0.00	13	6	0	0	125	-2	2	2	66
5+85.00	585.00	5.00	71.62	38.01	1.04	0.00	13	7	0	0	138	-2	2	2	72
5+90.00	590.00	5.00	72.16	38.05	0.73	0.00	13	7	0	0	151	-2	2	2	78
5+91.08	591.08	1.08	72.35	38.06	0.68	0.00	3	2	0	0	154	-2	2	2	79
6+00.00	600.00	8.92	75.05	38.14	0.28	0.00	24	13	0	0	178	-2	2	2	90

NOTES:	
1 - CUT	CUT INCLUDES SALVAGED/UNUSABLE PAVEMENT MATERIAL
2 - SALVAGED/UNUSABLE PAVEMENT MATERIAL	THIS DOES NOT SHOW UP IN CROSS SECTIONS
3 - FILL	DOES NOT INCLUDE UNUSABLE PAVEMENT EXC VOLUME
5 - EXPANDED EBS	WILL BE BACKFILLED WITH GRANULAR BACKFILL (OR CUT, OR BORROW)
7 - REDUCED EBS IN FILL	REDUCED EBS EXCAVATION THAT CAN BE USED IN FILL
8 - MASS ORDINATE	IF EBS TO BE BACKFILLED WITH GRANULAR: [CUT - SALVAGED PAVT - ((FILL - REDUCED EBS IN FILL) * FILL FACTOR)]

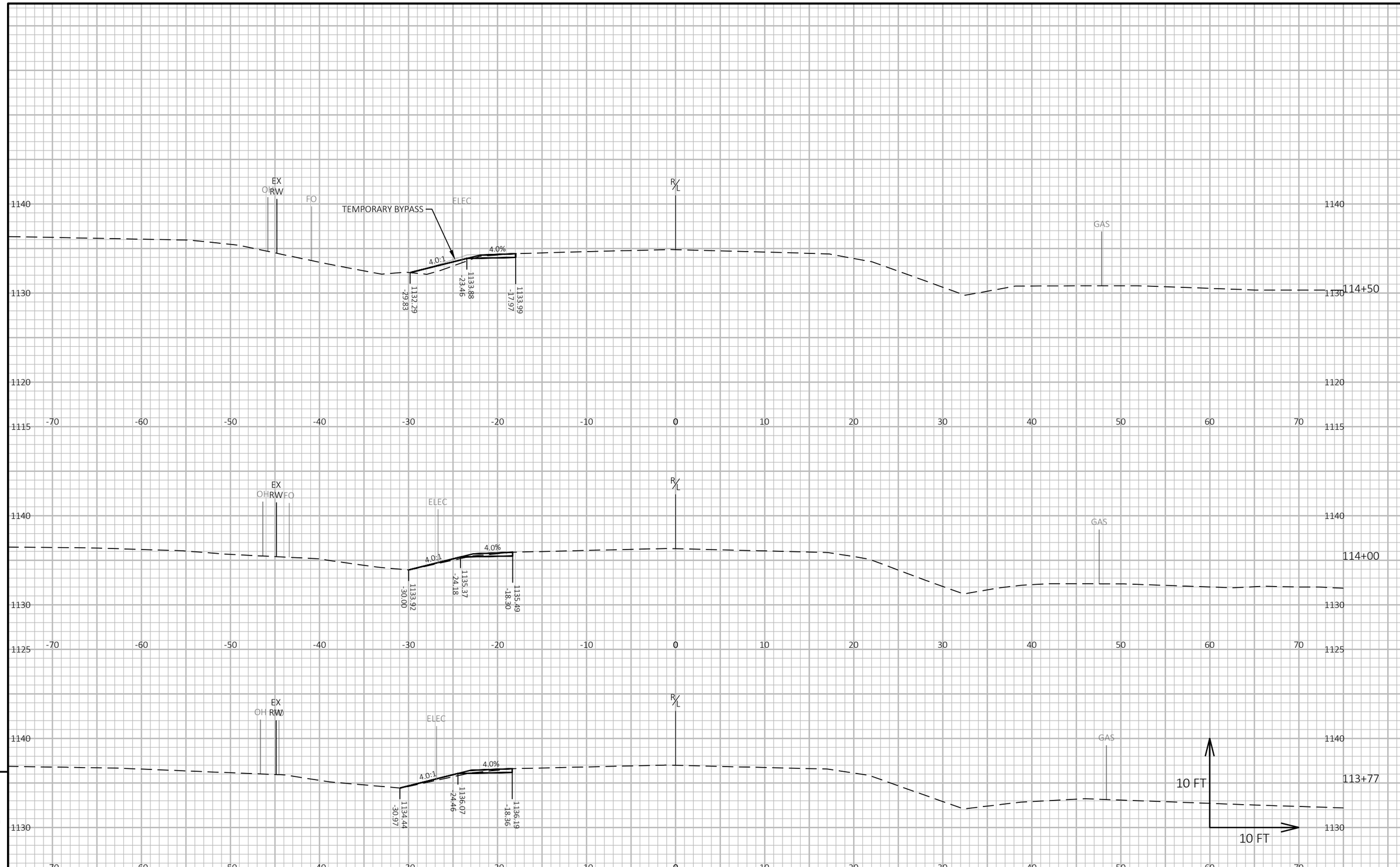

9

9

PROJECT NO: 1550-02-73, 1550-02-77	HWY: USH 63	COUNTY: ST. CROIX	CROSS SECTIONS: USH 63	SHEET 167	E

FILE NAME : N:\PDS\C3D\15500203\SHEETSPLAN\090201-XS.DWG
LAYOUT NAME - 090201
PLOT DATE : 4/17/2024 7:53 PM
PLOT BY : MATT PAYNE
PLOT NAME :
PLOT SCALE : 1 IN:10 FT HORZ. / 1 IN:10 FT VERT.
WISDOT/CADDS SHEET 49

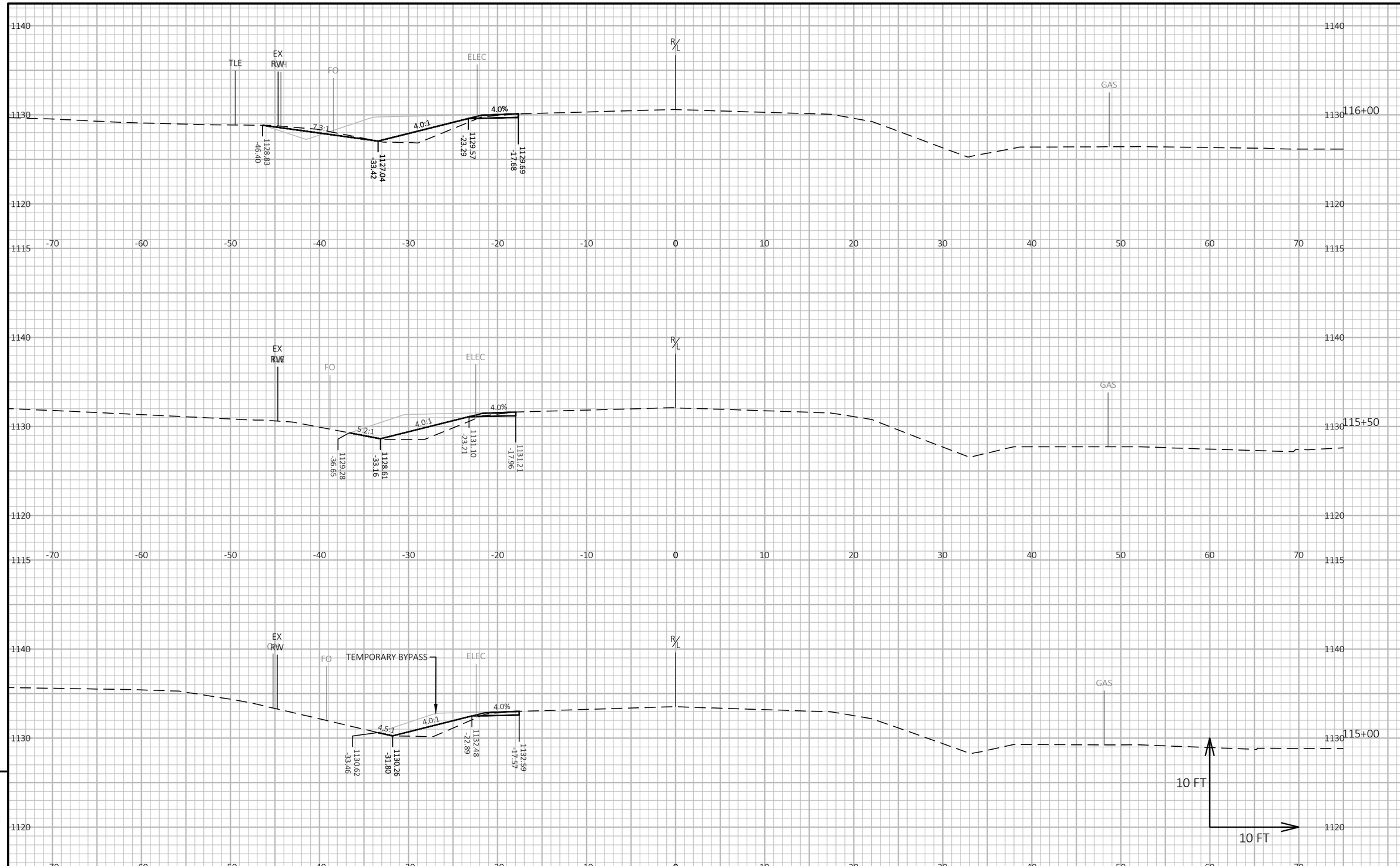

9

9

PROJECT NO: 1550-02-73, 1550-02-77	HWY: USH 63	COUNTY: ST. CROIX	CROSS SECTIONS: USH 63	SHEET 168	E

FILE NAME : N:\PDS\C3D\15500203\SHEETSPLAN\090201-XS.DWG
LAYOUT NAME - 090202

PLOT DATE : 4/17/2024 7:53 PM PLOT BY : MATT PAYNE PLOT NAME : PLOT SCALE : 1 IN:10 FT HORZ. / 1 IN:10 FT VERT.

WISDOT/CADDS SHEET 49

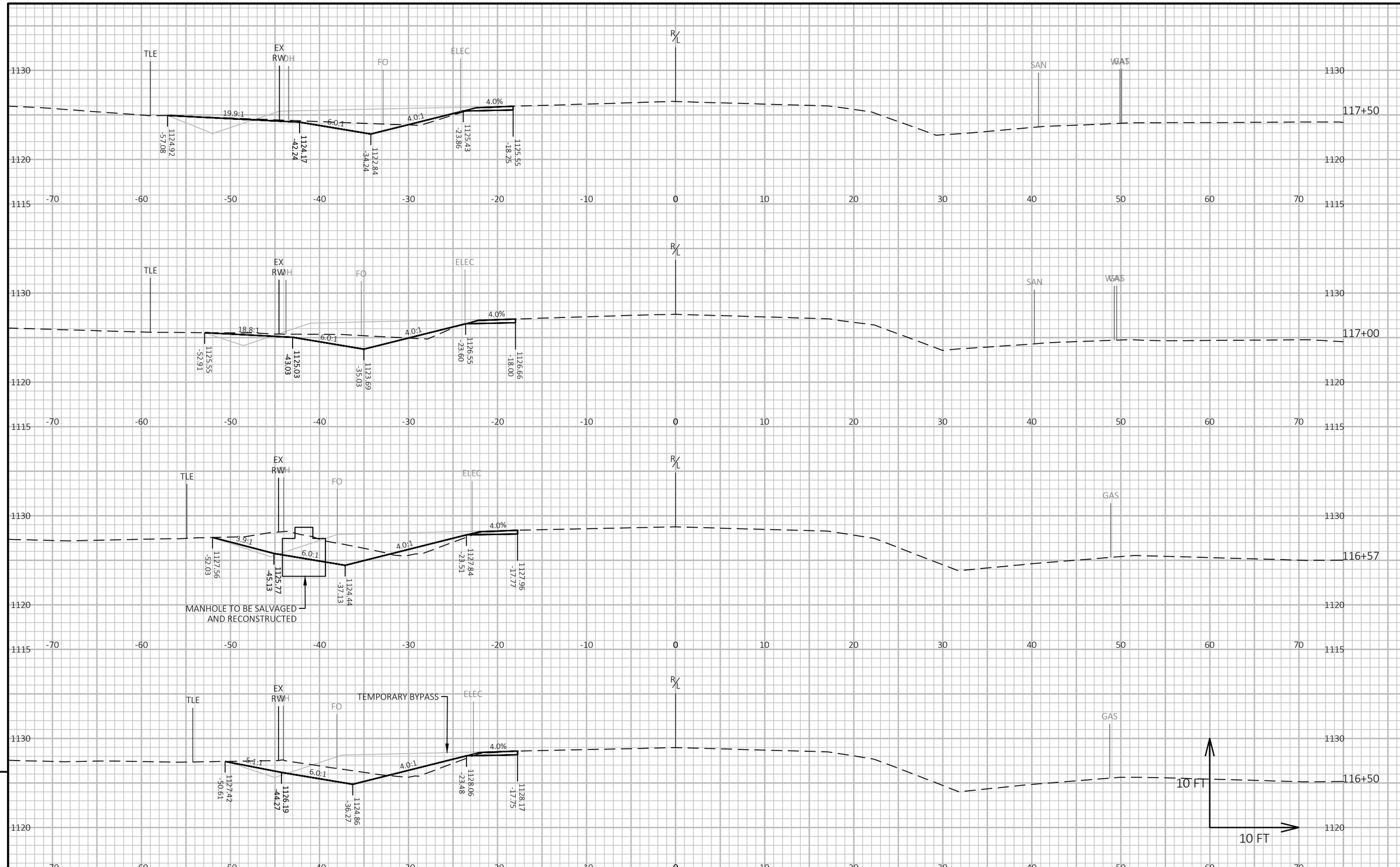

9

9

PROJECT NO: 1550-02-73, 1550-02-77	HWY: USH 63	COUNTY: ST. CROIX	CROSS SECTIONS: USH 63	SHEET 169	E

FILE NAME : N:\PDS\C3D\15500203\SHEETSPLAN\090201-XS.DWG
LAYOUT NAME - 090203
PLOT DATE : 4/17/2024 7:53 PM
PLOT BY : MATT PAYNE
PLOT NAME :
PLOT SCALE : 1 IN:10 FT HORZ. / 1 IN:10 FT VERT.
WISDOT/CADDS SHEET 49

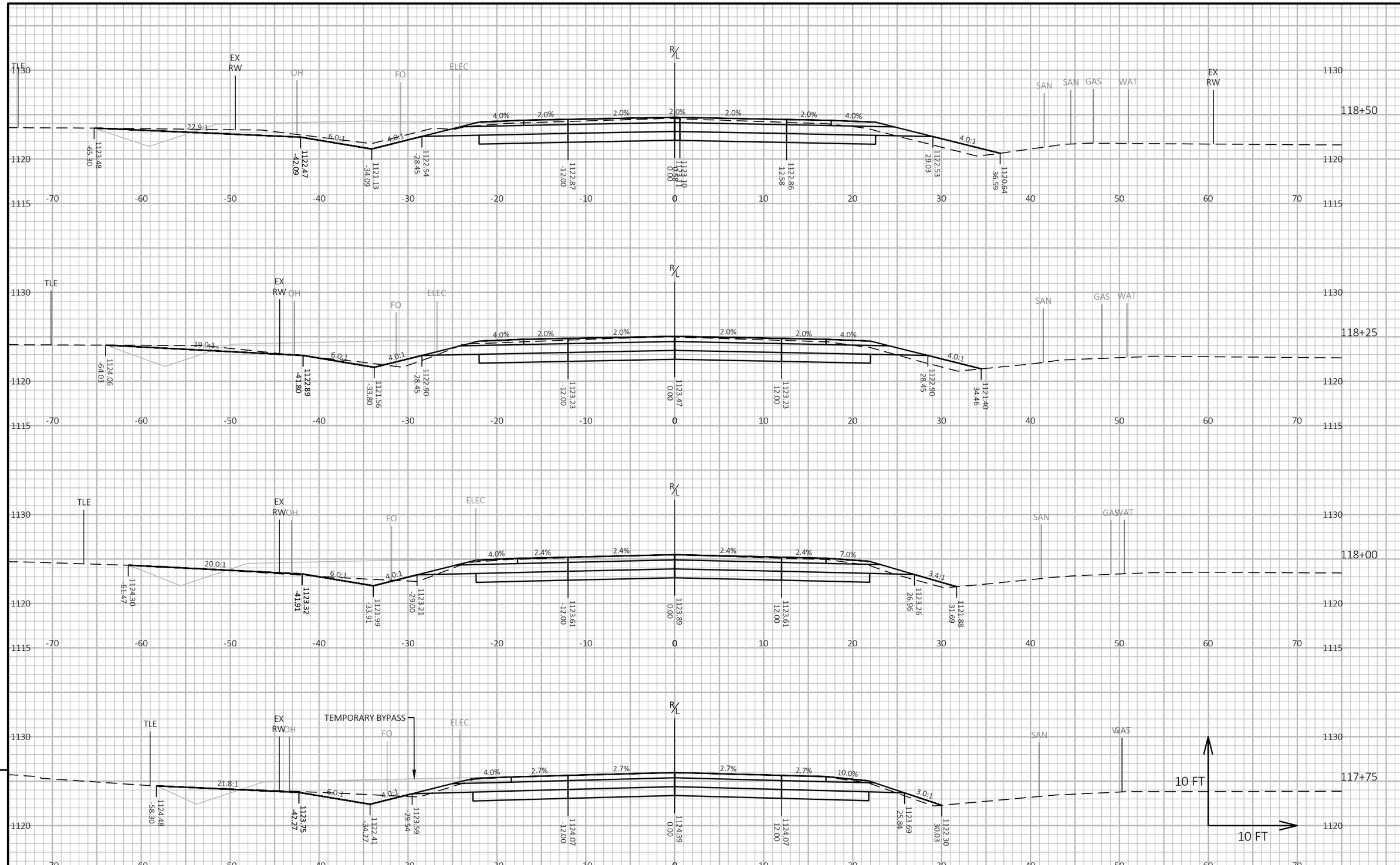

PROJECT NO: 1550-02-73, 1550-02-77	HWY: USH 63	COUNTY: ST. CROIX	CROSS SECTIONS: USH 63	SHEET 170	E

FILE NAME : N:\PDS\C3D\15500203\SHEETSPLAN\090201-XS.DWG
LAYOUT NAME - 090204
PLOT DATE : 4/17/2024 7:53 PM
PLOT BY : MATT PAYNE
PLOT NAME :
PLOT SCALE : 1 IN:10 FT HORZ. / 1 IN:10 FT VERT.

WISDOT/CADDS SHEET 49

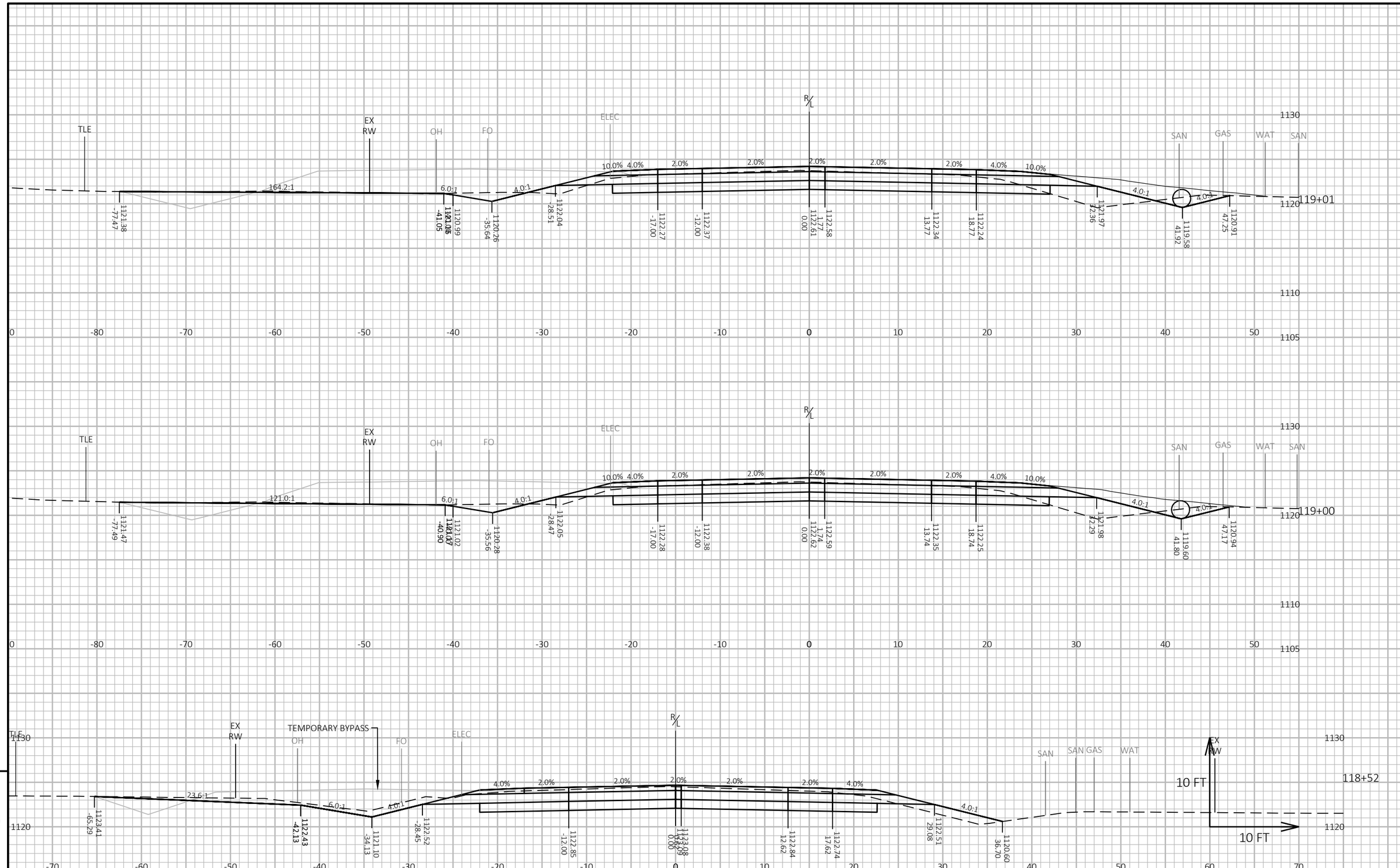

PROJECT NO: 1550-02-73, 1550-02-77	HWY: USH 63	COUNTY: ST. CROIX	CROSS SECTIONS: USH 63	SHEET 171	E

FILE NAME : N:\PDS\C3D\15500203\SHEETSPLAN\090201-XS.DWG
LAYOUT NAME - 090205
PLOT DATE : 4/17/2024 7:53 PM
PLOT BY : MATT PAYNE
PLOT NAME :
PLOT SCALE : 1 IN:10 FT HORZ. / 1 IN:10 FT VERT.
WISDOT/CADDS SHEET 49

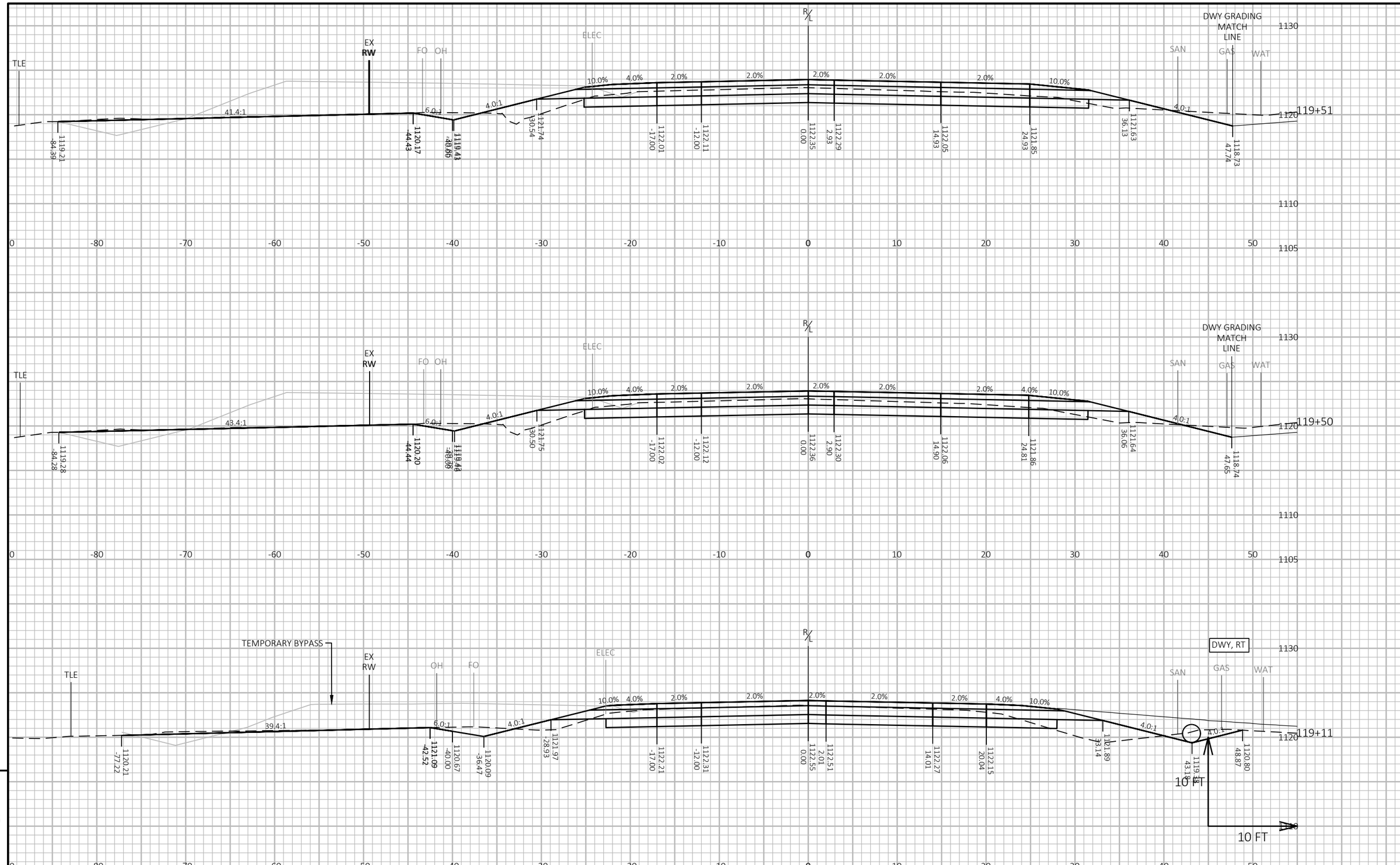

PROJECT NO: 1550-02-73, 1550-02-77	HWY: USH 63	COUNTY: ST. CROIX	CROSS SECTIONS: USH 63	SHEET 172	E

FILE NAME : N:\PDS\C3D\15500203\SHEETSPLAN\090201-XS.DWG
LAYOUT NAME - 090206
PLOT DATE : 4/17/2024 7:54 PM
PLOT BY : MATT PAYNE
PLOT NAME :
PLOT SCALE : 1 IN:10 FT HORZ. / 1 IN:10 FT VERT.
WISDOT/CADDS SHEET 49

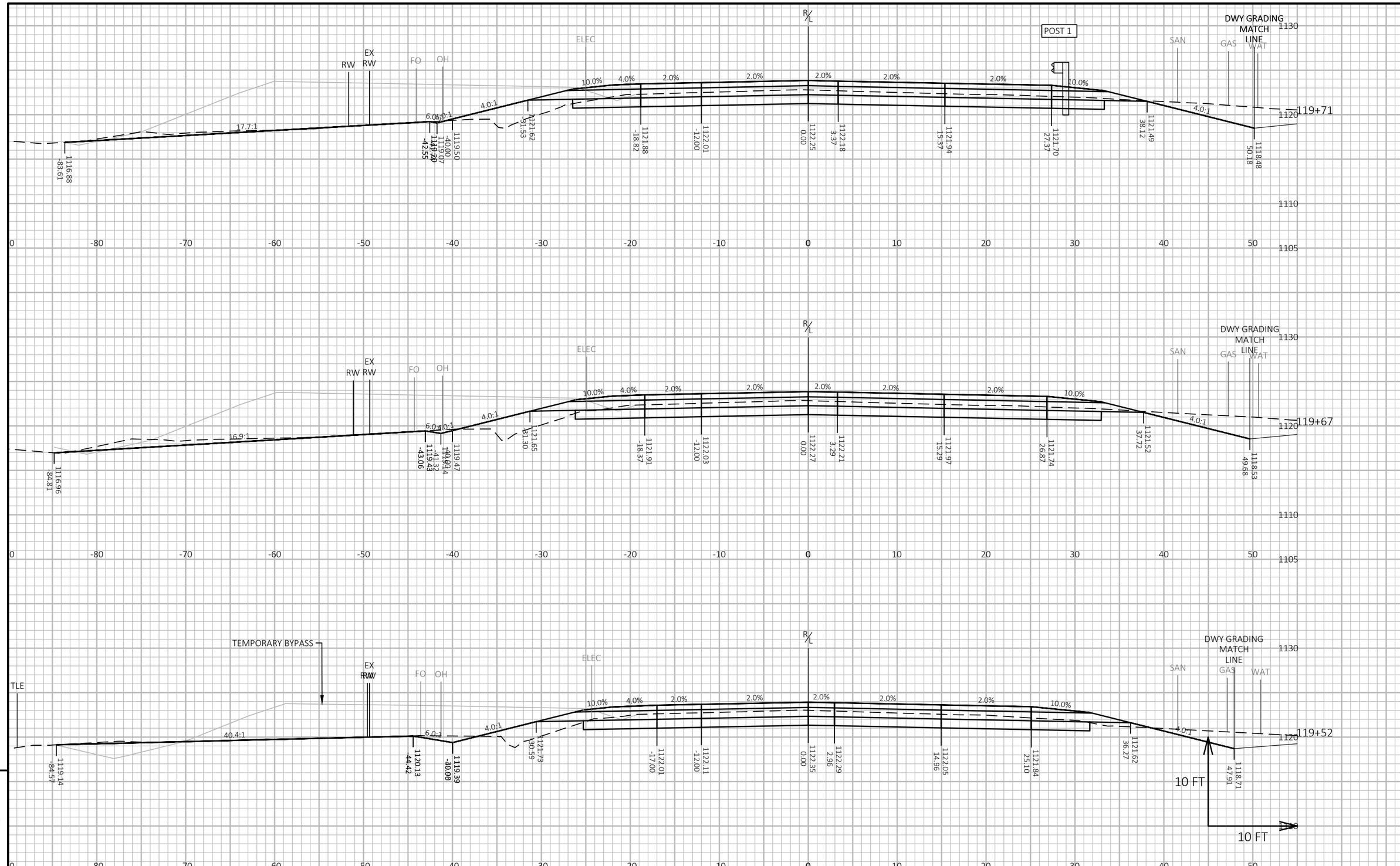

9

9

PROJECT NO: 1550-02-73, 1550-02-77	HWY: USH 63	COUNTY: ST. CROIX	CROSS SECTIONS: USH 63	SHEET 173	E

FILE NAME : N:\PDS\C3D\15500203\SHEETSPLAN\090201-XS.DWG
LAYOUT NAME - 090207

PLOT DATE : 4/17/2024 7:54 PM PLOT BY : MATT PAYNE PLOT NAME : **PLOT SCALE :** 1 IN:10 FT HORZ. / 1 IN:10 FT VERT.

WISDOT/CADDS SHEET 49

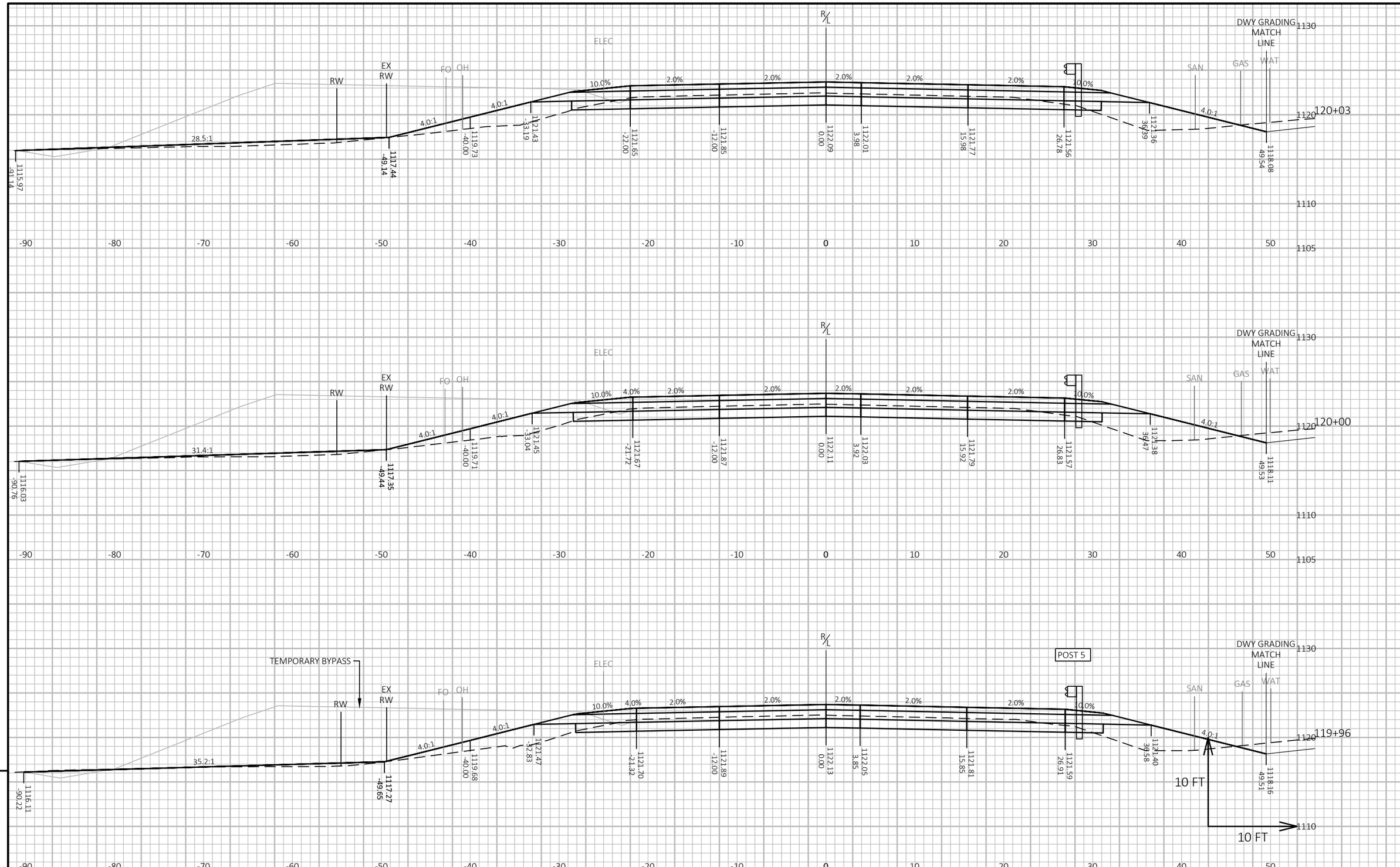

9

9

PROJECT NO: 1550-02-73, 1550-02-77	HWY: USH 63	COUNTY: ST. CROIX	CROSS SECTIONS: USH 63	SHEET 174	E

FILE NAME : N:\PDS\C3D\15500203\SHEETSPLAN\090201-XS.DWG
LAYOUT NAME - 090208
PLOT DATE : 4/17/2024 7:54 PM
PLOT BY : MATT PAYNE
PLOT NAME :
PLOT SCALE : 1 IN:10 FT HORZ. / 1 IN:10 FT VERT.
WISDOT/CADDS SHEET 49

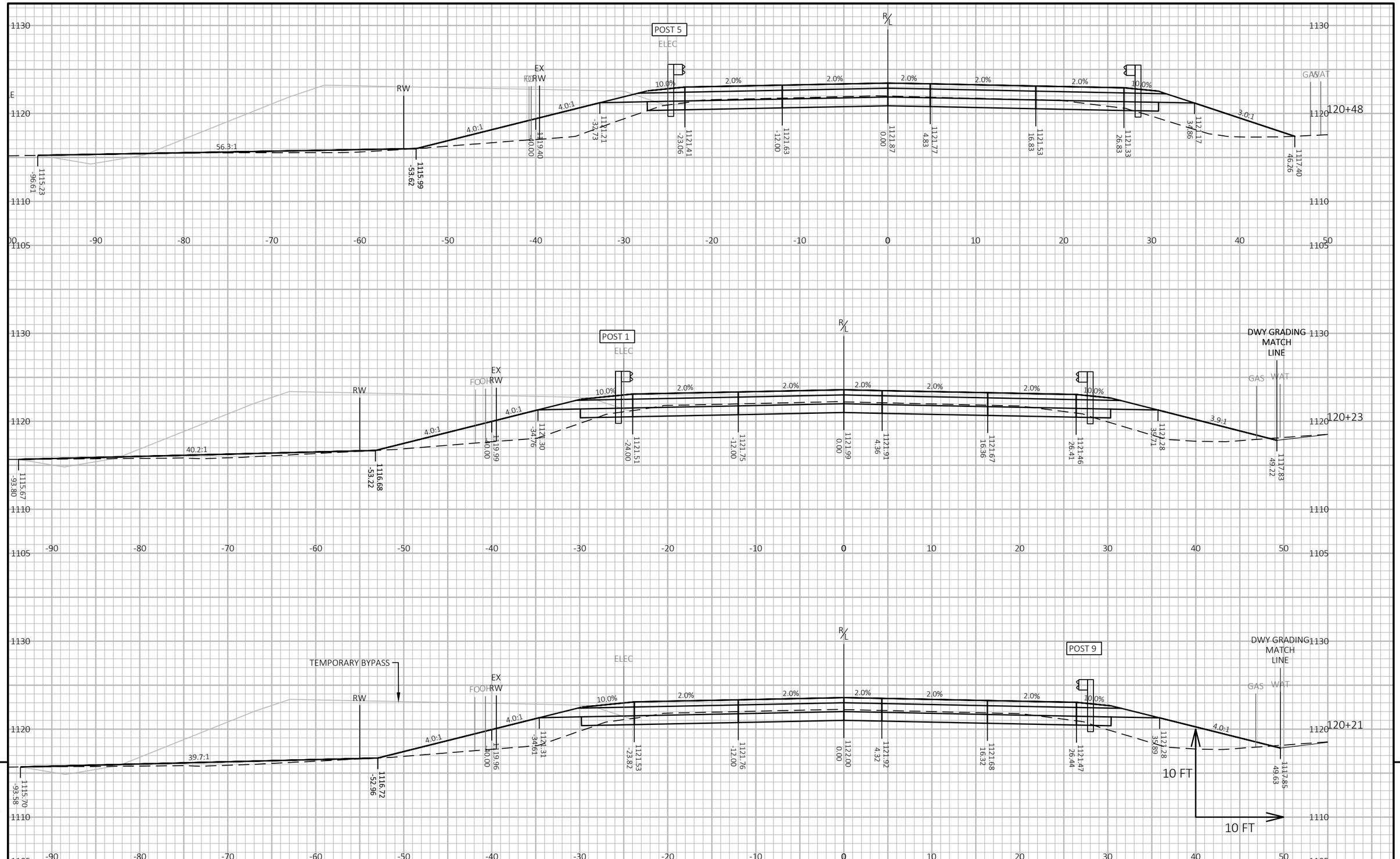

9

9

PROJECT NO: 1550-02-73, 1550-02-77	HWY: USH 63	COUNTY: ST. CROIX	CROSS SECTIONS: USH 63	SHEET 175	E

FILE NAME : N:\PDS\C3D\15500203\SHEETSPLAN\090201-XS.DWG
LAYOUT NAME - 090209
PLOT DATE : 4/17/2024 7:54 PM
PLOT BY : MATT PAYNE
PLOT NAME :
PLOT SCALE : 1 IN:10 FT HORZ. / 1 IN:10 FT VERT.
WISDOT/CADDS SHEET 49

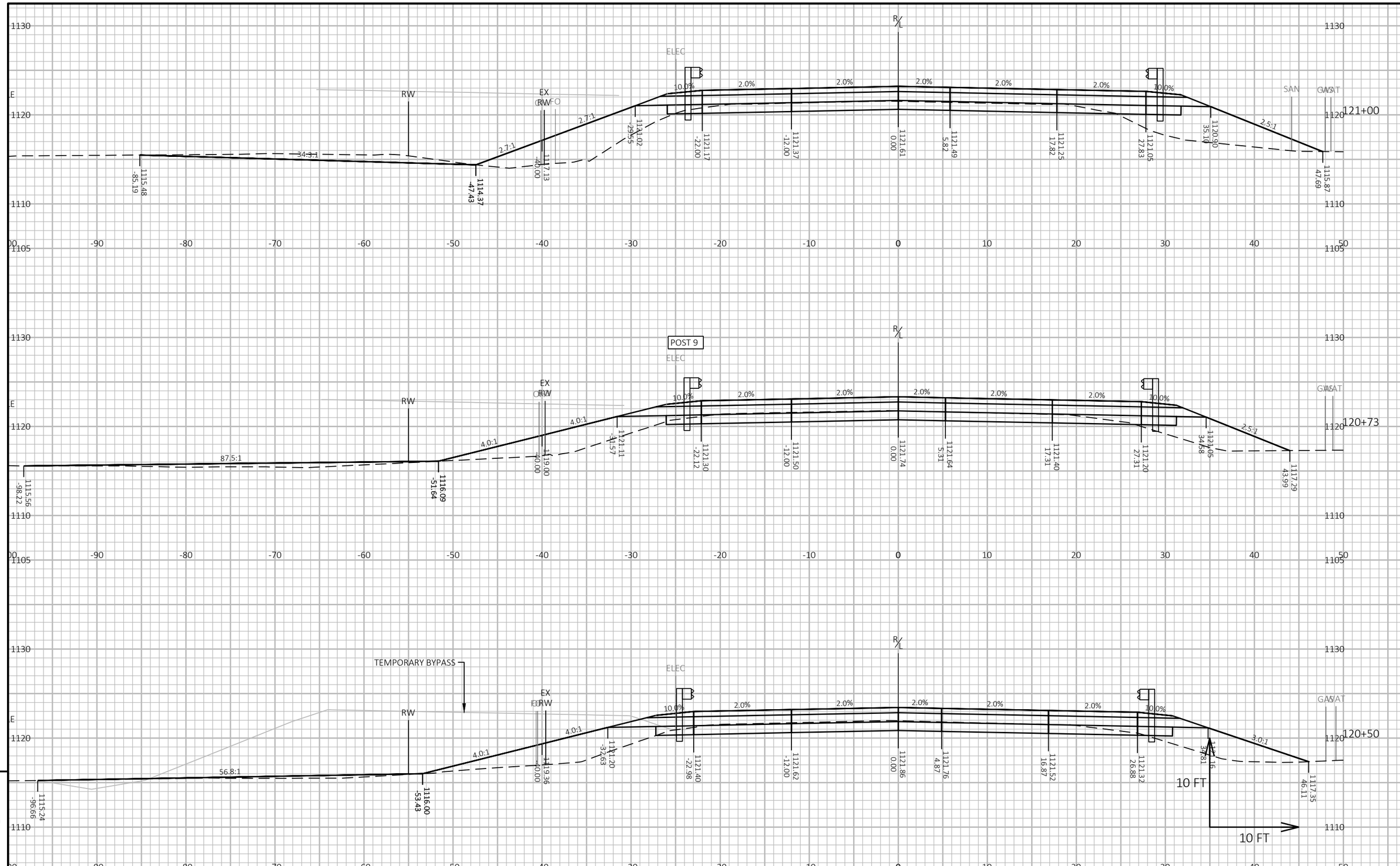

9

9

PROJECT NO: 1550-02-73, 1550-02-77	HWY: USH 63	COUNTY: ST. CROIX	CROSS SECTIONS: USH 63	SHEET 176	E

FILE NAME : N:\PDS\C3D\15500203\SHEETSPLAN\090201-XS.DWG
LAYOUT NAME - 090210

PLOT DATE : 4/17/2024 7:54 PM PLOT BY : MATT PAYNE PLOT NAME : **PLOT SCALE :** 1 IN:10 FT HORZ. / 1 IN:10 FT VERT.

WISDOT/CADDS SHEET 49

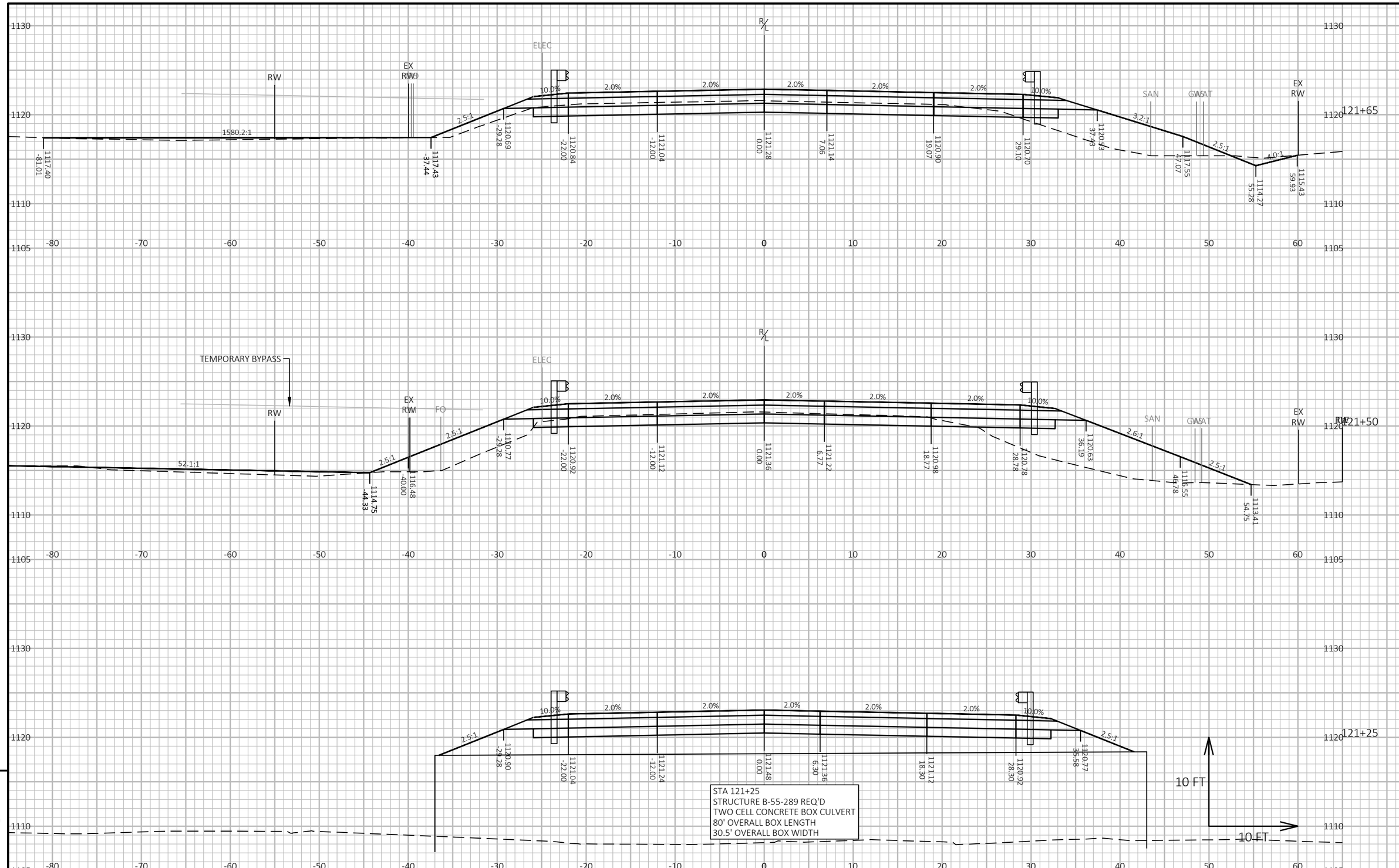

PROJECT NO: 1550-02-73, 1550-02-77	HWY: USH 63	COUNTY: ST. CROIX	CROSS SECTIONS: USH 63	SHEET 177	E

FILE NAME : N:\PDS\C3D\15500203\SHEETSPLAN\090201-XS.DWG
LAYOUT NAME - 090211
PLOT DATE : 4/17/2024 7:54 PM
PLOT BY : MATT PAYNE
PLOT NAME :
PLOT SCALE : 1 IN:10 FT HORZ. / 1 IN:10 FT VERT.
WISDOT/CADDS SHEET 49

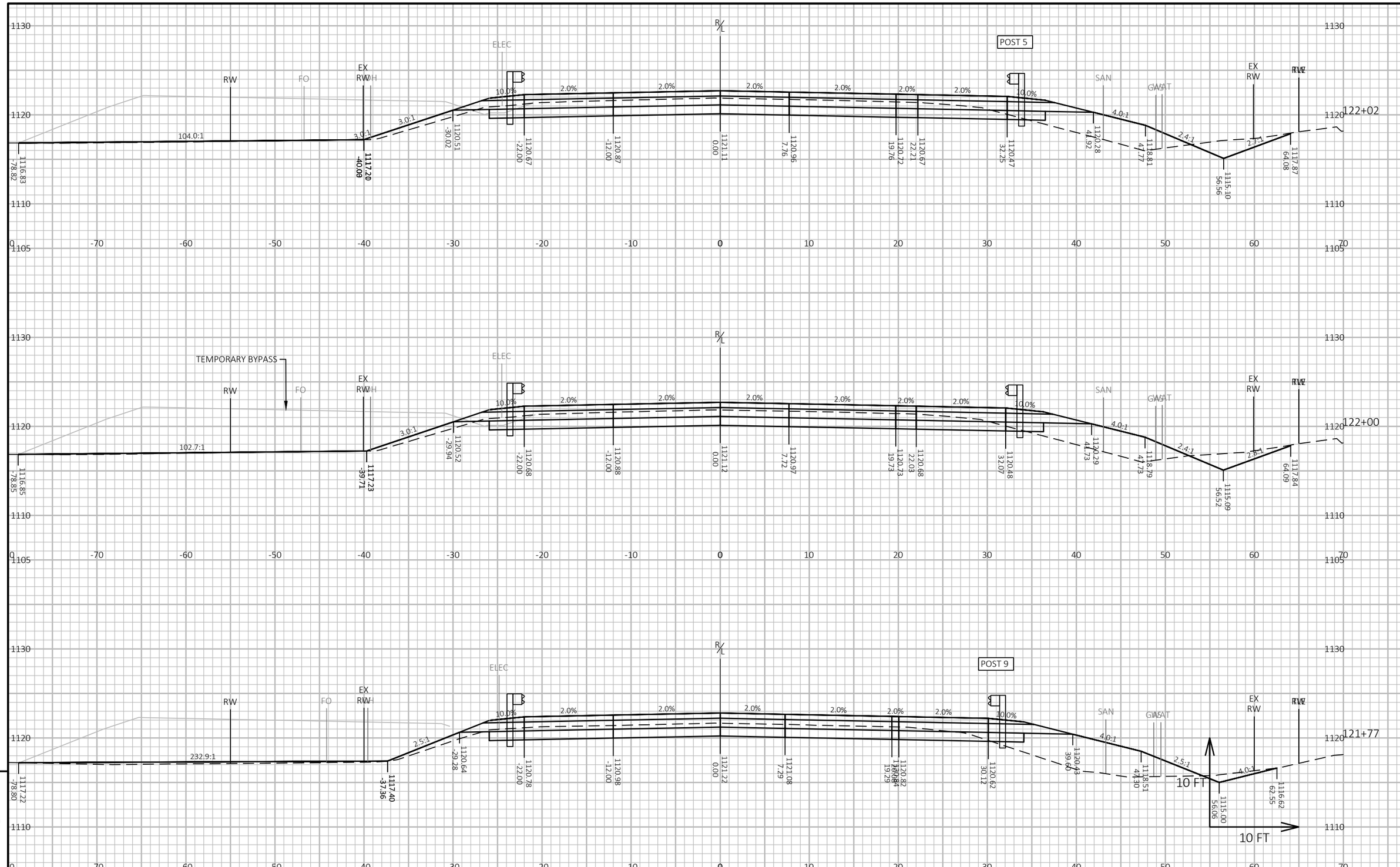

9

9

PROJECT NO: 1550-02-73, 1550-02-77	HWY: USH 63	COUNTY: ST. CROIX	CROSS SECTIONS: USH 63	SHEET 178	E

FILE NAME : N:\PDS\C3D\15500203\SHEETSPLAN\090201-XS.DWG
LAYOUT NAME - 090212
PLOT DATE : 4/17/2024 7:54 PM
PLOT BY : MATT PAYNE
PLOT NAME :
PLOT SCALE : 1 IN:10 FT HORZ. / 1 IN:10 FT VERT.
WISDOT/CADDS SHEET 49

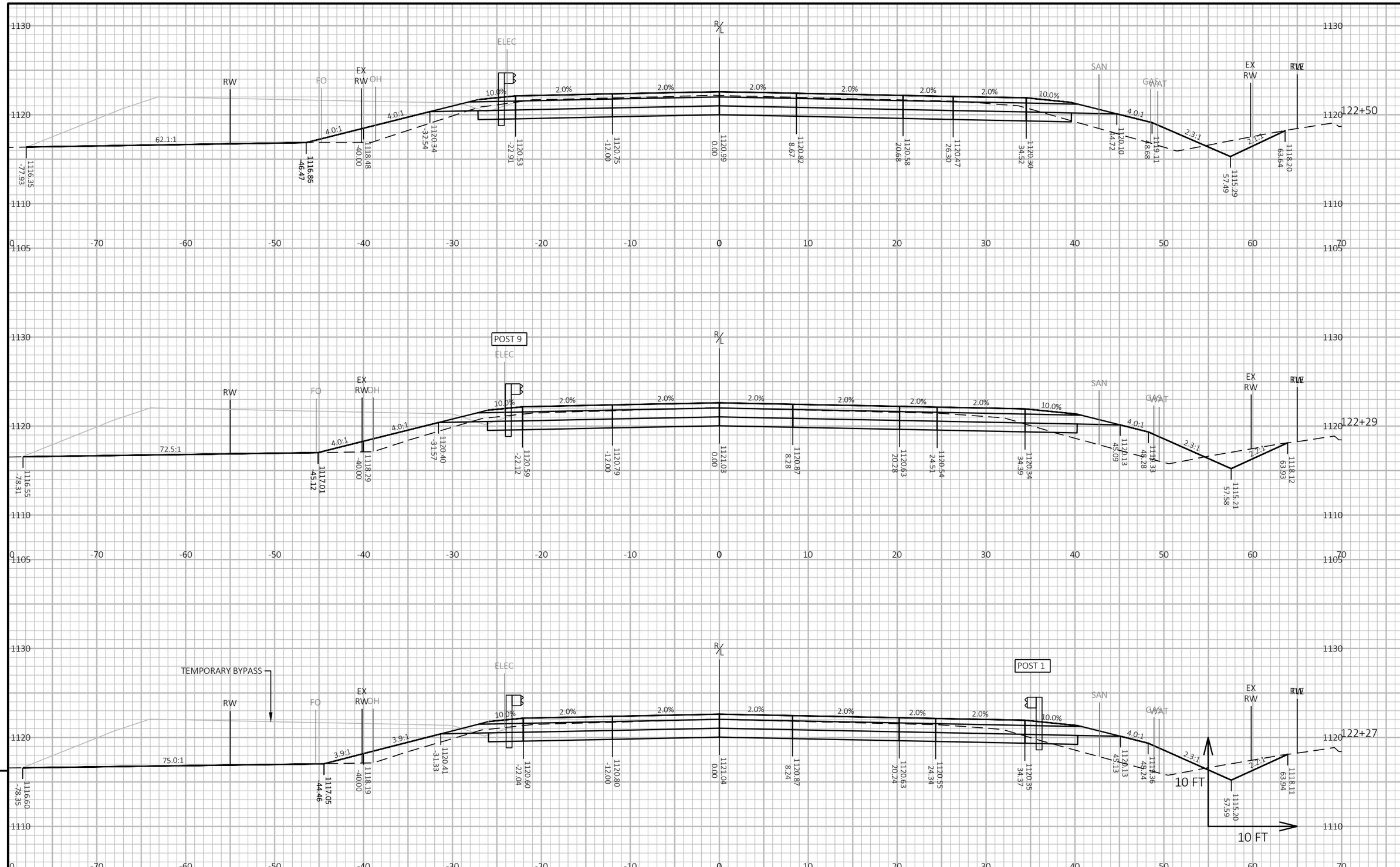

9

9

PROJECT NO: 1550-02-73, 1550-02-77	HWY: USH 63	COUNTY: ST. CROIX	CROSS SECTIONS: USH 63	SHEET 179	E

FILE NAME : N:\PDS\C3D\15500203\SHEETSPLAN\090201-XS.DWG
LAYOUT NAME - 090213

PLOT DATE : 4/17/2024 7:54 PM PLOT BY : MATT PAYNE PLOT NAME : **PLOT SCALE :** 1 IN:10 FT HORZ. / 1 IN:10 FT VERT.

WISDOT/CADDS SHEET 49

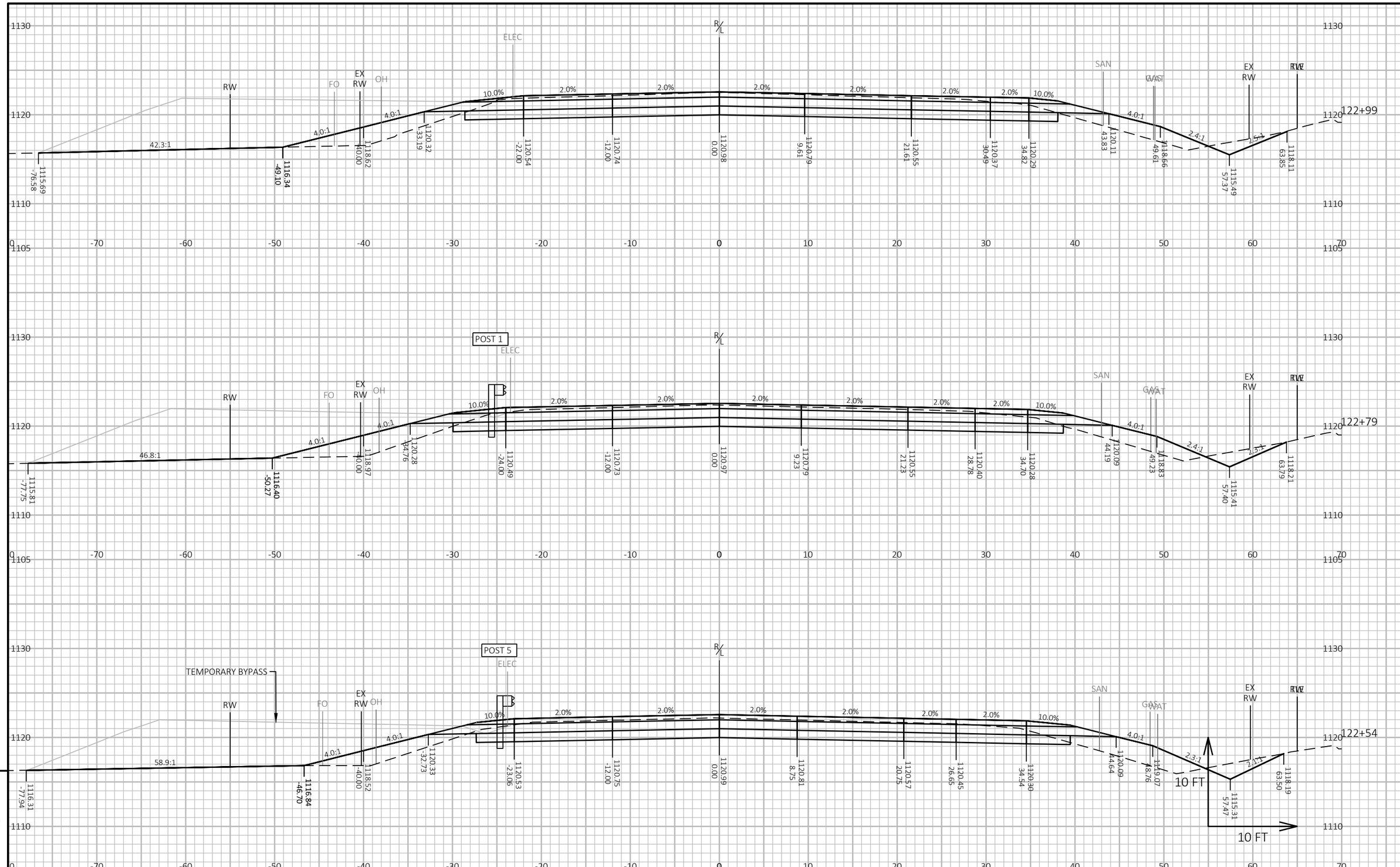

PROJECT NO: 1550-02-73, 1550-02-77	HWY: USH 63	COUNTY: ST. CROIX	CROSS SECTIONS: USH 63	SHEET 180	E

FILE NAME : N:\PDS\C3D\15500203\SHEETSPLAN\090201-XS.DWG
LAYOUT NAME - 090214
PLOT DATE : 4/17/2024 7:54 PM
PLOT BY : MATT PAYNE
PLOT NAME :
PLOT SCALE : 1 IN:10 FT HORZ. / 1 IN:10 FT VERT.
WISDOT/CADDS SHEET 49

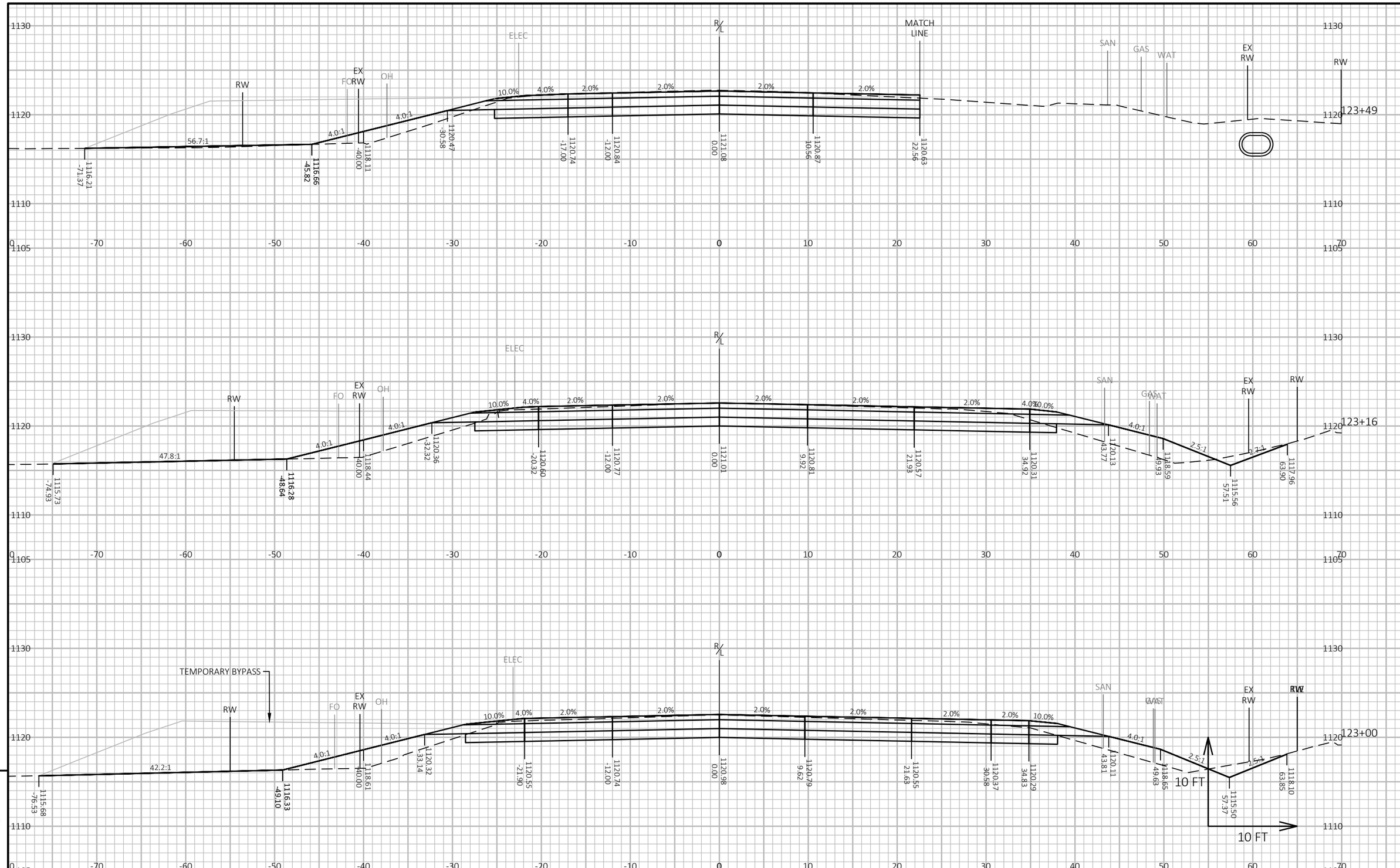

PROJECT NO: 1550-02-73, 1550-02-77	HWY: USH 63	COUNTY: ST. CROIX	CROSS SECTIONS: USH 63	SHEET 181	E

FILE NAME : N:\PDS\C3D\15500203\SHEETSPLAN\090201-XS.DWG
LAYOUT NAME - 090215
PLOT DATE : 4/17/2024 7:54 PM
PLOT BY : MATT PAYNE
PLOT NAME :
PLOT SCALE : 1 IN:10 FT HORZ. / 1 IN:10 FT VERT.
WISDOT/CADDS SHEET 49

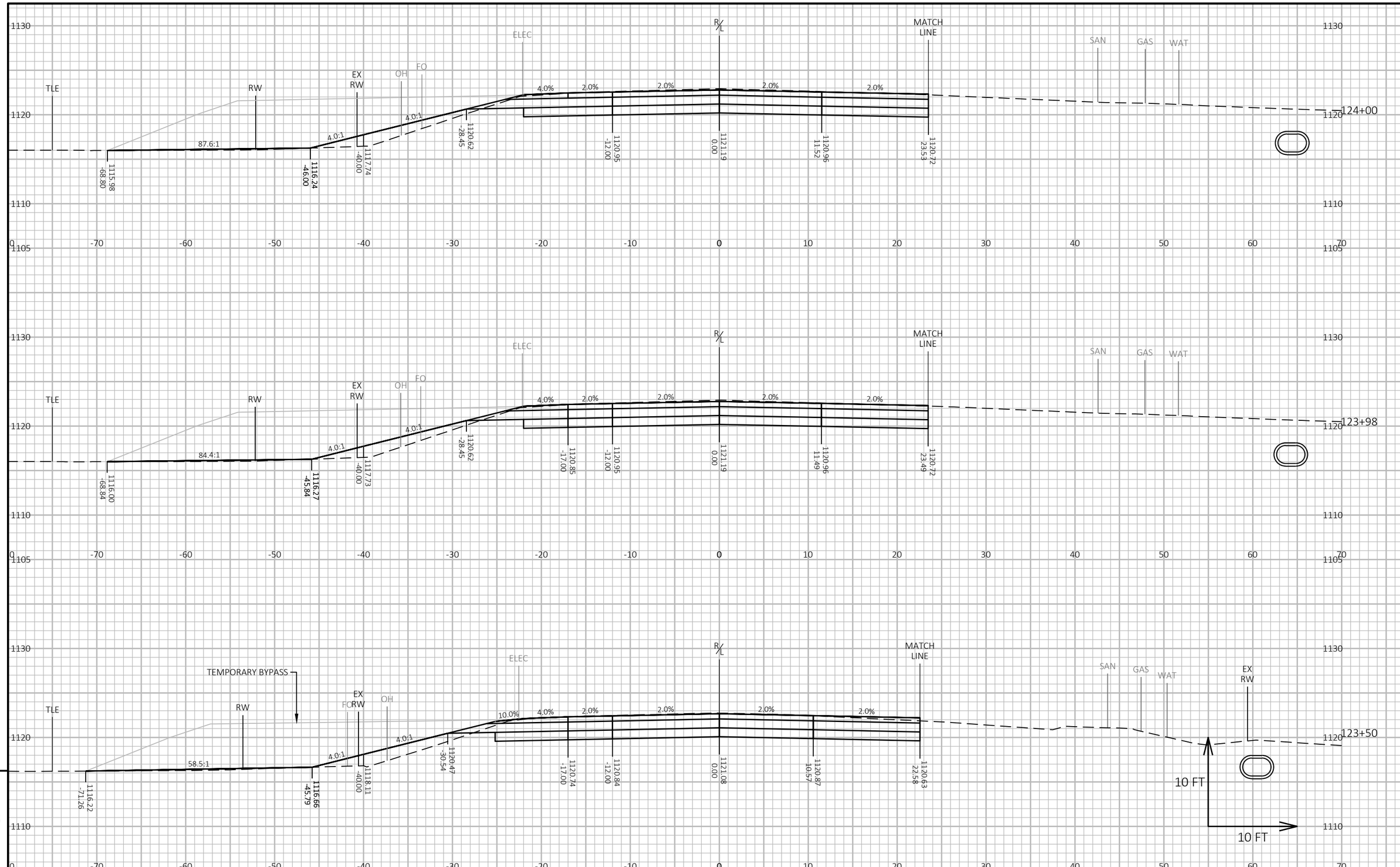

9

9

PROJECT NO: 1550-02-73, 1550-02-77	HWY: USH 63	COUNTY: ST. CROIX	CROSS SECTIONS: USH 63	SHEET 182	E

FILE NAME : N:\PDS\C3D\15500203\SHEETSPLAN\090201-XS.DWG
LAYOUT NAME - 090216
PLOT DATE : 4/17/2024 7:54 PM
PLOT BY : MATT PAYNE
PLOT NAME :
PLOT SCALE : 1 IN:10 FT HORZ. / 1 IN:10 FT VERT.
WISDOT/CADDS SHEET 49

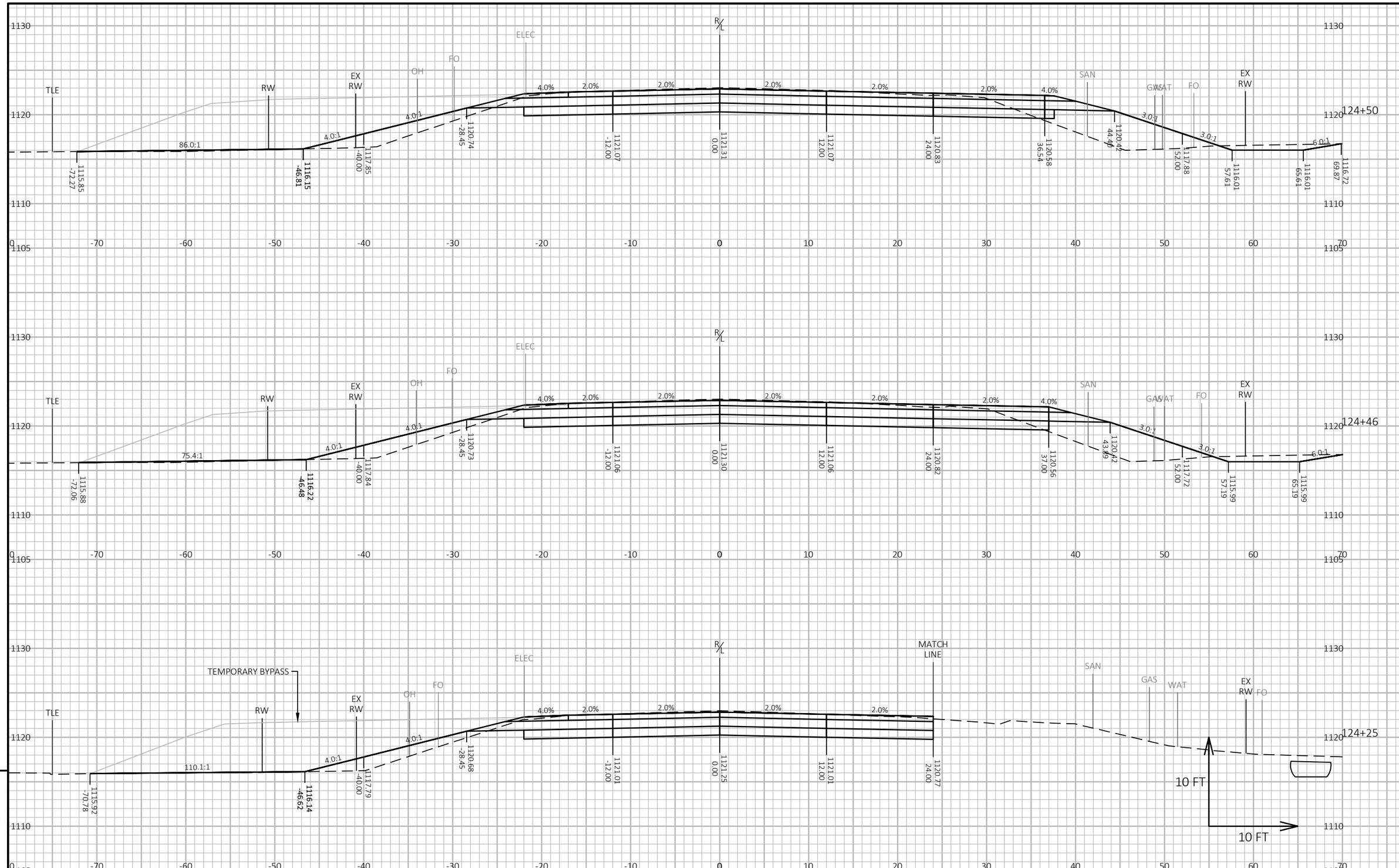

9

9

PROJECT NO: 1550-02-73, 1550-02-77	HWY: USH 63	COUNTY: ST. CROIX	CROSS SECTIONS: USH 63	SHEET 183	E

FILE NAME : N:\PDS\C3D\15500203\SHEETSPLAN\090201-XS.DWG
LAYOUT NAME - 090217

PLOT DATE : 4/17/2024 7:54 PM PLOT BY : MATT PAYNE PLOT NAME : **PLOT SCALE :** 1 IN:10 FT HORZ. / 1 IN:10 FT VERT.

WISDOT/CADDS SHEET 49

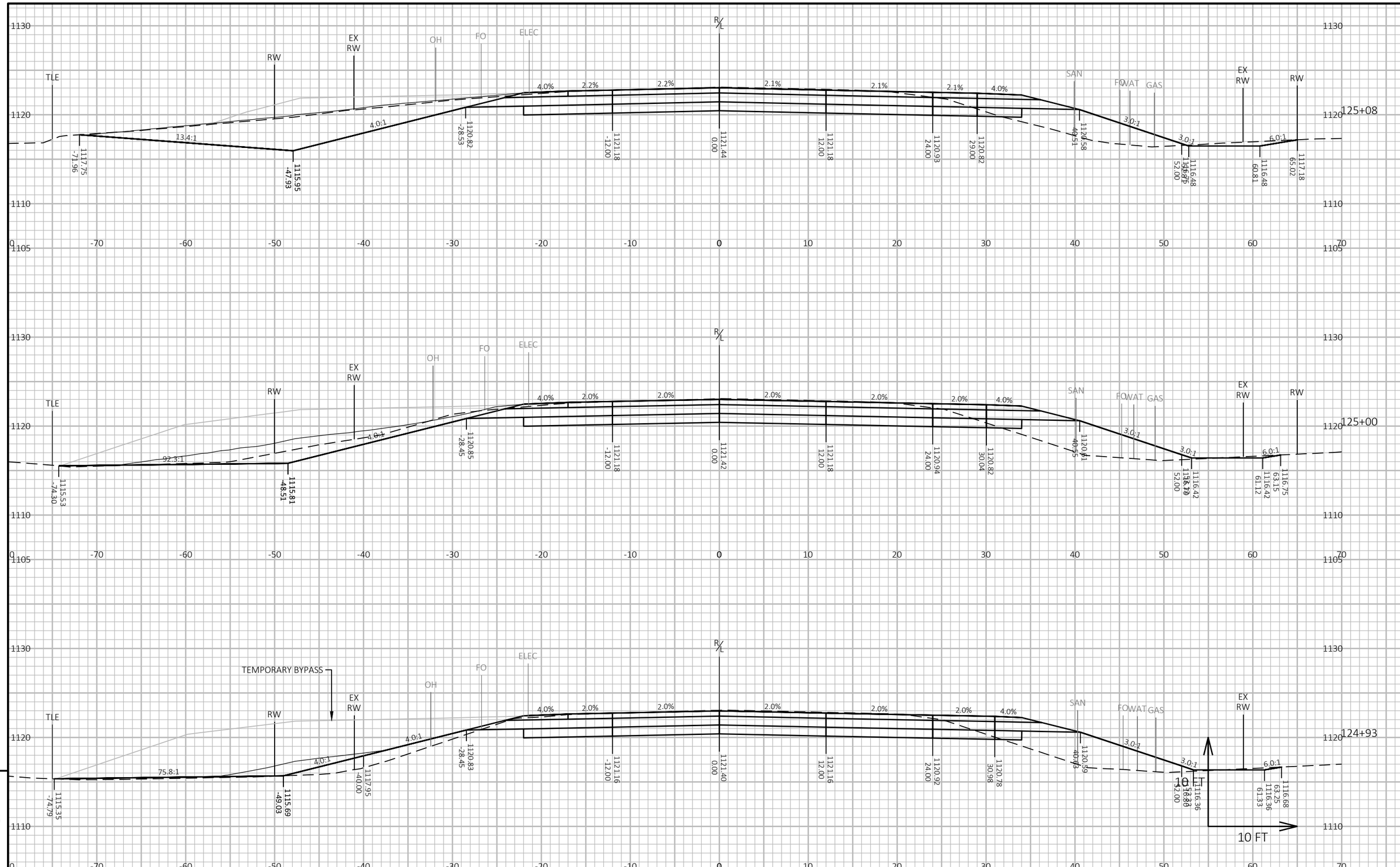

PROJECT NO: 1550-02-73, 1550-02-77	HWY: USH 63	COUNTY: ST. CROIX	CROSS SECTIONS: USH 63	SHEET 184	E

FILE NAME : N:\PDS\C3D\15500203\SHEETSPLAN\090201-XS.DWG
LAYOUT NAME - 090218
PLOT DATE : 4/17/2024 7:54 PM
PLOT BY : MATT PAYNE
PLOT NAME :
PLOT SCALE : 1 IN:10 FT HORZ. / 1 IN:10 FT VERT.
WISDOT/CADDS SHEET 49

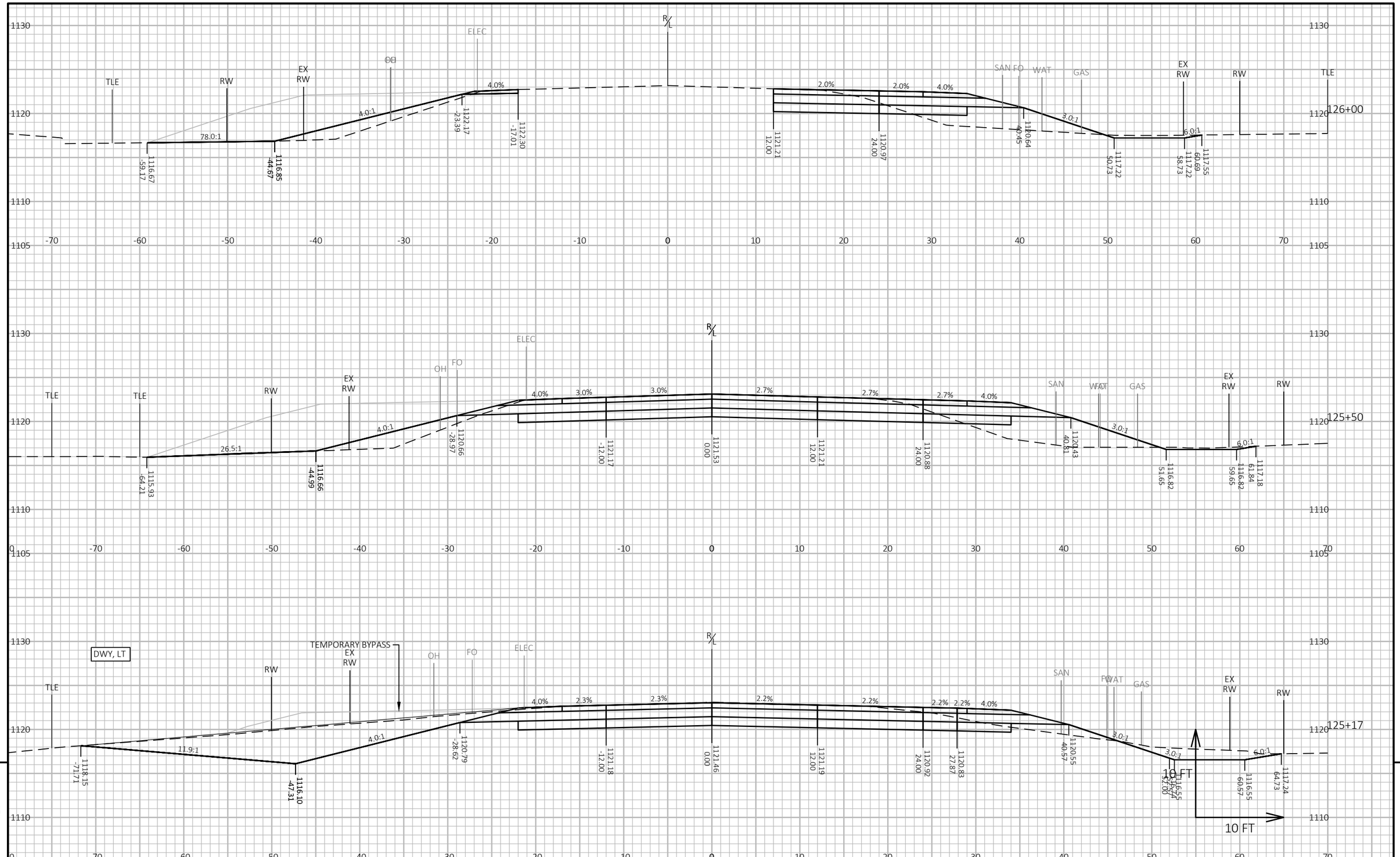

PROJECT NO: 1550-02-73, 1550-02-77	HWY: USH 63	COUNTY: ST. CROIX	CROSS SECTIONS: USH 63	SHEET 185	E

FILE NAME : N:\PDS\C3D\15500203\SHEETSPLAN\090201-XS.DWG
LAYOUT NAME - 090219
PLOT DATE : 4/17/2024 7:54 PM
PLOT BY : MATT PAYNE
PLOT NAME :
PLOT SCALE : 1 IN:10 FT HORZ. / 1 IN:10 FT VERT.
WISDOT/CADDS SHEET 49

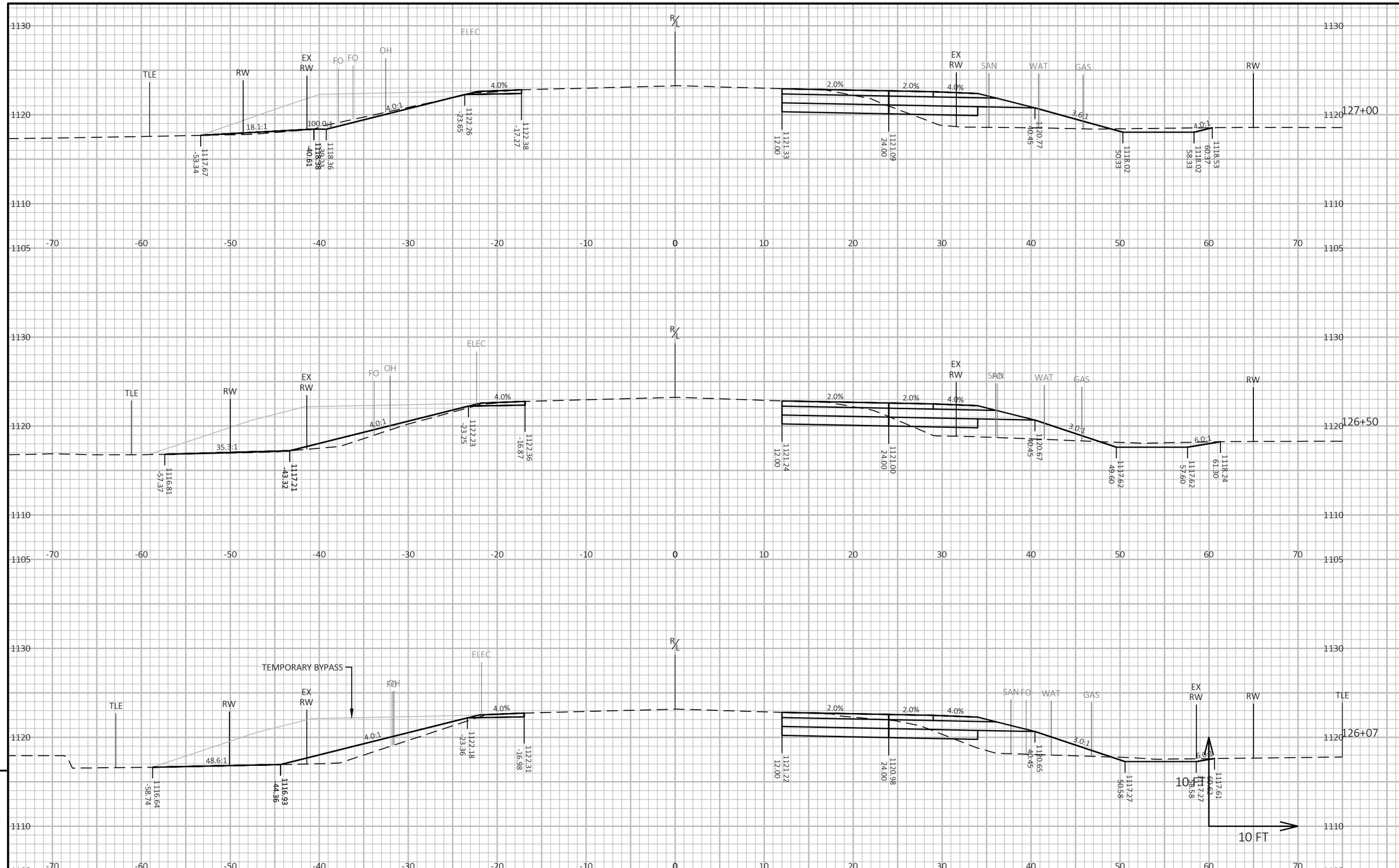

PROJECT NO: 1550-02-73, 1550-02-77	HWY: USH 63	COUNTY: ST. CROIX	CROSS SECTIONS: USH 63	SHEET 186	E

FILE NAME : N:\PDS\C3D\15500203\SHEETSPLAN\090201-XS.DWG
LAYOUT NAME - 090220
PLOT DATE : 4/17/2024 7:54 PM
PLOT BY : MATT PAYNE
PLOT NAME :
PLOT SCALE : 1 IN:10 FT HORZ. / 1 IN:10 FT VERT.
WISDOT/CADDS SHEET 49

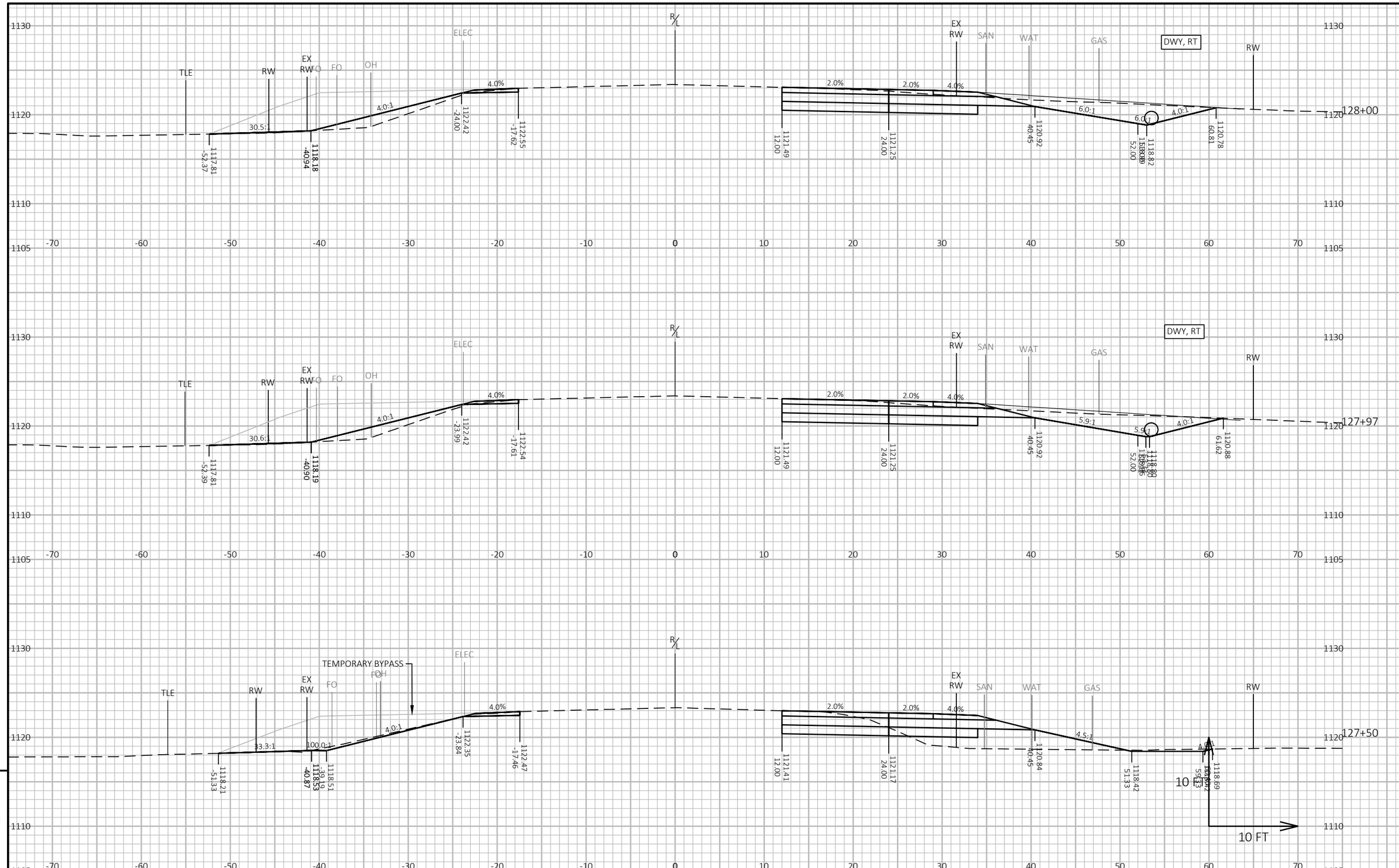

9

9

PROJECT NO: 1550-02-73, 1550-02-77	HWY: USH 63	COUNTY: ST. CROIX	CROSS SECTIONS: USH 63	SHEET 187	E

FILE NAME : N:\PDS\C3D\15500203\SHEETSPLAN\090201-XS.DWG
LAYOUT NAME - 090221

PLOT DATE : 4/17/2024 7:54 PM PLOT BY : MATT PAYNE PLOT NAME : **PLOT SCALE :** 1 IN:10 FT HORZ. / 1 IN:10 FT VERT.

WISDOT/CADDS SHEET 49

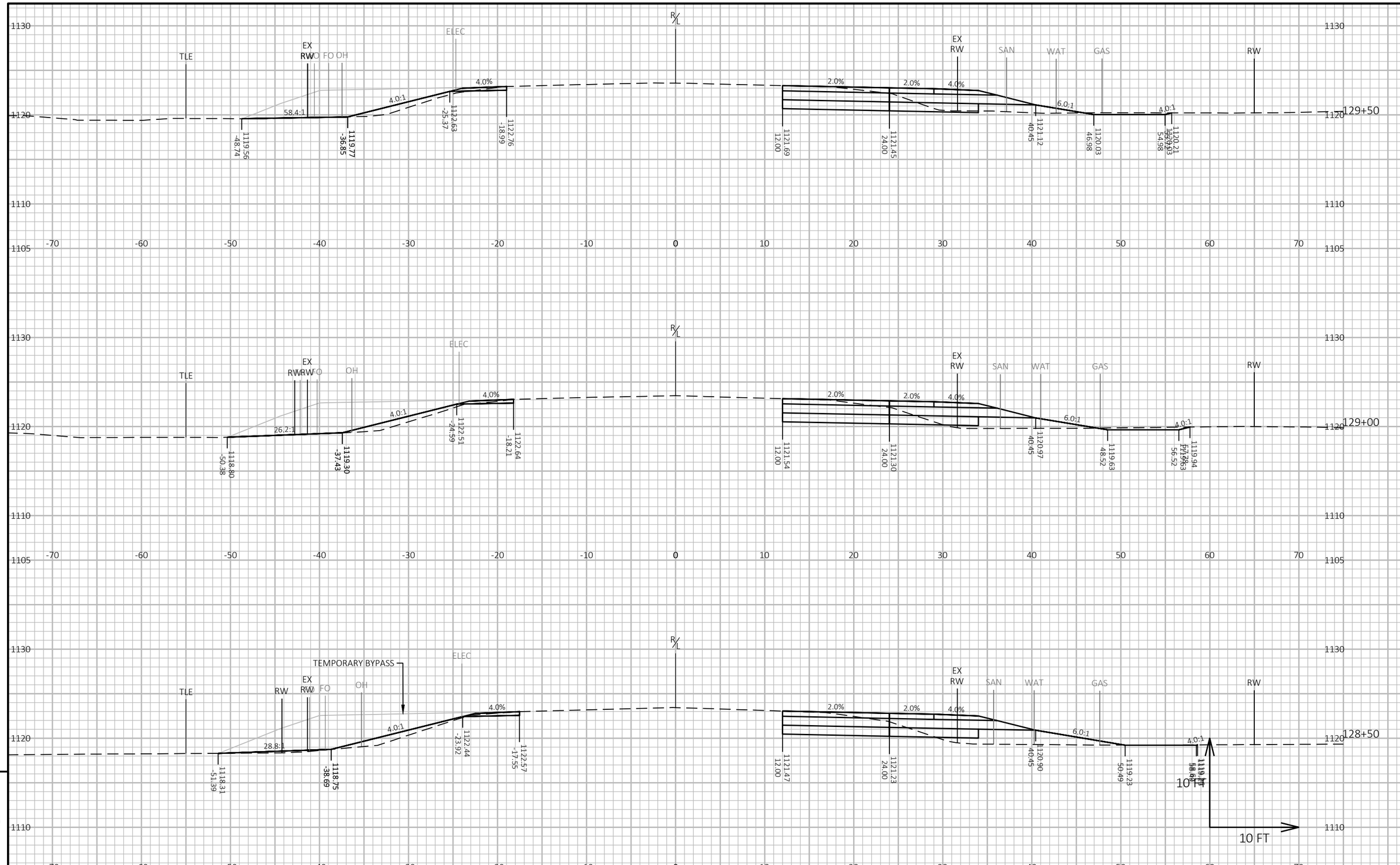

9

9

PROJECT NO: 1550-02-73, 1550-02-77	HWY: USH 63	COUNTY: ST. CROIX	CROSS SECTIONS: USH 63	SHEET 188	E

FILE NAME : N:\PDS\C3D\15500203\SHEETSPLAN\090201-XS.DWG
LAYOUT NAME - 090222

PLOT DATE : 4/17/2024 7:54 PM PLOT BY : MATT PAYNE PLOT NAME : PLOT SCALE : 1 IN:10 FT HORZ. / 1 IN:10 FT VERT.

WISDOT/CADDS SHEET 49

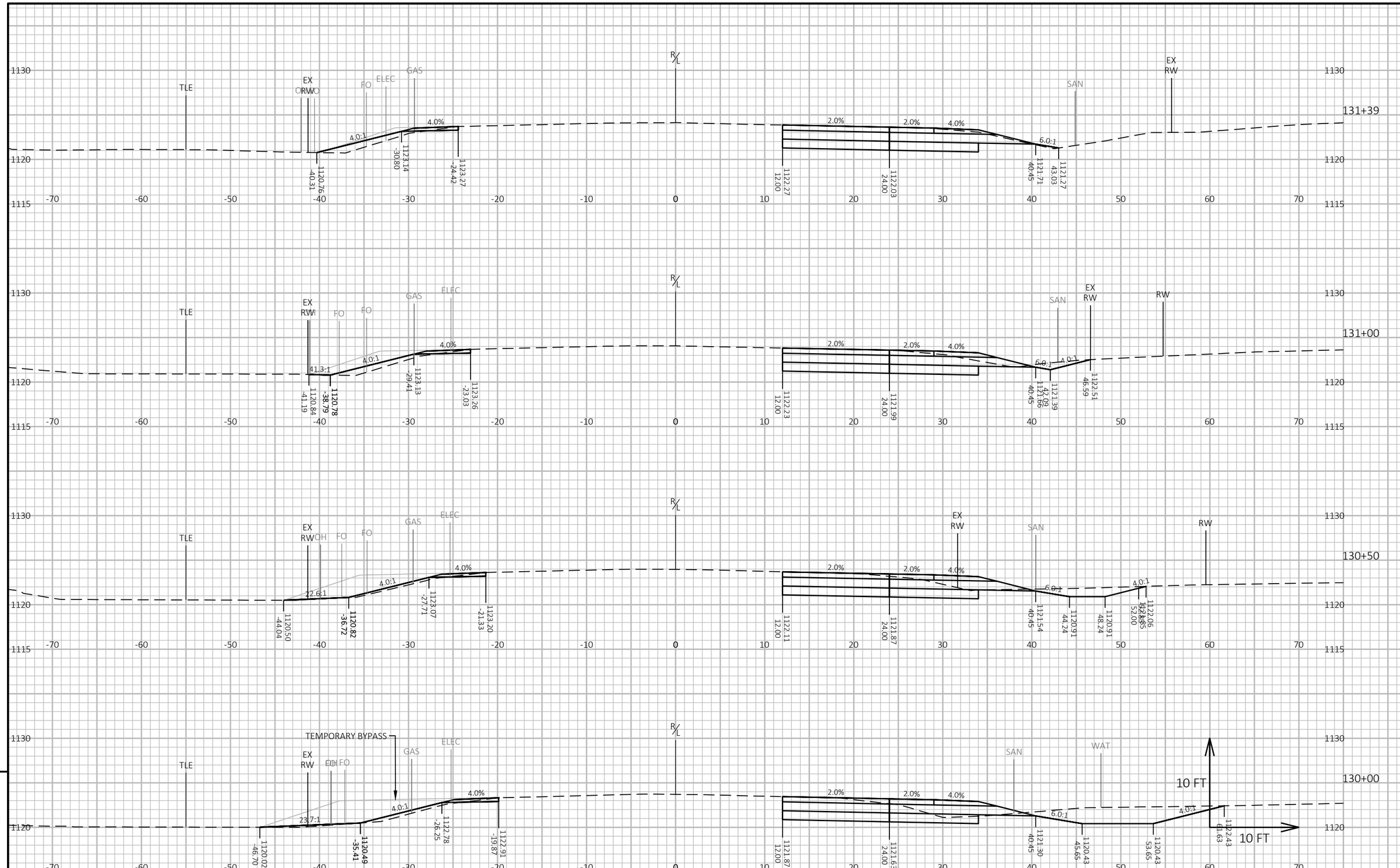

9

9

PROJECT NO: 1550-02-73, 1550-02-77	HWY: USH 63	COUNTY: ST. CROIX	CROSS SECTIONS: USH 63	SHEET 189	E

FILE NAME : N:\PDS\C3D\15500203\SHEETSPLAN\090201-XS.DWG
LAYOUT NAME - 090223
PLOT DATE : 4/17/2024 7:55 PM
PLOT BY : MATT PAYNE
PLOT NAME :
PLOT SCALE : 1 IN:10 FT HORZ. / 1 IN:10 FT VERT.
WISDOT/CADDS SHEET 49

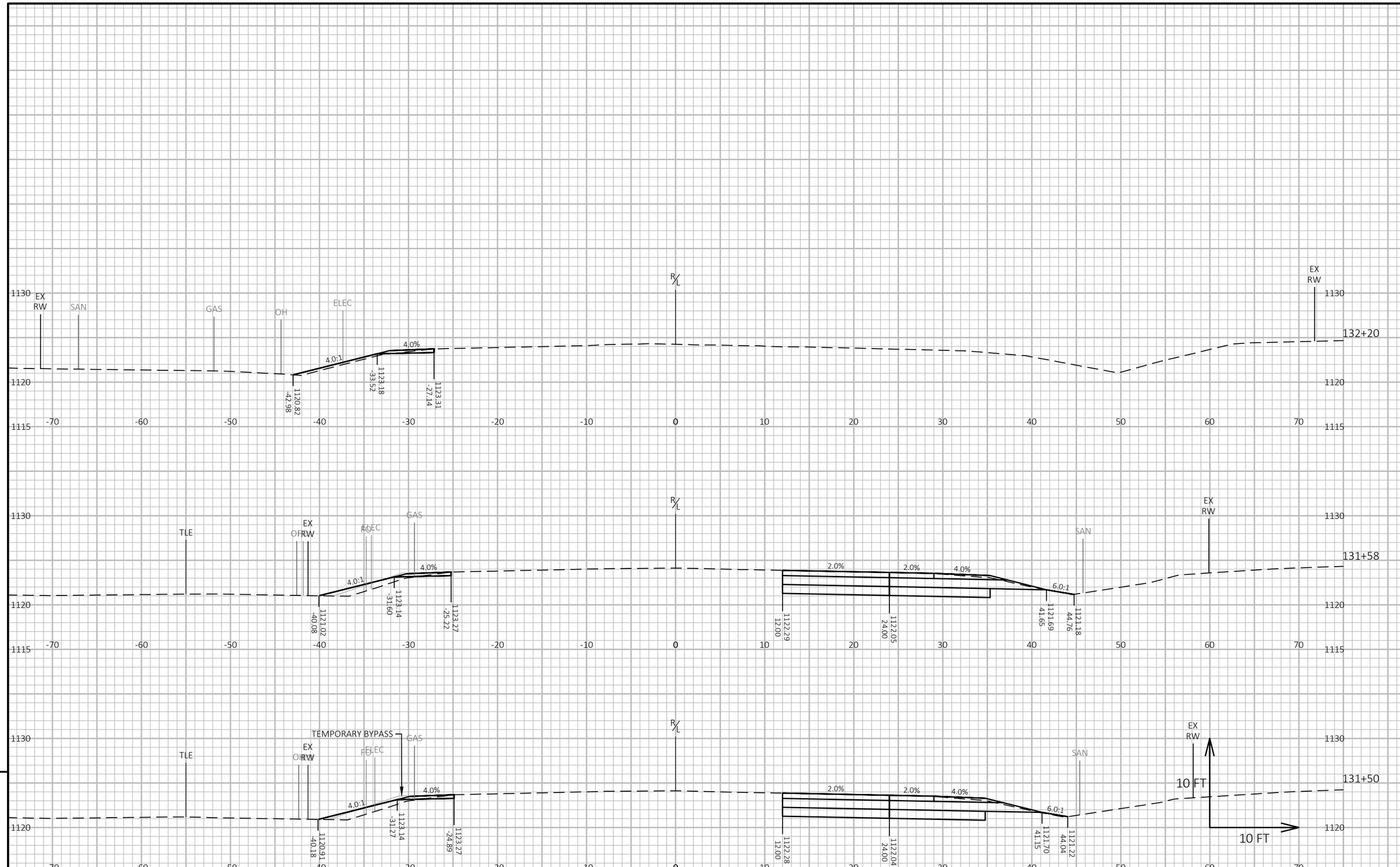

9

9

PROJECT NO: 1550-02-73, 1550-02-77	HWY: USH 63	COUNTY: ST. CROIX	CROSS SECTIONS: USH 63	SHEET 190	E

FILE NAME : N:\PDS\C3D\15500203\SHEETSPLAN\090201-XS.DWG
LAYOUT NAME - 090224
PLOT DATE : 4/17/2024 7:55 PM
PLOT BY : MATT PAYNE
PLOT NAME :
PLOT SCALE : 1 IN:10 FT HORZ. / 1 IN:10 FT VERT.

WISDOT/CADDS SHEET 49

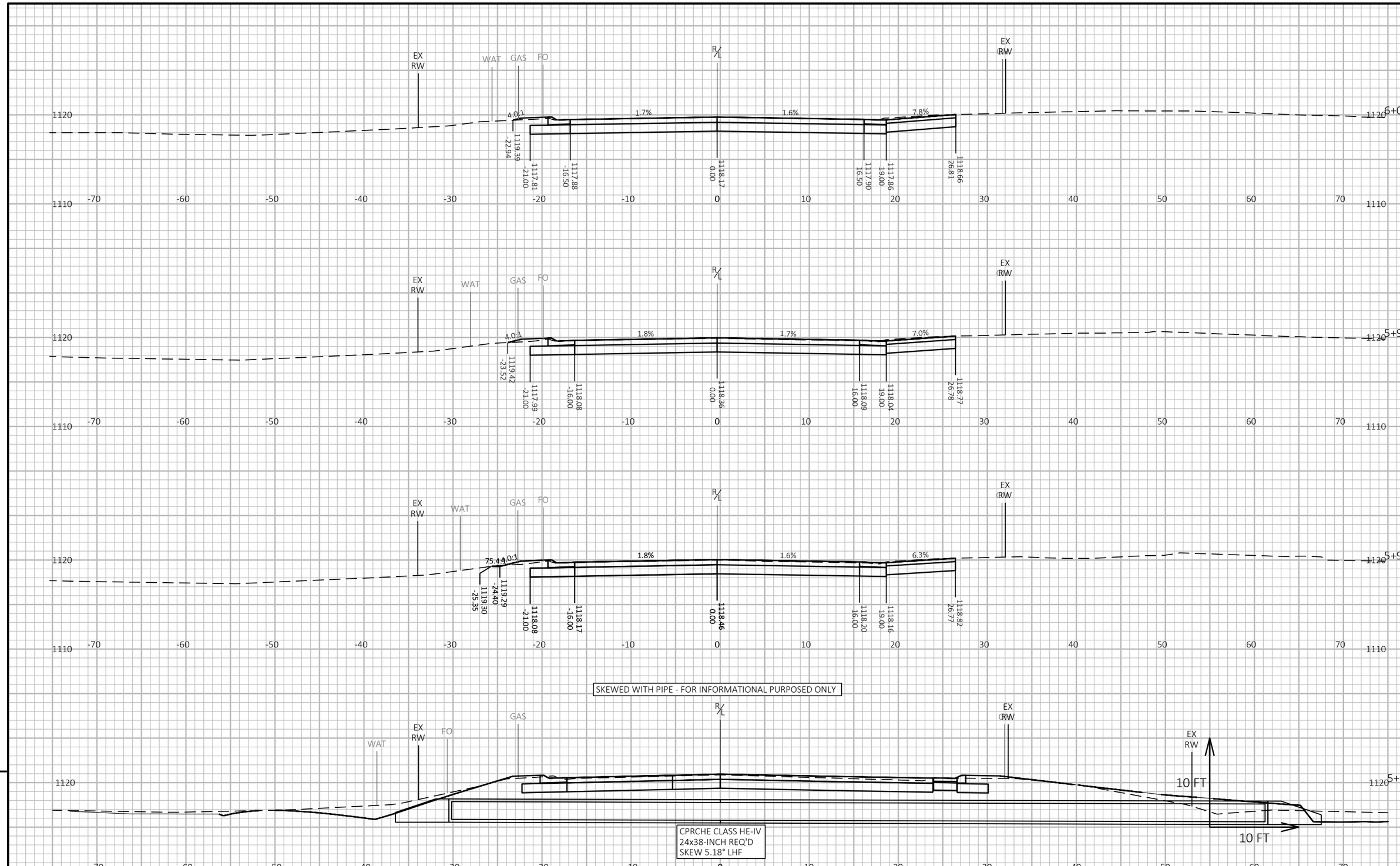

9

9

PROJECT NO: 1550-02-73, 1550-02-77	HWY: USH 63	COUNTY: ST. CROIX	CROSS SECTIONS: SPRUCE ST	SHEET 191	E

FILE NAME : N:\PDS\C3D\15500203\SHEETSPLAN\090201-XS.DWG
LAYOUT NAME - 090230
PLOT DATE : 4/17/2024 8:07 PM
PLOT BY : MATT PAYNE
PLOT NAME :
PLOT SCALE : 1 IN:10 FT HORZ. / 1 IN:10 FT VERT.
WISDOT/CADDS SHEET 49

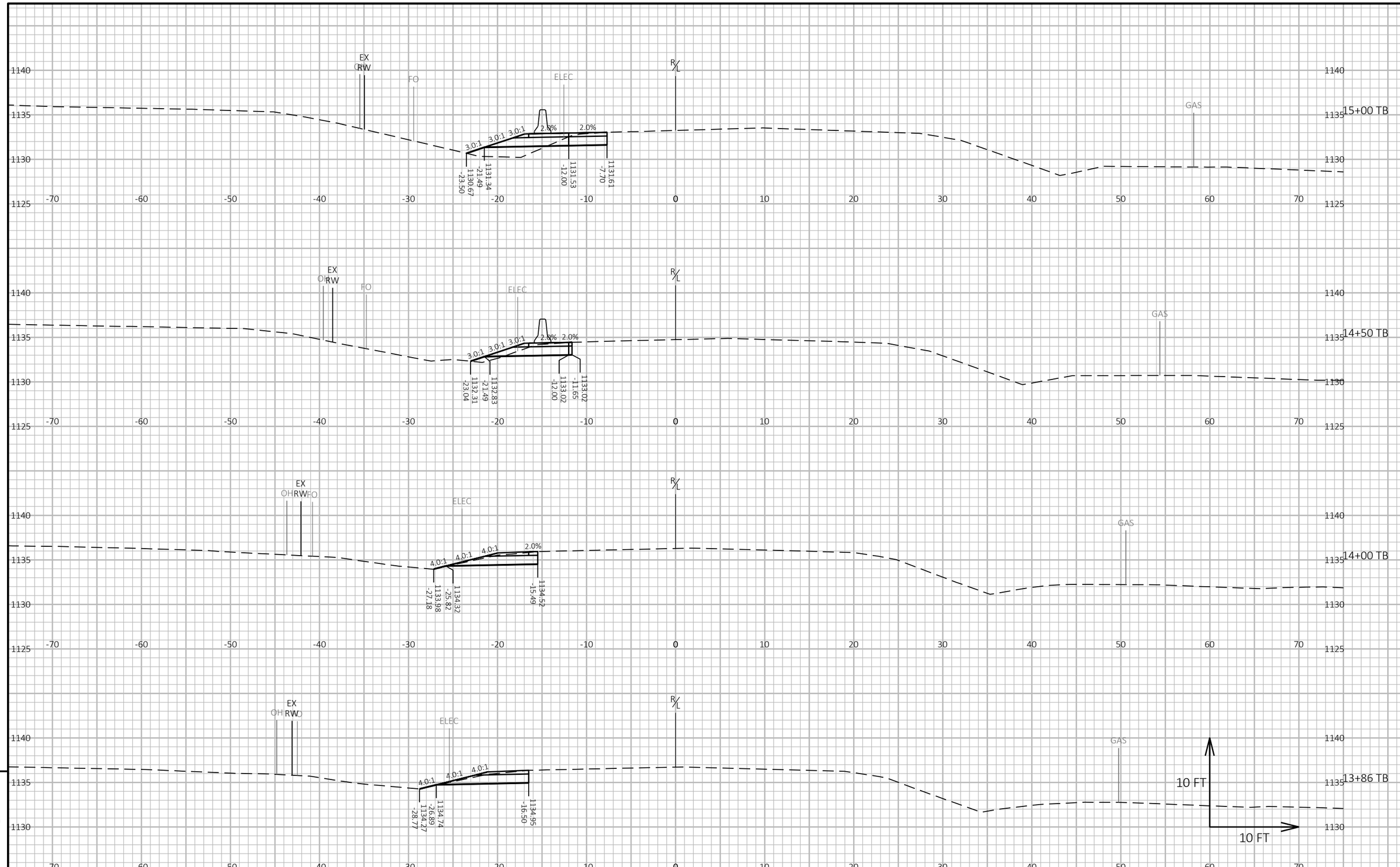

9

9

PROJECT NO: 1550-02-73, 1550-02-77	HWY: USH 63	COUNTY: ST. CROIX	CROSS SECTIONS: TEMPORARY BYPASS	SHEET 192	E

FILE NAME : N:\PDS\C3D\15500203\SHEETSPLAN\090202-XS.DWG
LAYOUT NAME - 01

PLOT DATE : 4/18/2024 8:25 AM PLOT BY : MATT PAYNE PLOT NAME : **PLOT SCALE :** 1 IN:10 FT HORZ. / 1 IN:10 FT VERT.

WISDOT/CADDS SHEET 49

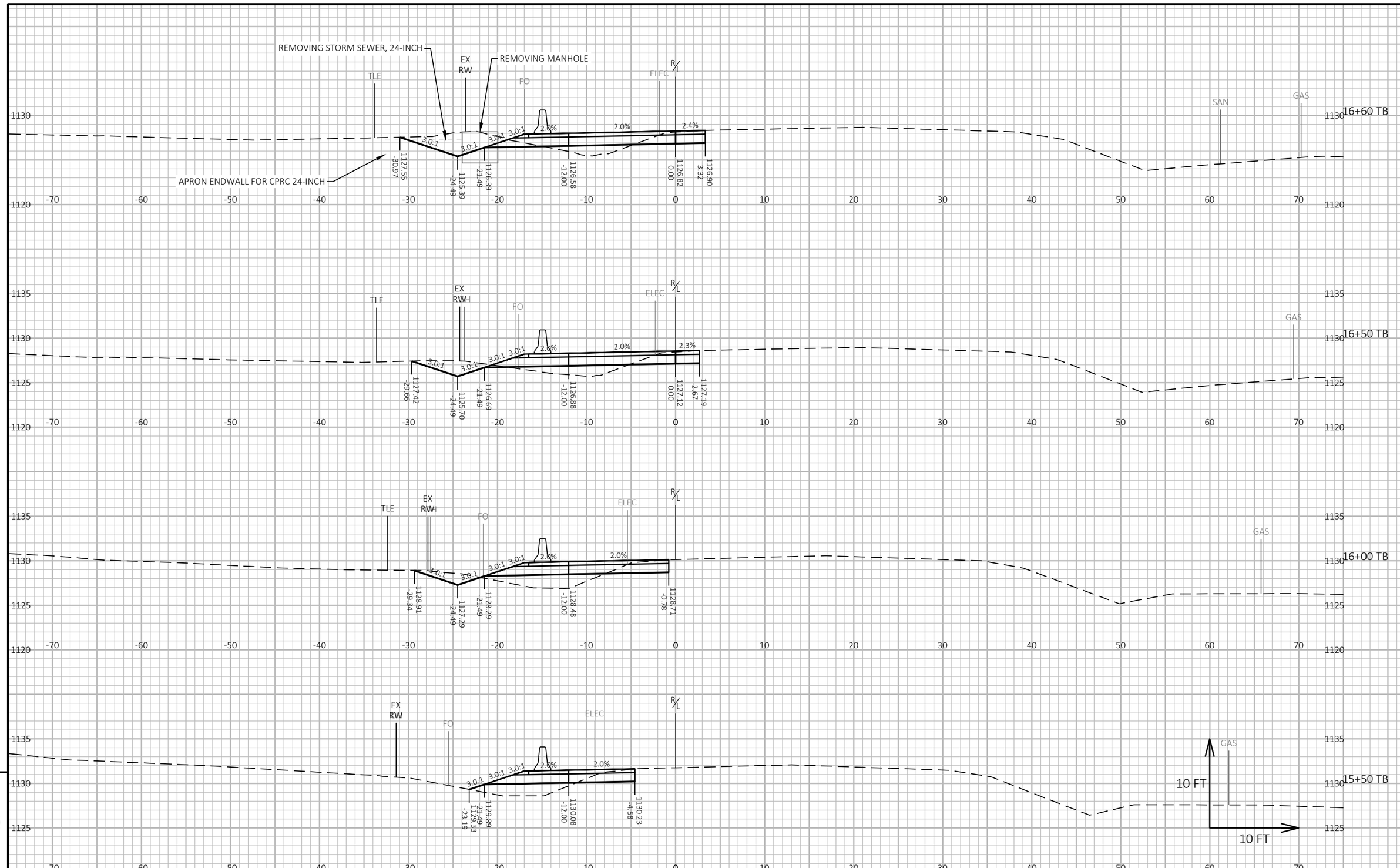

9

9

PROJECT NO: 1550-02-73, 1550-02-77	HWY: USH 63	COUNTY: ST. CROIX	CROSS SECTIONS: TEMPORARY BYPASS	SHEET 193	E

FILE NAME : N:\PDS\C3D\15500203\SHEETSPLAN\090202-XS.DWG
LAYOUT NAME - 02
PLOT DATE : 4/18/2024 8:25 AM
PLOT BY : MATT PAYNE
PLOT NAME :
PLOT SCALE : 1 IN:10 FT HORZ. / 1 IN:10 FT VERT.
WISDOT/CADDS SHEET 49

9

9

PROJECT NO: 1550-02-73, 1550-02-77	HWY: USH 63	COUNTY: ST. CROIX	CROSS SECTIONS: TEMPORARY BYPASS	SHEET 194	E

FILE NAME : N:\PDS\C3D\15500203\SHEETSPLAN\090202-XS.DWG
LAYOUT NAME - 03
PLOT DATE : 4/18/2024 8:25 AM
PLOT BY : MATT PAYNE
PLOT NAME :
PLOT SCALE : 1 IN:10 FT HORZ. / 1 IN:10 FT VERT.
WISDOT/CADDS SHEET 49

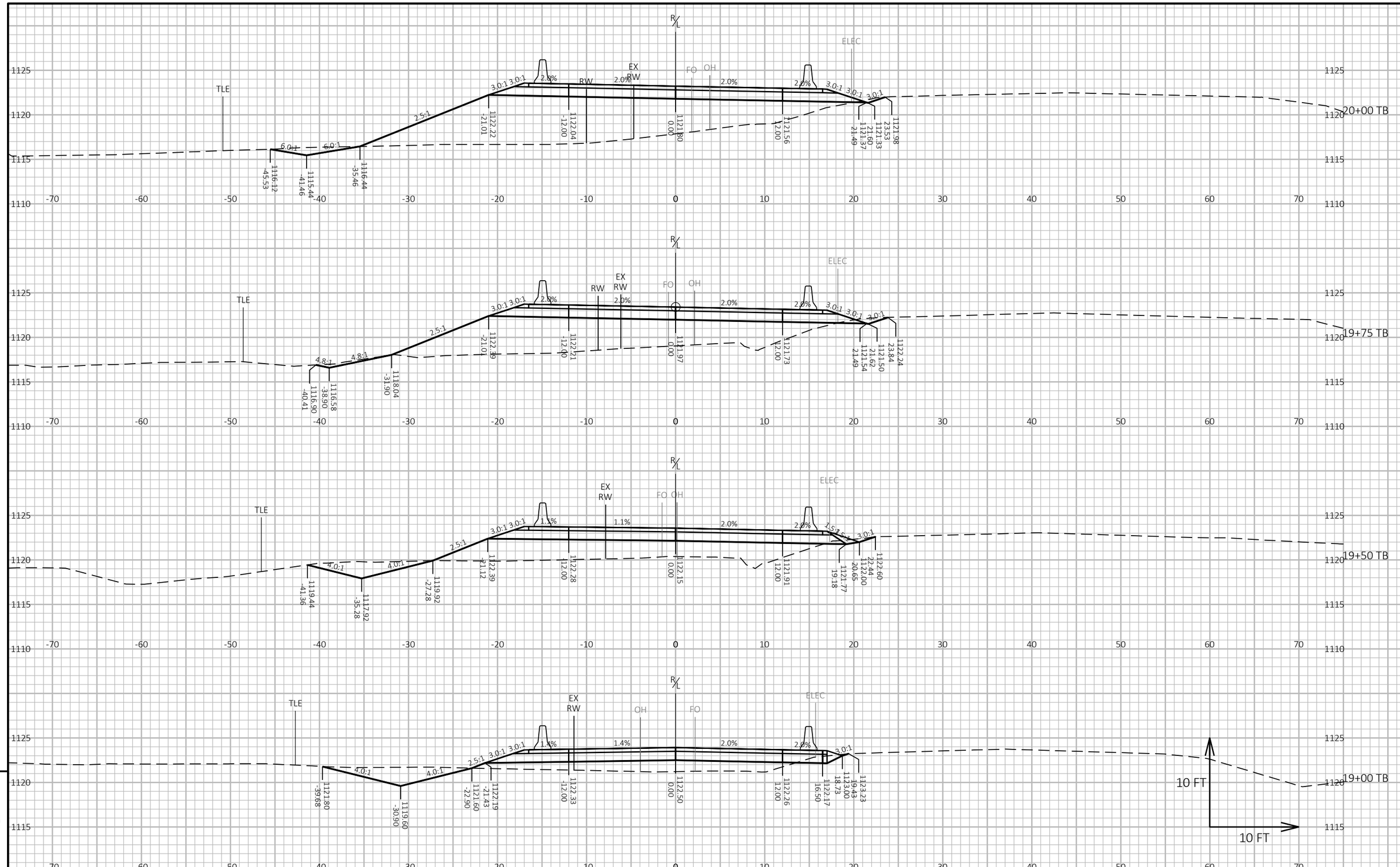

PROJECT NO: 1550-02-73, 1550-02-77	HWY: USH 63	COUNTY: ST. CROIX	CROSS SECTIONS: TEMPORARY BYPASS	SHEET 195	E

FILE NAME : N:\PDS\C3D\15500203\SHEETSPLAN\090202-XS.DWG
LAYOUT NAME - 04
PLOT DATE : 4/18/2024 8:25 AM
PLOT BY : MATT PAYNE
PLOT NAME :
PLOT SCALE : 1 IN:10 FT HORZ. / 1 IN:10 FT VERT.
WISDOT/CADDS SHEET 49

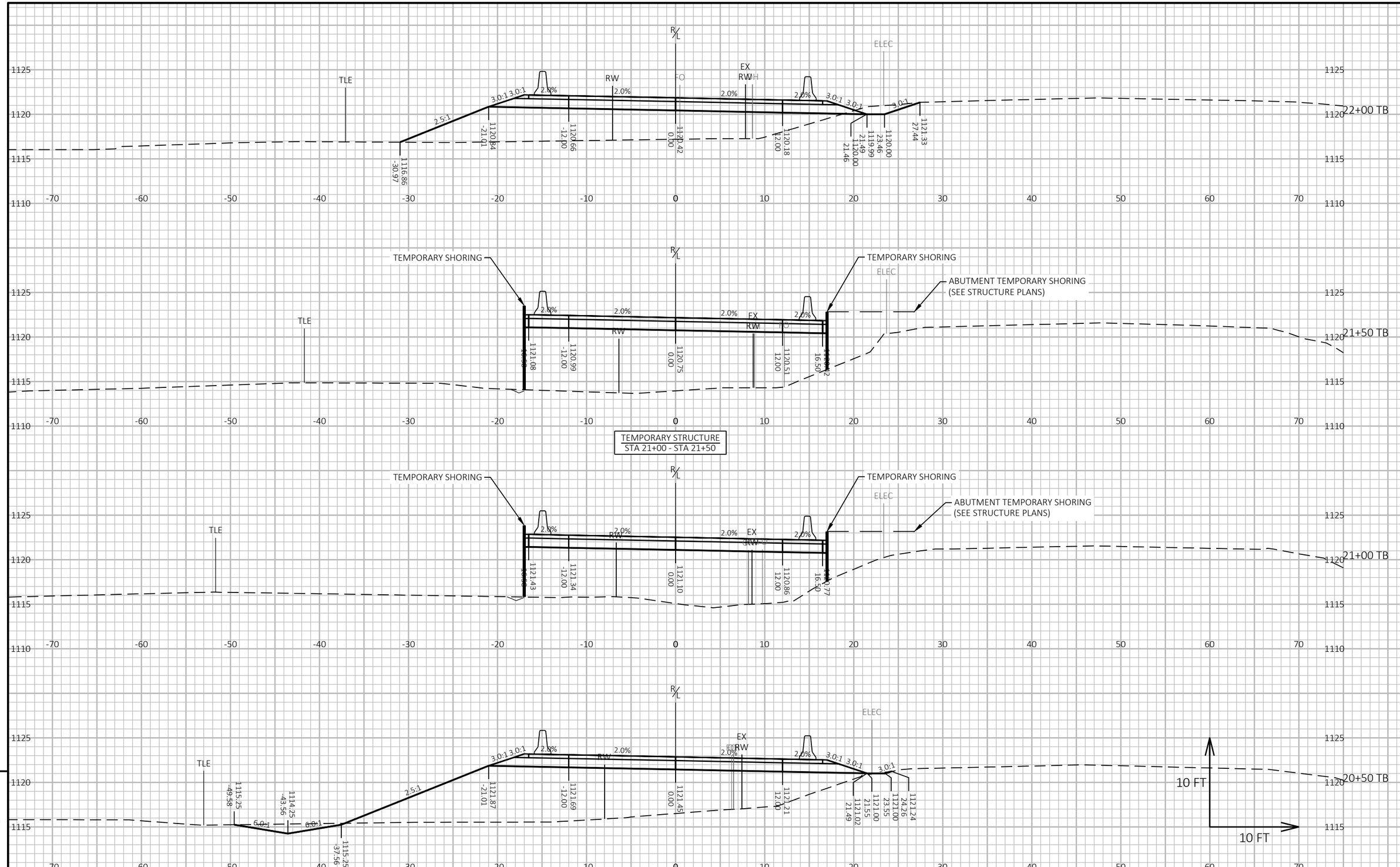

PROJECT NO: 1550-02-73, 1550-02-77	HWY: USH 63	COUNTY: ST. CROIX	CROSS SECTIONS: TEMPORARY BYPASS	SHEET 196	E

FILE NAME : N:\PDS\C3D\15500203\SHEETSPLAN\090202-XS.DWG
LAYOUT NAME - 05
PLOT DATE : 4/18/2024 8:25 AM
PLOT BY : MATT PAYNE
PLOT NAME :
PLOT SCALE : 1 IN:10 FT HORZ. / 1 IN:10 FT VERT.
WISDOT/CADDS SHEET 49

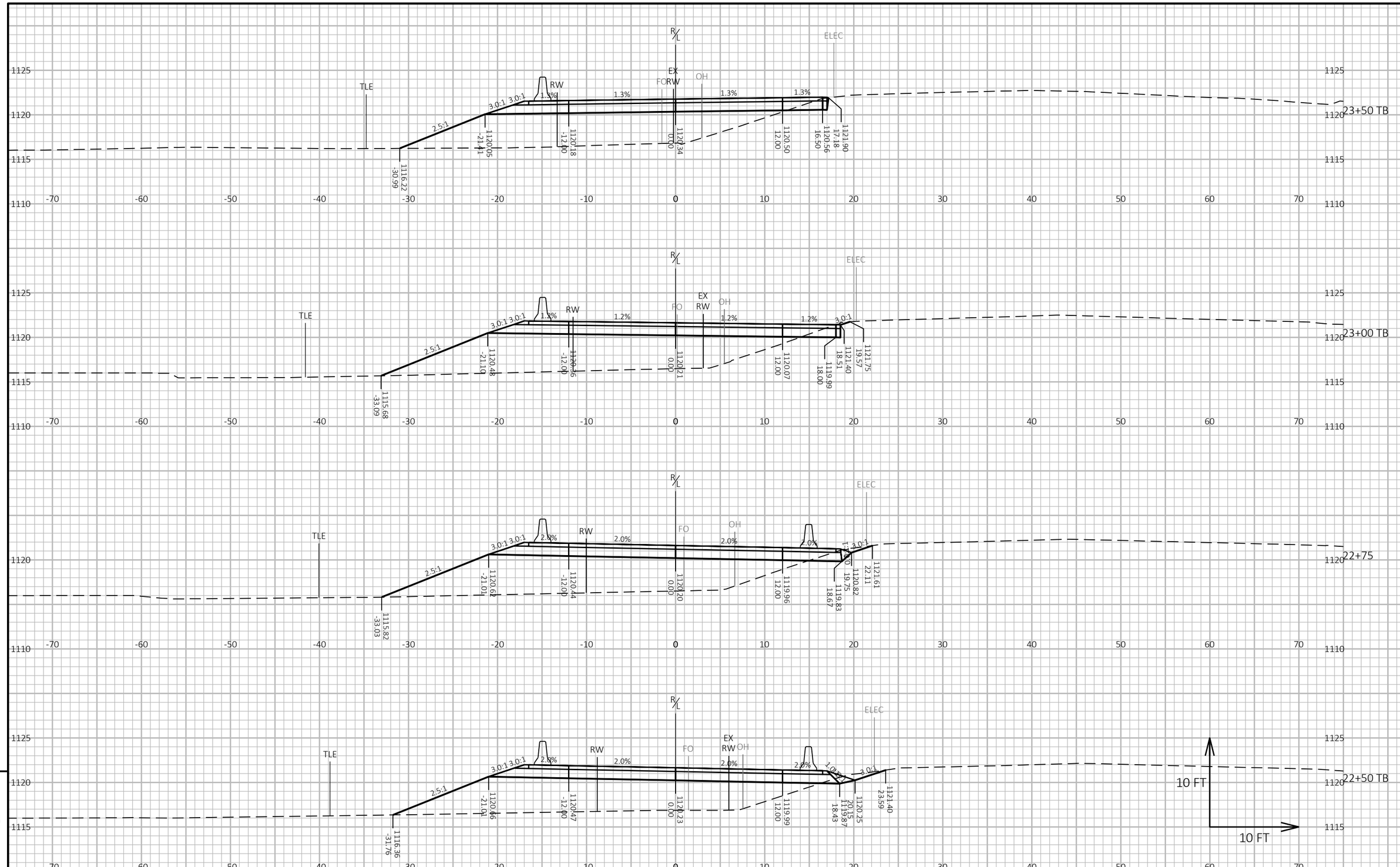

PROJECT NO: 1550-02-73, 1550-02-77	HWY: USH 63	COUNTY: ST. CROIX	CROSS SECTIONS: TEMPORARY BYPASS	SHEET 197	E

FILE NAME : N:\PDS\C3D\15500203\SHEETSPLAN\090202-XS.DWG
LAYOUT NAME - 06
PLOT DATE : 4/18/2024 8:25 AM
PLOT BY : MATT PAYNE
PLOT NAME :
PLOT SCALE : 1 IN:10 FT HORZ. / 1 IN:10 FT VERT.
WISDOT/CADDS SHEET 49

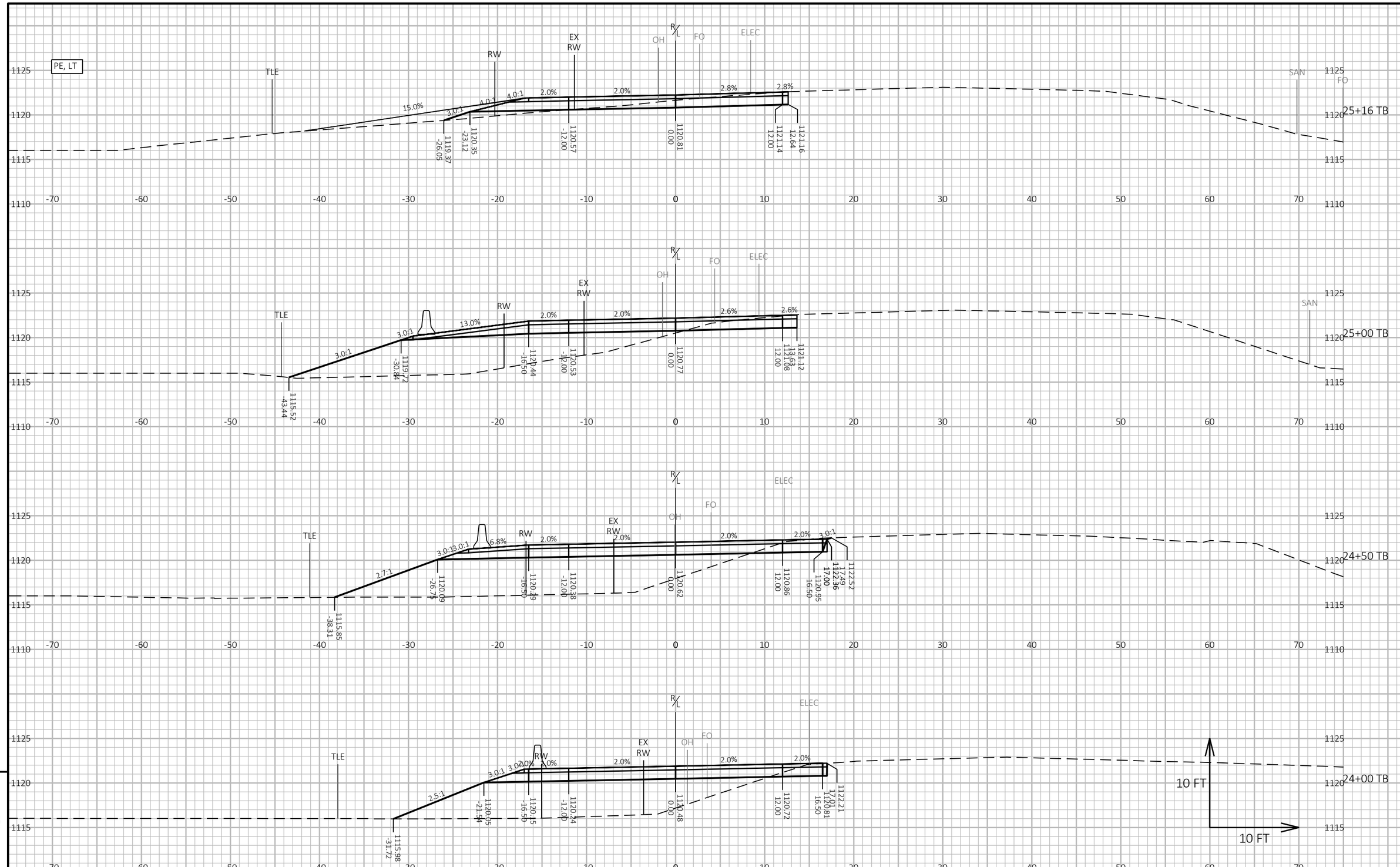

9

9

PROJECT NO: 1550-02-73, 1550-02-77	HWY: USH 63	COUNTY: ST. CROIX	CROSS SECTIONS: TEMPORARY BYPASS	SHEET 198	E

FILE NAME : N:\PDS\C3D\15500203\SHEETSPLAN\090202-XS.DWG
LAYOUT NAME - 07
PLOT DATE : 4/18/2024 8:25 AM
PLOT BY : MATT PAYNE
PLOT NAME :
PLOT SCALE : 1 IN:10 FT HORZ. / 1 IN:10 FT VERT.
WISDOT/CADDS SHEET 49

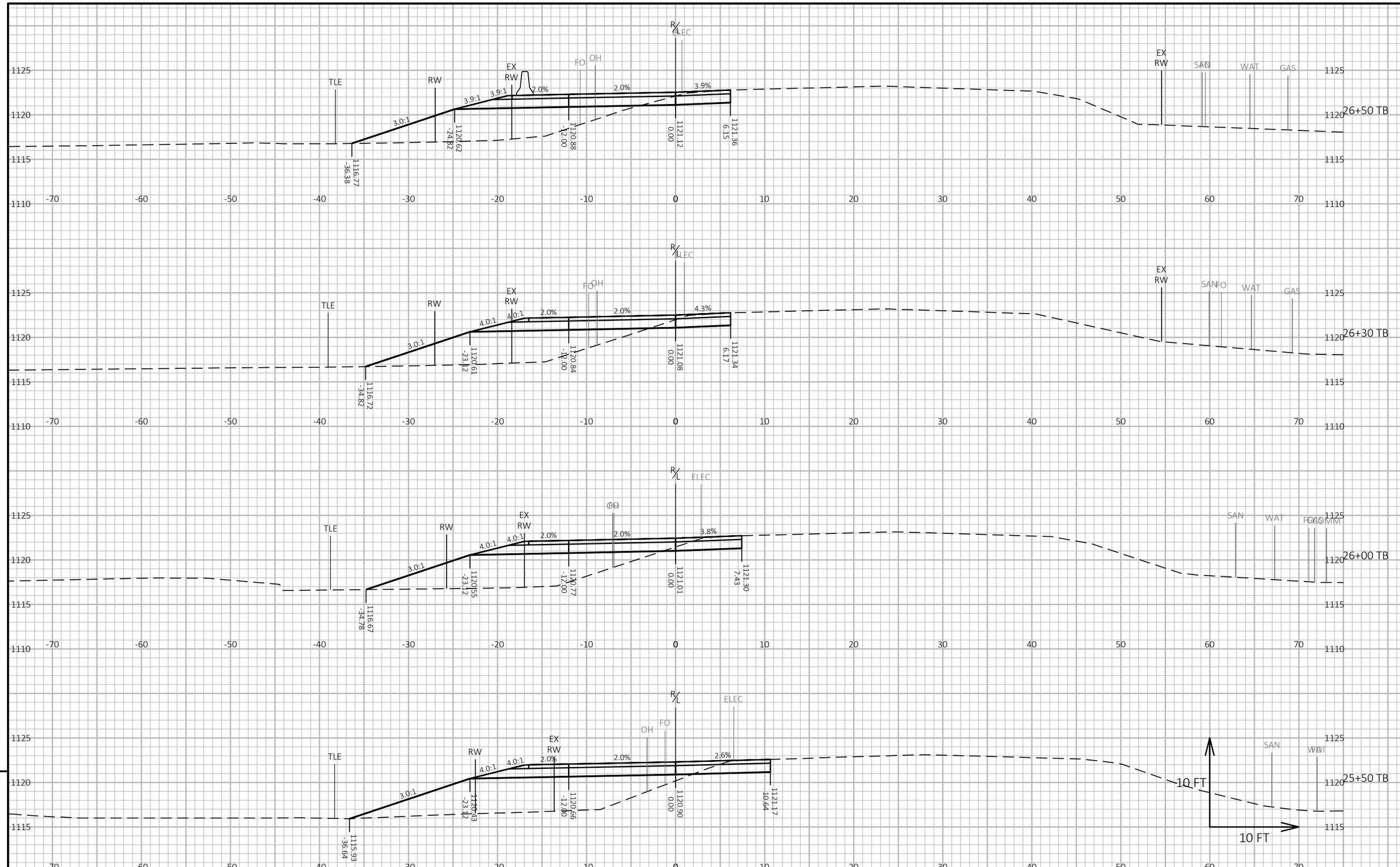

9

9

PROJECT NO: 1550-02-73, 1550-02-77	HWY: USH 63	COUNTY: ST. CROIX	CROSS SECTIONS: TEMPORARY BYPASS	SHEET 199	E

FILE NAME : N:\PDS\C3D\15500203\SHEETSPLAN\090202-XS.DWG
LAYOUT NAME - 08
PLOT DATE : 4/18/2024 8:25 AM
PLOT BY : MATT PAYNE
PLOT NAME :
PLOT SCALE : 1 IN:10 FT HORZ. / 1 IN:10 FT VERT.
WISDOT/CADDS SHEET 49

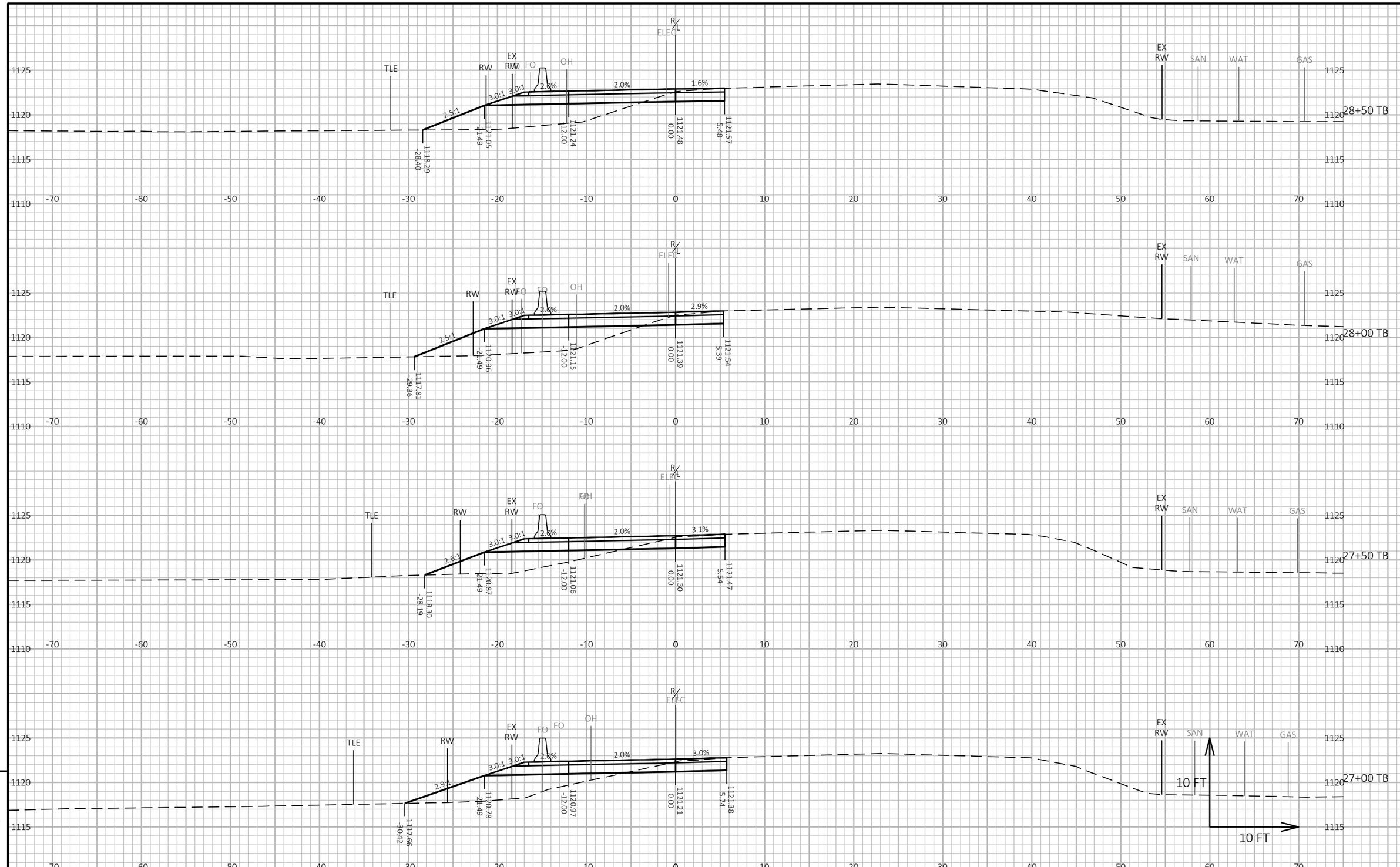

9

9

PROJECT NO: 1550-02-73, 1550-02-77	HWY: USH 63	COUNTY: ST. CROIX	CROSS SECTIONS: TEMPORARY BYPASS	SHEET 200	E

FILE NAME : N:\PDS\C3D\15500203\SHEETSPLAN\090202-XS.DWG
LAYOUT NAME - 09

PLOT DATE : 4/18/2024 8:25 AM

PLOT BY : MATT PAYNE

PLOT NAME :

PLOT SCALE : 1 IN:10 FT HORZ. / 1 IN:10 FT VERT.

WISDOT/CADDS SHEET 49

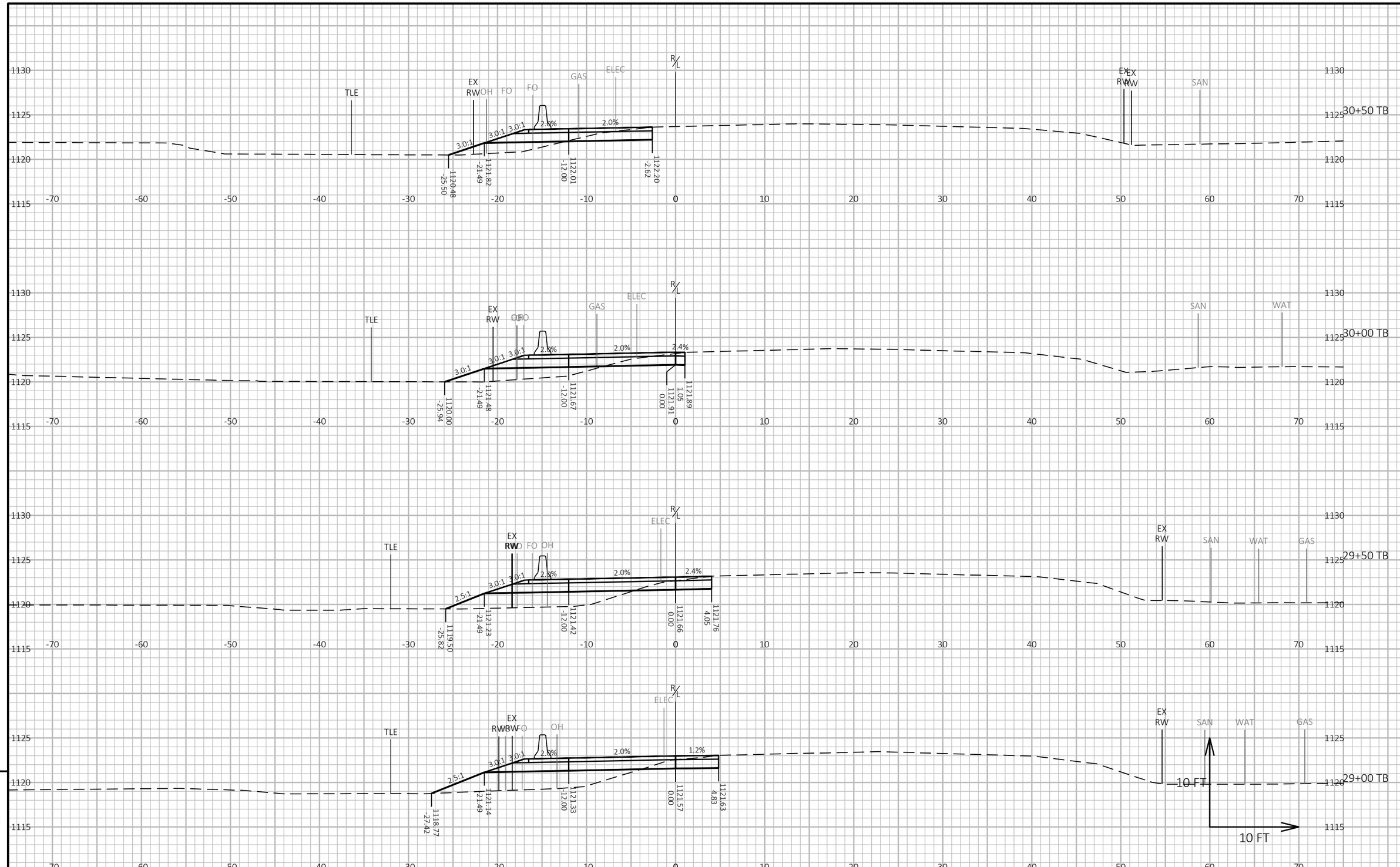

9

9

PROJECT NO: 1550-02-73, 1550-02-77	HWY: USH 63	COUNTY: ST. CROIX	CROSS SECTIONS: TEMPORARY BYPASS	SHEET 201	E

FILE NAME : N:\PDS\C3D\15500203\SHEETSPLAN\090202-XS.DWG
LAYOUT NAME - 10
PLOT DATE : 4/18/2024 8:25 AM
PLOT BY : MATT PAYNE
PLOT NAME :
PLOT SCALE : 1 IN:10 FT HORZ. / 1 IN:10 FT VERT.
WISDOT/CADDS SHEET 49

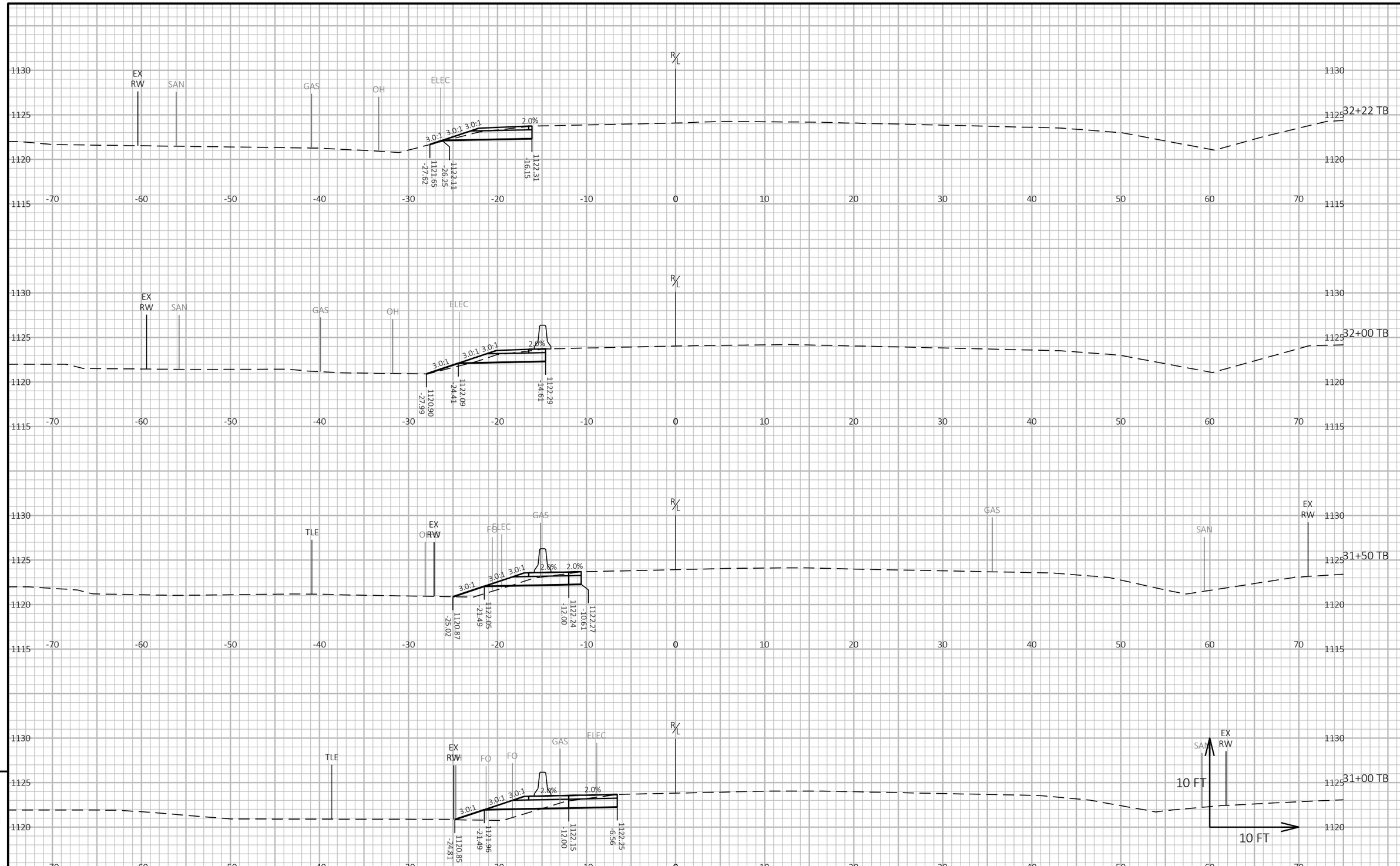

9

9

PROJECT NO: 1550-02-73, 1550-02-77	HWY: USH 63	COUNTY: ST. CROIX	CROSS SECTIONS: TEMPORARY BYPASS	SHEET 202	E

FILE NAME : N:\PDS\C3D\15500203\SHEETSPLAN\090202-XS.DWG
LAYOUT NAME - 11
PLOT DATE : 4/18/2024 8:25 AM
PLOT BY : MATT PAYNE
PLOT NAME :
PLOT SCALE : 1 IN:10 FT HORZ. / 1 IN:10 FT VERT.
WISDOT/CADDS SHEET 49

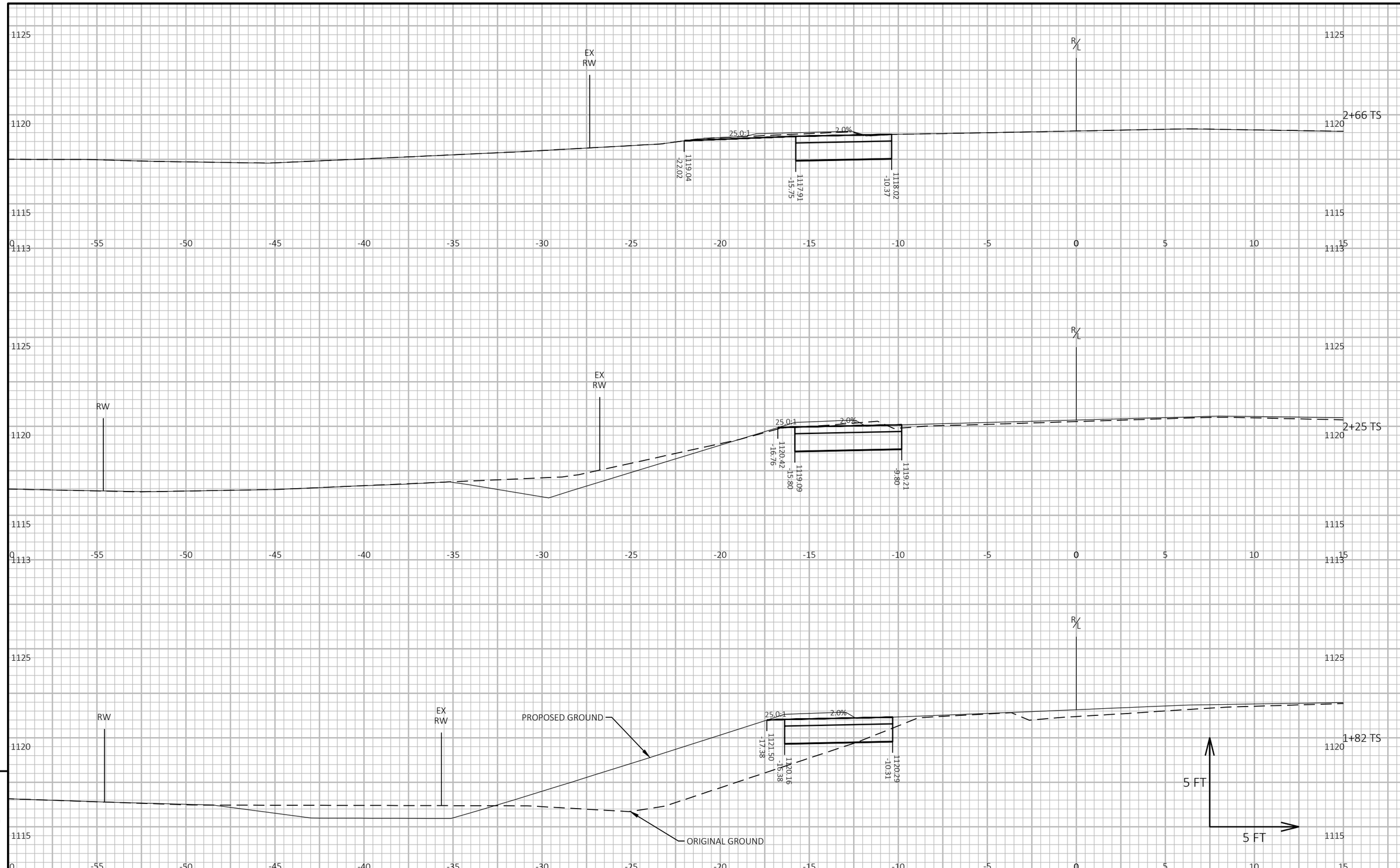

9

9

PROJECT NO: 1550-02-73, 1550-02-77	HWY: USH 63	COUNTY: ST. CROIX	CROSS SECTIONS: TEMPORARY WIDENING - NE SPRUCE ST	SHEET 203	E

FILE NAME : N:\PDS\C3D\15500203\SHEETSPLAN\090203-XS-TC.DWG
LAYOUT NAME - 01
PLOT DATE : 4/18/2024 8:48 AM
PLOT BY : MATT PAYNE
PLOT NAME :
PLOT SCALE : 1 IN:5 FT HORZ. / 1 IN:5 FT VERT.

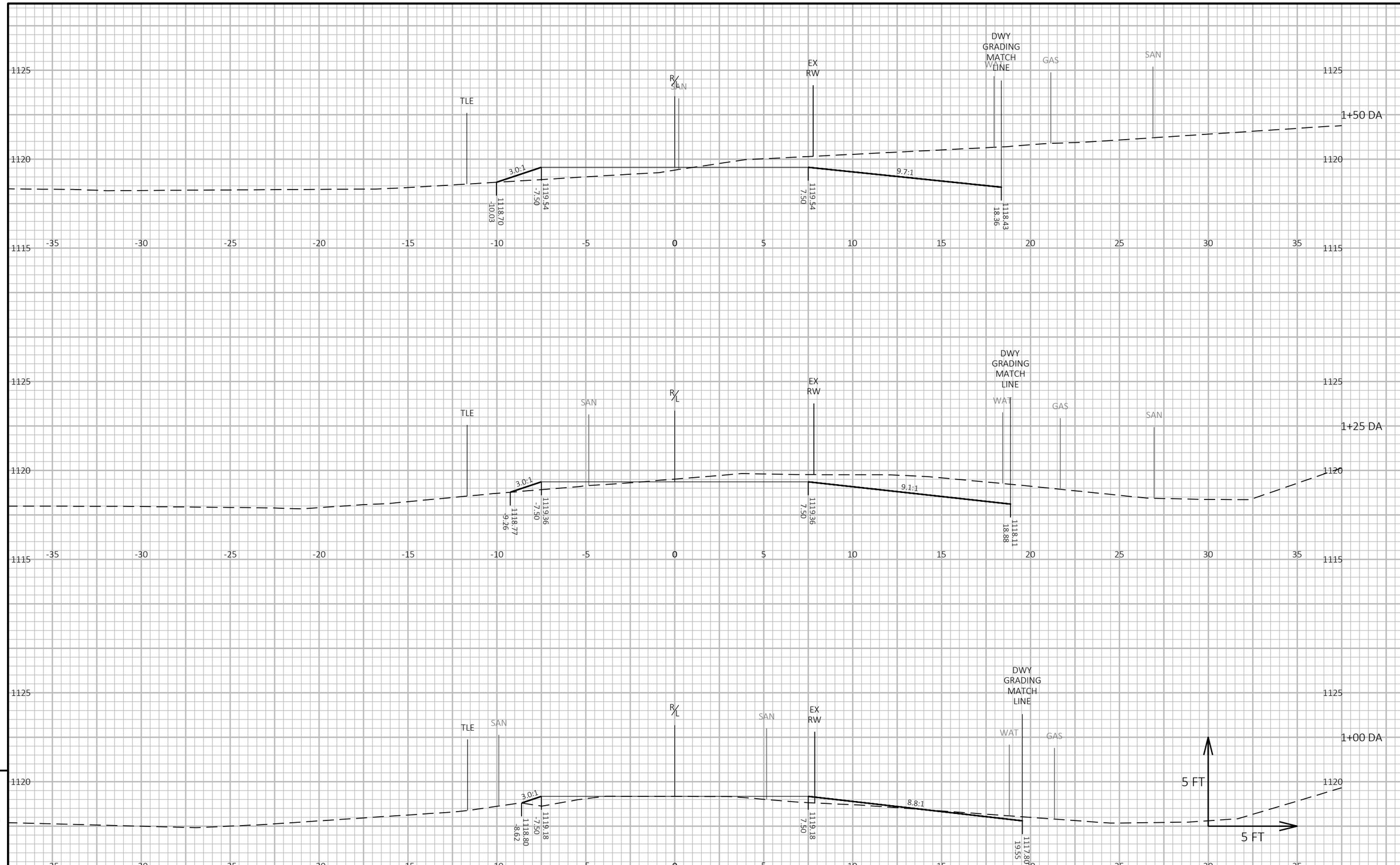

9

9

PROJECT NO: 1550-02-73, 1550-02-77	HWY: USH 63	COUNTY: ST. CROIX	CROSS SECTIONS: STA 119+11 DRIVEWAY	SHEET 204	E

FILE NAME : N:\PDS\C3D\15500203\SHEETSPLAN\090204-XS-DWY.DWG
LAYOUT NAME - 01
PLOT DATE : 3/4/2024 8:54 AM
PLOT BY : MATT PAYNE
PLOT NAME :
PLOT SCALE : 1 IN:5 FT HORZ. / 1 IN:5 FT VERT.

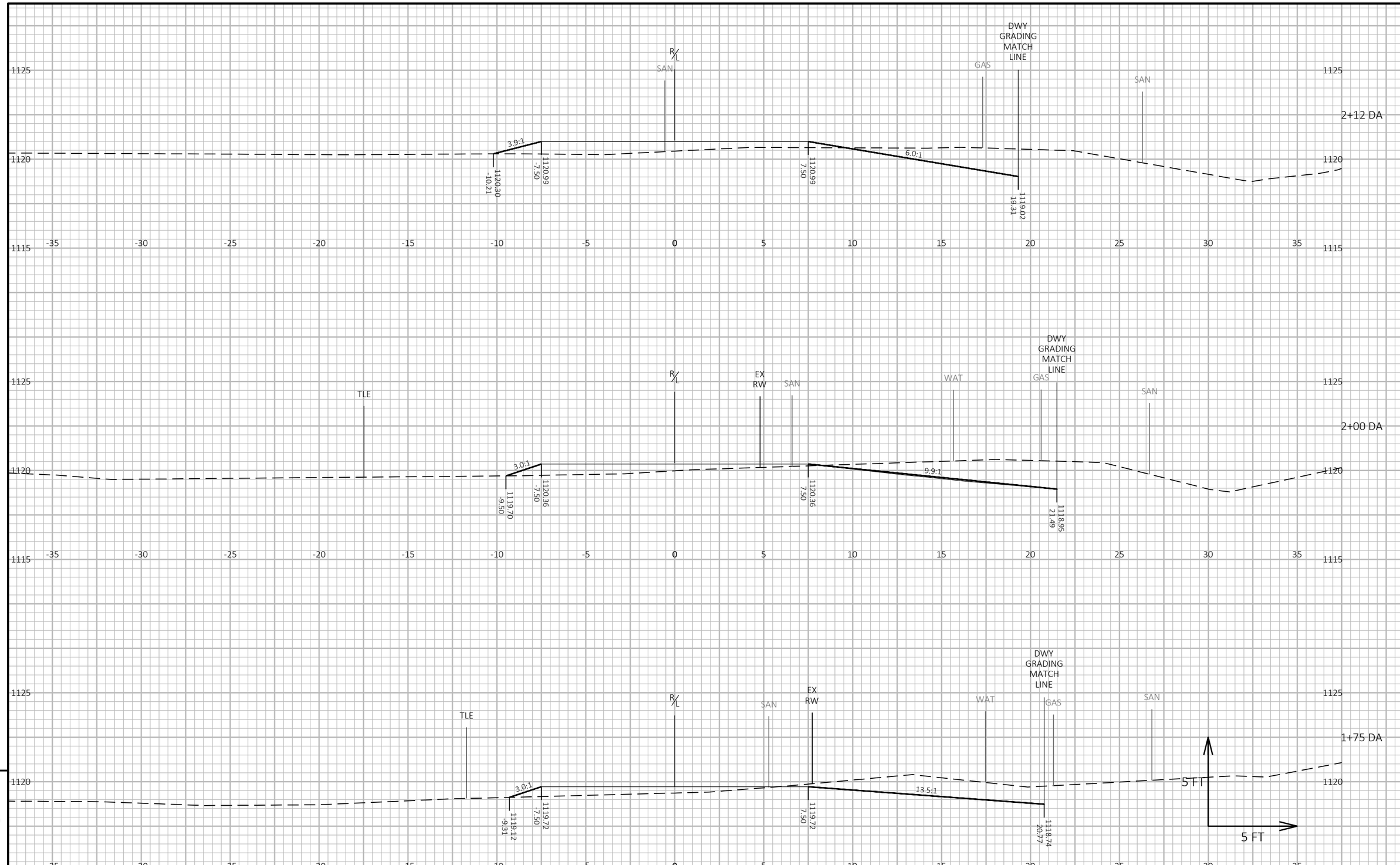

9

9

PROJECT NO: 1550-02-73, 1550-02-77	HWY: USH 63	COUNTY: ST. CROIX	CROSS SECTIONS: STA 119+11 DRIVEWAY	SHEET 205	E

FILE NAME : N:\PDS\C3D\15500203\SHEETSPLAN\090204-XS-DWY.DWG
LAYOUT NAME - 02

PLOT DATE : 3/4/2024 8:54 AM PLOT BY : MATT PAYNE PLOT NAME : PLOT SCALE : 1 IN:5 FT HORZ. / 1 IN:5 FT VERT.

WISDOT/CADDS SHEET 49

Wisconsin Department of Transportation

Dedicated people creating transportation solutions through innovation and exceptional service.

http://www.dot.wisconsin.gov