EAU

AUGUST 2024

PROJECT ID: 7840-03-73

WITH: N/A

COUNTY: CLARK

ORDER OF SHEETS

TOTAL SHEETS = 138

STATE OF WISCONSIN
DEPARTMENT OF TRANSPORTATION

PLAN OF PROPOSED IMPROVEMENT

USH 10 - GREENWOOD

BLACK RIVER BRIDGE B-10-0398

CTH G
CLARK COUNTY

STATE PROJECT	FEDERAL PROJECT	
	PROJECT	CONTRACT
7840-03-73	WISC 2024421	1

STATE PROJECT NUMBER

7840-03-73

16

N

DESIGN DESIGNATION

A.A.D.T.	(2023)	=	1,430
A.A.D.T.	(2043)	=	1,570
D.H.V.		=	220
D.D.		=	60/40
T.		=	7%
DESIGN SPEED		=	30 MPH
ESALS		=	290,000

CONVENTIONAL SYMBOLS

PLAN

CORPORATE LIMITS
PROPERTY LINE
LOT LINE
LIMITED HIGHWAY EASEMENT
EXISTING RIGHT OF WAY
PROPOSED OR NEW R/W LINE
SLOPE INTERCEPT
REFERENCE LINE (300'EB')
EXISTING CULVERT
PROPOSED CULVERT (Box or Pipe)
COMBUSTIBLE FLUIDS (CAUTION)
MARSH AREA
WOODED OR SHRUB AREA

PROFILE

GRADE LINE
ORIGINAL GROUND
MARSH OR ROCK PROFILE (To be noted as such) (ROCK)
SPECIAL DITCH (LABEL)
GRADE ELEVATION (95.36)
CULVERT (Profile View)

UTILITIES

ELECTRIC (E)
FIBER OPTIC (FO)
GAS (G)
SANITARY SEWER (SAN)
STORM SEWER (SS)
TELEPHONE (T)
WATER (W)
UTILITY PEDESTAL
POWER POLE
TELEPHONE POLE

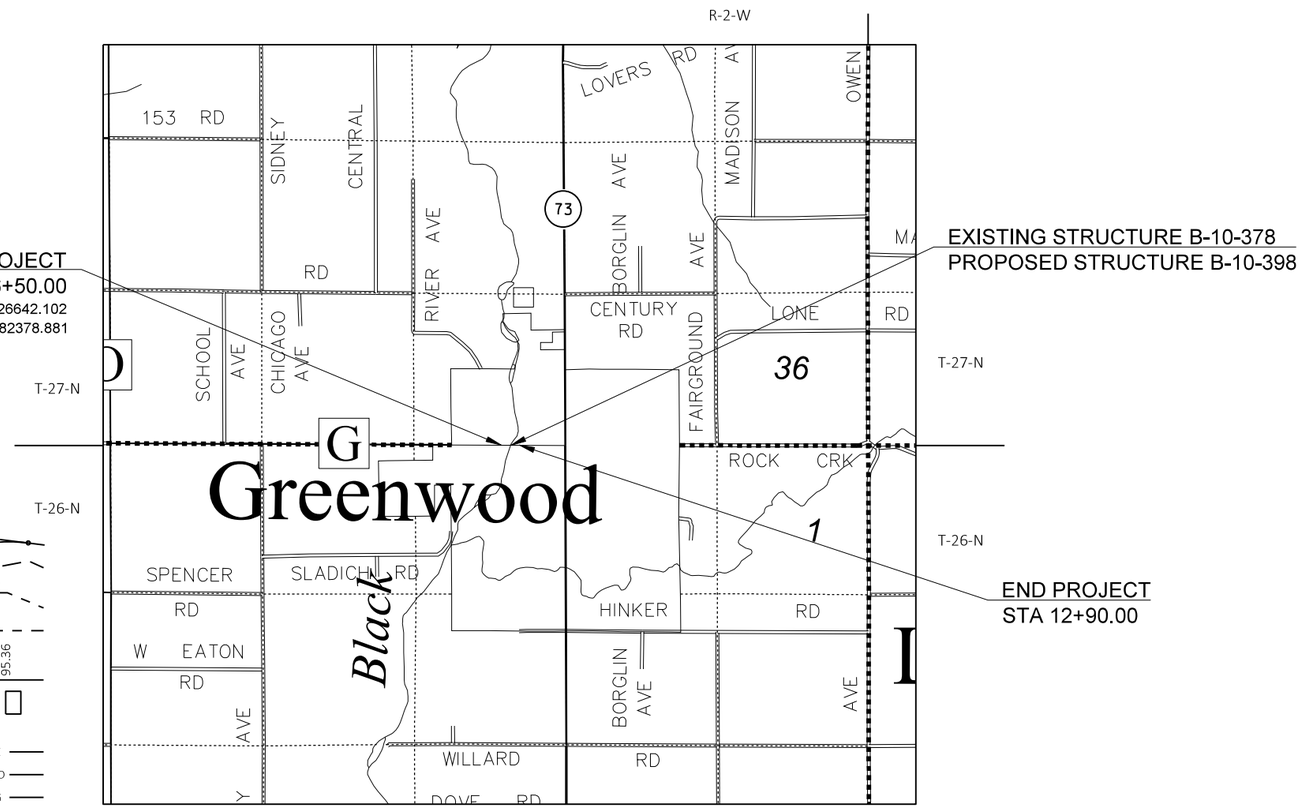

LAYOUT

SCALE 0 — 1 MI

TOTAL NET LENGTH OF CENTERLINE = 0.062 MI

HORIZONTAL POSITIONS SHOWN ON THIS PLAN ARE WISCONSIN COUNTY COORDINATE SYSTEM (WCCS), CLARK, NAD83 (2011), IN U.S. SURVEY FEET. POSITIONS SHOWN ARE GRID COORDINATES, GRID BEARINGS, AND GRID DISTANCES. GRID DISTANCES ARE THE SAME AS GROUND DISTANCES. ELEVATIONS ARE REFERENCED TO NAVD 88 (2012). GPS DERIVED ELEVATIONS ARE BASED ON GEOID 12A.

ACCEPTED FOR

COUNTY of CLARK

4/18/2024 — Date

Brian Duell — HIGHWAY COMMISSIONER

Brian Duell
cn=Brian Duell, o=Clark County, ou=Clark County Highway, email=brian.duell@co.clark.wi.us, c=US
2024.04.18 13:35:40 -05'00'

ORIGINAL PLANS PREPARED BY

AECOM

WISCONSIN PROFESSIONAL ENGINEER
JESSICA L. LANCELLE
E-44657
MILWAUKEE
WISCONSIN

4/17/2024

(Date) (Signature)

STATE OF WISCONSIN
DEPARTMENT OF TRANSPORTATION

PREPARED BY

Surveyor	AECOM
Designer	AECOM
Regional Local Program Project Manager	TOU YANG, PE
Regional Local Program Supervisor	TOU YANG, PE
Regional Local Program Examiner	NWR

APPROVED FOR THE DEPARTMENT

DATE: 4/24/2024 — Tou Yang (Signature)

Digitally signed by Tou Yang
Location: NW Region - Eau Claire
Contact Info: tou.yang@dot.wi.gov
Date: 2024.04.24 14:23:00-05'00'

E

2

LIST OF STANDARD ABBREVIATIONS

ABUT.	ABUTMENT
AGG.	AGGREGATE
APPROX.	APPROXIMATE
A.E.W	APRON ENDWALL
ASPH.	ASPHALTIC
A.D.T.	AVERAGE DAILY TRAFFIC
AZ.	AZIMUTH
BK.	BACK
BEG.	BEGIN
B.M.	BENCH MARK
C/L	CENTER LINE
CONC.	CONCRETE
CONST.	CONSTRUCTION
CO.	COUNTY
C.T.H.	COUNTY TRUNK HIGHWAY
X-SEC.	CROSS SECTION
CR.	CRUSHED
CFS.	CUBIC FEET/SECOND
C.Y., CU. YD.	CUBIC YARD
CULV.	CULVERT
C.P.	CULVERT PIPE
D.O.T.	DEPARTMENT OF TRANSPORTATION
D.H.V.	DESIGN HOUR VOLUME
DIA.	DIAMETER
D.	DIRECTIONAL DISTRIBUTION
DISCH. OR DIS.	DISCHARGE
EA.	EACH
ELECT.	ELECTRIC
EL. OR ELEV.	ELEVATION
EMB.	EMBANKMENT
E.B.S.	EXCAVATION BELOW SUBGRADE
EXIST.	EXISTING
FERT.	FERTILIZE
F.E.	FIELD ENTRANCE
FIN.	FINISHED
FT.	FOOT
F.L.	FLOW LINE
GA.	GAUGE
HORIZ.	HORIZONTAL
CWT.	HUNDREDWEIGHT
INL.	INLET
LT.	LEFT
L.H.F.	LEFT-HAND FORWARD
LIN.	LINEAR
LIN. FT.	LINEAR FOOT
L.S.	LUMP SUM
MAX.	MAXIMUM
MI.	MILE
MISC.	MISCELLANEOUS
N.E.	NORTH EAST
N.W.	NORTH WEST
PAV'T	PAVEMENT
P.C.	POINT OF CURVATURE
P.I.	POINT OF INTERSECTION
P.T.	POINT OF TANGENCY
P.O.T.	POINT OF TANGENT
LB.	POUND
P.E.	PRIVATE ENTRANCE
PROJ.	PROJECT
R.	RANGE
REQ'D	REQUIRED
RT.	RIGHT
R.H.F.	RIGHT-HAND FORWARD
R/W	RIGHT OF WAY
RD.	ROAD
SHR.	SHRINKAGE
SL.	SLOPE
STD.	STANDARD
S.D.D.	STANDARD DETAIL DRAWING
S.T.H.	STATE TRUNK HIGHWAY
STA.	STATION
S.P.P.A.	STRUCTURAL PLATE PIPE ARCH
STRUCT.	STRUCTURE
SURF.	SURFACE
TEL.	TELEPHONE
TN.	TOWN
T.	TRUCKS (PERCENT OF)
UNCL.	UNCLASSIFIED
U.G.	UNDERGROUND
V.	VELOCITY
V.C.	VERTICAL CURVE

GENERAL NOTES

THE LOCATIONS OF EXISTING AND PROPOSED UTILITY INSTALLATIONS AS SHOWN ON THE PLANS ARE APPROXIMATE. THERE MAY BE OTHER UTILITY INSTALLATIONS WITHIN THE PROJECT AREA THAT ARE NOT SHOWN.

NO TREES OR SHRUBS ARE TO BE REMOVED WITHOUT APPROVAL OF THE ENGINEER.

EXCAVATION BELOW SUBGRADE (EBS) IS NOT USED TO BALANCE YARDAGE AND IS NOT SHOWN ON THE CROSS SECTIONS. IF EBS IS REQUIRED, IT SHALL BE MEASURED AND PAID FOR AS EXCAVATION COMMON. LOCATION FOR EBS WILL BE DETERMINED BY THE ENGINEER.

DISTURBED AREAS WITHIN THE RIGHT-OF-WAY, EXCEPT THE AREAS WITHIN THE FINISHED SHOULDER POINTS, SHALL BE FERTILIZED, SEEDED, AND E-MATTED.

EROSION CONTROL FEATURES AS SHOWN ON THE PLANS ARE SUGGESTED LOCATIONS. EXACT LOCATIONS WILL BE DETERMINED BY THE ENGINEER IN THE FIELD.

DISTANCES SHOWN ON THIS PLAN ARE GROUND DISTANCES.

WETLANDS ARE PRESENT WITHIN THE PROJECT LIMITS. DO NOT OPERATE EQUIPMENT OUTSIDE THE SLOPE INTERCEPTS.

THE WISCONSIN DEPARTMENT OF TRANSPORTATION WILL FURNISH THE CONTRACTOR AN ALUMINUM MONUMENT TO SET IN THE STRUCTURE AS DESIGNATED BY THE ENGINEER.

SECTION 2 SHEETS

GENERAL NOTES
PROJECT OVERIVEW
TYPICAL SECTIONS
CONSTRUCTION DETAILS
PLAN DETAILS
REMOVALS
EROSION CONTROL
DETOUR

UTILITY CONTACTS

COMMUNICATIONS
ASTREA
ANDY HEIGL
105 KENT STREET
PO BOX 190
IRON MOUNTAIN, MI 49801
T: 906-774-6621
C: 906-221-7536
ANDY.HEIGL@ASTREACONNECT.COM

EVERSTREAM
SHAD GARCIA
324 E. WISCONSIN AVENUE, SUITE 730
MILWAUKEE, WI 53202
T: 414-409-1708
C: 414-522-6685
SGARCIA@EVERSTREAM.NET

BADGER TELECOM (TDS)
JEFF OLSON
171 PAOLI RD
VERONA, WI 53593
T: 608-845-2219
JEFFREY.OLSON@TDSTELECOM.COM

ELECTRIC
XCEL ENERGY
PAMELA DENZINE
500 N. 5TH STREET
ABBOTSFORD, WI 54405
T: 715-737-7174
PAMELA.DENZINE@XCELENERGY.COM

GAS
WE ENERGIES
TAYLOR WIETING
1621 8TH STREET SOUTH
WISCONSIN RAPIDS. WI 54494
T: 715-421-7277
C: 715-213-5189
TAYLOR.WIETING@WE-ENERGIES.COM

WATER
CITY OF GREENWOOD
TRENT JOHNSON
PO BOX D
GREENWOOD, WI 54437
715-937-3784
TJOHNSON@GREENWOODWI.COM

DIGGERS HOTLINE
Dial 811 or (800)242-8511
www.DiggersHotline.com

PROJECT CONTACTS

WISCONSIN DNR - NW REGION
BRAD BETTHAUSER
BLACK RIVER FALLS DNR SERVICE CENTER
910 HWY 54 E
BLACK RIVER FALLS, WI 54615
BRADLEY.BETTHAUSER@WISCONSIN.GOV
C: 715-213-9064

LOCAL CONTACT
CLARK COUNTY HIGHWAY COMMISSIONER
BRIAN DUELL
511 W. SOUTH STREET
LOYAL, WI 54446
BRIAN.DUELL@CO.CLARK.WI.US
715-743-3680

RUNOFF COEFFICIENT TABLE

	HYDROLOGIC SOIL GROUP											
	A			B			C			D		
	SLOPE RANGE (PERCENT)			SLOPE RANGE (PERCENT)			SLOPE RANGE (PERCENT)			SLOPE RANGE (PERCENT)		
LAND USE:	0-2	2-6	6 & OVER	0-2	2-6	6 & OVER	0-2	2-6	6 & OVER	0-2	2-6	6 & OVER
ROW CROPS	.08 .22	.16 .30	.22 .38	.12 .26	.20 .34	.27 .44	.15 .30	.24 .37	.33 .50	.19 .34	.28 .41	.38 .56
MEDIAN STRIP-TURF	.19 .24	.20 .26	.24 .30	.19 .25	.22 .28	.26 .33	.20 .26	.23 .30	.30 .37	.20 .27	.25 .32	.30 .40
SIDE SLOPE-TURF			.25 .32			.27 .34			.28 .36			.30 .38
PAVEMENT:												
ASPHALT	.70 - .95											
CONCRETE	.80 - .95											
BRICK	.70 - .80											
DRIVES, WALKS	.75 - .85											
ROOFS	.75 - .95											
GRAVEL ROADS, SHOULDERS	.40 - .60											

TOTAL PROJECT AREA = 2.528 ACRES
TOTAL AREA EXPECTED TO BE DISTURBED BY CONSTRUCTION ACTIVITIES = 1.527 ACRES

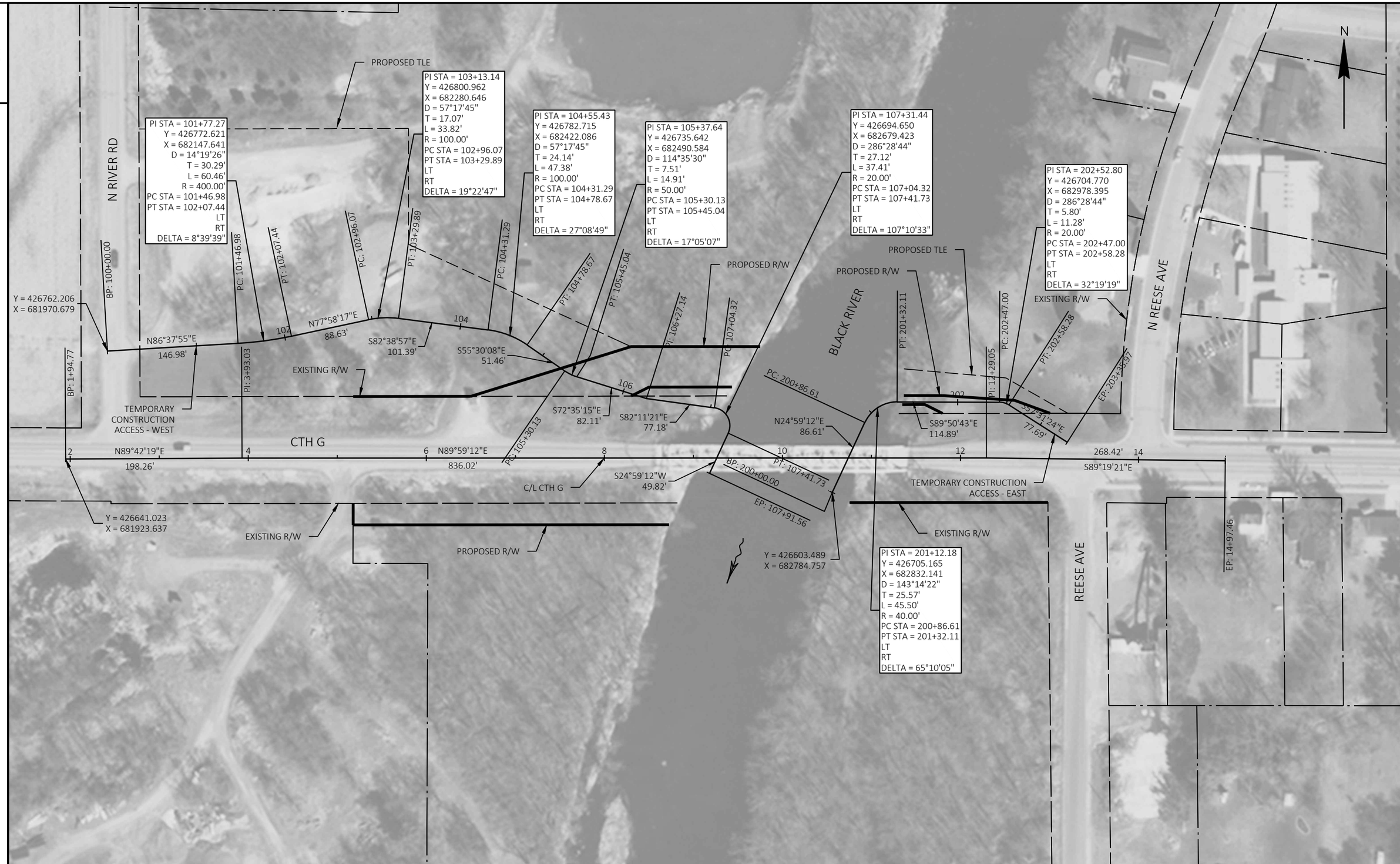

PROJECT NO: 7840-03-73	HWY: CTH G	COUNTY: CLARK	PROJECT OVERVIEW AND ALIGNMENT PLANS	SHEET 3	E

FILE NAME : C:\ONEDRIVE\AECOM\60645919 - CTH G, CLARK COUNTY - GENERAL\900_CAD_GIS\910_CAD\78400303\SHEETSPLAN\0202-PO.DWG
LAYOUT NAME - 020201-po
PLOT DATE : 5/20/2024 12:06 PM PLOT BY : LANCELLE, JESSICA PLOT NAME : PLOT SCALE : 1 IN:100 FT
WISDOT/CADDS SHEET 42

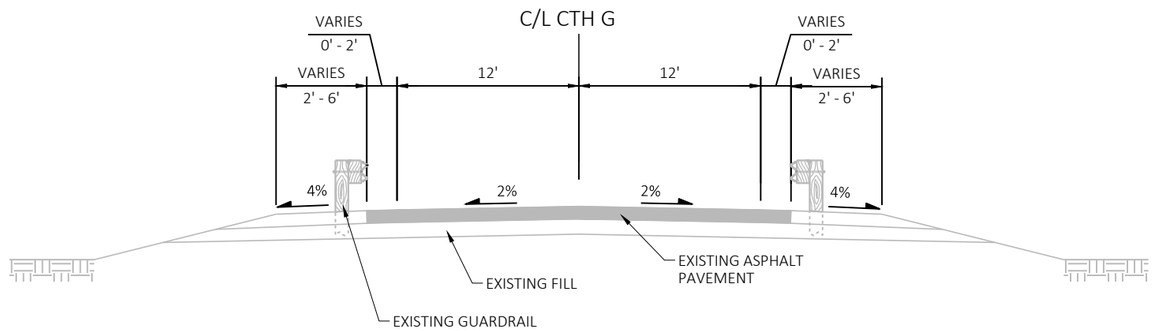

TYPICAL EXISTING SECTION

STA 6+50.00 TO STA 12+90.00

LEGEND

1 PLACE TOPSOIL, FERTILIZER, SEED AND EROSION MAT

2 PLACE FERTILIZER AND SEED

* RESTORATION ITEMS MEASURED FOR A WIDTH OF 10' FROM EDGE OF RECREATIONAL LANE TO BE PAID UNDER CATEGORY 0030. RESTORATION ITEMS BEYOND THAT POINT TO THE SLOPE INTERCEPT TO BE PAID UNDER CATEGORY 0010.

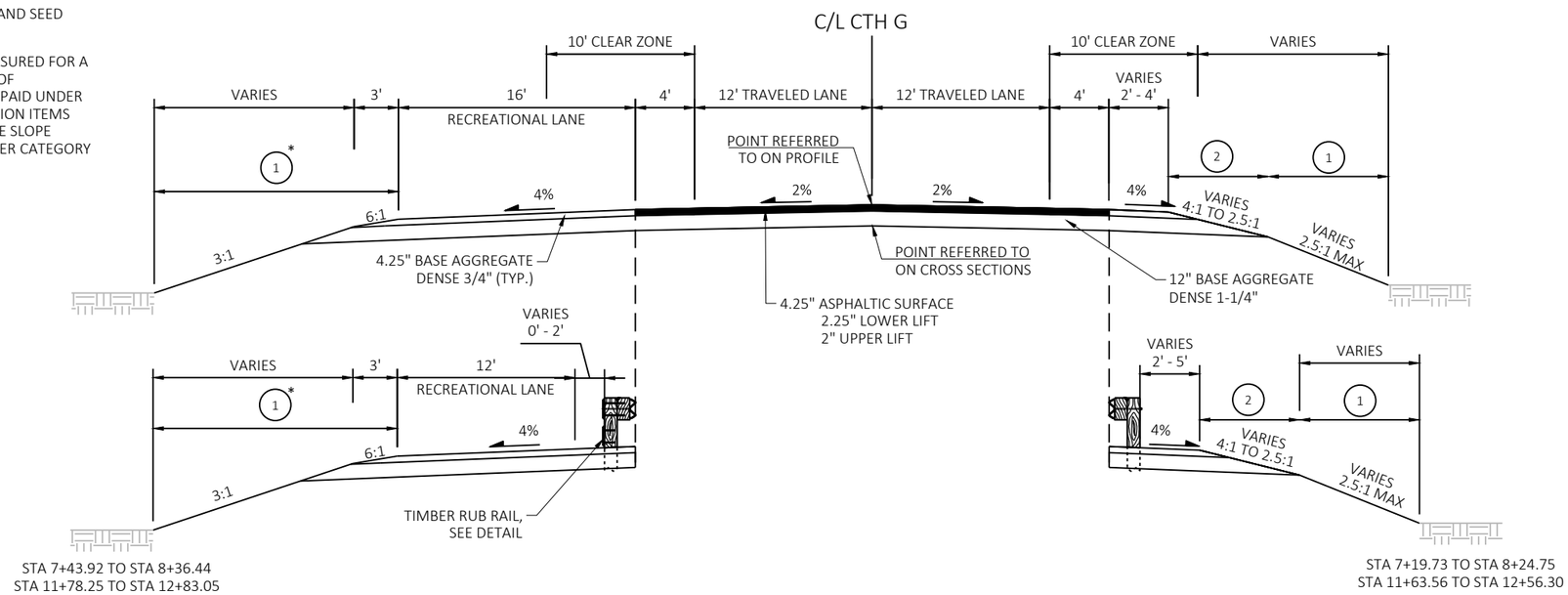

TYPICAL PROPOSED SECTION

STA 6+50.00 TO STA 8+21.54
STA 11+78.41 TO STA 12+90.00

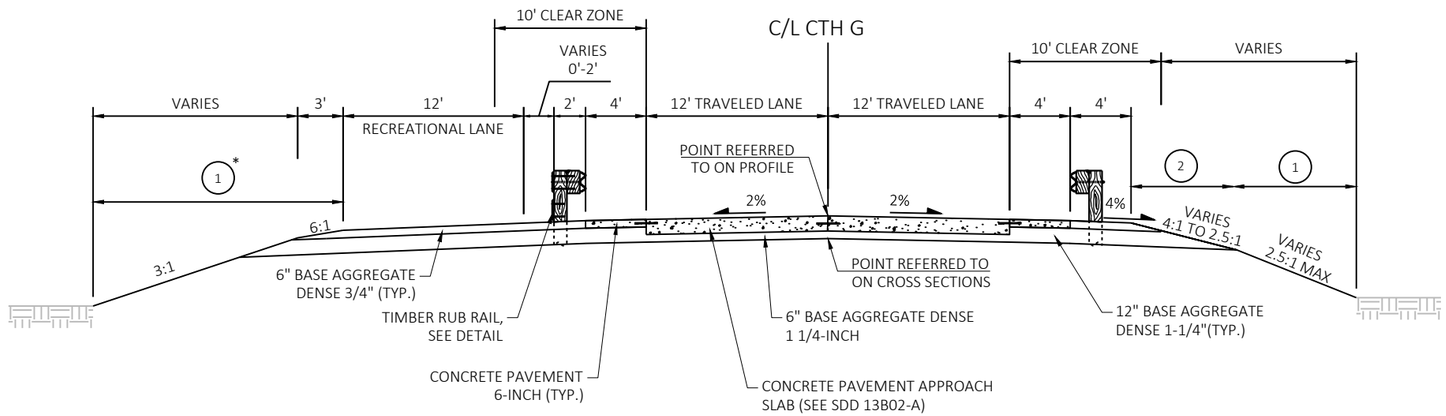

LEGEND

1 PLACE TOPSOIL, FERTILIZER, SEED AND EROSION MAT

2 PLACE FERTILIZER AND SEED

* RESTORATION ITEMS MEASURED FOR A WIDTH OF 10' FROM EDGE OF RECREATIONAL LANE TO BE PAID UNDER CATEGORY 0030. RESTORATION ITEMS BEYOND THAT POINT TO THE SLOPE INTERCEPT TO BE PAID UNDER CATEGORY 0010.

TYPICAL PROPOSED SECTION

STA 8+21.54 TO STA 8+42.14
STA 11+57.86 TO STA 11+78.41

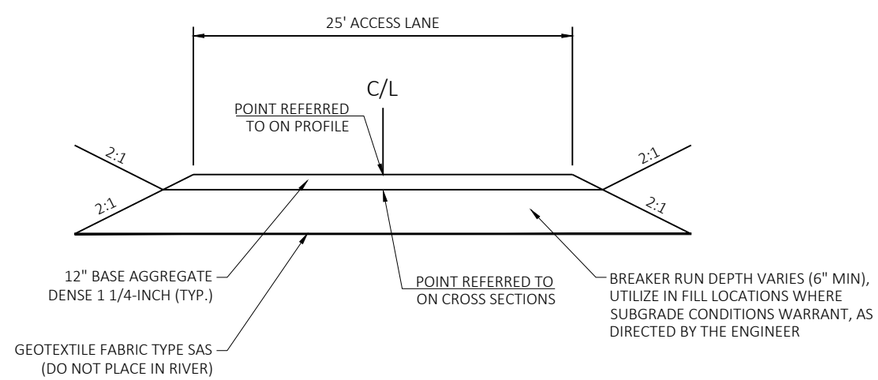

TYPICAL PROPOSED SECTION - TEMPORARY CONSTRUCTION ACCESS

STA 100+13.00 TO STA 107+97.38
STA 200+00.00 TO STA 203+35.97

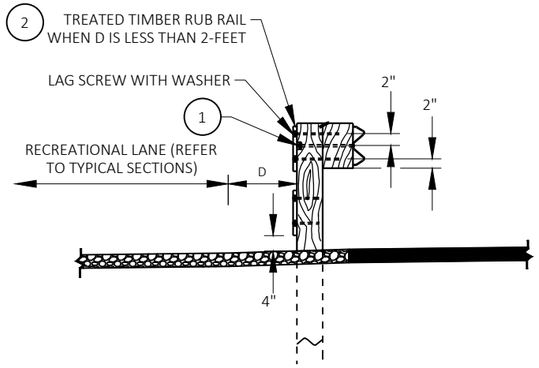

TREATED TIMBER RUB RAIL DETAIL AT BEAMGUARD

STA 8+09.58 - STA 12+05.35

1 ALL CARRIAGE BOLTS & LAG SCREWS USED IN CONSTRUCTION THAT ARE ADJACENT TO THE MULTI-USE TRAIL SHALL BE COUNTERSUNK TO CLEAR SCREW HEAD OR BOLT NUT.

2 2"x10" TREATED TIMBER RUB RAIL REQUIRED WHERE BEAM GUARD IS ADJACENT TO RECREATIONAL LANE.
DO NOT PLACE ON ENERGY ABSORBING TERMINAL.

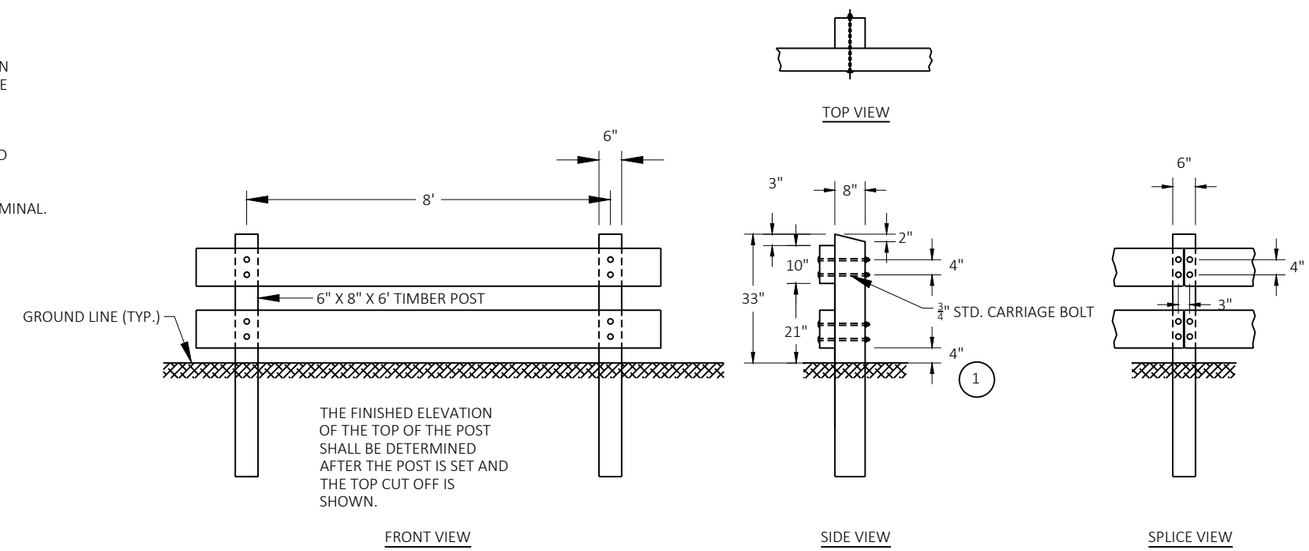

TIMBER RAIL GUARD FENCE DETAIL

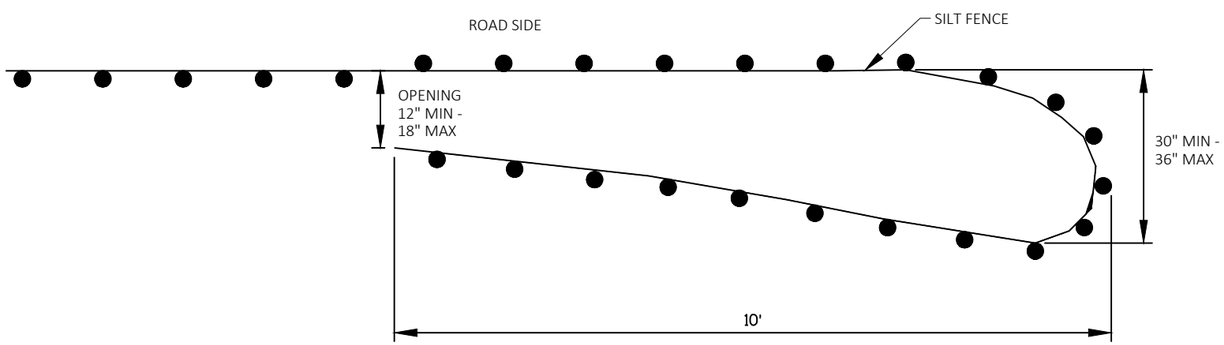

PLAN VIEW

GENERAL NOTES:
SILT FENCE POSTS FOR THE TURN-AROUND SHOULD BE ON THE OUTSIDE OF THE TURN-AROUND. AND TRENCHED IN ACCORDING TO SILT FENCE REQUIREMENTS.

SEE PLANS FOR SILT FENCE LOCATIONS. INSTALL TURN-AROUND AT END OF SHOWN FENCING.

ROADSIDE OFFSETS DEPENDENT ON LOCATION.

TEMPORARY SMALL ANIMAL TURN-AROUND

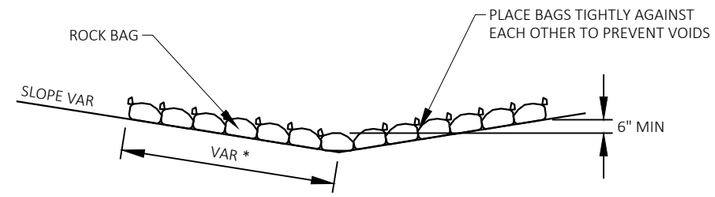

SIDE VIEW (SINGLE LAYER)

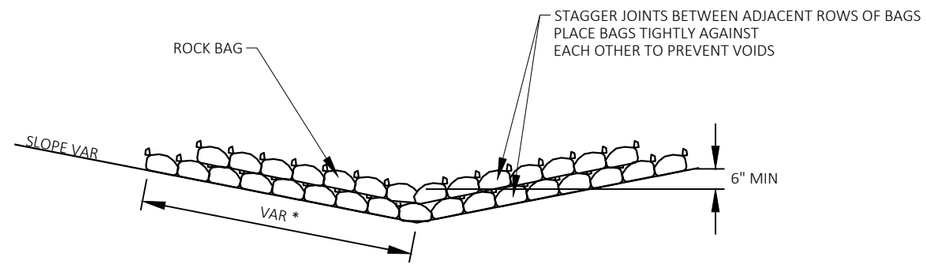

* LENGTH AND NUMBER OF BAGS MAY VARY
DEPENDING ON DESIRED DEPTH OF WATER POOL

SIDE VIEW (MULTIPLE LAYER)

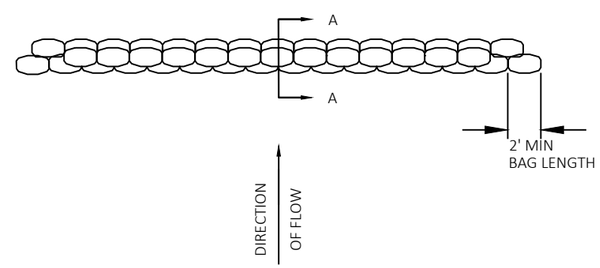

TOP VIEW (MULTIPLE LAYER)

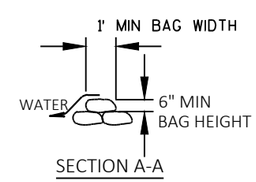

ROCK BAGS USED FOR DITCH CHECKS

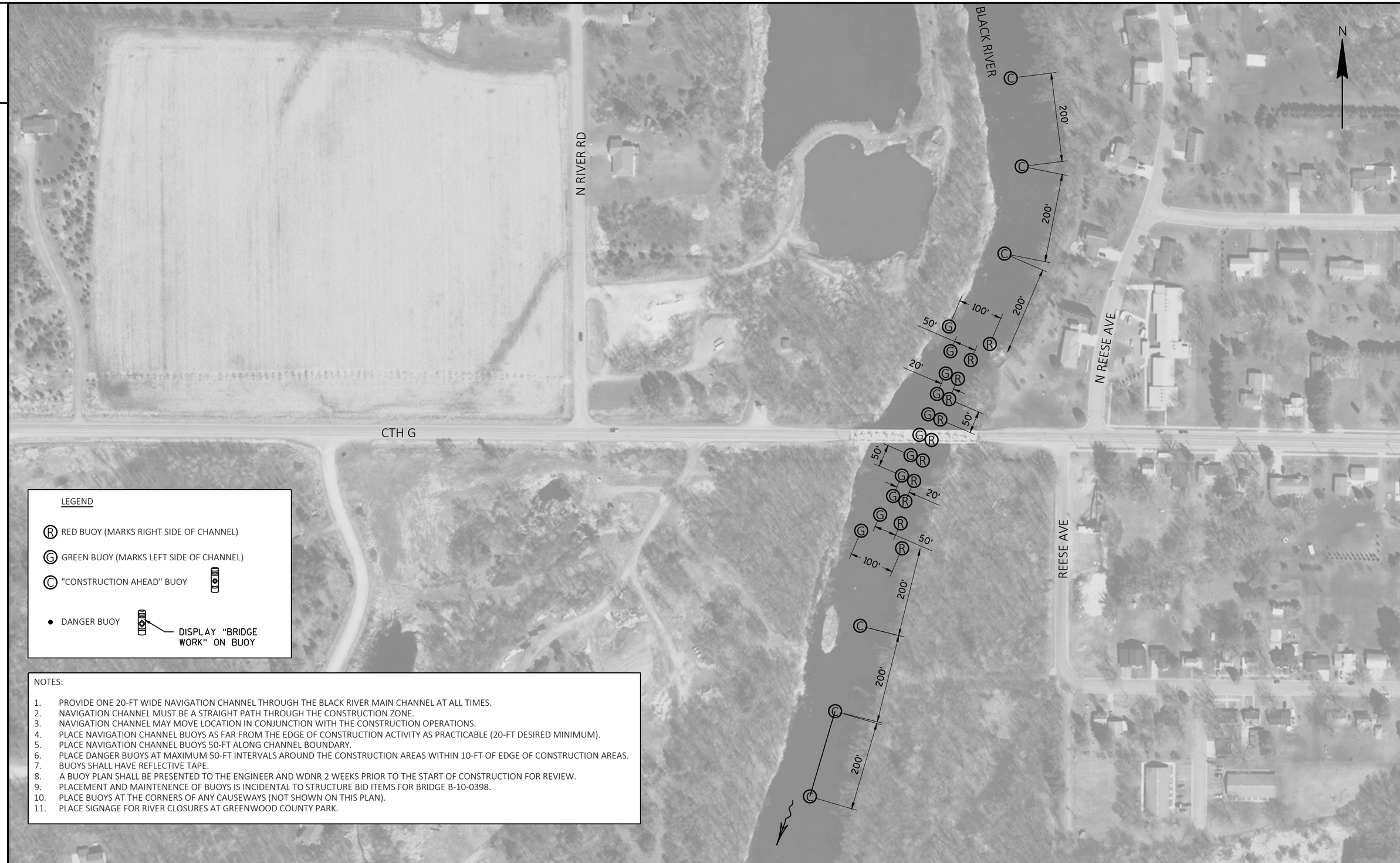

NOTES:

1. PROVIDE ONE 20-FT WIDE NAVIGATION CHANNEL THROUGH THE BLACK RIVER MAIN CHANNEL AT ALL TIMES.
2. NAVIGATION CHANNEL MUST BE A STRAIGHT PATH THROUGH THE CONSTRUCTION ZONE.
3. NAVIGATION CHANNEL MAY MOVE LOCATION IN CONJUNCTION WITH THE CONSTRUCTION OPERATIONS.
4. PLACE NAVIGATION CHANNEL BUOYS AS FAR FROM THE EDGE OF CONSTRUCTION ACTIVITY AS PRACTICABLE (20-FT DESIRED MINIMUM).
5. PLACE NAVIGATION CHANNEL BUOYS 50-FT ALONG CHANNEL BOUNDARY.
6. PLACE DANGER BUOYS AT MAXIMUM 50-FT INTERVALS AROUND THE CONSTRUCTION AREAS WITHIN 10-FT OF EDGE OF CONSTRUCTION AREAS.
7. BUOYS SHALL HAVE REFLECTIVE TAPE.
8. A BUOY PLAN SHALL BE PRESENTED TO THE ENGINEER AND WDNR 2 WEEKS PRIOR TO THE START OF CONSTRUCTION FOR REVIEW.
9. PLACEMENT AND MAINTENENCE OF BUOYS IS INCIDENTAL TO STRUCTURE BID ITEMS FOR BRIDGE B-10-0398.
10. PLACE BUOYS AT THE CORNERS OF ANY CAUSEWAYS (NOT SHOWN ON THIS PLAN).
11. PLACE SIGNAGE FOR RIVER CLOSURES AT GREENWOOD COUNTY PARK.

PROJECT NO: 7840-03-73	HWY: CTH G	COUNTY: CLARK	TRAFFIC CONTROL - WATERWAY MARKER	SHEET 8	E

FILE NAME : C:\ONEDRIVE\AECOM\60645919 - CTH G, CLARK COUNTY - GENERAL\900_CAD_GIS\910_CAD\78400303\SHEETSPLAN\0210-CD-BUOY.DWG
LAYOUT NAME - 02101-cd-buoy
PLOT DATE : 4/17/2024 12:45 PM PLOT BY : LANCELLE, JESSICA PLOT NAME : PLOT SCALE : 1 IN:200 FT

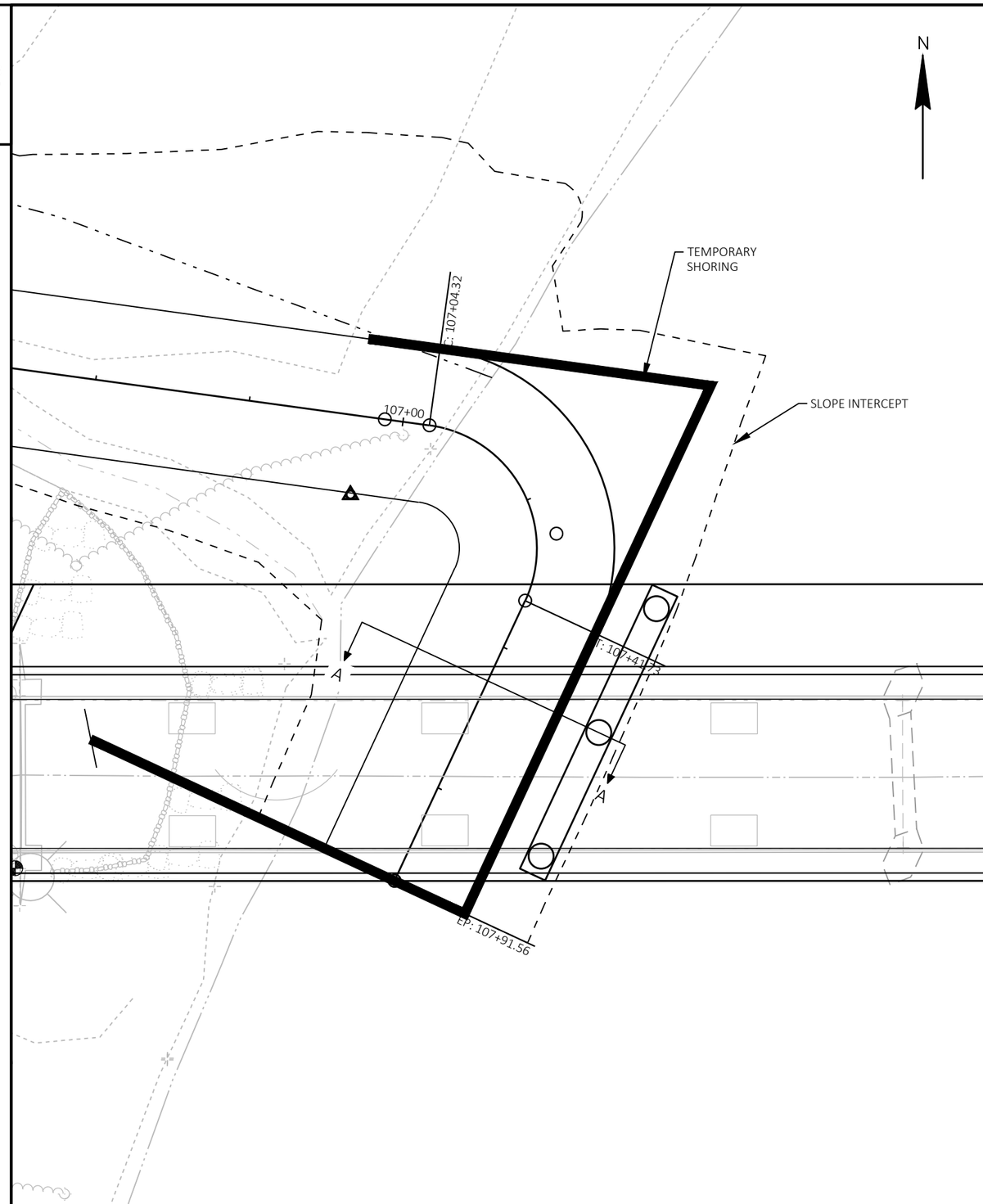

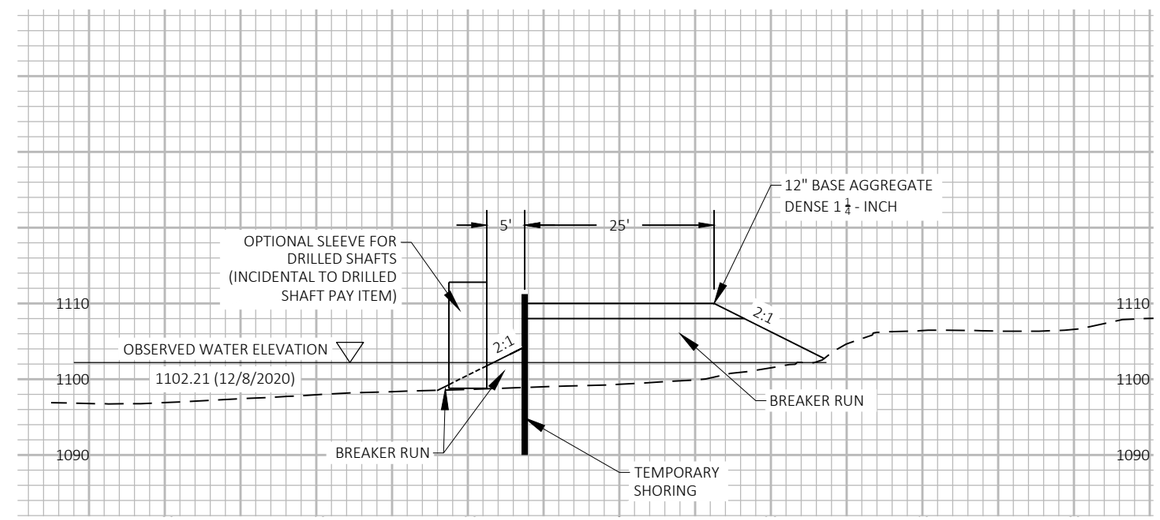

SECTION A-A

NOTES:

1. CONSTRUCTION DETAIL FOR TEMPORARY CONSTRUCTION ACCESS DEPICTS ASSUMPTIONS MADE FOR PERMITTING PURPOSES. CONTRACTOR MAY MODIFY CONSTRUCTION ACCESSES BUT LIMITS MUST REMAIN WITHIN LIMITS SHOWN UNLESS A PERMIT MODIFICATION IS SUBMITTED AND APPROVED. SEE SPECIAL PROVISIONS.

2. DETAIL IS SHOWN AT PIER 1 BUT IS TYPICAL TO PIER 2.

ASSUMPTIONS:

1. TEMPORARY CONSTRUCTION ACCESS ELEVATION 1110.00.

2. FOR EACH 1' OF TEMPORARY SHORING EMBEDMENT INTO THE RIVER BED, ALLOWABLE CANTILEVER HEIGHT IS 0.5'. ADDITIONAL SUPPORT TO BE PROVIDED BY BREAKER RUN TOE FILL. IN ACCORDANCE WITH THE STANDARD SPEC, FINAL DESIGN OF TEMPORARY SHORING IS THE CONTRACTOR'S RESPONSIBILITY.

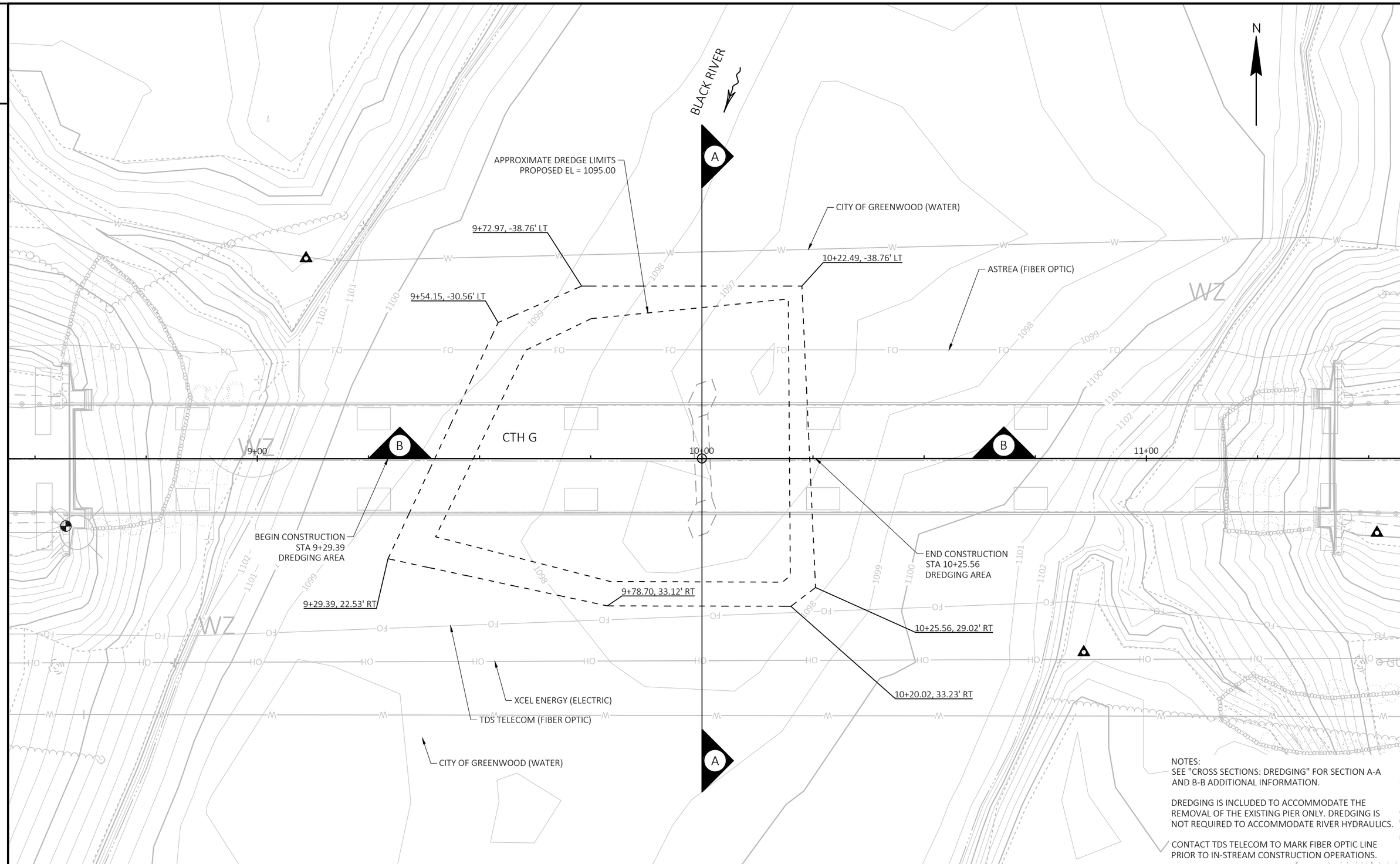

NOTES:
SEE "CROSS SECTIONS: DREDGING" FOR SECTION A-A AND B-B ADDITIONAL INFORMATION.

DREDGING IS INCLUDED TO ACCOMMODATE THE REMOVAL OF THE EXISTING PIER ONLY. DREDGING IS NOT REQUIRED TO ACCOMMODATE RIVER HYDRAULICS.

CONTACT TDS TELECOM TO MARK FIBER OPTIC LINE PRIOR TO IN-STREAM CONSTRUCTION OPERATIONS.

PROJECT NO: 7840-03-73	HWY: CTH G	COUNTY: CLARK	PLAN DETAIL - DREDGING	SHEET 10	E

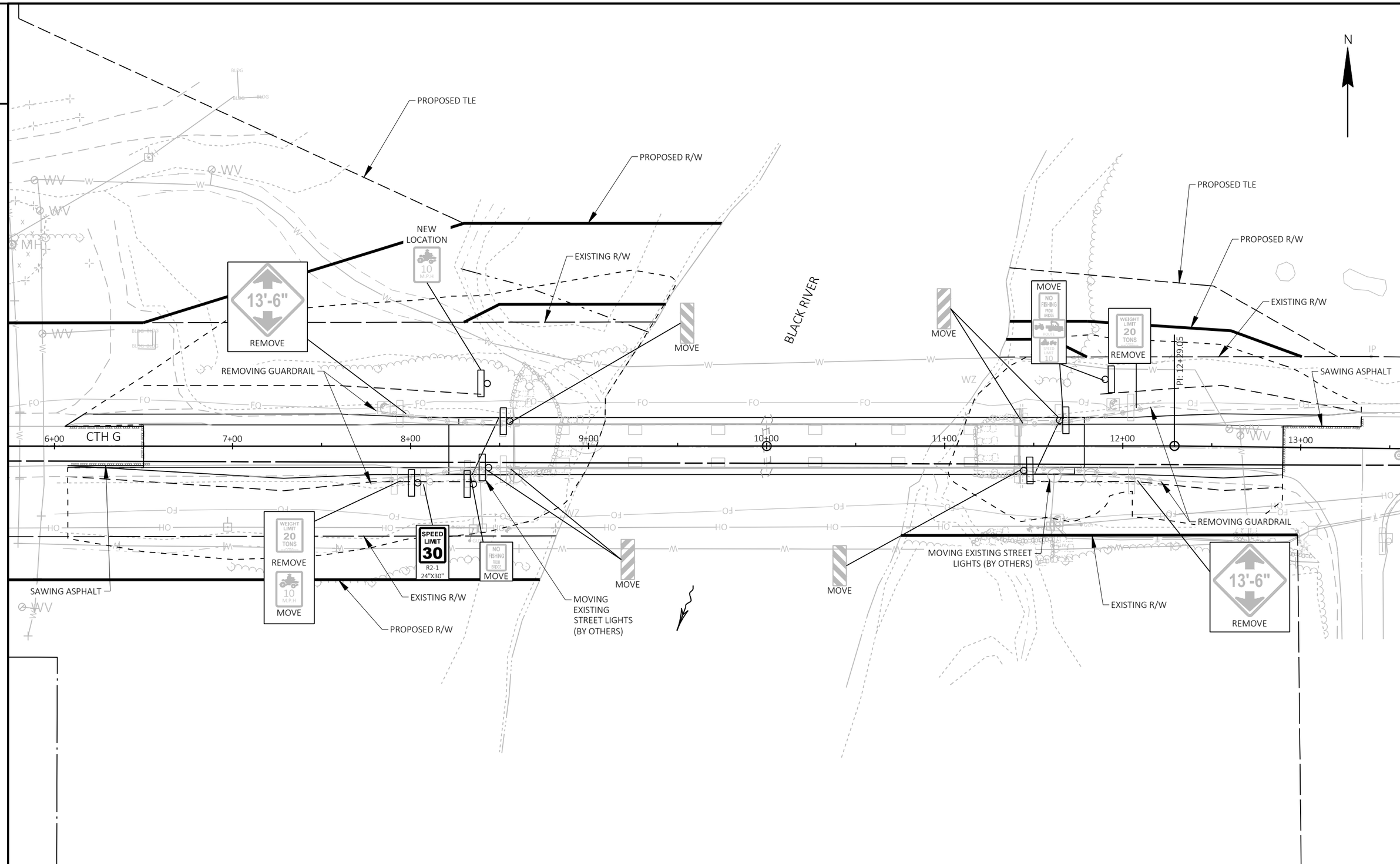

PROJECT NO: 7840-03-73	HWY: CTH G	COUNTY: CLARK	REMOVALS	SHEET 11	E

FILE NAME : C:\ONEDRIVE\AECOM\60645919 - CTH G, CLARK COUNTY - GENERAL\900_CAD_GIS\910_CAD\78400303\SHEETSPLAN\0211-PD-REMOVALS.DWG
LAYOUT NAME - 0211-pd-removals
PLOT DATE : 6/3/2024 1:21 PM
PLOT BY : LANCELLE, JESSICA
PLOT NAME :
PLOT SCALE : 1 IN:50 FT
WISDOT/CADDS SHEET 42

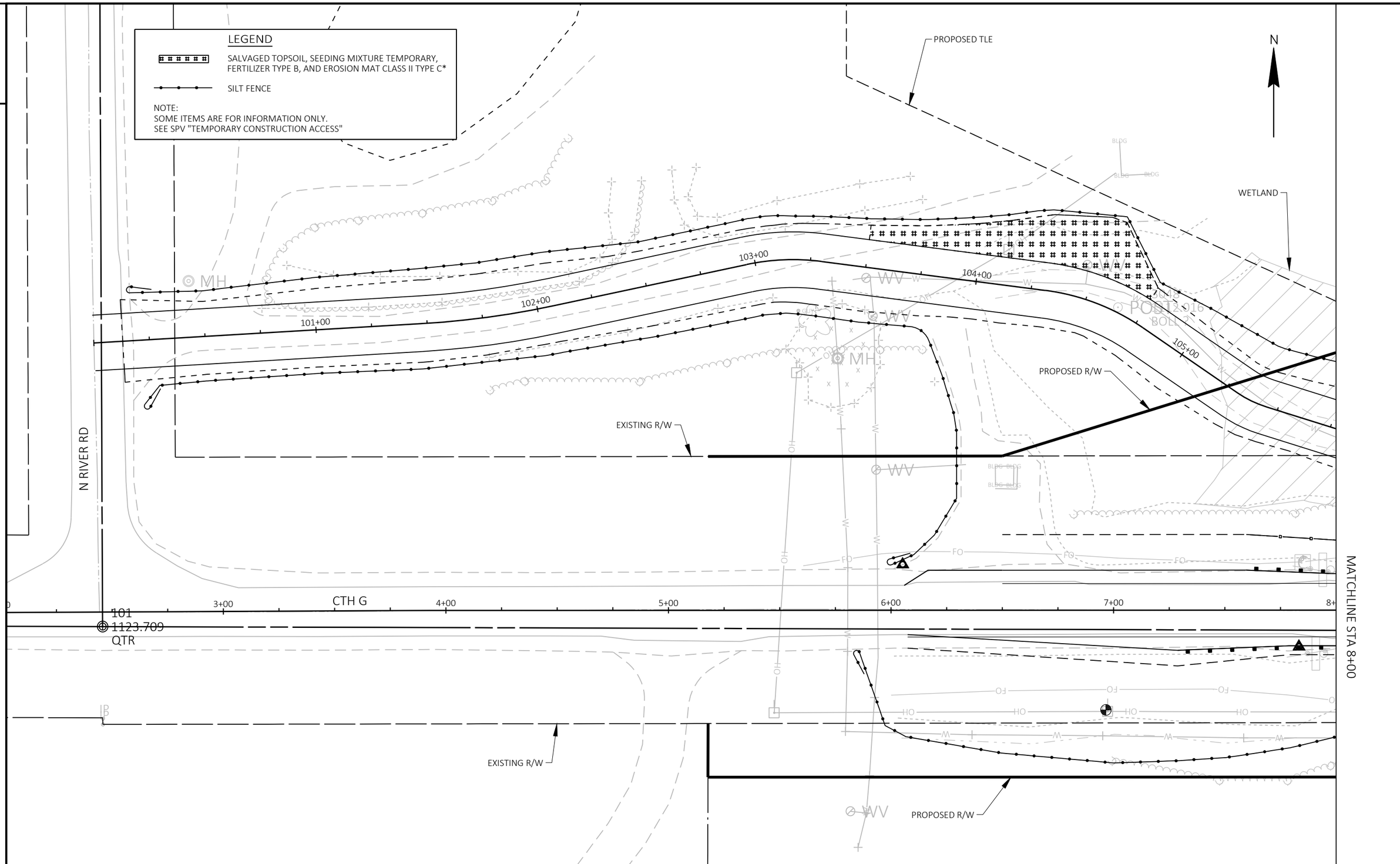

PROJECT NO: 7840-03-73	HWY: CTH G	COUNTY: CLARK	EROSION CONTROL - PHASE 1	SHEET 12	E

FILE NAME : C:\ONEDRIVE\AECOM\60645919 - CTH G, CLARK COUNTY - GENERAL\900_CAD_GIS\910_CAD\78400303\SHEETSPLAN\0220-EC1.DWG
LAYOUT NAME - 022001-ec1
PLOT DATE : 6/21/2024 9:33 AM
PLOT BY : LANCELLE, JESSICA
PLOT NAME :
PLOT SCALE : 1 IN:40 FT
WISDOT/CADDS SHEET 42

2

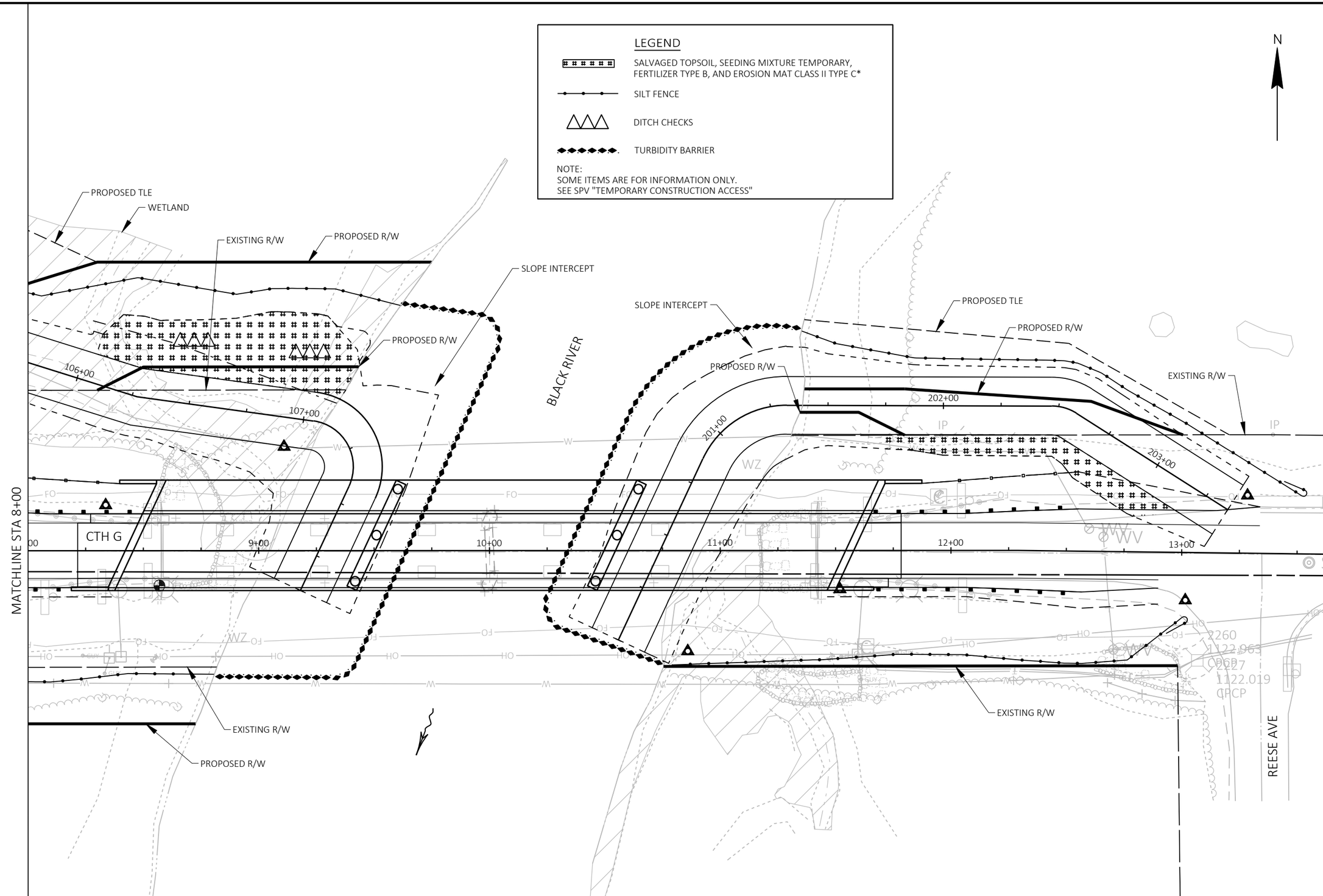

2

PROJECT NO: 7840-03-73	HWY: CTH G	COUNTY: CLARK	EROSION CONTROL - PHASE 1	SHEET 13	E

FILE NAME : C:\ONEDRIVE\AECOM\60645919 - CTH G, CLARK COUNTY - GENERAL\900_CAD_GIS\910_CAD\78400303\SHEETSPLAN\0220-EC1.DWG
LAYOUT NAME - 022002-ec1
PLOT DATE : 6/21/2024 9:33 AM
PLOT BY : LANCELLE, JESSICA
PLOT NAME :
PLOT SCALE : 1 IN:40 FT
WISDOT/CADDS SHEET 42

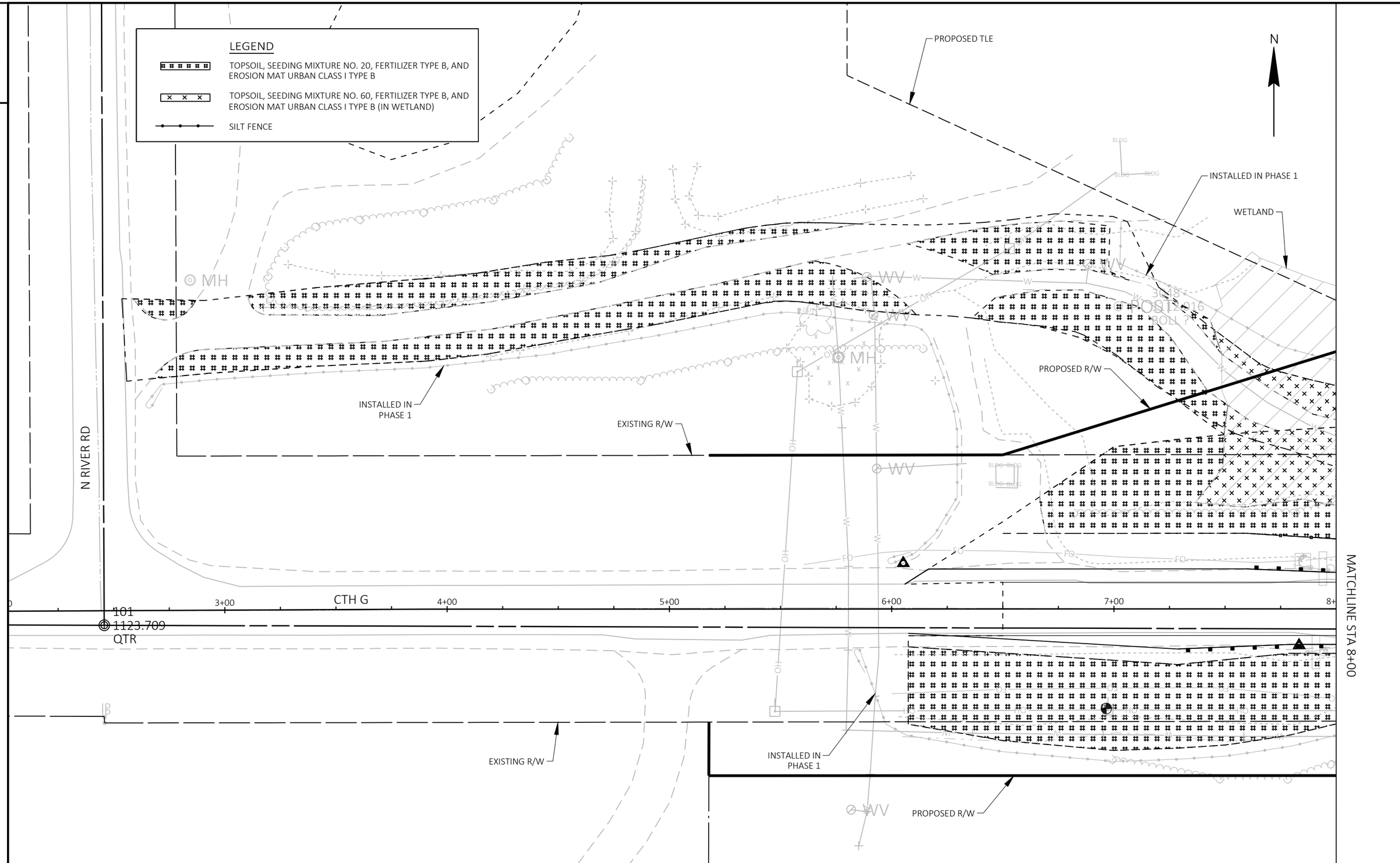

PROJECT NO: 7840-03-73	HWY: CTH G	COUNTY: CLARK	EROSION CONTROL - PHASE 2	SHEET 14	E

FILE NAME : C:\ONEDRIVE\AECOM\60645919 - CTH G, CLARK COUNTY - GENERAL\900_CAD_GIS\910_CAD\78400303\SHEETSPLAN\0220-EC2.DWG
LAYOUT NAME - 022001-ec1
PLOT DATE : 6/3/2024 1:22 PM
PLOT BY : LANCELLE, JESSICA
PLOT NAME :
PLOT SCALE : 1 IN:40 FT
WISDOT/CADDS SHEET 42

2

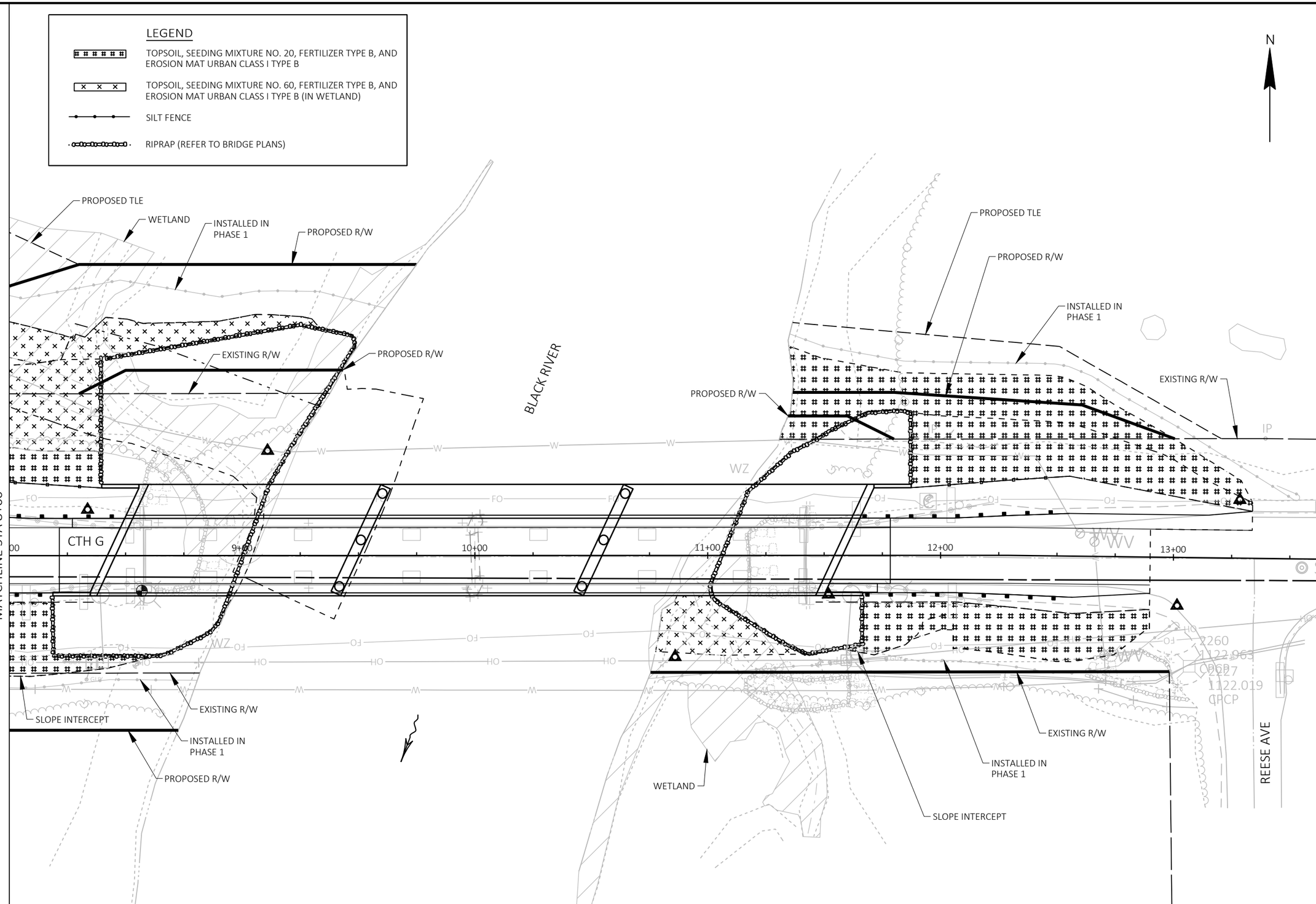

2

PROJECT NO: 7840-03-73	HWY: CTH G	COUNTY: CLARK	EROSION CONTROL - PHASE 2	SHEET 15	E

FILE NAME : C:\ONEDRIVE\AECOM\60645919 - CTH G, CLARK COUNTY - GENERAL\900_CAD_GIS\910_CAD\78400303\SHEETSPLAN\0220-EC2.DWG
LAYOUT NAME - 022002-ec1
PLOT DATE : 6/3/2024 1:22 PM
PLOT BY : LANCELLE, JESSICA
PLOT NAME :
PLOT SCALE : 1 IN:40 FT
WISDOT/CADDS SHEET 42

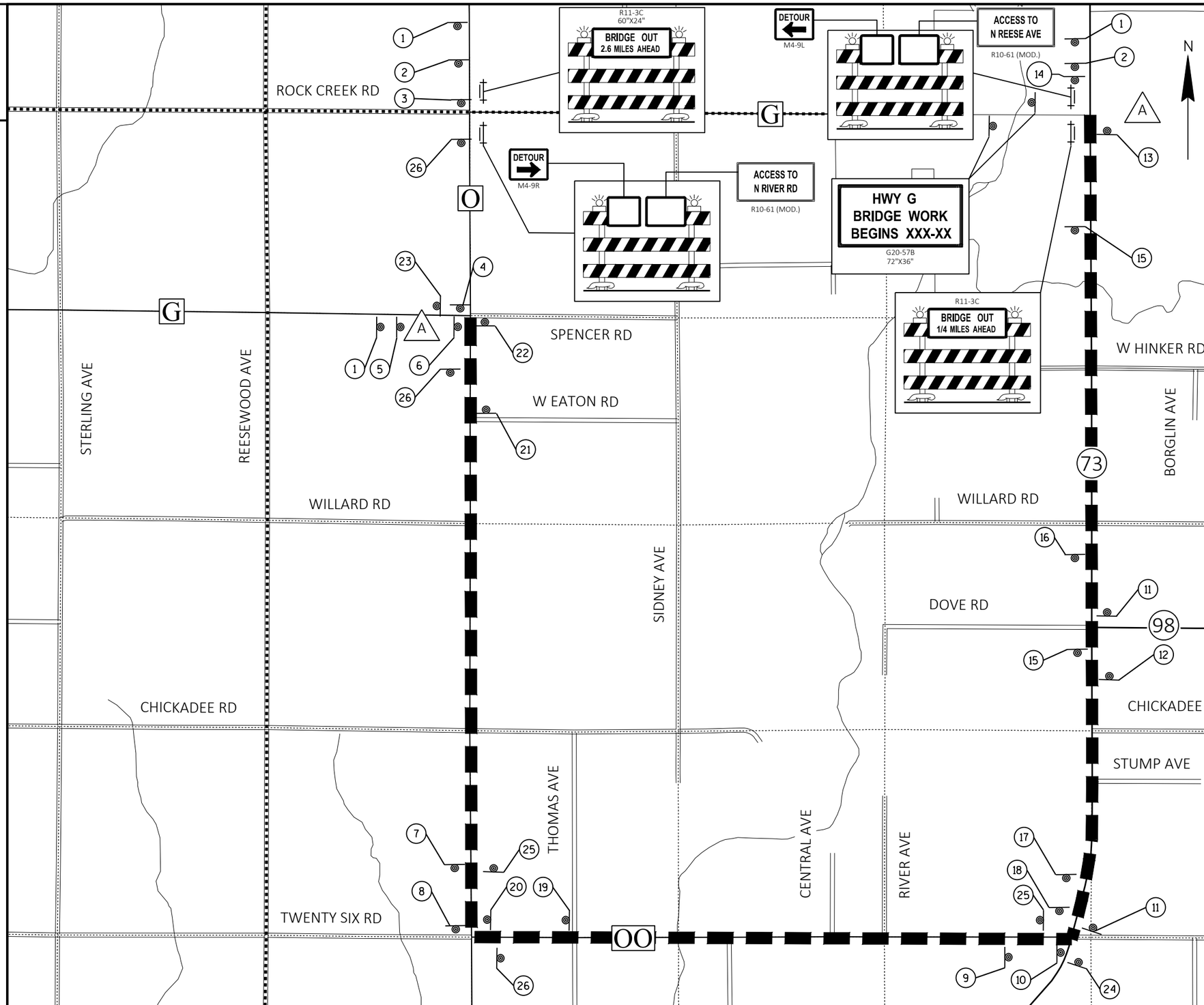

GENERAL NOTES:

THE EXACT NUMBER, LOCATION AND SPACING OF ALL SIGNS SHALL BE ADJUSTED TO FIT FIELD CONDITIONS AS APPROVED BY THE ENGINEER.

THE SPACING BETWEEN SIGNS SHOULD BE ADJUSTED TO NOT CONFLICT WITH AND TO PROVIDE A DESIRABLE MINIMUM OF 200 FEET CLEARANCE TO EXISTING SIGNS THAT WILL REMAIN IN PLACE.

ANY SIGNS, TEMPORARY OR EXISTING, WHICH CONFLICT WITH TRAFFIC CONTROL "IN USE" SHALL BE REMOVED OR COVERED AS NEEDED AND AS APPROVED BY THE ENGINEER.

SIGNS THAT WILL BE IN PLACE LESS THAN 7 CONTINUOUS DAYS AND NIGHTS MAY BE MOUNTED ON PORTABLE SUPPORTS.

"MO" SIGNS ARE THE SAME AS "M" SIGNS EXCEPT THE BACKGROUND IS ORANGE.

USE SIZE (2) SIGNS FOR ALL SIGNING.

*G20-57B SIGNS ARE TO BE PLACED 7 DAYS PRIOR TO CONSTRUCTION AND REMOVED WHEN CONSTRUCTION BEGINS.

LEGEND

- TYPE III BARRICADE WITH ATTACHED SIGN
- SIGN ON PERMANENT SUPPORT
- TYPE A WARNING LIGHT (FLASHING)
- DETOUR ROUTE
- # SIGN DETAIL # - SEE DETOUR SIGNING DETAILS

KEYNOTES

A — SEE SDD "BARRICADES AND SIGNS FOR MAINLINE CLOSURES", DETAIL A

PROJECT NO: 7840-03-73	HWY: CTH G	COUNTY: CLARK	DETOUR	SHEET 16	E

FILE NAME : C:\ONEDRIVE\AECOM\60645919 - CTH G, CLARK COUNTY - GENERAL\900_CAD_GIS\910_CAD\78400303\SHEETSPLAN\0270-DT.DWG
LAYOUT NAME - 027001-dt
PLOT DATE : 4/17/2024 12:47 PM PLOT BY : LANCELLE, JESSICA PLOT NAME : PLOT SCALE : 1 IN:0.5 MI

WISDOT/CADDS SHEET 42

2

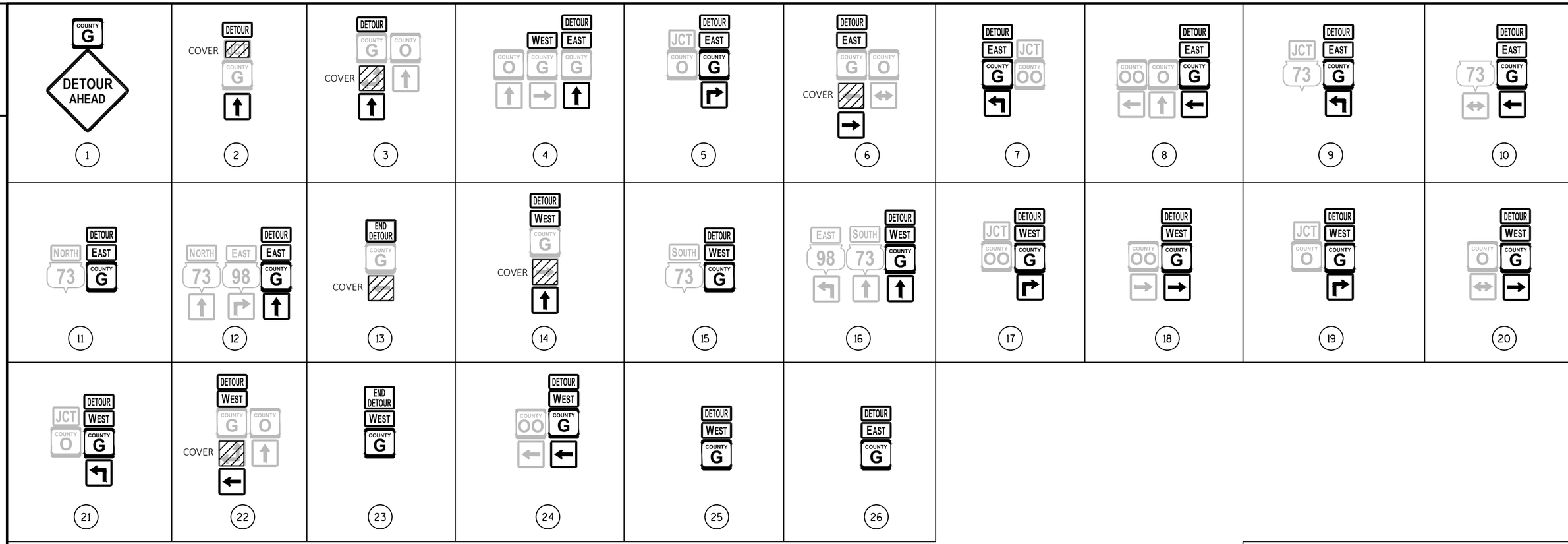

2

SIGN ASSEMBLY LEGEND

PROJECT NO: 7840-03-73	HWY: CTH G	COUNTY: CLARK	DETOUR SIGNING DETAILS	SHEET 17	E

FILE NAME : C:\ONEDRIVE\AECOM\60645919 - CTH G, CLARK COUNTY - GENERAL\900_CAD_GIS\910_CAD\78400303\SHEETSPLAN\0270-DT.DWG
LAYOUT NAME - 027002-dt
PLOT DATE : 4/17/2024 12:47 PM PLOT BY : LANCELLE, JESSICA PLOT NAME : PLOT SCALE :

WISDOT/CADDS SHEET 42

Estimate Of Quantities

7840-03-73

Line	Item	Item Description	Unit	Total	Qty
0002	201.0105	Clearing	STA	10.000	10.000
0004	201.0205	Grubbing	STA	6.000	6.000
0006	203.0250	Removing Structure Over Waterway Remove Debris (structure) 01. B-10-0378	EACH	1.000	1.000
0008	204.0165	Removing Guardrail	LF	311.000	311.000
0010	205.0100	Excavation Common	CY	432.000	432.000
0012	206.1001	Excavation for Structures Bridges (structure) 01. B-10-0398	EACH	1.000	1.000
0014	208.0100	Borrow	CY	3,970.000	3,970.000
0016	210.1500	Backfill Structure Type A	TON	640.000	640.000
0018	213.0100	Finishing Roadway (project) 01. 7840-03-73	EACH	1.000	1.000
0020	305.0110	Base Aggregate Dense 3/4-Inch	TON	231.000	231.000
0022	305.0120	Base Aggregate Dense 1 1/4-Inch	TON	1,638.000	1,638.000
0024	415.0060	Concrete Pavement 6-Inch	SY	32.000	32.000
0026	415.0410	Concrete Pavement Approach Slab	SY	110.000	110.000
0028	450.4000	HMA Cold Weather Paving	TON	271.000	271.000
0030	455.0605	Tack Coat	GAL	77.000	77.000
0032	465.0105	Asphaltic Surface	TON	271.000	271.000
0034	502.0100	Concrete Masonry Bridges	CY	801.000	801.000
0036	502.3200	Protective Surface Treatment	SY	1,825.000	1,825.000
0038	502.3210	Pigmented Surface Sealer	SY	274.000	274.000
0040	503.0146	Prestressed Girder Type I 45W-Inch	LF	1,872.000	1,872.000
0042	505.0400	Bar Steel Reinforcement HS Structures	LB	51,530.000	51,530.000
0044	505.0600	Bar Steel Reinforcement HS Coated Structures	LB	153,580.000	153,580.000
0046	506.2605	Bearing Pads Elastomeric Non-Laminated	EACH	36.000	36.000
0048	506.4000	Steel Diaphragms (structure) 01. B-10-0398	EACH	30.000	30.000
0050	509.5100.S	Polymer Overlay	SY	421.000	421.000
0052	513.4061	Railing Tubular Type M	LF	700.000	700.000
0054	514.0445	Floor Drains Type GC	EACH	1.000	1.000
0056	514.2625	Downspout 6-Inch	LF	4.000	4.000
0058	516.0500	Rubberized Membrane Waterproofing	SY	24.000	24.000
0060	550.0500	Pile Points	EACH	20.000	20.000
0062	550.1120	Piling Steel HP 12-Inch X 53 Lb	LF	700.000	700.000
0064	606.0300	Riprap Heavy	CY	1,170.000	1,170.000
0066	612.0406	Pipe Underdrain Wrapped 6-Inch	LF	230.000	230.000
0068	614.0150	Anchor Assemblies for Steel Plate Beam Guard	EACH	4.000	4.000
0070	614.2500	MGS Thrie Beam Transition	LF	157.600	157.600
0072	614.2610	MGS Guardrail Terminal EAT	EACH	4.000	4.000
0074	615.0100	Guard Fence Timber Rail	LF	148.000	148.000
0076	618.0100	Maintenance and Repair of Haul Roads (project) 01. 7840-03-73	EACH	1.000	1.000
0078	619.1000	Mobilization	EACH	1.000	1.000
0080	624.0100	Water	MGAL	19.000	19.000
0082	625.0100	Topsoil	SY	2,740.000	2,740.000
0084	628.1504	Silt Fence	LF	2,660.000	2,660.000
0086	628.1520	Silt Fence Maintenance	LF	2,660.000	2,660.000
0088	628.1905	Mobilizations Erosion Control	EACH	3.000	3.000
0090	628.1910	Mobilizations Emergency Erosion Control	EACH	2.000	2.000
0092	628.2008	Erosion Mat Urban Class I Type B	SY	2,740.000	2,740.000
0094	628.6005	Turbidity Barriers	SY	790.000	790.000
0096	628.7570	Rock Bags	EACH	30.000	30.000
0098	629.0210	Fertilizer Type B	CWT	2.200	2.200

Estimate Of Quantities

7840-03-73

Line	Item	Item Description	Unit	Total	Qty
0100	630.0120	Seeding Mixture No. 20	LB	40.000	40.000
0102	630.0160	Seeding Mixture No. 60	LB	11.000	11.000
0104	630.0200	Seeding Temporary	LB	10.000	10.000
0106	630.0500	Seed Water	MGAL	65.000	65.000
0108	634.0814	Posts Tubular Steel 2x2-Inch X 14-FT	EACH	1.000	1.000
0110	637.2210	Signs Type II Reflective H	SF	5.000	5.000
0112	638.2102	Moving Signs Type II	EACH	10.000	10.000
0114	638.2602	Removing Signs Type II	EACH	4.000	4.000
0116	642.5001	Field Office Type B	EACH	1.000	1.000
0118	643.0300	Traffic Control Drums	DAY	500.000	500.000
0120	643.0420	Traffic Control Barricades Type III	DAY	2,882.000	2,882.000
0122	643.0705	Traffic Control Warning Lights Type A	DAY	3,200.000	3,200.000
0124	643.0900	Traffic Control Signs	DAY	19,842.000	19,842.000
0126	643.0920	Traffic Control Covering Signs Type II	EACH	6.000	6.000
0128	643.1000	Traffic Control Signs Fixed Message	SF	36.000	36.000
0130	643.5000	Traffic Control	EACH	1.000	1.000
0132	645.0111	Geotextile Type DF Schedule A	SY	72.000	72.000
0134	645.0120	Geotextile Type HR	SY	2,240.000	2,240.000
0136	646.1005	Marking Line Paint 4-Inch	LF	2,560.000	2,560.000
0138	650.4500	Construction Staking Subgrade	LF	427.000	427.000
0140	650.5000	Construction Staking Base	LF	371.000	371.000
0142	650.6501	Construction Staking Structure Layout (structure) 01. B-10-0398	EACH	1.000	1.000
0144	650.7000	Construction Staking Concrete Pavement	LF	56.000	56.000
0146	650.9911	Construction Staking Supplemental Control (project) 01. 7840-03-73	EACH	1.000	1.000
0148	650.9920	Construction Staking Slope Stakes	LF	427.000	427.000
0150	690.0150	Sawing Asphalt	LF	186.000	186.000
0152	715.0502	Incentive Strength Concrete Structures	DOL	4,806.000	4,806.000
0154	715.0720	Incentive Compressive Strength Concrete Pavement	DOL	500.000	500.000
0156	ASP.1T0A	On-the-Job Training Apprentice at $5.00/HR	HRS	1,500.000	1,500.000
0158	ASP.1T0G	On-the-Job Training Graduate at $5.00/HR	HRS	990.000	990.000
0160	SPV.0035	Special 01. Excavation, Hauling, and Disposal of Dredged Soil	CY	350.000	350.000
0162	SPV.0060	Special 01. Temporary Emergency Action Plan	EACH	1.000	1.000
0164	SPV.0060	Special 02. Emergency Response	EACH	1.000	1.000
0166	SPV.0060	Special 03. Crosshole Sonic Log (CSL) Testing, Drilled Shaft Foundation 48-inch	EACH	6.000	6.000
0168	SPV.0060	Special 04. Thermal Integrity Profiler (TIP) Testing, Drilled Shaft Foundation 48-inch	EACH	6.000	6.000
0170	SPV.0060	Special 05. Temporary Construction Access	EACH	1.000	1.000
0172	SPV.0090	Special 01. Treated Timber Rub Rail	LF	174.000	174.000
0174	SPV.0090	Special 02. Drilled Shaft Foundation 48-Inch	LF	291.000	291.000
0176	SPV.0195	Special 01. Select Crushed Material for Travel Corridor	TON	588.000	588.000

3

CLEARING & GRUBBING

CAT.		STATION	-	STATION	201.0105 CLEARING STA	201.0205 GRUBBING STA
0010	ROADWAY	6+50	-	9+25	3	3
0010	ROADWAY	10+75	-	13+00	3	3
CATEGORY 0010 SUBTOTAL					**6**	**6**
0030	RECREATIONAL LANE	104+00	-	107+00	3	---
0030	RECREATIONAL LANE	201+40	-	201+90	1	---
CATEGORY 0030 SUBTOTAL					**4**	**0**
PROJECT TOTAL					**10**	**6**

REMOVING GUARDRAIL

CAT.		STATION	-	STATION	OFFSET	204.0165 REMOVING GUARDRAIL LF
0010	ROADWAY	7+78	-	8+56	RT	79
0010	ROADWAY	7+80	-	8+56	LT	76
0010	ROADWAY	11+44	-	12+22	RT	78
0010	ROADWAY	11+44	-	12+21	LT	78
CATEGORY 0010 SUBTOTAL						311
PROJECT TOTAL						**311**

3

EARTHWORK

DIVISION	FROM/TO STATION	LOCATION	205.0100 COMMON EXCAVATION (CY) (1) CUT (2)	EBS EXCAVATION (3)	SALVAGED/UNUSABLE PAVEMENT MATERIAL (4)	AVAILABLE MATERIAL (5)	UNEXPANDED FILL	EXPANDED FILL (13) FACTOR 1.25	MASS ORDINATE +/- (14)	WASTE	208.0100 BORROW (CY)
CTH G - WEST	6+07.00/8+42.15		210	0	70	140	1,979	2,474	-2,334	0	2,334
CTH G - EAST	11+72.00/13+34.00		222	0	53	169	94	118	52	52	0
Cat. 0010	SUBTOTAL COMMON EXC		432		123	309	2,073	2,591	-2,282	52	2,334
	TOTAL COMMON EXC CAT. 0010		432								2,334
CTH G - WEST REC LANE	6+07.00/8+42.15		0	0	0	0	1,086	1,358	-1,358	0	1,358
CTH G - EAST REC LANE	11+72.00/13+34.00		0	0	0	0	223	279	-279	0	279
Cat. 0030	SUBTOTAL COMMON EXC		0		0	0	1,309	1,636	-1,636	0	1,636
	TOTAL COMMON EXC CAT. 0030		0								1,636
		PRJOECT TOTAL	432								3,970

NOTES:

(1) COMMON EXCAVATION IS THE SUM OF THE CUT AND EBS EXCAVATION COLUMNS. ITEM NUMBER 205.0100

(2) SALVAGED/UNUSUABLE PAVEMENT MATERIAL IS INCLUDED IN CUT.

(4) SALVAGED/UNUSABLE PAVEMENT MATERIAL

(5) AVAILABLE MATERIAL = CUT - SALVAGED/UNUSUABLE PAVEMENT MATERIAL

(13) EXPANDED FILL FACTOR = 1.25

(14) THE MASS ORDINATE + OR - QTY CALCULATED FOR THE DIVISION. PLUS QUANTITY INDICATES AN EXCESS OF MATERIAL WITHIN THE DIVISION. MINUS INDICATES A SHORTAGE OF MATERIAL WITHIN THE DIVISION.

(15) FACTORS USED TO COMPUTE ANTICIPATED WASTE AND THE COMPUTED WASTE VOLUME IDENTIFIED ARE FOR GENERAL INFORMATION ONLY.

3

BASE AGGREGATE DENSE

CAT.	STATION	-	STATION	LOCATION	305.0110 3/4-INCH TON	305.0120 1 1/4-INCH TON	624.0100 WATER MGAL
0010	6+07	-	8+50	CTH G	42	580	6.3
0010	8+22	-	8+48	CTH G	---	19	0.2
0010	11+51	-	13+34	CTH G	24	380	4.1
0010	11+52	-	11+78	CTH G	---	19	0.2
				UNDISTRIBUTED	14	200	2.2
CATEGORY 0010 SUBTOTAL					**80**	**1,198**	**13.0**
0030	6+50	-	8+50	RECREATIONAL LANE	91	260	3.6
0030	11+65	-	13+34	RECREATIONAL LANE	60	180	2.4
CATEGORY 0030 SUBTOTAL					**151**	**440**	**6.0**
PROJECT TOTAL					**231**	**1,638**	**19.0**

CONCRETE PAVEMENT

CAT.	STATION	-	STATION	LOCATION	415.0060 CONCRETE PAVEMENT 6-INCH SY	415.0410 CONCRETE PAVEMENT APPROACH SLAB SY
0010	8+22	-	8+50	CTH G	16	55
0010	11+51	-	11+78	CTH G	16	55
CATEGORY 0010 SUBTOTAL					32	110
PROJECT TOTAL					**32**	**110**

3

ASPHALTIC ITEMS

CAT.	STATION	-	STATION	LOCATION	450.4000 HMA COLD WEATHER PAVING TON	455.0605 TACK COAT GAL	465.0105 ASPHALTIC SURFACE TON
0010	6+07	-	8+27	CTH G	162	46	162
0010	11+73	-	13+34	CTH G	109	31	109
CATEGORY 0010 SUBTOTAL					271	77	271
PROJECT TOTAL					**271**	**77**	**271**

TIMBER FENCE

CAT.		STATION	-	STATION	OFFSET	LOCATION	615.0100 GUARD FENCE TIMBER RAIL LF
0030	RECREATIONAL LANE	7+60	-	8+40	LT	CTH G	80
0030	RECREATIONAL LANE	11+87	-	12+55	LT	CTH G	68
CATEGORY 0030 TOTAL							148
PROJECT TOTAL							**148**

3

GUARDRAIL

CAT.		STATION	-	STATION	OFFSET	614.2500 MGS THRIE BEAM TRANSITION LF	614.2610 MGS GUARDRAIL TERMINAL EAT EACH
0010	CTH G	7+29	-	8+22	RT	39.4	1
0010	CTH G	7+60	-	8+52	LT	39.4	1
0010	CTH G	11+63	-	12+55	LT	39.4	1
0010	CTH G	11+64	-	12+57	RT	39.4	1
CATEGORY 0010 SUBTOTAL						157.60	4
PROJECT TOTAL						**157.6**	**4**

3

LANDSCAPING

CAT.		STATION	-	STATION	LOCATION	625.0100 TOPSOIL SY	628.2008 EROSION MAT URBAN CLASS I TYPE B SY	629.0210 FERTILIZER TYPE B CWT	630.0120 SEEDING MIXTURE NO. 20 LB	630.0160 SEEDING MIXTURE NO. 60 LB	630.0200 SEEDING TEMPORARY LB	630.0500 SEED WATER MGAL
0010	ROADWAY PHASE 2	6+07	-	8+09	RT	980	980	0.7	18	---	---	23
0010	ROADWAY PHASE 2	6+67	-	8+28	LT	300	300	0.2	5	---	---	7
0010	ROADWAY PHASE 2	7+37	-	8+28	LT	530	530	0.4	---	8	---	12
0010	ROADWAY PHASE 2	10+77	-	11+40	RT	130	130	0.1	---	3	---	3
0010	ROADWAY PHASE 2	11+76	-	12+90	RT	280	280	0.2	6	---	---	7
0010	ROADWAY PHASE 2	11+98	-	13+34	LT	170	170	0.2	4	---	---	4
0010	UNDISTRIBUTED					---	---	---	---	---	10	---
CATEGORY 0010 TOTAL						**2,390**	**2,390**	**1.8**	**33**	**11**	**10**	**56**
0030	RECREATIONAL LANE	6+67	-	8+28	LT	190	190	0.2	4	---	---	5
0030	RECREATIONAL LANE	11+98	-	13+34	LT	160	160	0.2	3	---	---	4
CATEGORY 0030 TOTAL						**350**	**350**	**0.4**	**7**	**0**	**0**	**9**
PROJECT TOTAL						**2,740**	**2,740**	**2.2**	**40**	**11**	**10**	**65**

3

EROSION CONTROL MOBILIZATION

CATEGORY		628.1905 MOBILIZATIONS EROSION CONTROL EACH	628.1910 MOBILIZATION EMERGENCY EROSION CONTROL EACH
0010	ROADWAY	2	1
CATEGORY 0010 SUBTOTAL		**2**	**1**
0030	RECREATIONAL LANE	1	1
CATEGORY 0030 SUBTOTAL		**1**	**1**
PROJECT TOTAL		**3**	**2**

EROSION CONTROL

CAT.		STATION	-	STATION	OFFSET	628.1504 SILT FENCE LF	628.1520 SILT FENCE MAINTENANCE LF	628.6005 TURBIDITY BARRIERS SY	628.7570 ROCK BAGS EACH
0010	ROADWAY	5+80	-	8+80	RT/LT	670	670	---	---
0010	ROADWAY	10+75	-	13+40	RT/LT	480	480	---	---
0010	ROADWAY	8+80	-	10+05	RT/LT	---	---	420	---
0010	ROADWAY	10+25	-	11+30	RT/LT	---	---	370	---
CATEGORY 0010 TOTAL						**1,150**	**1,150**	**790**	**0**
0030	RECREATIONAL LANE	100+15	-	107+12	LT	755	755	---	---
0030	RECREATIONAL LANE	100+20	-	104+05	RT	505	505	---	---
0030	RECREATIONAL LANE	106+50	-		LT	---	---	---	15
0030	RECREATIONAL LANE	107+00	-		LT	---	---	---	15
0030	RECREATIONAL LANE	201+40	-	13+55	LT	250	250	---	---
CATEGORY 0030 TOTAL						**1,510**	**1,510**	**0**	**30**
PROJECT TOTAL						**2,660**	**2,660**	**790**	**30**

3

PERMANENT SIGNING

CAT.		STATION	OFFSET	SIGN MESSAGE	SIGN CODE	SIZE IN X IN	634.0814 POSTS TUBULAR STEEL 2x2-INCH 14-FT EACH	637.2210 SIGNS TYPE II REFLECTIVE H SF	638.2102 MOVING SIGNS TYPE II EACH	638.2602 REMOVING SIGNS TYPE II EACH	REMARKS
0010	ROADWAY	7+95	RT	WEIGHT LIMIT 20 TONS	R12-1	X	---	---	---	1	SAME POLE
0010	ROADWAY	7+95	RT	ATV 10 MPH	--	X	---	---	1	---	
0010	ROADWAY	7+98	LT	13'-6" CLEARANCE	W12-2	X	---	---	---	1	
0010	ROADWAY	8+10	RT	SPEED LIMIT 30	R2-1	24 X 30	1	5.00	1	---	
0010	ROADWAY	8+35	RT	ATV ROUTE CITY OF GREENWOOD	--	X	---	---	1	---	SAME POLE
0010	ROADWAY	8+35	RT	NO FISHING FROM BRIDGE	R9-55	X	---	---	---	---	
0010	ROADWAY	8+55	LT	BRIDGE HASH MARKS	W5-52L	X	---	---	1	---	
0010	ROADWAY	8+55	RT	BRIDGE HASH MARKS	W5-52R	X	---	---	1	---	
0010	ROADWAY	11+45	LT	BRIDGE HASH MARKS	W5-52L	X	---	---	1	---	
0010	ROADWAY	11+45	RT	BRIDGE HASH MARKS	W5-52R	X	---	---	1	---	
0010	ROADWAY	11+67	LT	NO FISHING FROM BRIDGE	R9-55	X	---	---	1	---	SAME POLE
0010	ROADWAY	11+67	LT	ATV/UTV ROUTE	--	X	---	---	1	---	
0010	ROADWAY	11+67	LT	ATV/SNOWMOBILE 10 MPH	--	X	---	---	---	---	
0010	ROADWAY	12+08	LT	WEIGHT LIMIT 20 TONS	R12-1	X	---	---	---	1	
0010	ROADWAY	12+08	RT	13'-6" CLEARANCE	W12-2	X	---	---	---	1	
CAT. 0010 SUBTOTAL							**1**	**5.00**	**9**	**4**	
0030	RECREATIONAL LANE	11+67	LT	SNOWMOBILE SPEED LIMIT 10	--	X	---	---	1	---	
CAT. 0030 SUBTOTAL							**0**	**0.00**	**1**	**0**	
PROJECT TOTAL							**1**	**5.00**	**10**	**4**	

3

TRAFFIC CONTROL

CAT.	LOCATION	DAYS IN SERVICE	643.0300 TRAFFIC CONTROL DRUMS NO.	DAY	643.0420 TRAFFIC CONTROL BARRICADES TYPE III NO.	DAY	643.0705 TRAFFIC CONTROL WARNING LIGHTS TYPE A NO.	DAY	643.0900 TRAFFIC CONTROL SIGNS NO.	DAY	643.0920 TRAFFIC CONTROL COVERING SIGNS TYPE II NO. SIGNS	NO. CYCLES	EACH	643.1000 TRAFFIC CONTROL SIGNS FIXED MESSAGE SF
0010	DETOUR ROUTE	160	---	---	---	---	---	---	108	17,280	6	1	6	---
0010	CTH G	160	---	---	18	2,880	20	3,200	16	2,560	---	---	---	36
0010	UNDISTRIBUTED	---	---	500	---	---	---	---	---	---	---	---	---	---
CATEGORY 0010 TOTAL				500		2,880		3,200		19,840			6	36
0030	POLYMER OVERLAY	1	---	---	2	2	---	---	2	2	---	---	---	---
CATEGORY 0030 TOTAL				0		2		0		2			0	0
PROJECT TOTAL				**500**		**2,882**		**3,200**		**19,842**			**6**	**36**

3

PAVEMENT MARKING ITEMS

CAT.		STATION	-	STATION	OFFSET	TYPE	646.1005 MARKING LINE PAINT 4-INCH YELLOW LF	WHITE
0010	ROADWAY	6+50	-	12+90	CTR	CENTERLINE (DOUBLE SOLID)	1,280	---
0010	ROADWAY	6+50	-	12+90	LT	EDGELINE (SOLID)	---	640
0010	ROADWAY	6+50	-	12+90	RT	EDGELINE (SOLID)	---	640
CATEGORY 0010 TOTAL							2,560	
PROJECT TOTAL							**2,560**	

3

CONSTRUCTION STAKING

CAT.	STATION	-	STATION	LOCATION	650.4500 CONSTRUCTION STAKING SUBGRADE LF	650.5000 CONSTRUCTION STAKING BASE LF	650.7000 CONSTRUCTION STAKING CONCRETE PAVEMENT LF	650.9911.01 CONSTRUCTION STAKING SUPPLEMENTAL CONTROL 7840-03-73 EACH	650.9920 CONSTRUCTION STAKING SLOPE STAKES LF	650.6501.01 CONSTRUCTION STAKING STRUCTURE LAYOUT B-10-398 EACH
0010				PROJECT	---	---	---	1	---	---
0010	6+07	-	8+22	ROADWAY	215	215	---	---	215	---
0010	8+22	-	8+50	ROADWAY	28	---	28	---	28	---
0010	11+50	-	11+78	ROADWAY	28	---	28	---	28	---
0010	11+78	-	13+34	ROADWAY	156	156	---	---	156	---
CATEGORY 0010 TOTAL					**427**	**371**	**56**	**1**	**427**	**0**
0020				STRUCTURE	---	---	---	---	---	1
CATEGORY 0020 TOTAL					**0**	**0**	**0**	**0**	**0**	**1**
PROJECT TOTAL					**427**	**371**	**56**	**1**	**427**	**1**

SAWING

CAT.	STATION	-	STATION	OFFSET	LOCATION	690.0150 SAWING ASPHALT LF
0010	6+06	-	6+50	RT/LT	CTH G	109
0010	12+90	-	13+34	RT/LT	CTH G	77
CATEGORY 0010 TOTAL						186
PROJECT TOTAL						**186**

DREDGING

CAT.	STATION	-	STATION	LOCATION	SPV.0035.01 EXCAVATION, HAULING, AND DISPOSAL OF DREDGED SOIL CY
0010	9+80	-	10+20	LT	350
CATEGORY 0010 TOTAL					350
PROJECT TOTAL					**350**

3

EMERGENCY ACTION PLAN

CAT.	PROJECT	SPV.0060.01 TEMPORARY EMERGENCY ACTION PLAN EACH	SPV.0060.02 EMERGENCY RESPONSE EACH
0010	7840-03-73	1	1
CATEGORY 0010 TOTAL		1	1
PROJECT TOTAL		1	1

RUB RAIL

CAT.		STATION	-	STATION	OFFSET	LOCATION	SPV.0090.01 TREATED TIMBER RUB RAIL LF
0030	RECREATIONAL LANE	8+09	-	8+53	LT	CTH G	88
0030	RECREATIONAL LANE	11+62	-	12+05	LT	CTH G	86
CATEGORY 0030 TOTAL							174
PROJECT TOTAL							174

3

TEMPORARY CONSTRUCTION ACCESS

CAT.	PROJECT	SPV.0060.05 TEMPORARY CONSTRUCTION ACCESS EACH
0010	7840-03-73	1
CATEGORY 0010 TOTAL		1
PROJECT TOTAL		1

TCA QUANTITIES FOR INFORMATION ONLY

ITEM	DESCRIPTION	UNIT	QTY
204.0100	EXCAVATION COMMON	CY	4398
2080.0100	BORROW	CY	1269
305.0120	BASE AGGREGATE DENSE 1 1/4-INCH	TON	660
311.0110	BREAKER RUN	TON	6200
511.1100	TEMPORARY SHORING	SF	4,520
625.0100	TOPSOIL	SY	1,960
625.0500	SALVAGED TOPSOIL	SY	740
628.1504	SILT FENCE	LF	1,515
628.1520	SILT FENCE MAINTENANCE	LF	1,515
628.1905	MOBILIZATIONS EROSION CONTROL	EACH	4
628.1910	MOBILIZATIONS EMERGENCY EROSION CONTROL	EACH	2
628.2008	EROSION MAT URBAN CLASS I TYPE B	SY	1,960
628.2027	EROSION MAT CLASS II TYPE C	SY	740
629.0210	FERTILIZER TYPE B	CWT	1.8
630.0120	SEEDING MIXTURE NO. 20	LB	34
630.0160	SEEDING MIXTURE NO. 60	LB	2
630.0200	SEEDING TEMPORARY	LB	22
630.0500	SEED WATER	MGAL	63
645.0140	GEOTEXTILE TYPE SAS	SY	3,980

R/W PROJECT NUMBER 7840-03-03	SHEET NUMBER	TOTAL SHEETS
FEDERAL PROJECT NUMBER	4.01	2

PLAT OF RIGHT OF WAY REQUIRED FOR

USH 10 - Greenwood
Black River Bridge B-10-0378

CTH G	CLARK

CONSTRUCTION PROJECT NUMBER
7840-03-70

CONVENTIONAL SYMBOLS

SECTION LINE
QUARTER LINE
SIXTEENTH LINE
NEW REFERENCE LINE
NEW R/W LINE
EXISTING R/W OR HE LINE
PROPERTY LINE
LOT, TIE & OTHER MINOR LINES
SLOPE INTERCEPT
CORPORATE LIMITS
UNDERGROUND FACILITY (COMMUNICATIONS, ELECTRIC, ETC)
NEW R/W (FEE OR HE) (HATCHING VARIES BY OWNER)
TEMPORARY LIMITED EASEMENT AREA
EASEMENT AREA (PERMANENT LIMITED OR RESTRICTED DEVELOPMENT)
TRANSMISSION STRUCTURES
BUILDING
TO BE REMOVED
BRIDGE
CULVERT
PARALLEL OFFSETS

SECTION CORNER SYMBOL
SECTION CORNER MONUMENT
GEODETIC SURVEY MONUMENT
SIXTEENTH CORNER MONUMENT
SIGN
OFF-PREMISE SIGN
R/W MONUMENT (TO BE SET)
NON-MONUMENTED R/W POINT
FOUND IRON PIN (1-INCH UNLESS NOTED)

	COMPENSABLE	NON-COMPENSABLE
ELECTRIC POLE		
TELEPHONE POLE		
PEDESTAL (LABEL TYPE) (TV, TEL, ELEC, ETC.)		

ACCESS RESTRICTED BY ACQUISITION
NO ACCESS (BY STATUTORY AUTHORITY)
ACCESS RESTRICTED (BY PREVIOUS PROJECT OR CONTROL)
NO ACCESS (NEW HIGHWAY)

PARCEL NUMBER 25
UTILITY NUMBER 40
R/W BOUNDARY POINT 200
TLE BOUNDARY POINT 300

CONVENTIONAL UTILITY SYMBOLS

WATER — W —
GAS — G —
TELEPHONE — T —
OVERHEAD TRANSMISSION LINES — OH —
ELECTRIC — E —
CABLE TELEVISION — TV —
FIBER OPTIC — FO —
SANITARY SEWER — SAN —
STORM SEWER — SS —
ELECTRIC TOWER

CONVENTIONAL ABBREVIATIONS

ACCESS RIGHTS	AR	POINT OF COMPOUND CURVE	PCC
ACRES	AC	POINT OF INTERSECTION	PI
AHEAD	AH	PROPERTY LINE	PL
ALUMINUM	ALUM	RECORDED AS	(100')
AND OTHERS	ET AL	REEL / IMAGE	R/I
BACK	BK	REFERENCE LINE	R/L
BLOCK	BLK	REMAINING	REM
CENTERLINE	C/L	RESTRICTIVE DEVELOPMENT EASEMENT	RDE
CERTIFIED SURVEY MAP	CSM		
CONCRETE	CONC	RIGHT	RT
COUNTY	CO	RIGHT OF WAY	R/W
COUNTY TRUNK HIGHWAY	CTH	SECTION	SEC
DISTANCE	DIST	SEPTIC VENT	SEPV
CORNER	COR	SQUARE FEET	SF
DOCUMENT NUMBER	DOC	STATE TRUNK HIGHWAY	STH
EASEMENT	EASE	STATION	STA
EXISTING	EX	TELEPHONE PEDESTAL	TP
GAS VALVE	GV	TEMPORARY LIMITED EASEMENT	TLE
GRID NORTH	GN		
HIGHWAY EASEMENT	HE	TRANSPORTATION PROJECT PLAT	TPP
IDENTIFICATION	ID	UNITED STATES HIGHWAY	USH
LAND CONTRACT	LC	VOLUME	V
LEFT	LT		
MONUMENT	MON		
NATIONAL GEODETIC SURVEY	NGS		
NUMBER	NO		
OUTLOT	OL		
PAGE	P		
POINT OF TANGENCY	PT		
PERMANENT LIMITED EASEMENT	PLE		
POINT OF BEGINNING	POB		
POINT OF CURVATURE	PC		

CURVE DATA ABBREVIATIONS

LONG CHORD	LCH
LONG CHORD BEARING	LCB
RADIUS	R
DEGREE OF CURVE	D
CENTRAL ANGLE	Δ/DELTA
LENGTH OF CURVE	L
TANGENT	T
DIRECTION AHEAD	DA
DIRECTION BACK	DB

BEGIN RELOCATION ORDER
STA 2+78.76
6.67' NORTH AND 33.03' EAST OF THE SOUTH QUARTER CORNER OF SECTION 34, T27N, R2W.

END RELOCATION ORDER
STA 13+20.00
6.38' NORTH AND 1074.26' EAST OF THE SOUTH QUARTER CORNER OF SECTION 34, T27N, R2W.

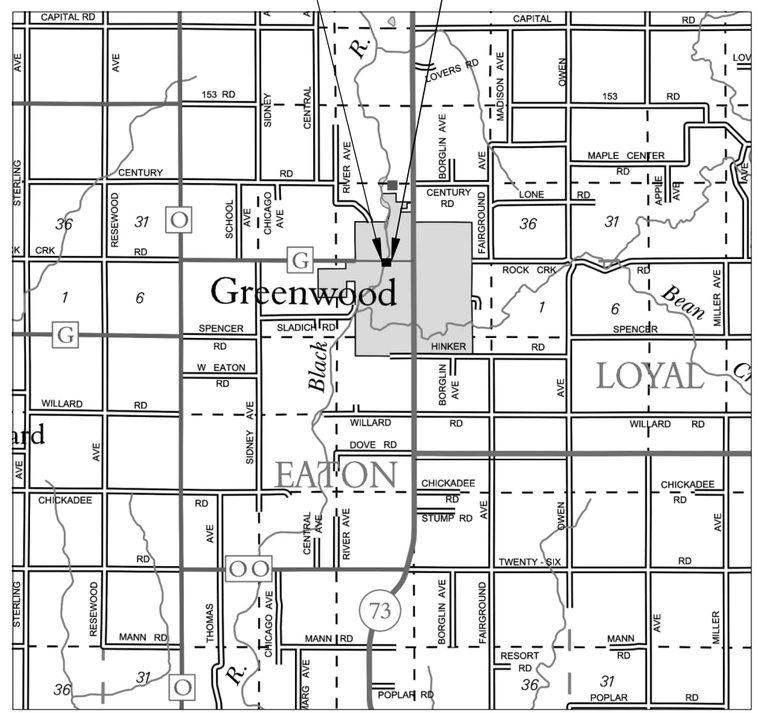

NOTES:

POSITIONS SHOWN ON THIS PLAT ARE WISCONSIN COUNTY COORDINATE SYSTEM COORDINATES (WCCS), CLARK COUNTY, NAD83 (2011) IN US SURVEY FEET. VALUES SHOWN ARE GRID COORDINATES, GRID BEARINGS, AND GRID DISTANCES. GRID DISTANCES MAY BE USED AS GROUND DISTANCES.

ALL NEW RIGHT-OF-WAY MONUMENTS WILL BE TYPE 2 (TYPICALLY 3/4"X24" IRON REBARS) UNLESS OTHERWISE NOTED, AND WILL BE PLACED PRIOR TO THE COMPLETION OF THE PROJECT.

RIGHT-OF-WAY BOUNDARIES ARE DEFINED WITH COURSES OF THE PERIMETER OF THE HIGHWAY LANDS REFERENCED TO THE U.S. PUBLIC LAND SURVEY SYSTEM OR OTHER "SURVEYS" OF PUBLIC RECORD.

DIMENSIONING FOR THE NEW RIGHT-OF-WAY IS MEASURED ALONG AND PERPENDICULAR TO THE NEW REFERENCE LINES.

A TEMPORARY LIMITED EASEMENT (TLE) IS A RIGHT FOR CONSTRUCTION PURPOSES, AS DEFINED HEREIN, INCLUDING THE RIGHT TO OPERATE NECESSARY EQUIPMENT THEREON, THE RIGHT OF INGRESS AND EGRESS, AS LONG AS REQUIRED FOR SUCH PUBLIC PURPOSE, INCLUDING THE RIGHT TO PRESERVE, PROTECT, REMOVE, OR PLANT THEREON ANY VEGETATION THAT THE VILLAGE OF PLOVER MAY DEEM DESIRABLE. ALL (TLEs) ON THIS PLAT EXPIRE AT THE COMPLETION OF THE CONSTRUCTION PROJECT FOR WHICH THIS INSTRUMENT IS GIVEN.

PROPERTY LINES SHOWN ON THIS PLAT ARE DRAWN FROM DATA DERIVED FROM MAPS AND DOCUMENTS OF PUBLIC RECORD AND/OR EXISTING OCCUPATIONAL LINES. THIS PLAT MAY NOT BE A TRUE REPRESENTATION OF EXISTING PROPERTY LINES, EXCLUDING RIGHT-OF-WAY, AND SHOULD NOT BE USED AS A SUBSTITUTE FOR AN ACCURATE FIELD SURVEY.

FOR THE LATEST ACCESS/DRIVEWAY INFORMATION, CONTACT THE CLARK COUNTY HIGHWAY DEPARTMENT.

N

LAYOUT
SCALE 0 — 2 MI.

TOTAL NET LENGTH OF CENTERLINE = 0.197 MI

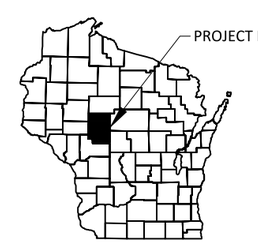

ORIGINAL PLAT PREPARED BY
AECOM

WISCONSIN
DONALD J. BUZA
S-2338
CUSTER, WI
LAND SURVEYOR

Donald J. Buza
DONALD J. BUZA, PLS-2338
DATE: 3/18/2024

THIS PLAT IS A GRAPHIC REPRESENTATION AND IS FOR REFERENCE PURPOSES ONLY. DEEDS MUST BE CHECKED TO DETERMINE PROPERTY BOUNDARIES AND ACCESS RIGHTS.

REVISION DATE 5/17/2024

CLARK COUNTY
Brian Duell - Highway Commissioner
APPROVED FOR CLARK COUNTY
DATE: 3/21/2024
Brian Duell
(Signatur

NOTES: PROJECT REFERENCE LINE AND RIGHT-OF-WAY CENTERLINE ARE NOT THE SAME LINE.
EXISTING RIGHT-OF-WAY FOR CTH G ESTABLISHED FROM DIVISION JOB NO. 6399.
EXISTING RIGHT-OF-WAY FOR N. RIVER ROAD ESTABLISHED FROM CSM 1064.
EXISTING RIGHT-OF-WAY FOR N. REESE AVENUE ESTABLISHED FROM GREENWOOD ASSESSOR'S PLAT NO. 5 AND BLACK RIVER HEIGHTS SUBDIVISION.

SCHEDULE OF LANDS & INTERESTS REQUIRED

OWNER'S NAMES ARE SHOWN FOR REFERENCE PURPOSES ONLY AND ARE SUBJECT TO CHANGE PRIOR TO THE TRANSFER OF LAND INTERESTS TO CLARK COUNTY.

PARCEL NUMBER	OWNER(S)	INTEREST REQUIRED	RW ACRES REQUIRED NEW	EXISTING	TOTAL	TLE ACRES
1	CITY OF GREENWOOD	FEE, TLE	0.023	0.714	0.737	2.621
2	DALE H. THOMAS AND CRYSTAL THOMAS, HUSBAND AND WIFE, SURVIVORSHIP MARITAL PROPERTY	FEE, TLE	0.009	0.265	0.274	0.091
3	CLARK COUNTY	FEE	0.201	0.359	0.560	-----
101	CITY OF GREENWOOD	FEE	0.251	-----	0.251	-----
102	DALE H. THOMAS AND CRYSTAL THOMAS, HUSBAND AND WIFE, SURVIVORSHIP MARITAL PROPERTY	FEE	0.051	-----	0.051	-----

UTILITY INTERESTS REQUIRED

UTILITY NUMBER	OWNER(S)	INTEREST REQUIRED	EASEMENT VOL. PG. DOC
50	CITY OF GREENWOOD (SANITARY SEWER)	RELEASE OF RIGHTS	NO EASEMENT OF RECORD
51	XCEL ENERGY, INC. (ELECTRIC)	RELEASE OF RIGHTS	NO EASEMENT OF RECORD
52	CITY OF GREENWOOD (WATERMAIN)	RELEASE OF RIGHTS	NO EASEMENT OF RECORD

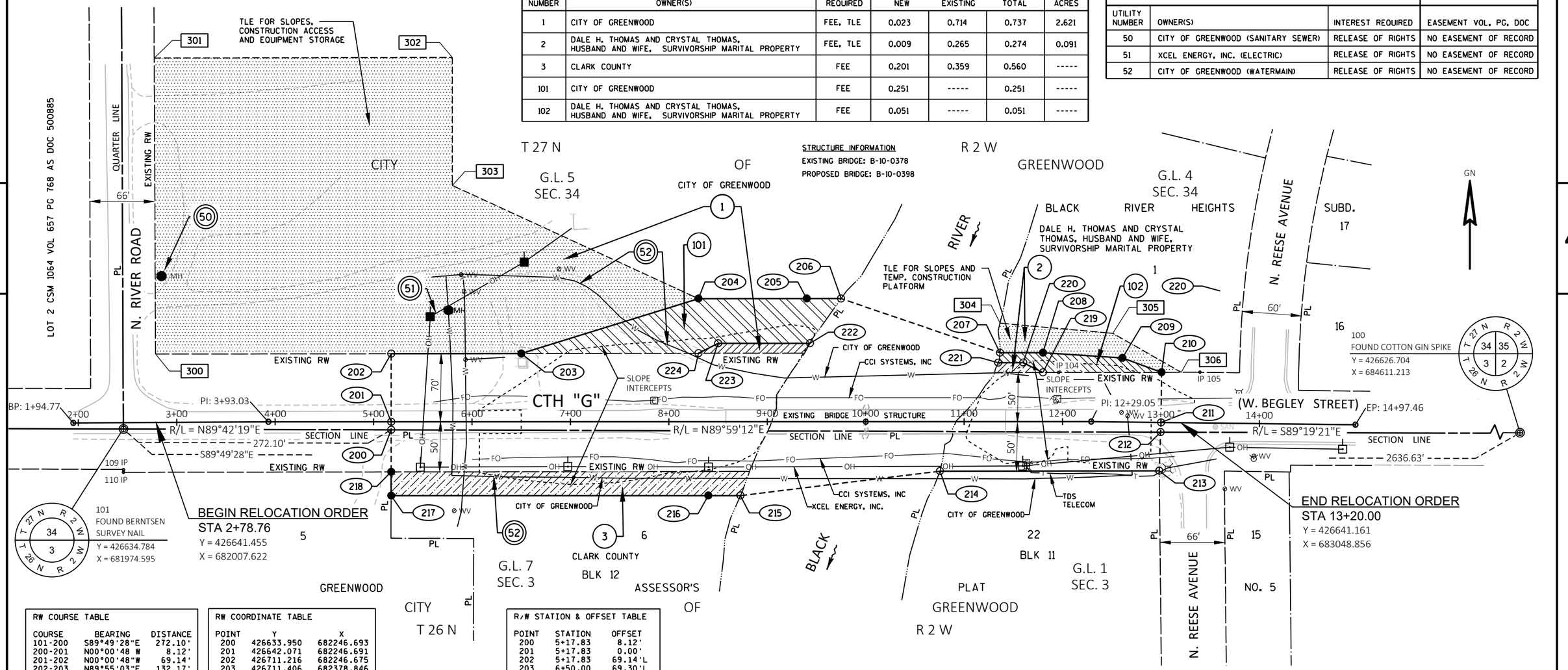

RW COURSE TABLE		
COURSE	BEARING	DISTANCE
101-200	S89°49'28"E	272.10'
200-201	N00°00'48 W	8.12'
201-202	N00°00'48"W	69.14'
202-203	N89°55'03"E	132.17'
203-204	N72°47'36"E	188.42'
204-205	N89°59'12"E	110.00'
205-206	N89°59'12"E	34.96'
206-207	S71°11'48"E	170.52'
207-208	N89°59'12"E	43.63'
208-209	S86°12'16"E	80.96'
209-210	S69°58'06"E	42.40'
210-211	S00°40'39"W	50.95'
211-212	S02°03'38"W	9.85'
212-213	S02°03'38"W	39.24'
213-214	S89°55'03"W	222.77'
214-215	S83°00'31"W	204.28'
215-216	S89°59'12"W	32.68'
216-217	S89°59'12"W	322.25'
217-218	N00°10'48"E	24.14'
218-200	N00°00'48"W	42.73'
210-219	S89°55'03"W	120.61'
219-220	N63°30'13"W	22.35'
220-221	S89°55'03"W	25.43'
222-223	S89°55'03"W	93.38'
223-224	S63°21'58"W	22.37'
224-203	S89°55'03"W	180.00'

RW COORDINATE TABLE		
POINT	Y	X
200	426633.950	682246.693
201	426642.071	682246.691
202	426711.216	682246.675
203	426711.406	682378.846
204	426767.144	682558.833
205	426767.169	682668.833
206	426767.178	682703.795
207	426712.215	682865.216
208	426712.225	682908.846
209	426706.866	682989.629
210	426692.344	683029.460
211	426641.398	683028.857
212	426631.554	683028.503
213	426592.340	683027.092
214	426592.019	682804.324
215	426567.154	682601.560
216	426567.146	682568.880
217	426567.071	682246.627
218	426591.216	682246.703
219	426692.170	682908.851
220	426702.141	682888.848
221	426702.105	682863.422
222	426721.829	682672.221
223	426721.694	682578.844
224	426711.666	682558.846

R/W STATION & OFFSET TABLE		
POINT	STATION	OFFSET
200	5+17.83	8.12'
201	5+17.83	0.00'
202	5+17.83	69.14'L
203	6+50.00	69.30'L
204	8+30.00	125.00'L
205	9+40.00	125.00'L
206	9+74.96	125.00'L
208	11+80.00	70.00'L
207	11+36.37	70.00'L
209	12+60.00	65.00'L
210	13+00.00	50.95'L
211	13+00.00	0.00'
212	12+99.76	9.85'
213	12+98.81	49.08'
214	10+75.45	50.18'
215	8+72.68	75.00'
216	8+40.00	75.00'
217	5+17.75	75.00'
218	5+17.83	50.86'
219	11+80.00	49.95'L
220	11+60.00	59.92'L
221	11+34.57	59.89'L
222	9+43.38	79.66'L
223	8+50.00	79.55'L
224	8+30.00	69.52'L

TLE COURSE TABLE		
COURSE	BEARING	DISTANCE
202-300	S89°55'03"W	239.41'
300-301	N00°14'54"W	300.58'
301-302	N89°52'48"E	302.81'
302-303	S00°00'48"E	130.00'
303-204	S65°18'39"E	275.18'
203-300	S89°55'03"W	371.58'
304-305	S84°53'58"E	115.10'
305-306	S60°19'59"E	80.03'
306-210	S89°55'03"W	20.00'
207-304	N00°07'49"E	30.00'
101-212	S89°49'28"E	1053.91'

TLE STATION & OFFSET TABLE		
POINT	STATION	OFFSET
300	2+78.76	69.417'L
301	2+79.00	370.000'L
302	5+80.00	370.000'L
303	5+80.00	240.000'L
304	11+36.45	100.000'L
305	12+50.00	90.000'L
306	13+20.00	51.215'L

EXISTING MONUMENTS			
POINT	Y	X	DESCRIPTION
104	426692.122	682924.698	2" IRON PIPE
105	426692.400	683068.409	2" IRON PIPE
109	426593.369	681974.712	2" IRON PIPE
110	426590.752	681974.709	2" IRON PIPE

REVISION DATE 5/17/2024	DATE 3/18/2024	SCALE, FEET 0 50 100	HWY: CTH "G"	STATE R/W PROJECT NUMBER 7840-03-03	PLAT SHEET 4.02
	GRID FACTOR: N/A		COUNTY: CLARK	CONSTRUCTION PROJECT NUMBER 7840-03-70	PS&E SHEET — 28 E

FILE NAME : 0401-RP.DWG
LAYOUT NAME - 040201
PLOT DATE : 5/17/2024 3:57 PM
PLOT BY : BUZA, DONALD
PLOT NAME :
PLOT SCALE : 1 IN:50 FT
WISDOT/CADDS SHEET 75

BENCHMARKS						
NO.	STATION	OFFSET	ELEV.	NORTHING	EASTING	DESCRIPTION
BM 3	6+96.51	44.79' RT	1111.72	426597.323	682425.405	RR SPIKE

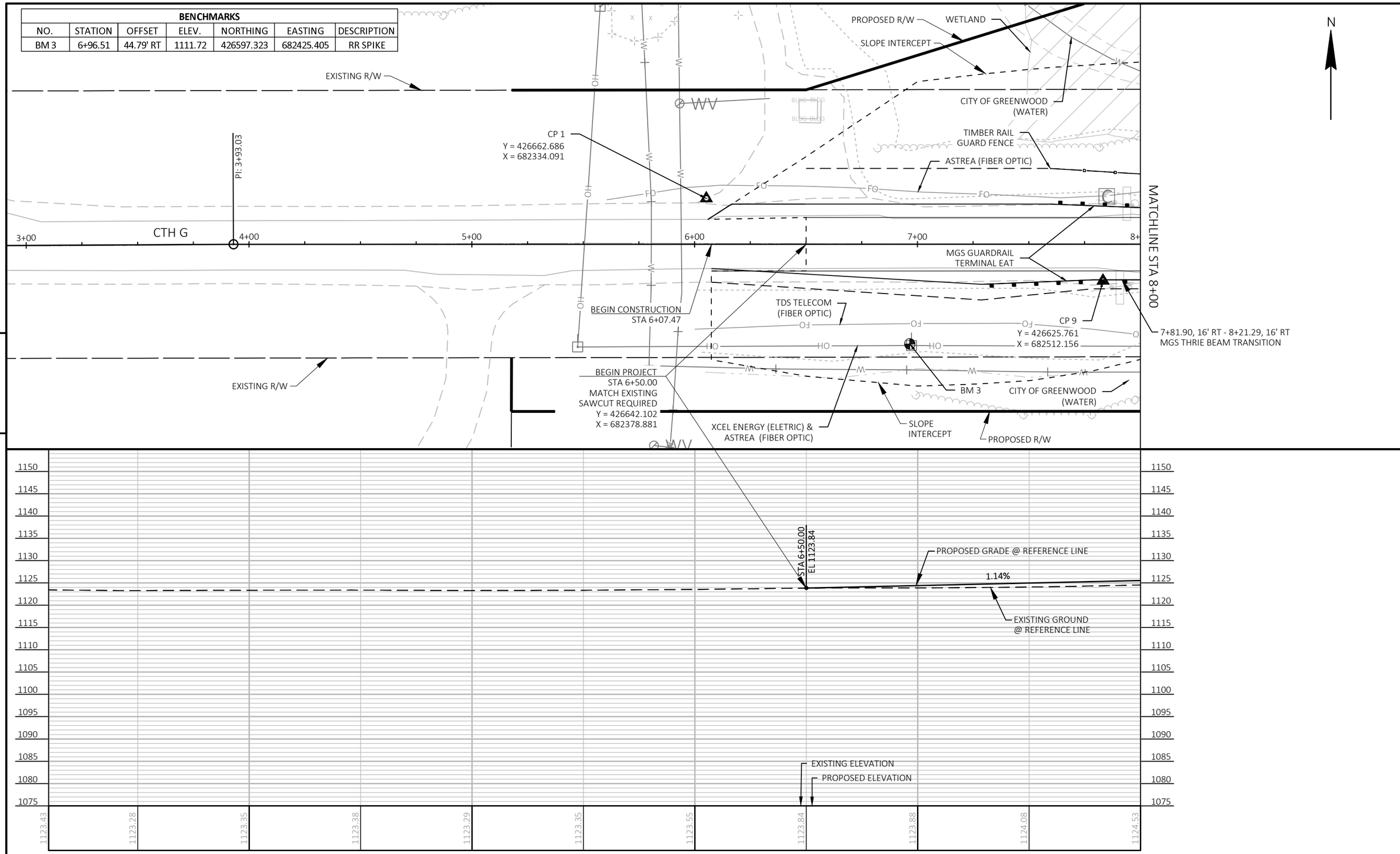

PROJECT NO: 7840-03-73	HWY: CTH G	COUNTY: CLARK	PLAN AND PROFILE: CTH G	SHEET 29	E

BENCHMARKS						
NO.	STATION	OFFSET	ELEV.	NORTHING	EASTING	DESCRIPTION
BM 2	8+56.90	15.18' RT	1124.85	426626.97	682585.789	CUT SQUARE SW WINGWAL
BM 1	13+78.86	31.40' LT	1131.38	426671.865	683108.098	HYDRANT NE FLANGE BOLT

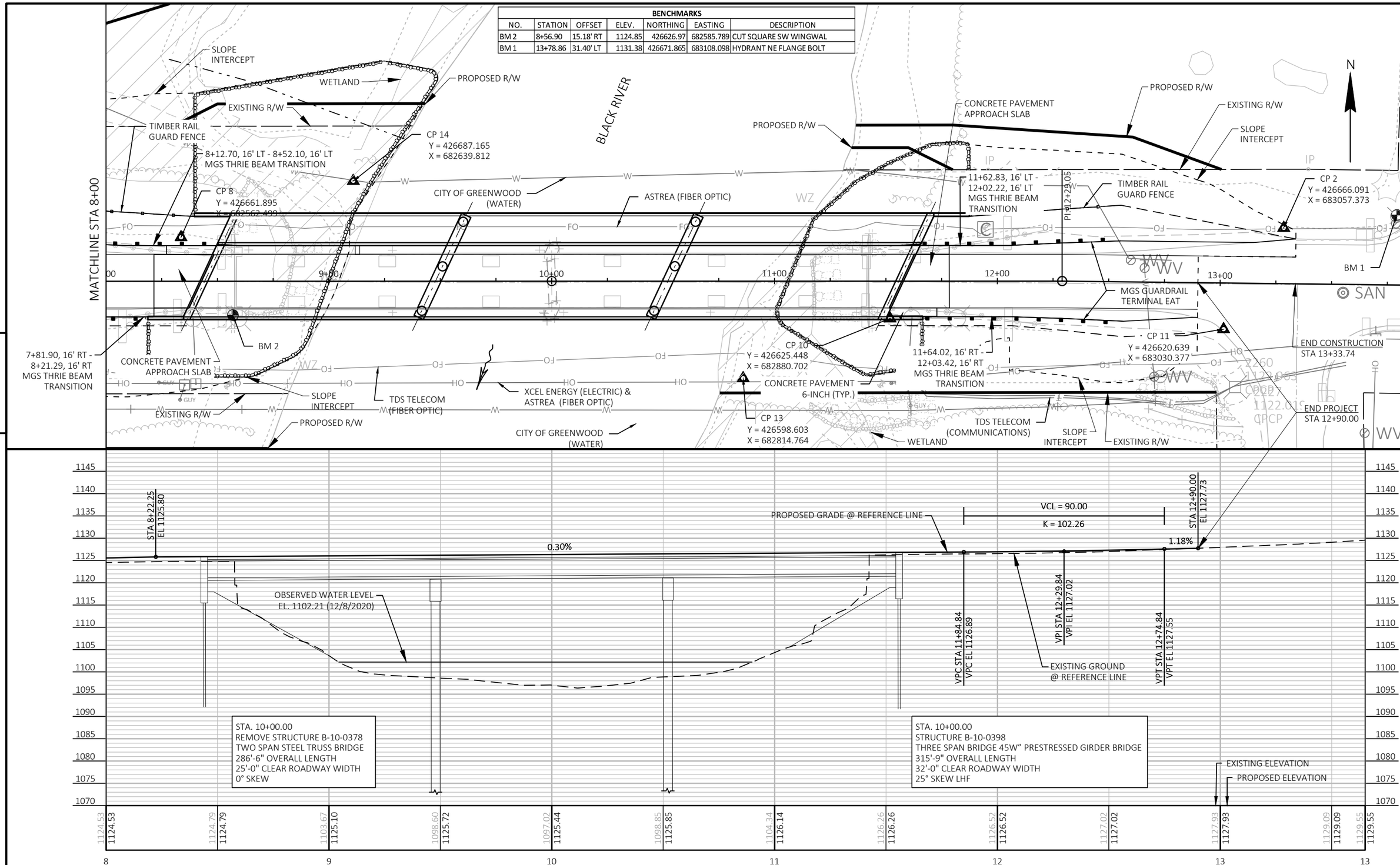

PROJECT NO: 7840-03-73	HWY: CTH G	COUNTY: CLARK	PLAN AND PROFILE: CTH G	SHEET 30	E

FILE NAME : C:\ONEDRIVE\AECOM\60645919 - CTH G, CLARK COUNTY - GENERAL\900_CAD_GIS\910_CAD\78400303\SHEETSPLAN\0501-PP.DWG
LAYOUT NAME - 050102-pp
PLOT DATE : 6/3/2024 5:18 PM PLOT BY : LANCELLE, JESSICA PLOT NAME : PLOT SCALE : 1 IN:40 FT

WISDOT/CADDS SHEET 44

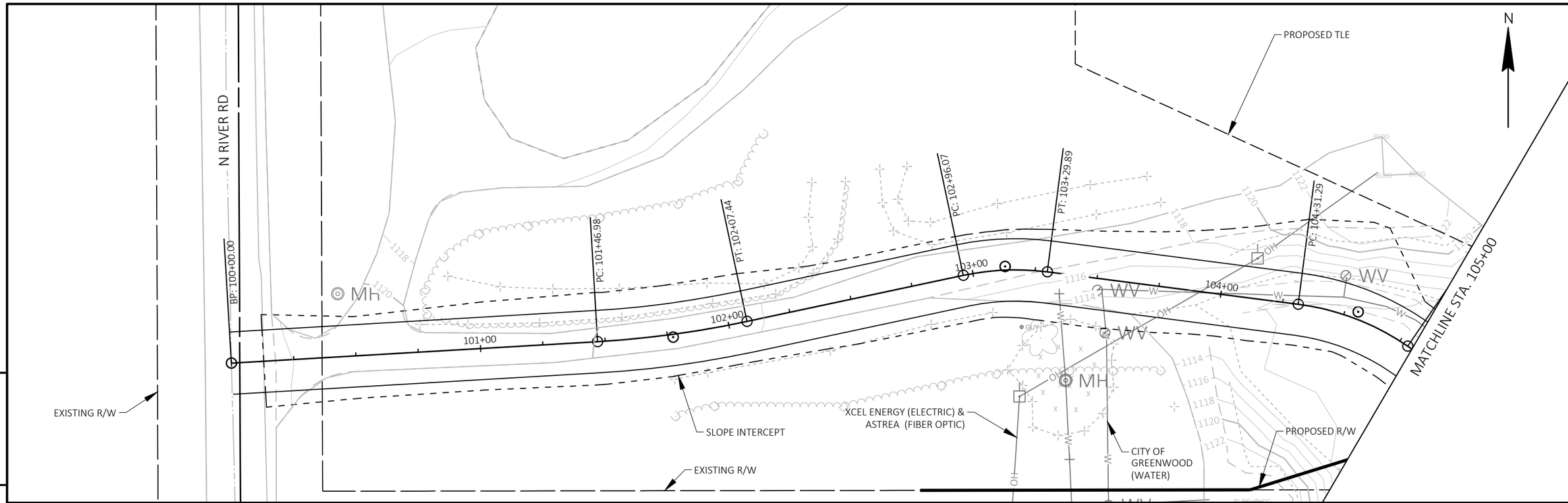

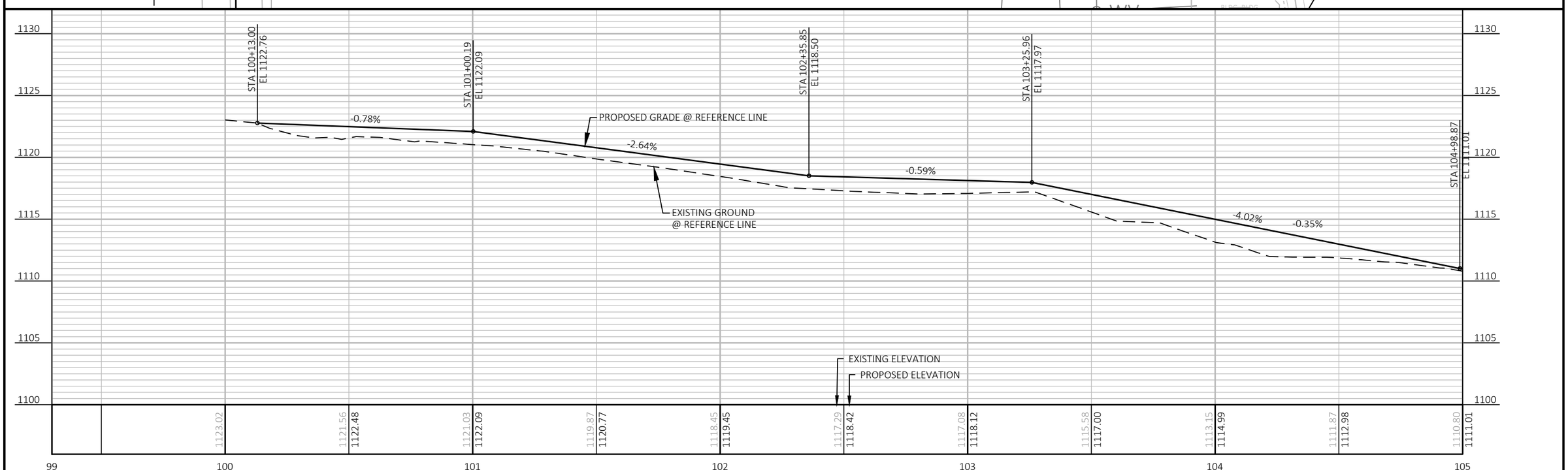

PROJECT NO: 7840-03-73	HWY: CTH G	COUNTY: CLARK	PLAN AND PROFILE: TEMPORARY CONSTRUCTION ACCESS - WEST	SHEET 31	E

FILE NAME : C:\ONEDRIVE\AECOM\60645919 - CTH G, CLARK COUNTY - GENERAL\900_CAD_GIS\910_CAD\78400303\SHEETSPLAN\0501-PP-TCA.DWG
LAYOUT NAME - 050101-pp-TCA
PLOT DATE : 6/3/2024 5:20 PM PLOT BY : LANCELLE, JESSICA PLOT NAME : PLOT SCALE : 1 IN:40 FT

WISDOT/CADDS SHEET 44

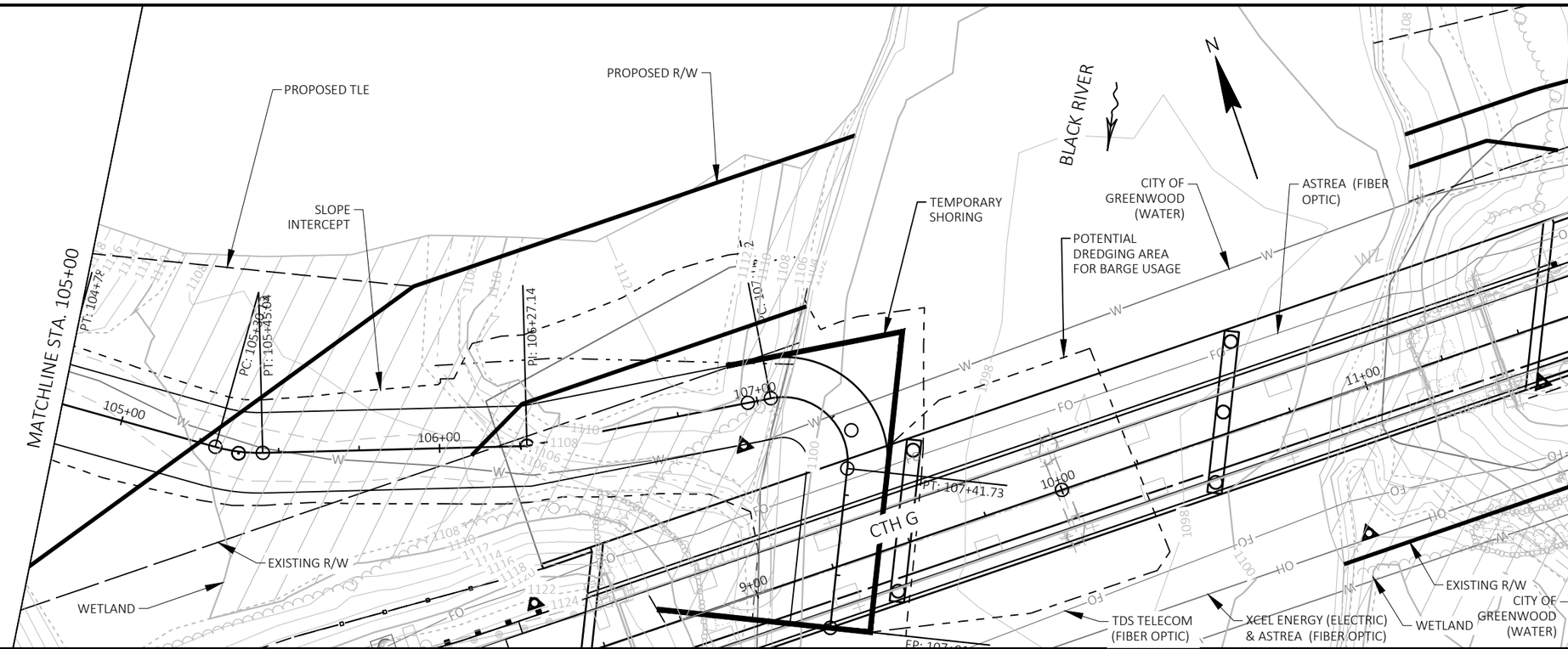

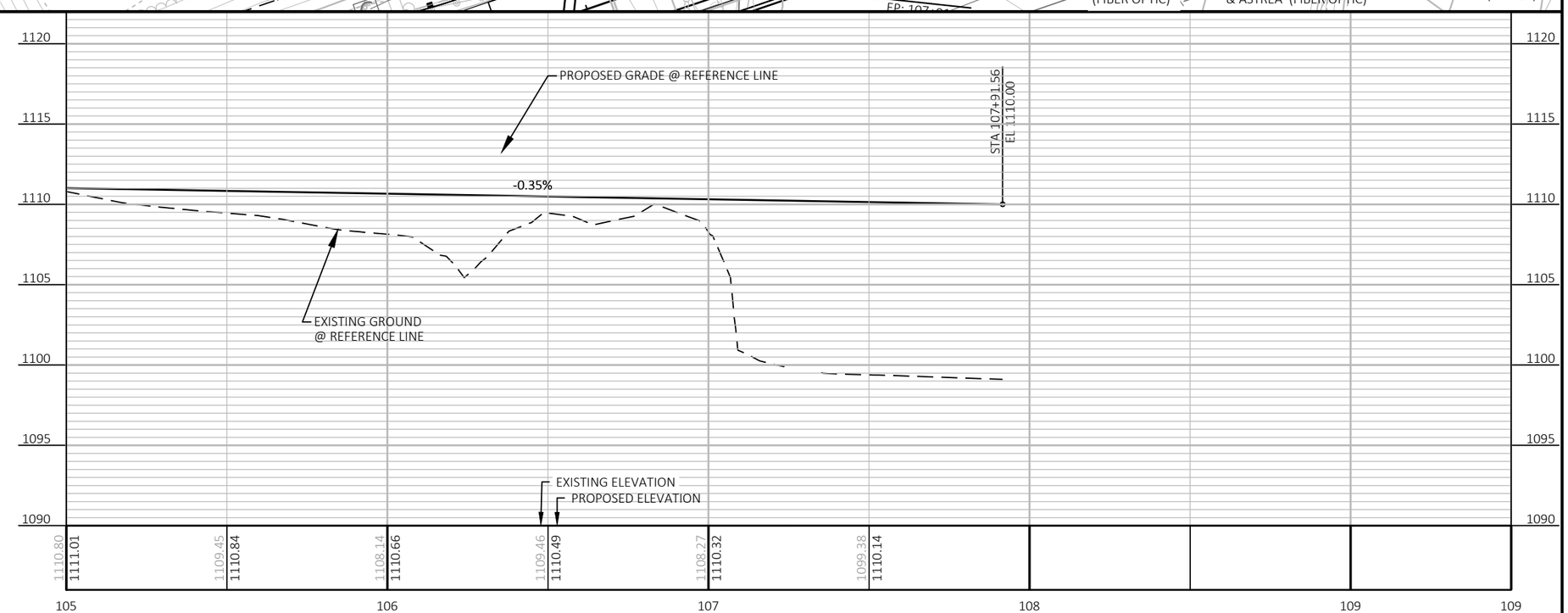

PROJECT NO: 7840-03-73	HWY: CTH G	COUNTY: CLARK	PLAN AND PROFILE: TEMPORARY CONSTRUCTION ACCESS - WEST	SHEET 32	E

FILE NAME : C:\ONEDRIVE\AECOM\60645919 - CTH G, CLARK COUNTY - GENERAL\900_CAD_GIS\910_CAD\78400303\SHEETSPLAN\0501-PP-TCA.DWG
LAYOUT NAME - 050102-pp-TCA
PLOT DATE : 6/3/2024 5:20 PM PLOT BY : LANCELLE, JESSICA PLOT NAME : PLOT SCALE : 1 IN:40 FT
WISDOT/CADDS SHEET 44

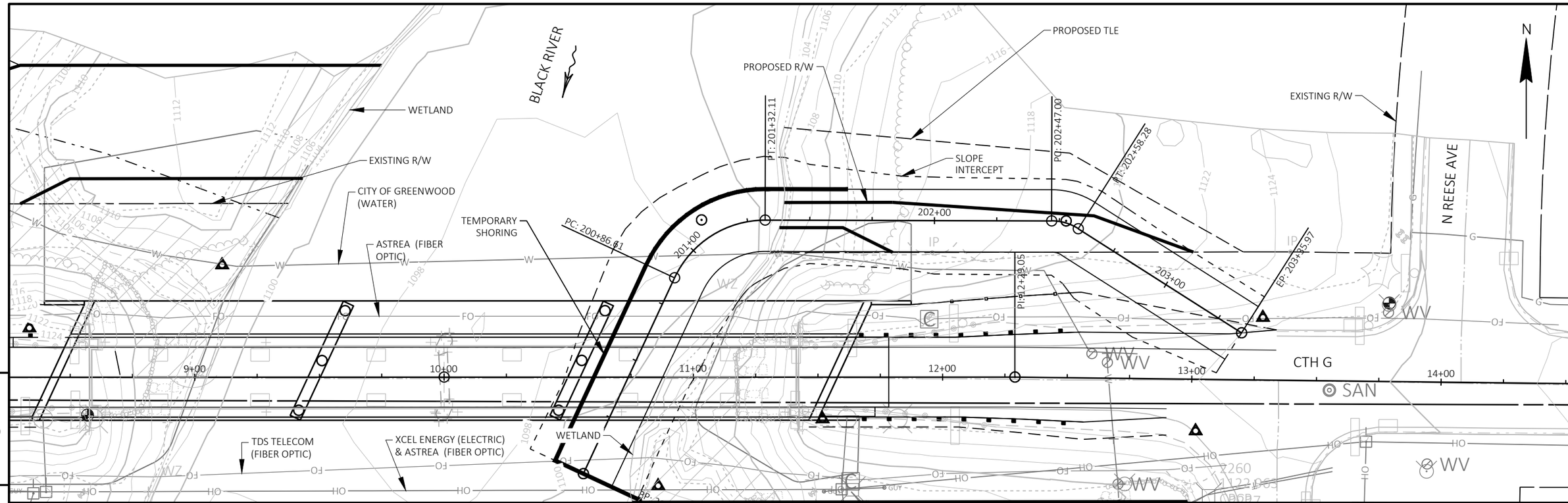

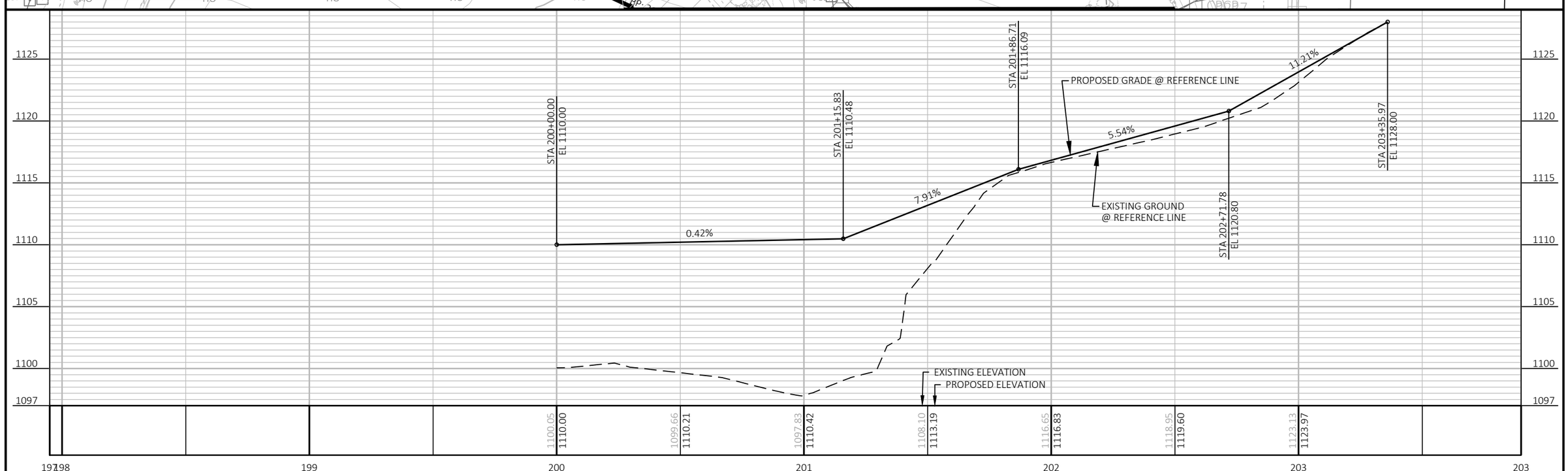

PROJECT NO: 7840-03-73	HWY: CTH G	COUNTY: CLARK	PLAN AND PROFILE: TEMPORARY CONSTRUCTION ACCESS - EAST	SHEET 33	E

FILE NAME : C:\ONEDRIVE\AECOM\60645919 - CTH G, CLARK COUNTY - GENERAL\900_CAD_GIS\910_CAD\78400303\SHEETSPLAN\0501-PP-TCA.DWG
LAYOUT NAME - 050103-pp-TCA
PLOT DATE : 6/3/2024 5:20 PM PLOT BY : LANCELLE, JESSICA PLOT NAME : PLOT SCALE : 1 IN:40 FT

WISDOT/CADDS SHEET 44

Standard Detail Drawing List

08E09-06	SILT FENCE
08E11-02	TURBIDITY BARRIER
12A03-10	NAME PLATE (STRUCTURES)
13B02-09A	CONCRETE PAVEMENT APPROACH SLAB
14B42-07A	MIDWEST GUARDRAIL SYSTEM (MGS) GUARDRAIL
14B42-07B	MIDWEST GUARDRAIL SYSTEM (MGS) GUARDRAIL
14B42-07C	MIDWEST GUARDRAIL SYSTEM (MGS) GUARDRAIL
14B42-07D	MIDWEST GUARDRAIL SYSTEM (MGS) GUARDRAIL
14B44-04A	MIDWEST GUARDRAIL SYSTEM ENERGY ABSORBING TERMINAL (MGS)
14B44-04B	MIDWEST GUARDRAIL SYSTEM ENERGY ABSORBING TERMINAL (MGS)
14B44-04C	MIDWEST GUARDRAIL SYSTEM ENERGY ABSORBING TERMINAL (MGS)
14B45-05A	MIDWEST GUARDRAIL SYSTEM THRIE BEAM TRANSITION (MGS)
14B45-05B	MIDWEST GUARDRAIL SYSTEM THRIE BEAM TRANSITION (MGS)
14B45-05C	MIDWEST GUARDRAIL SYSTEM THRIE BEAM TRANSITION (MGS)
14B45-05H	MIDWEST GUARDRAIL SYSTEM THRIE BEAM TRANSITION (MGS)
14B45-05I	MIDWEST GUARDRAIL SYSTEM THRIE BEAM TRANSITION (MGS)
15C02-09A	BARRICADES AND SIGNS FOR MAINLINE CLOSURES
15C02-09B	BARRICADES AND SIGNS FOR VARIOUS CLOSURES
15C02-09C	DETOUR SIGNING FOR MAINLINE CLOSURES
15C08-23A	PERMANENT LONGITUDINAL PAVEMENT MARKINGS
15C11-10B	CHANNELIZING DEVICES DRUMS, CONES, BARRICADES AND VERTICAL PANELS

6

6

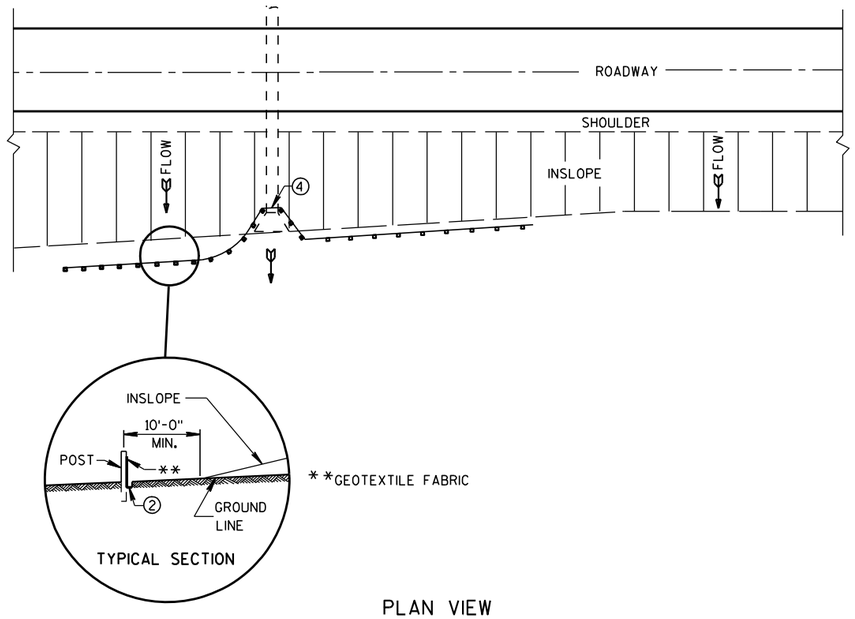

PLAN VIEW

TYPICAL APPLICATION OF SILT FENCE

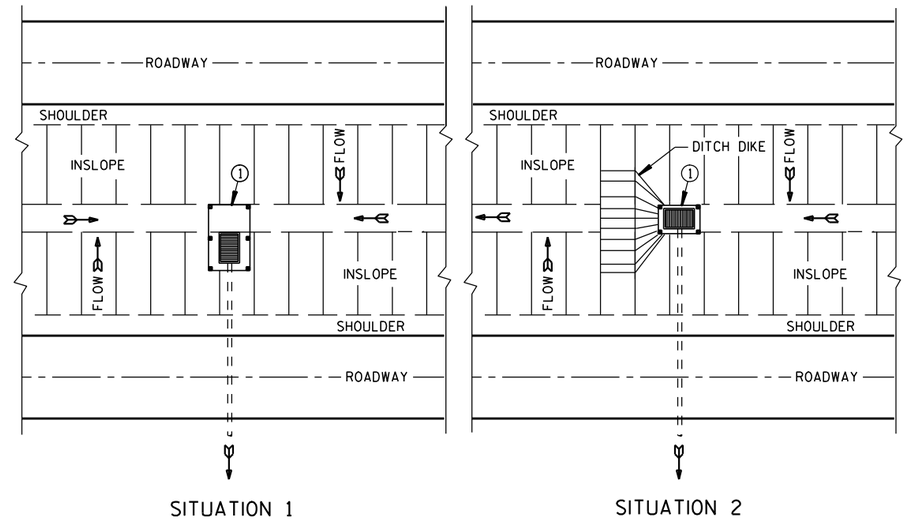

PLAN VIEW

SILT FENCE AT MEDIAN SURFACE DRAINS

GENERAL NOTES

DETAILS OF CONSTRUCTION NOT SHOWN ON THIS DRAWING SHALL CONFORM TO THE PERTINENT REQUIREMENTS OF THE STANDARD SPECIFICATIONS AND APPLICABLE SPECIAL PROVISIONS.

① HORIZONTAL BRACE REQUIRED WITH 2" X 4" WOODEN FRAME OR EQUIVALENT AT TOP OF POSTS.

② FOR MANUAL INSTALLATIONS THE TRENCH SHALL BE A MINIMUM OF 4" WIDE & 6" DEEP TO BURY AND ANCHOR THE GEOTEXTILE FABRIC. FOLD MATERIAL TO FIT TRENCH AND BACKFILL & COMPACT TRENCH WITH EXCAVATED SOIL.

③ WOOD POSTS SHALL BE A MINIMUM SIZE OF 1⅛" X 1⅛" OF OAK OR HICKORY.

④ SILT FENCE TO EXTEND ACROSS THE TOP OF THE PIPE.

⑤ CONSTRUCT SILT FENCE FROM A CONTINUOUS ROLL IF POSSIBLE BY CUTTING LENGTHS TO AVOID JOINTS. IF A JOINT IS NECESSARY USE ONE OF THE FOLLOWING TWO METHODS; A) OVERLAP THE END POSTS AND TWIST, OR ROTATE, AT LEAST 180 DEGREES. B) HOOK THE END OF EACH SILT FENCE LENGTH.

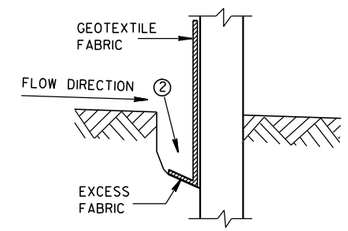

TRENCH DETAIL

NOTE: ADDITIONAL POST DEPTH OR TIE BACKS MAY BE REQUIRED IN UNSTABLE SOILS

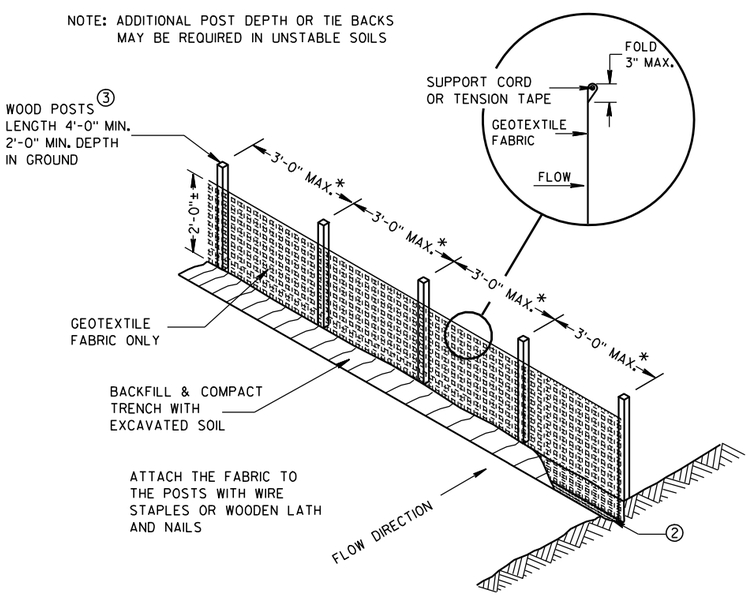

*NOTE: 8'-0" POST SPACING ALLOWED IF A WOVEN GEOTEXTILE FABRIC IS USED.

SILT FENCE

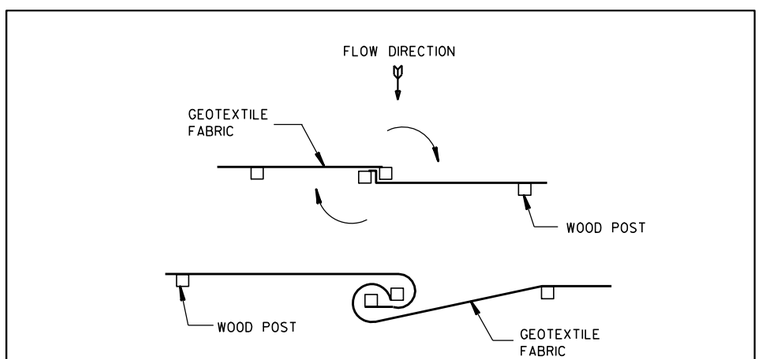

TWIST METHOD

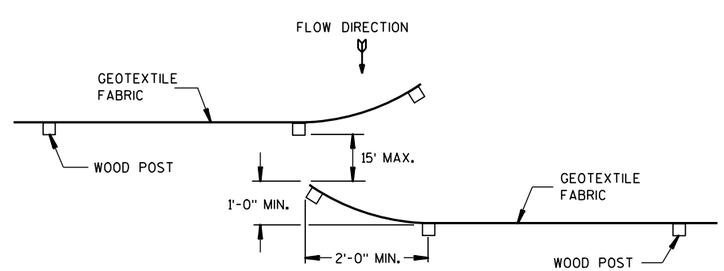

HOOK METHOD

JOINING TWO LENGTHS OF SILT FENCE ⑤

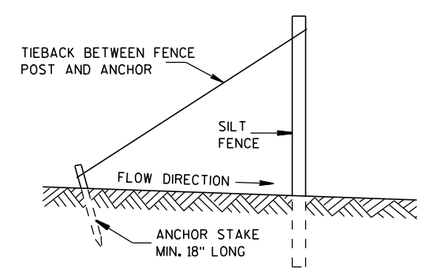

SILT FENCE TIE BACK

(WHEN REQUIRED BY THE ENGINEER)

SILT FENCE
STATE OF WISCONSIN DEPARTMENT OF TRANSPORTATION
APPROVED 4-29-05 /S/ Beth Cann----- DATE CHIEF ROADWAY DEVELOP ENGINEER FHWA

6

6

S.D.D. 8 E 9-6

S.D.D. 8 E 9-6

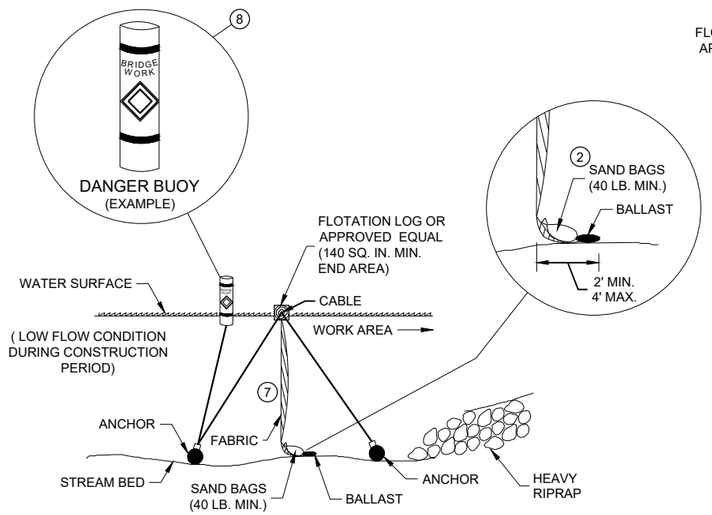

SECTION B - B

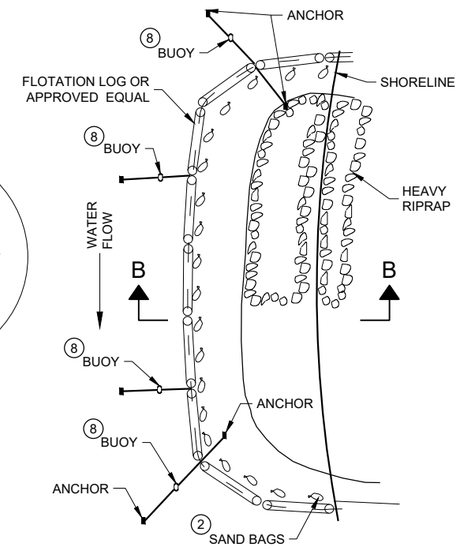

PLAN VIEW

TURBIDITY BARRIER - FLOAT ALTERNATIVE
CAUTION - SEE NOTE 6

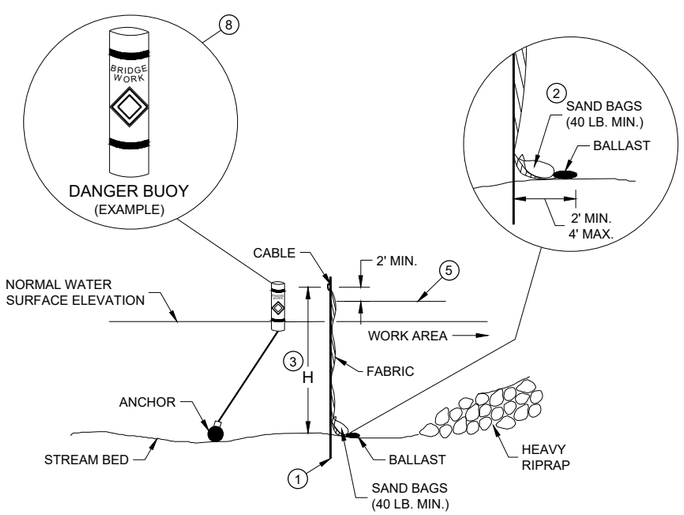

SECTION A - A

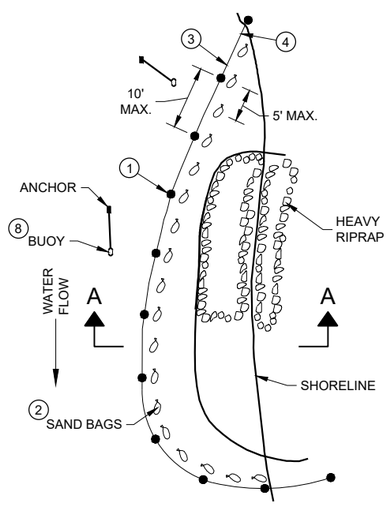

PLAN VIEW

TURBIDITY BARRIER - STANDARD POST INSTALLATION

TURBIDITY BARRIER PLACEMENT DETAILS

GENERAL NOTES

DETAILS OF CONSTRUCTION, MATERIALS AND WORKMANSHIP NOT SHOWN ON THIS DRAWING SHALL CONFORM TO THE PERTINENT REQUIREMENTS OF THE STANDARD SPECIFICATIONS AND THE APPLICABLE SPECIAL PROVISIONS.

TURBIDITY BARRIER MAY BE REMOVED AT THE ENGINEERS DISCRETION, WHEN PERMANENT EROSION CONTROL MEASURES HAVE BEEN ESTABLISHED.

1. DRIVEN STEEL POSTS, PIPES, OR CHANNELS. LENGTH SHALL BE SUFFICIENT TO SECURELY SUPPORT BARRIER AT HIGH WATER ELEVATIONS.
2. SAND BAGS TO BE USED AS ADDITIONAL BALLAST WHEN ORDERED BY THE ENGINEER TO MEET ADVERSE FIELD CONDITIONS. SPACE AS APPROPRIATE FOR SITE CONDITIONS.
3. WHEN BARRIER HEIGHT "H" EXCEEDS 8 FEET, POST SPACING MAY NEED TO BE DECREASED.
4. IN WATERWAYS SUBJECT TO FLUCTUATING WATER ELEVATIONS, PROVISIONS SHOULD BE MADE TO ALLOW THE WATER TO EQUALIZE ON EACH SIDE OF THE BARRIER. THIS MAY BE ACCOMPLISHED BY LEAVING A PORTION OF THE BARRIER OPEN ON THE UPSTREAM END.
5. ESTIMATED HIGH WATER ELEVATION DURING CONSTRUCTION PERIOD. MINIMUM BARRIER HEIGHT SHALL BE 2' GREATER THAN EITHER THE Q2 ELEVATION OR THE ESTIMATED HIGH WATER ELEVATION DURING CONSTRUCTION, WHICHEVER IS GREATER.
6. FLOAT ALTERNATIVE WILL ONLY BE ALLOWED WITH WRITTEN APPROVAL OF THE ENGINEER, AND IS MEANT FOR LOCATIONS WHERE BEDROCK PREVENTS THE INSTALLATION OF POSTS.
7. ALLOW SUFFICIENT SLACK VERTICALLY AND HORIZONTALLY SO THAT SEDIMENT BUILD UP WILL NOT SEPARATE OR LOWER THE TURBIDITY BARRIER.
8. USE AS DIRECTED BY COAST GUARD OR DNR PERMIT WHEN WORKING IN NAVIGABLE WATERWAYS.

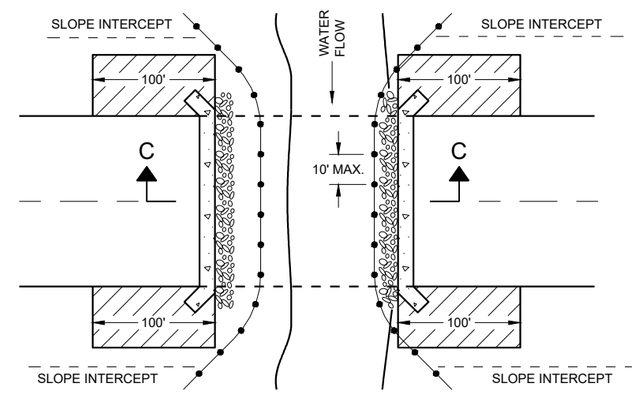

PLAN VIEW

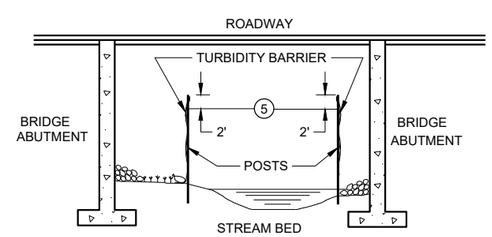

SECTION C - C

TURBIDITY BARRIER DETAIL SHOWING TYPICAL PLACEMENT AT STRUCTURES

TURBIDITY BARRIER

STATE OF WISCONSIN
DEPARTMENT OF TRANSPORTATION

APPROVED
6/4/02 — DATE
/S/ Beth Cannestra — CHIEF ROADWAY DEVELOPMENT ENGINEER
FHWA

6

SDD 08E11 - 02

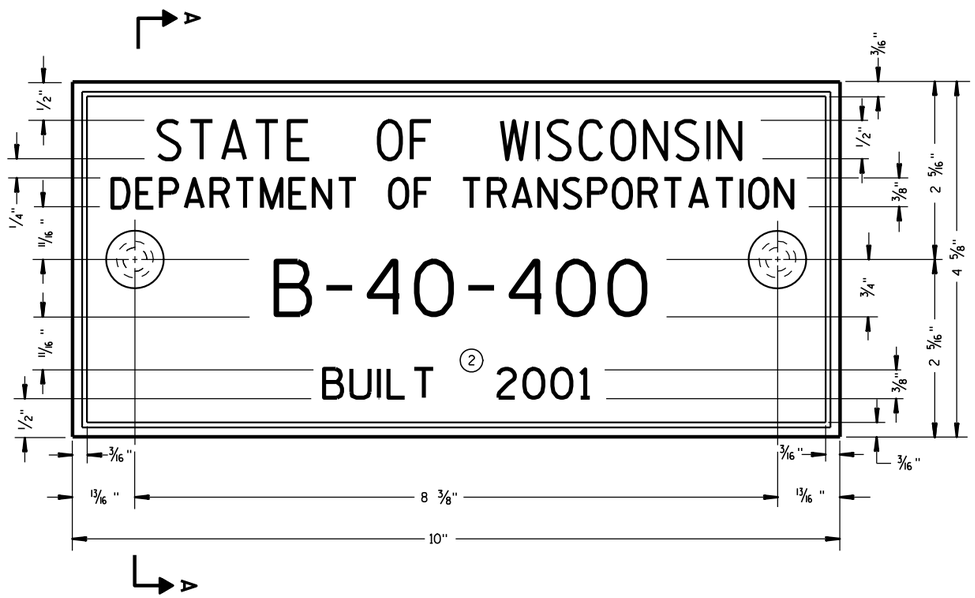

TYPICAL NAME PLATE
(BRIDGES, CULVERTS, AND RETAINING WALLS)

GENERAL NOTES

NAME PLATES TO BE INSTALLED ON BRIDGES, CULVERTS, AND RETAINING WALLS SHALL CONFORM TO THE REQUIREMENTS OF SECTION 502.3.11 OF THE STANDARD SPECIFICATIONS.

THE BRIDGE NUMBER AND YEAR BUILT SHOWN ON THIS DRAWING ARE EXAMPLES ONLY. SEE CONSTRUCTION PLANS FOR INDIVIDUAL NUMBERING AND YEAR BUILT.

(1) EPOXY RESIN SHALL BE FROM AN APPROVED MANUFACTURER AND USED IN ACCORDANCE WITH MANUFACTURER'S RECOMMENDATIONS.

(2) REHABILITATION OF AN EXISTING STRUCTURE SHOULD USE THE DATE OF ORIGINAL STRUCTURE CONSTRUCTION.

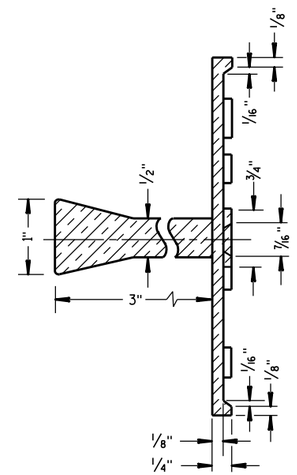

SECTION A-A

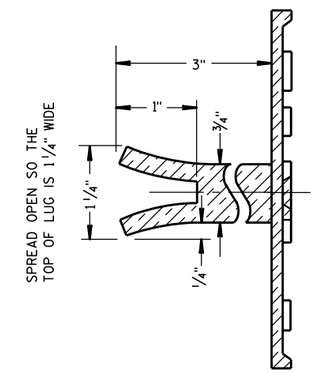

ALTERNATE LUG

6

FOR MULTI-UNIT STRUCTURES
LINE 3 ABOVE SHALL READ

B = BRIDGE
C = CULVERT
R = RETAINING WALL

COUNTY NO.

BRIDGE NO.

UNIT NO. FOR MULTIPLE
UNIT BRIDGE

B-40-400-1A

NUMBERING DESIGNATION
MULTI-UNIT STRUCTURES

(1) ADHERE ANCHOR LUG TO PRECAST RETAINING WALL WITH EPOXY RESIN.

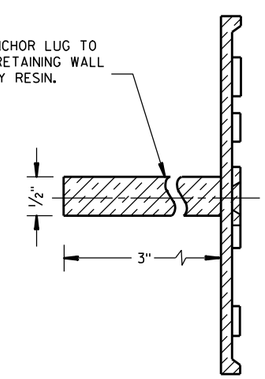

ALTERNATE LUG
(FOR ATTACHMENT TO PRECAST STRUCTURES)

NAME PLATE (STRUCTURES)

STATE OF WISCONSIN
DEPARTMENT OF TRANSPORTATION

APPROVED

3/26/10 — DATE

/S/ Scot Beck -- CHIEF STRUCTURAL DEVELOPMENT ENGINEER

FHWA

S.D.D. 12 A 3-10

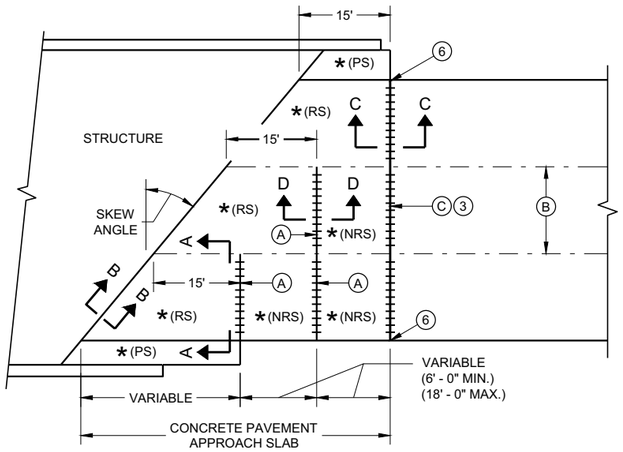

SKEWED APPROACH
(PAVEMENT MORE THAN TWO LANES)

* (RS) = REINFORCED CONCRETE SLAB

* (PS) = PAVED CONCRETE SHOULDER OR CONCRETE DRAINAGE SLAB

* (NRS) - NON - REINFORCED CONCRETE SLAB

*** STANDARD DOWEL BAR DIAMETER (SEE SDD 13C11 AND SDD 13C13)

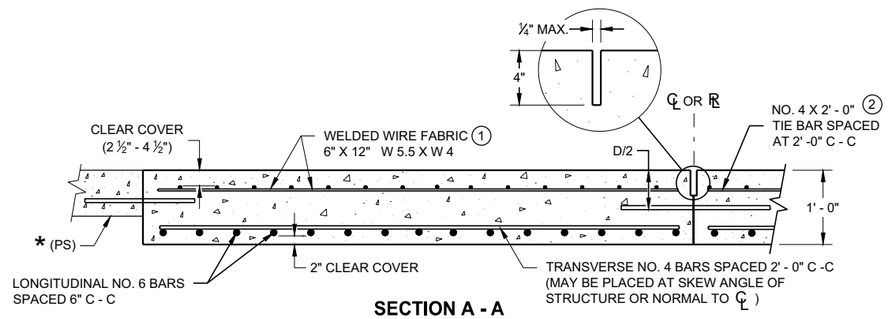

SECTION A - A
REINFORCEMENT POSITIONING DETAIL

GENERAL NOTES

THE CONTRACTOR MAY SPLICE NO. 6 BARS IN THE APPROACH SLAB FOR SKEWED STRUCTURES ONLY. STAGGER SPLICES WITH A MAXIMUM OF ONE SPLICE PER BAR. THE LENGTH OF LAP IS 20 INCHES.

TACK WELD DOWEL BARS TO THE BASKETS ON ALTERNATE ENDS.

1. THE CONTRACTOR MAY USE NO. 4 BARS SPACED AT 2' - 0 " C - C IN BOTH THE LONGITUDINAL AND TRANSVERSE DIRECTIONS FOR TOP REINFORCEMENT AS AN ALTERNATIVE TO THE WELDED WIRE FABRIC.
2. THE CONTRACTOR MAY OMIT THE BARS BETWEEN REINFORCED SLABS WHERE SLAB REINFORCEMENT BARS EXTEND ACROSS THE CENTERLINE OR REFERENCE LINE.
3. DO NOT CONSTRUCT AN EXPANSION JOINT OR INSTALL DOWEL BARS WHEN ABUTTING AN HMA PAVEMENT.
4. USE A JOINT SEALANT CONFORMING TO STANDARD SPECIFICATION 415.2.6.
5. PLACE EXPANSION CAP ON THE END OF THE DOWEL THAT IS NOT TACK WELDED TO THE BASKET. DO NOT FORCE DOWEL BAR PAST THE DOWEL STOP.
6. EXTEND EXPANSION JOINT THROUGH ANY ADJACENT TIED CONCRETE.

A. STANDARD CONTRACTION JOINT NORMAL TO ℄ OR ℞.

B. STANDARD LONGITUDINAL JOINT WITH TIE BARS.

C. 1 ½" EXPANSION JOINT WITH DOWEL BARS NORMAL TO ℄ OR ℞ .

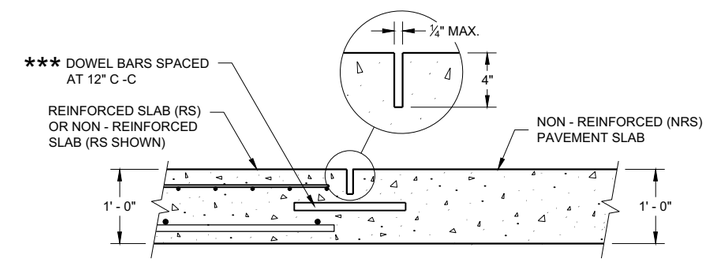

SECTION D - D
CONTRACTION JOINT

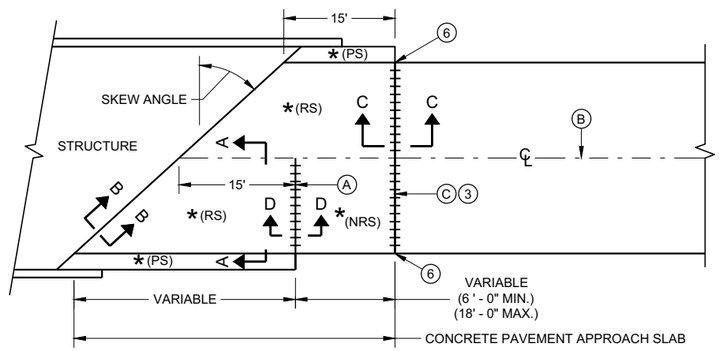

SKEWS > 20°
(PAVEMENT WIDTH ≤ 30')

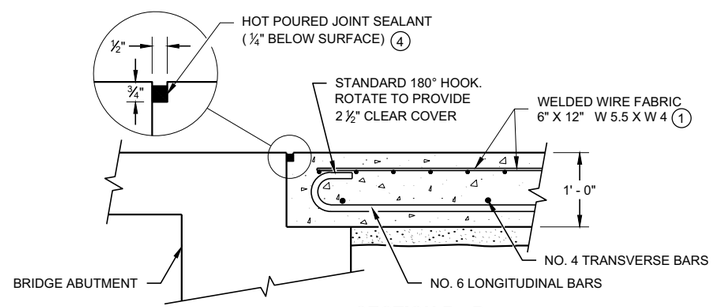

SECTION B - B
BEND DETAIL
BOTTOM REINFORCEMENT

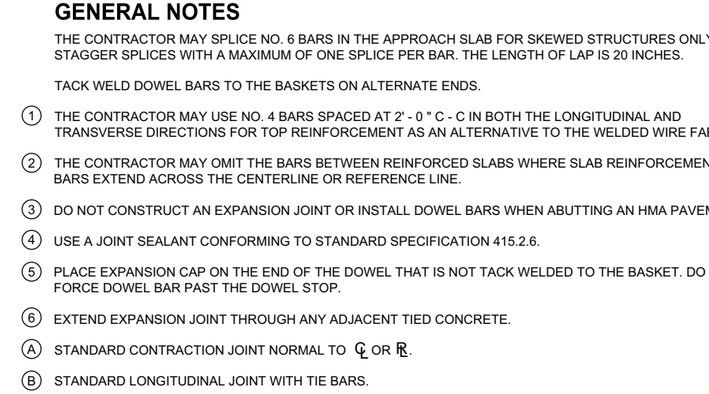

EXPANSION JOINT DETAIL

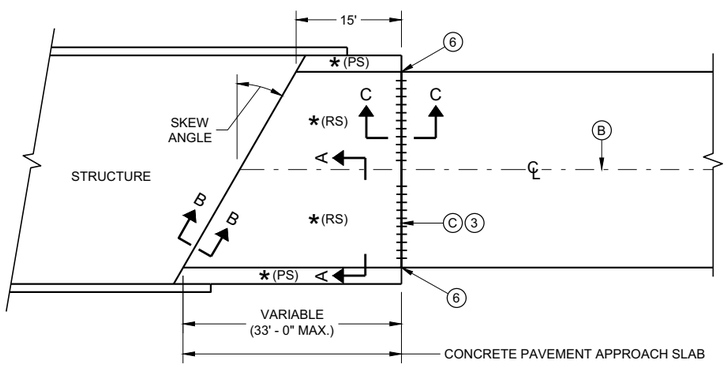

SKEWS ≤ 20°
(PAVEMENT WIDTH ≤ 30')

APPROACH SLAB AND ADJACENT PAVEMENT

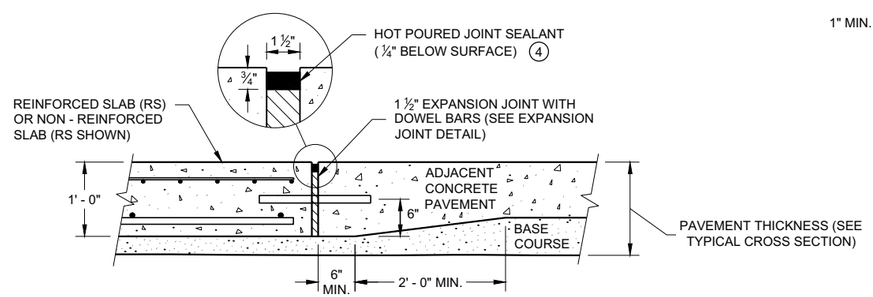

SECTION C - C
TRANSITION DETAIL
APPROACH SLAB TO ADJACENT PAVEMENT

CONCRETE PAVEMENT APPROACH SLAB

STATE OF WISCONSIN
DEPARTMENT OF TRANSPORTATION

APPROVED
November 2018 /S/ Peter Kemp, P.E.
DATE PAVEMENT SUPERVISOR
FHWA

6

SDD 13B02 - 09a

1. WOOD OR STEEL POSTS (w6X9 OR w6X8.5) MAY BE USED. DO NOT INTERMIX WOOD AND STEEL POSTS. INSTALL STEEL POSTS WITH HOLES ON APPROACHING TRAFFIC SIDE.
2. USE WOOD OR APPROVED PLASTIC BLOCKOUTS. WOOD BLOCKOUTS MAY BE CONSTRUCTED OUT OF TWO OR MORE WOOD BLOCKOUTS. SEE ALTERNATE WOOD BLOCKOUT DETAIL. DIMENSIONS OF APPROVED PLASTIC BLOCKOUTS MAY VARY.
3. IF ROCK IS ENCOUNTERED DURING EXCAVATION, PROVIDE A HOLE 12 INCHES IN DIAMETER EXTENDING 20 INCHES DEEP INTO THE ROCK. PLACE APPROXIMATELY 2 1/2" INCHES OF GRANULAR MATERIAL IN THE BOTTOM OF THE HOLE. CUT THE POSTS THE TO LENGTH AMD INSTALL. BACKFILL WITH EXCAVATED MATERIAL AND COMPACT. BACKFILL IS TO BE FREE OF LARGE ROCKS.
4. WHEN THE DISTANCE FROM BACK OF POST TO SHOULDER HINGE POINT IS LESS THAN 2 FEET INSTALL LONGER POST AT HALF POST SPACING (K).
5. FOR NEW MGS INSTALLATION TOP OF W-BEAM RAIL TOLERANCE IS ±1". FOR EXISTING MGS INSTALLATION TOP OF W-BEAM IS BETWEEN 27 ¾" TO 32".
6. WHEN USING STEEL POST AND WOOD BLOCKOUTS INSTALL FOUR 16D GALVANIZED NAILS. INSTALL NAILS AT THE BACK CORNERS OF THE BLOCK AND BEND THE NAILS OVER THE FLANGE OF THE STEEL POST.
7. TOTAL POST LENGTH FOR TYPE K IS 7' - 0". TOTAL POST LENGTH FOR OTHER MGS TYPES IS 6' - 0".

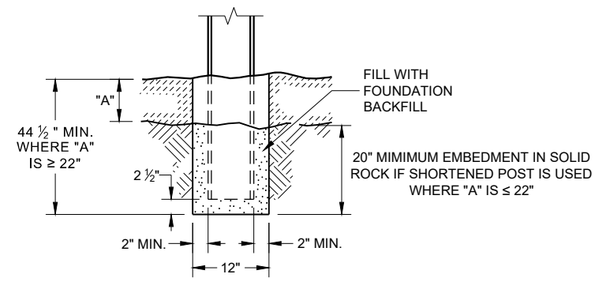

END VIEW
SETTING STEEL OR WOOD POST IN ROCK (3)

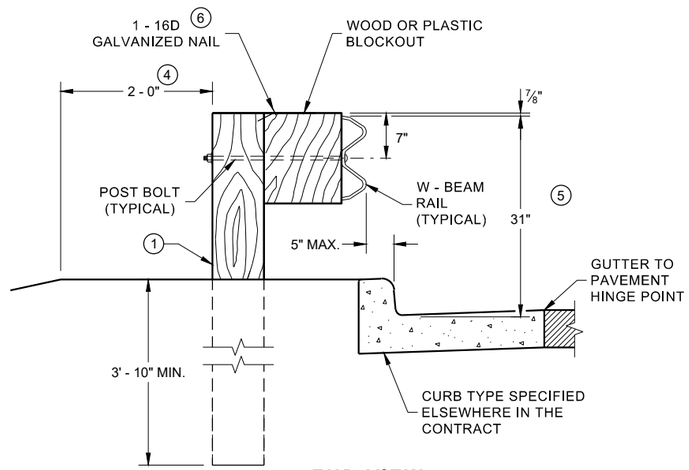

END VIEW
LOCATED ALONG A CURBED ROADWAY

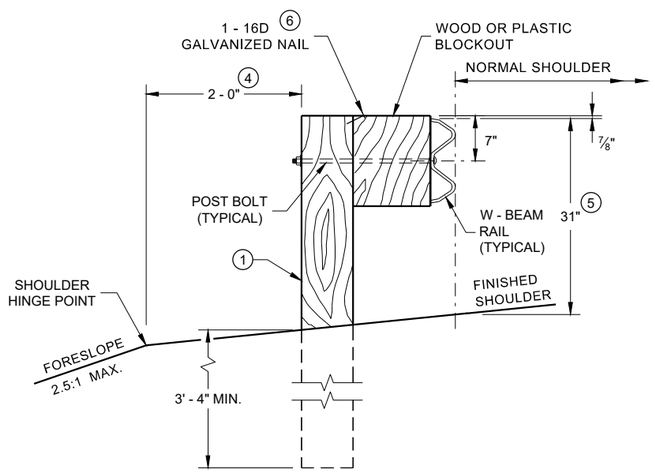

END VIEW
LOCATED ALONG A ROADWAY SHOULDER STANDARD INSTALLATION

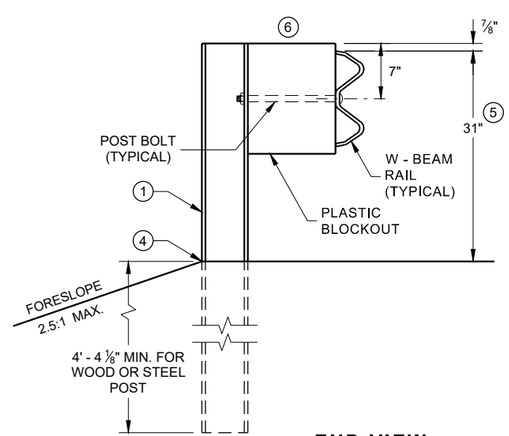

END VIEW
MGS LONGER POST AT HALFPOST SPACING W BEAM (K)

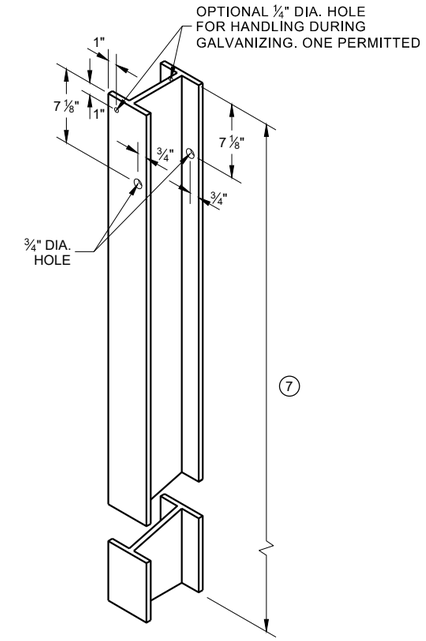

STEEL POST & HOLE PUNCHING DETAIL (W 6 X 9) (1)

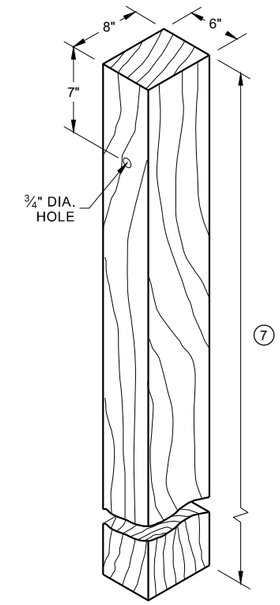

WOOD POST (6" X 8") NOMINAL (1)

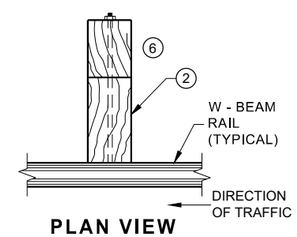

PLAN VIEW WOOD POST, BLOCKOUT & BEAM

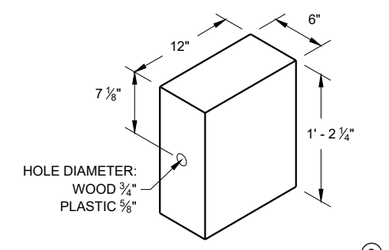

WOOD OR PLASTIC BLOCKOUT (2)

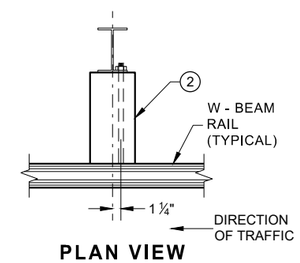

PLAN VIEW STEEL POST, PLASTIC BLOCKOUT & BEAM

MIDWEST GUARDRAIL SYSTEM (MGS) GUARDRAIL

STATE OF WISCONSIN
DEPARTMENT OF TRANSPORTA

6

SDD 14B42 - 07a

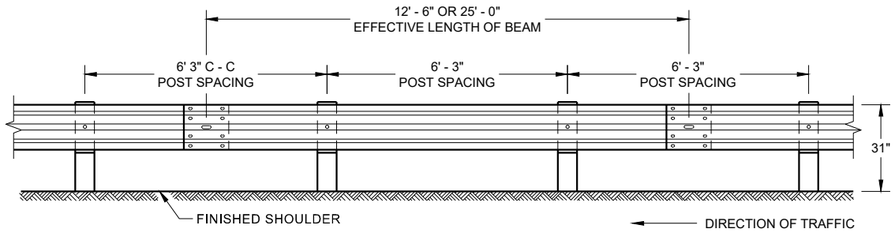

FRONT VIEW
POST SPACING STANDARD INSTALLATION

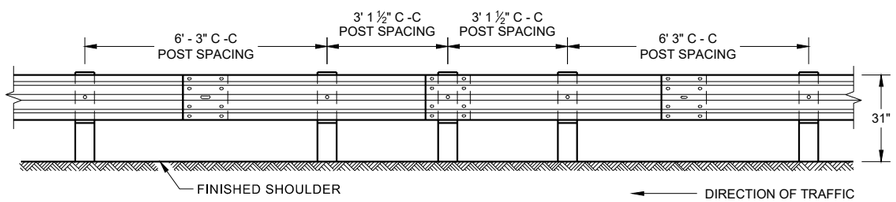

FRONT VIEW
HALF POST SPACING (HS) AND HALF POST SPACING WITH LONGER POSTS (K)

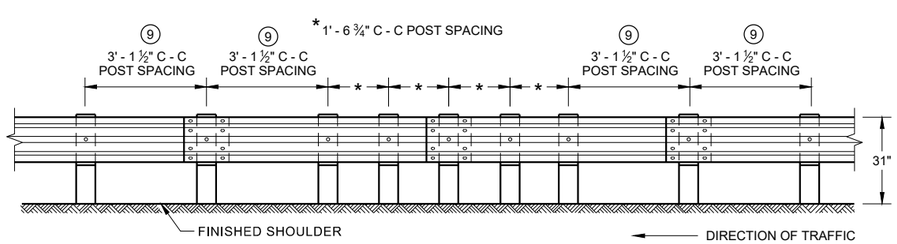

FRONT VIEW
QUARTER POST SPACING (QS)

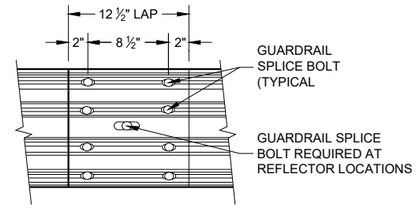

FRONT VIEW
MID-SPAN BEAM SPLICE

GENERAL NOTES

8 DO NOT INSTALL REFLECTORS ON THE FIRST 50 FEET OF THE APPROACH END OF THE ENERGY ABSORBING TERMINAL.

9 25 FEET OF HALF POST SPACING IS REQUIRED ON APPROACH AND DEPARTURE ENDS OF QUARTER POST SPACING.

POST BOLTS ARE A ⅝" DIAMETER ASTM A307 GUARDRAIL BOLT. A POST BOLT REQUIRES ⅝" DIAMETER A563A DOUBLE RECESSED (DR) HEAVY HEX NUT AND ⅝" DIAMETER F844 FLAT WASHER. POST BOLTS MAY BE LONGER IF MULTIPLE BLOCKOUTS ARE BEING USED.

GUARD RAIL SPLICE BOLTS ARE A ⅝" DIAMETER ASTM A307 GUARDRAIL HEAD BOLT. A GUARDRAIL SPLICE BOLT REQUIRES ⅝" DIAMETER A563A DOUBLE RECESSED (DR) HEAVY HEX NUT.

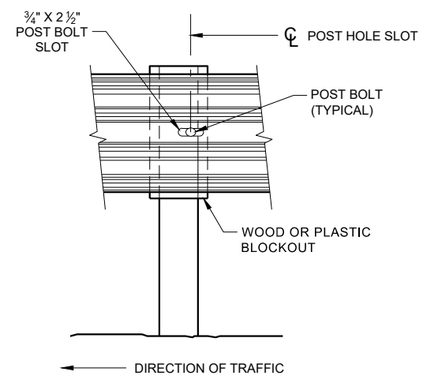

FRONT VIEW AT STEEL POST

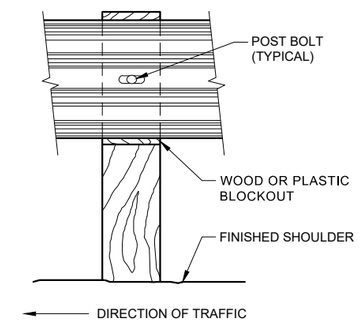

FRONT VIEW AT WOOD POST

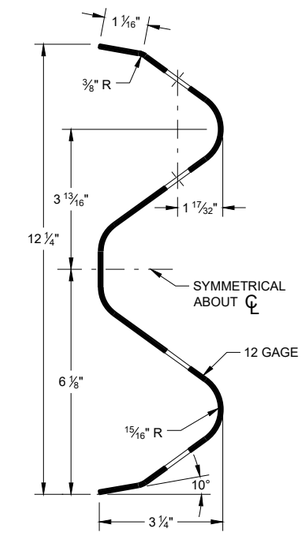

SECTION THRU W-BEAM RAIL

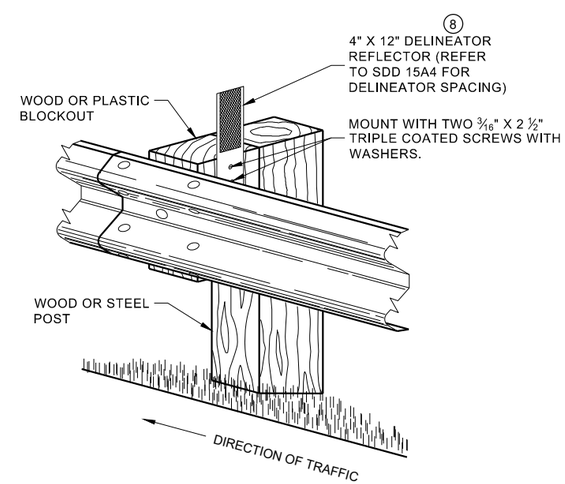

ONE SIDED REFLECTOR DETAIL AND TYPICAL INSTALLATION

6

6

MIDWEST GUARDRAIL SYSTEM (MGS) GUARDRAIL

STATE OF WISCONSIN
DEPARTMENT OF TRANSPORTAT

SDD 14B42 - 07b

SDD 14B42 - 07b

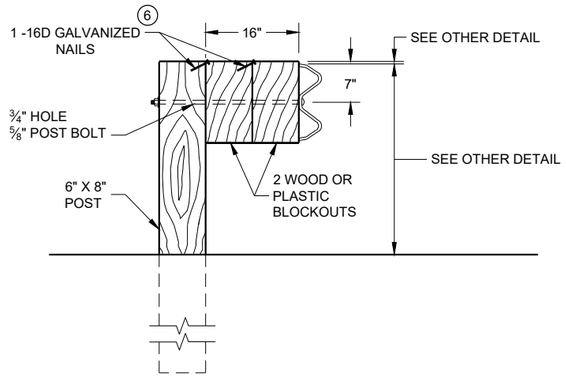

DETAIL FOR 16" BLOCKOUT DEPTH

IT IS ACCEPTABLE TO USE BLOCKOUTS UP TO 16" DEEP TO INCREASE THE POST OFFSET TO AVOID UNDERGROUND OBSTACLES. THERE IS NO LIMIT TO THE NUMBER OF POSTS THAT CAN HAVE ADDITIONAL BLOCKOUTS UP TO 16" DEEP.

NOTE:

1. ALL FILLETS SHALL HAVE A MINIMUM RADIUS OF 3/16".
2. IF THE BOLT EXTENDS MORE THAN ¼" FROM THE NUT THE BOLT SHOULD BE TRIMMED BACK.

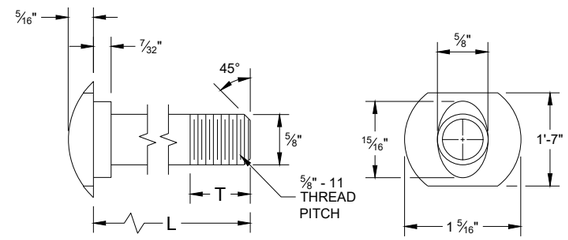

POST BOLT TABLE

L	T (MIN.)
1 ¼"	1 ⅛"
2"	1 ¾"
10"	4"
14"	4 1/16"
18"	4"
21"	4 1/16"
25"	4"

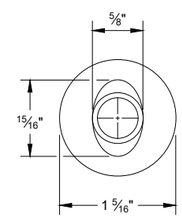

ALTERNATE BOLT HEAD

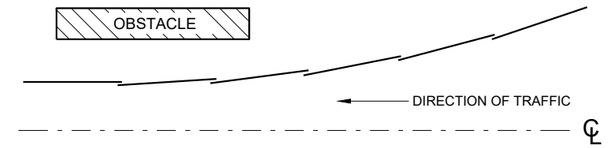

PLAN VIEW
BEAM LAPPING DETAIL

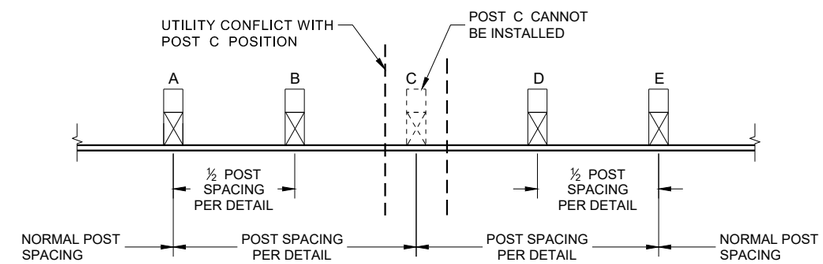

POST DRIVING FOR CONTINUOUS UNDERGROUND OBSTRUCTION

6

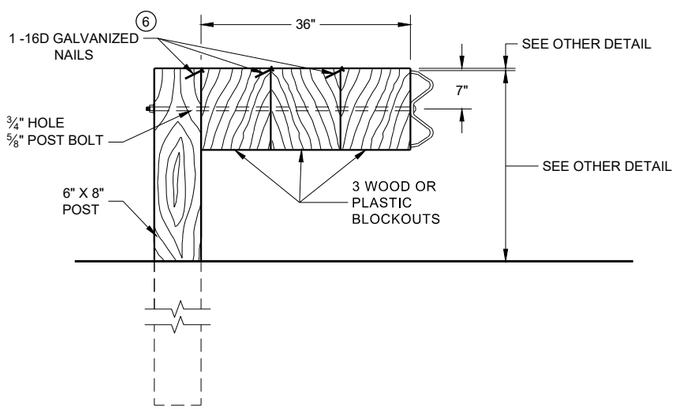

DETAIL FOR 36" BLOCKOUT DEPTH

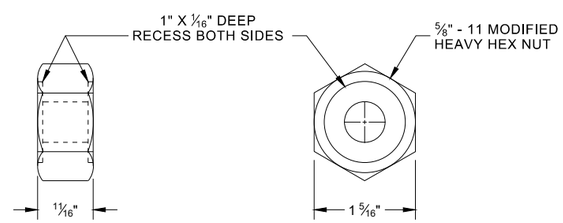

POST BOLT, SPLICE BOLT AND RECESS NUT

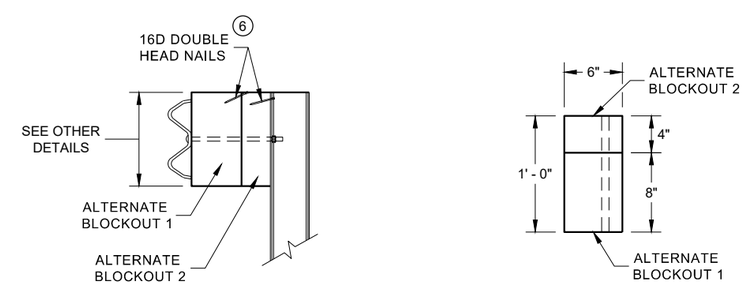

SIDE VIEW

PLAN VIEW

ALTERNATE WOOD BLOCKOUT DETAIL

NOTES: UNDER SPECIAL CIRCUMSTANCES, SUCH AS AVOIDING OBSTACLES THAT ARE NOT RELOCATED, IT IS ACCEPTABLE TO INSTALL ADDITIONAL BLOCKOUTS TO OBTAIN UP TO 36" DEPTH FOR ONE OR TWO POSTS IN A SECTION OF GUARDRAIL.

DO NOT USE 16" OR 36" BLOCKOUTS IF IT CAUSES THE POST TO BE DRIVEN BEYOND SHOULDER HINGE POINT OR CAUSES A FIXED OBJECT TO BE WITHIN THE DEFLECTION DISTANCE OF THE BARRIER.

(6) WHEN USING STEEL POST AD WOOD BLOCKOUTS, INSTALL FOUR 16D GALVANIZED NAILS. INSTALL NAILS AT THE BACK CORNERS OF THE BLOCK AND BEND THE NAILS OVER THE FLANGE OF THE STEEL POST.

MIDWEST GUARDRAIL SYSTEM (MGS) GUARDRAIL

STATE OF WISCONSIN
DEPARTMENT OF TRANSPORTA

SDD 14B42 - 07c

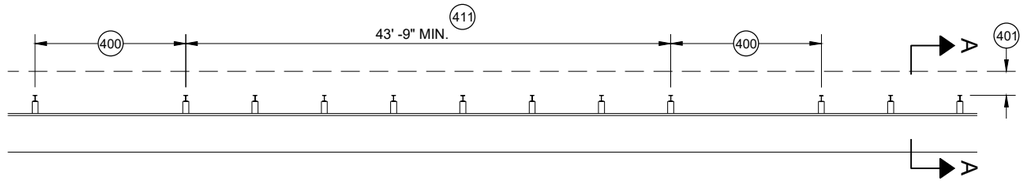

MISSING POST IN MGS GUARDRAIL

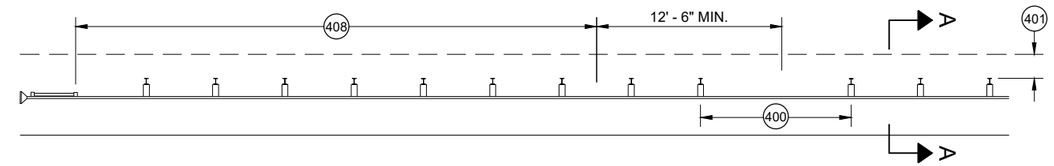

MISSING POST IN MGS GUARDRAIL NEAR EAT

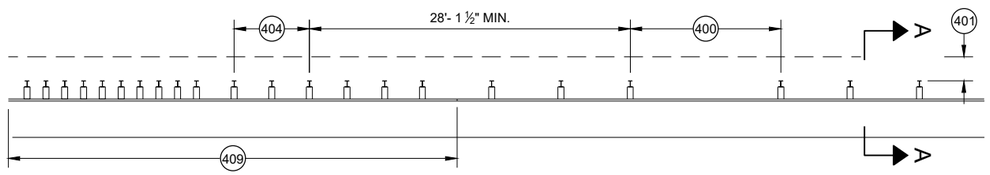

MISSING POST IN MGS GUARDRAIL NEAR AN APPROACH TRANSITION

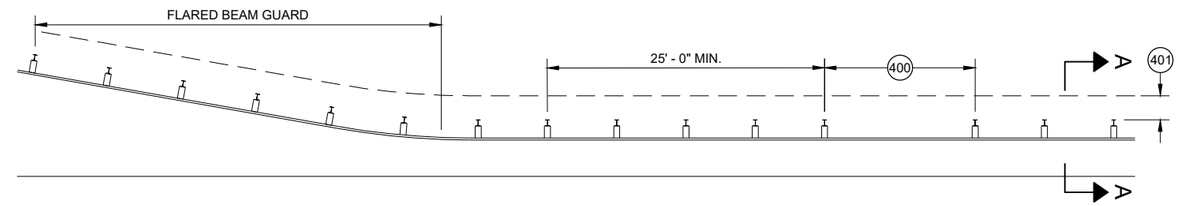

MISSING POST IN MGS GUARDRAIL NEAR FLARED BEAM GUARD

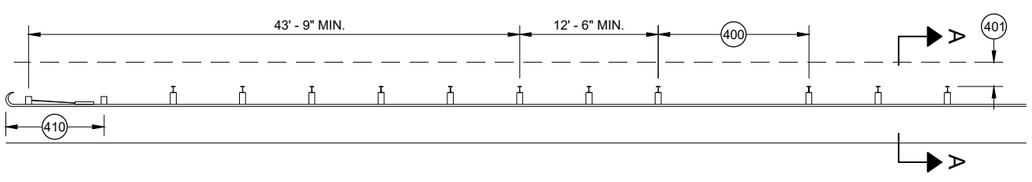

MISSING POST IN MGS GUARDRAIL NEAR A TYPE 2 END TERMINAL

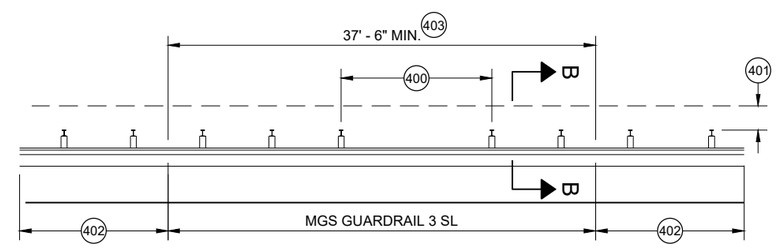

MISSING POST IN SHORT SPAN MGS GUARDRAIL NEAR CURB (SL) 407

400 MAX SPAN 12' - 6"
401 2' MIN.
402 MGS GUARDRAIL 3
403 NESTING BEAM GUARD
404 ASYMMETRIC TRANSITION
405 SOIL WELL DRAINED AND COMPACTED
406 SEE OTHER DRAWINGS IN THIS SDD
407 SEE OTHER DRAWINGS FOR MIN. SPACING BETWEEN SPANS
408 SEE SDD 14B44
409 SEE SDD 14B45
410 SEE SDD 14B47
411 MINIMUM DISTANCE BETWEEN MISSING POST SPANS.

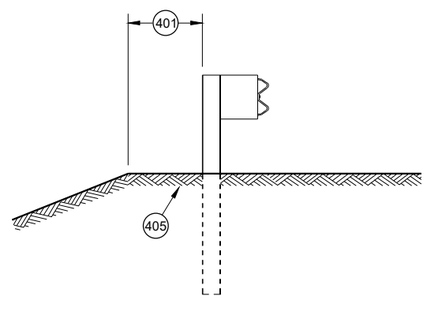

SECTION A - A 406

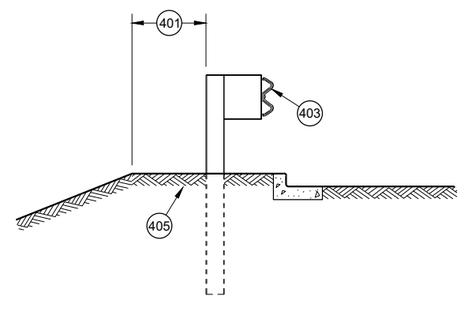

SECTION B - B 406

MIDWEST GUARDRAIL SYSTEM (MGS) GUARDRAIL

STATE OF WISCONSIN
DEPARTMENT OF TRANSPORTATION

APPROVED
May 2021 — DATE
/S/ Rodney Taylor — ROADWAY STANDARDS DEVE UNIT SUPERVISOR
FHWA

6

SDD 14B42 - 07d

GENERAL NOTES

(A) THE SLOPE IN THE AREA BOUNDED BY THE GRADELINE, THE HINGE POINT LINE (HPL) AND THE CLEAR ZONE LIMITS (CZL) SHALL BE 4:1 OR FLATTER.

(B) AFTER FINAL ASSEMBLY, RECHECK CABLE TO BE SURE IT IS TAUT AND HAS NOT RELAXED

(C) DIFFERENT MANUFACTURERS REQUIRE DIFFERENT PERFORATED W - BEAM RAIL END PANELS. SEE MANUFACTURER'S INFORMATION.

(D) ATTACH ALUMINUM SHEET TO E.A.T. HEAD USING 4 STAINLESS STEEL SELF - TAPPING SCREWS. ONE SCREW PER CORNER.

(E) HARDWARE MAY VARY BETWEEN MANUFACTURER. SEE MANUFACTURER'S DRAWING FOR INFORMATION.

DIMENSIONS MAY VARY, MANUFACTURER'S INFORMATION.

SEE SDD 14B42 FOR MORE INFORMATION.

* DO NOT ATTACH BLOCKOUTS TO POST 1 AND 2.

DO NOT INSTALL REFLECTORS ON THE FIRST 50 FEET OF THE APPROACH END OF THE ENERGY ABSORBING TERMINAL.

SEE MANUFACTURER'S DRAWING FOR SPLICE LOCATION, HARDWARE DIMENSIONS AND INSTALLATION INSTRUCTIONS.

THE CENTER OF THE UPPER 3 ½" DIAMETER HOLE ON POST NUMBER 3 THROUGH POST 9 IS TO BE FLUSH WITH THE GROUND LINE UP TO A MAXIMUM OF 2" ABOVE GROUND LINE. WOOD BLOCKS ON POSTS NUMBERED 3 THROUGH 9 MAY BE ADJUSTED UP TO 3" ABOVE THE TOP OF POST.

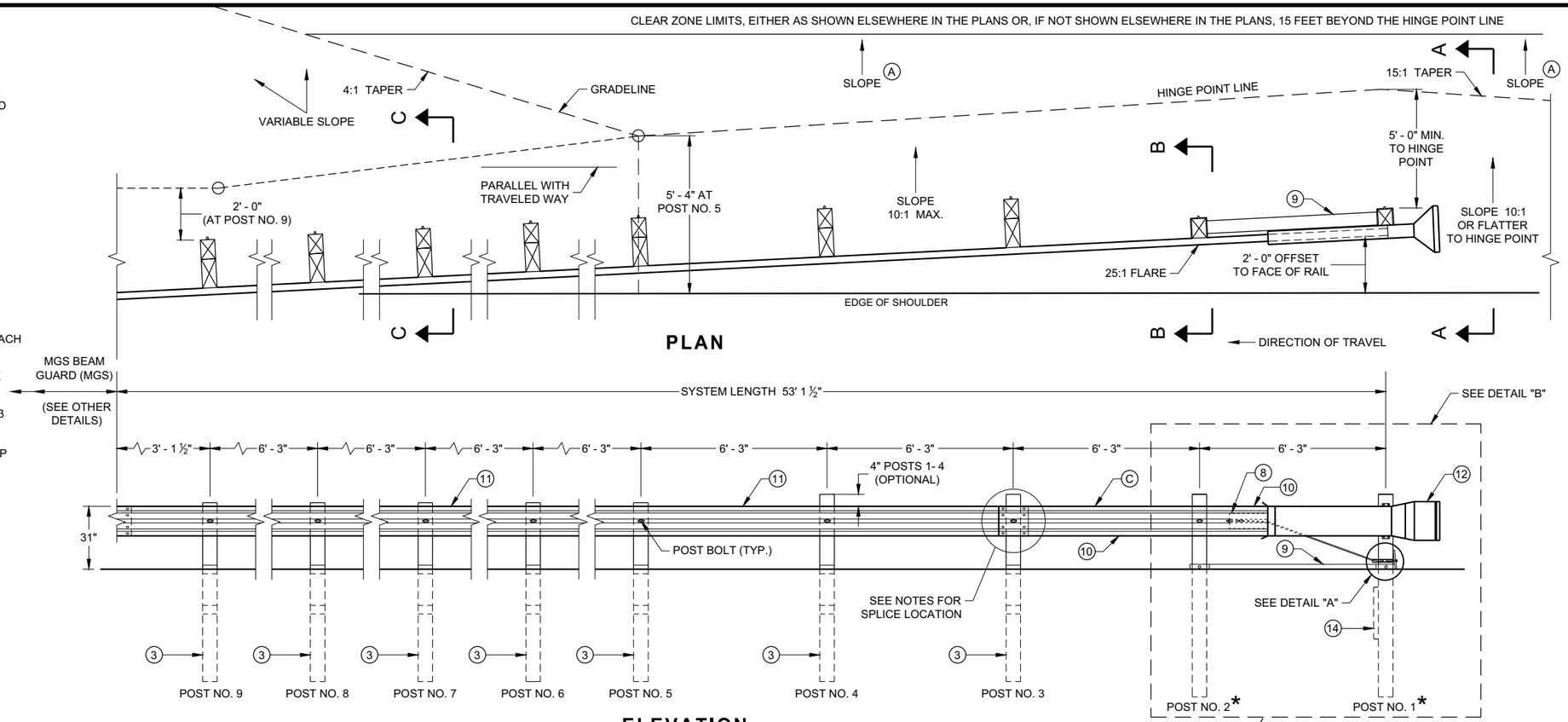

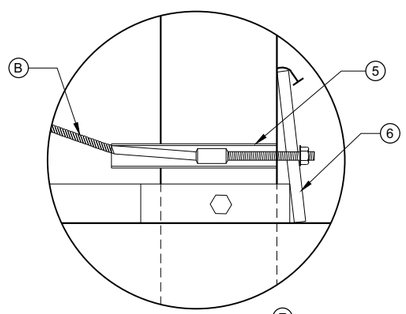

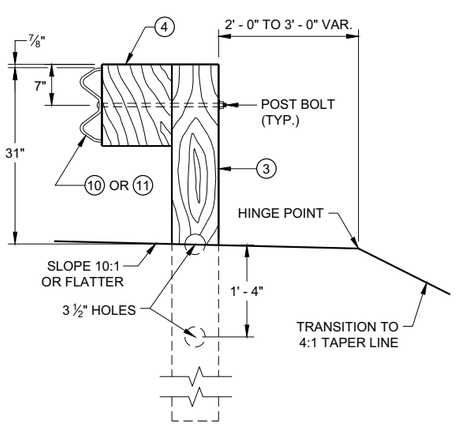

SECTION C - C
TYPICAL AT POST NOS. 3 - 9

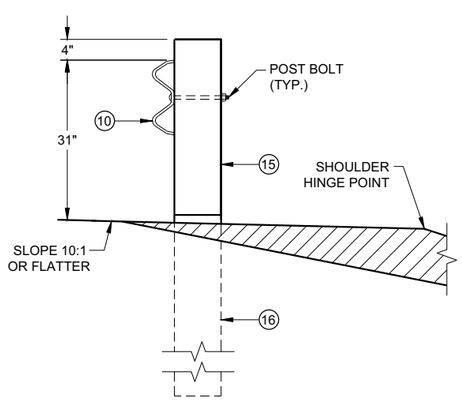

SECTION B - B
TYPICAL AT POST NO. 2*

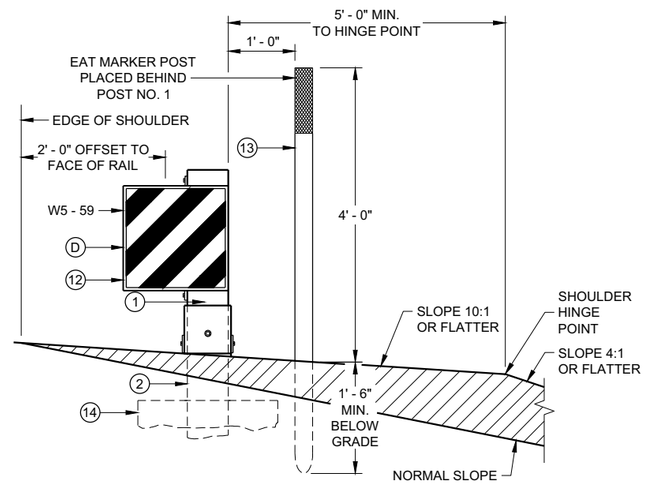

SECTION A - A
TYPICAL AT POST NO. 1*

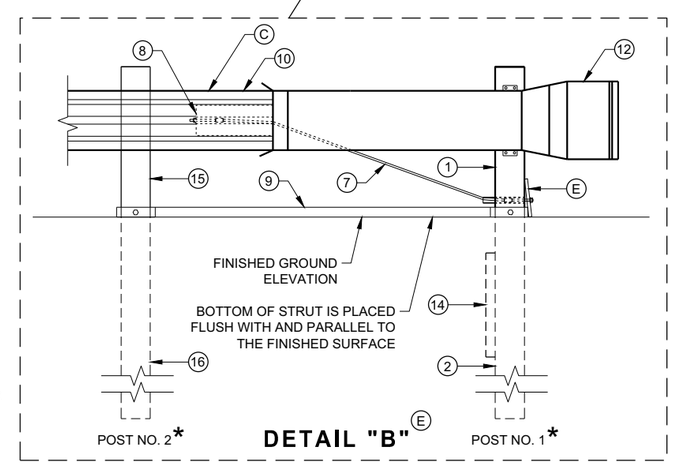

MIDWEST GUARDRAIL SYSTEM ENERGY ABSORBING TERMINAL (MGS)

STATE OF WISCONSIN
DEPARTMENT OF TRANSPORTATION

6

6

SDD 14B44 - 04a

SDD 14B44 - 04a

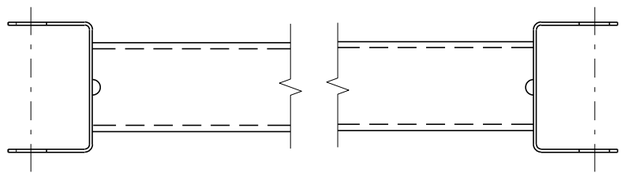

GENERIC GROUND STRUT (9)(E)

BILL OF MATERIALS

PART NO.	DESCRIPTION MATERIALS PROVIDED BY MGS EAT MANUFACTURER. SEE MANUGACTURER'S DETAILS FOR MORE INFORMATION.
1	UPPER POST NO. 1 6" X 6" TUBE
2	LOWER POST NO. 1
3	WOOD CRT
4	WOOD BLOCKOUT
5	PIPE SLEEVE
6	BEARING PLATE
7	BCT CABLE ASSEMBLY
8	ANCHOR CABLE BOX
9	GROUND STRUT
10	PERFORATED W-BEAM RAIL END PANEL, 12'-6" LONG.
11	STANDARD W-BEAM RAIL. MULTIPLE SECTIONS REQUIRED. SECTIONS VARY IN LENGTH.
12	IMPACT HEAD
13	EAT MARKER POST - YELLOW (SEE APPROVED PRODUCTS LIST)
14	SOIL PLATE
15	UPPER POST NO. 2
16	LOWER POST NO. 2

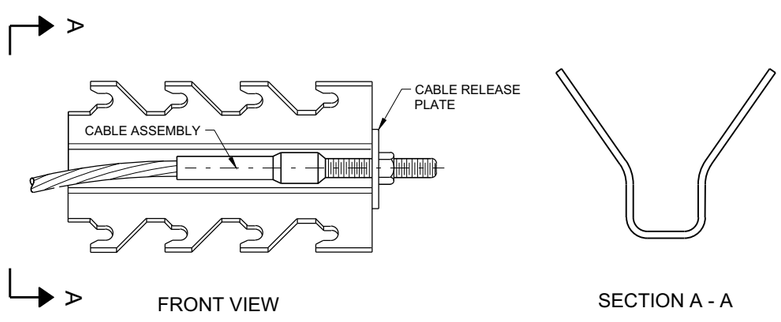

GENERIC ANCHOR CABLE BOX (9)(E)

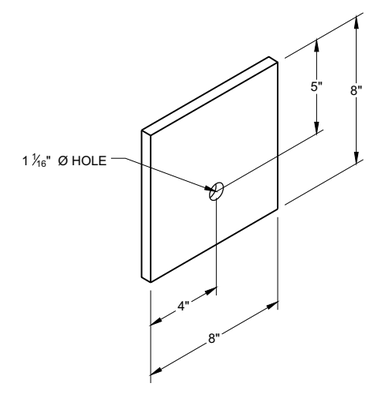

BEARING PLATE (6)(E)

MIDWEST GUARDRAIL SYSTEM ENERGY ABSORBING TERMINAL (MGS)

STATE OF WISCONSIN
DEPARTMENT OF TRANSPORTAT

6

SDD 14B44 - 04b

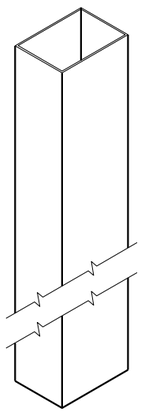

UPPER POST NO. 1 (1) (E)

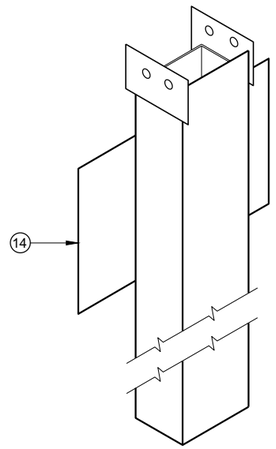

LOWER POST NO. 1 (2) (E)

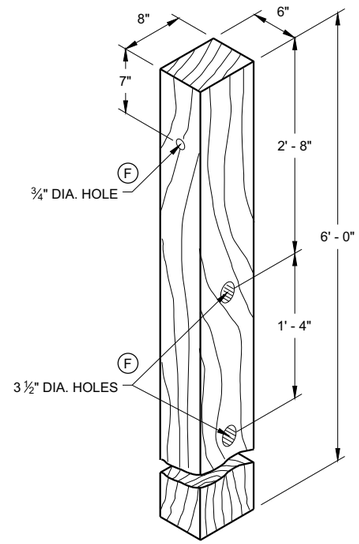

WOOD CRT POST (3) (E)
POSTS NUMBER 3-9

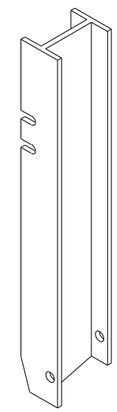

UPPER POST NO. 2 (15) (E)

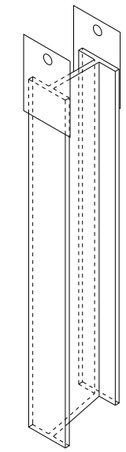

LOWER POST NO. 2 (16) (E)

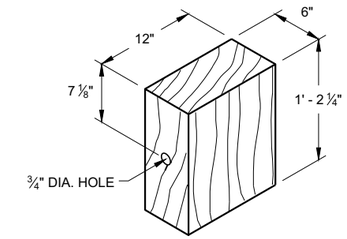

WOOD BLOCKOUT (4)
REQ'D. AT ALL POSTS EXCEPT POST NO'S 1 & 2

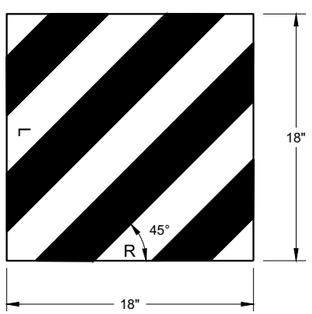

W5 - 59

REFLECTIVE SHEETING DETAIL (E)

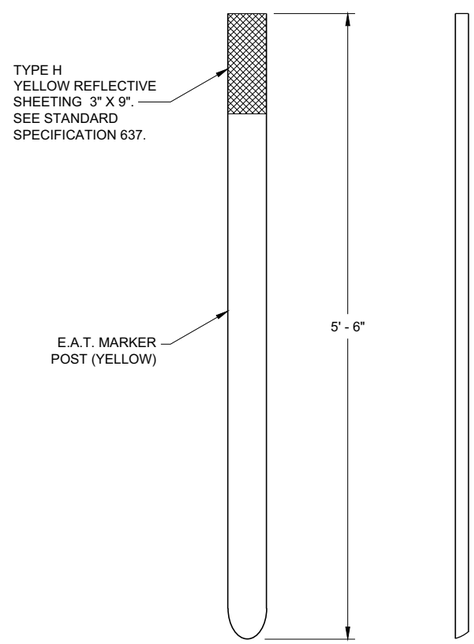

FRONT VIEW SIDE VIEW

E.A.T. MARKER POST (13)

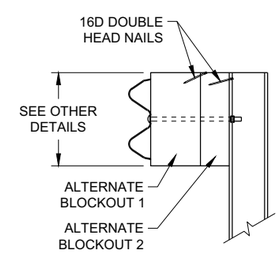

SIDE VIEW

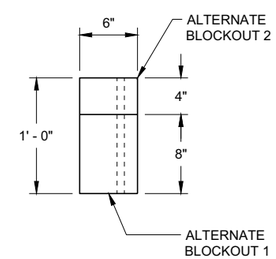

TOP VIEW

ALTERNATE WOOD BLOCKOUT DETAIL

MIDWEST GUARDRAIL SYSTEM ENERGY ABSORBING TERMINAL (MGS)

STATE OF WISCONSIN
DEPARTMENT OF TRANSPORTATION

APPROVED
7/2018 — DATE
/S/ Rodney Taylor — ROADWAY STANDARDS DEVE UNIT SUPERVISOR
FHWA

6
SDD 14B44 - 04c

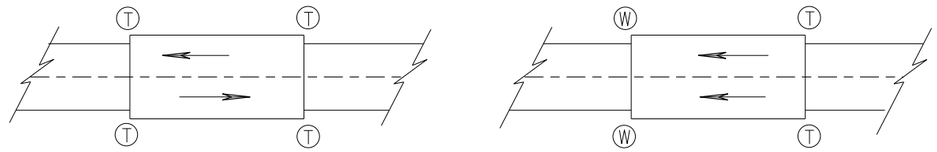

TWO WAY TRAFFIC **ONE WAY TRAFFIC**

(T) THRIE BEAM CONNECTION

(W) W-BEAM CONNECTION WHEN REQUIRED

TYPICAL LOCATIONS OF THRIE BEAM AND W-BEAM CONNECTIONS TO BRIDGE

GENERAL NOTES

IF ROCK IS ENCOUNTERED, REMOVE ROCK TO FULL DEPTH OF POST PLUS 2½", AND 12" DIAMETER AROUND POST. SEE 14B42 FOR MORE DETAILS.

TRANSITION USES STEEL POSTS ONLY.

SEE STANDARD DETAIL DRAWING 14 B 42 FOR MORE INFORMATION.

POST 2 THROUGH 17 USES STEEL POST ONLY

(1) BRIDGE RAILING TYPE "W" DOES NOT REQUIRE A TERMINAL CONNECTOR.

(2) OPTIONAL CURB AND GUTTER OR DRAINAGE FEATURE SEE PLAN FOR INFORMATION.

(13) STEEL OR WOOD POST IS ACCEPTABLE AT POST 1. SEE SDD14B42

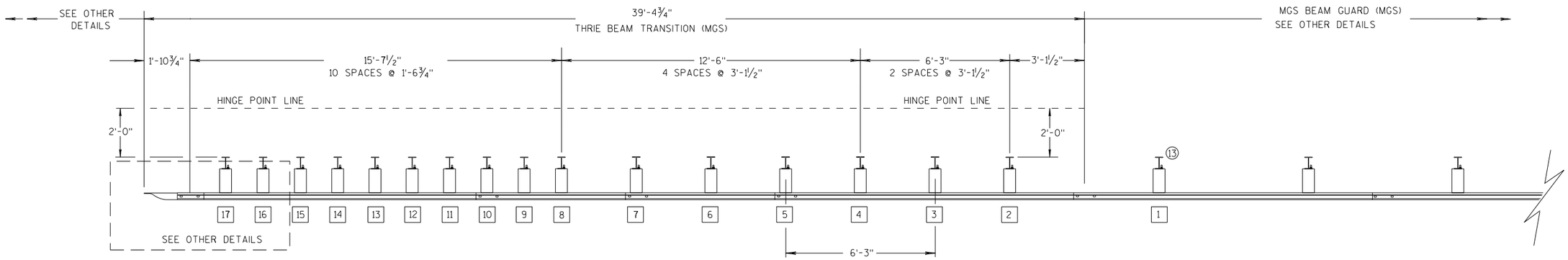

PLAN VIEW

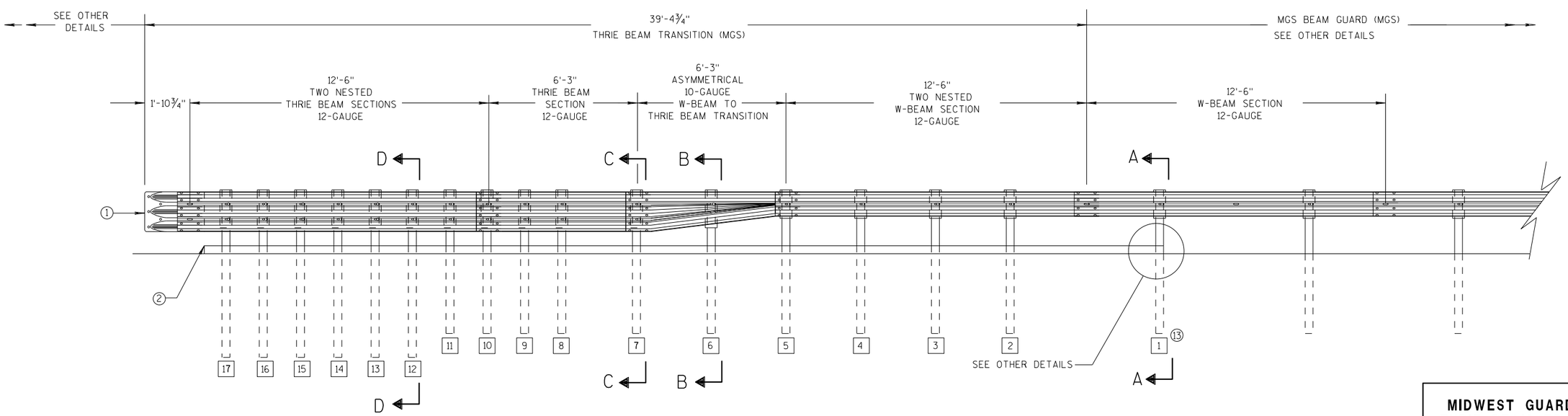

ELEVATION VIEW

MIDWEST GUARDRAIL SYSTEM THRIE BEAM TRANSITION

MIDWEST GUARDRAIL SYSTEM THRIE BEAM TRANSITION (MGS)

STATE OF WISCONSIN
DEPARTMENT OF TRANSPOR

6

S.D.D. 14 B 45-5a

GENERAL NOTES

(2) OPTIONAL CURB AND GUTTER OR DRAINAGE FEATURE SEE PLAN FOR INFORMATION.

(3) WHEN USING STEEL POSTS AND WOOD BLOCKOUTS INSTALL FOUR 10D GALVANIZED NAILS. INSTALL NAILS AT THE BACK CORNERS OF THE BLOCK AND BEND THE NAILS OVER THE FLANGE OF THE STEEL POST.

(4) TOLERANCE FOR TOP OF W-BEAM RAIL IS ± 1".

(13) STEEL OR WOOD POST IS ACCEPTABLE AT POST 1. SEE SDD 14B42

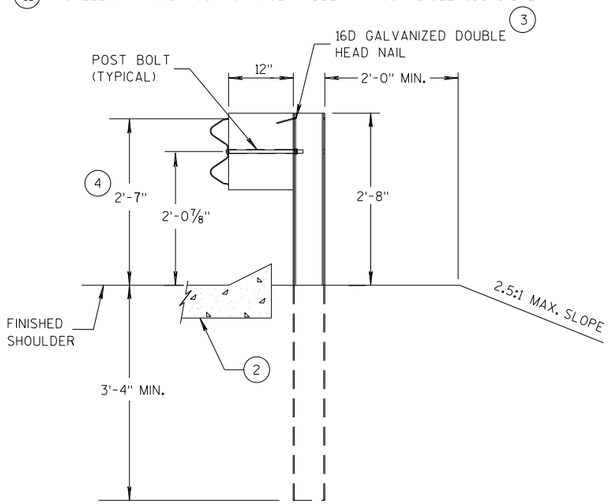

SECTION A-A (13)

POSTS 1-5

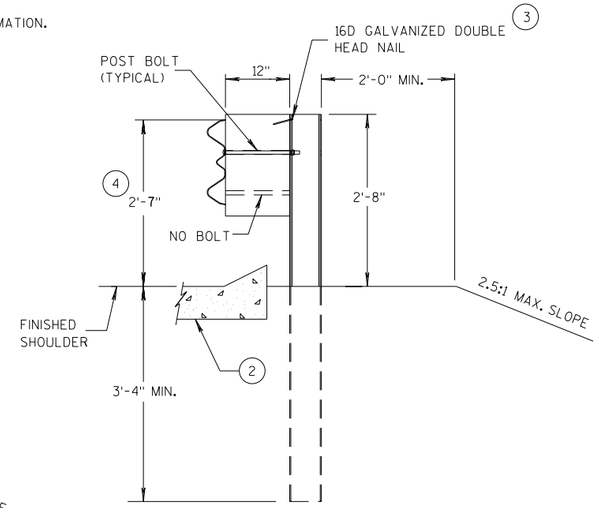

SECTION B-B

POST 6

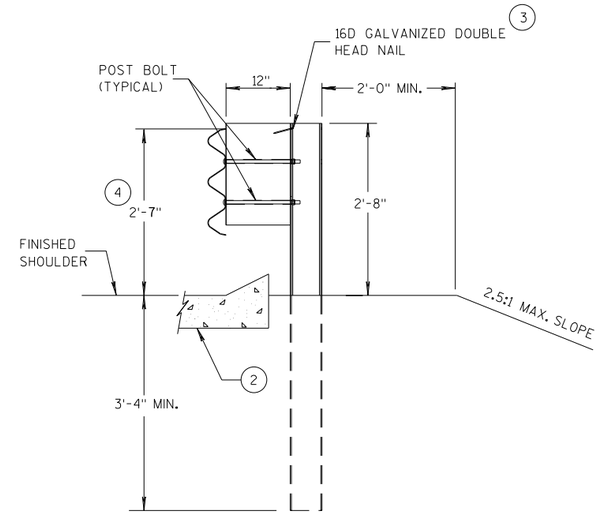

SECTION C-C

POSTS 7-11

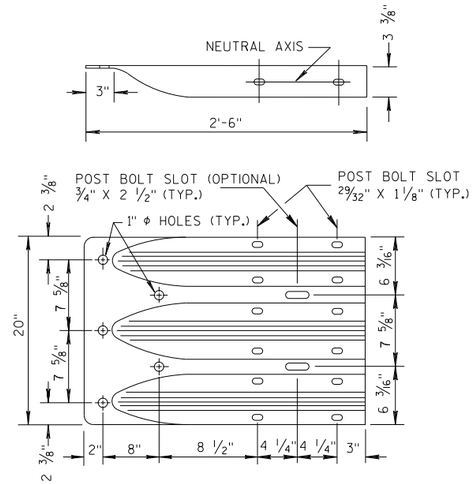

THRIE BEAM TERMINAL CONNECTOR

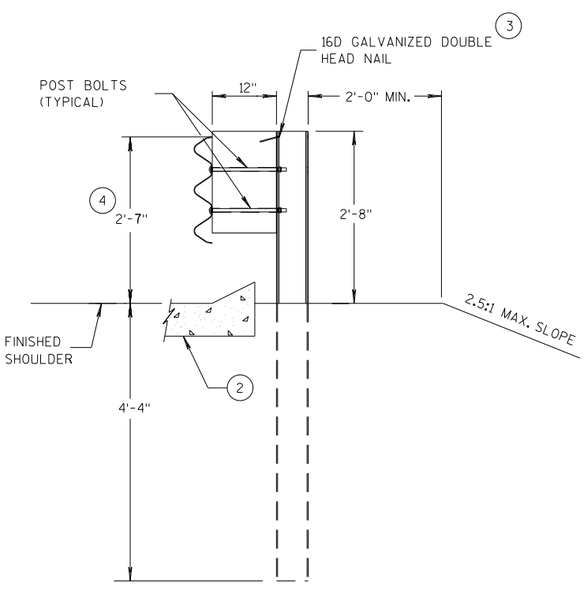

SECTION D-D

POSTS 12-17

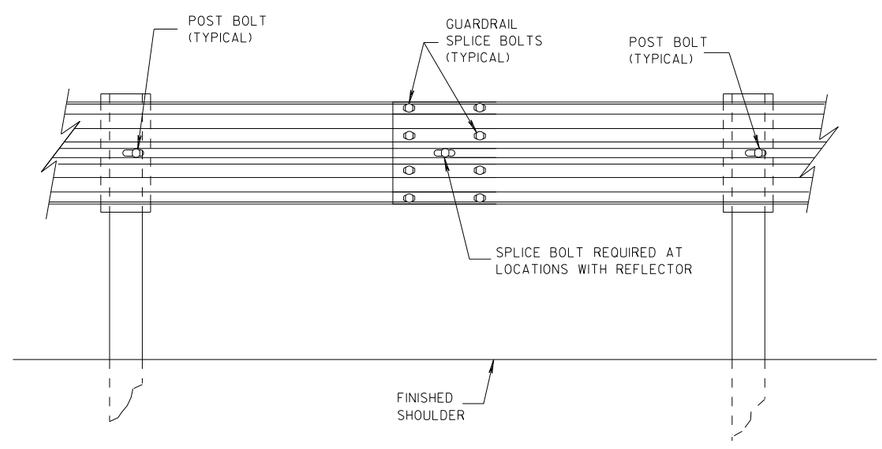

SPLICE DETAIL

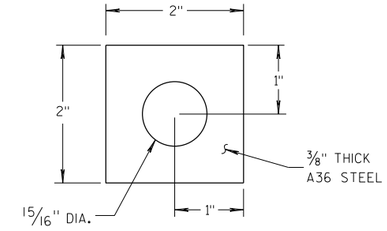

PLATE WASHER DETAIL

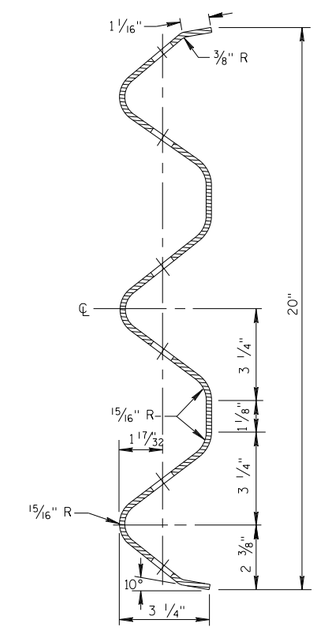

SECTION THRU THRIE BEAM RAIL ELEMENT

MIDWEST GUARDRAIL SYSTEM THRIE BEAM TRANSITION (MGS)

STATE OF WISCONSIN
DEPARTMENT OF TRANSPORT

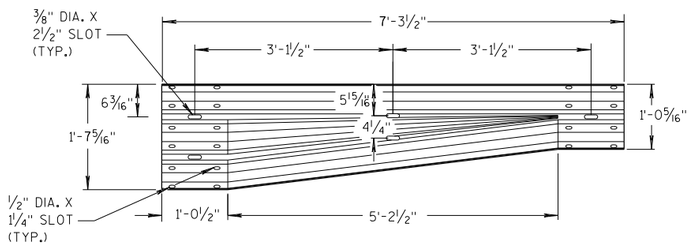

W-BEAM TO THRIE BEAM TRANSITION SECTION

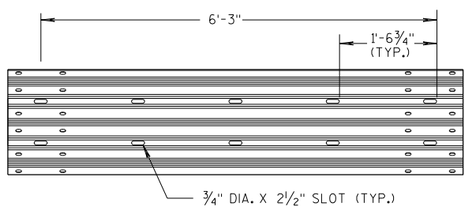

6'-3" THRIE BEAM SECTION

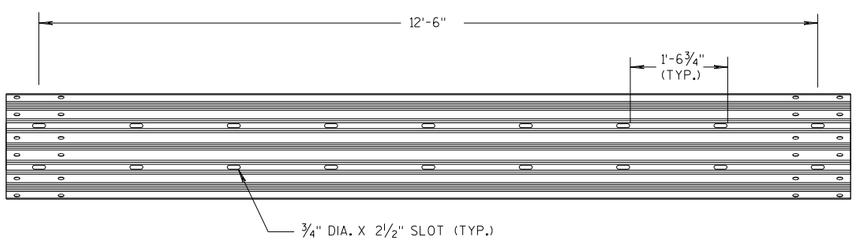

12'-6" THRIE BEAM SECTION

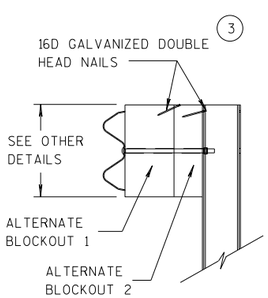

SIDE VIEW

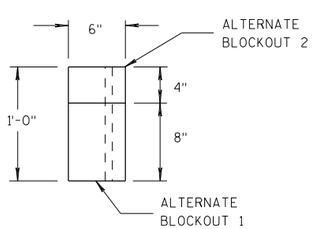

TOP VIEW

ALTERNATE WOOD BLOCKOUT DETAIL

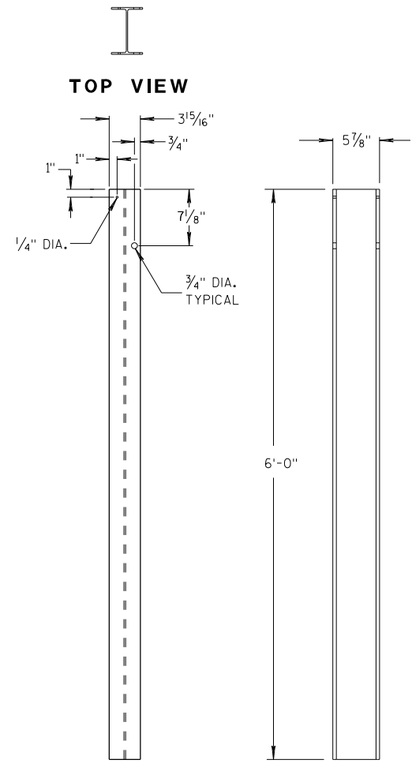

STEEL POSTS 1-5 (13)

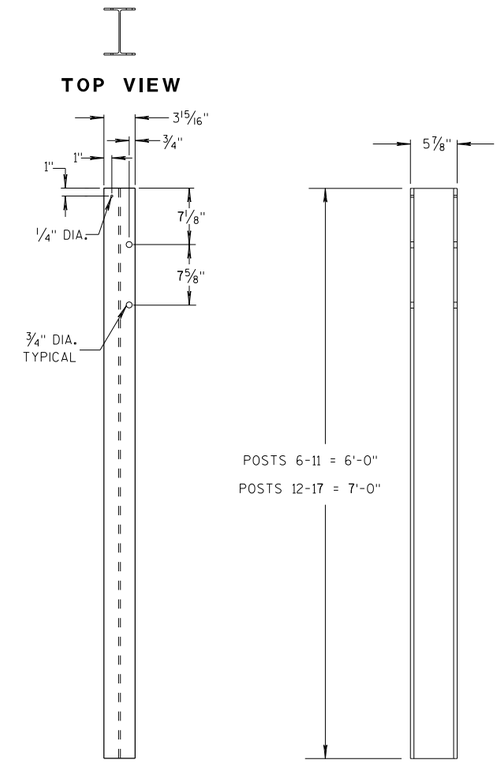

STEEL POSTS 6-17

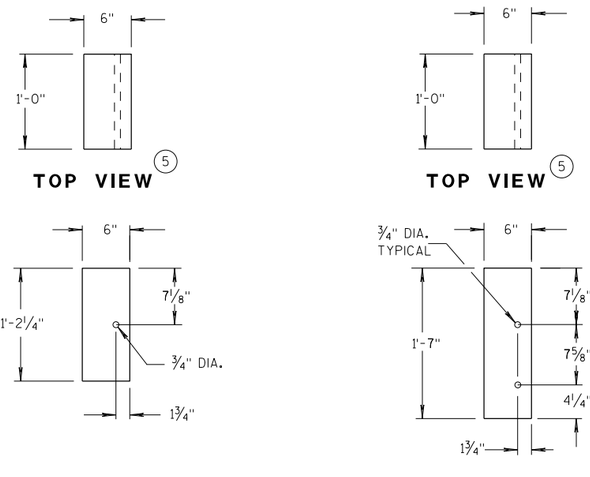

BLOCKOUT POSTS 1-5

BLOCKOUT POSTS 6-17

GENERAL NOTES

STEEL POSTS ARE W6X9 OR W6X8.5.

BOLT HOLES FOR POST ARE ON FRONT AND OF SIDE OF POST.

(3) WHEN USING STEEL POSTS AND WOOD BLOCKOUTS INSTALL FOUR 16D GALVANIZED NAILS. INSTALL NAILS AT THE BACK CORNERS OF THE BLOCK AND BEND THE NAILS OVER THE FLANGE OF THE STEEL POST.

(5) WOOD BLOCKS MAY BE CONSTRUCTED OUT OF 2 WOOD BLOCKS. SEE ALTERNATE WOOD BLOCK DETAIL.

(13) STEEL OR WOOD POST IS ACCEPTABLE AT POST 1. SEE SDD 14B42.

MIDWEST GUARDRAIL SYSTEM THRIE BEAM TRANSITION (MGS)

STATE OF WISCONSIN
DEPARTMENT OF TRANSPOR

6

S.D.D. 14 B 45-5c

GENERAL NOTES

(4) TOLERANCE FOR TOP OF W-BEAM RAIL IS ± 1".

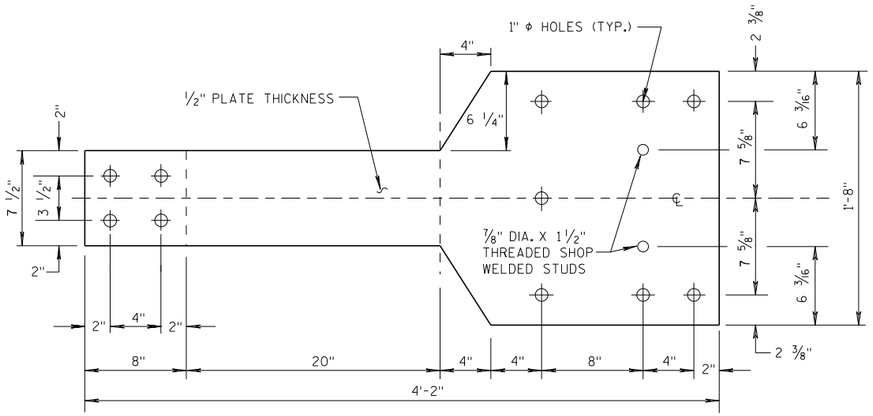

FRONT VIEW

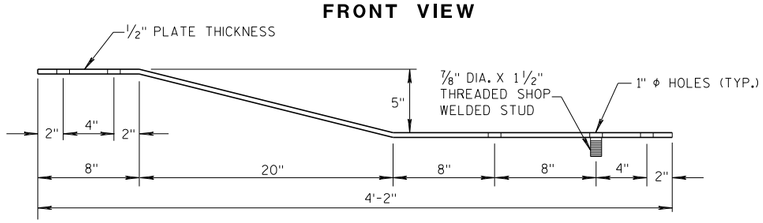

PLAN VIEW

BACK-UP PLATE DETAIL, TYPE "M"

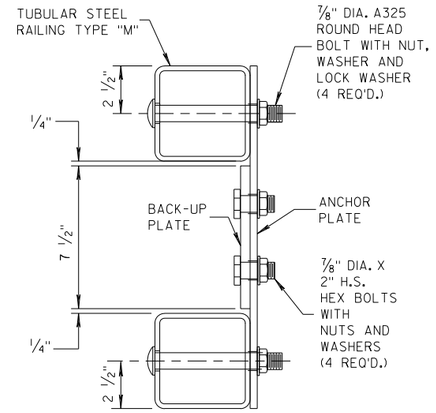

SECTION L-L

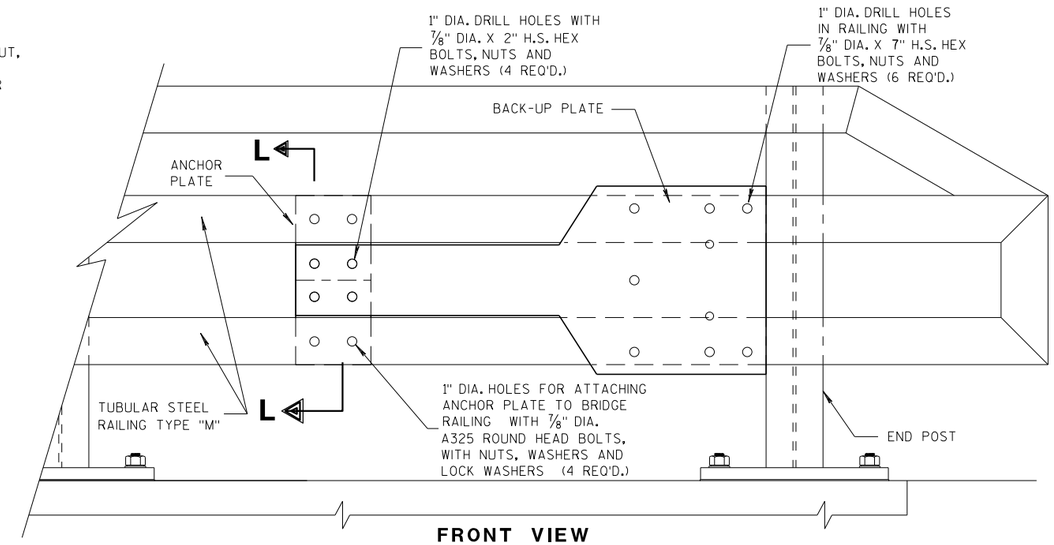

FRONT VIEW

ANCHOR AND BACK-UP PLATE MOUNTING TO BRIDGE RAILING, TYPE "M"

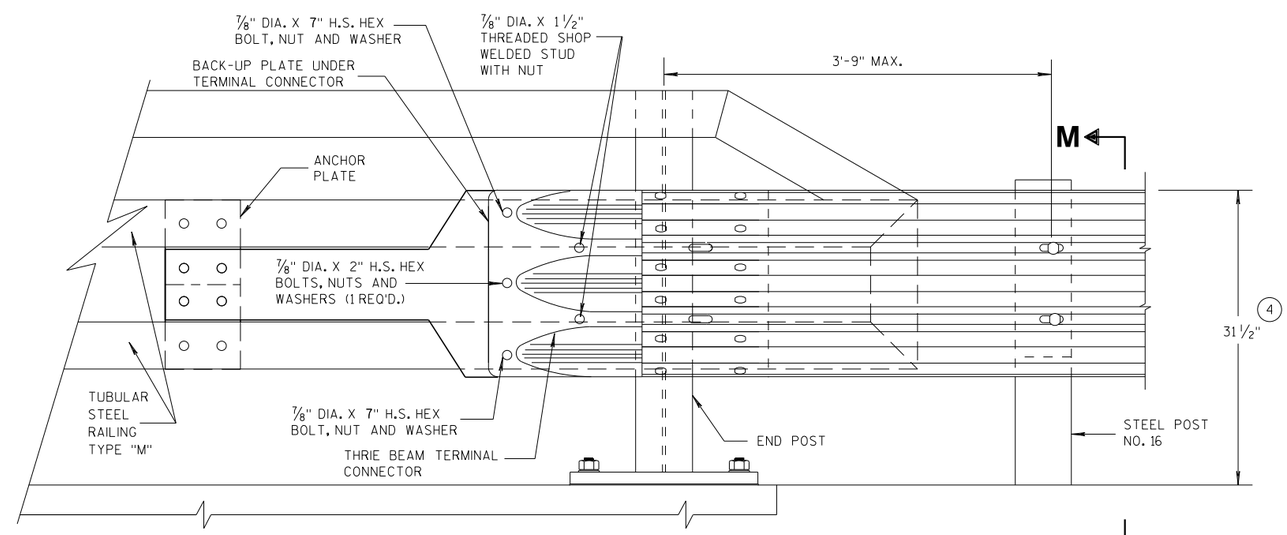

FRONT VIEW

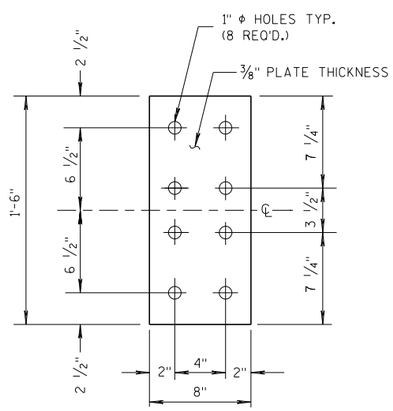

FRONT VIEW

ANCHOR PLATE DETAIL, TYPE "M"

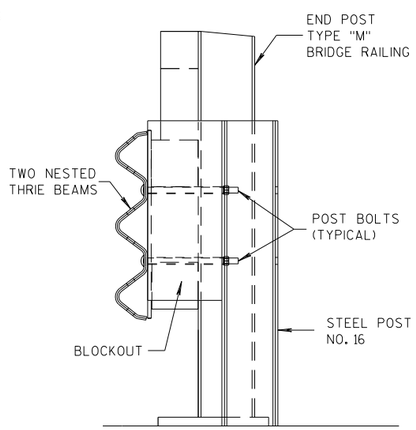

SECTION M-M

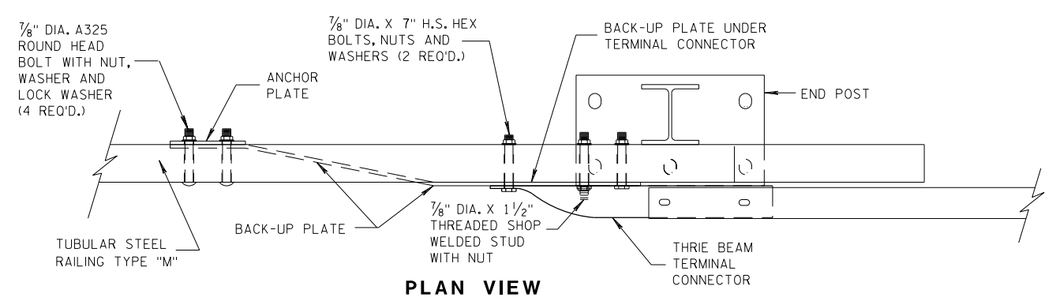

PLAN VIEW

THRIE BEAM CONNECTION TO TUBULAR RAILING, TYPE "M"

MIDWEST GUARDRAIL SYSTEM THRIE BEAM TRANSITION (MGS)

STATE OF WISCONSIN
DEPARTMENT OF TRANSPORTATION

APPROVED
07/2018 — DATE
/S/ Rodney Taylor — ROADWAY STANDARDS DEVELOPMENT UNIT SUPERVISOR
FHWA

GENERAL NOTES

COVER PLATE PANELS ARE 3/16" THICK.

ALL STIFFENERS ARE 1/4" THICK.

CONNECTOR PLATE SHALL BE FABRICATED FROM ASTM GRADE A36 STEEL AND GALVANIZED.

FOR GALVANIZED REQUIREMENTS, SEE SECTION 614 OF THE STANDARD SPECIFICATIONS.

ALL HOLE DIAMETERS SHALL BE 1".

FOR OPPOSITE SIDE INSTALLATION MIRROR DRAWINGS.

(10) STIFFENERS LOCATED AT THE OUTSIDE EDGES OF THE COVER PLATES SHALL BE WELDED AS FOLLOWS:
SINGLE BEVEL GROOVE WELD ON EXTERNAL SIDES AND 3/16" FILLET WELD BY 1" LONG SPACED AT 2" ON INTERNAL SIDES.

(11) STIFFENERS LOCATED ON THE INSIDE OF THE COVER PLATE SHALL BE WELDED AS FOLLOWS:
3/16" FILLET WELD BY 1" LONG SPACED AT 2".

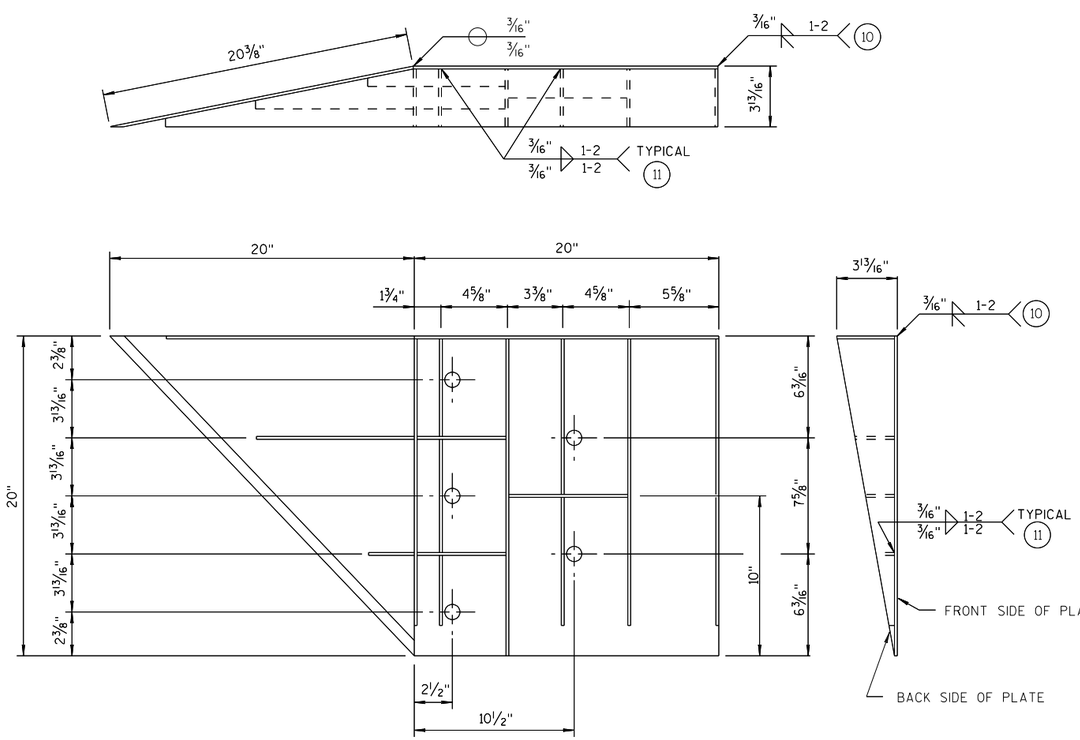

WELDING INSTRUCTION

(VIEWED FROM BACK SIDE OF PLATE)

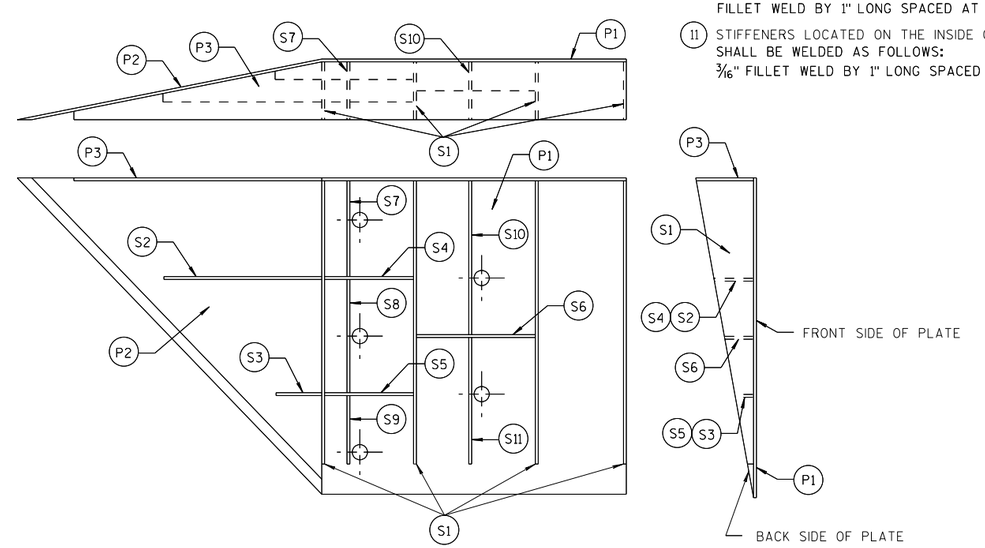

PLATE AND STIFFENER IDENTIFICATION

(VIEWED FROM BACK SIDE OF PLATE)

CONNECTOR PLATE DIMENSION (PER ASSEMBLY)				
PLATE	QUANTITY	SHAPE	SIZE (A x B x C x D)	THICKNESS
P1	1		20" x 20"	3/16"
P2	1		20" x 20" x 28 9/16"	3/16"
P3	1		39" x 3 5/8" x 20" x 19 5/16"	3/16"
S1	4		18 7/16" x 3 5/8" x 18 3/4"	1/4"
S2	1		10 1/4" x 2 7/16" x 10 3/8" x 1/2"	1/4"
S3	1		3" x 1 1/16" x 3 1/8" x 1/2"	1/4"
S4	1		6 1/8" x 2 7/16"	1/4"
S5	1		6 1/8" x 1 1/16"	1/4"
S6	1		7 3/4" x 1 3/4"	1/4"
S7	1		2 9/16" x 6" x 3 5/8" x 5 7/8"	1/4"
S8	1		1 5/32" x 7 1/2" x 2 1/2" x 7 3/8"	1/4"
S9	1		6 1/16" x 6 3/16" x 1 3/32"	1/4"
S10	1		1 7/8" x 9 7/8" x 3 5/8" x 9 11/16"	1/4"
S11	1		8 1/2" x 8 3/4" x 1 13/16"	1/4"

SINGLE SLOPE CONNECTION PLATE

MIDWEST GUARDRAIL SYSTEM THRIE BEAM TRANSITION (MGS)

STATE OF WISCONSIN
DEPARTMENT OF TRANSPORTATION

APPROVED
7/2018 /S/ Rodney Taylor
DATE ROADWAY STANDARDS DEVELOPMENT UNIT SUPERVISOR
FHWA

6
S.D.D. 14 B 45-5i

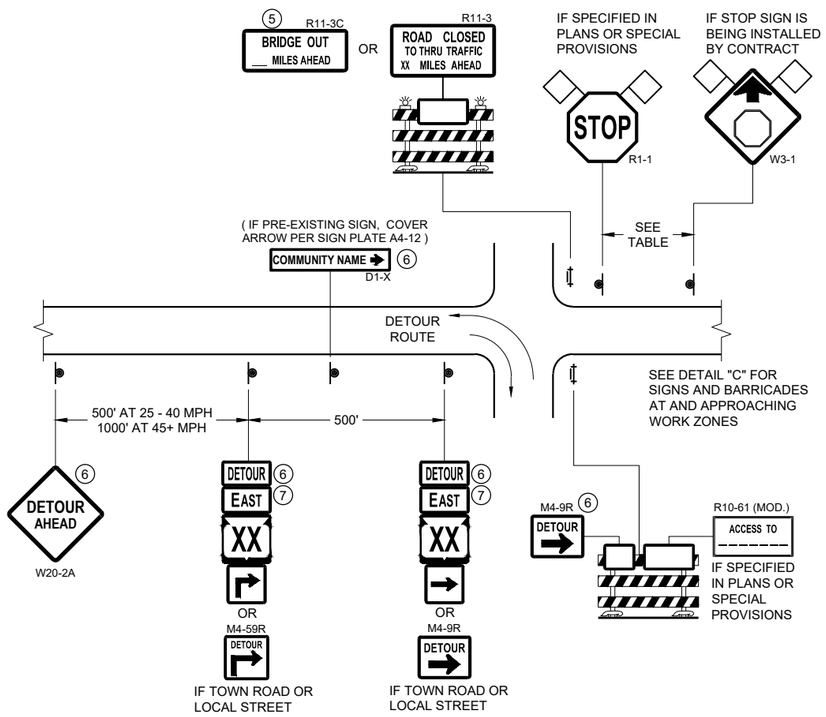

DETAIL A
MAINLINE CLOSURE WITH POSTED DETOUR
WORK ZONE GREATER THAN OR EQUAL TO ½ MILE FROM DETOUR ROUTE (1000 FEET IF URBAN)

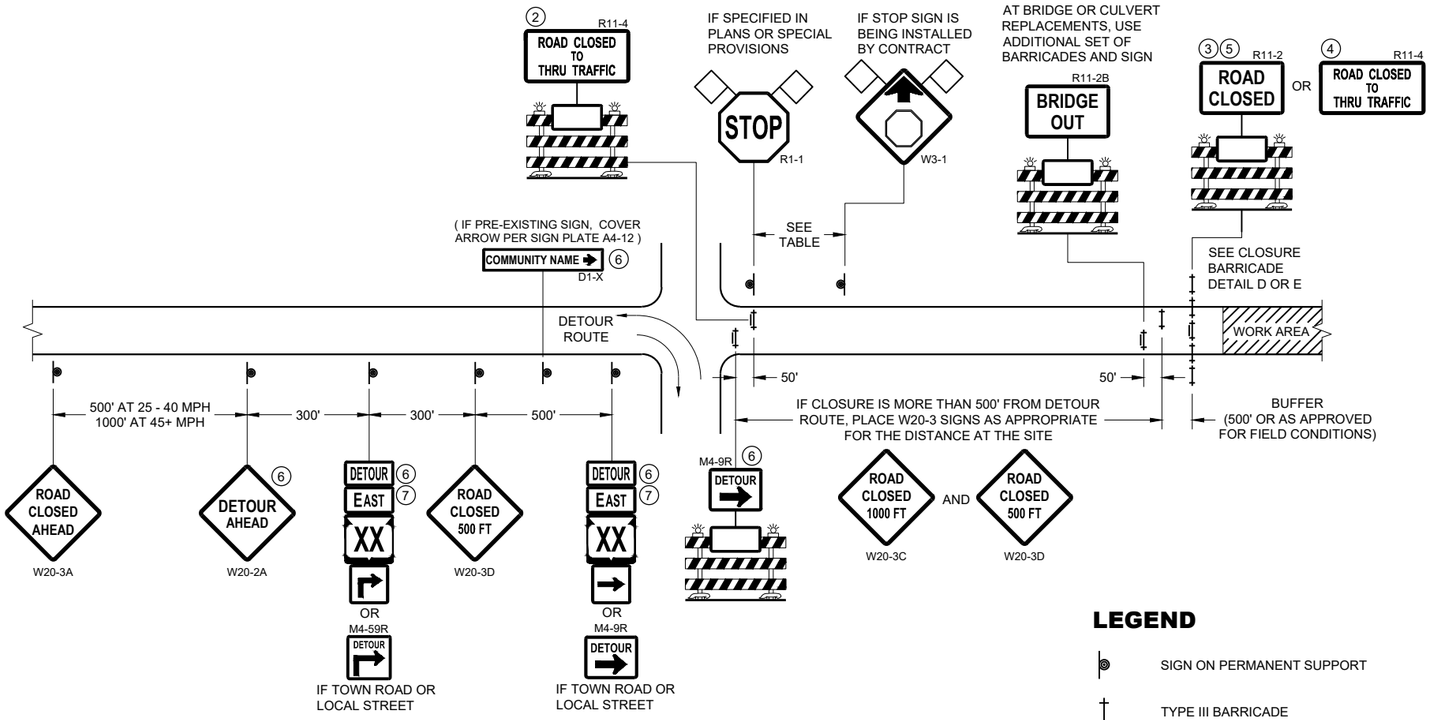

DETAIL B
MAINLINE CLOSURE WITH POSTED DETOUR
WORK ZONE LESS THAN ½ MILE FROM DETOUR ROUTE (1000 FEET IF URBAN)

LEGEND

- SIGN ON PERMANENT SUPPORT
- TYPE III BARRICADE
- TYPE III BARRICADE WITH ATTACHED SIGN
- TYPE "A" WARNING LIGHT (FLASHING)
- WORK AREA
- FLAGS, 16" X 16" MIN. (ORANGE)
- DETOUR — M4 - 8
- EAST — M3 - X
- XX (M1 - 4) OR XX (M1 - 6) OR COUNTY X (M1 - 5A)
- M05 - 1 OR M06 - 1

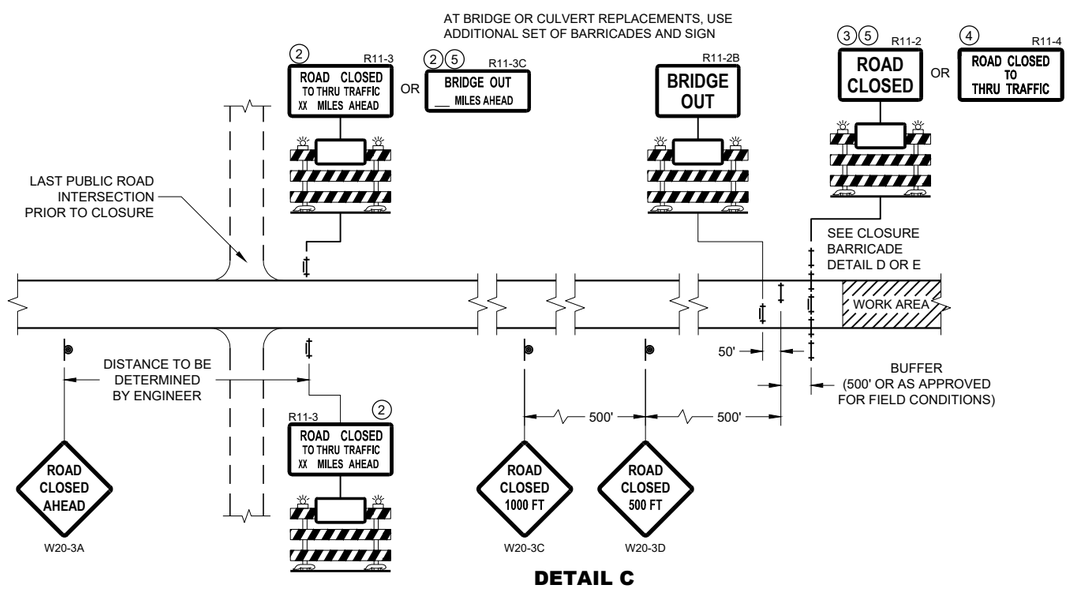

DETAIL C
MAINLINE CLOSURE, NO POSTED DETOUR

SPEED LIMIT (MPH)	"STOP AHEAD" ADVANCE WARNING DISTANCE (FT)
25	200
30	200
35	350
40	350
45	500
50	550
55	750

SEE SDD 15C2-SHEET "b" FOR GENERAL NOTES AND FOOTNOTES 1 THROUGH 7

BARRICADES AND SIGNS FOR MAINLINE CLOSURES

STATE OF WISCONSIN
DEPARTMENT OF TRANSPORTATION

APPROVED
May 2023 — DATE
/S/ Andrew Heidtke — WORK ZONE ENGINEER
FHWA

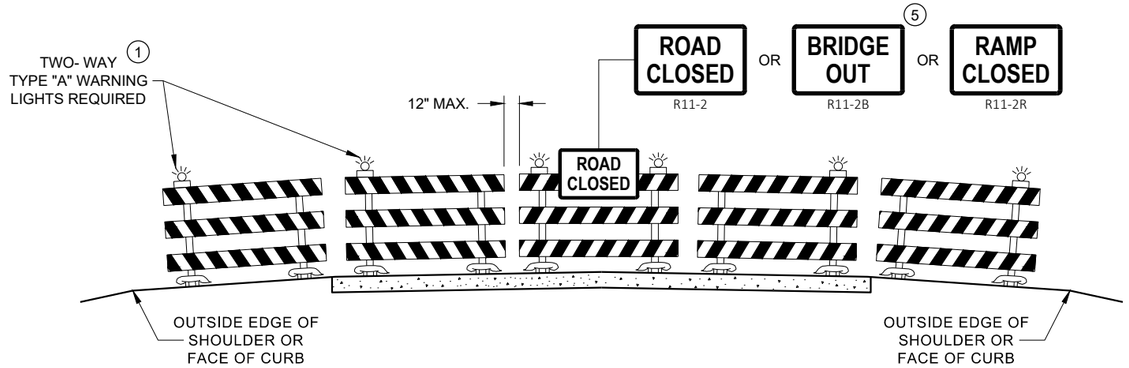

DETAIL D
ROAD CLOSURE BARRICADE DETAIL
APPROACH VIEW

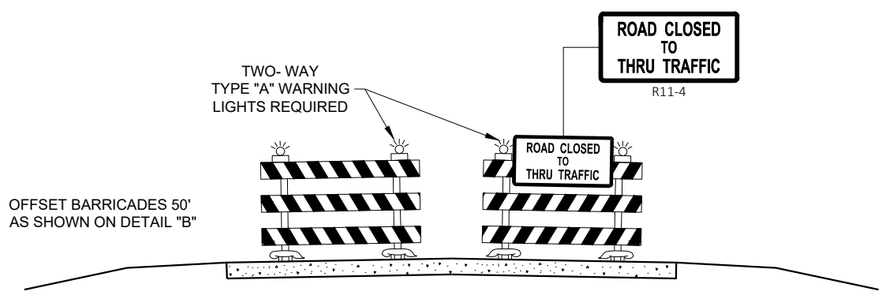

DETAIL E
LANE CLOSURE BARRICADE DETAIL
APPROACH VIEW

SEE SDD 15C2 - SHEET "a" FOR LEGEND

GENERAL NOTES

THE EXACT NUMBER, LOCATION, AND SPACING OF ALL SIGNS AND BARRICADES SHALL BE ADJUSTED TO FIT FIELD CONDITIONS AS APPROVED BY THE ENGINEER.

ANY SIGNS TEMPORARY OR EXISTING, WHICH CONFLICT WITH TRAFFIC CONTROL "IN USE", SHALL BE REMOVED OR COVERED AS NEEDED AND AS APPROVED BY THE ENGINEER.

THE SPACING BETWEEN TRAFFIC CONTROL SIGNS SHOULD BE ADJUSTED TO NOT CONFLICT WITH AND SHOULD PROVIDE A DESIRABLE MINIMUM OF 200 FEET CLEARANCE TO EXISTING SIGNS THAT WILL REMAIN IN PLACE.

BARRICADES THAT MUST BE MOVED FOR A WORK OPERATION SHALL BE IMMEDIATELY RE-ESTABLISHED UPON COMPLETION OF THE OPERATION, OR FOR CONTINUING OPERATIONS, AT THE END OF EACH WORKING DAY.

SIGNS THAT WILL BE IN PLACE LESS THAN 7 CONTINUOUS DAYS AND NIGHTS MAY BE MOUNTED ON PORTABLE SUPPORTS.

ALL TYPE III BARRICADES SHALL HAVE RAILS REFLECTORIZED ON BOTH FACES. STRIPES SHALL BE PROPERLY SLOPED DOWN TOWARD THE TRAFFIC SIDE OR AS SHOWN IN THE ROAD CLOSURE BARRICADE DETAIL "D" FOR FULL ROAD CLOSURES.

TYPE "A" LOW - INTENSITY FLASHING WARNING LIGHTS SHALL BE VISIBLE ON BOTH SIDES OF THE BARRICADE.

THE R11 - 2, R11 - 3, M4 - 9, R11 - 4, AND R10 - 61 SIGNS PLACED ON THE BARRICADES SHALL COVER NO MORE THAN THE TOP RAIL. THE SIGNS SHALL NOT COVER ANY PORTION OF THE MIDDLE RAIL OR BOTTOM RAILS.

"WO" AND "MO" SIGNS ARE THE SAME AS "W" AND "M" SIGNS EXCEPT THE BACKGROUND IS ORANGE.

ALL SIGNS SHALL BE 48" X 48" UNLESS OTHERWISE NOTED BELOW:
- R11 - 2 SHALL BE 48" X 30"
- R11 - 3 SHALL, R11 - 4 AND R10 - 61 SHALL BE 60 " X 30"
- M4 - 9 SHALL BE 30" X 24"
- M3 - X SHALL BE 24" X 12" (36" X 18" IF NEEDED TO MATCH EXISTING SIGNS)
- M4 - 8 SHALL BE 24" X 12" (36" X 18" IF NEEDED TO MATCH EXISTING SIGNS)
- M1 - 4, M1 - 5A AND M1 - 6 SHALL BE 24" X 24" (36" X 36" IF NEEDED TO MATCH EXISTING SIGNS)
- MO5 - 1 AND MO6 - 1 SHALL BE 21" X 21" (30" X 30" IF NEEDED TO MATCH EXISTING SIGNS)
- D1 - X SHALL BE AS SHOWN ON SPECIFIC PROJECT SIGNING DETAIL SHEETS.
- R1 - 1 SHALL BE 36" X 36"

1. TWO WARNING LIGHTS SHALL BE PROVIDED ON THE CENTER BARRICADE AND A MINIMUM OF ONE WARNING LIGHT SHALL BE PROVIDED ON EACH OF THE OTHER BARRICADES WITHIN THE ROADWAY LIMITS. SPACING OF THE WARNING LIGHTS SHALL BE UNIFORM TO THE EDGE OF ROADWAY AS SHOWN (APPROX. 8 FOOT LIGHT SPACING.
2. THESE SIGNS AND BARRICADES ARE NOT REQUIRED IF ROAD CLOSURE BEGINS AT AN INTERSECTION.
3. FOR ROAD CLOSURE WITHOUT LOCAL ACCESS TO PROJECT, SEE ROAD CLOSURE BARRICADE DETAIL "D".
4. FOR ROAD CLOSURE WITH LOCAL ACCESS TO PROJECT, SEE ROAD CLOSURE BARRICADE DETAIL "E".
5. FOR BRIDGE OR CULVERT REPLACEMENTS, SUBSTITUTE "BRIDGE OUT" INSTEAD OF "ROAD CLOSED" ON R11 - 2 AND R11 - 3 SIGNS.
6. INSTALL DETOUR AND COMMUNITY GUIDE SIGNS AND ARROWS ONLY IF SPECIFIED IN THE CONTRACT. IF THERE ARE EXISTING ROUTE MARKER ASSEMBLIES THAT WILL REMAIN IN PLACE, ADJUST THE LOCATION OF THE DETOUR ROUTE SIGNS TO CORRESPOND WITH THE EXISTING ASSEMBLIES. MODIFY EXISTING SIGNS WHERE POSSIBLE. SEE SPECIFIC PROJECT DETOUR SIGNING DETAIL SHEETS. IF DETOUR SIGNS ARE BEING INSTALLED BY OTHERS, PLACE THE CONTRACTED TRAFFIC CONTROL SIGNS TO ALLOW FOR PLACEMENT OF ALL WARNING, DETOUR AND GUIDE SIGNS AS SHOWN.
7. "EAST" CARDINAL DIRECTION MARKERS AND RIGHT TURN ARROWS ARE SHOWN. USE OTHER CARDINAL DIRECTIONS AND ARROWS AS APPROPRIATE.

BARRICADES AND SIGNS FOR VARIOUS CLOSURES

STATE OF WISCONSIN
DEPARTMENT OF TRANSPORTATION

APPROVED
May 2023 — DATE
/S/ Andrew Heidtke — WORK ZONE ENGINEE
FHWA

6
SDD 15C02 - 09b

THIS DRAWING PROVIDES GENERAL GUIDANCE ON TYPICAL DETOUR SIGN LAYOUT AND SPACING. SEE PROJECT DETOUR SIGNING SHEETS FOR SPECIFIC DETAILS FOR EACH PROJECT.

LEGEND

- SIGN ON PERMANENT SUPPORT
- WORK AREA
- DETOUR — M4 - 8
- EAST — M3 - X
- XX — M1 - 4 OR XX — M1 - 6 OR COUNTY X — M1 - 5A
- M05 - 1 OR M06 - 1 OR M06 - 1

GENERAL NOTES

THE EXACT NUMBER, LOCATION AND SPACING OF ALL SIGNS SHALL BE ADJUSTED TO FIT FIELD CONDITIONS AS APPROVED BY THE ENGINEER.

IF THERE ARE EXISTING ROUTE MARKER ASSEMBLIES THAT WILL REMAIN IN PLACE, ADJUST THE LOCATION OF THE DETOUR ROUTE SIGNS TO CORRESPOND WITH THE EXISTING ASSEMBLIES. SEE SPECIFIC PROJECT DETOUR SIGNING DETAIL SHEETS. MODIFY EXISTING SIGNS WHERE POSSIBLE.

THE SPACING BETWEEN TRAFFIC CONTROL AND DETOUR SIGNS SHOULD BE ADJUSTED TO NOT CONFLICT WITH AND TO PROVIDE A DESIRABLE MINIMUM OF 200 FEET CLEARANCE TO EXISTING SIGNS THAT WILL REMAIN IN PLACE.

ANY SIGNS TEMPORARY OR EXISTING, WHICH CONFLICT WITH TRAFFIC CONTROL "IN USE" SHALL BE REMOVED OR COVERED AS NEEDED AND AS APPROVED BY THE ENGINEER.

SIGNS THAT WILL BE IN PLACE LESS THAN 7 CONTINUOUS DAYS AND NIGHTS MAY BE MOUNTED ON PORTABLE SUPPORTS.

"MO" SIGNS ARE THE SAME AS "M" SIGNS EXCEPT THE BACKGROUND IS ORANGE.

SIGN SIZES SHALL BE AS FOLLOWS:

- M3-X SHALL BE 24" X 12" (36" X 18" IF NEEDED TO MATCH EXISTING SIGNS)
- M4-8 SHALL BE 24" X 12" (36" X 18" IF NEEDED TO MATCH EXISTING SIGNS)
- M1-4, M1-5A AND M1-6 SHALL BE 24" X 24" (36" X 36" IF NEEDED TO MATCH EXISTING SIGNS)
- M05-1 AND M06-1 SHALL BE 21" X 21" (30" X 30" IF NEEDED TO MATCH EXISTING SIGNS)
- M4-9 AND M4-59 SHALL BE 30" X 24"
- M4-8a SHALL BE 24" X 18"
- G20-51 SHALL BE 60" X 24"
- W20-2A SHALL BE 48" X 48"
- D1-X SHALL BE AS SHOWN ON SPECIFIC PROJECT SIGNING DETAIL SHEETS.

* OPTIONAL SIGNS. SEE SPECIFIC PROJECT DETOUR SIGNING DETAIL SHEETS.

** FOR A TOWN ROAD OR LOCAL STREET DETOURED ONTO A STATE TRUNK HIGHWAY, PLACE A ROAD NAME PLAQUE ABOVE THE M4-9 SIGN AS SPECIFIED IN THE CONTRACT.

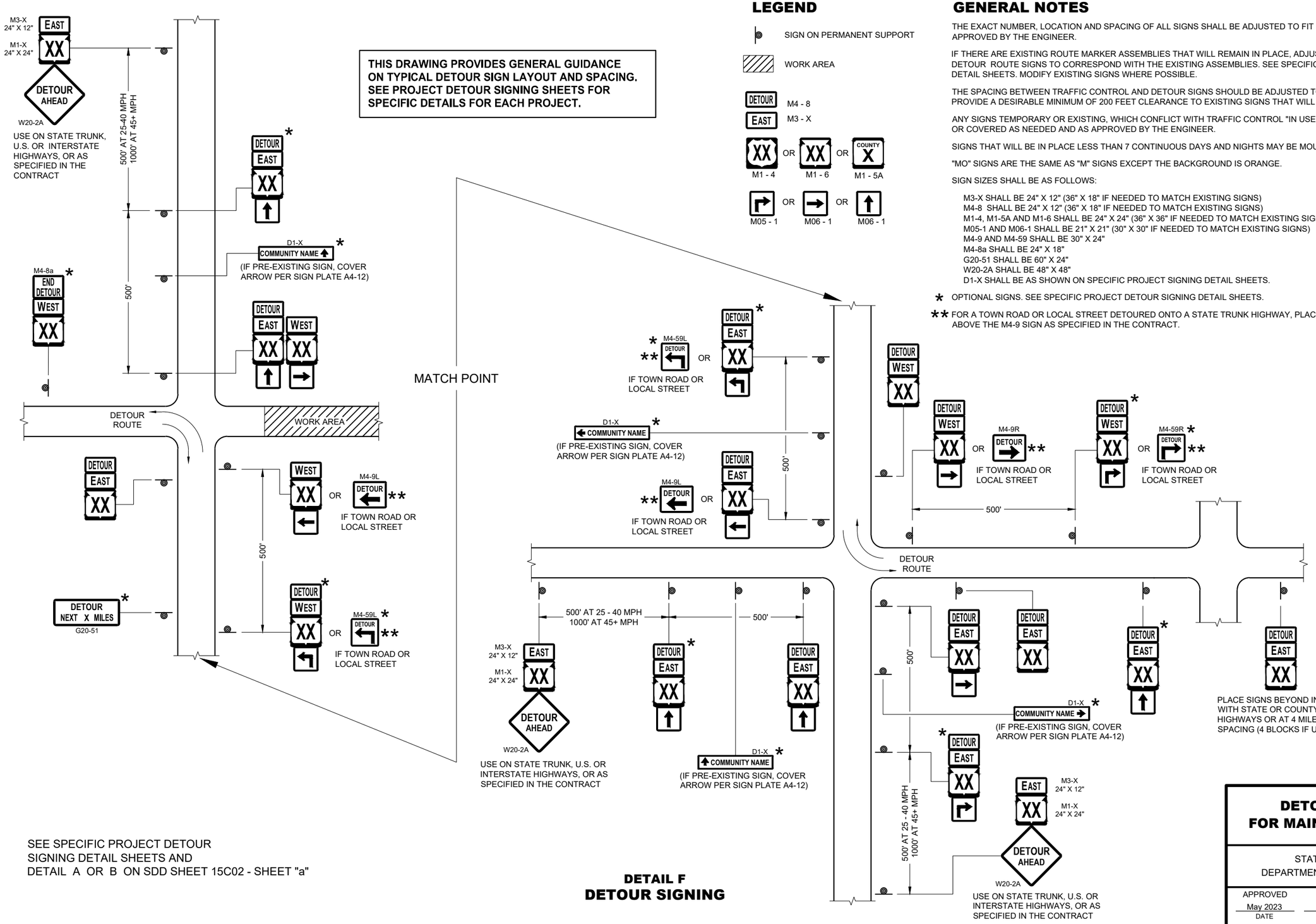

SEE SPECIFIC PROJECT DETOUR SIGNING DETAIL SHEETS AND DETAIL A OR B ON SDD SHEET 15C02 - SHEET "a"

DETAIL F
DETOUR SIGNING

DETOUR SIGNING FOR MAINLINE CLOSURES

STATE OF WISCONSIN
DEPARTMENT OF TRANSPORTATION

APPROVED
May 2023 — DATE
/S/ Andrew Heidtke — WORK ZONE ENGINEER
FHWA

6

SDD 15C02 - 09c

*CONFIRM MARKING LINE WIDTH WITH THE MISCELLANEOUS QUANTITIES

GENERAL NOTES

DETAILS OF CONSTRUCTION NOT SHOWN ON THIS DRAWING SHALL CONFORM TO STANDARD SPECIFICATIONS AND SPECIAL PROVISIONS.

1. LOCATE THE NO PASSING ZONE W14-3 SIGN WITHIN 50 FEET OF THE "T" MARKING
2. MEASURE FROM EDGE OF MARKING TO JOINT LINE. THIS DOES NOT INCLUDE SPACE NEEDED FOR GROOVING OPERATIONS.

LEGEND

"T" MARKING

SIGN ON PERMANENT SUPPORT

DIRECTION OF TRAFFIC

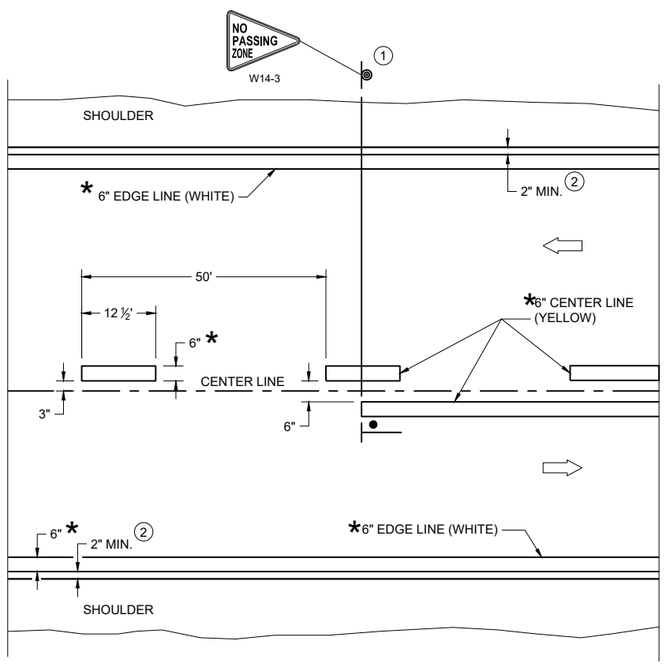

TWO WAY TRAFFIC

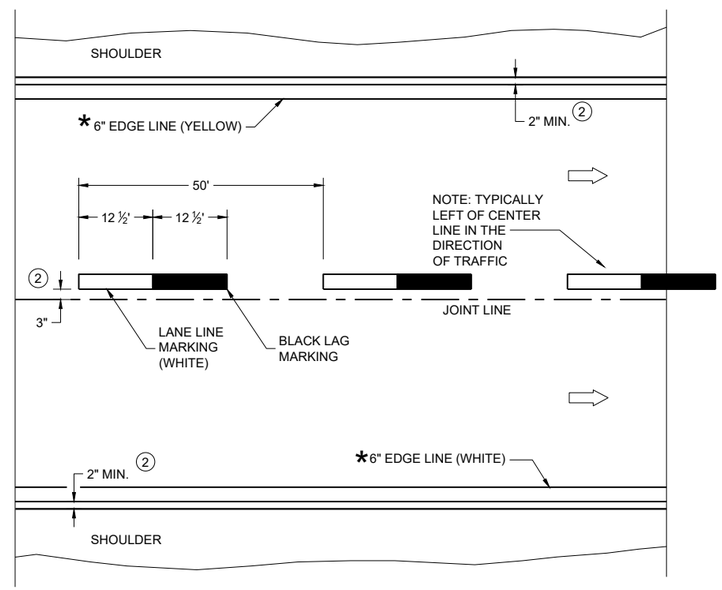

ONE WAY TRAFFIC

PERMANENT PAVEMENT MARKING

6

SDD 15C08-23a

PERMANENT LONGITUDINAL PAVEMENT MARKINGS

STATE OF WISCONSIN
DEPARTMENT OF TRANSPORTATION

APPROVED

May 2023 — DATE

/S/ Jeannie Silver — Statewide Pavement Marking Engineer

FHWA

6

SDD 15C08-23a

GENERAL NOTES

1. REFLECTIVE SHEETING SHALL FOLLOW THE REQUIREMENTS IN THE APPROVED PRODUCTS LISTING FOR SIGN SHEETING.
2. LOCATION OF WARNING LIGHTS WHEN SHOWN ON THE PLAN.

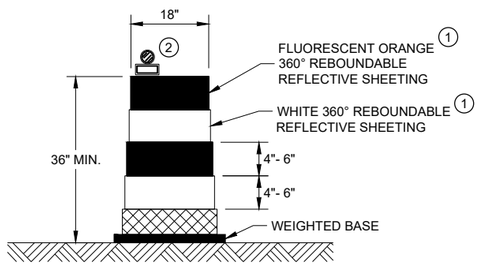

DRUM

BALLAST WIDTHS
RANGE FROM 24"-36"

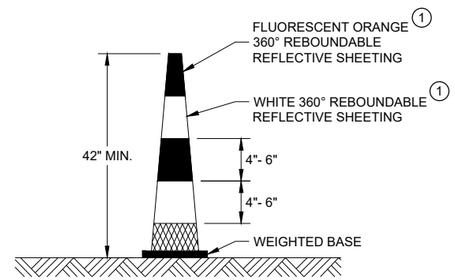

42" CONE

DO NOT USE IN TAPERS
½ SPACING OF DRUMS

BALLAST WIDTHS
RANGE FROM 14"-20"

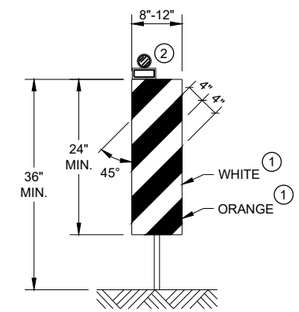

VERTICAL PANEL

THE STRIPES SHALL SLOPE DOWNWARD TO
THE TRAFFIC SIDE FOR CHANNELIZATION.

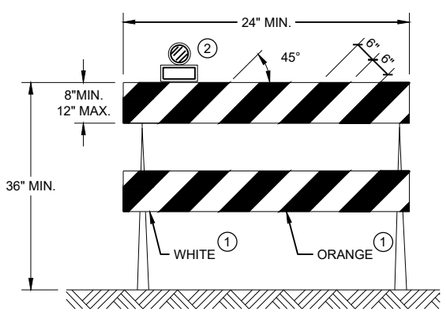

TYPE II BARRICADE

FOR RAILS LESS THAN 36" LONG, 4" WIDE STRIPES
MAY BE USED. ALL STRIPES SHALL SLOPE DOWNWARD
TO THE TRAFFIC SIDE FOR CHANNELIZATION.

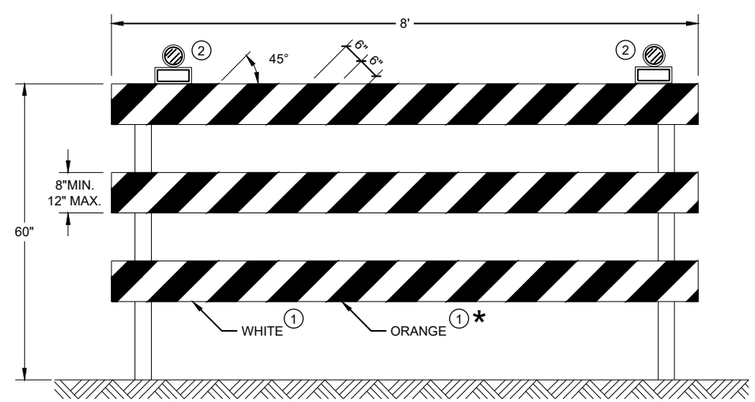

TYPE III BARRICADE

IF SIGN MOUNTED, DO NOT COVER MORE THAN 50% OF THE TOP
TWO RAILS OR 33% OF THE TOTAL AREA OF THE THREE RAILS.

* IF USED FOR A PERMANENT APPLICATION USE RED SHEETING.

CHANNELIZING DEVICES
DRUMS, CONES, BARRICADES
AND VERTICAL PANELS

STATE OF WISCONSIN
DEPARTMENT OF TRANSPORTATION

APPROVED
November 2022 — /S/ Andrew Heidtke
DATE — WORK ZONE ENGINEE
FHWA

6

6

SDD 15C11 - 10b

SDD 15C11 - 10b

URBAN AREA

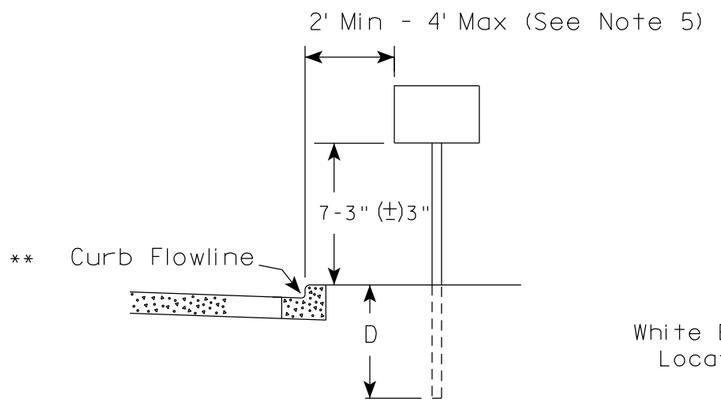

RURAL AREA (See Note 2)

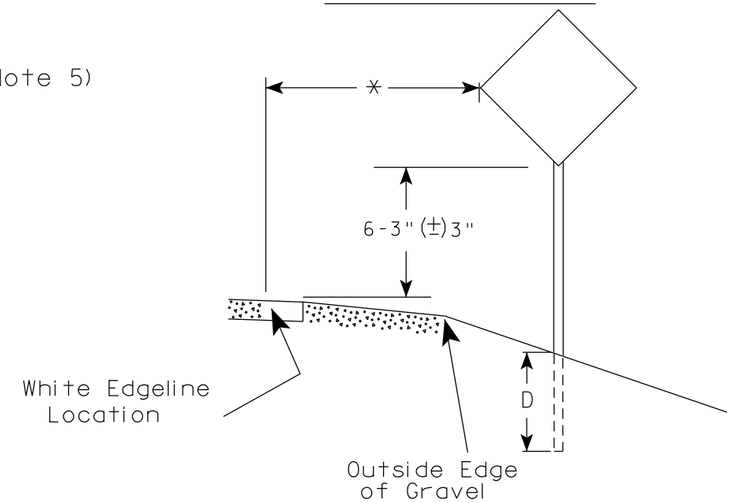

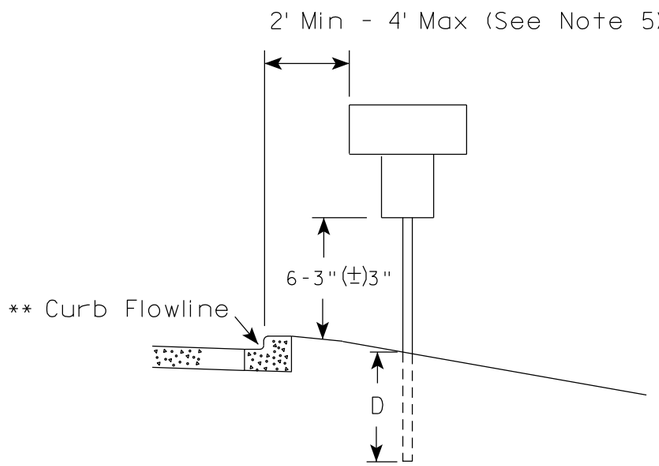

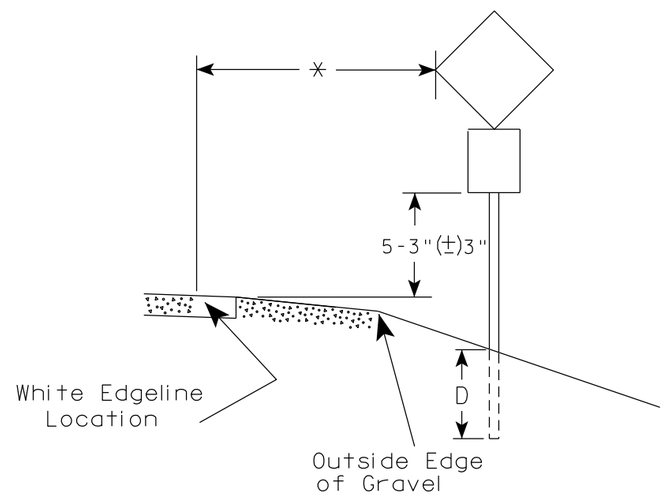

** The existence of curb and gutter does not in itself mandate the vertical clearance illustrated. That height is typically measured where there is sidewalk adjacent to the roadway or parking is permitted. In the absence of sidewalk vertical clearance is measured from the top of the curb. Offset of signs is measured from the flow line.

* 6 feet from edge of a paved shoulder or 12 feet from the edge of pavement (edge line location) or 2 feet from outside edge of gravel, whichever is greater unless directed by project engineer.

GENERAL NOTES

1. Signs wider than 4 feet or 20 sq.ft or larger, shall be mounted on multiple posts. Refer to plate A4-4.
2. If signs are mounted on or behind barrier wall, see A4-10 sign plate.
   The Double Arrow sign (W12-1D) shall be mounted at a height of 2'-3" (±) 3". The Chevron sign (W1-8), Roundabout Chevron panel (R6-4B), Enhanced Reference Markers, Clearance Markers (W5-52), Mile Markers (D10 series), In Road Object Markers (W5-54) & End of Road Markers (W5-56) shall be mounted at a height of 4'-3" (±) 3".
3. For expressways and freeways, mounting height is 7'- 3" (±) 3" or 6'-3" (±) 3" depending upon existence of a sub-sign.
4. Minimum mounting height for signs mounted on traffic signal poles is 5'- 3" (±) 3".
5. Offset distance shall be consistent with existing signs or consistent throughout length of project.
6. Folding signs shall be mounted at a height of 5'-3" (±) 3" or as directd by the Engineer.

POST EMBEDMENT DEPTH

Area of Sign Installation (Sq. Ft.)	D (Min)
20 or Less	4'
Greater than 20	5'

TYPICAL INSTALLATION OF PERMANENT TYPE II SIGNS ON SINGLE POSTS

WISCONSIN DEPT OF TRANSPORTATION

APPROVED Matthew R Rauch
for State Traffic Engineer

DATE 12/6/23 PLATE NO. A4-3.23

7 7

PROJECT NO:	HWY:	COUNTY:		SHEET NO: 56	E

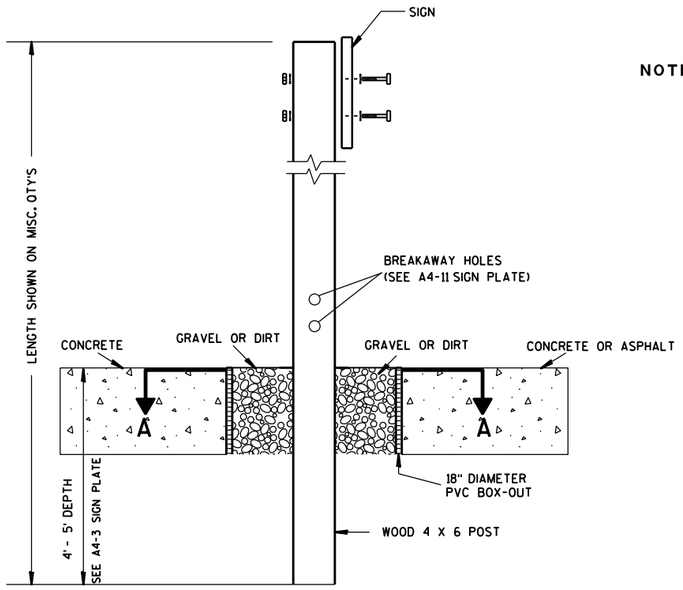

ELEVATION VIEW

DETAIL OF WOOD 4 X 6 SIGN POST IN BOX-OUT

NOTES:
1. ALL MATERIAL TO BE APPROVED BY ENGINEER PRIOR TO INSTALLATION
2. SEE SIGN PLATE A4-8 FOR SIGN HARDWARE REQUIREMENTS
3. 18 INCH X 18 INCH SQUARE BOX-OUTS MAY BE USED FOR INSTALLATIONS IN EXISTING CONCRETE OR ASPHALT LOCATIONS.

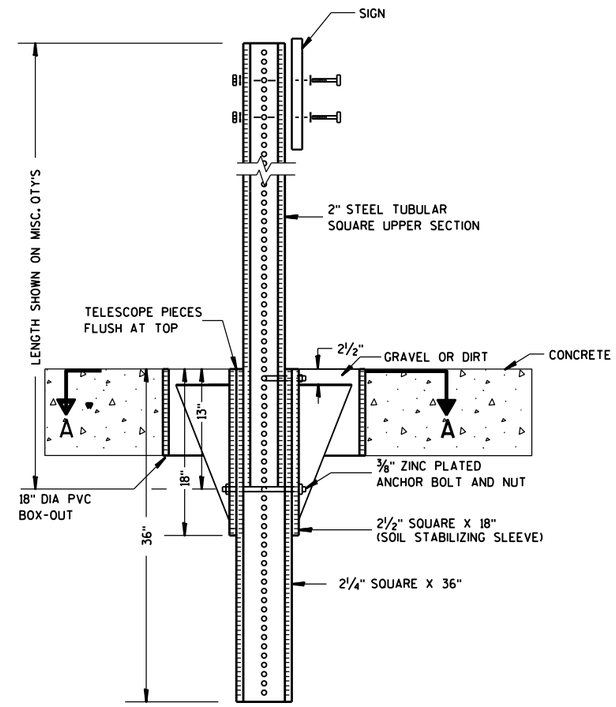

ELEVATION VIEW

DETAIL OF STEEL 2 X 2 SIGN POST IN BOX-OUT

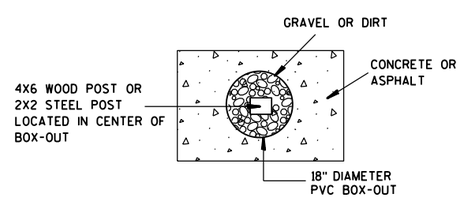

PLAN VIEW

FOR NEW CONCRETE/ASPHALT INSTALLATIONS

SIGN POST
BOX-OUTS
A4-3B

WISCONSIN DEPT OF TRANSPORTATION

APPROVED Matthew R Rauch
for State Traffic Engineer

DATE 1/27/14 PLATE NO. A4-3B.1

PROJECT NO:	HWY:	COUNTY:		SHEET NO:	E

URBAN AREA

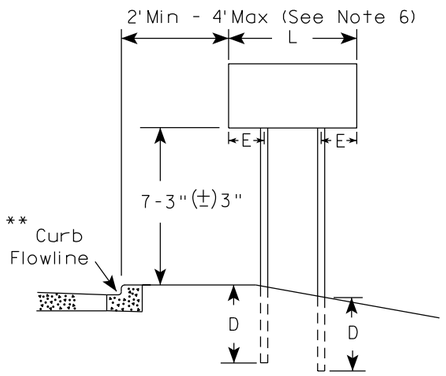

RURAL AREA (See Note 3)

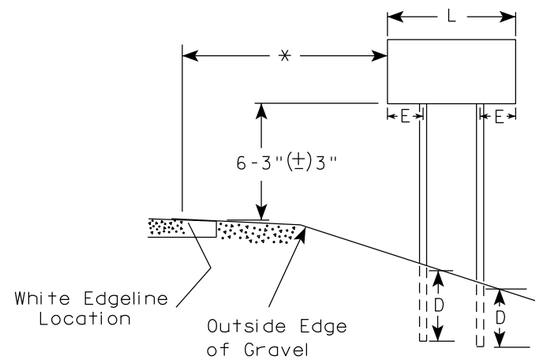

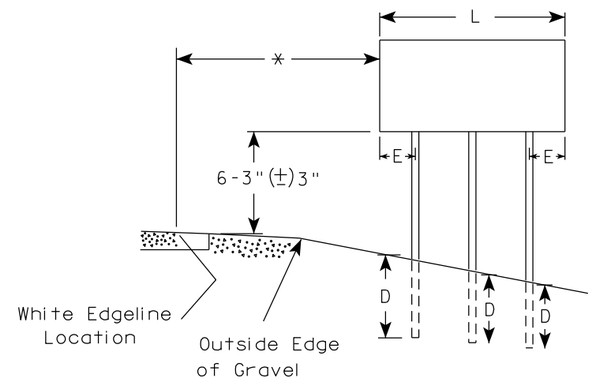

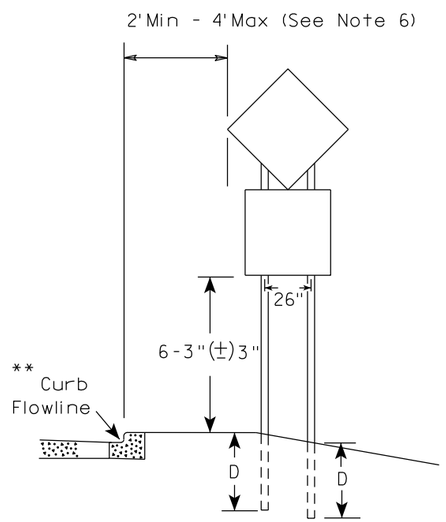

48" DIAMOND WARNING SIGN

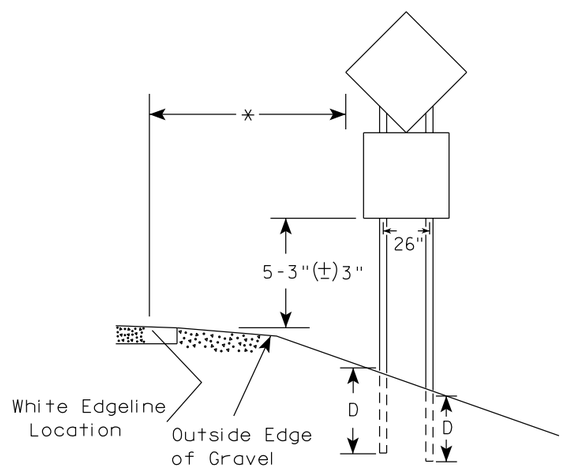

48" DIAMOND WARNING SIGN

GENERAL NOTES

1. For 3 or 4 post installations, individual post spacing shall be greater than 3'-6".
2. See tables below for required number of posts.
3. For expressways and freeways, mounting height is 7'-3" (±) 3" or 6'-3" (±) 3" depending upon existence of sub-sign.
4. The (±) tolerance for mounting height is 3 inches.
5. J-Assemblies are considered to be one sign for mounting height.
6. Offset distance shall be consistent with existing signs or consistent throughout length of project.
7. Folding signs shall be mounted at a height of 5'-3" (±) 3" or as directed by the engineer.
8. The Double Arrow sign (W12-1) shall be mounted at a height of 2'-3" (±) 3". The Chevron sign (W1-8), Roundabout Chevron panel (R6-4B), Clearance Markers (W5-52), Mile Markers (D10 series), In Road Object Markers (W5-54) & End of Road Markers (W5-56) shall be mounted at a height of 4"-3" (±) 3".

* 6 feet from edge of a paved shoulder or 12 feet from the edge of pavement (edge line location) or 2 feet from outside edge of gravel, whichever is greater unless directed by project engineer.

** The existence of curb and gutter does not in itself mandate the vertical clearance illustrated. That height is typically measured where there is sidewalk adjacent to the roadway or parking is permitted. In the absence of sidewalk vertical clearance is measured from the top of the curb. Offset of signs is measured from the flow line.

*** See A4-3 sign plate for signs 4' or less in width and less than 20 S.F. in area.

SIGN SHAPE OTHER THAN DIAMOND (TWO POSTS REQUIRED)	
L	E
*** Greater than 48" Less than 60"	12"
60" to 108"	L/5

SIGN SHAPE OTHER THAN DIAMOND (THREE POSTS REQUIRED)	
L	E
Greater than 108" to 144"	12"

POST EMBEDMENT DEPTH

Area of Sign Installation (Sq. Ft.)	D (Min)
20 or Less	4'
Greater than 20	5'

TYPICAL INSTALLATION OF TYPE II SIGNS ON MULTIPLE POSTS

WISCONSIN DEPT OF TRANSPORTATION

APPROVED Matthew R Rauch
for State Traffic Engineer

DATE 12/6/23 PLATE NO. A4-4.16

PROJECT NO:	HWY:	COUNTY:		SHEET NO: 58	E

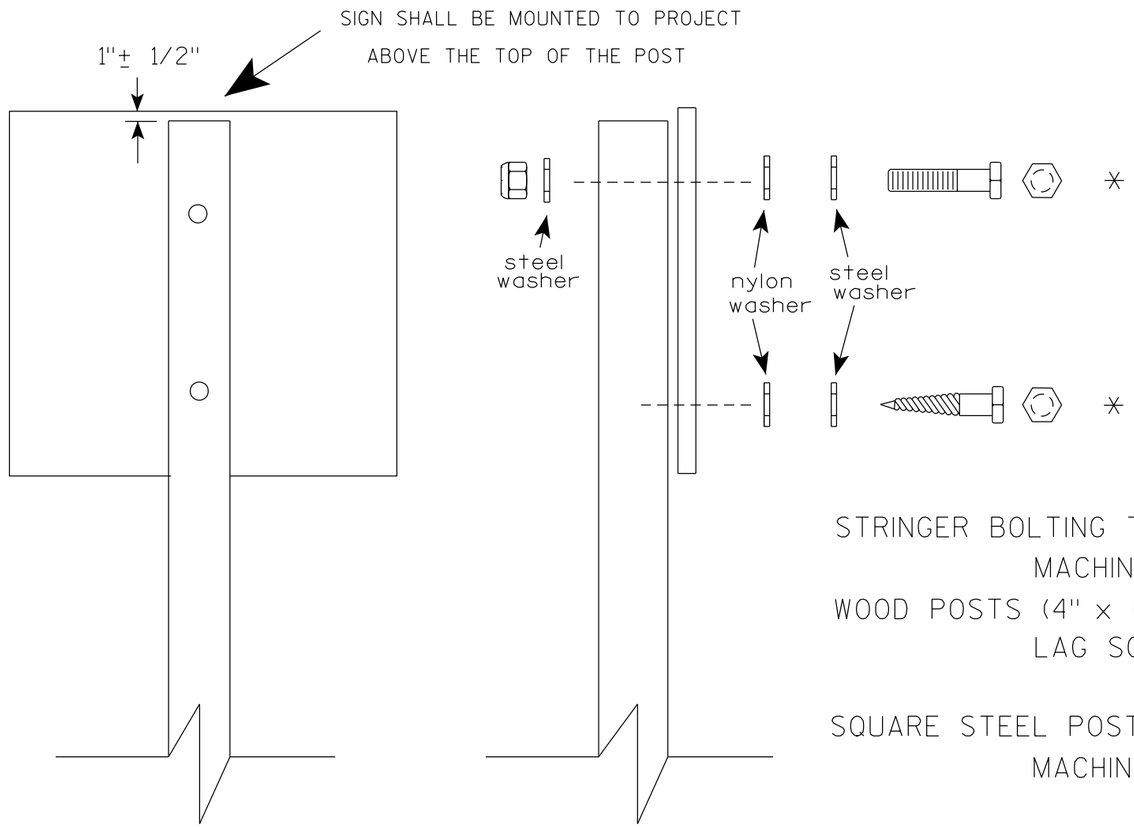

Nuts, bolts and lags used for mounting signs shall have hexagonal heads and shall be either :

a. Hot dip galvanized in accordance with ASTM Designation: A 153, Class D, or SC 3

b. Electro-galvanized in accordance with ASTM Designation : B 633, TYPE III, SC 3.

Threads on bolts and nuts shall be manufactured with sufficient allowance for the cadmium plate or galvanized coating to permit the nuts to run freely on the bolts.

STRINGER BOLTING TO ALUMINUM SIGNS (SEE SIGN PLATE A4-18)

MACHINE BOLTS - 5/16" X 1-3/4" Length w/ lock nuts

WOOD POSTS (4" x 6")

LAG SCREWS - 3/8" X 3" (NO STRINGERS ON BACK OF SIGN)
3/8" X 4" (STRINGERS ON BACK OF SIGN)

SQUARE STEEL POSTS (2" x 2")

MACHINE BOLTS - 3/8" X 3-1/4" Length w/ nuts (NO STRINGER ON BACK OF SIGN)
3/8" X 5" Length w/ nuts (STRINGERS ON BACK OF SIGN)

RIVETS - 9/32 " (6605-9-6) BULB-TITE, TRI-FOLD, ALUMINUM BODY/MANDREL
O.D. FLANGE .720-.765 INCH, GRIP RANGE .042-.375 INCH

WASHERS (ALL POSTS) -

1-1/4" O.D. X 3/8" I.D. X 1/16" STEEL
1-1/4" O.D. X 3/8" I.D. X .080 NYLON

* Two different fastening systems are shown for illustration purposes. On any individual sign, either one or the other system shall be used. Actual number of fasteners per sign varies with the sign area, but normally there are two. For a single post installation, all signs greater than 9 sq. ft. require the use of 3 fasteners.

ATTACHMENT OF SIGNS TO POSTS

WISCONSIN DEPT OF TRANSPORTATION

APPROVED Matthew R Rauch
for State Traffic Engineer

DATE 4/1/2020 PLATE NO. A4-8.9

TELESCOPIC TUBING ANCHORS
TWO PIECE SYSTEM

2 1/4" SQUARE
12 GAUGE
PERFORATED
GALVANIZED FINISH

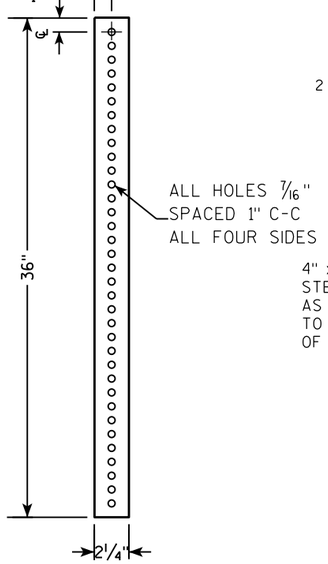

2 1/2" SQUARE
12 GAUGE
OMNI-DIRECTIONAL
PERFORATED
SOIL STABILIZING SLEEVE
GALVANIZED FINISH

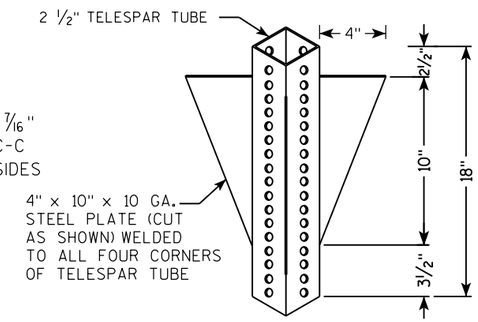

DETAIL OF TUBULAR STEEL SIGN POST
(IN POURED CONCRETE OR ASPHALT)

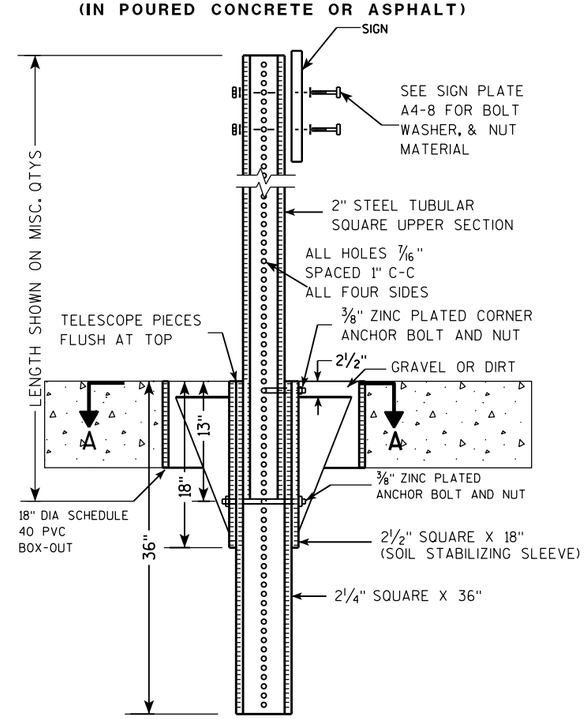

DETAIL OF TUBULAR STEEL SIGN POST
(IN LOCATIONS OTHER THAN POURED CONCRETE OR ASPHALT)

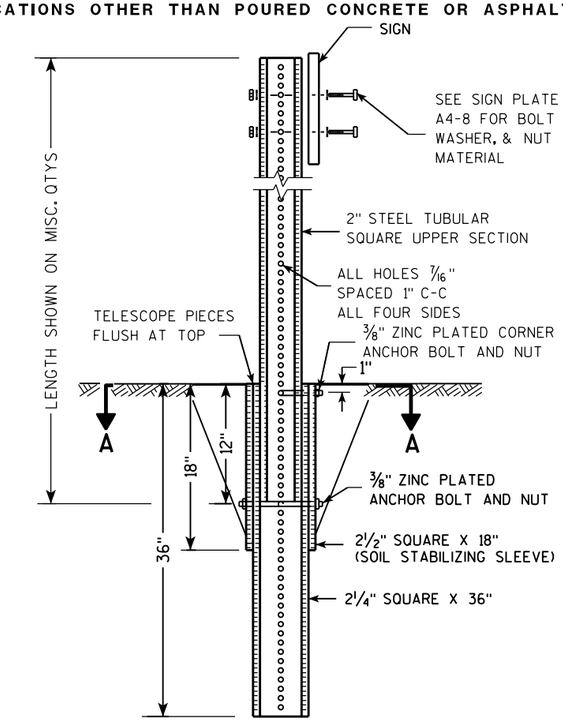

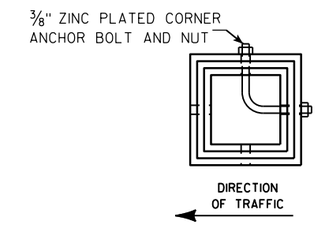

SECTION A-A

Area of Sign Installation (Sq. Ft.)	Number of Required Posts
9 or less	1
Greater than 9 less than or equal to 18	2
Greater than 18 less than or equal to 27	3

Signs wider than 3 feet or larger than 9 sq. ft shall be mounted on multiple posts (see above table).

TUBULAR STEEL
SIGN POST
A4-9

WISCONSIN DEPT OF TRANSPORTATION

APPROVED Matthew R Rauch
for State Traffic Engineer

DATE 2/05/15 PLATE A4-9.9

7 7

PROJECT NO:	HWY:	COUNTY:		SHEET NO:	E

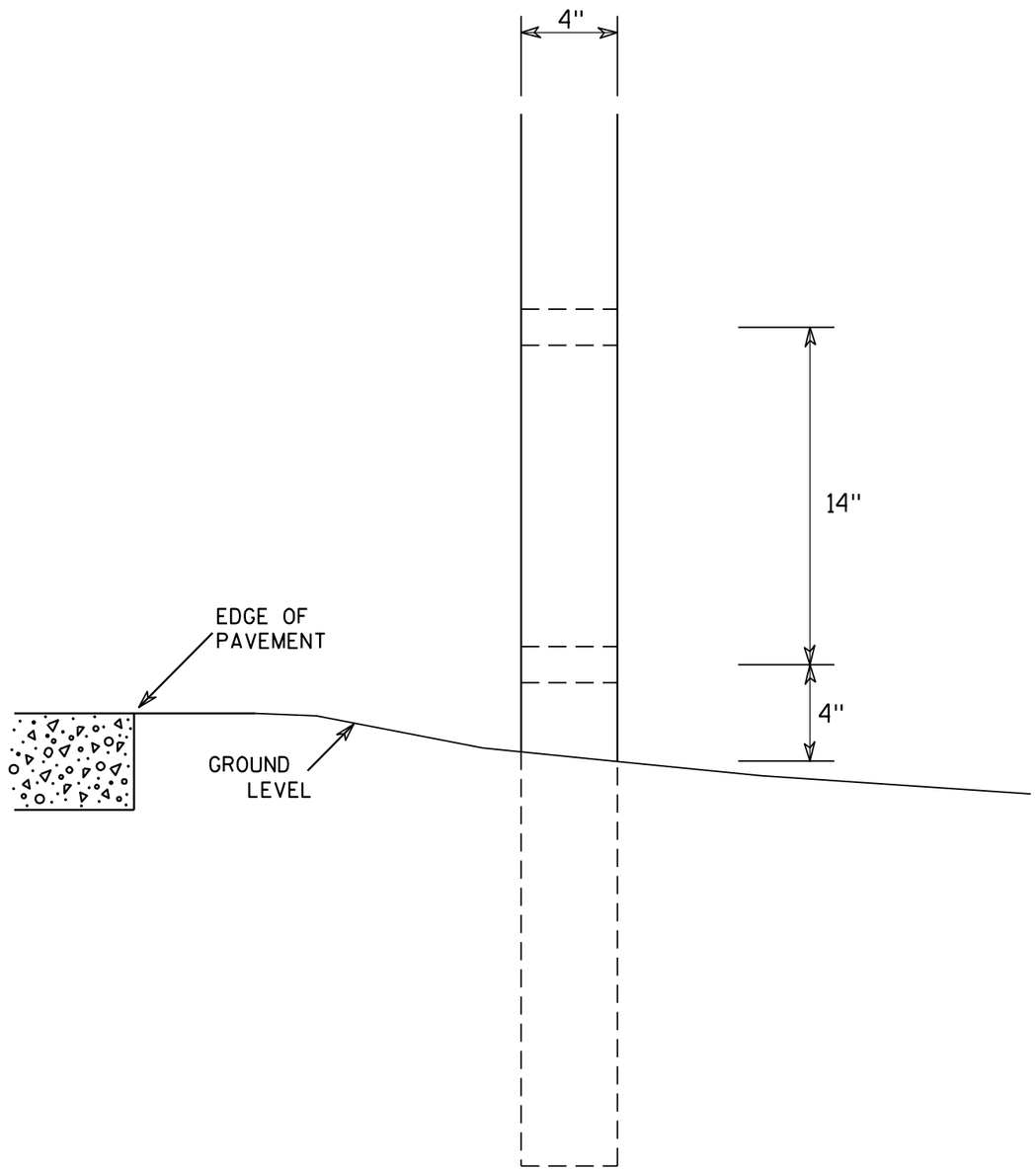

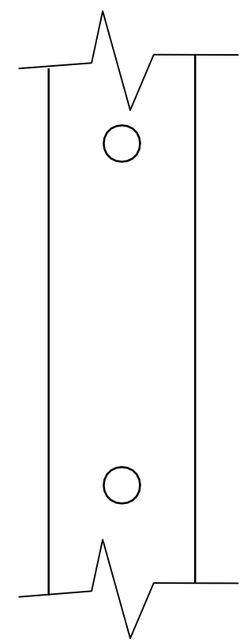

SIDE VIEW

GENERAL NOTES

1. All 4 x 6 Wood Posts shall be modified by having two 1½" diameter holes drilled perpendicular to the roadway centerline.

7

7

4 X 6 WOOD POST MODIFICATIONS

WISCONSIN DEPT OF TRANSPORTATION

APPROVED Chester J Spang for State Traffic Engineer

DATE 3/27/97 PLATE NO. A4-11.2

PROJECT NO:	HWY:	COUNTY:		SHEET NO: 61	E

BANDING

SINGLE SIGN

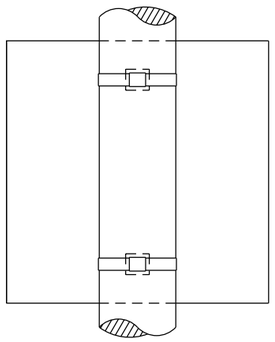

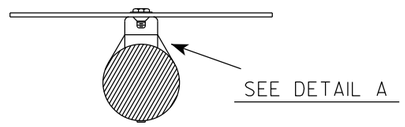

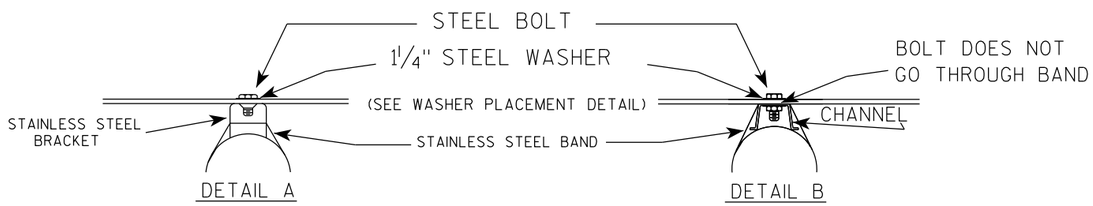

WASHER PLACEMENT

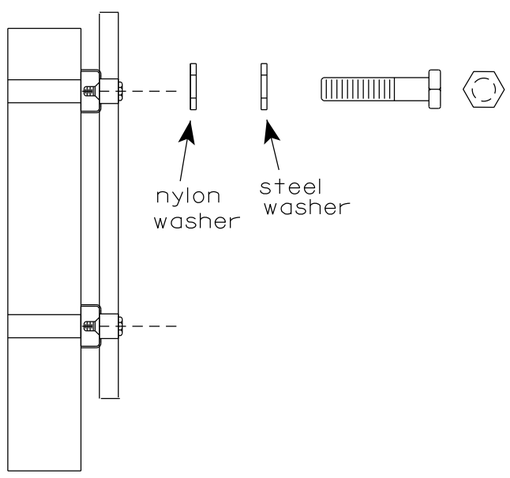

WASHERS (ALL POSTS) -
1-1/4" O.D. X 3/8" I.D. X 1/16" STEEL
1-1/4" O.D. X 3/8" I.D. X .080 NYLON
FOR ALL TYPE H SIGNS

GENERAL NOTES

1. Any sign over 3 feet in width shall use the V-Block banding method. See A5-10 standard plate.
2. Signs 3 feet or greater in height shall have three bracket bands installed. Signs less than 3 feet in height shall have two bracket bands installed.
3. Banding and assembly bracket shall be stainless steel. All bands shall be 3/4" in width and 0.025" thickness.
4. ALL SIGN MOUNTING BOLTS AND WASHERS SHALL BE EITHER:
   a. Hot dip or mechanically galvanized in accordance with ASTM Designation: A 153, Class D
   b. Electro-galvanized in accordance with ASTM designation: B 633, Type III, SC 3

"J" ASSEMBLY

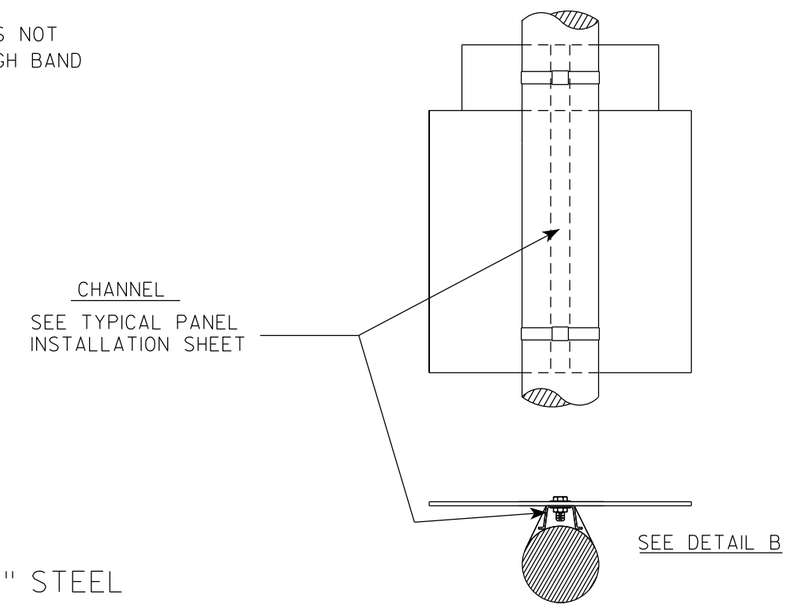

STANDARD SIGN
SIGN BANDING DETAILS

WISCONSIN DEPT OF TRANSPORTATION

APPROVED Matthew R Rauch
for State Traffic Engineer

DATE 6/10/19 PLATE NO. A5-9.4

PROJECT NO:	HWY:	COUNTY:		SHEET NO: 62	E

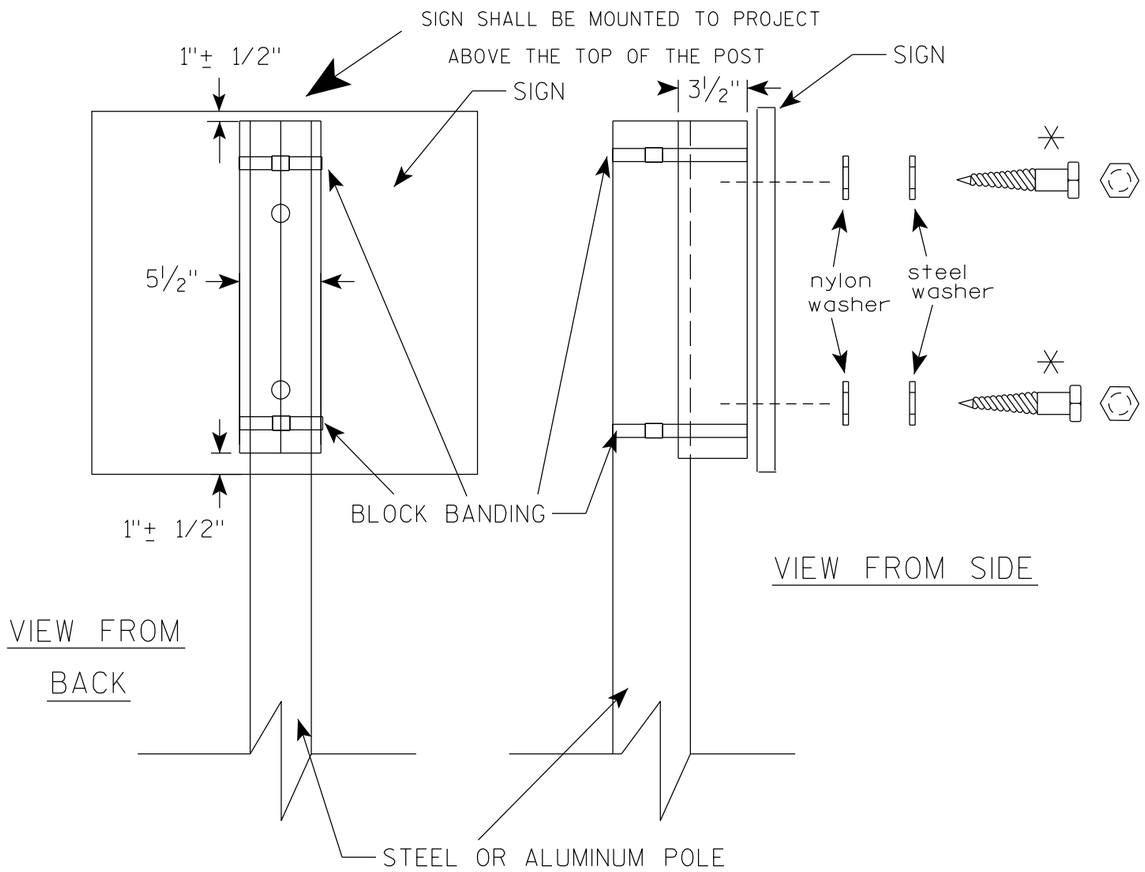

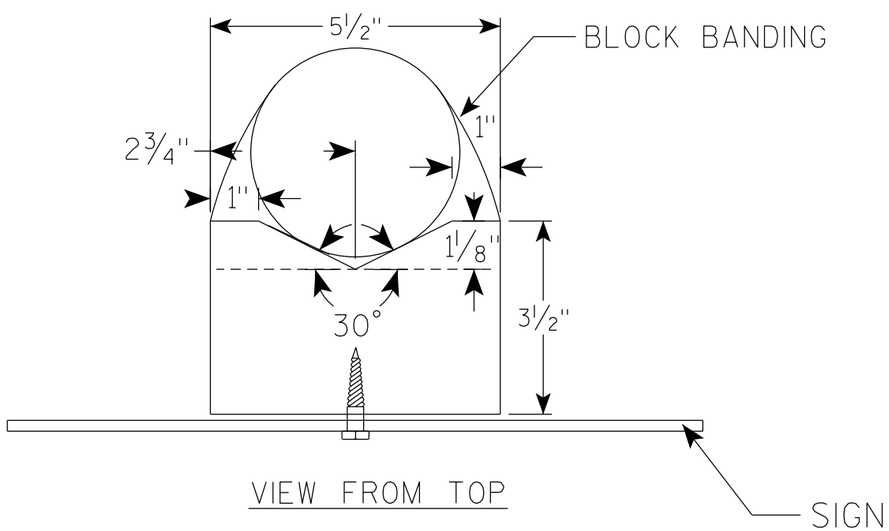

GENERAL NOTES

1. WOOD 4"X6" POST MATERIAL SHALL CONFORM TO 507.2.2 OF THE WisDOT STANDARD SPECIFICATIONS
2. BLOCK BANDING AND CLIPS SHALL BE STAINLESS STEEL, 3/4" WIDTH AND 0.025" THICKNESS
3. SIGNS 3' OR GREATER IN HEIGHT SHALL UTILIZE 3 BLOCK BANDS. SIGNS UNDER 3' IN HEIGHT SHALL UTILIZE 2 BLOCK BANDS
4. ACTUAL NUMBER OF FASTENERS PER SIGN VARIES WITH THE SIGN AREA, BUT NORNALLY THERE ARE TWO. FOR SIGNS GREATER THAN 9 S.F. 3 FASTENERS SHALL BE USED.
5. ALL SIGN MOUNTING BOLTS AND WASHERS SHALL BE EITHER:
   a. Hot dip or mechanically galvanized in accordance with ASTM Designation: A 153, Class D
   b. Electro-galvanized in accordance with ASTM Designation : B 633, TYPE III, SC 3
6. ALL BOLTS SHALL HAVE HEXAGONAL HEADS.
7. STEEL WASHERS SHALL BE 1 1/4" O.D. X 3/8" I.D. X 1/16"
8. NYLON WASHERS SHALL BE 1 1/4" O.D. X 3/8" I.D. X .080 FOR TYPE H OR TYPE F FACE SIGN

✳ LAG BOLTS SHALL BE 3/8" X 2 1/2"

7

7

BLOCK BANDING DETAIL
(V-BLOCK OPTION)

WISCONSIN DEPT OF TRANSPORTATION

APPROVED Matthew R Rauch
for State Traffic Engineer

DATE 4/19/2022 PLATE NO. A5-10.3

PROJECT NO:				SHEET NO: 63	E

NOTES

1. Sign is Type II - Type F Reflective
2. Color:
   Background - Orange
   Message - Black
3. Message Series - D
4. Substitute appropriate numeral and adjust spacing to achieve proper balance.

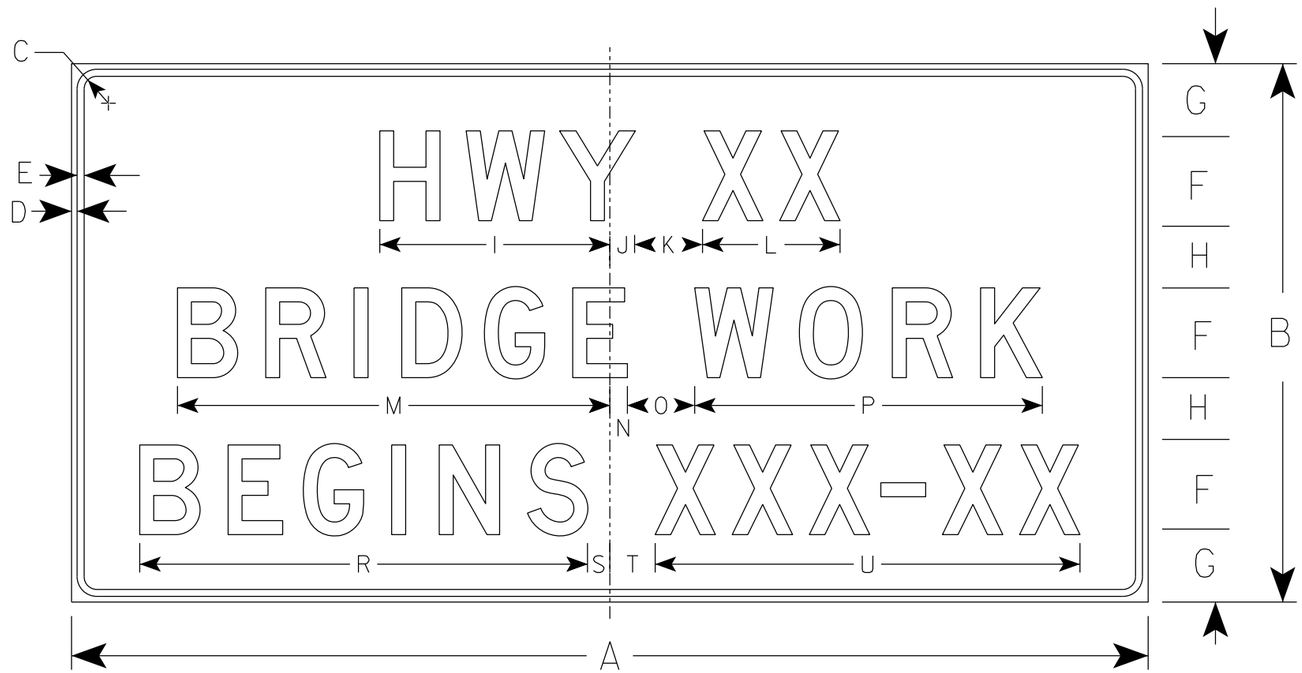

G20-57B

SIZE	A	B	C	D	E	F	G	H	I	J	K	L	M	N	O	P	Q	R	S	T	U	V	W	X	Y	Z	Area sq. ft.
1																											
2																											
3	72	36	1 1/8	1/2	5/8	6	5	4	15 5/8	1 5/8	5	9 1/4	29 1/8	7/8	5	23 1/4		29 7/8	1 3/4	3 1/4	28 1/2						18.0
4	96	48	2 1/4	3/4	1	8	6 1/2	5 1/2	20 5/8	2 1/4	6	12 1/4	38 1/2	1 1/2	6	31		39 1/4	2	4	37 7/8						32.0
5																											

STANDARD SIGN
G20-57B

WISCONSIN DEPT OF TRANSPORTATION

APPROVED Matthew R Rauch
for State Traffic Engineer

DATE 1/22/19 PLATE NO. G20-57B.1

PROJECT NO:	HWY:	COUNTY:		SHEET NO: 64	E

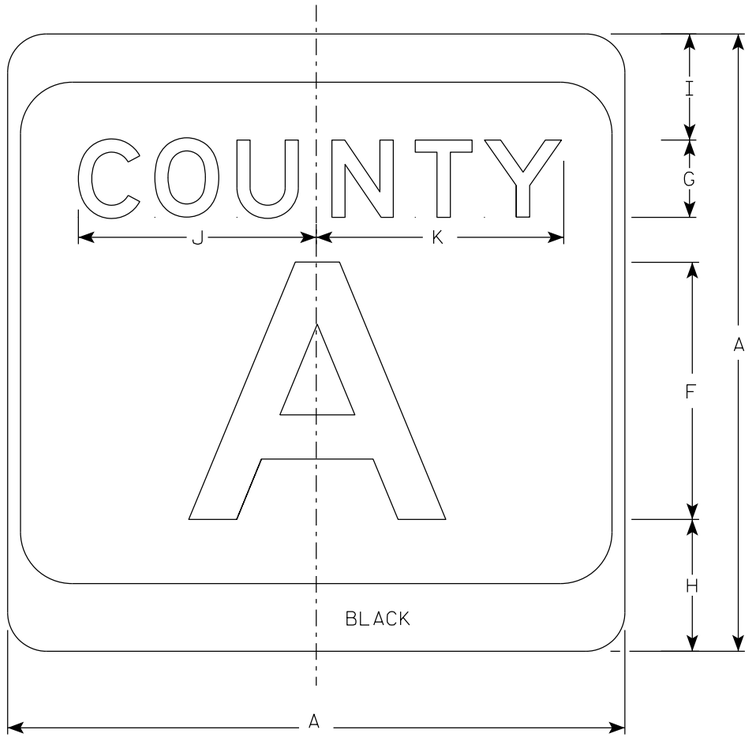

M1-5A

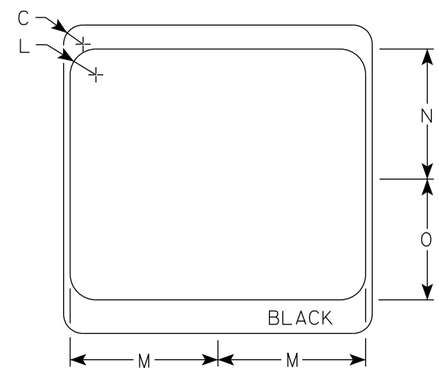

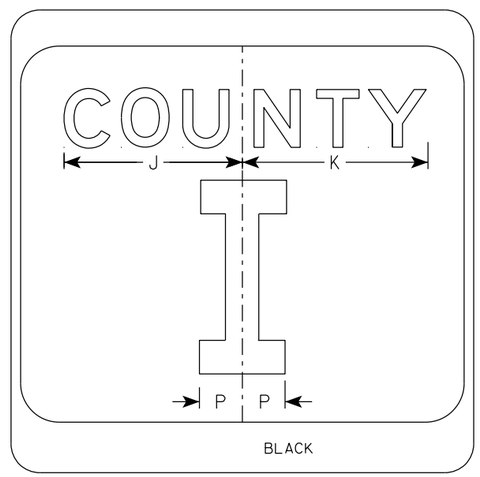

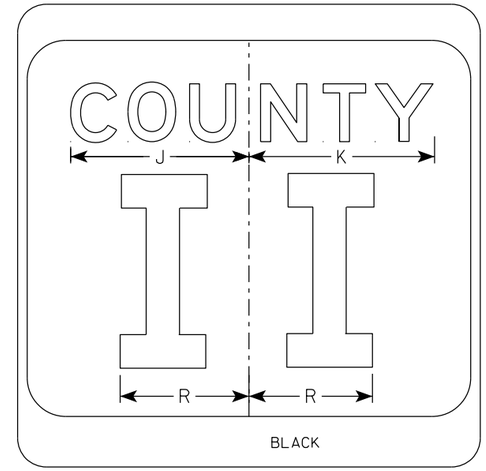

NOTES

1. Sign is Type II - Type H Reflective
2. Color:
   Background - White & Black
   Message - Black
3. Message Series - see Note 4
4. Message Series E for 1 letter.
   Message Series D for 2 letters unless message is too big then Series C.
   Message Series C for 3 letters unless message is too big then Series B.
5. Substitute appropriate letters & optically center to achieve proper balance.

SIZE	A	B	C	D	E	F	G	H	I	J	K	L	M	N	O	P	Q	R	S	T	U	V	W	X	Y	Z	Area sq. ft.
1																											
2	24		1 1/2			10	3	5 1/8	4 1/8	9 1/4	9 5/8	2	11 1/2	10 1/8	9 3/8	2 1/4		6 5/8									4.0
2M	24		1 1/2			10	3	5 1/8	4 1/8	9 1/4	9 5/8	2	11 1/2	10 1/8	9 3/8	2 1/4		6 5/8									4.0
3	36		2 1/4			16	4	7 5/8	5 5/8	12 1/4	12 7/8	3	17 1/8	15 1/4	14	3 3/8		10									9.0
4	36		2 1/4			16	4	7 5/8	5 5/8	12 1/4	12 7/8	3	17 1/8	15 1/4	14	3 3/8		10									9.0
5	36		2 1/4			16	4	7 5/8	5 5/8	12 1/4	12 7/8	3	17 1/8	15 1/4	14	3 3/8		10									9.0

CTH MARKER
M1-5A FOR ASSEMBLIES

WISCONSIN DEPT OF TRANSPORTATION

APPROVED Matthew R Rauch
for State Traffic Engineer

DATE 11/8/2022 PLATE NO. M1-5A.9

PROJECT NO: | HWY: | COUNTY: | SHEET NO: 65 | E

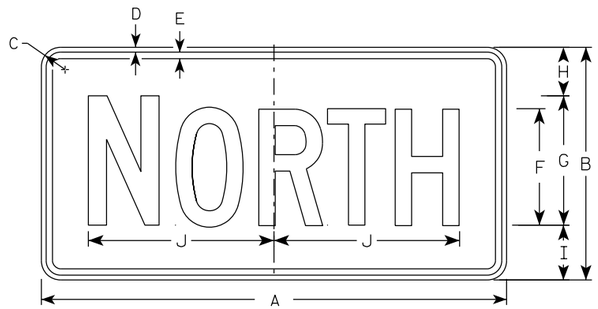

M3-1
MM3-1
MP3-1

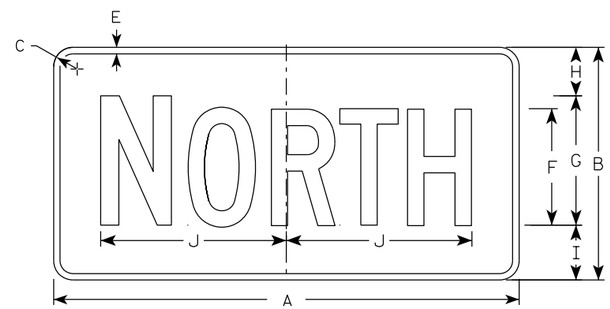

MB3-1
MK3-1
MN3-1

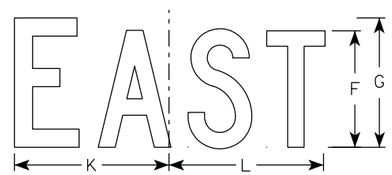

M3-2
MM3-2
MP3-2

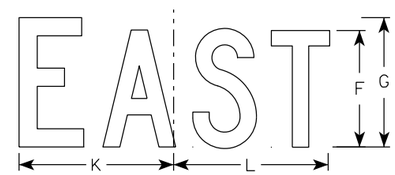

MB3-2
MK3-2
MN3-2

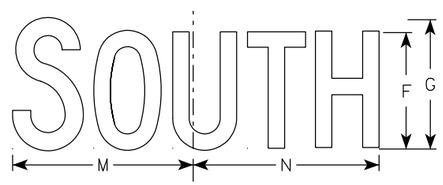

M3-3
MM3-3
MP3-3

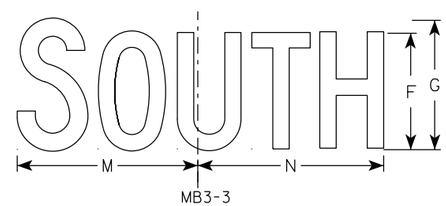

MB3-3
MK3-3
MN3-3

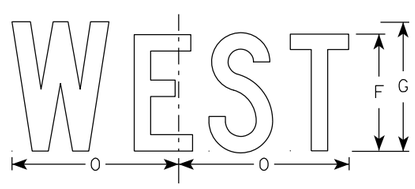

M3-4
MM3-4
MP3-4

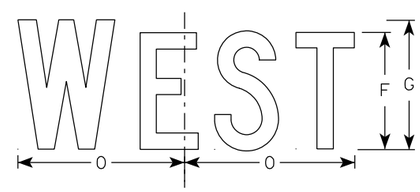

MB3-4
MK3-4
MN3-4

NOTES

1. All Signs Type II - Type H Reflective
2. Color:
   Background - See note 5
   Message - See note 5
3. Message Series - C
4. Corners may be square or rounded when base material is plywood but borders shall be rounded as shown. When base material is metal, the corners and borders shall be rounded.
5. M3-1 thru M3-4 Background - White
   Message - Black
   MB3-1 thru MB3-4 Background - Blue
   Message - White
   MK3-1 thru MK3-4 Background - Green
   Message - White
   MM3-1 thru MM3-4 Background - White
   Message - Green
   MN3-1 thru MN3-4 Background - Brown
   Message - White
   MP3-1 thru MP3-4 Background - White
   Message - Blue
6. Note the first letter of each direction is larger than the remainder of the message.

SIZE	A	B	C	D	E	F	G	H	I	J	K	L	M	N	O	P	Q	R	S	T	U	V	W	X	Y	Z	Area sq. ft.
1																											
2S	24	12	1 1/2	3/8	3/8	6	7	2 1/4	2 3/4	10 1/4	7 7/8	8 3/8	10 1/4	9 3/4	8 3/4												2.00
2M	24	12	1 1/2	3/8	3/8	6	7	2 1/4	2 3/4	10 1/4	7 7/8	8 3/8	10 1/4	9 3/4	8 3/4												2.00
3	36	18	1 1/2	3/8	1/2	9	10	3 3/4	4 1/4	14 3/8	12	12 1/8	14	14 1/8	13												4.5
4	36	18	1 1/2	3/8	1/2	9	10	3 3/4	4 1/4	14 3/8	12	12 1/8	14	14 1/8	13												4.5
5	36	18	1 1/2	3/8	1/2	9	10	3 3/4	4 1/4	14 3/8	12	12 1/8	14	14 1/8	13												4.5

STANDARD SIGNS
M3-1 THRU M3-4
SERIES

WISCONSIN DEPT OF TRANSPORTATION

APPROVED Matthew R Rauch
For State Traffic Engineer

DATE 2/8/2023 PLATE NO. M3-1.15

PROJECT NO: | HWY: | COUNTY: | SHEET NO: 66 | E

NOTES

1. Sign is Type II - Type F Reflective
2. Color:
   Background - Orange
   Message - Black
3. Message Series - B
4. Corners may be square or rounded when base material is plywood but borders shall be rounded as shown. When base material is metal, the corners and borders shall be rounded.

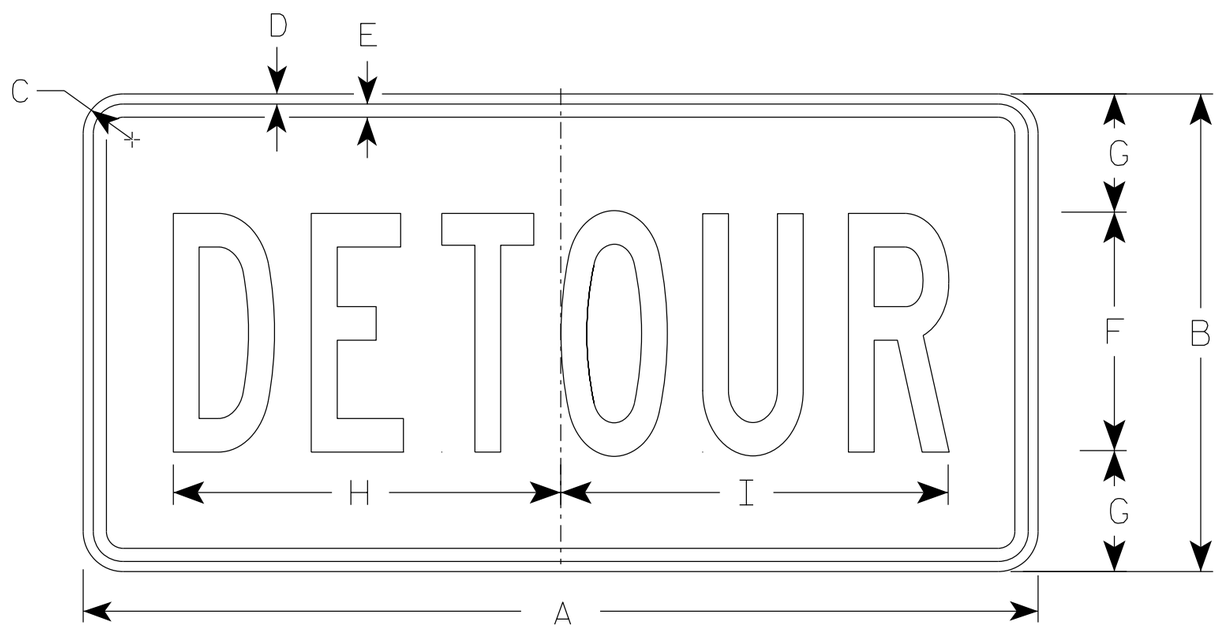

M4-8

SIZE	A	B	C	D	E	F	G	H	I	J	K	L	M	N	O	P	Q	R	S	T	U	V	W	X	Y	Z	Area sq. ft.
1																											
2	24	12	1 1/2	3/8	3/8	6	3	10	10 1/4																		2.0
2M	24	12	1 1/2	3/8	3/8	6	3	10	10 1/4																		2.0
3	36	18	1 1/2	3/8	1/2	9	4 1/2	14 5/8	14 1/2																		4.5
4	36	18	1 1/2	3/8	1/2	9	4 1/2	14 5/8	14 1/2																		4.5
5	36	18	1 1/2	3/8	1/2	9	4 1/2	14 5/8	14 1/2																		4.5

STANDARD SIGN
M4-8

WISCONSIN DEPT OF TRANSPORTATION

APPROVED Matthew R Rauch
for State Traffic Engineer

DATE 2/9/2023 PLATE NO. M4-8.4

PROJECT NO:	HWY:	COUNTY:		SHEET NO: 67	E

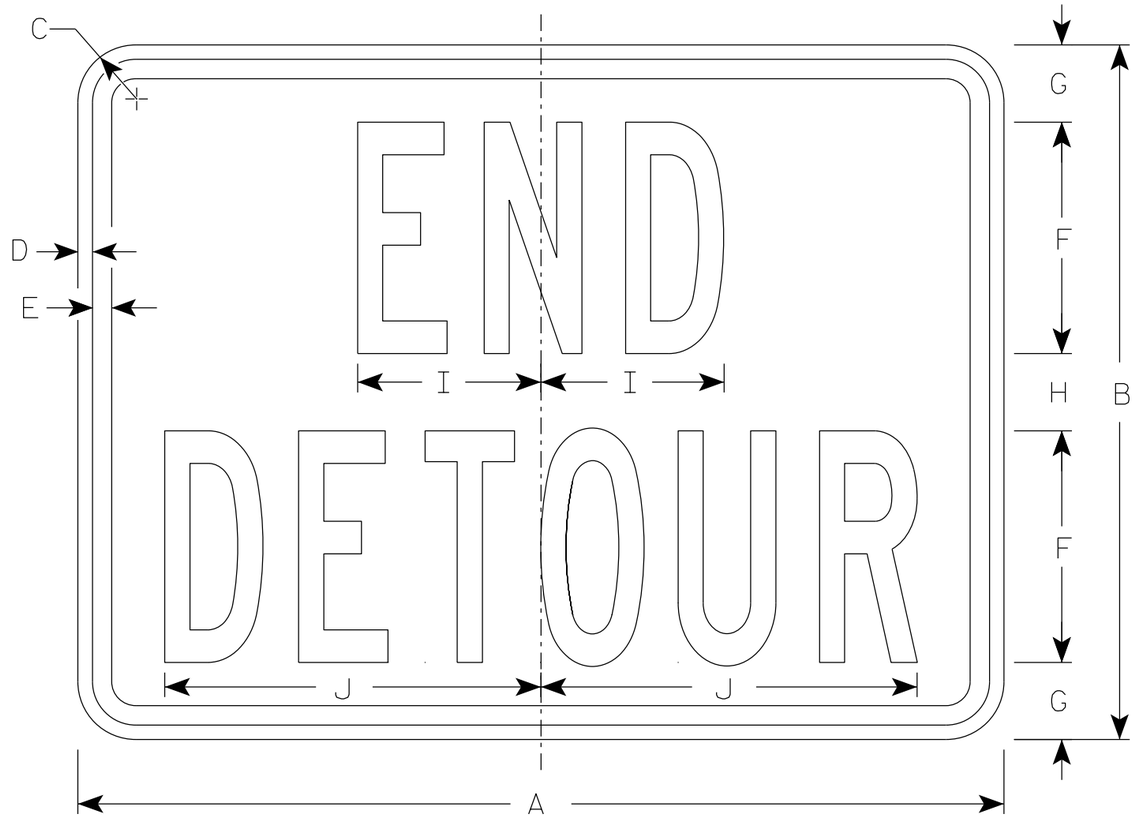

M4-8A

NOTES

1. Sign is Type II - Type F Reflective
2. Color:
   Background - Orange
   Message - Black
3. Message Series - B
4. Corners may be square or rounded when base material is plywood but borders shall be rounded as shown. When base material is metal, the corners and borders shall be rounded.

SIZE	A	B	C	D	E	F	G	H	I	J	K	L	M	N	O	P	Q	R	S	T	U	V	W	X	Y	Z	Area sq. ft.
1																											
2	24	18	1 1/2	3/8	1/2	6	2	2	4 3/4	9 3/4																	3.0
2M	24	18	1 1/2	3/8	1/2	6	2	2	4 3/4	9 3/4																	3.0
3	30	24	1 1/2	3/8	1/2	8	2 1/2	3	6 3/4	13																	5.0
4	30	24	1 1/2	3/8	1/2	8	2 1/2	3	6 3/4	13																	5.0
5	30	24	1 1/2	3/8	1/2	8	2 1/2	3	6 3/4	13																	5.0

STANDARD SIGN
M4-8A

WISCONSIN DEPT OF TRANSPORTATION

APPROVED Matthew R Rauch
for State Traffic Engineer

DATE 2/9/2023 PLATE NO. M4-8A.4

PROJECT NO: | HWY: | COUNTY: | SHEET NO: 68 | E

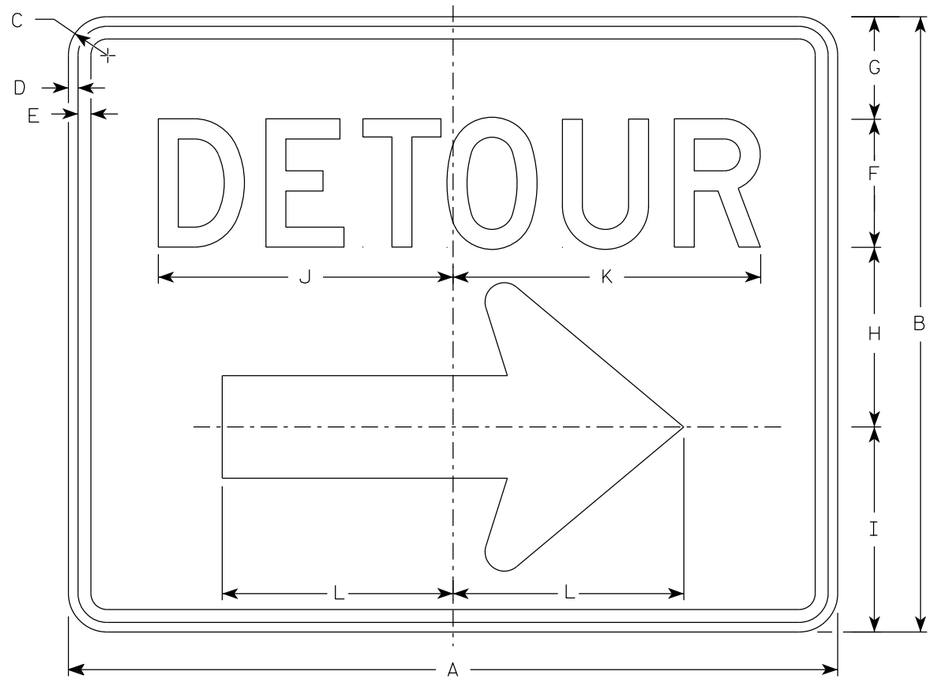

M4-9R

NOTES

1. Sign is Type II - Type F Reflective
2. Color:
   Background - Orange
   Message - Black
3. Message Series - D
4. Corners may be square or rounded when base material is plywood but borders shall be rounded as shown. When base material is metal, the corners and borders shall be rounded.
4. M4-9L is the same as M4-9R except the arrow is reversed.

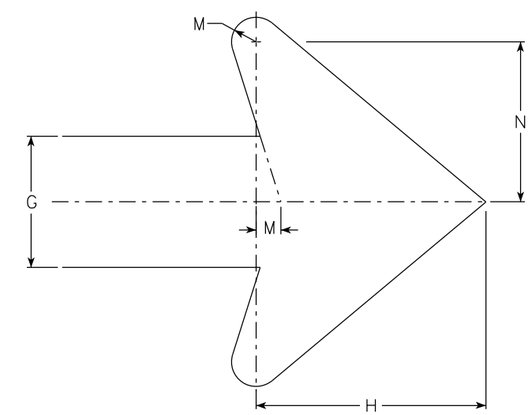

Arrow Detail

SIZE	A	B	C	D	E	F	G	H	I	J	K	L	M	N	O	P	Q	R	S	T	U	V	W	X	Y	Z	Area sq. ft.
1																											
2	30	24	1 1/2	3/8	1/2	5	4	7	8	11 1/2	12	9	3/4	4 7/8													5.00
2M	30	24	1 1/2	3/8	1/2	5	4	7	8	11 1/2	12	9	3/4	4 7/8													5.00
3	30	24	1 1/2	3/8	1/2	5	4	7	8	11 1/2	12	9	3/4	4 7/8													5.00
4	48	36	1 7/8	1/2	5/8	8	6	10 1/2	11 5/8	20 5/8	20 1/2	13 1/4	1 1/8	6 7/8													12.0
5	48	36	1 7/8	1/2	5/8	8	6	10 1/2	11 5/8	20 5/8	20 1/2	13 1/4	1 1/8	6 7/8													12.0

STANDARD SIGN
M4-9 R & L

WISCONSIN DEPT OF TRANSPORTATION

APPROVED Matthew R Rauch
For State Traffic Engineer

DATE 2/9/2023 PLATE NO. M4-9R.6

PROJECT NO: | HWY: | COUNTY: | SHEET NO: E

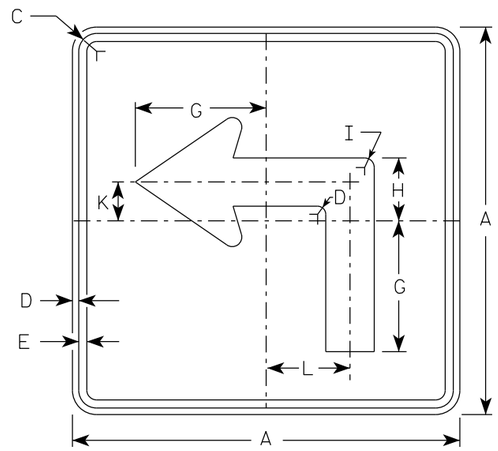

M5-1L
MM5-1L
MO5-1L
MP5-1L

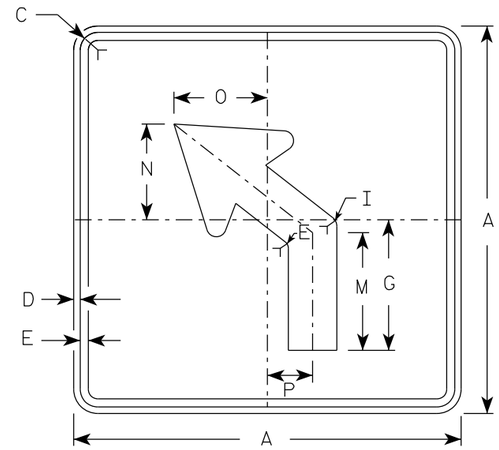

M5-2L
MM5-2L
MO5-2L
MP5-2L

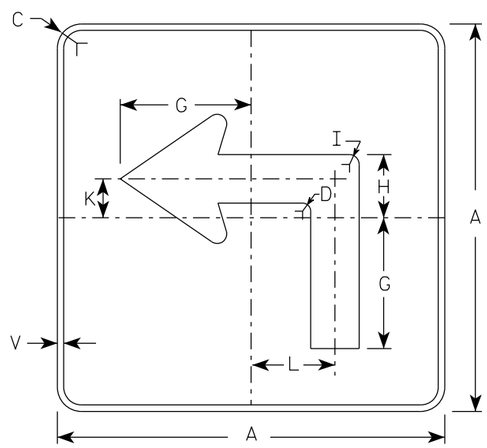

MB5-1L
MK5-1L
MN5-1L
MR5-1L

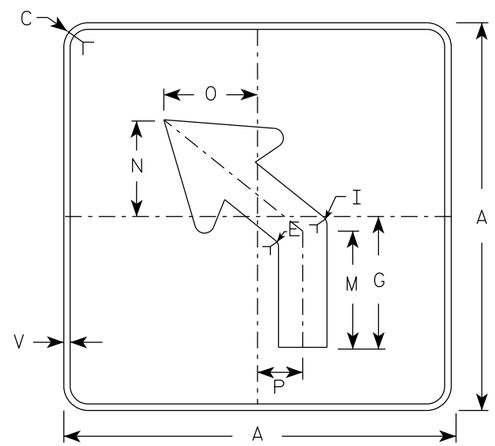

MB5-2L
MK5-2L
MN5-2L
MR5-2L

NOTES

1. Signs are Type II - Type H reflective except as shown
2. Color:
   Background - See note 4
   Message - See note 4
3. Corners may be square or rounded when base material is plywood but borders shall be rounded as shown. When base material is metal, the corners and borders shall be rounded.
4. M5-1 and M5-2 Background - White
   Message - Black
   MB5-1 and MB5-2 Background - Blue
   Message - White
   MK5-1 and MK5-2 Background - Green
   Message - White
   MM5-1 and MM5-2 Background - White
   Message - Green
   MN5-1 and MN5-2 Background - Brown
   Message - White
   MO5-1 and MO5-2 Background - Orange - Type F Reflective
   Message - Black
   MP5-1 and MP5-2 Background - White
   Message - Blue
   MR5-1 and MR5-2 Background - Brown
   Message - Yellow
5. M5-1R same as M5-1L except arrow points right.
6. M5-2R same as M5-2L except arrow tilts right.

ARROW DETAIL

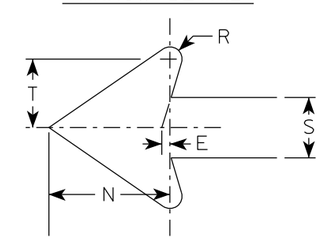

SIZE	A	B	C	D	E	F	G	H	I	J	K	L	M	N	O	P	Q	R	S	T	U	V	W	X	Y	Z	Area sq. ft.
1																											
2S	21		1 1/2	3/8	3/8		7	3 3/8	5/8		2 1/8	4 1/2	6 3/8	5 1/4	5	2 1/2		1/2	2 5/8	3		1/2					3.06
2M	21		1 1/2	3/8	3/8		7	3 3/8	5/8		2 1/8	4 1/2	6 3/8	5 1/4	5	2 1/2		1/2	2 5/8	3		1/2					3.06
3	30		1 7/8	1/2	5/8		10 1/8	4 7/8	7/8		3	6 1/2	9 1/8	7 1/2	7 1/4	3 1/2		3/4	3 3/4	4 1/4		1/2					6.25
4	30		1 7/8	1/2	5/8		10 1/8	4 7/8	7/8		3	6 1/2	9 1/8	7 1/2	7 1/4	3 1/2		3/4	3 3/4	4 1/4		1/2					6.25
5	30		1 7/8	1/2	5/8		10 1/8	4 7/8	7/8		3	6 1/2	9 1/8	7 1/2	7 1/4	3 1/2		3/4	3 3/4	4 1/4		1/2					6.25

STANDARD SIGN
M5-1 & M5-2

WISCONSIN DEPT OF TRANSPORTATION

APPROVED Matthew R Rauch
for State Traffic Engineer

DATE 2/13/2023 PLATE NO. M5-1.15

PROJECT NO: | HWY: | COUNTY: | SHEET NO: 70 | E

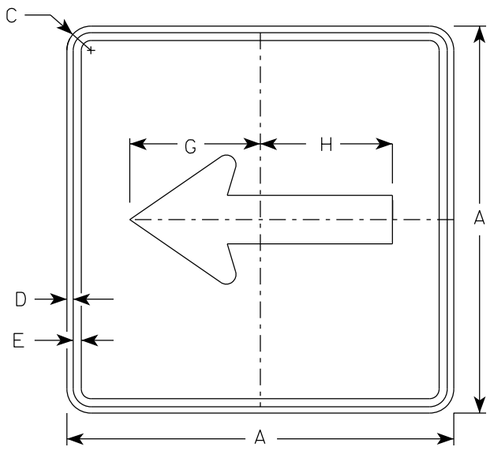

M6-1
MM6-1
MO6-1
MP6-1

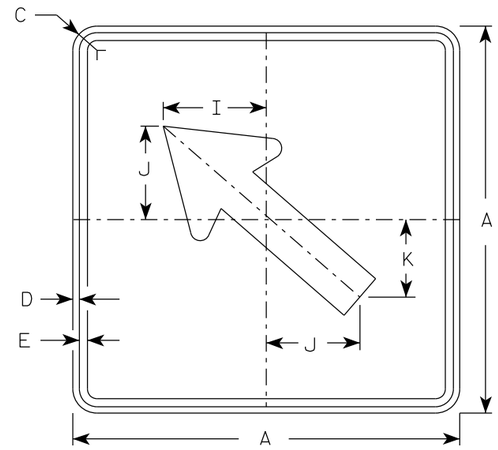

M6-2
MM6-2
MO6-2
MP6-2

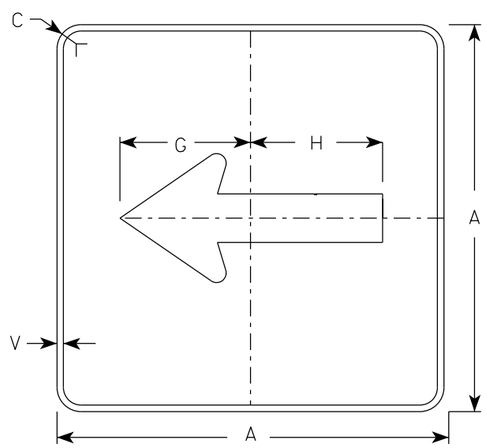

MB6-1
MK6-1
MN6-1
MR6-1

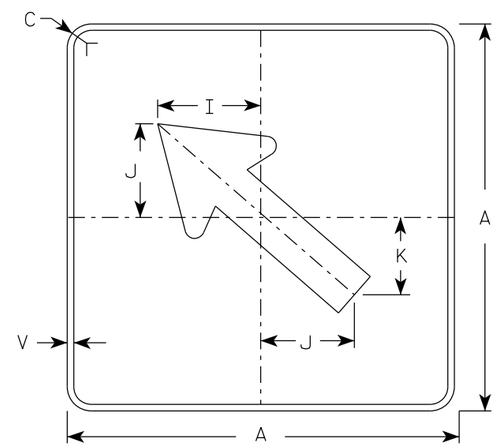

MB6-2
MK6-2
MN6-2
MR6-2

NOTES

1. Signs are Type II - Type H Reflective except as Shown
2. Color:
   Background - See note 4
   Message - See note 4
3. Corners may be square or rounded when base material is plywood but borders shall be rounded as shown. When base material is metal, the corners and borders shall be rounded.
4. M6-1 and M6-2 Background - White
   Message - Black
   MB6-1 and MB6-2 Background - Blue
   Message - White
   MK6-1 and MK6-2 Background - Green
   Message - White
   MM6-1 and MM6-2 Background - White
   Message - Green
   MN6-1 and MN6-2 Background - Brown
   Message - White
   MO6-1 and MO6-2 Background - Orange - Type F Reflective
   Message - Black
   MP6-1 and MP6-2 Background - White
   Message - Blue
   MR6-1 and MR6-2 Background - Brown
   Message - Yellow

ARROW DETAIL

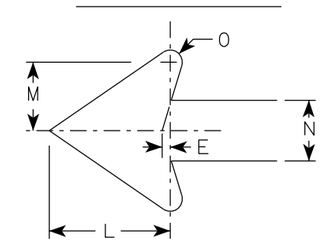

SIZE	A	B	C	D	E	F	G	H	I	J	K	L	M	N	O	P	Q	R	S	T	U	V	W	X	Y	Z	Area sq. ft.
1																											
2S	21		1 1/2	3/8	3/8		7 1/2	7 1/8	5 5/8	5	4 1/4	5 1/4	3	2 5/8	1/2							1/2					3.06
2M	21		1 1/2	3/8	3/8		7 1/2	7 1/8	5 5/8	5	4 1/4	5 1/4	3	2 5/8	1/2							1/2					3.06
3	30		1 7/8	1/2	5/8		10 3/4	10 1/4	8	7 1/4	6	7 1/2	4 1/4	3 3/4	3/4							1/2					6.25
4	30		1 7/8	1/2	5/8		10 3/4	10 1/4	8	7 1/4	6	7 1/2	4 1/4	3 3/4	3/4							1/2					6.25
5	30		1 7/8	1/2	5/8		10 3/4	10 1/4	8	7 1/4	6	7 1/2	4 1/4	3 3/4	3/4							1/2					6.25

STANDARD SIGN
M6-1 & M6-2
SERIES

WISCONSIN DEPT OF TRANSPORTATION

APPROVED Matthew R Rauch
for State Traffic Engineer

DATE 2/13/2023 PLATE NO. M6-1.16

PROJECT NO: | HWY: | COUNTY: | SHEET NO: 71 | E

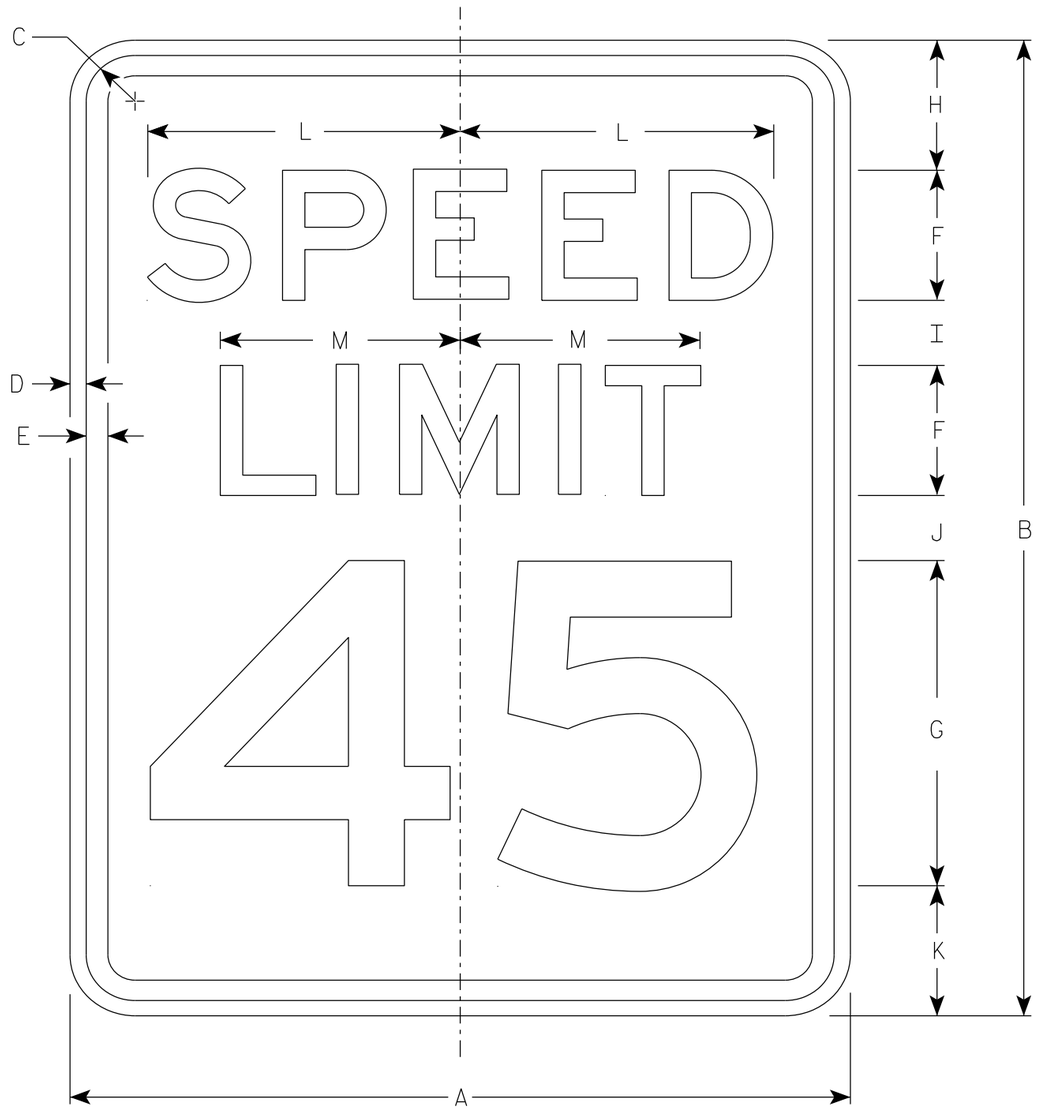

R2-1

NOTES

1. Sign is Type II - Type H Reflective
2. Color:
   Background - White
   Message - Black
3. Message Series - E
4. Substitute appropriate numerals and optically adjust spacing to achieve proper balance.

SIZE	A	B	C	D	E	F	G	H	I	J	K	L	M	N	O	P	Q	R	S	T	U	V	W	X	Y	Z	Area sq. ft.
1	18	24	1 1/2	3/8	1/2	3	8	3	2	2	3	7 1/4	5 1/2														3.0
2S	24	30	1 1/2	3/8	1/2	4	10	3	2 1/4	3 3/8	3 3/8	9 5/8	7 3/8														5.0
2M	30	36	1 7/8	1/2	5/8	5	12	5	2 1/2	2 1/2	4	12	9 1/4														7.5
3	36	48	1 7/8	1/2	5/8	6	14	6	5	5	6	14 3/8	11														12.0
4	36	48	1 7/8	1/2	5/8	6	14	6	5	5	6	14 3/8	11														12.0
5	48	60	3	3/4	1	8	20	6	4 1/2	6 3/4	6 3/4	19 1/4	14 5/8														20.0

STANDARD SIGN
R2-1

WISCONSIN DEPT OF TRANSPORTATION

APPROVED Matthew R Rauch
for State Traffic Engineer

DATE 2/1/23 PLATE NO. R2-1.14

PROJECT NO: | HWY: | COUNTY: | SHEET NO: 72 | E

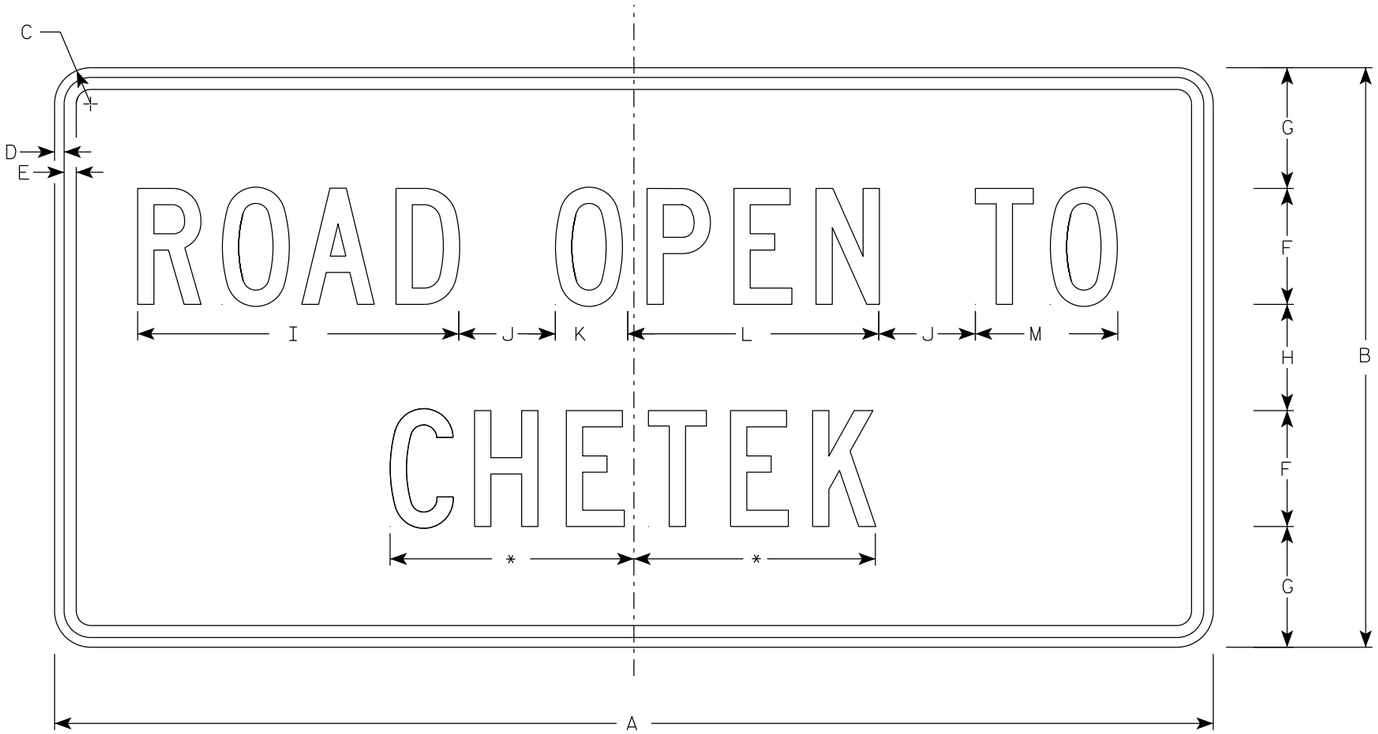

R10-61

*See note 5

NOTES

1. Sign is Type II - Type H Reflective
2. Color:
   Background - White
   Message - Black
3. Message Series - C
4. Corners may be square or rounded when base material is plywood but borders shall be rounded as shown. When base material is metal, the corners and borders shall be rounded.
5. Substitute appropriate message and optically balance.

SIZE	A	B	C	D	E	F	G	H	I	J	K	L	M	N	O	P	Q	R	S	T	U	V	W	X	Y	Z	Area sq. ft.
1	36	24	1 1/2	1/2	5/8	4	5 1/2	5	10 3/4	2	2 1/8	8 3/8	4 5/8														6.0
2S	60	30	1 7/8	1/2	5/8	6	6 1/4	5 1/2	16 5/8	5	3 3/4	13	7 3/8														12.5
2M	60	30	1 7/8	1/2	5/8	6	6 1/4	5 1/2	16 5/8	5	3 3/4	13	7 3/8														12.5
3																											
4																											
5																											

STANDARD SIGN
R10-61

WISCONSIN DEPT OF TRANSPORTATION

APPROVED Matthew R Rauch
for State Traffic Engineer

DATE 2/5/24 PLATE NO. R10-61.6

PROJECT NO: | HWY: | COUNTY: | SHEET NO: 73 | E

NOTES

1. Sign is Type II - Type H Reflective
2. Color:
   Background - White
   Message - Black
3. Message Series - C
4. Corners may be square or rounded when base material is plywood but borders shall be rounded as shown. When base material is metal, the corners and borders shall be rounded.
5. Substitute appropriate numerals to nearest quarter mile and optically adjust spacing to achieve proper balance.

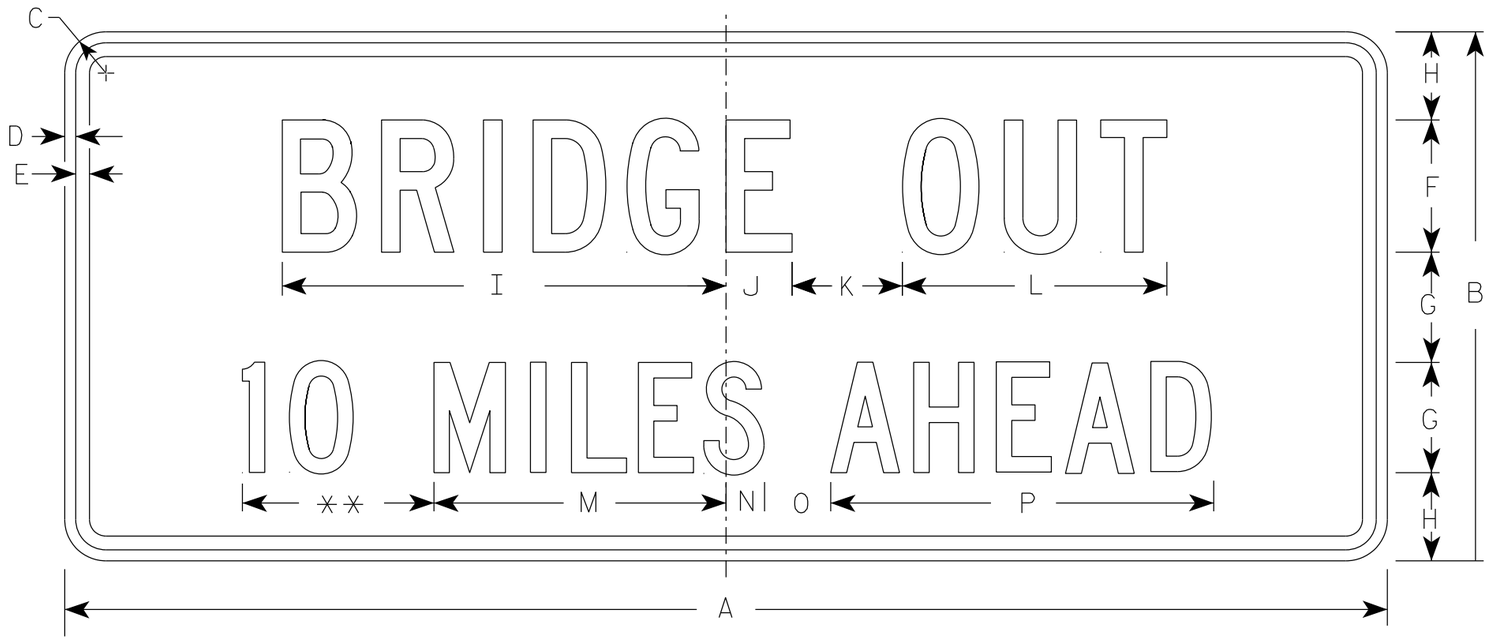

R11-3C

** See Note 5

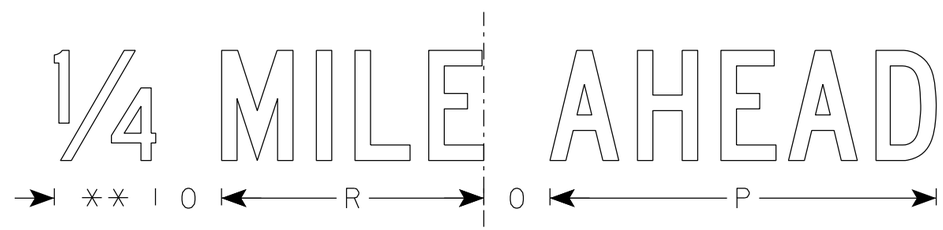

SIZE	A	B	C	D	E	F	G	H	I	J	K	L	M	N	O	P	Q	R	S	T	U	V	W	X	Y	Z	Area sq. ft.
1	36	15	1 1/2	1/2	5/8	4	3	2 1/2	13 1/4	2 1/4	3	8	8	1 1/2	2	10 3/4		7 1/8									3.75
2S	60	24	1 7/8	1/2	5/8	6	5	4	20 1/8	3	5	12	13 1/4	1 3/4	3	17 3/8		11 7/8									10.0
2M	60	24	1 7/8	1/2	5/8	6	5	4	20 1/8	3	5	12	13 1/4	1 3/4	3	17 3/8		11 7/8									10.0
3																											
4																											
5																											

STANDARD SIGN
R11-3C

WISCONSIN DEPT OF TRANSPORTATION

APPROVED Matthew R Rauch
for State Traffic Engineer

DATE 2/5/24 PLATE NO. R11-3C.4

PROJECT NO:

SHEET NO: 74 E

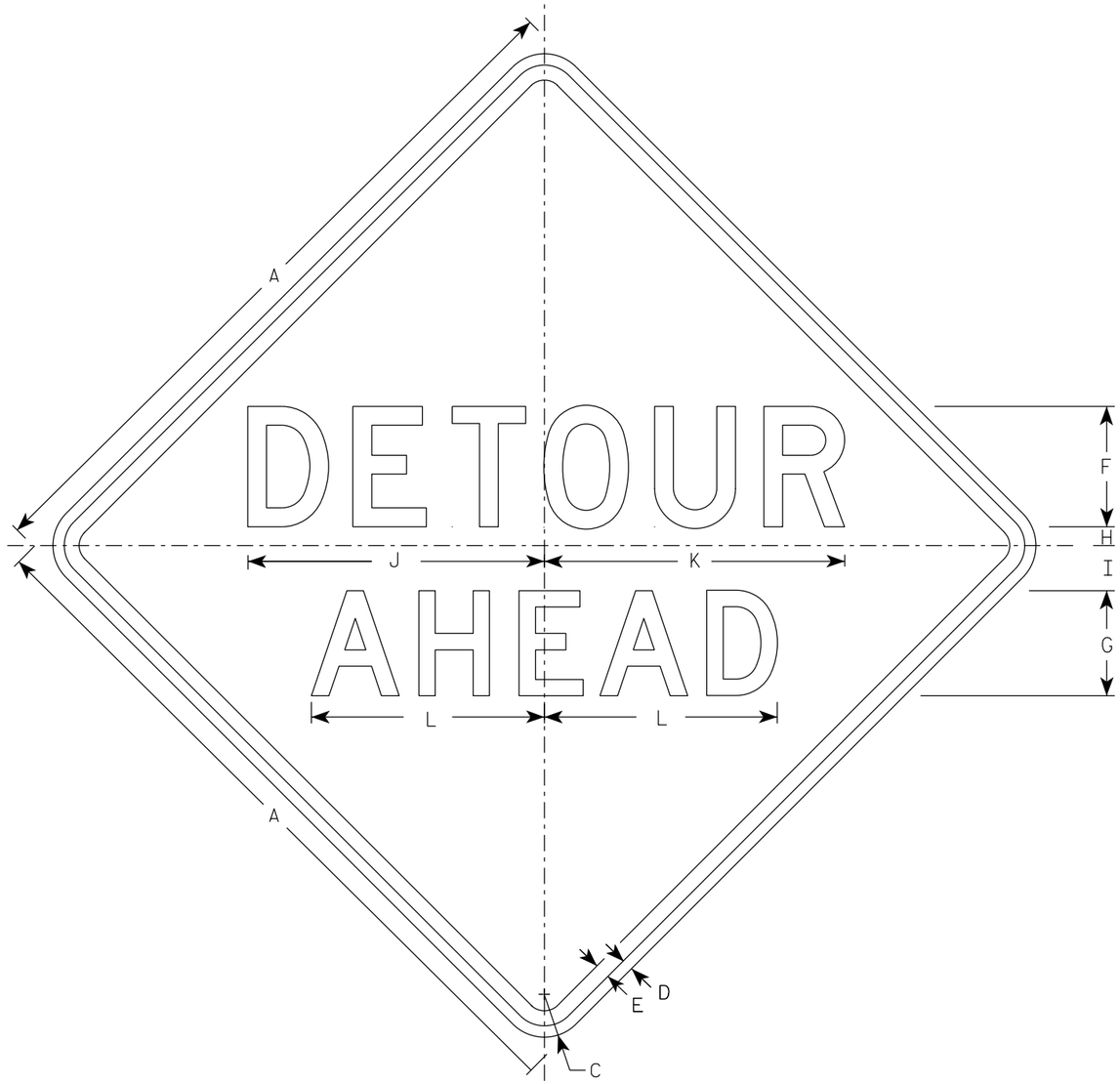

W20-2A

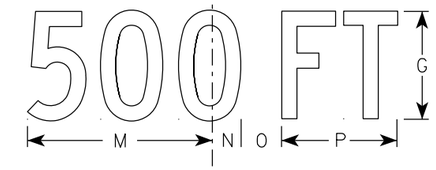

W20-2D

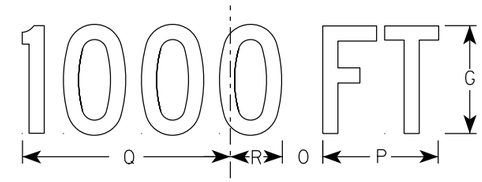

W20-2C

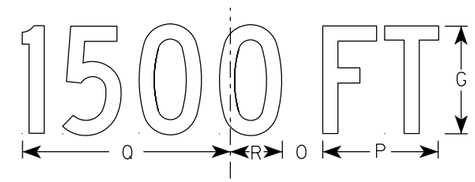

W20-2B

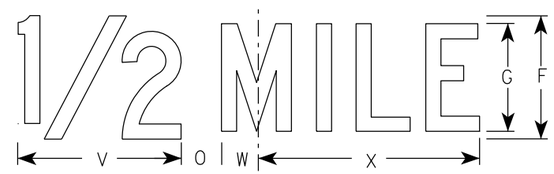

W20-2G

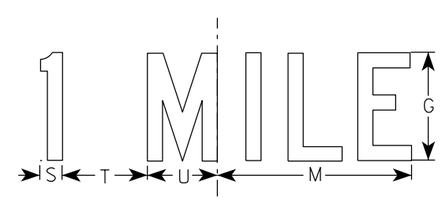

W20-2F

NOTES

1. Sign is Type II - Type F Reflective
2. Color:
   Background - Orange
   Message - Black
3. Message Series - See note 5
4. Corners may be square or rounded when base material is plywood but borders shall be rounded as shown. When base material is metal, the corners and borders shall be rounded.
5. Line 1 is Series D.
   Line 2 is Series D for AHEAD and Series C for all other distances.

SIZE	A	B	C	D	E	F	G	H	I	J	K	L	M	N	O	P	Q	R	S	T	U	V	W	X	Y	Z	Area sq. ft.
1	36		2 1/4	5/8	3/4	6	5	1	2 1/4	14 3/4	15	11 5/8	9	1 3/8	1 7/8	5 5/8	10 1/8	2 1/2	1 1/8	4 1/2	3 1/2	8	1 3/4	10 3/4			9.0
2S	48		3	3/4	1	8	7	1 1/4	3	19 3/4	20	15 1/2	12	1 7/8	2 5/8	7 1/2	13 1/2	3 3/8	1 1/2	6	4 5/8	10 5/8	2 3/8	14 3/8			16.0
2M	48		3	3/4	1	8	7	1 1/4	3	19 3/4	20	15 1/2	12	1 7/8	2 5/8	7 1/2	13 1/2	3 3/8	1 1/2	6	4 5/8	10 5/8	2 3/8	14 3/8			16.0
3	48		3	3/4	1	8	7	1 1/4	3	19 3/4	20	15 1/2	12	1 7/8	2 5/8	7 1/2	13 1/2	3 3/8	1 1/2	6	4 5/8	10 5/8	2 3/8	14 3/8			16.0
4	48		3	3/4	1	8	7	1 1/4	3	19 3/4	20	15 1/2	12	1 7/8	2 5/8	7 1/2	13 1/2	3 3/8	1 1/2	6	4 5/8	10 5/8	2 3/8	14 3/8			16.0
5	48		3	3/4	1	8	7	1 1/4	3	19 3/4	20	15 1/2	12	1 7/8	2 5/8	7 1/2	13 1/2	3 3/8	1 1/2	6	4 5/8	10 5/8	2 3/8	14 3/8			16.0

STANDARD SIGN
W20-2A,B,C,D,F & G

WISCONSIN DEPT OF TRANSPORTATION

APPROVED Matthew R Rauch
For State Traffic Engineer

DATE 1/10/2024 PLATE NO. W20-2.7

PROJECT NO:	HWY:	COUNTY:		SHEET NO: 75	E

BENCH MARK

NO.	STATION	DESCRIPTION	ELEV.
BM 2	8+56.90, 15.18' RT	EXISTING BRIDGE SW WING	1124.85

(X) INDICATES WING NUMBER

✳ PROVIDE FOR THRIE BEAM GUARD RAIL ATTACHMENT. AT UNUSED ANCHOR ASSEMBLIES CAULK HOLES SHUT WITH "100% SILICONE CAULK."

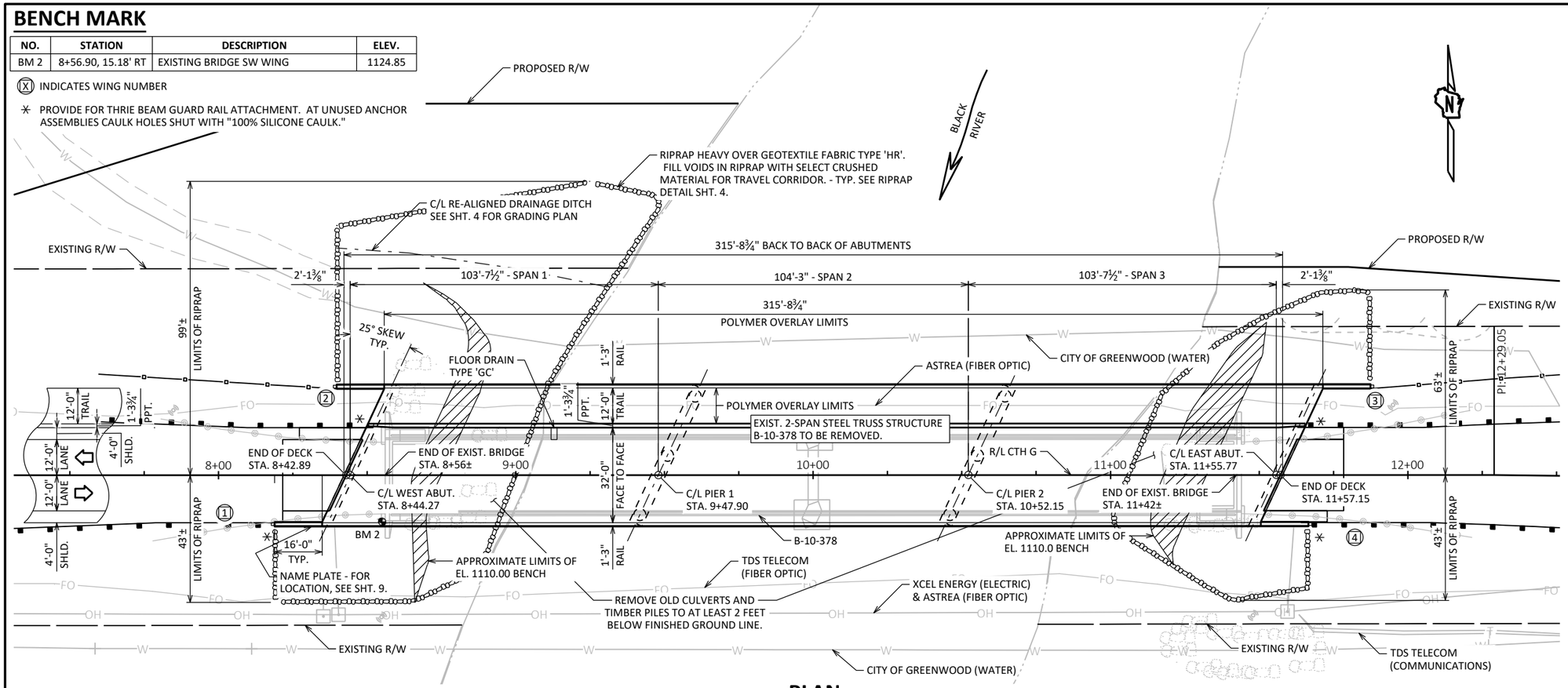

PLAN

3-SPAN 45W" PRESTRESSED GIRDERS

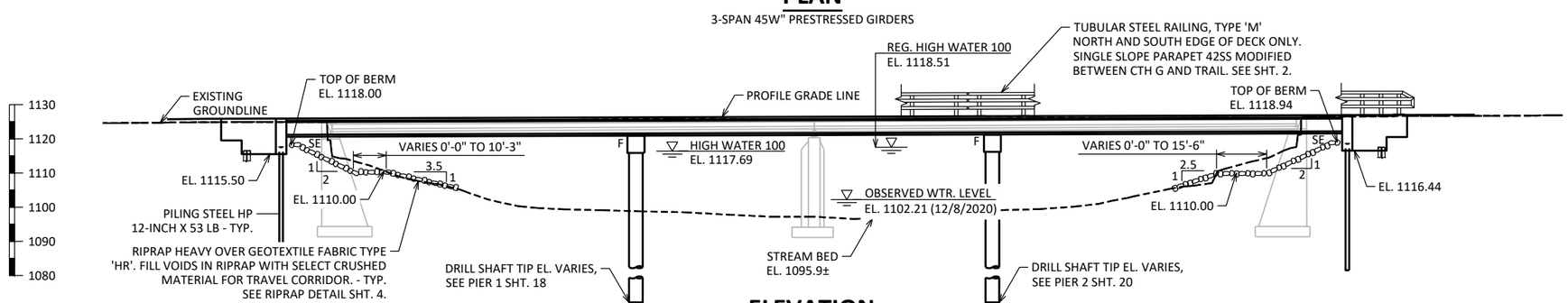

ELEVATION

(LOOKING UPSTREAM)

STATE PROJECT NUMBER

7840-03-73

LIST OF DRAWINGS:

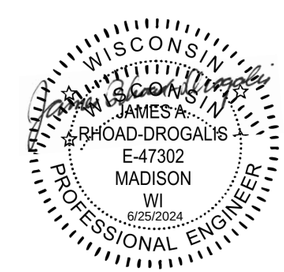

DESIGN DATA

LIVE LOAD:

DESIGN LOADING: HL-93
INVENTORY RATING: RF = 1.11
OPERATING RATING: RF = 1.58
WISCONSIN STANDARD PERMIT VEHICLE (WIS-SPV): 250 (KIPS)

STRUCTURE IS DESIGNED FOR A FUTURE WEARING SURFACE OF 20 POUNDS PER SQUARE FOOT.

MATERIAL PROPERTIES:

CONCRETE MASONRY:
SUPERSTRUCTURE & STRUCTURAL APPROACH SLAB ——— f'_c = 4,000 PSI
ALL OTHER ——— f'_c = 3,500 PSI

BAR STEEL REINFORCEMENT
GRADE 60 ——— f_y = 60,000 PSI

45W" PRESTRESSED GIRDERS:
CONCRETE MASONRY ——— f'_c = 8,000 PSI
STRANDS: 0.6" DIA. WITH ULTIMATE TENSILE STRENGTH OF 270,000 P.S.I.

FOUNDATION DATA

ABUTMENTS TO BE SUPPORTED ON HP 12-INCH X 53 LB PILING (WITH PILE POINTS) DRIVEN TO A REQUIRED DRIVING RESISTANCE OF 210 TONS ** PER PILE AS DETERMINED BY THE MODIFIED GATES DYNAMIC FORMULA. ESTIMATED 35-'0" LONG.

**THE FACTORED AXIAL RESISTANCE OF PILES IN COMPRESSION USED FOR DESIGN IS THE REQUIRED DRIVING RESISTANCE MULTIPLIED BY A RESISTANCE FACTOR OF 0.5 USING MODIFIED GATES TO DETERMINE PILE CAPACITY.

PIERS CONSISTING OF DRILLED SHAFTS TO BE SUPPORTED ON SOUND ROCK WITH A MINIMUM FACTORED END BEARING RESISTANCE OF 150,000 PSF***. A GEOTECHNICAL ENGINEER WILL DETERMINE THE MINIMUM FACTORED RESISTANCES BY VISUAL INSPECTION PRIOR TO CONSTRUCTION OF THE DRILLED SHAFTS.

***THE FACTORED BEARING RESISTANCE IS THE VALUE USED FOR DESIGN.

HYDRAULIC DATA

100-YEAR FREQUENCY:

Q_{100}= 33,000 C.F.S.
V_{100}= 8.7 F.P.S.
HW_{100}= EL 1117.69
WATERWAY AREA = 3771 SQ. FT.
DRAINAGE AREA = 527 SQ. MI.
ROADWAY OVERTOPPING = N/A
SCOUR CRITICAL CODE = 5

2-YEAR FREQUENCY:

Q_2= 8990 C.F.S.
V_2= 4.8 F.P.S.
HW_2= EL. 1109.39

TRAFFIC DATA

FEATURE ON CTH G:

ADT = 1430 (2023)
ADT = 1570 (2043)
R.D.S. = 30 MPH

STRUCTURE DESIGN CONTACTS:

BUREAU OF STRUCTURES:
AARON BONK (608) 261-0261

CONSULTANT
JAMES RHOAD-DROGALIS (608) 828-8166

NO.	DATE	REVISION	BY

AECOM

STATE OF WISCONSIN
DEPARTMENT OF TRANSPORTATION

ACCEPTED SDR 06/26/24
CHIEF STRUCTURES DESIGN ENGINEER DATE

STRUCTURE B-10-398

CTH G OVER BLACK RIVER

COUNTY CLARK | CITY GREENWOOD

DESIGN SPEC.
AASHTO LRFD BRIDGE DESIGN SPECIFICATION

DESIGNED BY	DESIGNED CK'D	DRAWN BY	PLANS CK'D
DCH	JRD	DCH	JRD

GENERAL PLAN & ELEVATION

SHEET 1 OF 33
76

SCALE =

I.D. 7840-03-03 DATE: APR 2024

8

8

STATE PROJECT NUMBER
7840-03-73

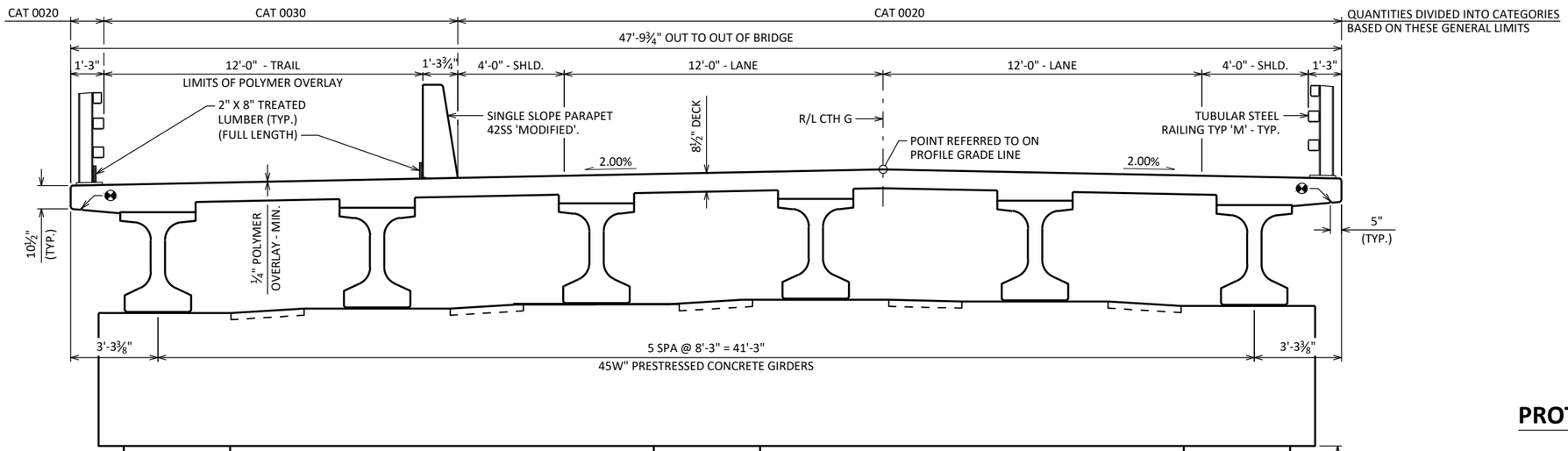

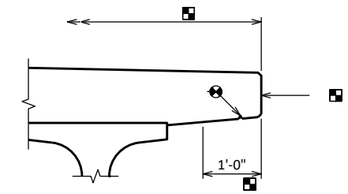

PROTECTIVE SURFACE TREATMENT DETAIL

(DECK REINFORCEMENT NOT SHOWN)

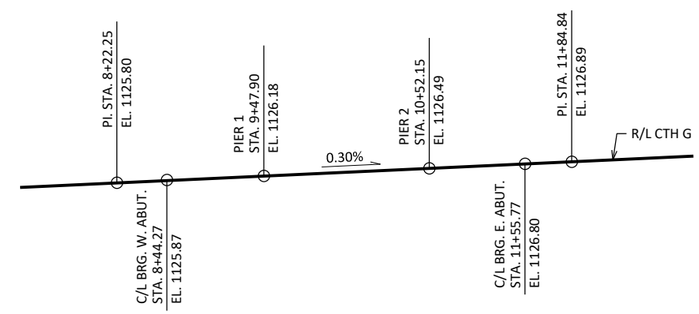

PROFILE GRADE LINE - CTH G

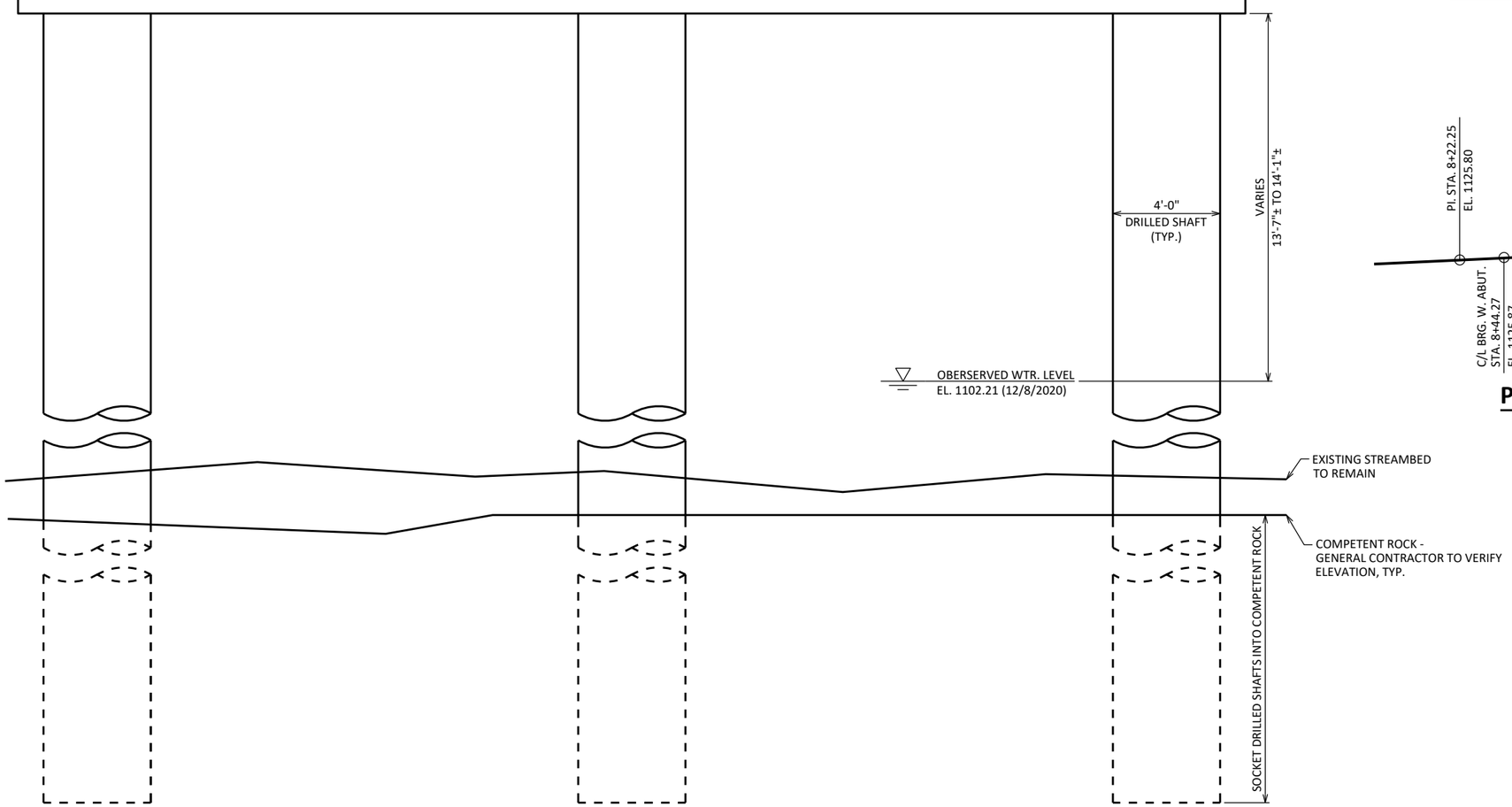

TYPICAL SECTION VIEW ON BRIDGE

(LOOKING EAST)

NOTES

- ¾" V-GROOVE REQ'D. EXTEND TO 6" FROM F.F. OF ABUTMENT DIAPHRAGM.
- PROTECTIVE SURFACE TREATMENT SHALL BE APPLIED TO THE TOP, SIDE AND BOTTOM OF DECK AS SHOWN.

NO.	DATE	REVISION	BY

STATE OF WISCONSIN
DEPARTMENT OF TRANSPORTATION

STRUCTURE B-10-398

DRAWN BY DCH | PLANS CK'D JRD

CROSS SECTION

SHEET 2 OF 33

77

SCALE =

8

8

TOTAL ESTIMATED QUANTITIES

BID ITEM NUMBER	BID ITEMS	UNIT	SUPER	WEST ABUT.	PIER 1	PIER 2	EAST ABUT.	TOTALS	CATEGORY 0020	CATEGORY 0030
203.0250	REMOVING STRUCTURE OVER WATERWAY REMOVE DEBRIS B-10-0378	EACH	---	---	---	---	---	1	1	---
206.1001	EXCAVATION FOR STRUCTURES BRIDGES B-10-0398	EACH	---	---	---	---	---	1	1	---
210.1500	BACKFILL STRUCTURE TYPE A	TON	---	320	---	---	320	640	460	180
502.0100	CONCRETE MASONRY BRIDGES	CY	578.4	51.7	59.1	59.5	51.5	801	543	258
502.3200	PROTECTIVE SURFACE TREATMENT	SY	1775	25	---	---	25	1825	1361	464
502.3210	PIGMENTED SURFACE SEALER	SY	274	---	---	---	---	274	---	274
503.0146	PRESTRESSED GIRDER TYPE I 45W-INCH	LF	1872	---	---	---	---	1872	1248	624
505.0400	BAR STEEL REINFORCEMENT HS STRUCTURES	LB	---	3150	24640	20590	3150	51530	36627	14903
505.0600	BAR STEEL REINFORCEMENT HS COATED STRUCTURES	LB	149280	2150	---	---	2150	153580	104356	49224
506.2605	BEARING PADS ELASTOMERIC NON-LAMINATED	EACH	36	---	---	---	---	36	24	12
506.4000	STEEL DIAPHRAGMS B-10-0398	EACH	30	---	---	---	---	30	18	12
509.5100.S	POLYMER OVERLAY	SY	421	---	---	---	---	421	---	421
513.4061	RAILING TUBULAR TYPE M	LF	632	34	---	---	34	700	700	---
514.0445	FLOOR DRAIN TYPE GC	EACH	1	---	---	---	---	1	---	1
514.2625	DOWNSPOUT 6-INCH	LF	4	--	--	--	--	4	--	4
516.0500	RUBBERIZED MEMBRANE WATERPROOFING	SY	---	12	---	---	12	24	19	5
550.0500	PILE POINTS	EACH	---	10	---	---	10	20	16	4
550.1120	PILING STEEL HP 12-INCH X 53 LB	LF	---	350	---	---	350	700	560	140
606.0300	RIPRAP HEAVY	CY	---	389	---	---	781	1170	908	262
612.0406	PIPE UNDERDRAIN WRAPPED 6-INCH	LF	---	115	---	---	115	230	201	29
614.0150	ANCHOR ASSEMBLIES FOR STEEL PLATE BEAM GUARD	EACH	4	---	---	---	---	4	4	---
645.0111	GEOTEXTILE TYPE DF SCHEDULE A	SY	---	36	---	---	36	72	49	23
645.0120	GEOTEXTILE TYPE HR	SY	---	1480	---	---	760	2240	1732	508
SPV.0060.03	CROSSHOLE SONIC LOG (CSL) TESTING, DRILLED SHAFT FOUNDATION 48-INCH	EACH	---	---	3	3	--	6	6	--
SPV.0060.04	THERMAL INTEGRITY PROFILER (TIP) TESTING, DRILLED SHAFT FOUNDATION 48-INCH	EACH	---	---	3	3	--	6	6	--
SPV.0090.02	DRILLED SHAFT FOUNDATION 48-INCH	LF	---	--	165	126	--	291	164	127
SPV.0195.01	SELECT CRUSHED MATERIAL FOR TRAVEL CORRIDOR	TON	---	392	--	--	196	588	455	133
	NON-BID ITEMS									
	FILLER	SIZE	---	---	---	---	---	½"	---	---

GENERAL NOTES

DRAWINGS SHALL NOT BE SCALED.

BAR STEEL REINFORCEMENT SHALL BE EMBEDDED 2" CLEAR UNLESS OTHERWISE SHOWN OR NOTED OTHERWISE.

THE FIRST OR FIRST TWO DIGITS OF THE BAR MARK SIGNIFIES THE BAR SIZE.

BEVEL EXPOSED EDGES OF CONCRETE ¾" UNLESS OTHERWISE NOTED.

THE UPPER LIMITS OF "EXCAVATION FOR STRUCTURES B-10-0398" SHALL BE THE EXISTING GROUNDLINE.

THE EXISTING STRUCTURE (B-10-0378) IS A STEEL TRUSS BRIDGE, 286.5' LONG X 25' WIDE, TO BE REMOVED.

AT THE BACK FACE OF ABUTMENT ALL VOLUME WHICH CANNOT BE PLACED BEFORE ABUTMENT CONSTRUCTION AND IS NOT OCCUPIED BY THE NEW STRUCTURE SHALL BE BACKFILLED WITH STRUCTURE BACKFILL TYPE A.

EXCAVATION BELOW THE ABUTMENT AND ABUTMENT BEDDING MATERIALS REQUIRES ENGINEER APPROVAL. GEOTEXTILE SHALL BE SET AT THE BOTTOM OF EXCAVATION AND EXTEND 2'-0" ABOVE BOTTOM OF ABUTMENT.

THE QUANTITY FOR BACKFILL STRUCTURE IS CALCULATED BASED ON THE DETAIL SHOWN IN THE PLANS.

ELASTOMERIC BEARING PADS NEED NOT BE INDIVIDUALLY MOLDED PROVIDED THE CUT EDGES ARE SMOOTH AND TRUE.

PROTECTIVE SURFACE TREATMENT TO BE APPLIED TO THE ENTIRE EXPOSED TOP OF DECK, VERTICAL AND HORIZONTAL SURFACES OF THE PAVING NOTCHES AT ABUTMENT DIAPHRAGMS, TOP AND EXTERIOR EXPOSED FACES OF WINGS, AND THE END 1'-0" OF THE FRONT FACE OF THE ABUTMENT.

PIGMENTED SURFACE SEALER TO BE APPLIED TO THE FRONT FACE, BACK FACE AND THE TOP OF THE SINGLE SLOPE PARAPET 42SS MODIFIED.

THE SLOPE OF THE FILL IN FRONT OF THE ABUTMENTS SHALL BE COVERED WITH HEAVY RIPRAP, SELECT CRUSHED MATERIAL FOR TRAVEL CORRIDOR, AND GEOTEXTILE TYPE "HR" TO THE EXTENT SHOWN ON THE GENERAL PLAN SHEET OR AS DIRECTED BY THE ENGINEER.

THE HAUNCH CONCRETE QUANTITY IS BASED ON THE AVERAGE HAUNCH SHOWN ON THE "45W" PRESTRESSED GIRDER DETAILS 2" SHEET.

THE EXISTING STREAM BED SHALL BE USED AS THE UPPER LIMITS OF EXCAVATION AT THE PIERS.

ALL REQUIRED REMOVAL OF THE EXISTING SUBSTRUCTURE IS INCLUDED IN THE BID ITEM "REMOVING STRUCTURE OVER WATERWAY REMOVE DEBRIS B-10-0378". BID ITEM ALSO INCLUDES THE REMOVAL OF OLD CULVERT PIPES AND TIMBER PILES UNDER THE EXISTING BRIDGE TO AT LEAST 2 FEET BELOW THE FINISHED GROUND LINE.

EXCAVATION REQUIRED UNDER THE BID ITEM "EXCAVATION FOR STRUCTURES B-10-0398" IS NOT USED TO BALANCE EARTHWORK.

BAR STEEL REINFORCEMENT INCLUDED WITHIN THE LIMITS OF "DRILLED SHAFT FOUNDATION 48-INCH" IS PAID FOR UNDER THE "BAR STEEL REINFORCEMENT HS STRUCTURES" BID ITEM. CONCRETE INCLUDED WITHIN THE LIMITS OF "DRILLED SHAFT FOUNDATION 48-INCH" AS SHOWN ON SHEET 18 AND 20 IS PAID FOR UNDER BID ITEM "DRILLED SHAFT FOUNDATION 48-INCH".

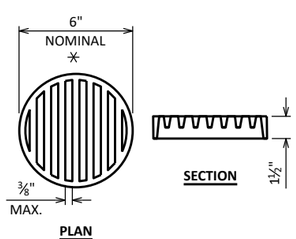

RODENT SHIELD DETAIL

✳ DIMENSIONS ARE APPROXIMATE. THE GRATE IS SIZED TO FIT INTO A PIPE COUPLING. ORIENT SO SLOTS ARE VERTICAL.

THE RODENT SHIELD, PIPE COUPLING AND SCREWS SHALL BE CONSIDERED INCIDENTAL TO THE BID ITEM "PIPE UNDERDRAIN WRAPPED 6-INCH".

THE RODENT SHIELD SHALL BE A PVC GRATE SIMILAR TO THIS DETAIL. THE GRATE IS COMMERCIALLY AVAILABLE AS A FLOOR STRAINER. A PIPE COUPLING IS REQUIRED FOR THE ATTACHMENT OF THIS SHIELD TO THE EXPOSED END OF THE PIPE UNDERDRAIN. THE SHIELD SHALL BE FASTENED TO THE PIPE COUPLING WITH TWO OR MORE NO. 10 X 1-INCH STAINLESS STEEL SHEET METAL SCREWS.

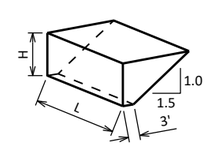

ABUTMENT BACKFILL DIAGRAM

L = OUT TO OUT OF ABUTMENT BODY INCLUDING WINGS (FT)
H = AVERAGE ABUTMENT FILL HEIGHT (FT)
EF = EXPANSION FACTOR (1.20 FOR CY BID ITEMS AND 1.00 FOR TON BID ITEMS)
V_{CF} = (L)(3.0')(H) + (L)(0.5)(1.5H)(H)
V_{CY} = V_{CF}(EF)/27
V_{TON} = V_{CY}(2.0)

8

8

NO.	DATE	REVISION	BY

STATE OF WISCONSIN
DEPARTMENT OF TRANSPORTATION

STRUCTURE B-10-398

DRAWN BY DCH PLANS CK'D JRD

GENERAL NOTES & QUANTITIES

SCALE =

STATE PROJECT NUMBER

7840-03-73

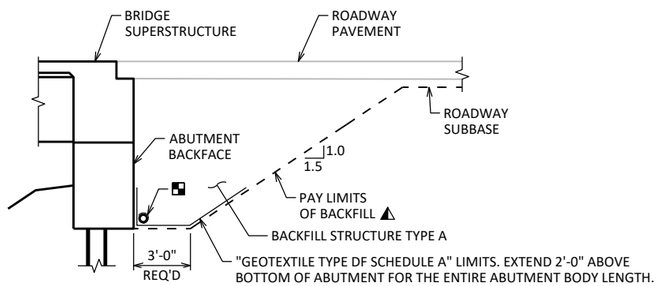

TYPICAL SECTION THRU ABUTMENT

◭ BACKFILL PAY LIMITS. BACKFILL BEYOND PAY LIMITS SHALL BE INCIDENTAL TO EXCAVATION FOR STRUCTURES. LIMITS OF EXCAVATION SHALL BE DETERMINED BY THE CONTRACTOR.

◘ PIPE UNDERDRAIN WRAPPED (6-INCH). SLOPE 0.5% MIN. TO SUITABLE DRAINAGE. ATTACH RODENT SHIELD AT ENDS OF PIPE UNDERDRAIN.

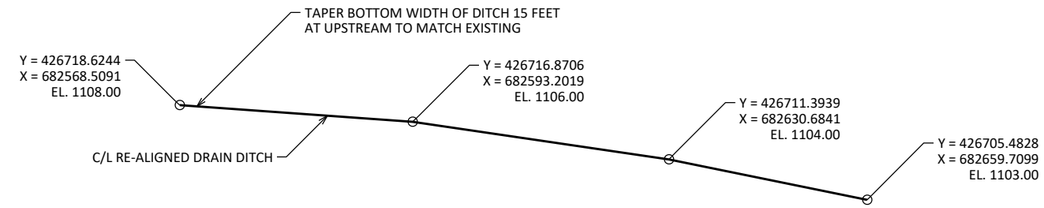

RE-ALIGNED DRAIN DITCH

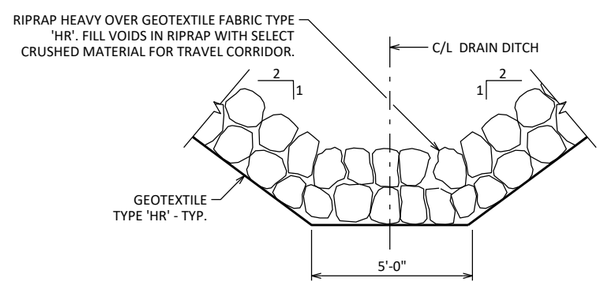

RE-ALIGNED DRAIN DITCH SECTION

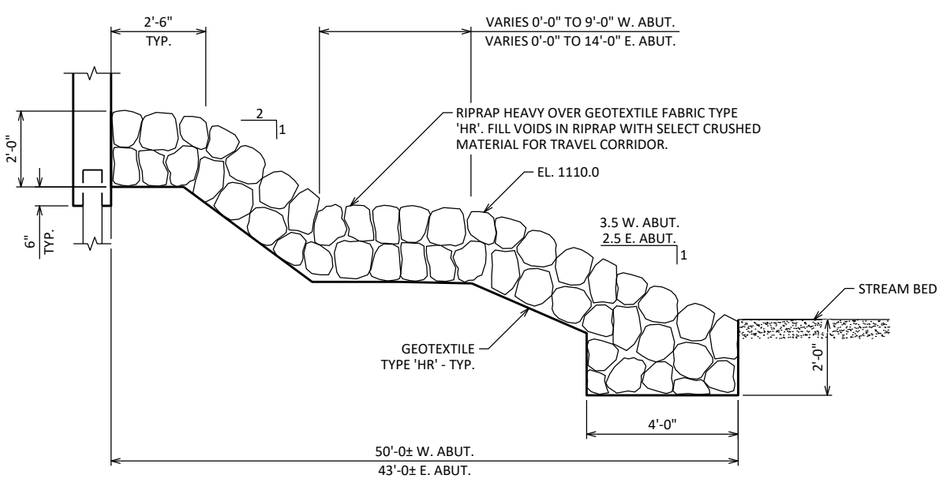

RIPRAP DETAIL

NOTE: FILL VOIDS BETWEEN RIPRAP WITH SELECT CRUSHED MATERIAL FOR TRAVEL CORRIDOR. (NORMAL TO ABUTMENT)

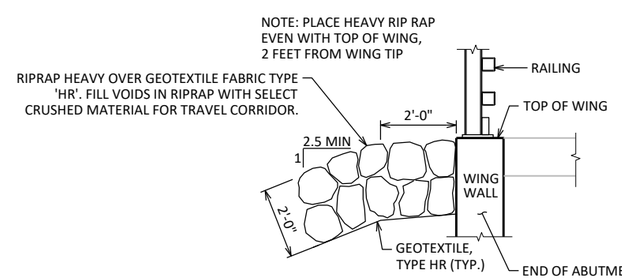

TYPICAL FILL SECTION AT WING TIPS

8

8

NO.	DATE	REVISION	BY

STATE OF WISCONSIN
DEPARTMENT OF TRANSPORTATION

STRUCTURE B-10-398

DRAWN BY DCH | PLANS CK'D JRD

CONSTRUCTION DETAILS

SHEET 4 OF 33

SCALE =

BORING #	DATE COMPLETED	NORTHING (Y)	EASTING (X)
1	6/14/2021	426635.4	682570.0
2	6/15/2021	426648.3	682679.6
3	6/16/2021	426636.2	682778.2
4	6/15/2021	426649.2	682887.9

BORINGS COMPLETED BY: AMERICAN ENGINEERING TESTING, INC.
REPORT COMPLETED BY: AMERICAN ENGINEERING TESTING, INC.
ALL COORDINATES REFERENCED TO WCCS NAD 83(91) CLARK COUNTY

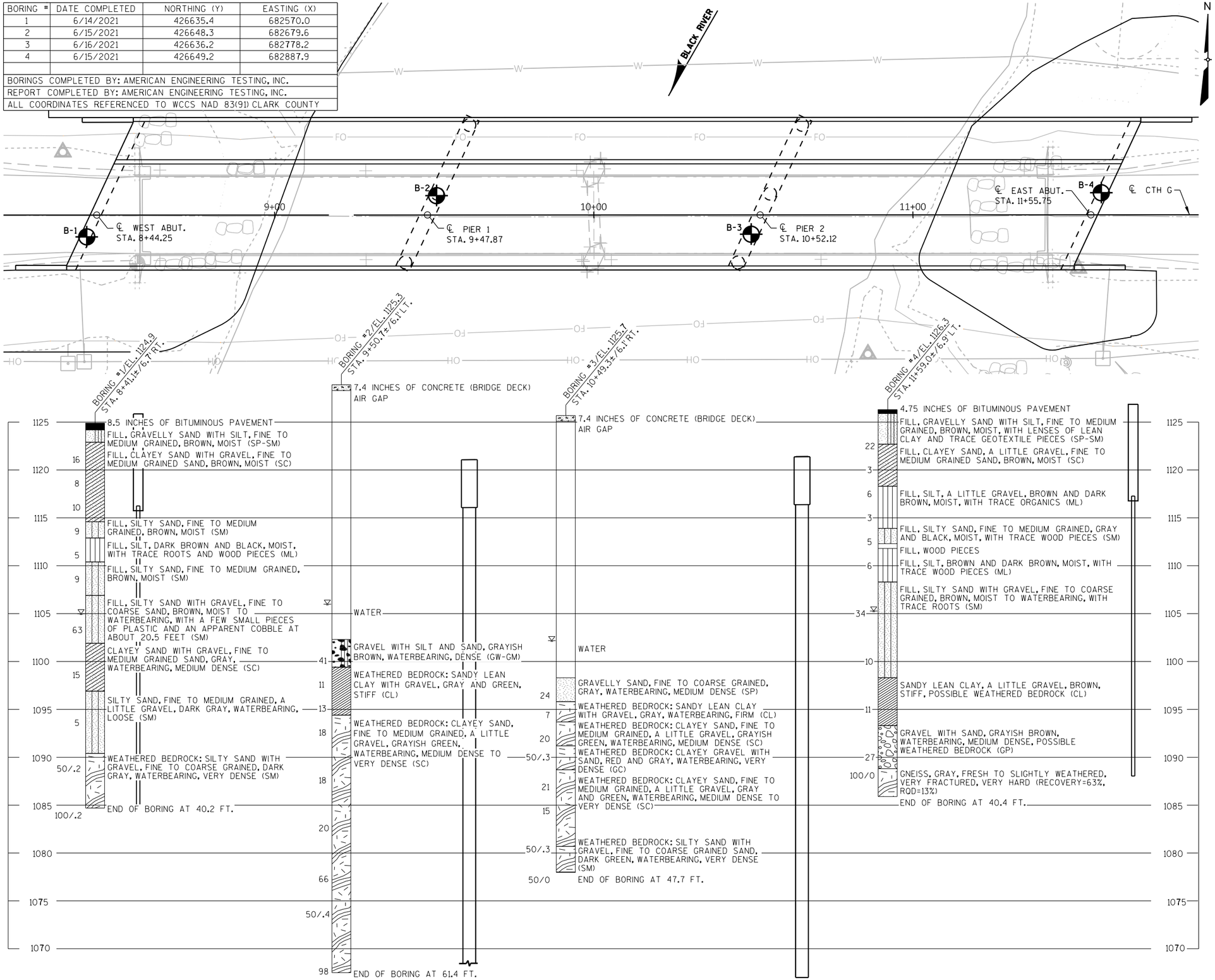

STATE PROJECT NUMBER

7840-03-73

MATERIAL SYMBOLS

ASPHALT, TOPSOIL, PEAT, CONCRETE, FILL, GRAVEL, SAND, CLAY, SILT, BOULDERS OR COBBLES, LIMESTONE, BEDROCK (UNKNOWN), SHALE, SANDSTONE, IGNEOUS/META

LEGEND OF BORING

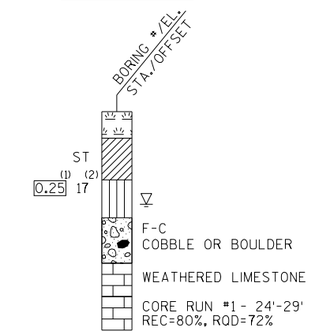

(1) UNCONFINED STRENGTH, AS DETERMINED BY A POCKET PENETROMETER (TSF)

(2) UNLESS OTHERWISE, SPECIFIED THE SPT 'N' VALUE IS BASED ON AASHTO T-206, STANDARD PENETRATION TEST. THE SPT 'N' VALUE PRESENTED HAS NOT BEEN CORRECTED FOR OVERBURDEN PRESSURE OR HAMMER EFFICIENCY.

GROUND WATER ELEVATION

- AT TIME OF DRILLING
- END OF DRILLING
- AFTER DRILLING

ABBREVIATIONS

F-FINE M-MEDIUM C-COARSE ST-SHELBY TUBE

SUBSURFACE EXPLORATION FOR FOUNDATION DESIGN AND BIDDERS INFORMATION

BORINGS WERE COMPLETED AT POINTS APPROXIMATELY AS INDICATED ON THIS DRAWING TO OBTAIN INFORMATION CONCERNING THE CHARACTER OF SUBSURFACE MATERIALS FOUND AT THE SITE. BECAUSE THE INVESTIGATED DEPTHS ARE LIMITED AND THE AREA OF THE BORINGS IS VERY SMALL IN RELATION TO THE ENTIRE SITE, THE WISCONSIN DEPARTMENT OF TRANSPORTATION DOES NOT WARRANT SIMILAR SUBSURFACE CONDITIONS BELOW, BETWEEN, OR BEYOND THESE BORINGS. VARIATIONS IN SOIL CONDITIONS SHOULD BE EXPECTED AND FLUCTUATIONS IN GROUNDWATER LEVELS MAY OCCUR.

NO.	DATE	REVISION	BY

STATE OF WISCONSIN
DEPARTMENT OF TRANSPORTATION

STRUCTURE B-10-398

DRAWN BY MES | PLANS CK'D. JRD

SUBSURFACE EXPLORATION

SHEET 5 OF 33

8

SCALE =

BORING #	DATE COMPLETED	NORTHING (Y)	EASTING (X)
2A	11/17/2021	426648.3	682679.6
3A	11/19/2021	426636.2	682778.2

BORINGS COMPLETED BY: AMERICAN ENGINEERING TESTING, INC.
REPORT COMPLETED BY: AMERICAN ENGINEERING TESTING, INC.
ALL COORDINATES REFERENCED TO WCCS NAD 83(91) CLARK COUNTY

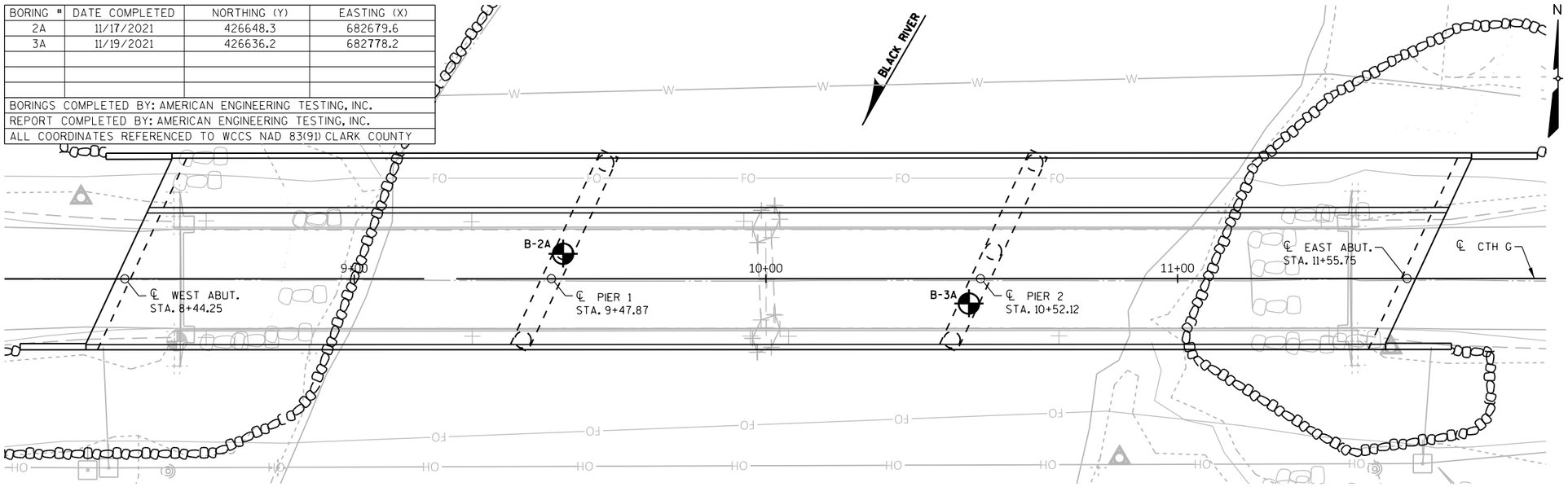

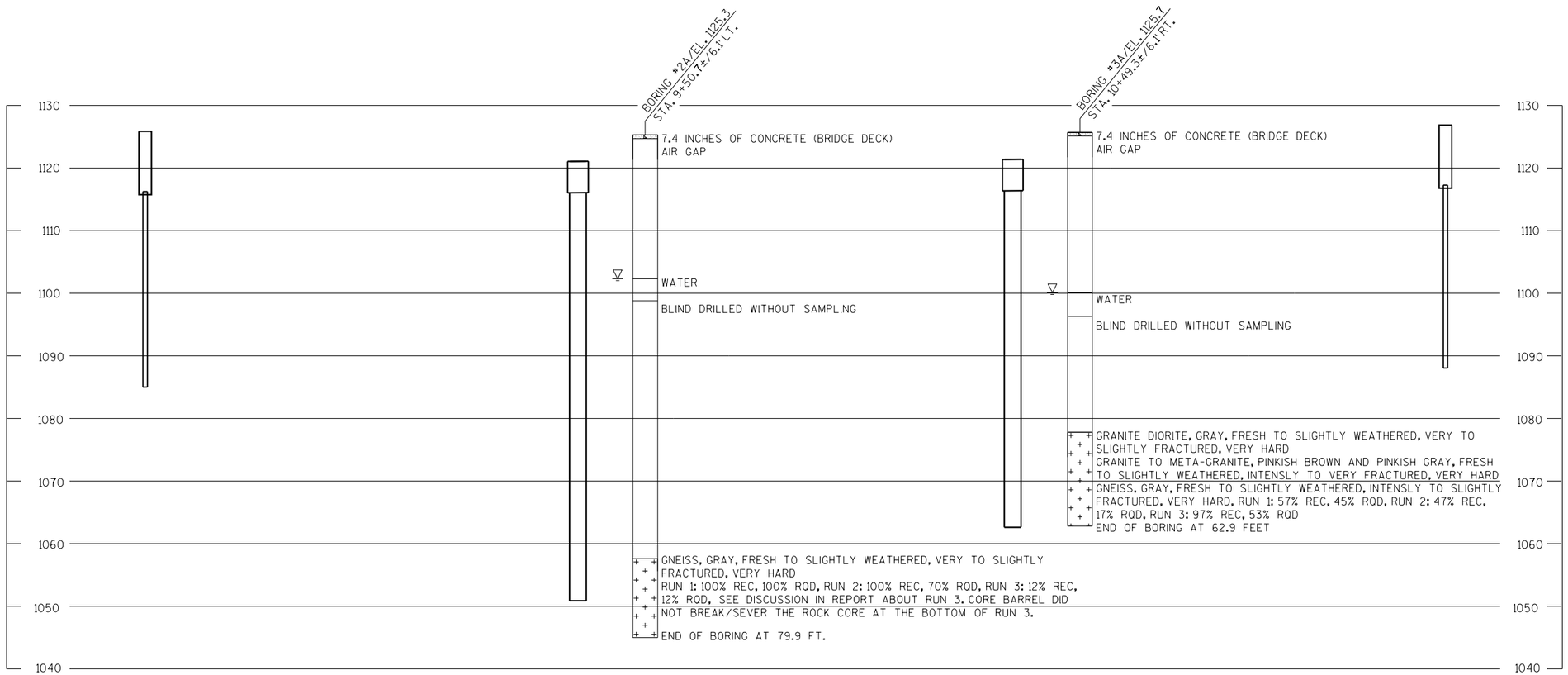

STATE PROJECT NUMBER

7840-03-73

MATERIAL SYMBOLS

ASPHALT	TOPSOIL	PEAT
CONCRETE	FILL	GRAVEL
SAND	CLAY	SILT
BOULDERS OR COBBLES	LIMESTONE	BEDROCK (UNKNOWN)
SHALE	SANDSTONE	IGNEOUS/ META

LEGEND OF BORING

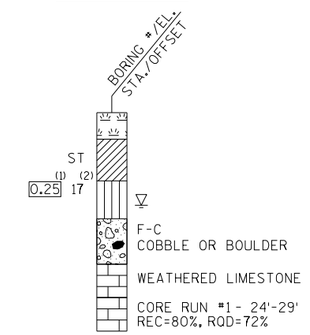

(1) UNCONFINED STRENGTH, AS DETERMINED BY A POCKET PENETROMETER (TSF)

(2) UNLESS OTHERWISE, SPECIFIED THE SPT 'N' VALUE IS BASED ON AASHTO T-206, STANDARD PENETRATION TEST. THE SPT 'N' VALUE PRESENTED HAS NOT BEEN CORRECTED FOR OVERBURDEN PRESSURE OR HAMMER EFFICIENCY.

GROUND WATER ELEVATION

- AT TIME OF DRILLING
- END OF DRILLING
- AFTER DRILLING

ABBREVIATIONS

F-FINE M-MEDIUM C-COARSE ST-SHELBY TUBE

SUBSURFACE EXPLORATION FOR FOUNDATION DESIGN AND BIDDERS INFORMATION

BORINGS WERE COMPLETED AT POINTS APPROXIMATELY AS INDICATED ON THIS DRAWING TO OBTAIN INFORMATION CONCERNING THE CHARACTER OF SUBSURFACE MATERIALS FOUND AT THE SITE. BECAUSE THE INVESTIGATED DEPTHS ARE LIMITED AND THE AREA OF THE BORINGS IS VERY SMALL IN RELATION TO THE ENTIRE SITE, THE WISCONSIN DEPARTMENT OF TRANSPORTATION DOES NOT WARRANT SIMILAR SUBSURFACE CONDITIONS BELOW, BETWEEN, OR BEYOND THESE BORINGS. VARIATIONS IN SOIL CONDITIONS SHOULD BE EXPECTED AND FLUCTUATIONS IN GROUNDWATER LEVELS MAY OCCUR.

NO.	DATE	REVISION	BY

STATE OF WISCONSIN
DEPARTMENT OF TRANSPORTATION

STRUCTURE B-10-398

DRAWN BY MES PLANS CK'D. JRD

SUBSURFACE EXPLORATION

SHEET 6 OF 33

8

8

SCALE =

STATE PROJECT NUMBER

7840-03-73

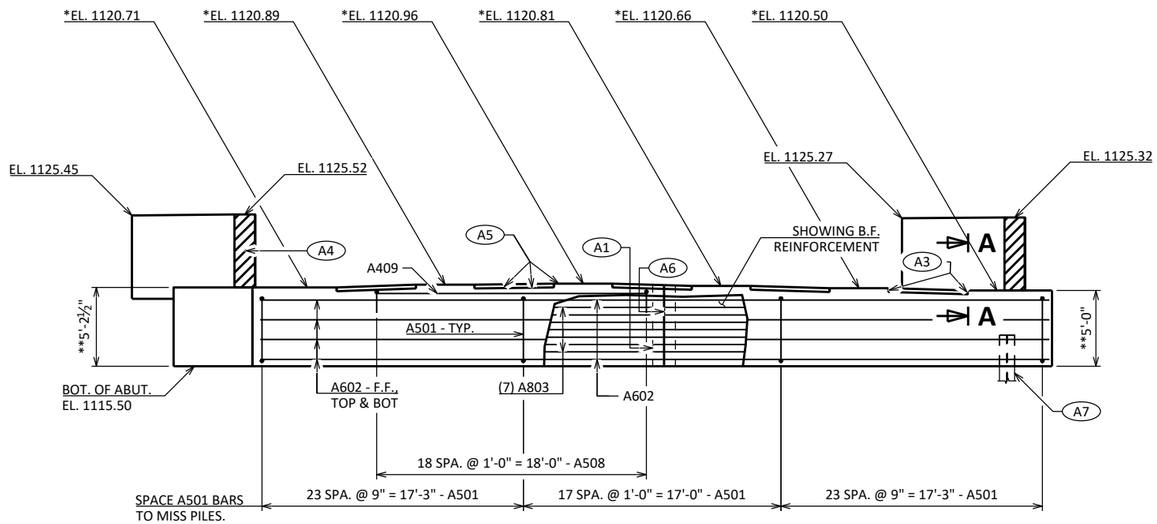

ELEVATION

(LOOKING WEST)

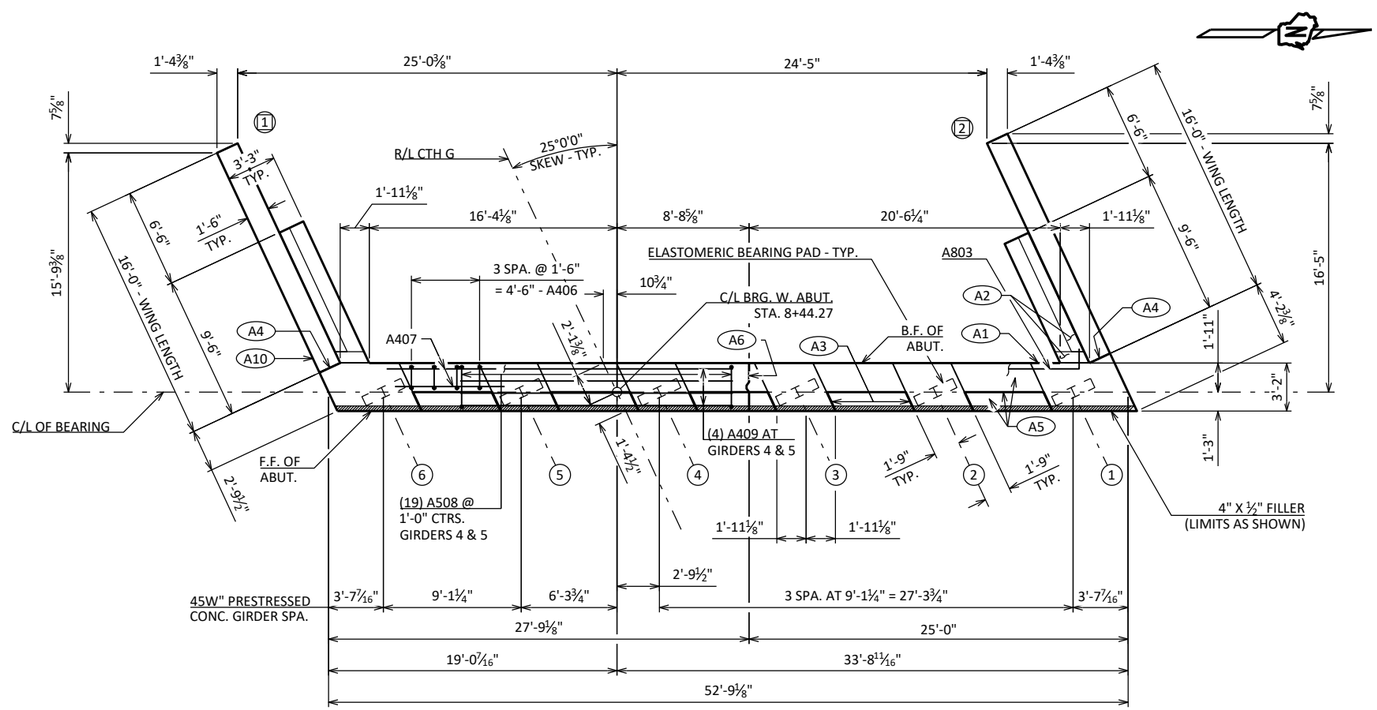

PLAN

LEGEND

- * ELEVATIONS ARE GIVEN AT THE TOP OF CONCRETE AT THE C/L OF BEARING.
- ** DIMENSIONS AND ELEVATIONS ARE GIVEN AT THE B.F. OF ABUTMENT. FOR WING DETAILS AND ELEVATIONS, SEE SHEETS 9 & 10.
- (X) INDICATES WING/CORNER NUMBER
- (X) INDICATES GIRDER NUMBER
- (A1) 18" (RMW) RUBBERIZED MEMBRANE WATERPROOFING. SEAL ALL HORIZ. & VERT. JOINTS AT BACKFACE.
- (A2) PLACE BOTTOM HALF OF RUBBERIZED MEMBRANE WATERPROOFING HORIZONTAL IN THIS AREA. SEE SECTION A-A ON THIS SHEET.
- (A3) ¾" CORK FILLER UP VERT. BEAM SEAT FACES THAT RUN PARALLEL WITH GIRDER.
- (A4) ½" FILLER (INCLUDED IN WING LENGTH): SEAL ALL EXPOSED HORIZ. & VERT. SURFACES OF ½" FILLER WITH NON-STAINING GRAY NON-BITUMINOUS JOINT SEALER. (1" DEEP AND HOLD ⅛" BELOW SURFACE OF CONCRETE). EXTEND FROM BRIDGE SEAT TO TOP OF WING.
- (A5) STEEL TROWEL TOP SURFACE OF ABUTMENT AND PLACE MULTIPLE LAYERS (0.03" MIN. TOTAL THK.) OF POLYETHYLENE SHEETS OVER THE ENTIRE LENGTH OF THE ABUTMENT.
- (A6) VERT. CONST. JOINT: KEYWAY FORMED BY A BEVELED 2" x 8". USE ¾" "V" GROOVE @ THE FRONT FACE AND 18" RMW @ BACKFACE.
- (A7) SUPPORT ABUTMENT ON HP 12 x 53 STEEL PILING (WITH PILE POINTS), ESTIMATED 35'-0" LONG WITH A REQUIRED DRIVING RESISTANCE OF 210 TONS PER PILE.
- (A10) CONTRACTOR SHALL SUPPLY A NEW NAME PLATE PER 502.3.11 OF STD. SPEC.

NOTES

FOR 'SECTION THRU BODY', SEE SHEET 8.

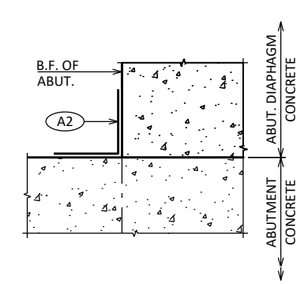

SECTION A - A

NO.	DATE	REVISION	BY

STATE OF WISCONSIN
DEPARTMENT OF TRANSPORTATION

STRUCTURE B-10-398

DRAWN BY UD | PLANS CK'D JRD

WEST ABUTMENT

SHEET 7 OF 33

82

SCALE =

8

8

STATE PROJECT NUMBER

7840-03-73

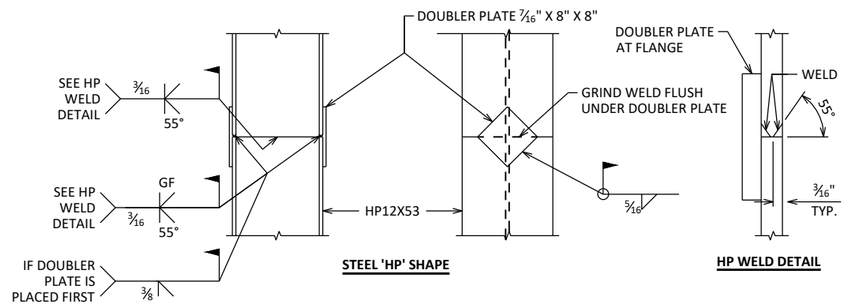

'HP' PILE DETAILS

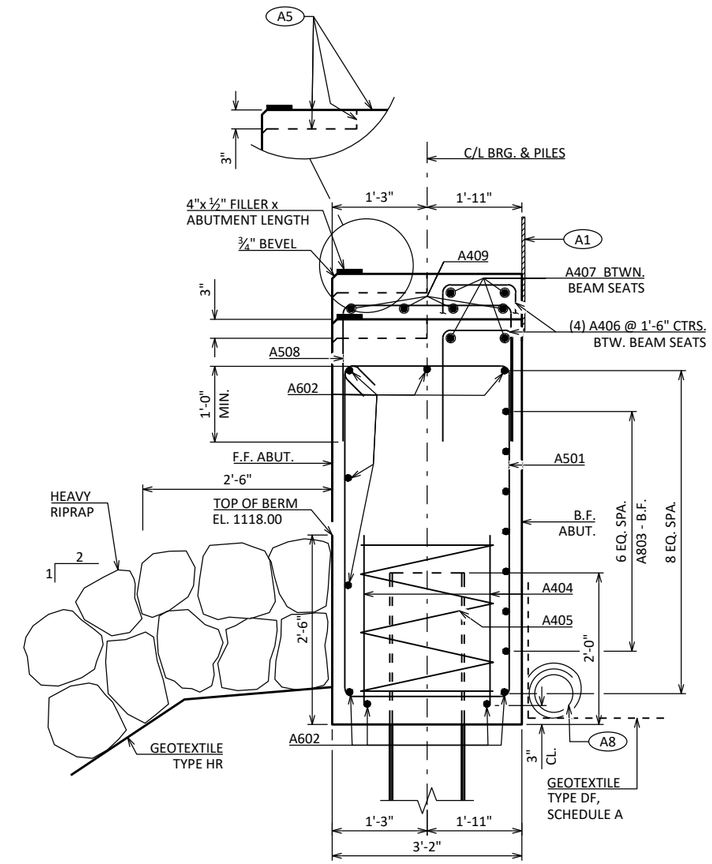

SECTION THRU BODY

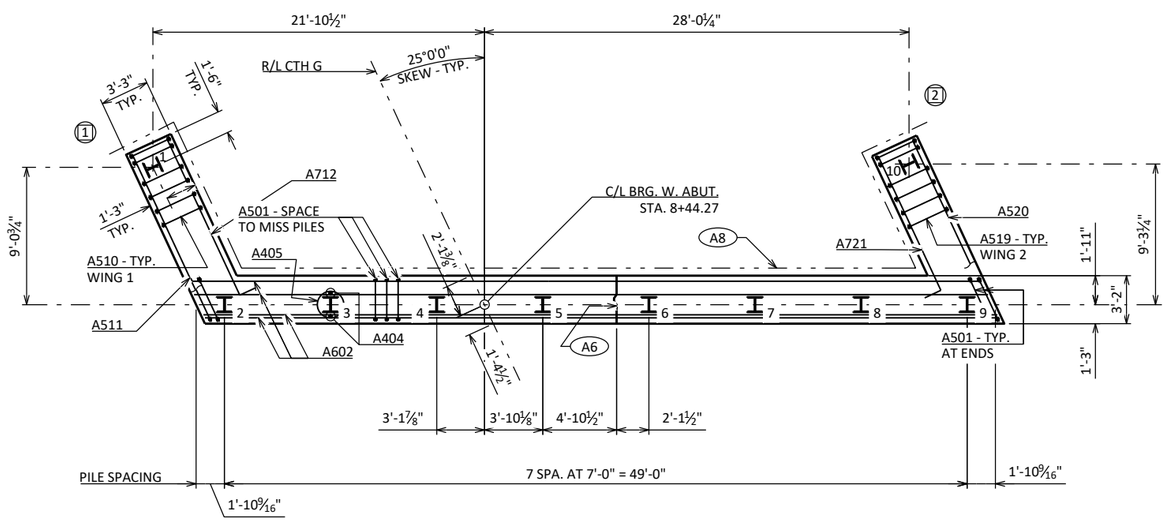

PILE PLAN

LEGEND

(X)	INDICATES WING/CORNER NUMBER
A8	PIPE UNDERDRAIN WRAPPED (6-INCH). SLOPE 0.5% MIN. TO SUITABLE DRAINAGE. RODENT SHIELD REQUIRED.
A1 A5 A6	FOR SYMBOL DESCRIPTION, SEE SHEET 7.

NO.	DATE	REVISION	BY

STATE OF WISCONSIN
DEPARTMENT OF TRANSPORTATION

STRUCTURE B-10-398

DRAWN BY UD | PLANS CK'D JRD

WEST ABUTMENT DETAILS

SHEET 8 OF 33

83

SCALE =

8

8

STATE PROJECT NUMBER

7840-03-73

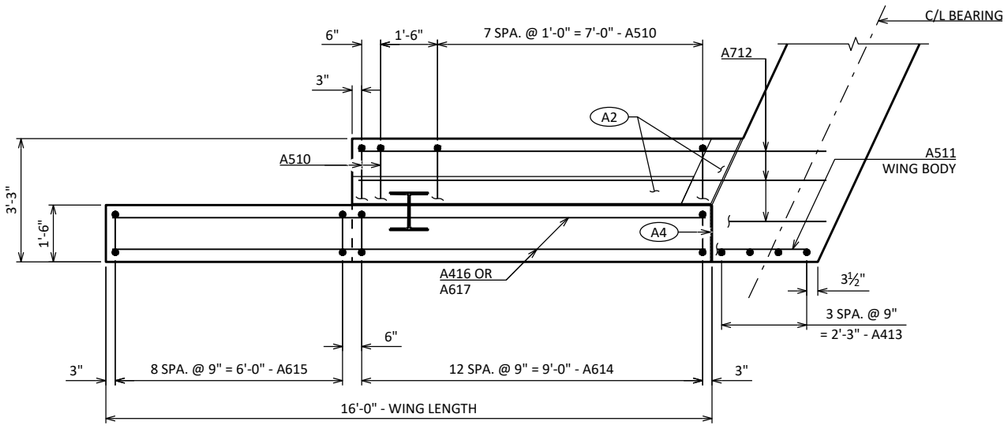

PLAN - WING 1

LEGEND

** DIMENSIONS AND ELEVATIONS ARE GIVEN AT THE B.F.

A9 OPTIONAL CONSTRUCTION JOINT FORMED BY BEVELED 2" x 6" KEYWAY WITH RUBBERIZED MEMBRANE WATERPROOFING ON BACKFACE. ("V" GROOVE NOT REQUIRED IF CONST. JOINT IS NOT USED.)

A1 A2 A4 A7 A8 A10 FOR SYMBOL DESCRIPTIONS, SEE SHEET 7 & 8.

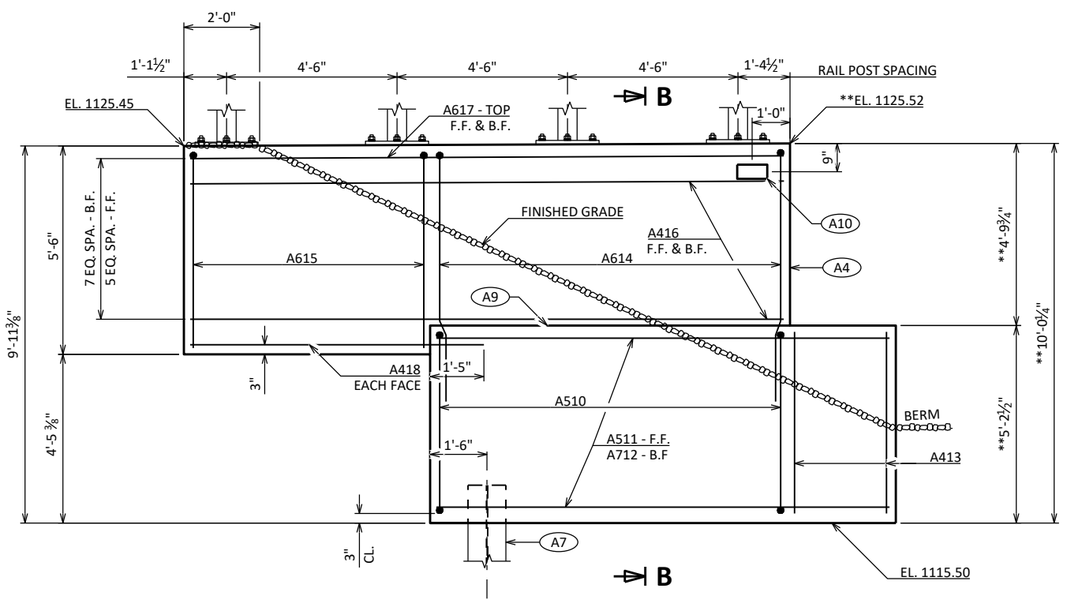

ELEVATION - WING 1

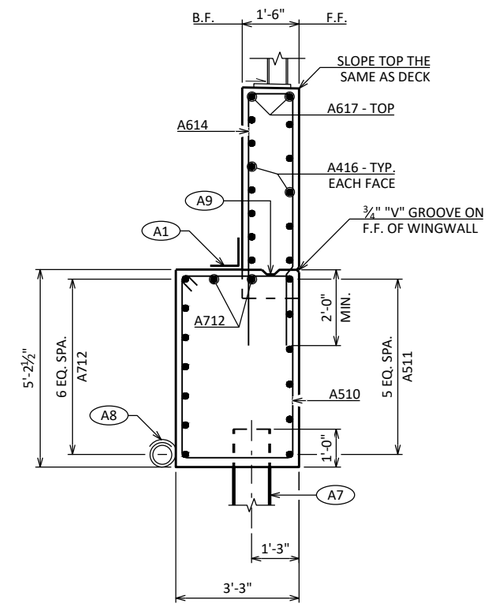

SECTION B-B

NO.	DATE	REVISION	BY

STATE OF WISCONSIN
DEPARTMENT OF TRANSPORTATION

STRUCTURE B-10-398

DRAWN BY UD | PLANS CK'D JRD

WING 1

SHEET 9 OF 33

84

SCALE =

8

8

STATE PROJECT NUMBER

7840-03-73

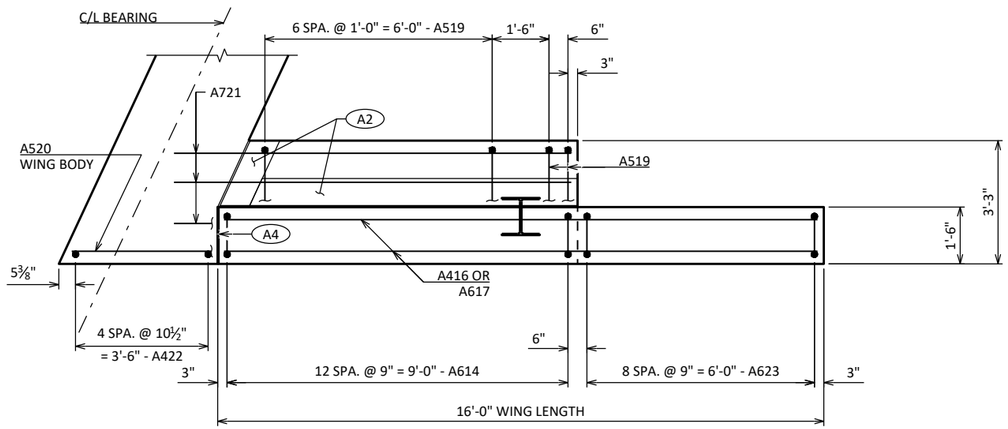

PLAN - WING 2

LEGEND

**	DIMENSIONS AND ELEVATIONS ARE GIVEN AT THE B.F
A9	OPTIONAL CONSTRUCTION JOINT FORMED BY BEVELED 2" x 6" KEYWAY WITH RUBBERIZED MEMBRANE WATERPROOFING ON BACKFACE. ("V" GROOVE NOT REQUIRED IF CONST. JOINT IS NOT USED.)
A1 A2 A4 A7 A8 A10	FOR SYMBOL DESCRIPTIONS, SEE SHEET 7 & 8.

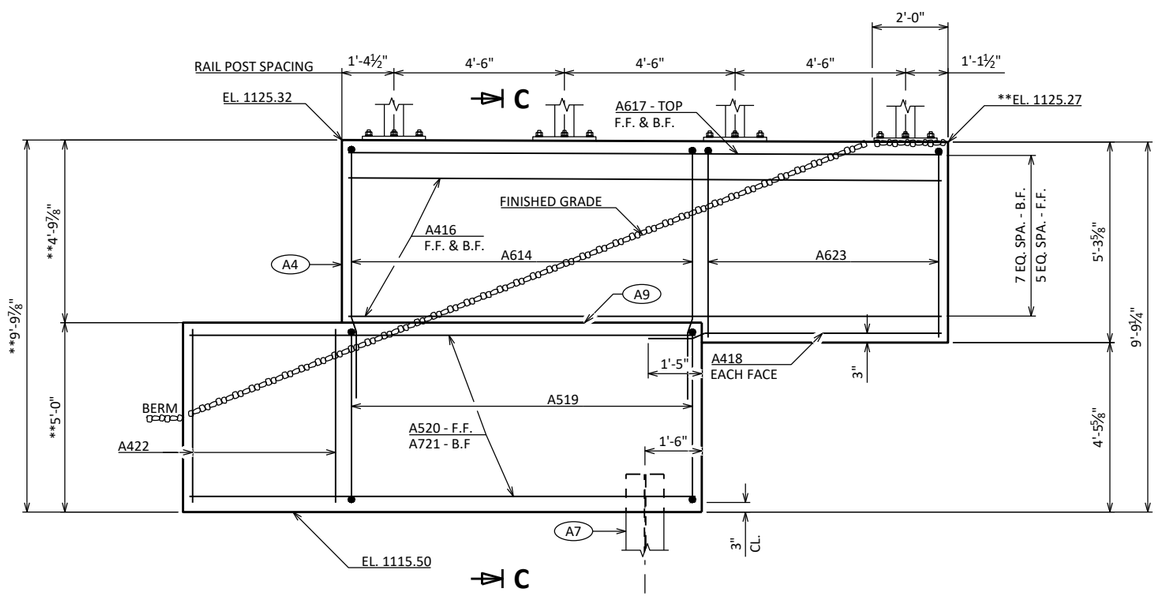

ELEVATION - WING 2

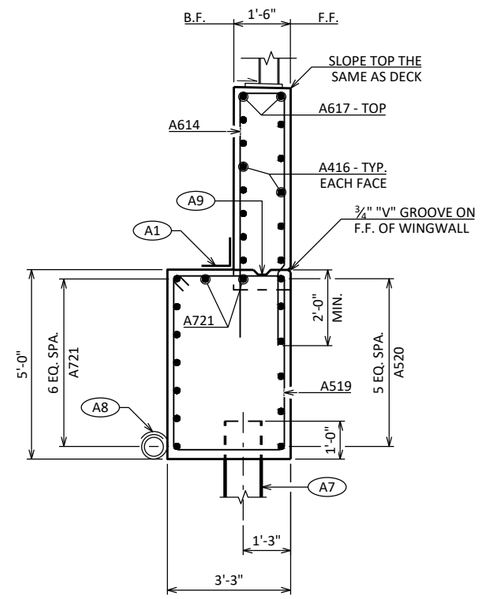

SECTION C-C

NO.	DATE	REVISION	BY

STATE OF WISCONSIN
DEPARTMENT OF TRANSPORTATION

STRUCTURE B-10-398

DRAWN BY UD | PLANS CK'D JRD

WING 2

SHEET 10 OF 33

85

SCALE =

8

8

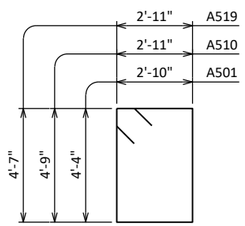

A501, A510 & A519

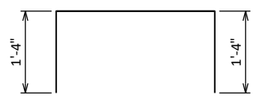

A803

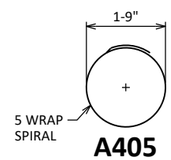

A405

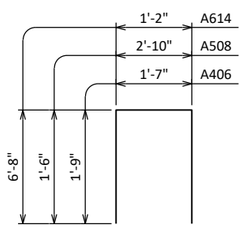

A406, A508 & A614

A712 & A721

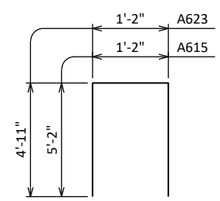

A615 & A623

BILL OF BARS

NOTE: THE FIRST OR FIRST TWO DIGITS OF THE BAR MARK SIGNIFIES THE BAR SIZE.

MARK	NO. REQ'D.	LENGTH	BENT	BAR SERIES	LOCATION	ORIEN.
NON-COATED BARS					TOTAL WEIGHT = 3150	
A501	64	15-0	X		ABUTMENT BODY - STIRRUPS	VERT.
A602	9	52-4			ABUTMENT BODY - F.F., B.F., & TOP	HORIZ.
A803	7	53-0	X		ABUTMENT BODY - B.F.	HORIZ.
A404	16	2-3			ABUTMENT BODY - 2 PER PILE	VERT.
A405	8	28-0	X		ABUTMENT BODY - SPIRAL WRAP @ PILE	VERT.
A406	20	4-11	X		ABUTMENT BODY - TOP	VERT.
A407	10	7-3			ABUTMENT BODY - TOP	HORIZ.
A508	19	5-7	X		ABUTMENT BODY - TOP - AT GIRDERS 4 & 5	VERT.
A409	4	18-0			ABUTMENT BODY - TOP - AT GIRDERS 4 & 5	HORIZ.
COATED BARS					TOTAL WEIGHT = 2150	
A510	10	16-0	X		WING 1 BODY - STIRRUPS	VERT.
A511	6	12-0			WING 1 BODY - F.F.	HORIZ.
A712	9	12-6	X		WING 1 BODY - B.F. & TOP	HORIZ.
A413	4	4-9			WING 1 BODY - @ END	VERT.
A614	26	14-2	X		WING 1 & 2 - F.F. & B.F.	VERT.
A615	9	11-2	X		WING 1 - F.F. & B.F.	VERT.
A416	24	15-8			WING 1 & 2 - F.F. & B.F.	HORIZ.
A617	4	15-8			WING 1 & 2 - F.F. & B.F. - TOP	HORIZ.
A418	4	7-9			WING 1 & 2 - F.F. & B.F. - BOT.	HORIZ.
A519	9	15-8	X		WING 2 BODY - STIRRUPS	VERT.
A520	6	13-5			WING 2 BODY - F.F.	HORIZ.
A721	9	10-9	X		WING 2 BODY - B.F. & TOP	HORIZ.
A422	5	4-7			WING 2 BODY - @ END	VERT.
A623	9	10-8	X		WING 2 - F.F. & B.F.	VERT.

8

8

NO.	DATE	REVISION	BY

STATE OF WISCONSIN
DEPARTMENT OF TRANSPORTATION

STRUCTURE B-10-398

DRAWN BY UD | PLANS CK'D JRD

WEST ABUTMENT BILL OF BARS

SHEET 11 OF 33
86

SCALE =

STATE PROJECT NUMBER

7840-03-73

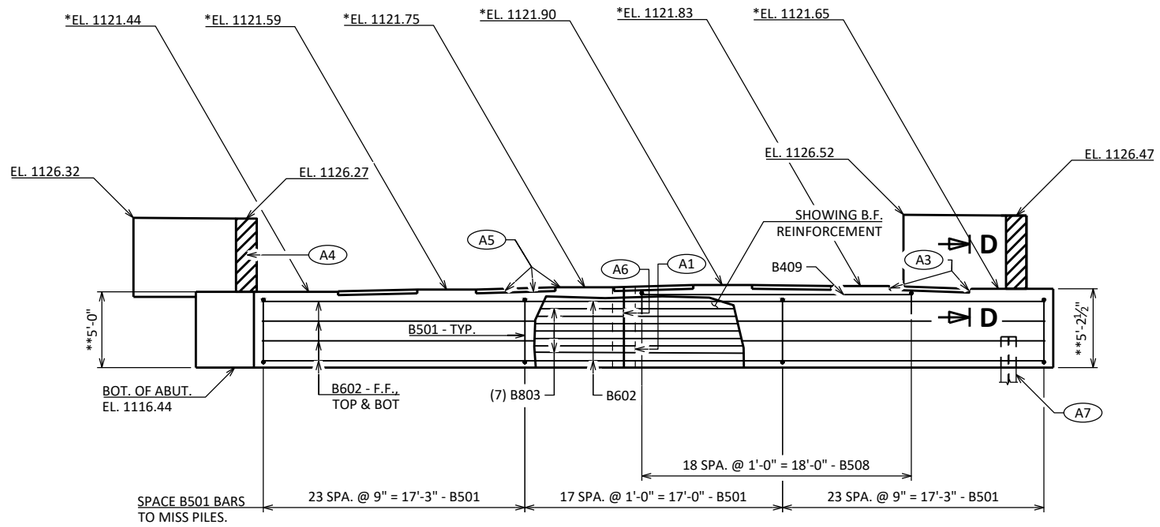

ELEVATION

(LOOKING EAST)

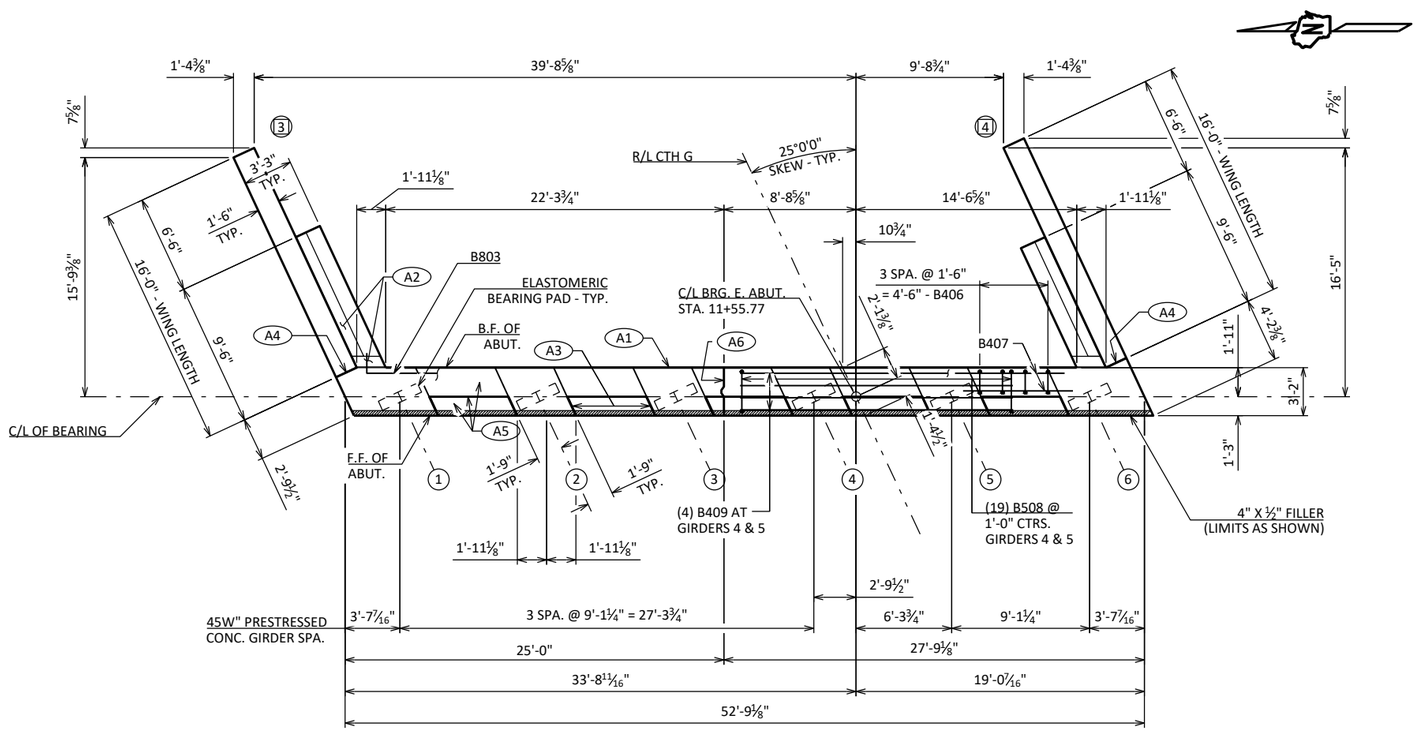

PLAN

LEGEND

- * ELEVATIONS ARE GIVEN AT THE TOP OF CONCRETE AT THE C/L OF BEARING.
- ** DIMENSIONS AND ELEVATIONS ARE GIVEN AT THE B.F. OF ABUTMENT. FOR WING DETAILS AND ELEVATIONS, SEE SHEETS 14 & 15.
- (X) INDICATES WING/CORNER NUMBER
- (X) INDICATES GIRDER NUMBER
- (A1) 18" (RMW) RUBBERIZED MEMBRANE WATERPROOFING. SEAL ALL HORIZ. & VERT. JOINTS AT BACKFACE.
- (A2) PLACE BOTTOM HALF OF RUBBERIZED MEMBRANE WATERPROOFING HORIZONTAL IN THIS AREA. SEE SECTION D-D ON THIS SHEET.
- (A3) ¾" CORK FILLER UP VERT. BEAM SEAT FACES THAT RUN PARALLEL WITH GIRDER.
- (A4) ½" FILLER (INCLUDED IN WING LENGTH): SEAL ALL EXPOSED HORIZ. & VERT. SURFACES OF ½" FILLER WITH NON-STAINING GRAY NON-BITUMINOUS JOINT SEALER. (1" DEEP AND HOLD ⅛" BELOW SURFACE OF CONCRETE). EXTEND FROM BRIDGE SEAT TO TOP OF WING.
- (A5) STEEL TROWEL TOP SURFACE OF ABUTMENT AND PLACE MULTIPLE LAYERS (0.03" MIN. TOTAL THK.) OF POLYETHYLENE SHEETS OVER THE ENTIRE LENGTH OF THE ABUTMENT.
- (A6) VERT. CONST. JOINT: KEYWAY FORMED BY A BEVELED 2" x 8". USE ¾" "V" GROOVE @ THE FRONT FACE AND 18" RMW @ BACKFACE.
- (A7) SUPPORT ABUTMENT ON HP 12 x 53 STEEL PILING (WITH PILING POINTS), ESTIMATED 35'-0" LONG WITH A REQUIRED DRIVING RESISTANCE OF 210 TONS PER PILE.

NOTES

FOR 'SECTION THRU BODY', SEE SHEET 13.

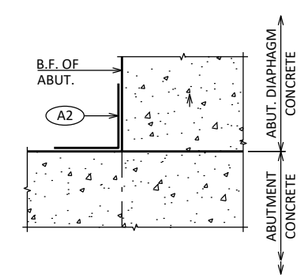

SECTION D - D

8

8

NO.	DATE	REVISION	BY

STATE OF WISCONSIN
DEPARTMENT OF TRANSPORTATION

STRUCTURE B-10-398

DRAWN BY UD | PLANS CK'D JRD

EAST ABUTMENT

SHEET 12 OF 33

87

SCALE =

STATE PROJECT NUMBER

7840-03-73

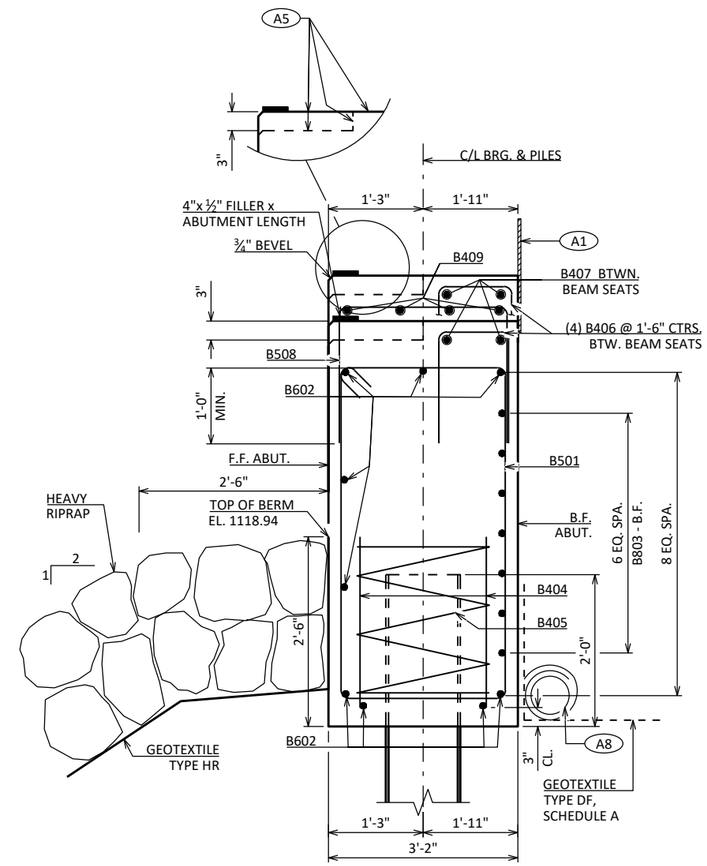

SECTION THRU BODY

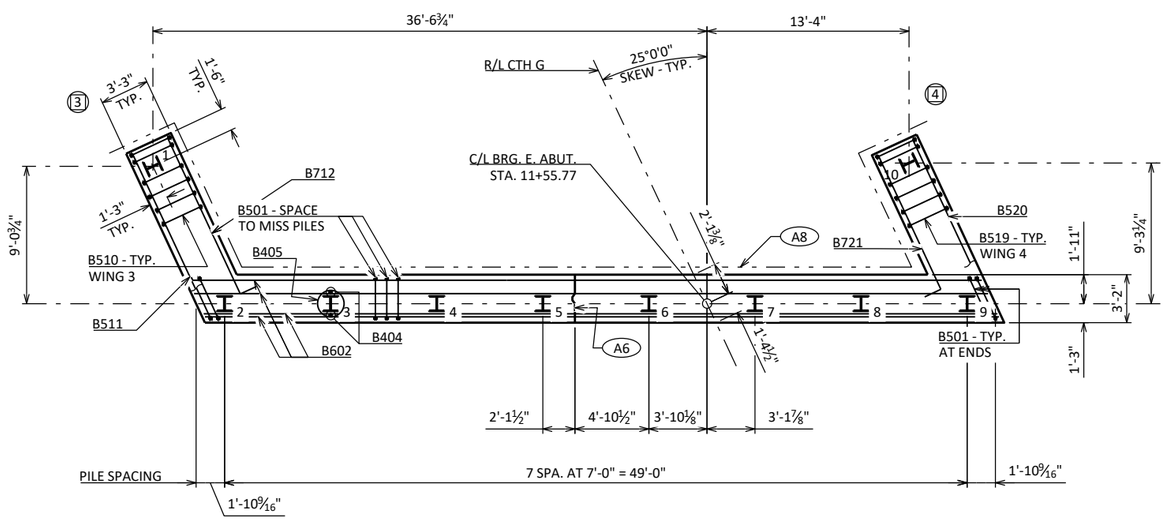

PILE PLAN

LEGEND

(X) INDICATES WING/CORNER NUMBER

(A8) PIPE UNDERDRAIN WRAPPED (6-INCH). SLOPE 0.5% MIN. TO SUITABLE DRAINAGE. RODENT SHIELD REQUIRED.

(A1) (A5) (A6) FOR SYMBOL DESCRIPTION, SEE SHEET 12.

NOTE: FOR 'HP' PILE DETAILS, SEE SHEET 8.

8

8

NO.	DATE	REVISION	BY

STATE OF WISCONSIN
DEPARTMENT OF TRANSPORTATION

STRUCTURE B-10-398

DRAWN BY UD | PLANS CK'D JRD

EAST ABUTMENT DETAILS

SHEET 13 OF 33

88

SCALE =

STATE PROJECT NUMBER

7840-03-73

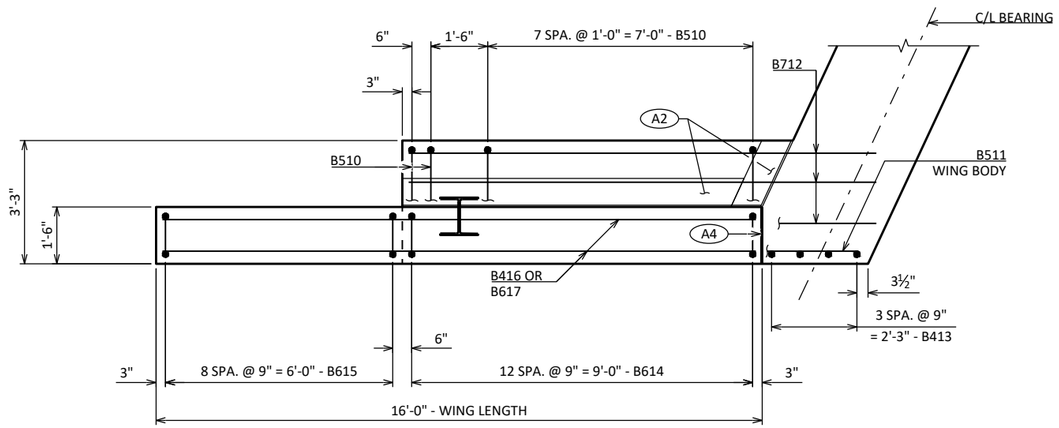

PLAN - WING 3

LEGEND

✳✳ DIMENSIONS AND ELEVATIONS ARE GIVEN AT THE B.F.

(A9) OPTIONAL CONSTRUCTION JOINT FORMED BY BEVELED 2" x 6" KEYWAY WITH RUBBERIZED MEMBRANE WATERPROOFING ON BACKFACE. ("V" GROOVE NOT REQUIRED IF CONST. JOINT IS NOT USED.)

(A1) (A2) (A4) (A7) (A8) FOR SYMBOL DESCRIPTIONS, SEE SHEET 12 & 13.

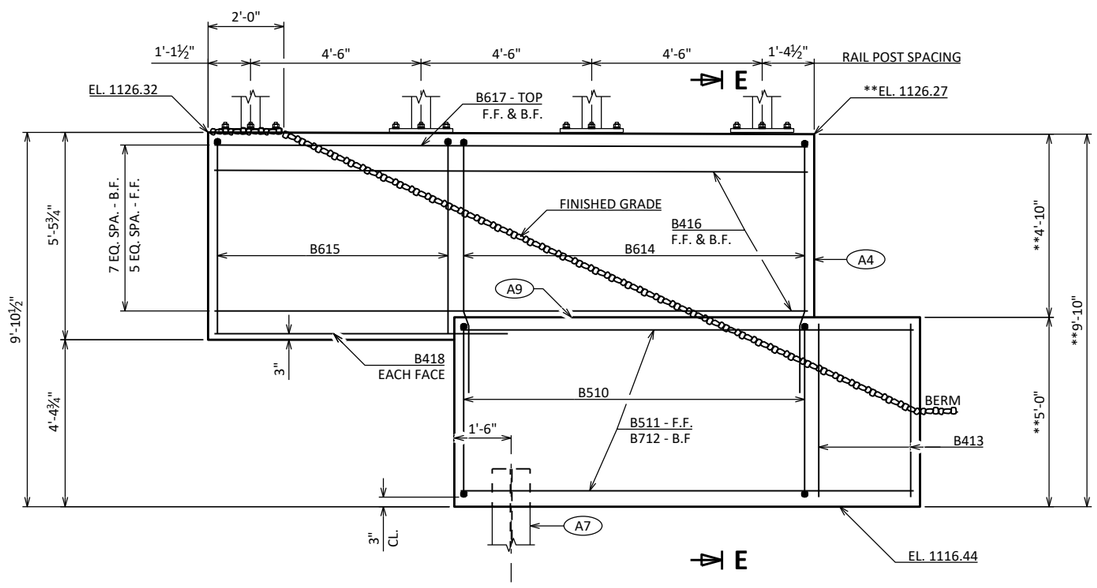

ELEVATION - WING 3

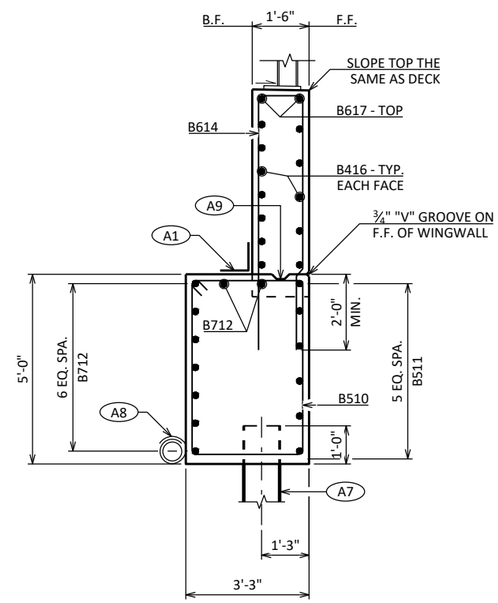

SECTION E-E

NO.	DATE	REVISION	BY

STATE OF WISCONSIN
DEPARTMENT OF TRANSPORTATION

STRUCTURE B-10-398

DRAWN BY UD | PLANS CK'D JRD

WING 3

SHEET 14 OF 33

89

SCALE =

8

8

STATE PROJECT NUMBER

7840-03-73

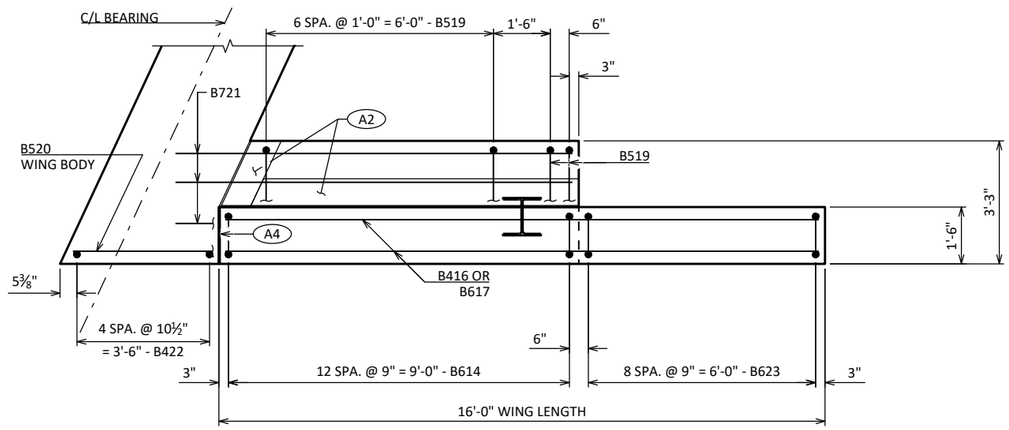

PLAN - WING 4

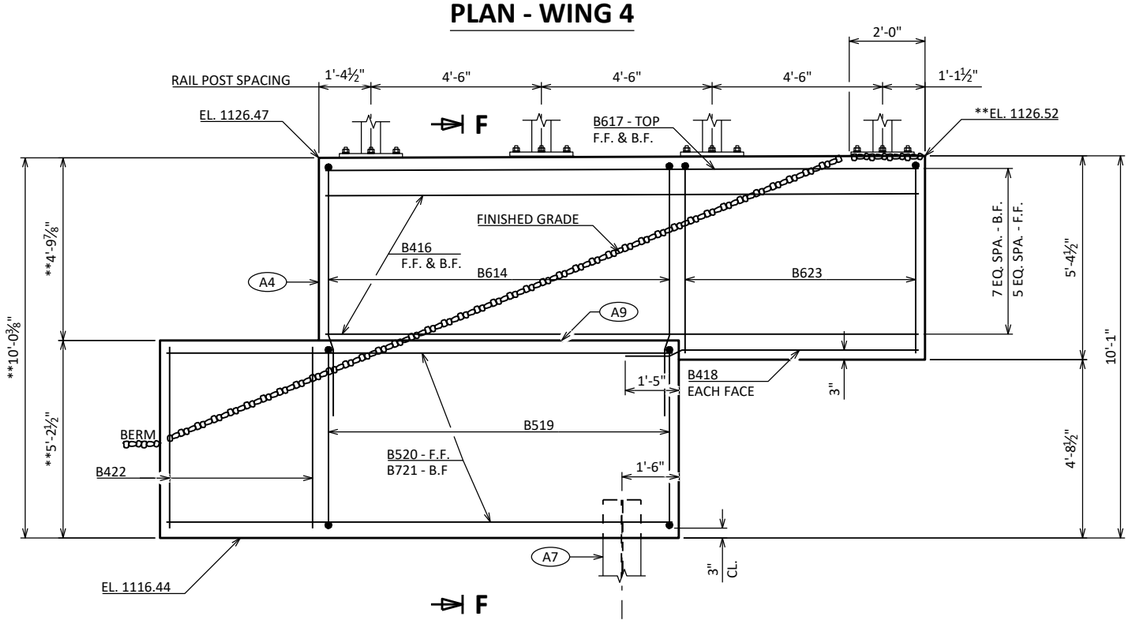

ELEVATION - WING 4

LEGEND

** DIMENSIONS AND ELEVATIONS ARE GIVEN AT THE B.F. OF ABUTMENT.

A9 OPTIONAL CONSTRUCTION JOINT FORMED BY BEVELED 2" x 6" KEYWAY WITH RUBBERIZED MEMBRANE WATERPROOFING ON BACKFACE. ("V" GROOVE NOT REQUIRED IF CONST. JOINT IS NOT USED.)

A1 A2 A4 A7 A8 FOR SYMBOL DESCRIPTIONS, SEE SHEET 12 & 13.

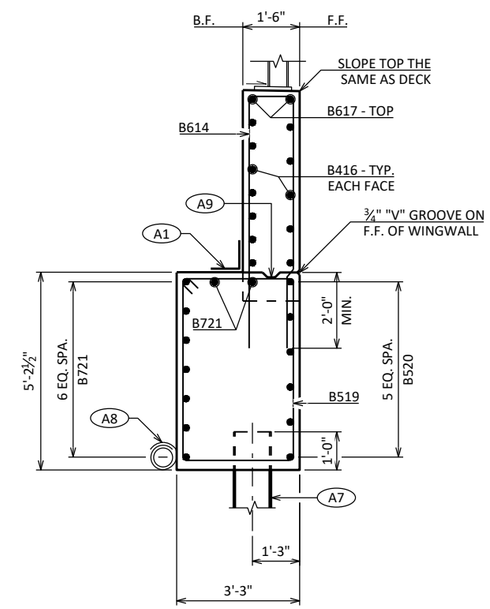

SECTION F-F

NO.	DATE	REVISION	BY

STATE OF WISCONSIN
DEPARTMENT OF TRANSPORTATION

STRUCTURE B-10-398

DRAWN BY UD | PLANS CK'D JRD

WING 4

SHEET 15 OF 33

90

SCALE =

8

8

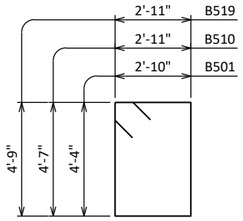

B501, B510 & B519

B803

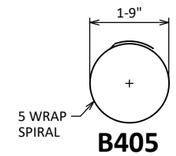

B405

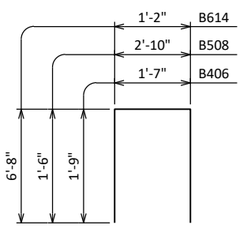

B406, B508 & B614

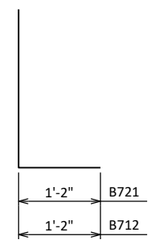

B712 & B721

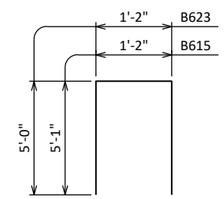

B615 & B623

STATE PROJECT NUMBER

7840-03-73

BILL OF BARS

NOTE: THE FIRST OR FIRST TWO DIGITS OF THE BAR MARK SIGNIFIES THE BAR SIZE.

MARK	NO. REQ'D.	LENGTH	BENT	BAR SERIES	LOCATION	ORIEN.
NON-COATED BARS					TOTAL WEIGHT = 3150	
B501	64	15-0	X		ABUTMENT BODY - STIRRUPS	VERT.
B602	9	52-4			ABUTMENT BODY - F.F., B.F., & TOP	HORIZ.
B803	7	53-0	X		ABUTMENT BODY - B.F.	HORIZ.
B404	16	2-3			ABUTMENT BODY - 2 PER PILE	VERT.
B405	8	28-0	X		ABUTMENT BODY - SPIRAL WRAP @ PILE	VERT.
B406	20	4-11	X		ABUTMENT BODY - TOP	VERT.
B407	10	7-3			ABUTMENT BODY - TOP	HORIZ.
B508	19	5-7	X		ABUTMENT BODY - TOP - AT GIRDERS 4 & 5	VERT.
B409	4	18-0			ABUTMENT BODY - TOP - AT GIRDERS 4 & 5	HORIZ.
COATED BARS					TOTAL WEIGHT = 2150	
B510	10	15-8	X		WING 3 BODY - STIRRUPS	VERT.
B511	6	12-0			WING 3 BODY - F.F.	HORIZ.
B712	9	12-5	X		WING 3 BODY - B.F. & TOP	HORIZ.
B413	4	4-7			WING 3 BODY - @ END	VERT.
B614	26	14-2	X		WING 3 & 4 - F.F. & B.F.	VERT.
B615	9	11-0	X		WING 3 - F.F. & B.F.	VERT.
B416	24	15-8			WING 3 & 4 - F.F. & B.F.	HORIZ.
B617	4	15-8			WING 3 & 4 - F.F. & B.F. - TOP	HORIZ.
B418	4	7-9			WING 3 & 4 - F.F. & B.F. - BOT.	HORIZ.
B519	9	16-0	X		WING 4 BODY - STIRRUPS	VERT.
B520	6	13-5			WING 4 BODY - F.F.	HORIZ.
B721	9	10-9	X		WING 4 BODY - B.F. & TOP	HORIZ.
B422	5	4-9			WING 4 BODY - @ END	VERT.
B623	9	10-10	X		WING 4 - F.F. & B.F.	VERT.

8

8

NO.	DATE	REVISION	BY

STATE OF WISCONSIN
DEPARTMENT OF TRANSPORTATION

STRUCTURE B-10-398

DRAWN BY UD | PLANS CK'D JRD

EAST ABUTMENT BILL OF BARS

SHEET 16 OF 33

SCALE =

STATE PROJECT NUMBER

7840-03-73

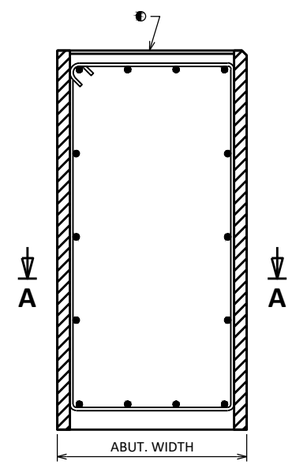

SECTION THRU ABUTMENT BODY

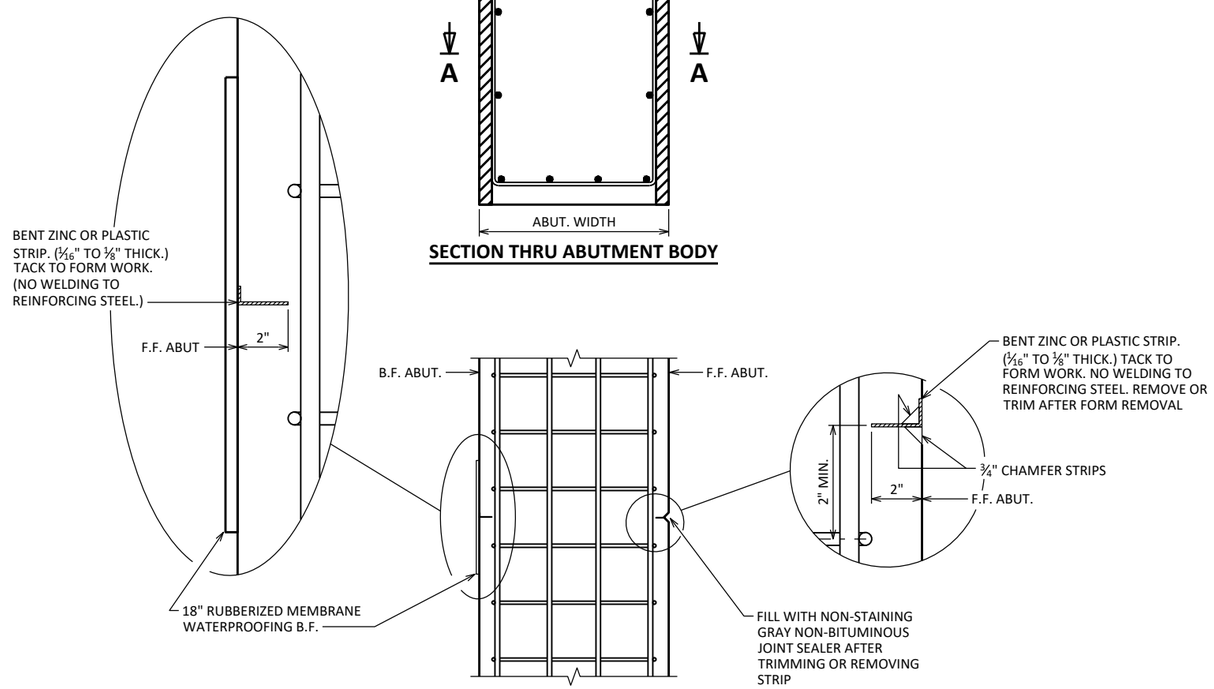

SECTION A-A

ALTERNATE CONSTRUCTION JOINT AT ABUTMENT

NOTES

PARTIAL ZINC OR PLASTIC BULKHEAD MAY BE USED AS ALTERNATIVE CONSTRUCTION JOINT, WITH THE PERMISSION OF THE ENGINEER, AT THE CONTRACTOR'S EXPENSE.

VERTICAL CONSTRUCTION JOINT KEYWAY IS NOT REQUIRED WHEN USING ALTERNATE CONSTRUCTION JOINT.

CARE IS TO BE USED IN CASTING CONCRETE AROUND BULKHEAD TO PREVENT DISLOCATION OR MISALIGNMENT OF THE BULKHEAD.

SAW CUTTING JOINT IS NOT ALLOWED.

◐ USE A JOINT TOOL TO CONSTRUCT A CONTRACTION JOINT APPROXIMATELY 1/2" DEEP.

NO.	DATE	REVISION	BY

STATE OF WISCONSIN
DEPARTMENT OF TRANSPORTATION

STRUCTURE B-10-398

DRAWN BY UD | PLANS CK'D JRD

ALTERNATE CONSTRUCTION JOINT

SHEET 17 OF 33

SCALE =

8

8

STATE PROJECT NUMBER

7840-03-73

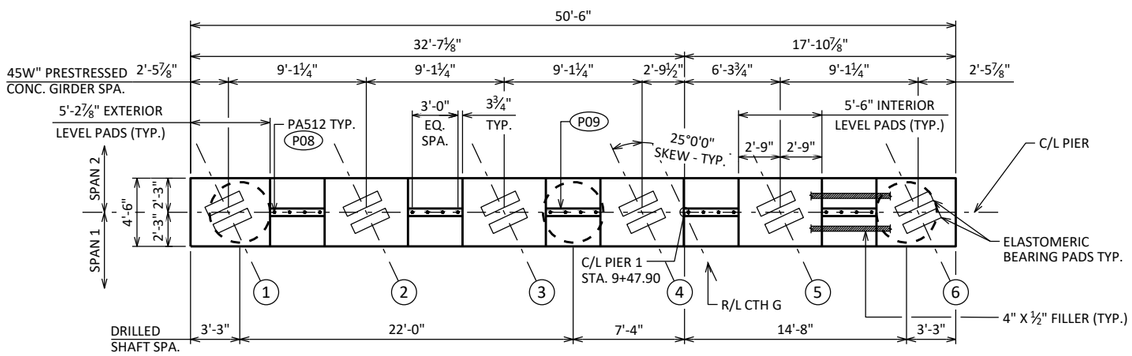

PLAN

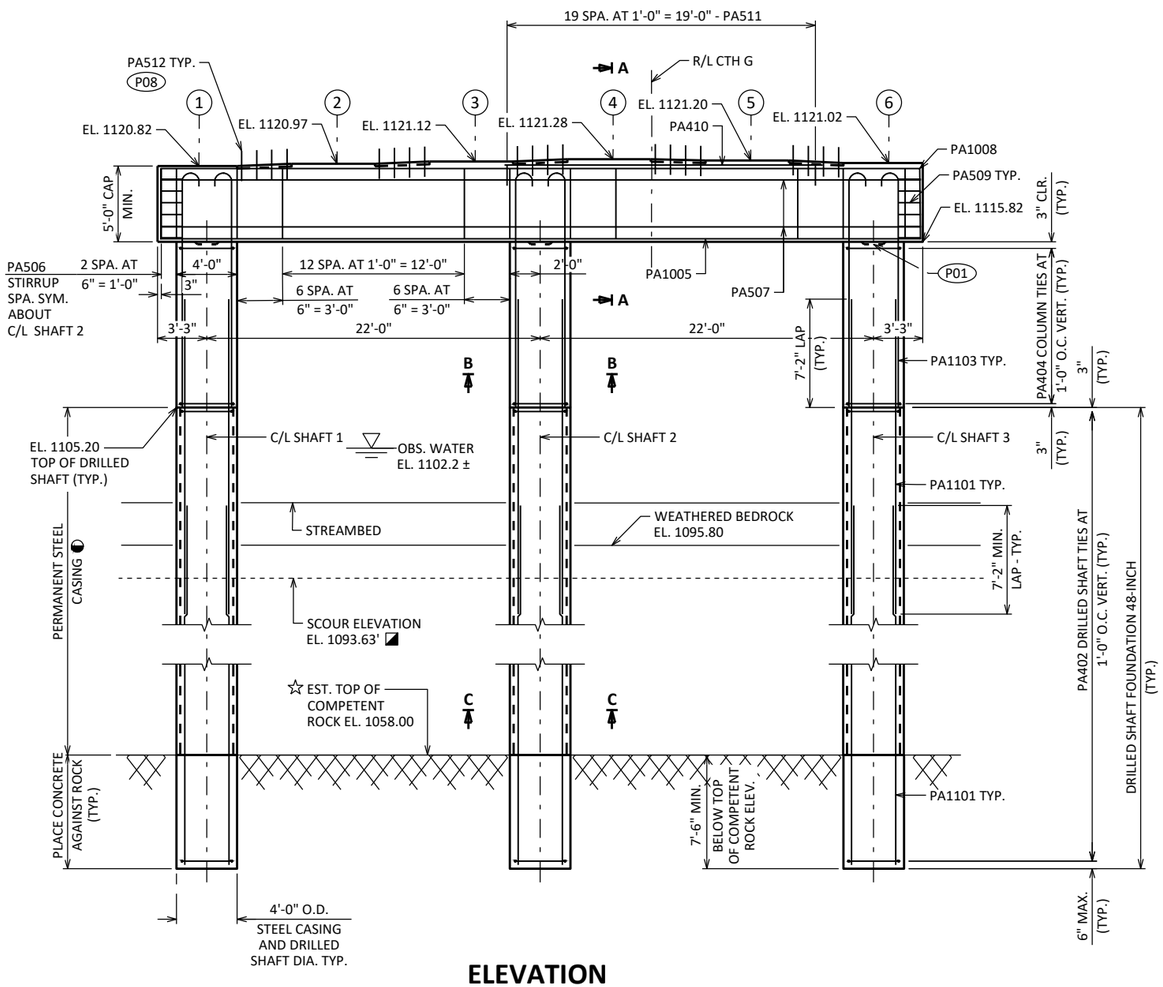

ELEVATION

(LOOKING EAST)

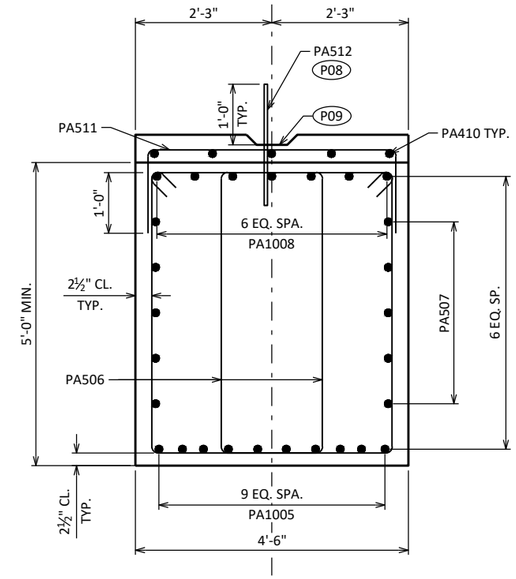

SECTION A-A

(TYP. SECTION THROUGH PIER CAP.)

◪ SCOUR ELEVATION IS BASED ON HYDRAULIC ANALYSIS.

☆ COMPETENT ROCK ELEVATIONS ARE BASED ON SUBSURFACE EXPLORATION DATA. GEOTECHNICAL ENGINEER & CONTRACTORS TO VERIFY COMPETENT ROCK ELEVATION.

◐ ESTIMATED PERMANENT STEEL CASING LENGTH

SHAFT 1	47'-0" ±
SHAFT 2	47'-0" ±
SHAFT 3	47'-0" ±

P01 1'-3" X 1'-3" X 2" DEEP CONSTRUCTION JOINT FORMED BY BEVELED KEYWAY AT EACH SHAFT.

P08 PA512 BARS AT 1'-0" CTRS. BETWEEN BEAM SEATS. MAY BE PLACED AFTER CONCRETE IS POURED BUT BEFORE INITIAL SET HAS TAKEN PLACE. (EMBED 1'-0" INTO CONC.)

P09 KEYED CONSTRUCTION JOINT - FORMED BY BEVELED 2" X 6" BETWEEN BEAM SEATS.

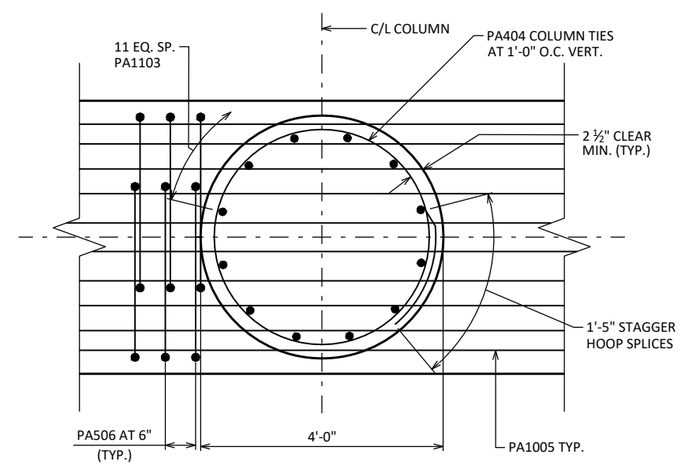

SECTION B-B

(TYP. SECTION THROUGH COLUMN)

NO.	DATE	REVISION	BY

STATE OF WISCONSIN
DEPARTMENT OF TRANSPORTATION

STRUCTURE B-10-398

DRAWN BY JAC | PLANS CK'D JRD

PIER 1

SHEET 18 OF 33

8

8

STATE PROJECT NUMBER

7840-03-73

BILL OF BARS

NOTE: THE FIRST OR FIRST TWO DIGITS OF THE BAR MARK SIGNIFIES THE BAR SIZE

BAR MARK	COAT	NO. REQ'D.	LENGTH	BENT	BAR SERIES	LOCATION	ORIEN.
NON-COATED BARS						TOTAL WEIGHT = 24640	
PA1101		72	34-6			SHAFT 1-3 VERTICAL BARS	VERT.
PA402		165	12-2	X		SHAFT 1-3 TIES	HORIZ.
PA1103		36	16-9	X		COLUMN 1-3 VERTICAL BARS	VERT.
PA404		39	12-8	X		COLUMN 1-3 TIES	HORIZ.
PA1005		10	50-1			PIER CAP - BOT. LONG. BARS	HORIZ.
PA506		112	15-4	X		PIER CAP - STIRRUP BARS	VERT.
PA507		10	50-1			PIER CAP - LONGITUDINAL BARS	HORIZ.
PA1008		7	58-8	X		PIER CAP - TOP LONG. BARS	HORIZ.
PA509		12	6-8	X		PIER CAP - END BARS	HORIZ.
PA410		5	19-0			PIER CAP - ADDITIONAL TOP LONG. BARS	HORIZ.
PA511		20	6-9	X		PIER CAP - ADDITIONAL TOP U-BARS	VERT.
PA512		20	2-0			PIER CAP - DOWEL BARS	VERT.

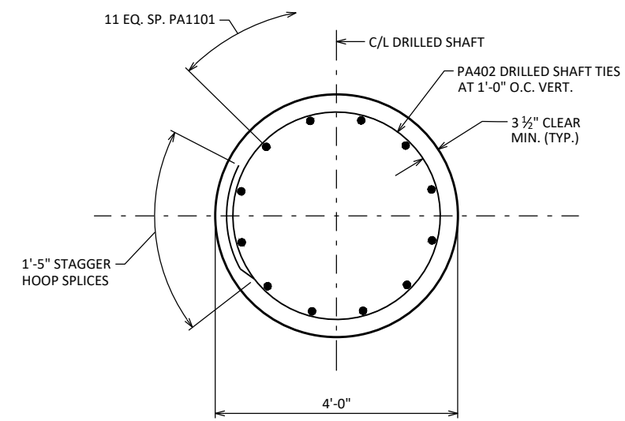

SECTION C-C

(TYP. SECTION THROUGH DRILLED SHAFT)

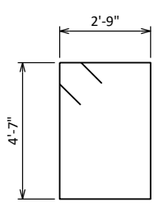

PA506

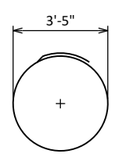

PA402

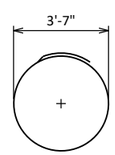

PA404

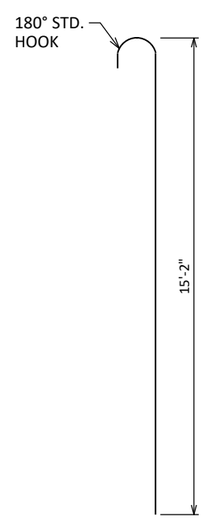

PA1103

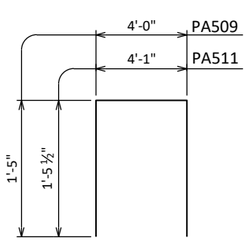

PA509, PA511

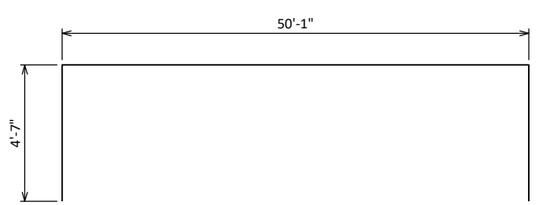

PA1008

8

8

NO.	DATE	REVISION	BY

STATE OF WISCONSIN
DEPARTMENT OF TRANSPORTATION

STRUCTURE B-10-398

DRAWN BY JAC PLANS CK'D JRD

PIER 1 DETAILS

SHEET 19 OF 33

STATE PROJECT NUMBER

7840-03-73

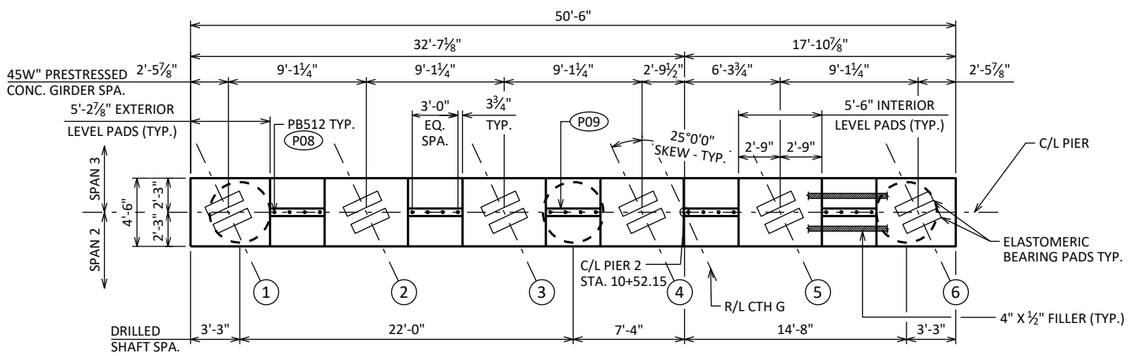

PLAN

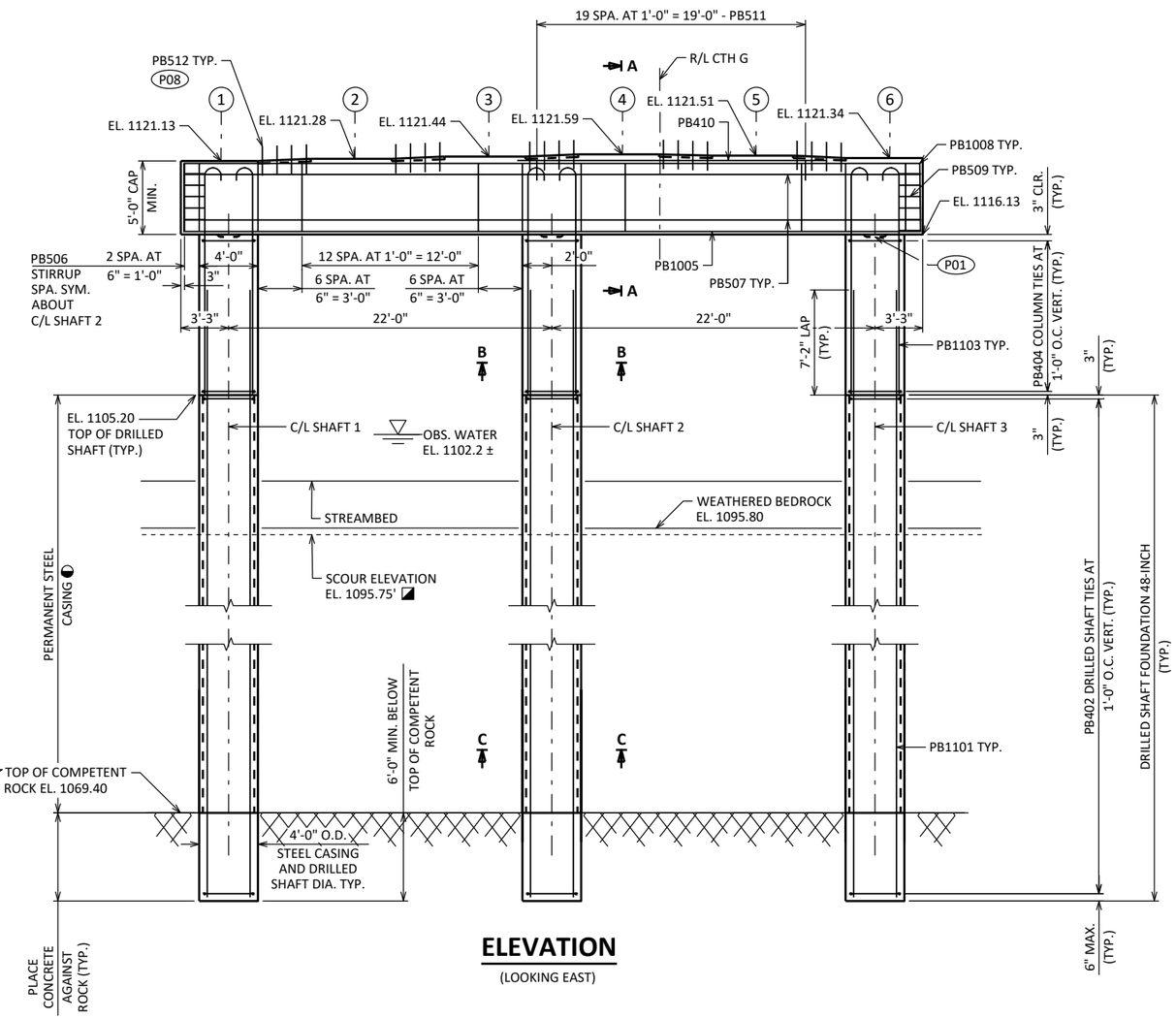

ELEVATION

(LOOKING EAST)

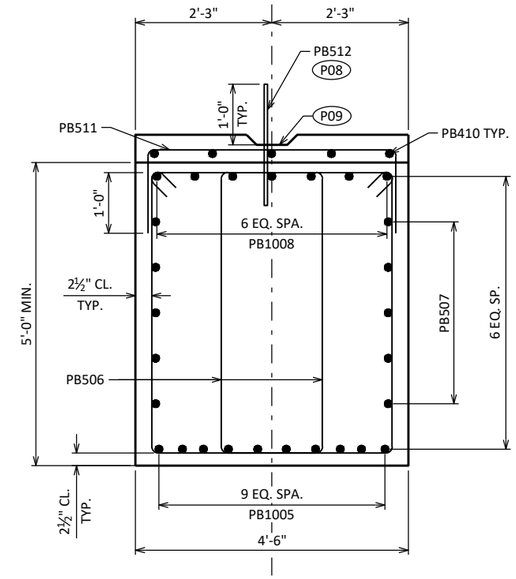

SECTION A-A

(TYP. SECTION THROUGH PIER CAP.)

◪ SCOUR ELEVATION IS BASED ON HYDRAULIC ANALYSIS.

☆ COMPETENT ROCK ELEVATIONS ARE BASED ON SUBSURFACE EXPLORATION DATA. GEOTECHNICAL ENGINEER & CONTRACTORS TO VERIFY COMPETENT ROCK ELEVATION.

◐ ESTIMATED PERMANENT STEEL CASING LENGTH

SHAFT 1	35'-9" ±
SHAFT 2	35'-9" ±
SHAFT 3	35'-9" ±

P01 1'-3" X 1'-3" X 2" DEEP CONSTRUCTION JOINT FORMED BY BEVELED KEYWAY AT EACH SHAFT.

P08 PB512 BARS AT 1'-0" CTRS. BETWEEN BEAM SEATS. MAY BE PLACED AFTER CONCRETE IS POURED BUT BEFORE INITIAL SET HAS TAKEN PLACE. (EMBED 1'-0" INTO CONC.)

P09 KEYED CONSTRUCTION JOINT - FORMED BY BEVELED 2" X 6" BETWEEN BEAM SEATS.

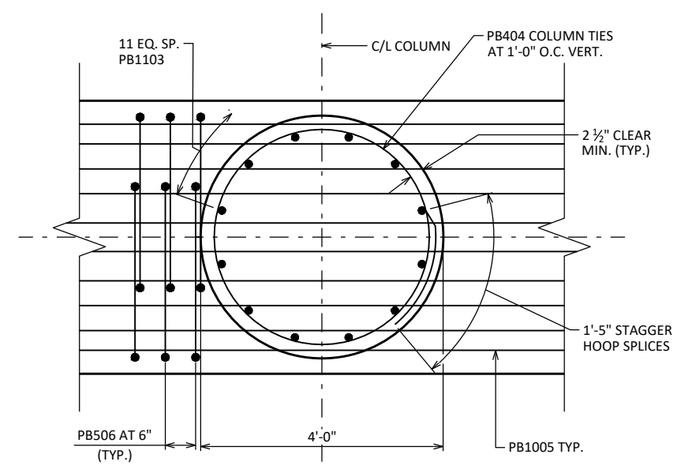

SECTION B-B

(TYP. SECTION THROUGH COLUMN)

NO.	DATE	REVISION	BY

STATE OF WISCONSIN
DEPARTMENT OF TRANSPORTATION

STRUCTURE B-10-398

DRAWN BY JAC PLANS CK'D JRD

PIER 2

SHEET 20 OF 33

8

8

STATE PROJECT NUMBER

7840-03-73

BILL OF BARS

NOTE: THE FIRST OR FIRST TWO DIGITS OF THE BAR MARK SIGNIFIES THE BAR SIZE

BAR MARK	COAT	NO. REQ'D.	LENGTH	BENT	BAR SERIES	LOCATION	ORIEN.
NON-COATED BARS						TOTAL WEIGHT = 20590	
PB1101		36	49-0			SHAFT 1-3 VERTICAL BARS	VERT.
PB402		129	12-2	X		SHAFT 1-3 TIES	HORIZ.
PB1103		36	17-1	X		COLUMN 1-3 VERTICAL BARS	VERT.
PB404		39	12-8	X		COLUMN 1-3 TIES	HORIZ.
PB1005		10	50-1			PIER CAP - BOT. LONG. BARS	HORIZ.
PB506		112	15-4	X		PIER CAP - STIRRUP BARS	VERT.
PB507		10	50-1			PIER CAP - LONGITUDINAL BARS	HORIZ.
PB1008		7	58-8	X		PIER CAP - TOP LONG. BARS	HORIZ.
PB509		12	6-8	X		PIER CAP - END BARS	HORIZ.
PB410		5	19-0			PIER CAP - ADDITIONAL TOP LONG. BARS	HORIZ.
PB511		20	6-9	X		PIER CAP - ADDITIONAL TOP U-BARS	VERT.
PB512		20	2-0			PIER CAP - DOWEL BARS	VERT.

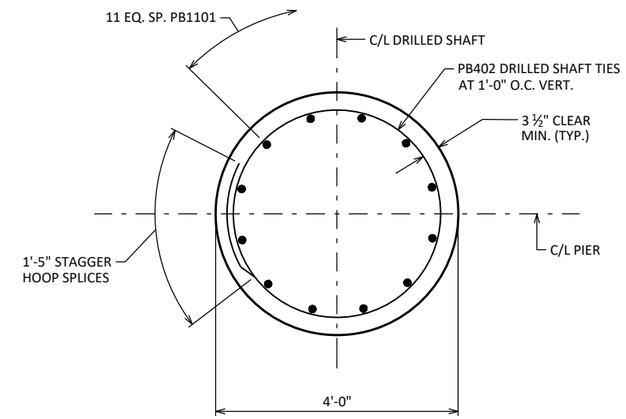

SECTION C-C

(TYP. SECTION THROUGH DRILLED SHAFT)

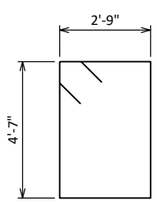

PB506

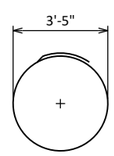

PB402

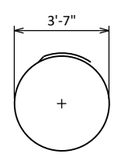

PB404

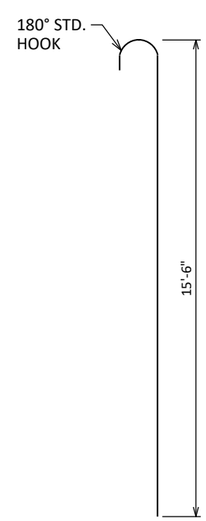

PB1103

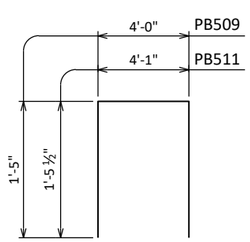

PB509, PB511

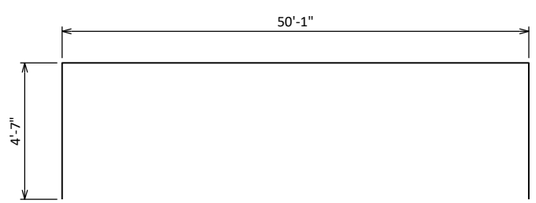

PB1008

8

8

NO.	DATE	REVISION	BY

STATE OF WISCONSIN
DEPARTMENT OF TRANSPORTATION

STRUCTURE B-10-398

DRAWN BY JAC | PLANS CK'D JRD

PIER 2 DETAILS

SHEET 21 OF 33

STATE PROJECT NUMBER

7840-03-73

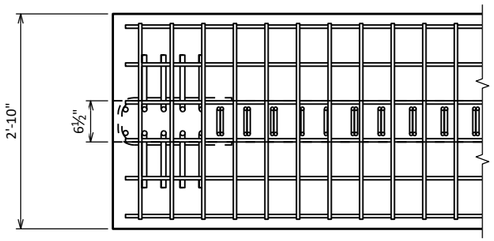

TOP FLANGE

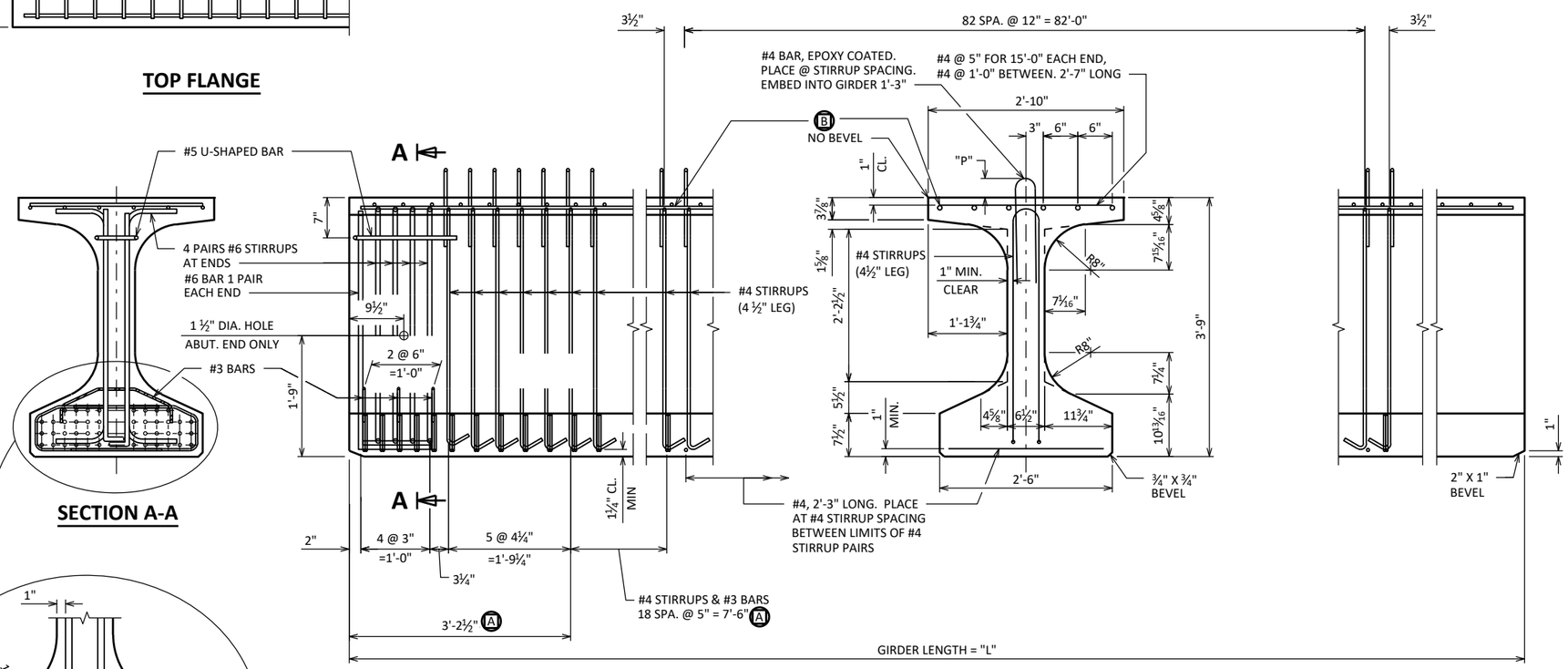

SECTION A-A

SIDE VIEW & TYPICAL SECTION IN SPAN

A DETAIL TYP. AT EACH END

B 6 #4 BARS, FULL LENGTH, MIN. LAP = 2'-4"

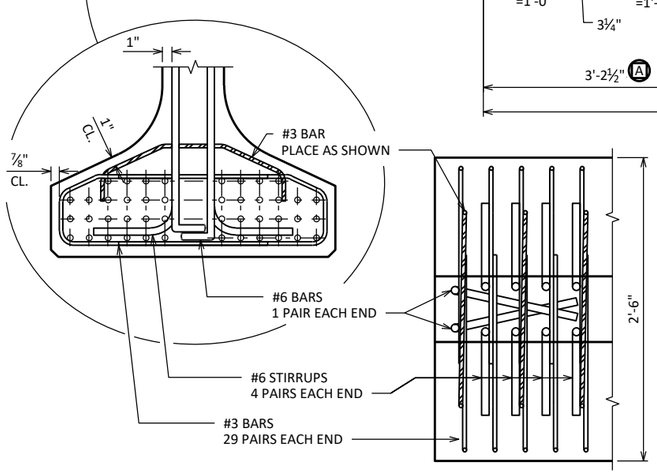

BOTTOM FLANGE

NOTES

TOP OF GIRDER TO BE ROUGH FLOATED AND BROOMED TRANSVERSELY, EXCEPT THE OUTSIDE 8" OF GIRDER, WHICH SHALL RECEIVE A SMOOTH FINISH. AN APPROVED CONCRETE SEALER SHALL BE APPLIED TO ALL SMOOTH SURFACES INCLUDING THE OUTSIDE 8" OF THE TOP FLANGE.

DO NOT APPLY CONCRETE SEALER OR EPOXY TO SURFACES RECEIVING APPLICATION OF CONCRETE STAINING.

THE GIRDERS SHALL BE PROVIDED WITH A SUITABLE LIFTING DEVICE FOR HANDLING AND ERECTING THE GIRDERS. SEE SECT. 503.3.4 OF STANDARD SPECIFICATIONS FOR GUIDANCE.

STRANDS SHALL BE FLUSH WITH END OF GIRDER. FOR GIRDER ENDS EMBEDDED COMPLETELY IN CONCRETE, END OF STRANDS SHALL BE COATED WITH NON-BITUMINOUS JOINT SEALER. FOR GIRDER ENDS THAT ARE FINALLY EXPOSED, COAT THE GIRDER ENDS, EXPOSED STRAND ENDS AND ALL NON-BONDING SURFACES WITHIN 2 FEET OF THE GIRDER ENDS WITH A NON-PIGMENTED EPOXY CONFORMING TO AASHTO M-235 TYPE III, CLASS B OR C. THE EPOXY SHALL BE APPLIED AT LEAST 3 DAYS AFTER MOIST CURING HAS CEASED AND PRIOR TO THE APPLICATION OF THE SEALER.

ALL GIRDERS SHALL BE CAST FULL LENGTH AS SHOWN.

SPACING SHOWN FOR #4 STIRRUPS IS FOR GRADE 60 REINFORCEMENT.

AN EQUIVALENT OF WELDED WIRE FABRIC (WWF) ASTM A1064 MAY BE SUBSTITUTED FOR THE STIRRUP REINFORCEMENT SHOWN, UPON APPROVAL OF THE STRUCTURES DESIGN SECTION. IF USED, WWF SUBSTITUTION DETAILS SHALL BE SUBMITTED ELECTRONICALLY TO THE WISDOT FABRICATION LIBRARY AND ACCEPTED PRIOR TO SHOP DRAWING SUBMITTAL.

PRESTRESSING STRANDS SHALL BE (0.6" DIA.)-7 WIRE LOW-RELAXATION STRANDS WITH AN ULTIMATE STRENGTH OF 270,000 PSI.

FOR DIAPHRAGM INSERT & CONNECTION DETAILS SEE "STEEL DIAPHRAGM" SHEET.

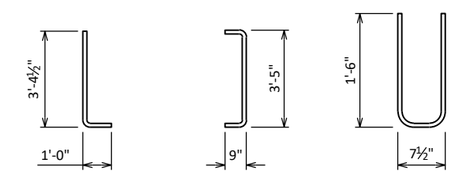

#6 BAR 2 @ EACH END

#6 BAR 8 @ EACH END

#5 BAR 1 @ EACH END

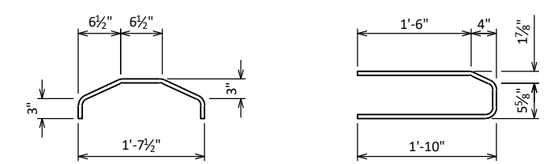

#3 BAR 3 @ EACH END (EPOXY COATED)

#3 BAR 29 PAIRS EACH END (EPOXY COATED)

⚹ MINIMUM CYLINDER STRENGTH OF CONCRETE @ TIME OF TRANSFER OF PRESTRESS FORCE.

GIRDER DATA

SPAN	GIRDER	GIRDER LENGTH "L" (FEET)	DEAD LOAD DEFL. (IN.)									CONC. STRGTH. f'c (P.S.I.)	"P" (IN.)			DIA. OF STRAND (IN.)	DRAPED PATTERN						UNDRAPED PATTERN	
			1/10	2/10	3/10	4/10	5/10	6/10	7/10	8/10	9/10		1ST ⅓ OF GIRDER	MID ⅓ OF GIRDER	END ⅓ OF GIRDER		TOTAL NO. OF STRANDS	f'ci (P.S.I.) ⚹	(IN.) "A"	"B" MIN.	"B" MAX.	"C"	TOTAL NO. OF STRANDS	f'ci (P.S.I.) ⚹
1-3	1 & 6	104'-0"	0.7	1.3	1.8	2.1	2.2	2.1	1.8	1.3	0.7	8,000	8	7	8	0.6	36	6,800	40	13.75	16.75	5		
1	2-5	104'-0"	0.7	1.3	1.9	2.2	2.3	2.2	1.8	1.3	0.7	8,000	8	7	8	0.6	36	6,800	40	13.75	16.75	5		
2	2-5	104'-0"	0.7	1.3	1.8	2.1	2.2	2.1	1.8	1.3	0.7	8,000	8	7	8	0.6	36	6,800	40	13.75	16.75	5		
3	2-5	104'-0"	0.7	1.3	1.8	2.2	2.3	2.2	1.9	1.3	0.7	8,000	8	7	8	0.6	36	6,800	40	13.75	16.75	5		

NO.	DATE	REVISION	BY

STATE OF WISCONSIN
DEPARTMENT OF TRANSPORTATION

STRUCTURE B-10-398

DRAWN BY UD | PLANS CK'D JRD

45W" PRESTRESSED GIRDER DETAILS

SHEET 22 OF 33

SCALE =

8

8

STATE PROJECT NUMBER

7840-03-73

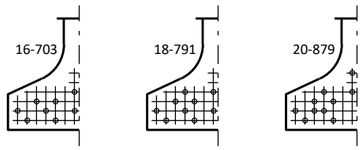

STANDARD ARRANGEMENTS TO RAISE CENTER OF GRAVITY TO AVOID DRAPING OF STRANDS

0.6" DIA. STRANDS

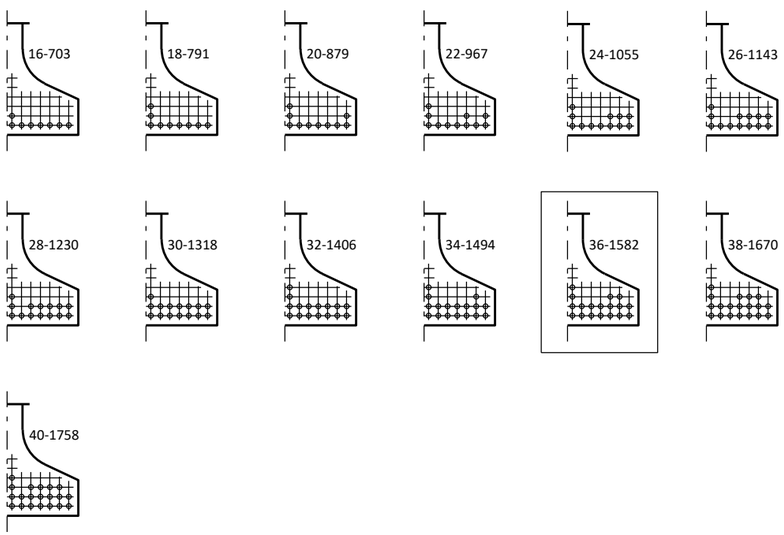

ARRANGEMENT AT C/L SPAN - FOR GIRDERS WITH DRAPED STRANDS

0.6" DIA. STRANDS

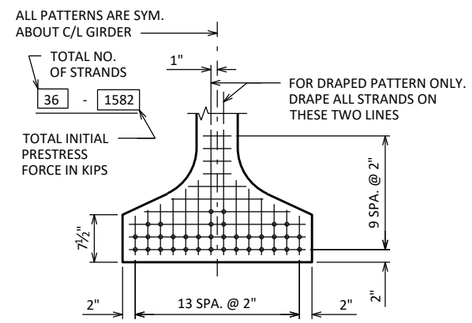

TYP. STRAND PATTERN

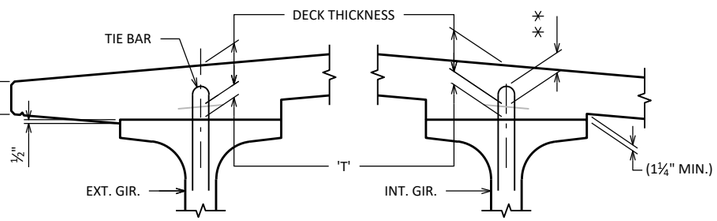

DECK HAUNCH DETAIL

IF 1¼" MINIMUM HAUNCH HEIGHT AT EDGE OF GIRDER CANNOT BE MAINTAINED, THE GRADE LINE MAY BE REVISED BY THE ENGINEER AT THE OPTION OF THE CONTRACTOR, THE PLAN DECK THICKNESS SHALL BE HELD. NOTIFY THE STRUCTURES SECTION IF THE GRADE LINE IS RAISED FROM THE PLAN PROFILE BY MORE THAN ½" OR,
✳✳ IF 3" MINIMUM DECK EMBEDMENT OF TIE BAR CANNOT BE OBTAINED.

TO DETERMINE 'T', ELEV. OF TOP OF GIR'S. AT C/L OF SUBSTRUCTURE UNITS & AT 1/10 POINTS OF EACH SPAN SHALL BE TAKEN. THEN FOLLOW THIS PROCESS:

	TOP OF DECK ELEV. AT FINAL GRADE
-	TOP OF GIRDER ELEVATION
+	DEAD LOAD DEFLECTION
-	DECK THICKNESS
=	HAUNCH HEIGHT 'T'

NOTE: AN AVERAGE HAUNCH ('T') OF 3¼" WAS USED IN THE QUANTITY "CONCRETE MASONRY BRIDGES".

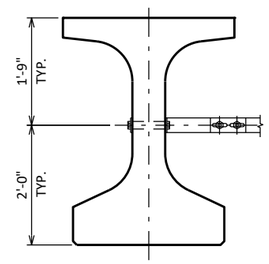

GIRDER 2

FLOOR DRAIN ATTACHMENT INSERT LOCATION

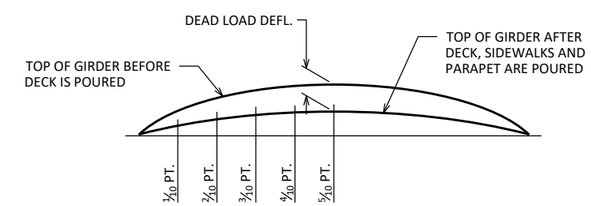

DEAD LOAD DEFLECTION DIAGRAM

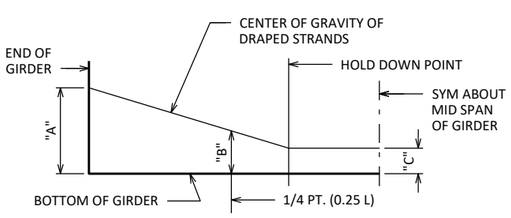

DRAPED STRAND PROFILE

✳ THE THEORETICAL INITIAL CAMBER VALUE AT THE TIME OF STRAND RELEASE AT MIDSPAN MULTIPLIED BY A FACTOR OF 1.4 TO ACCOUNT FOR CAMBER GROWTH FROM THE TIME OF STRAND RELEASE TO JOBSITE PLACEMENT.

SPAN	CAMBER (IN.) ✳
1-3	3.948

THESE VALUES ARE NOT TO BE USED IN DETERMINING 'T', USE ACTUAL GIRDER SHOTS.

THESE VALUES ARE FOR INFORMATIONAL PURPOSES ONLY.

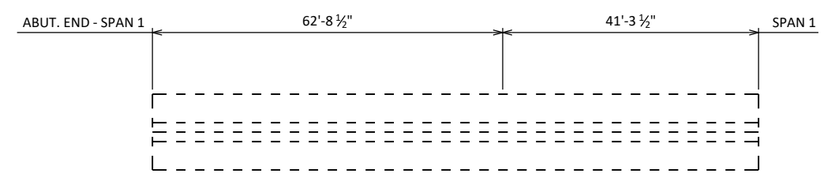

GIRDER 2

FLOOR DRAIN ATTACHMENT INSERT LOCATION

(PLACE INSERT ON SOUTH FACE OF GIRDER)

8

8

NO.	DATE	REVISION	BY

STATE OF WISCONSIN
DEPARTMENT OF TRANSPORTATION

STRUCTURE B-10-398

DRAWN BY UD | PLANS CK'D JRD

45W" PRESTRESSED GIRDER DETAILS 2

SHEET 23 OF 33

98

SCALE =

STATE PROJECT NUMBER

7840-03-73

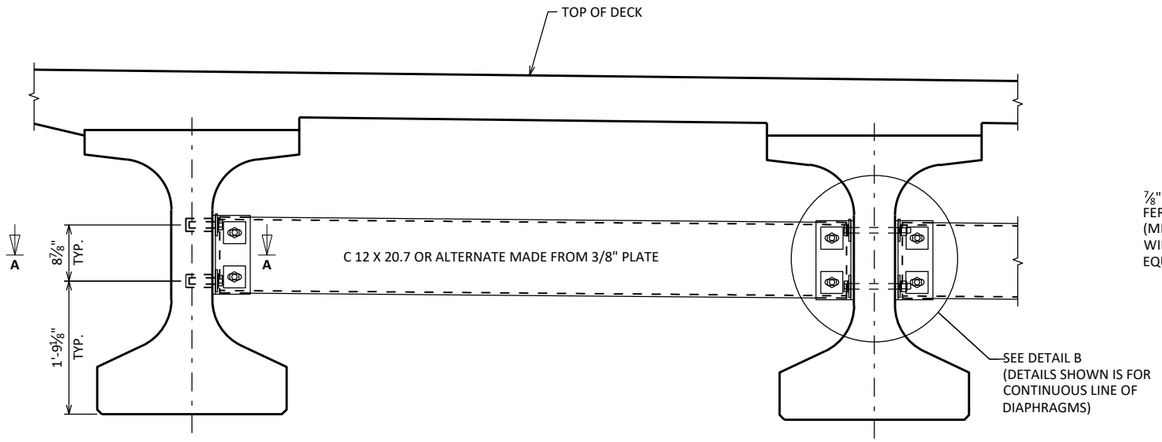

EXTERIOR GIRDER

INTERIOR GIRDER

PART TRANSVERSE SECTION AT DIAPHRAGM

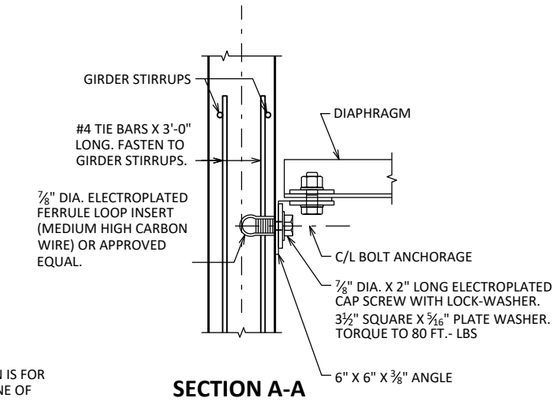

SECTION A-A

(FOR EXTERIOR ATTACHMENT)

NOTES

ALL DIAPHRAGM MATERIAL NOT EMBEDDED IN THE CONCRETE GIRDER SHALL BE PAID FOR AT THE UNIT PRICE BID FOR "STEEL DIAPHRAGMS B-10-398", EACH.

EACH DIAPHRAGM BETWEEN GIRDERS SHALL CONSTITUTE ONE UNIT.

ALL DIAPHRAGM STRUCTURAL STEEL SHALL BE ASTM A709 GRADE 36.

ALL DIAPHRAGM MATERIAL INCLUDING BOLTS, NUTS AND WASHERS SHALL BE GALVANIZED AFTER FABRICATION.

STEEL DIAPHRAGM TO CONCRETE WEB CONNECTION SHALL BE SNUG-TIGHT PLUS 1/4 TURN, UNLESS NOTED OTHERWISE. HIGH STRENGTH BOLTS FOR WEB CONNECTION SHALL MEET THE REQUIREMENTS FOR ASTM A325 OR ASTM A449.

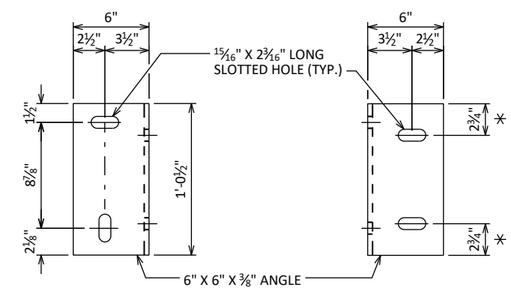

BEAM FACE

DIAPHRAGM FACE

DIAPHRAGM SUPPORT

* 2½" FOR ALTERNATE PLATE DIAPHRAGM

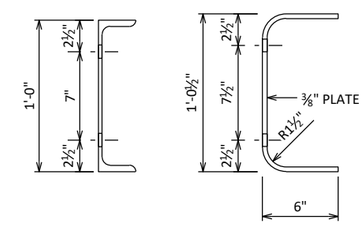

C12X20.7

ALTERNATE DIAPHRAGM

SECTION THRU DIAPHRAGM

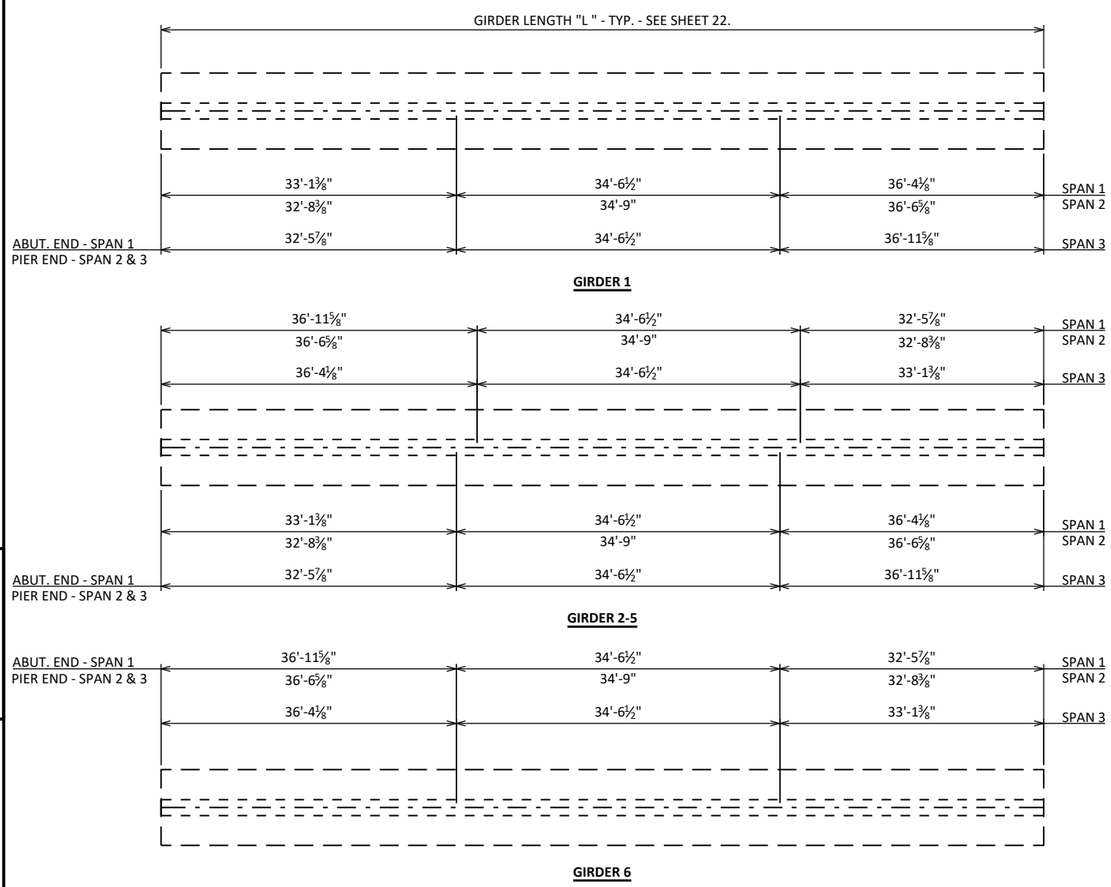

DIAPHRAGM CONNECTION SPACING

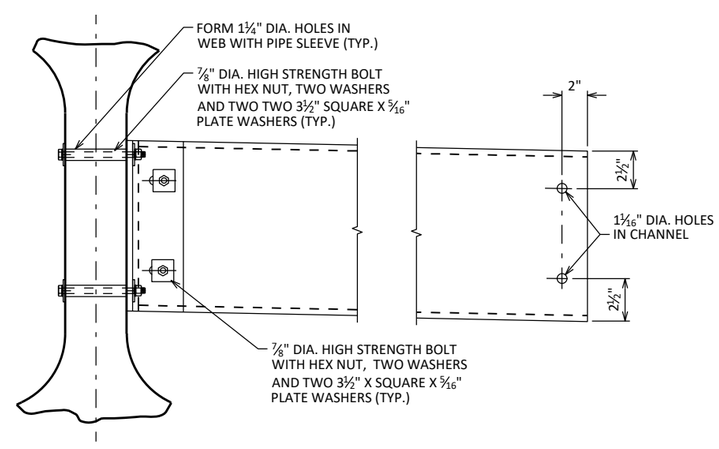

(FOR STAGGERED DIAPHRAGM)

DETAIL B

NO.	DATE	REVISION	BY

STATE OF WISCONSIN
DEPARTMENT OF TRANSPORTATION

STRUCTURE B-10-398

DRAWN BY UD | PLANS CK'D JRD

STEEL INTER. DIAPHRAGM DETAILS

SHEET 24 OF 33

99

SCALE =

8

8

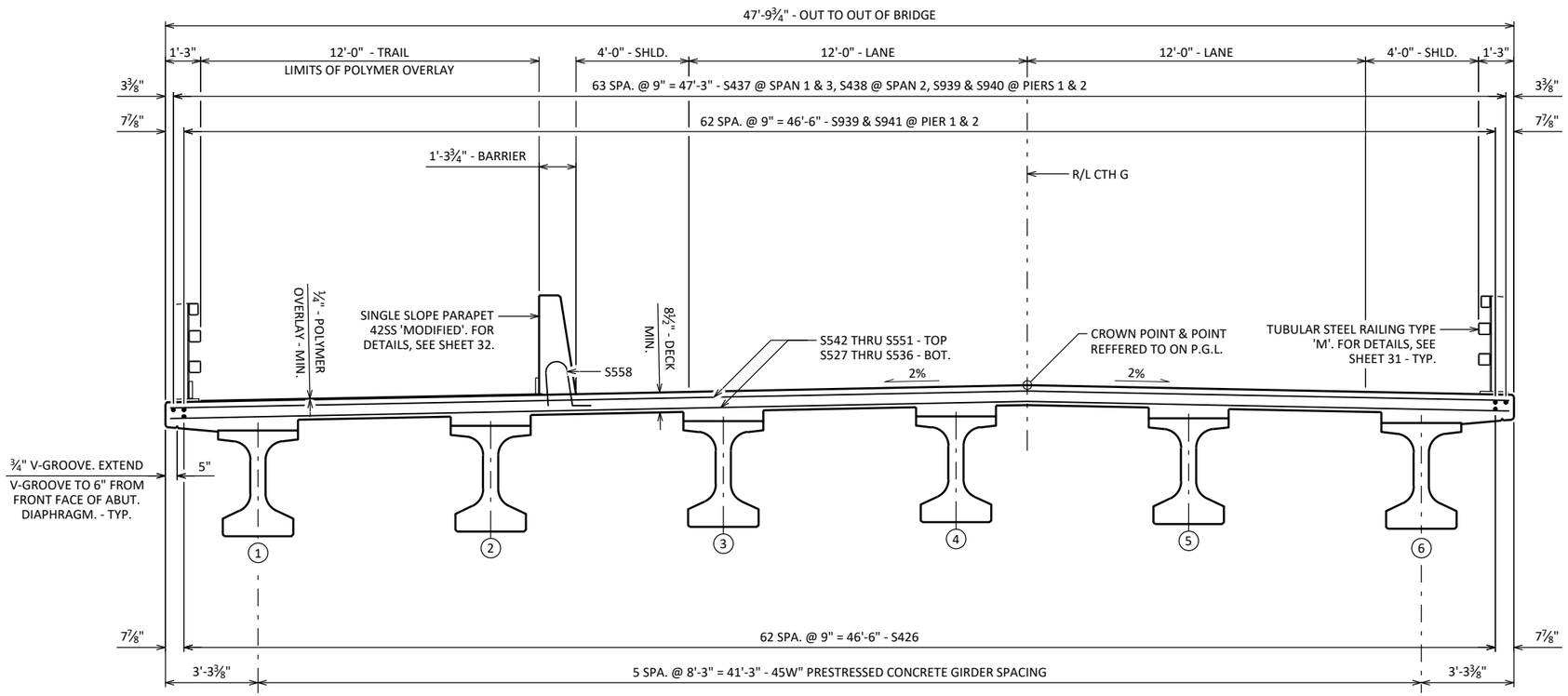

CROSS SECTION THRU ROADWAY

(LOOKING EAST)

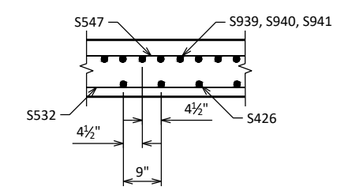

CROSS SECTION THRU DECK AT PIERS

(LOOKING EAST. SEE "CROSS SECTION THRU ROADWAY" ON THIS SHEET FOR EXCEPTIONS TO THE BAR SPACING SHOWN.)

8

TOP OF DECK ELEVATIONS

LOCATION	C.L. BRG. W. ABUT.	0.10 PT.	0.20 PT.	0.30 PT.	0.40 PT.	0.50 PT.	0.60 PT.	0.70 PT.	0.80 PT.	0.90 PT.	C.L. PIER 1	0.10 PT.	0.20 PT.	0.30 PT.	0.40 PT.	0.50 PT.	0.60 PT.	0.70 PT.	0.80 PT.	0.90 PT.	C.L. PIER 2	0.10 PT.	0.20 PT.	0.30 PT.	0.40 PT.	0.50 PT.	0.60 PT.	0.70 PT.	0.80 PT.	0.90 PT.	C.L. BRG. E. ABUT.
N. EOD	1125.30	1125.33	1125.36	1125.39	1125.42	1125.45	1125.48	1125.52	1125.55	1125.58	1125.61	1125.64	1125.67	1125.70	1125.73	1125.77	1125.80	1125.83	1125.86	1125.89	1125.92	1125.95	1125.98	1126.02	1126.05	1126.08	1126.11	1126.14	1126.17	1126.20	1126.23
GIRDER 1	1125.36	1125.39	1125.42	1125.45	1125.48	1125.51	1125.55	1125.58	1125.61	1125.64	1125.67	1125.70	1125.73	1125.76	1125.80	1125.83	1125.86	1125.89	1125.92	1125.95	1125.98	1126.01	1126.05	1126.08	1126.11	1126.14	1126.17	1126.20	1126.23	1126.26	1126.30
GIRDER 2	1125.51	1125.54	1125.57	1125.61	1125.64	1125.67	1125.70	1125.73	1125.76	1125.79	1125.82	1125.86	1125.89	1125.92	1125.95	1125.98	1126.01	1126.04	1126.07	1126.11	1126.14	1126.17	1126.20	1126.23	1126.26	1126.29	1126.32	1126.36	1126.39	1126.42	1126.45
GIRDER 3	1125.67	1125.70	1125.73	1125.76	1125.79	1125.82	1125.85	1125.88	1125.91	1125.95	1125.98	1126.01	1126.04	1126.07	1126.10	1126.13	1126.17	1126.20	1126.23	1126.26	1126.29	1126.32	1126.35	1126.38	1126.42	1126.45	1126.48	1126.51	1126.54	1126.57	1126.60
GIRDER 4	1125.82	1125.85	1125.88	1125.91	1125.94	1125.97	1126.01	1126.04	1126.07	1126.10	1126.13	1126.16	1126.19	1126.22	1126.26	1126.29	1126.32	1126.35	1126.38	1126.41	1126.44	1126.48	1126.51	1126.54	1126.57	1126.60	1126.63	1126.66	1126.69	1126.72	1126.76
R/L CTH G	1125.87	1125.90	1125.93	1125.96	1125.99	1126.02	1126.05	1126.08	1126.12	1126.15	1126.18	1126.21	1126.24	1126.27	1126.30	1126.33	1126.37	1126.40	1126.43	1126.46	1126.49	1126.52	1126.55	1126.58	1126.62	1126.65	1126.68	1126.71	1126.74	1126.77	1126.80
GIRDER 5	1125.74	1125.77	1125.81	1125.84	1125.87	1125.90	1125.93	1125.96	1125.99	1126.02	1126.06	1126.09	1126.12	1126.15	1126.18	1126.21	1126.24	1126.27	1126.31	1126.34	1126.37	1126.40	1126.43	1126.46	1126.49	1126.52	1126.56	1126.59	1126.62	1126.65	1126.68
GIRDER 6	1125.57	1125.60	1125.63	1125.66	1125.69	1125.72	1125.75	1125.79	1125.82	1125.85	1125.88	1125.91	1125.94	1125.97	1126.00	1126.04	1126.07	1126.10	1126.13	1126.16	1126.19	1126.22	1126.25	1126.29	1126.32	1126.35	1126.38	1126.41	1126.44	1126.47	1126.50
S. EOD	1125.50	1125.53	1125.56	1125.59	1125.62	1125.65	1125.68	1125.72	1125.75	1125.78	1125.81	1125.84	1125.87	1125.90	1125.93	1125.97	1126.00	1126.03	1126.06	1126.09	1126.12	1126.15	1126.18	1126.22	1126.25	1126.28	1126.31	1126.34	1126.37	1126.40	1126.43

NO.	DATE	REVISION	BY

STATE OF WISCONSIN
DEPARTMENT OF TRANSPORTATION

STRUCTURE B-10-398

DRAWN BY UD PLANS CK'D JRD

SUPERSTRUCTURE

SHEET 25 OF 33

SCALE = 100

STATE PROJECT NUMBER

7840-03-73

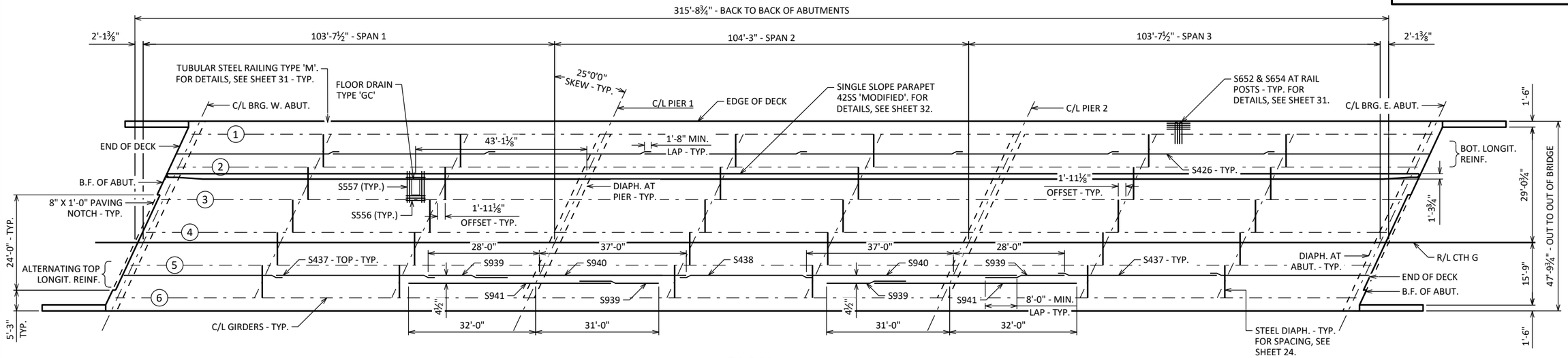

PLAN

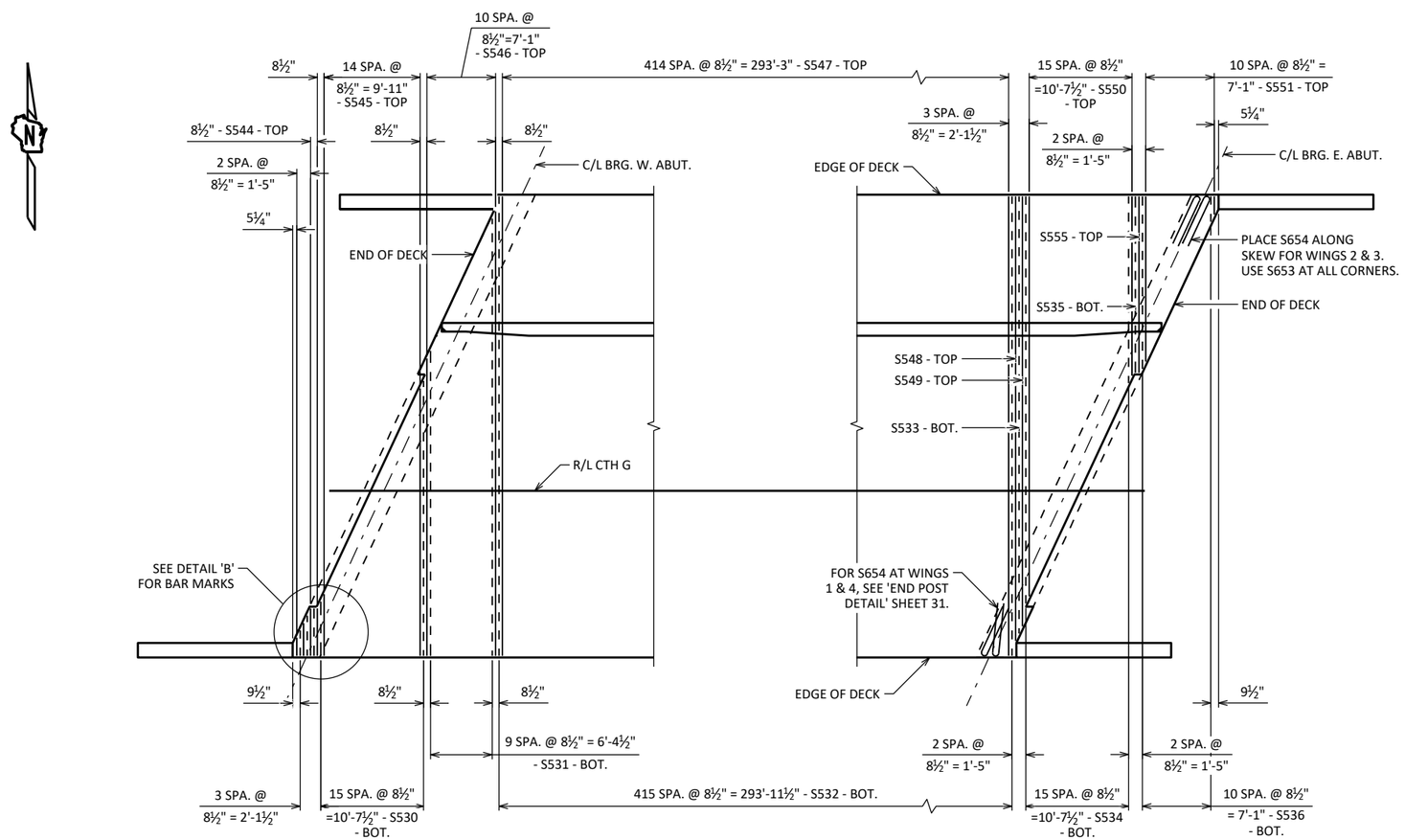

PART PLAN

(SHOWING TRANSVERSE STEEL REINFORCEMENT)

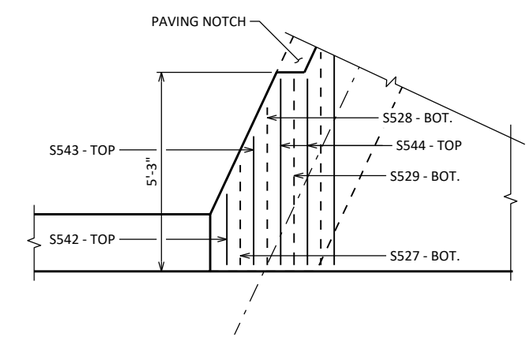

DETAIL B

8

8

NO.	DATE	REVISION	BY

STATE OF WISCONSIN
DEPARTMENT OF TRANSPORTATION

STRUCTURE B-10-398

DRAWN BY UD | PLANS CK'D JRD

SUPERSTRUCTURE PLAN

SHEET 26 OF 33

101

SCALE =

STATE PROJECT NUMBER

7840-03-73

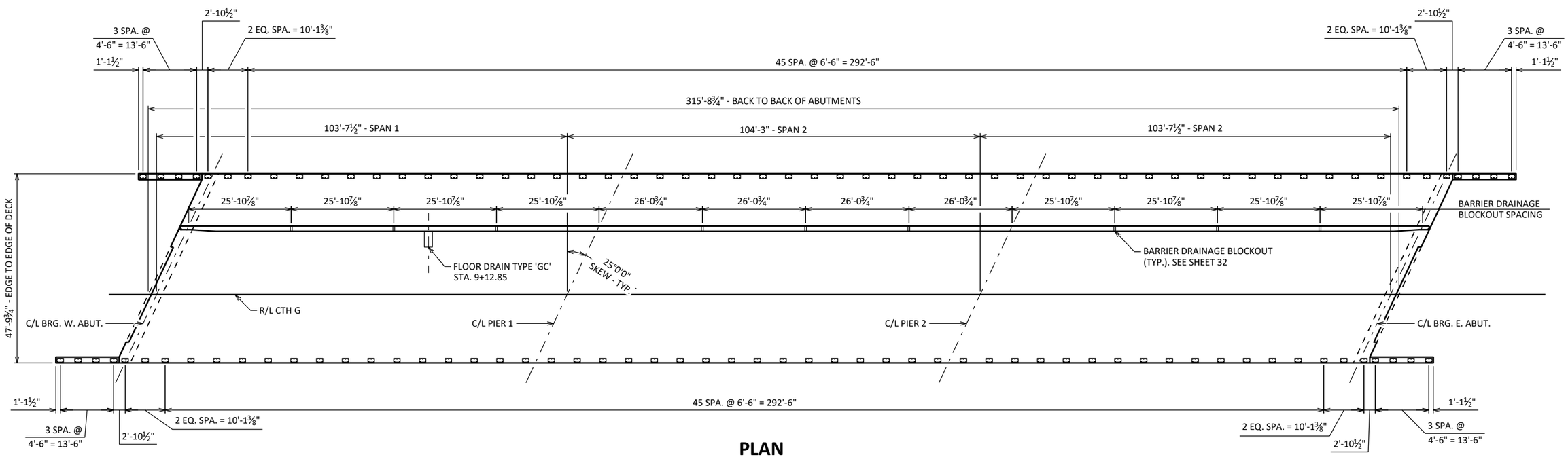

PLAN

(SHOWING RAIL POST SPACING)

8

8

NO.	DATE	REVISION	BY

STATE OF WISCONSIN
DEPARTMENT OF TRANSPORTATION

STRUCTURE B-10-398

DRAWN BY UD | PLANS CK'D JRD

SUPERSTRUCTURE DETAILS

SHEET 27 OF 33

102

SCALE =

STATE PROJECT NUMBER

7840-03-73

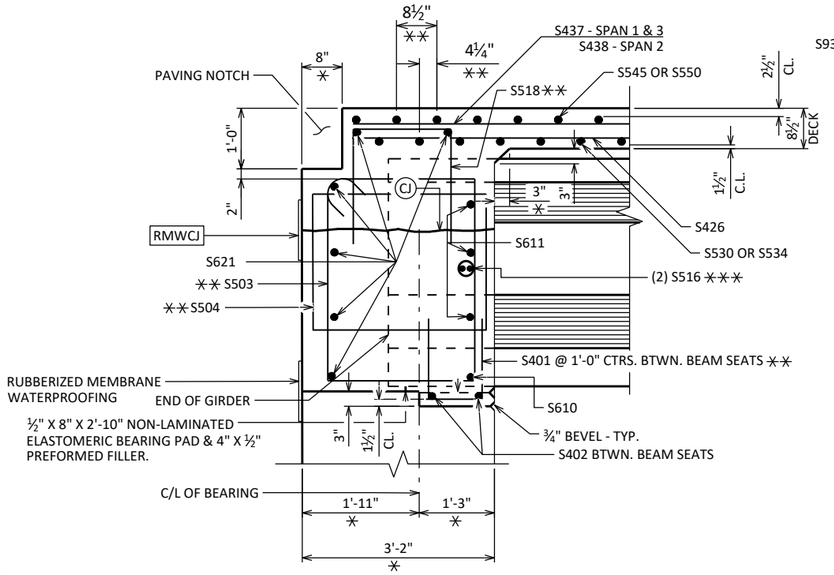

AT ABUTMENTS
(WITH PAVING NOTCH)

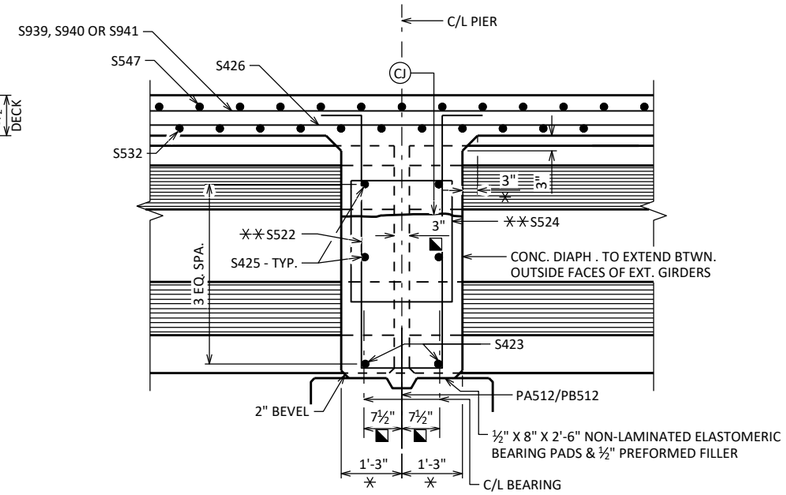

AT PIERS

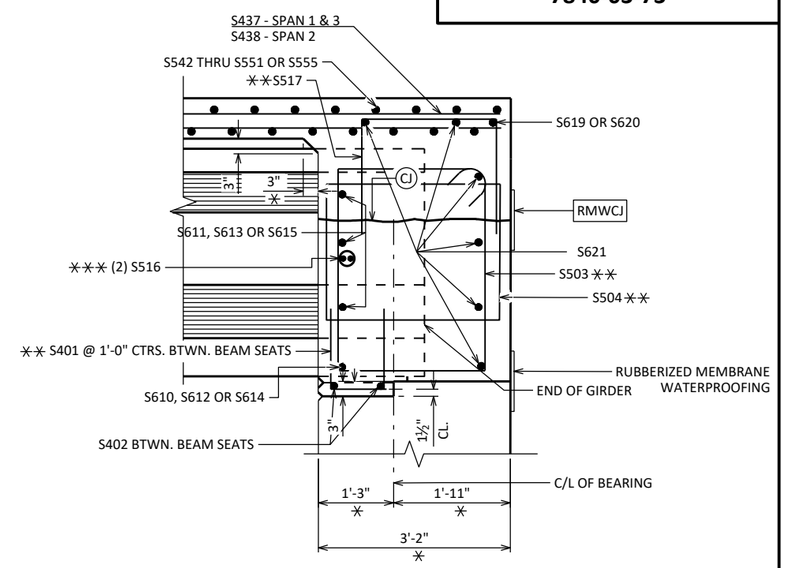

AT ABUTMENTS
(WITHOUT PAVING NOTCH)

PART LONGITUDINAL SECTION

LEGEND

✳ DIMENSIONS TAKEN NORMAL TO C/L OF SUBSTRUCTURE UNITS.

✳✳ BARS PLACED PERPENDICULAR TO C/L GIRDERS.

✳✳✳ ½" DIA. HOLE IN WEB FOR S516 BARS. PLACE TWO S516 BARS SYMMETRICAL ABOUT THE C/L OF EACH GIRDER. FIELD BEND BARS ALONG SKEW.

CJ OPTIONAL CONSTRUCTION JOINT 1'-2" BELOW TOP OF GIRDER. IF USED, DECK POUR MUST BE WITHIN 2 WEEKS FROM THE TIME OF THE DIAPHRAGM POUR.

RWMCJ 18" RUBBERIZED MEMBRANE WATERPROOFING IF CONSTRUCTION JOINT IS USED. (COST INCIDENTAL TO BID ITEM "CONCRETE MASONRY BRIDGES").

◪ DIMENSION IS TAKEN PARALLEL TO C/L GIRDER.

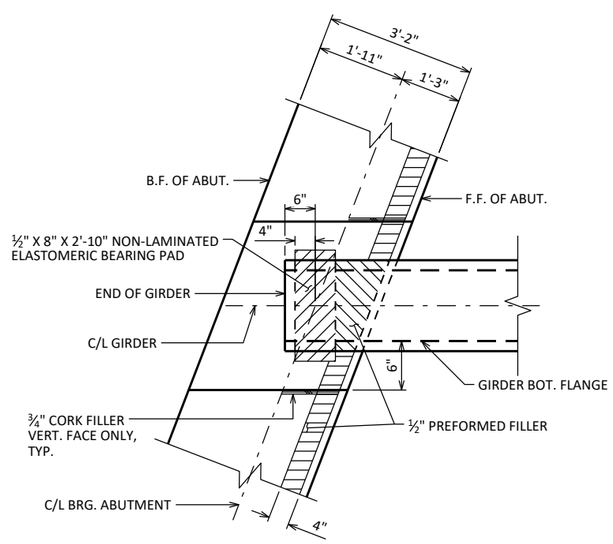

AT ABUTMENTS

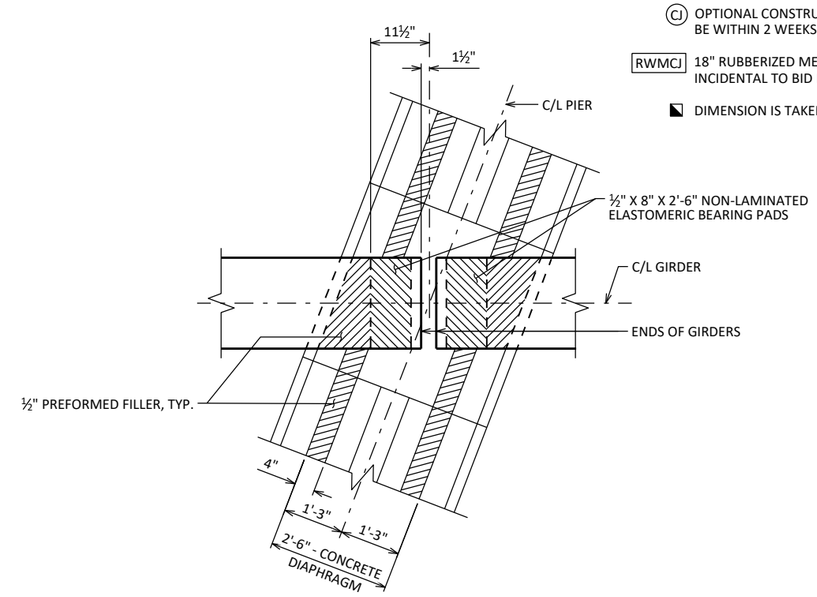

AT PIER

BEARING PAD DETAIL

NO.	DATE	REVISION	BY

STATE OF WISCONSIN
DEPARTMENT OF TRANSPORTATION

STRUCTURE B-10-398

DRAWN BY UD | PLANS CK'D JRD

SUPERSTRUCTURE DETAILS 2

SHEET 28 OF 33

SCALE =

8

8

STATE PROJECT NUMBER

7840-03-73

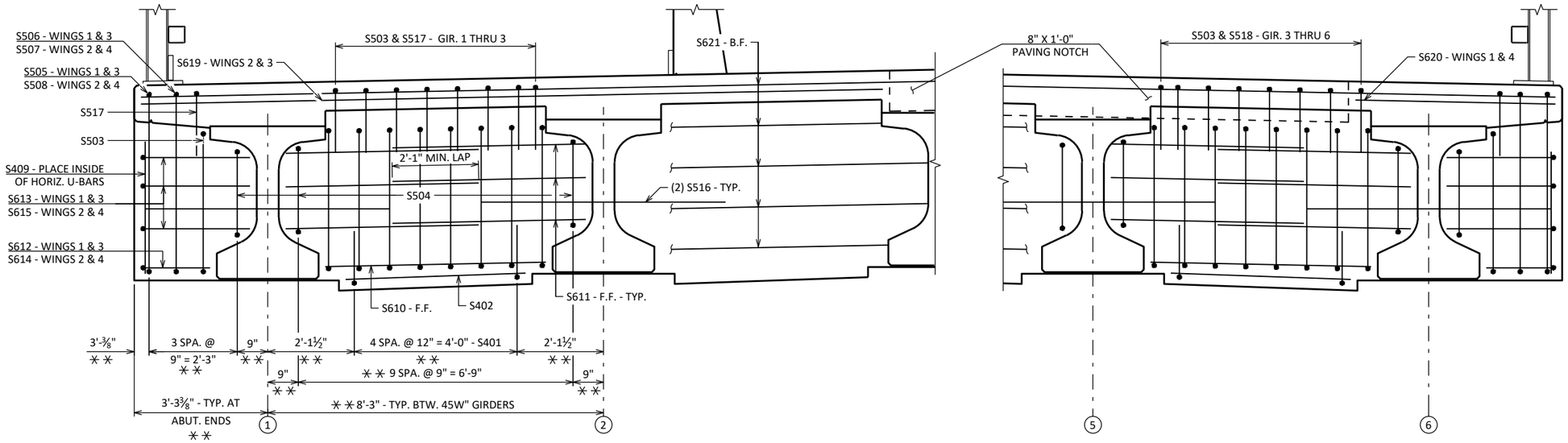

PART TRANSVERSE SECTION AT ABUTMENT DIAPHRAGM

(LOOKING EAST)

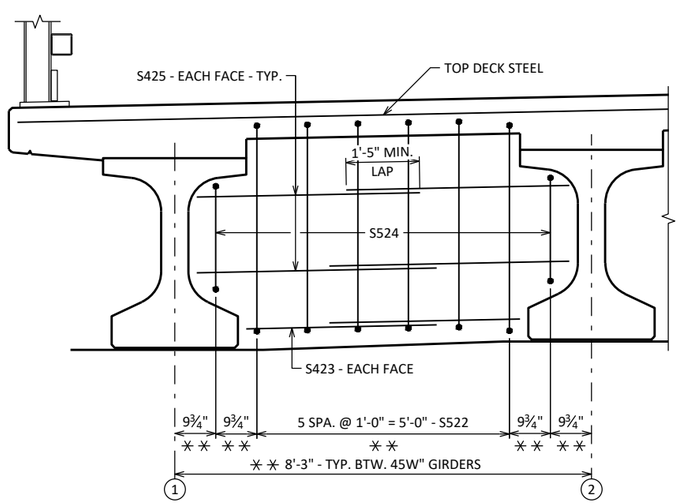

PART TRANSVERSE SECTION AT PIER DIAPHRAGM

(LOOKING EAST)

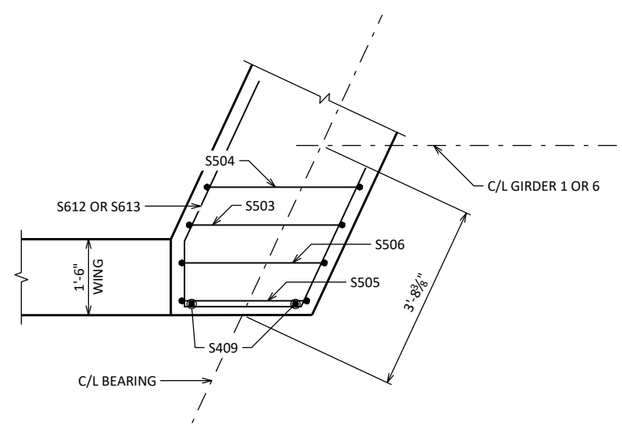

PLAN - DIAPHRAGM AT WINGS 1 & 3

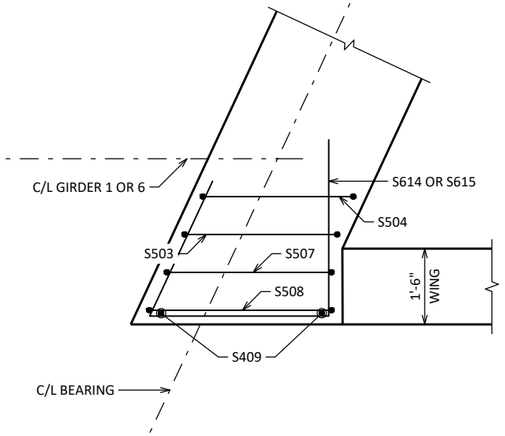

PLAN - DIAPHRAGM AT WINGS 2 & 4

LEGEND

✳✳ DIMENSIONS TAKEN NORMAL TO C/L GIRDERS.

NO.	DATE	REVISION	BY

STATE OF WISCONSIN
DEPARTMENT OF TRANSPORTATION

STRUCTURE B-10-398

DRAWN BY UD | PLANS CK'D JRD

SUPERSTRUCTURE DETAILS 3

SHEET 29 OF 33

SCALE =

8

8

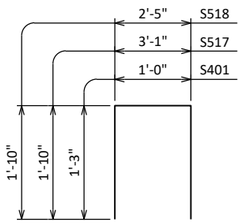

S401, S517 & S518

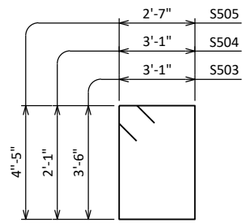

S503 THRU S505

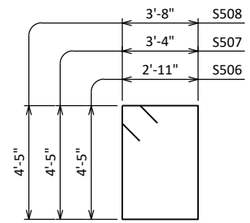

S506 THRU S508

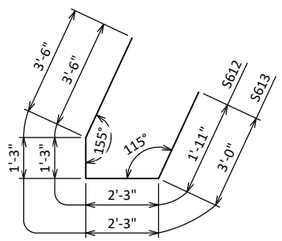

S612 & S613

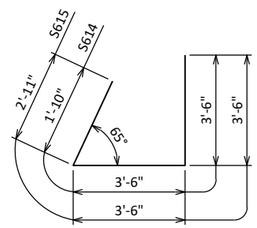

S614 & S615

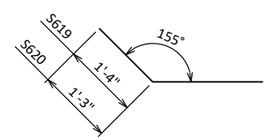

S619 & S620

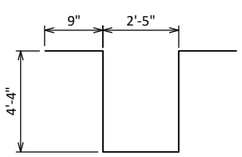

S522

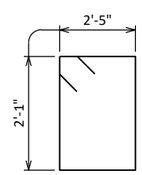

S524

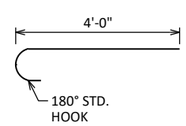

S653

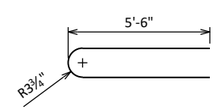

S654

BAR SERIES TABLE

BUNDLE AND TAG EACH SERIES SEPARATELY.

BAR MARK	NO. REQ'D.	LENGTH
S530	1 SERIES OF 16	5'-7" TO 28'-4"
S531	1 SERIES OF 10	31'-5" TO 45'-2"
S534	1 SERIES OF 16	19'-3" TO 42'-0"
S536	1 SERIES OF 11	2'-7" TO 17'-9"
S545	1 SERIES OF 15	6'-4" TO 27'-7"
S546	1 SERIES OF 11	30'-8" TO 45'-11"
S550	1 SERIES OF 16	18'-6" TO 41'-4"
S551	1 SERIES OF 11	1'-10" TO 17'-0"

BILL OF BARS

NOTE: THE FIRST OR FIRST TWO DIGITS OF THE BAR MARK SIGNIFIES THE BAR SIZE.

MARK	NO. REQ'D.	LENGTH	BENT	BAR SERIES	LOCATION	ORIEN.
COATED BARS					TOTAL WEIGHT = 140940	
S401	50	3-4	X		ABUT. DIAPH. - BOT.	VERT.
S402	20	4-8			ABUT. DIAPH. - BOT.	HORIZ.
S503	84	13-10	X		ABUT. DIAPH. - STIRRUPS	VERT.
S504	24	11-0	X		ABUT. DIAPH. - STIRRUPS	VERT.
S505	2	14-8	X		ABUT. DIAPH. - STIRRUPS - WINGS 1 & 3	VERT.
S506	2	15-4	X		ABUT. DIAPH. - STIRRUPS - WINGS 1 & 3	VERT.
S507	2	16-2	X		ABUT. DIAPH. - STIRRUPS - WINGS 2 & 4	VERT.
S508	2	16-10	X		ABUT. DIAPH. - STIRRUPS - WINGS 2 & 4	VERT.
S409	8	3-3			ABUT. DIAPH. - ENDS	VERT.
S610	10	5-11			ABUT. DIAPH. - BTW. GIRDERS	HORIZ.
S611	60	5-1			ABUT. DIAPH. - BTW. GIRDERS	HORIZ.
S612	2	8-7	X		ABUT. DIAPH. - WINGS 1 & 3 ENDS	HORIZ.
S613	6	9-8	X		ABUT. DIAPH. - WINGS 1 & 3 ENDS	HORIZ.
S614	2	8-6	X		ABUT. DIAPH. - WINGS 2 & 4 ENDS	HORIZ.
S615	6	9-7	X		ABUT. DIAPH. - WINGS 2 & 4 ENDS	HORIZ.
S516	24	6-0			ABUT. DIAPH. - THRU GIRDER WEB	HORIZ.
S517	36	6-6	X		ABUT. DIAPH. - TOP - BTW. GIRDERS 1-3	VERT.
S518	48	5-10	X		ABUT. DIAPH. - TOP	VERT.
S619	2	20-0	X		ABUT. DIAPH. - B.F. - AT TRAIL	HORIZ.
S620	2	5-3	X		ABUT. DIAPH. - B.F. - WINGS 1 & 4	HORIZ.
S621	12	49-5			ABUT. DIAPH. - B.F.	HORIZ.
S522	60	12-1	X		PIER DIAPH. - STIRRUPS	VERT.
S423	40	3-8			PIER DIAPH. - BOT.	HORIZ.
S524	20	9-8	X		PIER DIAPH. - STIRRUPS	VERT.
S425	80	4-9			PIER DIAPH.	HORIZ.
S426	504	40-11			DECK - BOT.	LONGIT.
S527	1	2-7			DECK - BOT.	TRANS.
S528	1	4-1			DECK - BOT.	TRANS.
S529	1	4-11			DECK - BOT.	TRANS.
S530	16	17-0		◭	DECK - BOT.	TRANS.
S531	10	38-4		◭	DECK - BOT.	TRANS.
S532	416	47-5			DECK - BOT.	TRANS.
S533	1	45-2			DECK - BOT.	TRANS.
S534	16	30-8		◭	DECK - BOT.	TRANS.
S535	1	18-2			DECK - BOT.	TRANS.
S536	11	10-2		◭	DECK - BOT.	TRANS.
S437	256	40-6			DECK - TOP - SPAN 1 & 3	LONGIT.
S438	64	33-8			DECK - TOP - SPAN 2	LONGIT.
S939	254	20-0			DECK - TOP - PIER 1 & 2	LONGIT.
S940	128	53-0			DECK - TOP - PIER 1 & 2	LONGIT.
S941	126	51-0			DECK - TOP - PIER 1 & 2	LONGIT.
S542	1	1-10			DECK - TOP	TRANS.
S543	1	3-4			DECK - TOP	TRANS.
S544	2	4-11			DECK - TOP	TRANS.
S545	15	17-0		◭	DECK - TOP	TRANS.
S546	11	38-4		◭	DECK - TOP	TRANS.
S547	415	47-5			DECK - TOP	TRANS.
S548	1	45-11			DECK - TOP	TRANS.
S549	1	44-4			DECK - TOP	TRANS.
S550	16	29-11		◭	DECK - TOP	TRANS.
S551	11	9-5		◭	DECK - TOP	TRANS.
S652	384	6-0			RAILING - TYPE 'M'	LONGIT.
S653	16	4-8	X		RAILING - TYPE 'M'	LONGIT.
S654	200	11-8	X		RAILING - TYPE 'M'	TRANS.
S555	1	18-2			DECK - TOP	TRANS.
S556	4	5-0			FLOOR DRAIN	LONGIT.
S557	4	8-0			FLOOR DRAIN	TRANS.

◭ LENGTH SHOWN FOR BAR IS AN AVERAGE AND SHOULD ONLY BE USED FOR BAR WEIGHT CALCULATIONS. SEE BAR SERIES TABLE FOR ACTUAL LENGTHS.

8

NO.	DATE	REVISION	BY

STATE OF WISCONSIN
DEPARTMENT OF TRANSPORTATION

STRUCTURE B-10-398

DRAWN BY UD | PLANS CK'D JRD

SUPERSTRUCTURE BILL OF BARS

SCALE =

8

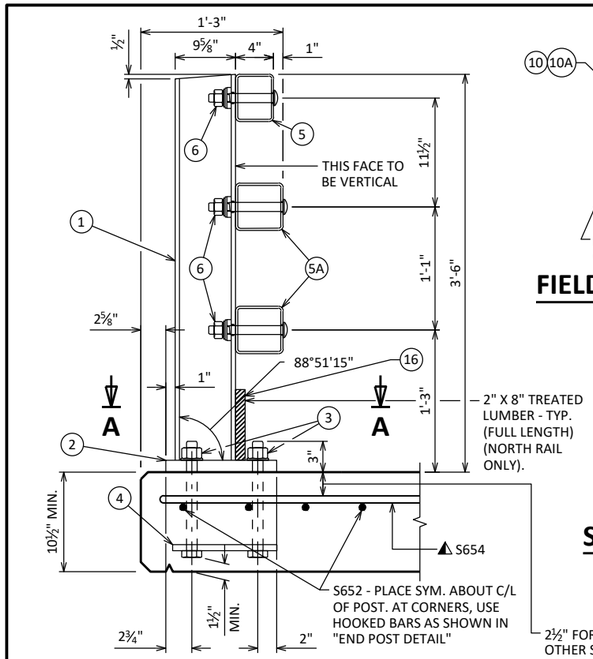

SECTION THRU RAILING ON DECK

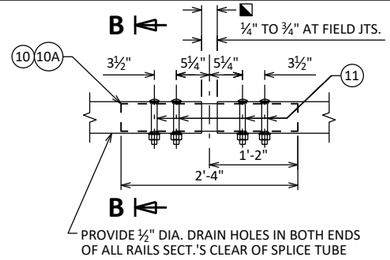

FIELD ERECTION JOINT DETAIL

SECTION B-B

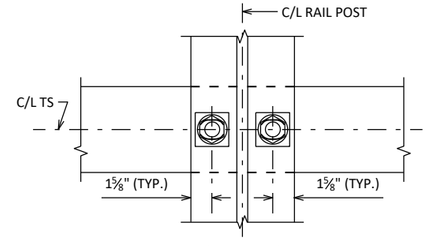

NOTE: CONNECTIONS AT LOWER RAILS SHOWN. CONNECTIONS AT TOP RAIL SIMILAR.

TYPICAL RAIL TO POST CONNECTIONS

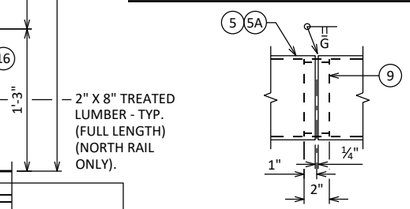

SHOP RAIL SPLICE DETAIL

LOCATION MUST BE SHOWN ON SHOP DRAWINGS

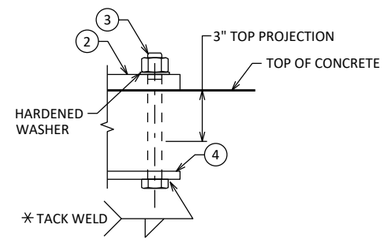

ANCHOR BOLTS

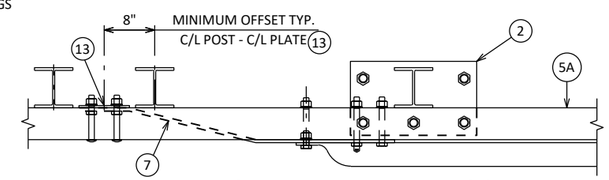

TOP VIEW AT END POST

THRIE BEAM RAIL ATTACHMENT

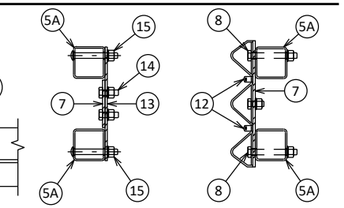

SECTION C-C SECTION D-D

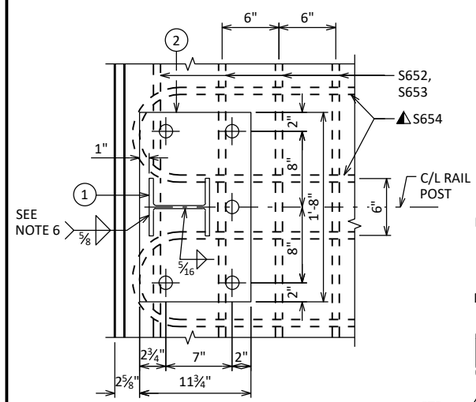

SECTION A-A

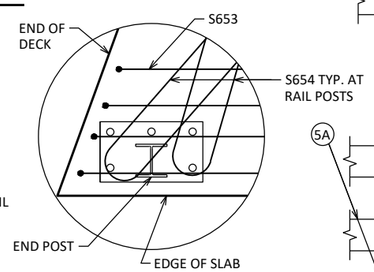

END POST DETAIL

REINFORCEMENT AT SW SHOWN, SE SIMILAR

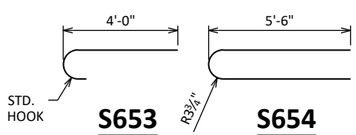

S653 S654

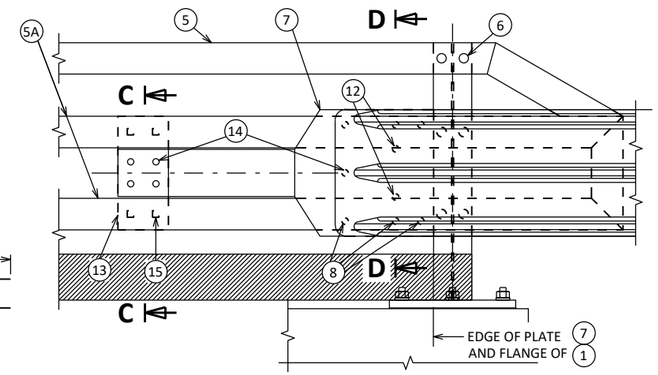

DETAIL AT END POST

THRIE BEAM RAIL ATTACHMENT

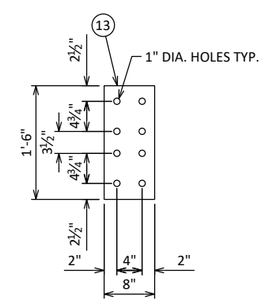

ANCHOR PLATE

AT BEAM GUARD ATTACHMENT

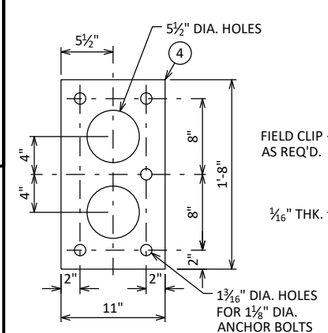

ANCHOR PLATE

AT RAIL TO DECK CONNECTION

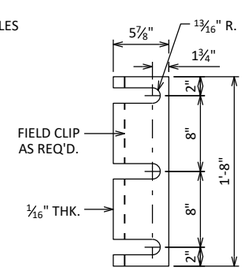

POST SHIM DETAIL

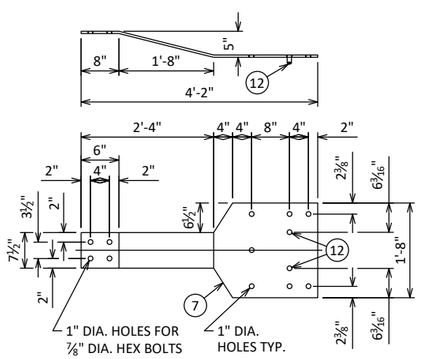

BACK-UP PLATE DETAIL

AT BEAM GUARD ATTACHMENT

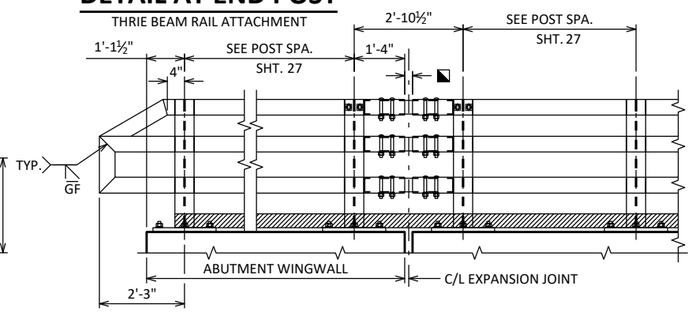

PART ELEVATION OF RAILING

LEGEND

1. W6 X 25 WITH 1⅛" X 1½" HORIZ. SLOTS ON EACH SIDE OF POST FOR BOLT NO. 6. CUT BOTTOM OF POST TO MATCH CROSS SLOPE OF ROADWAY. PLACE POST VERTICAL. PLACE POSTS NORMAL TO GRADE LINE.
2. PLATE 1¼" X 11¾" X 1'-8" WITH 1⁷⁄₁₆" DIA. OVERSIZED HOLES FOR ANCHOR BOLTS NO. 3. WELD TO NO. 1 AS SHOWN.
3. ASTM A449 - 1⅛" DIA. ANCHOR BOLTS WITH NUT AND HARDENED WASHER (ALL GALVANIZED). 5 REQ'D. PER POST. THREAD 3" AND PLACE NORMAL TO PLATE NO. 2. CHAMFER TOP OF BOLTS BEFORE THREADING. USE 1'-9" LONG IN ABUTMENT WINGS. AT POSTS ON CONCRETE SLAB SUPERSTRUCTURES WHERE THE SLAB THICKNESS IS > 16" USE 1'-3" LONG. USE 10¾" LONG AT ALL OTHER LOCATIONS. (AN EQUIVALENT THREADED ROD WITH NUTS AND HARDENED WASHERS MAY BE SUBSTITUTED FOR ANCHOR BOLTS IN WINGS IF REQ'D. FOR CONSTRUCTABILITY.)
4. ⅝" X 11" X 1'-8" ANCHOR PLATE (GALVANIZED) WITH 1³⁄₁₆" DIA. HOLES FOR ANCHOR BOLTS NO. 3
5. TS 5 X 4 X 0.25 STRUCTURAL TUBING. ATTACH TO NO. 1 WITH NO. 6.
5A. TS 5 X 5 X 0.25 STRUCTURAL TUBING. ATTACH TO NO. 1 WITH NO. 6.
6. ⅞" DIA. A325 SLOTTED ROUND HEAD BOLT WITH NUT, ³⁄₁₆" X 1⅝" X 1⅝" MIN. WASHER, AND LOCK WASHER (2 REQ'D. AT EACH RAIL TO POST LOCATION.)
7. ½" THK. BACK-UP PLATE WITH 2 - ⅞" X 1½" THREADED SHOP WELDED STUDS (NO. 12). BOLT TO RAIL AS SHOWN IN DETAIL. REQUIRED AT THRIE BEAM GUARD RAIL ATTACHMENTS ONLY. PLACE SYMMETRICALLY ABOUT TUBES NO. 5A.
8. 1" DIA. HOLES IN PLATE NO. 7 & TUBES NO. 5A FOR ⅞" DIA. A325 BOLTS WITH HEX NUTS AND WASHERS. 6 HOLES IN TUBES AND PLATE NO. 7.
9. SPLICE SLEEVE FABRICATED FROM ¼" PLATE. PROVIDE "SLIDING FIT".
10. ⅜" X 3⅝" X 2'-4" PLATE. 2 PER RAIL. USED IN NO. 5 & 5A.
10A. ⅜" X 2⅝" X 2'-4" PLATE USED IN NO. 5, ⅜" X 3⅝" X 2'-4" PLATE USED IN NO. 5A. 2 PER RAIL.
11. ⅞" DIA. A325 ROUND HEAD BOLT WITH NUT, WASHER, AND LOCK WASHER. USE ¹⁵⁄₁₆" X 1¼" LONGIT. SLOTTED HOLES AT FIELD JOINTS AND ¹⁵⁄₁₆" X 2¼" MIN. LONGIT. SLOTTED HOLES AT EXP. JOINTS IN PLATE NO. 10A.
12. ⅞" DIA. X 1½" LONG THREADED SHOP WELDED STUDS (2 REQ'D).
13. ⅜" X 8" X 1'-6" PLATE. BOLT TO RAIL AS SHOWN IN DETAIL. REQ'D. AT THRIE BEAM GUARD RAIL ATTACHMENTS ONLY. PLACE SYM. ABOUT TUBES NO. 5A.
14. ⅞" DIA. X 2" LONG A325 HEX BOLT WITH NUT AND WASHER (5 REQ'D.).
15. 1" DIA. HOLES IN TUBES NO. 5A FOR ⅞" DIA. A325 ROUND HEAD BOLT WITH NUT, WASHER AND LOCK WASHER (4 REQ'D.). 4 HOLES IN TUBES.
16. PROVIDE A POSITIVE CONNECTION BETWEEN THE TREATED TIMBER AND W6 X 25 POST USING A CAST IRON "C" CLIP OR SIMILAR HARDWARE. HOLES SHALL NOT BE DRILLED IN W6 X 25 POST TO ATTACH TREATED TIMBER. ATTACHMENT HARDWARE AND TREATED TIMBER ARE INCIDENTAL TO "RAILING TUBULAR TYPE M" BID ITEM.

GENERAL NOTES

1. BID ITEM SHALL BE "RAILING TUBULAR TYPE M" WHICH INCLUDES ALL ITEMS SHOWN.
2. RAIL POST AND BASE PLATES SHALL CONFORM TO THE REQUIREMENTS OF ASTM A709 GRADE 50. HOLLOW RAILING STRUCTURAL TUBING SHALL CONFORM TO THE REQUIREMENTS OF ASTM A500 GRADE B OR C WITH A CERTIFIED FY = 50 KSI. ANCHOR PLATES, AND SPLICE TUBE PLATES SHALL CONFORM TO THE REQUIREMENTS OF ASTM A709 GRADE 36.
3. THE NUT SECURING THE POST BASE PLATE TO THE CONCRETE SHALL BE TIGHTENED TO A SNUG FIT AND GIVEN AN ADDITIONAL ⅛ TURN.
4. RAILS SHALL BE CONTINUOUS OVER A MINIMUM OF THREE (3) POSTS WITHOUT SPLICES WHERE POSSIBLE. RAILS SHALL BE SPLICED IN A PANEL OVER EXPANSION JOINTS.
5. ENDS OF TUBE SECTIONS SHALL BE SAWED. GRIND SMOOTH EXPOSED EDGES. ALL CUT ENDS SHALL BE TRUE AND SMOOTH.
6. WELD IS THE SAME ON BOTH FLANGES. FLANGE WELD DOES NOT REQUIRE MAGNETIC PARTICLE TESTING.
7. FILL BOLT SLOT OPENINGS IN POST SHIMS AND PLATE NO. 2 AND CAULK AROUND PERIMETER OF PLATE NO. 2 WITH NON-STAINING GRAY NON-BITUMINOUS JOINT SEALER. STEEL POST SHIMS MAY BE USED UNDER POSTS WHERE REQ'D. FOR ALIGNMENT.
8. POST BASE PLATES SHALL BE FLAT WITH ALL SURFACES SMOOTH AND FREE FROM WARP AND ALL EDGES SMOOTH, STRAIGHT AND VERTICAL. ALL PLATE CUTS SHALL BE MACHINE OR MACHINE FLAME CUT.
9. ALL MATERIAL SHALL BE GALVANIZED AFTER FABRICATION. PRIOR TO GALVANIZING, ALL STEEL RAILING POSTS & STEEL TUBING SHALL BE GIVEN A NO. 6 BLAST CLEANING BY SSPC SPECIFICATIONS.

TIE TO TOP MAT OF STEEL.

ANCHOR BOLT ASSEMBLY MAY BE TACK WELDED, EITHER IN THE SHOP, OR IN THE FIELD AFTER THE ANCHOR PLATE IS PLACED.

RDWY. OPENING OR 2½" MIN. FOR STRIP SEAL EXP. JOINT & (¼" TO ¾") OPENING FOR A1 ABUTMENT.

NO.	DATE	REVISION	BY

STATE OF WISCONSIN
DEPARTMENT OF TRANSPORTATION

STRUCTURE B-10-398

DRAWN BY UD PLANS CK'D JRD

TUBULAR STEEL RAILING TYPE "M"

SCALE =

8

8

STATE PROJECT NUMBER

7840-03-73

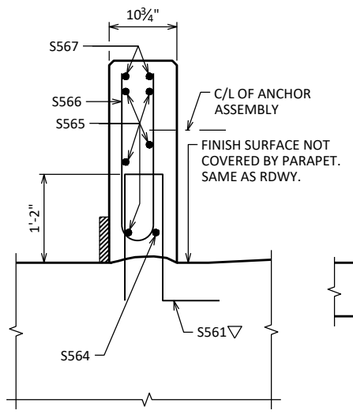

SECTION A-A

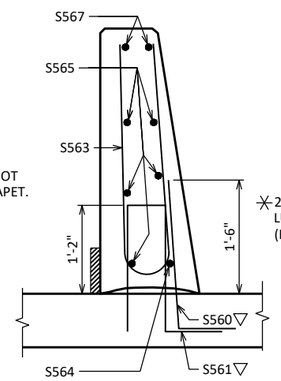

SECTION B-B

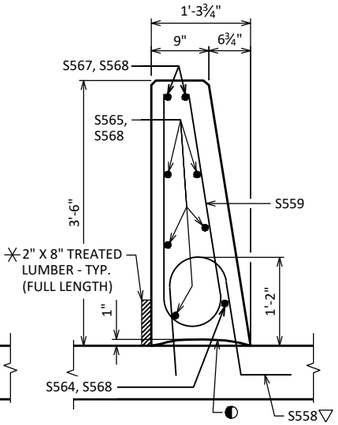

SECTION C-C

✳ ATTACH TREATED LUMBER TO PARAPET WITH CONCRETE SCREWS OR ANCHORS. THE COST OF SCREWS OR ANCHORS AND TREATED TIMBER SHALL BE INCIDENTAL TO "CONCRETE MASONRY BRIDGES" BID ITEM. CUT 4" WIDE BY 2" HIGH OPENINGS AT BARRIER BLOCKOUT LOCATIONS.

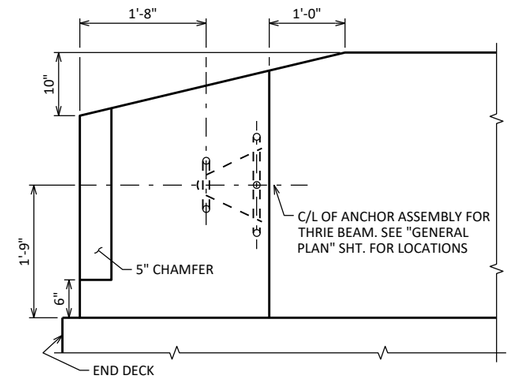

PARAPET END TREATMENT DETAIL

LOOKING AT INSIDE FACE OF PARAPET
NW CORNER SHOWN, NE SIMILAR

BILL OF BARS

FOR DECK PARAPETS

BAR MARK	COAT	W. END OF DECK	E. END OF DECK	LENGTH	BENT	BAR SERIES	LOCATION
COATED BARS							TOTAL WEIGHT = 8340
S558	X	224	223	4'-5"	X		PARAPET VERT.
S559	X	224	223	6'-8"	X		PARAPET VERT.
S560	X	12	12	2'-9"	X		PARAPET VERT.
S561	X	17	17	4'-4"	X		PARAPET VERT.
S562	X	5	5	6'-5"	X		PARAPET VERT.
S563	X	6	6	6'-6"	X		PARAPET VERT.
S564	X	1	1	19'-9"	X		PARAPET HORIZ.
S565	X	5	5	19'-9"			PARAPET HORIZ.
S566	X	6	6	5'-5"	X	▲	PARAPET VERT.
S567	X	2	2	19'-9"	X		PARAPET HORIZ.
S568	X	24	24	48'-0"			PARAPET HORIZ.

▲ LENGTH SHOWN FOR BAR IS AN AVERAGE AND SHOULD ONLY BE USED FOR BAR WEIGHT CALCULATIONS. SEE BAR SERIES TABLE FOR ACTUAL LENGTHS.

BAR SERIES TABLE

BUNDLE AND TAG EACH SERIES SEPARATELY.

BAR MARK	NO. REQ'D.	LENGTH
S566	2 SERIES OF 6	4'-9" TO 6'-1"

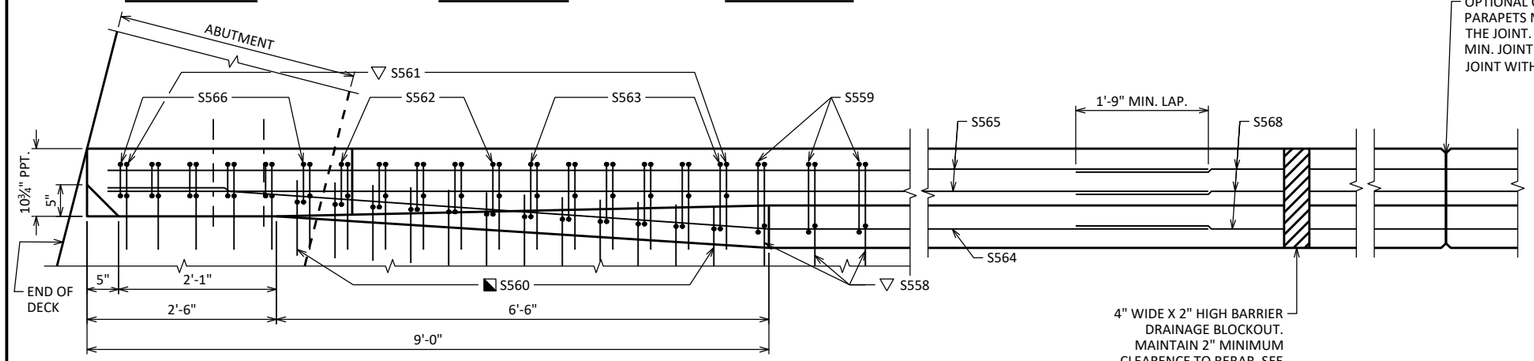

PLAN

NW CORNER SHOWN, NE SIMILAR

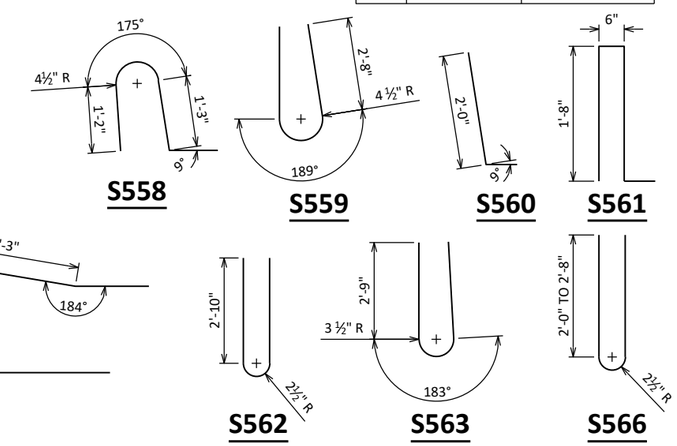

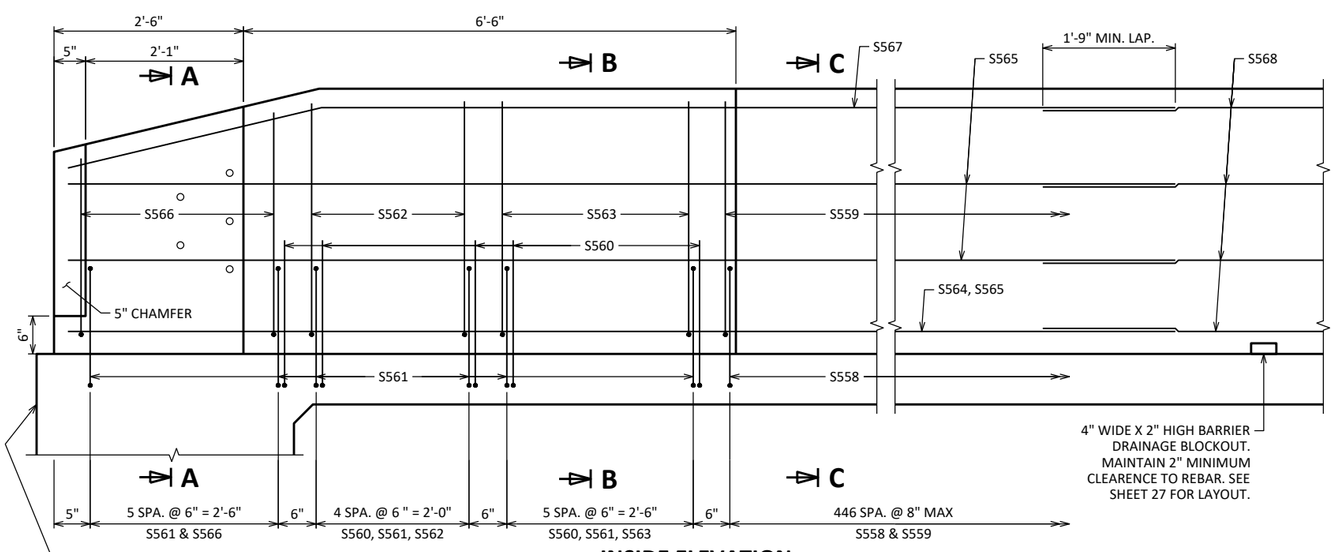

INSIDE ELEVATION

NW CORNER SHOWN, NE SIMILAR

◐ CONST. JOINT - STRIKE OFF AT GUTTERLINE ELEVATION AT DRAINAGE BLOCKOUT LOCATIONS

◪ USE CARE TO PLACE S560 BARS CORRECTLY ALONG TRANSITION OF PARAPET.

▽ S558, S560 AND S561 BARS TO BE TIED TO SUPERSTRUCTURE STEEL BEFORE SUPERSTRUCTURE IS POURED.

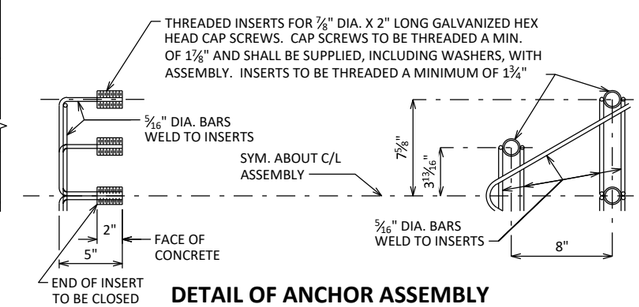

DETAIL OF ANCHOR ASSEMBLY

NOTE: HEX HEAD CAP SCREWS & WASHERS TO BE GALVANIZED IN ACCORDANCE WITH ASTM F2329.

ASSEMBLY SHALL BE BID ITEM "ANCHOR ASSEMBLIES FOR STEEL PLATE BEAM GUARD", EACH.

NO.	DATE	REVISION	BY

STATE OF WISCONSIN
DEPARTMENT OF TRANSPORTATION

STRUCTURE B-10-398

DRAWN BY UD | PLANS CK'D JRD

SINGLE SLOPE PARAPET 42SS 'MODIFIED'

SHEET 32 OF 33

107

SCALE =

8

8

STATE PROJECT NUMBER
7840-03-73

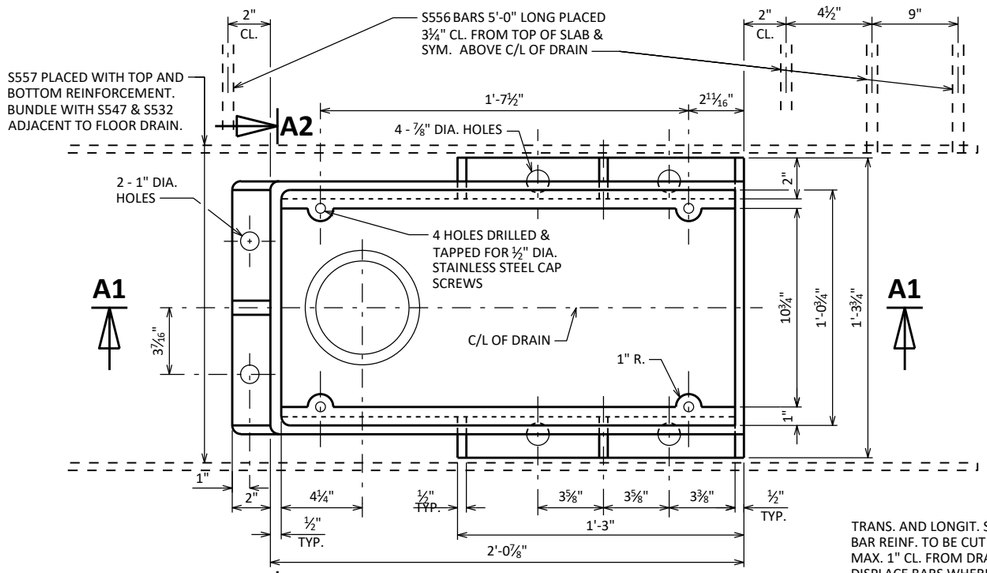

PLAN

TRANS. AND LONGIT. SLAB BAR REINF. TO BE CUT A MAX. 1" CL. FROM DRAIN FRAME DISPLACE BARS WHERE POSSIBLE

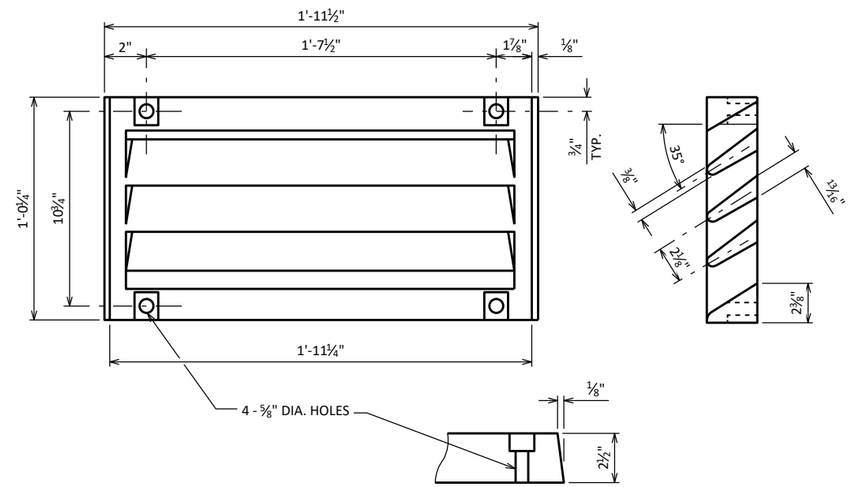

GRATE CASTING DETAIL

ATTACH GRATE TO FRAME FOR SHIPMENT

NOTES

ALL MATERIAL FOR TYPE "GC" CASTING, EXCLUDING GRATE HOLD DOWN SCREWS, SHALL BE GRAY IRON CONFORMING TO ASTM A48, CLASS 30. (APPROXIMATE WEIGHT = 225#)

MATERIAL FOR BRACKETS SHALL CONFORM TO ASTM A36.

ALL MATERIAL FOR FLOOR DRAINS TO BE INCLUDED IN THE BID ITEM "FLOOR DRAINS TYPE GC".

ALL MATERIAL FOR DOWNSPOUTS, DOWNSPOUT CONNECTIONS, AND BRACKETS TO BE INCLUDED IN THE BID ITEM "DOWNSPOUT 6-INCH".

ALTERNATE BRACKETS ARE NOT ALLOWED.

◪ FLANGED 6" DIA. DOWNSPOUTS SHALL BE REINFORCED THERMOSETTING RESIN PIPE (RTRP) OR GALVANIZED STANDARD PIPE CONFORMING TO ASTM A53.

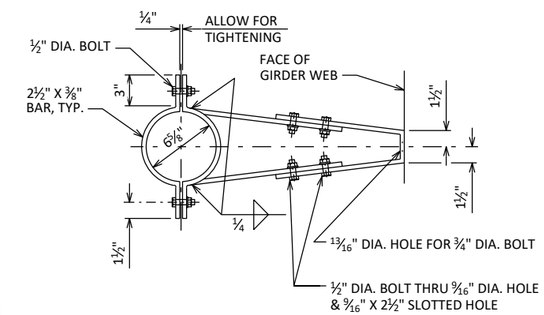

BRACKET DETAIL

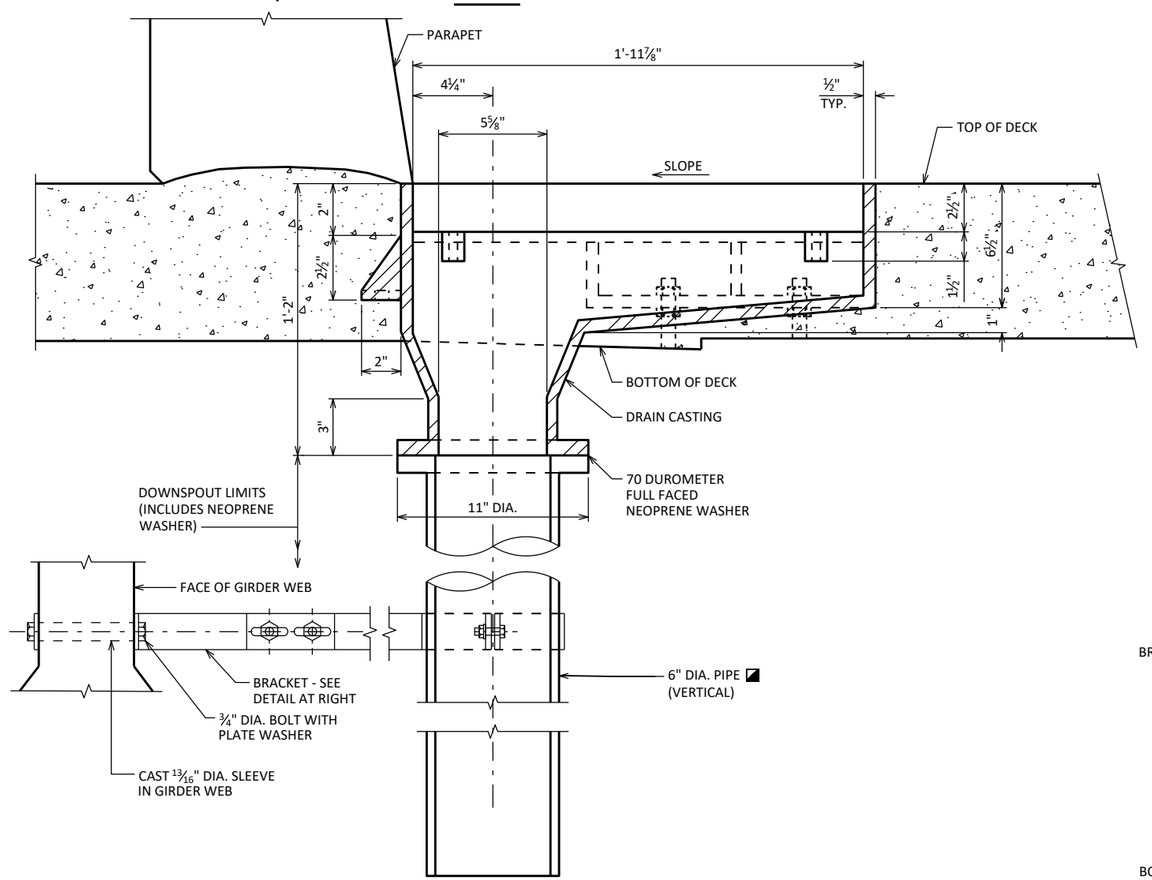

SECTION A1

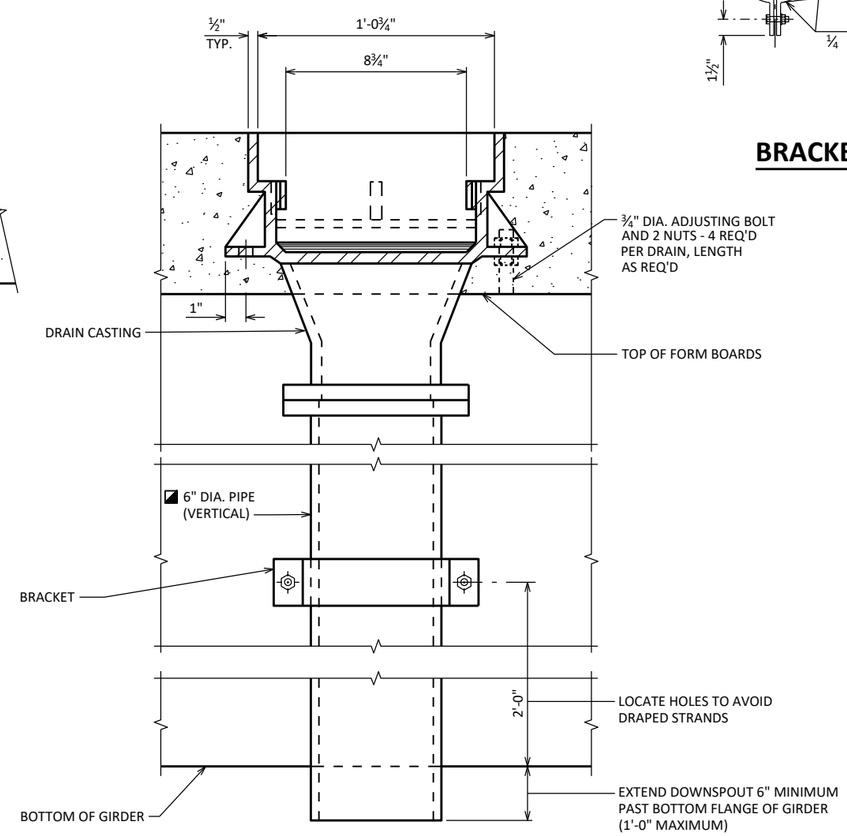

SECTION A2

8

8

NO.	DATE	REVISION	BY

STATE OF WISCONSIN
DEPARTMENT OF TRANSPORTATION

STRUCTURE B-10-398

DRAWN BY JAC | PLANS CK'D JRD

FLOOR DRAIN TYPE 'GC'

SHEET 33 OF 33

SCALE = 0.17

CTH G - WEST

STATION	REAL STATION	DISTANCE	AREA (SF)			INCREMENTAL VOL (CY) (UNADJUSTED)			CUMULATIVE VOL (CY)		
			CUT	SALVAGED/UNUSABLE PAVEMENT MATERIAL	FILL	CUT	SALVAGED/UNUSABLE PAVEMENT MATERIAL	FILL	CUT	EXPANDED FILL	MASS ORDINATE
									1.00	1.25	
						NOTE 1	NOTE 2	NOTE 3	NOTE 1		NOTE 8
6+07.00	607.00	0.00	0.00	0.00	0.00	0	0	0	0	0	0
6+07.49	607.49	0.49	10.03	8.00	36.08	0	0	0	0	0	0
6+49.00	649.00	41.51	9.15	8.00	99.90	15	12	105	15	131	-128
6+50.02	650.02	1.02	77.92	8.00	101.11	2	0	4	17	136	-131
7+00.00	700.00	49.98	30.69	8.00	303.52	101	15	375	118	605	-514
7+28.71	728.71	28.71	22.91	8.00	307.60	29	9	325	147	1,011	-900
7+50.00	750.00	21.29	17.72	8.00	287.44	16	6	235	163	1,305	-1,184
7+59.69	759.69	9.69	15.58	8.00	281.83	6	3	102	169	1,433	-1,309
8+00.00	800.00	40.31	12.41	8.67	273.99	21	12	415	190	1,951	-1,818
8+42.15	842.15	42.15	12.57	8.00	261.49	20	13	418	210	2,474	-2,334

CTH G - EAST

STATION	REAL STATION	DISTANCE	AREA (SF)			INCREMENTAL VOL (CY) (UNADJUSTED)			CUMULATIVE VOL (CY)		
			CUT	SALVAGED/UNUSABLE PAVEMENT MATERIAL	FILL	CUT	SALVAGED/UNUSABLE PAVEMENT MATERIAL	FILL	CUT	EXPANDED FILL	MASS ORDINATE
									1.00	1.25	
						NOTE 1	NOTE 2	NOTE 3	NOTE 1		NOTE 8
11+72.00	1172.00	0.00	34.64	8.67	0.00	0	0	0	0	0	0
11+87.00	1187.00	15.00	36.37	8.67	0.00	20	5	0	20	0	15
12+00.00	1200.00	13.00	38.66	8.67	40.48	18	4	10	38	13	17
12+50.00	1250.00	50.00	48.53	8.67	23.06	81	16	59	119	86	8
12+55.15	1255.15	5.15	50.23	8.67	23.44	9	2	4	128	91	10
12+88.00	1288.00	32.85	63.29	8.67	1.70	69	11	15	197	110	49
12+90.02	1290.02	2.02	15.75	8.67	2.98	3	1	0	200	110	51
12+91.00	1291.00	0.98	15.84	8.67	11.23	1	0	0	201	110	52
13+00.00	1300.00	9.00	16.14	8.67	4.16	5	3	3	206	114	50
13+33.76	1333.76	33.76	9.95	8.67	0.00	16	11	3	222	118	52
13+34.00	1334.00	0.24	0.00	0.00	0.00	0	0	0	222	118	52

Note 1: Mass Ordinate = Cut - Fill

RECREATIONAL LANE - WEST

STATION	REAL STATION	DISTANCE	AREA (SF)			INCREMENTAL VOL (CY) (UNADJUSTED)			CUMULATIVE VOL (CY)		
			CUT	SALVAGED/UNUSABLE PAVEMENT MATERIAL	FILL	CUT	SALVAGED/UNUSABLE PAVEMENT MATERIAL	FILL	CUT	EXPANDED FILL	MASS ORDINATE
									1.00	1.25	
						NOTE 1	NOTE 2	NOTE 3	NOTE 1		NOTE 8
6+07.00	607.00	0.00	0.00	0.00	0.00	0	0	0	0	0	0
6+07.49	607.49	0.49	0.00	0.00	0.00	0	0	0	0	0	0
6+49.00	649.00	41.51	0.00	0.00	0.00	0	0	0	0	0	0
6+50.02	650.02	1.02	0.00	0.00	0.00	0	0	0	0	0	0
7+00.00	700.00	49.98	0.00	0.00	158.30	0	0	147	0	184	-184
7+28.71	728.71	28.71	0.00	0.00	170.78	0	0	175	0	403	-403
7+50.00	750.00	21.29	0.00	0.00	182.75	0	0	139	0	576	-576
7+59.69	759.69	9.69	0.00	0.00	188.32	0	0	67	0	660	-660
8+00.00	800.00	40.31	0.00	0.00	183.11	0	0	277	0	1,006	-1,006
8+42.15	842.15	42.15	0.00	0.00	176.60	0	0	281	0	1,358	-1,358

RECREATIONAL LANE - EAST

STATION	REAL STATION	DISTANCE	AREA (SF)			INCREMENTAL VOL (CY) (UNADJUSTED)			CUMULATIVE VOL (CY)		
			CUT	SALVAGED/UNUSABLE PAVEMENT MATERIAL	FILL	CUT	SALVAGED/UNUSABLE PAVEMENT MATERIAL	FILL	CUT	EXPANDED FILL	MASS ORDINATE
									1.00	1.25	
						NOTE 1	NOTE 2	NOTE 3	NOTE 1		NOTE 8
11+72.00	1172.00	0.00	0.00	0.00	36.40	0	0	0	0	0	0
11+87.00	1187.00	15.00	0.00	0.00	22.95	0	0	16	0	20	-20
12+00.00	1200.00	13.00	0.00	0.00	71.21	0	0	23	0	49	-49
12+50.00	1250.00	50.00	0.00	0.00	61.27	0	0	123	0	203	-203
12+55.15	1255.15	5.15	0.00	0.00	60.30	0	0	12	0	218	-218
12+88.00	1288.00	32.85	0.00	0.00	18.12	0	0	48	0	278	-278
12+90.02	1290.02	2.02	0.00	0.00	9.06	0	0	1	0	279	-279
12+91.00	1291.00	0.98	0.00	0.00	0.00	0	0	0	0	279	-279
13+00.00	1300.00	9.00	0.00	0.00	0.00	0	0	0	0	279	-279
13+33.76	1333.76	33.76	0.00	0.00	0.00	0	0	0	0	279	-279
13+34.00	1334.00	0.24	0.00	0.00	0.00	0	0	0	0	279	-279

Note 1: Mass Ordinate = Cut - Fill

TEMPORARY CONSTRUCTION ACCESS - WEST

STATION	REAL STATION	DISTANCE	AREA (SF)			INCREMENTAL VOL (CY) (UNADJUSTED)			CUMULATIVE VOL (CY)		
			CUT	SALVAGED/UNUSABLE PAVEMENT MATERIAL	FILL	CUT NOTE 1	SALVAGED/UNUSABLE PAVEMENT MATERIAL NOTE 2	FILL NOTE 3	CUT 1.00 NOTE 1	EXPANDED FILL 1.25	MASS ORDINATE NOTE 8
100+13.00	10013.00	0.00	0.00	0.00	0.00	0	0	0	0	0	0
100+50.00	10050.00	37.00	16.46	0.00	0.00	11	0	0	11	0	11
101+00.00	10100.00	50.00	11.07	0.00	0.00	25	0	0	36	0	36
101+50.00	10150.00	50.00	16.58	0.00	0.00	26	0	0	62	0	62
102+00.00	10200.00	50.00	8.23	0.00	0.00	23	0	0	85	0	85
102+50.00	10250.00	50.00	9.06	0.00	0.00	16	0	0	101	0	101
103+00.00	10300.00	50.00	10.54	0.00	0.00	18	0	0	119	0	119
103+50.00	10350.00	50.00	22.19	0.00	0.00	30	0	0	149	0	149
104+00.00	10400.00	50.00	48.93	0.00	0.00	66	0	0	215	0	215
104+50.00	10450.00	50.00	74.35	0.00	0.00	114	0	0	329	0	329
105+00.00	10500.00	50.00	41.95	0.00	0.00	108	0	0	437	0	437
105+50.00	10550.00	50.00	3.02	0.00	0.00	42	0	0	479	0	479
106+00.00	10600.00	50.00	0.00	0.00	0.00	3	0	0	482	0	482
106+50.00	10650.00	50.00	103.29	0.00	0.00	96	0	0	578	0	578
107+00.00	10700.00	50.00	135.38	0.00	0.00	221	0	0	799	0	799
107+25.00	10725.00	25.00	0.00	0.00	0.00	63	0	0	862	0	862
107+50.00	10750.00	25.00	0.00	0.00	0.00	0	0	0	862	0	862
107+90.00	10790.00	40.00	0.00	0.00	0.00	0	0	0	862	0	862

TEMPORARY CONSTRUCTION ACCESS - EAST

STATION	REAL STATION	DISTANCE	AREA (SF)			INCREMENTAL VOL (CY) (UNADJUSTED)			CUMULATIVE VOL (CY)		
			CUT	SALVAGED/UNUSABLE PAVEMENT MATERIAL	FILL	CUT NOTE 1	SALVAGED/UNUSABLE PAVEMENT MATERIAL NOTE 2	FILL NOTE 3	CUT 1.00 NOTE 1	EXPANDED FILL 1.25	MASS ORDINATE NOTE 8
200+00.00	20000.00	0.00	0.00	0.00	0.00	0	0	0	0	0	0
200+50.00	20050.00	50.00	0.00	0.00	0.00	0	0	0	0	0	0
201+00.00	20100.00	50.00	0.00	0.00	0.00	0	0	0	0	0	0
201+25.00	20125.00	25.00	0.00	0.00	0.00	0	0	0	0	0	0
201+50.00	20150.00	25.00	0.00	0.00	0.00	0	0	0	0	0	0
202+00.00	20200.00	50.00	48.66	0.00	0.00	45	0	0	45	0	45
202+50.00	20250.00	50.00	33.20	0.00	0.00	76	0	0	121	0	121
203+00.00	20300.00	50.00	54.37	0.00	0.00	81	0	0	202	0	202
203+35.97	20335.97	35.97	36.33	0.00	0.00	60	0	0	262	0	262

9

9

FOR INFORMATION ONLY – SEE TEMPORARY CONSTRUCTION ACCESS QUANTITIES

Note 1: Mass Ordinate = Cut - Fill

REMOVING TEMPORARY CONSTRUCTION ACCESS - WEST

STATION	REAL STATION	DISTANCE	AREA (SF)			INCREMENTAL VOL (CY) (UNADJUSTED)			CUMULATIVE VOL (CY)		
			CUT	SALVAGED/UNUSABLE PAVEMENT MATERIAL	FILL	CUT NOTE 1	SALVAGED/UNUSABLE PAVEMENT MATERIAL NOTE 2	FILL NOTE 3	CUT 1.00 NOTE 1	EXPANDED FILL 1.25	MASS ORDINATE NOTE 8
100+13.00	10013.00	0.00	0.00	0.00	0.00	0	0	0	0	0	0
100+50.00	10050.00	37.00	0.00	0.00	0.00	0	0	0	0	0	0
101+00.00	10100.00	50.00	0.00	0.00	0.00	0	0	0	0	0	0
101+50.00	10150.00	50.00	0.00	0.00	0.00	0	0	0	0	0	0
102+00.00	10200.00	50.00	0.00	0.00	0.00	0	0	0	0	0	0
102+50.00	10250.00	50.00	0.00	0.00	0.00	0	0	0	0	0	0
103+00.00	10300.00	50.00	5.90	5.90	10.54	5	5	10	5	13	-13
103+50.00	10350.00	50.00	25.74	25.74	22.19	29	29	30	34	50	-50
104+00.00	10400.00	50.00	14.70	14.70	48.93	37	37	66	71	133	-133
104+50.00	10450.00	50.00	0.02	0.02	74.35	14	14	114	85	275	-275
105+00.00	10500.00	50.00	0.00	0.00	41.95	0	0	108	85	410	-410
105+50.00	10550.00	50.00	2.76	2.76	3.02	3	3	42	88	463	-463
106+00.00	10600.00	50.00	40.13	40.13	0.00	40	40	3	128	466	-466
106+50.00	10650.00	50.00	43.15	43.15	103.29	77	77	96	205	586	-586
107+00.00	10700.00	50.00	36.00	36.00	135.38	73	73	221	278	863	-863
107+25.00	10725.00	25.00	331.40	331.40	0.00	170	170	63	448	941	-941
107+50.00	10750.00	25.00	443.06	443.06	0.00	359	359	0	807	941	-941
107+90.00	10790.00	40.00	314.87	314.87	0.00	561	561	0	1,368	941	-941

REMOVING TEMPORARY CONSTRUCTION ACCESS - EAST

STATION	REAL STATION	DISTANCE	AREA (SF)			INCREMENTAL VOL (CY) (UNADJUSTED)			CUMULATIVE VOL (CY)		
			CUT	SALVAGED/UNUSABLE PAVEMENT MATERIAL	FILL	CUT NOTE 1	SALVAGED/UNUSABLE PAVEMENT MATERIAL NOTE 2	FILL NOTE 3	CUT 1.00 NOTE 1	EXPANDED FILL 1.25	MASS ORDINATE NOTE 8
200+00.00	20000.00	0.00	292.59	292.59	0.00	0	0	0	0	0	0
200+50.00	20050.00	50.00	304.69	304.69	0.00	553	553	0	553	0	0
201+00.00	20100.00	50.00	398.72	398.72	0.00	651	651	0	1,204	0	0
201+25.00	20125.00	25.00	367.25	367.25	0.00	355	355	0	1,559	0	0
201+50.00	20150.00	25.00	120.05	120.05	0.00	226	226	0	1,785	0	0
202+00.00	20200.00	50.00	0.00	0.00	48.66	111	111	45	1,896	56	-56
202+50.00	20250.00	50.00	0.00	0.00	33.20	0	0	76	1,896	151	-151
203+00.00	20300.00	50.00	5.78	5.78	54.37	5	5	81	1,901	253	-253
203+35.97	20335.97	35.97	1.49	1.49	36.33	5	5	60	1,906	328	-328

9

9

FOR INFORMATION ONLY – SEE TEMPORARY CONSTRUCTION ACCESS QUANTITIES

Note 1: Mass Ordinate = Cut - Fill

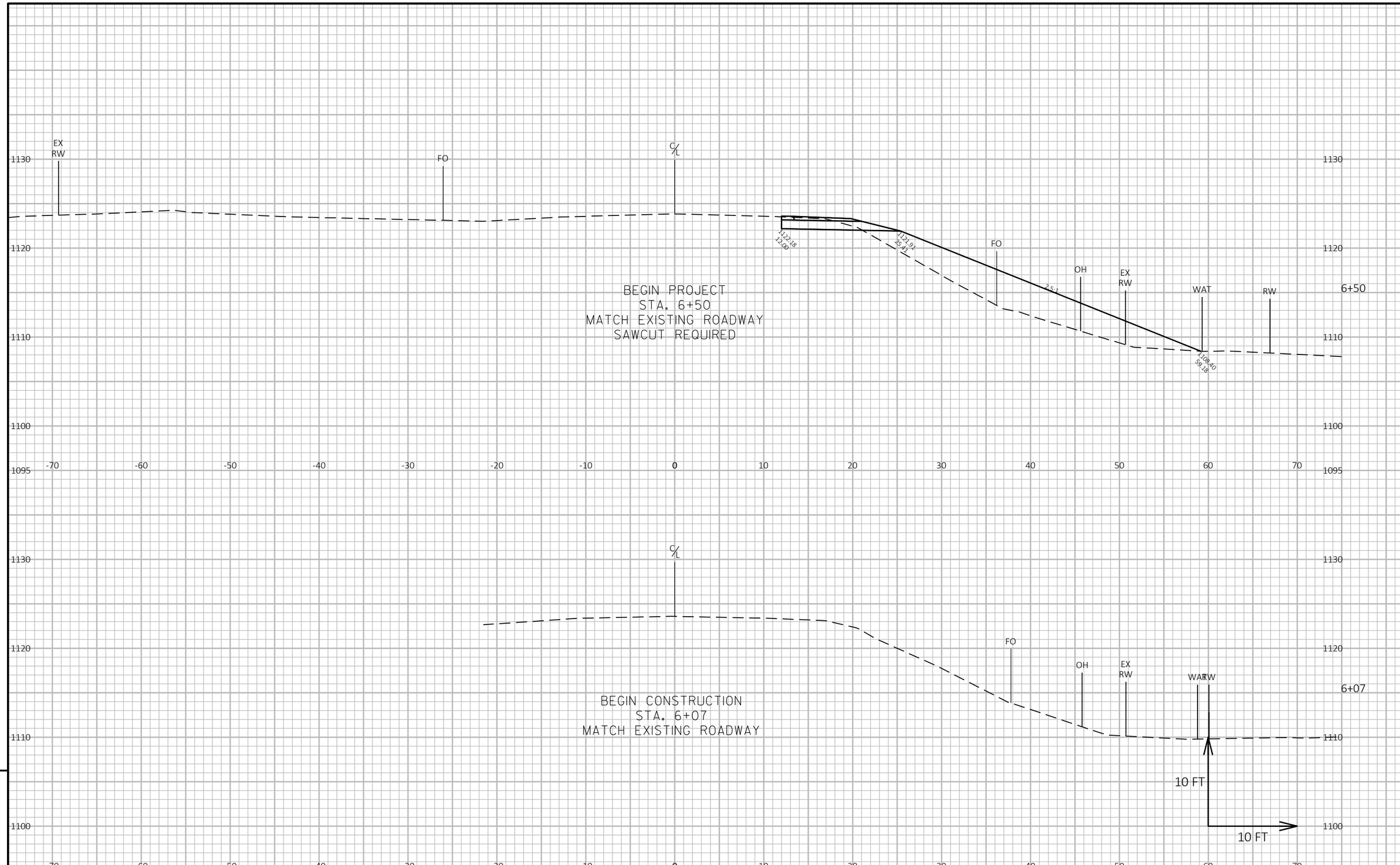

9

9

PROJECT NO: 7840-03-73	HWY: CTH G	COUNTY: CLARK	CROSS SECTIONS: CTH G	SHEET 113	E

FILE NAME : C:\ONEDRIVE\AECOM\60645919 - CTH G, CLARK COUNTY - GENERAL\900_CAD_GIS\910_CAD\78400303\SHEETSPLAN\0902-XS.DWG
LAYOUT NAME - 090201-xs
PLOT DATE : 4/17/2024 12:50 PM
PLOT BY : LANCELLE, JESSICA
PLOT NAME :
PLOT SCALE : 1 IN:10 FT HORZ. / 1 IN:10 FT VERT.
WISDOT/CADDS SHEET 49

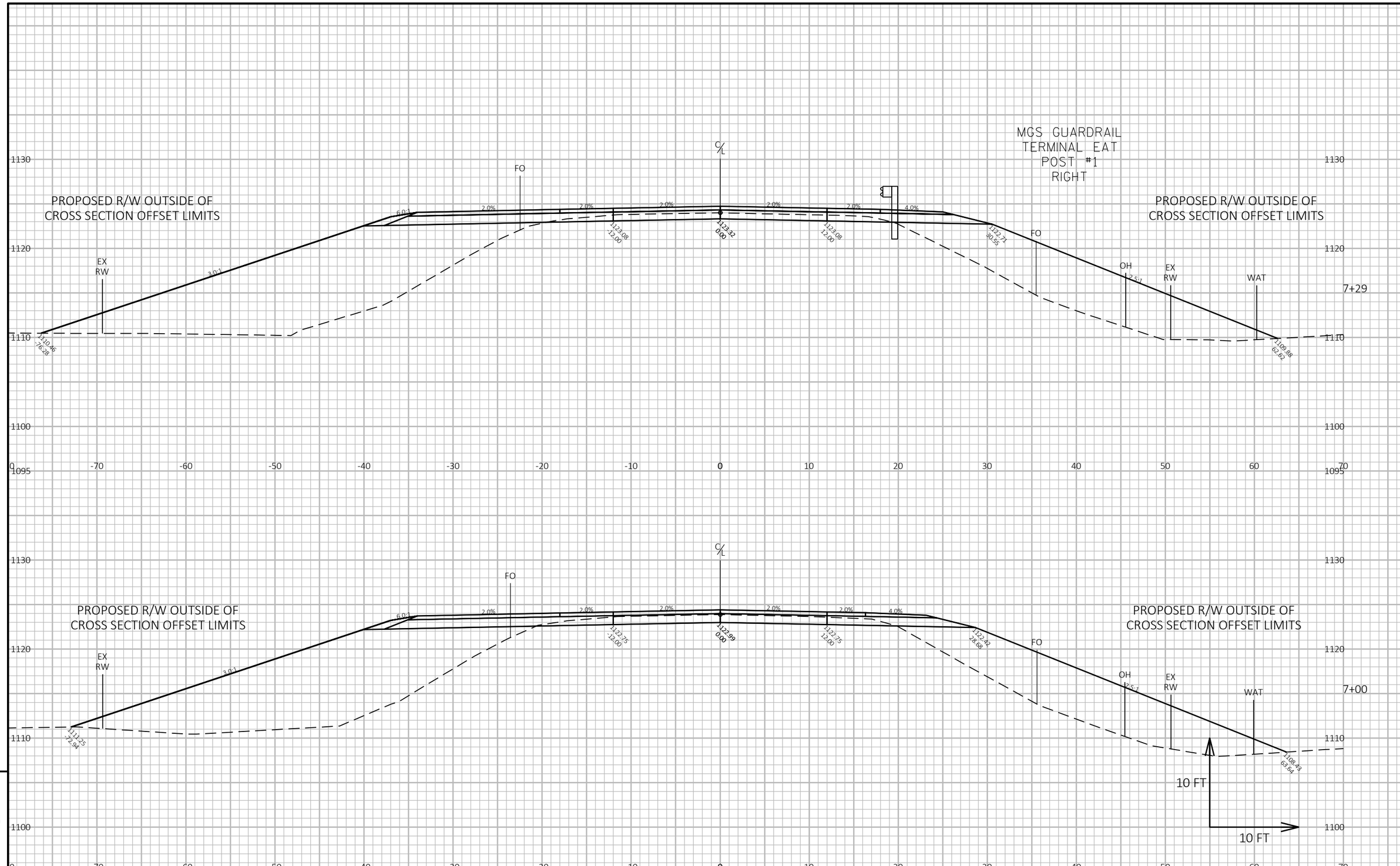

9

9

PROJECT NO: 7840-03-73	HWY: CTH G	COUNTY: CLARK	CROSS SECTIONS: CTH G	SHEET 114	E

FILE NAME : C:\ONEDRIVE\AECOM\60645919 - CTH G, CLARK COUNTY - GENERAL\900_CAD_GIS\910_CAD\78400303\SHEETSPLAN\0902-XS.DWG
LAYOUT NAME - 090202-xs
PLOT DATE : 4/17/2024 12:50 PM
PLOT BY : LANCELLE, JESSICA
PLOT NAME :
PLOT SCALE : 1 IN:10 FT HORZ. / 1 IN:10 FT VERT.
WISDOT/CADDS SHEET 49

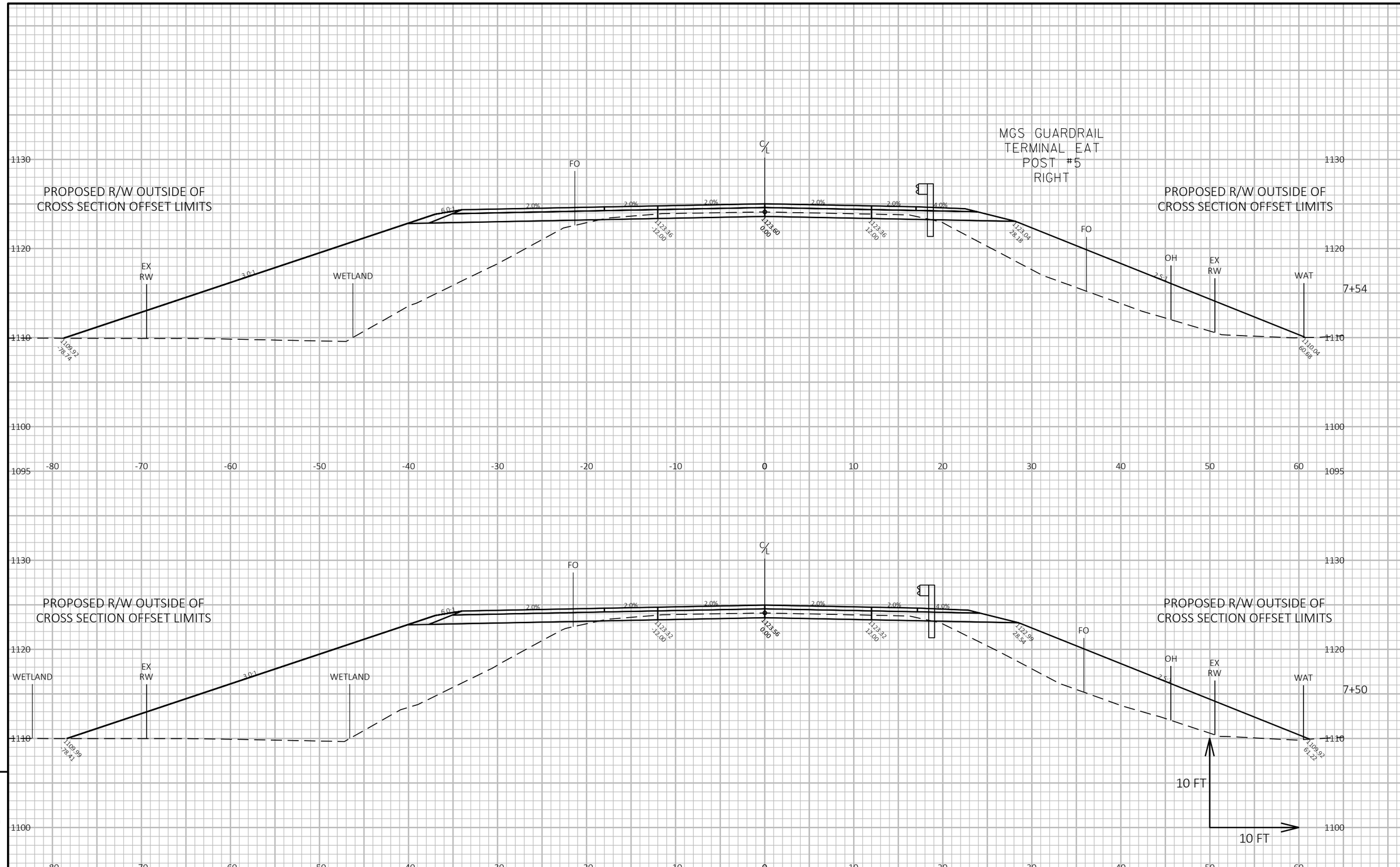

9

9

PROJECT NO: 7840-03-73	HWY: CTH G	COUNTY: CLARK	CROSS SECTIONS: CTH G	SHEET 115	E

FILE NAME : C:\ONEDRIVE\AECOM\60645919 - CTH G, CLARK COUNTY - GENERAL\900_CAD_GIS\910_CAD\78400303\SHEETSPLAN\0902-XS.DWG
LAYOUT NAME - 090203-xs
PLOT DATE : 4/17/2024 12:50 PM
PLOT BY : LANCELLE, JESSICA
PLOT NAME :
PLOT SCALE : 1 IN:10 FT HORZ. / 1 IN:10 FT VERT.
WISDOT/CADDS SHEET 49

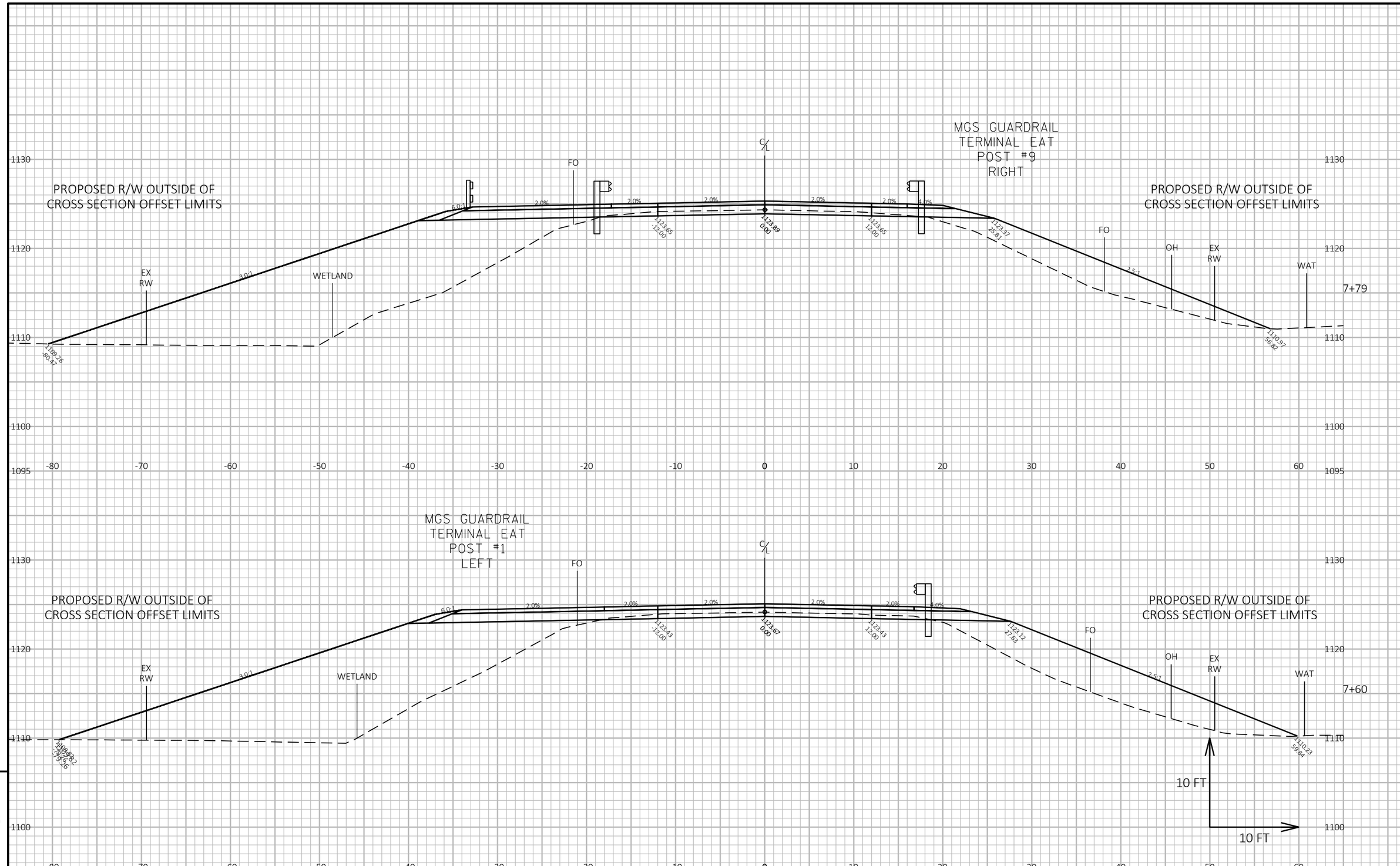

9

9

PROJECT NO: 7840-03-73	HWY: CTH G	COUNTY: CLARK	CROSS SECTIONS: CTH G	SHEET 116	E

FILE NAME : C:\ONEDRIVE\AECOM\60645919 - CTH G, CLARK COUNTY - GENERAL\900_CAD_GIS\910_CAD\78400303\SHEETSPLAN\0902-XS.DWG
LAYOUT NAME - 090204-xs
PLOT DATE : 4/17/2024 12:50 PM
PLOT BY : LANCELLE, JESSICA
PLOT NAME :
PLOT SCALE : 1 IN:10 FT HORZ. / 1 IN:10 FT VERT.
WISDOT/CADDS SHEET 49

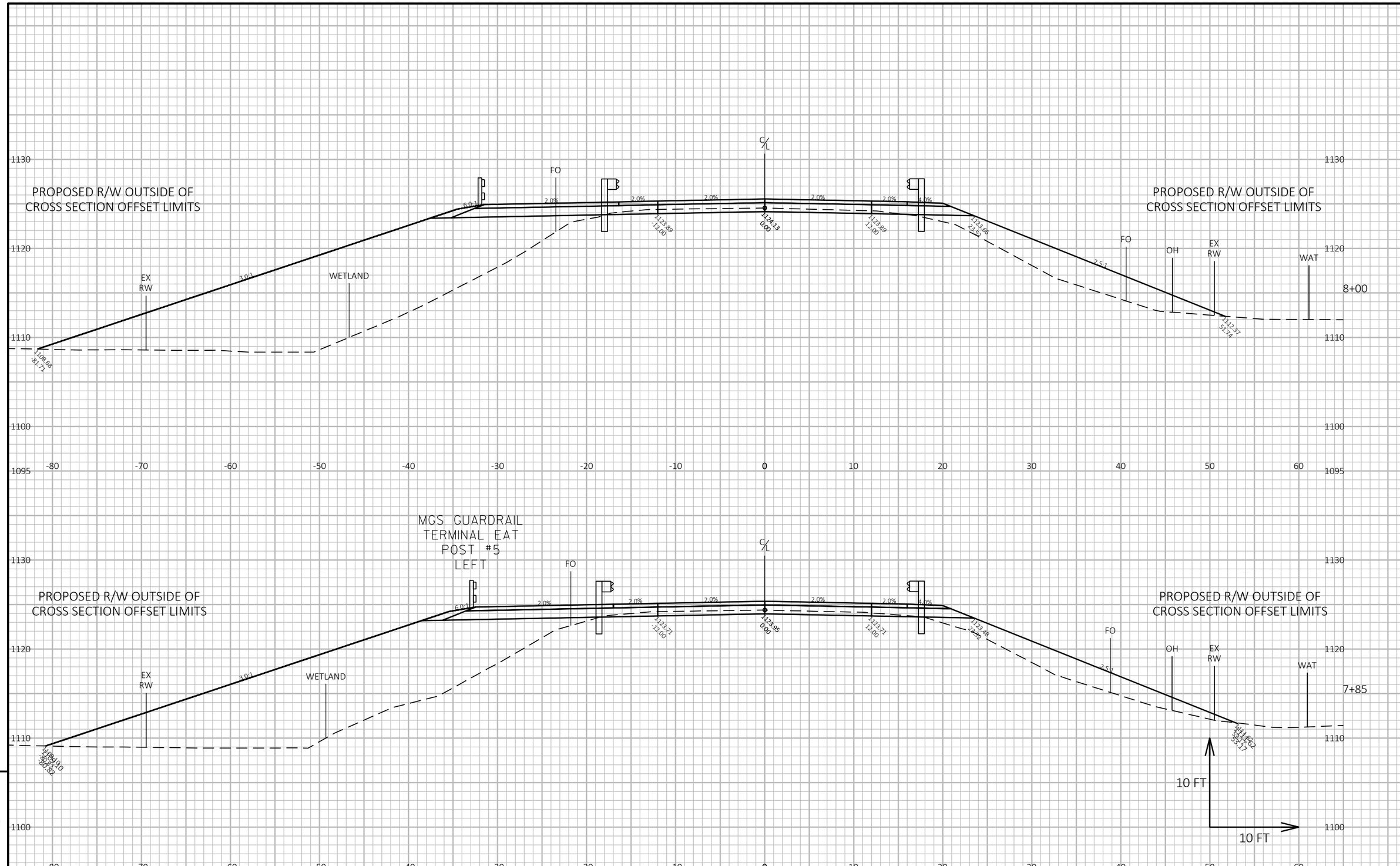

PROJECT NO: 7840-03-73	HWY: CTH G	COUNTY: CLARK	CROSS SECTIONS: CTH G	SHEET 117	E

FILE NAME : C:\ONEDRIVE\AECOM\60645919 - CTH G, CLARK COUNTY - GENERAL\900_CAD_GIS\910_CAD\78400303\SHEETSPLAN\0902-XS.DWG
LAYOUT NAME - 090205-xs
PLOT DATE : 4/17/2024 12:51 PM PLOT BY : LANCELLE, JESSICA PLOT NAME : **PLOT SCALE :** 1 IN:10 FT HORZ. / 1 IN:10 FT VERT.
WISDOT/CADDS SHEET 49

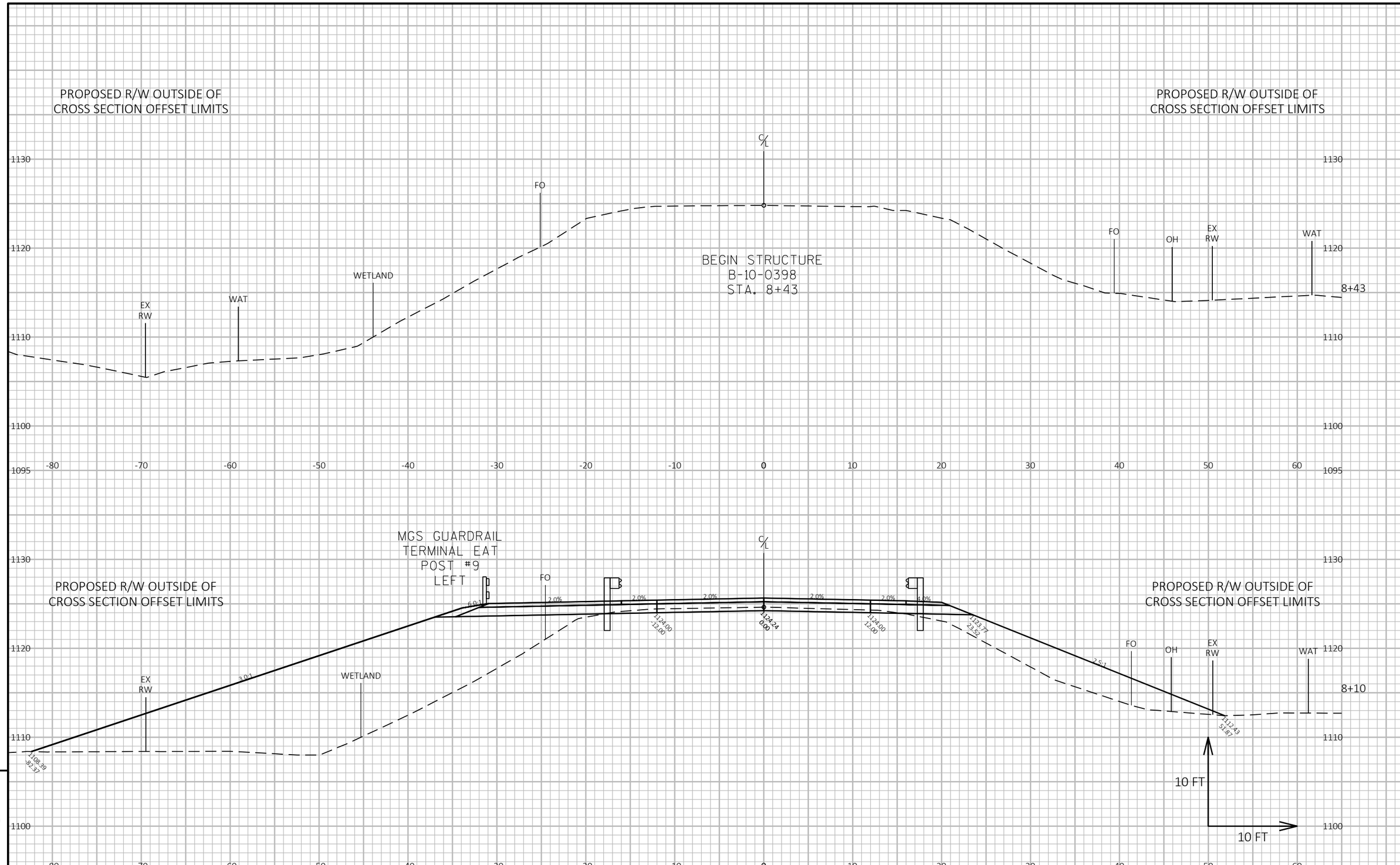

9

9

PROJECT NO: 7840-03-73	HWY: CTH G	COUNTY: CLARK	CROSS SECTIONS: CTH G	SHEET 118	E

FILE NAME : C:\ONEDRIVE\AECOM\60645919 - CTH G, CLARK COUNTY - GENERAL\900_CAD_GIS\910_CAD\78400303\SHEETSPLAN\0902-XS.DWG
LAYOUT NAME - 090206-xs
PLOT DATE : 4/17/2024 12:51 PM
PLOT BY : LANCELLE, JESSICA
PLOT NAME :
PLOT SCALE : 1 IN:10 FT HORZ. / 1 IN:10 FT VERT.
WISDOT/CADDS SHEET 49

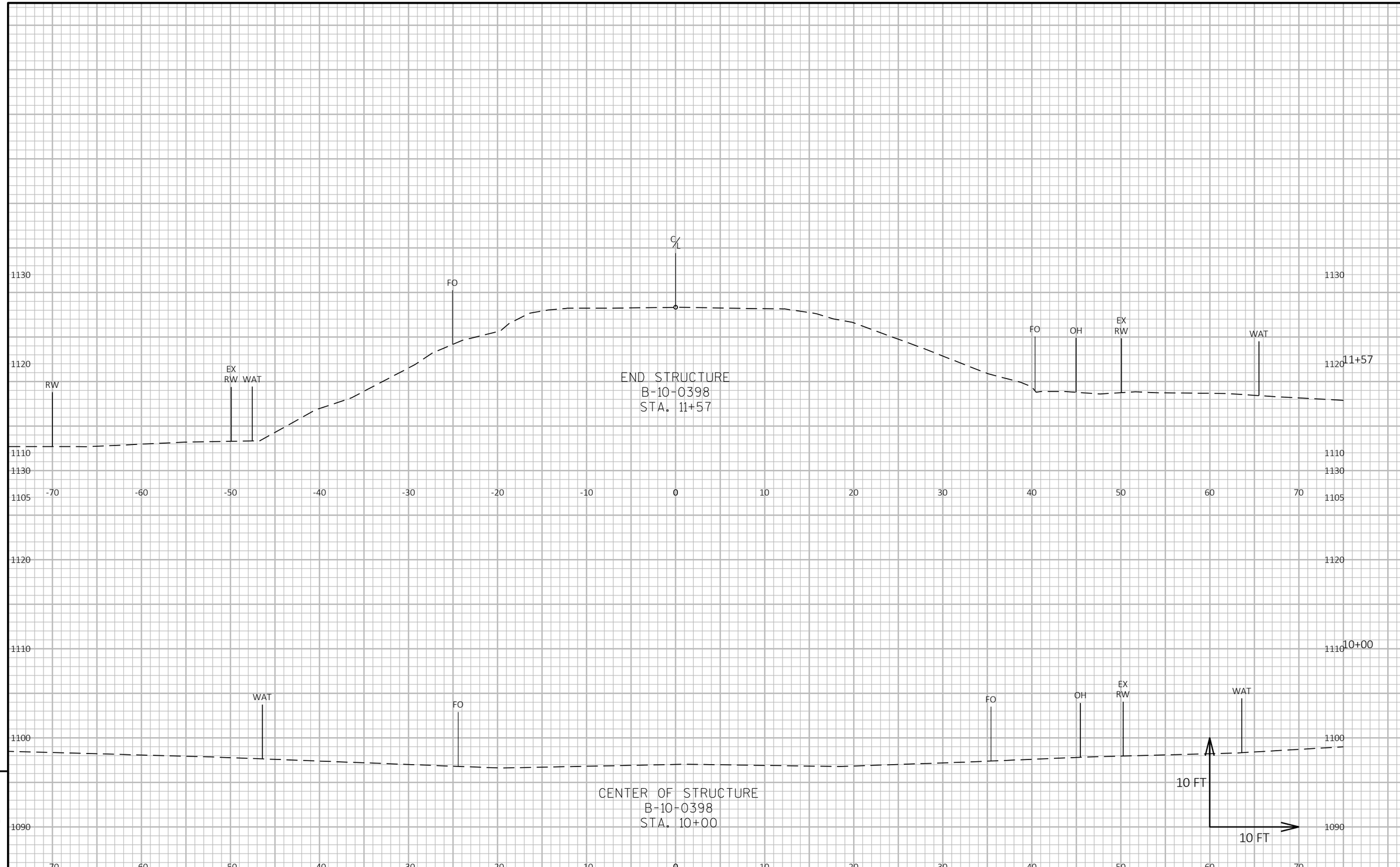

PROJECT NO: 7840-03-73	HWY: CTH G	COUNTY: CLARK	CROSS SECTIONS: CTH G	SHEET 119	E

FILE NAME : C:\ONEDRIVE\AECOM\60645919 - CTH G, CLARK COUNTY - GENERAL\900_CAD_GIS\910_CAD\78400303\SHEETSPLAN\0902-XS.DWG
LAYOUT NAME - 090207-xs
PLOT DATE : 4/17/2024 12:51 PM PLOT BY : LANCELLE, JESSICA PLOT NAME : **PLOT SCALE :** 1 IN:10 FT HORZ. / 1 IN:10 FT VERT.
WISDOT/CADDS SHEET 49

MGS GUARDRAIL
TERMINAL EAT
POST #9
LEFT

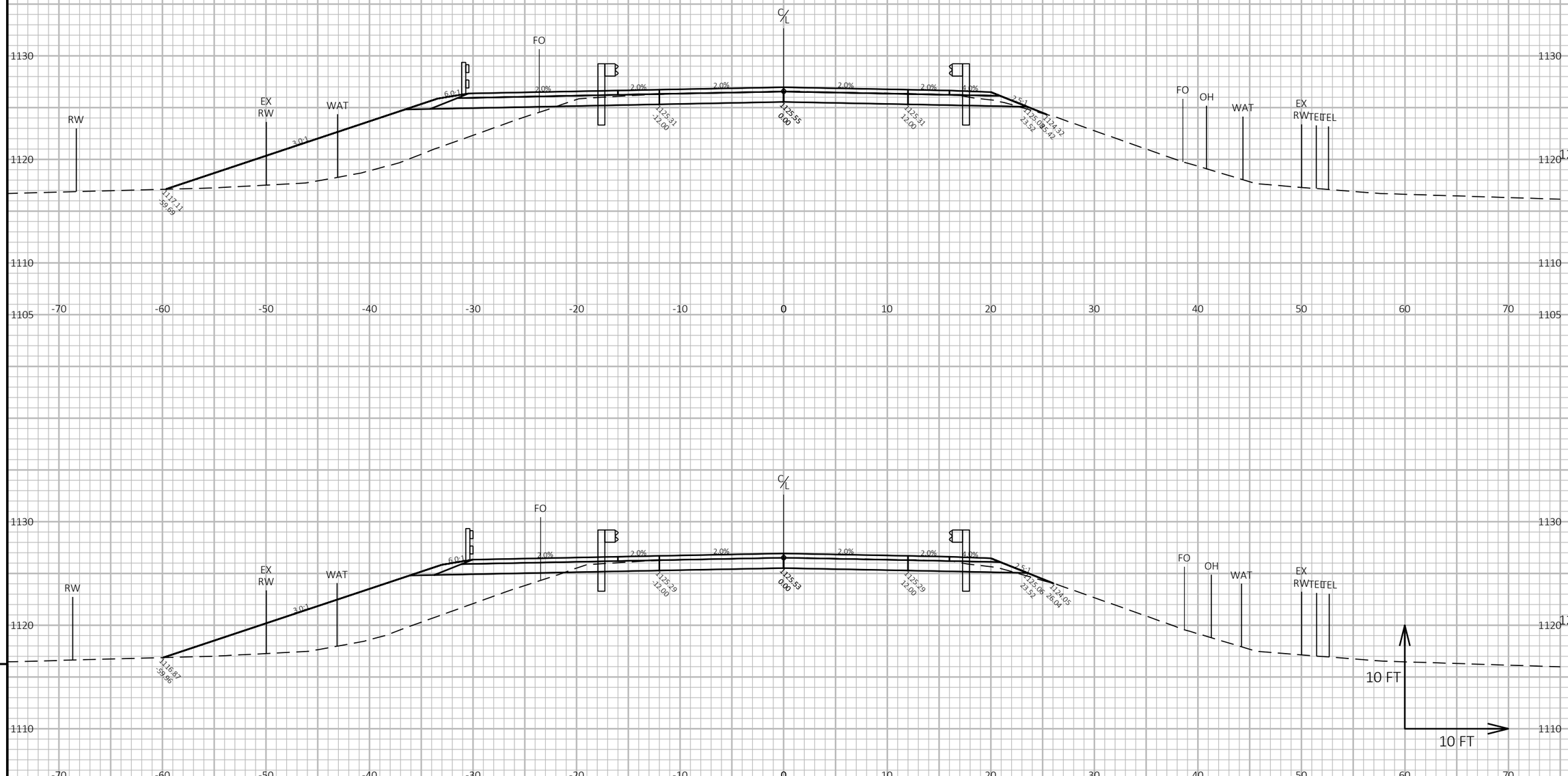

9

9

PROJECT NO: 7840-03-73	HWY: CTH G	COUNTY: CLARK	CROSS SECTIONS: CTH G	SHEET 120	E

FILE NAME : C:\ONEDRIVE\AECOM\60645919 - CTH G, CLARK COUNTY - GENERAL\900_CAD_GIS\910_CAD\78400303\SHEETSPLAN\0902-XS.DWG
LAYOUT NAME - 090208-xs
PLOT DATE : 4/17/2024 12:51 PM
PLOT BY : LANCELLE, JESSICA
PLOT NAME :
PLOT SCALE : 1 IN:10 FT HORZ. / 1 IN:10 FT VERT.
WISDOT/CADDS SHEET 49

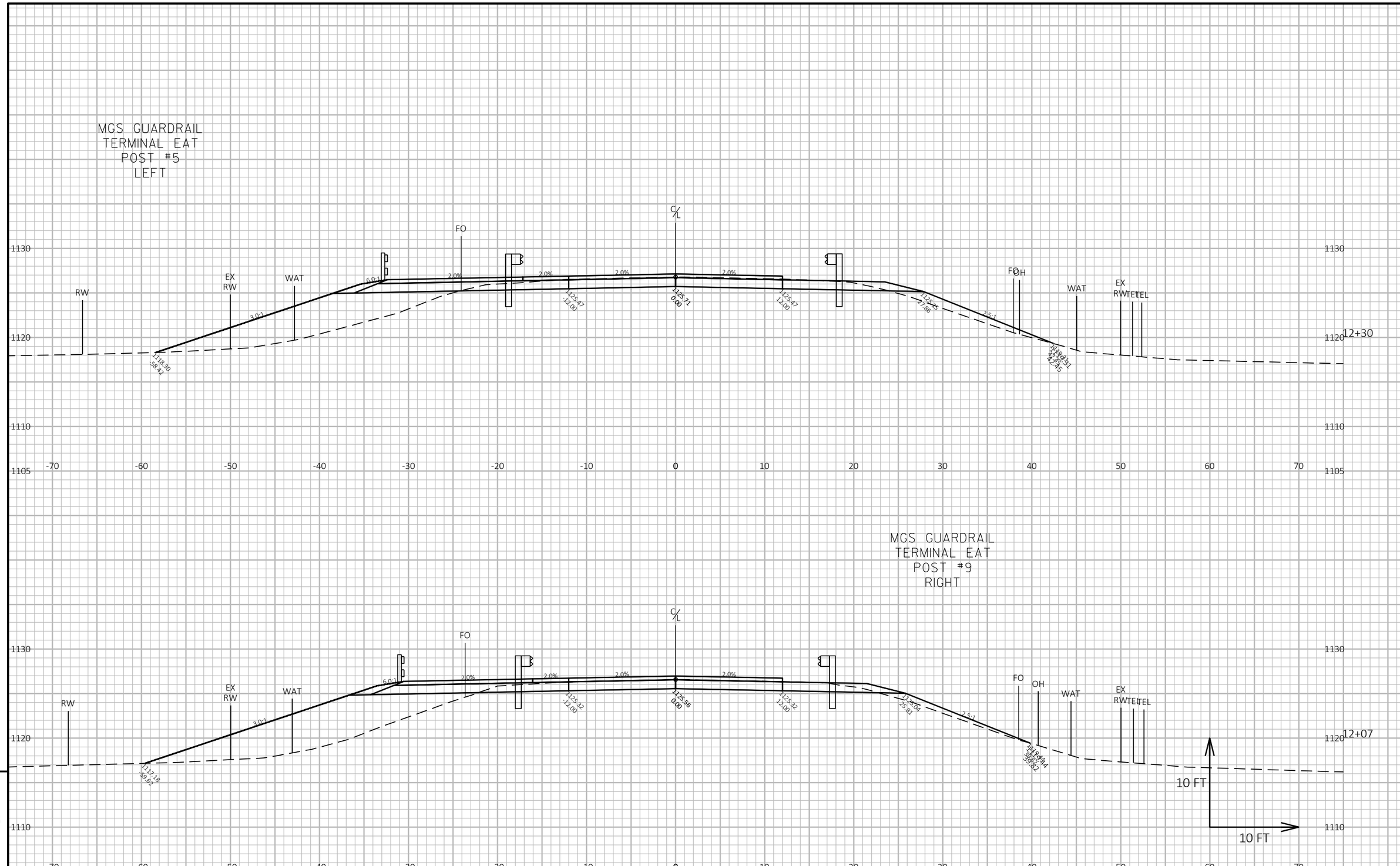

PROJECT NO: 7840-03-73	HWY: CTH G	COUNTY: CLARK	CROSS SECTIONS: CTH G	SHEET 121	E

FILE NAME : C:\ONEDRIVE\AECOM\60645919 - CTH G, CLARK COUNTY - GENERAL\900_CAD_GIS\910_CAD\78400303\SHEETSPLAN\0902-XS.DWG
LAYOUT NAME - 090209-xs
PLOT DATE : 4/17/2024 12:51 PM PLOT BY : LANCELLE, JESSICA PLOT NAME : PLOT SCALE : 1 IN:10 FT HORZ. / 1 IN:10 FT VERT.
WISDOT/CADDS SHEET 49

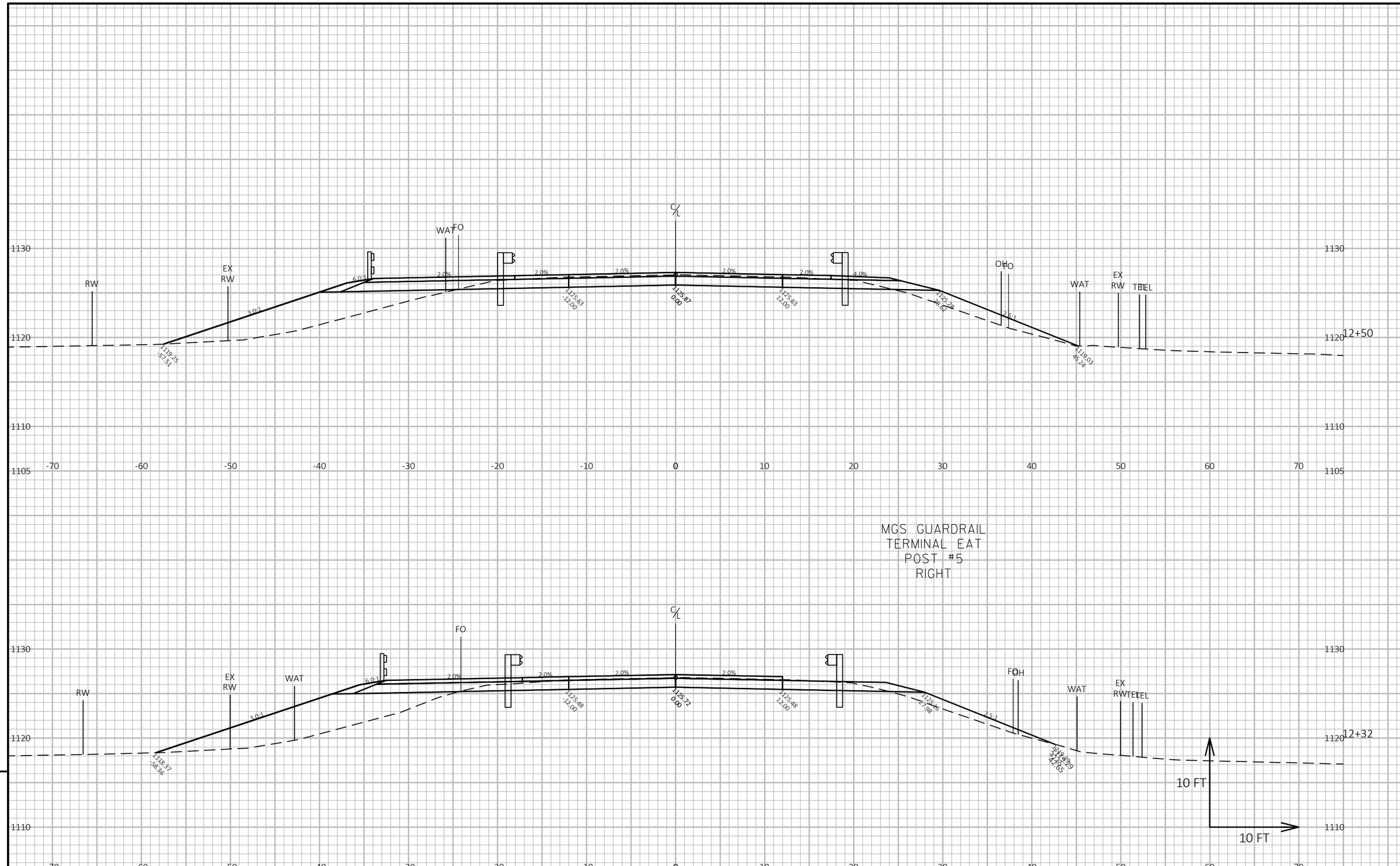

MGS GUARDRAIL
TERMINAL EAT
POST #5
RIGHT

9

9

PROJECT NO: 7840-03-73	HWY: CTH G	COUNTY: CLARK	CROSS SECTIONS: CTH G	SHEET 122	E

FILE NAME : C:\ONEDRIVE\AECOM\60645919 - CTH G, CLARK COUNTY - GENERAL\900_CAD_GIS\910_CAD\78400303\SHEETSPLAN\0902-XS.DWG
LAYOUT NAME - 090210-xs
PLOT DATE : 4/17/2024 12:51 PM
PLOT BY : LANCELLE, JESSICA
PLOT NAME :
PLOT SCALE : 1 IN:10 FT HORZ. / 1 IN:10 FT VERT.
WISDOT/CADDS SHEET 49

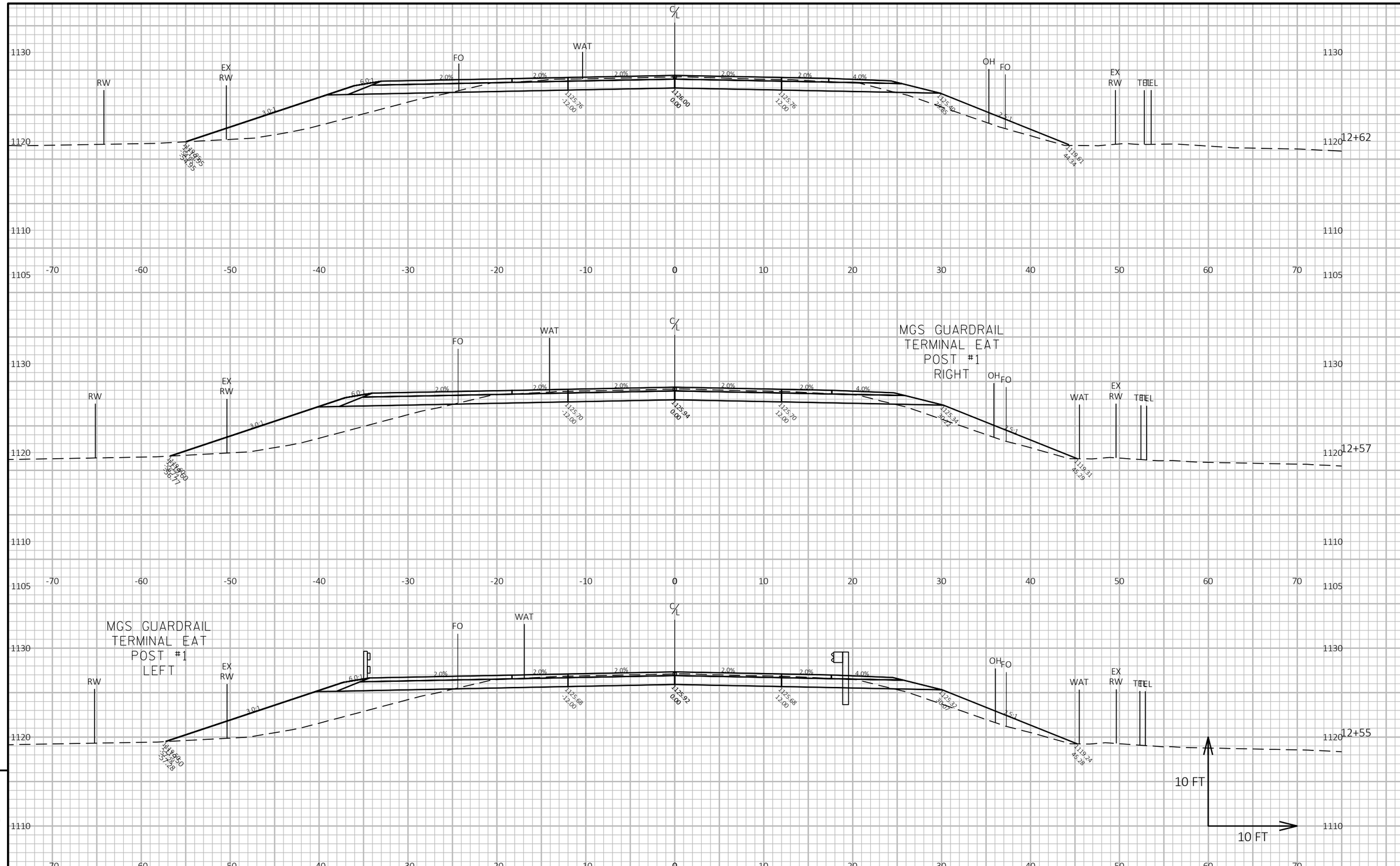

9

9

PROJECT NO: 7840-03-73	HWY: CTH G	COUNTY: CLARK	CROSS SECTIONS: CTH G	SHEET 123	E

FILE NAME : C:\ONEDRIVE\AECOM\60645919 - CTH G, CLARK COUNTY - GENERAL\900_CAD_GIS\910_CAD\78400303\SHEETSPLAN\0902-XS.DWG
LAYOUT NAME - 090211-xs
PLOT DATE : 4/17/2024 12:52 PM PLOT BY : LANCELLE, JESSICA PLOT NAME : **PLOT SCALE :** 1 IN:10 FT HORZ. / 1 IN:10 FT VERT.
WISDOT/CADDS SHEET 49

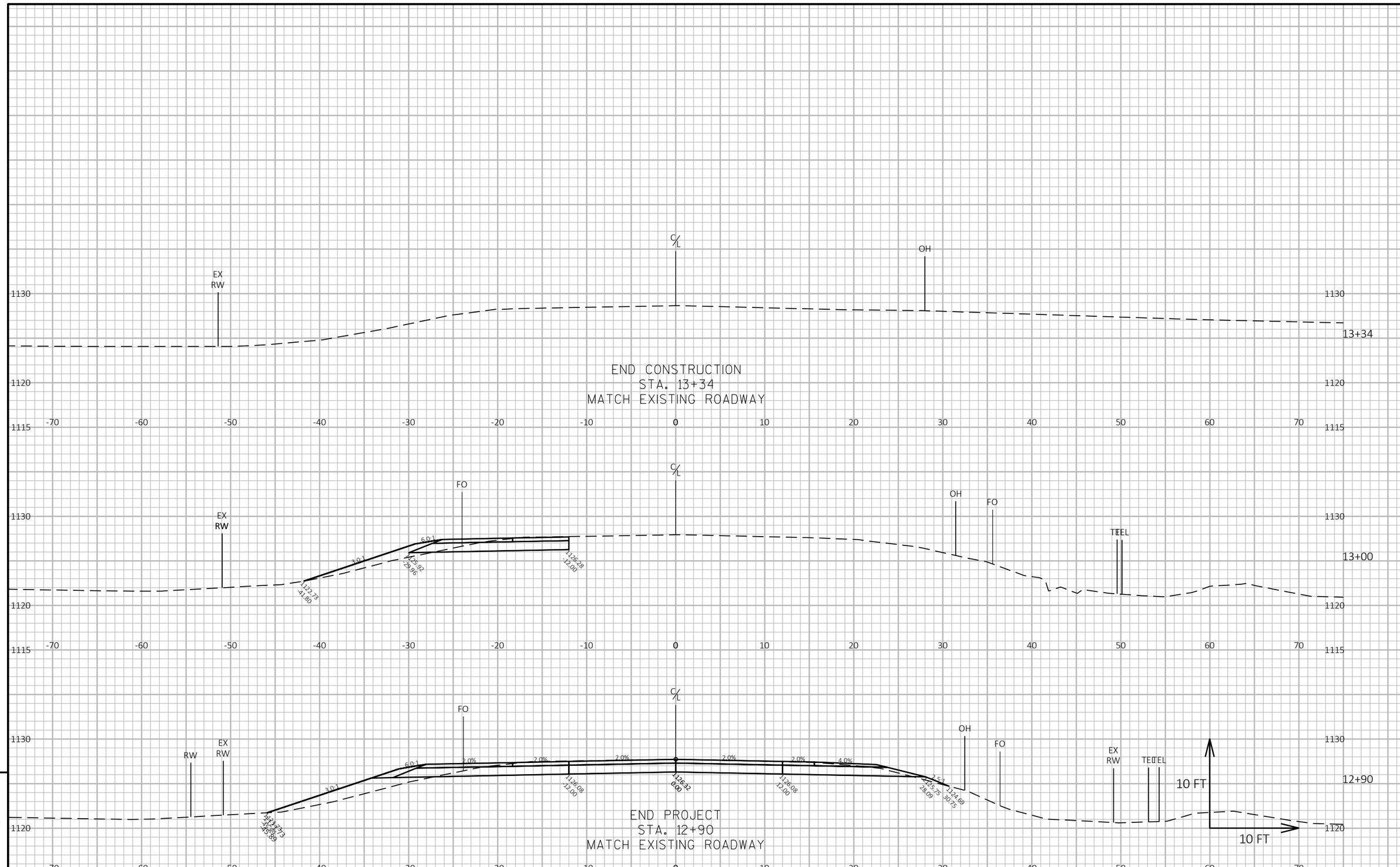

9

9

PROJECT NO: 7840-03-73	HWY: CTH G	COUNTY: CLARK	CROSS SECTIONS: CTH G	SHEET 124	E

FILE NAME : C:\ONEDRIVE\AECOM\60645919 - CTH G, CLARK COUNTY - GENERAL\900_CAD_GIS\910_CAD\78400303\SHEETSPLAN\0902-XS.DWG
LAYOUT NAME - 090212-xs
PLOT DATE : 4/17/2024 12:52 PM
PLOT BY : LANCELLE, JESSICA
PLOT NAME :
PLOT SCALE : 1 IN:10 FT HORZ. / 1 IN:10 FT VERT.

WISDOT/CADDS SHEET 49

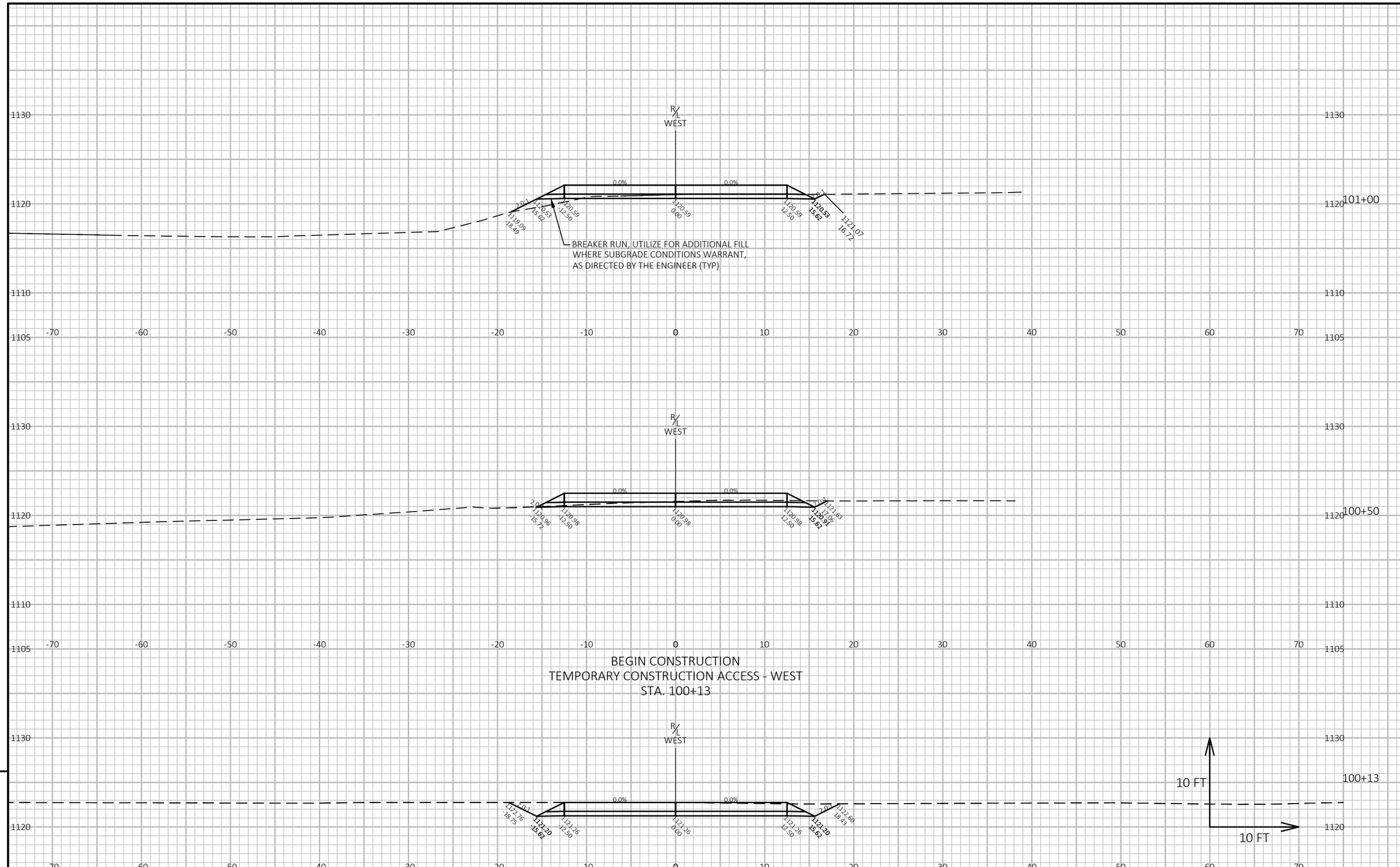

9

9

PROJECT NO: 7840-03-73	HWY: CTH G	COUNTY: CLARK	CROSS SECTIONS: TEMPORARY CONSTRUCTION ACCESS - WEST	SHEET 125	E

FILE NAME : C:\ONEDRIVE\AECOM\60645919 - CTH G, CLARK COUNTY - GENERAL\900_CAD_GIS\910_CAD\78400303\SHEETSPLAN\0902-XS-TCA.DWG
LAYOUT NAME - 090201-xs-TCA
PLOT DATE : 6/4/2024 10:51 AM
PLOT BY : LANCELLE, JESSICA
PLOT NAME :
PLOT SCALE : 1 IN:10 FT HORZ. / 1 IN:10 FT VERT.
WISDOT/CADDS SHEET 49

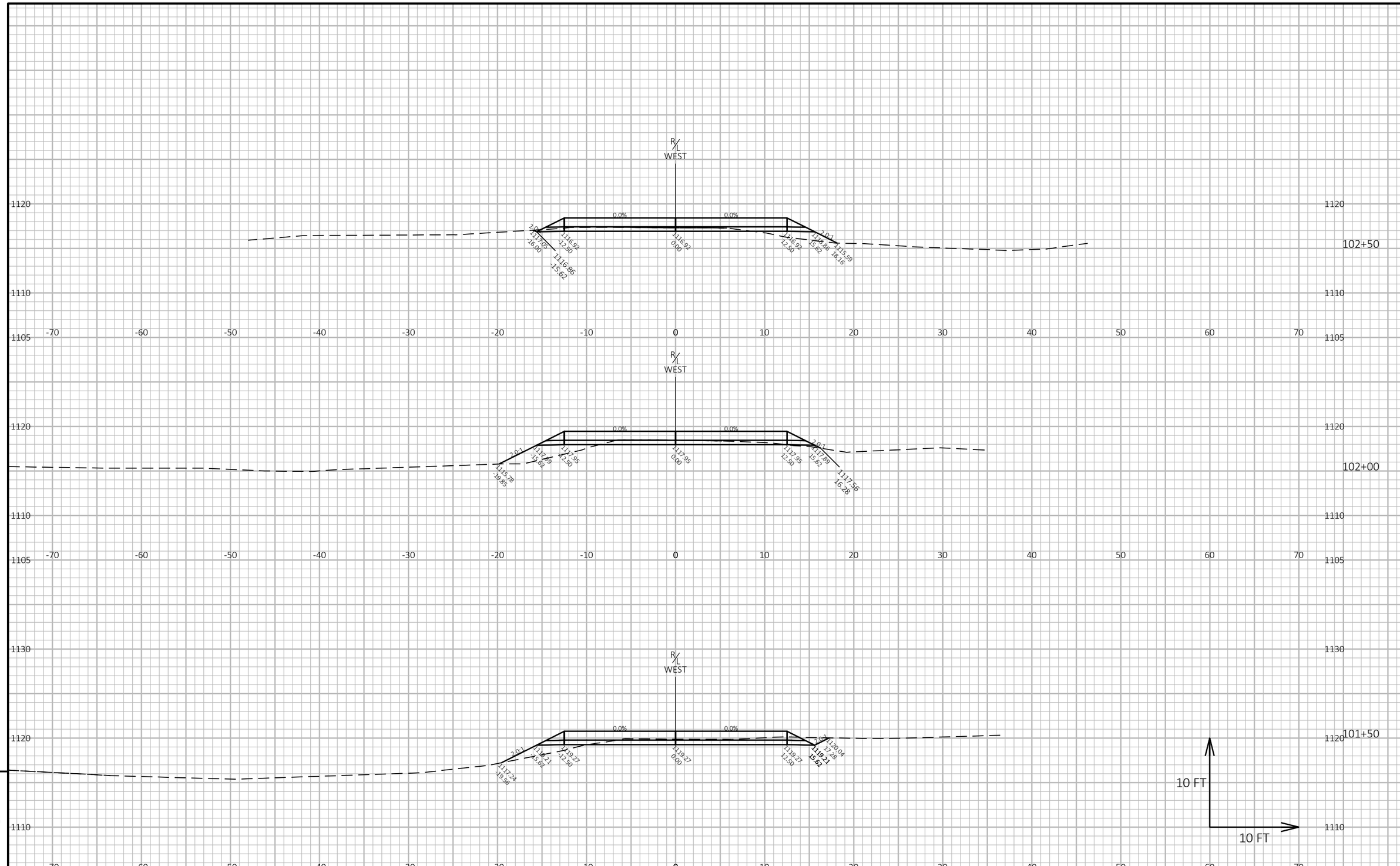

9

9

PROJECT NO: 7840-03-73	HWY: CTH G	COUNTY: CLARK	CROSS SECTIONS: TEMPORARY CONSTRUCTION ACCESS - WEST	SHEET 126	E

FILE NAME : C:\ONEDRIVE\AECOM\60645919 - CTH G, CLARK COUNTY - GENERAL\900_CAD_GIS\910_CAD\78400303\SHEETSPLAN\0902-XS-TCA.DWG
LAYOUT NAME - 090202-xs-TCA

PLOT DATE : 6/4/2024 10:52 AM PLOT BY : LANCELLE, JESSICA PLOT NAME : **PLOT SCALE :** 1 IN:10 FT HORZ. / 1 IN:10 FT VERT.

WISDOT/CADDS SHEET 49

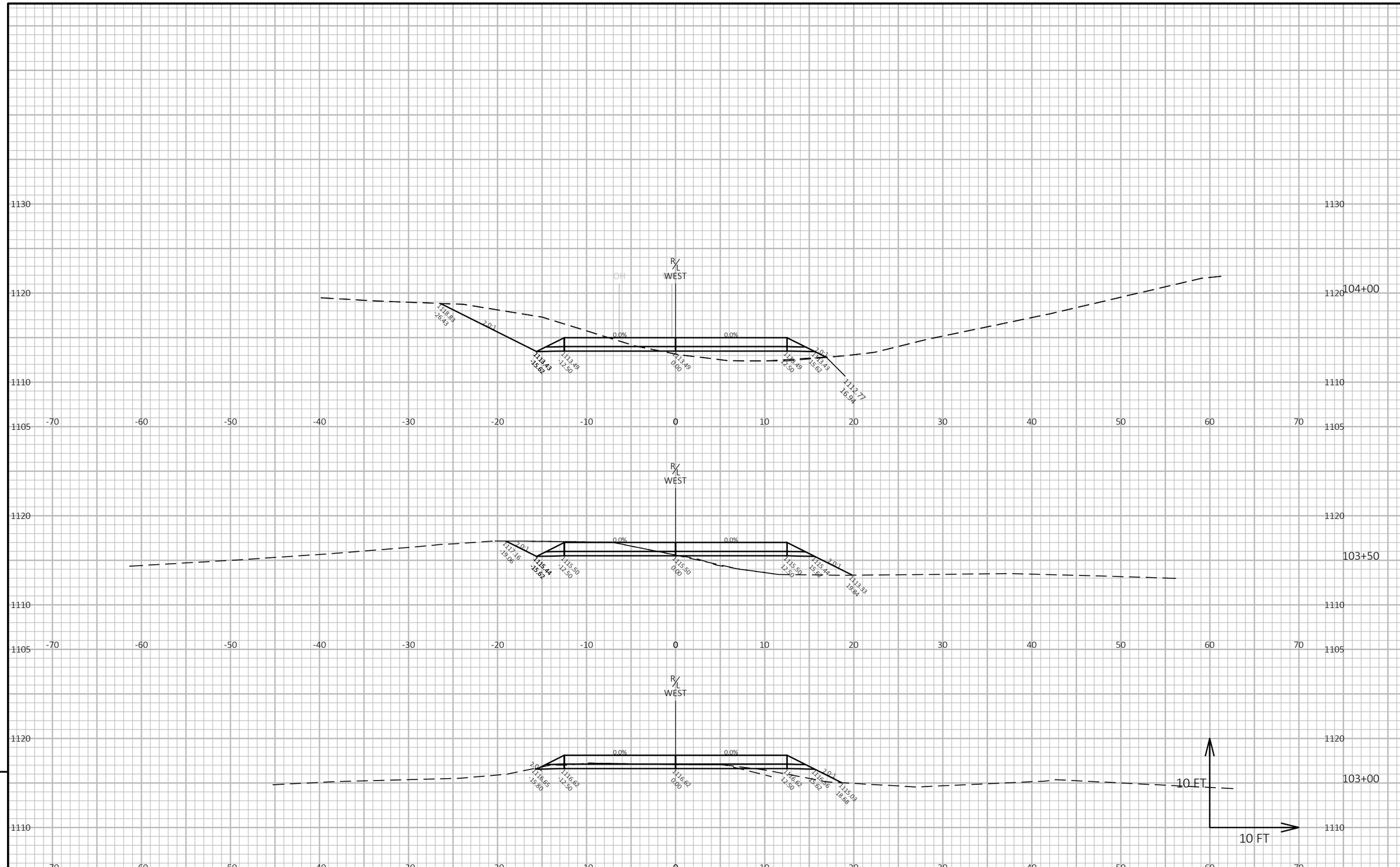

9

9

PROJECT NO: 7840-03-73	HWY: CTH G	COUNTY: CLARK	CROSS SECTIONS: TEMPORARY CONSTRUCTION ACCESS - WEST	SHEET 127	E

FILE NAME : C:\ONEDRIVE\AECOM\60645919 - CTH G, CLARK COUNTY - GENERAL\900_CAD_GIS\910_CAD\78400303\SHEETSPLAN\0902-XS-TCA.DWG
LAYOUT NAME - 090203-xs-TCA
PLOT DATE : 6/4/2024 10:52 AM
PLOT BY : LANCELLE, JESSICA
PLOT NAME :
PLOT SCALE : 1 IN:10 FT HORZ. / 1 IN:10 FT VERT.
WISDOT/CADDS SHEET 49

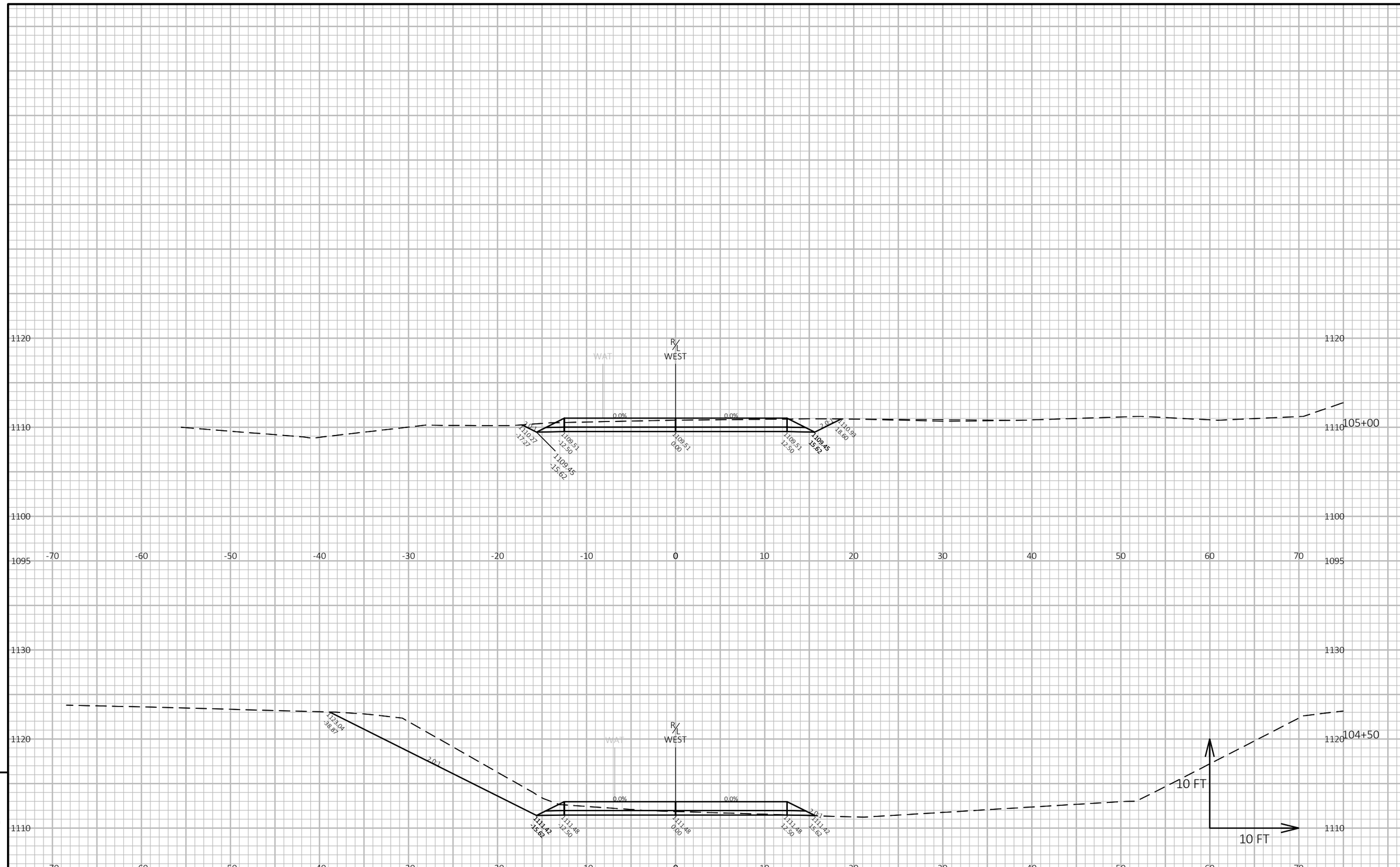

PROJECT NO: 7840-03-73	HWY: CTH G	COUNTY: CLARK	CROSS SECTIONS: TEMPORARY CONSTRUCTION ACCESS - WEST	SHEET 128	E

FILE NAME : C:\ONEDRIVE\AECOM\60645919 - CTH G, CLARK COUNTY - GENERAL\900_CAD_GIS\910_CAD\78400303\SHEETSPLAN\0902-XS-TCA.DWG
LAYOUT NAME - 090204-xs-TCA
PLOT DATE : 6/4/2024 10:52 AM PLOT BY : LANCELLE, JESSICA PLOT NAME : PLOT SCALE : 1 IN:10 FT HORZ. / 1 IN:10 FT VERT.

WISDOT/CADDS SHEET 49

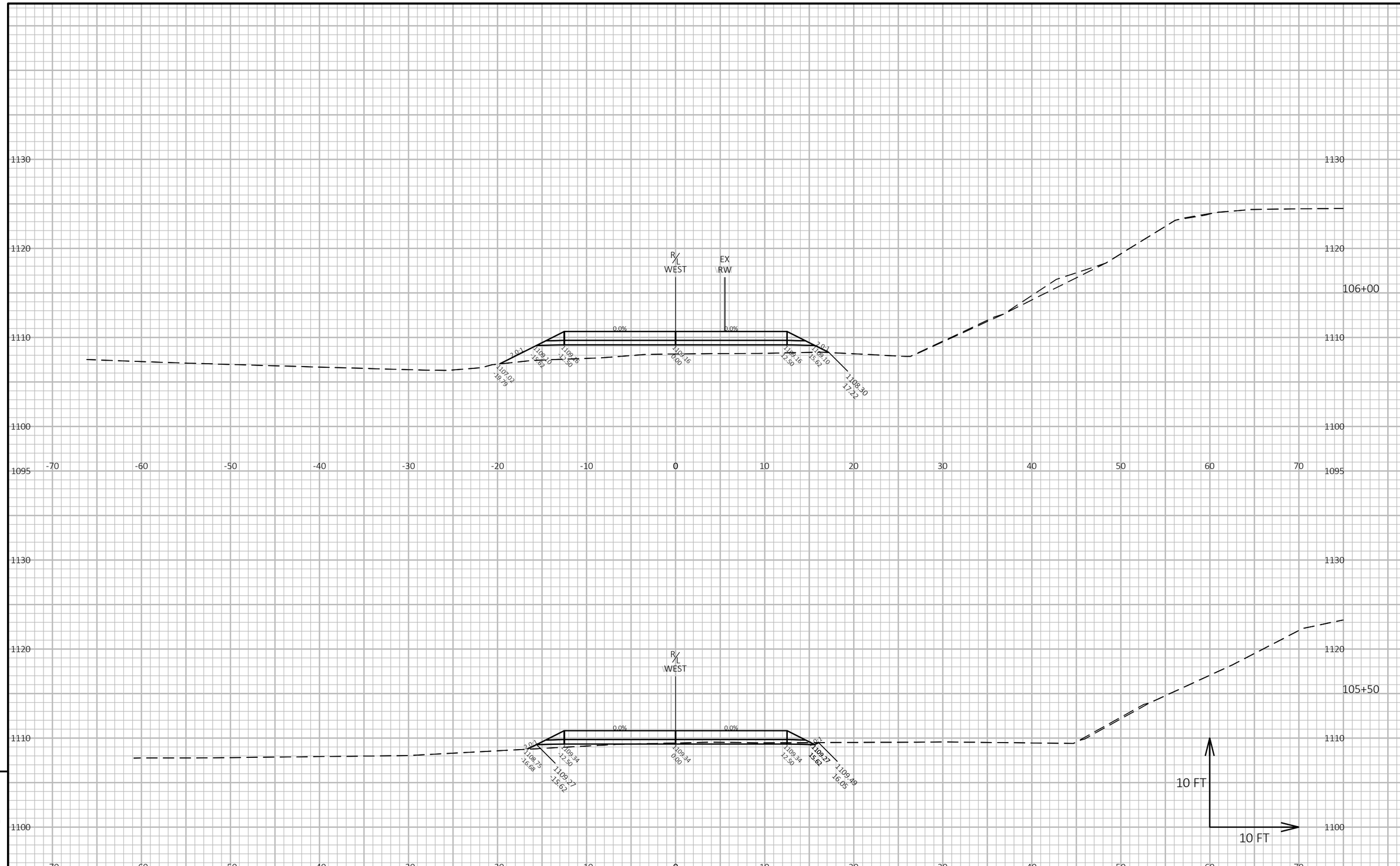

PROJECT NO: 7840-03-73	HWY: CTH G	COUNTY: CLARK	CROSS SECTIONS: TEMPORARY CONSTRUCTION ACCESS - WEST	SHEET 129	E

FILE NAME : C:\ONEDRIVE\AECOM\60645919 - CTH G, CLARK COUNTY - GENERAL\900_CAD_GIS\910_CAD\78400303\SHEETSPLAN\0902-XS-TCA.DWG
LAYOUT NAME - 090205-xs-TCA
PLOT DATE : 6/4/2024 10:52 AM
PLOT BY : LANCELLE, JESSICA
PLOT NAME :
PLOT SCALE : 1 IN:10 FT HORZ. / 1 IN:10 FT VERT.
WISDOT/CADDS SHEET 49

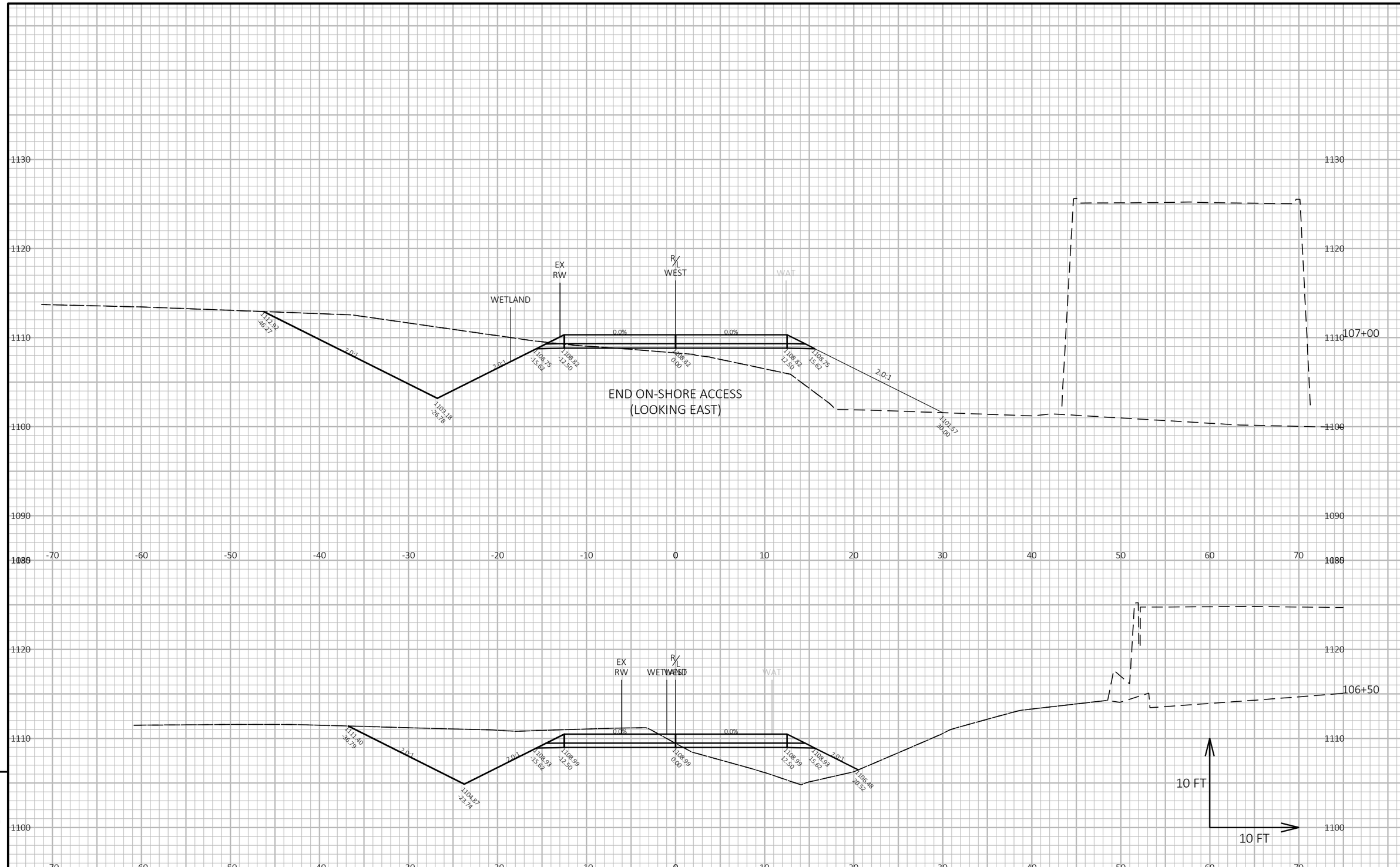

9

9

PROJECT NO: 7840-03-73	HWY: CTH G	COUNTY: CLARK	CROSS SECTIONS: TEMPORARY CONSTRUCTION ACCESS - WEST	SHEET 130	E

FILE NAME : C:\ONEDRIVE\AECOM\60645919 - CTH G, CLARK COUNTY - GENERAL\900_CAD_GIS\910_CAD\78400303\SHEETSPLAN\0902-XS-TCA.DWG
LAYOUT NAME - 090206-xs-TCA
PLOT DATE : 6/4/2024 10:52 AM
PLOT BY : LANCELLE, JESSICA
PLOT NAME :
PLOT SCALE : 1 IN:10 FT HORZ. / 1 IN:10 FT VERT.
WISDOT/CADDS SHEET 49

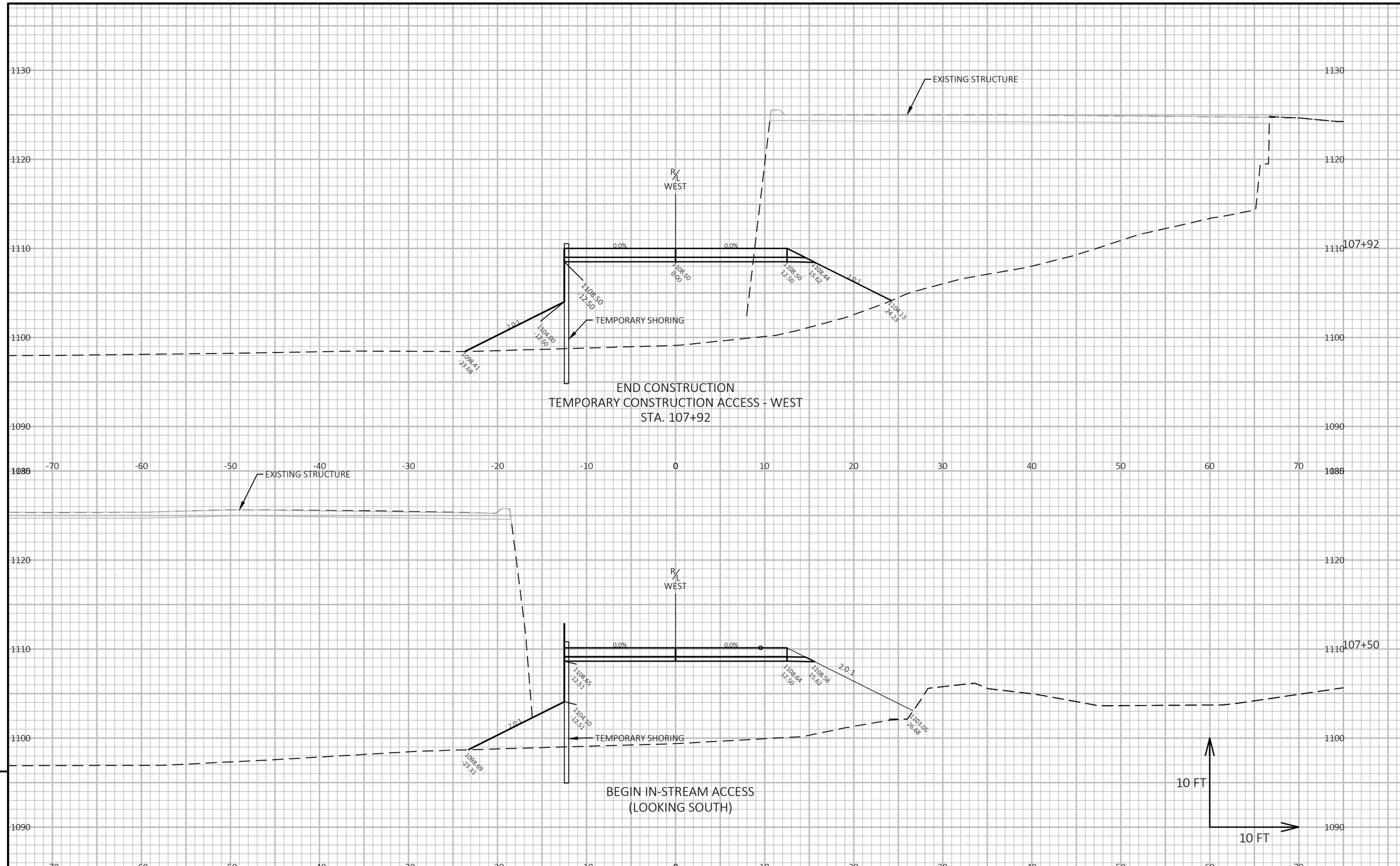

PROJECT NO: 7840-03-73	HWY: CTH G	COUNTY: CLARK	CROSS SECTIONS: TEMPORARY CONSTRUCTION ACCESS - WEST	SHEET 131	E

FILE NAME : C:\ONEDRIVE\AECOM\60645919 - CTH G, CLARK COUNTY - GENERAL\900_CAD_GIS\910_CAD\78400303\SHEETSPLAN\0902-XS-TCA.DWG
LAYOUT NAME - 090207-xs-TCA
PLOT DATE : 6/4/2024 10:52 AM PLOT BY : LANCELLE, JESSICA PLOT NAME : PLOT SCALE : 1 IN:10 FT HORZ. / 1 IN:10 FT VERT.

WISDOT/CADDS SHEET 49

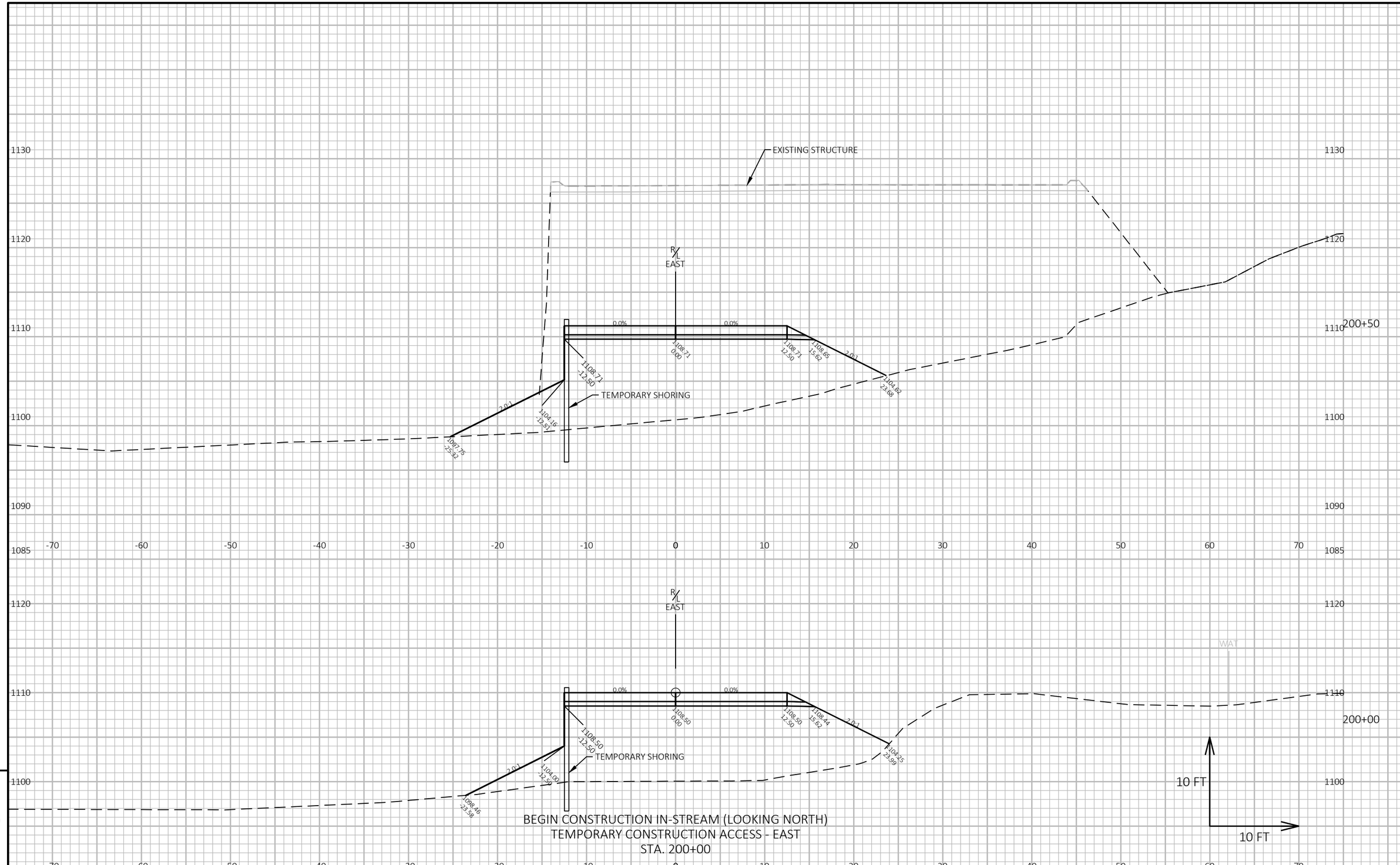

9

9

PROJECT NO: 7840-03-73	HWY: CTH G	COUNTY: CLARK	CROSS SECTIONS: TEMPORARY CONSTRUCTION ACCESS - EAST	SHEET 132	E

FILE NAME : C:\ONEDRIVE\AECOM\60645919 - CTH G, CLARK COUNTY - GENERAL\900_CAD_GIS\910_CAD\78400303\SHEETSPLAN\0902-XS-TCA.DWG
LAYOUT NAME - 090210-xs-TCA
PLOT DATE : 6/4/2024 10:52 AM
PLOT BY : LANCELLE, JESSICA
PLOT NAME :
PLOT SCALE : 1 IN:10 FT HORZ. / 1 IN:10 FT VERT.
WISDOT/CADDS SHEET 49

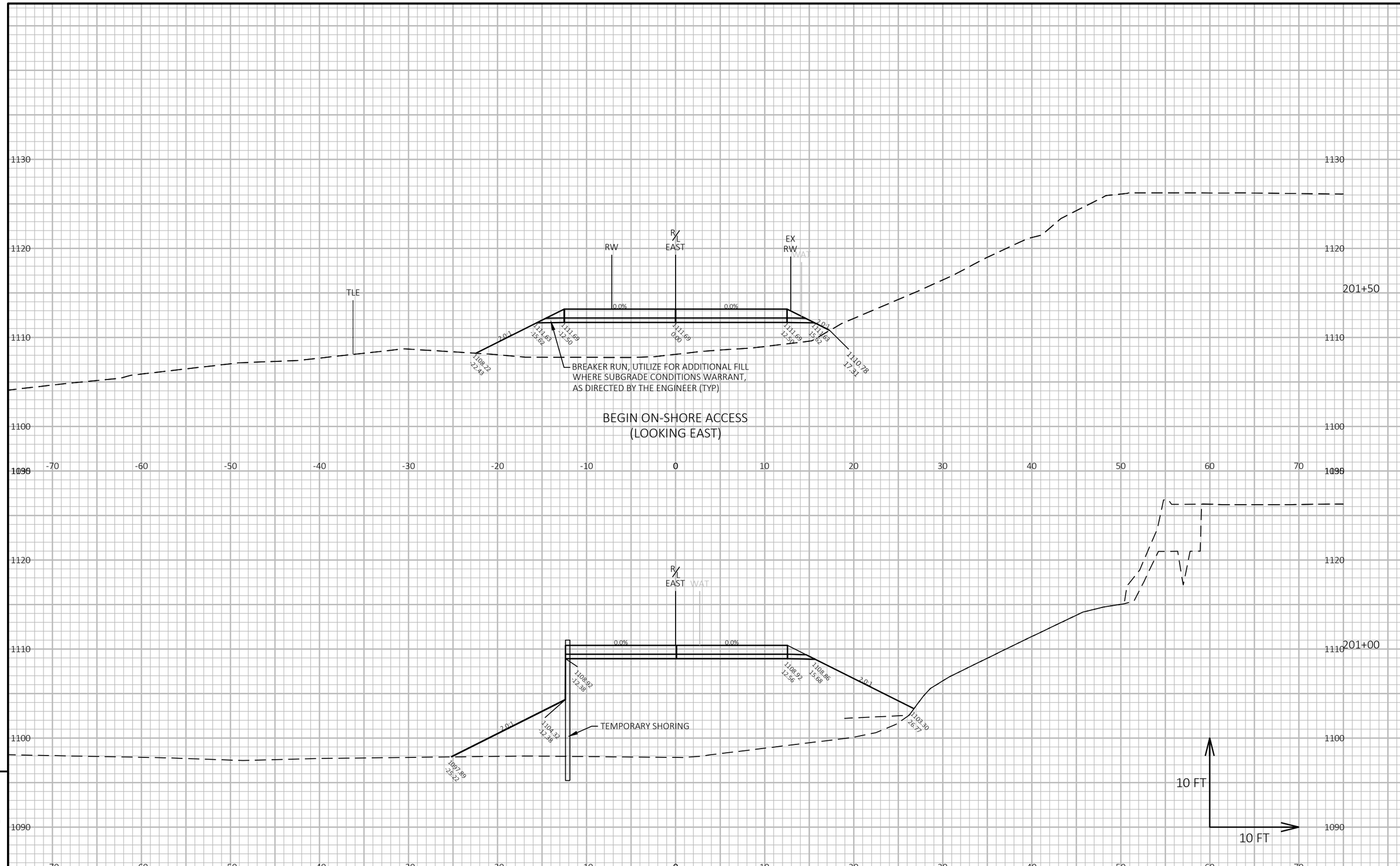

9

9

PROJECT NO: 7840-03-73	HWY: CTH G	COUNTY: CLARK	CROSS SECTIONS: TEMPORARY CONSTRUCTION ACCESS - EAST	SHEET 133	E

FILE NAME : C:\ONEDRIVE\AECOM\60645919 - CTH G, CLARK COUNTY - GENERAL\900_CAD_GIS\910_CAD\78400303\SHEETSPLAN\0902-XS-TCA.DWG
LAYOUT NAME - 090211-xs-TCA
PLOT DATE : 6/4/2024 10:52 AM
PLOT BY : LANCELLE, JESSICA
PLOT NAME :
PLOT SCALE : 1 IN:10 FT HORZ. / 1 IN:10 FT VERT.
WISDOT/CADDS SHEET 49

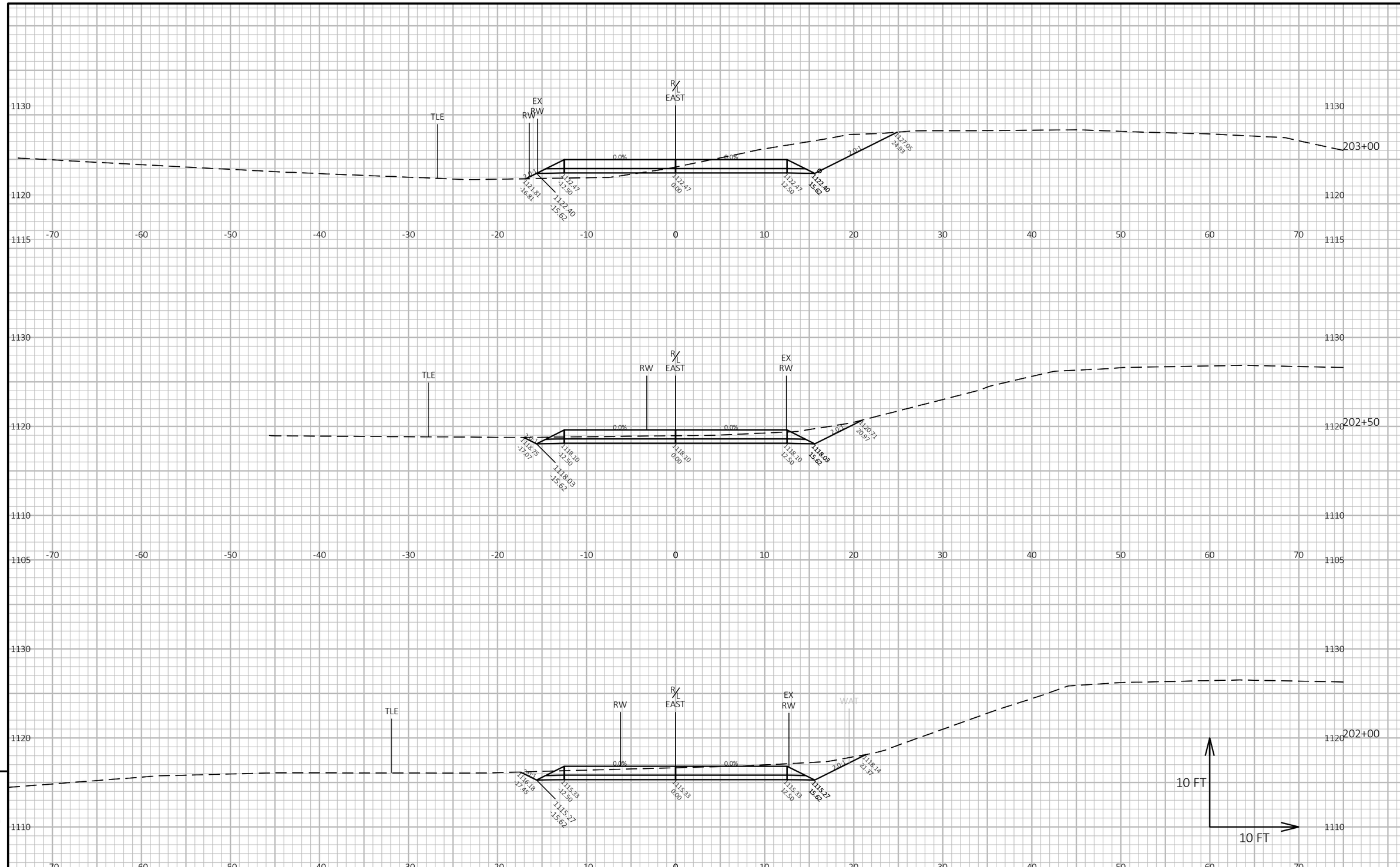

PROJECT NO: 7840-03-73	HWY: CTH G	COUNTY: CLARK	CROSS SECTIONS: TEMPORARY CONSTRUCTION ACCESS - EAST	SHEET 134	E

FILE NAME : C:\ONEDRIVE\AECOM\60645919 - CTH G, CLARK COUNTY - GENERAL\900_CAD_GIS\910_CAD\78400303\SHEETSPLAN\0902-XS-TCA.DWG
LAYOUT NAME - 090212-xs-TCA
PLOT DATE : 6/4/2024 10:52 AM PLOT BY : LANCELLE, JESSICA PLOT NAME : **PLOT SCALE :** 1 IN:10 FT HORZ. / 1 IN:10 FT VERT.
WISDOT/CADDS SHEET 49

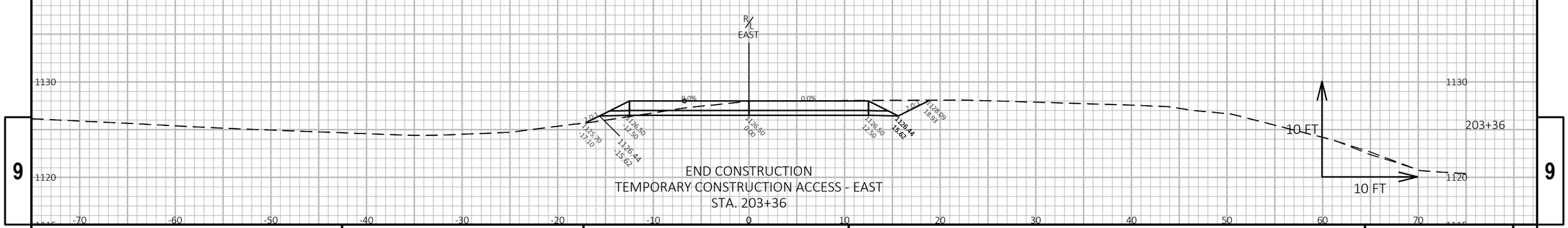

END CONSTRUCTION
TEMPORARY CONSTRUCTION ACCESS - EAST
STA. 203+36

9

9

PROJECT NO: 7840-03-73	HWY: CTH G	COUNTY: CLARK	CROSS SECTIONS: TEMPORARY CONSTRUCTION ACCESS - EAST	SHEET 135	E

FILE NAME : C:\ONEDRIVE\AECOM\60645919 - CTH G, CLARK COUNTY - GENERAL\900_CAD_GIS\910_CAD\78400303\SHEETSPLAN\0902-XS-TCA.DWG
LAYOUT NAME - 090213-xs-TCA
PLOT DATE : 6/4/2024 10:52 AM
PLOT BY : LANCELLE, JESSICA
PLOT NAME :
PLOT SCALE : 1 IN:10 FT HORZ. / 1 IN:10 FT VERT.
WISDOT/CADDS SHEET 49

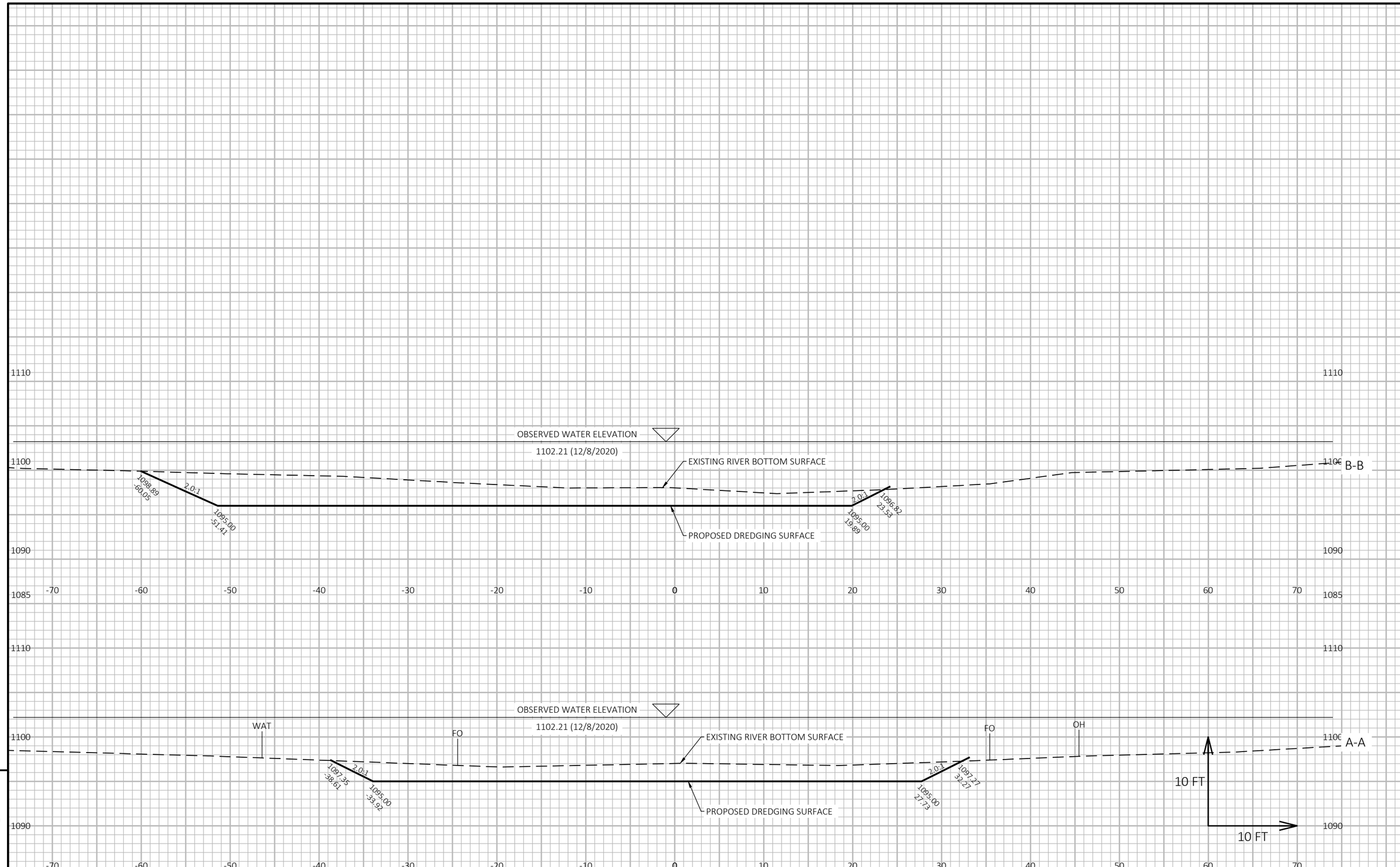

PROJECT NO: 7840-03-73	HWY: CTH G	COUNTY: CLARK	CROSS SECTIONS: DREDGING	SHEET 136	E

FILE NAME : C:\ONEDRIVE\AECOM\60645919 - CTH G, CLARK COUNTY - GENERAL\900_CAD_GIS\910_CAD\78400303\SHEETSPLAN\0902-XS-DREDGE.DWG
LAYOUT NAME - 090201-xs
PLOT DATE : 4/17/2024 12:53 PM PLOT BY : LANCELLE, JESSICA PLOT NAME : PLOT SCALE : 1 IN:10 FT HORZ. / 1 IN:10 FT VERT.

Notes

Wisconsin Department of Transportation

Dedicated people creating transportation solutions through innovation and exceptional service.

http://www.dot.wisconsin.gov