MAD

AUGUST 2024

PROJECT ID: 5849-02-07

WITH: N/A

COUNTY: DANE

03

ORDER OF SHEETS

TOTAL SHEETS = 292

STATE OF WISCONSIN
DEPARTMENT OF TRANSPORTATION

PLAN OF PROPOSED IMPROVEMENT

C FITCHBURG, SYENE ROAD

MCCOY ROAD INTERSECTION

LOCAL STREET
DANE COUNTY

STATE PROJECT NUMBER
5849-02-07

STATE PROJECT	FEDERAL PROJECT	
	PROJECT	CONTRACT
5849-02-07	WISC 2024405	1
N/A		

N

DESIGN DESIGNATION

A.A.D.T.	2024	=	8,625
A.A.D.T.	2044	=	10,080
D.H.V.		=	3.1
D.D.		=	59/41
T.		=	3.6%
DESIGN SPEED		=	40 MPH
ESALS		=	760,000

BEGIN PROJECT 5849-02-07
STA 670+35.78 SRN
Y = 461,697.12
X = 818,117.27

END PROJECT 5849-02-07
STA 684+29.09 SRN

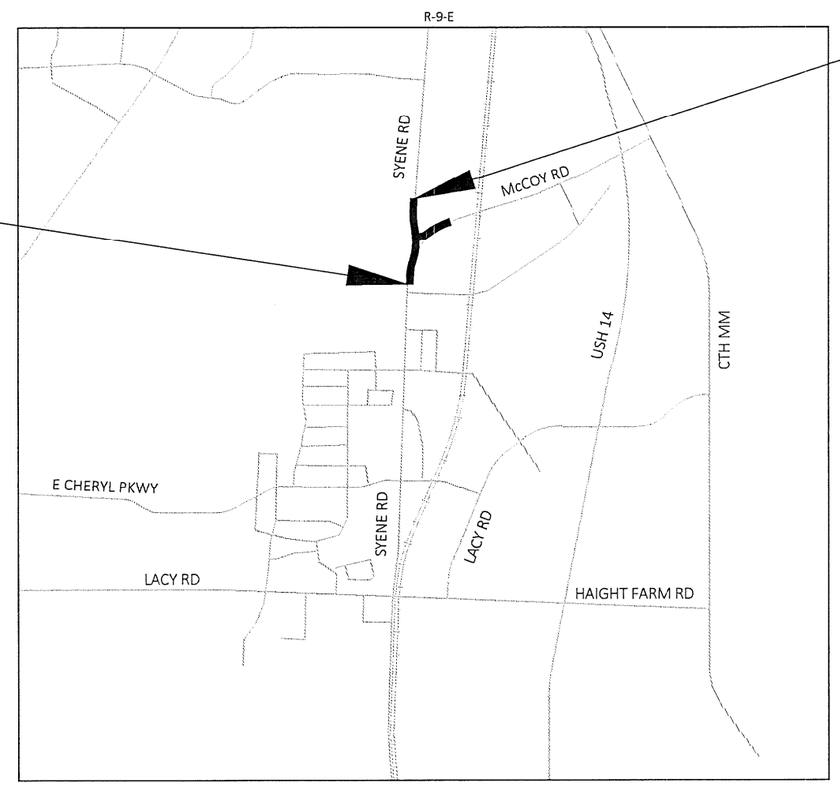

CONVENTIONAL SYMBOLS

PLAN
- CORPORATE LIMITS
- PROPERTY LINE
- LOT LINE
- LIMITED HIGHWAY EASEMENT
- EXISTING RIGHT OF WAY
- PROPOSED OR NEW R/W LINE
- SLOPE INTERCEPT
- REFERENCE LINE (300 EB')
- EXISTING CULVERT
- PROPOSED CULVERT (Box or Pipe)
- COMBUSTIBLE FLUIDS (CAUTION)
- MARSH AREA
- WOODED OR SHRUB AREA

PROFILE
- GRADE LINE
- ORIGINAL GROUND
- MARSH OR ROCK PROFILE (To be noted as such) (ROCK)
- SPECIAL DITCH (LABEL)
- GRADE ELEVATION (95.36)
- CULVERT (Profile View)

UTILITIES
- ELECTRIC (E)
- FIBER OPTIC (FO)
- GAS (G)
- SANITARY SEWER (SAN)
- STORM SEWER (SS)
- TELEPHONE (T)
- WATER (W)
- UTILITY PEDESTAL
- POWER POLE
- TELEPHONE POLE

LAYOUT

SCALE 0 — 0.5 MI

TOTAL NET LENGTH OF CENTERLINE = 0.264 MI

HORIZONTAL POSITIONS SHOWN ON THIS PLAN ARE WISCONSIN COORDINATE REFERENCE SYSTEM (WISCRS), DANE COUNTY, NAD83 (2011), IN U.S. SURVEY FEET. POSITIONS SHOWN ARE GRID COORDINATES, GRID BEARINGS, AND GRID DISTANCES. GRID DISTANCES ARE THE SAME AS GROUND DISTANCES.

ELEVATIONS ARE REFERENCED TO NAVD 88 (2012). GPS DERIVED ELEVATIONS ARE BASED ON GEOID 12A-W

PUBLIC IMPROVEMENT DESIGN APPROVED BY:

4/25/24 (Date) — Tim Vaill — City of Fitchburg

ORIGINAL PLANS PREPARED BY

KL Engineering — [A] Better Experience

WISCONSIN PROFESSIONAL ENGINEER — BRIAN J. ST. VINCENT 44329-6 FITCHBURG, WI

April 24, 2024 (Date) — (Signature)

STATE OF WISCONSIN
DEPARTMENT OF TRANSPORTATION

PREPARED BY

Surveyor	KL ENGINEERING, INC.
Designer	KL ENGINEERING, INC.
Project Manager	LORRAINE BETZEL P.E.
Regional Examiner	
Regional Supervisor	

APPROVED FOR THE DEPARTMENT

DATE: 4/29/24 — Lorraine Betzel (Signature)

E

ABBREVIATIONS

BAD	BASE AGGREGATE DENSE
BM	BENCH MARK
BLDG.	BUILDING
CBTP	CONCRETE BARRIER TEMPORARY PRECAST
CTR	CENTER
C/L	CENTERLINE
C.E.	COMMERCIAL ENTRANCE
CONC.	CONCRETE
CSW	CONCRETE SIDEWALK
CMCP	CORRUGATED METAL CULVERT PIPE
CP	CULVERT PIPE
CPCS	CULVERT PIPE CORRUGATED STEEL
CPRC	CULVERT PIPE REINFORCED CONCRETE
CPRCHE	CULVERT PIPE REINFORCED CONCRETE HORIZONTAL ELLIPTICAL
CPT	CONSTRUCTION PERMIT
DMS	DYNAMIC MESSAGE SIGN
EAT	ENERGY ABSORBING TERMINAL
EB	EASTBOUND
ELEC	ELECTRIC
IE	INVERT ELEVATION
EX. OR EXIST	EXISTING
FO	FIBER OPTIC
F.E.	FIELD ENTRANCE
GAS	GAS
HMA	HOT MIX ASPHALT
HSE.	HOUSE
LHF	LEFT HAND FORWARD
MH	MANHOLE
MAX.	MAXIMUM
MIN.	MINIMUM
NB	NORTHBOUND
NOR.	NORMAL
NTS	NOT TO SCALE
PLE	PERMANENT LIMITED EASEMENT
P.E.	PRIVATE ENTRANCE
P.L.	PROPERTY LINE
PRW	PROPOSED RIGHT-OF-WAY
RAD OR R	RADIUS
R/L	REFERENCE LINE
REQ'D.	REQUIRED
RHF	RIGHT HAND FORWARD
RW	RIGHT-OF-WAY LINE
SAN	SANITARY SEWER
SB	SOUTHBOUND
SHLD	SHOULDER
SW	SIDEWALK
SF	SQUARE FEET
SY	SQUARE YARD
S.D.D.	STANDARD DETAIL DRAWING
STA	STATION
SS	STORM SEWER
TEL	TELEPHONE
TLE	TEMPORARY LIMITED EASEMENT
TYP	TYPICAL
WAT	WATER
WB	WESTBOUND

UTILITY CONTACTS

ELECTRIC
AMERICAN TRANSMISSION COMPANY
DOUG VOSBERG
2489 RINDEN RD
COTTAGE GROVE, WI 53527
(608) 877-7650
DVOSBERG@ATCLLC.COM

COMMUNICATIONS
AT&T DISTRIBUTION
MATTHEW VACHALIK
411 7TH ST
RACINE, WI 53403
(262) 707-6216
MV5616@ATT.COM

COMMUNICATIONS
CHARTER/SPECTRUM COMMUNICATIONS
DERRICK BUZZELL
2701 DANIELS STREET
MADISON, WI 53718
(608) 287-4505
DERRICK.BUZZEL@CHARTER.COM

WATER
CITY OF FITCHBURG
TRACY FOSS
5520 LACY ROAD
FITCHBURG, WI 53711
(608) 270-4272
TRACY.FOSS@FITCHBURGWI.GOV

ELECTRIC
MADISON GAS & ELECTRIC COMPANY
MARK BOHM
PO BOX 1231
MADISON, WI 53701
(608) 252-4730
MBOHM@MGE.COM

GAS
MADISON GAS & ELECTRIC COMPANY
JOHN WICHERN
PO BOX 1231
MADISON, WI 53701-1231
(608) 252-1563
JWICHERN@MGE.COM

SEWER
MADISON METRO SEWERAGE DIST.
RAY SCHNEIDER
1610 MOORLAND ROAD
MADISON, WI 53713
(608) 347-3628
RAYS@MADSEWER.ORG

DIGGERS HOTLINE
Dial 811 or (800)242-8511
www.DiggersHotline.com

ORDER OF DETAIL SHEETS

GENERAL NOTES

ALL STREET DIMENSIONS (WIDTHS, RADII LENGTH) ARE MEASURED TO THE EDGE OF PAVEMENT UNLESS NOTED IN THE PLANS ELSEWHERE.

ALL ADA RAMPS TO BE VERIFIED BY THE CITY BEFORE PLACEMENT.

ALL GRADES PROVIDED ALONG RADII ARE ALONG EDGE OF PAVEMENT.

THE LOCATION OF EXISTING AND PROPOSED UTILITIES INSTALLATIONS AS SHOWN IN THE PLANS, ARE APPROXIMATE. THERE MAY BE OTHER UTILITY INSTALLATIONS WITHIN THE PROJECT AREA THAT ARE NOT SHOWN.

UTILITY REFERENCE LINES ON THE CROSS SECTIONS ARE FOR APPROXIMATE HORIZONTAL REFERENCE ONLY.

EROSION CONTROL FEATURES AS SHOWN IN THE PLANS ARE AT SUGGESTED LOCATIONS. EXACT LOCATIONS WILL BE DETERMINED BY THE ENGINEER IN THE FIELD.

CONTRACTOR IS RESPONSIBLE FOR RESHAPING AND FINISHING ANY PREVIOUSLY GRASSED AREAS WHICH ARE DISTURBED BY THEIR OPERATION OUTSIDE THE NORMAL CONSTRUCTION LIMITS.

NO TREES AND/OR SHRUBS ARE TO BE REMOVED UNLESS SUCH TREES AND/OR SHRUBS HAVE FIRST BEEN INDICATED FOR REMOVAL BY THE ENGINEER.

PIPE ELEVATIONS, LENGTHS, AND LOCATIONS SHOWN TO END OF PIPE, MAY BE ADJUSTED TO FIT EXISTING FIELD CONDITIONS AS APPROVED BY THE ENGINEER.

HMA PAVEMENT CALCULATIONS ARE BASED ON 112 LBS/SY/IN. TACK COAT QUANTITIES BASED ON 0.07 GAL/SY APPLICATION RATE.

WETLANDS ARE PRESENT AS SHOWN ON PLANS. DO NOT OPERATE MACHINERY OUTSIDE OF SLOPE INTERCEPTS ADJACENT TO THESE LOCATIONS.

THE CONTRACTOR'S HMA PAVING OPERATION SHALL BE CONSISTENT WITH THE TYPICAL SECTIONS AND CONSTRUCTED TO PREVENT LONGITUDINAL JOINTS FROM BEING LOCATED WITHIN A DRIVING OR TURNING LANE.

ALIGNMENT IDENTIFIERS

SRN	SYENE ROAD NORTHBOUND
SRS	SYENE ROAD SOUTHBOUND
EM	MCCOY ROAD EASTBOUND
WM	MCCOY ROAD WESTBOUND
CCT	CAPITAL CITY TRAIL
SCT	SYENE ROAD TEMPORARY CONNECTION
WSP	WEST SIDE PATH
TPD	TRAILHEAD PARKING LOT DRIVEWAY

DESIGN CONTACT
BRIAN ST. VINCENT, P.E.
KL ENGINEERING, INC.
5400 KING JAMES WAY
SUITE 200
MADISON, WI 53719
(608) 663-1218
BRIAN.STVINCENT@KLENGINEERING.COM

WISDOT
LORRAINE BETZEL P.E.
WISDOT SOUTHWEST REGION
2101 WRIGHT STREET
MADISON, WI 53704
(608) 246-3279
LORRAINE.BETZEL@DOT.WI.GOV

DNR CONTACT
ERIC HEGGELUND
WISCONSIN DEPT. OF NATURAL RESOURCES
3911 FISH HATCHERY ROAD
FITCHBURG, WI 53711
(608) 228-7927
ERIC.HEGGELUND@WISCONSIN.GOV

CITY OF FITCHBURG
ROSS KAHLER
5520 LACY ROAD
FITCHBURG, WI 53711
(608) 270-4266
ROSS.KAHLER@FITCHBURGWI.GOV

2

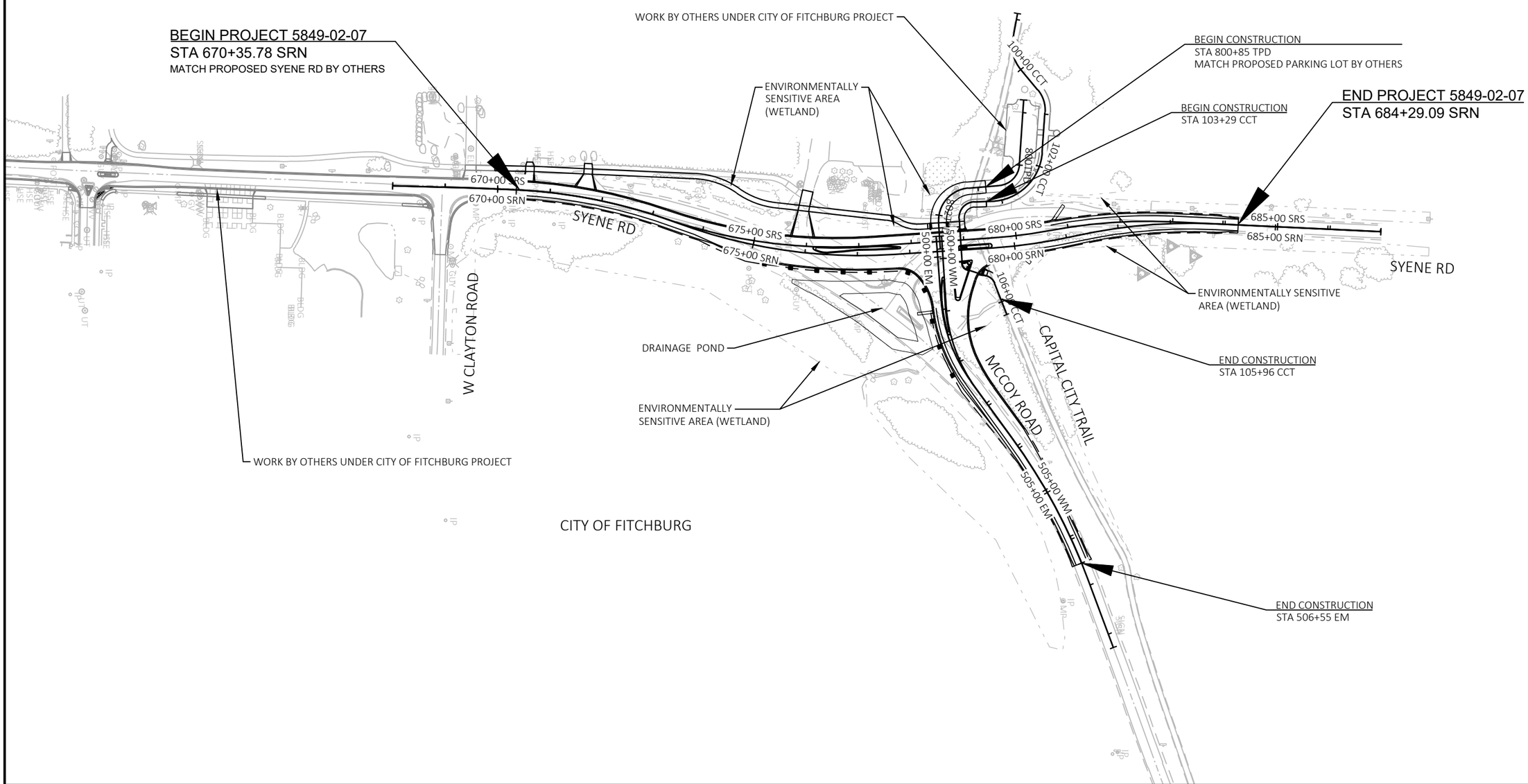

PROJECT NO: 5849-02-07	HWY: LOCAL STREET - SYENE ROAD	COUNTY: DANE	PROJECT OVERVIEW	SHEET 3	E

FILE NAME : G:\FITCHBRG\20087-000 SYENE ROAD\CIVIL 3D\SHEETSPLAN\PHASE 3 SHEET FILES - W CLAYTON TO MCCOY\020201-PO_P3.DWG
LAYOUT NAME - Plan 1 IN 200 FT
PLOT DATE : 5/1/2024 10:06 AM PLOT BY : BRIAN ST. VINCENT PLOT NAME : PLOT SCALE : 1 IN:200 FT

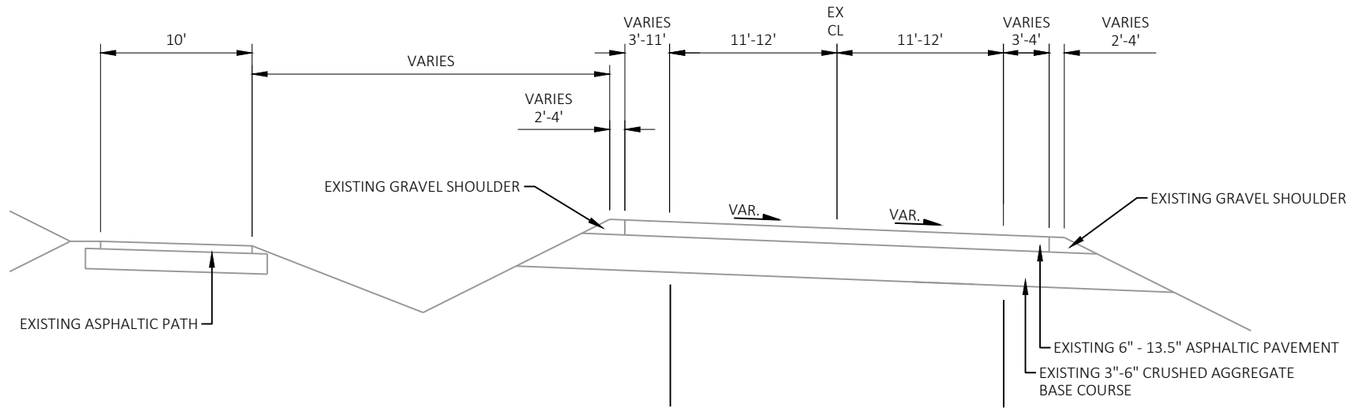

EXISTING TYPICAL SECTION - SYENE ROAD & MCCOY ROAD

STA 670+36 SRN - STA 677+49 SRN
STA 500+90 EM - STA 506+55 EM

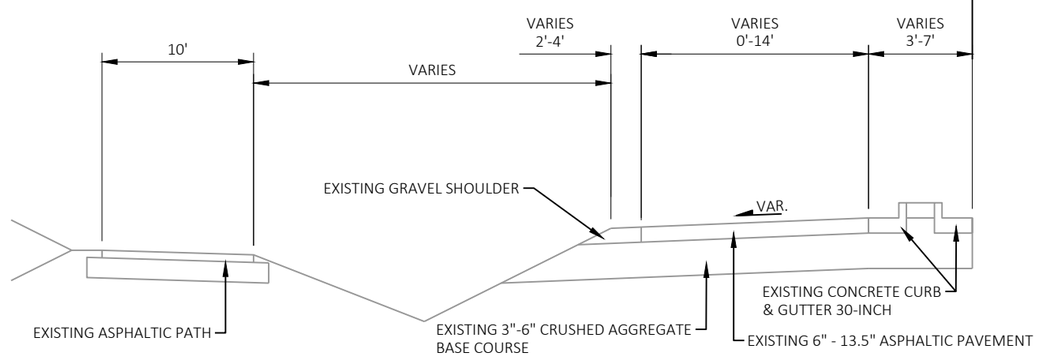

PARTIAL EXISTING TYPICAL SECTION

STA 500+87 EM - STA 501+29 EM

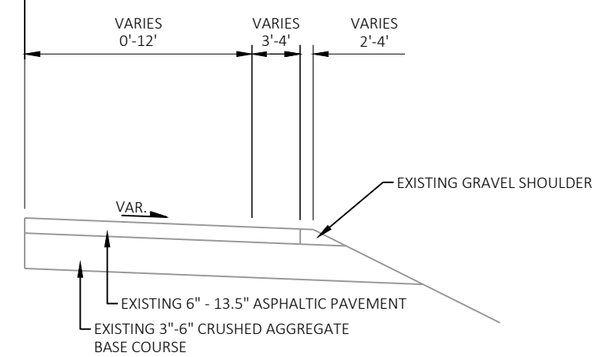

PARTIAL EXISTING TYPICAL SECTION

STA 674+00 SRN - STA 677+49 SRN
STA 500+90 EM - STA 504+53 EM

2

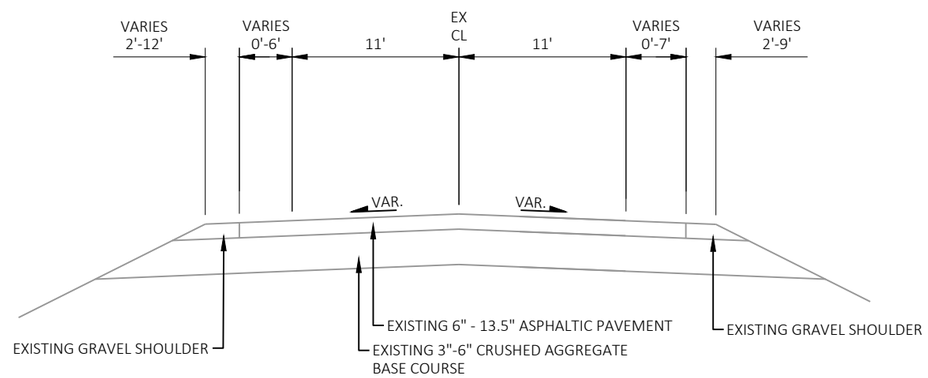

EXISTING TYPICAL SECTION - SYENE ROAD

STA 677+49 SRN - STA 684+29 SRN

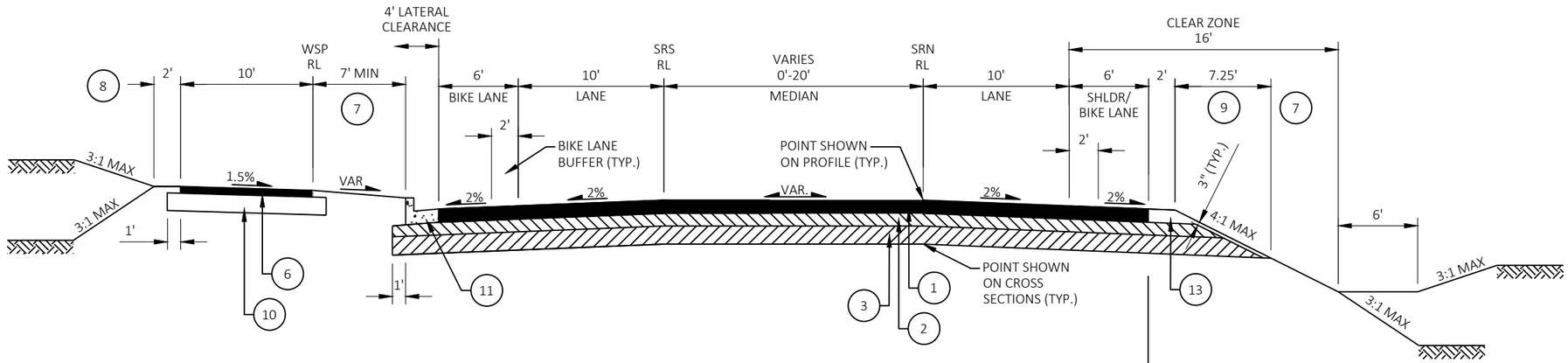

FINISHED TYPICAL SECTION - WEST SIDE PATH

STA 670+00 WSP - STA 676+25 WSP

FINISHED TYPICAL SECTION - SYENE ROAD

STA 670+36 SRN - STA 676+14 SRN

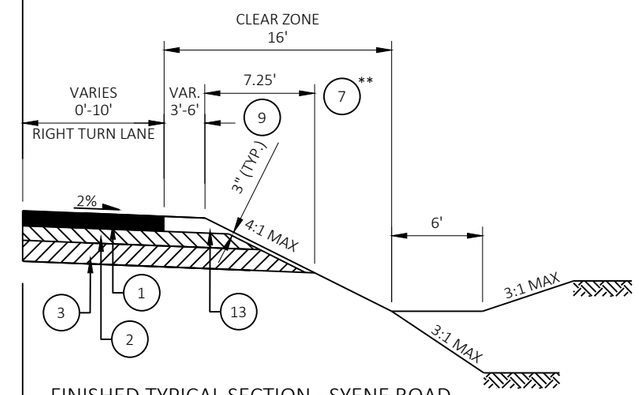

FINISHED TYPICAL SECTION - SYENE ROAD

STA 674+34 SRN - STA 674+92 SRN

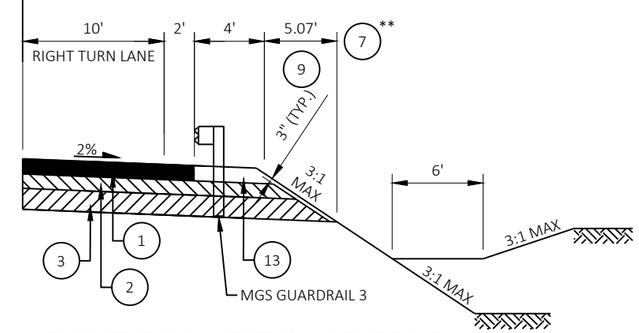

FINISHED TYPICAL SECTION - SYENE ROAD

STA 674+92 SRN - STA 676+14 SRN

LEGEND

1. HMA PAVEMENT 6.00-INCH UPPER, 2.25-INCH, 5 MT 58-28 S LOWER, 3.75-INCH, 3 MT 58-28 S
2. BASE AGGREGATE DENSE 1 1/4-INCH, 5-INCH
3. BASE AGGREGATE DENSE 3-INCH, 9-INCH
4. CONCRETE SIDEWALK 5-INCH / STAMPING COLORED CONCRETE *
5. BASE AGGREGATE DENSE 3/4-INCH, 4-INCH
6. HMA PAVEMENT 3.00-INCH UPPER, 3.00-INCH, 5 LT 58-28 S
7. 6" SALVAGED TOPSOIL, SEED MIXTURE NO. 70A, FERTILIZER TYPE B, AND EMAT
8. 6" SALVAGED TOPSOIL, TURF GRASS SEED MIXTURE, FERTILIZER TYPE B, AND EMAT
9. SEED MIXTURE NO. 70A AND FERTILIZER TYPE B
10. BASE AGGREGATE DENSE 3/4-INCH, 8-INCH
11. CONCRETE CURB & GUTTER 30-INCH, TYPE D
12. CONCRETE CURB & GUTTER 24-INCH REJECT
13. BASE AGGREGATE DENSE 3/4-INCH TO MATCH PAVEMENT THICKNESS
14. ASPH. SURF. DRIVEWAYS AND FIELD ENTRANCES, 4-INCH
15. BASE AGGREGATE DENSE 1 1/4-INCH, 10-INCH

* STAMPED RED BRICK PATTERN. SEE PROJECT SPECIAL PROVISIONS.

**SEE BASIN SEEDING PLAN.

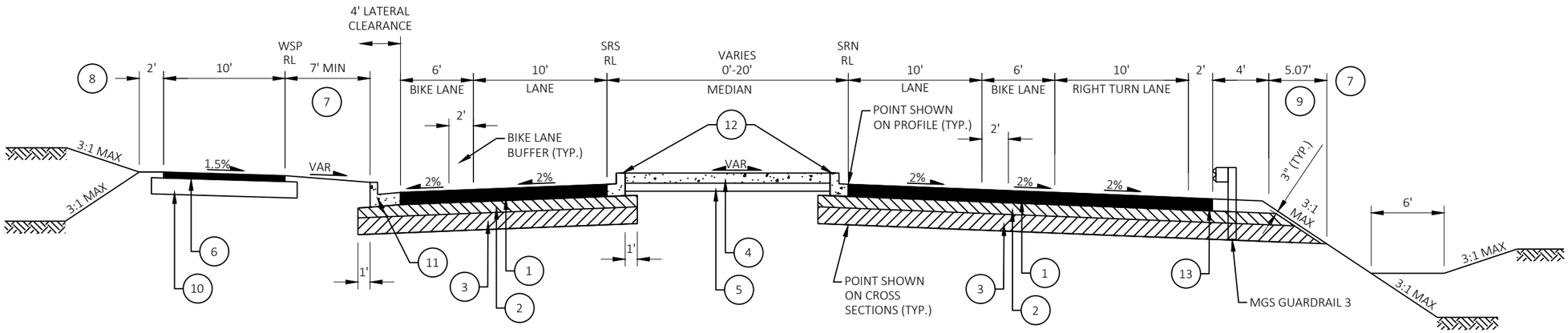

FINISHED TYPICAL SECTION - WEST SIDE PATH

STA 676+25 WSP - STA 679+02 WSP

FINISHED TYPICAL SECTION - SYENE ROAD

STA 676+14 SRN - STA 678+50 SRN

LEGEND

1. HMA PAVEMENT 6.00-INCH
   UPPER, 2.25-INCH, 5 MT 58-28 S
   LOWER, 3.75-INCH, 3 MT 58-28 S
2. BASE AGGREGATE DENSE 1 1/4-INCH, 5-INCH
3. BASE AGGREGATE DENSE 3-INCH, 9-INCH
4. CONCRETE SIDEWALK 5-INCH /
   STAMPING COLORED CONCRETE *
5. BASE AGGREGATE DENSE 3/4-INCH, 4-INCH
6. HMA PAVEMENT 3.00-INCH
   UPPER, 3.00-INCH, 5 LT 58-28 S
7. 6" SALVAGED TOPSOIL, SEED MIXTURE NO. 70A,
   FERTILIZER TYPE B, AND EMAT
8. 6" SALVAGED TOPSOIL, TURF GRASS SEED MIXTURE,
   FERTILIZER TYPE B, AND EMAT
9. SEED MIXTURE NO. 70A AND FERTILIZER TYPE B
10. BASE AGGREGATE DENSE 3/4-INCH, 8-INCH
11. CONCRETE CURB & GUTTER 30-INCH, TYPE D
12. CONCRETE CURB & GUTTER 24-INCH REJECT
13. BASE AGGREGATE DENSE 3/4-INCH
    TO MATCH PAVEMENT THICKNESS
14. ASPH. SURF. DRIVEWAYS AND FIELD ENTRANCES, 4-INCH
15. BASE AGGREGATE DENSE 1 1/4-INCH, 10-INCH

* STAMPED RED BRICK PATTERN. SEE PROJECT SPECIAL PROVISIONS.

**SEE BASIN SEEDING PLAN.

2

LEGEND

1	HMA PAVEMENT 6.00-INCH UPPER, 2.25-INCH, 5 MT 58-28 S LOWER, 3.75-INCH, 3 MT 58-28 S
2	BASE AGGREGATE DENSE 1 1/4-INCH, 5-INCH
3	BASE AGGREGATE DENSE 3-INCH, 9-INCH
4	CONCRETE SIDEWALK 5-INCH / STAMPING COLORED CONCRETE *
5	BASE AGGREGATE DENSE 3/4-INCH, 4-INCH
6	HMA PAVEMENT 3.00-INCH UPPER, 3.00-INCH, 5 LT 58-28 S
7	6" SALVAGED TOPSOIL, SEED MIXTURE NO. 70A, FERTILIZER TYPE B, AND EMAT
8	6" SALVAGED TOPSOIL, TURF GRASS SEED MIXTURE, FERTILIZER TYPE B, AND EMAT
9	SEED MIXTURE NO. 70A AND FERTILIZER TYPE B
10	BASE AGGREGATE DENSE 3/4-INCH, 8-INCH
11	CONCRETE CURB & GUTTER 30-INCH, TYPE D
12	CONCRETE CURB & GUTTER 24-INCH REJECT
13	BASE AGGREGATE DENSE 3/4-INCH TO MATCH PAVEMENT THICKNESS
14	ASPH. SURF. DRIVEWAYS AND FIELD ENTRANCES, 4-INCH
15	BASE AGGREGATE DENSE 1 1/4-INCH, 10-INCH

* STAMPED RED BRICK PATTERN. SEE PROJECT SPECIAL PROVISIONS.

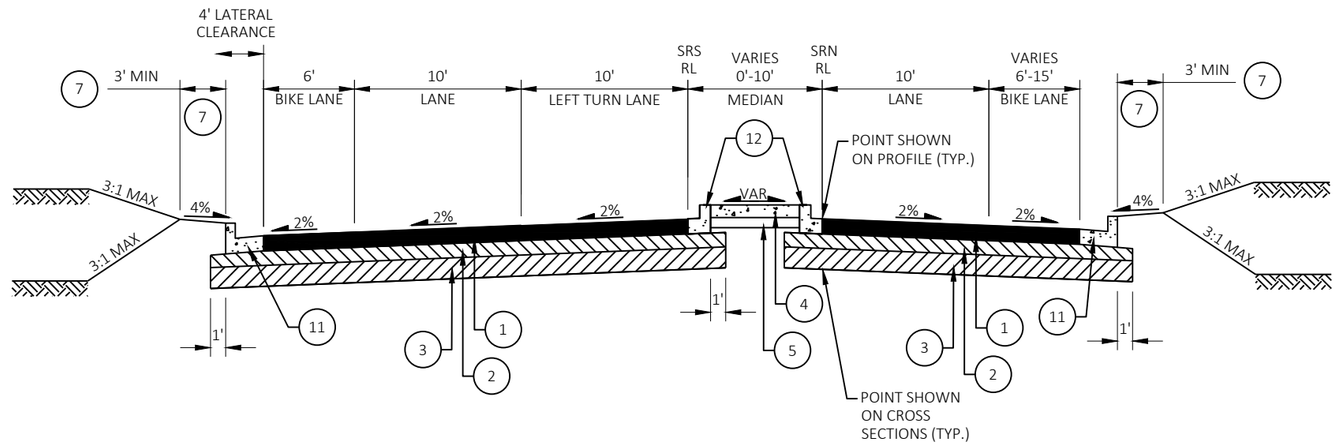

FINISHED TYPICAL SECTION - SYENE ROAD

STA 678+50 SRN - STA 679+57 SRN

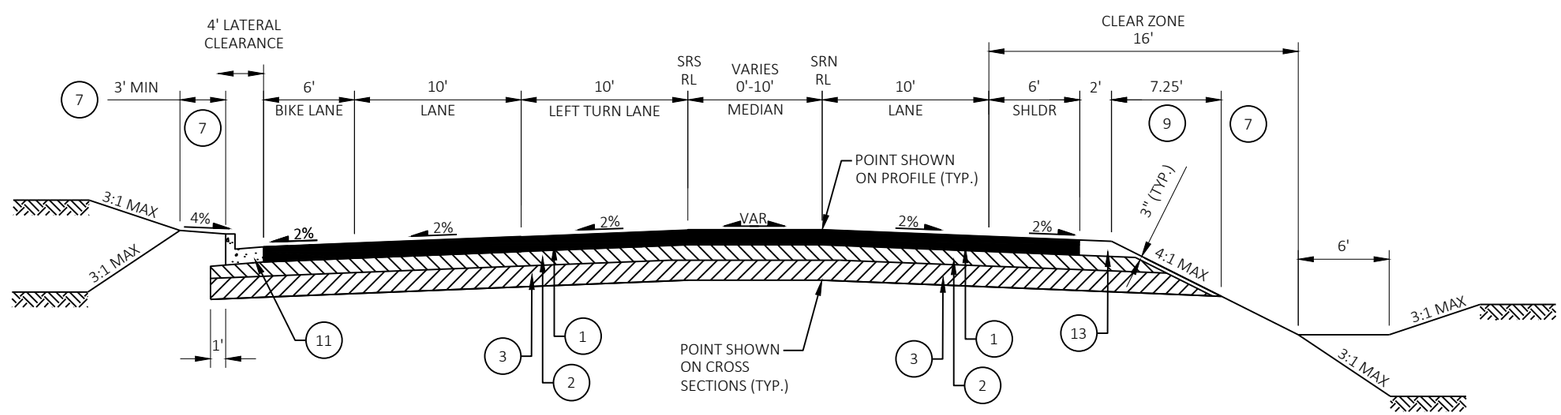

FINISHED TYPICAL SECTION - SYENE ROAD

STA 679+57 SRN - STA 680+75 SRN

2

LEGEND

1. HMA PAVEMENT 6.00-INCH
   UPPER, 2.25-INCH, 5 MT 58-28 S
   LOWER, 3.75-INCH, 3 MT 58-28 S
2. BASE AGGREGATE DENSE 1 1/4-INCH, 5-INCH
3. BASE AGGREGATE DENSE 3-INCH, 9-INCH
4. CONCRETE SIDEWALK 5-INCH /
   STAMPING COLORED CONCRETE *
5. BASE AGGREGATE DENSE 3/4-INCH, 4-INCH
6. HMA PAVEMENT 3.00-INCH
   UPPER, 3.00-INCH, 5 LT 58-28 S
7. 6" SALVAGED TOPSOIL, SEED MIXTURE NO. 70A,
   FERTILIZER TYPE B, AND EMAT
8. 6" SALVAGED TOPSOIL, TURF GRASS SEED MIXTURE,
   FERTILIZER TYPE B, AND EMAT
9. SEED MIXTURE NO. 70A AND FERTILIZER TYPE B
10. BASE AGGREGATE DENSE 3/4-INCH, 8-INCH
11. CONCRETE CURB & GUTTER 30-INCH, TYPE D
12. CONCRETE CURB & GUTTER 24-INCH REJECT
13. BASE AGGREGATE DENSE 3/4-INCH
    TO MATCH PAVEMENT THICKNESS
14. ASPH. SURF. DRIVEWAYS AND FIELD ENTRANCES, 4-INCH
15. BASE AGGREGATE DENSE 1 1/4-INCH, 10-INCH

* STAMPED RED BRICK PATTERN. SEE PROJECT SPECIAL PROVISIONS.

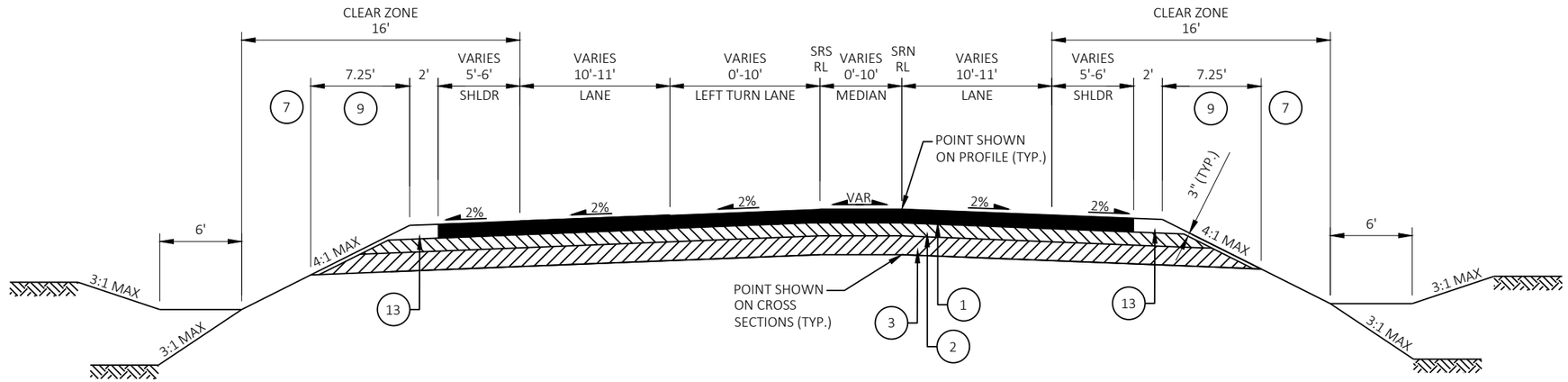

FINISHED TYPICAL SECTION - SYENE ROAD

STA 680+75 SRN - STA 684+29 SRN

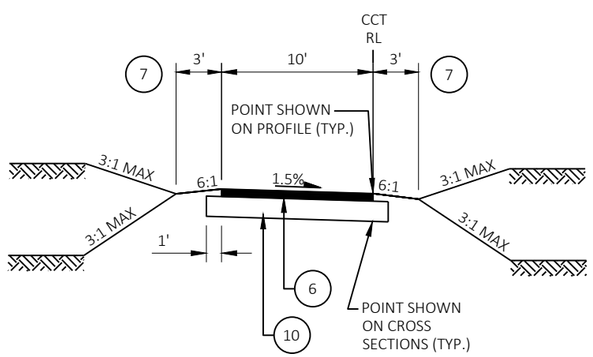

FINISHED TYPICAL SECTION - CAPITAL CITY TRAIL

STA 103+29 CCT - STA 104+23 CCT
STA 104+83 CCT - STA 105+05 CCT
STA 105+27 CCT - STA 105+96 CCT

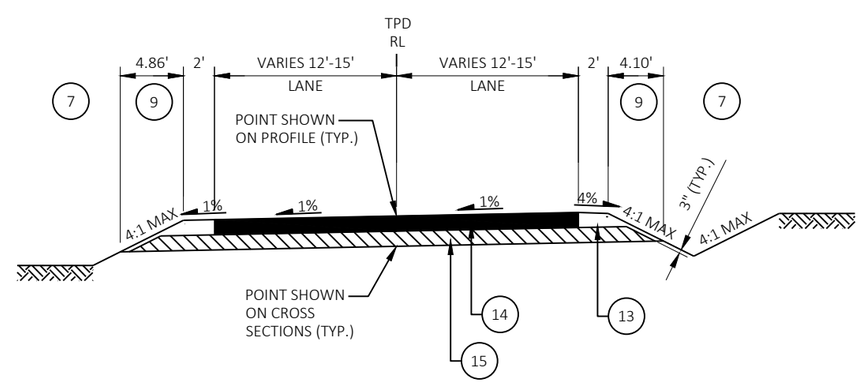

FINISHED TYPICAL SECTION - TRAILHEAD PARKING LOT DRIVEWAY

STA 800+85 TPD - STA 802+14 TPD

2

LEGEND

1. HMA PAVEMENT 6.00-INCH
   UPPER, 2.25-INCH, 5 MT 58-28 S
   LOWER, 3.75-INCH, 3 MT 58-28 S
2. BASE AGGREGATE DENSE 1 1/4-INCH, 5-INCH
3. BASE AGGREGATE DENSE 3-INCH, 9-INCH
4. CONCRETE SIDEWALK 5-INCH /
   STAMPING COLORED CONCRETE *
5. BASE AGGREGATE DENSE 3/4-INCH, 4-INCH
6. HMA PAVEMENT 3.00-INCH
   UPPER, 3.00-INCH, 5 LT 58-28 S
7. 6" SALVAGED TOPSOIL, SEED MIXTURE NO. 70A,
   FERTILIZER TYPE B, AND EMAT
8. 6" SALVAGED TOPSOIL, TURF GRASS SEED MIXTURE,
   FERTILIZER TYPE B, AND EMAT
9. SEED MIXTURE NO. 70A AND FERTILIZER TYPE B
10. BASE AGGREGATE DENSE 3/4-INCH, 8-INCH
11. CONCRETE CURB & GUTTER 30-INCH, TYPE D
12. CONCRETE CURB & GUTTER 24-INCH REJECT
13. BASE AGGREGATE DENSE 3/4-INCH
    TO MATCH PAVEMENT THICKNESS
14. ASPH. SURF. DRIVEWAYS AND FIELD ENTRANCES, 4-INCH
15. BASE AGGREGATE DENSE 1 1/4-INCH, 10-INCH

* STAMPED RED BRICK PATTERN. SEE PROJECT SPECIAL PROVISIONS.

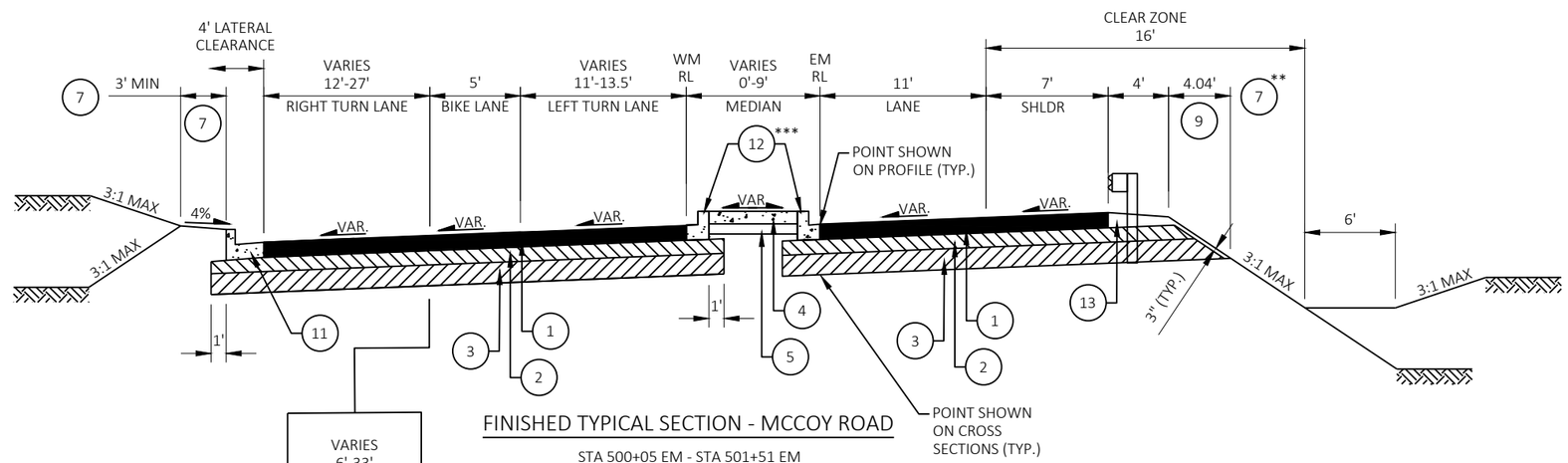

FINISHED TYPICAL SECTION - MCCOY ROAD

STA 500+05 EM - STA 501+51 EM

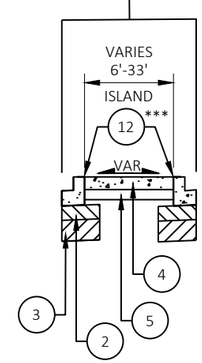

FINISHED TYPICAL SECTION - MCCOY ROAD

STA 500+10 EM - STA 500+86 EM

SUPERELEVATION

STATION	LEFT UNPAVED SHOULDER	LEFT LANE AND PAVED SHOULDER	RIGHT LANE AND PAVED SHOULDER	RIGHT UNPAVED SHOULDER	DESCRIPTION
500+14.70 EM	-4.00%	-0.75%	0.75%	-4.00%	MATCH SYENE RD
500+77.36 EM	-4.00%	-2.00%	2.00%	-4.00%	NORMAL
502+60.00 EM	-4.00%	-2.00%	2.00%	-4.00%	NORMAL
503+04.61 EM	-4.00%	0.00%	0.00%	-4.00%	LEVEL
503+49.23 EM	-4.00%	2.00%	-2.00%	-4.00%	REVERSE
504+20.61 EM	-2.80%	5.20%	-5.20%	-5.20%	BEGIN FULL SUPER
506+28.98 EM	-2.80%	5.20%	-5.20%	-5.20%	END FULL SUPER
506+55.42 EM	-2.57%	5.43%	-6.15%	-6.15%	MATCH EXISTING SE

**SEE BASIN SEEDING PLAN.

***STANDARD CURB (NON-REJECT) ON THE SOUTH SIDE OF THE MEDIAN ISLAND WHEN SUPERELEVATED

2

LEGEND

1. HMA PAVEMENT 6.00-INCH UPPER, 2.25-INCH, 5 MT 58-28 S LOWER, 3.75-INCH, 3 MT 58-28 S
2. BASE AGGREGATE DENSE 1 1/4-INCH, 5-INCH
3. BASE AGGREGATE DENSE 3-INCH, 9-INCH
4. CONCRETE SIDEWALK 5-INCH / STAMPING COLORED CONCRETE *
5. BASE AGGREGATE DENSE 3/4-INCH, 4-INCH
6. HMA PAVEMENT 3.00-INCH UPPER, 3.00-INCH, 5 LT 58-28 S
7. 6" SALVAGED TOPSOIL, SEED MIXTURE NO. 70A, FERTILIZER TYPE B, AND EMAT
8. 6" SALVAGED TOPSOIL, TURF GRASS SEED MIXTURE, FERTILIZER TYPE B, AND EMAT
9. SEED MIXTURE NO. 70A AND FERTILIZER TYPE B
10. BASE AGGREGATE DENSE 3/4-INCH, 8-INCH
11. CONCRETE CURB & GUTTER 30-INCH, TYPE D
12. CONCRETE CURB & GUTTER 24-INCH REJECT
13. BASE AGGREGATE DENSE 3/4-INCH TO MATCH PAVEMENT THICKNESS
14. ASPH. SURF. DRIVEWAYS AND FIELD ENTRANCES, 4-INCH
15. BASE AGGREGATE DENSE 1 1/4-INCH, 10-INCH

* STAMPED RED BRICK PATTERN. SEE PROJECT SPECIAL PROVISIONS.

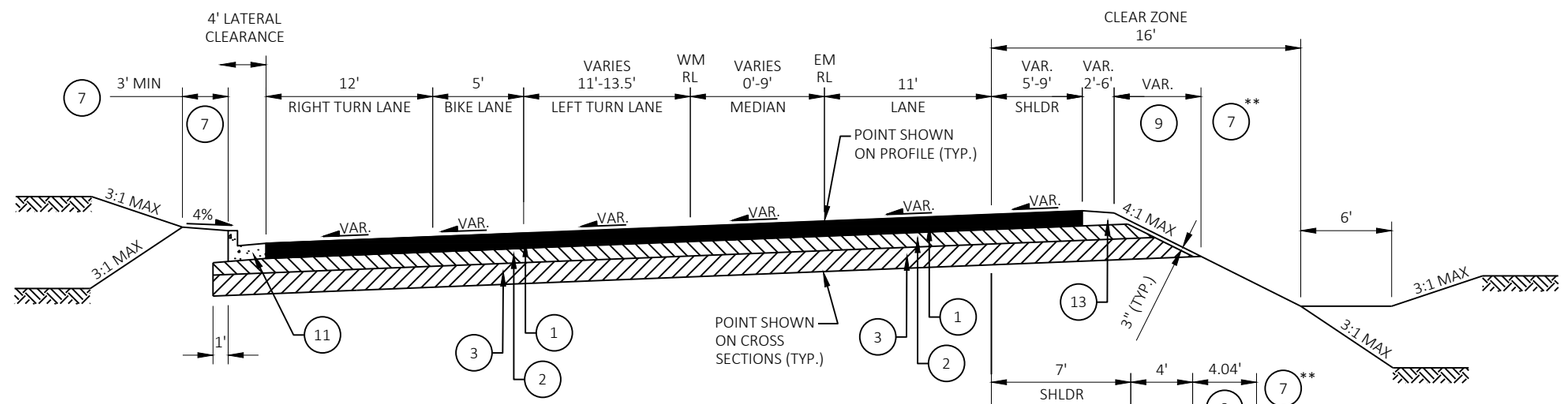

FINISHED TYPICAL SECTION - MCCOY ROAD

STA 501+51 EM - STA 503+05 EM

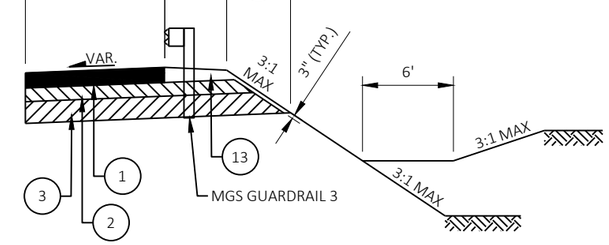

FINISHED TYPICAL SECTION - MCCOY ROAD

STA 501+51 EM - STA 502+55 EM

SUPERELEVATION

STATION	LEFT UNPAVED SHOULDER	LEFT LANE AND PAVED SHOULDER	RIGHT LANE AND PAVED SHOULDER	RIGHT UNPAVED SHOULDER	DESCRIPTION
500+14.70 EM	-4.00%	-0.75%	0.75%	-4.00%	MATCH SYENE RD
500+77.36 EM	-4.00%	-2.00%	2.00%	-4.00%	NORMAL
502+60.00 EM	-4.00%	-2.00%	2.00%	-4.00%	NORMAL
503+04.61 EM	-4.00%	0.00%	0.00%	-4.00%	LEVEL
503+49.23 EM	-4.00%	2.00%	-2.00%	-4.00%	REVERSE
504+20.61 EM	-2.80%	5.20%	-5.20%	-5.20%	BEGIN FULL SUPER
506+28.98 EM	-2.80%	5.20%	-5.20%	-5.20%	END FULL SUPER
506+55.42 EM	-2.57%	5.43%	-6.15%	-6.15%	MATCH EXISTING SE

**SEE BASIN SEEDING PLAN.

2

LEGEND

1. HMA PAVEMENT 6.00-INCH
   UPPER, 2.25-INCH, 5 MT 58-28 S
   LOWER, 3.75-INCH, 3 MT 58-28 S
2. BASE AGGREGATE DENSE 1 1/4-INCH, 5-INCH
3. BASE AGGREGATE DENSE 3-INCH, 9-INCH
4. CONCRETE SIDEWALK 5-INCH /
   STAMPING COLORED CONCRETE *
5. BASE AGGREGATE DENSE 3/4-INCH, 4-INCH
6. HMA PAVEMENT 3.00-INCH
   UPPER, 3.00-INCH, 5 LT 58-28 S
7. 6" SALVAGED TOPSOIL, SEED MIXTURE NO. 70A,
   FERTILIZER TYPE B, AND EMAT
8. 6" SALVAGED TOPSOIL, TURF GRASS SEED MIXTURE,
   FERTILIZER TYPE B, AND EMAT
9. SEED MIXTURE NO. 70A AND FERTILIZER TYPE B
10. BASE AGGREGATE DENSE 3/4-INCH, 8-INCH
11. CONCRETE CURB & GUTTER 30-INCH, TYPE D
12. CONCRETE CURB & GUTTER 24-INCH REJECT
13. BASE AGGREGATE DENSE 3/4-INCH
    TO MATCH PAVEMENT THICKNESS
14. ASPH. SURF. DRIVEWAYS AND FIELD ENTRANCES, 4-INCH
15. BASE AGGREGATE DENSE 1 1/4-INCH, 10-INCH

* STAMPED RED BRICK PATTERN. SEE PROJECT SPECIAL PROVISIONS.

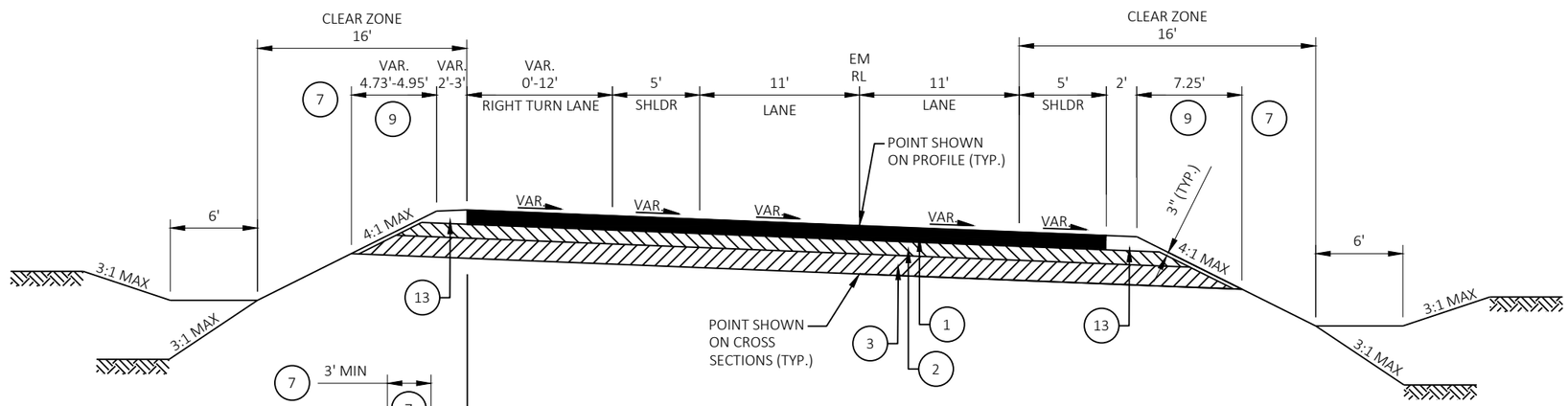

FINISHED TYPICAL SECTION - MCCOY ROAD

STA 503+05 EM - STA 506+55 EM

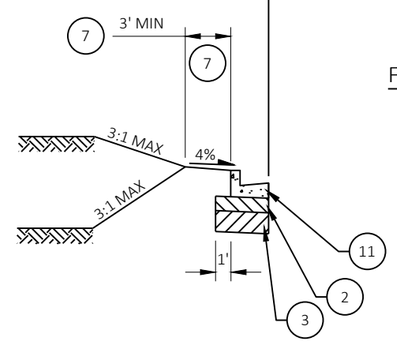

FINISHED TYPICAL SECTION - MCCOY ROAD

STA 503+05 EM - STA 503+82 EM

SUPERELEVATION

STATION	LEFT UNPAVED SHOULDER	LEFT LANE AND PAVED SHOULDER	RIGHT LANE AND PAVED SHOULDER	RIGHT UNPAVED SHOULDER	DESCRIPTION
500+14.70 EM	-4.00%	-0.50%	0.50%	-4.00%	MATCH SYENE RD
500+77.36 EM	-4.00%	-2.00%	2.00%	-4.00%	NORMAL
502+60.00 EM	-4.00%	-2.00%	2.00%	-4.00%	NORMAL
503+04.61 EM	-4.00%	0.00%	0.00%	-4.00%	LEVEL
503+49.23 EM	-4.00%	2.00%	-2.00%	-4.00%	REVERSE
504+20.61 EM	-2.80%	5.20%	-5.20%	-5.20%	BEGIN FULL SUPER
506+28.98 EM	-2.80%	5.20%	-5.20%	-5.20%	END FULL SUPER
506+55.42 EM	-2.57%	5.43%	-6.15%	-6.15%	MATCH EXISTING SE

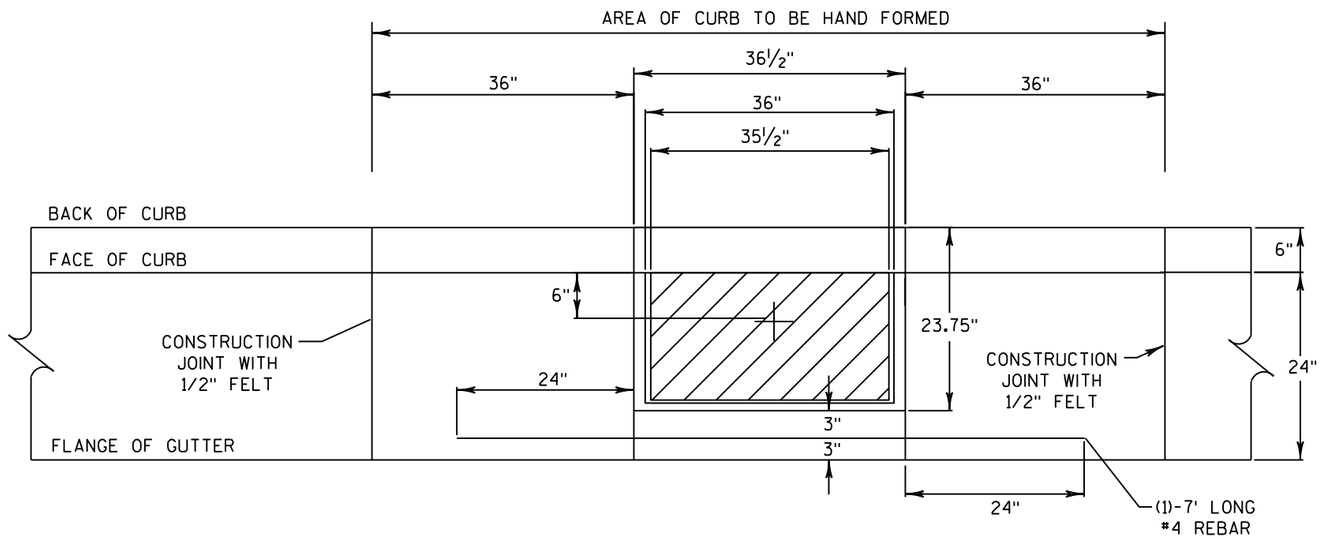

TYPE H CASTING AND 30-INCH CONCRETE CURB AND GUTTER
PLAN VIEW

= CENTER OF STRUCTURE (STATION AND OFFSET AS INDICATED ON THE STORM SCHEDULE)

INLET LOCATIONS IN CURB DETAIL

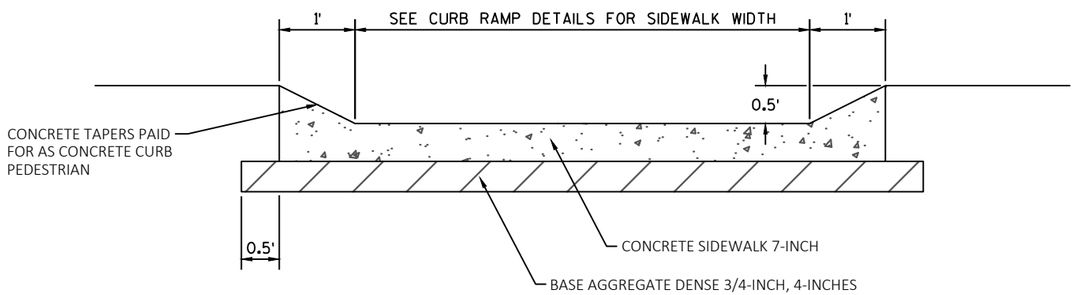

MEDIAN ISLAND CURB RAMP SECTION

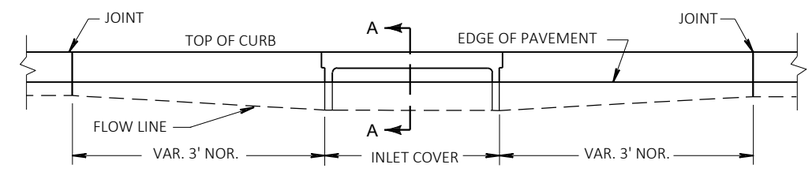

ELEVATION

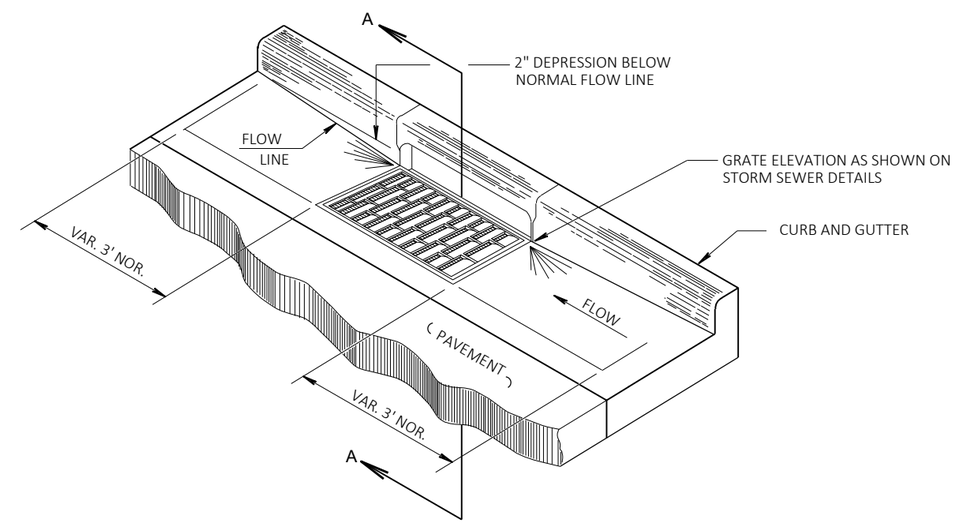

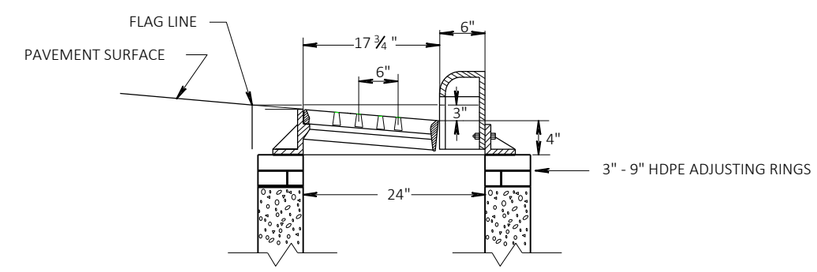

SECTION A-A

DETAIL OF CURB AND GUTTER AT INLETS

(TYPE 3-H INLET SHOWN)

NOTES:
1. SEAL BOLT HOLES WITH CONCRETE.
2. INSTALL 7' #4 EPOXY COATED REBAR IN CENTER OF CONCRETE IN FRONT OF CASTING
3. FOR INLET COVER TYPES NOT SHOWN, SEE CITY OF FITCHBURG AND WISDOT DETAILS FOR DIMENSIONS NOT SHOWN

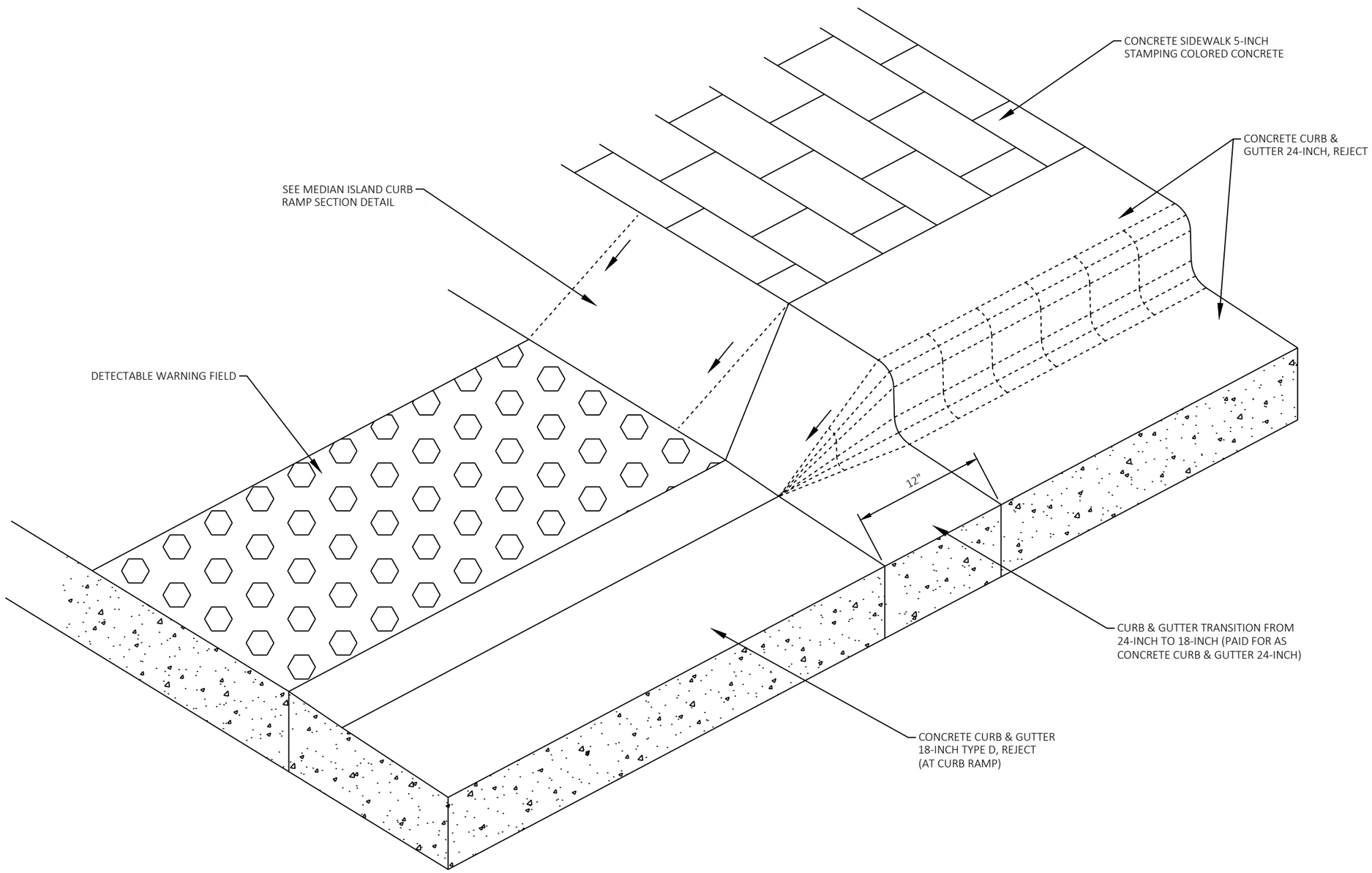

CURB & GUTTER TRANSITION 24-INCH TO 18-INCH

SEE PLAN FOR LOCATIONS

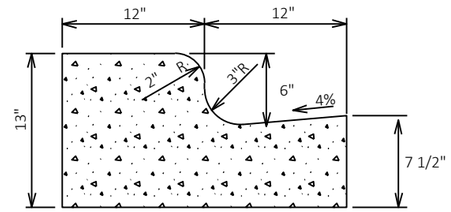

CONCRETE CURB & GUTTER 24-INCH

4% GUTTER DETAILS
FOR REJECT TYPE, GUTTER SLOPE TO MATCH ADJACENT PAVEMENT SLOPE

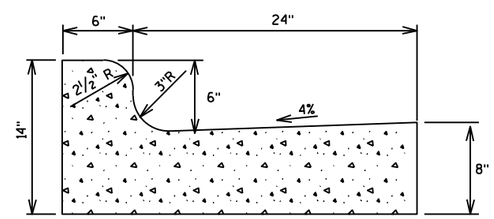

CONCRETE CURB & GUTTER 30-INCH

4% GUTTER DETAILS

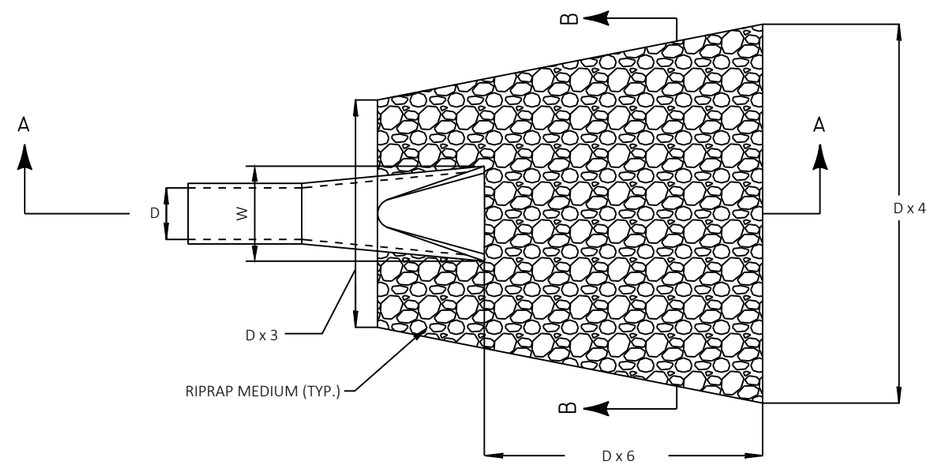

PLAN VIEW

NOTE: RIPRAP SHALL EXTEND TO TOE OF SLOPE MIN.

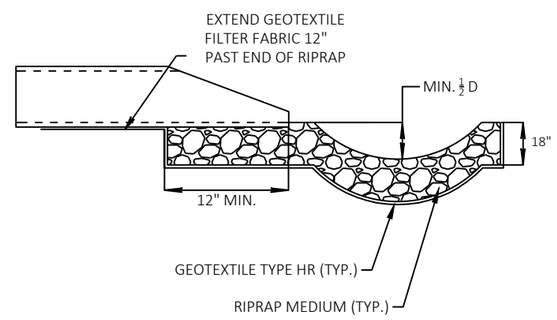

SECTION A-A (DITCH)

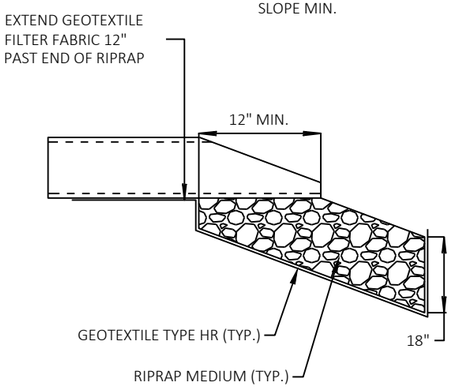

SECTION A-A (SLOPE)

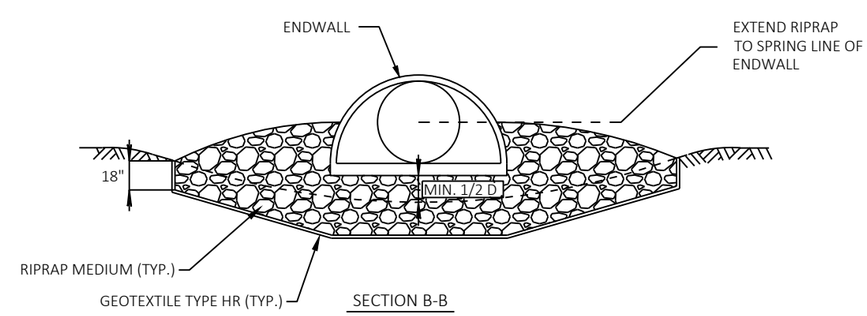

SECTION B-B

RIPRAP TREATMENT AT PIPE ENDWALL DETAIL

SEE EROSION CONTROL PLAN FOR LOCATIONS

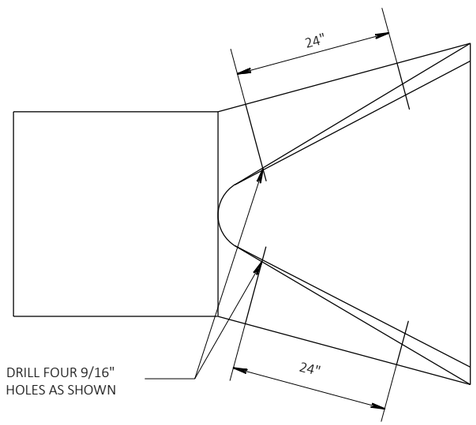

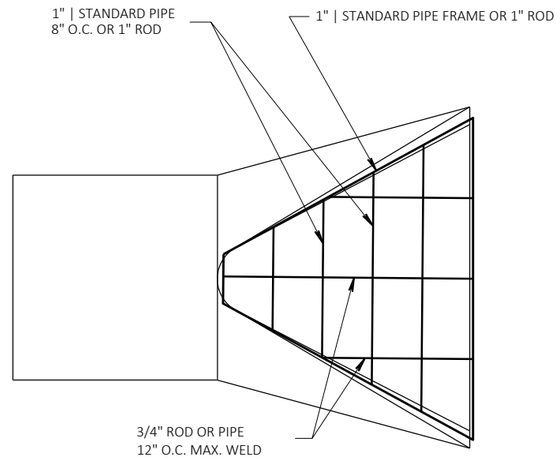

AT EACH PIPE

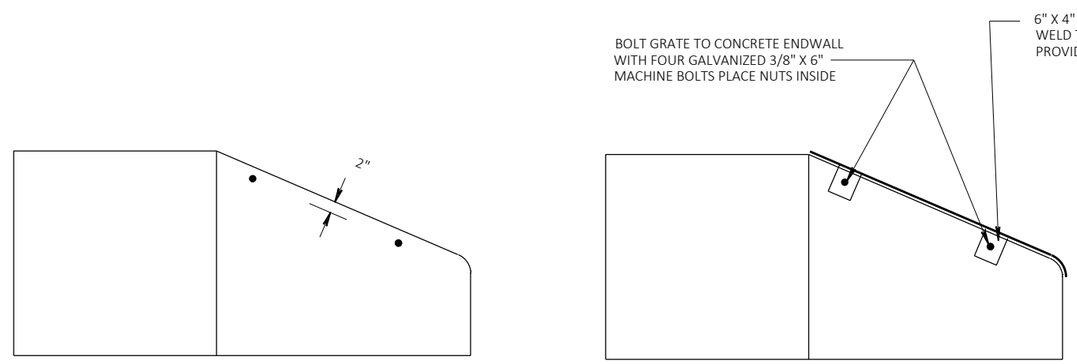

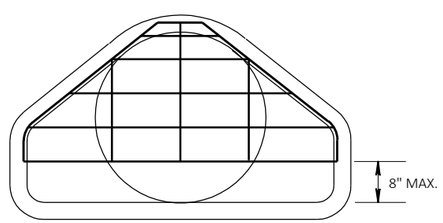

PIPE GRATE DETAIL

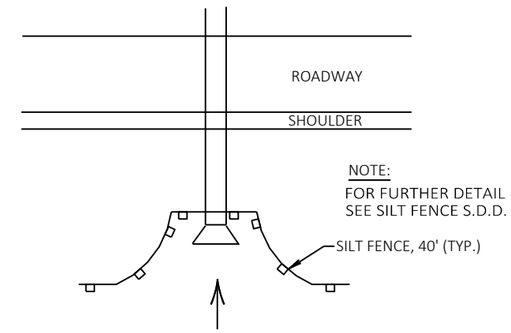

SILT FENCE AT PIPE INLET

SEE EROSION CONTROL PLAN FOR LOCATIONS

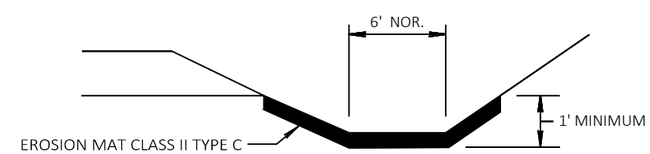

EROSION MAT DETAIL FOR DITCHES

GENERAL NOTES:

DETAILS OF CONSTRUCTION, MATERIALS, AND WORKSMANSHIP NOT SHOWN ON THIS DRAWING SHALL CONFORM TO THE PERTINENT REQUIREMENTS OF THE CITY OF FITCHBURG SPECIFICATIONS.

PIPE SHALL EXTEND 2" INTO STRUCTURE AND COLLARS EXTENDED INSIDE, FIELD POURED FLOW LINE.

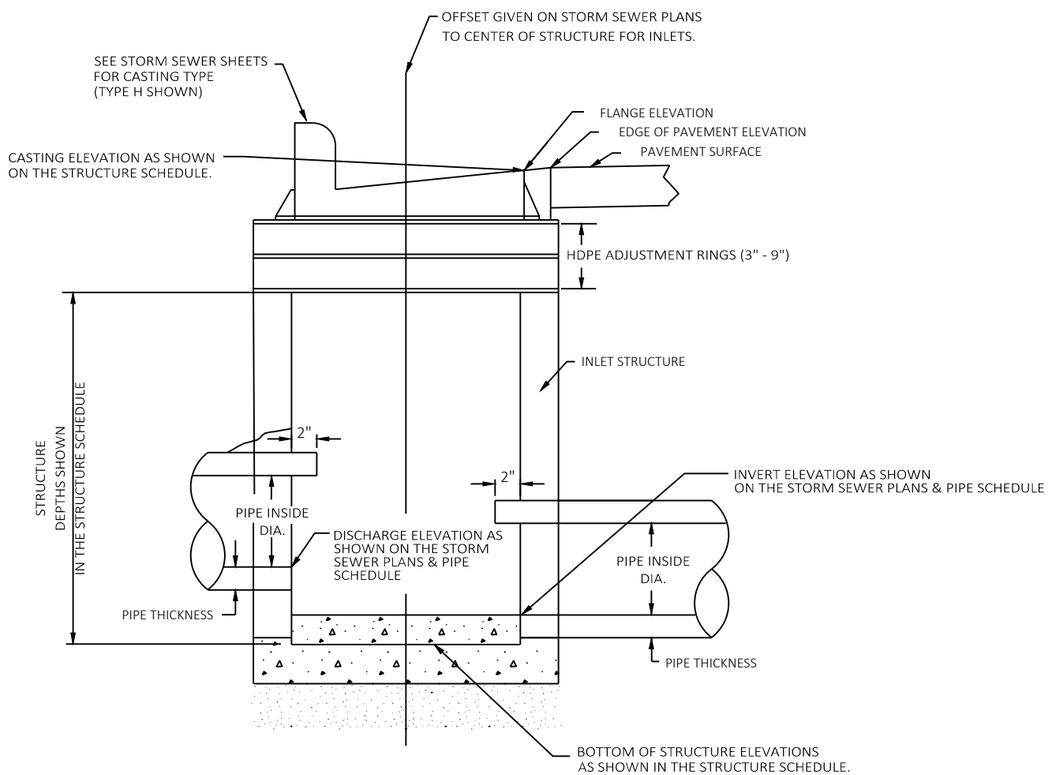

DETAIL OF INLET W/CASTING

GENERAL NOTES:

DETAILS OF CONSTRUCTION, MATERIALS, AND WORKSMANSHIP NOT SHOWN ON THIS DRAWING SHALL CONFORM TO THE PERTINENT REQUIREMENTS OF THE CITY OF FITCHBURG SPECIFICATIONS.

PIPE SHALL EXTEND 2" INTO STRUCTURE AND COLLARS EXTENDED INSIDE, FIELD POURED FLOW LINE.

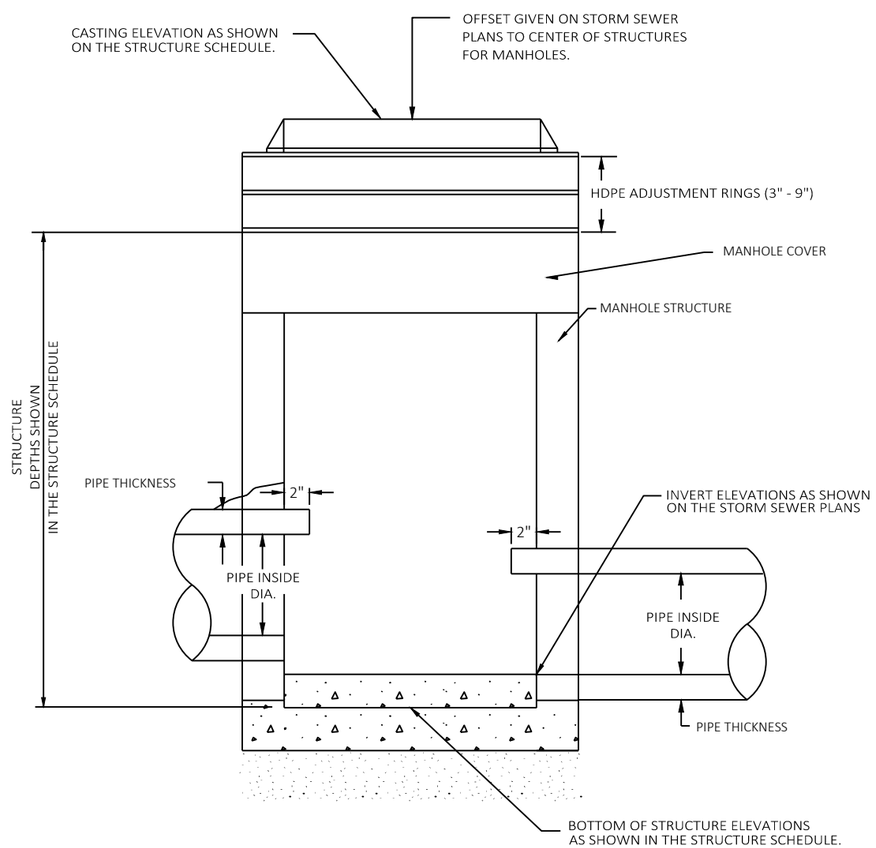

STORM SEWER MANHOLE W/CASTING DETAIL

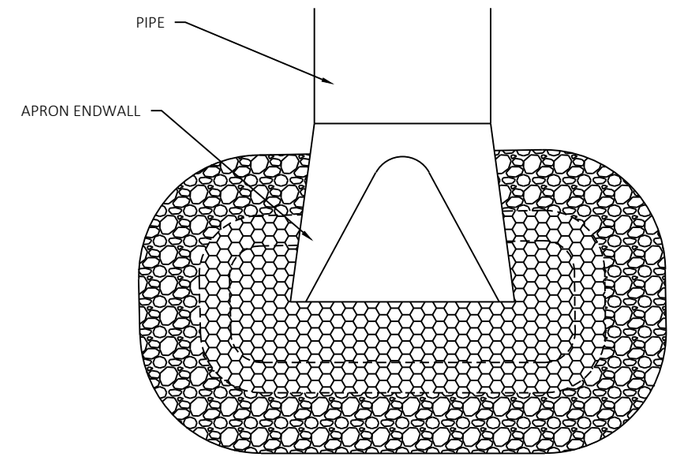

PLAN VIEW

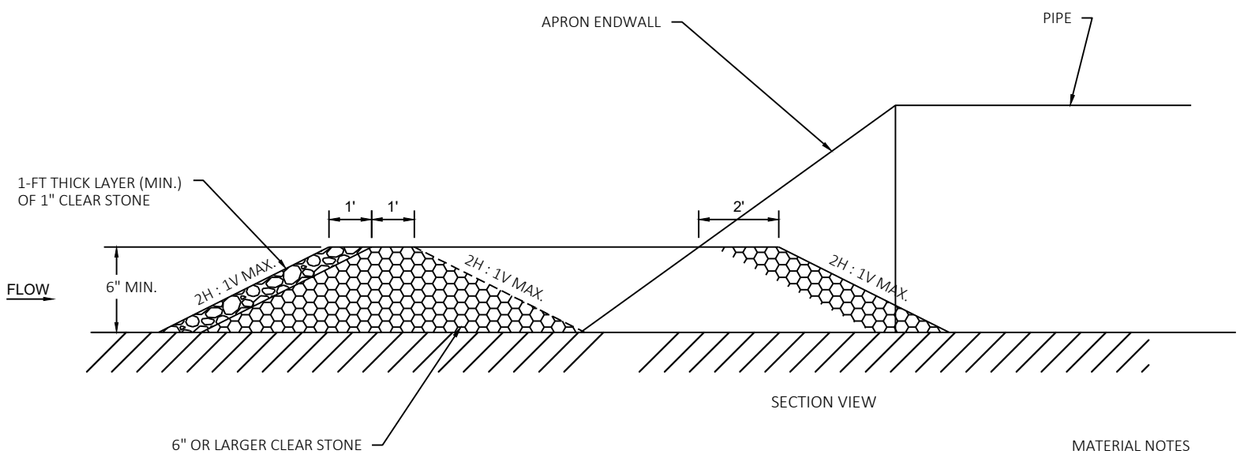

SECTION VIEW

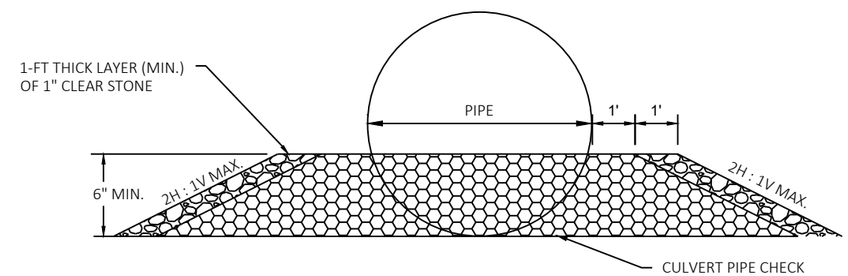

ELEVATION VIEW

MATERIAL NOTES

1. CULVERT PIPE CHECK SHALL BE CONSTRUCTED USING 6" OR LARGER CLEAR STONE.

INSTALLATION NOTES

1. CUVLERT PIPE CHECK SHALL BE INSTALLED AT THE END OF PIPE APRON ENDWALL AND REMOVED AFTER CONSTRUCTION.

CULVERT PIPE CHECK SPECIAL

SEE EROSION CONTROL PLAN FOR LOCATIONS

2

RUNOFF COEFFICIENT TABLE

	HYDROLOGIC SOIL GROUP											
	A			B			C			D		
	SLOPE RANGE (PERCENT)			SLOPE RANGE (PERCENT)			SLOPE RANGE (PERCENT)			SLOPE RANGE (PERCENT)		
LAND USE:	0-2	2-6	6 & OVER	0-2	2-6	6 & OVER	0-2	2-6	6 & OVER	0-2	2-6	6 & OVER
ROW CROPS:	.08 .22	.16 .30	.22 .38	.12 .26	.20 .34	.27 .44	.15 .30	.24 .37	.33 .50	.19 .34	.28 .41	.38 .56
MEDIAN STRIPTURF:	.19 .24	.20 .26	.24 .30	.19 .25	.22 .28	.26 .33	.20 .26	.23 .30	.30 .37	.20 .27	.25 .32	.30 .40
SIDE SLOPETURF:			.25 .32			.27 .34			.28 .36			.30 .38
PAVEMENT:												
ASPHALT:	.70 - .95											
CONCRETE:	.80 - .95											
BRICK:	.70 - .80											
DRIVES, WALKS:	.75 - .85											
ROOFS:	.75 - .95											
GRAVEL ROADS, SHOULDERS:	.40 - .60											

TOTAL PROJECT AREA = 8.497 ACRES
TOTAL AREA EXPECTED TO BE DISTURBED BY CONSTRUCTION ACTIVITIES = 5.929 ACRES

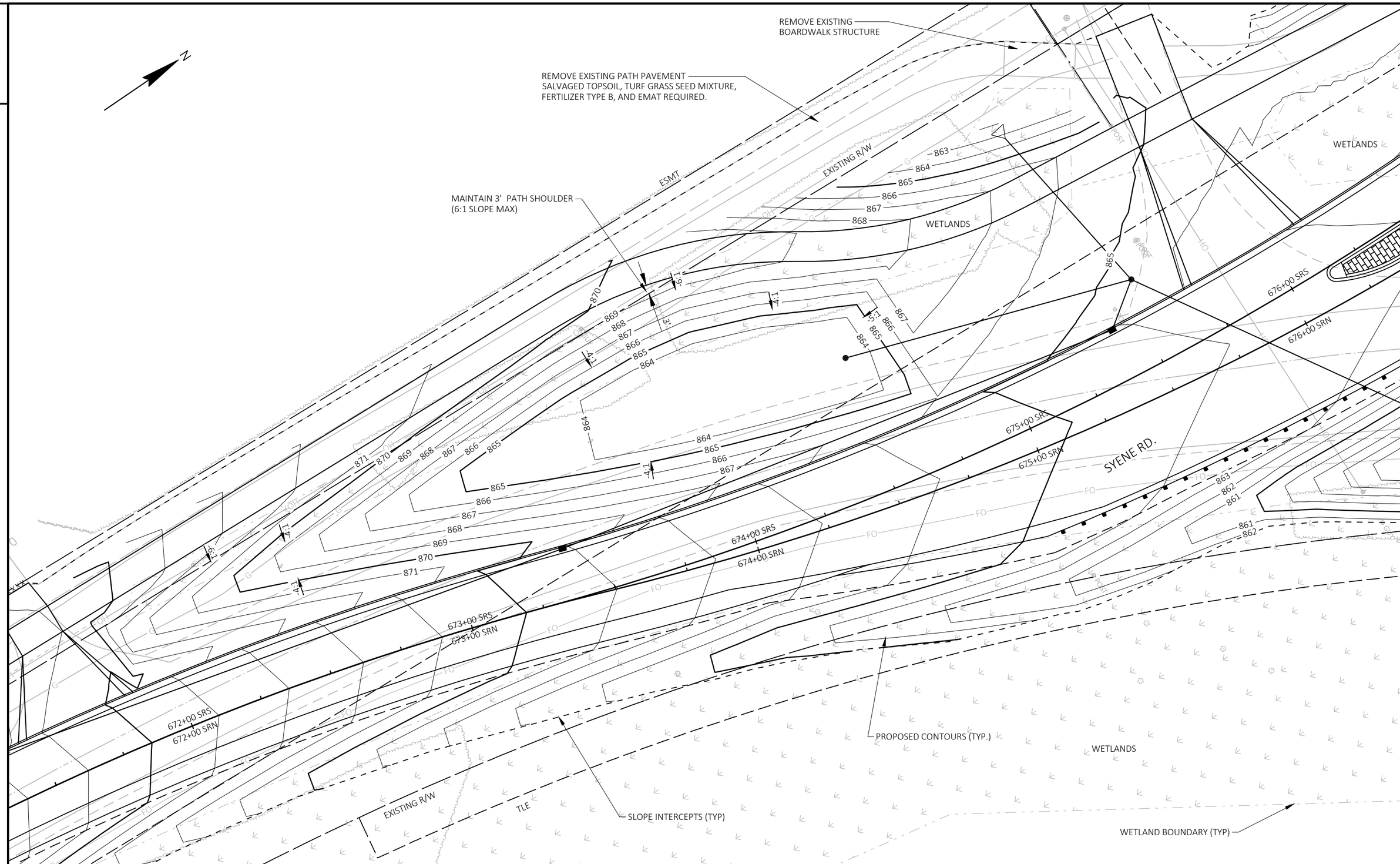

PROJECT NO: 5849-02-07	HWY: LOCAL STREET - SYENE ROAD	COUNTY: DANE	CONSTRUCTION DETAILS - SYENE ROAD DRAINAGE SWALE	SHEET 22	E

FILE NAME : G:\FITCHBRG\20087-000 SYENE ROAD\CIVIL 3D\SHEETSPLAN\PHASE 3 SHEET FILES - W CLAYTON TO MCCOY\021003-CD_P3_POND.DWG
LAYOUT NAME - W
PLOT DATE : 4/30/2024 3:11 PM PLOT BY : BRIAN ST. VINCENT PLOT NAME : PLOT SCALE : 1 IN:30 FT

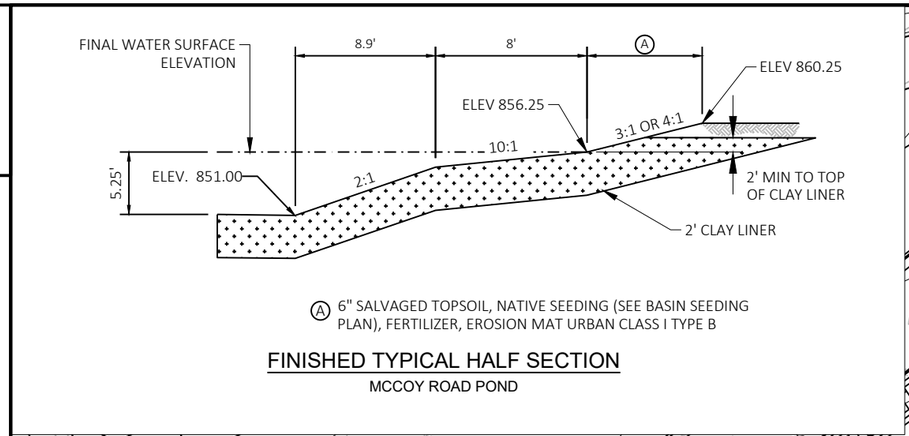

FINISHED TYPICAL HALF SECTION

MCCOY ROAD POND

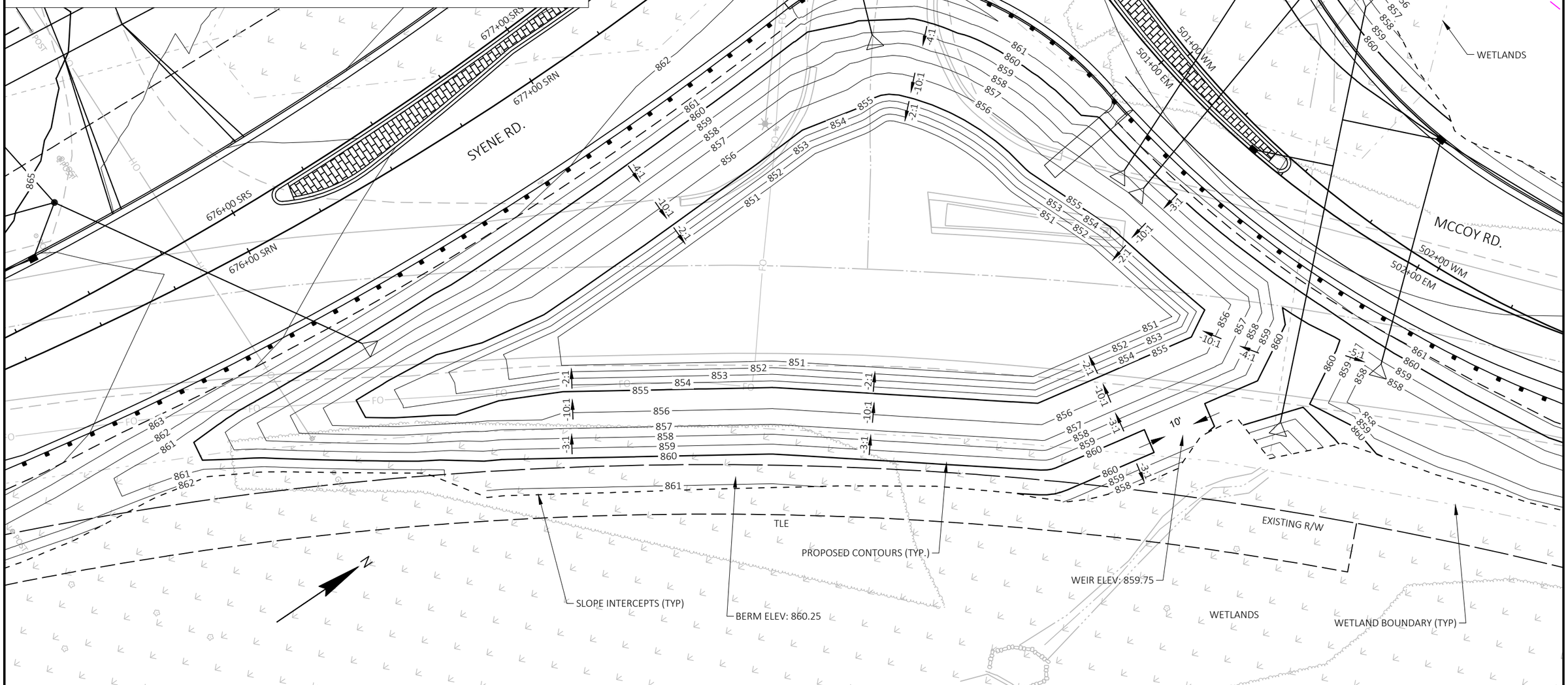

PROJECT NO: 5849-02-07	HWY: LOCAL STREET - SYENE ROAD	COUNTY: DANE	CONSTRUCTION DETAILS - MCCOY ROAD POND	SHEET 23	E

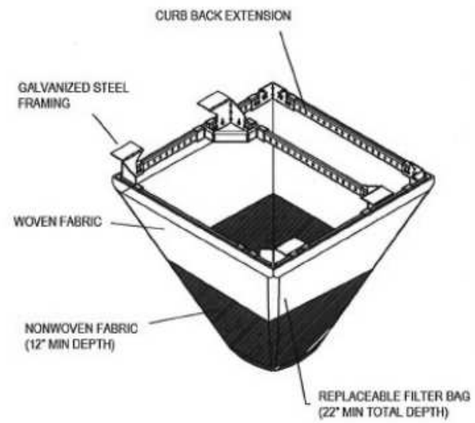

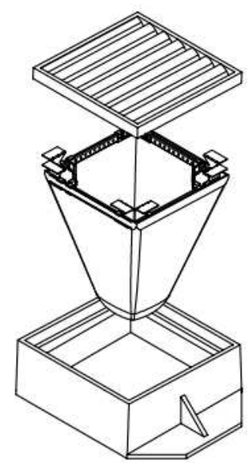

INSTALLATION:

1. REMOVE GRATE.
2. DROP INLET FILTER ONTO LOAD BEARING LIP OF CASTING OR CONCRETE STRUCTURE.
3. REPLACE GRATE.

THE CITY OF Fitchburg ENGINEERING

FRAMED INLET PROTECTION

STANDARD DETAIL DRAWING

DATE: 2/8/2019

SHEET NO.: 2.01

2

Commercial Driveway Detail

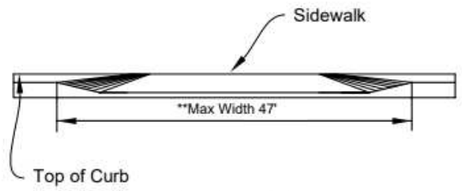

Section A-A

**Applicant may request an administrative variance for a commercial or industrial curb opening (excluding tapers) that is greater than 37' in width by providing documentation per City Ordinance 27-402 (b).

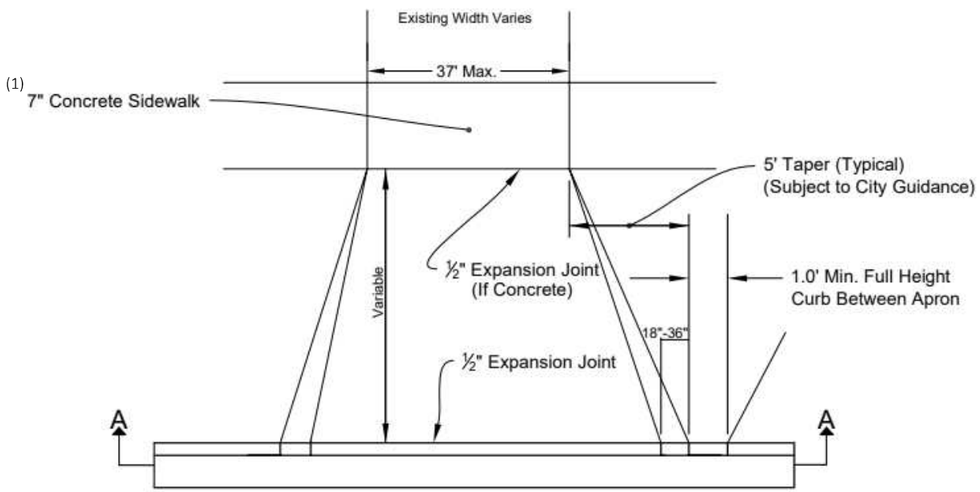

Plan

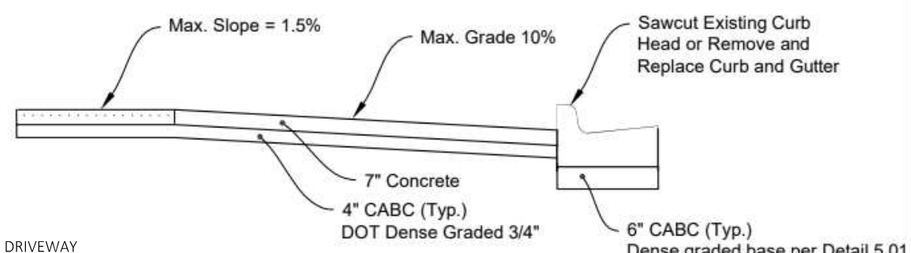

(1) CONCRETE DRIVEWAY
7-INCH FOR THIS PROJECT

Profile

THE CITY OF Fitchburg ENGINEERING

COMMERCIAL DRIVEWAY	DATE: 2/1/2017
STANDARD DETAIL DRAWING	SHEET NO.: 4.03

Urban Driveway Detail

Residental

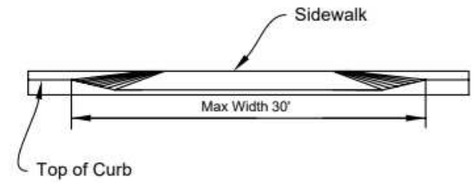

Section A-A

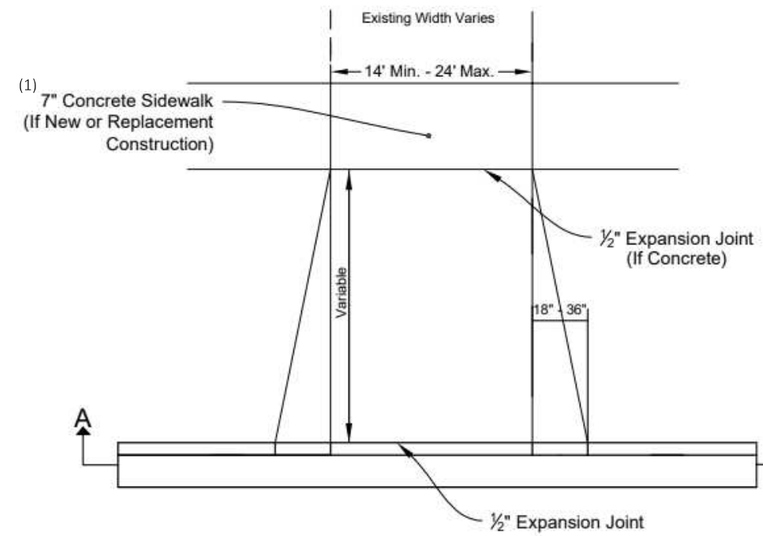

Plan

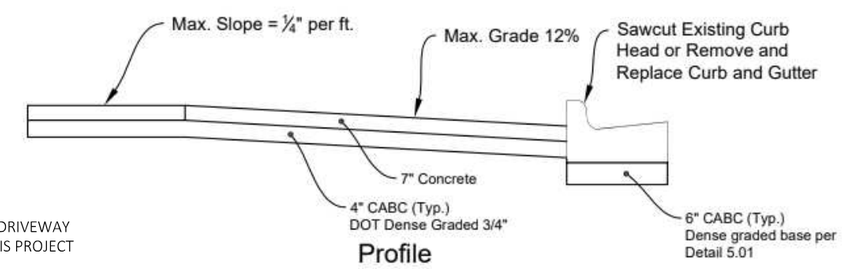

(1) CONCRETE DRIVEWAY
7-INCH FOR THIS PROJECT

Profile

THE CITY OF Fitchburg ENGINEERING

URBAN DRIVEWAY	DATE: 2/1/2017
STANDARD DETAIL DRAWING	SHEET NO.: 4.04

2

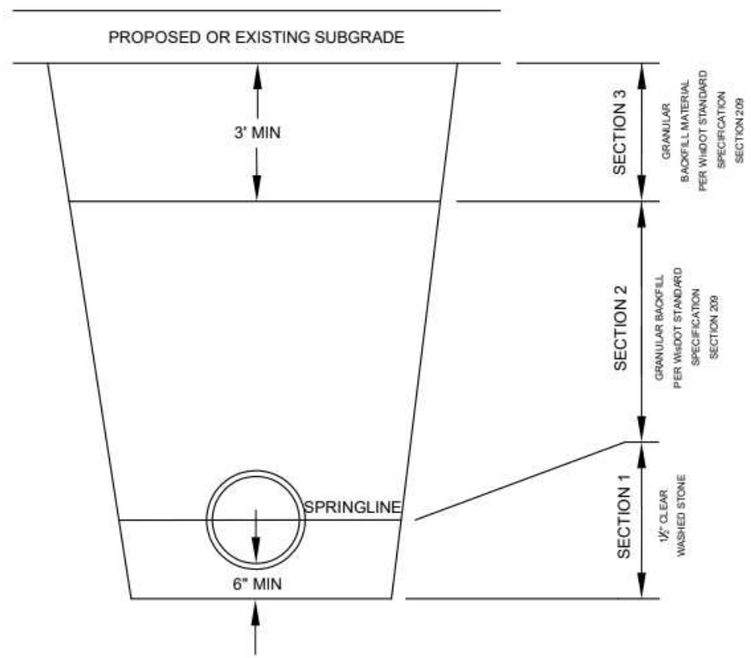

STANDARD TRENCH COMPACTION
ALL BACKFILL MATERIAL SHALL BE PLACED IN LIFTS NOT TO EXCEED 18" BEFORE COMPACTION UNLESS AUTHORIZED BY THE ENGINEER DUE TO THE CHARACTER OF THE MATERIAL AND THE COMPACTING EQUIPMENT. EACH LIFT SHALL BE MECHANICALLY COMPACTED TO THE REQUIRED DENSITY PRIOR TO PLACING SUCCEEDING LIFTS OF BACKFILL MATERIAL.

SECTION 1:
MECHANICALLY COMPACTED BEDDING AS REQUIRED BY THE SPECIFICATIONS. COMPACTION ACHIEVED WITH SMALLER PLATE COMPACTOR.

SECTION 2:
MINIMUM COMPACTION 90% MAXIMUM DENSITY. COMPACTION OF BACKFILL WITH BOMAG OR HOE-PAC SHALL NOT BEGIN UNTIL THE DEPTH OF BACKFILL MATERIAL IS TWO (2) FEET ABOVE THE TOP OF PIPE.

SECTION 3:
MINIMUM COMPACTION 95% MAXIMUM DENSITY.

THE CITY OF Fitchburg ENGINEERING	STORM SEWER TRENCH	DATE: 2/1/2017
	STANDARD DETAIL DRAWING	SHEET NO.: 6.01

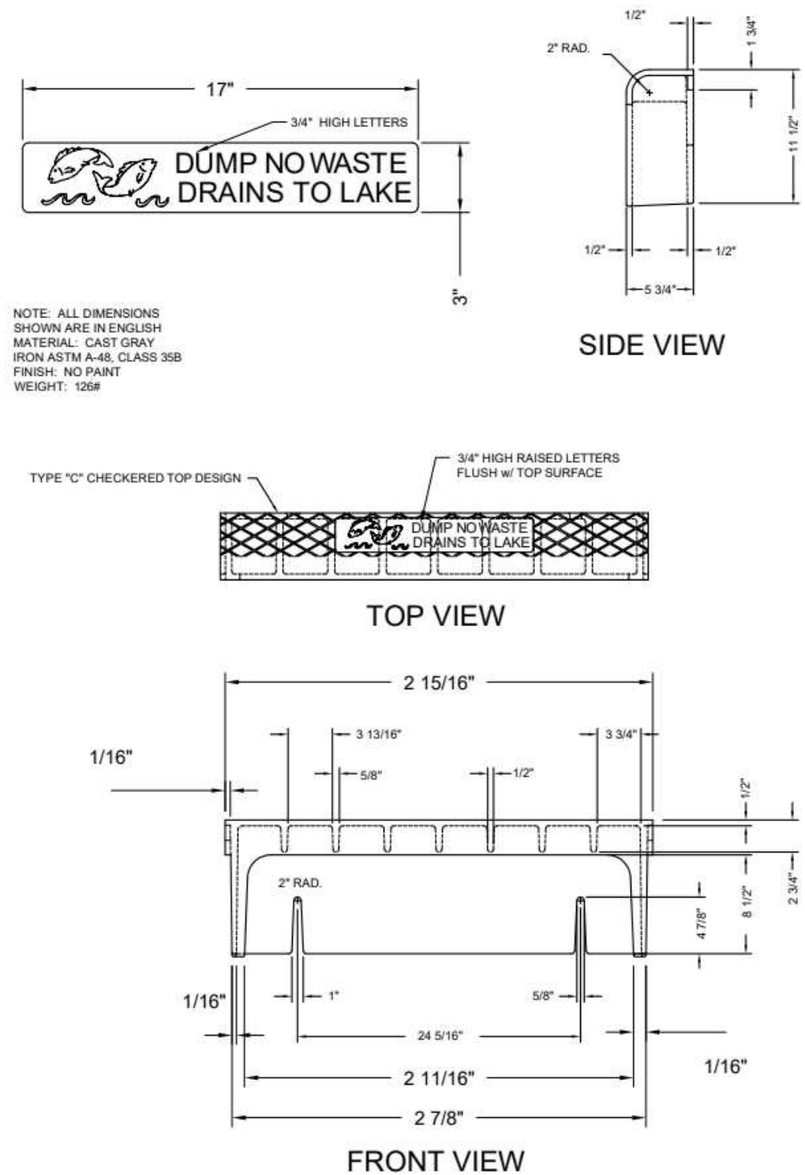

THE CITY OF Fitchburg ENGINEERING	CURB BOX	DATE: 1/24/2014
	STANDARD DETAIL DRAWING	SHEET NO.: 6.02

2

Type L Grate

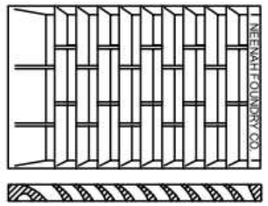

Vane Grate Openings

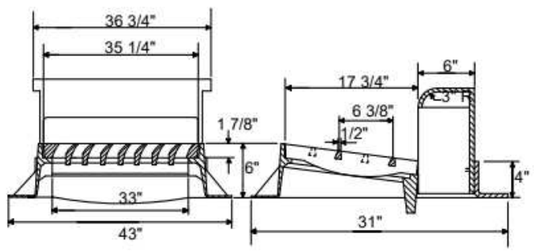

Type VB Grate

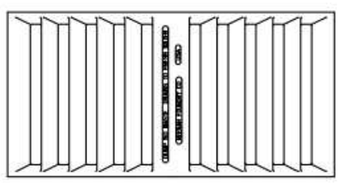

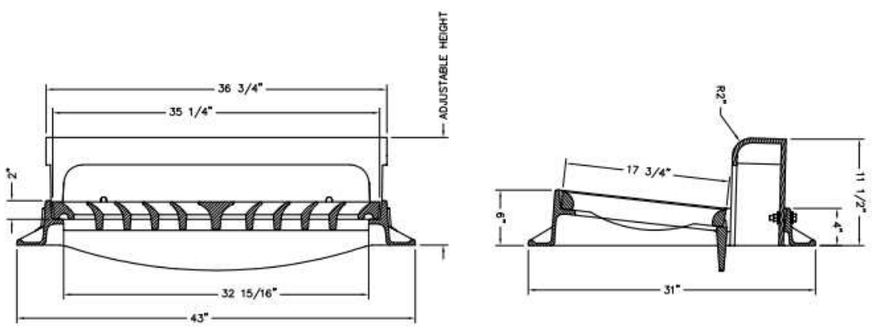

THE CITY OF Fitchburg ENGINEERING

INLET COVERS, TYPE H	DATE: 1/31/2019
STANDARD DETAIL DRAWING	SHEET NO.: 6.03

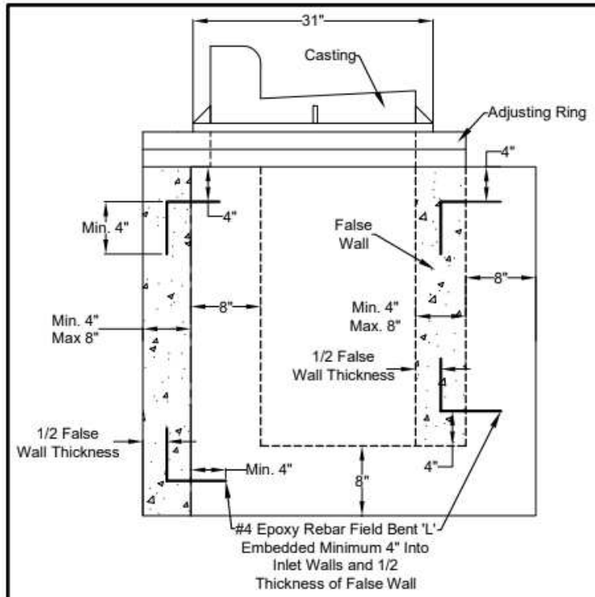

Offset Using False Wall
Inlet Side View

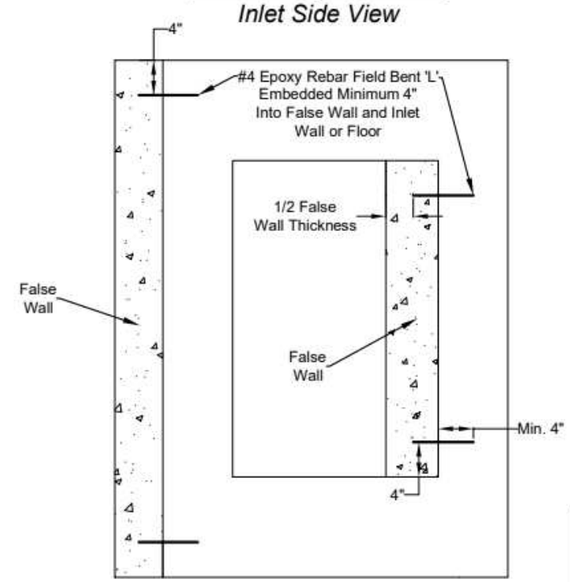

Offset Using False Wall
Inlet Top View

Note:

To insure the inlet casting is aligned correctly with the curb and gutter, an offset of the inlet casting may be required. The acceptable inlet casting offsets are shown and the guidelines are as follows:

(1) If adjustment is required the inlet casting offset shall be obtained by the construction of two false walls with equal wall thickness varying from four to eight inches (4"-8") depending on the offset required. The placement and anchoring shall be constructed in the manner shown.

(2) If the adjustment required is greater than eight inches (8"), the inlet shall be repositioned or reconstructed to reduce the offset.

These specifications are applicable for both poured-in-place and precast inlets. The detail shows a poured-in-place inlet. A precast inlet would only differ with a wall thickness of 5".

THE CITY OF Fitchburg ENGINEERING

INLET FALSE WALL	DATE: 1/8/2015
STANDARD DETAIL DRAWING	SHEET NO.: 6.04

2

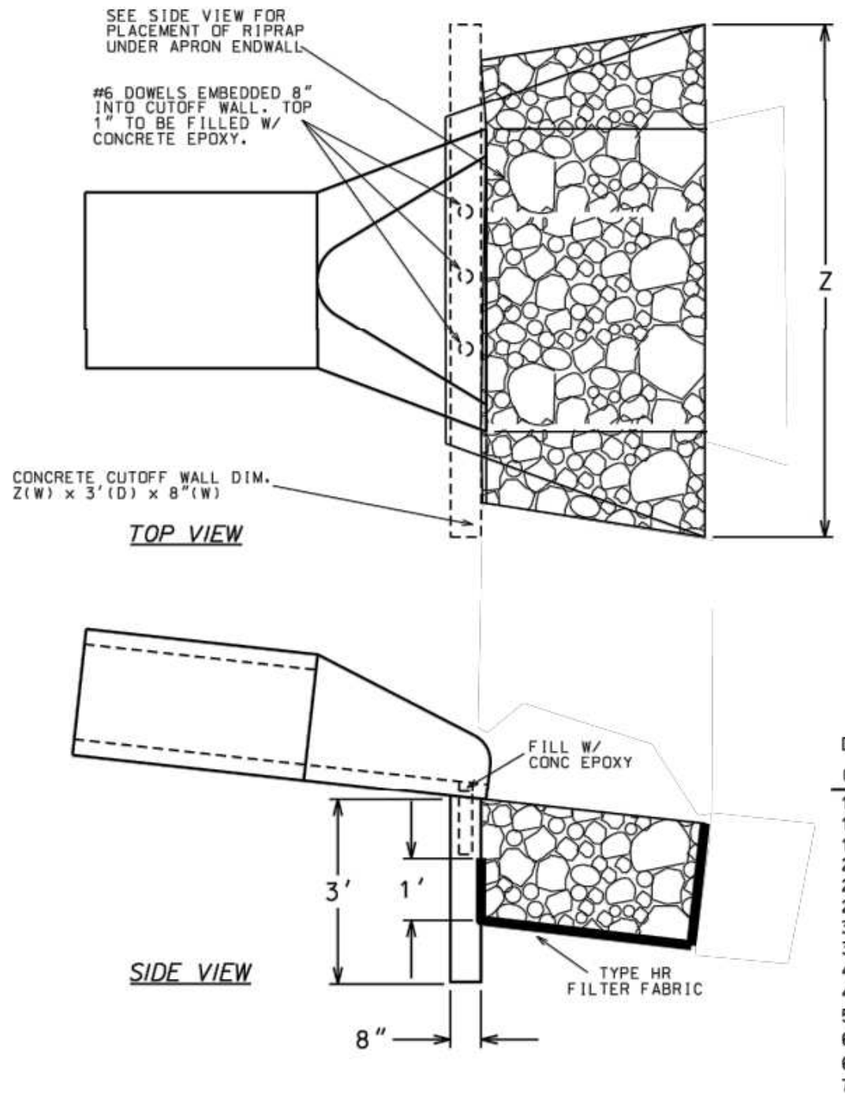

DIA (in)	Z (in)
12	48
15	60
18	60
21	72
24	72
27	81
30	90
36	108
42	120
48	120
54	150
60	162
66	174
72	186

DETAIL COURTESY OF CITY OF MADISON

THE CITY OF Fitchburg ENGINEERING

CUTOFF WALL DETAIL

STANDARD DETAIL DRAWING

DATE: 5/18/2022

SHEET NO.: 6.09

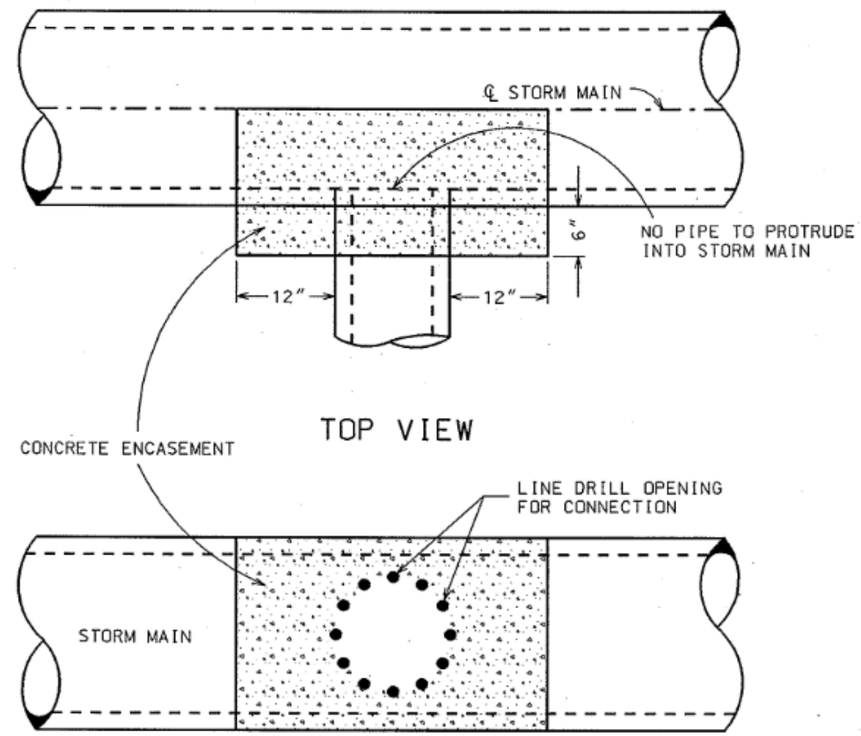

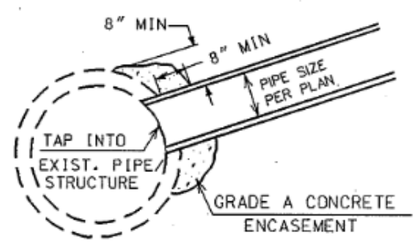

STORM SEWER TAP DETAIL

TO BE PAID FOR AS CONCRETE COLLARS FOR PIPE

SCALE, FEET
0 20 40

1	HMA PAVEMENT 6-INCH	8	CONCRETE CURB & GUTTER 30-INCH, TYPE D
2	HMA PAVEMENT 3-INCH	9	CONCRETE CURB & GUTTER 24-INCH, REJECT
3	CONCRETE MEDIAN SLOPED NOSE	10	BASE AGGREGATE DENSE 3/4-INCH TO MATCH PAVEMENT THICKNESS
4	CONCRETE SIDEWALK 7-INCH	11	ASPHALTIC SURFACE DRIVEWAYS AND FIELD ENTRANCES
5	CONCRETE SIDEWALK 5-INCH / STAMPING COLORED CONCRETE*	12	CONCRETE CURB PEDESTRIAN
6	CONCRETE CURB & GUTTER 18-INCH, TYPE D REJECT	XXXXXXXX	SAWCUT
7	CONCRETE DRIVEWAY 7-INCH		

* RED BRICK PATTERN. SEE SPECIAL PROVISIONS.

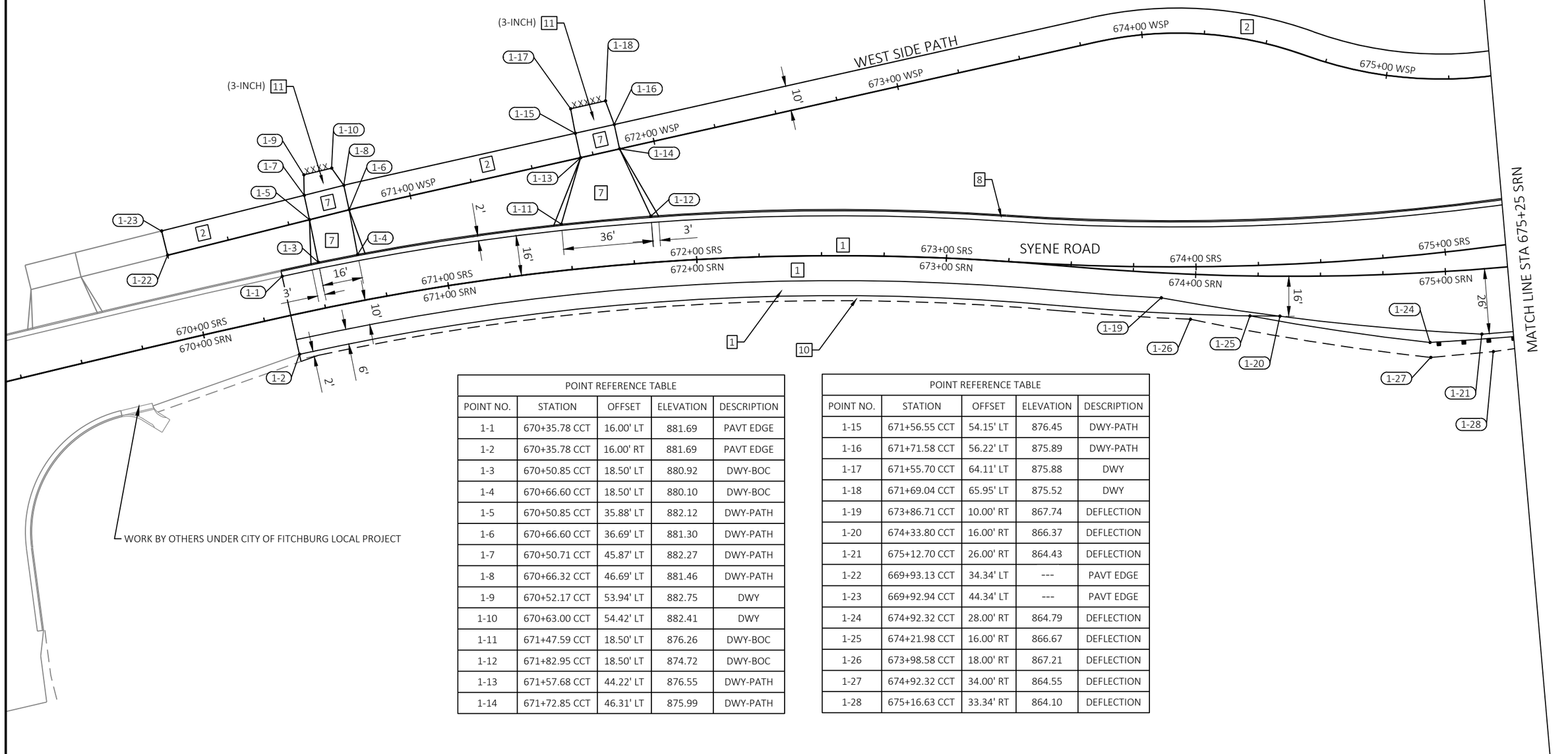

POINT REFERENCE TABLE				
POINT NO.	STATION	OFFSET	ELEVATION	DESCRIPTION
1-1	670+35.78 CCT	16.00' LT	881.69	PAVT EDGE
1-2	670+35.78 CCT	16.00' RT	881.69	PAVT EDGE
1-3	670+50.85 CCT	18.50' LT	880.92	DWY-BOC
1-4	670+66.60 CCT	18.50' LT	880.10	DWY-BOC
1-5	670+50.85 CCT	35.88' LT	882.12	DWY-PATH
1-6	670+66.60 CCT	36.69' LT	881.30	DWY-PATH
1-7	670+50.71 CCT	45.87' LT	882.27	DWY-PATH
1-8	670+66.32 CCT	46.69' LT	881.46	DWY-PATH
1-9	670+52.17 CCT	53.94' LT	882.75	DWY
1-10	670+63.00 CCT	54.42' LT	882.41	DWY
1-11	671+47.59 CCT	18.50' LT	876.26	DWY-BOC
1-12	671+82.95 CCT	18.50' LT	874.72	DWY-BOC
1-13	671+57.68 CCT	44.22' LT	876.55	DWY-PATH
1-14	671+72.85 CCT	46.31' LT	875.99	DWY-PATH

POINT REFERENCE TABLE				
POINT NO.	STATION	OFFSET	ELEVATION	DESCRIPTION
1-15	671+56.55 CCT	54.15' LT	876.45	DWY-PATH
1-16	671+71.58 CCT	56.22' LT	875.89	DWY-PATH
1-17	671+55.70 CCT	64.11' LT	875.88	DWY
1-18	671+69.04 CCT	65.95' LT	875.52	DWY
1-19	673+86.71 CCT	10.00' RT	867.74	DEFLECTION
1-20	674+33.80 CCT	16.00' RT	866.37	DEFLECTION
1-21	675+12.70 CCT	26.00' RT	864.43	DEFLECTION
1-22	669+93.13 CCT	34.34' LT	---	PAVT EDGE
1-23	669+92.94 CCT	44.34' LT	---	PAVT EDGE
1-24	674+92.32 CCT	28.00' RT	864.79	DEFLECTION
1-25	674+21.98 CCT	16.00' RT	866.67	DEFLECTION
1-26	673+98.58 CCT	18.00' RT	867.21	DEFLECTION
1-27	674+92.32 CCT	34.00' RT	864.55	DEFLECTION
1-28	675+16.63 CCT	33.34' RT	864.10	DEFLECTION

1	HMA PAVEMENT 6-INCH	8	CONCRETE CURB & GUTTER 30-INCH, TYPE D
2	HMA PAVEMENT 3-INCH	9	CONCRETE CURB & GUTTER 24-INCH, REJECT
3	CONCRETE MEDIAN SLOPED NOSE	10	BASE AGGREGATE DENSE 3/4-INCH TO MATCH PAVEMENT THICKNESS
4	CONCRETE SIDEWALK 7-INCH	11	ASPHALTIC SURFACE DRIVEWAYS AND FIELD ENTRANCES
5	CONCRETE SIDEWALK 5-INCH / STAMPING COLORED CONCRETE*	12	CONCRETE CURB PEDESTRIAN
6	CONCRETE CURB & GUTTER 18-INCH, TYPE D REJECT	.XXXXXXXX.	SAWCUT
7	CONCRETE DRIVEWAY 7-INCH		

* RED BRICK PATTERN. SEE SPECIAL PROVISIONS.
** STANDARD GUTTER SLOPE WHEN LANES SLOPED DOWN TOWARD MEDIAN / ISLAND (NON-REJECT).

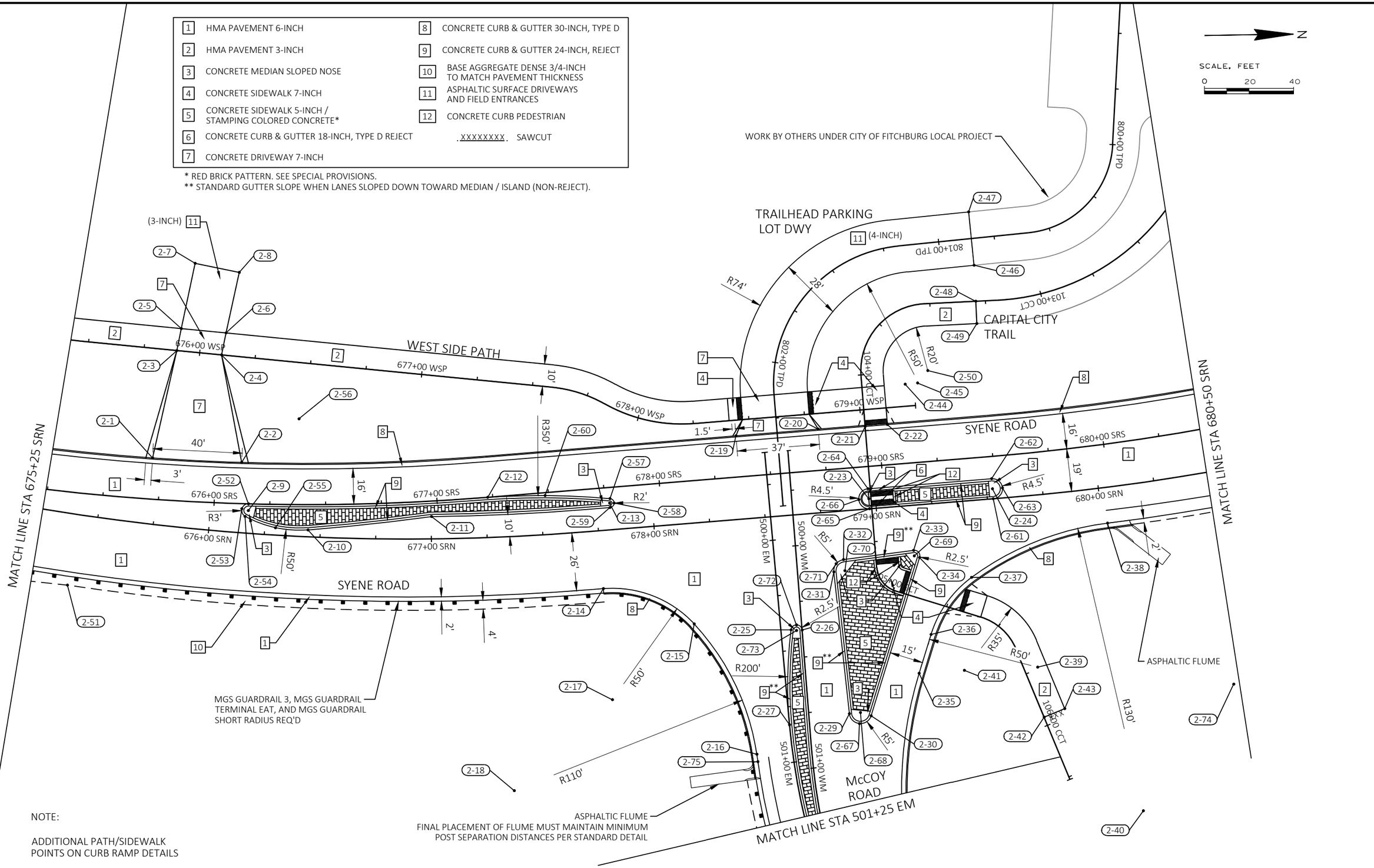

NOTE:

ADDITIONAL PATH/SIDEWALK POINTS ON CURB RAMP DETAILS

PROJECT NO: 5849-02-07	HWY: LOCAL STREET - SYENE ROAD	COUNTY: DANE	PLAN DETAILS - SYENE ROAD	SHEET 31	E

POINT REFERENCE TABLE				
POINT NO.	STATION	OFFSET	ELEVATION	DESCRIPTION
2-1	675+71.21 CCT	29.60' LT	863.56	DWY-BOC
2-2	676+12.43 CCT	31.49' LT	862.98	DWY-BOC
2-3	675+76.78 CCT	78.71' LT	865.04	DWY-PATH
2-4	675+98.61 CCT	78.79' LT	864.54	DWY-PATH
2-5	675+77.76 CCT	88.72' LT	865.17	DWY-PATH
2-6	675+99.83 CCT	88.78' LT	864.66	DWY-PATH
2-7	675+81.03 CCT	118.47' LT	864.41	DWY
2-8	676+03.81 CCT	116.36' LT	864.36	DWY
2-9	676+17.07 CCT	10.18' LT	---	CENTER 3' RADIUS
2-10	676+44.45 CCT	3.05' LT	863.05	DEFLECTION
2-11	677+00.12 CCT	10.00' LT	862.73	DEFLECTION
2-12	677+25.89 CCT	18.03' LT	862.39	DEFLECTION
2-13	677+80.98 CCT	12.00' LT	---	CENTER 2' RADIUS
2-14	677+75.12 CCT	26.00' RT	861.88	CURVE BEGIN
2-15	678+14.44 CCT	45.11' RT	861.60	CURVE TRANSITION
2-16	678+37.70 CCT	105.61' RT	861.20	CURVE END
2-17	677+75.12 CCT	76.00' RT	---	CENTER 50' RADIUS
2-18	677+32.27 CCT	113.88' RT	---	CENTER 110'
2-19	678+39.94 CCT	37.50' LT	861.91	DWY-BOC
2-20	678+76.91 CCT	37.50' LT	861.72	DWY-BOC
2-21	678+98.02 CCT	37.00' LT	861.12	PATH
2-22	679+08.02 CCT	37.00' LT	861.08	PATH
2-23	678+97.01 CCT	4.50' LT	862.09	CENTER 5' RADIUS
2-24	679+52.61 CCT	4.50' LT	861.85	CENTER 4' RADIUS
2-25	678+57.47 CCT	51.25' RT	861.18	---
2-26	678+62.42 CCT	51.76' RT	861.12	---
2-27	678+53.37 CCT	93.63' RT	860.93	DEFLECTION
2-28	677+34.14 CCT	331.86' RT	---	CENTER 350' RADIUS
2-29	678+80.52 CCT	90.87' RT	860.43	---
2-30	678+90.17 CCT	92.58' RT	860.23	---

POINT REFERENCE TABLE				
POINT NO.	STATION	OFFSET	ELEVATION	DESCRIPTION
2-31	678+78.73 CCT	26.89' RT	861.33	---
2-32	678+83.48 CCT	21.76' RT	861.37	---
2-33	679+15.13 CCT	20.19' RT	861.23	---
2-34	679+17.57 CCT	23.61' RT	861.16	---
2-35	679+13.16 CCT	75.33' RT	860.02	DEFLECTION
2-36	679+19.89 CCT	58.41' RT	860.32	CURVE BEGIN
2-37	679+40.07 CCT	34.34' RT	860.66	CURVE TRANSITION
2-38	680+02.11 CCT	16.00' RT	860.67	CURVE END
2-39	679+65.82 CCT	76.90' RT	---	CENTER 50' RADIUS
2-40	680+02.11 CCT	146.00' RT	---	CENTER 130' RADIUS
2-41	679+33.49 CCT	75.65' RT	---	CENTER 35' RADIUS
2-42	679+66.68 CCT	99.51' RT	860.36	PAVT EDGE
2-43	679+75.38 CCT	96.55' RT	860.82	PAVT EDGE
2-44	679+17.44 CCT	54.38' LT	---	CENTER 74' RADIUS
2-45	679+23.02 CCT	54.50' LT	---	CENTER 50' RADIUS
2-46	679+52.54 CCT	105.09' LT	861.95	PAVT EDGE
2-47	679+52.06 CCT	129.08' LT	862.19	PAVT EDGE
2-48	679+52.01 CCT	88.89' LT	861.80	PAVT EDGE
2-49	679+51.68 CCT	78.90' LT	861.65	PAVT EDGE
2-50	679+28.02 CCT	59.67' LT	---	CENTER 20' RADIUS
2-51	675+40.96 CCT	32.00' RT	863.71	DEFLECTION
2-52	676+16.93 CCT	13.17' LT	863.31	CURVE END
2-53	676+14.09 CCT	10.75' LT	863.38	CURVE MIDDLE
2-54	676+15.80 CCT	7.45' LT	863.59	CURVE BEGIN
2-55	676+29.83 CCT	3.25' LT	863.21	CURVE MIDDLE
2-56	676+37.88 CCT	52.64' LT	---	CENTER 50' RADIUS
2-57	677+81.32 CCT	13.97' LT	862.16	CURVE END
2-58	677+82.97 CCT	11.83' LT	862.18	CURVE MIDDLE
2-59	677+80.98 CCT	10.00' LT	862.21	CURVE BEGIN
2-60	677+52.11 CCT	17.53' LT	862.27	CURVE MIDDLE

POINT REFERENCE TABLE				
POINT NO.	STATION	OFFSET	ELEVATION	DESCRIPTION
2-61	679+52.61 CCT	0.00'	861.24	CURVE BEGIN
2-62	679+52.61 CCT	9.00' LT	861.42	CURVE END
2-63	679+57.11 CCT	4.50' LT	861.30	CURVE MIDDLE
2-64	678+97.01 CCT	9.00' LT	861.62	CURVE END
2-65	678+97.01 CCT	0.00'	861.52	CURVE BEGIN
2-66	678+92.51 CCT	4.50' LT	861.59	CURVE MIDDLE
2-67	678+84.65 CCT	95.66' RT	860.32	CURVE MIDDLE
2-68	678+85.52 CCT	90.73' RT	---	CENTER 5' RADIUS
2-69	679+15.25 CCT	22.69' RT	---	CENTER 2.5' RADIUS
2-70	678+83.73 CCT	26.75' RT	---	CENTER 5' RADIUS
2-71	678+80.06 CCT	23.36' RT	861.37	CURVE MIDDLE
2-72	678+60.09 CCT	49.26' RT	861.18	CURVE MIDDLE
2-73	678+59.92 CCT	51.75' RT	---	CENTER 2.5' RADIUS
2-74	680+45.22 CCT	95.70' RT	---	CENTER 200' RADIUS
2-75	678+37.88 CCT	108.98' RT	861.18	END C&G

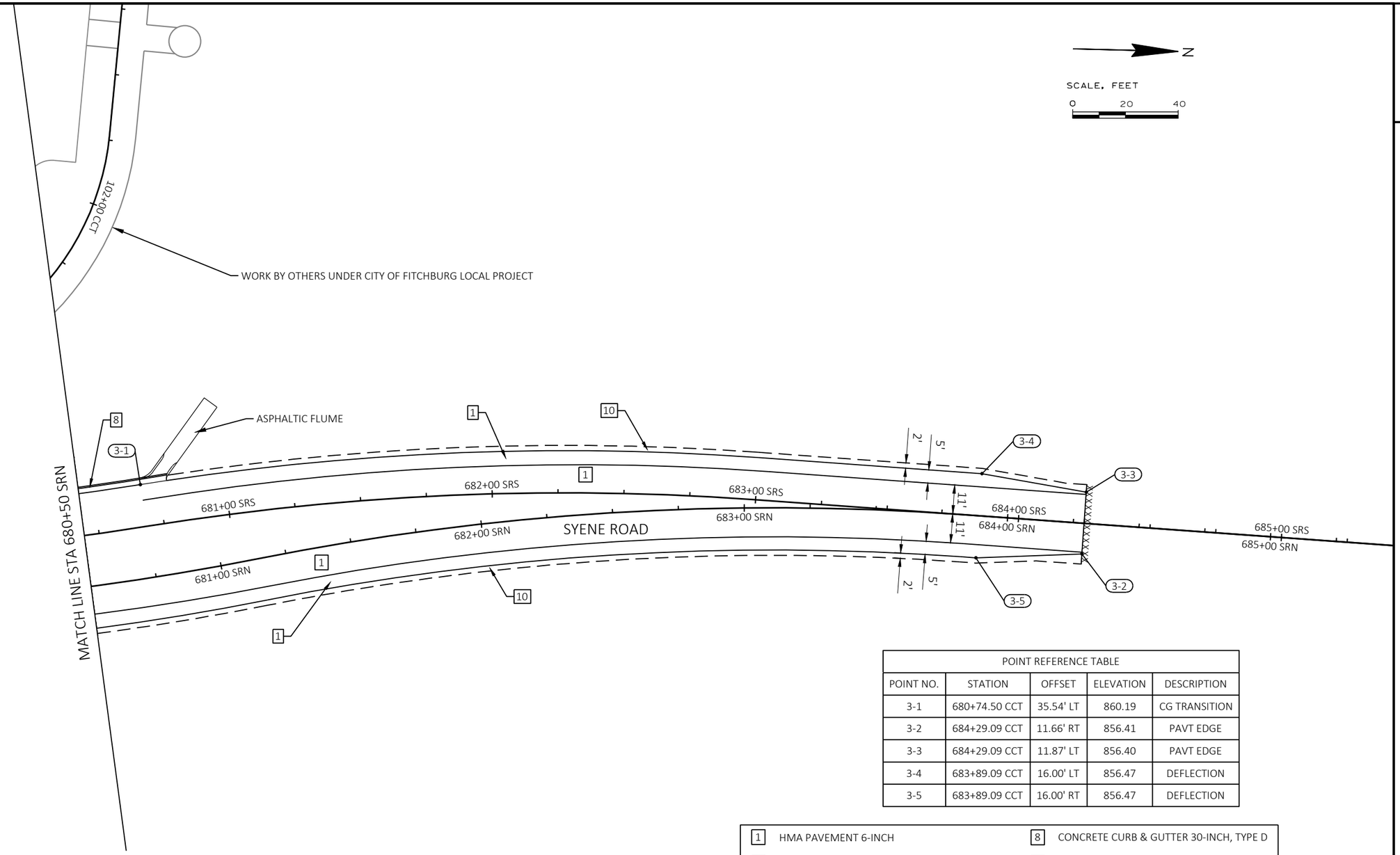

POINT REFERENCE TABLE				
POINT NO.	STATION	OFFSET	ELEVATION	DESCRIPTION
3-1	680+74.50 CCT	35.54' LT	860.19	CG TRANSITION
3-2	684+29.09 CCT	11.66' RT	856.41	PAVT EDGE
3-3	684+29.09 CCT	11.87' LT	856.40	PAVT EDGE
3-4	683+89.09 CCT	16.00' LT	856.47	DEFLECTION
3-5	683+89.09 CCT	16.00' RT	856.47	DEFLECTION

1	HMA PAVEMENT 6-INCH	8	CONCRETE CURB & GUTTER 30-INCH, TYPE D
2	HMA PAVEMENT 3-INCH	9	CONCRETE CURB & GUTTER 24-INCH, REJECT
3	CONCRETE MEDIAN SLOPED NOSE	10	BASE AGGREGATE DENSE 3/4-INCH TO MATCH PAVEMENT THICKNESS
4	CONCRETE SIDEWALK 7-INCH	11	ASPHALTIC SURFACE DRIVEWAYS AND FIELD ENTRANCES
5	CONCRETE SIDEWALK 5-INCH / STAMPING COLORED CONCRETE*	12	CONCRETE CURB PEDESTRIAN
6	CONCRETE CURB & GUTTER 18-INCH, TYPE D REJECT		XXXXXXXX SAWCUT
7	CONCRETE DRIVEWAY 7-INCH		

* RED BRICK PATTERN. SEE SPECIAL PROVISIONS.

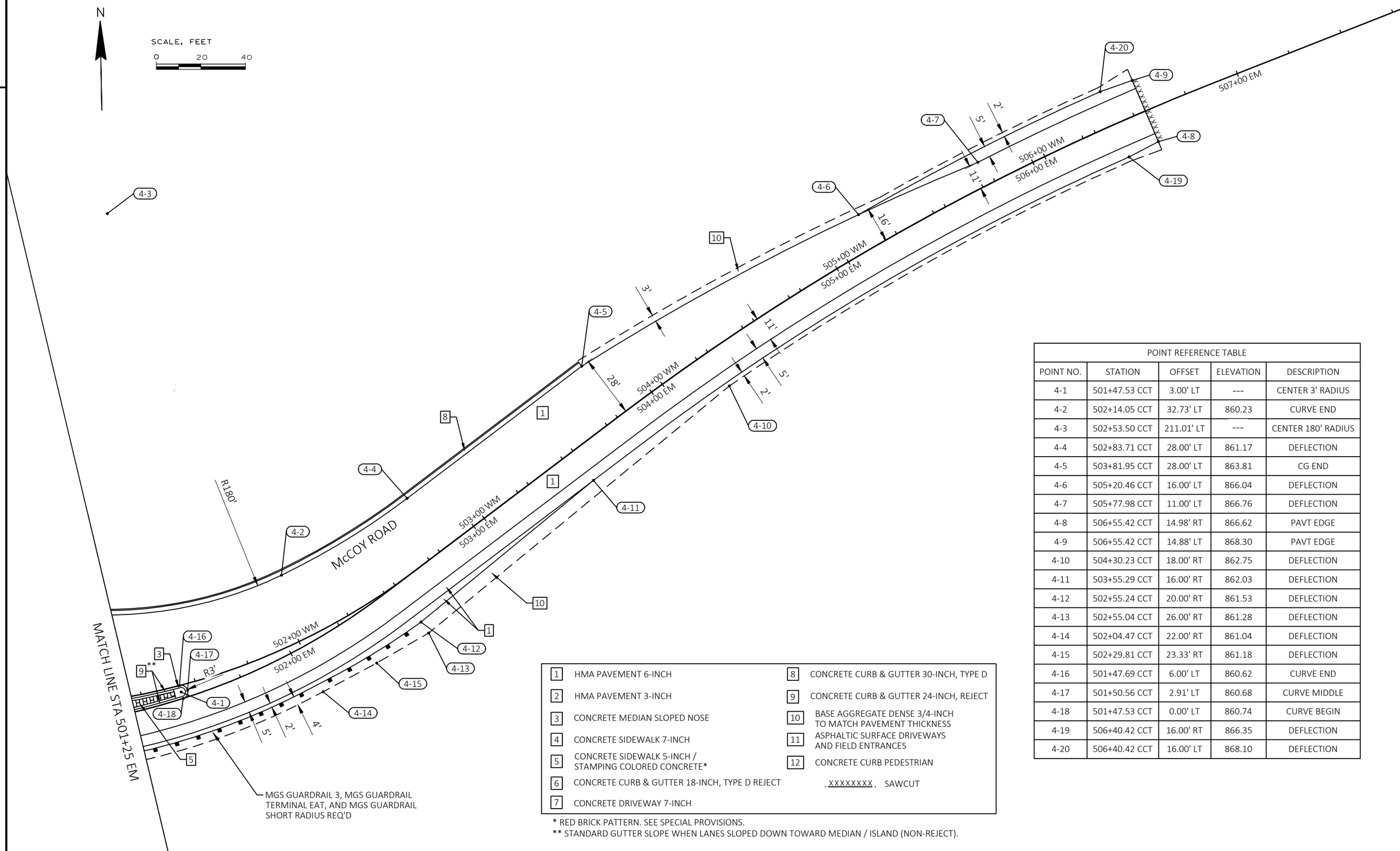

POINT REFERENCE TABLE				
POINT NO.	STATION	OFFSET	ELEVATION	DESCRIPTION
4-1	501+47.53 CCT	3.00' LT	---	CENTER 3' RADIUS
4-2	502+14.05 CCT	32.73' LT	860.23	CURVE END
4-3	502+53.50 CCT	211.01' LT	---	CENTER 180' RADIUS
4-4	502+83.71 CCT	28.00' LT	861.17	DEFLECTION
4-5	503+81.95 CCT	28.00' LT	863.81	CG END
4-6	505+20.46 CCT	16.00' LT	866.04	DEFLECTION
4-7	505+77.98 CCT	11.00' LT	866.76	DEFLECTION
4-8	506+55.42 CCT	14.98' RT	866.62	PAVT EDGE
4-9	506+55.42 CCT	14.88' LT	868.30	PAVT EDGE
4-10	504+30.23 CCT	18.00' RT	862.75	DEFLECTION
4-11	503+55.29 CCT	16.00' RT	862.03	DEFLECTION
4-12	502+55.24 CCT	20.00' RT	861.53	DEFLECTION
4-13	502+55.04 CCT	26.00' RT	861.28	DEFLECTION
4-14	502+04.47 CCT	22.00' RT	861.04	DEFLECTION
4-15	502+29.81 CCT	23.33' RT	861.18	DEFLECTION
4-16	501+47.69 CCT	6.00' LT	860.62	CURVE END
4-17	501+50.56 CCT	2.91' LT	860.68	CURVE MIDDLE
4-18	501+47.53 CCT	0.00' LT	860.74	CURVE BEGIN
4-19	506+40.42 CCT	16.00' RT	866.35	DEFLECTION
4-20	506+40.42 CCT	16.00' LT	868.10	DEFLECTION

1	HMA PAVEMENT 6-INCH	8	CONCRETE CURB & GUTTER 30-INCH, TYPE D
2	HMA PAVEMENT 3-INCH	9	CONCRETE CURB & GUTTER 24-INCH, REJECT
3	CONCRETE MEDIAN SLOPED NOSE	10	BASE AGGREGATE DENSE 3/4-INCH TO MATCH PAVEMENT THICKNESS
4	CONCRETE SIDEWALK 7-INCH	11	ASPHALTIC SURFACE DRIVEWAYS AND FIELD ENTRANCES
5	CONCRETE SIDEWALK 5-INCH / STAMPING COLORED CONCRETE*	12	CONCRETE CURB PEDESTRIAN
6	CONCRETE CURB & GUTTER 18-INCH, TYPE D REJECT	.XXXXXXXX.	SAWCUT
7	CONCRETE DRIVEWAY 7-INCH		

* RED BRICK PATTERN. SEE SPECIAL PROVISIONS.
** STANDARD GUTTER SLOPE WHEN LANES SLOPED DOWN TOWARD MEDIAN / ISLAND (NON-REJECT).

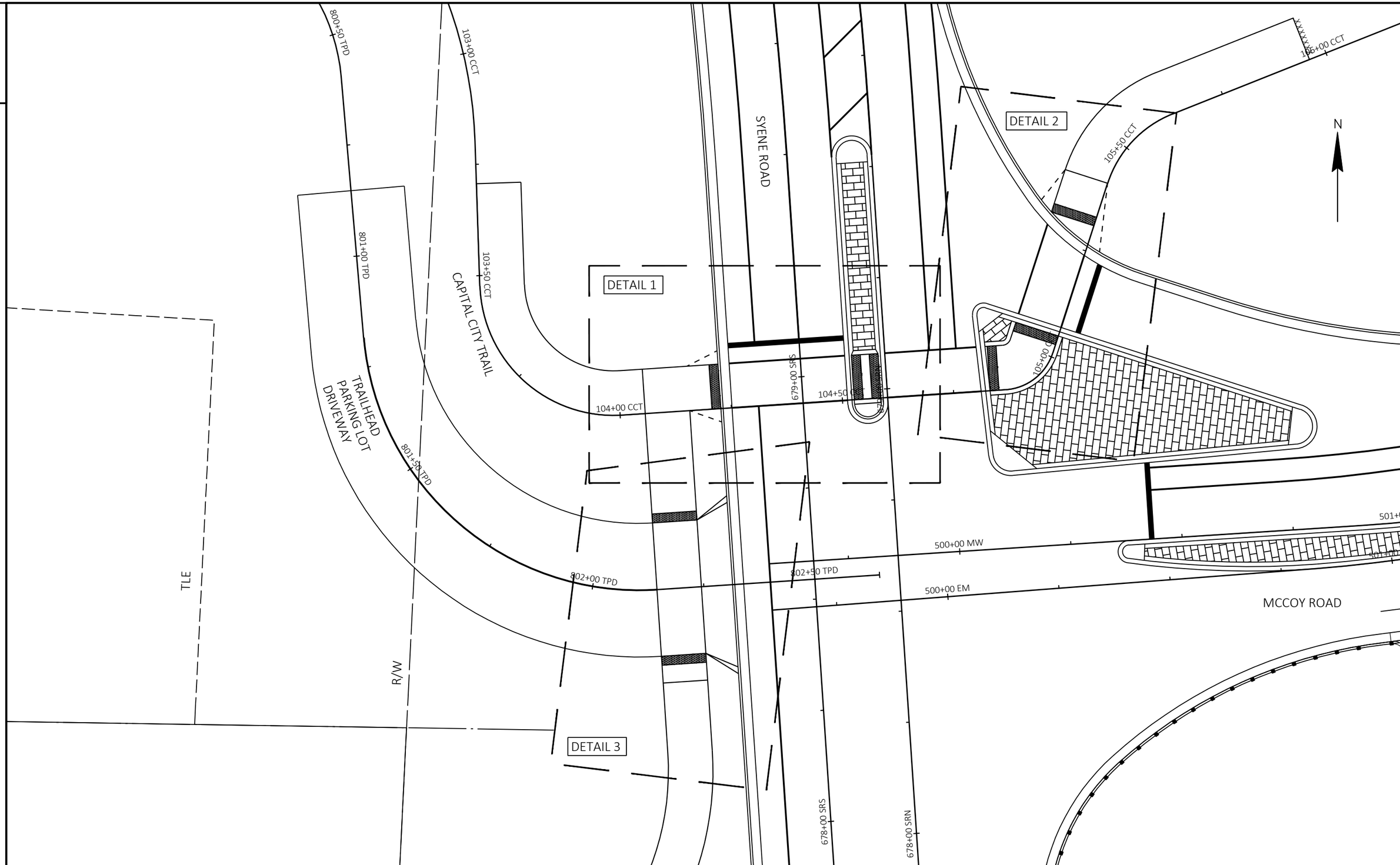

PROJECT NO: 5849-02-07	HWY: LOCAL STREET - SYENE ROAD	COUNTY: DANE	CURB RAMP DETAILS OVERVIEW	SHEET 35	E

FILE NAME : G:\FITCHBRG\20087-000 SYENE ROAD\CIVIL 3D\SHEETSPLAN\PHASE 3 SHEET FILES - W CLAYTON TO MCCOY\021201-PD_P3_CURB RAMPS.DWG
LAYOUT NAME - Overview 1 to 20
PLOT DATE : 4/30/2024 3:20 PM PLOT BY : BRIAN ST. VINCENT PLOT NAME : PLOT SCALE : 1 IN:20 FT
WISDOT/CADDS SHEET 42

2

POINT REFERENCE TABLE			
POINT NO.	STATION	OFFSET	ELEVATION
1-1	104+05.65 CCT	10.00' LT	861.64
1-2	104+05.65 CCT	0.00'	861.79
1-3	104+15.65 CCT	0.00'	861.64
1-4	104+15.65 CCT	10.00' LT	861.49
1-5	104+23.15 CCT	10.00' LT	861.08
1-6	104+23.15 CCT	0.00'	861.12
1-7	104+52.15 CCT	10.00' LT	861.60
1-8	104+52.15 CCT	0.00'	861.64
1-9	104+59.15 CCT	10.00' LT	861.49
1-10	104+59.15 CCT	0.00'	861.54
1-11	104+20.65 CCT	0.00' LT	861.29
1-12	104+15.65 CCT	5.51' RT	861.73
1-13	104+05.65 CCT	5.51' RT	861.88
1-14	104+20.65 CCT	10.00' LT	861.25

DETAIL 1

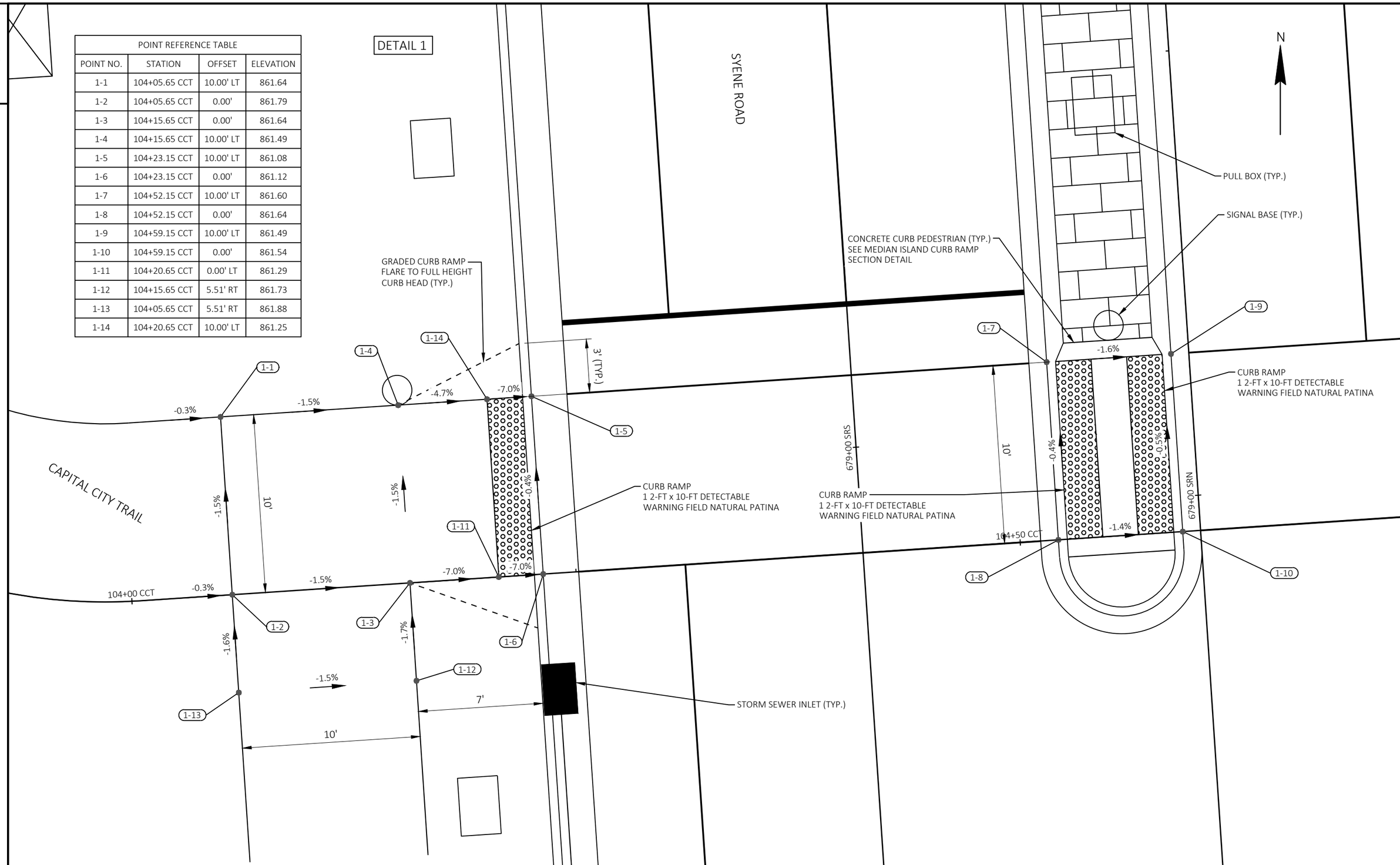

2

PROJECT NO: 5849-02-07	HWY: LOCAL STREET - SYENE ROAD	COUNTY: DANE	CURB RAMP DETAILS	SHEET 36	E

FILE NAME : G:\FITCHBRG\20087-000 SYENE ROAD\CIVIL 3D\SHEETSPLAN\PHASE 3 SHEET FILES - W CLAYTON TO MCCOY\021201-PD_P3_CURB RAMPS.DWG
LAYOUT NAME - Detail 2 - 1 to 10
PLOT DATE : 4/30/2024 3:20 PM PLOT BY : BRIAN ST. VINCENT PLOT NAME : PLOT SCALE : 1 IN:5 FT
WISDOT/CADDS SHEET 42

2

DETAIL 2

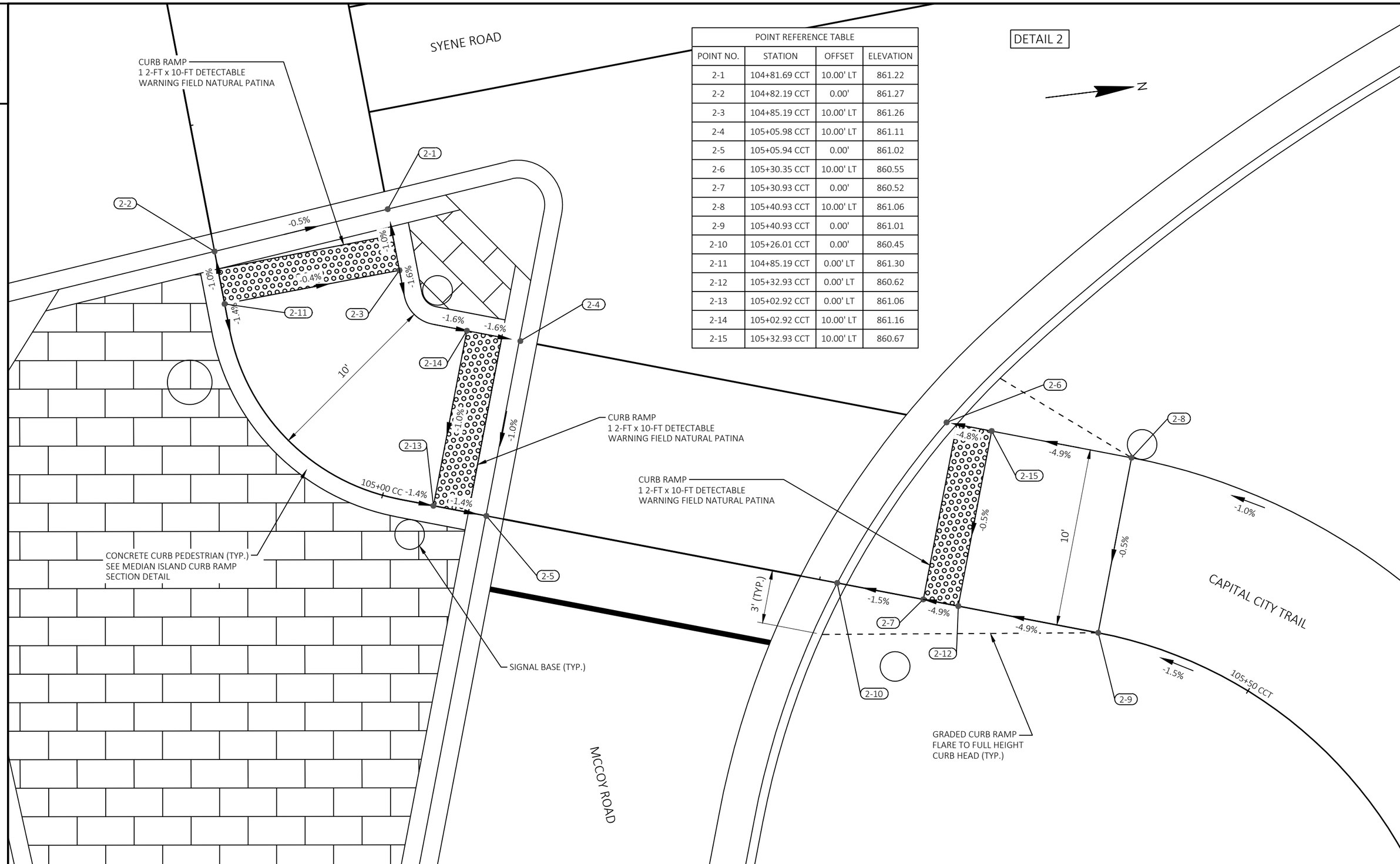

POINT REFERENCE TABLE			
POINT NO.	STATION	OFFSET	ELEVATION
2-1	104+81.69 CCT	10.00' LT	861.22
2-2	104+82.19 CCT	0.00'	861.27
2-3	104+85.19 CCT	10.00' LT	861.26
2-4	105+05.98 CCT	10.00' LT	861.11
2-5	105+05.94 CCT	0.00'	861.02
2-6	105+30.35 CCT	10.00' LT	860.55
2-7	105+30.93 CCT	0.00'	860.52
2-8	105+40.93 CCT	10.00' LT	861.06
2-9	105+40.93 CCT	0.00'	861.01
2-10	105+26.01 CCT	0.00'	860.45
2-11	104+85.19 CCT	0.00' LT	861.30
2-12	105+32.93 CCT	0.00' LT	860.62
2-13	105+02.92 CCT	0.00' LT	861.06
2-14	105+02.92 CCT	10.00' LT	861.16
2-15	105+32.93 CCT	10.00' LT	860.67

2

PROJECT NO: 5849-02-07	HWY: LOCAL STREET - SYENE ROAD	COUNTY: DANE	CURB RAMP DETAILS	SHEET 37	E

FILE NAME : G:\FITCHBRG\20087-000 SYENE ROAD\CIVIL 3D\SHEETSPLAN\PHASE 3 SHEET FILES - W CLAYTON TO MCCOY\021201-PD_P3_CURB RAMPS.DWG
LAYOUT NAME - Detail 3 - 1 to 10
PLOT DATE : 4/30/2024 3:20 PM PLOT BY : BRIAN ST. VINCENT PLOT NAME : PLOT SCALE : 1 IN:5 FT

WISDOT/CADDS SHEET 42

DETAIL 3

POINT REFERENCE TABLE			
POINT NO.	STATION	OFFSET	ELEVATION
3-1	104+15.65 CCT	60.58' RT	862.08
3-2	104+05.65 CCT	60.58' RT	862.23
3-3	104+15.65 CCT	54.58' RT	862.04
3-4	104+05.65 CCT	54.58' RT	862.19
3-5	104+05.65 CCT	24.58' RT	862.03
3-6	104+15.65 CCT	24.58' RT	861.88
3-7	104+05.65 CCT	18.58' RT	862.00
3-8	104+15.65 CCT	18.58' RT	861.85

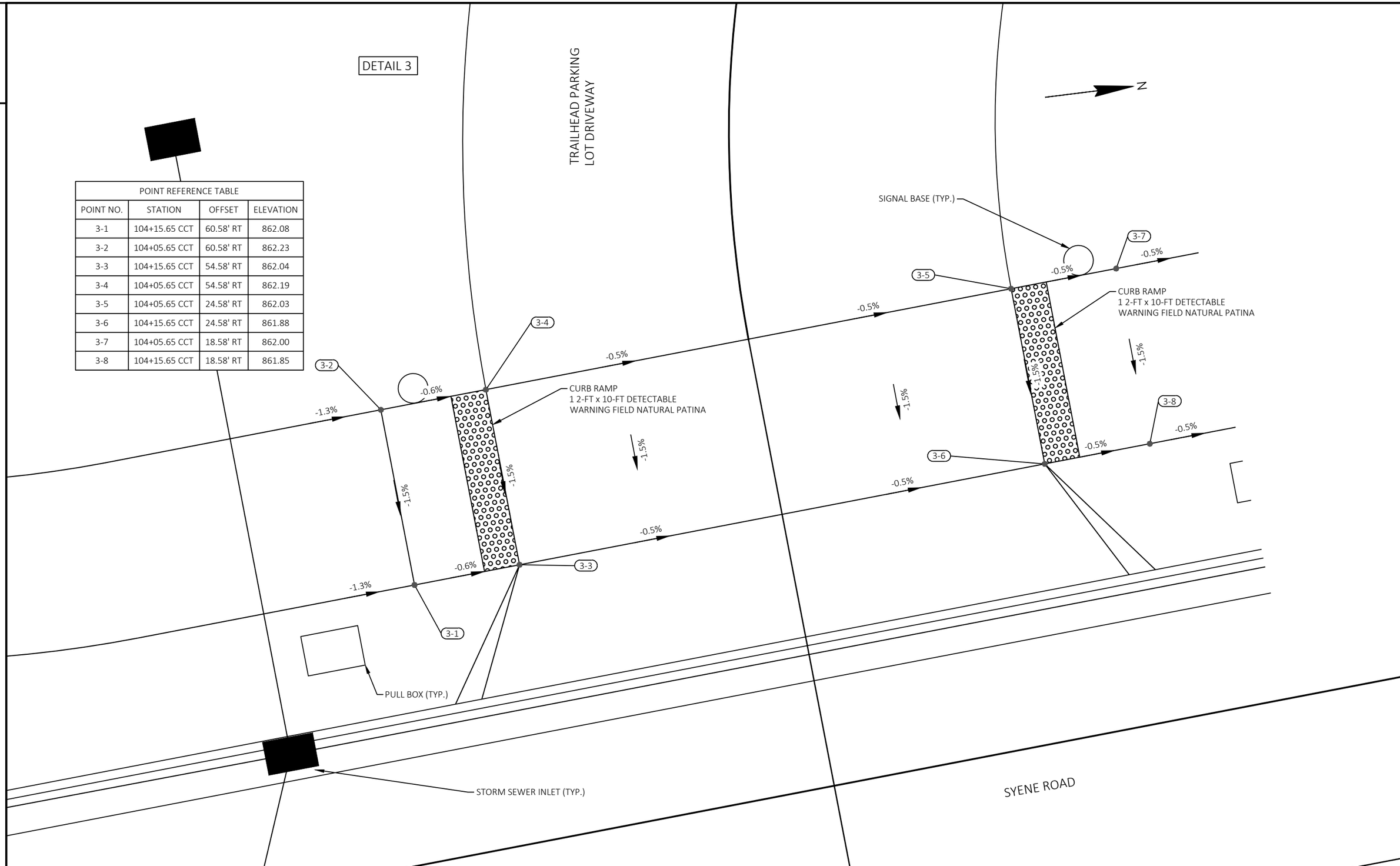

PROJECT NO: 5849-02-07	HWY: LOCAL STREET - SYENE ROAD	COUNTY: DANE	CURB RAMP DETAILS	SHEET 38	E

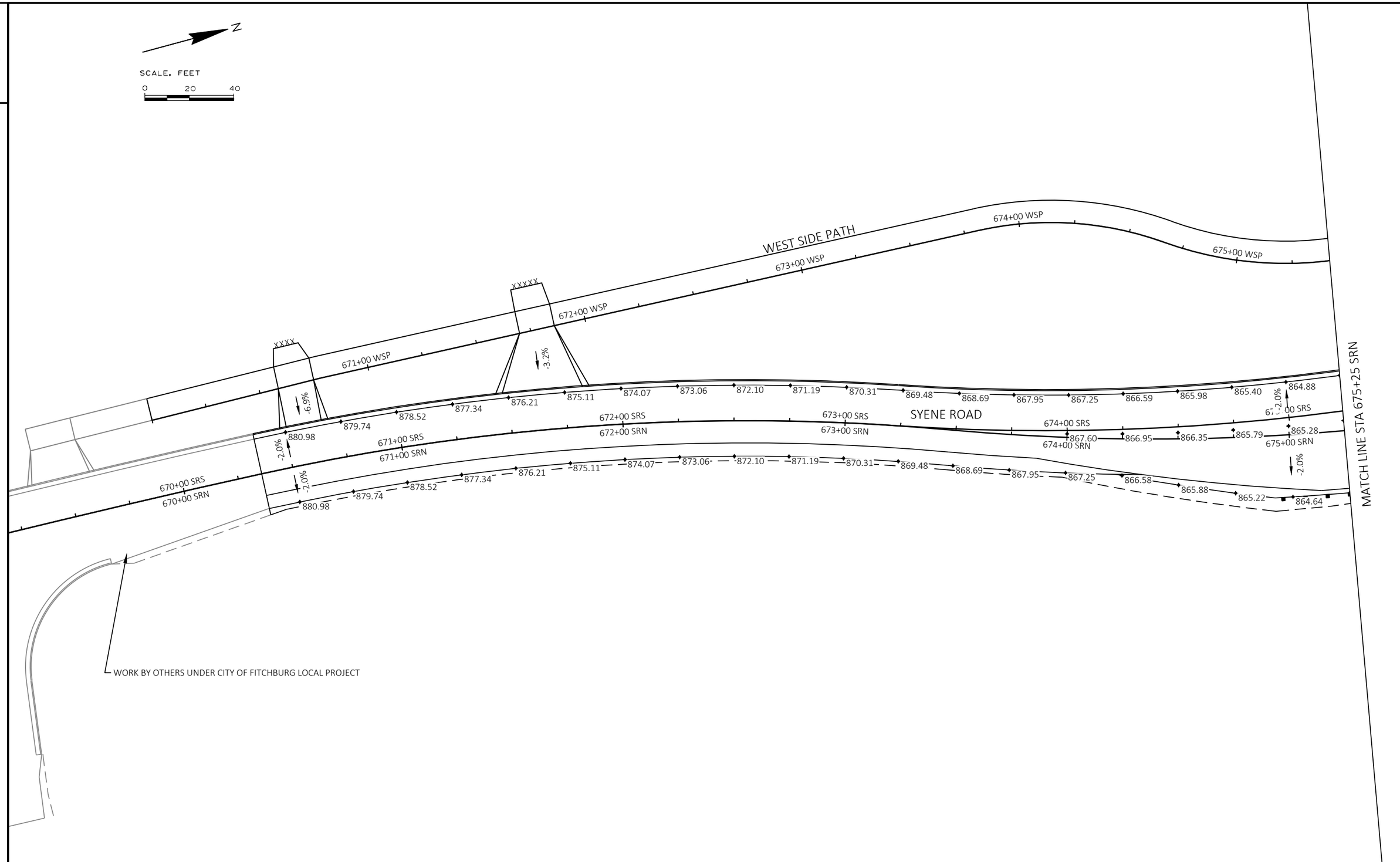
N
SCALE, FEET
0 20 40
WEST SIDE PATH
674+00 WSP
673+00 WSP
675+00 WSP
672+00 WSP
671+00 WSP
XXXXX
XXXX
-3.2%
-6.9%
-2.0%
SYENE ROAD
672+00 SRS
672+00 SRN
673+00 SRS
673+00 SRN
674+00 SRS
674+00 SRN
675+00 SRN
671+00 SRS
671+00 SRN
670+00 SRS
670+00 SRN
880.98
879.74
878.52
877.34
876.21
875.11
874.07
873.06
872.10
871.19
870.31
869.48
868.69
867.95
867.25
866.59
865.98
865.40
864.88
867.60
866.95
866.35
865.79
865.28
866.58
865.88
865.22
864.64
MATCH LINE STA 675+25 SRN
WORK BY OTHERS UNDER CITY OF FITCHBURG LOCAL PROJECT

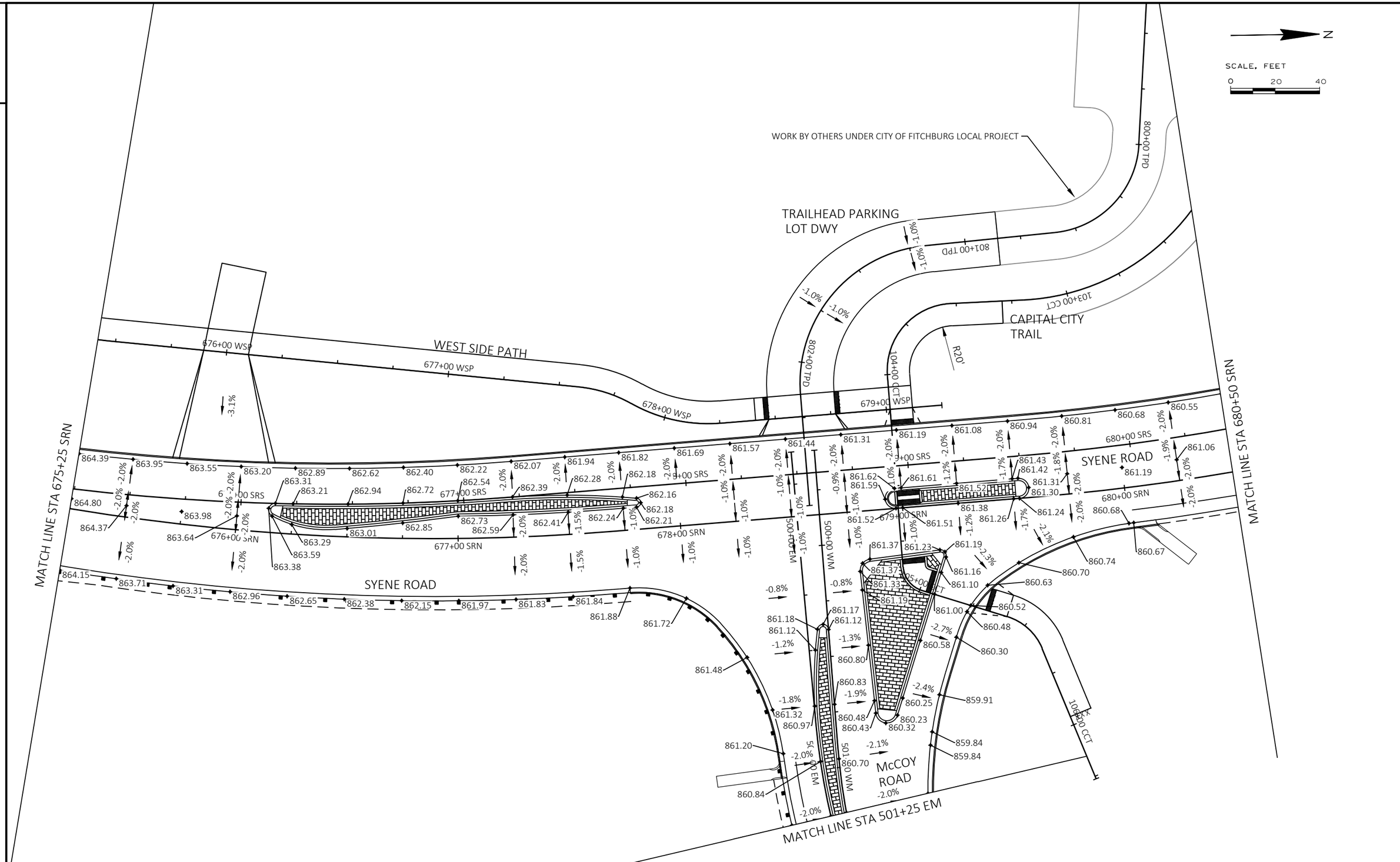

PROJECT NO: 5849-02-07	HWY: LOCAL STREET - SYENE ROAD	COUNTY: DANE	PAVING DETAILS - SYENE ROAD	SHEET 40	E

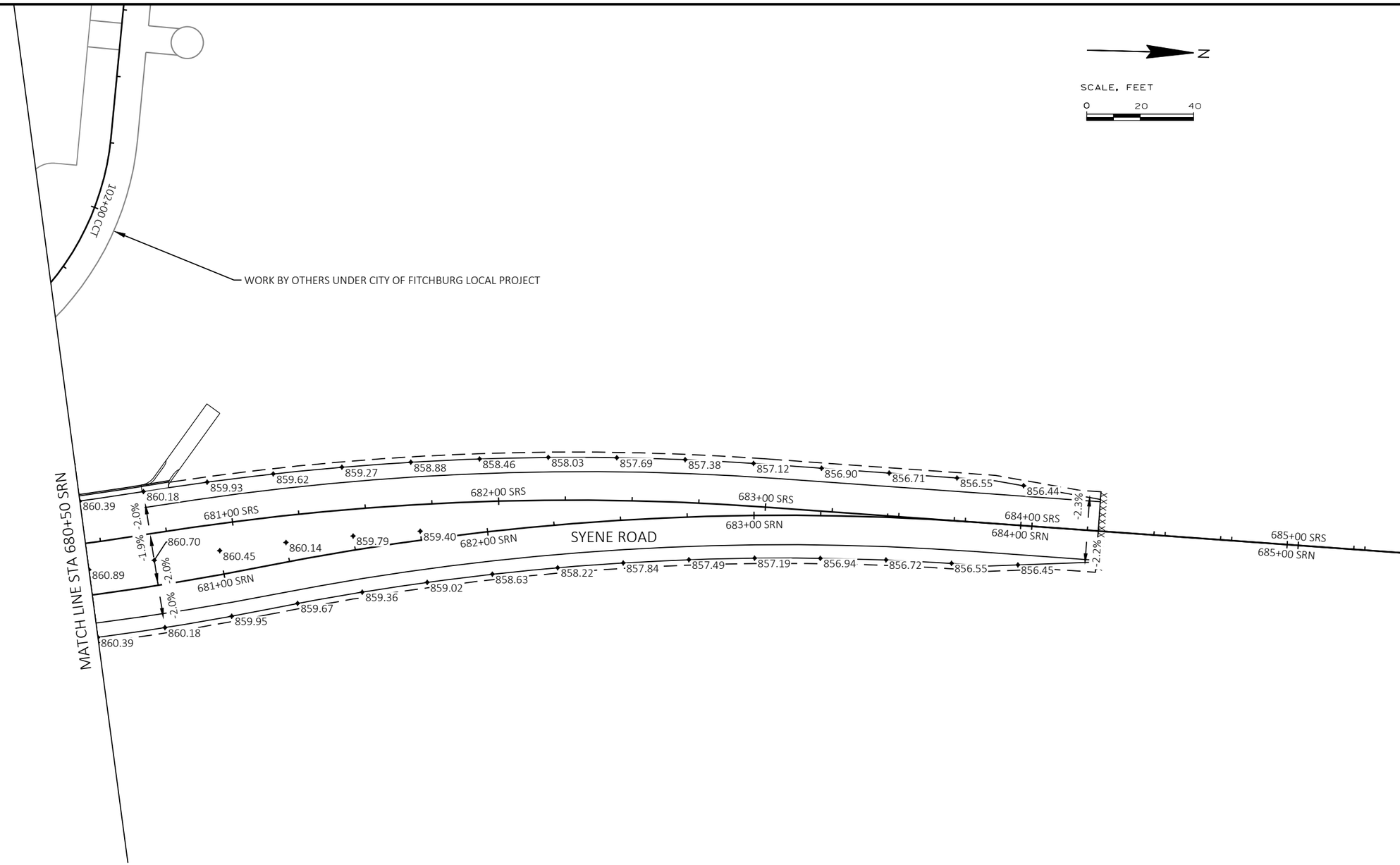

PROJECT NO: 5849-02-07	HWY: LOCAL STREET - SYENE ROAD	COUNTY: DANE	PAVING DETAILS - SYENE ROAD	SHEET 41	E

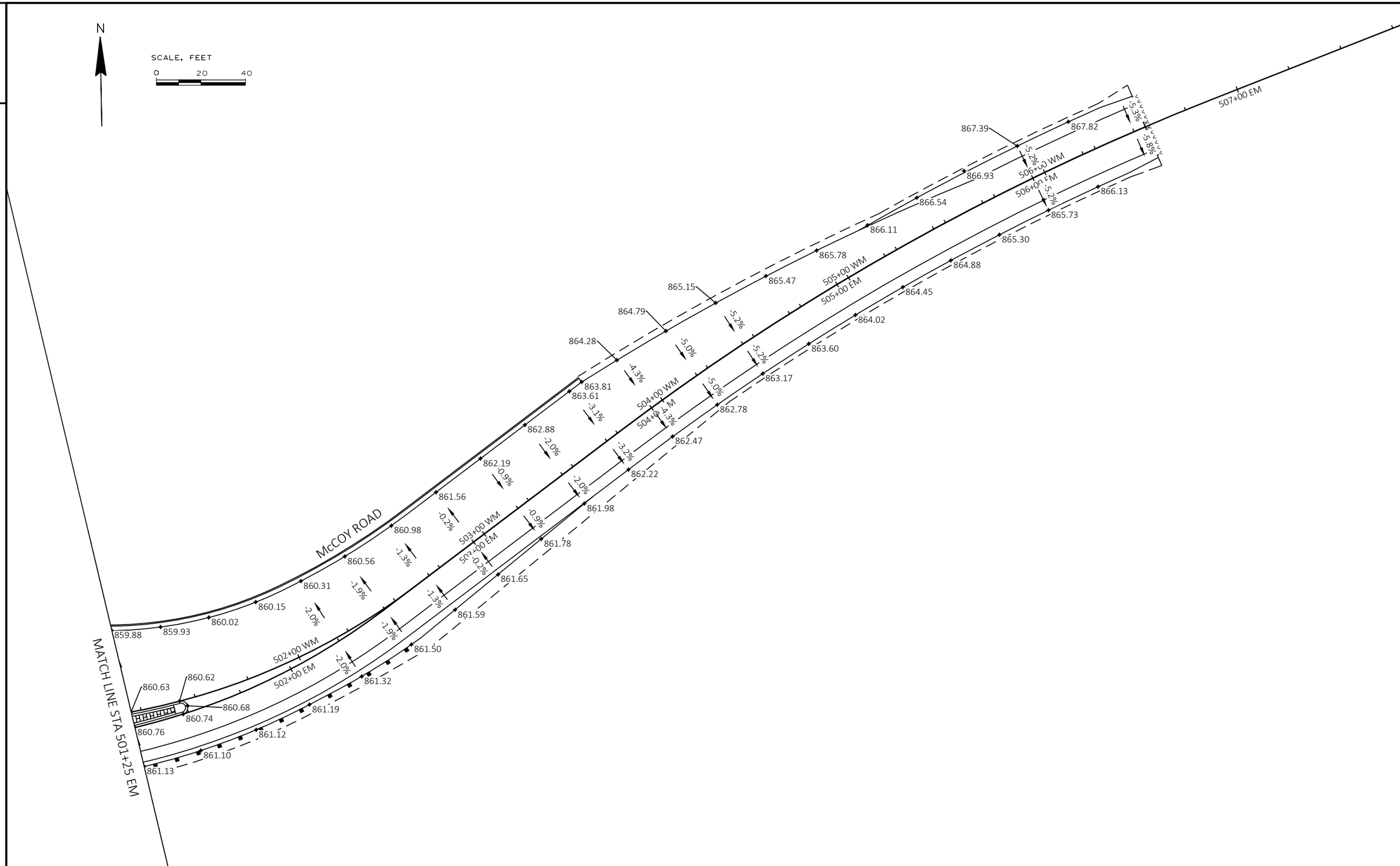

PROJECT NO: 5849-02-07	HWY: LOCAL STREET - SYENE ROAD	COUNTY: DANE	PAVING DETAILS - McCOY ROAD	SHEET 42	E

2

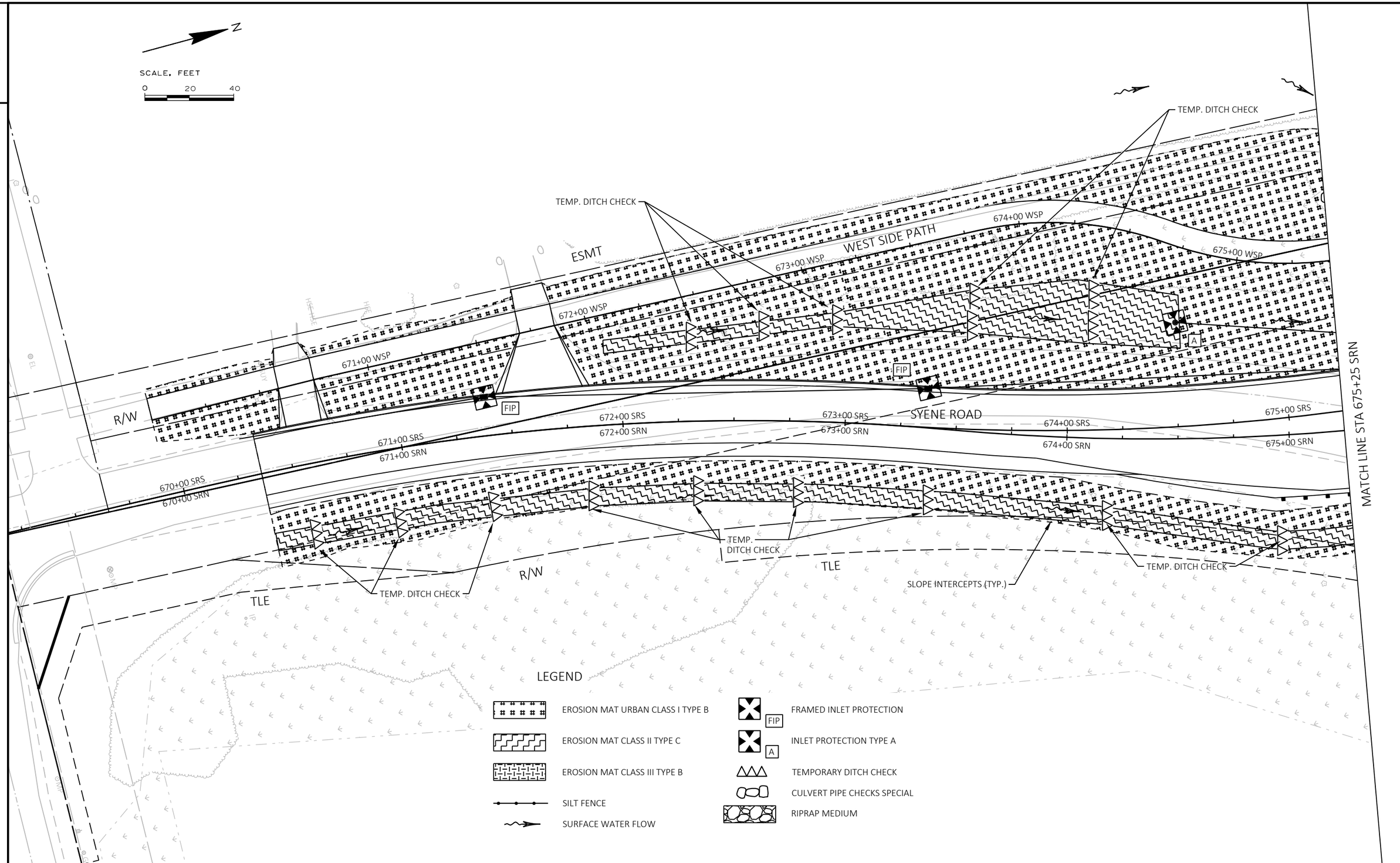

2

PROJECT NO: 5849-02-07	HWY: LOCAL STREET - SYENE ROAD	COUNTY: DANE	EROSION CONTROL - SYENE ROAD	SHEET 43	E

FILE NAME : G:\FITCHBRG\20087-000 SYENE ROAD\CIVIL 3D\SHEETSPLAN\PHASE 3 SHEET FILES - W CLAYTON TO MCCOY\022001-EC_P3.DWG PLOT DATE : 4/30/2024 3:26 PM PLOT BY : BRIAN ST. VINCENT PLOT NAME :

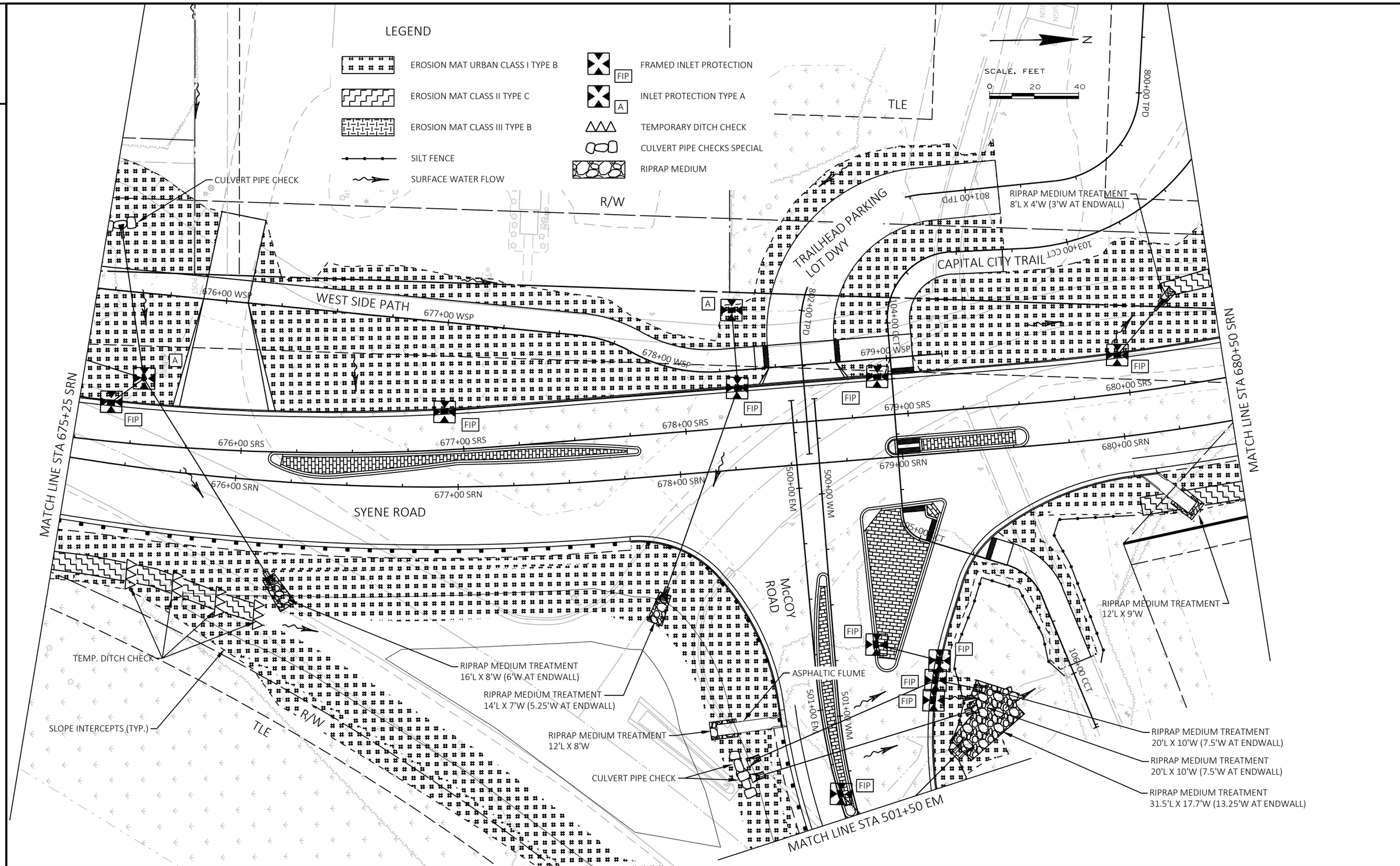
LEGEND
EROSION MAT URBAN CLASS I TYPE B
EROSION MAT CLASS II TYPE C
EROSION MAT CLASS III TYPE B
SILT FENCE
SURFACE WATER FLOW
FRAMED INLET PROTECTION
INLET PROTECTION TYPE A
TEMPORARY DITCH CHECK
CULVERT PIPE CHECKS SPECIAL
RIPRAP MEDIUM
N
SCALE, FEET
0 20 40
TLE
R/W
CULVERT PIPE CHECK
TRAILHEAD PARKING LOT DWY
CAPITAL CITY TRAIL
RIPRAP MEDIUM TREATMENT
8'L X 4'W (3'W AT ENDWALL)
801+00 TPD
800+00 TPD
802+00 TPD
103+00 CCT
104+00 CCT
WEST SIDE PATH
676+00 WSP
677+00 WSP
678+00 WSP
679+00 WSP
680+00 SRS
679+00 SRS
678+00 SRS
677+00 SRS
676+00 SRS
680+00 SRN
679+00 SRN
678+00 SRN
677+00 SRN
676+00 SRN
SYENE ROAD
MATCH LINE STA 675+25 SRN
MATCH LINE STA 680+50 SRN
500+00 EM
500+00 WM
McCOY ROAD
105+00 CCT
RIPRAP MEDIUM TREATMENT
12'L X 9'W
106+00 CCT
TEMP. DITCH CHECK
RIPRAP MEDIUM TREATMENT
16'L X 8'W (6'W AT ENDWALL)
ASPHALTIC FLUME
RIPRAP MEDIUM TREATMENT
14'L X 7'W (5.25'W AT ENDWALL)
501+00 EM
501+00 WM
SLOPE INTERCEPTS (TYP.)
RIPRAP MEDIUM TREATMENT
12'L X 8'W
RIPRAP MEDIUM TREATMENT
20'L X 10'W (7.5'W AT ENDWALL)
RIPRAP MEDIUM TREATMENT
20'L X 10'W (7.5'W AT ENDWALL)
CULVERT PIPE CHECK
RIPRAP MEDIUM TREATMENT
31.5'L X 17.7'W (13.25'W AT ENDWALL)
MATCH LINE STA 501+50 EM
FIP
A

2

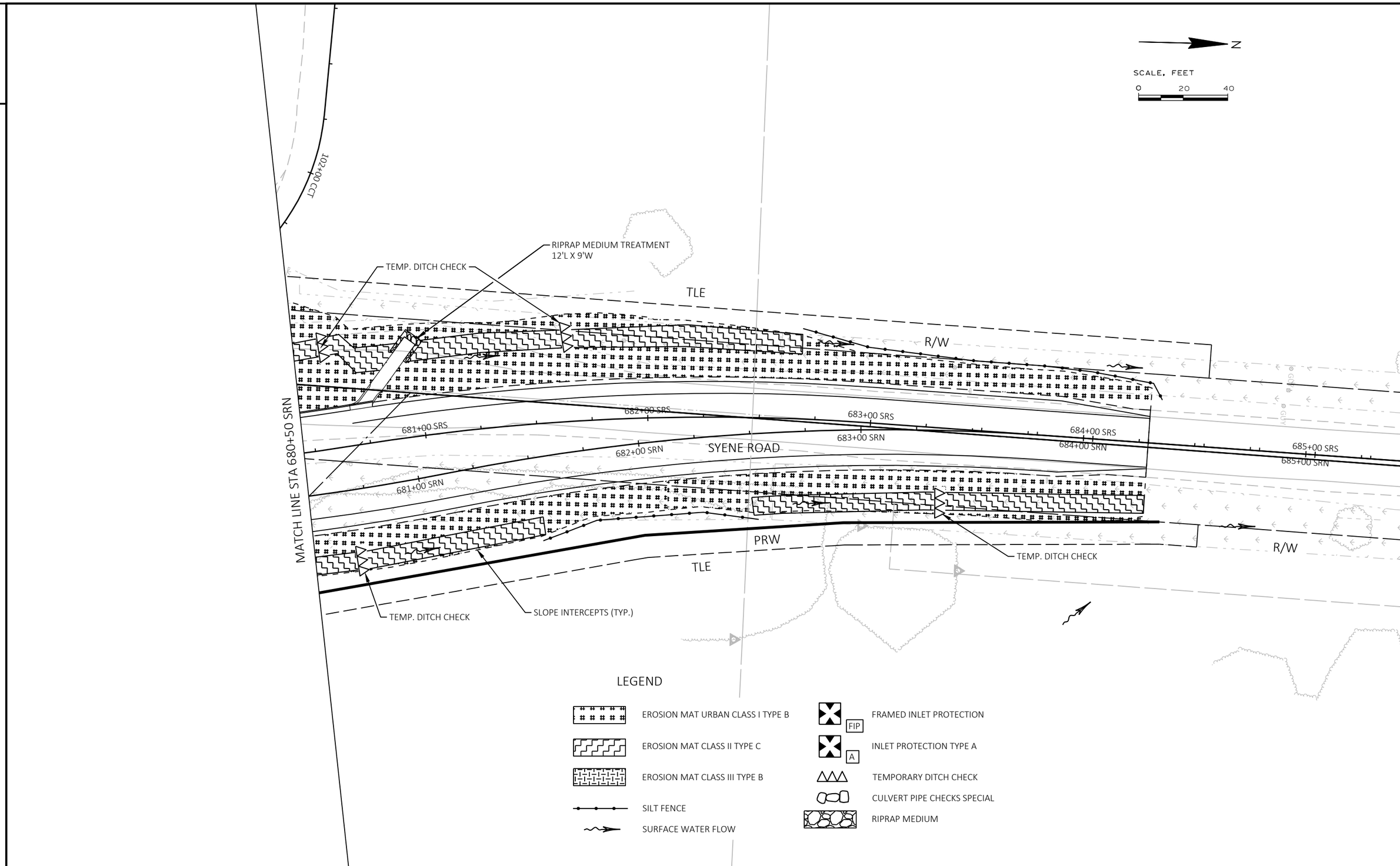

2

PROJECT NO: 5849-02-07	HWY: LOCAL STREET - SYENE ROAD	COUNTY: DANE	EROSION CONTROL - SYENE ROAD	SHEET 45	E

FILE NAME : G:\FITCHBRG\20087-000 SYENE ROAD\CIVIL 3D\SHEETSPLAN\PHASE 3 SHEET FILES - W CLAYTON TO MCCOY\022001-EC_P3.DWG PLOT DATE : 4/30/2024 3:26 PM PLOT BY : BRIAN ST. VINCENT PLOT NAME :

WISDOT/CADDS SHEET 42

2

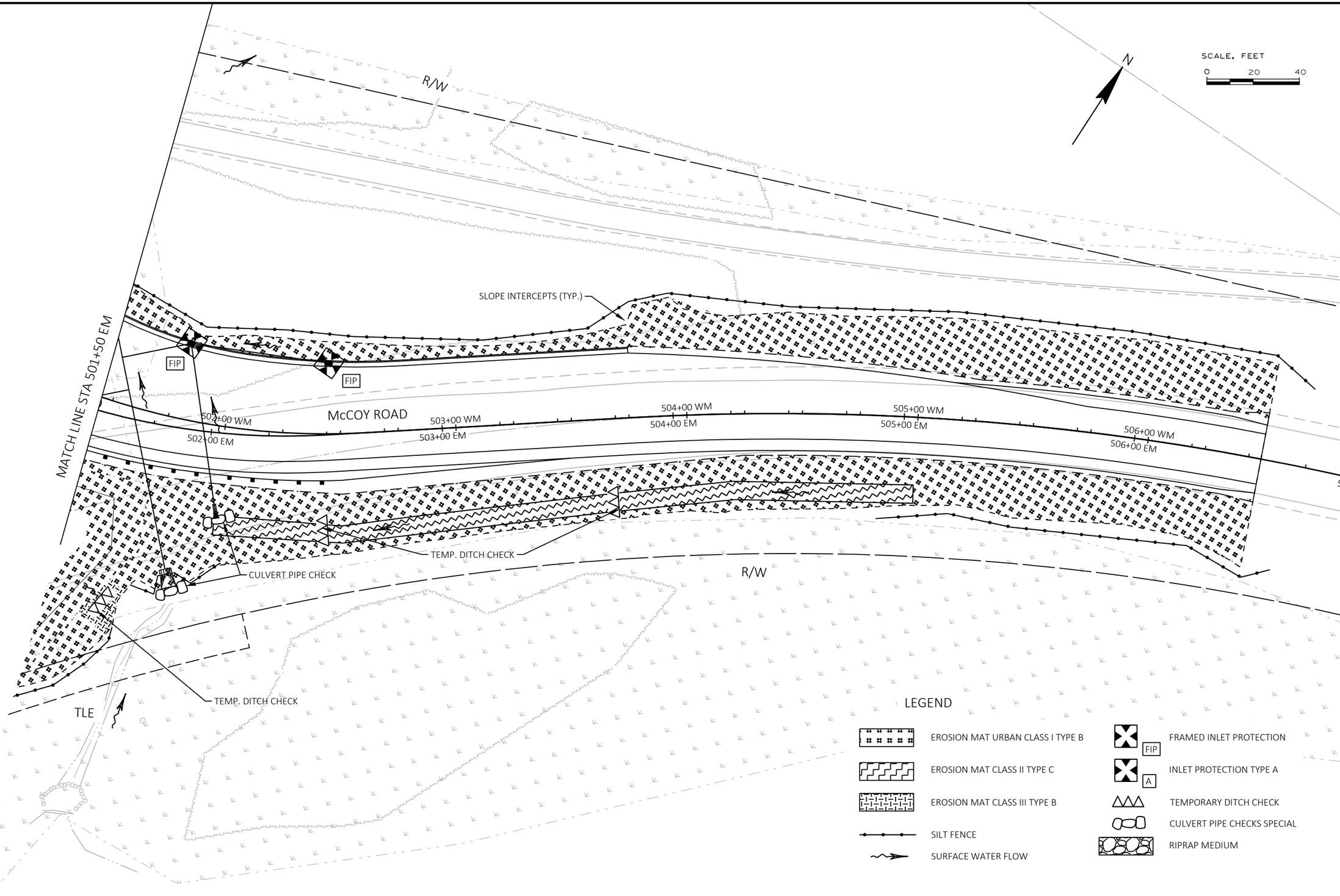

2

PROJECT NO: 5849-02-07	HWY: LOCAL STREET - SYENE ROAD	COUNTY: DANE	EROSION CONTROL - McCOY ROAD	SHEET 46	E

FILE NAME : G:\FITCHBRG\20087-000 SYENE ROAD\CIVIL 3D\SHEETSPLAN\PHASE 3 SHEET FILES - W CLAYTON TO MCCOY\022001-EC_P3.DWG PLOT DATE : 4/30/2024 3:26 PM PLOT BY : BRIAN ST. VINCENT PLOT NAME :

WISDOT/CADDS SHEET 42

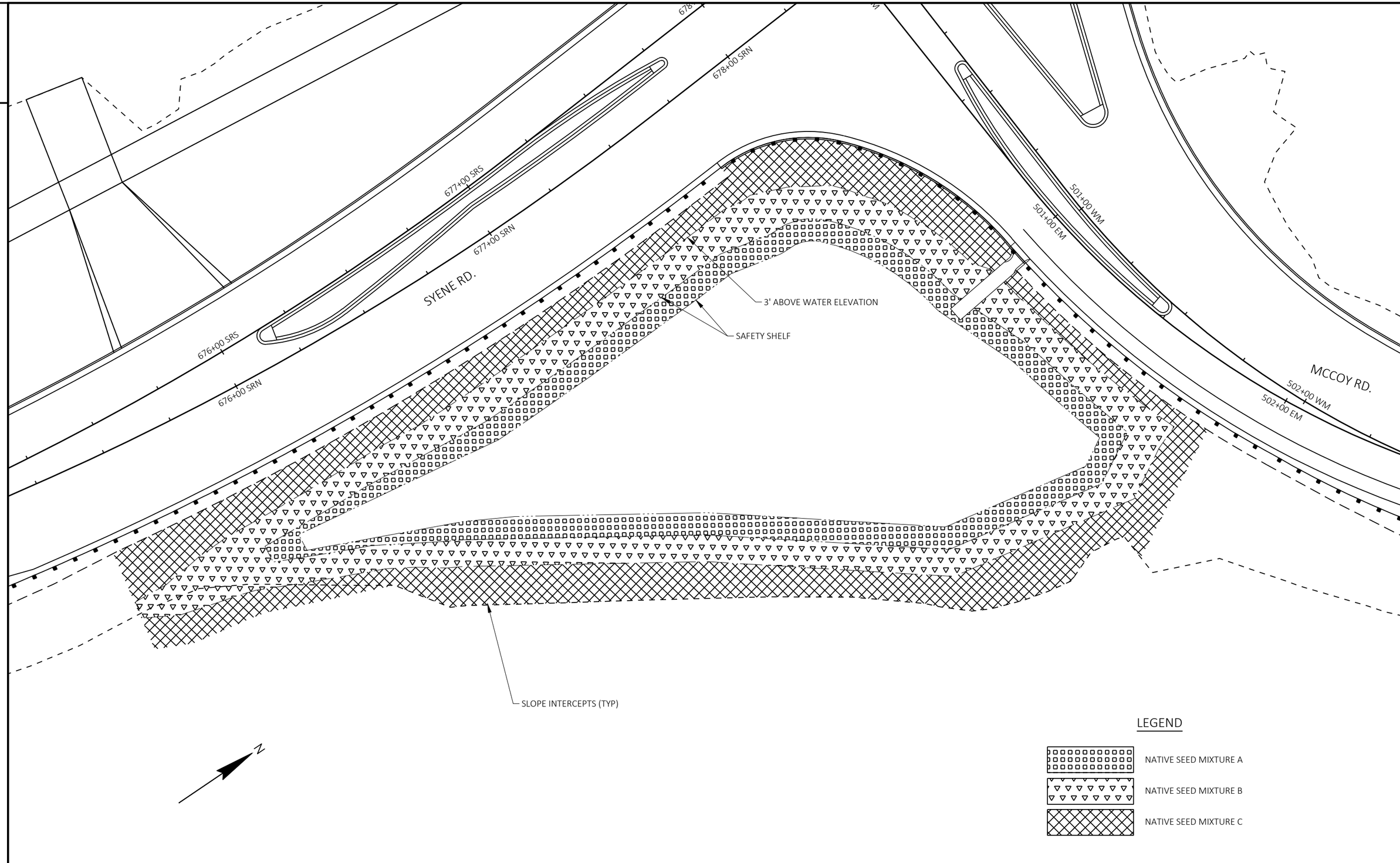

PROJECT NO: 5849-02-07	HWY: LOCAL STREET - SYENE ROAD	COUNTY: DANE	BASIN SEEDING PLAN	SHEET 47	E

FILE NAME : G:\FITCHBRG\20087-000 SYENE ROAD\CIVIL 3D\SHEETSPLAN\PHASE 3 SHEET FILES - W CLAYTON TO MCCOY\022101-LS.DWG
LAYOUT NAME - SE
PLOT DATE : 4/30/2024 3:30 PM PLOT BY : BRIAN ST. VINCENT PLOT NAME : PLOT SCALE : 1 IN:30 FT

2

STORM SEWER PIPE AND STRUCTURES TO BE INSTALLED WITH ADJACENT LOCAL SYENE ROAD RECONSTRUCTION PROJECT (BY OTHERS)

CAUTION

N

ESMT

EXISTING R/W

WATER MAIN ADJUSTMENTS TO BE COMPLETED WITH ADJACENT LOCAL SYENE ROAD RECONSTRUCTION PROJECT (BY OTHERS)

75.6 STA 671+39 SRS, 17.5' LT INLETS 4-H

SYENE ROAD

669+00 SRS
669+00 SRN
670+00 SRS
670+00 SRN
671+00 SRS
671+00 SRN
672+00 SRS
672+00 SRN
673+00 SRS
673+00 SRN
674+00 SRS
674+00 SRN

75.5 STA 673+37 SRS, 17.5' LT INLETS 4-H

MATCH LINE 674+25'SRN'

W CLAYTON ROAD

PRW

TLE

WETLANDS BOUNDARY

EXISTING R/W

SLOPE INTERCEPTS (TYP.)

PROPOSED SURFACE CONTOURS (TYP.)

TLE

2

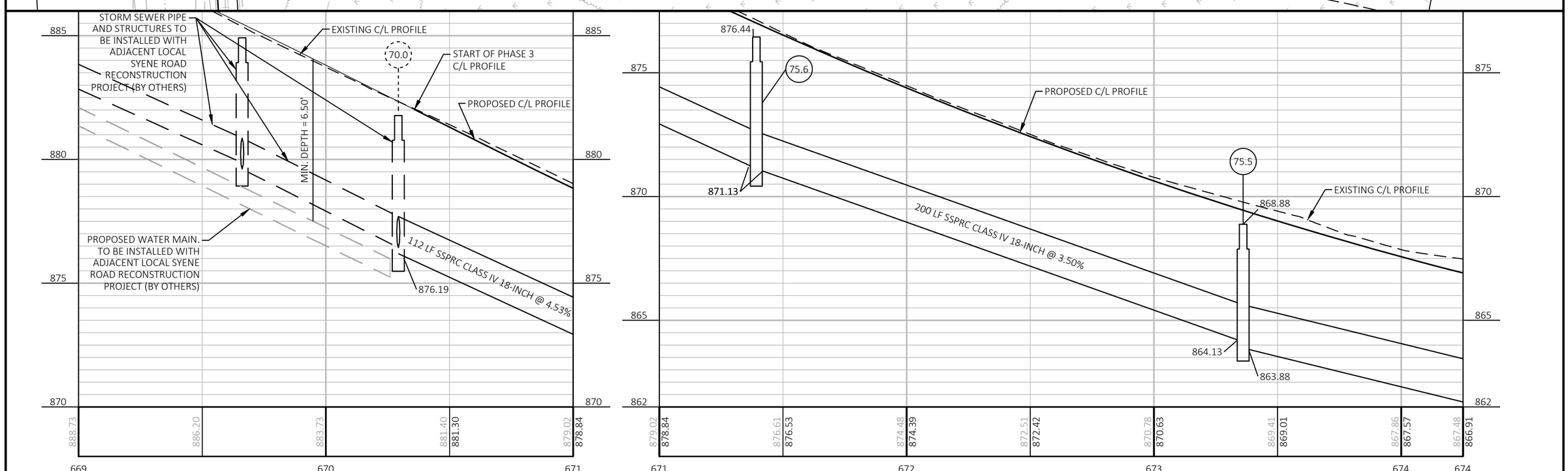

PROJECT NO: 5849-02-07	HWY: LOCAL STREET - SYENE ROAD	COUNTY: DANE	STORM SEWER: SYENE ROAD	SHEET 48	E

FILE NAME : G:\FITCHBRG\20087-000 SYENE ROAD\CIVIL 3D\SHEETSPLAN\PHASE 3 SHEET FILES - W CLAYTON TO MCCOY\022501-SS_P3.DWG
LAYOUT NAME - SRN1
PLOT DATE : 6/19/2024 6:03 PM PLOT BY : BRIAN ST. VINCENT PLOT NAME : PLOT SCALE : 1 IN:40 FT

2

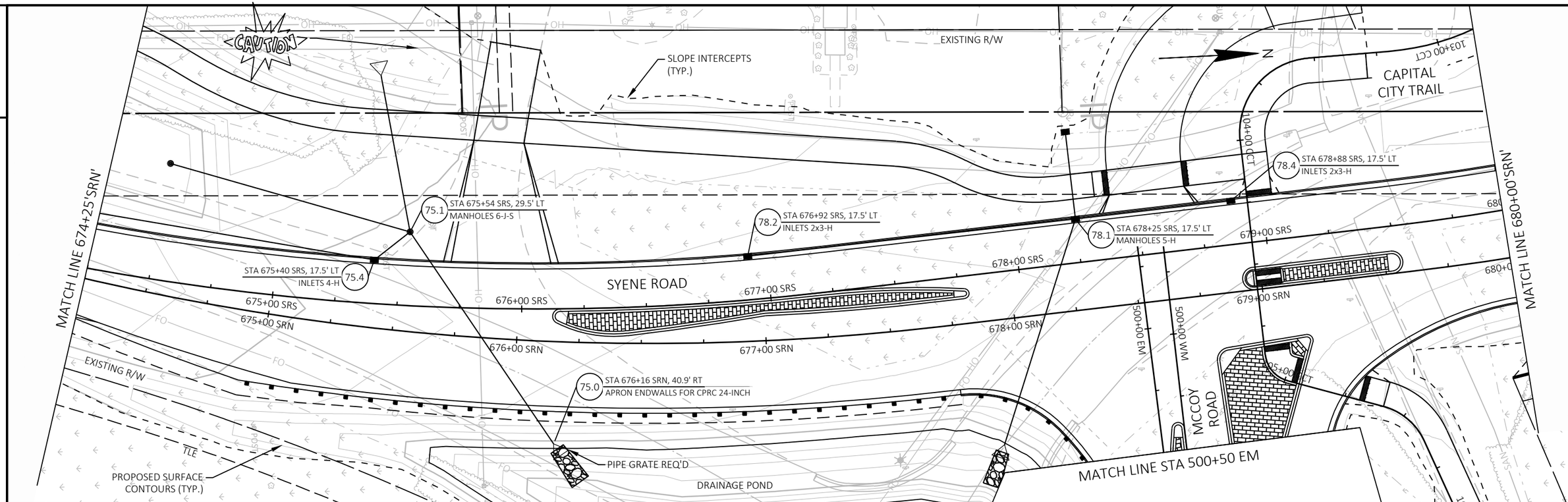

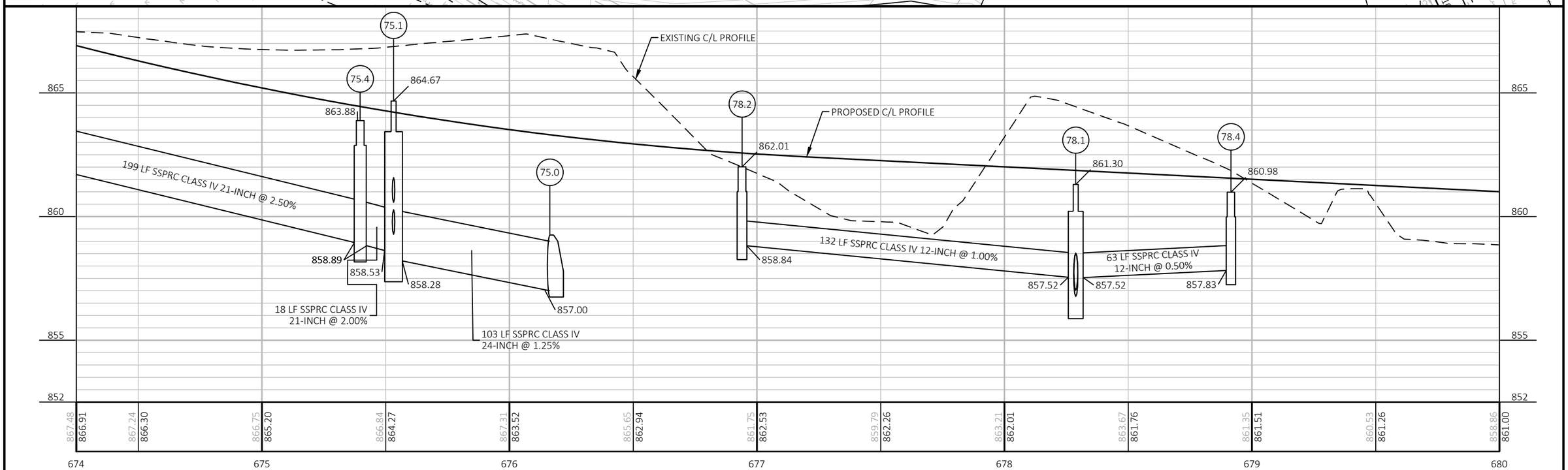

2

PROJECT NO: 5849-02-07	HWY: LOCAL STREET - SYENE ROAD	COUNTY: DANE	STORM SEWER: SYENE ROAD	SHEET 49	E

FILE NAME : G:\FITCHBRG\20087-000 SYENE ROAD\CIVIL 3D\SHEETSPLAN\PHASE 3 SHEET FILES - W CLAYTON TO MCCOY\022501-SS_P3.DWG
LAYOUT NAME - SRN2
PLOT DATE : 6/19/2024 6:04 PM PLOT BY : BRIAN ST. VINCENT PLOT NAME : PLOT SCALE : 1 IN:40 FT

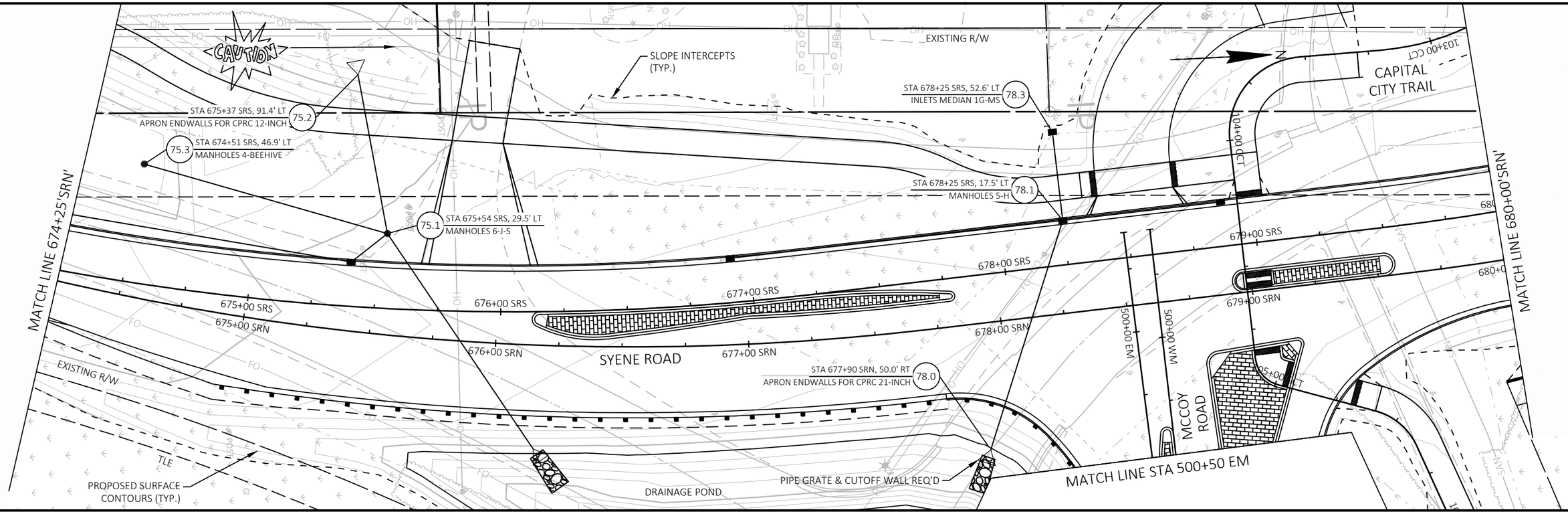

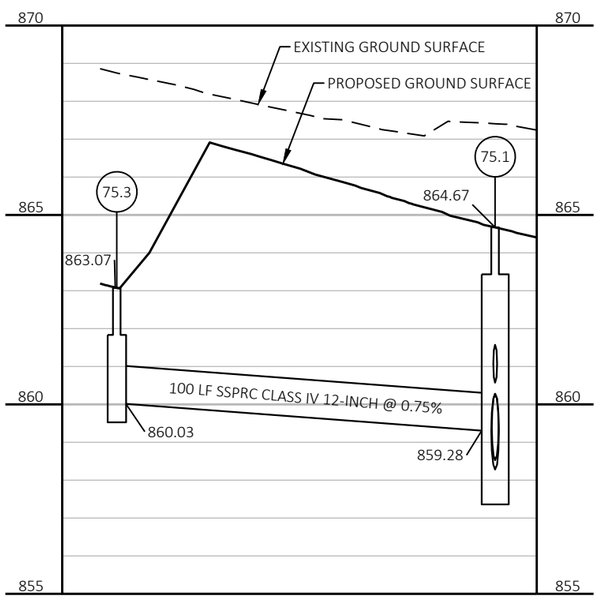

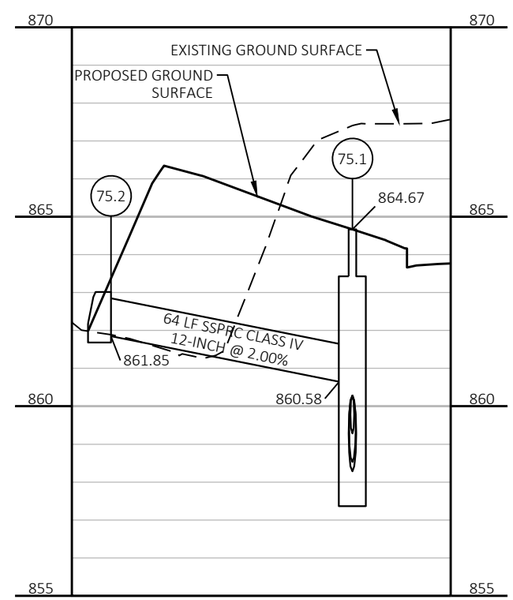

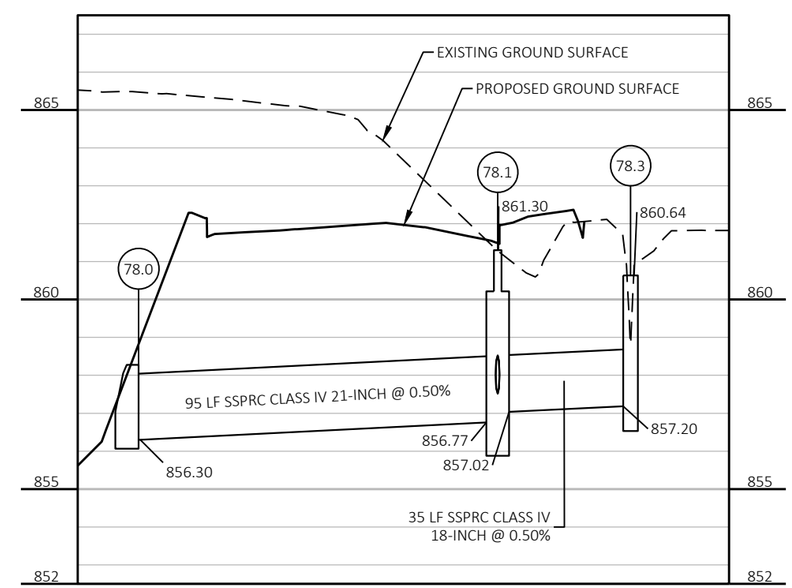

PROJECT NO: 5849-02-07	HWY: LOCAL STREET - SYENE ROAD	COUNTY: DANE	STORM SEWER: SYENE ROAD	SHEET 50	E

2

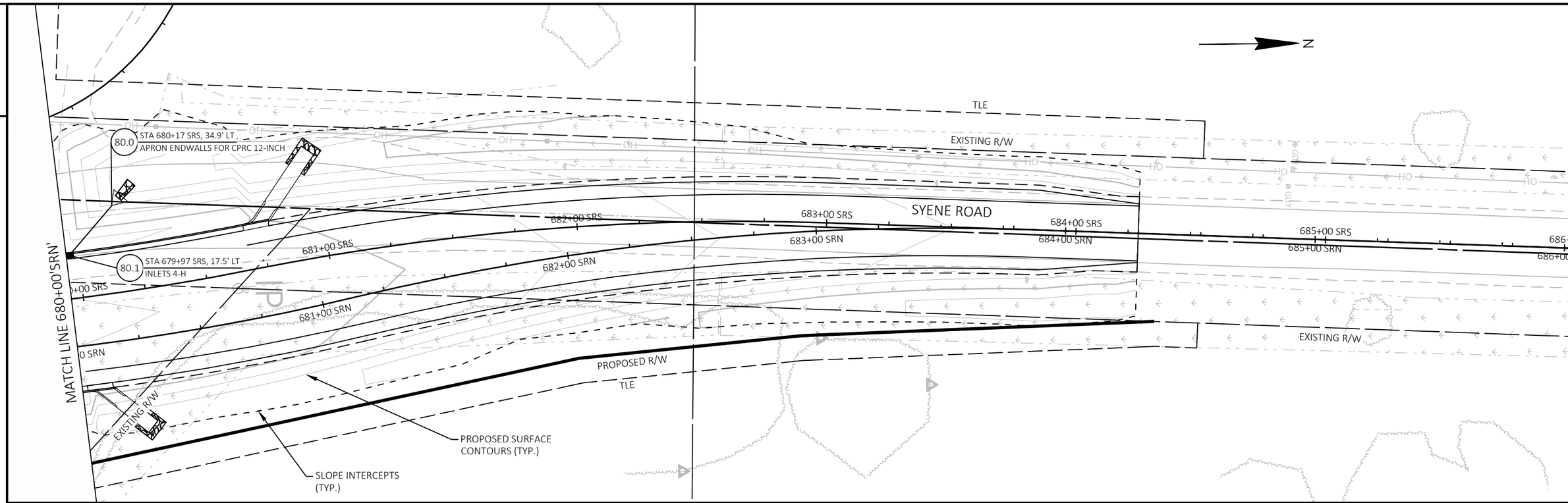

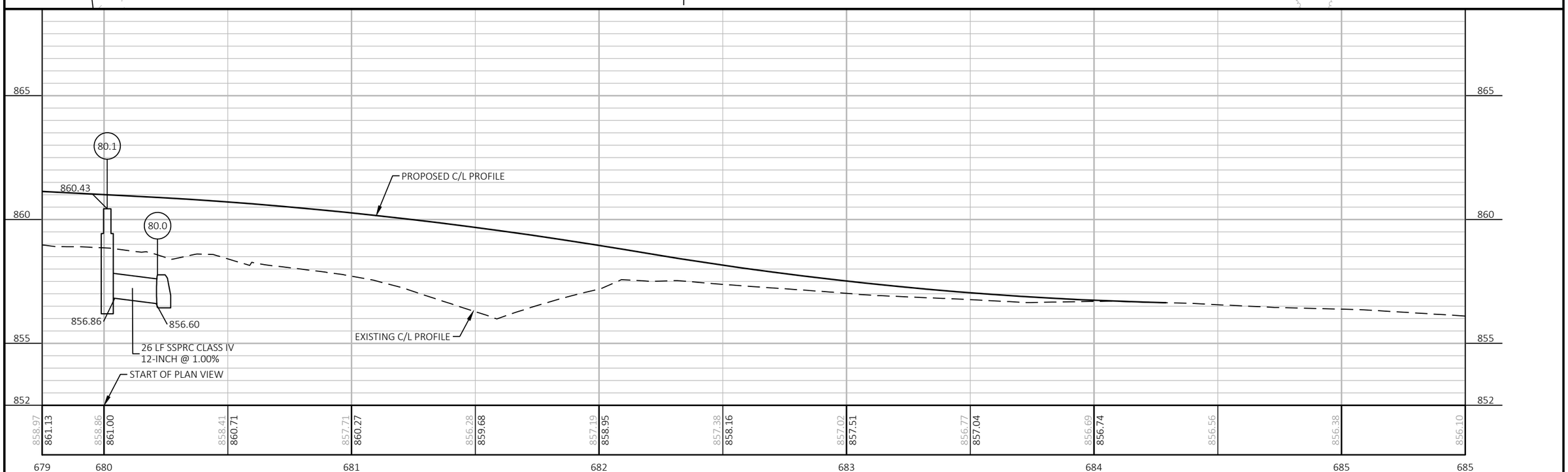

PROJECT NO: 5849-02-07	HWY: LOCAL STREET - SYENE ROAD	COUNTY: DANE	STORM SEWER: SYENE ROAD	SHEET 51	E

FILE NAME : G:\FITCHBRG\20087-000 SYENE ROAD\CIVIL 3D\SHEETSPLAN\PHASE 3 SHEET FILES - W CLAYTON TO MCCOY\022501-SS_P3.DWG
LAYOUT NAME - SRN3
PLOT DATE : 6/10/2024 8:33 AM PLOT BY : BRIAN ST. VINCENT PLOT NAME : PLOT SCALE : 1 IN:40 FT

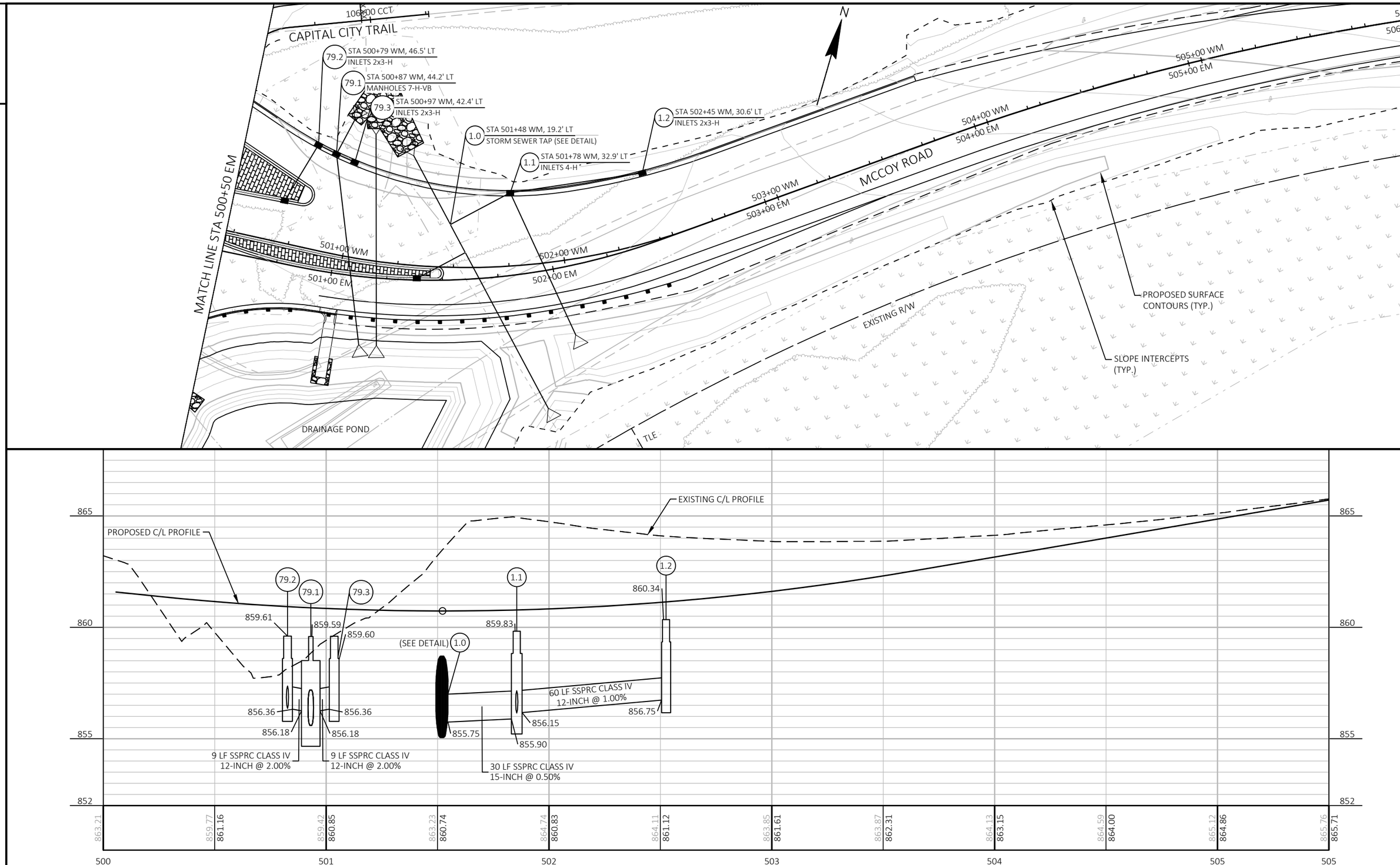

PROJECT NO: 5849-02-07	HWY: LOCAL STREET - SYENE ROAD	COUNTY: DANE	STORM SEWER: MCCOY ROAD	SHEET 52	E

FILE NAME : G:\FITCHBRG\20087-000 SYENE ROAD\CIVIL 3D\SHEETSPLAN\PHASE 3 SHEET FILES - W CLAYTON TO MCCOY\022502-SS_P3.DWG
LAYOUT NAME - EM1
PLOT DATE : 6/10/2024 8:41 AM PLOT BY : BRIAN ST. VINCENT PLOT NAME : PLOT SCALE : 1 IN:40 FT
WISDOT/CADDS SHEET 44

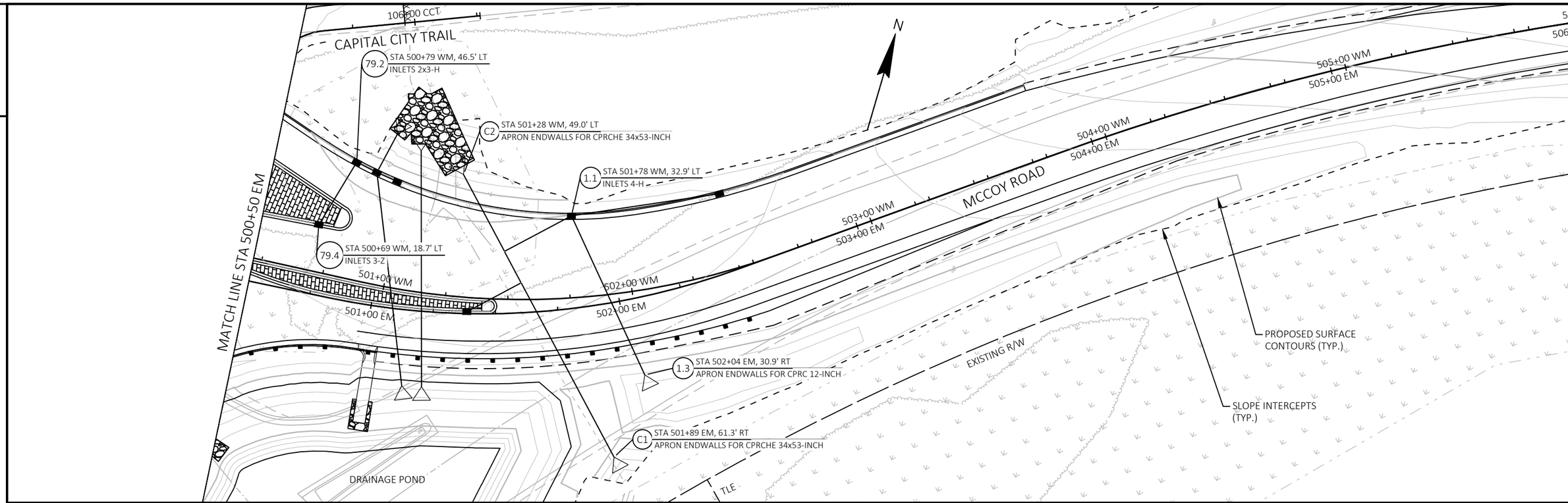

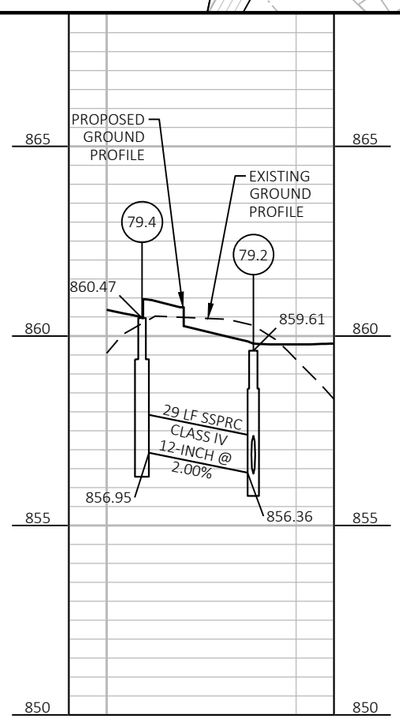

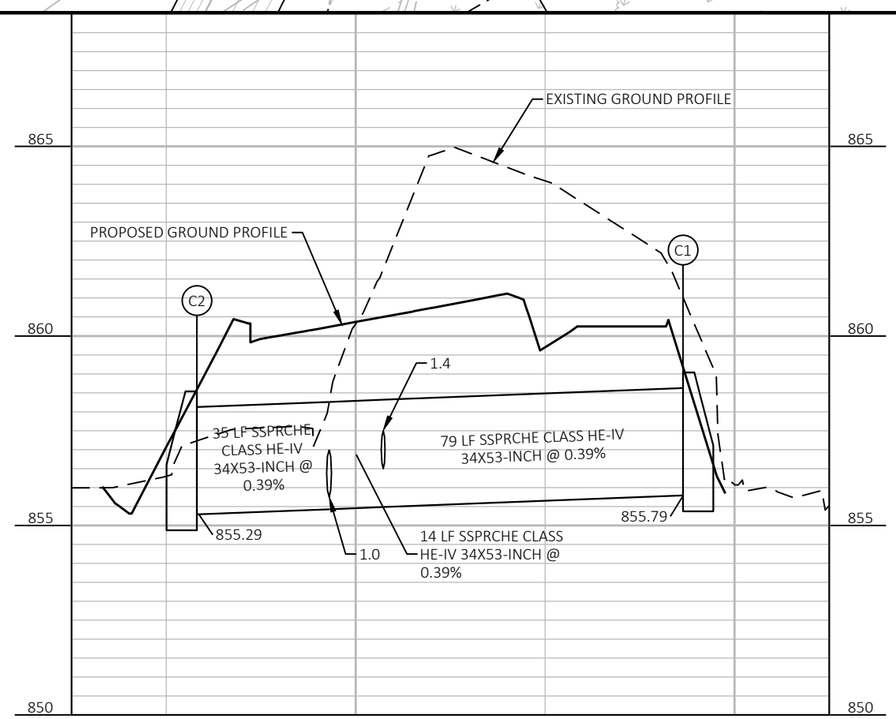

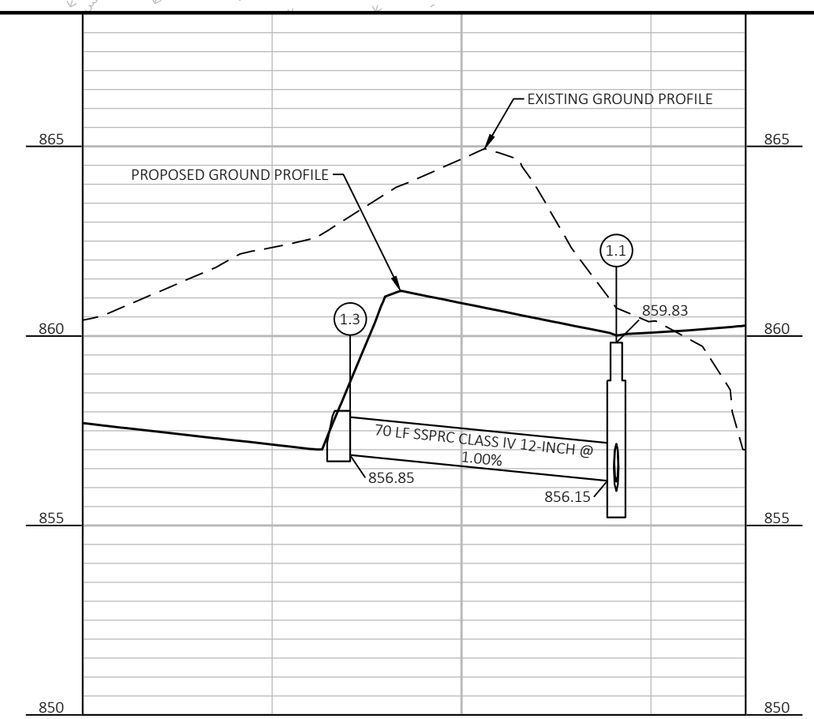

PROJECT NO: 5849-02-07	HWY: LOCAL STREET - SYENE ROAD	COUNTY: DANE	STORM SEWER: MCCOY ROAD	SHEET 53	E

FILE NAME : G:\FITCHBRG\20087-000 SYENE ROAD\CIVIL 3D\SHEETSPLAN\PHASE 3 SHEET FILES - W CLAYTON TO MCCOY\022502-SS_P3.DWG
LAYOUT NAME - EM1.1
PLOT DATE : 6/10/2024 8:41 AM PLOT BY : BRIAN ST. VINCENT PLOT NAME : PLOT SCALE : 1 IN:40 FT

2

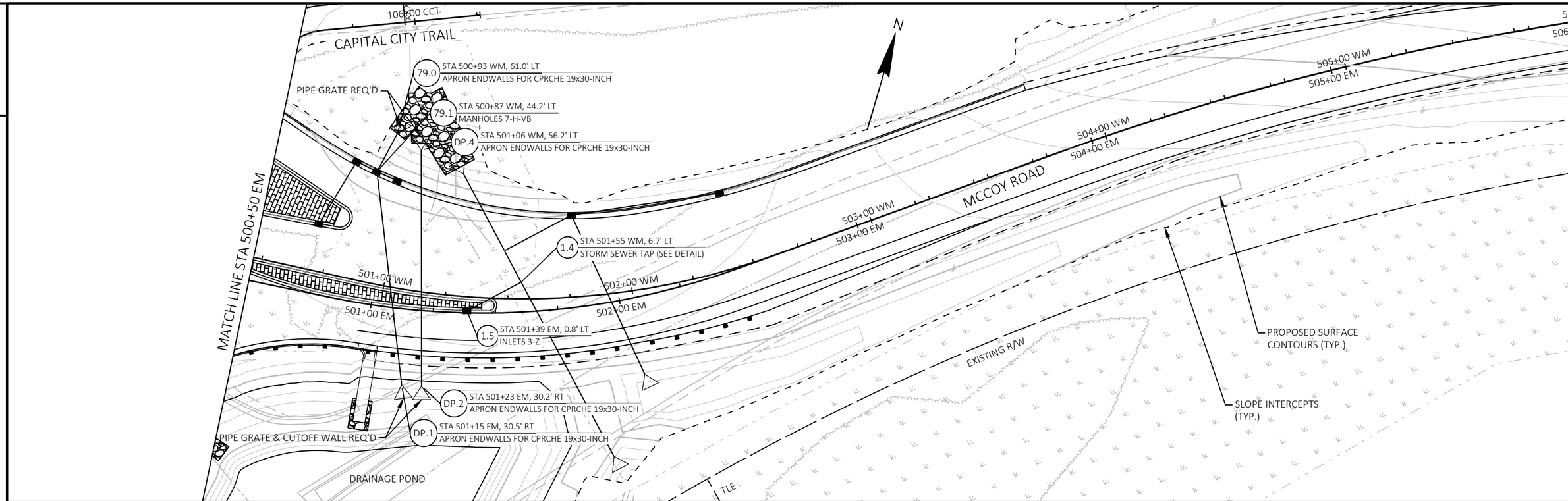

2

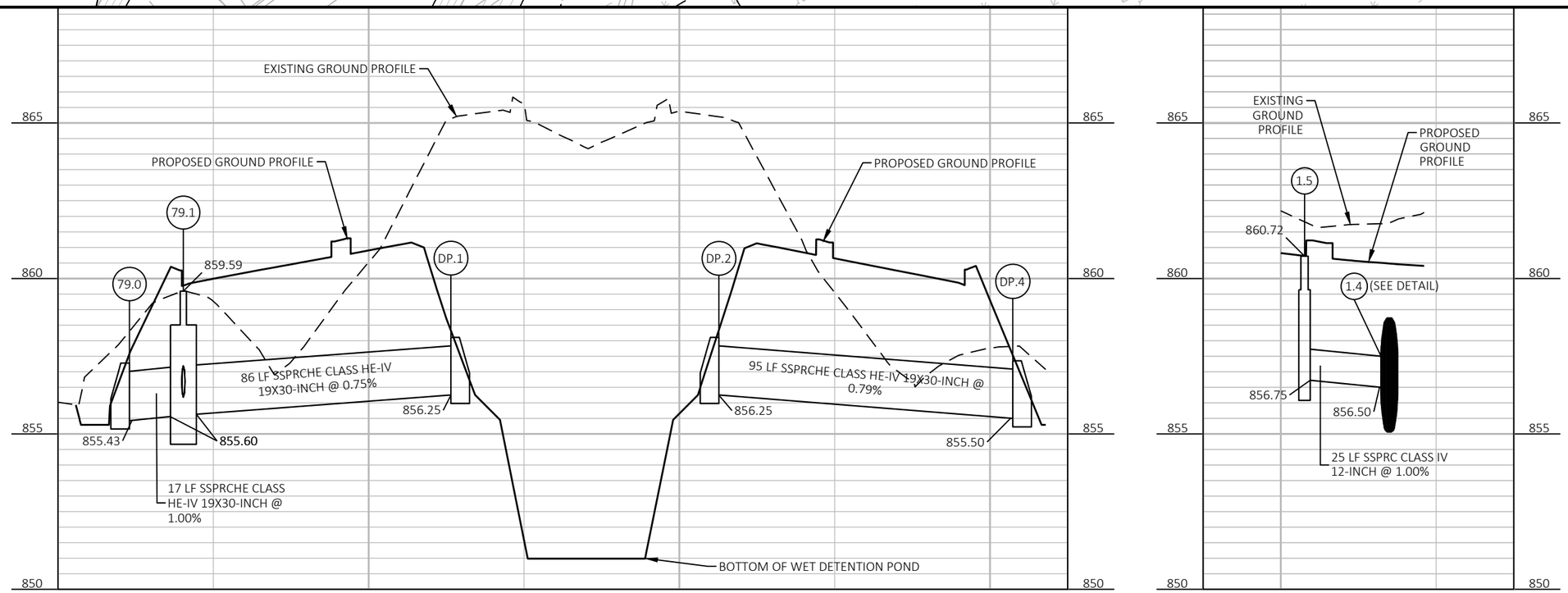

PROJECT NO: 5849-02-07	HWY: LOCAL STREET - SYENE ROAD	COUNTY: DANE	STORM SEWER: MCCOY ROAD	SHEET 54	E

FILE NAME : G:\FITCHBRG\20087-000 SYENE ROAD\CIVIL 3D\SHEETSPLAN\PHASE 3 SHEET FILES - W CLAYTON TO MCCOY\022502-SS_P3.DWG
LAYOUT NAME - EM1.2
PLOT DATE : 6/10/2024 8:41 AM PLOT BY : BRIAN ST. VINCENT PLOT NAME : PLOT SCALE : 1 IN:40 FT
WISDOT/CADDS SHEET 44

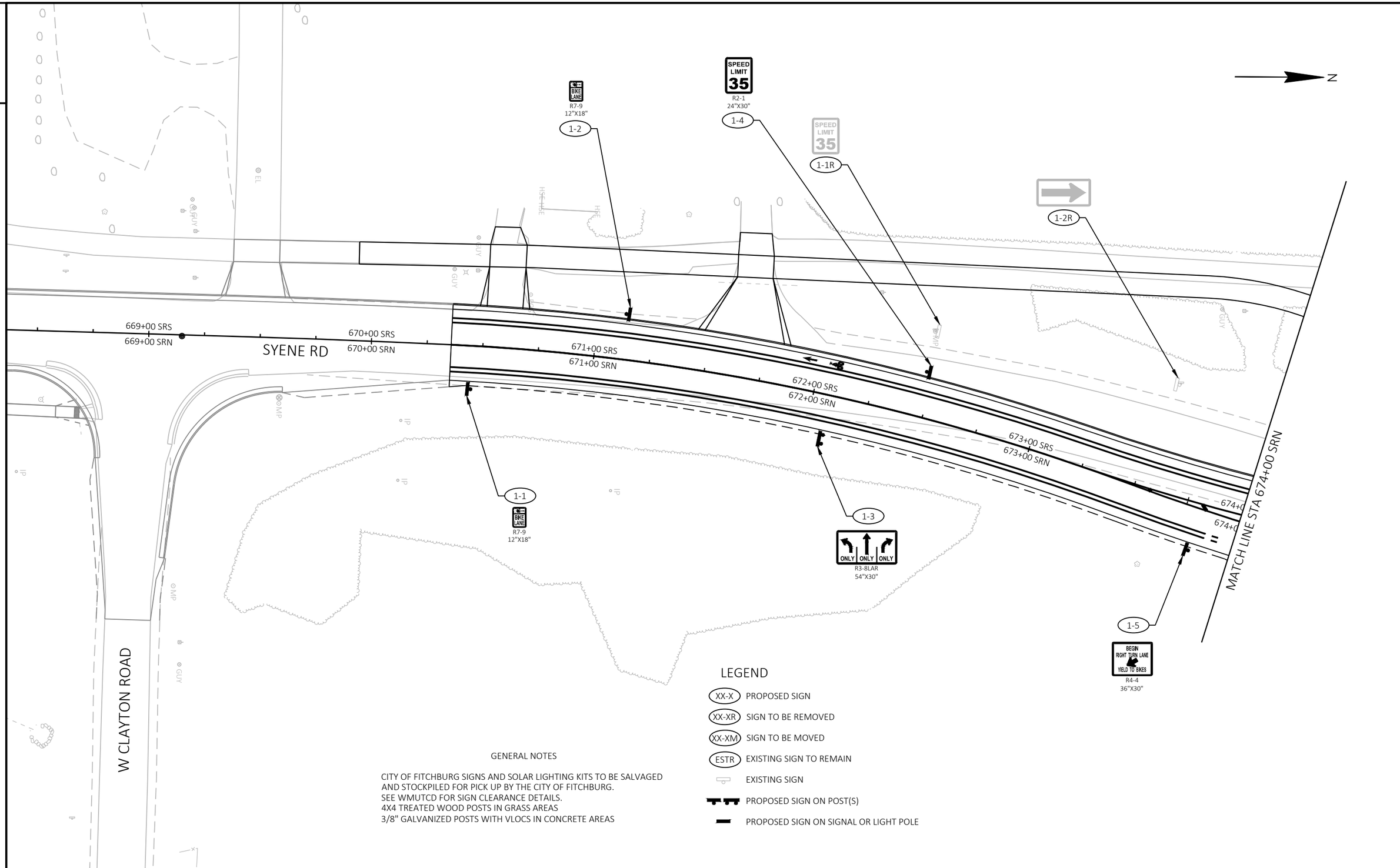

LEGEND

- (XX-X) PROPOSED SIGN
- (XX-XR) SIGN TO BE REMOVED
- (XX-XM) SIGN TO BE MOVED
- (ESTR) EXISTING SIGN TO REMAIN
- EXISTING SIGN
- PROPOSED SIGN ON POST(S)
- PROPOSED SIGN ON SIGNAL OR LIGHT POLE

GENERAL NOTES

CITY OF FITCHBURG SIGNS AND SOLAR LIGHTING KITS TO BE SALVAGED AND STOCKPILED FOR PICK UP BY THE CITY OF FITCHBURG.
SEE WMUTCD FOR SIGN CLEARANCE DETAILS.
4X4 TREATED WOOD POSTS IN GRASS AREAS
3/8" GALVANIZED POSTS WITH VLOCS IN CONCRETE AREAS

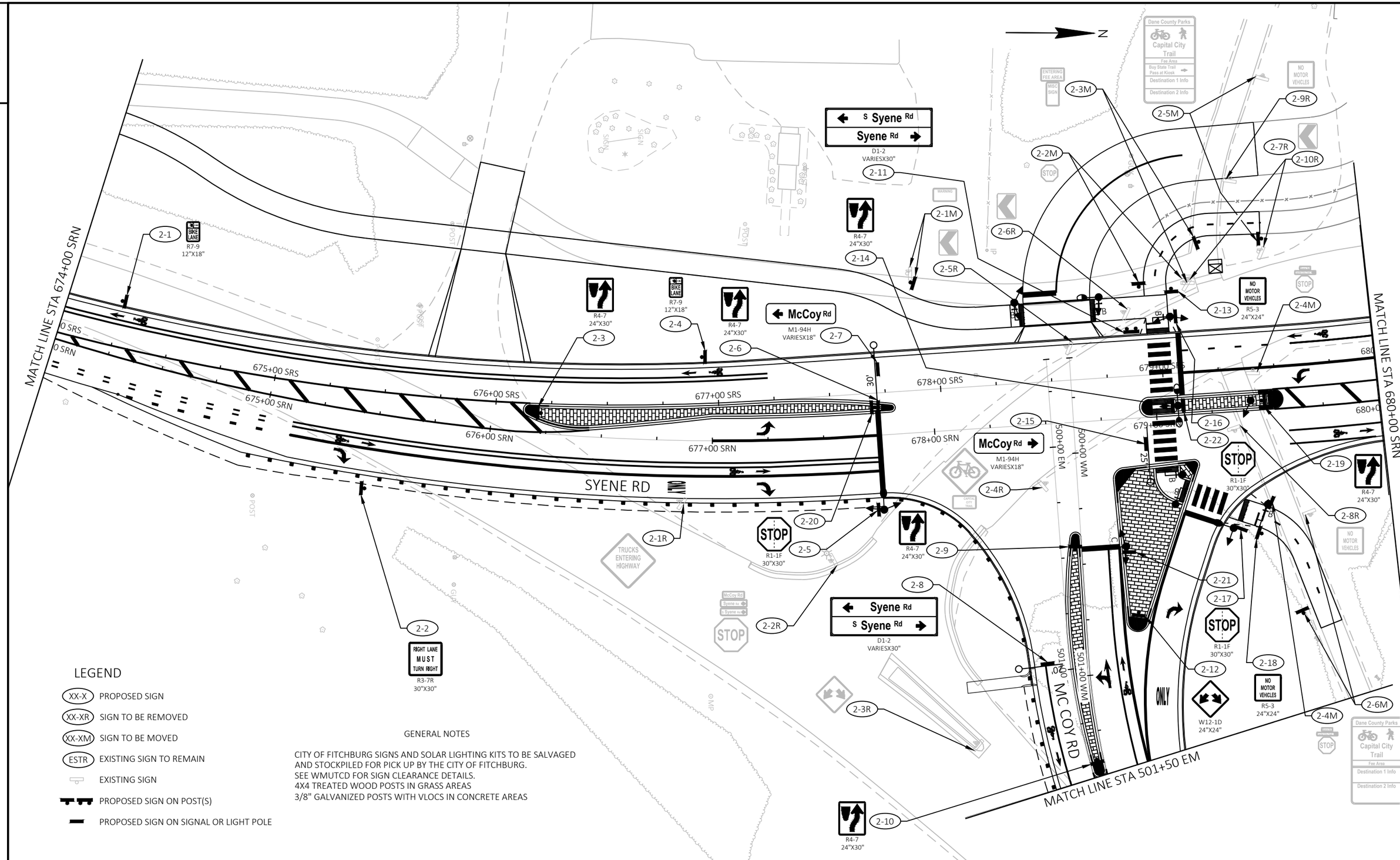

LEGEND

- (XX-X) PROPOSED SIGN
- (XX-XR) SIGN TO BE REMOVED
- (XX-XM) SIGN TO BE MOVED
- (ESTR) EXISTING SIGN TO REMAIN
- EXISTING SIGN
- PROPOSED SIGN ON POST(S)
- PROPOSED SIGN ON SIGNAL OR LIGHT POLE

GENERAL NOTES

CITY OF FITCHBURG SIGNS AND SOLAR LIGHTING KITS TO BE SALVAGED AND STOCKPILED FOR PICK UP BY THE CITY OF FITCHBURG.
SEE WMUTCD FOR SIGN CLEARANCE DETAILS.
4X4 TREATED WOOD POSTS IN GRASS AREAS
3/8" GALVANIZED POSTS WITH VLOCS IN CONCRETE AREAS

PROJECT NO: 5849-02-07	HWY: LOCAL STREET - SYENE ROAD	COUNTY: DANE	PERMANENT SIGNING	SHEET 56	E

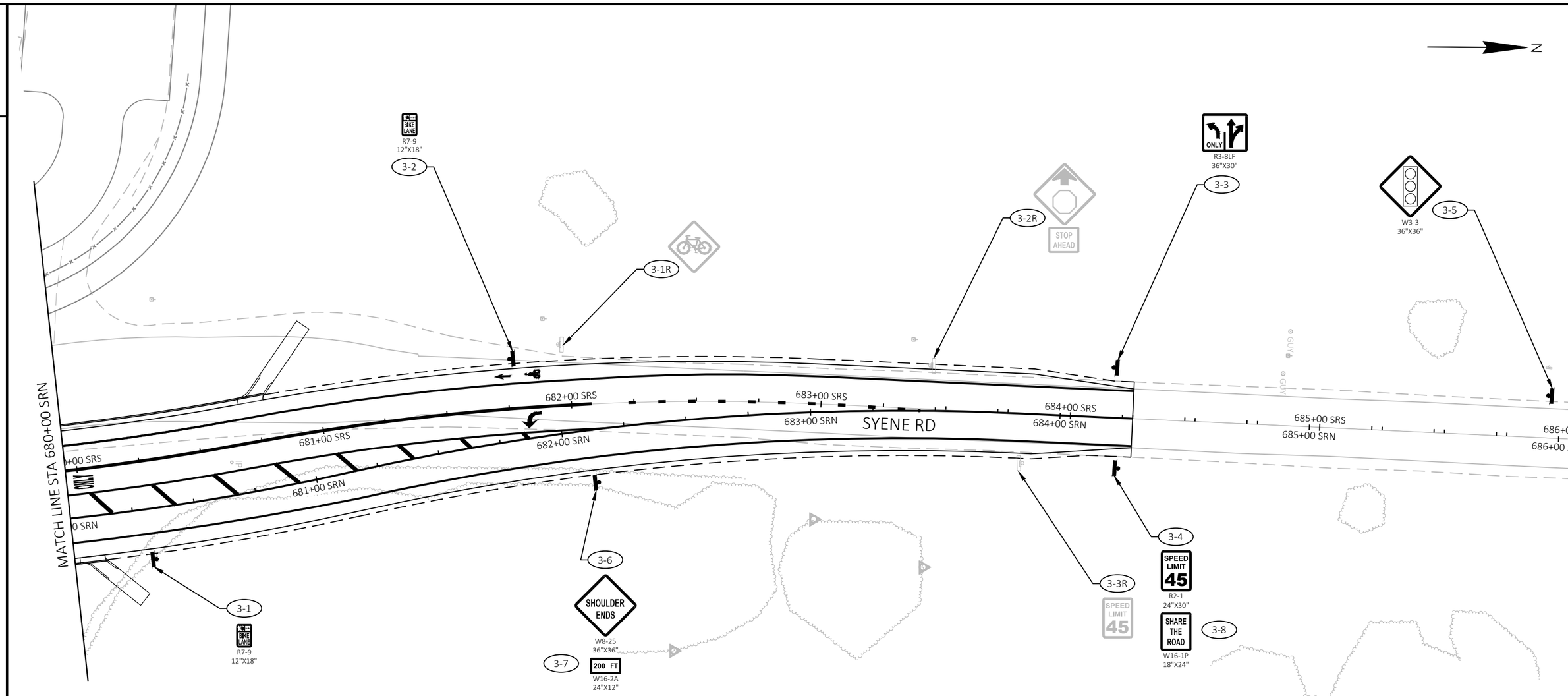

GENERAL NOTES

CITY OF FITCHBURG SIGNS AND SOLAR LIGHTING KITS TO BE SALVAGED AND STOCKPILED FOR PICK UP BY THE CITY OF FITCHBURG.
SEE WMUTCD FOR SIGN CLEARANCE DETAILS.
4X4 TREATED WOOD POSTS IN GRASS AREAS
3/8" GALVANIZED POSTS WITH VLOCS IN CONCRETE AREAS

LEGEND

- XX-X PROPOSED SIGN
- XX-XR SIGN TO BE REMOVED
- XX-XM SIGN TO BE MOVED
- ESTR EXISTING SIGN TO REMAIN
- EXISTING SIGN
- PROPOSED SIGN ON POST(S)
- PROPOSED SIGN ON SIGNAL OR LIGHT POLE

PROJECT NO: 5849-02-07	HWY: LOCAL STREET - SYENE ROAD	COUNTY: DANE	PERMANENT SIGNING	SHEET 57	E

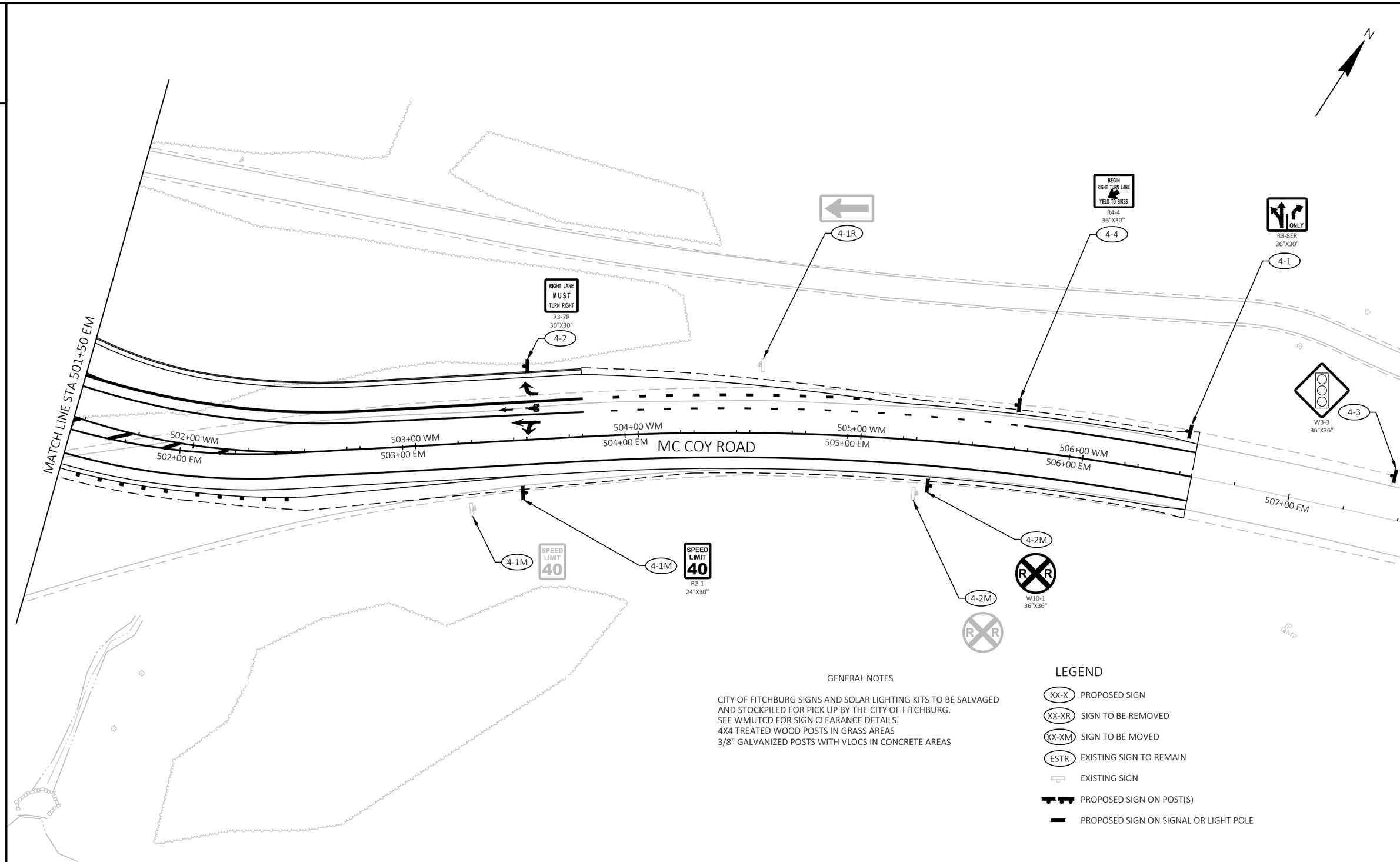

GENERAL NOTES

CITY OF FITCHBURG SIGNS AND SOLAR LIGHTING KITS TO BE SALVAGED AND STOCKPILED FOR PICK UP BY THE CITY OF FITCHBURG.
SEE WMUTCD FOR SIGN CLEARANCE DETAILS.
4X4 TREATED WOOD POSTS IN GRASS AREAS
3/8" GALVANIZED POSTS WITH VLOCS IN CONCRETE AREAS

LEGEND

- XX-X PROPOSED SIGN
- XX-XR SIGN TO BE REMOVED
- XX-XM SIGN TO BE MOVED
- ESTR EXISTING SIGN TO REMAIN
- EXISTING SIGN
- PROPOSED SIGN ON POST(S)
- PROPOSED SIGN ON SIGNAL OR LIGHT POLE

PROJECT NO: 5849-02-07	HWY: LOCAL STREET - SYENE ROAD	COUNTY: DANE	PERMANENT SIGNING	SHEET 58	E

2

LEGEND

- CONTROL CABINET
- NONMETALLIC CONDUIT 2", UNLESS OTHERWISE NOTED
- LOOP DETECTOR CONDUIT 1" NONMETALLIC
- SIGNAL HEAD, TRAFFIC SIGNAL STANDARD, PEDESTAL BASE
- (XX) SIGNAL HEAD, TRAFFIC SIGNAL POLE, TRANSFORMER BASE
- (XX) MONOTUBE BASE, POLE, 15'-30' ARM
- PEDESTRIAN HEAD
- B PEDESTRIAN PUSH BUTTON
- C CYCLIST PUSH BUTTON
- LUMINAIRE, TRAFFIC POLE, TRANSFORMER BASE
- HANDHOLE, TYPE 1, 17"x30"
- HANDHOLE, TYPE 5, 24"x36"
- X EVP DESIGNATOR
- EVP DETECTOR HEAD
- R Y G TRAFFIC SIGNAL HEAD
- XX WALK/DON'T WALK INDICATOR 16" (COUNTDOWN TIMER)
- XX LED BLANK OUT SIGN (NO RIGHT TURN)
- LANE DESIGNATION FOR INFO ONLY

NOTES:
1. ALL LENSES ARE 12-INCH
2. GRAYSHADE REPRESENTS EXISTING

PEDESTRIAN CROSSING SIGN SUMMARY		
BASE	SIGN CODE	SIGN TO FACE
SB1	R10-3ER	SOUTH
SB2	R10-3ED	SOUTH
SB5	R10-3EL	SOUTHEAST
SB6	R10-3EL	NORTHWEST
SB7	R10-3EL	SOUTH
SB9	R10-24	SOUTH
SB13	R10-3ER	EAST
SB14	R10-3EL	EAST

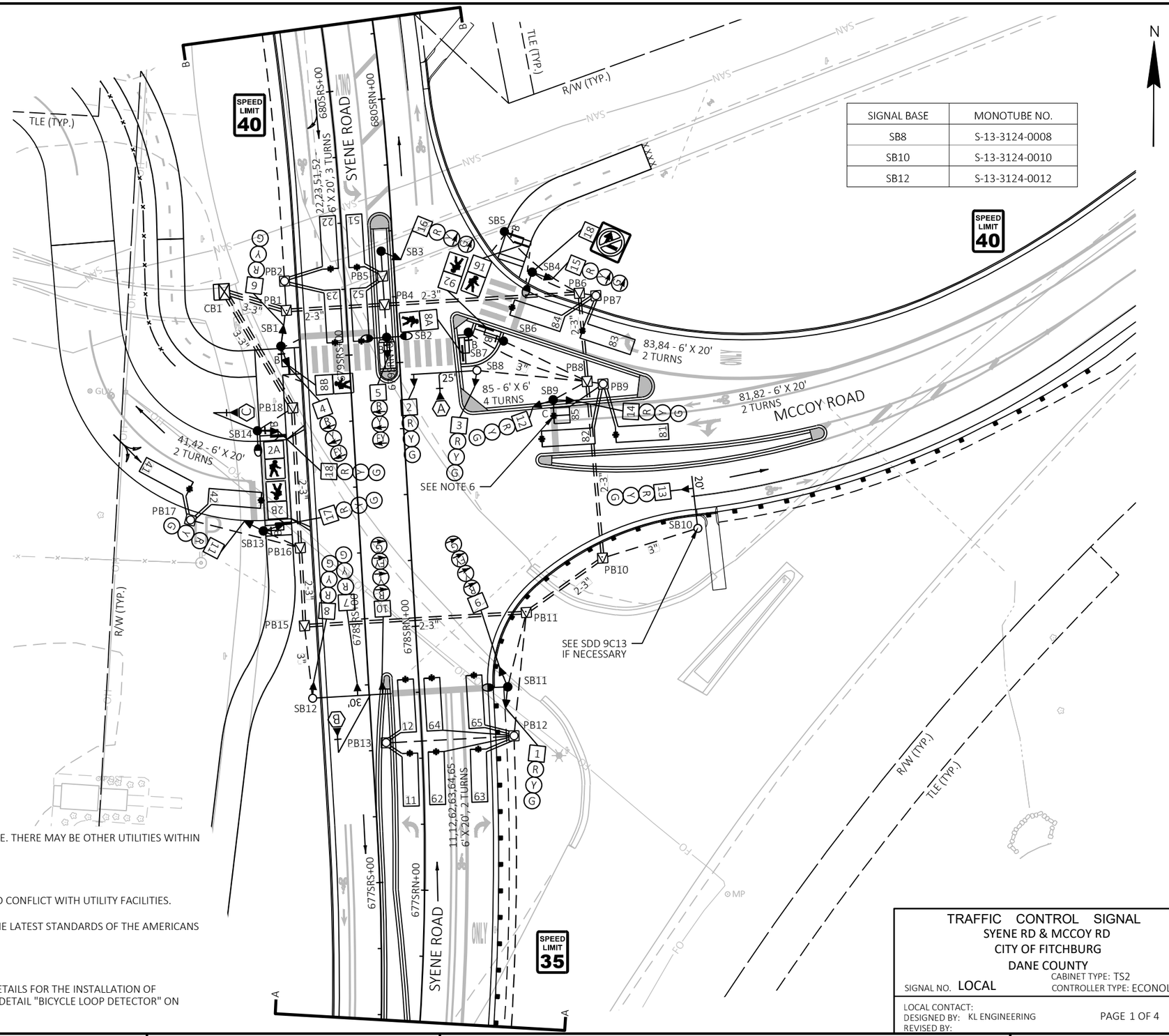

CONSTRUCTION NOTES

1) THE LOCATIONS OF UTILITY FACILITIES SHOWN ON THE SHEET PLANS ARE APPROXIMATE. THERE MAY BE OTHER UTILITIES WITHIN THE PROJECT AREA WHICH ARE NOT SHOWN.

2) PAVEMENT MARKING IS SHOWN IN GRAYSHADE FOR PLAN CLARITY.

3) THE ENGINEER MAY ADJUST THE LOCATIONS OF ITEMS UNDER THIS CONTRACT TO AVOID CONFLICT WITH UTILITY FACILITIES.

4) THE FINAL LOCATION AND ORIENTATION OF PEDESTRIAN BUTTONS MUST ADHERE TO THE LATEST STANDARDS OF THE AMERICANS WITH DISABILITIES ACT.

5) ALL SIGNAL HEADS SHALL BE MOUNTED VERTICALLY.

6) INSTALL LOOP ACCORDING TO METHODS DESCRIBED IN STANDARD DETAIL DRAWING "DETAILS FOR THE INSTALLATION OF TEMPORARY TRAFFIC SIGNAL LOOP DETECTOR WIRES IN ANY EXISTING PAVEMENT." SEE DETAIL "BICYCLE LOOP DETECTOR" ON SHEET 2 OF THIS PLAN FOR SAW CUT AND WIRING DETAILS.

SIGNAL BASE	MONOTUBE NO.
SB8	S-13-3124-0008
SB10	S-13-3124-0010
SB12	S-13-3124-0012

TRAFFIC CONTROL SIGNAL
SYENE RD & MCCOY RD
CITY OF FITCHBURG
DANE COUNTY

SIGNAL NO. LOCAL
CABINET TYPE: TS2
CONTROLLER TYPE: ECONOLITE

LOCAL CONTACT:
DESIGNED BY: KL ENGINEERING
REVISED BY:

PAGE 1 OF 4

PROJECT NO: 5849-02-07	HWY: LOCAL	COUNTY: DANE	TRAFFIC SIGNAL PLAN	SHEET 59	E

FILE NAME : G:\FITCHBRG\20087-000 SYENE ROAD\CIVIL 3D\SHEETSPLAN\SIGNALS\MCCOY INTERSECTION\024201-SP-MCCOY.DWG
LAYOUT NAME - Syene & McCoy
PLOT DATE : 6/5/2024 4:37 PM
PLOT BY : KL ENGINEERING
PLOT NAME :
PLOT SCALE : 1 IN:40 FT

LEGEND

NONMETALLIC CONDUIT 2", UNLESS OTHERWISE NOTED

LOOP DETECTOR CONDUIT 1" NONMETALLIC

HANDHOLE, TYPE 1, 17"x30"

LANE DESIGNATION FOR INFO ONLY

NOTES:
1. ALL LENSES ARE 12-INCH
2. GRAYSHADE REPRESENTS EXISTING

N

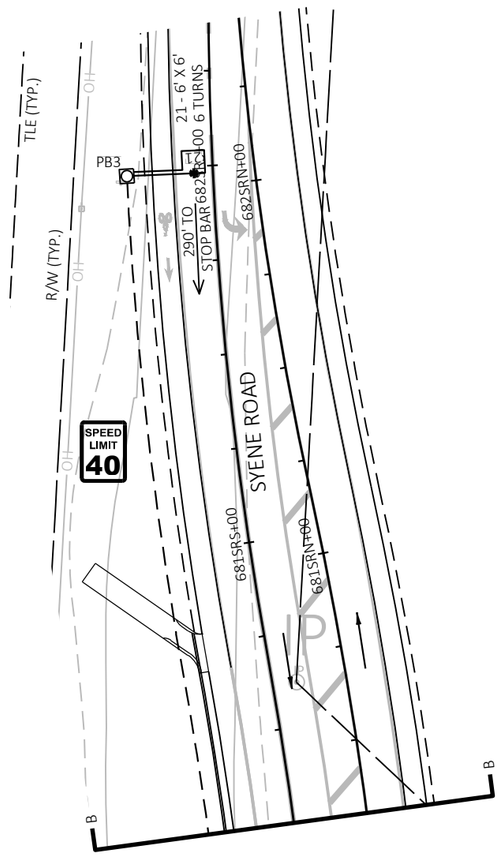

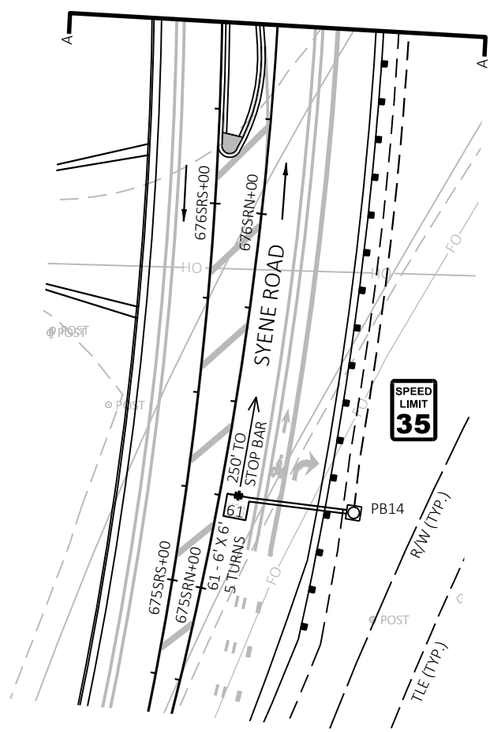

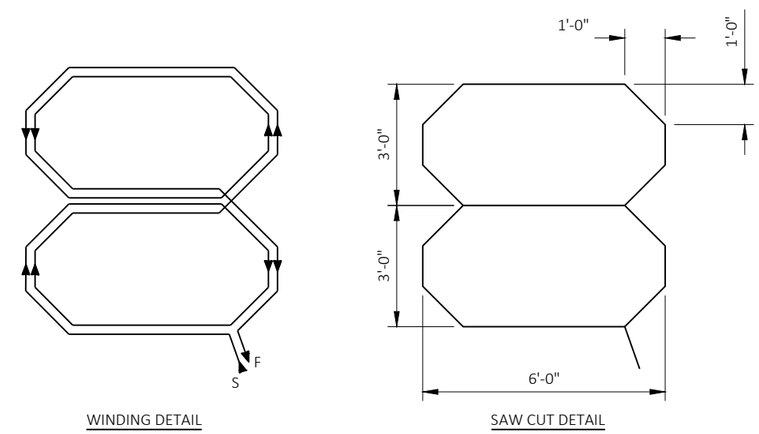

WINDING DETAIL

SAW CUT DETAIL

BICYCLE LOOP DETECTOR CONFIGURATION

TRAFFIC CONTROL SIGNAL
SYENE RD & MCCOY RD
CITY OF FITCHBURG
DANE COUNTY

SIGNAL NO. LOCAL

CABINET TYPE: TS2
CONTROLLER TYPE: ECONOLITE

LOCAL CONTACT:
DESIGNED BY: KL ENGINEERING
REVISED BY:

PAGE 2 OF 4

PROJECT NO: 5849-02-07	HWY: LOCAL	COUNTY: DANE	TRAFFIC SIGNAL PLAN	SHEET 60	E

FILE NAME : G:\FITCHBRG\20087-000 SYENE ROAD\CIVIL 3D\SHEETSPLAN\SIGNALS\MCCOY INTERSECTION\024201-SP-MCCOY.DWG
LAYOUT NAME - Tails
PLOT DATE : 6/5/2024 4:37 PM
PLOT BY : KL ENGINEERING
PLOT NAME :
PLOT SCALE : 1 IN:40 FT

2

	HEAD NUMBERS	FLASH	
Ø1			
Ø2	6,7,8	R	
Ø3			
Ø4	11,12,13	R	
Ø5	9,10		
Ø6	1,2,3	R	
Ø7			
Ø8	14,17,18	R	
Ø2 PED	2A,2B		
Ø4 PED			
Ø6 PED			
Ø8 PED	8A,8B		O.L. ASSIGNMENTS
NE PED	91, 92		Ø6+Ø11
O.L.A	15,16	R	Ø5+Ø12
O.L.B			
O.L.C			
O.L.D			
O.L.E	4,5	R ←	Ø2
O.L.F			
O.L.G	9,10	R ←	Ø5,Ø6
O.L.H			

N

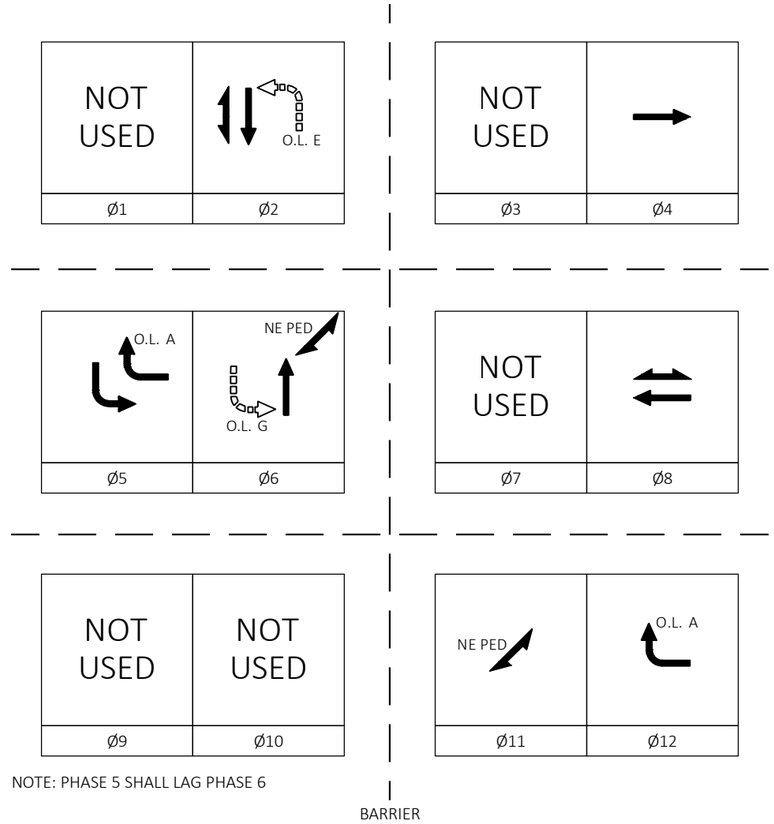

NOTE: PHASE 5 SHALL LAG PHASE 6

PREEMPTION ASSIGNMENTS				
PREEMPTION DESIGNATION	PREEMPTION TYPE	EVP CHANNEL	DIRECTION OF TRAVEL	PHASE(S) CALLED
1	RESERVED	-	-	-
2	RESERVED	-	-	-
3	EVP	A	NORTH	2+6
4	EVP	B	SOUTH	2+6
5	EVP	C	WEST	4+8+12
6	RESERVED	-	-	-
7	NOT USED	-	-	-
8	NOT USED	-	-	-
9	NOT USED	-	-	-
10	NOT USED	-	-	-

CONTROLLER LOGIC

PHASE NUMBER	PHASE LOCKING	DUAL ENTRY W/Ø	PHASE RECALL	PHASE ACTIVE
1				
2	X	6	MIN	X
3				
4		8+12		X
5		2		X
6	X	2	MIN	X
7				
8		4+12		X
11		4+8		X
12		4+8		X

2

LEGEND

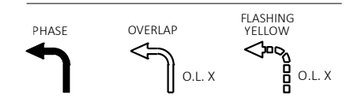

TYPE OF PRE-EMPT	
NONE	
RAILROAD	
EMERGENCY VEHICLE	X
GPS	
TOMAR	
HARDWIRE	
OTHER	
LIFT BRIDGE	
QUEUE DETECTOR	

CENTRAL SYSTEM	
LOCATION OF MASTER	
CONTROLLER NO.:	N/A
SIGNAL SYSTEM #:	

TYPE OF LIGHTING	
BY OTHER AGENCY	
IN TRAFFIC SIGNAL CABINET	X
IN SEPARATE LIGHTING CABINET	

DETECTOR LOGIC

DETECTOR INPUT	3	1	7	5	11	9	15	13	19	17	23	21	27	25	31	29	DETECTOR INPUT
DETECTOR #(S)	12		23	42	52		64	65	82	84	85						DETECTOR #(S)
PHASE CALLED	2		2	4	5		6	6	8	8	8						PHASE CALLED
PHASE EXTENDED	2		2	4	5		6	6	8	8	8						PHASE EXTENDED
DISCONNECT TIME																	DISCONNECT TIME
CALLING DELAY				3				10		10							CALLING DELAY
EXTENSION STRETCH																	EXTENSION STRETCH
LOOP FUNCTION																	LOOP FUNCTION

DETECTOR INPUT	4	2	8	6	12	10	16	14	20	18	24	22	28	26	32	30	DETECTOR INPUT
DETECTOR #(S)	11	21	22	41	51	61	62	63	81	83							DETECTOR #(S)
PHASE CALLED	2	2	2	4	5	6	6	6	8	8							PHASE CALLED
PHASE EXTENDED	2	2	2	4	5	6	6	6	8	8							PHASE EXTENDED
DISCONNECT TIME																	DISCONNECT TIME
CALLING DELAY								10		10							CALLING DELAY
EXTENSION STRETCH																	EXTENSION STRETCH
LOOP FUNCTION																	LOOP FUNCTION

TYPE OF INTERCONNECT	
NONE	X
TBC	
CLOSED LOOP TWISTED PAIR	
CLOSED LOOP FIBER OPTIC	
RADIO	

TYPE OF REMOTE COMMUNICATION	
NONE	X
FIBER	
CELL MODEM	
PHONE	

TRAFFIC CONTROL SIGNAL
SYENE RD & MCCOY RD
CITY OF FITCHBURG
DANE COUNTY

SIGNAL NO. LOCAL
CABINET TYPE: TS2
CONTROLLER TYPE: ECONOLITE

LOCAL CONTACT:
DESIGNED BY: KL ENGINEERING
REVISED BY:

PAGE 3 OF 4

2

INTERSECTION:	SYENE RD & MCCOY RD

SIGNAL WIRE	BLK-BLACK	RED-RED	GRN-GREEN
COLOR CODING	WHT-WHITE	BLU-BLUE	ORG-ORANGE

DATE:	Apr-24

N

2

CB1 TO	AWG 14 # OF COND.	HEAD NO.	PHASE	SIGNAL INDICATION WIRE COLOR									PED BUTTON	OTHER
				RED	YELLOW	GREEN	<RED>	<YELLOW>	<FLASH YEL>	<GREEN>	DWALK	WALK		
SB1	12	6	2	RED	ORG	GRN								
		4	O.L.E				RED/BLK	ORG/BLK	WHT/BLK					
		8B	8								BLK	BLU		
		BUTTON	8										*	
SB2	12	5	O.L.E				RED	ORG	WHT/BLK					
		BUTTON	8										*	
SB3	12	16	O.L.A	RED				ORG/BLK		GRN/BLK				
SB4	12	15	O.L.A	RED				ORG/BLK		GRN/BLK				
		18	BLANKOUT											BLU/BLK
SB5	12	91	NE PED								BLK	BLU		
		BUTTON	NE PED										*	
SB6	12	92	NE PED								BLK	BLU		
		BUTTON	NE PED										*	
SB7	12	8A	8								BLK	BLU		
		BUTTON	8										*	
SB8	12	2	6	RED	ORG	GRN								
		3	6	RED	ORG	GRN								
SB9	12	12	4	RED	ORG	GRN								
		14	8	RED/BLK	ORG/BLK	GRN/BLK								
		BUTTON	8										BLU/BLK	
SB10	12	13	4	RED	ORG	GRN								
SB11	12	1	6	RED	ORG	GRN								
		9	5, O.L.G				RED/BLK	ORG/BLK	WHT/BLK	GRN/BLK				
SB12	12	7	2	RED	ORG	GRN								
		8	2	RED	ORG	GRN								
		10	5, O.L.G				RED/BLK	ORG/BLK	WHT/BLK	GRN/BLK				
SB13	12	11	4	RED	ORG	GRN								
		17	8	RED/BLK	ORG/BLK	GRN/BLK								
		2B	2								BLK	BLU		
		BUTTON	2										*	
SB14	12	18	8	RED	ORG	GRN								
		2A	2								BLK	BLU		
		BUTTON	2										*	

*LOOP DETECTOR LEAD IN CABLE USED FOR PEDESTRIAN PUSH BUTTON.

EQUIPMENT GROUNDING CONDUCTORS 10 AWG GRN XLP	
FROM	TO
CB1	SB1
SB1	SB2
SB2	SB3
SB3	SB4
SB4	SB5
SB5	SB6
SB6	SB7
SB7	SB8
SB8	SB9
SB9	SB10
SB10	SB11
SB11	SB12
SB12	SB13
SB13	SB14
SB14	CB1

LIGHTING UF 12 AWG W/GROUND	
FROM	TO
CB1	SB2
SB2	SB4
CB1	SB14
SB14	SB11

LOOP DETECTOR LEAD-IN CABLE		
FROM	TO BUTTON ON	PHASE
CB1	SB1	8
CB1	SB2	8
CB1	SB5	NE PED
CB1	SB6	NE PED
CB1	SB7	8
CB1	SB13	2
CB1	SB14	2

NOTE: ALL RUNS SHALL BE COMPLETED WITH ONE CONTINUOUS CABLE FROM CABINET TO BUTTON. NO CABLE TO CABLE SPLICING IS PERMITTED.

TRAFFIC CONTROL SIGNAL
SYENE RD & MCCOY RD
CITY OF FITCHBURG
DANE COUNTY

SIGNAL NO. LOCAL
CABINET TYPE: TS2
CONTROLLER TYPE: ECONOLITE

LOCAL CONTACT:
DESIGNED BY: KL ENGINEERING
REVISED BY:

PAGE 4 OF 4

GENERAL NOTES:

1) BICYCLE DETECTOR LOOPS SHALL BE INSTALLED PRIOR TO PAVEMENT MARKINGS.

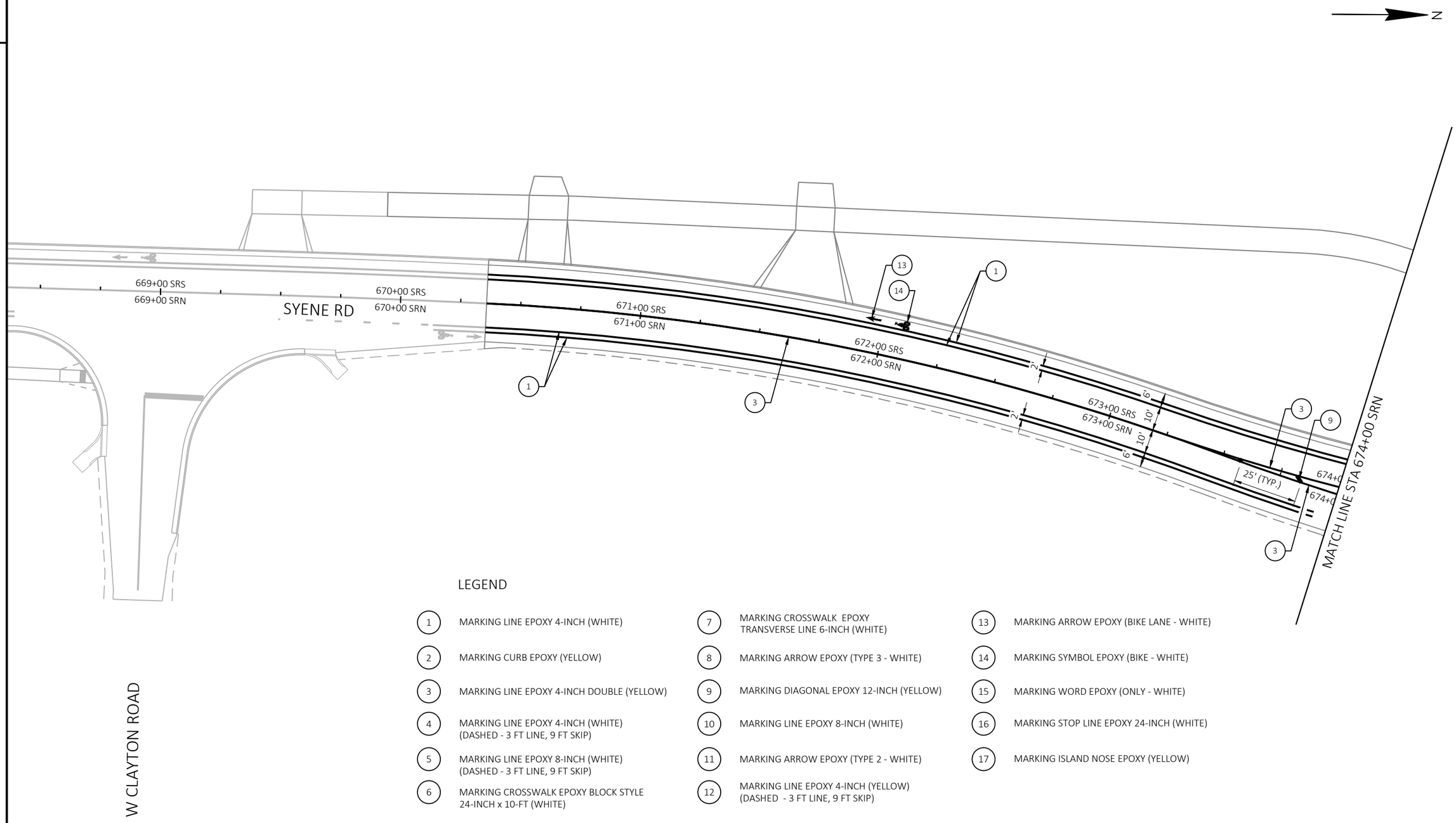

LEGEND

1	MARKING LINE EPOXY 4-INCH (WHITE)	7	MARKING CROSSWALK EPOXY TRANSVERSE LINE 6-INCH (WHITE)	13	MARKING ARROW EPOXY (BIKE LANE - WHITE)
2	MARKING CURB EPOXY (YELLOW)	8	MARKING ARROW EPOXY (TYPE 3 - WHITE)	14	MARKING SYMBOL EPOXY (BIKE - WHITE)
3	MARKING LINE EPOXY 4-INCH DOUBLE (YELLOW)	9	MARKING DIAGONAL EPOXY 12-INCH (YELLOW)	15	MARKING WORD EPOXY (ONLY - WHITE)
4	MARKING LINE EPOXY 4-INCH (WHITE) (DASHED - 3 FT LINE, 9 FT SKIP)	10	MARKING LINE EPOXY 8-INCH (WHITE)	16	MARKING STOP LINE EPOXY 24-INCH (WHITE)
5	MARKING LINE EPOXY 8-INCH (WHITE) (DASHED - 3 FT LINE, 9 FT SKIP)	11	MARKING ARROW EPOXY (TYPE 2 - WHITE)	17	MARKING ISLAND NOSE EPOXY (YELLOW)
6	MARKING CROSSWALK EPOXY BLOCK STYLE 24-INCH x 10-FT (WHITE)	12	MARKING LINE EPOXY 4-INCH (YELLOW) (DASHED - 3 FT LINE, 9 FT SKIP)		

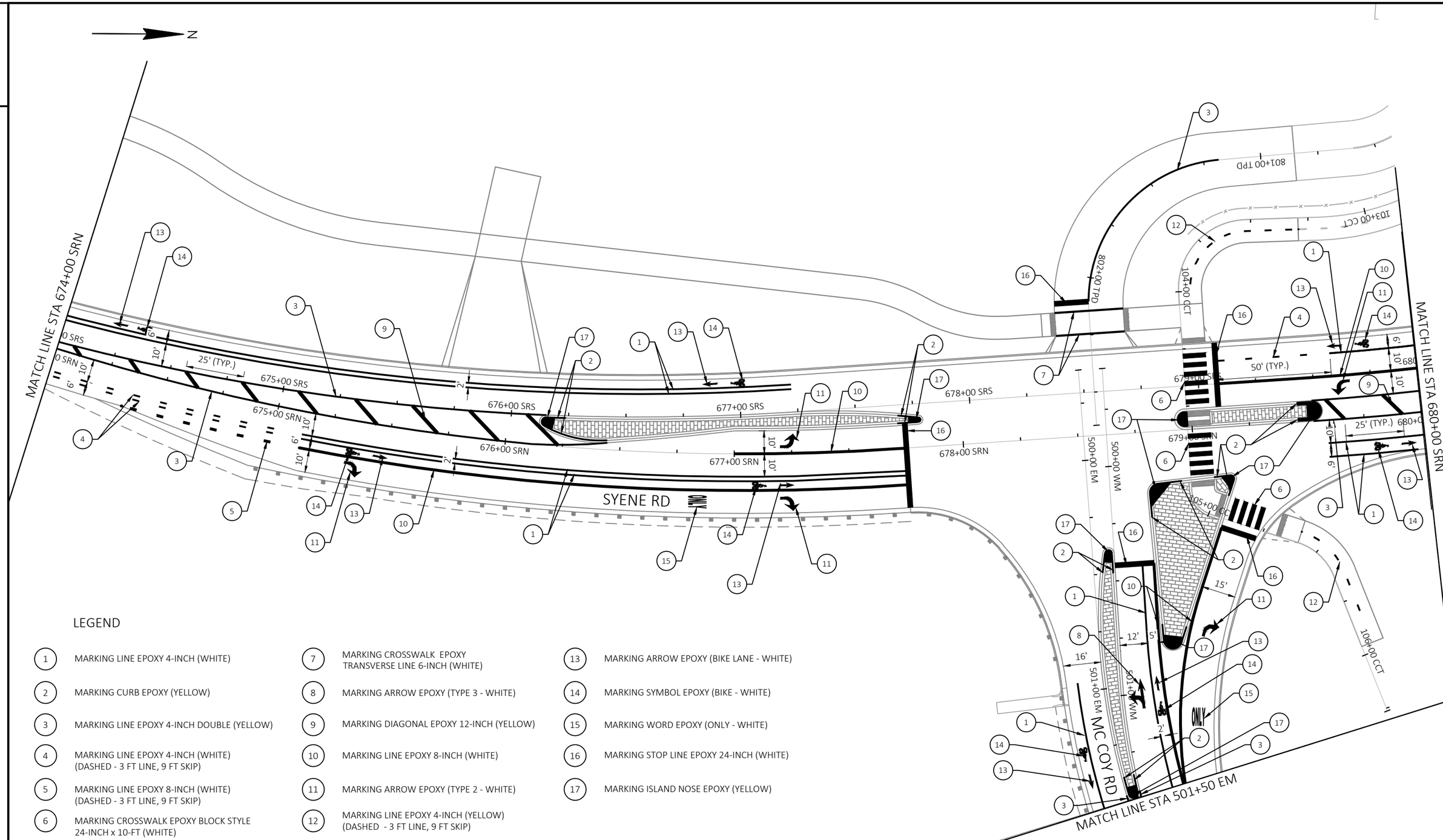

LEGEND

1. MARKING LINE EPOXY 4-INCH (WHITE)
2. MARKING CURB EPOXY (YELLOW)
3. MARKING LINE EPOXY 4-INCH DOUBLE (YELLOW)
4. MARKING LINE EPOXY 4-INCH (WHITE) (DASHED - 3 FT LINE, 9 FT SKIP)
5. MARKING LINE EPOXY 8-INCH (WHITE) (DASHED - 3 FT LINE, 9 FT SKIP)
6. MARKING CROSSWALK EPOXY BLOCK STYLE 24-INCH x 10-FT (WHITE)
7. MARKING CROSSWALK EPOXY TRANSVERSE LINE 6-INCH (WHITE)
8. MARKING ARROW EPOXY (TYPE 3 - WHITE)
9. MARKING DIAGONAL EPOXY 12-INCH (YELLOW)
10. MARKING LINE EPOXY 8-INCH (WHITE)
11. MARKING ARROW EPOXY (TYPE 2 - WHITE)
12. MARKING LINE EPOXY 4-INCH (YELLOW) (DASHED - 3 FT LINE, 9 FT SKIP)
13. MARKING ARROW EPOXY (BIKE LANE - WHITE)
14. MARKING SYMBOL EPOXY (BIKE - WHITE)
15. MARKING WORD EPOXY (ONLY - WHITE)
16. MARKING STOP LINE EPOXY 24-INCH (WHITE)
17. MARKING ISLAND NOSE EPOXY (YELLOW)

PROJECT NO: 5849-02-07	HWY: LOCAL STREET - SYENE ROAD	COUNTY: DANE	PAVEMENT MARKING	SHEET 64	E

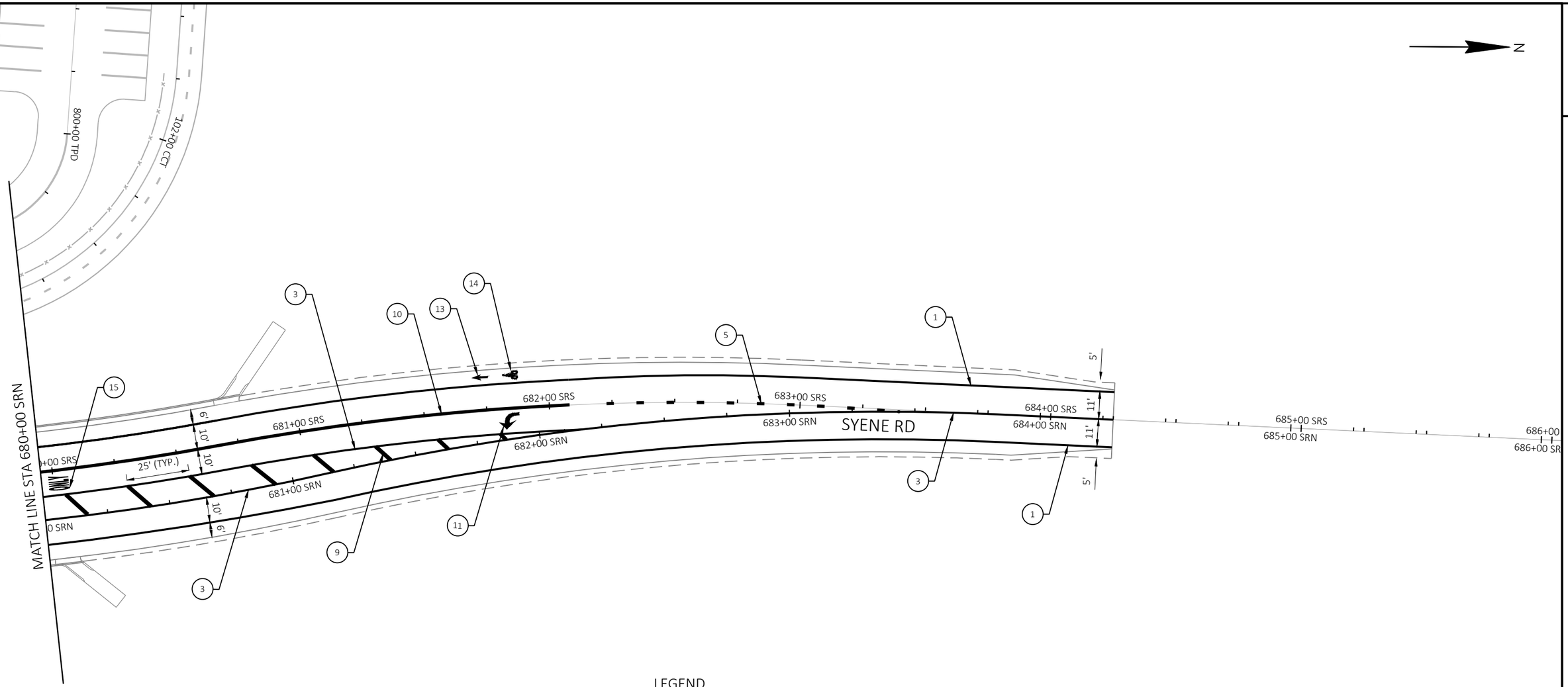

LEGEND

1	MARKING LINE EPOXY 4-INCH (WHITE)	7	MARKING CROSSWALK EPOXY TRANSVERSE LINE 6-INCH (WHITE)	13	MARKING ARROW EPOXY (BIKE LANE - WHITE)
2	MARKING CURB EPOXY (YELLOW)	8	MARKING ARROW EPOXY (TYPE 3 - WHITE)	14	MARKING SYMBOL EPOXY (BIKE - WHITE)
3	MARKING LINE EPOXY 4-INCH DOUBLE (YELLOW)	9	MARKING DIAGONAL EPOXY 12-INCH (YELLOW)	15	MARKING WORD EPOXY (ONLY - WHITE)
4	MARKING LINE EPOXY 4-INCH (WHITE) (DASHED - 3 FT LINE, 9 FT SKIP)	10	MARKING LINE EPOXY 8-INCH (WHITE)	16	MARKING STOP LINE EPOXY 24-INCH (WHITE)
5	MARKING LINE EPOXY 8-INCH (WHITE) (DASHED - 3 FT LINE, 9 FT SKIP)	11	MARKING ARROW EPOXY (TYPE 2 - WHITE)	17	MARKING ISLAND NOSE EPOXY (YELLOW)
6	MARKING CROSSWALK EPOXY BLOCK STYLE 24-INCH x 10-FT (WHITE)	12	MARKING LINE EPOXY 4-INCH (YELLOW) (DASHED - 3 FT LINE, 9 FT SKIP)		

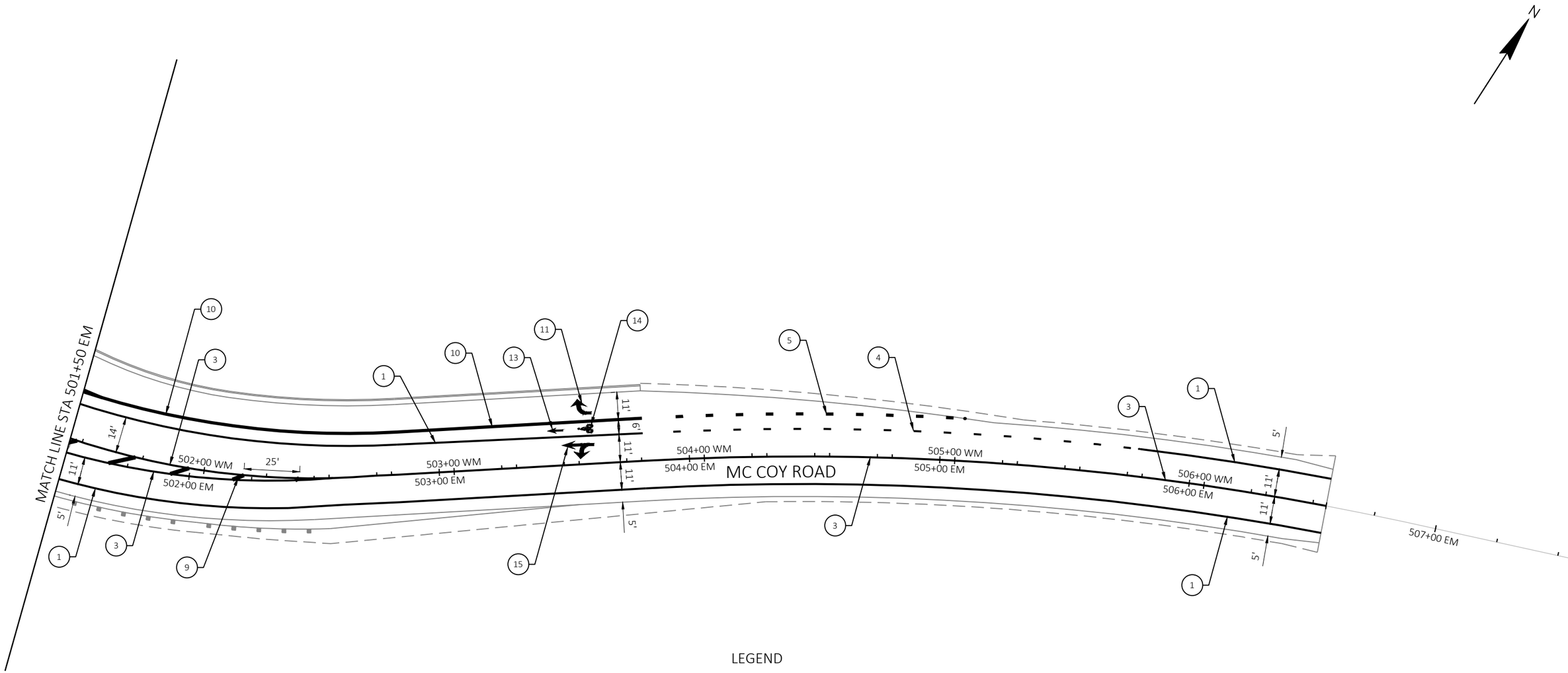

LEGEND

1	MARKING LINE EPOXY 4-INCH (WHITE)	7	MARKING CROSSWALK EPOXY TRANSVERSE LINE 6-INCH (WHITE)	13	MARKING ARROW EPOXY (BIKE LANE - WHITE)
2	MARKING CURB EPOXY (YELLOW)	8	MARKING ARROW EPOXY (TYPE 3 - WHITE)	14	MARKING SYMBOL EPOXY (BIKE - WHITE)
3	MARKING LINE EPOXY 4-INCH DOUBLE (YELLOW)	9	MARKING DIAGONAL EPOXY 12-INCH (YELLOW)	15	MARKING WORD EPOXY (ONLY - WHITE)
4	MARKING LINE EPOXY 4-INCH (WHITE) (DASHED - 3 FT LINE, 9 FT SKIP)	10	MARKING LINE EPOXY 8-INCH (WHITE)	16	MARKING STOP LINE EPOXY 24-INCH (WHITE)
5	MARKING LINE EPOXY 8-INCH (WHITE) (DASHED - 3 FT LINE, 9 FT SKIP)	11	MARKING ARROW EPOXY (TYPE 2 - WHITE)	17	MARKING ISLAND NOSE EPOXY (YELLOW)
6	MARKING CROSSWALK EPOXY BLOCK STYLE 24-INCH x 10-FT (WHITE)	12	MARKING LINE EPOXY 4-INCH (YELLOW) (DASHED - 3 FT LINE, 9 FT SKIP)		

TRAFFIC CONTROL GENERAL NOTES:

- ANY SIGNS, TEMPORARY OR EXISTING, WHICH CONFLICT WITH TRAFFIC CONTROL "IN USE" SHALL BE REMOVED OR COVERED AS NEEDED AND AS APPROVED BY THE ENGINEER.
- "WO" SIGNS ARE THE SAME AS "W" SIGNS EXCEPT THE BACKGROUND IS REFLECTIVE ORANGE.
- CONSIDER GEOMETRICS WHEN LOCATING TRAFFIC CONTROL ITEMS SUCH AS SIGNS AND MESSAGE BOARDS SO THE DRIVER HAS A CLEAR VIEW OF THE TRAFFIC CONTROL ITEMS.
- IF SIGNS ARE IN PLACE LESS THAN 7 CONTINUOUS DAYS AND NIGHTS, THE ADVANCED WARNING SIGNS MAY BE MOUNTED ON PORTABLE SUPPORTS WITH A MINIMUM 5' MOUNTING HEIGHT.
- THE TURNING OF TRAFFIC CONTROL DEVICES WHEN NOT IN USE TO OBSCURE THE MESSAGE WILL NOT BE ALLOWED.
- MOVE, REMOVE OR INSTALL ROUTE MARKER SIGNS AS REQUIRED TO MAINTAIN NECESSARY ROUTE GUIDANCE THROUGHOUT CONSTRUCTION.
- CONTRACTORS EQUIPMENT AND MATERIAL STOCKPILES MAY NOT BE STORED WITHIN THE CONSTRUCTION CLEAR ZONE WHILE THE CONTRACTOR IS NOT WORKING, UNLESS THEY ARE PROTECTED BY CONCRETE BARRIER TEMPORARY PRECAST.

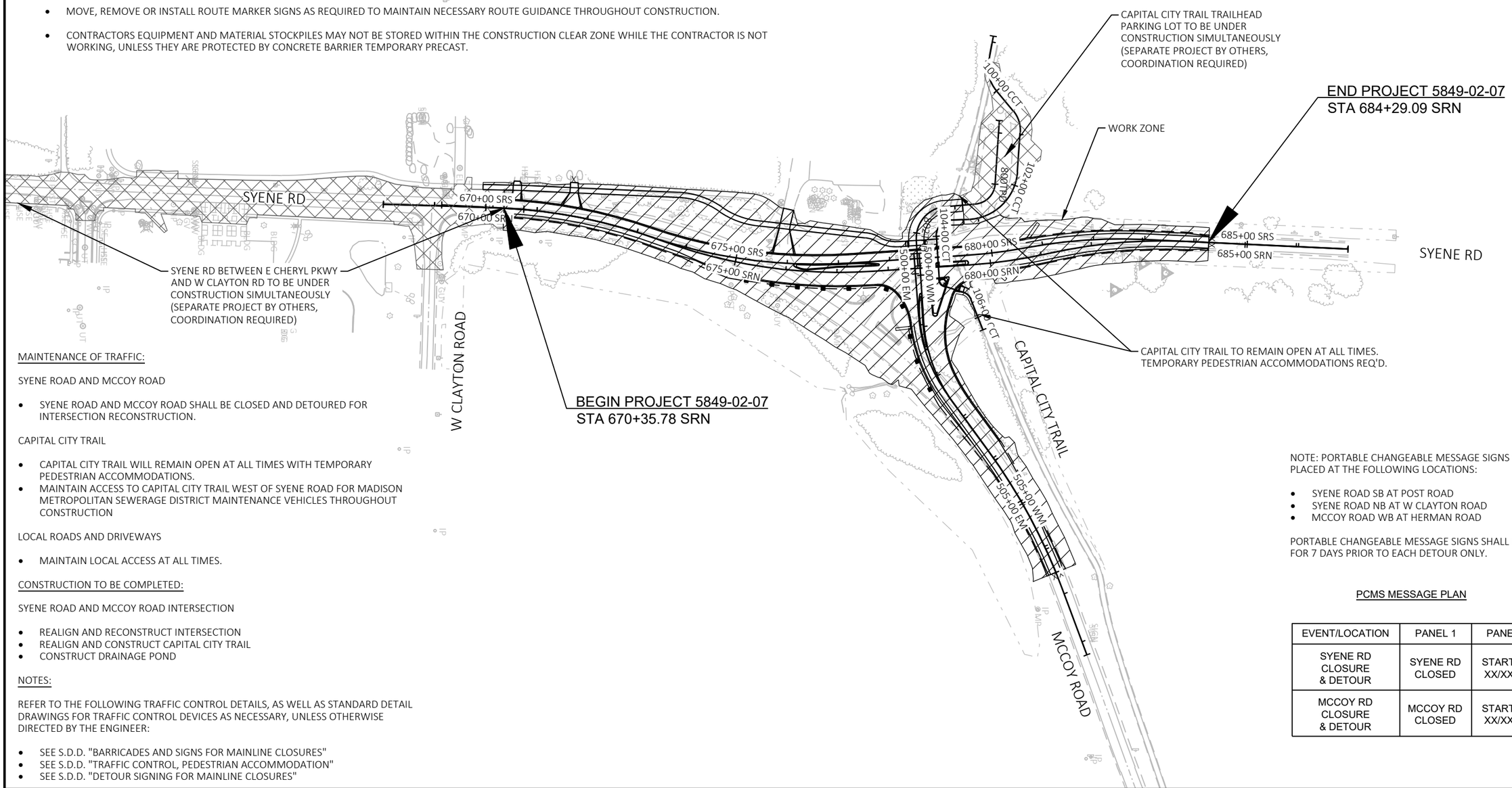

MAINTENANCE OF TRAFFIC:

SYENE ROAD AND MCCOY ROAD

- SYENE ROAD AND MCCOY ROAD SHALL BE CLOSED AND DETOURED FOR INTERSECTION RECONSTRUCTION.

CAPITAL CITY TRAIL

- CAPITAL CITY TRAIL WILL REMAIN OPEN AT ALL TIMES WITH TEMPORARY PEDESTRIAN ACCOMMODATIONS.
- MAINTAIN ACCESS TO CAPITAL CITY TRAIL WEST OF SYENE ROAD FOR MADISON METROPOLITAN SEWERAGE DISTRICT MAINTENANCE VEHICLES THROUGHOUT CONSTRUCTION

LOCAL ROADS AND DRIVEWAYS

- MAINTAIN LOCAL ACCESS AT ALL TIMES.

CONSTRUCTION TO BE COMPLETED:

SYENE ROAD AND MCCOY ROAD INTERSECTION

- REALIGN AND RECONSTRUCT INTERSECTION
- REALIGN AND CONSTRUCT CAPITAL CITY TRAIL
- CONSTRUCT DRAINAGE POND

NOTES:

REFER TO THE FOLLOWING TRAFFIC CONTROL DETAILS, AS WELL AS STANDARD DETAIL DRAWINGS FOR TRAFFIC CONTROL DEVICES AS NECESSARY, UNLESS OTHERWISE DIRECTED BY THE ENGINEER:

- SEE S.D.D. "BARRICADES AND SIGNS FOR MAINLINE CLOSURES"
- SEE S.D.D. "TRAFFIC CONTROL, PEDESTRIAN ACCOMMODATION"
- SEE S.D.D. "DETOUR SIGNING FOR MAINLINE CLOSURES"

NOTE: PORTABLE CHANGEABLE MESSAGE SIGNS SHALL BE PLACED AT THE FOLLOWING LOCATIONS:

- SYENE ROAD SB AT POST ROAD
- SYENE ROAD NB AT W CLAYTON ROAD
- MCCOY ROAD WB AT HERMAN ROAD

PORTABLE CHANGEABLE MESSAGE SIGNS SHALL BE IN PLACE FOR 7 DAYS PRIOR TO EACH DETOUR ONLY.

PCMS MESSAGE PLAN

EVENT/LOCATION	PANEL 1	PANEL 2
SYENE RD CLOSURE & DETOUR	SYENE RD CLOSED	STARTING XX/XX/XX
MCCOY RD CLOSURE & DETOUR	MCCOY RD CLOSED	STARTING XX/XX/XX

2

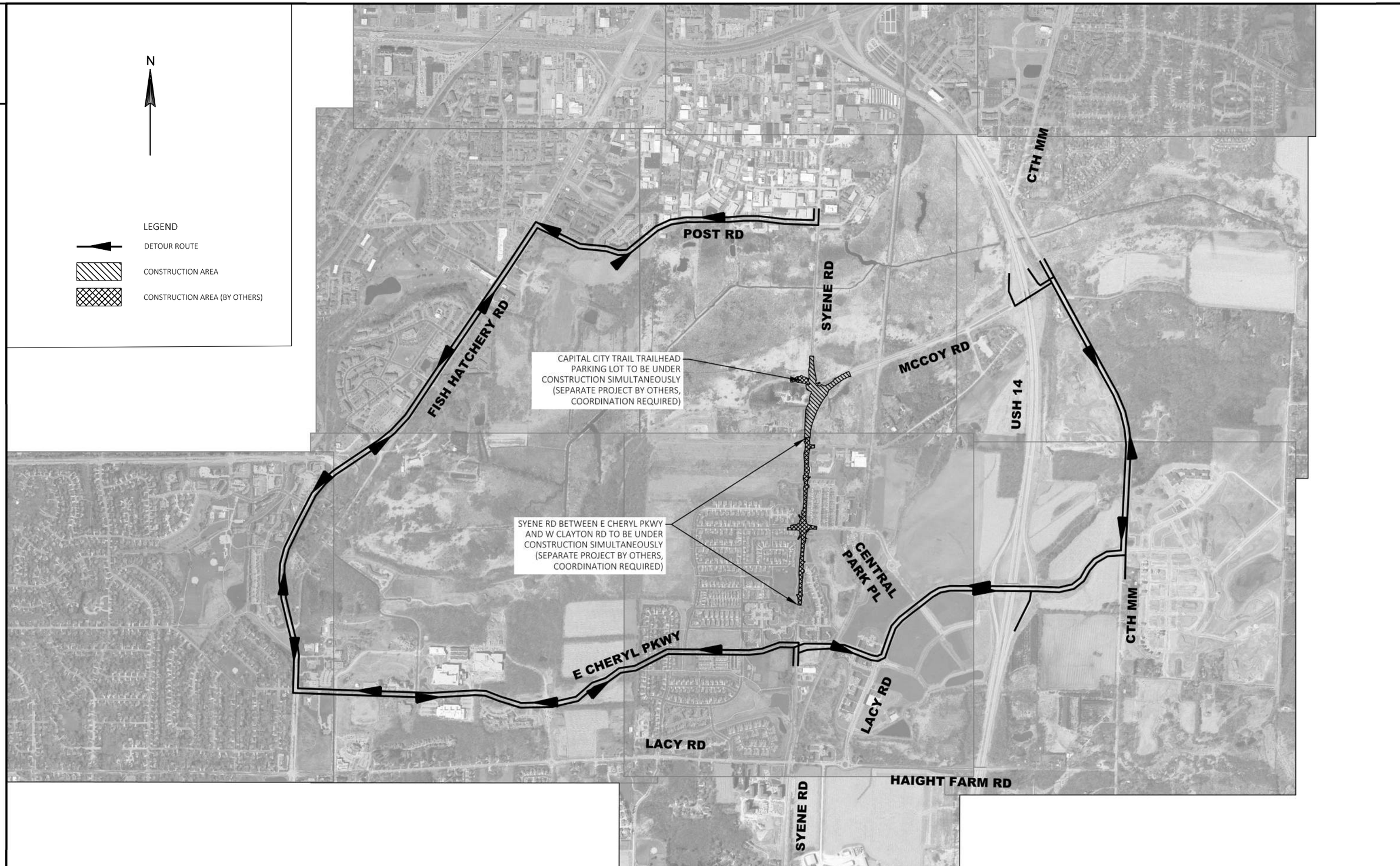

2

PROJECT NO: 5849-02-07	HWY: LOCAL STREET - SYENE ROAD	COUNTY: DANE	TRAFFIC CONTROL - DETOUR OVERVIEW	SHEET 68	E

FILE NAME : G:\FITCHBRG\20087-000 SYENE ROAD\CIVIL 3D\SHEETSPLAN\PHASE 3 SHEET FILES - W CLAYTON TO MCCOY\025002-TC_P3.DWG PLOT DATE : 4/11/2024 7:47 AM PLOT BY : BRIAN ST. VINCENT PLOT NAME : PLOT SCALE : 1 IN: 1500 FT

WISDOT/CADDS SHEET 42

2

LEGEND

- TYPE II / III BARRICADE WITH TYPE A LIGHTS
- TYPE II / III BARRICADE WITH ATTACHED SIGN AND TYPE A LIGHTS
- SIGN ON TEMPORARY SUPPORT
- PCMS — PORTABLE CHANGEABLE MESSAGE SIGN
- WORK AREA

N

SCALE, FEET
0 150 300

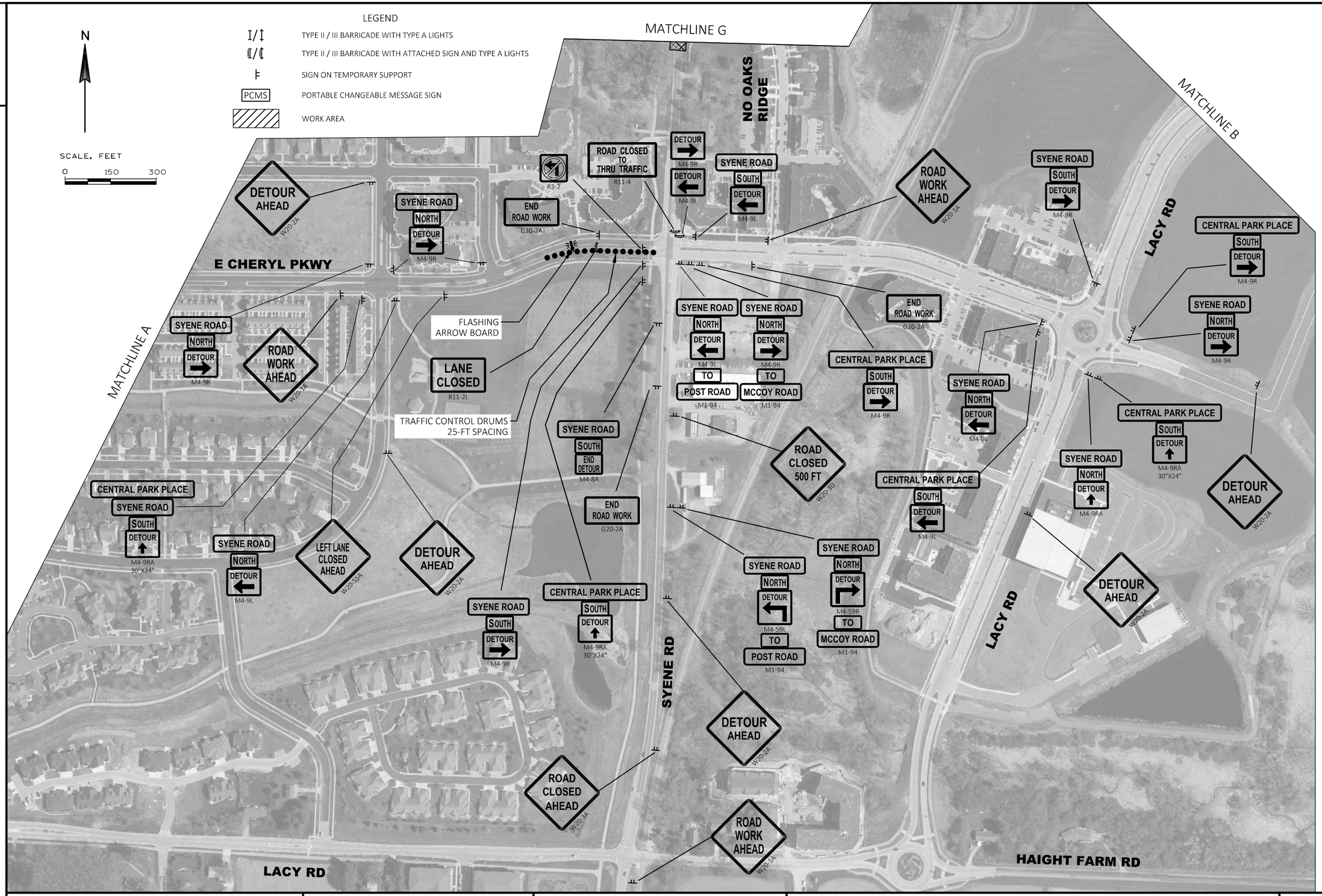

PROJECT NO: 5849-02-07	HWY: LOCAL STREET - SYENE ROAD	COUNTY: DANE	TRAFFIC CONTROL - CLOSURE AND DETOUR ROUTE	SHEET 69	E

FILE NAME : G:\FITCHBRG\20087-000 SYENE ROAD\CIVIL 3D\SHEETSPLAN\PHASE 3 SHEET FILES - W CLAYTON TO MCCOY\025002-TC_P3.DWG PLOT DATE : 4/11/2024 7:47 AM PLOT BY : BRIAN ST. VINCENT PLOT NAME : PLOT SCALE : 1 IN: 300 FT

WISDOT/CADDS SHEET 42

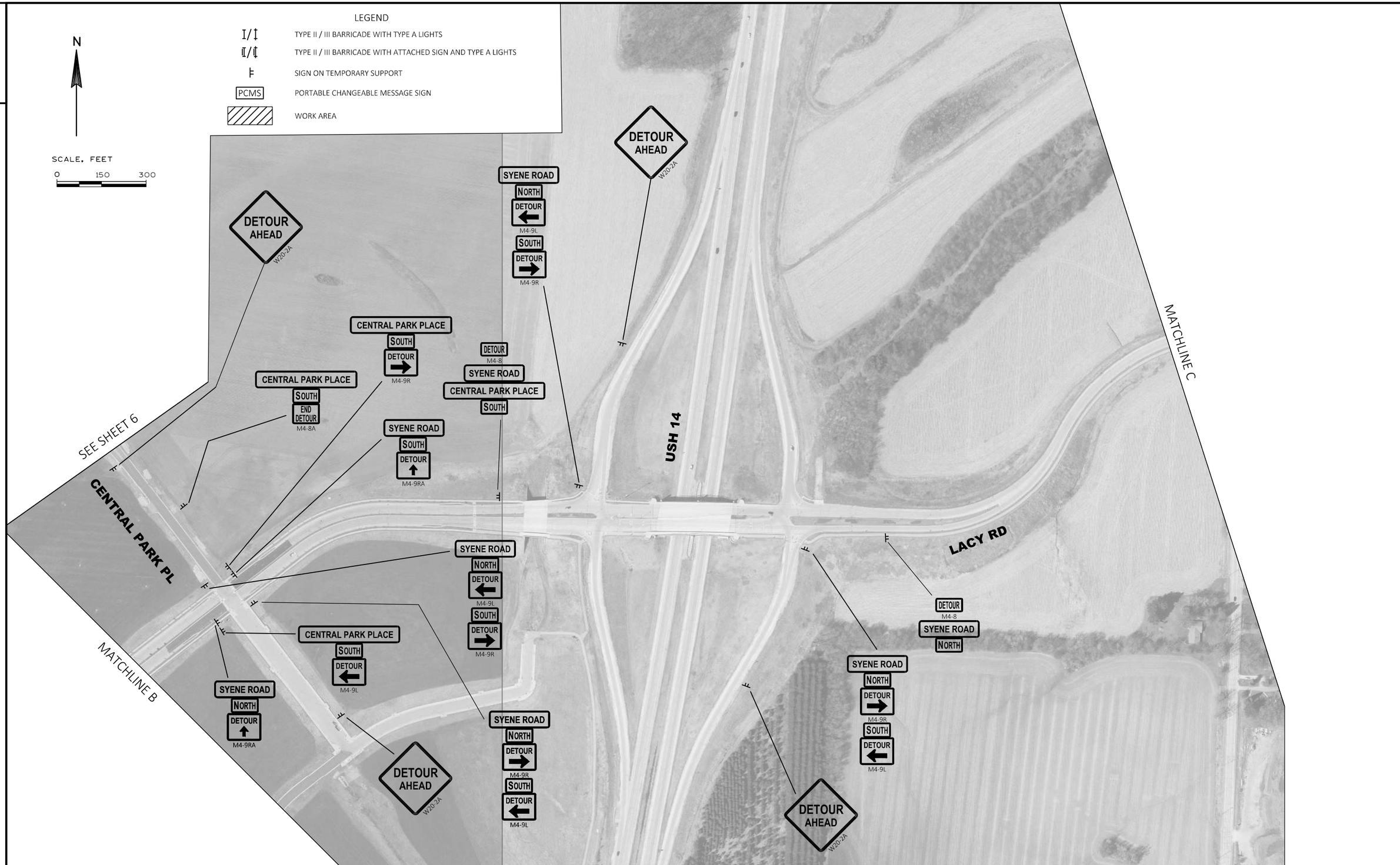
LEGEND
TYPE II / III BARRICADE WITH TYPE A LIGHTS
TYPE II / III BARRICADE WITH ATTACHED SIGN AND TYPE A LIGHTS
SIGN ON TEMPORARY SUPPORT
PCMS
PORTABLE CHANGEABLE MESSAGE SIGN
WORK AREA
N
SCALE, FEET
0 150 300
DETOUR AHEAD
W20-2A
SYENE ROAD
NORTH
DETOUR
M4-9L
SOUTH
DETOUR
M4-9R
CENTRAL PARK PLACE
SOUTH
DETOUR
M4-9R
DETOUR
M4-8
SYENE ROAD
CENTRAL PARK PLACE
SOUTH
CENTRAL PARK PLACE
SOUTH
END DETOUR
M4-8A
SYENE ROAD
SOUTH
DETOUR
M4-9RA
SEE SHEET 6
CENTRAL PARK PL
USH 14
LACY RD
MATCHLINE C
MATCHLINE B
SYENE ROAD
NORTH
DETOUR
M4-9L
SOUTH
DETOUR
M4-9R
CENTRAL PARK PLACE
SOUTH
DETOUR
M4-9L
SYENE ROAD
NORTH
DETOUR
M4-9RA
SYENE ROAD
NORTH
DETOUR
M4-9R
SOUTH
DETOUR
M4-9L
DETOUR
M4-8
SYENE ROAD
NORTH
SYENE ROAD
NORTH
DETOUR
M4-9R
SOUTH
DETOUR
M4-9L

2

LEGEND

TYPE II / III BARRICADE WITH TYPE A LIGHTS

TYPE II / III BARRICADE WITH ATTACHED SIGN AND TYPE A LIGHTS

SIGN ON TEMPORARY SUPPORT

PCMS — PORTABLE CHANGEABLE MESSAGE SIGN

WORK AREA

N

SCALE, FEET

0 150 300

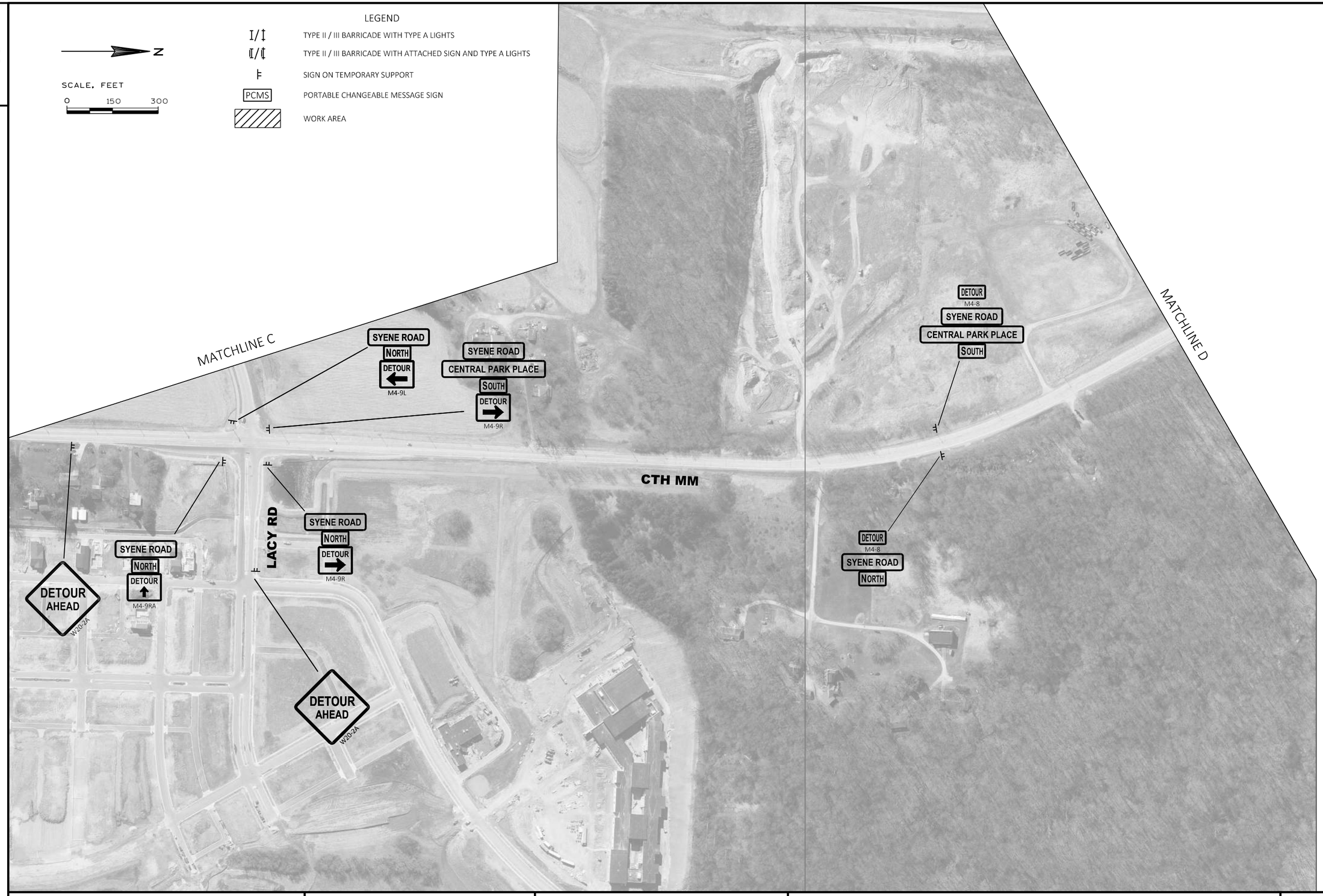

2

PROJECT NO: 5849-02-07	HWY: LOCAL STREET - SYENE ROAD	COUNTY: DANE	TRAFFIC CONTROL - DETOUR ROUTE	SHEET 71	E

FILE NAME : G:\FITCHBRG\20087-000 SYENE ROAD\CIVIL 3D\SHEETSPLAN\PHASE 3 SHEET FILES - W CLAYTON TO MCCOY\025002-TC_P3.DWG PLOT DATE : 4/11/2024 7:47 AM PLOT BY : BRIAN ST. VINCENT PLOT NAME : PLOT SCALE : 1 IN: 300 FT

WISDOT/CADDS SHEET 42

2

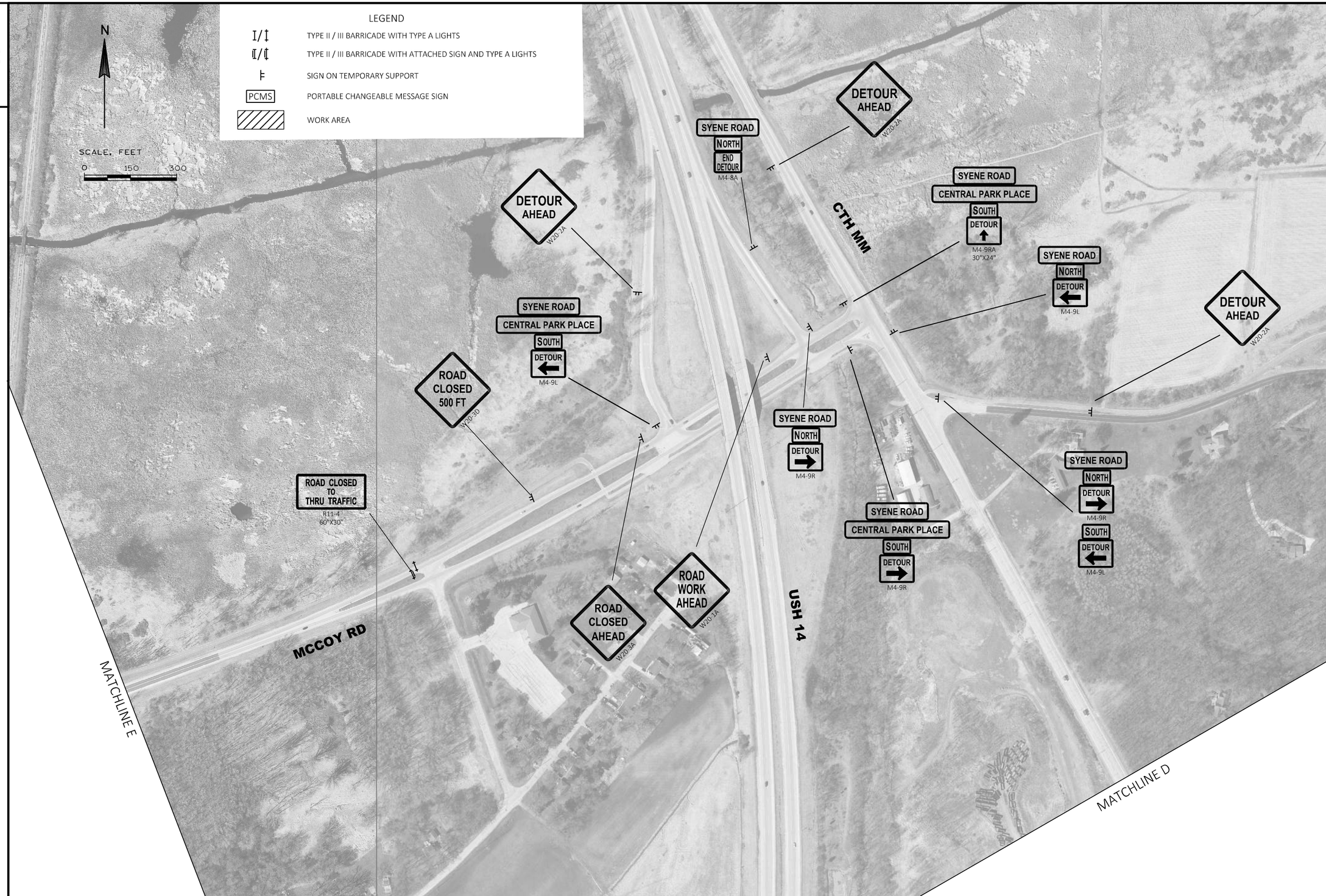

2

PROJECT NO: 5849-02-07	HWY: LOCAL STREET - SYENE ROAD	COUNTY: DANE	TRAFFIC CONTROL - DETOUR ROUTE	SHEET 72	E

FILE NAME : G:\FITCHBRG\20087-000 SYENE ROAD\CIVIL 3D\SHEETSPLAN\PHASE 3 SHEET FILES - W CLAYTON TO MCCOY\025002-TC_P3.DWG PLOT DATE : 4/11/2024 7:48 AM PLOT BY : BRIAN ST. VINCENT PLOT NAME : PLOT SCALE : 1 IN: 300 FT

WISDOT/CADDS SHEET 42

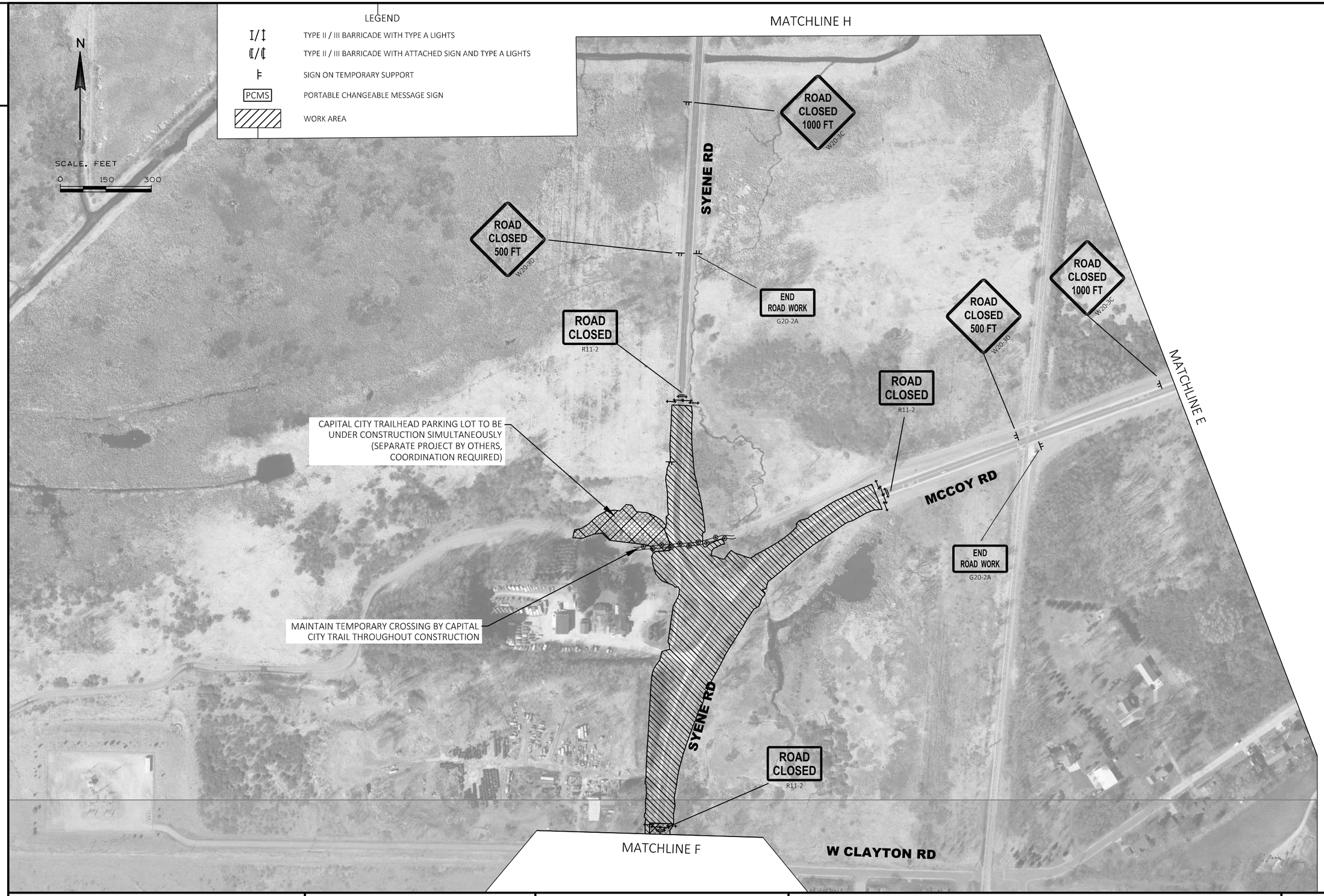

2

PROJECT NO: 5849-02-07	HWY: LOCAL STREET - SYENE ROAD	COUNTY: DANE	TRAFFIC CONTROL - CLOSURE	SHEET 73	E

2

2

PROJECT NO: 5849-02-07	HWY: LOCAL STREET - SYENE ROAD	COUNTY: DANE	TRAFFIC CONTROL - CLOSURE	SHEET 74	E

FILE NAME : G:\FITCHBRG\20087-000 SYENE ROAD\CIVIL 3D\SHEETSPLAN\PHASE 3 SHEET FILES - W CLAYTON TO MCCOY\025002-TC_P3.DWG PLOT DATE : 4/11/2024 7:48 AM PLOT BY : BRIAN ST. VINCENT PLOT NAME : PLOT SCALE : 1 IN: 300 FT

WISDOT/CADDS SHEET 42

2

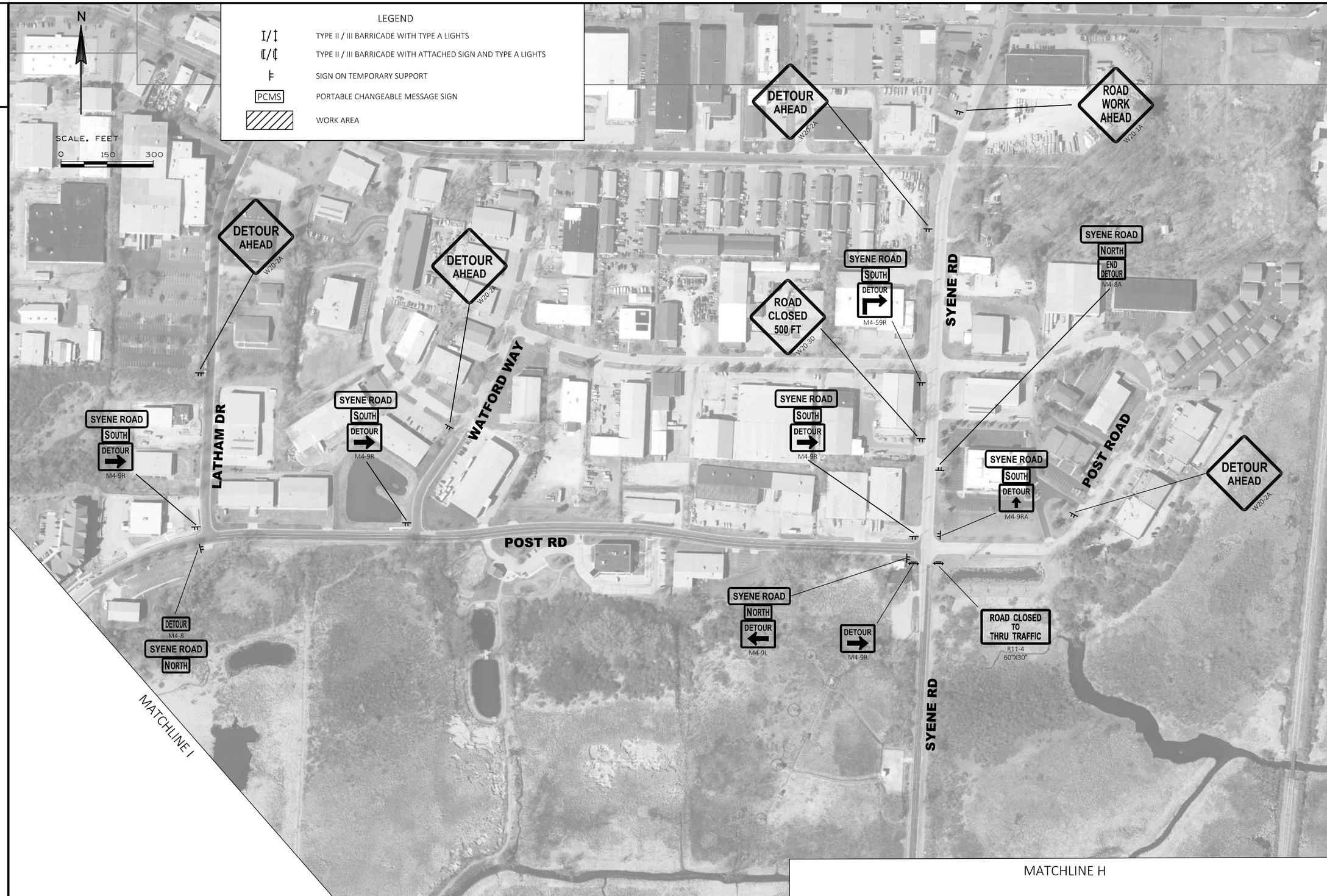

2

PROJECT NO: 5849-02-07	HWY: LOCAL STREET - SYENE ROAD	COUNTY: DANE	TRAFFIC CONTROL - DETOUR ROUTE	SHEET 75	E

FILE NAME : G:\FITCHBRG\20087-000 SYENE ROAD\CIVIL 3D\SHEETSPLAN\PHASE 3 SHEET FILES - W CLAYTON TO MCCOY\025002-TC_P3.DWG PLOT DATE : 4/11/2024 7:48 AM PLOT BY : BRIAN ST. VINCENT PLOT NAME : PLOT SCALE : 1 IN: 300 FT

WISDOT/CADDS SHEET 42

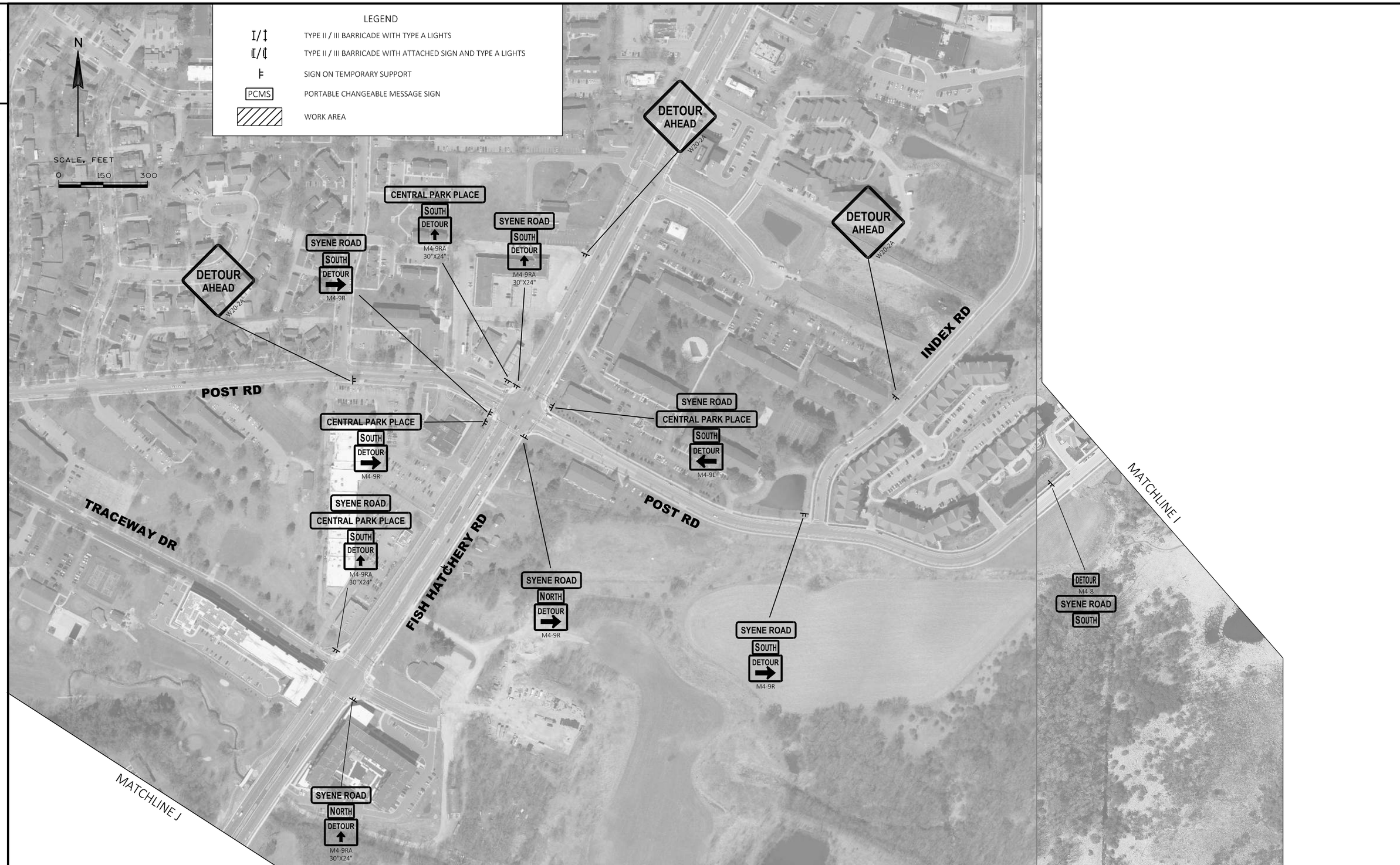

PROJECT NO: 5849-02-07	HWY: LOCAL STREET - SYENE ROAD	COUNTY: DANE	TRAFFIC CONTROL - DETOUR ROUTE	SHEET 76	E

FILE NAME : G:\FITCHBRG\20087-000 SYENE ROAD\CIVIL 3D\SHEETSPLAN\PHASE 3 SHEET FILES - W CLAYTON TO MCCOY\025002-TC_P3.DWG PLOT DATE : 4/11/2024 7:48 AM PLOT BY : BRIAN ST. VINCENT PLOT NAME : PLOT SCALE : 1 IN: 300 FT

WISDOT/CADDS SHEET 42

2

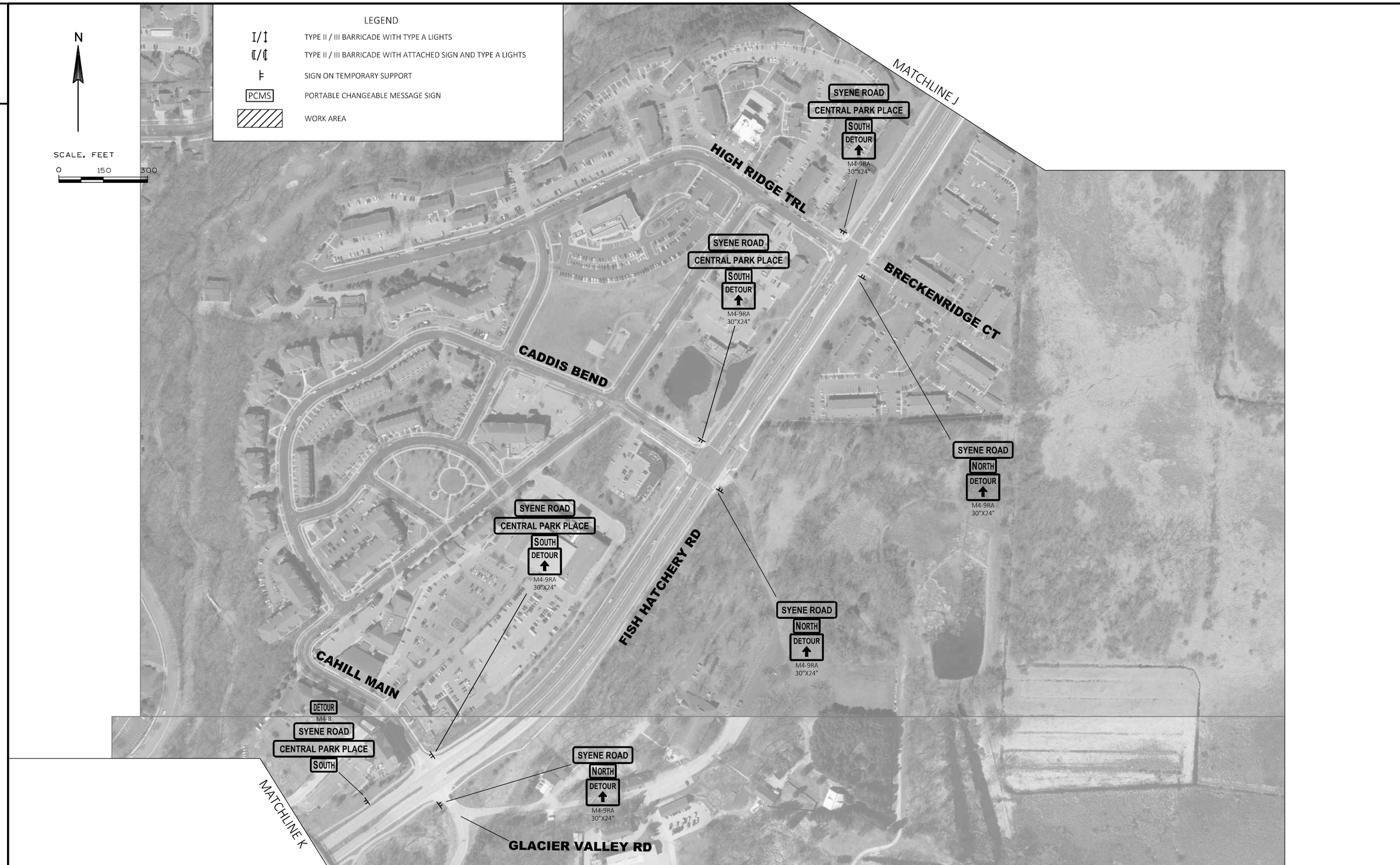

2

PROJECT NO: 5849-02-07	HWY: LOCAL STREET - SYENE ROAD	COUNTY: DANE	TRAFFIC CONTROL - DETOUR ROUTE	SHEET 77	E

FILE NAME : G:\FITCHBRG\20087-000 SYENE ROAD\CIVIL 3D\SHEETSPLAN\PHASE 3 SHEET FILES - W CLAYTON TO MCCOY\025002-TC_P3.DWG PLOT DATE : 4/11/2024 7:48 AM PLOT BY : BRIAN ST. VINCENT PLOT NAME : PLOT SCALE : 1 IN: 300 FT

WISDOT/CADDS SHEET 42

2

LEGEND

I/‡	TYPE II / III BARRICADE WITH TYPE A LIGHTS
I/‡	TYPE II / III BARRICADE WITH ATTACHED SIGN AND TYPE A LIGHTS
⊢	SIGN ON TEMPORARY SUPPORT
PCMS	PORTABLE CHANGEABLE MESSAGE SIGN
	WORK AREA

N

0
SCALE, FEET
100 200

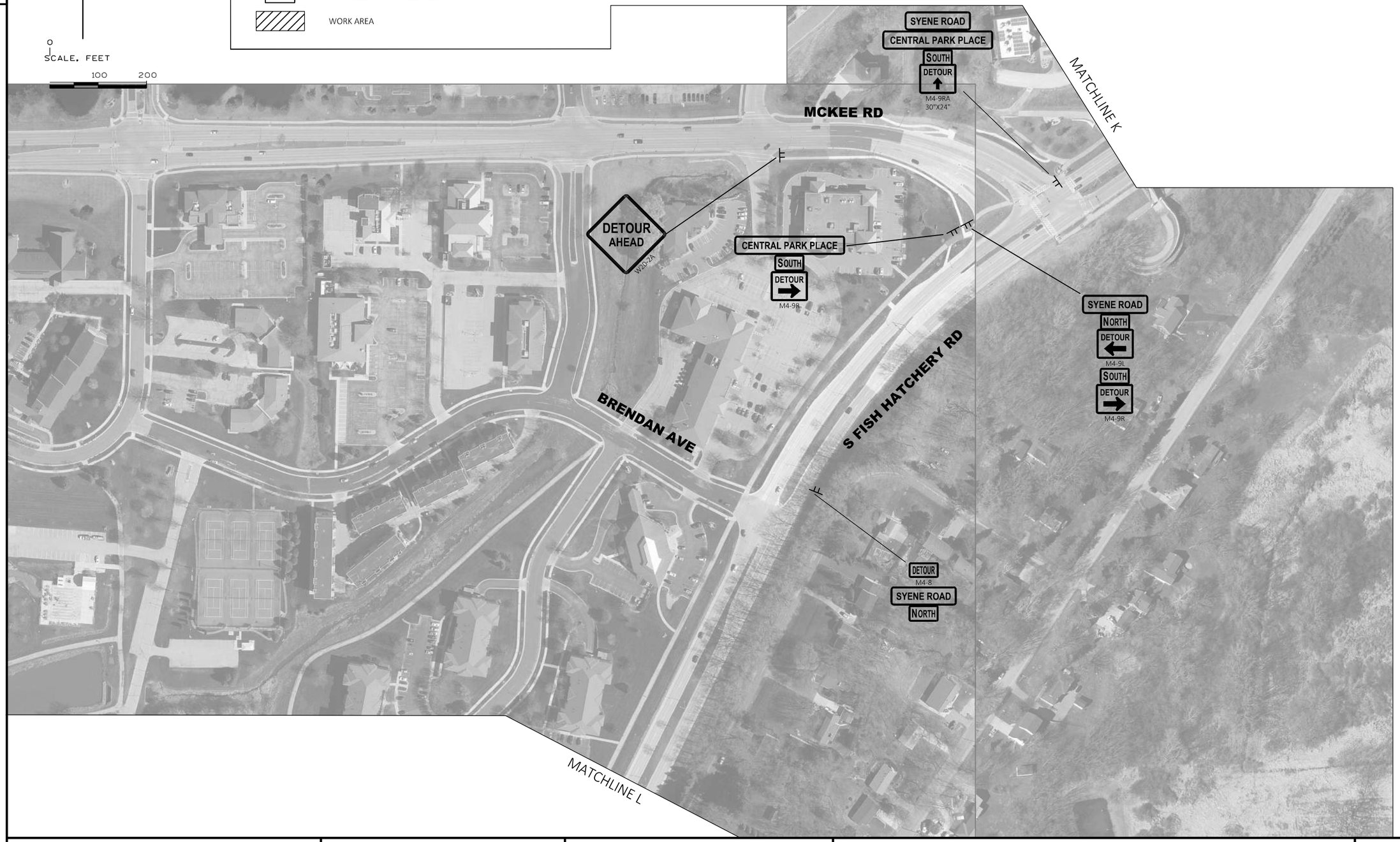

2

PROJECT NO: 5849-02-07	HWY: LOCAL STREET - SYENE ROAD	COUNTY: DANE	TRAFFIC CONTROL - DETOUR ROUTE	SHEET 78	E

FILE NAME : G:\FITCHBRG\20087-000 SYENE ROAD\CIVIL 3D\SHEETSPLAN\PHASE 3 SHEET FILES - W CLAYTON TO MCCOY\025002-TC_P3.DWG PLOT DATE : 4/11/2024 7:48 AM PLOT BY : BRIAN ST. VINCENT PLOT NAME : PLOT SCALE : 1 IN: 200 FT

WISDOT/CADDS SHEET 42

2

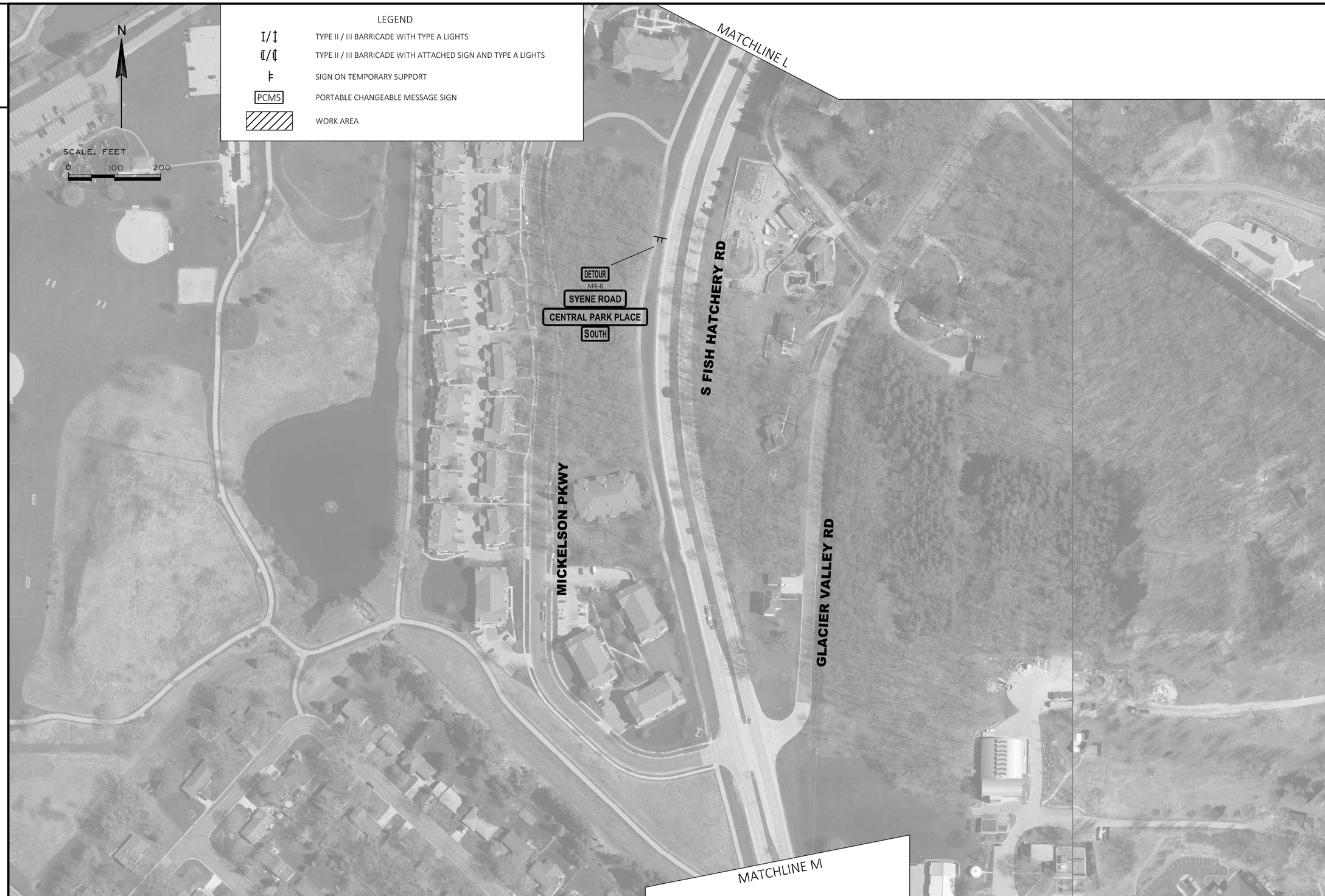

2

PROJECT NO: 5849-02-07	HWY: LOCAL STREET - SYENE ROAD	COUNTY: DANE	TRAFFIC CONTROL - DETOUR ROUTE	SHEET 79	E

FILE NAME : G:\FITCHBRG\20087-000 SYENE ROAD\CIVIL 3D\SHEETSPLAN\PHASE 3 SHEET FILES - W CLAYTON TO MCCOY\025002-TC_P3.DWG PLOT DATE : 4/11/2024 7:48 AM PLOT BY : BRIAN ST. VINCENT PLOT NAME : 1 IN: 200 FT

WISDOT/CADDS SHEET 42

2

LEGEND

I/‡	TYPE II / III BARRICADE WITH TYPE A LIGHTS
I/‡	TYPE II / III BARRICADE WITH ATTACHED SIGN AND TYPE A LIGHTS
⊨	SIGN ON TEMPORARY SUPPORT
PCMS	PORTABLE CHANGEABLE MESSAGE SIGN
	WORK AREA

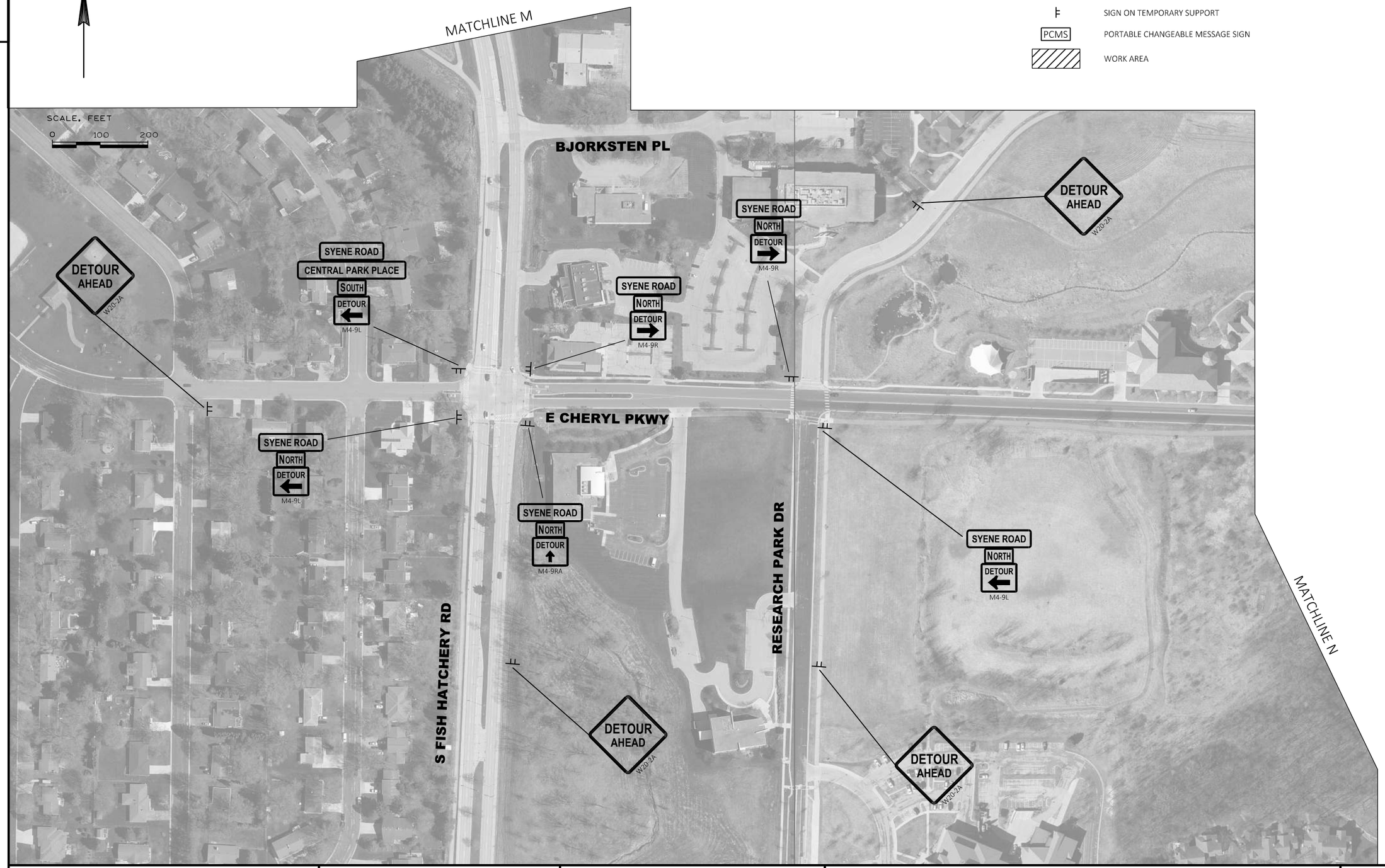

2

PROJECT NO: 5849-02-07	HWY: LOCAL STREET - SYENE ROAD	COUNTY: DANE	TRAFFIC CONTROL - DETOUR ROUTE	SHEET 80	E

FILE NAME : G:\FITCHBRG\20087-000 SYENE ROAD\CIVIL 3D\SHEETSPLAN\PHASE 3 SHEET FILES - W CLAYTON TO MCCOY\025002-TC_P3.DWG PLOT DATE : 4/11/2024 7:48 AM PLOT BY : BRIAN ST. VINCENT PLOT NAME : PLOT SCALE : 1 IN: 200 FT

WISDOT/CADDS SHEET 42

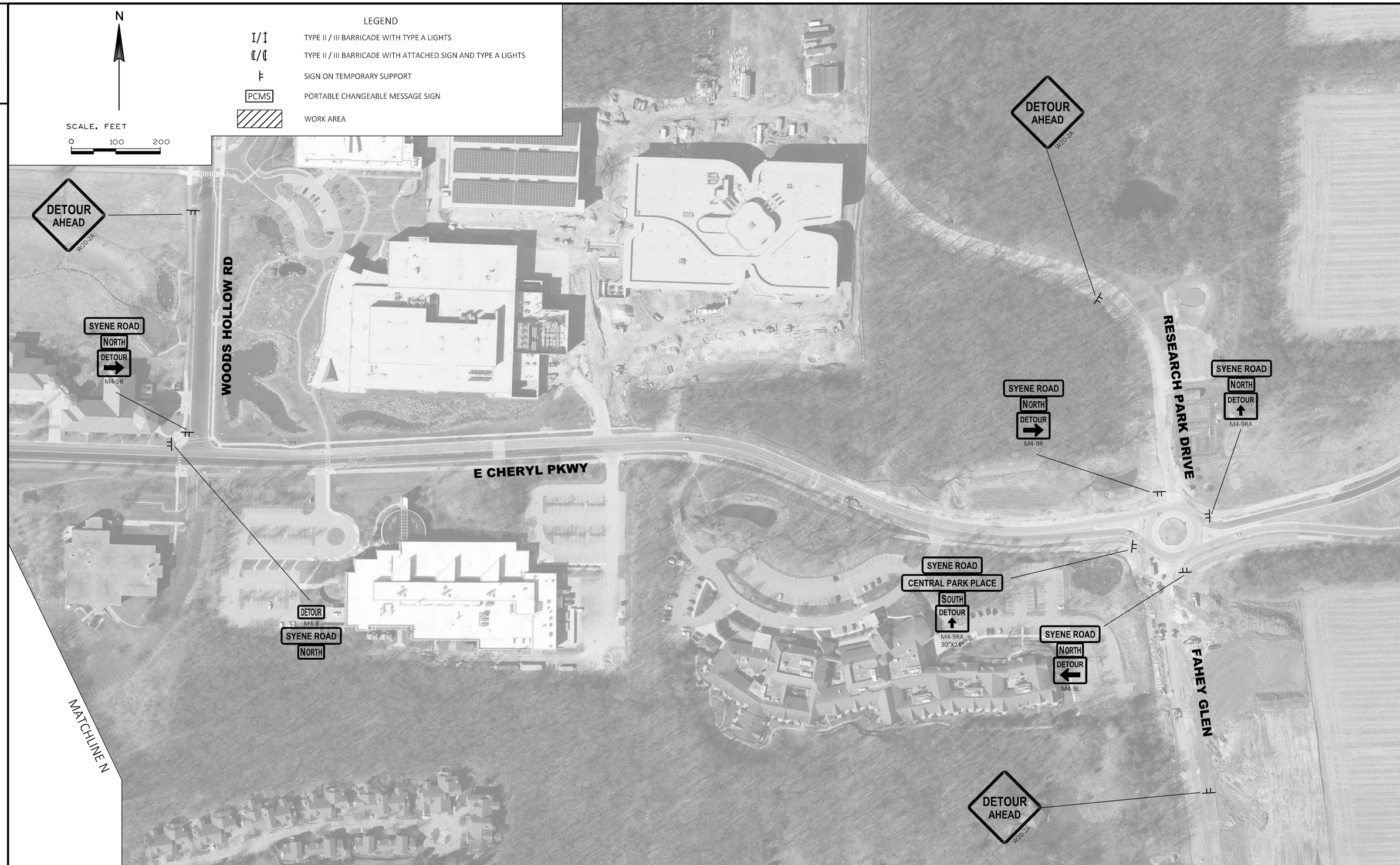

2

PROJECT NO: 5849-02-07	HWY: LOCAL STREET - SYENE ROAD	COUNTY: DANE	TRAFFIC CONTROL - DETOUR ROUTE	SHEET 81	E

2

2

PROJECT NO: 5849-02-07	HWY: LOCAL STREET - SYENE ROAD	COUNTY: DANE	TRAFFIC CONTROL - DETOUR ROUTE	SHEET 82	E

FILE NAME : G:\FITCHBRG\20087-000 SYENE ROAD\CIVIL 3D\SHEETSPLAN\PHASE 3 SHEET FILES - W CLAYTON TO MCCOY\025002-TC_P3.DWG PLOT DATE : 4/11/2024 7:48 AM PLOT BY : BRIAN ST. VINCENT PLOT NAME : PLOT SCALE : 1 IN: 200 FT

WISDOT/CADDS SHEET 42

2

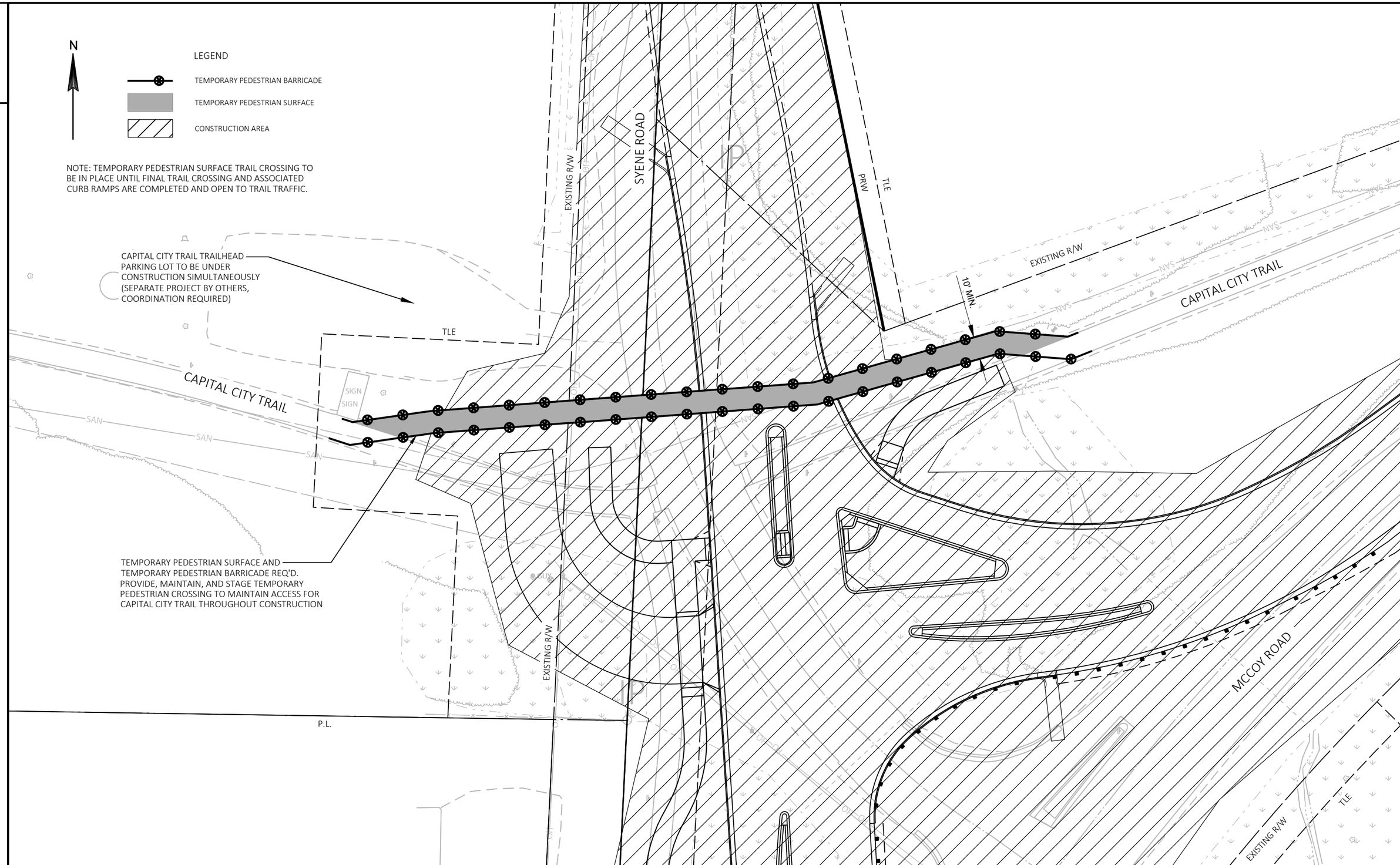

2

PROJECT NO: 5849-02-07	HWY: LOCAL STREET - SYENE ROAD	COUNTY: DANE	TRAFFIC CONTROL - TEMPORARY PEDESTRIAN ACCOMMODATIONS	SHEET 83	E

FILE NAME : G:\FITCHBRG\20087-000 SYENE ROAD\CIVIL 3D\SHEETSPLAN\PHASE 3 SHEET FILES - W CLAYTON TO MCCOY\025003-TC_P3.DWG PLOT DATE : 4/24/2024 1:13 PM PLOT BY : BRIAN ST. VINCENT PLOT NAME :

WISDOT/CADDS SHEET 42

2

PI STA = 669+89.43 SRS
Y = 461650.822
X = 818115.052
DELTA = 1°03'44" RT
D = 1°08'45"
T = 46.36'
L = 92.71'
R = 5000.00'
PC STA = 669+43.07 SRS
PT STA = 670+35.78 SRS

PI STA = 671+80.69 SRS
Y = 461841.870
X = 818124.202
DELTA = 16°19'47" RT
D = 5°40'22"
T = 144.91'
L = 287.86'
R = 1010.00'
PC STA = 670+35.78 SRS
PT STA = 673+23.64 SRS

PI STA = 675+25.88 SRS
Y = 462169.972
X = 818237.638
DELTA = 22°52'02" LT
D = 5°43'46"
T = 202.25'
L = 399.11'
R = 1000.00'
PC STA = 673+23.64 SRS
PT STA = 677+22.74 SRS

PI STA = 680+08.57 SRS
Y = 462656.974
X = 818205.333
DELTA = 6°47'26" LT
D = 5°40'22"
T = 59.92'
L = 119.70'
R = 1010.00'
PC STA = 679+48.65 SRS
PT STA = 680+68.35 SRS

PI STA = 681+84.56 SRS
Y = 462830.105
X = 818172.977
DELTA = 13°15'24" RT
D = 5°43'46"
T = 116.21'
L = 231.37'
R = 1000.00'
PC STA = 680+68.35 SRS
PT STA = 682+99.73 SRS

N

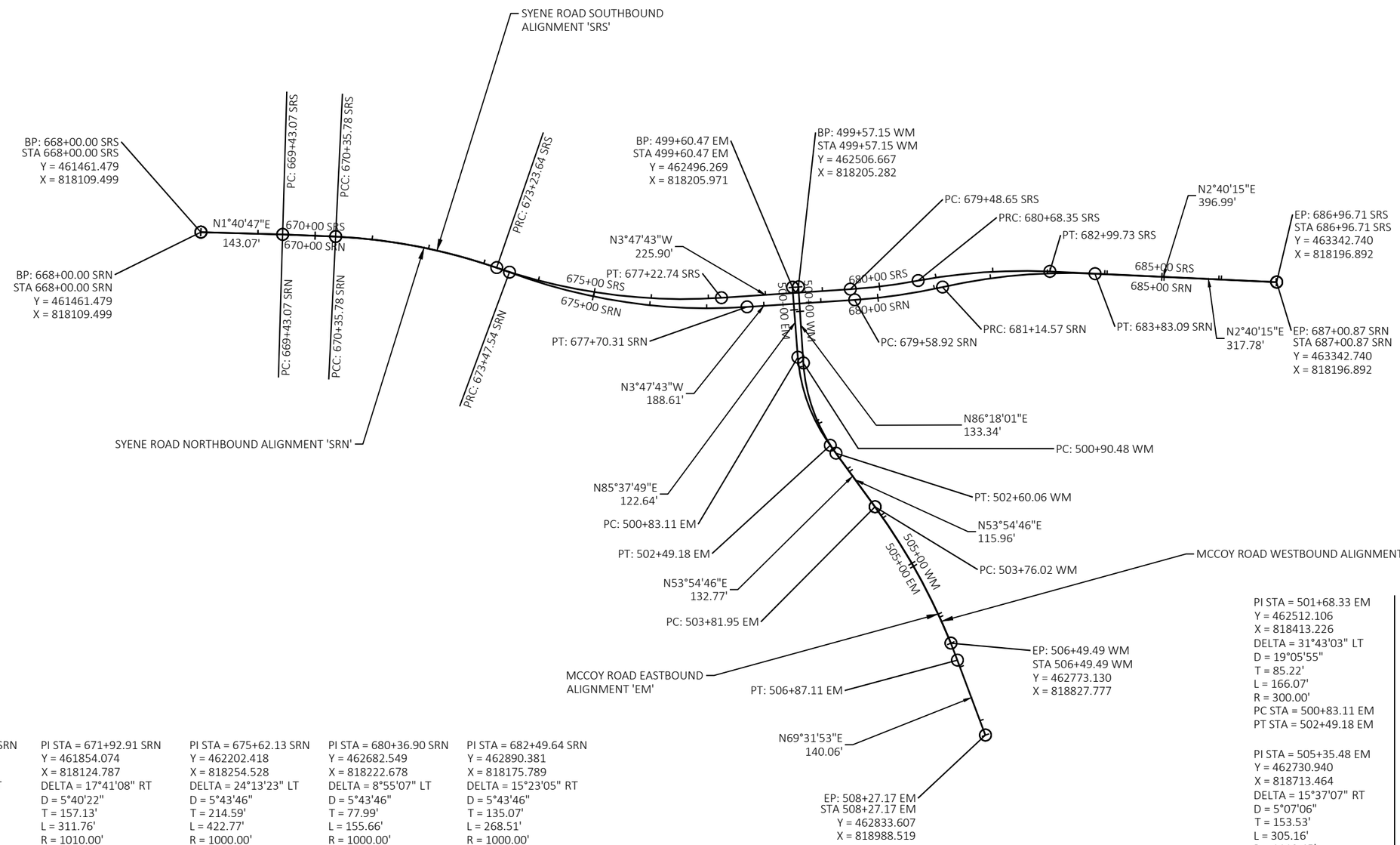

PI STA = 501+68.33 EM
Y = 462512.106
X = 818413.226
DELTA = 31°43'03" LT
D = 19°05'55"
T = 85.22'
L = 166.07'
R = 300.00'
PC STA = 500+83.11 EM
PT STA = 502+49.18 EM

PI STA = 501+77.61 WM
Y = 462520.892
X = 818425.280
DELTA = 32°23'15" LT
D = 19°05'55"
T = 87.12'
L = 169.58'
R = 300.00'
PC STA = 500+90.48 WM
PT STA = 502+60.06 WM

PI STA = 505+35.48 EM
Y = 462730.940
X = 818713.464
DELTA = 15°37'07" RT
D = 5°07'06"
T = 153.53'
L = 305.16'
R = 1119.45'
PC STA = 503+81.95 EM
PT STA = 506+87.11 EM

PI STA = 505+13.44 WM
Y = 462721.451
X = 818700.445
DELTA = 13°59'49" RT
D = 5°07'06"
T = 137.42'
L = 273.47'
R = 1119.45'
PC STA = 503+76.02 WM
PT STA = 506+49.49 WM

PI STA = 669+89.43 SRN
Y = 461650.822
X = 818115.052
DELTA = 1°03'44" RT
D = 1°08'45"
T = 46.36'
L = 92.71'
R = 5000.00'
PC STA = 669+43.07 SRN
PT STA = 670+35.78 SRN

PI STA = 671+92.91 SRN
Y = 461854.074
X = 818124.787
DELTA = 17°41'08" RT
D = 5°40'22"
T = 157.13'
L = 311.76'
R = 1010.00'
PC STA = 670+35.78 SRN
PT STA = 673+47.54 SRN

PI STA = 675+62.13 SRN
Y = 462202.418
X = 818254.528
DELTA = 24°13'23" LT
D = 5°43'46"
T = 214.59'
L = 422.77'
R = 1000.00'
PC STA = 673+47.54 SRN
PT STA = 677+70.31 SRN

PI STA = 680+36.90 SRN
Y = 462682.549
X = 818222.678
DELTA = 8°55'07" LT
D = 5°43'46"
T = 77.99'
L = 155.66'
R = 1000.00'
PC STA = 679+58.92 SRN
PT STA = 681+14.57 SRN

PI STA = 682+49.64 SRN
Y = 462890.381
X = 818175.789
DELTA = 15°23'05" RT
D = 5°43'46"
T = 135.07'
L = 268.51'
R = 1000.00'
PC STA = 681+14.57 SRN
PT STA = 683+83.09 SRN

PROJECT NO: 5849-02-07	HWY: LOCAL STREET - SYENE ROAD	COUNTY: DANE	ALIGNMENT DIAGRAM	SHEET 84	E

FILE NAME : G:\FITCHBRG\20087-000 SYENE ROAD\CIVIL 3D\SHEETSPLAN\PHASE 3 SHEET FILES - W CLAYTON TO MCCOY\027201-AD_P3.DWG
LAYOUT NAME - Plan 1 IN 200 FT
PLOT DATE : 4/24/2024 1:14 PM PLOT BY : BRIAN ST. VINCENT PLOT NAME : PLOT SCALE : 1 IN:200 FT

WISDOT/CADDS SHEET 42

2

PI STA = 674+24.94 WSP
Y = 462080.433
X = 818098.324
DELTA = 32°29'41" RT
D = 38°11'50"
T = 43.71'
L = 85.07'
R = 150.00'
PC STA = 673+81.22 WSP
PT STA = 674+66.29 WSP

PI STA = 675+07.16 WSP
Y = 462149.649
X = 818146.929
DELTA = 28°39'12" LT
D = 35°48'36"
T = 40.86'
L = 80.01'
R = 160.00'
PC STA = 674+66.29 WSP
PT STA = 675+46.31 WSP

PI STA = 677+71.32 WSP
Y = 462413.855
X = 818176.677
DELTA = 23°54'42" RT
D = 95°29'35"
T = 12.70'
L = 25.04'
R = 60.00'
PC STA = 677+58.62 WSP
PT STA = 677+83.66 WSP

PI STA = 678+05.15 WSP
Y = 462443.367
X = 818193.947
DELTA = 34°07'51" LT
D = 81°51'04"
T = 21.49'
L = 41.70'
R = 70.00'
PC STA = 677+83.66 WSP
PT STA = 678+25.36 WSP

PI STA = 801+79.15 TPD
Y = 462496.846
X = 818119.519
DELTA = 88°51'55" LT
D = 92°24'45"
T = 60.78'
L = 96.16'
R = 62.00'
PC STA = 801+18.37 TPD
PT STA = 802+14.53 TPD

PI STA = 800+35.98 TPD
Y = 462651.903
X = 818106.144
DELTA = 81°10'42" RT
D = 136°25'07"
T = 35.98'
L = 59.51'
R = 42.00'
PC STA = 800+00.00 TPD
PT STA = 800+59.51 TPD

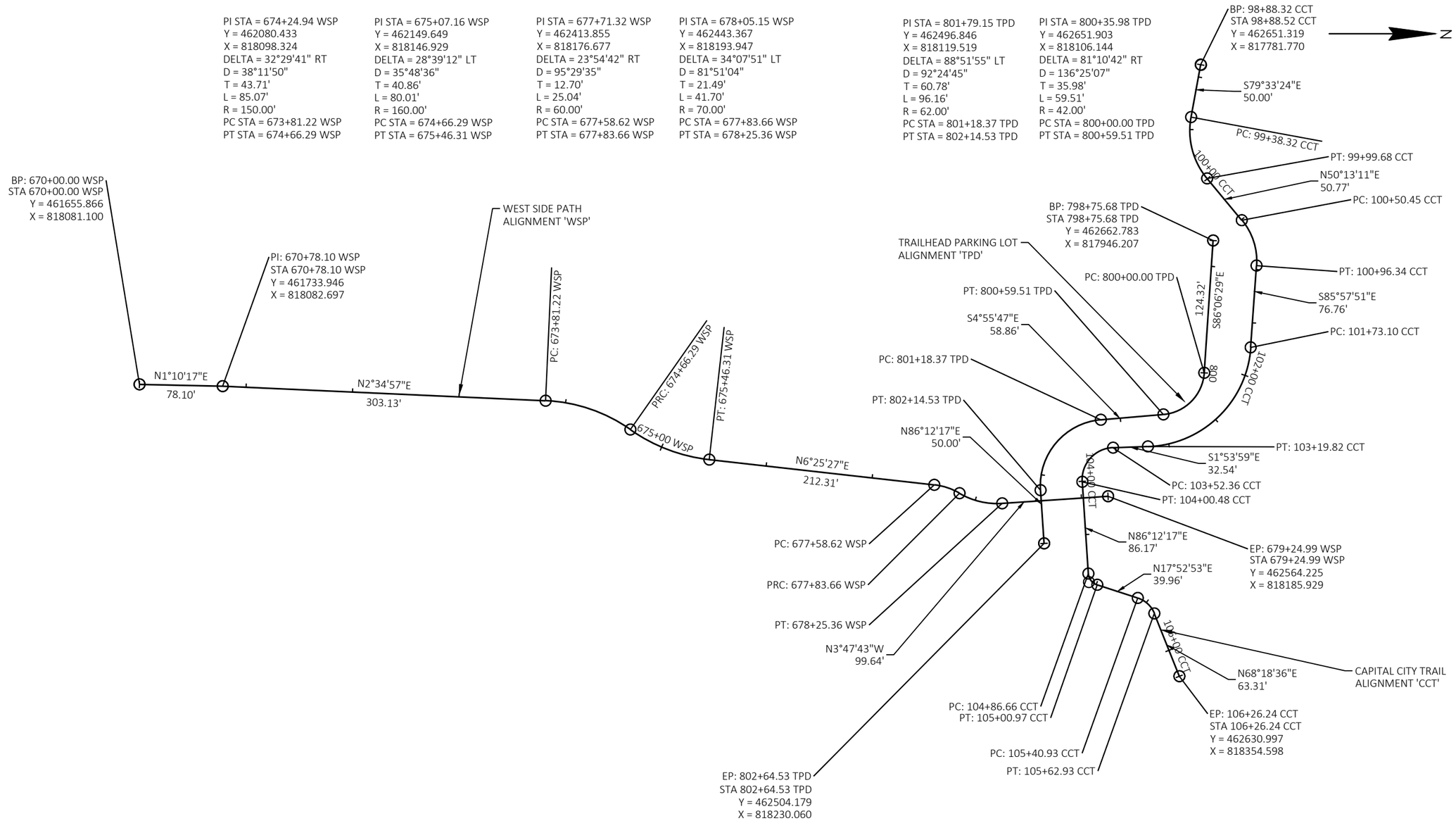

PI STA = 99+71.13 CCT
Y = 462636.104
X = 817862.961
DELTA = 50°13'26" LT
D = 81°51'04"
T = 32.81'
L = 61.36'
R = 70.00'
PC STA = 99+38.32 CCT
PT STA = 99+99.68 CCT

PI STA = 100+74.58 CCT
Y = 462705.023
X = 817945.738
DELTA = 43°48'59" RT
D = 95°29'35"
T = 24.13'
L = 45.88'
R = 60.00'
PC STA = 100+50.45 CCT
PT STA = 100+96.34 CCT

PI STA = 102+63.24 CCT
Y = 462691.578
X = 818136.297
DELTA = 84°03'52" RT
D = 57°17'45"
T = 90.14'
L = 146.72'
R = 100.00'
PC STA = 101+73.10 CCT
PT STA = 103+19.82 CCT

PI STA = 103+83.37 CCT
Y = 462537.966
X = 818141.392
DELTA = 91°53'44" LT
D = 190°59'09"
T = 31.01'
L = 48.12'
R = 30.00'
PC STA = 103+52.36 CCT
PT STA = 104+00.48 CCT

PI STA = 104+94.80 CCT
Y = 462546.261
X = 818266.445
DELTA = 68°19'25" LT
D = 477°27'53"
T = 8.14'
L = 14.31'
R = 12.00'
PC STA = 104+86.66 CCT
PT STA = 105+00.97 CCT

PI STA = 105+52.70 CCT
Y = 462603.247
X = 818284.831
DELTA = 50°25'44" RT
D = 229°11'01"
T = 11.77'
L = 22.00'
R = 25.00'
PC STA = 105+40.93 CCT
PT STA = 105+62.93 CCT

PROJECT NO: 5849-02-07	HWY: LOCAL STREET - SYENE ROAD	COUNTY: DANE	ALIGNMENT DIAGRAM	SHEET 85	E

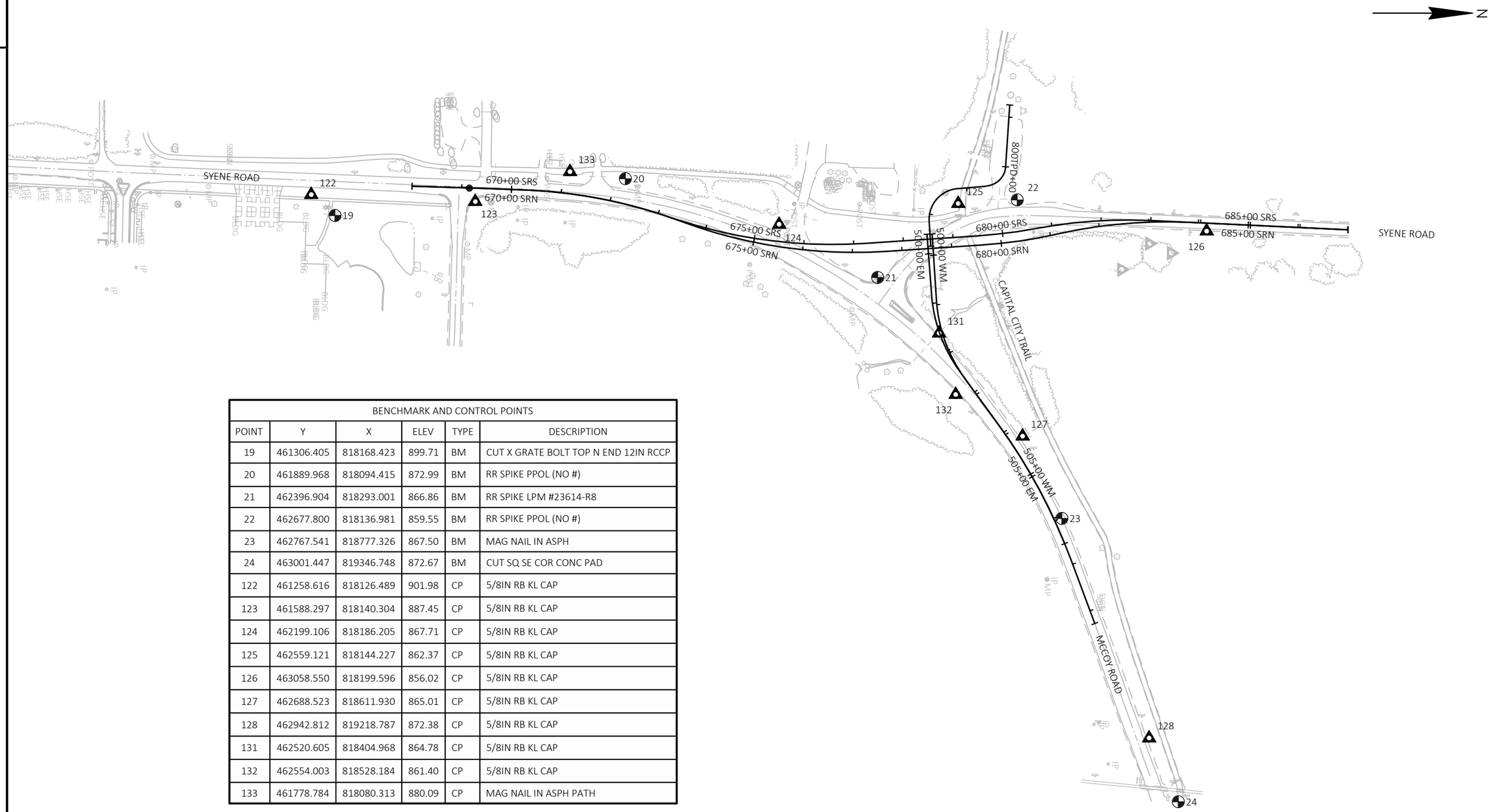

BENCHMARK AND CONTROL POINTS					
POINT	Y	X	ELEV	TYPE	DESCRIPTION
19	461306.405	818168.423	899.71	BM	CUT X GRATE BOLT TOP N END 12IN RCCP
20	461889.968	818094.415	872.99	BM	RR SPIKE PPOL (NO #)
21	462396.904	818293.001	866.86	BM	RR SPIKE LPM #23614-R8
22	462677.800	818136.981	859.55	BM	RR SPIKE PPOL (NO #)
23	462767.541	818777.326	867.50	BM	MAG NAIL IN ASPH
24	463001.447	819346.748	872.67	BM	CUT SQ SE COR CONC PAD
122	461258.616	818126.489	901.98	CP	5/8IN RB KL CAP
123	461588.297	818140.304	887.45	CP	5/8IN RB KL CAP
124	462199.106	818186.205	867.71	CP	5/8IN RB KL CAP
125	462559.121	818144.227	862.37	CP	5/8IN RB KL CAP
126	463058.550	818199.596	856.02	CP	5/8IN RB KL CAP
127	462688.523	818611.930	865.01	CP	5/8IN RB KL CAP
128	462942.812	819218.787	872.38	CP	5/8IN RB KL CAP
131	462520.605	818404.968	864.78	CP	5/8IN RB KL CAP
132	462554.003	818528.184	861.40	CP	5/8IN RB KL CAP
133	461778.784	818080.313	880.09	CP	MAG NAIL IN ASPH PATH

Estimate Of Quantities

5849-02-07

Line	Item	Item Description	Unit	Total	Qty
0002	201.0105	Clearing	STA	12.000	12.000
0004	201.0205	Grubbing	STA	12.000	12.000
0006	203.0100	Removing Small Pipe Culverts	EACH	8.000	8.000
0008	204.0110	Removing Asphaltic Surface	SY	175.000	175.000
0010	204.0150	Removing Curb & Gutter	LF	250.000	250.000
0012	204.0155	Removing Concrete Sidewalk	SY	35.000	35.000
0014	204.9060.S	Removing (item description) 01. Existing Boardwalk	EACH	1.000	1.000
0016	205.0100	Excavation Common	CY	28,328.000	28,328.000
0018	205.0400	Excavation Marsh	CY	4,673.000	4,673.000
0020	213.0100	Finishing Roadway (project) 01. 5849-02-07	EACH	1.000	1.000
0022	305.0110	Base Aggregate Dense 3/4-Inch	TON	1,050.000	1,050.000
0024	305.0120	Base Aggregate Dense 1 1/4-Inch	TON	3,950.000	3,950.000
0026	305.0130	Base Aggregate Dense 3-Inch	TON	7,350.000	7,350.000
0028	311.0110	Breaker Run	TON	20,630.000	20,630.000
0030	405.1000	Stamping Colored Concrete	CY	40.000	40.000
0032	455.0605	Tack Coat	GAL	720.000	720.000
0034	460.2000	Incentive Density HMA Pavement	DOL	2,330.000	2,330.000
0036	460.5225	HMA Pavement 5 LT 58-28 S	TON	180.000	180.000
0038	460.6223	HMA Pavement 3 MT 58-28 S	TON	2,130.000	2,130.000
0040	460.6225	HMA Pavement 5 MT 58-28 S	TON	1,290.000	1,290.000
0042	465.0120	Asphaltic Surface Driveways and Field Entrances	TON	105.000	105.000
0044	465.0315	Asphaltic Flumes	SY	70.000	70.000
0046	520.8000	Concrete Collars for Pipe	EACH	2.000	2.000
0048	522.1012	Apron Endwalls for Culvert Pipe Reinforced Concrete 12-Inch	EACH	3.000	3.000
0050	522.1024	Apron Endwalls for Culvert Pipe Reinforced Concrete 24-Inch	EACH	1.000	1.000
0052	522.2619	Apron Endwalls for Culvert Pipe Reinforced Concrete Horizontal Elliptical 19x30-Inch	EACH	2.000	2.000
0054	522.2634	Apron Endwalls for Culvert Pipe Reinforced Concrete Horizontal Elliptical 34x53-Inch	EACH	2.000	2.000
0056	601.0407	Concrete Curb & Gutter 18-Inch Type D	LF	20.000	20.000
0058	601.0411	Concrete Curb & Gutter 30-Inch Type D	LF	1,550.000	1,550.000
0060	601.0600	Concrete Curb Pedestrian	LF	50.000	50.000
0062	602.0410	Concrete Sidewalk 5-Inch	SF	2,440.000	2,440.000
0064	602.0420	Concrete Sidewalk 7-Inch	SF	865.000	865.000
0066	602.0515	Curb Ramp Detectable Warning Field Natural Patina	SF	160.000	160.000
0068	602.0815	Concrete Driveway 7-Inch	SY	435.000	435.000
0070	606.0200	Riprap Medium	CY	70.000	70.000
0072	608.0412	Storm Sewer Pipe Reinforced Concrete Class IV 12-Inch	LF	587.000	587.000
0074	608.0415	Storm Sewer Pipe Reinforced Concrete Class IV 15-Inch	LF	30.000	30.000
0076	608.0418	Storm Sewer Pipe Reinforced Concrete Class IV 18-Inch	LF	347.000	347.000
0078	608.0421	Storm Sewer Pipe Reinforced Concrete Class IV 21-Inch	LF	312.000	312.000
0080	608.0424	Storm Sewer Pipe Reinforced Concrete Class IV 24-Inch	LF	103.000	103.000
0082	608.2419	Storm Sewer Pipe Reinforced Concrete Horizontal Elliptical Class HE-IV 19x30-Inch	LF	198.000	198.000
0084	608.2434	Storm Sewer Pipe Reinforced Concrete Horizontal Elliptical Class HE-IV 34x53-Inch	LF	128.000	128.000
0086	611.0535	Manhole Covers Type J-Special	EACH	1.000	1.000
0088	611.0624	Inlet Covers Type H	EACH	11.000	11.000
0090	611.0642	Inlet Covers Type MS	EACH	1.000	1.000
0092	611.0666	Inlet Covers Type Z	EACH	2.000	2.000
0094	611.2004	Manholes 4-FT Diameter	EACH	1.000	1.000
0096	611.2005	Manholes 5-FT Diameter	EACH	1.000	1.000
0098	611.2006	Manholes 6-FT Diameter	EACH	1.000	1.000

Estimate Of Quantities

5849-02-07

Line	Item	Item Description	Unit	Total	Qty
0100	611.2007	Manholes 7-FT Diameter	EACH	1.000	1.000
0102	611.3003	Inlets 3-FT Diameter	EACH	2.000	2.000
0104	611.3004	Inlets 4-FT Diameter	EACH	5.000	5.000
0106	611.3230	Inlets 2x3-FT	EACH	5.000	5.000
0108	611.3901	Inlets Median 1 Grate	EACH	1.000	1.000
0110	611.9850.S	Pipe Grates (size) 01. 19x30-Inch	EACH	4.000	4.000
0112	611.9850.S	Pipe Grates (size) 02. 24-Inch	EACH	1.000	1.000
0114	611.9850.S	Pipe Grates (size) 03. 21-Inch	EACH	1.000	1.000
0116	614.2300	MGS Guardrail 3	LF	350.000	350.000
0118	614.2350	MGS Guardrail Short Radius	LF	125.000	125.000
0120	614.2610	MGS Guardrail Terminal EAT	EACH	2.000	2.000
0122	616.0700.S	Fence Safety	LF	1,000.000	1,000.000
0124	619.1000	Mobilization	EACH	1.000	1.000
0126	620.0300	Concrete Median Sloped Nose	SF	205.000	205.000
0128	624.0100	Water	MGAL	250.000	250.000
0130	625.0100	Topsoil	SY	500.000	500.000
0132	625.0500	Salvaged Topsoil	SY	16,500.000	16,500.000
0134	628.1504	Silt Fence	LF	1,720.000	1,720.000
0136	628.1520	Silt Fence Maintenance	LF	1,720.000	1,720.000
0138	628.1905	Mobilizations Erosion Control	EACH	9.000	9.000
0140	628.1910	Mobilizations Emergency Erosion Control	EACH	5.000	5.000
0142	628.2008	Erosion Mat Urban Class I Type B	SY	14,250.000	14,250.000
0144	628.2027	Erosion Mat Class II Type C	SY	2,170.000	2,170.000
0146	628.2033	Erosion Mat Class III Type B	SY	40.000	40.000
0148	628.7005	Inlet Protection Type A	EACH	5.000	5.000
0150	628.7504	Temporary Ditch Checks	LF	390.000	390.000
0152	628.7560	Tracking Pads	EACH	3.000	3.000
0154	629.0210	Fertilizer Type B	CWT	11.000	11.000
0156	630.0171	Seeding Mixture No. 70A	LB	50.000	50.000
0158	630.0200	Seeding Temporary	LB	445.000	445.000
0160	630.0500	Seed Water	MGAL	375.000	375.000
0162	637.2210	Signs Type II Reflective H	SF	176.750	176.750
0164	637.2215	Signs Type II Reflective H Folding	SF	31.080	31.080
0166	637.2230	Signs Type II Reflective F	SF	36.000	36.000
0168	638.2102	Moving Signs Type II	EACH	10.000	10.000
0170	638.2602	Removing Signs Type II	EACH	16.000	16.000
0172	638.3000	Removing Small Sign Supports	EACH	16.000	16.000
0174	638.4000	Moving Small Sign Supports	EACH	8.000	8.000
0176	640.1303.S	Pond Liner Clay	CY	1,900.000	1,900.000
0178	642.5201	Field Office Type C	EACH	1.000	1.000
0180	643.0300	Traffic Control Drums	DAY	1,850.000	1,850.000
0182	643.0410	Traffic Control Barricades Type II	DAY	125.000	125.000
0184	643.0420	Traffic Control Barricades Type III	DAY	2,950.000	2,950.000
0186	643.0705	Traffic Control Warning Lights Type A	DAY	5,850.000	5,850.000
0188	643.0800	Traffic Control Arrow Boards	DAY	125.000	125.000
0190	643.0900	Traffic Control Signs	DAY	46,800.000	46,800.000
0192	643.0920	Traffic Control Covering Signs Type II	EACH	5.000	5.000
0194	643.1050	Traffic Control Signs PCMS	DAY	21.000	21.000
0196	643.5000	Traffic Control	EACH	1.000	1.000

5849-02-07

Line	Item	Item Description	Unit	Total	Qty
0198	644.1410	Temporary Pedestrian Surface Asphalt	SF	3,800.000	3,800.000
0200	644.1810	Temporary Pedestrian Barricade	LF	870.000	870.000
0202	645.0120	Geotextile Type HR	SY	310.000	310.000
0204	645.0220	Geogrid Type SR	SY	3,761.000	3,761.000
0206	646.1020	Marking Line Epoxy 4-Inch	LF	9,430.000	9,430.000
0208	646.3020	Marking Line Epoxy 8-Inch	LF	1,180.000	1,180.000
0210	646.5020	Marking Arrow Epoxy	EACH	20.000	20.000
0212	646.5120	Marking Word Epoxy	EACH	3.000	3.000
0214	646.5220	Marking Symbol Epoxy	EACH	11.000	11.000
0216	646.7120	Marking Diagonal Epoxy 12-Inch	LF	265.000	265.000
0218	646.7420	Marking Crosswalk Epoxy Transverse Line 6-Inch	LF	60.000	60.000
0220	646.7520	Marking Crosswalk Epoxy Block Style 24-Inch	LF	150.000	150.000
0222	646.8120	Marking Curb Epoxy	LF	100.000	100.000
0224	646.8220	Marking Island Nose Epoxy	EACH	9.000	9.000
0226	650.4000	Construction Staking Storm Sewer	EACH	28.000	28.000
0228	650.4500	Construction Staking Subgrade	LF	2,086.000	2,086.000
0230	650.5000	Construction Staking Base	LF	2,086.000	2,086.000
0232	650.5500	Construction Staking Curb Gutter and Curb & Gutter	LF	2,375.000	2,375.000
0234	650.8501	Construction Staking Electrical Installations (project) 01. 5849-02-07	EACH	1.000	1.000
0236	650.9000	Construction Staking Curb Ramps	EACH	6.000	6.000
0238	650.9500	Construction Staking Sidewalk (project) 01. 5849-02-07	EACH	1.000	1.000
0240	650.9911	Construction Staking Supplemental Control (project) 01. 5849-02-07	EACH	1.000	1.000
0242	650.9920	Construction Staking Slope Stakes	LF	2,086.000	2,086.000
0244	652.0225	Conduit Rigid Nonmetallic Schedule 40 2-Inch	LF	970.000	970.000
0246	652.0235	Conduit Rigid Nonmetallic Schedule 40 3-Inch	LF	1,144.000	1,144.000
0248	652.0800	Conduit Loop Detector	LF	1,408.000	1,408.000
0250	654.0101	Concrete Bases Type 1	EACH	7.000	7.000
0252	654.0102	Concrete Bases Type 2	EACH	4.000	4.000
0254	654.0110	Concrete Bases Type 10	EACH	3.000	3.000
0256	654.0217	Concrete Control Cabinet Bases Type 9 Special	EACH	1.000	1.000
0258	655.0230	Cable Traffic Signal 5-14 AWG	LF	778.000	778.000
0260	655.0260	Cable Traffic Signal 12-14 AWG	LF	3,185.000	3,185.000
0262	655.0305	Cable Type UF 2-12 AWG Grounded	LF	673.000	673.000
0264	655.0515	Electrical Wire Traffic Signals 10 AWG	LF	1,870.000	1,870.000
0266	655.0610	Electrical Wire Lighting 12 AWG	LF	605.000	605.000
0268	655.0700	Loop Detector Lead In Cable	LF	4,866.000	4,866.000
0270	655.0800	Loop Detector Wire	LF	3,994.000	3,994.000
0272	655.0900	Traffic Signal EVP Detector Cable	LF	785.000	785.000
0274	656.0201	Electrical Service Meter Breaker Pedestal (location) 01. Syene Road & McCoy Road	EACH	1.000	1.000
0276	657.0100	Pedestal Bases	EACH	7.000	7.000
0278	657.0255	Transformer Bases Breakaway 11 1/2-Inch Bolt Circle	EACH	4.000	4.000
0280	657.0315	Poles Type 4	EACH	4.000	4.000
0282	657.0345	Poles Type 9	EACH	3.000	3.000
0284	657.0420	Traffic Signal Standards Aluminum 13-FT	EACH	4.000	4.000
0286	657.0430	Traffic Signal Standards Aluminum 10-FT	EACH	3.000	3.000
0288	657.0520	Monotube Arms 20-FT	EACH	1.000	1.000
0290	657.0525	Monotube Arms 25-FT	EACH	1.000	1.000
0292	657.0530	Monotube Arms 30-FT	EACH	1.000	1.000
0294	657.0609	Luminaire Arms Single Member 4-Inch Clamp 6-FT	EACH	5.000	5.000

Line	Item	Item Description	Unit	Total	Qty
0296	658.0173	Traffic Signal Face 3S 12-Inch	EACH	16.000	16.000
0298	658.0174	Traffic Signal Face 4S 12-Inch	EACH	2.000	2.000
0300	658.0416	Pedestrian Signal Face 16-Inch	EACH	6.000	6.000
0302	658.0500	Pedestrian Push Buttons	EACH	1.000	1.000
0304	658.5070	Signal Mounting Hardware (location) 01. Syene Road & McCoy Road	EACH	1.000	1.000
0306	659.1115	Luminaires Utility LED A	EACH	5.000	5.000
0308	690.0150	Sawing Asphalt	LF	142.000	142.000
0310	ASP.1T0A	On-the-Job Training Apprentice at $5.00/HR	HRS	2,000.000	2,000.000
0312	ASP.1T0G	On-the-Job Training Graduate at $5.00/HR	HRS	1,320.000	1,320.000
0314	SPV.0060	Special 01. Framed Inlet Protection	EACH	20.000	20.000
0316	SPV.0060	Special 02. Project Dewatering	EACH	1.000	1.000
0318	SPV.0060	Special 03. Posts Wood 4x4-Inch x 14-FT	EACH	16.000	16.000
0320	SPV.0060	Special 04. Posts Wood 4x4-Inch x 16-FT	EACH	7.000	7.000
0322	SPV.0060	Special 05. Posts Galvanized Steel 2 3/8-Inch Diameter x 11-FT	EACH	6.000	6.000
0324	SPV.0060	Special 06. Posts Wood 4x4-Inch x 12-FT	EACH	2.000	2.000
0326	SPV.0060	Special 07. V-Loc Sign Base	EACH	6.000	6.000
0328	SPV.0060	Special 08. Inlet Covers Type Beehive	EACH	1.000	1.000
0330	SPV.0060	Special 09. Apron Endwalls for Culvert Pipe Reinforced Concrete 21-Inch with Cutoff Wall	EACH	1.000	1.000
0332	SPV.0060	Special 10. Apron Endwalls for CPRC Horizontal Elliptical 19x30-Inch with Cutoff Wall	EACH	2.000	2.000
0334	SPV.0060	Special 11. Culvert Pipe Checks Special	EACH	7.000	7.000
0336	SPV.0060	Special 12. Posts Wood 4x4-Inch x 18-FT	EACH	2.000	2.000
0338	SPV.0060	Special 13. Inlet Covers Type H-VB	EACH	1.000	1.000
0340	SPV.0060	Special 20. Construct Electrical Handhole Type 1	EACH	8.000	8.000
0342	SPV.0060	Special 21. Construct Electrical Handhole Type 5	EACH	10.000	10.000
0344	SPV.0060	Special 22. Traffic Signal Cabinet and Controller (Syene Road & McCoy Road)	EACH	1.000	1.000
0346	SPV.0060	Special 23. Furnish and Install EVP System (Syene Road & McCoy Road)	EACH	1.000	1.000
0348	SPV.0060	Special 24. Furnish and Install APS System (Syene Road & McCoy Road)	EACH	1.000	1.000
0350	SPV.0060	Special 25. LED Blank Out Sign No Right Turn 30-Inch	EACH	1.000	1.000
0352	SPV.0085	Special 01. Turf Grass Seed Mixture	LB	80.000	80.000
0354	SPV.0085	Special 02. Native Seed Mixture A	LB	5.000	5.000
0356	SPV.0085	Special 03. Native Seed Mixture B	LB	5.000	5.000
0358	SPV.0085	Special 04. Native Seed Mixture C	LB	5.000	5.000
0360	SPV.0090	Special 01. Concrete Curb & Gutter 24-Inch	LF	755.000	755.000
0362	SPV.0090	Special 02. Marking Stop Line Epoxy 24-Inch	LF	115.000	115.000

3

CLEARING AND GRUBBING

CATEGORY	STATION	TO	STATION	LOCATION	201.0105 CLEARING STA	201.0205 GRUBBING STA
0010	500+92	-	506+55	McCoy Road	4	4
0010	670+35	-	677+71	Syene Road South	4	4
0010	677+71	-	680+00	Syene/McCoy Intersection	1	1
0010	680+00	-	684+29	Syene Road North	3	3
				PROJECT TOTAL	12	12

REMOVING SMALL PIPE CULVERTS

CATEGORY	STATION	OFFSET	LOCATION	203.0100 REMOVING SMALL PIPE CULVERTS EACH	NOTES
0010	501+75	RT	McCoy Road	1	36 IN CMCP
0010	670+60	LT	Syene Road South	1	18 IN CMCP
0010	671+00	RT	Syene Road South	1	18 IN CMCP
0010	671+65	LT	Syene Road South	1	18 IN CMCP
0010	675+90	LT	Syene Road South	1	18 IN CMCP
0010	676+40	LT	Syene Road South	1	12 IN CMCP
0010	678+10	RT	Syene/McCoy Intersection	1	24 IN CMCP
0010	678+20	LT	Syene/McCoy Intersection	1	12 IN CMCP
			PROJECT TOTAL	8	

3

REMOVALS

CATEGORY	STATION	TO	STATION	LOCATION	204.0110 REMOVING ASPHALTIC SURFACE SY	204.0150 REMOVING CURB & GUTTER LF	204.0155 REMOVING CONCRETE SIDEWALK SY	204.9060.01 REMOVING EXISTING BOARDWALK EA
0010	500+92	-	506+55	McCoy Road	5	--	--	--
0010	670+35	-	677+71	Syene Road South	100	--	--	1
0010	677+71	-	680+00	Syene/McCoy Intersection	70	250	35	--
0010	680+00	-	684+29	Syene Road North	--	--	--	--
				PROJECT TOTAL	175	250	35	1

PROJECT ITEMS

CATEGORY	STATION	TO	STATION	LOCATION	213.0100 FINISHING ROADWAY 5849-02-07 EACH	619.1000 MOBILIZATION EACH	642.5201 FIELD OFFICE TYPE C EACH	643.5000 TRAFFIC CONTROL EACH
0010	PROJECT			PROJECT	1	1	1	1
				PROJECT TOTAL	1	1	1	1

3

DIVISION	FROM/TO STATION	LOCATION	205.0100 COMMON EXCAVATION (1) CUT (CY) (2)	EBS EXCAVATION (CY) (3)	SALVAGED / UNUSABLE PAVEMENT MATERIAL (4)	AVAILABLE MATERIAL (5)	205.0400 MARSH EXCAVATION (CY) (6)	645.0220 GEOGRID TYPE SR (SY) (16)	REDUCED MARSH IN FILL (8) FACTOR 0.80	REDUCED EBS IN FILL (9) FACTOR 0.80	EXPANDED MARSH BACKFILL (10) FACTOR 1.25	EXPANDED EBS BACKFILL (11) FACTOR 1.25	UNEXPANDED FILL	EXPANDED FILL (13) FACTOR 1.25	MASS ORDINATE +/- (14) (15)	WASTE	BORROW (CY)
1-1	670+36 - 684+29	SYENE ROAD NORTHBOUND 'SRN'	8,625	3,019	0	8,625	3,128	2,437	2,502	2,415	3,910	3,774	2,355	2,944	5,681	5,681	0
1-2	500+05 - 506+55	MCCOY ROAD EASTBOUND 'EM'	3,951	1,383	0	3,951	1,052	1,030	842	1,106	1,315	1,729	214	268	3,683	3,683	0
1-3	103+29 - 105+96	CAPITAL CITY TRAIL 'CCT'	147	52	0	147	0	0	0	42	0	65	0	0	147	147	0
1-4	800+85 - 802+14	TRAILHEAD PARKING LOT DRIVEWAY 'TPD'	119	42	0	119	105	294	84	34	131	53	41	52	67	67	0
1-5	PROJECT	EXCAVATION FOR POND (7)	9,090	0	0	9,090	388	0	0	0	485	0	36	45	9,045	9,045	0
1-6	PROJECT	EXCAVATION FOR POND LINER (7)	1,900	0	0	1,900	0	0	0	0	0	0	0	0	1,900	1,900	0
GRAND TOTAL			23,832	4,496			4,673	3,761			5,841	5,620					0
TOTAL COMMON EXC			28,328								11,461						

3

NOTES:
(1) COMMON EXCAVATION IS THE SUM OF THE CUT AND EBS EXCAVATION COLUMNS. ITEM NUMBER 205.0100
(2) SALVAGED/UNSUABLE PAVEMENT MATERIAL IS INCLUDED IN CUT.
(3) EBS EXCAVATION TO BE BACKFILLED WITH BREAKER RUN.
(4) SALVAGED/UNUSABLE PAVEMENT MATERIAL
(5) AVAILABLE MATERIAL = CUT - SALVAGED/UNUSUABLE PAVEMENT MATERIAL
(6) MARSH EXCAVATION - TO BE BACKFILLED WITH BREAKER RUN. ITEM NUMBER 311.0110
(7) EXCAVATION FOR POND AND EXCAVATION FOR POND LINER CALCULATED BY USING AUTOCAD SURFACE AND AREA X DEPTH CALCULATIONS
(8) REDUCED MARSH IN FILL - EXCAVATED MARSH MATERIAL IS USUABLE IN FILLS OUTSIDE THE 1:1 SLOPE. MARSH IN FILL REDUCTION FACTOR = .80
(9) REDUCED EBS IN FILL - EXCAVATED EBS MATERIAL IS USUABLE IN FILLS OUTSIDE THE 1:1 SLOPE. EBS IN FILL REDUCTION FACTOR = .80
(10) EXPANDED MARSH BACKFILL - THIS IS TO BE FILLED WITH BREAKER RUN. MARSH BACKFILL FACTOR = 1.25. ITEM NUMBER 311.0110
(11) EXPANDED EBS BACKFILL - THIS IS TO BE FILLED WITH BREAKER RUN. EBS BACKFILL FACTOR = 1.25. ITEM NUMBER 311.0110
(12) FACTORS USED TO COMPUTE ANTICIPATED WASTE AND THE COMPUTED WASTE VOLUME IDENTIFIED ARE FOR GENERAL INFORMATION ONLY.
(13) EXPANDED FILL FACTOR = 1.25
EXPANDED FILL = UNEXPANDED FILL * FILL FACTOR
(14) THE MASS ORDINATE + OR - QTY CALCULATED FOR THE DIVISION. PLUS QUANTITY INDICATES AN EXCESS OF MATERIAL WITHIN THE DIVISION. MINUS INDICATES A SHORTAGE OF MATERIAL WITHIN THE DIVISION.
(15) MASS ORDINATE = AVAILABLE MATERIAL - EXPANDED FILL
(16) GEOGRID TYPE SR FOR USE IN AREAS OVER MARSH EXCAVATION.

BASE AGGREGATE DENSE

CATEGORY	STATION	TO	STATION	LOCATION	305.0110 BASE AGGREGATE DENSE 3/4-INCH TON	305.0120 BASE AGGREGATE DENSE 1 1/4-INCH TON	305.0130 BASE AGGREGATE DENSE 3-INCH TON	311.0110 BREAKER RUN TON	624.0100 WATER MGAL
0010	500+92	-	506+55	McCoy Road	144	953	2,022	--	63
0010	670+35	-	677+71	Syene Road South	615	1397	2,557	--	93
0010	677+71	-	680+00	Syene/McCoy Intersection	109	674	1,308	--	42
0010	680+00	-	684+29	Syene Road North	88	679	1,463	--	45
0010	103+30	-	104+06	Capital City Trail	44	--	--	--	1
0010	105+41	-	105+96	Capital City Trail	50	--	--	--	1
0010	800+86	-	802+15	Trailhead Parking Lot Driveway	--	247	--	--	5
0010	PROJECT			EBS Backfill	--	--	--	10,116	--
0010	PROJECT			Marsh Excavation Backfill	--	--	--	10,514	--
				PROJECT TOTAL	1,050	3,950	7,350	20,630	250

CONCRETE DRIVEWAYS

CATEGORY	STATION	TO	STATION	LOCATION	602.0815 CONCRETE DRIVEWAY 7-INCH SY
0010	500+92	-	506+55	McCoy Road	--
0010	670+35	-	677+71	Syene Road South	370
0010	677+71	-	680+00	Syene/McCoy Intersection	65
0010	680+00	-	684+29	Syene Road North	--
				PROJECT TOTAL	435

3

HMA PAVEMENT

CATEGORY	STATION	TO	STATION	LOCATION	455.0605 TACK COAT GAL	460.5225 HMA PAVEMENT 5 LT 58-28 S TON	460.6223 HMA PAVEMENT 3 MT 58-28 S TON	460.6225 HMA PAVEMENT 5 MT 58-28 S TON	465.0120 ASPHALTIC SURFACE DRIVEWAYS AND FIELD ENTRANCES TON	465.0315 ASPHALTIC FLUMES SY
0010	500+92	-	506+55	McCoy Road	190	--	560	340	--	25
0010	670+35	-	677+71	Syene Road South	240	--	720	430	16	--
0010	677+71	-	680+00	Syene/McCoy Intersection	150	--	430	260	--	--
0010	680+00	-	684+29	Syene Road North	140	--	420	260	--	45
0010	103+30	-	104+06	Capital City Trail	--	155	--	--	--	--
0010	105+41	-	105+96	Capital City Trail	--	25	--	--	--	--
0010	800+86	-	802+15	Trailhead Parking Lot Driveway	--	--	--	--	89	--
				PROJECT TOTAL	720	180	2,130	1,290	105	70

3

CONCRETE SIDEWALK

CATEGORY	STATION	TO	STATION	LOCATION	405.1000 STAMPING COLORED CONCRETE CY	602.0410 CONCRETE SIDEWALK 5-INCH SF	602.0420 CONCRETE SIDEWALK 7-INCH SF	602.0515 CURB RAMP DETECTABLE WARNING FIELD NATURAL PATINA SF	620.0300 CONCRETE MEDIAN SLOPED NOSE SF
0010	500+92	-	506+55	McCoy Road	3	165	--	--	19
0010	670+35	-	677+71	Syene Road South	11	685	--	--	21
0010	677+71	-	680+00	Syene/McCoy Intersection	26	1,590	865	160	165
0010	680+00	-	684+29	Syene Road North	--	--	--	--	--
				PROJECT TOTAL	40	2,440	865	160	205

CONCRETE COLLARS

CATEGORY	STATION	TO	STATION	LOCATION	520.8000 CONCRETE COLLARS FOR PIPE EACH
0010	500+92	-	506+55	McCoy Road	2
0010	670+35	-	677+71	Syene Road South	--
0010	677+71	-	680+00	Syene/McCoy Intersection	--
0010	680+00	-	684+29	Syene Road North	--
				PROJECT TOTAL	2

CONCRETE CURB & GUTTER

CATEGORY	STATION	TO	STATION	LOCATION	601.0407 CONCRETE CURB & GUTTER 18-INCH TYPE D LF	601.0411 CONCRETE CURB & GUTTER 30-INCH TYPE D LF	601.0600 CONCRETE CURB PEDESTRIAN LF	SPV.0090.01 CONCRETE CURB & GUTTER 24-INCH LF
0010	500+92	-	506+55	McCoy Road	--	268	--	97
0010	670+35	-	677+71	Syene Road South	--	734	--	312
0010	677+71	-	680+00	Syene/McCoy Intersection	20	478	50	346
0010	680+00	-	684+29	Syene Road North	--	70	--	--
				PROJECT TOTAL	20	1,550	50	755

3

STORM SEWER STRUCTURES

STRUCTURE	STATION	OFFSET*	LOCATION	522.1012 APRON ENDWALLS FOR CULVERT PIPE REINFORCED CONCRETE 12-INCH EACH	SPV.0060.09 APRON ENDWALLS FOR CULVERT PIPE REINFORCED CONCRETE 21-INCH WITH CUTOFF WALL EACH	522.1024 APRON ENDWALLS FOR CULVERT PIPE REINFORCED CONCRETE 24-INCH EACH	522.2619 APRON ENDWALLS FOR CULVERT PIPE REINFORCED CONCRETE HORIZONTAL ELLIPTICAL 19X30-INCH EACH	SPV.0060.10 APRON ENDWALLS FOR CULVERT PIPE REINFORCED CONCRETE HORIZONTAL ELLIPTICAL 19X30-INCH WITH CUTOFF WALL EACH	522.2634 APRON ENDWALLS FOR CULVERT PIPE REINFORCED CONCRETE HORIZONTAL ELLIPTICAL 34X53-INCH EACH	611.0535 MANHOLE COVERS TYPE J-SPECIAL EACH	SPV.0060.08 INLET COVERS TYPE BEEHIVE EACH	611.0624 INLET COVERS TYPE H EACH	SPV.0060.13 INLET COVERS TYPE H-VB EACH	611.0642 INLET COVERS TYPE MS EACH	611.0666 INLET COVERS TYPE Z EACH	611.2004 MANHOLES 4-FT DIAMETER EACH	611.2005 MANHOLES 5-FT DIAMETER EACH	611.2006 MANHOLES 6-FT DIAMETER EACH	611.2007 MANHOLES 7-FT DIAMETER EACH	611.3003 INLETS 3-FT DIAMETER EACH	611.3004 INLETS 4-FT DIAMETER EACH	611.3230 INLETS 2X3-FT EACH	611.3901 INLETS MEDIAN 1 GRATE EACH	650.4000 CONSTRUCTION STAKING STORM SEWER EACH	RIM** ELEVATION	INVERT*** ELEVATION	DEPTH**** FT
1.1	501+77.93	32.86' LT	MCCOY ROAD WB - WM	---	---	---	---	---	---	---	---	1	---	---	---	---	---	---	---	1	---	---	1	859.83	855.90	3.11
1.2	502+45.06	30.63' LT	MCCOY ROAD WB - WM	---	---	---	---	---	---	---	---	1	---	---	---	---	---	---	---	---	---	1	---	1	860.34	856.75	2.76
1.3	502+04.14	30.93' RT	MCCOY ROAD EB - EM	1	---	---	---	---	---	---	---	---	---	---	---	---	---	---	---	---	---	---	---	1	---	856.85	---
1.5	501+38.52	0.75' LT	MCCOY ROAD EB - EM	---	---	---	---	---	---	---	---	---	---	1	---	---	---	---	1	---	---	---	---	1	860.72	856.75	3.06
75.0	676+16.35	40.93' RT	SYENE ROAD NB - SRN	---	---	1	---	---	---	---	---	---	---	---	---	---	---	---	---	---	---	---	---	1	---	857.00	---
75.1	675+53.72	29.53' LT	SYENE ROAD SB - SRS	---	---	---	---	---	---	1	---	---	---	---	---	---	1	---	---	---	---	---	---	1	864.67	858.28	5.40
75.2	675+37.36	91.36' LT	SYENE ROAD SB - SRS	1	---	---	---	---	---	---	---	---	---	---	---	---	---	---	---	---	---	---	---	1	---	861.85	---
75.3	674+51.42	46.89' LT	SYENE ROAD SB - SRS	---	---	---	---	---	---	---	1	---	---	---	1	---	---	---	---	---	---	---	---	1	863.07	860.03	1.97
75.4	675+39.78	17.50' LT	SYENE ROAD SB - SRS	---	---	---	---	---	---	---	---	1	---	---	---	---	---	---	---	---	1	---	---	1	863.88	858.89	4.22
75.5	673+36.52	17.50' LT	SYENE ROAD SB - SRS	---	---	---	---	---	---	---	---	1	---	---	---	---	---	---	---	---	1	---	---	1	868.88	863.88	4.23
75.6	671+39.24	17.50' LT	SYENE ROAD SB - SRS	---	---	---	---	---	---	---	---	1	---	---	---	---	---	---	---	---	1	---	---	1	876.44	871.13	4.52
78.0	677+90.09	49.99' RT	SYENE ROAD NB - SRN	---	1	---	---	---	---	---	---	---	---	---	---	---	---	---	---	---	---	---	---	1	---	856.30	---
78.1	678+24.87	17.50' LT	SYENE ROAD SB - SRS	---	---	---	---	---	---	---	---	1	---	---	---	1	---	---	---	---	---	---	---	1	861.30	856.77	3.76
78.2	676+92.15	17.50' LT	SYENE ROAD SB - SRS	---	---	---	---	---	---	---	---	1	---	---	---	---	---	---	---	---	---	1	---	1	862.01	858.84	2.34
78.3	678+24.87	52.58' LT	SYENE ROAD SB - SRS	---	---	---	---	---	---	---	---	---	---	1	---	---	---	---	---	---	---	---	1	1	860.64	857.20	3.65
78.4	678+87.55	17.50' LT	SYENE ROAD SB - SRS	---	---	---	---	---	---	---	---	1	---	---	---	---	---	---	---	---	---	1	--	1	860.98	857.83	2.32
79.0	500+92.52	60.97' LT	MCCOY ROAD WB - WM	---	---	---	1	---	---	---	---	---	---	---	---	---	---	---	---	---	---	---	---	1	---	855.43	---
79.1	500+87.39	44.25' LT	MCCOY ROAD WB - WM	---	---	---	---	---	---	---	---	---	1	---	---	---	---	1	---	---	---	---	---	1	859.59	855.60	3.26
79.2	500+78.67	46.50' LT	MCCOY ROAD WB - WM	---	---	---	---	---	---	---	---	1	---	---	---	---	---	---	---	---	---	1	---	1	859.61	856.36	2.41
79.3	500+97.15	42.38' LT	MCCOY ROAD WB - WM	---	---	---	---	---	---	---	---	1	---	---	---	---	---	---	---	---	---	1	---	1	859.60	856.36	2.40
79.4	500+69.21	18.68' LT	MCCOY ROAD WB - WM	---	---	---	---	---	---	---	---	---	---	1	---	---	---	---	1	---	---	---	---	1	860.47	856.78	2.60
80.0	680+16.61	34.90' LT	SYENE ROAD SB - SRS	1	---	---	---	---	---	---	---	---	---	---	---	---	---	---	---	---	---	---	---	1	---	856.60	---
80.1	679+96.60	17.50' LT	SYENE ROAD SB - SRS	---	---	---	---	---	---	---	---	1	---	---	---	---	---	---	---	---	1	---	---	1	860.43	856.86	2.74
C1	501+88.74	61.28' RT	MCCOY ROAD EB - EM	---	---	---	---	---	1	---	---	---	---	---	---	---	---	---	---	---	---	---	---	1	---	855.79	---
C2	501+27.59	49.01' LT	MCCOY ROAD WB - WM	---	---	---	---	---	1	---	---	---	---	---	---	---	---	---	---	---	---	---	---	1	---	855.29	---
DP.1	501+15.38	30.46' RT	MCCOY ROAD EB - EM	---	---	---	---	1	---	---	---	---	---	---	---	---	---	---	---	---	---	---	---	1	---	856.25	---
DP.2	501+22.60	30.18' RT	MCCOY ROAD EB - EM	---	---	---	---	1	---	---	---	---	---	---	---	---	---	---	---	---	---	---	---	1	---	856.25	---
DP.4	501+05.69	56.19' LT	MCCOY ROAD WB - WM	---	---	---	1	---	---	---	---	---	---	---	---	---	---	---	---	---	---	---	---	1	---	855.50	---
			TOTALS	3	1	1	2	2	2	1	1	11	1	1	2	1	1	1	1	2	5	5	1	28			

REMARKS:
*STATIONS AND OFFSETS ARE TO CENTER OF STRUCTURE
**RIM ELEV IS AT THE INLET COVER FLOWLINE LOCATION
***FOR STRUCTURES WITH SUMPS, THE INVERT ELEVATION IS THE ELEVATION OF THE SUMP. FOR STRUCTURES WITHOUT SUMPS, THE INVERT ELEVATION IS THE ELEVATION OF THE LOWEST PIPE FLOW LINE
****DEPTH = RIM ELEV - TOP OF STRUCTURE BASE ELEV - COVER HEIGHT - 6-INCH ADJUSTMENT RING HEIGHT

3

EROSION CONTROL

CATEGORY	STATION	TO	STATION	LOCATION	606.0200 RIPRAP MEDIUM CY	628.1504 SILT FENCE LF	628.1520 SILT FENCE MAINTENANCE LF	628.2008 EROSION MAT URBAN CLASS I TYPE B SY	628.2027 EROSION MAT CLASS II TYPE C SY	628.2033 EROSION MAT CLASS III TYPE B SY	628.7005 INLET PROTECTION TYPE A EACH	628.7504 TEMPORARY DITCH CHECKS LF	SPV.0060.11 CULVERT PIPE CHECKS SPECIAL EACH	628.7560 TRACKING PADS EACH	645.0120 GEOTEXTILE TYPE HR SY	SPV.0060.01 FRAMED INLET PROTECTION EACH
0010	500+92	-	506+55	McCoy Road	36	990	990	2,340	270	--	--	40	4	--	160	4
0010	670+35	-	677+71	Syene Road South	6	--	--	4,830	940	--	2	225	1	--	28	4
0010	677+71	-	680+00	Syene/McCoy Intersection	5	380	380	2,220	--	30	1	--	--	--	21	5
0010	680+00	-	684+29	Syene Road North	8	--	--	1,990	520	--	--	40	--	--	33	1
				UNDISTRIBUTED	15	350	350	2,870	440	10	2	85	2	3	68	6
				PROJECT TOTAL	70	1,720	1,720	14,250	2,170	40	5	390	7	3	310	20

3

BEAM GUARD

CATEGORY	STATION	TO	STATION	LOCATION	614.2300 MGS GUARDRAIL 3 LF	614.2350 MGS GUARDRAIL SHORT RADIUS LF	614.2610 MGS GUARDRAIL TERMINAL EAT EA	NOTES
0010	500+92	-	506+55	McCoy Road	112.5	75.0	1	108' RADIUS, 16 CRT POSTS
0010	670+35	-	677+71	Syene Road South	237.5	50.0	1	48' RADIUS, 12 CRT POSTS
				PROJECT TOTAL	350.0	125.0	2	

PIPE GRATES

CATEGORY	STRUCTURE	LOCATION	611.9850.S.01 PIPE GRATES 19X30-INCH EA	611.9850.S.02 PIPE GRATES 24-INCH EA	611.9850.S.03 PIPE GRATES 21-INCH EA
0010	DP.1	McCoy Road	1	--	--
	DP.2	McCoy Road	1	--	--
	79.0	McCoy Road	1	--	--
	DP.4	McCoy Road	1	--	--
	75.0	Syene/McCoy Intersection	--	1	--
	78.0	Syene/McCoy Intersection	--	--	1
		PROJECT TOTAL	4	1	1

MOBILIZATIONS EROSION CONTROL

CATEGORY	STATION	TO	STATION	LOCATION	628.1905 MOBILIZATIONS EROSION CONTROL EA	628.1910 MOBILIZATIONS EMERGENCY EROSION CONTROL EA
0010	PROJECT			PROJECT	9	5
				PROJECT TOTAL	9	5

3

FENCE SAFETY

CATEGORY	STATION TO STATION	LOCATION	616.0700.S FENCE SAFETY LF	NOTES
0010	PROJECT	UNDISTRIBUTED	1,000	SITE DELINEATION AND WETLAND PROTECTION
		PROJECT TOTAL	1,000	

RESTORATION

CATEGORY	STATION TO STATION	LOCATION	625.0100 TOPSOIL SY	625.0500 SALVAGED TOPSOIL SY	629.0210 FERTILIZER TYPE B CWT	630.0171 SEEDING MIXTURE NO. 70A LB	630.0200 SEEDING TEMPORARY LB	630.0500 SEED WATER MGAL	SPV.0085.01 TURF GRASS SEED MIXTURE LB	SPV.0085.02 NATIVE SEED MIXTURE A LB	SPV.0085.03 NATIVE SEED MIXTURE B LB	SPV.0085.04 NATIVE SEED MIXTURE C LB
0010	500+92 - 506+55	McCoy Road	--	2,610	1.7	8	71	59	--	1	1	1
0010	670+35 - 677+71	Syene Road South	--	5,770	3.7	12	156	130	51	1	2	2
0010	677+71 - 680+00	Syene/McCoy Intersection	--	2,250	1.5	7	61	51	6	1	1	1
0010	680+00 - 684+29	Syene Road North	--	2,510	1.6	10	68	57	--	--	--	--
		UNDISTRIBUTED	500	3,360	2.5	13	89	78	23	2	1	1
		PROJECT TOTAL	500	16,500	11.0	50	445	375	80	5	5	5

3

STORM SEWER PIPES

FROM - TO	LOCATION	608.0412 STORM SEWER PIPE REINFORCED CONCRETE CLASS IV 12-INCH LF	608.0415 STORM SEWER PIPE REINFORCED CONCRETE CLASS IV 15-INCH LF	608.0418 STORM SEWER PIPE REINFORCED CONCRETE CLASS IV 18-INCH LF	608.0421 STORM SEWER PIPE REINFORCED CONCRETE CLASS IV 21-INCH LF	608.0424 STORM SEWER PIPE REINFORCED CONCRETE CLASS IV 24-INCH LF	608.2419 STORM SEWER PIPE REINFORCED CONCRETE HORIZONTAL ELLIPTICAL CLASS HE-IV 19X30-INCH LF	608.2434 STORM SEWER PIPE REINFORCED CONCRETE HORIZONTAL ELLIPTICAL CLASS HE-IV 34X53-INCH LF	INLET ELEVATION	DISCHARGE ELEVATION	SLOPE FT/FT
1.0 - C2	MCCOY ROAD	---	---	---	---	---	---	35	855.43	855.29	0.0039
1.1 - 1.0	MCCOY ROAD	---	30	---	---	---	---	---	855.90	855.75	0.0050
1.2 - 1.1	MCCOY ROAD	60	---	---	---	---	---	---	856.75	856.15	0.0100
1.3 - 1.1	MCCOY ROAD	70	---	---	---	---	---	---	856.85	856.15	0.0100
1.4 - 1.0	MCCOY ROAD	---	---	---	---	---	---	14	855.48	855.43	0.0039
1.5 - 1.4	MCCOY ROAD	25	---	---	---	---	---	---	856.75	856.50	0.0100
70.0 - 75.6	SYENE ROAD	---	---	112	---	---	---	---	876.19	871.13	0.0453
75.1 - 75.0	SYENE ROAD	---	---	---	---	103	---	---	858.28	857.00	0.0125
75.2 - 75.1	SYENE ROAD	64	---	---	---	---	---	---	861.85	860.58	0.0200
75.3 - 75.1	SYENE ROAD	100	---	---	---	---	---	---	860.03	859.28	0.0075
75.4 - 75.1	SYENE ROAD	---	---	---	18	---	---	---	858.89	858.53	0.0200
75.5 - 75.4	SYENE ROAD	---	---	---	199	---	---	---	863.88	858.89	0.0250
75.6 - 75.5	SYENE ROAD	---	---	200	---	---	---	---	871.13	864.13	0.0350
78.1 - 78.0	SYENE ROAD	---	---	---	95	---	---	---	856.77	856.30	0.0050
78.2 - 78.1	SYENE ROAD	132	---	---	---	---	---	---	858.84	857.52	0.0100
78.3 - 78.1	SYENE ROAD	---	---	35	---	---	---	---	857.20	857.02	0.0050
78.4 - 78.1	SYENE ROAD	63	---	---	---	---	---	---	857.83	857.52	0.0050
79.1 - 79.0	MCCOY ROAD	---	---	---	---	---	17	---	855.60	855.43	0.0100
79.2 - 79.1	MCCOY ROAD	9	---	---	---	---	---	---	856.36	856.18	0.0200
79.3 - 79.1	MCCOY ROAD	9	---	---	---	---	---	---	856.36	856.18	0.0200
79.4 - 79.2	MCCOY ROAD	29	---	---	---	---	---	---	856.95	856.36	0.0200
80.1 - 80.0	SYENE ROAD	26	---	---	---	---	---	---	856.86	856.60	0.0100
C1 - 1.4	MCCOY ROAD	---	---	---	---	---	---	79	855.79	855.48	0.0039
DP.1 - 79.1	MCCOY ROAD	---	---	---	---	---	86	---	856.25	855.60	0.0075
DP.2 - DP.4	MCCOY ROAD	---	---	---	---	---	95	---	856.25	855.50	0.0079
	TOTALS	587	30	347	312	103	198	128			

3

SIGNING REMOVALS

CATEGORY	SIGN #	SIGN CODE	638.2602 REMOVING SIGNS TYPE II EACH	638.3000 REMOVING SMALL SIGN SUPPORTS EACH	REMARKS
0010	1-1R	R2-1	1	1	SPEED LIMIT 35 MPH
0010	1-2R	W1-6	1	1	NIGHT ARROW (SINGLE)
0010	2-1R	--	1	1	TRUCKS ENTERING
0010	2-2R	R1-1, D3-1	1	1	STOP SIGN, STREET NAME (3 SIGNS)
0010	2-3R	W12-1D	1	1	DOUBLE DOWN ARROW
0010	2-4R	W11-1, D3-1	1	1	BICYCLE WARNING SIGN, CAPITAL CITY TRAIL
0010	2-5R	W1-8	1	1	CHEVRON
0010	2-6R	W1-8	1	1	CHEVRON
0010	2-7R	W1-8	1	1	CHEVRON
0010	2-8R	R5-3	1	1	NO MOTOR VEHICLES
0010	2-9R	R5-3	1	1	NO MOTOR VEHICLES
0010	2-10R	W1-8	1	1	CHEVRON
0010	3-1R	W11-1	1	1	BICYCLE WARNING SIGN
0010	3-2R	W3-1, --	1	1	STOP AHEAD, STOP AHEAD PLAQUE
0010	3-3R	R2-1	1	1	SPEED LIMIT 45 MPH
0010	4-1R	W1-6	1	1	NIGHT ARROW (SINGLE)
		PROJECT TOTAL	16	16	

POND ITEMS

CATEGORY	STATION TO STATION	LOCATION	640.1303.S POND LINER CLAY CY	SPV.0060.02 PROJECT DEWATERING EA
0010	PROJECT	DRAINAGE POND	1,900	1
		PROJECT TOTAL	1,900	1

3

COVERING SIGNS

CATEGORY	STATION TO STATION	LOCATION	CYCLES	SIGNS	643.0920 TRAFFIC CONTROL COVERING SIGNS TYPE II EACH
0010	PROJECT	UNDISTRIBUTED	1	5	5
		PROJECT TOTAL			5

TRAFFIC CONTROL

CATEGORY	LOCATION	DAYS	643.0300 TRAFFIC CONTROL DRUMS DAY	643.0410 TRAFFIC CONTROL BARRICADES TYPE II DAY	643.0420 TRAFFIC CONTROL BARRICADES TYPE III DAY	643.0705 TRAFFIC CONTROL WARNING LIGHTS TYPE A DAY	643.0800 TRAFFIC CONTROL ARROW BOARDS DAY	643.0900 TRAFFIC CONTROL SIGNS DAY	643.1050 TRAFFIC CONTROL SIGNS PCMS DAY
0010	ADVANCED WARNING	110	--	--	--	--	--	1,100	--
0010	ROAD CLOSURE	110	1,650	--	2,420	4,840	110	2,310	21
0010	TRAIL AND SIDEWALK CLOSURE	110	--	110	220	440	--	330	--
0010	SYENE RD DETOUR SIGNING	110	--	--	--	--	--	33,110	--
0010	CENTRAL PARK PL DETOUR SIGNING	110	--	--	--	--	--	5,610	--
		UNDISTRIBUTED	200	15	310	570	15	4,340	--
		PROJECT TOTAL	1,850	125	2,950	5,850	125	46,800	21

3

PERMANENT SIGNING

CATEGORY	SIGN #	SIGN CODE	SIGN SIZE	SIGN SIZE WXH IN	SPV.0060.06 POSTS WOOD 4X4-INCH X 12-FT EACH	SPV.0060.03 POSTS WOOD 4X4-INCH X 14-FT EACH	SPV.0060.04 POSTS WOOD 4X4-INCH X 16-FT EACH	SPV.0060.12 POSTS WOOD 4X4-INCH X 18-FT	637.2210 SIGNS TYPE II REFLECTIVE H SF	637.2215 SIGNS TYPE II REFLECTIVE H FOLDING SF	637.2230 SIGNS TYPE II REFLECTIVE F SF	638.2102 MOVING SIGNS TYPE II EACH	638.4000 MOVING SMALL SIGN SUPPORTS EACH	SPV.0060.05 POSTS GALVANIZED STEEL 2 3/8-INCH DIAMETER X 11-FT EACH	SPV.0060.07 V-LOC SIGN BASE EACH	REMARKS
0010	1-1	R7-9	2S	12X18	--	1	--	--	1.50	--	--	--	--	--	--	NO PARKING BIKE LANE
0010	1-2	R7-9	2S	12X18	--	1	--	--	1.50	--	--	--	--	--	--	NO PARKING BIKE LANE
0010	1-3	R3-8	2S	54X30	--	2	--	--	11.25	--	--	--	--	--	--	VARIOUS ONLYS
0010	1-4	R2-1	2S	24X30	--	1	--	--	5.00	--	--	--	--	--	--	SPEED LIMIT 35 MPH
0010	1-5	R4-4	2S	36X30	--	1	--	--	7.50	--	--	--	--	--	--	BEGIN RIGHT TURN LANE - YIELD TO BIKES
0010	2-1	R7-9	2S	12X18	--	1	--	--	1.50	--	--	--	--	--	--	NO PARKING BIKE LANE
0010	2-2	R3-7R	2S	30X30	--	1	--	--	6.25	--	--	--	--	--	--	RIGHT LANE MUST TURN RIGHT
0010	2-3	R4-7	2S	24X30	--	--	--	--	5.00	--	--	--	--	1	1	KEEP RIGHT
0010	2-4	R7-9	2S	12X18	--	1	--	--	1.50	--	--	--	--	--	--	NO PARKING BIKE LANE
0010	2-5	R1-1F	2S	30X30	--	--	--	--	--	5.18	--	--	--	--	--	STOP SIGN (FOLDING)
0010	2-6	R4-7	2S	24X30	--	--	--	--	5.00	--	--	--	--	1	1	KEEP RIGHT
0010	2-7	M1-94H	Custom	84X18	--	--	--	--	10.50	--	--	--	--	--	--	CROSS ROAD NAME FOR OVERHEAD STREET
0010	2-8	D1-2	Custom	90X36	--	--	--	--	22.50	--	--	--	--	--	--	TWO DESTINATION (ARROWS)
0010	2-9	R4-7	2S	24X30	--	--	--	--	5.00	--	--	--	--	1	1	KEEP RIGHT
0010	2-10	R4-7	2S	24X30	--	--	--	--	5.00	--	--	--	--	1	1	KEEP RIGHT
0010	2-11	D1-2	Custom	90X36	--	--	2	--	22.50	--	--	--	--	--	--	TWO DESTINATION (ARROWS)
0010	2-12	W12-1D	2S	24X24	--	--	--	--	--	--	4.00	--	--	1	1	DOUBLE DOWN ARROW
0010	2-13	R5-3	2S	24X24	1	--	--	--	4.00	--	--	--	--	--	--	NO MOTOR VEHICLES
0010	2-14	R4-7	2S	24X30	--	--	--	--	5.00	--	--	--	--	--	--	KEEP RIGHT
0010	2-15	M1-94H	Custom	84X18	--	--	--	--	10.50	--	--	--	--	--	--	CROSS ROAD NAME FOR OVERHEAD STREET
0010	2-16	R1-1F	2S	30X30	--	--	--	--	--	5.18	--	--	--	--	--	STOP SIGN (FOLDING)
0010	2-17	R1-1F	2S	30X30	--	--	--	--	--	5.18	--	--	--	--	--	STOP SIGN (FOLDING)
0010	2-18	R5-3	2S	24X24	1	1	--	--	4.00	--	--	--	--	--	--	NO MOTOR VEHICLES
0010	2-19	R4-7	2S	24X30	--	--	--	--	5.00	--	--	--	--	1	1	KEEP RIGHT
0010	2-20	R1-1F	2S	30X30	--	--	--	--	--	5.18	--	--	--	--	--	STOP SIGN (FOLDING)
0010	2-21	R1-1F	2S	30X30	--	--	--	--	--	5.18	--	--	--	--	--	STOP SIGN (FOLDING)
0010	2-22	R1-1F	2S	30X30	--	--	--	--	--	5.18	--	--	--	--	--	STOP SIGN (FOLDING)
0010	3-1	R7-9	2S	12X18	--	1	--	--	1.50	--	--	--	--	--	--	NO PARKING BIKE LANE
0010	3-2	R7-9	2S	12X18	--	1	--	--	1.50	--	--	--	--	--	--	NO PARKING BIKE LANE
0010	3-3	R3-8	2S	36X30	--	1	--	--	7.50	--	--	--	--	--	--	VARIOUS ONLYS
0010	3-4	R2-1	2S	24X30	--	--	1	--	5.00	--	--	--	--	--	--	SPEED LIMIT 45 MPH
0010	3-5	W3-3	2S	36X36	--	--	2	--	--	--	9.00	--	--	--	--	SIGNAL AHEAD
0010	3-6	W8-25	2S	36X36	--	--	--	2	--	--	9.00	--	--	--	--	SHOULDER ENDS
0010	3-7	W16-2A	2S	24X12	--	--	--	--	--	--	2.00	--	--	--	--	XX FT
0010	3-8	W16-1P	2S	24X30	--	--	--	--	--	--	3.00	--	--	--	--	SHRE THE ROAD
0010	4-1	R3-8	2S	36X30	--	1	--	--	7.50	--	--	--	--	--	--	VARIOUS ONLYS
0010	4-2	R3-7R	2S	30X30	--	1	--	--	6.25	--	--	--	--	--	--	RIGHT LANE MUST TURN RIGHT
0010	4-3	W3-3	2S	36X36	--	--	2	--	--	--	9.00	--	--	--	--	SIGNAL AHEAD
0010	4-4	R4-4	2S	36X30	--	1	--	--	7.50	--	--	--	--	--	--	BEGIN RIGHT TURN LANE - YIELD TO BIKES
0010	2-1M	--	--	--	--	--	--	--	--	--	--	1	1	--	--	WARNING TRAIL SIGNS
0010	2-2M	R1-1	--	--	--	--	--	--	--	--	--	1	1	--	--	STOP SIGN
0010	2-3M	--	--	--	--	--	--	--	--	--	--	1	1	--	--	ENTERING FEE AREA
0010		--	--	--	--	--	--	--	--	--	--	--	--	--	--	MISC INFO
0010	2-4M	R1-1	--	--	--	--	--	--	--	--	--	1	1	--	--	STOP SIGN
0010		D3-1	--	--	--	--	--	--	--	--	--	1	--	--	--	STREET NAME
0010		D3-1	--	--	--	--	--	--	--	--	--	1	--	--	--	STREET NAME
0010	2-5M	--	--	--	--	--	--	--	--	--	--	1	1	--	--	CAPITAL CITY TRAIL
0010	2-6M	--	--	--	--	--	--	--	--	--	--	1	1	--	--	CAPITAL CITY TRAIL
0010	4-1M	R2-1	2S	24X30	--	--	--	--	--	--	--	1	1	--	--	SPEED LIMIT 40 MPH
0010	4-2M	W10-1	2S	36X36	--	--	--	--	--	--	--	1	1	--	--	RAILROAD CROSSING
				PROJECT TOTAL	2	16	7	2	176.75	31.08	36.00	10	8	6	6	

3

3

TEMPORARY PEDESTRIAN ITEMS

CATEGORY	STATION	TO	STATION	LOCATION	644.1410 TEMPORARY PEDESTRIAN SURFACE ASPHALT SF	644.1810 TEMPORARY PEDESTRIAN BARRICADE LF
0010	500+92	-	506+55	McCoy Road	--	--
0010	670+35	-	677+71	Syene Road South	--	--
0010	677+71	-	680+00	Syene/McCoy Intersection	3,040	690
0010	680+00	-	684+29	Syene Road North	--	--
				UNDISTRIBUTED	760	180
				PROJECT TOTAL	3,800	870

PAVEMENT MARKING

CATEGORY	STATION	TO	STATION	LOCATION	646.1020 MARKING LINE EPOXY 4-INCH WHITE LF	646.1020 MARKING LINE EPOXY 4-INCH YELLOW LF	646.3020 MARKING LINE EPOXY 8-INCH LF	646.5020 MARKING ARROW EPOXY EACH	646.5120 MARKING WORD EPOXY EACH	646.5220 MARKING SYMBOL EPOXY EACH	SPV.0090.02 MARKING STOP LINE EPOXY 24-INCH LF	646.7120 MARKING DIAGONAL EPOXY 12-INCH LF	646.7420 MARKING CROSSWALK EPOXY TRANSVERSE LINE 6-INCH LF	646.7520 MARKING CROSSWALK EPOXY BLOCK STYLE 24-INCH LF	646.8120 MARKING CURB EPOXY LF	646.8220 MARKING ISLAND NOSE EPOXY EACH
0010	500+92	-	506+55	McCoy Road	971	1,234	457	7	1	3	--	30	--	--	30	2
0010	670+35	-	677+71	Syene Road South	2,666	1,804	362	8	1	5	37	131	--	--	40	2
0010	677+71	-	680+00	Syene/McCoy Intersection	160	--	113	2	-	1	63	24	--	150	30	5
0010	680+00	-	684+29	Syene Road North	900	1,480	248	3	1	2	--	80	--	--	--	--
0010	103+30	-	104+06	Capital City Trail	--	17	--	--	--	--	--	--	--	--	--	--
0010	105+41	-	105+96	Capital City Trail	--	15	--	--	--	--	--	--	--	--	--	--
0010	800+86	-	802+25	Trailhead Parking Lot Driveway	--	184	--	--	--	--	15	--	60	--	--	--
				SUBTOTAL	4,696	4,734	1,180	20	3	11	115	265	60	150	100	9
				PROJECT TOTAL	9,430		1,180	20	3	11	115	265	60	150	100	9

3

CONSTRUCTION STAKING

CATEGORY	STATION	TO	STATION	LOCATION	650.4500 CONSTRUCTION STAKING SUBGRADE LF	650.5000 CONSTRUCTION STAKING BASE LF	650.5500 CONSTRUCTION STAKING CURB GUTTER AND CURB & GUTTER LF	650.9000 CONSTRUCTION STAKING CURB RAMPS EACH	650.9500.01 CONSTRUCTION STAKING SIDEWALK 5849-02-07 EACH	650.9911.01 CONSTRUCTION STAKING SUPPLEMENTAL CONTROL 5849-02-07 EACH	650.9920 CONSTRUCTION STAKING SLOPE STAKES LF
0010				PROJECT	--	--	--	--	1	1	--
0010	500+92	-	506+55	McCoy Road	563	563	365	--	--	--	563
0010	670+35	-	677+71	Syene Road South	736	736	1,046	--	--	--	736
0010	677+71	-	680+00	Syene/McCoy Intersection	229	229	894	6	--	--	229
0010	680+00	-	684+29	Syene Road North	429	429	70	--	--	--	429
0010	800+86		802+15	Trailhead Parking Lot Driveway	129	129	--	--	--	--	129
				PROJECT TOTAL	2,086	2,086	2,375	6	1	1	2,086

SAWING

CATEGORY	STATION	TO	STATION	LOCATION	690.0150 SAWING ASPHALT LF
0010	500+92	-	506+55	McCoy Road	32
0010	670+35	-	677+71	Syene Road South	68
0010	677+71	-	680+00	Syene/McCoy Intersection	10
0010	680+00	-	684+29	Syene Road North	32
				PROJECT TOTAL	142

TRAFFIC SIGNAL STRUCTURES

LOCATION / BASE NUMBER	STATION	OFFSET	L/R	654.0101 CONCRETE BASES TYPE 1 EACH	654.0102 CONCRETE BASES TYPE 2 EACH	657.0100 PEDESTAL BASES EACH	657.0255 TRANSFORMER BASES BREAKAWAY 11 1/2-INCH BOLT CIRCLE EACH	657.0315 POLES TYPE 4 EACH	657.0430 TRAFFIC SIGNAL STANDARDS ALUMINUM 10-FT EACH	657.0420 TRAFFIC SIGNAL STANDARDS ALUMINUM 13-FT EACH	657.0609 LUMINAIRE ARMS SINGLE MEMBER 4-INCH CLAMP 6-FT EACH	659.1115 LUMINAIRES UTILITY LED A EACH
CATEGORY 0010												
SYENE ROAD & MCCOY ROAD												
SB1	679+04.9 'SRS'	25.5	L	1	--	1	--	--	--	1	--	--
SB2	679+09.9 'SRN'	4.4	L	--	1	--	1	1	--	--	2	2
SB3	679+42.5 'SRN'	4.5	L	1	--	1	--	--	--	1	--	--
SB4	679+31.2 'SRN'	52.1	R	--	1	--	1	1	--	--	--	--
SB5	679+47.1 'SRN'	42.5	R	1	--	1	--	--	1	--	1	1
SB6	679+05.8 'SRN'	39.7	R	1	--	1	--	--	1	--	--	--
SB7	679+10.0 'SRN'	26.5	R	1	--	1	--	--	1	--	--	--
SB9	678+82.4 'SRN'	57.1	R	1	--	1	--	--	--	1	1	1
SB11	677+75.0 'SRN'	33.5	R	--	1	--	1	1	--	--	1	1
SB13	678+35.5 'SRS'	36.3	L	1	--	1	--	--	--	1	--	--
SB14	678+73.5 'SRS'	36.4	L	--	1	--	1	1	--	--	--	--
SUBTOTAL				**7**	**4**	**7**	**4**	**4**	**3**	**4**	**5**	**5**
PROJECT TOTAL				**7**	**4**	**7**	**4**	**4**	**3**	**4**	**5**	**5**

TRAFFIC SIGNAL STRUCTURES

LOCATION / BASE NUMBER	STATION	OFFSET	L/R	654.0110 CONCRETE BASES TYPE 10 EACH	657.0345 POLES TYPE 9 EACH	657.0520 MONOTUBE ARMS ARMS 20-FT EACH	657.0525 MONOTUBE ARMS ARMS 25-FT EACH	657.0530 MONOTUBE ARMS ARMS 30-FT EACH
CATEGORY 0010								
SYENE ROAD & MCCOY ROAD								
SB8	678+95.3 'SRN'	29.0	R	1	1	--	1	--
SB10	678+30.6 'SRN'	108.9	R	1	1	1	--	--
SB12	677+71.2 'SRS'	21.5	L	1	1	--	--	1
SUBTOTAL				**3**	**3**	**1**	**1**	**1**
PROJECT TOTAL				**3**	**3**	**1**	**1**	**1**

TRAFFIC SIGNAL MOUNTING HARDWARE

LOCATION	658.5070.001 SIGNAL MOUNTING HARDWARE (SYENE ROAD & MCCOY ROAD) EACH
CATEGORY 0010	
SYENE ROAD & MCCOY ROAD	1
PROJECT TOTAL	**1**

TRAFFIC SIGNAL SYSTEMS

LOCATION	SPV.0060.24 FURNISH & INSTALL APS SYSTEM (SYENE ROAD & MCCOY ROAD) EACH
CATEGORY 0010	
SYENE ROAD & MCCOY ROAD	1
PROJECT TOTAL	**1**

3

TRAFFIC SIGNAL CABLE AND WIRE - BELOW GROUND

LOCATION	FROM	-	TO	655.0260 CABLE TRAFFIC SIGNAL 12-14 AWG LF	655.0305 CABLE TYPE UF 2-12 AWG GROUNDED LF	655.0700* LOOP DETECTOR LEAD IN CABLE LF	655.0515 ELECTRICAL WIRE TRAFFIC SIGNALS 10 AWG LF	655.0900* TRAFFIC SIGNAL EVP DETECTOR CABLE LF
CATEGORY 0010								
SYENE ROAD & MCCOY ROAD								
	CB1	-	SB1	77	--	77	77	--
	CB1	-	SB2	128	128	128	--	--
	CB1	-	SB3	150	--	--	--	--
	CB1	-	SB4	224	--	--	--	--
	CB1	-	SB5	241	--	241	--	--
	CB1	-	SB6	289	--	289	--	--
	CB1	-	SB7	302	--	302	--	--
	CB1	-	SB8	295	--	--	--	300
	CB1	-	SB9	268	--	--	--	--
	CB1	-	SB10	372	--	--	--	--
	CB1	-	SB11	330	--	--	--	--
	CB1	-	SB12	230	--	--	--	235
	CB1	-	SB13	173	--	173	--	--
	CB1	-	SB14	106	106	106	106	111
	SB1	-	SB2	--	--	--	110	--
	SB2	-	SB3	--	--	--	79	--
	SB3	-	SB4	--	--	--	175	--
	SB4	-	SB5	--	--	--	88	--
	SB5	-	SB6	--	--	--	152	--
	SB6	-	SB7	--	--	--	116	--
	SB7	-	SB8	--	--	--	126	--
	SB8	-	SB9	--	--	--	88	--
	SB9	-	SB10	--	--	--	167	--
	SB10	-	SB11	--	--	--	149	--
	SB11	-	SB12	--	--	--	188	--
	SB12	-	SB13	--	--	--	119	--
	SB13	-	SB14	--	--	--	130	--
	SB2	-	SB4	--	152	--	--	--
	SB14	-	SB11	--	287	--	--	--
SUBTOTAL				**3,185**	**673**	**1,316**	**1,870**	**646**
PROJECT TOTAL				**3,185**	**673**	*	**1,870**	*

*ADDITIONAL QUANTITIES SHOWN ELSEWHERE.

TRAFFIC SIGNAL CONDUIT

LOCATION	FROM	-	TO	652.0225 CONDUIT RIGID NONMETALLIC SCHEDULE 40 2-INCH LF	652.0235 CONDUIT RIGID NONMETALLIC SCHEDULE 40 3-INCH LF
CATEGORY 0010					
SYENE ROAD & MCCOY ROAD					
	CB1	-	PB1	--	75
	PB1	-	SB1	14	--
	PB1	-	PB2	12	--
	PB2	-	PB3	270	--
	PB1	-	PB4	--	76
	PB4	-	SB2	13	--
	PB4	-	PB5	11	--
	PB4	-	PB6	--	146
	PB5	-	SB3	10	--
	PB6	-	SB4	20	--
	PB6	-	SB5	37	--
	PB6	-	PB7	7	--
	PB6	-	PB8	--	67
	PB8	-	SB6	35	--
	PB8	-	SB7	50	--
	PB8	-	SB8	--	42
	PB8	-	SB9	15	--
	PB8	-	PB9	7	--
	PB8	-	PB10	--	136
	PB10	-	SB10	--	38
	PB10	-	PB11	--	72
	PB11	-	SB11	30	--
	PB11	-	PB12	47	--
	PB12	-	PB13	49	--
	PB12	-	PB14	239	--
	PB11	-	PB15	--	170
	PB15	-	SB12	28	--
	PB15	-	PB16	--	60
	PB16	-	SB13	16	--
	PB16	-	PB17	44	--
	PB16	-	PB18	--	106
	PB18	-	SB14	16	--
	PB18	-	CB1	--	156
SUBTOTAL				**970**	**1,144**
PROJECT TOTAL				**970**	**1,144**

3

TRAFFIC SIGNAL HEADS

LOCATION	SIGNAL BASE NO.	HEAD NO.	658.0173 TRAFFIC SIGNAL FACE 3S 12-INCH EACH	658.0174 TRAFFIC SIGNAL FACE 4S 12-INCH EACH	658.0416 PEDESTRIAN SIGNAL FACE 16-INCH EACH
CATEGORY 0010					
SYENE ROAD & MCCOY ROAD					
	SB1	4	1	--	--
		6	1	--	--
		8B	--	--	1
	SB2	5	1	--	--
	SB3	16	1	--	--
	SB4	15	1	--	--
	SB5	91	--	--	1
	SB6	92	--	--	1
	SB7	8A	--	--	1
	SB8	2	1	--	--
		3	1	--	--
	SB9	12	1	--	--
		14	1	--	--
	SB10	13	1	--	--
	SB11	1	1	--	--
		9	--	1	--
	SB12	7	1	--	--
		8	1	--	--
		10	--	1	--
	SB13	11	1	--	--
		17	1	--	--
		2B	--	--	1
	SB14	18	1	--	--
		2A	--	--	1
SUBTOTAL			**16**	**2**	**6**
PROJECT TOTAL			**16**	**2**	**6**

TRAFFIC SIGNAL PULL BOXES

LOCATION / PULL BOX NUMBER	STATION	OFFSET	L/R	SPV.0060.20 CONSTRUCT ELECTRICAL HANDHOLE TYPE 1 EACH	SPV.0060.21 CONSTRUCT ELECTRICAL HANDHOLE TYPE 5 EACH
CATEGORY 0010					
SYENE ROAD & MCCOY ROAD					
PB1	679+18.3 'SRS'	22.6	L	--	1
PB2	679+29.4 'SRS'	22.7	L	1	--
PB3	681+98.2 'SRS'	22.7	L	1	--
PB4	679+22.2 'SRN'	4.4	L	--	1
PB5	679+33.0 'SRN'	4.5	L	--	1
PB6	679+22.2 'SRN'	69.5	R	--	1
PB7	679+20.9 'SRN'	75.7	R	1	--
PB8	678+88.6 'SRN'	70.4	R	--	1
PB9	678+87.3 'SRN'	76.4	R	1	--
PB10	678+21.5 'SRN'	72.3	R	--	1
PB11	678+02.7 'SRN'	42.2	R	--	1
PB12	677+56.8 'SRN'	34.9	R	1	--
PB13	677+52.7 'SRS'	5.3	R	1	--
PB14	675+26.8 'SRN'	35.6	R	1	--
PB15	677+98.7 'SRS'	22.9	L	--	1
PB16	678+28.3 'SRS'	22.7	L	--	1
PB17	678+41.3 'SRS'	63.6	L	1	--
PB18	678+81.3 'SRS'	22.4	L	--	1
SUBTOTAL				**8**	**10**
PROJECT TOTAL				**8**	**10**

TRAFFIC SIGNAL EQUIPMENT

LOCATION	654.0217 CONCRETE CONTROL CABINET BASES TYPE 9 SPECIAL EACH	656.0201.001 ELECTRICAL SERVICE METER BREAKER PEDESTAL (SYENE ROAD & MCCOY ROAD) EACH	SPV.0060.22 TRAFFIC SIGNAL CABINET AND CONTROLLER (SYENE ROAD & MCCOY ROAD) EACH	SPV.0060.23 FURNISH AND INSTALL EVP SYSTEM (SYENE ROAD & MCCOY ROAD) EACH	SPV.0060.25 LED BLANK OUT SIGN NO RIGHT TURN 30-INCH EACH
CATEGORY 0010					
SYENE ROAD & MCCOY ROAD	1	1	1	1	1
PROJECT TOTAL	**1**	**1**	**1**	**1**	**1**

TRAFFIC SIGNAL LOOP DETECTORS

LOCATION / LOOP NO.	STATION **	OFFSET	L/R	SIZE FT	X	SIZE FT	NO. OF TURNS	INSTALLATION METHOD	652.0800 CONDUIT LOOP DETECTOR LF	655.0800 LOOP DETECTOR WIRE LF	655.0700* LOOP DETECTOR LEAD IN CABLE LF
CATEGORY 0010											
SYENE ROAD & MCCOY ROAD											
11	677+80.1 'SRN'	5.0	L	6	X	20	2	LOOP DETECTOR INSTALLED IN BASE COURSE WITH PULL (SPLICE) BOX OFF ROADWAY (OPTION 2)	68	144	121
12	677+52.0 'SRN'	4.8	L	6	X	20	2	LOOP DETECTOR INSTALLED IN BASE COURSE WITH PULL (SPLICE) BOX OFF ROADWAY (OPTION 2)	66	140	121
21	681+98.2 'SRS'	5.0	L	6	X	6	6	LOOP DETECTOR INSTALLED IN BASE COURSE WITH PULL (SPLICE) BOX OFF ROADWAY (OPTION 2)	54	332	513
22	679+53.1 'SRS'	4.9	L	6	X	20	3	LOOP DETECTOR INSTALLED IN BASE COURSE WITH PULL (SPLICE) BOX OFF ROADWAY (OPTION 2)	84	260	244
23	679+05.0 'SRS'	5.0	L	6	X	20	3	LOOP DETECTOR INSTALLED IN BASE COURSE WITH PULL (SPLICE) BOX OFF ROADWAY (OPTION 2)	84	260	244
41	678+53.0 'SRS'	63.3	L	6	X	20	2	LOOP DETECTOR INSTALLED IN BASE COURSE WITH PULL (SPLICE) BOX OFF ROADWAY (OPTION 2)	72	152	186
42	678+47.1 'SRS'	36.5	L	6	X	20	2	LOOP DETECTOR INSTALLED IN BASE COURSE WITH PULL (SPLICE) BOX OFF ROADWAY (OPTION 2)	70	148	186
51	679+33.1 'SRS'	5.0	R	6	X	20	3	LOOP DETECTOR INSTALLED IN BASE COURSE WITH PULL (SPLICE) BOX OFF ROADWAY (OPTION 2)	68	212	281
52	679+05.0 'SRS'	4.9	R	6	X	20	3	LOOP DETECTOR INSTALLED IN BASE COURSE WITH PULL (SPLICE) BOX OFF ROADWAY (OPTION 2)	68	212	281
61	675+25.7 'SRN'	4.9	R	6	X	6	5	LOOP DETECTOR INSTALLED IN BASE COURSE WITH PULL (SPLICE) BOX OFF ROADWAY (OPTION 2)	82	418	309
62	677+52.3 'SRN'	5.1	R	6	X	20	2	LOOP DETECTOR PLACED IN CRUSHED AGGREGATE BASE (NEW ASPHALTIC PAVEMENT)	81	228	72
63	677+52.5 'SRN'	21.1	R	6	X	20	2	LOOP DETECTOR INSTALLED IN BASE COURSE WITH PULL (SPLICE) BOX OFF ROADWAY (OPTION 2)	80	168	72
64	677+80.1 'SRN'	5.0	R	6	X	20	2	LOOP DETECTOR PLACED IN CRUSHED AGGREGATE BASE (NEW ASPHALTIC PAVEMENT)	81	228	72
65	677+80.2 'SRN'	21.0	R	6	X	20	2	LOOP DETECTOR INSTALLED IN BASE COURSE WITH PULL (SPLICE) BOX OFF ROADWAY (OPTION 2)	80	168	72
81	678+67.9 'SRN'	80.1	R	6	X	20	2	LOOP DETECTOR INSTALLED IN BASE COURSE WITH PULL (SPLICE) BOX OFF ROADWAY (OPTION 2)	86	180	100
82	678+67.9 'SRN'	52.1	R	6	X	20	2	LOOP DETECTOR INSTALLED IN BASE COURSE WITH PULL (SPLICE) BOX OFF ROADWAY (OPTION 2)	86	180	100
83	679+08.0 'SRN'	69.8	R	6	X	20	2	LOOP DETECTOR INSTALLED IN BASE COURSE WITH PULL (SPLICE) BOX OFF ROADWAY (OPTION 2)	76	160	151
84	679+18.3 'SRN'	43.8	R	6	X	20	2	LOOP DETECTOR INSTALLED IN BASE COURSE WITH PULL (SPLICE) BOX OFF ROADWAY (OPTION 2)	82	172	151
85	678+76.4 'SRN'	57.1	R	6	X	6	4	REFER TO WISDOT TEMPORARY TRAFFIC SIGNAL LOOP DETECTOR SDD	40	232	186
SUBTOTAL									**1,408**	**3,994**	**3,462**
PROJECT TOTAL									**1,408**	**3,994**	*

*ADDITIONAL QUANTITIES SHOWN ELSEWHERE.

CONSTRUCTION STAKING

LOCATION	650.8501.001 CONSTRUCTION STAKING ELECTRICAL INSTALLATIONS (5849-02-07) EACH
CATEGORY 0010	
5849-02-07	1
PROJECT TOTAL	**1**

PEDESTRIAN PUSH BUTTONS

LOCATION / BASE NUMBER	658.0500 PEDESTRIAN PUSH BUTTON EACH
CATEGORY 0010	
SYENE ROAD & MCCOY ROAD	
SB9	1
INTERSECTION TOTAL	**1**
PROJECT TOTAL	**1**

TRAFFIC SIGNAL CABLE AND WIRE - ABOVE GROUND

LOCATION	FROM SIGNAL BASE	-	TO SIGNAL HEAD	655.0230 CABLE TRAFFIC SIGNAL 5-14 AWG LF	655.0610 ELECTRICAL WIRE LIGHTING 12 AWG LF	655.0700* LOOP DETECTOR LEAD IN CABLE LF	655.0900* TRAFFIC SIGNAL EVP DETECTOR CABLE LF
CATEGORY 0010							
SYENE ROAD & MCCOY ROAD							
	SB1	-	4	24	--	--	--
		-	6	24	--	--	--
		-	8B	20	--	--	--
		-	BUTTON	--	--	11	--
	SB2	-	5	24	--	--	--
		-	BUTTON	--	--	11	--
		-	LUMINAIRE	--	239	--	--
	SB3	-	16	24	--	--	--
	SB4	-	15	24	--	--	--
		-	18	24	--	--	--
		-	LUMINAIRE	--	122	--	--
	SB5	-	91	20	--	--	--
		-	BUTTON	--	--	11	--
	SB6	-	92	20	--	--	--
		-	BUTTON	--	--	11	--
	SB7	-	8A	20	--	--	--
		-	BUTTON	--	--	11	--
	SB8	-	2	55	--	--	--
		-	3	55	--	--	--
		-	EVP A	--	--	--	55
SYENE ROAD & MCCOY ROAD SUBTOTAL				**334**	**361**	**55**	**55**

*ADDITIONAL QUANTITIES SHOWN ELSEWHERE.

CONTINUED

3

TRAFFIC SIGNAL CABLE AND WIRE - ABOVE GROUND (CONTINUED)

LOCATION	FROM SIGNAL BASE	-	TO SIGNAL HEAD	655.0230 CABLE TRAFFIC SIGNAL 5-14 AWG LF	655.0610 ELECTRICAL WIRE LIGHTING 12 AWG LF	655.0700* LOOP DETECTOR LEAD IN CABLE LF	655.0900* TRAFFIC SIGNAL EVP DETECTOR CABLE LF
CATEGORY 0010							
SYENE ROAD & MCCOY ROAD							
	SB9	-	12	24	--	--	--
		-	14	24	--	--	--
		-	BUTTON	--	--	11	--
	SB10	-	13	50	--	--	--
	SB11	-	1	27	--	--	--
		-	9	27	--	--	--
			LUMINAIRE	--	122	--	--
	SB12	-	7	60	--	--	--
		-	8	60	--	--	--
		-	10	60	--	--	--
		-	EVP B	--	--	--	60
	SB13	-	11	24	--	--	--
		-	17	24	--	--	--
		-	2B	20	--	--	--
		-	BUTTON	--	--	11	--
	SB14	-	18	24	--	--	--
		-	2A	20	--	--	--
		-	BUTTON	--	--	11	--
		-	LUMINAIRE	--	122	--	--
		-	EVP C	--	--	--	24
SYENE ROAD & MCCOY ROAD SUBTOTAL				**444**	**244**	**33**	**84**
SUBTOTAL				**778**	**605**	**88**	**139**
PROJECT TOTAL				**778**	**605**	**4,866**	**785**

*ADDITIONAL QUANTITIES SHOWN ELSEWHERE.

Document # 5937529

TRANSPORTATION PROJECT PLAT NO: 5849-02-06 - 4.01

THAT PART OF THE SE 1/4 OF THE SW 1/4, AND PART OF THE SW 1/4 OF THE SE 1/4 OF SECTION 2, T 6 N, R 9 E, CITY OF FITCHBURG, DANE COUNTY, WISCONSIN.

RELOCATION ORDER: LOCAL STREET, C FITCHBURG, SYENE ROAD, MC COY ROAD INTERSECTION, DANE COUNTY.

TO PROPERLY ESTABLISH, LAY OUT, WIDEN, ENLARGE, EXTEND, CONSTRUCT, RECONSTRUCT, IMPROVE, OR MAINTAIN A PORTION OF THE HIGHWAY DESIGNATED ABOVE, THE CITY OF FITCHBURG DEEMS IT NECESSARY TO RELOCATE OR CHANGE SAID HIGHWAY AND ACQUIRE CERTAIN LANDS AND INTERESTS OR RIGHTS IN LANDS FOR THE ABOVE PROJECT.

TO EFFECT THIS CHANGE, PURSUANT TO AUTHORITY GRANTED UNDER SECTION 62.22, WISCONSIN STATUTES, THE CITY OF FITCHBURG HEREBY ORDERS THAT:

1. THAT PORTION OF SAID HIGHWAY AS SHOWN ON THIS PLAT IS LAID OUT AND ESTABLISHED TO THE LINES AND WIDTHS AS SO SHOWN FOR THE ABOVE PROJECT.
2. THE LANDS OR INTERESTS OR RIGHTS IN LANDS AS SHOWN ON THIS PLAT ARE REQUIRED BY THE CITY FOR THE ABOVE PROJECT AND SHALL BE ACQUIRED IN THE NAME OF THE CITY OF FITCHBURG, PURSUANT TO THE PROVISIONS OF SECTION 62.22, WISCONSIN STATUTES.

GN

SCALE, FEET 0 50 100

Office of Register of Deeds
Dane County, Wisconsin
Received for Record December 20 23 at 1:04 o'clock P.M.
and recorded in vol. 61-099 of Plats on pages 587-588.
Kristi Chlebowski by B. Dishoff Deputy Register

RESERVED FOR REGISTER OF DEEDS
PROJECT NUMBER 5849-02-06 - 4.01
SHEET 1 OF 2

UTILITY INTERESTS REQUIRED

UTILITY NUMBER	UTILITY OWNER(S)	INTEREST REQUIRED
101	MG&E - ELECTRIC	RELEASE OF RIGHTS
103	AT&T	RELEASE OF RIGHTS
104	CHARTER COMMUNICATIONS	RELEASE OF RIGHTS
106	AMERICAN TRANSMISSION COMPANY	RELEASE OF RIGHTS

EASEMENT TABLE

UTILITY NUMBER	OWNER	RECORDING INFORMATION	LOCATED IN R/W PARCEL NO.
101	MG&E - ELECTRIC	30' WIDE EASEMENT DOC. 1140513	27
103	AT&T	NO RECORD OF EASEMENT	27
104	CHARTER COMMUNICATIONS	NO RECORD OF EASEMENT	27
106	AMERICAN TRANSMISSION COMPANY	EASEMENT ASSIGNMENT DOC. 3283455	27

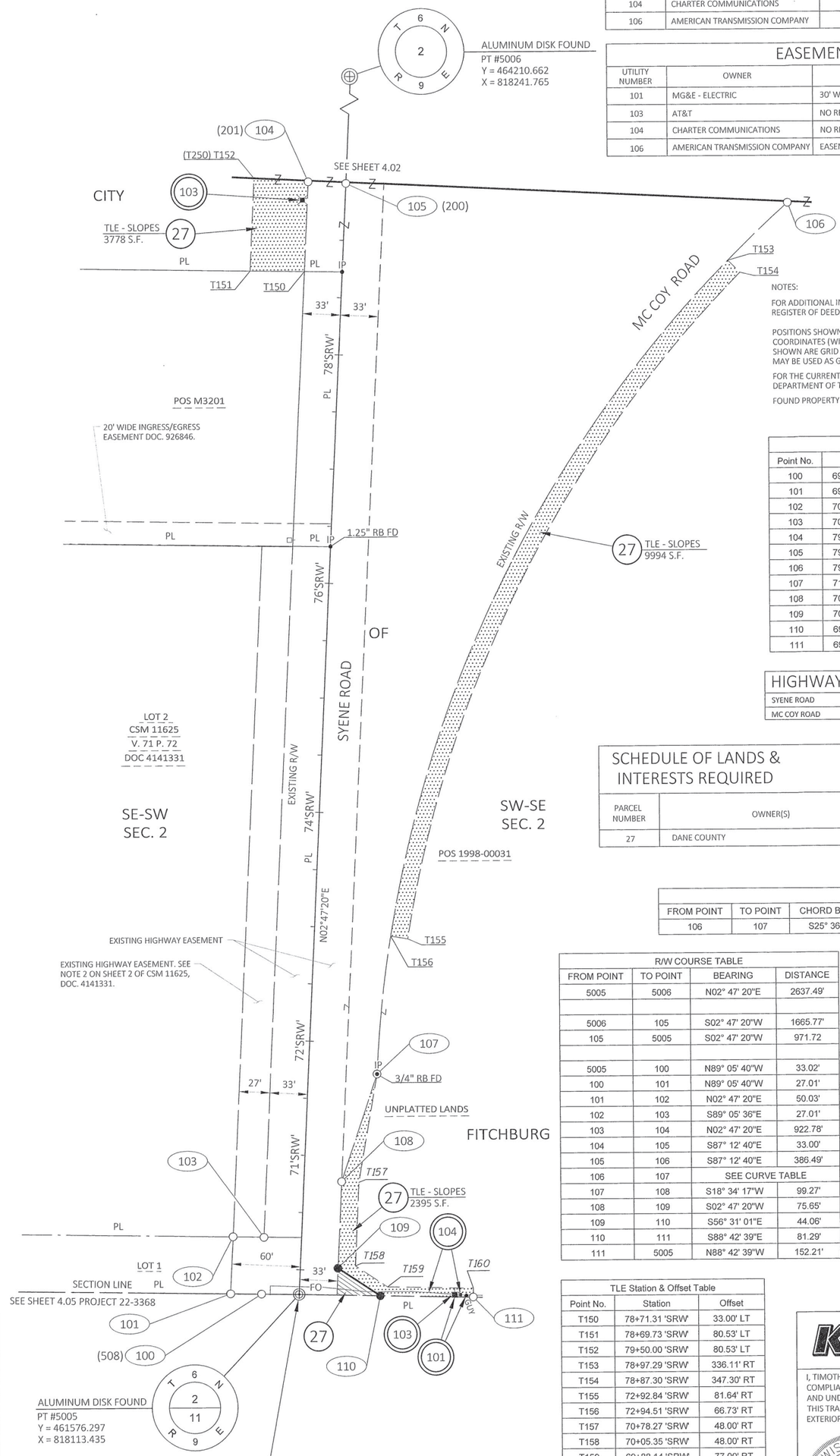

NOTES:

FOR ADDITIONAL INFORMATION REFER TO THE TITLE SHEET, RECORDED IN THE OFFICE OF THE REGISTER OF DEEDS IN DANE COUNTY AS SHEET 2 OF 2 OF THIS DOCUMENT.

POSITIONS SHOWN ON THIS PLAT ARE WISCONSIN COORDINATE REFERENCE SYSTEM COORDINATES (WISCRS), DANE COUNTY, NAD83(2011), IN U.S. SURVEY FEET. VALUES SHOWN ARE GRID COORDINATES, GRID BEARINGS, AND GRID DISTANCES. GRID DISTANCES MAY BE USED AS GROUND DISTANCES.

FOR THE CURRENT ACCESS/DRIVEWAY INFORMATION, CONTACT THE PLANNING / ZONING DEPARTMENT OF THE CITY OF FITCHBURG.

FOUND PROPERTY IRONS ARE 3/4" REBAR, UNLESS OTHERWISE NOTED.

R/W Station & Offset Table

Point No.	Station	Offset	Y	X
100	69+77.20 'SRW'	33.00' LT	461576.819	818080.421
101	69+76.31 'SRW'	60.00' LT	461577.246	818053.410
102	70+26.34 'SRW'	60.00' LT	461627.218	818055.844
103	70+27.22 'SRW'	33.00' LT	461626.790	818082.856
104	79+50.00 'SRW'	33.00' LT	462548.473	818127.754
105	79+50.00 'SRW'	0.00'	462546.867	818160.715
106	79+50.00 'SRW'	386.49' RT	462528.062	818546.745
107	71+73.80 'SRW'	60.00' RT	461768.668	818182.877
108	70+78.27 'SRW'	33.00' RT	461674.568	818151.261
109	70+02.63 'SRW'	33.00' RT	461599.011	818147.581
110	69+80.14 'SRW'	70.89' RT	461574.702	818184.332
111	69+82.26 'SRW'	152.16' RT	461572.872	818265.605

HIGHWAY	BASIS OF EXISTING R/W
SYENE ROAD	PREVIOUS PROJECT T 014-2(27), CSM 11625, POS 1998-00031, M3201
MC COY ROAD	PREVIOUS PROJECT T 014-2(27), POS 1998-00031

SCHEDULE OF LANDS & INTERESTS REQUIRED

OWNER'S NAMES ARE SHOWN FOR REFERENCE PURPOSES ONLY AND ARE SUBJECT TO CHANGE PRIOR TO THE TRANSFER OF LAND INTERESTS TO THE CITY OF FITCHBURG.

PARCEL NUMBER	OWNER(S)	INTEREST REQUIRED	R/W S.F. REQUIRED NEW	EXISTING	TOTAL	TLE S.F.
27	DANE COUNTY	FEE/TLE	445	----	445	16167

R/W CURVE TABLE

FROM POINT	TO POINT	CHORD BEARING	CHORD DISTANCE	ARC LENGTH	RADIUS
106	107	S25° 36' 06"W	842.07'	864.74'	1085.92'

R/W COURSE TABLE

FROM POINT	TO POINT	BEARING	DISTANCE
5005	5006	N02° 47' 20"E	2637.49'
5006	105	S02° 47' 20"W	1665.77'
105	5005	S02° 47' 20"W	971.72
5005	100	N89° 05' 40"W	33.02'
100	101	N89° 05' 40"W	27.01'
101	102	N02° 47' 20"E	50.03'
102	103	S89° 05' 36"E	27.01'
103	104	N02° 47' 20"E	922.78'
104	105	S87° 12' 40"E	33.00'
105	106	S87° 12' 40"E	386.49'
106	107	SEE CURVE TABLE	
107	108	S18° 34' 17"W	99.27'
108	109	S02° 47' 20"W	75.65'
109	110	S56° 31' 01"E	44.06'
110	111	S88° 42' 39"E	81.29'
111	5005	N88° 42' 39"W	152.21'

TLE Station & Offset Table

Point No.	Station	Offset
T150	78+71.31 'SRW'	33.00' LT
T151	78+69.73 'SRW'	80.53' LT
T152	79+50.00 'SRW'	80.53' LT
T153	78+97.29 'SRW'	336.11' RT
T154	78+87.30 'SRW'	347.30' RT
T155	72+92.84 'SRW'	81.64' RT
T156	72+94.51 'SRW'	66.73' RT
T157	70+78.27 'SRW'	48.00' RT
T158	70+05.35 'SRW'	48.00' RT
T159	69+88.14 'SRW'	77.00' RT
T160	69+90.10 'SRW'	151.95' RT

LOCATION SKETCH

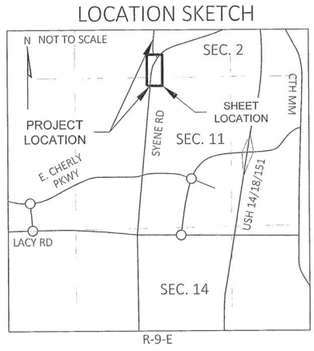

KL Engineering
A Better Experience

I, TIMOTHY M. HELD, PROFESSIONAL LAND SURVEYOR, HEREBY CERTIFY THAT IN FULL COMPLIANCE WITH THE PROVISIONS OF SECTION 84.095 OF THE WISCONSIN STATUTES AND UNDER THE DIRECTION OF THE CITY OF FITCHBURG, I HAVE SURVEYED AND MAPPED THIS TRANSPORTATION PROJECT PLAT AND SUCH PLAT CORRECTLY REPRESENTS ALL EXTERIOR BOUNDARIES OF THE SURVEYED LAND.

WISCONSIN TIMOTHY M. HELD S-2591 MADISON, WI LAND SURVEYOR

SIGNATURE: T. M. Held DATE: NOV. 10, 2023
PRINT NAME: TIMOTHY M. HELD
REGISTRATION NUMBER: S-2591

THIS PLAT AND RELOCATION ORDER ARE APPROVED FOR THE CITY OF FITCHBURG

SIGNATURE: Julia Aratti-Fratta DATE: 12/05/23
PRINT NAME: JULIA ARATTI-FRATTA

5849-02-06 - 4.01 106

PLOT SCALE :
PLOT NAME :
PLOT BY : Scott DeMeuse
PLOT DATE : 11/10/2023 8:04 AM
PLOT DATE :
FILE NAME : G:\FITCHBRG\20087-000 SYENE ROAD\CIVIL 3D\SHEETS\PLAN\040103-RP.DWG
APPRAISAL PLAT DATE : NOVEMBER 10, 2023

TRANSPORTATION PROJECT PLAT TITLE SHEET

5849-02-06

C FITCHBURG, SYENE ROAD

MC COY ROAD INTERSECTION

LOCAL STREET

DANE COUNTY

CONVENTIONAL SYMBOLS

SECTION LINE
QUARTER LINE
SIXTEENTH LINE
NEW REFERENCE LINE
NEW R/W LINE
EXISTING R/W OR HE LINE
PROPERTY LINE
LOT, TIE & OTHER MINOR LINES
SLOPE INTERCEPT
CORPORATE LIMITS
UNDERGROUND FACILITY (COMMUNICATIONS, ELECTRIC, ETC) — W — (TYPE)
NEW R/W (FEE OR HE) (HATCHING VARIES BY OWNER)
TEMPORARY LIMITED EASEMENT AREA
EASEMENT AREA (PERMANENT LIMITED OR RESTRICTED DEVELOPMENT)
TRANSMISSION STRUCTURES
BUILDING — TO BE REMOVED
BRIDGE — CULVERT

SECTION CORNER SYMBOL
SECTION CORNER MONUMENT
GEODETIC SURVEY MONUMENT
SIXTEENTH CORNER MONUMENT
SIGN
OFF-PREMISE SIGN

R/W MONUMENT (TO BE SET)
NON-MONUMENTED R/W POINT
FOUND IRON PIN (1-INCH UNLESS NOTED) IP

	COMPENSABLE	NON-COMPENSABLE
ELECTRIC POLE		
TELEPHONE POLE		
PEDESTAL (LABEL TYPE) (TV, TEL, ELEC, ETC.)		

ACCESS RESTRICTED BY ACQUISITION
NO ACCESS (BY STATUTORY AUTHORITY)
ACCESS RESTRICTED (BY PREVIOUS PROJECT OR CONTROL)
NO ACCESS (NEW HIGHWAY)
PARCEL NUMBER 25
UTILITY NUMBER 40
PARALLEL OFFSETS

CONVENTIONAL ABBREVIATIONS

ACCESS RIGHTS	AR	POINT OF COMPOUND CURVE	PCC
ACRES	AC	POINT OF INTERSECTION	PI
AHEAD	AH	PROPERTY LINE	PL
ALUMINUM	ALUM	RECORDED AS	(100')
AND OTHERS	ET AL	REEL / IMAGE	R/I
BACK	BK	REFERENCE LINE	R/L
BLOCK	BLK	REMAINING	REM
CENTERLINE	C/L	RESTRICTIVE DEVELOPMENT EASEMENT	RDE
CERTIFIED SURVEY MAP	CSM	RIGHT	RT
CONCRETE	CONC	RIGHT OF WAY	R/W
COUNTY	CO	SECTION	SEC
COUNTY TRUNK HIGHWAY	CTH	SEPTIC VENT	SEPV
DISTANCE	DIST	SQUARE FEET	SF
CORNER	COR	STATE TRUNK HIGHWAY	STH
DOCUMENT NUMBER	DOC	STATION	STA
EASEMENT	EASE	TELEPHONE PEDESTAL	TP
EXISTING	EX	TEMPORARY LIMITED EASEMENT	TLE
GAS VALVE	GV	TRANSPORTATION PROJECT PLAT	TPP
GRID NORTH	GN	UNITED STATES HIGHWAY	USH
HIGHWAY EASEMENT	HE	VOLUME	V
IDENTIFICATION	ID		
LAND CONTRACT	LC		
LEFT	LT		
MONUMENT	MON		
NATIONAL GEODETIC SURVEY	NGS		
NUMBER	NO		
OUTLOT	OL		
PAGE	P		
POINT OF TANGENCY	PT		
PERMANENT LIMITED EASEMENT	PLE		
POINT OF BEGINNING	POB		
POINT OF CURVATURE	PC		

CURVE DATA ABBREVIATIONS

LONG CHORD	LCH
LONG CHORD BEARING	LCB
RADIUS	R
DEGREE OF CURVE	D
CENTRAL ANGLE	Δ /DELTA
LENGTH OF CURVE	L
TANGENT	T
DIRECTION AHEAD	DA
DIRECTION BACK	DB

CONVENTIONAL UTILITY SYMBOLS

WATER	W
GAS	G
TELEPHONE	T
OVERHEAD TRANSMISSION LINES	OH
ELECTRIC	E
CABLE TELEVISION	TV
FIBER OPTIC	FO
SANITARY SEWER	SAN
STORM SEWER	SS
ELECTRIC TOWER	

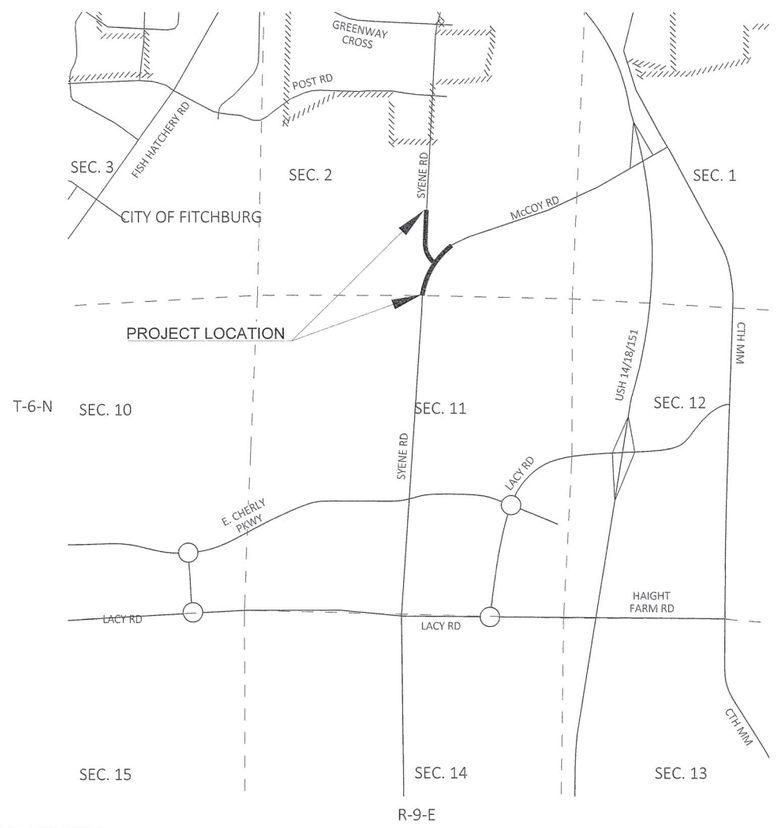

LAYOUT
SCALE 0 0.25 MI.

THE NOTES,CONVENTIONAL SIGNS, AND ABBREVIATIONS ARE ASSOCIATED WITH EACH TRANSPORTATION PROJECT PLAT FOR PROJECT 5849-02-06

NOTES:

POSITIONS SHOWN ON THIS PLAT ARE WISCONSIN COORDINATE REFERENCE SYSTEM COORDINATES (WISCRS) DANE COUNTY, NAD83(2011), IN U.S. SURVEY FEET. VALUES ARE GRID COORDINATES, GRID BEARINGS, AND GRID DISTANCES. GRID DISTANCES MAY BE USED AS GROUND DISTANCES.

ALL NEW RIGHT-OF-WAY MONUMENTS WILL BE TYPE 2 (TYPICALLY ¾" X 24" IRON REBARS), UNLESS OTHERWISE NOTED, AND WILL BE PLACED PRIOR TO THE COMPLETION OF THE PROJECT.

ALL RIGHT-OF-WAY LINES DEPICTED IN THE NON-ACQUISITION AREAS ARE INTENDED TO RE-ESTABLISH EXISTING RIGHT-OF-WAY LINES AS DETERMINED FROM PREVIOUS PROJECTS, OTHER RECORDED DOCUMENTS, OR FROM CENTERLINE OF EXISTING PAVEMENTS.

RIGHT-OF-WAY BOUNDARIES ARE DEFINED WITH COURSES OF THE PERIMETER OF THE HIGHWAY LANDS REFERENCED TO THE U.S. PUBLIC LAND SURVEY SYSTEM OR OTHER "SURVEYS" OF PUBLIC RECORD.

DIMENSIONING FOR THE NEW RIGHT-OF-WAY IS MEASURED ALONG AND PERPENDICULAR TO THE NEW REFERENCE LINES.

A TEMPORARY LIMITED EASEMENT (TLE) IS A RIGHT FOR CONSTRUCTION PURPOSES, AS DEFINED HEREIN, INCLUDING THE RIGHT TO OPERATE NECESSARY EQUIPMENT THEREON, THE RIGHT OF INGRESS AND EGRESS, AS LONG AS REQUIRED FOR SUCH PUBLIC PURPOSE, INCLUDING THE RIGHT TO PRESERVE, PROTECT, REMOVE, OR PLANT THEREON ANY VEGETATION THAT THE HIGHWAY AUTHORITIES MAY DEEM DESIRABLE. ALL (TLEs) ON THIS PLAT EXPIRE AT THE COMPLETION OF THE CONSTRUCTION PROJECT FOR WHICH THIS INSTRUMENT IS GIVEN.

PROPERTY LINES SHOWN ON THIS PLAT ARE DRAWN FROM DATA DERIVED FROM MAPS AND DOCUMENTS OF PUBLIC RECORD AND/OR EXISTING OCCUPATIONAL LINES. THIS PLAT MAY NOT BE A TRUE REPRESENTATION OF EXISTING PROPERTY LINES, EXCLUDING RIGHT-OF-WAY, AND SHOULD NOT BE USED AS A SUBSTITUTE FOR AN ACCURATE FIELD SURVEY.

FOR THE CURRENT ACCESS/DRIVEWAY INFORMATION, CONTACT THE PLANNING/ZONING DEPARTMENT OF THE CITY OF FITCHBURG.

PARCEL IDENTIFICATION NUMBERS MAY NOT POINT TO ALL AREAS OF ACQUISITION, AS NOTED ON THE SCHEDULE OF LANDS & INTERESTS REQUIRED.

INFORMATION FOR THE BASIS OF HIGHWAY RIGHT-OF-WAY POINTS OF REFERENCE AND ACCESS CONTROL ARE LISTED ON THE TPP DETAIL PAGES.

PROJECT NUMBER 5849-02-06 - 4.01
SHEET 2 OF 2
AMENDMENT NO:

FILE NAME : G:\FITCHBRG\20087-000 SYENE ROAD\CIVIL 3D\SHEETSPLAN\040103-RP - TITLE SHEET.DWG
LAYOUT NAME: TPP Title 34x22
PLOT DATE : 9/16/2015 3:04 PM PLOT BY : SCOTT DEMEUSE PLOT NAME : _____
APPRAISAL PLAT DATE : NOVEMBER 10, 2023

TRANSPORTATION PROJECT PLAT NO: 5849-02-06 - 4.02 AMENDMENT NO. 1

REVISES UTILITY NUMBER 106 TO UTILITY NUMBER 107 OF TRANSPORTATION PROJECT PLAT 5849-02-06-4.02 RECORDED AS DOCUMENT NUMBER 5937767 AND FILED IN VOL. 61-099B OF PLATS ON PAGE 589.

THAT PART OF THE SE 1/4 OF THE SW 1/4, PART OF THE NE 1/4 OF THE SW 1/4, PART OF THE NW 1/4 OF THE SE 1/4 AND PART OF THE SW 1/4 OF THE SE 1/4, ALL IN SECTION 2, T 6 N, R 9 E, CITY OF FITCHBURG, DANE COUNTY, WISCONSIN.

RELOCATION ORDER: LOCAL STREET, C FITCHBURG, SYENE ROAD, MC COY ROAD INTERSECTION, DANE COUNTY.

TO PROPERLY ESTABLISH, LAY OUT, WIDEN, ENLARGE, EXTEND, CONSTRUCT, RECONSTRUCT, IMPROVE, OR MAINTAIN A PORTION OF THE HIGHWAY DESIGNATED ABOVE, THE CITY OF FITCHBURG DEEMS IT NECESSARY TO RELOCATE OR CHANGE SAID HIGHWAY AND ACQUIRE CERTAIN LANDS AND INTERESTS OR RIGHTS IN LANDS FOR THE ABOVE PROJECT.

TO EFFECT THIS CHANGE, PURSUANT TO AUTHORITY GRANTED UNDER SECTION 62.22, WISCONSIN STATUTES, THE CITY OF FITCHBURG HEREBY ORDERS THAT:

1. THAT PORTION OF SAID HIGHWAY AS SHOWN ON THIS PLAT IS LAID OUT AND ESTABLISHED TO THE LINES AND WIDTHS AS SO SHOWN FOR THE ABOVE PROJECT.
2. THE LANDS OR INTERESTS OR RIGHTS IN LANDS AS SHOWN ON THIS PLAT ARE REQUIRED BY THE CITY FOR THE ABOVE PROJECT AND SHALL BE ACQUIRED IN THE NAME OF THE CITY OF FITCHBURG, PURSUANT TO THE PROVISIONS OF SECTION 62.22, WISCONSIN STATUTES.

Office of Register of Deeds
Dane County, Wisconsin
Received for Record April 1st
2024 at 1:29 o'clock P M.
and recorded in vol. 62-006A
of Plats on page 19
Kristich Leboeuf by
Jessica Palma, Register
Deputy
Doc# 5956377

RESERVED FOR REGISTER OF DEEDS
PROJECT NUMBER 5849-02-06 - 4.02
SHEET 1 OF 1
AMENDMENT NO. 1

108

EASEMENT TABLE

UTILITY NUMBER	OWNER	RECORDING INFORMATION	LOCATED IN R/W PARCEL NO.
107	MADISON METROPOLITAN SEWERAGE DISTRICT	30' WIDE SANITARY SEWER EASEMENT DOC. 4257437	27
107	MADISON METROPOLITAN SEWERAGE DISTRICT	INDETERMINATE WIDTH SANITARY SEWER EASEMENT DOC. 1102313	27
107	MADISON METROPOLITAN SEWERAGE DISTRICT	INDETERMINATE WIDTH SANITARY SEWER EASEMENT DOC. 1102314	27
107	MADISON METROPOLITAN SEWERAGE DISTRICT	30' WIDE SANITARY SEWER EASEMENT DOC. 1414745	27

SCHEDULE OF LANDS & INTERESTS REQUIRED

OWNER'S NAMES ARE SHOWN FOR REFERENCE PURPOSES ONLY AND ARE SUBJECT TO CHANGE PRIOR TO THE TRANSFER OF LAND INTERESTS TO THE CITY OF FITCHBURG.

PARCEL NUMBER	OWNER(S)	INTEREST REQUIRED	R/W S.F. REQUIRED NEW	EXISTING	TOTAL	TLE S.F.
27	DANE COUNTY	FEE/TLE	9643	----	9643	20802

NOTES:

FOR ADDITIONAL INFORMATION REFER TO THE TITLE SHEET, RECORDED IN THE OFFICE OF THE REGISTER OF DEEDS IN DANE COUNTY AS SHEET 2 OF 2 OF DOCUMENT NO. 5937529 AND FILED IN VOLUME 61-099A, AS PAGES 587 - 588.

POSITIONS SHOWN ON THIS PLAT ARE WISCONSIN COORDINATE REFERENCE SYSTEM COORDINATES (WISCRS), DANE COUNTY, NAD83(2011), IN U.S. SURVEY FEET. VALUES SHOWN ARE GRID COORDINATES, GRID BEARINGS, AND GRID DISTANCES. GRID DISTANCES MAY BE USED AS GROUND DISTANCES.

FOR THE CURRENT ACCESS/DRIVEWAY INFORMATION, CONTACT THE PLANNING / ZONING DEPARTMENT OF THE CITY OF FITCHBURG.

FOUND PROPERTY IRONS ARE 3/4" REBAR, UNLESS OTHERWISE NOTED.

BASIS OF EXISTING ACCESS CONTROL FROM PREVIOUS PROJECT: T014-2(27).

R/W Station & Offset Table

Point No.	Station	Offset	Y	X
200	79+50.00 'SRW'	0.00'	462546.867	818160.715
201	79+50.00 'SRW'	33.00' LT	462548.473	818127.754
202	85+00.00 'SRW'	33.00' LT	463097.821	818154.515
203	85+00.00 'SRW'	0.00'	463096.215	818187.476
204	85+00.00 'SRW'	33.00' RT	463094.610	818220.437
205	84+82.56 'SRW'	33.00' RT	463077.195	818219.589
206	83+41.45 'SRW'	43.78' RT	462935.722	818223.491
207	82+52.74 'SRW'	56.06' RT	462846.523	818231.442
208	80+52.79 'SRW'	106.81' RT	462644.340	818272.401
209	79+50.00 'SRW'	106.81' RT	462541.670	818267.399

TLE Station & Offset Table

Point No.	Station	Offset
T250	79+50.00 'SRW'	80.53' LT
T251	79+60.53 'SRW'	80.53' LT
T252	79+60.53 'SRW'	145.49' LT
T253	80+39.32 'SRW'	145.49' LT
T254	80+39.32 'SRW'	48.00' LT
T255	85+00.00 'SRW'	48.00' LT
T256	85+00.00 'SRW'	43.00' RT
T257	84+83.33 'SRW'	42.97' RT
T258	83+42.52 'SRW'	53.73' RT
T259	82+54.66 'SRW'	65.89' RT
T260	80+56.76 'SRW'	116.12' RT

R/W COURSE TABLE

FROM POINT	TO POINT	BEARING	DISTANCE
5005	5006	N02° 47' 20"E	2637.49'
5006	203	S02° 47' 20"W	1115.77'
203	200	S02° 47' 20"W	550.00'
200	5005	S02° 47' 20"W	971.72'
200	201	N87° 12' 40"W	33.00'
201	202	N02° 47' 20"E	550.00'
202	203	S87° 12' 40"E	33.00'
203	204	S87° 12' 40"E	33.00'
204	205	S02° 47' 20"W	17.44'
205	206	S01° 34' 49"E	141.53'
206	207	S05° 05' 36"E	89.55'
207	208	S11° 27' 08"E	206.29'
208	209	S02° 47' 20"W	102.79'
209	200	N87° 12' 40"W	106.81'

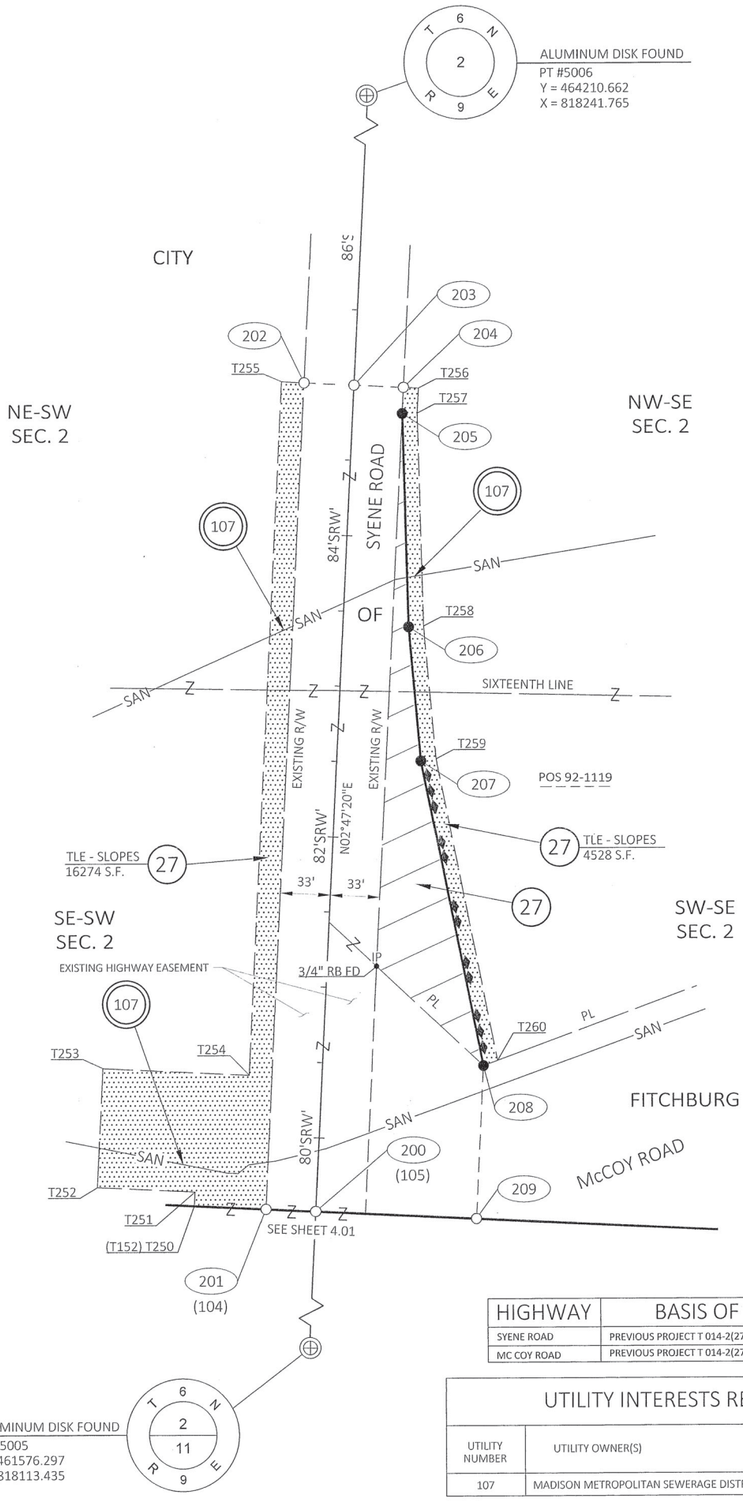

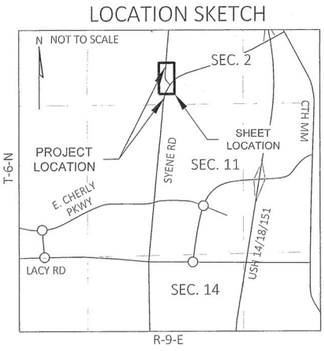

HIGHWAY	BASIS OF EXISTING R/W
SYENE ROAD	PREVIOUS PROJECT T 014-2(27), POS 92-1119
MC COY ROAD	PREVIOUS PROJECT T 014-2(27), POS 92-1119

UTILITY INTERESTS REQUIRED

UTILITY NUMBER	UTILITY OWNER(S)	INTEREST REQUIRED
107	MADISON METROPOLITAN SEWERAGE DISTRICT	RELEASE OF RIGHTS

KL Engineering
[A] Better Experience

I, TIMOTHY M. HELD, PROFESSIONAL LAND SURVEYOR, HEREBY CERTIFY THAT IN FULL COMPLIANCE WITH THE PROVISIONS OF SECTION 84.095 OF THE WISCONSIN STATUTES AND UNDER THE DIRECTION OF THE CITY OF FITCHBURG, I HAVE SURVEYED AND MAPPED THIS TRANSPORTATION PROJECT PLAT AND SUCH PLAT CORRECTLY REPRESENTS ALL EXTERIOR BOUNDARIES OF THE SURVEYED LAND.

WISCONSIN TIMOTHY M. HELD S-2591 MADISON, WI LAND SURVEYOR

SIGNATURE: T. M. Held DATE: JAN. 17, 2024
PRINT NAME: TIMOTHY M. HELD
REGISTRATION NUMBER: S-2591

THIS PLAT AND RELOCATION ORDER ARE APPROVED FOR THE CITY OF FITCHBURG.

SIGNATURE: Julia Arata DATE: 4/09/2024
PRINT NAME: JULIA ARATA-FRATTA

5849-02-06 - 4.02, AMEND. 1
PLOT SCALE :
PLOT NAME :
PLOT BY : Jennifer Lauer
PLOT DATE : 1/17/2024 11:38 AM
PLOT DATE :
FILE NAME : G:\FITCHBRG\20087-000 SYENE ROAD\CIVIL 3D\SHEETSPLAN\040103-RP - 4.02 AMEND 1.DWG
APPRAISAL PLAT DATE : JANUARY 17, 2024

Office of Register of Deeds
Dane County, Wisconsin
Received for Record 07, December
2023 at 02:22 o'clock PM
and recorded in vol. 61-099B
of Plats on page 589.
Kristi Chlebowski, Reg. of Deeds
Cheryl Ann Meyer, Register Deputy
Document # 5937767

RESERVED FOR REGISTER OF DEEDS
PROJECT NUMBER 5849-02-06 - 4.02
SHEET 1 OF 1

TRANSPORTATION PROJECT PLAT NO: 5849-02-06 - 4.02

THAT PART OF THE SE 1/4 OF THE SW 1/4, PART OF THE NE 1/4 OF THE SW 1/4, PART OF THE NW 1/4 OF THE SE 1/4 AND PART OF THE SW 1/4 OF THE SE 1/4, ALL IN SECTION 2, T 6 N, R 9 E, CITY OF FITCHBURG, DANE COUNTY, WISCONSIN.

RELOCATION ORDER: LOCAL STREET, C FITCHBURG, SYENE ROAD, MC COY ROAD INTERSECTION, DANE COUNTY.

TO PROPERLY ESTABLISH, LAY OUT, WIDEN, ENLARGE, EXTEND, CONSTRUCT, RECONSTRUCT, IMPROVE, OR MAINTAIN A PORTION OF THE HIGHWAY DESIGNATED ABOVE, THE CITY OF FITCHBURG DEEMS IT NECESSARY TO RELOCATE OR CHANGE SAID HIGHWAY AND ACQUIRE CERTAIN LANDS AND INTERESTS OR RIGHTS IN LANDS FOR THE ABOVE PROJECT.

TO EFFECT THIS CHANGE, PURSUANT TO AUTHORITY GRANTED UNDER SECTION 62.22, WISCONSIN STATUTES, THE CITY OF FITCHBURG HEREBY ORDERS THAT:

1. THAT PORTION OF SAID HIGHWAY AS SHOWN ON THIS PLAT IS LAID OUT AND ESTABLISHED TO THE LINES AND WIDTHS AS SO SHOWN FOR THE ABOVE PROJECT.
2. THE LANDS OR INTERESTS OR RIGHTS IN LANDS AS SHOWN ON THIS PLAT ARE REQUIRED BY THE CITY FOR THE ABOVE PROJECT AND SHALL BE ACQUIRED IN THE NAME OF THE CITY OF FITCHBURG, PURSUANT TO THE PROVISIONS OF SECTION 62.22, WISCONSIN STATUTES.

EASEMENT TABLE

UTILITY NUMBER	OWNER	RECORDING INFORMATION	LOCATED IN R/W PARCEL NO.
106	MADISON METROPOLITAN SEWERAGE DISTRICT	30' WIDE SANITARY SEWER EASEMENT DOC. 4257437	27
106	MADISON METROPOLITAN SEWERAGE DISTRICT	INDETERMAINATE WIDTH SANITARY SEWER EASEMENT DOC. 1102313	27
106	MADISON METROPOLITAN SEWERAGE DISTRICT	INDETERMAINATE WIDTH SANITARY SEWER EASEMENT DOC. 1102314	27
106	MADISON METROPOLITAN SEWERAGE DISTRICT	30' WIDE SANITARY SEWER EASEMENT DOC. 1414745	27

SCHEDULE OF LANDS & INTERESTS REQUIRED

OWNER'S NAMES ARE SHOWN FOR REFERENCE PURPOSES ONLY AND ARE SUBJECT TO CHANGE PRIOR TO THE TRANSFER OF LAND INTERESTS TO THE CITY OF FITCHBURG.

PARCEL NUMBER	OWNER(S)	INTEREST REQUIRED	R/W S.F. REQUIRED NEW	EXISTING	TOTAL	TLE S.F.
27	DANE COUNTY	FEE/TLE	9643	----	9643	20802

NOTES:

FOR ADDITIONAL INFORMATION REFER TO THE TITLE SHEET, RECORDED IN THE OFFICE OF THE REGISTER OF DEEDS IN DANE COUNTY AS SHEET 2 OF 2 OF DOCUMENT NO. 5937529 AND FILED IN VOLUME 61-099A AS PAGES 587-588

POSITIONS SHOWN ON THIS PLAT ARE WISCONSIN COORDINATE REFERENCE SYSTEM COORDINATES (WISCRS), DANE COUNTY, NAD83(2011), IN U.S. SURVEY FEET. VALUES SHOWN ARE GRID COORDINATES, GRID BEARINGS, AND GRID DISTANCES. GRID DISTANCES MAY BE USED AS GROUND DISTANCES.

FOR THE CURRENT ACCESS/DRIVEWAY INFORMATION, CONTACT THE PLANNING / ZONING DEPARTMENT OF THE CITY OF FITCHBURG.

FOUND PROPERTY IRONS ARE 3/4" REBAR, UNLESS OTHERWISE NOTED.

BASIS OF EXISTING ACCESS CONTROL FROM PREVIOUS PROJECT: T014-2(27).

R/W Station & Offset Table

Point No.	Station	Offset	Y	X
200	79+50.00 'SRW'	0.00'	462546.867	818160.715
201	79+50.00 'SRW'	33.00' LT	462548.473	818127.754
202	85+00.00 'SRW'	33.00' LT	463097.821	818154.515
203	85+00.00 'SRW'	0.00'	463096.215	818187.476
204	85+00.00 'SRW'	33.00' RT	463094.610	818220.437
205	84+82.56 'SRW'	33.00' RT	463077.195	818219.589
206	83+41.45 'SRW'	43.78' RT	462935.722	818223.491
207	82+52.74 'SRW'	56.06' RT	462846.523	818231.442
208	80+52.79 'SRW'	106.81' RT	462644.340	818272.401
209	79+50.00 'SRW'	106.81' RT	462541.670	818267.399

TLE Station & Offset Table

Point No.	Station	Offset
T250	79+50.00 'SRW'	80.53' LT
T251	79+60.53 'SRW'	80.53' LT
T252	79+60.53 'SRW'	145.49' LT
T253	80+39.32 'SRW'	145.49' LT
T254	80+39.32 'SRW'	48.00' LT
T255	85+00.00 'SRW'	48.00' LT
T256	85+00.00 'SRW'	43.00' RT
T257	84+83.33 'SRW'	42.97' RT
T258	83+42.52 'SRW'	53.73' RT
T259	82+54.66 'SRW'	65.89' RT
T260	80+56.76 'SRW'	116.12' RT

R/W COURSE TABLE

FROM POINT	TO POINT	BEARING	DISTANCE
5005	5006	N02° 47' 20"E	2637.49'
5006	203	S02° 47' 20"W	1115.77'
203	200	S02° 47' 20"W	550.00'
200	5005	S02° 47' 20"W	971.72'
200	201	N87° 12' 40"W	33.00'
201	202	N02° 47' 20"E	550.00'
202	203	S87° 12' 40"E	33.00'
203	204	S87° 12' 40"E	33.00'
204	205	S02° 47' 20"W	17.44'
205	206	S01° 34' 49"E	141.53'
206	207	S05° 05' 36"E	89.55'
207	208	S11° 27' 08"E	206.29'
208	209	S02° 47' 20"W	102.79'
209	200	N87° 12' 40"W	106.81'

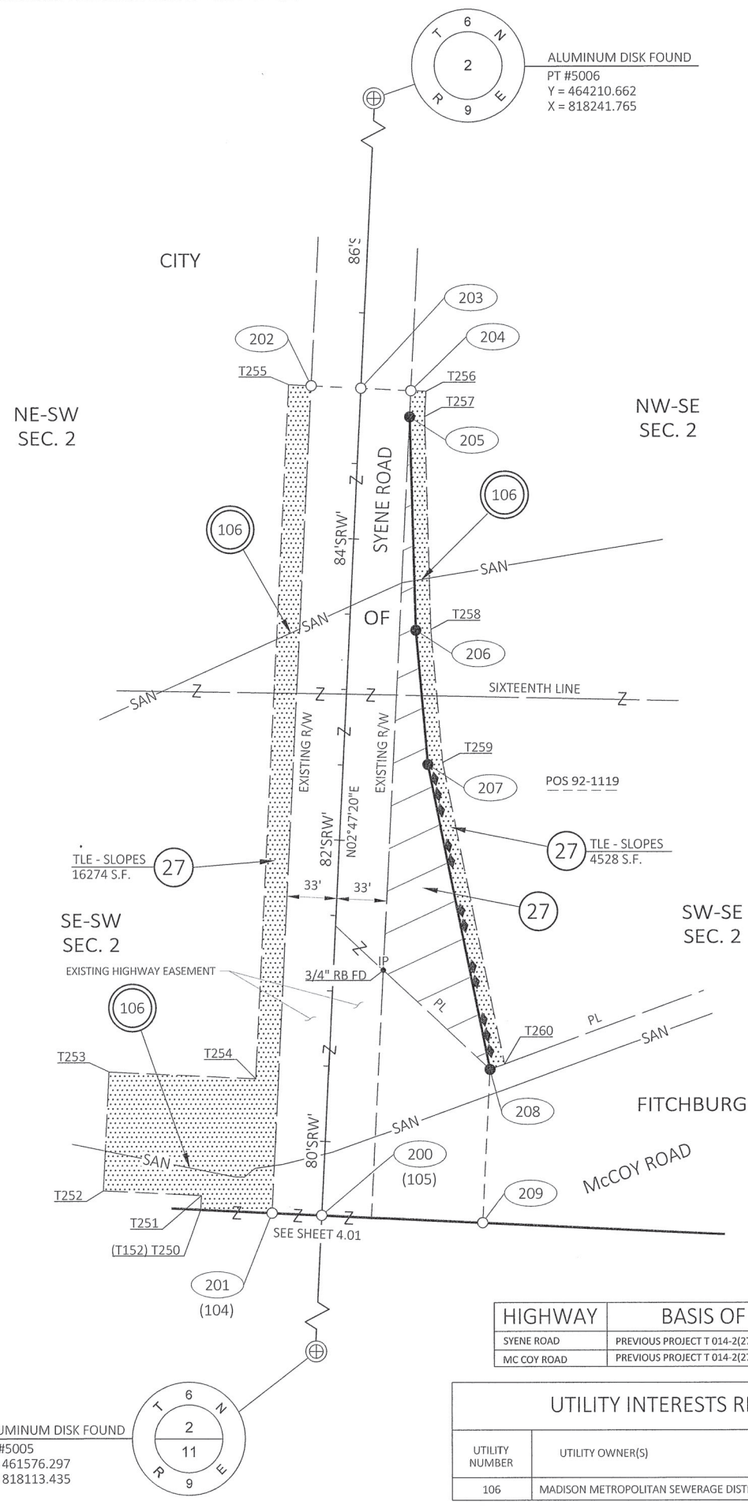

GN

SCALE, FEET
0 50 100

LOCATION SKETCH

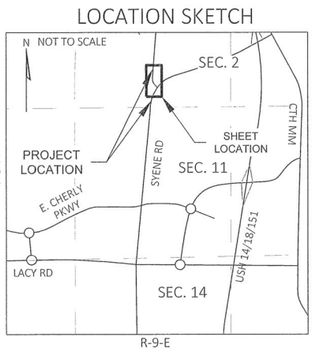

HIGHWAY	BASIS OF EXISTING R/W
SYENE ROAD	PREVIOUS PROJECT T 014-2(27), POS 92-1119
MC COY ROAD	PREVIOUS PROJECT T 014-2(27), POS 92-1119

UTILITY INTERESTS REQUIRED

UTILITY NUMBER	UTILITY OWNER(S)	INTEREST REQUIRED
106	MADISON METROPOLITAN SEWERAGE DISTRICT	RELEASE OF RIGHTS

KL Engineering
[A] Better Experience

I, TIMOTHY M. HELD, PROFESSIONAL LAND SURVEYOR, HEREBY CERTIFY THAT IN FULL COMPLIANCE WITH THE PROVISIONS OF SECTION 84.095 OF THE WISCONSIN STATUTES AND UNDER THE DIRECTION OF THE CITY OF FITCHBURG, I HAVE SURVEYED AND MAPPED THIS TRANSPORTATION PROJECT PLAT AND SUCH PLAT CORRECTLY REPRESENTS ALL EXTERIOR BOUNDARIES OF THE SURVEYED LAND.

WISCONSIN TIMOTHY M. HELD S-2591 MADISON, WI LAND SURVEYOR

SIGNATURE: DATE: NOV. 10, 2023
PRINT NAME: TIMOTHY M. HELD
REGISTRATION NUMBER: S-2591

THIS PLAT AND RELOCATION ORDER ARE APPROVED FOR THE CITY OF FITCHBURG.

SIGNATURE: DATE: 12/05/23
PRINT NAME: JULIA ARATA-FRATTA

5849-02-06 - 4.02
109

PLOT SCALE :
PLOT NAME :
PLOT BY : Timothy Held
PLOT DATE : 11/29/2023 12:58 PM
PLOT DATE :
FILE NAME : G:\FITCHBRG\20087-000 SYENE ROAD\CIVIL 3D\SHEETSPLAN\040103-RP.DWG
APPRAISAL PLAT DATE : NOVEMBER 10, 2023

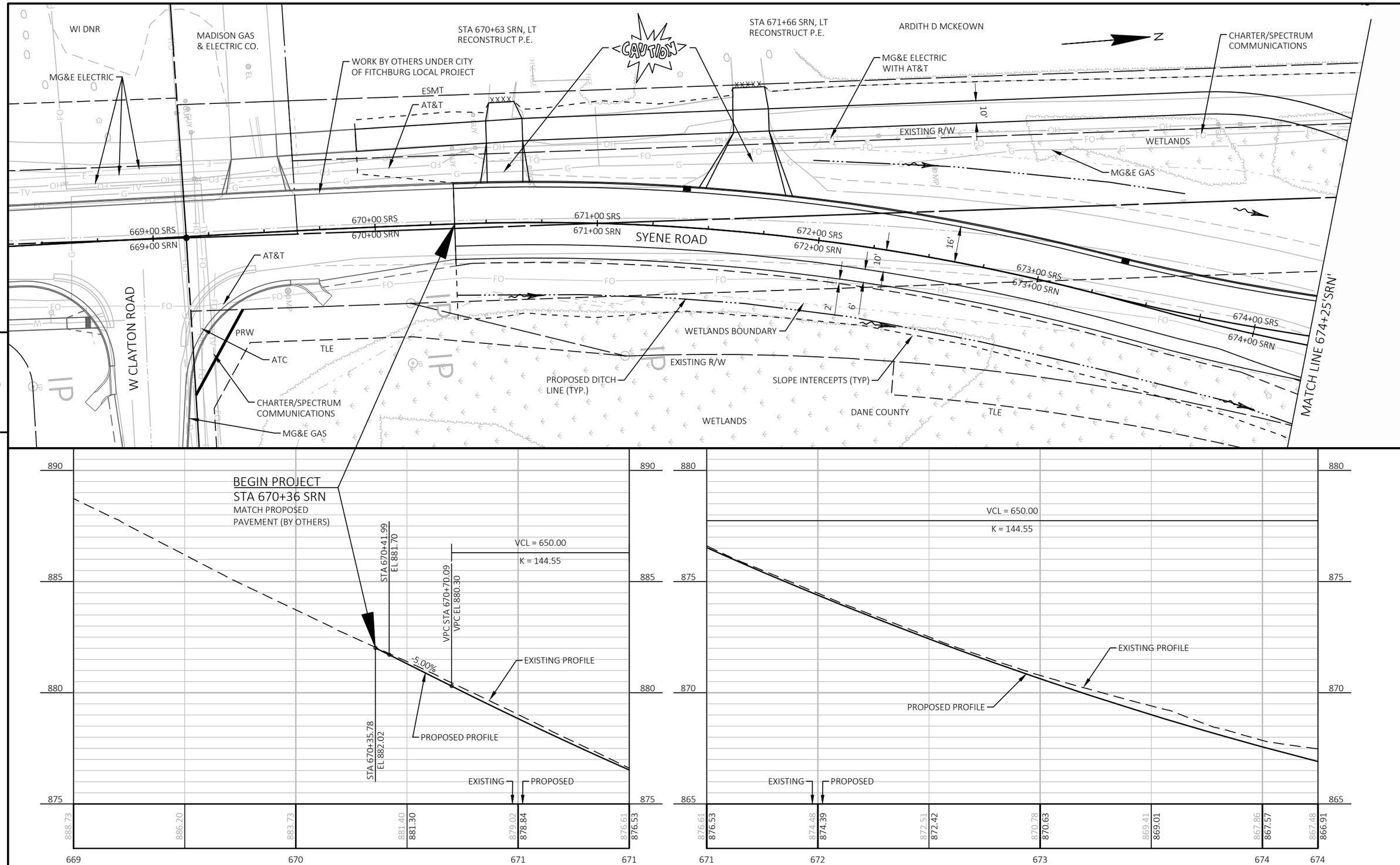

PROJECT NO: 5849-02-07	HWY: LOCAL STREET - SYENE ROAD	COUNTY: DANE	PLAN AND PROFILE: SYENE ROAD	SHEET 110	E

FILE NAME : G:\FITCHBRG\20087-000 SYENE ROAD\CIVIL 3D\SHEETSPLAN\PHASE 3 SHEET FILES - W CLAYTON TO MCCOY\050101-PP_SRN_P3.DWG
LAYOUT NAME - SRN1
PLOT DATE : 6/24/2024 3:54 PM PLOT BY : BRIAN ST. VINCENT PLOT NAME : PLOT SCALE : 1 IN:40 FT
WISDOT/CADDS SHEET 44

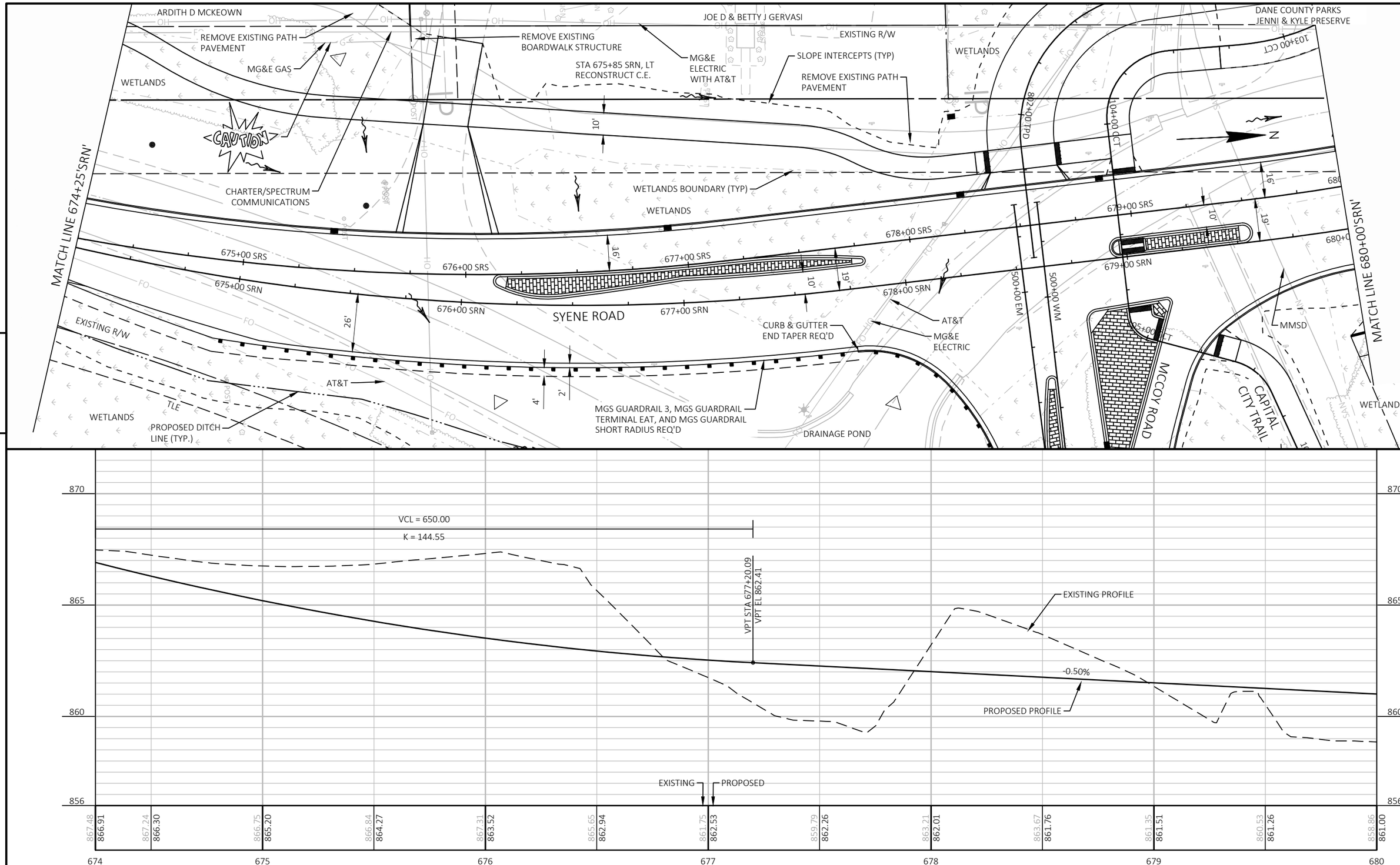

PROJECT NO: 5849-02-07	HWY: LOCAL STREET - SYENE ROAD	COUNTY: DANE	PLAN AND PROFILE: SYENE ROAD	SHEET 111	E

FILE NAME : G:\FITCHBRG\20087-000 SYENE ROAD\CIVIL 3D\SHEETSPLAN\PHASE 3 SHEET FILES - W CLAYTON TO MCCOY\050101-PP_SRN_P3.DWG
LAYOUT NAME - SRN2
PLOT DATE : 6/24/2024 3:54 PM PLOT BY : BRIAN ST. VINCENT PLOT NAME : PLOT SCALE : 1 IN:40 FT
WISDOT/CADDS SHEET 44

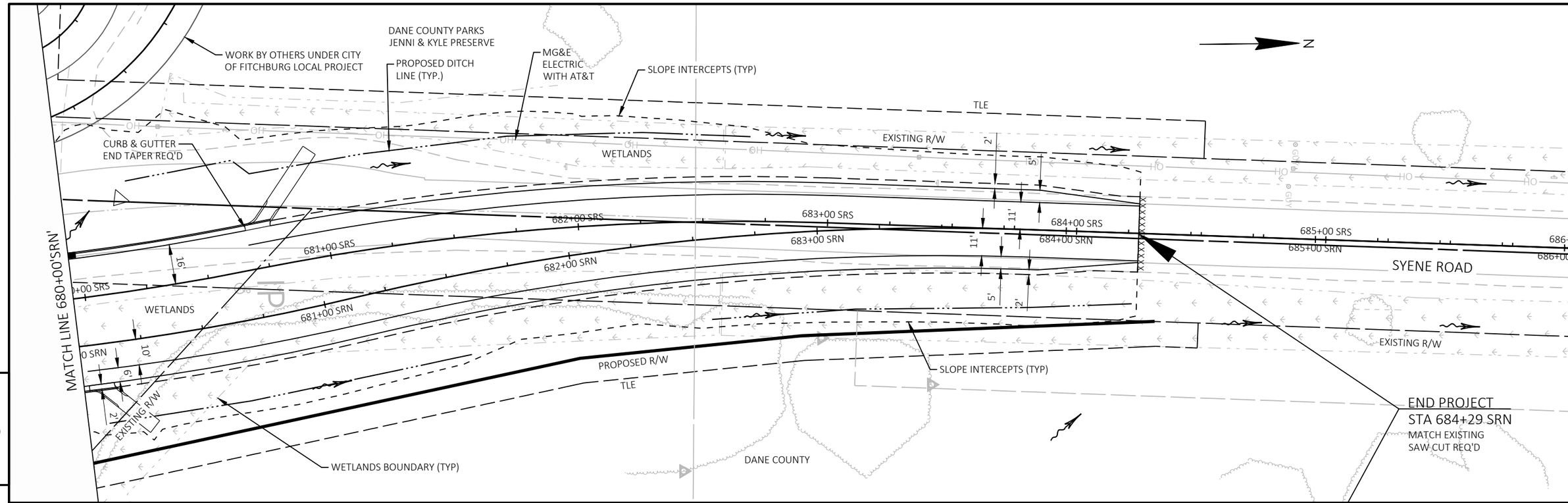

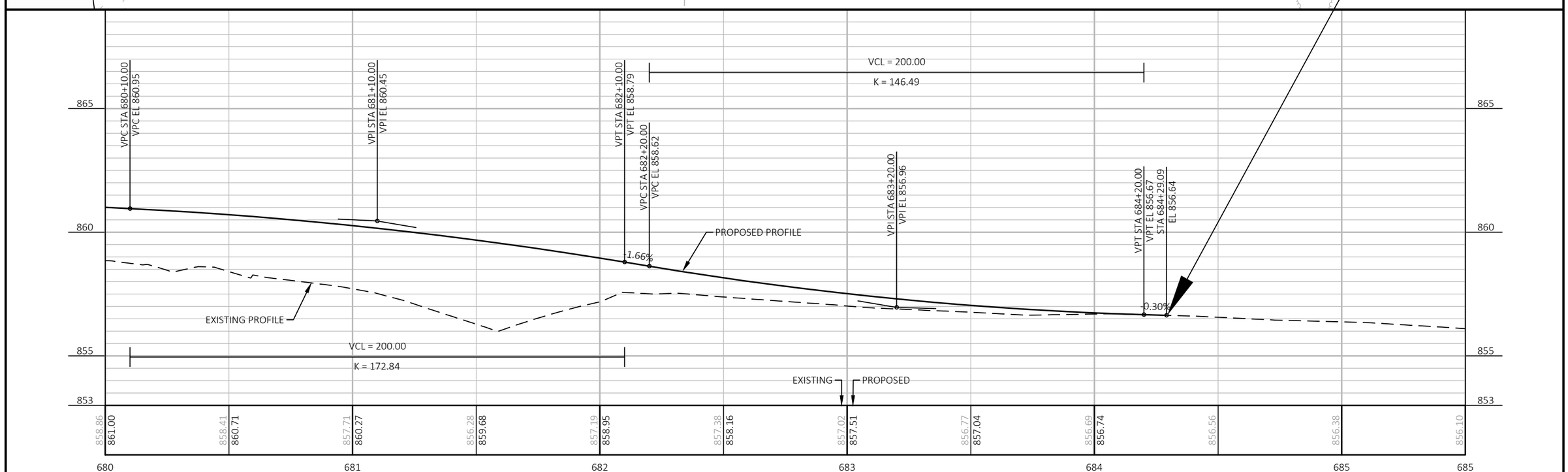

PROJECT NO: 5849-02-07	HWY: LOCAL STREET - SYENE ROAD	COUNTY: DANE	PLAN AND PROFILE: SYENE ROAD	SHEET 112	E

FILE NAME : G:\FITCHBRG\20087-000 SYENE ROAD\CIVIL 3D\SHEETSPLAN\PHASE 3 SHEET FILES - W CLAYTON TO MCCOY\050101-PP_SRN_P3.DWG
LAYOUT NAME - SRN3
PLOT DATE : 5/1/2024 7:12 AM PLOT BY : BRIAN ST. VINCENT PLOT NAME : PLOT SCALE : 1 IN:40 FT
WISDOT/CADDS SHEET 44

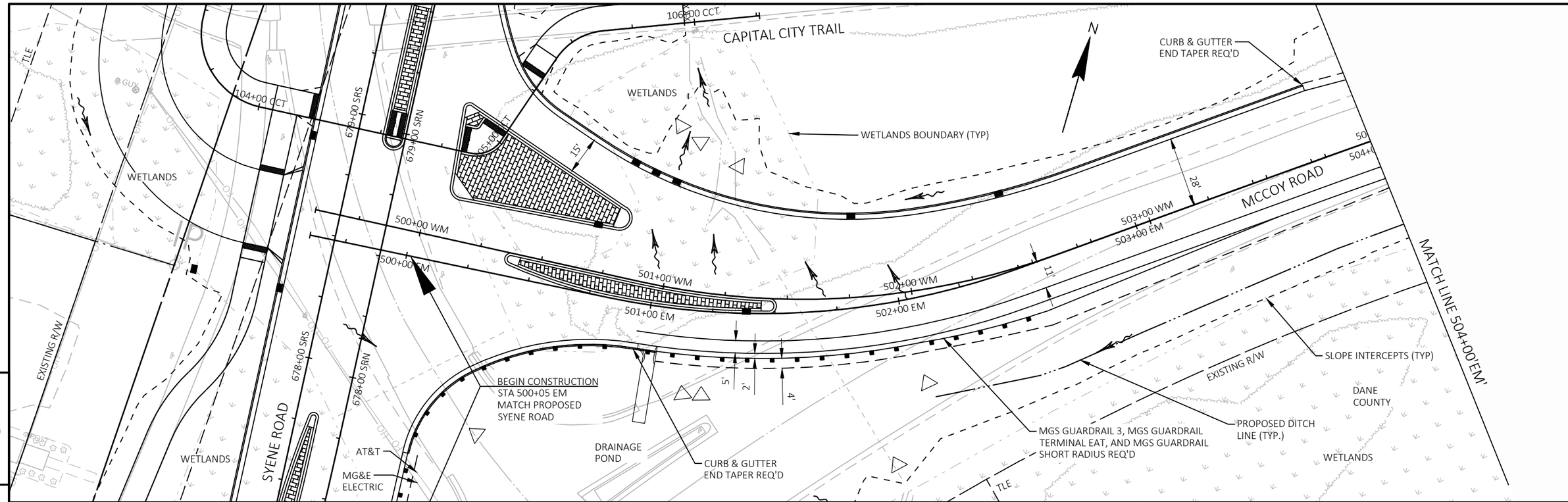

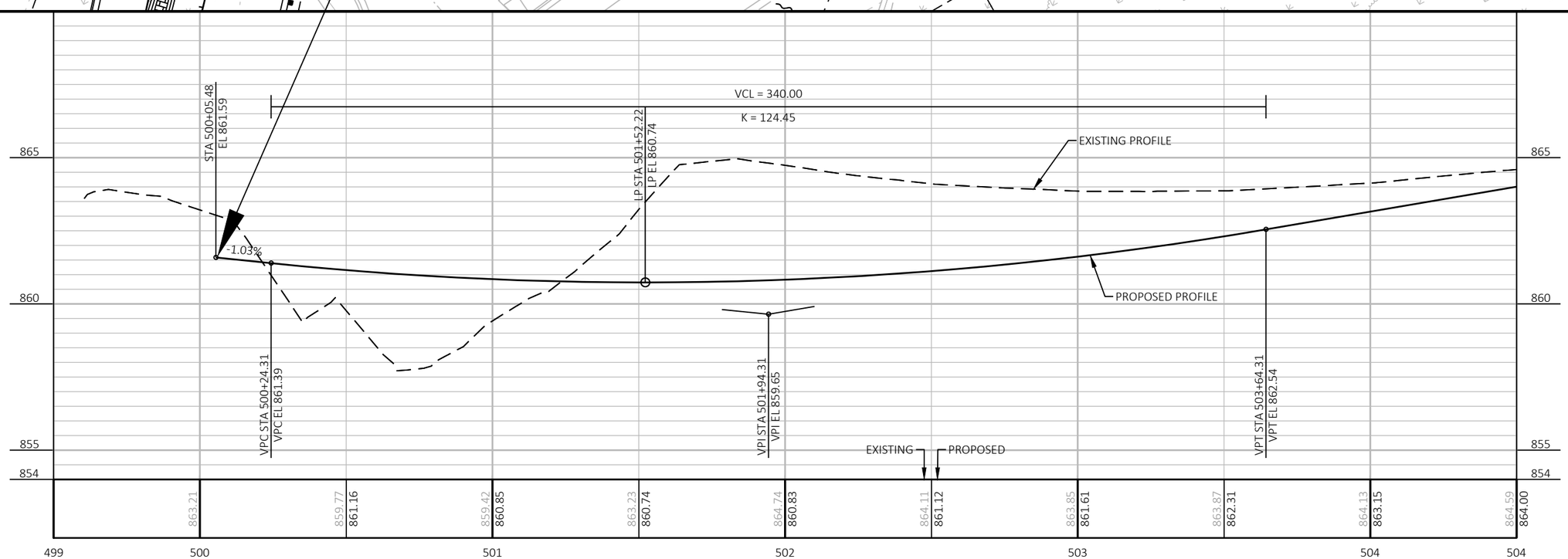

PROJECT NO: 5849-02-07	HWY: LOCAL STREET - SYENE ROAD	COUNTY: DANE	PLAN AND PROFILE: MCCOY ROAD	SHEET 113	E

FILE NAME : G:\FITCHBRG\20087-000 SYENE ROAD\CIVIL 3D\SHEETSPLAN\PHASE 3 SHEET FILES - W CLAYTON TO MCCOY\050103-PP_EM_P3.DWG
LAYOUT NAME - EM1
PLOT DATE : 5/1/2024 7:08 AM PLOT BY : BRIAN ST. VINCENT PLOT NAME : PLOT SCALE : 1 IN:40 FT

WISDOT/CADDS SHEET 44

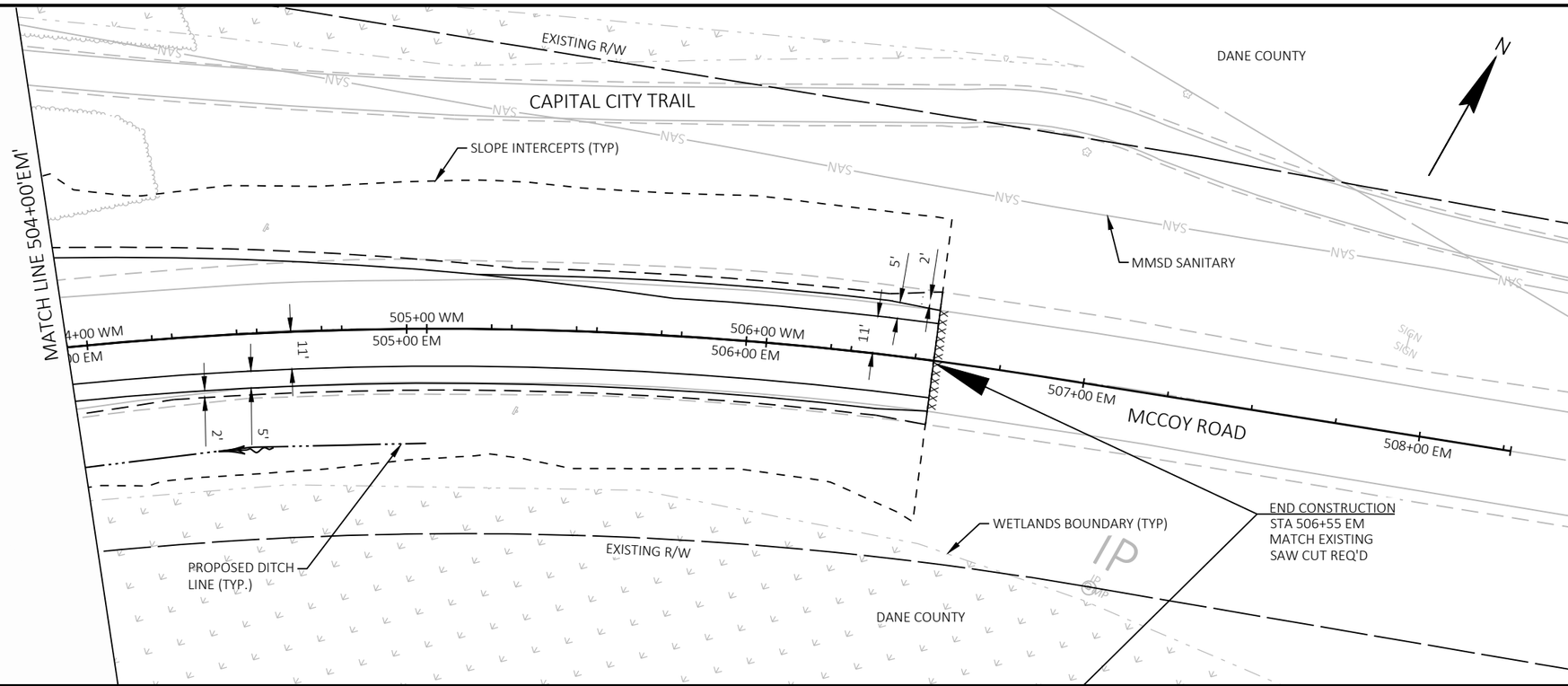

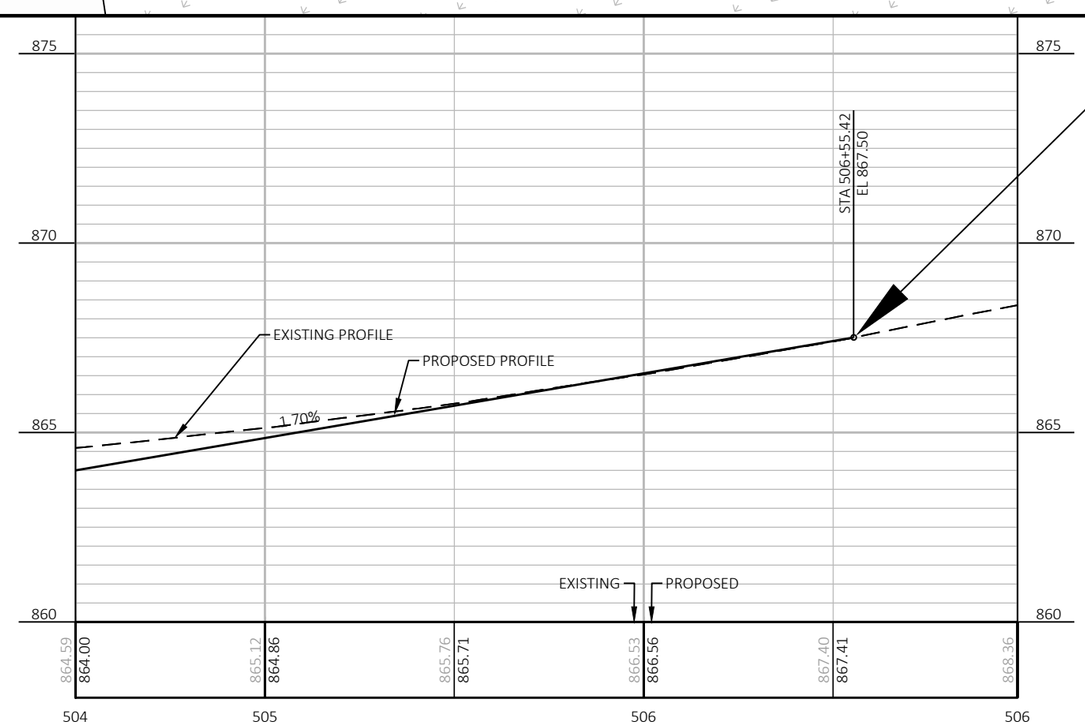

PROJECT NO: 5849-02-07	HWY: LOCAL STREET - SYENE ROAD	COUNTY: DANE	PLAN AND PROFILE: MCCOY ROAD	SHEET 114	E

FILE NAME : G:\FITCHBRG\20087-000 SYENE ROAD\CIVIL 3D\SHEETSPLAN\PHASE 3 SHEET FILES - W CLAYTON TO MCCOY\050103-PP_EM_P3.DWG
LAYOUT NAME - EM2
PLOT DATE : 5/1/2024 7:08 AM PLOT BY : BRIAN ST. VINCENT PLOT NAME : PLOT SCALE : 1 IN:40 FT

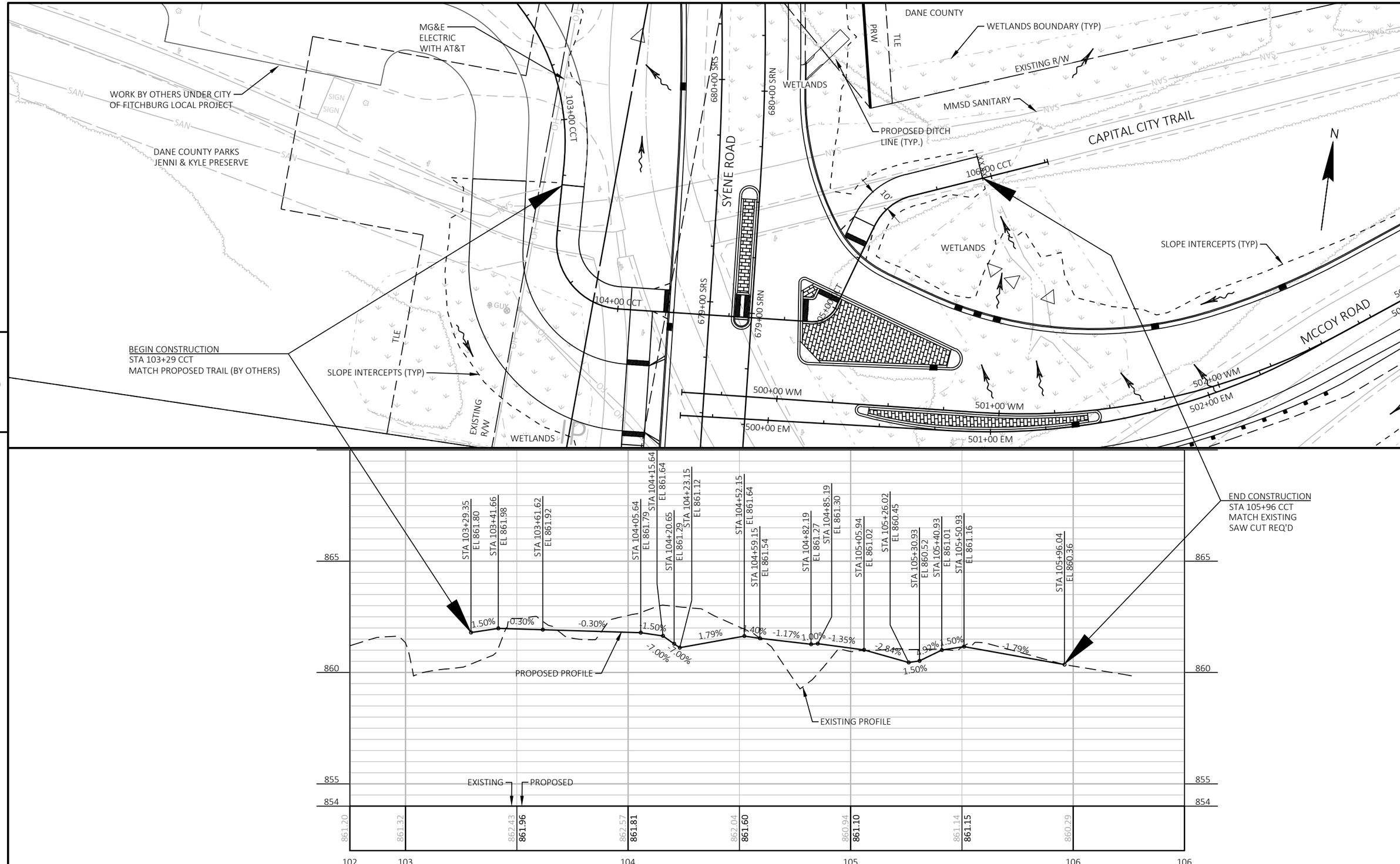

PROJECT NO: 5849-02-07	HWY: LOCAL STREET - SYENE ROAD	COUNTY: DANE	PLAN AND PROFILE: CAPITAL CITY TRAIL	SHEET 115	E

FILE NAME : G:\FITCHBRG\20087-000 SYENE ROAD\CIVIL 3D\SHEETSPLAN\PHASE 3 SHEET FILES - W CLAYTON TO MCCOY\050105-PP_CCT_P3.DWG
LAYOUT NAME - CCT1
PLOT DATE : 4/23/2024 1:05 PM PLOT BY : BRIAN ST. VINCENT PLOT NAME : PLOT SCALE : 1 IN:40 FT

WISDOT/CADDS SHEET 44

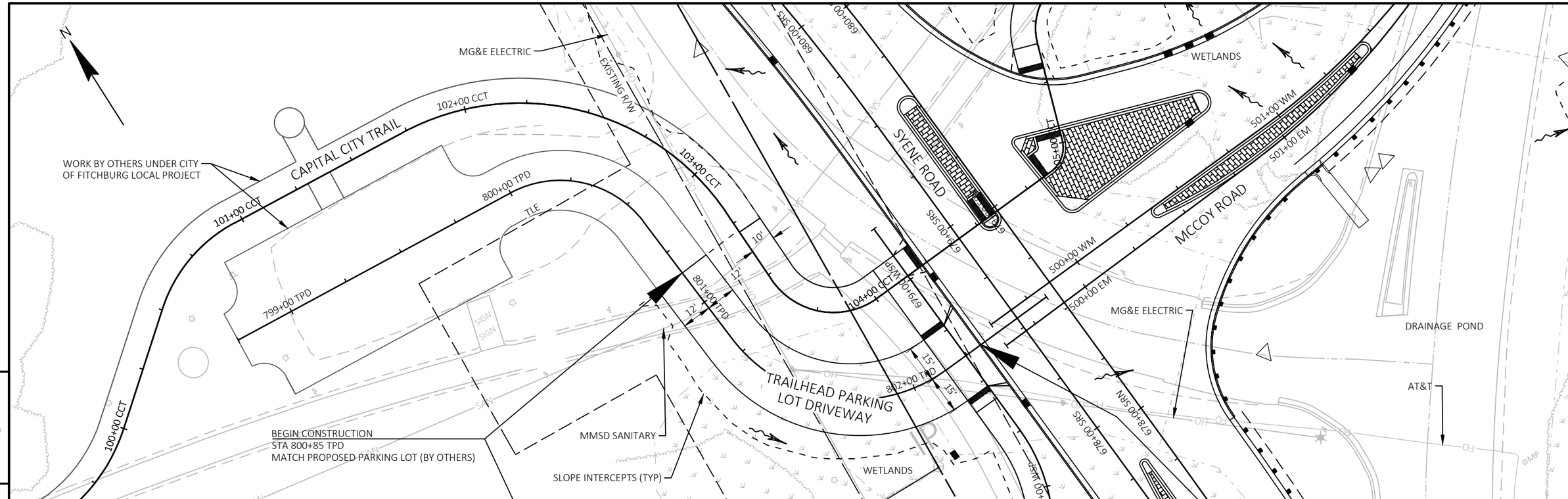

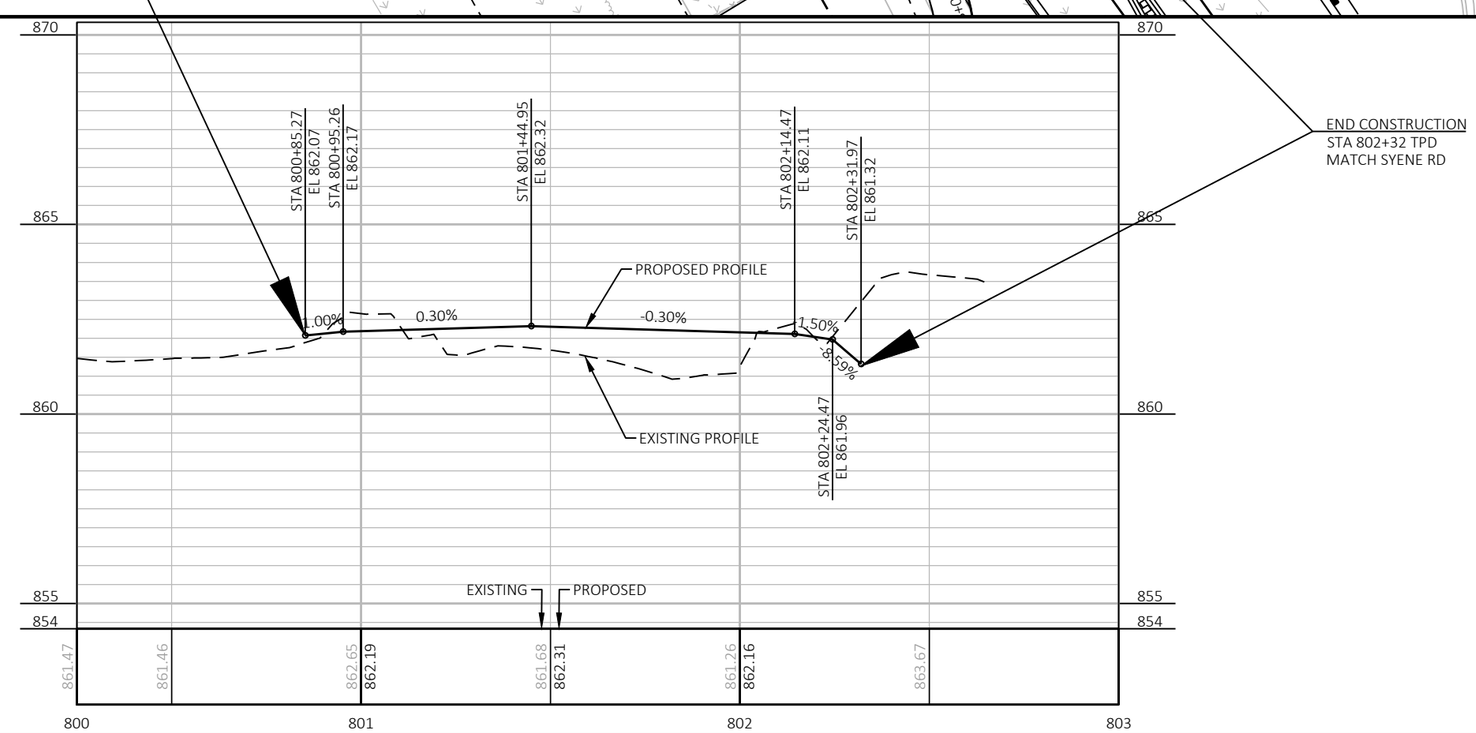

PROJECT NO: 5849-02-07	HWY: LOCAL STREET - SYENE ROAD	COUNTY: DANE	PLAN AND PROFILE: TRAILHEAD PARKING LOT DRIVEWAY	SHEET 116	E

FILE NAME : G:\FITCHBRG\20087-000 SYENE ROAD\CIVIL 3D\SHEETSPLAN\PHASE 3 SHEET FILES - W CLAYTON TO MCCOY\050107-PP_TPD_P3.DWG
LAYOUT NAME - 01
PLOT DATE : 5/1/2024 7:33 AM PLOT BY : BRIAN ST. VINCENT PLOT NAME : PLOT SCALE : 1 IN:40 FT

WISDOT/CADDS SHEET 44

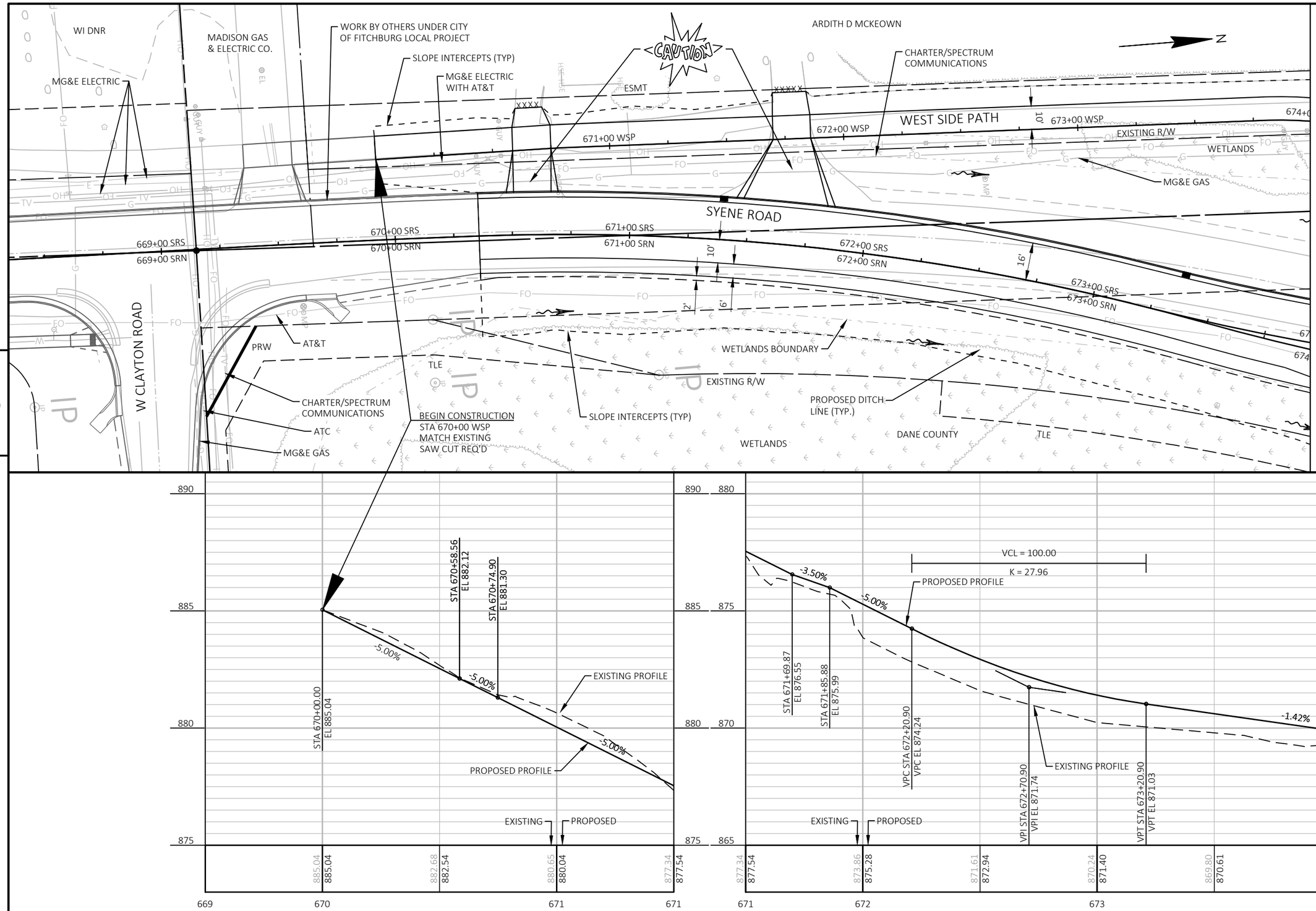

PROJECT NO: 5849-02-07	HWY: LOCAL STREET - SYENE ROAD	COUNTY: DANE	PLAN AND PROFILE: WEST SIDE PATH	SHEET 117	E

FILE NAME : G:\FITCHBRG\20087-000 SYENE ROAD\CIVIL 3D\SHEETSPLAN\PHASE 3 SHEET FILES - W CLAYTON TO MCCOY\050107-PP_WSP_P3.DWG
LAYOUT NAME - SRN1
PLOT DATE : 6/24/2024 3:56 PM
PLOT BY : BRIAN ST. VINCENT
PLOT NAME :
PLOT SCALE : 1 IN:40 FT
WISDOT/CADDS SHEET 44

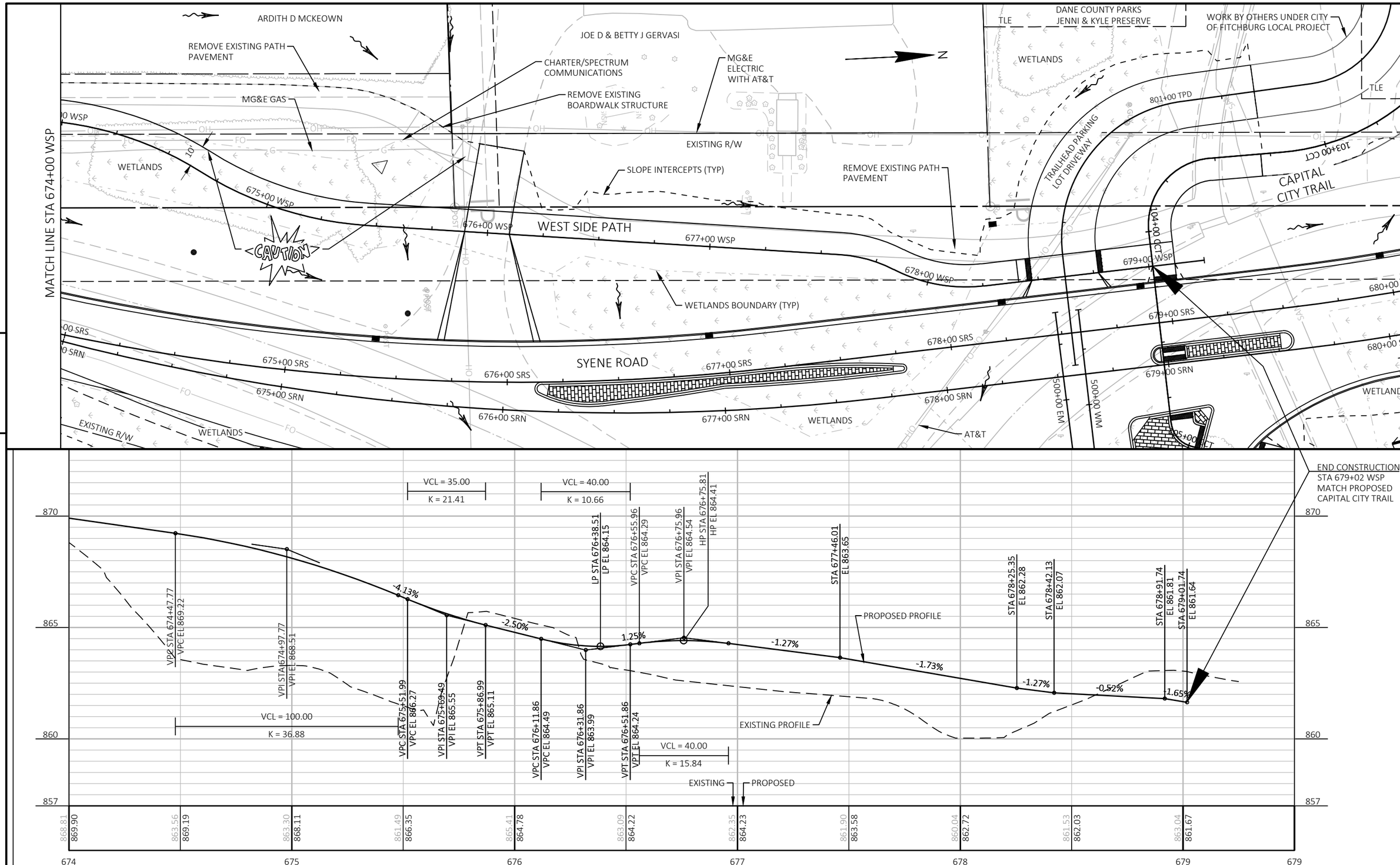

PROJECT NO: 5849-02-07	HWY: LOCAL STREET - SYENE ROAD	COUNTY: DANE	PLAN AND PROFILE: WEST SIDE PATH	SHEET 118	E

FILE NAME : G:\FITCHBRG\20087-000 SYENE ROAD\CIVIL 3D\SHEETSPLAN\PHASE 3 SHEET FILES - W CLAYTON TO MCCOY\050107-PP_WSP_P3.DWG
LAYOUT NAME - SRN2
PLOT DATE : 6/24/2024 3:57 PM PLOT BY : BRIAN ST. VINCENT PLOT NAME : PLOT SCALE : 1 IN:40 FT

WISDOT/CADDS SHEET 44

Standard Detail Drawing List

08A05-21A	INLET COVERS TYPE A, H, A-S, H-S & Z
08A05-21B	INLET COVERS TYPE B, B-A, C, MS, MS-A, & WM
08B09-04	MANHOLES 3-FT, 4-FT, 5-FT, 6-FT, 7-FT, 8-FT, 9-FT, 10-FT DIAMETER
08C06-03	INLETS 3-FT AND 4-FT DIAMETER
08C07-03	INLETS 2X2-FT, 2X2.5-FT, 2X3-FT, 2.5X3-FT & 2X3.5-FT
08C08-03	INLETS MEDIAN 1 AND 2 GRATE
08D01-23A	CONCRETE CURB & GUTTER
08D01-23B	CONCRETE CURB, TIES AND CURB AND GUTTER APPLICATIONS
08D04-07	CONCRETE SURFACE DRAINS & ASPHALTIC FLUMES
08D05-21A	CURB RAMPS TYPES 1 AND 1-A
08D05-21B	CURB RAMPS TYPES 2 AND 3
08D05-21C	CURB RAMPS TYPES 4A AND 4A1
08D05-21D	CURB RAMPS TYPE 4B AND 4B1
08D05-21E	CURB RAMPS TYPES 5, 6, 7A, 7B & 8
08D05-21F	CURB RAMPS RADIAL DETECTABLE WARNING FIELD APPLICATIONS
08D05-21G	CURB RAMPS RECTANGULAR AND RADIAL DETECTABLE WARNING PLATES
08E08-03	TYPICAL INSTALLATIONS OF EROSION BALES / TEMPORARY DITCH CHECKS
08E09-06	SILT FENCE
08E10-02	INLET PROTECTION TYPE A, B, C AND D
08E14-01	TRACKING PAD
08E15-01	CULVERT PIPE CHECK
08F01-11	APRON ENDWALLS FOR CULVERT PIPE
08F02-01	APRON ENDWALLS FOR PIPE ARCH AND ELLIPTICAL PIPE
08F04-08	JOINT TIES FOR CONCRETE PIPE AND CONCRETE COLLAR DETAIL
09B02-10	CONDUIT
09C02-09	CONCRETE BASES, TYPES 1, 2, 5, & 6
09C03-04	TRANSFORMER/PEDESTAL BASES
09C06-07	CONCRETE CONTROL CABINET BASE, TYPE 9, SPECIAL
09C11-10	CONCRETE BASE TYPE 10
09C13-03	CONCRETE BASE TYPE 10 & TYPE 13 EXTENSION
09D02-03	SIGNAL CONTROL CABINET
09E01-15C	POLE MOUNTINGS FOR TRAFFIC SIGNALS AND LIGHTING UNITS, TYPE 4
09E01-15G	HARDWARE DETAILS FOR POLE MOUNTINGS
09E06-05	TRAFFIC SIGNAL STANDARD POLY BRACKET MOUNTINGS (TYPICAL) 13 FT. OR 15 FT.
09E07-06	TRAFFIC SIGNAL STANDARD PEDESTRIAN AND FLASHER TYPICAL MOUNTING DETAILS
09E08-09A	TYPE 9 POLE 15'-30' MONOTUBE ARM
09E08-09K	GENERAL NOTES,HARDWARE DETAILS FOR TYPE 9/10,9/10 SPECIAL,12 & 13 POLES W/MONOTUBE ARMS
09F01-04	DETAILS FOR THE INSTALLATION OF TEMPORARY TRAFFIC SIGNAL LOOP DETECTOR WIRES IN ANY EXISTING PAVEMENT
09F08-04	LOOP DETECTOR PLACED IN CRUSHED AGGREGATE BASE (NEW ASPHALTIC PAVEMENT)
09F15-04B	LOOP DETECTOR INSTALLED IN BASE COURSE WITH PULL (SPLICE) BOX OFF ROADWAY (OPTION 2)
11B02-02	CONCRETE MEDIAN NOSE
13C19-03	HMA LONGITUDINAL JOINTS
14B42-07A	MIDWEST GUARDRAIL SYSTEM (MGS) GUARDRAIL
14B42-07B	MIDWEST GUARDRAIL SYSTEM (MGS) GUARDRAIL
14B42-07C	MIDWEST GUARDRAIL SYSTEM (MGS) GUARDRAIL
14B42-07D	MIDWEST GUARDRAIL SYSTEM (MGS) GUARDRAIL
14B44-04A	MIDWEST GUARDRAIL SYSTEM ENERGY ABSORBING TERMINAL (MGS)
14B44-04B	MIDWEST GUARDRAIL SYSTEM ENERGY ABSORBING TERMINAL (MGS)
14B44-04C	MIDWEST GUARDRAIL SYSTEM ENERGY ABSORBING TERMINAL (MGS)
14B53-02A	SHORT RADIUS BEAM GUARD (MGS) SHORT RADIUS TERMINAL (MGS)
14B53-02B	SHORT RADIUS BEAM GUARD (MGS) SHORT RADIUS TERMINAL (MGS)
14B53-02C	SHORT RADIUS BEAM GUARD (MGS) SHORT RADIUS TERMINAL (MGS)
14B53-02D	SHORT RADIUS BEAM GUARD (MGS) SHORT RADIUS TERMINAL (MGS)
14B53-02E	SHORT RADIUS BEAM GUARD (MGS) SHORT RADIUS TERMINAL (MGS)
14B53-02F	SHORT RADIUS BEAM GUARD (MGS) SHORT RADIUS TERMINAL (MGS)
14B53-02G	SHORT RADIUS BEAM GUARD (MGS) SHORT RADIUS TERMINAL (MGS)
14B53-02H	SHORT RADIUS BEAM GUARD (MGS) SHORT RADIUS TERMINAL (MGS)
14B53-02I	SHORT RADIUS BEAM GUARD (MGS) SHORT RADIUS TERMINAL (MGS)
15C02-09A	BARRICADES AND SIGNS FOR MAINLINE CLOSURES
15C02-09B	BARRICADES AND SIGNS FOR VARIOUS CLOSURES
15C02-09C	DETOUR SIGNING FOR MAINLINE CLOSURES
15C05-05	TRAFFIC CONTROL, ADVANCE WARNING SIGNS 40 M.P.H. OR LESS
15C07-15A	PAVEMENT MARKING SYMBOLS
15C07-15B	PAVEMENT MARKING WORDS
15C07-15C	PAVEMENT MARKING ARROWS
15C07-15E	PAVEMENT MARKING FOR BIKE LANES
15C08-23A	PERMANENT LONGITUDINAL PAVEMENT MARKINGS

Standard Detail Drawing List

15C08-23C	PAVEMENT MARKING (TURN LANES)
15C08-23D	PAVEMENT MARKING (TURN LANES)
15C11-10B	CHANNELIZING DEVICES DRUMS, CONES, BARRICADES AND VERTICAL PANELS
15C18-08A	MEDIAN ISLAND MARKING PAVEMENT MARKINGS
15C18-08B	MEDIAN ISLAND MARKING MEDIAN ISLAND NOSE
15C18-08C	MEDIAN PAVEMENT MARKINGS DOUBLE ARROW WARNING SIGN PLACEMENT
15C29-08A	BICYCLE LANE MARKING
15C33-04	STOP LINE AND CROSSWALK PAVEMENT MARKING
15C35-06A	PAVEMENT MARKING (INTERSECTIONS)
15D30-09A	TRAFFIC CONTROL, PEDESTRIAN ACCOMMODATION
15D30-09B	TRAFFIC CONTROL, PEDESTRIAN ACCOMMODATION
15D30-09C	TRAFFIC CONTROL, PEDESTRIAN ACCOMMODATION
15D30-09D	TRAFFIC CONTROL, PEDESTRIAN ACCOMMODATION
15D30-09E	TRAFFIC CONTROL, PEDESTRIAN ACCOMMODATION
15D30-09F	TRAFFIC CONTROL, PEDESTRIAN ACCOMMODATION
15D30-09G	TRAFFIC CONTROL, PEDESTRIAN ACCOMMODATION
15D30-09H	TRAFFIC CONTROL, PEDESTRIAN ACCOMMODATION
15D30-09I	TRAFFIC CONTROL, PEDESTRIAN ACCOMMODATION
15D30-09J	TRAFFIC CONTROL, PEDESTRIAN ACCOMMODATION
15D30-09K	TRAFFIC CONTROL, PEDESTRIAN ACCOMMODATION
15D30-09L	TRAFFIC CONTROL, PEDESTRIAN ACCOMMODATION

6

6

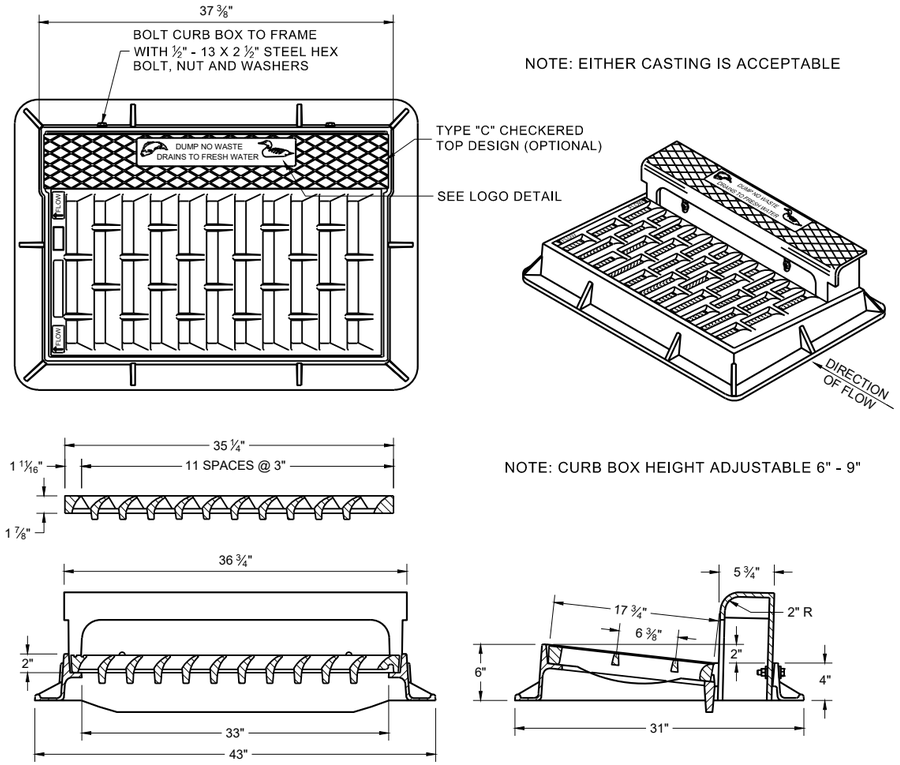

NOTE: EITHER CASTING IS ACCEPTABLE

NOTE: CURB BOX HEIGHT ADJUSTABLE 6" - 9"

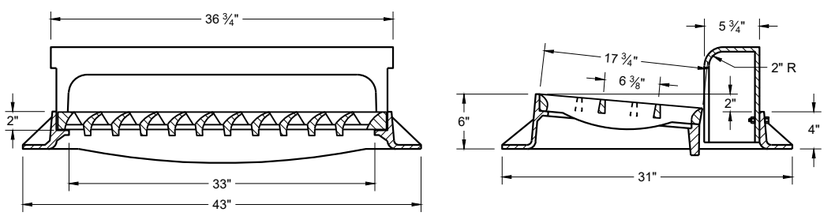

TYPE "H"

NOTE: EITHER CASTING IS ACCEPTABLE

1 ⅛" DIAGONAL BARS WITH 1 ⅝" OPENINGS

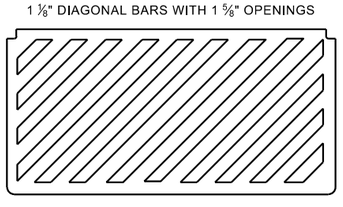

SPECIAL GRATE FOR TYPE "H" COVER

(MEASURES 35" X 17 ¾" X 2")

(NOTED AS TYPE H-S ON DRAINAGE TABLE)

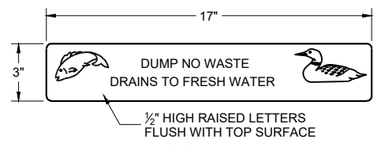

LOGO DETAIL

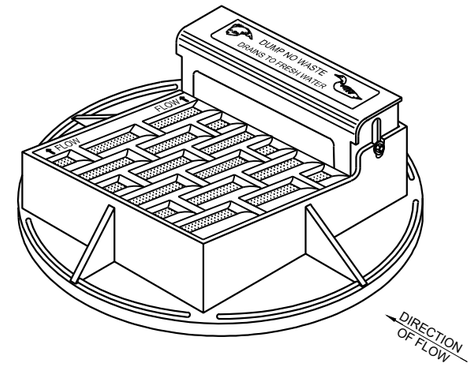

NOTE: CURB BOX HEIGHT ADJUSTABLE 6" - 9"

NOTE: EITHER CASTING IS ACCEPTABLE

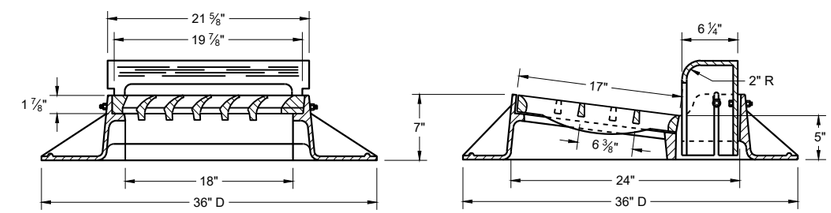

TYPE "A"

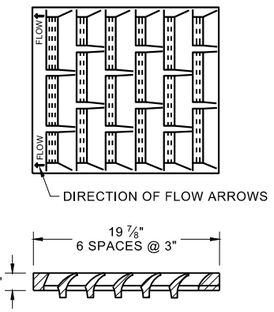

1" DIAGONAL BARS WITH 1 ½" OPENINGS

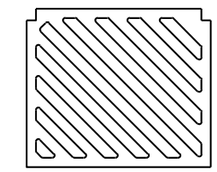

SPECIAL GRATE FOR TYPE "A" COVER

(MEASURES 19 ¾" X 17" X 1 ⅞")

(NOTED AS TYPE A-S ON DRAINAGE TABLE)

GENERAL NOTES

DETAILS OF CONSTRUCTION, MATERIALS AND WORKMANSHIP NOT SHOWN ON THIS DRAWING SHALL CONFORM TO THE PERTINENT REQUIREMENTS OF THE STANDARD SPECIFICATIONS AND THE APPLICABLE SPECIAL PROVISIONS.

DETAIL DRAWINGS FOR PROPOSED ALTERNATE DESIGNS FOR CATCH BASIN, MANHOLE AND INLET COVERS SHALL BE SUBMITTED TO THE ENGINEER FOR APPROVAL PROVIDING THAT SUCH ALTERNATE DESIGNS MAKE PROVISION FOR EQUIVALENT CAPACITY AND STRENGTH.

ROUND FRAMES AND COVERS SHALL HAVE CONTINUOUSLY MACHINED BEARING SURFACES TO PREVENT ROCKING AND RATTLING.

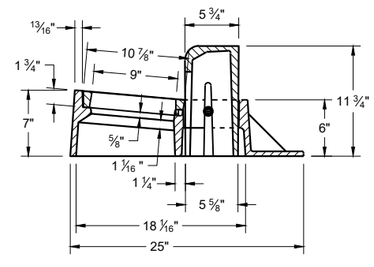

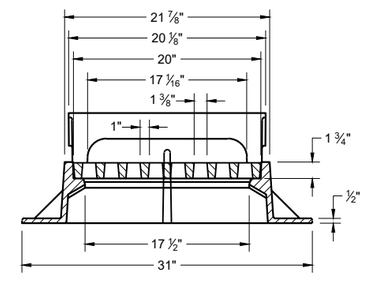

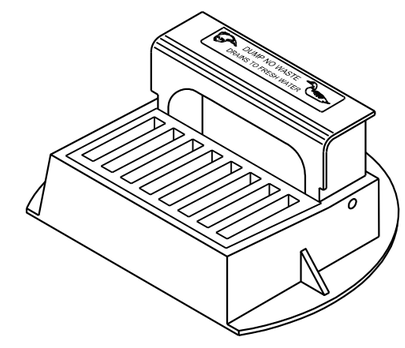

TYPE "Z"

INLET COVERS
TYPES A, H, A-S, H-S AND Z

STATE OF WISCONSIN
DEPARTMENT OF TRANSPORTATION

APPROVED
December 2023 — DATE
/S/ Rodney Taylor — ROADWAY STANDARDS DEVELOPMENT UNIT SUPERVISOR

FHWA

SDD 08A05-21a
6

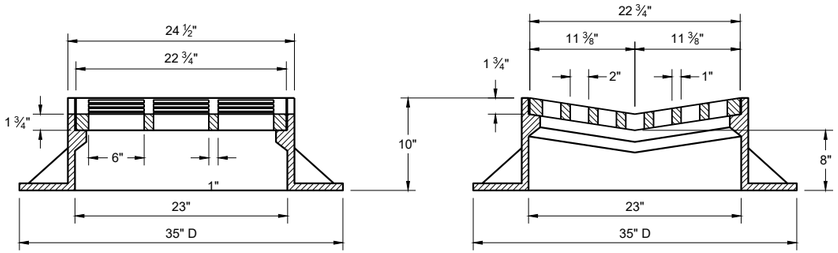

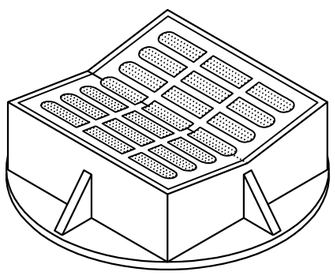

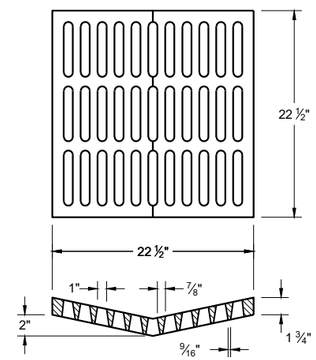

TYPE "B"

ALTERNATIVE GRATE FOR TYPE "B" COVER

USE WHERE PEDESTRIAN OF BICYCLE TRAFFIC IS POSSIBLE

NOTED AS TYPE B - A ON THE DRAINAGE TABLE

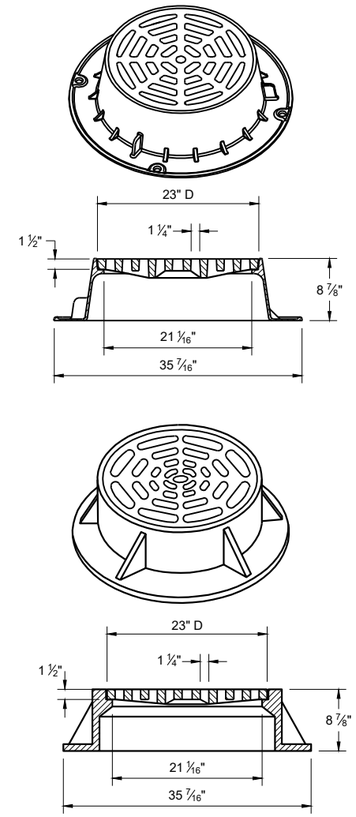

TYPE "C"

NOTE: EITHER CASTING IS ACCEPTABLE

GENERAL NOTES

DETAILS OF CONSTRUCTION, MATERIALS AND WORKMANSHIP NOT SHOWN ON THIS DRAWING SHALL CONFORM TO THE PERTINENT REQUIREMENTS OF THE STANDARD SPECIFICATIONS AND THE APPLICABLE SPECIAL PROVISIONS.

DETAIL DRAWINGS FOR PROPOSED ALTERNATE DESIGNS FOR CATCH BASIN, MANHOLE AND INLET COVERS SHALL BE SUBMITTED TO THE ENGINEER FOR APPROVAL PROVIDING THAT SUCH ALTERNATE DESIGNS MAKE PROVISION FOR EQUIVALENT CAPACITY AND STRENGTH.

ROUND FRAMES AND COVERS SHALL HAVE CONTINUOUSLY MACHINED BEARING SURFACES TO PREVENT ROCKING AND RATTLING.

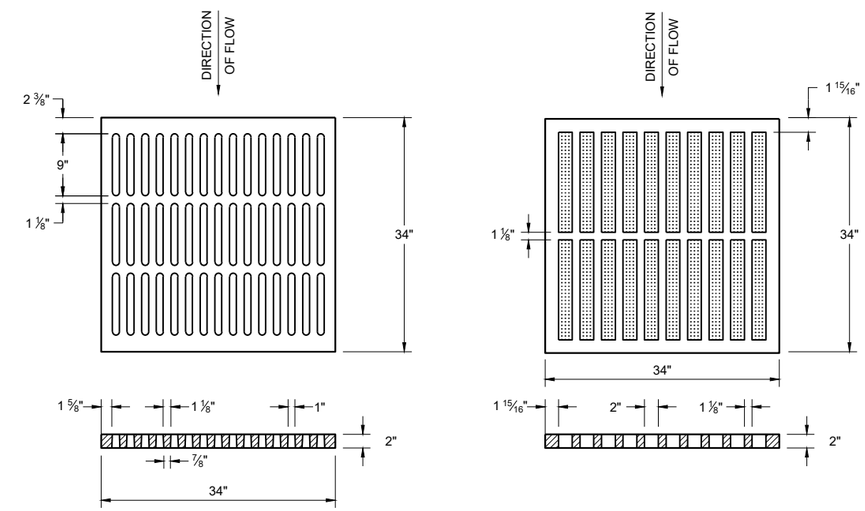

ALTERNATIVE TYPE "MS"

USE WHERE PEDESTRIAN OF BICYCLE TRAFFIC IS PERMITTED

NOTED AS TYPE MS-A ON THE DRAINAGE TABLE

TYPE "MS"

USE ON FREEWAYS AND EXPRESSWAYS

NOTED AS TYPE MS ON THE DRAINAGE TABLE

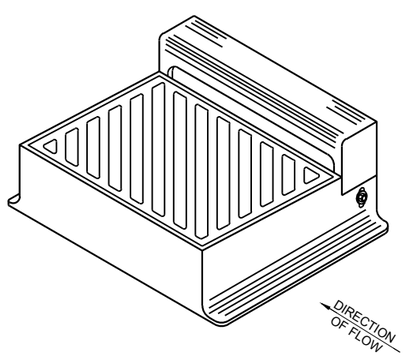

DIAGONAL SLOTS SHALL BE ORIENTEDTO THE DIRECTION OF FLOW AS ILLUSTRATED.
GRATES ARE MANUFACTURED TO BE REVERSIBLE.

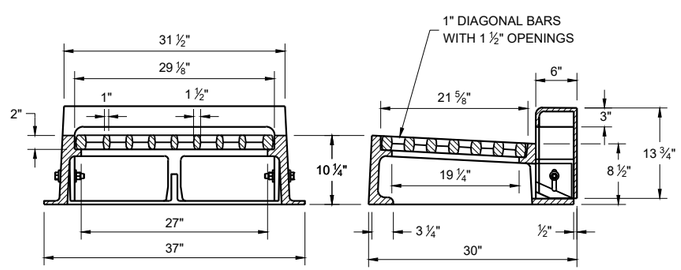

TYPE "WM"

NOTE: CURB BOX HEIGHT ADJUSTABLE 6" - 9"

INLET COVERS
TYPES B, B-A, C,
MS, MS-A AND WM

STATE OF WISCONSIN
DEPARTMENT OF TRANSPORTATION

APPROVED
December 2023 — DATE
/S/ Rodney Taylor — ROADWAY STANDARDS DEVELOPMENT UNIT SUPERVISOR
FHWA

6

SDD 08A05-21b

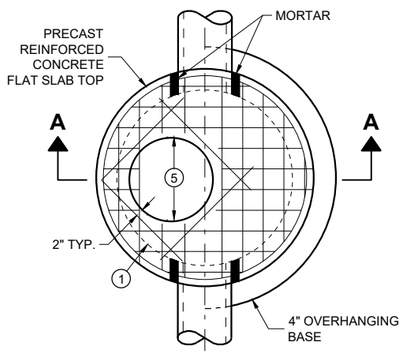

PLAN VIEW
CIRCULAR OPENING

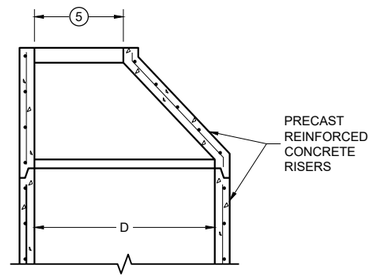

OPTIONAL PRECAST REINFORCED CONCRETE ECCENTRIC TOP

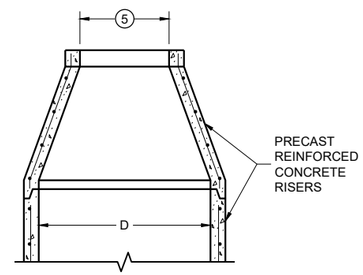

OPTIONAL PRECAST REINFORCED CONCRETE CONCENTRIC TOP

MANHOLE COVER OPENING MATRIX

OPENING SIZE (FT.) (5) \ MANHOLE COVER TYPE	C	ALL J'S	K	L	M
2 DIA.	X	X		X	
3 DIA.			X		X

PIPE MATRIX

MANHOLE SIZE (DIA.)	MAXIMUM INSIDE PIPE DIAMETER FOR TWO PIPES		MINIMUM WALL THICKNESS (IN)	MINIMUM PRECAST FLAT SLAB TOP AND BASE THICKNESS
	180° SEPARATION (IN)	90° SEPARATION (IN)		
3-FT	15	12	4	6
4-FT	24	18	4	6
5-FT	36	24	5	8
6-FT	42	36	6	8
7-FT	48	36/42 *	7	8
8-FT	60	42	8	8
9-FT	66	54	9	10
10-FT	72	60	10	10

*A 36" PIPE AND A 42" PIPE CAN BE PLACED WITHIN 90 DEGREES. SEE MINIMUM HORIZONTAL PIPE SEPARATION DETAIL.

GENERAL NOTES

DETAILS OF CONSTRUCTION, MATERIALS AND WORKMANSHIP NOT SHOWN ON THIS DRAWING SHALL CONFORM TO THE PERTINENT REQUIREMENTS OF THE STANDARD SPECIFICATIONS AND THE APPLICABLE SPECIAL PROVISIONS.

UNLESS OTHERWISE AUTHORIZED IN WRITING BY THE ENGINEER, THE CONTRACTOR SHALL NOT ORDER AND DELIVER PRECAST MANHOLE UNITS REQUIRED FOR THE PROJECT UNTIL A LIST OF SIZES IS FURNISHED BY THE ENGINEER.

DETAILED DRAWINGS FOR PROPOSED ALTERNATE DESIGNS FOR UNDERGROUND DRAINAGE STRUCTURES SHALL BE SUBMITTED TO THE ENGINEER FOR APPROVAL PROVIDING THAT SUCH ALTERNATE DESIGNS MAKE PROVISION FOR EQUIVALENT CAPACITY AND STRENGTH.

ALL DRAINAGE STRUCTURES ARE DESIGNATED ON THE PLANS AS "MANHOLES 3X3-L", "CATCH BASINS 4-B", "INLETS 2X3-H", ETC. THE FIRST NUMBERS DESIGNATE THE SIZE OF THE STRUCTURE, AND THE FOLLOWING LETTER DESIGNATES THE TYPE OF COVER TO BE USED TO COMPRISE THE COMPLETE UNIT.

BASES SHALL BE PLACED ON A BED OF MATERIAL AT LEAST 6 INCHES IN DEPTH, WHICH MEETS THE REQUIREMENTS OF FOUNDATION BACKFILL. THIS BEDDING SHALL BE COMPACTED AND PROVIDE UNIFORM SUPPORT FOR THE ENTIRE AREA OF THE BASE.

PRECAST REINFORCED CONCRETE CONE TOPS (ECCENTRIC OR CONCENTRIC) OR PRECAST REINFORCED CONCRETE FLAT SLAB TOPS MAY BE USED ON CONCRETE BLOCK STRUCTURES.

ECCENTRIC CONE TOPS MAY BE USED ON ALL STRUCTURES. CONCENTRIC CONE TOPS SHALL BE USED ONLY ON STRUCTURES 5 FEET OR LESS IN DEPTH UNLESS OTHERWISE DIRECTED BY THE ENGINEER.

STEPS MEETING AASHTO M199 AND THE FOLLOWING REQUIREMENTS SHALL BE INSTALLED IN ALL STRUCTURES OVER 5 FEET IN DEPTH: 16 INCH C-C MAXIMUM SPACING; PROJECT A MINIMUM CLEAR DISTANCE OF 4 INCHES FROM THE WALL AT THE POINT OF EMBEDMENT; MINIMUM LENGTH OF 10 INCHES; MINIMUM WALL EMBEDMENT OF 3 INCHES. FERROUS METAL STEPS NOT PAINTED OR TREATED TO RESIST CORROSION SHALL HAVE A MINIMUM CROSS SECTIONAL IMENSION OF 1 INCH.

STEPS OF APPROVED POLYPROPYLENE PLASTIC COATED REINFORCEMENT BAR ARE ACCEPTABLE. REINFORCING BAR MUST BE A MINIMUM OF ½ INCH AND MEET THE REQUIREMENTS OF ASTM A615.

CERTIFICATION SHALL BE PROVIDED THAT INSTALLED STEPS WHEN TESTED IN ACCORDANCE WITH SECTION 10 OF AASHTO T280 CAN WITHSTAND A VERTICAL LOAD OF 800 LBS. AND A HORIZONTAL LOAD OF 400 LBS.

ALL BAR STEEL REINFORCEMENT SHALL BE EMBEDDED 2 INCHES CLEAR UNLESS OTHERWISE SHOWN OR NOTED.

ALL PRECAST MANHOLE UNITS SHALL CONFORM TO THE PERTINENT REQUIREMENTS OF AASHTO DESIGNATION M199.

PRECAST REINFORCED RISERS SHALL HAVE A TONGUE AND GROOVE JOINT WITH TONGUE UP OR DOWN.

CONCRETE BLOCK WILL NOT BE PERMITTED FOR STRUCTURES GREATER THAN 4 FEET IN DIAMETER.

4" OVERHANGING BASES ARE REQUIRED FOR ALL CONCRETE BLOCK INSTALLATIONS. 4" OVERHANG IS REQUIRED WHEN SEPARATE PRECAST BASE IS PROVIDED. OVERHANG IS NOT REQUIRED ON PRECAST STRUCTURES WITH AN INTEGRAL OR MONOLITHIC BASE.

FOR ADDITIONAL CONFIGURATIONS, MAINTAIN A MINIMUM OF 12 INCHES AS MEASURED FROM THE INSIDE OF THE STRUCTURE WALL BETWEEN THE OUTSIDE PIPE WALLS OF ADJACENT PIPES. SEE DETAIL "D".

(1) FOR PRECAST MANHOLES AND REINFORCED CONCRETE BASES PROVIDE REINFORCING STEEL IN ACCORDANCE TO AASHTO M199.

(2) SEE PIPE MATRIX TABLE FOR MINIMUM WALL THICKNESS FOR PRECAST MANHOLES

(3) SEE PIPE MATRIX TABLE FOR MINIMUM THICKNESS OF PRECAST FLAT SLAB TOPS AND BASES.

(4) JOINTS TO BE SEALED WITH A BUTYL RUBBER SEAL PER SEALANT MANUFACTURERS RECOMMENDATIONS CONFORMING TO ASTM C 990 OR RUBBER GASKETS CONFORMING TO ASTM C443.

(5) SEE MANHOLE COVER OPENING MATRIX.

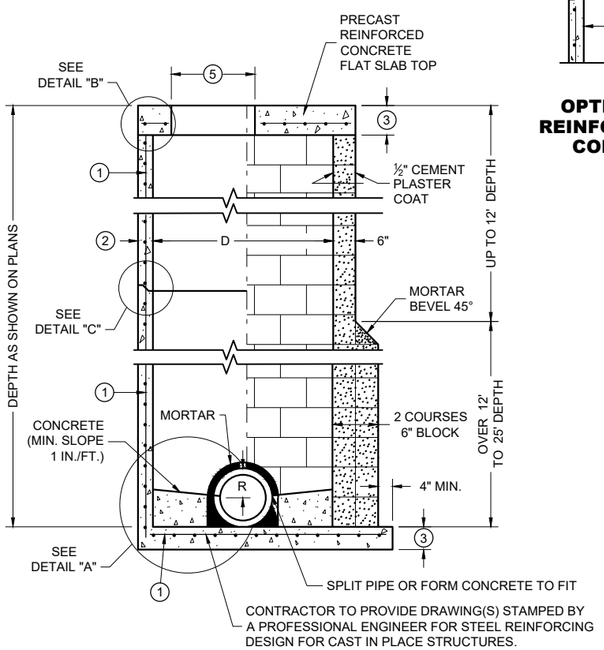

SECTION A - A

PRECAST REINFORCED CONCRETE WITH MONOLITHIC BASE

CONCRETE BLOCK WITH CAST IN PLACE OR PRECAST REINFORCED CONCRETE BASE (1)

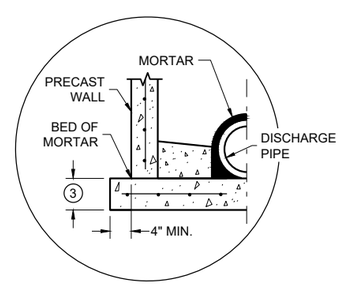

SEPARATE PRECAST REINFORCED CONCRETE BASE OPTION

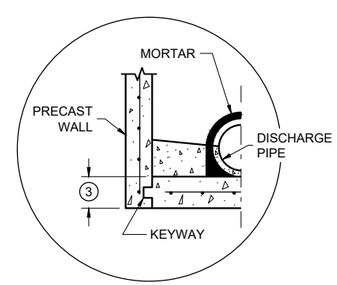

PRECAST REINFORCED CONCRETE WITH INTEGRAL BASE OPTION

DETAIL "A"

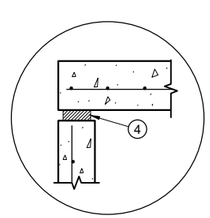

TOP WITH PLAIN END JOINT

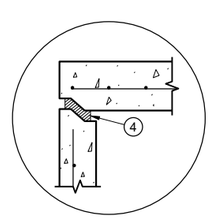

TOP WITH TONGUE AND GROOVE JOINT

DETAIL "B"

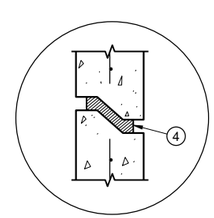

RISER WITH TONGUE AND GROOVE JOINT

DETAIL "C"

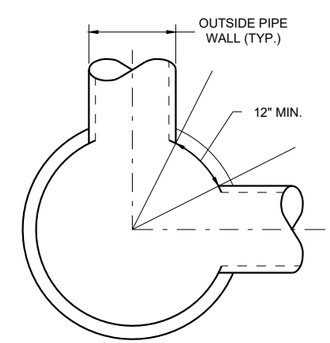

MINIMUM HORIZONTAL PIPE SEPARATION

DETAIL "D"

MANHOLES 3-FT, 4-FT, 5-FT, 6-FT, 7-FT, 8-FT, 9-FT AND 10-FT DIAMETER

MANHOLES, 3-FT, 4-FT 5-FT, 6-FT, 7-FT, 8-FT, 9-FT AND 10-FT DIAMETER

STATE OF WISCONSIN
DEPARTMENT OF TRANSPORTATION

APPROVED
December 2023 — DATE
/S/ Rodney Taylor — ROADWAY STANDARDS DEVELOPMENT UNIT SUPERVISOR
FHWA

6

SDD 08B09-04

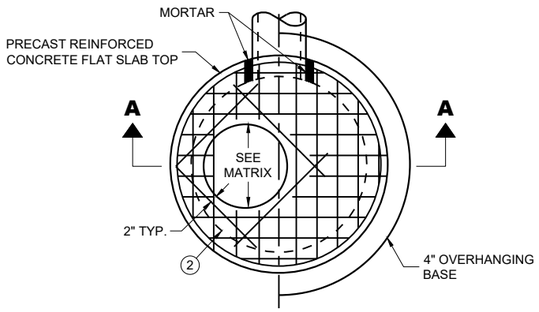

PLAN VIEW CIRCULAR OPENING

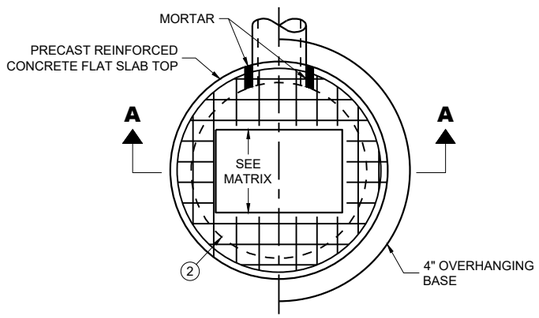

PLAN VIEW RECTANGULAR OPENING

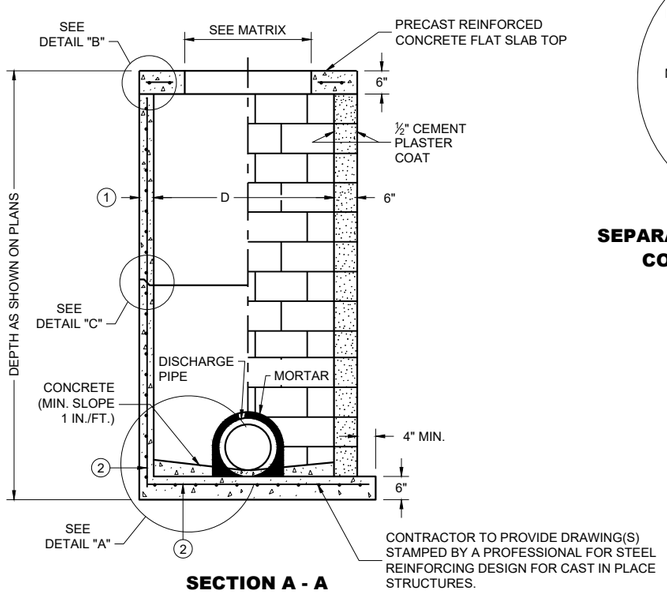

SECTION A - A

PRECAST REINFORCED CONCRETE WITH MONOLITHIC BASE

CONCRETE BLOCK WITH CAST IN PLACE OR PRECAST REINFORCED CONCRETE BASE (2)

CIRCULAR INLETS WITH FLAT TOP

CATCH BASIN COVER OPENING MATRIX

INLET SIZE	INLET COVER TYPE	ALL A'S	ALL B'S	BW	C	F	ALL H'S	S	T	V	WM	Z
	OPENING SIZE (FT.)											
3-FT	2 DIA.				X							X
	2 X 2	X	X					X		X		
4-FT	2 DIA.				X							X
	2 X 2	X	X					X		X		
	2 X 2.5			X				X	X	X	X	
	2 X 3						X					
	2.5 X 3					X						

PIPE MATRIX

INLET SIZE	MAXIMUM INSIDE PIPE DIAMETER FOR TWO PIPES	
	180° SEPARATION (IN)	90° SEPARATION (IN)
3-FT	15	12
4-FT	24	18

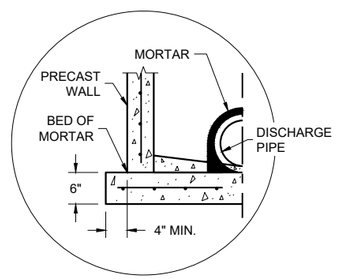

SEPARATE PRECAST REINFORCED CONCRETE BASE OPTION

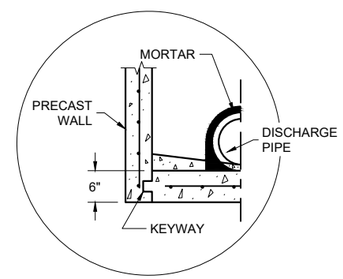

PRECAST REINFORCED CONCRETE WITH INTEGRAL BASE OPTION

DETAIL "A"

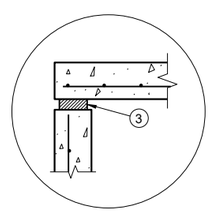

TOP WITH PLAIN END JOINT

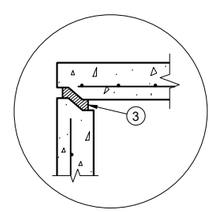

TOP WITH TONGUE AND GROOVE JOINT

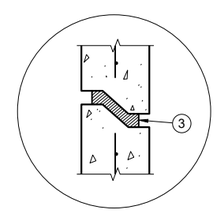

RISER WITH TONGUE AND GROOVE JOINT

DETAIL "B"

DETAIL "C"

INLETS 3-FT AND 4-FT DIAMETER

GENERAL NOTES

DETAILS OF CONSTRUCTION, MATERIALS AND WORKMANSHIP NOT SHOWN ON THIS DRAWING SHALL CONFORM TO THE PERTINENT REQUIREMENTS OF THE STANDARD SPECIFICATIONS AND THE APPLICABLE SPECIAL PROVISIONS.

UNLESS OTHERWISE AUTHORIZED IN WRITING BY THE ENGINEER, THE CONTRACTOR SHALL NOT ORDER AND DELIVER PRECAST INLET UNITS REQUIRED FOR THE PROJECT UNTIL A LIST OF SIZES IS FURNISHED BY THE ENGINEER.

DETAILED DRAWINGS FOR PROPOSED ALTERNATE DESIGNS FOR UNDERGROUND DRAINAGE STRUCTURES SHALL BE SUBMITTED TO THE ENGINEER FOR APPROVAL PROVIDING THAT SUCH ALTERNATE DESIGNS MAKE PROVISION FOR EQUIVALENT CAPACITY AND STRENGTH.

ALL DRAINAGE STRUCTURES ARE DESIGNATED ON THE PLANS AS "MANHOLES 3X3-L", "CATCH BASINS 4-B", "INLETS 2X3-H", ETC. THE FIRST NUMBERS DESIGNATE THE SIZE OF THE STRUCTURE, AND THE FOLLOWING LETTER DESIGNATES THE TYPE OF COVER TO BE USED TO COMPRISE THE COMPLETE UNIT.

BASES SHALL BE PLACED ON A BED OF MATERIAL AT LEAST 6 INCHES IN DEPTH, WHICH MEETS THE REQUIREMENTS OF FOUNDATION BACKFILL. THIS BEDDING SHALL BE COMPACTED AND PROVIDE UNIFORM SUPPORT FOR THE ENTIRE AREA OF THE BASE.

ALL BAR STEEL REINFORCEMENT SHALL BE EMBEDDED 2 INCHES CLEAR UNLESS OTHERWISE SHOWN OR NOTED.

ALL PRECAST INLET UNITS SHALL CONFORM TO THE PERTINENT REQUIREMENTS OF AASHTO DESIGNATION M199.

PRECAST REINFORCED RISERS SHALL HAVE A TONGUE AND GROOVE JOINT WITH TONGUE UP OR DOWN.

4" OVERHANGING BASES ARE REQUIRED FOR ALL CONCRETE BLOCK INSTALLATIONS. 4" OVERHANG IS REQUIRED WHEN SEPARATE PRECAST BASE IS PROVIDED. OVERHANG IS NOT REQUIRED ON PRECAST STRUCTURES WITH AN INTEGRAL OR MONOLITHIC BASE.

FOR ADDITIONAL CONFIGURATIONS, MAINTAIN A MINIMUM OF 12 INCHES AS MEASURED FROM THE INSIDE OF THE STRUCTURE WALL BETWEEN THE OUTSIDE PIPE WALLS OF ADJACENT PIPES. SEE DETAIL "D".

(1) MINIMUM WALL THICKNESS SHALL BE 4 INCHES FOR 3-FT DIAMETER AND 5 INCHES FOR 4-FT DIAMTER PRECAST INLETS.

(2) FOR PRECAST INLETS AND REINFORCED CONCRETE BASES PROVIDE REINFORCING STEEL IN ACCORDANCE TO AASHTO M199.

(3) JOINTS TO BE SEALED WITH A BUTYL RUBBER SEAL PER SEALANT MANUFACTURERS RECOMMENDATIONS CONFORMING TO ASTM C 990 OR RUBBER GASKETS CONFORMING TO ASTM C443.

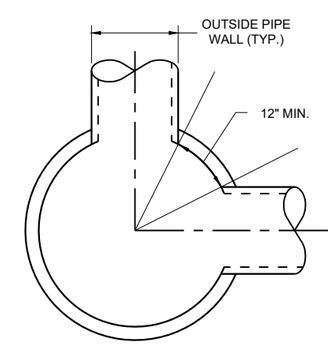

MINIMUM HORIZONTAL PIPE SEPARATION

DETAIL "D"

INLETS 3-FT AND 4-FT DIAMETER

STATE OF WISCONSIN
DEPARTMENT OF TRANSPORTATION

APPROVED
December 2023 — DATE
/S/ Rodney Taylor — ROADWAY STANDARDS DEVELOPMENT UNIT SUPERVISOR
FHWA

6

SDD 08C06-03

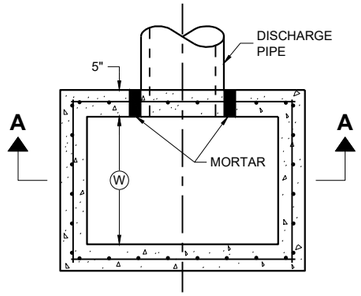

PLAN VIEW

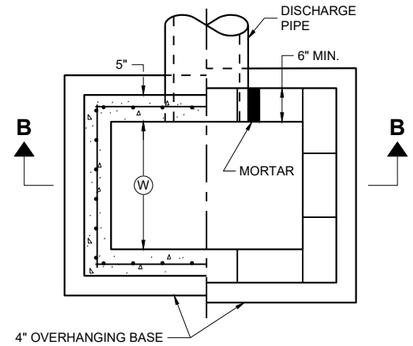

PLAN VIEW

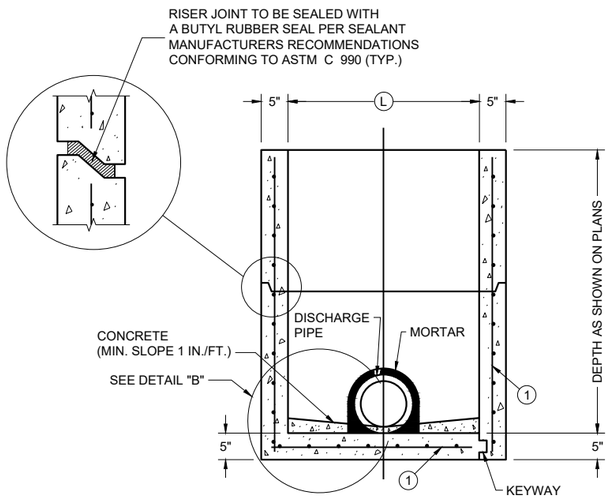

PRECAST REINFORCED CONCRETE WITH MONOLITHIC BASE

PRECAST REINFORCED CONCRETE WITH INTEGRAL BASE

SECTION A - A

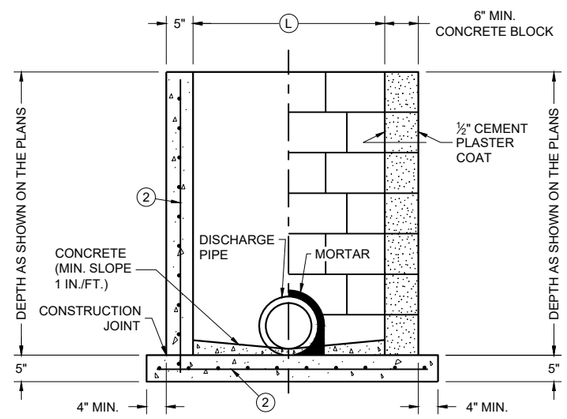

CAST IN PLACE REINFORCED CONCRETE

CONCRETE BLOCK WITH CAST IN PLACE OR PRECAST REINFORCED CONCRETE BASE (1)

SECTION B - B

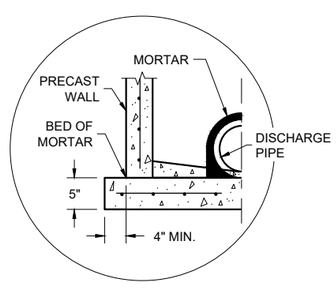

SEPARATE PRECAST REINFORCED CONCRETE BASE OPTION

DETAIL "B"

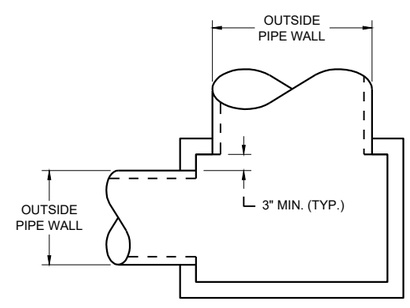

DETAIL "A"

GENERAL NOTES

DETAILS OF CONSTRUCTION, MATERIALS AND WORKMANSHIP N0T SHOWN ON THIS DRAWING SHALL CONFORM TO THE PERTINENT REQUIREMENTS OF THE STANDARD SPECIFICATIONS AND THE APPLICABLE SPECIAL PROVISIONS.

UNLESS OTHERWISE AUTHORIZED IN WRITING BY THE ENGINEER, THE CONTRACTOR SHALL NOT ORDER AND DELIVER PRECAST INLET UNITS REQUIRED FOR THE PROJECT UNTIL A LIST OF SIZES IS FURNISHED BY THE ENGINEER.

DETAILED DRAWINGS FOR PROPOSED ALTERNATE DESIGNS FOR UNDERGROUND DRAINAGE STRUCTURES SHALL BE SUBMITTED TO THE ENGINEER FOR APPROVAL PROVIDING THAT SUCH ALTERNATE DESIGNS MAKE PROVISION FOR EQUIVALENT CAPACITY AND STRENGTH.

ALL PRECAST INLET UNITS SHALL CONFORM TO THE PERTINENT REQUIREMENTS OF ASTM C 913.

ALL DRAINAGE STRUCTURES ARE DESIGNATED ON THE PLANS AS "MANHOLES 3X3-L", "CATCH BASINS 4-B", "INLETS 2X3-H", ETC. THE FIRST NUMBERS DESIGNATES THE SIZE OF THE STRUCTURE, AND THE FOLLOWING LETTER DESIGNATES THE TYPE OF COVER TO BE USED TO COMPRISE THE COMPLETE UNIT.

BASES SHALL BE PLACED ON A BED OF MATERIAL AT LEAST 6 INCHES IN DEPTH, WHICH MEETS THE REQUIREMENTS OF FOUNDATION BACKFILL. THIS BEDDING SHALL BE COMPACTED AND PROVIDE UNIFORM SUPPORT FOR THE ENTIRE AREA OF THE BASE.

ALL BAR STEEL REINFORCEMENT SHALL BE EMBEDDED 2 INCHES CLEAR UNLESS OTHERWISE SHOWN OR NOTED.

PRECAST REINFORCED RISERS SHALL HAVE A TONGUE AND GROOVE JOINT WITH TONGUE UP OR DOWN.

4" OVERHANGING BASES ARE REQUIRED FOR CAST-IN-PLACE REINFORCED CONCRETE AND CONCRETE BLOCK INSTALLATIONS. 4" OVERHANG IS REQUIRED WHEN SEPARATE PRECAST BASE IS PROVIDED. OVERHANG IS NOT REQUIRED ON PRECAST STRUCTURES WITH AN INTEGRAL OR MONOLITHIC BASE.

MAXIMUM INSIDE PIPE DIAMETER DETERMINED BY 3" CLEARANCE ON EACH SIDE OF THE OUTSIDE WALL OF THE PIPE. SEE DETAIL "A". ASSUMES PIPE ENTERS PERPENDICULAR TO THE STRUCTURE.

(1) FOR PRECAST INLETS AND REINFORCED CONCRETE BASES PROVIDE REINFORCING STEEL IN ACCORDANCE TO ASTM C 913
(2) CONTRACTOR TO PROVIDE DRAWING(S) STAMPED BY A PROFESSIONAL ENGINEER FOR STEEL REINFORCING DESIGN FOR CAST-IN-PLACE STRUCTURES.

CATCH BASIN COVER MATRIX

INLET SIZE	WIDTH (W) (FT.)	LENGTH (L) (FT.)	INLET COVER TYPE									
			ALL A'S	ALL B'S	BW	F	ALL H'S	S	T	V	WM	V V-B
2 X 2-FT	2	2	X	X				X				
2 X 2.5-FT	2	2.5			X			X	X	X	X	
2 X 3-FT	2	3					X					
2.5 X 3-FT	2.5	3				X						
2 X 3.5-FT	2	3.5										X

PIPE MATRIX

CATCH BASIN SIZE	MAXIMUM INSIDE PIPE DIAMETER FOR TWO PIPES	
	WIDTH (IN)	LENGTH (IN)
2 X 2-FT	12	12
2 X 2.5-FT	12	18
2 X 3-FT	12	24
2.5 X 3-FT	18	24
2 X 3.5-FT	12	30

INLETS 2 X 2-FT, 2 X 2.5-FT, 2 X 3-FT, 2.5 X 3-FT AND 2X3.5-FT

INLETS 2 X 2-FT, 2 X 2.5-FT, 2 X 3-FT, 2.5 X 3-FT AND 2 X 3.5-FT

STATE OF WISCONSIN
DEPARTMENT OF TRANSPORTATION

APPROVED
December 2023 — DATE
/S/ Rodney Taylor — ROADWAY STANDARDS DEVELOPMENT UNIT SUPERVISOR
FHWA

6

SDD 08C07-03

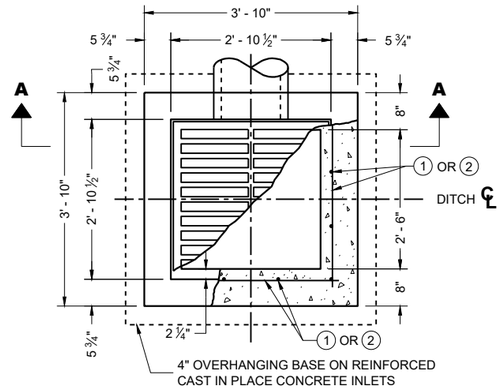

PLAN VIEW

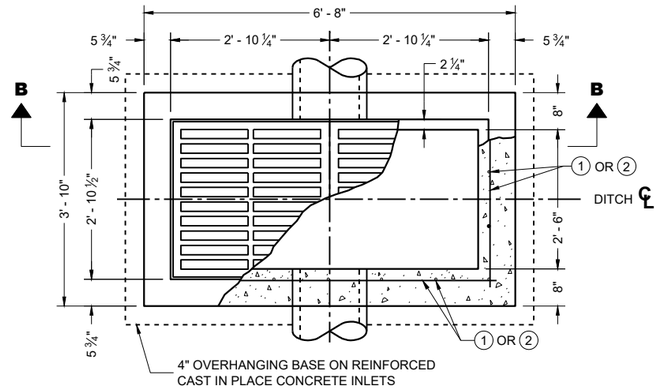

PLAN VIEW

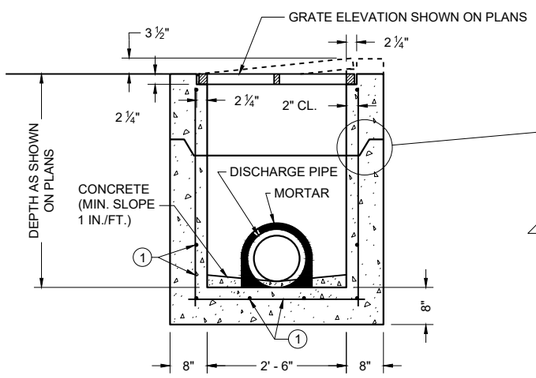

PRECAST REINFORCED CONCRETE SECTION A - A

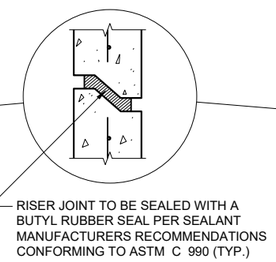

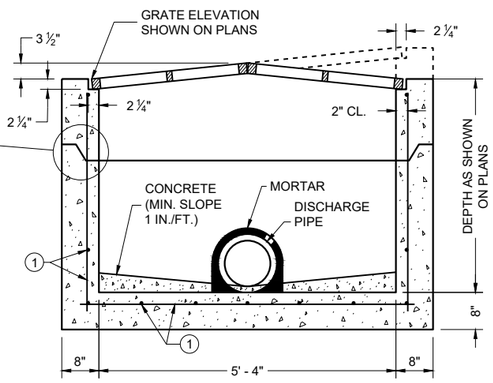

PRECAST REINFORCED CONCRETE SECTION B - B

GENERAL NOTES

DETAILS OF CONSTRUCTION, MATERIALS AND WORKMANSHIP N0T SHOWN ON THIS DRAWING SHALL CONFORM TO THE PERTINENT REQUIREMENTS OF THE STANDARD SPECIFICATIONS AND THE APPLICABLE SPECIAL PROVISIONS.

UNLESS OTHERWISE AUTHORIZED IN WRITING BY THE ENGINEER, THE CONTRACTOR SHALL NOT ORDER AND DELIVER PRECAST INLET UNITS REQUIRED FOR THE PROJECT UNTIL A LIST OF SIZES IS FURNISHED BY THE ENGINEER.

DETAILED DRAWINGS FOR PROPOSED ALTERNATE DESIGNS FOR INLETS WHICH MAY INCLUDE PRECAST REINFORCED CONCRETE INLETS, SHALL BE SUBMITTED TO THE ENGINEER FOR APPROVAL PROVIDING THAT SUCH ALTERNATE DESIGNS MAKE PROVISION FOR EQUIVALENT CAPACITY AND STRENGTH.

ALL MEDIAN INLETS ARE DESIGNATED ON THE PLANS AS "INLETS, 1G-MS", ETC. THE FIRST NUMBER AND LETTER DESIGNATE THE TYPE OF STRUCTURE, AND THE FOLLOWING LETTERS DESIGNATE THE TYPE OF COVER TO BE USED TO COMPRISE THE COMPLETE UNIT.

BASES SHALL BE PLACED ON A BED OF MATERIAL AT LEAST 6 INCHES IN DEPTH, WHICH MEETS THE REQUIREMENTS OF FOUNDATION BACKFILL. THIS BEDDING SHALL BE COMPACTED AND PROVIDE UNIFORM SUPPORT FOR THE ENTIRE AREA OF THE BASE.

ALL PRECAST INLET UNITS SHALL CONFORM TO THE PERTINENT REQUIREMENTS OF ASTM C 913.

ALL BAR STEEL REINFORCEMENT SHALL BE EMBEDDED 2 INCHES CLEAR UNLESS OTHERWISE SHOWN OR NOTED.

PRECAST REINFORCED RISERS SHALL HAVE A TONGUE AND GROOVE JOINT WITH TONGUE UP OR DOWN.

MAXIMUM INSIDE PIPE DIAMETER DETERMINED BY 3" CLEARANCE ON EACH SIDE OF THE OUTSIDE WALL OF THE PIPE. SEE DETAIL "A". ASSUMES PIPE ENTERS PERPENDICULAR TO THE STRUCTURE.

1 FOR PRECAST INLETS AND REINFORCED CONCRETE BASES PROVIDE REINFORCING STEEL IN ACCORDANCE TO ASTM C 913.

2 CONTRACTOR TO PROVIDE DRAWING(S) STAMPED BY A PROFESSIONAL ENGINEER FOR STEEL REINFORCING DESIGN FOR CAST-IN-PLACE STRUCTURES.

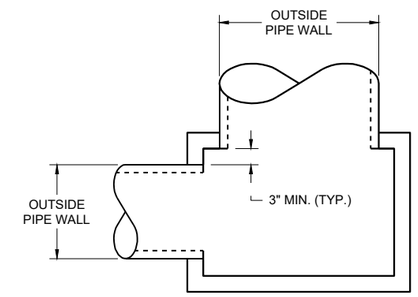

DETAIL "A"

PIPE MATRIX

INLET SIZE	MAXIMUM INSIDE PIPE DIAMETER	
	WIDTH (IN)	LENGTH (IN)
1 GRATE	18	18
2 GRATE	18	42

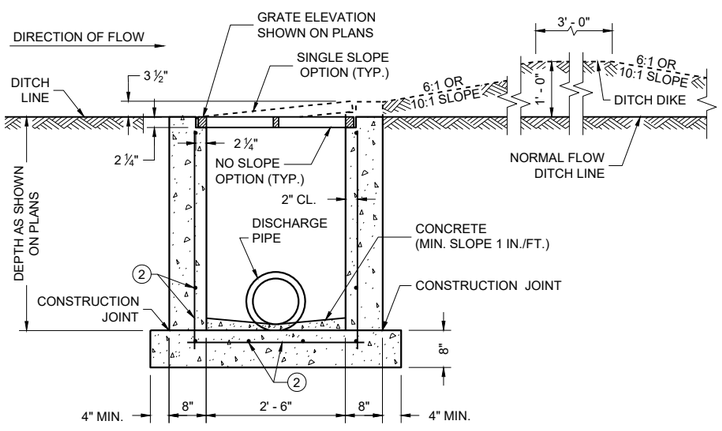

REINFORCED CAST IN PLACE CONCRETE SECTION A - A

INLETS MEDIAN 1 GRATE

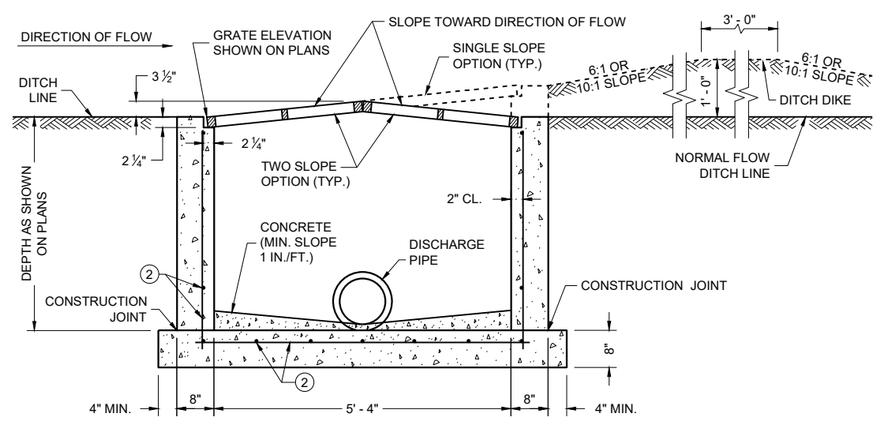

REINFORCED CAST IN PLACE CONCRETE SECTION B - B

INLETS MEDIAN 2 GRATE

INLETS
MEDIAN 1 AND 2 GRATE

STATE OF WISCONSIN
DEPARTMENT OF TRANSPORTATION

APPROVED
December 2023 — DATE
/S/ Rodney Taylor — ROADWAY STANDARDS DEVELOPMENT UNIT SUPERVISOR
FHWA

6
SDD 08C08-03

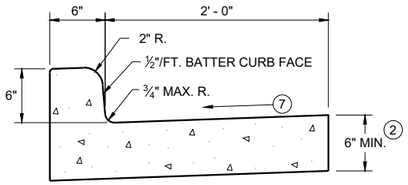

TYPES A (1) & D

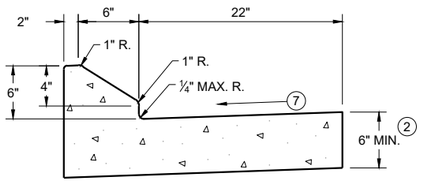

6" SLOPED CURB TYPES G (1) & J

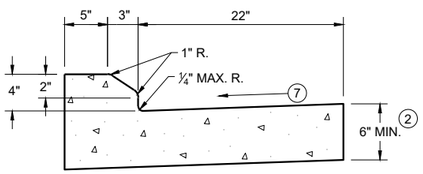

4" SLOPED CURB TYPES G (1) & J

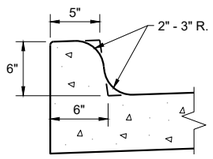

TYPES K (1) & L
(OPTIONAL CURB SHAPE)

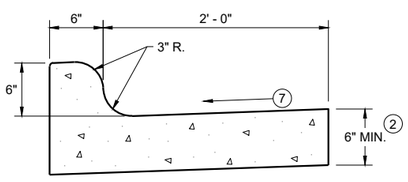

TYPES K (1) & L

CONCRETE CURB AND GUTTER 30"

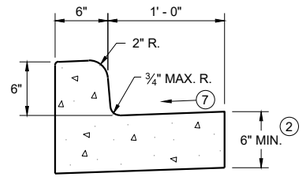

TYPES A (1) & D

CONCRETE CURB AND GUTTER 18"

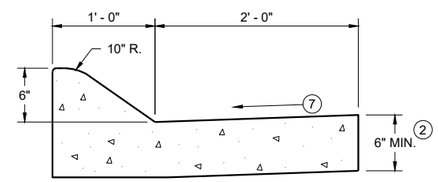

6" SLOPED CURB TYPES A (1) & D

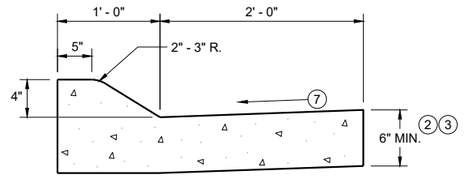

4" SLOPED CURB TYPES A (1) & D

CONCRETE CURB AND GUTTER 36"

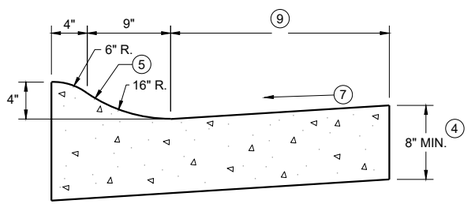

4" SLOPED CURB TYPES R (1) & T

TBT & TBTT	X
30"	22"
36"	28"

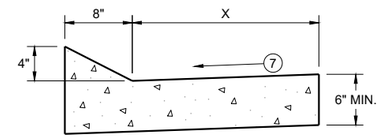

TYPES TBT & TBTT (1)

CONCRETE CURB AND GUTTER

PAVEMENT THICKNESS AND MAXIMUM CONCRETE PANEL WIDTH TABLE

PAVEMENT THICKNESS	MAXIMUM PANEL WIDTH
LESS THAN 10"	12'
10" & ABOVE	15'

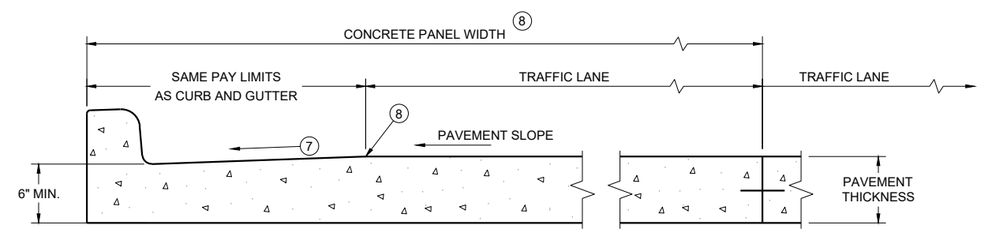

PARTIAL SECTION OF PAVEMENT * WITH INTEGRAL CURB AND GUTTER

* BIKE LANE IS NOT SHOWN

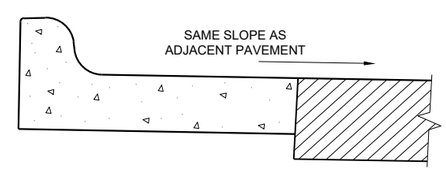

REVERSE SLOPE GUTTER (6)
(TYPICAL FOR ALL CURB & GUTTER TYPES)

GENERAL NOTES

DETAILS OF CONSTRUCTION AND WORKMANSHIP NOT SHOWN ON THIS DRAWING SHALL CONFORM TO THE PERTINENT REQUIREMENTS OF THE CONTRACT.

PAVEMENT TIES AND TIE BARS SHALL BE EPOXY COATED IN CONFORMANCE WITH SUBSECTION 505.2.6.2 OF THE STANDARD SPECIFICATIONS.

INTEGRAL CURB AND GUTTER SHALL CONFORM TO THE DETAILS SHOWN FOR CONCRETE CURB AND GUTTER INCLUDING THE TRANSVERSE GUTTER SLOPE.

UNLESS OTHERWISE SHOWN ON THE TYPICAL CROSS SECTIONS, THE BASE AGGREGATE AND COMMON EXCAVATION LIMITS ARE 2' - 0" BEHIND THE BACK OF CURBS.

(1) TIE BARS ARE REQUIRED FOR CURB AND GUTTERS TYPES A, G, K, R, AND TBTT.

(2) THE BOTTOM OF CURB AND GUTTER MAY BE CONSTRUCTED EITHER LEVEL OR PARALLEL TO THE SLOPE OF THE SUBGRADE OR BASE AGGREGATE PROVIDED A 6" MINIMUM GUTTER THICKNESS IS MAINTAINED.

(3) USE 8" MINIMUM GUTTER THICKNESS WHEN USED WITH AN ADJACENT CONCRETE TRUCK APRON PLACED BEHIND BACK OF CURB.

(4) THE BOTTOM OF CURB AND GUTTER MAY BE CONSTRUCTED EITHER LEVEL OR PARALLEL TO THE SLOPE OF THE SUBGRADE OR BASE AGGREGATE PROVIDED A 8" MINIMUM GUTTER THICKNESS IS MAINTAINED.

(5) UNLESS OTHERWISE NOTED, FOR STAKING PURPOSES THE FACE OF CURB IS 6" FROM THE BACK OF CURB.

(6) WHEN REVERSE SLOPE GUTTER IS REQUIRED, THE LOCATION(S) WILL BE SHOWN ELSEWHERE IN THE PLAN.

(7) USE 4% GUTTER CROSS SLOPE UNLESS OTHERWISE NOTED IN THE PLANS.

(8) INCLUDE LONGITUDINAL JOINT AND TIE BARS ALONG LANE EDGE WHEN CONCRETE PANEL WIDTH EXCEEDS THE MAXIMUM WIDTH PER TABLE BELOW. LONGITUDINAL JOINT(S) ARE NOT ALLOWED WITHIN TRAFFIC LANES AND BIKE LANES. LONGITUDINAL JOINT MAY BE SAWED.

(9) CONCRETE CURB AND GUTTER 4-INCH SLOPED 30-INCH TYPE "R" AND "T" = 17 INCHES
CONCRETE CURB AND GUTTER 4-INCH SLOPED 36-INCH TYPE "R" AND "T" = 23 INCHES

CONCRETE CURB AND GUTTER

STATE OF WISCONSIN
DEPARTMENT OF TRANSPORTATION

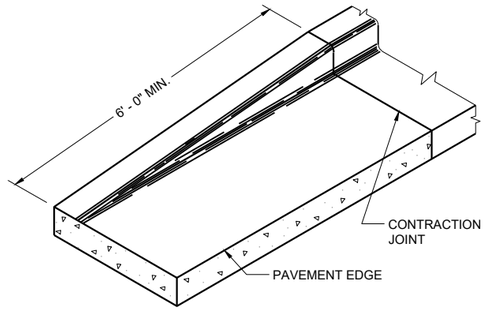

END SECTION CURB AND GUTTER

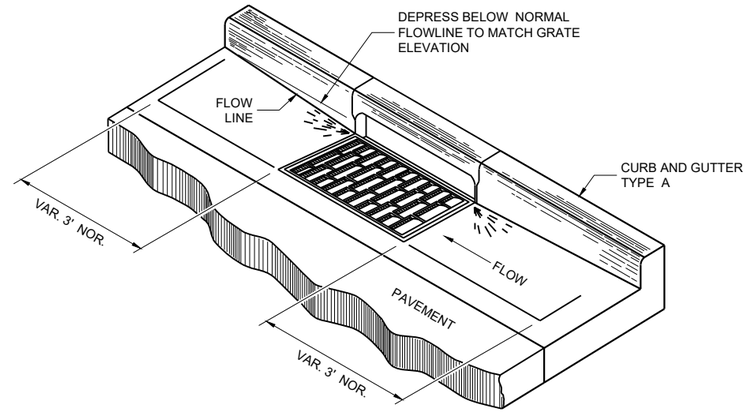

DETAIL OF CURB AND GUTTER AT INLETS

(TYPICAL H INLET COVER SHOWN)

GENERAL NOTES

DETAILS OF CONSTRUCTION AND WORKMANSHIP NOT SHOWN ON THIS DRAWING SHALL CONFORM TO THE PERTINENT REQUIREMENTS OF THE CONTRACT.

PAVEMENT TIES AND TIE BARS SHALL BE EPOXY COATED IN CONFORMANCE WITH SUBSECTION 505.2.6.2 OF THE STANDARD SPECIFICATIONS.

UNLESS OTHERWISE SHOWN ON THE TYPICAL CROSS SECTIONS, THE BASE AGGREGATE AND COMMON EXCAVATION LIMITS ARE 2' - 0" BEHIND THE BACK OF CURBS.

(1) TIE BARS ARE REQUIRED FOR CURB AND GUTTERS TYPES A, G, K, R, AND TBTT.

(2) THE BOTTOM OF CURB AND GUTTER MAY BE CONSTRUCTED EITHER LEVEL OR PARALLEL TO THE SLOPE OF THE SUBGRADE OR BASE AGGREGATE PROVIDED A 6" MINIMUM GUTTER THICKNESS IS MAINTAINED.

(10) REFER TO SDD 08D18 AND 08D19 FOR ADDITIONAL DRIVEWAY ENTRANCE CURB DETAILS.

(11) PLACE 1" THICK EXPANSION JOINT MATERIAL BETWEEN VERTICAL FACE CURB TYPES EXTENDING FROM THE TOP OF CURB TO 1 INCH BELOW THE ADJOINING CONCRETE SURFACE. RIGID CONCRETE STRUCTURES INCLUDE RAISED CONCRETE MEDIANS, CONCRETE SAFETY ISLANDS, SPLITTER ISLANDS, OR LOCATIONS IDENTIFIED ON THE PLANS.

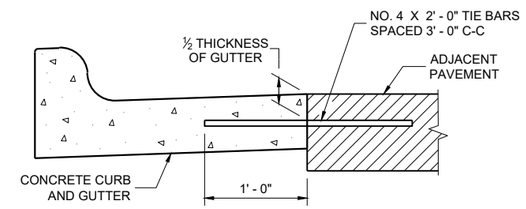

TYPICAL TIE BAR LOCATION (1)

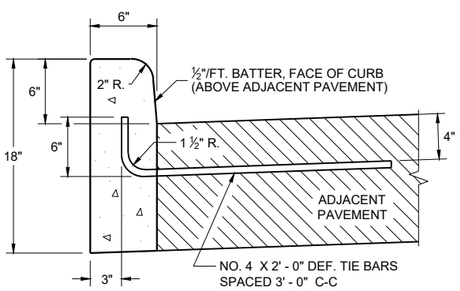

TYPES A (1) & D

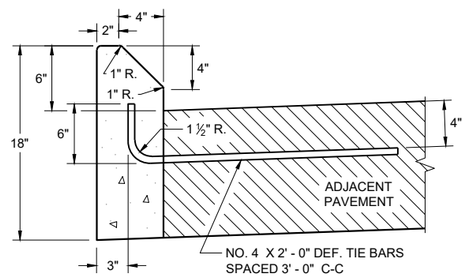

TYPES G (1) & J

CONCRETE CURB

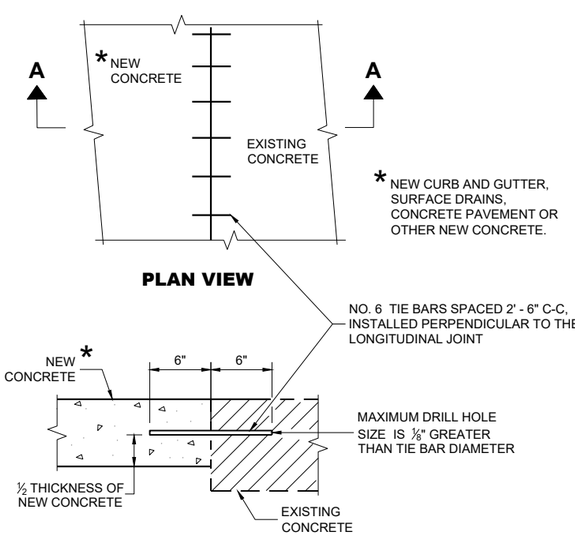

PLAN VIEW

SECTION A - A

TIE BARS DRILLED INTO EXISTING PAVEMENT

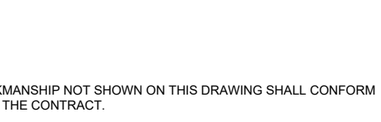

DRIVEWAY ENTRANCE CURB (10)

(WHEN DIRECTED BY THE ENGINEER)

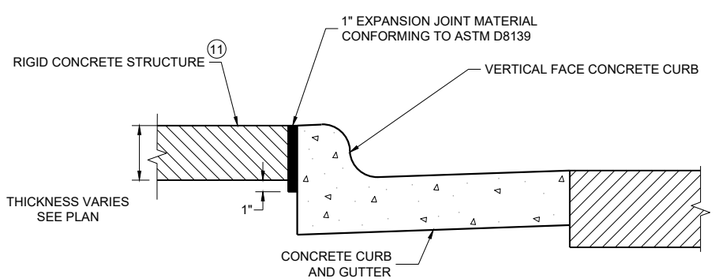

EXPANSION JOINT DETAIL FOR VERTICAL CURB ABUTTING A RIGID STRUCTURE (11)

CONCRETE CURB, TIES AND CURB AND GUTTER APPLICATIONS

STATE OF WISCONSIN
DEPARTMENT OF TRANSPORTATION

APPROVED
May 2023 — DATE
/S/ Rodnery Taylor — ROADWAY STANDARDS DEVELOPMENT UNIT SUPERVISOR

FHWA

NOTE: TAPER CURB ENDS TO GUTTER IN 1' - 0"

ASPHALTIC FLUME

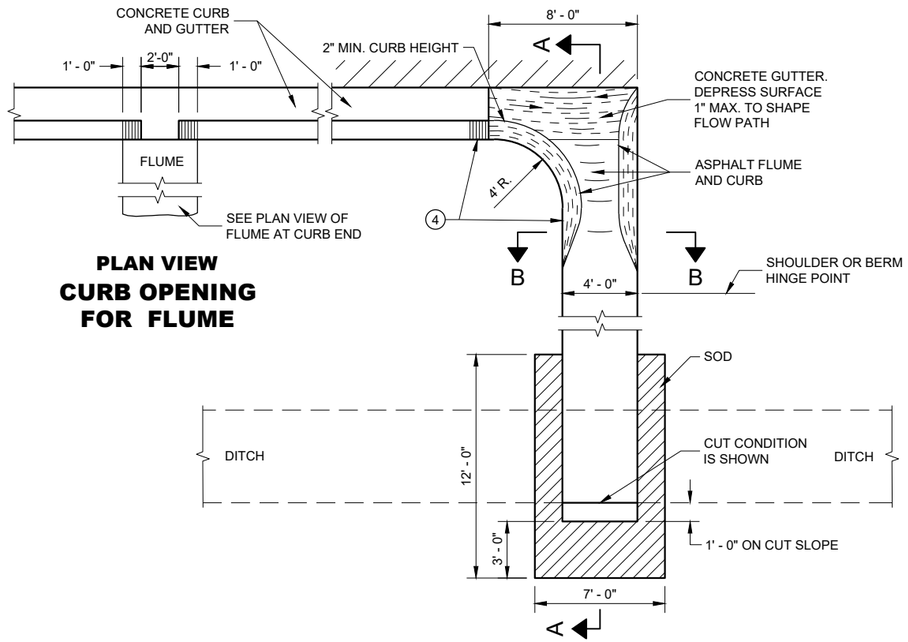

PLAN VIEW
CURB OPENING FOR FLUME

PLAN VIEW
FLUME AT CURB END

GENERAL NOTES

DETAILS OF CONSTRUCTION, MATERIALS AND WORKMANSHIP NOT SHOWN ON THIS DRAWING SHALL CONFORM TO PERTINENT REQUIREMENTS OF THE STANDARD SPECIFICATIONS AND APPLICABLE SPECIAL PROVISIONS.

4" X 4" - W3.0 X W3.0 CONCRETE REINFORCEMENT SHALL BE IN ACCORDANCE WITH AASHTO SPECIFICATION M55.

1. JOINTS SHALL BE ⅛" TO ¼" WIDE BY 1½" DEEP AND SPACED AT UNIFORM INTERVALS OF APPROXIMATELY 4 FEET.
2. GEOTEXTILE TYPE "R" SHALL UNDERLAY THE FULL LENGTH AND WIDTH OF THE CONCRETE SURFACE DRAIN AND RIPRAP.
3. CONCRETE SURFACE DRAIN WITHOUT CURB AND GUTTER MAY BE USED ON BACKSLOPES WHEN SPECIFIED.
4. ANGLE OF FLUME IN RELATION TO BACK OF CURB TO BE CONSTRUCTED PER THE PLAN DETAILS OR AS DIRECTED BY THE ENGINEER. ANGLE OF FLUME MAY BE OTHER THAN 90 DEGREES AS SHOWN.

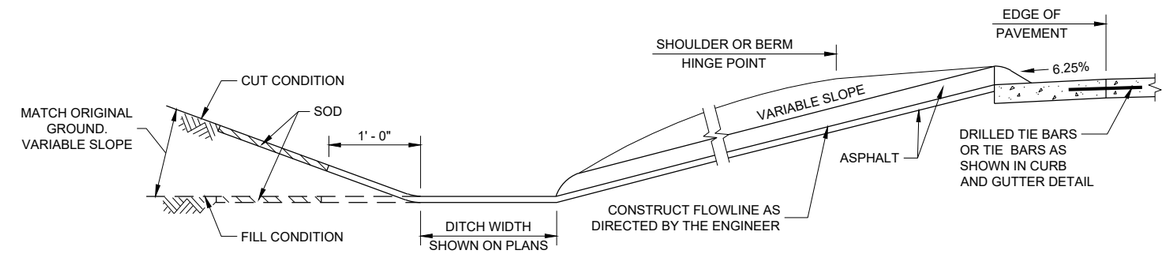

SECTION A - A

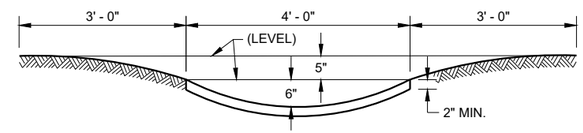

SECTION B - B

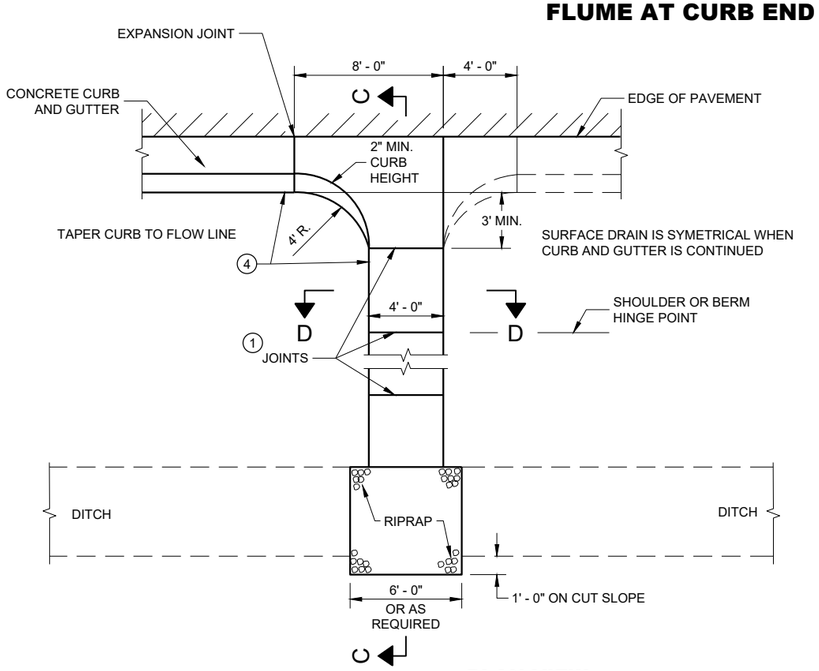

PLAN VIEW
CONCRETE SURFACE DRAIN

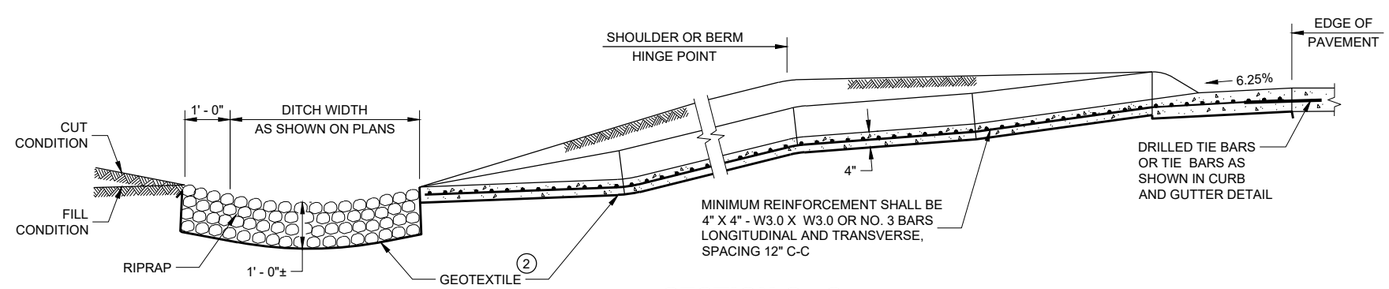

SECTION C - C

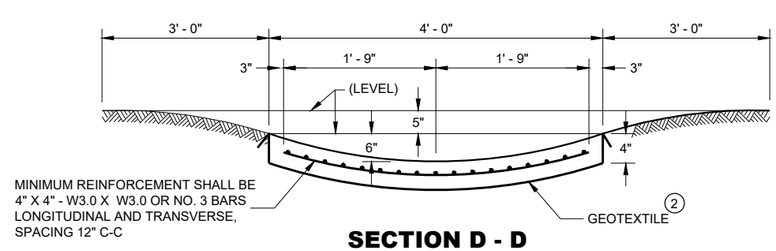

SECTION D - D

CONCRETE SURFACE DRAINS AND ASPHALTIC FLUMES

STATE OF WISCONSIN
DEPARTMENT OF TRANSPORTATION

APPROVED
May 2023 — DATE
/S/ Rodney Taylor — ROADWAY STANDARDS DEVE ENGINEER
FHWA

6
SDD 08D04 - 07

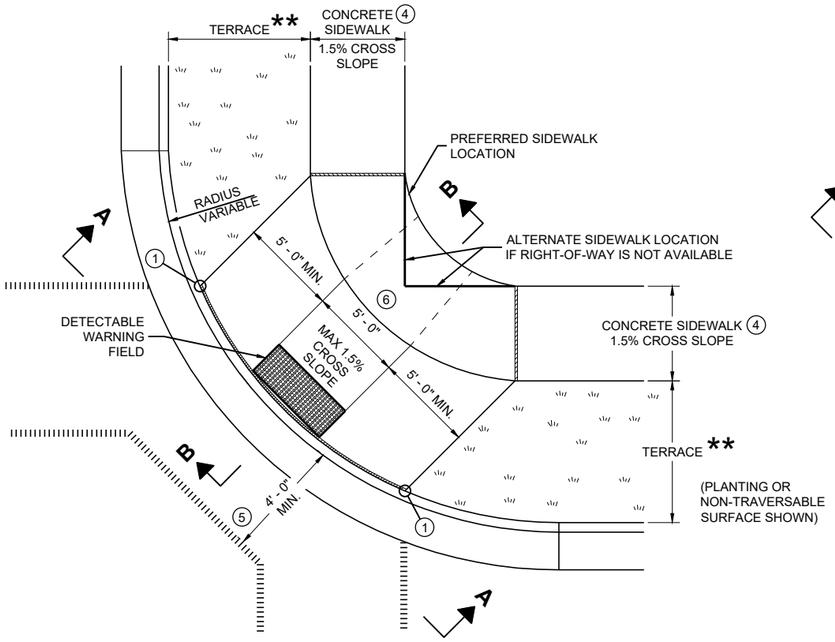

PLAN VIEW

CURB RAMP TYPE 1

(CENTER OF CORNER RADIUS)

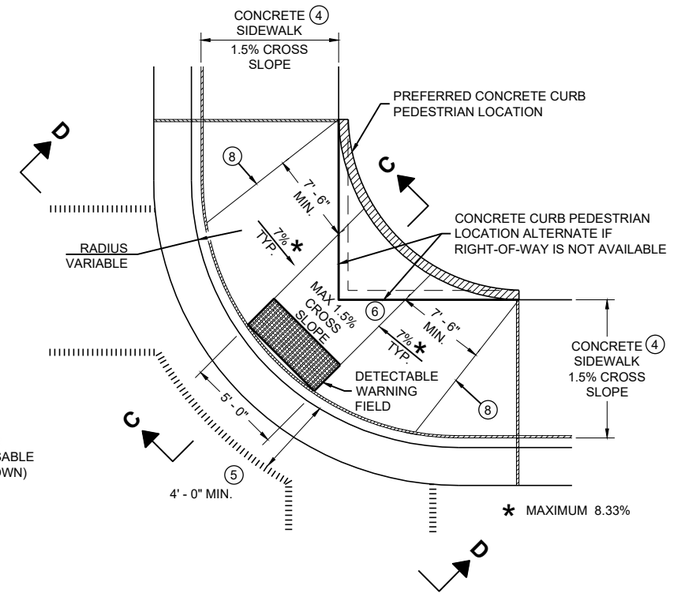

PLAN VIEW

CURB RAMP TYPE 1 - A

(NO TERRACE)

GENERAL NOTES

AVOID PLACING DRAINAGE STRUCTURES, JUNCTION BOXES OR OTHER OBSTRUCTIONS IN FRONT OF RAMP ACCESS AREAS.

DETAILS OF CONSTRUCTION, MATERIALS AND WORKMANSHIP NOT SHOWN ON THIS DRAWING SHALL CONFORM TO THE PERTINENT REQUIREMENTS OF THE STANDARD SPECIFICATIONS AND THE APPLICABLE SPECIAL PROVISIONS.

WHEN NECESSARY, THE SIDEWALK ELEVATION MAY BE LOWERED TO MEET THE HIGH POINT ON THE RAMP.

TYPE 1 CURB RAMPS SHALL HAVE A NORMAL SIDEWALK APRON AND CURB ON BOTH SIDES OF RAMP.

DETECTABLE WARNING FILED SHALL BE MEASURED AND PAID BY THE SQUARE FOOT AS "CURB RAMP DETECTABLE WARNING FIELD". THE CONCRETE PEDESTRIAN CURB, IF NEEDED, SHALL BE MEASURED AND PAID BY THE LINEAR FOOT AS "CONCRETE CURB PEDESTRIAN". CONCRETE SIDEWALK IN THE CURB RAMP AREA SHALL BE MEASURED AND PAID BY THE SQUARE FOOT AS CONCRETE SIDEWALK, INCLUDING THE AREA UNDER THE DETECTABLE WARNING FIELD.

SELECT CURB RAMP DETECTABLE WARNING FIELD MATERIALS AND DEVICES FROM THE DEPARTMENT'S APPROVED MATERIALS LIST. THE COLOR OF THE DETECTABLE WARNING FIELD IS SPECIFIED ELSEWHERE AND IS INCIDENTAL TO THE BID ITEM OF "CURB RAMP DETECTABLE WARNING FIELD"

DETECTABLE WARNING FIELDS THAT ARE INSTALLED AS A GROUP OR SIDE BY SIDE, SHALL BE FROM THE SAME MANUFACTURER.

SURFACE TEXTURE OF THE RAMP SHALL BE OBTAINED BY COARSE BROOMING TRANSVERSE TO THE SLOPE OF THE RAMP.

1. THIS POINT IS AN EXTENSION OF OUTSIDE EDGE OF APPROACHING SIDEWALK WHERE IT MEETS THE BACK OF CONCRETE CURB. POINT LOCATION MAY BE ADJUSTED TO ALIGN WITH BEGINNING OF FULL-HEIGHT CURB IF THIS DISTANCE IS SHORT.
2. GRADE CHANGE BETWEEN GUTTER FLAG SLOPE AND THE CURB RAMP SLOPE SHALL NOT EXCEED 11%. MAXIMUM GUTTER FLAG SLOPE IS 4%. PROVIDE LONGITUDINAL DRAINAGE AROUND CURB AND AWAY FROM CURB RAMP. NO VERTICAL LIPS OR DISCONTINUITIES GREATER THAN ¼ - INCH ARE ALLOWED. SLOPE OF CURB HEAD OPENING SHALL MATCH THE RAMP SLOPE, MINIMALLY 1.5% AND NOT TO EXCEED 7%. WHEN ADJACENT TO 1.5% LANDING, CONSTRUCT CURB HEAD OPENING AT 1.5% IN THE DIRECTION OF PEDESTRIAN TRAVEL.
3. MAXIMUM 8.33% CURB RAMP SLOPE IS ALLOWABLE WITH FLATTENED GUTTER FLAG SLOPE AND NOT TO EXCEED 11% GRADE CHANGE.
4. ±0.5% CONSTRUCTION TOLERANCE IN SIDEWALK CROSS SLOPE. THE SIDEWALK CROSS SLOPE SHALL NOT EXCEED 2% WITHOUT PRIOR APPROVAL FROM THE ENGINEER.
5. PROVIDE A LEVEL LANDING IN THE STREET AND GUTTER AREA (2% MAXIMUM SLOPE IN ANY DIRECTION). WHEN THE GUTTER SLOPE EXCEEDS 2%, CONSTRUCT THE LEVEL LANDING IN THE STREET AREA. 4 FOOT WIDTH IS MEASURED FROM THE FLANGE LINE
6. PROVIDE A LEVEL LANDING (MAXIMUM 2% SLOPE) IN ANY DIRECTION OF PEDESTRIAN TRAVEL. STANDARD LEVEL LANDING SIZE IS 5 FEET BY 5 FEET.
8. PROVIDE GRADE BREAK PERPENDICULAR TO DIRECTION OF WHEELCHAIR TRAVEL.

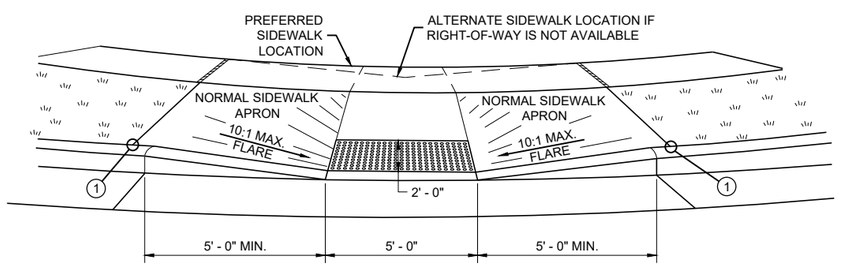

VIEW A - A FOR TYPE 1

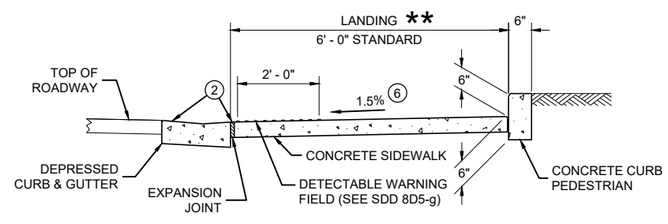

SECTION C - C FOR TYPE 1 - A

LEGEND

- ½" EXPANSION JOINT SIDEWALK
- CONTRACTION JOINT FIELD LOCATED
- PAVEMENT MARKING CROSSWALK (WHITE)

** WIDTH SHOWN ELSEWHERE IN THE PLANS

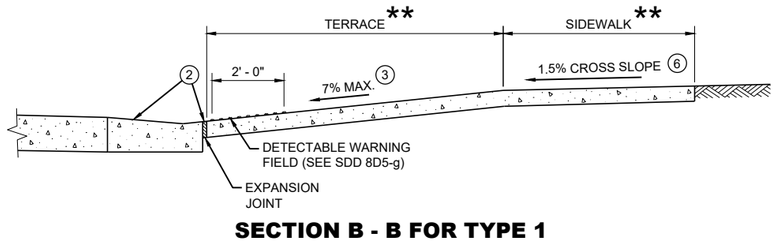

SECTION B - B FOR TYPE 1

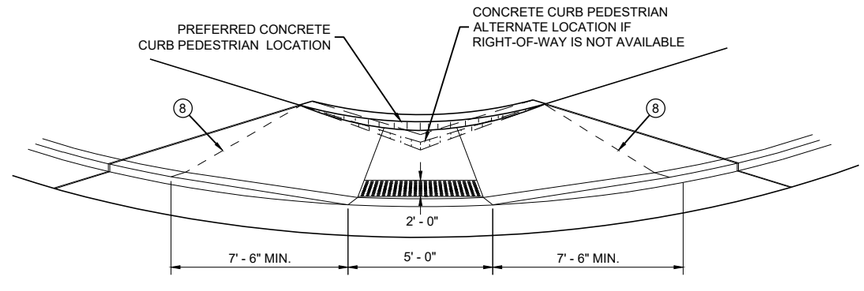

VIEW D - D FOR TYPE 1 - A

CURB RAMPS TYPE 1 AND 1-A

STATE OF WISCONSIN
DEPARTMENT OF TRANSPORTATION

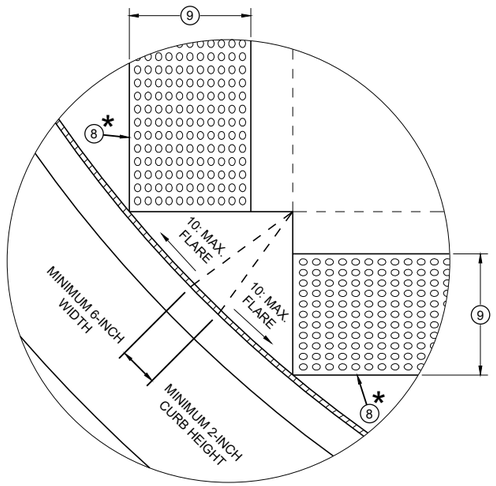

DETAIL A

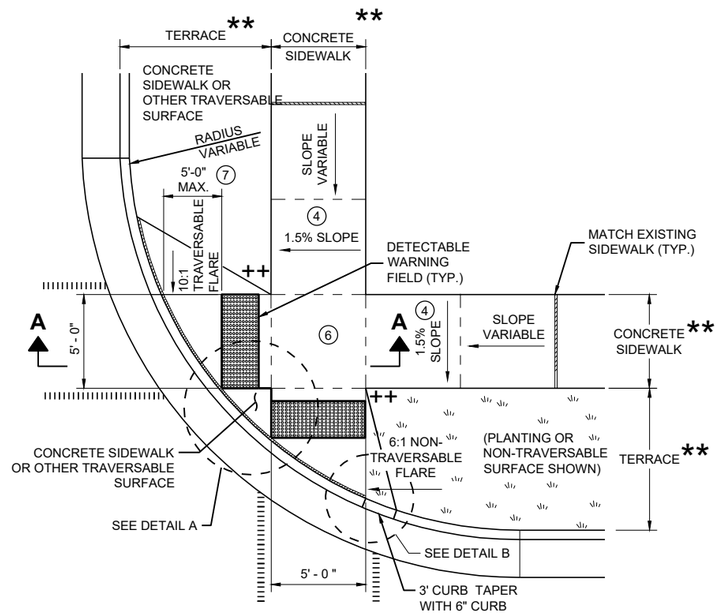

PLAN VIEW

CURB RAMP TYPE 2

(CENTER OF CORNER RADIUS)

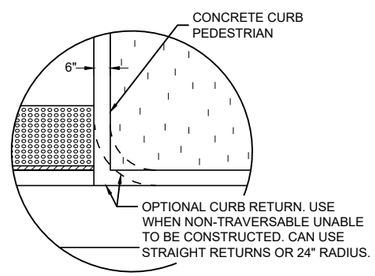

DETAIL B

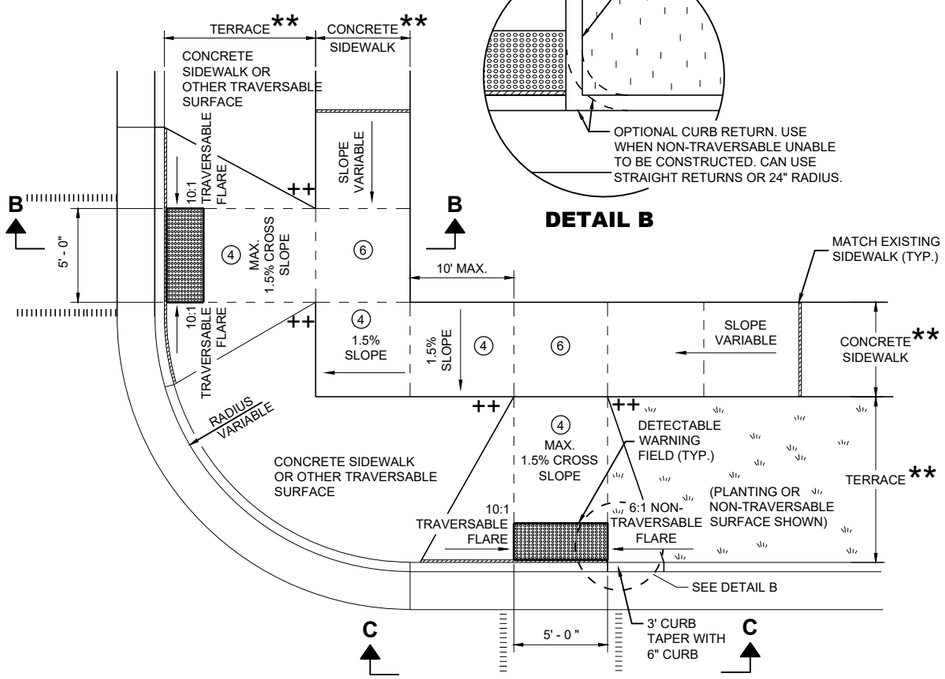

PLAN VIEW

CURB RAMP TYPE 3

(OUTSIDE OF CROSSWALK AREA)

GENERAL NOTES

AVOID PLACING DRAINAGE STRUCTURES, JUNCTION BOXES OR OTHER OBSTRUCTIONS IN FRONT OF RAMP ACCESS AREAS.

DETAILS OF CONSTRUCTION, MATERIALS AND WORKMANSHIP NOT SHOWN ON THIS DRAWING SHALL CONFORM TO THE PERTINENT REQUIREMENTS OF THE STANDARD SPECIFICATIONS AND THE APPLICABLE SPECIAL PROVISIONS.

DETECTABLE WARNING FIELDS THAT ARE INSTALLED AS A GROUP OR SIDE BY SIDE SHALL BE FROM THE SAME MANUFACTURER.

(2) GRADE CHANGE BETWEEN GUTTER FLAG SLOPE AND THE CURB RAMP SLOPE SHALL NOT EXCEED 11%. MAXIMUM GUTTER FLAG SLOPE IS 4%. PROVIDE LONGITUDINAL DRAINAGE AROUND CURB AND AWAY FROM CURB RAMP. NO VERTICAL LIPS OR DISCONTINUITIES GREATER THAN ¼ - INCH ARE ALLOWED. SLOPE OF CURB HEAD OPENING SHALL MATCH THE RAMP SLOPE, MINIMALLY 1.5% AND NOT TO EXCEED 7%. WHEN ADJACENT TO 1.5% LANDING, CONSTRUCT CURB HEAD OPENING AT 1.5% IN THE DIRECTION OF PEDESTRIAN TRAVEL.

(3) AN 8.33% CURB RAMP SLOPE IS ALLOWABLE WITH FLATTENED GUTTER FLAG SLOPE (2.67% OR LESS) AND NOT TO EXCEED 11% GRADE CHANGE.

(4) ±0.5% CONSTRUCTION TOLERANCE IN SIDEWALK CROSS SLOPE. THE SIDEWALK CROSS SLOPE SHALL NOT EXCEED 2% WITHOUT PRIOR APPROVAL FROM THE ENGINEER.

(6) PROVIDE A LEVEL LANDING (MAXIMUM 2% SLOPE) IN ANY DIRECTION OF PEDESTRIAN TRAVEL. STANDARD LEVEL LANDING SIZE IS 5 FEET X 5 FEET.

(7) WHEN GRADE BREAK DISTANCE EXCEEDS 5 FEET, USE RADIAL DETECTABLE WARNING FIELD PER SDD 8D5-f.

(8) PROVIDE GRADE BREAK PERPENDICULAR TO DIRECTION OF WHEELCHAIR TRAVEL.

(9) WHEN DISTANCE IS LESS THAN 6' - 0", IT MAY BE DIFFICULT TO ACHIEVE A 7% SLOPE OR FLATTER ALONG THE RAMP. REDUCE CURB HEIGHT IN TRIANGLE AREA TO ACHIEVE 7% SLOPE OR FLATTER ON RAMP. CONSTRUCT 2-INCH MINIMUM CURB HEIGHT BETWEEN 10:1 FLARES.

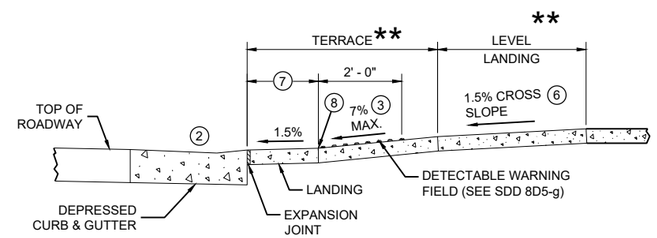

SECTION A - A FOR TYPE 2

* MAXIMUM 2.0% SLOPE IN ALL DIRECTIONS IN FRONT OF GRADE BREAK

** WIDTH SHOWN ELSEWHERE IN THE PLANS

++ CONSTRUCT 6" WEDGE TO AVOID CONCRETE BREAKAGE

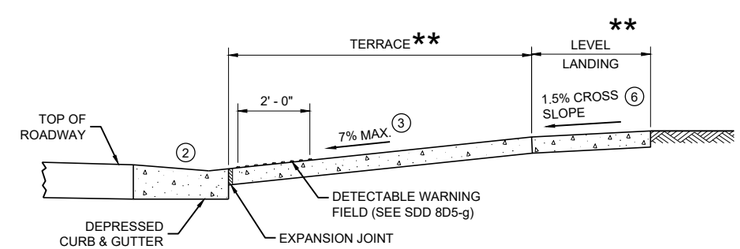

SECTION B - B FOR TYPE 3

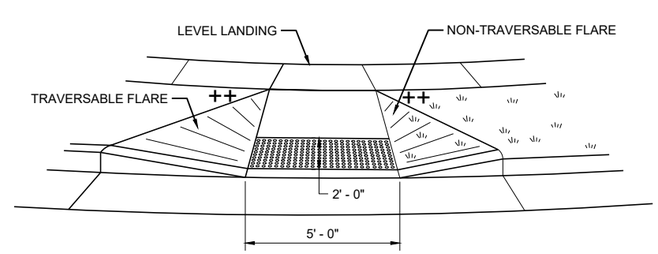

VIEW C - C FOR TYPE 3

LEGEND

- ½" EXPANSION JOINT SIDEWALK
- CONTRACTION JOINT SIDEWALK
- PAVEMENT MARKING CROSSWALK (WHITE)

CURB RAMPS TYPE 2 AND 3

STATE OF WISCONSIN
DEPARTMENT OF TRANSPORTATION

6

6

SDD 08D05-21b

SDD 08D05-21b

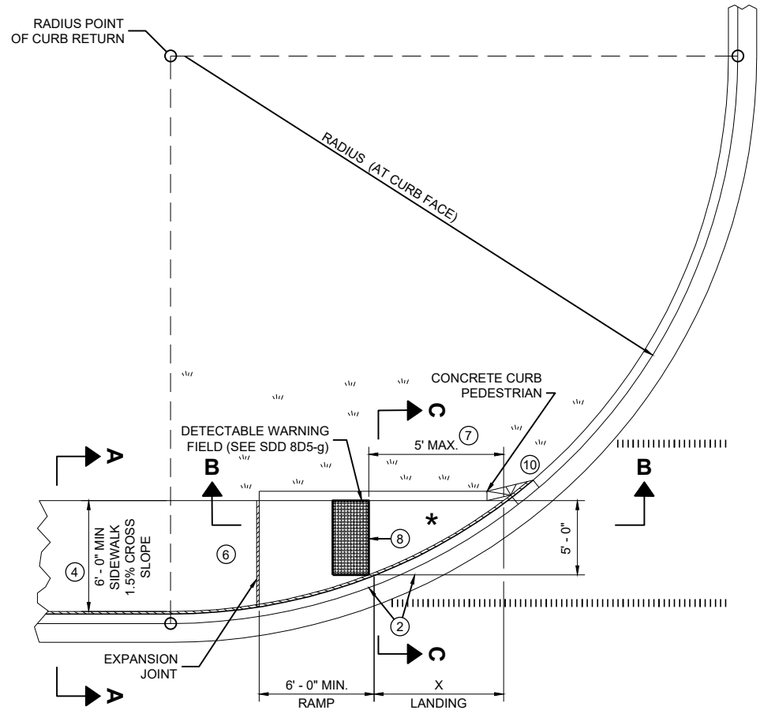

PLAN VIEW

CURB RAMP TYPE 4A

RADIUS (AT CURB FACE)	X
10 FEET	4' - 7"

INTERMEDIATE RADII CAN BE INTERPOLATED

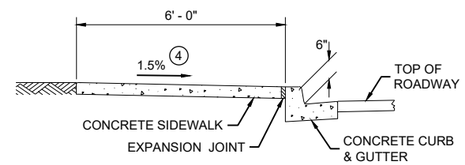

SECTION A - A FOR TYPE 4A

GENERAL NOTES

AVOID PLACING DRAINAGE STRUCTURES, JUNCTION BOXES OR OTHER OBSTRUCTIONS IN FRONT OF RAMP ACCESS AREAS.

DETAILS OF CONSTRUCTION, MATERIALS AND WORKMANSHIP NOT SHOWN ON THIS DRAWING SHALL CONFORM TO THE PERTINENT REQUIREMENTS OF THE STANDARD SPECIFICATIONS AND THE APPLICABLE SPECIAL PROVISIONS.

DETECTABLE WARNING FIELDS THAT ARE INSTALLED AS A GROUP OR SIDE BY SIDE, SHALL BE FROM THE SAME MANUFACTURER.

(2) GRADE CHANGE BETWEEN GUTTER FLAG SLOPE AND THE CURB RAMP SLOPE SHALL NOT EXCEED 11%. MAXIMUM GUTTER FLAG SLOPE IS 4%. PROVIDE LONGITUDINAL DRAINAGE AROUND CURB AND AWAY FROM CURB RAMP. NO VERTICAL LIPS OR DISCONTINUITIES GREATER THAN ¼ - INCH ARE ALLOWED. SLOPE OF CURB HEAD OPENING SHALL MATCH THE RAMP SLOPE, MINIMALLY 1.5% AND NOT TO EXCEED 7%. WHEN ADJACENT TO 1.5% LANDING, CONSTRUCT CURB HEAD OPENING AT 1.5% IN THE DIRECTION OF PEDESTRIAN TRAVEL.

(3) AN 8.33% CURB RAMP SLOPE IS ALLOWABLE WITH FLATTENED GUTTER FLAG SLOPE AND NOT TO EXCEED 11% GRADE CHANGE.

(4) ±0.5% CONSTRUCTION TOLERANCE IN SIDEWALK CROSS SLOPE. THE SIDEWALK CROSS SLOPE SHALL NOT EXCEED 2% WITHOUT PRIOR APPROVAL FROM THE ENGINEER.

(6) PROVIDE A LEVEL LANDING (MAXIMUM 2% SLOPE) IN ANY DIRECTION OF PEDESTRIAN TRAVEL. STANDARD LEVEL LANDING SIZE IS 5 FEET BY 5 FEET.

(7) WHEN THIS GRADE BREAK DISTANCE EXCEEDS 5 FEET, USE RADIAL DETECTABLE WARNING FIELD PER SDD 8D5-f.

(8) PROVIDE GRADE BREAK PERPENDICULAR TO DIRECTION OF WHEELCHAIR TRAVEL.

(10) INSTALL TRANSITION NOSE (INCIDENTAL TO OTHER PAY ITEMS). DO NOT MARK TRANSITION NOSE.

LEGEND

½" EXPANSION JOINT SIDEWALK

CONTRACTION JOINT SIDEWALK

PAVEMENT MARKING CROSSWALK (WHITE)

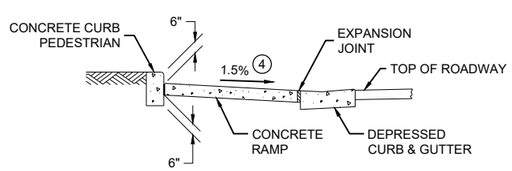

SECTION C - C FOR TYPE 4A

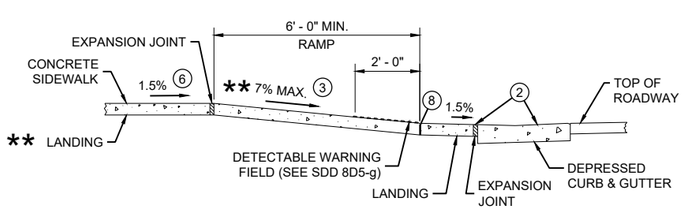

** IF RAMP SLOPE IS LESS THAN 5.0%, THEN NO ADJACENT UPHILL LANDING IS REQUIRED

SECTION B - B FOR TYPE 4A AND TYPE 4A1

* MAXIMUM 2.0% SLOPE IN ALL DIRECTIONS IF FRONT OF GRADE BREAK

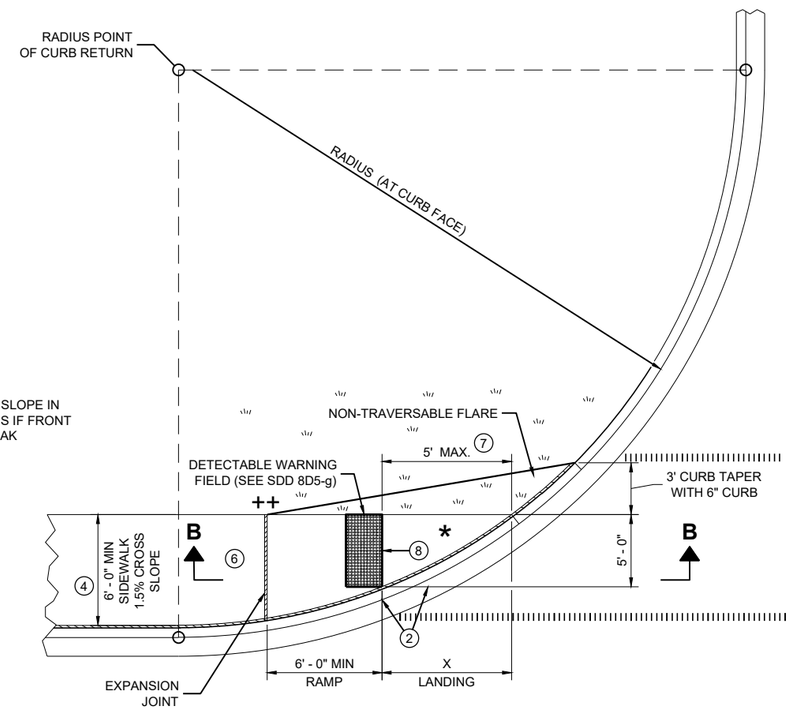

PLAN VIEW

CURB RAMP TYPE 4A1

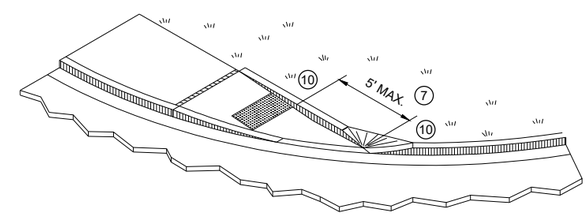

ISOMETRIC VIEW FOR TYPE 4A

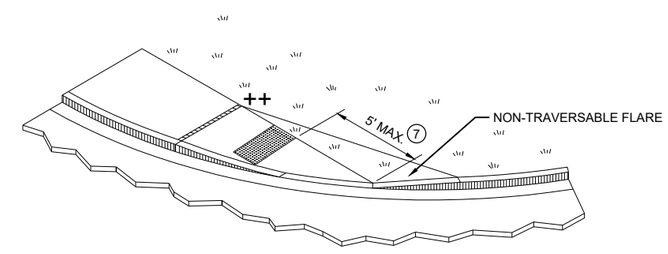

ISOMETRIC VIEW FOR TYPE 4A1

++ CONSTRUCT 6" WEDGE TO AVOID CONCRETE BREAKAGE

CURB RAMPS TYPE 4A AND 4A1

STATE OF WISCONSIN
DEPARTMENT OF TRANSPORTATION

6

6

SDD 08D05-21c

SDD 08D05-21c

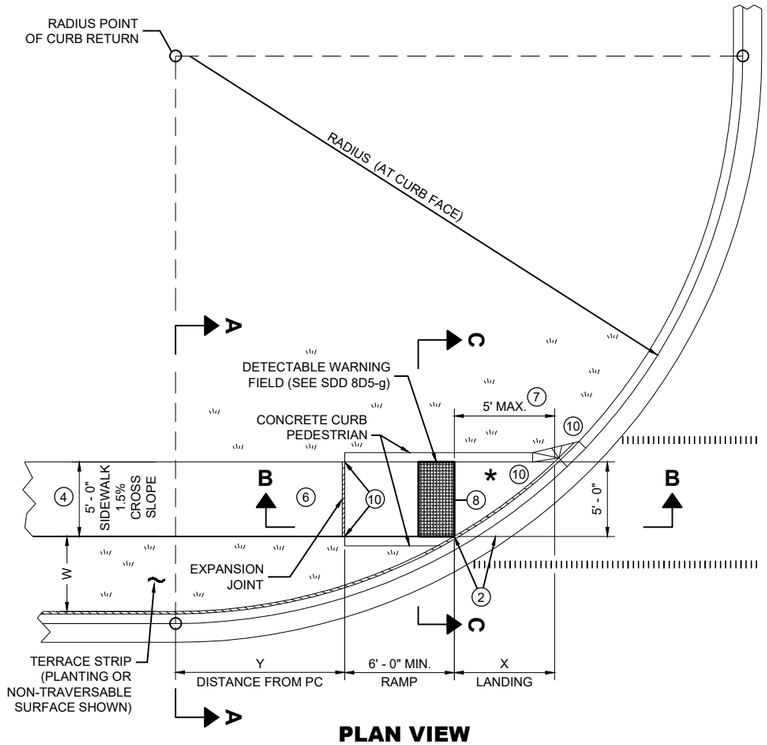

PLAN VIEW
CURB RAMP TYPE 4B

RADIUS (AT CURB FACE)	W = 3' - 0"		W = 4' - 0"		W = 5' - 0"		W = 6' - 0"		W = 7' - 0"		W = 8' - 0"		W = 9' - 0"		W = 10' - 0"	
	X	Y	X	Y	X	Y	X	Y	X	Y	X	Y	X	Y	X	Y
10 FEET	2' - 10 ¼"	0' - 5"	2' - 1"	1' - 4 ½"	1' - 5"	2' - 1"	0' - 10"	2' - 7 ½"	0' - 3 ¼"	3' - 0 ¼"						
15 FEET	4' - 6 ¾"	2' - 1 ¾"	3' - 9"	3' - 5 ¾"	3' - 1 ¼"	4' - 6"	2' - 6 ¾"	5' - 4 ½"	2' - 1"	6' - 1"	1' - 8"	6' - 8 ½"	1' - 3 ¼"	7' - 2 ½"	0' - 10 ¾"	7' - 7 ¼"
20 FEET			4' - 11 ½"	5' - 1 ¾"	4' - 3 ¼"	6' - 5 ½"	3' - 8 ¾"	7' - 7"	3' - 3"	8' - 6 ½"	2' - 10"	9' - 4 ½"	2' - 5 ½"	10' - 1 ¼"	2' - 1 ¼"	10' - 9"
30 FEET									4' - 10 ¾"	12' - 5 ¾"	4' - 5 ½"	13' - 7 ¾"	4' - 0 ¾"	14' - 8 ½"	3' - 8 ½"	15' - 8 ¼"
40 FEET															4' - 10 ¾"	19' - 8 ¼"

INTERMEDIATE RADII CAN BE INTERPOLATED
DIMENSION "Y" IS CALCULATED BASED ON 6'-0" RAMP LENGTH
DIMENSION "X" IS CALCULATED BASED ON 5'-0" SIDEWALK WIDTH

LEGEND

- ½" EXPANSION JOINT SIDEWALK
- CONTRACTION JOINT SIDEWALK
- PAVEMENT MARKING CROSSWALK (WHITE)

GENERAL NOTES

AVOID PLACING DRAINAGE STRUCTURES, JUNCTION BOXES OR OTHER OBSTRUCTIONS IN FRONT OF RAMP ACCESS AREAS.

DETAILS OF CONSTRUCTION, MATERIALS AND WORKMANSHIP NOT SHOWN ON THIS DRAWING SHALL CONFORM TO THE PERTINENT REQUIREMENTS OF THE STANDARD SPECIFICATIONS AND THE APPLICABLE SPECIAL PROVISIONS.

DETECTABLE WARNING FIELDS THAT ARE INSTALLED AS A GROUP OR SIDE BY SIDE, SHALL BE FROM THE SAME MANUFACTURER.

(2) GRADE CHANGE BETWEEN GUTTER FLAG SLOPE AND THE CURB RAMP SLOPE SHALL NOT EXCEED 11%. MAXIMUM GUTTER FLAG SLOPE IS 4%. PROVIDE LONGITUDINAL DRAINAGE AROUND CURB AND AWAY FROM CURB RAMP. NO VERTICAL LIPS OR DISCONTINUITIES GREATER THAN ¼ - INCH ARE ALLOWED. SLOPE OF CURB HEAD OPENING SHALL MATCH THE RAMP SLOPE, MINIMALLY 1.5% AND NOT TO EXCEED 7%. WHEN ADJACENT TO 1.5% LANDING, CONSTRUCT CURB HEAD OPENING AT 1.5% IN THE DIRECTION OF PEDESTRIAN TRAVEL.

(3) AN 8.33% CURB RAMP SLOPE IS ALLOWABLE WITH FLATTENED GUTTER FLAG SLOPE AND NOT TO EXCEED 11% GRADE CHANGE.

(4) ±0.5% CONSTRUCTION TOLERANCE IN SIDEWALK CROSS SLOPE. THE SIDEWALK CROSS SLOPE SHALL NOT EXCEED 2% WITHOUT PRIOR APPROVAL FROM THE ENGINEER.

(6) PROVIDE A LEVEL LANDING (MAXIMUM 2% SLOPE) IN ANY DIRECTION OF PEDESTRIAN TRAVEL. STANDARD LEVEL LANDING SIZE IS 5 FEET BY 5 FEET.

(7) WHEN THIS GRADE BREAK DISTANCE EXCEEDS 5 FEET, USE RADIAL DETECTABLE WARNING FIELD PER SDD 8D5-f.

(8) PROVIDE GRADE BREAK PERPENDICULAR TO DIRECTION OF WHEELCHAIR TRAVEL.

(10) INSTALL TRANSITION NOSE (INCIDENTAL TO OTHER PAY ITEMS). DO NOT MARK TRANSITION NOSE.

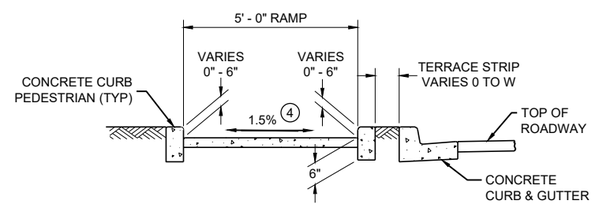

SECTION C - C FOR TYPE 4B

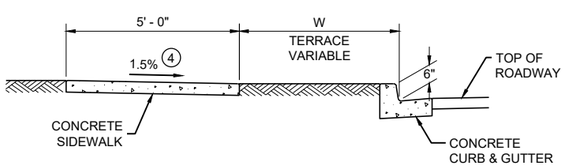

SECTION A - A FOR TYPE 4B

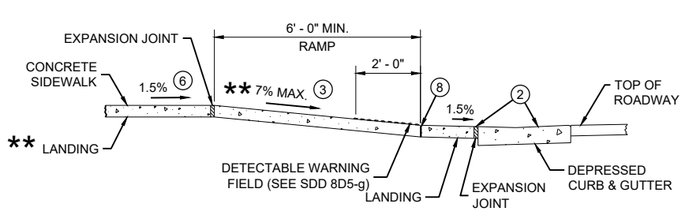

** IF RAMP SLOPE IS LESS THAN 5.0%, THEN NO ADJACENT UPHILL LANDING IS REQUIRED

SECTION B - B FOR TYPE 4B AND TYPE 4B1

* MAXIMUM 2.0% SLOPE IN ALL DIRECTIONS IF FRONT OF GRADE BREAK

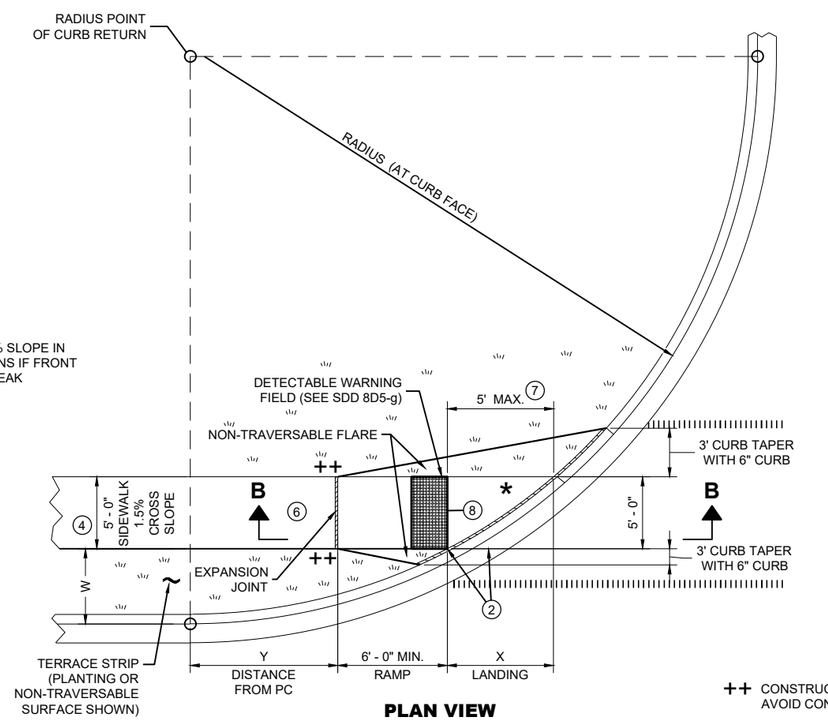

PLAN VIEW
CURB RAMP TYPE 4B1

++ CONSTRUCT 6" WEDGE TO AVOID CONCRETE BREAKAGE

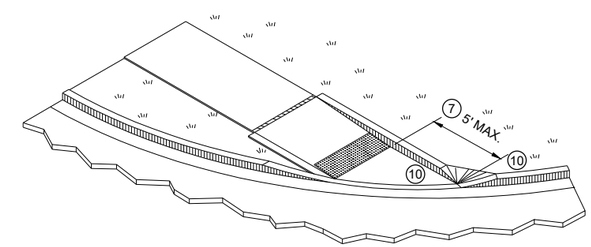

ISOMETRIC VIEW FOR TYPE 4B

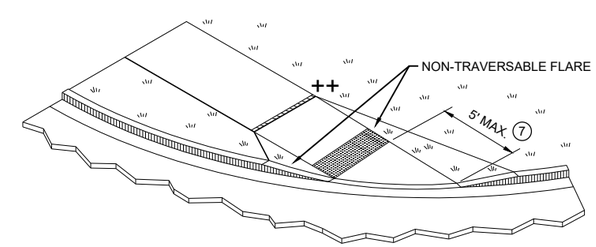

ISOMETRIC VIEW FOR TYPE 4B1

CURB RAMPS TYPE 4B AND 4B1

STATE OF WISCONSIN
DEPARTMENT OF TRANSPORTATION

6

SDD 08D05-21d

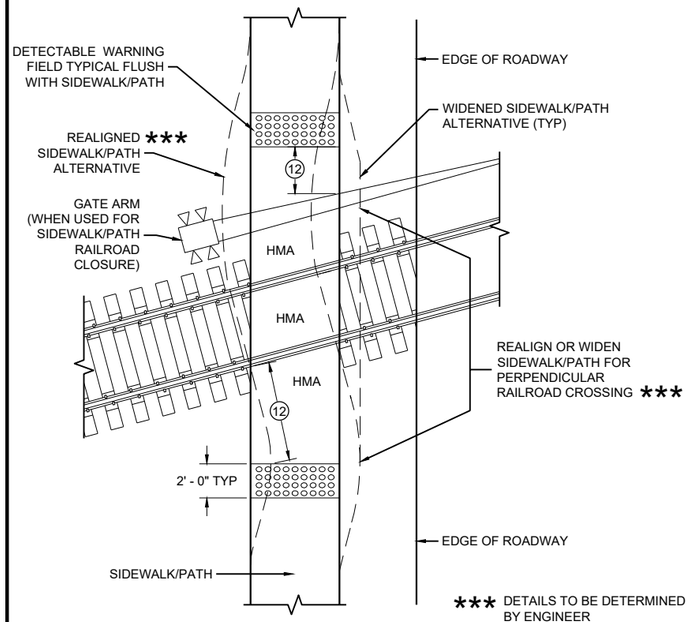

CURB RAMP TYPE 8

DETECTABLE WARNINGS FOR SIDEWALKS OR SHARED USE PATHS AT RAILROAD CROSSINGS

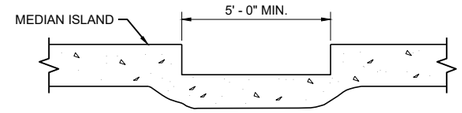

SECTION A - A FOR TYPE 5

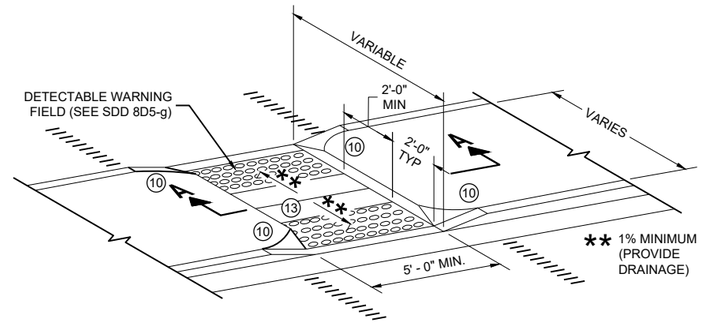

CURB RAMP TYPE 5

MEDIAN ISLAND NON-ELEVATED PEDESTRIAN CROSSING

GENERAL NOTES

AVOID PLACING DRAINAGE STRUCTURES, JUNCTION BOXES OR OTHER OBSTRUCTIONS IN FRONT OF RAMP ACCESS AREAS.

DETAILS OF CONSTRUCTION, MATERIALS AND WORKMANSHIP NOT SHOWN ON THIS DRAWING SHALL CONFORM TO THE PERTINENT REQUIREMENTS OF THE STANDARD SPECIFICATIONS AND THE APPLICABLE SPECIAL PROVISIONS.

SIDEWALK CROSS SLOPE SHALL NOT EXCEED 2%.

DETECTABLE WARNING FIELDS THAT ARE INSTALLED AS A GROUP OR SIDE BY SIDE, SHALL BE FROM THE SAME MANUFACTURER.

(2) GRADE CHANGE BETWEEN GUTTER FLAG SLOPE AND THE CURB RAMP SLOPE SHALL NOT EXCEED 11%. MAXIMUM GUTTER FLAG SLOPE IS 4%. PROVIDE LONGITUDINAL DRAINAGE AROUND CURB AND AWAY FROM CURB RAMP. NO VERTICAL LIPS OR DISCONTINUITIES GREATER THAN ¼ - INCH ARE ALLOWED. SLOPE OF CURB HEAD OPENING SHALL MATCH THE RAMP SLOPE, MINIMALLY 1.5% AND NOT TO EXCEED 7%. WHEN ADJACENT TO 1.5% LANDING, CONSTRUCT CURB HEAD OPENING AT 1.5% IN THE DIRECTION OF PEDESTRIAN TRAVEL.

(3) AN 8.33% CURB RAMP SLOPE IS ALLOWABLE WITH FLATTENED GUTTER FLAG SLOPE AND NOT TO EXCEED 11% GRADE CHANGE.

(4) ±0.5% CONSTRUCTION TOLERANCE IN SIDEWALK CROSS SLOPE. THE SIDEWALK CROSS SLOPE SHALL NOT EXCEED 2% WITHOUT PRIOR APPROVAL FROM THE ENGINEER.

(6) PROVIDE A LEVEL LANDING (MAXIMUM 2% SLOPE) IN ANY DIRECTION OF PEDESTRIAN TRAVEL. STANDARD LEVEL LANDING SIZE IS 5 FEET BY 5 FEET.

(10) INSTALL TRANSITION NOSE (INCIDENTAL TO OTHER PAY ITEMS). DO NOT MARK TRANSITION NOSE.

(11) SLOPE SIDEWALK TOWARD LANDING AS SHOWN WHERE THERE IS NO TERRACE OR WHERE THE TERRACE WIDTH IS LESS THAN 6 FEET WIDE.

(12) THE EDGE OF THE DETECTABLE WARNING FIELD NEAREST TO A RAILROAD CROSSING SHALL BE 1.5 FEET ±0.1' FROM THE FACE OF THE GATE ARM IF THE GATE ARM EXTENDS ACROSS THE SIDEWALK/PATH. WHERE THERE IS NO PEDESTRIAN GATE, THE EDGE OF THE DETECTABLE WARNING FIELD NEAREST TO THE RAILROAD TRACK IS 15 FEET MAXIMUM AND 12 FEET MINIMUM, 15 FEET TYPICAL FROM THE NEAREST RAIL.

(13) DO NOT INSTALL DETECTABLE WARNING FIELDS AT THE EDGES OF STEET-LEVEL PEDESTRIAN REFUGE ISLANDS IF A MINIMUM 2 FOOT CONCRETE SURFACE WITHOUT DETECTABLE WARNINGS (MEASURED IN THE DIRECTION OF PEDESTRIAN TRAVEL) CANNOT BE ACHIEVED.

LEGEND

- ½" EXPANSION JOINT SIDEWALK
- CONTRACTION JOINT FIELD LOCATED
- PAVEMENT MARKING CROSSWALK (WHITE)

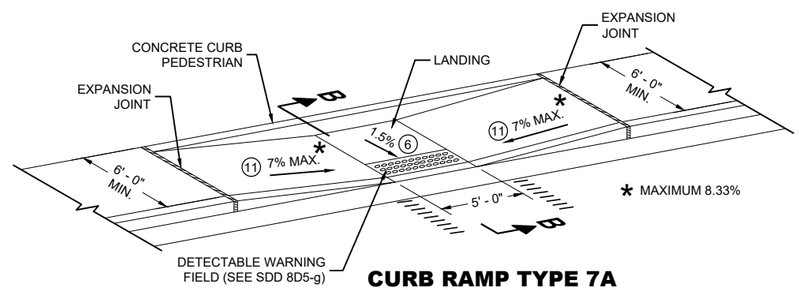

CURB RAMP TYPE 7A

FOR INTERSECTIONS AND MID BLOCK CROSSINGS

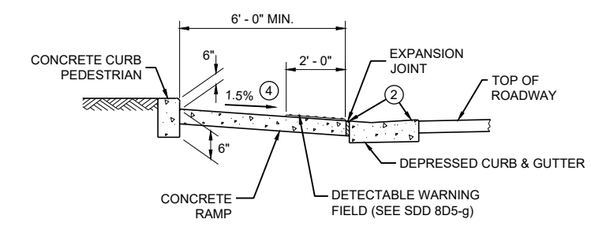

SECTION B - B FOR TYPE 7A

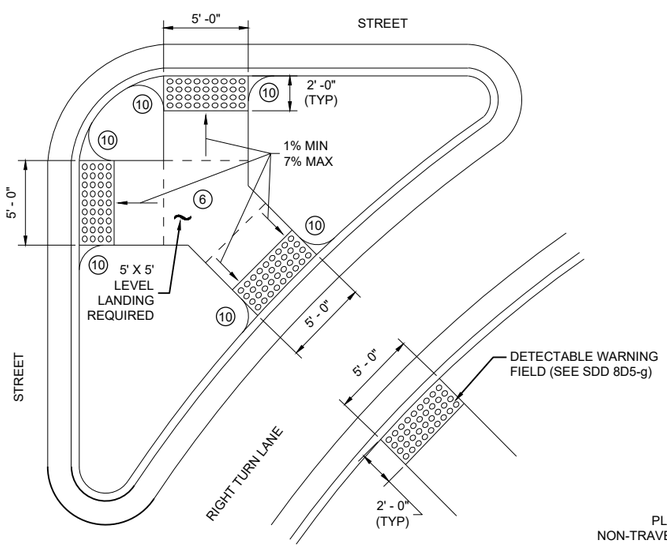

CURB RAMP TYPE 6

DETECTABLE WARNING AT ISLANDS

REFER TO GENERAL NOTES (2) AND (3) FOR ALL ISLAND CURB RAMPS

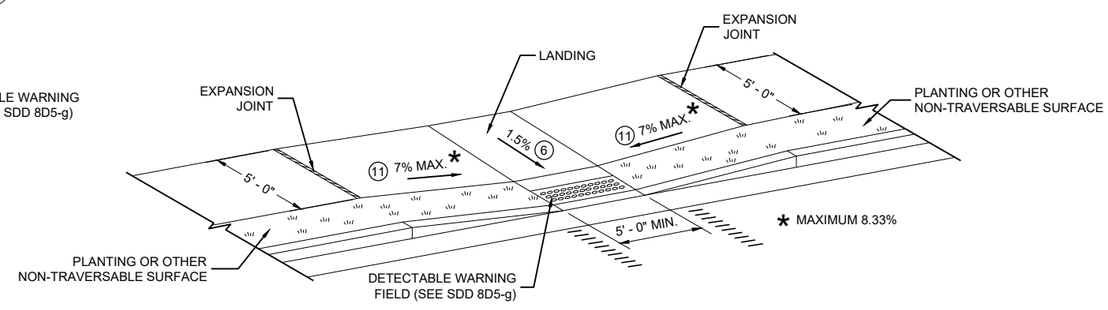

CURB RAMP TYPE 7B

FOR INTERSECTIONS AND MID BLOCK CROSSINGS

CURB RAMPS TYPE 5, 6, 7A, 7B & 8

STATE OF WISCONSIN
DEPARTMENT OF TRANSPORTATION

6

6

SDD 08D05-21e

SDD 08D05-21e

RADIAL DETECTABLE WARNING FIELD PLACEMENT WHEN 5 FOOT GRADE BREAK DISTANCE PER SDD 8D5-c IS EXCEEDED

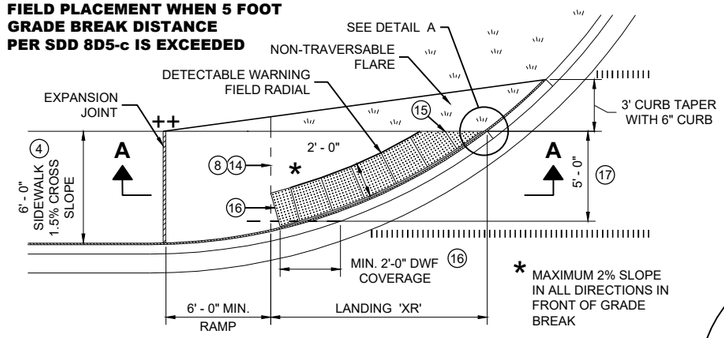

PLAN VIEW

CURB RAMP TYPE 4A1

(GRADE BREAK DISTANCE GREATER THAN 5 FEET)

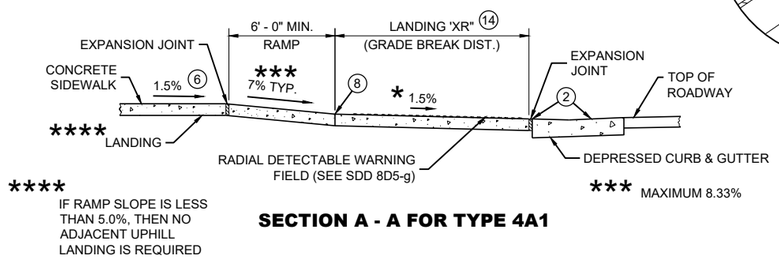

SECTION A - A FOR TYPE 4A1

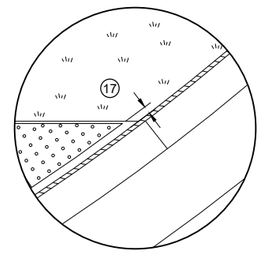

DETAIL A

LEGEND

- ½" EXPANSION JOINT SIDEWALK
- CONTRACTION JOINT SIDEWALK
- PAVEMENT MARKING CROSSWALK (WHITE)

GENERAL NOTES

AVOID PLACING DRAINAGE STRUCTURES, JUNCTION BOXES OR OTHER OBSTRUCTIONS IN FRONT OF RAMP ACCESS AREAS.

DETAILS OF CONSTRUCTION, MATERIALS AND WORKMANSHIP NOT SHOWN ON THIS DRAWING SHALL CONFORM TO THE PERTINENT REQUIREMENTS OF THE STANDARD SPECIFICATIONS AND THE APPLICABLE SPECIAL PROVISIONS.

DETECTABLE WARNING FIELDS THAT ARE INSTALLED AS A GROUP OR SIDE BY SIDE, SHALL BE FROM THE SAME MANUFACTURER.

APPLY RADIAL DETECTABLE WARNING PLACEMENT SIMILARLY FOR TYPE 4A AND 4A1 CURB RAMPS AND SIMILARLY FOR TYPE 4B AND 4B1 CURB RAMPS. TYPE 4A AND 4B CURB RAMPS ARE NOT SHOWN.

REFER TO SDD 8D5-g FOR ADDITIONAL RADIAL PLATE REQUIREMENTS.

FIELD CUTS AT INTERMEDIATE JOINTS WITHIN THE RADIAL DETECTABLE WARNING FILED ARE PROHIBITED.

DETERMINE FINAL RADIAL WARNING FIELD CONFIGURATION AD ITS INDIVIDUAL PLATE LOCATIONS. PERFORM PRE-LAYOUT PRIOR TO PLACEMENT IN PLASTIC CONCRETE. FOLLOW MANUFACTURER'S PRODUCT LIST AND INSTALLATION RECOMMENDATIONS.

(2) GRADE CHANGE BETWEEN GUTTER FLAG SLOPE AND THE CURB RAMP SLOPE SHALL NOT EXCEED 11%. MAXIMUM GUTTER FLAG SLOPE IS 4%. PROVIDE LONGITUDINAL DRAINAGE AROUND CURB AND AWAY FROM CURB RAMP. NO VERTICAL LIPS OR DISCONTINUITIES GREATER THAN ¼ - INCH ARE ALLOWED. SLOPE OF CURB HEAD OPENING SHALL MATCH THE RAMP SLOPE, MINIMALLY 1.5% AND NOT TO EXCEED 7%. WHEN ADJACENT TO 1.5% LANDING, CONSTRUCT CURB HEAD OPENING AT 1.5% IN THE DIRECTION OF PEDESTRIAN TRAVEL.

(3) AN 8.33% CURB RAMP SLOPE IS ALLOWABLE WITH FLATTENED GUTTER FLAG SLOPE AND NOT TO EXCEED 11% GRADE CHANGE.

(4) ±0.5% CONSTRUCTION TOLERANCE IN SIDEWALK CROSS SLOPE. THE SIDEWALK CROSS SLOPE SHALL NOT EXCEED 2% WITHOUT PRIOR APPROVAL FROM THE ENGINEER.

(6) PROVIDE A LEVEL LANDING (MAXIMUM 2% SLOPE) IN ANY DIRECTION OF PEDESTRIAN TRAVEL. STANDARD LANDING SIZE IS 5 FEET BY 5 FEET.

(8) PROVIDE GRADE BREAK PERPENDICULAR TO DIRECTION OF WHEELCHAIR TRAVEL.

(14) CONSULT ENGINEER IF GRADE BREAK LOCATION (END OF LANDING DIMENSION "XR") REQUIRES FIELD ADJUSTMENT WHEN ESTABLISHING FINAL RADIAL DETECTABLE WARNING FIELD LOCATION.

(15) FIELD SAW CUTS ALONG RADIAL DETECTABLE WARNING PLATES WILL BE NECESSARY TO MATCH EACH CURB RAMP EDGE. AVOID CUTTING THROUGH DOMES WHENEVER POSSIBLE. MAKE FIELD CUTS TRUE TO LINE AND WITHIN ⅛" DEVIATION. SMOOTH EDGES OF FIELD CUT PLATES.

(16) USE 1' X 2" RECTANGULAR END PLATE AT END OF TYPE 4A1 RAMP AND PROVIDE MINIMUM 2' - 0" DETECTABLE WARNING FIELD COVERAGE (IN DIRECTION OF PEDESTRIAN TRAVEL) ALONG THE ENTIRE CURB RAMP WIDTH.

(17) A MAXIMUM 3 INCH CONCRETE BORDER WIDTH IS ALLOWABLE IN FRONT OF RADIAL DETECTABLE WARNING FIELD FOR CONSTRUCTABILITY PURPOSES. CONCRETE BORDER WIDTH MAY VARY UP TO 1 INCH.

RADIAL DETECTABLE WARNING FIELD PLACEMENT WHEN 5 FOOT GRADE BREAK DISTANCE PER SDD 8D5-d IS EXCEEDED

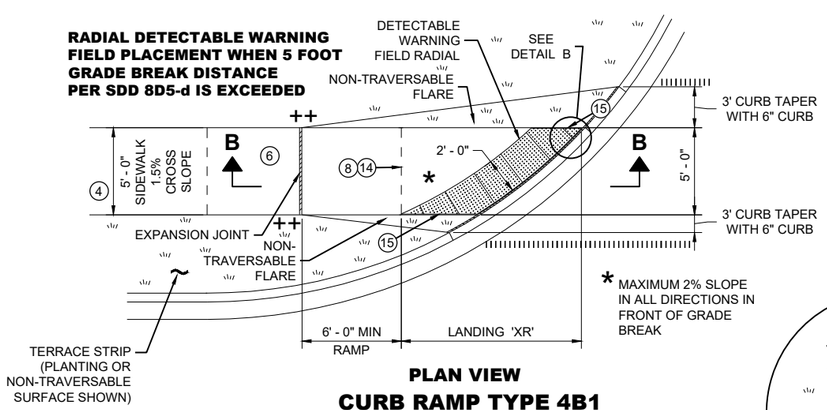

PLAN VIEW

CURB RAMP TYPE 4B1

(GRADE BREAK DISTANCE GREATER THAN 5 FEET)

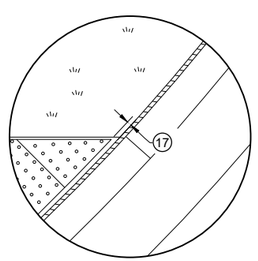

DETAIL B

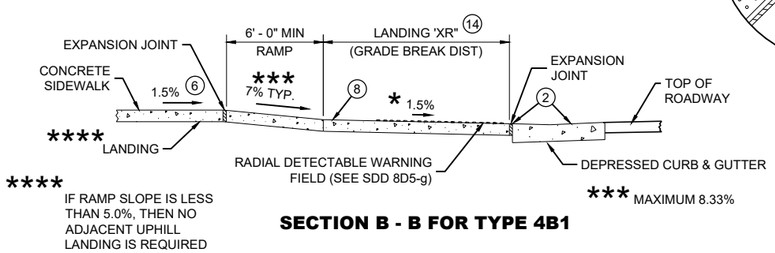

SECTION B - B FOR TYPE 4B1

RADIAL DETECTABLE WARNING FIELD PLACEMENT WHEN 5 FOOT GRADE BREAK DISTANCE PER SDD 8D5-b IS EXCEEDED

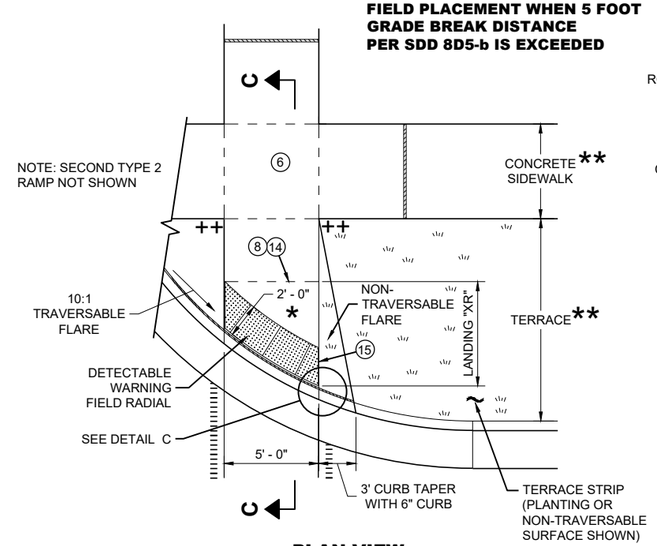

PLAN VIEW

CURB RAMP TYPE 2

(GRADE BREAK DISTANCE GREATER THAN 5 FEET)

(ON LINE WITH SIDEWALK)

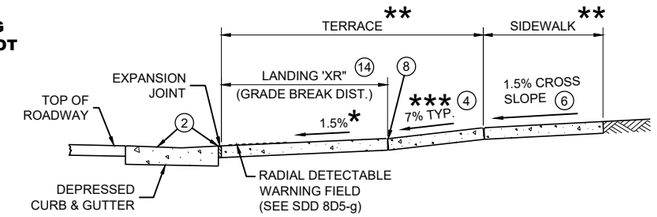

SECTION C - C FOR TYPE 2

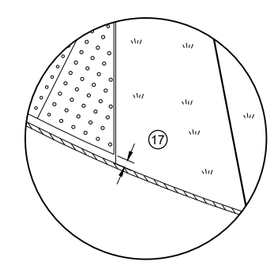

DETAIL C

* MAXIMUM 2% SLOPE IN ALL DIRECTIONS IN FRONT OF GRADE BREAK

** WIDTH SHOWN ELSEWHERE IN THE PLANS

*** MAXIMUM 8.33%

++ CONSTRUCT 6" WEDGE TO AVOID CONCRETE BREAKAGE

CURB RAMPS
RADIAL DETECTABLE WARNING

STATE OF WISCONSIN
DEPARTMENT OF TRANSPORTATION

6

6

SDD 08D05-21f

SDD 08D05-21f

	MIN.	MAX.
A	1.6"	2.4"
B	0.65"	1.5"
C	*	*
D	0.9"	1.4"

* THE C DIMENSION IS 50% TO 65% OF THE D DIMENSION.

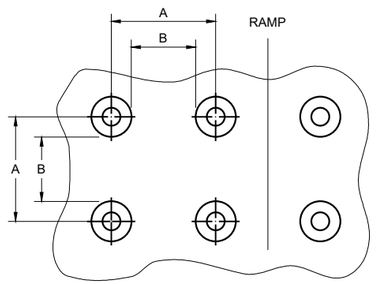

PLAN VIEW

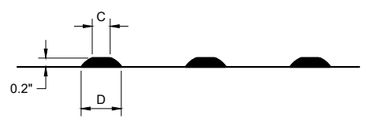

ELEVATION VIEW

TRUNCATED DOMES
DETECTABLE WARNING PATTERN DETAIL

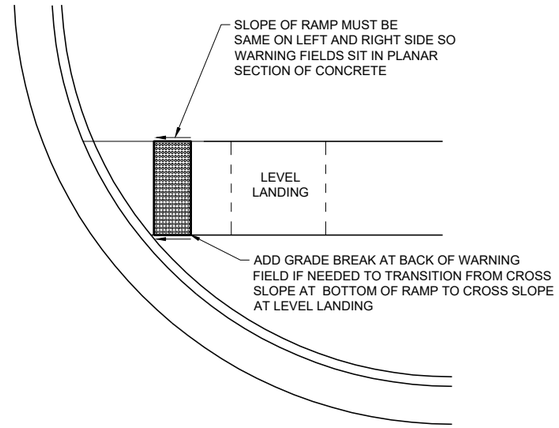

DETECTABLE WARNING FIELD
PLANAR INSTALLATION

GENERAL NOTES

DETECTABLE WARNING FIELDS THAT ARE INSTALLED AT A CURB RAMP SHALL BE FROM THE SAME MANUFACTURER.

PLACE ALL DETECTABLE WARNING FIELD SYSTEMS IN ACCORDANCE TO THE MANUFACTURER'S RECOMMENDATION.

FIELD CUTS AT INTERMEDIATE JOINTS WITHIN THE RADIAL DETECTABLE WARNING FILED ARE PROHIBITED.

DETERMINE FINAL RADIAL WARNING FIELD CONFIGURATION AND ITS INDIVIDUAL PLATE LOCATIONS. PERFORM PRE-LAYOUT PRIOR TO PLACEMENT IN PLASTIC CONCRETE. FOLLOW MANUFACTURER'S PRODUCT LIST AND INSTALLATION RECOMMENDATIONS.

FOR RADIAL DETECTABLE WARNING FIELD APPLICATIONS WHERE STANDARD RADIAL PLATES ARE NOT AVAILABLE AT AN INTERSECTION CURB RADIUS, A COMBINATION OF SQUARE OR RECTANGULAR PLATES AND RADIAL PLATES MAY BE USED TO FORM RADIAL CONFIGURATION. RADIAL WEDGE PLATES IN COMBINATION WITH SQUARE PLATES ARE ALSO ACCEPTABLE. FOLLOW MANUFACTURER'S RECOMMENDATIONS.

REFER TO CONTRACT AND STANDARD SPECIFICATIONS FOR FIELD CUTTING REQUIREMENTS.

DO NOT EMBED IN CONCRETE ANY FIELD-CUT PLATES WITH CUT EDGES SHORTER THAN 6 INCHES. CONSULT WITH MANUFACTURER FOR RE-DRILLING AND ANCHORING REQUIREMENTS OF FIELD-CUT PLATES.

(15) FIELD SAW CUTS ALONG RADIAL DETECTABLE WARNING PLATES WILL BE NECESSARY TO MATCH EACH CURB RAMP EDGE. AVOID CUTTING THROUGH DOMES WHENEVER POSSIBLE. MAKE FIELD CUTS TRUE TO LINE AND WITHIN ⅛" DEVIATION. SMOOTH EDGES OF FIELD CUT PLATES.

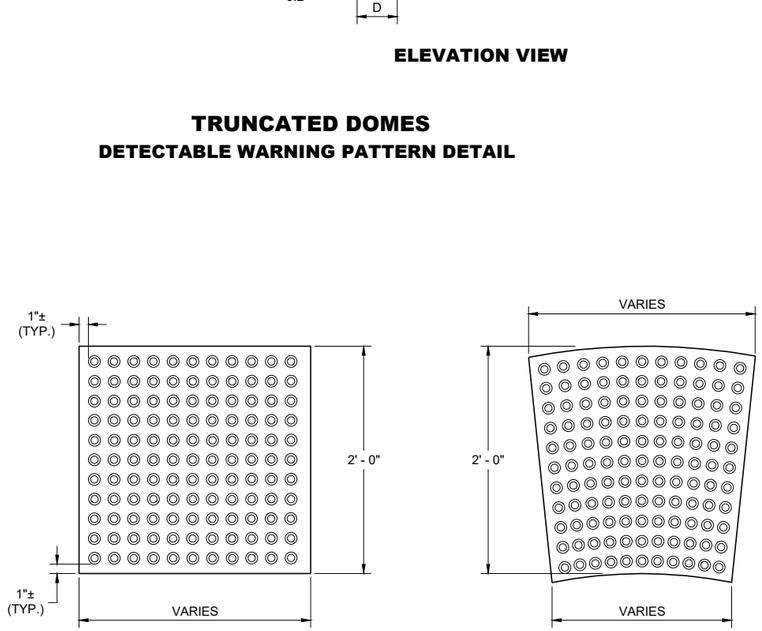

RECTANGULAR PLATES **RADIAL PLATES**

PLAN VIEW
DETECTABLE WARNING FIELDS (TYPICAL)

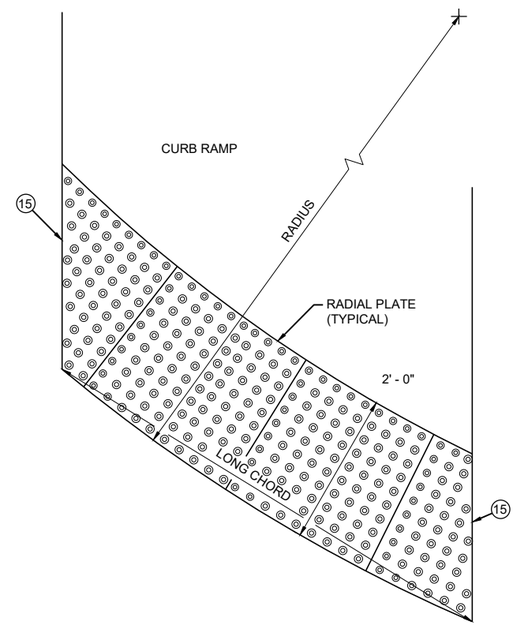

PLAN VIEW
RADIAL DETECTABLE WARNING FIELD ATTRIBUTES

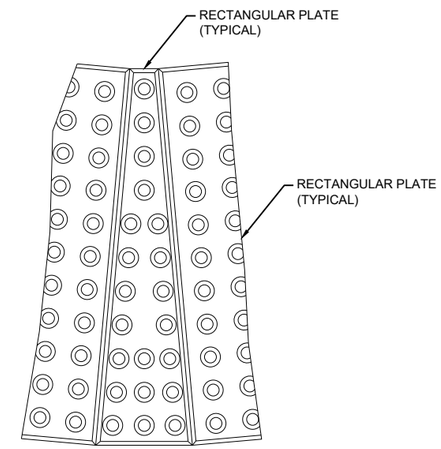

PLAN VIEW
RADIAL WEDGE PLATE CONNECTION DETAIL

6

SDD 08D05-21g

CURB RAMPS
RECTANGULAR AND RADIAL DETECTABLE WARNING PLATES

STATE OF WISCONSIN
DEPARTMENT OF TRANSPORTATION

APPROVED
July 2023 — DATE
/S/ Rodney Taylor — ROADWAY STANDARDS DEVELOPMENT UNIT SUPERVISOR

FHWA

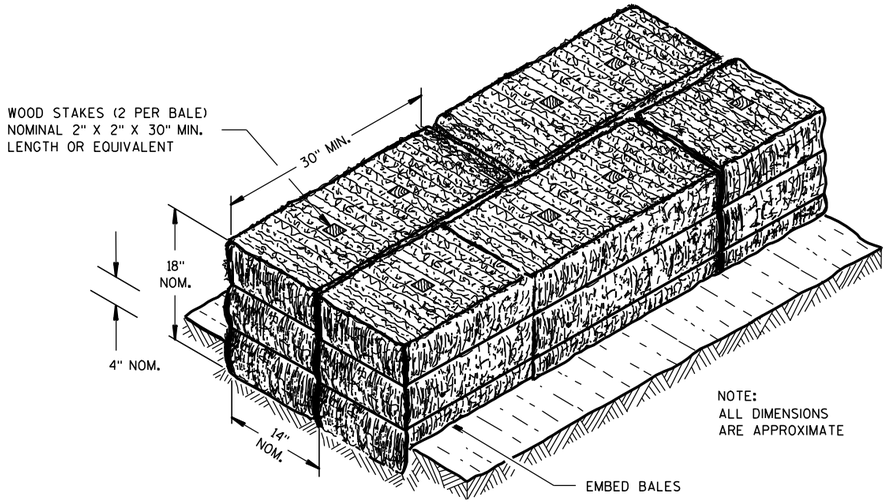

SECTION A-A

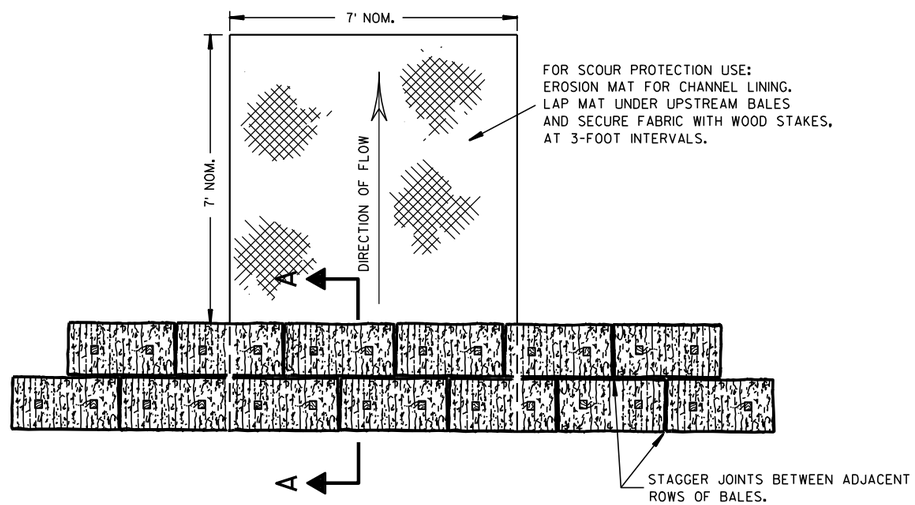

PLAN VIEW

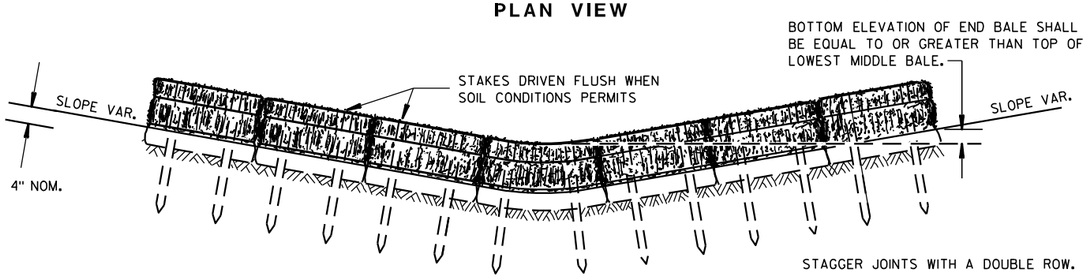

FRONT ELEVATION

TEMPORARY DITCH CHECK USING EROSION BALES ①

GENERAL NOTES

DETAILS OF CONSTRUCTION, MATERIALS AND WORKMANSHIP NOT SHOWN ON THIS DRAWING SHALL CONFORM TO THE PERTINENT REQUIREMENTS OF THE STANDARD SPECIFICATIONS AND THE APPLICABLE SPECIAL PROVISIONS.

① TEMPORARY DITCH CHECKS EITHER EROSION BALES OR MANUFACTURED SHALL BE PAID FOR UNDER THE BID ITEM OF TEMPORARY DITCH CHECK. THE DEPARTMENT WILL NOT PAY FOR TEMPORARY DITCH CHECKS CONSTRUCTED OF A SINGLE ROW OF EROSION BALES.

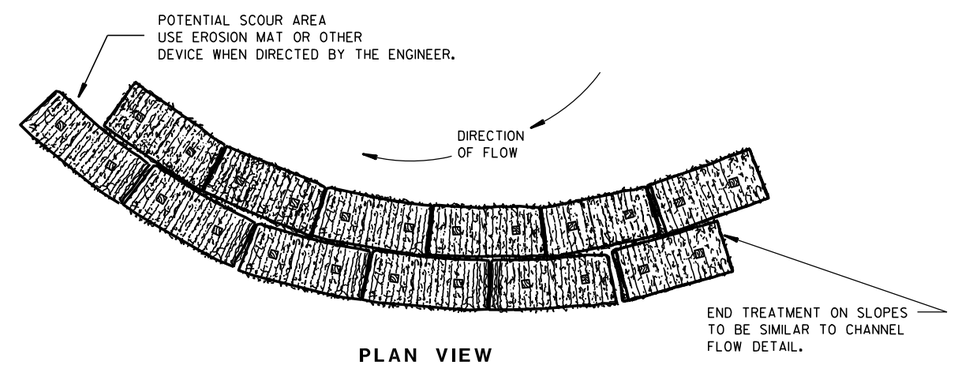

PLAN VIEW

WHEN ALTERING THE DIRECTION OF FLOW

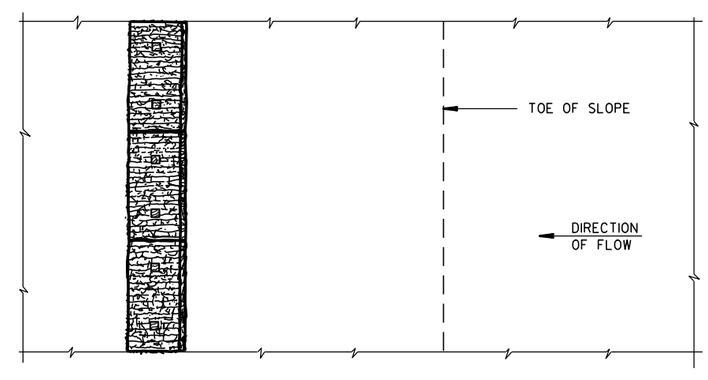

PLAN VIEW

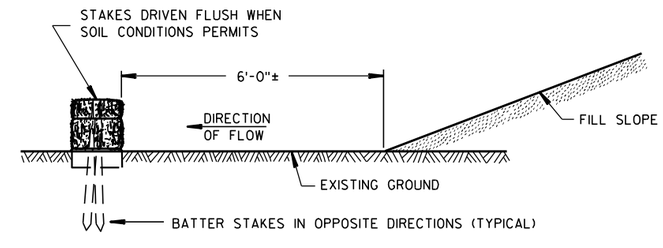

FRONT ELEVATION

WHEN EXISTING GROUND SLOPES AWAY FROM FILL SLOPE

EROSION BALES FOR SHEET FLOW

TYPICAL INSTALLATIONS OF EROSION BALES / TEMPORARY DITCH CHECKS

STATE OF WISCONSIN
DEPARTMENT OF TRANSPORTATION

APPROVED
6/04/02 — /S/ Beth Cann... — ...GINEER
DATE — CHIEF ROADWAY DEVELOP...
FHWA

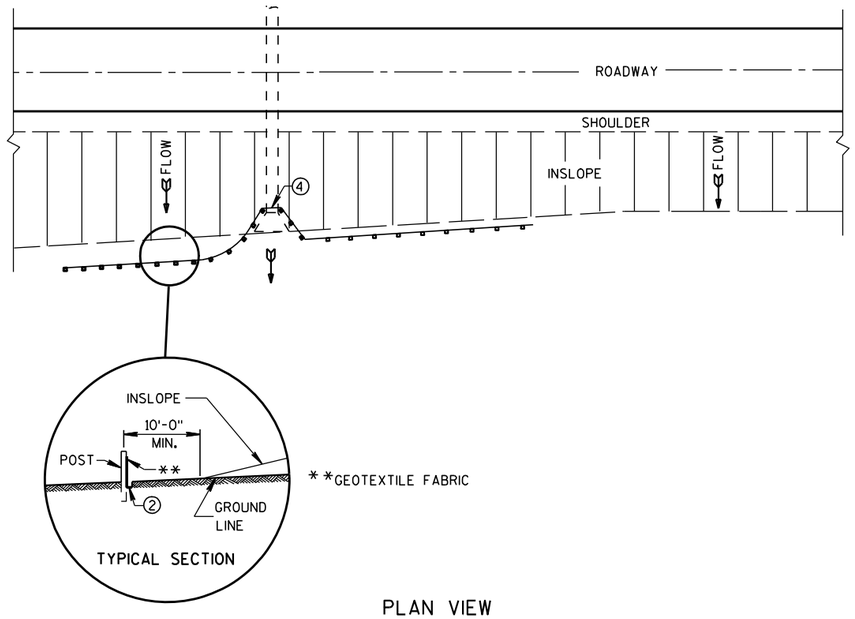

PLAN VIEW

TYPICAL APPLICATION OF SILT FENCE

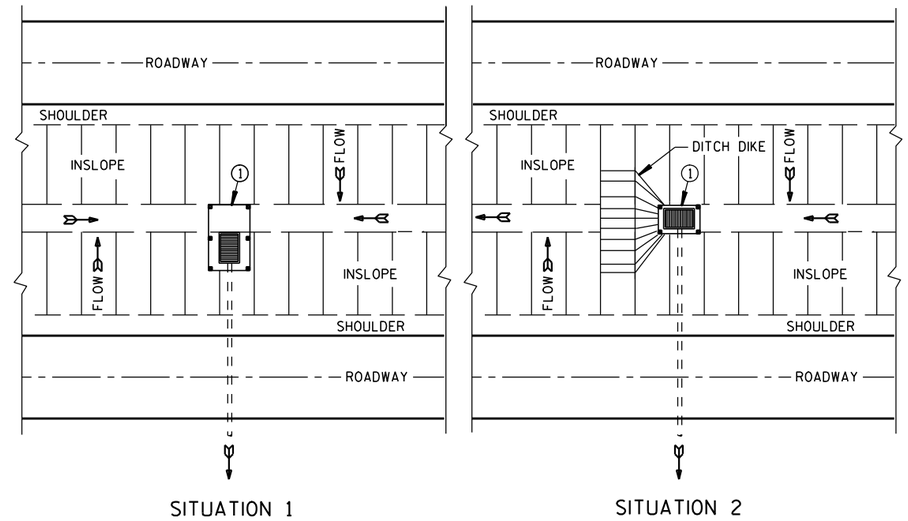

PLAN VIEW

SILT FENCE AT MEDIAN SURFACE DRAINS

GENERAL NOTES

DETAILS OF CONSTRUCTION NOT SHOWN ON THIS DRAWING SHALL CONFORM TO THE PERTINENT REQUIREMENTS OF THE STANDARD SPECIFICATIONS AND APPLICABLE SPECIAL PROVISIONS.

① HORIZONTAL BRACE REQUIRED WITH 2" X 4" WOODEN FRAME OR EQUIVALENT AT TOP OF POSTS.

② FOR MANUAL INSTALLATIONS THE TRENCH SHALL BE A MINIMUM OF 4" WIDE & 6" DEEP TO BURY AND ANCHOR THE GEOTEXTILE FABRIC. FOLD MATERIAL TO FIT TRENCH AND BACKFILL & COMPACT TRENCH WITH EXCAVATED SOIL.

③ WOOD POSTS SHALL BE A MINIMUM SIZE OF 1⅛" X 1⅛" OF OAK OR HICKORY.

④ SILT FENCE TO EXTEND ACROSS THE TOP OF THE PIPE.

⑤ CONSTRUCT SILT FENCE FROM A CONTINUOUS ROLL IF POSSIBLE BY CUTTING LENGTHS TO AVOID JOINTS. IF A JOINT IS NECESSARY USE ONE OF THE FOLLOWING TWO METHODS; A) OVERLAP THE END POSTS AND TWIST, OR ROTATE, AT LEAST 180 DEGREES. B) HOOK THE END OF EACH SILT FENCE LENGTH.

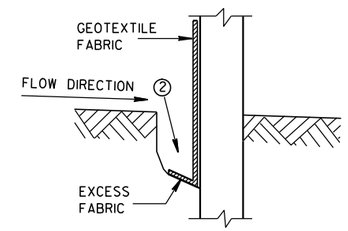

TRENCH DETAIL

NOTE: ADDITIONAL POST DEPTH OR TIE BACKS MAY BE REQUIRED IN UNSTABLE SOILS

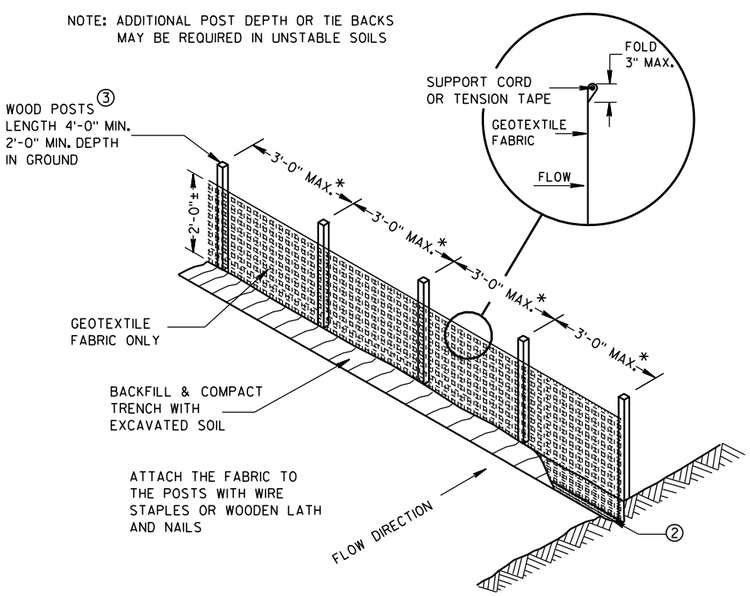

*NOTE: 8'-0" POST SPACING ALLOWED IF A WOVEN GEOTEXTILE FABRIC IS USED.

SILT FENCE

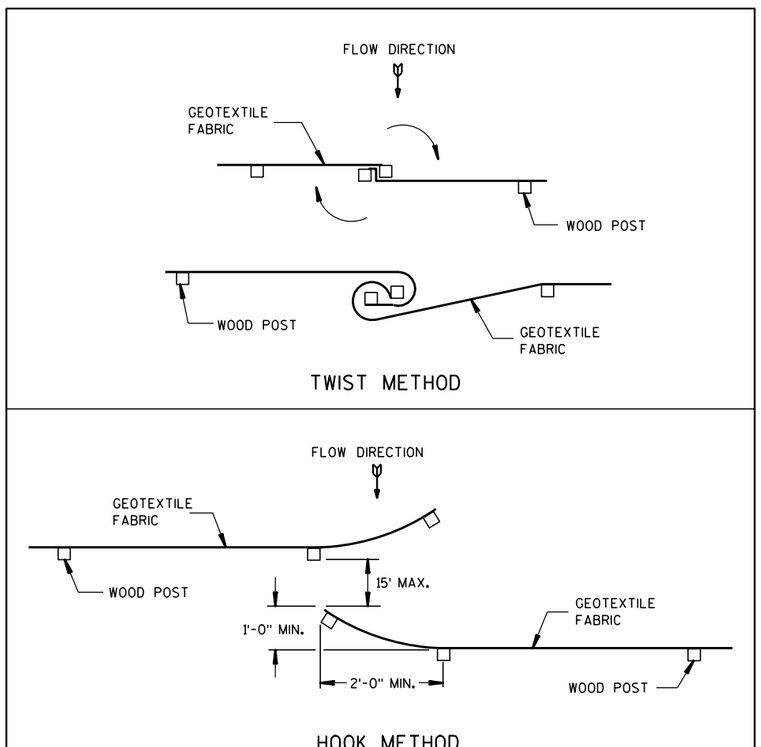

JOINING TWO LENGTHS OF SILT FENCE ⑤

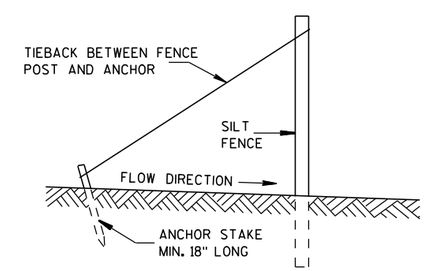

SILT FENCE TIE BACK

(WHEN REQUIRED BY THE ENGINEER)

SILT FENCE	
STATE OF WISCONSIN DEPARTMENT OF TRANSPORTATION	
APPROVED 4-29-05 DATE	/S/ Beth Cann-- CHIEF ROADWAY DEVELOP ENGINEER
FHWA	

6

6

S.D.D. 8 E 9-6

S.D.D. 8 E 9-6

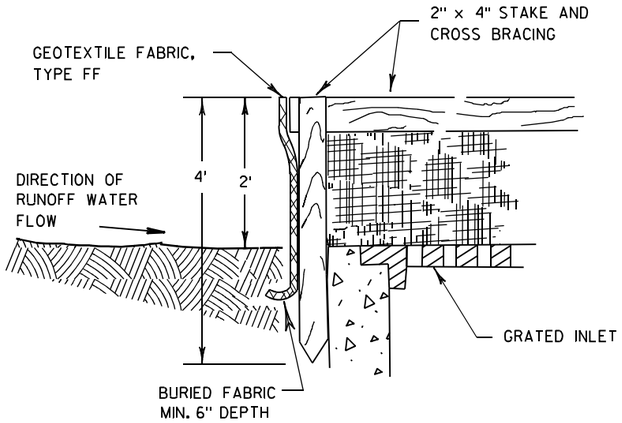

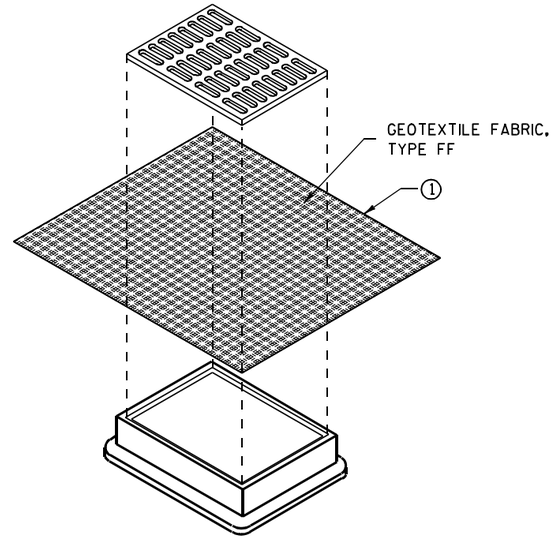

INLET PROTECTION, TYPE B
(WITHOUT CURB BOX)

(CAN BE INSTALLED IN ANY INLET WITHOUT A CURB BOX)

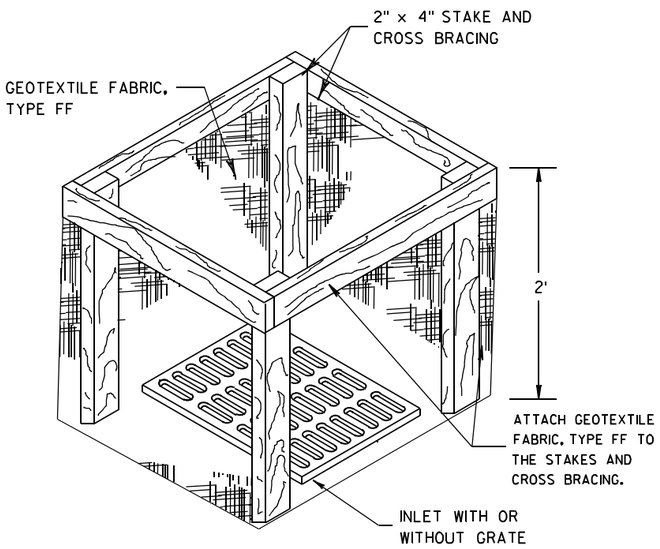

INLET PROTECTION, TYPE A

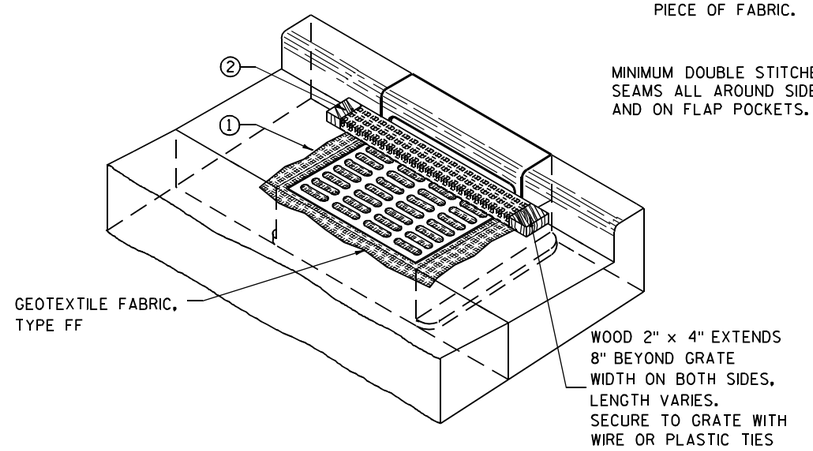

INLET PROTECTION, TYPE C (WITH CURB BOX)

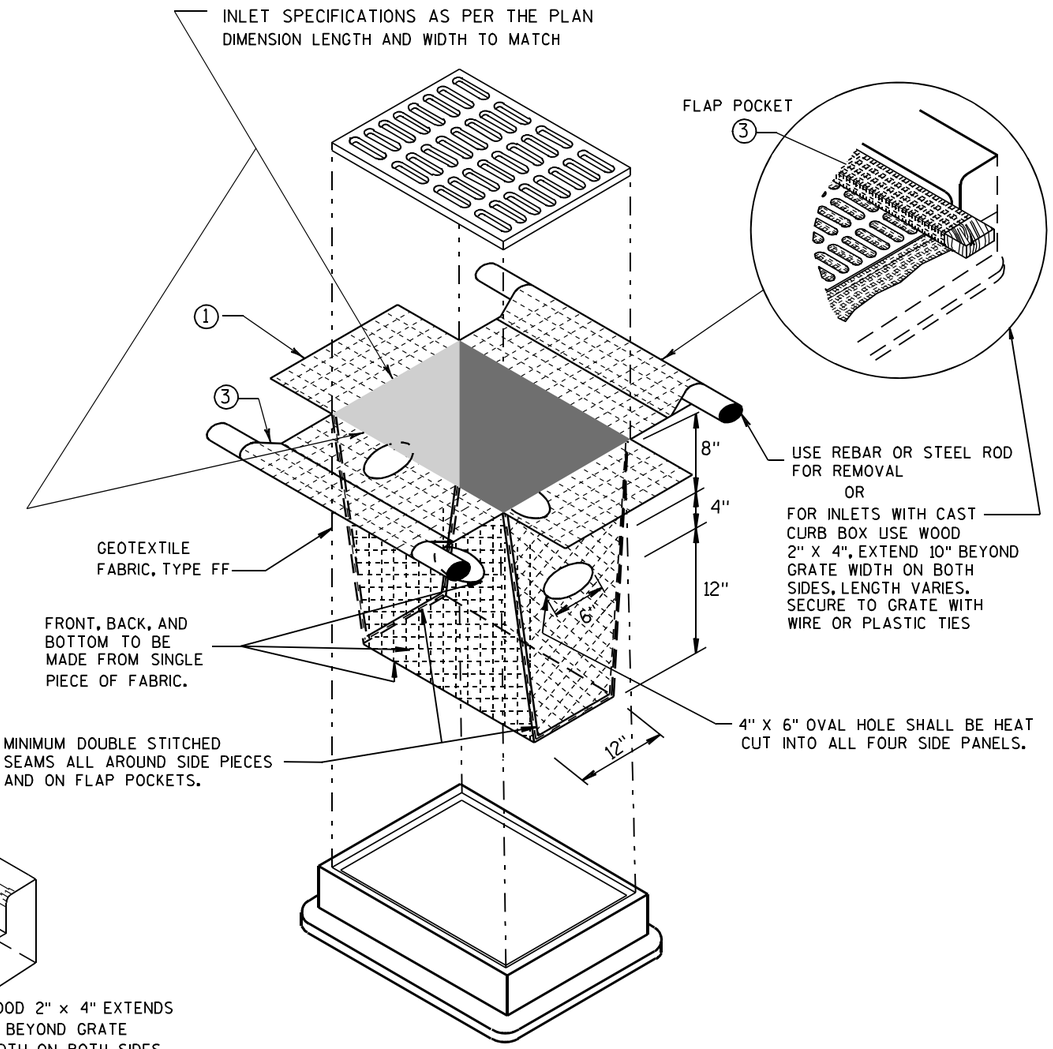

INLET PROTECTION, TYPE D

(CAN BE INSTALLED IN ANY INLET TYPE WITH
OR WITHOUT A CURB BOX AS PER NOTE 2)

GENERAL NOTES

INLET PROTECTION DEVICES SHALL BE MAINTAINED OR REPLACED AT THE DIRECTION OF THE ENGINEER.

MANUFACTURED ALTERNATIVES APPROVED AND LISTED ON THE DEPARTMENT'S EROSION CONTROL PRODUCT ACCEPTABILITY LIST MAY BE SUBSTITUTED.

WHEN REMOVING OR MAINTAINING INLET PROTECTION, CARE SHALL BE TAKEN SO THAT THE SEDIMENT TRAPPED ON THE GEOTEXTILE FABRIC DOES NOT FALL INTO THE INLET. ANY MATERIAL FALLING INTO THE INLET SHALL BE REMOVED IMMEDIATELY.

1 FINISHED SIZE, INCLUDING FLAP POCKETS WHERE REQUIRED, SHALL EXTEND A MINIMUM OF 10" AROUND THE PERIMETER TO FACILITATE MAINTENANCE OR REMOVAL.

2 FOR INLET PROTECTION, TYPE C (WITH CURB BOX), AN ADDITIONAL 18" OF FABRIC IS WRAPPED AROUND THE WOOD AND SECURED WITH STAPLES. THE WOOD SHALL NOT BLOCK THE ENTIRE HEIGHT OF THE CURB BOX OPENING.

3 FLAP POCKETS SHALL BE LARGE ENOUGH TO ACCEPT WOOD 2X4.

INSTALLATION NOTES

TYPE B & C

TRIM EXCESS FABRIC IN THE FLOW LINE TO WITHIN 3" OF THE GRATE.

THE CONTRACTOR SHALL DEMONSTRATE A METHOD OF MAINTENANCE, USING A SEWN FLAP, HAND HOLDS OR OTHER METHOD TO PREVENT ACCUMULATED SEDIMENT FROM ENTERING THE INLET.

TYPE D

DO NOT INSTALL INLET PROTECTION TYPE D IN INLETS SHALLOWER THAN 30", MEASURED FROM THE BOTTOM OF THE INLET TO THE TOP OF THE GRATE.

TRIM EXCESS FABRIC IN THE FLOW LINE TO WITHIN 3" OF THE GRATE.

THE INSTALLED BAG SHALL HAVE A MINIMUM SIDE CLEARANCE, BETWEEN THE INLET WALLS AND THE BAG, MEASURED AT THE BOTTOM OF THE OVERFLOW HOLES, OF 3". WHERE NECESSARY THE CONTRACTOR SHALL CINCH THE BAG, USING PLASTIC ZIP TIES, TO ACHIEVE THE 3" CLEARANCE. THE TIES SHALL BE PLACED AT A MAXIMUM OF 4" FROM THE BOTTOM OF THE BAG.

INLET PROTECTION
TYPE A, B, C, AND D

STATE OF WISCONSIN
DEPARTMENT OF TRANSPORTATION

APPROVED
10/16/02 — DATE
/S/ Beth Cannon
CHIEF ROADWAY DEVELOPMENT ENGINEER
FHWA

6

S.D.D. 8 E 10-2

GENERAL NOTES

DETAILS OF CONSTRUCTION, MATERIALS AND WORKMANSHIP NOT SHOWN ON THIS DRAWING SHALL CONFORM TO THE PERTINENT REQUIREMENTS OF THE STANDARD SPECIFICATIONS AND THE APPLICABLE SPECIAL PROVISIONS.

TRACKING PAD SHALL BE INSPECTED DAILY. DEFICIENT AREAS SHALL BE REPAIRED OR REPLACED IMMEDIATELY.

TRACKING PAD TO BE REMOVED AFTER CONSTRUCTION IS COMPLETED.

TRACKING PAD SHALL BE THE FULL WIDTH OF THE EGRESS POINT.

SURFACE WATER MUST BE PREVENTED FROM PASSING THROUGH THE TRACKING PAD. FLOWS SHALL BE DIVERTED AWAY, AROUND OR CONVEYED UNDER THE TRACKING PAD.

CULVERT PIPE OR OTHER BMP USED TO DIVERT WATER AWAY, AROUND OR UNDER THE TRACKING PAD SHALL BE DESIGNED TO CONVEY THE 2 YEAR - 24 HOUR EVENT.

THE COST OF ADDITIONAL BMP TO DIVERT WATER ARE INCIDENTAL TO THE TRACKING PAD BID ITEM.

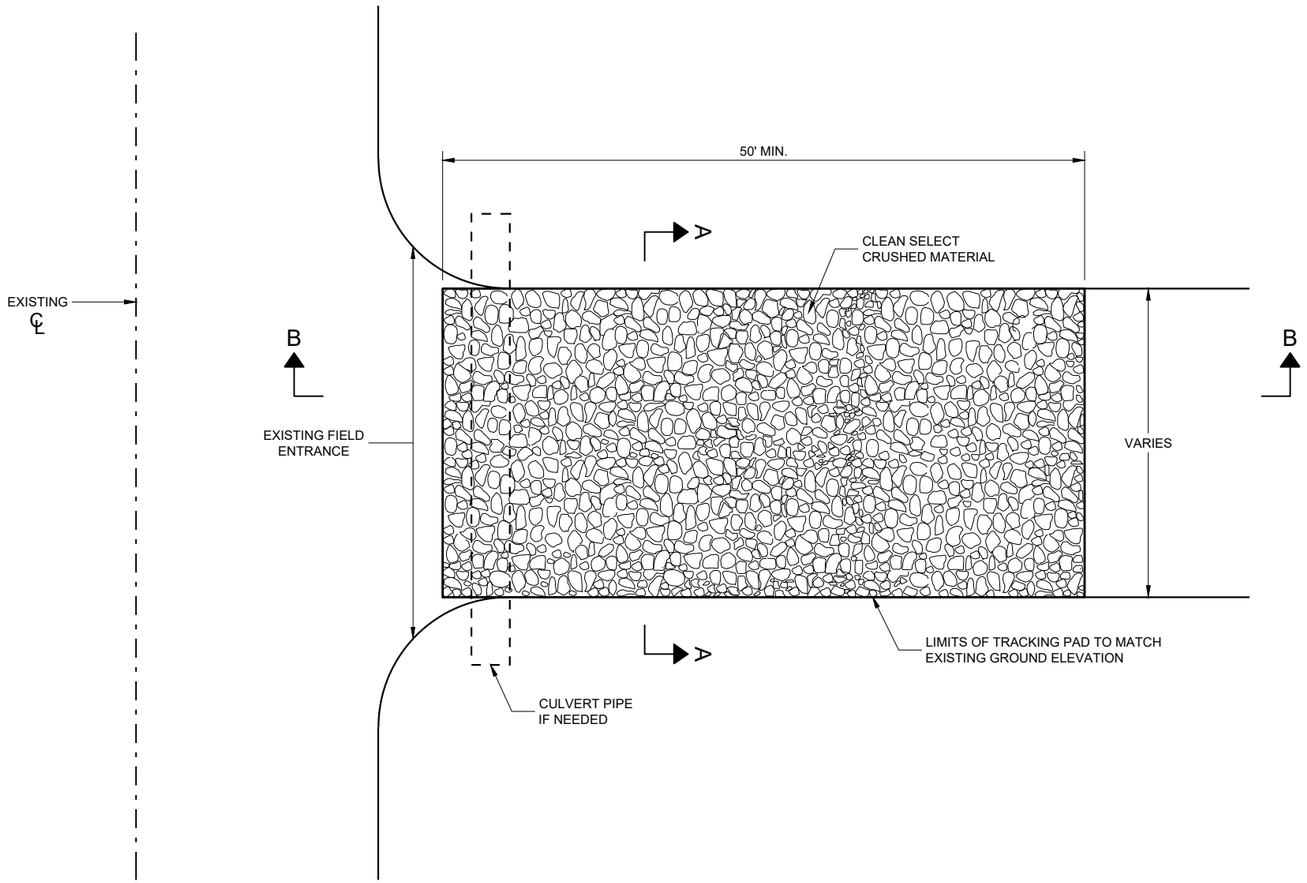

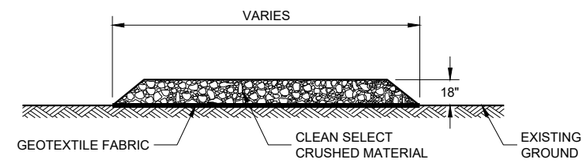

SECTION A - A

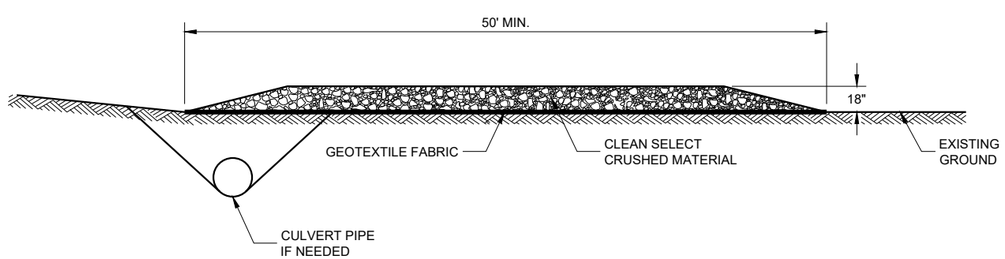

SECTION B - B

TRACKING PAD

STATE OF WISCONSIN
DEPARTMENT OF TRANSPORTATION

APPROVED
3/24/2011 — DATE
/S/ Jerry H. Zogg — ROADWAY STANDARDS DEVE ENGINEER
FHWA

6

SDD 08E14 - 01

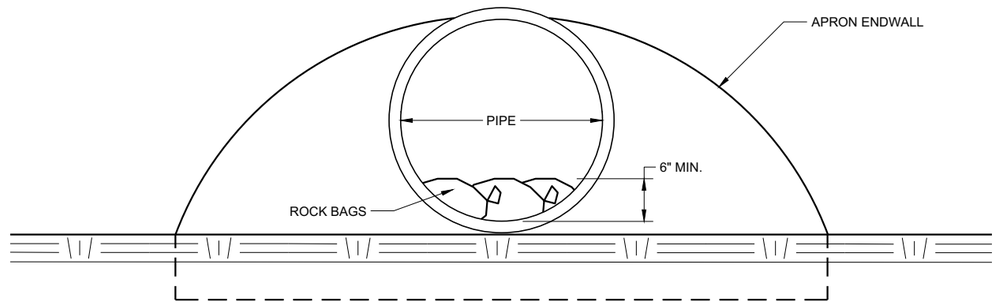

END VIEW

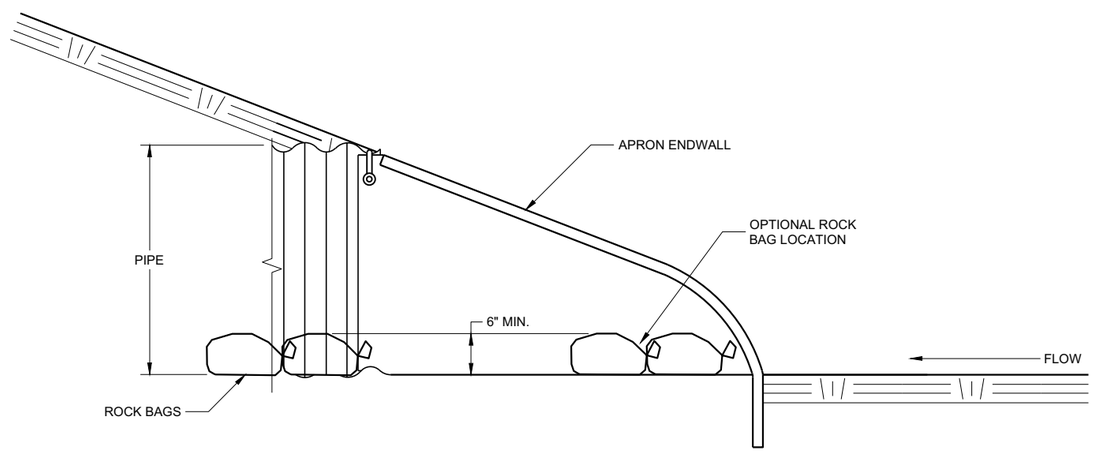

SIDE VIEW

CULVERT PIPE CHECK

(INSTALL ON INLET END ONLY)

CULVERT PIPE CHECK

STATE OF WISCONSIN
DEPARTMENT OF TRANSPORTATION

APPROVED
May 2019 — DATE
/S/ Daniel Schave — EROSION CONTROL ENGI
FHWA

6

6

SDD 08E15 - 01

SDD 08E15 - 01

METAL APRON ENDWALLS

PIPE DIA. (IN.)	MIN. THICK. (Inches) STEEL	MIN. THICK. (Inches) ALUM.	DIMENSIONS (Inches) A (±1")	B (MAX.)	H (±1")	L (±1 1/2")	L1 ①	L2 ①	W (±2")	APPROX. SLOPE	BODY
12	.064	.060	6	6	6	21	12	17 1/2	24	2 1/2 to 1	1 Pc.
15	.064	.060	7	8	6	26	14	21 3/4	30	2 1/2 to 1	1 Pc.
18	.064	.060	8	10	6	31	15	28 1/4	36	2 1/2 to 1	1 Pc.
21	.064	.060	9	12	6	36	18	29 5/8	42	2 1/2 to 1	1 Pc.
24	.064	.075	10	13	6	41	18	37 1/4	48	2 1/2 to 1	1 Pc.
30	.079	.075	12	16	8	51	18	52 1/4	60	2 1/2 to 1	1 Pc.
36	.079	.105	14	19	9	60	24	59 3/4	72	2 1/2 to 1	2 Pc.
42	.109	.105	16	22	11	69	24	75 5/8	84	2 1/2 to 1	2 Pc.
48	.109	.105	18	27	12	78	24	81	90	2 1/4 to 1	3 Pc.
54	.109	.105	18	30	12	84	30	85 1/2	102	2 1/4 to 1	3 Pc.
60	.109×	.105×	18	33	12	87	—	—	114	2 to 1	3 Pc.
66	.109×	.105×	18	36	12	87	—	—	120	2 to 1	3 Pc.
72	.109×	.105×	18	39	12	87	—	—	126	2 to 1	3 Pc.
78	.109×	.105×	18	42	12	87	—	—	132	1 1/2 to 1	3 Pc.
84	.109×	.105×	18	45	12	87	—	—	138	1 1/2 to 1	3 Pc.
90	.109×	.105×	18	37	12	87	—	—	144	1 1/2 to 1	3 Pc.
96	.109×	.105×	18	35	12	87	—	—	150	1 1/2 to 1	3 Pc.

× EXCEPT CENTER PANEL
SEE GENERAL NOTES

REINFORCED CONCRETE APRON ENDWALLS

PIPE DIA. (IN.)	DIMENSIONS (Inches) T	A	B	C	D	E	G	APPROX. SLOPE
12	2	4	24	48 7/8	72 7/8	24	2	3 to 1
15	2 1/4	6	27	46	73	30	2 1/4	3 to 1
18	2 1/2	9	27	46	73	36	2 1/2	3 to 1
21	2 3/4	9	36	37 1/2	73 1/2	42	2 3/4	3 to 1
24	3	9 1/2	43 1/2	30	73 1/2	48	3	3 to 1
27	3 1/4	10 1/2	49 1/2	24	73 1/2	54	3 1/4	3 to 1
30	3 1/2	12	54	19 3/4	73 1/2	60	3 1/2	3 to 1
36	4	15	63	34 3/4	97 3/4	72	4	3 to 1
42	4 1/2	21	63	35	98	78	4 1/2	3 to 1
48	5	24	72	26	98	84	5	3 to 1
54	5 1/2	27	65	*33 1/4-**35	*98 1/4-**100	90	5 1/2	2 2/5 to 1
60	6	*30-**35	60	39	99	96	5	2 to 1
66	6 1/2	*24-**30	*72-**78	*21-**27	99	102	5 1/2	2 to 1
72	7	*24-**36	78	21	99	108	6	2 to 1
78	7 1/2	*24-**36	78	21	99	114	6 1/2	2 to 1
84	8	36	90 1/2	21	111 1/2	120	6 1/2	1 1/2 to 1
90	8 1/2	41	87 1/2	24	111 1/2	132	6 1/2	1 1/2 to 1

*MINIMUM
**MAXIMUM

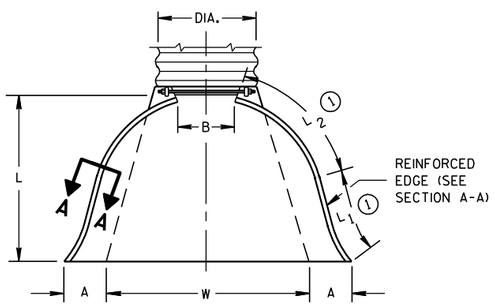

PLAN VIEW

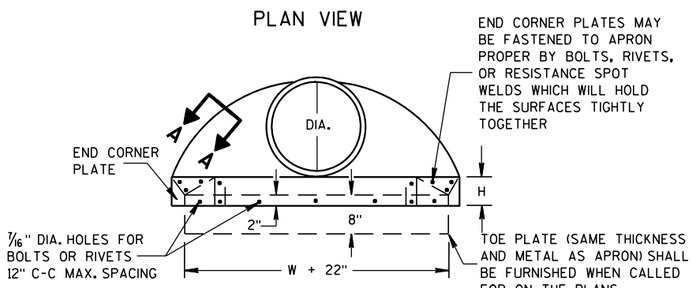

END VIEW

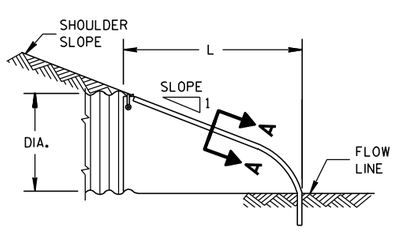

SIDE ELEVATION

METAL ENDWALLS

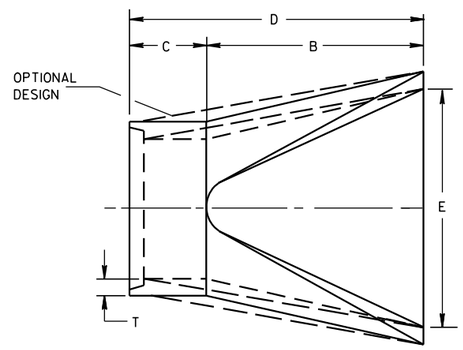

PLAN

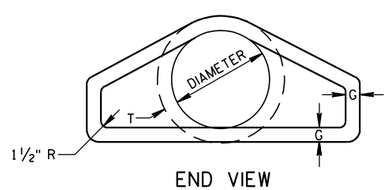

END VIEW

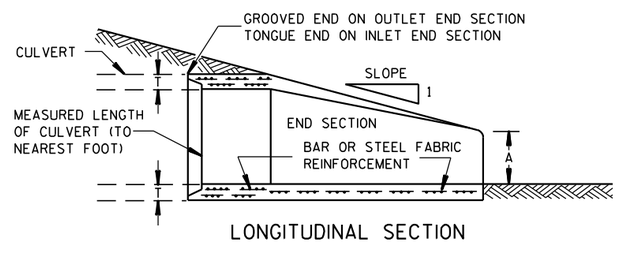

LONGITUDINAL SECTION

CONCRETE ENDWALLS

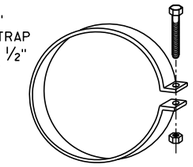

ALTERNATE FOR TYPE 1 CONNECTION

END SECTION CONNECTOR STRAP

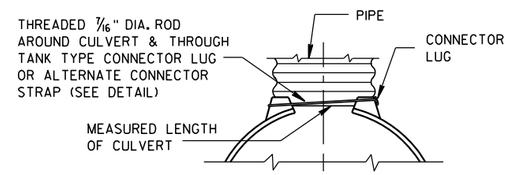

TYPE 1
FOR 12" THRU 24" CORR. PIPE

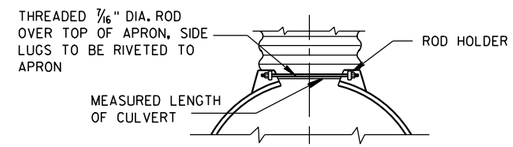

TYPE 2
FOR 30" THRU 96" CORR. PIPE

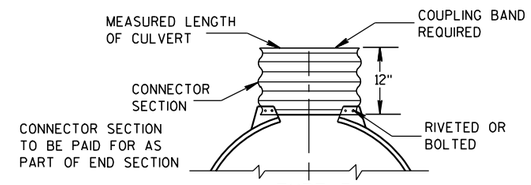

TYPE 3
FOR 42" THRU 96" CORR. PIPE

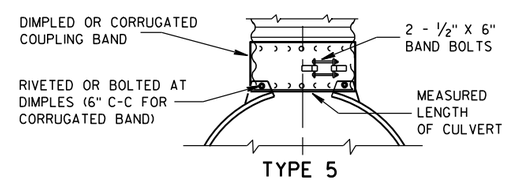

TYPE 5
ALTERNATE FOR:
ALL SIZES CORRUGATED CIRCULAR PIPE

NOTE: DIMPLED BAND FITS OVER OUTSIDE OF ENDWALL, AND CORRUGATED BAND FITS INSIDE ENDWALL. DIMPLED BAND MAY BE USED WITH HELICALLY CORRUGATED PIPE.

FOR CIRCUMFERENTIALLY CORRUGATED PIPE USE ENDWALL CONNECTION DETAILS 1, 2, 3 OR 5 AS APPLICABLE.

FOR HELICALLY CORRUGATED PIPE USE ENDWALL CONNECTION DETAILS 1, 2 OR 5.

FOR HELICALLY CORRUGATED PIPES WITH TWO CIRCUMFERENTIAL CORRUGATIONS AT EACH END USE ENDWALL CONNECTION DETAILS 1, 2 OR 3.

CONNECTION DETAILS

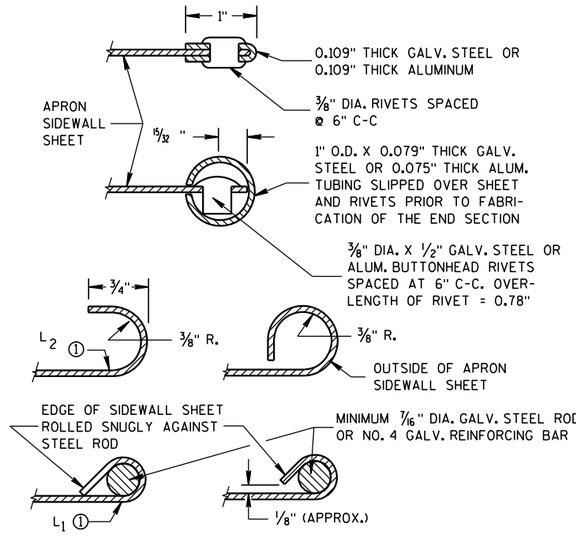

SECTION A-A

GENERAL NOTES

DETAILS OF CONSTRUCTION, MATERIALS AND WORKMANSHIP NOT SHOWN ON THIS DRAWING SHALL CONFORM TO THE PERTINENT REQUIREMENTS OF THE STANDARD SPECIFICATIONS AND THE APPLICABLE SPECIAL PROVISIONS.

CONCRETE CULVERT ENDWALLS MAY NOT BE USED WITH GALVANIZED STEEL OR ALUMINUM CULVERT PIPE OR VISE VERSA. GALVANIZED STEEL OR ALUMINUM ENDWALLS SHALL NORMALLY BE INSTALLED ON CULVERT PIPE OF THE SAME METAL.

ALL THREE PIECE STEEL APRON ENDWALLS FOR 60" DIAMETER PIPE AND LARGER SHALL HAVE 0.109" SIDES AND 0.138" CENTER PANELS. ALL THREE PIECE ALUMINUM APRON ENDWALLS FOR 60" DIAMETER PIPE AND LARGER SHALL HAVE 0.105" SIDES AND 0.134" CENTER PANELS. THE WIDTH OF CENTER PANELS SHALL BE GREATER THAN 20 PERCENT OF THE PIPE PERIMETER.

LAP SEAMS SHALL BE TIGHTLY JOINED BY GALVANIZED RIVETS OR BOLTS FOR STEEL UNITS AND ALUMINUM RIVETS AND BOLTS FOR ALUMINUM UNITS. FOR THE 60" THROUGH 96" DIAMETER APRON ENDWALL SIZES, THE REINFORCED EDGES AND CENTER PANEL SEAMS SHALL BE FURTHER REINFORCED WITH GALVANIZED STEEL OR ALUMINUM STIFFENER ANGLES. THE ANGLES SHALL BE ATTACHED BY GALVANIZED NUTS AND BOLTS FOR STEEL UNITS AND ALUMINUM NUTS AND BOLTS FOR ALUMINUM UNITS.

WHERE TWO OR MORE PIPES WITH APRON ENDWALLS ARE LAID ADJACENT TO EACH OTHER, THEY SHALL BE SEPARATED BY A DISTANCE SUFFICIENT TO PROVIDE A MINIMUM CLEARANCE OF 6 INCHES BETWEEN APRON ENDWALLS.

① FOR PIPE SIZES UP TO 60" DIAMETER, A 180° ROLLED EDGE MAY BE USED INSTEAD OF STEEL ROD REINFORCEMENT. SEE SECTION A-A.

APRON ENDWALLS FOR CULVERT PIPE

STATE OF WISCONSIN
DEPARTMENT OF TRANSPORTATION

APPROVED
11/30/94 — DATE
/S/ Rory L. Rhinesmith — CHIEF ROADWAY DEVELOPMENT ENGINEER
FHWA

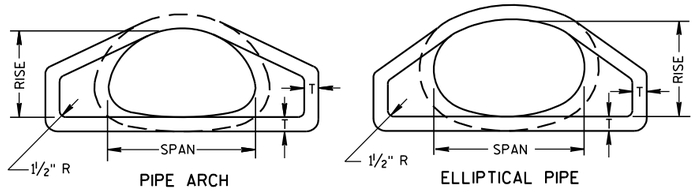

END VIEW

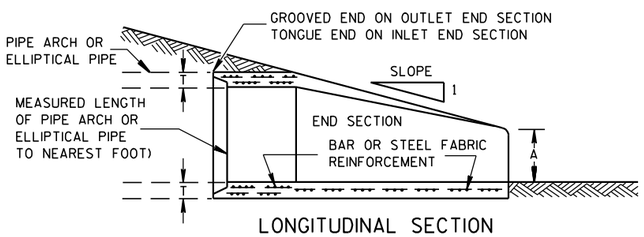

LONGITUDINAL SECTION

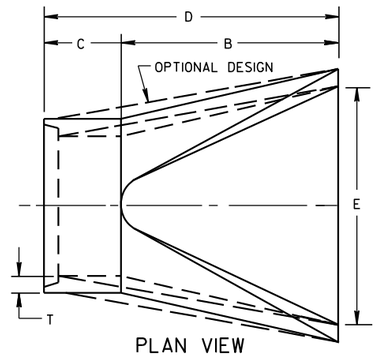

PLAN VIEW

CONCRETE ENDWALLS

2- ⅔" X ½" CORRUGATIONS														
EQUIV. DIA. (Inches)	(Inches)		MIN. THICK. (Inches)		DIMENSIONS (Inches)							APPROX. SLOPE	BODY
	SPAN	RISE	STEEL	ALUM.	A (±1")	B (MAX.)	H (±1")	L (±1½")	L1 ①	L2 ①	W (±2")		
15	17	13	.064	.060	7	9	6	19	14	16	30	2½ to 1	1 Pc.
18	21	15	.064	.060	7	10	6	23	14	19⅜	36	2½ to 1	1 Pc.
21	24	18	.064	.060	8	12	6	28	18	21¾	42	2½ to 1	1 Pc.
24	28	20	.064	.060	9	14	6	32	18	27½	48	2½ to 1	1 Pc.
30	35	24	.079	.075	10	16	6	39	18	37⅝	60	2½ to 1	1 Pc.
36	42	29	.079	.075	12	18	8	46	24	45⅜	75	2½ to 1	1 Pc.
42	49	33	.109	.105	13	21	9	53	24	54¾	85	2½ to 1	2 Pc.
48	57	38	.109	.105	18	26	12	63	24	68	90	2½ to 1	3 Pc.
54	64	43	.109	.105	18	30	12	70	24	72¾	102	2¼ to 1	3 Pc.
60	71	47	.109*	.105*	18	33	12	77	30	82¼	114	2¼ to 1	3 Pc.
66	77	52	.109*	.105*	18	36	12	77	—	—	126	2 to 1	3 Pc.
72	83	57	.109*	.105*	18	39	12	77	—	—	138	2 to 1	3 Pc.

3" X 1" CORRUGATIONS														
EQUIV. DIA. (Inches)	(Inches)		MIN. THICK. (Inches)		DIMENSIONS (Inches)							APPROX. SLOPE	BODY
	SPAN	RISE	STEEL	ALUM.	A (±1")	B (MAX.)	H (±1")	L (±1½")	L1 ①	L2 ①	W (±2")		
48	53	41	.109	.105	18	26	12	63	24	72¾	90	2½ to 1	2 Pc.
54	60	46	.109	.105	18	30	12	70	30	82¼	102	2 to 1	2 Pc.
60	66	51	.109*	.105*	18	33	12	77	—	—	114	1½ to 1	3 Pc.
66	73	55	.109*	.105*	18	36	12	77	—	—	126	1½ to 1	3 Pc.
72	81	59	.109*	.105*	18	39	12	77	—	—	138	2 to 1	3 Pc.
78	87	63	.109*	.105*	22	38	12	77	—	—	148	1½ to 1	3 Pc.
84	95	67	.109*	.105*	22	34	12	77	—	—	162	1½ to 1	3 Pc.
90	103	71	.109*	.105*	22	38	12	77	—	—	174	1½ to 1	3 Pc.
96	112	75	.109*	.105*	24	40	12	77	—	—	174	1½ to 1	3 Pc.

NOTE: ALL SPLICES TO BE LAP RIVETED OR BOLTED.

* EXCEPT CENTER PANEL SEE GENERAL NOTES

REINFORCED CONCRETE PIPE ARCH									
EQUIV. DIA. (Inches)	DIMENSIONS (Inches)								APPROX. SLOPE
	** SPAN	** RISE	T	A	B	C	D	E	
24	29	18	3	8½	39	33	72	48	3 to 1
30	36	22	3½	9½	50	46	96	60	3 to 1
36	44	27	4	11⅛	60	36	96	72	3 to 1
42	51	31	4½	15 13/16	60	36	96	78	3 to 1
48	58	36	5	21	60	36	96	84	3 to 1
54	65	40	5½	25½	60	36	96	90	3 to 1
60	73	45	6	31	60	36	96	96	3 to 1
72	88	54	7	31	60	39	99	120	2 to 1
84	102	62	8	28½	83	19	102	144	2 to 1

REINFORCED CONCRETE ELLIPTICAL PIPE									
EQUIV. DIA. (Inches)	DIMENSIONS (Inches)								APPROX. SLOPE
	** SPAN	** RISE	T	A	B	C	D	E	
24	30	19	3¼	8½	39	33	72	48	3 to 1
30	38	24	3¾	9½	54	18	72	60	3 to 1
36	45	29	4½	11⅛	60	24	84	72	2½ to 1
42	53	34	5	15¾	60	36	96	78	2½ to 1
48	60	38	5½	21	60	36	96	84	2½ to 1
54	68	43	6	25½	60	36	96	90	2½ to 1
60	76	48	6½	30	60	36	96	96	2½ to 1

**NOMINAL SIZE

GENERAL NOTES

DETAILS OF CONSTRUCTION, MATERIALS AND WORKMANSHIP NOT SHOWN ON THIS DRAWING SHALL CONFORM TO THE PERTINENT REQUIREMENTS OF THE STANDARD SPECIFICATIONS AND THE APPLICABLE SPECIAL PROVISIONS.

CONCRETE APRON ENDWALLS MAY NOT BE USED WITH GALVANIZED STEEL OR ALUMINUM CULVERT PIPE OR VISE VERSA. GALVANIZED STEEL OR ALUMINUM APRON ENDWALLS SHALL NORMALLY BE INSTALLED ON CULVERT PIPE OF THE SAME METAL.

ALL THREE PIECE STEEL APRON ENDWALLS FOR 66" X 51" PIPE ARCH AND LARGER SHALL HAVE 0.109" SIDES AND 0.138" CENTER PANELS. ALL THREE PIECE ALUMINUM APRON ENDWALLS FOR 66" X 51" PIPE ARCH AND LARGER SHALL HAVE 0.105" SIDES AND 0.134" CENTER PANELS. THE WIDTH OF CENTER PANELS SHALL BE GREATER THAN 20 PERCENT OF THE PIPE ARCH PERIMETER.

LAP SEAMS SHALL BE TIGHTLY JOINED BY GALVANIZED RIVETS OR BOLTS FOR STEEL UNITS AND ALUMINUM RIVETS AND BOLTS FOR ALUMINUM UNITS. FOR THE 77" X 52" THROUGH 112" X 75" APRON ENDWALL SIZES, THE REINFORCED EDGES AND CENTER PANEL SEAMS SHALL BE FURTHER REINFORCED WITH GALVANIZED STEEL OR ALUMINUM STIFFENER ANGLES. THE ANGLES SHALL BE ATTACHED BY GALVANIZED NUTS AND BOLTS FOR STEEL UNITS AND ALUMINUM NUTS AND BOLTS FOR ALUMINUM UNITS.

WHERE TWO OR MORE PIPES WITH APRON ENDWALLS ARE LAID ADJACENT TO EACH OTHER, THEY SHALL BE SEPARATED BY A DISTANCE SUFFICIENT TO PROVIDE A MINIMUM CLEARANCE OF 6 INCHES BETWEEN APRON ENDWALLS.

① FOR PIPE ARCH SIZES UP TO 73" X 55" A 180° ROLLED EDGE MAY BE USED INSTEAD OF STEEL ROD REINFORCEMENT. SEE SECTION A-A.

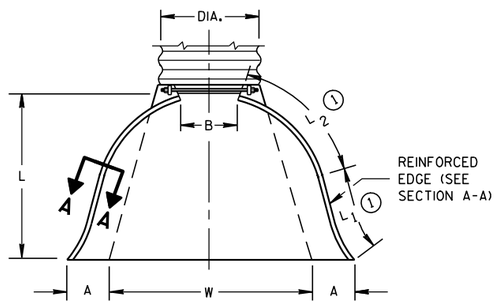

PLAN VIEW

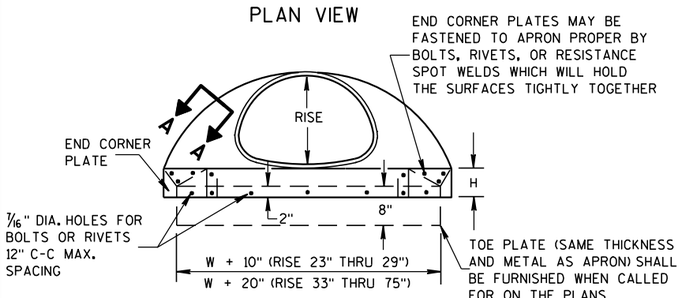

END VIEW

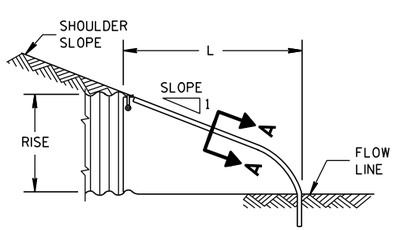

SIDE ELEVATION

METAL ENDWALLS

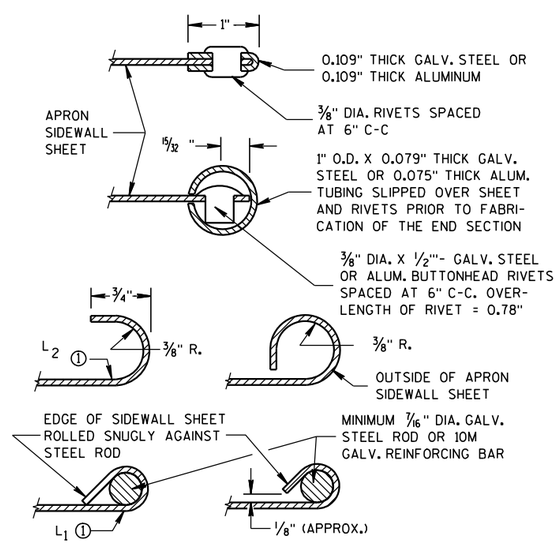

SECTION A-A

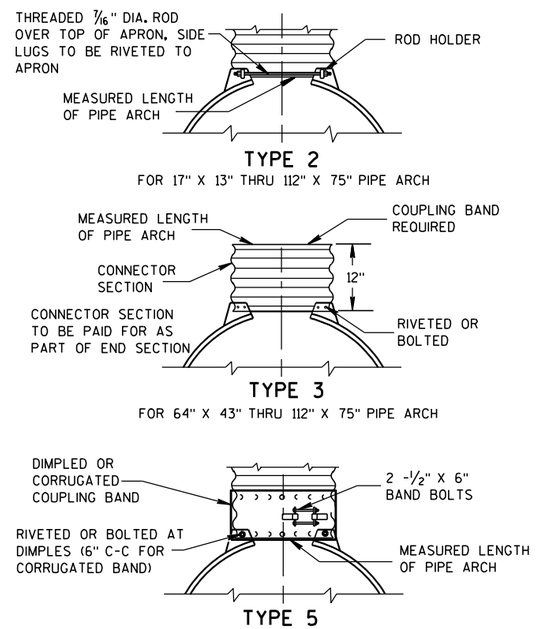

NOTE: DIMPLED BAND FITS OVER OUTSIDE OF ENDWALL, AND CORRUGATED BAND FITS INSIDE ENDWALL.

CONNECTION DETAILS

APRON ENDWALLS FOR PIPE ARCH AND ELLIPTICAL PIPE

STATE OF WISCONSIN
DEPARTMENT OF TRANSPORTATION

APPROVED

11/30/94 — DATE

/S/ Rory L. Rhinesmith — CHIEF ROADWAY DEVELOPMENT ENGINEER

FHWA

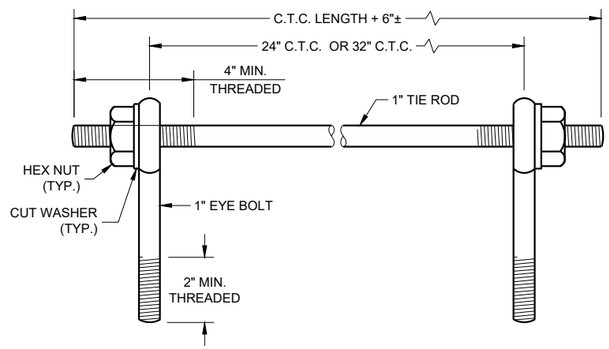

EYE BOLTS AND TIE ROD

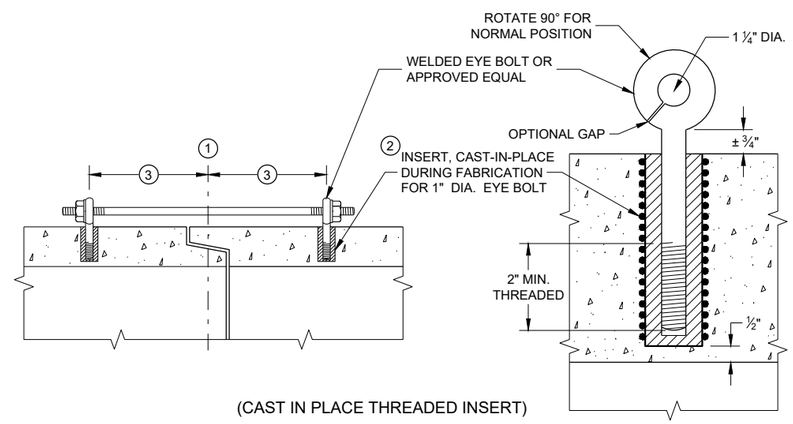

(CAST IN PLACE THREADED INSERT)

LONGITUDINAL SECTIONS

EYE BOLT AND TIE ROD ASSEMBLY (ALTERNATE NO. 1)

GENERAL NOTES

DETAILS OF CONSTRUCTION, MATERIALS, AND WORKMANSHIP NOT SHOWN ON THIS DRAWING SHALL CONFORM TO THE PERTINENT REQUIREMENTS OF THE STANDARD SPECIFICATIONS AND APPLICABLE SPECIAL PROVISIONS.

CONCRETE CULVERT AND STORM SEWER PIPE SHALL BE TIED TOGETHER IN THE MANNER ILLUSTRATED BY THIS DETAIL AT LOCATIONS DESIGNATED IN THE STANDARD SPECIFICATIONS AND THE PLAN. THE CONTRACTOR MAY USE EITHER ALTERNATE 1, 2 OR 3 FOR DRAINAGE STRUCTURES. ONLY ALTERNATE 1 AND 3 MAY BE USED FOR CATTLE PASSES, UNLESS OTHERWISE STATED IN THE CONTRACT. THE MATERIALS, FABRICATION AND WORK NECESSARY TO TIE THE PIPE BY THIS DETAIL WILL BE CONSIDERED INCIDENTAL TO THE PIPE AND APRON ENDWALLS IF REQUIRED.

DETAILED DRAWINGS FOR PROPOSED ALTERNATE DESIGNS FOR JOINT TIES SHALL BE SUBMITTED TO THE ENGINEER FOR APPROVAL.

JOINT TIES TO BE HOT-DIP GALVANIZED PER ASTM A 153.

1. CENTER LINE OF TONGUE AND GROOVE OR BELL AND SPIGOT JOINTS.
2. THE INSIDE OF THE THREADED INSERTS SHALL BE CLEAN TO ALLOW THE INSERTION OF THREADED EYE BOLTS.
3. HOLES SHALL BE CAST-IN-PLACE OR DRILLED PER THE APPLICABLE DETAIL, AND EQUAL DISTANCE FROM THE CENTERLINE OF THE JOINT.
4. BOLT PROJECTION INSIDE OF PIPE SHALL NOT EXCEED 2 INCHES.
5. OPENING TO BE ROD DIAMETER PLUS 1 INCH.
6. LENGTH ADEQUATE TO EXTEND TO WITHIN ½ INCH OF THE INNER SURFACE OF THE PIPE.
7. EYE BOLT LENGTH DETERMINED BY WALL THICKNESS, BELL THICKNESS AND BOLT PROJECTION INSIDE PIPE.

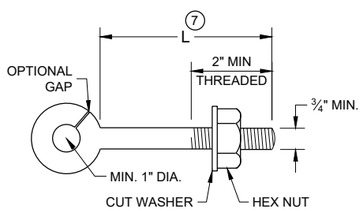

EYE BOLT 7

NOTE: TWO EYE BOLTS MAY BE USED WITH A 30" OR 38" LONG THREADED ROD IN LIEU OF THE 90° BENT TIE ROD.

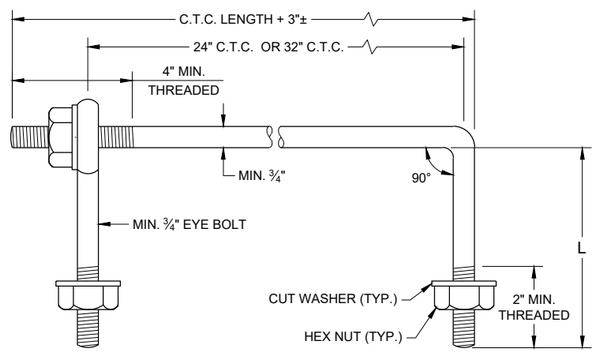

EYE BOLT AND TIE ROD

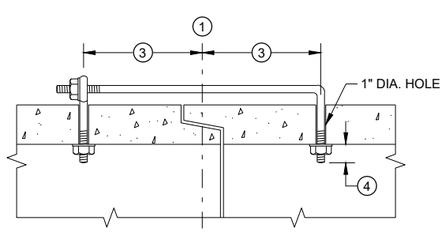

(TONGUE AND GROOVE PIPE)

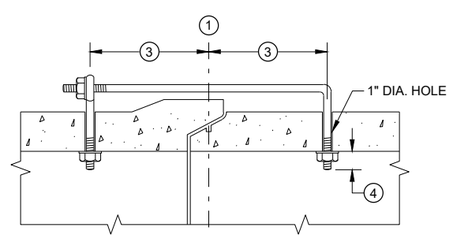

(MODIFIED BELL PIPE)

LONGITUDINAL SECTION

(JOINT TIES FOR 18" TO 66" DIA. CONCRETE PIPE)

EYE BOLT AND TIE ROD ASSEMBLY (ALTERNATE NO. 2)

ADJUSTABLE TIE ROD TABLE

PIPE DIAMETER	TIE ROD DIAMETER	D	L_1	N
12 - 60	⅝	⅝	5	½
66 - 84	¾	¾	5	½
90 - 144	1	1	7	1 7/16

DIMENSIONS SHOWN ARE IN INCHES

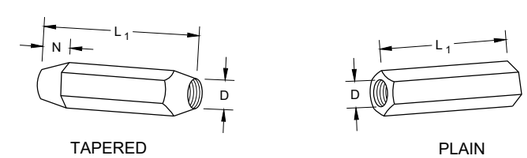

RIGHT AND LEFT THREADS

SLEEVE NUTS

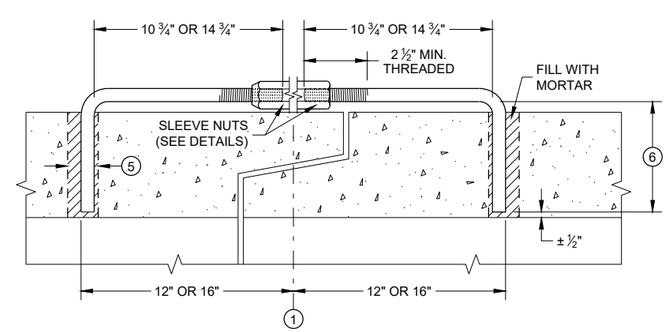

LONGITUDINAL SECTION

ADJUSTABLE TIE ROD (ALTERNATE NO. 3)

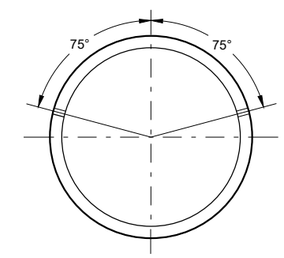

PLACEMENT OF (2) CAST-IN-PLACE INSERTS OR HOLES DURING FABRICATION FOR PIPE SECTIONS REQUIRING TIE RODS

TRANSVERSE SECTION

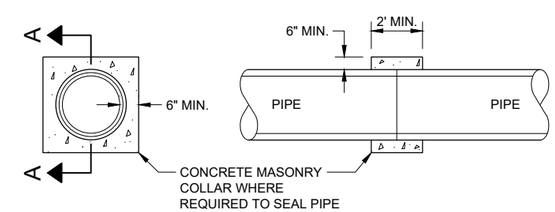

SECTION A - A

CONCRETE COLLAR DETAIL

JOINT TIES FOR CONCRETE PIPE AND CONCRETE COLLAR DETAIL

STATE OF WISCONSIN
DEPARTMENT OF TRANSPORTATION

APPROVED
November 2021 — DATE
/S/ Rodney Taylor — ROADWAY STANDARDS DEVE ENGINEER
FHWA

6

SDD 08F04 - 08

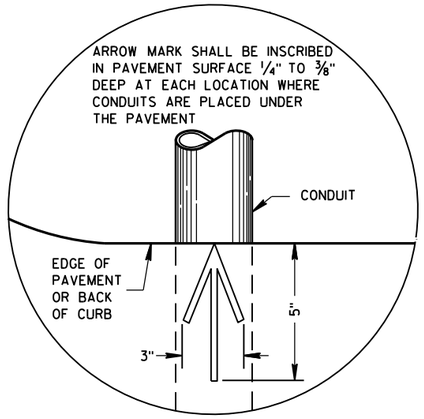

PLAN VIEW

ARROW MARK

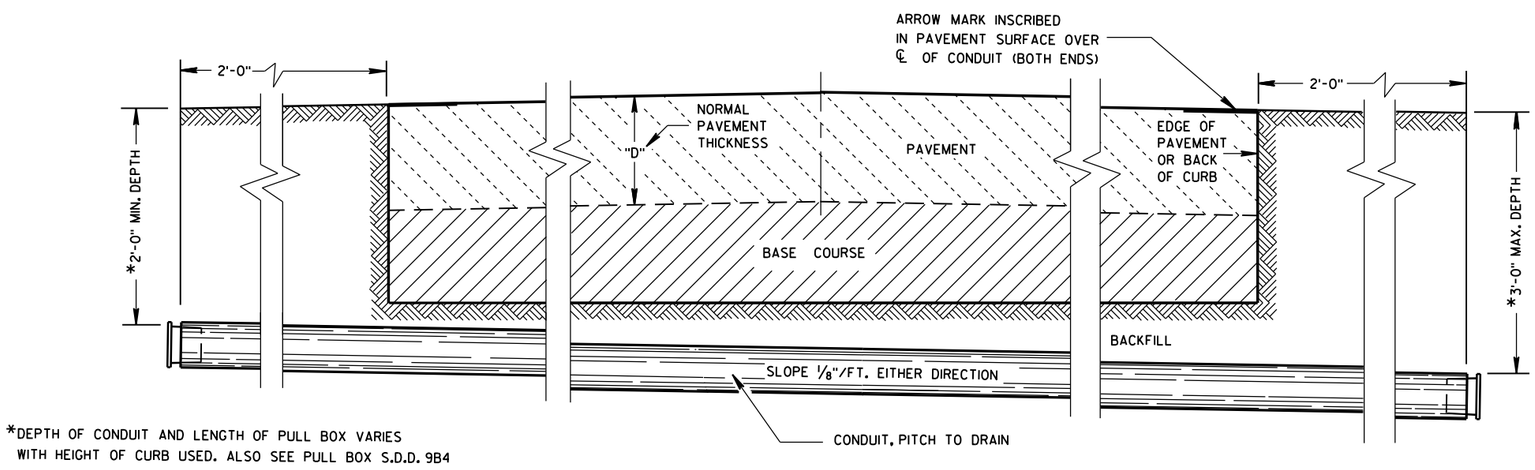

*DEPTH OF CONDUIT AND LENGTH OF PULL BOX VARIES WITH HEIGHT OF CURB USED. ALSO SEE PULL BOX S.D.D. 9B4

SIDE ELEVATION

DETAIL FOR CONDUIT UNDER PAVED HIGHWAYS

GENERAL NOTES

DETAILS OF CONSTRUCTION, MATERIALS AND WORKMANSHIP NOT SHOWN ON THIS DRAWING SHALL CONFORM TO THE PERTINENT REQUIREMENTS OF THE CONTRACT.

METALLIC (STANDARD SPECIFICATION 652.2.2) OR NONMETALLIC (STANDARD SPECIFICATION 652.2.3) CONDUIT SHALL BE FURNISHED AND PLACED AS SHOWN.

DEPTH OF CONDUIT INSTALLED BELOW THE TRAVELED WAY SHALL BE 24 INCHES MINIMUM AND 36 INCHES MAXIMUM.

DEPTH OF CONDUIT INSTALLED THAT IS NOT BELOW THE TRAVELED WAY SHALL BE 18 INCHES MINIMUM AND 36 INCHES MAXIMUM.

ANY EXCEPTION TO THE MAXIMUM DEPTH SHALL BE ONLY WITH THE WRITTEN APPROVAL OF THE ENGINEER.

THE TRENCH SHALL NOT BE BACKFILLED PRIOR TO INSPECTION OF THE CONDUIT.

ALL METALLIC CONDUIT RACEWAY ENDS SHALL BE REAMED AND THREADED.

ALL METALLIC CONDUIT IN WHICH WIRE OR CABLE IS TO BE INSTALLED SHALL BE BUSHED WITH APPROVED THREADED BUSHINGS BEFORE INSTALLATION OF THE WIRE OR CABLE.

ALL METALLIC CONDUITS IN WHICH WIRE OR CABLE IS NOT TO BE INSTALLED SHALL BE CAPPED WITH THREADED PROTECTIVE CAPS, AS APPROVED BY THE ENGINEER.

ALL NONMETALLIC CONDUIT SHALL BE CAPPED OR PLUGGED IMMEDIATELY AFTER INSTALLATION AND SHALL REMAIN CAPPED OR PLUGGED UNTIL WIRE/CABLES ARE INSTALLED.

NONMETALLIC CONDUITS IN WHICH WIRE OR CABLE IS NOT BEING INSTALLED SHALL REMAIN CAPPED OR PLUGGED.

BENDING OF PVC ELECTRICAL CONDUIT SHALL BE ACCOMPLISHED BY USING A BLANKET OR EMERSION TYPE TANK DESIGNED FOR THE PURPOSE OF BENDING PVC ELECTRICAL CONDUIT.

ALL CUT ENDS SHALL BE TRIMMED INSIDE AND OUTSIDE TO REMOVE ALL ROUGH EDGES ON NONMETALLIC CONDUIT. (SEE NEC 347.5)

WHEN REQUIRED TO CONNECT NONMETALLIC CONDUIT TO METALLIC CONDUIT, ONLY U.L. LISTED ADAPTER FITTINGS SHALL BE USED.

PRIOR TO CONDUIT ACCEPTANCE, CONDUIT CAPS OR PLUGS SHALL BE REMOVED, AND THE CAPS, PLUGS AND CONDUIT ENDS SHALL BE THOROUGHLY CLEANED AND THEN THE CAPS OR PLUGS REINSTALLED TO ENSURE THAT THE CAPS OR PLUGS CAN BE EASILY REMOVED IN THE FUTURE.

ALL CONDUIT BEING FURNISHED AND INSTALLED SHALL HAVE THE U.L. LABEL FIRMLY ATTACHED.

CONDUIT RUNS SHALL BE THE SAME SIZE OF CONDUIT FROM ONE END TO THE OTHER (FROM PULL BOX TO PULL BOX-OR-JUNCTION BOX TO JUNCTION BOX-OR-BASE TO BASE, ETC.).

TRACER WIRE SHALL BE INSTALLED AS STATED IN THE STANDARD SPECIFICATION, ITEM 652.3.1.1.

ALL CONDUIT RUNS SHALL BE STRAIGHT (WITHOUT BENDS) FROM PULL BOX TO PULL BOX, PULL BOX TO BASE AND BASE TO BASE AS SHOWN ON THE PLANS.

CONDUIT

STATE OF WISCONSIN
DEPARTMENT OF TRANSPORTATION

APPROVED
March, 2017 — /S/ Ahmet Demirbilek
DATE — STATE ELECTRICAL
FHWA

FORM DEPTH SHALL BE NO MORE THAN 6" BELOW GRADE ON THE LOWER SIDE OF BASE

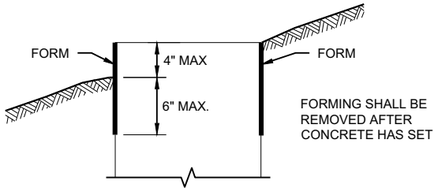

FORMING DETAIL

QUANTITY REQUIREMENTS	CONCRETE BASE TYPE		
	1	2	5 & 6
APPROX. CUBIC YARDS OF CONCRETE	0.40	0.57	0.40
LBS. OF HOOP BAR STEEL	NONE	23	16
LBS. OF VERTICAL BAR STEEL	NONE	60	18

GENERAL NOTES

DETAILS OF CONSTRUCTION, MATERIALS AND WORKMANSHIP NOT SHOWN ON THIS DRAWINGSHALL CONFORM TO THE PERTINENT REQUIREMENTS OF THE CONTRACT.

BASES SHALL BE EXCAVATED BY USE OF A CIRCULAR AUGER.

TOP SURFACES OF CONCRETE BASES SHALL BE TROWEL FINISHED SMOOTH AND LEVEL.

CONDUIT SIZES AND LOCATIONS SHALL BE SHOWN ON THE PLANS

THE FINAL OR TERMINATING CONCRETE BASE IN A CONDUIT RUN SHALL HAVE A 6" EXIT STUB INSTALLED FOR FUTURE CABLING USE. THE EXIT STUB SHALL BE SIZED AS USED THROUGHOUT THE CONDUIT RUN AS SHOWN A THE ENTRANCE OF THE BASE.

ENDS OF CONDUIT INSTALLED BELOW GRADE FRO FUTURE USE SHALL BE CAPPED IF METALLIC OR PLUGGED IF NON-METALLIC.

MINIMUM BENDING RADIUS OF CONDUIT IS EQUAL TO 6X THE DIAMETER.

CONDUIT HEIGHT ABOVE CONCRETE BASES SHALL BE 1 INCH. ALL METALLIC CONDUIT ENDS SHALL BE REAMED AND THREADED.

ALL CONDUIT ENDS AT THE TOP OF CONCRETE BASES SHALL BE CAPPED IF METALLIC OR PLUGGED IF NON-METALLIC IMMEDIATELY AFTER PLACEMENT AND BEFORE CONCRETE IS POURED. CONDUITS IN WHICH WIRE OR CABLE IS NOT INSTALLED SHALL REMAIN CAPPED OR PLUGGED.

BELL ENDS SHALL BE INSTALLED ON ALL PVC CONDUIT EXPOSED AT THE TOP OF CONCRETE BASES BEFORE INSTALLATION.

WHEN REQUIRED TO CONNECT NON-METALLIC CONDUIT TO METALLIC CONDUIT, ONLY ADAPTER FITTINGS, U.L. LISTED FOR ELECTRICAL USE, SHALL BE USED.

IF A BASE REQUIRES A DEEP FORM BECAUSE OF LOOSE DIRT OR FILL, THE FORM SHALL BE REMOVED BEFORE BACKFILLING AROUND THE BASE. BACKFILL SHALL BE TAMPED TIGHT AGAINST THE BARE CONCRETE BASE IN LAYERS OF 1 FOOT OR LESS.

A NO. 4 AWG STRANDED COPPER EQUIPMENT GROUNDING CONDUCTOR SHALL BE EXOTHERMICALLY WELDED TO THE EQUIPMENT GROUNDING ELECTRODE (GROUND ROD) FOR TYPE 2, TYPE 5 AND TYPE 6 BASES.

THE EQUIPMENT GROUNDING CONDUCTOR SHALL BE FURNISHED AND INSTALLED TO ENTER ALL BASE TYPES THROUGH A 1 INCH CONDUIT INSTALLED FOR GROUNDING PURPOSES, LEAVING A 4 FOOT COIL OF WIRE ABOVE THE CONCRETE BASE. THE EQUIPMENT GROUNDING CONDUCTOR SHALL BE NEATLY COILED AND THE COILS TIED TOGETHER.

ANCHOR RODS SHALL BE THREADED 12" IN LENGTH ON EACH END OF THE ROD. ANCHOR RODS SHALL BE MANUFACTURED IN ACCORDANCE WITH SECTION 654.2.1 OF THE STANDARD SPECIFICATIONS.

WASHERS AND LOCK WASHERS ARE REQUIRED ON ALL ANCHOR RODS.

WHEN ANCHOR RODS USING THE ALTERNATE "L" BEND ARE FURNISHED, THE 4 INCH"L" BEND SHALL BE IN ADDITION TO THE SPECIFIED ANCHOR ROD BAR LENGTH. THE "L" BEND SHALL NOT BE THREADED.

ANCHOR RODS SHALL BE INSTALLED WITH MISALIGNMENTS OF LESS THAN 1:40 FROM VERTICAL.

WELDING OF THE ANCHOR RODS TO THE CAGE IS UNACCEPTABLE. TIE WIRES SHALL BE USED.

BAR STEEL REINFORCEMENT SHALL BE COATED WITH POWDERED EPOXY RESIN IN ACCORDANCE WITH SECTION 505 OF THE STANDARD SPECIFICATIONS (LATEST EDITION).

(1) THE MINIMUM DEPTH OF CONDUIT EXITING THE CONCRETE BASE AND INSTALLED BELOW THE TRAVELED WAY SHALL BE 24 INCHES. THE MINIMUM DEPTH OF CONDUIT EXITING THE CONCRETE BASE THAT IS NOT INSTALLED BELOW THE TRAVELED WAY SHALL BE 18 INCHES. THE MAXIMUM DEPTH OF ALL CONDUIT SHALL BE 36 INCHES EXCEPT WITH WRITTEN APPROVAL OF THE ENGINEER.

(2) (4) 1" DIA. X 3' - 6" ANCHOR RODS.

(3) (4) 1" DIA. X 5' - 0" ANCHOR RODS.

(4) (6) NO. 6 X 6' - 8" BAR STEEL REINFORCEMENT.

(5) (7) NO. 4 X 5' - 1" BAR STEEL REINFORCEMENT @ 1' - 0" C - C.

(6) (4) 1" DIA. X 3' - 6" ANCHOR RODS.

(7) (6) NO. 4 X 4' - 8" BAR STEEL REINFORCEMENT.

(8) (5) NO. 4 X 5' - 1" BAR STELL REINFORCEMENT @ 1' - 0" C -C.

(9) EXOTHERMIC CONNECTION TO EUIPMENT GROUNDING CONDUCTOR

(10) ⅝" DIA. X 8' -0" COPPERCLAD EQUIPMENT GROUNDING ELECTRODE REQUIRED

(11) ANY ANCHOR ROD PROJECTION SHORTER THAN 2 ¾" OR LONGER THAN 3 ¼" SHALL REQUIRE THE BASE TO BE REMOVED AND REPLACED AT THE CONTRACTORS EXPENSE.

(12) FOR NON - BREAKAWAY INSTALLATIONS, 4 ½" ± ANCHOR ROD PROJECTION WITH THE USE OF LEVELING NUTS. RODENT SCREEN REQUIRED.

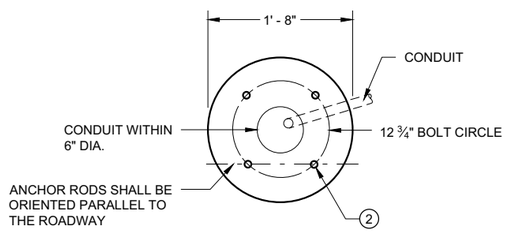

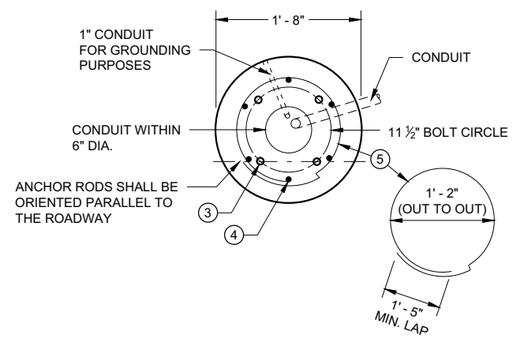

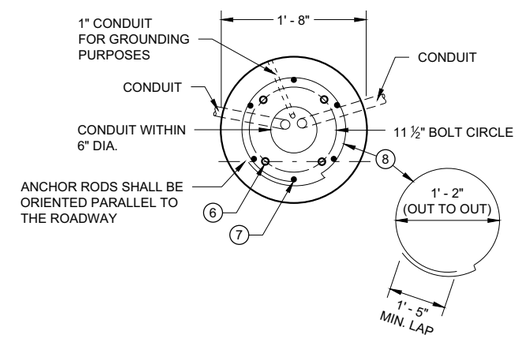

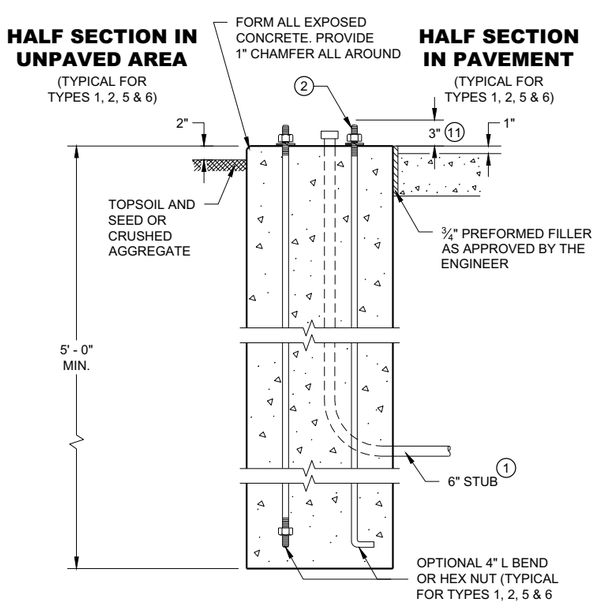

TYPE 1

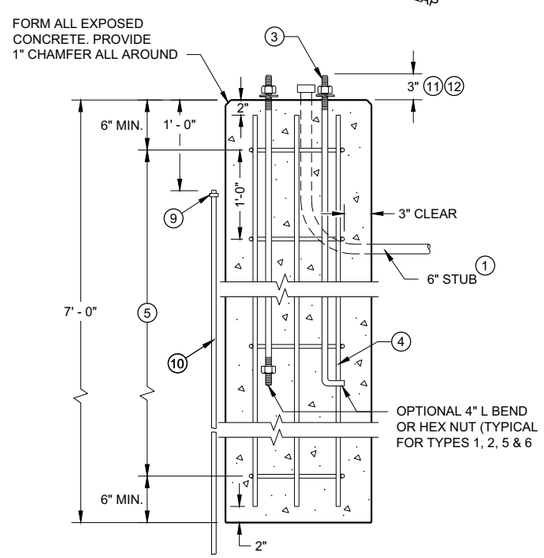

TYPE 2

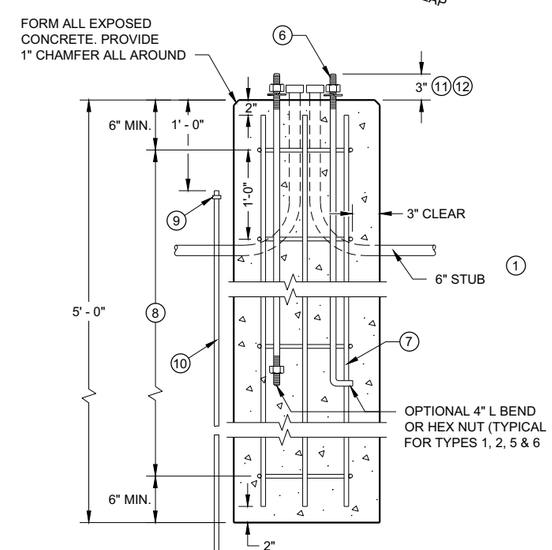

TYPE 5 & 6

CONCRETE BASES

CONCRETE BASES TYPES 1, 2, 5, & 6

STATE OF WISCONSIN
DEPARTMENT OF TRANSPORTATION

APPROVED
May 2019 — DATE
/S/ Ahmet Demirbilek — STATE ELECTRICAL ENGI
FHWA

6

SDD 09C02 - 09

GENERAL NOTES

DETAILS OF CONSTRUCTION, MATERIALS AND WORKMANSHIP NOT SHOWN ON THIS DRAWING SHALL CONFORM TO THE PERTINENT REQUIREMENTS OF THE CONTRACT.

FOUR (4) BOLTS SHALL BE FURNISHED WITH EACH TRANSFORMER BASE. BOLTS SHALL BE 1" DIAMETER, 4" IN LENGTH, WITH WASHERS, LOCK WASHERS AND NUTS. BOLTS, NUTS AND WASHERS SHALL BE MANUFACTURED IN ACCORDANCE WITH SECTION 531.2.2 OF THE STANDARD SPECIFICATIONS.

LEVELING SHIMS, IF NEEDED, SHALL BE DESIGNED FOR THE PURPOSE AND USED UNDER CAST BASES WHEN PLUMBING POLES OR STANDARDS DURING INSTALLATION. THE USE OF WASHERS IN LIEU OF PROPER LEVELING SHIMS IS NOT ACCEPTABLE.

SHIM LENGTH SHALL BE LONG ENOUGH TO COMPLETELY COVER THE AREA UNDER THE LENGTH AND WIDTH OF THE BASE MOUNTING FLANGE.

DOUBLE NUTTING IS NOT ACCEPTABLE FOR LEVELING OR MOUNTING PURPOSES.

A NEMA APPROVED, U.L. LISTED, COPPER WITH BRASS OR STAINLESS STEEL SET SCREW, DIRECT BURY RATED, MECHANICAL CONNECTOR (LUG), SIZED TO ACCEPT AWG. #10 TO #4 COPPER STRANDED WIRE SHALL BE FURNISHED AND INSTALLED IN THE PEDESTAL AND TRANSFORMER BASES.

THE MECHANICAL CONNECTOR SHALL BE INSTALLED USING A 1/4" - 20 (TPI) STAINLESS STEEL HEX HEAD BOLT OF SUFFICIENT LENGTH TO FIRMLY ATTACH THE LUG TO THE BASE.

SHOULD THE MANNER OF ATTACHMENT OF THE LUG REQUIRE WASHERS, HEX NUTS, LOCK WASHER - THEY SHALL BE STAINLESS STEEL AS IS THE BOLT. THE MANNER OF ATTACHMENT SHALL NOT BLOCK ACCESSIBILITY TO WIRE PLACEMENT IN THE CONNECTOR.

PEDESTAL BASE COLLAR THREADING SHALL BE TAPERED AND IN ACCORDANCE WITH NATIONAL PIPE THREADING DIMENSIONS.

BASE COLLAR THREADING SHALL EXTEND INTO THE BASE COLLAR WITH SUFFICIENT DEPTH TO ACCEPT THE INSTALLATION OF TRAFFIC SIGNAL STANDARDS TO A DEPTH OF 1 1/2", THEN TIGHTENING TO A POINT OF BEING IMMOVABLE.

THE ACCESS DOOR SHALL BE OF THE SAME MATERIAL AS THE BASE.

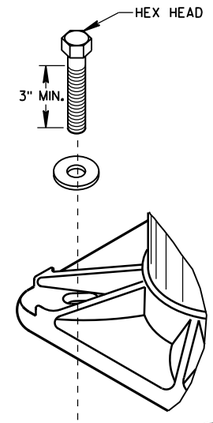

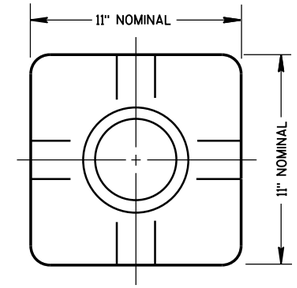

TOP VIEW
(PEDESTAL BASE)

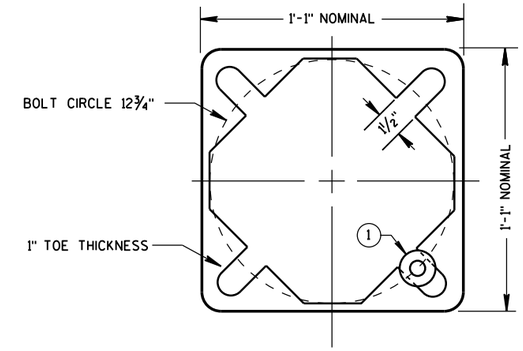

BOTTOM VIEW
(PEDESTAL BASE)

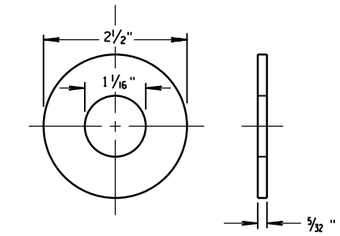

ZINC COATED STEEL WASHER
TO BE PROVIDED BY THE CONTRACTOR

PEDESTAL BASE WASHER (1)

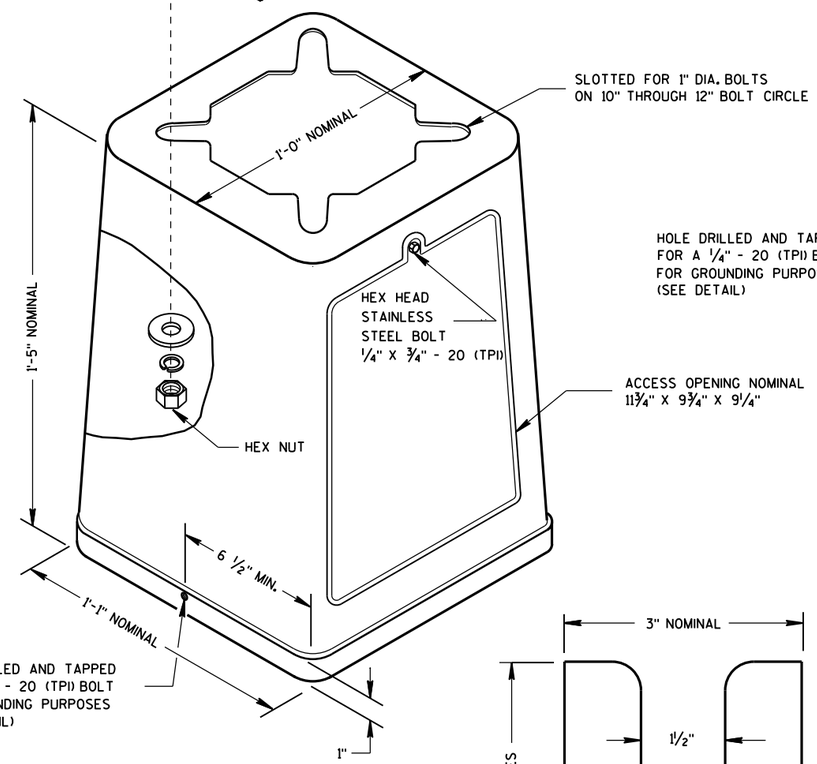

ISOMETRIC VIEW

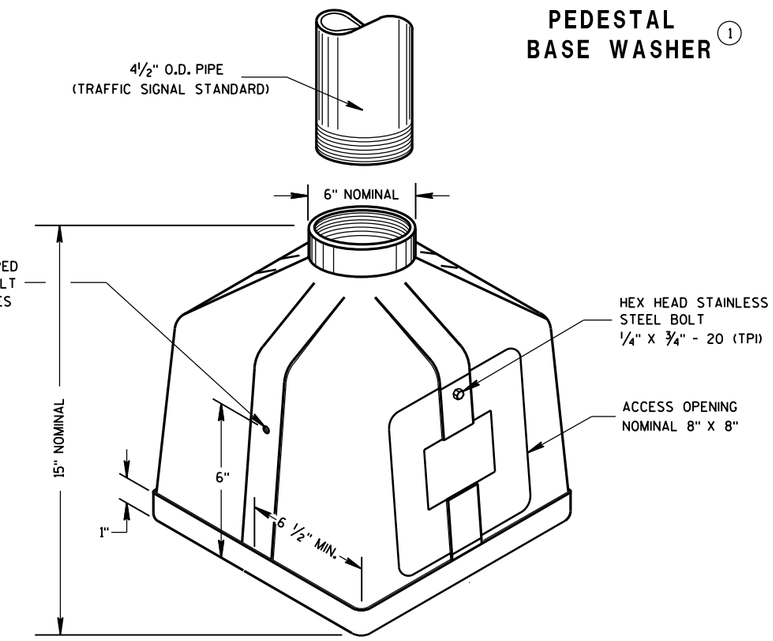

ISOMETRIC VIEW
PEDESTAL BASE

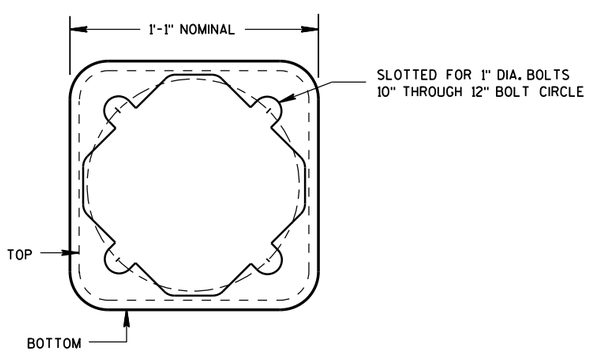

BOTTOM VIEW
(TRANSFORMER BASE)

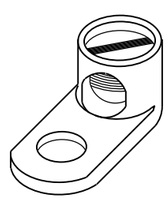

TYPICAL MECHANICAL CONNECTOR LUG

TO BE FURNISHED WITH EACH BASE

TRANSFORMER BASE

INTENDED FOR USE WITH TYPE 2, 3, 4, 5 & 6 POLES

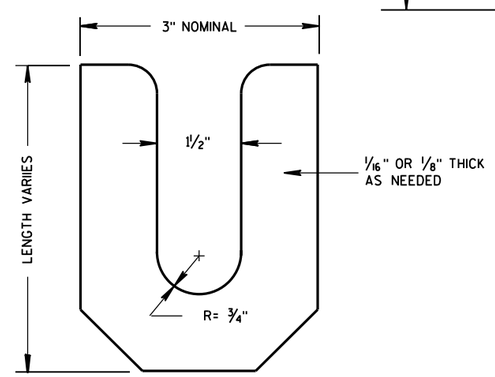

LEVELING SHIM

TRANSFORMER/PEDESTAL BASES	
STATE OF WISCONSIN DEPARTMENT OF TRANSPORTATION	
APPROVED Sept. 2014 DATE FHWA	/S/ Ahmet Demirbilek STATE ELECTRICAL

6

6

S.D.D. 9 C 3-4

S.D.D. 9 C 3-4

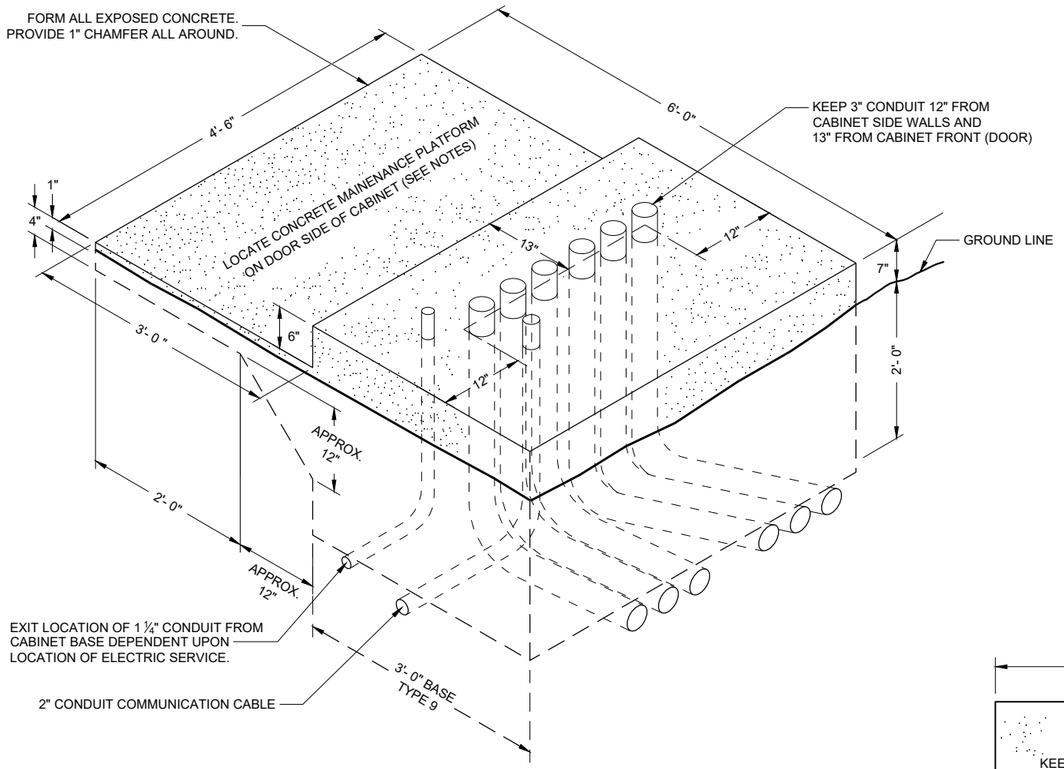

ISOMETRIC VIEW

TYPE 9 SPECIAL

(C.Y. CONCRETE = APPROX. 1.56)

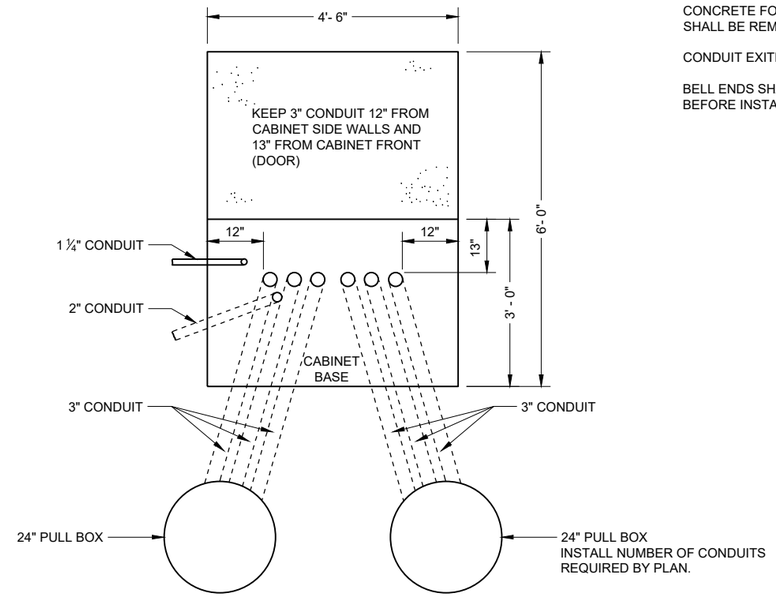

PLAN VIEW

CONCRETE CONTROL CABINET BASE,
TYPE 9 SPECIAL

GENERAL NOTES

DETAILS OF CONSTRUCTION, MATERIALS AND WORKMANSHIP NOT SHOWN ON THIS DRAWING SHALL CONFORM TO THE PERTINENT REQUIREMENTS OF THE CONTRACT.

INSTALL FOUR INCH MINIMUM DIAMETER X 4 INCH MINIMUM LENGTH STAINLESS STEEL APPROVED CONCRETE MASONRY ANCHORS WITH A PULLOUT STRENGTH OF 9,000 LBS. TO ANCHOR THE CABINET TO TYPE 6, 7, 8, AND 9 BASES. THE ANCHOR STUDS SHALL BE LOCATED AS DIRECTED BY THE ENGINEER TO PROPERLY ANCHOR THE CONTROL CABINET TO THE BASE.

WHEN REQUIRED TO CONNECT NON - METALLIC CONDUIT TO METALLIC CONDUIT, ONLY ADAPTER FITTINGS, U. L. LISTED FOR ELECTRICAL USE, SHALL BE USED.

CONDUIT HEIGHT ABOVE THE CONCRETE BASE SHALL BE 1 INCH.

DEPTH OF CONDUIT INSTALLED BELOW THE TRAVELED WAY SHALL BE 24 INCHES MINIMUM AND 36 INCHES MAXIMUM.

DEPTH OF CONDUIT INSTALLED THAT IS NOT BELOW THE TRAVELED WAY SHALL BE 18 INCHES MINIMUM AND 36 INCHES MAXIMUM.

ANY EXCEPTION TO THE MAXIMUM DEPTH SHALL BE ONLY WITH THE WRITTEN APPROVAL OF THE ENGINEER.

CONTROL CABINET BASE TOP SURFACE SHALL BE TROWEL FINISHED SMOOTH AND LEVEL.

MAINTENANCE PLATFORM SHALL BE FLOAT OR BROOM FINISHED AND LEVEL.

MAINTENANCE PLATFORMS ARE NOT REQUIRED WHEN THE SURROUNDING AREA IS PAVED.

MINIMUM BENDING RADIUS OF CONDUIT EQUALS 6 TIMES THE DIAMETER.

ALL METALLIC CONDUIT ENDS SHALL BE REAMED AND THREADED.

CAP ALL BELOW GRADE METALLIC CONDUIT ENDS IN WHICH WIRE OR CABLE IS NOT BEING INSTALLED.

PLUG ALL BELOW GRADE NON - METALLIC CONDUIT ENDS IN WHICH WIRE OR CABLE IS NOT BEING INSTALLED.

ALL CONDUIT ENDS AT THE TOP OF CONCRETE BASES SHALL BE CAPPED IF METALLIC OR PLUGGED IF NON - METALLIC IMMEDIATELY AFTER PLACEMENT AND BEFORE CONCRETE IS POURED. CONDUITS IN WHICH WIRE OR CABLE IS NOT BEING INSTALLED SHALL REMAIN CAPPED OR PLUGGED.

CONCRETE FORM DEPTH BELOW FINISHED GRADE SHALL BE 6 INCHES MAXIMUM. CONCRETE FORMS SHALL BE REMOVED AFTER CONCRETE HAS SET.

CONDUIT EXITING THE CONCRETE BASE (SIX 3") SHALL TERMINATE IN PULL BOXES AS SHOWN ON THE PLANS.

BELL ENDS SHALL BE INSTALLED ON ALL PVC CONDUIT EXPOSED AT THE TOP OF THE CONCRETE BASE BEFORE INSTALLATION OF CABLE OR WIRE.

CONCRETE CONTROL CABINET BASE TYPE 9, SPECIAL

STATE OF WISCONSIN
DEPARTMENT OF TRANSPORTATION

APPROVED
September 2014 /S/ Ahmet Demerbilek
DATE STATE ELECTRICAL ENGI

FHWA

GENERAL NOTES

DETAILS OF CONSTRUCTION, MATERIALS AND WORKMANSHIP NOT SHOWN ON THIS DRAWING SHALL CONFORM TO THE PERTINENT REQUIREMENTS OF THE CONTRACT.

BASES (SHAFT) SHALL BE EXCAVATED BY THE USE OF A CIRCULAR AUGER. IF BASE REQUIRES A DEEP FORM BECAUSE OF LOOSE SOIL, THE FORM SHALL BE REMOVED BEFORE BACKFILLING. A STEEL CASING OR CORRUGATED METAL PIPE IS ALLOWED TO REMAIN. BACKFILL SHALL BE TAMPED TIGHT AGAINST THE BASE IN LAYERS OF ONE FOOT OR LESS.

TOP SURFACE OF THE CONCRETE BASE SHALL BE TROWEL FINISHED AND LEVEL.

ANCHOR RODS SHALL BE INSTALLED WITH MISALIGNMENTS OF LESS THAN 1:40 FROM VERTICAL.

BAR STEEL REINFORCEMENT SHALL BE COATED WITH POWDERED EPOXY RESIN IN ACCORDANCE WITH SECTION 505 OF THE STANDARD SPECIFICATIONS (LATEST EDITION).

WELDING OF ANCHOR RODS TO THE CAGE IS UNACCEPTABLE. TEMPLATES SHALL BE USED.

CONDUIT SIZES AND LOCATIONS SHALL BE SHOWN ON THE PLANS.

MINIMUM BENDING RADIUS OF CONDUIT IS EQUAL TO 6 TIMES THE DIAMETER.

CONDUIT HEIGHT ABOVE CONCRETE BASES SHALL BE 4" INCHES. ALL METALLIC CONDUIT ENDS SHALL BE REAMED AND THREADED. NON-METALLIC CONDUIT SHALL HAVE BELL ENDS INSTALLED. ALL CONDUIT SHALL SLOPE TO PULL BOX.

ALL CONDUIT ENDS AT THE TOP OF CONCRETE BASES SHALL BE CAPPED IF METALLIC OR PLUGGED IF NON-METALLIC IMMEDIATELY AFTER PLACEMENT AND BEFORE CONCRETE IS POURED. CONDUITS IN WHICH WIRE OR CABLE IS NOT INSTALLED SHALL REMAIN CAPPED OR PLUGGED.

BELL ENDS SHALL BE INSTALLED ON ALL PVC CONDUIT EXPOSED AT THE TOP OF CONCRETE BASES BEFORE INSTALLATION OF CABLE OR WIRE.

WHEN REQUIRED TO CONNECT NON-METALLIC CONDUIT TO METALLIC CONDUIT, ONLY ADAPTER FITTINGS, U.L. LISTED FOR ELECTRICAL USE, SHALL BE USED.

ENDS OF CONDUIT INSTALLED BELOW GRADE FOR FUTURE USE SHALL BE CAPPED IF METALLIC OR PLUGGED IF NONMETALLIC.

A NO. 4 AWG STRANDED COPPER EQUIPMENT GROUNDING CONDUCTOR SHALL BE EXOTHERMICALLY WELDED TO THE EQUIPMENT GROUNDING ELECTRODE (GROUND ROD).

THE EQUIPMENT GROUNDING CONDUCTOR SHALL BE FURNISHED AND INSTALLED TO ENTER THE BASE THROUGH A 1 INCH CONDUIT INSTALLED FOR GROUNDING PURPOSES, LEAVING A 4 FOOT COIL OF WIRE ABOVE THE CONCRETE BASE. THE EQUIPMENT GROUNDING CONDUCTOR SHALL BE NEATLY COILED AND THE COILS TIED TOGETHER.

THE FINAL OR TERMINATING CONCRETE BASE IN A CONDUIT RUN SHALL HAVE A 6" EXIT STUB INSTALLED FOR FUTURE CABLING USE. THE EXIT STUB SHALL BE SIZED AS USED THROUGHOUT THE CONDUIT RUN AS SHOWN A THE ENTRANCE OF THE BASE.

(1) THE MINIMUM DEPTH OF CONDUIT EXITING THE CONCRETE BASE AND INSTALLED BELOW THE TRAVELED WAY SHALL BE 24 INCHES. THE MINIMUM DEPTH OF CONDUIT EXITING THE CONCRETE BASE THAT IS NOT INSTALLED BELOW THE TRAVELED WAY SHALL BE 18 INCHES. THE MAXIMUM DEPTH OF ALL CONDUIT SHALL BE 36 INCHES (GREATER THAN 36 INCHES IF INSTALLED IN BREAKER RUN) EXCEPT WITH WRITTEN APPROVAL OF THE ENGINEER.

(2) (6) 1 ½ DIA. X 4' - 4" ANCHOR RODS

(3) (6) NO. 6 X 13' - 7" BAR STEEL REINFORCEMENT.

(4) (21) NO. 5 X 7'-10" BAR STEEL REINFORCEMENT @ 8" MAX. C-C.

CONCRETE MASONRY.....fc = 3,500 p.s.i
HIGH STRENGTH BAR STEEL REINFORCEMENT, GRADE 60.....fy = 60,000 p.s.i.
ANCHOR RODS, ASTM F1554 GRADE 55 (IN ACCORDANCE .....fy = 55,000 p.s.i.
WITH SECTION 531.2.2 OF THE STANDARD SPECIFICATION)
TEMPLATES, ASTM A709, GRADE 36.....fy = 36,000 p.s.i.

QUANTITY REQUIREMENTS	
APPROX. CUBIC YARDS OF CONCRETE	2.5
LBS. OF HOOP BAR STEEL	172
LBS. OF VERTICAL BAR STEEL	122

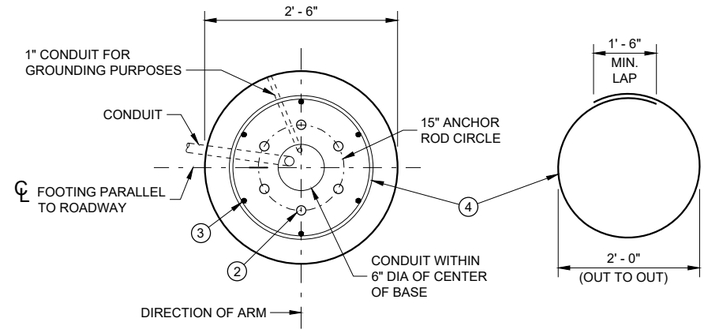

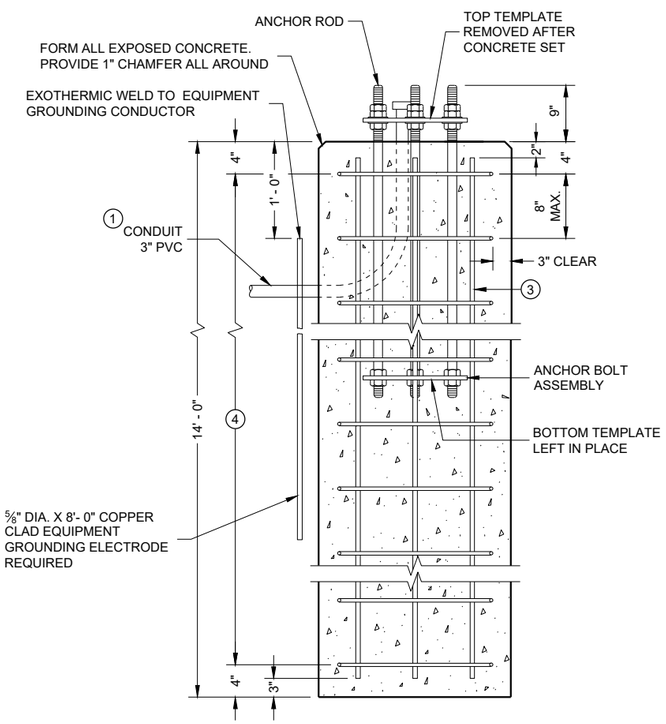

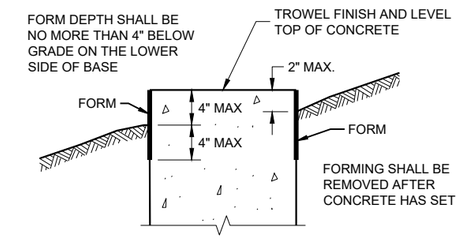

FORMING DETAIL

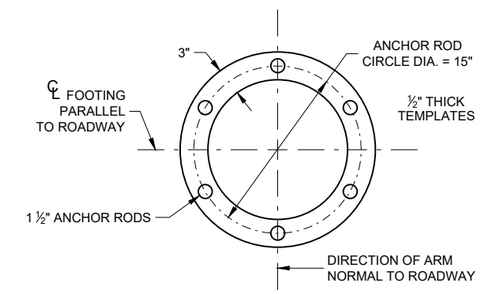

TOP AND BOTTOM TEMPLATE

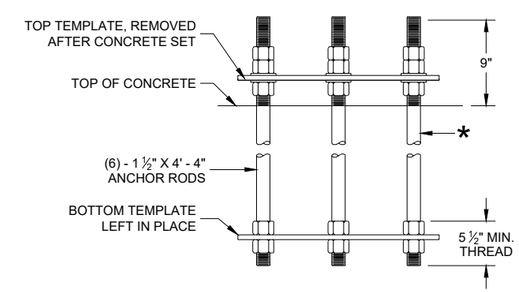

ANCHOR ROD ASSEMBLY DETAILS

* THREAD TOP 10" OF ANCHOR ROD FOR 3 NUTS AND 2 WASHERS AND BOTTOM 5 ½" FOR 2 NUTS PER ANCHOR ROD. HOT DIP GALVANIZE THE ENTIRE LENGTH OF THE ANCHOR ROD (ASTM A123) AND HOT DIP NUTS AND WASHERS (ASTM A153. USE ZINC COATED NUTS MANUFACTURED WITH SUFFICIENT ALLOWANCE TO ALLOW NUTS TO RUN FREELY ON THE THREADS.

CONCRETE BASE, TYPE 10
(FOR TYPE 9, TYPE 10 AND OVER HEIGHT (OH) POLES)

TO BE USED WHEN GROUND ELEVATION AT BASE EQUALS OR IS GREATER THAN HIGH POINT OF ROADWAY ELEVATION. SEE SDD 9C13 WHEN GROUND ELEVATION AT BASE IS LOWER THAN HIGH POINT OF ROADWAY ELEVATION.

CONCRETE BASE TYPE 10

STATE OF WISCONSIN
DEPARTMENT OF TRANSPORTATION

APPROVED
May 2017 — DATE
/S/ Ahmet Demerbilek — WIND LOADED STRUCTU PROGRAM LEADER
FHWA

6

SDD 09C11 - 10

REINFORCEMENT AND CONCRETE QUANTITIES ADJUSTED FOR EXTENDED TYPE 10 CONCRETE BASE

HEIGHT INCREASE REQUIRED	*HEIGHT ABOVE GROUND SURFACE ON LOW SIDE (MAX.)	SHAFT LENGTH	LENGTH OF #6 VERTICAL REINF.	NO. OF #5 HOOPS	CU. YD. OF CONCRETE	LBS. OF HOOP BAR STEEL	LBS. OF VERTICAL STEEL
>0" TO 6"	10"	14' - 6"	14' - 1"	22	2.6	180	127
>6" TO 1' - 0"	1' - 4"	15' - 0"	14' - 7"	23	2.7	188	131
>1' - 0" TO 1' - 6"	1' - 10"	15' - 6"	15' - 1"	24	2.8	196	136
>1' - 6" TO 2 - 0"	2' - 4"	16' - 0"	15' - 7"	24	2.9	196	141

REINFORCEMENT AND CONCRETE QUANTITIES ADJUSTED FOR EXTENDED TYPE 13 CONCRETE BASE

HEIGHT INCREASE REQUIRED	*HEIGHT ABOVE GROUND SURFACE ON LOW SIDE (MAX.)	SHAFT LENGTH	LENGTH OF #6 VERTICAL REINF.	NO. OF #5 HOOPS	CU. YD. OF CONCRETE	LBS. OF H.S. BAR STEEL
>0" TO 6"	10"	15' - 0"	14' - 7"	23	6.5	654
>6" TO 1' - 0"	1' - 4"	15' - 6"	15' - 1"	24	6.6	673
>1' - 0" TO 1' - 6"	1' - 10"	16' - 0"	15' - 7"	24	6.8	680
>1' - 6" TO 2 - 0"	2' - 4"	16' - 6"	16' - 1"	25	7.0	699

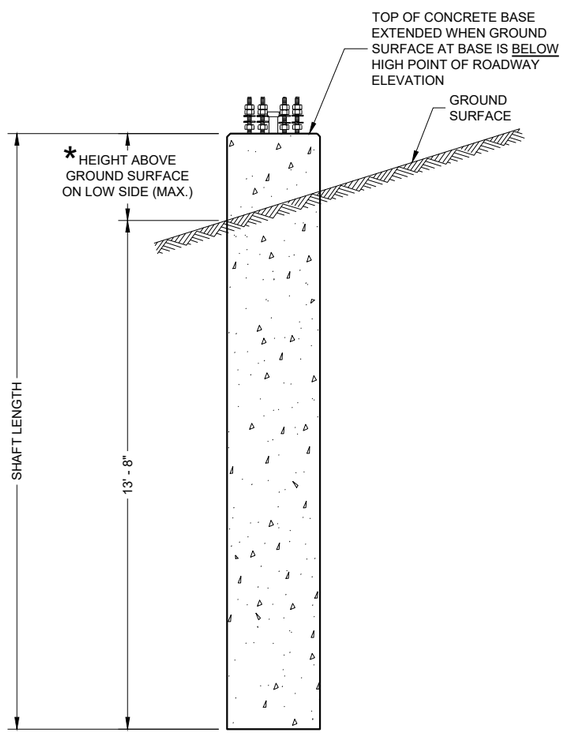

CONCRETE BASE TYPE 10 (EXTENDED)

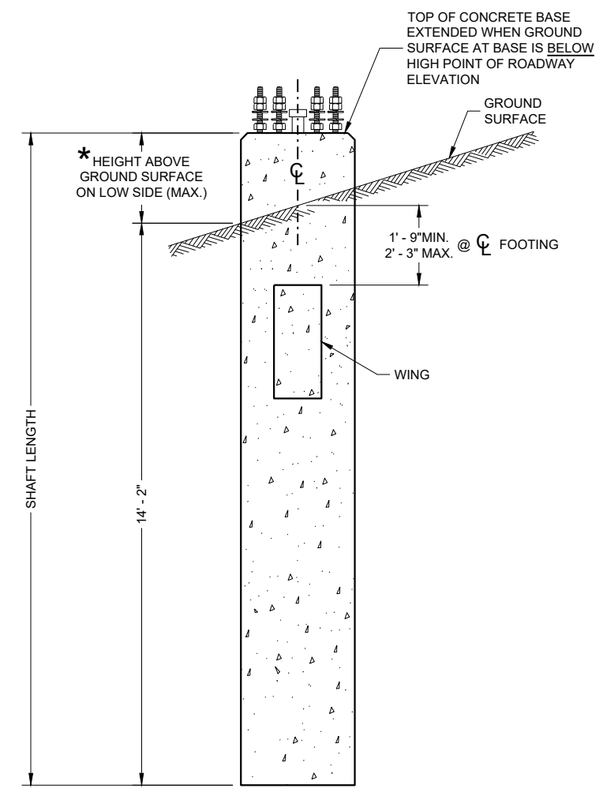

CONCRETE BASE TYPE 13 (EXTENDED)

CONCRETE BASE TYPE 10 AND TYPE13 EXTENSION

STATE OF WISCONSIN
DEPARTMENT OF TRANSPORTATION

APPROVED
February 2023 — DATE
/S/ Ahmet Demirbilek — STATE ELECTRICAL ENGI
FHWA

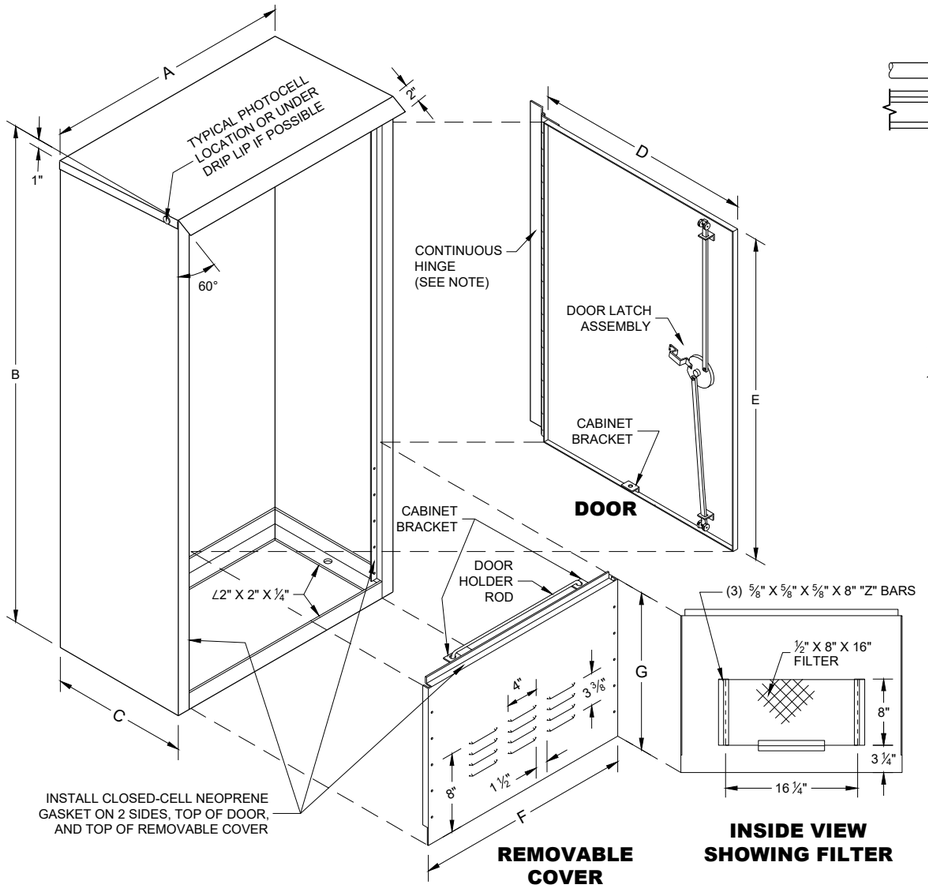

REMOVABLE COVER

INSIDE VIEW SHOWING FILTER

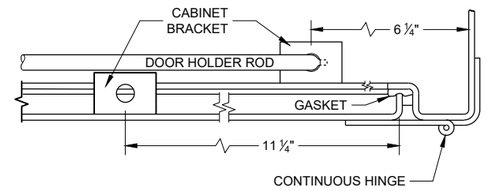

HINGE AND DOOR HOLDER

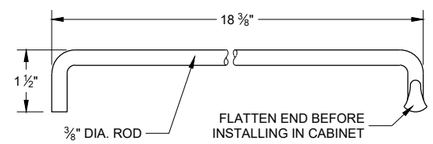

HOLDER ROD

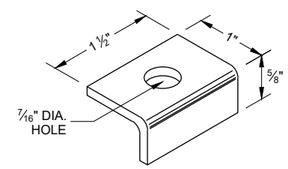

CABINET BRACKET

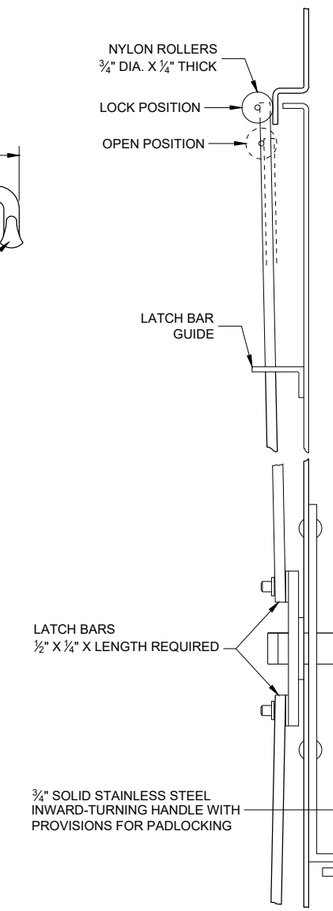

SIDE VIEW

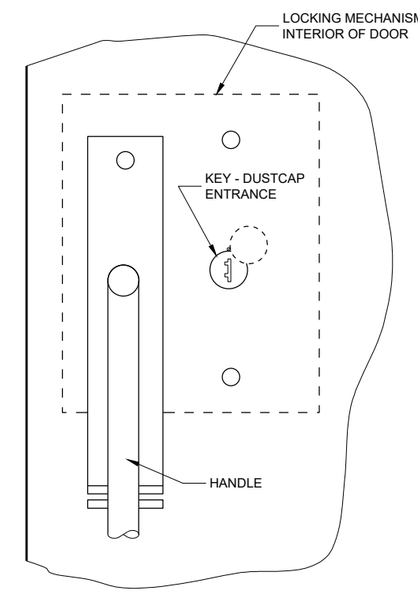

FRONT VIEW

LATCH ASSEMBLY

GENERAL NOTES

DETAILS OF CONSTRUCTION, MATERIALS AND WORKMANSHIP NOT SHOWN ON THIS DRAWING SHALL CONFORM TO THE PERTINENT REQUIREMENTS OF THE STANDARD SPECIFICATIONS AND APPLICABLE SPECIAL PROVISIONS.

PRIME WITH PHOSPHATE TREATMENT AND PRIMER.

FINISH EXTERIOR SURFACES WITH RUSTOLEUM #906 SILVER GRAY OR APPROVED EQUAL.

FINISH INTERIOR WITH RUSTOLEUM #2766 HIGH GLOSS WHITE ENAMEL OR APPROVED EQUAL.

ALL SHEET METAL PARTS SHALL BE .125 INCH THICK ALUMINUM.

ALL SEAMS SHALL BE CONTINUOUSLY WELDED.

ALUMINUM SHALL BE TYPE 5052-H32.

CONTINUOUS HINGE SHALL BE HEAVY GAUGE ALUMINUM WITH ¼" DIAMETER STAINLESS STEEL HINGE PIN. HINGE IS SECURED WITH ¼" X 20 TPI STAINLESS STEEL CARRIAGE BOLTS AND STAINLESS STEEL NYLOCK NUTS.

A SINGLE PHOTOCELL SHALL BE LOCATED ON THE NORTH - NORTHEAST SIDE OF THE CABINET UNLESS OTHERWISE CALLED FOR IN THE SPECIAL PROVISIONS. THE PHOTOCELL SHALL BE PLACED AS SHOWN AND SHALL BE LISTED ON THE DEPARTMENTS APPROVED PRODUCTS LIST.

DOOR LATCH ASSEMBLY TO BE PROVIDED WITH THREE-POINT LOCKING MECHANISM.

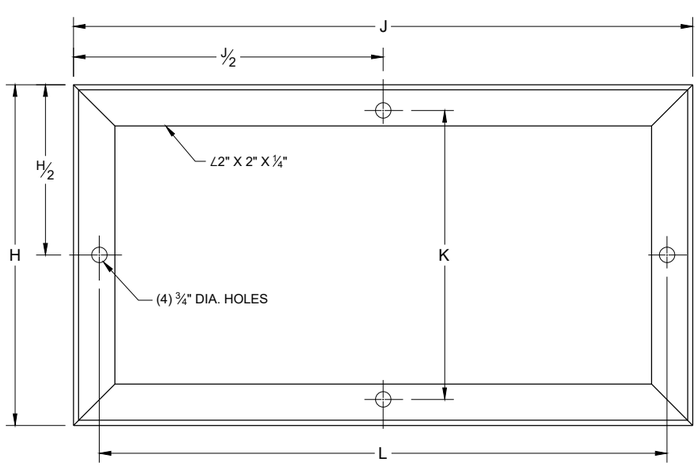

MOUNTING BASE

TABLE OF DIMENSIONS (INCHES)

MARK	CABINET TYPE		
	3060	3860	3866
A	30	38	38
B	60	60	66
C	16 ½	16 ½	24
D	26 ½	34 ¾	33 ¾
E	38 ¾	38 ¾	38 ¾
F	26 ½	34 ¾	33 ¾
G	19	19	25
H	16 ½	16 ½	24
H/2	8 ¼	8 ¼	12
J	30	38	38
J/2	15	19	19
K	13 ¾	13 ¾	21 ¼
L	27 ½	35 ½	35 ½

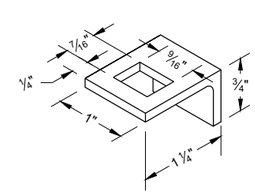

LATCH BAR GUIDE

SIGNAL CONTROL CABINET

STATE OF WISCONSIN
DEPARTMENT OF TRANSPORTATION

APPROVED
September 2014 /S/ Ahmet Demerbilek
DATE STATE ELECTRICAL ENGI 151
FHWA

6

6

SDD 09D02 - 03

SDD 09D02 - 03

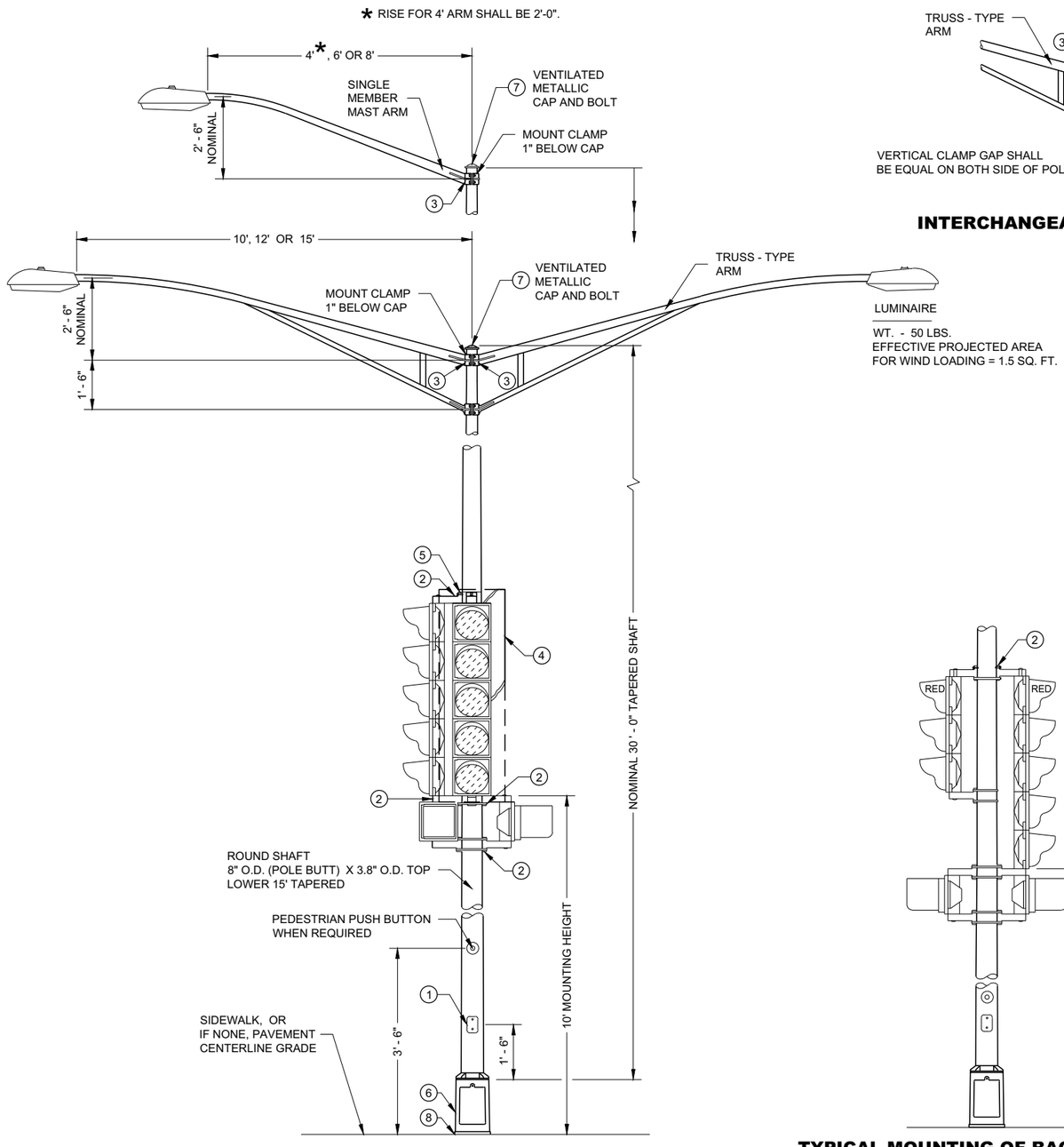

(MAXIMUM LOAD)

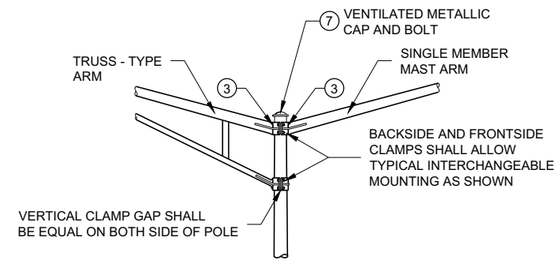

INTERCHANGEABLE MOUNTING DETAIL

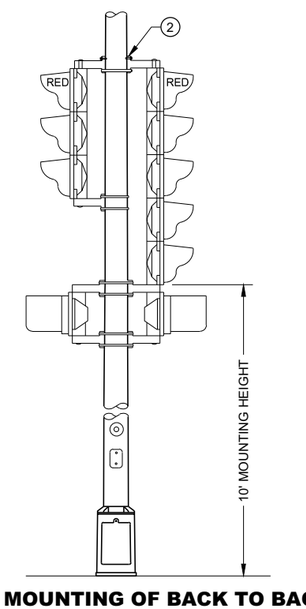

TYPICAL MOUNTING OF BACK TO BACK 3 AND 5 SECTION SIGNAL FACES

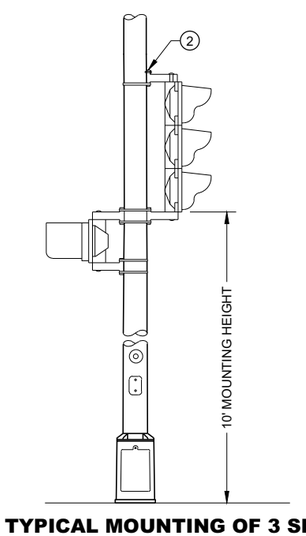

TYPICAL MOUNTING OF 3 SECTION SIGNAL FACE

TYPE 4 POLE MOUNTING CONFIGURATION

GENERAL NOTES

DETAILS OF CONSTRUCTION, MATERIALS AND WORKMANSHIP NOT SHOWN ON THIS DRAWING SHALL CONFORM TO THE PERTINENT REQUIREMENTS OF THE CONTRACT.

ALL TYPE 4 POLE MOUNTINGS SHALL BE DESIGNED TO INCLUDE TWIN 15' ARMS WITH LUMINAIRES.

POLES SHALL BE GALVANIZED STEEL WITH A MINIMUM WALL THICKNESS OF U.S. STANDARD 11 GAGE (.1196").

SECTION 657, POLES, OF THE STANDARD SPECIFICATIONS SHALL APPLY TO THIS DRAWING.

A PULL WIRE / ROPE SHALL BE INSTALLED IN EACH TROMBONE ARM RACEWAY DURING THE MANUFACTURING PROCESS.

THE SLIPFITTER END OF THE LUMINAIRE MAST ARM SHALL BE A NOMINAL 2 ⅜ INCHES IN OUTSIDE DIAMETER. THE STRAIGHT PORTION OF THE SLIPFITTER END OF THE LUMINAIRE MAST ARM SHALL BE A NOMINAL 12 INCHES IN LENGTH.

WHEN TRANSFORMER BASES ARE USED, WIRE CONNECTIONS SHALL BE MADE IN THE TRANSFORMER BASE.

1. 4" X 6" REINFORCED HANDHOLE AND COVER ASSEMBLY WITH TWO (2) ¼" X ¾" - 20 TPI , STAINLESS STEEL, HEX HEAD BOLTS.
2. SIGNAL FACE MOUNTING BRACKETS. MOUNT WITH CAP SCREWS AND BANDING.
3. GROMMETS. 1" CHASE NIPPLES OR 1" CLOSE CONDUIT NIPPLES WITH BUSHINGS SHALL BE PROVIDED FOR 1 ⅜" HOLE IN POLE SHAFT FOR WIRING.
4. SECURELY MOUNT DULL BLACK POLYCARBONATE BACKPLATES, PROJECTING 5" BEYOND ALL SIDES OF THE SIGNAL FACE HOUSING, PER MANUFACTURER'S RECOMMENDATIONS.
5. POLE MOUNTED SIGNAL FACES SHALL REQUIRE ONE OR MORE MOUNTING SPACERS UNDER THE TOP MOUNTING BRACKET(S) AS REQUIRED, TO PLUMB THE SIGNAL FACE.
6. CAST ALUMINUM TRANSFORMER BASE, WHEN REQUIRED.
7. FURNISH AND INSTALL VENTILATED, CAST METALLIC (ALUMINUM ALLOY) CAPS. FASTEN CAPS WITH ONE (1) ¼" X ¾" - 20 TPI STAINLESS STEEL, HEX HEAD BOLT.
8. SHIMMING, IF NEEDED, SHALL BE LOCATED BETWEEN THE CONCRETE FOUNDATION AND POLE.
9. USE 1 ½" ID NIPPLES ZINC-COATED RIGID METAL CONDUIT, LONG ENOUGH TO ACCOMMODATE FULL DEPTH THREADING INTO THE HEAD MOUNTING LOCK NUT IN ORDER TO TIGHTEN THE FACE, BUT THAT DO NOT INTERFERE WITH REFLECTOR CLOSURE. THREAD THE NIPPLE INTO THE MOUNTING BRACKET/ELBOW UNTIL TIGHT. USE APPROVED PINNACLE TYPE HARDWARE FROM A DEPARTMENT APPROVED MANUFACTURER TO CLOSE THE UNUSED 1 ½" OPENING IN SIGNAL FACES AND BRACKET ENDS.

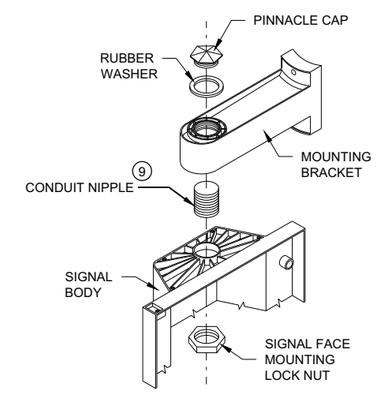

SIGNAL FACE MOUNTING DETAIL
(BANDED)

POLE MOUNTINGS FOR TRAFFIC SIGNALS AND LIGHTING UNITS, TYPE 4

STATE OF WISCONSIN
DEPARTMENT OF TRANSPORTAT

6

SDD 09E01 - 15c

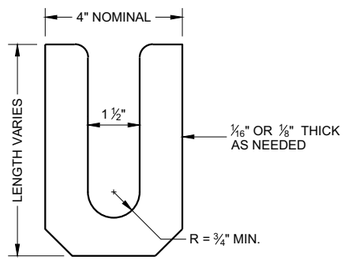

LEVELING SHIM (1)
SHALL BE ALUMINUM

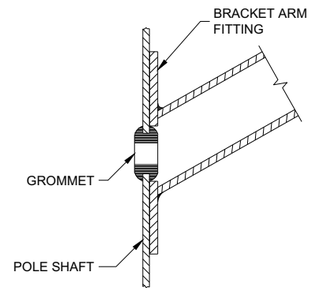

TYPICAL APPLICATION OF GROMMET IN POLE SHAFT

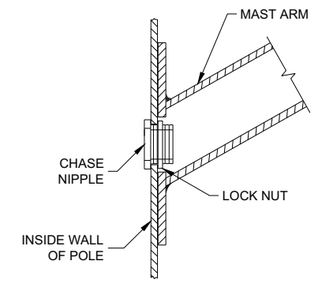

TYPICAL APPLICATION OF CHASE NIPPLE IN POLE SHAFT

GENERAL NOTES

CLAMP BOLT-NUT TIGHTENING TORQUE SHALL BE INDICATED BY INDENT STAMPING (1/2 INCH NUMERALS AND LETTERS) OR WEATHERPROOF PRINTING ON THE INSIDE OF THE CLAMP THAT IS WELDED TO THE ARM MEMBER.

(1) 4.5" I.D. FOR LUMINAIRE MAST ARM CLAMP. 6.625" I.D. FOR TROMBONE MAST ARM CLAMP.

(2) INDIVIDUAL BASE PLATE ANCHOR ROD COVERS. (4 REQUIRED)

(3) BASE PLATE SLOTTED TO ACCEPT 11" THROUGH 12" BOLT CIRCLE USING 1" DIAMETER ANCHOR RODS.

(4) LEVELING SHIMS, DESIGNED FOR THE PURPOSE, SHALL BE USED WHEN PLUMBING POLES. THE USE OF WASHERS IN LIEU OF PROPER LEVELING SHIMS IS NOT ACCEPTABLE. LEVELING SHIMS SHALL BE USED ONLY BETWEEN THE TOP OF THE CONCRETE BASE AND A METALLIC BASE PLATE.

SHIMS SHALL BE LONG ENOUGH AND WIDE ENOUGH TO COMPLETELY COVER THE AREA UNDER THE LENGTH AND WIDTH OF THE BASE MOUNTING FLANGE.

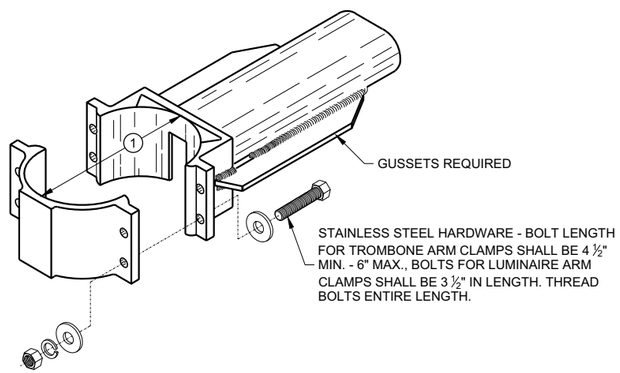

TYPICAL TROMBONE MAST ARM AND SINGLE LUMINAIRE MAST ARM MOUNTING CLAMP

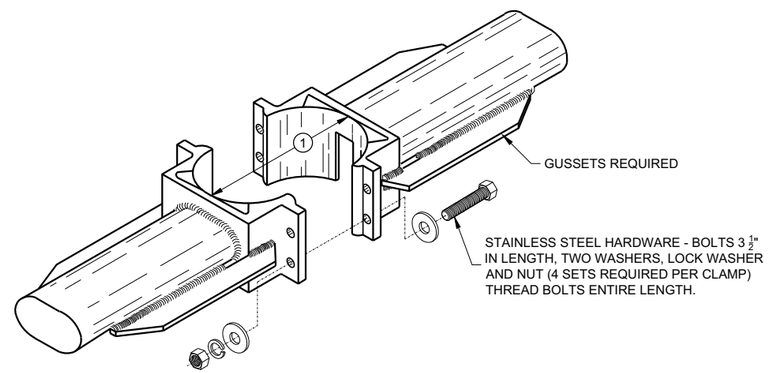

TYPICAL LUMINAIRE MAST ARM (DOUBLE) MOUNTING BRACKETS

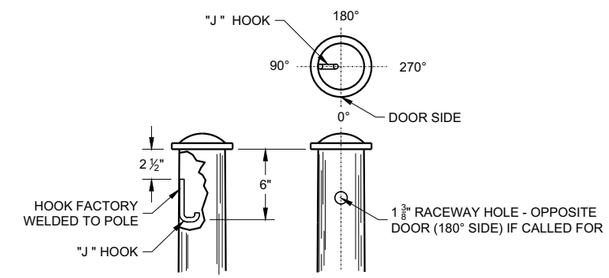

TYPICAL "J" HOOK LOCATION

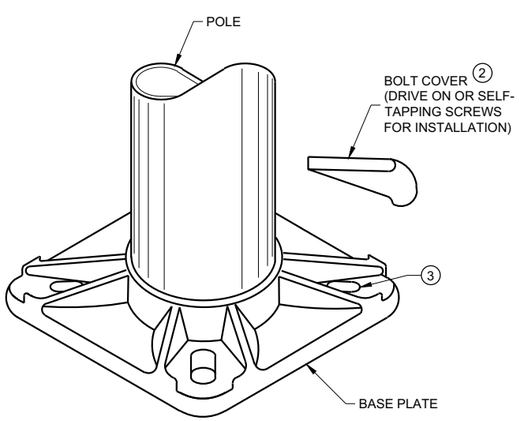

BASE PLATE

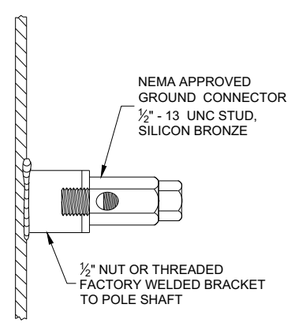

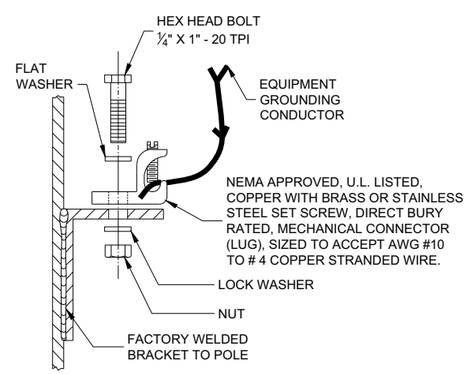

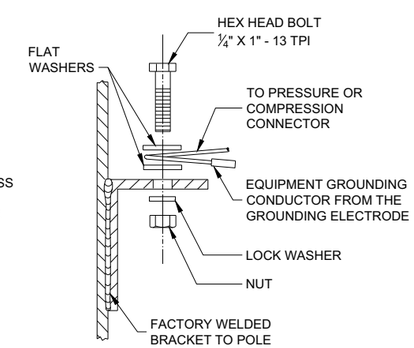

TYPICAL GROUNDING CONNECTIONS
NUT, BOLT AND WASHERS SHALL BE STAINLESS STEEL

HARDWARE DETAILS FOR POLE MOUNTING

STATE OF WISCONSIN
DEPARTMENT OF TRANSPORTATION

APPROVED
November 2018 /S/ Ahmet Demirbilek
DATE STATE ELECTRICAL ENGI

FHWA

6

SDD 09E01 - 15g

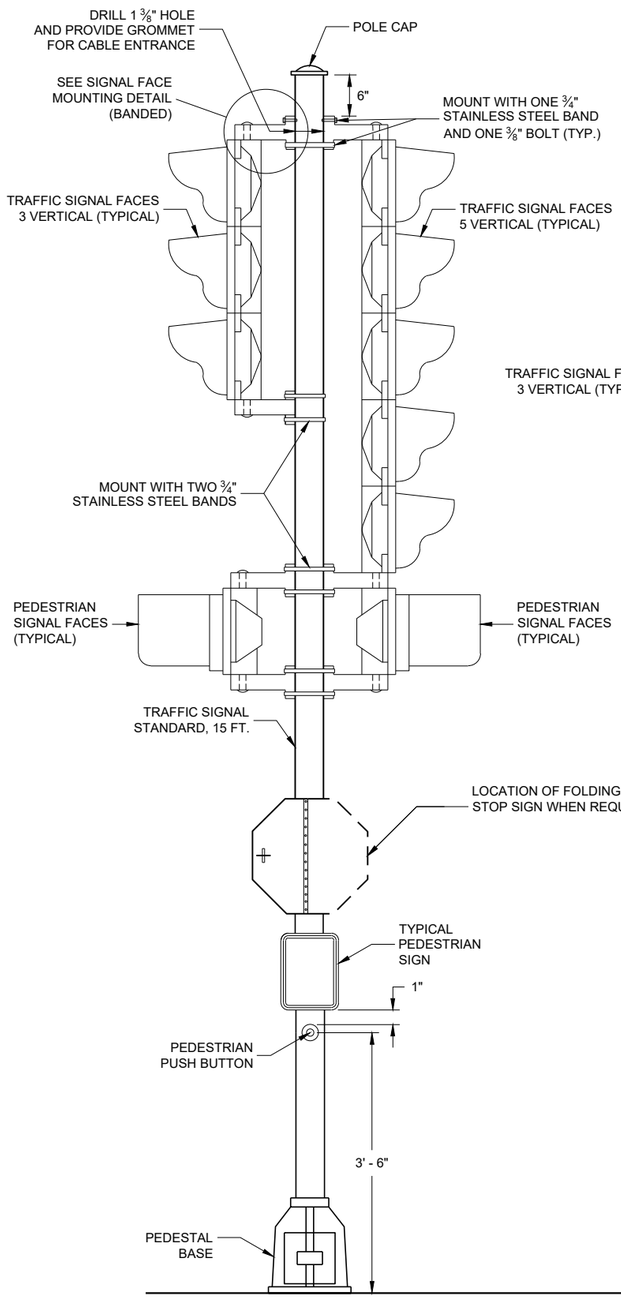

TRAFFIC SIGNAL STANDARD - 15 FT.

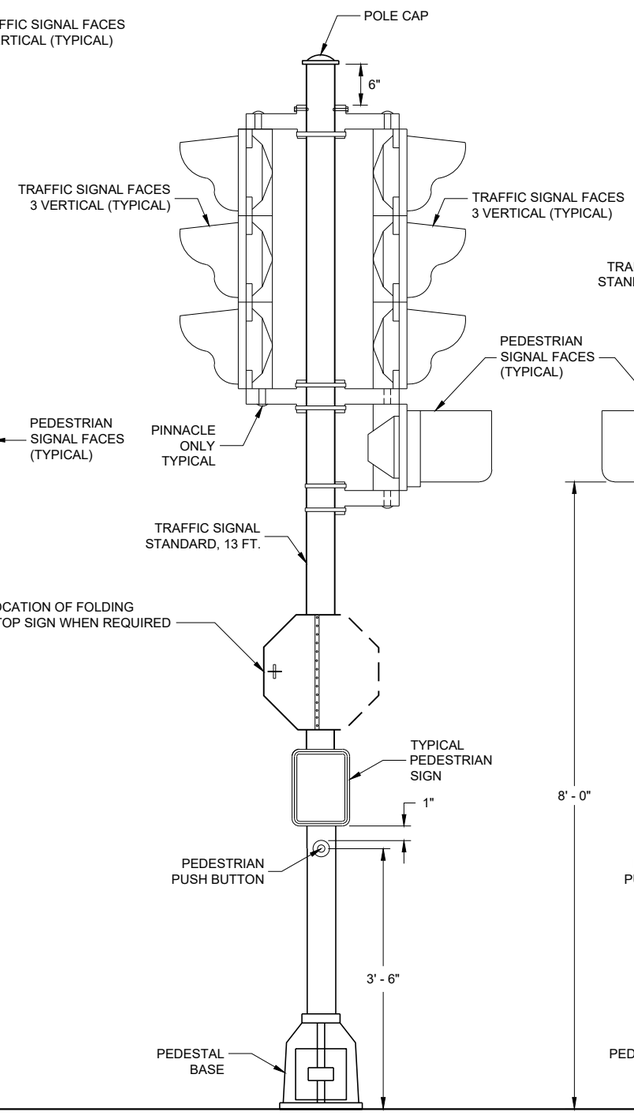

TRAFFIC SIGNAL STANDARD - 13 FT.

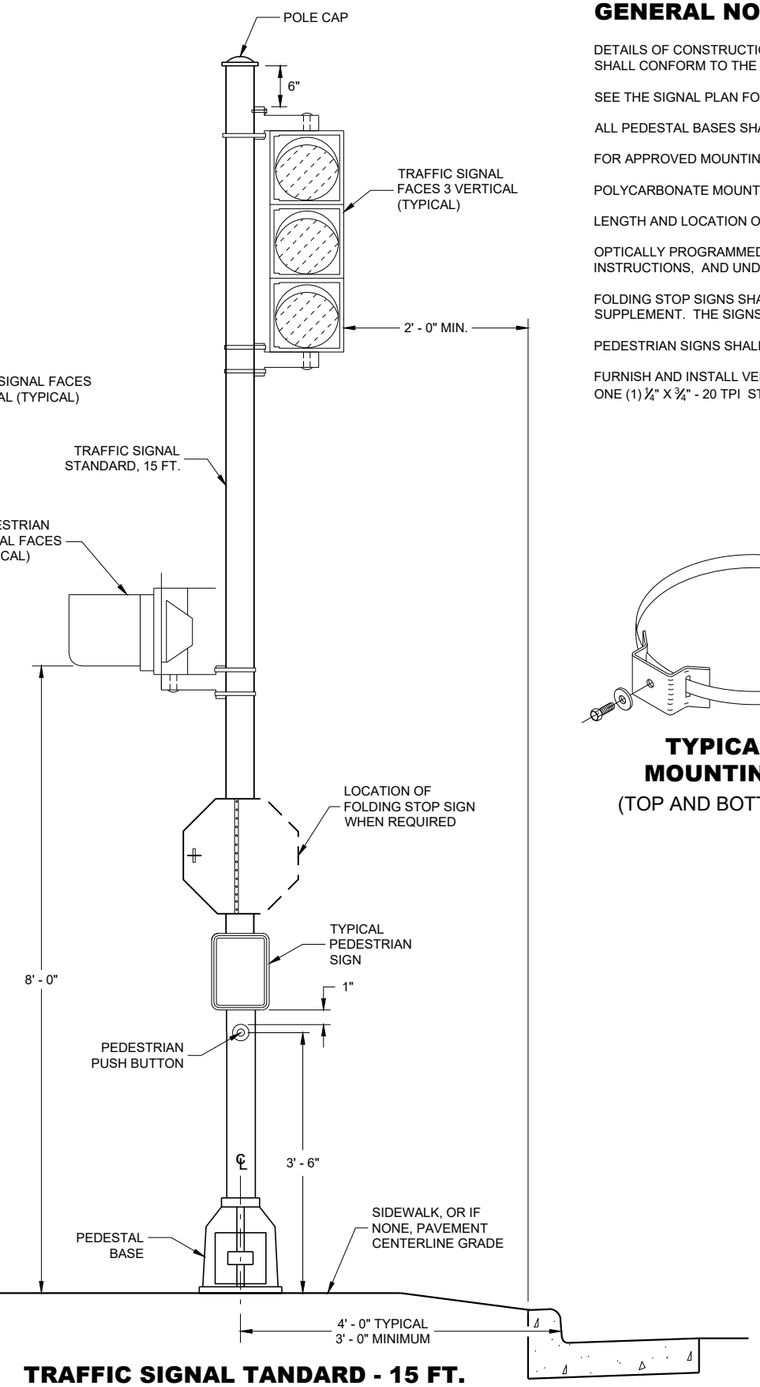

TRAFFIC SIGNAL TANDARD - 15 FT.
3M MOUNTING (TYPICAL)

GENERAL NOTES

DETAILS OF CONSTRUCTION, MATERIALS AND WORKMANSHIP NOT SHOWN ON THIS DRAWING SHALL CONFORM TO THE PERTINENT REQUIREMENTS OF THE CONTRACT.

SEE THE SIGNAL PLAN FOR REQUIRED SIGNAL FACE SIZES.

ALL PEDESTAL BASES SHALL BE MOUNTED ON CONCRETE BASE - TYPE 1.

FOR APPROVED MOUNTING HARDWARE, SEE THE CONTRACT SPECIAL PROVISIONS.

POLYCARBONATE MOUNTING BRACKETS SHALL BE USED.

LENGTH AND LOCATION OF TRAFFIC SIGNAL STANDARDS SHALL BE AS SHOWN ON THE PLANS.

OPTICALLY PROGRAMMED SIGNAL FACES SHALL BE MASKED IN ACCORDANCE WITH MANUFACTURERS INSTRUCTIONS, AND UNDER THE DIRECTIONS OF THE REGION TRAFFIC ENGINEER.

FOLDING STOP SIGNS SHALL BE IN ACCORDANCE WITH THE MUTCD AND/OR THE LATEST WISCONSIN SUPPLEMENT. THE SIGNS SHALL BE SIZED AND LOCATED AS CALLED FOR IN IN THE PLANS.

PEDESTRIAN SIGNS SHALL BE AS DESIGNATED IN THE PLANS.

FURNISH AND INSTALL VENTILATED, CAST, METALLIC (ALUMINUM ALLOY) CAPS. FASTEN CAPS WITH ONE (1) 1/4" X 3/4" - 20 TPI STAINLESS STEEL, HEX HEAD BOLT.

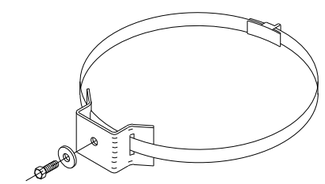

TYPICAL SIGN MOUNTING BAND
(TOP AND BOTTOM OF SIGN)

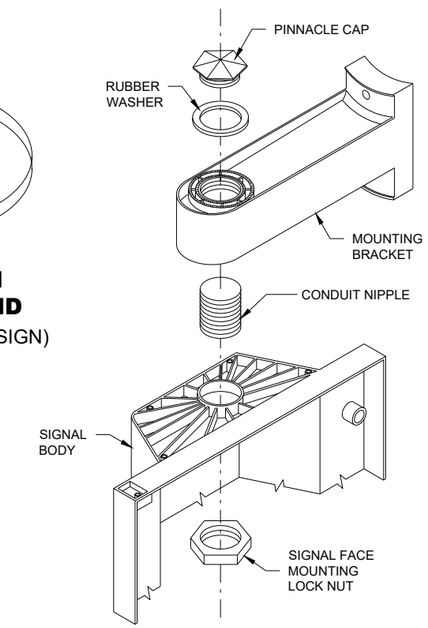

SIGNAL FACE MOUNTING DETAIL (BANDED)

TRAFFIC SIGNAL STANDARD POLY BRACKET MOUNTINGS (TYPICAL) 13 FT. OR 15 FT.

STATE OF WISCONSIN
DEPARTMENT OF TRANSPORTATION

APPROVED
2/28/2013 — DATE
/S/ Ahmet Demirbilek — STATE ELECTRICAL ENGI
FHWA

6

6

SDD 09E06 - 05

SDD 09E06 - 05

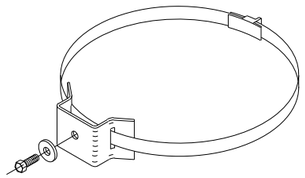

TYPICAL SIGN MOUNTING BAND
(TOP AND BOTTOM OF SIGN)

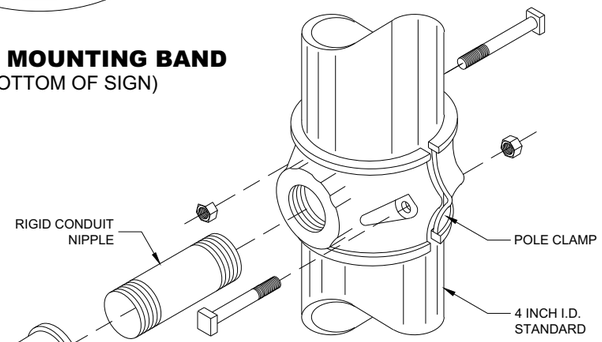

(ORNAMENTAL)

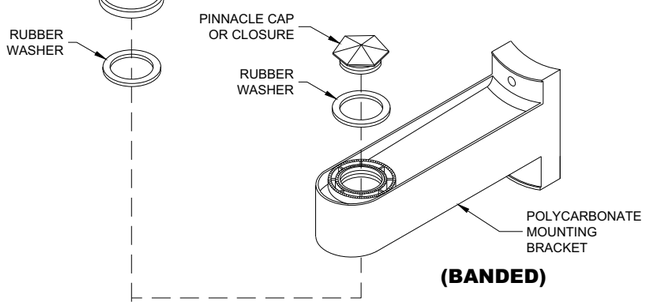

(BANDED)

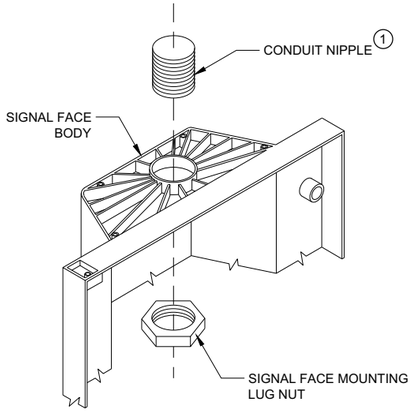

SIGNAL FACE MOUNTING DETAILS

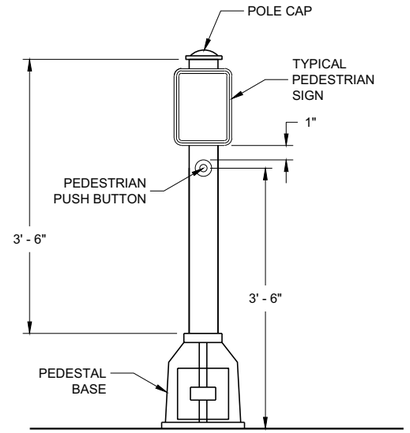

PEDESTRIAN PUSH BUTTON TYPICAL MOUNTING

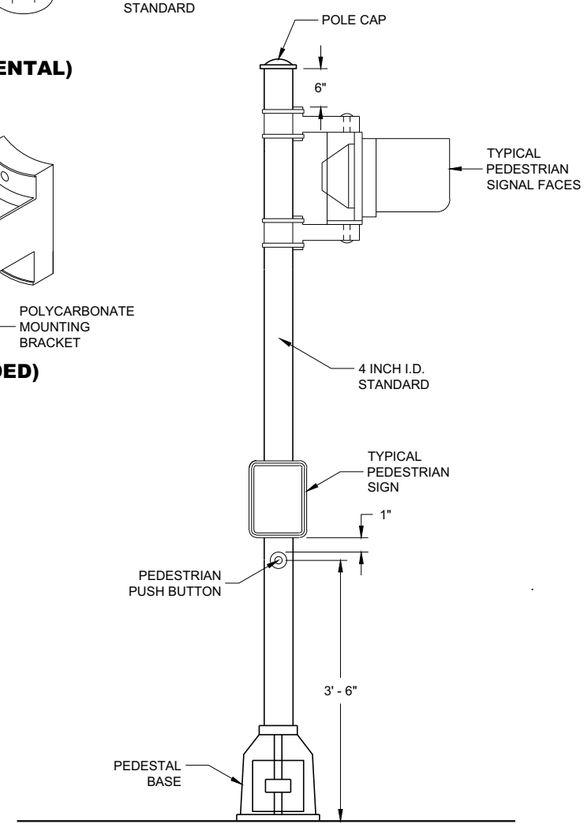

PEDESTRIAN FACE STANDARD - 10 FT.
(WALK - DON'T WALK)

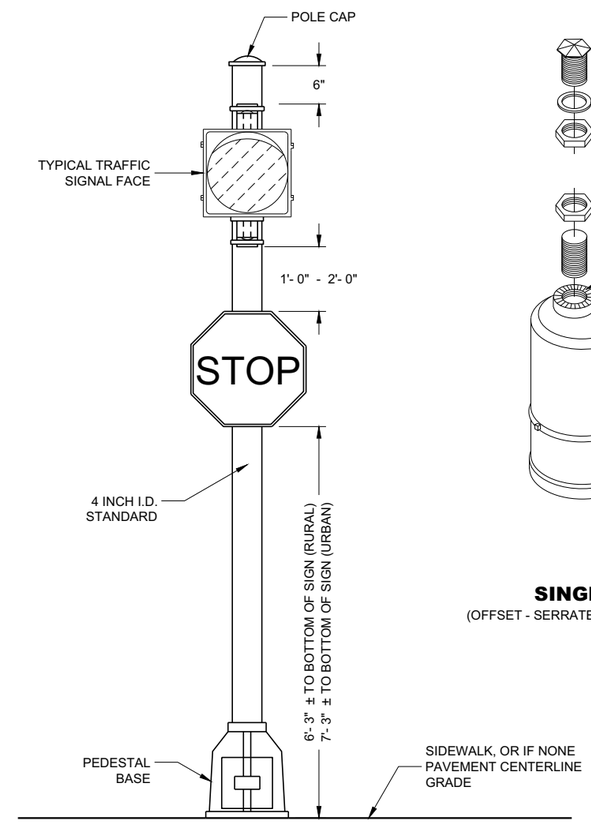

STANDARD FLASHER
10 FOOT, 13 FOOT OR 15 FOOT AS REQUIRED

GENERAL NOTES

DETAILS OF CONSTRUCTION, MATERIALS AND WORKMANSHIP NOT SHOWN ON THIS DRAWING SHALL CONFORM TO THE PERTINENT REQUIREMENTS OF THE CONTRACT.

SEE THE SIGNAL PLAN FOR REQUIRED SIGNAL FACE SIZES.

LOCATIONS SHALL BE AS SHOWN ON THE PLANS, UNLESS APPROVED BY THE ENGINEER IN THE FIELD.

ALL PEDESTAL BASES SHALL BE MOUNTED ON CONCRETE BASE - TYPE 1.

FOR APPROVED MOUNTING HARDWARE, SEE THE CONTRACT SPECIFICATIONS.

POLYCARBONATE SIGNAL FACE MOUNTING BRACKETS SHALL BE USED UNLESS ORNAMENTAL POLE CLAMPS ARE SPECIFIED.

LENGTH OF TRAFFIC STANDARDS SHALL BE AS SHOWN ON THE PLANS.

MOUNTINGS AND BRACKETS SHALL BE AS SHOWN ON THE PLANS OR DESCRIBED IN THE SPECIAL PROVISIONS (BY THE REGION TRAFFIC ENGINEER).

PEDESTRIAN SIGNS SHALL BE AS DESIGNATED IN THE PLANS.

FURNISH AND INSTALL VENTILATED, CAST, METALLIC (ALUMINUM ALLOY) CAPS. FASTEN CAPS WITH ONE (1) ¼" X ¾" - 20 TPI STAINLESS STEEL, HEX HEAD BOLT.

1 USE 1 ½" ID NIPPLES ZINC-COATED RIGID METAL CONDUIT, LONG ENOUGH TO ACCOMMODATE FULL DEPTH THREADING INTO THE HEAD MOUNTING LOCK NUT IN ORDER TO TIGHTEN THE FACE, BUT THAT DO NOT INTERFERE WITH REFLECTOR CLOSURE. THREAD THE NIPPLE INTO THE MOUNTING BRACKET/ELBOW UNTIL TIGHT. USE APPROVED PINNACLE TYPE HARDWARE FROM A DEPARTMENT APPROVED MANUFACTURER TO CLOSE THE UNUSED 1 ½" OPENING IN SIGNAL FACESAND BRACKET ENDS.

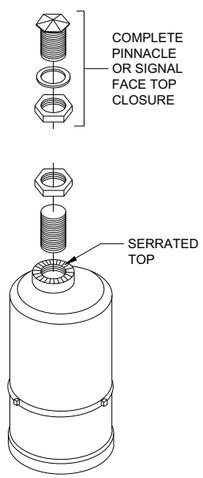

SINGLE
(OFFSET - SERRATED MOUNTING)

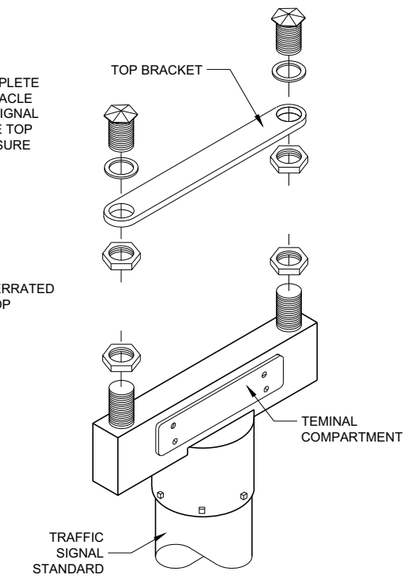

DOUBLE
(SERRATED MOUNTING)

SLIPFITTERS

TRAFFIC SIGNAL STANDARD PEDESTRIAN AND FLASHER TYPICAL MOUNTING DETAILS

STATE OF WISCONSIN
DEPARTMENT OF TRANSPORTATION

APPROVED
November 2018 /S/ Ahmet Demirbilek
DATE STATE ELECTRICAL ENGI
FHWA

6

SDD 09E07 - 06

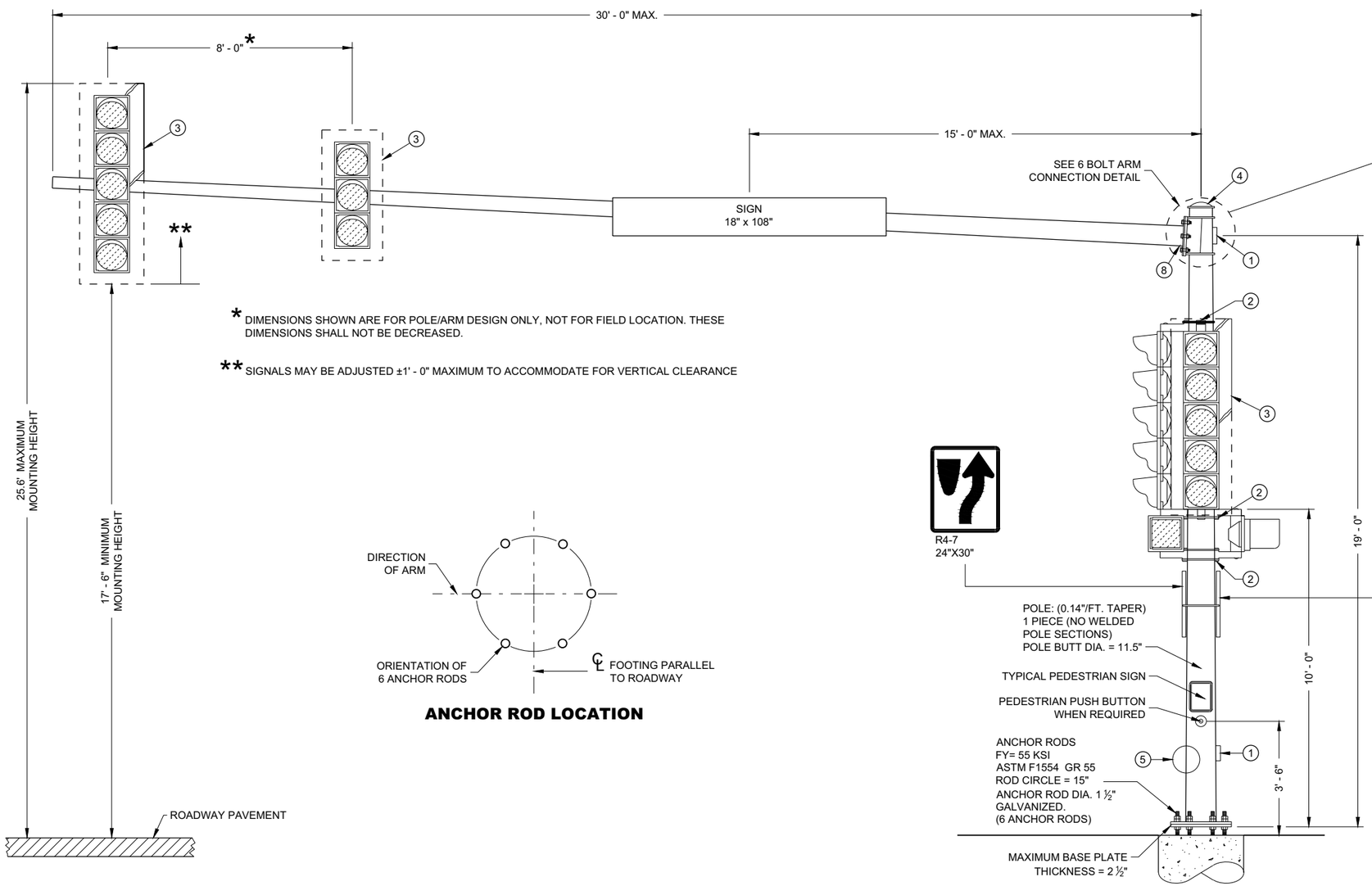

* DIMENSIONS SHOWN ARE FOR POLE/ARM DESIGN ONLY, NOT FOR FIELD LOCATION. THESE DIMENSIONS SHALL NOT BE DECREASED.

** SIGNALS MAY BE ADJUSTED ±1' - 0" MAXIMUM TO ACCOMMODATE FOR VERTICAL CLEARANCE

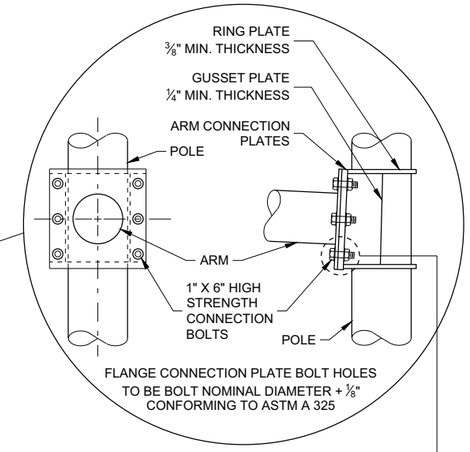

6 BOLT ARM CONNECTION DETAIL

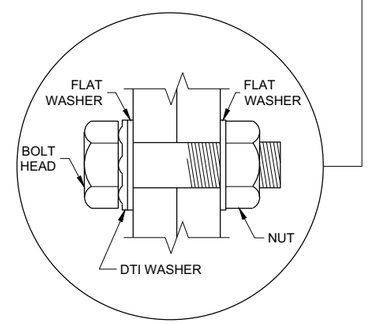

RECOMMENDED BOLT ASSEMBLY DETAIL

ANCHOR ROD LOCATION

TYPE 9 POLE
15' - 30' MONOTUBE ARM
(MAXIMUM LOAD)

6

6

SDD 09E08 - 09a

SDD 09E08 - 09a

TYPE 9 POLE
15' - 30' MONOTUBE ARM

STATE OF WISCONSIN
DEPARTMENT OF TRANSPORTATION

APPROVED
August 2020 — DATE
/S/ Ahmet Demirbilek — STATE ELECTRICAL ENGI
FHWA

GENERAL NOTES

DETAILS OF CONSTRUCTION NOT SHOWN ON THIS DRAWING SHALL CONFORM TO THE PERTINENT REQUIREMENTS OF THE CONTRACT.

POLE TYPES 9 AND 10 ARE FOR ARM LENGTHS 15 FOOT TO 30 FOOT.

POLE TYPES 9 SPECIAL AND 10 SPECIAL ARE FOR ARM LENGTHS 35 FOOT, 40 FOOT, AND 45 FOOT.

POLE TYPES 12 AND 13 ARE FOR ARM LENGTHS 35 FOOT TO 55 FOOT.

MONOTUBE POLES AND ARMS SHALL BE GALVANIZED STEEL.

RING STIFFENED BUILT UP BOX TYPE OF ATTACHMENT FOR TRAFFIC SIGNAL ARM.

ONE PIECE POLE CONSTRUCTION (NO WELDED POLE SECTIONS).

STANDARD STRAIGHT ARM DESIGN (3% ± RISE).

SECTION 657, POLES OF THE STANDARD SPECIFICATION SHALL APPLY TO THIS DRAWING.

PROVIDE WIREWAY THRU POLE WALL AND ARM CONNECTION PLATES. PROVIDE ROUND, SMOOTH INSIDE SURFACE.

MANUFACTURER'S SUBMITTED POLE DESIGNS AND DRAWINGS SHALL BE SIGNED AND STAMPED BY A REGISTERED PROFESSIONAL ENGINEER AND CERTIFIED AS BEING IN COMPLIANCE WITH THE AASHTO "LRFD SPECIFICATIONS FOR STRUCTURAL SUPPORTS FOR HIGHWAY SIGNS, LUMINAIRES AND TRAFFIC SIGNAL 2015 1ST EDITION (INCLUDING INTERIM REVISIONS)" AND ALL PERTINENT WISDOT SPECIFICATIONS AND DRAWINGS FOR THE LIGHTING STRUCTURES AS FOLLOWS:

CATEGORY III FATIGUE LOADS OF GALLOPING, TRUCK GUSTS (AT 45 MPH VEHICLE VELOCITY) AND NATURAL WIND GUSTS FOR DESIGN OF TYPE 9 AND TYPE 10 STRUCTURES.

CATEGORY II FATIGUE LOADS OF TRUCK GUSTS (AT 45 MPH VEHICLE VELOCITY) AND NATURAL WIND GUSTS FOR DESIGN OF TYPE 9 SPECIAL AND TYPE 10 SPECIAL STRUCTURES. IN LIEU OF DESIGNING FOR GALLOPING, A VIBRATION DAMPER MITIGATION DEVICE IS REQUIRED TO BE SUPPLIED AND INSTALLED AT THE END OF THE MAST ARM.

CATEGORY II FATIGUE FATIGUE LOADS OF GALLOPING, TRUCK GUSTS (AT 45 MPH VEHICLE VELOCITY) AND NATURAL WIND GUSTS FOR DESIGN OF TYPE12 AND TYPE 13 STRUCTURES.

115 MPH (700 YEAR MRI BASIC WIND SPEED).

SECURE THE OPENING BELOW THE BASE PLATE WITH STAINLESS STEEL OR GALVANIZED STEEL MESH AND SECURE THE MESH WITH ¾" STAINLESS STEEL BANDING AROUND THE LEVELING NUTS.

INDENT PRINT (NOMINAL ½" HIGH) THE POLE LENGTH AND FIRST TWO LETTERS OF THE MANUFACTURERS NAME ON TWO SIDES OF THE BASE PLATE 180 DEGREES APART, BEFORE GALVANIZING. THE ARM SHALL BE IDENTIFIED WITH THE SAME INFORMATION BY INDENT PRINT.

SIGNAL FACE SHALL BE MOUNTED 6 INCHES (NOMINAL) FROM THE END OF THE MONOTUBE ARM OR AS SHOWN ON THE PLAN CONSTRUCTION DETAIL OR A S DIRECTED BY THE PROJECT ENGINEER/ELECTRICAL OPERATIONS PERSONNEL. MOUNT ALL LIKE HEAD AT SAME ELEVATION.

SIGN MOUNTING BRACKETS SHALL BE FURNISHED IN ACCORDANCE WITH SECTION 637 OF THE STANDARD SPECIFICATIONS FOR HIGHWAY AND STRUCTURE CONSTRUCTION.

1. DESIGN FOR MAXIMUM ALLOWABLE HAND HOLE WITH COVER ASSEMBLY WITH TWO ¼" X ¾" - 20 TPI STAINLESS STEEL HEX HEAD BOLTS.
2. SIGNAL MOUNTING BRACKETS FOR POLE MOUNTING, MOUNT WITH CAP SCREW AND BANDING (SEE SPECIFICATION SECTION 658).
3. SECURELY MOUNT BACK PLATES, PROJECTING 5" BEYOND ALL SIDES OF THE SIGNAL FACE HOUSING, PER MANUFACTURERS RECOMMENDATIONS.
4. THE TOP OF THE POLE SHAFT AND THE MONOTUBE ARM SHALL BE EQUIPPED WITH A REMOVABLE, VENTILATED CAP HELD SECURELY IN PLACE WITH SET SCREWS.
5. FACTORY WELDED BRACKET FOR GROUNDING LUG, OPPOSITE HAND HOLD, (LUG AND HARDWARE PAID UNDER SEPARATE ITEM). PROVIDE HOLE IN BRACKET FOR ¼" X ¾" - 20 TPI STAINLESS STEEL HEX HEAD BOLT.
6. FACTORY WELDED "J" HOOK FOR STRAIN RELIEF FOR POLE LUMINAIRE WIRE.
7. INSTALL STRUCTURAL IDENTIFICATION PLAQUES.

   STRUCTURAL IDENTIFICATION PLAQUES SHALL BE PLACED ON THE POLES IN THE SAME DIRECTION AS THE ARM.

   MOUNTING HEIGHT SHALL BE 6' - 0" ABOVE THE CURB OR SHOULDER. ADJUST IF IT IS KNOWN THAT REQUIRED TRAFFIC SIGNS WILL BE OBSTRUCTED.
8. FACTORY DRILLED ½" DRAIN HOLE 2" FROM FLANGE CONNECTION PLATE.

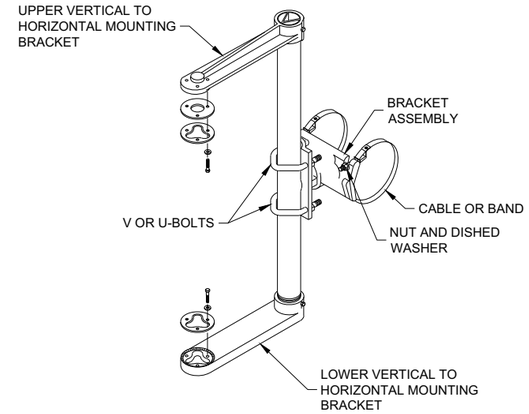

SIGNAL FACE MOUNTING BRACKET DETAIL FOR MONOTUBE ARM

(MOUNT PER MANFACTURER'S RECOMMENDATION)

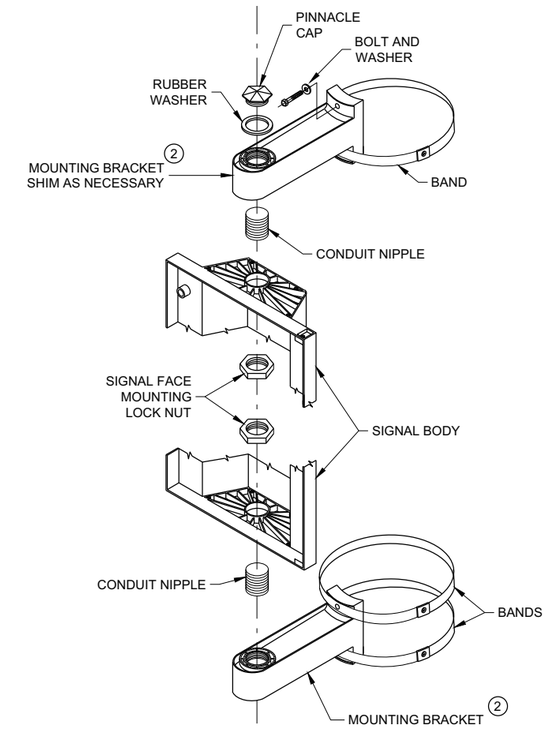

SIGNAL FACE VERTICAL MOUNTING DETAIL

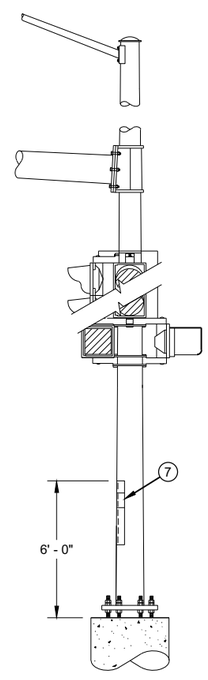

STRUCTURAL IDENTIFICATION PLAQUE PLACEMENT

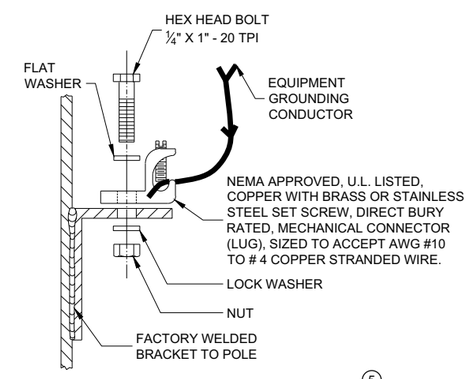

TYPICAL GROUNDING CONNECTIONS 5

NUT, BOLT AND WASHERS SHALL BE STAINLESS STEEL

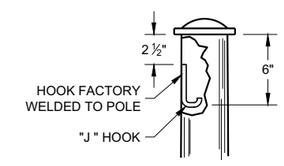

TYPICAL "J" HOOK WIRE SUPPORT 6

GENERAL NOTES AND HARDWARE FOR TYPES 9,10, 9/10 SPECIAL, 12 AND 13 POLES WITH MONOTUBE ARMS

STATE OF WISCONSIN
DEPARTMENT OF TRANSPORTATION

APPROVED
August 2020 — DATE
/S/ Ahmet Demirbilek — STATE ELECTRICAL ENGINEER
FHWA

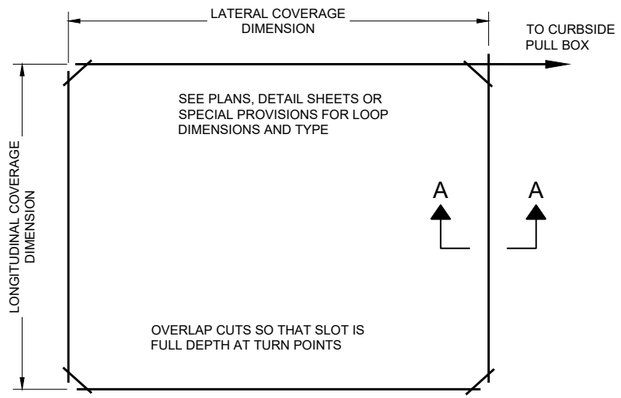

LOOP WIRE SLOT CONSTRUCTION

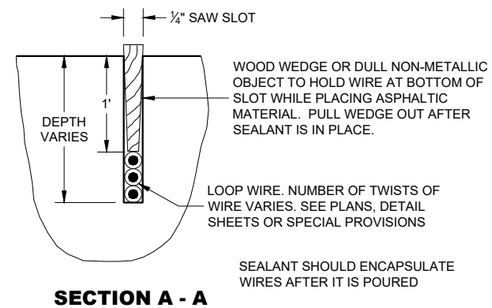

SECTION A - A
LOOP AND LEAD-IN WIRES IN PAVEMENT

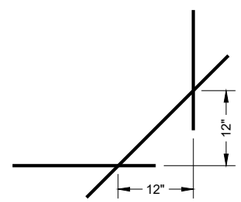

EXPANDED VIEW SAW CUT CORNERS

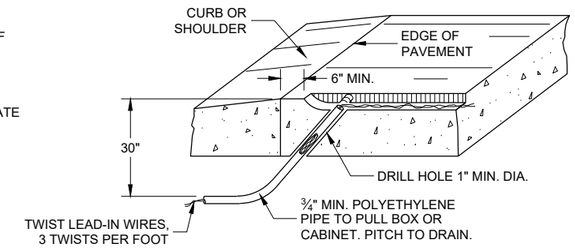

LOOP LEAD-IN WIRES THROUGH PAVEMENT

GENERAL NOTES

DETAILS OF CONSTRUCTION, MATERIALS AND WORKMANSHIP NOT SHOWN ON THIS DRAWING SHALL CONFORM TO THE PERTINENT REQUIREMENTS OF THE CONTRACT.

THE SLOTS IN THE PAVEMENT SHALL BE CUT TO DIMENSION WITH A SAW. THE SLOTS SHALL BE CLEANED FREE OF DIRT, DUST, MOISTURE AND DEBRIS PRIOR TO INSTALLATION OF THE WIRE.

AFTER PLACING THE WIRE IN THE SLOT, FILL THE SLOT WITH AN ASPHALTIC MATERIAL IN ACCORDANCE WITH THE "SPECIFICATION FOR JOINT SEALANTS, HOT POURED, FOR CONCRETE AND ASPHALT PAVEMENTS, ASTM DESIGNATION: D6690".

IN THE EVENT ASPHALTIC MATERIAL IS UNAVAILABLE, A FLEXIBLE TYPE EPOXY MAY BE USED AS A LOOP SLOT FILLER. THE LOOP SLOT SHALL BE CLEAN AND DRY BEFORE EPOXY IS INSTALLED. EPOXY USE SHALL BE APPROVED BY THE DISTRICT TRAFFIC ENGINEER AND THE FURNISHED EPOXY SHALL BE INSTALLED ONLY AFTER WRITTEN APPROVAL BY THE BY THE PROJECT ENGINEER.

THE TWO SINGLE CONDUCTOR LOOP WIRES SHALL BE TWISTED TOGETHER AT A RATE OF THREE TWISTS PER FOOT FROM THE PAVEMENT EDGE TO THE SPLICE CONNECTION WITH THE LOOP LEAD-IN CABLE.

LEAD-IN CABLES AND LOOP LEAD-IN WIRES SHALL BOTH BE CUT TO 6 FEET IN LENGTH AT THE SPLICING PULL BOX.

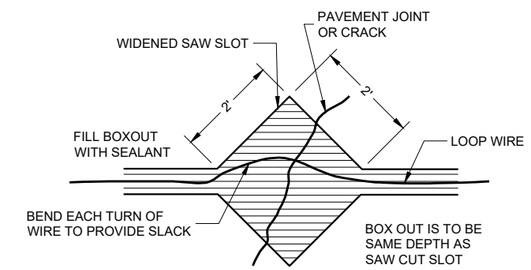

PLAN VIEW

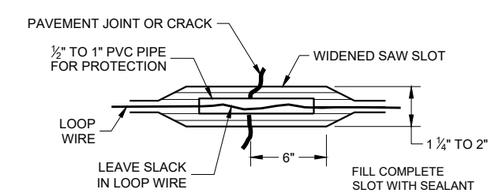

FRONT VIEW

LOOP WIRE INSTALLATION ACROSS PAVEMENT JOINT OR CRACK

CENTER LOOP IN LANE

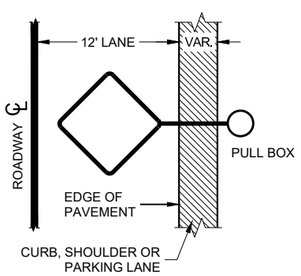

LOOP WIRE SLOT PLAN

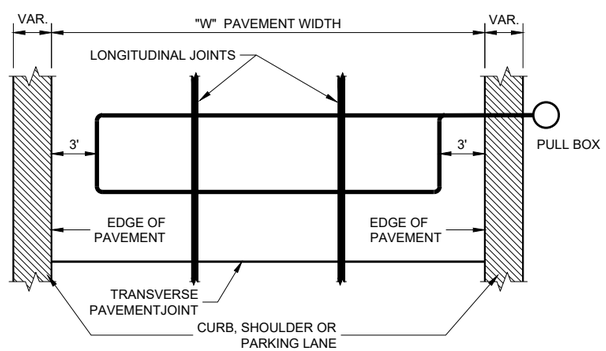

LOOP WIRE SLOT PLAN

PLACE LOOPS IN CENTER OF LANES

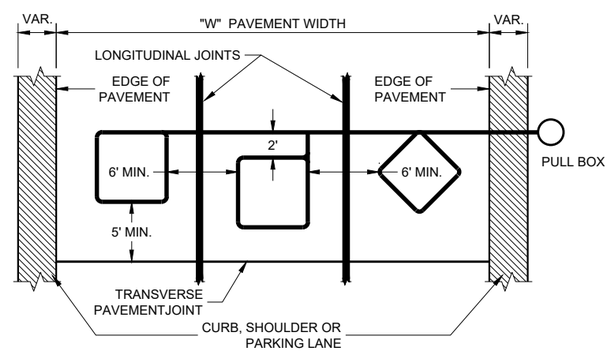

LOOP WIRE SLOT PLAN

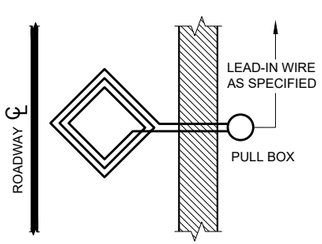

LOOP WIRE LAY CONSTRUCTION DETAILS

SINGLE LANE LOOP DETECTION

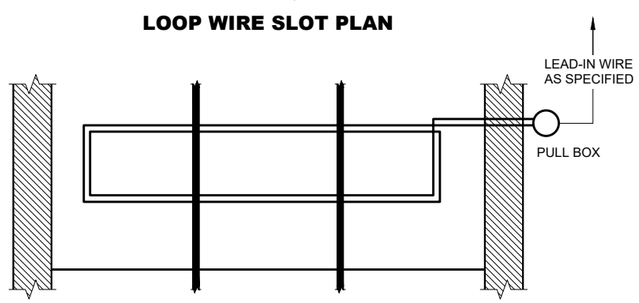

LOOP WIRE LAY CONSTRUCTION DETAILS

MULTIPLE LANE MASS LOOP DETECTION

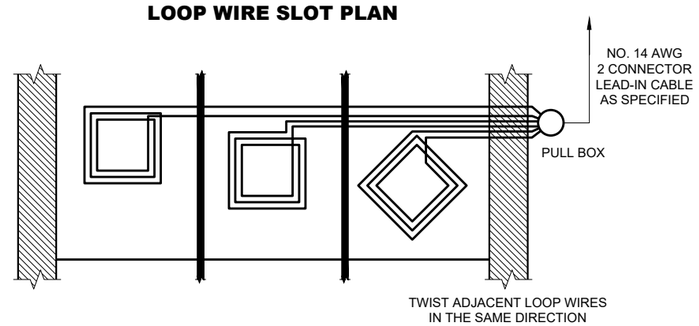

LOOP WIRE LAY CONSTRUCTION DETAILS

MULTIPLE LANE DETECTION BY INDIVIDUAL LANES. TYPICAL STYLE LOOPS

DETAILS FOR THE INSTALLATION OF TEMPORARY TRAFFIC LOOP DETECTOR WIRES IN ANY EXISTING PAVEMENT

STATE OF WISCONSIN
DEPARTMENT OF TRANSPORTATION

APPROVED
June 2015 — DATE
/S/ Ahmet Demirbilek — STATE ELECTRICAL ENGI
FHWA

6

SDD 09F01 - 04

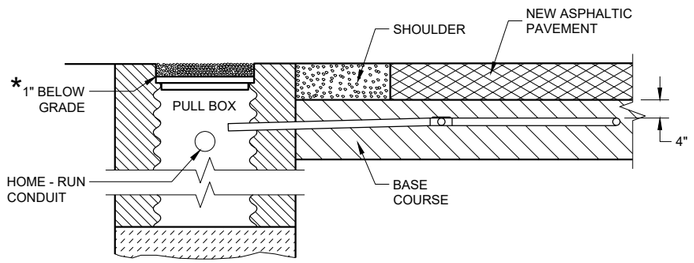

SECTION A - A
NO CURB AND GUTTER

LOOP DETECTOR INSTALLATION DETAIL

* RECESS PULL BOX SO THAT THE COVER IS 3" BELOW GRADE IN SHOULDER AREAS OF CRUSHED AGGREGATE. BACKFILL OVER COVER WITH THE CRUSHED AGGREGATE TO BRING THE AREA TO GRADE LEVEL.

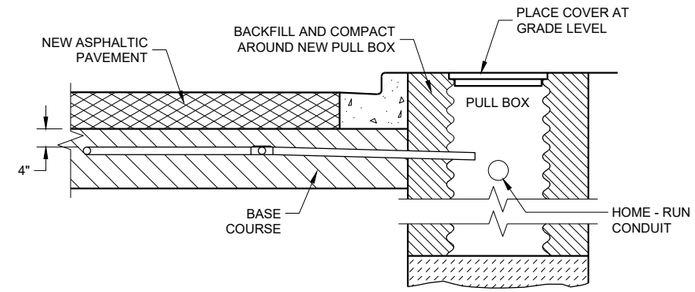

SECTION B - B
CURB AND GUTTER

LOOP DETECTOR INSTALLATION DETAIL

GENERAL NOTES

DETAILS OF CONSTRUCTION, MATERIALS AND WORKMANSHIP NOT SHOWN ON THIS DRAWING SHALL CONFORM TO THE PERTINENT REQUIREMENTS OF THE CONTRACT.

PITCH LEAD OUT CONDUIT TO DRAIN TO ROADSIDE PULL BOX.

LOOP SIZE, LOCATION, NUMBER OF TURNS OF WIRE AND ASSOCIATED SIGNAL PHASE SHALL BE AS SHOWN ON THE PLANS.

SPLICES SHALL BE INSTALLED BY USING CAST IN PLACE SPLICE KITS LISTED ON THE DEPARTMENTS APPROVED PRODUCTS LIST OR AN ENGINEER APPROVED EQUAL. NON-INSULATED BUTT SPLICES TO FIT #12 AWG STRANDED WIRE SHALL BE USED. SPLICES SHALL BE SOLDERED AND INSULATED FROM EACH OTHER AS PER INSTRUCTIONS INCLUDED IN THE SPLICE KIT.

MEASURE GROUND RESISTANCE USING A MEGGER. REPLACE LOOP WIRE NOT ATTAINING A READING OF INFINITY TO GROUND.

AFTER SPLICING THE LOOP WIRE TO THE LOOP LEAD-IN CABLE, THE CONTRACTOR SHALL MEASURE INDUCTANCE, GROUND RESISTANCE AND WIRE RESISTANCE AT THE CABINET END OF THE LEAD-IN CABLE AND FURNISH A COPY OF THE READING TO THE PROJECT ENGINEER FOR EVALUATION.

LOOP DETECTOR LEADS SHALL BE IDENTIFIED WITH THEIR ASSOCIATED LOOP BY USE OF WATERPROOF TAGS AT BOTH ENDS OF THE CABLE. A LISTING OF THE CABLE IDENTIFICATION PER INDIVIDUAL LOOP LEAD-IN SHALL BE PLACED IN THE CABINET.

THE #12 AWG LOOP WIRE FROM THE LOOP TO THE ROADSIDE PULL BOX, SHALL BE HAND TWISTED AT LEAST 3 TWISTS PER FOOT BEFORE INSTALLATION.

SPLICES OF LOOP WIRE TO LEAD-IN CABLE SHALL BE MADE ONLY IN PULL BOXES AT THE SIDE OF THE ROAD.

THE #12 AWG LOOP WIRE SHALL BE INSTALLED FROM THE ROADSIDE PULL BOX, THROUGH THE LOOP DUCT, BACK TO THE ROADSIDE PULL BOX, AND BE INSTALLED IN ONE NON-SPLICED, CONTINUOUS LENGTH.

PROTECTION OF THE PULL BOX IN THE BASE COURSE, AND THE RELATED CONDUITS SHALL BE REQUIRED AFTER INSTALLATION AND BEFORE NEW CONCRETE PAVEMENT IS POURED.

PROTECTION OF THE PULL BOX AND CONDULET SHALL BE REQUIRED AFTER THE ASPHALTIC PAVEMENT IS PLACED.

WHEN MULTIPLE LAYERS OF ASPHALTIC PAVEMENT ARE TO BE PLACED, LOOPS MAY BE INSTALLED BY SAWING A TWO INCH WIDE SLOT IN THE FIRST LAYER, DIG OUT THE ASPHALTIC MATERIAL AND BASE COURSE, PLACE THE LOOP, FILL THE SLOT WITH BASE COURSE MATERIAL AND NEW ASPHALTIC MATERIAL AND TAMP THE ASPHALTIC MATERIAL IN PLACE.

SHOULD TRAFFIC BE ALLOWED TO USE THE AREA OF ROADWAY WITH THE NEWLY INSTALLED LOOP BEFORE THE PLACEMENT OF THE NEXT LAYER OF ASPHALTIC PAVEMENT, THE SLOT/PAVEMENT OPENING SHALL BE SEALED WITH HOT POURED ELASTIC TYPE MATERIAL CONFORMING TO THE REQUIREMENTS OF THE "SPECIFICATION FOR JOINT SEALANTS, HOT POURED, FOR CONCRETE AND ASPHALT PAVEMENTS, ASTM DESIGNATION: D3405".

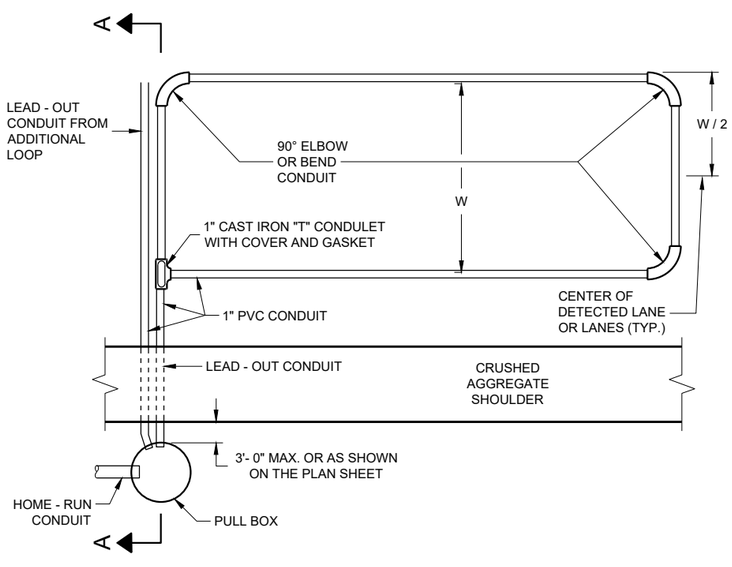

TYPICAL PLAN OF LOOP DETECTOR

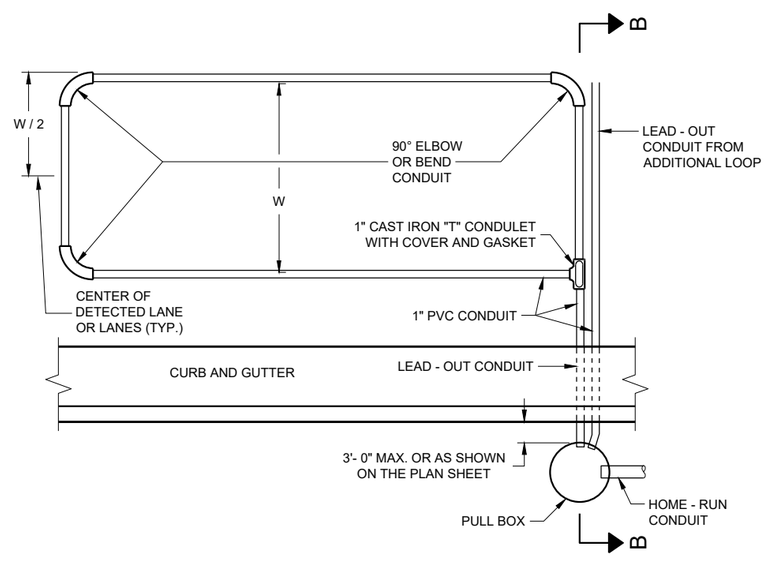

TYPICAL PLAN OF LOOP DETECTOR

LOOP DETECTOR PLACED IN CRUSHED AGGREGATE BASE (NEW ASPHALTIC PAVEMENT)

STATE OF WISCONSIN
DEPARTMENT OF TRANSPORTATION

APPROVED
September 2014 /S/ Ahmet Demirbilek
DATE STATE ELECTRICAL ENGI
FHWA

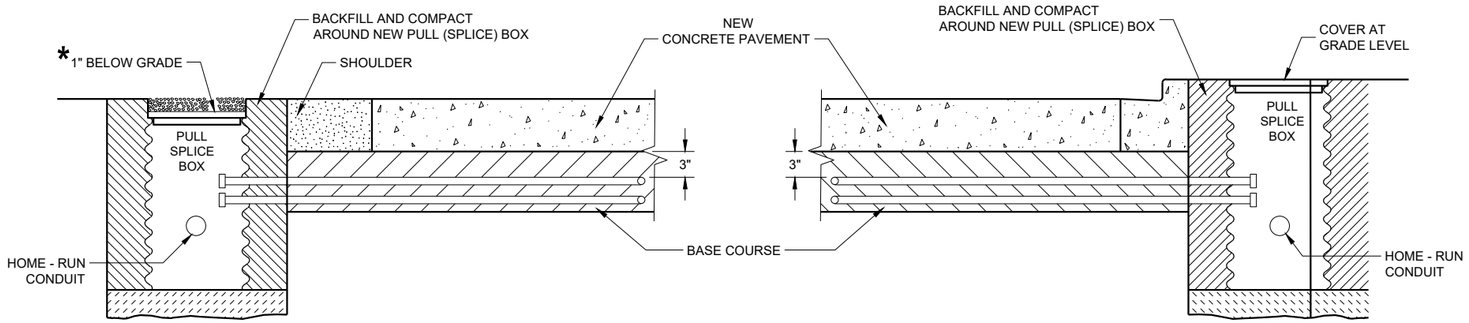

SECTION A - A
NO CURB AND GUTTER

SECTION B - B
CURB AND GUTTER

*RECESS PULL (SPLICE) BOX SO THAT THE COVER IS 3" BELOW GRADE IN SHOULDER AREAS OF CRUSHED AGGREGATE. BACKFILL OVER COVER WITH THE CRUSHED AGGREGATE TO BRING THE AREA TO GRADE LEVEL.

LOOP DETECTOR INSTALLATION DETAIL

GENERAL NOTES

DETAILS OF CONSTRUCTION, MATERIALS AND WORKMANSHIP NOT SHOWN ON THIS DRAWING SHALL CONFORM TO THE PERTINENT REQUIREMENTS OF THE CONTRACT.

PITCH LEAD OUT CONDUIT TO DRAIN TO ROADSIDE PULL (SPLICE) BOX.

LOOP SIZE, LOCATION, NUMBER OF TURNS OF WIRE AND ASSOCIATED SIGNAL PHASE SHALL BE AS SHOWN ON THE PLANS.

SPLICES SHALL BE INSTALLED BY USING CAST IN PLACE SPLICE KITS LISTED ON THE DEPARTMENTS APPROVED PRODUCTS LIST OR AN ENGINEER APPROVED EQUAL. NON-INSULATED BUTT SPLICES TO FIT #12 AWG STRANDED WIRE SHALL BE USED. SPLICES SHALL BE SOLDERED AND INSULATED FROM EACH OTHER AS PER INSTRUCTIONS INCLUDED IN THE SPLICE KIT.

MEASURE GROUND RESISTANCE USING A MEGGER. REPLACE LOOP WIRE NOT ATTAINING A READING OF INFINITY TO GROUND.

AFTER SPLICING THE LOOP WIRE TO THE LOOP LEAD-IN CABLE, THE CONTRACTOR SHALL MEASURE INDUCTANCE, GROUND RESISTANCE AND WIRE RESISTANCE AT THE CABINET END OF THE LEAD-IN CABLE AND FURNISH A COPY OF THE READING TO THE PROJECT ENGINEER FOR EVALUATION.

LOOP DETECTOR LEADS SHALL BE IDENTIFIED WITH THEIR ASSOCIATED LOOP BY USE OF WATERPROOF TAGS AT BOTH ENDS OF THE CABLE. A LISTING OF THE CABLE IDENTIFICATION PER INDIVIDUAL LOOP LEAD-IN SHALL BE PLACED IN THE CABINET.

THE #12 AWG LOOP WIRE IN THE PULL (SPLICE) BOX SHALL BE HAND TWISTED AT LEAST 3 TWISTS PER FOOT BEFORE BEING SPLICED TO THE LOOP LEAD-IN CABLE.

SPLICES OF LOOP WIRE TO LEAD-IN CABLE SHALL BE MADE ONLY IN PULL (SPLICE) BOXES AT THE SIDE OF THE ROAD.

THE #12 AWG LOOP WIRE SHALL BE INSTALLED FROM THE ROADSIDE PULL (SPLICE) BOX, THROUGH THE LOOP CONDUIT, BACK TO THE ROADSIDE PULL (SPLICE) BOX, AND BE INSTALLED IN ONE NON-SPLICED, CONTINUOUS LENGTH.

PROTECTION OF THE CONDUIT IN THE BASE COURSE SHALL BE REQUIRED AFTER INSTALLATION AND BEFORE NEW PAVEMENT IS INSTALLED.

SHOULD INSTALLATION REPAIR BE REQUIRED, IT SHALL BE DONE UNDER THE DIRECTION OF THE PROJECT ENGINEER.

6

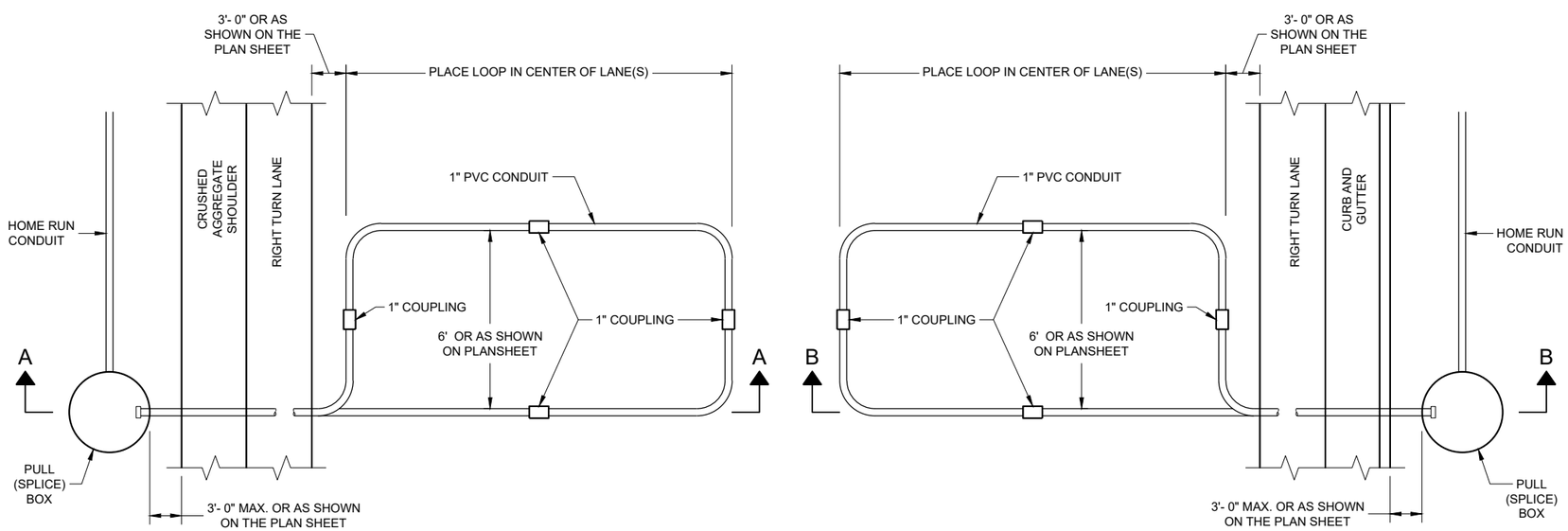

TYPICAL PLAN LOOP DETECTOR
WITH 24" PULL (SPLICE) BOX

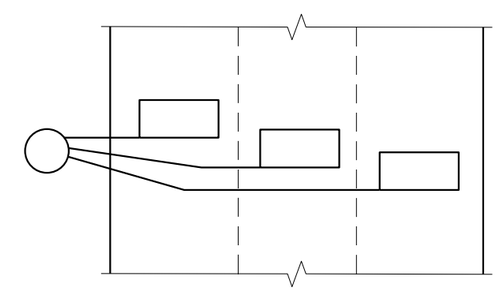

MULTI-LANE
INSTALLATION

6

LOOP DETECTOR INSTALLED IN BASE COURSE WITH PULL (SPLICE) BOX OFF ROADWAY (OPTION 2)

STATE OF WISCONSIN
DEPARTMENT OF TRANSPORTATION

APPROVED
September 2014 /S/ Ahmet Demirbilek
DATE STATE ELECTRICAL ENGI
FHWA

SDD 09F15 - 04b

SDD 09F15 - 04b

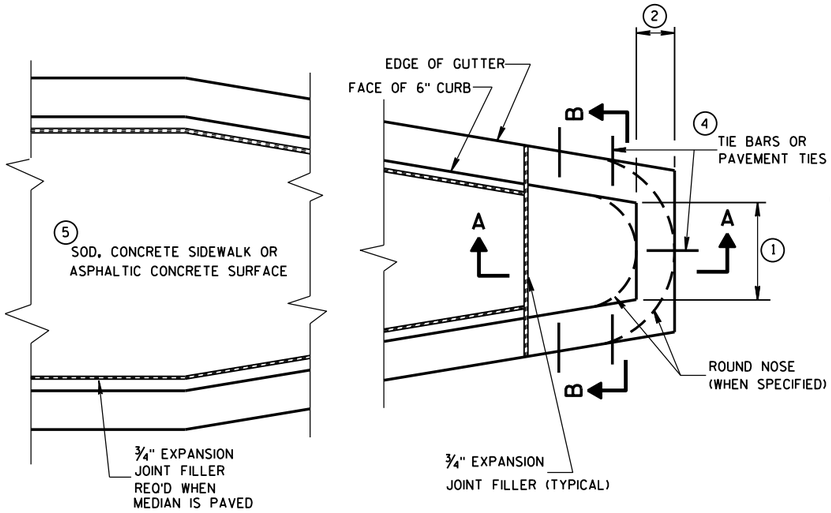

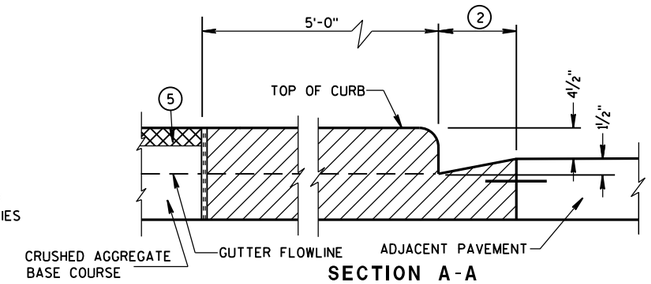

SECTION A-A

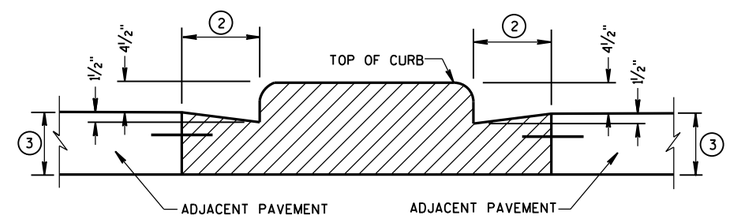

SECTION B-B

CONCRETE MEDIAN BLUNT NOSE DETAIL

GENERAL NOTES

DETAILS OF CONSTRUCTION, MATERIALS AND WORKMANSHIP NOT SHOWN ON THIS DRAWING SHALL CONFORM TO THE PERTINENT REQUIREMENTS OF THE STANDARD SPECIFICATIONS AND THE APPLICABLE SPECIAL PROVISIONS.

1. SEE PLAN FOR MEDIAN NOSE WIDTH AND RADIUS (FOR ROUND NOSE ALTERNATE).
2. WIDTH OF GUTTER TO MATCH EXISTING ADJACENT GUTTER OR AS SPECIFIED ELSEWHERE IN THE PLAN.
3. DEPTH EQUAL TO ADJACENT PAVEMENT. ADJACENT PAVEMENT STRUCTURE DETAILS ARE SHOWN ON THE PLAN. TYPICAL OPTIONS ARE:
   (1) NEW OR EXISTING CONCRETE PAVEMENT.
   (2) ASPHALTIC CONCRETE PAVEMENT OVER NEW OR EXISTING CONCRETE BASE COURSE.
   (3) ASPHALTIC CONCRETE PAVEMENT OVER CRUSHED AGGREGATE BASE COURSE.
4. TIE BARS OR PAVEMENT TIES REQUIRED IN NEW CONCRETE PAVEMENT OR CONCRETE BASE COURSE. TIE BARS SHALL BE NO. 4 X 2'-0" SPACED AT 2'-0" C-C.

   PAVEMENT TIES REQUIRED IN EXISTING CONCRETE BASE COURSE. PAVEMENT TIES SHALL BE NO. 6 X 1'-0" SPACED AT 3'-0" C-C INSTALLED ON A HORIZONTAL SKEW OF 6:1. THE DIRECTION OF SKEW SHALL ALTERNATE AFTER EVERY ONE OR TWO BARS.
5. SURFACE TYPE AND DETAILS ARE SHOWN ELSEWHERE IN THE PLAN.

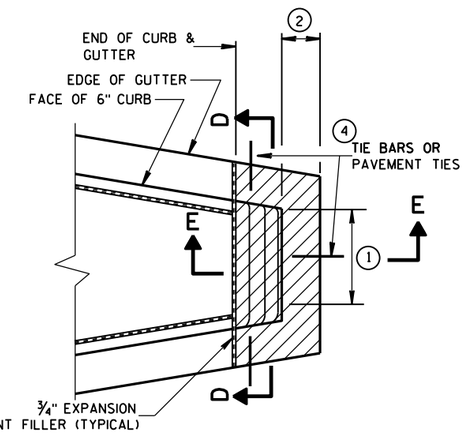

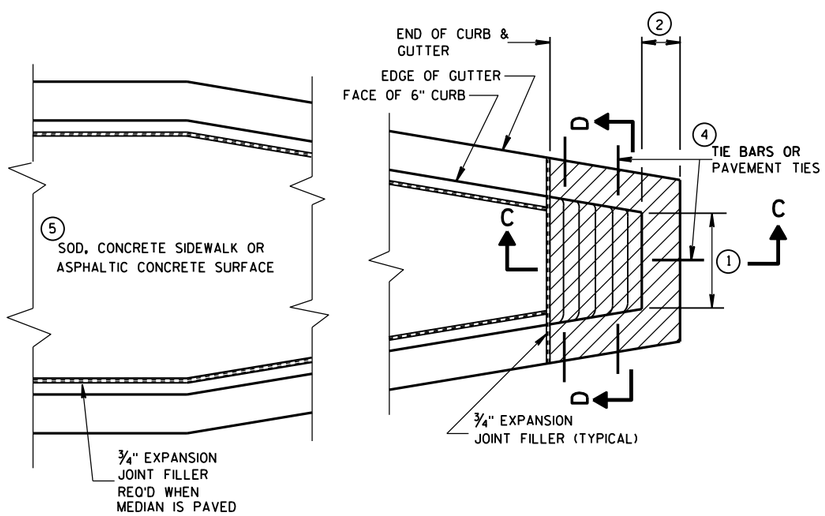

CONCRETE MEDIAN SLOPED NOSE TYPE 1

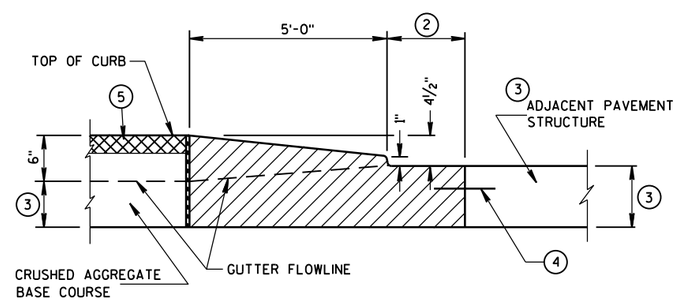

SECTION C-C

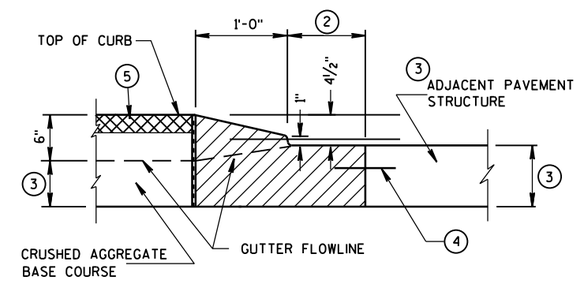

SECTION E-E

CONCRETE MEDIAN SLOPED NOSE TYPE 2

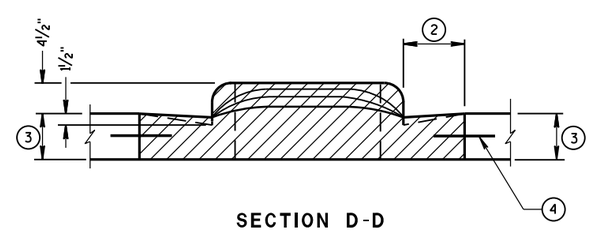

SECTION D-D

CONCRETE MEDIAN NOSE

STATE OF WISCONSIN
DEPARTMENT OF TRANSPORTATION

APPROVED
6/8/2006 — DATE
/S/ Jerry H. Zogg — ROADWAY STANDARDS DEVELOPMENT ENGINEER
FHWA

6

S.D.D. 11 B 2-2

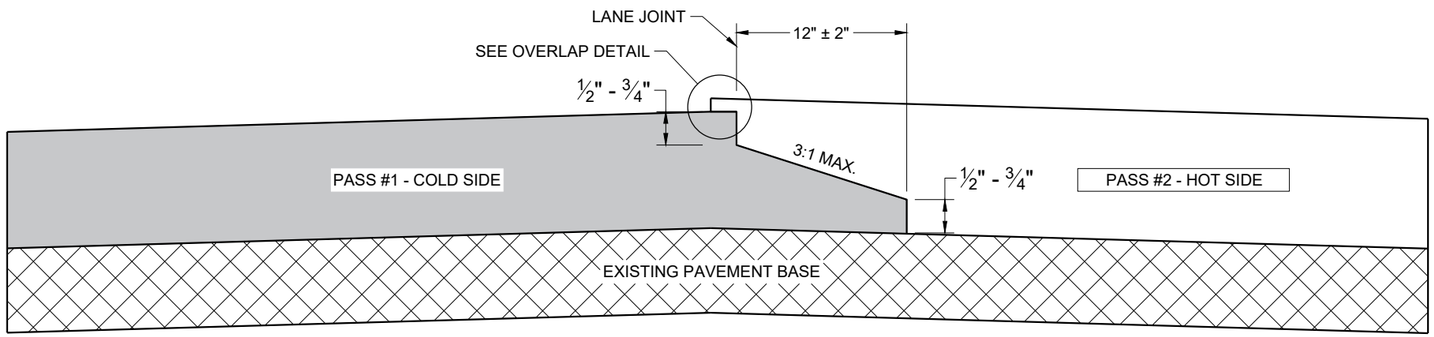

TYPICAL PAVEMENT CROSS SECTION
NOTCHED WEDGE JOINT

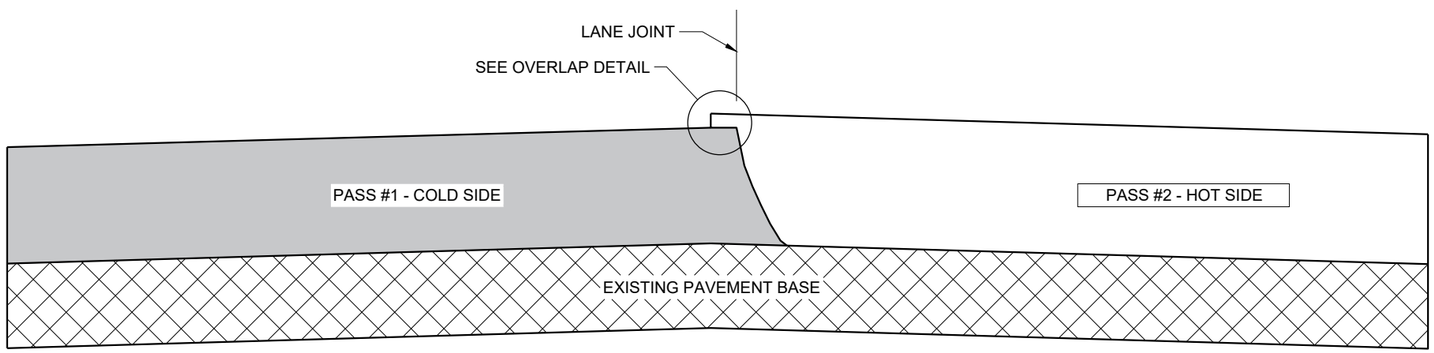

TYPICAL PAVEMENT CROSS SECTION
VERTICAL JOINT

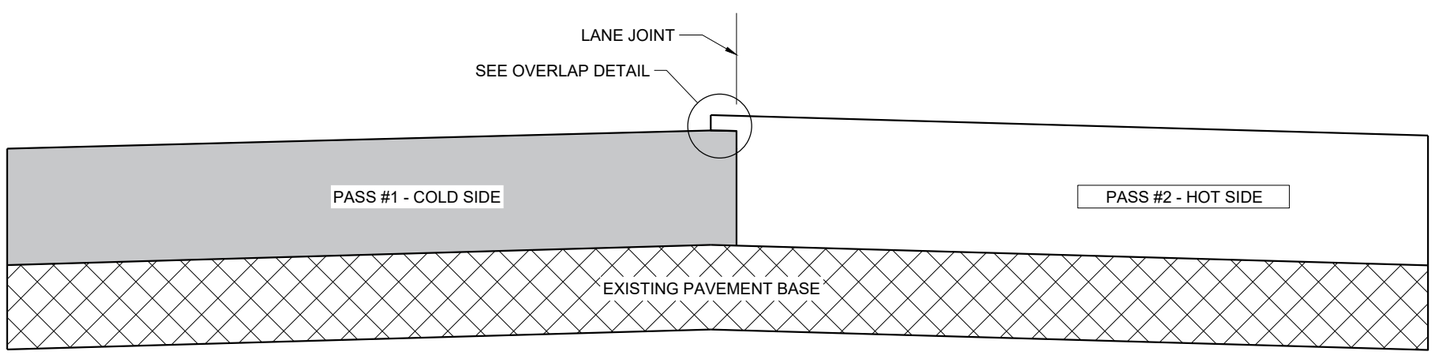

TYPICAL PAVEMENT CROSS SECTION
VERTICAL JOINT (MILLED)

GENERAL NOTES

IN ADDITION TO THE DETAILS PROVIDED IN THIS DRAWING, CONFORM TO STANDARD SPECIFICATION 450.3.2.8 FOR WHEN A NOTCHED WEDGE JOINT IS REQUIRED AND FOR GENERAL JOINT CONSTRUCTION REQUIREMENTS.

FOR ALL LONGITUDINAL JOINTS, ENSURE THE PAVER SCREED OVERLAPS THE PREVIOUSLY PLACED PAVEMENT BY 1" ± 0.5" AND THE HOT SIDE OF THE JOINT REMAINS HIGHER THAN THE COLD SIDE BY APPROXIMATELY 0.1" AFTER FINAL COMPACTION. (IT WILL BE FLUSH WHEN PAVING IN ECHELON.)

ONLY REMOVE THE LONGITUDINAL NOTCHED WEDGE JOINT FOR SMA PAVEMENT OR AS DIRECTED BY THE ENGINEER TO ADDRESS SPECIFIC LENGTHS OF JOINT DAMAGED BY TRAFFIC.

WHEN MILLING BACK OR REMOVING ANY LONGITUDINAL JOINT, LIMIT THE MATERIAL REMOVED TO 2" FROM THE TOP NOTCH OR FROM THE VERTICAL JOINT EDGE ON THE COLD SIDE OF THE JOINT.

USE LONGITUDINAL MILLED JOINT AS PLANS SHOW OR THE AS THE ENGINEER DIRECTS.

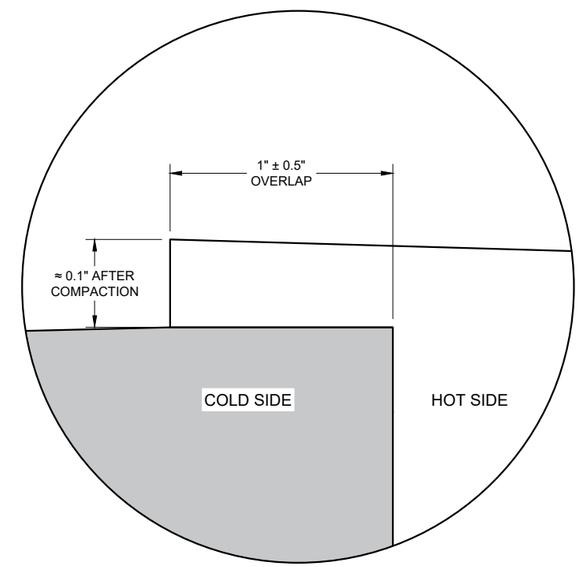

OVERLAP DETAIL (TYPICAL)

6

6

SDD 13C19 - 03

SDD 13C19 - 03

HMA LONGITUDINAL JOINTS

STATE OF WISCONSIN
DEPARTMENT OF TRANSPORTATION

APPROVED
November 2020 /S/ Steven Hefel
DATE HMA PAVEMENT ENGIN

FHWA

1. WOOD OR STEEL POSTS (w6X9 OR w6X8.5) MAY BE USED. DO NOT INTERMIX WOOD AND STEEL POSTS. INSTALL STEEL POSTS WITH HOLES ON APPROACHING TRAFFIC SIDE.
2. USE WOOD OR APPROVED PLASTIC BLOCKOUTS. WOOD BLOCKOUTS MAY BE CONSTRUCTED OUT OF TWO OR MORE WOOD BLOCKOUTS. SEE ALTERNATE WOOD BLOCKOUT DETAIL. DIMENSIONS OF APPROVED PLASTIC BLOCKOUTS MAY VARY.
3. IF ROCK IS ENCOUNTERED DURING EXCAVATION, PROVIDE A HOLE 12 INCHES IN DIAMETER EXTENDING 20 INCHES DEEP INTO THE ROCK. PLACE APPROXIMATELY 2 1/2" INCHES OF GRANULAR MATERIAL IN THE BOTTOM OF THE HOLE. CUT THE POSTS THE TO LENGTH AMD INSTALL. BACKFILL WITH EXCAVATED MATERIAL AND COMPACT. BACKFILL IS TO BE FREE OF LARGE ROCKS.
4. WHEN THE DISTANCE FROM BACK OF POST TO SHOULDER HINGE POINT IS LESS THAN 2 FEET INSTALL LONGER POST AT HALF POST SPACING (K).
5. FOR NEW MGS INSTALLATION TOP OF W-BEAM RAIL TOLERANCE IS ±1". FOR EXISTING MGS INSTALLATION TOP OF W-BEAM IS BETWEEN 27 ¾" TO 32".
6. WHEN USING STEEL POST AND WOOD BLOCKOUTS INSTALL FOUR 16D GALVANIZED NAILS. INSTALL NAILS AT THE BACK CORNERS OF THE BLOCK AND BEND THE NAILS OVER THE FLANGE OF THE STEEL POST.
7. TOTAL POST LENGTH FOR TYPE K IS 7' - 0". TOTAL POST LENGTH FOR OTHER MGS TYPES IS 6' - 0".

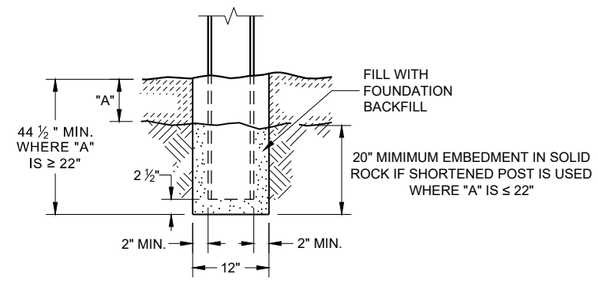

END VIEW
SETTING STEEL OR WOOD POST IN ROCK (3)

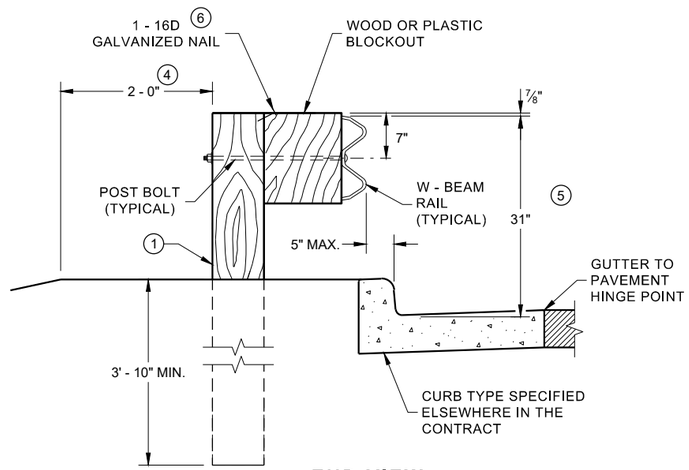

END VIEW
LOCATED ALONG A CURBED ROADWAY

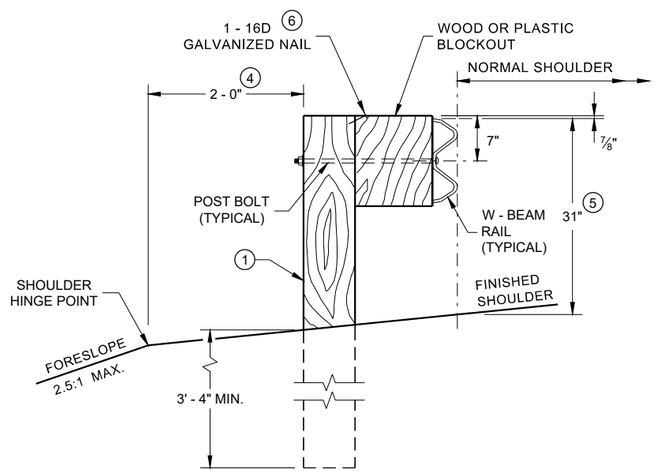

END VIEW
LOCATED ALONG A ROADWAY SHOULDER STANDARD INSTALLATION

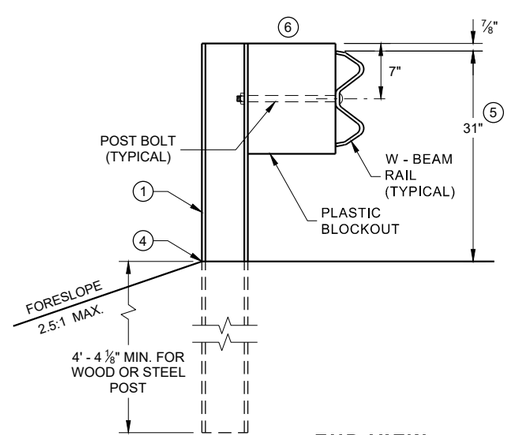

END VIEW
MGS LONGER POST AT HALFPOST SPACING W BEAM (K)

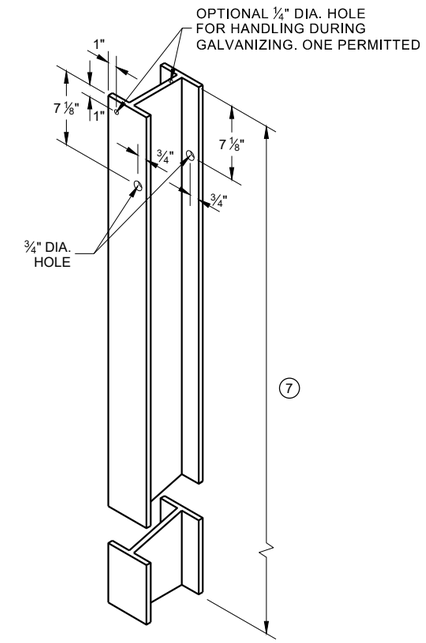

STEEL POST & HOLE PUNCHING DETAIL (W 6 X 9) (1)

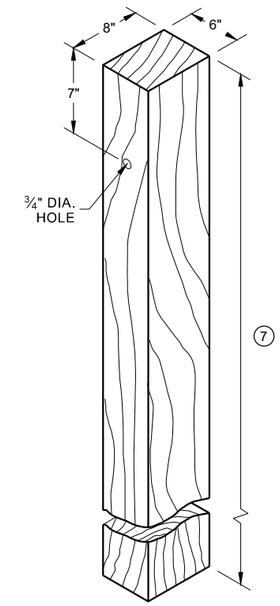

WOOD POST (6" X 8") NOMINAL (1)

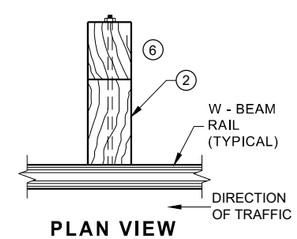

PLAN VIEW WOOD POST, BLOCKOUT & BEAM

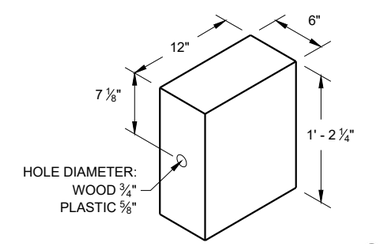

WOOD OR PLASTIC BLOCKOUT (2)

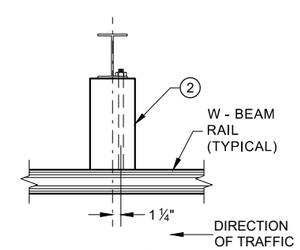

PLAN VIEW STEEL POST, PLASTIC BLOCKOUT & BEAM

MIDWEST GUARDRAIL SYSTEM (MGS) GUARDRAIL

STATE OF WISCONSIN
DEPARTMENT OF TRANSPORTA

6

SDD 14B42 - 07a

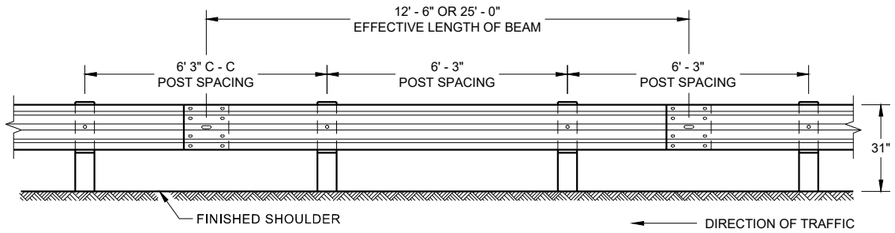

FRONT VIEW
POST SPACING STANDARD INSTALLATION

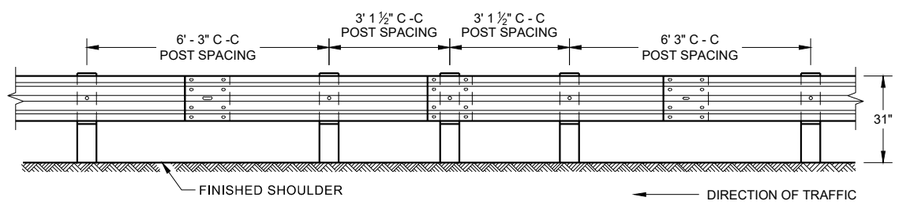

FRONT VIEW
HALF POST SPACING (HS) AND HALF POST SPACING WITH LONGER POSTS (K)

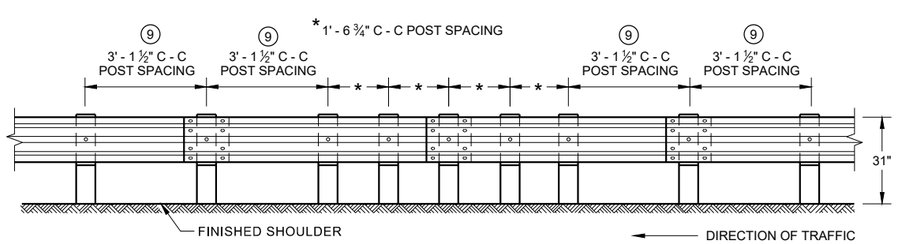

FRONT VIEW
QUARTER POST SPACING (QS)

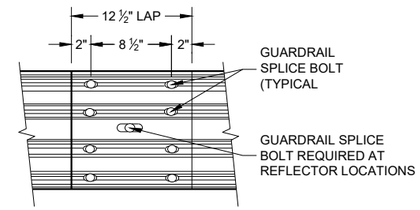

FRONT VIEW
MID-SPAN BEAM SPLICE

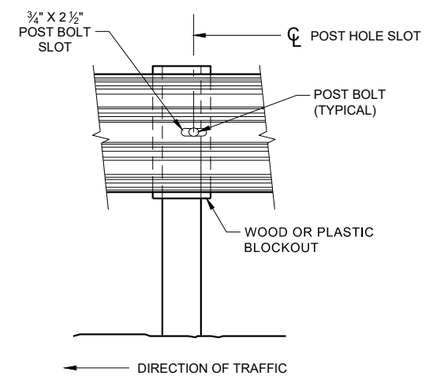

FRONT VIEW AT STEEL POST

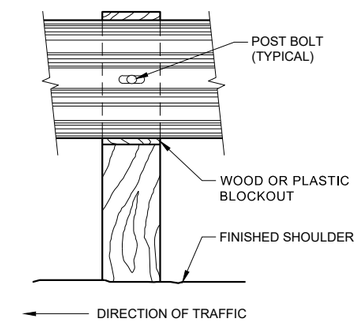

FRONT VIEW AT WOOD POST

GENERAL NOTES

8 DO NOT INSTALL REFLECTORS ON THE FIRST 50 FEET OF THE APPROACH END OF THE ENERGY ABSORBING TERMINAL.

9 25 FEET OF HALF POST SPACING IS REQUIRED ON APPROACH AND DEPARTURE ENDS OF QUARTER POST SPACING.

POST BOLTS ARE A ⅝" DIAMETER ASTM A307 GUARDRAIL BOLT. A POST BOLT REQUIRES ⅝" DIAMETER A563A DOUBLE RECESSED (DR) HEAVY HEX NUT AND ⅝" DIAMETER F844 FLAT WASHER. POST BOLTS MAY BE LONGER IF MULTIPLE BLOCKOUTS ARE BEING USED.

GUARD RAIL SPLICE BOLTS ARE A ⅝" DIAMETER ASTM A307 GUARDRAIL HEAD BOLT. A GUARDRAIL SPLICE BOLT REQUIRES ⅝" DIAMETER A563A DOUBLE RECESSED (DR) HEAVY HEX NUT.

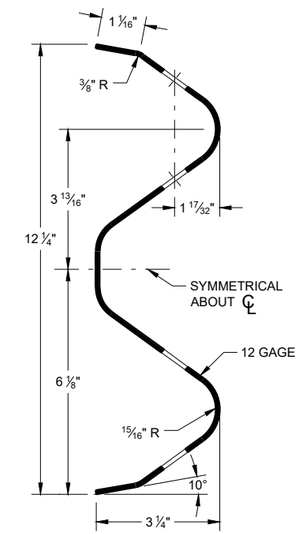

SECTION THRU W-BEAM RAIL

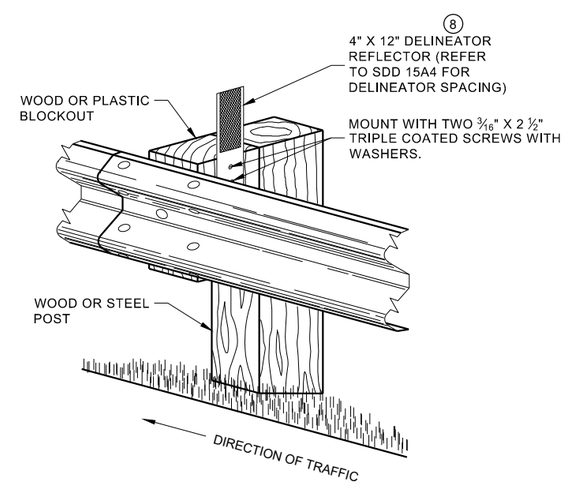

ONE SIDED REFLECTOR DETAIL AND TYPICAL INSTALLATION

MIDWEST GUARDRAIL SYSTEM (MGS) GUARDRAIL

STATE OF WISCONSIN
DEPARTMENT OF TRANSPORTA

6

SDD 14B42 - 07b

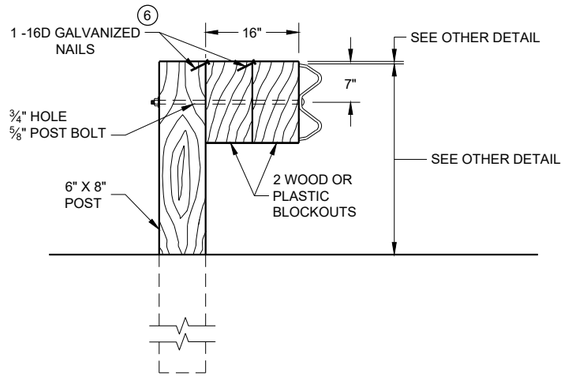

DETAIL FOR 16" BLOCKOUT DEPTH

IT IS ACCEPTABLE TO USE BLOCKOUTS UP TO 16" DEEP TO INCREASE THE POST OFFSET TO AVOID UNDERGROUND OBSTACLES. THERE IS NO LIMIT TO THE NUMBER OF POSTS THAT CAN HAVE ADDITIONAL BLOCKOUTS UP TO 16" DEEP.

NOTE:

1. ALL FILLETS SHALL HAVE A MINIMUM RADIUS OF 3/16".
2. IF THE BOLT EXTENDS MORE THAN ¼" FROM THE NUT THE BOLT SHOULD BE TRIMMED BACK.

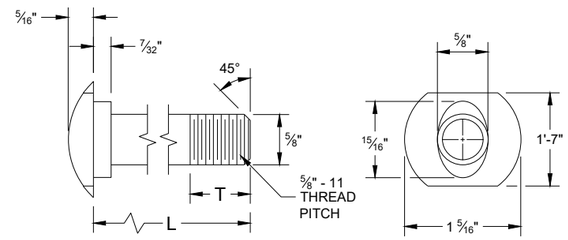

POST BOLT TABLE

L	T (MIN.)
1 ¼"	1 ⅛"
2"	1 ¾"
10"	4"
14"	4 1/16"
18"	4"
21"	4 1/16"
25"	4"

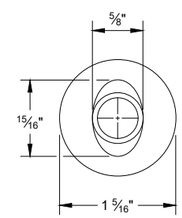

ALTERNATE BOLT HEAD

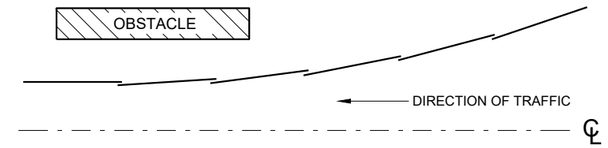

PLAN VIEW
BEAM LAPPING DETAIL

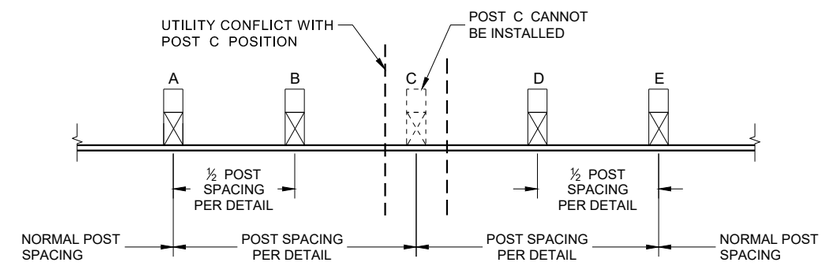

POST DRIVING FOR CONTINUOUS UNDERGROUND OBSTRUCTION

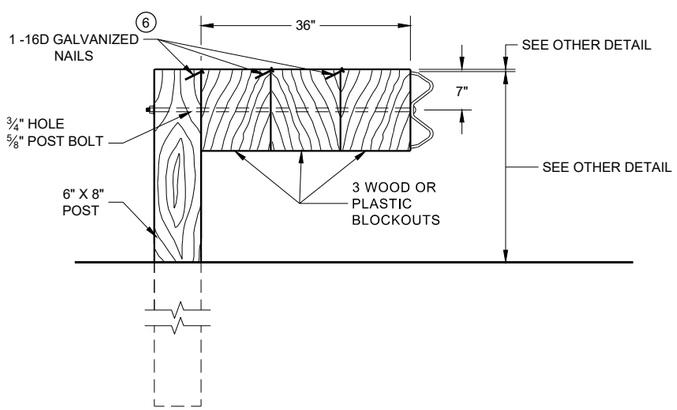

DETAIL FOR 36" BLOCKOUT DEPTH

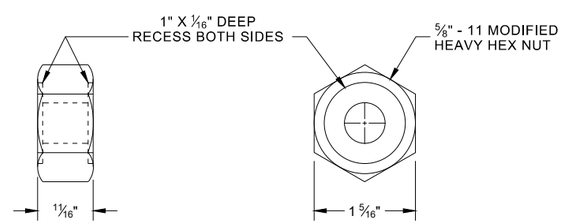

POST BOLT, SPLICE BOLT AND RECESS NUT

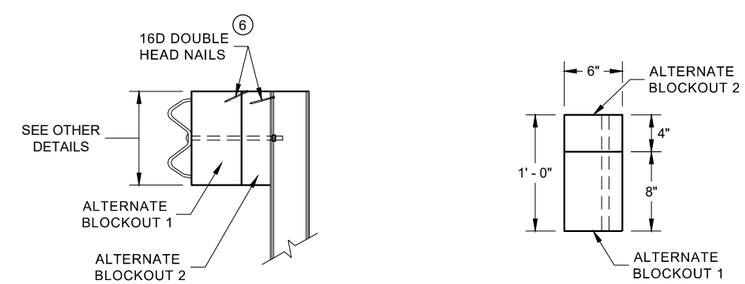

SIDE VIEW

PLAN VIEW

ALTERNATE WOOD BLOCKOUT DETAIL

NOTES: UNDER SPECIAL CIRCUMSTANCES, SUCH AS AVOIDING OBSTACLES THAT ARE NOT RELOCATED, IT IS ACCEPTABLE TO INSTALL ADDITIONAL BLOCKOUTS TO OBTAIN UP TO 36" DEPTH FOR ONE OR TWO POSTS IN A SECTION OF GUARDRAIL.

DO NOT USE 16" OR 36" BLOCKOUTS IF IT CAUSES THE POST TO BE DRIVEN BEYOND SHOULDER HINGE POINT OR CAUSES A FIXED OBJECT TO BE WITHIN THE DEFLECTION DISTANCE OF THE BARRIER.

(6) WHEN USING STEEL POST AD WOOD BLOCKOUTS, INSTALL FOUR 16D GALVANIZED NAILS. INSTALL NAILS AT THE BACK CORNERS OF THE BLOCK AND BEND THE NAILS OVER THE FLANGE OF THE STEEL POST.

MIDWEST GUARDRAIL SYSTEM (MGS) GUARDRAIL

STATE OF WISCONSIN
DEPARTMENT OF TRANSPORTA

6

SDD 14B42 - 07c

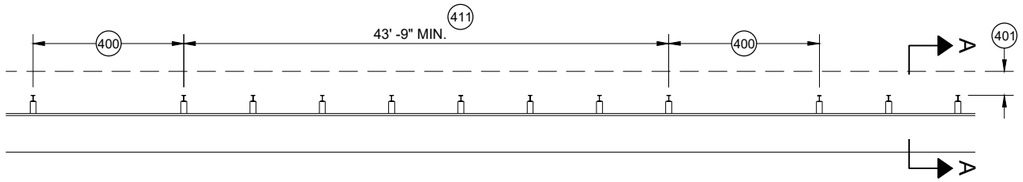

MISSING POST IN MGS GUARDRAIL

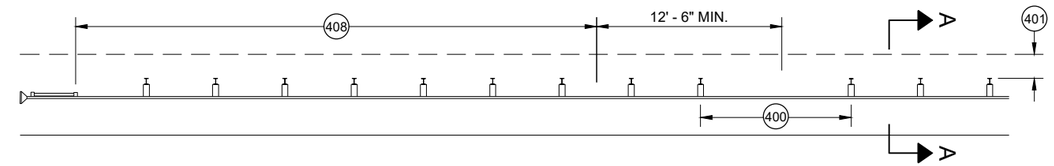

MISSING POST IN MGS GUARDRAIL NEAR EAT

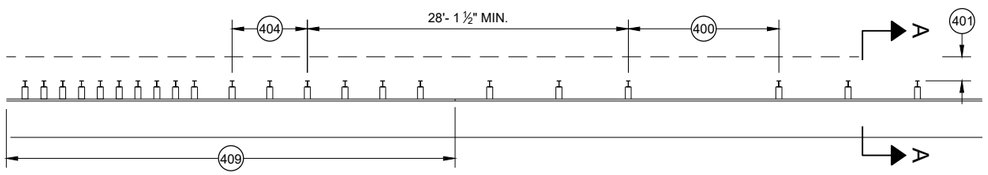

MISSING POST IN MGS GUARDRAIL NEAR AN APPROACH TRANSITION

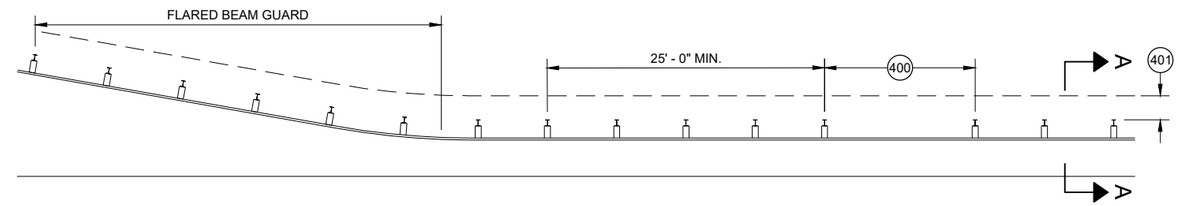

MISSING POST IN MGS GUARDRAIL NEAR FLARED BEAM GUARD

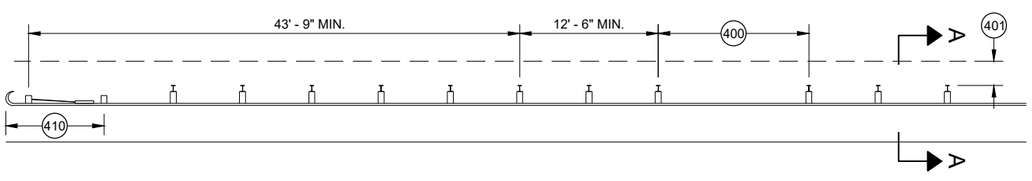

MISSING POST IN MGS GUARDRAIL NEAR A TYPE 2 END TERMINAL

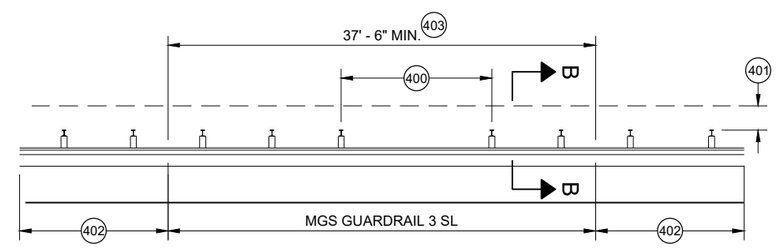

MISSING POST IN SHORT SPAN MGS GUARDRAIL NEAR CURB (SL) 407

400 MAX SPAN 12' - 6"
401 2' MIN.
402 MGS GUARDRAIL 3
403 NESTING BEAM GUARD
404 ASYMMETRIC TRANSITION
405 SOIL WELL DRAINED AND COMPACTED
406 SEE OTHER DRAWINGS IN THIS SDD
407 SEE OTHER DRAWINGS FOR MIN. SPACING BETWEEN SPANS
408 SEE SDD 14B44
409 SEE SDD 14B45
410 SEE SDD 14B47
411 MINIMUM DISTANCE BETWEEN MISSING POST SPANS.

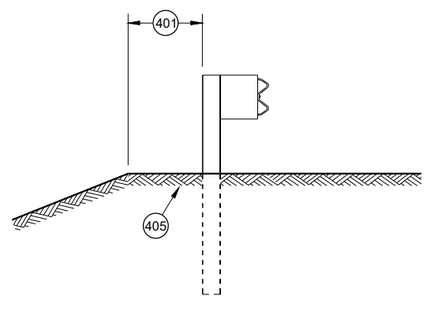

SECTION A - A 406

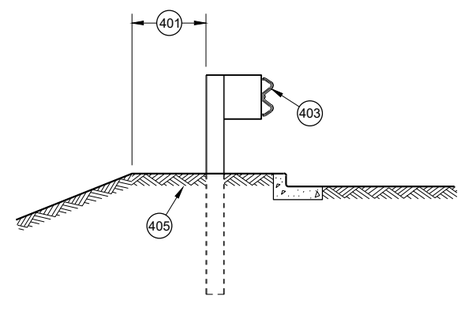

SECTION B - B 406

MIDWEST GUARDRAIL SYSTEM (MGS) GUARDRAIL

STATE OF WISCONSIN
DEPARTMENT OF TRANSPORTATION

APPROVED
May 2021 — DATE
/S/ Rodney Taylor — ROADWAY STANDARDS DEVE UNIT SUPERVISOR
FHWA

6

SDD 14B42 - 07d

GENERAL NOTES

(A) THE SLOPE IN THE AREA BOUNDED BY THE GRADELINE, THE HINGE POINT LINE (HPL) AND THE CLEAR ZONE LIMITS (CZL) SHALL BE 4:1 OR FLATTER.

(B) AFTER FINAL ASSEMBLY, RECHECK CABLE TO BE SURE IT IS TAUT AND HAS NOT RELAXED

(C) DIFFERENT MANUFACTURERS REQUIRE DIFFERENT PERFORATED W - BEAM RAIL END PANELS. SEE MANUFACTURER'S INFORMATION.

(D) ATTACH ALUMINUM SHEET TO E.A.T. HEAD USING 4 STAINLESS STEEL SELF - TAPPING SCREWS. ONE SCREW PER CORNER.

(E) HARDWARE MAY VARY BETWEEN MANUFACTURER. SEE MANUFACTURER'S DRAWING FOR INFORMATION.

DIMENSIONS MAY VARY, MANUFACTURER'S INFORMATION.

SEE SDD 14B42 FOR MORE INFORMATION.

* DO NOT ATTACH BLOCKOUTS TO POST 1 AND 2.

DO NOT INSTALL REFLECTORS ON THE FIRST 50 FEET OF THE APPROACH END OF THE ENERGY ABSORBING TERMINAL.

SEE MANUFACTURER'S DRAWING FOR SPLICE LOCATION, HARDWARE DIMENSIONS AND INSTALLATION INSTRUCTIONS.

THE CENTER OF THE UPPER 3 ½" DIAMETER HOLE ON POST NUMBER 3 THROUGH POST 9 IS TO BE FLUSH WITH THE GROUND LINE UP TO A MAXIMUM OF 2" ABOVE GROUND LINE. WOOD BLOCKS ON POSTS NUMBERED 3 THROUGH 9 MAY BE ADJUSTED UP TO 3" ABOVE THE TOP OF POST.

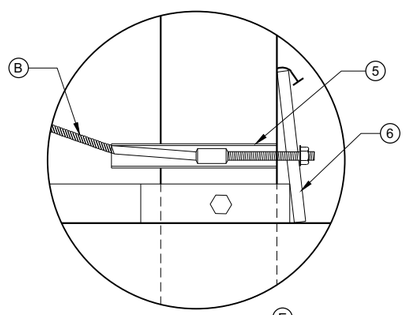

DETAIL "A" (E)

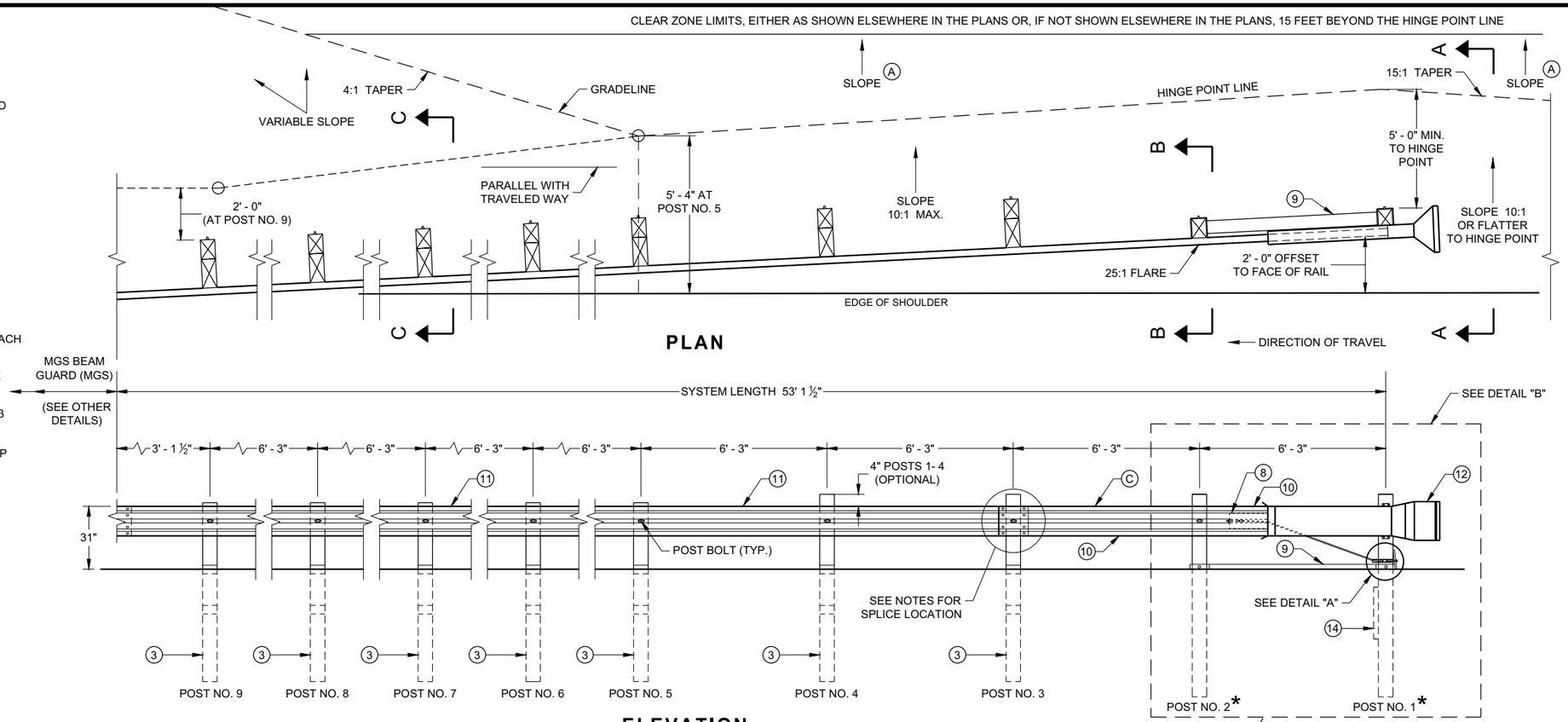

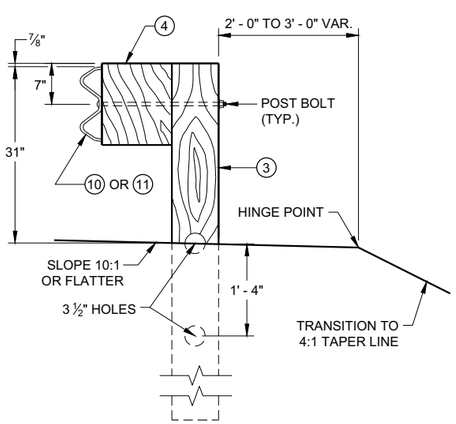

SECTION C - C
TYPICAL AT POST NOS. 3 - 9

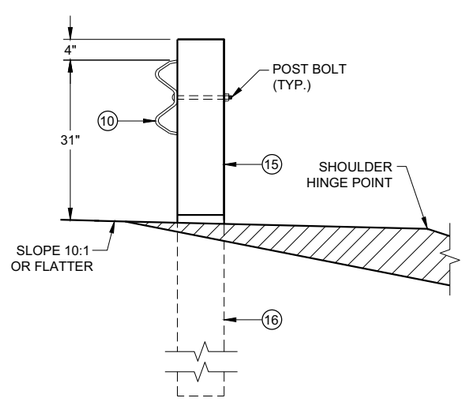

SECTION B - B
TYPICAL AT POST NO. 2*

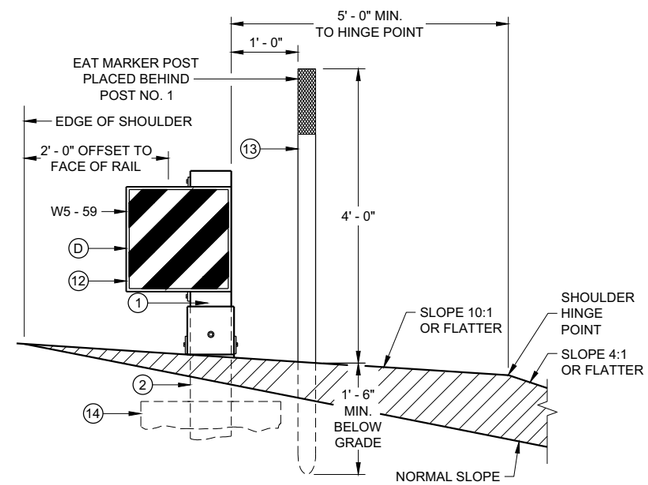

SECTION A - A
TYPICAL AT POST NO. 1*

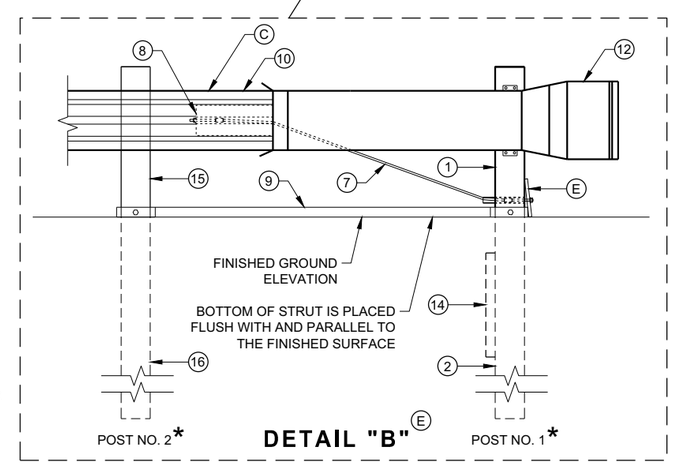

DETAIL "B" (E)

MIDWEST GUARDRAIL SYSTEM ENERGY ABSORBING TERMINAL (MGS)

STATE OF WISCONSIN
DEPARTMENT OF TRANSPORTATION

6

6

SDD 14B44 - 04a

SDD 14B44 - 04a

BILL OF MATERIALS

PART NO.	DESCRIPTION MATERIALS PROVIDED BY MGS EAT MANUFACTURER. SEE MANUGACTURER'S DETAILS FOR MORE INFORMATION.
1	UPPER POST NO. 1 6" X 6" TUBE
2	LOWER POST NO. 1
3	WOOD CRT
4	WOOD BLOCKOUT
5	PIPE SLEEVE
6	BEARING PLATE
7	BCT CABLE ASSEMBLY
8	ANCHOR CABLE BOX
9	GROUND STRUT
10	PERFORATED W-BEAM RAIL END PANEL, 12'-6" LONG.
11	STANDARD W-BEAM RAIL. MULTIPLE SECTIONS REQUIRED. SECTIONS VARY IN LENGTH.
12	IMPACT HEAD
13	EAT MARKER POST - YELLOW (SEE APPROVED PRODUCTS LIST)
14	SOIL PLATE
15	UPPER POST NO. 2
16	LOWER POST NO. 2

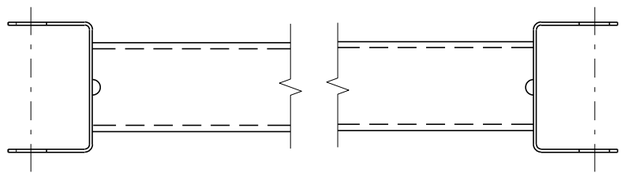

GENERIC GROUND STRUT 9 E

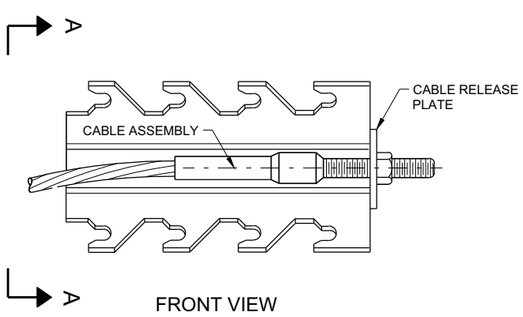

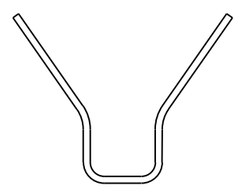

SECTION A - A

GENERIC ANCHOR CABLE BOX 9 E

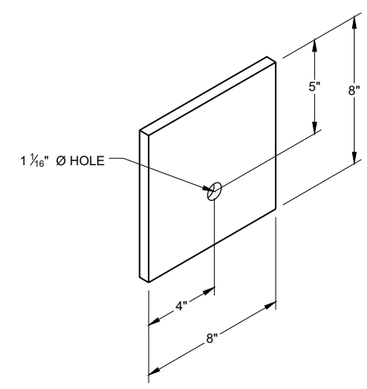

BEARING PLATE 6 E

MIDWEST GUARDRAIL SYSTEM ENERGY ABSORBING TERMINAL (MGS)

STATE OF WISCONSIN
DEPARTMENT OF TRANSPORTAT

6

SDD 14B44 - 04b

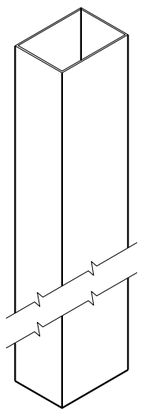

UPPER POST NO. 1 (1) (E)

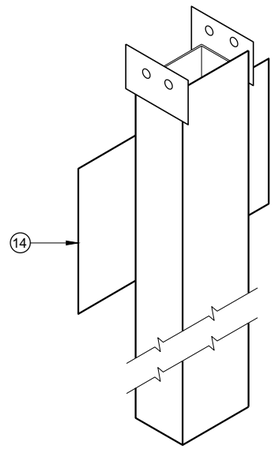

LOWER POST NO. 1 (2) (E)

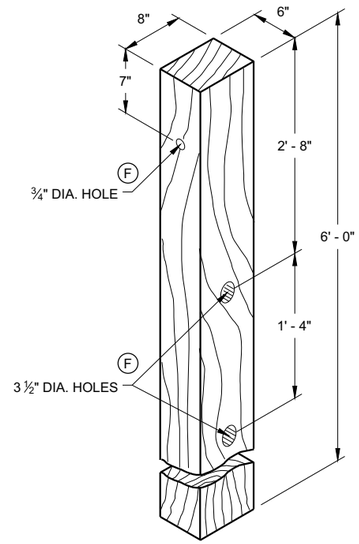

WOOD CRT POST (3) (E)

POSTS NUMBER 3-9

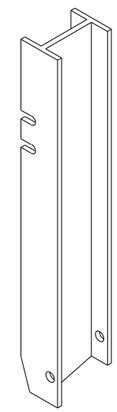

UPPER POST NO. 2 (15) (E)

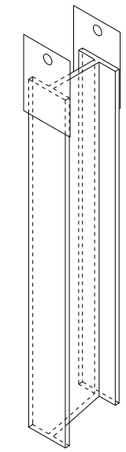

LOWER POST NO. 2 (16) (E)

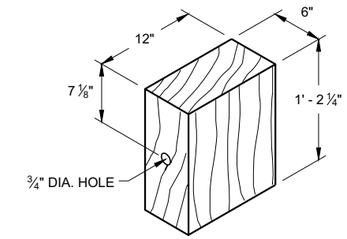

WOOD BLOCKOUT (4)

REQ'D. AT ALL POSTS EXCEPT POST NO'S 1 & 2

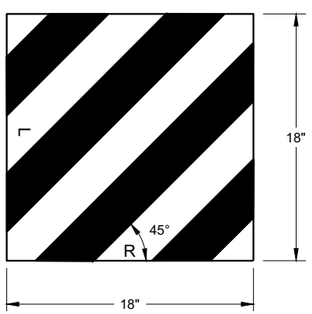

W5 - 59

REFLECTIVE SHEETING DETAIL (E)

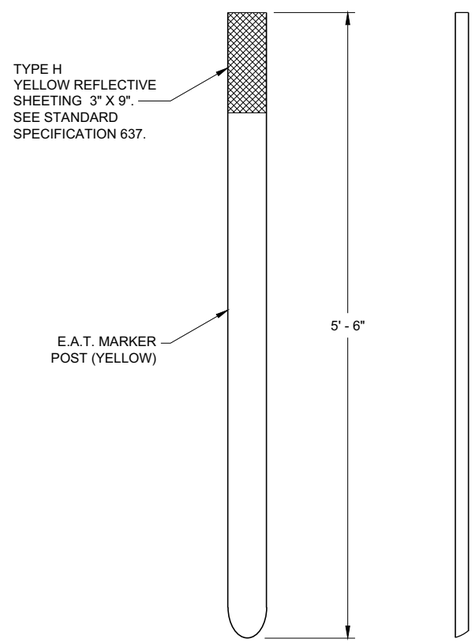

FRONT VIEW SIDE VIEW

E.A.T. MARKER POST (13)

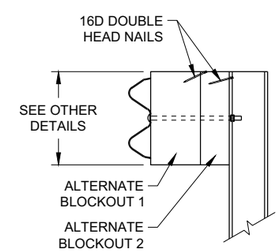

SIDE VIEW

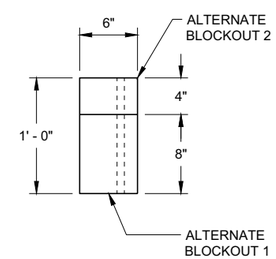

TOP VIEW

ALTERNATE WOOD BLOCKOUT DETAIL

MIDWEST GUARDRAIL SYSTEM ENERGY ABSORBING TERMINAL (MGS)

STATE OF WISCONSIN
DEPARTMENT OF TRANSPORTATION

APPROVED
7/2018 — DATE
/S/ Rodney Taylor — ROADWAY STANDARDS DEVE UNIT SUPERVISOR
FHWA

6

6

SDD 14B44 - 04c

SDD 14B44 - 04c

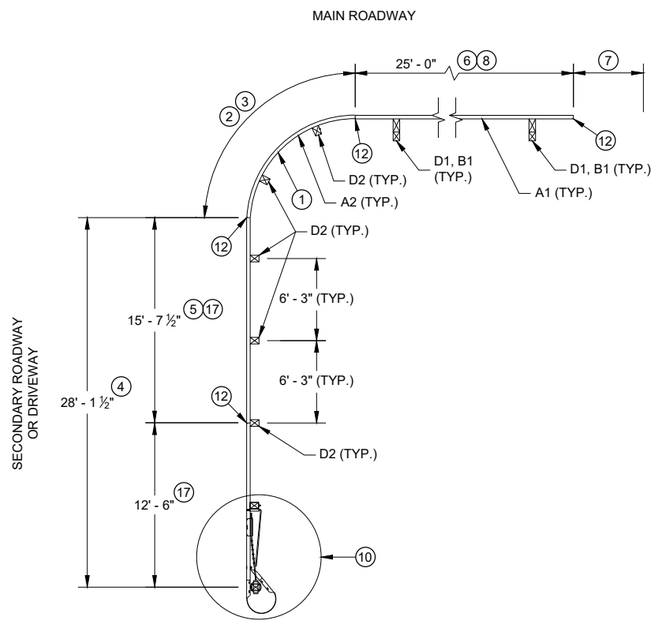

PLAN VIEW

SHORT RADIUS BEAM GUARD WITH SHORT RADIUS TERMINAL ON SECONDARY ROAD OR DRIVEWAY

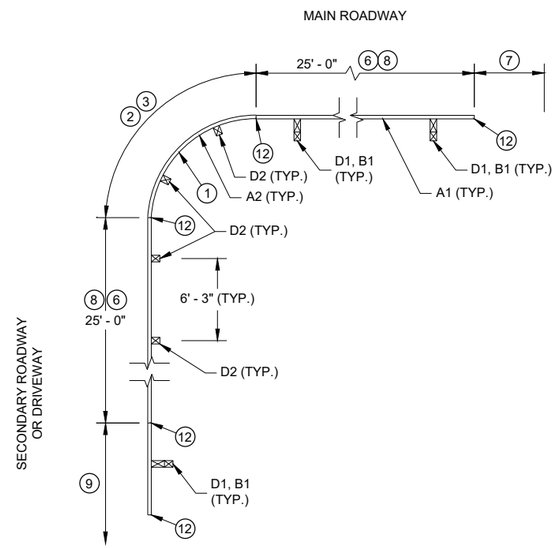

PLAN VIEW

SHORT RADIUS BEAM GUARD WITH EAT, ADDITIONAL BEAM GUARD OR TRANSITION TO RIGID BARRIER ON SECONDARY ROAD OR DRIVEWAY

TABLE FOR RADIUS OF 32' AND LESS

RADIUS (FT)	LENGTH (FT)	WIDTH (FT)
8	25	15
16	30	15
24	40	20
32	50	30

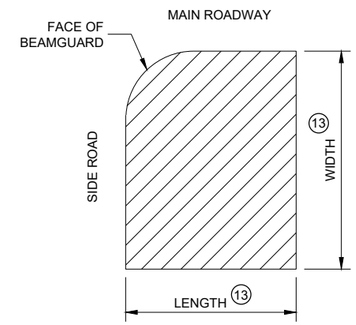

AREA FREE OF FIXED OBJECTS FOR RADIUS 32' AND LESS 16

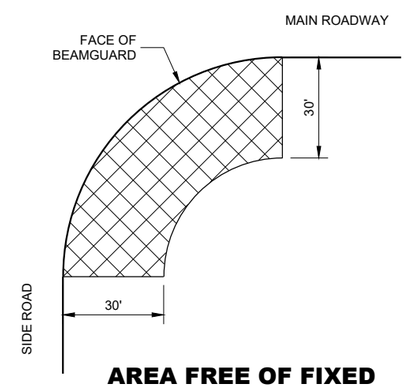

AREA FREE OF FIXED OBJECTS FOR RADIUS GREATER THAN 32'

GENERAL NOTES

SEE PLANS FOR OTHER BARRIER SYSTEM AND LOCATION SPECIFICS.

SEE SDD 14B42 FOR MORE INFORMATION ON BEAM GUARD INSTALLATION, PARTS, MATERIALS, AND INSTALLATION INFORMATION.

GALVANIZE PARTS AFTER FABRICATION.

WELDING TO FOLLOW CURRENT REQUIREMENTS OF THE AMERICAN WELDING SOCIETY STRUCTURAL WELDING CODE ANSI / AWS D1.1.

UNLESS NOTED OTHERWISE, ALL PLATES ARE FLAT AND FREE OF WARP.

UNLESS NOTED OTHERWISE, ALL EDGES ARE SMOOTH, STRAIGHT AND VERTICAL.

ALL CUTS AND HOLES, EXCEPT IN BEAM GUARD RAIL ARE TO BE MACHINED OR MACHINE FLAME CUT.

UNLESS NOTED OTHERWISE, CUT OR PROVIDE BOLTS THAT ARE ¼" TO ½" BEYOND THE NUT.

DRAWINGS ARE NOT TO SCALE.

1. RADIUS MEASURE FROM INSIDE OF RAIL. LENGTH OF BEAM GUARD SHORT RADIUS GUARD MEASURED ALONG TRAFFIC SIDE OF RAIL. RADIUS BETWEEN 8 FEET TO 150 FEET. SEE PLAN FOR REQUIRED RADIUS. BEAM GUARD RAIL IN RADIUS IS SHOP BENT. ODD RAIL LENGTH OR FIELD CUTS MAY BE REQUIRED.
2. CONTROLLED RELEASE TERMINAL (CRT) POSTS ARE USED IN THE RADIUS. CONTROLLED RELEASE TERMINAL (CRT) POSTS ARE SPACED 6' - 3". SEE PLAN FOR NUMBER OF CONTROLLED RELEASE (CRT) POSTS.
3. WITHIN RADIUS BEAM GUARD RAILS ARE NOT BOLTED TO POSTS. BEAM GUARD RAIL IS RESTED ON TOP OF LAG SCREW.
4. MINIMUM LENGTH OF BEAM GUARD ALONG SIDE ROAD OR DRIVEWAY TO INSTALL SHORT RADIUS TERMINAL. BEAM GUARD IS PAID WITH BEAM GUARD ITEM.
5. ODD LENGTH OF BEAM GUARD REQUIRED TO INSTALL SHORT RADIUS TERMINAL.
6. MINIMUM AMOUNT OF BEAM GUARD TO BE INSTALLED PRIOR TO TRANSITION TO RIGID BARRIER. ADDITIONAL BEAM GUARD, OR EAT. BEAM GUARD PAID FOR WITH BEAM GUARD ITEM. SEE PLANS FOR MORE DETAIL.
7. BEAM GUARD, EAT, OR TRANSITION TO RIGID BARRIER. SEE PLAN.
8. TOP OF BEAM GUARD BY THE RADIUS IS 27". HEIGHT OF BEAM GUARD IS 31" BY TRANSITION TO RIGID BARRIER, ADDITIONAL BEAM GUARD OR EAT.
9. ADDITIONAL BEAM GUARD, EAT OR TRANSITION TO RIGID BARRIER. BEAM GUARD SHOWN. SEE PLAN FOR DETAILS.
10. SHORT RADIUS TERMINAL (SEE OTHER DETAILS).
11. HEIGHT VARIES. SEE NOTE 8 AND 8.
12. BEAM GUARD RAIL SPLICE LOCATION. SPLICE LOCATION REQUIRES PART F1 AND F2. SEE SDD 14B42 FOR DETAILS.
13. SEE TABLE FOR VALUES.
14. MAXIMUM HEIGHT FOR CENTER OF HOLE IS ¾" ABOVE FINISHED GROUND ±1".
15. DRILL POST 15/64" DIA. PILOT HOLE. DO NOT HAMMER LAG SCREW INTO POST.
16. SMALL SIGNS ON BREAKAWAY HARDWARE ARE ACCEPTABLE.
17. TOP OF RAIL HEIGHT IS 27" WHEN USING A SHORT RADIUS TERMINAL (CRT).

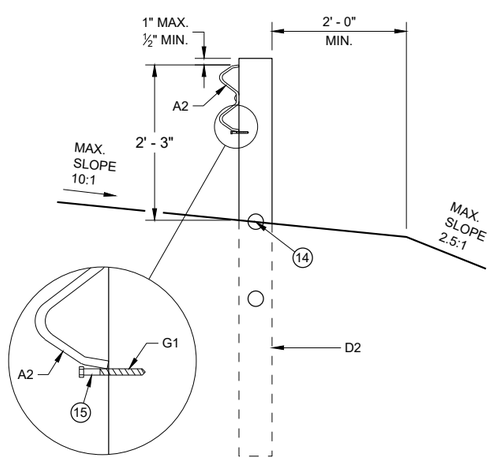

CONTROLLED RELEASE TERMINAL POST (CRT) IN RADIUS

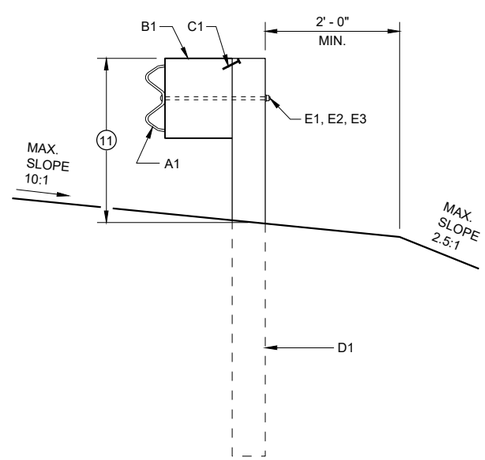

BEAM GUARD POSTS IN HEIGHT TRANSITION

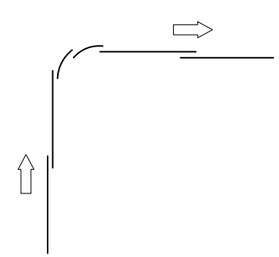

LAP SPLICE DETAIL

SHORT RADIUS BEAM GUARD (MGS) SHORT RADIUS TERMINAL (MGS)

STATE OF WISCONSIN
DEPARTMENT OF TRANSPORTA

6

SDD 14B53 - 02a

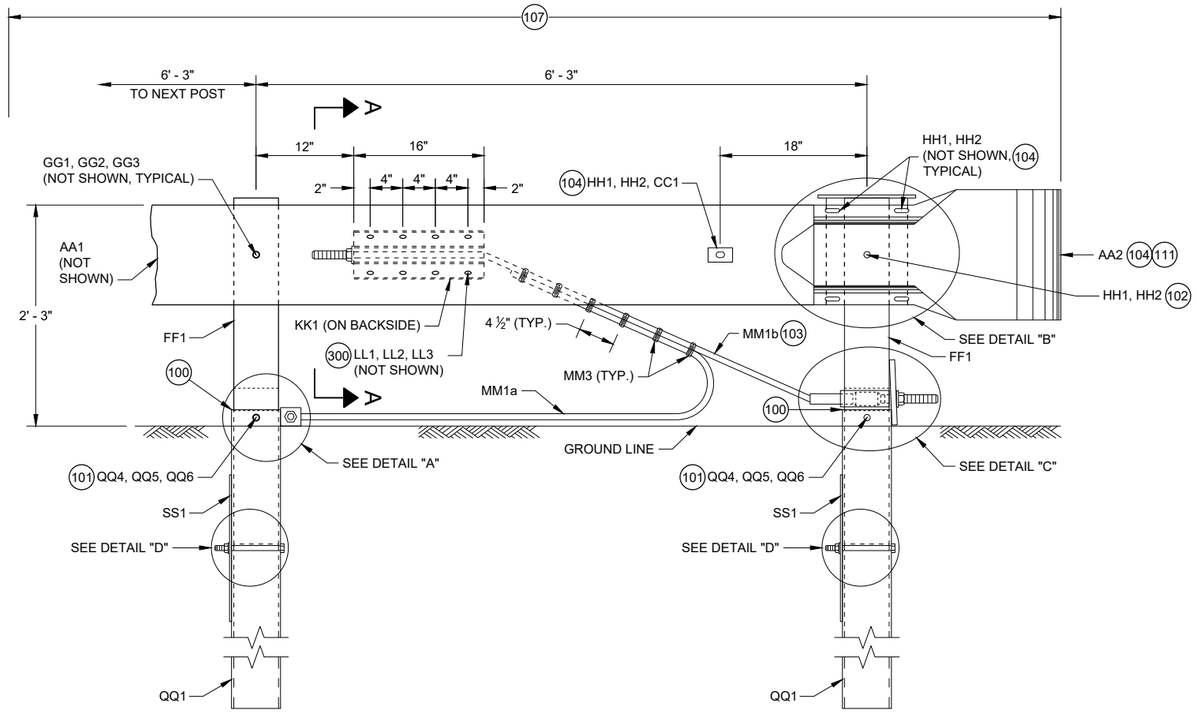

PROFILE VIEW

SHORT RADIUS TERMINAL

GENERAL NOTES

100 TOP OF FOUNDATION TUBE 2 INCHES MAXIMUM ABOVE FINISHED GROUND.

101 WASHERS REQUIRED BETWEEN BOLT HEAD AND FOUNDATION TUBE AND BETWEEN NUT AND FOUNDATION TUBE.

102 SPLICE BOLT AND NUT CONNECTS BEAM GUARD RAIL, W-BEAM SECTION BUFFER, AND STEEL PIPE ASSEMBLY. NO WASHER REQUIRED. SEE DETAIL "B".

103 CABLE IS TAUT.

104 ADJUST AA2 AND BB1 TO FIT.

105 BREAK POINT OF SHOULDER.

106 TACK WELD CABLE CONNECTOR TUBE PLATE TO CABLE CONNECTION TUBE. SEE DETAIL "A" PROFILE VIEW.

107 PAY LIMIT FOR BEAM GUARD.

108 SQUARE WASHER BETWEEN HEAD OF BOLT AND TRAFFIC FACE OF BEAM GUARD. ROUND WASHER REQUIRED BETWEEN NUT AND BB1.

109 CUT OR PROVIDE THREADED STUD THAT IS FLUSH WITH FACE OF BEAM GUARD RAIL KK1 (PLUS OR MINUS ½" TOLERANCE). DEBURR AFTER CUTTING.

110 SEE STEEL PIPE ASSEMBLY DETAILS.

111 ATTACH UU2 WITH UU3. SHOP APPLY UU1 TO UU2.

112 FOUR (4) HH1 AND HH2 REQUIRED TO ATTACH AA1 TO AA2.

113 FOUR (4) HH1 AND HH2 REQUIRED TO ATTACH AA2 TO BB1.

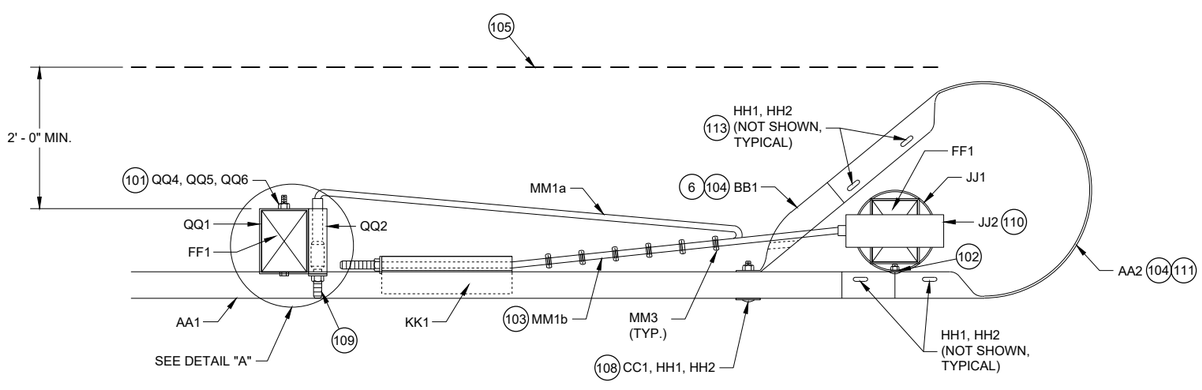

TOP VIEW

SHORT RADIUS TERMINAL

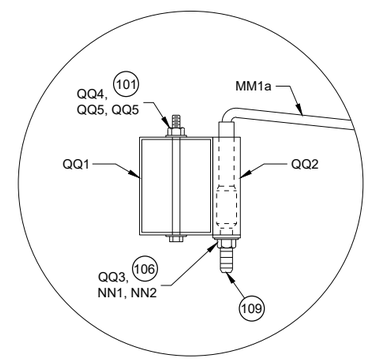

TOP VIEW

DETAIL "A"

(WOOD BREAKAWAY AND BEAM GUARD RAIL POSTS NOT SHOWN)

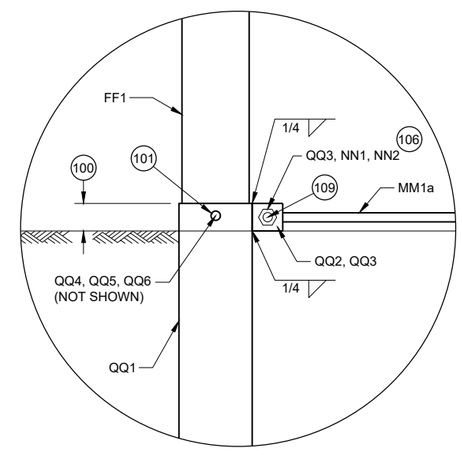

PROFILE VIEW

DETAIL "A"

6

6

SDD 14B53 - 02b

SDD 14B53 - 02b

SHORT RADIUS BEAM GUARD (MGS) SHORT RADIUS TERMINAL (MGS)

STATE OF WISCONSIN
DEPARTMENT OF TRANSPORTA

GENERAL NOTES

(200) TWO (2) NAILS SPACED 4 INCHES CENTER TO CENTER.

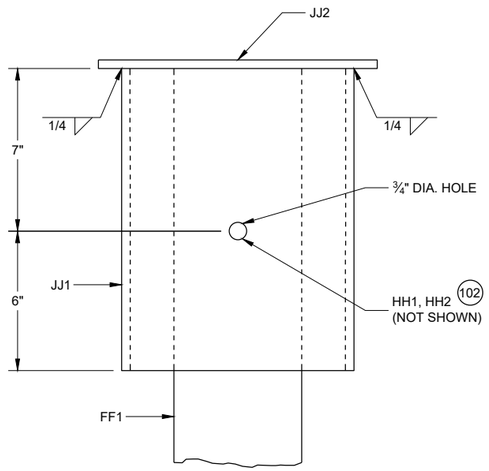

PROFILE VIEW

DETAIL "B"
STEEL PIPE ASSEMBLY
(BEAM GUARD AND W BEAM END SECTION NOT SHOWN)

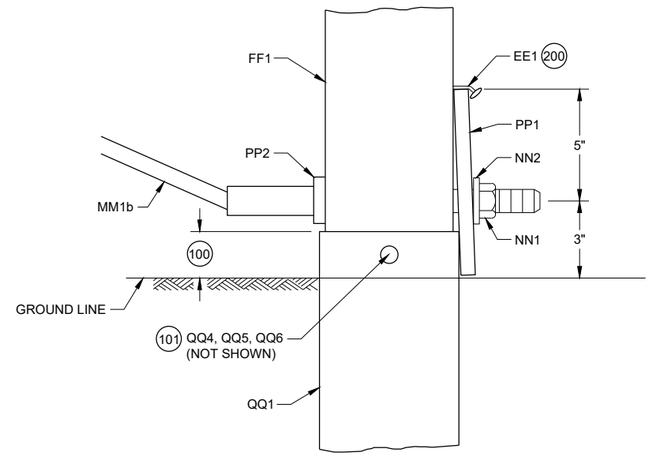

PROFILE VIEW

DETAIL "C"

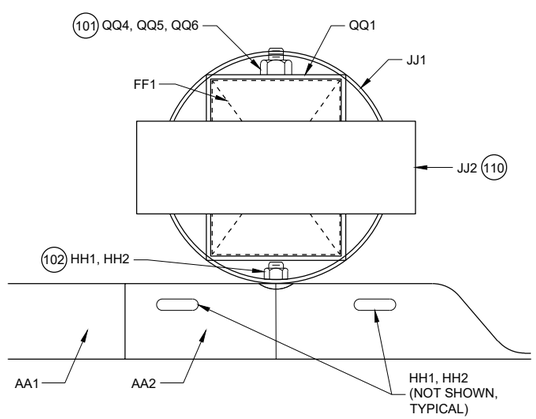

PLAN VIEW

DETAIL "B"
STEEL PIPE ASSEMBLY

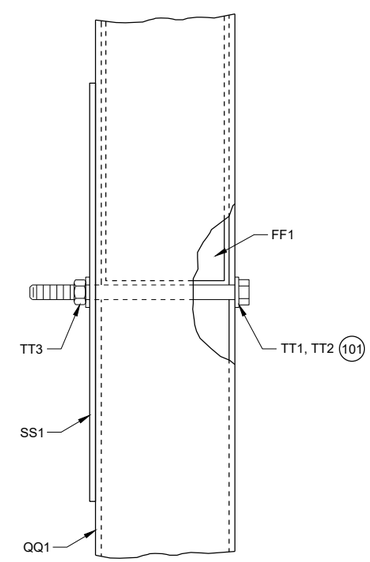

PROFILE VIEW

DETAIL "D"

SHORT RADIUS BEAM GUARD (MGS) SHORT RADIUS TERMINAL (MGS)

STATE OF WISCONSIN
DEPARTMENT OF TRANSPORTAT

6

SDD 14B53 - 02c

GENERAL NOTES

(300) WASHERS REQUIRED BETWEEN BOLT HEAD AND BEAM GUARD RAIL AND BETWEEN NUT AND ANCHOR BRACKET. EIGHT (8) LL1 AND LL3 REQUIRED. SIXTEEN (16) LL2 REQUIRED.

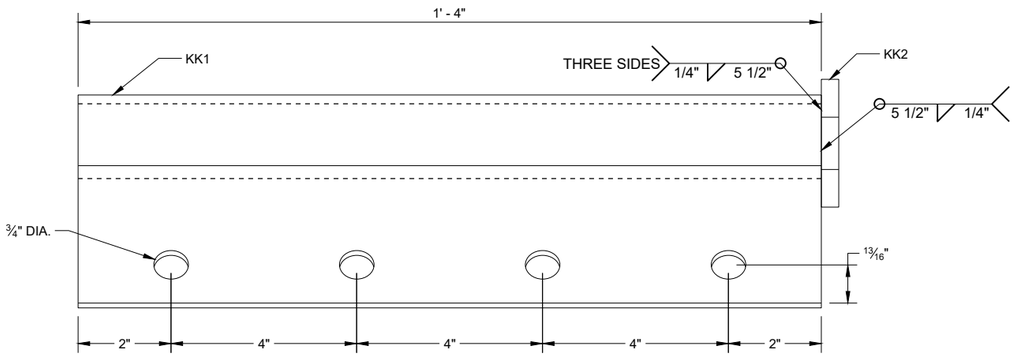

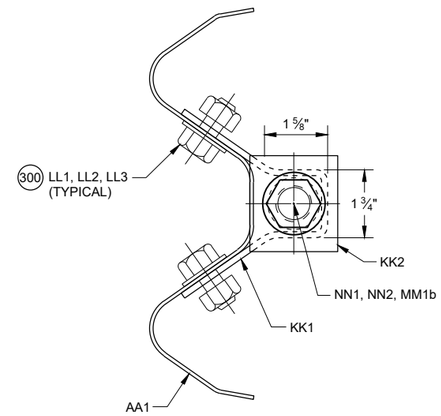

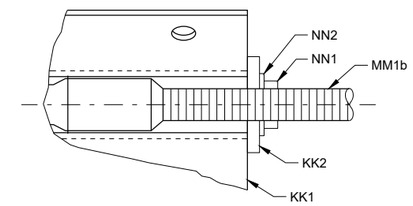

SECTION A - A

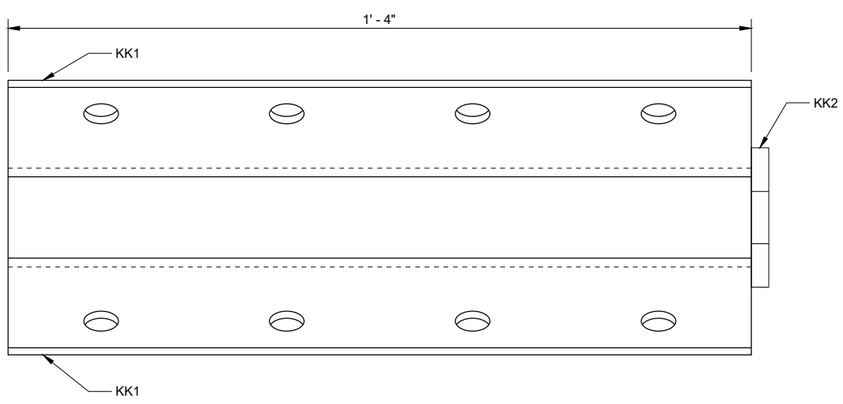

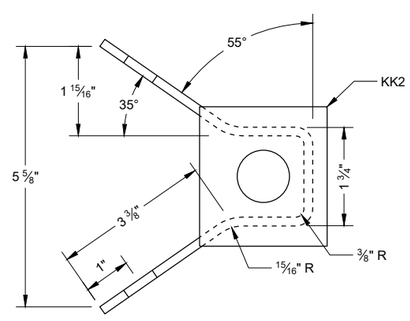

ANCHOR BRACKET (KK1, KK2)

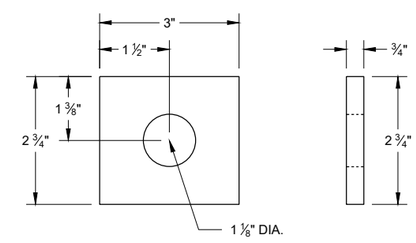

ANCHOR BRACKET BEARING PLATE (KK2)

6

6

SDD 14B53 - 02d

SDD 14B53 - 02d

SHORT RADIUS BEAM GUARD (MGS) SHORT RADIUS TERMINAL (MGS)

STATE OF WISCONSIN
DEPARTMENT OF TRANSPORTAT

GENERAL NOTES

(400) CROSS SECTION OF PART IS TO FIT OVER AA1 .

(401) CROSS SECTION OF PART IS TO FIT OVER OR UNDER AA1 .

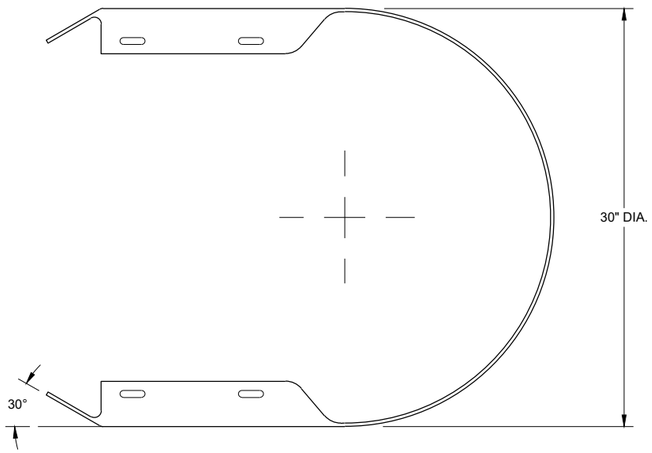

TOP VIEW

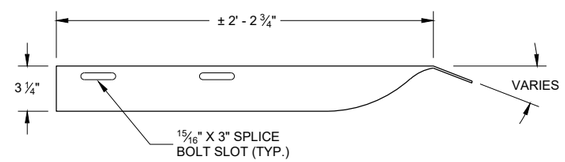

TOP VIEW

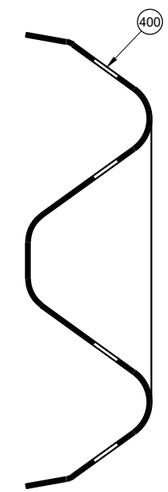

SECTION B -B

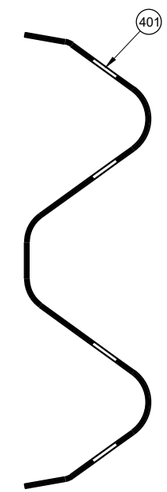

SECTION C -C

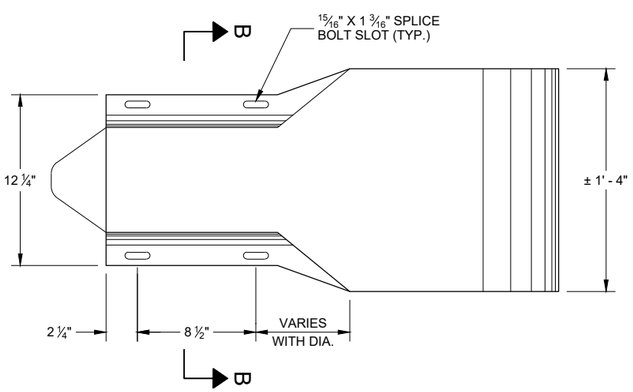

PROFILE VIEW

W BEAM
END SECTION BUFFER (AA2)

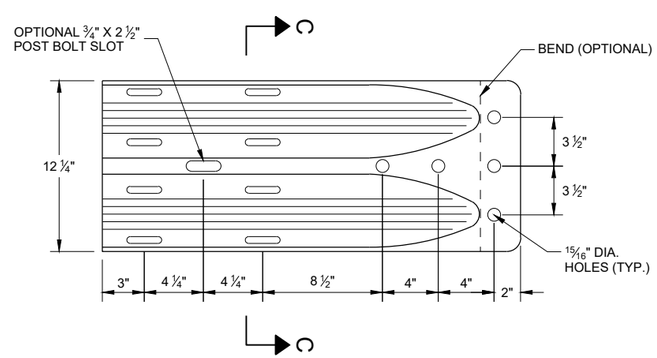

PROFILE VIEW

W BEAM
TERMINAL CONNECTOR (BB1)

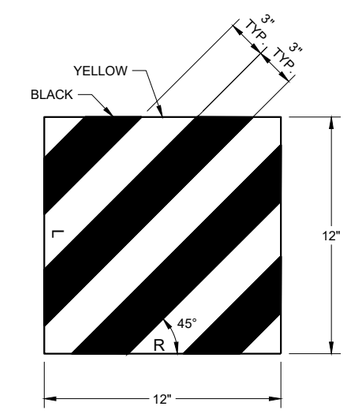

REFLECTIVE SHEETING (UU1, UU2)

SHORT RADIUS BEAM GUARD (MGS) SHORT RADIUS TERMINAL (MGS)

STATE OF WISCONSIN
DEPARTMENT OF TRANSPORTAT

6

6

SDD 14B53 - 02e

SDD 14B53 - 02e

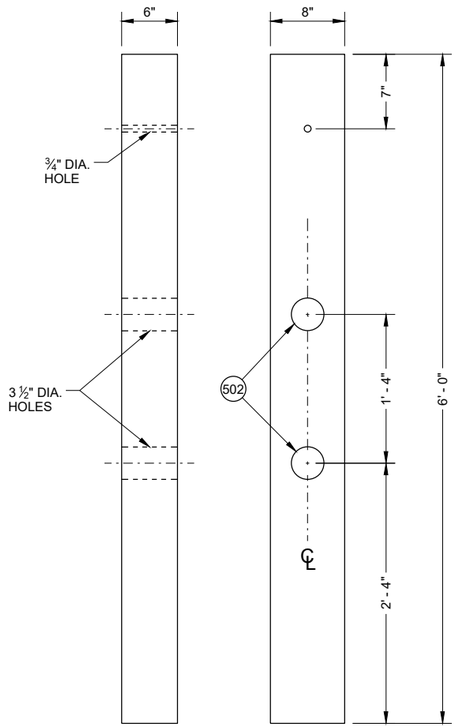

FRONT VIEW SIDE VIEW

CONTROLLED RELEASE POST (CRT) (DD2)

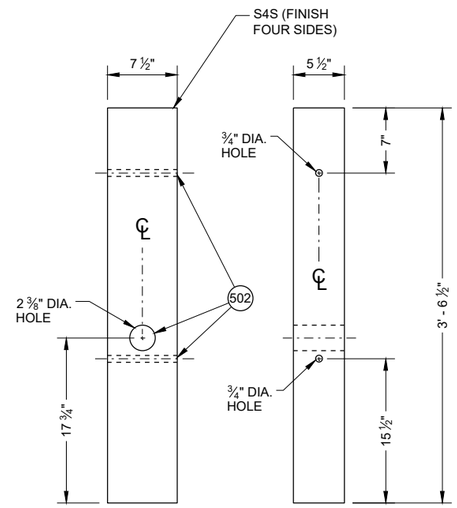

FRONT VIEW SIDE VIEW

WOOD BREAKAWAY POST (FF1)

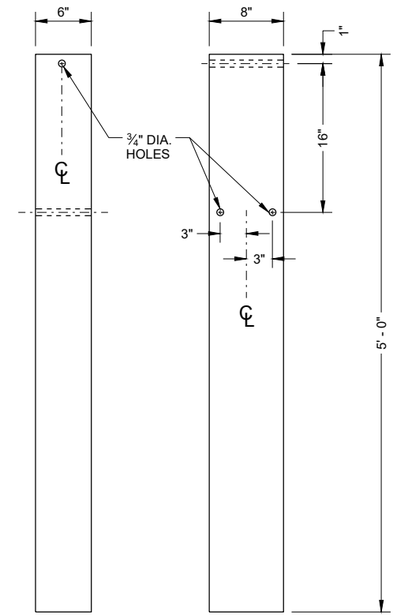

FRONT VIEW SIDE VIEW

FOUNDATION TUBE (QQ1) 500

GENERAL NOTES

500 SEE DETAIL "D" FOR LOCATION AND ATTACHMENT OF SS1.

501 FOR MM1a THREADED STUD ONLY REQUIRED ON ONE END. SWAGED FITTING REQUIRED.

502 LOCATE HOLES ON THE CENTERLINE OF THE SIDE OF THE POST.

503 MM1a MAY HAVE ONE THREADED STUD 4 INCHES LONG. SEE NOTE 109.

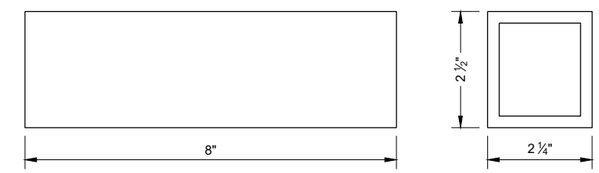

FOUNDATION TUBE - ANCHOR CABLE TUBE (QQ2)

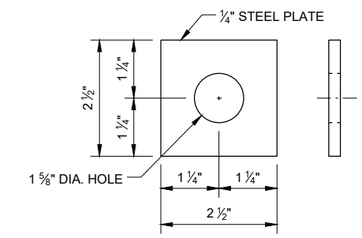

ANCHOR CABLE TUBE END PLATE (QQ3)

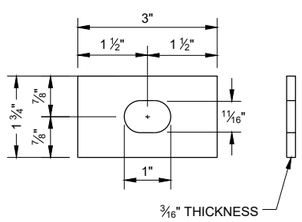

RECTANGULAR PLATE WASHER (CC1)

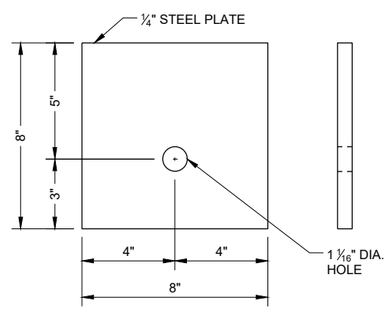

BEARING PLATE (PP1)

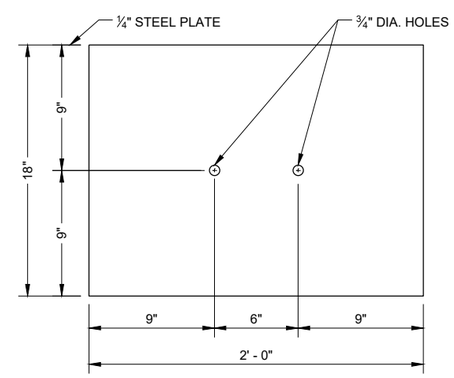

SOIL PLATE (SS1)

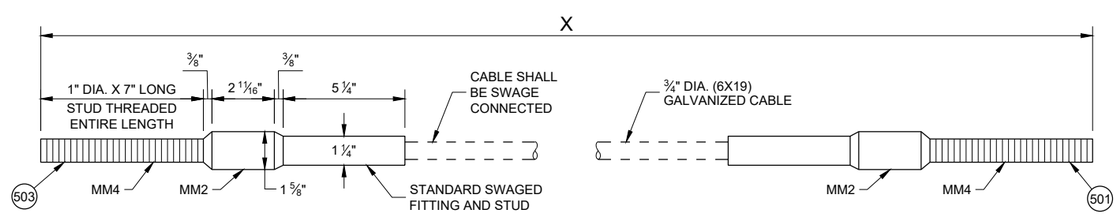

CABLE ASSEMBLY (MM1a, MM1b)

"X" LENGTH

MM1b	9' - 0"
MM1b	6' - 8"

SHORT RADIUS BEAM GUARD (MGS) SHORT RADIUS TERMINAL (MGS)

STATE OF WISCONSIN
DEPARTMENT OF TRANSPORTAT

6

SDD 14B53 - 02f

BILL OF MATERIALS - SHORT RADIUS BEAM GUARD (MGS)

PART	DESCRIPTION	MATERIALS SPECIFICATIONS	NOTES
A1	BEAM GUARD RAIL	AASHTO M180, CLASS A, TYPE 2	
		APPROVED PRODUCER	
A2	BEAM GUARD RAIL - SHOP BENT	INDICATE ON BACK OF RAIL THE RADIUS THAT RAIL WAS BENT TO. SHOP BEND RADIUS IS TO THE NEAREST FOOT. FOLLOW AASHTO M180 ON HOW TO MARK RADIUS INFORMATION.	
		AASHTO M180, CLASS A, TYPE 2	
		APPROVED PRODUCER	
B1	BLOCK - WOOD	WISDOT SPEC. 614	SEE SDD 14B42
C1	NAIL	ASTM A153 HOT DIP CLASS D	
		ASTM F1667 TYPE 1 STYLE 12 (16 DOUBLE HEAD)	
D1	POST-STRONG POST-WOOD	WISDOT SPEC. 614	SEE SDD 14B42
D2	POST-CRT-WOOD	WISDOT SPEC. 614	
E1	POST BOLT	ASTM A307 GRADE A OR SAE J429 GRADE 2	5/8" DIA. SEE SDD 14B42 FOR BOLT GEOMETRY
		AASHTO M180	
		GALV. HOT DIP TO AASHTO M232 CLASS C / ASTM A153 CLASS C / ASTM F2329 OR GALV. MECHANICALLY TO AASHTO M298 CLASS 50, TYPE 1 / ASTM B695 CLASS 50, TYPE 1	
		UNC	
E2	POST BOLT - WASHER	ASTM F436 TYPE 1 (HARDEN TYPICALLY USED WITH STEEL) OR ASTM F844 (UNHARDENED TYPICALLY WITH WOOD)	5/8" DIA.
		GALV. AASHTO M111 / ASTM A 123 OR GALV. HOT DIP. TO AASHTO M232 CLASS C / ASTM A153 CLASS C / ASTM F2329	
E3	POST BOLT - NUT	AASHTO M180 DOUBLE RECESSED HEAVY HEX HEAD	5/8" DIA. SEE SDD 14B42 FOR BOLT GEOMETRY
		GALV. HOT DIP TO AASHTO M232 CLASS C / ASTM A153 CLASS C / ASTM F2329 OR GALV. MECHANICALLY TO AASHTO M298 CLASS 50, TYPE 1 / ASTM B695 CLASS 50, TYPE 1	
		UNC	
		OVER TAPPED NUTS OVER-SIZE AS SPECIFIED IN AASHTO 291 / ASTM A 563	
		ASTM A563 GRADE A HEAVY HEX HEAD	
F1	SPLICE BOLT	GALV. HOT DIP TO AASHTO M232 CLASS C / ASTM A153 CLASS C / ASTM F2329 OR GALV. MECHANICALLY TO AASHTO M298 CLASS 50, TYPE 1 / ASTM B695 CLASS 50, TYPE 1	5/8" DIA. SEE SDD 14B42 FOR BOLT GEOMETRY
		ASTM A307 GRADE A OR SAE J429 GRADE 2	
		UNC	
		AASHTO M180	

PART	DESCRIPTION	MATERIALS SPECIFICATIONS	NOTES
F2	SPLICE BOLT - NUT	ASTM A563 GRADE A	5/8" DIA. SEE SDD 14B42 FOR BOLT GEOMETRY
		AASHTO M180 DOUBLE RECESSED HEAVY HEX HEAD	
		GALV. HOT DIP TO AASHTO M232 CLASS C/ASTM A153 CLASS C/ASTM F2329 OR GALV. MECHANICALLY TO AASHTO M298 CLASS 50, TYPE 1/ASTM B695 CLASS 50, TYPE 1	
		OVER TAPPED NUTS OVER-SIZE AS SPECIFIED IN AASHTO 291 / ASTM A 563	
		UNC	
G1	LAG SCREW	ASTM A308 GRADE A ASTM A153 CLASS D	1/2" DIA. 6" LONG
H1	DELINEATOR - BEAM GUARD		SEE SDD 14B42 FOR MORE INFORMATION
H2	DELINEATION - SHEETING	YELLOW OR WHITE	
		WISDOT SPEC 637 TYPE SH	
		APPROVED PRODUCT LIST	
J1	FOUNDATION BACKFILL	STANDARD SPEC. 614	
AA1	BEAM GUARD RAIL - PUNCHED	AASHTO M180, CLASS A, TYPE 2	
		APPROVED PRODUCER	
AA2	BEAM GUARD RAIL - END SECTION BUFFER	AASHTO M180, CLASS A, TYPE 2	
		APPROVED PRODUCER	
BB1	BEAM GUARD RAIL - TERMINAL CONNECTOR MODIFIED	AASHTO M180, CLASS A, TYPE 2	
		APPROVED PRODUCER	
CC1	SHORT RADIUS - SQUARE WASHER	AASHTO M180	
		GALV. AASHTO M111 / ASTM A123	
EE1	NAIL	ASTM A153 HOT DIP CLASS D	
		ASTM F1667 TYPE 1 STYLE 12 (16 DOUBLE HEADED)	
FF1	POST - BCT - WOOD	S4S FINISH ON 4 SIDES	
		WISDOT SPEC. 614	
GG1	POST BOLT	ASTM A307 GRADE A OR SAE J429 GRADE 2	3/8" DIA. SEE SDD 14B42 FOR BOLT GEOMETRY
		AASHTO M180	
		GALV. HOT DIP TO AASHTO M232 CLASS C/ASTM A153 CLASS C/ASTM F2329 OR GALV. MECHANICALLY TO AASHTO M298 CLASS 50, TYPE 1/ASTM B695 CLASS 50, TYPE 1	
		UNC	
GG2	POST BOLT - WASHER	ASTM F436 TYPE 1 (HARDEN TYPICALLY USED WITH STEEL) OR ASTM F844 (UNHARDENED TYPICALLY WITH WOOD)	3/8" DIA.
		GALV. AASHTO M111 / ASTM A 123 OR GALV. HOT DIP. TO AASHTO M232 CLASS C/ASTM A153 CLASS C / ASTM F2329	

SHORT RADIUS BEAM GUARD (MGS) SHORT RADIUS TERMINAL (MGS)

STATE OF WISCONSIN
DEPARTMENT OF TRANSPORTAT

6

SDD 14B53 - 02g

BILL OF MATERIALS - SHORT RADIUS BEAM GUARD (MGS)

PART	DESCRIPTION	MATERIALS SPECIFICATIONS	NOTES
GG3	POST BOLT - NUT	ASTM A563 GRADE A	⅜" DIA. SEE 14B42 FOR GEOMETRY
		AASHTO M180 DOUBLE RECESSED HEAVY HEX HEAD	
		GALV. HOT DIP TO AASHTO M232 CLASS C / ASTM A153 CLASS C / ASTM F2329 OR GALV. MECHANICALLY TO AASHTO M298 CLASS 50, TYPE 1 / ASTM B695 CLASS 50, TYPE 1	
		UNC	
		OVER TAPPED NUTS OVER-SIZE AS SPECIFIED IN AASHTO 291 / ASTM A 563	
		ASTM A563 GRADE A HEAVY HEX HEAD	
HH1	SPLICE BOLT	GALV. HOT DIP TO AASHTO M232 CLASS C / ASTM A153 CLASS C / ASTM F2329 OR GALV. MECHANICALLY TO AASHTO M298 CLASS 50, TYPE 1 / ASTM B695 CLASS 50, TYPE 1	⅜" DIA. SEE SDD 14B42 FOR BOLT GEOMETRY
		ASTM A307 GRADE A OR SAE J429 GRADE 2	
		UNC	
		AASHTO M180 HEAD GEOMETRY	
HH2	SPLICE BOLT - NUT	ASTM A563 GRADE A	⅜" DIA. SEE SDD 14B42 FOR BOLT GEOMETRY
		AASHTO M180 DOUBLE RECESSED HEAVY HEX HEAD	
		GALV. HOT DIP TO AASHTO M232 CLASS C / ASTM A153 CLASS C / ASTM F2329 OR GALV. MECHANICALLY TO AASHTO M298 CLASS 50, TYPE 1 / ASTM B695 CLASS 50, TYPE 1	
		OVER TAPPED NUTS OVER-SIZE AS SPECIFIED IN AASHTO 291 / ASTM A 563	
		UNC	
JJ1	PIPE - STEEL	ASTM A53 GALVANIZED GRADE B SCHEDULE 40	10" O.D.
JJ2	TOP PLATE	ASTM A36 MIN. STRENGTH 36 KSI, OR ASTM A529 MAX. STRENGTH 50 KSI, OR ASTM A572 MAX STRENGTH 50 KSI OR ASTM A709 MAX STRENGTH 50 KSI OR ASTM A992 MAX STRENGTH 50 KSI	DIMENSIONS ⅜" X 4" X 1' - 0"
		GALV. AASHTO M111 / ASTM A123	
KK1	ANCHOR BRACKET	ASTM A36 MIN. STRENGTH 36 KSI, OR ASTM A529 MAX. STRENGTH 50 KSI, OR ASTM A572 MAX STRENGTH 50 KSI OR ASTM A709 MAX STRENGTH 50 KSI OR ASTM A992 MAX STRENGTH 50 KSI	
		GALV. AASHTO M111 / ASTM A123	
KK2	ANCHOR BRACKET - BEARING PLATE	ASTM A36 MIN. STRENGTH 36 KSI, OR ASTM A529 MAX. STRENGTH 50 KSI, OR ASTM A572 MAX STRENGTH 50 KSI OR ASTM A709 MAX STRENGTH 50 KSI OR ASTM A992 MAX STRENGTH 50 KSI	
		GALV. AASHTO M111 / ASTM A123	
LL1	ANCHOR BRACKET - BOLT	ASTM A307 GRADE B HEAVY HEX HEAD OR SAE J429 GRADE 2 HEAVY HEX HEAD	⅝" DIA.
		GALV. HOT DIP TO AASHTO M232 CLASS C / ASTM A153 CLASS C / ASTM F2329 OR GALV. MECHANICALLY TO AASHTO M298 CLASS 50, TYPE 1 / ASTM B695 CLASS 50, TYPE 1	
		UNC	

PART	DESCRIPTION	MATERIALS SPECIFICATIONS	NOTES
LL2	ANCHOR BRACKET - WASHER	ASTM F436 TYPE 1 (HARDEN WASHER ONLY)	⅝" DIA.
		GALV. AASHTO M111 / ASTM A123 OR GALV. HOT DIP TO AASHTO M232 CLASS C / ASTM A153 CLASS C / ASTM F2329	
LL3	ANCHOR BRACKET - NUT	ASTM A563 GRADE A	⅝" DIA.
		GALV. HOT DIP TO AASHTO M232 CLASS C / ASTM A153 CLASS C / ASTM F2329 OR GALV. MECHANICALLY TO AASHTO M298 CLASS 50, TYPE 1 / ASTM B695 CLASS 50, TYPE 1	
		OVER TAPPED NUTS OVER-SIZE AS SPECIFIED IN AASHTO 291 / ASTM A 563	
		UNC	
MM1a	ANCHOR CABLE	AASHTO M30 / ASTM A741 INDEPENDENT WIRE CORE (IWRC) OR WIRE STRAND CORE (WCS), IMPROVED PLOW STEEL (IPS), 6X19, TYPE II OR IIc CLASS C ZINC COATED	
MM1b	ANCHOR CABLE	AASHTO M30 / ASTM A741 INDEPENDENT WIRE CORE (IWRC) OR WIRE STRAND CORE (WCS), IMPROVED PLOW STEEL (IPS), 6X19, TYPE II OR IIc CLASS C ZINC COATED	
MM2	ANCHOR CABLE - SWAGE FITTING	ASTM A576 GRADE 1035	
		SWAGE FITTINGS ARE TO BE FACTORY SWEDGED. WITH A BREAKING STRENGTH 40,000 LBS.	
		GALV. AASHTO M111 / ASTM A123	
		ASME B30.26 FORGED, CAST, OR DIE STAMPED WITH THE FOLLOWING INTO CONNECTION: NAME OF MANUFACTURER OR TRADEMARK OF CONNECTION'S MANUFACTURER, SIZE OR RATED LOAD, GRADE.	
MM3	WIRE ROPE CABLE CLAMPS	FF-C-450D TYPE 1 CLASS 1	¾"
		ASTM A153 HOT DIP CLASS D	
MM4	ANCHOR CABLE - SWAGE FITTING - STUD	ASTM F3125 GRADE A325 TYPE 1 OR SAE GRADE 5 OR ASTM A449 TYPE 1 HEAVY HEX HEAD	
		GALV. HOT DIP TO AASHTO M232 CLASS C / ASTM A153 CLASS C / ASTM F2329 OR GALV. MECHANICALLY TO AASHTO M298 CLASS 50, TYPE 1 / ASTM B695 CLASS 50, TYPE 1	
		UNC	
NN1	ANCHOR CABLE - NUT	ASTM A563 GRADE A	1" DIA.
		AASHTO M180 DOUBLE RECESSED HEAVY HEX HEAD	
		GALV. HOT DIP TO AASHTO M232 CLASS C / ASTM A153 CLASS C / ASTM F2329 OR GALV. MECHANICALLY TO AASHTO M298 CLASS 50, TYPE 1 / ASTM B695 CLASS 50, TYPE 1	
		OVER TAPPED NUTS OVER-SIZE AS SPECIFIED IN AASHTO 291 / ASTM A 563	
		UNC	
NN2	ANCHOR CABLE - NUT - WASHER	ASTM F436 TYPE 1 (HARDEN WASHER ONLY)	1" DIA.
		GALV. AASHTO M111 / ASTM A123 OR GALV. HOT DIP TO AASHTO M232 CLASS C / ASTM A153 CLASS C / ASTM F2329	

SHORT RADIUS BEAM GUARD (MGS) SHORT RADIUS TERMINAL (MGS)

STATE OF WISCONSIN
DEPARTMENT OF TRANSPORTA

6

SDD 14B53 - 02h

BILL OF MATERIALS - SHORT RADIUS BEAM GUARD (MGS)

PART	DESCRIPTION	MATERIALS SPECIFICATIONS	NOTES
PP1	BEARING PLATE AT POST	ASTM A36 MIN. STRENGTH 36 KSI, OR ASTM A529 MAX. STRENGTH 50 KSI, OR ASTM A572 MAX STRENGTH 50 KSI OR ASTM A709 MAX STRENGTH 50 KSI OR ASTM A992 MAX STRENGTH 50 KSI	
		GALV. AASHTO M111 / ASTM A123	
PP2	PIPE - STEEL	ASTM A53 GALVANIZED GRADE B SCHEDULE 40	2" DIA. x 6" LONG
QQ1	FOUNDATION TUBE	ASTM A500 GRADE B	8" X 6" X 3/16"
		GALV. AASHTO M111 / ASTM A123	
QQ2	SHORT RADIUS - FOUNDATION TUBE - ANCHOR CABLE - TUBE	ASTM A500 GRADE B	DIMENSIONS 2 1/2" X 2 1/4" X 1/4" X 8"
		GALV. AASHTO M111 / ASTM A123	
QQ3	SHORT RADIUS - SOIL TUBE - ANCHOR CABLE - TUBE - END PLATE	ASTM A36 MIN. STRENGTH 36 KSI, OR ASTM A529 MAX. STRENGTH 50 KSI, OR ASTM A572 MAX STRENGTH 50 KSI OR ASTM A709 MAX STRENGTH 50 KSI OR ASTM A992 MAX STRENGTH 50 KSI	DIMENSIONS 2 1/2" X 2 1/2" X 1/4"
		GALV. AASHTO M111 / ASTM A123	
QQ4	GROUND STRUT AND YOKE - BOLT	GALV. HOT DIP TO AASHTO M232 CLASS C / ASTM A153 CLASS C / ASTM F2329 OR GALV. MECHANICALLY TO AASHTO M298 CLASS 50, TYPE 1 / ASTM B695 CLASS 50, TYPE 1	5/8 DIA.
		ASTM A307 GRADE B HEAVY HEX HEAD OR SAE J429 GRADE 2 HEAVY HEX HEAD	
		UNC	
QQ5	GROUND PLATE AND YOKE - WASHER	ASTM F436 TYPE 1 (HARDEN WASHER ONLY)	5/8 DIA.
		GALV. AASHTO M111 / ASTM A123 OR GALV. HOT DIP TO AASHTO M232 CLASS C / ASTM A153 CLASS C / ASTM F2329	
QQ6	GROUND STRUT AND YOKE - NUT	HEAVY HEX	5/8 DIA.
		UNC	
		ASTM A563 GRADE A	
		OVER TAPPED NUTS AS SPECIFIED IN AASHTO 291 / ASTM A 563	
		GALV. HOT DIP TO AASHTO M232 CLASS C / ASTM A153 CLASS C / ASTM F2329 OR GALV. MECHANICALLY TO AASHTO M298 CLASS 50, TYPE 1 / ASTM B695 CLASS 50, TYPE 1	

PART	DESCRIPTION	MATERIALS SPECIFICATIONS	NOTES
SS1	SOIL PLATE	ASTM A36 MIN. STRENGTH 36 KSI, OR ASTM A529 MAX. STRENGTH 50 KSI, OR ASTM A572 MAX STRENGTH 50 KSI OR ASTM A709 MAX STRENGTH 50 KSI OR ASTM A992 MAX STRENGTH 50 KSI	
		GALV. AASHTO M111 / A123	
TT1	SOIL PLATE - BOLT	ASTM A307 GRADE B HEAVY HEX HEAD OR SAE J429 GRADE 2 HEAVY HEX HEAD	5/8 DIA.
		GALV. HOT DIP TO AASHTO M232 CLASS C / ASTM A153 CLASS C / ASTM F2329 OR GALV. MECHANICALLY TO AASHTO M298 CLASS 50, TYPE 1 / ASTM B695 CLASS 50, TYPE 1	
		UNC	
TT2	SOIL PLATE - WASHER	ASTM F436 TYPE 1 (HARDEN WASHER ONLY)	5/8 DIA.
		GALV. AASHTO M111 / ASTM A123 OR GALV. HOT DIP TO AASHTO M232 CLASS C / ASTM A153 CLASS C / ASTM F2329	
TT3	SOIL PLATE - NUT	GALV. HOT DIP TO AASHTO M232 CLASS C / ASTM A153 CLASS C / ASTM F2329 OR GALV. MECHANICALLY TO AASHTO M298 CLASS 50, TYPE 1 / ASTM B695 CLASS 50, TYPE 1	5/8 DIA.
UU1	OBJECT MARKER - SHEETING	MUTCD / WISDOT OBJECT MARKER TYPE 3	PATTERN AND COLOR FOR SHEETING. SHEETING TYPE FOR MARKER.
		WISDOT SPEC 637 TYPE F	
		APPROVED PRODUCT LIST	
UU2	OBJECT MARKER - ALUMINUM PLATE	WISDOT SPEC 637 ALUMINUM PLATE	MATERIAL AND THICKNESS OF MATERIALS
UU3	OBJECT MARKER - SCREWS	STAINLESS SELF-TAPPING SCREWS	
VV1	FOUNDATION BACKFILL	WISDOT SPEC 614	

SHORT RADIUS BEAM GUARD (MGS) SHORT RADIUS TERMINAL (MGS)

STATE OF WISCONSIN
DEPARTMENT OF TRANSPORTATION

APPROVED
May 2022 — DATE
/S/ Rodney Taylor — ROADWAY STANDARDS DEVE ENGINEER
FHWA

6
SDD 14B53 - 02i

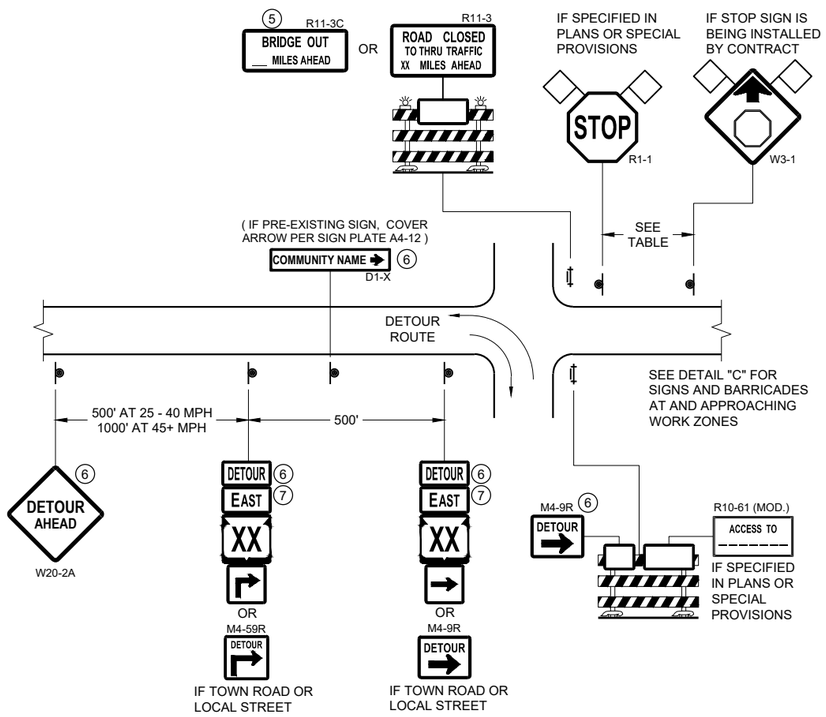

DETAIL A
MAINLINE CLOSURE WITH POSTED DETOUR
WORK ZONE GREATER THAN OR EQUAL TO ½ MILE FROM DETOUR ROUTE (1000 FEET IF URBAN)

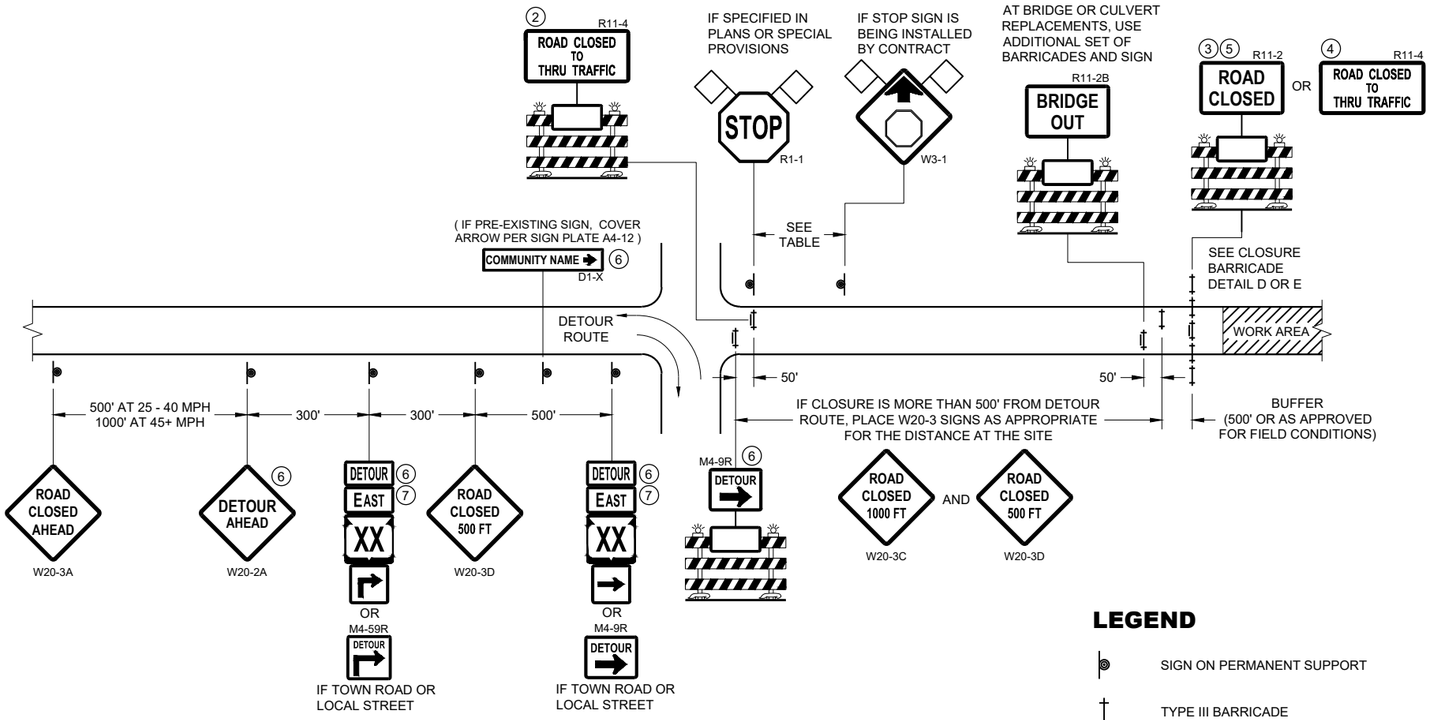

DETAIL B
MAINLINE CLOSURE WITH POSTED DETOUR
WORK ZONE LESS THAN ½ MILE FROM DETOUR ROUTE (1000 FEET IF URBAN)

LEGEND

- SIGN ON PERMANENT SUPPORT
- TYPE III BARRICADE
- TYPE III BARRICADE WITH ATTACHED SIGN
- TYPE "A" WARNING LIGHT (FLASHING)
- WORK AREA
- FLAGS, 16" X 16" MIN. (ORANGE)
- DETOUR — M4 - 8
- EAST — M3 - X
- XX (M1 - 4) OR XX (M1 - 6) OR COUNTY X (M1 - 5A)
- (M05 - 1) OR (M06 - 1)

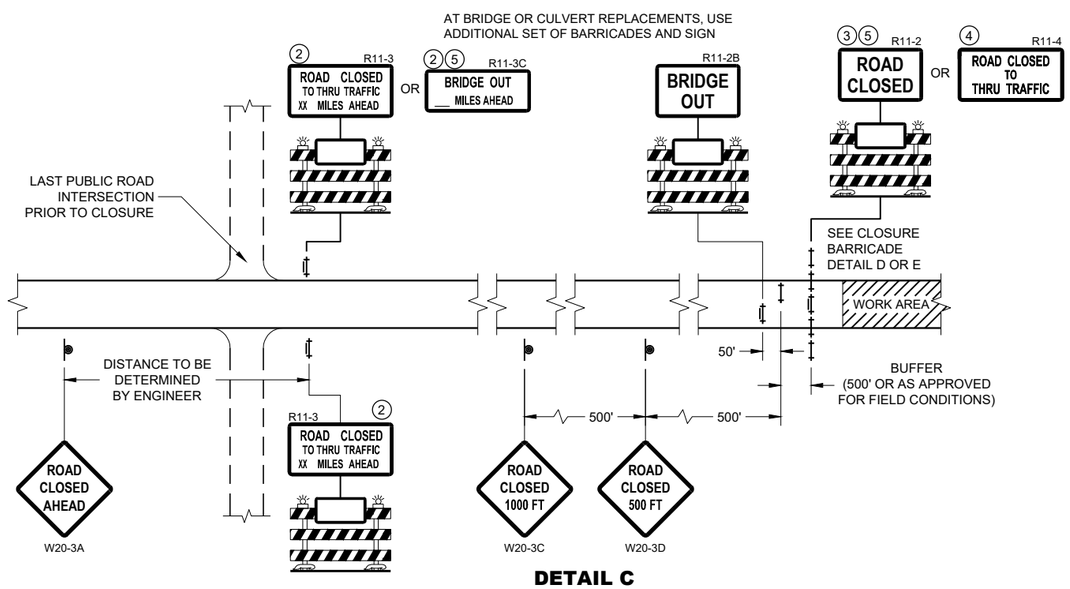

DETAIL C
MAINLINE CLOSURE, NO POSTED DETOUR

SPEED LIMIT (MPH)	"STOP AHEAD" ADVANCE WARNING DISTANCE (FT)
25	200
30	200
35	350
40	350
45	500
50	550
55	750

SEE SDD 15C2-SHEET "b" FOR GENERAL NOTES AND FOOTNOTES 1 THROUGH 7

BARRICADES AND SIGNS FOR MAINLINE CLOSURES

STATE OF WISCONSIN
DEPARTMENT OF TRANSPORTATION

APPROVED
May 2023 — DATE
/S/ Andrew Heidtke — WORK ZONE ENGINEER

FHWA

6

SDD 15C02 - 09a

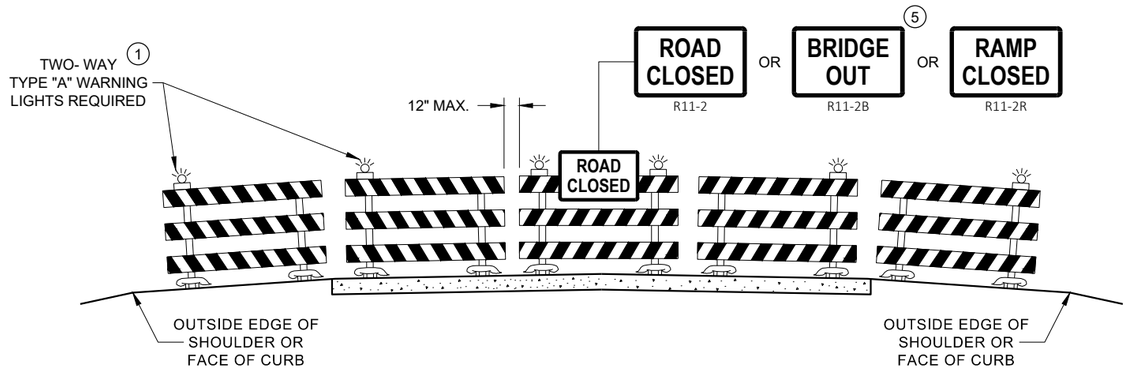

DETAIL D
ROAD CLOSURE BARRICADE DETAIL
APPROACH VIEW

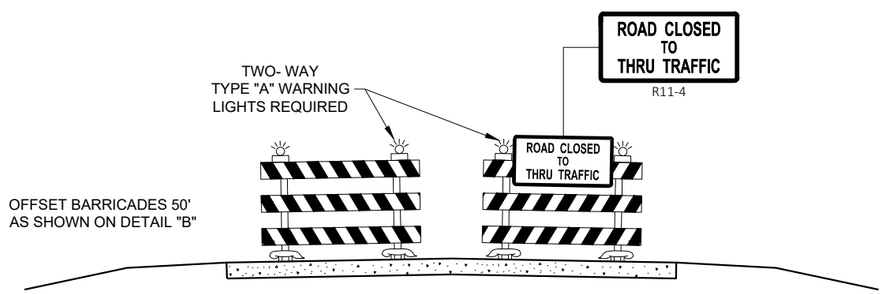

DETAIL E
LANE CLOSURE BARRICADE DETAIL
APPROACH VIEW

SEE SDD 15C2 - SHEET "a" FOR LEGEND

GENERAL NOTES

THE EXACT NUMBER, LOCATION, AND SPACING OF ALL SIGNS AND BARRICADES SHALL BE ADJUSTED TO FIT FIELD CONDITIONS AS APPROVED BY THE ENGINEER.

ANY SIGNS TEMPORARY OR EXISTING, WHICH CONFLICT WITH TRAFFIC CONTROL "IN USE", SHALL BE REMOVED OR COVERED AS NEEDED AND AS APPROVED BY THE ENGINEER.

THE SPACING BETWEEN TRAFFIC CONTROL SIGNS SHOULD BE ADJUSTED TO NOT CONFLICT WITH AND SHOULD PROVIDE A DESIRABLE MINIMUM OF 200 FEET CLEARANCE TO EXISTING SIGNS THAT WILL REMAIN IN PLACE.

BARRICADES THAT MUST BE MOVED FOR A WORK OPERATION SHALL BE IMMEDIATELY RE-ESTABLISHED UPON COMPLETION OF THE OPERATION, OR FOR CONTINUING OPERATIONS, AT THE END OF EACH WORKING DAY.

SIGNS THAT WILL BE IN PLACE LESS THAN 7 CONTINUOUS DAYS AND NIGHTS MAY BE MOUNTED ON PORTABLE SUPPORTS.

ALL TYPE III BARRICADES SHALL HAVE RAILS REFLECTORIZED ON BOTH FACES. STRIPES SHALL BE PROPERLY SLOPED DOWN TOWARD THE TRAFFIC SIDE OR AS SHOWN IN THE ROAD CLOSURE BARRICADE DETAIL "D" FOR FULL ROAD CLOSURES.

TYPE "A" LOW - INTENSITY FLASHING WARNING LIGHTS SHALL BE VISIBLE ON BOTH SIDES OF THE BARRICADE.

THE R11 - 2, R11 - 3, M4 - 9, R11 - 4, AND R10 - 61 SIGNS PLACED ON THE BARRICADES SHALL COVER NO MORE THAN THE TOP RAIL. THE SIGNS SHALL NOT COVER ANY PORTION OF THE MIDDLE RAIL OR BOTTOM RAILS.

"WO" AND "MO" SIGNS ARE THE SAME AS "W" AND "M" SIGNS EXCEPT THE BACKGROUND IS ORANGE.

ALL SIGNS SHALL BE 48" X 48" UNLESS OTHERWISE NOTED BELOW:
- R11 - 2 SHALL BE 48" X 30"
- R11 - 3 SHALL, R11 - 4 AND R10 - 61 SHALL BE 60 " X 30"
- M4 - 9 SHALL BE 30" X 24"
- M3 - X SHALL BE 24" X 12" (36" X 18" IF NEEDED TO MATCH EXISTING SIGNS)
- M4 - 8 SHALL BE 24" X 12" (36" X 18" IF NEEDED TO MATCH EXISTING SIGNS)
- M1 - 4, M1 - 5A AND M1 - 6 SHALL BE 24" X 24" (36" X 36" IF NEEDED TO MATCH EXISTING SIGNS)
- MO5 - 1 AND MO6 - 1 SHALL BE 21" X 21" (30" X 30" IF NEEDED TO MATCH EXISTING SIGNS)
- D1 - X SHALL BE AS SHOWN ON SPECIFIC PROJECT SIGNING DETAIL SHEETS.
- R1 - 1 SHALL BE 36" X 36"

1. TWO WARNING LIGHTS SHALL BE PROVIDED ON THE CENTER BARRICADE AND A MINIMUM OF ONE WARNING LIGHT SHALL BE PROVIDED ON EACH OF THE OTHER BARRICADES WITHIN THE ROADWAY LIMITS. SPACING OF THE WARNING LIGHTS SHALL BE UNIFORM TO THE EDGE OF ROADWAY AS SHOWN (APPROX. 8 FOOT LIGHT SPACING.
2. THESE SIGNS AND BARRICADES ARE NOT REQUIRED IF ROAD CLOSURE BEGINS AT AN INTERSECTION.
3. FOR ROAD CLOSURE WITHOUT LOCAL ACCESS TO PROJECT, SEE ROAD CLOSURE BARRICADE DETAIL "D".
4. FOR ROAD CLOSURE WITH LOCAL ACCESS TO PROJECT, SEE ROAD CLOSURE BARRICADE DETAIL "E".
5. FOR BRIDGE OR CULVERT REPLACEMENTS, SUBSTITUTE "BRIDGE OUT" INSTEAD OF "ROAD CLOSED" ON R11 - 2 AND R11 - 3 SIGNS.
6. INSTALL DETOUR AND COMMUNITY GUIDE SIGNS AND ARROWS ONLY IF SPECIFIED IN THE CONTRACT. IF THERE ARE EXISTING ROUTE MARKER ASSEMBLIES THAT WILL REMAIN IN PLACE, ADJUST THE LOCATION OF THE DETOUR ROUTE SIGNS TO CORRESPOND WITH THE EXISTING ASSEMBLIES. MODIFY EXISTING SIGNS WHERE POSSIBLE. SEE SPECIFIC PROJECT DETOUR SIGNING DETAIL SHEETS. IF DETOUR SIGNS ARE BEING INSTALLED BY OTHERS, PLACE THE CONTRACTED TRAFFIC CONTROL SIGNS TO ALLOW FOR PLACEMENT OF ALL WARNING, DETOUR AND GUIDE SIGNS AS SHOWN.
7. "EAST" CARDINAL DIRECTION MARKERS AND RIGHT TURN ARROWS ARE SHOWN. USE OTHER CARDINAL DIRECTIONS AND ARROWS AS APPROPRIATE.

BARRICADES AND SIGNS FOR VARIOUS CLOSURES

STATE OF WISCONSIN
DEPARTMENT OF TRANSPORTATION

APPROVED
May 2023 — DATE
/S/ Andrew Heidtke — WORK ZONE ENGINEE
FHWA

THIS DRAWING PROVIDES GENERAL GUIDANCE ON TYPICAL DETOUR SIGN LAYOUT AND SPACING. SEE PROJECT DETOUR SIGNING SHEETS FOR SPECIFIC DETAILS FOR EACH PROJECT.

LEGEND

- SIGN ON PERMANENT SUPPORT
- WORK AREA
- DETOUR — M4 - 8
- EAST — M3 - X
- XX — M1 - 4 OR XX — M1 - 6 OR COUNTY X — M1 - 5A
- M05 - 1 OR M06 - 1 OR M06 - 1

GENERAL NOTES

THE EXACT NUMBER, LOCATION AND SPACING OF ALL SIGNS SHALL BE ADJUSTED TO FIT FIELD CONDITIONS AS APPROVED BY THE ENGINEER.

IF THERE ARE EXISTING ROUTE MARKER ASSEMBLIES THAT WILL REMAIN IN PLACE, ADJUST THE LOCATION OF THE DETOUR ROUTE SIGNS TO CORRESPOND WITH THE EXISTING ASSEMBLIES. SEE SPECIFIC PROJECT DETOUR SIGNING DETAIL SHEETS. MODIFY EXISTING SIGNS WHERE POSSIBLE.

THE SPACING BETWEEN TRAFFIC CONTROL AND DETOUR SIGNS SHOULD BE ADJUSTED TO NOT CONFLICT WITH AND TO PROVIDE A DESIRABLE MINIMUM OF 200 FEET CLEARANCE TO EXISTING SIGNS THAT WILL REMAIN IN PLACE.

ANY SIGNS TEMPORARY OR EXISTING, WHICH CONFLICT WITH TRAFFIC CONTROL "IN USE" SHALL BE REMOVED OR COVERED AS NEEDED AND AS APPROVED BY THE ENGINEER.

SIGNS THAT WILL BE IN PLACE LESS THAN 7 CONTINUOUS DAYS AND NIGHTS MAY BE MOUNTED ON PORTABLE SUPPORTS.

"MO" SIGNS ARE THE SAME AS "M" SIGNS EXCEPT THE BACKGROUND IS ORANGE.

SIGN SIZES SHALL BE AS FOLLOWS:

M3-X SHALL BE 24" X 12" (36" X 18" IF NEEDED TO MATCH EXISTING SIGNS)
M4-8 SHALL BE 24" X 12" (36" X 18" IF NEEDED TO MATCH EXISTING SIGNS)
M1-4, M1-5A AND M1-6 SHALL BE 24" X 24" (36" X 36" IF NEEDED TO MATCH EXISTING SIGNS)
M05-1 AND M06-1 SHALL BE 21" X 21" (30" X 30" IF NEEDED TO MATCH EXISTING SIGNS)
M4-9 AND M4-59 SHALL BE 30" X 24"
M4-8a SHALL BE 24" X 18"
G20-51 SHALL BE 60" X 24"
W20-2A SHALL BE 48" X 48"
D1-X SHALL BE AS SHOWN ON SPECIFIC PROJECT SIGNING DETAIL SHEETS.

* OPTIONAL SIGNS. SEE SPECIFIC PROJECT DETOUR SIGNING DETAIL SHEETS.

** FOR A TOWN ROAD OR LOCAL STREET DETOURED ONTO A STATE TRUNK HIGHWAY, PLACE A ROAD NAME PLAQUE ABOVE THE M4-9 SIGN AS SPECIFIED IN THE CONTRACT.

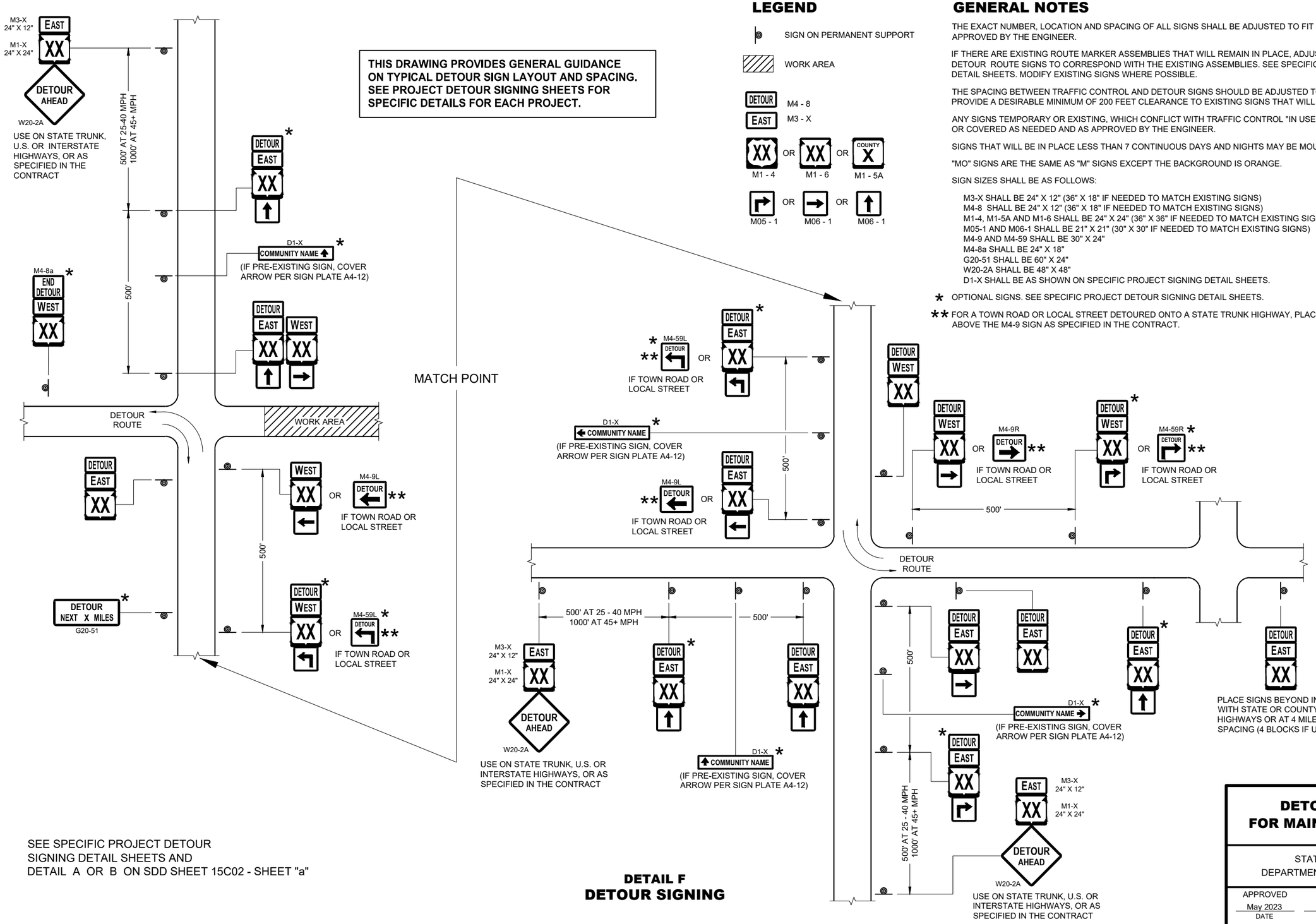

SEE SPECIFIC PROJECT DETOUR SIGNING DETAIL SHEETS AND DETAIL A OR B ON SDD SHEET 15C02 - SHEET "a"

DETAIL F
DETOUR SIGNING

DETOUR SIGNING FOR MAINLINE CLOSURES

STATE OF WISCONSIN
DEPARTMENT OF TRANSPORTATION

APPROVED
May 2023 — DATE
/S/ Andrew Heidtke — WORK ZONE ENGINEER
FHWA

SDD 15C02 - 09c

GENERAL NOTES

THE EXACT NUMBER, LOCATION, AND SPACING OF ALL SIGNS AND DEVICES SHALL BE ADJUSTED TO FIT FIELD CONDITIONS.

THE SPACING BETWEEN TRAFFIC CONTROL SIGNS SHOULD BE ADJUSTED TO NOT CONFLICT WITH AND SHOULD PROVIDE A MINIMUM OF 200 FEET (500 FEET DESIRABLE) CLEARANCE TO EXISTING SIGNS THAT WILL REMAIN IN PLACE.

ALL SIGNS ARE 48" X 48" UNLESS OTHERWISE NOTED. IF NECESSARY DUE TO SPACE CONSTRAINTS, 36"X36" SIGNS MAY BE USED INSTEAD OF 48" X 48" SIGNS.

SIGNS THAT WILL BE IN PLACE LESS THAN SEVEN CONTINUOUS DAYS AND NIGHTS MAY BE MOUNTED ON PORTABLE SUPPORTS.

IF A "STOP" SIGN MUST BE REMOVED FOR A WORK OPERATION, A TEMPORARY "STOP" SIGN SHALL BE PLACED PRIOR TO THE SIGN REMOVAL, OR A FLAGGER SHALL BE PROVIDED UNTIL THE SIGN IS REESTABLISHED.

* THE THIRD W20-1 SIGN IS REQUIRED ONLY IF THERE IS AN INTERSECTION BETWEEN THE "ROAD WORK 500 FEET" SIGN AND THE WORK ZONE. ADJUST THE PLACEMENT OF THIS SIGN BASED ON INTERSECTION LOCATION AND OTHER FIELD CONDITIONS.

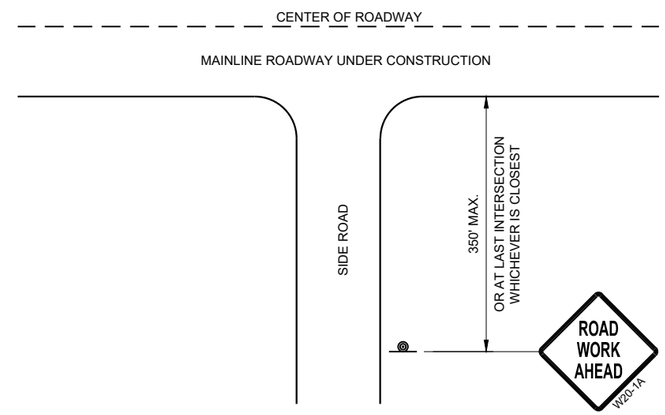

TYPICAL SIDE ROAD APPROACH WARNING SIGN DETAIL

LEGEND

- SIGN ON PERMANENT SUPPORT
- DIRECTION OF TRAFFIC
- WORK AREA

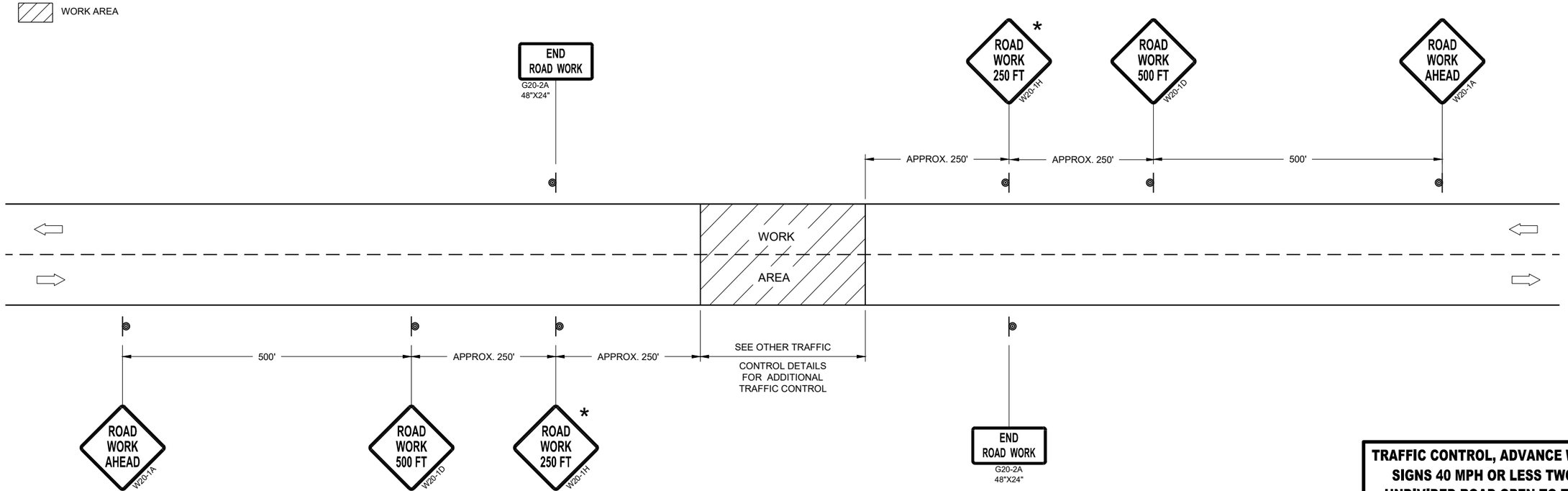

TRAFFIC CONTROL, ADVANCE WARNING SIGNS 40MPH OR LESS

TRAFFIC CONTROL, ADVANCE WARNING SIGNS 40 MPH OR LESS TWO-WAY UNDIVIDED ROAD OPEN TO TRAFFIC

STATE OF WISCONSIN
DEPARTMENT OF TRANSPORTATION

APPROVED
July 2018 — DATE
/S/ Andrew Heidtke — WORK ZONE ENGINEE
FHWA

6
SDD 15C05 - 05

GENERAL NOTES

DETAILS OF INSTALLATION, MATERIALS AND WORKMANSHIP NOT SHOWN ON THIS DRAWING SHALL CONFORM TO THE PERTINENT REQUIREMENTS OF THE STANDARD SPECIFICATIONS AND APPLICABLE SPECIAL PROVISIONS.

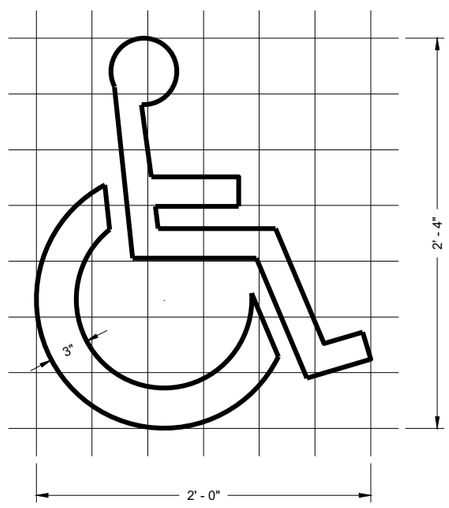

HANDICAP SYMBOL

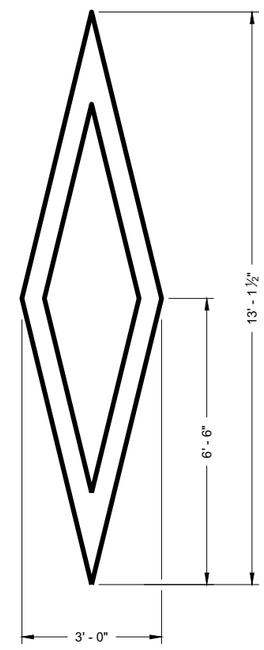

PREFERENTIAL LANE SYMBOL

6

6

SDD 15C07 - 15a

SDD 15C07 - 15a

PAVEMENT MARKING SYMBOLS

STATE OF WISCONSIN
DEPARTMENT OF TRANSPORTATION

APPROVED
November 2019 — DATE
/S/ Matthew Rauch — STATE SIGNING AND MAR ENGINEER
FHWA

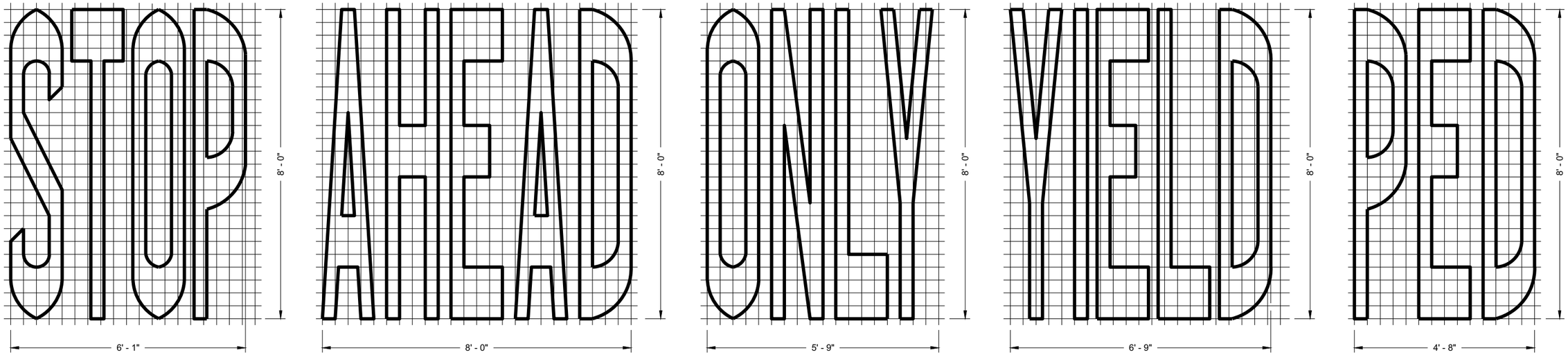

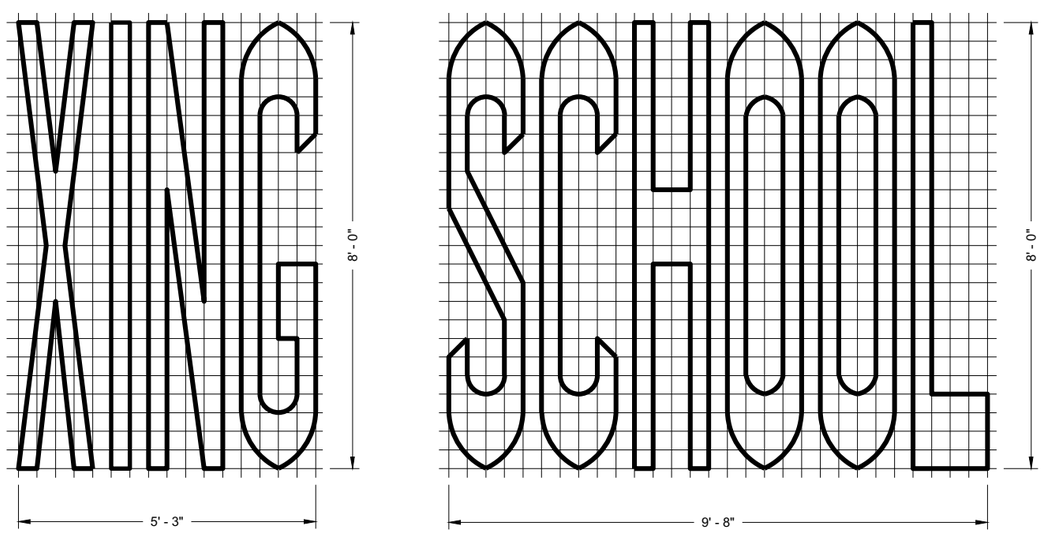

SINGLE LANE

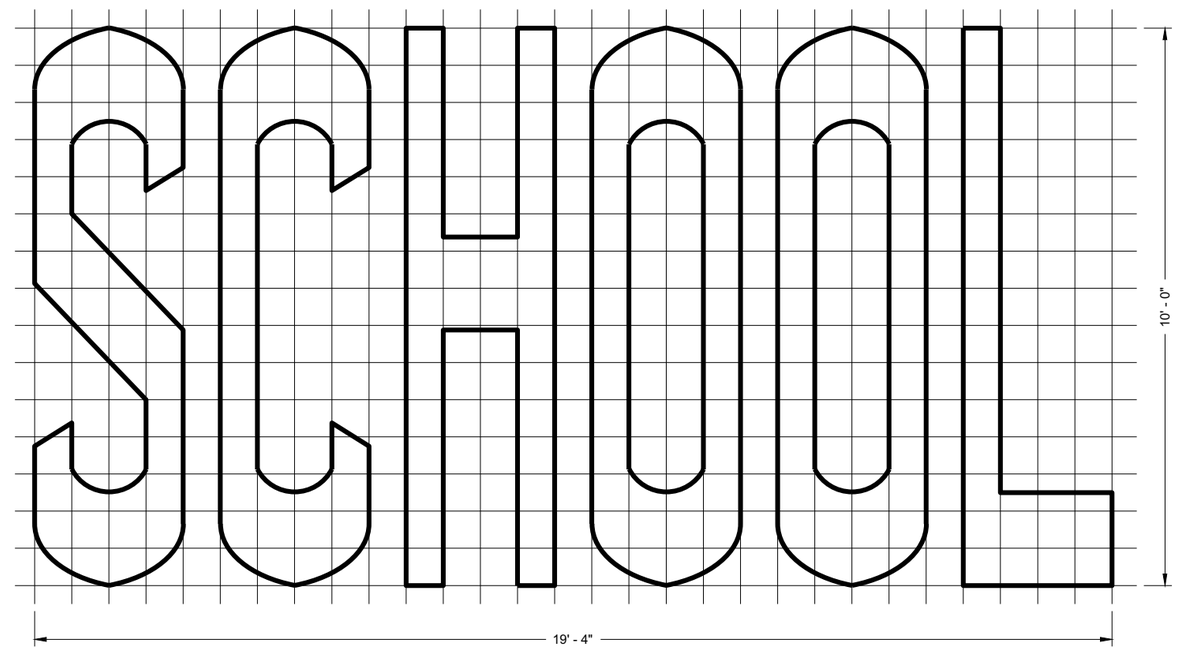

TWO - LANE

6

6

GENERAL NOTES

DETAILS OF INSTALLATION, MATERIALS AND WORKMANSHIP NOT SHOWN ON THIS DRAWING SHALL CONFORM TO THE PERTINENT REQUIREMENTS OF THE STANDARD SPECIFICATIONS AND APPLICABLE SPECIAL PROVISIONS.

PAVEMENT MARKING WORDS

STATE OF WISCONSIN
DEPARTMENT OF TRANSPORTATION

APPROVED

November 2019 — DATE

/S/ Matthew Rauch — STATE SIGNING AND MAR ENGINEER

FHWA

SDD 15C07 - 15b

SDD 15C07 - 15b

GENERAL NOTES

DETAILS OF INSTALLATION, MATERIALS AND WORKMANSHIP NOT SHOWN ON THIS DRAWING SHALL CONFORM TO THE PERTINENT REQUIREMENTS OF THE STANDARD SPECIFICATIONS AND APPLICABLE SPECIAL PROVISIONS.

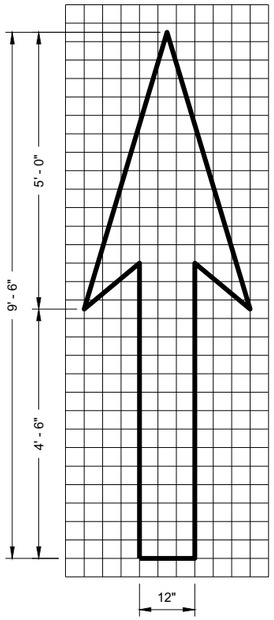

TYPE 1

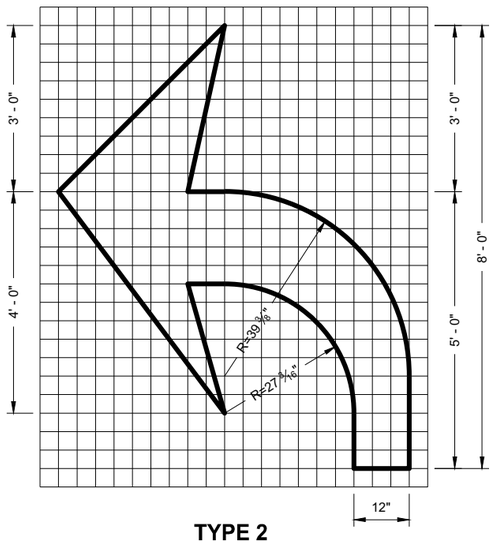

TYPE 2

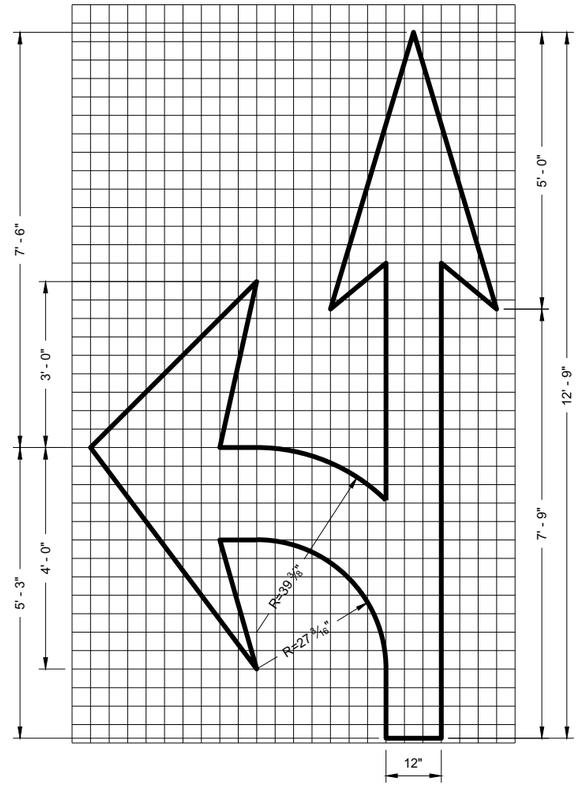

TYPE 3

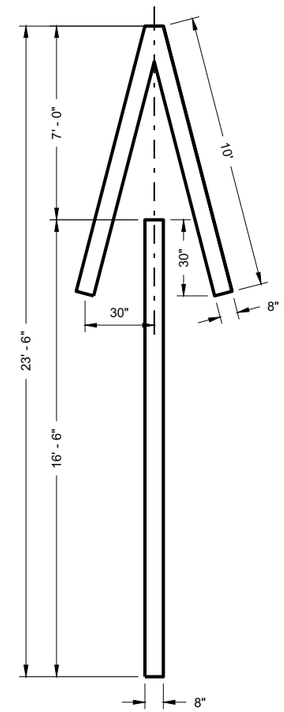

TYPE 4

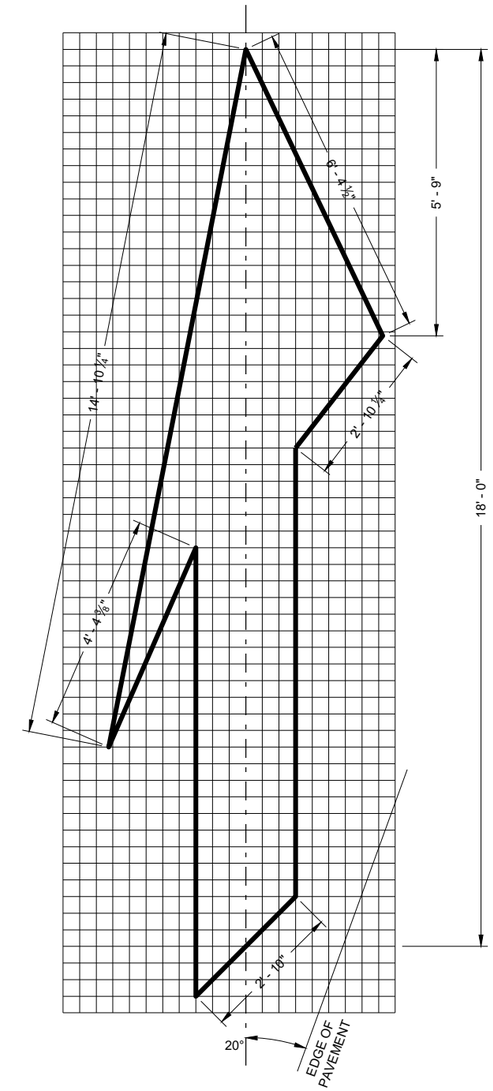

TYPE 5 LANE DROP ARROW

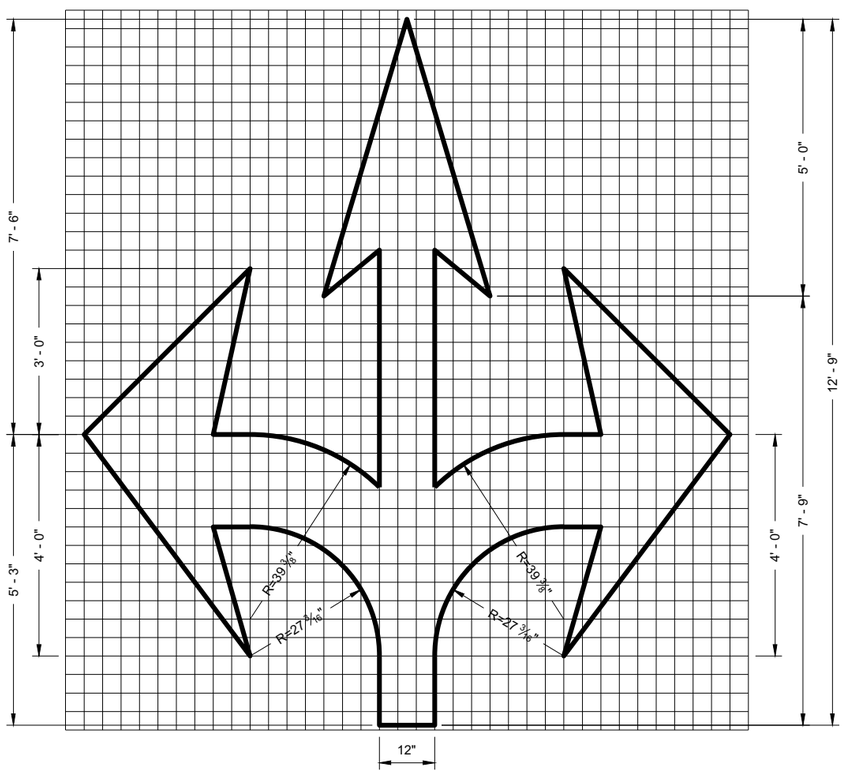

TYPE 6

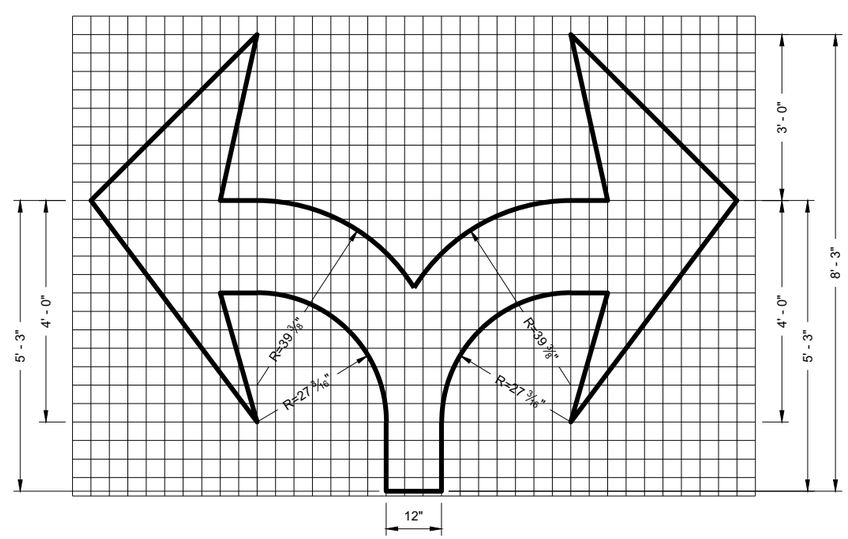

TYPE 7

PAVEMENT MARKING ARROWS

STATE OF WISCONSIN
DEPARTMENT OF TRANSPORTATION

APPROVED
November 2019 — DATE
/S/ Matthew Rauch — STATE SIGNING AND MAR ENGINEER
FHWA

6

SDD 15C07 - 15c

SDD 15C7-e Pavement Marking For Bike Lanes

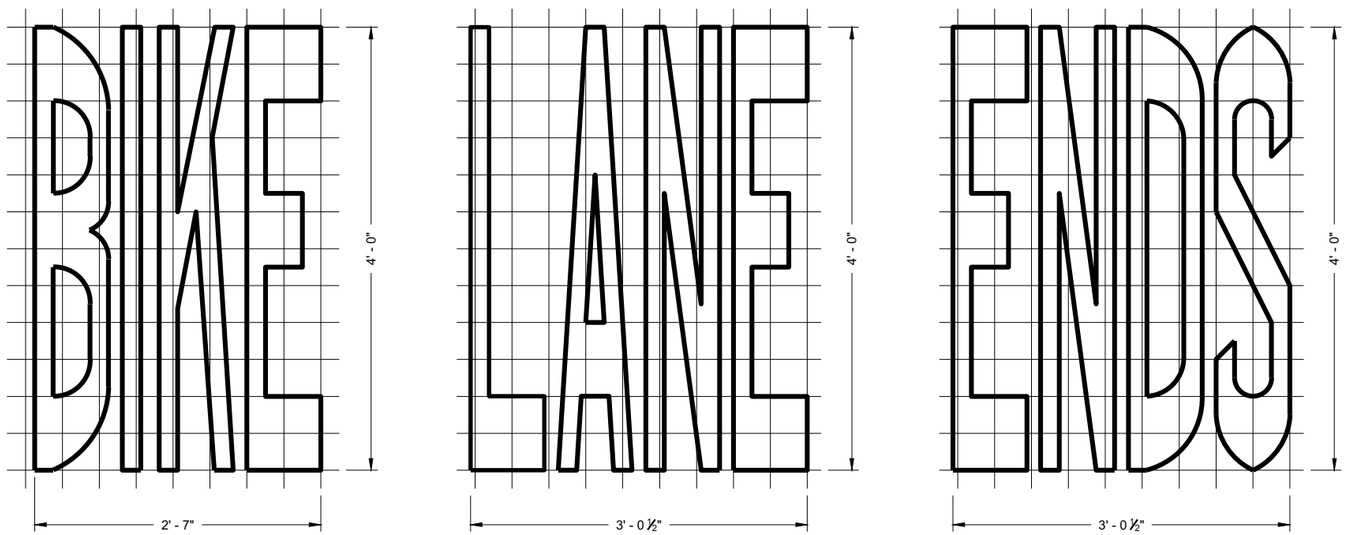

BIKE LANE WORDS

GENERAL NOTES

DETAILS OF INSTALLATION, MATERIALS AND WORKMANSHIP NOT SHOWN ON THIS DRAWING SHALL CONFORM TO THE PERTINENT REQUIREMENTS OF THE STANDARD SPECIFICATIONS AND APPLICABLE SPECIAL PROVISIONS.

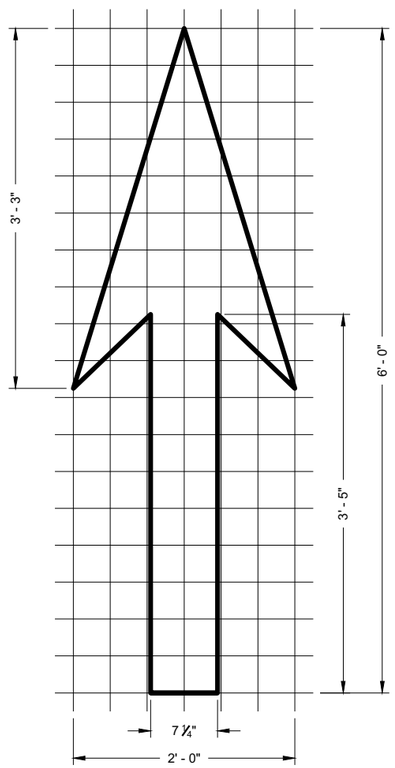

BIKE LANE ARROW

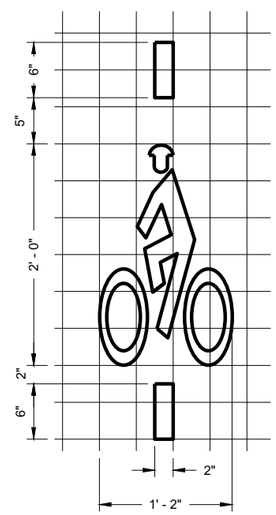

BICYCLE DETECTOR PAVEMENT MARKING

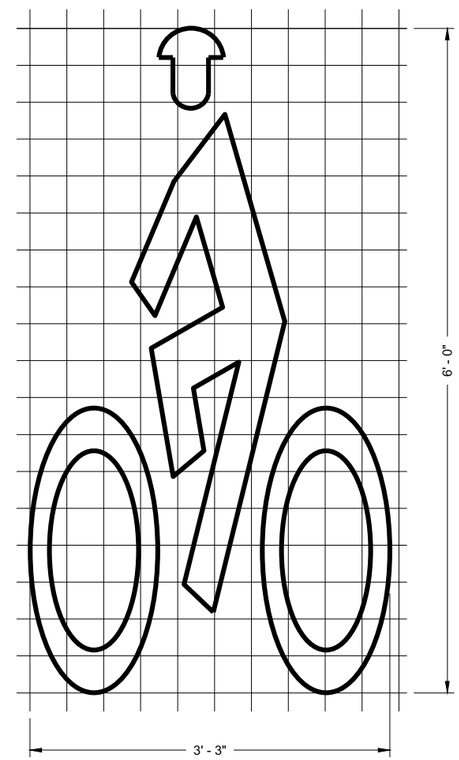

BIKE LANE SYMBOL

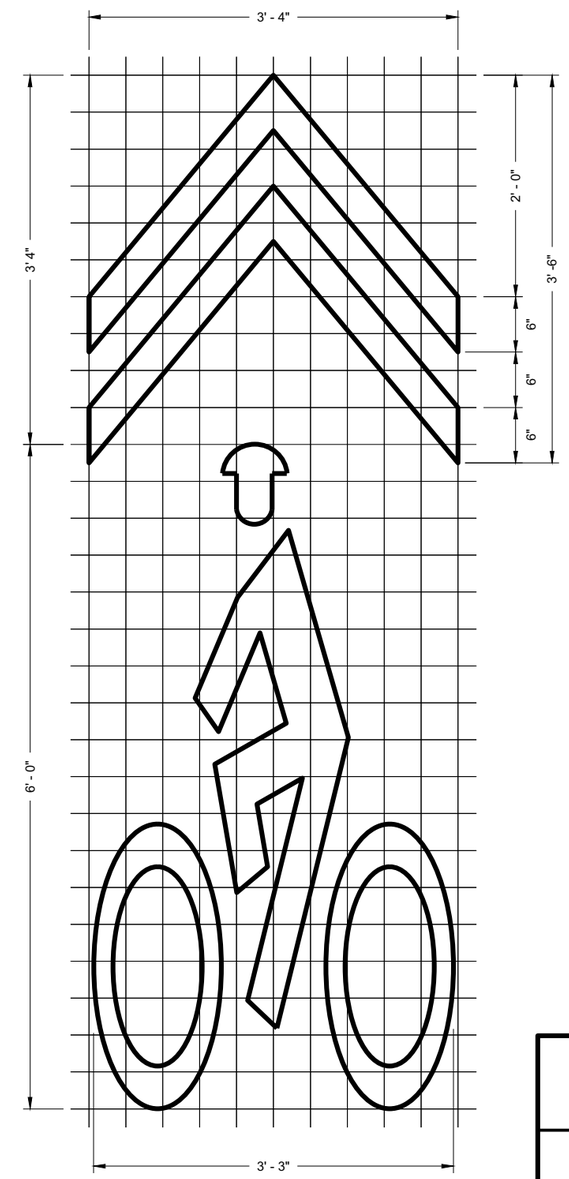

BIKE LANE SYMBOL FOR SHARED LANE

PAVEMENT MARKING FOR BIKE LANES

STATE OF WISCONSIN
DEPARTMENT OF TRANSPORTATION

APPROVED
November 2019 — DATE
/S/ Matthew Rauch — STATE SIGNING AND MAR ENGINEER
FHWA

6

SDD 15C07 - 15e

6

SDD 15C07 - 15e

*CONFIRM MARKING LINE WIDTH WITH THE MISCELLANEOUS QUANTITIES

GENERAL NOTES

DETAILS OF CONSTRUCTION NOT SHOWN ON THIS DRAWING SHALL CONFORM TO STANDARD SPECIFICATIONS AND SPECIAL PROVISIONS.

1. LOCATE THE NO PASSING ZONE W14-3 SIGN WITHIN 50 FEET OF THE "T" MARKING
2. MEASURE FROM EDGE OF MARKING TO JOINT LINE. THIS DOES NOT INCLUDE SPACE NEEDED FOR GROOVING OPERATIONS.

LEGEND

"T" MARKING

SIGN ON PERMANENT SUPPORT

DIRECTION OF TRAFFIC

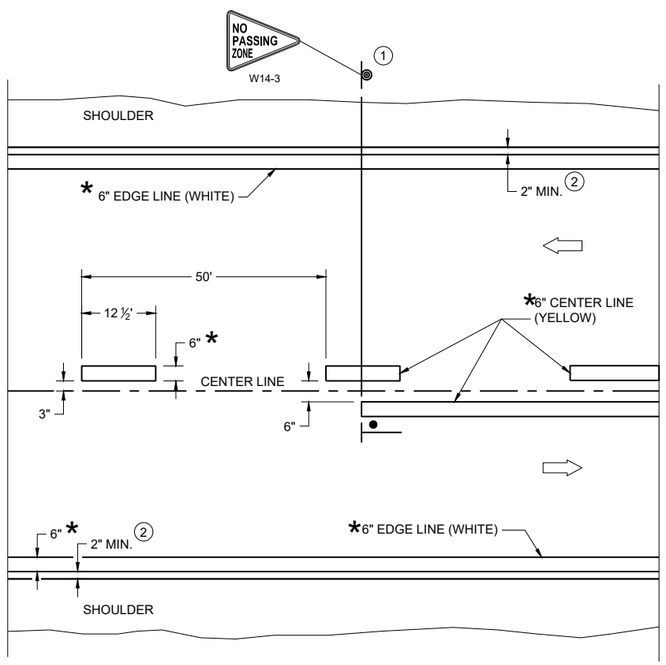

TWO WAY TRAFFIC

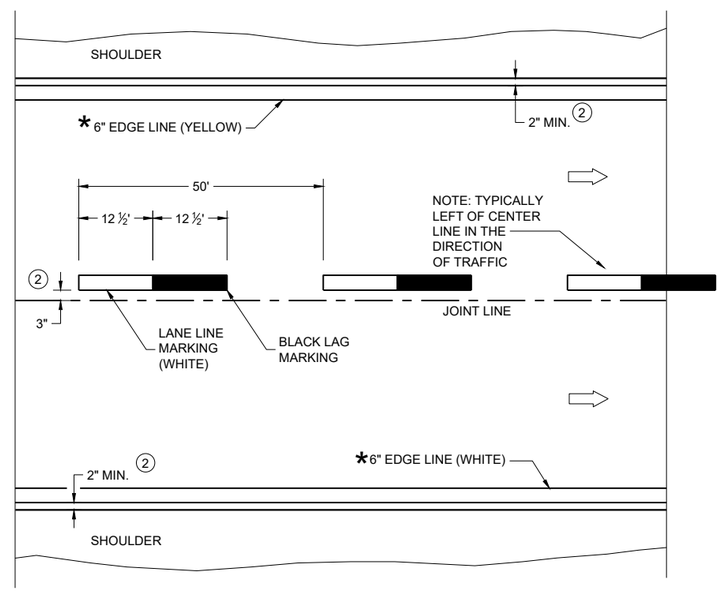

ONE WAY TRAFFIC

PERMANENT PAVEMENT MARKING

6

SDD 15C08-23a

PERMANENT LONGITUDINAL PAVEMENT MARKINGS

STATE OF WISCONSIN
DEPARTMENT OF TRANSPORTATION

APPROVED
May 2023 — DATE
/S/ Jeannie Silver — Statewide Pavement Marking Engineer
FHWA

GENERAL NOTES

1. A SET OF ARROWS IS REQUIRED EVERY 400 FEET OR NEAR INTERSECTIONS OR DRIVEWAYS WITH TURNING TRAFFIC.
2. 10" WHITE
3. TURN BAY LENGTH OF LESS THAN 48' DOES NOT REQUIRE PAVEMENT ARROWS OR TEXT.

⇨ DIRECTION OF TRAFFIC

* CONFIRM MARKING LINE WIDTH WITH THE MISCELLANEOUS QUANTITIES

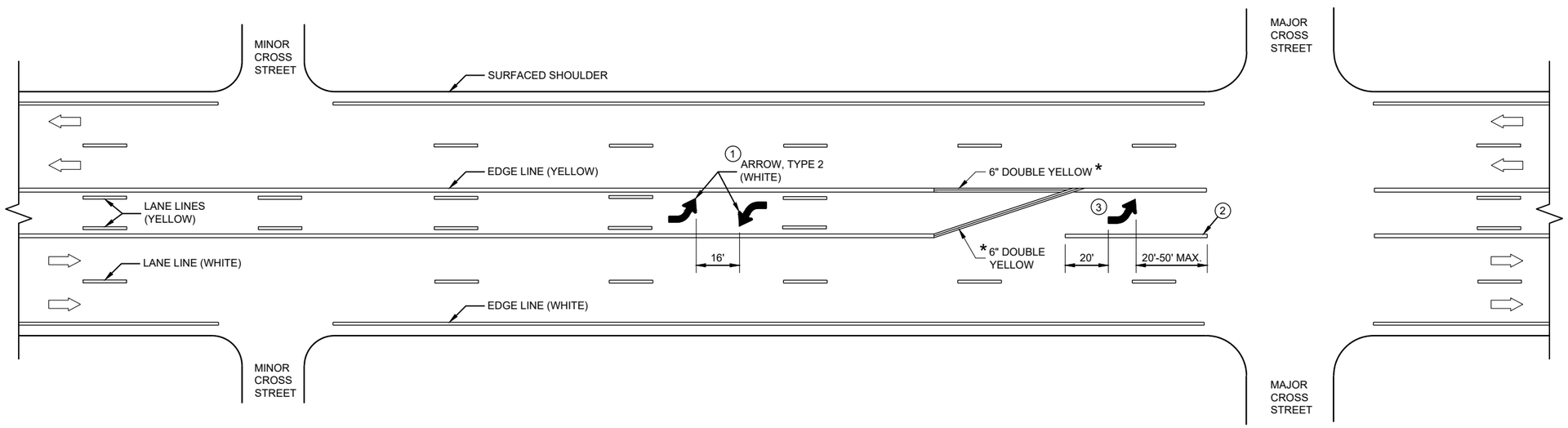

TWO WAY LEFT TURN LANE

PAVEMENT MARKING (TURN LANES)

STATE OF WISCONSIN
DEPARTMENT OF TRANSPORTA

6

SDD 15C08-23c

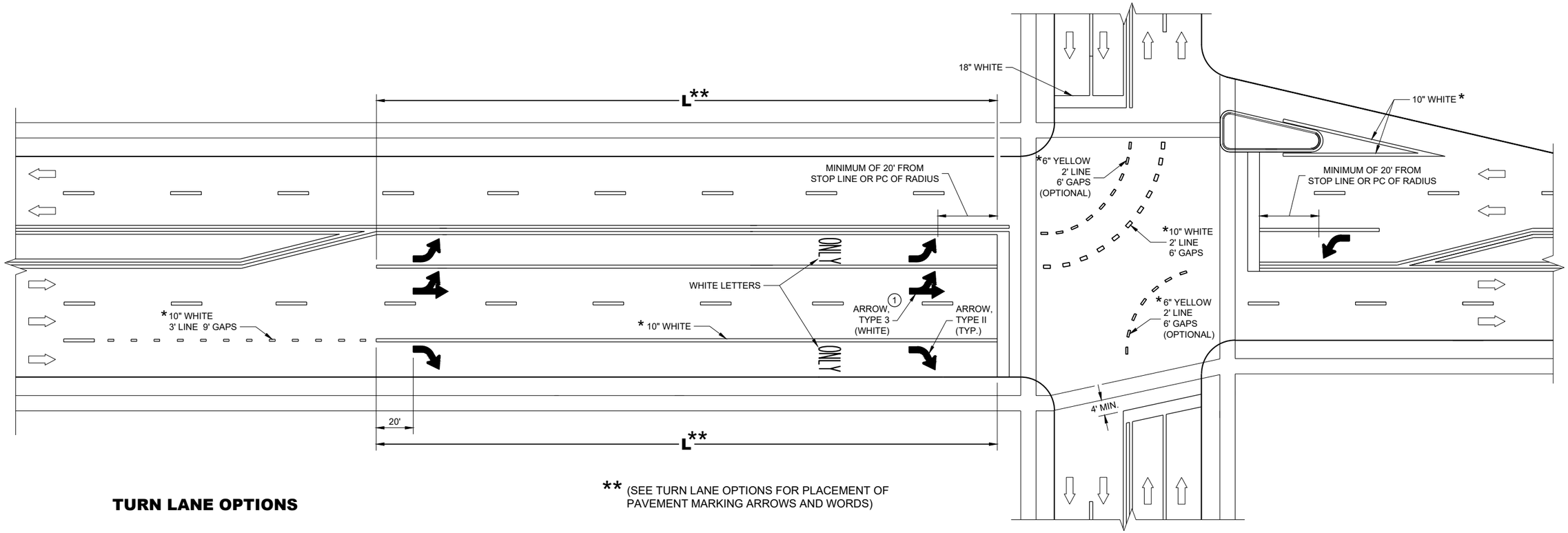

** (SEE TURN LANE OPTIONS FOR PLACEMENT OF PAVEMENT MARKING ARROWS AND WORDS)

TURN LANE OPTIONS

LENGTH OF TURN BAY (L) OF 0 - 47' DOES NOT REQUIRE PAVEMENT MARKING ARROWS OR WORDS

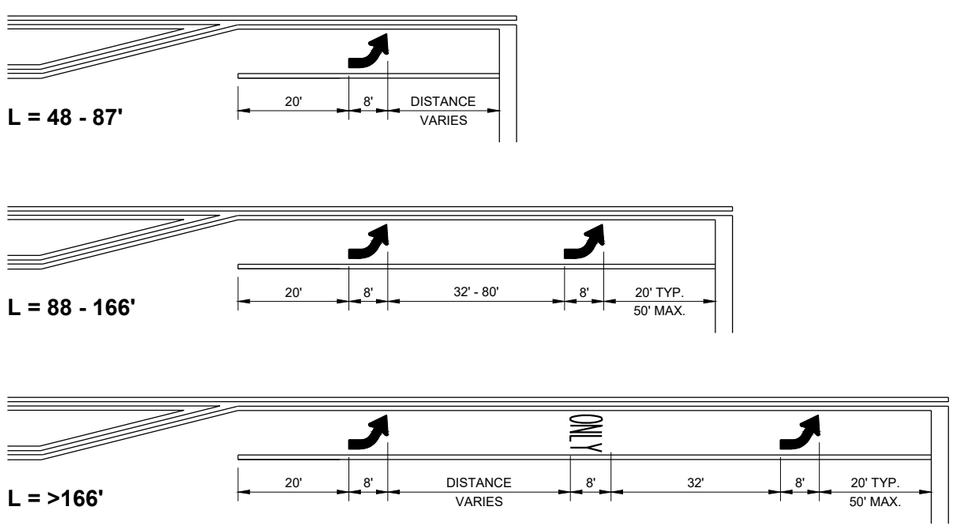

GENERAL NOTES

1. QUANTITY AND LOCATION OF TYPE 3 ARROWS ARE THE SAME AS THE TYPE II ARROWS IN THE ADJACENT TURN LANE. FOR TURN LANES WITH A PHYSICAL SEPARATION IN THE SAME DIRECTION OF TRAVEL, THE ARROWS AND "ONLY" MARKING MAY BE ELIMINATED.

⇨ DIRECTION OF TRAFFIC

L = LENGTH OF TURN BAY

* CONFIRM MARKING LINE WIDTH WITH THE MISCELLANEOUS QUANTITIES

PAVEMENT MARKING (TURN LANES)

STATE OF WISCONSIN
DEPARTMENT OF TRANSPORTAT

6

SDD 15C08-23d

GENERAL NOTES

1. REFLECTIVE SHEETING SHALL FOLLOW THE REQUIREMENTS IN THE APPROVED PRODUCTS LISTING FOR SIGN SHEETING.
2. LOCATION OF WARNING LIGHTS WHEN SHOWN ON THE PLAN.

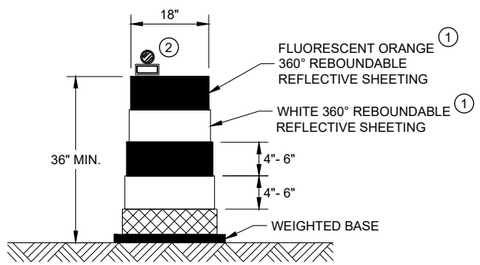

DRUM

BALLAST WIDTHS
RANGE FROM 24"-36"

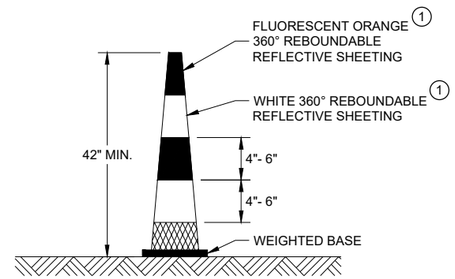

42" CONE

DO NOT USE IN TAPERS
½ SPACING OF DRUMS

BALLAST WIDTHS
RANGE FROM 14"-20"

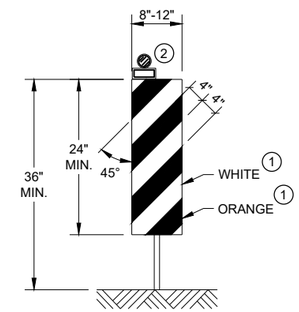

VERTICAL PANEL

THE STRIPES SHALL SLOPE DOWNWARD TO
THE TRAFFIC SIDE FOR CHANNELIZATION.

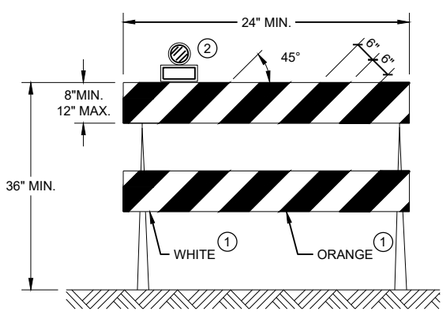

TYPE II BARRICADE

FOR RAILS LESS THAN 36" LONG, 4" WIDE STRIPES
MAY BE USED. ALL STRIPES SHALL SLOPE DOWNWARD
TO THE TRAFFIC SIDE FOR CHANNELIZATION.

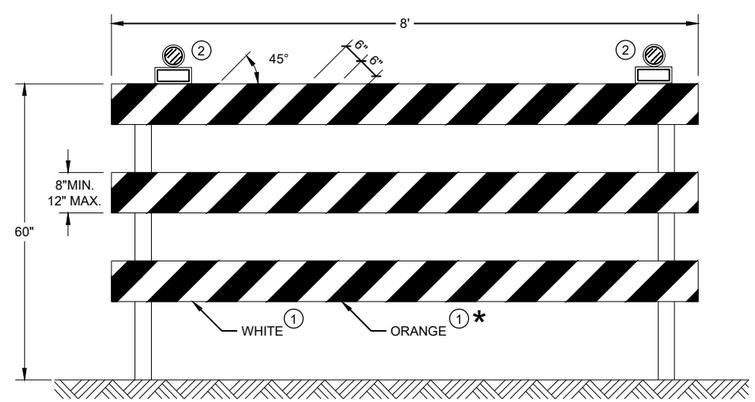

TYPE III BARRICADE

IF SIGN MOUNTED, DO NOT COVER MORE THAN 50% OF THE TOP
TWO RAILS OR 33% OF THE TOTAL AREA OF THE THREE RAILS.

* IF USED FOR A PERMANENT APPLICATION USE RED SHEETING.

CHANNELIZING DEVICES
DRUMS, CONES, BARRICADES
AND VERTICAL PANELS

STATE OF WISCONSIN
DEPARTMENT OF TRANSPORTATION

APPROVED
November 2022 /S/ Andrew Heidtke
DATE WORK ZONE ENGINEE
FHWA

6

6

SDD 15C11 - 10b

SDD 15C11 - 10b

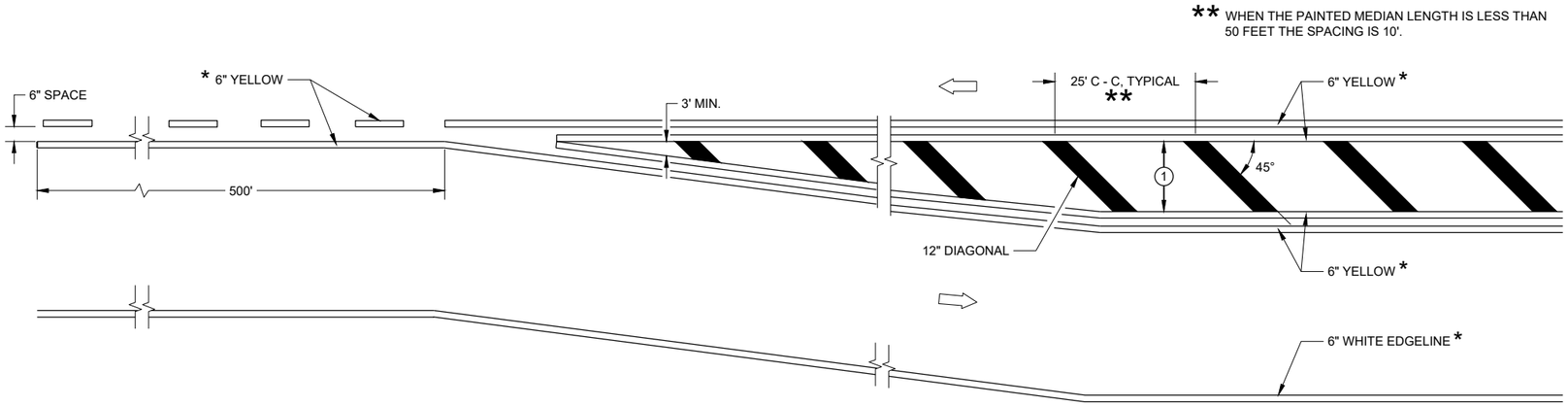

MEDIAN ISLAND DETAIL

GENERAL NOTES

1. DIAGONALS ARE OPTIONAL WHEN PAINTED ISLAND IS LESS THAN 6 FEET AT THE WIDEST POINT. OMIT DIAGONALS IF WIDTH IS LESS THAN 4 FEET.

⇨ DIRECTION OF TRAVEL

* CONFIRM MARKING LINE WIDTH WITH THE MISCELLANEOUS QUANTITIES

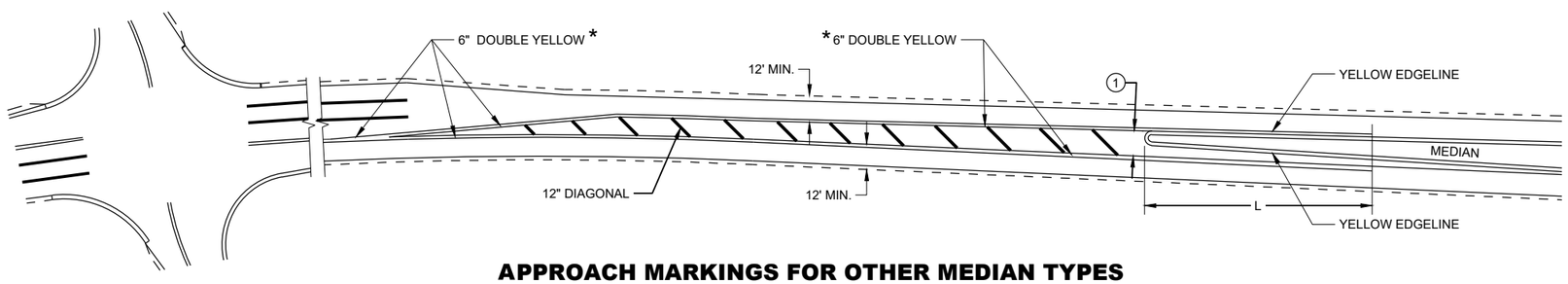

APPROACH MARKINGS FOR OTHER MEDIAN TYPES

SPEED LIMIT	L
<35 MPH	5'
35> MPH	50'

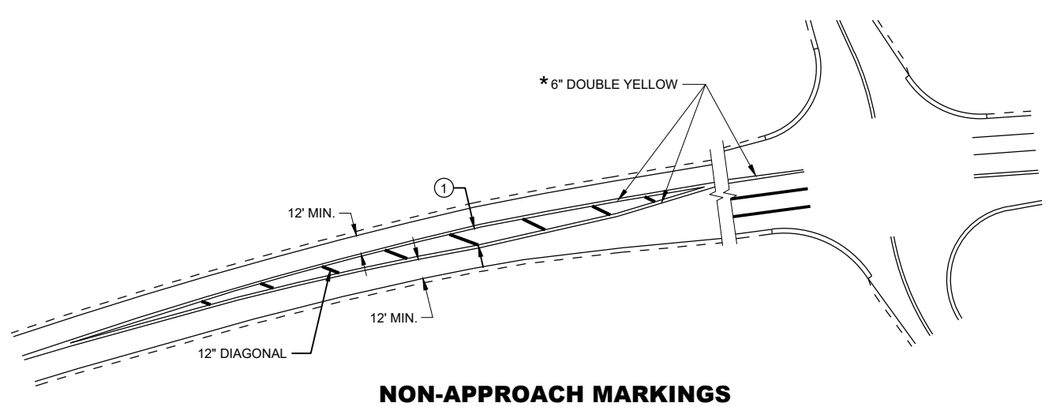

NON-APPROACH MARKINGS

MEDIAN ISLAND PAVEMENT MARKINGS

STATE OF WISCONSIN
DEPARTMENT OF TRANSPORTATION

APPROVED
May 2023 — DATE
/S/ Jeannie Silver — STATE SIGNING AND MAR ENGINEER
FHWA

6

SDD 15C18-08a

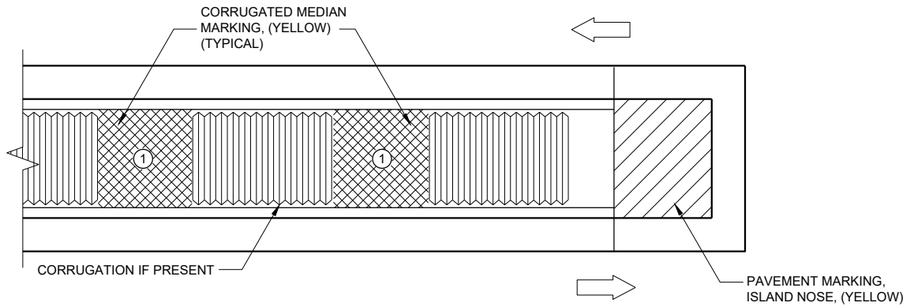

MEDIAN ISLAND WITH SQUARE BLUNT NOSE

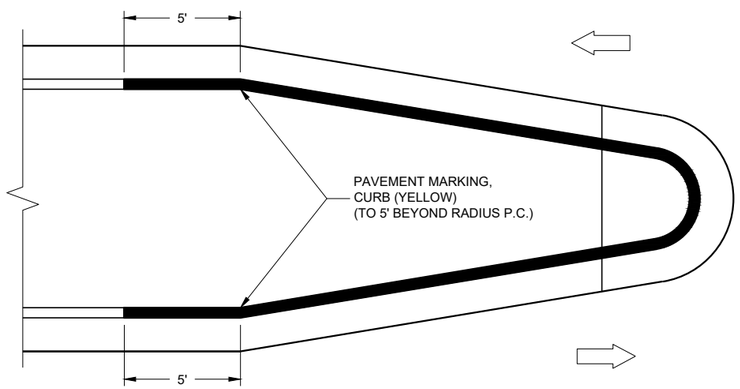

MEDIAN ISLAND WITH ROUND BLUNT NOSE

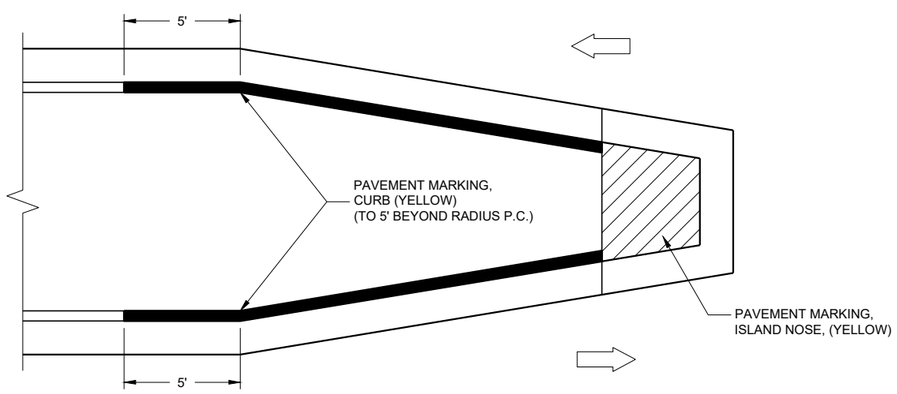

MEDIAN ISLAND WITH SLOPED NOSE

TYPICAL PLACEMENT OF PAVEMENT MARKING ON MEDIAN ISLANDS

GENERAL NOTES

WHEN CONCRETE CORRUGATED MEDIAN IS CONSTRUCTED TO SEPARATE TRAFFIC OPERATING IN THE OPPOSING DIRECTION, YELLOW PAVEMENT MARKING SHALL BE APPLIED TO THE FLAT PORTION OF THE CONCRETE CORRUGATED MEDIAN. THE ITEM OF PAVEMENT MARKING, CONCRETE CORRUGATED MEDIAN, WILL BE MEASURED IN PLACE AND ACCEPTED IN ACCORDANCE WITH THE CONTRACT AND PAID FOR AT THE CONTRACT UNIT PRICE PER SQUARE FOOT.

(1) APPLY PAVEMENT MARKING TO THE FLAT PORTION OF CORRUGATED MEDIAN.

ISLAND NOSE MARKING

CURB MARKING

CORRUGATED MEDIAN MARKING

DIRECTION OF TRAVEL

PAVEMENT MARKINGS, MEDIAN ISLAND NOSE

STATE OF WISCONSIN
DEPARTMENT OF TRANSPORTATION

APPROVED
May 2023 — DATE
/S/ Jeannie Silver — STATE SIGNING AND MAR ENGINEER
FHWA

6
SDD 15C18-08b

REQUIREMENTS FOR EDGE LINES		
POSTED SPEED	IS THERE CONTINUOUS LIGHTING?	
	YES	NO
≤ 30 MPH	NO	OPTIONAL
35 OR 40 MPH	OPTIONAL	RECOMMENDED
≥ 45 MPH	RECOMMENDED	REQUIRED

GENERAL NOTES

APPLIES TO ISLANDS AT LEFT TURNS AT ONE WAY ROADWAYS AS WELL.

SEE MISCELLANEOUS QUANTITIES FOR SIGN SIZE.

(1) MARK CURB NOSES YELLOW.

(2) MARK ACCORDING TO TABLE.

DIRECTION OF TRAVEL

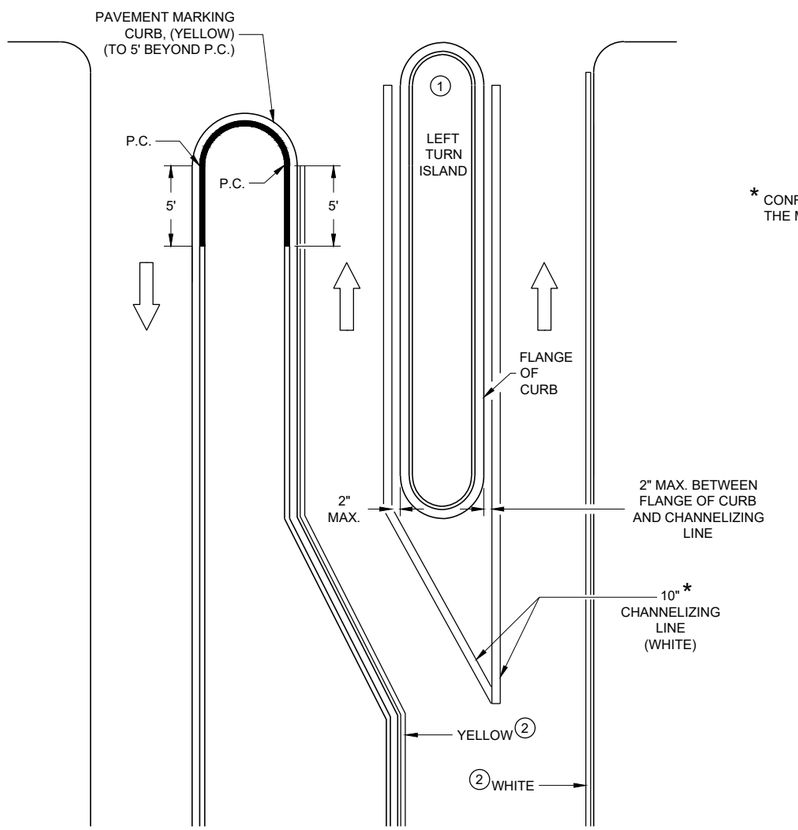

* CONFIRM MARKING LINE WIDTH WITH THE MISCELLANEOUS QUANTITIES

LEFT TURN & MEDIAN ISLAND

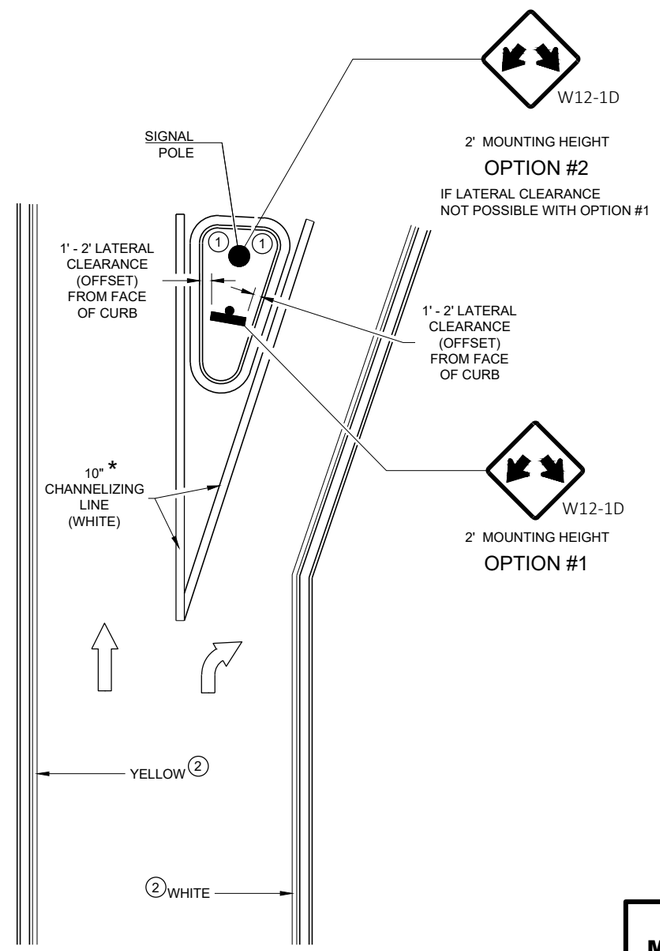

RIGHT TURN ISLAND

MEDIAN PAVEMENT MARKINGS, DOUBLE ARROW WARNING SIGN PLACEMENT

STATE OF WISCONSIN
DEPARTMENT OF TRANSPORTATION

APPROVED
May 2023 — DATE
/S/ Jeannie Silver — STATE SIGNING AND MAR ENGINEER
FHWA

6

SDD 15C18-08c

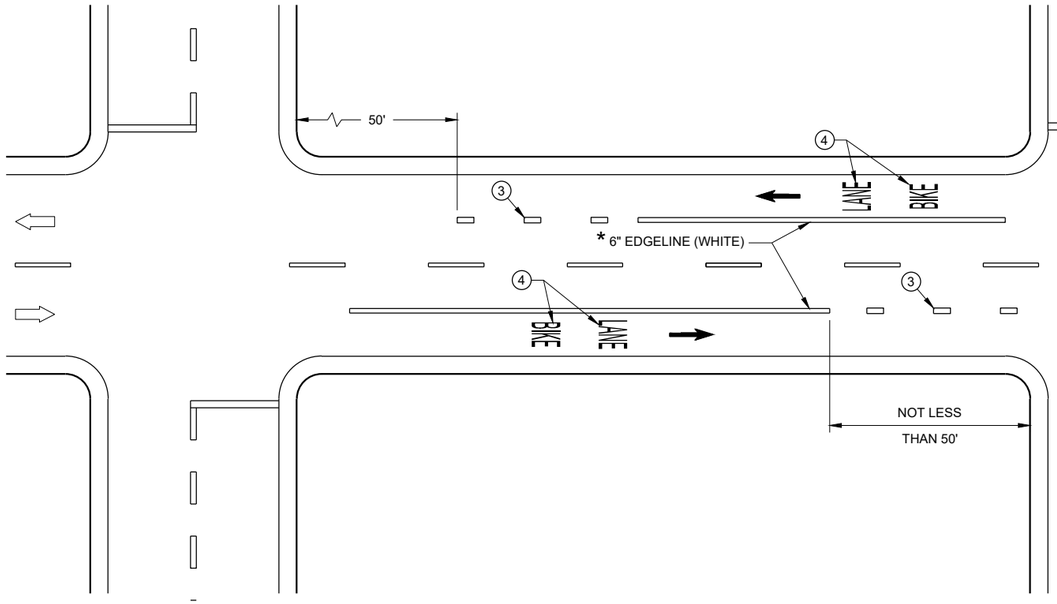

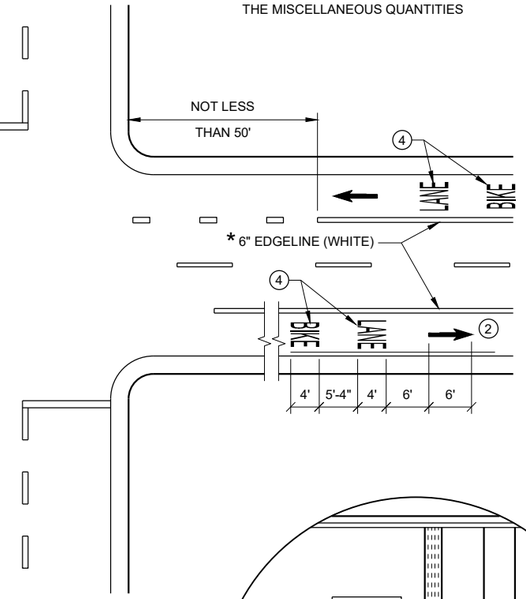

* CONFIRM MARKING LINE WIDTH WITH THE MISCELLANEOUS QUANTITIES

GENERAL NOTES

1. DETAILS OF CONSTRUCTION NOT SHOWN ON THIS DRAWING SHALL CONFORM TO STANDARD SPECIFICATIONS AND SPECIAL PROVISIONS.
2. MINIMUM OF ONE PER BLOCK. MAXIMUM OF 250 FEET.
3. DOTTED LINES (3' LINE, 9' GAP) SHOULD BE USED 50 FEET TO 200 FEET IN ADVANCE OF AN INTERSECTION WHERE THERE IS NO RIGHT TURN ONLY LANE AND THERE IS HEAVY RIGHT TURN TRAFFIC OR THERE IS A NEAR-SIDE BUS STOP. AT OTHER INTERSECTIONS WHERE RIGHT TURN TRAFFIC IS LIGHT TO MODERATE, A SOLID LINE CAN BE USED UP TO THE INTERSECTION.
4. BIKE SYMBOLS OR WORDS MAY BE USED.
5. BIKE ACCOMMODATION IS TYPICAL 5 FEET WIDE AND MINIMUM OF 4 FEET FROM A LONGITUDINAL JOINT. USE 5 FEET AT ≥ 45 MPH.
6. OMIT THESE MARKINGS FOR WIDER TURN LANE APPLICATIONS (MINIMUM OF 15 FOOT WIDE TURN LANE).
7. REFER TO CONTRACT PLANS FOR LANE WIDTH.

DIRECTION OF TRAVEL

DESIGNATED BIKE LANE - NO PARKING

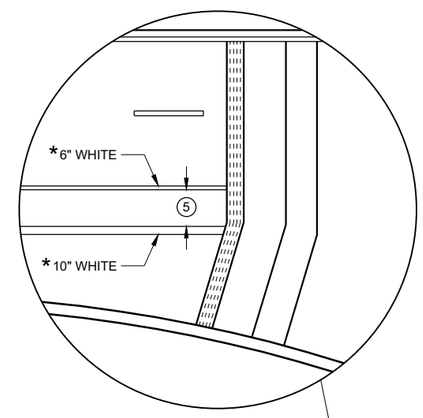

4 LANE DIVIDED WITHOUT ISLAND

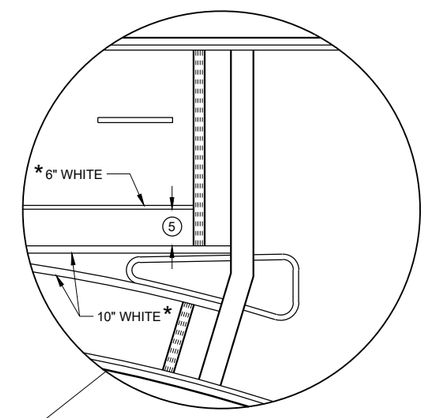

4 LANE DIVIDED WITH ISLAND

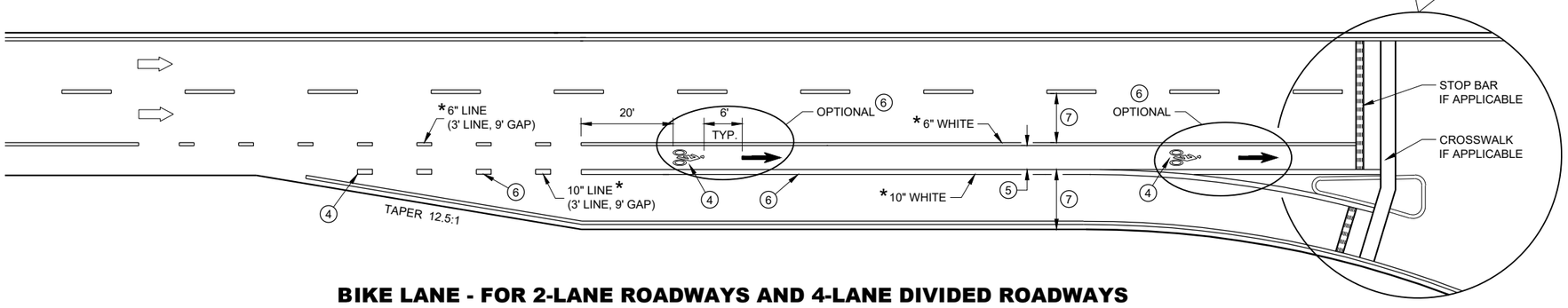

BIKE LANE - FOR 2-LANE ROADWAYS AND 4-LANE DIVIDED ROADWAYS (4-LANE DIVIDED WITH RIGHT TURN LANE SHOWN)

BIKE LANE MARKING

STATE OF WISCONSIN
DEPARTMENT OF TRANSPORTATION

APPROVED
May 2023 — DATE
/S/ Matthew Rauch — STATE SIGNING AND MAF ENGINEER
FHWA

6

SDD 15C29-08a

GENERAL NOTES

STOP SIGN SHALL BE PLACED A MINIMUM OF 6 FEET TO A MAXIMUM OF 50 FEET FROM THE EDGELINE LOCATION.

1. 18-INCH STOP LINES MAY BE DELETED OR ADDED BY THE REGION MARKING ENGINEER BASED ON VISIBILITY AND SIGHT LINES.
2. NO STOP LINE IS REQUIRED IF STOP SIGN IS LESS THAN OR EQUAL TO 40 FEET FROM THE EDGELINE.
3. NO STOP LINE IS REQUIRED IF STOP SIGN IS LESS THAN OR EQUAL TO 30 FEET FROM THE FLANGELINE EXTENSION.
4. MOVE CLOSER TO THE EDGE OF TRAVEL LINE AS NEEDED FOR VISIBILITY AND SIGHT LINES (NO CLOSER THAN 4 FEET).
5. LADDER BAR CROSSWALKS SHOULD ONLY BE USED FOR MID BLOCK CROSSINGS. USE 2 - 6" TRANSVERSE LINES INSTEAD.

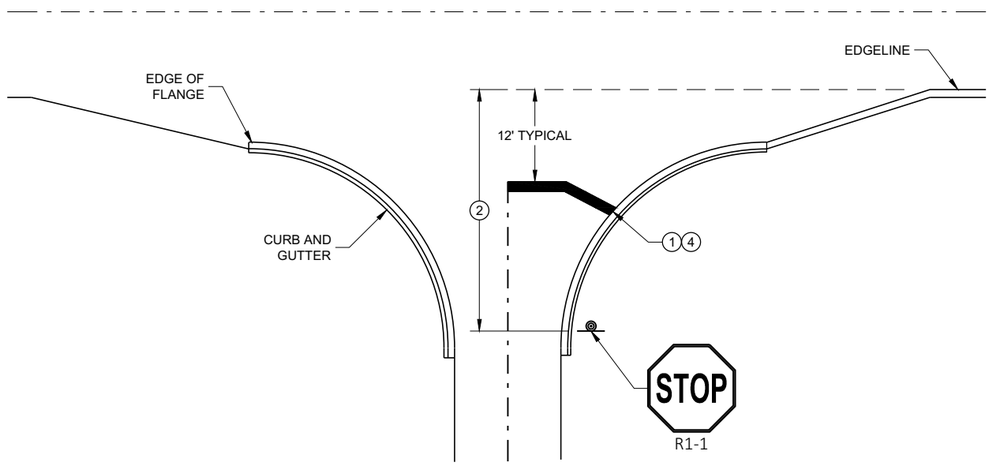

TYPICAL STOP LINE PAVEMENT MARKING WITH CURB AND GUTTER

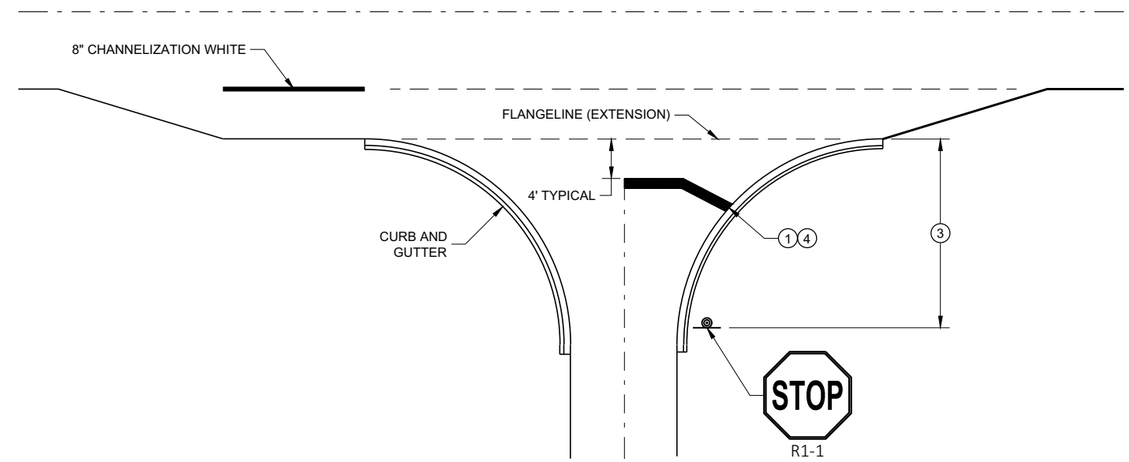

TYPICAL STOP LINE PAVEMENT MARKING FOR SIDEROADS WITH RIGHT TURN LANE

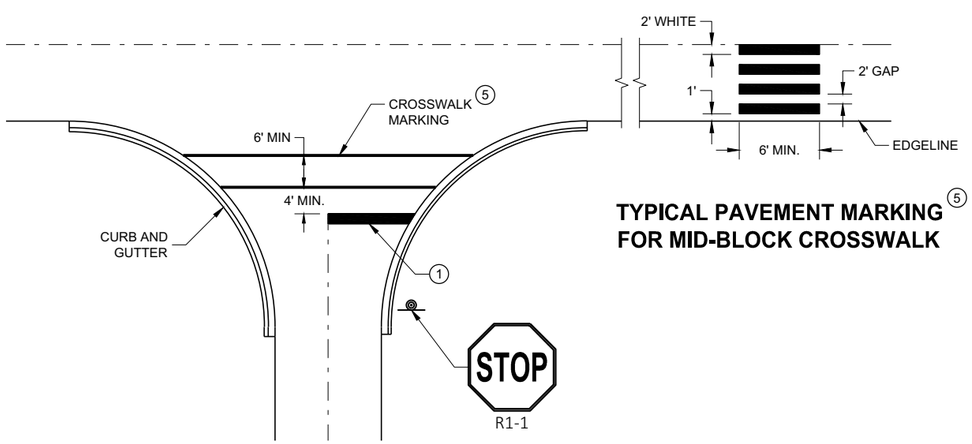

TYPICAL STOP LINE PAVEMENT MARKING FOR SIDEROADS WITH CROSSWALK MARKING

TYPICAL PAVEMENT MARKING 5 FOR MID-BLOCK CROSSWALK

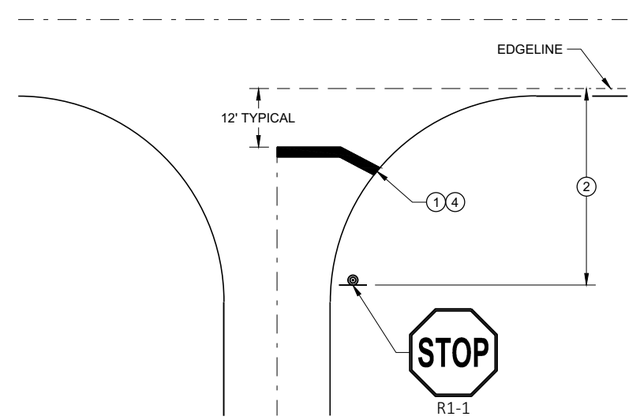

TYPICAL STOP LINE PAVEMENT MARKING WITHOUT CURB AND GUTTER

STOP LINE AND CROSSWALK PAVEMENT MARKING

STATE OF WISCONSIN
DEPARTMENT OF TRANSPORTATION

APPROVED
November 2019 — DATE
/S/ Matthew Rauch — STATE SIGNING AND MAF ENGINEER
FHWA

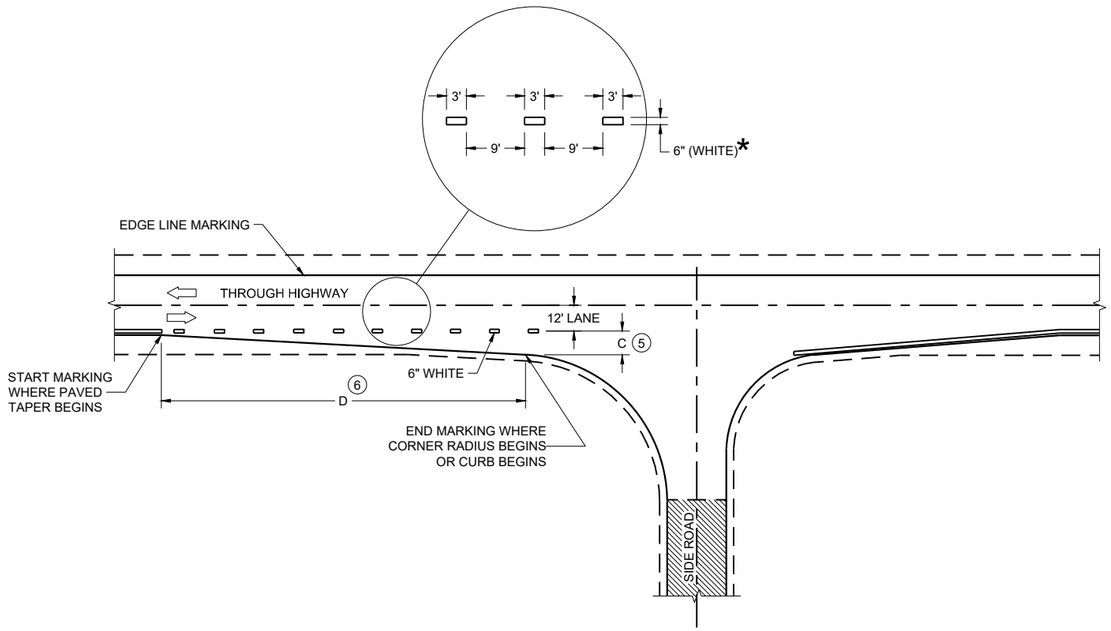

MINOR INTERSECTION

*CONFIRM MARKING LINE WIDTH WITH THE MISCELLANEOUS QUANTITIES

GENERAL NOTES

OMIT EDGE LINES THROUGH INTERSECTIONS. CONTINUE EDGE LINES THROUGH DRIVEWAYS.

1. WHEN DISTANCE "A" IS LESS THAN 250 FEET, OMIT LANE LINE.
2. WHEN DISTANCE "B" IS LESS THAN 100 FEET, OMIT CHANNELIZING LANE LINE.
3. BARRIER LINE ENDS AT SIDE ROAD PAVEMENT / SURFACE EDGE EXTENSION.
4. BARRIER LINE STARTS 500 FEET PRIOR TO THE BYPASS TAPER.
5. WHEN DISTANCE "C" IS LESS THAN 4 FEET, OMIT DOTTED EXTENSION.
6. WHEN DISTANCE "D" IS LESS THAN 50 FEET, OMIT DOTTED EXTENSION.

LEGEND

⇨ DIRECTION OF TRAVEL

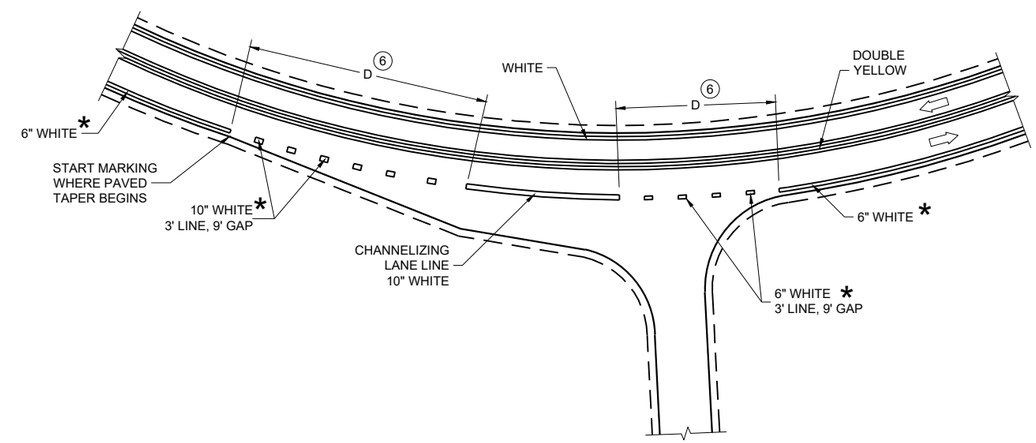

INTERSECTION ON OUTSIDE OF CURVE

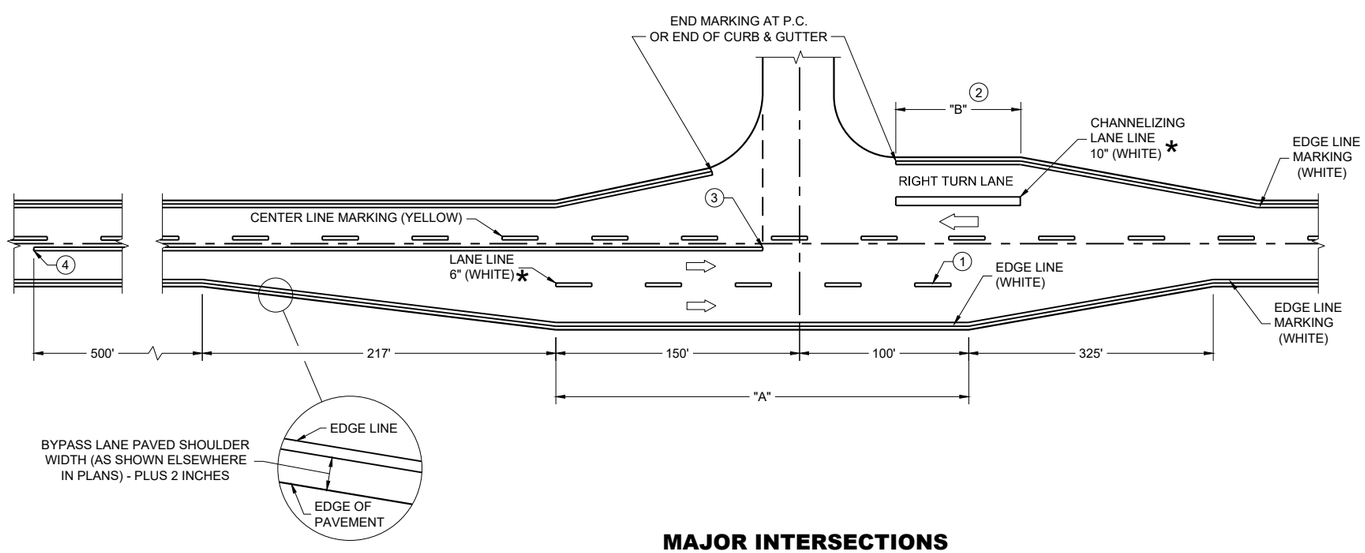

MAJOR INTERSECTIONS

(INTERSECTION WITH FULL RIGHT TURN LANE OR BYPASS LANE)

PAVEMENT MARKING (INTERSECTIONS)

STATE OF WISCONSIN
DEPARTMENT OF TRANSPORTATION

GENERAL NOTES

BARRICADE DEVICE SELECTED FROM APPROVED PRODUCT LIST

1. REFLECTIVE SHEETING SHALL FOLLOW THE REQUIREMENTS IN THE APPROVED PRODUCTS LISTING FOR SIGN SHEETING.
2. SHEETING REQUIRED ON MORE THAN 50% OF BARRICADE WIDTH.
3. PLACE SHEETING ON BOTH SIDES OF THE BARRICADE.

* USE THIS DETAIL FOR SHEETING PLACEMENT REFERENCE.

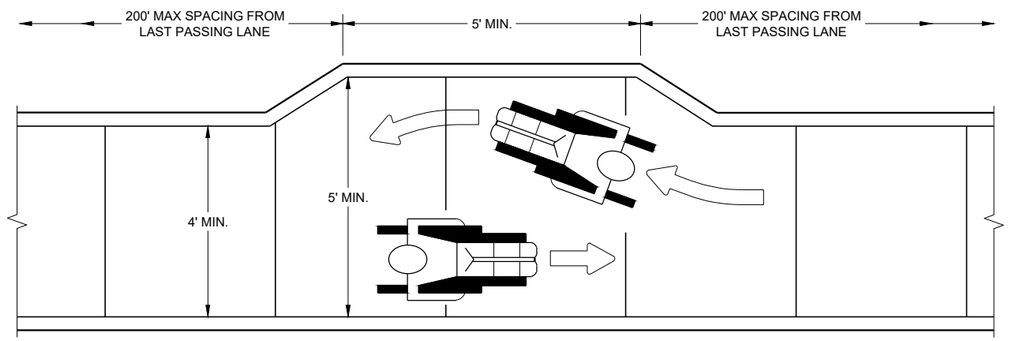

NARROW SIDEWALK PASSING DETAIL

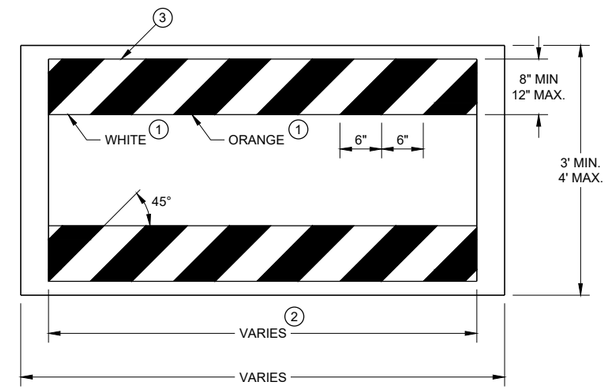

TEMPORARY PEDESTRIAN BARRICADE*

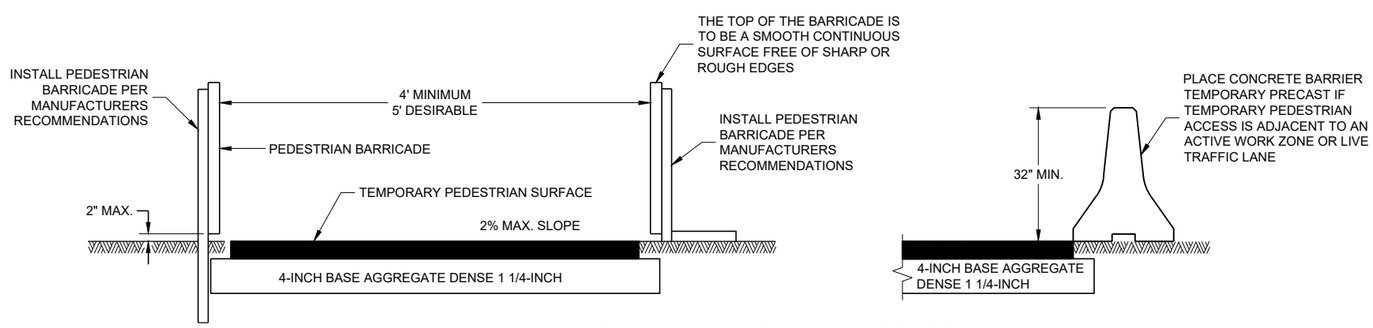

TEMPORARY PEDESTRIAN ACCESS

6

SDD 15D30 - 09a

TRAFFIC CONTROL, PEDESTRIAN ACCOMMODATION

STATE OF WISCONSIN
DEPARTMENT OF TRANSPORTAT

6

SDD 15D30 - 09a

GENERAL NOTES

CURB RAMPS SHALL BE 48" MIN. WIDTH WITH A FIRM, STABLE AND SLIP RESISTANT SURFACE.

CURB RAMPS AND LANDINGS SHALL HAVE A 1:50 (2%) MAX. CROSS-SLOPE.

CLEAR SPACE OF 48" X 48" SHALL BE PROVIDED ABOVE AND BELOW THE CURB RAMP.
LATERAL JOINTS OR GAPS BETWEEN SURFACES SHALL BE LESS THAN ½" WIDTH.

CHANGES BETWEEN SURFACE HEIGHTS SHALL NOT EXCEED ½". LATERAL EDGES MAY BE VERTICAL UP TO ¼" HIGH AND SHALL BE BEVELED AT 1:2 BETWEEN ¼" AND ½".

1. INSTALL CONTRASTING TEMPORARY DETECTABLE WARNING FIELD AT PEDESTRIAN STREET CROSSINGS, AS SHOWN IN THE PLANS.
2. PROTECTIVE EDGING WITH A 2" MIN. HEIGHT SHALL BE INSTALLED WHEN A CURB RAMP OR LANDING PLATFORM HAS A VERTICAL DROP OF 6" OR GREATER OR HAS A SIDE APRON SLOPE STEEPER THAN 1:3 (33%). PROTECTIVE EDGING SHOULD BE CONSIDERED WHEN CURB RAMPS OR LANDING PLATFORMS HAVE A VERTICAL DROP OF 3" OR MORE.
3. DETECTABLE EDGING WITH 6" MIN. HEIGHT AND CONTRASTING COLOR SHALL BE INSTALLED ON ALL CURB RAMP LANDINGS WHERE THE WALKWAY CHANGES DIRECTION (TURNS).
4. DO NOT RESTRICT WATER FLOW IN THE GUTTER SYSTEM.
5. ENSURE CURB RAMP IS OUT OF THE GUTTER PAN.
6. IF ONLY PART OF THE END PANEL OF TEMPORARY PEDESTRIAN BARRICADE PANEL IS NEEDED, EXTEND EXCESS PORTION OF TEMPORARY PEDESTRIAN BARRICADE PANEL HERE.

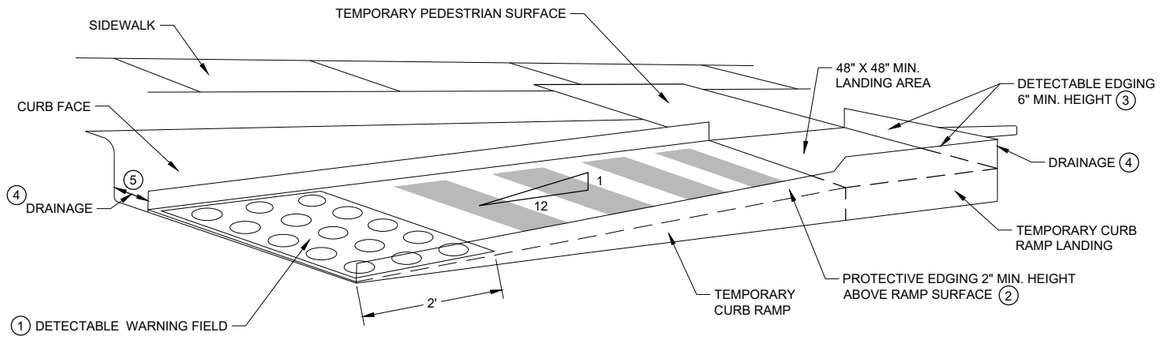

PERSPECTIVE VIEW

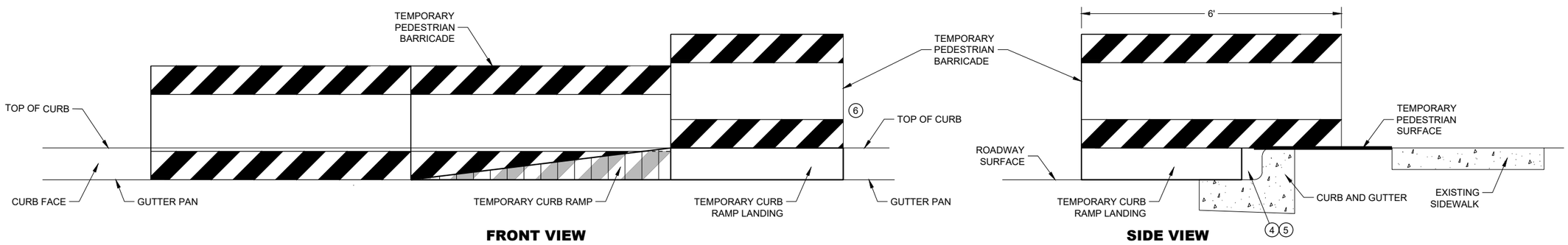

FRONT VIEW **SIDE VIEW**

TEMPORARY CURB RAMP PARALLEL TO CURB

6

6

SDD 15D30 - 09b

SDD 15D30 - 09b

TRAFFIC CONTROL, PEDESTRIAN ACCOMMODATION

STATE OF WISCONSIN
DEPARTMENT OF TRANSPORTAT

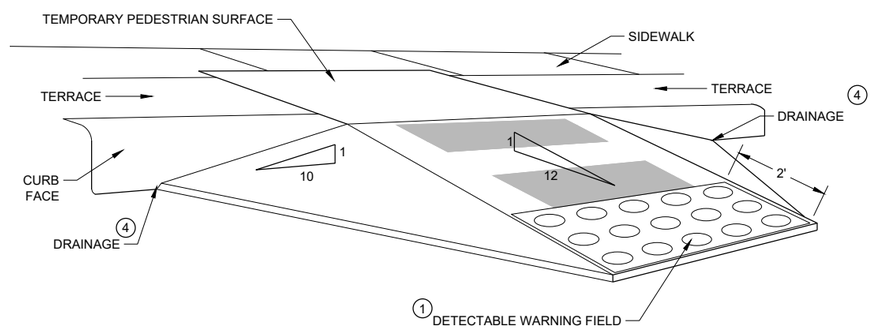

WITH SIDE APRON 5

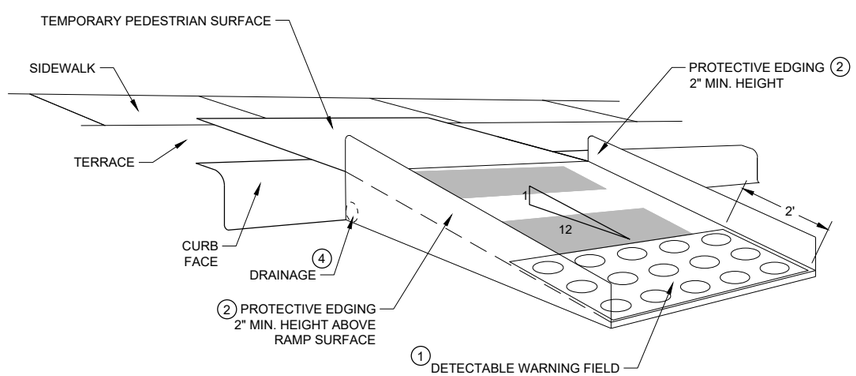

WITH PROTECTIVE EDGE

TEMPORARY CURB RAMP PERPENDICULAR TO CURB

GENERAL NOTES

CURB RAMPS SHALL BE 48" MINIMUM WIDTH WITH A FIRM, STABLE AND SLIP RESISTANT SURFACE.

ALTERNATE SIDEWALK WORK BETWEEN LEFT AND RIGHT SIDE OF ROADWAY TO MAINTAIN PEDESTRIAN ACCESS.

CURB RAMPS AND LANDINGS SHALL HAVE A 1:50 (2%) MAX. CROSS-SLOPE.

CLEAR SPACE OF 48" X 48" SHALL BE PROVIDED ABOVE AND BELOW THE CURB RAMP.

LATERAL JOINTS OR GAPS BETWEEN SURFACES SHALL BE LESS THAN ½" WIDTH.

CHANGES BETWEEN SURFACE HEIGHTS SHALL NOT EXCEED ½". LATERAL EDGES MAY BE VERTICAL UP TO ¼" HIGH AND SHALL BE BEVELED AT 1:2 BETWEEN ¼" AND ½".

1. INSTALL CONTRASTING TEMPORARY DETECTABLE WARNING FIELD AT PEDESTRIAN STREET CROSSINGS, AS SHOWN IN THE PLANS
2. PROTECTIVE EDGING WITH A 2" MIN. HEIGHT SHALL BE INSTALLED WHEN A CURB RAMP OR LANDING PLATFORM HAS A VERTICAL DROP OF 6" OR GREATER OR HAS A SIDE APRON SLOPE STEEPER THAN 1:3 (33%). PROTECTIVE EDGING SHOULD BE CONSIDERED WHEN CURB RAMPS OR LANDING PLATFORMS HAVE A VERTICAL DROP OF 3" OR MORE.
3. DETECTABLE EDGING WITH 6" MIN. HEIGHT AND CONTRASTING COLOR SHALL BE INSTALLED ON ALL CURB RAMP LANDINGS WHERE THE WALKWAY CHANGES DIRECTION (TURNS).
4. DO NOT RESTRICT WATER FLOW IN THE GUTTER SYSTEM.
5. CAN ONLY BE USED FOR RAMPS WITH 6" OR LESS OF VERTICAL CHANGE.

6

SDD 15D30 - 09c

TRAFFIC CONTROL, PEDESTRIAN ACCOMMODATION

STATE OF WISCONSIN
DEPARTMENT OF TRANSPORTAT

GENERAL NOTES

BARRICADE DEVICE SELECTED FROM APPROVED PRODUCT LIST

1. REFLECTIVE SHEETING SHALL FOLLOW THE REQUIREMENTS IN THE APPROVED PRODUCTS LISTING FOR SIGN SHEETING.
2. SHEETING REQUIRED ON MORE THAN 50% OF BARRICADE WIDTH.
3. PLACE SHEETING ON BOTH SIDES OF THE BARRICADE.

* USE THIS DETAIL FOR SHEETING PLACEMENT REFERENCE.

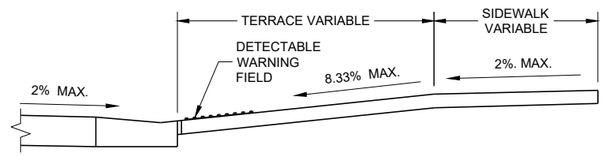

SECTION A - A

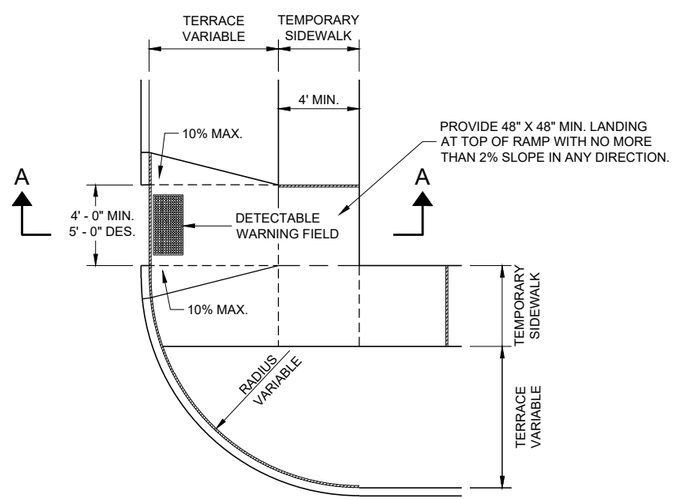

PLAN VIEW

TEMPORARY TYPE 3 RAMP

(OUTSIDE OF CROSSWALK AREA)

TRAFFIC CONTROL, PEDESTRIAN ACCOMMODATION

STATE OF WISCONSIN
DEPARTMENT OF TRANSPORTATION

APPROVED

May 2023 — DATE

/S/ Andrew Heidtke — WORK ZONE ENGINEE

FHWA

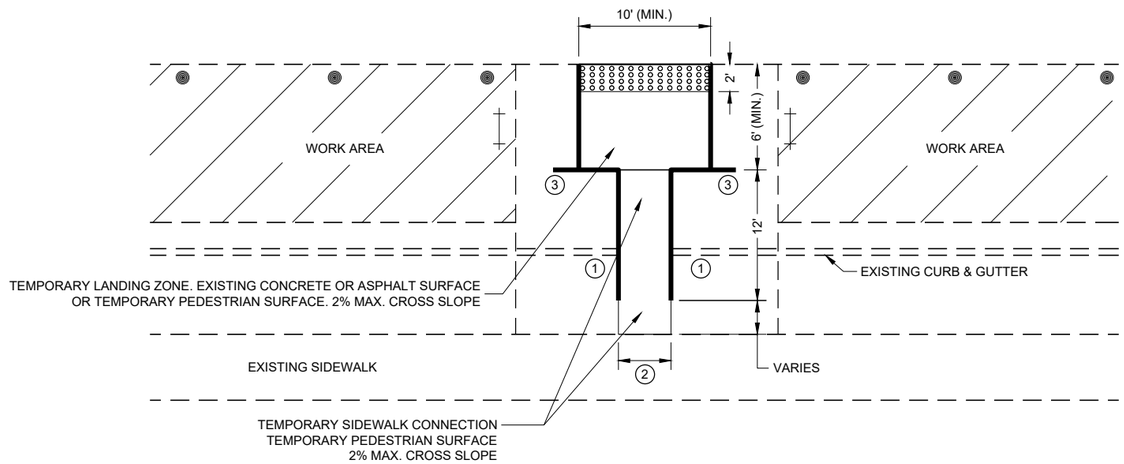

PLAN VIEW

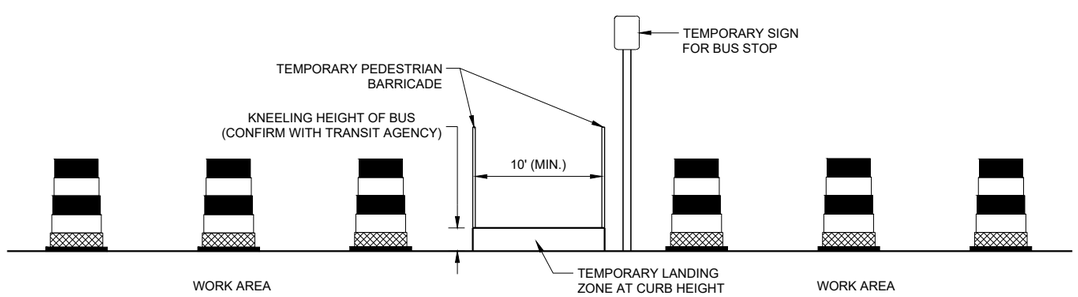

PROFILE VIEW

TEMPORARY BUS STOP PAD

GENERAL NOTES

TYPICAL TEMPORARY PEDESTRIAN BARRICADE PANEL IS 6 FEET LONG.

NOTIFY THE BUS COMPANY 7 DAYS IN ADVANCE OF THE BUS STOP RELOCATION.

PROTECTIVE EDGING WITH A 2" MIN. HEIGHT SHALL BE INSTALLED WHEN A CURB RAMP OR LANDING PLATFORM HAS A VERTICAL DROP OF 6" OR GREATER OR HAS A SIDE APRON SLOPE STEEPER THAN 1:3 (33%). PROTECTIVE EDGING SHOULD BE CONSIDERED WHEN CURB RAMPS OR LANDING PLATFORMS HAVE A VERTICAL DROP OF 3" OR MORE.

DETECTABLE EDGING WITH 6" MIN. HEIGHT AND CONTRASTING COLOR SHALL BE INSTALLED ON ALL CURB RAMP LANDINGS WHERE THE WALKWAY CHANGES DIRECTION (TURNS).

LATERAL JOINTS OR GAPS BETWEEN SURFACES SHALL BE LESS THAN ½" WIDTH.

CHANGES BETWEEN SURFACE HEIGHTS SHALL NOT EXCEED ½". LATERAL EDGES MAY BE VERTICAL UP TO ¼" HIGH AND SHALL BE BEVELED AT 1:2 BETWEEN ¼" AND ½".

CURB RAMPS AND LANDINGS SHALL HAVE A 1:50 (2%) MAX. CROSS-SLOPE.

1. DO NOT RESTRICT WATER FLOW IN THE GUTTER SYSTEM.
2. 5' WIDE MIN. WITH TEMPORARY PEDESTRIAN BARRICADE, 10' WIDE MIN. WITHOUT TEMPORARY PEDESTRIAN BARRICADE.
3. PLACE EXCESS PORTION OF TEMPORARY PEDESTRIAN BARRICADE INTO THIS SPACE.

LEGEND

- TRAFFIC CONTROL DRUM
- TYPE III BARRICADE
- TEMPORARY PEDESTRIAN BARRICADE
- TEMPORARY DETECTABLE WARNING FIELD
- WORK AREA

6

6

SDD 15D30 - 09e

SDD 15D30 - 09e

TRAFFIC CONTROL, PEDESTRIAN ACCOMMODATION

STATE OF WISCONSIN
DEPARTMENT OF TRANSPORTAT 201

LEGEND

- SIGN ON PERMANENT SUPPORT
- SIGN ON TEMPORARY SUPPORT
- UNDER PEDESTRIAN TRAFFIC
- WORK AREA
- TEMPORARY PEDESTRIAN BARRICADE
- DIRECTION OF TRAFFIC

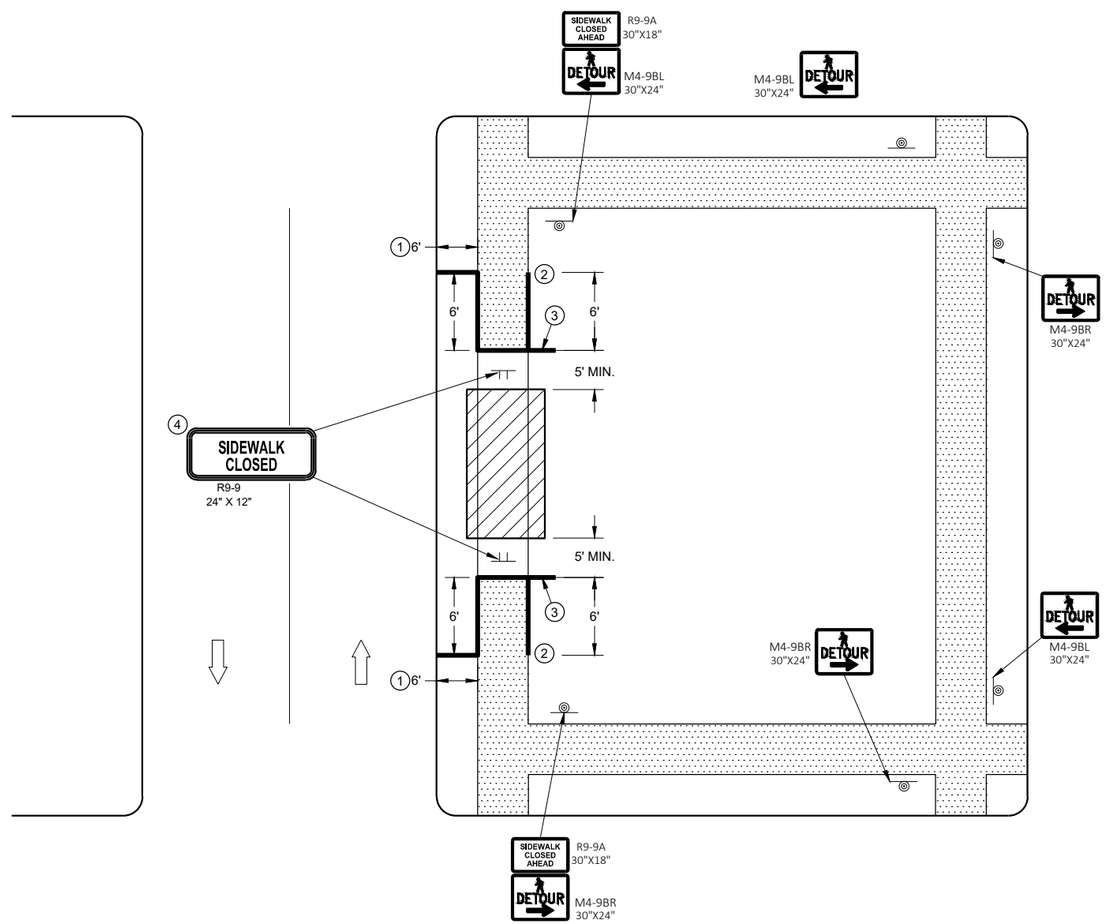

SIDEWALK DETOUR, SIDEWALK ONLY ON ONE SIDE

GENERAL NOTES

SIGN LAYOUTS SHALL BE IN ACCORDANCE WITH THE WISCONSIN STANDARD SIGN PLATES.

WHERE TEMPORARY BARRICADE RUNS PARALLEL ALONG SIDEWALK, PLACE THE FACE OF THE BARRICADE AT THE EDGE OF THE SIDEWALK.

SIGNS THAT REMAIN IN PLACE LESS THAN SEVEN CONTINUOUS DAYS AND NIGHTS MAY BE MOUNTED ON PORTABLE SUPPORTS.

PLACE TEMPORARY PEDESTRIAN BARRICADE TO FIT FIELD CONDITIONS, AVOIDING CONFLICTS WITH DRIVEWAYS AND OTHER EXISTING FEATURES.

1. IF TERRACE IS LESS THAN 6 FEET WIDE, OMIT TEMPORARY PEDESTRIAN BARRICADE FROM THE SIDEWALK TO THE CURB.
2. PLACE BARRICADE CLOSURE SO THAT THE TEMPORARY PEDESTRIAN BARRICADE END IS AT THE LAST OPEN SIDEWALK ACCESS TO RESIDENCES OR BUSINESSES BEFORE THE SIDEWALK CLOSURE.
3. IF TEMPORARY PEDESTRIAN BARRICADE PANEL IS WIDER THAN THE SIDEWALK WIDTH, THE PORTION OF EXCESS PANEL SHOULD EXTEND INTO THE TERRACE.
4. MOUNTING HEIGHT OF 5 FEET FROM THE SURFACE TO THE BOTTOM OF SIGN.

TRAFFIC CONTROL, PEDESTRIAN ACCOMMODATION

STATE OF WISCONSIN
DEPARTMENT OF TRANSPORTAT 202

6

SDD 15D30 - 09f

LEGEND

- SIGN ON TEMPORARY SUPPORT
- WORK AREA
- UNDER PEDESTRIAN TRAFFIC
- TEMPORARY PEDESTRIAN SURFACE
- TEMPORARY PEDESTRIAN BARRICADE
- OPTIONAL TEMPORARY PEDESTRIAN BARRICADE
- DIRECTION OF TRAFFIC

GENERAL NOTES

TYPICAL TEMPORARY PEDESTRIAN BARRICADE PANEL IS 6 FEET LONG.

SIGN LAYOUTS SHALL BE IN ACCORDANCE WITH THE WISCONSIN STANDARD SIGN PLATES.

WHERE TEMPORARY BARRICADE RUNS PARALLEL ALONG SIDEWALK, PLACE THE FACE OF THE BARRICADE AT THE EDGE OF THE SIDEWALK.

SIGNS THAT REMAIN IN PLACE LESS THAN SEVEN CONTINUOUS DAYS AND NIGHTS MAY BE MOUNTED ON PORTABLE SUPPORTS.

1. USE TEMPORARY PEDESTRIAN BARRICADE TO SEPARATE PEDESTRIANS FROM DROP OFFS OR FOR ADDITIONAL PEDESTRIAN CHANNELIZATION.
2. IF TEMPORARY PEDESTRIAN BARRICADE PANEL IS WIDER THAN THE SIDEWALK WIDTH, THE PORTION OF EXCESS PANEL SHOULD EXTEND INTO THE TERRACE.
3. MOUNTING HEIGHT OF 5 FEET FROM THE SURFACE TO THE BOTTOM OF SIGN.

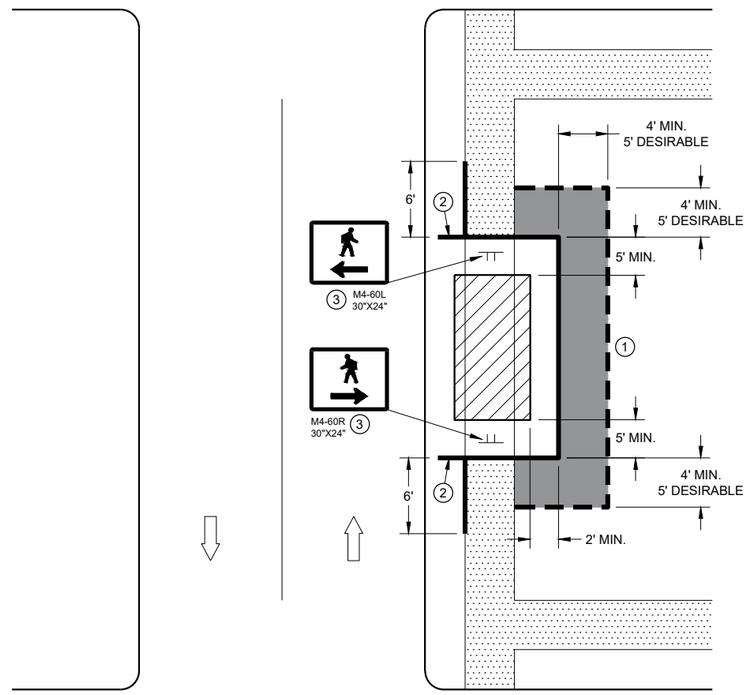

SIDEWALK DIVERSION
SINGLE SIDE

TRAFFIC CONTROL, PEDESTRIAN ACCOMMODATION

STATE OF WISCONSIN
DEPARTMENT OF TRANSPORTAT

6

SDD 15D30 - 09g

LEGEND

- SIGN ON TEMPORARY SUPPORT
- TRAFFIC CONTROL DRUM
- WORK AREA
- UNDER PEDESTRIAN TRAFFIC
- TEMPORARY CURB RAMP
- TEMPORARY PEDESTRIAN SURFACE "A"
- TEMPORARY PEDESTRIAN SURFACE "B"
- TEMPORARY PEDESTRIAN BARRICADE
- DIRECTION OF TRAFFIC

GENERAL NOTES

TYPICAL TEMPORARY PEDESTRIAN BARRICADE PANEL IS 6 FEET LONG.

SIGN LAYOUTS SHALL BE IN ACCORDANCE WITH THE WISCONSIN STANDARD SIGN PLATES.

WHERE TEMPORARY BARRICADE RUNS PARALLEL ALONG SIDEWALK, PLACE THE FACE OF THE BARRICADE AT THE EDGE OF THE SIDEWALK.

1. SHOULDER OR LANE CLOSURE ADVANCE WARNING AND BUFFER SPACE REQUIRED.
2. PLACE EXCESS PORTION OF TEMPORARY PEDESTRIAN BARRICADE PANEL PAST THE SIDEWALK ON THE SIDE AWAY FROM THE ROAD.
3. MOUNTING HEIGHT OF 5 FEET FROM THE SURFACE TO THE BOTTOM OF SIGN.
4. USE EXISTING PAVEMENT SURFACE. IF EXISTING PAVEMENT SURACE HAS BEEN REMOVED, USE A TEMPORARY PEDESTRIAN SURFACE.

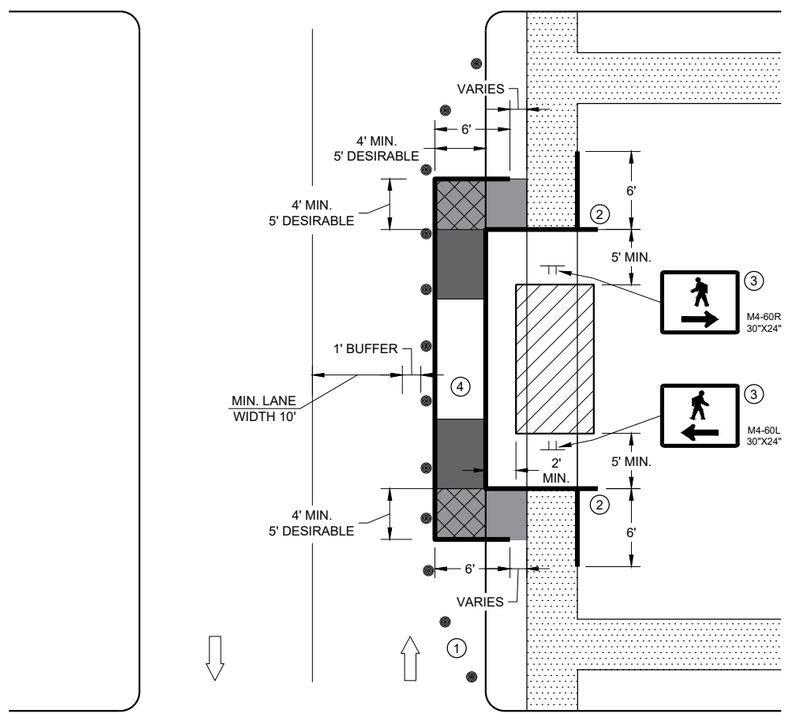

SIDEWALK DIVERSION, SINGLE SIDE

6

SDD 15D30 - 09h

TRAFFIC CONTROL, PEDESTRIAN ACCOMMODATION

STATE OF WISCONSIN
DEPARTMENT OF TRANSPORTAT

6

SDD 15D30 - 09h

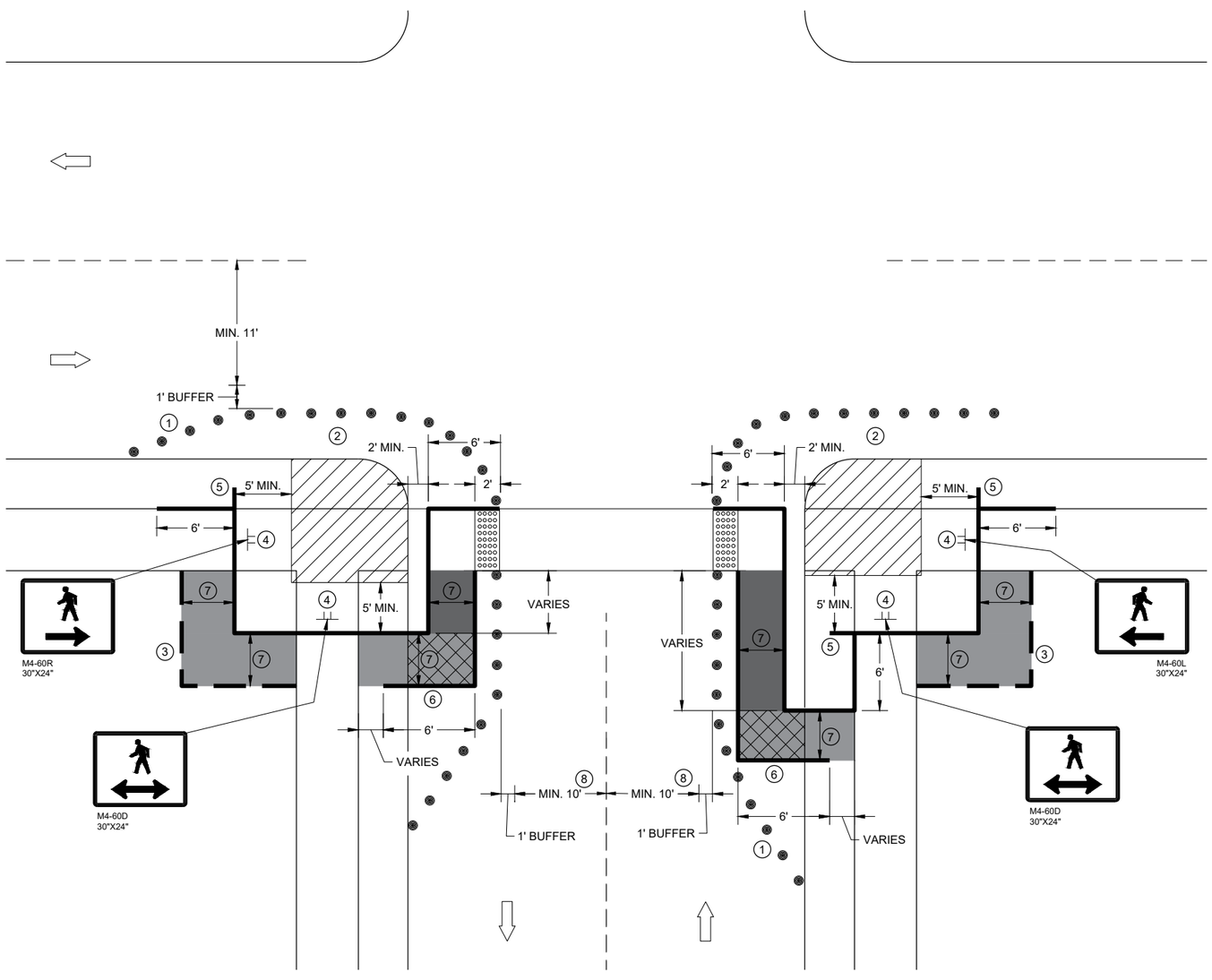

CURB RAMP PEDESTRIAN TRAFFIC CONTROL
SIDEWALK ON SINGLE SIDE

GENERAL NOTES

IF PEDESTRIAN PUSH BUTTONS ARE PRESENT ON THE EXISTING FACILITY, ENSURE THEY ARE MAINTAINED/ACCESSIBLE FOR PEDESTRIAN USE THROUGHOUT THE TEMPORARY PEDESTRIAN ACCOMMODATIONS.

SIGN LAYOUTS SHALL BE IN ACCORDANCE WITH THE WISCONSIN STANDARD SIGN PLATES.

TYPICAL TEMPORARY PEDESTRIAN BARRICADE PANEL IS 6 FEET LONG

WHEN TEMPORARY PEDESTRIAN BARRICADE RUNS PARALLEL ALONG THE SIDEWALK, PLACE THE FACE OF THE BARRICADE AT THE EDGE OF THE SIDEWALK.

1. SHOULDER OR LANE CLOSURE ADVANCE WARNING AND PROPER BUFFER SPACE REQUIRED.
2. PROVIDE ADEQUATE SPACE FOR CONTRACTOR OPERATIONS
3. USE TEMPORARY PEDESTRIAN BARRICADE TO SEPARATE PEDESTRIANS FROM DROP OFFS OR FOR ADDITIONAL PEDESTRIAN CHANNELIZATION.
4. MOUNTING HEIGHT OF 5 FEET FROM SIDEWALK SURFACE TO BOTTOM OF SIGN.
5. PLACE EXCESS PORTION OF TEMPORARY PEDESTRIAN BARRICADE PANEL IN THE SIDEWALK TERRACE.
6. IF TEMPORARY PEDESTRIAN BARRICADE DOES NOT REACH THE FACE OF THE CURB, USE AN ADDITIONAL PANEL AND EXTEND INTO THE TERRACE.
7. 4 FEET MINIMUM, 5 FEET DESIRABLE
8. IF MINIMUM LANE WIDTHS CAN'T BE ATTAINED, CURB RAMPS MAY NEED TO BE CONSTRUCTED AT SEPARATE TIMES.

LEGEND

- SIGN ON TEMPORARY SUPPORT
- TRAFFIC CONTROL DRUM
- WORK AREA
- TEMPORARY CURB RAMP
- TEMPORARY PEDESTRIAN SURFACE "A"
- TEMPORARY PEDESTRIAN SURFACE "B"
- TEMPORARY DETECTABLE WARNING FIELD
- TEMPORARY PEDESTRIAN BARRICADE
- OPTIONAL TEMPORARY PEDESTRIAN BARRICADE
- DIRECTION OF TRAFFIC

TRAFFIC CONTROL, PEDESTRIAN ACCOMMODATION

STATE OF WISCONSIN
DEPARTMENT OF TRANSPORTAT

6

SDD 15D30 - 09i

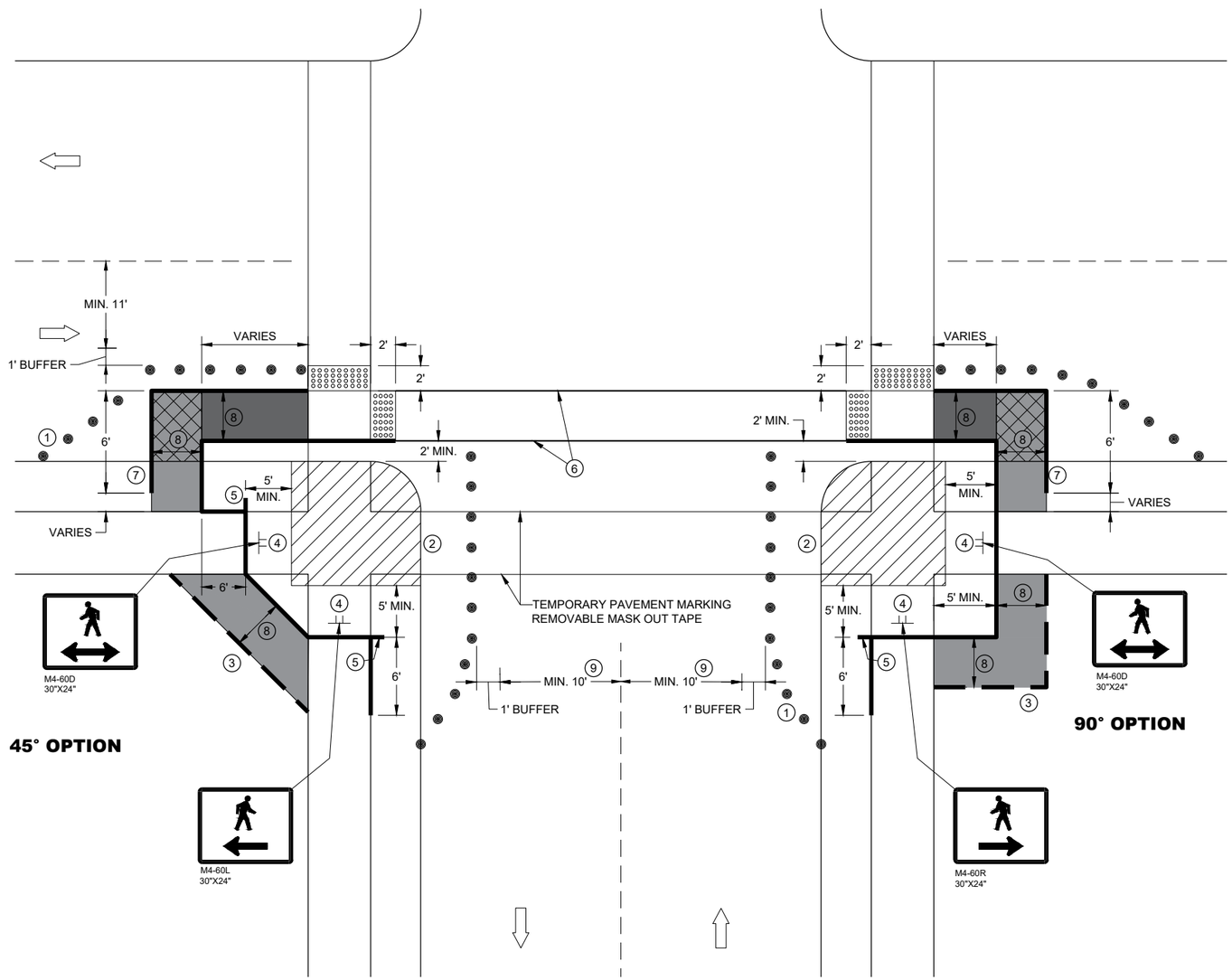

CURB RAMP PEDESTRIAN TRAFFIC CONTROL

GENERAL NOTES

IF PEDESTRIAN PUSH BUTTONS ARE PRESENT ON THE EXISTING FACILITY, ENSURE THEY ARE MAINTAINED/ACCESSIBLE FOR PEDESTRIAN USE THROUGHOUT THE TEMPORARY PEDESTRIAN ACCOMMODATIONS.

SIGN LAYOUTS SHALL BE IN ACCORDANCE WITH THE WISCONSIN STANDARD SIGN PLATES.

TYPICAL TEMPORARY PEDESTRIAN BARRICADE PANEL IS 6 FEET LONG

WHEN TEMPORARY PEDESTRIAN BARRICADE RUNS PARALLEL ALONG THE SIDEWALK, PLACE THE FACE OF THE BARRICADE AT THE EDGE OF THE SIDEWALK.

1. SHOULDER OR LANE CLOSURE ADVANCE WARNING AND PROPER BUFFER SPACE REQUIRED.
2. PROVIDE ADEQUATE SPACE FOR CONTRACTOR OPERATIONS
3. USE TEMPORARY PEDESTRIAN BARRICADE TO SEPARATE PEDESTRIANS FROM DROP OFFS OR FOR ADDITIONAL PEDESTRIAN CHANNELIZATION.
4. MOUNTING HEIGHT OF 5 FEET FROM SIDEWALK SURFACE TO BOTTOM OF SIGN.
5. PLACE EXCESS PORTION OF TEMPORARY PEDESTRIAN BARRICADE PANEL IN THE SIDEWALK TERRACE.
6. WHITE 6" TEMPORARY PAVEMENT MARKING
7. IF TEMPORARY PEDESTRIAN BARRICADE DOES NOT REACH THE FACE OF THE CURB, USE AN ADDITIONAL PANEL AND EXTEND INTO THE TERRACE.
8. 4 FEET MINIMUM, 5 FEET DESIRABLE
9. IF MINIMUM LANE WIDTHS CAN'T BE ATTAINED, CURB RAMPS MAY NEED TO BE CONSTRUCTED AT SEPARATE TIMES.

LEGEND

- SIGN ON TEMPORARY SUPPORT
- TRAFFIC CONTROL DRUM
- WORK AREA
- TEMPORARY CURB RAMP
- TEMPORARY PEDESTRIAN SURFACE "A"
- TEMPORARY PEDESTRIAN SURFACE "B"
- TEMPORARY DETECTABLE WARNING FIELD
- TEMPORARY PEDESTRIAN BARRICADE
- OPTIONAL TEMPORARY PEDESTRIAN BARRICADE
- DIRECTION OF TRAFFIC

TRAFFIC CONTROL, PEDESTRIAN ACCOMMODATION

STATE OF WISCONSIN
DEPARTMENT OF TRANSPORTAT

6

SDD 15D30 - 09j

LEGEND

- SIGN ON PERMANENT SUPPORT
- SIGN ON TEMPORARY SUPPORT
- UNDER PEDESTRIAN TRAFFIC
- WORK AREA
- TEMPORARY PEDESTRIAN BARRICADE
- DIRECTION OF TRAFFIC

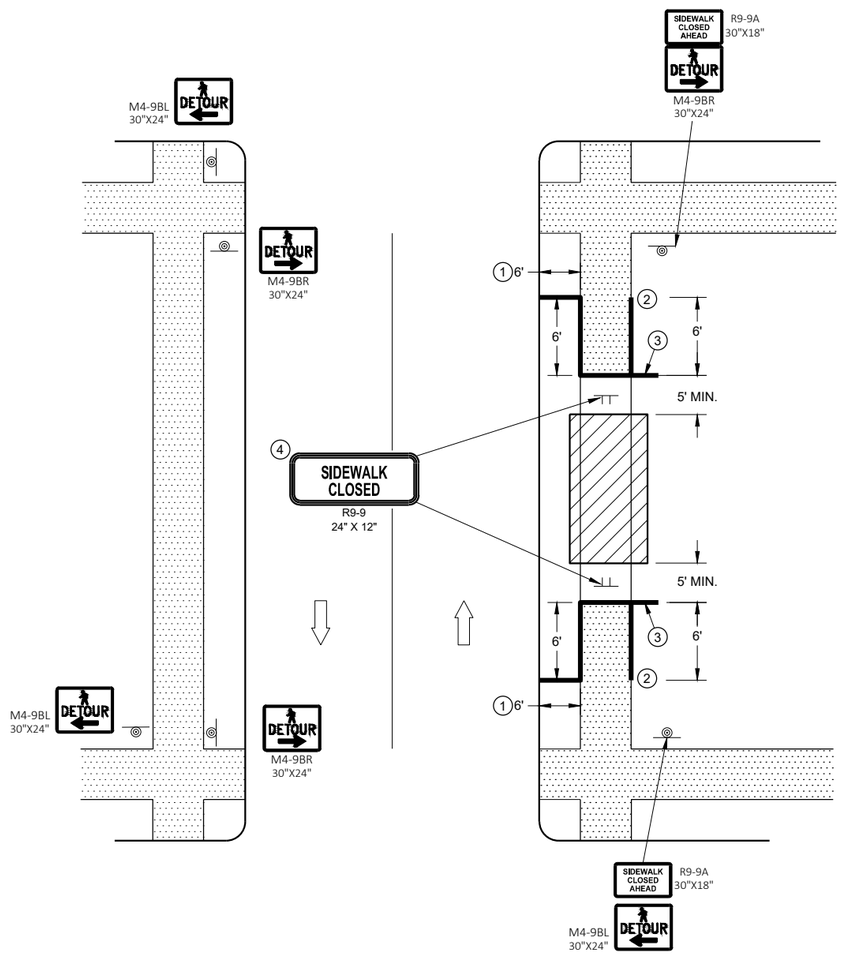

SIDEWALK DETOUR, SIDEWALK ON BOTH SIDES

GENERAL NOTES

SIGN LAYOUTS SHALL BE IN ACCORDANCE WITH THE WISCONSIN STANDARD SIGN PLATES.

WHERE TEMPORARY BARRICADE RUNS PARALLEL ALONG SIDEWALK, PLACE THE FACE OF THE BARRICADE AT THE EDGE OF THE SIDEWALK.

SIGNS THAT REMAIN IN PLACE LESS THAN SEVEN CONTINUOUS DAYS AND NIGHTS MAY BE MOUNTED ON PORTABLE SUPPORTS.

PLACE TEMPORARY PEDESTRIAN BARRICADE TO FIT FIELD CONDITIONS, AVOIDING CONFLICT WITH DRIVEWAYS AND OTHER EXISTING FEATURES.

1. IF TERRACE IS LESS THAN 6 FEET WIDE, OMIT TEMPORARY PEDESTRIAN BARRICADE FROM THE SIDEWALK TO THE CURB.
2. PLACE BARRICADE CLOSURE SO THAT THE TEMPORARY PEDESTRIAN BARRICADE END IS AT THE LAST OPEN SIDEWALK ACCESS TO RESIDENCES OR BUSINESSES BEFORE THE SIDEWALK CLOSURE.
3. IF TEMPORARY PEDESTRIAN BARRICADE PANEL IS WIDER THAN THE SIDEWALK WIDTH, THE PORTION OF EXCESS PANEL SHOULD EXTEND INTO THE TERRACE.
4. MOUNTING HEIGHT OF 5 FEET FROM THE SURFACE TO THE BOTTOM OF SIGN.

TRAFFIC CONTROL, PEDESTRIAN ACCOMMODATION

STATE OF WISCONSIN
DEPARTMENT OF TRANSPORTAT

6
SDD 15D30 - 09k

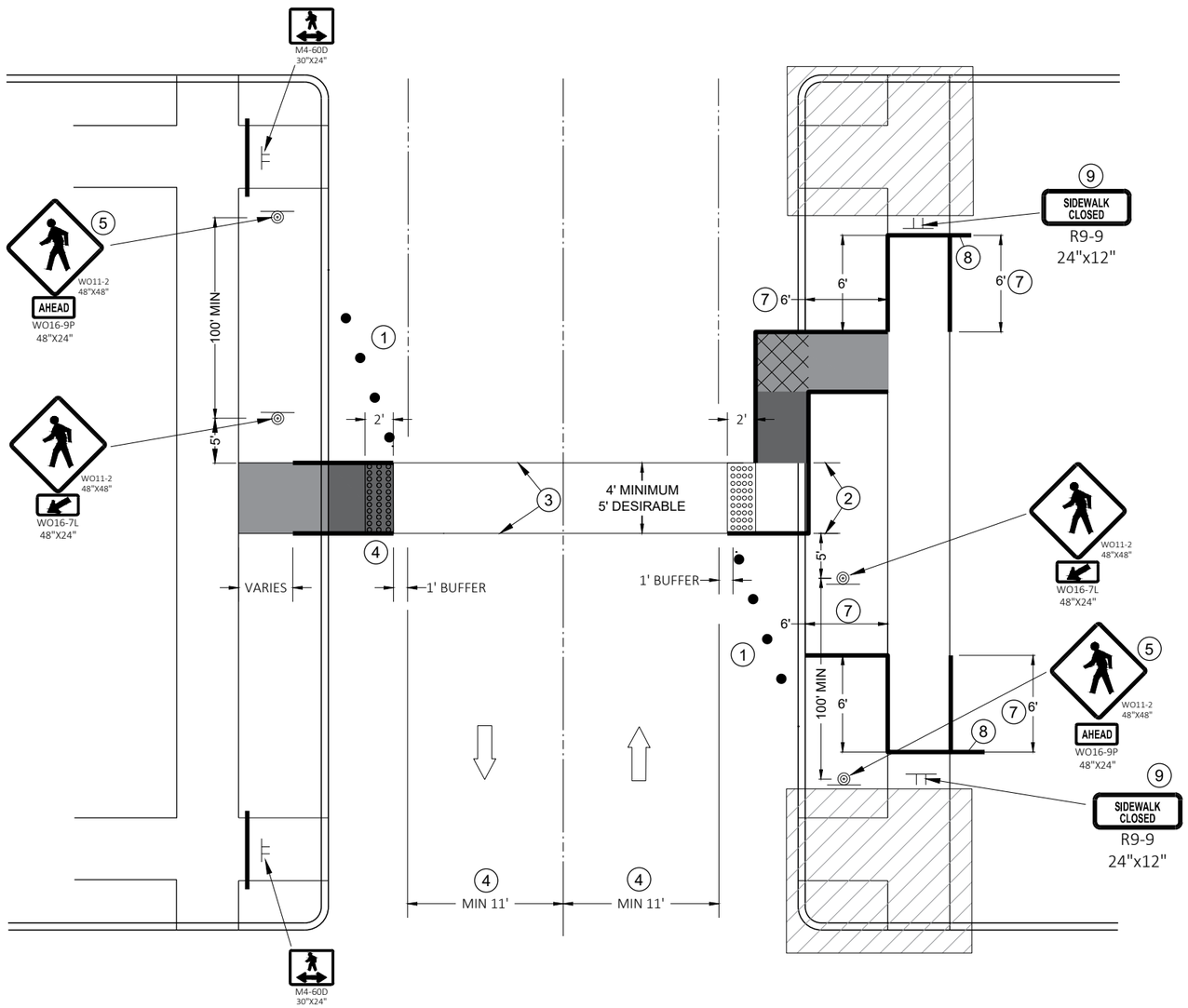

TEMPORARY PEDESTRIAN CROSSING

GENERAL NOTES

TYPICAL TEMPORARY PEDESTRIAN BARRICADE PANEL IS 6 FEET LONG.

SIGN LAYOUTS SHALL BE IN ACCORDANCE WITH THE WISCONSIN STANDARD SIGN PLATES.

SEE OTHER PEDESTRIAN ACCOMMODATION DETAILS FOR SIGNING AND DEVICES FOR DIFFERENT PEDESTRIAN FACILITIES CLOSURES.

1. SHOULDER OR LANE CLOSURE ADVANCED WARNING AND PROPER BUFFER SPACE REQUIRED.
2. 4 FEET MINIMUM, 5 FEET DESIRABLE.
3. WHITE 6" TEMPORARY PAVEMENT MARKING.
4. IF MINIMUM LANE WIDTHS CAN'T BE ATTAINED, PERPENDICULAR CURB RAMPS MAY NEED TO BE UTILIZED.
5. IF MINIMUM 100' SPACING FROM THE MID-BLOCK CROSSING CANNOT BE ATTAINED BEFORE THE INTERSECTION, REMOVE THIS SIGN ASSEMBLY.
6. IF TERRACE IS LESS THAN 6 FEET WIDE, OMIT TEMPORARY PEDESTRIAN BARRICADE FROM THE SIDEWALK TO THE CURB.
7. PLACE BARRICADE CLOSURE SO THAT THE TEMPORARY PEDESTRIAN BARRICADE END IS AT THE LAST OPEN SIDEWALK ACCESS TO RESIDENCES OR BUSINESSES BEFORE THE SIDEWALK CLOSURE.
8. IF TEMPORARY PEDESTRIAN BARRICADE PANEL IS WIDER THAN THE SIDEWALK WIDTH, THE PORTION OF THE EXCESS PANEL SHOULD EXTEND INTO THE TERRACE.
9. MOUNTING HEIGHT OF 5 FEET FROM THE SURFACE TO THE BOTTOM OF THE SIGN.

LEGEND

- TRAFFIC CONTROL DRUM
- SIGN ON TEMPORARY SUPPORT
- TEMPORARY CURB RAMP
- TEMPORARY DETECTABLE WARNING FIELD
- TEMPORARY PEDESTRIAN SURFACE "A"
- TEMPORARY PEDESTRIAN SURFACE "B"
- WORK AREA
- TEMPORARY PEDESTRIAN BARRICADE
- DIRECTION OF TRAFFIC

TRAFFIC CONTROL, PEDESTRIAN ACCOMMODATION

STATE OF WISCONSIN
DEPARTMENT OF TRANSPORTAT 208

6
SDD 15D30 - 09L

NOTES

1. ALL SIGNS TYPE II - TYPE H REFLECTIVE
2. COLOR:
   BACKGROUND - GREEN
   MESSAGE - WHITE
3. MESSAGE SERIES C

2-7

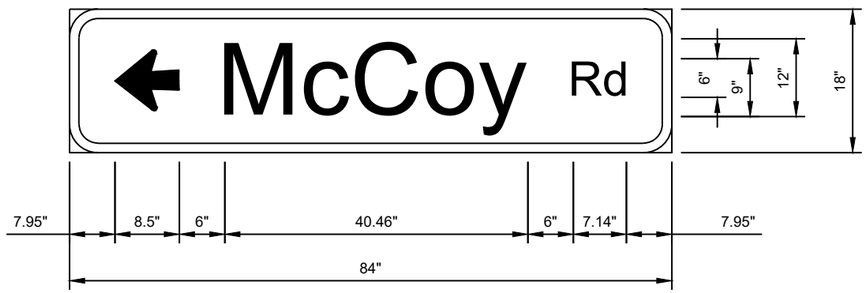

2-15

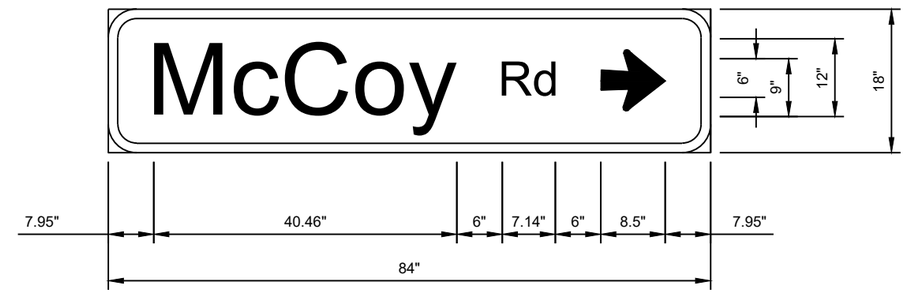

2-11

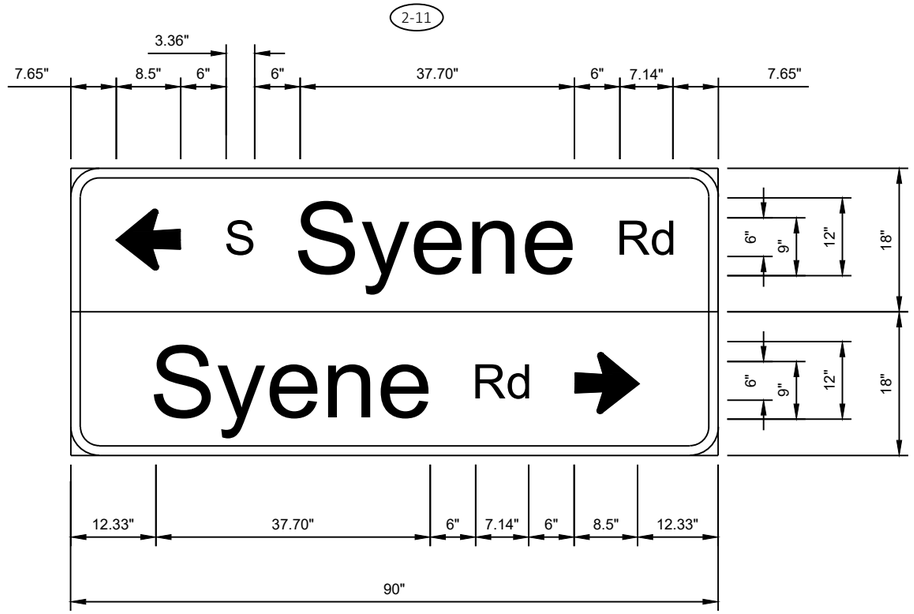

2-8

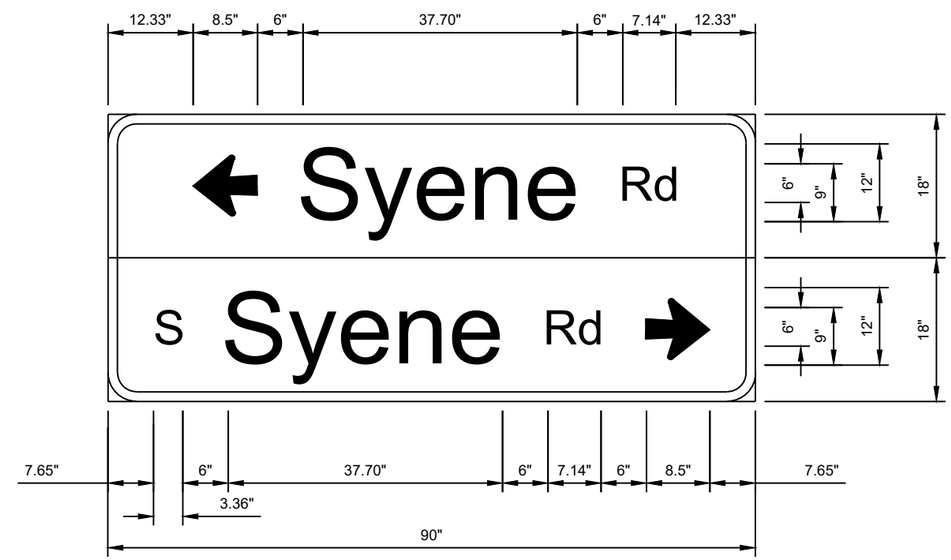

7

7

PROJECT NO: 5849-02-07	HWY: LOCAL STREET - SYENE ROAD	COUNTY: DANE	SIGN DETAILS	SHEET 209	E

URBAN AREA

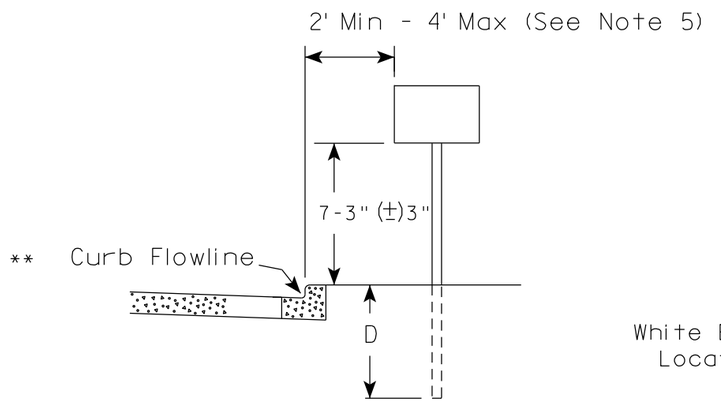

RURAL AREA (See Note 2)

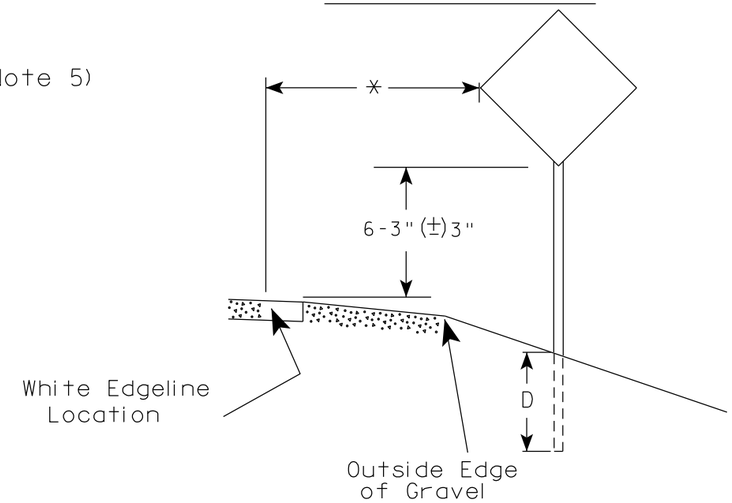

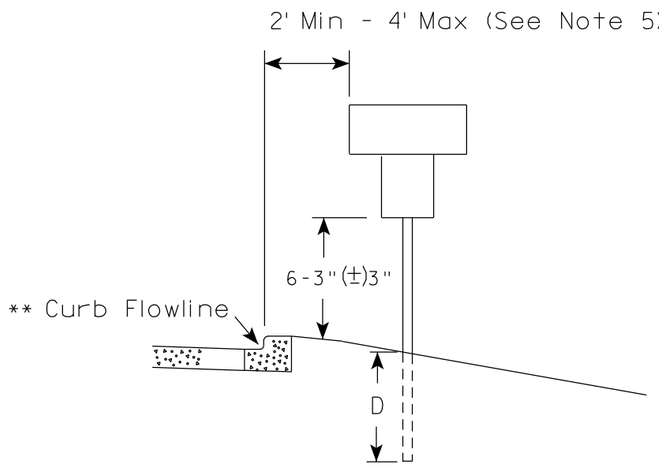

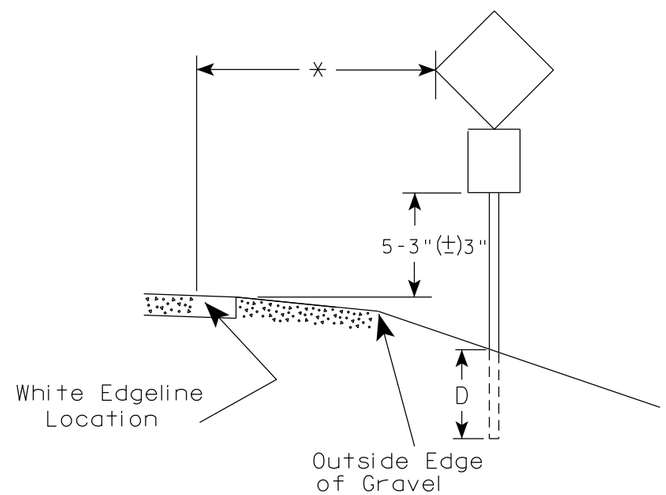

** The existence of curb and gutter does not in itself mandate the vertical clearance illustrated. That height is typically measured where there is sidewalk adjacent to the roadway or parking is permitted. In the absence of sidewalk vertical clearance is measured from the top of the curb. Offset of signs is measured from the flow line.

* 6 feet from edge of a paved shoulder or 12 feet from the edge of pavement (edge line location) or 2 feet from outside edge of gravel, whichever is greater unless directed by project engineer.

GENERAL NOTES

1. Signs wider than 4 feet or 20 sq.ft or larger, shall be mounted on multiple posts. Refer to plate A4-4.
2. If signs are mounted on or behind barrier wall, see A4-10 sign plate.
   The Double Arrow sign (W12-1D) shall be mounted at a height of 2'-3" (±) 3". The Chevron sign (W1-8), Roundabout Chevron panel (R6-4B), Enhanced Reference Markers, Clearance Markers (W5-52), Mile Markers (D10 series), In Road Object Markers (W5-54) & End of Road Markers (W5-56) shall be mounted at a height of 4'-3" (±) 3".
3. For expressways and freeways, mounting height is 7'- 3" (±) 3" or 6'-3" (±) 3" depending upon existence of a sub-sign.
4. Minimum mounting height for signs mounted on traffic signal poles is 5'- 3" (±) 3".
5. Offset distance shall be consistent with existing signs or consistent throughout length of project.
6. Folding signs shall be mounted at a height of 5'-3" (±) 3" or as directd by the Engineer.

POST EMBEDMENT DEPTH

Area of Sign Installation (Sq. Ft.)	D (Min)
20 or Less	4'
Greater than 20	5'

TYPICAL INSTALLATION OF PERMANENT TYPE II SIGNS ON SINGLE POSTS

WISCONSIN DEPT OF TRANSPORTATION

APPROVED Matthew R Rauch
for State Traffic Engineer

DATE 12/6/23 PLATE NO. A4-3.23

7 7

PROJECT NO:	HWY:	COUNTY:		SHEET NO: 210	E

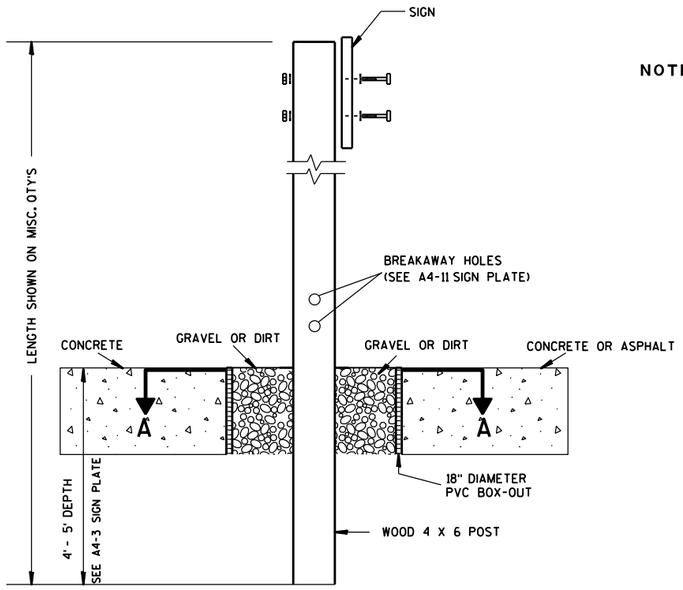

ELEVATION VIEW

DETAIL OF WOOD 4 X 6 SIGN POST IN BOX-OUT

NOTES:
1. ALL MATERIAL TO BE APPROVED BY ENGINEER PRIOR TO INSTALLATION
2. SEE SIGN PLATE A4-8 FOR SIGN HARDWARE REQUIREMENTS
3. 18 INCH X 18 INCH SQUARE BOX-OUTS MAY BE USED FOR INSTALLATIONS IN EXISTING CONCRETE OR ASPHALT LOCATIONS.

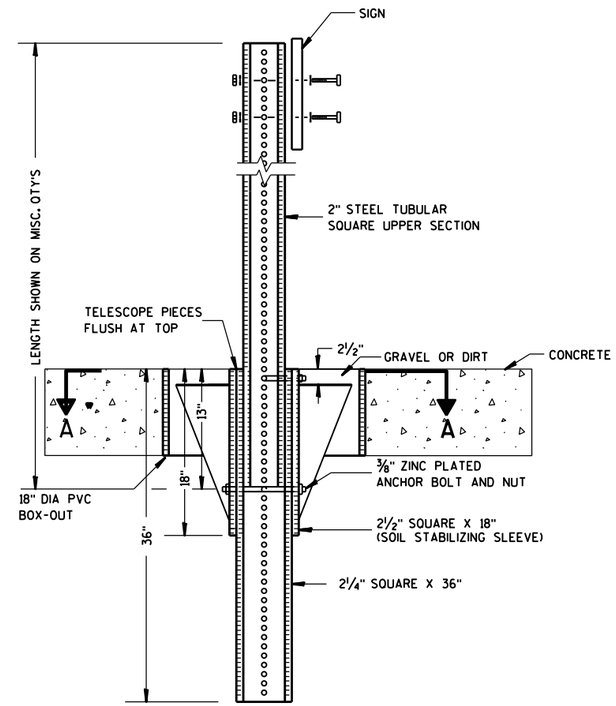

ELEVATION VIEW

DETAIL OF STEEL 2 X 2 SIGN POST IN BOX-OUT

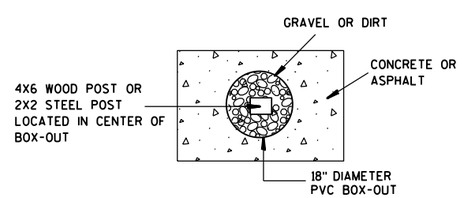

PLAN VIEW

FOR NEW CONCRETE/ASPHALT INSTALLATIONS

SIGN POST
BOX-OUTS
A4-3B

WISCONSIN DEPT OF TRANSPORTATION

APPROVED Matthew R Rauch
for State Traffic Engineer

DATE 1/27/14 PLATE NO. A4-3B.1

PROJECT NO:	HWY:	COUNTY:		SHEET NO:	E

URBAN AREA

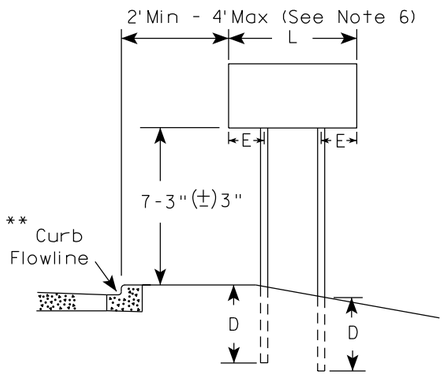

RURAL AREA (See Note 3)

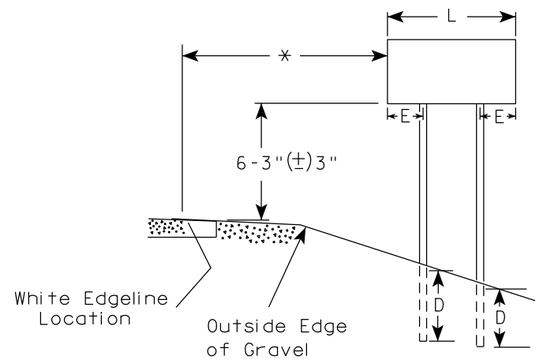

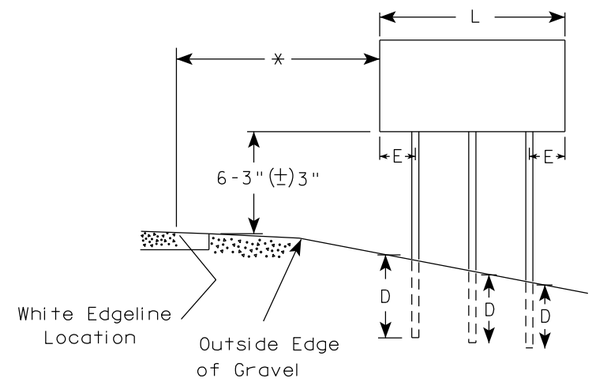

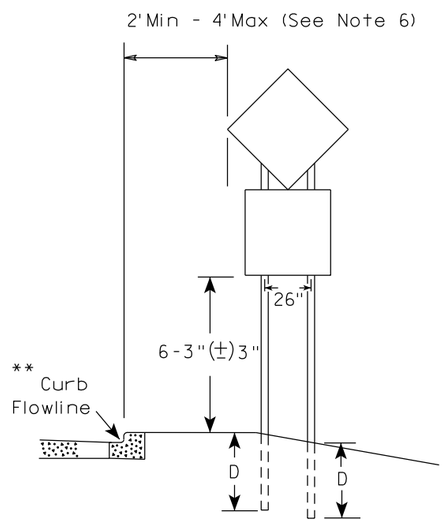

48" DIAMOND WARNING SIGN

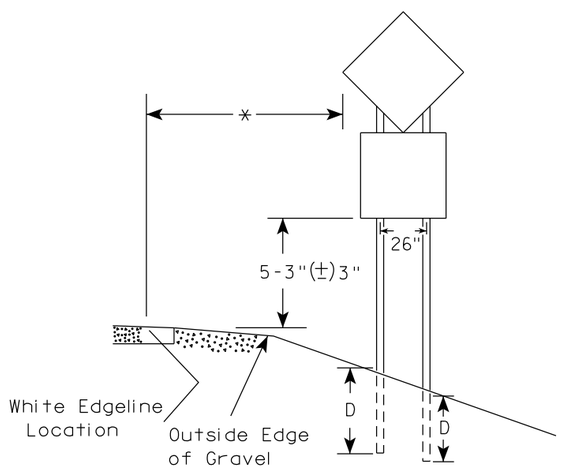

48" DIAMOND WARNING SIGN

GENERAL NOTES

1. For 3 or 4 post installations, individual post spacing shall be greater than 3'-6".
2. See tables below for required number of posts.
3. For expressways and freeways, mounting height is 7'-3" (±) 3" or 6'-3" (±) 3" depending upon existence of sub-sign.
4. The (±) tolerance for mounting height is 3 inches.
5. J-Assemblies are considered to be one sign for mounting height.
6. Offset distance shall be consistent with existing signs or consistent throughout length of project.
7. Folding signs shall be mounted at a height of 5'-3" (±) 3" or as directed by the engineer.
8. The Double Arrow sign (W12-1) shall be mounted at a height of 2'-3" (±) 3". The Chevron sign (W1-8), Roundabout Chevron panel (R6-4B), Clearance Markers (W5-52), Mile Markers (D10 series), In Road Object Markers (W5-54) & End of Road Markers (W5-56) shall be mounted at a height of 4"-3" (±) 3".

* 6 feet from edge of a paved shoulder or 12 feet from the edge of pavement (edge line location) or 2 feet from outside edge of gravel, whichever is greater unless directed by project engineer.

** The existence of curb and gutter does not in itself mandate the vertical clearance illustrated. That height is typically measured where there is sidewalk adjacent to the roadway or parking is permitted. In the absence of sidewalk vertical clearance is measured from the top of the curb. Offset of signs is measured from the flow line.

*** See A4-3 sign plate for signs 4' or less in width and less than 20 S.F. in area.

SIGN SHAPE OTHER THAN DIAMOND (TWO POSTS REQUIRED)	
L	E
*** Greater than 48" Less than 60"	12"
60" to 108"	L/5

SIGN SHAPE OTHER THAN DIAMOND (THREE POSTS REQUIRED)	
L	E
Greater than 108" to 144"	12"

POST EMBEDMENT DEPTH

Area of Sign Installation (Sq. Ft.)	D (Min)
20 or Less	4'
Greater than 20	5'

TYPICAL INSTALLATION OF TYPE II SIGNS ON MULTIPLE POSTS

WISCONSIN DEPT OF TRANSPORTATION

APPROVED Matthew R Rauch
for State Traffic Engineer

DATE 12/6/23 PLATE NO. A4-4.16

PROJECT NO:	HWY:	COUNTY:		SHEET NO: 212	E

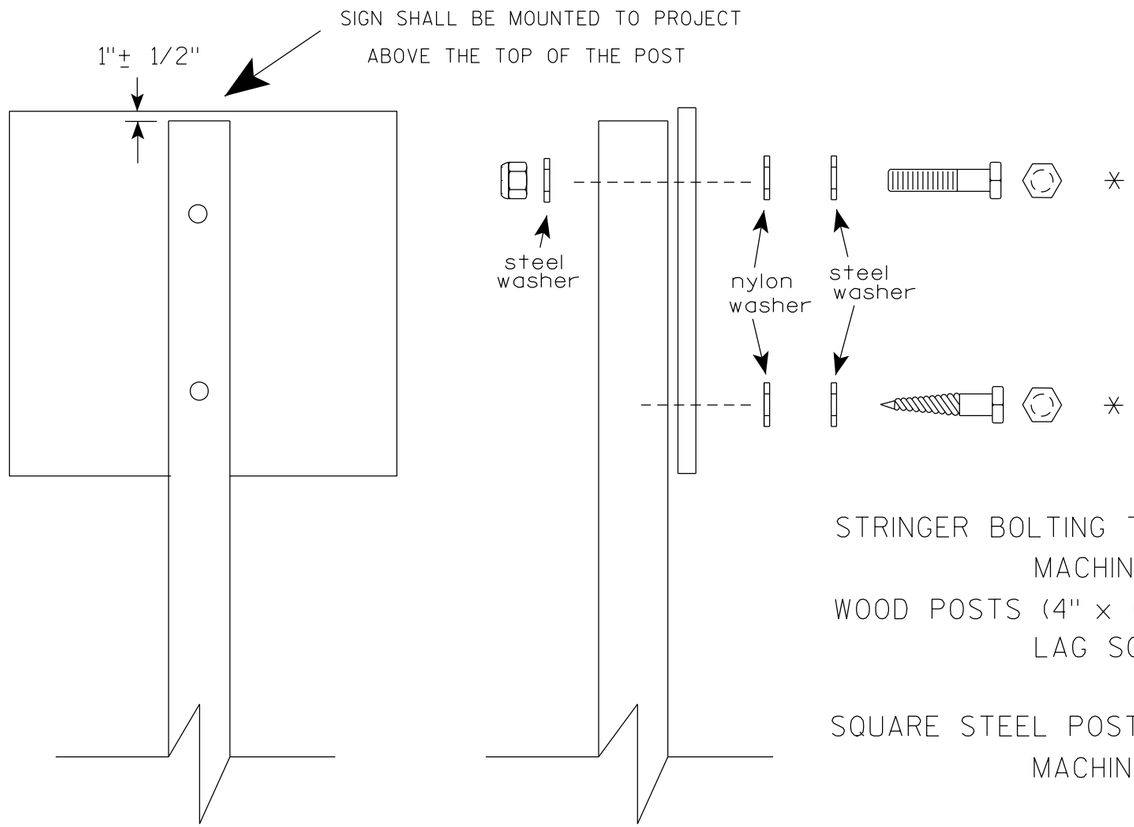

Nuts, bolts and lags used for mounting signs shall have hexagonal heads and shall be either :

a. Hot dip galvanized in accordance with ASTM Designation: A 153, Class D, or SC 3

b. Electro-galvanized in accordance with ASTM Designation : B 633, TYPE III, SC 3.

Threads on bolts and nuts shall be manufactured with sufficient allowance for the cadmium plate or galvanized coating to permit the nuts to run freely on the bolts.

STRINGER BOLTING TO ALUMINUM SIGNS (SEE SIGN PLATE A4-18)

MACHINE BOLTS - 5/16" X 1-3/4" Length w/ lock nuts

WOOD POSTS (4" x 6")

LAG SCREWS - 3/8" X 3" (NO STRINGERS ON BACK OF SIGN)
3/8" X 4" (STRINGERS ON BACK OF SIGN)

SQUARE STEEL POSTS (2" x 2")

MACHINE BOLTS - 3/8" X 3-1/4" Length w/ nuts (NO STRINGER ON BACK OF SIGN)
3/8" X 5" Length w/ nuts (STRINGERS ON BACK OF SIGN)

RIVETS - 9/32" (6605-9-6) BULB-TITE, TRI-FOLD, ALUMINUM BODY/MANDREL
O.D. FLANGE .720-.765 INCH, GRIP RANGE .042-.375 INCH

WASHERS (ALL POSTS) -

1-1/4" O.D. X 3/8" I.D. X 1/16" STEEL
1-1/4" O.D. X 3/8" I.D. X .080 NYLON

* Two different fastening systems are shown for illustration purposes. On any individual sign, either one or the other system shall be used. Actual number of fasteners per sign varies with the sign area, but normally there are two. For a single post installation, all signs greater than 9 sq. ft. require the use of 3 fasteners.

ATTACHMENT OF SIGNS TO POSTS

WISCONSIN DEPT OF TRANSPORTATION

APPROVED Matthew R Rauch
for State Traffic Engineer

DATE 4/1/2020 PLATE NO. A4-8.9

TELESCOPIC TUBING ANCHORS
TWO PIECE SYSTEM

2 1/4" SQUARE
12 GAUGE
PERFORATED
GALVANIZED FINISH

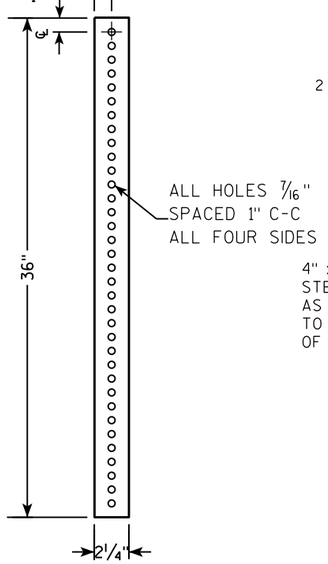

2 1/2" SQUARE
12 GAUGE
OMNI-DIRECTIONAL
PERFORATED
SOIL STABILIZING SLEEVE
GALVANIZED FINISH

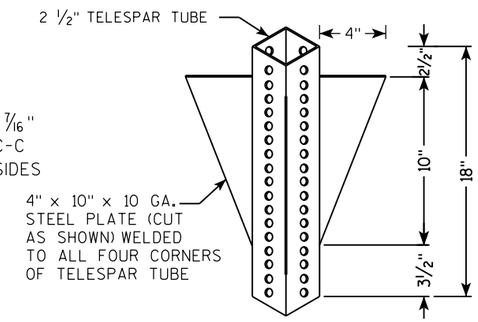

DETAIL OF TUBULAR STEEL SIGN POST
(IN POURED CONCRETE OR ASPHALT)

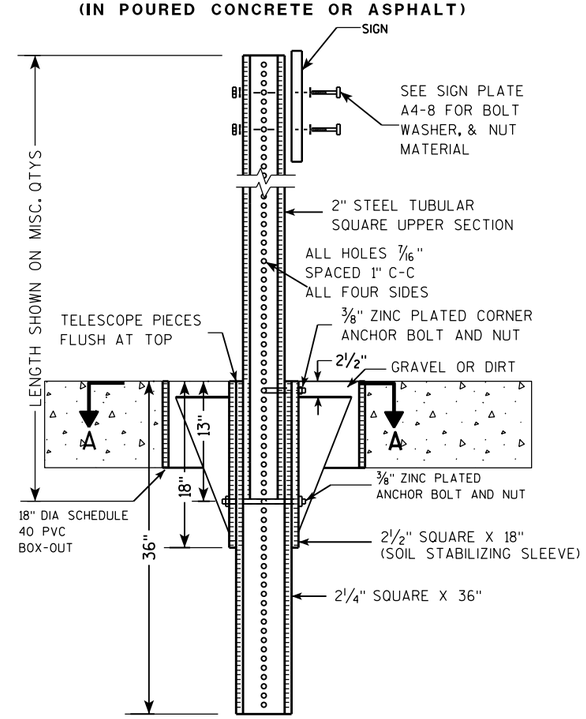

DETAIL OF TUBULAR STEEL SIGN POST
(IN LOCATIONS OTHER THAN POURED CONCRETE OR ASPHALT)

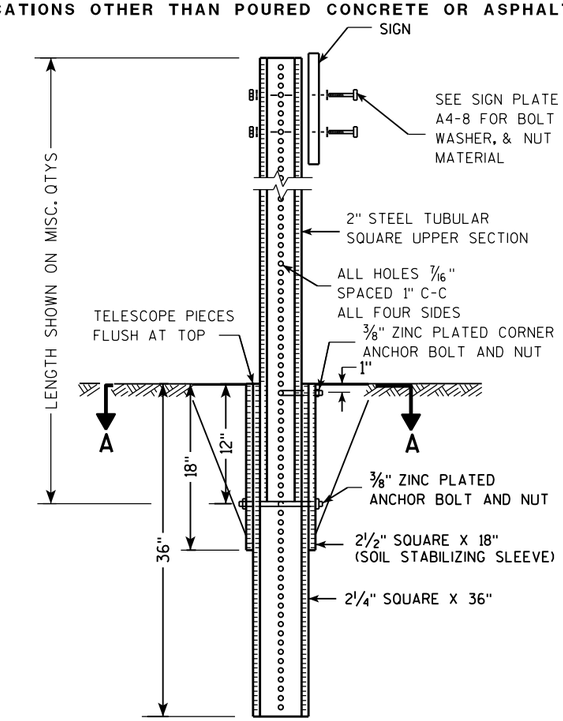

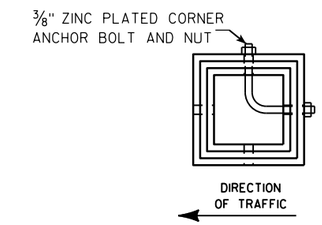

SECTION A-A

Area of Sign Installation (Sq. Ft.)	Number of Required Posts
9 or less	1
Greater than 9 less than or equal to 18	2
Greater than 18 less than or equal to 27	3

Signs wider than 3 feet or larger than 9 sq. ft shall be mounted on multiple posts (see above table).

TUBULAR STEEL
SIGN POST
A4-9

WISCONSIN DEPT OF TRANSPORTATION

APPROVED Matthew R Rauch
for State Traffic Engineer

DATE 2/05/15 PLATE A4-9.9

7

7

PROJECT NO:	HWY:	COUNTY:		SHEET NO:	E

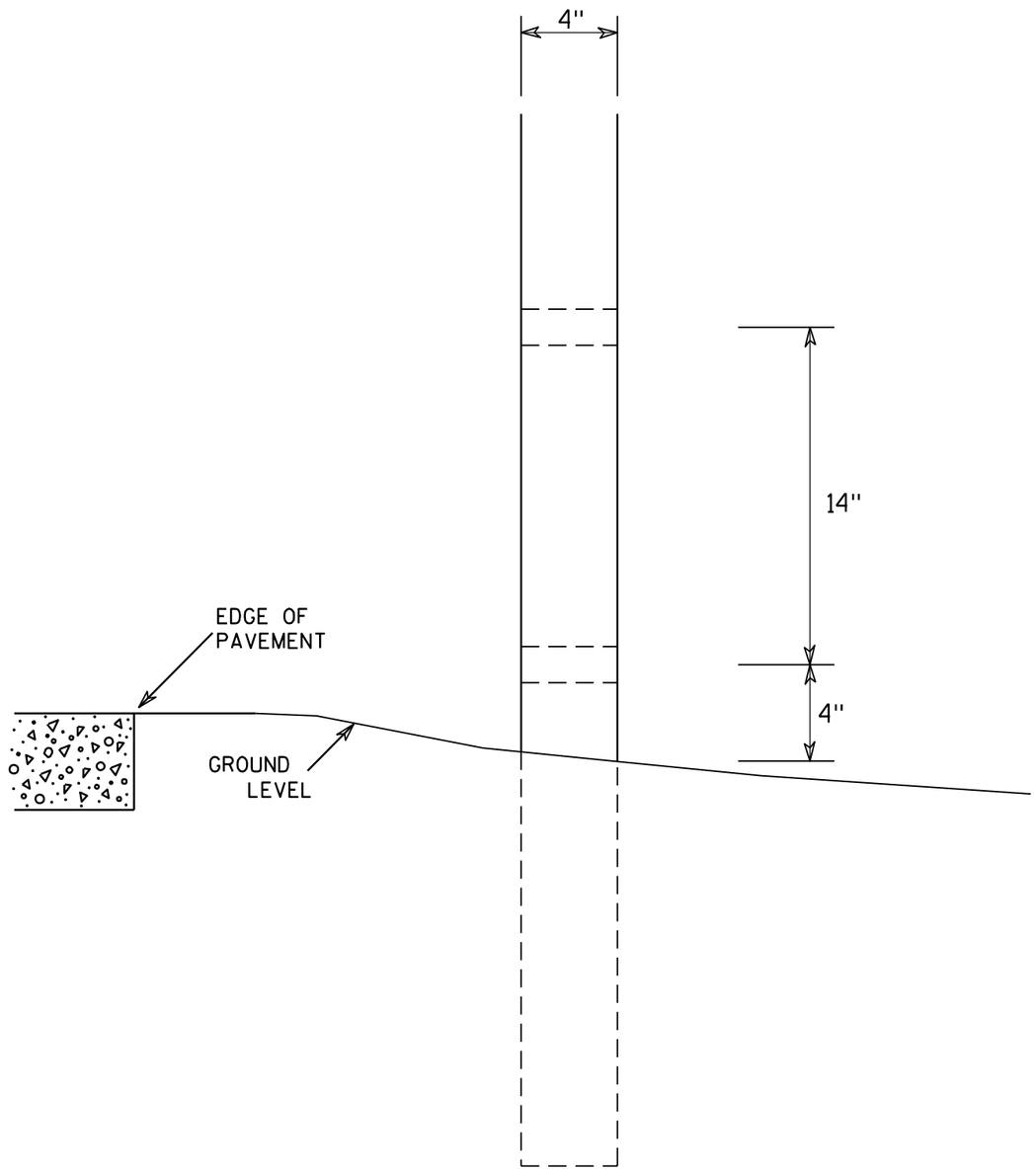

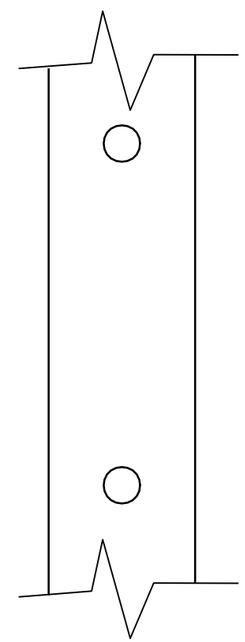

SIDE VIEW

GENERAL NOTES

1. All 4 x 6 Wood Posts shall be modified by having two 1½" diameter holes drilled perpendicular to the roadway centerline.

7

7

4 X 6 WOOD POST MODIFICATIONS

WISCONSIN DEPT OF TRANSPORTATION

APPROVED Chester J Spang for State Traffic Engineer

DATE 3/27/97 PLATE NO. A4-11.2

PROJECT NO:	HWY:	COUNTY:		SHEET NO: 215	E

BANDING

SINGLE SIGN

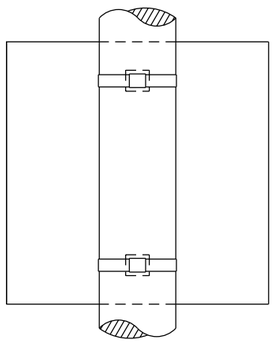

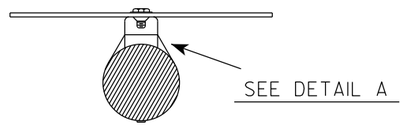

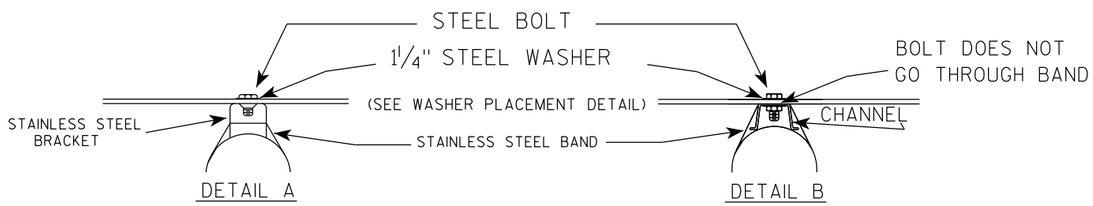

WASHER PLACEMENT

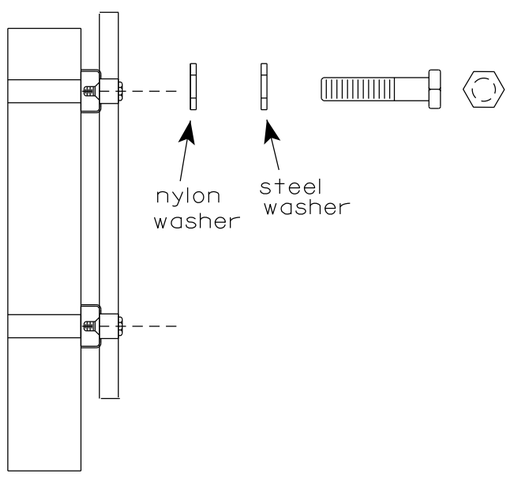

WASHERS (ALL POSTS) -
1-1/4" O.D. X 3/8" I.D. X 1/16" STEEL
1-1/4" O.D. X 3/8" I.D. X .080 NYLON
FOR ALL TYPE H SIGNS

GENERAL NOTES

1. Any sign over 3 feet in width shall use the V-Block banding method. See A5-10 standard plate.
2. Signs 3 feet or greater in height shall have three bracket bands installed. Signs less than 3 feet in height shall have two bracket bands installed.
3. Banding and assembly bracket shall be stainless steel. All bands shall be 3/4" in width and 0.025" thickness.
4. ALL SIGN MOUNTING BOLTS AND WASHERS SHALL BE EITHER:
   a. Hot dip or mechanically galvanized in accordance with ASTM Designation: A 153, Class D
   b. Electro-galvanized in accordance with ASTM designation: B 633, Type III, SC 3

"J" ASSEMBLY

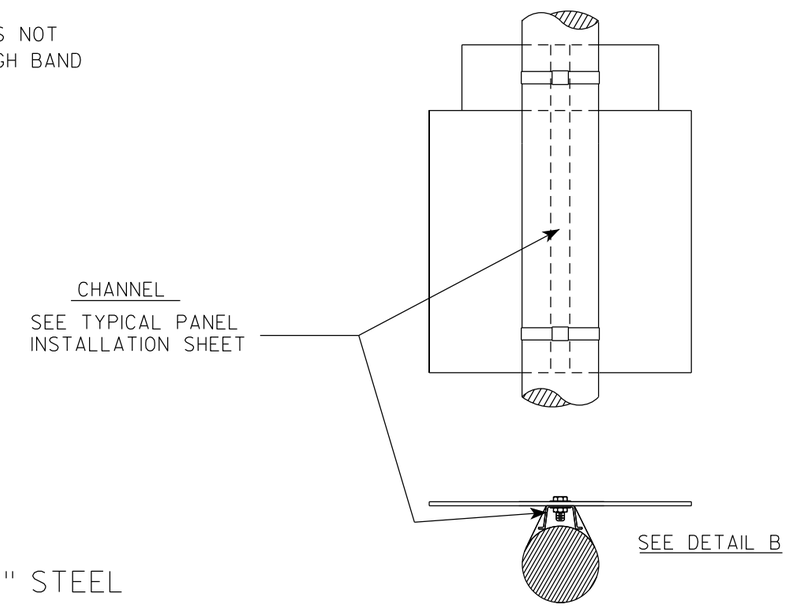

STANDARD SIGN
SIGN BANDING DETAILS

WISCONSIN DEPT OF TRANSPORTATION

APPROVED Matthew R Rauch for State Traffic Engineer

DATE 6/10/19 PLATE NO. A5-9.4

PROJECT NO:	HWY:	COUNTY:		SHEET NO: 216	E

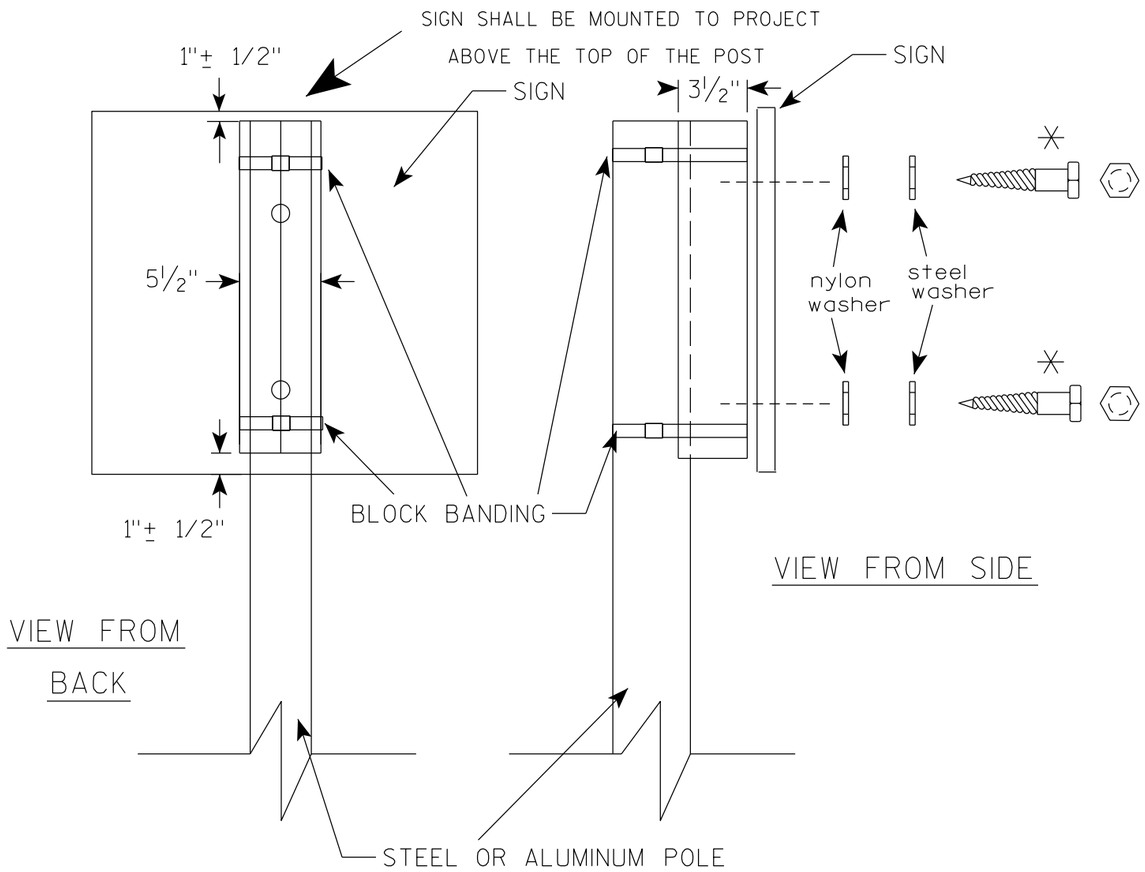

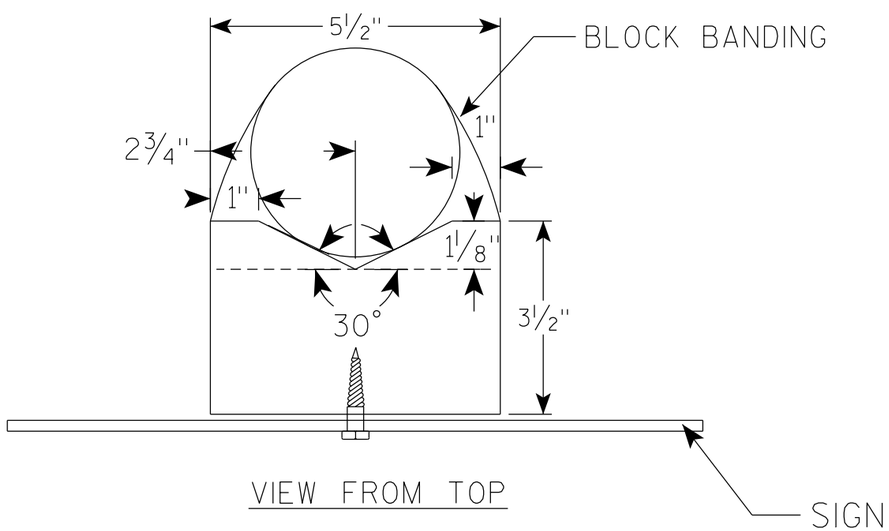

GENERAL NOTES

1. WOOD 4"X6" POST MATERIAL SHALL CONFORM TO 507.2.2 OF THE WisDOT STANDARD SPECIFICATIONS
2. BLOCK BANDING AND CLIPS SHALL BE STAINLESS STEEL, 3/4" WIDTH AND 0.025" THICKNESS
3. SIGNS 3' OR GREATER IN HEIGHT SHALL UTILIZE 3 BLOCK BANDS. SIGNS UNDER 3' IN HEIGHT SHALL UTILIZE 2 BLOCK BANDS
4. ACTUAL NUMBER OF FASTENERS PER SIGN VARIES WITH THE SIGN AREA, BUT NORNALLY THERE ARE TWO. FOR SIGNS GREATER THAN 9 S.F. 3 FASTENERS SHALL BE USED.
5. ALL SIGN MOUNTING BOLTS AND WASHERS SHALL BE EITHER:
   a. Hot dip or mechanically galvanized in accordance with ASTM Designation: A 153, Class D
   b. Electro-galvanized in accordance with ASTM Designation : B 633, TYPE III, SC 3
6. ALL BOLTS SHALL HAVE HEXAGONAL HEADS.
7. STEEL WASHERS SHALL BE 1 1/4" O.D. X 3/8" I.D. X 1/16"
8. NYLON WASHERS SHALL BE 1 1/4" O.D. X 3/8" I.D. X .080 FOR TYPE H OR TYPE F FACE SIGN

✳ LAG BOLTS SHALL BE 3/8" X 2 1/2"

7

7

BLOCK BANDING DETAIL
(V-BLOCK OPTION)

WISCONSIN DEPT OF TRANSPORTATION

APPROVED Matthew R Rauch
for State Traffic Engineer

DATE 4/19/2022 PLATE NO. A5-10.3

PROJECT NO:				SHEET NO: 217	E

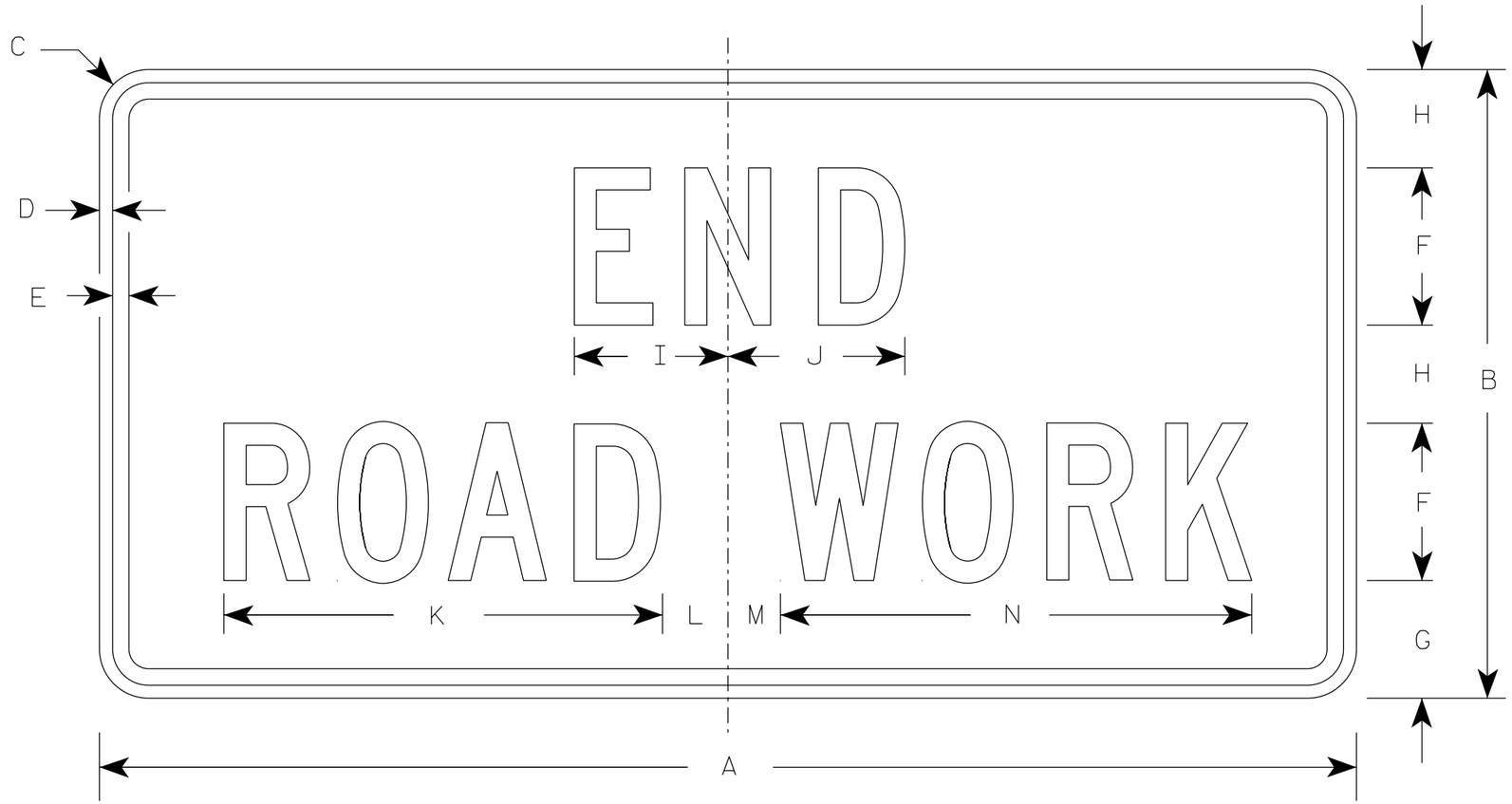

G20-2A

NOTES

1. Sign is Type II - Type F Reflective
2. Color:
   Background - Orange
   Message - Black
3. Message Series - C
4. Corners may be square or rounded when base material is plywood but borders shall be rounded as shown. When base material is metal, the corners and borders shall be rounded.

SIZE	A	B	C	D	E	F	G	H	I	J	K	L	M	N	O	P	Q	R	S	T	U	V	W	X	Y	Z	Area sq. ft.
1	36	18	1 1/2	3/8	1/2	4	3 3/4	2 1/2	4 1/8	4 1/8	11 1/8	2	1	12 1/8													4.5
2	48	24	1 7/8	1/2	5/8	6	4 1/2	3 3/4	5 7/8	6 3/4	16 3/4	2 1/2	1 3/4	18 1/2													8.0
2M	48	24	1 7/8	1/2	5/8	6	4 1/2	3 3/4	5 7/8	6 3/4	16 3/4	2 1/2	1 3/4	18 1/2													8.0
3	48	24	1 7/8	1/2	5/8	6	4 1/2	3 3/4	5 7/8	6 3/4	16 3/4	2 1/2	1 3/4	18 1/2													8.0
4	48	24	1 7/8	1/2	5/8	6	4 1/2	3 3/4	5 7/8	6 3/4	16 3/4	2 1/2	1 3/4	18 1/2													8.0
5	48	24	1 7/8	1/2	5/8	6	4 1/2	3 3/4	5 7/8	6 3/4	16 3/4	2 1/2	1 3/4	18 1/2													8.0

STANDARD SIGN

G20-2A

WISCONSIN DEPT OF TRANSPORTATION

APPROVED Matthew R Rauch
for State Traffic Engineer

DATE 1/26/2023 PLATE NO. G20-2A.10

PROJECT NO: | HWY: | COUNTY: | SHEET NO: 218 | E

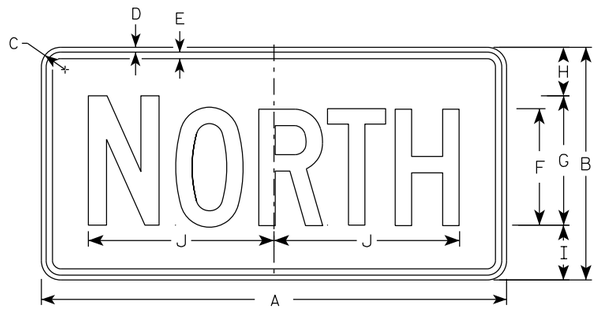

M3-1
MM3-1
MP3-1

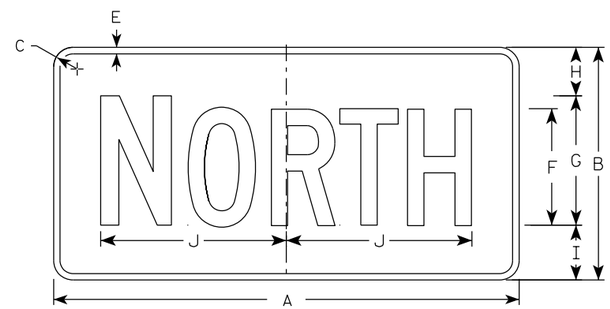

MB3-1
MK3-1
MN3-1

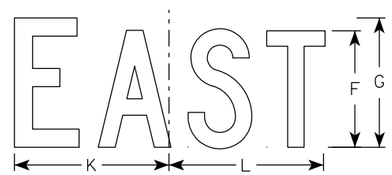

M3-2
MM3-2
MP3-2

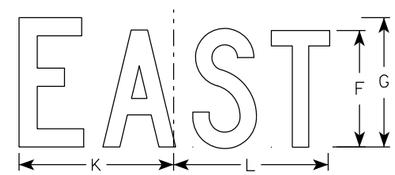

MB3-2
MK3-2
MN3-2

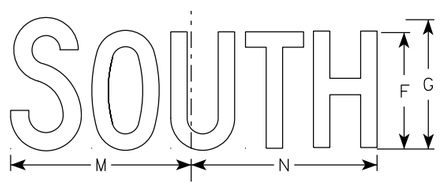

M3-3
MM3-3
MP3-3

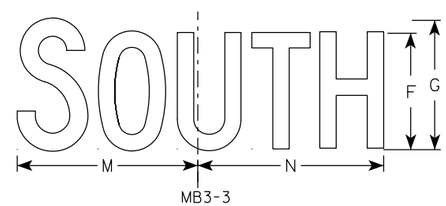

MB3-3
MK3-3
MN3-3

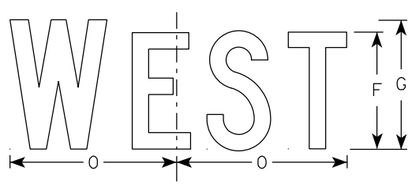

M3-4
MM3-4
MP3-4

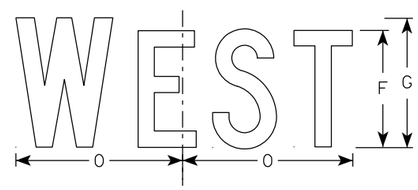

MB3-4
MK3-4
MN3-4

NOTES

1. All Signs Type II - Type H Reflective
2. Color:
   Background - See note 5
   Message - See note 5
3. Message Series - C
4. Corners may be square or rounded when base material is plywood but borders shall be rounded as shown. When base material is metal, the corners and borders shall be rounded.
5. M3-1 thru M3-4 Background - White
   Message - Black
   MB3-1 thru MB3-4 Background - Blue
   Message - White
   MK3-1 thru MK3-4 Background - Green
   Message - White
   MM3-1 thru MM3-4 Background - White
   Message - Green
   MN3-1 thru MN3-4 Background - Brown
   Message - White
   MP3-1 thru MP3-4 Background - White
   Message - Blue
6. Note the first letter of each direction is larger than the remainder of the message.

SIZE	A	B	C	D	E	F	G	H	I	J	K	L	M	N	O	P	Q	R	S	T	U	V	W	X	Y	Z	Area sq. ft.
1																											
2S	24	12	1 1/2	3/8	3/8	6	7	2 1/4	2 3/4	10 1/4	7 7/8	8 3/8	10 1/4	9 3/4	8 3/4												2.00
2M	24	12	1 1/2	3/8	3/8	6	7	2 1/4	2 3/4	10 1/4	7 7/8	8 3/8	10 1/4	9 3/4	8 3/4												2.00
3	36	18	1 1/2	3/8	1/2	9	10	3 3/4	4 1/4	14 3/8	12	12 1/8	14	14 1/8	13												4.5
4	36	18	1 1/2	3/8	1/2	9	10	3 3/4	4 1/4	14 3/8	12	12 1/8	14	14 1/8	13												4.5
5	36	18	1 1/2	3/8	1/2	9	10	3 3/4	4 1/4	14 3/8	12	12 1/8	14	14 1/8	13												4.5

STANDARD SIGNS
M3-1 THRU M3-4
SERIES

WISCONSIN DEPT OF TRANSPORTATION

APPROVED Matthew R Rauch
For State Traffic Engineer

DATE 2/8/2023 PLATE NO. M3-1.15

PROJECT NO: | HWY: | COUNTY: | SHEET NO: 219 | E

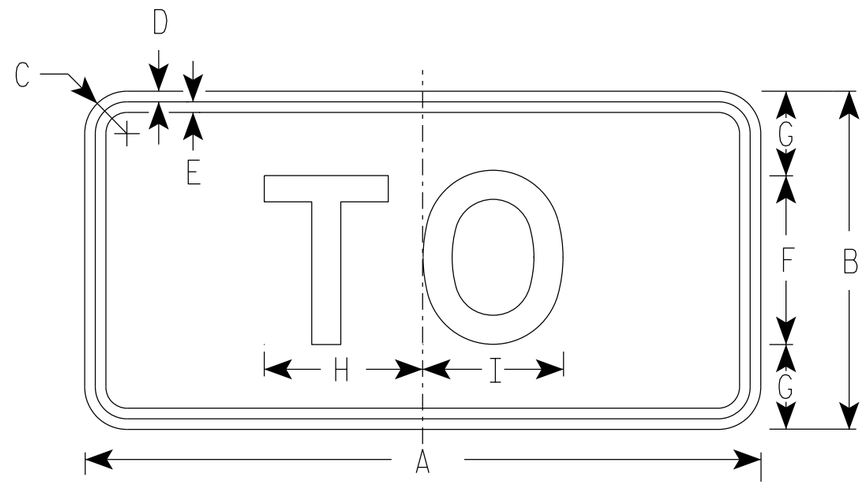

M4-5
MM4-5
MP4-5
M04-5

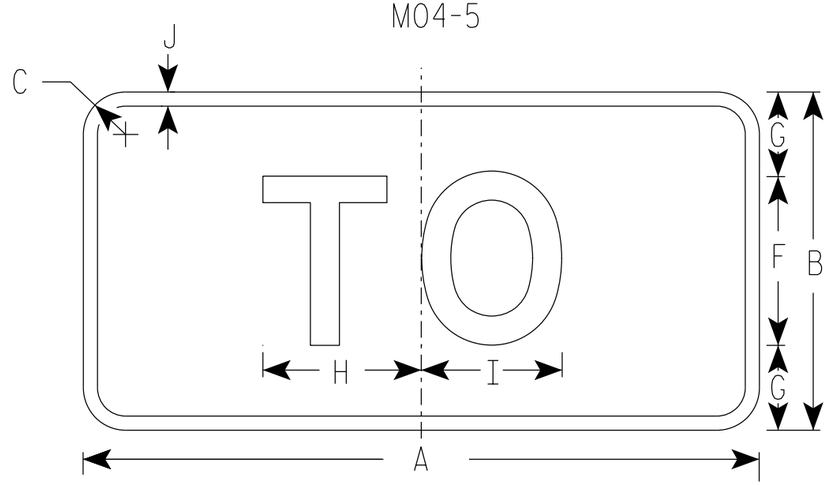

MB4-5
MK4-5
MN4-5

NOTES

1. Sign is Type II - Type H Reflective
2. Color:
   Background - See note 5
   Message - See note 5
3. Message Series - E
4. Corners may be square or rounded when base material is plywood but borders shall be rounded as shown. When base material is metal, the corners and borders shall be rounded.
5. M4-5 Background - White
   Message - Black

   MB4-5 Background - Blue
   Message - White

   MK4-5 Background - Green
   Message - White

   MM4-5 Background - White
   Message - Green

   MN4-5 Background - Brown
   Message - White

   MP4-5 Background - White
   Message - Blue

   M04-5 Background - Orange Type F Reflective
   Message - Black

SIZE	A	B	C	D	E	F	G	H	I	J	K	L	M	N	O	P	Q	R	S	T	U	V	W	X	Y	Z	Area sq. ft.
1																											
2S	24	12	1 1/2	3/8	3/8	6	3	5 3/8	5 1/4	1/2																	2.00
2M	24	12	1 1/2	3/8	3/8	6	3	5 3/8	5 1/4	1/2																	2.00
3	36	18	1 1/2	3/8	1/2	9	4 1/2	8 1/4	8 3/8	1/2																	4.5
4	36	18	1 1/2	3/8	1/2	9	4 1/2	8 1/4	8 3/8	1/2																	4.5
5	36	18	1 1/2	3/8	1/2	9	4 1/2	8 1/4	8 3/8	1/2																	4.5

STANDARD SIGN
M4-5

WISCONSIN DEPT OF TRANSPORTATION

APPROVED Matthew R Rauch
for State Traffic Engineer

DATE 2/8/2023 PLATE NO. M4-5.11

PROJECT NO: | HWY: | COUNTY: | SHEET NO: 220 | E

NOTES

1. Sign is Type II - Type F Reflective
2. Color:
   Background - Orange
   Message - Black
3. Message Series - B
4. Corners may be square or rounded when base material is plywood but borders shall be rounded as shown. When base material is metal, the corners and borders shall be rounded.

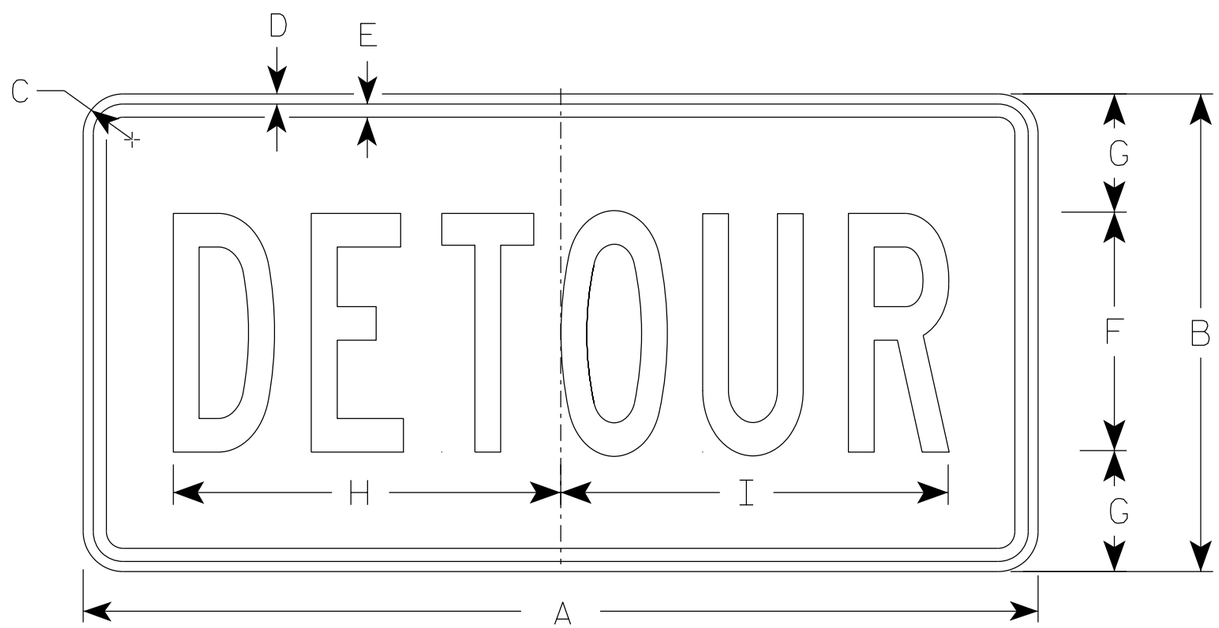

M4-8

SIZE	A	B	C	D	E	F	G	H	I	J	K	L	M	N	O	P	Q	R	S	T	U	V	W	X	Y	Z	Area sq. ft.
1																											
2	24	12	1 1/2	3/8	3/8	6	3	10	10 1/4																		2.0
2M	24	12	1 1/2	3/8	3/8	6	3	10	10 1/4																		2.0
3	36	18	1 1/2	3/8	1/2	9	4 1/2	14 5/8	14 1/2																		4.5
4	36	18	1 1/2	3/8	1/2	9	4 1/2	14 5/8	14 1/2																		4.5
5	36	18	1 1/2	3/8	1/2	9	4 1/2	14 5/8	14 1/2																		4.5

STANDARD SIGN
M4-8

WISCONSIN DEPT OF TRANSPORTATION

APPROVED Matthew R Rauch
for State Traffic Engineer

DATE 2/9/2023 PLATE NO. M4-8.4

PROJECT NO:	HWY:	COUNTY:		SHEET NO:	E

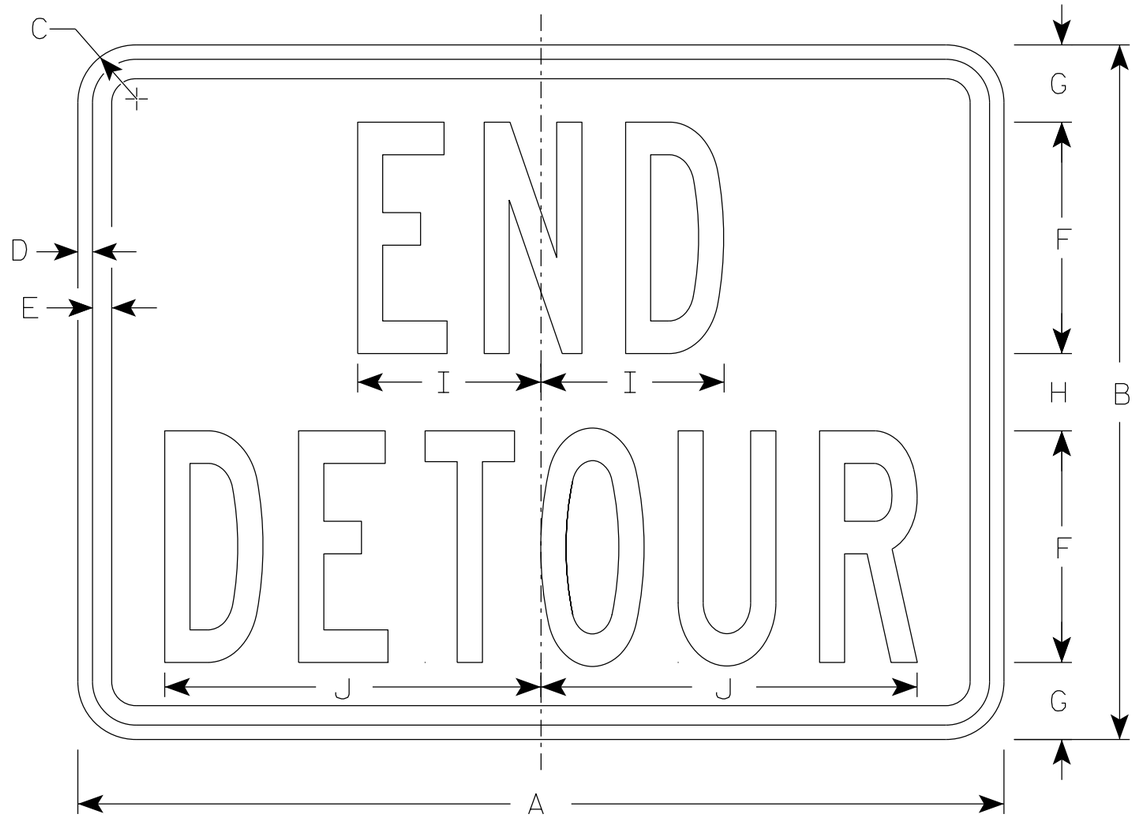

M4-8A

NOTES

1. Sign is Type II - Type F Reflective
2. Color:
   Background - Orange
   Message - Black
3. Message Series - B
4. Corners may be square or rounded when base material is plywood but borders shall be rounded as shown. When base material is metal, the corners and borders shall be rounded.

SIZE	A	B	C	D	E	F	G	H	I	J	K	L	M	N	O	P	Q	R	S	T	U	V	W	X	Y	Z	Area sq. ft.
1																											
2	24	18	1 1/2	3/8	1/2	6	2	2	4 3/4	9 3/4																	3.0
2M	24	18	1 1/2	3/8	1/2	6	2	2	4 3/4	9 3/4																	3.0
3	30	24	1 1/2	3/8	1/2	8	2 1/2	3	6 3/4	13																	5.0
4	30	24	1 1/2	3/8	1/2	8	2 1/2	3	6 3/4	13																	5.0
5	30	24	1 1/2	3/8	1/2	8	2 1/2	3	6 3/4	13																	5.0

STANDARD SIGN
M4-8A

WISCONSIN DEPT OF TRANSPORTATION

APPROVED Matthew R Rauch
for State Traffic Engineer

DATE 2/9/2023 PLATE NO. M4-8A.4

PROJECT NO: | HWY: | COUNTY: | SHEET NO: 222 | E

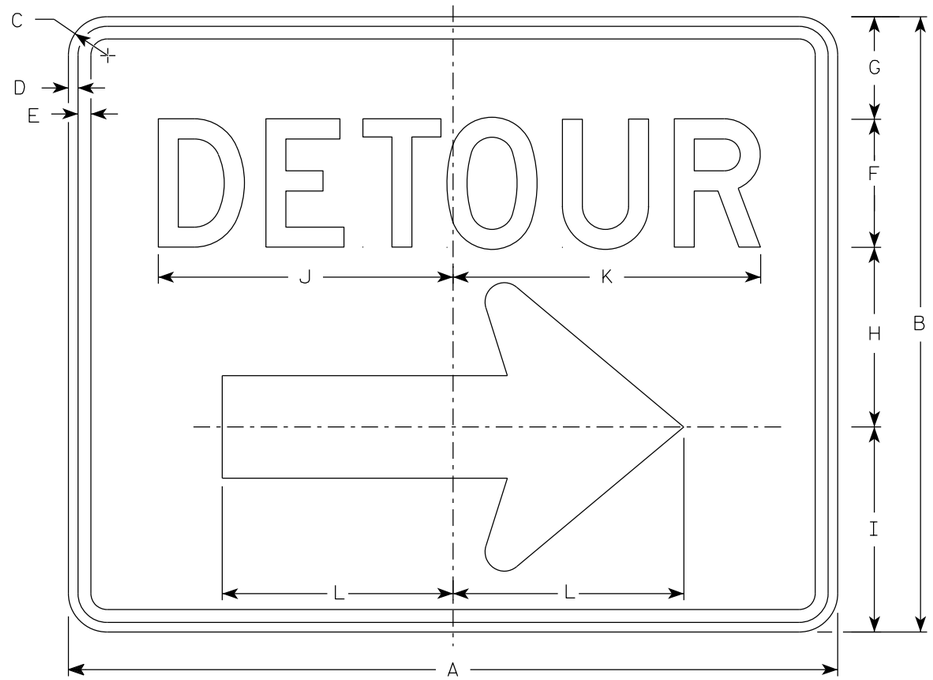

M4-9R

NOTES

1. Sign is Type II - Type F Reflective
2. Color:
   Background - Orange
   Message - Black
3. Message Series - D
4. Corners may be square or rounded when base material is plywood but borders shall be rounded as shown. When base material is metal, the corners and borders shall be rounded.
4. M4-9L is the same as M4-9R except the arrow is reversed.

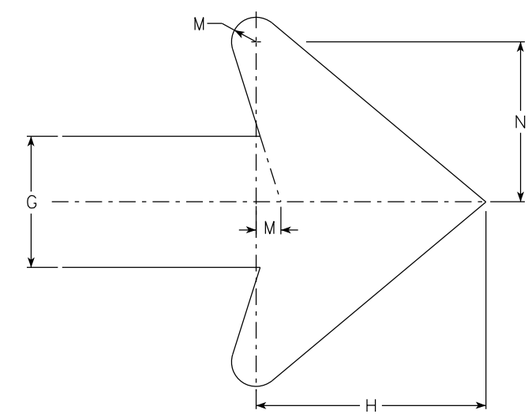

Arrow Detail

SIZE	A	B	C	D	E	F	G	H	I	J	K	L	M	N	O	P	Q	R	S	T	U	V	W	X	Y	Z	Area sq. ft.
1																											
2	30	24	1 1/2	3/8	1/2	5	4	7	8	11 1/2	12	9	3/4	4 7/8													5.00
2M	30	24	1 1/2	3/8	1/2	5	4	7	8	11 1/2	12	9	3/4	4 7/8													5.00
3	30	24	1 1/2	3/8	1/2	5	4	7	8	11 1/2	12	9	3/4	4 7/8													5.00
4	48	36	1 7/8	1/2	5/8	8	6	10 1/2	11 5/8	20 5/8	20 1/2	13 1/4	1 1/8	6 7/8													12.0
5	48	36	1 7/8	1/2	5/8	8	6	10 1/2	11 5/8	20 5/8	20 1/2	13 1/4	1 1/8	6 7/8													12.0

STANDARD SIGN
M4-9 R & L

WISCONSIN DEPT OF TRANSPORTATION

APPROVED Matthew R Rauch
For State Traffic Engineer

DATE 2/9/2023 PLATE NO. M4-9R.6

PROJECT NO: | HWY: | COUNTY: | SHEET NO: E

NOTES

1. Sign is Type II-Type F Reflective
2. Color:
   Background - Orange
   Message - Black
3. Message Series - D

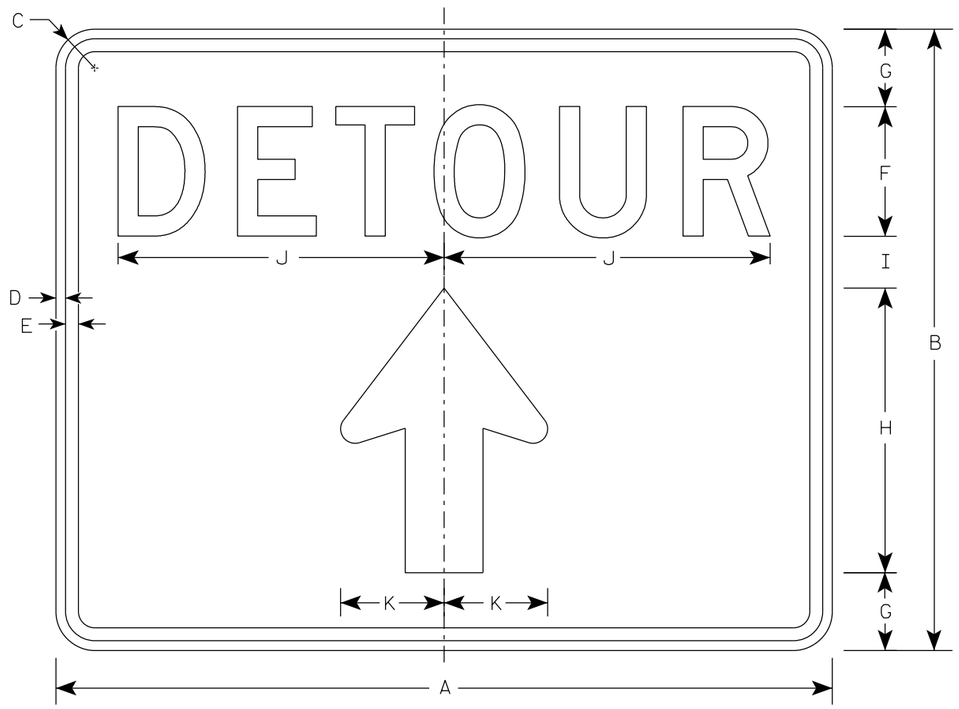

M4-9RA

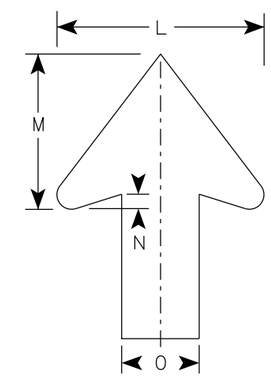

Arrow Detail

SIZE	A	B	C	D	E	F	G	H	I	J	K	L	M	N	O	P	Q	R	S	T	U	V	W	X	Y	Z	Area sq. ft.
1																											
2S	30	24	1 1/2	3/8	1/2	5	3	11	2	12 5/8	4	8	6	1/2	3												5.00
2M	30	24	1 1/2	3/8	1/2	5	3	11	2	12 5/8	4	8	6	1/2	3												5.00
3																											
4																											
5																											

STANDARD SIGN
M4-9RA

WISCONSIN DEPT OF TRANSPORTATION

APPROVED Matthew R Rauch
for State Traffic Engineer

DATE 2/9/2023 PLATE NO. M4-9RA.3

PROJECT NO:	HWY:	COUNTY:		SHEET NO: 224	E

NOTES

1. Sign is Type II - Type F Reflective
2. Color:
   Background - Orange
   Message - Black
3. Message Series - D
4. Corners may be square or rounded when base material is plywood but borders shall be rounded as shown when base material is metal.
5. M4-59L is the same as M4-59R except the arrow is reversed.

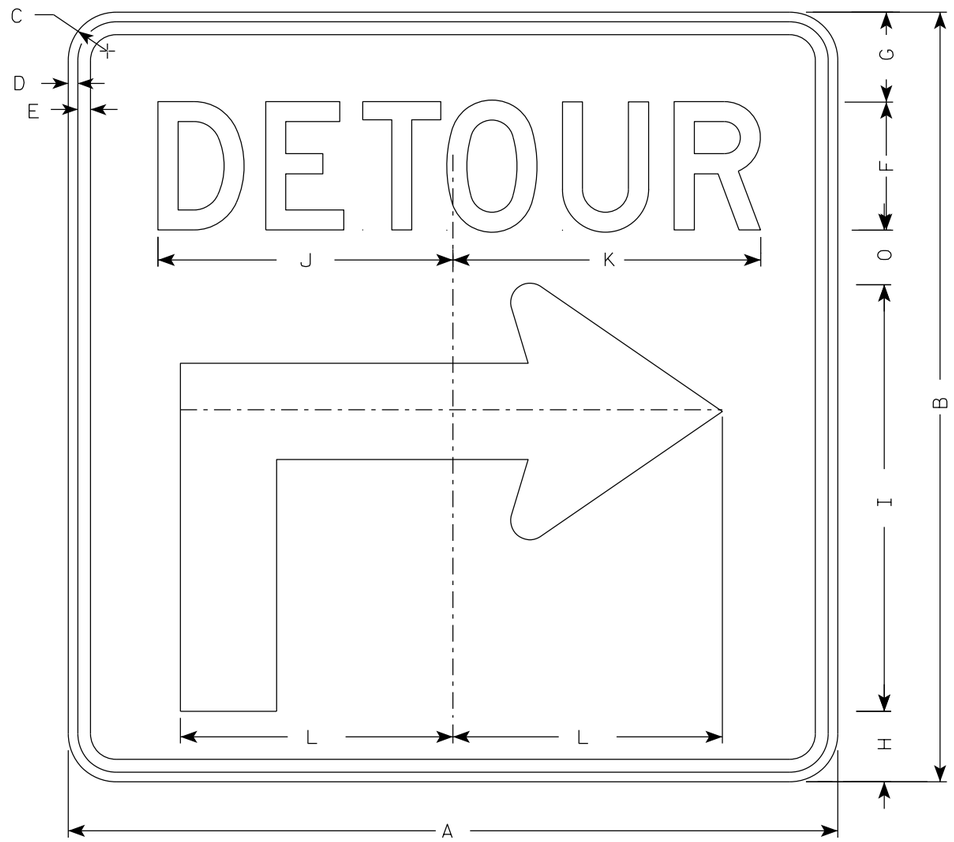

M4-59R

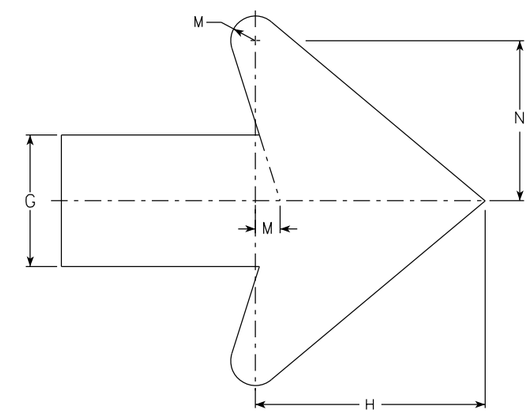

Arrow Detail

SIZE	A	B	C	D	E	F	G	H	I	J	K	L	M	N	O	P	Q	R	S	T	U	V	W	X	Y	Z	Area sq. ft.
1																											
2S	30	30	1 7/8	3/8	1/2	5	3 1/2	2 3/4	16 5/8	11 1/2	12	10 1/2	3/4	4 7/8	2 1/8												6.25
2M	30	30	1 7/8	3/8	1/2	5	3 1/2	2 3/4	16 5/8	11 1/2	12	10 1/2	3/4	4 7/8	2 1/8												6.25
3	30	30	1 7/8	3/8	1/2	5	3 1/2	2 3/4	16 5/8	11 1/2	12	10 1/2	3/4	4 7/8	2 1/8												6.25
4	48	48	2 1/4	1/2	5/8	8	5 5/8	4 3/8	26 5/8	20 5/8	20 1/2	17	1 1/8	6 7/8	3 3/8												16.0
5	48	48	2 1/4	1/2	5/8	8	5 5/8	4 3/8	26 5/8	20 5/8	20 1/2	17	1 1/8	6 7/8	3 3/8												16.0

STANDARD SIGN
M4-59 L&R

WISCONSIN DEPT OF TRANSPORTATION

APPROVED Matthew R Rauch
for State Traffic Engineer

DATE 2/13/2023 PLATE NO. M4-59.2

PROJECT NO: | HWY: | COUNTY: | SHEET NO: E

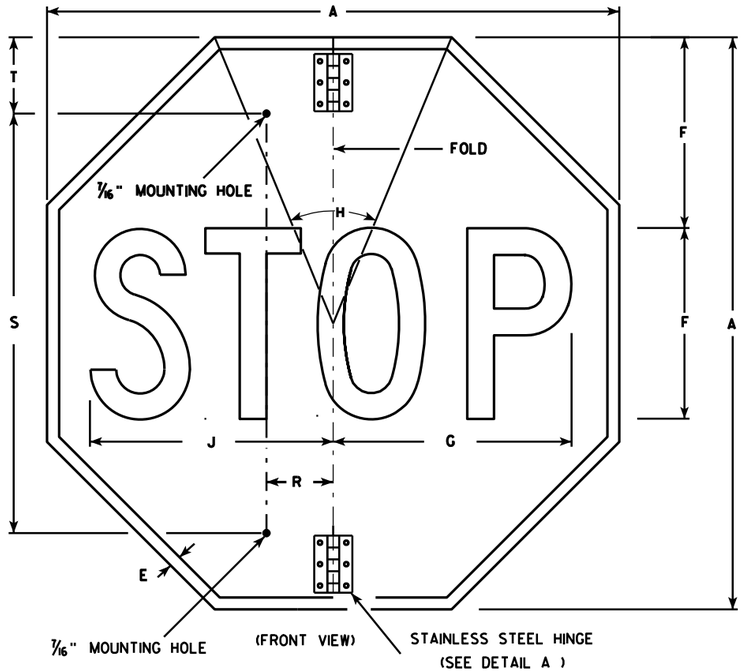

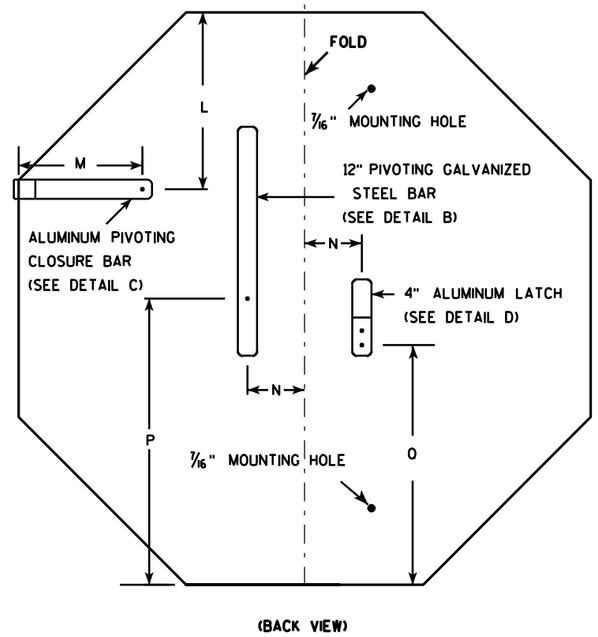

NOTES

1. Sign is Type II - Type H Reflective - reference WIS DOT Standard Specification for HIGHWAY and STRUCTURE CONSTRUCTION latest edition.
2. Color:
   Background - Red
   Message - White
3. Message Series - C
4. All hardware used on the folding STOP sign installation shall conform to 637.2.4 of the WIS DOT Standard Specification.

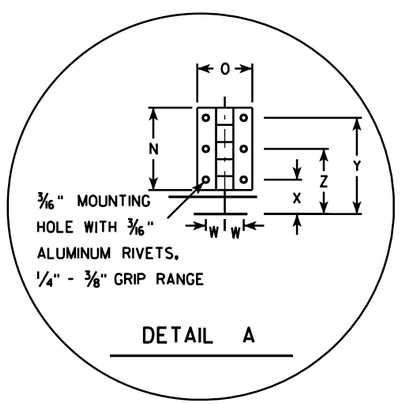

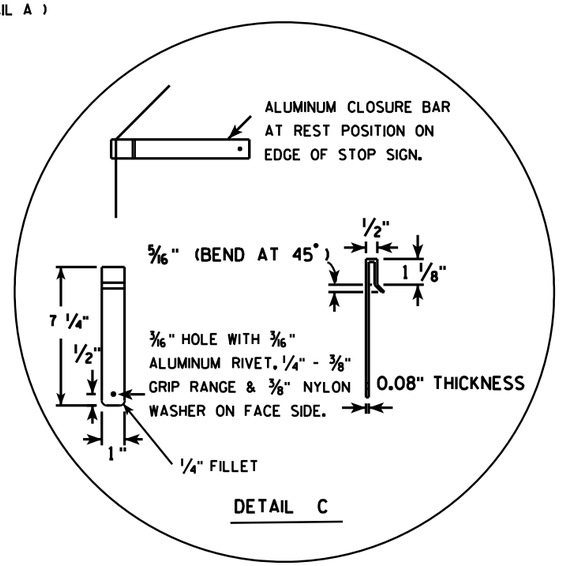

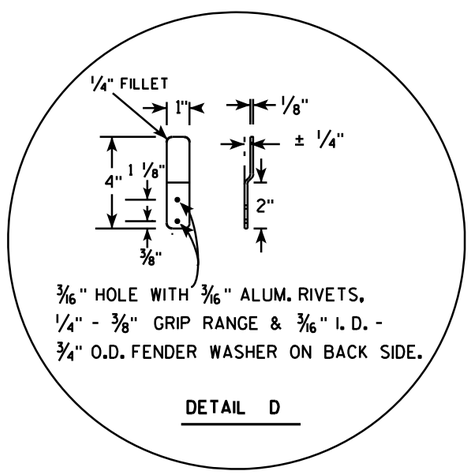

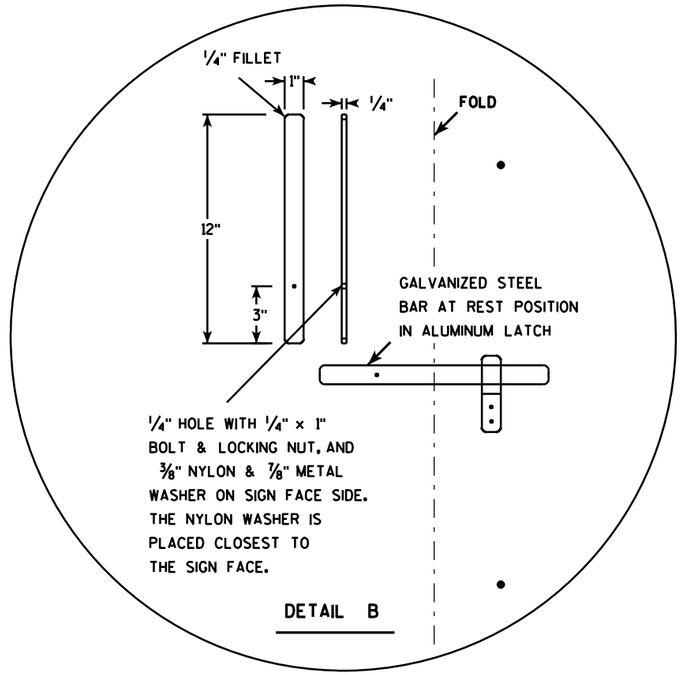

SIZE	A	B	C	D	E	F	G	H	I	J	K	L	M	N	O	P	Q	R	S	T	U	V	W	X	Y	Z	Area sq. ft.
1																											
2S	30				5/8	10	12 1/2	45		12 3/4		9 1/4	6 1/2	3	2	15	12 3/8	2 1/2	22	5			11/16	1 1/4	3 1/2	2 3/8	5.18
2M	36				3/4	12	15	45		15 3/8		11	6 1/2	3	2	18	15 3/8	2 1/2	26	5			11/16	1 1/4	3 1/2	2 3/8	7.46
3	36				3/4	12	15	45		15 3/8		11	6 1/2	3	2	18	15 3/8	2 1/2	26	5			11/16	1 1/4	3 1/2	2 3/8	7.46
4																											
5																											

STANDARD SIGN
R1-1F

WISCONSIN DEPT OF TRANSPORTATION

APPROVED Matthew R Rauch
for State Traffic Engineer

DATE 12/03/10 PLATE NO. R1-1F.3

PROJECT NO:	HWY:	COUNTY:		SHEET NO: 226	E

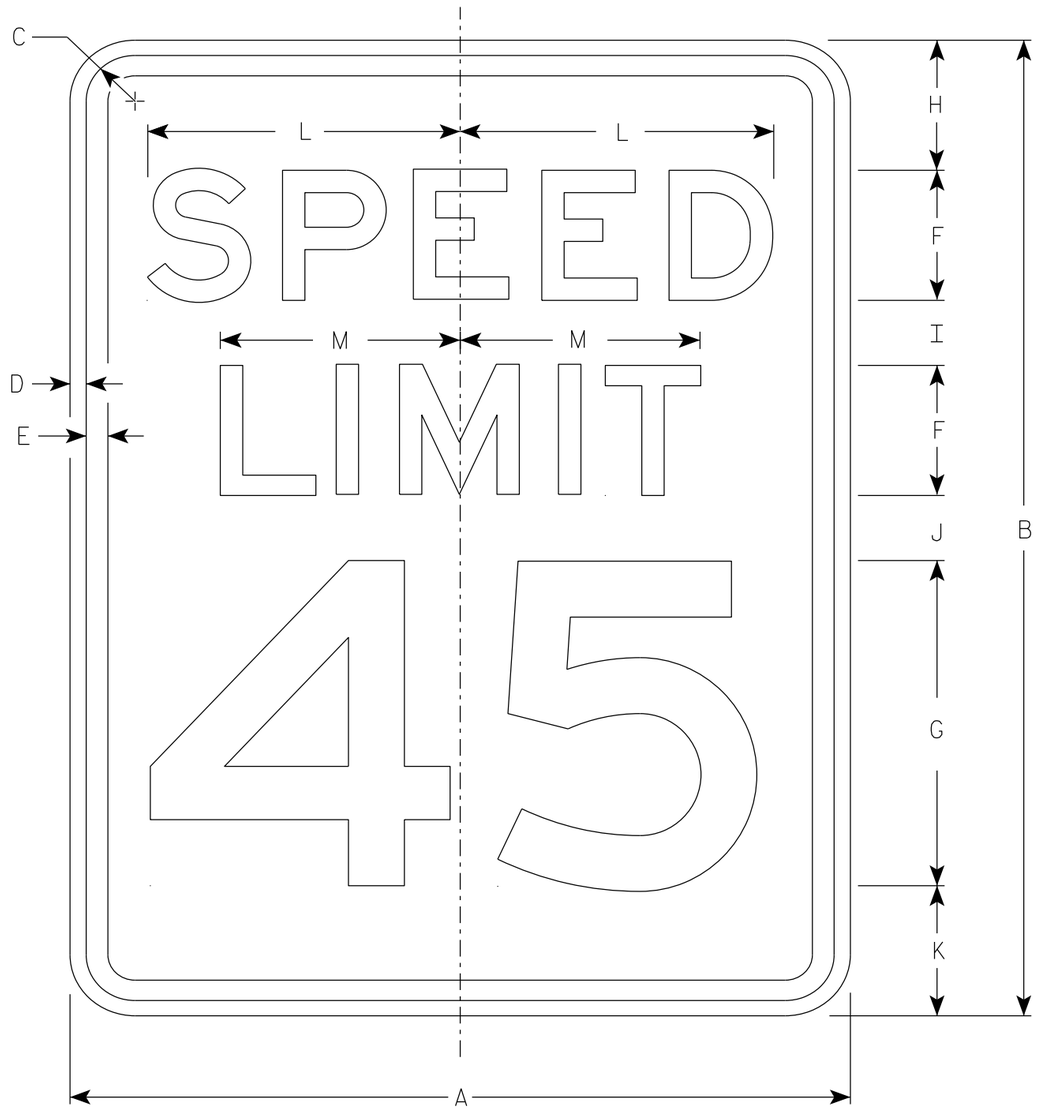

R2-1

NOTES

1. Sign is Type II - Type H Reflective
2. Color:
   Background - White
   Message - Black
3. Message Series - E
4. Substitute appropriate numerals and optically adjust spacing to achieve proper balance.

SIZE	A	B	C	D	E	F	G	H	I	J	K	L	M	N	O	P	Q	R	S	T	U	V	W	X	Y	Z	Area sq. ft.
1	18	24	1 1/2	3/8	1/2	3	8	3	2	2	3	7 1/4	5 1/2														3.0
2S	24	30	1 1/2	3/8	1/2	4	10	3	2 1/4	3 3/8	3 3/8	9 5/8	7 3/8														5.0
2M	30	36	1 7/8	1/2	5/8	5	12	5	2 1/2	2 1/2	4	12	9 1/4														7.5
3	36	48	1 7/8	1/2	5/8	6	14	6	5	5	6	14 3/8	11														12.0
4	36	48	1 7/8	1/2	5/8	6	14	6	5	5	6	14 3/8	11														12.0
5	48	60	3	3/4	1	8	20	6	4 1/2	6 3/4	6 3/4	19 1/4	14 5/8														20.0

STANDARD SIGN
R2-1

WISCONSIN DEPT OF TRANSPORTATION

APPROVED Matthew R Rauch
for State Traffic Engineer

DATE 2/1/23 PLATE NO. R2-1.14

PROJECT NO: | HWY: | COUNTY: | SHEET NO: 227 | E

NOTES

1. Sign is Type II - Type H Reflective
2. Color:
   Background - White
   Message - See note 3
3. Border & Arrow are non reflective black, the circle with diagonal bar is reflective red.

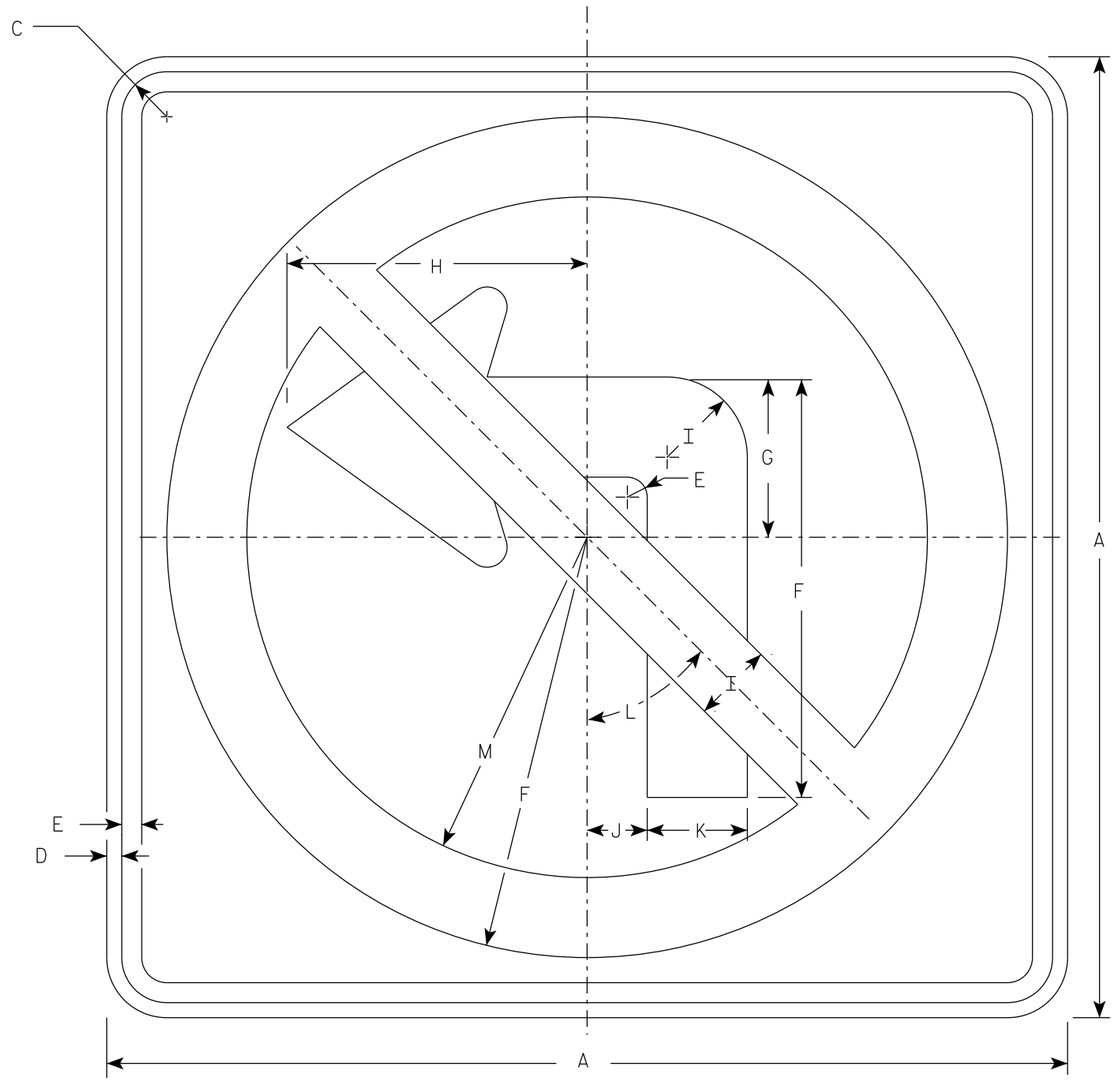

R3-2

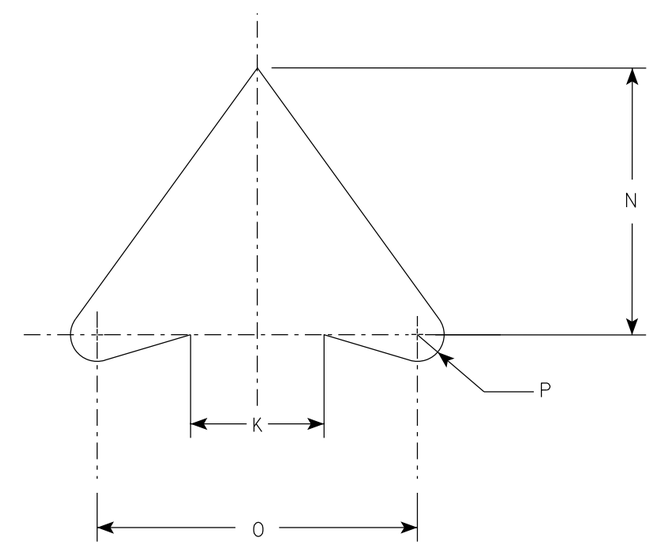

ARROW DETAIL

SIZE	A	B	C	D	E	F	G	H	I	J	K	L	M	N	O	P	Q	R	S	T	U	V	W	X	Y	Z	Area sq. ft.
1	24		1 1/2	3/8	1/2	10 1/2	4	7 1/2	2	1 1/2	2 1/2	45°	8 1/2	5	6	1/2											4.0
2S	24		1 1/2	3/8	1/2	10 1/2	4	7 1/2	2	1 1/2	2 1/2	45°	8 1/2	5	6	1/2											4.0
2M	36		2 1/4	5/8	3/4	15 3/4	6	11 1/4	3	2 1/4	3 3/4	45°	12 3/4	7 1/2	9	3/4											9.0
3	36		2 1/4	5/8	3/4	15 3/4	6	11 1/4	3	2 1/4	3 3/4	45°	12 3/4	7 1/2	9	3/4											9.0
4	36		2 1/4	5/8	3/4	15 3/4	6	11 1/4	3	2 1/4	3 3/4	45°	12 3/4	7 1/2	9	3/4											9.0
5	48		2 1/4	3/4	1	21	8	15	4	3	5	45°	17	10	12	1											16.0

STANDARD SIGN
R3-2

WISCONSIN DEPT OF TRANSPORTATION

APPROVED Matthew R Rauch
for State Traffic Engineer

DATE 2/2/23 PLATE NO. R3-2.11

PROJECT NO: | HWY: | COUNTY: | SHEET NO: 228 | E

NOTES

1. Sign is Type II - Type H Reflective
2. Color:
   Background - White
   Message - Black
3. Message Series - Line 1 is Series B.
   Line 2 is Series C.
   Line 3 on plate R3-7R is Series B and Series C on plate R3-7L.

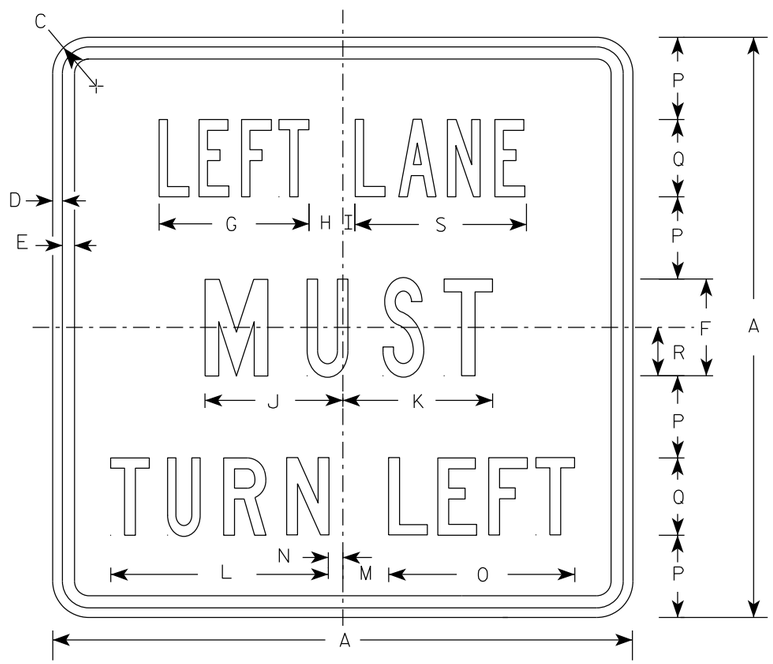

R3-7L

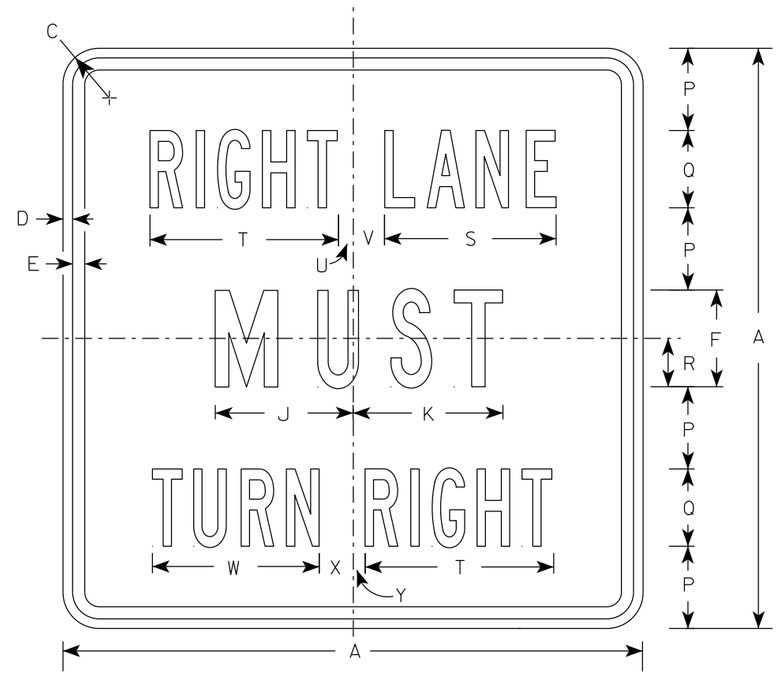

R3-7R

SIZE	A	B	C	D	E	F	G	H	I	J	K	L	M	N	O	P	Q	R	S	T	U	V	W	X	Y	Z	Area sq. ft.
1	30		1 7/8	1/2	5/8	5	7 3/4	1 3/4	5/8	7 1/8	7 3/4	11 1/4	2 3/8	3/4	9 5/8	4 1/4	4	2 1/2	8 7/8	9 3/4	3/4	1 5/8	8 5/8	1 5/8	5/8		6.25
2S	30		1 7/8	1/2	5/8	5	7 3/4	1 3/4	5/8	7 1/8	7 3/4	11 1/4	2 3/8	3/4	9 5/8	4 1/4	4	2 1/2	8 7/8	9 3/4	3/4	1 5/8	8 5/8	1 5/8	5/8		6.25
2M	30		1 7/8	1/2	5/8	5	7 3/4	1 3/4	5/8	7 1/8	7 3/4	11 1/4	2 3/8	3/4	9 5/8	4 1/4	4	2 1/2	8 7/8	9 3/4	3/4	1 5/8	8 5/8	1 5/8	5/8		6.25
3	36		2 1/4	5/8	3/4	6	9 5/8	2	1 1/8	8 3/4	9	13 1/2	3 7/8	1 1/2	12 1/2	5	5	3	10 5/8	12	7/8	2 1/4	10 5/8	2 1/8	1		9.00
4	48		2 1/4	3/4	1	8	13 1/2	2 3/8	1 1/2	11 1/2	11 7/8	17 3/4	3 5/8	2 1/2	16 3/8	6 1/2	7	4	14 3/8	16 7/8	5/8	3 1/4	15 1/8	2 3/4	1 1/8		16.00
5																											

STANDARD SIGN
R3-7L & R3-7R

WISCONSIN DEPT OF TRANSPORTATION

APPROVED Matthew R Rauch
for State Traffic Engineer

DATE 2/13/23 PLATE NO. R3-7.4

PROJECT NO: | HWY: | COUNTY: | SHEET NO: 229 | E

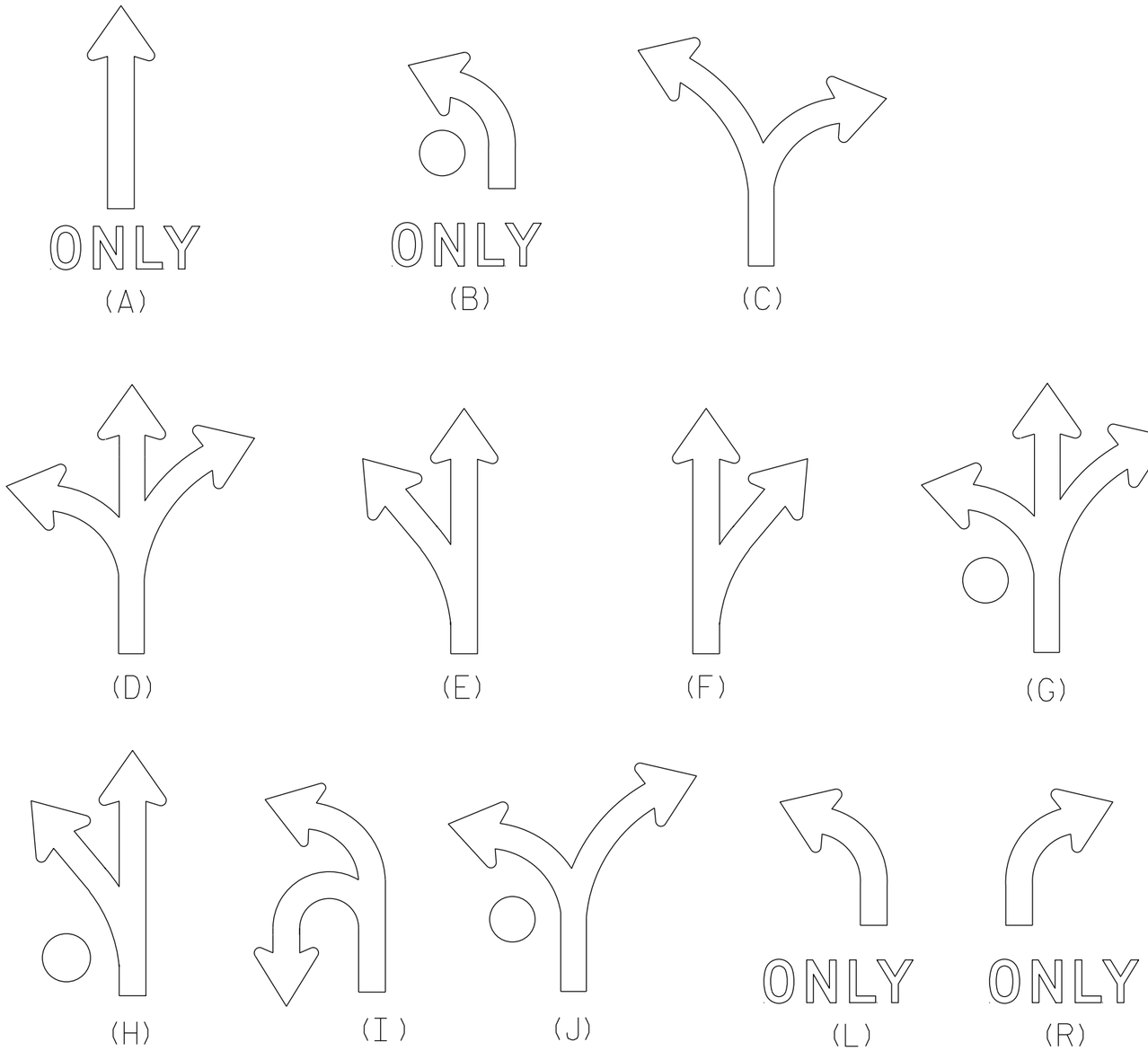

NOTES

1. Sigs are Type II - Type H Reflective
2. Color:
   Background - White
   Message - Black
3. Message Series - D
4. Use appropriate Letter for Sign Code
   Each letter added makes sign wider. Example R3-8EAR
5. Square footage of sign varies by letters

1 Letter =	3.75 sq ft for Size 2	
	6.0 sq ft for Size 3	
	10.0 sq ft for Size 4 or 5	
2 Letters =	7.5 sq ft for Size 2	
	12.0 sq ft for Size 3	
	20.0 sq ft for Size 4 or 5	
3 Letters =	11.25 sq ft for Size 2	
	18.0 sq ft for Size 3	
	30.0 sq ft for Size 4 or 5	
4 Letters =	15.0 sq ft for Size 2	
	24.0 sq ft for Size 3	
	40.0 sq ft for Size 4 or 5	
5 Letters =	18.75 sq ft for Size 2	
	30.0 sq ft for Size 3	
	50.0 sq ft for Size 4 or 5	
6 Letters =	22.5 sq ft for Size 2	
	36.0 sq ft for Size 3	
	60.0 sq ft for Size 4 or 5	

6. When letters C,D,G,J are used on the Left or Right end of the sign the Sq. Ft. changes.
   Add the amounts when these letters are used:
   1.25 sq ft for Size 2
   1.5 sq ft for Size 3
   2.0 sq ft for Size 4 or 5

STANDARD SIGN
R3-8 Series

WISCONSIN DEPT OF TRANSPORTATION

APPROVED Matthew R Rauch
for State Traffic Engineer

DATE 2/14/23 PLATE NO. R3-8.2

7

7

PROJECT NO:

SHEET NO: 230 E

NOTES

1. Sign is Type II - Type H Reflective
2. Color:
   Background - White
   Message - Black
3. Message Series - D

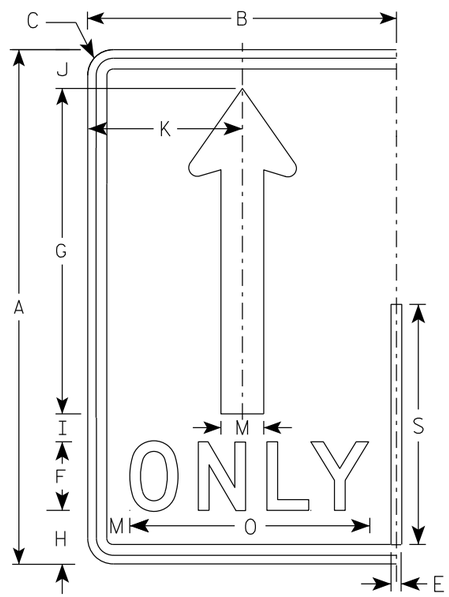

(A)

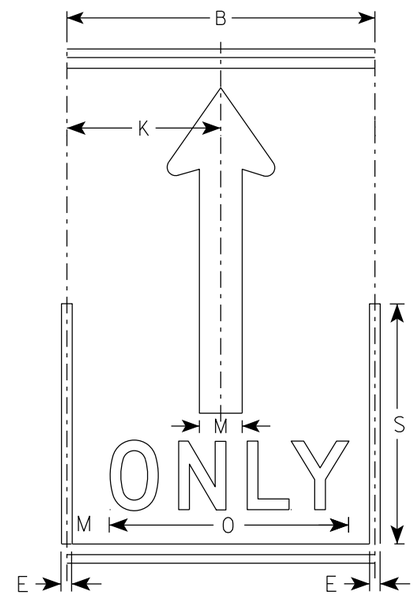

(A)

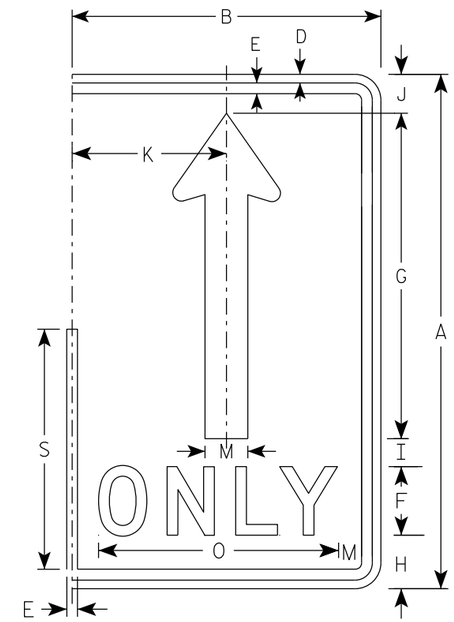

(A)

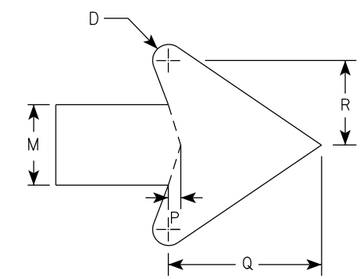

ARROW DETAIL

SIZE	A	B	C	D	E	F	G	H	I	J	K	L	M	N	O	P	Q	R	S	T	U	V	W	X	Y	Z	Area sq. ft.
1																											
2S	30	18	1 1/2	1/2	5/8	4	19	3 1/8	1 5/8	2 1/4	9		2 1/2		14	3/8	4 3/4	2 5/8	14								3.75
2M	30	18	1 1/2	1/2	5/8	4	19	3 1/8	1 5/8	2 1/4	9		2 1/2		14	3/8	4 3/4	2 5/8	14								3.75
3	36	24	1 1/2	1/2	5/8	5	22 3/4	3 3/4	1 3/4	2 3/4	12		3		17 5/8	1/2	5 3/4	3 1/8	16 3/4								6.0
4	48	30	2 1/4	3/4	1	6	30 3/8	5 1/8	2 7/8	3 5/8	15		4		21 3/4	5/8	7 5/8	4 1/4	22 3/8								10.0
5	48	30	2 1/4	3/4	1	6	30 3/8	5 1/8	2 7/8	3 5/8	15		4		21 3/4	5/8	7 5/8	4 1/4	22 3/8								10.0

STANDARD SIGN
R3-8 (A) Arrow

WISCONSIN DEPT OF TRANSPORTATION

APPROVED Matthew R Rauch
for State Traffic Engineer

DATE 2/14/23 PLATE NO. R3-8.2

PROJECT NO: | HWY: | COUNTY: | SHEET NO: 231 | E

NOTES

1. Sign is Type II - Type H Reflective
2. Color:
   Background - White
   Message - Black
   Message Series - D

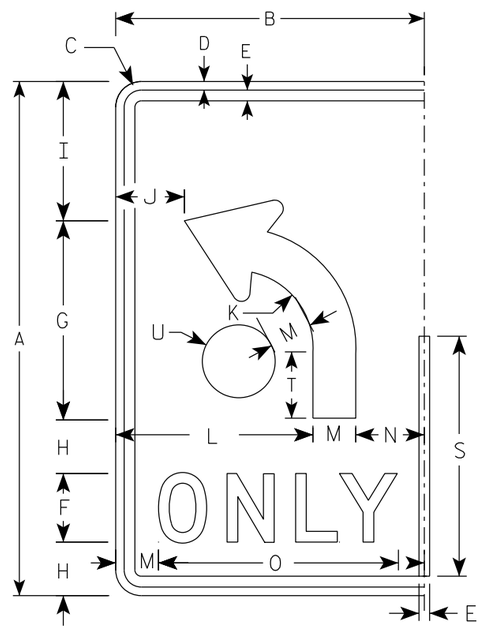

(B)

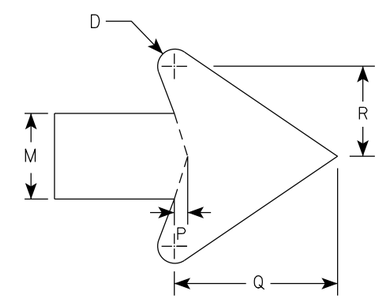

ARROW DETAIL

SIZE	A	B	C	D	E	F	G	H	I	J	K	L	M	N	O	P	Q	R	S	T	U	V	W	X	Y	Z	Area sq. ft.
1																											
2S	30	18	1 1/2	1/2	5/8	4	11 5/8	3 1/8	8 1/8	4	4 1/2	11 1/2	2 1/2	4	14	3/8	4 3/4	2 5/8	14	3 7/8	2 1/8						3.75
2M	30	18	1 1/2	1/2	5/8	4	11 5/8	3 1/8	8 1/8	4	4 1/2	11 1/2	2 1/2	4	14	3/8	4 3/4	2 5/8	14	3 7/8	2 1/8						3.75
3	36	24	1 1/2	1/2	5/8	5	14	3 1/2	9 3/4	6	5 3/8	15	3	6	17 5/8	1/2	5 3/4	3 1/8	16 3/4	4 5/8	2 1/2						6.0
4	48	30	2 1/4	3/4	1	6	18 5/8	5 1/8	13 1/8	6 1/8	7 1/4	18	4	8	21 3/4	5/8	7 5/8	4 1/4	22 3/8	6 1/4	3 3/8						10.0
5	48	30	2 1/4	3/4	1	6	18 5/8	5 1/8	13 1/8	6 1/8	7 1/4	18	4	8	21 3/4	5/8	7 5/8	4 1/4	22 3/8	6 1/4	3 3/8						10.0

STANDARD SIGN

R3-8 (B) Arrow

WISCONSIN DEPT OF TRANSPORTATION

APPROVED Matthew R Rauch
for State Traffic Engineer

DATE 2/14/23 PLATE NO. R3-8.2

PROJECT NO:

SHEET NO: 232 E

NOTES

1. Sign is Type II - Type H Reflective
2. Color:
   Background - White
   Message - Black
3. Message Series - None

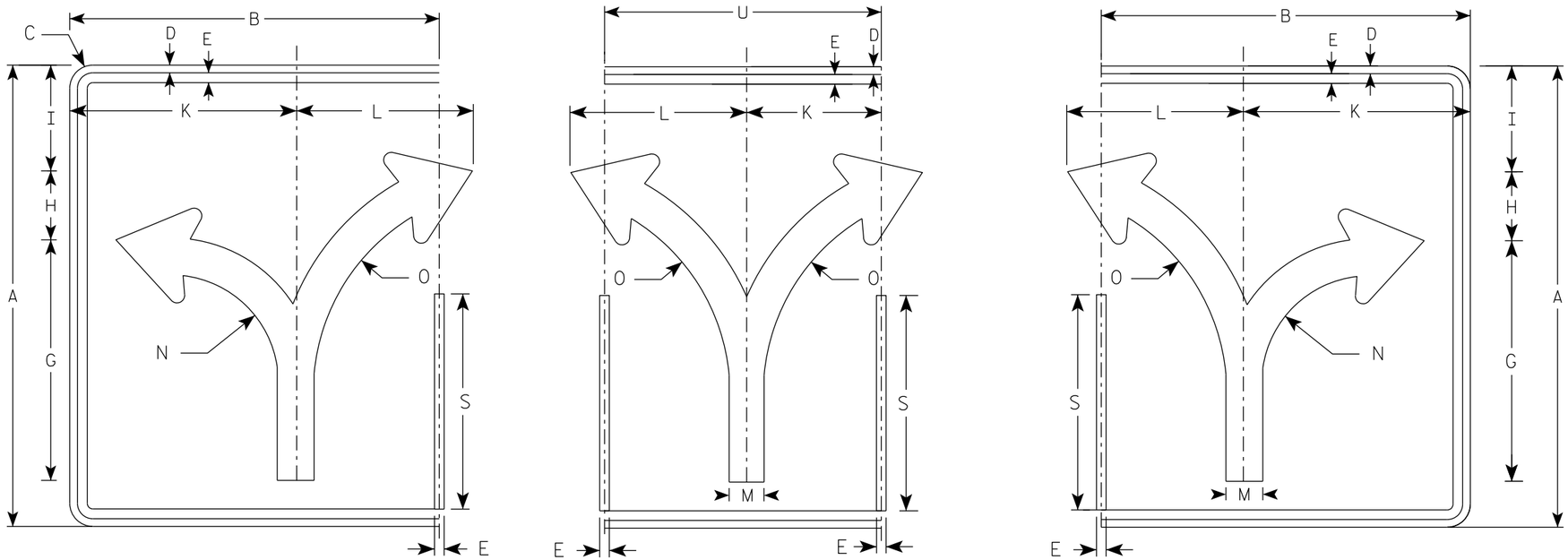

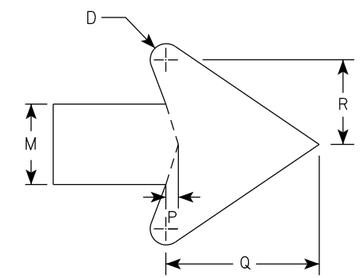

ARROW DETAIL

SIZE	A	B	C	D	E	F	G	H	I	J	K	L	M	N	O	P	Q	R	S	T	U	V	W	X	Y	Z	ENDS Area sq. ft.	MIDDLE Area sq. ft.
1																												
2S	30	24	1 1/2	1/2	5/8		15 5/8	4 1/2	6 7/8		14 3/4	11 1/2	2 3/8	7	13 1/4	3/8	4 1/2	2 1/2	14		18						5.0	3.75
2M	30	24	1 1/2	1/2	5/8		15 5/8	4 1/2	6 7/8		14 3/4	11 1/2	2 3/8	7	13 1/4	3/8	4 1/2	2 1/2	14		18						5.0	3.75
3	36	30	1 1/2	1/2	5/8		18 3/4	5 1/2	8 1/4		17 1/4	17 1/4	2 7/8	8 3/8	16	1/2	5 1/2	3	16 3/4		24						7.5	6.0
4	48	36	2 1/4	3/4	1		24 7/8	7 1/4	11		23 1/8	18	3 3/4	11 1/8	21 1/4	5/8	7 1/8	4	22 3/8		30						12.0	10.0
5	48	36	2 1/4	3/4	1		24 7/8	7 1/4	11		23 1/8	18	3 3/4	11 1/8	21 1/4	5/8	7 1/8	4	22 3/8		30						12.0	10.0

STANDARD SIGN
R3-8 (C) Arrow

WISCONSIN DEPT OF TRANSPORTATION

APPROVED Matthew R Rauch
for State Traffic Engineer

DATE 2/14/23 PLATE NO. R3-8.2

PROJECT NO: | HWY: | COUNTY: | SHEET NO: 233 | E

7

NOTES

1. Sign is Type II - Type H Reflective
2. Color:
   Background - White
   Message - Black
3. Message Series - None

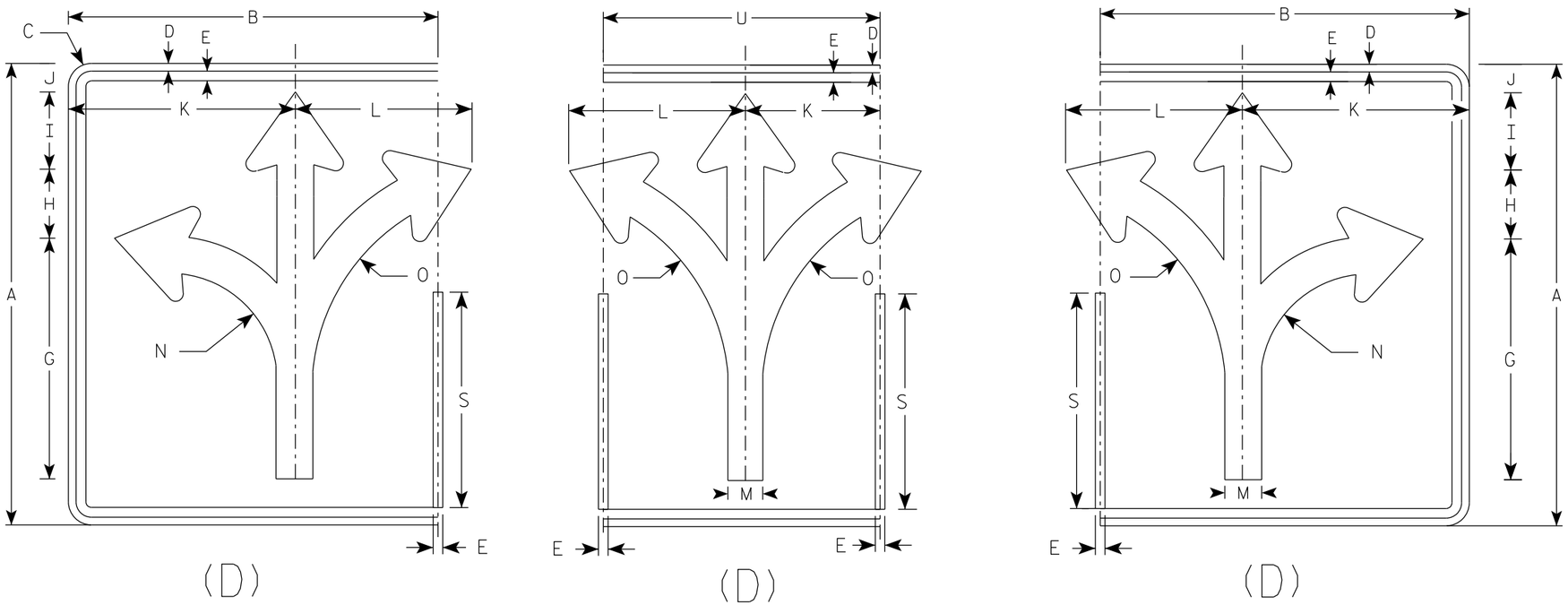

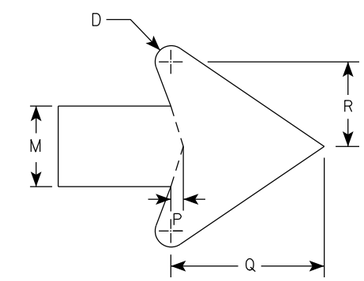

ARROW DETAIL

SIZE	A	B	C	D	E	F	G	H	I	J	K	L	M	N	O	P	Q	R	S	T	U	V	W	X	Y	Z	ENDS Area sq. ft.	MIDDLE Area sq. ft.
1																												
2S	30	24	1 1/2	1/2	5/8		15 5/8	4 1/2	5	1 7/8	14 3/4	11 1/2	2 3/8	7	13 1/4	3/8	4 1/2	2 1/2	14		18						5.0	3.75
2M	30	24	1 1/2	1/2	5/8		15 5/8	4 1/2	5	1 7/8	14 3/4	11 1/2	2 3/8	7	13 1/4	3/8	4 1/2	2 1/2	14		18						5.0	3.75
3	36	30	1 1/2	1/2	5/8		18 3/4	5 1/2	6	2 1/4	17 1/4	17 1/4	2 7/8	8 3/8	16	1/2	5 1/2	3	16 3/4		24						7.5	6.0
4	48	36	2 1/4	3/4	1		24 7/8	7 1/4	7 7/8	3 1/8	23 1/8	18	3 3/4	11 1/8	21 1/4	5/8	7 1/8	4	22 3/8		30						12.0	10.0
5	48	36	2 1/4	3/4	1		24 7/8	7 1/4	7 7/8	3 1/8	23 1/8	18	3 3/4	11 1/8	21 1/4	5/8	7 1/8	4	22 3/8		30						12.0	10.0

STANDARD SIGN
R3-8 (D) Arrow

WISCONSIN DEPT OF TRANSPORTATION

APPROVED Matthew R Rauch
for State Traffic Engineer

DATE 2/14/23 PLATE NO. R3-8.2

PROJECT NO: | HWY: | COUNTY: | SHEET NO: 234 | E

NOTES

1. Sign is Type II - Type H Reflective
2. Color:
   Background - White
   Message - Black
3. Message Series - None

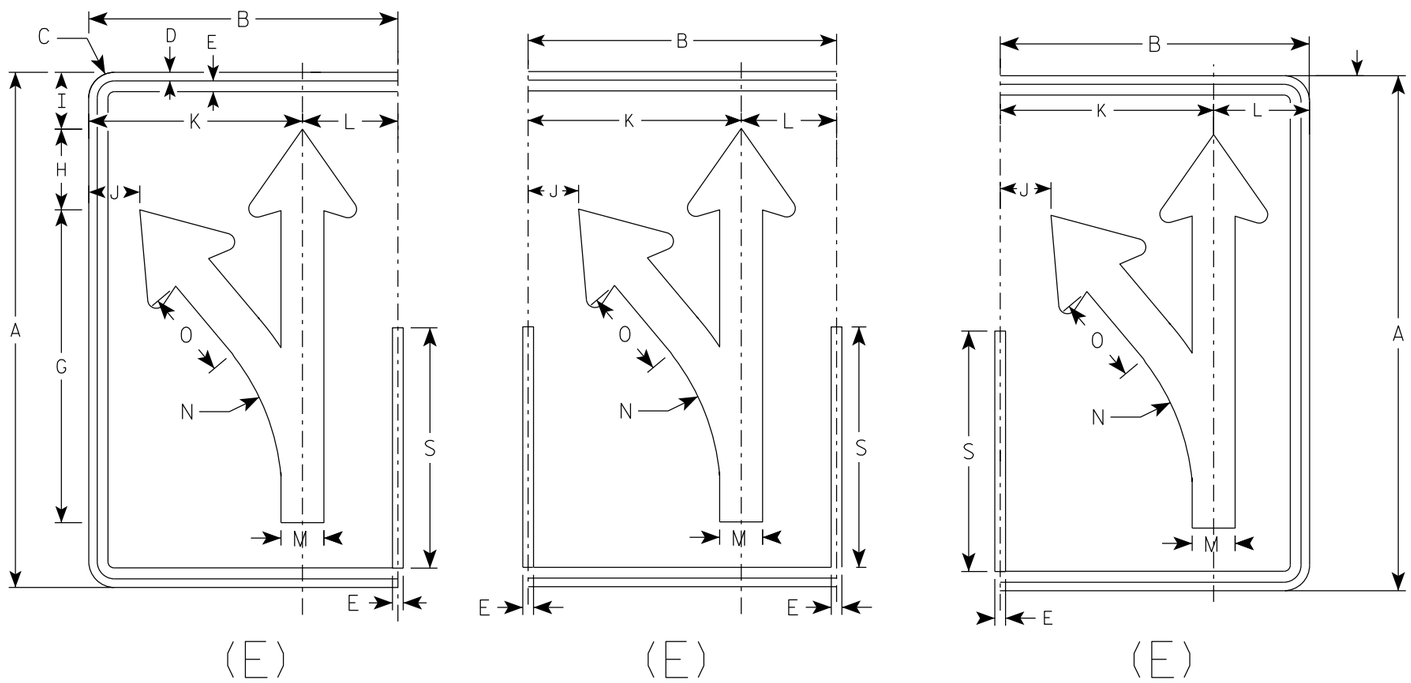

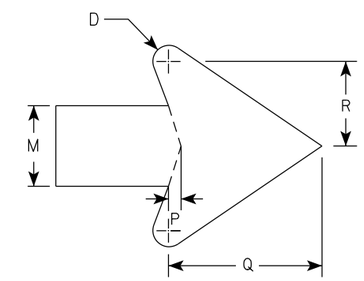

ARROW DETAIL

SIZE	A	B	C	D	E	F	G	H	I	J	K	L	M	N	O	P	Q	R	S	T	U	V	W	X	Y	Z	Area sq. ft.
1																											
2S	30	18	1 1/2	1/2	5/8		18 1/4	4 3/4	3 1/4	3	12 1/2	5 1/2	2 1/2	13 1/4	5 1/8	3/8	4 3/4	2 5/8	14								3.75
2M	30	18	1 1/2	1/2	5/8		18 1/4	4 3/4	3 1/4	3	12 1/2	5 1/2	2 1/2	13 1/4	5 1/8	3/8	4 3/4	2 5/8	14								3.75
3	36	24	1 1/2	1/2	5/8		21 7/8	5 5/8	4	4 7/8	16 1/8	7 3/4	3	15 7/8	6 1/8	1/2	5 3/4	3 1/8	16 3/4								6.0
4	48	30	2 1/4	3/4	1		29 1/8	7 1/2	5 1/4	5 3/8	20 1/2	9 1/2	4	21 1/4	8 1/4	5/8	7 5/8	4 1/4	22 3/8								10.0
5	48	30	2 1/4	3/4	1		29 1/8	7 1/2	5 1/4	5 3/8	20 1/2	9 1/2	4	21 1/4	8 1/4	5/8	7 5/8	4 1/4	22 3/8								10.0

STANDARD SIGN
R3-8 (E) Arrow

WISCONSIN DEPT OF TRANSPORTATION

APPROVED Matthew R Rauch
for State Traffic Engineer

DATE 2/14/23 PLATE NO. R3-8.2

PROJECT NO: | HWY: | COUNTY: | SHEET NO: 235 | E

NOTES

1. Sign is Type II - Type H Reflective
2. Color:
   Background - White
   Message - Black
3. Message Series - None

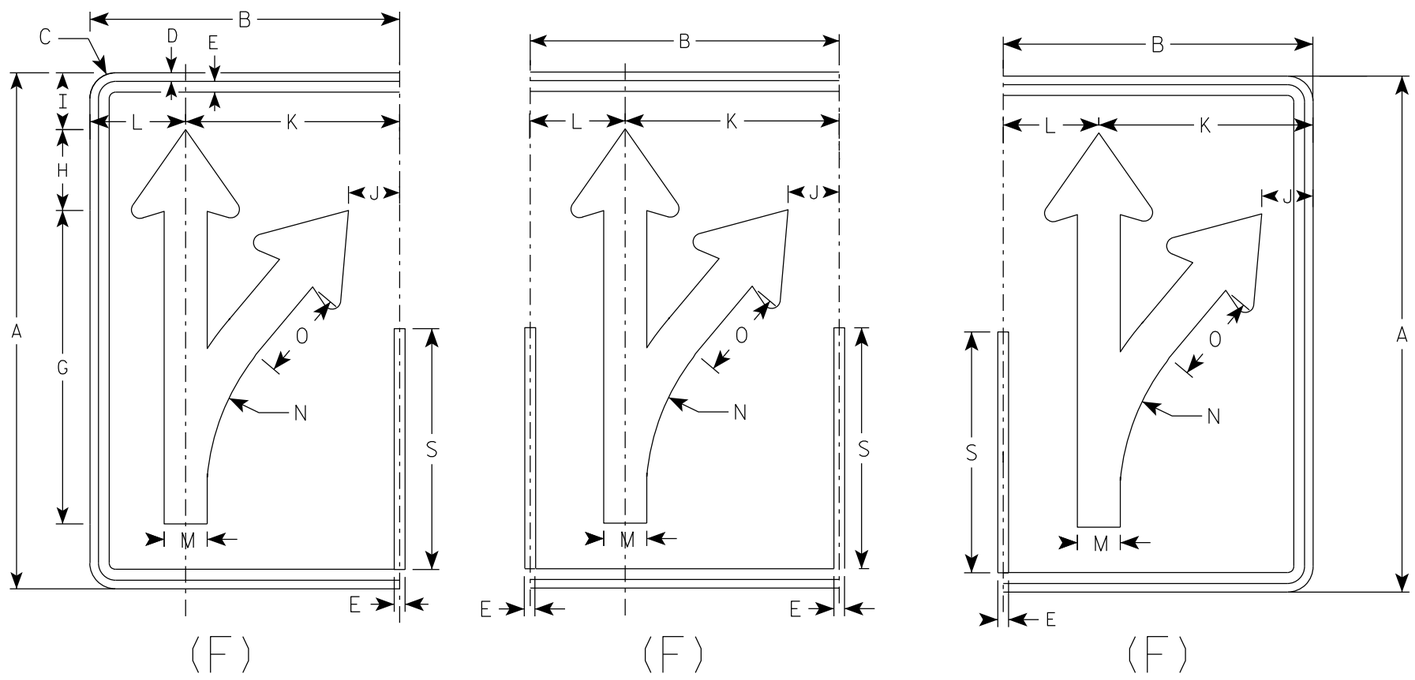

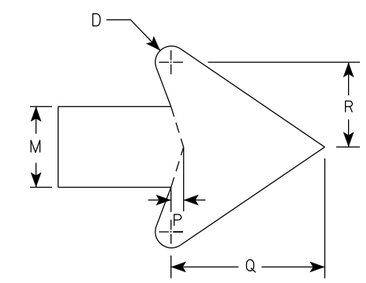

ARROW DETAIL

SIZE	A	B	C	D	E	F	G	H	I	J	K	L	M	N	O	P	Q	R	S	T	U	V	W	X	Y	Z	Area sq. ft.
1																											
2S	30	18	1 1/2	1/2	5/8		18 1/4	4 3/4	3 1/4	3	12 1/2	5 1/2	2 1/2	13 1/4	5 1/8	3/8	4 3/4	2 5/8	14								3.75
2M	30	18	1 1/2	1/2	5/8		18 1/4	4 3/4	3 1/4	3	12 1/2	5 1/2	2 1/2	13 1/4	5 1/8	3/8	4 3/4	2 5/8	14								3.75
3	36	24	1 1/2	1/2	5/8		21 7/8	5 5/8	4	4 7/8	16 1/8	7 3/4	3	15 7/8	6 1/8	1/2	5 3/4	3 1/8	16 3/4								6.0
4	48	30	2 1/4	3/4	1		29 1/8	7 1/2	5 1/4	5 3/8	20 1/2	9 1/2	4	21 1/4	8 1/4	5/8	7 5/8	4 1/4	22 3/8								10.0
5	48	30	2 1/4	3/4	1		29 1/8	7 1/2	5 1/4	5 3/8	20 1/2	9 1/2	4	21 1/4	8 1/4	5/8	7 5/8	4 1/4	22 3/8								10.0

STANDARD SIGN
R3-8 (F) Arrow

WISCONSIN DEPT OF TRANSPORTATION

APPROVED Matthew R Rauch
For State Traffic Engineer

DATE 2/14/23 PLATE NO. R3-8.2

PROJECT NO: | HWY: | COUNTY: | SHEET NO: 236 | E

NOTES

1. Sign is Type II - Type H Reflective
2. Color:
   Background - White
   Message - Black
3. Message Series - None

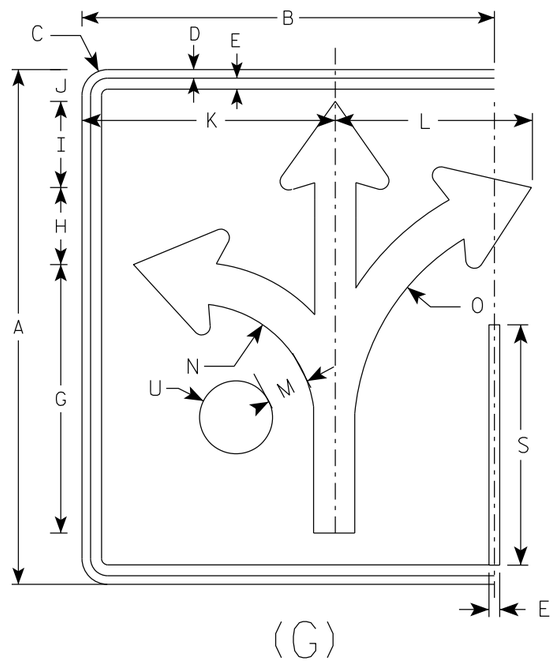

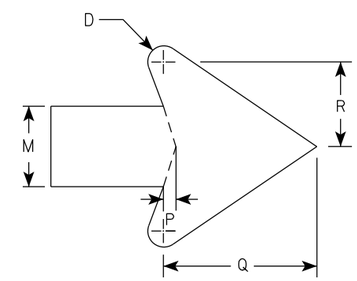

ARROW DETAIL

SIZE	A	B	C	D	E	F	G	H	I	J	K	L	M	N	O	P	Q	R	S	T	U	V	W	X	Y	Z	Area sq. ft.
1																											
2S	30	24	1 1/2	1/2	5/8		15 5/8	4 1/2	5	1 7/8	14 3/4	11 1/2	2 3/8	7	13 1/4	3/8	4 1/2	2 1/2	14		2 1/8						5.0
2M	30	24	1 1/2	1/2	5/8		15 5/8	4 1/2	5	1 7/8	14 3/4	11 1/2	2 3/8	7	13 1/4	3/8	4 1/2	2 1/2	14		2 1/8						5.0
3	36	30	1 1/2	1/2	5/8		18 3/4	5 1/2	6	3 1/8	17 1/4	17 1/4	2 7/8	8 3/8	16	1/2	5 1/2	3	16 3/4		2 1/2						7.5
4	48	36	2 1/4	3/4	1		24 7/8	7 1/4	7 7/8	3 1/8	23 1/8	18	3 3/4	11 1/8	21 1/4	5/8	7 1/8	4	22 3/8		3 3/8						12.0
5	48	36	2 1/4	3/4	1		24 7/8	7 1/4	7 7/8	3 1/8	23 1/8	18	3 3/4	11 1/8	21 1/4	5/8	7 1/8	4	22 3/8		3 3/8						12.0

STANDARD SIGN
R3-8 (G) Arrow

WISCONSIN DEPT OF TRANSPORTATION

APPROVED Matthew R Rauch
for State Traffic Engineer

DATE 2/14/23 PLATE NO. R3-8.2

PROJECT NO: | HWY: | COUNTY: | SHEET NO: 237 | E

7

NOTES

1. Sign is Type II - Type H Reflective
2. Color:
   Background - White
   Message - Black
3. Message Series - None

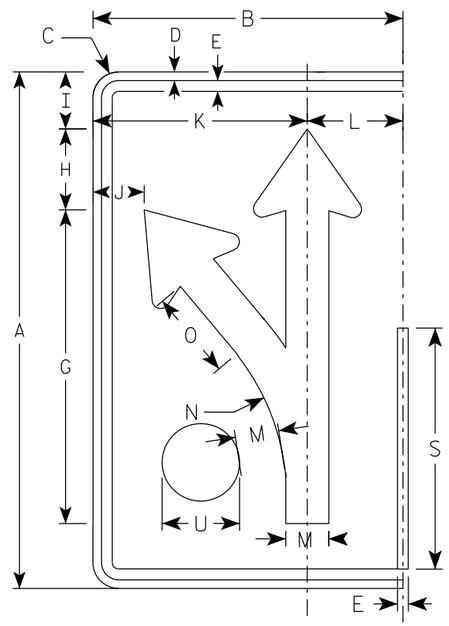

(H)

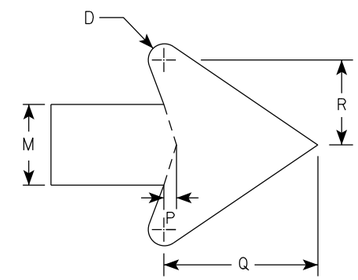

ARROW DETAIL

SIZE	A	B	C	D	E	F	G	H	I	J	K	L	M	N	O	P	Q	R	S	T	U	V	W	X	Y	Z	Area sq. ft.
1																											
2S	30	18	1 1/2	1/2	5/8		18 1/4	4 3/4	3 1/4	3	12 1/2	5 1/2	2 1/2	13 1/4	5 1/8	3/8	4 3/4	2 5/8	14		2 1/8						3.75
2M	30	18	1 1/2	1/2	5/8		18 1/4	4 3/4	3 1/4	3	12 1/2	5 1/2	2 1/2	13 1/4	5 1/8	3/8	4 3/4	2 5/8	14		2 1/8						3.75
3	36	24	1 1/2	1/2	5/8		21 7/8	5 5/8	4	4 7/8	16 1/8	7 3/4	3	15 7/8	6 1/8	1/2	5 3/4	3 1/8	16 3/4		2 1/2						6.0
4	48	30	2 1/4	3/4	1		29 1/8	7 1/2	5 1/4	5 3/8	20 1/2	9 1/2	4	21 1/4	8 1/4	5/8	7 5/8	4 1/4	22 3/8		3 3/8						10.0
5	48	30	2 1/4	3/4	1		29 1/8	7 1/2	5 1/4	5 3/8	20 1/2	9 1/2	4	21 1/4	8 1/4	5/8	7 5/8	4 1/4	22 3/8		3 3/8						10.0

STANDARD SIGN
R3-8 (H) Arrow

WISCONSIN DEPT OF TRANSPORTATION

APPROVED Matthew R Rauch
for State Traffic Engineer

DATE 2/14/23 PLATE NO. R3-8.2

PROJECT NO: | HWY: | COUNTY: | SHEET NO: 238 | E

7

NOTES

1. Sign is Type II - Type H Reflective
2. Color:
   Background - White
   Message - Black
3. Message Series - None

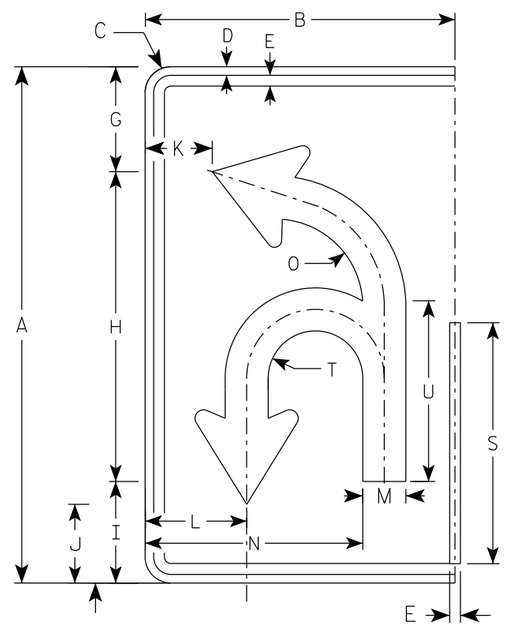

(I)

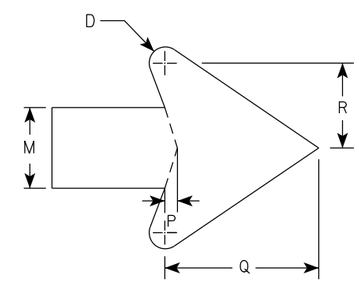

ARROW DETAIL

SIZE	A	B	C	D	E	F	G	H	I	J	K	L	M	N	O	P	Q	R	S	T	U	V	W	X	Y	Z	Area sq. ft.
1																											
2S	30	18	1 1/2	1/2	5/8		6 1/8	18	5 7/8	4 5/8	3 7/8	5 7/8	2 1/2	12 5/8	5 1/8	3/8	4 3/4	2 5/8	14	2 3/4	10 1/2						3.75
2M	30	18	1 1/2	1/2	5/8		6 1/8	18	5 7/8	4 5/8	3 7/8	5 7/8	2 1/2	12 5/8	5 1/8	3/8	4 3/4	2 5/8	14	2 3/4	10 1/2						3.75
3	36	24	1 1/2	1/2	5/8		21 7/8	21 5/8	7 1/8	5 1/2	5 7/8	8 1/4	3	16 3/8	6 1/8	1/2	5 3/4	3 1/8	16 3/4	3 1/4	12 5/8						6.0
4	48	30	2 1/4	3/4	1		29 1/8	28 3/4	9 3/8	7 1/4	6 7/8	10	4	20 7/8	8 1/8	5/8	7 5/8	4 1/4	22 3/8	4 3/8	16 3/4						10.0
5	48	30	2 1/4	3/4	1		29 1/8	28 3/4	9 3/8	7 1/4	6 7/8	10	4	20 7/8	8 1/8	5/8	7 5/8	4 1/4	22 3/8	4 3/8	16 3/4						10.0

STANDARD SIGN
R3-8 (I) Arrow

WISCONSIN DEPT OF TRANSPORTATION

APPROVED Matthew R Rauch
For State Traffic Engineer

DATE 2/14/23 PLATE NO. R3-8.2

PROJECT NO: | HWY: | COUNTY: | SHEET NO: 239 | E

NOTES

1. Sign is Type II - Type H Reflective
2. Color:
   Background - White
   Message - Black
3. Message Series - None

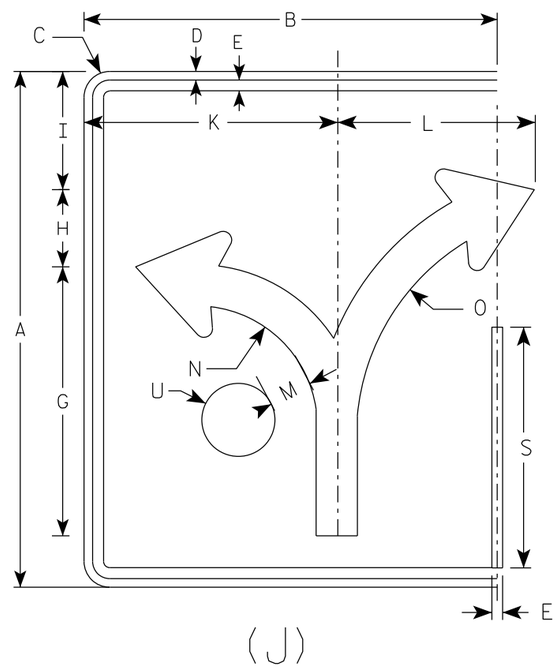

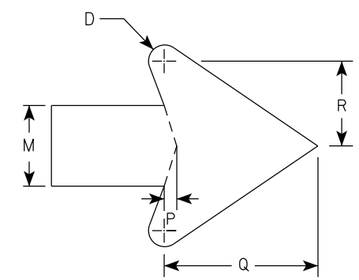

ARROW DETAIL

SIZE	A	B	C	D	E	F	G	H	I	J	K	L	M	N	O	P	Q	R	S	T	U	V	W	X	Y	Z	Area sq. ft.
1																											
2S	30	24	1 1/2	1/2	5/8		15 5/8	4 1/2	6 7/8		14 3/4	11 1/2	2 3/8	7	13 1/4	3/8	4 1/2	2 1/2	14		2 1/8						5.0
2M	30	24	1 1/2	1/2	5/8		15 5/8	4 1/2	6 7/8		14 3/4	11 1/2	2 3/8	7	13 1/4	3/8	4 1/2	2 1/2	14		2 1/8						5.0
3	36	30	1 1/2	1/2	5/8		18 3/4	5 1/2	8 1/4		17 1/4	17 1/4	2 7/8	8 3/8	16	1/2	5 1/2	3	16 3/4		2 1/2						7.5
4	48	36	2 1/4	3/4	1		24 7/8	7 1/4	11		23 1/8	18	3 3/4	11 1/8	21 1/4	5/8	7 1/8	4	22 3/8		3 3/8						12.0
5	48	36	2 1/4	3/4	1		24 7/8	7 1/4	11		23 1/8	18	3 3/4	11 1/8	21 1/4	5/8	7 1/8	4	22 3/8		3 3/8						12.0

STANDARD SIGN
R3-8 (J) Arrow

WISCONSIN DEPT OF TRANSPORTATION

APPROVED Matthew R Rauch
for State Traffic Engineer

DATE 2/14/23 PLATE NO. R3-8.2

PROJECT NO: | HWY: | COUNTY: | SHEET NO: 240 | E

NOTES

1. Sign is Type II - Type H Reflective
2. Color:
   Background - White
   Message - Black
3. Message Series - D

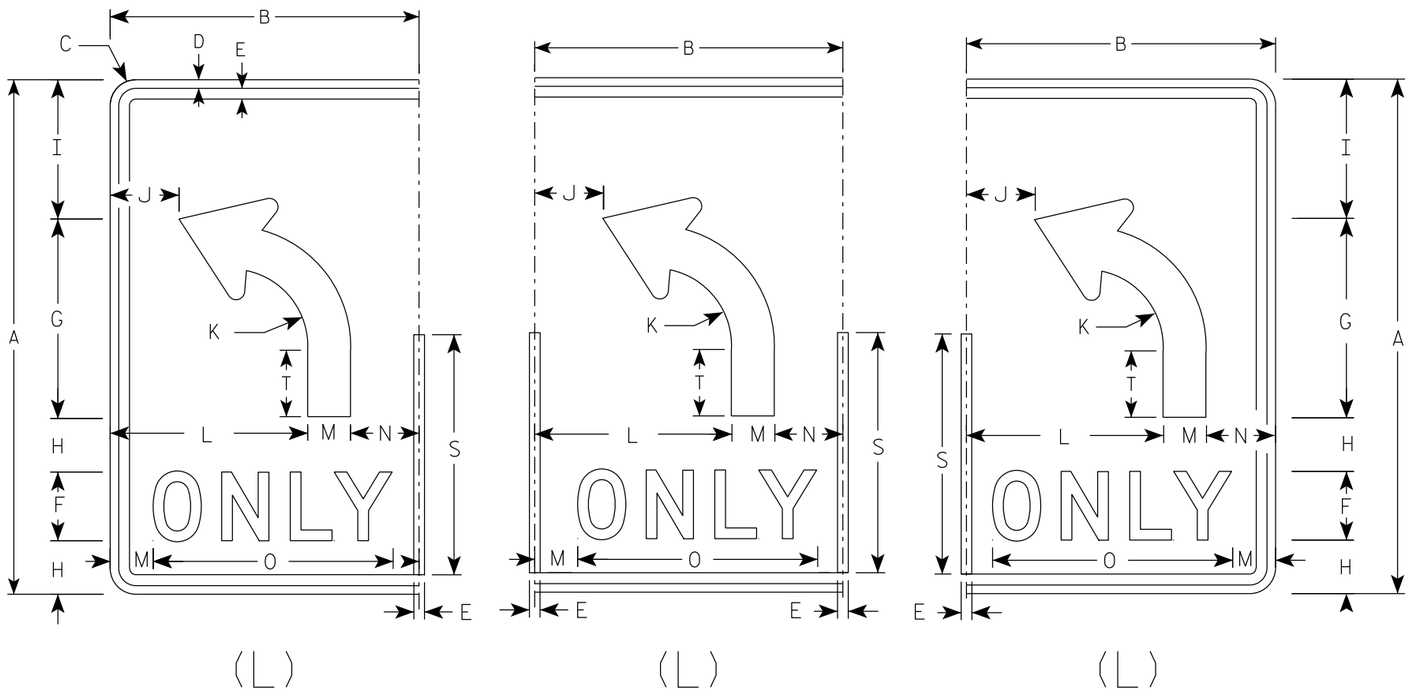

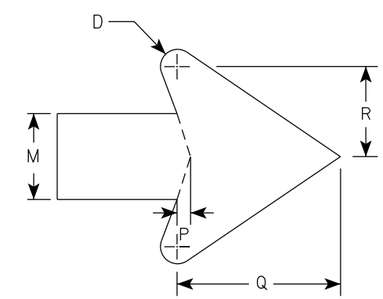

ARROW DETAIL

SIZE	A	B	C	D	E	F	G	H	I	J	K	L	M	N	O	P	Q	R	S	T	U	V	W	X	Y	Z	Area sq. ft.
1																											
2S	30	18	1 1/2	1/2	5/8	4	11 5/8	3 1/8	8 1/8	4	4 1/2	11 1/2	2 1/2	4	14	3/8	4 3/4	2 5/8	14	3 7/8							3.75
2M	30	18	1 1/2	1/2	5/8	4	11 5/8	3 1/8	8 1/8	4	4 1/2	11 1/2	2 1/2	4	14	3/8	4 3/4	2 5/8	14	3 7/8							3.75
3	36	24	1 1/2	1/2	5/8	5	14	3 1/2	9 3/4	6	5 3/8	15	3	6	17 5/8	1/2	5 3/4	3 1/8	16 3/4	4 5/8							6.0
4	48	30	2 1/4	3/4	1	6	18 5/8	5 1/8	13 1/8	6 1/8	7 1/4	18	4	8	21 3/4	5/8	7 5/8	4 1/4	22 3/8	6 1/4							10.0
5	48	30	2 1/4	3/4	1	6	18 5/8	5 1/8	13 1/8	6 1/8	7 1/4	18	4	8	21 3/4	5/8	7 5/8	4 1/4	22 3/8	6 1/4							10.0

STANDARD SIGN
R3-8 (L) Arrow

WISCONSIN DEPT OF TRANSPORTATION

APPROVED Matthew R Rauch
for State Traffic Engineer

DATE 2/14/23 PLATE NO. R3-8.2

PROJECT NO:

SHEET NO: 241 E

NOTES

1. Sign is Type II - Type H Reflective
2. Color:
   Background - White
   Message - Black
3. Message Series - D

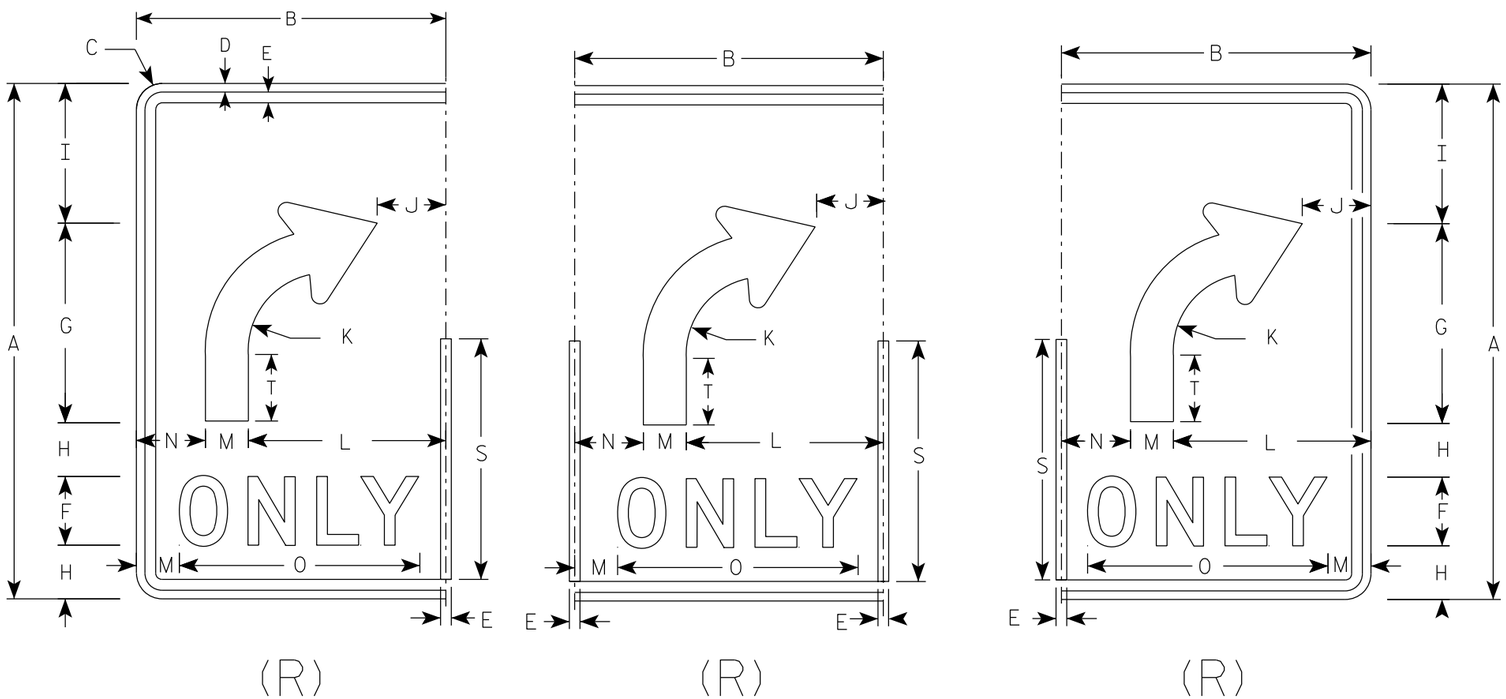

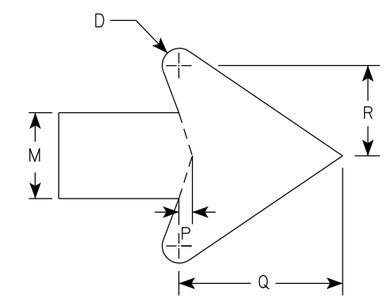

ARROW DETAIL

SIZE	A	B	C	D	E	F	G	H	I	J	K	L	M	N	O	P	Q	R	S	T	U	V	W	X	Y	Z	Area sq. ft.
1																											
2S	30	18	1 1/2	1/2	5/8	4	11 5/8	3 1/8	8 1/8	4	4 1/2	11 1/2	2 1/2	4	14	3/8	4 3/4	2 5/8	14	3 7/8							3.75
2M	30	18	1 1/2	1/2	5/8	4	11 5/8	3 1/8	8 1/8	4	4 1/2	11 1/2	2 1/2	4	14	3/8	4 3/4	2 5/8	14	3 7/8							3.75
3	36	24	1 1/2	1/2	5/8	5	14	3 1/2	9 3/4	6	5 3/8	15	3	6	17 5/8	1/2	5 3/4	3 1/8	16 3/4	4 5/8							6.0
4	48	30	2 1/4	3/4	1	6	18 5/8	5 1/8	13 1/8	6 1/8	7 1/4	18	4	8	21 3/4	5/8	7 5/8	4 1/4	22 3/8	6 1/4							10.0
5	48	30	2 1/4	3/4	1	6	18 5/8	5 1/8	13 1/8	6 1/8	7 1/4	18	4	8	21 3/4	5/8	7 5/8	4 1/4	22 3/8	6 1/4							10.0

STANDARD SIGN

R3-8 (R) Arrow

WISCONSIN DEPT OF TRANSPORTATION

APPROVED Matthew R Rauch
for State Traffic Engineer

DATE 2/14/23 PLATE NO. R3-8.2

PROJECT NO:

SHEET NO: 242 E

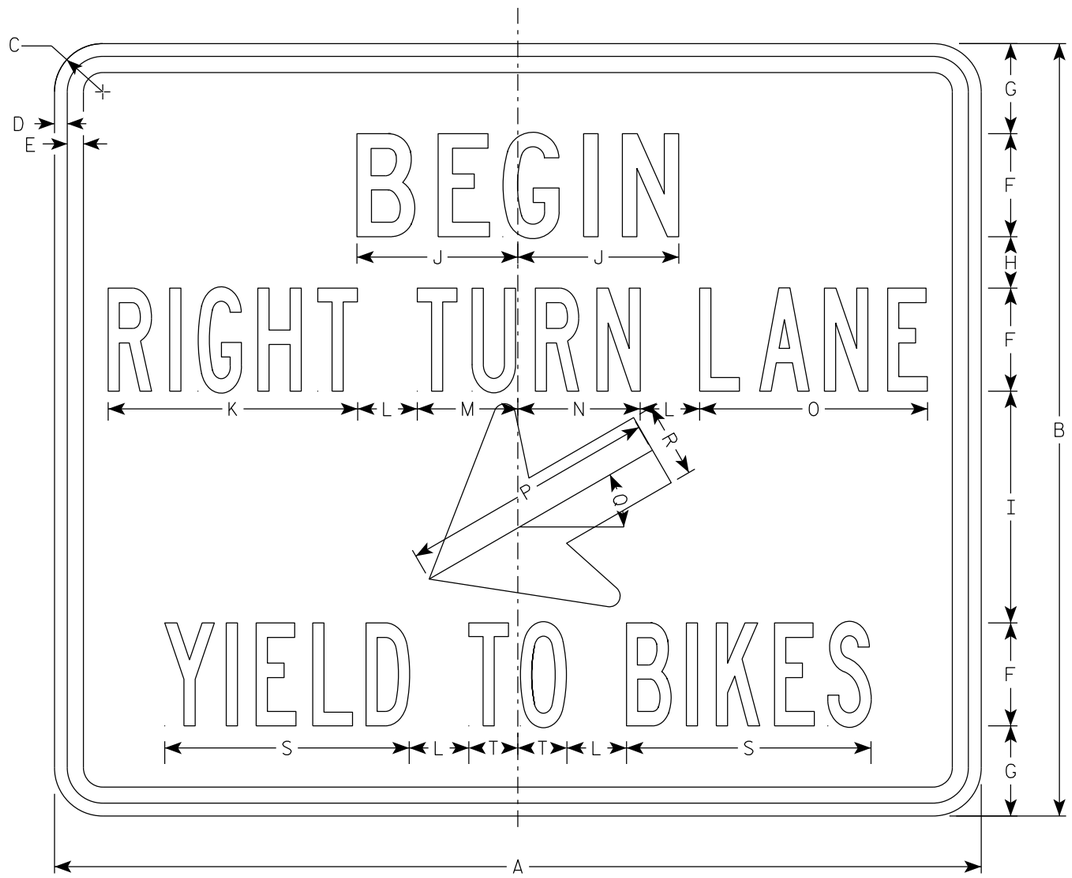

R4-4

NOTES

1. Sign is Type II - Type H Reflective
2. Color:
   Background - White
   Message - Black
3. Message Series - See Note 5
4. Line 1 is Series C
   Lines 2 & 3 are Series B

SIZE	A	B	C	D	E	F	G	H	I	J	K	L	M	N	O	P	Q	R	S	T	U	V	W	X	Y	Z	Area sq. ft.
1																											
2S	36	30	1 7/8	1/2	5/8	4	3 1/2	2	9	6 1/4	9 3/4	2 3/8	3 7/8	4 3/4	8 7/8	10	30°	2 7/8	9 1/2	1 7/8							7.5
2M	36	30	1 7/8	1/2	5/8	4	3 1/2	2	9	6 1/4	9 3/4	2 3/8	3 7/8	4 3/4	8 7/8	10	30°	2 7/8	9 1/2	1 7/8							7.5
3																											
4																											
5																											

STANDARD SIGN
R4-4

WISCONSIN DEPT OF TRANSPORTATION

APPROVED Matthew R Rauch
for State Traffic Engineer

DATE 5/31/23 PLATE NO. R4-4.3

PROJECT NO: | HWY: | COUNTY: | SHEET NO: 243 | E

NOTES

1. Sign is Type II - Type H Reflective
2. Color:
   Background - White
   Message - Black
3. R4-8 is the same as R4-7 except Legend is reversed.

DIVIDER DETAIL

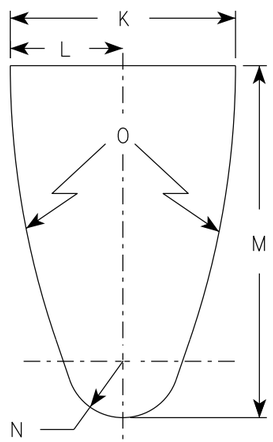

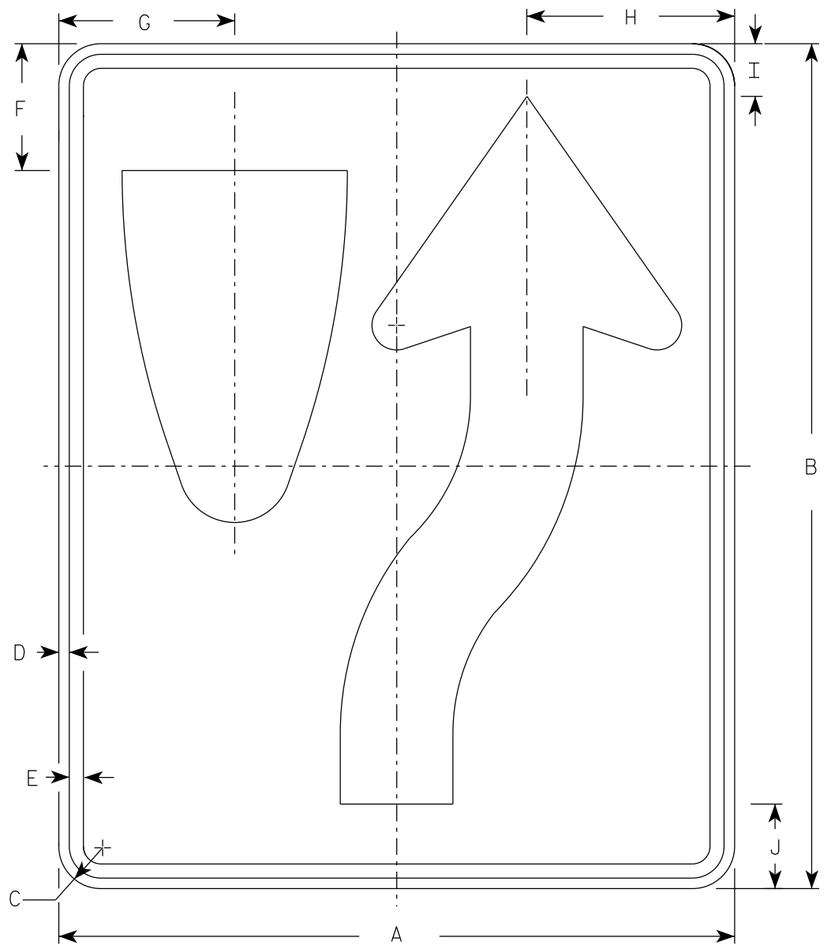

R4-7

ARROW DETAIL

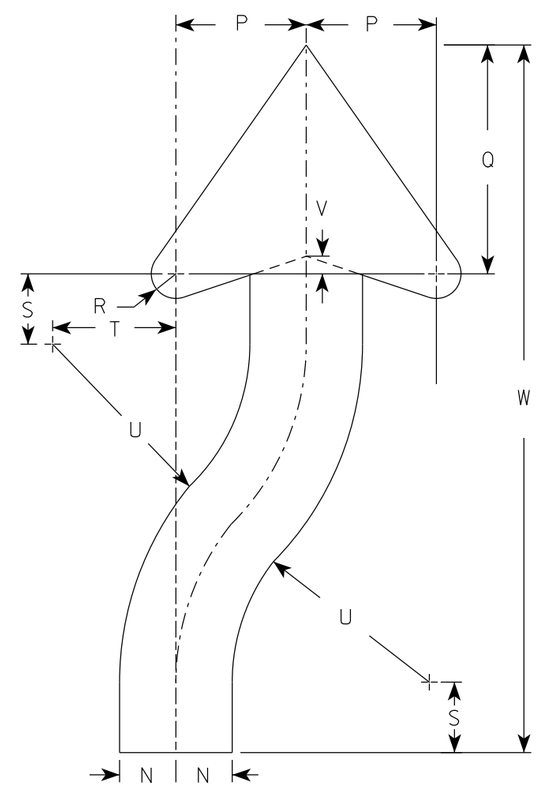

SIZE	A	B	C	D	E	F	G	H	I	J	K	L	M	N	O	P	Q	R	S	T	U	V	W	X	Y	Z	Area sq. ft.
1	18	24	1 1/2	3/8	1/2	3 3/8	4 3/4	5 1/2	1 3/8	2 1/4	6	3	9 3/8	1 1/2	22 1/2	3 1/2	6 1/8	5/8	1 7/8	3 1/4	6 3/4	1/2	20 3/8				3.0
2S	24	30	1 1/2	3/8	1/2	4 1/2	6 1/4	7 3/8	1 7/8	3	8	4	12 1/2	2	30	4 5/8	8 1/8	7/8	2 1/2	4 3/8	9	5/8	25 1/8				5.0
2M	24	30	1 1/2	3/8	1/2	4 1/2	6 1/4	7 3/8	1 7/8	3	8	4	12 1/2	2	30	4 5/8	8 1/8	7/8	2 1/2	4 3/8	9	5/8	25 1/8				5.0
3	36	48	1 7/8	1/2	5/8	6 3/4	9 3/8	11 1/8	2 7/8	4 1/2	12	6	18 3/4	3	45	6 7/8	12 1/4	1 1/4	3 3/4	6 5/8	13 1/2	1	40 3/4				12.0
4	36	48	1 7/8	1/2	5/8	6 3/4	9 3/8	11 1/8	2 7/8	4 1/2	12	6	18 3/4	3	45	6 7/8	12 1/4	1 1/4	3 3/4	6 5/8	13 1/2	1	40 3/4				12.0
5	48	60	3	3/4	1	9	12 1/2	14 3/4	3 3/4	6	16	8	25	4	60	9 1/4	16 1/4	1 5/8	5	8 3/4	18	1 1/4	50 1/4				20.0

STANDARD SIGN
R4-7 & R4-8

WISCONSIN DEPT OF TRANSPORTATION

APPROVED Matthew R Rauch for State Traffic Engineer

DATE 8/17/23 PLATE NO. R4-7.9

PROJECT NO: | HWY: | COUNTY: | SHEET NO: 244 | E

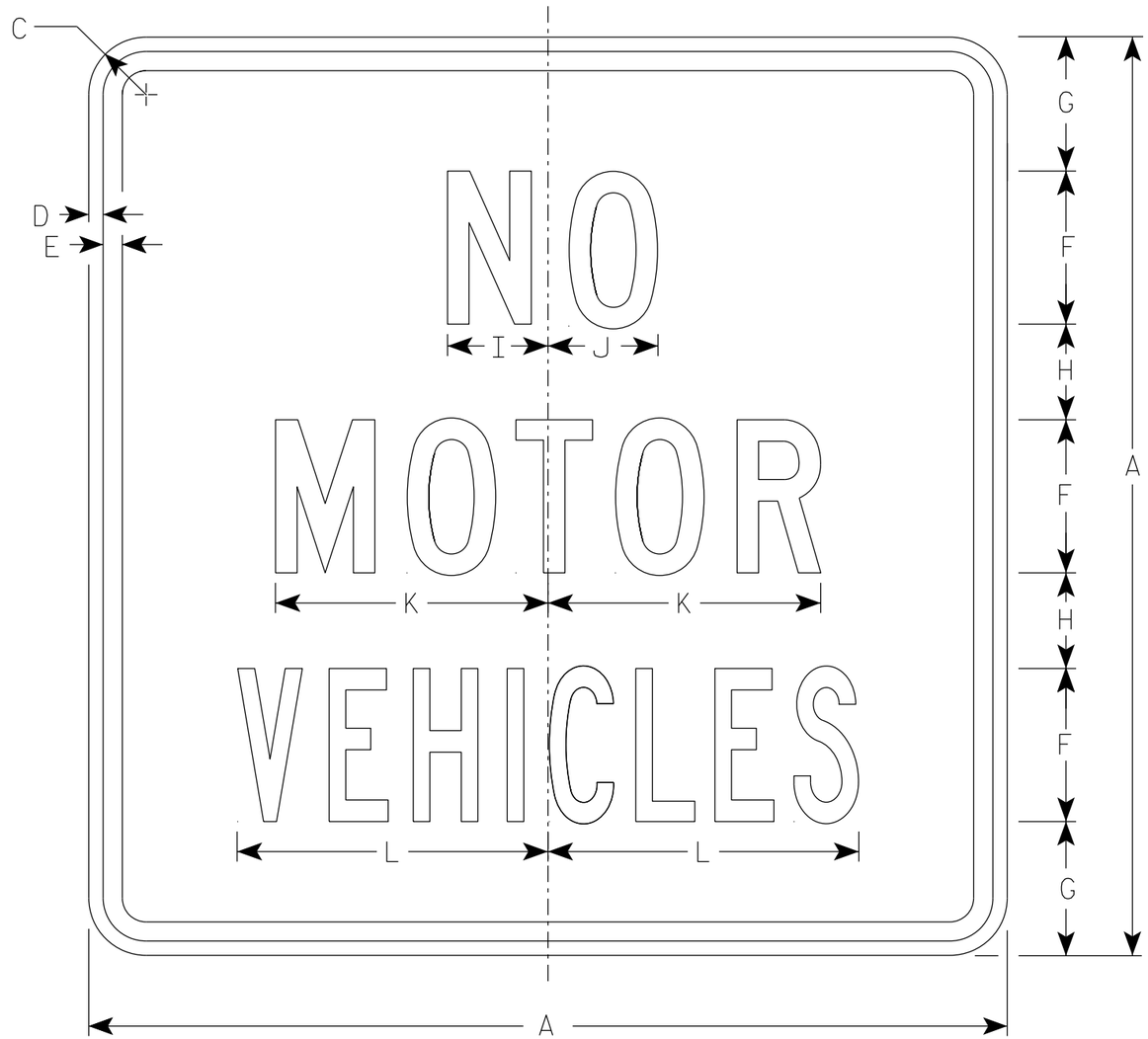

R5-3

NOTES

1. Sign is Type II - Type H Reflective
2. Color:
   Background - White
   Message - Black
3. Message Series - See Note 4
4. Lines 1 & 2 are Series C.
   Line 3 is Series B.

SIZE	A	B	C	D	E	F	G	H	I	J	K	L	M	N	O	P	Q	R	S	T	U	V	W	X	Y	Z	Area sq. ft.
1																											
2S	24		1 1/2	3/8	1/2	4	3 1/2	2 1/2	2 5/8	2 7/8	7 1/8	8 1/8															4.0
2M	24		1 1/2	3/8	1/2	4	3 1/2	2 1/2	2 5/8	2 7/8	7 1/8	8 1/8															4.0
3																											
4																											
5																											

STANDARD SIGN

R5-3

WISCONSIN DEPT OF TRANSPORTATION

APPROVED Matthew R Rauch
for State Traffic Engineer

DATE 8/17/23 PLATE NO. R5-3.3

PROJECT NO: | HWY: | COUNTY: | SHEET NO: 245 | E

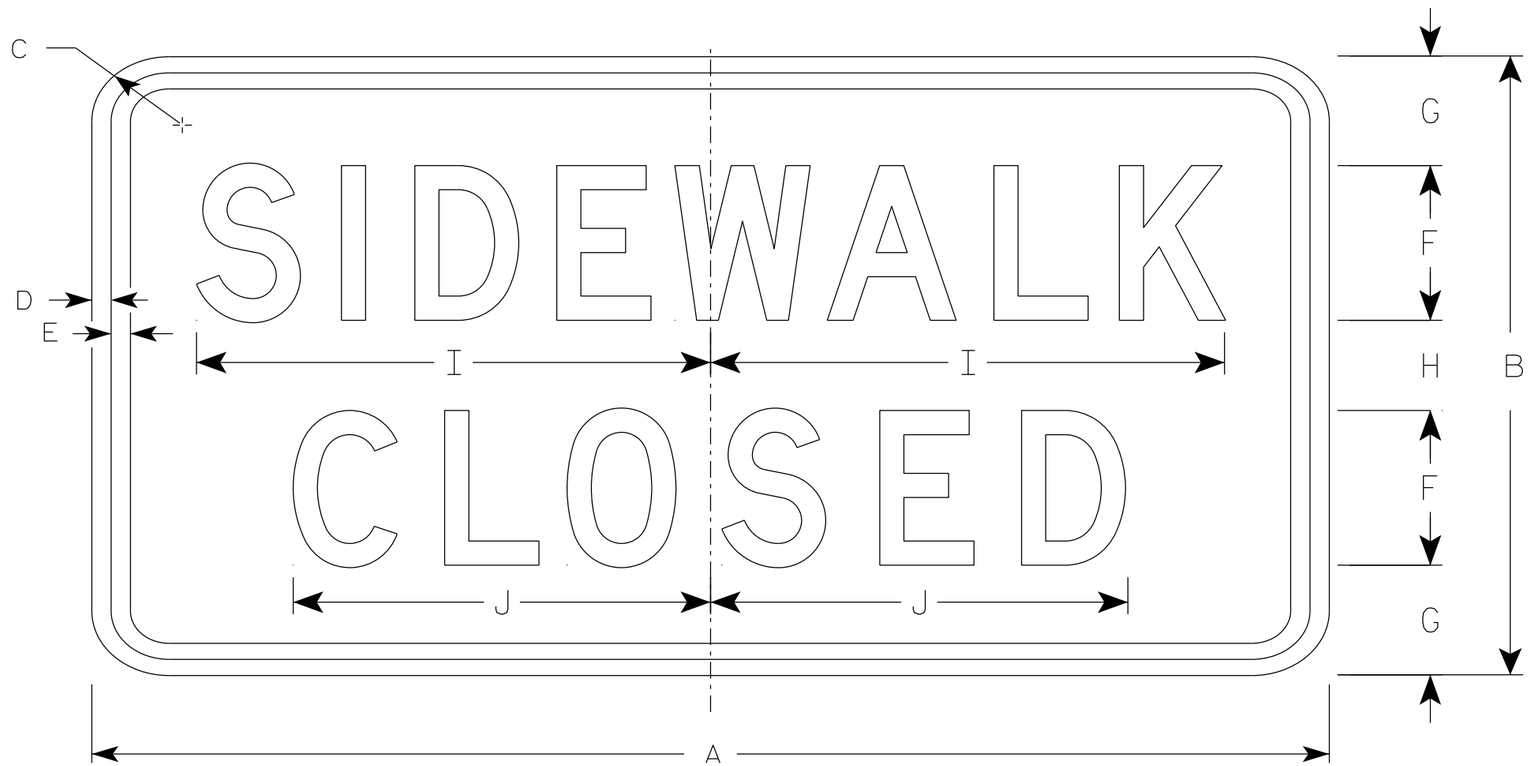

R9-9

NOTES

1. Sign is Type II - Type H Reflective
2. Color:
   Background - White
   Message - Black
3. Message Series - C
4. Use Size 2 for Sidewalks. Use Size 3 for Paths and Trails.

SIZE	A	B	C	D	E	F	G	H	I	J	K	L	M	N	O	P	Q	R	S	T	U	V	W	X	Y	Z	Area sq. ft.
1																											
2S	24	12	1 1/2	1/2	1/2	3	2 1/8	1 3/4	10	8 1/8																	2.0
2M	24	12	1 1/2	1/2	1/2	3	2 1/8	1 3/4	10	8 1/8																	2.0
3	30	18	1 1/2	1/2	1/2	4	3 1/2	3	12 1/2	10 1/4																	3.75
4																											
5																											

STANDARD SIGN
R9-9

WISCONSIN DEPT OF TRANSPORTATION

APPROVED Matthew R Rauch
for State Traffic Engineer

DATE 1/24/24 PLATE NO. R9-9.7

PROJECT NO: | HWY: | COUNTY: | SHEET NO: 246 | E

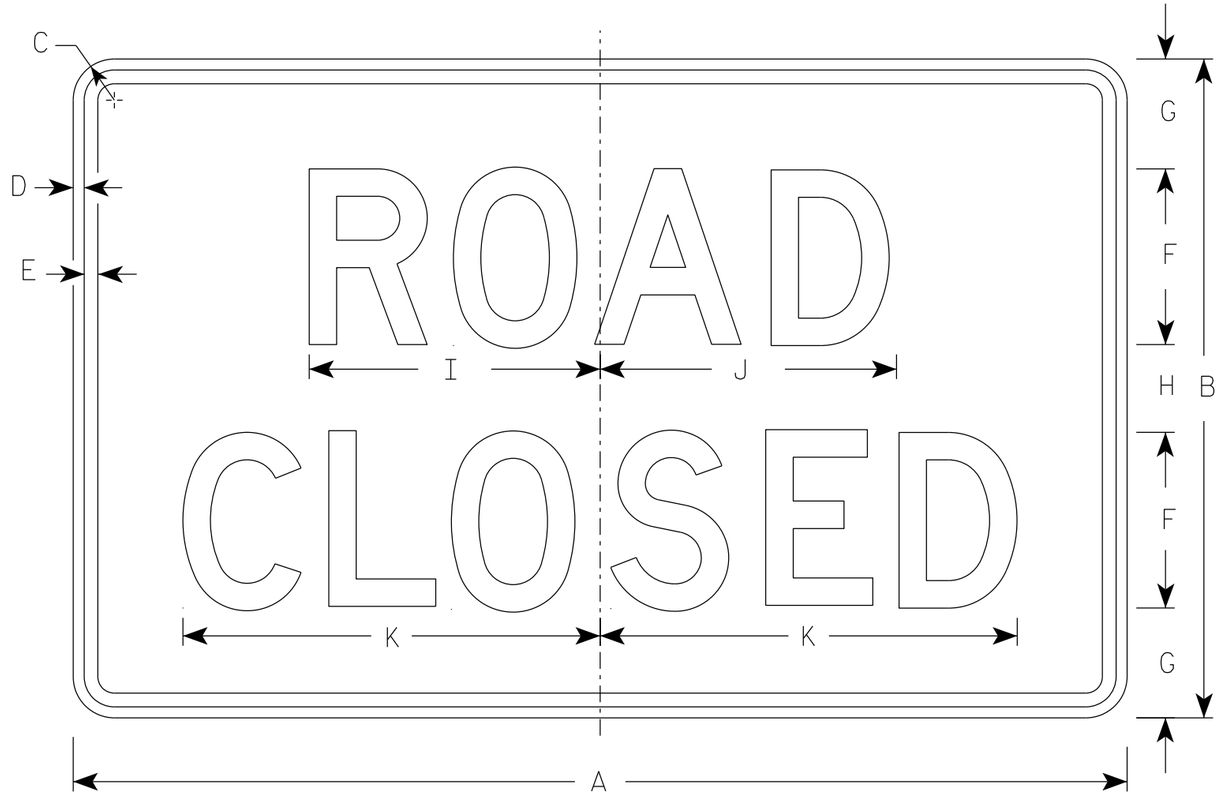

R11-2

NOTES

1. Sign is Type II - Type H Reflective
2. Color:
   Background - White
   Message - Black
3. Message Series - D
4. Corners may be square or rounded when base material is plywood but borders shall be rounded as shown. When base material is metal, the corners and borders shall be rounded.
5. Modify the message as required.

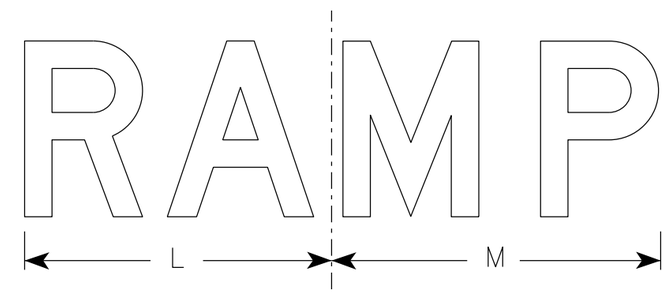

R11-2R

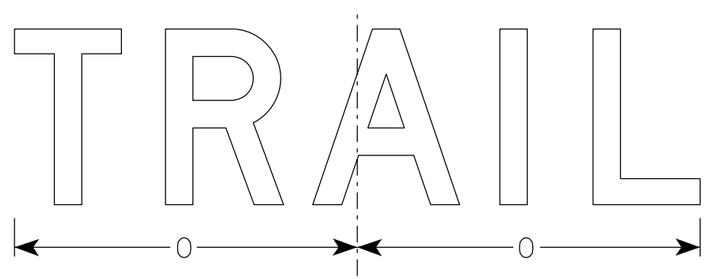

R11-2T

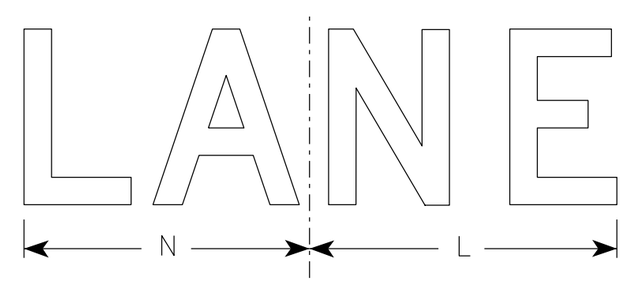

R11-2L

SIZE	A	B	C	D	E	F	G	H	I	J	K	L	M	N	O	P	Q	R	S	T	U	V	W	X	Y	Z	Area sq. ft.
1																											
2S	48	30	1 7/8	1/2	5/8	8	5	4	13 1/4	13 1/2	19	14	15	13	15 5/8												10.0
2M	48	30	1 7/8	1/2	5/8	8	5	4	13 1/4	13 1/2	19	14	15	13	15 5/8												10.0
3	48	30	1 7/8	1/2	5/8	8	5	4	13 1/4	13 1/2	19	14	15	13	15 5/8												10.0
4	48	30	1 7/8	1/2	5/8	8	5	4	13 1/4	13 1/2	19	14	15	13	15 5/8												10.0
5	48	30	1 7/8	1/2	5/8	8	5	4	13 1/4	13 1/2	19	14	15	13	15 5/8												10.0

STANDARD SIGN
R11-2

WISCONSIN DEPT OF TRANSPORTATION

APPROVED Matthew R Rauch
for State Traffic Engineer

DATE 2/5/24 PLATE NO. R11-2.12

PROJECT NO: | HWY: | COUNTY: | SHEET NO: E

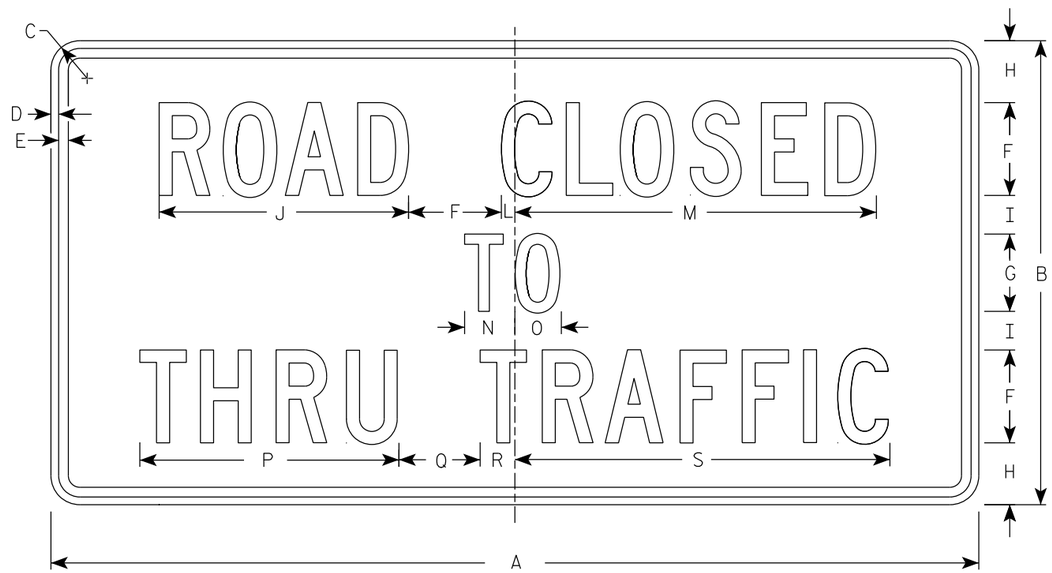

R11-4

NOTES

1. Sign is Type II - Type H Reflective
2. Color:
   Background - White
   Message - Black
3. Message Series - C
4. Corners may be square or rounded when base material is plywood but borders shall be rounded as shown. When base material is metal, the corners and borders shall be rounded.

SIZE	A	B	C	D	E	F	G	H	I	J	K	L	M	N	O	P	Q	R	S	T	U	V	W	X	Y	Z	Area sq. ft.
1																											
2S	60	30	1 7/8	1/2	5/8	6	5	4	2 1/2	16 1/8		7/8	23 3/8	3 1/4	3	16 3/4	5 1/4	2 1/4	24 1/4								12.5
2M	60	30	1 7/8	1/2	5/8	6	5	4	2 1/2	16 1/8		7/8	23 3/8	3 1/4	3	16 3/4	5 1/4	2 1/4	24 1/4								12.5
3																											
4																											
5																											

STANDARD SIGN
R11 - 4

WISCONSIN DEPT OF TRANSPORTATION

APPROVED Matthew R Rauch for State Traffic Engineer

DATE 2/5/24 PLATE NO. R11-4.4

PROJECT NO: | HWY: | COUNTY: | SHEET NO: 248 | E

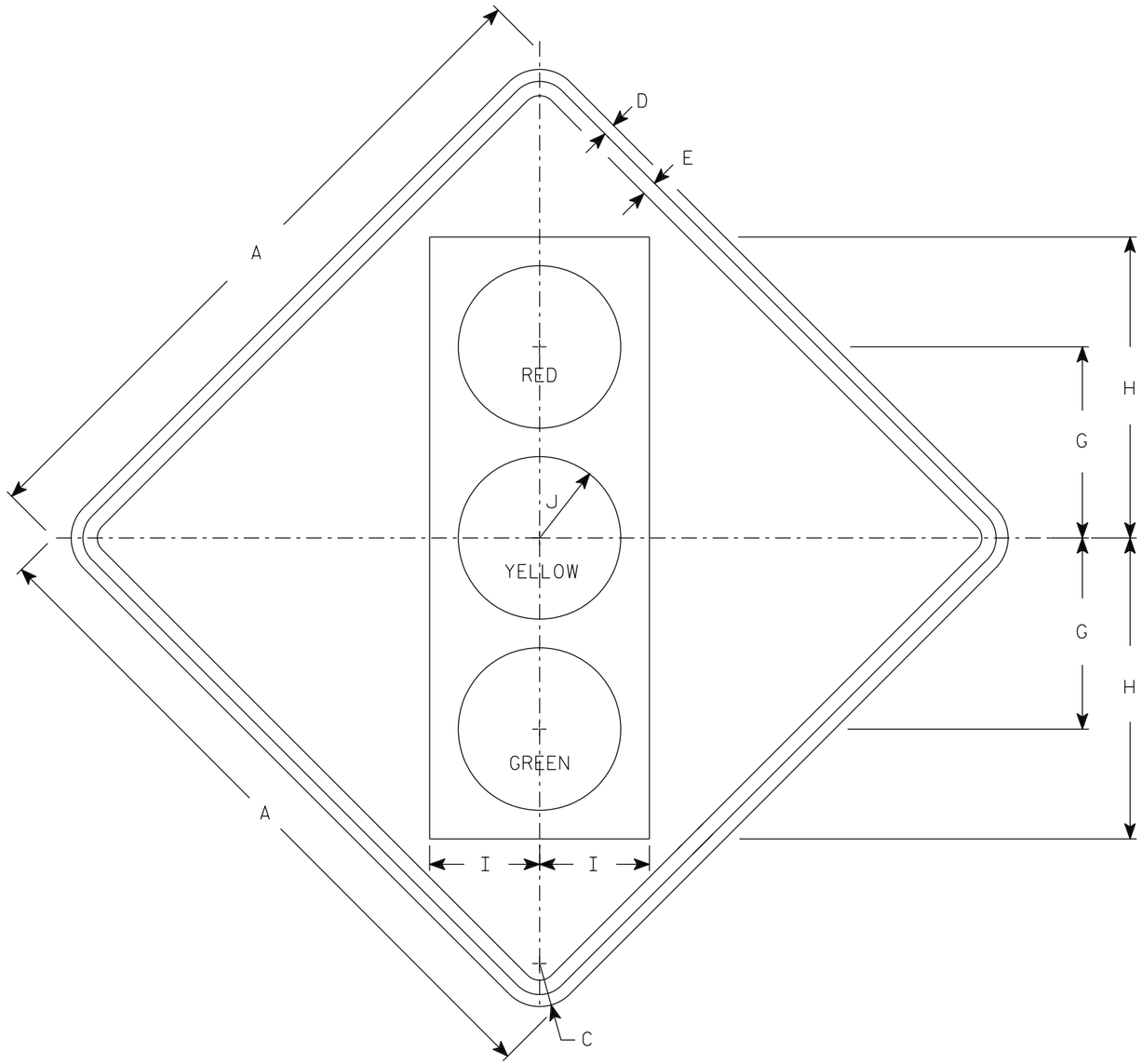

W3-3

NOTES

1. Sign is Type II - Type F Reflective
2. Color:
   Background - Yellow
   Message - See Note 3
3. Symbol and border are non-reflective black.
   Top circle - Type H Reflectorized Red
   Center circle - Same as background
   Bottom circle - Type H Reflectorized Green

SIZE	A	B	C	D	E	F	G	H	I	J	K	L	M	N	O	P	Q	R	S	T	U	V	W	X	Y	Z	Area sq. ft.
1	30		1 7/8	1/2	5/8		8 3/4	13 3/4	5	3 3/4																	6.25
2S	36		2 1/4	5/8	3/4		10	15 3/4	5 3/4	4 1/4																	9.0
2M	36		2 1/4	5/8	3/4		10	15 3/4	5 3/4	4 1/4																	9.0
3	36		2 1/4	5/8	3/4		10	15 3/4	5 3/4	4 1/4																	9.0
4	48		3	3/4	1		12 1/2	20	7 1/2	5																	16.0
5	48		3	3/4	1		12 1/2	20	7 1/2	5																	16.0

STANDARD SIGN
W3-3

WISCONSIN DEPT OF TRANSPORTATION

APPROVED Matthew R Rauch
for State Traffic Engineer

DATE 8/21/2023 PLATE NO. W3-3.12

PROJECT NO:	HWY:	COUNTY:		SHEET NO: 249	E

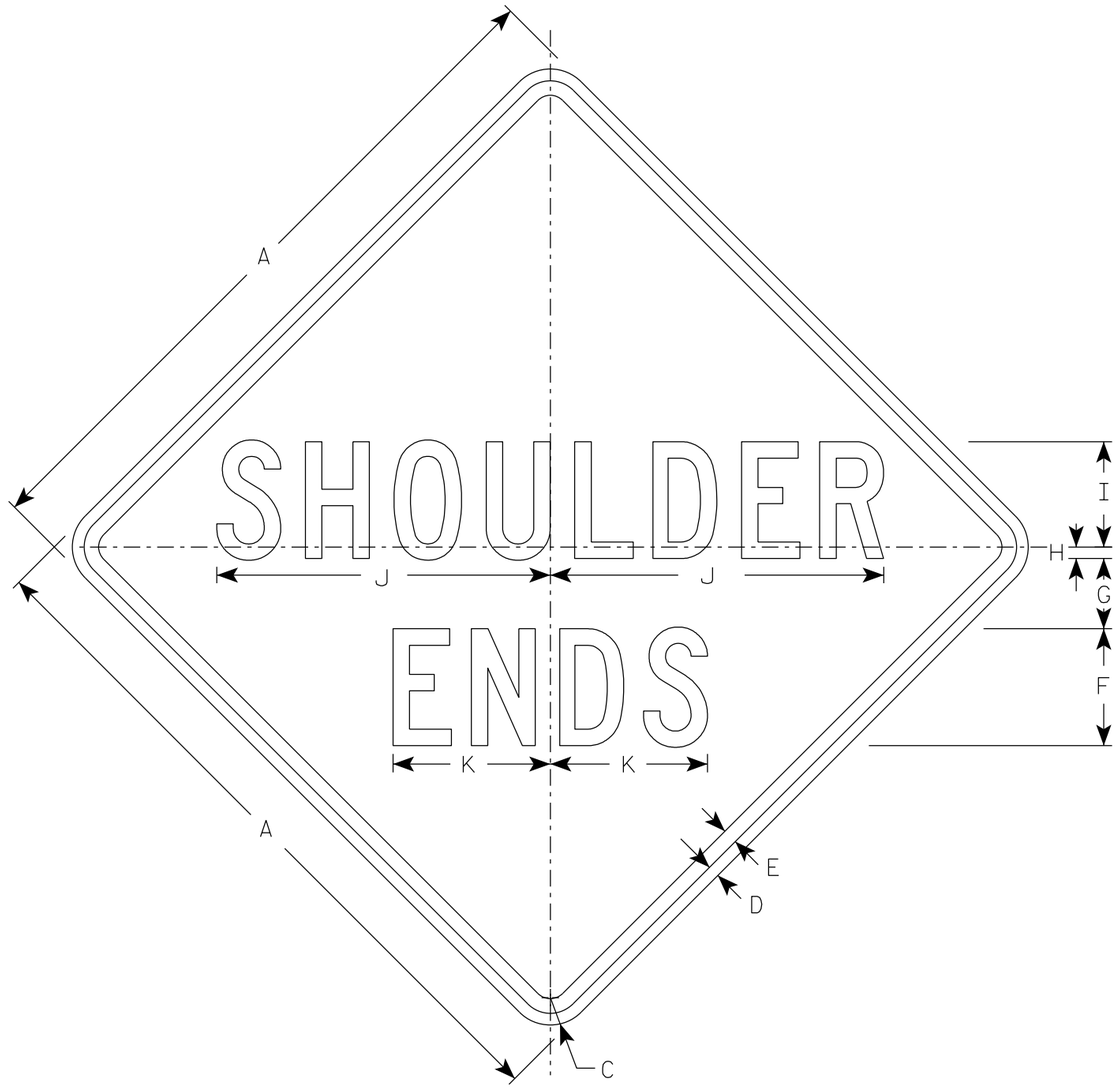

W8-25

NOTES

1. Sign is Type II - Type F Reflective
2. Color:
   Background - Yellow
   Message - Black
3. Message Series - C

SIZE	A	B	C	D	E	F	G	H	I	J	K	L	M	N	O	P	Q	R	S	T	U	V	W	X	Y	Z	Area sq. ft.
1	30		1 7/8	1/2	5/8	5	3	1/2	4 1/2	14 1/4	6 3/4																6.25
2S	36		2 1/4	5/8	3/4	6	3 1/2	1/2	5 1/2	17 1/8	8 1/8																9.0
2M	36		2 1/4	5/8	3/4	6	3 1/2	1/2	5 1/2	17 1/8	8 1/8																9.0
3	36		2 1/4	5/8	3/4	6	3 1/2	1/2	5 1/2	17 1/8	8 1/8																9.0
4	36		2 1/4	5/8	3/4	6	3 1/2	1/2	5 1/2	17 1/8	8 1/8																9.0
5	48		3	3/4	1	8	4	1/2	7 1/2	22 3/4	10 3/4																16.0

STANDARD SIGN
W8-25

WISCONSIN DEPT OF TRANSPORTATION

APPROVED Matthew R Rauch
for State Traffic Engineer

DATE 11/2/2023 PLATE NO. W8-25.2

PROJECT NO: | HWY: | COUNTY: | SHEET NO: 250 | E

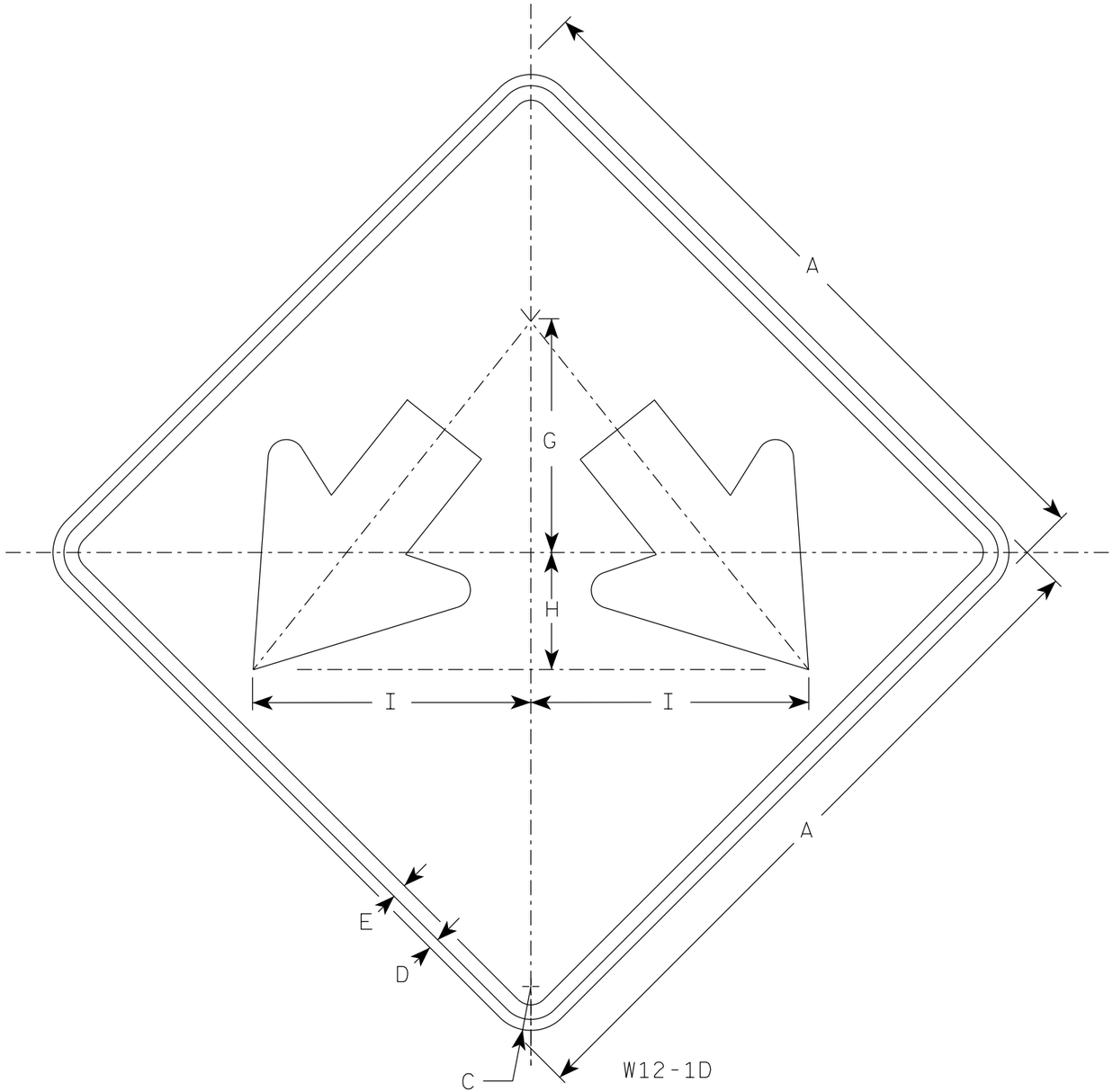

NOTES

1. Sign is Type II - Type F Reflective
2. Color:
   Background - Yellow
   Message - Black

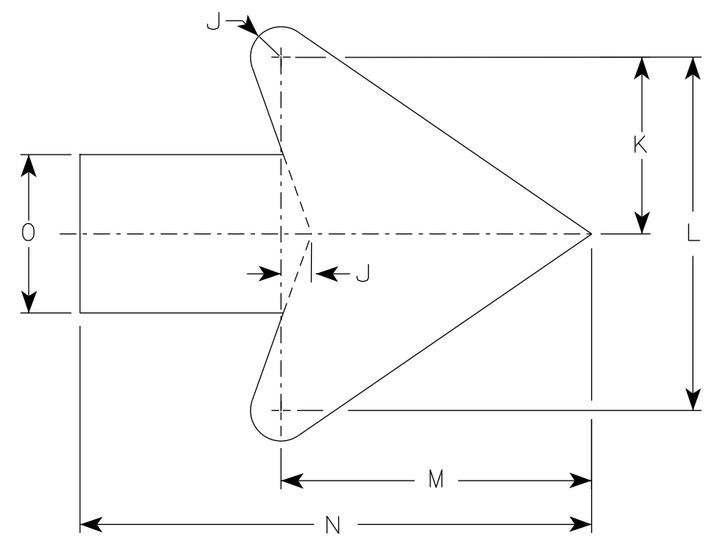

Arrow Detail

SIZE	A	B	C	D	E	F	G	H	I	J	K	L	M	N	O	P	Q	R	S	T	U	V	W	X	Y	Z	Area sq. ft.
1																											
2S	24		1 1/2	1/2	3/8		8	4	9 1/2	3/8	3 3/8	7 1/4	6 3/8	10 3/8	3 1/4												4.0
2M	24		1 1/2	1/2	3/8		8	4	9 1/2	3/8	3 3/8	7 1/4	6 3/8	10 3/8	3 1/4												4.0
3	30		1 7/8	1/2	5/8		10	5	11 7/8	3/4	4 1/2	9	7 7/8	13	4												6.25
4	36		2 1/4	1/2	5/8		12	6	14 1/4	1	5 1/2	10 7/8	9 5/8	15 3/4	4 3/4												9.0
5	48		3	3/4	1		16	8	19	1 1/4	7 1/4	14 1/2	12 3/4	21	6 1/4												16.0

STANDARD SIGN
W12-1D

WISCONSIN DEPT OF TRANSPORTATION

APPROVED Matthew R Rauch
for State Traffic Engineer

DATE 11/30/2023 PLATE NO. W12-1D.16

PROJECT NO: | HWY: | COUNTY: | SHEET NO: 251 | E

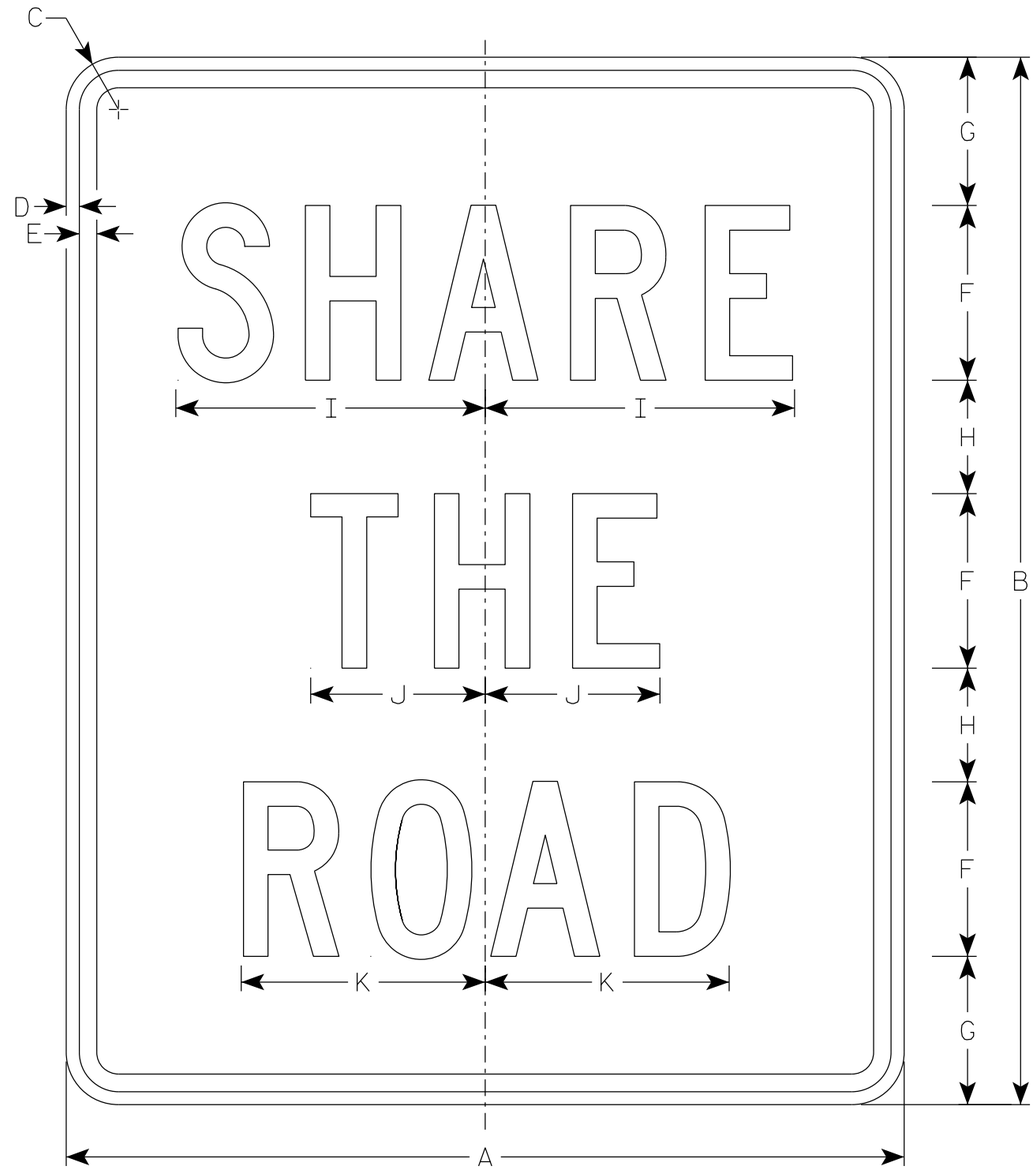

W16-1P

NOTES

1. Sign is Type II - Type F Reflective
2. Color:
   Background - Yellow
   Message - Black
3. Message Series - C

SIZE	A	B	C	D	E	F	G	H	I	J	K	L	M	N	O	P	Q	R	S	T	U	V	W	X	Y	Z	Area sq. ft.
1																											
2S	18	24	1 1/2	3/8	1/2	4	3 3/8	2 5/8	6 5/8	3 3/4	5 3/8																3.0
2M	18	24	1 1/2	3/8	1/2	4	3 3/8	2 5/8	6 5/8	3 3/4	5 3/8																3.0
3	24	30	1 1/2	3/8	1/2	5	4 1/4	3 1/4	8 7/8	5	7																5.0
4	24	30	1 1/2	3/8	1/2	5	4 1/4	3 1/4	8 7/8	5	7																5.0
5																											

STANDARD SIGN
W16-1P

WISCONSIN DEPT OF TRANSPORTATION

APPROVED Matthew R Rauch
for State Traffic Engineer

DATE 1/8/2024 PLATE NO. W16-1P.3

PROJECT NO:	HWY:	COUNTY:		SHEET NO: 252	E

7

NOTES

1. Sign is Type II - Type F Reflective
2. Color:
   Background - Yellow
   Message - Black
3. Message Series - D

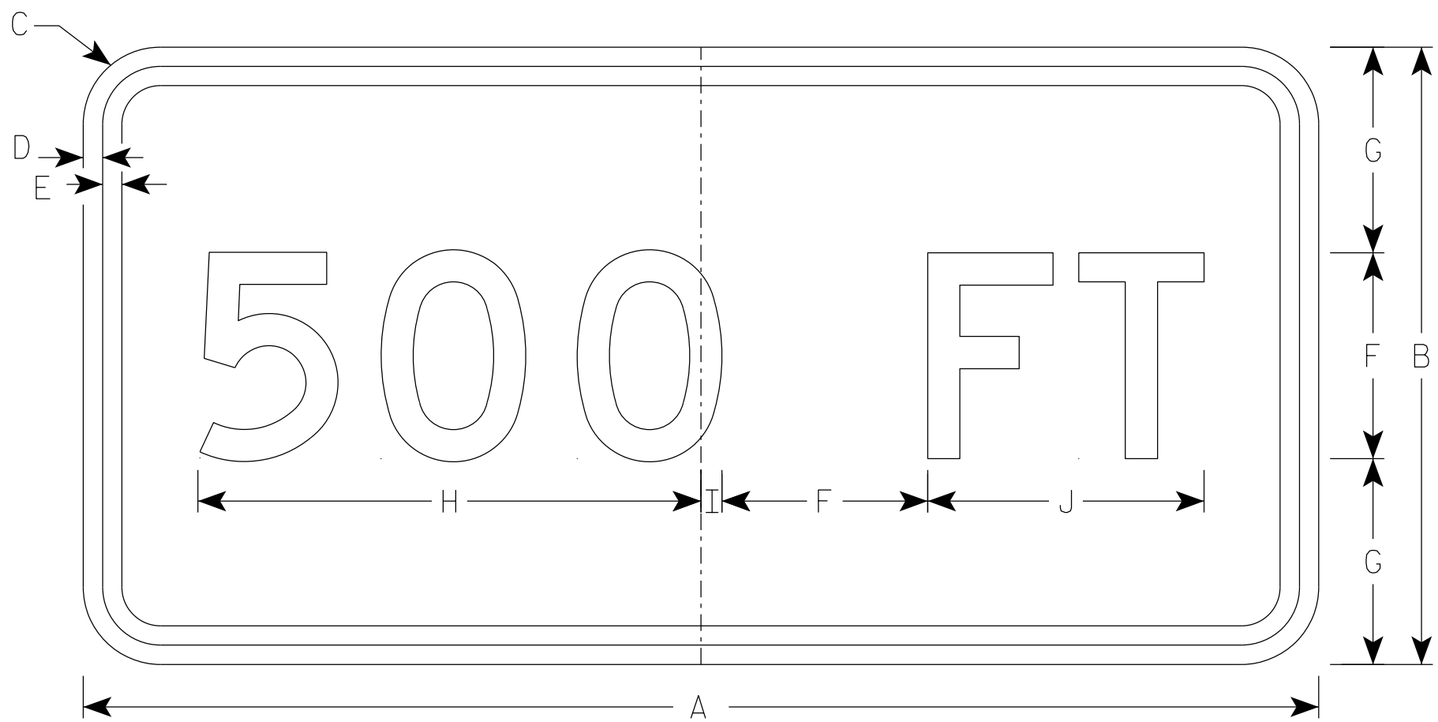

W16-2A

SIZE	A	B	C	D	E	F	G	H	I	J	K	L	M	N	O	P	Q	R	S	T	U	V	W	X	Y	Z	Area sq. ft.
1																											
2S	24	12	1 1/2	3/8	3/8	4	4	9 3/4	3/8	5 3/8																	2.0
2M	24	12	1 1/2	3/8	3/8	4	4	9 3/4	3/8	5 3/8																	2.0
3	30	18	1 1/2	3/8	1/2	5	5 1/2	12 1/4	1/2	6 3/4																	3.75
4	42	21	1 7/8	1/2	5/8	7	7	16 5/8	1 1/8	9 3/8																	6.13
5	42	21	1 7/8	1/2	5/8	7	7	16 5/8	1 1/8	9 3/8																	

STANDARD SIGN
W16-2A

WISCONSIN DEPT OF TRANSPORTATION

APPROVED Matthew R Rauch
for State Traffic Engineer

DATE 1/16/2024 PLATE NO. W16-2A.3

PROJECT NO:	HWY:	COUNTY:		SHEET NO: 253	E

NOTES

1. Sign is Type II - Type F Reflective
2. Color:
   Background - Orange
   Message - Black
3. Message Series - C
4. Corners may be square or rounded when base material is plywood but borders shall be rounded as shown. When base material is metal, the corners and borders shall be rounded.

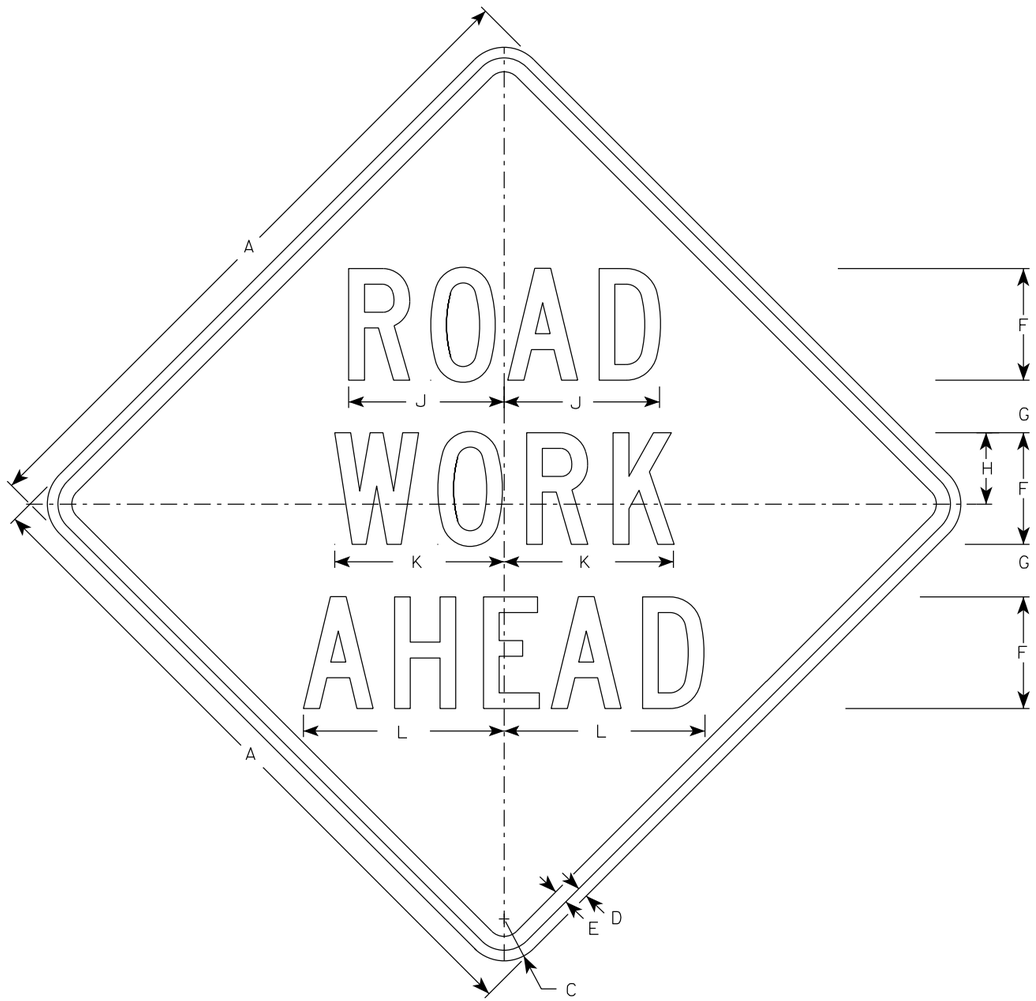

W20-1A

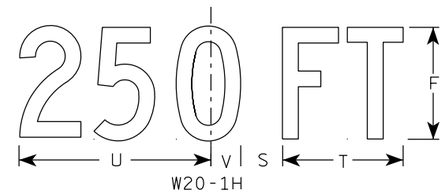

W20-1H

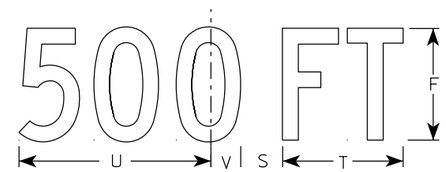

W20-1D

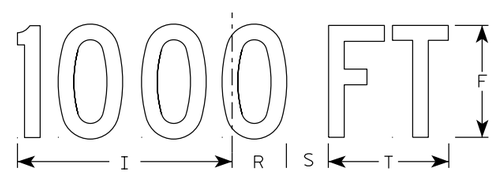

W20-1C

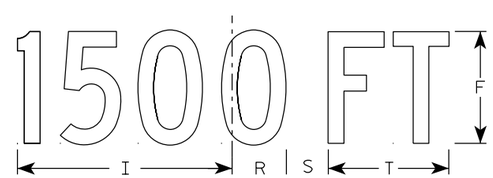

W20-1B

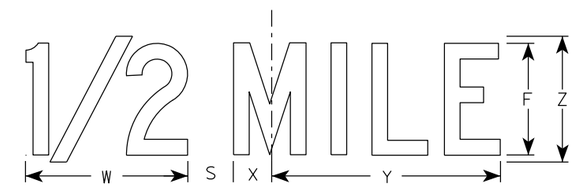

W20-1G

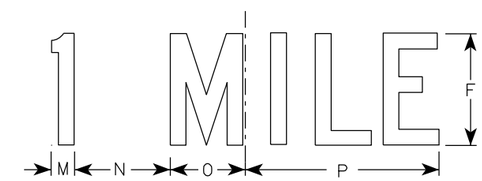

W20-1F

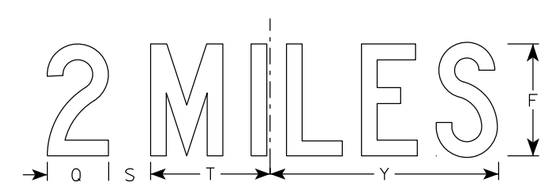

W20-1E

SIZE	A	B	C	D	E	F	G	H	I	J	K	L	M	N	O	P	Q	R	S	T	U	V	W	X	Y	Z	Area sq. ft.
1	36		2 1/4	5/8	3/4	5	2 5/8	3 1/4	10 1/8	7	7 5/8	8 7/8	1 1/8	4 1/2	3 1/2	9	3 1/4	2 1/2	2 1/4	5 5/8	9	1 3/8	8	1 3/4	10 3/4	6	9.0
2S	48		3	3/4	1	8	3 3/4	5 1/8	15 3/8	11 1/8	12 1/8	14 3/8	1 5/8	6 7/8	5 3/8	13 7/8	4 3/8	3 7/8	3	8 5/8	13 3/4	2 1/8	11 7/8	2 3/4	16 3/8	9	16.0
2M	48		3	3/4	1	8	3 3/4	5 1/8	15 3/8	11 1/8	12 1/8	14 3/8	1 5/8	6 7/8	5 3/8	13 7/8	4 3/8	3 7/8	3	8 5/8	13 3/4	2 1/8	11 7/8	2 3/4	16 3/8	9	16.0
3	48		3	3/4	1	8	3 3/4	5 1/8	15 3/8	11 1/8	12 1/8	14 3/8	1 5/8	6 7/8	5 3/8	13 7/8	4 3/8	3 7/8	3	8 5/8	13 3/4	2 1/8	11 7/8	2 3/4	16 3/8	9	16.0
4	48		3	3/4	1	8	3 3/4	5 1/8	15 3/8	11 1/8	12 1/8	14 3/8	1 5/8	6 7/8	5 3/8	13 7/8	4 3/8	3 7/8	3	8 5/8	13 3/4	2 1/8	11 7/8	2 3/4	16 3/8	9	16.0
5	48		3	3/4	1	8	3 3/4	5 1/8	15 3/8	11 1/8	12 1/8	14 3/8	1 5/8	6 7/8	5 3/8	13 7/8	4 3/8	3 7/8	3	8 5/8	13 3/4	2 1/8	11 7/8	2 3/4	16 3/8	9	16.0

STANDARD SIGN
W20-1A, B, C, D, E, F, G & H

WISCONSIN DEPT OF TRANSPORTATION

APPROVED Matthew R Rauch
For State Traffic Engineer

DATE 1/10/2024 PLATE NO. W20-1.12

PROJECT NO:

SHEET NO: 254 E

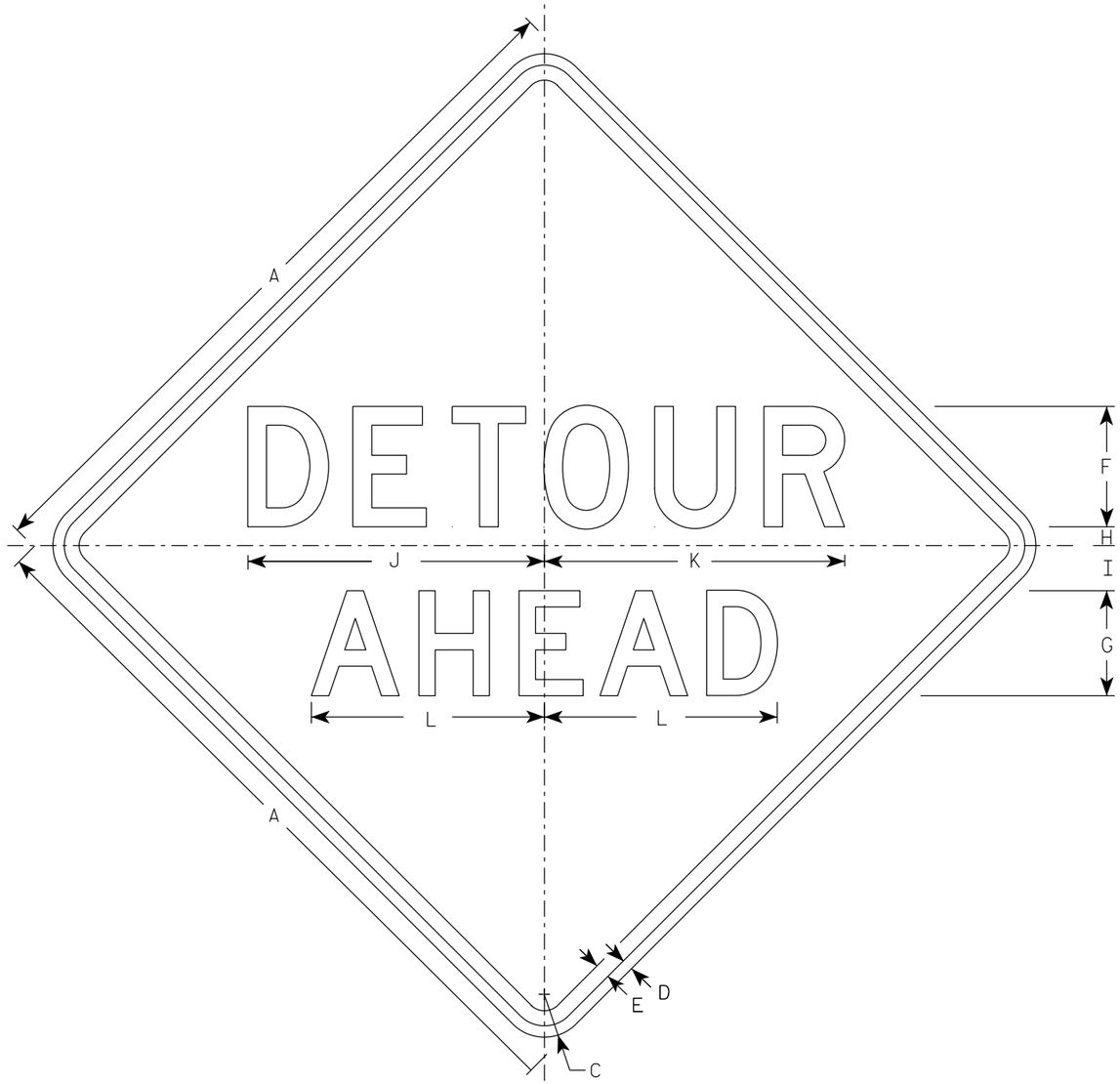

W20-2A

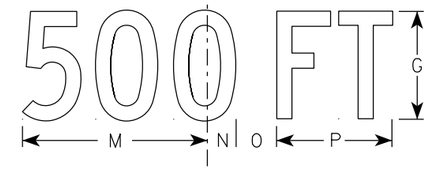

W20-2D

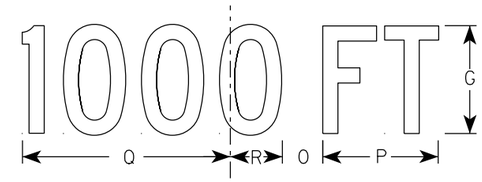

W20-2C

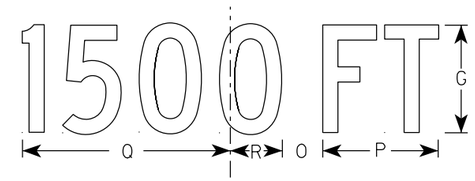

W20-2B

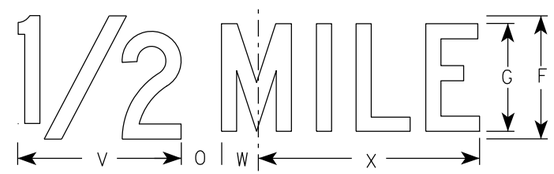

W20-2G

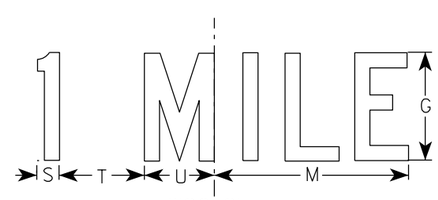

W20-2F

NOTES

1. Sign is Type II - Type F Reflective
2. Color:
   Background - Orange
   Message - Black
3. Message Series - See note 5
4. Corners may be square or rounded when base material is plywood but borders shall be rounded as shown. When base material is metal, the corners and borders shall be rounded.
5. Line 1 is Series D.
   Line 2 is Series D for AHEAD and Series C for all other distances.

SIZE	A	B	C	D	E	F	G	H	I	J	K	L	M	N	O	P	Q	R	S	T	U	V	W	X	Y	Z	Area sq. ft.
1	36		2 1/4	5/8	3/4	6	5	1	2 1/4	14 3/4	15	11 5/8	9	1 3/8	1 7/8	5 5/8	10 1/8	2 1/2	1 1/8	4 1/2	3 1/2	8	1 3/4	10 3/4			9.0
2S	48		3	3/4	1	8	7	1 1/4	3	19 3/4	20	15 1/2	12	1 7/8	2 5/8	7 1/2	13 1/2	3 3/8	1 1/2	6	4 5/8	10 5/8	2 3/8	14 3/8			16.0
2M	48		3	3/4	1	8	7	1 1/4	3	19 3/4	20	15 1/2	12	1 7/8	2 5/8	7 1/2	13 1/2	3 3/8	1 1/2	6	4 5/8	10 5/8	2 3/8	14 3/8			16.0
3	48		3	3/4	1	8	7	1 1/4	3	19 3/4	20	15 1/2	12	1 7/8	2 5/8	7 1/2	13 1/2	3 3/8	1 1/2	6	4 5/8	10 5/8	2 3/8	14 3/8			16.0
4	48		3	3/4	1	8	7	1 1/4	3	19 3/4	20	15 1/2	12	1 7/8	2 5/8	7 1/2	13 1/2	3 3/8	1 1/2	6	4 5/8	10 5/8	2 3/8	14 3/8			16.0
5	48		3	3/4	1	8	7	1 1/4	3	19 3/4	20	15 1/2	12	1 7/8	2 5/8	7 1/2	13 1/2	3 3/8	1 1/2	6	4 5/8	10 5/8	2 3/8	14 3/8			16.0

STANDARD SIGN
W20-2A,B,C,D,F & G

WISCONSIN DEPT OF TRANSPORTATION

APPROVED Matthew R Rauch
For State Traffic Engineer

DATE 1/10/2024 PLATE NO. W20-2.7

PROJECT NO:	HWY:	COUNTY:		SHEET NO: 255	E

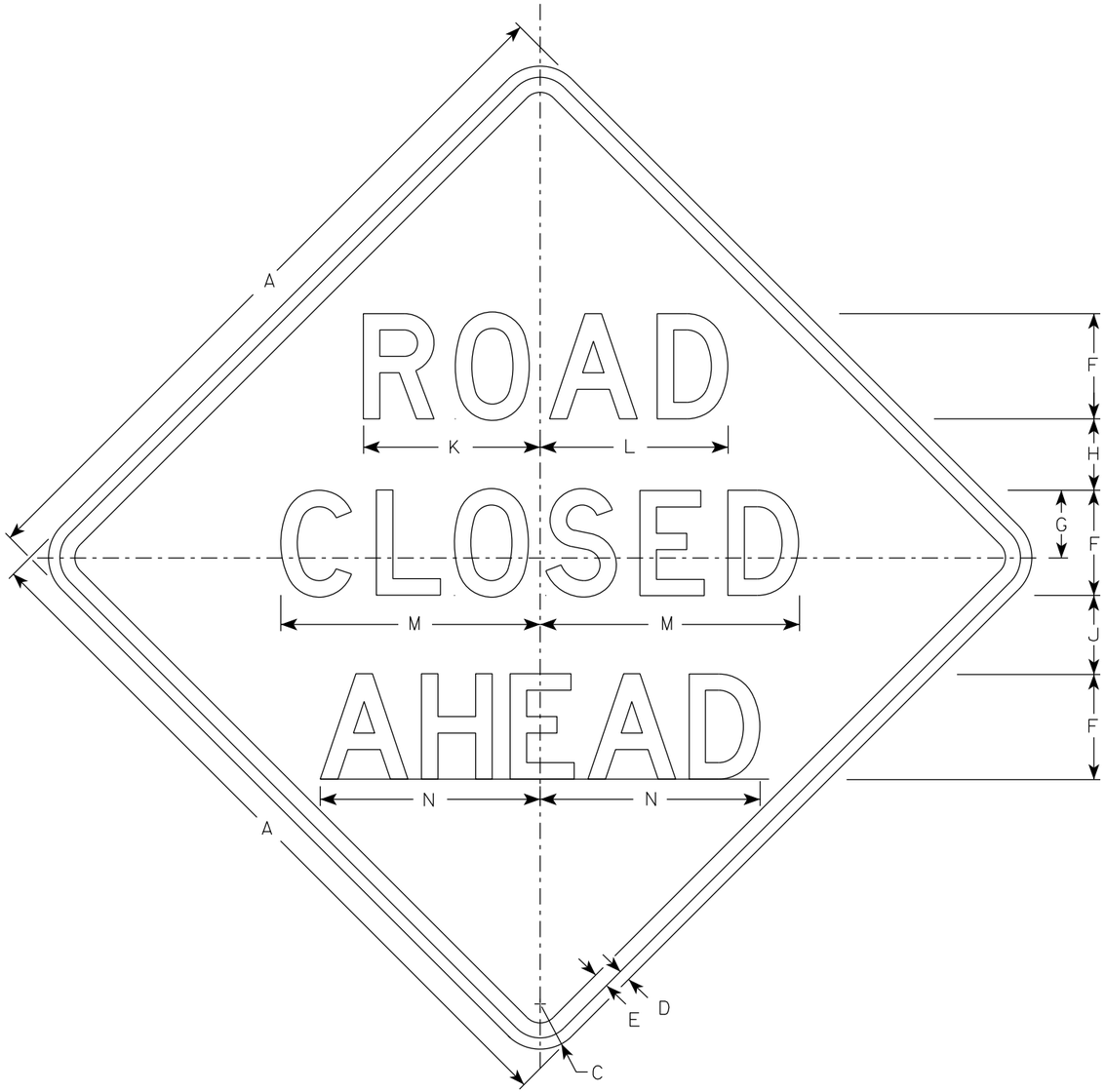

W20-3A

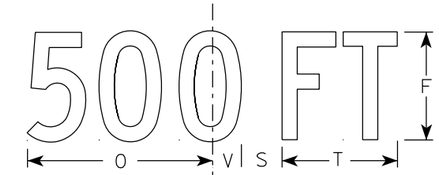

W20-3D

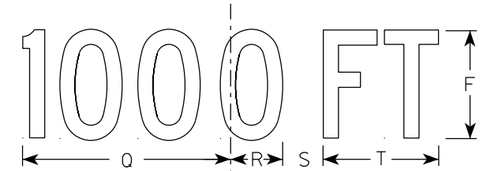

W20-3C

W20-3B

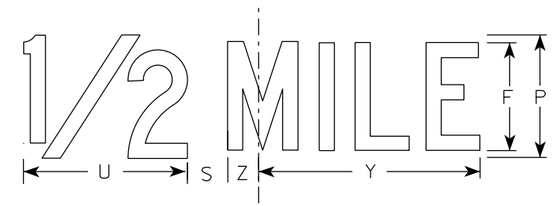

W20-3G

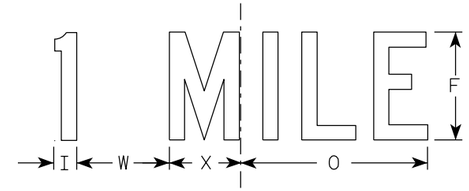

W20-3F

NOTES

1. Sign is Type II - Type F Reflective
2. Color:
   Background - Orange
   Message - Black
3. Message Series - see note 5
4. Corners may be square or rounded when base material is plywood but borders shall be rounded as shown. When base material is metal, the corners and borders shall be rounded.
5. Lines 1 and 2 are Series D.
   Line 3 is Series D for AHEAD and Series C for all other distances.

SIZE	A	B	C	D	E	F	G	H	I	J	K	L	M	N	O	P	Q	R	S	T	U	V	W	X	Y	Z	Area sq. ft.
1	36		2 1/4	5/8	3/4	5	3 3/8	3 1/2	1 1/8	4	8 3/8	8 7/8	12 1/2	11	9	6	10 1/8	2 1/2	1 7/8	5 5/8	8	1 3/8	4 1/2	3 1/2	10 3/4	1 3/4	9.0
2S	48		3	3/4	1	7	4 1/2	4 3/4	1 1/2	5 1/4	11 3/4	12 1/2	17 1/4	14 5/8	12	8	13 1/2	3 3/8	2 5/8	7 1/2	10 5/8	1 7/8	6	4 5/8	14 3/8	2 3/8	16.0
2M	48		3	3/4	1	7	4 1/2	4 3/4	1 1/2	5 1/4	11 3/4	12 1/2	17 1/4	14 5/8	12	8	13 1/2	3 3/8	2 5/8	7 1/2	10 5/8	1 7/8	6	4 5/8	14 3/8	2 3/8	16.0
3	48		3	3/4	1	7	4 1/2	4 3/4	1 1/2	5 1/4	11 3/4	12 1/2	17 1/4	14 5/8	12	8	13 1/2	3 3/8	2 5/8	7 1/2	10 5/8	1 7/8	6	4 5/8	14 3/8	2 3/8	16.0
4	48		3	3/4	1	7	4 1/2	4 3/4	1 1/2	5 1/4	11 3/4	12 1/2	17 1/4	14 5/8	12	8	13 1/2	3 3/8	2 5/8	7 1/2	10 5/8	1 7/8	6	4 5/8	14 3/8	2 3/8	16.0
5	48		3	3/4	1	7	4 1/2	4 3/4	1 1/2	5 1/4	11 3/4	12 1/2	17 1/4	14 5/8	12	8	13 1/2	3 3/8	2 5/8	7 1/2	10 5/8	1 7/8	6	4 5/8	14 3/8	2 3/8	16.0

STANDARD SIGN
W20-3A, B, C, D, F & G

WISCONSIN DEPT OF TRANSPORTATION

APPROVED Matthew R Rauch
for State Traffic Engineer

DATE 1/10/2024 PLATE NO. W20-3.8

PROJECT NO: | HWY: | COUNTY: | SHEET NO: 256 | E

DIVISION - ALI-SYENE ROAD NB PHASE 3

STATION	REAL STATION	DISTANCE	AREA (SF)				INCREMENTAL VOL (CY) (UNADJUSTED)				CUMULATIVE VOL (CY)		
			CUT	SALVAGED/UNUSABLE PAVEMENT MATERIAL	FILL	MARSH EXC	CUT NOTE 1	SALVAGED/UNUSABLE PAVEMENT MATERIAL NOTE 2	FILL NOTE 3	MARSH EXC	CUT 1.00 NOTE 1	EXPANDED FILL 1.25	MASS ORDINATE NOTE 4
670+36.00	67036.00	0.00	104.56	0.00	0.21	0.00	0	0	0	0	0	0	0
670+50.00	67050.00	14.00	104.56	0.00	0.21	4.20	54	0	0	1	54	0	54
670+58.73	67058.73	8.73	107.02	0.00	0.00	3.20	34	0	0	1	88	0	88
670+63.22	67063.22	4.49	105.54	0.00	0.00	1.70	18	0	0	0	106	0	106
671+00.00	67100.00	36.78	140.81	0.00	6.96	2.20	168	0	5	3	274	6	268
671+50.00	67150.00	50.00	103.63	0.00	5.93	3.70	226	0	12	5	500	21	479
671+65.04	67165.04	15.04	109.76	0.00	0.66	3.40	59	0	2	2	559	24	535
672+00.00	67200.00	34.96	130.76	0.00	8.37	3.50	156	0	6	4	715	31	684
672+50.00	67250.00	50.00	176.50	0.00	5.86	2.60	285	0	13	6	1,000	48	953
673+00.00	67300.00	50.00	238.78	0.00	15.37	7.70	385	0	20	10	1,385	73	1,313
673+50.00	67350.00	50.00	311.69	0.00	17.04	100.40	510	0	30	100	1,895	110	1,785
673+50.00	67350.00	0.00	311.69	0.00	17.04	100.40	0	0	0	0	1,895	110	1,785
674+00.00	67400.00	50.00	316.44	0.00	67.95	99.80	582	0	79	185	2,477	209	2,268
674+00.00	67400.00	0.00	316.44	0.00	67.95	99.80	0	0	0	0	2,477	209	2,268
674+50.00	67450.00	50.00	328.43	0.00	133.64	241.20	597	0	187	316	3,074	443	2,632
674+50.00	67450.00	0.00	328.43	0.00	133.64	241.20	0	0	0	0	3,074	443	2,632
674+92.32	67492.32	42.32	238.56	0.00	155.62	248.10	444	0	227	383	3,518	726	2,792
674+92.32	67492.32	0.00	238.56	0.00	155.62	248.10	0	0	0	0	3,518	726	2,792
675+00.00	67500.00	7.68	251.94	0.00	159.24	255.90	70	0	45	72	3,588	783	2,806
675+00.00	67500.00	0.00	251.94	0.00	159.24	255.90	0	0	0	0	3,588	783	2,806
675+16.63	67516.63	16.63	277.09	0.00	160.71	240.40	163	0	99	153	3,751	906	2,845
675+16.63	67516.63	0.00	277.09	0.00	160.71	240.40	0	0	0	0	3,751	906	2,845
675+40.95	67540.95	24.32	326.55	0.00	138.44	203.50	272	0	135	200	4,023	1,075	2,948
675+40.95	67540.95	0.00	326.55	0.00	138.44	203.50	0	0	0	0	4,023	1,075	2,948
675+50.00	67550.00	9.05	355.11	0.00	120.62	81.00	114	0	43	48	4,137	1,129	3,008
675+50.00	67550.00	0.00	355.11	0.00	120.62	81.00	0	0	0	0	4,137	1,129	3,008
675+84.80	67584.80	34.80	572.68	0.00	0.00	4.00	598	0	78	55	4,735	1,226	3,509
675+84.80	67584.80	0.00	572.68	0.00	0.00	4.00	0	0	0	0	4,735	1,226	3,509
676+00.00	67600.00	15.20	671.40	0.00	0.00	5.30	350	0	0	3	5,085	1,226	3,859
676+00.00	67600.00	0.00	671.40	0.00	0.00	5.30	0	0	0	0	5,085	1,226	3,859
676+50.00	67650.00	50.00	267.95	0.00	132.70	1.70	870	0	123	6	5,955	1,380	4,575
676+50.00	67650.00	0.00	267.95	0.00	132.70	1.70	0	0	0	0	5,955	1,380	4,575
677+00.00	67700.00	50.00	131.60	0.00	154.22	14.70	370	0	266	15	6,325	1,713	4,613
677+00.00	67700.00	0.00	131.60	0.00	154.22	14.70	0	0	0	0	6,325	1,713	4,613
677+50.00	67750.00	50.00	62.50	0.00	140.87	10.40	180	0	273	23	6,505	2,054	4,451
677+50.00	67750.00	0.00	62.50	0.00	140.87	10.40	0	0	0	0	6,505	2,054	4,451
678+00.00	67800.00	50.00	95.34	0.00	41.16	19.00	146	0	169	27	6,651	2,265	4,386
678+50.00	67850.00	50.00	197.78	0.00	0.03	0.00	271	0	38	18	6,922	2,313	4,610
679+00.04	67900.04	50.04	105.75	0.00	1.52	0.00	281	0	1	0	7,203	2,314	4,889
679+50.00	67950.00	49.96	91.34	0.00	2.63	0.00	182	0	4	0	7,385	2,319	5,066
679+81.54	67981.54	31.54	51.74	0.00	33.72	59.40	84	0	21	35	7,469	2,345	5,124
680+00.00	68000.00	18.46	45.75	0.00	53.06	137.00	33	0	30	67	7,502	2,383	5,120
680+50.00	68050.00	50.00	128.35	0.00	33.72	143.40	161	0	80	260	7,663	2,483	5,181
681+00.00	68100.00	50.00	112.27	0.00	35.49	131.30	223	0	64	254	7,886	2,563	5,324
681+50.00	68150.00	50.00	71.46	0.00	40.01	98.50	170	0	70	213	8,056	2,650	5,406
682+00.00	68200.00	50.00	72.99	0.00	43.17	116.90	134	0	77	199	8,190	2,746	5,444
682+50.00	68250.00	50.00	39.42	0.00	26.68	70.00	104	0	65	173	8,294	2,828	5,467
683+00.00	68300.00	50.00	42.15	0.00	16.43	52.70	76	0	40	114	8,370	2,878	5,493
683+50.00	68350.00	50.00	51.30	0.00	11.46	44.00	87	0	26	90	8,457	2,910	5,547
684+00.00	68400.00	50.00	60.47	0.00	8.39	32.00	103	0	18	70	8,560	2,933	5,628
684+29.00	68429.00	29.00	60.47	0.00	8.39	0.00	65	0	9	17	8,625	2,944	5,681

DIVISION - ALI-MCCOY ROAD EB

STATION	REAL STATION	DISTANCE	AREA (SF)				INCREMENTAL VOL (CY) (UNADJUSTED)				CUMULATIVE VOL (CY)		
			CUT	SALVAGED/UNUSABLE PAVEMENT MATERIAL	FILL	MARSH EXC	CUT NOTE 1	SALVAGED/UNUSABLE PAVEMENT MATERIAL NOTE 2	FILL NOTE 3	MARSH EXC	CUT 1.00 NOTE 1	EXPANDED FILL 1.25	MASS ORDINATE NOTE 4
500+05.00	50005.00	0.00	45.74	0.00	1.16	0.00	0	0	0	0	0	0	0
500+50.00	50050.00	45.00	44.00	0.00	1.16	121.50	0	0	0	101	0	0	0
500+77.36	50077.36	27.36	6.29	0.00	42.69	187.60	25	0	22	157	25	28	-3
501+00.00	50100.00	22.64	89.63	0.00	41.66	378.20	40	0	35	237	65	71	-6
501+24.97	50124.97	24.97	115.98	0.00	96.90	230.10	95	0	64	281	160	151	9
501+50.33	50150.33	25.36	175.05	0.00	58.18	133.60	137	0	73	171	297	243	55
501+58.00	50158.00	7.67	210.32	0.00	17.76	148.60	55	0	11	40	352	256	96
501+81.56	50181.56	23.56	290.57	0.00	2.55	0.00	219	0	9	65	571	268	304
501+87.89	50187.89	6.33	301.27	0.00	0.11	0.00	69	0	0	0	640	268	373
502+00.00	50200.00	12.11	316.20	0.00	0.00	0.00	138	0	0	0	778	268	511
502+06.94	50206.94	6.94	440.60	0.00	0.00	0.00	97	0	0	0	875	268	608
502+28.53	50228.53	21.59	391.00	0.00	0.00	0.00	332	0	0	0	1,207	268	940
502+38.29	50238.29	9.76	364.22	0.00	0.01	0.00	136	0	0	0	1,343	268	1,076
502+50.00	50250.00	11.71	342.05	0.00	0.00	0.00	153	0	0	0	1,496	268	1,229
502+55.26	50255.26	5.26	332.04	0.00	0.00	0.00	66	0	0	0	1,562	268	1,295
502+60.00	50260.00	4.74	323.85	0.00	0.00	0.00	58	0	0	0	1,620	268	1,353
503+00.00	50300.00	40.00	261.55	0.00	0.00	0.00	434	0	0	0	2,054	268	1,787
503+50.00	50350.00	50.00	207.37	0.00	0.33	0.00	434	0	0	0	2,488	268	2,221
504+00.00	50400.00	50.00	173.91	0.00	0.00	0.00	353	0	0	0	2,841	268	2,574
504+20.61	50420.61	20.61	159.75	0.00	0.00	0.00	127	0	0	0	2,968	268	2,701
504+50.00	50450.00	29.39	147.12	0.00	0.00	0.00	167	0	0	0	3,135	268	2,868
505+00.00	50500.00	50.00	117.58	0.00	0.00	0.00	245	0	0	0	3,380	268	3,113
505+50.00	50550.00	50.00	101.20	0.00	0.00	0.00	203	0	0	0	3,583	268	3,316
506+00.00	50600.00	50.00	92.15	0.00	0.00	0.00	179	0	0	0	3,762	268	3,495
506+28.98	50628.98	28.98	92.10	0.00	0.00	0.00	99	0	0	0	3,861	268	3,594
506+50.00	50650.00	21.02	94.35	0.00	0.00	0.00	73	0	0	0	3,934	268	3,667
506+55.00	50655.00	5.00	94.35	0.00	0.00	0.00	17	0	0	0	3,951	268	3,684

DIVISION - ALI-CAPITAL CITY TRAIL

STATION	REAL STATION	DISTANCE	AREA (SF)				INCREMENTAL VOL (CY) (UNADJUSTED)				CUMULATIVE VOL (CY)		
			CUT	SALVAGED/UNUSABLE PAVEMENT MATERIAL	FILL	MARSH EXC	CUT NOTE 1	SALVAGED/UNUSABLE PAVEMENT MATERIAL NOTE 2	FILL NOTE 3	MARSH EXC	CUT 1.00 NOTE 1	EXPANDED FILL 1.25	MASS ORDINATE NOTE 4
103+29.00	10329.00	0.00	17.02	0.00	0.00	0.00	0	0	0	0	0	0	0
103+50.00	10350.00	21.00	17.02	0.00	0.00	0.00	13	0	0	0	13	0	13
103+75.00	10375.00	25.00	12.90	0.00	0.00	0.00	14	0	0	0	27	0	27
104+00.00	10400.00	25.00	21.45	0.00	0.00	0.00	16	0	0	0	43	0	43
105+00.00	10500.00	100.00	11.18	0.00	0.00	0.00	60	0	0	0	103	0	103
105+50.00	10550.00	50.00	19.59	0.00	0.00	0.00	28	0	0	0	131	0	131
105+75.00	10575.00	25.00	15.54	0.00	0.03	0.00	16	0	0	0	147	0	147
105+75.00	10575.00	0.00	15.54	0.00	0.03	0.00	0	0	0	0	147	0	147

DIVISION - ALI-TRAILHEAD PARKING LOT DRIVEWAY

STATION	REAL STATION	DISTANCE	AREA (SF)				INCREMENTAL VOL (CY) (UNADJUSTED)				CUMULATIVE VOL (CY)		
			CUT	SALVAGED/UNUSABLE PAVEMENT MATERIAL	FILL	MARSH EXC	CUT	SALVAGED/UNUSABLE PAVEMENT MATERIAL	FILL	MARSH EXC	CUT 1.00	EXPANDED FILL 1.25	MASS ORDINATE
							NOTE 1	NOTE 2	NOTE 3		NOTE 1		NOTE 4
800+85.00	80085.00	0.00	47.29	0.00	2.02	0.00	0	0	0	0	0	0	0
801+00.00	80100.00	15.00	47.29	0.00	2.02	0.00	26	0	1	0	26	1	25
801+25.00	80125.00	25.00	23.39	0.00	2.67	16.90	33	0	2	8	59	4	55
801+50.00	80150.00	25.00	21.79	0.00	17.44	43.20	21	0	9	28	80	15	65
801+75.00	80175.00	25.00	4.91	0.00	16.55	33.80	12	0	16	36	92	35	57
802+00.00	80200.00	25.00	25.73	0.00	5.47	17.50	14	0	10	24	106	48	59
802+14.00	80214.00	14.00	25.73	0.00	5.47	17.50	13	0	3	9	119	51	68

NOTES:	
1 - CUT	CUT INCLUDES SALVAGED/UNUSABLE PAVEMENT MATERIAL
2 - SALVAGED/UNUSABLE PAVEMENT MATER	THIS DOES NOT SHOW UP IN CROSS SECTIONS
3 - FILL	DOES NOT INCLUDE UNUSABLE PAVEMENT EXC VOLUME
4 - MASS ORDINATE	MASS ORDINATE = CUT - SALVAGED/UNUSABLE MATERIAL - EXPANDED FILL

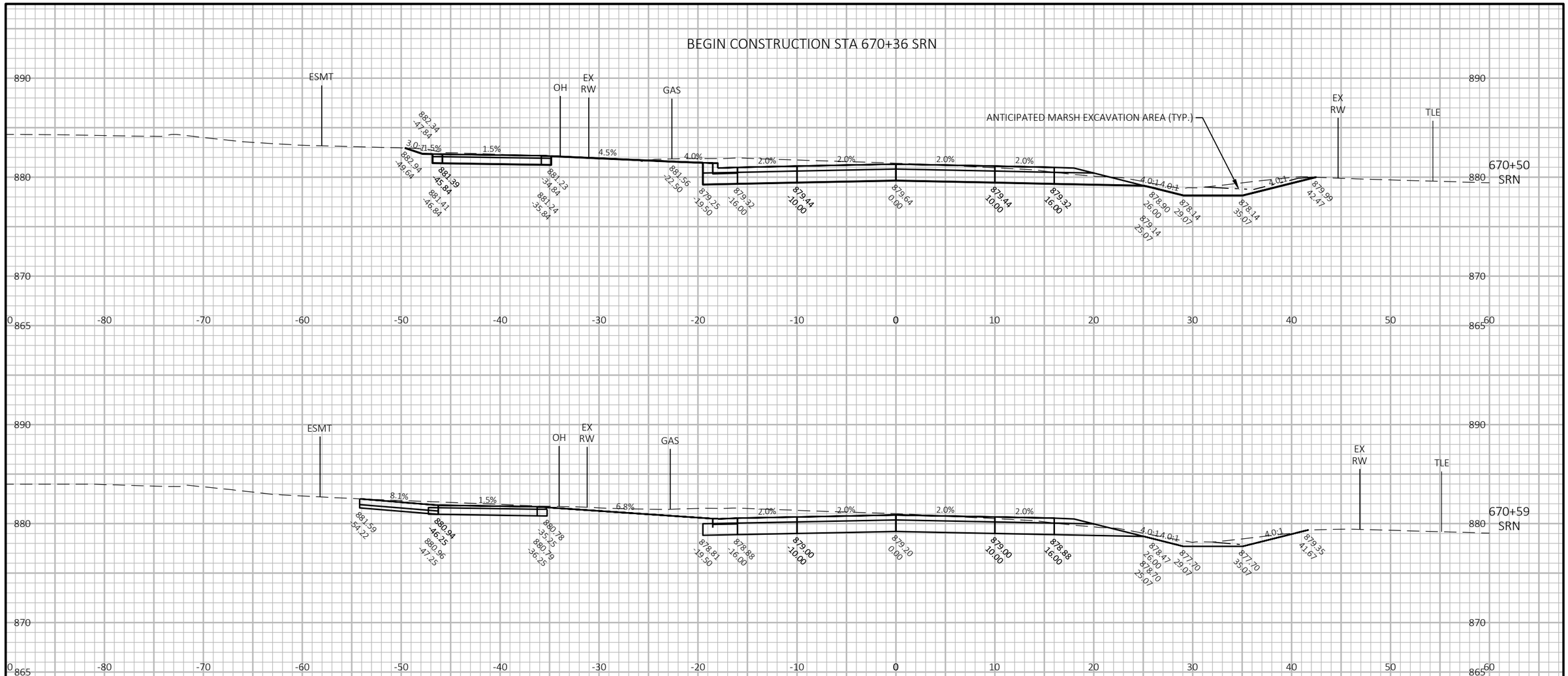

9

9

PROJECT NO: 5849-02-07	HWY: LOCAL STREET - SYENE ROAD	COUNTY: DANE	CROSS SECTIONS: SYENE ROAD	SHEET 260	E

FILE NAME : G:\FITCHBRG\20087-000 SYENE ROAD\CIVIL 3D\SHEETSPLAN\PHASE 3 SHEET FILES - W CLAYTON TO MCCOY\090101_XS_P3.DWG
LAYOUT NAME - SR1
PLOT DATE : 4/24/2024 1:49 PM
PLOT BY : BRIAN ST. VINCENT
PLOT NAME :
PLOT SCALE : 1 IN:10 FT HORZ. / 1 IN:10 FT VERT.
WISDOT/CADDS SHEET 49

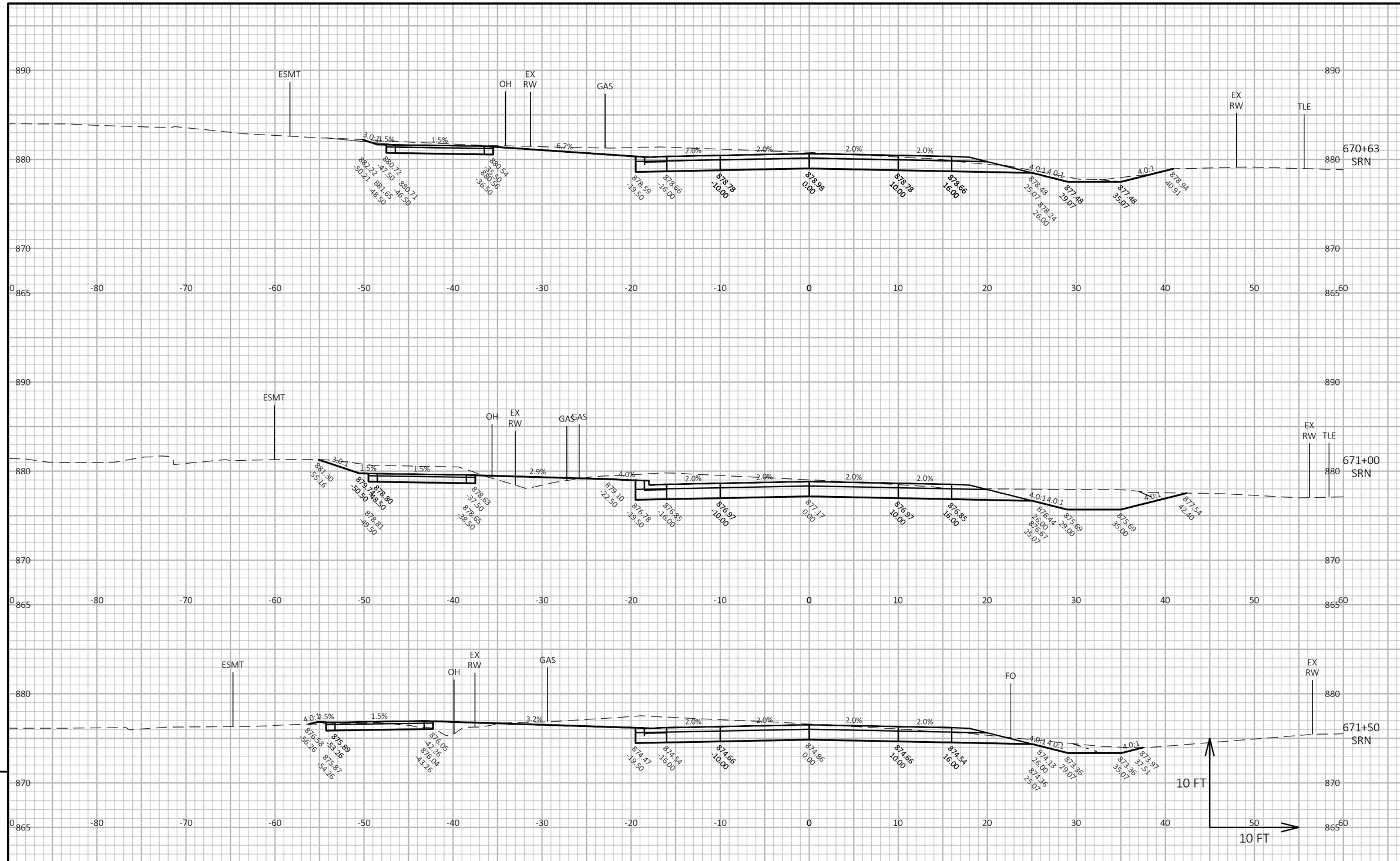

9

9

PROJECT NO: 5849-02-07	HWY: LOCAL STREET - SYENE ROAD	COUNTY: DANE	CROSS SECTIONS: SYENE ROAD	SHEET 261	E

FILE NAME : G:\FITCHBRG\20087-000 SYENE ROAD\CIVIL 3D\SHEETSPLAN\PHASE 3 SHEET FILES - W CLAYTON TO MCCOY\090101_XS_P3.DWG
LAYOUT NAME - SR2
PLOT DATE : 4/24/2024 1:49 PM
PLOT BY : BRIAN ST. VINCENT
PLOT NAME :
PLOT SCALE : 1 IN:10 FT HORZ. / 1 IN:10 FT VERT.
WISDOT/CADDS SHEET 49

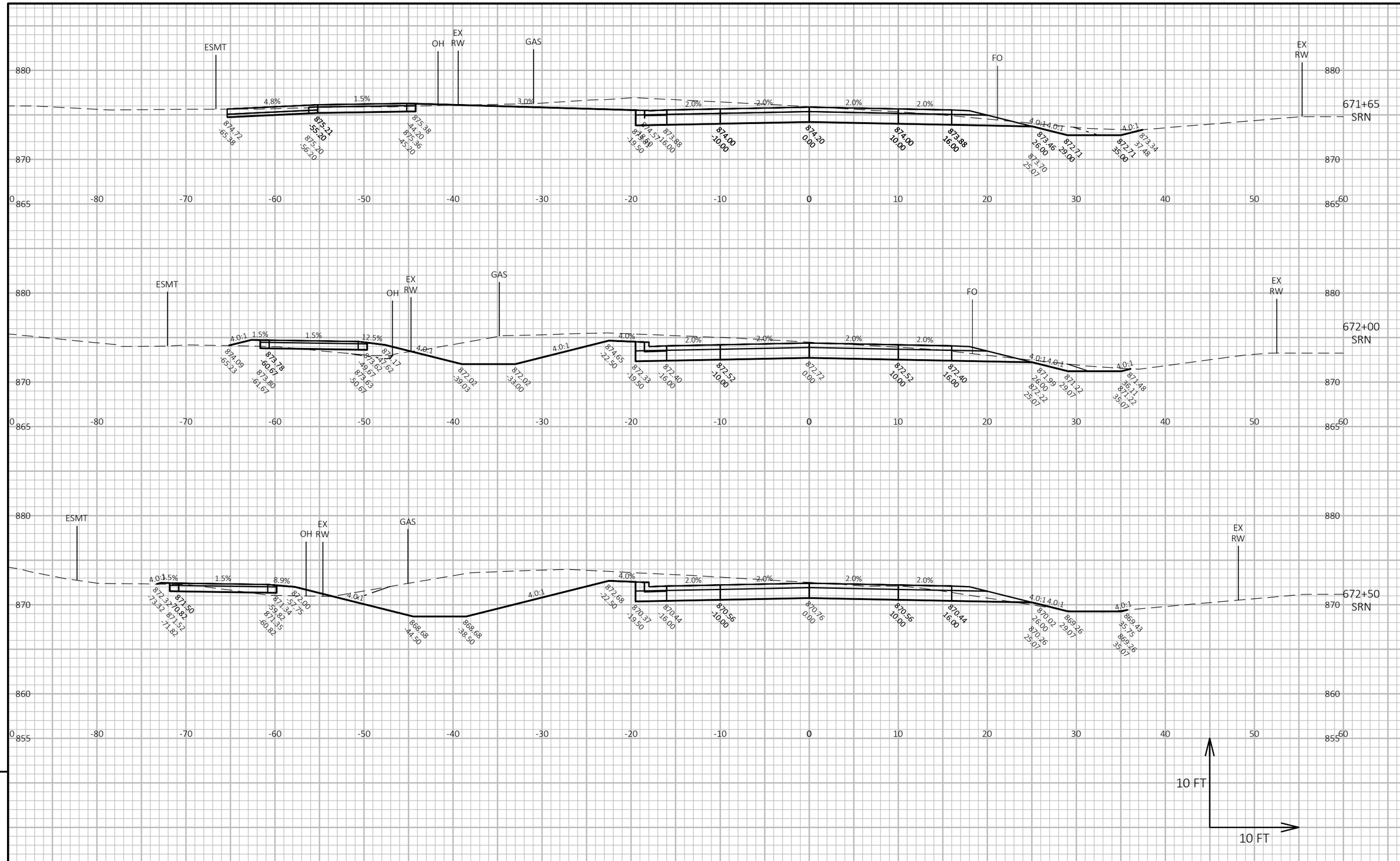

9

9

PROJECT NO: 5849-02-07	HWY: LOCAL STREET - SYENE ROAD	COUNTY: DANE	CROSS SECTIONS: SYENE ROAD	SHEET 262	E

FILE NAME : G:\FITCHBRG\20087-000 SYENE ROAD\CIVIL 3D\SHEETSPLAN\PHASE 3 SHEET FILES - W CLAYTON TO MCCOY\090101_XS_P3.DWG
LAYOUT NAME - SR3
PLOT DATE : 4/24/2024 1:49 PM
PLOT BY : BRIAN ST. VINCENT
PLOT NAME :
PLOT SCALE : 1 IN:10 FT HORZ. / 1 IN:10 FT VERT.
WISDOT/CADDS SHEET 49

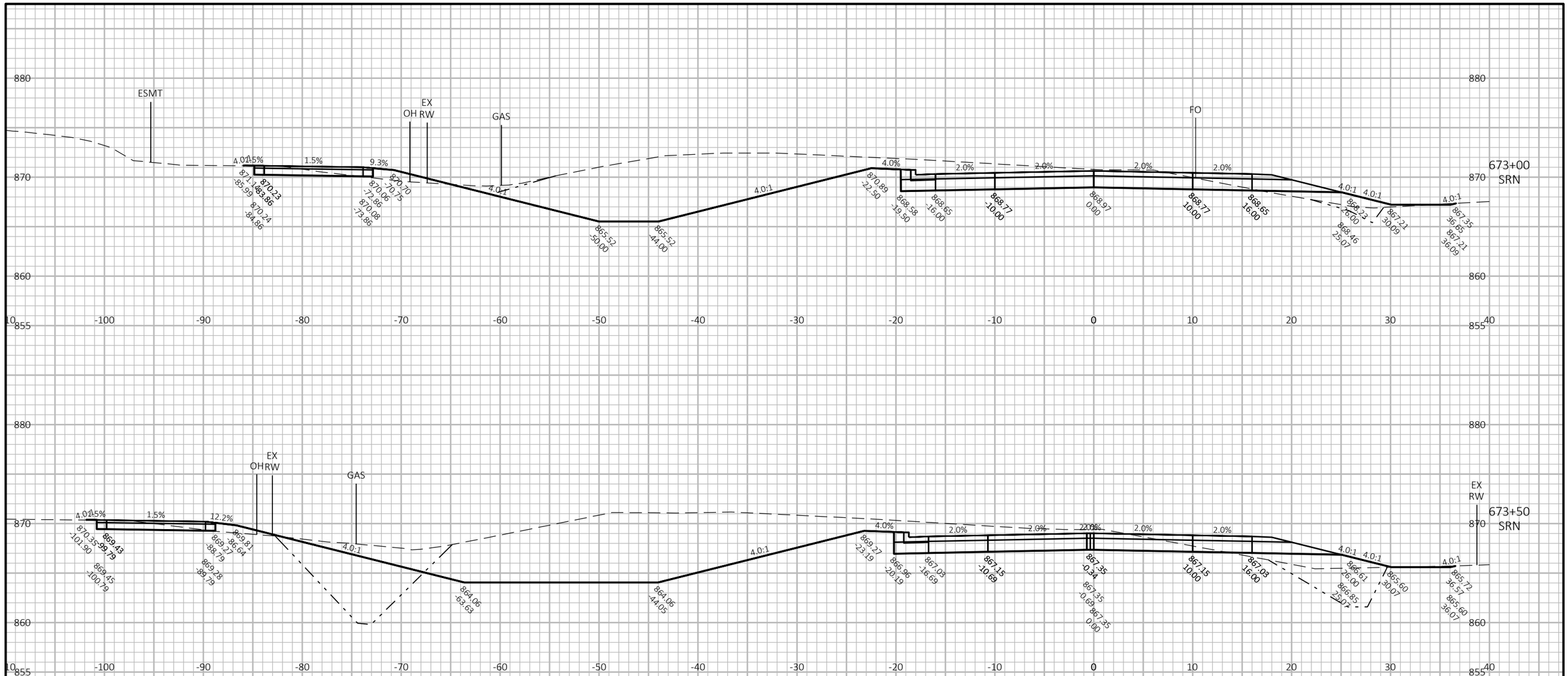

9

9

PROJECT NO: 5849-02-07	HWY: LOCAL STREET - SYENE ROAD	COUNTY: DANE	CROSS SECTIONS: SYENE ROAD	SHEET 263	E

FILE NAME : G:\FITCHBRG\20087-000 SYENE ROAD\CIVIL 3D\SHEETSPLAN\PHASE 3 SHEET FILES - W CLAYTON TO MCCOY\090101_XS_P3.DWG
LAYOUT NAME - SR4
PLOT DATE : 4/24/2024 1:49 PM
PLOT BY : BRIAN ST. VINCENT
PLOT NAME :
PLOT SCALE : 1 IN:10 FT HORZ. / 1 IN:10 FT VERT.
WISDOT/CADDS SHEET 49

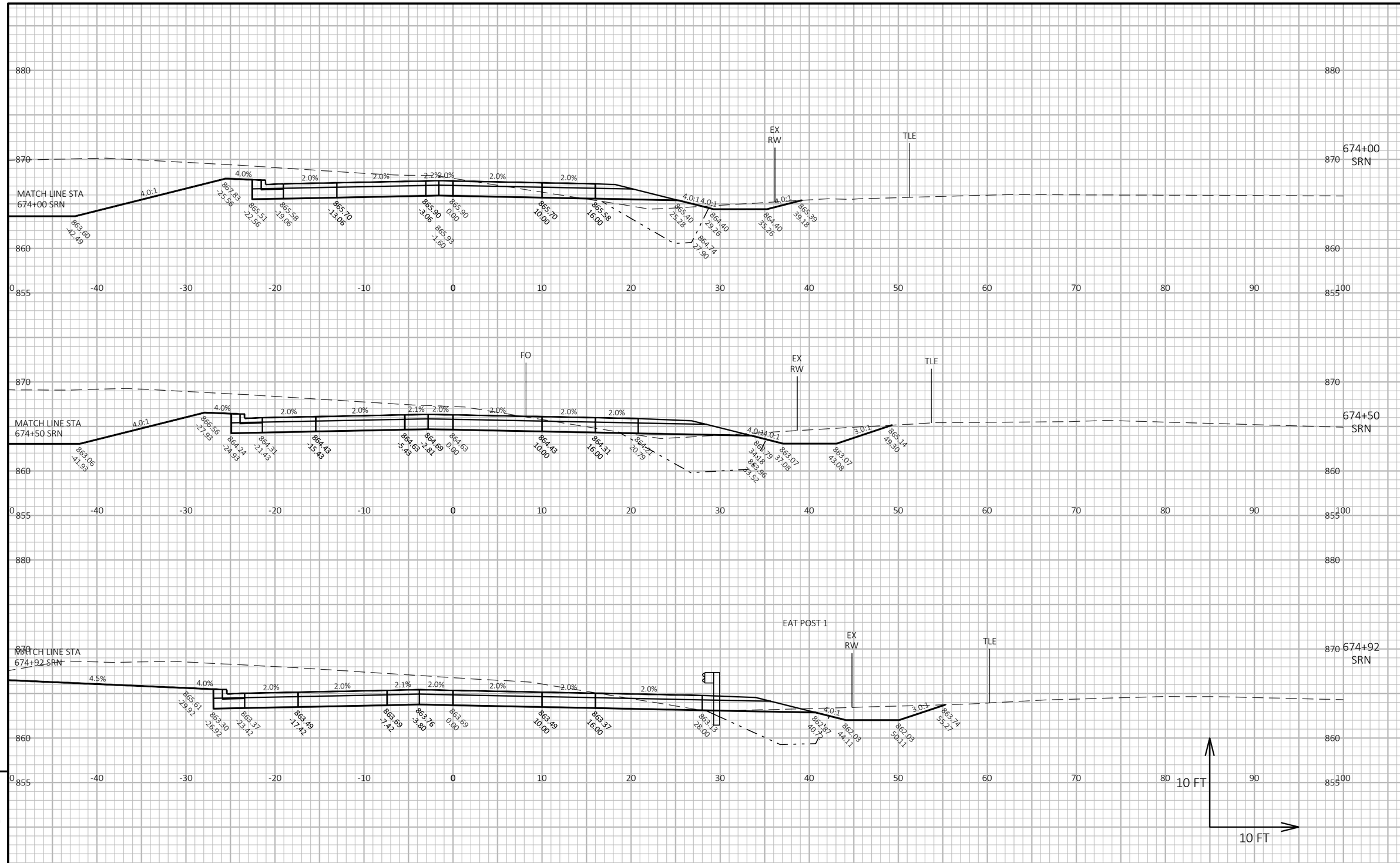

PROJECT NO: 5849-02-07	HWY: LOCAL STREET - SYENE ROAD	COUNTY: DANE	CROSS SECTIONS: SYENE ROAD	SHEET 264	E

FILE NAME : G:\FITCHBRG\20087-000 SYENE ROAD\CIVIL 3D\SHEETSPLAN\PHASE 3 SHEET FILES - W CLAYTON TO MCCOY\090101_XS_P3.DWG
LAYOUT NAME - SR5
PLOT DATE : 4/24/2024 1:49 PM PLOT BY : BRIAN ST. VINCENT PLOT NAME : **PLOT SCALE :** 1 IN:10 FT HORZ. / 1 IN:10 FT VERT.
WISDOT/CADDS SHEET 49

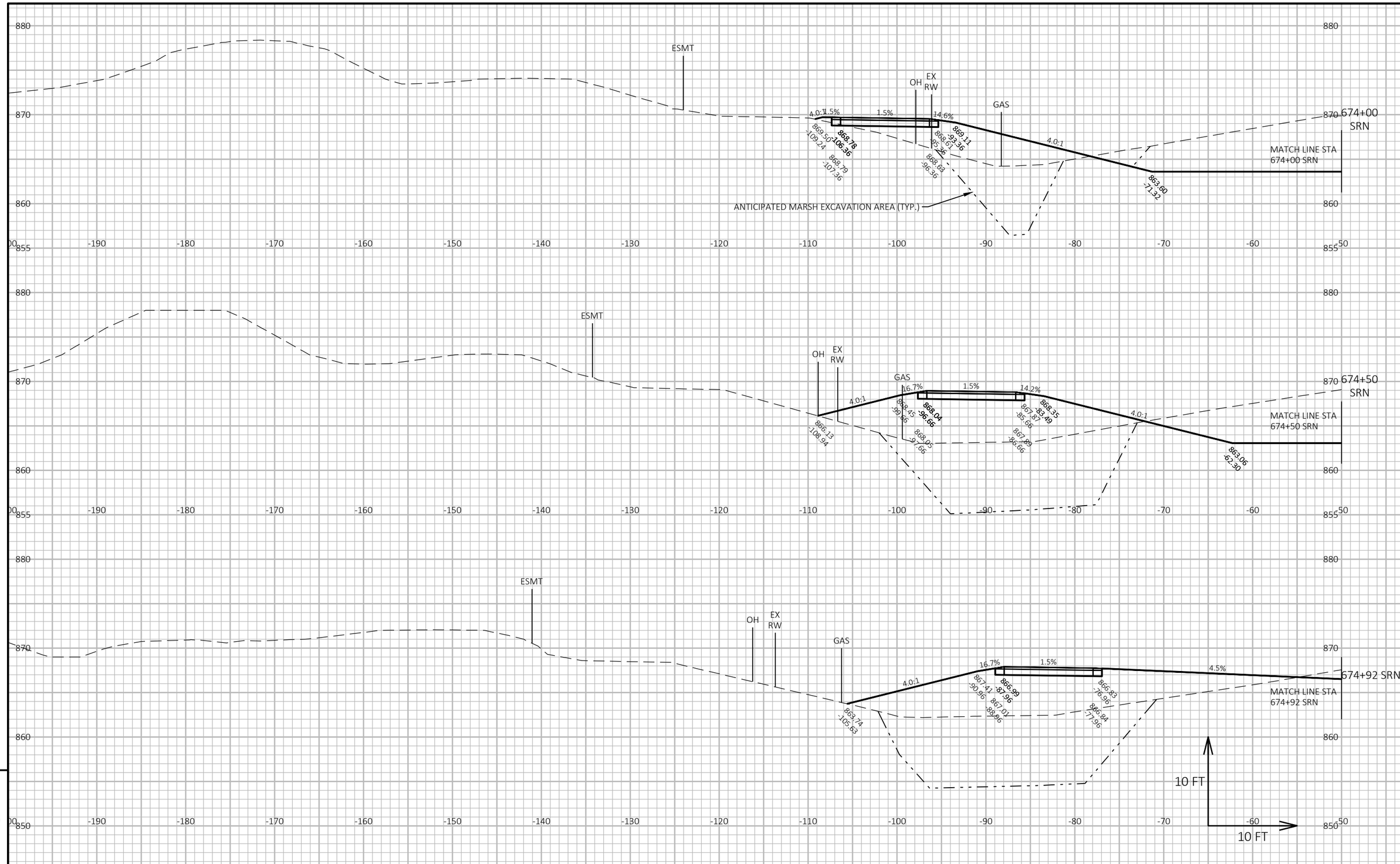

9

9

PROJECT NO: 5849-02-07	HWY: LOCAL STREET - SYENE ROAD	COUNTY: DANE	CROSS SECTIONS: SYENE ROAD	SHEET 265	E

FILE NAME : G:\FITCHBRG\20087-000 SYENE ROAD\CIVIL 3D\SHEETSPLAN\PHASE 3 SHEET FILES - W CLAYTON TO MCCOY\090101_XS_P3.DWG
LAYOUT NAME - SR5 (2)
PLOT DATE : 4/24/2024 1:50 PM
PLOT BY : BRIAN ST. VINCENT
PLOT NAME :
PLOT SCALE : 1 IN:10 FT HORZ. / 1 IN:10 FT VERT.
WISDOT/CADDS SHEET 49

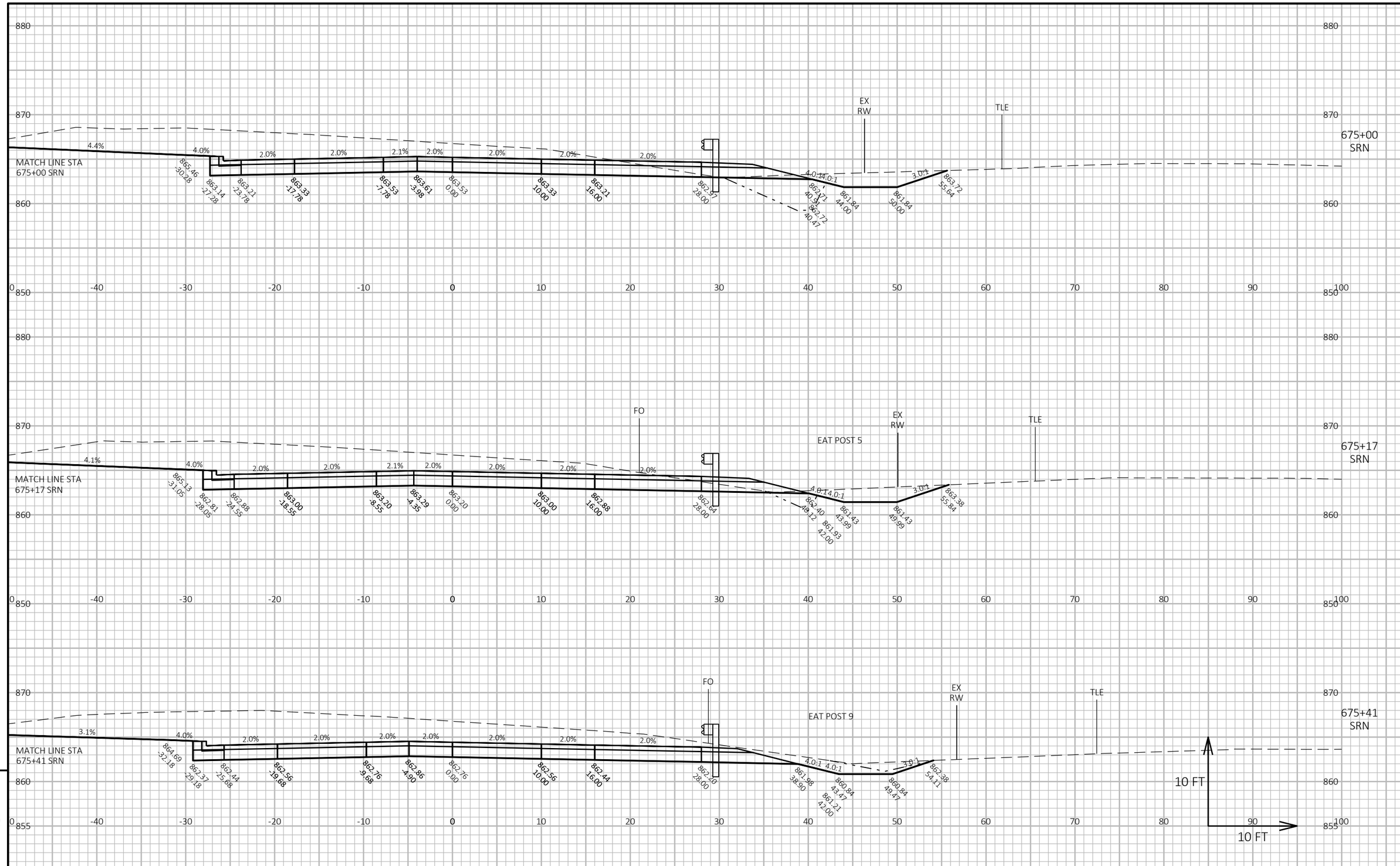

9

9

PROJECT NO: 5849-02-07	HWY: LOCAL STREET - SYENE ROAD	COUNTY: DANE	CROSS SECTIONS: SYENE ROAD	SHEET 266	E

FILE NAME : G:\FITCHBRG\20087-000 SYENE ROAD\CIVIL 3D\SHEETSPLAN\PHASE 3 SHEET FILES - W CLAYTON TO MCCOY\090101_XS_P3.DWG
LAYOUT NAME - SR6
PLOT DATE : 4/24/2024 1:50 PM
PLOT BY : BRIAN ST. VINCENT
PLOT NAME :
PLOT SCALE : 1 IN:10 FT HORZ. / 1 IN:10 FT VERT.
WISDOT/CADDS SHEET 49

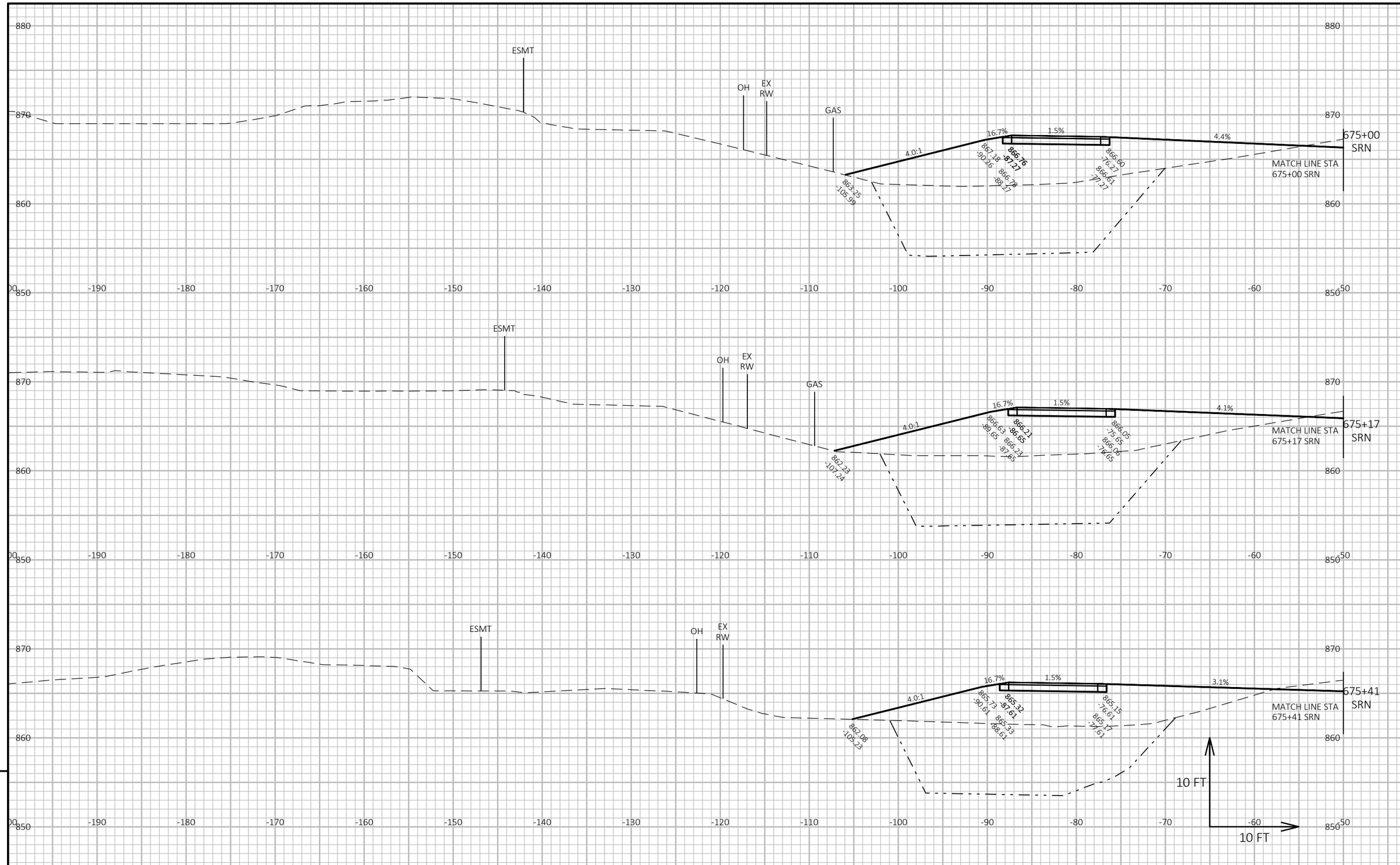

9

9

PROJECT NO: 5849-02-07	HWY: LOCAL STREET - SYENE ROAD	COUNTY: DANE	CROSS SECTIONS: SYENE ROAD	SHEET 267	E

FILE NAME : G:\FITCHBRG\20087-000 SYENE ROAD\CIVIL 3D\SHEETSPLAN\PHASE 3 SHEET FILES - W CLAYTON TO MCCOY\090101_XS_P3.DWG
LAYOUT NAME - SR6 (3)
PLOT DATE : 4/24/2024 1:50 PM PLOT BY : BRIAN ST. VINCENT PLOT NAME : **PLOT SCALE :** 1 IN:10 FT HORZ. / 1 IN:10 FT VERT.

WISDOT/CADDS SHEET 49

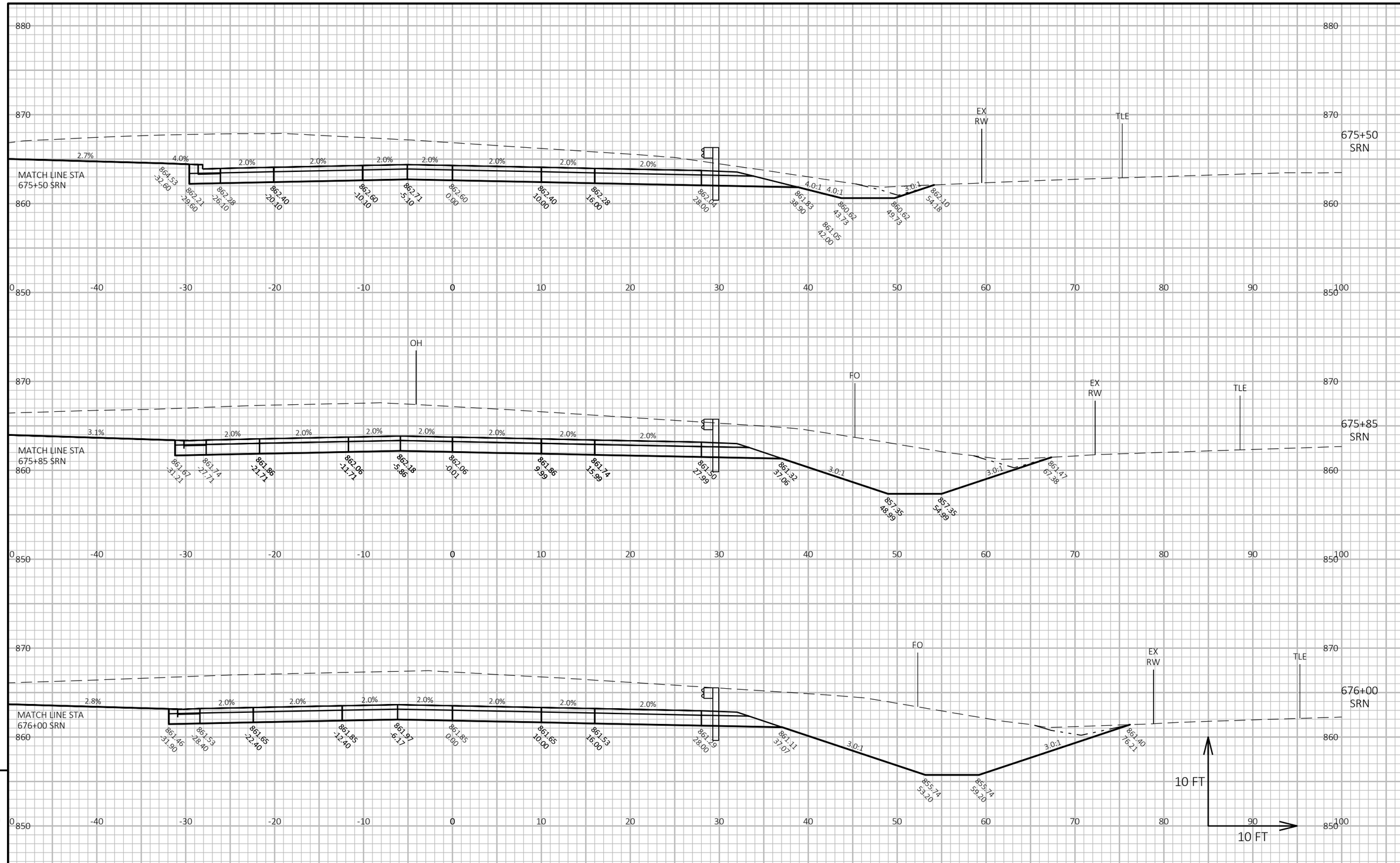

PROJECT NO: 5849-02-07	HWY: LOCAL STREET - SYENE ROAD	COUNTY: DANE	CROSS SECTIONS: SYENE ROAD	SHEET 268	E

FILE NAME : G:\FITCHBRG\20087-000 SYENE ROAD\CIVIL 3D\SHEETSPLAN\PHASE 3 SHEET FILES - W CLAYTON TO MCCOY\090101_XS_P3.DWG
LAYOUT NAME - SR7
PLOT DATE : 4/24/2024 1:50 PM PLOT BY : BRIAN ST. VINCENT PLOT NAME : **PLOT SCALE :** 1 IN:10 FT HORZ. / 1 IN:10 FT VERT.

WISDOT/CADDS SHEET 49

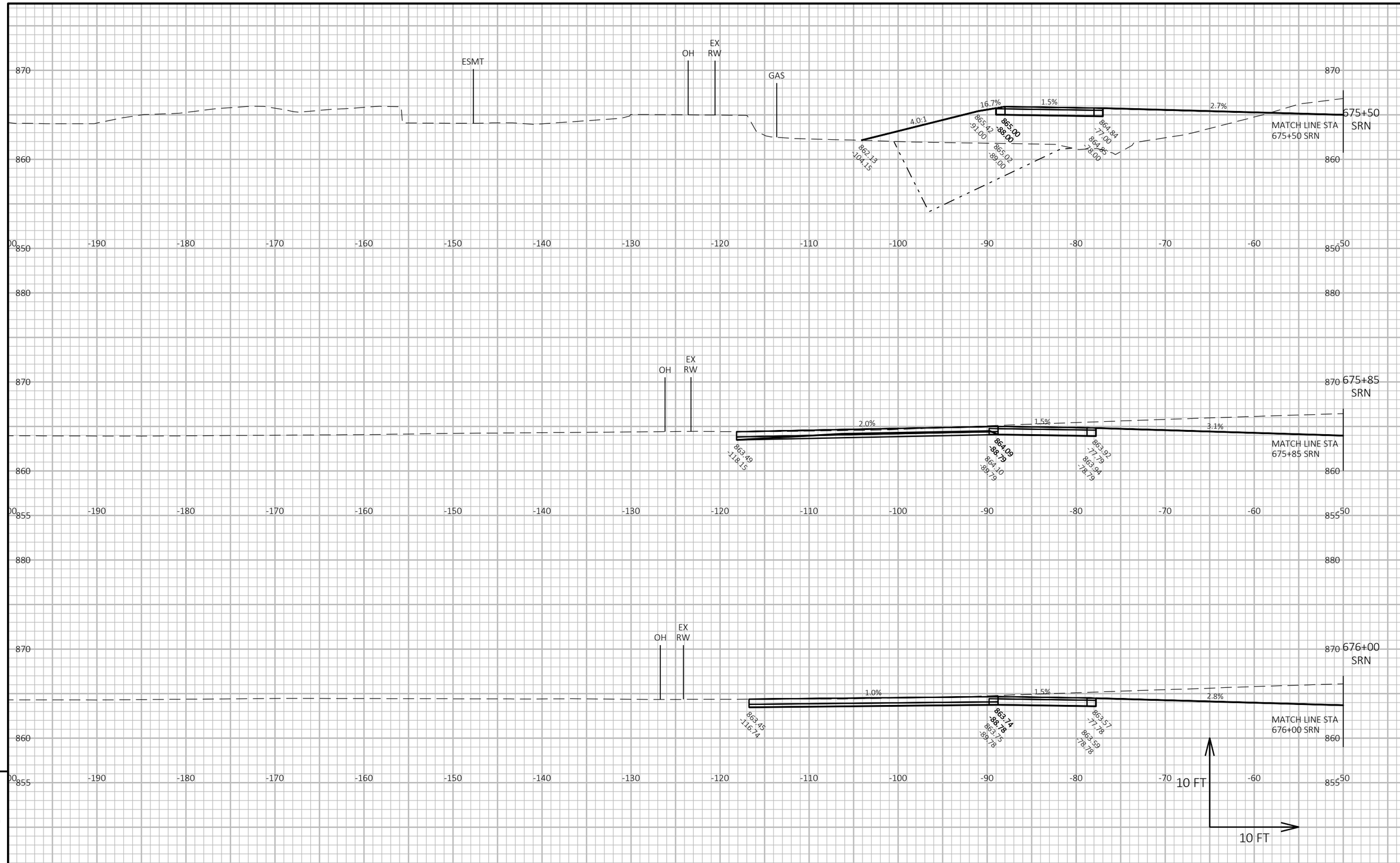

9

9

PROJECT NO: 5849-02-07	HWY: LOCAL STREET - SYENE ROAD	COUNTY: DANE	CROSS SECTIONS: SYENE ROAD	SHEET 269	E

FILE NAME : G:\FITCHBRG\20087-000 SYENE ROAD\CIVIL 3D\SHEETSPLAN\PHASE 3 SHEET FILES - W CLAYTON TO MCCOY\090101_XS_P3.DWG
LAYOUT NAME - SR7 (4)
PLOT DATE : 4/24/2024 1:50 PM PLOT BY : BRIAN ST. VINCENT PLOT NAME : **PLOT SCALE :** 1 IN:10 FT HORZ. / 1 IN:10 FT VERT.
WISDOT/CADDS SHEET 49

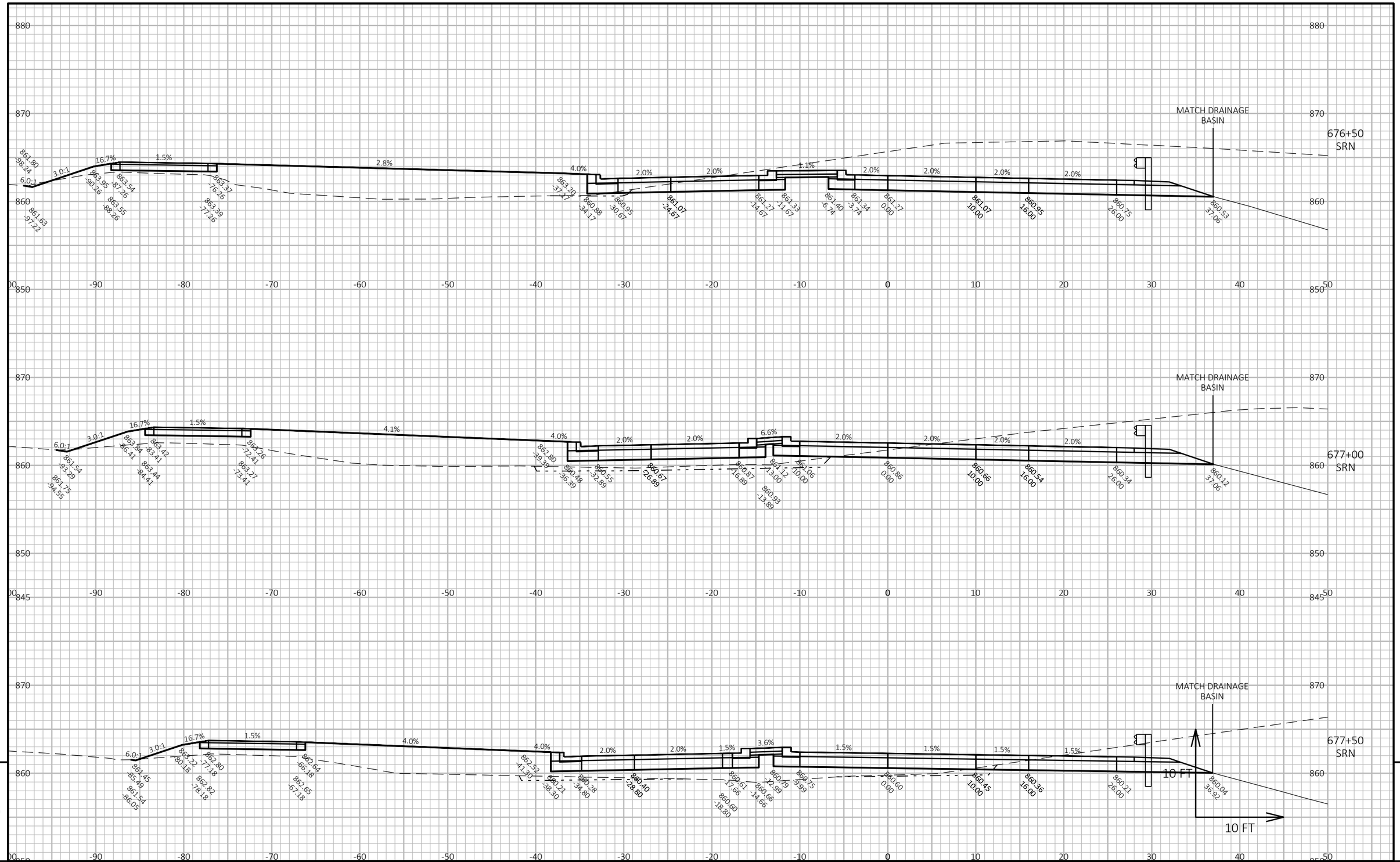

PROJECT NO: 5849-02-07	HWY: LOCAL STREET - SYENE ROAD	COUNTY: DANE	CROSS SECTIONS: SYENE ROAD	SHEET 270	E

FILE NAME : G:\FITCHBRG\20087-000 SYENE ROAD\CIVIL 3D\SHEETSPLAN\PHASE 3 SHEET FILES - W CLAYTON TO MCCOY\090101_XS_P3.DWG
LAYOUT NAME - SR8
PLOT DATE : 4/24/2024 1:50 PM PLOT BY : BRIAN ST. VINCENT PLOT NAME : PLOT SCALE : 1 IN:10 FT HORZ. / 1 IN:10 FT VERT.

WISDOT/CADDS SHEET 49

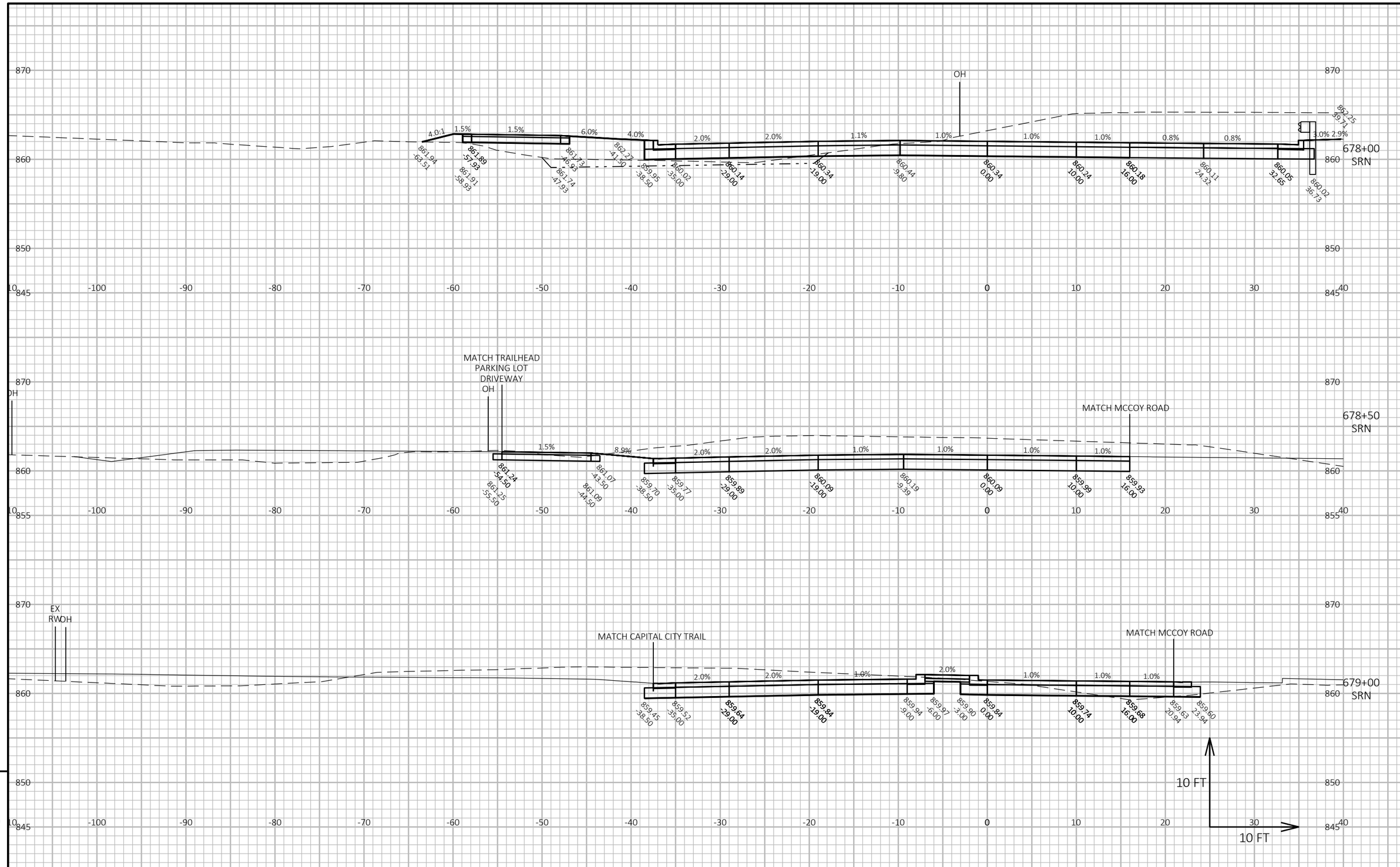

PROJECT NO: 5849-02-07	HWY: LOCAL STREET - SYENE ROAD	COUNTY: DANE	CROSS SECTIONS: SYENE ROAD	SHEET 271	E

FILE NAME : G:\FITCHBRG\20087-000 SYENE ROAD\CIVIL 3D\SHEETSPLAN\PHASE 3 SHEET FILES - W CLAYTON TO MCCOY\090101_XS_P3.DWG
LAYOUT NAME - SR9
PLOT DATE : 4/24/2024 1:50 PM
PLOT BY : BRIAN ST. VINCENT
PLOT NAME :
PLOT SCALE : 1 IN:10 FT HORZ. / 1 IN:10 FT VERT.
WISDOT/CADDS SHEET 49

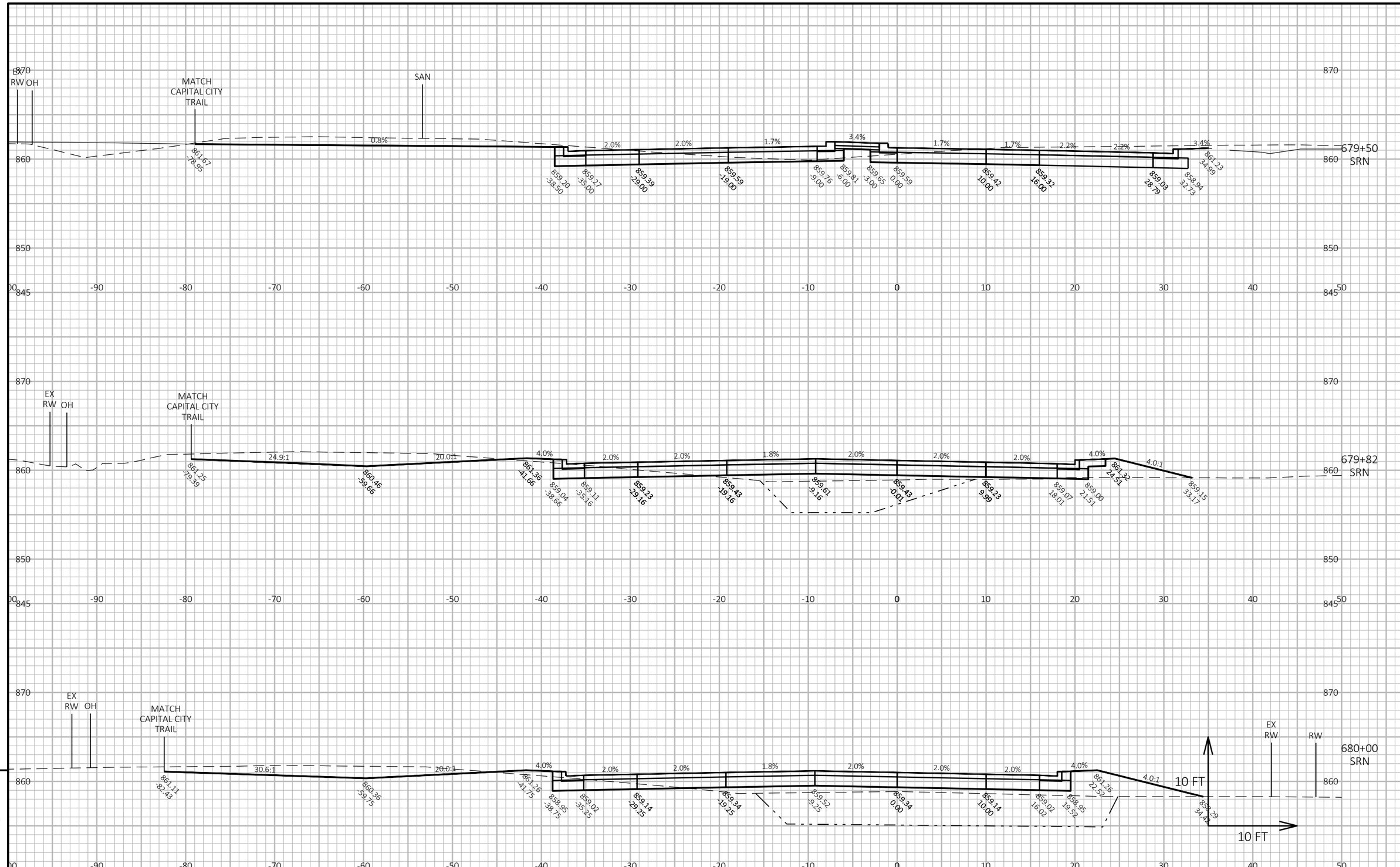

PROJECT NO: 5849-02-07	HWY: LOCAL STREET - SYENE ROAD	COUNTY: DANE	CROSS SECTIONS: SYENE ROAD	SHEET 272	E

FILE NAME : G:\FITCHBRG\20087-000 SYENE ROAD\CIVIL 3D\SHEETSPLAN\PHASE 3 SHEET FILES - W CLAYTON TO MCCOY\090101_XS_P3.DWG
LAYOUT NAME - SR10
PLOT DATE : 4/24/2024 1:51 PM
PLOT BY : BRIAN ST. VINCENT
PLOT NAME :
PLOT SCALE : 1 IN:10 FT HORZ. / 1 IN:10 FT VERT.
WISDOT/CADDS SHEET 49

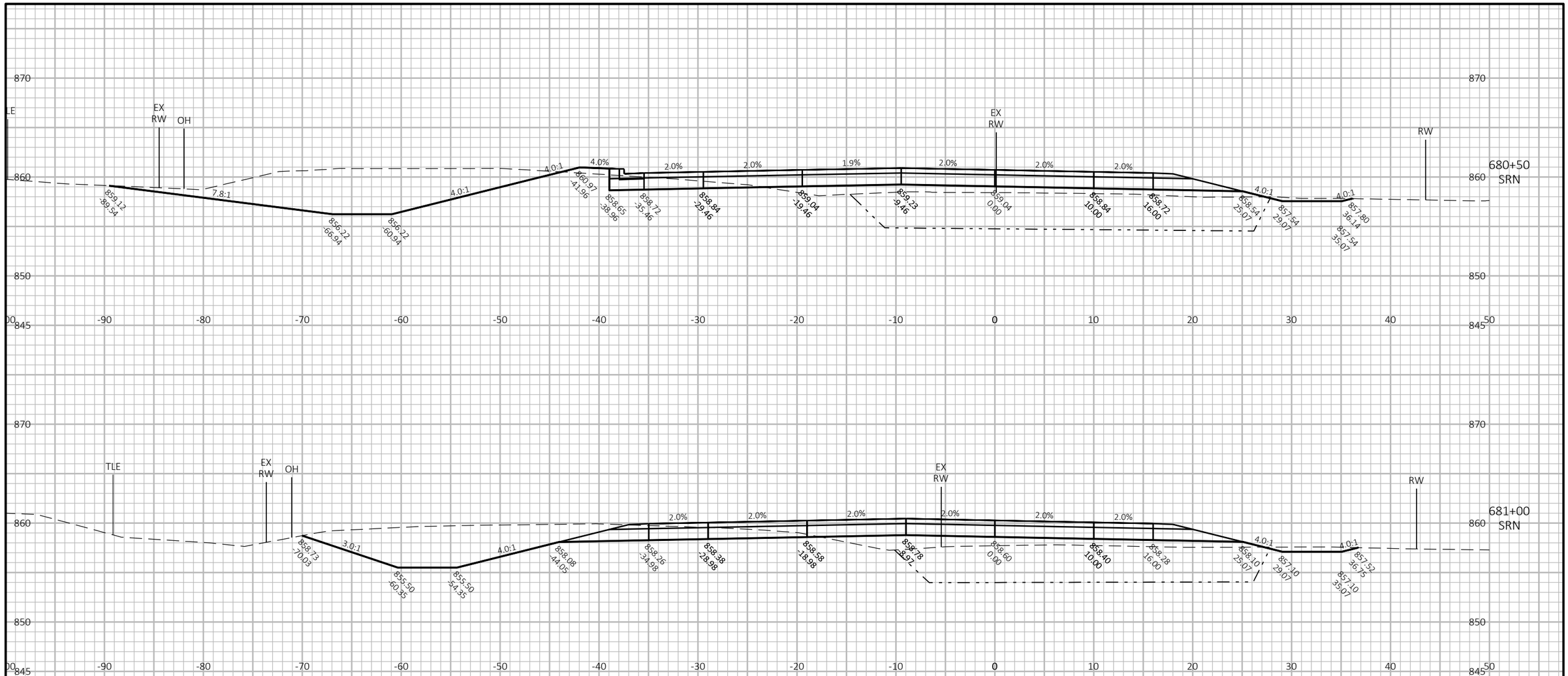

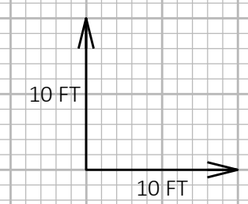

9

9

PROJECT NO: 5849-02-07	HWY: LOCAL STREET - SYENE ROAD	COUNTY: DANE	CROSS SECTIONS: SYENE ROAD	SHEET 273	E

FILE NAME : G:\FITCHBRG\20087-000 SYENE ROAD\CIVIL 3D\SHEETSPLAN\PHASE 3 SHEET FILES - W CLAYTON TO MCCOY\090101_XS_P3.DWG
LAYOUT NAME - SR11
PLOT DATE : 4/24/2024 1:51 PM PLOT BY : BRIAN ST. VINCENT PLOT NAME : PLOT SCALE : 1 IN:10 FT HORZ. / 1 IN:10 FT VERT.

WISDOT/CADDS SHEET 49

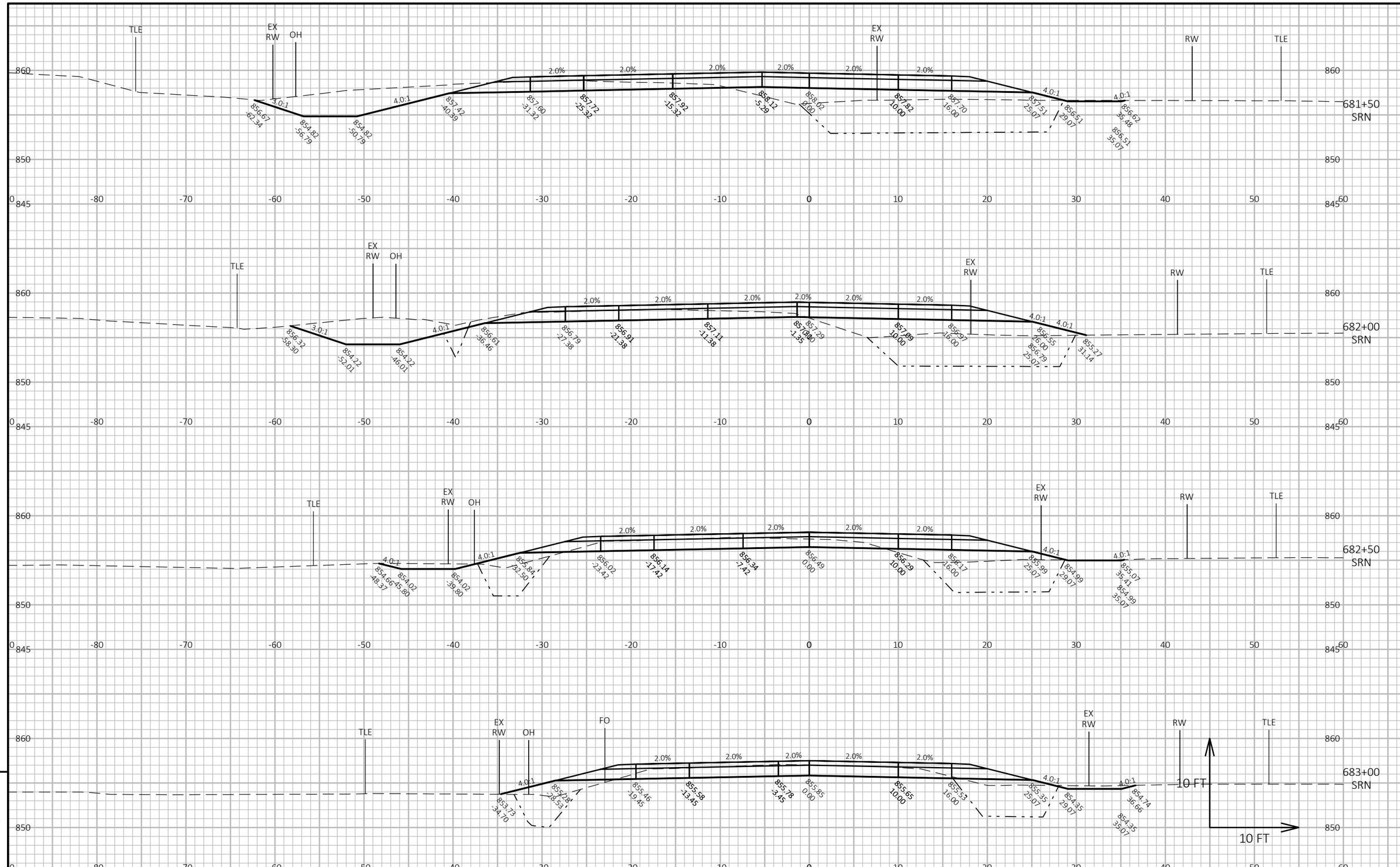

PROJECT NO: 5849-02-07	HWY: LOCAL STREET - SYENE ROAD	COUNTY: DANE	CROSS SECTIONS: SYENE ROAD	SHEET 274	E

FILE NAME : G:\FITCHBRG\20087-000 SYENE ROAD\CIVIL 3D\SHEETSPLAN\PHASE 3 SHEET FILES - W CLAYTON TO MCCOY\090101_XS_P3.DWG
LAYOUT NAME - SR12
PLOT DATE : 4/24/2024 1:51 PM
PLOT BY : BRIAN ST. VINCENT
PLOT NAME :
PLOT SCALE : 1 IN:10 FT HORZ. / 1 IN:10 FT VERT.
WISDOT/CADDS SHEET 49

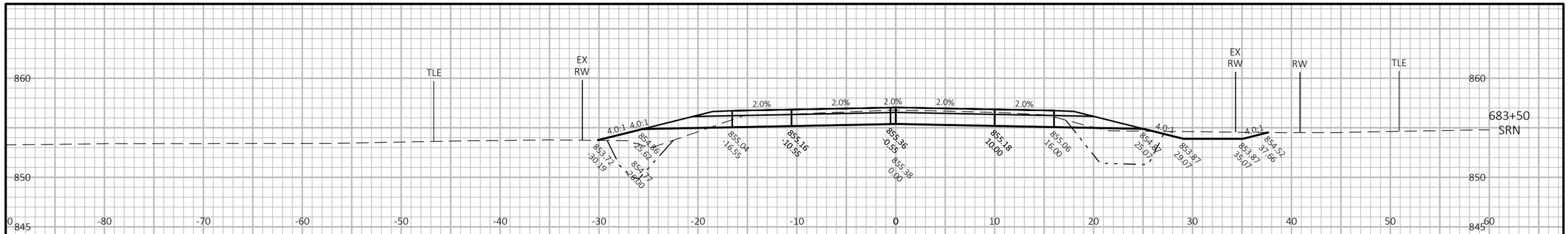

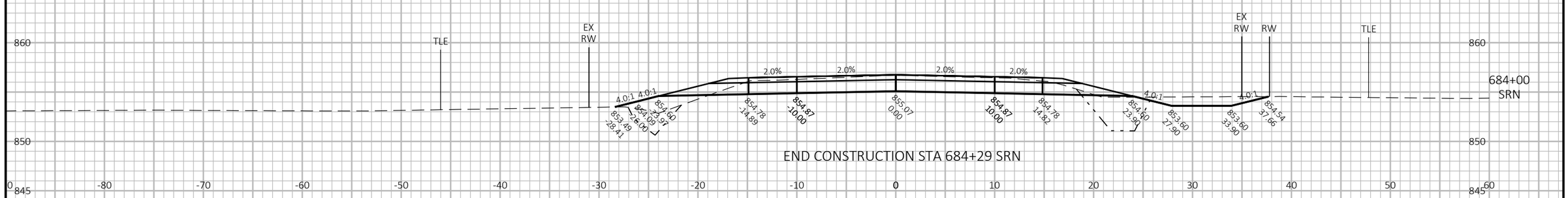

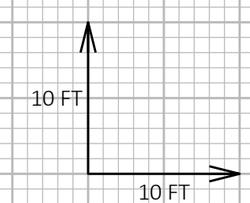

9

9

PROJECT NO: 5849-02-07	HWY: LOCAL STREET - SYENE ROAD	COUNTY: DANE	CROSS SECTIONS: SYENE ROAD	SHEET 275	E

FILE NAME : G:\FITCHBRG\20087-000 SYENE ROAD\CIVIL 3D\SHEETSPLAN\PHASE 3 SHEET FILES - W CLAYTON TO MCCOY\090101_XS_P3.DWG
LAYOUT NAME - SR13
PLOT DATE : 4/24/2024 1:51 PM
PLOT BY : BRIAN ST. VINCENT
PLOT NAME :
PLOT SCALE : 1 IN:10 FT HORZ. / 1 IN:10 FT VERT.
WISDOT/CADDS SHEET 49

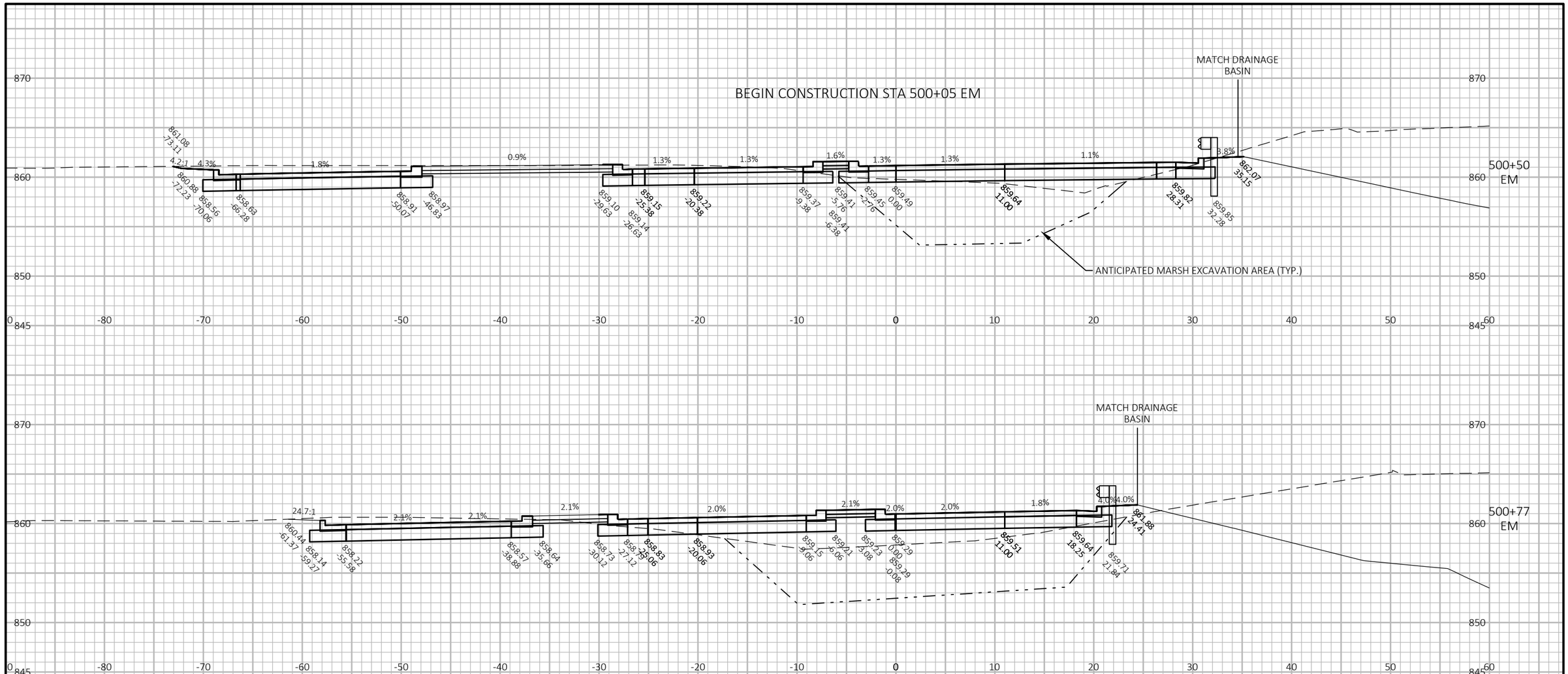

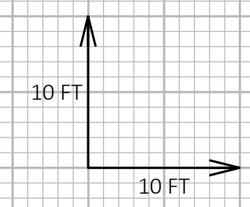

9

9

PROJECT NO: 5849-02-07	HWY: LOCAL STREET - SYENE ROAD	COUNTY: DANE	CROSS SECTIONS: MCCOY ROAD	SHEET 276	E

FILE NAME : G:\FITCHBRG\20087-000 SYENE ROAD\CIVIL 3D\SHEETSPLAN\PHASE 3 SHEET FILES - W CLAYTON TO MCCOY\090101_XS_P3.DWG
LAYOUT NAME - EM1
PLOT DATE : 4/24/2024 1:51 PM
PLOT BY : BRIAN ST. VINCENT
PLOT NAME :
PLOT SCALE : 1 IN:10 FT HORZ. / 1 IN:10 FT VERT.
WISDOT/CADDS SHEET 49

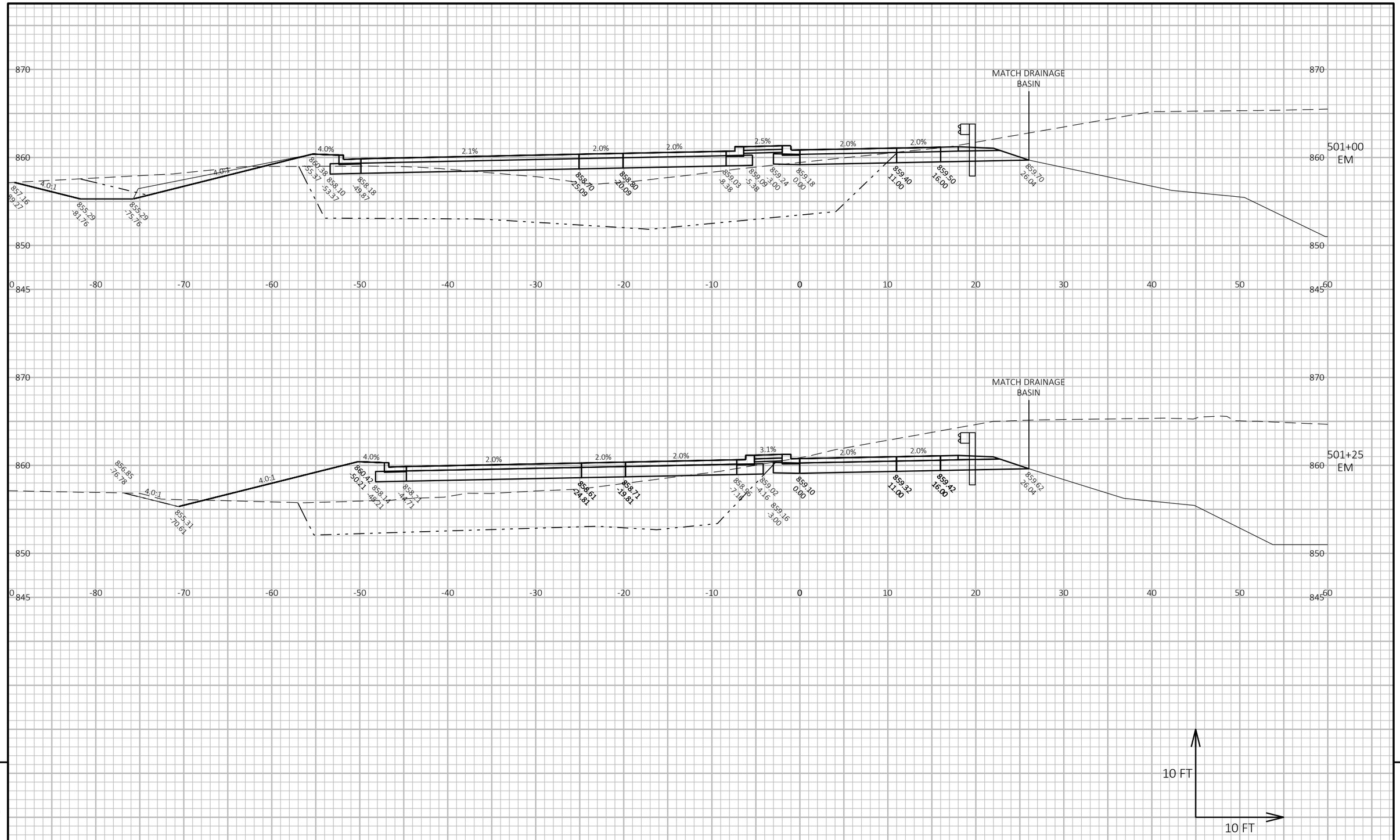

PROJECT NO: 5849-02-07	HWY: LOCAL STREET - SYENE ROAD	COUNTY: DANE	CROSS SECTIONS: MCCOY ROAD	SHEET 277	E

FILE NAME : G:\FITCHBRG\20087-000 SYENE ROAD\CIVIL 3D\SHEETSPLAN\PHASE 3 SHEET FILES - W CLAYTON TO MCCOY\090101_XS_P3.DWG
LAYOUT NAME - EM2
PLOT DATE : 4/24/2024 1:51 PM PLOT BY : BRIAN ST. VINCENT PLOT NAME : **PLOT SCALE :** 1 IN:10 FT HORZ. / 1 IN:10 FT VERT.

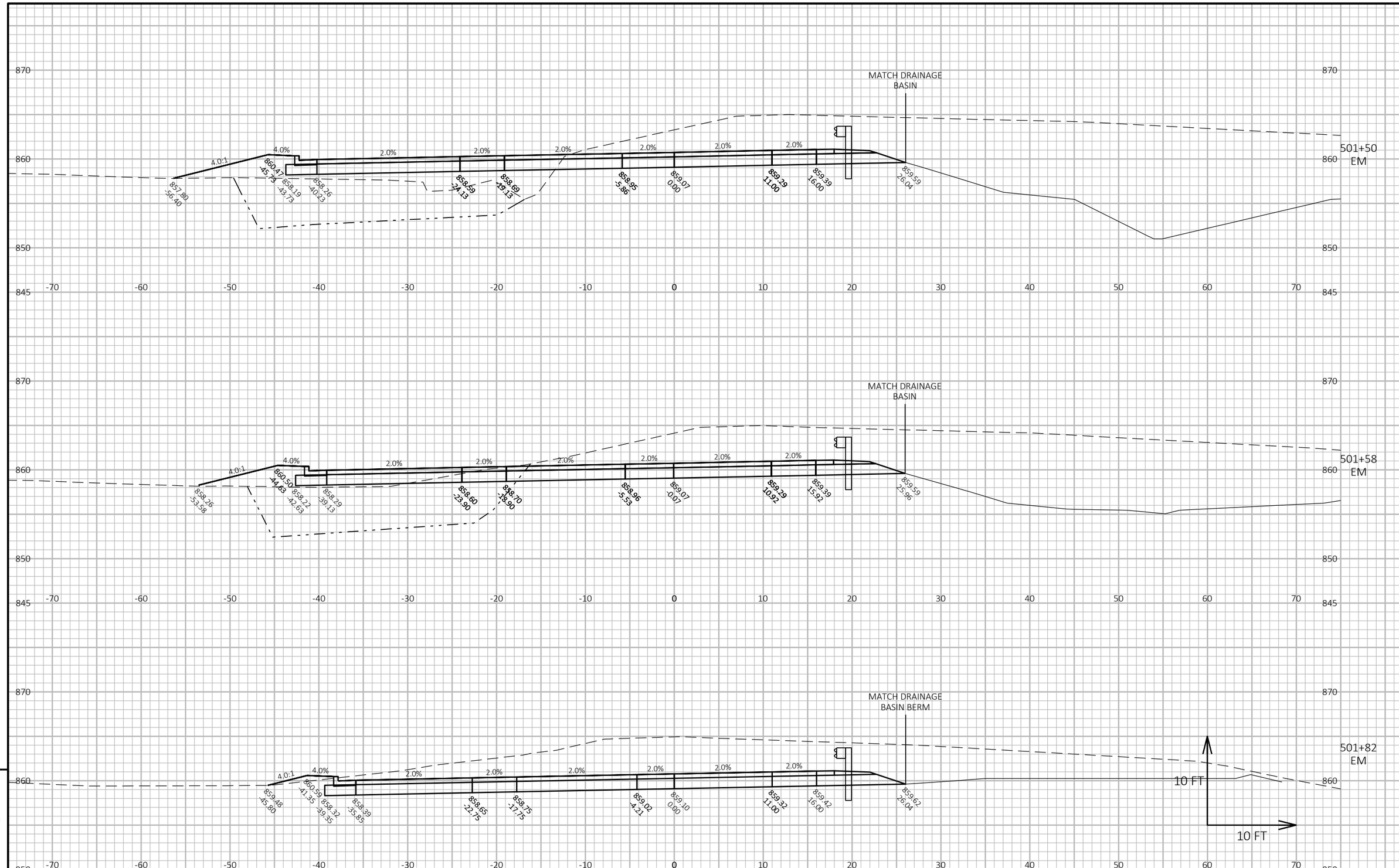

9

9

PROJECT NO: 5849-02-07	HWY: LOCAL STREET - SYENE ROAD	COUNTY: DANE	CROSS SECTIONS: MCCOY ROAD	SHEET 278	E

FILE NAME : G:\FITCHBRG\20087-000 SYENE ROAD\CIVIL 3D\SHEETSPLAN\PHASE 3 SHEET FILES - W CLAYTON TO MCCOY\090101_XS_P3.DWG
LAYOUT NAME - EM3

PLOT DATE : 4/24/2024 1:52 PM PLOT BY : BRIAN ST. VINCENT PLOT NAME : **PLOT SCALE :** 1 IN:10 FT HORZ. / 1 IN:10 FT VERT.

WISDOT/CADDS SHEET 49

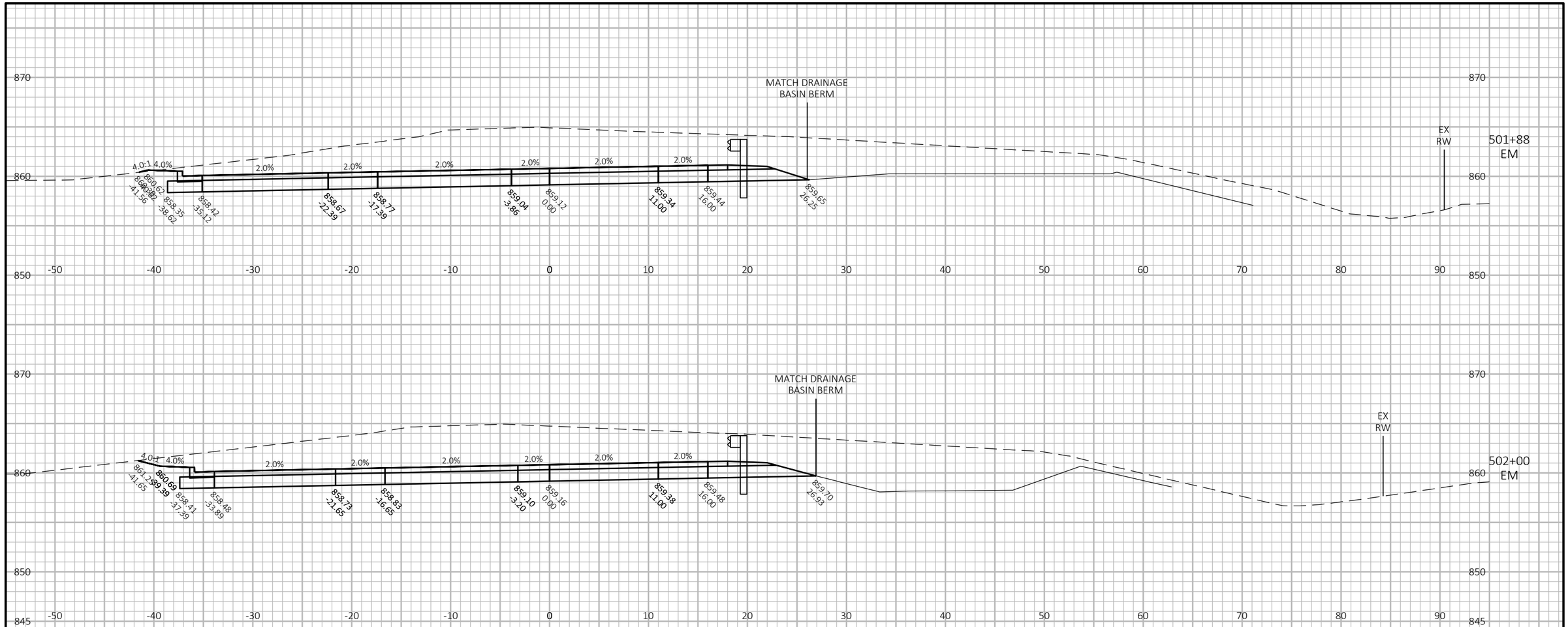

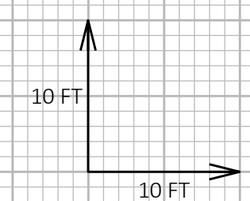

9

9

PROJECT NO: 5849-02-07	HWY: LOCAL STREET - SYENE ROAD	COUNTY: DANE	CROSS SECTIONS: MCCOY ROAD	SHEET 279	E

FILE NAME : G:\FITCHBRG\20087-000 SYENE ROAD\CIVIL 3D\SHEETSPLAN\PHASE 3 SHEET FILES - W CLAYTON TO MCCOY\090101_XS_P3.DWG
LAYOUT NAME - EM4
PLOT DATE : 4/24/2024 1:52 PM
PLOT BY : BRIAN ST. VINCENT
PLOT NAME :
PLOT SCALE : 1 IN:10 FT HORZ. / 1 IN:10 FT VERT.
WISDOT/CADDS SHEET 49

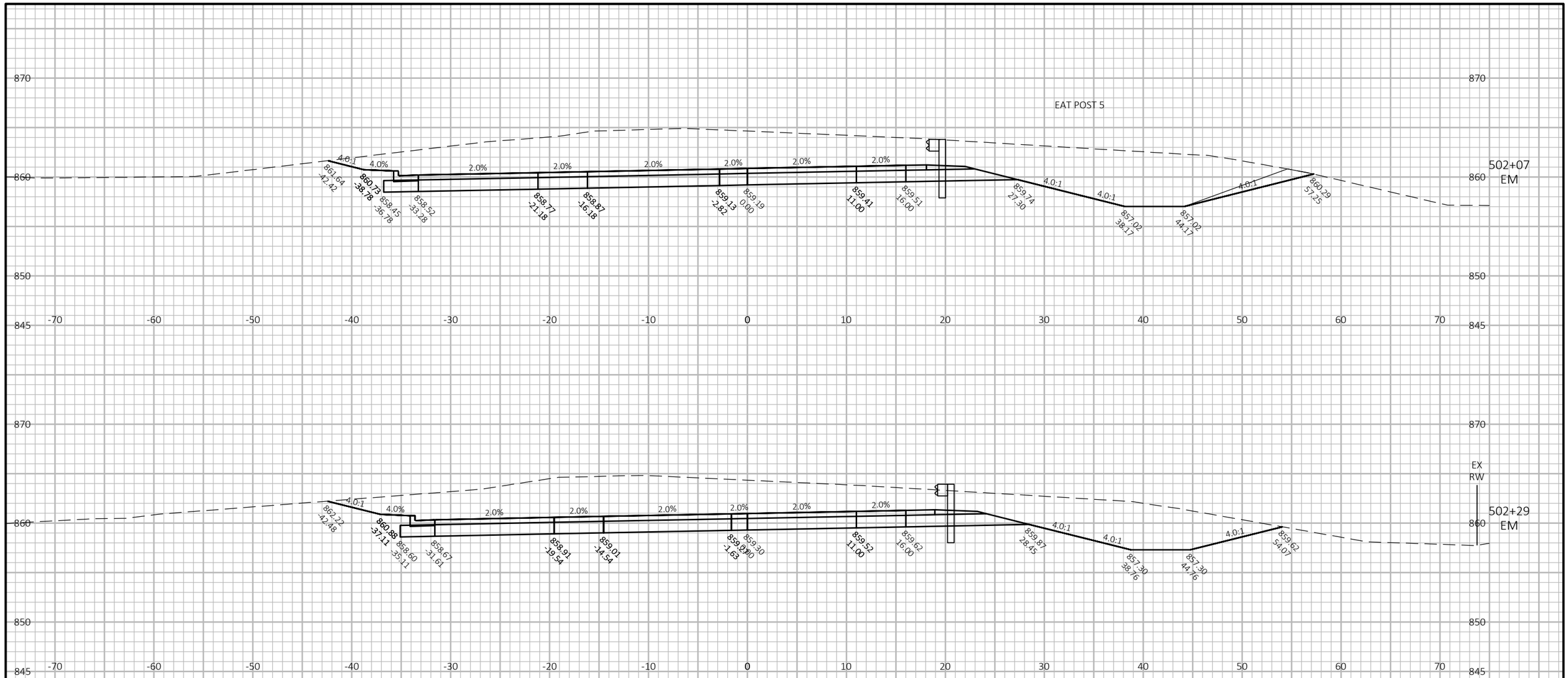

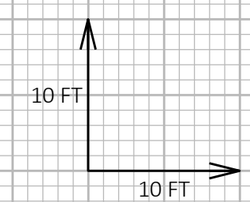

9

9

PROJECT NO: 5849-02-07	HWY: LOCAL STREET - SYENE ROAD	COUNTY: DANE	CROSS SECTIONS: MCCOY ROAD	SHEET 280	E

FILE NAME : G:\FITCHBRG\20087-000 SYENE ROAD\CIVIL 3D\SHEETSPLAN\PHASE 3 SHEET FILES - W CLAYTON TO MCCOY\090101_XS_P3.DWG
LAYOUT NAME - EM5
PLOT DATE : 4/24/2024 1:52 PM PLOT BY : BRIAN ST. VINCENT PLOT NAME : PLOT SCALE : 1 IN:10 FT HORZ. / 1 IN:10 FT VERT.

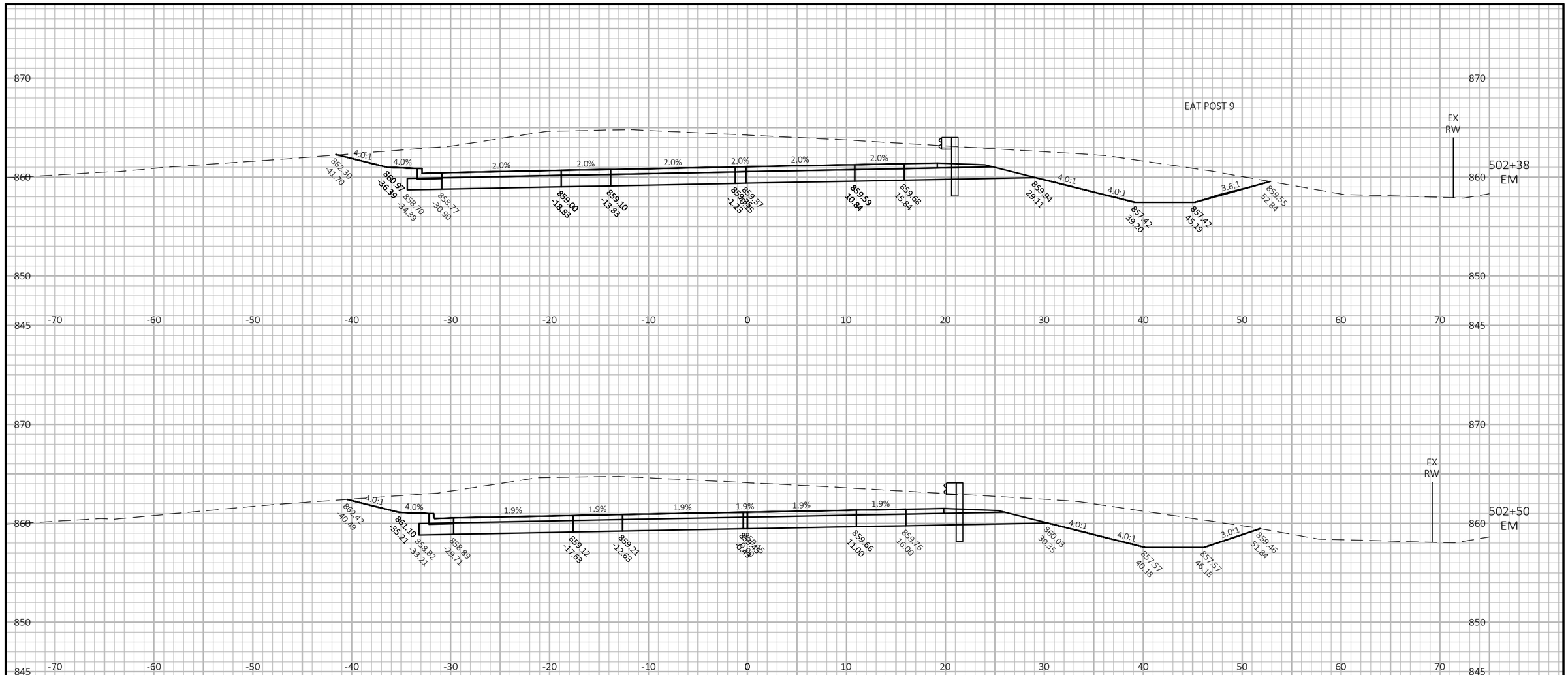

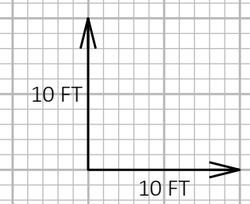

9

9

PROJECT NO: 5849-02-07	HWY: LOCAL STREET - SYENE ROAD	COUNTY: DANE	CROSS SECTIONS: MCCOY ROAD	SHEET 281	E

FILE NAME : G:\FITCHBRG\20087-000 SYENE ROAD\CIVIL 3D\SHEETSPLAN\PHASE 3 SHEET FILES - W CLAYTON TO MCCOY\090101_XS_P3.DWG
LAYOUT NAME - EM6
PLOT DATE : 4/24/2024 1:52 PM
PLOT BY : BRIAN ST. VINCENT
PLOT NAME :
PLOT SCALE : 1 IN:10 FT HORZ. / 1 IN:10 FT VERT.
WISDOT/CADDS SHEET 49

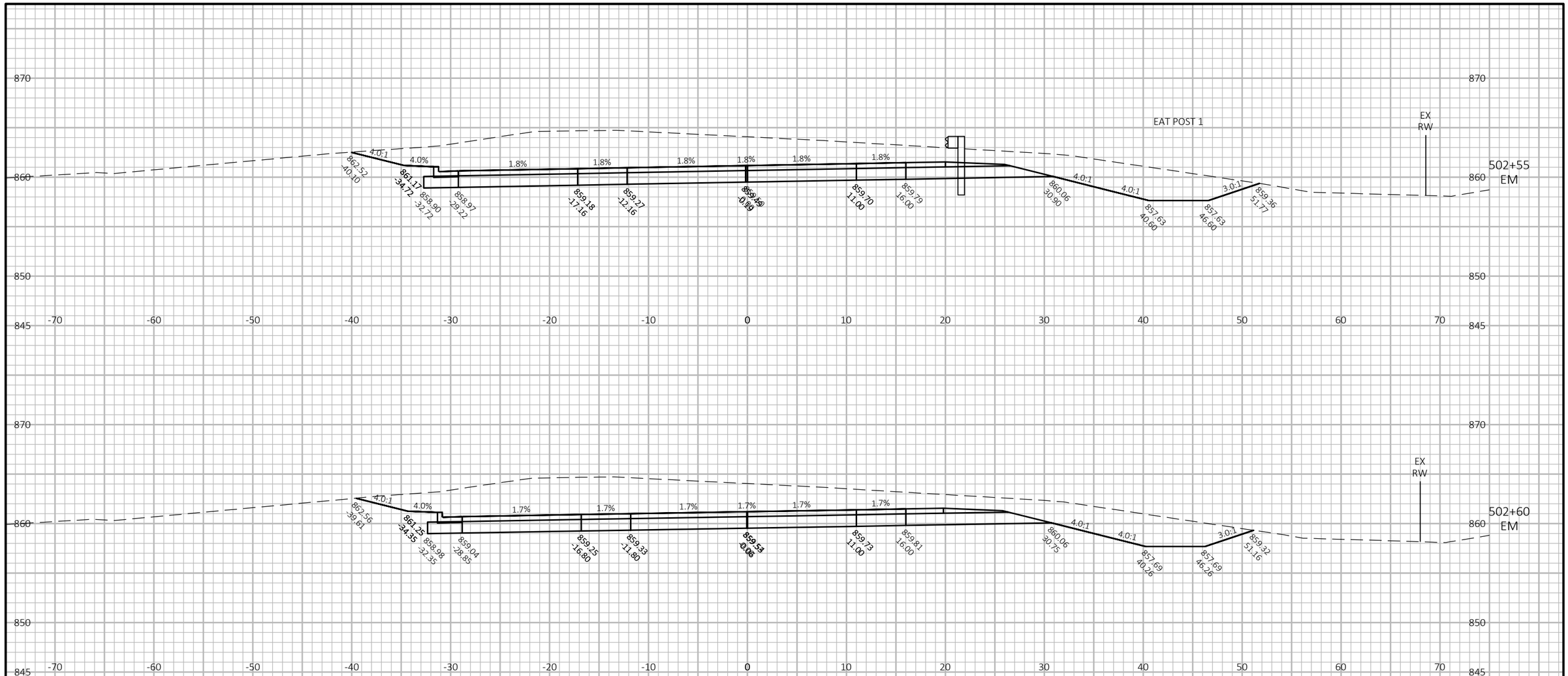

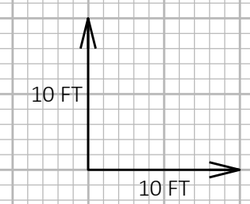

9

9

PROJECT NO: 5849-02-07	HWY: LOCAL STREET - SYENE ROAD	COUNTY: DANE	CROSS SECTIONS: MCCOY ROAD	SHEET 282	E

FILE NAME : G:\FITCHBRG\20087-000 SYENE ROAD\CIVIL 3D\SHEETSPLAN\PHASE 3 SHEET FILES - W CLAYTON TO MCCOY\090101_XS_P3.DWG
LAYOUT NAME - EM7
PLOT DATE : 4/24/2024 1:52 PM PLOT BY : BRIAN ST. VINCENT PLOT NAME : **PLOT SCALE :** 1 IN:10 FT HORZ. / 1 IN:10 FT VERT.

WISDOT/CADDS SHEET 49

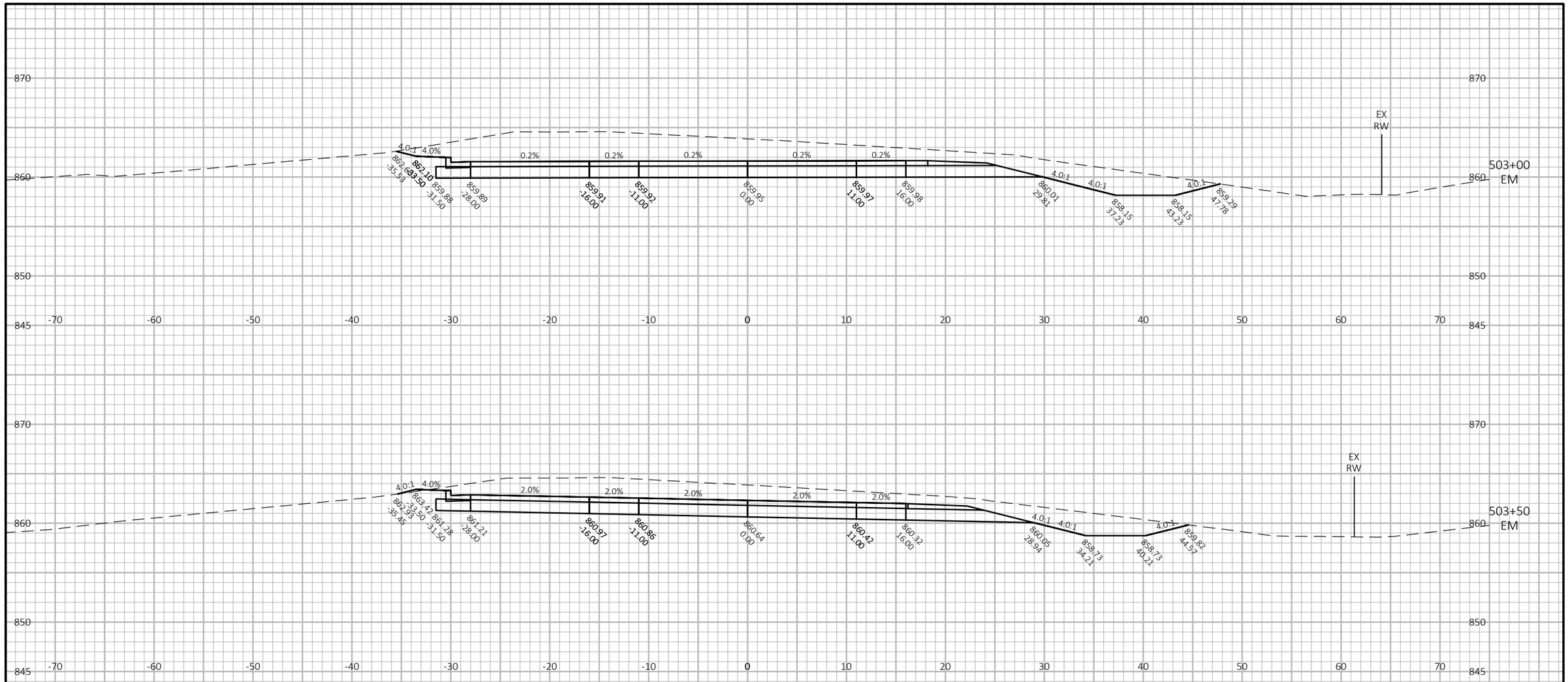

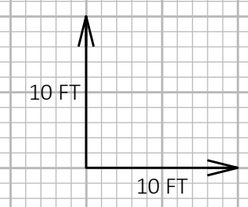

9

9

PROJECT NO: 5849-02-07	HWY: LOCAL STREET - SYENE ROAD	COUNTY: DANE	CROSS SECTIONS: MCCOY ROAD	SHEET 283	E

FILE NAME : G:\FITCHBRG\20087-000 SYENE ROAD\CIVIL 3D\SHEETSPLAN\PHASE 3 SHEET FILES - W CLAYTON TO MCCOY\090101_XS_P3.DWG
LAYOUT NAME - EM7 (2)
PLOT DATE : 4/24/2024 1:52 PM PLOT BY : BRIAN ST. VINCENT PLOT NAME : **PLOT SCALE :** 1 IN:10 FT HORZ. / 1 IN:10 FT VERT.

WISDOT/CADDS SHEET 49

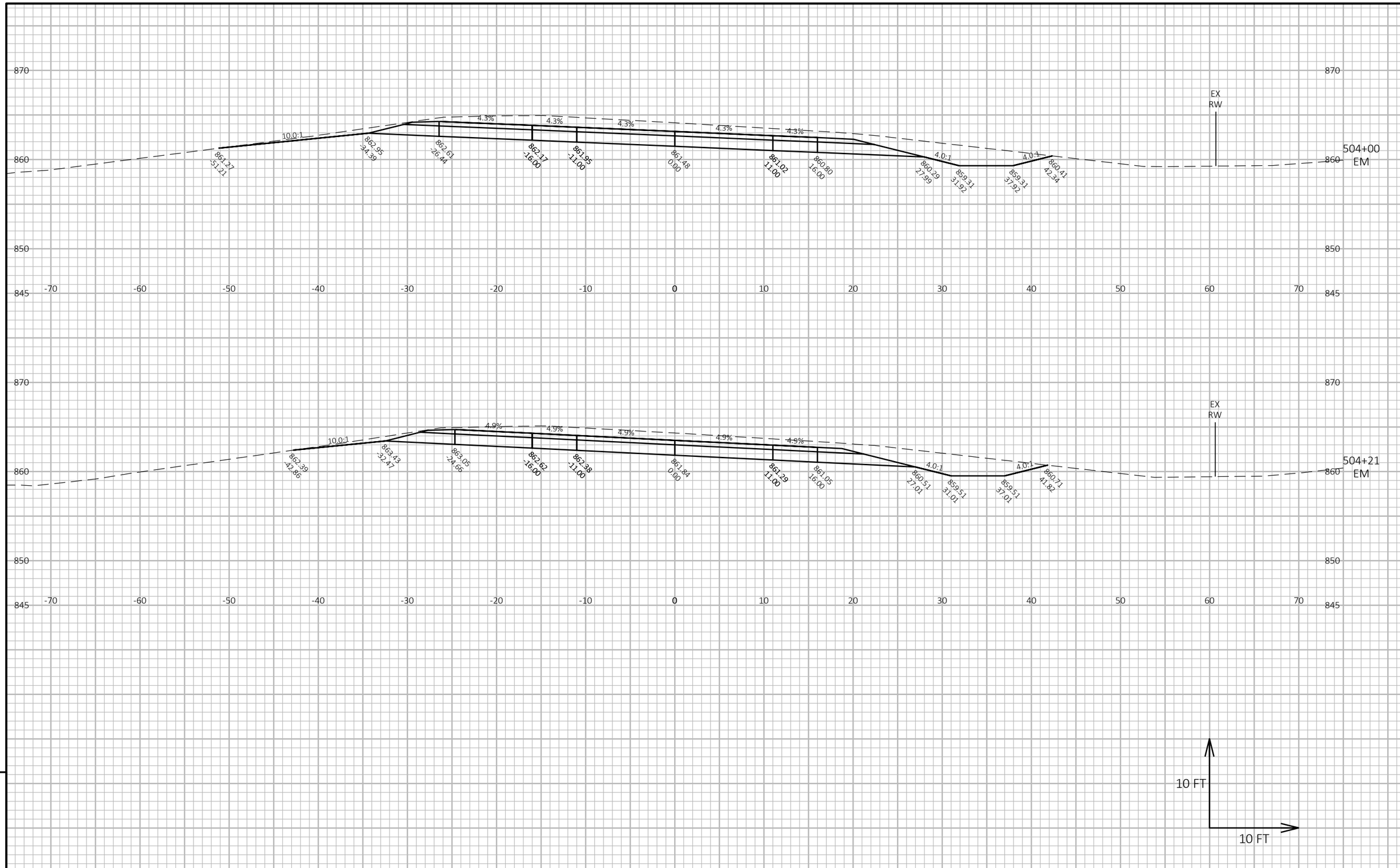

9

9

PROJECT NO: 5849-02-07	HWY: LOCAL STREET - SYENE ROAD	COUNTY: DANE	CROSS SECTIONS: MCCOY ROAD	SHEET 284	E

FILE NAME : G:\FITCHBRG\20087-000 SYENE ROAD\CIVIL 3D\SHEETSPLAN\PHASE 3 SHEET FILES - W CLAYTON TO MCCOY\090101_XS_P3.DWG
LAYOUT NAME - EM7 (3)
PLOT DATE : 4/24/2024 1:53 PM PLOT BY : BRIAN ST. VINCENT PLOT NAME : **PLOT SCALE :** 1 IN:10 FT HORZ. / 1 IN:10 FT VERT.

WISDOT/CADDS SHEET 49

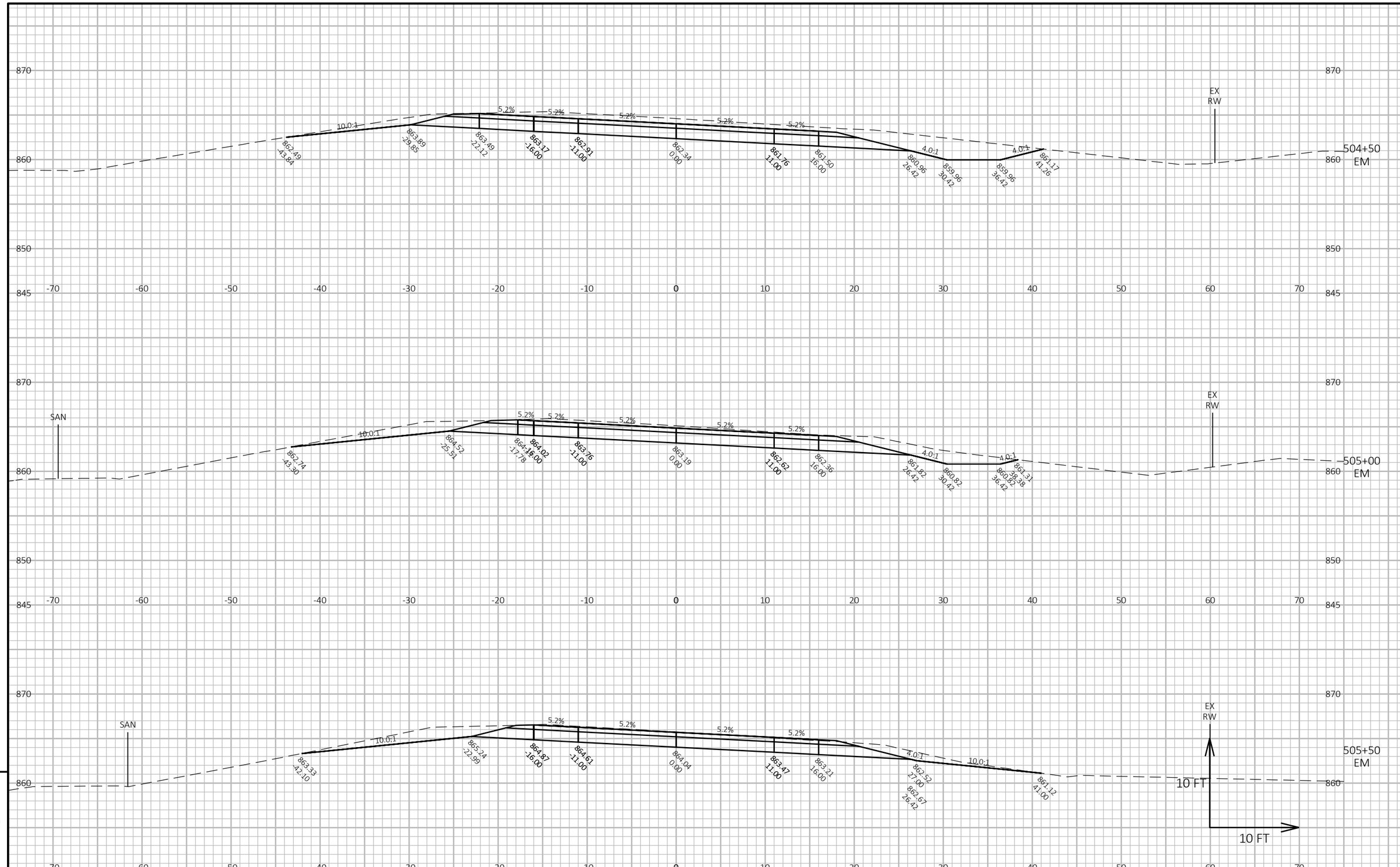

PROJECT NO: 5849-02-07	HWY: LOCAL STREET - SYENE ROAD	COUNTY: DANE	CROSS SECTIONS: MCCOY ROAD	SHEET 285	E

FILE NAME : G:\FITCHBRG\20087-000 SYENE ROAD\CIVIL 3D\SHEETSPLAN\PHASE 3 SHEET FILES - W CLAYTON TO MCCOY\090101_XS_P3.DWG
LAYOUT NAME - EM7 (4)
PLOT DATE : 4/24/2024 1:53 PM PLOT BY : BRIAN ST. VINCENT PLOT NAME : **PLOT SCALE :** 1 IN:10 FT HORZ. / 1 IN:10 FT VERT.
WISDOT/CADDS SHEET 49

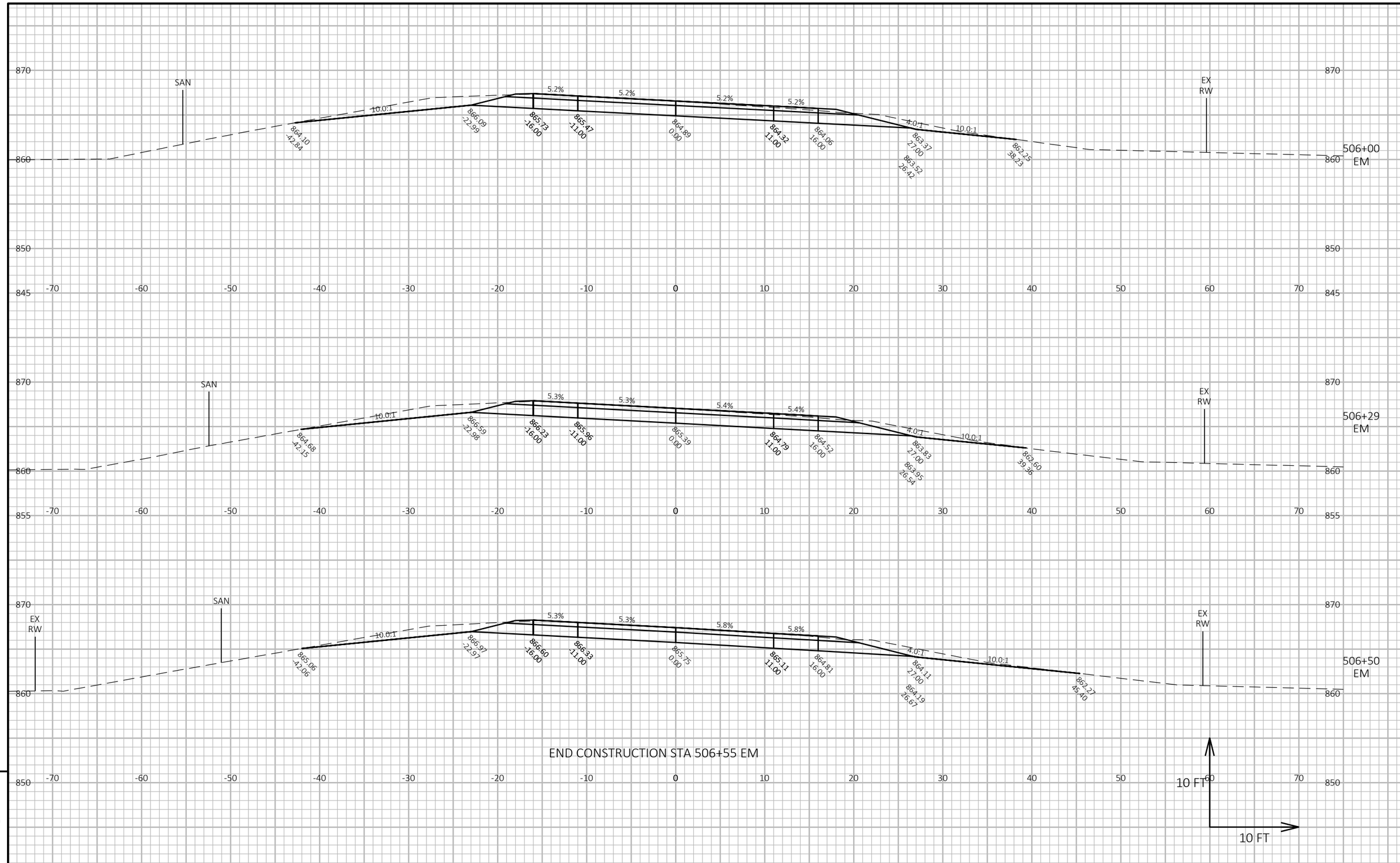

9

9

PROJECT NO: 5849-02-07	HWY: LOCAL STREET - SYENE ROAD	COUNTY: DANE	CROSS SECTIONS: MCCOY ROAD	SHEET 286	E

FILE NAME : G:\FITCHBRG\20087-000 SYENE ROAD\CIVIL 3D\SHEETSPLAN\PHASE 3 SHEET FILES - W CLAYTON TO MCCOY\090101_XS_P3.DWG
LAYOUT NAME - EM7 (5)
PLOT DATE : 4/24/2024 1:53 PM
PLOT BY : BRIAN ST. VINCENT
PLOT NAME :
PLOT SCALE : 1 IN:10 FT HORZ. / 1 IN:10 FT VERT.
WISDOT/CADDS SHEET 49

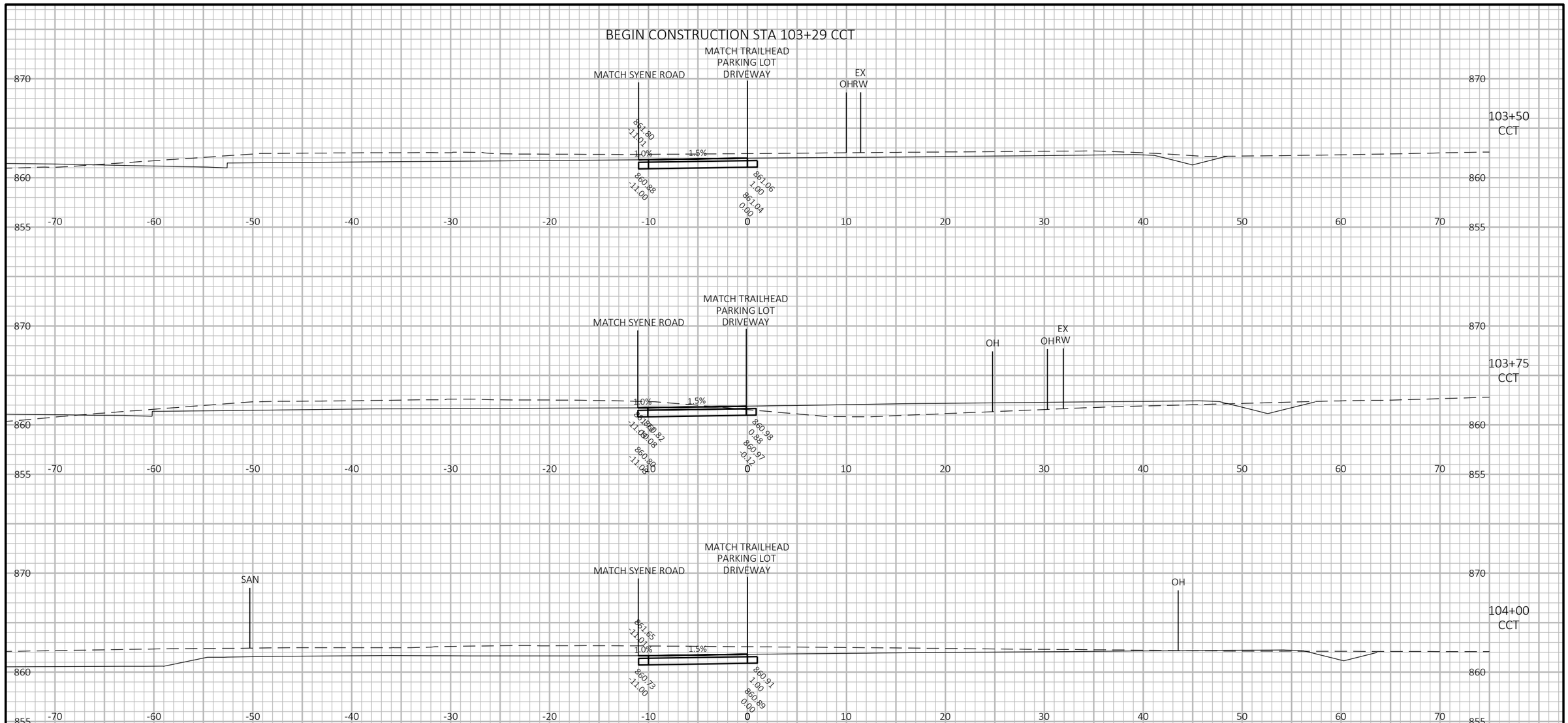

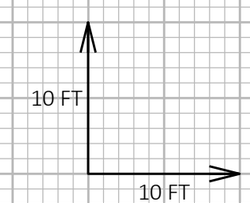

9

9

PROJECT NO: 5849-02-07	HWY: LOCAL STREET - SYENE ROAD	COUNTY: DANE	CROSS SECTIONS: CAPITAL CITY TRAIL	SHEET 287	E

FILE NAME : G:\FITCHBRG\20087-000 SYENE ROAD\CIVIL 3D\SHEETSPLAN\PHASE 3 SHEET FILES - W CLAYTON TO MCCOY\090101_XS_P3.DWG
LAYOUT NAME - CC1
PLOT DATE : 4/24/2024 1:53 PM
PLOT BY : BRIAN ST. VINCENT
PLOT NAME :
PLOT SCALE : 1 IN:10 FT HORZ. / 1 IN:10 FT VERT.
WISDOT/CADDS SHEET 49

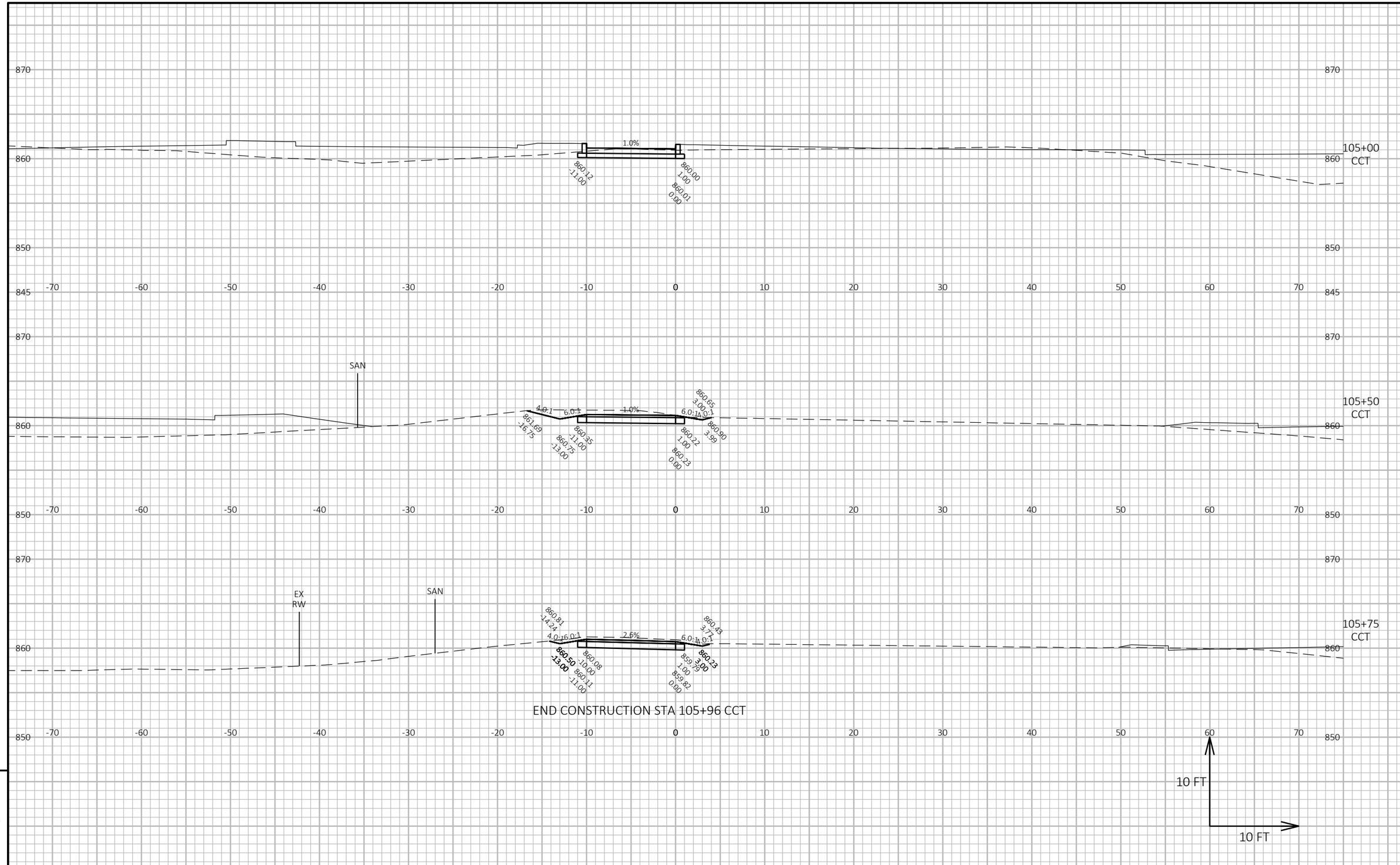

PROJECT NO: 5849-02-07	HWY: LOCAL STREET - SYENE ROAD	COUNTY: DANE	CROSS SECTIONS: CAPITAL CITY TRAIL	SHEET 288	E

FILE NAME : G:\FITCHBRG\20087-000 SYENE ROAD\CIVIL 3D\SHEETSPLAN\PHASE 3 SHEET FILES - W CLAYTON TO MCCOY\090101_XS_P3.DWG
LAYOUT NAME - CC2
PLOT DATE : 4/24/2024 1:53 PM PLOT BY : BRIAN ST. VINCENT PLOT NAME : PLOT SCALE : 1 IN:10 FT HORZ. / 1 IN:10 FT VERT.

WISDOT/CADDS SHEET 49

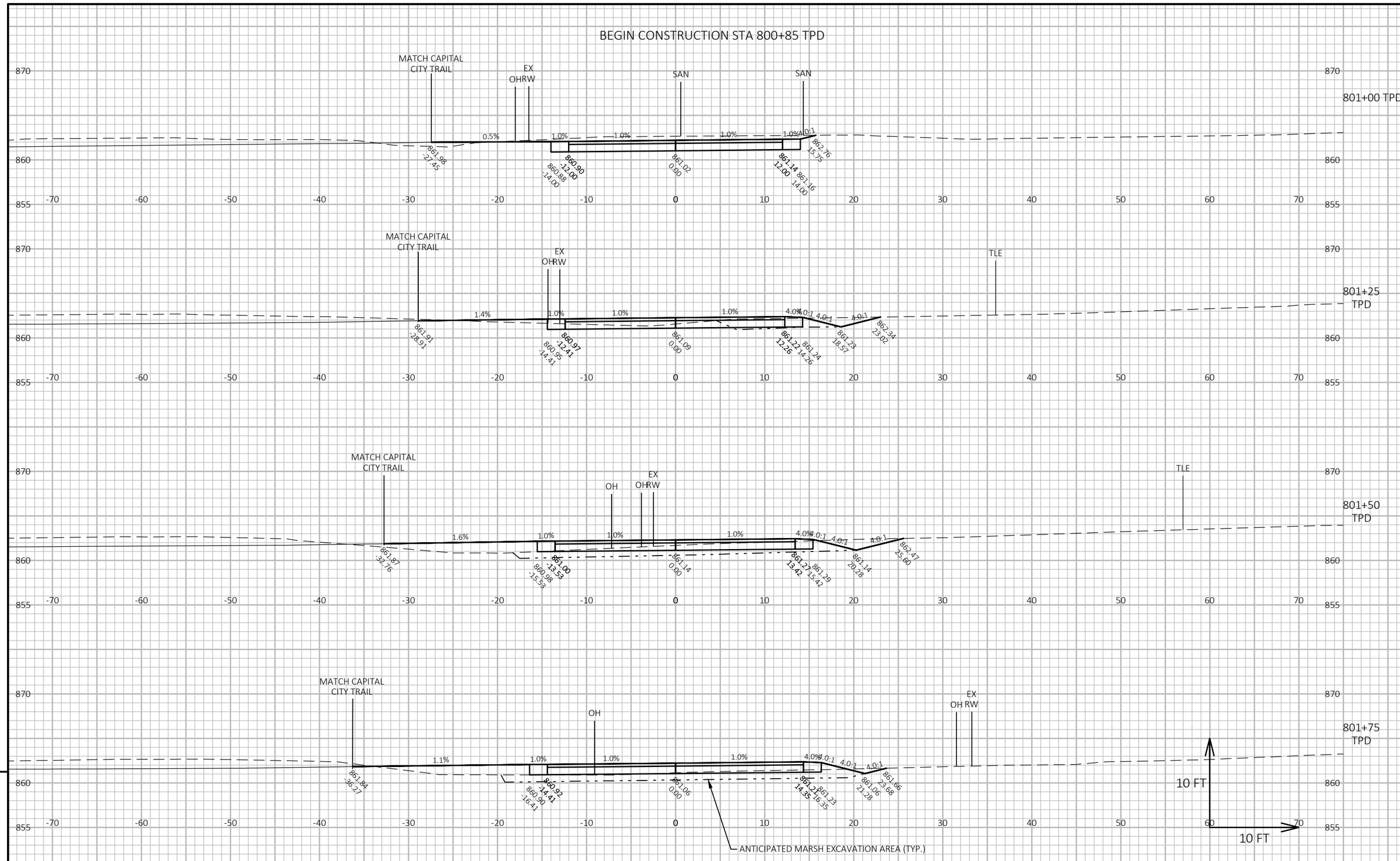

9

9

PROJECT NO: 5849-02-07	HWY: LOCAL STREET - SYENE ROAD	COUNTY: DANE	CROSS SECTIONS: TRAILHEAD PARKING LOT DRIVEWAY	SHEET 289	E

FILE NAME : G:\FITCHBRG\20087-000 SYENE ROAD\CIVIL 3D\SHEETSPLAN\PHASE 3 SHEET FILES - W CLAYTON TO MCCOY\090101_XS_P3.DWG
LAYOUT NAME - TPD1
PLOT DATE : 4/24/2024 1:53 PM
PLOT BY : BRIAN ST. VINCENT
PLOT NAME :
PLOT SCALE : 1 IN:10 FT HORZ. / 1 IN:10 FT VERT.
WISDOT/CADDS SHEET 49

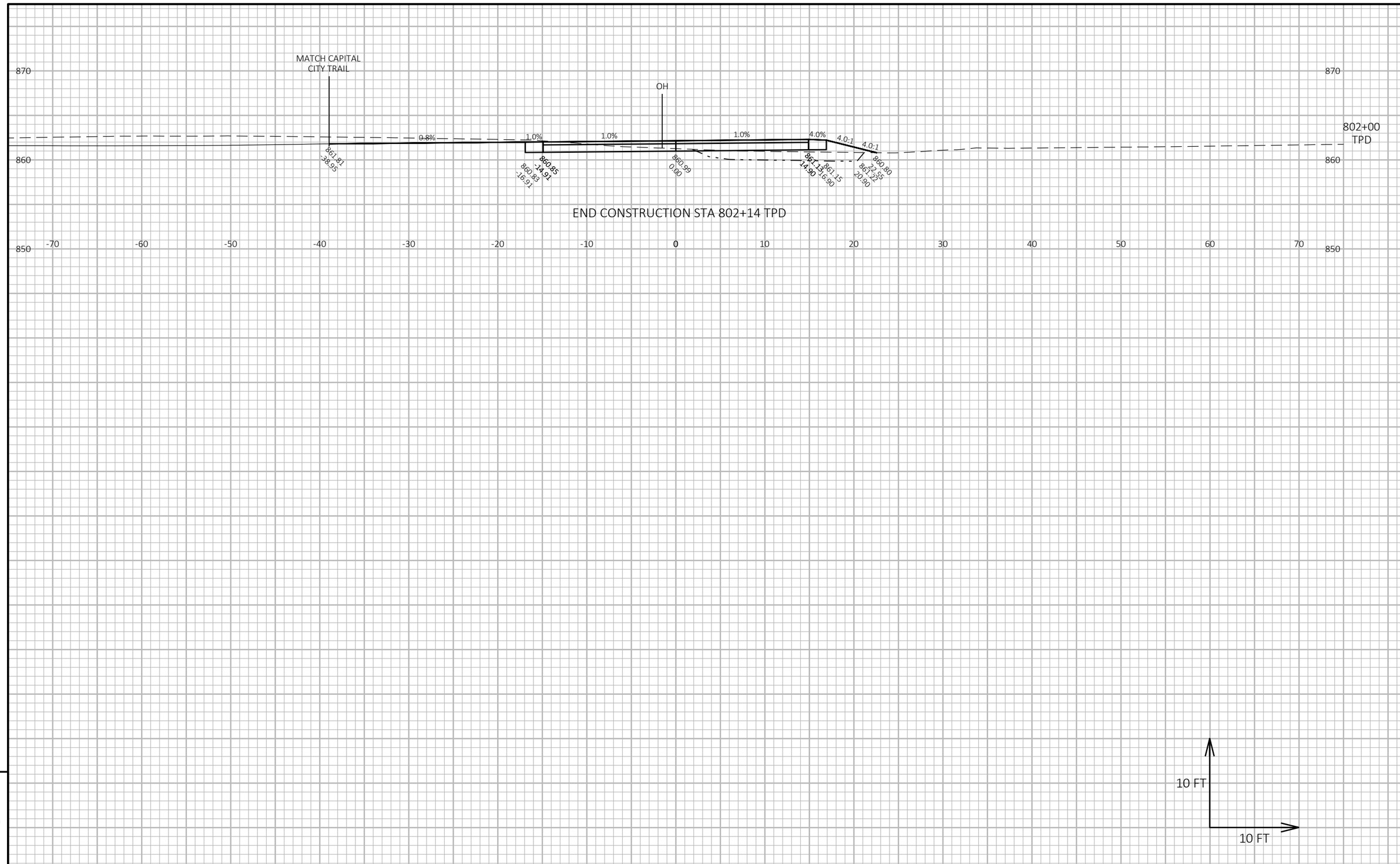

9

9

PROJECT NO: 5849-02-07	HWY: LOCAL STREET - SYENE ROAD	COUNTY: DANE	CROSS SECTIONS: TRAILHEAD PARKING LOT DRIVEWAY	SHEET 290	E

FILE NAME : G:\FITCHBRG\20087-000 SYENE ROAD\CIVIL 3D\SHEETSPLAN\PHASE 3 SHEET FILES - W CLAYTON TO MCCOY\090101_XS_P3.DWG
LAYOUT NAME - TPD1 (2)
PLOT DATE : 4/24/2024 1:54 PM
PLOT BY : BRIAN ST. VINCENT
PLOT NAME :
PLOT SCALE : 1 IN:10 FT HORZ. / 1 IN:10 FT VERT.
WISDOT/CADDS SHEET 49

Notes

Wisconsin Department of Transportation

Dedicated people creating transportation solutions through innovation and exceptional service.

http://www.dot.wisconsin.gov