WKE APRIL 2024

PROJECT ID: 2300-06-70
WITH: N/A

COUNTY: WASHINGTON

| STATE PROJECT | FEDERAL PROJECT | |
|---|---|---|
| | PROJECT | CONTRACT |
| 2300-06-70 | WISC 2024315 | 1 |
| | | |
| | | |
| | | |

# STATE OF WISCONSIN
# DEPARTMENT OF TRANSPORTATION

## PLAN OF PROPOSED IMPROVEMENT
## HIGHWAY SAFETY IMPROVEMENT PROGRAM
# WAUKESHA - SLINGER
## CTH K TO CTH CC
## STH 167
## WASHINGTON COUNTY

| STATE PROJECT NUMBER |
|---|
| 2300-06-70 |

ORDER OF SHEETS



TOTAL SHEETS = 168

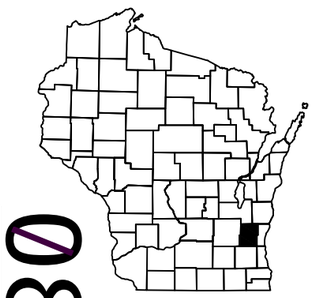

N

DESIGN DESIGNATION 2300-06-70

| | | | |
|---|---|---|---|
| A.A.D.T. | 2024 | = | 2700 |
| A.A.D.T. | 2044 | = | 3140 |
| D.H.V. | | = | 370 |
| D.D. | | = | 59/41 |
| T. | | = | 5.5 |
| DESIGN SPEED | | = | 45 MPH |
| ESALS | | = | 300,000 |

BEGIN PROJECT
STA 299+40
X = 321,991.03
Y = 121,504.76

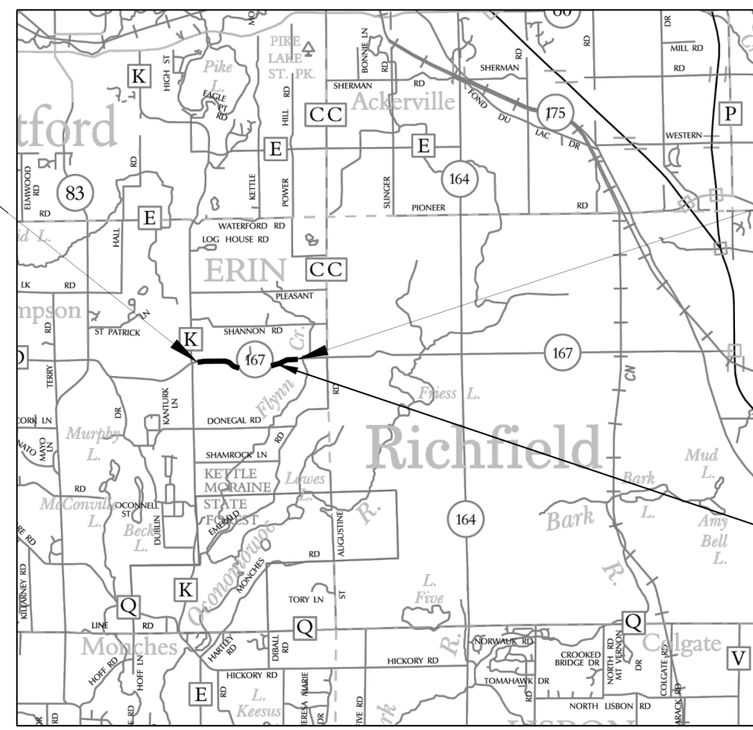


END PROJECT
STA 364+47.85

STRUCTURE R-66-085
STA 350+56

CONVENTIONAL SYMBOLS

PLAN
- CORPORATE LIMITS
- PROPERTY LINE
- LOT LINE
- LIMITED HIGHWAY EASEMENT
- EXISTING RIGHT OF WAY
- PROPOSED OR NEW R/W LINE
- SLOPE INTERCEPT
- REFERENCE LINE (300'EB')
- EXISTING CULVERT
- PROPOSED CULVERT (Box or Pipe)
- COMBUSTIBLE FLUIDS (CAUTION)
- MARSH AREA
- WOODED OR SHRUB AREA

PROFILE
- GRADE LINE
- ORIGINAL GROUND
- MARSH OR ROCK PROFILE (To be noted as such) (ROCK)
- SPECIAL DITCH (LABEL)
- GRADE ELEVATION (95.36)
- CULVERT (Profile View)

UTILITIES
- ELECTRIC (E)
- FIBER OPTIC (FO)
- GAS (G)
- SANITARY SEWER (SAN)
- STORM SEWER (SS)
- TELEPHONE (T)
- WATER (W)
- UTILITY PEDESTAL
- POWER POLE
- TELEPHONE POLE

LAYOUT
SCALE 0 — 2 MI

TOTAL NET LENGTH OF CENTERLINE = 1.27 MILES

HORIZONTAL POSITIONS SHOWN ON THIS PLAN ARE WISCONSIN COORDINATE REFERENCE SYSTEM (WISCRS), WASHINGTON COUNTY, NAD83 ( 2011 ), IN U.S. SURVEY FEET. POSITIONS SHOWN ARE GRID COORDINATES, GRID BEARINGS, AND GRID DISTANCES. GRID DISTANCES ARE THE SAME AS GROUND DISTANCES.

ELEVATIONS ARE REFERENCED TO NAVD 88 (2012 ). GPS DERIVED ELEVATIONS ARE BASED ON GEOID 12A.

STATE OF WISCONSIN
DEPARTMENT OF TRANSPORTATION

PREPARED BY

| | |
|---|---|
| Surveyor | WISDOT |
| Designer | WISDOT |
| Project Manager | JUSTIN SUYDAM |
| Regional Examiner | SE REGION |
| Regional Supervisor | JANET CANNON |

APPROVED FOR THE DEPARTMENT
DATE: 10/30/2023 Justin W Suydam (Signature)

E

## GENERAL NOTES

THE LOCATIONS OF EXISTING AND PROPOSED UTILITY INSTALLATIONS AS SHOWN ON THE PLANS ARE APPROXIMATE. THERE MAY BE OTHER UTILITY INSTALLATIONS WITHIN THE PROJECT AREA THAT ARE NOT SHOWN. THE CONTRACTOR SHALL COORDINATE HIS CONSTRUCTION ACTIVITIES WITH A CALL TO DIGGERS HOTLINE AND/OR A DIRECT CALL TO THE UTILITIES THAT HAVE FACILITIES IN THE AREA. NOT ALL UTILITIES ARE MEMBERS OF DIGGERS HOTLINE.

THE CONTRACTOR SHALL NOTIFY DIGGERS HOTLINE AND AFFECTED UTILITIES PRIOR TO THE START OF WORK. ANY LOCAL MUNICIPALITY OR PUBLIC AGENCY WHICH IS NOT A MEMBER OF DIGGERS HOTLINE MUST BE CONTACTED SEPARATELY.

WHEN THE QUANTITY OF BASE AGGREGATE OR ASPHALTIC SURFACE IS MEASURED FOR PAYMENT BY THE TON OR CUBIC YARD, THE DEPTH OR THICKNESS OF THE LAYER SHOWN ON THE PLANS IS APPROXIMATE AND THE ACTUAL THICKNESS WILL DEPEND ON THE DISTRIBUTION OF THE MATERIAL AS DIRECTED BY THE ENGINEER.

ALL ELEVATIONS AND OFFSETS SHOWN IN THE PLAN WHERE MATCHING INTO EXISTING GROUND SHALL BE VERIFIED IN THE FIELD.

NO TREES OR SHRUBS ARE TO BE REMOVED WITHOUT THE APPROVAL OF THE ENGINEER.

CURVE DATA IS BASED ON THE ARC DEFINITION.

DISTURBED AREAS WITHIN THE RIGHT-OF-WAY, EXCEPT THE AREAS WITHIN THE FINISHED SHOULDER POINTS, ARE TO BE 4-INCH TOPSOILED, FERTILIZED, AND EROSION MATTED.

BEARINGS SHOWN ON THE PLANS ARE GROUND BEARINGS TO THE NEAREST SECOND.

A VERTICAL SAWCUT SHALL BE MADE THROUGH EXISTING PAVEMENT AT REMOVAL LIMITS.

TRAFFIC CONTROL ITEMS SHOWN ON THE PLANS ARE AT SUGGESTED LOCATIONS, EXACT LOCATIONS WILL BE APPROVED BY THE ENGINEER IN THE FIELD.

CONTACT THE PROJECT ENGINEER AND SCOTT SCHMIDT, WASHINGTON COUNTY SURVEYOR, AT LEAST TWO WEEKS PRIOR TO WORK NEAR ANY PUBLIC SURVEY MONUMENT.

HMA PAVEMENT:

2" OVERLAY - 2" 4 LT 58-28 H

## LIST OF STANDARD ABBREVIATIONS

| | | | | | |
|---|---|---|---|---|---|
| ABUT | ABUTMENT | HYD | HYDRANT | RD | ROAD |
| AC | ACRE | IN DIA | INCH DIAMETER | RDWY | ROADWAY |
| AGG | AGGREGATE | INL | INLET | SALV | SALVAGED |
| AADT | ANNUAL AVERAGE DAILY TRAFFIC | ID | INSIDE DIAMETER | SSS | SANITARY AND STORM SEWER |
| ASPH | ASPHALT | INV | INVERT | SAN S | SANITARY SEWER |
| AVG | AVERAGE | IP | IRON PIPE | SEC | SECTION |
| ADT | AVERAGE DAILY TRAFFIC | JT | JOINT | SHLDR | SHOULDER |
| BF | BACK FACE | JCT | JUNCTION | SW | SIDEWALK |
| BL | BASE LINE | LT | LEFT | S | SOUTH |
| BM | BENCH MARK | L | LENGTH OF CURVE | SB | SOUTHBOUND |
| CB | CATCH BASIN | LHF | LEFT HAND FORWARD | SP | SPECIAL |
| C/L | CENTERLINE | LF | LINEAR FOOT | SPECS | SPECIFICATIONS |
| CC | CENTER TO CENTER | L | LITER | SQ | SQUARE |
| CE | COMMERCIAL ENTRANCE | LS | LUMP SUM | SF | SQUARE FEET |
| CONC | CONCRETE | MH | MANHOLE | SY | SQUARE YARD |
| CO | COUNTY | MB | MESSAGE BOARD | STD | STANDARD |
| CTH | COUNTY TRUNK HIGHWAY | MLB | MAILBOX | SDD | STANDARD DETAIL DRAWINGS |
| CY | CUBIC YARD | ML | MATCH LINE | STH | STATE TRUNK HIGHWAYS |
| CULV | CULVERT | NC | NORMAL CROWN | STA | STATION |
| C&G | CURB AND GUTTER | N | NORTH | SS | STORM SEWER |
| DHV | DESIGN HOUR VOLUME | Y | NORTH GRID COORDINATE | STR | STRUCTURE OR STRUCTURAL |
| DIA | DIAMETER | NB | NORTHBOUND | SL | SURVEY LINE |
| DD | DIRECTIONAL DISTRIBUTION | NO | NUMBER | TEL | TELEPHONE |
| E | EAST | OD | OUTSIDE DIAMETER | TEMP | TEMPORARY |
| X | EAST GRID COORDINATE | PAVT | PAVEMENT | TLE | TEMPORARY LIMITED EASEMENT |
| EB | EASTBOUND | PERM | PERMANENT | T | TON |
| ELEC | ELECTRIC | PLE | PERMANENT LIMITED EASEMENT | TC | TOP OF CURB |
| ELEV | ELEVATION | PT | POINT | T | TRUCKS (PERCENT OF) |
| ESALS | EQUIVALENT SINGLE AXLE LOADS | PVC | POLYVINYL CHLORIDE | TYP | TYPICAL |
| EXC | EXCAVATION | PCC | PORTLAND CEMENT CONCRETE | UG | UNDERGROUND |
| EBS | EXCAVATION BELOW SUBGRADE | PE | PRIVATE ENTRANCE | USH | UNITED STATES HIGHWAY |
| EXIST | EXISTING | PROJ | PROJECT | VAR | VARIABLE |
| FF | FACE TO FACE | PL | PROPERTY LINE | VERT | VERTICAL |
| FE | FIELD ENTRANCE | R | RADIUS | W | WATER |
| FG | FINISHED GRADE | R/L | REFERENCE LINE | WM | WATER MAIN |
| FL | FLOW LINE | RCCP | REINFORCED CONCRETE CULVERT PIPE | WV | WATER VALVE |
| FT | FOOT | REQD | REQUIRED | W | WEST |
| FTMS | FREEWAY TRAFFIC MANAGEMENT SYSTEM | RT | RIGHT | WB | WESTBOUND |
| HES | HIGH EARLY STRENGTH | RHF | RIGHT HAND FORWARD | YD | YARD |
| CWT | HUNDREDWEIGHT | R/W | RIGHT-OF-WAY | | |

## EROSION CONTROL AND STORM WATER MANAGEMENT GENERAL NOTES

EROSION CONTROL FEATURES AS SHOWN ON THE PLANS ARE AT SUGGESTED LOCATIONS, EXACT LOCATIONS WILL BE APPROVED BY THE ENGINEER IN THE FIELD.

SILT FENCE TO BE PLACED AS SHOWN ON THE PLANS OR AS DIRECTED BY THE ENGINEER, AND IN PLACE PRIOR TO REMOVALS.

ALL DISTURBED STREAM BANK AND/OR WETLAND AREAS SHOULD BE ADEQUATELY PROTECTED AND/OR RESTORED OR TEMPORARY PROTECTED/RESTORED WITHIN 24 HOURS OF ANY DISTURBANCE.

IF DEWATERING IS REQUIRED FOR ANY REASON, THE WATER MUST BE PUMPED INTO A PROPERLY SELECTED AND SIZED DEWATERING BASIN BEFORE THE CLEAN/FILTERED WATER IS ALLOWED TO ENTER ANY WATERWAY OR WETLAND. THE TREATMENT DEVICE MUST REMOVE SUSPENDED SOLIDS AND MEET WATER QUALITY STANDARDS. DO NOT HOUSE ANY DEWATERING DEVICE IN A WETLAND WITHOUT DNR APPROVAL.

THE CONTRACTOR SHALL RESTRICT THE REMOVAL OF VEGETATIVE COVER AND EXPOSURE OF BARE GROUND TO THE MINIMUM AMOUNTS NECESSARY TO COMPLETE CONSTRUCTION. RE-TOPSOIL DISTURBED AREAS, AS DESIGNATED BY THE ENGINEER. SEED AND E-MAT TOP-SOILED AREAS, AS DESIGNATED BY THE ENGINEER, WITHIN (5) CALENDAR DAYS AFTER PLACEMENT OF TOPSOIL.

ALL TEMPORARY STOCK PILES MUST BE IN AN UPLAND LOCATION AND PROTECTED WITH EROSION CONTROL MEASURES (E.G. SILT FENCE, ROCK FILTER-BAG BERN, ETC.). DO NOT STOCKPILE MATERIALS IN WETLANDS, WATERWAYS OR FLOODPLAINS.

## ORDER OF SECTION 2 SHEETS



DIGGERS HOTLINE
Dial 811 or (800)242-8511
www.DiggersHotline.com

## UTILITIES

### COMMUNICATIONS

AT&T WISCONSIN
DEAN HERRO
435 SOUTH 95TH ST
MILWAUKEE, WI 53214
PHONE: (262) 226-9639
EMAIL: DH2572@ATT.COM

### ELECTRICITY

WE ENERGIES
GREG BOERNER
500 S 116TH ST
WEST ALLIS, WI 53214
PHONE: (618) 409-5861
EMAIL: GREGORY.BOERNER@WE-ENERGIES.COM

### COMMUNICATIONS

SPECTRUM
ADAM OLSON
N3760 COUNTY RD DJ
JUNEAU, WI 53039
PHONE: (920) 349-5055
EMAIL: ADAM.OLSON@CHARTER.COM

## AGENCIES

### WISDOT CONTACT

SOUTHEAST REGION
JUSTIN SUYDAM, PE
141 NW BARSTOW ST
WAUKESHA, WI 53188
PHONE: (262) 548-8745
EMAIL: JUSTIN.SUYDAM@DOT.WI.GOV

### WASHINGTON COUNTY

WASHINGTON COUNTY HIGHWAY COMMISSIONER
SCOTT M. SCHMIDT, PE, PLS
900 LANG STREET
WEST BEND, WI 53090
PHONE: (262) 335-6881
FAX: (262) 335-4439
EMAIL: SCOTT.SCHMIDT@CO.WASHINGTON.WI.US

### DNR LIAISON

DNR SOUTHERN REGION
BENTON STELZEL
141 NW BARSTOW ST, ROOM 180
WAUKESHA, WI 53188
PHONE: (262) 623-0194
EMAIL: BENTON.STELZEL@WISCONSIN.GOV

### SOUTHEASTERN WISCONSIN REGIONAL PLANNING COMMISSION

CHIEF SURVEYOR
ROB MERRY
W239 N1812 ROCKWOOD DRIVE
P.O. BOX 1607
WAUKESHA, WI 53187-1607
PHONE: (262) 953-4289
CELL: (920) 912-1036
FAX: (262) 547-1103
EMAIL: RMERRY@SEWRPC.ORG

CONSTRUCTION COORDINATOR
ANDY TRAEGER
W239 N1812 ROCKWOOD DRIVE
P.O. BOX 1607
WAUKESHA, WI 53187-1607
PHONE: (262) 953-4296
CELL: (262) 853-8463
FAX: (262) 547-1103
EMAIL: ATRAEGER@SEWRPC.ORG

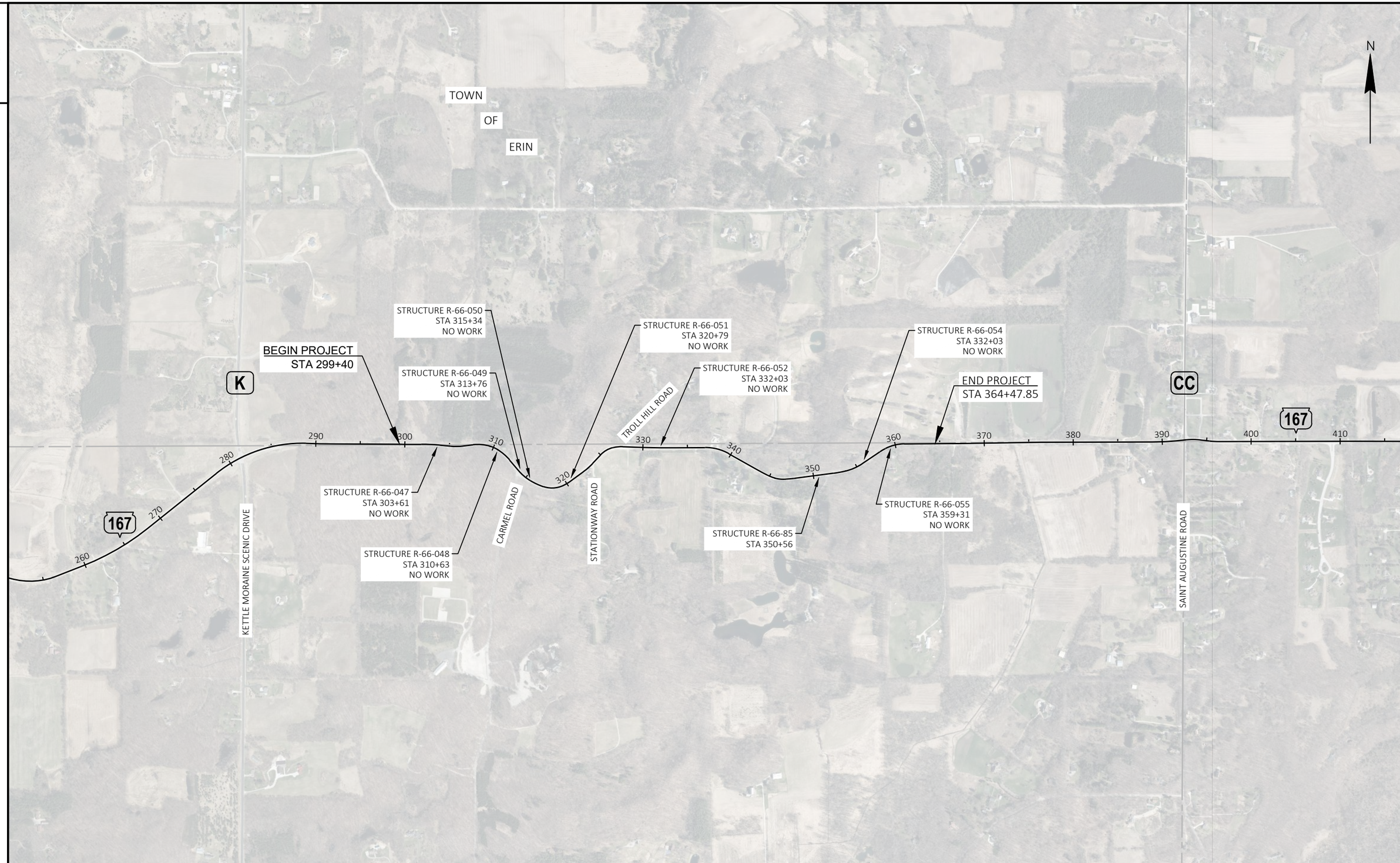


| PROJECT NO: 2300-06-70 | HWY: STH 167 | COUNTY: WASHINGTON | PROJECT OVERVIEW | SHEET 3 | E |
|---|---|---|---|---|---|

FILE NAME : N:\PDS\C3D\23000600\SHEETSPLAN\020201-PO.DWG
LAYOUT NAME - 01
PLOT DATE : 10/11/2023 9:10 AM
PLOT BY : SKIFFINGTON, NICHOLA
PLOT NAME :
PLOT SCALE : 1 IN:1000 FT
WISDOT/CADDS SHEET 42

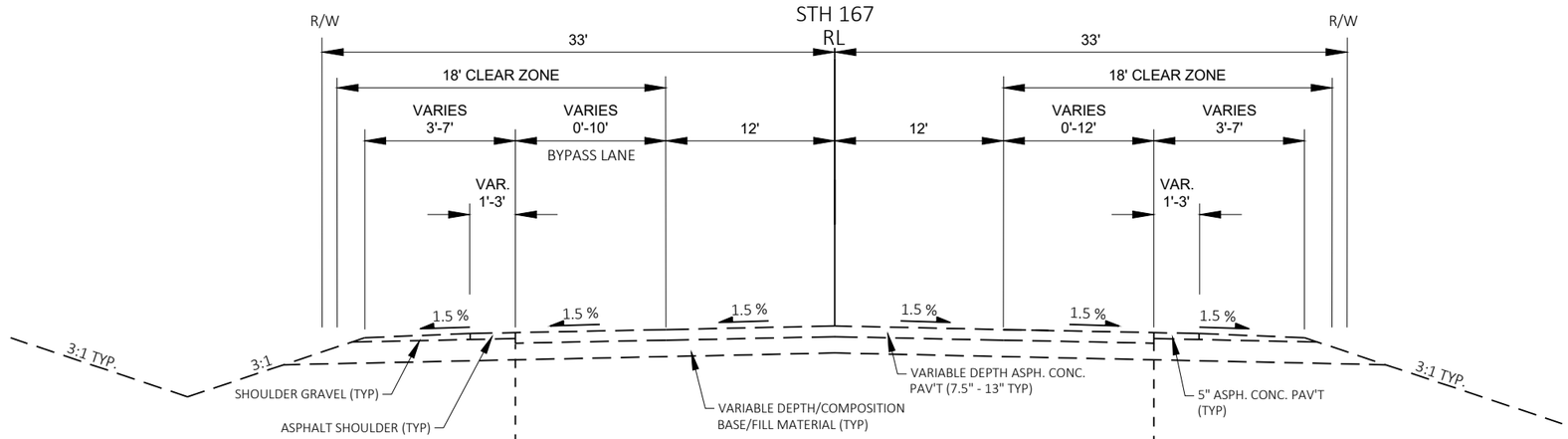


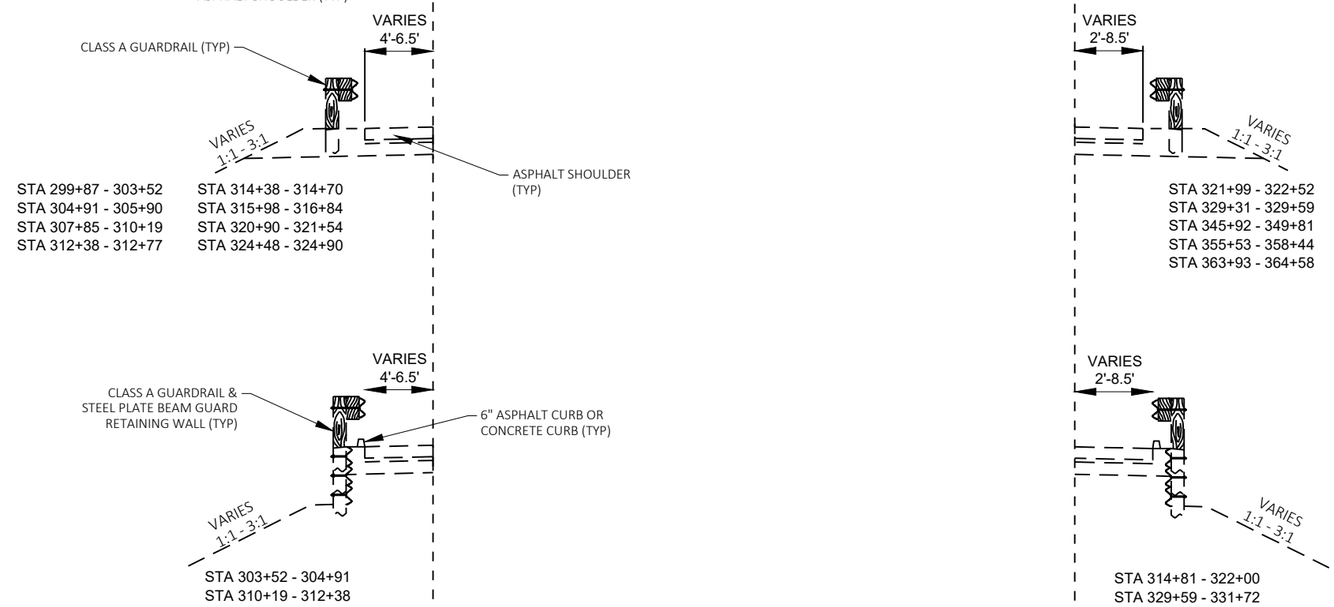


## EXISTING TYPICAL SECTION STH 167

STA 299+40 - 364+47

**CONCRETE WALLS**

R-66-049, STA 313+14 - 314+38
R-66-050, STA 314+70 - 315+98
R-66-051, STA 316+84 - 320+90
R-66-052, STA 321+54 - 324+48

**PILE & LAGGING WALLS**

R-66-053, STA 330+95 - 332+96
R-66-054, STA 354+76 - 357+60
R-66-055, STA 359+07 - 359+63

**PILE & LAGGING WALLS**

R-66-047, STA 302+62 - 304+61
R-66-048, STA 308+48 - 312+67
NO ID, STA 360+54 - 363+41

2

RESIN BINDER HIGH FRICTION SURFACE TREATMENT LIMITS:
STA 299+40 TO STA 366+53,
LATERAL LIMITS: ~+1' FROM ETW (AT EXISTING JOINT)

CURB TO REMAIN, LIMITS:
STA 307+59 TO 308+58 RT (CONCRETE)
STA 344+08 TO 350+54 LT (CONCRETE)

PROPOSED GABION WALL R-66-085
STA 349+81 - 351+31, RT
SEE CONSTRUCTION DETAILS AND STRUCTURE PLANS

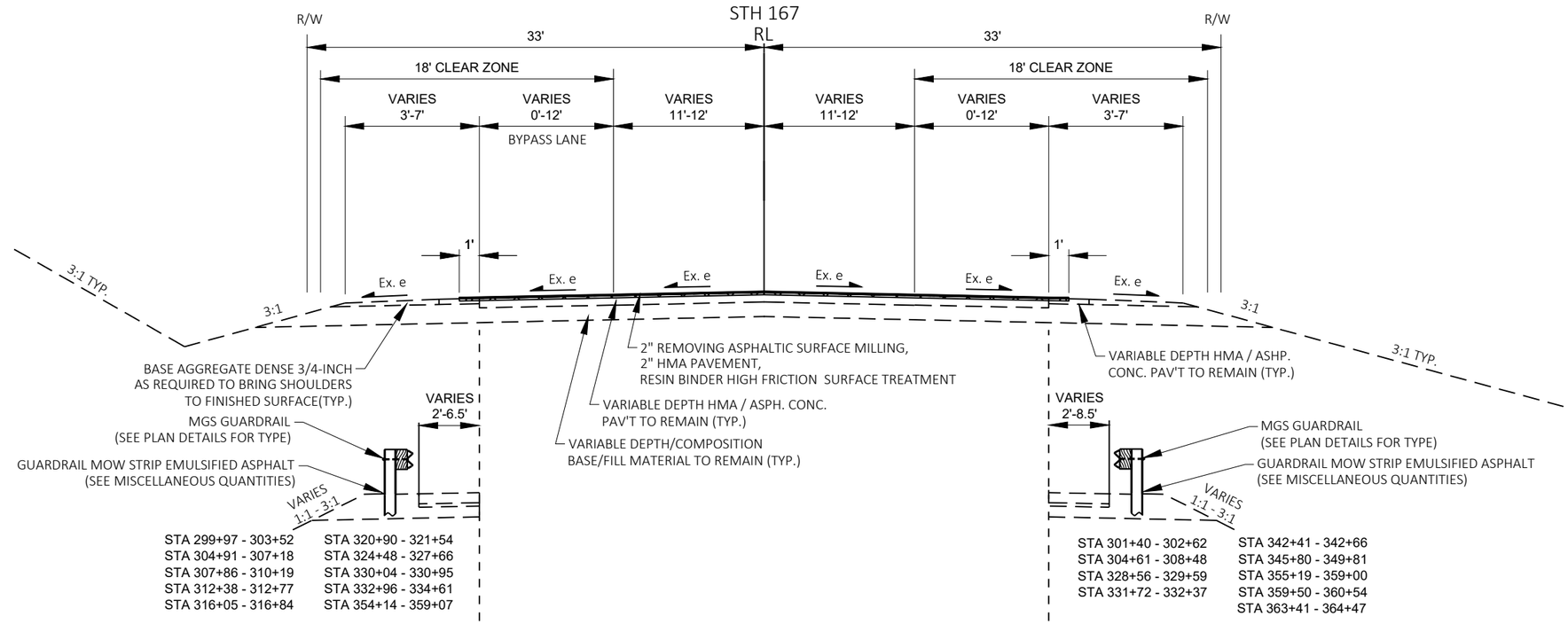


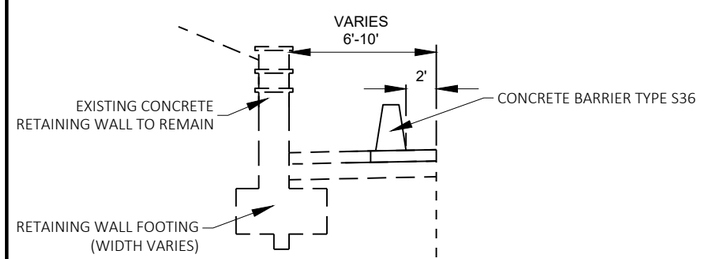


CONCRETE BARRIER LIMITS
STA 313+14 - 316+07

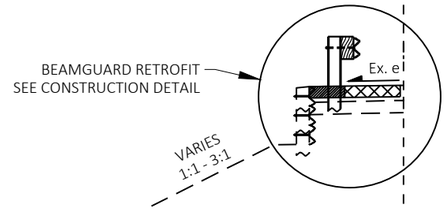


STA 303+52 - 304+91
STA 310+19 - 312+38

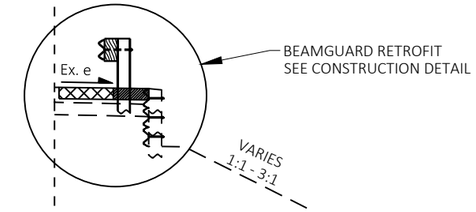


STA 329+59 - 331+72

FINISHED TYPICAL SECTION STH 167
STA 299+40 - 366+56

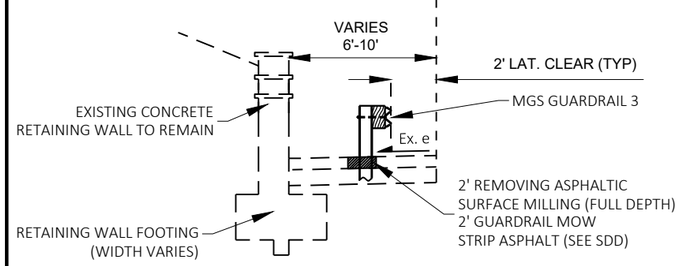


BEAM GUARD LIMITS
STA 316+84 - 320+90
STA 321+54 - 324+48

MOW STRIP ASPHALT - LIMITS
STA 316+84 - 320+90
STA 321+54 - 324+48

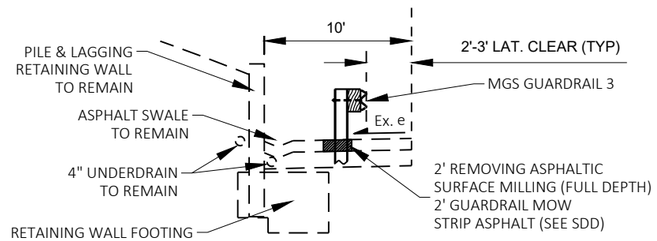


BEAM GUARD LIMITS
STA 330+95 - 332+96
STA 354+76 - 357+60
STA 359+07 - 359+63

MOW STRIP ASPHALT - LIMITS
STA 330+95 - 332+96
STA 354+76 - 357+60
STA 359+07 - 359+63

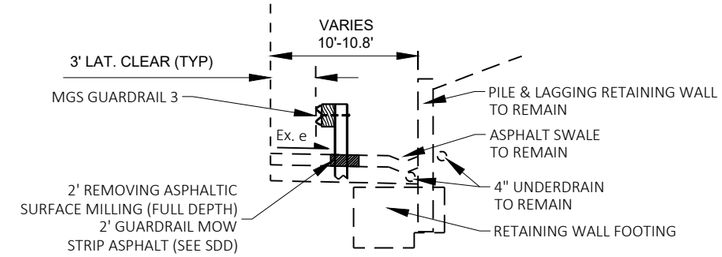


PILE & LAGGING WALLS
STA 302+62 - 304+61
STA 308+48 - 312+67
STA 360+54 - 363+41

MOW STRIP ASPHALT - LIMITS
STA 302+62 - 304+61
STA 308+48 - 312+67
STA 360+54 - 363+41

2

| PROJECT NO: 2300-06-70 | HWY: STH 167 | COUNTY: WASHINGTON | TYPICAL SECTIONS | SHEET 5 | E |
|---|---|---|---|---|---|

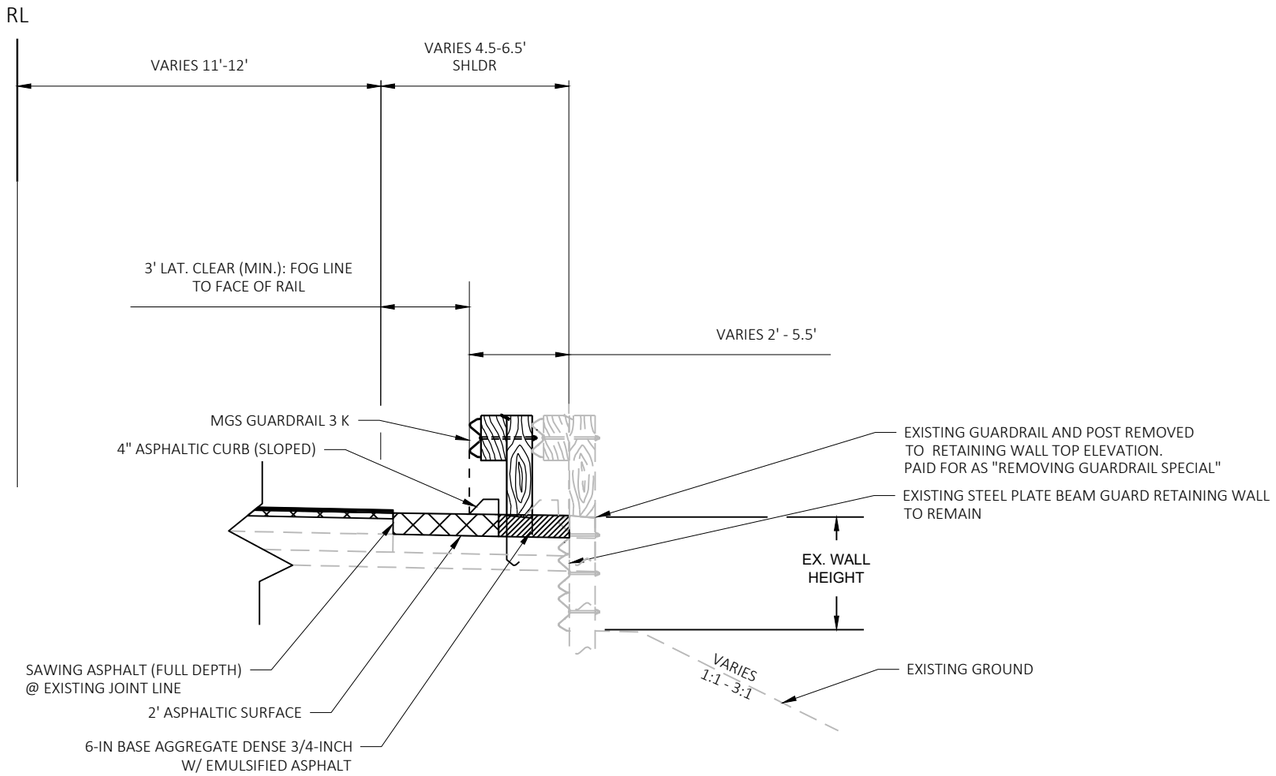


## BEAMGUARD RETROFIT DETAIL

STA. 303+52 - 304+91, LT
STA. 310+19 - 312+38, LT
STA. 329+59 - 331+72, RT

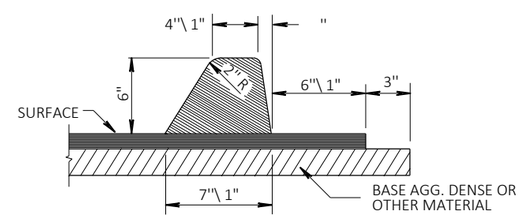


## ASPHALTIC CURB DETAIL

STA 303+52 - 304+91, LT
STA 310+19 - 312+38, LT
STA 329+59 - 331+72, RT
STA 349+81 - 351+31, RT

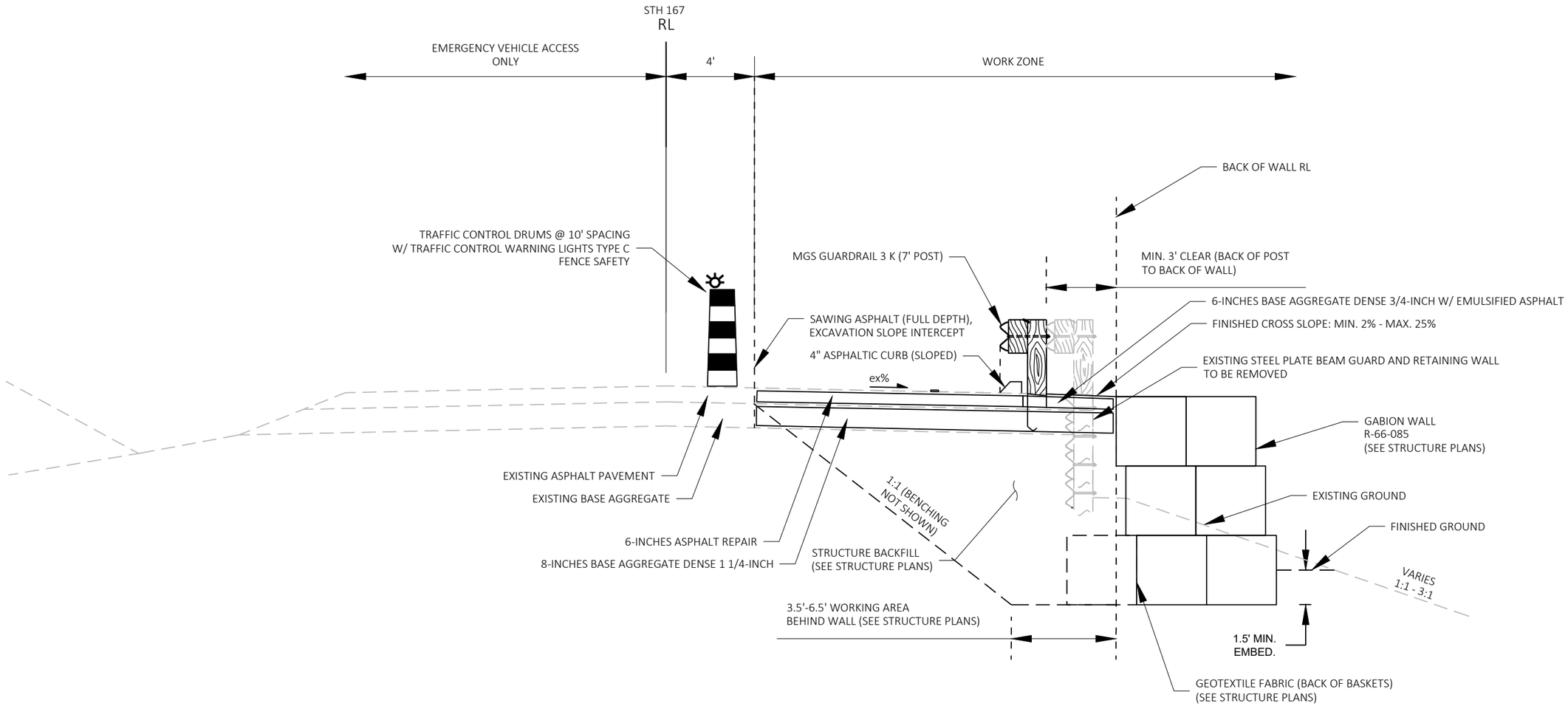


GABION WALL R-65-085 DETAIL
STA 349+81 - 351+31, RT

NTS

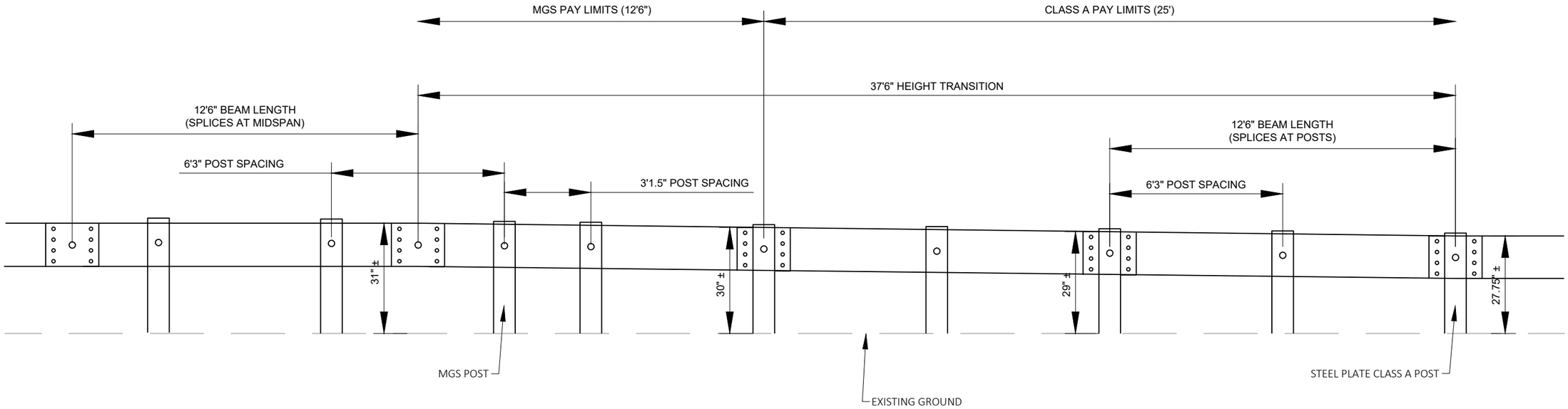


## GUARDRAIL TRANSITION FROM CLASS A TO MGS

STA. 345+91 - 346+29, RT
STA. 364+20 - 364+58, RT

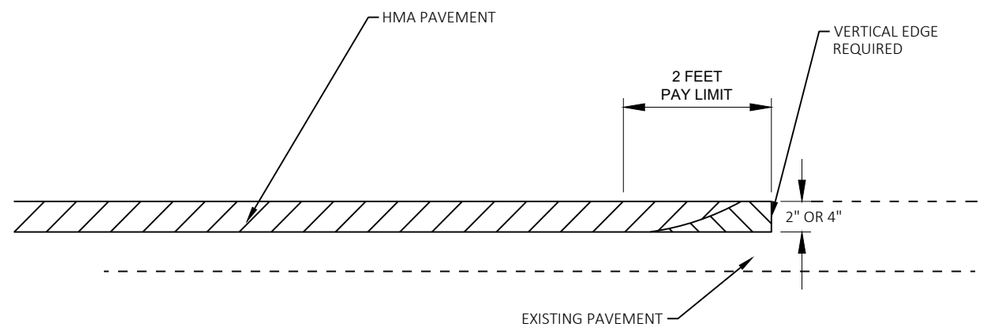


REMOVE MATERIAL UNDER ITEM 'REMOVING ASPHALTIC SURFACE BUTT JOINT'

REMOVING ASPHALTIC SURFACE MILLING

## REMOVING ASPHALTIC PAVEMENT BUTT JOINT DETAIL

NOTES:

1. MILL TO THE END OF RADIUS OR EXISTING PAVEMENT JOINT, WHICHEVER IS CLOSER.
2. WHEN MATCHING TO AN UNPAVED SURFACE BUTT JOINT IS NOT REQUIRED.
3. ASPHALTIC SURFACE TEMPORARY RAMP PAID FOR AS "ASPHALTIC SURFACE TEMPORARY"
4. INSTALLATION, REMOVAL, AND DISPOSAL OF RAMP IS INCIDENTAL TO ASPHALTIC SURFACE TEMPORARY BID ITEM.

2

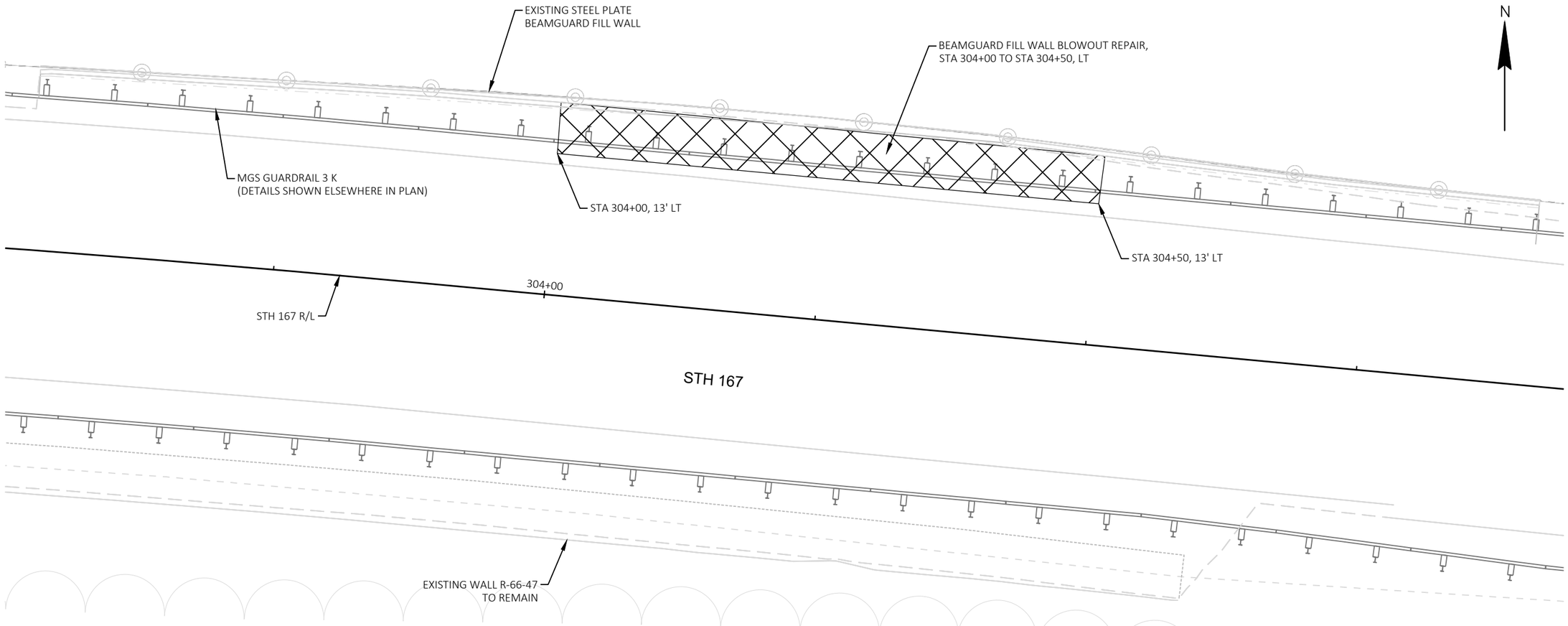


BEAMGUARD FILL WALL BLOWOUT REPAIR

980 FT WEST OF CARMEL RD INTERSECTION

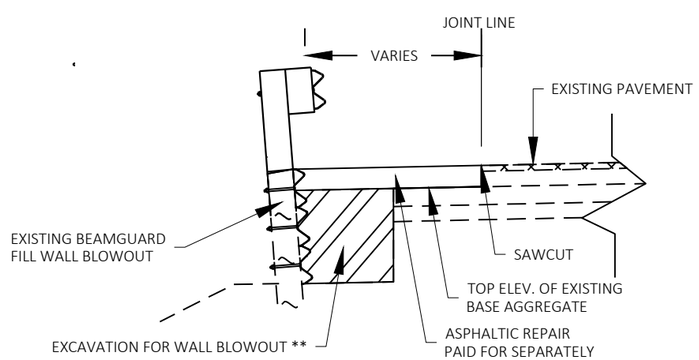


** INCIDENTAL TO BEAMGUARD FILL WALL BLOWOUT REPAIR ITEM

EXISTING TYPICAL SECTION
BEAMGUARD FILL WALL BLOWOUT

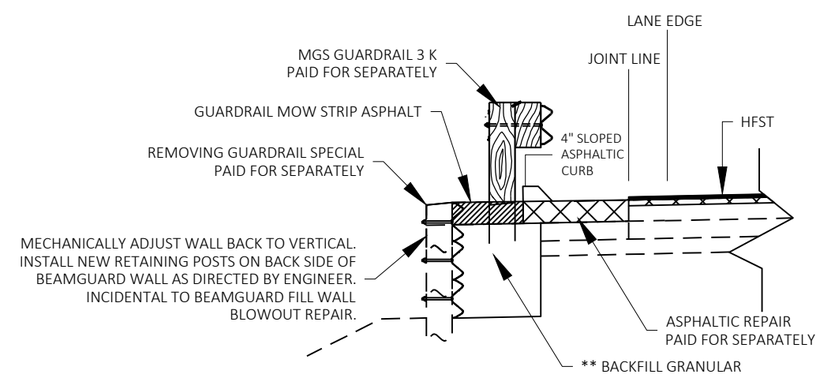


FINISH TYPICAL SECTION BEAMGUARD
FILL WALL BLOWOUT REPAIR

| PROJECT NO: 2300-06-70 | HWY: STH 167 | COUNTY: WASHINGTON | CONSTRUCTION DETAILS - BEAMGUARD FILL WALL BLOWOUT FIX | SHEET 10 | E |
|---|---|---|---|---|---|

2

N

STATE OF WISCONSIN

ICE AGE TRAIL

BEGIN CONSTRUCTION
STA 299+40
MATCH EXISTING
SAW CUT REQ'D

OVERHEAD ELECTRIC
(WE ENERGIES)

BARRIER SYSTEM GRADING SHAPING FINISHING

BEGIN BEAMGUARD TAPER
+88.5, 17' LT

SILT FENCE

+97.9, 17' LT

+51.0, 17' LT

NO FLARE

BG3

END BEAMGUARD TAPER
+26.0, 16.5' LT

BG7 299+87 - 303+52, LT

BG2

BEGIN BEAMGUARD TAPER
+00.2, 16.5' LT

END BEAMGUARD TAPER
+49.8, 14' LT

EXISTING STEEL PLATE BEAMGUARD RETAINING WALL
SEE CONSTRUCTION DETAIL
STA. 303+52 - STA. 304+91, LT

BG4 BG7S

R/W

SECTION LINE

297+00

298+00

299+00

300+00

301+00

302+00

303+00

304

STA.304+00

MATCH LINE

STH 167

R/L STH 167

26'
HFST

NO FLARE

BG3

+39.6, 15' RT

+92.7, 15' RT

BG1

REMOVING ASPHALTIC SURFACE BUTT JOINTS
(SEE CONSTRUCTIONDETAIL)

WETLAND
LIMITS (TYP)

EXISTING PILE & LAGGING WALL R-66-047
STA. 302+62 - STA. 304+61, 22' RT
TO REMAIN

302+62 - 304+61, RT BG6

ICE AGE TRAIL

STATE OF WISCONSIN

LEGEND:

- 2" REMOVING ASPHALTIC SURFACE MILLING, 2" HMA PAVEMENT, RESIN BINDER HIGH FRICTION SURFACE TREATMENT
- SLOPE INTERCEPTS
- BG1 MGS GUARDRAIL 3
- BG2 MGS GUARDRAIL 3 K
- BG3 MGS GUARDRAIL TERMINAL EAT
- BG4 BEAMGUARD RETROFIT (SEE CONSTRUCTION DETAIL)
- BG5 STEEL PLATE BEAMGUARD ENERGY ABSORBING TERMINAL
- BG6 GUARDRAIL MOW STRIP ASPHALT, REMOVING ASPHALTIC SURFACE MILLING (SEE TYPICAL SECTIONS)
- BG7 REMOVING GUARDRAIL BACKFILL POST HOLES WITH BACKFILL CONTROLLED LOW STRENGTH
- BG7S REMOVING GUARDRAIL SPECIAL (SEE CONSTRUCTION DETAIL)
- BG8 GUARDRAIL TRANSITION FROM CLASS A TO MGS (SEE CONSTRUCTION DETAIL)
- BG9 MGS THRIE BEAM TRANSITION

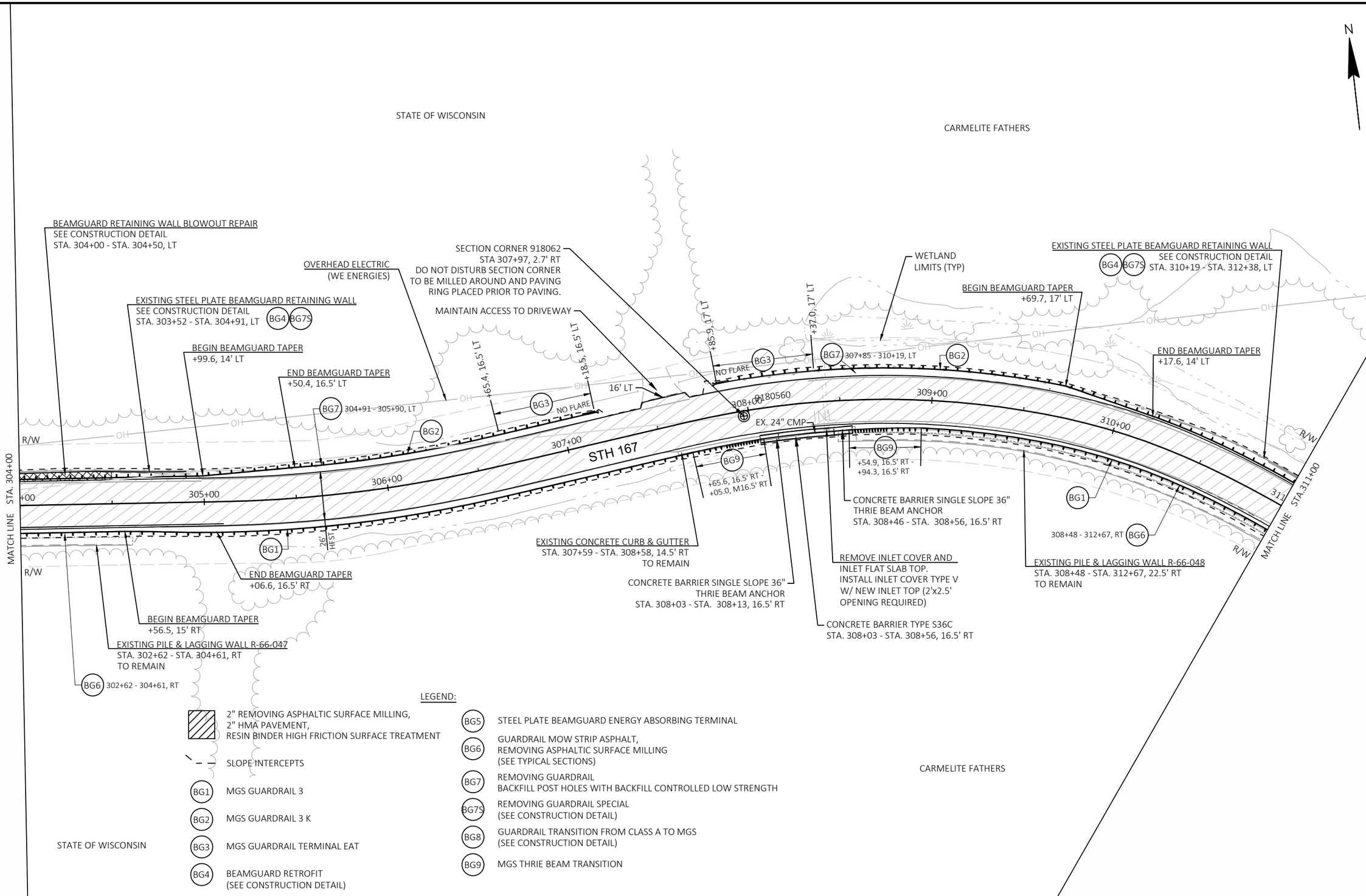
N
STATE OF WISCONSIN
CARMELITE FATHERS
BEAMGUARD RETAINING WALL BLOWOUT REPAIR
SEE CONSTRUCTION DETAIL
STA. 304+00 - STA. 304+50, LT
OVERHEAD ELECTRIC
(WE ENERGIES)
EXISTING STEEL PLATE BEAMGUARD RETAINING WALL
SEE CONSTRUCTION DETAIL
STA. 303+52 - STA. 304+91, LT
BG4 BG7S
BEGIN BEAMGUARD TAPER
+99.6, 14' LT
END BEAMGUARD TAPER
+50.4, 16.5' LT
BG7 304+91 - 305+90, LT
SECTION CORNER 918062
STA 307+97, 2.7' RT
DO NOT DISTURB SECTION CORNER
TO BE MILLED AROUND AND PAVING
RING PLACED PRIOR TO PAVING.
MAINTAIN ACCESS TO DRIVEWAY
+65.4, 16.5' LT
+18.5, 16.5' LT
+85.9, 17' LT
+37.0, 17' LT
16' LT
NO FLARE
BG3
BG2
BG7 307+85 - 310+19, LT
WETLAND
LIMITS (TYP)
BEGIN BEAMGUARD TAPER
+69.7, 17' LT
EXISTING STEEL PLATE BEAMGUARD RETAINING WALL
SEE CONSTRUCTION DETAIL
STA. 310+19 - STA. 312+38, LT
BG4 BG7S
END BEAMGUARD TAPER
+17.6, 14' LT
0180560
308+00
309+00
310+00
311
EX. 24" CMP
R/W
OH
STH 167
307+00
306+00
305+00
+00
MATCH LINE STA. 304+00
MATCH LINE STA. 311+00
BG9
+65.6, 16.5' RT -
+05.0, M16.5' RT
+54.9, 16.5' RT -
+94.3, 16.5' RT
BG1
26' HFST
END BEAMGUARD TAPER
+06.6, 16.5' RT
EXISTING CONCRETE CURB & GUTTER
STA. 307+59 - STA. 308+58, 14.5' RT
TO REMAIN
CONCRETE BARRIER SINGLE SLOPE 36"
THRIE BEAM ANCHOR
STA. 308+03 - STA. 308+13, 16.5' RT
CONCRETE BARRIER SINGLE SLOPE 36"
THRIE BEAM ANCHOR
STA. 308+46 - STA. 308+56, 16.5' RT
REMOVE INLET COVER AND
INLET FLAT SLAB TOP.
INSTALL INLET COVER TYPE V
W/ NEW INLET TOP (2'x2.5'
OPENING REQUIRED)
CONCRETE BARRIER TYPE S36C
STA. 308+03 - STA. 308+56, 16.5' RT
308+48 - 312+67, RT BG6
EXISTING PILE & LAGGING WALL R-66-048
STA. 308+48 - STA. 312+67, 22.5' RT
TO REMAIN
BEGIN BEAMGUARD TAPER
+56.5, 15' RT
EXISTING PILE & LAGGING WALL R-66-047
STA. 302+62 - STA. 304+61, RT
TO REMAIN
BG6 302+62 - 304+61, RT
LEGEND:
2" REMOVING ASPHALTIC SURFACE MILLING,
2" HMA PAVEMENT,
RESIN BINDER HIGH FRICTION SURFACE TREATMENT
SLOPE INTERCEPTS
BG1 MGS GUARDRAIL 3
BG2 MGS GUARDRAIL 3 K
BG3 MGS GUARDRAIL TERMINAL EAT
BG4 BEAMGUARD RETROFIT
(SEE CONSTRUCTION DETAIL)
BG5 STEEL PLATE BEAMGUARD ENERGY ABSORBING TERMINAL
BG6 GUARDRAIL MOW STRIP ASPHALT,
REMOVING ASPHALTIC SURFACE MILLING
(SEE TYPICAL SECTIONS)
BG7 REMOVING GUARDRAIL
BACKFILL POST HOLES WITH BACKFILL CONTROLLED LOW STRENGTH
BG7S REMOVING GUARDRAIL SPECIAL
(SEE CONSTRUCTION DETAIL)
BG8 GUARDRAIL TRANSITION FROM CLASS A TO MGS
(SEE CONSTRUCTION DETAIL)
BG9 MGS THRIE BEAM TRANSITION
STATE OF WISCONSIN
CARMELITE FATHERS

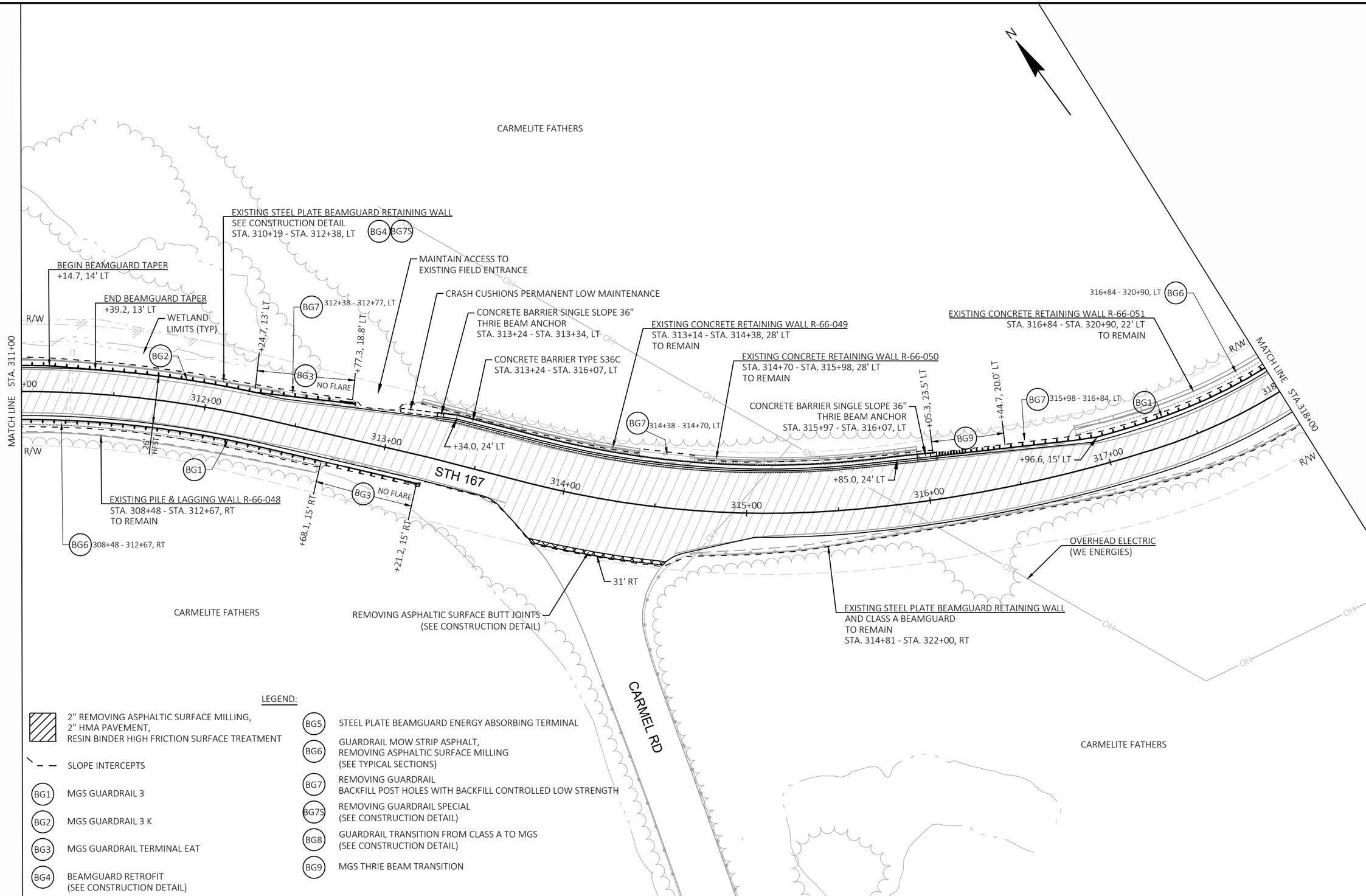


LEGEND:

- 2" REMOVING ASPHALTIC SURFACE MILLING, 2" HMA PAVEMENT, RESIN BINDER HIGH FRICTION SURFACE TREATMENT
- SLOPE INTERCEPTS
- BG1 MGS GUARDRAIL 3
- BG2 MGS GUARDRAIL 3 K
- BG3 MGS GUARDRAIL TERMINAL EAT
- BG4 BEAMGUARD RETROFIT (SEE CONSTRUCTION DETAIL)
- BG5 STEEL PLATE BEAMGUARD ENERGY ABSORBING TERMINAL
- BG6 GUARDRAIL MOW STRIP ASPHALT, REMOVING ASPHALTIC SURFACE MILLING (SEE TYPICAL SECTIONS)
- BG7 REMOVING GUARDRAIL BACKFILL POST HOLES WITH BACKFILL CONTROLLED LOW STRENGTH
- BG7S REMOVING GUARDRAIL SPECIAL (SEE CONSTRUCTION DETAIL)
- BG8 GUARDRAIL TRANSITION FROM CLASS A TO MGS (SEE CONSTRUCTION DETAIL)
- BG9 MGS THRIE BEAM TRANSITION

2

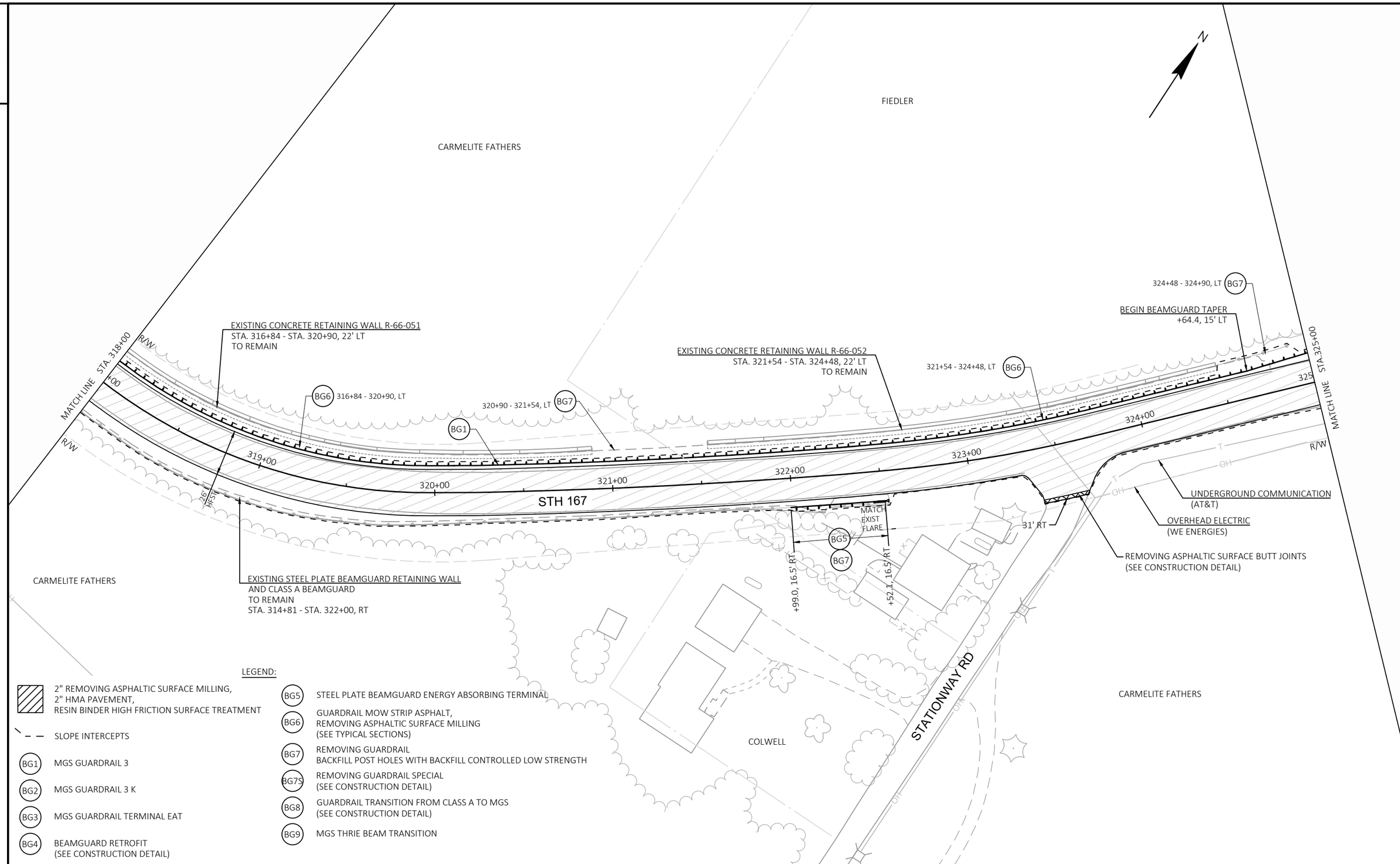


LEGEND:

- 2" REMOVING ASPHALTIC SURFACE MILLING, 2" HMA PAVEMENT, RESIN BINDER HIGH FRICTION SURFACE TREATMENT
- SLOPE INTERCEPTS
- BG1 MGS GUARDRAIL 3
- BG2 MGS GUARDRAIL 3 K
- BG3 MGS GUARDRAIL TERMINAL EAT
- BG4 BEAMGUARD RETROFIT (SEE CONSTRUCTION DETAIL)
- BG5 STEEL PLATE BEAMGUARD ENERGY ABSORBING TERMINAL
- BG6 GUARDRAIL MOW STRIP ASPHALT, REMOVING ASPHALTIC SURFACE MILLING (SEE TYPICAL SECTIONS)
- BG7 REMOVING GUARDRAIL BACKFILL POST HOLES WITH BACKFILL CONTROLLED LOW STRENGTH
- BG7S REMOVING GUARDRAIL SPECIAL (SEE CONSTRUCTION DETAIL)
- BG8 GUARDRAIL TRANSITION FROM CLASS A TO MGS (SEE CONSTRUCTION DETAIL)
- BG9 MGS THRIE BEAM TRANSITION

| PROJECT NO: 2300-06-70 | HWY: STH 167 | COUNTY: WASHINGTON | PLAN DETAILS | SHEET 14 | E |
|---|---|---|---|---|---|

LEGEND:

- 2" REMOVING ASPHALTIC SURFACE MILLING, 2" HMA PAVEMENT, RESIN BINDER HIGH FRICTION SURFACE TREATMENT
- SLOPE INTERCEPTS
- BG1 MGS GUARDRAIL 3
- BG2 MGS GUARDRAIL 3 K
- BG3 MGS GUARDRAIL TERMINAL EAT
- BG4 BEAMGUARD RETROFIT (SEE CONSTRUCTION DETAIL)
- BG5 STEEL PLATE BEAMGUARD ENERGY ABSORBING TERMINAL
- BG6 GUARDRAIL MOW STRIP ASPHALT, REMOVING ASPHALTIC SURFACE MILLING (SEE TYPICAL SECTIONS)
- BG7 REMOVING GUARDRAIL BACKFILL POST HOLES WITH BACKFILL CONTROLLED LOW STRENGTH
- BG7S REMOVING GUARDRAIL SPECIAL (SEE CONSTRUCTION DETAIL)
- BG8 GUARDRAIL TRANSITION FROM CLASS A TO MGS (SEE CONSTRUCTION DETAIL)
- BG9 MGS THRIE BEAM TRANSITION

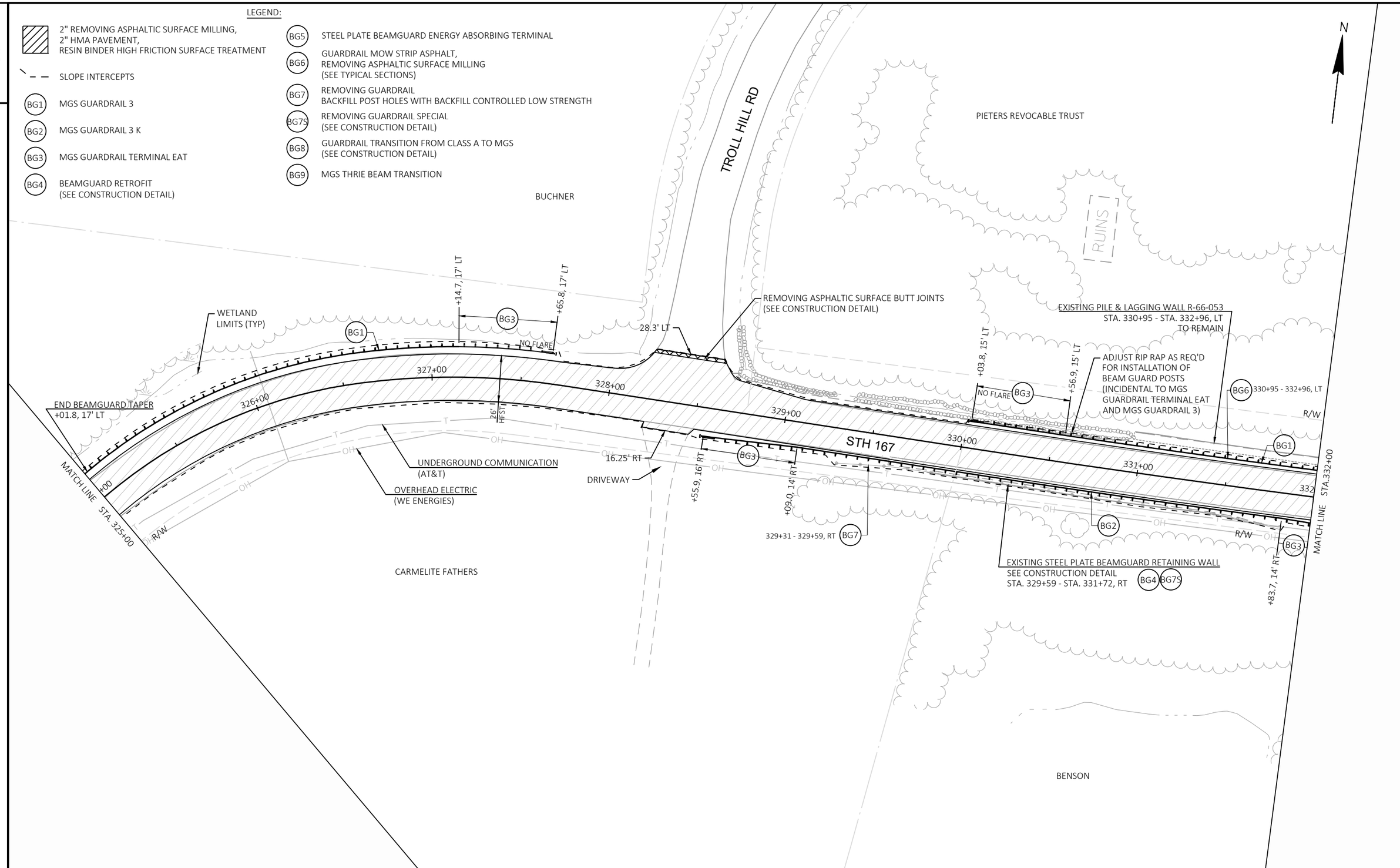

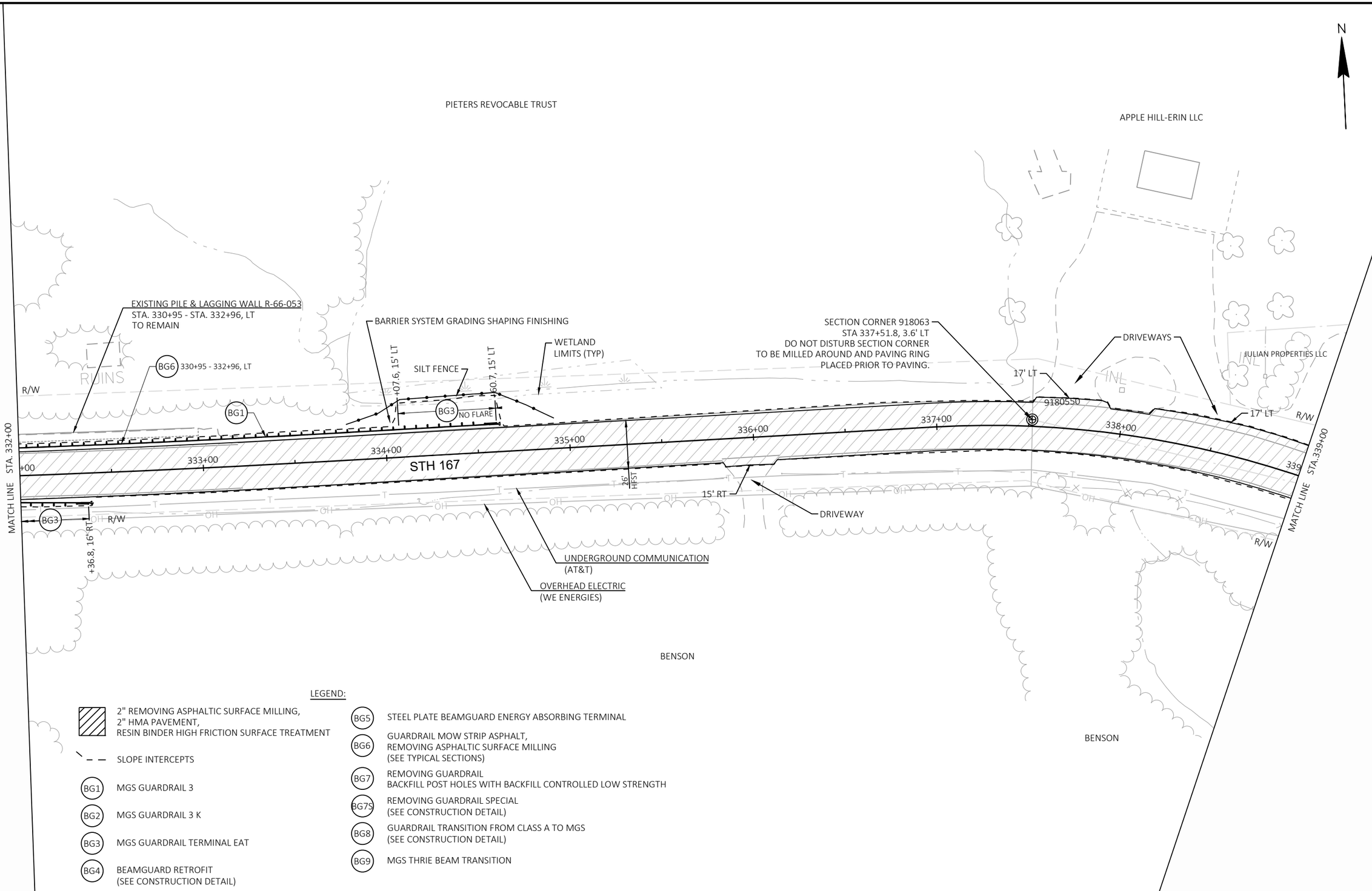


| PROJECT NO: 2300-06-70 | HWY: STH 167 | COUNTY: WASHINGTON | PLAN DETAILS | SHEET 16 | E |
|---|---|---|---|---|---|

BARBARA LESCH REVOCABLE TRUST

APPLE HILL - ERIN LLC

JULIAN PROPERTIES LLC

WALTON

N

EXISTING CONCRETE CURB & GUTTER
STA. 344+08 - STA. 350+54, 14'LT
TO REMAIN

17' LT

R/W

MATCH LINE STA. 339+00

340+00

341+00

342+00

343+00

344+00

345+00

346

MATCH LINE STA. 349+00

STH 167

26' HFST

UNDERGROUND COMMUNICATION
(AT&T)

OVERHEAD ELECTRIC
(WE ENERGIES)

SAWCUT REQ'D
31.5' RT

DRIVEWAY

BG5

BG7S

+62.2, 21' RT

+12.2, 16' RT

WETLAND
LIMITS (TYP)

EXISTING STEEL PLATE BEAMGUARD RETAINING WALL
NO WORK
STA. 343+12 - STA. 345+91, RT

+91.5, 16.5' RT

BG7

BG8

BEELER

BENSON

LEGEND:

- 2" REMOVING ASPHALTIC SURFACE MILLING, 2" HMA PAVEMENT, RESIN BINDER HIGH FRICTION SURFACE TREATMENT
- SLOPE INTERCEPTS
- BG1 MGS GUARDRAIL 3
- BG2 MGS GUARDRAIL 3 K
- BG3 MGS GUARDRAIL TERMINAL EAT
- BG4 BEAMGUARD RETROFIT (SEE CONSTRUCTION DETAIL)
- BG5 STEEL PLATE BEAMGUARD ENERGY ABSORBING TERMINAL
- BG6 GUARDRAIL MOW STRIP ASPHALT, REMOVING ASPHALTIC SURFACE MILLING (SEE TYPICAL SECTIONS)
- BG7 REMOVING GUARDRAIL BACKFILL POST HOLES WITH BACKFILL CONTROLLED LOW STRENGTH
- BG7S REMOVING GUARDRAIL SPECIAL (SEE CONSTRUCTION DETAIL)
- BG8 GUARDRAIL TRANSITION FROM CLASS A TO MGS (SEE CONSTRUCTION DETAIL)
- BG9 MGS THRIE BEAM TRANSITION

| PROJECT NO: 2300-06-70 | HWY: STH 167 | COUNTY: WASHINGTON | PLAN DETAILS | SHEET 17 | E |
|---|---|---|---|---|---|

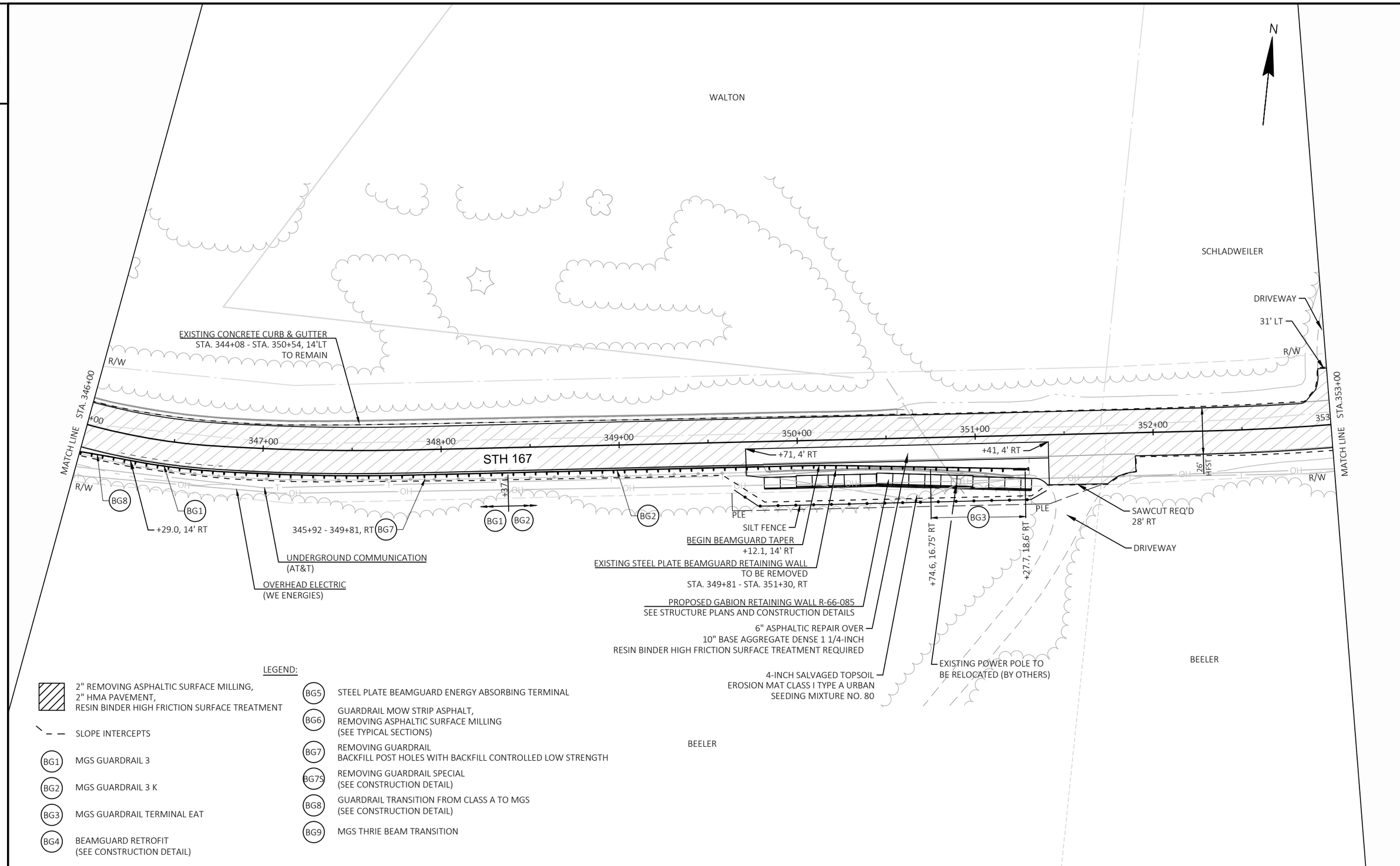
N
WALTON
SCHLADWEILER
DRIVEWAY
31' LT
R/W
EXISTING CONCRETE CURB & GUTTER
STA. 344+08 - STA. 350+54, 14'LT
TO REMAIN
R/W
MATCH LINE STA. 346+00
MATCH LINE STA.353+00
347+00
348+00
349+00
350+00
351+00
352+00
353
STH 167
+71, 4' RT
+41, 4' RT
26'
HFST
R/W
R/W
BG8
BG1
+29.0, 14' RT
345+92 - 349+81, RT
BG7
+37
BG1
BG2
BG2
PLE
SILT FENCE
BEGIN BEAMGUARD TAPER
+12.1, 14' RT
EXISTING STEEL PLATE BEAMGUARD RETAINING WALL
TO BE REMOVED
STA. 349+81 - STA. 351+30, RT
PROPOSED GABION RETAINING WALL R-66-085
SEE STRUCTURE PLANS AND CONSTRUCTION DETAILS
6" ASPHALTIC REPAIR OVER
10" BASE AGGREGATE DENSE 1 1/4-INCH
RESIN BINDER HIGH FRICTION SURFACE TREATMENT REQUIRED
4-INCH SALVAGED TOPSOIL
EROSION MAT CLASS I TYPE A URBAN
SEEDING MIXTURE NO. 80
+74.6, 16.75' RT
BG3
+27.7, 18.6' RT
PLE
SAWCUT REQ'D
28' RT
DRIVEWAY
EXISTING POWER POLE TO
BE RELOCATED (BY OTHERS)
BEELER
BEELER
UNDERGROUND COMMUNICATION
(AT&T)
OVERHEAD ELECTRIC
(WE ENERGIES)
LEGEND:
2" REMOVING ASPHALTIC SURFACE MILLING,
2" HMA PAVEMENT,
RESIN BINDER HIGH FRICTION SURFACE TREATMENT
SLOPE INTERCEPTS
BG1 MGS GUARDRAIL 3
BG2 MGS GUARDRAIL 3 K
BG3 MGS GUARDRAIL TERMINAL EAT
BG4 BEAMGUARD RETROFIT
(SEE CONSTRUCTION DETAIL)
BG5 STEEL PLATE BEAMGUARD ENERGY ABSORBING TERMINAL
BG6 GUARDRAIL MOW STRIP ASPHALT,
REMOVING ASPHALTIC SURFACE MILLING
(SEE TYPICAL SECTIONS)
BG7 REMOVING GUARDRAIL
BACKFILL POST HOLES WITH BACKFILL CONTROLLED LOW STRENGTH
BG7S REMOVING GUARDRAIL SPECIAL
(SEE CONSTRUCTION DETAIL)
BG8 GUARDRAIL TRANSITION FROM CLASS A TO MGS
(SEE CONSTRUCTION DETAIL)
BG9 MGS THRIE BEAM TRANSITION

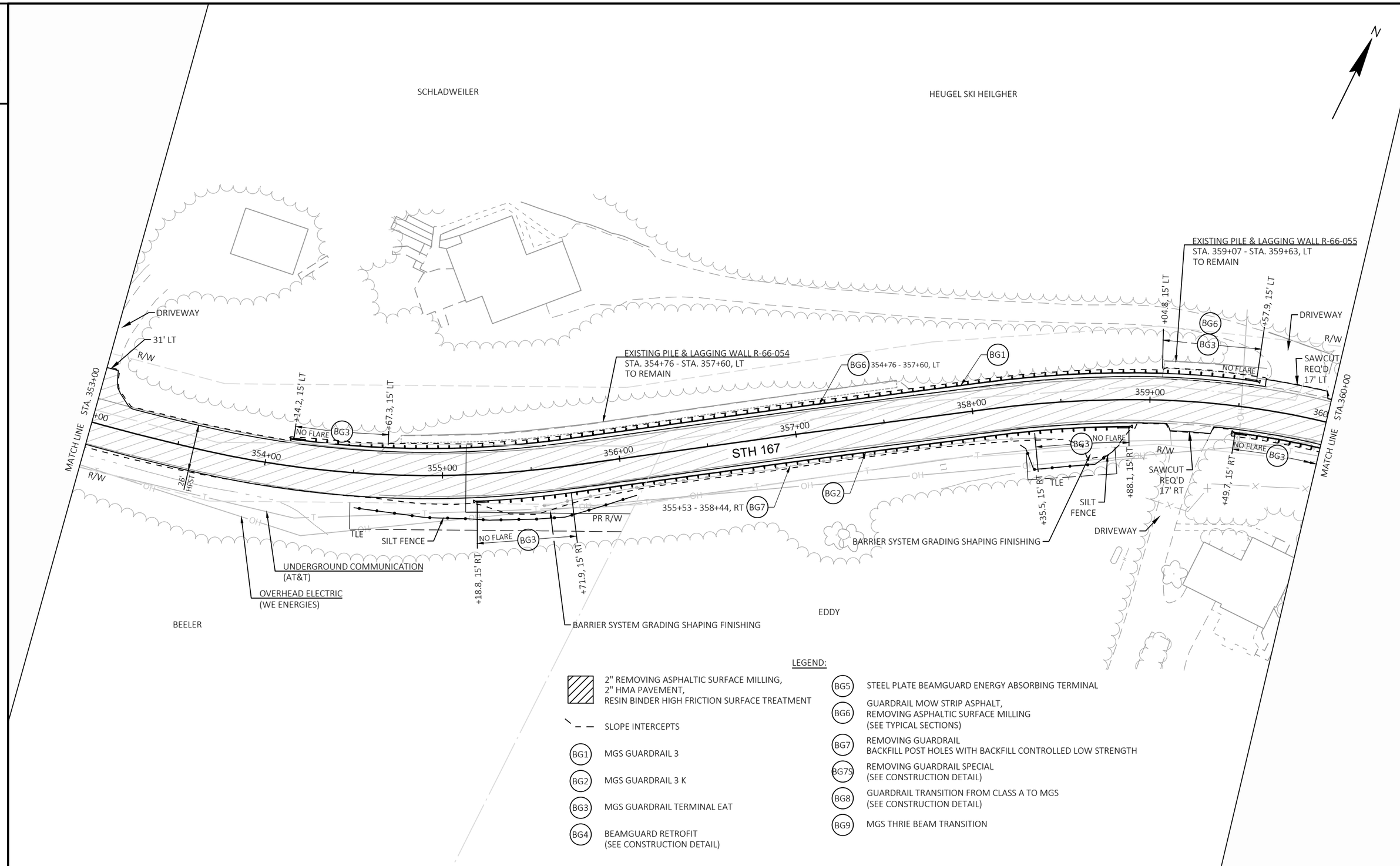


LEGEND:

- 2" REMOVING ASPHALTIC SURFACE MILLING, 2" HMA PAVEMENT, RESIN BINDER HIGH FRICTION SURFACE TREATMENT
- SLOPE INTERCEPTS
- BG1 MGS GUARDRAIL 3
- BG2 MGS GUARDRAIL 3 K
- BG3 MGS GUARDRAIL TERMINAL EAT
- BG4 BEAMGUARD RETROFIT (SEE CONSTRUCTION DETAIL)
- BG5 STEEL PLATE BEAMGUARD ENERGY ABSORBING TERMINAL
- BG6 GUARDRAIL MOW STRIP ASPHALT, REMOVING ASPHALTIC SURFACE MILLING (SEE TYPICAL SECTIONS)
- BG7 REMOVING GUARDRAIL BACKFILL POST HOLES WITH BACKFILL CONTROLLED LOW STRENGTH
- BG7S REMOVING GUARDRAIL SPECIAL (SEE CONSTRUCTION DETAIL)
- BG8 GUARDRAIL TRANSITION FROM CLASS A TO MGS (SEE CONSTRUCTION DETAIL)
- BG9 MGS THRIE BEAM TRANSITION

2

LEGEND:

- 2" REMOVING ASPHALTIC SURFACE MILLING, 2" HMA PAVEMENT, RESIN BINDER HIGH FRICTION SURFACE TREATMENT
- SLOPE INTERCEPTS
- BG1 MGS GUARDRAIL 3
- BG2 MGS GUARDRAIL 3 K
- BG3 MGS GUARDRAIL TERMINAL EAT
- BG4 BEAMGUARD RETROFIT (SEE CONSTRUCTION DETAIL)
- BG5 STEEL PLATE BEAMGUARD ENERGY ABSORBING TERMINAL
- BG6 GUARDRAIL MOW STRIP ASPHALT, REMOVING ASPHALTIC SURFACE MILLING (SEE TYPICAL SECTIONS)
- BG7 REMOVING GUARDRAIL BACKFILL POST HOLES WITH BACKFILL CONTROLLED LOW STRENGTH
- BG7S REMOVING GUARDRAIL SPECIAL (SEE CONSTRUCTION DETAIL)
- BG8 GUARDRAIL TRANSITION FROM CLASS A TO MGS (SEE CONSTRUCTION DETAIL)
- BG9 MGS THRIE BEAM TRANSITION

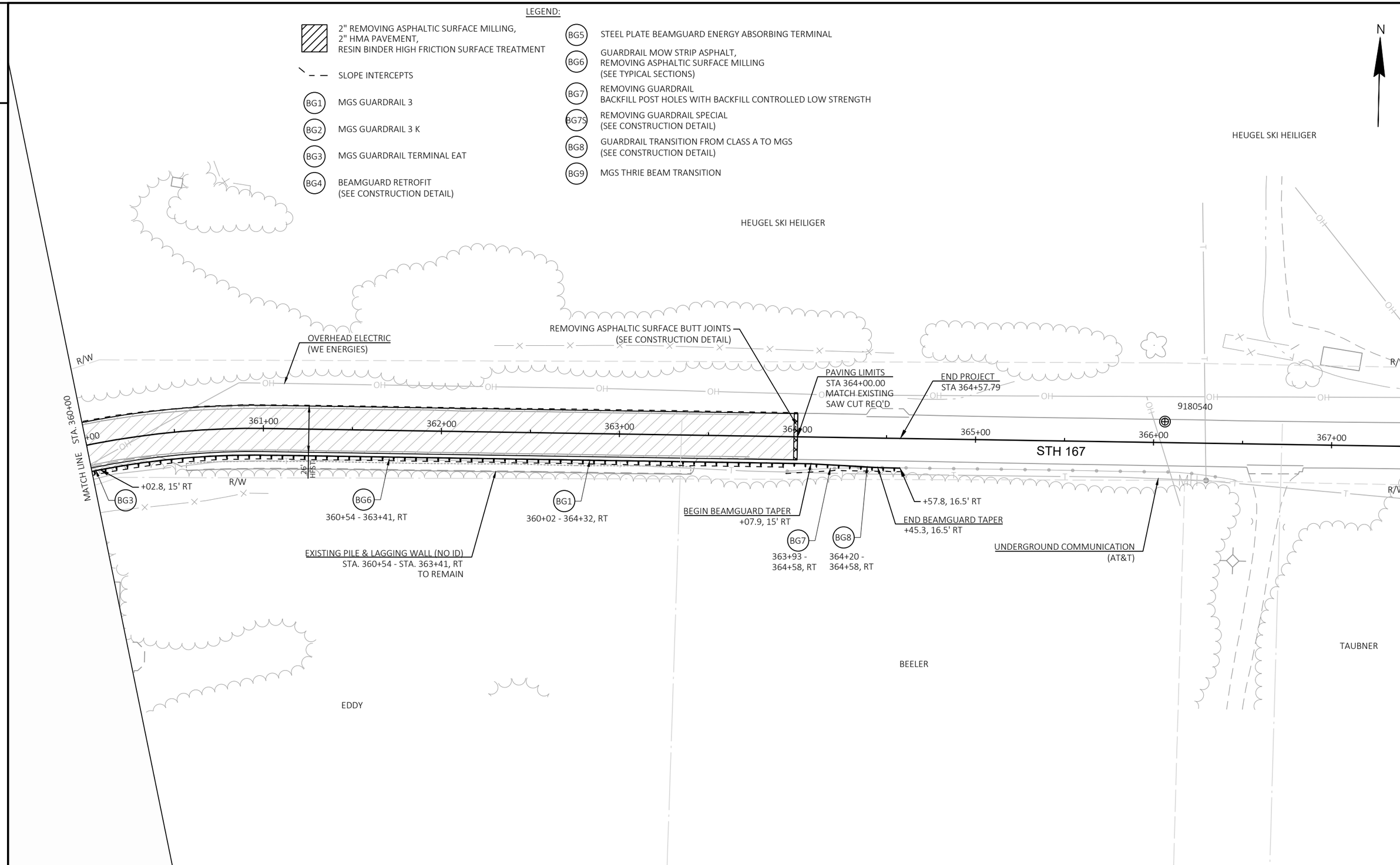


| PROJECT NO: 2300-06-70 | HWY: STH 167 | COUNTY: WASHINGTON | PLAN DETAILS | SHEET 20 | E |
|---|---|---|---|---|---|

2

LEGEND

- EXISTING SIGN MOUNTED ON POST(S)
- EXISTING SIGN MOUNTED ON BRIDGE OR SIGN BRIDGE
- PROPOSED SIGN MOUNTED ON POST(S)
- PROPOSED SIGN MOUNTED ON BRIDGE OR SIGN BRIDGE
- VMS — VARIABLE MESSAGE SIGN
- EXISTING LIGHT OR SIGNAL POLE
- SIGN BRIDGE
- CANTILEVER SIGN BRIDGE
- (XXX) — DENOTES SIGN NUMBER
- (X) — INDICATES SIGN SIZE
- (20XX) — YEAR OF SIGN

**2024 CORRIDORS REPLACEMENT BY COUNTY CREWS**

COUNTY CREWS WILL BE REPLACING ALL SIGNS ON ALL OF STH 167 IN 2024.

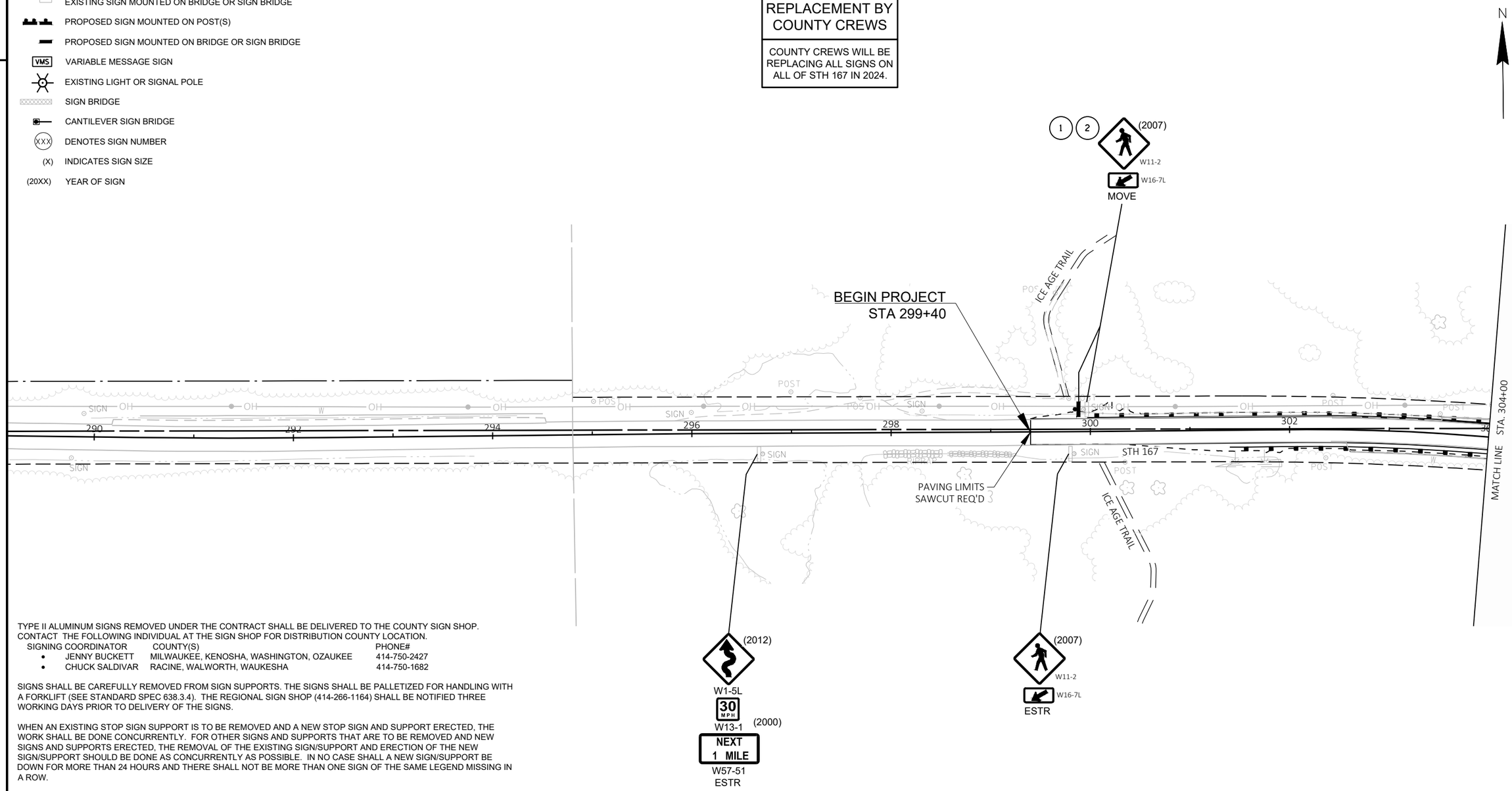


TYPE II ALUMINUM SIGNS REMOVED UNDER THE CONTRACT SHALL BE DELIVERED TO THE COUNTY SIGN SHOP. CONTACT THE FOLLOWING INDIVIDUAL AT THE SIGN SHOP FOR DISTRIBUTION COUNTY LOCATION.

| SIGNING COORDINATOR | COUNTY(S) | PHONE# |
|---|---|---|
| • JENNY BUCKETT | MILWAUKEE, KENOSHA, WASHINGTON, OZAUKEE | 414-750-2427 |
| • CHUCK SALDIVAR | RACINE, WALWORTH, WAUKESHA | 414-750-1682 |

SIGNS SHALL BE CAREFULLY REMOVED FROM SIGN SUPPORTS. THE SIGNS SHALL BE PALLETIZED FOR HANDLING WITH A FORKLIFT (SEE STANDARD SPEC 638.3.4). THE REGIONAL SIGN SHOP (414-266-1164) SHALL BE NOTIFIED THREE WORKING DAYS PRIOR TO DELIVERY OF THE SIGNS.

WHEN AN EXISTING STOP SIGN SUPPORT IS TO BE REMOVED AND A NEW STOP SIGN AND SUPPORT ERECTED, THE WORK SHALL BE DONE CONCURRENTLY. FOR OTHER SIGNS AND SUPPORTS THAT ARE TO BE REMOVED AND NEW SIGNS AND SUPPORTS ERECTED, THE REMOVAL OF THE EXISTING SIGN/SUPPORT AND ERECTION OF THE NEW SIGN/SUPPORT SHOULD BE DONE AS CONCURRENTLY AS POSSIBLE. IN NO CASE SHALL A NEW SIGN/SUPPORT BE DOWN FOR MORE THAN 24 HOURS AND THERE SHALL NOT BE MORE THAN ONE SIGN OF THE SAME LEGEND MISSING IN A ROW.

WOOD POST SIZES, FOR TYPE II SIGNS ARE ESTIMATED LENGTHS AND THE ACTUAL LENGTH WILL BE DETERMINED IN THE FIELD.

STREET NAME SIGNS ARE PROPERTY OF THE MUNICIPALITY (CITY, VILLAGE OR TOWN). THE MUNICIPALITY SHALL BE CONTACTED TO REMOVE THEIR STREET NAME SIGNS PRIOR TO CONSTRUCTION AND IT IS THEIR RESPONSIBILITY TO REINSTALL THE OLD SIGNS OR REPLACE THEM FOLLOWING CONSTRUCTION. WISDOT DOES NOT FURNISH OR INSTALL STREET NAME SIGNS. THE STREET NAME SIGNS SHALL NOT BE PLACED ON TOP OF THE STOP SIGNS.

LOCATE NO PASSING PENNANTS BASED ON ESTABLISHING NO PASSING ZONES PAY ITEM. PLACE SIGNS BASED ON WHERE THE PAVEMENT MARKING FOR NO PASSING ZONES BEGIN.

BOX OUT OR CORING OF CONCRETE FOR SIGN POSTS IS INCIDENTAL TO THE POST.

LEGEND

- EXISTING SIGN MOUNTED ON POST(S)
- EXISTING SIGN MOUNTED ON BRIDGE OR SIGN BRIDGE
- PROPOSED SIGN MOUNTED ON POST(S)
- PROPOSED SIGN MOUNTED ON BRIDGE OR SIGN BRIDGE
- VMS — VARIABLE MESSAGE SIGN
- EXISTING LIGHT OR SIGNAL POLE
- SIGN BRIDGE
- CANTILEVER SIGN BRIDGE
- XXX — DENOTES SIGN NUMBER
- (X) — INDICATES SIGN SIZE
- (20XX) — YEAR OF SIGN

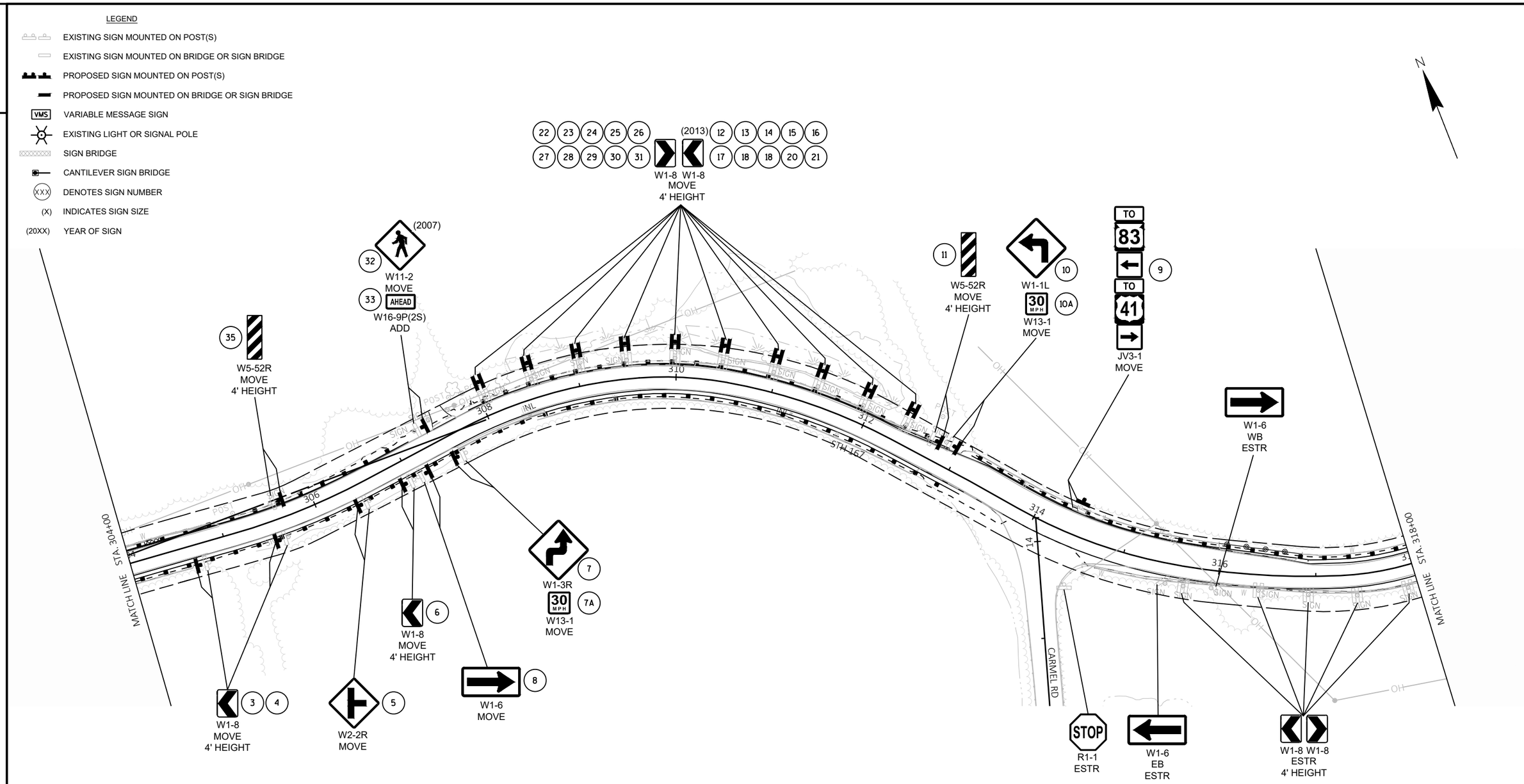


SHEET 2 OF 6

| PROJECT NO: 2300-06-70 | HWY: STH 167 | COUNTY: WASHINGTON | PERMANENT SIGNING | SHEET 22 | E |
|---|---|---|---|---|---|

2

LEGEND

- EXISTING SIGN MOUNTED ON POST(S)
- EXISTING SIGN MOUNTED ON BRIDGE OR SIGN BRIDGE
- PROPOSED SIGN MOUNTED ON POST(S)
- PROPOSED SIGN MOUNTED ON BRIDGE OR SIGN BRIDGE
- VMS — VARIABLE MESSAGE SIGN
- EXISTING LIGHT OR SIGNAL POLE
- SIGN BRIDGE
- CANTILEVER SIGN BRIDGE
- XXX — DENOTES SIGN NUMBER
- (X) — INDICATES SIGN SIZE
- (20XX) — YEAR OF SIGN

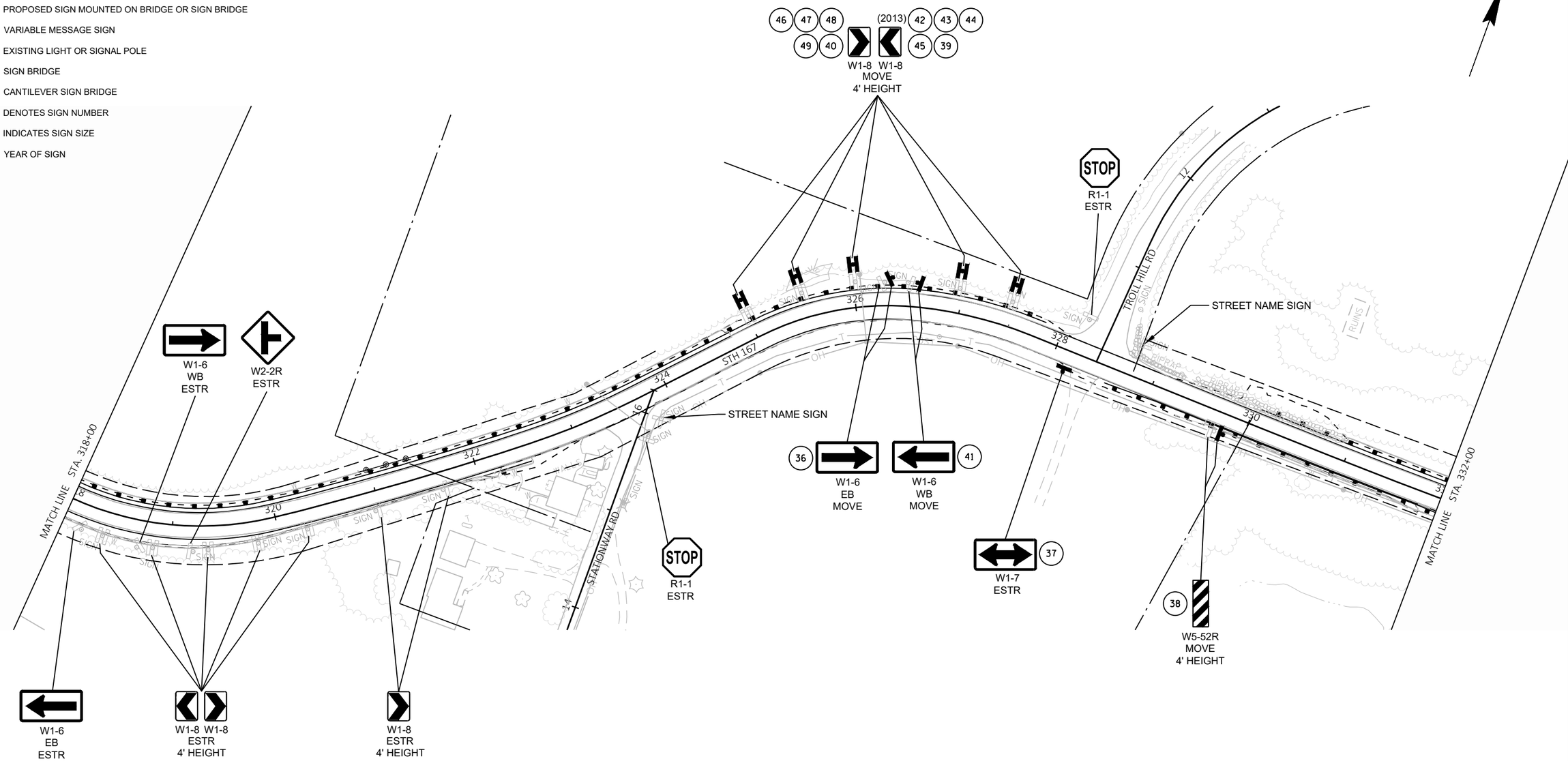


MOST SIGNS ARE DATE STICKERS FROM 2013 - TO BE REPLACED BY COUNTY CORRIDORS

SHEET 3 OF 6

| PROJECT NO: 2300-06-70 | HWY: STH 167 | COUNTY: WASHINGTON | PERMANENT SIGNING | SHEET 23 | E |
|---|---|---|---|---|---|

FILE NAME : N:\PDS\C3D\CAD\23000600\SIGN\023201_PS_2300-06-70.DWG
LAYOUT NAME - 03
PLOT DATE : 6/6/2023 2:59 PM
PLOT BY : VANDE LEEST, CYNTHIA
PLOT NAME :
PLOT SCALE : ############

WISDOT/CADDS SHEET 42

2

LEGEND

- EXISTING SIGN MOUNTED ON POST(S)
- EXISTING SIGN MOUNTED ON BRIDGE OR SIGN BRIDGE
- PROPOSED SIGN MOUNTED ON POST(S)
- PROPOSED SIGN MOUNTED ON BRIDGE OR SIGN BRIDGE
- VMS — VARIABLE MESSAGE SIGN
- EXISTING LIGHT OR SIGNAL POLE
- SIGN BRIDGE
- CANTILEVER SIGN BRIDGE
- (XXX) — DENOTES SIGN NUMBER
- (X) — INDICATES SIGN SIZE
- (20XX) — YEAR OF SIGN

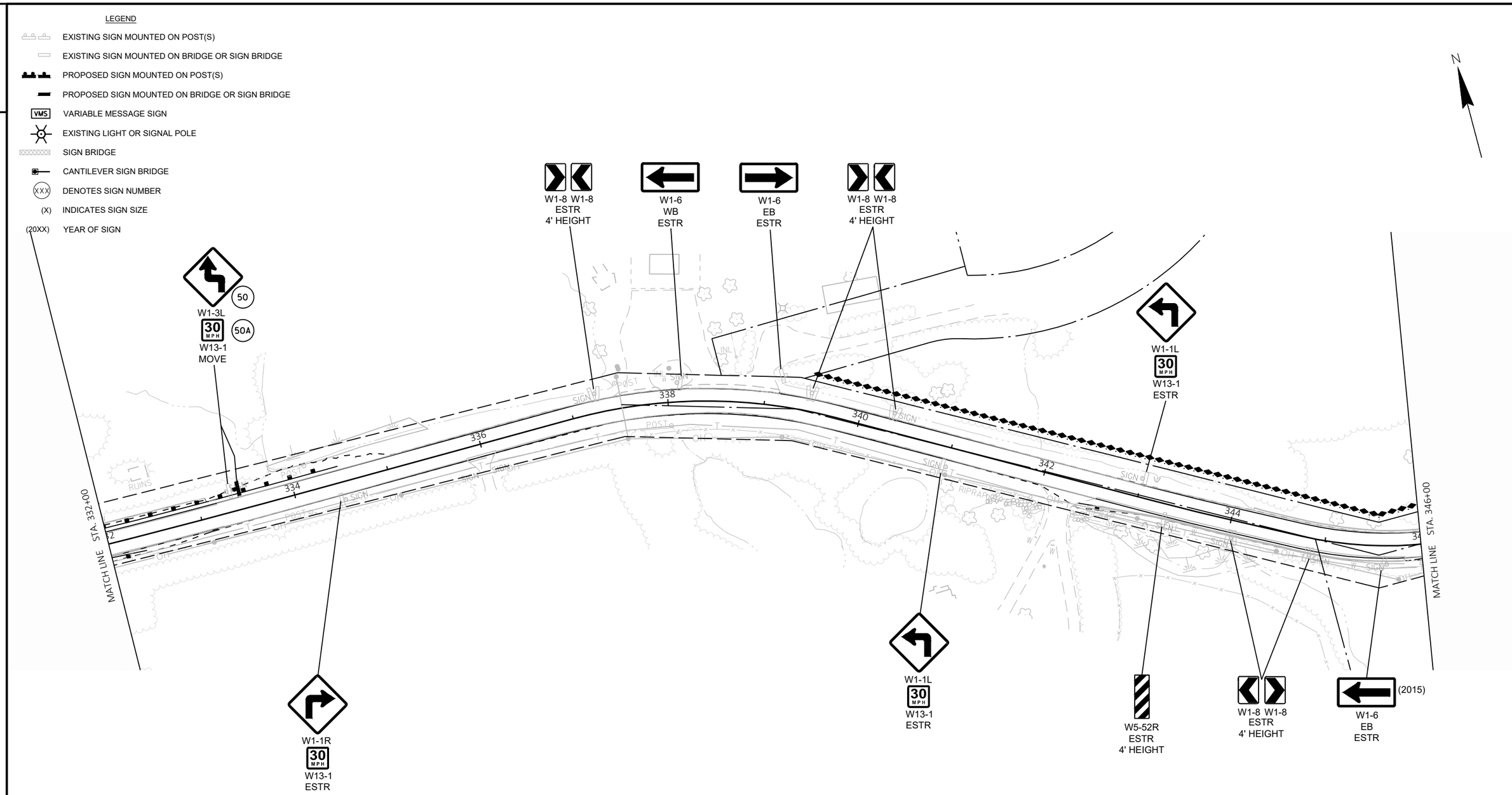


2

SHEET 4 OF 6

| PROJECT NO: 2300-06-70 | HWY: STH 167 | COUNTY: WASHINGTON | PERMANENT SIGNING | SHEET 24 | E |
|---|---|---|---|---|---|

FILE NAME : N:\PDS\C3D\CAD\23000600\SIGN\023201_PS_2300-06-70.DWG
LAYOUT NAME - 04
PLOT DATE : 6/6/2023 3:00 PM
PLOT BY : VANDE LEEST, CYNTHIA
PLOT NAME :
PLOT SCALE : ############

WISDOT/CADDS SHEET 42

2

LEGEND

- EXISTING SIGN MOUNTED ON POST(S)
- EXISTING SIGN MOUNTED ON BRIDGE OR SIGN BRIDGE
- PROPOSED SIGN MOUNTED ON POST(S)
- PROPOSED SIGN MOUNTED ON BRIDGE OR SIGN BRIDGE
- VMS — VARIABLE MESSAGE SIGN
- EXISTING LIGHT OR SIGNAL POLE
- SIGN BRIDGE
- CANTILEVER SIGN BRIDGE
- (XXX) — DENOTES SIGN NUMBER
- (X) — INDICATES SIGN SIZE
- (20XX) — YEAR OF SIGN

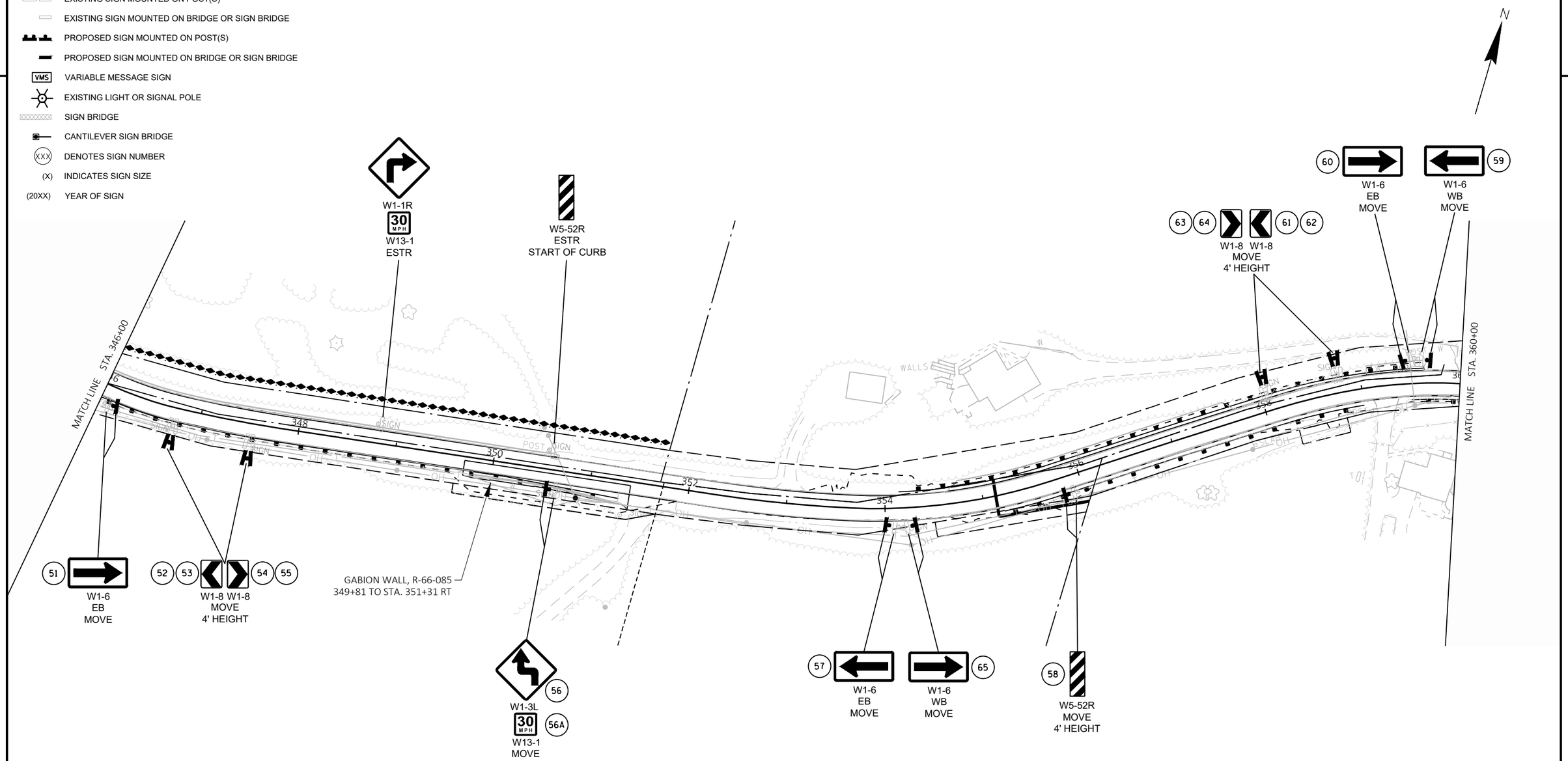


SHEET 5 OF 6

| PROJECT NO: 2300-06-70 | HWY: STH 167 | COUNTY: WASHINGTON | PERMANENT SIGNING | SHEET 25 | E |
|---|---|---|---|---|---|

FILE NAME : N:\PDS\C3D\CAD\23000600\SIGN\023201_PS_2300-06-70.DWG
LAYOUT NAME - 05
PLOT DATE : 6/6/2023 3:00 PM
PLOT BY : VANDE LEEST, CYNTHIA
PLOT NAME :
PLOT SCALE : ##########
WISDOT/CADDS SHEET 42

2

LEGEND

- EXISTING SIGN MOUNTED ON POST(S)
- EXISTING SIGN MOUNTED ON BRIDGE OR SIGN BRIDGE
- PROPOSED SIGN MOUNTED ON POST(S)
- PROPOSED SIGN MOUNTED ON BRIDGE OR SIGN BRIDGE
- VMS VARIABLE MESSAGE SIGN
- EXISTING LIGHT OR SIGNAL POLE
- SIGN BRIDGE
- CANTILEVER SIGN BRIDGE
- XXX DENOTES SIGN NUMBER
- (X) INDICATES SIGN SIZE
- (20XX) YEAR OF SIGN

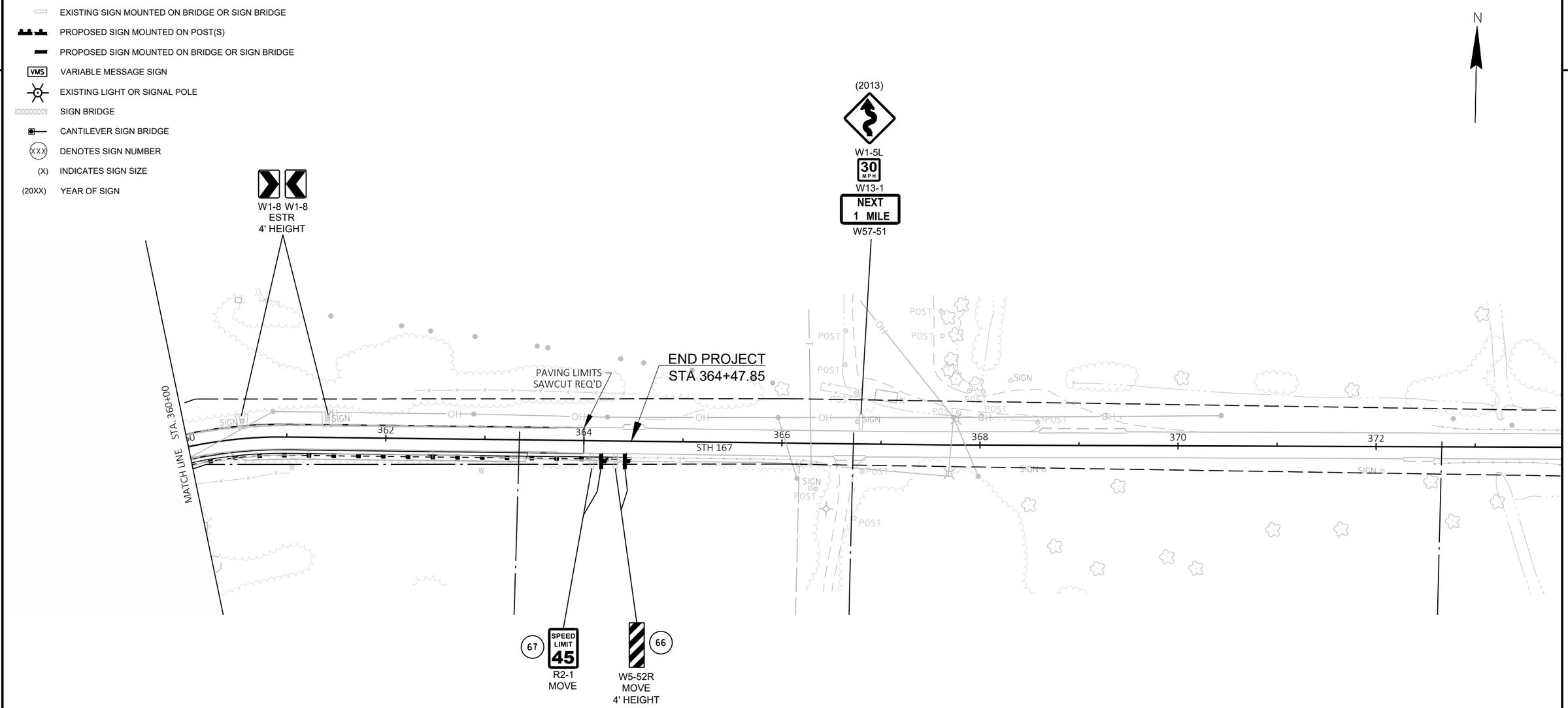


2

SHEET 6 OF 6

| PROJECT NO: 2300-06-70 | HWY: STH 167 | COUNTY: WASHINGTON | PERMANENT SIGNING | SHEET 26 | E |
|---|---|---|---|---|---|

FILE NAME : N:\PDS\C3D\CAD\23000600\SIGN\023201_PS_2300-06-70.DWG
LAYOUT NAME - 06
PLOT DATE : 6/6/2023 3:00 PM
PLOT BY : VANDE LEEST, CYNTHIA
PLOT NAME :
PLOT SCALE : ###########

WISDOT/CADDS SHEET 42

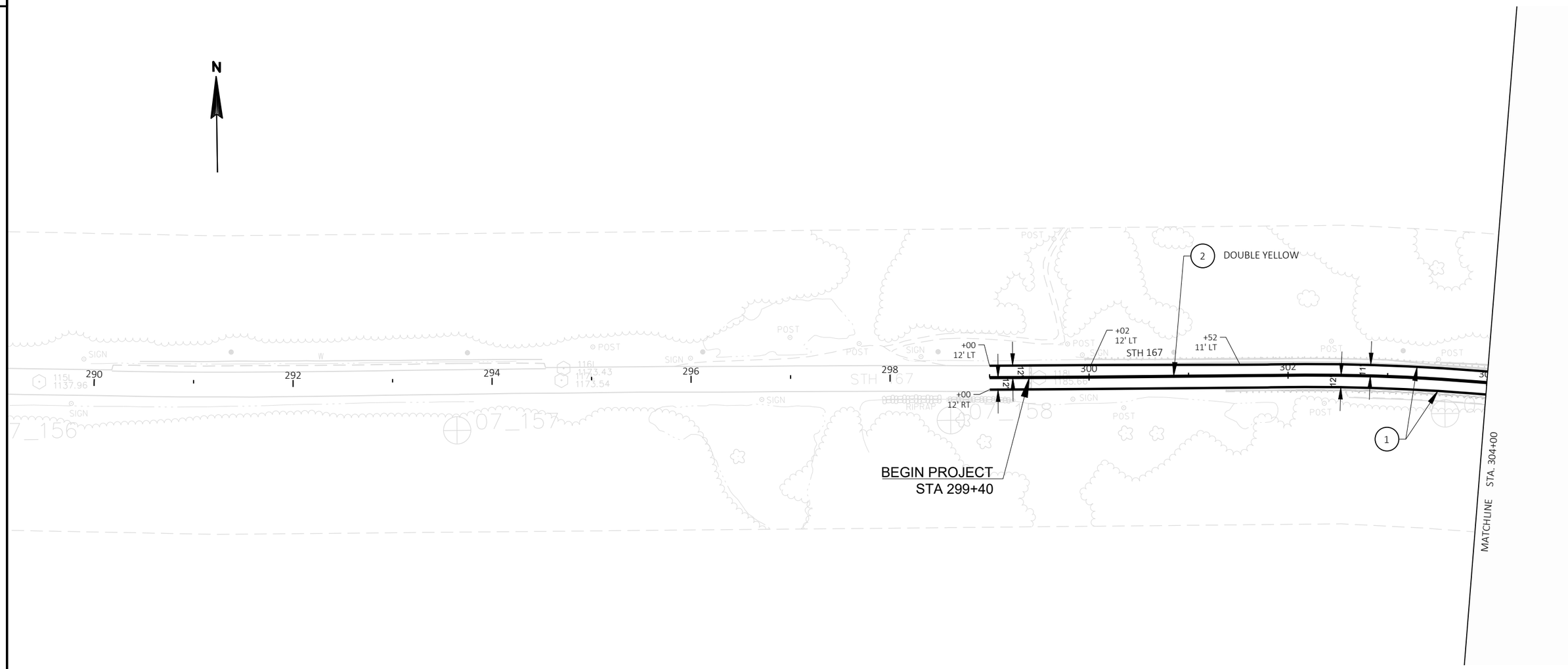


PAVEMENT MARKING NOTES:

1. ESTABLISH NO PASSING ZONES PER THE PROJECT SPECIFICATIONS. INSTALL "NO PASSING ZONE" PENNANT (W14-3) AT THE START OF THE NO PASSING ZONE IF ANY OF THE NO PASSING ZONES CHANGE FROM EXISTING CONDITIONS.

LEGEND:

1. MARKING LINE GROOVED WET REF EPOXY 6-INCH (WHITE)
2. MARKING LINE EPOXY 6-INCH (YELLOW)
3. MARKING STOP LINE EPOXY 18-INCH

| PROJECT NO:2300-06-70 | HWY:STH 167 | COUNTY:WASHINGTON | PAVEMENT MARKING | SHEET 27 | E |
|---|---|---|---|---|---|

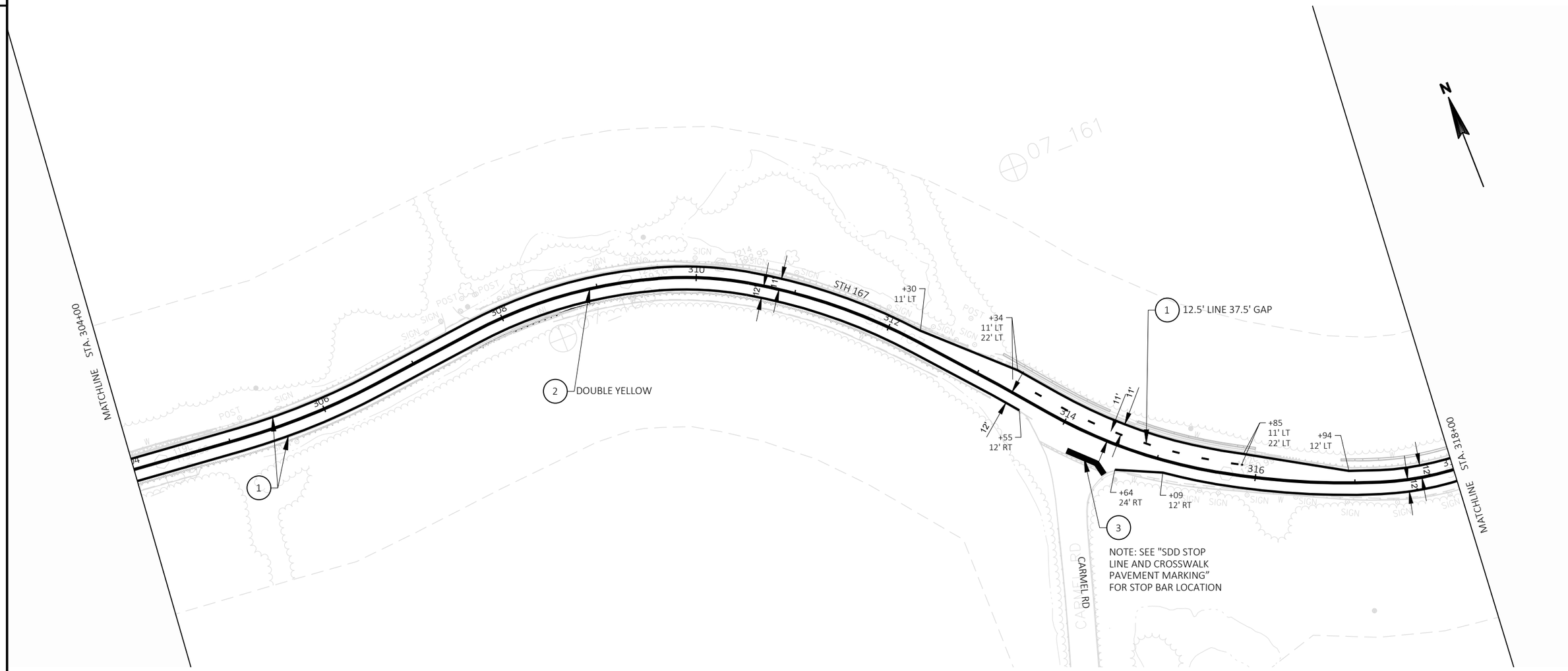


PAVEMENT MARKING NOTES:

1. ESTABLISH NO PASSING ZONES PER THE PROJECT SPECIFICATIONS. INSTALL "NO PASSING ZONE" PENNANT (W14-3) AT THE START OF THE NO PASSING ZONE IF ANY OF THE NO PASSING ZONES CHANGE FROM EXISTING CONDITIONS.

LEGEND:

1. MARKING LINE GROOVED WET REF EPOXY 6-INCH (WHITE)
2. MARKING LINE EPOXY 6-INCH (YELLOW)
3. MARKING STOP LINE EPOXY 18-INCH

| PROJECT NO:2300-06-70 | HWY:STH 167 | COUNTY:WASHINGTON | PAVEMENT MARKING | SHEET 28 | E |
|---|---|---|---|---|---|

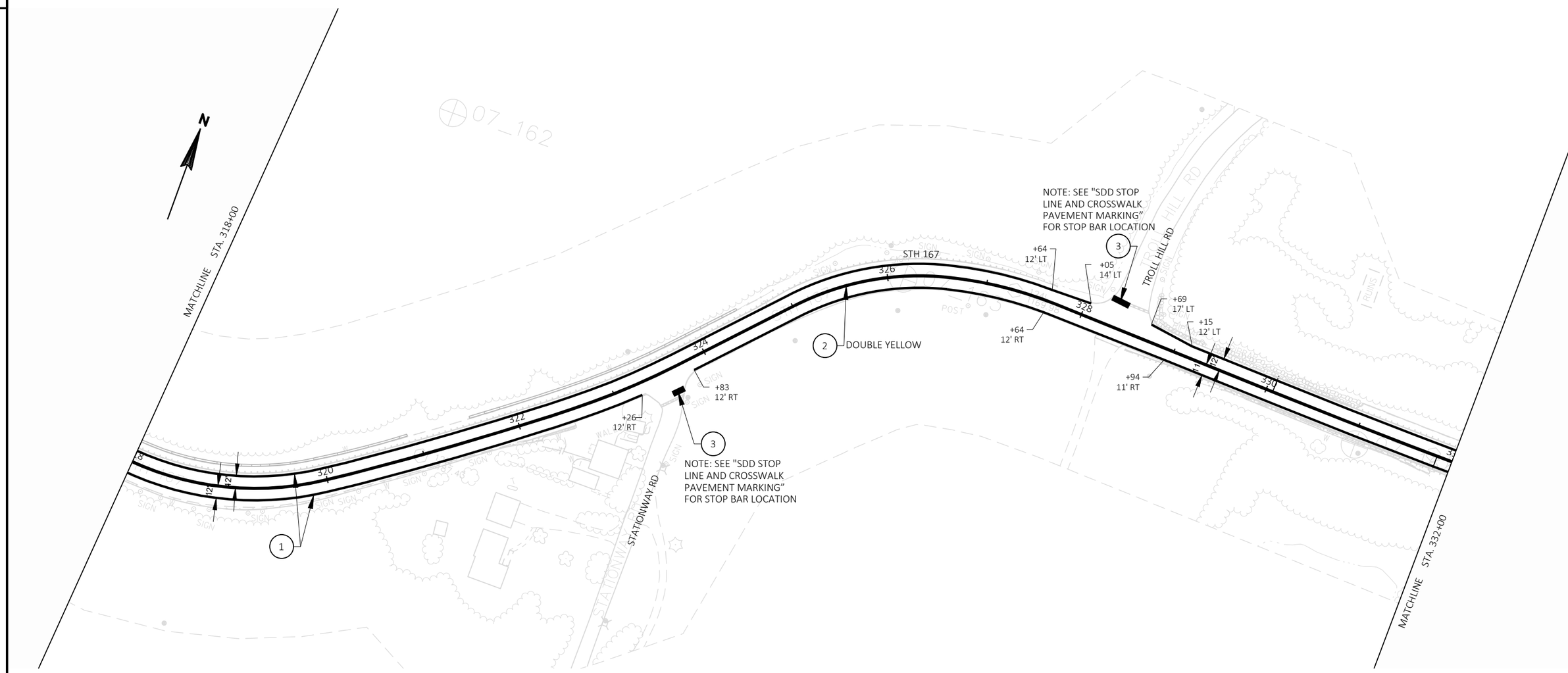


PAVEMENT MARKING NOTES:

1. ESTABLISH NO PASSING ZONES PER THE PROJECT SPECIFICATIONS. INSTALL "NO PASSING ZONE" PENNANT (W14-3) AT THE START OF THE NO PASSING ZONE IF ANY OF THE NO PASSING ZONES CHANGE FROM EXISTING CONDITIONS.

LEGEND:

1. MARKING LINE GROOVED WET REF EPOXY 6-INCH (WHITE)
2. MARKING LINE EPOXY 6-INCH (YELLOW)
3. MARKING STOP LINE EPOXY 18-INCH

| PROJECT NO:2300-06-70 | HWY:STH 167 | COUNTY:WASHINGTON | PAVEMENT MARKING | SHEET 29 | E |
|---|---|---|---|---|---|

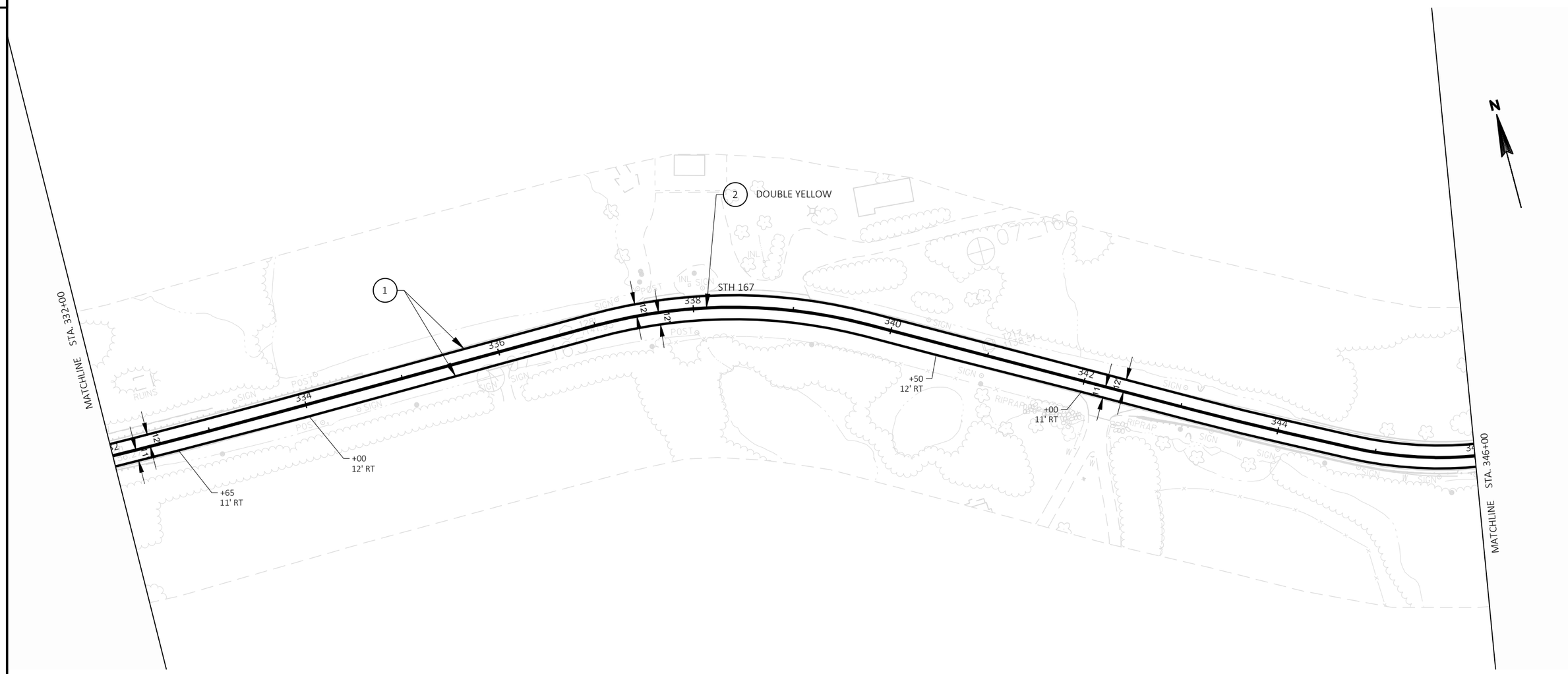


PAVEMENT MARKING NOTES:

1. ESTABLISH NO PASSING ZONES PER THE PROJECT SPECIFICATIONS. INSTALL "NO PASSING ZONE" PENNANT (W14-3) AT THE START OF THE NO PASSING ZONE IF ANY OF THE NO PASSING ZONES CHANGE FROM EXISTING CONDITIONS.

LEGEND:

1. MARKING LINE GROOVED WET REF EPOXY 6-INCH (WHITE)
2. MARKING LINE EPOXY 6-INCH (YELLOW)
3. MARKING STOP LINE EPOXY 18-INCH

2

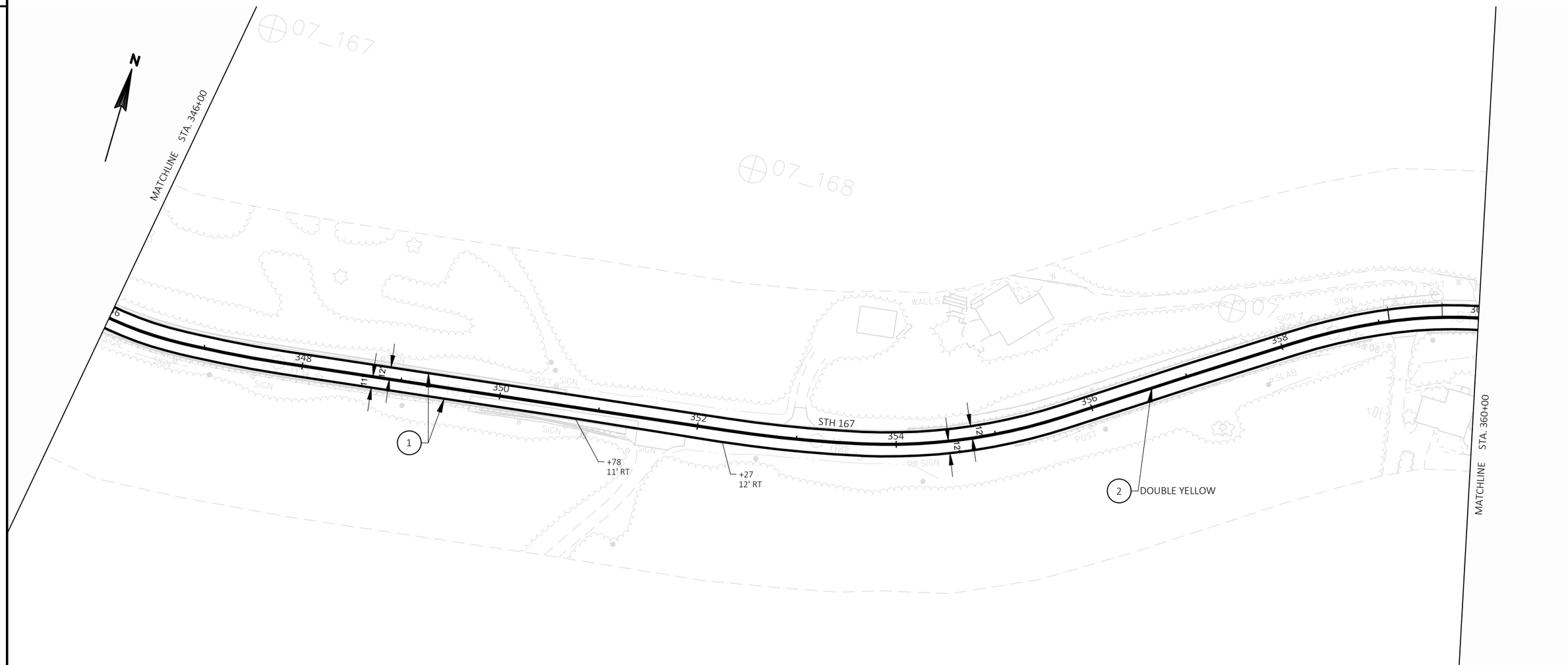


PAVEMENT MARKING NOTES:

1. ESTABLISH NO PASSING ZONES PER THE PROJECT SPECIFICATIONS. INSTALL "NO PASSING ZONE" PENNANT (W14-3) AT THE START OF THE NO PASSING ZONE IF ANY OF THE NO PASSING ZONES CHANGE FROM EXISTING CONDITIONS.

LEGEND:

1. MARKING LINE GROOVED WET REF EPOXY 6-INCH (WHITE)
2. MARKING LINE EPOXY 6-INCH (YELLOW)
3. MARKING STOP LINE EPOXY 18-INCH

| PROJECT NO:2300-06-70 | HWY:STH 167 | COUNTY:WASHINGTON | PAVEMENT MARKING | SHEET 31 | E |
|---|---|---|---|---|---|

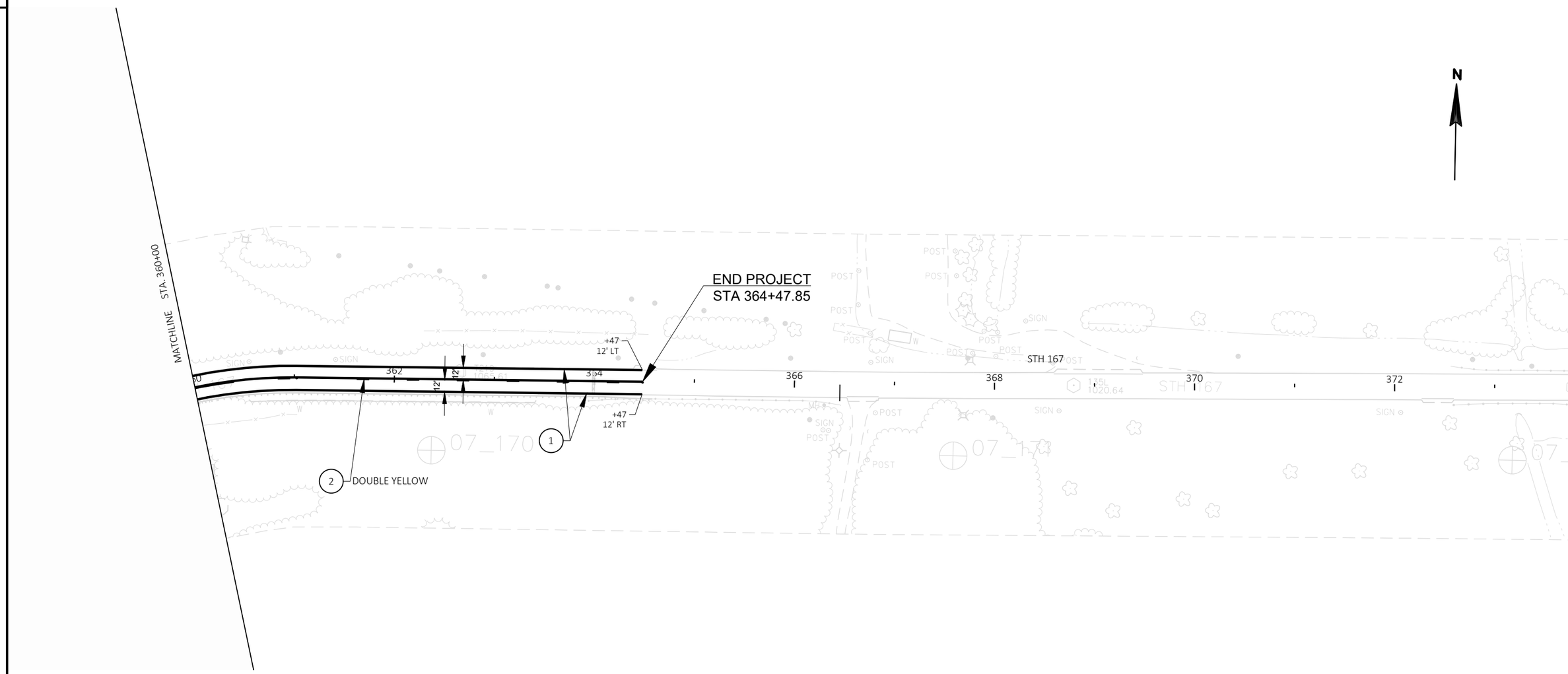


PAVEMENT MARKING NOTES:

1. ESTABLISH NO PASSING ZONES PER THE PROJECT SPECIFICATIONS. INSTALL "NO PASSING ZONE" PENNANT (W14-3) AT THE START OF THE NO PASSING ZONE IF ANY OF THE NO PASSING ZONES CHANGE FROM EXISTING CONDITIONS.

LEGEND:

1. MARKING LINE GROOVED WET REF EPOXY 6-INCH (WHITE)
2. MARKING LINE EPOXY 6-INCH (YELLOW)
3. MARKING STOP LINE EPOXY 18-INCH

| PROJECT NO:2300-06-70 | HWY:STH 167 | COUNTY:WASHINGTON | PAVEMENT MARKING | SHEET 32 | E |
|---|---|---|---|---|---|

2

## TRAFFIC CONTROL AND DETOUR NOTES

DURING REPAIR OF BEAMGUARD WALL BLOWOUT, STH 167 SHALL BE CLOSED BETWEEN STA 300+00 TO STA 313+75 AS SHOWN IN 'DETAIL A'. STH 167 SHALL BE REOPENED TO LOCAL TRAFFIC ONLY UPON COMPLETION OF THE BEAMGUARD WALL BLOWOUT REPAIR.

DURING CONSTRUCTION OF RETAINING WALL R-66-085, STH 167 SHALL BE CLOSED BETWEEN STA 342+50 TO STA 351+50 AS SHOWN IN 'DETAIL B' (FROM ADDRESSES 5661 TO 5585). STH 167 SHALL BE REOPENED TO LOCAL TRAFFIC ONLY UPON COMPLETION OF RETAINING WALL CONSTRUCTION.

THE EXACT NUMBER, LOCATION AND SPACING OF ALL SIGNS AND DEVICES SHALL BE ADJUSTED TO FIT FIELD CONDITIONS AS APPROVED BY THE ENGINEER.

THE SPACING BETWEEN SIGNS SHOULD BE ADJUSTED TO NOT CONFLICT WITH AND TO PROVIDE A MINIMUM OF 200' (500' DESIRABLE) DISTANCE TO EXISTING SIGNS.

DO NOT PLACE ANY TRAFFIC CONTROL ITEMS WITHIN 50-FEET OF RAILROAD RIGHT-OF-WAY

ALL SIGNS ARE 48" X 48" UNLESS OTHERWISE NOTED.

ANY SIGNS TEMPORARY OR EXISTING, WHICH CONFLICT WITH THE TRAFFIC CONTROL IN-USE SHALL BE REMOVED OR COVERED AS NEEDED AND AS APPROVED BY THE ENGINEER.

ALL TYPE III BARRICADES SHALL BE 8' IN LENGTH AND HAVE 2 TYPE 'A' WARNING LIGHTS.

ANY STOP SIGNS THAT ARE REMOVED FOR A CONSTRUCTION OPERATION SHALL BE IMMEDIATELY RE-ESTABLISHED.

## LEGEND

- SIGN ON FIXED SUPPORT(S)
- TYPE III BARRICADE WITHOUT/WITH SIGN AND 2 TYPE A WARNING LIGHTS (FLASHING)
- PROJECT LIMITS
- DETOUR ROUTE
- RR — GRADE-SEPARATED RAILROAD CROSSING (SEE NOTES)
- * — PLACE BARRICADES ON SHOULDERS

1 DETOUR M4-8 24"X12"
2 EAST M3-2 24"X12"
3 WEST M3-4 24"X12"
4 167 M1-6 24"X24"
5 MO5-1L 21"X21"
6 MO5-1R 21"X21"
7 MO6-1 21"X21"
8 MO6-1 21"X21"
9 MO6-1 21"X21"
10 END DETOUR M4-8A 24"X18"
11 HOLY HILL / DETOUR M4-9L 30"X24" FMS 42"X12"
12 HOLY HILL / DETOUR M4-9R 30"X24" FMS 42"X12"
13 HOLY HILL / DETOUR M4-9RA 30"X24" FMS 42"X12"
14 ROAD CLOSED AHEAD W20-3A
15 DETOUR AHEAD W20-2A
16 ROAD CLOSED 1000 FT W20-3C
17 ROAD CLOSED 500 FT W20-3D
18 ROAD CLOSED R11-2 48"X30"
19 ROAD CLOSED TO THRU TRAFFIC R11-4 60"X30"
20 ROAD CLOSED 1 3/4 MILES AHEAD LOCAL TRAFFIC ONLY R11-3 60"X30"
21 ROAD CLOSED 2 1/2 MILES AHEAD LOCAL TRAFFIC ONLY R11-3 60"X30"
22 ROAD CLOSED 1/2 MILES AHEAD LOCAL TRAFFIC ONLY R11-3 60"X30"
23 HWY 167 CLOSED HWY K TO HWY CC FOLLOW DETOUR FMS 90"X36"
24 HWY 167 CLOSED HWY K TO HWY CC USE ALT ROUTE FMS 90"X36"
25 HOLY HILL TRAFFIC FOLLOW DETOUR FMS 78"X36"

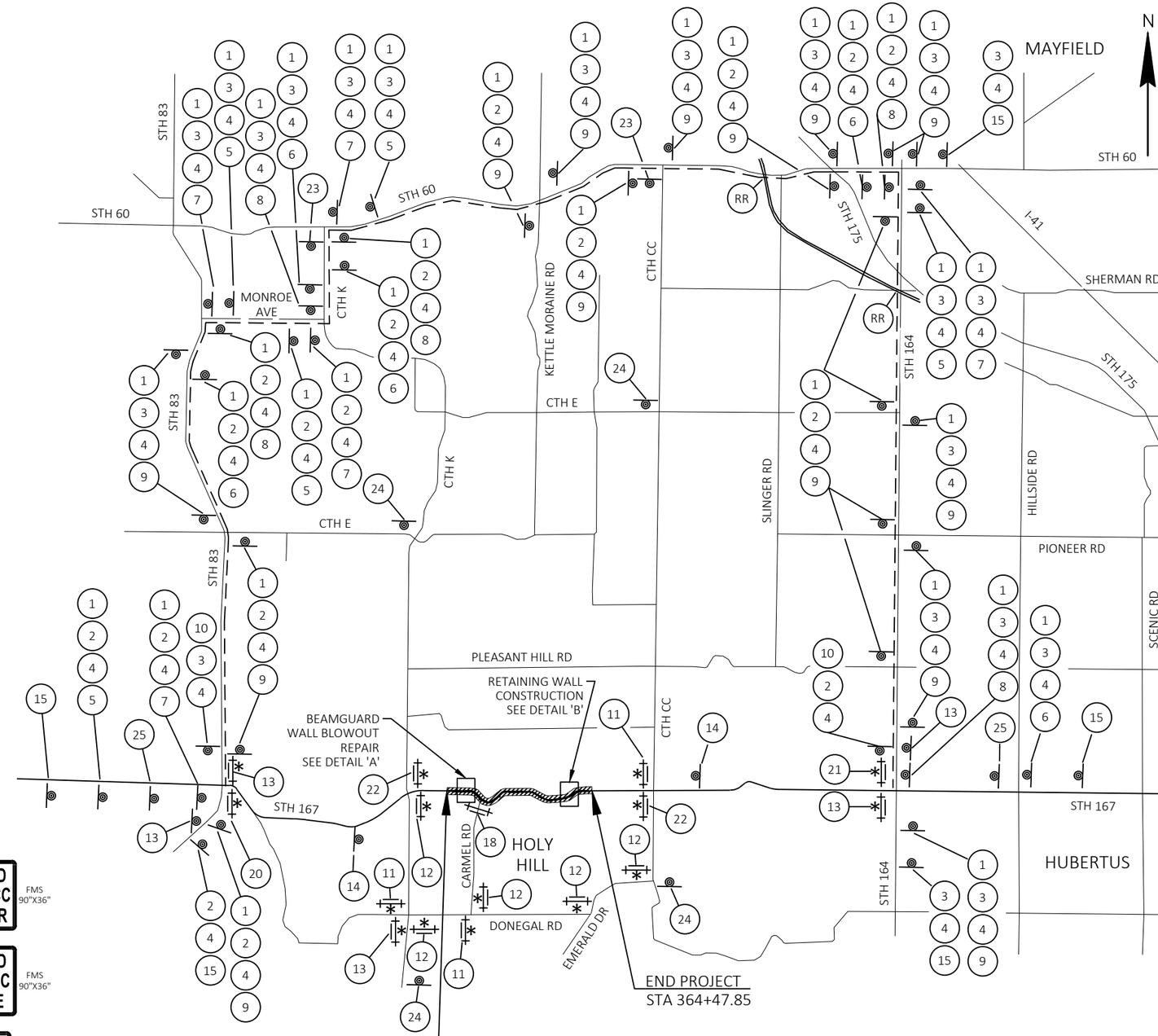


2

| PROJECT NO: 2300-06-70 | HWY: STH 167 | COUNTY: WASHINGTON | DETOUR STH 167 | SHEET 33 | E |
|---|---|---|---|---|---|

2

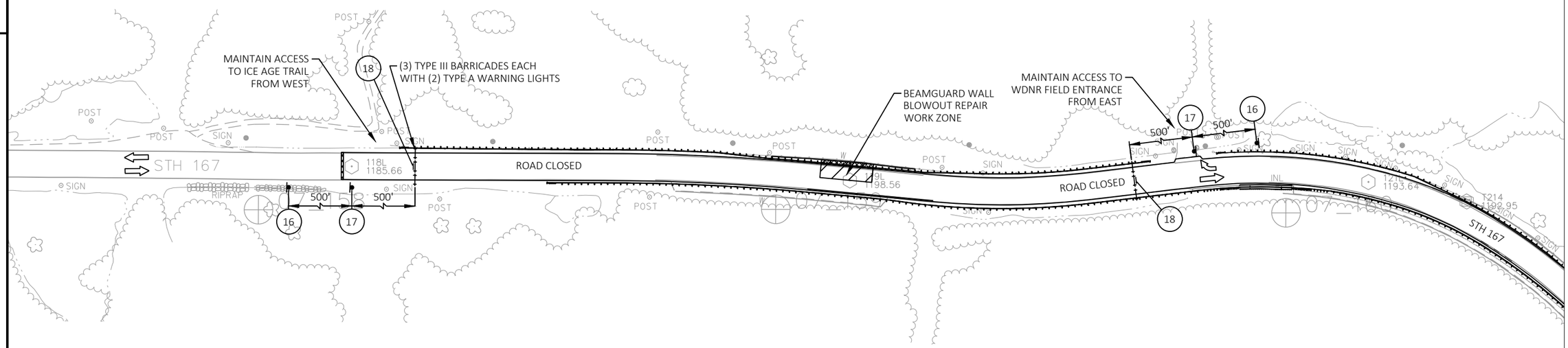


DETAIL A - ROAD CLOSED DURING BEAMGUARD WALL BLOWOUT REPAIR

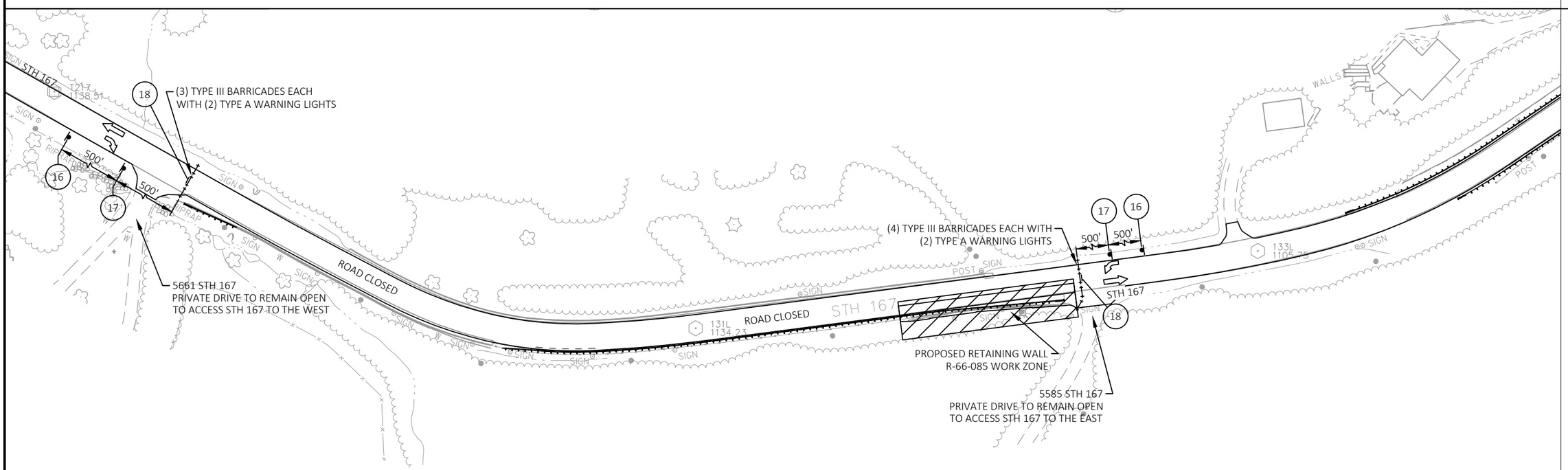


DETAIL B - ROAD CLOSED DURING RETAINING WALL CONSTRUCTION

| PROJECT NO: 2300-06-70 | HWY: STH 167 | COUNTY: WASHINGTON | DETOUR STH 167 | SHEET 34 | E |
|---|---|---|---|---|---|

FILE NAME : N:\PDS\C3D\23000600\SHEETSPLAN\025101-TC.DWG
LAYOUT NAME - 02
PLOT DATE : 10/27/2023 10:32 AM PLOT BY : SKIFFINGTON, NICHOLA PLOT NAME : PLOT SCALE : #########

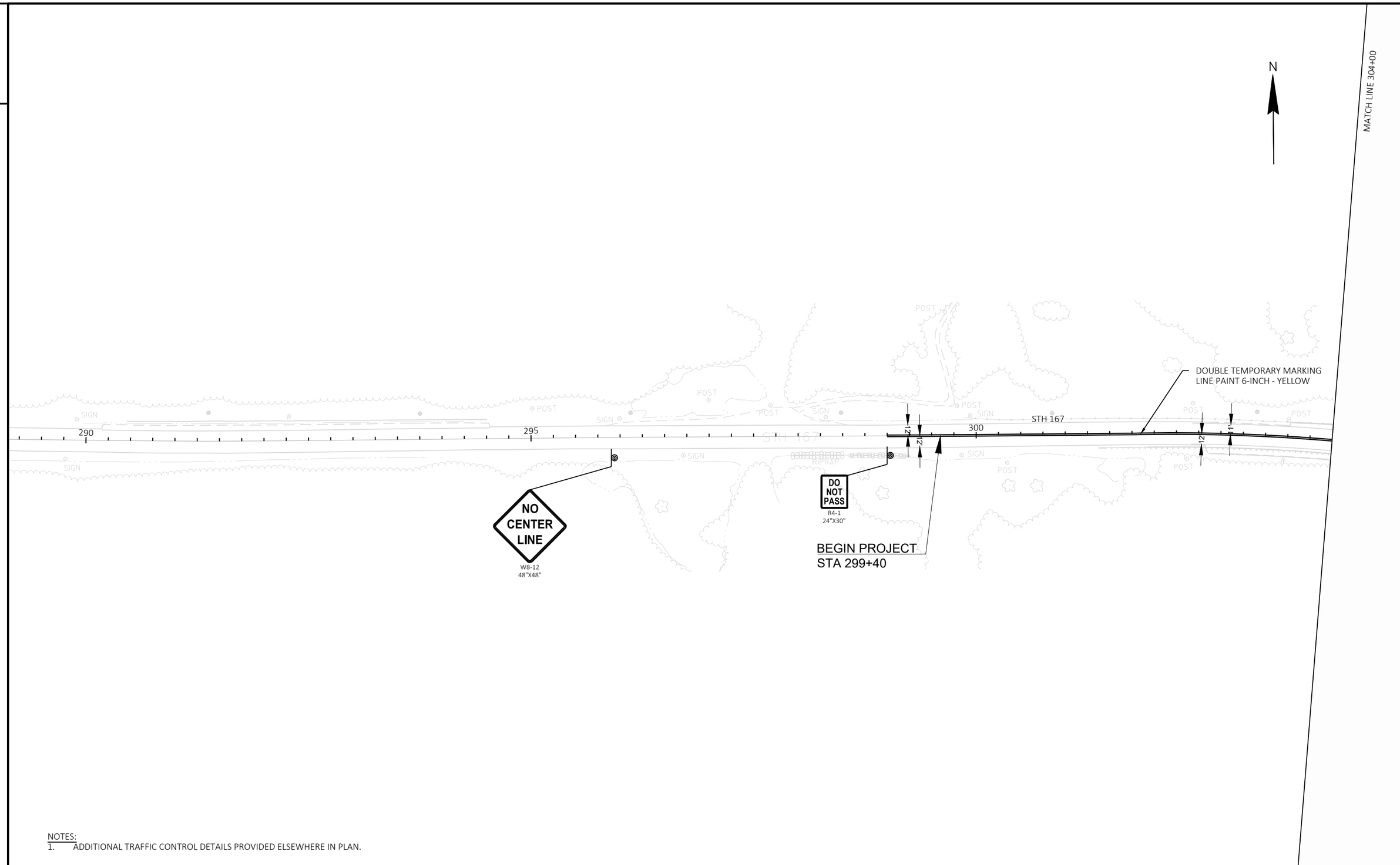


NOTES:
1. ADDITIONAL TRAFFIC CONTROL DETAILS PROVIDED ELSEWHERE IN PLAN.

| PROJECT NO: 2300-06-70 | HWY: STH 167 | COUNTY: WASHINGTON | TRAFFIC CONTROL | SHEET 35 | E |
|---|---|---|---|---|---|

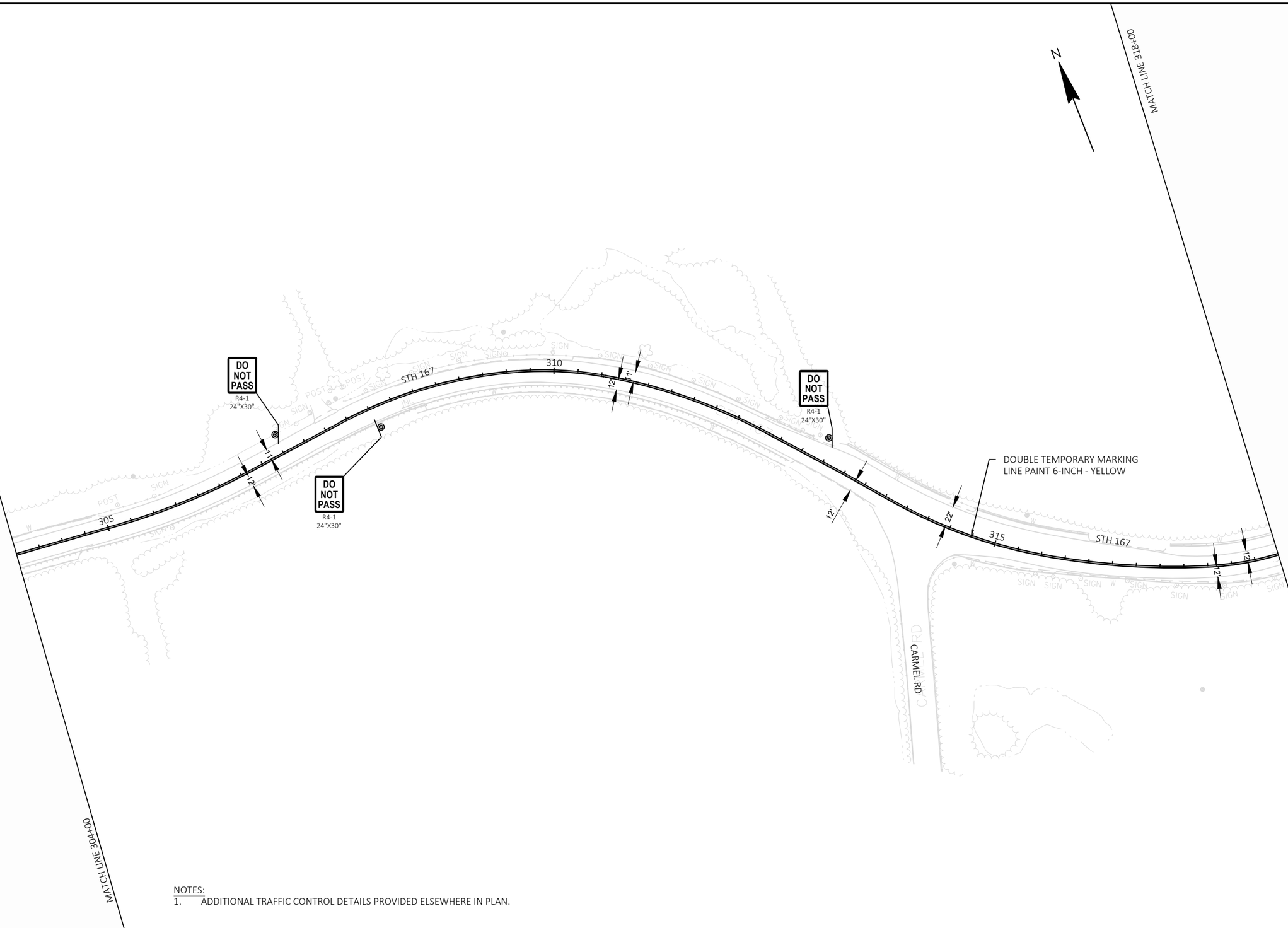


NOTES:
1. ADDITIONAL TRAFFIC CONTROL DETAILS PROVIDED ELSEWHERE IN PLAN.

| PROJECT NO: 2300-06-70 | HWY: STH 167 | COUNTY: WASHINGTON | TRAFFIC CONTROL | SHEET 36 | E |
|---|---|---|---|---|---|

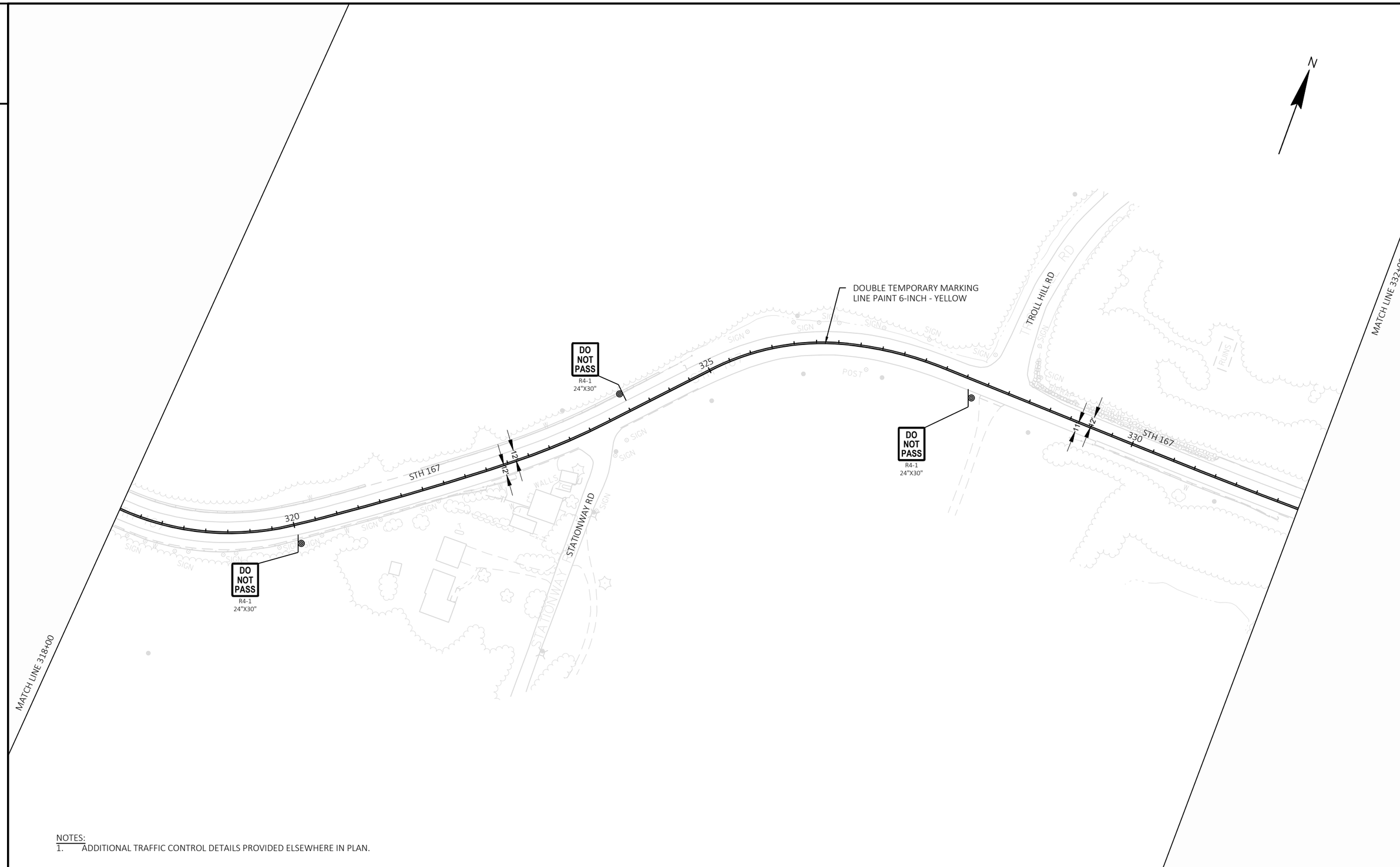


NOTES:
1. ADDITIONAL TRAFFIC CONTROL DETAILS PROVIDED ELSEWHERE IN PLAN.

| PROJECT NO: 2300-06-70 | HWY: STH 167 | COUNTY: WASHINGTON | TRAFFIC CONTROL | SHEET 37 | E |
|---|---|---|---|---|---|

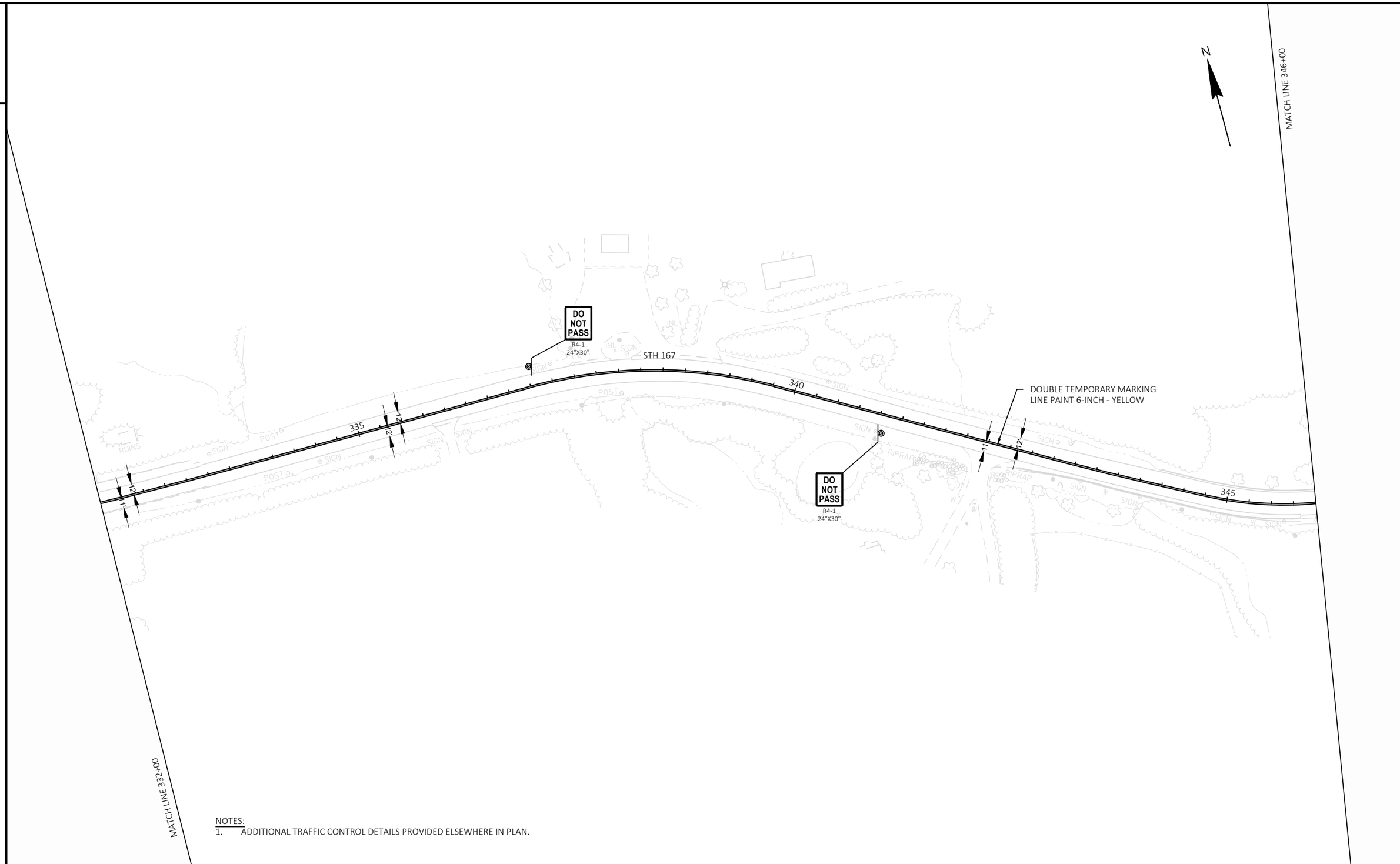


NOTES:
1. ADDITIONAL TRAFFIC CONTROL DETAILS PROVIDED ELSEWHERE IN PLAN.

| PROJECT NO: 2300-06-70 | HWY: STH 167 | COUNTY: WASHINGTON | TRAFFIC CONTROL | SHEET 38 | E |
|---|---|---|---|---|---|

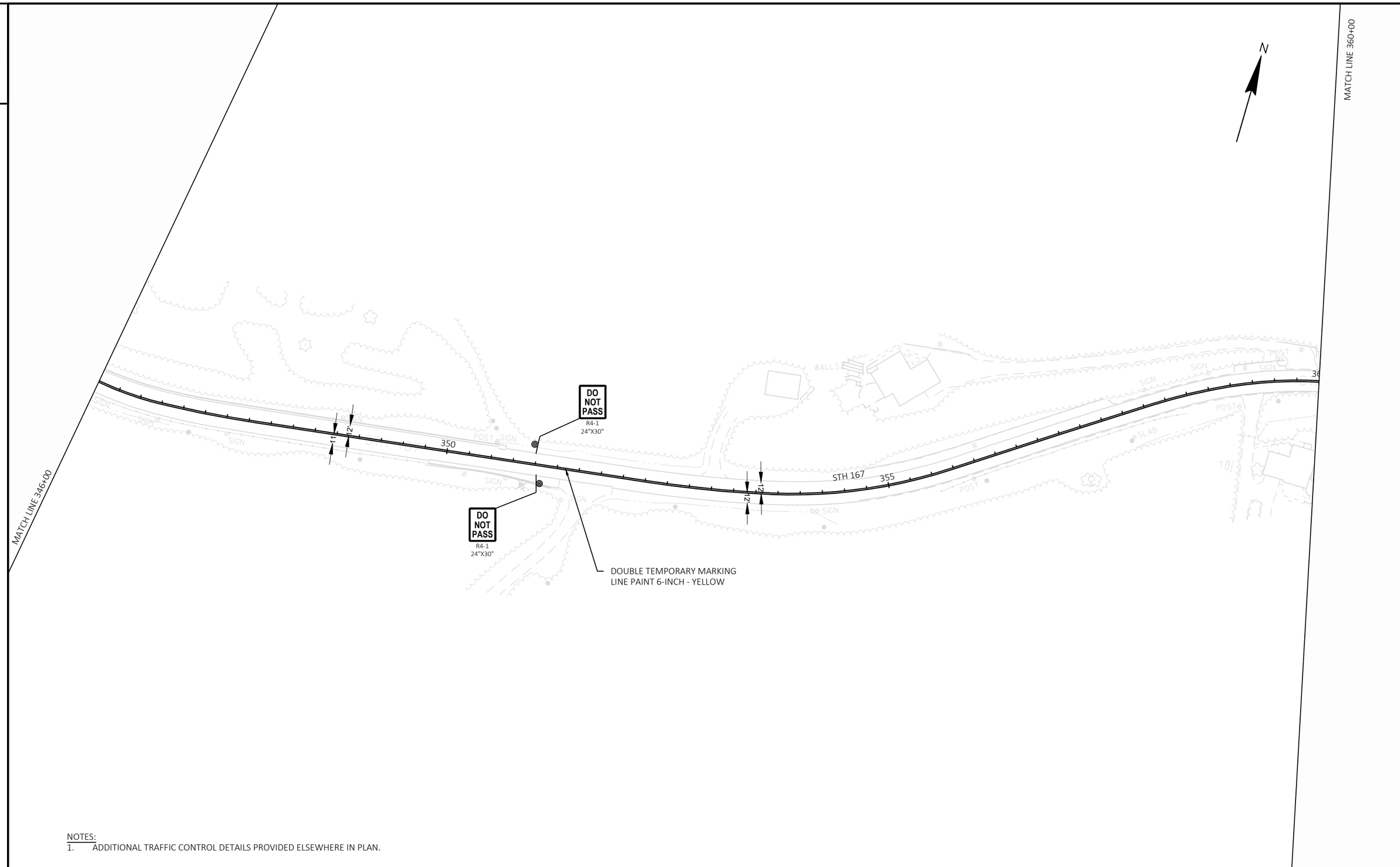


NOTES:
1. ADDITIONAL TRAFFIC CONTROL DETAILS PROVIDED ELSEWHERE IN PLAN.

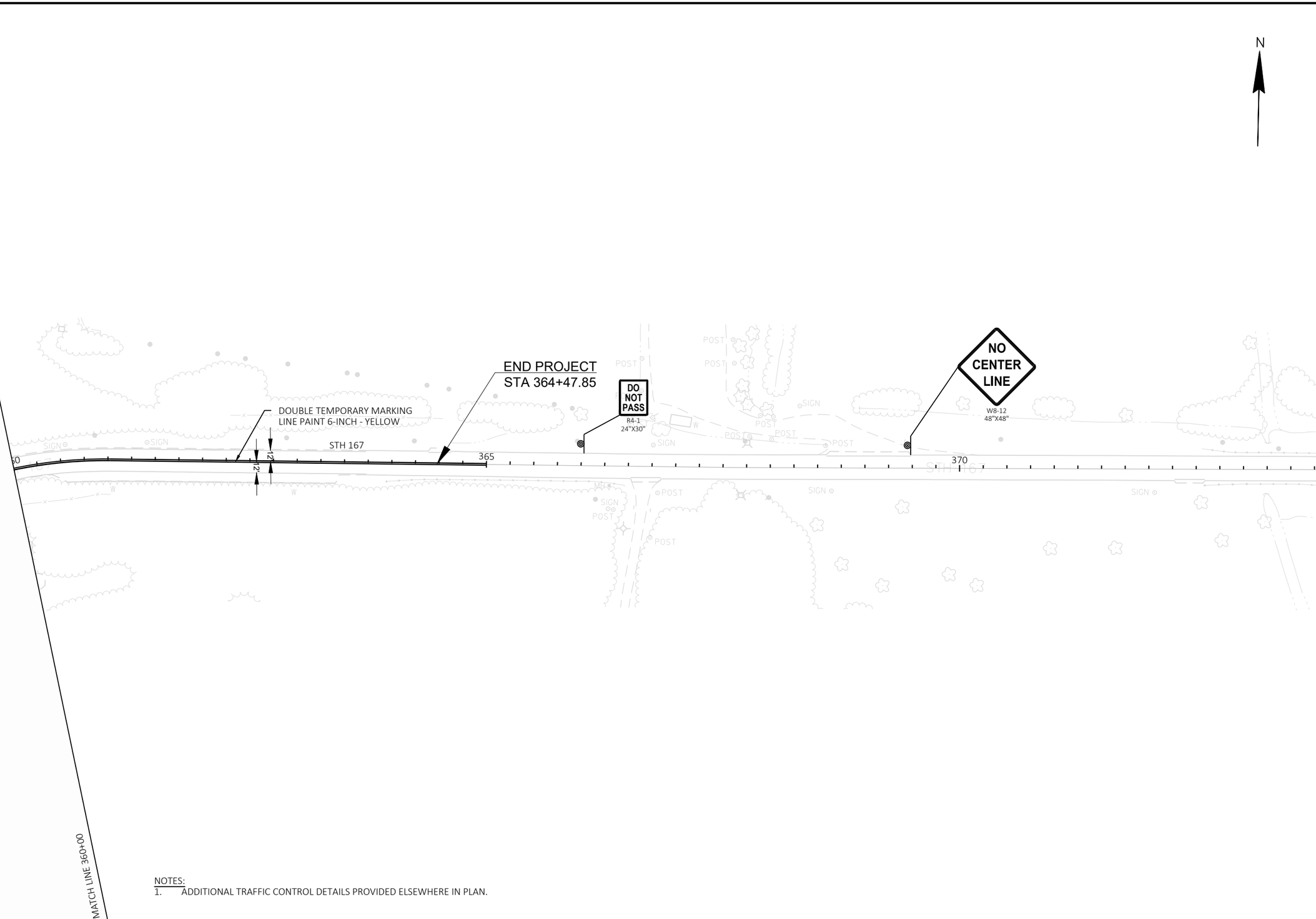


NOTES:
1. ADDITIONAL TRAFFIC CONTROL DETAILS PROVIDED ELSEWHERE IN PLAN.

2


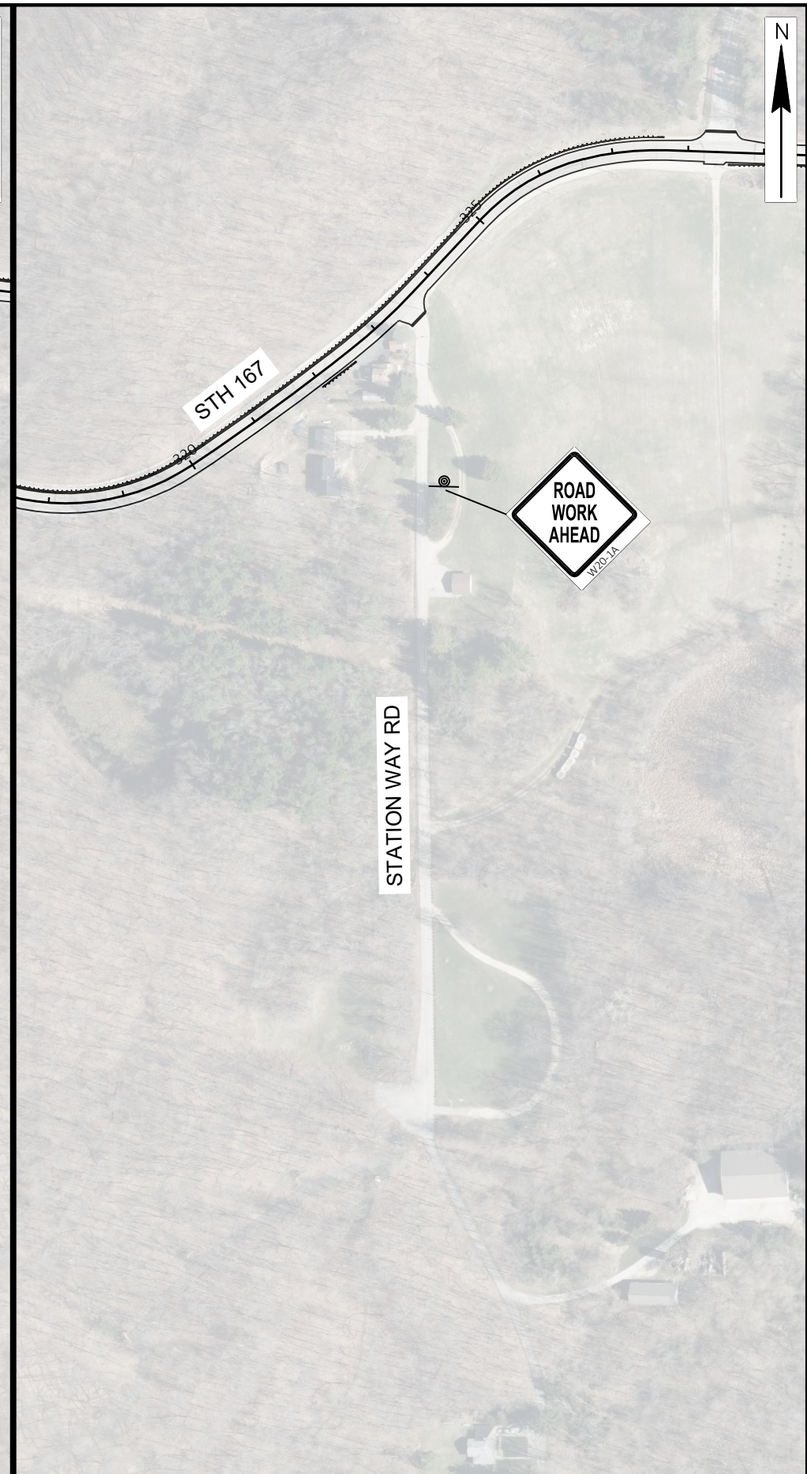


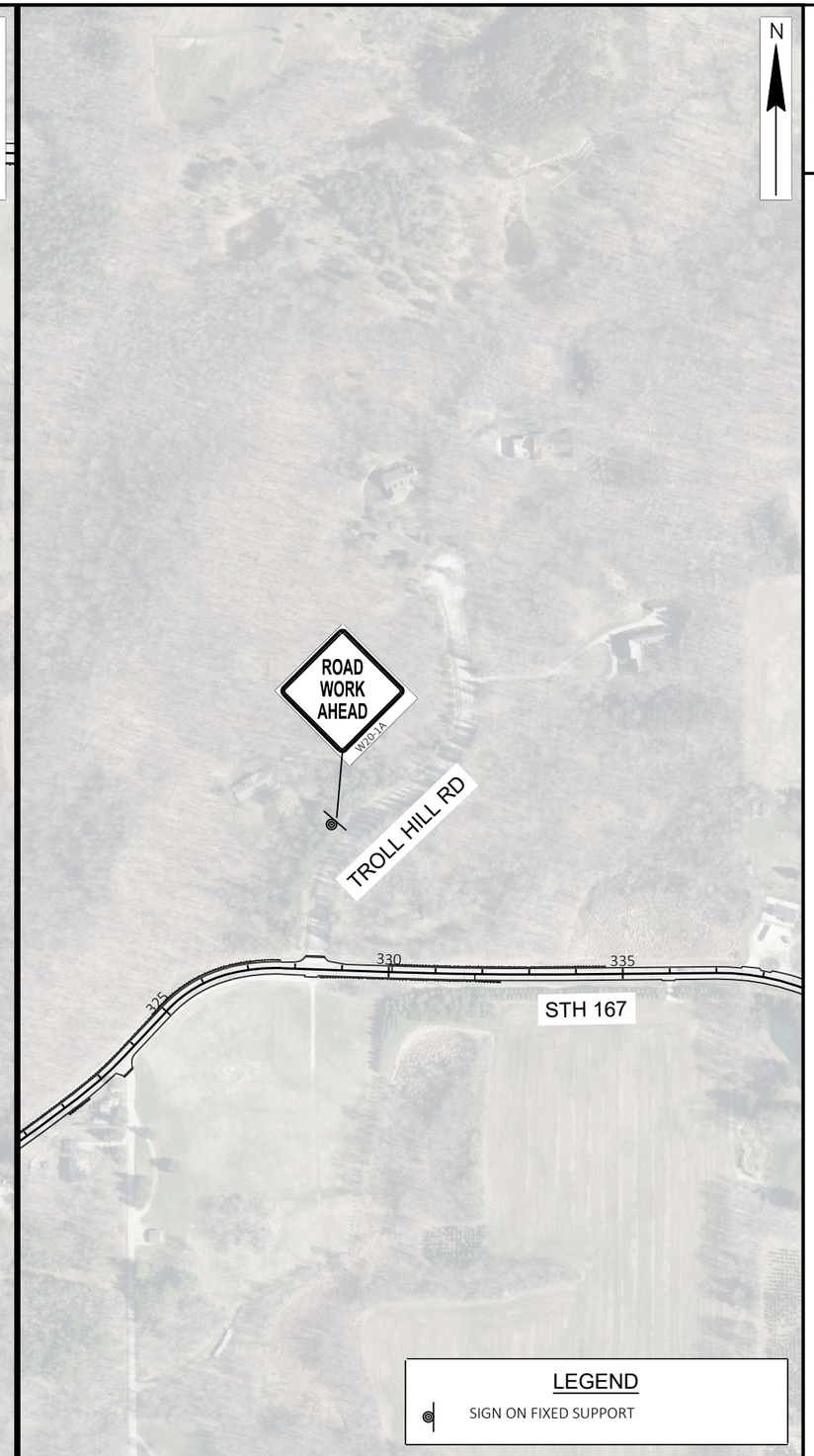


2

| PROJECT NO: 2300-06-70 | HWY: STH 167 | COUNTY: WASHINGTON | TRAFFIC CONTROL | SHEET 41 | E |
|---|---|---|---|---|---|

2

NOTE:
UTILIZE THE ROAD CLOSURE SHOWN ON THIS PLAN EXCEPT WHEN
CONSTRUCTING RETAINING WALL R-66-85 OR BEAM GUARD BLOW-OUT AREA.

N

2

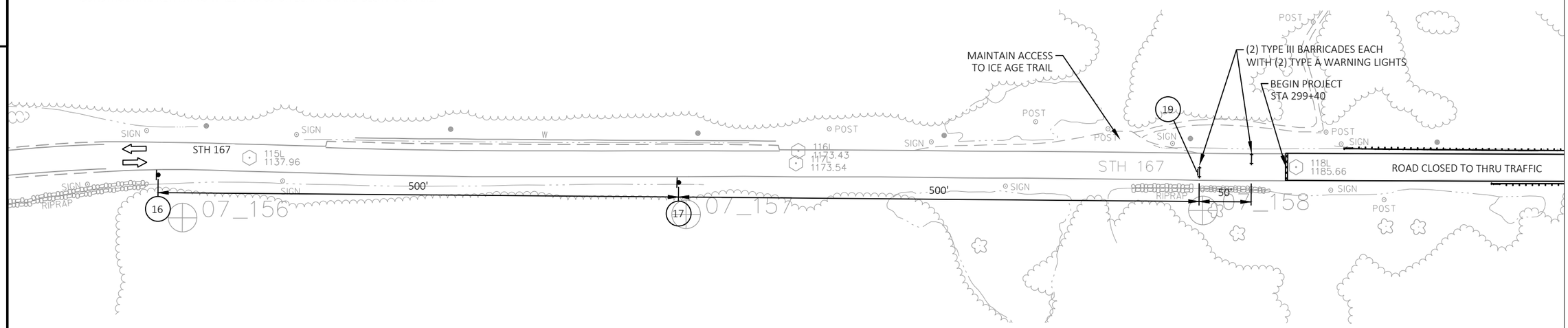


ROAD CLOSED TO THRU TRAFFIC ADVANCED WARNING SIGNING
WEST END OF WORK ZONE

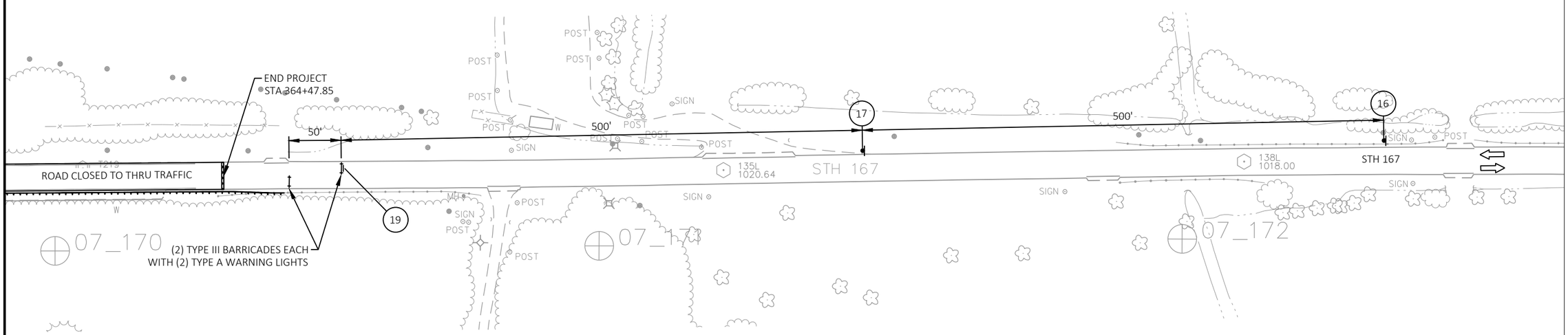


ROAD CLOSED TO THRU TRAFFIC ADVANCED WARNING SIGNING
EAST END OF WORK ZONE

| PROJECT NO: 2300-06-70 | HWY: STH 167 | COUNTY: WASHINGTON | TRAFFIC CONTROL | SHEET 42 | E |
|---|---|---|---|---|---|

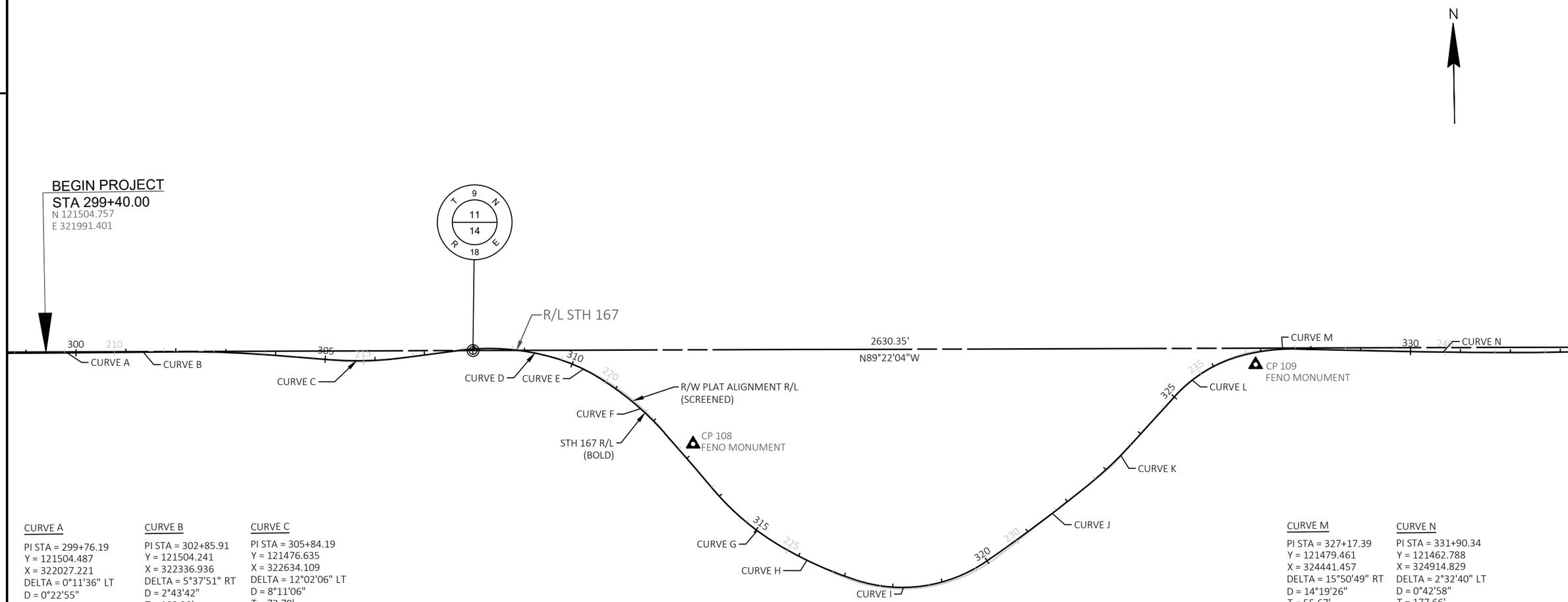


CURVE A

PI STA = 299+76.19
Y = 121504.487
X = 322027.221
DELTA = 0°11'36" LT
D = 0°22'55"
T = 25.29'
L = 50.59'
R = 15000.00'
PC STA = 299+50.89
Y = 121504.678
X = 322001.927
PT STA = 300+01.48
Y = 121504.381
X = 322052.515
DB = S89°34'03"E
DA = S89°45'38"E

CURVE B

PI STA = 302+85.91
Y = 121504.241
X = 322336.936
DELTA = 5°37'51" RT
D = 2°43'42"
T = 103.28'
L = 206.38'
R = 2100.00'
PC STA = 301+82.63
Y = 121503.658
X = 322233.663
PT STA = 303+89.02
Y = 121494.688
X = 322439.769
DB = N89°40'35"E
DA = S84°41'33"E

CURVE C

PI STA = 305+84.19
Y = 121476.635
X = 322634.109
DELTA = 12°02'06" LT
D = 8°11'06"
T = 73.79'
L = 147.03'
R = 700.00'
PC STA = 305+10.41
Y = 121483.460
X = 322560.637
PT STA = 306+57.44
Y = 121485.279
X = 322707.390
DB = S84°41'33"E
DA = N83°16'21"E

CURVE D

PI STA = 308+65.71
Y = 121509.677
X = 322914.224
DELTA = 23°46'19" RT
D = 12°11'26"
T = 98.92'
L = 195.00'
R = 470.00'
PC STA = 307+66.78
Y = 121498.088
X = 322815.981
PT STA = 309+61.79
Y = 121480.681
X = 323008.803
DB = N83°16'21"E
DA = S72°57'20"E

CURVE E

PI STA = 310+07.64
Y = 121467.242
X = 323052.639
DELTA = 14°30'53" RT
D = 15°54'56"
T = 45.84'
L = 91.20'
R = 360.00'
PC STA = 309+61.79
Y = 121480.680
X = 323008.808
PT STA = 310+52.99
Y = 121443.248
X = 323091.703
DB = S72°57'20"E
DA = S58°26'28"E

CURVE F

PI STA = 311+43.56
Y = 121395.846
X = 323168.879
DELTA = 17°50'40" RT
D = 9°57'52"
T = 90.27'
L = 179.08'
R = 575.00'
PC STA = 310+53.29
Y = 121443.092
X = 323091.958
PT STA = 312+32.37
Y = 121327.302
X = 323227.621
DB = S58°26'28"E
DA = S40°35'47"E

CURVE G

PI STA = 314+71.33
Y = 121143.641
X = 323380.476
DELTA = 19°48'53" LT
D = 11°01'06"
T = 90.82'
L = 179.83'
R = 520.00'
PC STA = 313+80.51
Y = 121213.969
X = 323323.006
PT STA = 315+60.34
Y = 121096.958
X = 323458.384
DB = S39°15'17"E
DA = S59°04'10"E

CURVE H

PI STA = 316+43.86
Y = 121054.028
X = 323530.027
DELTA = 12°08'54" LT
D = 7°26'28"
T = 81.94'
L = 163.26'
R = 770.00'
PC STA = 315+61.93
Y = 121096.144
X = 323459.742
PT STA = 317+25.19
Y = 121027.647
X = 323607.600
DB = S59°04'10"E
DA = S71°13'03"E

CURVE I

PI STA = 318+71.62
Y = 120980.498
X = 323746.238
DELTA = 52°15'41" LT
D = 19°13'36"
T = 146.19'
L = 271.82'
R = 298.00'
PC STA = 317+25.43
Y = 121027.567
X = 323607.836
PT STA = 319+97.25
Y = 121061.139
X = 323868.171
DB = S71°13'03"E
DA = N56°31'16"E

CURVE J

PI STA = 321+31.69
Y = 121136.971
X = 323979.183
DELTA = 3°09'39" LT
D = 1°38'13"
T = 96.57'
L = 193.09'
R = 3500.00'
PC STA = 320+35.13
Y = 121082.221
X = 323899.636
PT STA = 322+28.21
Y = 121196.024
X = 324055.591
DB = N55°27'41"E
DA = N52°18'02"E

CURVE K

PI STA = 323+13.04
Y = 121248.643
X = 324122.121
DELTA = 8°30'31" LT
D = 7°32'20"
T = 56.53'
L = 112.86'
R = 760.00'
PC STA = 322+56.50
Y = 121213.543
X = 324077.802
PT STA = 323+69.36
Y = 121289.914
X = 324160.758
DB = N51°37'16"E
DA = N43°06'45"E

CURVE L

PI STA = 325+83.77
Y = 121446.433
X = 324307.290
DELTA = 33°03'28" RT
D = 20°50'05"
T = 81.61'
L = 158.67'
R = 275.00'
PC STA = 325+02.16
Y = 121386.857
X = 324251.515
PT STA = 326+60.83
Y = 121465.941
X = 324386.534
DB = N43°06'45"E
DA = N76°10'13"E

CURVE M

PI STA = 327+17.39
Y = 121479.461
X = 324441.457
DELTA = 15°50'49" RT
D = 14°19'26"
T = 55.67'
L = 110.63'
R = 400.00'
PC STA = 326+61.72
Y = 121466.154
X = 324387.399
PT STA = 327+72.35
Y = 121477.501
X = 324497.093
DB = N76°10'13"E
DA = S87°58'58"E

CURVE N

PI STA = 331+90.34
Y = 121462.788
X = 324914.829
DELTA = 2°32'40" LT
D = 0°42'58"
T = 177.66'
L = 355.27'
R = 8000.00'
PC STA = 330+12.68
Y = 121469.042
X = 324737.275
PT STA = 333+67.95
Y = 121464.423
X = 325092.486
DB = S87°58'58"E
DA = N89°28'22"E

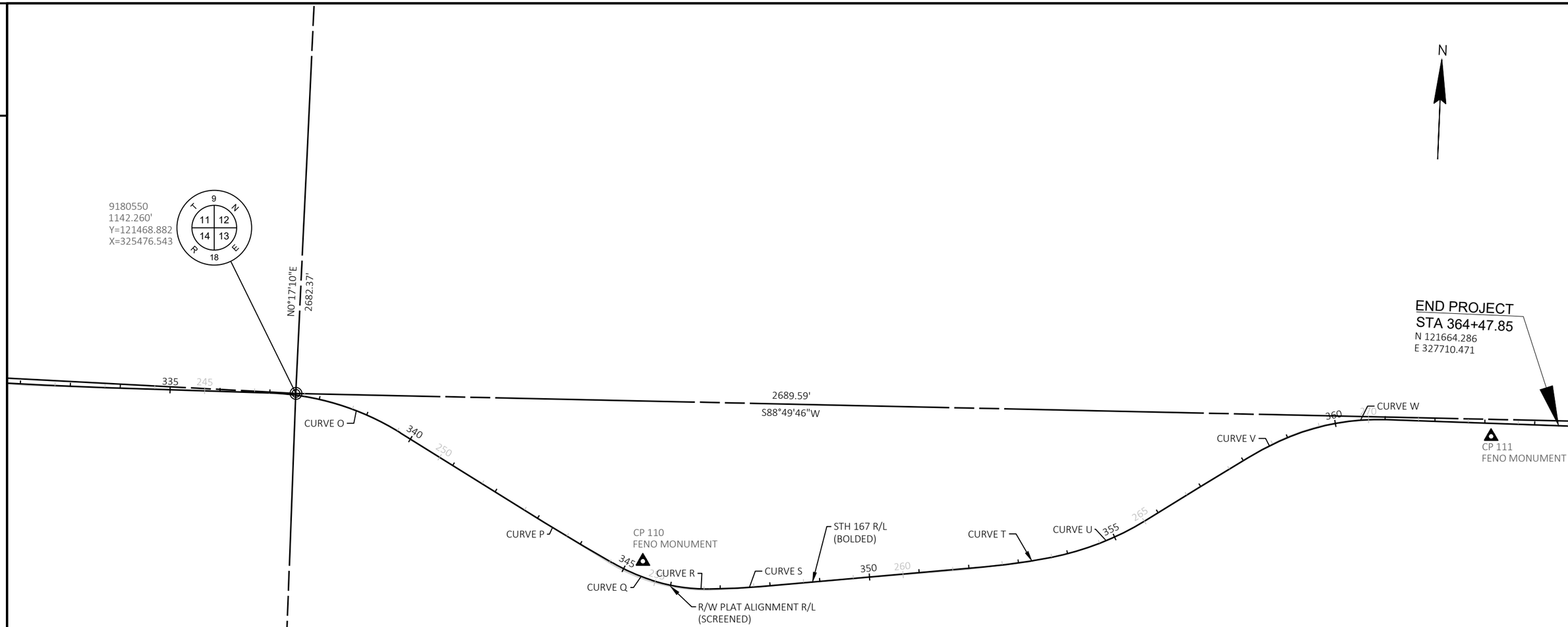


CURVE O
PI STA = 338+40.50
Y = 121468.771
X = 325565.012
DELTA = 29°58'30" RT
D = 10°48'38"
T = 141.89'
L = 277.28'
R = 530.00'
PC STA = 336+98.61
Y = 121467.465
X = 325423.129
PT STA = 339+75.88
Y = 121399.014
X = 325688.570
DB = N89°28'22"E
DA = S60°33'08"E

CURVE P
PI STA = 343+62.73
Y = 121208.826
X = 326025.441
DELTA = 1°46'44" LT
D = 1°54'35"
T = 46.57'
L = 93.14'
R = 3000.00'
PC STA = 343+16.16
Y = 121231.723
X = 325984.884
PT STA = 344+09.30
Y = 121187.199
X = 326066.688
DB = S60°33'08"E
DA = S62°19'52"E

CURVE Q
PI STA = 345+17.17
Y = 121137.107
X = 326162.225
DELTA = 12°08'26" LT
D = 14°19'26"
T = 42.54'
L = 84.76'
R = 400.00'
PC STA = 344+74.63
Y = 121156.860
X = 326124.552
PT STA = 345+59.39
Y = 121125.719
X = 326203.210
DB = S62°19'52"E
DA = S74°28'18"E

CURVE R
PI STA = 346+19.69
Y = 121109.575
X = 326261.313
DELTA = 18°38'43" LT
D = 15°54'56"
T = 59.10'
L = 117.15'
R = 360.00'
PC STA = 345+60.60
Y = 121125.396
X = 326204.372
PT STA = 346+77.75
Y = 121112.788
X = 326320.324
DB = S74°28'18"E
DA = N86°52'59"E

CURVE S
PI STA = 347+35.63
Y = 121115.936
X = 326378.125
DELTA = 4°19'04" LT
D = 4°46'29"
T = 45.24'
L = 90.43'
R = 1200.00'
PC STA = 346+90.40
Y = 121113.476
X = 326332.955
PT STA = 347+80.83
Y = 121121.789
X = 326422.981
DB = N86°52'59"E
DA = N82°33'55"E

CURVE T
PI STA = 352+97.26
Y = 121188.612
X = 326935.068
DELTA = 6°01'45" LT
D = 4°24'27"
T = 68.46'
L = 136.80'
R = 1300.00'
PC STA = 352+28.79
Y = 121179.754
X = 326867.182
PT STA = 353+65.59
Y = 121204.552
X = 327001.648
DB = N82°33'55"E
DA = N76°32'10"E

CURVE U
PI STA = 354+69.53
Y = 121228.754
X = 327102.734
DELTA = 20°35'44" LT
D = 10°03'07"
T = 103.56'
L = 204.89'
R = 570.00'
PC STA = 353+65.97
Y = 121204.641
X = 327002.017
PT STA = 355+70.86
Y = 121286.754
X = 327188.532
DB = N76°32'10"E
DA = N55°56'27"E

CURVE V
PI STA = 358+43.50
Y = 121438.506
X = 327415.034
DELTA = 6°19'57" RT
D = 9°32'57"
T = 33.19'
L = 66.31'
R = 600.00'
PC STA = 358+10.31
Y = 121420.135
X = 327387.392
PT STA = 358+76.63
Y = 121453.716
X = 327444.534
DB = N56°23'33"E
DA = N62°43'30"E

CURVE W
PI STA = 359+94.00
Y = 121507.505
X = 327548.860
DELTA = 26°50'59" RT
D = 12°11'26"
T = 112.18'
L = 220.25'
R = 470.00'
PC STA = 358+81.82
Y = 121456.095
X = 327449.148
PT STA = 361+02.07
Y = 121508.338
X = 327661.042
DB = N62°43'30"E
DA = N89°34'28"E

2

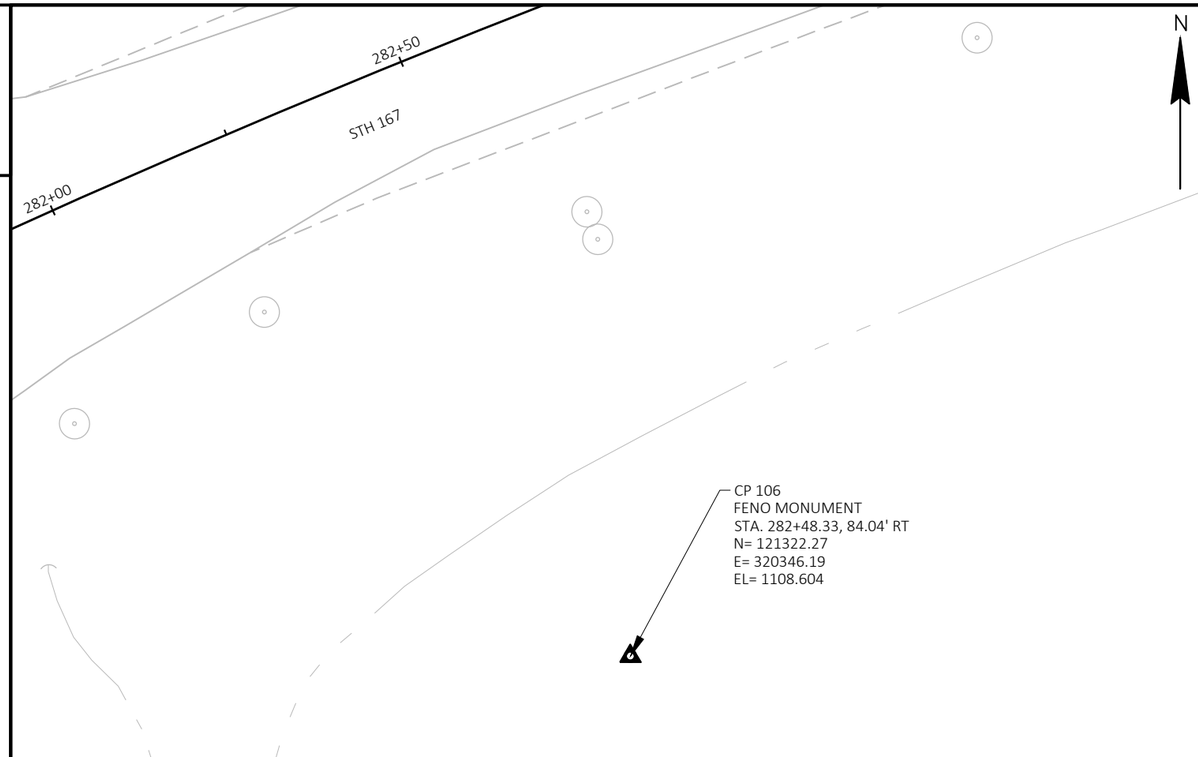


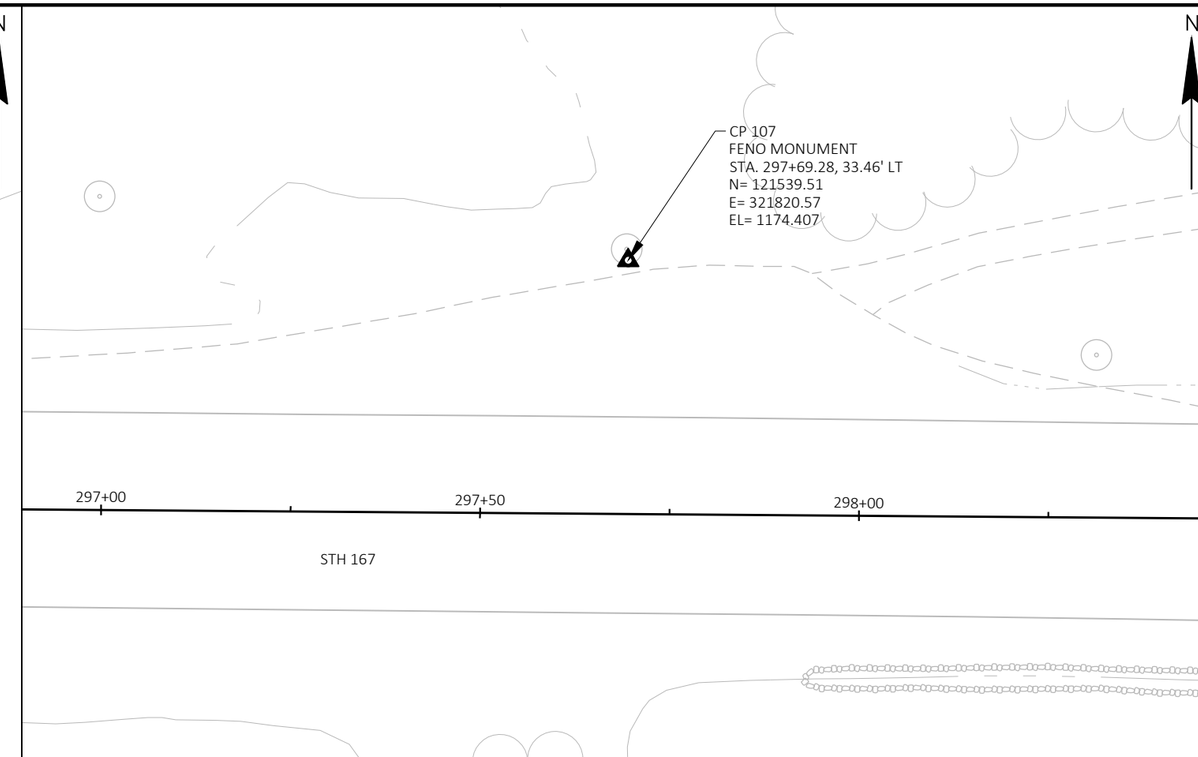


2

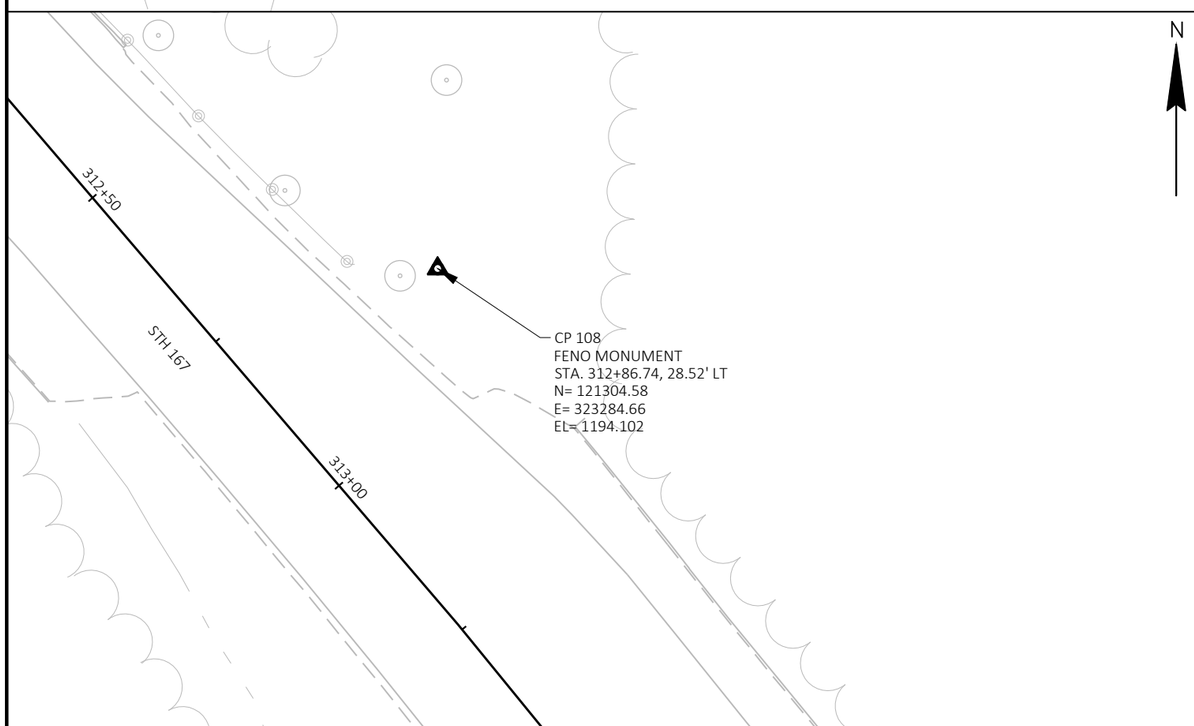


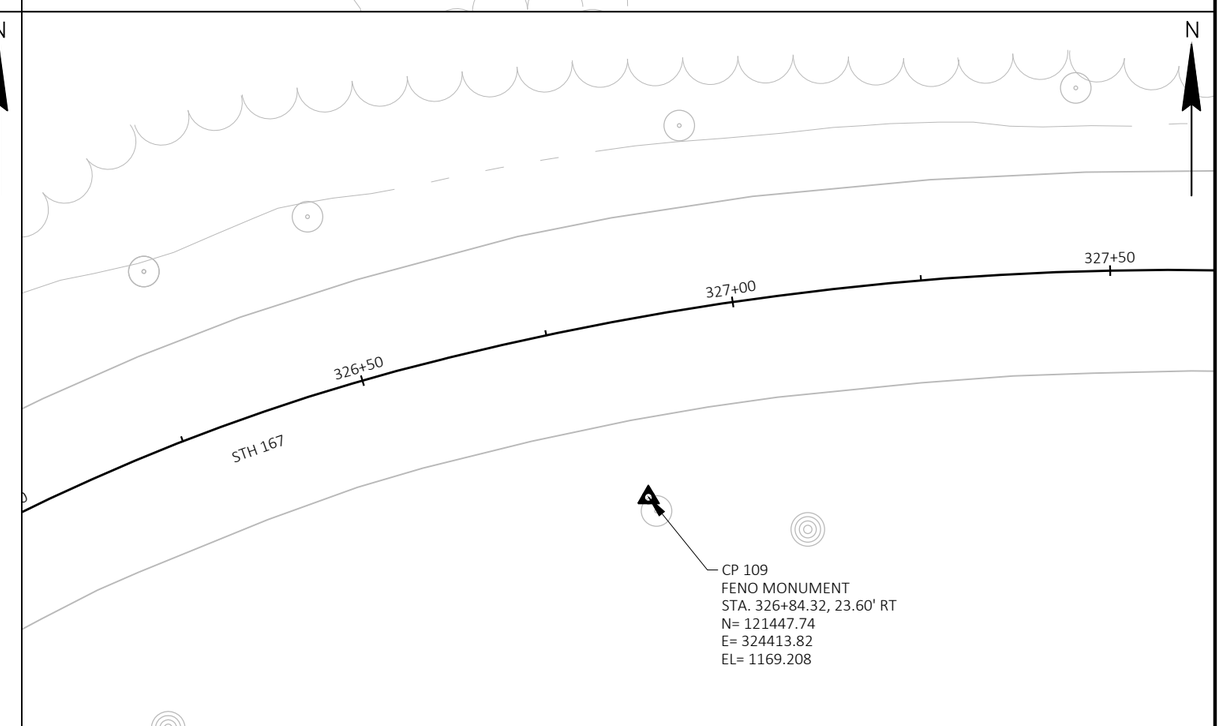


| PROJECT NO: 2300-06-70 | HWY: STH 167 | COUNTY: WASHINGTON | ALIGNMENT DETAILS - SURVEY CONTROL | SHEET 45 | E |
|---|---|---|---|---|---|

2

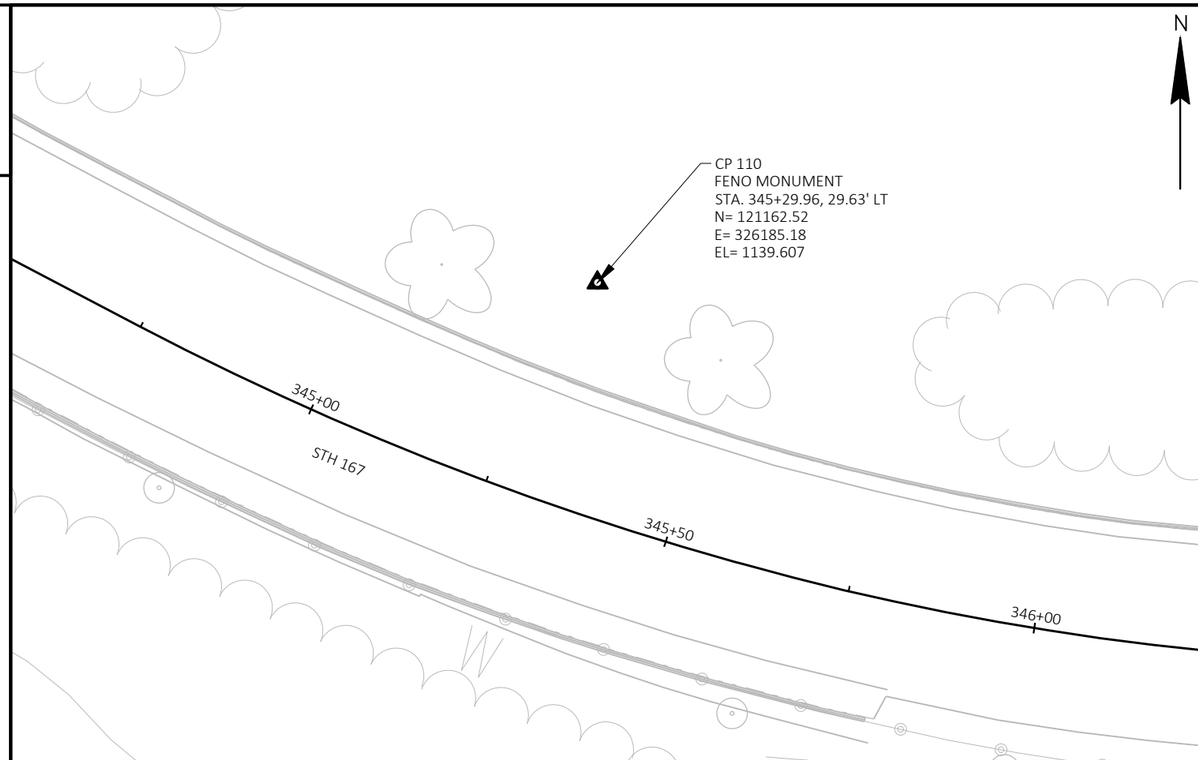


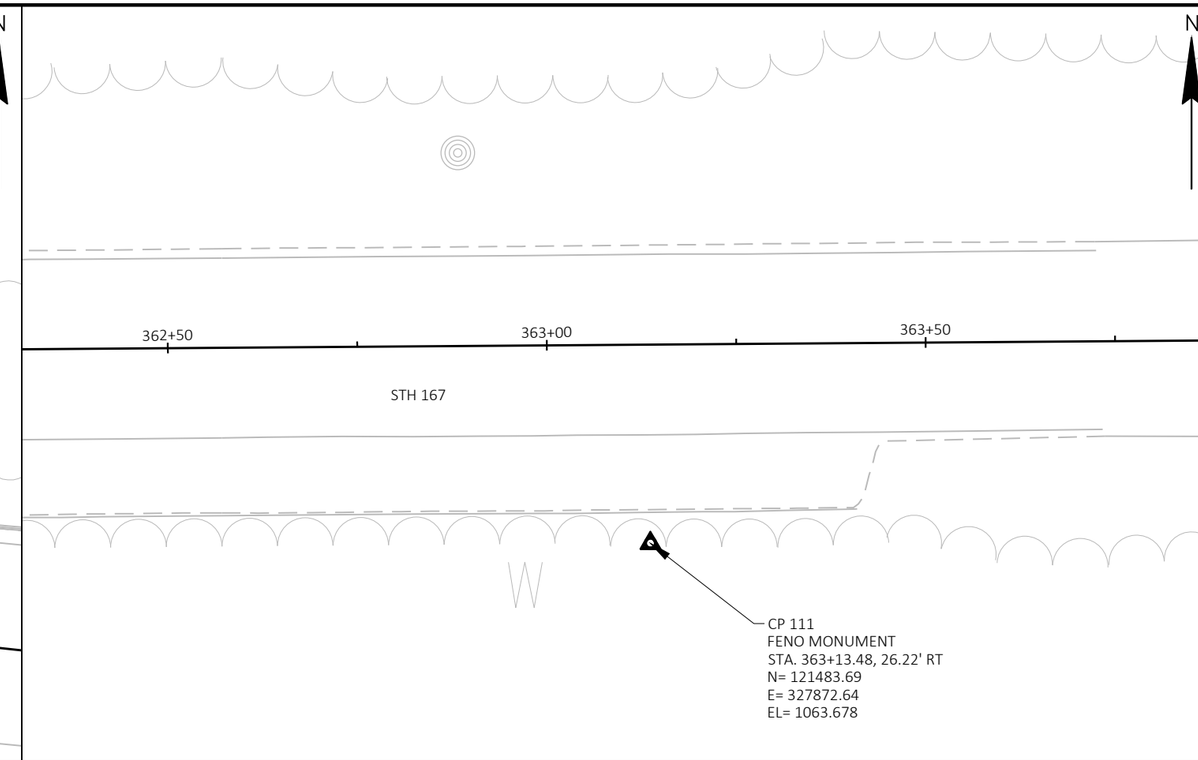


2

| PROJECT NO: 2300-06-70 | HWY: STH 167 | COUNTY: WASHINGTON | ALIGNMENT DETAILS - SURVEY CONTROL | SHEET 46 | E |
|---|---|---|---|---|---|

## Estimate Of Quantities

2300-06-70

| Line | Item | Item Description | Unit | Total | Qty |
|---|---|---|---|---|---|
| 0002 | 204.0115 | Removing Asphaltic Surface Butt Joints | SY | 114.000 | 114.000 |
| 0004 | 204.0120 | Removing Asphaltic Surface Milling | SY | 19,367.000 | 19,367.000 |
| 0006 | 204.0150 | Removing Curb & Gutter | LF | 55.000 | 55.000 |
| 0008 | 204.0165 | Removing Guardrail | LF | 1,787.000 | 1,787.000 |
| 0010 | 204.9060.S | Removing (item description) 01. Inlet Covers | EACH | 1.000 | 1.000 |
| 0012 | 204.9090.S | Removing (item description) 01. Guardrail Special | LF | 621.000 | 621.000 |
| 0014 | 204.9090.S | Removing (item description) 02. Steel Plate Beamguard Retaining Wall | LF | 150.000 | 150.000 |
| 0016 | 206.3001 | Excavation for Structures Retaining Walls (structure) 01. R-66-85 | EACH | 1.000 | 1.000 |
| 0018 | 209.0200.S | Backfill Controlled Low Strength | CY | 11.000 | 11.000 |
| 0020 | 209.1500 | Backfill Granular Grade 1 | TON | 665.000 | 665.000 |
| 0022 | 211.0101 | Prepare Foundation for Asphaltic Paving (project) 01. 2300-06-70 | EACH | 1.000 | 1.000 |
| 0024 | 213.0100 | Finishing Roadway (project) 01. 2300-06-70 | EACH | 1.000 | 1.000 |
| 0026 | 305.0110 | Base Aggregate Dense 3/4-Inch | TON | 204.000 | 204.000 |
| 0028 | 305.0120 | Base Aggregate Dense 1 1/4-Inch | TON | 111.000 | 111.000 |
| 0030 | 305.0500 | Shaping Shoulders | STA | 129.000 | 129.000 |
| 0032 | 455.0605 | Tack Coat | GAL | 1,322.000 | 1,322.000 |
| 0034 | 460.2000 | Incentive Density HMA Pavement | DOL | 1,427.000 | 1,427.000 |
| 0036 | 460.5424 | HMA Pavement 4 LT 58-28 H | TON | 2,229.000 | 2,229.000 |
| 0038 | 465.0115 | Asphaltic Surface Detours | TON | 50.000 | 50.000 |
| 0040 | 465.0310 | Asphaltic Curb | LF | 621.000 | 621.000 |
| 0042 | 465.0560 | Asphaltic Rumble Strips, Centerline | LF | 6,510.000 | 6,510.000 |
| 0044 | 511.1200 | Temporary Shoring (structure) 01. R-66-85 | SF | 590.000 | 590.000 |
| 0046 | 603.1436 | Concrete Barrier Type S36C | LF | 336.000 | 336.000 |
| 0048 | 611.0610 | Inlet Covers Type BW | EACH | 1.000 | 1.000 |
| 0050 | 614.0010 | Barrier System Grading Shaping Finishing | EACH | 4.000 | 4.000 |
| 0052 | 614.0305 | Steel Plate Beam Guard Class A | LF | 50.000 | 50.000 |
| 0054 | 614.0370 | Steel Plate Beam Guard Energy Absorbing Terminal | EACH | 2.000 | 2.000 |
| 0056 | 614.0396 | Guardrail Mow Strip Asphalt | SY | 477.000 | 477.000 |
| 0058 | 614.0397 | Guardrail Mow Strip Emulsified Asphalt | SY | 1,240.000 | 1,240.000 |
| 0060 | 614.0400 | Adjusting Steel Plate Beam Guard | LF | 50.000 | 50.000 |
| 0062 | 614.0805 | Crash Cushions Permanent Low Maintenance | EACH | 1.000 | 1.000 |
| 0064 | 614.2300 | MGS Guardrail 3 | LF | 3,508.000 | 3,508.000 |
| 0066 | 614.2330 | MGS Guardrail 3 K | LF | 1,723.000 | 1,723.000 |
| 0068 | 614.2500 | MGS Thrie Beam Transition | LF | 117.000 | 117.000 |
| 0070 | 614.2610 | MGS Guardrail Terminal EAT | EACH | 17.000 | 17.000 |
| 0072 | 616.0700.S | Fence Safety | LF | 200.000 | 200.000 |
| 0074 | 619.1000 | Mobilization | EACH | 1.000 | 1.000 |
| 0076 | 624.0100 | Water | MGAL | 2.000 | 2.000 |
| 0078 | 625.0100 | Topsoil | SY | 428.000 | 428.000 |
| 0080 | 628.1504 | Silt Fence | LF | 710.000 | 710.000 |
| 0082 | 628.1520 | Silt Fence Maintenance | LF | 710.000 | 710.000 |
| 0084 | 628.1905 | Mobilizations Erosion Control | EACH | 2.000 | 2.000 |
| 0086 | 628.1910 | Mobilizations Emergency Erosion Control | EACH | 2.000 | 2.000 |
| 0088 | 628.2006 | Erosion Mat Urban Class I Type A | SY | 428.000 | 428.000 |
| 0090 | 630.0110 | Seeding Mixture No. 10 | LB | 8.000 | 8.000 |
| 0092 | 630.0500 | Seed Water | MGAL | 2.000 | 2.000 |
| 0094 | 634.0618 | Posts Wood 4x6-Inch X 18-FT | EACH | 66.000 | 66.000 |
| 0096 | 634.0622 | Posts Wood 4x6-Inch X 22-FT | EACH | 3.000 | 3.000 |
| 0098 | 637.2210 | Signs Type II Reflective H | SF | 30.000 | 30.000 |
| 0100 | 637.2230 | Signs Type II Reflective F | SF | 40.000 | 40.000 |

## Estimate Of Quantities

2300-06-70

| Line | Item | Item Description | Unit | Total | Qty |
|---|---|---|---|---|---|
| 0102 | 638.2102 | Moving Signs Type II | EACH | 71.000 | 71.000 |
| 0104 | 638.2602 | Removing Signs Type II | EACH | 2.000 | 2.000 |
| 0106 | 638.3000 | Removing Small Sign Supports | EACH | 46.000 | 46.000 |
| 0108 | 642.5001 | Field Office Type B | EACH | 1.000 | 1.000 |
| 0110 | 643.0300 | Traffic Control Drums | DAY | 2,940.000 | 2,940.000 |
| 0112 | 643.0420 | Traffic Control Barricades Type III | DAY | 6,384.000 | 6,384.000 |
| 0114 | 643.0705 | Traffic Control Warning Lights Type A | DAY | 12,768.000 | 12,768.000 |
| 0116 | 643.0715 | Traffic Control Warning Lights Type C | DAY | 2,940.000 | 2,940.000 |
| 0118 | 643.0900 | Traffic Control Signs | DAY | 39,333.000 | 39,333.000 |
| 0120 | 643.0920 | Traffic Control Covering Signs Type II | EACH | 20.000 | 20.000 |
| 0122 | 643.1000 | Traffic Control Signs Fixed Message | SF | 212.500 | 212.500 |
| 0124 | 643.3165 | Temporary Marking Line Paint 6-Inch | LF | 13,200.000 | 13,200.000 |
| 0126 | 643.5000 | Traffic Control | EACH | 1.000 | 1.000 |
| 0128 | 646.2020 | Marking Line Epoxy 6-Inch | LF | 12,890.000 | 12,890.000 |
| 0130 | 646.2040 | Marking Line Grooved Wet Ref Epoxy 6-Inch | LF | 12,793.000 | 12,793.000 |
| 0132 | 646.4040 | Marking Line Grooved Wet Ref Epoxy 10-Inch | LF | 70.000 | 70.000 |
| 0134 | 646.6120 | Marking Stop Line Epoxy 18-Inch | LF | 90.000 | 90.000 |
| 0136 | 648.0100 | Locating No-Passing Zones | MI | 2.500 | 2.500 |
| 0138 | 650.4500 | Construction Staking Subgrade | LF | 170.000 | 170.000 |
| 0140 | 650.5000 | Construction Staking Base | LF | 170.000 | 170.000 |
| 0142 | 650.6501 | Construction Staking Structure Layout (structure) 01. R-66-85 | EACH | 1.000 | 1.000 |
| 0144 | 650.8000 | Construction Staking Resurfacing Reference | LF | 6,508.000 | 6,508.000 |
| 0146 | 650.9911 | Construction Staking Supplemental Control (project) 01. 2300-06-70 | EACH | 1.000 | 1.000 |
| 0148 | 690.0150 | Sawing Asphalt | LF | 400.000 | 400.000 |
| 0150 | 740.0440 | Incentive IRI Ride | DOL | 5,080.000 | 5,080.000 |
| 0152 | ASP.1T0A | On-the-Job Training Apprentice at $5.00/HR | HRS | 400.000 | 400.000 |
| 0154 | ASP.1T0G | On-the-Job Training Graduate at $5.00/HR | HRS | 900.000 | 900.000 |
| 0156 | SPV.0035 | Special 01. Gabion Retaining Wall R-66-85 | CY | 372.000 | 372.000 |
| 0158 | SPV.0060 | Special 01. Type 3 Inlet Cover 2'x2.5' Opening | EACH | 1.000 | 1.000 |
| 0160 | SPV.0060 | Special 02. Section Corner Monuments | EACH | 2.000 | 2.000 |
| 0162 | SPV.0060 | Special 03. Beamguard Fill Wall Blowout Repair | EACH | 1.000 | 1.000 |
| 0164 | SPV.0075 | Special 01. Pavement Cleanup | HRS | 50.000 | 50.000 |
| 0166 | SPV.0180 | Special 01. Resin Binder High Friction Surface Treatment | SY | 20,340.000 | 20,340.000 |
| 0168 | SPV.0195 | Special 01. Asphaltic Repair | TON | 61.000 | 61.000 |

3

## REMOVING ASPHALTIC SURFACE ITEMS

| CATEGORY | ROADWAY | STATION | TO | STATION | 204.0115 REMOVING ASPHALTIC SURFACE BUTT JOINTS SY | * 204.0120 REMOVING ASPHALTIC SURFACE MILLING SY |
|---|---|---|---|---|---|---|
| 0010 | STH 167 | 299+40 | - | 314+00 | 6 | 4,340 |
| | | 314+00 | - | 323+50 | 16 | 3,020 |
| | | 323+50 | - | 328+35 | 6 | 1,400 |
| | | 328+35 | - | 342+25 | 80 | 4,020 |
| | | 342+25 | - | 351+50 | - | 2,500 |
| | | 351+50 | - | 364+00 | 6 | 3,610 |
| | | | | PROJECT TOTALS | 114 | 18,890 |

* ADDITIONAL QUANTITIES SHOWN ELSEWHERE

REMOVING ITEMS

| CATEGORY | | STATION | TO | STATION | LOCATION | 204.0150 REMOVING CURB & GUTTER LF | 204.0165 REMOVING GUARDRAIL LF | 204.9090.S.01 REMOVING (ITEM DESCRIPTION) (01. GUARDRAIL SPECIAL) LF | 204.9090.S.02 REMOVING (ITEM DESCRIPTION) (02. STEEL PLATE BEAMGUARD RETAINING WALL) LF | 209.0200.S BACKFILL CONTROLLED LOW STRENGTH CY |
|---|---|---|---|---|---|---|---|---|---|---|
| | | | | | | | | | - | |
| 0010 | STH 167 | 299+87 | - | 303+52 | LT | - | 365 | - | - | - |
| | | 303+52 | - | 304+91 | LT | - | - | 139 | - | - |
| | | 304+91 | - | 305+90 | LT | - | 99 | - | - | - |
| | | 307+85 | - | 310+19 | LT | - | 234 | - | - | - |
| | | 310+19 | - | 312+38 | LT | - | - | 219 | - | - |
| | | 312+38 | - | 312+77 | LT | - | 39 | - | - | - |
| | | 314+38 | - | 314+70 | LT | - | 32 | - | - | - |
| | | 315+98 | - | 316+84 | LT | - | 86 | - | - | - |
| | | 320+90 | - | 321+54 | LT | - | 64 | - | - | - |
| | | 324+48 | - | 324+90 | LT | - | 42 | - | - | - |
| | | 299+87 | - | 324+90 | LEFT SIDE GUARDRAIL | - | - | - | - | 6 |
| | | 308+03 | - | 308+58 | RT | 55 | - | - | - | - |
| | | 321+99 | - | 322+52 | RT | - | 53 | - | - | - |
| | | 329+31 | - | 329+59 | RT | - | 28 | - | - | - |
| | | 329+59 | - | 331+72 | RT | - | - | 213 | - | - |
| | | 342+62 | - | 343+12 | RT | - | - | 50 | - | - |
| | | 345+92 | - | 349+81 | RT | - | 389 | - | - | - |
| | | 349+81 | - | 351+30 | RT | - | - | - | 150 | - |
| | | 355+53 | - | 358+44 | RT | - | 291 | - | - | - |
| | | 363+93 | - | 364+58 | RT | - | 65 | - | - | - |
| | | 308+03 | - | 364+58 | RIGHT SIDE GUARDRAIL | - | - | - | - | 5 |
| | | | | | PROJECT TOTALS | 55 | 1,787 | 621 | 150 | 11 |

3

STORM SEWER

| CATEGORY | ROADWAY | STATION | LOCATION | 204.9060.S.01 REMOVING (ITEM DESCRIPTION) (01. INLET COVERS) EACH | 611.0610 INLET COVERS TYPE BW EACH | SPV.0060.01 SPECIAL (01. TYPE 3 INLET COVER 2'X2.5' OPENING) EACH |
|---|---|---|---|---|---|---|
| 0010 | STH 167 | 308+42 | 15' RT | 1 | 1 | 1 |
| | | | PROJECT TOTALS | 1 | 1 | 1 |

FINISHING ROADWAY

| CATEGORY | ROADWAY | 213.0100.01 FINISHING ROADWAY (PROJECT) (01. 2300-06-70) EACH |
|---|---|---|
| 0010 | STH 167 | 1 |
| | PROJECT TOTAL | 1 |

SHAPING SHOULDERS

| CATEGORY | ROADWAY | STATION | TO | STATION | 305.0500 SHAPING SHOULDERS STA |
|---|---|---|---|---|---|
| 0010 | STH 167 | 299+40 | - | 364+00 | 129 |
| | | | | PROJECT TOTAL | 129 |

3

3

BASE AGGREGATE

| CATEGORY | ROADWAY | STATION | TO | STATION | OFFSET | LOCATION | 305.0110 BASE AGGREGATE DENSE 3/4-INCH TON | 305.0120 BASE AGGREGATE DENSE 1 1/4-INCH TON |
|---|---|---|---|---|---|---|---|---|
| 0010 | STH 167 | 290+40 | - | 302+62 | RT | SHOULDER | 32 | - |
| | | 299+40 | - | 303+00 | LT | SHOULDER | 9 | - |
| | | 304+61 | - | 307+59 | RT | SHOULDER | 8 | - |
| | | 304+91 | - | 309+70 | LT | SHOULDER | 12 | - |
| | | 312+68 | - | 313+85 | RT | SHOULDER | 3 | - |
| | | 312+77 | - | 313+14 | LT | SHOULDER | 1 | - |
| | | 314+38 | - | 314+70 | LT | SHOULDER | 1 | - |
| | | 316+05 | - | 316+84 | LT | SHOULDER | 2 | - |
| | | 320+90 | - | 321+54 | LT | SHOULDER | 2 | - |
| | | 323+00 | - | 329+09 | RT | SHOULDER | 16 | - |
| | | 324+48 | - | 330+95 | LT | SHOULDER | 17 | - |
| | | 332+37 | - | 342+05 | RT | SHOULDER | 25 | - |
| | | 332+96 | - | 344+08 | LT | SHOULDER | 29 | - |
| | | 349+81 | - | 351+31 | RT | PAVEMENT REPLACEMENT AT R-65-085 | - | 111 |
| | | 350+54 | - | 354+67 | LT | SHOULDER | 11 | - |
| | | 351+90 | - | 359+10 | RT | SHOULDER | 19 | - |
| | | 357+60 | - | 359+07 | LT | SHOULDER | 4 | - |
| | | 359+40 | - | 360+54 | RT | SHOULDER | 3 | - |
| | | 360+00 | - | 364+00 | LT | SHOULDER | 10 | - |
| | | | | | | PROJECT TOTAL | 204 | 111 |

3

ASPHALT

| CATEGORY | ROADWA | STATION | TO | STATION | LOCATION | 211.0101.01 PREPARE FOUNDATION FOR ASPHALTIC PAVING (PROJECT) (01. 2300-06-70) EACH | 455.0605 TACK COAT GAL | 460.5424 HMA PAVEMENT 4 LT 58-28 H TON | 465.0115 ASPHALTIC SURFACE DETOURS TON | 465.0310 ASPHALTIC CURB LF | 465.0560 ASPHALTIC RUMBLE STRIPS, CENTERLINE LF |
|---|---|---|---|---|---|---|---|---|---|---|---|
| 0010 | STH 167 | 299+40 | - | 314+00 | M/L | - | 304 | 512 | - | - | 1460 |
| | | 303+52 | - | 304+91 | LT | - | - | - | - | 139 | - |
| | | 304+00 | - | 304+50 | LT | - | - | - | - | 50 | - |
| | | 310+19 | - | 312+38 | LT | - | - | - | - | 219 | - |
| | | 314+00 | - | 323+50 | M/L | - | 211 | 356 | - | - | 950 |
| | | 323+50 | - | 328+35 | M/L | - | 98 | 165 | - | - | 485 |
| | | 328+35 | - | 342+25 | M/L | - | 281 | 474 | - | - | 1390 |
| | | 329+59 | - | 331+72 | RT | - | - | - | - | 213 | - |
| | | 342+25 | - | 351+50 | M/L | - | 175 | 295 | - | - | 925 |
| | | 351+50 | - | 364+50 | M/L | - | 253 | 426 | - | - | 1300 |
| | PROJECT 2300-06-70 | | | | | 1 | - | - | - | - | - |
| | UNDISTRIBUTED | | | | | - | - | - | 50 | - | - |
| | | | | PROJECT TOTALS | | 1 | 1,322 | 2,229 | 50 | 621 | 6,510 |

CONCRETE BARRIER

| CATEGORY | ROADWA | STATION | TO | STATION | LOCATION | 603.1436 CONCRETE BARRIER TYPE S36C LF |
|---|---|---|---|---|---|---|
| 0010 | STH 167 | 308+03 | - | 308+56 | RT | 53 |
| | | 313+24 | - | 316+07 | LT | 283 |
| | | | | | PROJECT TOTAL | 336 |

GUARDRAIL MOW STRIP EMULSIFIED ASPHALT

| CATEGORY | STATION | TO | STATION | LOCATION | WIDTH (FT) | 614.0397 GUARDRAIL MOW STRIP EMULSIFIED ASPHALT SY |
|---|---|---|---|---|---|---|
| 0010 | 299+72 | - | 303+52 | GUARDRAIL - LEFT | 4 | 169 |
| | 301+15 | - | 302+62 | GUARDRAIL - RIGHT | 5 | 82 |
| | 304+61 | - | 308+05 | GUARDRAIL - RIGHT | 3 | 115 |
| | 304+91 | - | 307+43 | GUARDRAIL - LEFT | 3 | 84 |
| | 307+76 | - | 310+19 | GUARDRAIL - LEFT | 3 | 81 |
| | 312+38 | - | 313+02 | GUARDRAIL - LEFT | 3 | 21 |
| | 316+05 | - | 316+84 | GUARDRAIL - LEFT | 3 | 26 |
| | 320+90 | - | 321+54 | GUARDRAIL - LEFT | 3 | 21 |
| | 324+48 | - | 327+91 | GUARDRAIL - LEFT | 3 | 114 |
| | 328+56 | - | 329+59 | GUARDRAIL - RIGHT | 3 | 34 |
| | 329+79 | - | 330+95 | GUARDRAIL - LEFT | 3 | 39 |
| | 331+72 | - | 332+62 | GUARDRAIL - RIGHT | 3 | 30 |
| | 332+96 | - | 334+86 | GUARDRAIL - LEFT | 3 | 63 |
| | 345+80 | - | 349+81 | GUARDRAIL - RIGHT | 3 | 134 |
| | 354+14 | - | 354+76 | GUARDRAIL - LEFT | 3 | 21 |
| | 354+94 | - | 359+00 | GUARDRAIL - RIGHT | 3 | 135 |
| | 359+50 | - | 360+54 | GUARDRAIL - RIGHT | 3 | 35 |
| | 363+41 | - | 364+47 | GUARDRAIL - RIGHT | 3 | 35 |
| | | | | | PROJECT TOTAL | 1,240 |

3

3

| CATEGORY | SEGMENT | STATION | TO | STATION | LOCATION | * 204.0120 REMOVING ASPHALTIC SURFACE MILLING SY | 614.0010 BARRIER SYSTEM GRADING SHAPING FINISHING EACH | 614.0305 STEEL PLATE BEAM GUARD CLASS A LF | BEAM GUARD 614.0370 STEEL PLATE BEAM GUARD ENERGY ABSORBING TERMINAL EACH | 614.0396 GUARDRAIL MOW STRIP ASPHALT SY | 614.0400 ADJUSTING STEEL PLATE BEAM GUARD LF | 614.0805 CRASH CUSHIONS PERMANENT LOW MAINTENANCE EACH | 614.2300 MGS GUARDRAIL 3 LF | 614.2330 MGS GUARDRAIL 3 K LF | 614.2500 MGS THRIE BEAM TRANSITION LF | 614.2610 MGS GUARDRAIL TERMINAL EAT EACH | SPV.0060.03 SPECIAL (03. BEAMGUARD FILL WALL BLOWOUT REPAIR) EACH |
|---|---|---|---|---|---|---|---|---|---|---|---|---|---|---|---|---|---|
| 0010 | RUN 1 | 299+97 | - | 307+19 | LT | - | 1 | - | - | - | - | - | - | 616 | - | 2 | - |
| | RUN 2 | 304+00 | - | 304+50 | LT | - | - | - | - | - | 50 | - | - | - | - | - | 1 |
| | RUN 3 | 307+85 | - | 312+77 | LT | - | - | - | - | - | - | - | - | 386 | - | 2 | - |
| | RUN 4 | 313+04 | - | 313+24 | LT | - | - | - | - | - | - | 1 | - | - | - | - | - |
| | RUN 5 | 316+05 | - | 316+45 | LT | - | - | - | - | - | - | - | - | - | 39 | - | - |
| | RUN 6 | 316+45 | - | 327+66 | LT | - | - | - | - | - | - | - | 1,068 | - | - | 1 | - |
| | RUN 7 | 316+84 | - | 320+90 | LT | 90 | - | - | - | 90 | - | - | - | - | - | - | - |
| | RUN 8 | 321+54 | - | 324+48 | LT | 65 | - | - | - | 65 | - | - | - | - | - | - | - |
| | RUN 9 | 330+04 | - | 334+61 | LT | - | 1 | - | - | - | - | - | 351 | - | - | 2 | - |
| | RUN 10 | 330+95 | - | 332+96 | LT | 45 | - | - | - | 45 | - | - | - | - | - | - | - |
| | RUN 11 | 354+14 | - | 359+58 | LT | - | - | - | - | - | - | - | 438 | - | - | 2 | - |
| | RUN 12 | 354+76 | - | 357+60 | LT | 63 | - | - | - | 63 | - | - | - | - | - | - | - |
| | RUN 13 | 359+07 | - | 359+63 | LT | 12 | - | - | - | 12 | - | - | - | - | - | - | - |
| | RUN 14 | 301+40 | - | 307+66 | RT | - | - | - | - | - | - | - | 573 | - | - | 1 | - |
| | RUN 15 | 302+62 | - | 304+61 | RT | 44 | - | - | - | 44 | - | - | - | - | - | - | - |
| | RUN 16 | 307+66 | - | 308+05 | RT | - | - | - | - | - | - | - | - | - | 39 | - | - |
| | RUN 17 | 308+48 | - | 312+67 | RT | 93 | - | - | - | 93 | - | - | - | - | - | - | - |
| | RUN 18 | 308+55 | - | 308+94 | RT | - | - | - | - | - | - | - | - | - | 39 | - | - |
| | RUN 19 | 308+94 | - | 313+21 | RT | - | - | - | - | - | - | - | 374 | - | - | 1 | - |
| | RUN 20 | 321+99 | - | 322+52 | RT | - | - | - | 1 | - | - | - | - | - | - | - | - |
| | RUN 21 | 328+56 | - | 332+37 | RT | - | - | - | - | - | - | - | 275 | - | - | 2 | - |
| | RUN 22 | 342+62 | - | 343+12 | RT | - | - | - | 1 | - | - | - | - | - | - | - | - |
| | RUN 23 | 345+92 | - | 348+37 | RT | - | - | 25 | - | - | - | - | - | 220 | - | - | - |
| | RUN 24 | 348+37 | - | 351+28 | RT | - | - | - | - | - | - | - | - | 238 | - | 1 | - |
| | RUN 25 | 355+19 | - | 358+88 | RT | - | 2 | - | - | - | - | - | - | 263 | - | 2 | - |
| | RUN 26 | 359+50 | - | 364+58 | RT | - | - | 25 | - | - | - | - | 430 | - | - | 1 | - |
| | RUN 27 | 360+54 | - | 363+41 | RT | 64 | - | - | - | 64 | - | - | - | - | - | - | - |
| | | | | | PROJECT TOTALS | 477 | 4 | 50 | 2 | 477 | 50 | 1 | 3,508 | 1,723 | 117 | 17 | 1 |

* ADDITIONAL QUANTITIES SHOWN ELSEWHERE

3

3

## BARRIER SYSTEM GRADING SHAPING FINISHING ITEMS

| RUN | LOCATION | OFFSET | **208.0100 BORROW CY | **625.0100 TOPSOIL SY | **628.2006 EROSION MAT URBAN CLASS I TYPE A SY | **630.0180 SEEDING MIX NO. 80 LB | **630.0200 SEEDING TEMPORARY LB |
|---|---|---|---|---|---|---|---|
| RUN 1 WEST EAT | 298+98 - 300+51 | LT | 16 | 108 | 108 | 1 | 1 |
| RUN 9 EAST EAT | 334+08 - 334+61 | LT | 10 | 108 | 108 | 1 | 1 |
| RUN 25 WEST EAT | 355+19 - 355+72 | RT | - | 180 | 180 | 1 | 1 |
| RUN 25 EAST EAT | 358+36 - 358+88 | RT | - | 109 | 109 | 1 | 1 |
| | PROJECT TOTALS | | 26 | 505 | 505 | 4 | 4 |

** INCIDENTAL, FOR BIDDING PURPOSES ONLY

## MOBILIZATION

| CATEGORY | PROJECT | 619.1000 MOBILIZATION EACH |
|---|---|---|
| 0010 | 2300-06-00 | 1 |
| | PROJECT TOTAL | 1 |

## WATER

| CATEGORY | ROADWAY | STATION | TO | STATION | 624.0100 WATER MGAL |
|---|---|---|---|---|---|
| 0010 | STH 167 | 349+71 | - | 351+41 | 2 |
| | | | | PROJECT TOTAL | 2 |

## RESTORATION

| CATEGORY | ROADWAY | STATION | TO | STATION | OFFSET | 625.0100 TOPSOIL SY | 630.0110 SEEDING MIXTURE NO. 10 LB |
|---|---|---|---|---|---|---|---|
| 0010 | STH 167 | 349+50 | - | 351+25 | RT | 378 | 3 |
| | | UNDISTRIBUTED | | | | 50 | 5 |
| | | | | PROJECT TOTALS | | 428 | 8 |

3

3

EROSION CONTROL

| CATEGORY | ROADWAY | STATION | TO | STATION | OFFSET | 628.1504 SILT FENCE LF | 628.1520 SILT FENCE MAINTENANCE LF | 628.1905 MOBILIZATIONS EROSION CONTROL EACH | 628.1910 MOBILIZATIONS EMERGENCY EROSION CONTROL EACH | 628.2006 EROSION MAT URBAN CLASS I TYPE A SY | 630.0500 SEED WATER MGAL |
|---|---|---|---|---|---|---|---|---|---|---|---|
| 0010 | STH 167 | 300+00 | - | 300+75 | LT | 90 | 90 | - | - | - | - |
| | | 333+75 | - | 334+75 | LT | 100 | 100 | - | - | - | - |
| | | 349+50 | - | 351+25 | RT | 180 | 180 | - | - | 378 | 2.0 |
| | | 354+50 | - | 355+00 | RT | 170 | 170 | - | - | - | - |
| | | 358+25 | - | 359+00 | RT | 70 | 70 | - | - | - | - |
| | | UNDISTRIBUTED | | | | 100 | 100 | 2 | 2 | 50 | - |
| | | | | PROJECT TOTALS | | 710 | 710 | 2 | 2 | 428 | 2 |

FIELD OFFICE

| CATEGORY | PROJECT | 642.5001 FIELD OFFICE TYPE B EACH |
|---|---|---|
| 0010 | 2300-06-70 | 1 |
| | PROJECT TOTAL | 1 |

3

| SIGN NO. | SIGN CODE & SIZE | SIGN MESSAGE | SIGN SIZE W x H [IN.] x [IN.] | 637.2210 SIGNS TYPE II REFLC H [SF] | 637.2230 SIGNS TYPE II REFLC F [SF] | 638.2602 REMOVING SIGNS TYPE II [EA] | 638.3000 REMOVING SMALL SIGN SUPPORTS [EA] | 634.0618 WOOD POSTS 4"X 6"X18' [EA] | 634.0622 WOOD POSTS 4" x 6" x 22' (EA) | 638.2102 MOVE SIGNS TYPE II [EA] | MOUNT ON SAME POST AS SIGN # | REMARKS / NEW SIGN LOCATION |
|---|---|---|---|---|---|---|---|---|---|---|---|---|
| 1 | W11-2 | | | | | | 1 | 1 | | 1 | | |
| 2 | W16-7L | | | | | | | | | 1 | 1 | |
| 3 | W1-8 | | | | | | 1 | 1 | | 1 | | 4 FOOT MOUNTING HEIGHT |
| 4 | W1-8 | | | | | | 1 | 1 | | 1 | | 4 FOOT MOUNTING HEIGHT |
| 5 | W2-2 | | | | | | 1 | 1 | | 1 | | |
| 6 | W1-8 | | | | | | 1 | 1 | | 1 | | 4 FOOT MOUNTING HEIGHT |
| 7 | W1-3R | | | | | | 1 | 1 | | 1 | | |
| 7A | W13-1 | | | | | | | | | 1 | 7 | |
| 8 | W1-6 | | | | | | 1 | 1 | | 1 | | |
| 9 | JV3-1 | | | | | | 1 | | 1 | 1 | | |
| 10 | W1-1L | | | | | | 1 | 1 | | 1 | | |
| 10A | W13-1 | | | | | | | | | 1 | 10 | |
| 11 | W5-52R | | | | | | 1 | 1 | | 1 | | 4 FOOT MOUNTING HEIGHT |
| 12 | W1-8 | | | | | | 1 | 1 | | 1 | | 4 FOOT MOUNTING HEIGHT |
| 13 | W1-8 | | | | | | 1 | 1 | | 1 | | 4 FOOT MOUNTING HEIGHT |
| 14 | W1-8 | | | | | | 1 | 1 | | 1 | | 4 FOOT MOUNTING HEIGHT |
| 15 | W1-8 | | | | | | 1 | 1 | | 1 | | 4 FOOT MOUNTING HEIGHT |
| 16 | W1-8 | | | | | | 1 | 1 | | 1 | | 4 FOOT MOUNTING HEIGHT |
| 17 | W1-8 | | | | | | 1 | 1 | | 1 | | 4 FOOT MOUNTING HEIGHT |
| 18 | W1-8 | | | | | | 1 | 1 | | 1 | | 4 FOOT MOUNTING HEIGHT |
| 19 | W1-8 | | | | | | 1 | 1 | | 1 | | 4 FOOT MOUNTING HEIGHT |
| 20 | W1-8 | | | | | | 1 | 1 | | 1 | | 4 FOOT MOUNTING HEIGHT |
| 21 | W1-8 | | | | | | 1 | 1 | | 1 | | 4 FOOT MOUNTING HEIGHT |
| 22 | W1-8 | | | | | | | 1 | | 1 | 12 | 4 FOOT MOUNTING HEIGHT |
| 23 | W1-8 | | | | | | | 1 | | 1 | 13 | 4 FOOT MOUNTING HEIGHT |
| 24 | W1-8 | | | | | | | 1 | | 1 | 14 | 4 FOOT MOUNTING HEIGHT |
| 25 | W1-8 | | | | | | | 1 | | 1 | 15 | 4 FOOT MOUNTING HEIGHT |
| 26 | W1-8 | | | | | | | 1 | | 1 | 16 | 4 FOOT MOUNTING HEIGHT |
| 27 | W1-8 | | | | | | | 1 | | 1 | 17 | 4 FOOT MOUNTING HEIGHT |
| 28 | W1-8 | | | | | | | 1 | | 1 | 18 | 4 FOOT MOUNTING HEIGHT |
| 29 | W1-8 | | | | | | | 1 | | 1 | 19 | 4 FOOT MOUNTING HEIGHT |
| 30 | W1-8 | | | | | | | 1 | | 1 | 20 | 4 FOOT MOUNTING HEIGHT |

3

| SIGN NO. | SIGN CODE & SIZE | SIGN MESSAGE | SIGN SIZE W [IN.] | x x | H [IN.] | 637.2210 SIGNS TYPE II REFLC H [SF] | 637.2230 SIGNS TYPE II REFLC F [SF] | 638.2602 REMOVING SIGNS TYPE II [EA] | 638.3000 REMOVING SMALL SIGN SUPPORTS [EA] | 634.0618 WOOD POSTS 4"X 6"X18' [EA] | 634.0622 WOOD POSTS 4" x 6" x 22' (EA) | 638.2102 MOVE SIGNS TYPE II [EA] | MOUNT ON SAME POST AS SIGN # | REMARKS / NEW SIGN LOCATION |
|---|---|---|---|---|---|---|---|---|---|---|---|---|---|---|
| 31 | W1-8 | | | | | | | | | 1 | | 1 | 21 | 4 FOOT MOUNTING HEIGHT |
| 32 | W11-2 | | | | | | | | 1 | 1 | | 1 | | |
| 33 | W16-9P (2S) | | 24 | X | 12 | | 2.000 | | | | | | 32 | |
| 34 | W1-6 | | | | | | | | 1 | 1 | | 1 | | |
| 35 | W5-52R | | | | | | | | 1 | 1 | | 1 | | 4 FOOT MOUNTING HEIGHT |
| 36 | W1-6 | | | | | | | | 1 | 1 | | 1 | | |
| 37 | W1-7(2S) | | 48 | X | 24 | | 8.000 | | | 1 | | | | |
| 38 | W5-52R | | | | | | | | 1 | 1 | | 1 | | 4 FOOT MOUNTING HEIGHT |
| 39 | W1-8 | | | | | | | | 1 | 1 | | 1 | | 4 FOOT MOUNTING HEIGHT |
| 40 | W1-8 | | | | | | | | | 1 | | 1 | 39 | 4 FOOT MOUNTING HEIGHT |
| 41 | W1-6 | | | | | | | | 1 | 1 | | 1 | | |
| 42 | W1-8 | | | | | | | | 1 | 1 | | 1 | | 4 FOOT MOUNTING HEIGHT |
| 43 | W1-8 | | | | | | | | 1 | 1 | | 1 | | 4 FOOT MOUNTING HEIGHT |
| 44 | W1-8 | | | | | | | | 1 | 1 | | 1 | | 4 FOOT MOUNTING HEIGHT |
| 45 | W1-8 | | | | | | | | 1 | 1 | | 1 | | 4 FOOT MOUNTING HEIGHT |
| 46 | W1-8 | | | | | | | | | 1 | | 1 | 42 | 4 FOOT MOUNTING HEIGHT |
| 47 | W1-8 | | | | | | | | | 1 | | 1 | 43 | 4 FOOT MOUNTING HEIGHT |
| 48 | W1-8 | | | | | | | | | 1 | | 1 | 44 | 4 FOOT MOUNTING HEIGHT |
| 49 | W1-8 | | | | | | | | | 1 | | 1 | 45 | 4 FOOT MOUNTING HEIGHT |
| 50 | W1-3L | | | | | | | | | 1 | | 1 | | |
| 50A | W13-1 | | | | | | | | | | | 1 | 50 | |
| 51 | W1-6 | | | | | | | | 1 | 1 | | 1 | | |
| 52 | W1-8 | | | | | | | | 1 | 1 | | 1 | | 4 FOOT MOUNTING HEIGHT |
| 53 | W1-8 | | | | | | | | 1 | 1 | | 1 | | 4 FOOT MOUNTING HEIGHT |
| 54 | W1-8 | | | | | | | | | 1 | | 1 | 52 | 4 FOOT MOUNTING HEIGHT |
| 55 | W1-8 | | | | | | | | | 1 | | 1 | 53 | 4 FOOT MOUNTING HEIGHT |
| 56 | W1-3L | | | | | | | | 1 | 1 | | 1 | | |
| 56A | W13-1 | | | | | | | | | | | 1 | 56 | |
| 57 | W1-6 | | | | | | | | 1 | 1 | | 1 | | |
| 58 | W5-52R | | | | | | | | 1 | 1 | | 1 | | 4 FOOT MOUNTING HEIGHT |
| 59 | W1-6 | | | | | | | | 1 | 1 | | 1 | | |
| 60 | W1-6 | | | | | | | | 1 | 1 | | 1 | | |

TYPE II PERMANENT SIGNING



| SIGN NO. | SIGN CODE & SIZE | SIGN MESSAGE | SIGN SIZE W x H [IN.] x [IN.] | 637.2210 SIGNS TYPE II REFLC H [SF] | 637.2230 SIGNS TYPE II REFLC F [SF] | 638.2602 REMOVING SIGNS TYPE II [EA] | 638.3000 REMOVING SMALL SIGN SUPPORTS [EA] | 634.0618 WOOD POSTS 4"X 6"X18' [EA] | 634.0622 WOOD POSTS 4" x 6" x 22' (EA) | 638.2102 MOVE SIGNS TYPE II [EA] | MOUNT ON SAME POST AS SIGN # | REMARKS / NEW SIGN LOCATION |
|---|---|---|---|---|---|---|---|---|---|---|---|---|
| 61 | W1-8 | | | | | | 1 | 1 | | 1 | | 4 FOOT MOUNTING HEIGHT |
| 62 | W1-8 | | | | | | 1 | 1 | | 1 | | 4 FOOT MOUNTING HEIGHT |
| 63 | W1-8 | | | | | | | 1 | | 1 | 61 | 4 FOOT MOUNTING HEIGHT |
| 64 | W1-8 | | | | | | | 1 | | 1 | 62 | 4 FOOT MOUNTING HEIGHT |
| 65 | W1-6 | | | | | | 1 | 1 | | 1 | | |
| 66 | W5-52R | | | | | | 1 | 1 | | 1 | | 4 FOOT MOUNTING HEIGHT |
| 67 | R2-1 | | | | | | 1 | 1 | | 1 | | |
| | UNDISTRIBUTED | | | 30.000 | 30.000 | 2 | 2 | 2 | 2 | 2 | | |
| | TOTALS | | | 30.000 | 40.000 | 2 | 46 | 66 | 3 | 71 | | |

3

TRAFFIC CONTROL

| CATEGORY | ROADWAY | 616.0700.S FENCE SAFETY LF | 643.0300 TRAFFIC CONTROL DRUMS DAY | 643.0420 TRAFFIC CONTROL BARRICADES TYPE III DAY | 643.0705 TRAFFIC CONTROL WARNING LIGHTS TYPE A DAY | 643.0715 TRAFFIC CONTROL WARNING LIGHTS TYPE C DAY | 643.0900 TRAFFIC CONTROL SIGNS DAY | 643.1000 TRAFFIC CONTROL SIGNS FIXED MESSAGE SF | 643.5000 TRAFFIC CONTROL EACH |
|---|---|---|---|---|---|---|---|---|---|
| 0010 | STH 60 | | - | - | - | - | 8526 | - | - |
| | STH 167 | | | 2058 | 4116 | - | 9702 | 56.5 | 1 |
| | STH 83 | | - | - | - | - | 4998 | - | - |
| | STH 164 | | - | - | - | - | 6321 | - | - |
| | CTH K | | - | 588 | 1176 | - | 3969 | 71.0 | - |
| | CTH CC | | - | 588 | 1176 | - | 441 | 71.0 | - |
| | DONEGAL RD | | - | 882 | 1764 | - | 1764 | 14.0 | - |
| | MONROE AVE | | - | - | - | - | 2352 | - | - |
| | CARMEL RD | | - | 1176 | 2352 | - | 294 | - | - |
| | DRIVEWAYS | | - | 588 | 1176 | - | 588 | - | - |
| | STH 167 (BEAMGUARD REPAIR & ADV. WARN. SIGNING) | | - | 504 | 1008 | - | 378 | - | - |
| | RETAINING WALL R-66-85 | 200 | | | | | | | |
| | UNDISTRIBUTED | | 2940 | - | - | 2940 | - | - | - |
| | PROJECT TOTALS | 200 | 2,940 | 6,384 | 12,768 | 2,940 | 39,333 | 212.5 | 1 |

COVERING SIGNS

| 643.0920 TRAFFIC CONTROL COVERING SIGNS TYPE II EACH | NUMBER OF CYCLES | NUMBER OF SIGNS |
|---|---|---|
| - | - | - |
| - | - | - |
| - | - | - |
| - | - | - |
| - | - | - |
| - | - | - |
| - | - | - |
| - | - | - |
| - | - | - |
| - | - | - |
| - | - | - |
| 20 | 1 | 20 |
| 20 | 1 | 20 |

TEMPRORARY MARKING

| CATEGORY | ROADWAY | STATION | TO | STATION | 643.3165 TEMPORARY MARKING LINE PAINT 6-INCH LF |
|---|---|---|---|---|---|
| 0010 | STH 167 | 299+00 | - | 365+00 | 13,200 |
| | | | | PROJECT TOTAL | 13,200 |

PAVEMENT MARKING

| CATEGORY | ROADWAY | STATION | TO | STATION | 646.2020 MARKING LINE EPOXY 6-INCH LF | 646.2040 MARKING LINE GROOVED WET REF EPOXY 6-INCH LF | 646.4040 MARKING LINE GROOVED WET REF EPOXY 10-INCH LF | 646.6120 MARKING STOP LINE EPOXY 18-INCH LF |
|---|---|---|---|---|---|---|---|---|
| 0010 | STH 167 | 299+40 | - | 364+48 | 12,890 | 12,793 | - | - |
| | CARMEL RD | 314+25 | | - | - | - | 70 | 50 |
| | STATIONWAY RD | 323+50 | | - | - | - | - | 20 |
| | TROLL HILL RD | 328+25 | | - | - | - | - | 20 |
| | | | | PROJECT TOTALS | 12,890 | 12,793 | 70 | 90 |

3

3

LOCATING NO-PASSING ZONES

| CATEGORY | ROADWAY | STATION | TO | STATION | 648.0100 LOCATING NO-PASSING ZONES MI |
|---|---|---|---|---|---|
| 0010 | STH 167 | 299+40 | - | 364+48 | 2.5 |
| | | | | PROJECT TOTAL | 2.5 |

'CONSTRUCTION STAKING ITEMS

| CATEGORY | ROADWAY | STATION | TO | STATION | 650.4500 CONSTRUCTION STAKING SUBGRADE LF | 650.5000 CONSTRUCTION STAKING BASE LF | 650.6501.01 CONSTRUCTION STAKING STRUCTURE LAYOUT (STRUCTURE) (01. R-66-85) EACH | 650.8000 CONSTRUCTION STAKING RESURFACING REFERENCE LF | 650.9911.01 CONSTRUCTION STAKING SUPPLEMENTAL CONTROL (PROJECT) (01. 2300-06-70) EACH |
|---|---|---|---|---|---|---|---|---|---|
| 0010 | STH 167 | 299+40 | - | 364+48 | - | - | - | 6,508 | 1 |
| | | 349+71 | - | 351+41 | 170 | 170 | - | - | - |
| | | 349+81 | - | 351+30 | - | - | 1 | - | - |
| | | | | PROJECT TOTALS | 170 | 170 | 1 | 6,508 | 1 |

SAWING ASPHALT

| CATEGORY | ROADWAY | STATION | TO | STATION | OFFSET | LOCATION | 690.0150 SAWING ASPHALT LF |
|---|---|---|---|---|---|---|---|
| 0010 | STH 167 | 304+00 | - | 304+50 | LT | BEAM GUARD WALL BLOWOUT REPAIR | 70 |
| | | 342+00 | - | 342+50 | RT | DRIVEWAY | 25 |
| | | 349+71 | - | 351+41 | RT | RETAINING WALL R-66-085 | 195 |
| | | 351+41 | - | 352+00 | RT | DRIVEWAY | 40 |
| | | 359+00 | - | 359+50 | RT | DRIVEWAY | 30 |
| | | 359+50 | - | 360+00 | LT | DRIVEWAY | 40 |
| | | | | PROJECT TOTAL | | | 400 |

3

SECTION CORNER MONUMENTS

| CATEGORY | ROADWA` | STATION | SPV.0060.02 SPECIAL (02. SECTION CORNER MONUMENTS) EACH |
|---|---|---|---|
| 0010 | STH 167 | 308+00 | 1 |
| | | 337+00 | 1 |
| | | PROJECT TOTAL | 2 |

PAVEMENT CLEANUP

| CATEGORY | ROADWAY | STATION | TO | STATION | SPV.0075.01 SPECIAL (01. PAVEMENT CLEANUP) HRS |
|---|---|---|---|---|---|
| 0010 | STH 167 | 299+40 | - | 364+48 | 50 |
| | | | | PROJECT TOTAL | 50 |

RESIN BINDER HIGH FRICTION SURFACE TREATMENT

| CATEGORY | ROADWAY | STATION | TO | STATION | SPV.0180.01 SPECIAL (01. RESIN BINDER HIGH FRICTION SURFACE TREATMENT) SY |
|---|---|---|---|---|---|
| 0010 | STH 167 | 299+40 | - | 314+00 | 4,670 |
| | | 314+00 | - | 323+50 | 3,230 |
| | | 323+50 | - | 328+35 | 1,510 |
| | | 328+35 | - | 342+25 | 4,320 |
| | | 342+25 | - | 351+50 | 2,710 |
| | | 351+50 | - | 364+58 | 3,900 |
| | | | | PROJECT TOTAL | 20,340 |

ASPHALTIC REPAIR

| CATEGORY | ROADWAY | STATION | TO | STATION | LOCATION | SPV.0195.01 SPECIAL (01. ASPHALTIC REPAIR) TON |
|---|---|---|---|---|---|---|
| 0010 | STH 167 | 304+00 | - | 304+50 | BEAM GUARD WALL BLOWOUT REPAIR | 8 |
| | | 349+71 | - | 351+41 | RETAINING WALL R-66-085 | 53 |
| | | | | | PROJECT TOTAL | 61 |

| R/W PROJECT NUMBER 2300-06-20 | SHEET NUMBER | TOTAL SHEETS |
|---|---|---|
| FEDERAL PROJECT NUMBER | 4.01 | |

PLAT OF RIGHT OF WAY REQUIRED FOR

# STH 167
# CTH K - CTH CC

| STH 167 | WASHINGTON COUNTY |
|---|---|

CONSTRUCTION PROJECT NUMBER
2300-06-70

## CONVENTIONAL SYMBOLS

SECTION LINE
QUARTER LINE
SIXTEENTH LINE
NEW REFERENCE LINE
NEW R/W LINE
EXISTING R/W OR HE LINE
PROPERTY LINE (P.L.)
LOT, TIE & OTHER MINOR LINES
SLOPE INTERCEPT
CORPORATE LIMITS
UNDERGROUND FACILITY (COMMUNICATIONS, ELECTRIC, ETC) (W (TYPE))
NEW R/W (FEE OR HE) (HATCHING VARIES BY OWNER)
TEMPORARY LIMITED EASEMENT AREA
EASEMENT AREA (PERMANENT LIMITED OR RESTRICTED DEVELOPMENT)
TRANSMISSION STRUCTURES
BUILDING
TO BE REMOVED
BRIDGE
CULVERT

SECTION CORNER SYMBOL (18, 4, 23, 24, 26, 25, 27, 6, 9)
SECTION CORNER MONUMENT
GEODETIC SURVEY MONUMENT
SIXTEENTH CORNER MONUMENT
SIGN (SIGN)
OFF-PREMISE SIGN (#1-25) (SIGN)

R/W MONUMENT (TO BE SET)
NON-MONUMENTED R/W POINT
FOUND IRON PIN (1-INCH UNLESS NOTED) (IP)

| | COMPENSABLE | NON-COMPENSABLE |
|---|---|---|
| ELECTRIC POLE | ■ | □ |
| TELEPHONE POLE | ● | ⌀ |
| PEDESTAL (LABEL TYPE) (TV, TEL, ELEC, ETC.) | ⌘ | ⌘ |

ACCESS RESTRICTED BY ACQUISITION
NO ACCESS (BY STATUTORY AUTHORITY)
ACCESS RESTRICTED (BY PREVIOUS PROJECT OR CONTROL)
NO ACCESS (NEW HIGHWAY)

PARCEL NUMBER (25)
UTILITY NUMBER (40)
PARALLEL OFFSETS

## CONVENTIONAL UTILITY SYMBOLS

WATER (W)
GAS (G)
TELEPHONE (T)
OVERHEAD TRANSMISSION LINES (OH)
ELECTRIC (E)
CABLE TELEVISION (TV)
FIBER OPTIC (FO)
SANITARY SEWER (SAN)
STORM SEWER (SS)
ELECTRIC TOWER

## CONVENTIONAL ABBREVIATIONS

| | | | |
|---|---|---|---|
| ACCESS RIGHTS | AR | POINT OF COMPOUND CURVE | PCC |
| ACRES | AC | POINT OF INTERSECTION | PI |
| AHEAD | AH | PROPERTY LINE | PL |
| ALUMINUM | ALUM | RECORDED AS | (100') |
| AND OTHERS | ET AL | REEL / IMAGE | R/I |
| BACK | BK | REFERENCE LINE | R/L |
| BLOCK | BLK | REMAINING | REM |
| CENTERLINE | C/L | RESTRICTIVE DEVELOPMENT EASEMENT | RDE |
| CERTIFIED SURVEY MAP | CSM | | |
| CONCRETE | CONC | RIGHT | RT |
| COUNTY | CO | RIGHT OF WAY | R/W |
| COUNTY TRUNK HIGHWAY | CTH | SECTION | SEC |
| DISTANCE | DIST | SEPTIC VENT | SEPV |
| CORNER | COR | SQUARE FEET | SF |
| DOCUMENT NUMBER | DOC | STATE TRUNK HIGHWAY | STH |
| EASEMENT | EASE | STATION | STA |
| EXISTING | EX | TELEPHONE PEDESTAL | TP |
| GAS VALVE | GV | TEMPORARY LIMITED EASEMENT | TLE |
| GRID NORTH | GN | | |
| HIGHWAY EASEMENT | HE | TRANSPORTATION PROJECT PLAT | TPP |
| IDENTIFICATION | ID | UNITED STATES HIGHWAY | USH |
| LAND CONTRACT | LC | VOLUME | V |
| LEFT | LT | | |
| MONUMENT | MON | | |
| NATIONAL GEODETIC SURVEY | NGS | | |
| NUMBER | NO | | |
| OUTLOT | OL | | |
| PAGE | P | | |
| POINT OF TANGENCY | PT | | |
| PERMANENT LIMITED EASEMENT | PLE | | |
| POINT OF BEGINNING | POB | | |
| POINT OF CURVATURE | PC | | |

## CURVE DATA ABBREVIATIONS

| | |
|---|---|
| LONG CHORD | LCH |
| LONG CHORD BEARING | LCB |
| RADIUS | R |
| DEGREE OF CURVE | D |
| CENTRAL ANGLE | Δ /DELTA |
| LENGTH OF CURVE | L |
| TANGENT | T |
| DIRECTION AHEAD | DA |
| DIRECTION BACK | DB |

END RELOCATION ORDER
PROJECT 2300-06-20
STA. 301+80.60
16.58 NORTH AND 0.00 WEST OF THE
SE CORNER OF SECTION 12, T9N, R18E

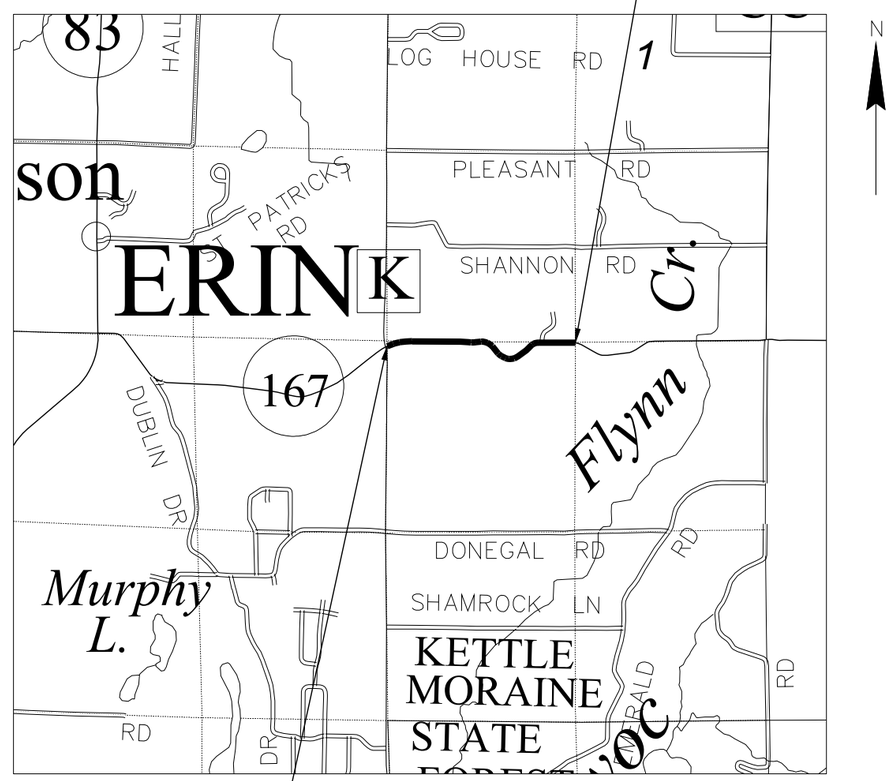


BEGIN RELOCATION ORDER
PROJECT 2300-06-20
STA. 190+65.42
170.54 SOUTH AND 0.00 EAST OF THE
NW CORNER OF SECTION 14, T9N, R18E

LAYOUT
SCALE 0 SCALE

TOTAL NET LENGTH OF CENTERLINE = 2.1 MILES

## NOTES:

POSITIONS SHOWN ON THIS PLAT ARE WISCONSIN COORDINATE REFERENCE SYSTEM COORDINATES (WISCRS), WASHINGTON COUNTY, NAD83 (2011)IN US SURVEY FEET. VALUES SHOWN ARE GRID COORDINATES, GRID BEARINGS, AND GRID DISTANCES. GRID DISTANCES MAY BE USED AS GROUND DISTANCES.

ALL NEW RIGHT-OF-WAY MONUMENTS WILL BE TYPE 2 (TYPICALLY ¾" X 24" IRON REBARS), UNLESS OTHERWISE NOTED, AND WILL BE PLACED PRIOR TO THE COMPLETION OF THE PROJECT.

DIMENSIONING FOR THE NEW RIGHT-OF-WAY IS MEASURED ALONG AND PERPENDICULAR TO THE NEW REFERENCE LINES.

RIGHT-OF-WAY BOUNDARIES ARE DEFINED WITH COURSES OF THE PERIMETER OF THE HIGHWAY LANDS REFERENCED TO THE U.S. PUBLIC LAND SURVEY SYSTEM OR OTHER "SURVEYS" OF PUBLIC RECORD.

FOR THE CURRENT ACCESS/DRIVEWAY INFORMATION, CONTACT THE PLANNING UNIT OF THE WISCONSIN DEPARTMENT OF TRANSPORTATION OFFICE IN WAUKESHA

PARCEL AND UTILITY IDENTIFICATION NUMBERS MAY NOT POINT TO ALL AREAS OF ACQUISITION, AS NOTED ON THE DETAIL PAGES.

INFORMATION FOR THE BASIS OF EXISTING HIGHWAY RIGHT-OF-WAY POINTS OF REFERENCE AND ACCESS CONTROL ARE LISTED ON THE DETAIL PAGES.

THIS PLAT IS A GRAPHIC REPRESENTATION AND IS FOR REFERENCE PURPOSES ONLY. DEEDS MUST BE CHECKED TO DETERMINE PROPERTY BOUNDARIES AND ACCESS RIGHTS.

REVISION DATE
4/05/2023

STATE OF WISCONSIN
DEPARTMENT OF TRANSPORTATION

APPROVED FOR THE DEPARTMENT
DATE: 4/18/2022 (Signatur

| ROAD NAME | BASIS OF EXISTING R/W AND ACCESS | YEAR | WIDTH |
|---|---|---|---|
| STH 167 | S 0142(1) | 1967 | VARIES |
| CTH K | S 0142(1) | 1967 | VARIES |
| STH 167 | TOWN RECORDS BOOK 1, PAGE 37 | 1850 | 66' |
| STH 167 | CSM NO 5722 | 2004 | 50' |
| STH 167 | R.A. PAGELS & CO PLAT OF SURVEY | 1997 | VARIES |
| CTH K | R.A. PAGELS & CO PLAT OF SURVEY | 1997 | VARIES |

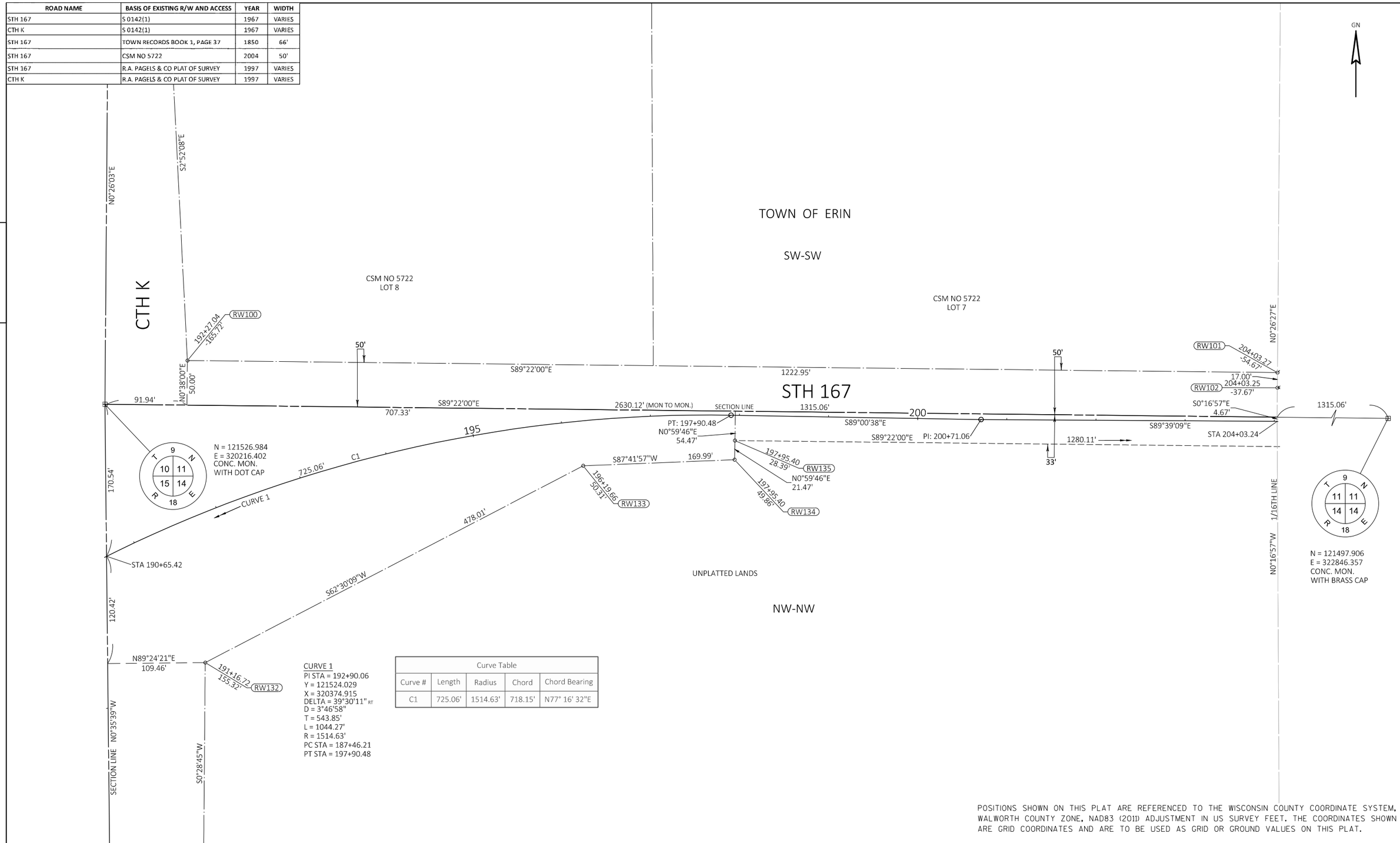


CURVE 1
PI STA = 192+90.06
Y = 121524.029
X = 320374.915
DELTA = 39°30'11" RT
D = 3°46'58"
T = 543.85'
L = 1044.27'
R = 1514.63'
PC STA = 187+46.21
PT STA = 197+90.48

Curve Table

| Curve # | Length | Radius | Chord | Chord Bearing |
|---|---|---|---|---|
| C1 | 725.06' | 1514.63' | 718.15' | N77° 16' 32"E |

POSITIONS SHOWN ON THIS PLAT ARE REFERENCED TO THE WISCONSIN COUNTY COORDINATE SYSTEM, WALWORTH COUNTY ZONE, NAD83 (2011) ADJUSTMENT IN US SURVEY FEET. THE COORDINATES SHOWN ARE GRID COORDINATES AND ARE TO BE USED AS GRID OR GROUND VALUES ON THIS PLAT.

| | | | | |
|---|---|---|---|---|
| REVISION DATE 4/05/2023 | DATE 4/18/2022 | SCALE, FEET 0 50' 100' | HWY: STH 167 | STATE R/W PROJECT NUMBER 2300-06-20 | PLAT SHEET 4.02 |
| | GRID FACTOR | | COUNTY: WASHINGTON | CONSTRUCTION PROJECT NUMBER 2300-06-70 | PS&E SHEET 63 |

E

FILE NAME : 2300-06-20_DETAILS.DWG
LAYOUT NAME - 040402_rp
PLOT DATE : 4/3/2023 11:41 AM PLOT BY : DODGE, BRIAN PLOT NAME : PLOT SCALE : 1 IN:50 FT

WISDOT/CADDS SHEET 75

| ROAD NAME | BASIS OF EXISTING R/W AND ACCESS | YEAR | WIDTH |
|---|---|---|---|
| STH 167 | TOWN RECORDS BOOK 1, PAGE 37 | 1850 | 66' |
| | | | |

4

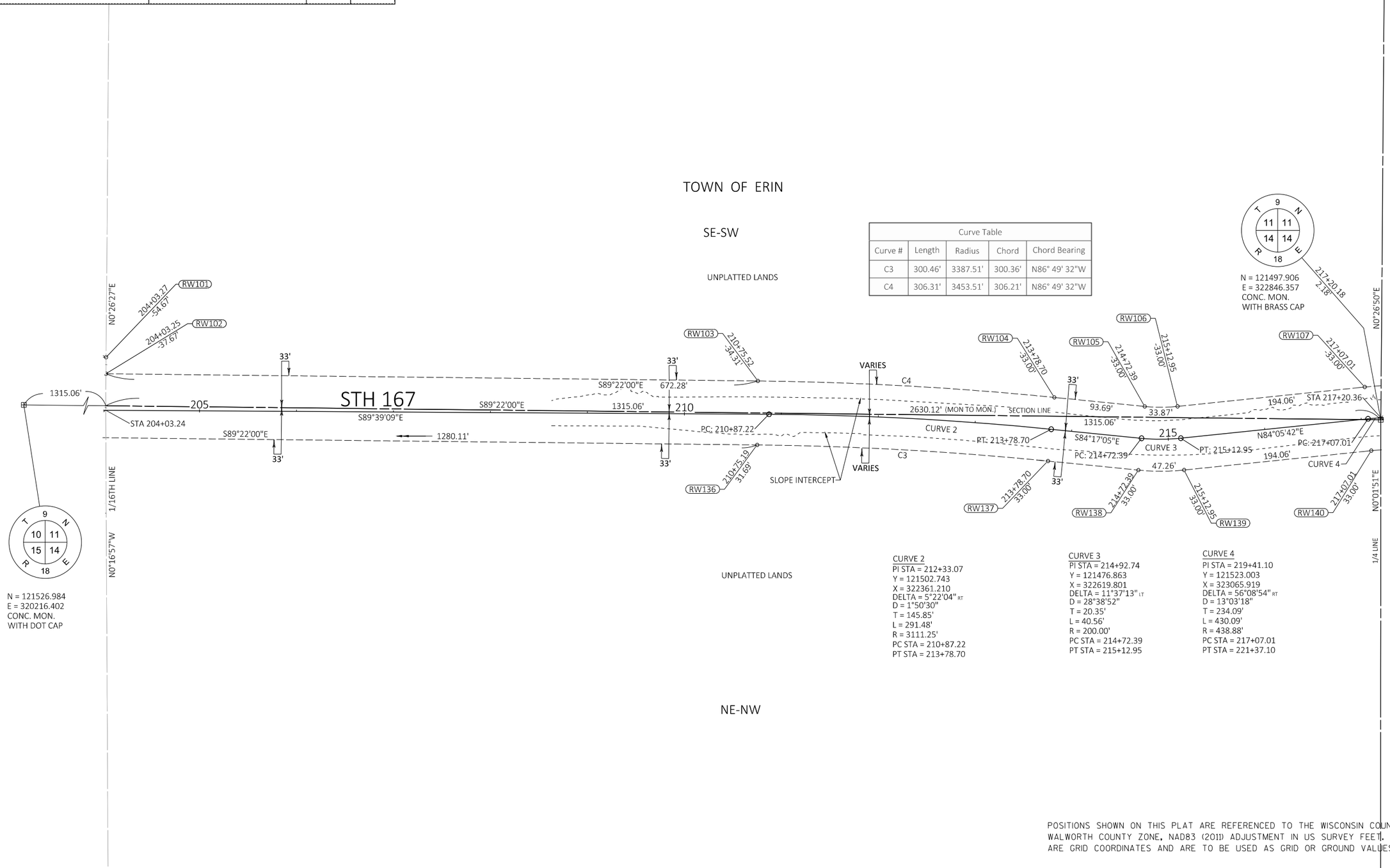


Curve Table

| Curve # | Length | Radius | Chord | Chord Bearing |
|---|---|---|---|---|
| C3 | 300.46' | 3387.51' | 300.36' | N86° 49' 32"W |
| C4 | 306.31' | 3453.51' | 306.21' | N86° 49' 32"W |

CURVE 2
PI STA = 212+33.07
Y = 121502.743
X = 322361.210
DELTA = 5°22'04" RT
D = 1°50'30"
T = 145.85'
L = 291.48'
R = 3111.25'
PC STA = 210+87.22
PT STA = 213+78.70

CURVE 3
PI STA = 214+92.74
Y = 121476.863
X = 322619.801
DELTA = 11°37'13" LT
D = 28°38'52"
T = 20.35'
L = 40.56'
R = 200.00'
PC STA = 214+72.39
PT STA = 215+12.95

CURVE 4
PI STA = 219+41.10
Y = 121523.003
X = 323065.919
DELTA = 56°08'54" RT
D = 13°03'18"
T = 234.09'
L = 430.09'
R = 438.88'
PC STA = 217+07.01
PT STA = 221+37.10

POSITIONS SHOWN ON THIS PLAT ARE REFERENCED TO THE WISCONSIN COUNTY COORDINATE SYSTEM, WALWORTH COUNTY ZONE, NAD83 (2011) ADJUSTMENT IN US SURVEY FEET. THE COORDINATES SHOWN ARE GRID COORDINATES AND ARE TO BE USED AS GRID OR GROUND VALUES ON THIS PLAT.

| | | | |
|---|---|---|---|
| REVISION DATE 4/05/2023 | DATE 4/18/2022 | SCALE, FEET 0 50' 100' | HWY: STH 167 |
| | GRID FACTOR | | COUNTY: WASHINGTON |

| | | |
|---|---|---|
| STATE R/W PROJECT NUMBER | 2300-06-20 | PLAT SHEET 4.03 |
| CONSTRUCTION PROJECT NUMBER | 2300-06-70 | PS&E SHEET 64 |

E

FILE NAME : 2300-06-20_DETAILS.DWG
LAYOUT NAME - 040403_rp
PLOT DATE : 4/3/2023 11:41 AM PLOT BY : DODGE, BRIAN PLOT NAME : PLOT SCALE : 1 IN:50 FT

WISDOT/CADDS SHEET 75

| ROAD NAME | BASIS OF EXISTING R/W AND ACCESS | YEAR | WIDTH |
|---|---|---|---|
| STH 167 | TOWN RECORDS BOOK 1, PAGE 37 | 1850 | 66' |
| | | | |

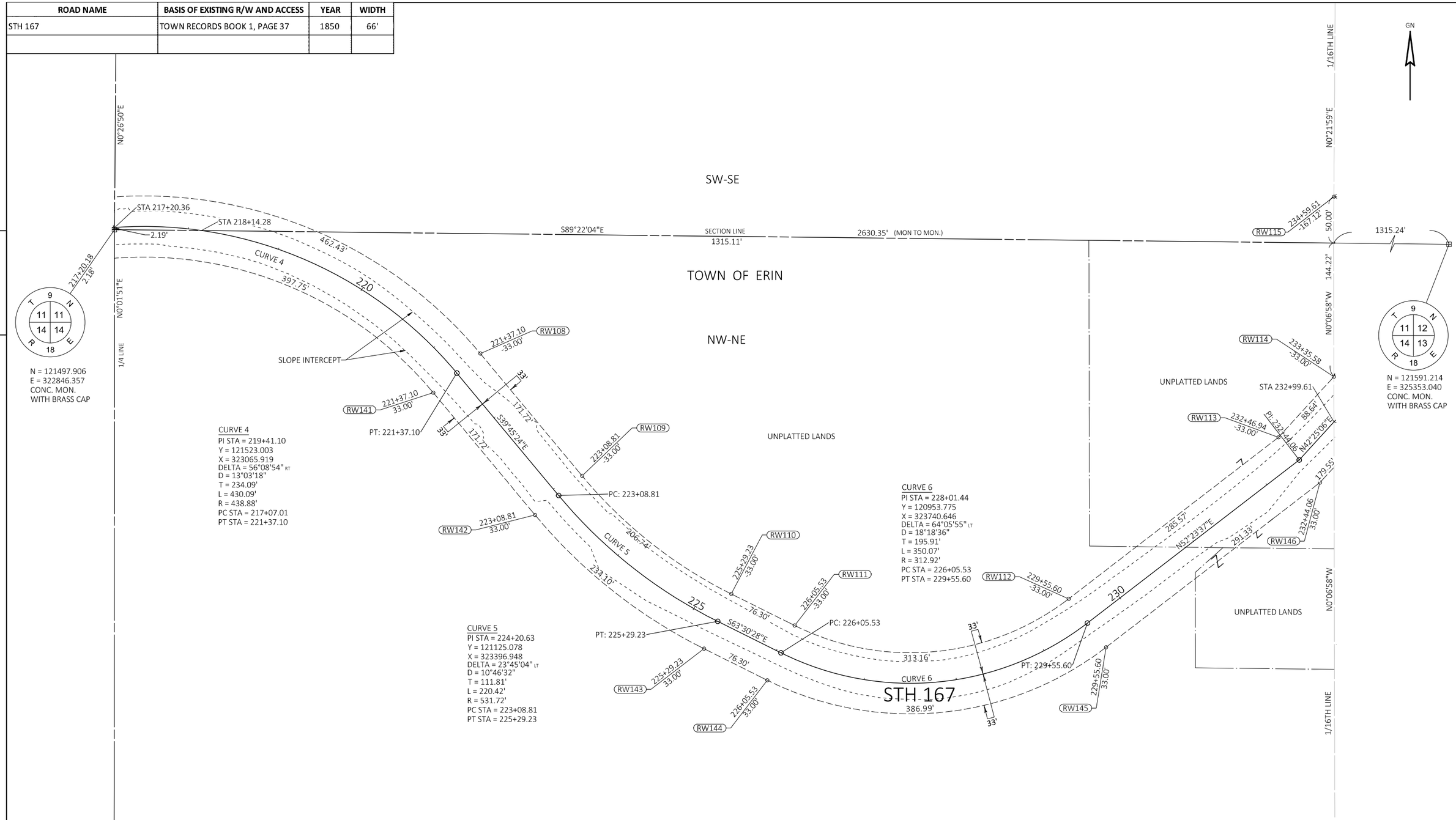


POSITIONS SHOWN ON THIS PLAT ARE REFERENCED TO THE WISCONSIN COUNTY COORDINATE SYSTEM, WALWORTH COUNTY ZONE, NAD83 (2011) ADJUSTMENT IN US SURVEY FEET. THE COORDINATES SHOWN ARE GRID COORDINATES AND ARE TO BE USED AS GRID OR GROUND VALUES ON THIS PLAT.

| | | | | | |
|---|---|---|---|---|---|
| REVISION DATE 4/05/2023 | DATE 4/18/2022 | SCALE, FEET 0 50' 100' | HWY: STH 167 | STATE R/W PROJECT NUMBER 2300-06-20 | PLAT SHEET 4.04 |
| | GRID FACTOR | | COUNTY: WASHINGTON | CONSTRUCTION PROJECT NUMBER 2300-06-70 | PS&E SHEET 65 — E |

| ROAD NAME | BASIS OF EXISTING R/W AND ACCESS | YEAR | WIDTH |
|---|---|---|---|
| STH 167 | TOWN RECORDS BOOK 1, PAGE 37 | 1850 | 66' |
| STH 167 | DOC. NO. 305104 | 1968 | 50' |
| | | | |

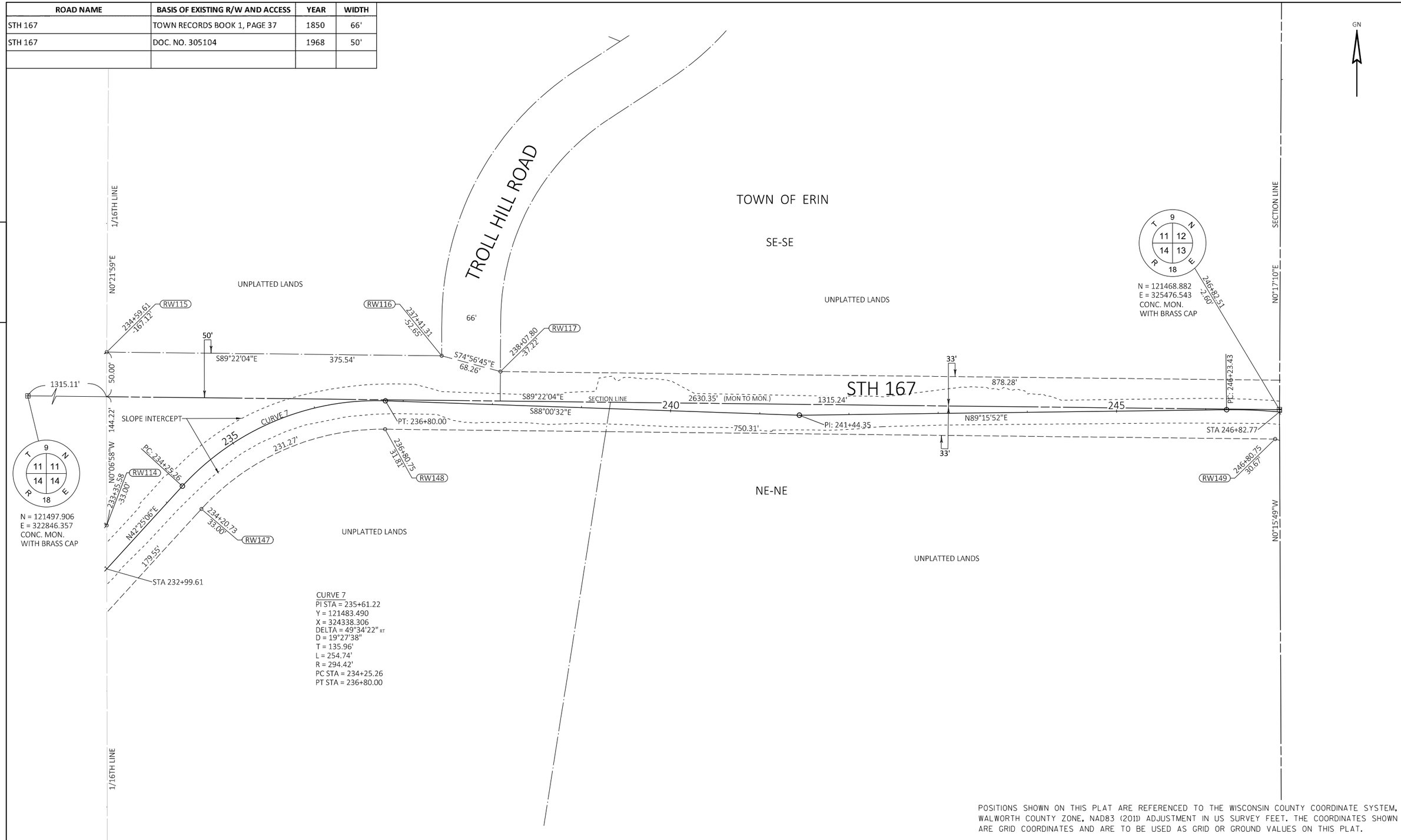


POSITIONS SHOWN ON THIS PLAT ARE REFERENCED TO THE WISCONSIN COUNTY COORDINATE SYSTEM, WALWORTH COUNTY ZONE, NAD83 (2011) ADJUSTMENT IN US SURVEY FEET. THE COORDINATES SHOWN ARE GRID COORDINATES AND ARE TO BE USED AS GRID OR GROUND VALUES ON THIS PLAT.

| | | | | |
|---|---|---|---|---|
| REVISION DATE 4/05/2023 | DATE 4/18/2022 | SCALE, FEET 0 50' 100' | HWY: STH 167 | STATE R/W PROJECT NUMBER 2300-06-20 | PLAT SHEET 4.05 |
| | GRID FACTOR | | COUNTY: WASHINGTON | CONSTRUCTION PROJECT NUMBER 2300-06-70 | PS&E SHEET 66 |

E

FILE NAME : 2300-06-20_DETAILS.DWG
LAYOUT NAME - 040405_rp
PLOT DATE : 4/3/2023 11:41 AM PLOT BY : DODGE, BRIAN PLOT NAME : PLOT SCALE : 1 IN:50 FT

WISDOT/CADDS SHEET 75

| ROAD NAME | BASIS OF EXISTING R/W AND ACCESS | YEAR | WIDTH |
|---|---|---|---|
| STH 167 | WIDTH BY SS 82.31(2) | -- | 66' |
| STH 167 | CSM NO. 5810 | 2004 | 33 |
| | | | |
| | | | |

SCHEDULE OF LANDS & INTERESTS REQUIRED

| PARCEL NUMBER | *OWNER | INTEREST REQUIRED | R/W ACRE(S) REQUIRED NEW | EXISTING | TOTAL | PLE AREA | TLE AREA | PARCEL NUMBER |
|---|---|---|---|---|---|---|---|---|
| 1 | BEELER & RENEE BEELER | TLE | -- | -- | -- | | 0.044 | 1 |
| 201(2) | BEELER & RENEE BEELER | PLE | | | | 0.044 | | 201 |
| | | | | | | | | |

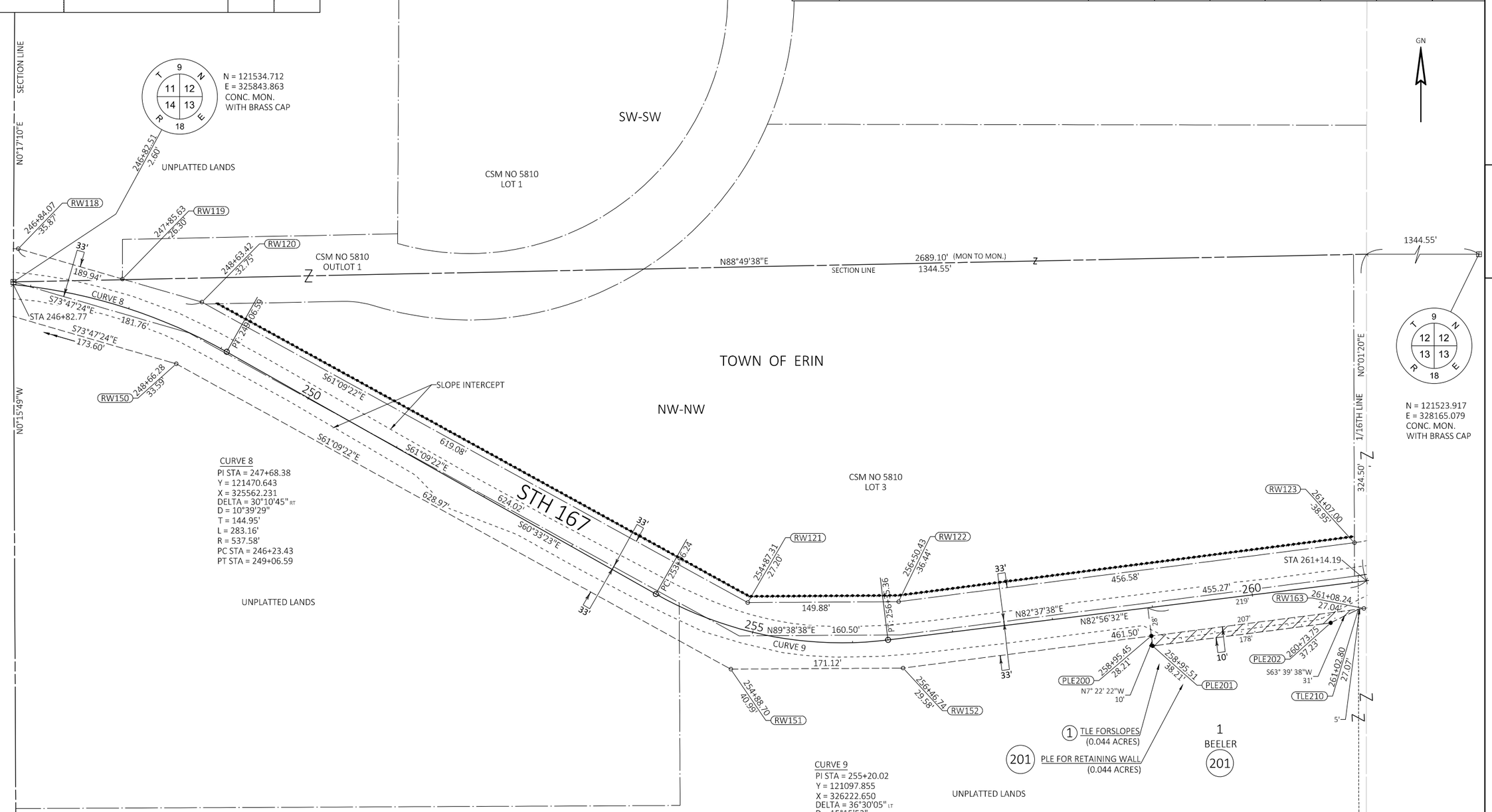


POSITIONS SHOWN ON THIS PLAT ARE REFERENCED TO THE WISCONSIN COUNTY COORDINATE SYSTEM, WALWORTH COUNTY ZONE, NAD83 (2011) ADJUSTMENT IN US SURVEY FEET. THE COORDINATES SHOWN ARE GRID COORDINATES AND ARE TO BE USED AS GRID OR GROUND VALUES ON THIS PLAT.

| | | | | |
|---|---|---|---|---|
| REVISION DATE 4/05/2023 | DATE 4/18/2022 | SCALE, FEET 0 50' 100' | HWY: STH 167 | STATE R/W PROJECT NUMBER 2300-06-20 | PLAT SHEET 4.06 |
| | GRID FACTOR | | COUNTY: WASHINGTON | CONSTRUCTION PROJECT NUMBER 2300-06-70 | PS&E SHEET 67 |

E

FILE NAME : 2300-06-20_DETAILS.DWG
LAYOUT NAME - 040406_rp
PLOT DATE : 4/3/2023 11:41 AM PLOT BY : DODGE, BRIAN PLOT NAME : PLOT SCALE : 1 IN:50 FT

WISDOT/CADDS SHEET 75

| ROAD NAME | BASIS OF EXISTING R/W AND ACCESS | YEAR | WIDTH |
|---|---|---|---|
| STH 167 | WIDTH BY SS 82.31(2) | -- | 66' |
| STH 167 | 6532 | 2013 | 33' |
| STH 167 | DOC NO 254173 | 1960 | C/L |
| STH 167 | TOWN RECORDS BOOK 1, PAGE 31 | 1854 | 66' |

500 AT&T WISCONSIN - COMMUNICATION LINE
PARCEL 1 - NO RECORD OF EASEMENT

SCHEDULE OF LANDS & INTERESTS REQUIRED

| PARCEL NUMBER | *OWNER | INTEREST REQUIRED | R/W ACRE(S) REQUIRED NEW | EXISTING | TOTAL | TLE AREA | PARCEL NUMBER |
|---|---|---|---|---|---|---|---|
| 1 | BEELER & RENEE BEELER | FEE, TLE | 0.011 | 0.079 | 0.090 | 0.043 | 1 |
| 2 | DAVID & PATRICIA EDDY | TLE | -- | -- | -- | 0.017 | 2 |

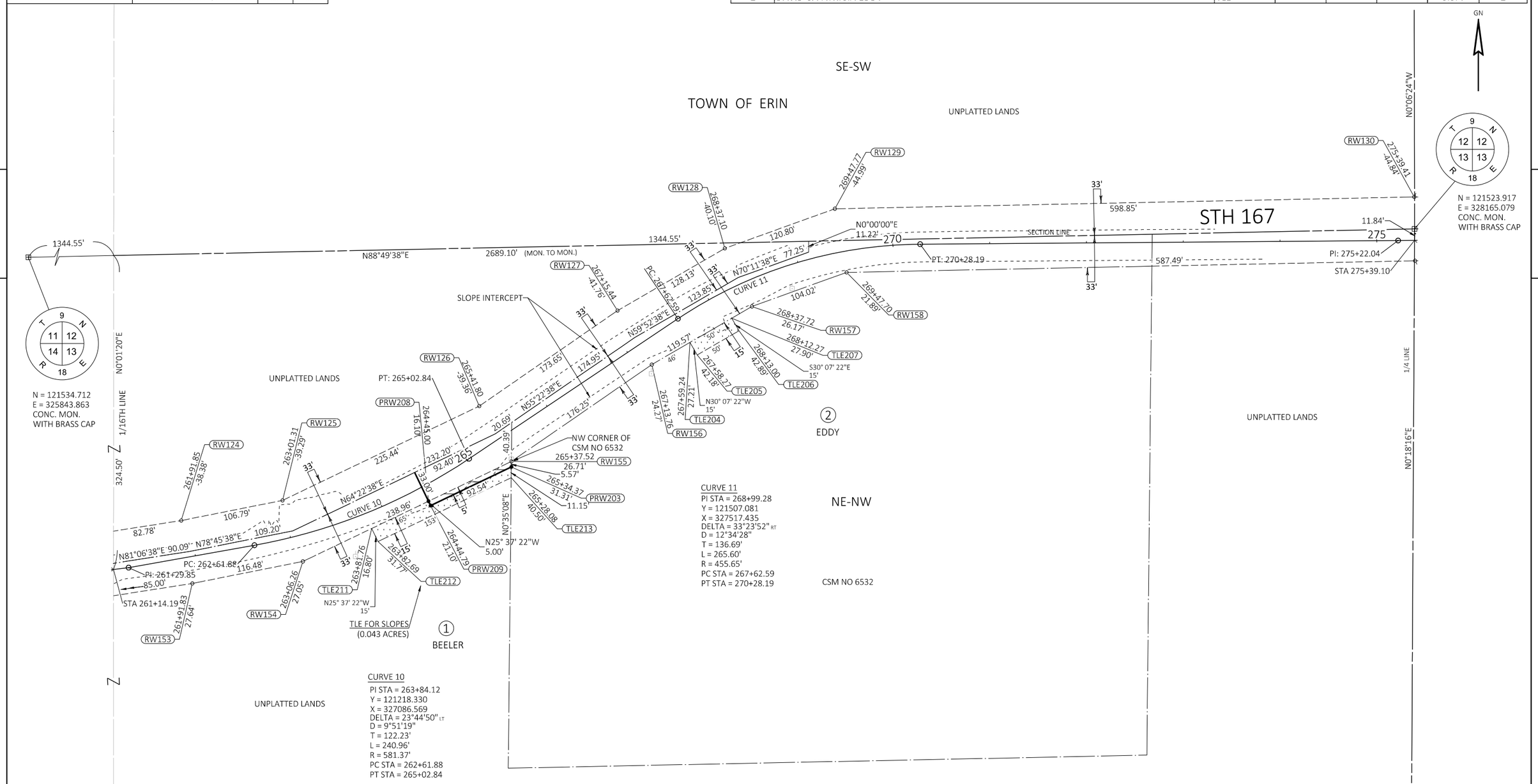


POSITIONS SHOWN ON THIS PLAT ARE REFERENCED TO THE WISCONSIN COUNTY COORDINATE SYSTEM, WALWORTH COUNTY ZONE, NAD83 (2011) ADJUSTMENT IN US SURVEY FEET. THE COORDINATES SHOWN ARE GRID COORDINATES AND ARE TO BE USED AS GRID OR GROUND VALUES ON THIS PLAT.

| | | | | |
|---|---|---|---|---|
| REVISION DATE 4/05/2023 | DATE 4/18/2022 | SCALE, FEET 0 50' 100' | HWY: STH 167 | STATE R/W PROJECT NUMBER 2300-06-20 | PLAT SHEET 4.07 |
| | GRID FACTOR | | COUNTY: WASHINGTON | CONSTRUCTION PROJECT NUMBER 2300-06-70 | PS&E SHEET 68 |

E

FILE NAME : 2300-06-20_DETAILS.DWG
LAYOUT NAME - 040407_rp
PLOT DATE : 4/3/2023 11:41 AM PLOT BY : DODGE, BRIAN PLOT NAME : PLOT SCALE : 1 IN:50 FT

WISDOT/CADDS SHEET 75

| ROAD NAME | BASIS OF EXISTING R/W AND ACCESS | YEAR | WIDTH |
|---|---|---|---|
| STH 167 | TOWN RECORDS BOOK 1, PAGE 31 | 1854 | 66' |
| | | | |
| | | | |

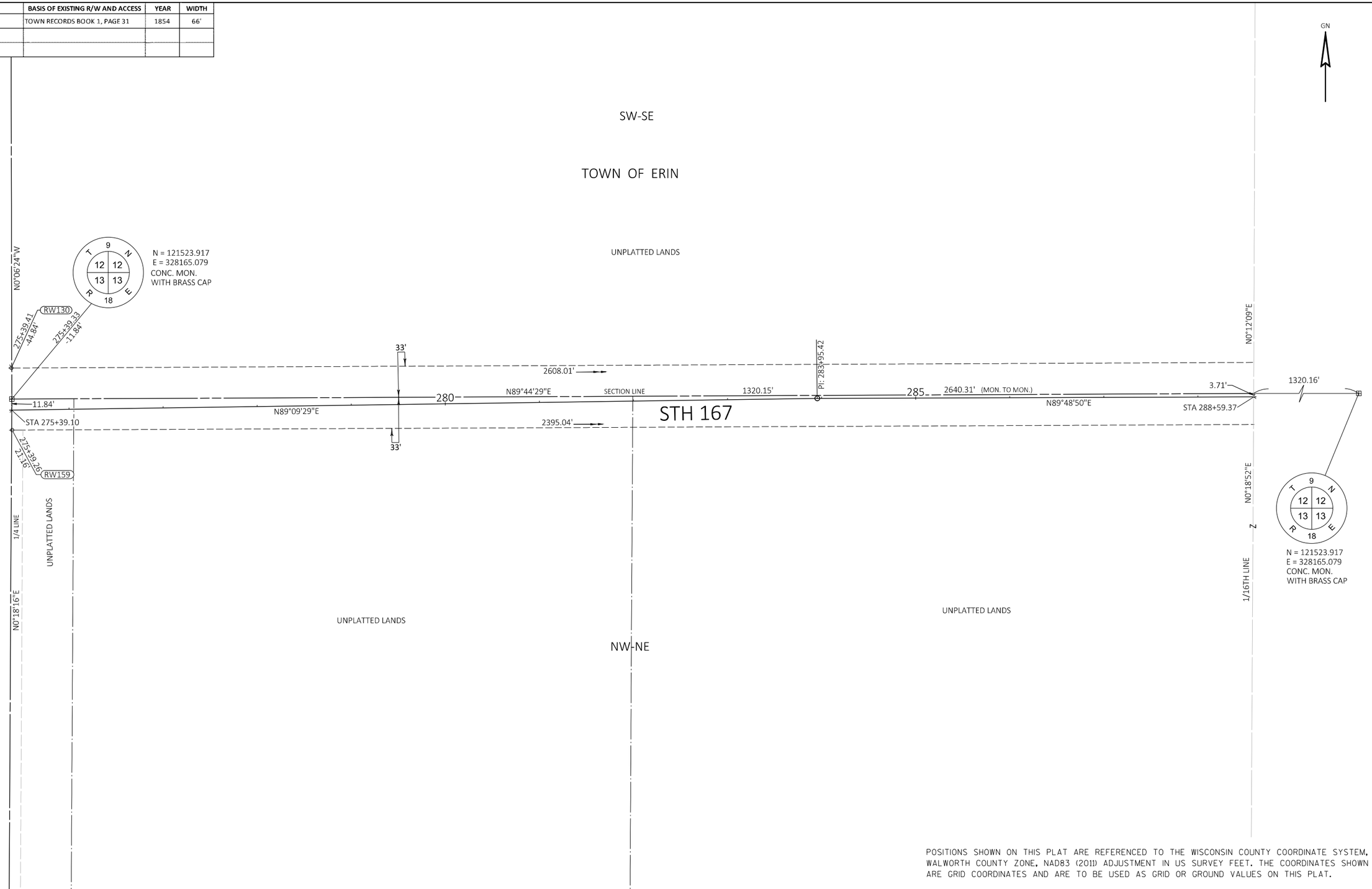


POSITIONS SHOWN ON THIS PLAT ARE REFERENCED TO THE WISCONSIN COUNTY COORDINATE SYSTEM, WALWORTH COUNTY ZONE, NAD83 (2011) ADJUSTMENT IN US SURVEY FEET. THE COORDINATES SHOWN ARE GRID COORDINATES AND ARE TO BE USED AS GRID OR GROUND VALUES ON THIS PLAT.

| | | | | | |
|---|---|---|---|---|---|
| REVISION DATE 4/05/2023 | DATE 4/18/2022 | SCALE, FEET 0 50' 100' | HWY: STH 167 | STATE R/W PROJECT NUMBER 2300-06-20 | PLAT SHEET 4.08 |
| | GRID FACTOR | | COUNTY: WASHINGTON | CONSTRUCTION PROJECT NUMBER 2300-06-70 | PS&E SHEET 69 — E |

FILE NAME : 2300-06-20_DETAILS.DWG
LAYOUT NAME - 040408_rp
PLOT DATE : 4/3/2023 11:41 AM PLOT BY : DODGE, BRIAN PLOT NAME : PLOT SCALE : 1 IN:50 FT

| ROAD NAME | BASIS OF EXISTING R/W AND ACCESS | YEAR | WIDTH |
|---|---|---|---|
| STH 167 | TOWN RECORDS BOOK 1, PAGE 31 | 1854 | 66' |
| STH 167 | CSM NO 6690 | 2016 | 33' |
| STH 167 | CSM NO 655 | 1973 | 33' |
| ST. AUGUSTINE ROAD | CSM NO 6690 | 2016 | 33' |

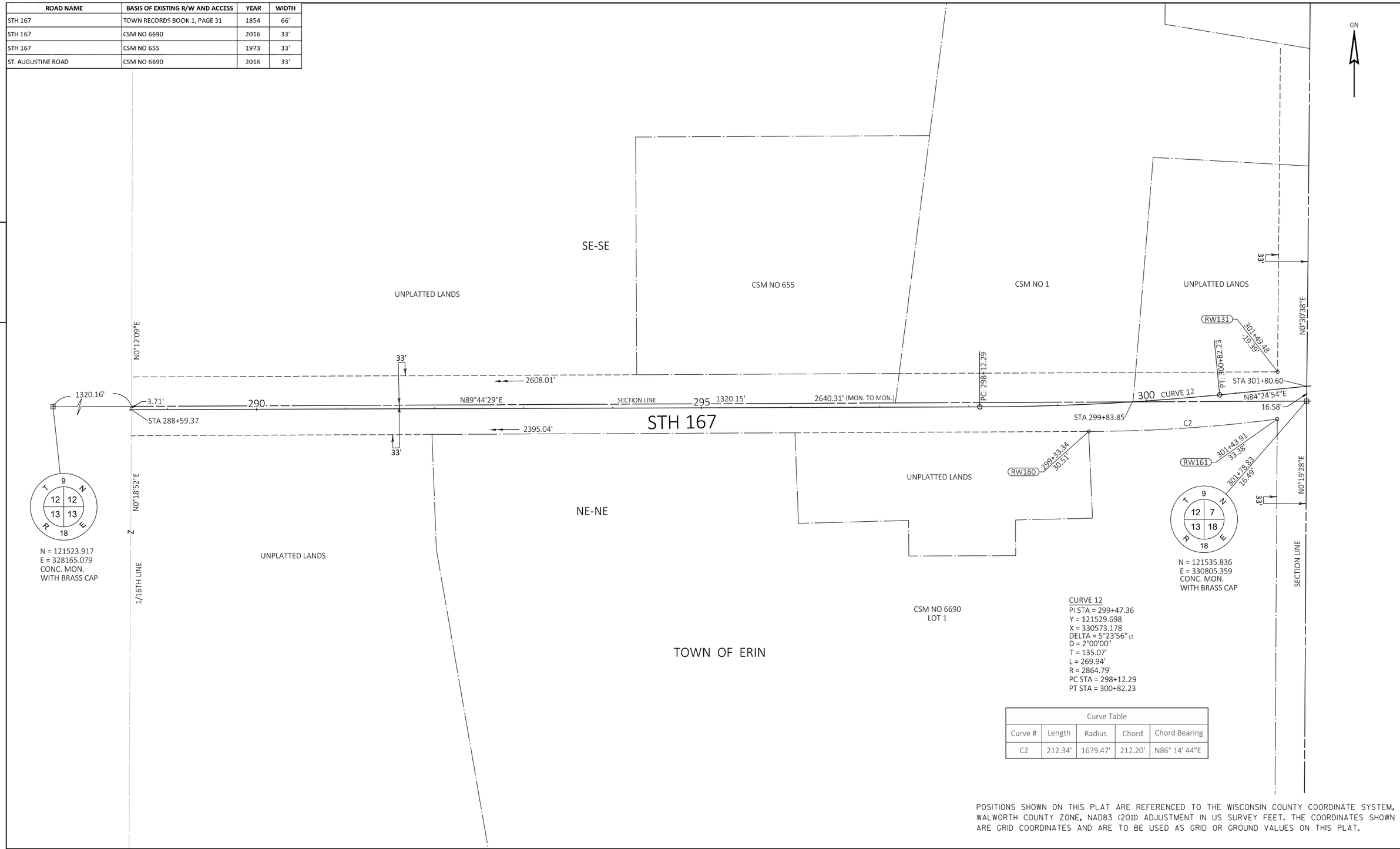


Curve Table

| Curve # | Length | Radius | Chord | Chord Bearing |
|---|---|---|---|---|
| C2 | 212.34' | 1679.47' | 212.20' | N86° 14' 44"E |

| | | | | | |
|---|---|---|---|---|---|
| REVISION DATE 4/05/2023 | DATE 4/18/2022 | SCALE, FEET 0 50' 100' | HWY: STH 167 | STATE R/W PROJECT NUMBER 2300-06-20 | PLAT SHEET 4.09 |
| | GRID FACTOR | | COUNTY: WASHINGTON | CONSTRUCTION PROJECT NUMBER 2300-06-70 | PS&E SHEET 70 E |

FILE NAME : 2300-06-20_DETAILS.DWG
LAYOUT NAME - 040409_rp
PLOT DATE : 4/3/2023 11:41 AM PLOT BY : DODGE, BRIAN PLOT NAME : PLOT SCALE : 1 IN:50 FT

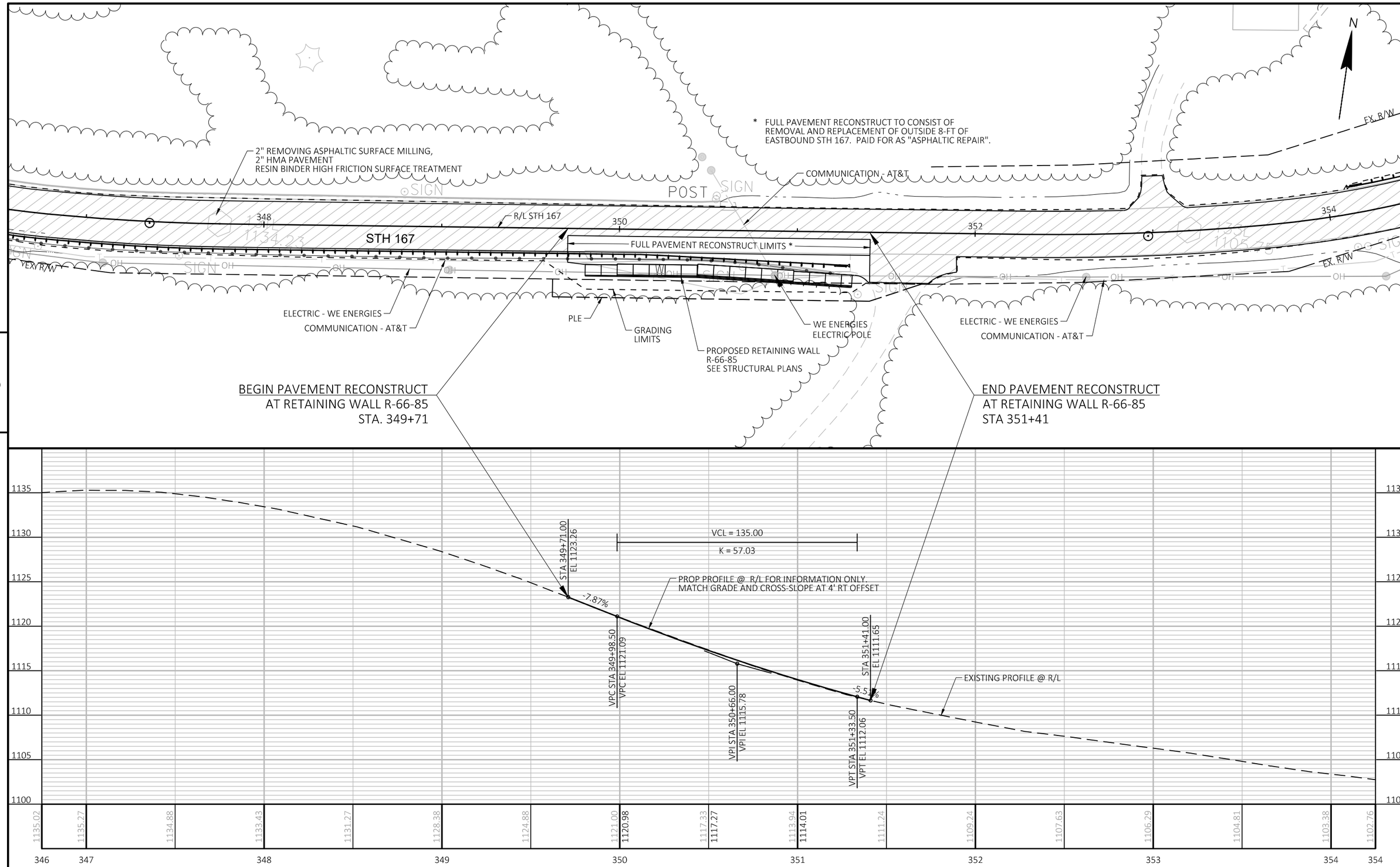


| PROJECT NO: 2300-06-70 | HWY: STH 167 | COUNTY: WASHINGTON | PLAN AND PROFILE: PLAN AND PROFILE | SHEET 71 | E |
|---|---|---|---|---|---|

FILE NAME : N:\PDS\C3D\23000600\SHEETSPLAN\050101-PP.DWG
LAYOUT NAME - 050101
PLOT DATE : 10/11/2023 9:39 AM
PLOT BY : SKIFFINGTON, NICHOLA
PLOT NAME :
PLOT SCALE : 1 IN:50 FT
WISDOT/CADDS SHEET 44

# Standard Detail Drawing List

| | |
|---|---|
| 08A05-20D | INLET COVER TYPE BW, MANHOLE COVERS, TYPE K, J, J-S, L & M |
| 08C06-02 | INLETS 3-FT AND 4-FT DIAMETER |
| 08E09-06 | SILT FENCE |
| 13C19-03 | HMA LONGITUDINAL JOINTS |
| 14B15-11A | STEEL PLATE BEAM GUARD, CLASS "A" INSTALLATION & ELEMENTS |
| 14B15-11B | STEEL PLATE BEAM GUARD, CLASS "A" INSTALLATION & ELEMENTS |
| 14B15-11C | STEEL PLATE BEAM GUARD, CLASS "A", INSTALLATION & ELEMENTS |
| 14B24-09A | STEEL PLATE BEAM GUARD ENERGY ABSORBING TERMINAL |
| 14B24-09B | STEEL PLATE BEAM GUARD ENERGY ABSORBING TERMINAL |
| 14B24-09C | STEEL PLATE BEAM GUARD ENERGY ABSORBING TERMINAL |
| 14B28-04A | GUARDRAIL MOW STRIP |
| 14B28-04B | GUARDRAIL MOW STRIP |
| 14B29-01 | SAFETY EDGE |
| 14B32-10A | CONCRETE BARRIER SINGLE SLOPE (CBSS) |
| 14B32-10B | CONCRETE BARRIER SINGLE SLOPE (CBSS) |
| 14B32-10C | CONCRETE BARRIER SINGLE SLOPE (CBSS) |
| 14B32-10D | CONCRETE BARRIER SINGLE SLOPE (CBSS) |
| 14B32-10E | CONCRETE BARRIER SINGLE SLOPE (CBSS) |
| 14B32-10F | CONCRETE BARRIER SINGLE SLOPE (CBSS) |
| 14B32-10G | CONCRETE BARRIER SINGLE SLOPE (CBSS) |
| 14B32-10H | CONCRETE BARRIER SINGLE SLOPE (CBSS) |
| 14B33-02D | CONCRETE BARRIER SINGLE SLOPE 36" THRIE BEAM ANCHOR |
| 14B33-02E | CONCRETE BARRIER SINGLE SLOPE 36" THRIE BEAM ANCHOR |
| 14B33-02F | CONCRETE BARRIER SINGLE SLOPE 36" THRIE BEAM ANCHOR |
| 14B42-07A | MIDWEST GUARDRAIL SYSTEM (MGS) GUARDRAIL |
| 14B42-07B | MIDWEST GUARDRAIL SYSTEM (MGS) GUARDRAIL |
| 14B42-07C | MIDWEST GUARDRAIL SYSTEM (MGS) GUARDRAIL |
| 14B42-07D | MIDWEST GUARDRAIL SYSTEM (MGS) GUARDRAIL |
| 14B44-04A | MIDWEST GUARDRAIL SYSTEM ENERGY ABSORBING TERMINAL (MGS) |
| 14B44-04B | MIDWEST GUARDRAIL SYSTEM ENERGY ABSORBING TERMINAL (MGS) |
| 14B44-04C | MIDWEST GUARDRAIL SYSTEM ENERGY ABSORBING TERMINAL (MGS) |
| 14B45-05A | MIDWEST GUARDRAIL SYSTEM THRIE BEAM TRANSITION (MGS) |
| 14B45-05B | MIDWEST GUARDRAIL SYSTEM THRIE BEAM TRANSITION (MGS) |
| 14B45-05C | MIDWEST GUARDRAIL SYSTEM THRIE BEAM TRANSITION (MGS) |
| 14B45-05D | MIDWEST GUARDRAIL SYSTEM THRIE BEAM TRANSITION (MGS) |
| 14B45-05E | MIDWEST GUARDRAIL SYSTEM THRIE BEAM TRANSITION (MGS) |
| 14B45-05F | MIDWEST GUARDRAIL SYSTEM THRIE BEAM TRANSITION (MGS) |
| 14B45-05G | MIDWEST GUARDRAIL SYSTEM THRIE BEAM TRANSITION (MGS) |
| 14B45-05H | MIDWEST GUARDRAIL SYSTEM THRIE BEAM TRANSITION (MGS) |
| 14B45-05I | MIDWEST GUARDRAIL SYSTEM THRIE BEAM TRANSITION (MGS) |
| 14B45-05J | MIDWEST GUARDRAIL SYSTEM THRIE BEAM TRANSITION (MGS) |
| 14B45-05K | MIDWEST GUARDRAIL SYSTEM THRIE BEAM TRANSITION (MGS) |
| 14B45-05L | MIDWEST GUARDRAIL SYSTEM THRIE BEAM TRANSITION (MGS) |
| 15C02-09A | BARRICADES AND SIGNS FOR MAINLINE CLOSURES |
| 15C02-09B | BARRICADES AND SIGNS FOR VARIOUS CLOSURES |
| 15C02-09C | DETOUR SIGNING FOR MAINLINE CLOSURES |
| 15C03-05 | BARRICADES AND SIGNS FOR SIDEROAD CLOSURES |
| 15C08-23A | PERMANENT LONGITUDINAL PAVEMENT MARKINGS |
| 15C08-23B | TEMPORARY LONGITUDINAL PAVEMENT MARKING |
| 15C08-23C | PAVEMENT MARKING (TURN LANES) |
| 15C08-23D | PAVEMENT MARKING (TURN LANES) |
| 15C11-10B | CHANNELIZING DEVICES DRUMS, CONES, BARRICADES AND VERTICAL PANELS |
| 15C12-09A | TRAFFIC CONTROL FOR LANE CLOSURE WITH FLAGGING OPERATION |
| 15C12-09B | TRAFFIC CONTROL, LANE CLOSURE WITH AUTOMATED FLAGGER ASSISTANCE DEVICE |
| 15C33-04 | STOP LINE AND CROSSWALK PAVEMENT MARKING |
| 15C35-06A | PAVEMENT MARKING (INTERSECTIONS) |
| 15D39-02 | TRAFFIC CONTROL, DROP-OFF SIGNING |
| 15D44-02 | TRAFFIC CONTROL, SIGNING ON ROADWAYS WITH MILLED SURFACES |
| 15D45-03 | TRAFFIC CONTROL, SIGNING ON ROADWAYS WITH LOOSE GRAVEL |



6

## GENERAL NOTES

DETAILS OF CONSTRUCTION, MATERIALS AND WORKMANSHIP NOT SHOWN ON THIS DRAWING SHALL CONFORM TO THE PERTINENT REQUIREMENTS OF THE STANDARD SPECIFICATIONS AND THE APPLICABLE SPECIAL PROVISIONS.

DETAIL DRAWINGS FOR PROPOSED ALTERNATE DESIGNS FOR MANHOLE COVERS SHALL BE SUBMITTED TO THE ENGINEER FOR APPROVAL PROVIDING THAT SUCH ALTERNATE DESIGNS MAKE PROVISION FOR EQUIVALENT CAPACITY AND STRENGTH.

ROUND FRAMES AND COVERS SHALL HAVE CONTINUOUSLY MACHINED BEARING SURFACES TO PREVENT ROCKING AND RATTLING.

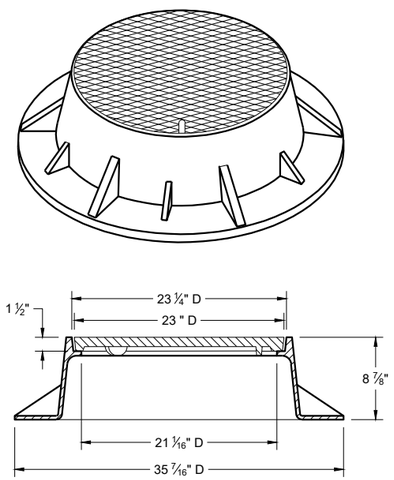


**TYPE "J"**

**NOTE: EITHER CASTING IS ACCEPTABLE**

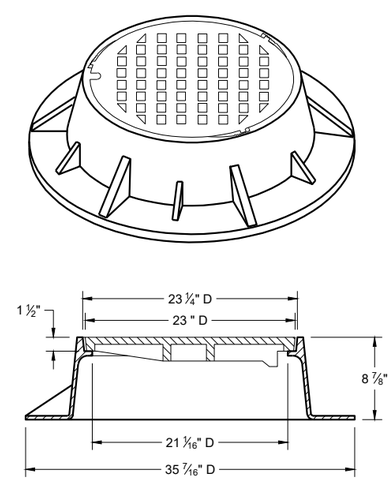


**TYPE "J" SPECIAL**

TYPE "B" NON-ROCKING SELF-SEAL LID
(NOTED AS TYPE J-S ON THE DRAINAGE TABLE)

**NOTE: EITHER CASTING IS ACCEPTABLE**

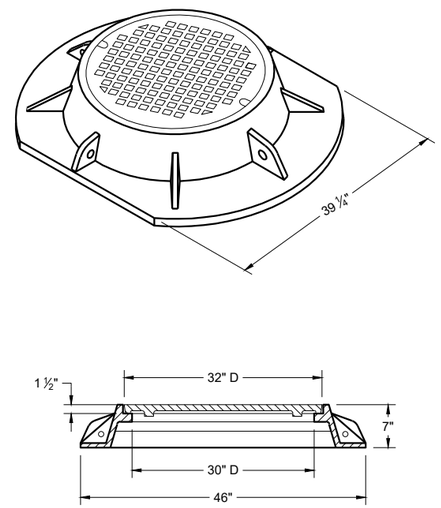


**TYPE "K"**

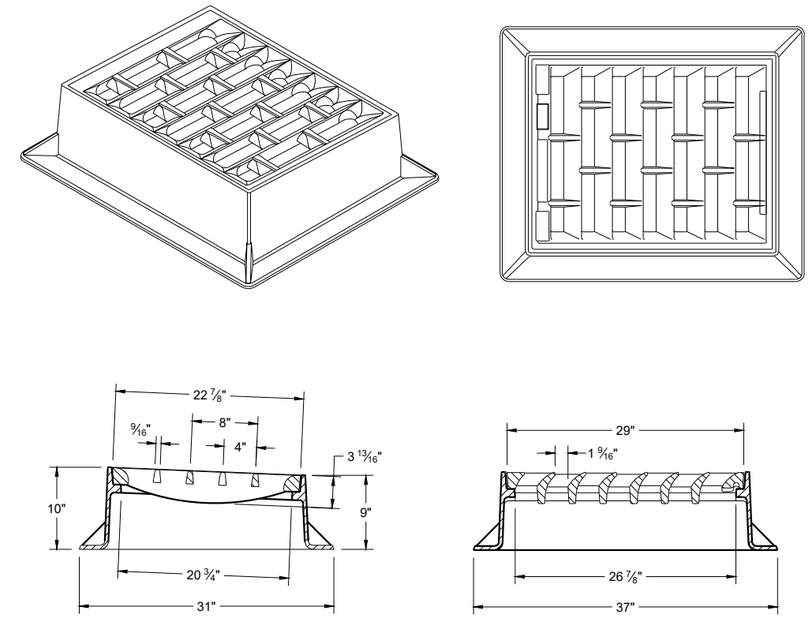


**INLET COVER TYPE "BW"**

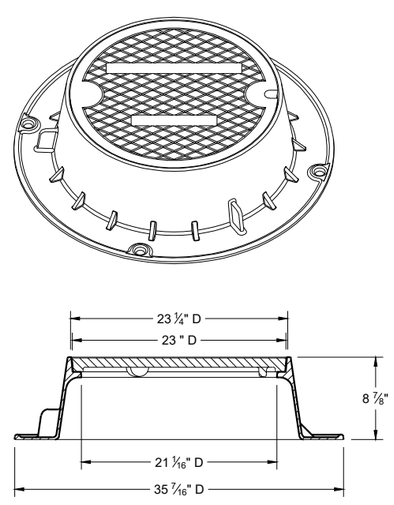


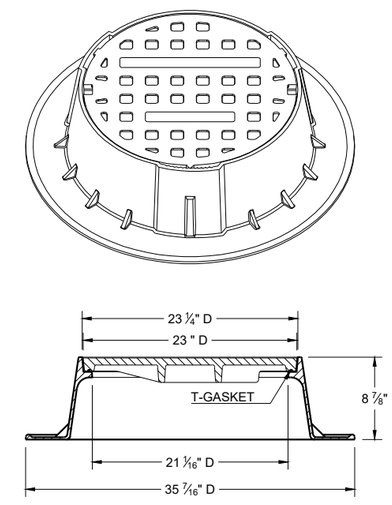


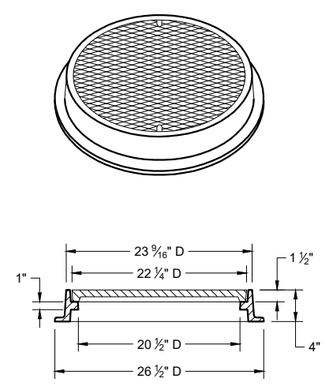


**TYPE "L"**

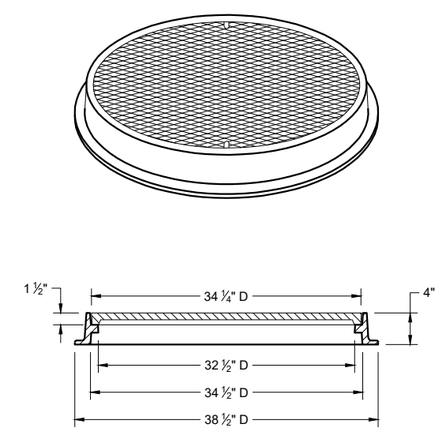


**TYPE "M"**

**INLET COVERS TYPES BW**
**MANHOLE COVERS TYPES K, J, J-S, L, AND M**

STATE OF WISCONSIN
DEPARTMENT OF TRANSPORTATION

APPROVED
July 2023 — DATE
/S/ Rodney Taylor — ROADWAY STANDARDS DEVELOPMENT UNIT SUPERVISOR

FHWA

6

SDD 08A05-20d

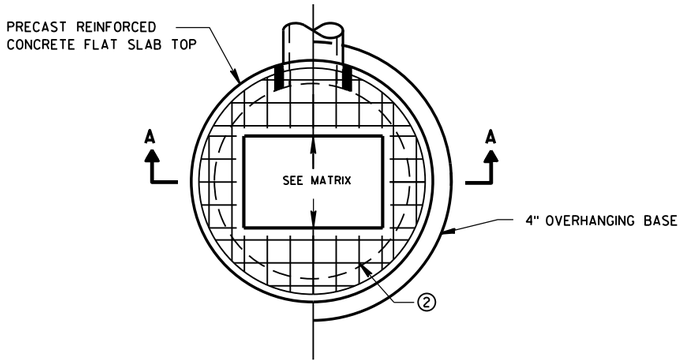


PLAN VIEW RECTANGULAR OPENING

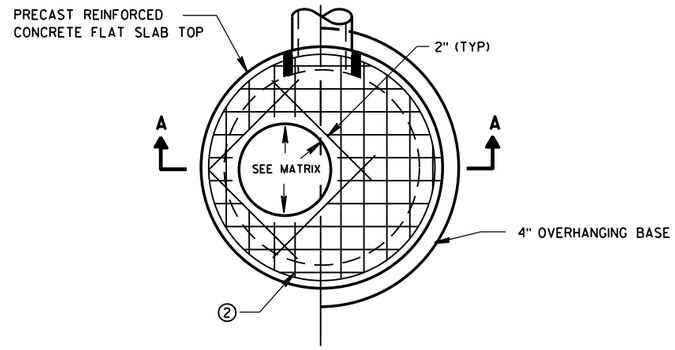


PLAN VIEW CIRCULAR OPENING

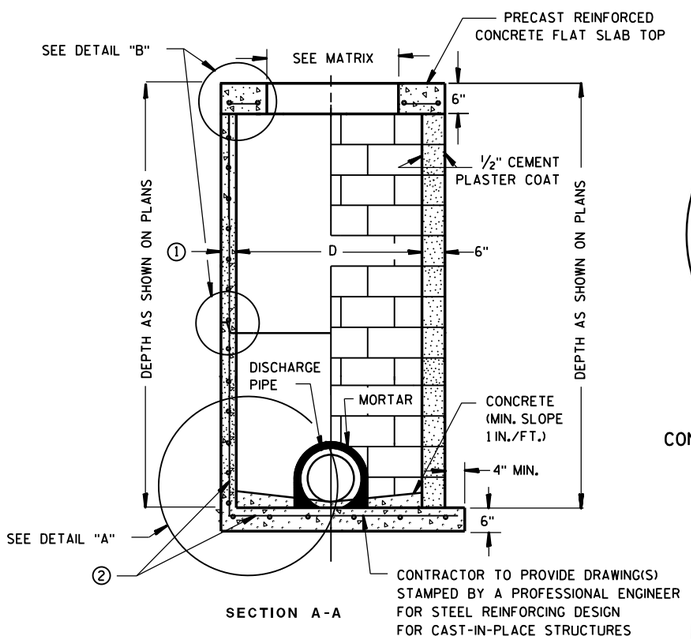


SECTION A-A

PRECAST REINFORCED CONCRETE WITH MONOLITHIC BASE

CONCRETE BLOCK WITH CAST-IN-PLACE OR PRECAST REINFORCED CONCRETE BASE ②

CIRCULAR INLETS W/ FLAT TOP

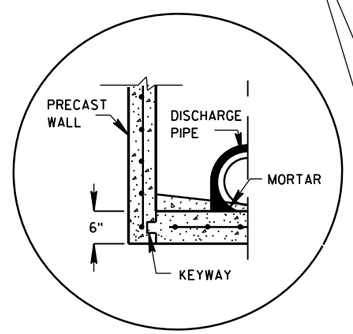


PRECAST REINFORCED CONCRETE WITH INTEGRAL BASE OPTION

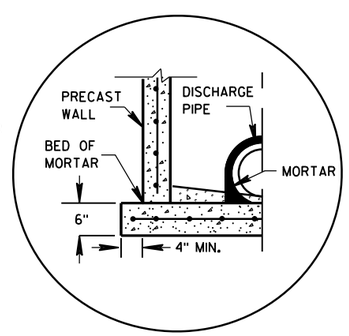


SEPARATE PRECAST REINFORCED CONCRETE BASE OPTION

DETAIL "A"

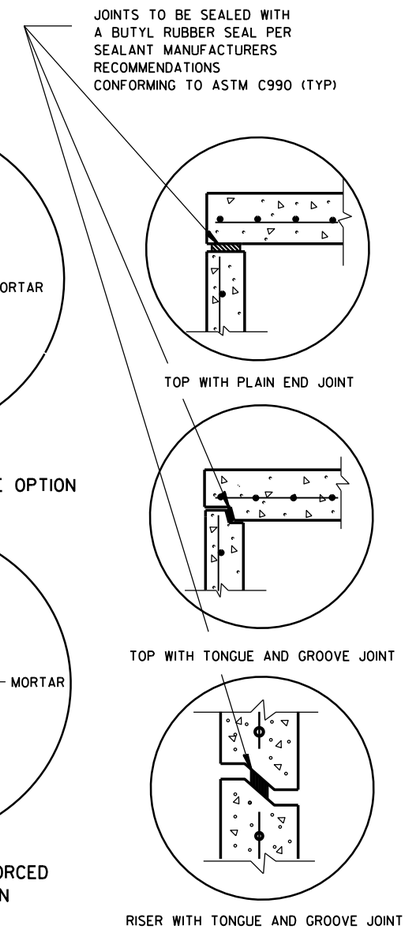


DETAIL "B"

## GENERAL NOTES

DETAILS OF CONSTRUCTION, MATERIALS AND WORKMANSHIP NOT SHOWN ON THIS DRAWING SHALL CONFORM TO THE PERTINENT REQUIREMENTS OF THE STANDARD SPECIFICATIONS AND THE APPLICABLE SPECIAL PROVISIONS.

UNLESS OTHERWISE AUTHORIZED IN WRITING BY THE ENGINEER, THE CONTRACTOR SHALL NOT ORDER AND DELIVER PRECAST INLET UNITS REQUIRED FOR THE PROJECT UNTIL A LIST OF SIZES IS FURNISHED BY THE ENGINEER.

DETAILED DRAWINGS FOR PROPOSED ALTERNATE DESIGNS FOR UNDERGROUND DRAINAGE STRUCTURES SHALL BE SUBMITTED TO THE ENGINEER FOR APPROVAL PROVIDING THAT SUCH ALTERNATE DESIGNS MAKE PROVISION FOR EQUIVALENT CAPACITY AND STRENGTH.

ALL DRAINAGE STRUCTURES ARE DESIGNATED ON THE PLANS AS "MANHOLES 3X3-L", "CATCH BASINS 4-B", "INLETS 2X3-H", ETC. THE FIRST NUMBERS DESIGNATE THE SIZE OF THE STRUCTURE, AND THE FOLLOWING LETTER DESIGNATES THE TYPE OF COVER TO BE USED TO COMPRISE THE COMPLETE UNIT.

BASES SHALL BE PLACED ON A BED OF MATERIAL AT LEAST 6 INCHES IN DEPTH, WHICH MEETS THE REQUIREMENTS OF FOUNDATION BACKFILL. THIS BEDDING SHALL BE COMPACTED AND PROVIDE UNIFORM SUPPORT FOR THE ENTIRE AREA OF THE BASE.

ALL BAR STEEL REINFORCEMENT SHALL BE EMBEDDED 2 INCHES CLEAR UNLESS OTHERWISE SHOWN OR NOTED.

ALL PRECAST INLET UNITS SHALL CONFORM TO THE PERTINENT REQUIREMENTS OF AASHTO DESIGNATION M199.

PRECAST REINFORCED RISERS SHALL HAVE A TONGUE AND GROOVE JOINT WITH TONGUE UP OR DOWN.

4" OVERHANGING BASES ARE REQUIRED FOR ALL CONCRETE BLOCK INSTALLATIONS. 4" OVERHANG IS REQUIRED WHEN SEPARATE PRECAST BASE IS PROVIDED. OVERHANG IS NOT REQUIRED ON PRECAST STRUCTURES WITH AN INTEGRAL OR MONOLITHIC BASE.

FOR ADDITIONAL CONFIGURATIONS, MAINTAIN A MINIMUM OF 12 INCHES AS MEASURED FROM THE INSIDE OF THE STRUCTURE WALL BETWEEN THE OUTSIDE PIPE WALLS OF ADJACENT PIPES. SEE DETAIL "C".

① MINIMUM WALL THICKNESS SHALL BE 4-IN FOR 3-FT DIAMETER AND 5-IN FOR 4-FT DIAMETER PRECAST INLETS.

② FOR PRECAST CATCH BASINS PROVIDE REINFORCING STEEL IN ACCORDANCE TO AASHTO M199.

## INLET COVER OPENING MATRIX

| | INLET COVER TYPE | ALL A'S | ALL B'S | BW | C | F | ALL H'S | S | T | V | WM | Z |
|---|---|---|---|---|---|---|---|---|---|---|---|---|
| INLET SIZE | OPENING SIZE (FT) | | | | | | | | | | | |
| 3-FT | 2 DIA. | | | | X | | | | | | | X |
| | 2X2 | X | X | | | | | X | | X | | |
| 4-FT | 2 DIA. | | | | X | | | | | | | X |
| | 2X2 | X | X | | | | | X | | X | | |
| | 2X2.5 | | | X | | | | X | X | X | X | |
| | 2X3 | | | | | | X | | | | | |
| | 2.5X3 | | | | | X | | | | | | |

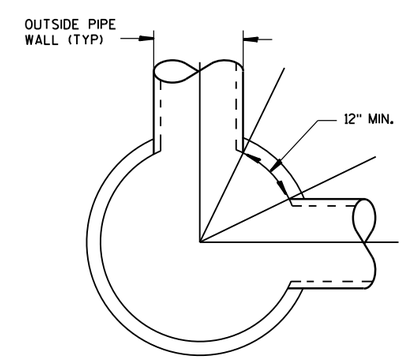


DETAIL "C"

## PIPE MATRIX

| INLET SIZE | MAXIMUM INSIDE PIPE DIAMETER FOR TWO PIPES | |
|---|---|---|
| | 180° SEPARATION (IN) | 90° SEPARATION (IN) |
| 3-FT | 15 | 12 |
| 4-FT | 24 | 18 |

INLETS 3-FT AND 4-FT DIAMETER

INLETS 3-FT
AND 4-FT DIAMETER

STATE OF WISCONSIN
DEPARTMENT OF TRANSPORTATION

APPROVED
Sept., 2016 — /S/ Rodney Taylor
DATE — ROADWAY STANDARDS DEVELOPMENT UNIT SUPERVISOR
FHWA




6

S.D.D. 8 C 6-2

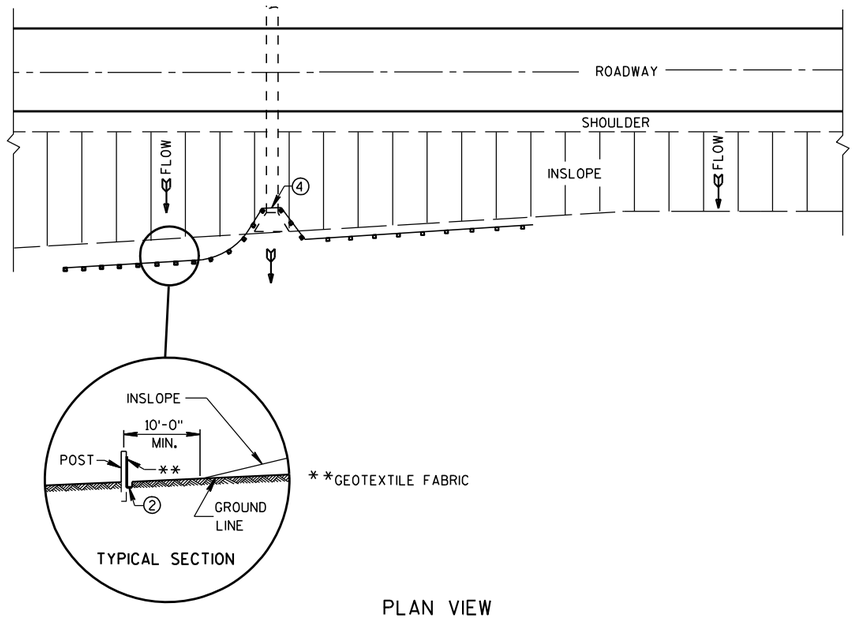


PLAN VIEW

## TYPICAL APPLICATION OF SILT FENCE

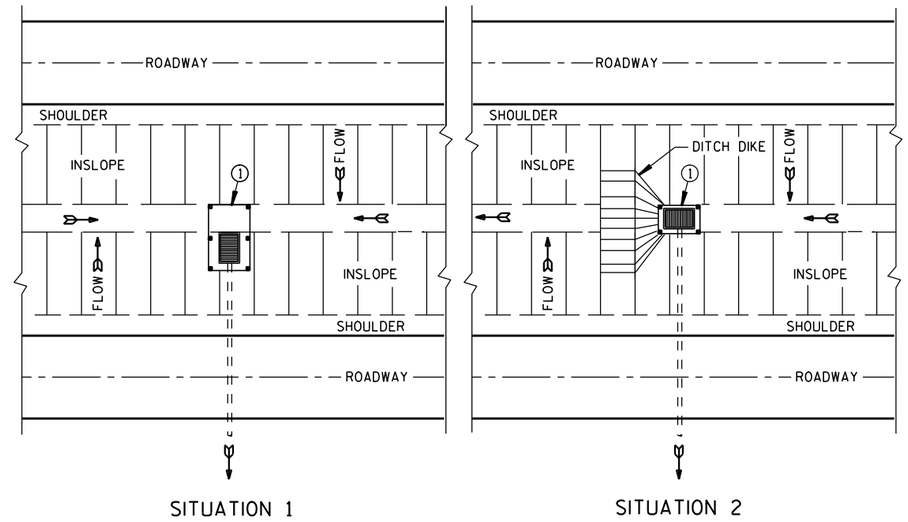


PLAN VIEW

## SILT FENCE AT MEDIAN SURFACE DRAINS

## GENERAL NOTES

DETAILS OF CONSTRUCTION NOT SHOWN ON THIS DRAWING SHALL CONFORM TO THE PERTINENT REQUIREMENTS OF THE STANDARD SPECIFICATIONS AND APPLICABLE SPECIAL PROVISIONS.

① HORIZONTAL BRACE REQUIRED WITH 2" X 4" WOODEN FRAME OR EQUIVALENT AT TOP OF POSTS.

② FOR MANUAL INSTALLATIONS THE TRENCH SHALL BE A MINIMUM OF 4" WIDE & 6" DEEP TO BURY AND ANCHOR THE GEOTEXTILE FABRIC. FOLD MATERIAL TO FIT TRENCH AND BACKFILL & COMPACT TRENCH WITH EXCAVATED SOIL.

③ WOOD POSTS SHALL BE A MINIMUM SIZE OF 1⅛" X 1⅛" OF OAK OR HICKORY.

④ SILT FENCE TO EXTEND ACROSS THE TOP OF THE PIPE.

⑤ CONSTRUCT SILT FENCE FROM A CONTINUOUS ROLL IF POSSIBLE BY CUTTING LENGTHS TO AVOID JOINTS. IF A JOINT IS NECESSARY USE ONE OF THE FOLLOWING TWO METHODS; A) OVERLAP THE END POSTS AND TWIST, OR ROTATE, AT LEAST 180 DEGREES. B) HOOK THE END OF EACH SILT FENCE LENGTH.

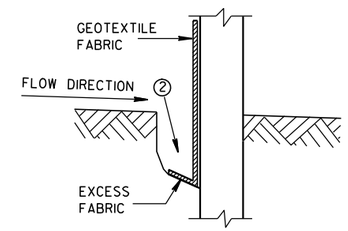


## TRENCH DETAIL

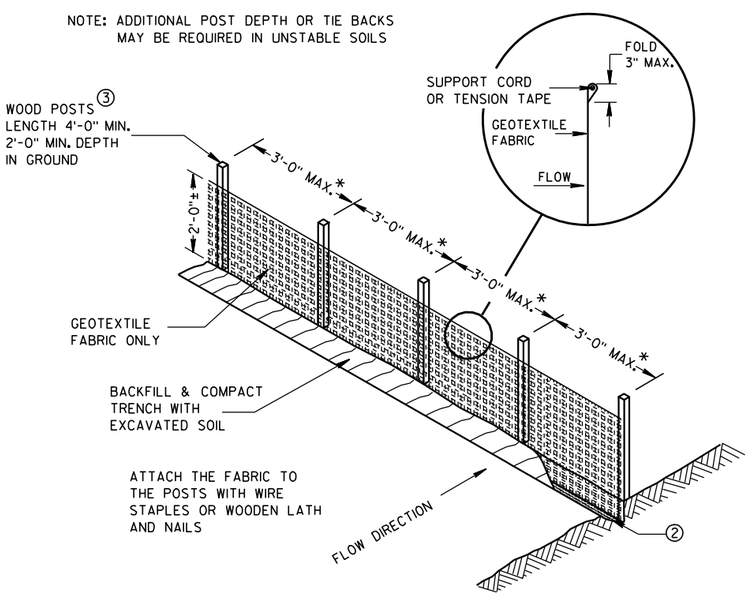


*NOTE: 8'-0" POST SPACING ALLOWED IF A WOVEN GEOTEXTILE FABRIC IS USED.

## SILT FENCE

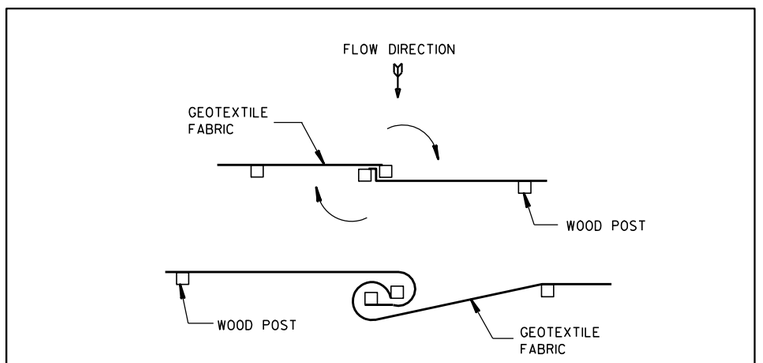


TWIST METHOD

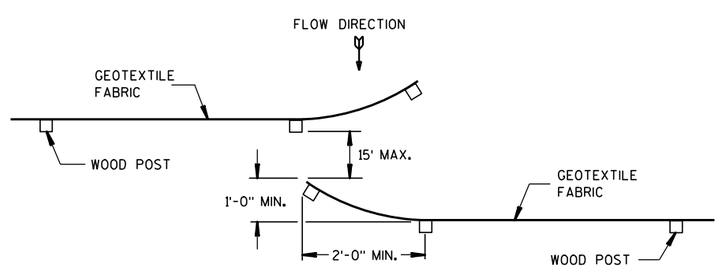


HOOK METHOD

## JOINING TWO LENGTHS OF SILT FENCE ⑤

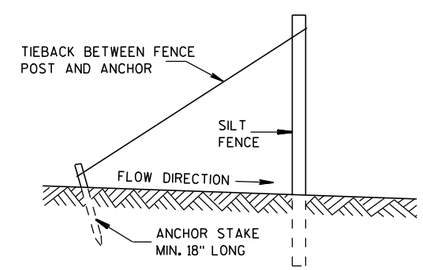


## SILT FENCE TIE BACK

(WHEN REQUIRED BY THE ENGINEER)

| SILT FENCE |
|---|
| STATE OF WISCONSIN<br>DEPARTMENT OF TRANSPORTATION |
| APPROVED<br>4-29-05 /S/ Beth Cann-----<br>DATE CHIEF ROADWAY DEVELOP ENGINEER<br>FHWA |

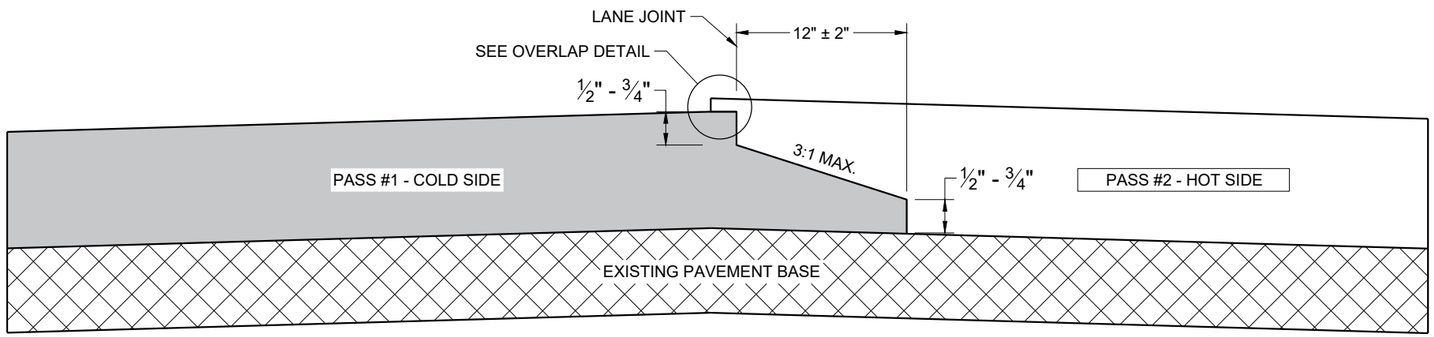


**TYPICAL PAVEMENT CROSS SECTION**
**NOTCHED WEDGE JOINT**

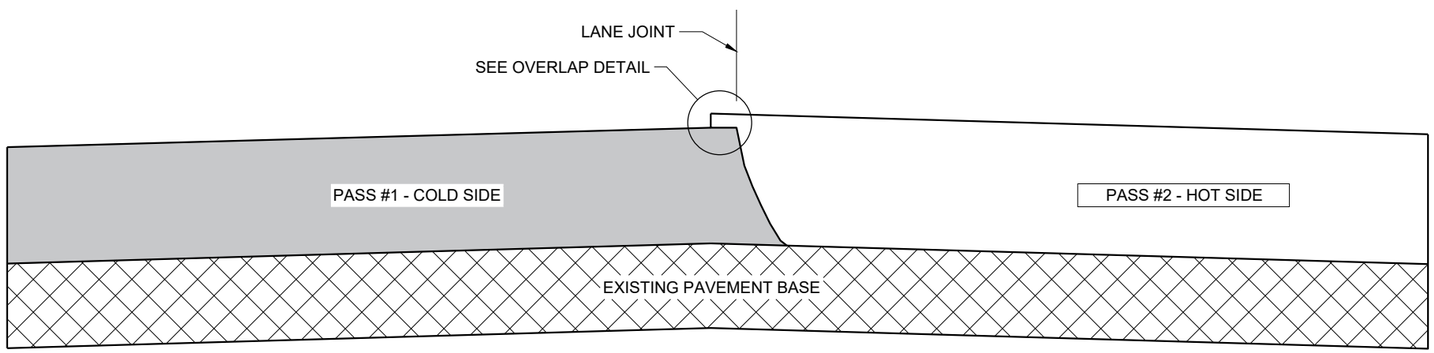


**TYPICAL PAVEMENT CROSS SECTION**
**VERTICAL JOINT**

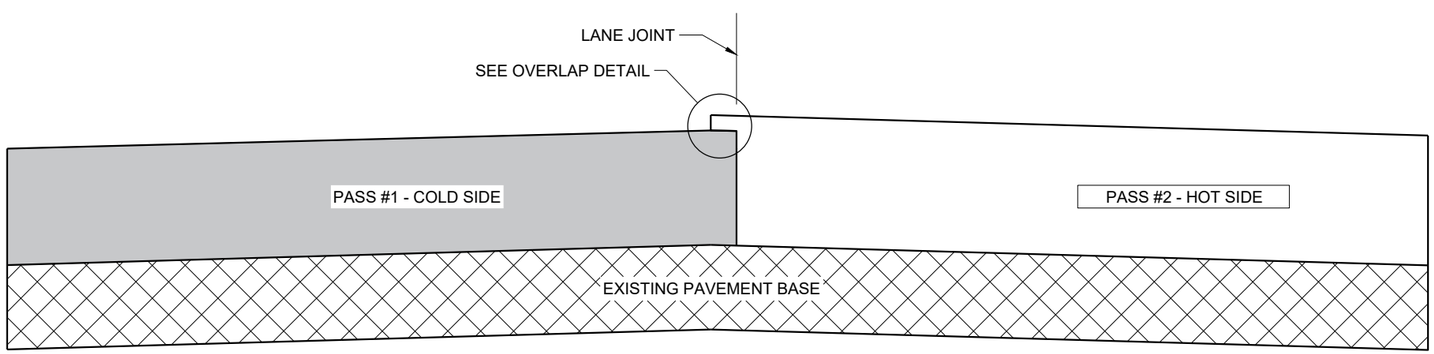


**TYPICAL PAVEMENT CROSS SECTION**
**VERTICAL JOINT (MILLED)**

## GENERAL NOTES

IN ADDITION TO THE DETAILS PROVIDED IN THIS DRAWING, CONFORM TO STANDARD SPECIFICATION 450.3.2.8 FOR WHEN A NOTCHED WEDGE JOINT IS REQUIRED AND FOR GENERAL JOINT CONSTRUCTION REQUIREMENTS.

FOR ALL LONGITUDINAL JOINTS, ENSURE THE PAVER SCREED OVERLAPS THE PREVIOUSLY PLACED PAVEMENT BY 1" ± 0.5" AND THE HOT SIDE OF THE JOINT REMAINS HIGHER THAN THE COLD SIDE BY APPROXIMATELY 0.1" AFTER FINAL COMPACTION. (IT WILL BE FLUSH WHEN PAVING IN ECHELON.)

ONLY REMOVE THE LONGITUDINAL NOTCHED WEDGE JOINT FOR SMA PAVEMENT OR AS DIRECTED BY THE ENGINEER TO ADDRESS SPECIFIC LENGTHS OF JOINT DAMAGED BY TRAFFIC.

WHEN MILLING BACK OR REMOVING ANY LONGITUDINAL JOINT, LIMIT THE MATERIAL REMOVED TO 2" FROM THE TOP NOTCH OR FROM THE VERTICAL JOINT EDGE ON THE COLD SIDE OF THE JOINT.

USE LONGITUDINAL MILLED JOINT AS PLANS SHOW OR THE AS THE ENGINEER DIRECTS.

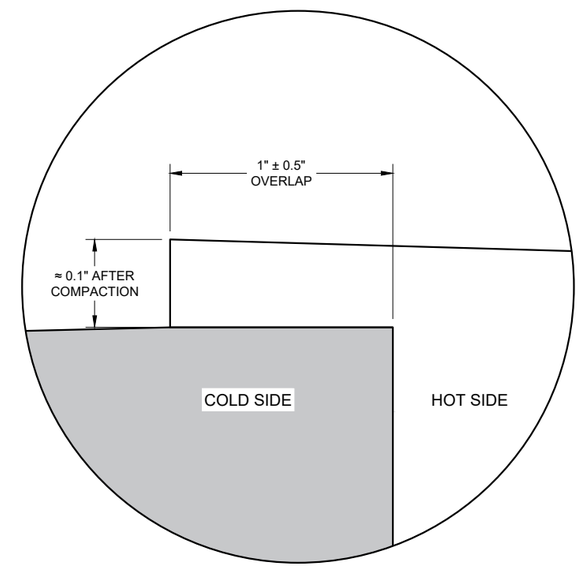


**OVERLAP DETAIL (TYPICAL)**

6

6

SDD 13C19 - 03

SDD 13C19 - 03

**HMA LONGITUDINAL JOINTS**

STATE OF WISCONSIN
DEPARTMENT OF TRANSPORTATION

APPROVED
November 2020 /S/ Steven Hefel
DATE HMA PAVEMENT ENGIN
FHWA

## GENERAL NOTES

1. W6 X 9 OR W6 X 8.5 STEEL POSTS AND NOTCHED PLASTIC BLOCKOUTS ARE ACCEPTABLE ALTERNATIVES FOR 6" X 8" WOOD POSTS WITH WOOD OR PLASTIC BLOCKOUTS. USE APPROVED NOTCHED PLASTIC BLOCKOUTS WITH STEEL POSTS. APPROVED PLASTIC BLOCKOUT DESIGNS MAY VARY FROM THIS TYPICAL DETAIL WHEN USED IN CONJUNCTION WITH STEEL POSTS.

   DO NOT MIX STEEL POSTS AND WOOD POSTS IN A SINGLE INSTALLATION.
2. USE STRUCTURAL STEEL POSTS CONFORMING TO ASTM A 36. GALVANIZED POSTS ACCORDING TO AASHTO M 111. EITHER SET THE POSTS IN DRILLED HOLES OR DRIVE TO GRADE. REMOVE MUSHROOMING CAUSED BY DRIVING AND REPAIR DAMAGED SPELTER COATING ON GALVANIZED POSTS.
3. INSTALL STEEL POSTS WITH HOLES ON APPROACHING TRAFFIC SIDE.
4. USE EITHER WOOD OR APPROVED PLASTIC BLOCKOUTS ON WOOD POSTS.
5. IF THE DISTANCE FROM BACK OF POST TO SHOULDER HINGE POINT IS LESS THAN 2 FEET INSTALL LONGER POST AT HALF POST SPACING, W BEAM (LHW).
6. IF ROCK IS ENCOUNTERED DURING EXCAVATION, THE ENGINEER MAY APPROVE USING A 12 INCH DIAMETER POST HOLE EXTENDING 20 INCHES DEEP INTO THE ROCK. PLACE GRANULAR MATERIAL IN THE BOTTOM OF THE HOLE APPROXIMATELY 2½ INCHES DEEP. CUT THE POSTS TO LENGTH AND PLACE IN YHE HOLE. BACKFILL WITH MATERIAL EXCAVATED FROM THE HOLE AND COMPACT ADEQUATEY.
7. WHEN USING STEEL POSTS AND WOOD BLOCKOUTS INSTALL FOUR 16D GALVANIZED NAILS. INSTALL NAILS AT THE BACK CORNERS OF THE BLOCK AND BEND THE NAILS OVER THE FLANGE OF THE STEEL POST.

INSTALL BEAM GUARD SECTIONS AND ALL NECESSARY HARDWARE ACCORDING TO THE APPLICABLE PLAN AND CURRENT STANDARD AND SUPPLEMENTAL SPECIFICATIONS.

ALL DIMENSIONS ARE SUBJECT TO MANUFACTURER'S TOLERANCES EXCEPT WHERE ALLOWABLE TOLERANCES ARE SHOWN.

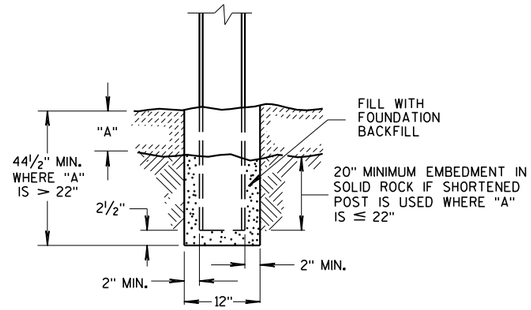


END VIEW
SETTING STEEL OR WOOD POST IN ROCK (6)

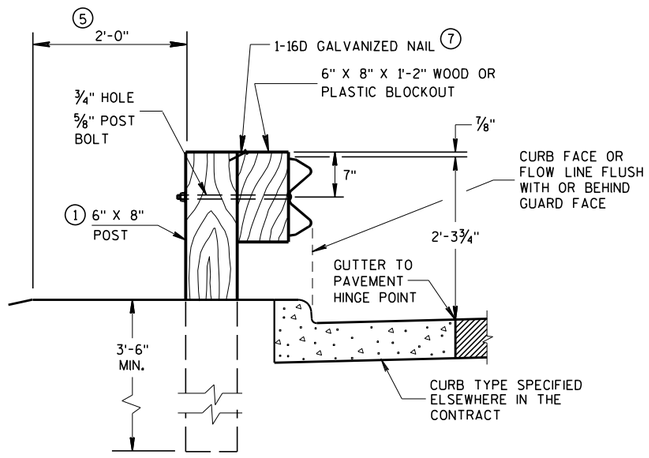


END VIEW
LOCATED ALONG A CURBED ROADWAY

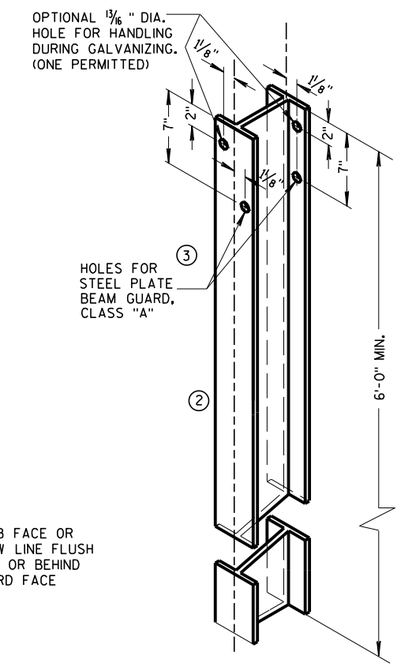


STEEL POST &
HOLE PUNCHING DETAIL
(W6 X 9) (1)

ALL HOLES 13/16" DIAMETER EXCEPT AS NOTED

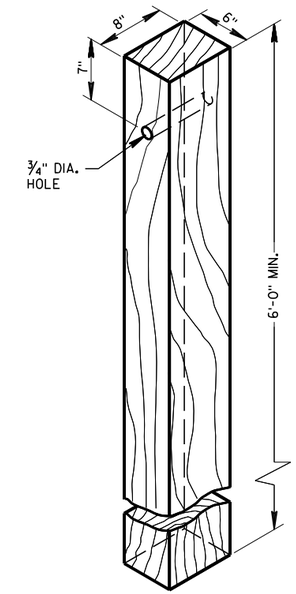


WOOD POST
(6"X8") NOMINAL

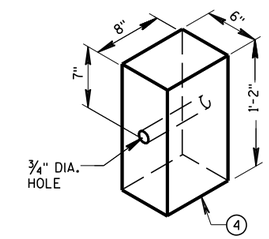


WOOD OR PLASTIC
BLOCKOUT FOR
WOOD POSTS

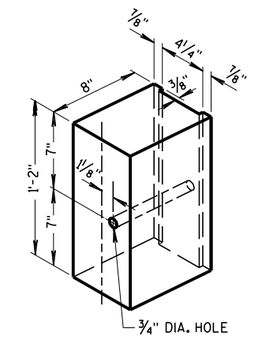


TYPICAL NOTCHED (1)
PLASTIC BLOCKOUT
FOR STEEL POSTS

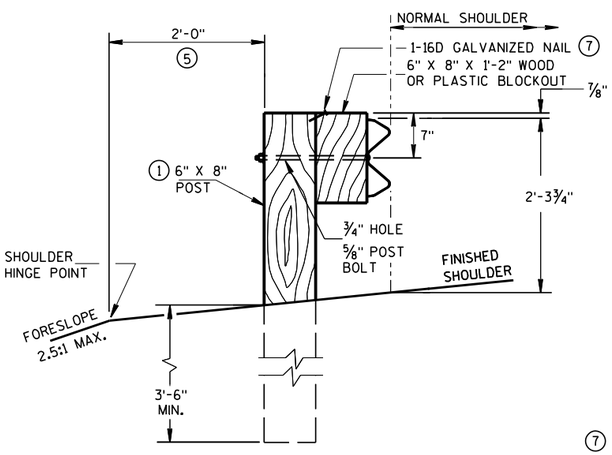


END VIEW
LOCATED ALONG A ROADWAY SHOULDER
STANDARD INSTALLATION

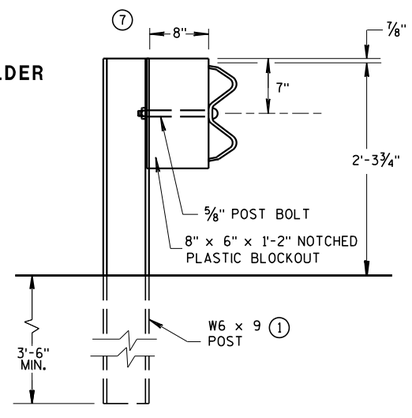


END VIEW
STEEL POST & NOTCHED
PLASTIC BLOCKOUT ALTERNATIVE
STANDARD INSTALLATION

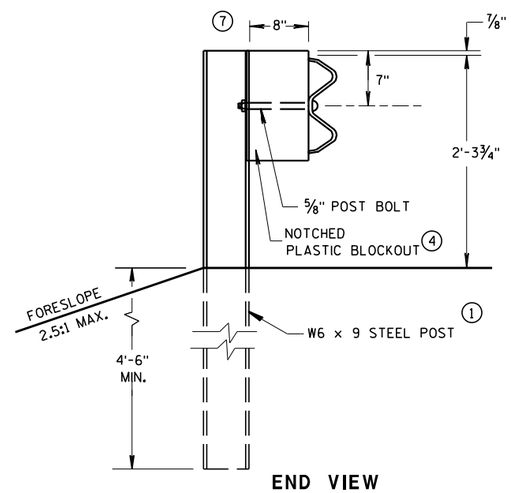


END VIEW
LONGER POST AT HALF
POST SPACING W BEAM
(LHW)

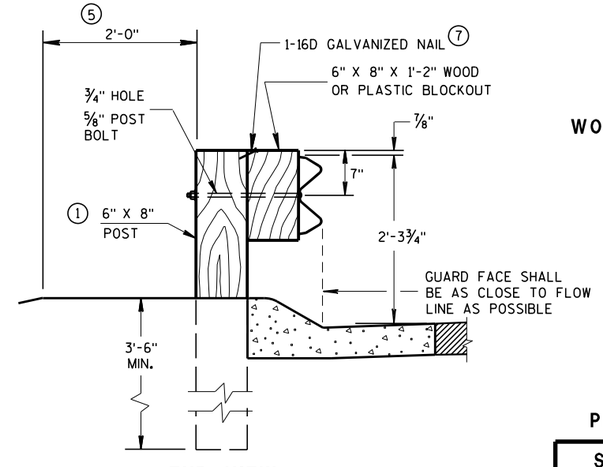


END VIEW
LOCATED ALONG A
MOUNTABLE CURBED ROADWAY

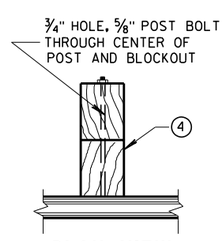


PLAN VIEW
WOOD POST, BLOCKOUT & BEAM

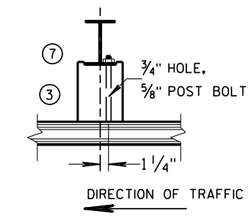


PLAN VIEW
STEEL POST, NOTCHED
PLASTIC BLOCKOUT & BEAM

TYPICAL INSTALLATION OF STEEL PLATE BEAM GUARD

STEEL PLATE BEAM GUARD,
CLASS "A"
INSTALLATION & ELEMENTS

STATE OF WISCONSIN
DEPARTMENT OF TRANSPORTATION

6

S.D.D. 14 B 15-11a

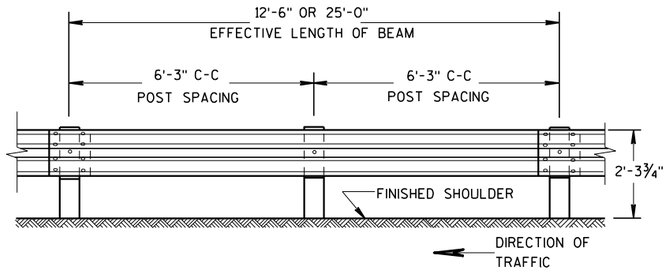


FRONT VIEW

## POST SPACING STANDARD INSTALLATION

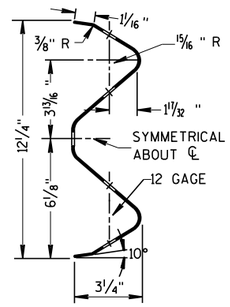


## SECTION THRU W BEAM

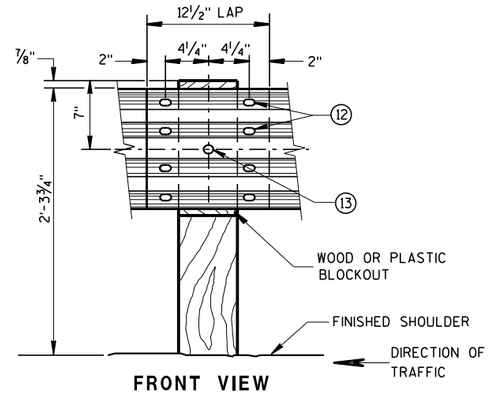


FRONT VIEW

## BEAM SPLICE AT WOOD POST AND POST MOUNTING DETAIL

## GENERAL NOTES

FURNISH GUARDRAIL DEFLECTORS FROM APPROVED PRODUCTS LIST.

(9) DO NOT INSTALL REFLECTORS ON THE FIRST 50 FEET OF THE APPROACH END OF THE ENERGY ABSORBING TERMINA. START REFLECTORS AT POST #9 AND SPACE EVENLY EVERY 100 FEET (MAX.) TO THE END OF GUARDRAIL RUN, USING A MINIMUM OF 3 REFLECTORS.

(12) 8 -5/8" Φ X 2" BUTTON HEAD BOLTS WITH OVAL SHOULDERS & RECESS NUTS.

(13) 5/8" DIA. BUTTON HEAD BOLT AND RECESS NUT WITH 5/8" DIA. F844 FLAT WASHER UNDER NUT.

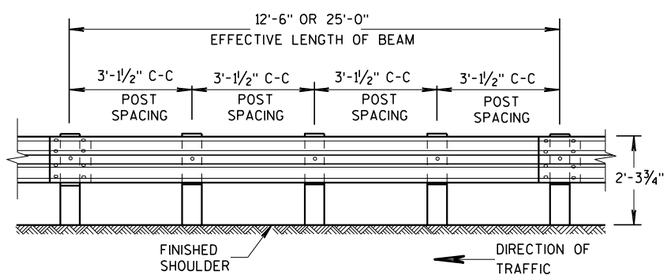


FRONT VIEW

## POST SPACING FOR LONGER POST AT HALF POST SPACING W BEAM (LHW)

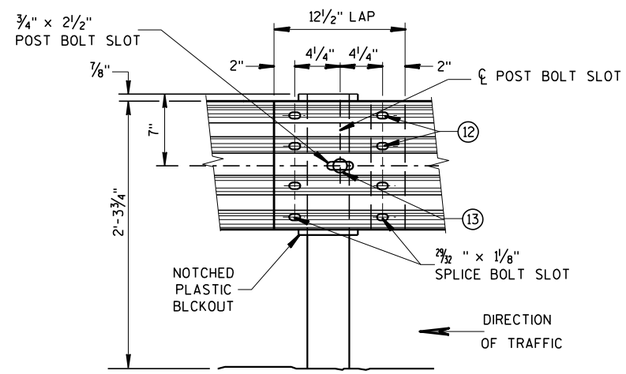


FRONT VIEW
BEAM SPLICE AT STEEL POST

## TYPICAL SPLICING DETAILS OF STEEL PLATE BEAM GUARD

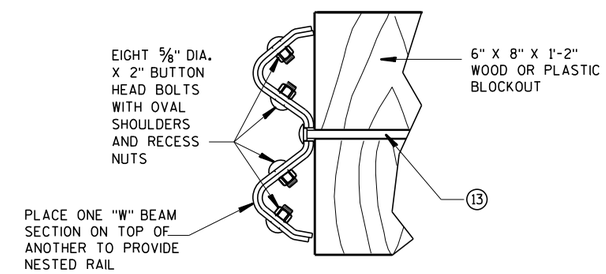


## NESTED W BEAM (NW)

USE ALL OTHER STANDARD BEAM GUARD DETAILS FOR CONSTRUCTING NESTED W BEAM (NW)

* USE DOUBLE SIDED WHITE GUADRAIL REFLECTORS ON ROADWAYS WITH BI-DIRECTIONAL TRAFFIC (NO MEDIAN). USE SINGLE SIDED WHITE (RIGHT SIDE) AND SINGLE SIDED YELLOW (LEFT SIDE) ON ROADWAYS WITH MEDIAN SEPARATION.

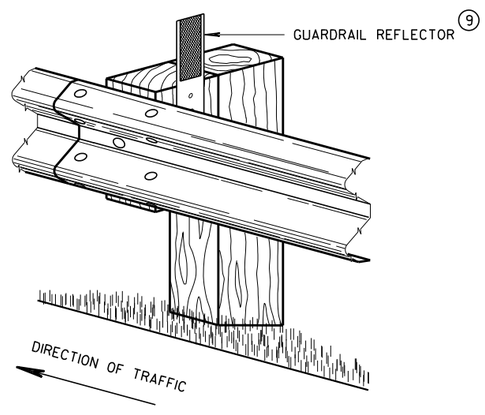


## 4" X 12" GUARDRAIL REFLECTOR DETAIL AND TYPICAL INSTALLATION *

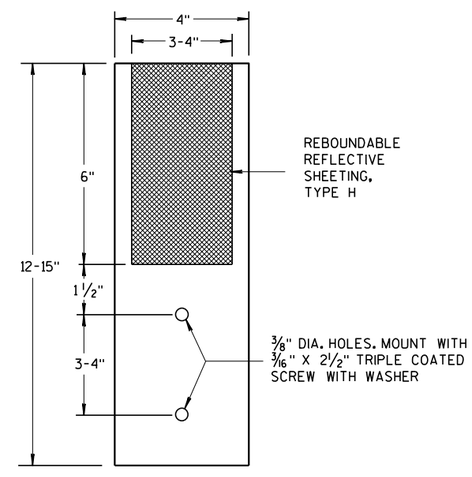


4"x 12" GUARDRAIL REFLECTOR

**STEEL PLATE BEAM GUARD, CLASS "A", INSTALLATION & ELEMENTS**

STATE OF WISCO 78
DEPARTMENT OF TRANSPORTATION

6

6

S.D.D. 14 B 15-11b

S.D.D. 14 B 15-11b

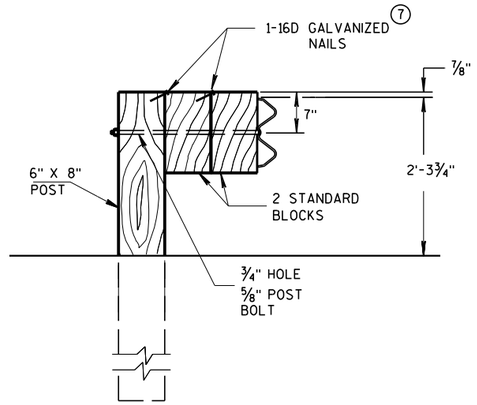


**DETAIL FOR DOUBLE BLOCKS**

THE NUMBER OF DOUBLE BLOCK POSTS WITHIN A BARRIER RUN IS UNLIMITED

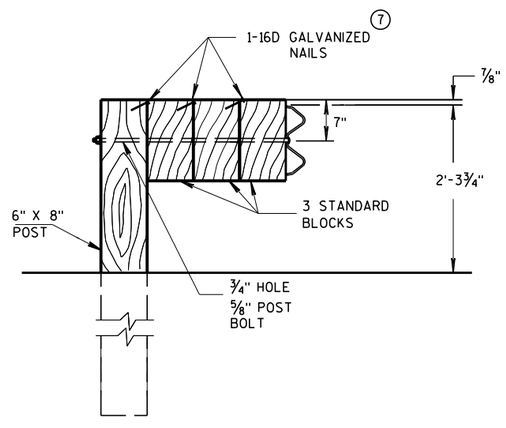


**DETAIL FOR TRIPLE BLOCKS**

TRIPLE BLOCK DETAIL IS LIMITED TO ONE LOCATION WITHIN A BEAM GUARD RUN.

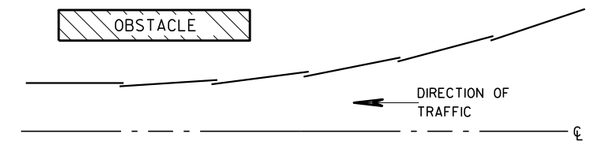


**PLAN VIEW**
**BEAM LAPPING DETAIL**

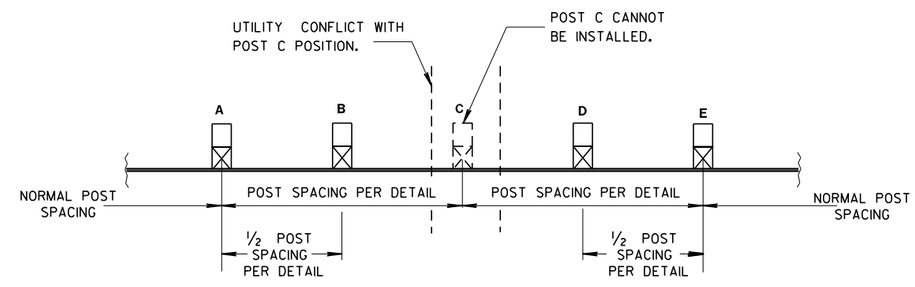


**POST DRIVING FOR CONTINUOUS UNDERGROUND OBSTRUCTION**

NOTES: USE DOUBLE OR TRIPLE BLOCKS WHEN UNDERGROUND OBSTACLES PREVENT THE POST FROM BEING INSTALLED.

DO NOT USE EXTRA BLOCKOUTS IF IT CAUSES THE POST TO BE DRIVEN BEYOND SHOULDER HINGE POINT OR CAUSES A FIXED OBJECT TO BE WITHIN THE DEFLECTION DISTANCE OF THE BARRIER.

**STEEL PLATE BEAM GUARD, CLASS "A", INSTALLATION & ELEMENTS**

STATE OF WISCONSIN
DEPARTMENT OF TRANSPORTATION

APPROVED
June 2017 — DATE
/S/ Rodney Taylor — ROADWAY STANDARDS DEVELOPMENT UNIT SUPERVISOR
FHWA


6
S.D.D. 14 B 15-11c

## BILL OF MATERIALS

| NOTE NO. | DESCRIPTION |
|---|---|
| 1 | WOOD BREAKAWAY TERMINAL POST: 5½" X 7½" X 3'-9" |
| 2 | STEEL TUBE TS 8" X 6" X 0.188", 6'-0" |
| 4 | WOOD BREAKAWAY CRT POST: 6" X 8" X 6'-0" |
| 5 | WOOD OFFSET BLOCKS: 6' X 8" X 1'-2" |
| 6 | PIPE SLEEVE: 2" X 5 ½" STANDARD PIPE |
| 7 | BEARING PLATE |
| 8 | BCT CABLE ASSEMBLY |
| 9 | CABLE ANCHOR BOX |
| 10 | STRUT & YOKE |
| 11 | STEEL PLATE BEAM, END PANEL 12 GA. |
| 12 | STEEL PLATE BEAM: 12 GA. 13'-6½" |
| 13 | IMPACT HEAD |
| 14 | 0.040" ALUMINUM SHEET WITH REFLECTIVE SHEETING TYPE F PER SECTION 637 OF THE STANDARD SPECIFICATIONS |

## GENERAL NOTES

FOLLOW MANUFACTURE'S BOLTING RECOMMENDATIONS.

(A) THE SLOPE IN THE AREA BOUNDED BY THE GRADELINE, THE HINGE POINT LINE (HPL), AND THE CLEAR ZONE LIMITS (CZL) SHALL BE 4:1 OR FLATTER.

(B) AFTER FINAL ASSEMBLY, RECHECK CABLE TO BE SURE IT IS TAUT AND HAS NOT RELAXED.

(D) THE TOP OF THE STEEL TUBE ON POSTS 1 AND 2 SHALL NOT BE MORE THAN 3" ABOVE THE FINISH GROUND ELEVATION.

(E) THE CENTER OF THE UPPER 3½" DIAMETER HOLE ON POST 3 THROUGH 8 SHALL BE ¾" ABOVE THE FINISHED GROUND LINE.

(F) ATTACH ALUMINUM SHEET TO E.A.T. HEAD USING 4 STAINLESS STEEL SELF-TAPPING SCREWS. ONE SCREW PER CORNER.

STEEL POSTS SHALL NOT BE ALLOWED FOR USE WITH ENERGY ABSORBING TERMINALS.

DO NOT INSTALL REFLECTORS ON THE FIRST 50 FEET OF THE APPROACH END OF THE ENERGY ABSORBING TERMINAL.

* DO NOT ATTACH BLOCKOUTS TO POSTS 1 AND 2.

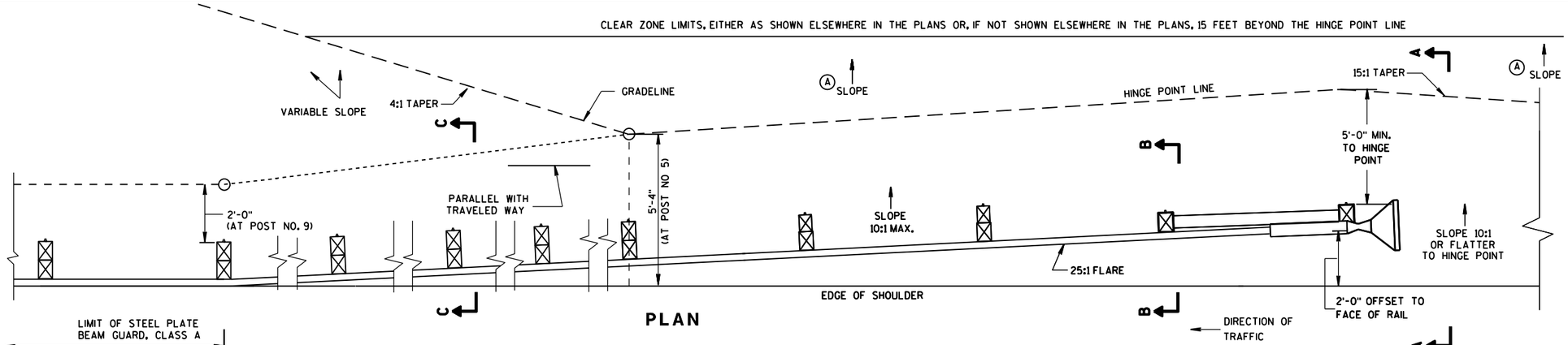


PLAN

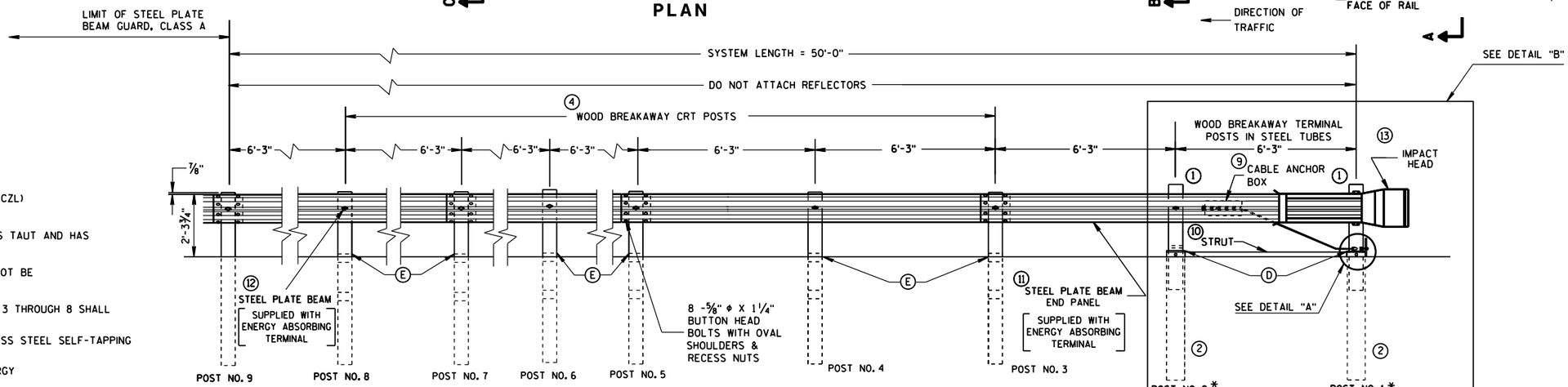


ELEVATION

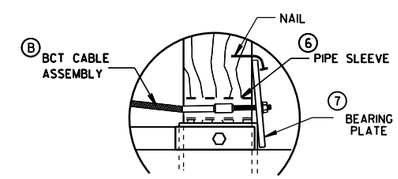


DETAIL "A"

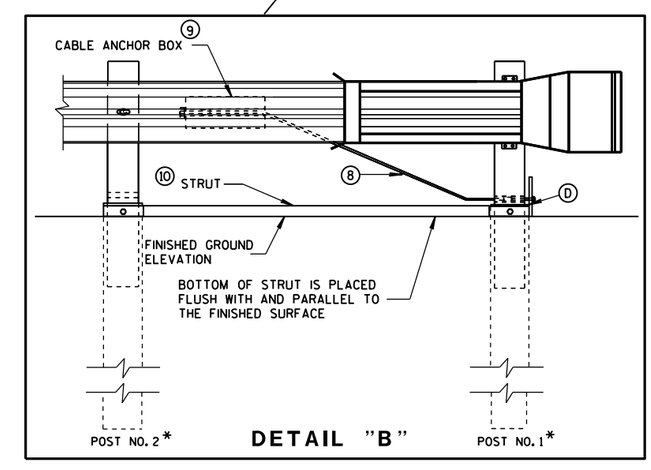


DETAIL "B"

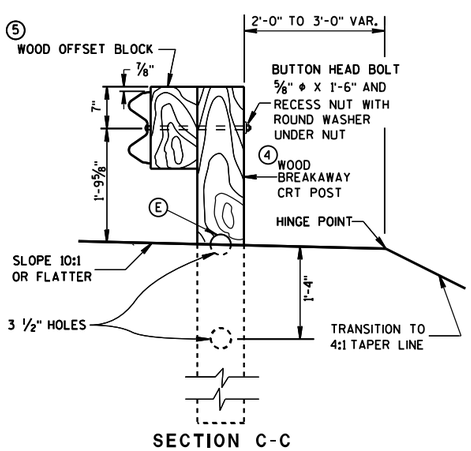


SECTION C-C
TYPICAL AT POST NOS. 6, 8

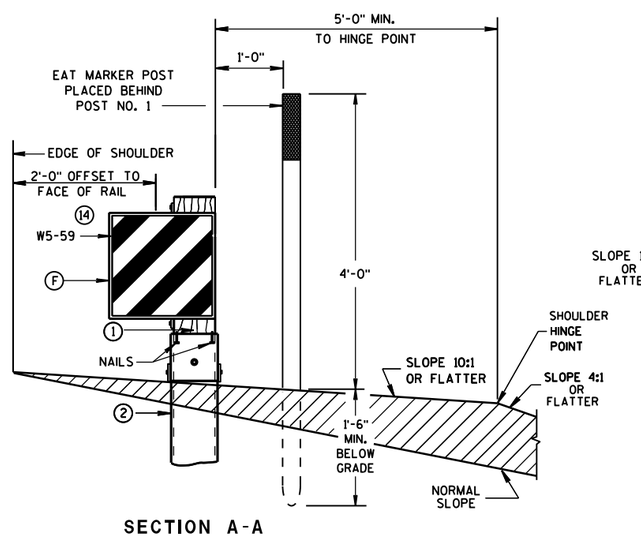


SECTION A-A
TYPICAL AT POST NO. 1*

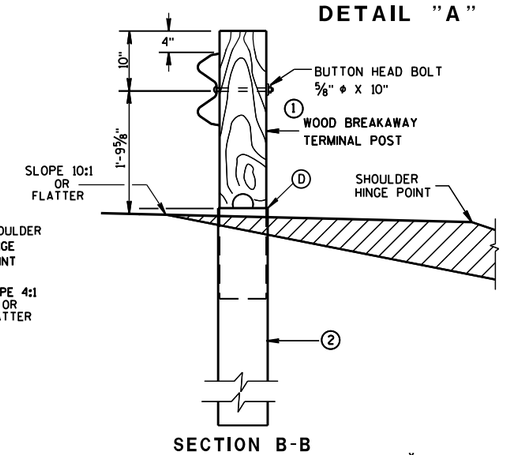


SECTION B-B
TYPICAL AT POST NO. 2*

STEEL PLATE BEAM GUARD
ENERGY ABSORBING TERMINAL

STATE OF WISCONSIN
DEPARTMENT OF TRANSPORTATION

6

6

S.D.D. 14 B 24-9a

S.D.D. 14 B 24-9a

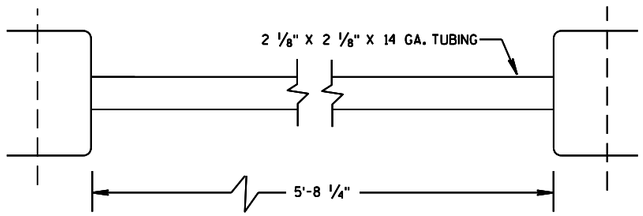


⑩ STRUT DETAIL

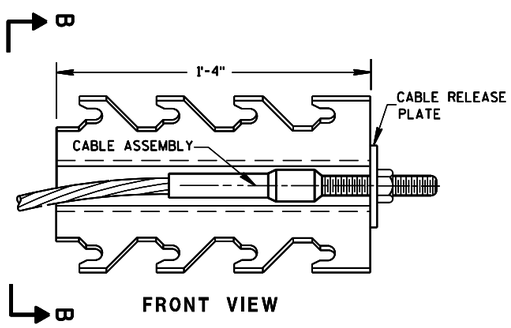


FRONT VIEW

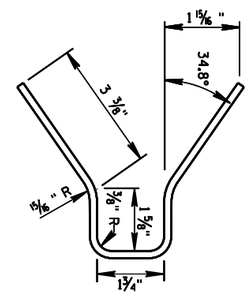


SECTION B-B

⑨ CABLE ANCHOR BOX

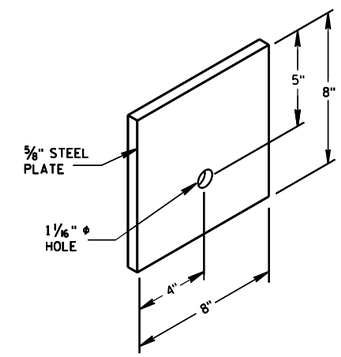


⑦ STEEL BEARING PLATE

6

6

S.D.D. 14 B 24-9b

S.D.D. 14 B 24-9b

STEEL PLATE BEAM GUARD
ENERGY ABSORBING TERMINAL

STATE OF WISCONSIN
DEPARTMENT OF TRANSPOR

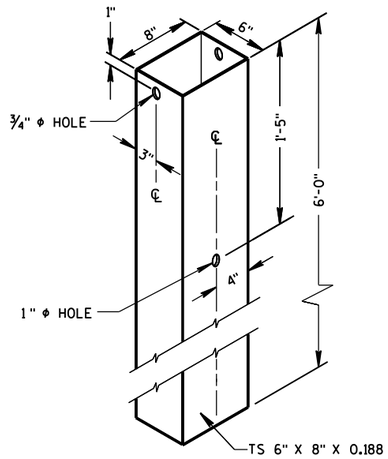


② 72" STEEL TUBE
(POSTS NO. 1-2

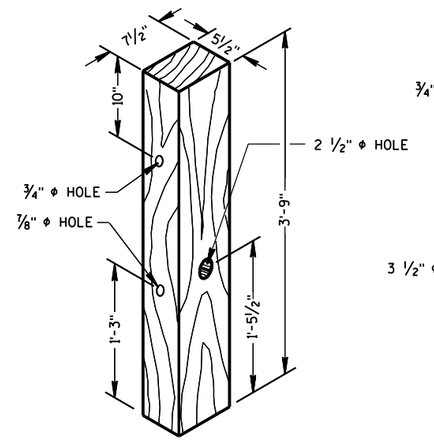


① TERMINAL POST

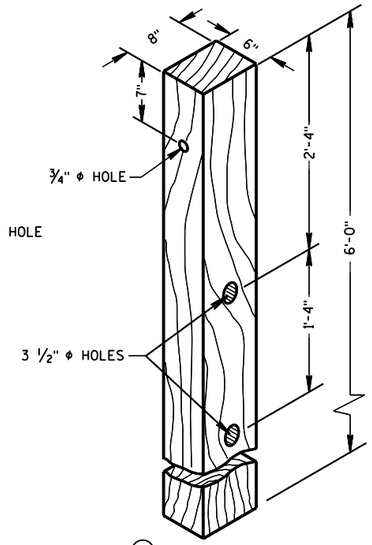


④ CRT POST
(POSTS NO'S 5-8

WOOD BREAKAWAY POSTS

## GENERAL NOTES

WHEN ROCK IS ENCOUNTERED DURING EXCAVATION, A 12 INCH DIA. POST HOLE EXTENDING 20 INCHES DEEP INTO THE ROCK MAY BE USED IF APPROVED BY THE ENGINEER. GRANULAR MATERIAL SHALL BE PLACED IN THE BOTTOM OF THE HOLE APPROXIMATELY 2 1/2" INCHES DEEP TO PROVIDE DRAINAGE. THE SOIL TUBES SHALL BE FIELD CUT TO LENGTH, PLACED IN THE HOLE AND BACKFILLED WITH ADEQUATELY COMPACTED MATERIAL EXCAVATED FROM THE HOLE.

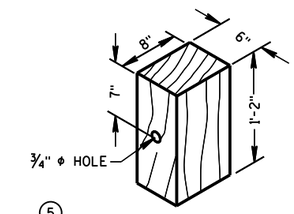


⑤ WOOD OFFSET BLOCK
REQ'D. AT ALL POSTS EXCEPT POST NO'S 1 & 2

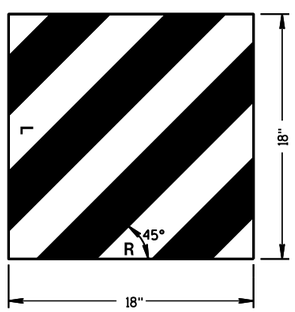


⑭ REFLECTIVE SHEETING DETAILS

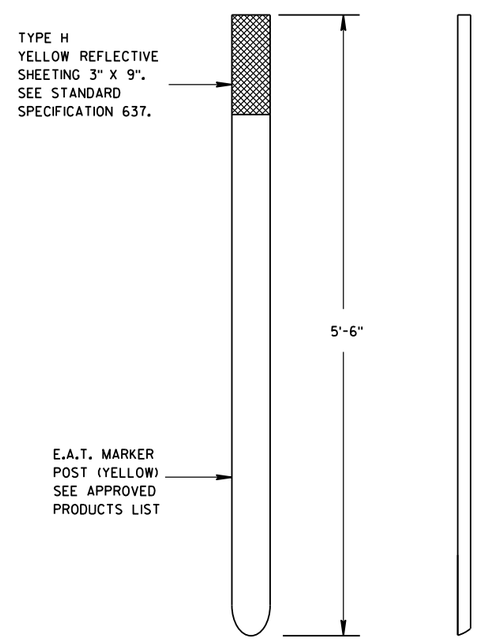


E.A.T. MARKER POST

6

6

S.D.D. 14 B 24-9c

S.D.D. 14 B 24-9c

STEEL PLATE BEAM GUARD
ENERGY ABSORBING TERMINAL

STATE OF WISCONSIN
DEPARTMENT OF TRANSPORTATION

APPROVED
June 2017
DATE
FHWA

/S/ Rodney Taylor
ROADWAY STANDARDS
UNIT SUPERV.

ENT

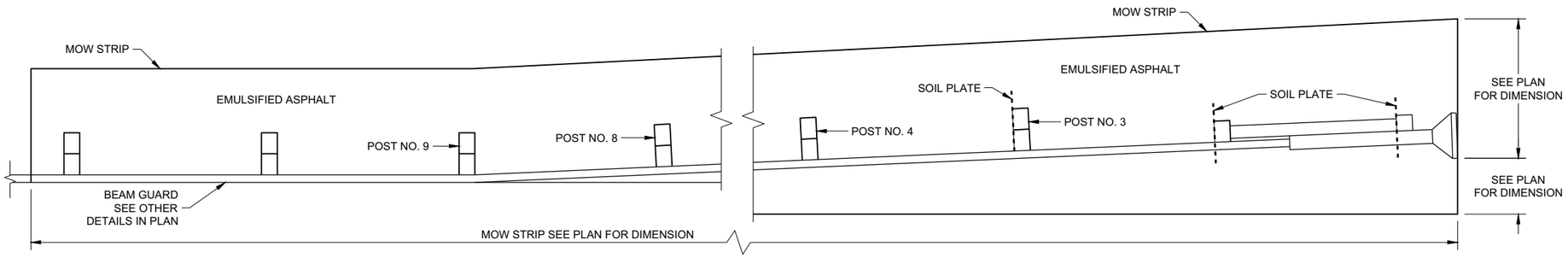


**PLAN VIEW**
**MOW STRIP LAYOUT FOR ENERGY ABSORBING TERMINAL**

## GENERAL NOTES

ONLY USE STEEL POSTS IN CONCRETE AND ASPHALT MOW STRIPS.

1. CONTROLLED LOW-STRENGTH BACKFILL OR EMULSIFIED ASPHALT.
2. DEPTH OF MOW STRIP:
   ASPHALT - 4"
   CONCRETE - 4"
   EMULSIFIED ASPHALT - 1" OR LESS
3. FOR EMULSIFIED ASPHALT, MOW STRIP STRIP LEAVE OUTS NOT REQUIRED. (TYPICAL FOR ALL POSTS)

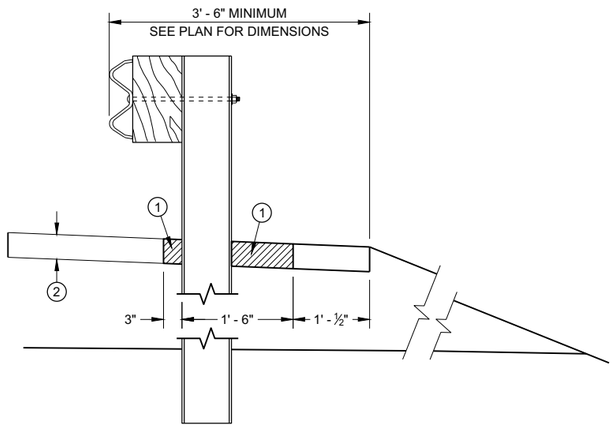


**SECTION A - A**

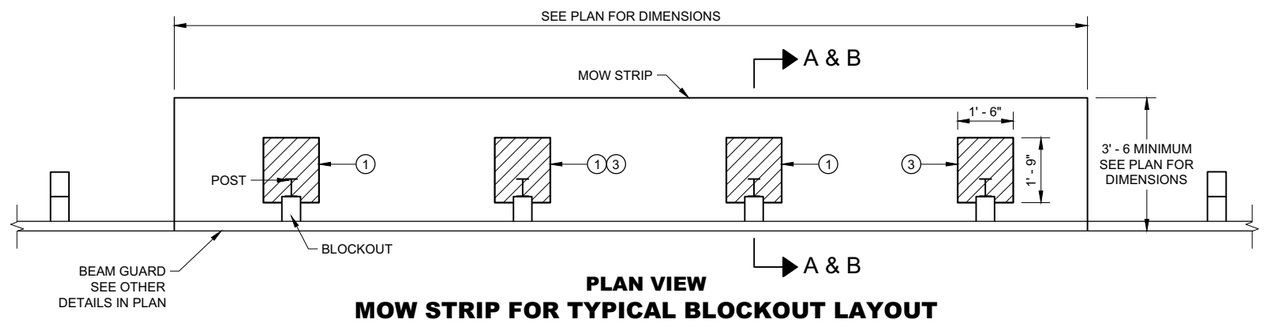


**PLAN VIEW**
**MOW STRIP FOR TYPICAL BLOCKOUT LAYOUT**

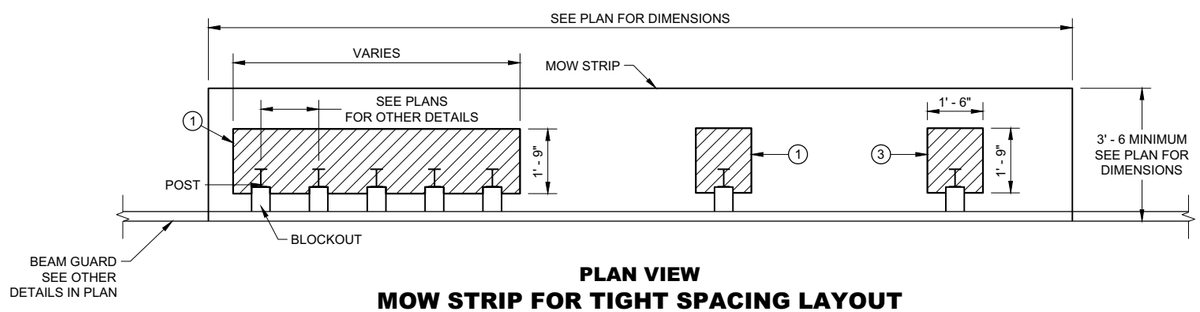


**PLAN VIEW**
**MOW STRIP FOR TIGHT SPACING LAYOUT**

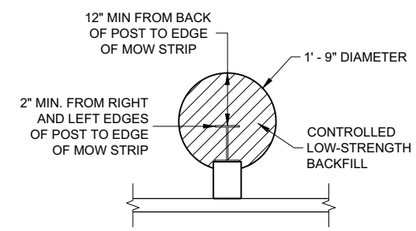


**ALTERNATIVE HMA**
**MOW STRIP DESIGN**

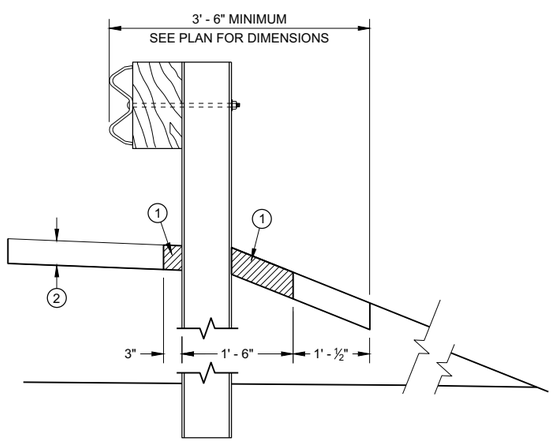


**SECTION B - B**

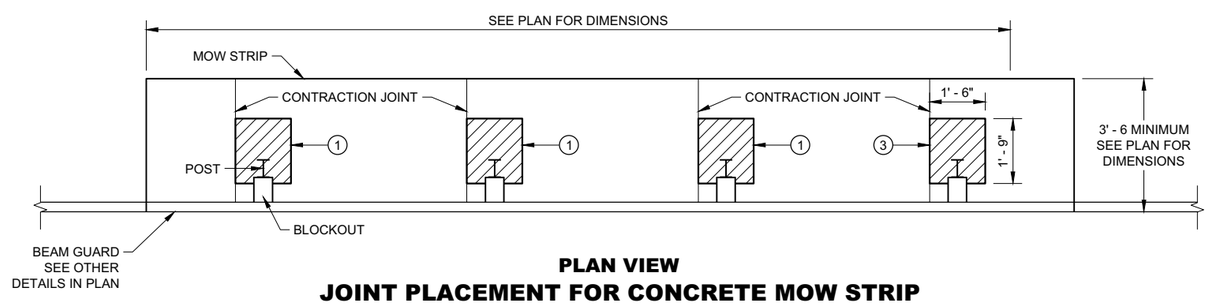


**PLAN VIEW**
**JOINT PLACEMENT FOR CONCRETE MOW STRIP**

**GUARDRAIL MOW STRIP**

STATE OF WISCONSIN
DEPARTMENT OF TRANSPORTATION

## LEGEND

CONCRETE, ASPHALT, OR EMULSIFIED ASPHALT MOW STRIP (SEE OTHER DETAILS)

EMULSIFIED ASPHALT MOW STRIP (SEE OTHER DETAILS)

## GENERAL NOTES

EXISTING THRIE BEAM BULLNOSES MAY HAVE WOOD POSTS. NEW THRIE BEAM BULLNOSE WILL HAVE STEEL POSTS.

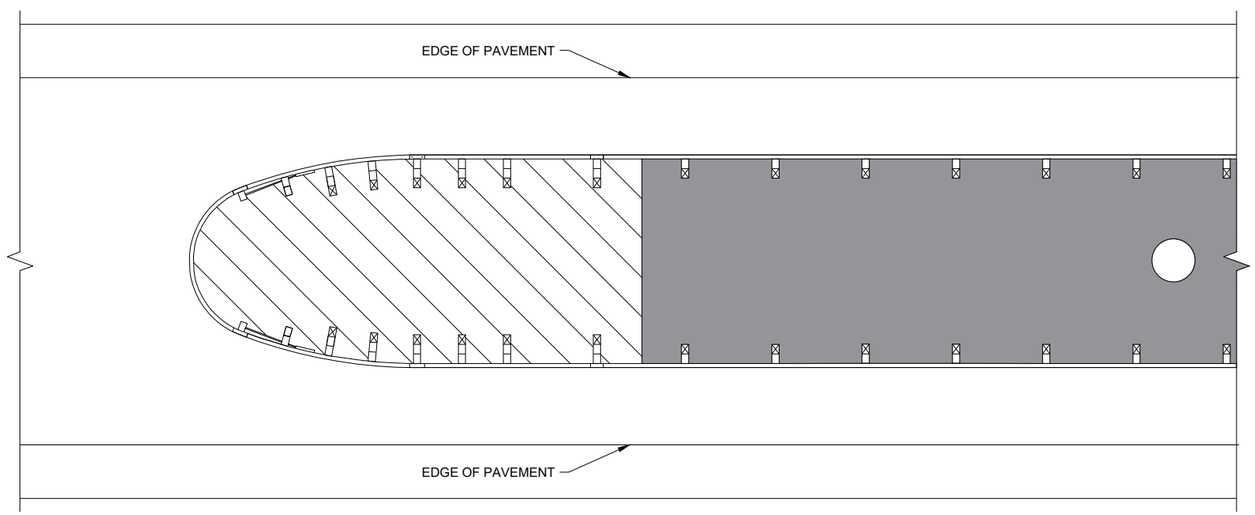


THRIE BEAM BULLNOSE

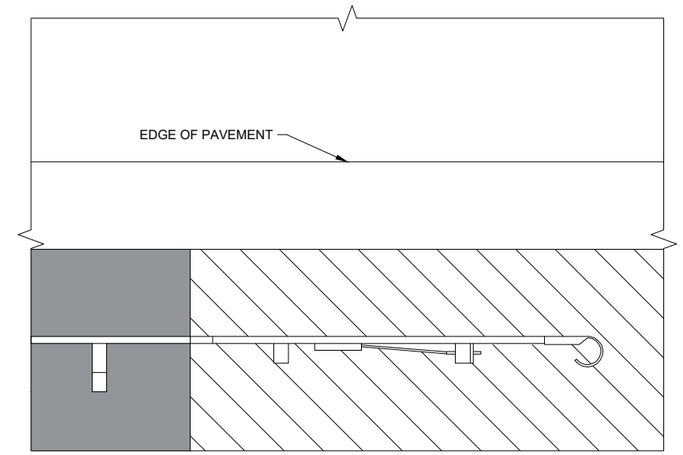


TYPE 2 TERMINAL

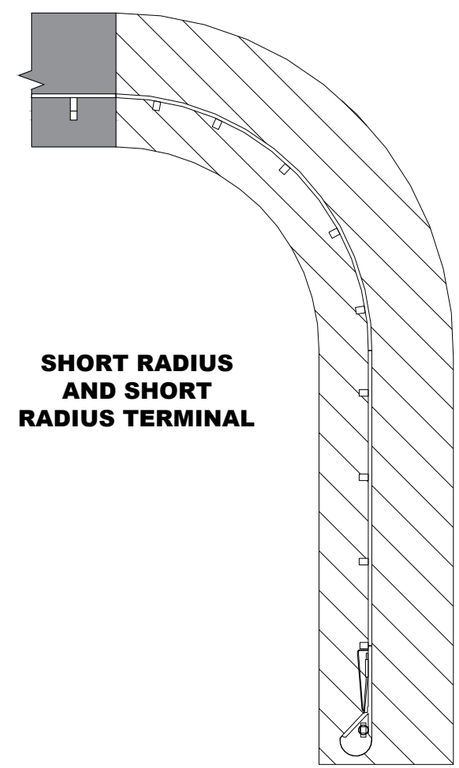

SHORT RADIUS AND SHORT RADIUS TERMINAL

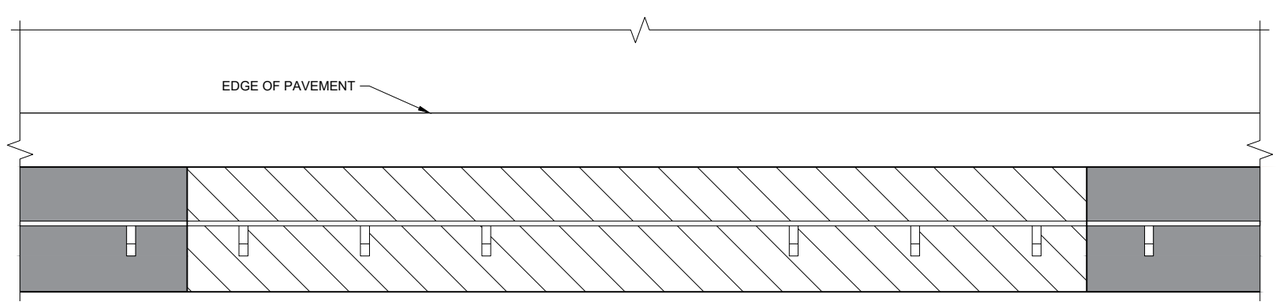


LONG - SPAN

6

6

SDD 14B28 - 04b

SDD 14B28 - 04b

**GUARDRAIL MOW STRIP**

STATE OF WISCONSIN
DEPARTMENT OF TRANSPORTATION

APPROVED
August 2020 — DATE
/S/ Rodney Taylor — ROADWAY STANDARDS DEVE ENGINEER
FHWA

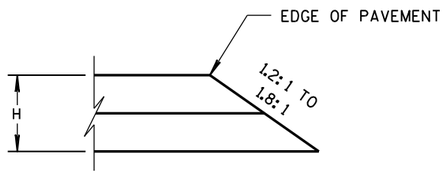


CONSTRUCTED WITH FINAL TWO LAYERS

FOR H 5" OR LESS

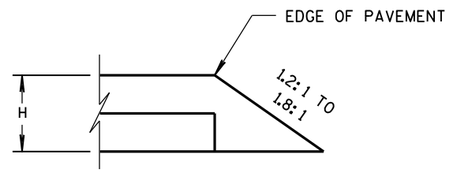


CONSTRUCTED WITH FINAL LAYER

FOR H 5" OR LESS

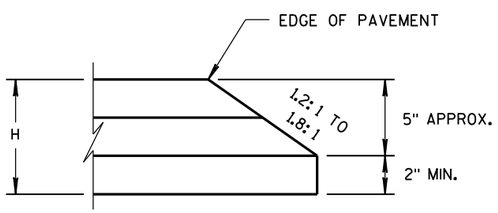


CONSTRUCTED WITH FINAL TWO LAYERS

FOR H GREATER THAN 5"

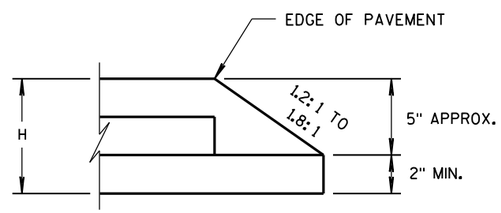


CONSTRUCTED WITH FINAL LAYER

FOR H GREATER THAN 5"

HMA PAVEMENT AND HMA OVERLAYS

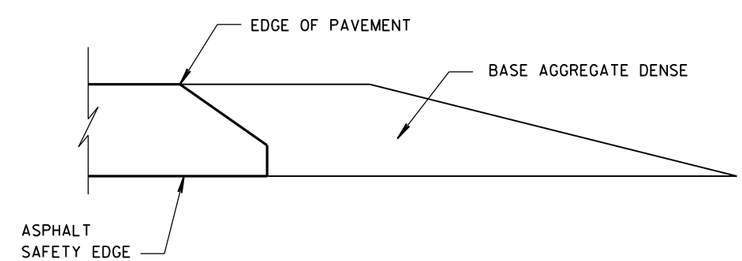


FINISHED SHOULDER AGGREGATE PLACEMENT

6

6

SAFETY EDGE SM

STATE OF WISCONSIN
DEPARTMENT OF TRANSPORTATION

APPROVED

11/30/2012
DATE

/S/ Jerry H. Zogg
ROADWAY STANDARDS DEVELOPMENT ENGINEER

FHWA



S.D.D. 14 B 29-1

S.D.D. 14 B 29-1

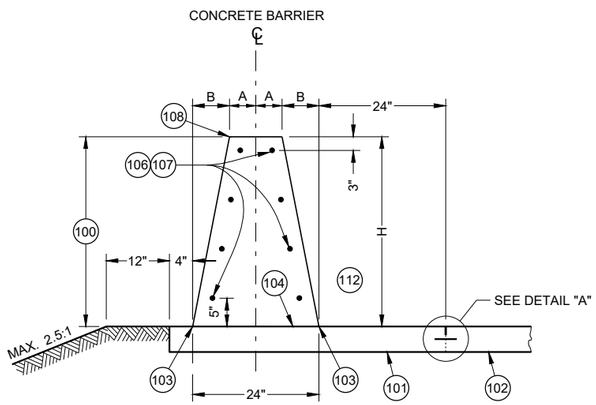


## 32 - INCH, 36 - INCH OR 42 - INCH SINGLE SLOPE CONCRETE BARRIER
**(TYPE S32, TYPE S36, TYPE S42)**

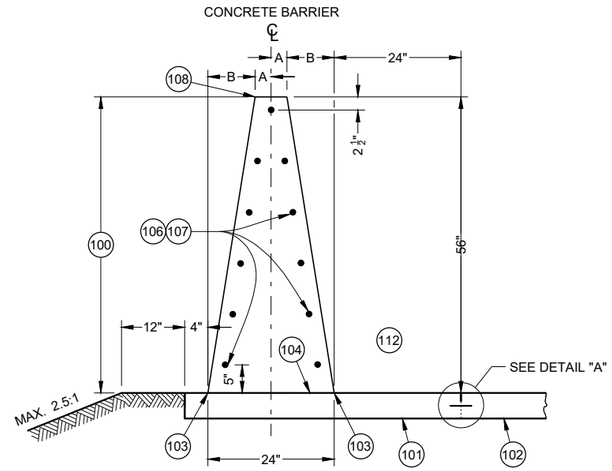


## 56 - INCH SINGLE SLOPE CONCRETE BARRIER
**(TYPE S56)**

### TABLE "A"

| BARRIER HEIGHT H INCHES | A INCHES | B INCHES | NUMBER OF NO. 5 BARS EACH |
|---|---|---|---|
| 32 | 7 | 5 | 8 |
| 36 | 6 ¼ | 5 ¾ | 8 |
| 42 | 5 ¼ | 6 ¾ | 10 |
| 56 | 3 | 9 | 11 |

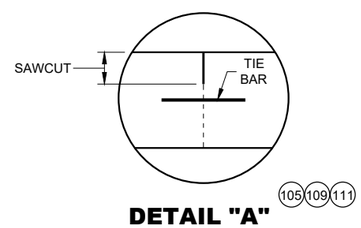


## DETAIL "A"

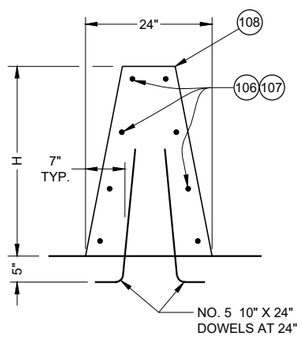


## SINGLE SLOPE CONCRETE BARRIER ON BRIDGE
**(NON OUTER PARAPET APPLICATION)**

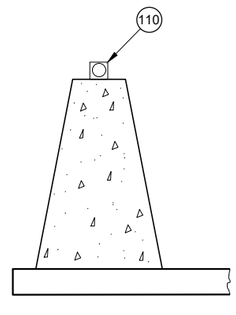


## DELINEATION

## GENERAL NOTES

WHERE THE CONCRETE BARRIER IS ADDED TO THE FACE OF EXISTING CONCRETE STRUCTURE, MATCH EXISTING WEEP HOLES.

LOCATE EXPANSION JOINTS IN CONCRETE BARRIER SHALL AT ALL DECK AND PRINCIPAL WALL JOINTS. FILL EXPANSION JOINT WITH EXPANSION JOINT MATERIAL. SEAL THE EXPANSION JOINT CONFORMING TO STANDARD SPECIFICATION 415.2.6.

PLACE BARRIER PERPENDICULAR TO SHOULDER GRADE, UNLESS INDICATED IN PLAN.

4000 PSI CONCRETE AIR ENTRAINMENT PER STANDARD SPECIFICATION 501.

2" CLEAR COVER TYPICAL

ANCHORS ARE REQUIRED AT CONCRETE BARRIER ENDS AND AT INTERRUPTIONS IN CONCRETE BARRIER. ANCHOR MAY BE AS SHOWN IN THIS SDD OR DETAIL SHOWN ON SDD 14B33. ANCHORS INCIDENTAL TO CBSS.

PROVIDE A 1" DEEP CONTRACTION JOINT IN BARRIER PAD AND BARRIER. JOINT IS TO MATCH ADJACENT CONCRETE JOINTS. NO DOWEL BARS ARE REQUIRED FOR BARRIER PAD. IF ADJACENT TO ASPHALT, CONTRACTION JOINT IS REQUIRED EVERY 15'.

ALL REBAR SHALL BE EPOXY COATED M31 TYPE S. SEE STANDARD SPECIFICATION 505.

CONCRETE BARRIER, UPPER CONCRETE BARRIER, LOWER CONCRETE BARRIER, CONCRETE BARRIER PAD, AND FOOTINGS ARE TERMS USED TO DESCRIBE PARTS OF SINGLE SLOPE CONCRETE BARRIER BID ITEMS. THESE PARTS ARE INCIDENTAL TO THE SINGLE SLOPE CONCRETE BARRIER BID ITEMS.

100 CONCRETE BARRIER

101 CONCRETE BARRIER PAD

102 PAVEMENT

103 WHERE VERTICAL ROADWAY OFFSET IS GREATER THAN 1 ½", USE TYPE A SINGLE SLOPE BARRIER.

104 OPTIONAL CONSTRUCTION JOINT.

105 CONSTRUCTION JOINTS MAY BE ELIMINATED WHEN CONCRETE SHOULDER IS LESS THAT 10'.

106 STAGGER LAPPING OF LONGITUDINAL STEEL. MINIMUM OVERLAP OF STEEL IS 2' BARS AT LAPS TO BE FIRMLY TIED OR CONNECTED.

107 NO. 5 CONTINUOUS BARS EVENLY SPACED (SEE TABLE "A").

108 USE ¾" BEVEL OR 1" RADIUS ON ALL EXPOSED SHARP EDGES UNLESS OTHERWISE NOTED.

109 CONCRETE BARRIER PAD UNDER CBSS MAY BE PLACED SEPARATELY OR PLACED WITH CONCRETE SHOULDER AND SAWED ⅓ DEPTH. CONCRETE BARRIER PAD AND SAWING OF CONCRETE SHOULDER IS INCIDENTAL TO CONCRETE BARRIER BID ITEM. CONCRETE BARRIER PAD MINIMUM DEPTH IS 6", OR EQUAL TO THE DEPTH OF THE CONCRETE SHOULDER.

110 SEE SDD 15A04 FOR DELINEATOR DETAILS AND SPACING.

111 SEE SDD 13C01 FOR DETAILS TYPING CONCRETE BARRIER TO ADJACENT CONCRETE

112 TRAFFIC SIDE

**CONCRETE BARRIER SINGLE SLOPE (CBSS)**

STATE OF WISCONSIN
DEPARTMENT OF TRANSPORTAT




6


SDD 14B32 - 10a

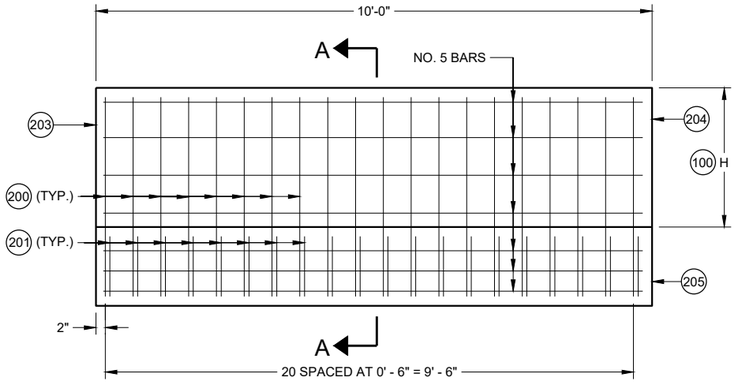


**END ANCHOR SINGLE SLOPE CONCRETE BARRIER**

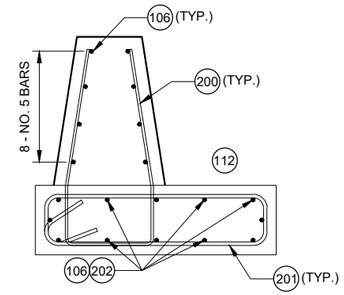


**32" AND 36" CBSS**

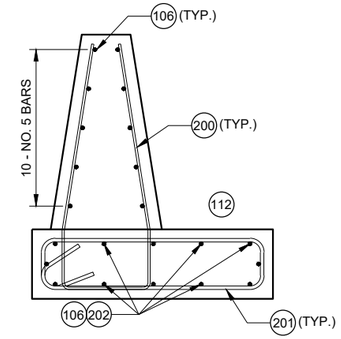


**42" CBSS**

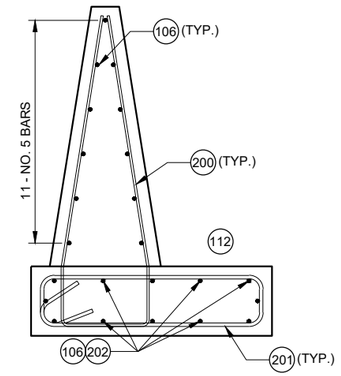


**56" CBSS**

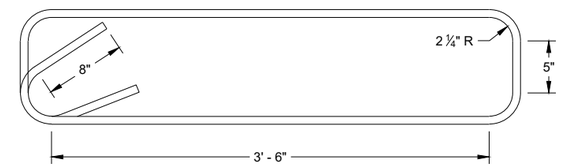


**STIRRUP BAR BENDING DETAIL**

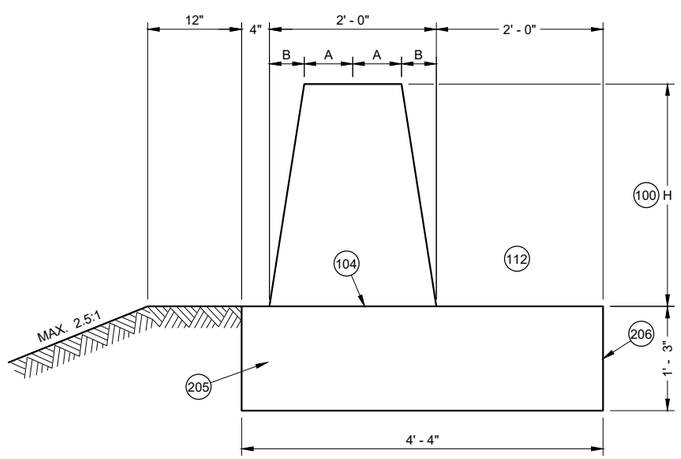


**SECTION A - A**

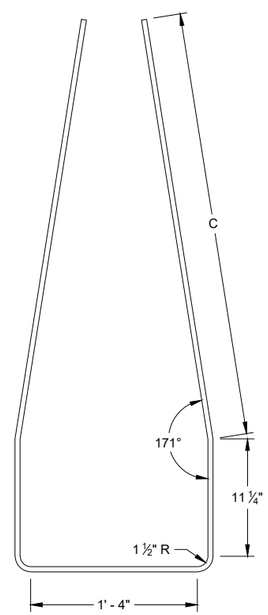


**V1 BAR BENDING DETAIL**

## TABLE "B"

| BARRIER HEIGHT H INCHES | C INCHES |
|---|---|
| 32 | 2' - 6" |
| 36 | 2' - 11" |
| 42 | 3' - 4" |
| 56 | 4' - 6 ½" |

## GENERAL NOTES

200 V1 BARS ARE NO. 5 BARS. (SEE BAR BENDING DETAIL)

201 STIRRUPS ARE NO. 6 BARS. (SEE BAR BENDING DETAIL)

202 TWELVE (12) NO. 5 BARS EVENLY SPACED

203 END OF INSTALLATION OR EXPANSION JOINT.

204 SEE COLD JOINT DETAIL TO CONNECT END ANCHOR SINGLE SLOPE CONCRETE BARRIER TO SINGLE SLOPE CONCRETE BARRIER.

205 FOOTING

206 DO NOT TIE TO FOOTING TO ADJACENT PAVEMENT.

**CONCRETE BARRIER SINGLE SLOPE (CBSS)**

STATE OF WISCONSIN
DEPARTMENT OF TRANSPORTAT





6



SDD 14B32 - 10b

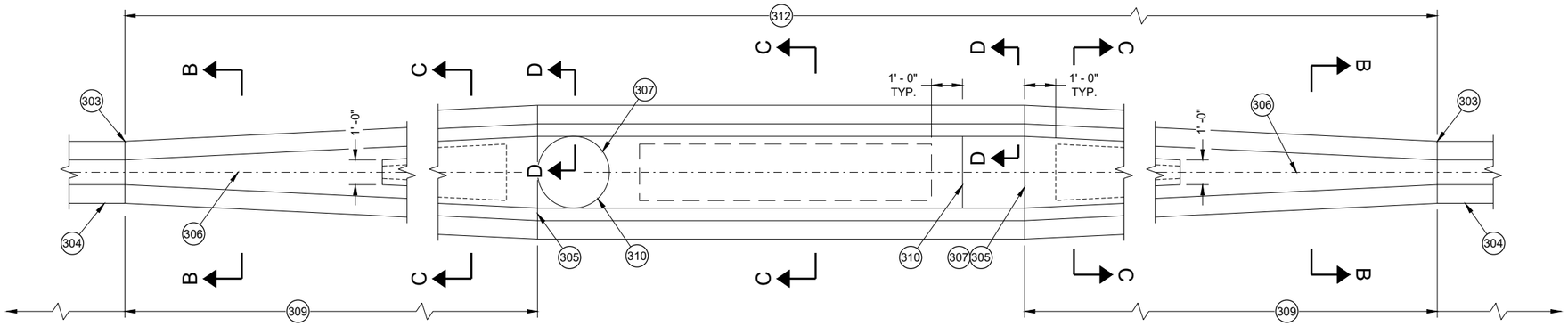


## LARGE FIXED OBJECTS PROTECTION
### (TYPE S32, TYPE S36, TYPE S42, TYPE S56)

### TABLE "C"

| BARRIER HEIGHT H INCHES | BAR SIZE | NUMBER OF BARS EACH |
|---|---|---|
| 32 | 4 | 6 |
| 36 | 4 | 6 |
| 42 | 5 | 6 |
| 56 | 5 | 6 |

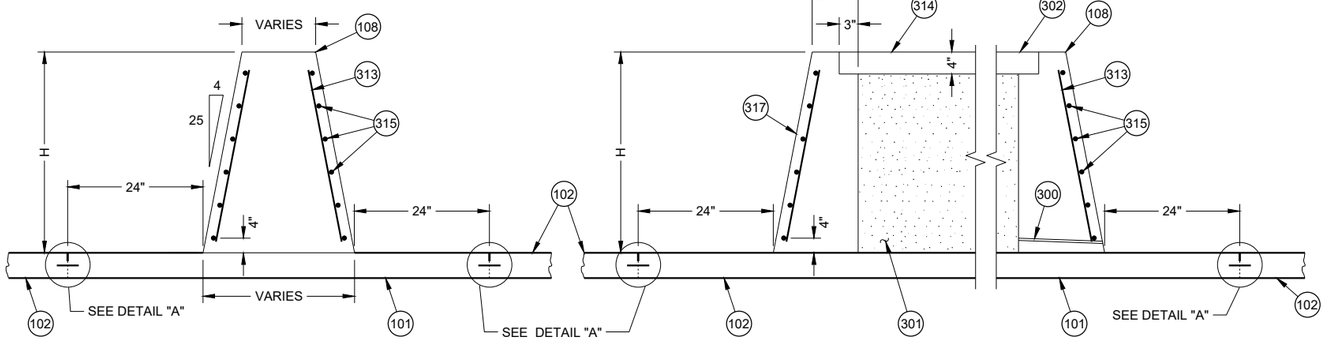


SECTION B - B

SECTION C - C

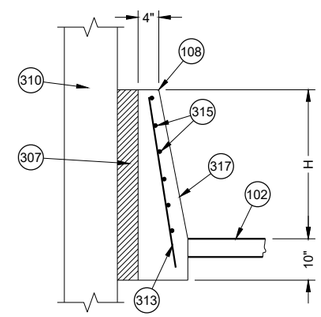


SECTION D - D

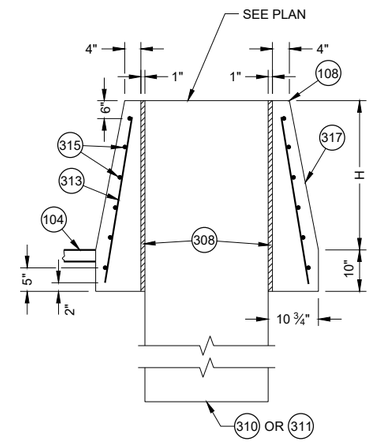


SECTION E - E

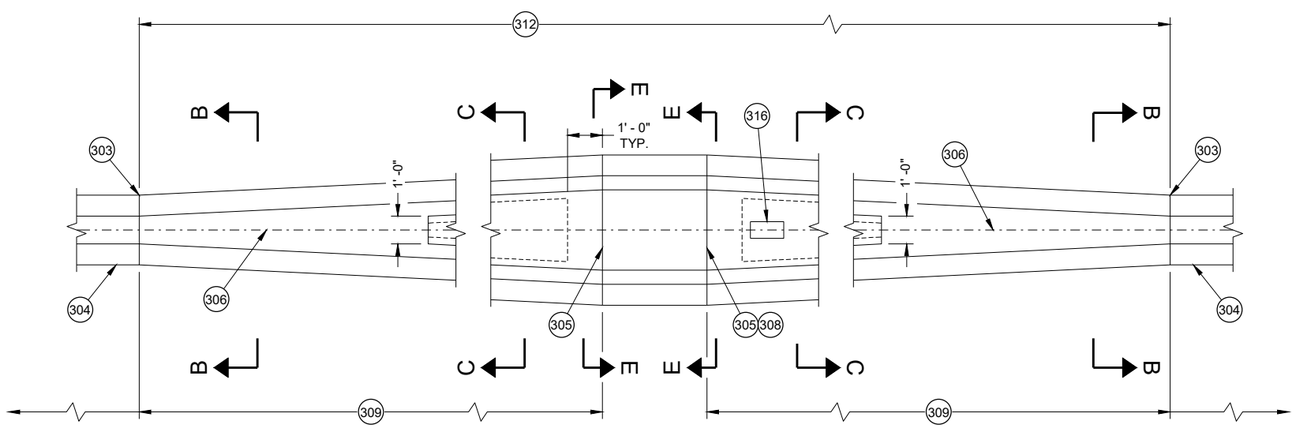


## SMALL FIXED OBJECTS PROTECTION
### (TYPE S32, TYPE S36, TYPE S42, TYPE S56)

### GENERAL NOTES

300 INSTALL 1 INCH DIAMETER DRAIN PIPE EVERY 20 FEET OF CROSS SECTION B -B. MINIMUM ONE DRAIN CAVITY.

301 BETWEEN CONCRETE BARRIER WALLS FILL WITH FOUNDATION BACKFILL.

302 LEVEL THE TOP OF CONCRETE BARRIER CAP ACROSS TOP OF BARRIER. ADJUST HEIGHT OF CONCRETE BARRIER WALL ON LOW SIDE OF OFFSET OR SUPERELEVATED ROADWAYS TO PROVIDE LEVEL GRADE ACROSS TOP OF CONCRETE CAP.

303 USE COLD JOINTS BETWEEN FIXED OBJECT PROTECTION AND CONCRETE BARRIER ANCHOR.

304 INSTALL END ANCHOR SINGLE SLOPE CONCRETE BARRIER.

305 SEE COLD JOINT DETAIL

306 CENTERLINE OF CONCRETE BARRIER.

307 INSTALL 4" EXPANDED POLYSTYRENE BETWEEN COLUMN AND CONCRETE BARRIER.

308 INSTALL 1" EXPANDED POLYSTYRENE BETWEEN PEDESTAL AND CONCRETE BARRIER.

309 20:1 MIN. TRANSITION.

310 COLUMN

311 PEDESTAL

312 LIMITS OF PAYMENT FOR LARGE FIXED OBJECT PROTECTION (SEE PLAN)

313 NO. 4 BARS SPACED 12" CENTER TO CENTER (TYP.)

314 USE NO. 3 BAR SPACED 12 INCHES CENTER TO CENTER (PLACED IN EACH DIRECTION) OR EQUIVALENT WIRE MESH.

315 SEE TABLE "C" FOR BAR INFORMATION

316 ELECTRICAL PULL BOX FOR SIGN FLUSH WITH TOP OF CONCRETE BARRIER.

317 VARIABLE SLOPE

**CONCRETE BARRIER SINGLE SLOPE (CBSS)**

STATE OF WISCONSIN
DEPARTMENT OF TRANSPORTAT





6



SDD 14B32 - 10c

## GENERAL NOTES

400 END ANCHOR SINGLE SLOPE CONCRETE BARRIER.

401 PARAPET, SIGN BRIDGE BASE, LIGHT POLE BASE OR OTHER OBJECT SINGLE SLOPE CONCRETE BARRIER CANNOT TIE INTO.

402 JOINT SEAL CONFORMING TO STANDARD SPECIFICATION 415.2.6

403 EXPANSION JOINT MATERIAL.

404 INLET (SEE PLAN)

405 INLET COVER BW (SEE PLAN)

406 WARP PAN TO MATCH INLET COVER.

407 EXTEND BARRIER SLOPE TO INLET. SEE PLAN FOR THE LENGTH OF EXTENSION.

408 CONTRACTION JOINT.

409 3' (TYP.)

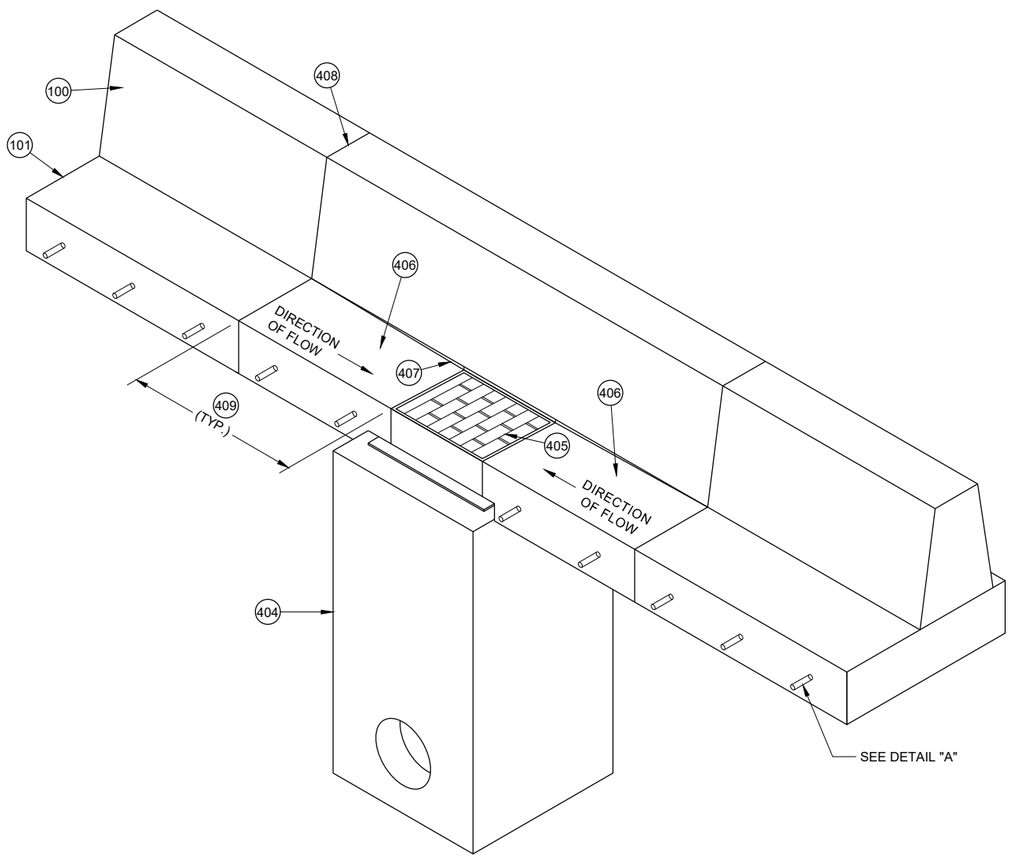


**DRAINAGE DETAIL**

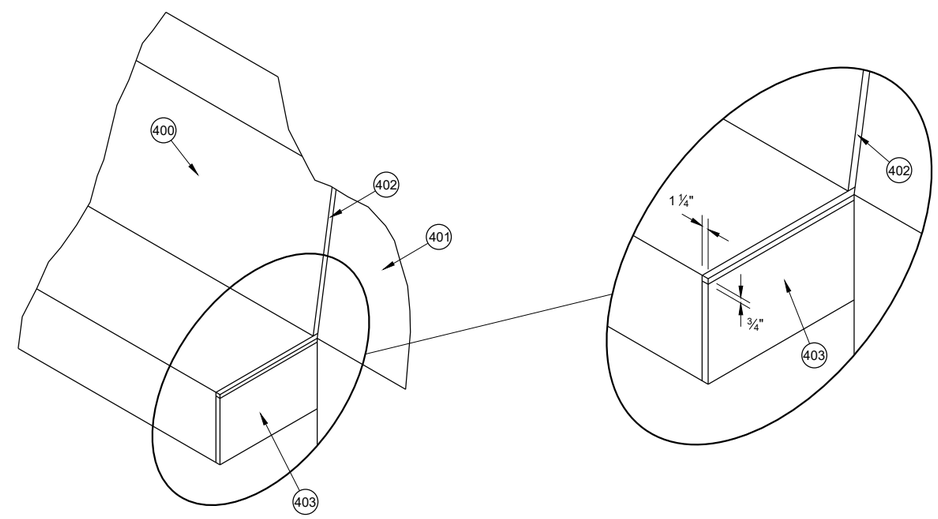


**EXPANSION JOINT DETAIL**

6

6

SDD 14B32 - 10d

SDD 14B32 - 10d

**CONCRETE BARRIER SINGLE SLOPE (CBSS)**

STATE OF WISCONSIN
DEPARTMENT OF TRANSPORTAT

## GENERAL NOTES

USE COLD JOINT TO CONNECT MULTIPLE HEIGHT TRANSITIONS.

500 SEE TABLE "A" FOR DIMENSIONS

501 SEE TABLE "D"

502 MULTIPLE HEIGHT TRANSITION MAY BE USED IN SEQUENCE TO GET APPROPRIATE HEIGHT.

503 COLD JOINT

504 BARRIER REBAR (SEE OTHER DETAILS FOR BAR SIZE, QUANTITY AND LOCATION).

505 SINGLE SLOPE BARRIER SHOWN. SIMILAR DETAIL CAN BE USED FOR COLD JOINT IN END ANCHORS AND TRANSITIONS.

506 NO. 5 REBAR FOR SPLICE. 3' OF SPLICE REBAR IS LAPPED AND TIED TO BARRIER REBAR. EXTEND 3' OF SPLICE REBAR BEYOND END OF POUR. ALL BARS ARE FIRMLY TIED OR CONNECTED. EVERY REBAR IN THE BARRIER SECTION REQUIRES A SPLICE BAR.

507 END OF POUR.

508 LAP AND TIE 3' OF NEXT POUR'S REBAR TO SPLICE REBAR.

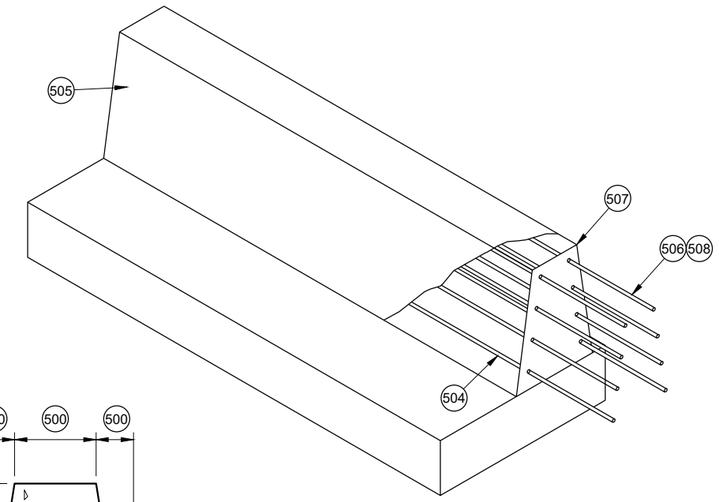


**COLD JOINT DETAIL**

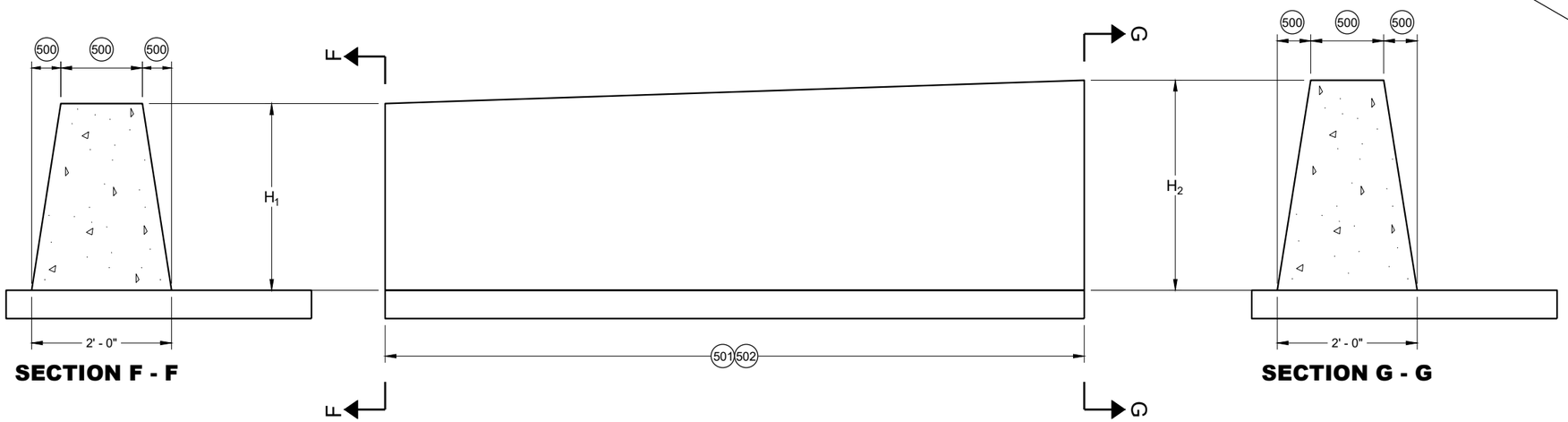


**SECTION F - F**

**SECTION G - G**

**DOUBLE COLD JOINT HEIGHT TRANSITION**

**TABLE "D"**

| $H_1$ | $H_2$ | L | NUMBER OF NO. 5 BARS |
|---|---|---|---|
| 32" | 36" | 10' - 0" | 8 |
| 36" | 42" | 10' - 6" | 10 |
| 42" | 56" | 24' - 6" | 11 |

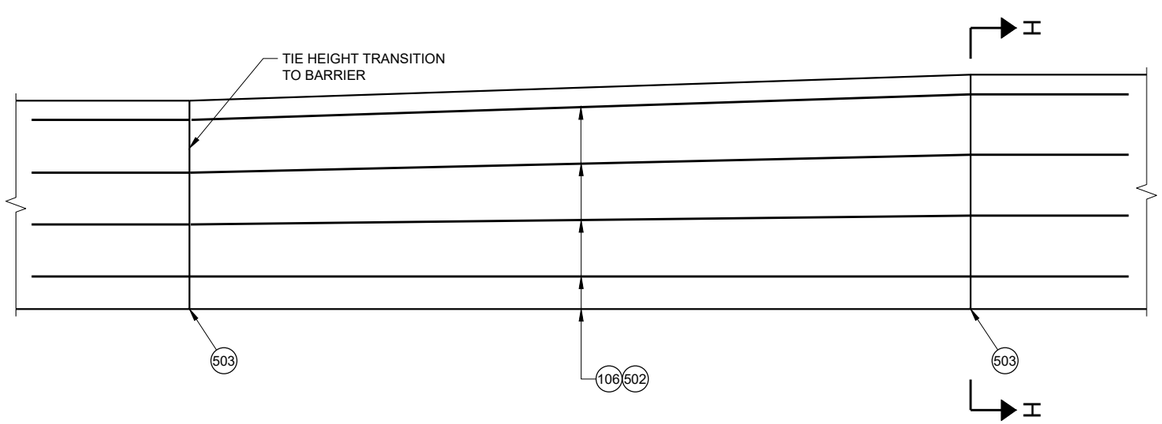


**STEEL REINFORCEMENT DETAIL**

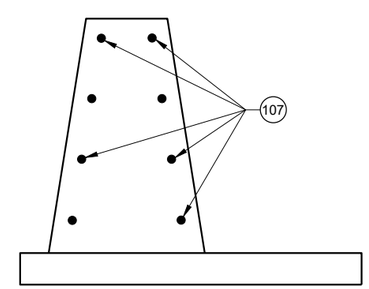


**SECTION H - H**

**CONCRETE BARRIER SINGLE SLOPE (CBSS)**

STATE OF WISCONSIN
DEPARTMENT OF TRANSPORTATION





6



SDD 14B32 - 10e

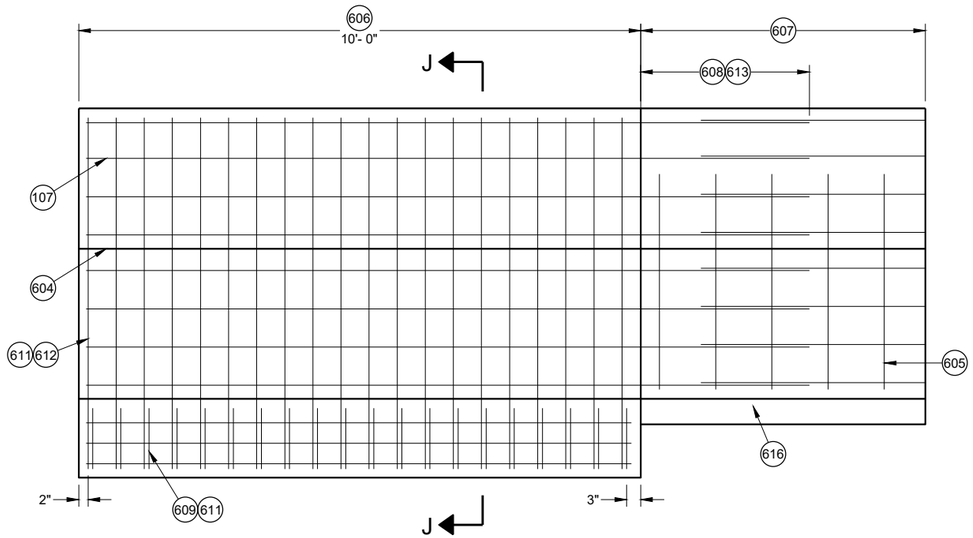


**END ANCHOR MEDIAN BARRIER AND RETAINING WALL**

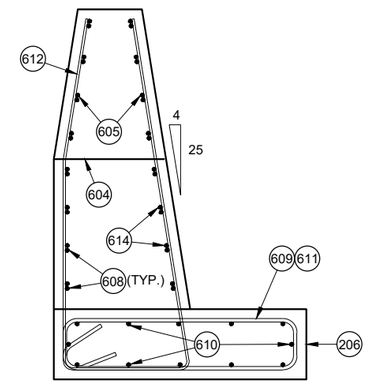


**SECTION J - J**
**END ANCHOR AND MEDIAN WALL END ANCHOR REINFORCEMENT DETAIL**

## GENERAL NOTES

600 UPPER CONCRETE BARRIER

601 LOWER CONCRETE BARRIER

602 MAX HEIGHT 36".

603 VERTICAL OFFSET FROM TOP ROADWAY SURFACES

604 OPTIONAL CONSTRUCTION JOINT WHEN HEIGHT IS GREATER THAN 1 ½".

605 NO. 4 BARRIER LOOP BARS ARE NOT REQUIRED FOR ROADWAY OFFSETS ARE LESS THAN 1'- 0", EXCEPT WHEN USED IN ANCHORS. BARRIER LOOP BARS ARE SPACED 12" CENTER TO CENTER OUTSIDE OF MEDIAN BARRIER AND RETAINING WALL END ANCHOR.

606 SINGLE SLOPE CONCRETE BARRIER AND RETAINING WALL ANCHOR

607 SINGLE SLOPE CONCRETE BARRIER AND RETAINING WALL (SEE OTHER DETAILS)

608 NO. 5 REBAR 3' OF LAP OF LONGITUDINAL STEEL.

609 NO. 6 REBAR END ANCHOR FOOTING LOOP

610 TWELVE (12) NO. 5 BARS EVENLY SPACED.

611 SS ANCHOR END LOOP AND END ANCHOR FOOTING LOOP ARE SPACED 6" CENTER TO CENTER.

612 END ANCHOR LOOP BAR IS NO. 5 REBAR.

613 SEE COLD JOINT DETAIL.

614 SEE TABLE "E" FOR REQUIRED REBAR

615 TOTAL BARRIER HEIGHT (SEE PLAN FOR HEIGHT)

616 FOR SOME LOCATIONS, NO PAN IS NEEDED. SEE OTHER DETAILS.

617 SEE TABLE "A" FOR DIMENSIONS

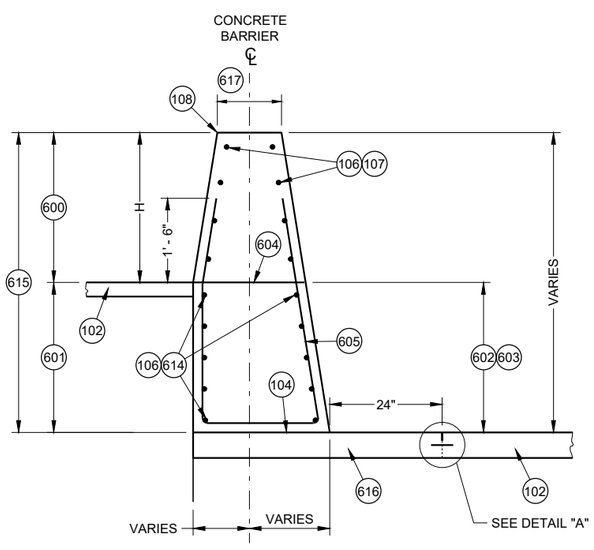


**SINGLE SLOPE CONCRETE BARRIER AND RETAINING WALL**
**(TYPE S32A, TYPE S36A, TYPE S42A, TYPE S56A)**
(BETWEEN ADJACENT ROADWAYS)

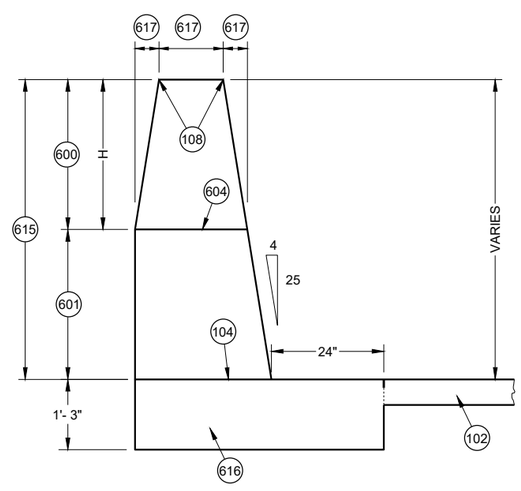


**SECTION J - J**
**MEDIAN BARRIER AND RETAINING WALL END ANCHOR DIMENSIONS**

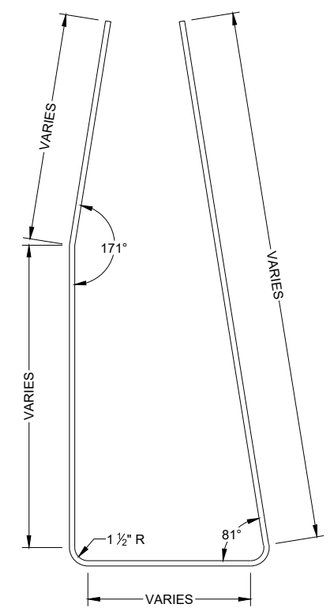


**LOOP BAR BENDING DETAIL**

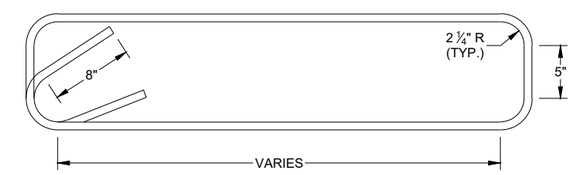


**END ANCHOR STIRRUP BAR BENDING DETAIL**

## TABLE "E"

| HEIGHT BETWEEN ROADWAY | QUANTITY OF NO. 6 BARS |
|---|---|
| 0 TO 3" | 0 |
| GREATER THAN 3" TO 8" | 2 |
| GREATER THAN 8" TO 12" | 4 |
| GREATER THAN 12" TO 36" | 8 |

**CONCRETE BARRIER SINGLE SLOPE (CBSS)**

STATE OF WISCONSIN
DEPARTMENT OF TRANSPORTATION

6

SDD 14B32 - 10f

6

SDD 14B32 - 10f

## GENERAL NOTES

700 END ANCHOR SINGLE SLOPE CONCRETE BARRIER

701 SEE EXPANSION JOINT DETAIL

702 END ANCHOR SINGLE SLOPE CONCRETE BARRIER AND RETAINING WALL

703 PAY LIMIT FOR SINGLE SLOPE CONCRETE BARRIER AND RETAINING WALL

704 SEE COLD JOINT DETAIL

705 LOW SIDE SHOULDER

706 HIGH SIDE SHOULDER

707 SINGLE SLOPE CONCRETE BARRIER AND RETAINING WALL INSTALLED WITHOUT A PAN.

708 SINGLE SLOPE CONCRETE BARRIER AND RETAINING WALL INSTALLED WITH A PAN.

709 EXCAVATION AND COMPACTION

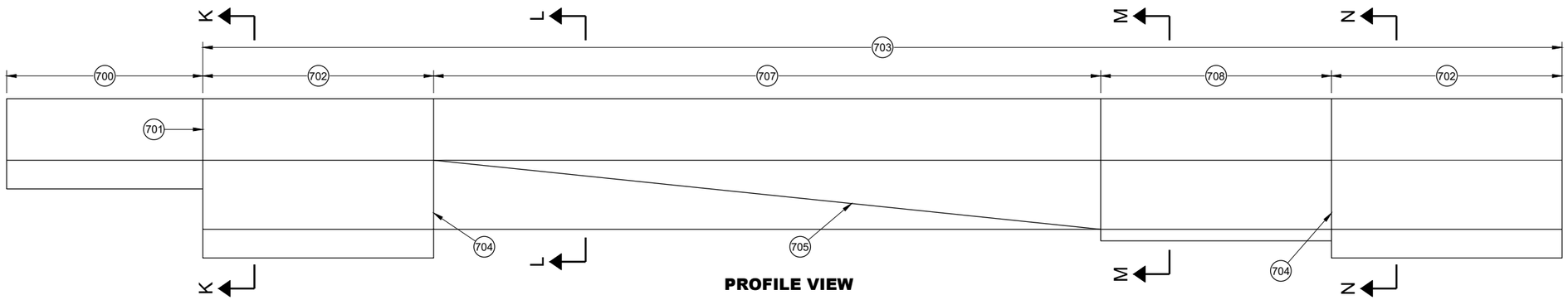


**PROFILE VIEW**

**SINGLE SLOPE CONCRETE BARRIER AND RETAINING WALL**

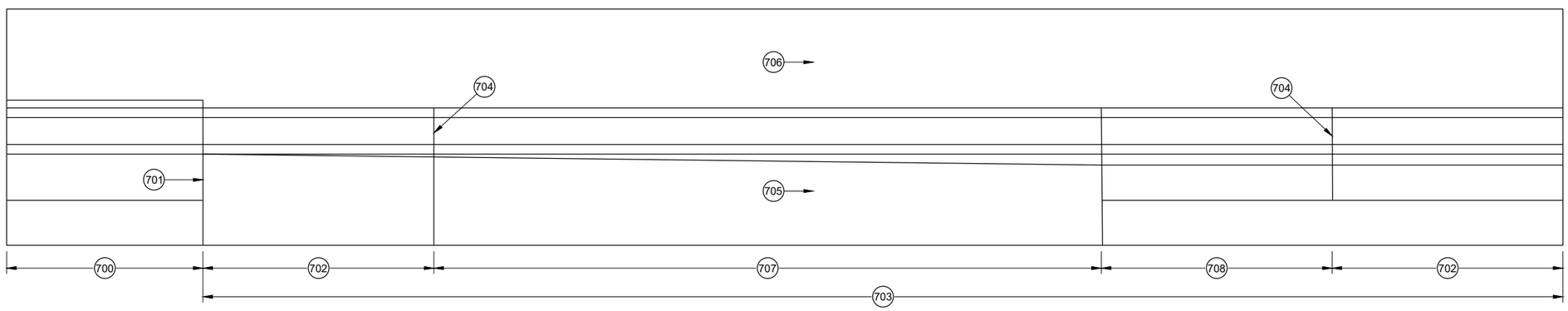


**PLAN VIEW**

**SINGLE SLOPE CONCRETE BARRIER AND RETAINING WALL**

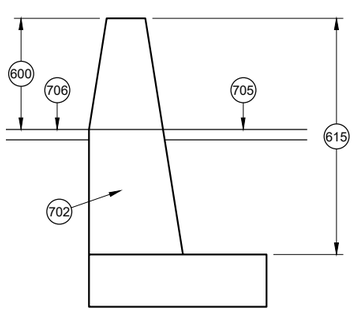


**SECTION K - K**

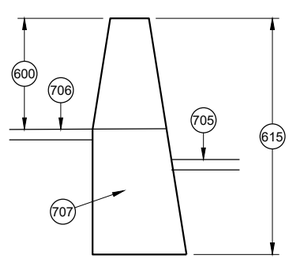


**SECTION L - L**

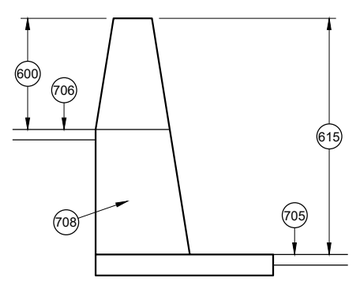


**SECTION M - M**

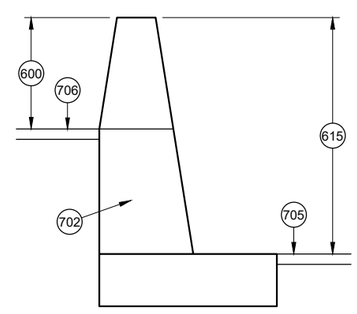


**SECTION N - N**

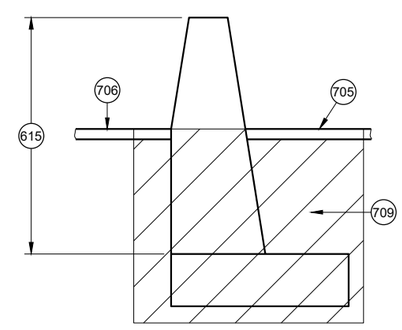


**CONCRETE BARRIER SINGLE SLOPE (CBSS)**

STATE OF WISCONSIN
DEPARTMENT OF TRANSPORTAT





6



SDD 14B32 - 10g

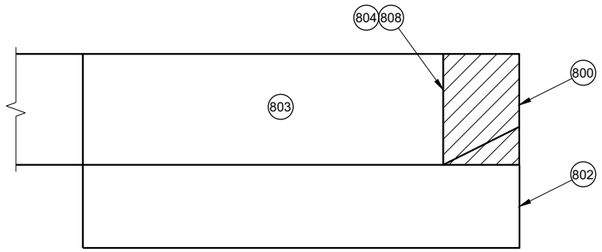


**REMOVAL AREA OF**
**32" CONCRETE THRIE BEAM ANCHORAGE**

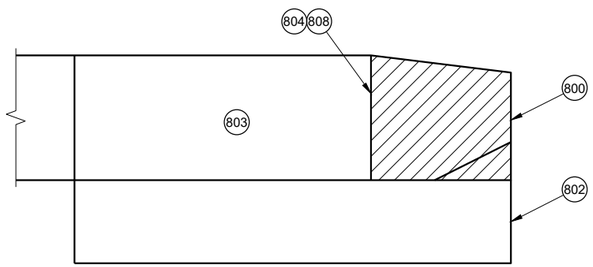


**REMOVAL AREA OF CONCRETE THRIE BEAM**
**ANCHORAGE WITH HEIGHT GREATER THAN 32"**

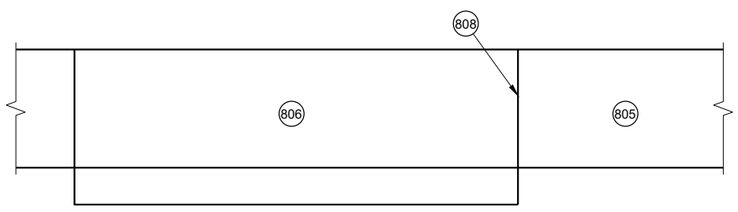


**CONCRETE BARRIER EXTENSION NEAR END ANCHORAGE**

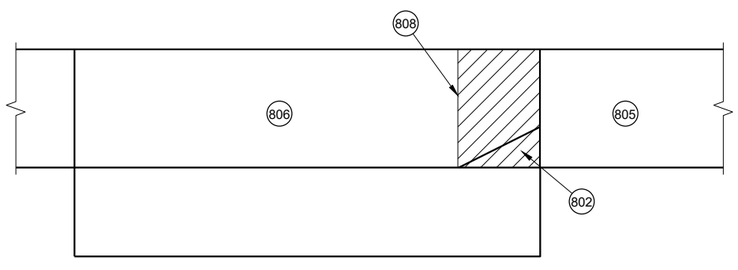


**CONCRETE BARRIER EXTENSION NEAR THRIE BEAM TERMINAL**

## GENERAL NOTES

END ANCHORAGE MAY OR MAY NOT BE PRESENT ON EXISTING BARRIER.

REMOVE THRIE BEAM ANCHORAGE AS SHOWN.

800 AREA OF BARRIER REMOVAL AN NEW CONCRETE AND STEEL IS INSTALLED.

801 MINIMUM LENGTH OF REMOVAL IS 15'

802 FOOTING BELOW GROUND MAY REMAIN IN PLACE.

803 CONCRETE BARRIER SINGLE SLOPE THRIE BEAM ANCHOR TO REMAIN.

804 SAW CUT

805 NEW SINGLE SLOPE CONCRETE BARRIER.

806 CONCRETE BARRIE SINGLE SLOPE TO REMAIN.

807 SINGLE SLOPE CONCRETE BARRIER OR CONCRETE BARRIER SINGLE SLOPE THRIE BEAM ANCHOR TO REMAIN.

808 SEE CONNECTION DETAIL.

809 NO. 5 CONTINUOUS BAR.

810 3' MIN. DRILL HOLES. USES NO. 5 ADHESIVE ANCHORS.

811 THE NUMBER OF DRILL HOLES IS EQUAL TO THE NUMBER OF HORIZONTAL REBAR IN BARRIER. DRILL HOLES ARE TO BE A MINIMUM OF 4" FROM EDGE OF CONCRETE.

812 EXISTING REBAR IN EXISTING BARRIER OR END ANCHOR.

813 3' BAR OVERLAP

814 EXISTING REINFORCEMENT

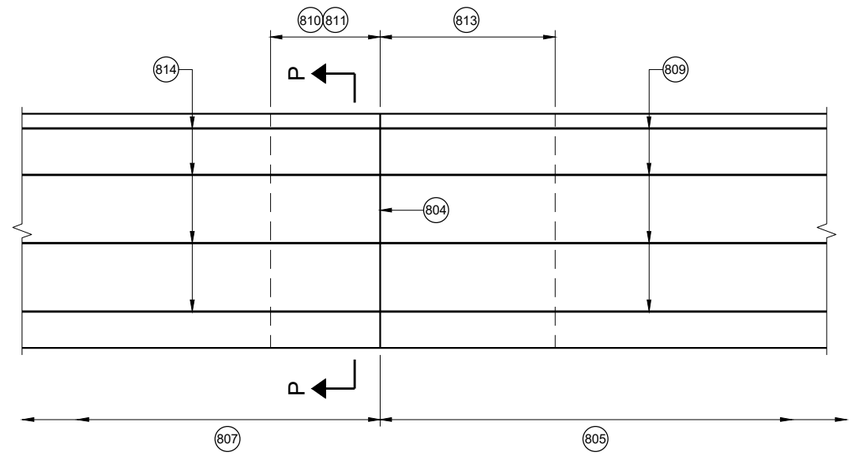


**CONNECTION DETAIL**

**SINGLE SLOPE CONCRETE BARRIER TO**
**NEW SINGLE SLOPE CONCRETE BARRIER**

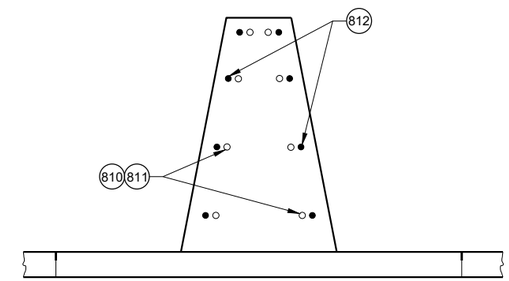


**SECTION P - P**

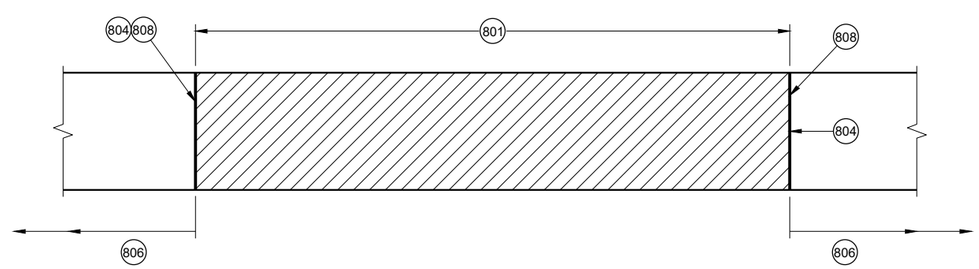


**BARRIER REMOVAL AND REPLACEMENT**

**RETROFIT OR REPAIR SINGLE SLOPE CONCRETE BARRIER**

**CONCRETE BARRIER**
**SINGLE SLOPE (CBSS)**

STATE OF WISCONSIN
DEPARTMENT OF TRANSPORTATION

APPROVED
May 2022 — DATE
/S/ Rodney Taylor — ROADWAY STANDARDS DEVE UNIT SUPERVISOR
FHWA

6

6

SDD 14B32 - 10h

SDD 14B32 - 10h

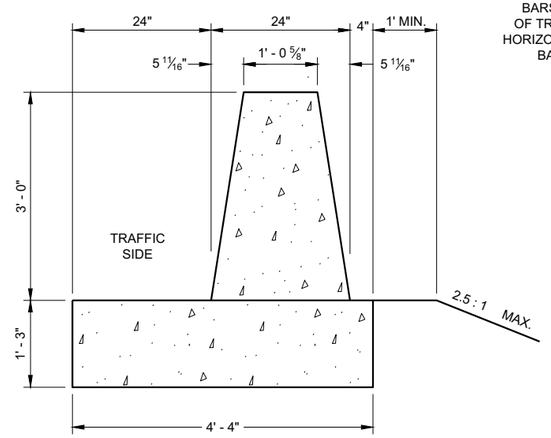


**SECTION A - A**

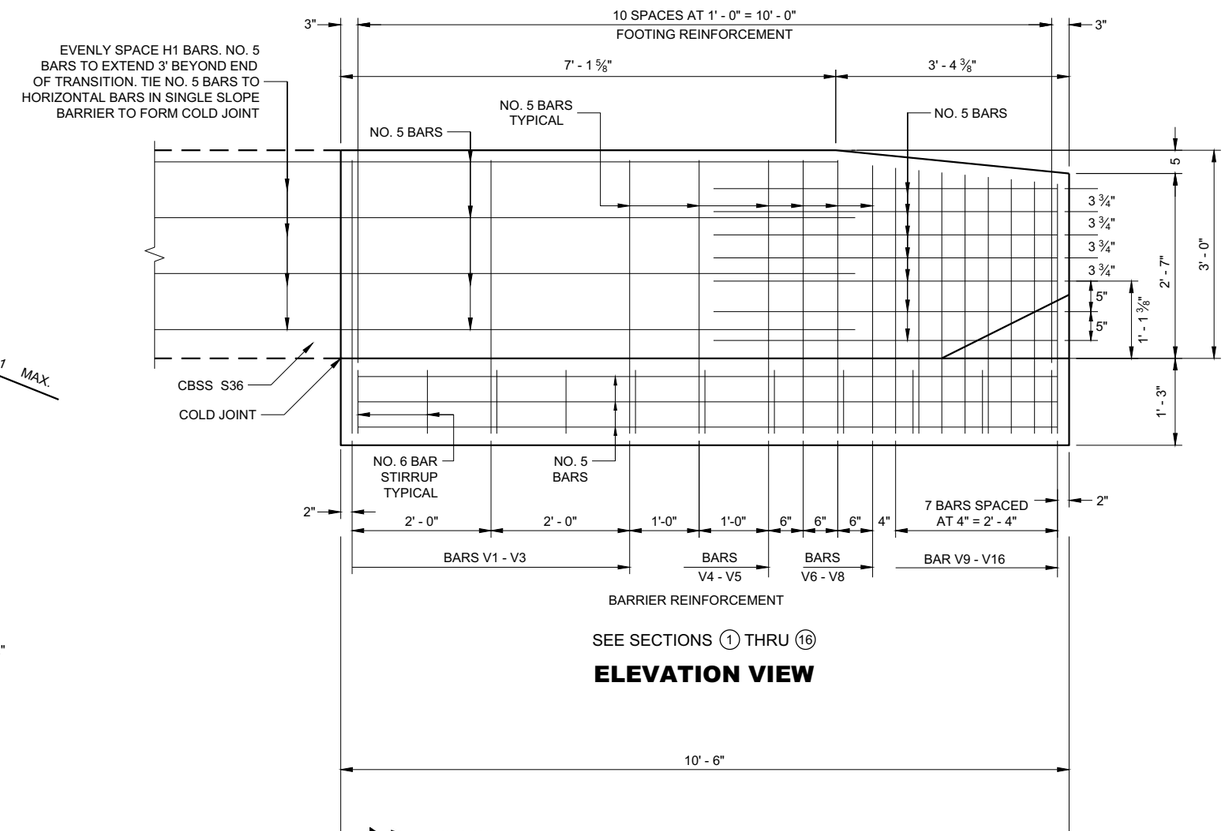


**ELEVATION VIEW**

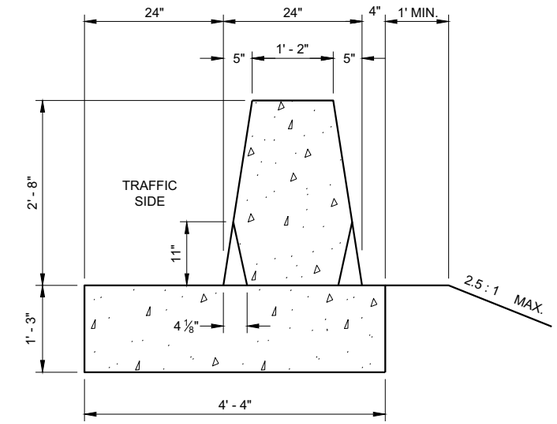


**SECTION B - B**

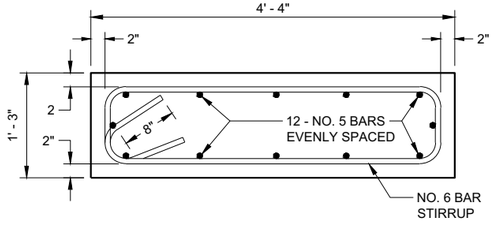


**TYPICAL FOOTING**

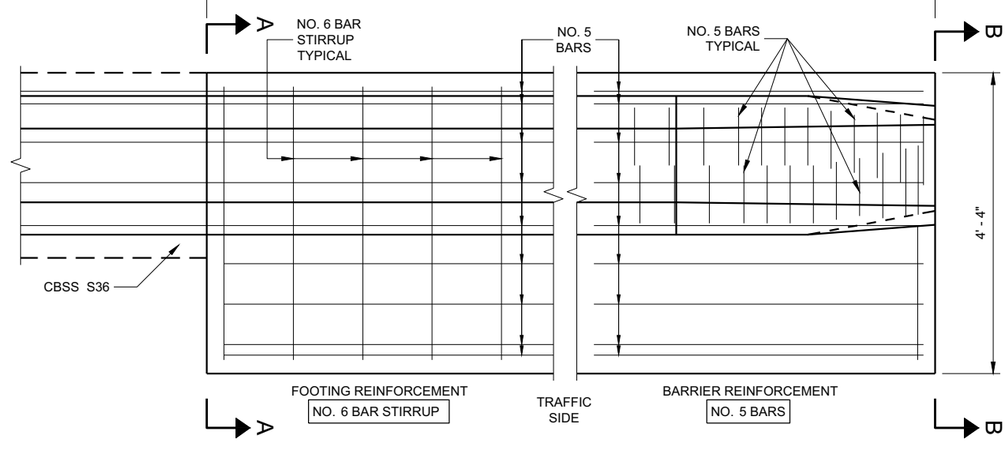


**PLAN VIEW**

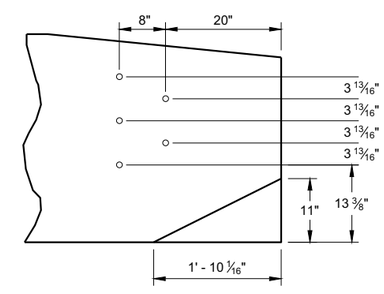


**PVC PIPE LOCATIONS**

## GENERAL NOTES

CONSTRUCT PER STANDARD SPECIFICATION 603.

SPLICES OF LONGITUDINAL BARS TO BE 2' LONG AND FIRMLY TIED AND FASTENED TOGETHER UNLESS OTHERWISE NOTED.

4000 PSI CONCRETE AIR ENTRAINMENT PER STANDARD SPECIFICATIONS SECTION 501.

USE 3/4" BEVEL OR 1" RADIUS ON ALL EXPOSED SHARP EDGES UNLESS OTHERWISE NOTED.

THRIE BEAM ANCHOR INCIDENTAL TO CONCRETE BARRIER ITEM.

INSTALL SCHEDULE 40 PVC PIPE 1" DIAMETER AT LOCATIONS INDICATED.

EXTEND PVC PIPE COMPLETELY THROUGH BARRIER.

CUT ENDS OF PVC PIPE FLUSH WITH FINISHED FACE OF BARRIER.

THE NUMBER IN BAR DESIGNATION REPRESENTS THE BARS LOCATION.

2" CLEAR COVER TYPICAL.

**CONCRETE BARRIER SINGLE SLOPE 36" THRIE BEAM ANCHOR**

STATE OF WISCONSIN
DEPARTMENT OF TRANSPORTATION




6


SDD 14B33 - 02d

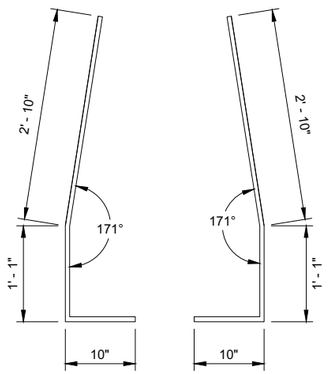


**BAR BENDING DETAIL**
**SECTIONS V1- V6**

**BAR CHART**
**BAR POSITIONS**
**7 - 11**

| BAR | A |
|---|---|
| V7 | 2' - 10 ¼" |
| V8 | 2' - 9 ¾" |
| V9 | 2' - 9 ¼" |
| V10 | 2' - 9" |
| V11 | 2' - 8 ½" |

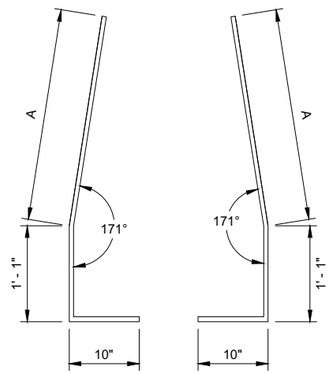


**BAR BENDING DETAIL**
**SECTIONS V7- V11**

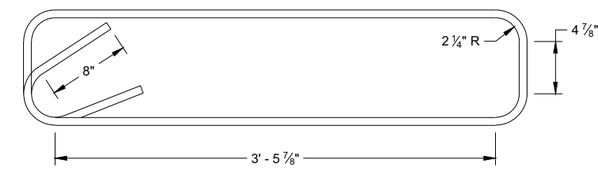


**STIRRUP BAR**
**BENDING DETAIL**

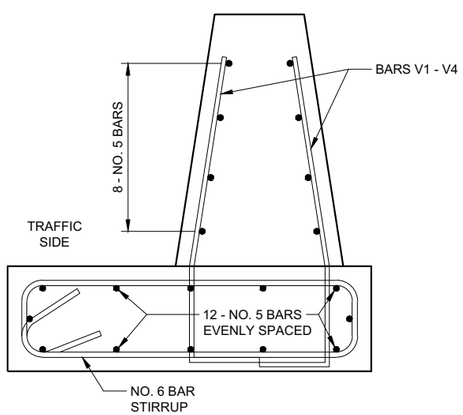


**BAR DETAIL**
**SECTIONS 1 - 4**

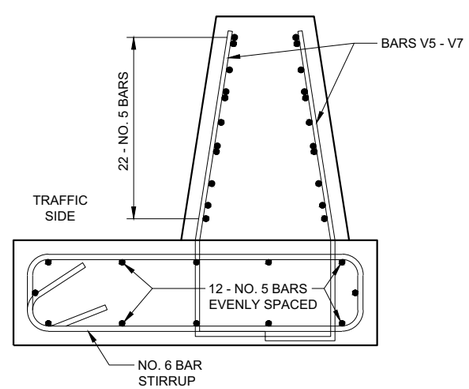


**BAR DETAIL**
**SECTIONS 5 - 7**

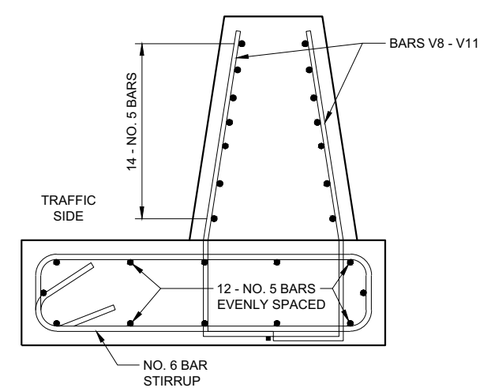


**BAR DETAIL**
**SECTIONS 8 - 11**

6

6

SDD 14B33 - 02e

SDD 14B33 - 02e

**CONCRETE BARRIER**
**SINGLE SLOPE 36"**
**THRIE BEAM ANCHOR**

STATE OF WISCONSIN
DEPARTMENT OF TRANSPORTAT

## BAR CHART
## BAR POSITIONS
## 12 - 13

| BAR | A | B |
|---|---|---|
| V12 | 1' - 3" | 2' - 6" |
| V13 | 1' - 8" | 2' - 1 ½" |

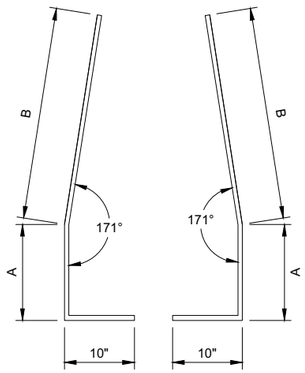


**BAR BENDING DETAIL**
**SECTIONS V12 - V13**

## BAR CHART
## BAR POSITIONS
## 14 - 16

| BAR | A | B |
|---|---|---|
| V14 | 6" | 2' - 1" |
| V15 | 8" | 1' - 11" |
| V16 | 10" | 1' - 8 ½" |

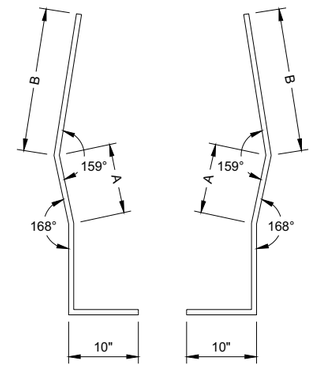


**BAR BENDING DETAIL**
**SECTIONS V14 - V16**

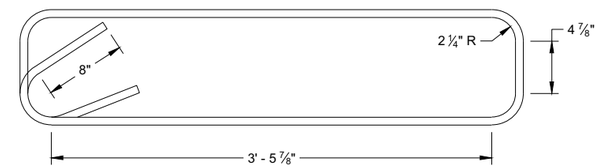


**STIRRUP BAR**
**BENDING DETAIL**

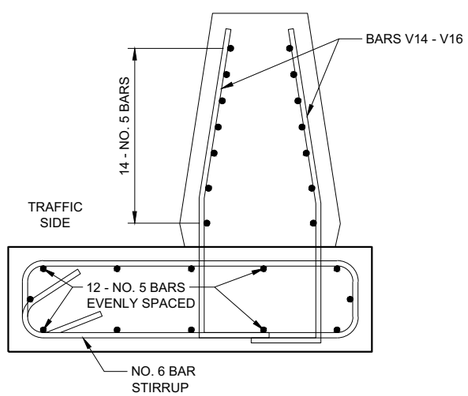


**BAR DETAIL**
**SECTIONS 12 - 13**

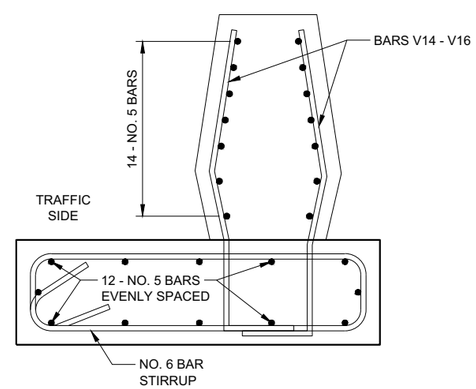


**BAR DETAIL**
**SECTIONS 14 - 16**

**CONCRETE BARRIER**
**SINGLE SLOPE 36"**
**THRIE BEAM ANCHOR**

STATE OF WISCONSIN
DEPARTMENT OF TRANSPORTATION

APPROVED
February 2020 — DATE
/S/ Rodney Taylor — ROADWAY STANDARDS DEVE ENGINEER
FHWA

6

6

SDD 14B33 - 02f

SDD 14B33 - 02f

1. WOOD OR STEEL POSTS (w6X9 OR w6X8.5) MAY BE USED. DO NOT INTERMIX WOOD AND STEEL POSTS. INSTALL STEEL POSTS WITH HOLES ON APPROACHING TRAFFIC SIDE.
2. USE WOOD OR APPROVED PLASTIC BLOCKOUTS. WOOD BLOCKOUTS MAY BE CONSTRUCTED OUT OF TWO OR MORE WOOD BLOCKOUTS. SEE ALTERNATE WOOD BLOCKOUT DETAIL. DIMENSIONS OF APPROVED PLASTIC BLOCKOUTS MAY VARY.
3. IF ROCK IS ENCOUNTERED DURING EXCAVATION, PROVIDE A HOLE 12 INCHES IN DIAMETER EXTENDING 20 INCHES DEEP INTO THE ROCK. PLACE APPROXIMATELY 2 1/2" INCHES OF GRANULAR MATERIAL IN THE BOTTOM OF THE HOLE. CUT THE POSTS THE TO LENGTH AMD INSTALL. BACKFILL WITH EXCAVATED MATERIAL AND COMPACT. BACKFILL IS TO BE FREE OF LARGE ROCKS.
4. WHEN THE DISTANCE FROM BACK OF POST TO SHOULDER HINGE POINT IS LESS THAN 2 FEET INSTALL LONGER POST AT HALF POST SPACING (K).
5. FOR NEW MGS INSTALLATION TOP OF W-BEAM RAIL TOLERANCE IS ±1". FOR EXISTING MGS INSTALLATION TOP OF W-BEAM IS BETWEEN 27 ¾" TO 32".
6. WHEN USING STEEL POST AND WOOD BLOCKOUTS INSTALL FOUR 16D GALVANIZED NAILS. INSTALL NAILS AT THE BACK CORNERS OF THE BLOCK AND BEND THE NAILS OVER THE FLANGE OF THE STEEL POST.
7. TOTAL POST LENGTH FOR TYPE K IS 7' - 0". TOTAL POST LENGTH FOR OTHER MGS TYPES IS 6' - 0".

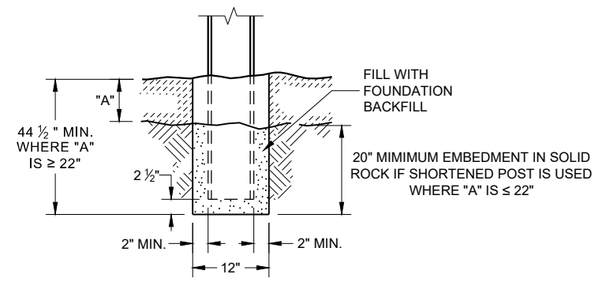


END VIEW
**SETTING STEEL OR WOOD POST IN ROCK** (3)

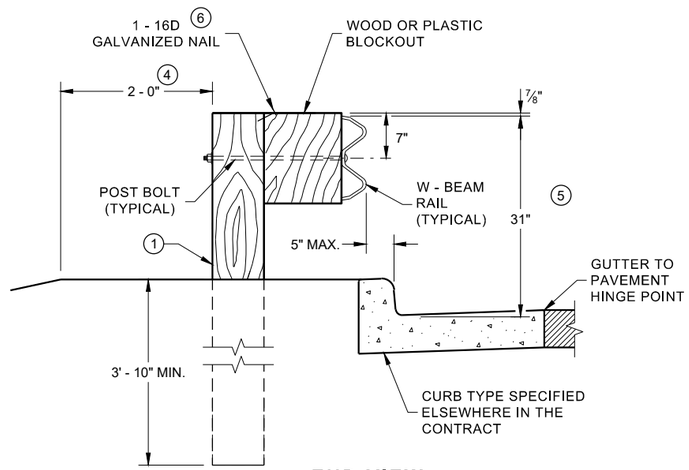


END VIEW
**LOCATED ALONG A CURBED ROADWAY**

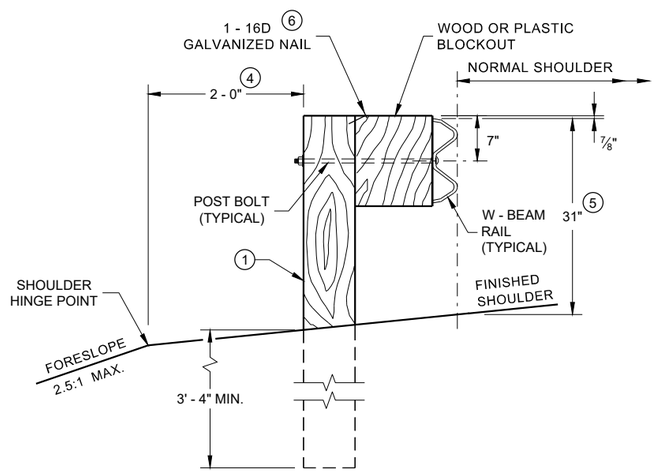


END VIEW
**LOCATED ALONG A ROADWAY SHOULDER STANDARD INSTALLATION**

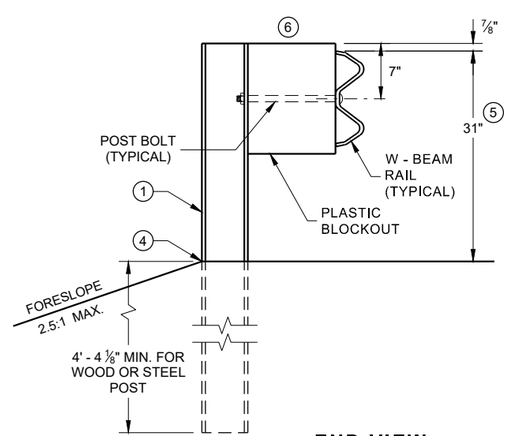


END VIEW
**MGS LONGER POST AT HALFPOST SPACING W BEAM (K)**

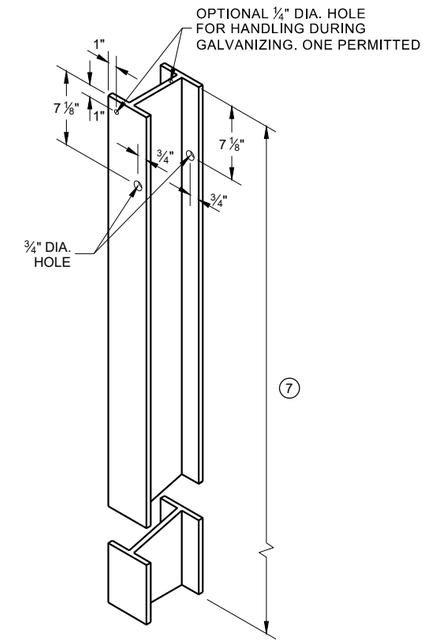


**STEEL POST & HOLE PUNCHING DETAIL (W 6 X 9)** (1)

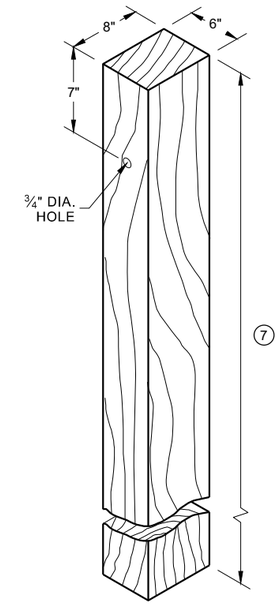


**WOOD POST (6" X 8") NOMINAL** (1)

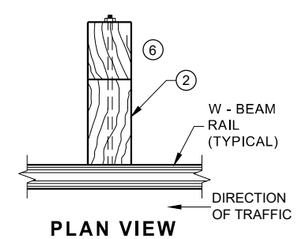


**PLAN VIEW WOOD POST, BLOCKOUT & BEAM**

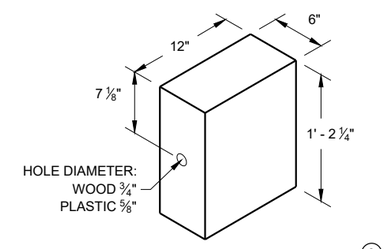


**WOOD OR PLASTIC BLOCKOUT** (2)

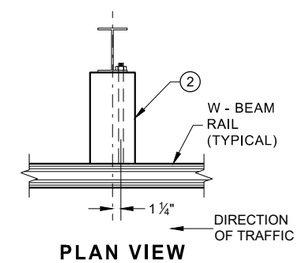


**PLAN VIEW STEEL POST, PLASTIC BLOCKOUT & BEAM**

**MIDWEST GUARDRAIL SYSTEM (MGS) GUARDRAIL**

STATE OF WISCONSIN
DEPARTMENT OF TRANSPORTATION

6

6

SDD 14B42 - 07a

SDD 14B42 - 07a

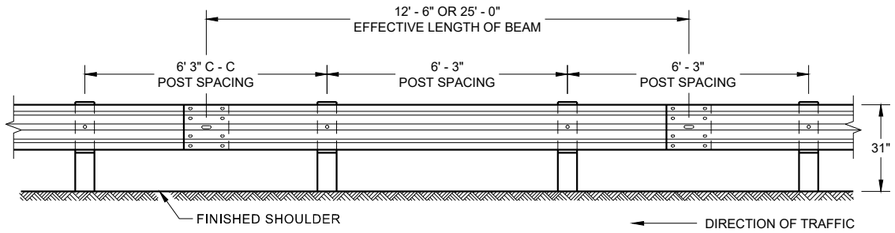


FRONT VIEW
## POST SPACING STANDARD INSTALLATION

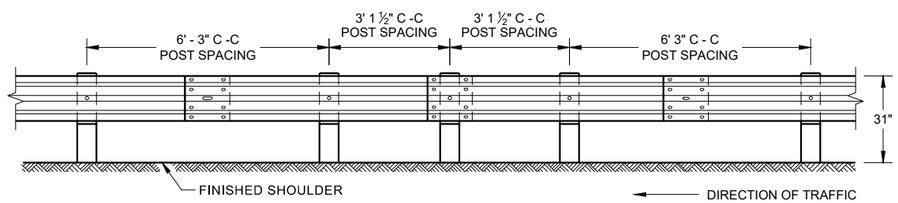


FRONT VIEW
## HALF POST SPACING (HS) AND HALF POST SPACING WITH LONGER POSTS (K)

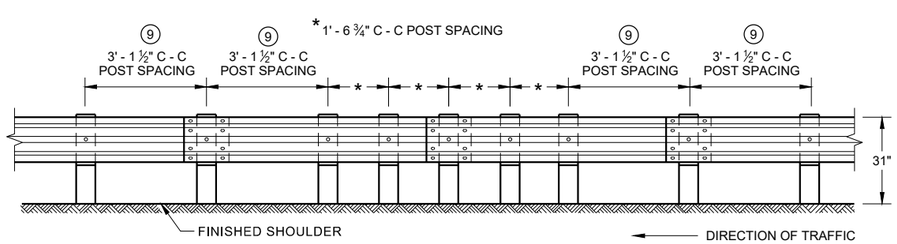


FRONT VIEW
## QUARTER POST SPACING (QS)

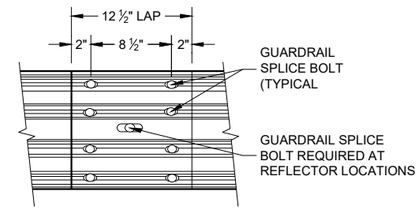


FRONT VIEW
## MID-SPAN BEAM SPLICE

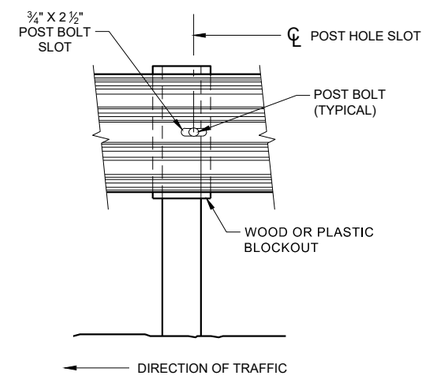


## FRONT VIEW AT STEEL POST

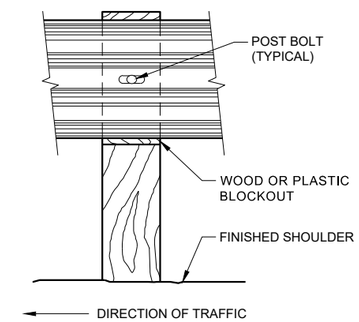


## FRONT VIEW AT WOOD POST

## GENERAL NOTES

8. DO NOT INSTALL REFLECTORS ON THE FIRST 50 FEET OF THE APPROACH END OF THE ENERGY ABSORBING TERMINAL.

9. 25 FEET OF HALF POST SPACING IS REQUIRED ON APPROACH AND DEPARTURE ENDS OF QUARTER POST SPACING.

POST BOLTS ARE A ⅝" DIAMETER ASTM A307 GUARDRAIL BOLT. A POST BOLT REQUIRES ⅝" DIAMETER A563A DOUBLE RECESSED (DR) HEAVY HEX NUT AND ⅝" DIAMETER F844 FLAT WASHER. POST BOLTS MAY BE LONGER IF MULTIPLE BLOCKOUTS ARE BEING USED.

GUARD RAIL SPLICE BOLTS ARE A ⅝" DIAMETER ASTM A307 GUARDRAIL HEAD BOLT. A GUARDRAIL SPLICE BOLT REQUIRES ⅝" DIAMETER A563A DOUBLE RECESSED (DR) HEAVY HEX NUT.

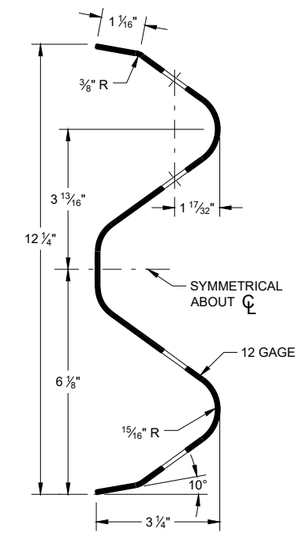


## SECTION THRU W-BEAM RAIL

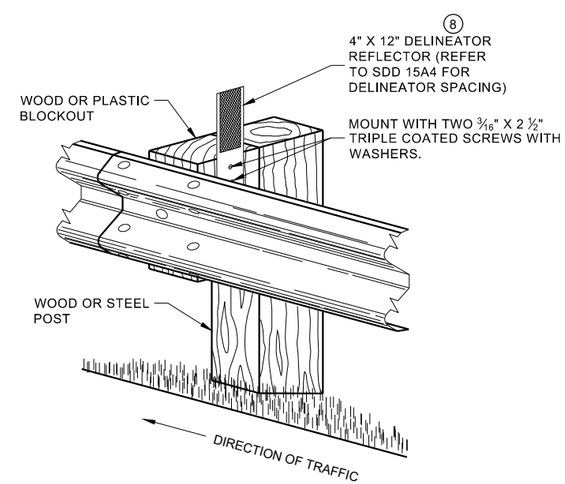


## ONE SIDED REFLECTOR DETAIL AND TYPICAL INSTALLATION

**MIDWEST GUARDRAIL SYSTEM (MGS) GUARDRAIL**

STATE OF WISCONSIN
DEPARTMENT OF TRANSPORTAT




6


SDD 14B42 - 07b

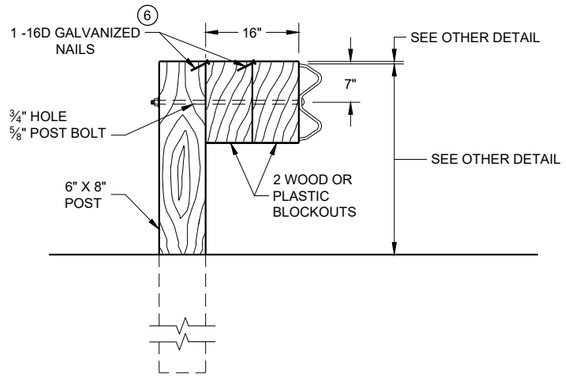


## DETAIL FOR 16" BLOCKOUT DEPTH

IT IS ACCEPTABLE TO USE BLOCKOUTS UP TO 16" DEEP TO INCREASE THE POST OFFSET TO AVOID UNDERGROUND OBSTACLES. THERE IS NO LIMIT TO THE NUMBER OF POSTS THAT CAN HAVE ADDITIONAL BLOCKOUTS UP TO 16" DEEP.

NOTE:

1. ALL FILLETS SHALL HAVE A MINIMUM RADIUS OF 3/16".
2. IF THE BOLT EXTENDS MORE THAN ¼" FROM THE NUT THE BOLT SHOULD BE TRIMMED BACK.

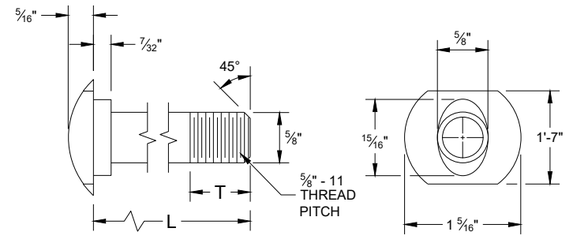


## POST BOLT TABLE

| L | T (MIN.) |
|---|---|
| 1 ¼" | 1 ⅛" |
| 2" | 1 ¾" |
| 10" | 4" |
| 14" | 4 1/16" |
| 18" | 4" |
| 21" | 4 1/16" |
| 25" | 4" |

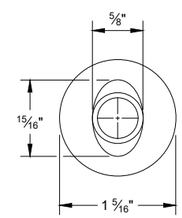


## ALTERNATE BOLT HEAD

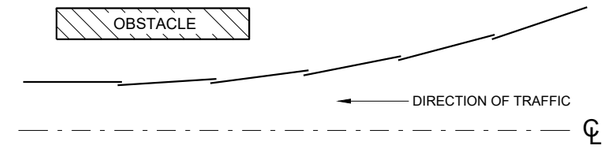


## PLAN VIEW
## BEAM LAPPING DETAIL

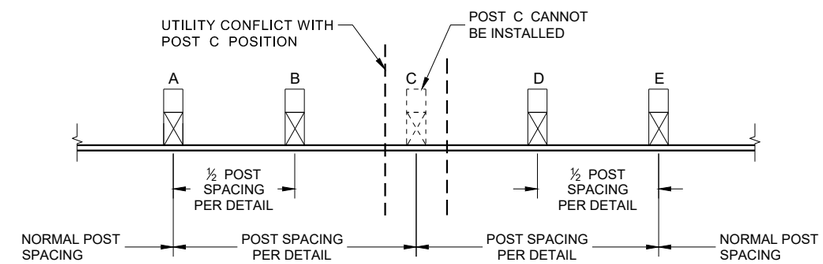


## POST DRIVING FOR CONTINUOUS UNDERGROUND OBSTRUCTION

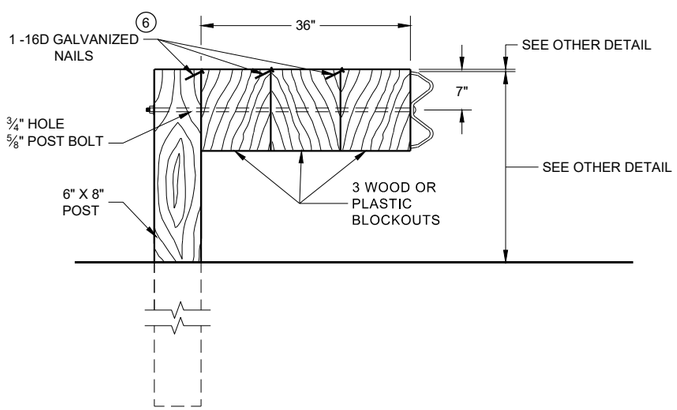


## DETAIL FOR 36" BLOCKOUT DEPTH

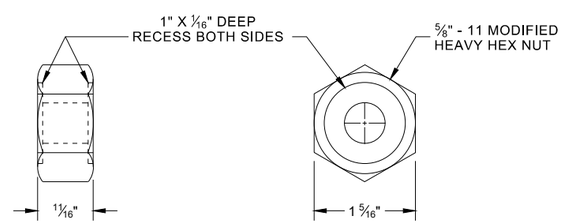


## POST BOLT, SPLICE BOLT AND RECESS NUT

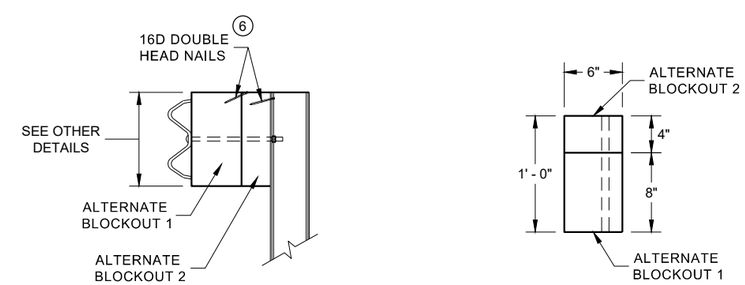


SIDE VIEW

PLAN VIEW

## ALTERNATE WOOD BLOCKOUT DETAIL

NOTES: UNDER SPECIAL CIRCUMSTANCES, SUCH AS AVOIDING OBSTACLES THAT ARE NOT RELOCATED, IT IS ACCEPTABLE TO INSTALL ADDITIONAL BLOCKOUTS TO OBTAIN UP TO 36" DEPTH FOR ONE OR TWO POSTS IN A SECTION OF GUARDRAIL.

DO NOT USE 16" OR 36" BLOCKOUTS IF IT CAUSES THE POST TO BE DRIVEN BEYOND SHOULDER HINGE POINT OR CAUSES A FIXED OBJECT TO BE WITHIN THE DEFLECTION DISTANCE OF THE BARRIER.

(6) WHEN USING STEEL POST AD WOOD BLOCKOUTS, INSTALL FOUR 16D GALVANIZED NAILS. INSTALL NAILS AT THE BACK CORNERS OF THE BLOCK AND BEND THE NAILS OVER THE FLANGE OF THE STEEL POST.

**MIDWEST GUARDRAIL SYSTEM (MGS) GUARDRAIL**

STATE OF WISCONSIN
DEPARTMENT OF TRANSPORTA




6


SDD 14B42 - 07c

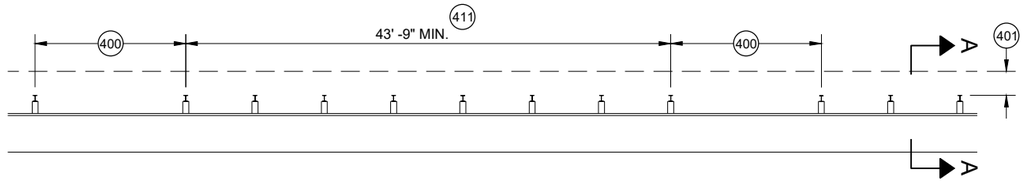


**MISSING POST IN MGS GUARDRAIL**

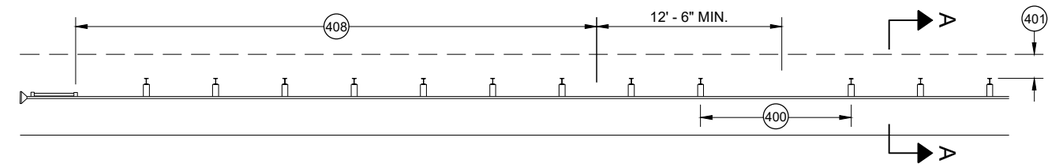


**MISSING POST IN MGS GUARDRAIL NEAR EAT**

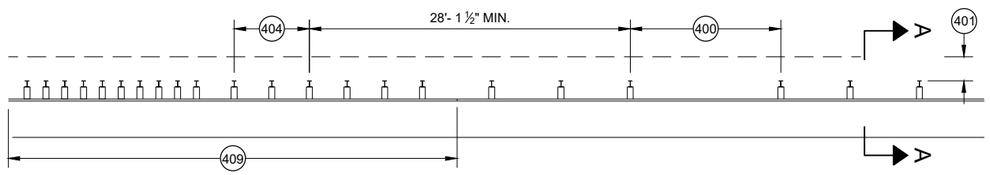


**MISSING POST IN MGS GUARDRAIL NEAR AN APPROACH TRANSITION**

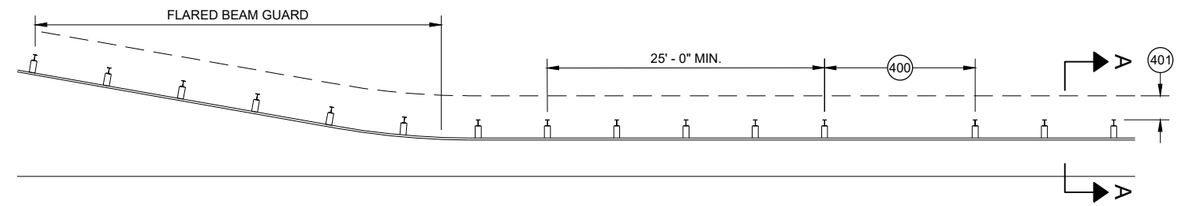


**MISSING POST IN MGS GUARDRAIL NEAR FLARED BEAM GUARD**

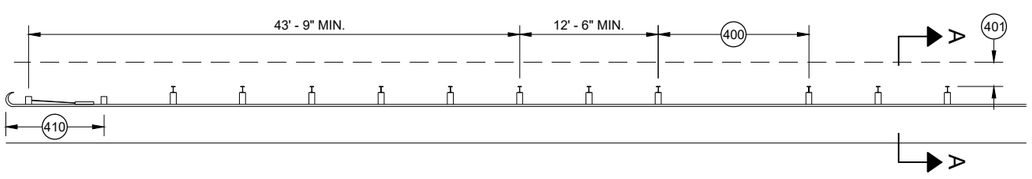


**MISSING POST IN MGS GUARDRAIL NEAR A TYPE 2 END TERMINAL**

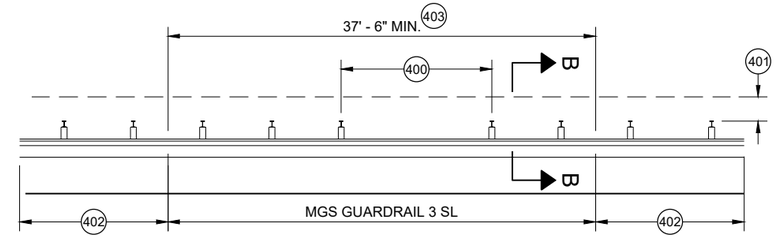


**MISSING POST IN SHORT SPAN MGS GUARDRAIL NEAR CURB (SL)** 407

400 MAX SPAN 12' - 6"
401 2' MIN.
402 MGS GUARDRAIL 3
403 NESTING BEAM GUARD
404 ASYMMETRIC TRANSITION
405 SOIL WELL DRAINED AND COMPACTED
406 SEE OTHER DRAWINGS IN THIS SDD
407 SEE OTHER DRAWINGS FOR MIN. SPACING BETWEEN SPANS
408 SEE SDD 14B44
409 SEE SDD 14B45
410 SEE SDD 14B47
411 MINIMUM DISTANCE BETWEEN MISSING POST SPANS.

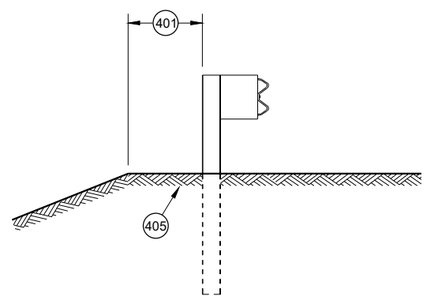


**SECTION A - A** 406

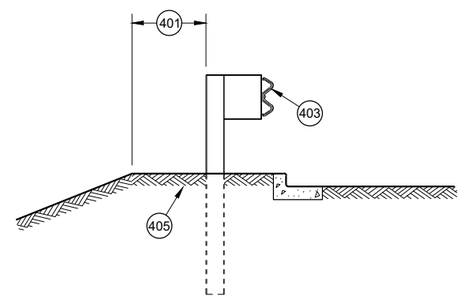


**SECTION B - B** 406

**MIDWEST GUARDRAIL SYSTEM (MGS) GUARDRAIL**

STATE OF WISCONSIN
DEPARTMENT OF TRANSPORTATION

APPROVED
May 2021 — DATE
/S/ Rodney Taylor — ROADWAY STANDARDS DEVE UNIT SUPERVISOR
FHWA




6


SDD 14B42 - 07d

## GENERAL NOTES

(A) THE SLOPE IN THE AREA BOUNDED BY THE GRADELINE, THE HINGE POINT LINE (HPL) AND THE CLEAR ZONE LIMITS (CZL) SHALL BE 4:1 OR FLATTER.

(B) AFTER FINAL ASSEMBLY, RECHECK CABLE TO BE SURE IT IS TAUT AND HAS NOT RELAXED

(C) DIFFERENT MANUFACTURERS REQUIRE DIFFERENT PERFORATED W - BEAM RAIL END PANELS. SEE MANUFACTURER'S INFORMATION.

(D) ATTACH ALUMINUM SHEET TO E.A.T. HEAD USING 4 STAINLESS STEEL SELF - TAPPING SCREWS. ONE SCREW PER CORNER.

(E) HARDWARE MAY VARY BETWEEN MANUFACTURER. SEE MANUFACTURER'S DRAWING FOR INFORMATION.

DIMENSIONS MAY VARY, MANUFACTURER'S INFORMATION.

SEE SDD 14B42 FOR MORE INFORMATION.

* DO NOT ATTACH BLOCKOUTS TO POST 1 AND 2.

DO NOT INSTALL REFLECTORS ON THE FIRST 50 FEET OF THE APPROACH END OF THE ENERGY ABSORBING TERMINAL.

SEE MANUFACTURER'S DRAWING FOR SPLICE LOCATION, HARDWARE DIMENSIONS AND INSTALLATION INSTRUCTIONS.

THE CENTER OF THE UPPER 3 ½" DIAMETER HOLE ON POST NUMBER 3 THROUGH POST 9 IS TO BE FLUSH WITH THE GROUND LINE UP TO A MAXIMUM OF 2" ABOVE GROUND LINE. WOOD BLOCKS ON POSTS NUMBERED 3 THROUGH 9 MAY BE ADJUSTED UP TO 3" ABOVE THE TOP OF POST.

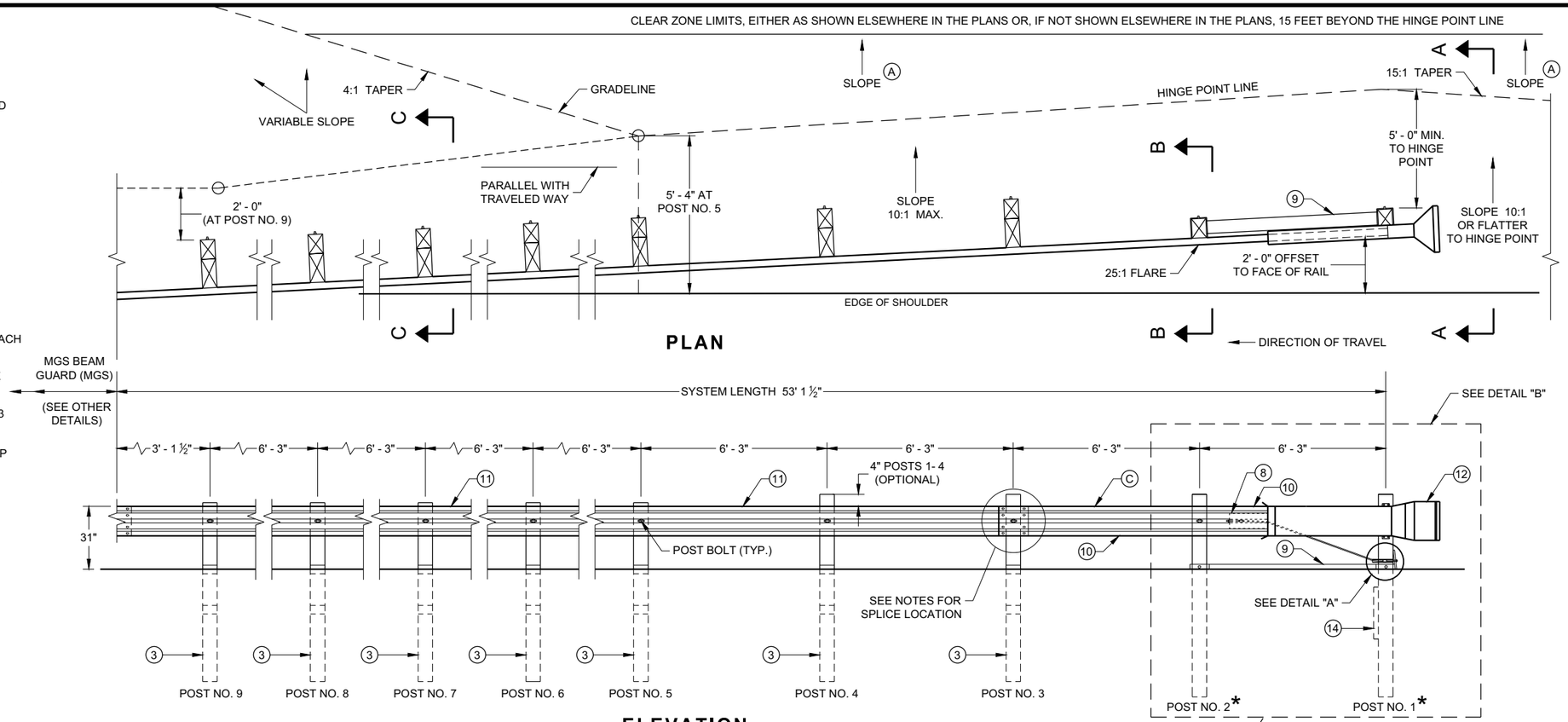


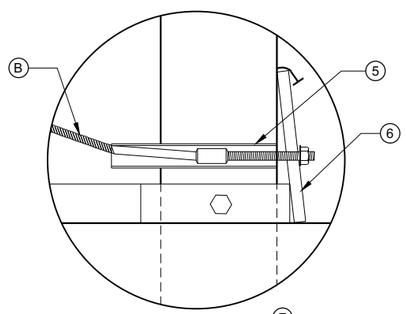


DETAIL "A" (E)

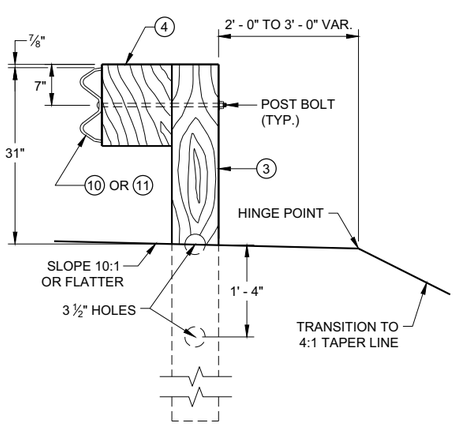


SECTION C - C
TYPICAL AT POST NOS. 3 - 9

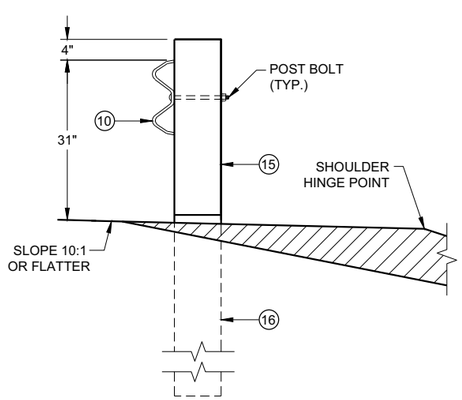


SECTION B - B
TYPICAL AT POST NO. 2*

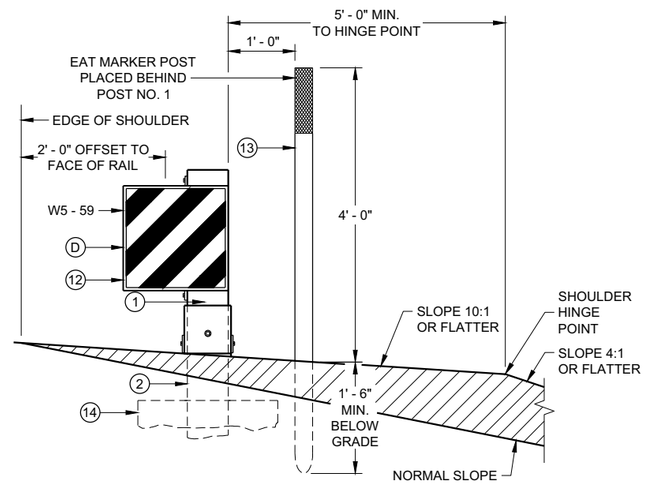


SECTION A - A
TYPICAL AT POST NO. 1*

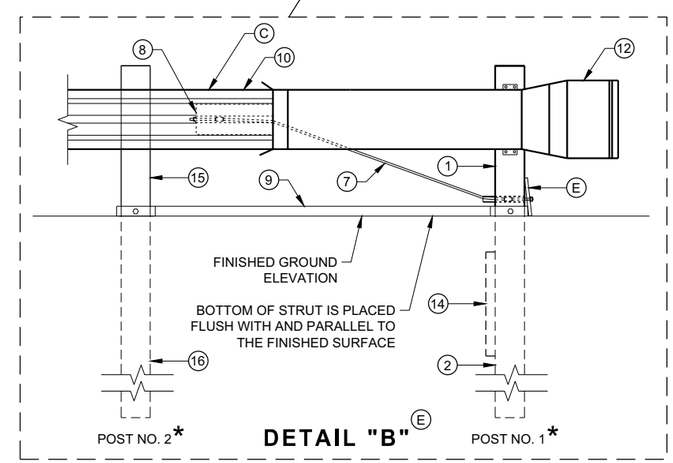


DETAIL "B" (E)

**MIDWEST GUARDRAIL SYSTEM ENERGY ABSORBING TERMINAL (MGS)**

STATE OF WISCONSIN
DEPARTMENT OF TRANSPORTATION

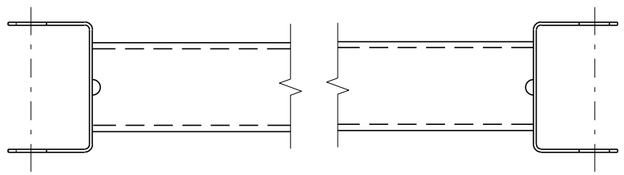

GENERIC GROUND STRUT (9)(E)

## BILL OF MATERIALS

| PART NO. | DESCRIPTION<br>MATERIALS PROVIDED BY MGS EAT MANUFACTURER.<br>SEE MANUGACTURER'S DETAILS FOR MORE INFORMATION. |
|---|---|
| 1 | UPPER POST NO. 1 6" X 6" TUBE |
| 2 | LOWER POST NO. 1 |
| 3 | WOOD CRT |
| 4 | WOOD BLOCKOUT |
| 5 | PIPE SLEEVE |
| 6 | BEARING PLATE |
| 7 | BCT CABLE ASSEMBLY |
| 8 | ANCHOR CABLE BOX |
| 9 | GROUND STRUT |
| 10 | PERFORATED W-BEAM RAIL END PANEL, 12'-6" LONG. |
| 11 | STANDARD W-BEAM RAIL. MULTIPLE SECTIONS REQUIRED.<br>SECTIONS VARY IN LENGTH. |
| 12 | IMPACT HEAD |
| 13 | EAT MARKER POST - YELLOW<br>(SEE APPROVED PRODUCTS LIST) |
| 14 | SOIL PLATE |
| 15 | UPPER POST NO. 2 |
| 16 | LOWER POST NO. 2 |

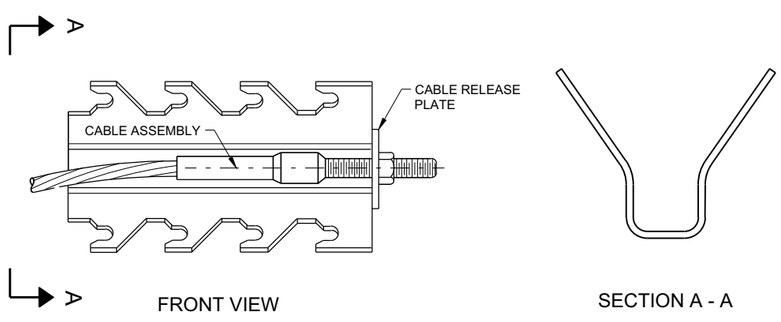


GENERIC ANCHOR CABLE BOX (9)(E)

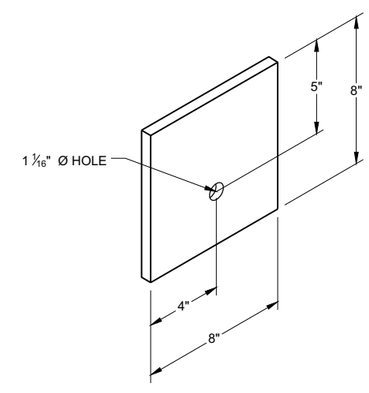


BEARING PLATE (6)(E)

6

6

SDD 14B44 - 04b

SDD 14B44 - 04b

**MIDWEST GUARDRAIL SYSTEM ENERGY ABSORBING TERMINAL (MGS)**

STATE OF WISCONSIN
DEPARTMENT OF TRANSPORTAT

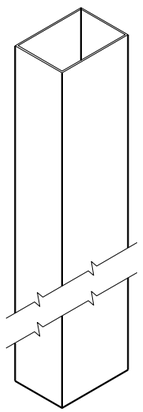

**UPPER POST NO. 1** (1) (E)

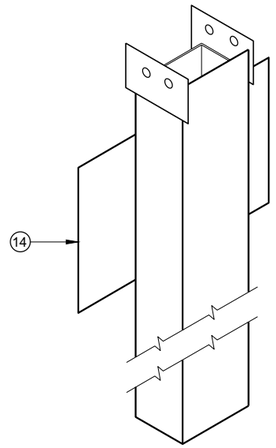


**LOWER POST NO. 1** (2) (E)

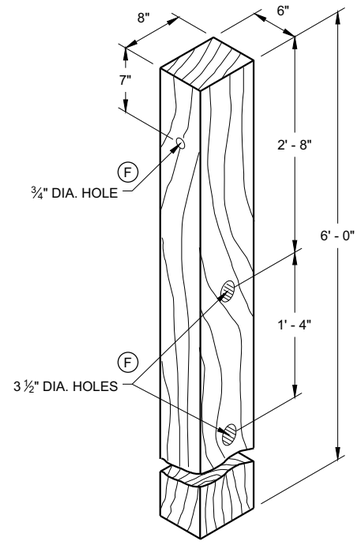


**WOOD CRT POST** (3) (E)

POSTS NUMBER 3-9

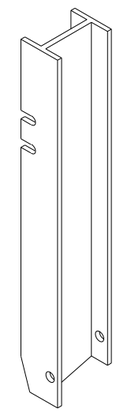

**UPPER POST NO. 2** (15) (E)

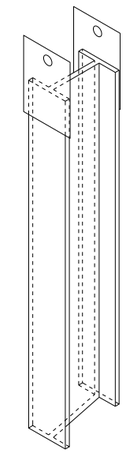

**LOWER POST NO. 2** (16) (E)

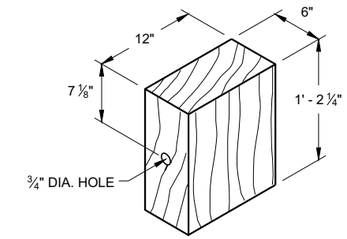


**WOOD BLOCKOUT** (4)

REQ'D. AT ALL POSTS EXCEPT POST NO'S 1 & 2

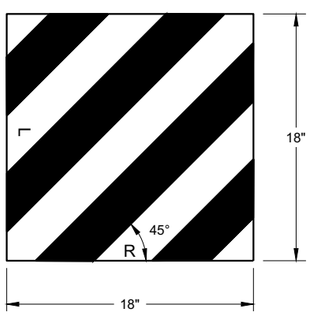


W5 - 59

**REFLECTIVE SHEETING DETAIL** (E)

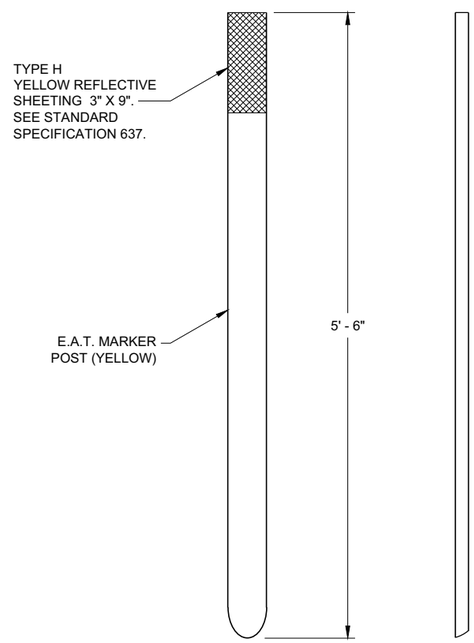


FRONT VIEW SIDE VIEW

**E.A.T. MARKER POST** (13)

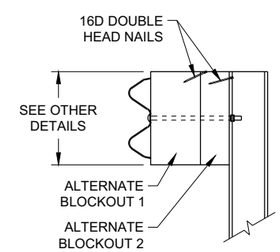


SIDE VIEW

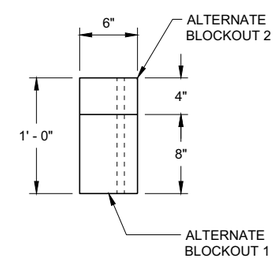


TOP VIEW

**ALTERNATE WOOD BLOCKOUT DETAIL**

**MIDWEST GUARDRAIL SYSTEM ENERGY ABSORBING TERMINAL (MGS)**

STATE OF WISCONSIN
DEPARTMENT OF TRANSPORTATION

APPROVED
7/2018 — DATE
/S/ Rodney Taylor — ROADWAY STANDARDS DEVE UNIT SUPERVISOR
FHWA

6

6

SDD 14B44 - 04c

SDD 14B44 - 04c

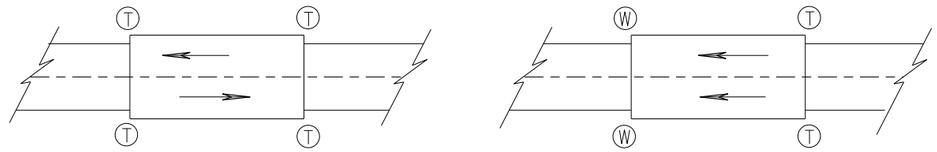


**TWO WAY TRAFFIC** **ONE WAY TRAFFIC**

(T) THRIE BEAM CONNECTION

(W) W-BEAM CONNECTION WHEN REQUIRED

## TYPICAL LOCATIONS OF THRIE BEAM AND W-BEAM CONNECTIONS TO BRIDGE

## GENERAL NOTES

IF ROCK IS ENCOUNTERED, REMOVE ROCK TO FULL DEPTH OF POST PLUS 2½", AND 12" DIAMETER AROUND POST. SEE 14B42 FOR MORE DETAILS.

TRANSITION USES STEEL POSTS ONLY.

SEE STANDARD DETAIL DRAWING 14 B 42 FOR MORE INFORMATION.

POST 2 THROUGH 17 USES STEEL POST ONLY

(1) BRIDGE RAILING TYPE "W" DOES NOT REQUIRE A TERMINAL CONNECTOR.

(2) OPTIONAL CURB AND GUTTER OR DRAINAGE FEATURE SEE PLAN FOR INFORMATION.

(13) STEEL OR WOOD POST IS ACCEPTABLE AT POST 1. SEE SDD14B42

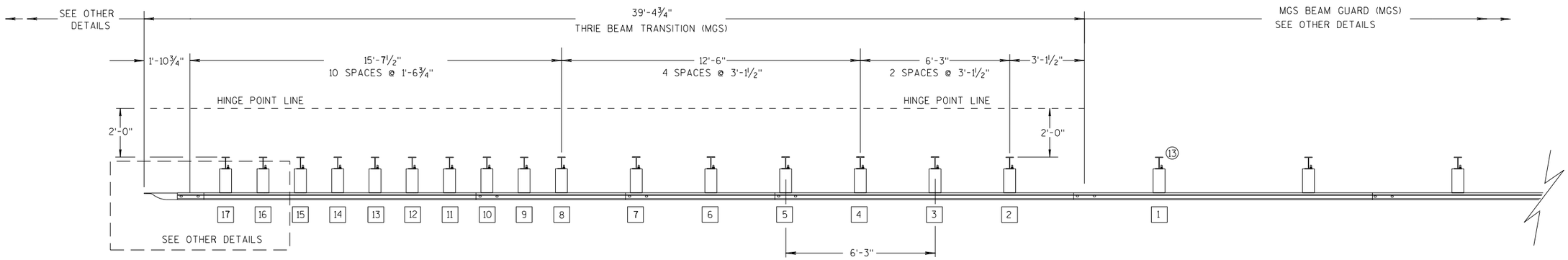


**PLAN VIEW**

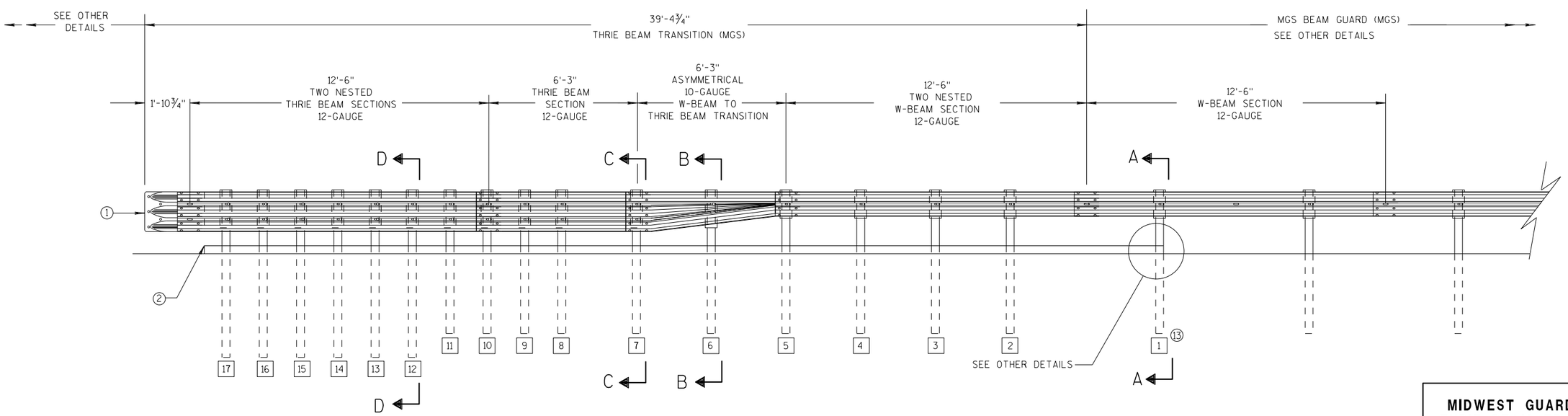


**ELEVATION VIEW**

## MIDWEST GUARDRAIL SYSTEM THRIE BEAM TRANSITION

**MIDWEST GUARDRAIL SYSTEM THRIE BEAM TRANSITION (MGS)**

STATE OF WISCONSIN
DEPARTMENT OF TRANSPOR







6

S.D.D. 14 B 45-5a

## GENERAL NOTES

(2) OPTIONAL CURB AND GUTTER OR DRAINAGE FEATURE SEE PLAN FOR INFORMATION.

(3) WHEN USING STEEL POSTS AND WOOD BLOCKOUTS INSTALL FOUR 10D GALVANIZED NAILS. INSTALL NAILS AT THE BACK CORNERS OF THE BLOCK AND BEND THE NAILS OVER THE FLANGE OF THE STEEL POST.

(4) TOLERANCE FOR TOP OF W-BEAM RAIL IS ± 1".

(13) STEEL OR WOOD POST IS ACCEPTABLE AT POST 1. SEE SDD 14B42

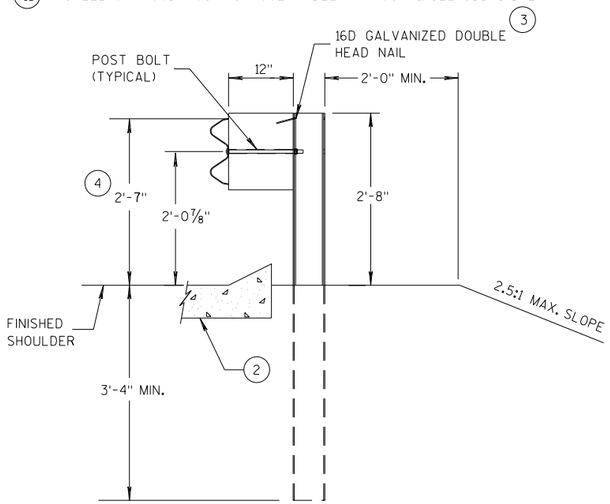


SECTION A-A (13)

POSTS 1-5

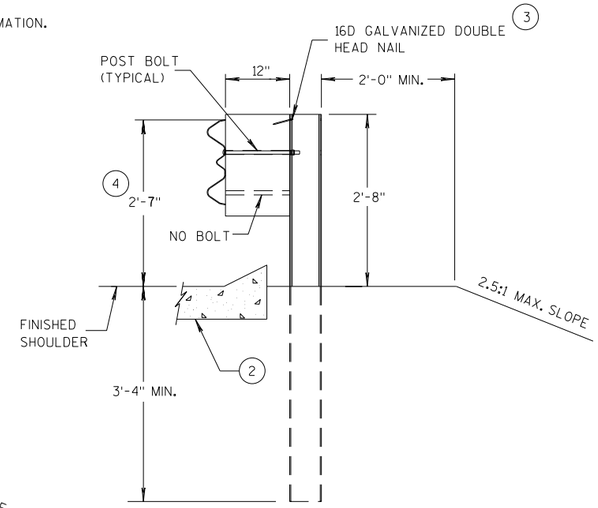


SECTION B-B

POST 6

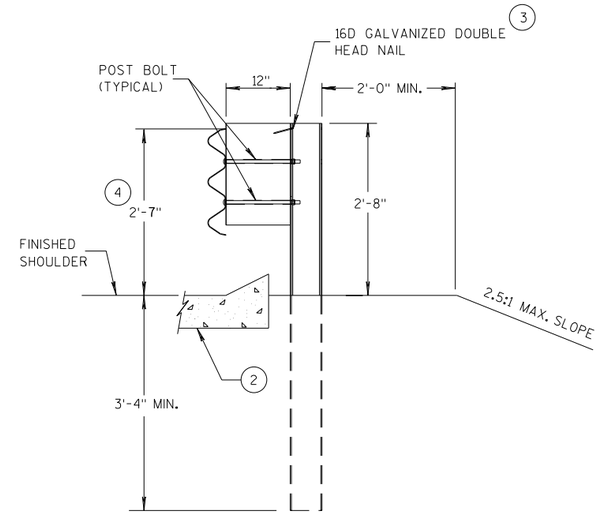


SECTION C-C

POSTS 7-11

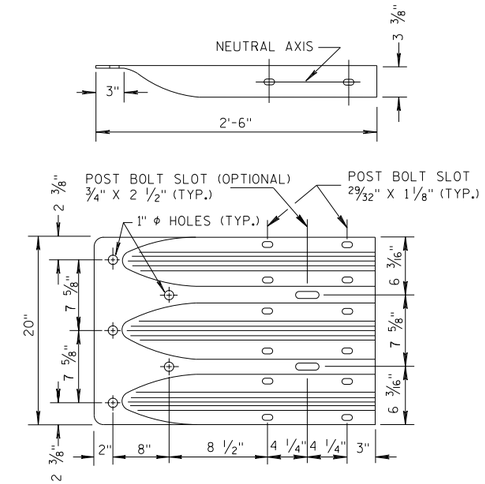


THRIE BEAM TERMINAL CONNECTOR

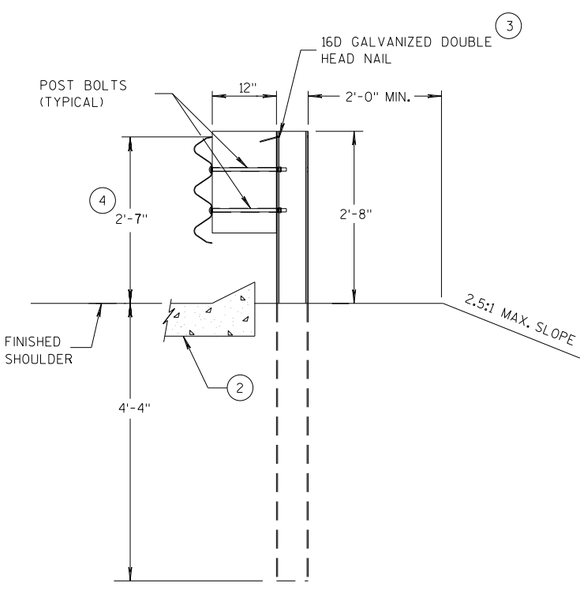


SECTION D-D

POSTS 12-17

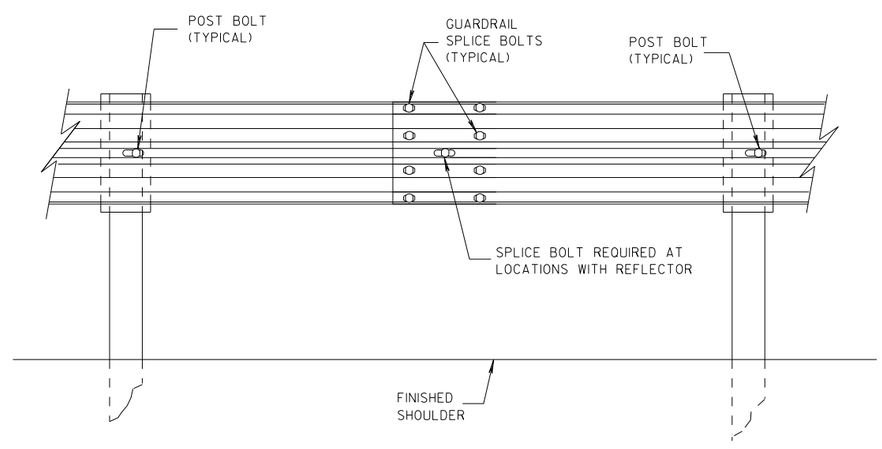


SPLICE DETAIL

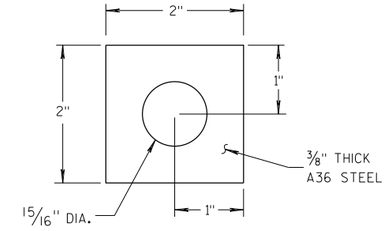


PLATE WASHER DETAIL

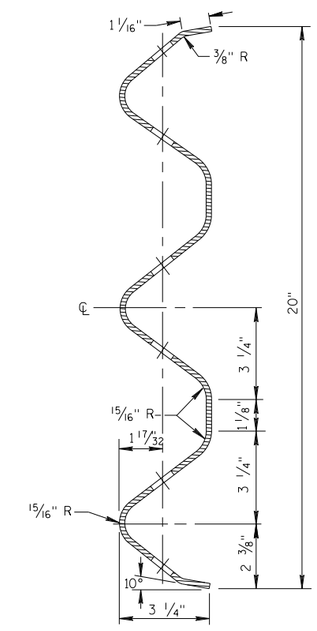


SECTION THRU THRIE BEAM RAIL ELEMENT

MIDWEST GUARDRAIL SYSTEM
THRIE BEAM TRANSITION (MGS)

STATE OF WISCONSIN
DEPARTMENT OF TRANSPOR

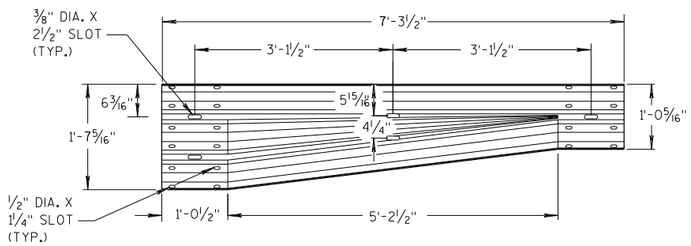


## W-BEAM TO THRIE BEAM TRANSITION SECTION

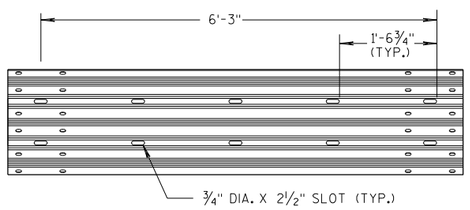


## 6'-3" THRIE BEAM SECTION

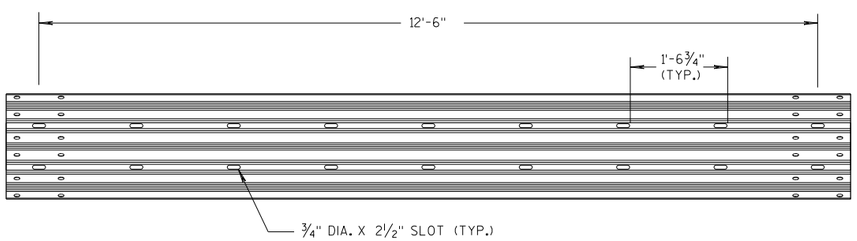


## 12'-6" THRIE BEAM SECTION

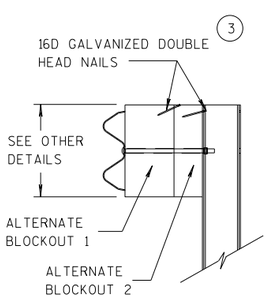


SIDE VIEW

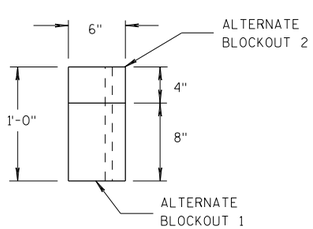


TOP VIEW

## ALTERNATE WOOD BLOCKOUT DETAIL

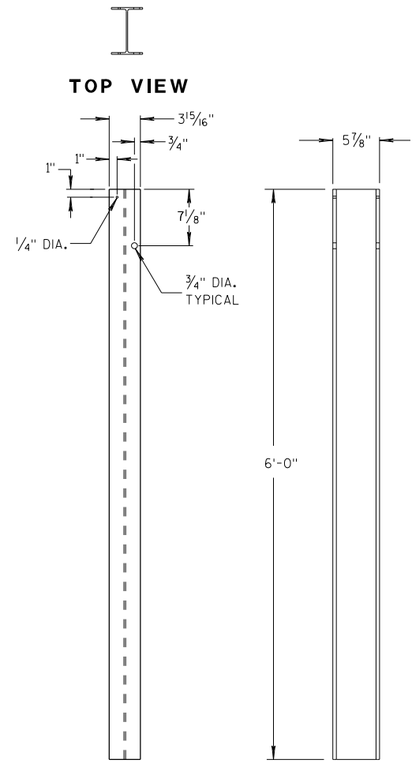


## STEEL POSTS 1-5 (13)

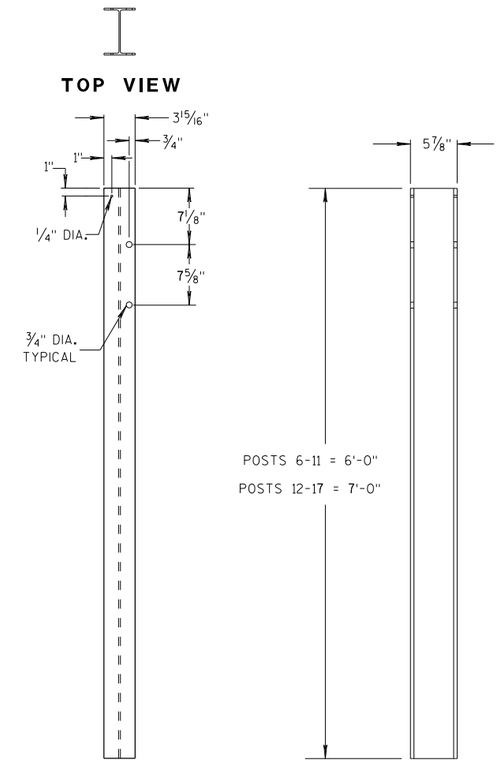


## STEEL POSTS 6-17

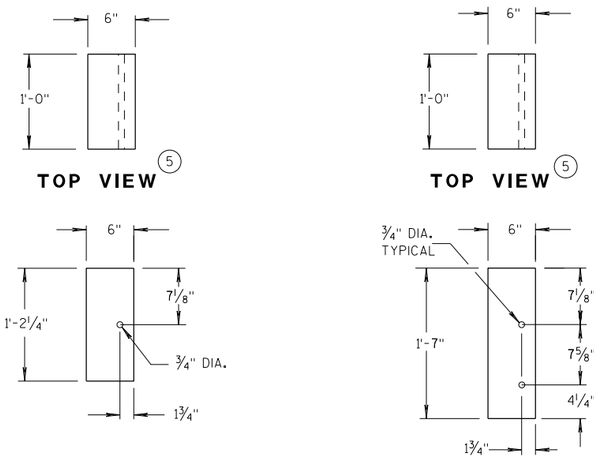


## BLOCKOUT POSTS 1-5

## BLOCKOUT POSTS 6-17

## GENERAL NOTES

STEEL POSTS ARE W6X9 OR W6X8.5.

BOLT HOLES FOR POST ARE ON FRONT AND OF SIDE OF POST.

(3) WHEN USING STEEL POSTS AND WOOD BLOCKOUTS INSTALL FOUR 16D GALVANIZED NAILS. INSTALL NAILS AT THE BACK CORNERS OF THE BLOCK AND BEND THE NAILS OVER THE FLANGE OF THE STEEL POST.

(5) WOOD BLOCKS MAY BE CONSTRUCTED OUT OF 2 WOOD BLOCKS. SEE ALTERNATE WOOD BLOCK DETAIL.

(13) STEEL OR WOOD POST IS ACCEPTABLE AT POST 1. SEE SDD 14B42.

**MIDWEST GUARDRAIL SYSTEM**
**THRIE BEAM TRANSITION (MGS)**

STATE OF WISCONSIN
DEPARTMENT OF TRANSPOR




6


S.D.D. 14 B 45-5c

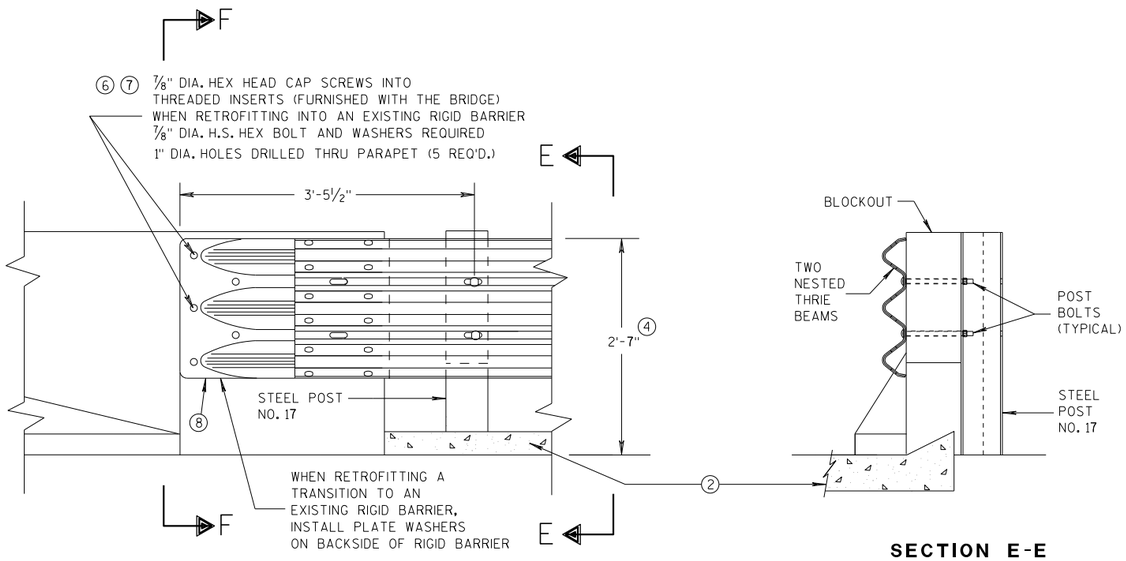


FRONT VIEW

SECTION E-E

## THRIE BEAM CONNECTION TO BRIDGE PARAPET WITH SQUARE ENDS

## GENERAL NOTES

THESE ARE TYPICAL CONNECTION DETAILS. ADJUST THE POSTION OF CONNECTIONS TO EXISTING BRIDGES TO FIT THE ACTUAL BRIDGE AND SITE DIMENSIONS.

② OPTIONAL CURB AND GUTTER OR DRAINAGE FEATURE SEE PLAN FOR INFORMATION.

④ TOLERANCE FOR TOP OF BEAM IS ± 1".

⑥ DRILLING BOLT HOLES THROUGH THE PARAPET, BOLTS, NUTS, WASHERS AND REPAIRING DAMAGED CONCRETE ARE INCIDENTAL TO THE CONTRACT.

⑦ BOLTS MAY BE A325 BOLTS OR A449 BOLTS. BOLT LENGTH AND THREADING LENGTH ARE TO ALLOW FOR A TIGHT CONNECTION BETWEEN RIGID BARRIER AND THRIE BEAM CONNECTION PLATE. CONTRACTOR IS TO FIELD VERIFY BOLT LENGTH AND THREAD LENGTH. ONE ROUND WASHER REQUIRED BETWEEN BOLT HEAD AND THRIE BEAM CONNECTOR PLATE. BOLTS THAT EXTEND THROUGH THE PARAPET AND OUT THE BACK FACE REQUIRE A HARDENED ROUND STEEL WASHER THAT IS 2" O.D. X 5/32" THICK AND ONE PLATE WASHER. REPAIR ANY DAMAGED CONCRETE FROM BOLT INSTALLATION.

⑧ THE RECESS FOR A W-BEAM CONNECTION, WHICH EXISTS ON SOME PARAPETS OF THIS TYPE, SHALL BE FILLED WITH A TREATED TIMBER BLOCKOUT. BLOCKOUT SIZE IS 1'-6" X 2'-0" X 3 1/2".

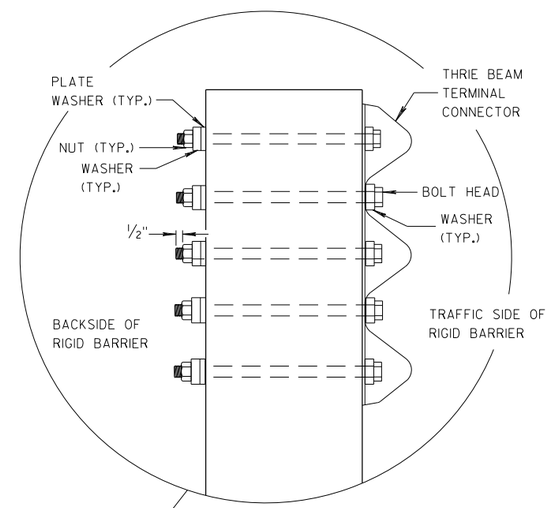


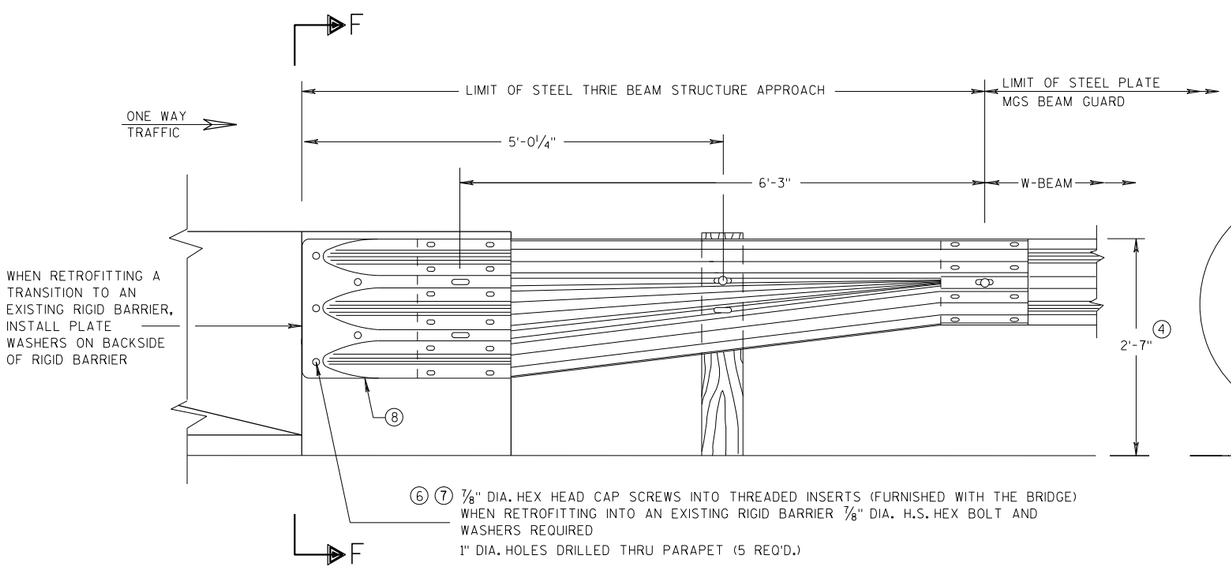


FRONT VIEW

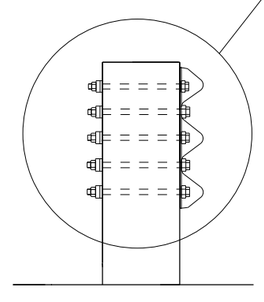

SECTION F-F

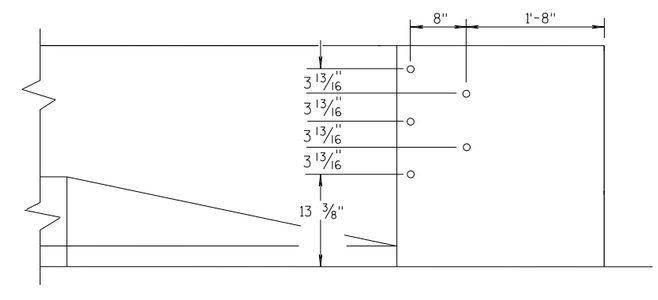


DRILL HOLE LOCATION

## W BEAM TRANSITION AND CONNECTION TO BRIDGE PARAPETS WITH SQUARE ENDS

(USE ONLY ON THE TRAFFIC EXIT END OF ONE WAY BRIDGES)

**MIDWEST GUARDRAIL SYSTEM THRIE BEAM TRANSITION (MGS)**

STATE OF WISCONSIN
DEPARTMENT OF TRANSPORTATION

APPROVED
07/2018 — DATE
/S/ Rodney Taylor — ROADWAY STANDARDS D[illegible] UNIT SUPERVI[illegible]
FHWA

6

S.D.D. 14 B 45-5d

## GENERAL NOTES

THESE ARE TYPICAL CONNECTION DETAILS. ADJUST THE POSTION OF CONNECTIONS TO EXISTING BRIDGES TO FIT THE ACTUAL BRIDGE AND SITE DIMENSIONS.

(2) OPTIONAL CURB AND GUTTER OR DRAINAGE FEATURE SEE PLAN FOR INFORMATION.

(4) TOLERANCE FOR TOP OF BEAM IS ± 1".

(6) DRILLING BOLT HOLES THROUGH THE PARAPET, BOLTS, NUTS, WASHERS AND REPAIRING DAMAGED CONCRETE ARE INCIDENTAL TO THE CONTRACT.

(7) BOLTS MAY BE A325 BOLTS OR A449 BOLTS. BOLT LENGTH AND THREADING LENGTH ARE TO ALLOW FOR A TIGHT CONNECTION BETWEEN RIGID BARRIER AND THRIE BEAM CONNECTION PLATE. CONTRACTOR IS TO FIELD VERIFY BOLT LENGTH AND THREAD LENGTH. ONE ROUND WASHER REQUIRED BETWEEN BOLT HEAD AND THRIE BEAM CONNECTOR PLATE. BOLTS THAT EXTEND THROUGH THE PARAPET AND OUT THE BACK FACE REQUIRE A HARDENED ROUND STEEL WASHER THAT IS 2" O.D. X 5/32" THICK AND ONE PLATE WASHER. REPAIR ANY DAMAGED CONCRETE FROM BOLT INSTALLATION.

(8) THE RECESS FOR A W-BEAM CONNECTION, WHICH EXISTS ON SOME PARAPETS OF THIS TYPE, SHALL BE FILLED WITH A TREATED TIMBER BLOCKOUT. BLOCKOUT SIZE IS 1'-6" X 2'-0" X 3 1/2".

(9) BOLT, NUT AND WASHERS NOT REQUIRED FOR THIS LOCATION WHEN RETROFITTING AN EXISTING PAPAPET AND THE HOLE IS EITHER ABOVE PARAPET OR WITHIN 4 INCHES OF THE EDGE OF PARAPET.

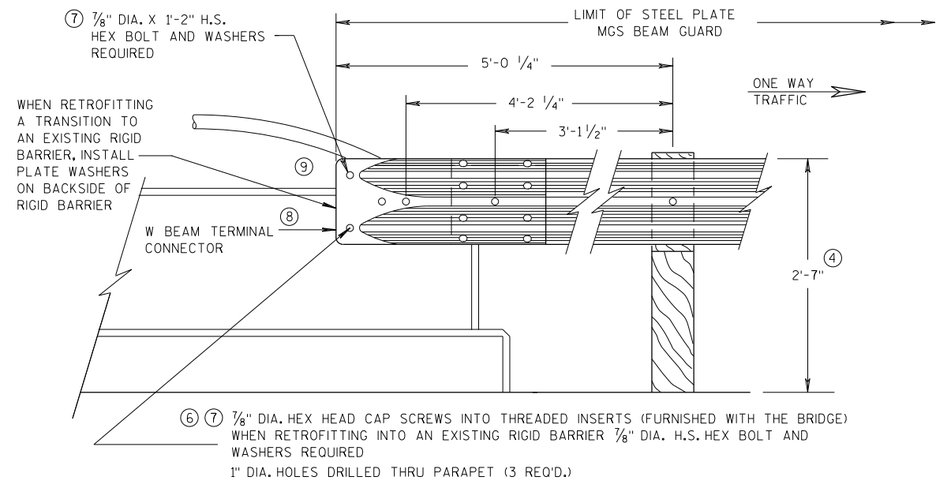


FRONT VIEW

## W BEAM CONNECTION TO VERTICAL FACE PARAPET

(USE ONLY ON THE TRAFFIC EXIT END OF ONE WAY BRIDGES)

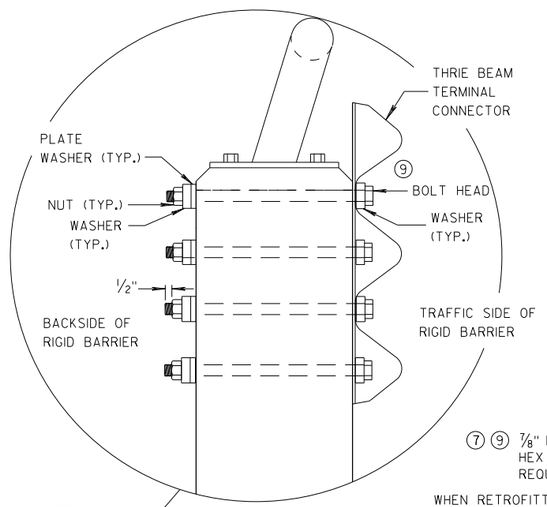


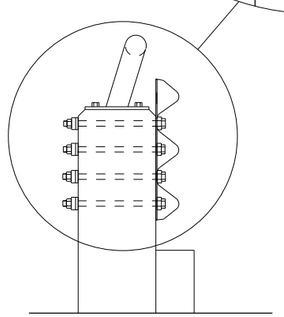

SECTION G-G

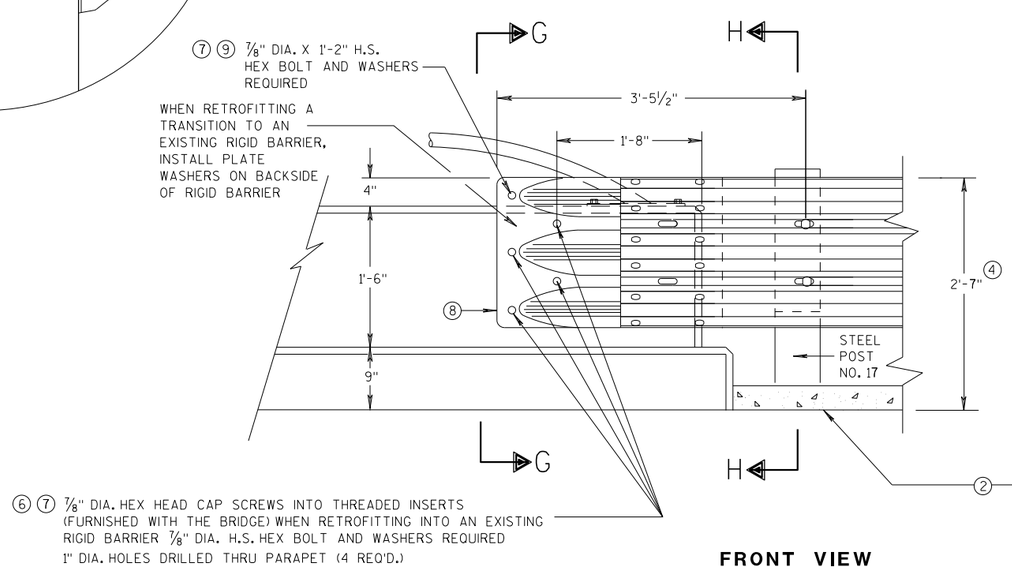


FRONT VIEW

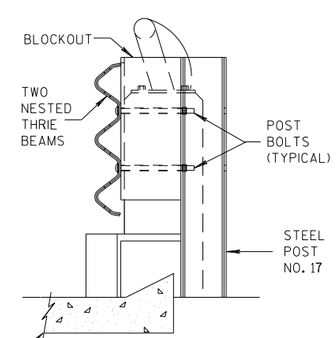


SECTION H-H

## THRIE BEAM CONNECTION TO VERTICAL FACED PARAPETS

MIDWEST GUARDRAIL SYSTEM
THRIE BEAM TRANSITION (MGS)

STATE OF WISCONSIN
DEPARTMENT OF TRANSPORTATION

APPROVED
07/2018 — DATE
/S/ Rodney Taylor
ROADWAY STANDARDS D UNIT SUPERVIS
FHWA

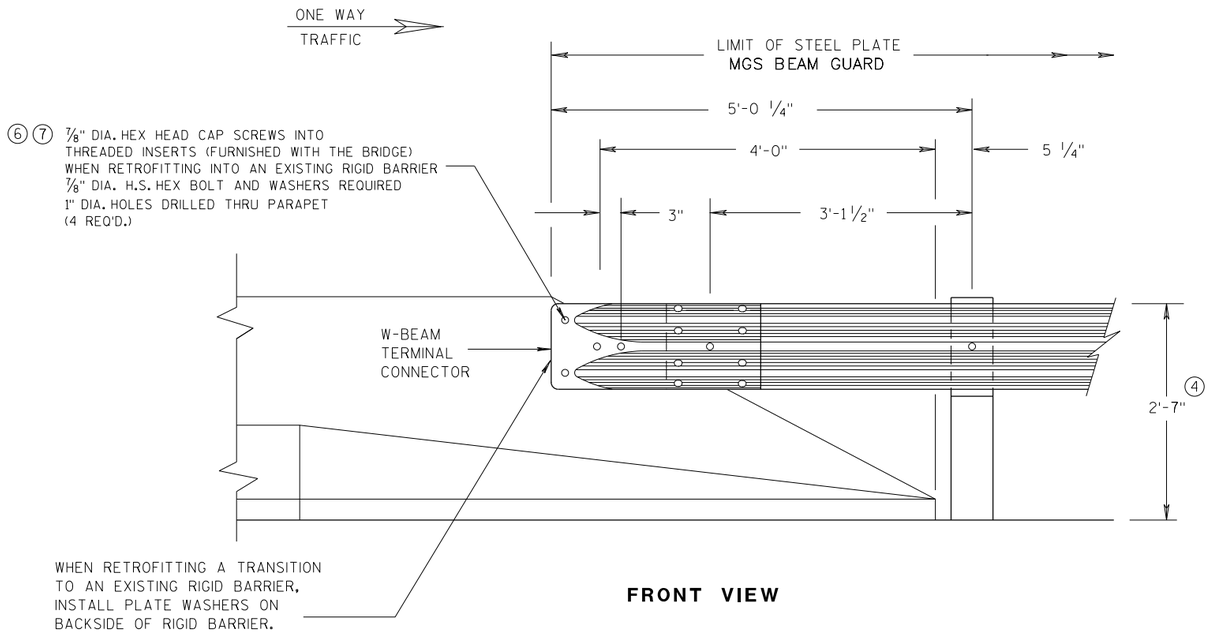


FRONT VIEW

## W BEAM CONNECTION TO PARAPETS WITH SLOPED ENDS

(USE ONLY AT TRAFFIC EXIT END OF ONE WAY BRIDGE)

## GENERAL NOTES

② OPTIONAL CURB AND GUTTER OR DRAINAGE FEATURE SEE PLAN FOR INFORMATION.

④ TOLERANCE FOR TOP OF BEAM IS ± 1".

⑥ DRILLING BOLT HOLES THROUGH THE PARAPET, BOLTS, NUTS, WASHERS AND REPAIRING DAMAGED CONCRETE ARE INCIDENTAL TO THE CONTRACT.

⑦ BOLTS MAY BE A325 BOLTS OR A449 BOLTS. BOLT LENGTH AND THREADING LENGTH ARE TO ALLOW FOR A TIGHT CONNECTION BETWEEN RIGID BARRIER AND THRIE BEAM CONNECTION PLATE. CONTRACTOR IS TO FIELD VERIFY BOLT LENGTH AND THREAD LENGTH. ONE ROUND WASHER REQUIRED BETWEEN BOLT HEAD AND THRIE BEAM CONNECTOR PLATE. BOLTS THAT EXTEND THROUGH THE PARAPET AND OUT THE BACK FACE REQUIRE A HARDENED ROUND STEEL WASHER THAT IS 2" O.D. X 5/32" THICK AND ONE PLATE WASHER. REPAIR ANY DAMAGED CONCRETE FROM BOLT INSTALLATION.

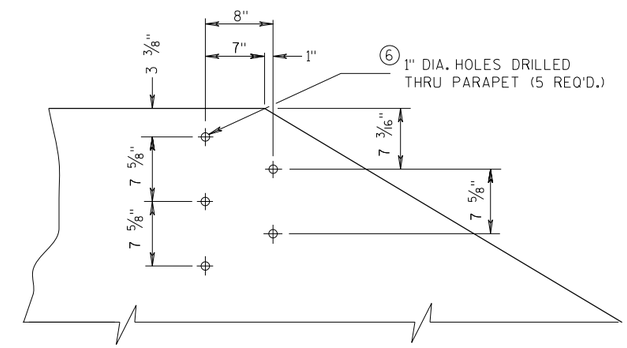


DRILL HOLE LOCATION AND PATTERN FOR THRIE BEAM CONNECTION

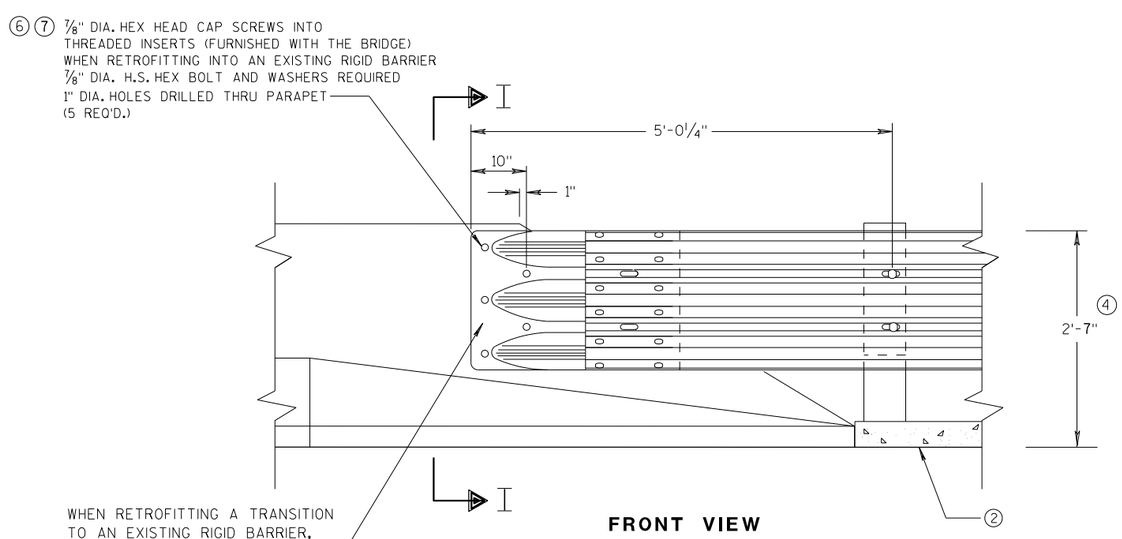


FRONT VIEW

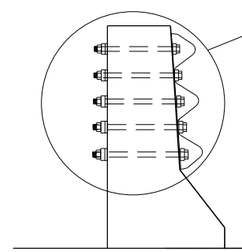

SECTION I-I

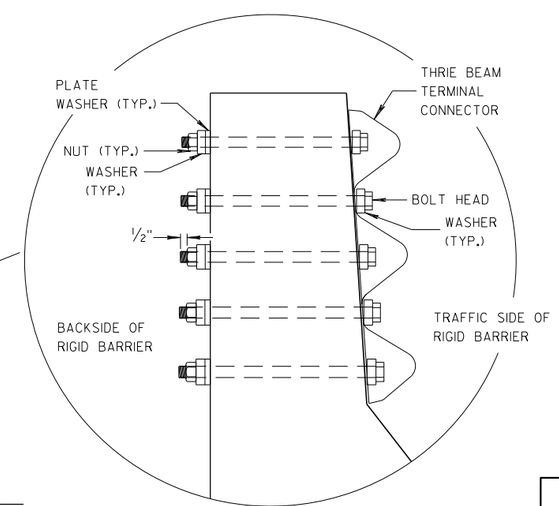


## THRIE BEAM CONNECTION TO BRIDGE PARAPETS WITH SLOPED ENDS

**MIDWEST GUARDRAIL SYSTEM THRIE BEAM TRANSITION (MGS)**

STATE OF WISCONSIN
DEPARTMENT OF TRANSPORTATION

APPROVED
07/2018 — DATE
/S/ Rodney Taylor
ROADWAY STANDARDS DEVELOPMENT UNIT SUPERVISOR
FHWA

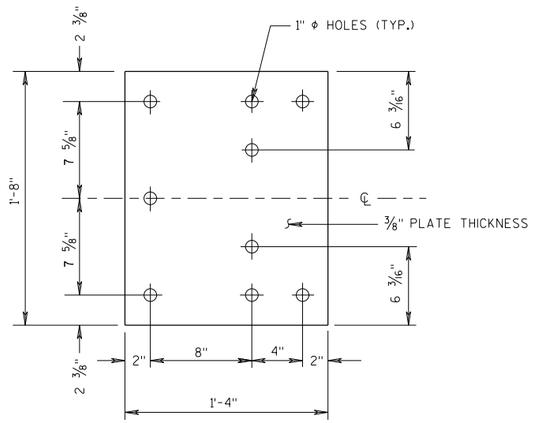


## BACK-UP PLATE DETAIL

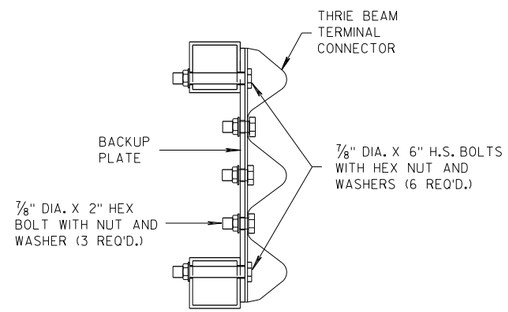


## SECTION J-J

## GENERAL NOTES

(4) TOLERANCE FOR TOP OF BEAM IS ± 1".

(6) DRILLING HOLES THROUGH THE PAPRPET, BOLTS, NUTS, WASHERS AND REPAIRING DAMAGED CONCRETE ARE INCIDENTAL TO THE CONTRACT.

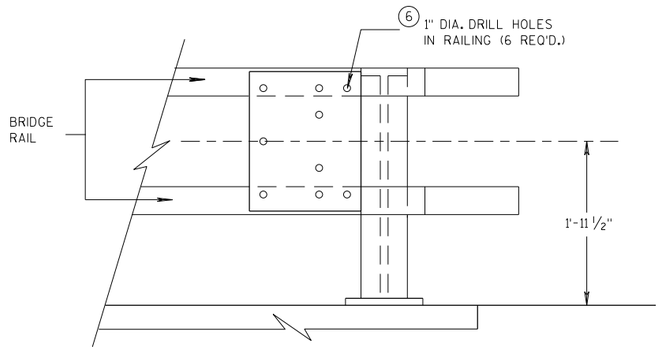


## BACK-UP PLATE MOUNTING ONTO BRIDGE RAILING

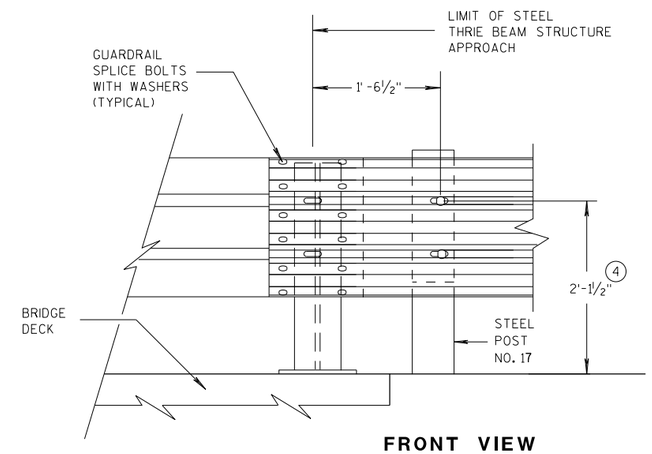


FRONT VIEW

## THRIE BEAM CONNECTION TO STEEL RAILING TYPE "W"

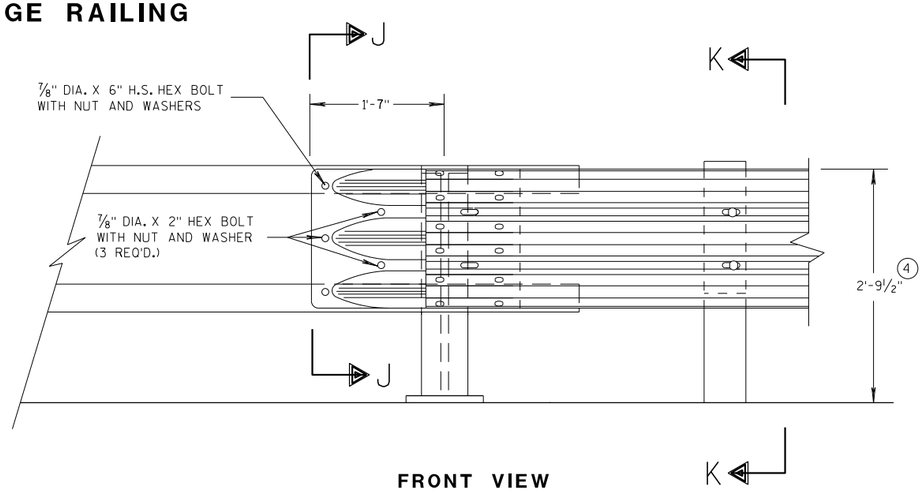


FRONT VIEW

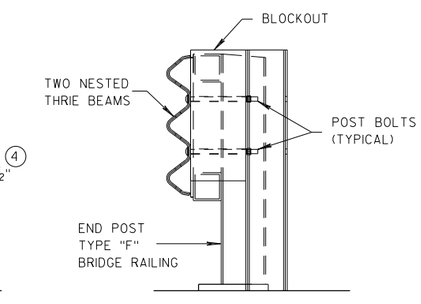


SECTION K-K

## THRIE BEAM CONNECTION TO TUBULAR RAILING TYPE "F"

**MIDWEST GUARDRAIL SYSTEM THRIE BEAM TRANSITION (MGS)**

STATE OF WISCONSIN
DEPARTMENT OF TRANSPORTATION

APPROVED 07/2018 — DATE — FHWA

/S/ Rodney Taylor — ROADWAY STANDARDS DEVELOPMENT UNIT SUPERVISOR

## GENERAL NOTES

(4) TOLERANCE FOR TOP OF W-BEAM RAIL IS ± 1".

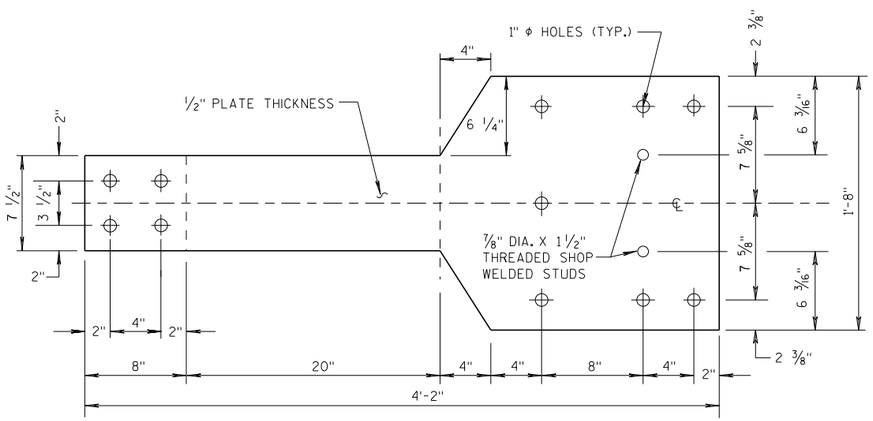


FRONT VIEW

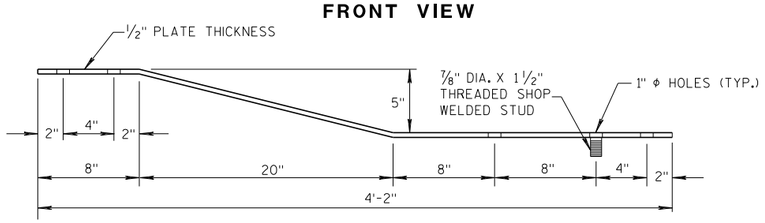


PLAN VIEW

## BACK-UP PLATE DETAIL, TYPE "M"

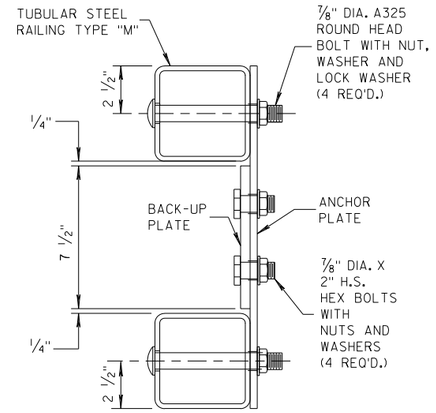


SECTION L-L

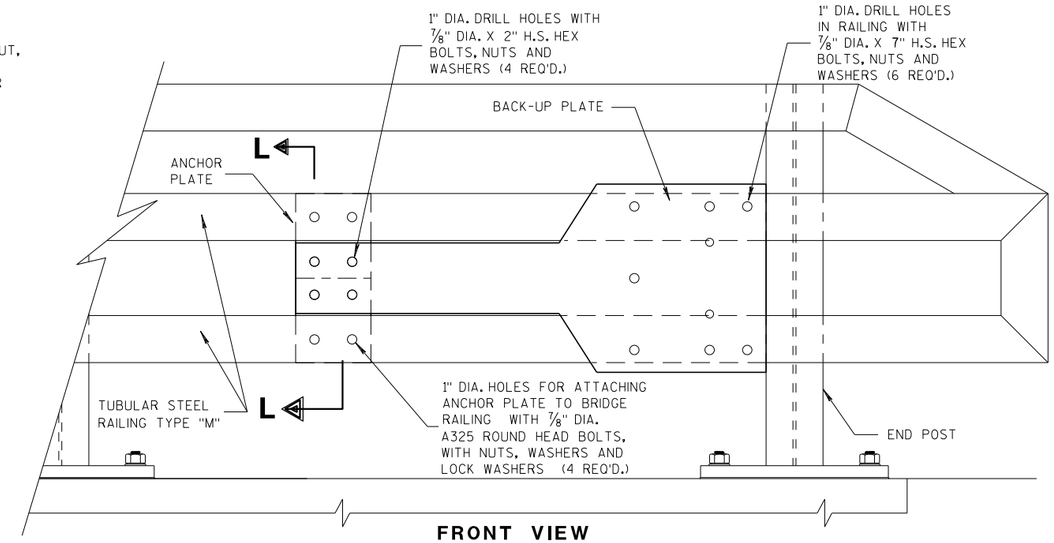


FRONT VIEW

## ANCHOR AND BACK-UP PLATE MOUNTING TO BRIDGE RAILING, TYPE "M"

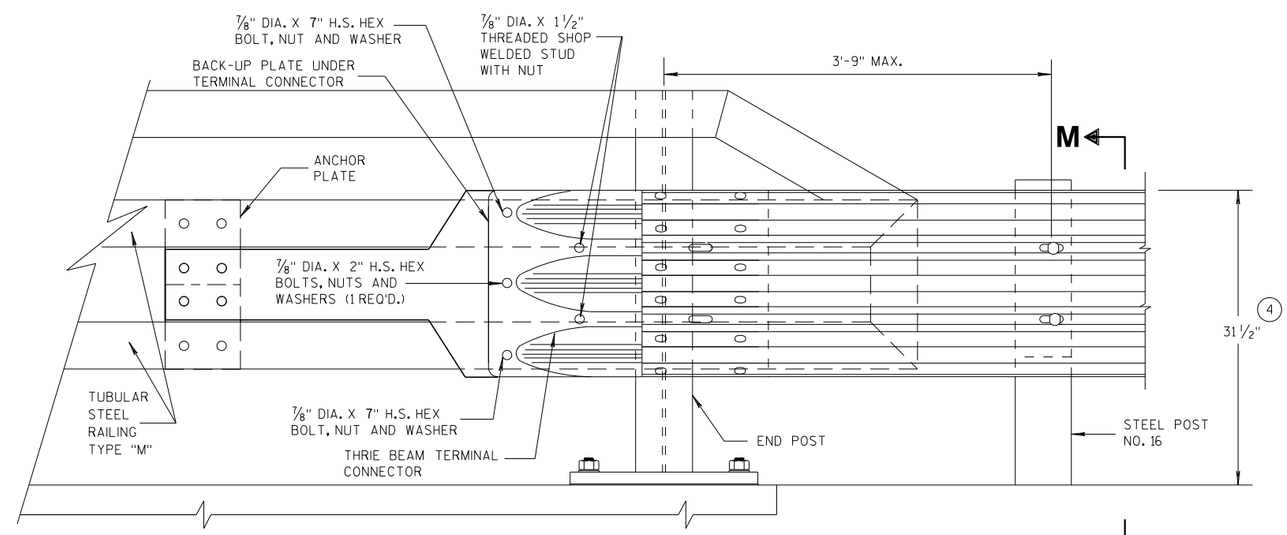


FRONT VIEW

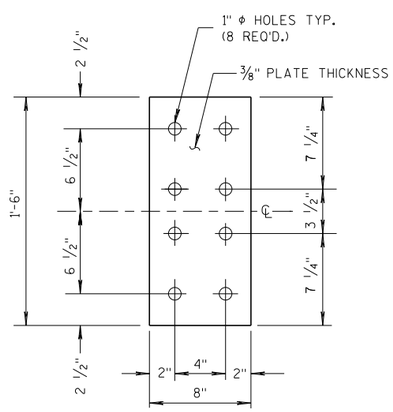


FRONT VIEW

## ANCHOR PLATE DETAIL, TYPE "M"

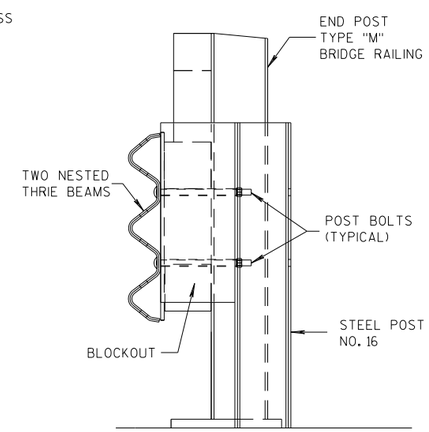


SECTION M-M

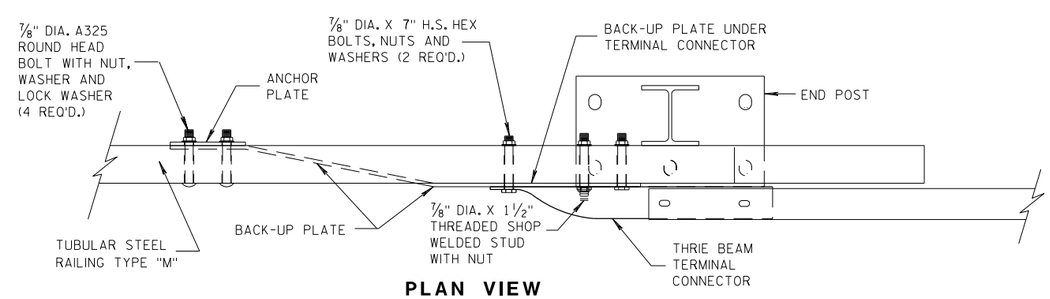


PLAN VIEW

## THRIE BEAM CONNECTION TO TUBULAR RAILING, TYPE "M"

**MIDWEST GUARDRAIL SYSTEM THRIE BEAM TRANSITION (MGS)**

STATE OF WISCONSIN
DEPARTMENT OF TRANSPORTATION

APPROVED
07/2018 — DATE
/S/ Rodney Taylor — ROADWAY STANDARDS DEVELOPMENT UNIT SUPERVISOR
FHWA

6

S.D.D. 14 B 45-5h

## GENERAL NOTES

COVER PLATE PANELS ARE 3/16" THICK.

ALL STIFFENERS ARE 1/4" THICK.

CONNECTOR PLATE SHALL BE FABRICATED FROM ASTM GRADE A36 STEEL AND GALVANIZED.

FOR GALVANIZED REQUIREMENTS, SEE SECTION 614 OF THE STANDARD SPECIFICATIONS.

ALL HOLE DIAMETERS SHALL BE 1".

FOR OPPOSITE SIDE INSTALLATION MIRROR DRAWINGS.

(10) STIFFENERS LOCATED AT THE OUTSIDE EDGES OF THE COVER PLATES SHALL BE WELDED AS FOLLOWS:
SINGLE BEVEL GROOVE WELD ON EXTERNAL SIDES AND 3/16" FILLET WELD BY 1" LONG SPACED AT 2" ON INTERNAL SIDES.

(11) STIFFENERS LOCATED ON THE INSIDE OF THE COVER PLATE SHALL BE WELDED AS FOLLOWS:
3/16" FILLET WELD BY 1" LONG SPACED AT 2".

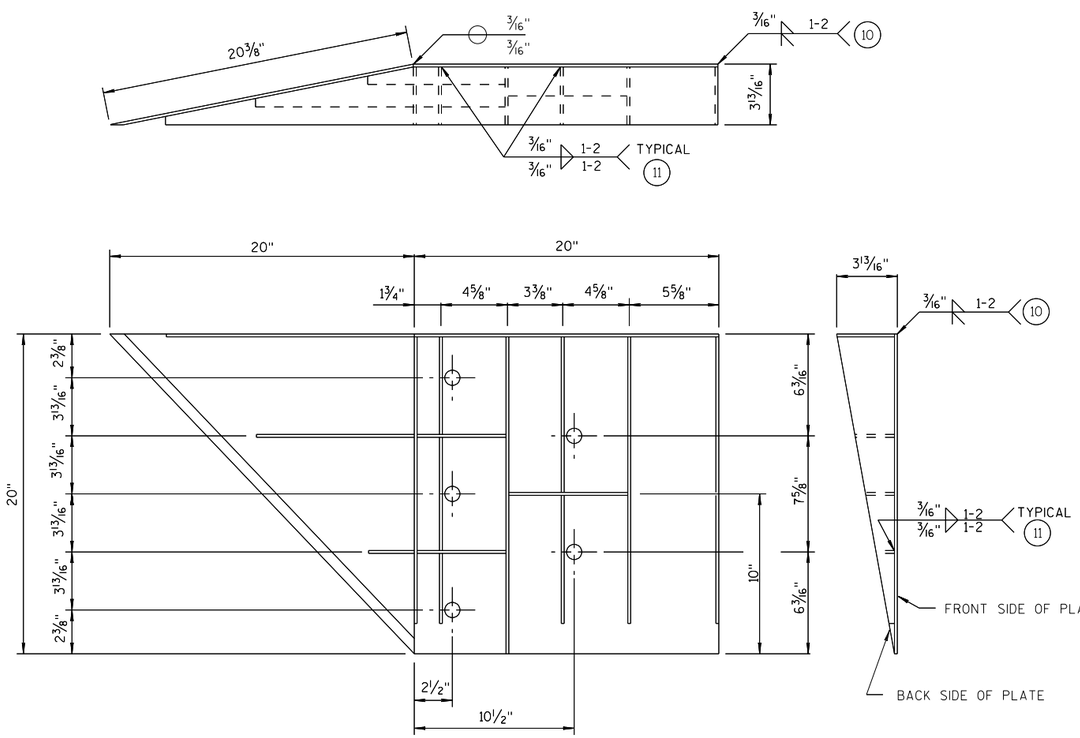


### WELDING INSTRUCTION

(VIEWED FROM BACK SIDE OF PLATE)

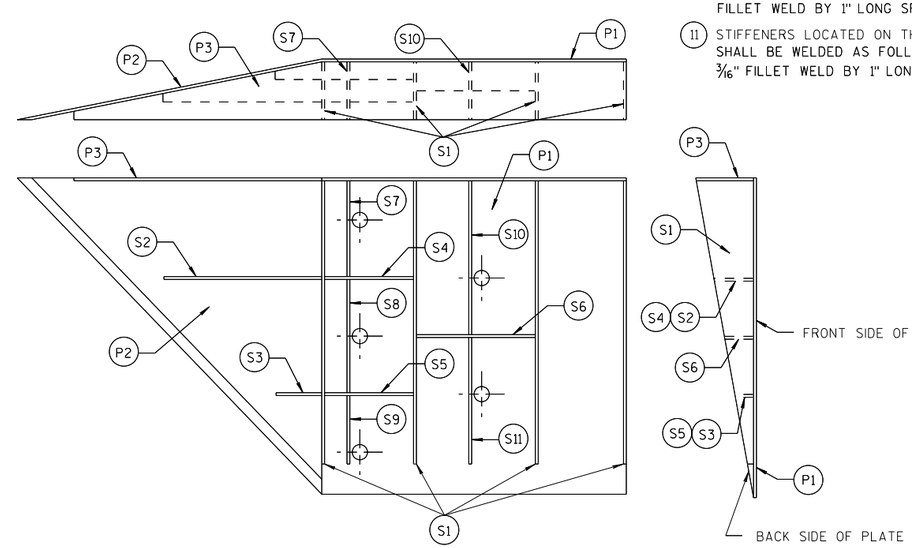


### PLATE AND STIFFENER IDENTIFICATION

(VIEWED FROM BACK SIDE OF PLATE)

**CONNECTOR PLATE DIMENSION (PER ASSEMBLY)**

| PLATE | QUANTITY | SHAPE | SIZE (A x B x C x D) | THICKNESS |
|---|---|---|---|---|
| P1 | 1 | | 20" x 20" | 3/16" |
| P2 | 1 | | 20" x 20" x 28 9/16" | 3/16" |
| P3 | 1 | | 39" x 3 5/8" x 20" x 19 5/16" | 3/16" |
| S1 | 4 | | 18 7/16" x 3 5/8" x 18 3/4" | 1/4" |
| S2 | 1 | | 10 1/4" x 2 7/16" x 10 3/8" x 1/2" | 1/4" |
| S3 | 1 | | 3" x 1 1/16" x 3 1/8" x 1/2" | 1/4" |
| S4 | 1 | | 6 1/8" x 2 7/16" | 1/4" |
| S5 | 1 | | 6 1/8" x 1 1/16" | 1/4" |
| S6 | 1 | | 7 3/4" x 1 3/4" | 1/4" |
| S7 | 1 | | 2 9/16" x 6" x 3 5/8" x 5 7/8" | 1/4" |
| S8 | 1 | | 1 5/32" x 7 1/2" x 2 1/2" x 7 3/8" | 1/4" |
| S9 | 1 | | 6 1/16" x 6 3/16" x 1 3/32" | 1/4" |
| S10 | 1 | | 1 7/8" x 9 7/8" x 3 5/8" x 9 11/16" | 1/4" |
| S11 | 1 | | 8 1/2" x 8 3/4" x 1 13/16" | 1/4" |

### SINGLE SLOPE CONNECTION PLATE

**MIDWEST GUARDRAIL SYSTEM THRIE BEAM TRANSITION (MGS)**

STATE OF WISCONSIN
DEPARTMENT OF TRANSPORTATION

APPROVED
7/2018 /S/ Rodney Taylor
DATE ROADWAY STANDARDS DEVELOPMENT UNIT SUPERVISOR
FHWA

6

S.D.D. 14 B 45-5i

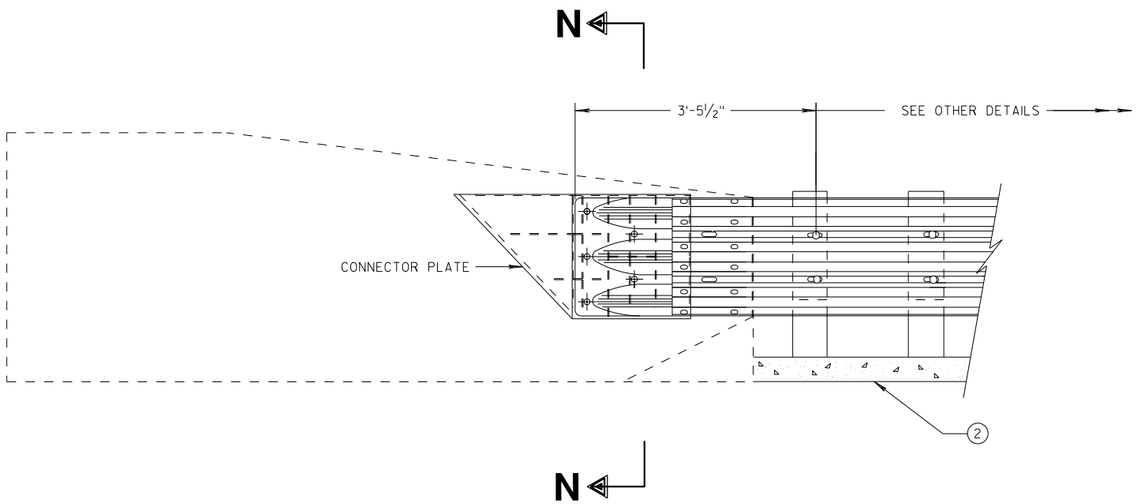


THRIE BEAM CONNECTION TO SINGLE SLOPE BARRIER

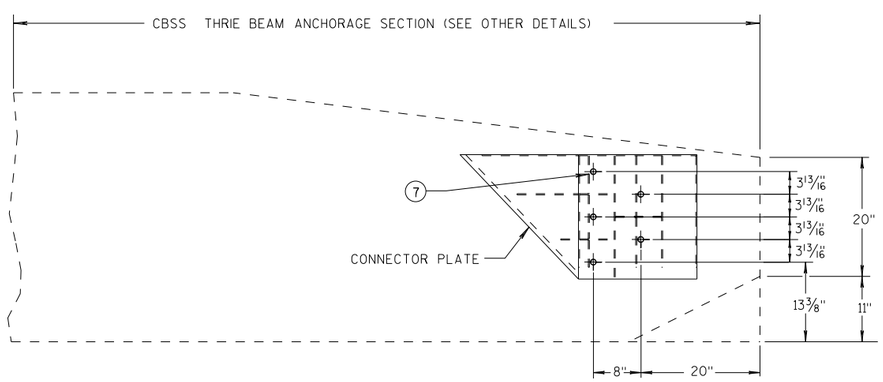


SINGLE SLOPE CONNECTION PLATE PLACEMENT

## GENERAL NOTES

CONNECTOR PLATE, DRILLING BOLT HOLES THROUGH THE PARAPET, BOLTS, NUTS, WASHERS AND REPAIRING DAMAGED CONCRETE ARE INCIDENTAL TO THE CONTRACT.

(2) OPTIONAL CURB AND GUTTER OR DRAINAGE FEATURE SEE PLAN FOR INFORMATION.

(7) BOLTS MAY BE A325 BOLTS OR A449 BOLTS. BOLT LENGTH AND THREADING LENGTH ARE TO ALLOW FOR A TIGHT CONNECTION BETWEEN RIGID BARRIER AND THRIE BEAM CONNECTION PLATE. CONTRACTOR IS TO FIELD VERIFY BOLT LENGTH AND THREAD LENGTH. ONE ROUND WASHER REQUIRED BETWEEN BOLT HEAD AND THRIE BEAM CONNECTOR PLATE. BOLTS THAT EXTEND THROUGH THE PARAPET AND OUT THE BACK FACE REQUIRE A HARDENED ROUND STEEL WASHER THAT IS 2" O.D. X 5/32" THICK AND ONE PLATE WASHER. REPAIR ANY DAMAGED CONCRETE FROM BOLT INSTALLATION.

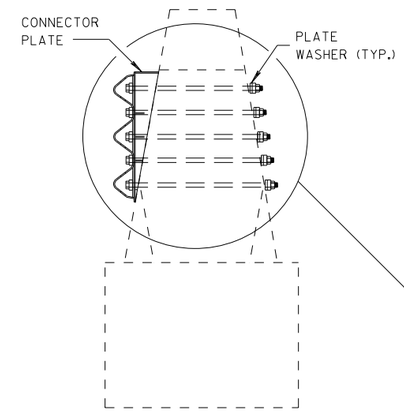


SECTION N-N

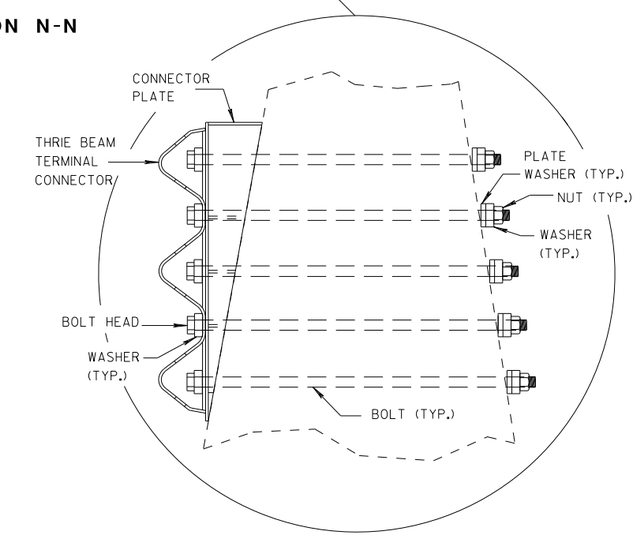


**MIDWEST GUARDRAIL SYSTEM THRIE BEAM TRANSITION (MGS)**

STATE OF WISCONSIN
DEPARTMENT OF TRANSPORTATION

APPROVED
7/2018 — DATE
/S/ Rodney Taylor — ROADWAY STANDARDS DI UNIT SUPERVIS NT
FHWA

6

S.D.D. 14 B 45-5j

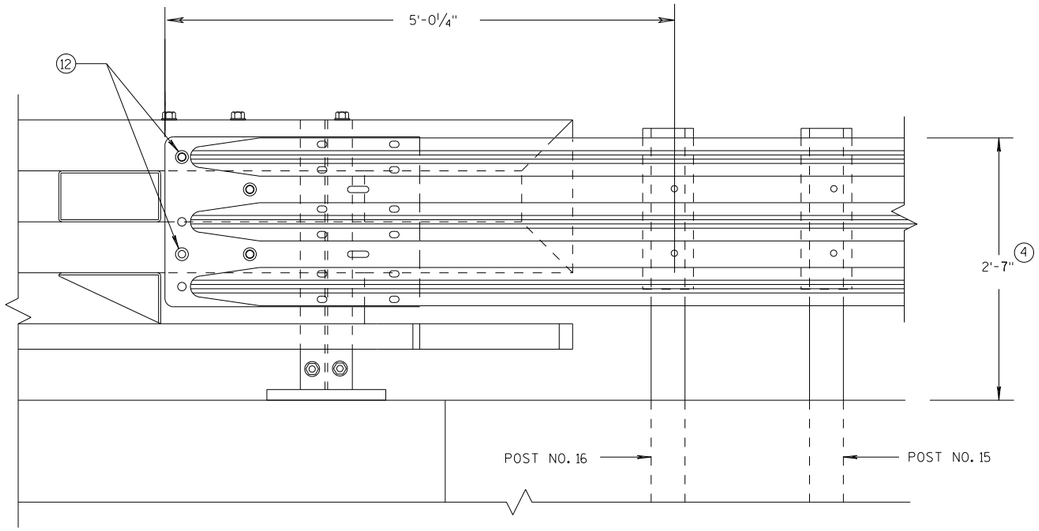


## ELEVATION OF DETAIL AT NY3 END POST

### THRIE BEAM RAIL ATTACHMENT

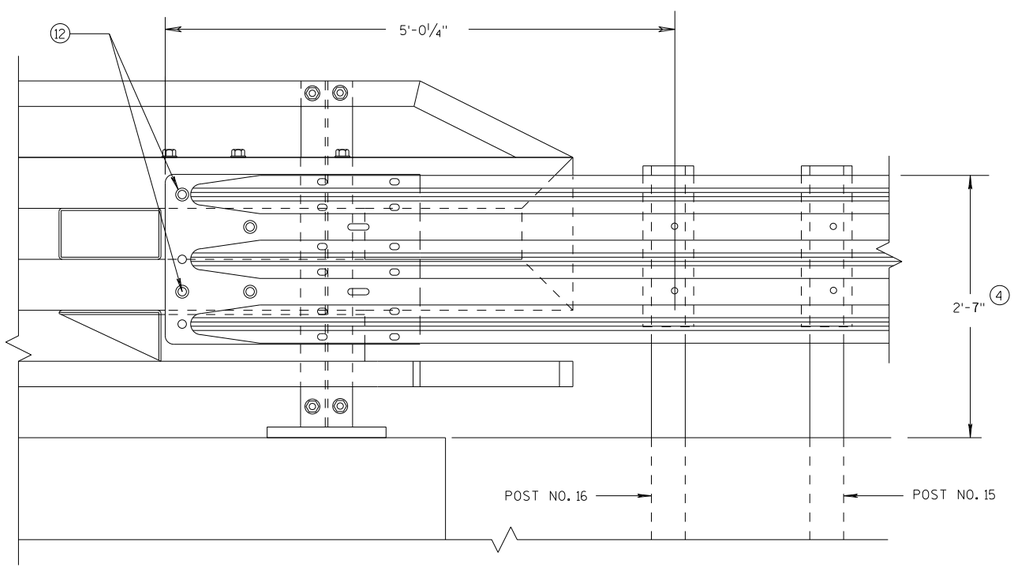


## ELEVATION OF DETAIL AT NY4 END POST

### THRIE BEAM RAIL ATTACHMENT

## GENERAL NOTES

(4) TOLERANCE FOR TOP OF BEAM IS ± 1".

(12) BOLTS MAY BE A325 BOLTS OR A449 BOLTS. BOLT LENGTH AND THREADING LENGTH ARE TO ALLOW FOR A TIGHT CONNECTION BETWEEN RIGID BARRIER AND THRIE BEAM CONNECTION PLATE. CONTRACTOR IS TO FIELD VERIFY BOLT LENGTH AND THREAD LENGTH. ONE ROUND WASHER REQUIRED BETWEEN BOLT HEAD AND THRIE BEAM CONNECTOR PLATE. ON BACKSIDE OF PARAPET ONE ROUND WASHER, AND NUT REQUIRED. BOLT THREAD IS TO EXTEND ½-INCH BEYOND NUT.

**MIDWEST GUARDRAIL SYSTEM**
**THRIE BEAM TRANSITION (MGS)**

STATE OF WISCONSIN
DEPARTMENT OF TRANSPORTATION

APPROVED
7/2018
DATE
FHWA

/S/ Rodney Taylor
ROADWAY STANDARDS D
UNIT SUPERVIS

NT



6
S.D.D. 14 B 45-5k

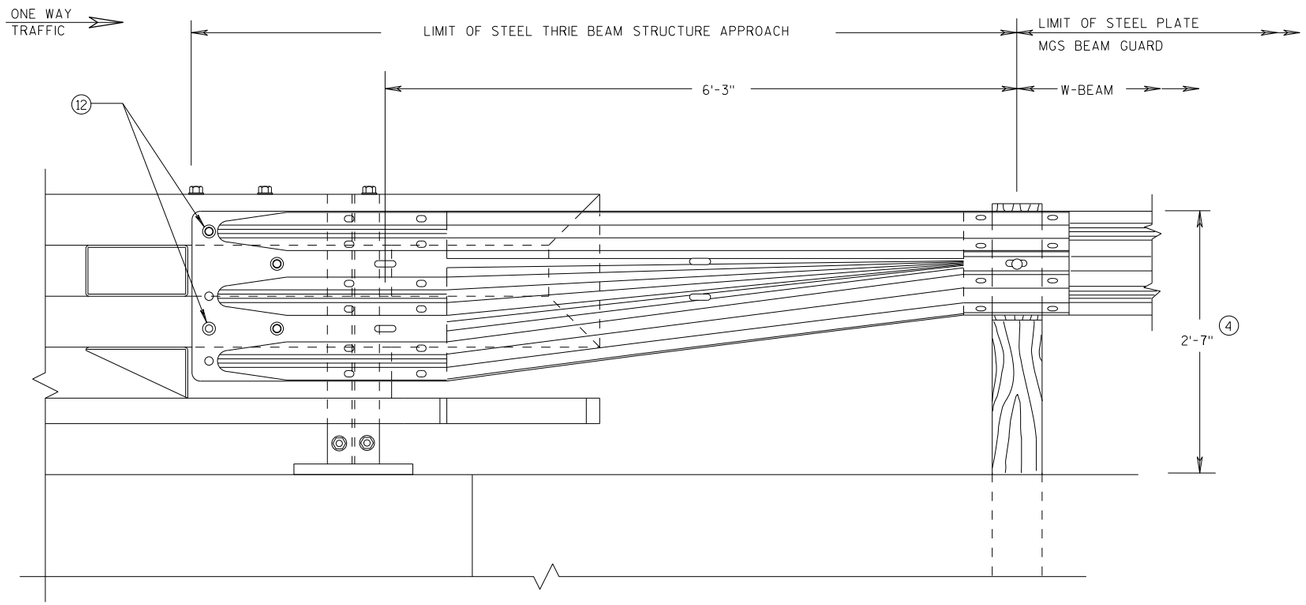


FRONT VIEW

## W BEAM TRANSITION AND CONNECTION TO BRIDGE RAILING TYPE "NY3"

(USE ONLY ON THE TRAFFIC EXIT END OF ONE WAY BRIDGES)

## GENERAL NOTES

(4) TOLERANCE FOR TOP OF BEAM IS ± 1".

(12) BOLTS MAY BE A325 BOLTS OR A449 BOLTS. BOLT LENGTH AND THREADING LENGTH ARE TO ALLOW FOR A TIGHT CONNECTION BETWEEN RIGID BARRIER AND THRIE BEAM CONNECTION PLATE. CONTRACTOR IS TO FIELD VERIFY BOLT LENGTH AND THREAD LENGTH. ONE ROUND WASHER REQUIRED BETWEEN BOLT HEAD AND THRIE BEAM CONNECTOR PLATE. ON BACKSIDE OF PARAPET ONE ROUND WASHER, AND NUT REQUIRED. BOLT THREAD IS TO EXTEND ½-INCH BEYOND NUT.

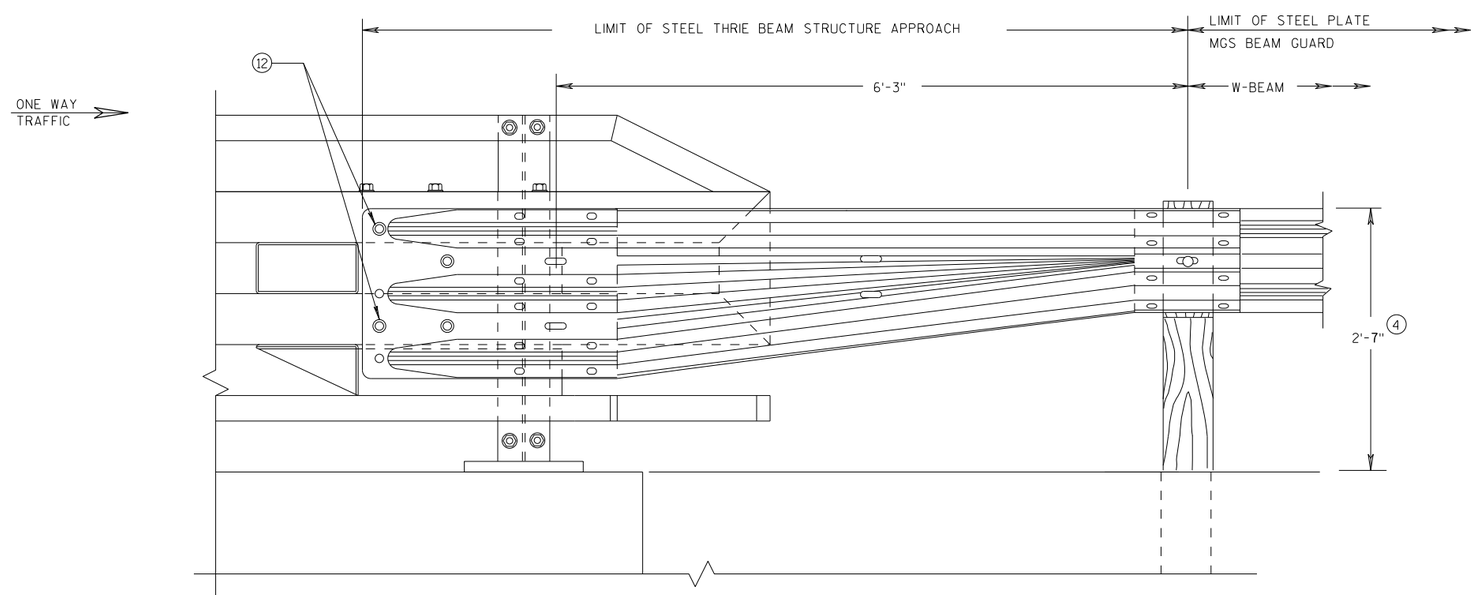


FRONT VIEW

## W BEAM TRANSITION AND CONNECTION TO BRIDGE RAILING TYPE "NY4"

(USE ONLY ON THE TRAFFIC EXIT END OF ONE WAY BRIDGES)

**MIDWEST GUARDRAIL SYSTEM THRIE BEAM TRANSITION (MGS)**

STATE OF WISCONSIN
DEPARTMENT OF TRANSPORTATION

APPROVED
7/2018 — DATE
/S/ Rodney Taylor — ROADWAY STANDARDS DEVELOPMENT UNIT SUPERVISOR
FHWA

NT




6


S.D.D. 14 B 45-5L

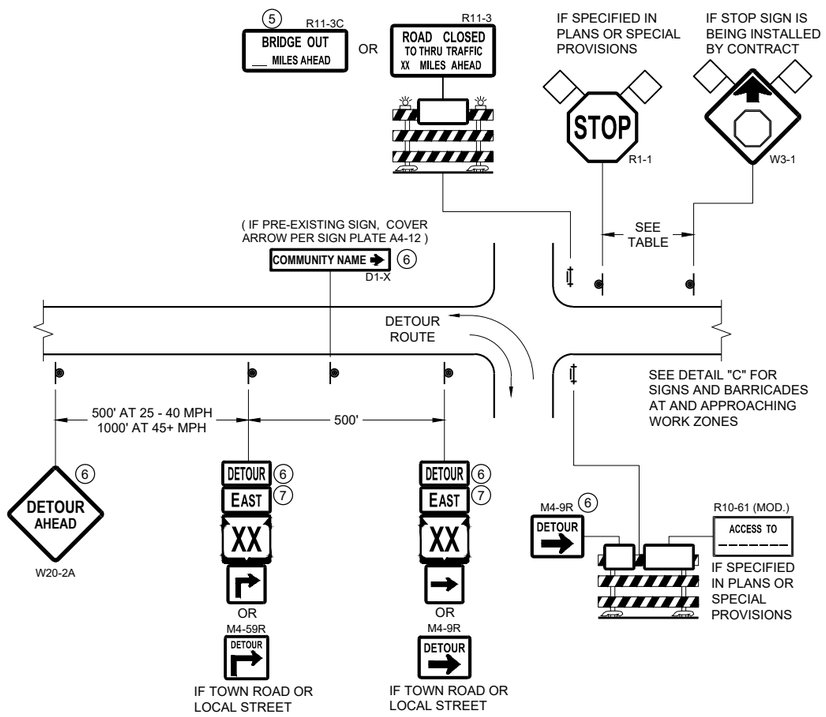


**DETAIL A**
**MAINLINE CLOSURE WITH POSTED DETOUR**
WORK ZONE GREATER THAN OR EQUAL TO ½ MILE FROM DETOUR ROUTE ( 1000 FEET IF URBAN )

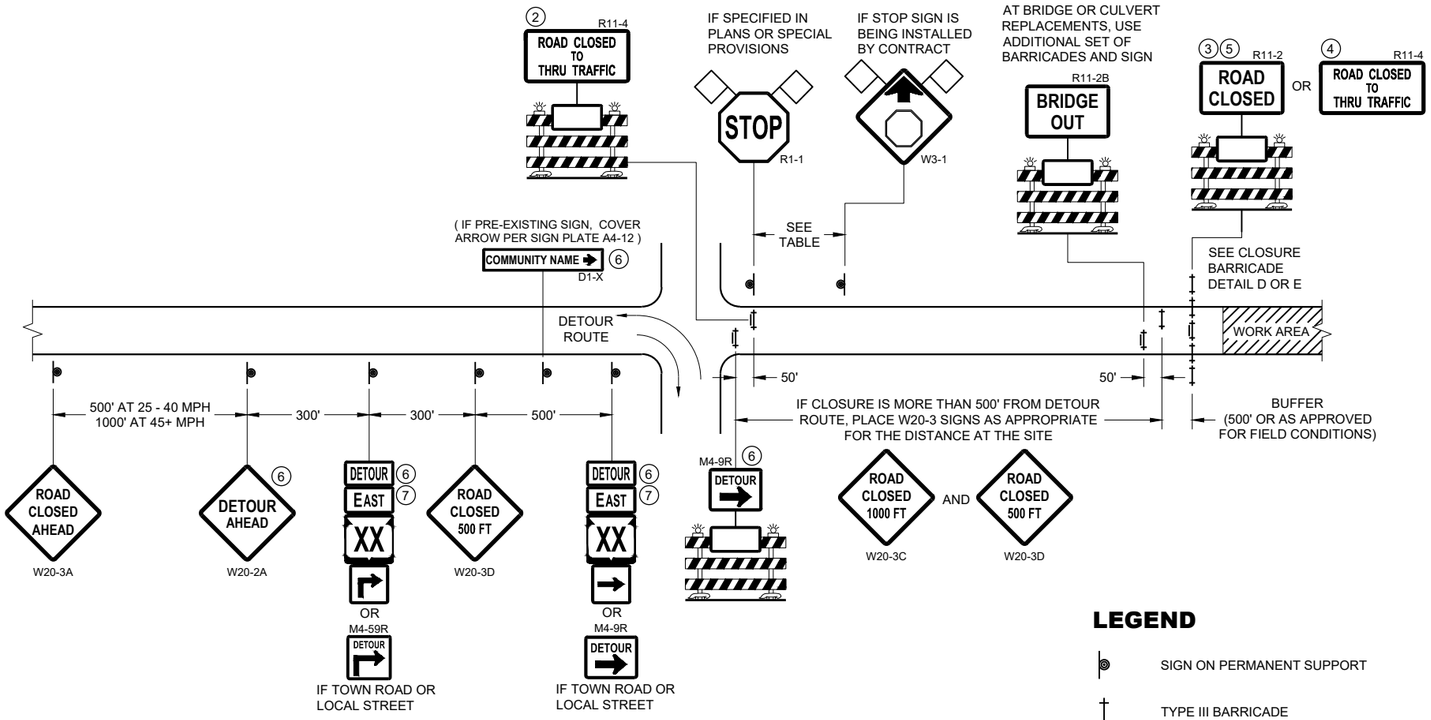


**DETAIL B**
**MAINLINE CLOSURE WITH POSTED DETOUR**
WORK ZONE LESS THAN ½ MILE FROM DETOUR ROUTE ( 1000 FEET IF URBAN )

## LEGEND

- SIGN ON PERMANENT SUPPORT
- TYPE III BARRICADE
- TYPE III BARRICADE WITH ATTACHED SIGN
- TYPE "A" WARNING LIGHT (FLASHING)
- WORK AREA
- FLAGS, 16" X 16" MIN. (ORANGE)
- DETOUR — M4 - 8
- EAST — M3 - X
- XX (M1 - 4) OR XX (M1 - 6) OR COUNTY X (M1 - 5A)
- M05 - 1 OR M06 - 1

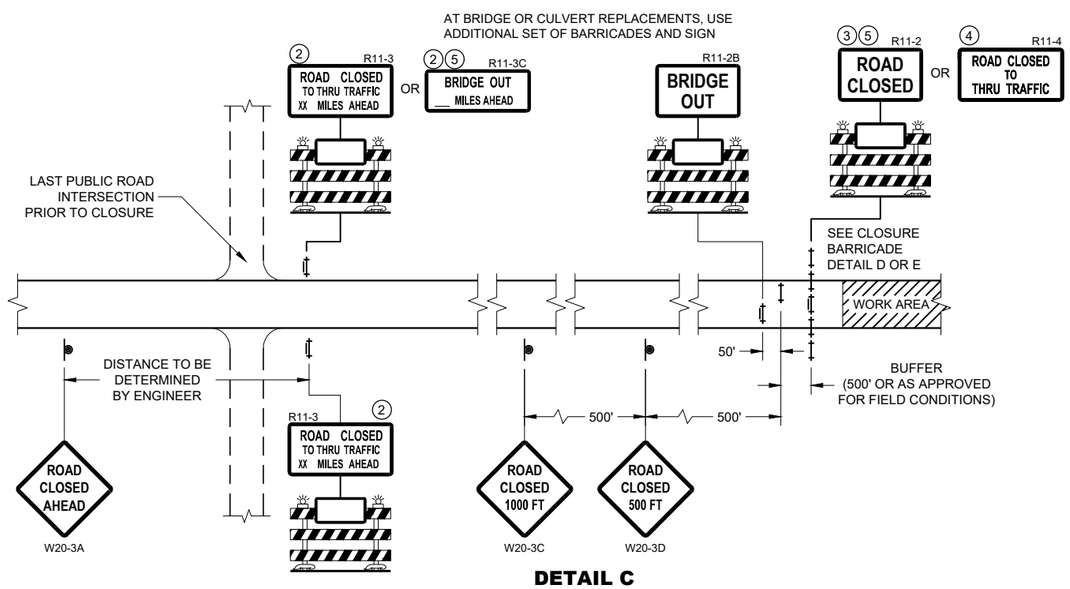


**DETAIL C**
**MAINLINE CLOSURE, NO POSTED DETOUR**

| SPEED LIMIT (MPH) | "STOP AHEAD" ADVANCE WARNING DISTANCE (FT) |
|---|---|
| 25 | 200 |
| 30 | 200 |
| 35 | 350 |
| 40 | 350 |
| 45 | 500 |
| 50 | 550 |
| 55 | 750 |

SEE SDD 15C2-SHEET "b" FOR GENERAL NOTES AND FOOTNOTES 1 THROUGH 7

**BARRICADES AND SIGNS FOR MAINLINE CLOSURES**

STATE OF WISCONSIN
DEPARTMENT OF TRANSPORTATION

APPROVED
May 2023 — DATE
/S/ Andrew Heidtke — WORK ZONE ENGINEER
FHWA




6


SDD 15C02 - 09a

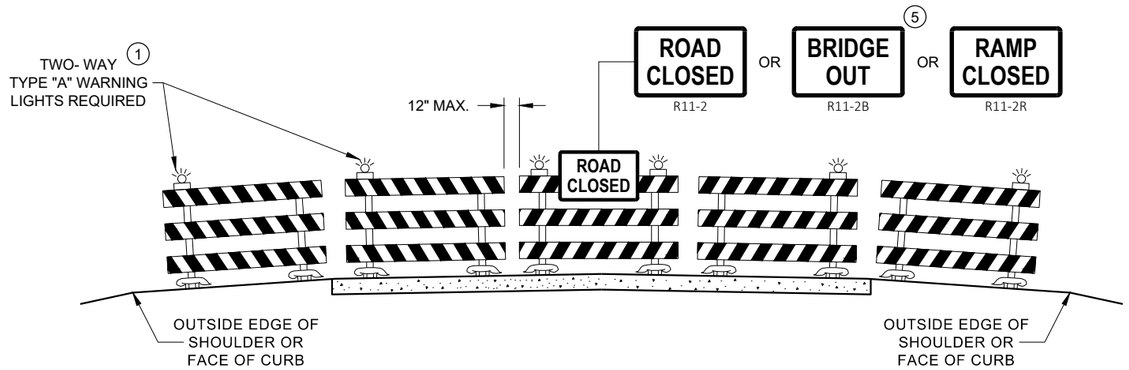


**DETAIL D**
**ROAD CLOSURE BARRICADE DETAIL**
**APPROACH VIEW**

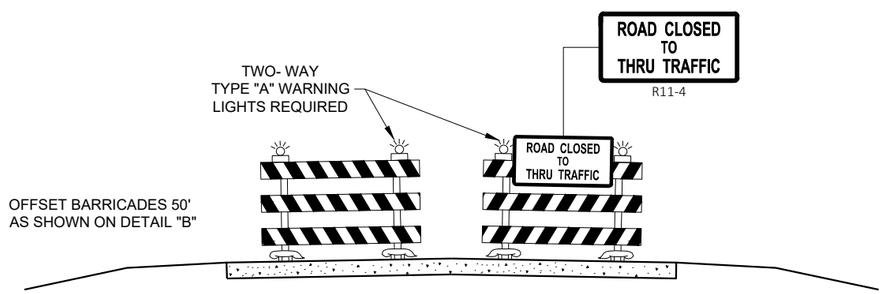


**DETAIL E**
**LANE CLOSURE BARRICADE DETAIL**
**APPROACH VIEW**

SEE SDD 15C2 - SHEET "a" FOR LEGEND

## GENERAL NOTES

THE EXACT NUMBER, LOCATION, AND SPACING OF ALL SIGNS AND BARRICADES SHALL BE ADJUSTED TO FIT FIELD CONDITIONS AS APPROVED BY THE ENGINEER.

ANY SIGNS TEMPORARY OR EXISTING, WHICH CONFLICT WITH TRAFFIC CONTROL "IN USE", SHALL BE REMOVED OR COVERED AS NEEDED AND AS APPROVED BY THE ENGINEER.

THE SPACING BETWEEN TRAFFIC CONTROL SIGNS SHOULD BE ADJUSTED TO NOT CONFLICT WITH AND SHOULD PROVIDE A DESIRABLE MINIMUM OF 200 FEET CLEARANCE TO EXISTING SIGNS THAT WILL REMAIN IN PLACE.

BARRICADES THAT MUST BE MOVED FOR A WORK OPERATION SHALL BE IMMEDIATELY RE-ESTABLISHED UPON COMPLETION OF THE OPERATION, OR FOR CONTINUING OPERATIONS, AT THE END OF EACH WORKING DAY.

SIGNS THAT WILL BE IN PLACE LESS THAN 7 CONTINUOUS DAYS AND NIGHTS MAY BE MOUNTED ON PORTABLE SUPPORTS.

ALL TYPE III BARRICADES SHALL HAVE RAILS REFLECTORIZED ON BOTH FACES. STRIPES SHALL BE PROPERLY SLOPED DOWN TOWARD THE TRAFFIC SIDE OR AS SHOWN IN THE ROAD CLOSURE BARRICADE DETAIL "D" FOR FULL ROAD CLOSURES.

TYPE "A" LOW - INTENSITY FLASHING WARNING LIGHTS SHALL BE VISIBLE ON BOTH SIDES OF THE BARRICADE.

THE R11 - 2, R11 - 3, M4 - 9, R11 - 4, AND R10 - 61 SIGNS PLACED ON THE BARRICADES SHALL COVER NO MORE THAN THE TOP RAIL. THE SIGNS SHALL NOT COVER ANY PORTION OF THE MIDDLE RAIL OR BOTTOM RAILS.

"WO" AND "MO" SIGNS ARE THE SAME AS "W" AND "M" SIGNS EXCEPT THE BACKGROUND IS ORANGE.

ALL SIGNS SHALL BE 48" X 48" UNLESS OTHERWISE NOTED BELOW:
- R11 - 2 SHALL BE 48" X 30"
- R11 - 3 SHALL, R11 - 4 AND R10 - 61 SHALL BE 60 " X 30"
- M4 - 9 SHALL BE 30" X 24"
- M3 - X SHALL BE 24" X 12" (36" X 18" IF NEEDED TO MATCH EXISTING SIGNS)
- M4 - 8 SHALL BE 24" X 12" (36" X 18" IF NEEDED TO MATCH EXISTING SIGNS)
- M1 - 4, M1 - 5A AND M1 - 6 SHALL BE 24" X 24" (36" X 36" IF NEEDED TO MATCH EXISTING SIGNS)
- MO5 - 1 AND MO6 - 1 SHALL BE 21" X 21" (30" X 30" IF NEEDED TO MATCH EXISTING SIGNS)
- D1 - X SHALL BE AS SHOWN ON SPECIFIC PROJECT SIGNING DETAIL SHEETS.
- R1 - 1 SHALL BE 36" X 36"

1. TWO WARNING LIGHTS SHALL BE PROVIDED ON THE CENTER BARRICADE AND A MINIMUM OF ONE WARNING LIGHT SHALL BE PROVIDED ON EACH OF THE OTHER BARRICADES WITHIN THE ROADWAY LIMITS. SPACING OF THE WARNING LIGHTS SHALL BE UNIFORM TO THE EDGE OF ROADWAY AS SHOWN (APPROX. 8 FOOT LIGHT SPACING.
2. THESE SIGNS AND BARRICADES ARE NOT REQUIRED IF ROAD CLOSURE BEGINS AT AN INTERSECTION.
3. FOR ROAD CLOSURE WITHOUT LOCAL ACCESS TO PROJECT, SEE ROAD CLOSURE BARRICADE DETAIL "D".
4. FOR ROAD CLOSURE WITH LOCAL ACCESS TO PROJECT, SEE ROAD CLOSURE BARRICADE DETAIL "E".
5. FOR BRIDGE OR CULVERT REPLACEMENTS, SUBSTITUTE "BRIDGE OUT" INSTEAD OF "ROAD CLOSED" ON R11 - 2 AND R11 - 3 SIGNS.
6. INSTALL DETOUR AND COMMUNITY GUIDE SIGNS AND ARROWS ONLY IF SPECIFIED IN THE CONTRACT. IF THERE ARE EXISTING ROUTE MARKER ASSEMBLIES THAT WILL REMAIN IN PLACE, ADJUST THE LOCATION OF THE DETOUR ROUTE SIGNS TO CORRESPOND WITH THE EXISTING ASSEMBLIES. MODIFY EXISTING SIGNS WHERE POSSIBLE. SEE SPECIFIC PROJECT DETOUR SIGNING DETAIL SHEETS. IF DETOUR SIGNS ARE BEING INSTALLED BY OTHERS, PLACE THE CONTRACTED TRAFFIC CONTROL SIGNS TO ALLOW FOR PLACEMENT OF ALL WARNING, DETOUR AND GUIDE SIGNS AS SHOWN.
7. "EAST" CARDINAL DIRECTION MARKERS AND RIGHT TURN ARROWS ARE SHOWN. USE OTHER CARDINAL DIRECTIONS AND ARROWS AS APPROPRIATE.

**BARRICADES AND SIGNS FOR VARIOUS CLOSURES**

STATE OF WISCONSIN
DEPARTMENT OF TRANSPORTATION

APPROVED
May 2023 — DATE
/S/ Andrew Heidtke — WORK ZONE ENGINEE
FHWA

THIS DRAWING PROVIDES GENERAL GUIDANCE ON TYPICAL DETOUR SIGN LAYOUT AND SPACING. SEE PROJECT DETOUR SIGNING SHEETS FOR SPECIFIC DETAILS FOR EACH PROJECT.

## LEGEND

- SIGN ON PERMANENT SUPPORT
- WORK AREA
- DETOUR — M4 - 8
- EAST — M3 - X
- XX — M1 - 4 OR XX — M1 - 6 OR COUNTY X — M1 - 5A
- M05 - 1 OR M06 - 1 OR M06 - 1

## GENERAL NOTES

THE EXACT NUMBER, LOCATION AND SPACING OF ALL SIGNS SHALL BE ADJUSTED TO FIT FIELD CONDITIONS AS APPROVED BY THE ENGINEER.

IF THERE ARE EXISTING ROUTE MARKER ASSEMBLIES THAT WILL REMAIN IN PLACE, ADJUST THE LOCATION OF THE DETOUR ROUTE SIGNS TO CORRESPOND WITH THE EXISTING ASSEMBLIES. SEE SPECIFIC PROJECT DETOUR SIGNING DETAIL SHEETS. MODIFY EXISTING SIGNS WHERE POSSIBLE.

THE SPACING BETWEEN TRAFFIC CONTROL AND DETOUR SIGNS SHOULD BE ADJUSTED TO NOT CONFLICT WITH AND TO PROVIDE A DESIRABLE MINIMUM OF 200 FEET CLEARANCE TO EXISTING SIGNS THAT WILL REMAIN IN PLACE.

ANY SIGNS TEMPORARY OR EXISTING, WHICH CONFLICT WITH TRAFFIC CONTROL "IN USE" SHALL BE REMOVED OR COVERED AS NEEDED AND AS APPROVED BY THE ENGINEER.

SIGNS THAT WILL BE IN PLACE LESS THAN 7 CONTINUOUS DAYS AND NIGHTS MAY BE MOUNTED ON PORTABLE SUPPORTS.

"MO" SIGNS ARE THE SAME AS "M" SIGNS EXCEPT THE BACKGROUND IS ORANGE.

SIGN SIZES SHALL BE AS FOLLOWS:

M3-X SHALL BE 24" X 12" (36" X 18" IF NEEDED TO MATCH EXISTING SIGNS)
M4-8 SHALL BE 24" X 12" (36" X 18" IF NEEDED TO MATCH EXISTING SIGNS)
M1-4, M1-5A AND M1-6 SHALL BE 24" X 24" (36" X 36" IF NEEDED TO MATCH EXISTING SIGNS)
M05-1 AND M06-1 SHALL BE 21" X 21" (30" X 30" IF NEEDED TO MATCH EXISTING SIGNS)
M4-9 AND M4-59 SHALL BE 30" X 24"
M4-8a SHALL BE 24" X 18"
G20-51 SHALL BE 60" X 24"
W20-2A SHALL BE 48" X 48"
D1-X SHALL BE AS SHOWN ON SPECIFIC PROJECT SIGNING DETAIL SHEETS.

* OPTIONAL SIGNS. SEE SPECIFIC PROJECT DETOUR SIGNING DETAIL SHEETS.

** FOR A TOWN ROAD OR LOCAL STREET DETOURED ONTO A STATE TRUNK HIGHWAY, PLACE A ROAD NAME PLAQUE ABOVE THE M4-9 SIGN AS SPECIFIED IN THE CONTRACT.

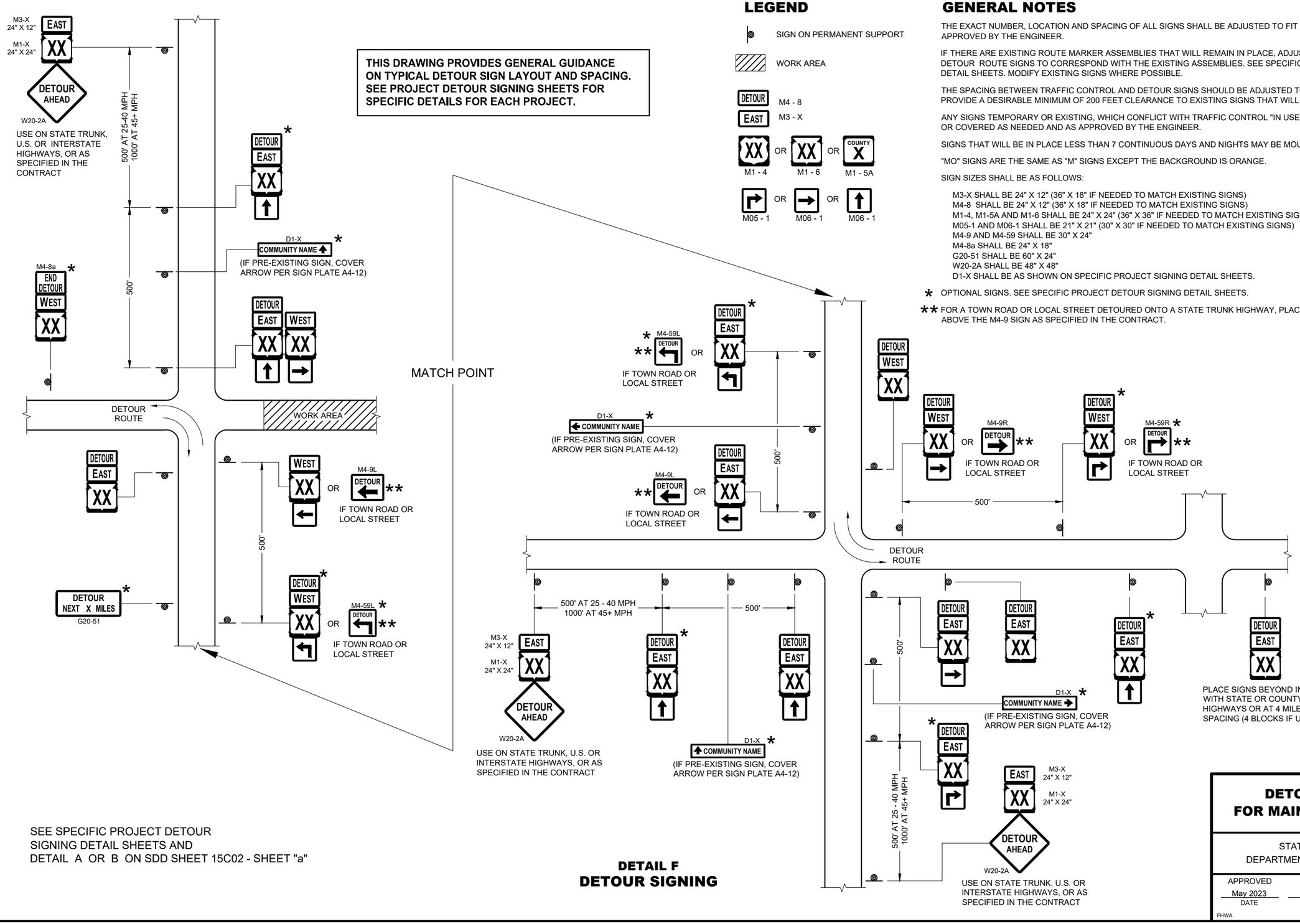


SEE SPECIFIC PROJECT DETOUR SIGNING DETAIL SHEETS AND DETAIL A OR B ON SDD SHEET 15C02 - SHEET "a"

**DETAIL F**
**DETOUR SIGNING**

**DETOUR SIGNING FOR MAINLINE CLOSURES**

STATE OF WISCONSIN
DEPARTMENT OF TRANSPORTATION

APPROVED
May 2023 — DATE
/S/ Andrew Heidtke — WORK ZONE ENGINEER
FHWA




6


SDD 15C02 - 09c

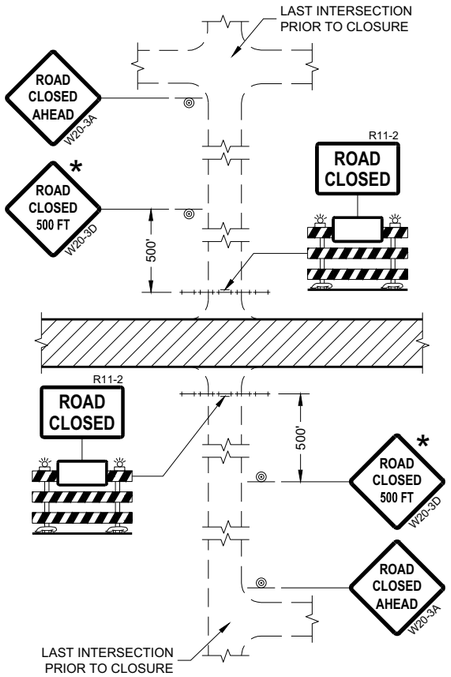


**DETAIL 1**
(NO ACCESS TO PROJECT)

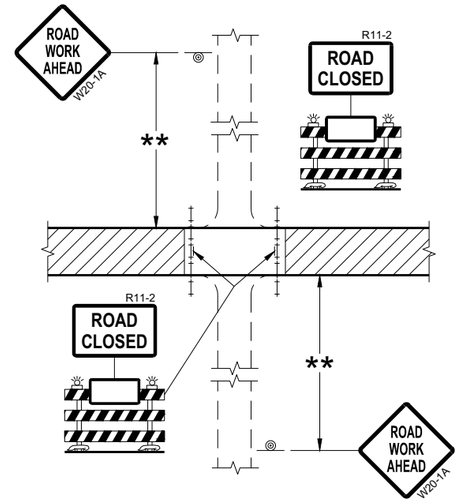


**DETAIL 2**
(PUBLIC CROSS-TRAFFIC MAINTAINED.
NO ACCESS TO PROJECT)

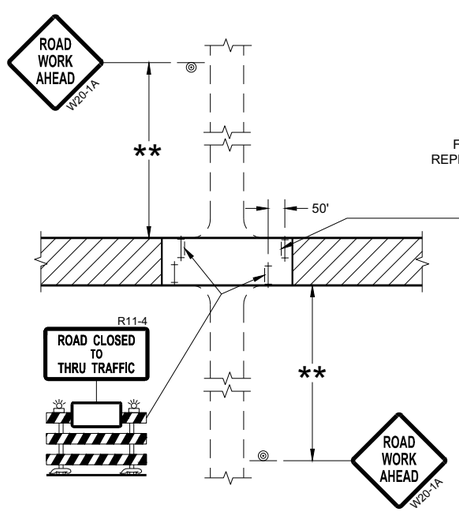


**DETAIL 3**
(PUBLIC CROSS-TRAFFIC MAINTAINED.
CONTRACTOR, LOCAL BUSINESS AND
RESIDENT ACCESS TO PROJECT)

FOR BRIDGE OR CULVERT
REPLACEMENT, USE ADDITIONAL
SIGN ON BARRICADE

BRIDGE OUT
XX MILES AHEAD
R11-3C

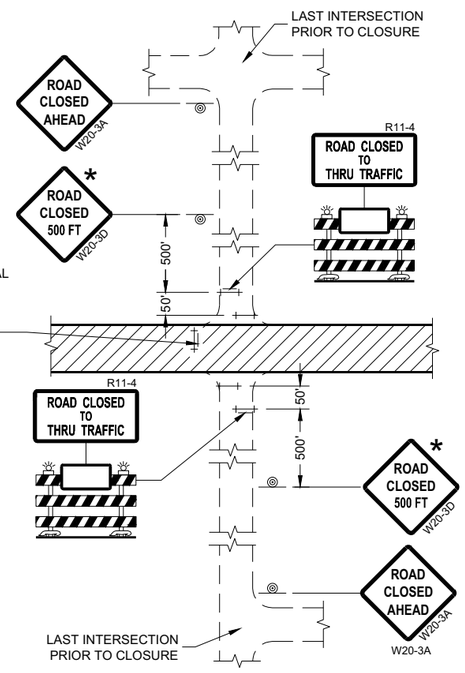


**DETAIL 4**
(CONTRACTOR, LOCAL BUSINESS AND
RESIDENT ACCESS TO PROJECT)

## GENERAL NOTES

THE EXACT NUMBER, LOCATION, AND SPACING OF ALL SIGNS AND BARRICADES SHALL BE ADJUSTED TO FIT FIELD CONDITIONS AS APPROVED BY THE ENGINEER.

ANY SIGNS TEMPORARY OR EXISTING, WHICH CONFLICT WITH TRAFFIC CONTROL "IN USE" SHALL BE REMOVED OR COVERED AS NEEDED AND AS APPROVED BY THE ENGINEER.

THE SPACING BETWEEN TRAFFIC CONTROL SIGNS SHOULD BE ADJUSTED TO NOT CONFLICT WITH AND SHOULD PROVIDE A DESIRABLE MINIMUM OF 200 FEET CLEARANCE (500 FEET DESIRABLE) TO EXISTING SIGNS THAT WILL REMAIN IN PLACE.

IF A "STOP" SIGN MUST BE REMOVED FOR A WORK OPERATION, A TEMPORARY "STOP" SIGN SHALL BE PLACED PRIOR TO THE SIGN REMOVAL, OR A FLAGGER SHALL BE PROVIDED UNTIL THE SIGN IS REESTABLISHED.

BARRICADES THAT MUST BE MOVED FOR A WORK OPERATION SHALL BE IMMEDIATELY REESTABLISHED UPON COMPLETION OF THE OPERATION OR FOR CONTINUING OPERATIONS, AT THE END OF EACH WORKING DAY.

SIGNS THAT WILL BE IN PLACE LESS THAN SEVEN CONTINUOUS DAYS AND NIGHTS MAY BE MOUNTED ON PORTABLE SUPPORTS.

ALL TYPE III BARRICADES SHALL HAVE RAILS REFLECTORIZED ON BOTH FACES. STRIPES SHALL BE PROPERLY SLOPED DOWN TOWARD THE TRAFFIC SIDE OR AS SHOWN IN THE ROAD CLOSURE BARRICADE DETAIL "D" FOR FULL ROAD CLOSURES.

TYPE "A" LOW-INTENSITY FLASHING WARNING LIGHTS SHALL BE VISIBLE ON BOTH SIDES OF THE BARRICADE.

THE R11-2, R11-3, AND R11-4 SIGNS PLACED ON BARRICADES SHALL COVER NO MORE THAN THE TOP RAIL. THE SIGNS SHALL NOT COVER ANY PORTION OF THE MIDDLE OR BOTTOM RAILS.

ALL SIGNS SHALL BE 48" X 48" UNLESS OTHERWISE NOTED BELOW:
R11-2 SHALL BE 48" X 30".
R11-4 AND R11-3 SHALL BE 60" X 30".

* OMIT THE "ROAD CLOSED 500 FT." SIGN IF THE LAST INTERSECTION IS 500 FEET OR LESS FROM THE WORK ZONE.

** 500' MAX. OR AT LAST INTERSECTION, WHICHEVER IS CLOSEST.

## LEGEND

- SIGN ON PERMANENT SUPPORT
- TYPE III BARRICADE
- TYPE III BARRICADE WITH ATTACHED SIGN
- TYPE "A" WARNING LIGHT (FLASHING)
- WORK AREA

**BARRICADES AND SIGNS FOR SIDEROAD CLOSURES**

STATE OF WISCONSIN
DEPARTMENT OF TRANSPORTATION

APPROVED
July 2018 — DATE
/S/ Andrew Heidtke — WORK ZONE ENGINEE
FHWA


6
SDD 15C03 - 05

## GENERAL NOTES

DETAILS OF CONSTRUCTION NOT SHOWN ON THIS DRAWING SHALL CONFORM TO STANDARD SPECIFICATIONS AND SPECIAL PROVISIONS.

(1) LOCATE THE NO PASSING ZONE W14-3 SIGN WITHIN 50 FEET OF THE "T" MARKING

(2) MEASURE FROM EDGE OF MARKING TO JOINT LINE. THIS DOES NOT INCLUDE SPACE NEEDED FOR GROOVING OPERATIONS.

## LEGEND

"T" MARKING

SIGN ON PERMANENT SUPPORT

DIRECTION OF TRAFFIC

* CONFIRM MARKING LINE WIDTH WITH THE MISCELLANEOUS QUANTITIES

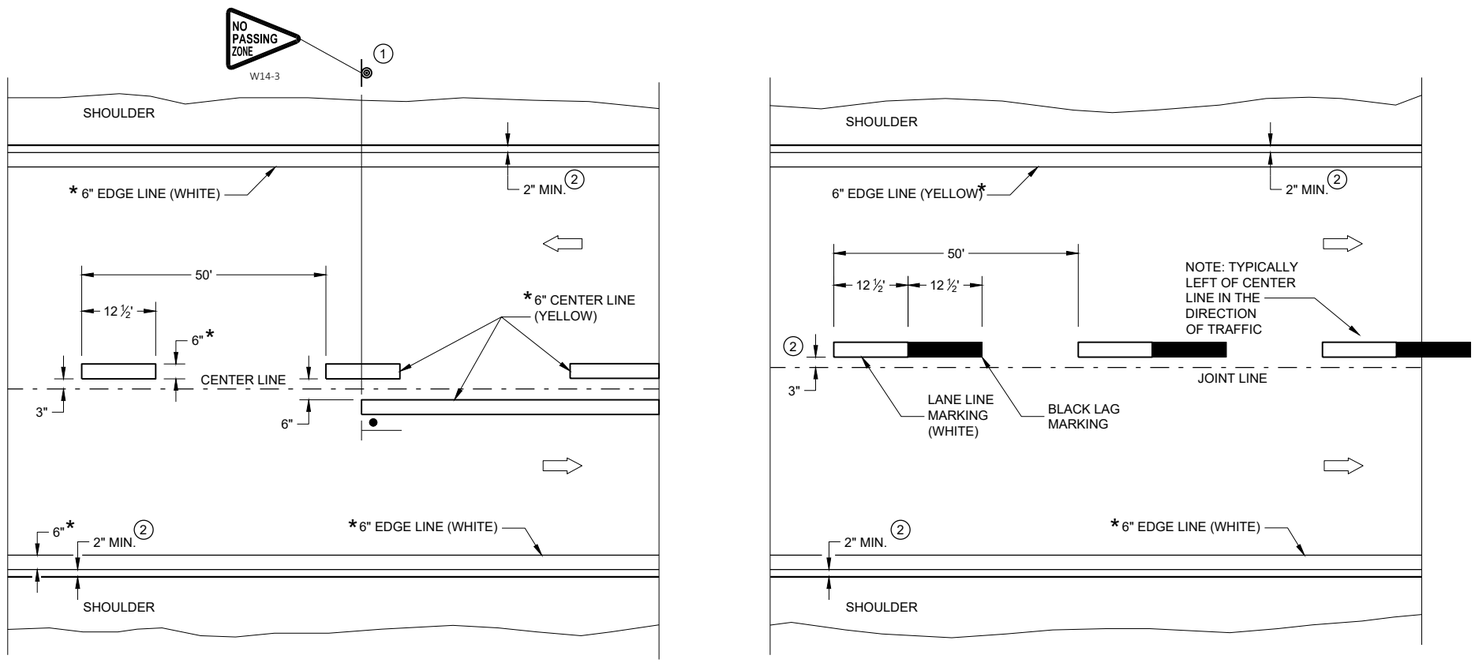


**TWO WAY TRAFFIC**

**ONE WAY TRAFFIC**

**PERMANENT PAVEMENT MARKING**

6

6

SDD 15C08-23a

SDD 15C08-23a

**PERMANENT LONGITUDINAL PAVEMENT MARKINGS**

STATE OF WISCONSIN
DEPARTMENT OF TRANSPORTATION

APPROVED

May 2023
DATE

/S/ Jeannie Silver
STATEWIDE SIGNING AND M
ENGINEER

FHWA

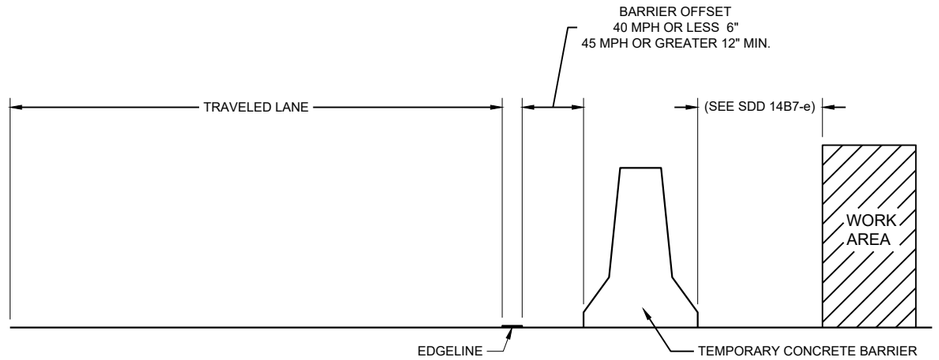


**TEMPORARY BARRIER OFFSET FROM EDGELINE**

## GENERAL NOTES

DETAILS OF CONSTRUCTION NOT SHOWN ON THIS DRAWING SHALL CONFORM TO STANDARD SPECIFICATIONS AND SPECIAL PROVISIONS.

## LEGEND

⇨ DIRECTION OF TRAFFIC

* CONFIRM MARKING LINE WIDTH WITH THE MISCELLANEOUS QUANTITIES

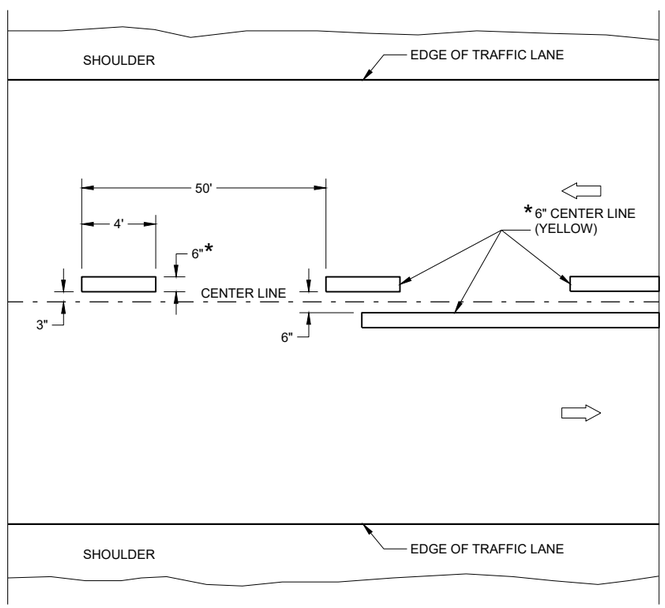


**TWO WAY TRAFFIC**

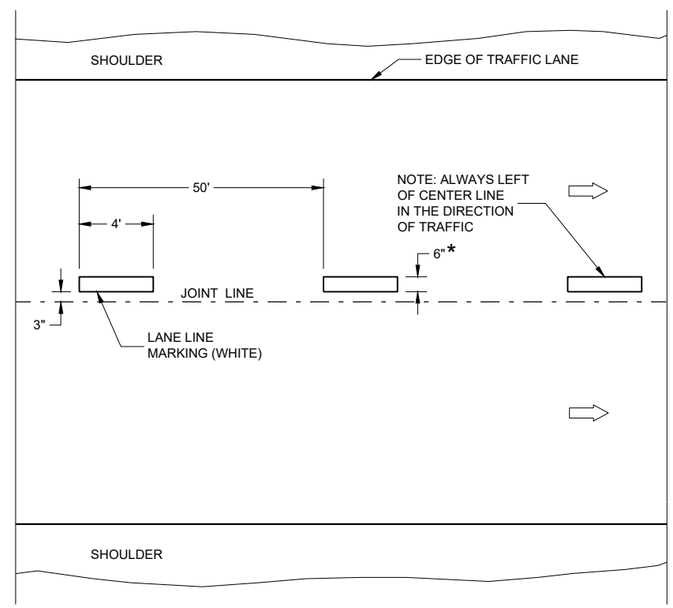


**ONE WAY TRAFFIC**

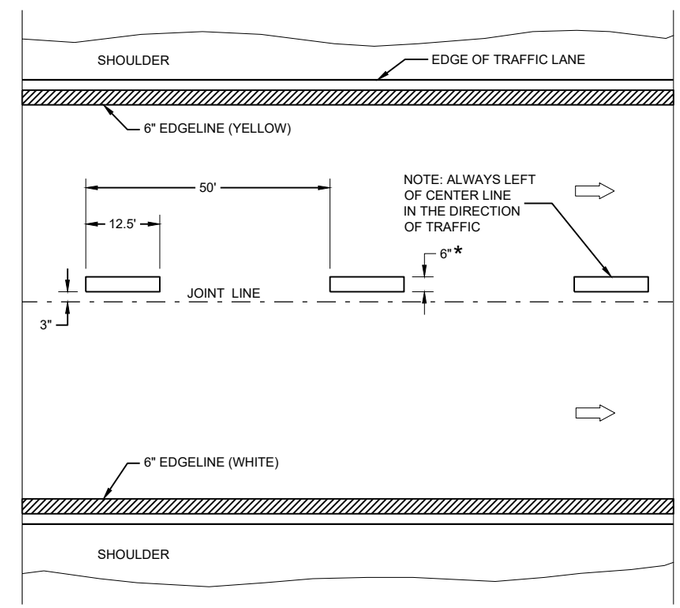


**FREEWAYS AND EXPRESSWAYS**

**TEMPORARY PAVEMENT MARKING**

**TEMPORARY LONGITUDINAL PAVEMENT MARKING**

STATE OF WISCONSIN
DEPARTMENT OF TRANSPORTATION

APPROVED
May 2023 — DATE
/S/ Jeannie Silver — STATEWIDE SIGNING AND M ENGINEER
FHWA




6

SDD 15C08-23b

## GENERAL NOTES

1. A SET OF ARROWS IS REQUIRED EVERY 400 FEET OR NEAR INTERSECTIONS OR DRIVEWAYS WITH TURNING TRAFFIC.
2. 10" WHITE
3. TURN BAY LENGTH OF LESS THAN 48' DOES NOT REQUIRE PAVEMENT ARROWS OR TEXT.

⇨ DIRECTION OF TRAFFIC

* CONFIRM MARKING LINE WIDTH WITH THE MISCELLANEOUS QUANTITIES

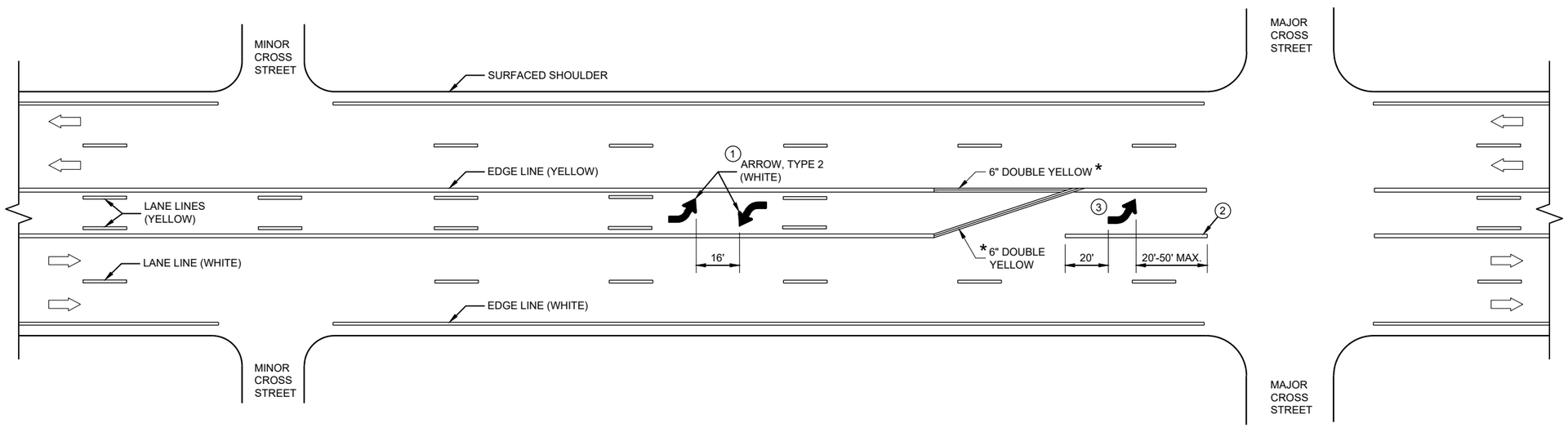


**TWO WAY LEFT TURN LANE**

6

SDD 15C08-23c

**PAVEMENT MARKING (TURN LANES)**

STATE OF WISCONSIN
DEPARTMENT OF TRANSPORTA



6

SDD 15C08-23c

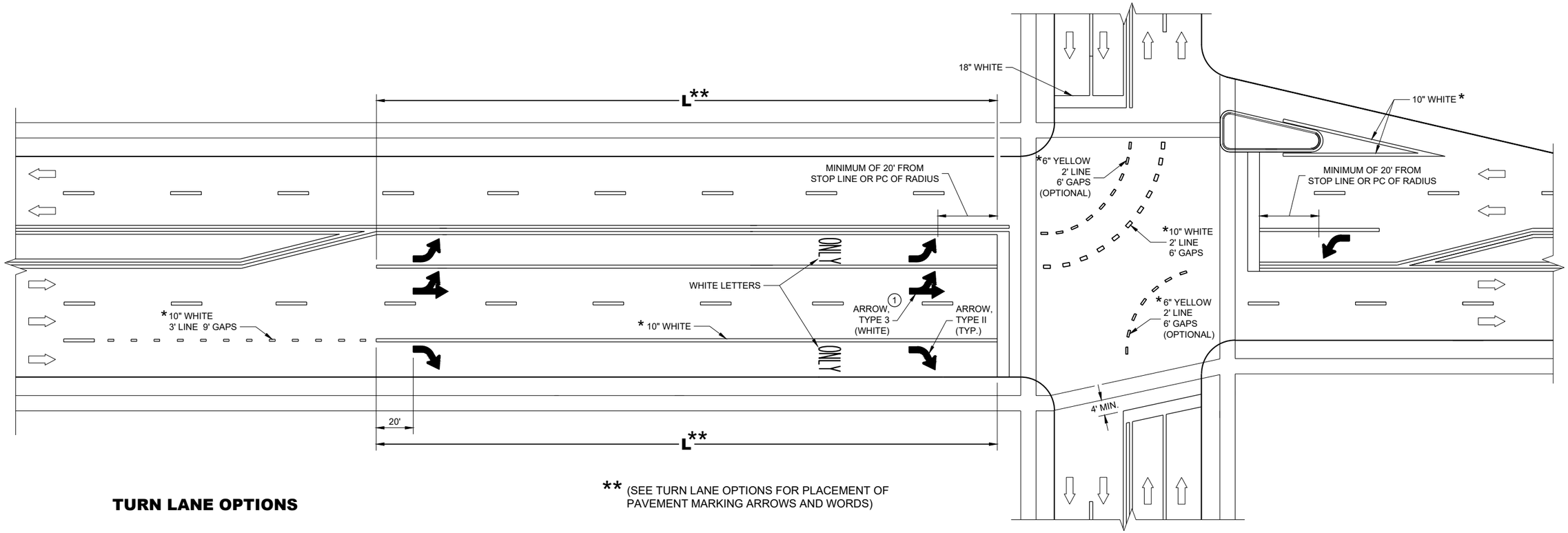


** (SEE TURN LANE OPTIONS FOR PLACEMENT OF PAVEMENT MARKING ARROWS AND WORDS)

## TURN LANE OPTIONS

LENGTH OF TURN BAY ( L ) OF 0 - 47' DOES NOT REQUIRE PAVEMENT MARKING ARROWS OR WORDS

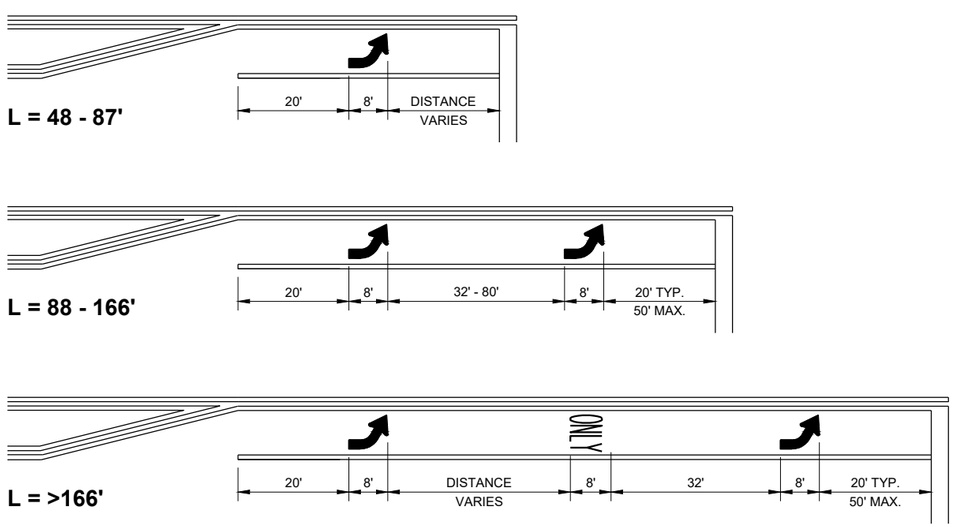


## GENERAL NOTES

1. QUANTITY AND LOCATION OF TYPE 3 ARROWS ARE THE SAME AS THE TYPE II ARROWS IN THE ADJACENT TURN LANE. FOR TURN LANES WITH A PHYSICAL SEPARATION IN THE SAME DIRECTION OF TRAVEL, THE ARROWS AND "ONLY" MARKING MAY BE ELIMINATED.

⇨ DIRECTION OF TRAFFIC

L = LENGTH OF TURN BAY

* CONFIRM MARKING LINE WIDTH WITH THE MISCELLANEOUS QUANTITIES

**PAVEMENT MARKING (TURN LANES)**

STATE OF WISCONSIN
DEPARTMENT OF TRANSPORTAT




6

SDD 15C08-23d

## GENERAL NOTES

1. REFLECTIVE SHEETING SHALL FOLLOW THE REQUIREMENTS IN THE APPROVED PRODUCTS LISTING FOR SIGN SHEETING.
2. LOCATION OF WARNING LIGHTS WHEN SHOWN ON THE PLAN.

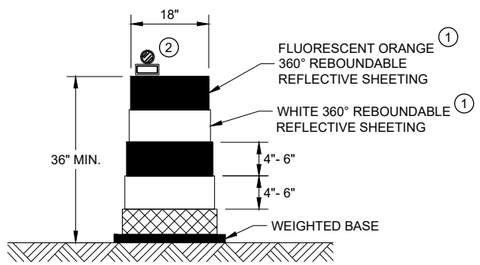


### DRUM

BALLAST WIDTHS
RANGE FROM 24"-36"

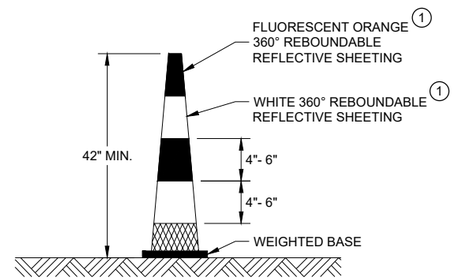


### 42" CONE

DO NOT USE IN TAPERS
½ SPACING OF DRUMS

BALLAST WIDTHS
RANGE FROM 14"-20"

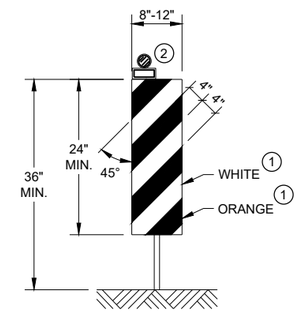


### VERTICAL PANEL

THE STRIPES SHALL SLOPE DOWNWARD TO
THE TRAFFIC SIDE FOR CHANNELIZATION.

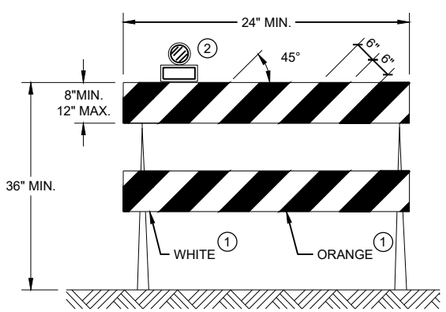


### TYPE II BARRICADE

FOR RAILS LESS THAN 36" LONG, 4" WIDE STRIPES
MAY BE USED. ALL STRIPES SHALL SLOPE DOWNWARD
TO THE TRAFFIC SIDE FOR CHANNELIZATION.

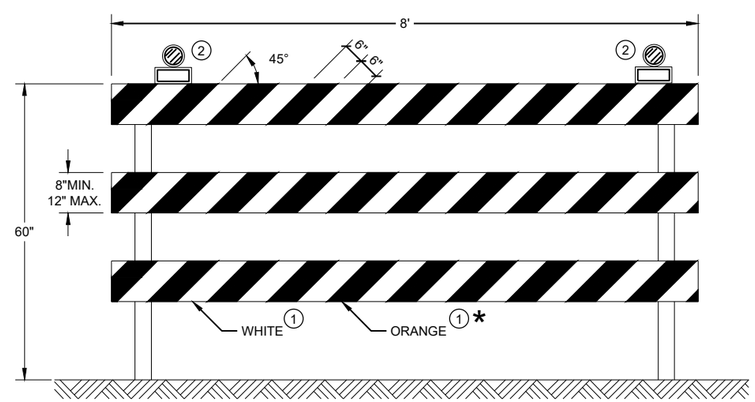


### TYPE III BARRICADE

IF SIGN MOUNTED, DO NOT COVER MORE THAN 50% OF THE TOP
TWO RAILS OR 33% OF THE TOTAL AREA OF THE THREE RAILS.

* IF USED FOR A PERMANENT APPLICATION USE RED SHEETING.

**CHANNELIZING DEVICES**
**DRUMS, CONES, BARRICADES**
**AND VERTICAL PANELS**

STATE OF WISCONSIN
DEPARTMENT OF TRANSPORTATION

APPROVED
November 2022 — /S/ Andrew Heidtke
DATE — WORK ZONE ENGINEE
FHWA



6

6

SDD 15C11 - 10b

SDD 15C11 - 10b

## LEGEND

SIGN ON PORTABLE OR PERMANENT SUPPORT

TEMPORARY PORTABLE RUMBLE STRIP ARRAY

DIRECTION OF TRAFFIC

WORK AREA

FLAGGER, EQUIPPED WITH STOP/SLOW PADDLE FASTENED ON SUPPORT STAFF

## GENERAL NOTES

DETAILS OF TRAFFIC CONTROL DEVICES AND INSTALLATION NOT SHOWN ON THIS DRAWING SHALL CONFORM TO THE PERTINENT REQUIREMENTS OF THE STANDARD SPECIFICATIONS, THE SPECIAL PROVISIONS, AND THE MANUAL ON UNIFORM TRAFFIC CONTROL DEVICES.

ALL SIGNS ARE 48" X 48" UNLESS OTHERWISE NOTED.

"WO" SIGNS ARE THE SAME AS "W" SIGNS EXCEPT THE BACKGROUND IS ORANGE.

THE EXACT NUMBER, LOCATION AND SPACING OF ALL SIGNS, DEVICES, AND LOCATION OF ALL FLAGGERS SHALL BE ADJUSTED TO FIT FIELD CONDITIONS AS APPROVED BY THE ENGINEER.

THE FIRST ADVANCE WARNING SIGN SHOULD TYPICALLY BE LOCATED IN ADVANCE OF THE ANTICIPATED TRAFFIC BACKUP OR QUEUE.

WHEN A SIDE ROAD OR RAMP INTERSECTS THE FACILITY ON WHICH THE WORK IS BEING PERFORMED, ADDITIONAL TRAFFIC CONTROLS SHALL BE PROVIDED AS SPECIFIED IN THE PLANS AND/OR THE SPECIAL PROVISIONS OR AS APPROVED BY THE ENGINEER.

## FLAGGING

FLAGGERS SHALL BE IN SIGHT OF EACH OTHER OR IN DIRECT COMMUNICATION AT ALL TIMES. THEY SHALL BE EQUIPPED WITH STOP/SLOW PADDLES FASTENED ON SUPPORT STAFFS. WHEN THE FLAGGING OPERATION IS NOT IN EFFECT REMOVE TEMPORARY PORTABLE RUMBLE STRIPS PRIOR TO COVERING OR REMOVING ALL ADVANCE SIGNING.

(1) FOR MOVING WORK OPERATIONS, POST ADDITIONAL W20-7A FLAGGER SIGNS AT APPROXIMATELY 3,500' INTERVALS IN THE MOVING WORK OPERATION OR AS APPROVED BY THE ENGINEER.

(2) SIGN NOT REQUIRED IF FLAGGING OPERATION OCCURS WITHIN A SIGNED ROAD WORK ZONE AREA.

WHEN THE DISTANCE BETWEEN FLAGGERS EXCEEDS 2 MILES, A PILOT CAR IS REQUIRED. WHEN CURVES REDUCE SIGHT DISTANCE BELOW 400', A PILOT CAR IS REQUIRED.

## TEMPORARY PORTABLE RUMBLE STRIPS

UTILIZE TEMPORARY PORTABLE RUMBLE STRIPS ON ALL FLAGGING OPERATIONS.

(3) EACH TEMPORARY PORTABLE RUMBLE STRIP ARRAY CONSISTS OF THREE RUMBLE STRIPS PLACED TRANSVERSE ACROSS THE LANE AT THE LOCATIONS SHOWN. WITHIN EACH ARRAY, SPACING BETWEEN RUMBLE STRIPS SHALL BE 15 FEET ON CENTER

ONLY USE TEMPORARY PORTABLE RUMBLE STRIPS FROM THE APPROVED PRODUCTS LIST.

INSTALL TEMPORARY RUMBLE STRIPS PER MANUFACTURER'S RECOMMENDATIONS.

PLACE ADVANCE SIGNING PRIOR TO INSTALLING TEMPORARY RUMBLE STRIPS.

DO NOT INSTALL TEMPORARY PORTABLE RUMBLE STRIPS ON GRAVEL, MILLED SURFACES, OR ASPHALT THAT HAS BEEN PAVED LESS THAN 12 HOURS.

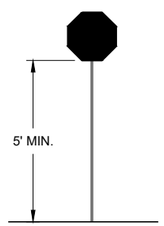


**STOP/SLOW PADDLE ON SUPPORT STAFF**

### SIGN AND TEMPORARY RUMBLE STRIP ARRAY SPACING TABLE

| SPEED LIMIT | SPACING "A" |
|---|---|
| 25-30 MPH | 200' |
| 35-40 MPH | 350' |
| 45-55 MPH | 500' |


WO3-4

USE OF WO3-4 SIGN IS OPTIONAL. WHEN USED, THIS SIGN SHALL BE LOCATED BETWEEN THE W20-7A AND W20-4A SIGNS, USING SPACING "A".

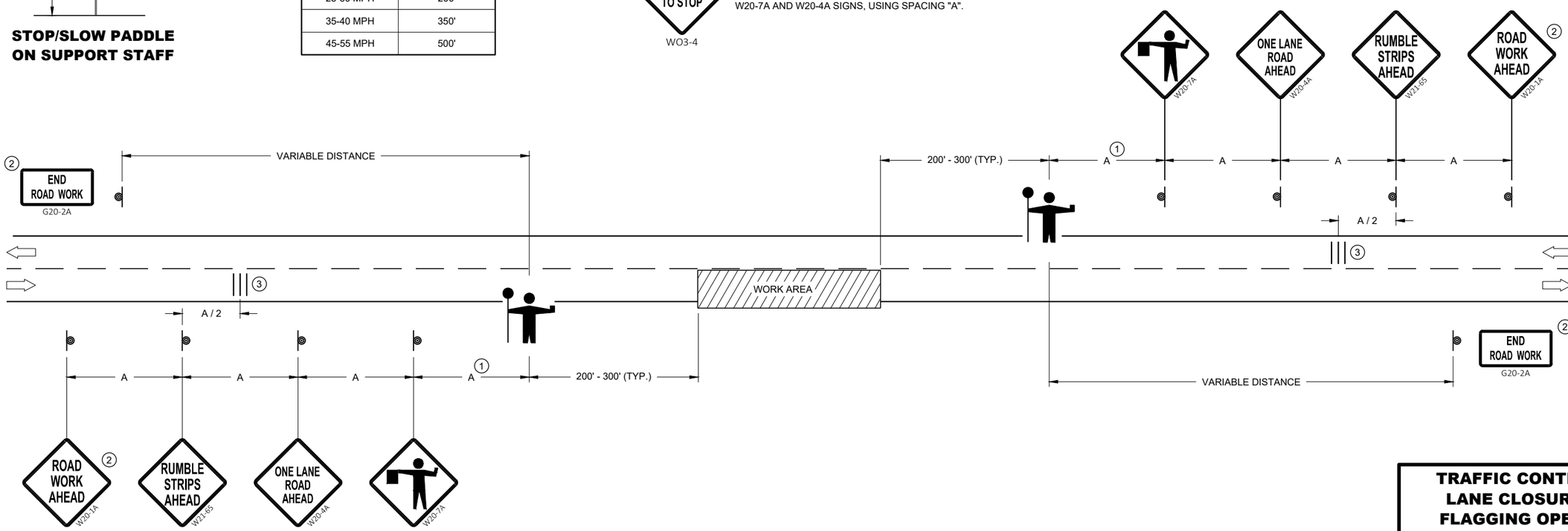


**TRAFFIC CONTROL FOR LANE CLOSURE WITH FLAGGING OPERATION**

STATE OF WISCONSIN
DEPARTMENT OF TRANSPORTATION

APPROVED
May 2022 — DATE
/S/ Andrew Heidtke — WORK ZONE ENGINEE
FHWA



6

SDD 15C12 - 09a

6

SDD 15C12 - 09a

## GENERAL NOTES

- SIGN ON PERMANENT SUPPORT
- TRAFFIC CONTROL CONE 42-INCH
- TRAFFIC CONTROL DRUM
- TEMPORARY PORTABLE RUMBLE STRIP ARRAY
- DIRECTION OF TRAFFIC
- WORK AREA
- AFAD — AUTOMATED FLAGGER ASSISTANCE DEVICE (AFAD)

## GENERAL NOTES

DETAILS OF TRAFFIC CONTROL DEVICES AND INSTALLATION NOT SHOWN ON THIS DRAWING SHALL CONFORM TO THE PERTINENT REQUIREMENTS OF THE STANDARD SPECIFICATIONS, THE SPECIAL PROVISIONS, AND THE MANUAL ON UNIFORM TRAFFIC CONTROL DEVICES.

ALL SIGNS ARE 48" X 48" UNLESS OTHERWISE NOTED.

"WO" SIGNS ARE THE SAME AS "W" SIGNS EXCEPT THE BACKGROUND IS ORANGE.

THE EXACT NUMBER, LOCATION AND SPACING OF ALL SIGNS, DEVICES, AND LOCATION OF ALL FLAGGERS SHALL BE ADJUSTED TO FIT FIELD CONDITIONS AS APPROVED BY THE ENGINEER.

THE FIRST ADVANCE WARNING SIGN SHOULD TYPICALLY BE LOCATED IN ADVANCE OF THE ANTICIPATED TRAFFIC BACKUP OR QUEUE.

WHEN A SIDE ROAD OR RAMP INTERSECTS THE FACILITY ON WHICH THE WORK IS BEING PERFORMED, ADDITIONAL TRAFFIC CONTROLS SHALL BE PROVIDED AS SPECIFIED IN THE PLANS AND/OR THE SPECIAL PROVISIONS OR AS APPROVED BY THE ENGINEER.

## FLAGGING

IF THE AUTOMATED FLAGGER ASSISTANCE DEVICE (AFAD) STOPS WORKING, FLAGGERS SHALL BE IN SIGHT OF EACH OTHER OR IN DIRECT COMMUNICATION AT ALL TIMES. THEY SHALL BE EQUIPPED WITH STOP/SLOW PADDLES FASTENED ON SUPPORT STAFFS. WHEN THE FLAGGING OPERATION IS NOT IN EFFECT REMOVE TEMPORARY PORTABLE RUMBLE STRIPS PRIOR TO COVERING OR REMOVING ALL ADVANCE SIGNING.

WHEN THE DISTANCE BETWEEN FLAGGERS EXCEEDS 2 MILES, A PILOT CAR IS REQUIRED. WHEN CURVES REDUCE SIGHT DISTANCE BELOW 400', A PILOT CAR IS REQUIRED.

(1) SIGN NOT REQUIRED IF FLAGGING OPERATION OCCURS WITHIN A SIGNED ROAD WORK ZONE AREA.

(2) IF FLAGGERS ARE PHYSICALLY NEEDED TO FLAG, REPLACE WO3-4 SIGNS WITH W20-7A SIGNS.

## TEMPORARY PORTABLE RUMBLE STRIPS

UTILIZE TEMPORARY PORTABLE RUMBLE STRIPS ON ALL FLAGGING OPERATIONS.

ONLY USE TEMPORARY PORTABLE RUMBLE STRIPS FROM THE APPROVED PRODUCTS LIST.

PLACE ADVANCE SIGNING PRIOR TO INSTALLING TEMPORARY RUMBLE STRIPS.

DO NOT INSTALL TEMPORARY PORTABLE RUMBLE STRIPS ON GRAVEL, MILLED SURFACES, OR ASPHALT THAT HAS BEEN PAVED LESS THAN 12 HOURS.

(3) EACH TEMPORARY PORTABLE RUMBLE STRIP ARRAY CONSISTS OF THREE RUMBLE STRIPS PLACED TRANSVERSELY AT THE LOCATIONS SHOWN. WITHIN EACH ARRAY, SPACING BETWEEN RUMBLE STRIPS SHALL BE 15 FEET ON CENTER.

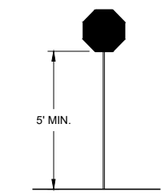


**STOP/SLOW PADDLE ON SUPPORT STAFF**

**SIGN AND TEMPORARY RUMBLE STRIP ARRAY SPACING TABLE**

| SPEED LIMIT | SPACING "A" |
|---|---|
| 25-30 MPH | 200' |
| 35-40 MPH | 350' |
| 45-55 MPH | 500' |

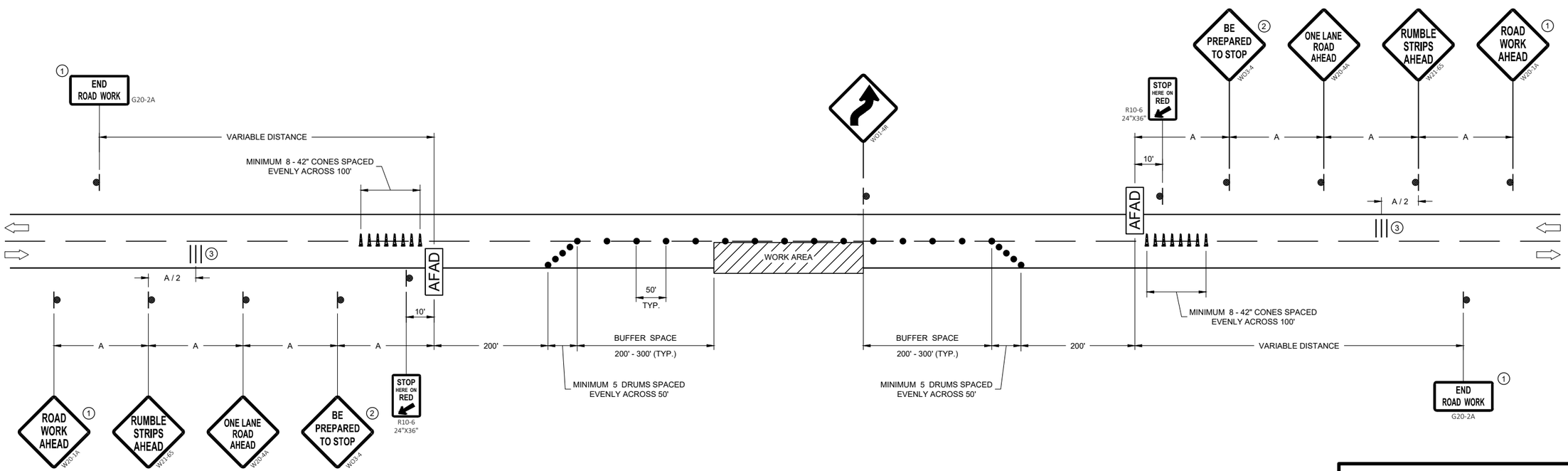


**TRAFFIC CONTROL, LANE CLOSURE WITH AUTOMATED FLAGGER ASSISTANCE DEVICE**

STATE OF WISCONSIN
DEPARTMENT OF TRANSPORTATION

APPROVED
May 2022 — DATE
/S/ Andrew Heidtke — WORK ZONE ENGINEER
FHWA




6


SDD 15C12 - 09b

## GENERAL NOTES

STOP SIGN SHALL BE PLACED A MINIMUM OF 6 FEET TO A MAXIMUM OF 50 FEET FROM THE EDGELINE LOCATION.

1. 18-INCH STOP LINES MAY BE DELETED OR ADDED BY THE REGION MARKING ENGINEER BASED ON VISIBILITY AND SIGHT LINES.
2. NO STOP LINE IS REQUIRED IF STOP SIGN IS LESS THAN OR EQUAL TO 40 FEET FROM THE EDGELINE.
3. NO STOP LINE IS REQUIRED IF STOP SIGN IS LESS THAN OR EQUAL TO 30 FEET FROM THE FLANGELINE EXTENSION.
4. MOVE CLOSER TO THE EDGE OF TRAVEL LINE AS NEEDED FOR VISIBILITY AND SIGHT LINES (NO CLOSER THAN 4 FEET).
5. LADDER BAR CROSSWALKS SHOULD ONLY BE USED FOR MID BLOCK CROSSINGS. USE 2 - 6" TRANSVERSE LINES INSTEAD.

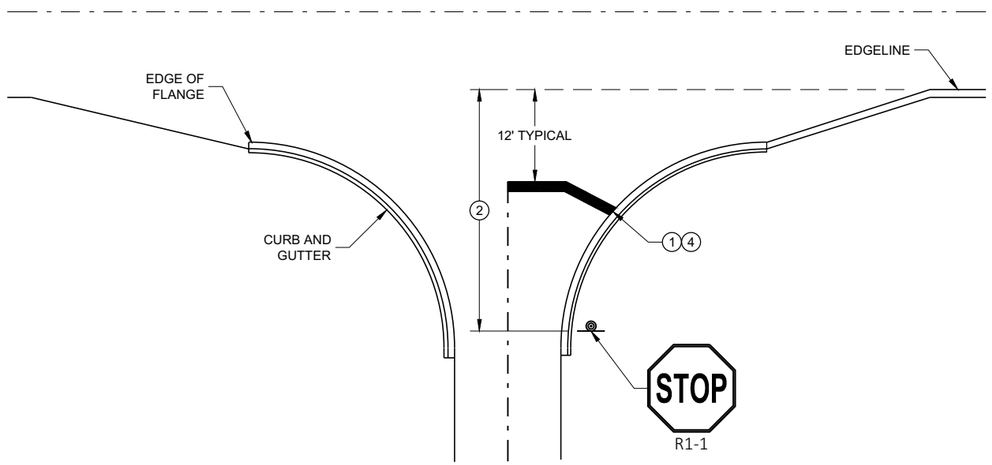


**TYPICAL STOP LINE PAVEMENT MARKING WITH CURB AND GUTTER**

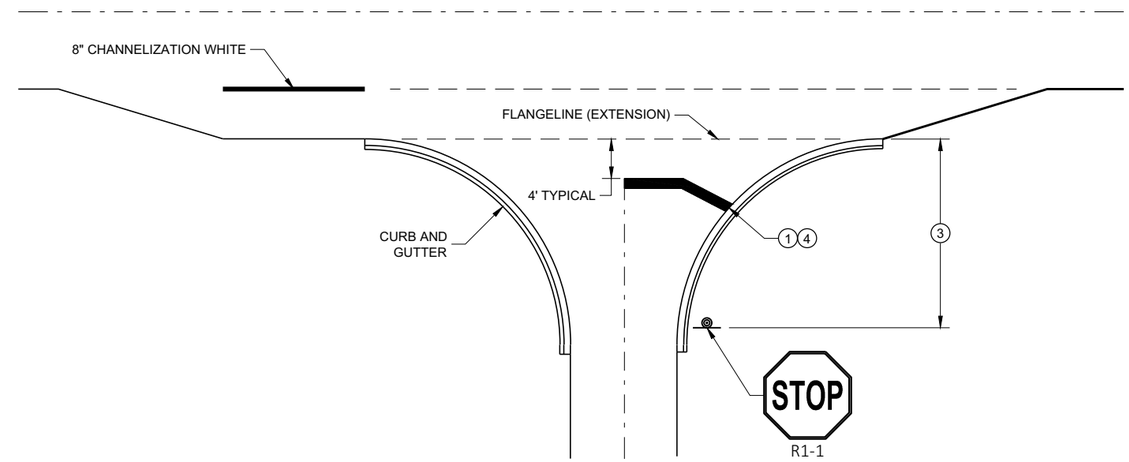


**TYPICAL STOP LINE PAVEMENT MARKING FOR SIDEROADS WITH RIGHT TURN LANE**

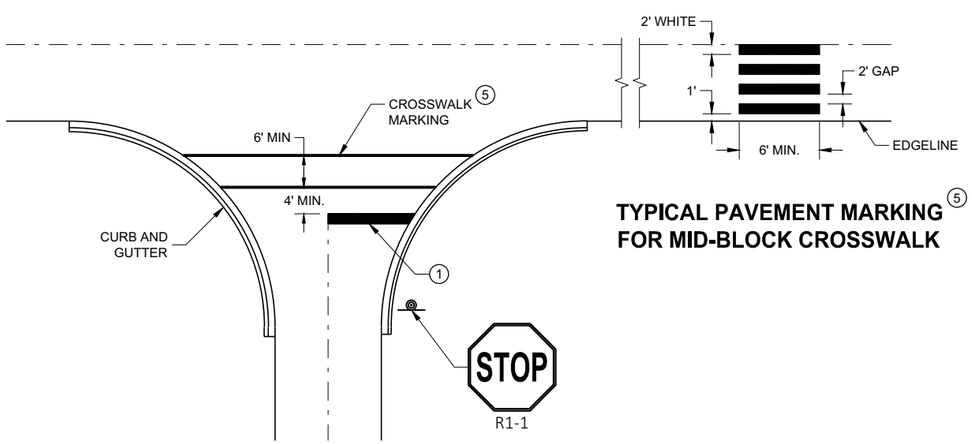


**TYPICAL STOP LINE PAVEMENT MARKING FOR SIDEROADS WITH CROSSWALK MARKING**




**TYPICAL PAVEMENT MARKING 5 FOR MID-BLOCK CROSSWALK**

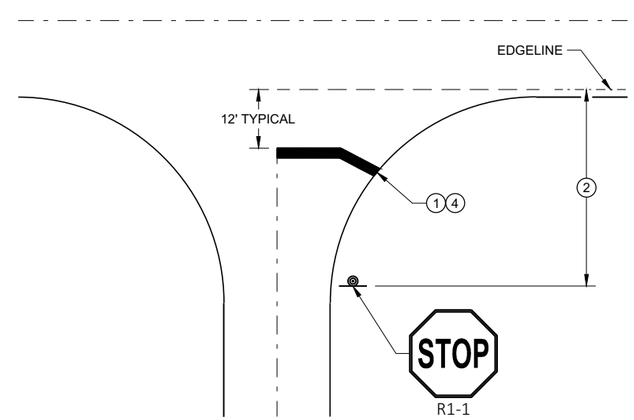


**TYPICAL STOP LINE PAVEMENT MARKING WITHOUT CURB AND GUTTER**

**STOP LINE AND CROSSWALK PAVEMENT MARKING**

STATE OF WISCONSIN
DEPARTMENT OF TRANSPORTATION

APPROVED
November 2019 — DATE
/S/ Matthew Rauch — STATE SIGNING AND MAR ENGINEER
FHWA




6

SDD 15C33 - 04

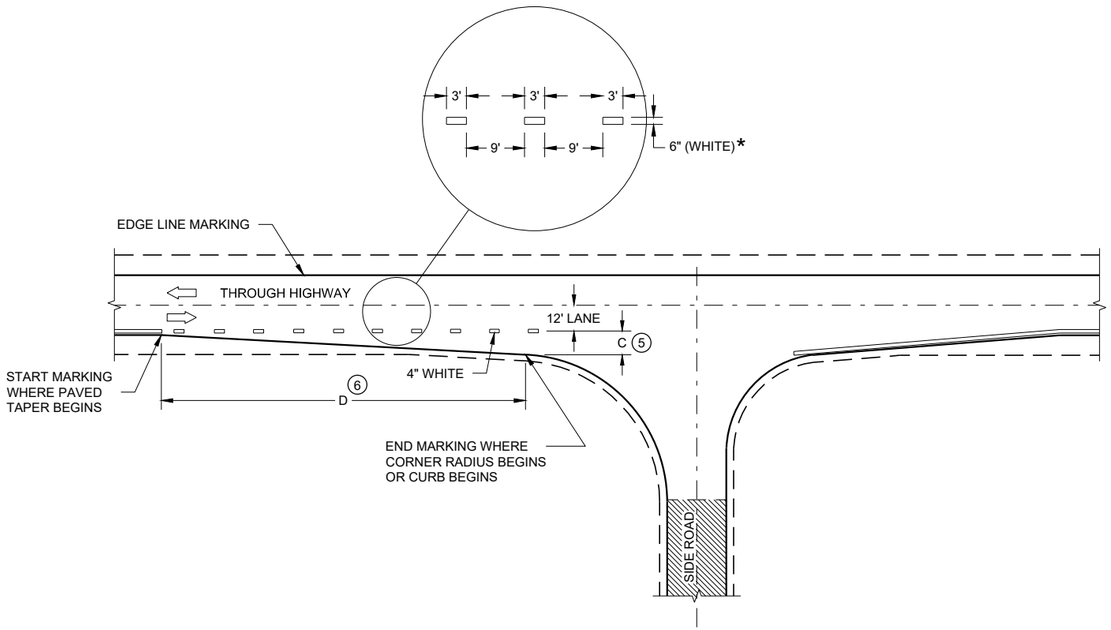


## MINOR INTERSECTION

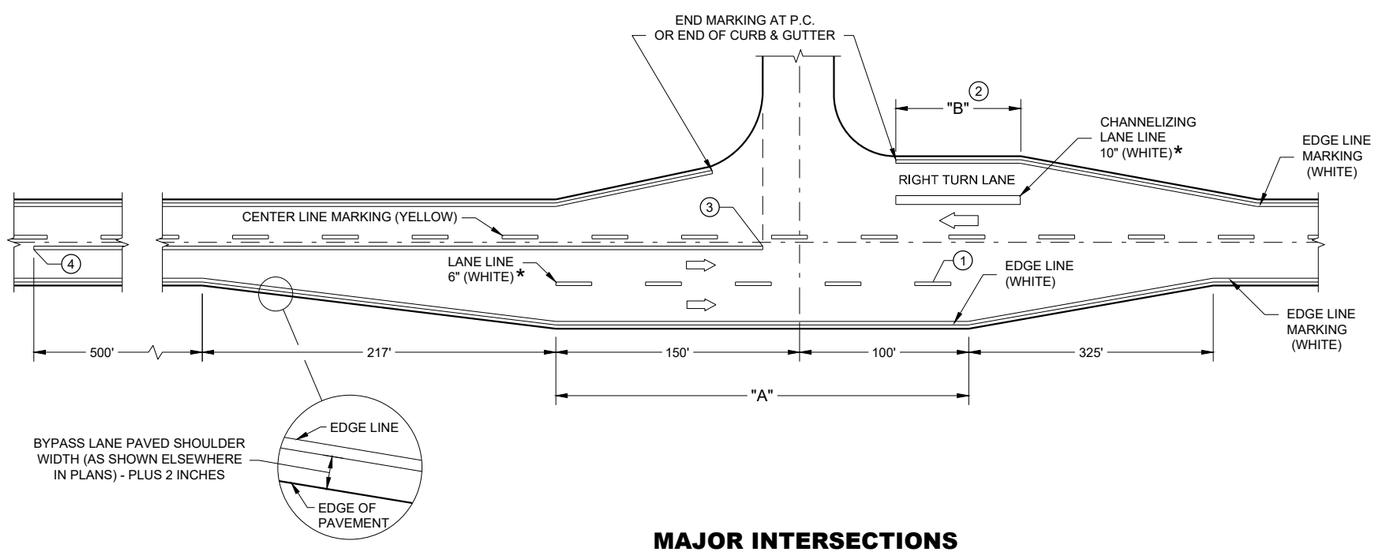


## MAJOR INTERSECTIONS

### (INTERSECTION WITH FULL RIGHT TURN LANE OR BYPASS LANE)

* CONFIRM MARKING LINE WIDTH WITH THE MISCELLANEOUS QUANTITIES

## GENERAL NOTES

OMIT EDGE LINES THROUGH INTERSECTIONS. CONTINUE EDGE LINES THROUGH DRIVEWAYS.

1. WHEN DISTANCE "A" IS LESS THAN 250 FEET, OMIT LANE LINE.
2. WHEN DISTANCE "B" IS LESS THAN 100 FEET, OMIT CHANNELIZING LANE LINE.
3. BARRIER LINE ENDS AT SIDE ROAD PAVEMENT / SURFACE EDGE EXTENSION.
4. BARRIER LINE STARTS 500 FEET PRIOR TO THE BYPASS TAPER.
5. WHEN DISTANCE "C" IS LESS THAN 4 FEET, OMIT DOTTED EXTENSION.
6. WHEN DISTANCE "D" IS LESS THAN 50 FEET, OMIT DOTTED EXTENSION.

## LEGEND

DIRECTION OF TRAVEL

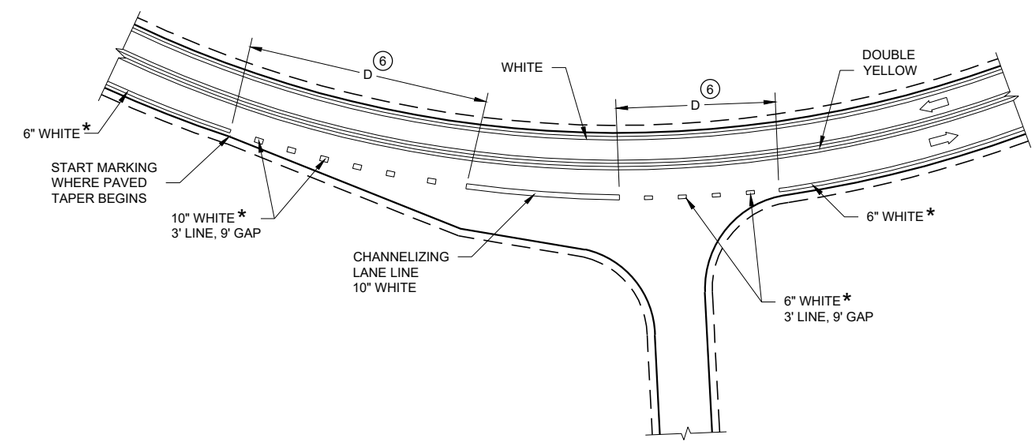


## INTERSECTION ON OUTSIDE OF CURVE

**PAVEMENT MARKING (INTERSECTIONS)**

STATE OF WISCONSIN
DEPARTMENT OF TRANSPORTA




6

SDD 15C35-06a

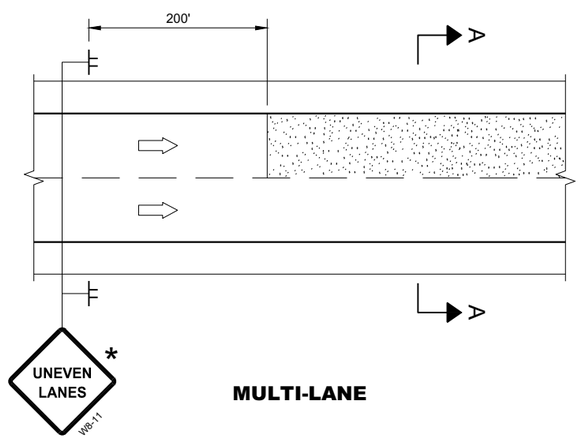


**MULTI-LANE**

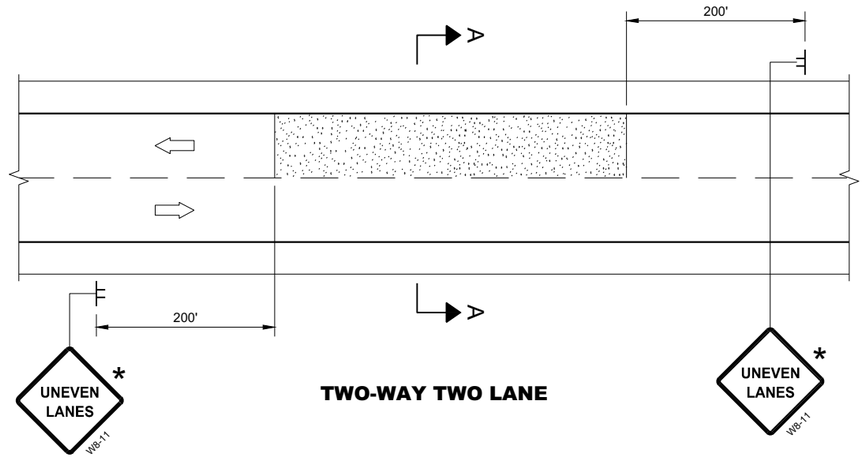


**TWO-WAY TWO LANE**

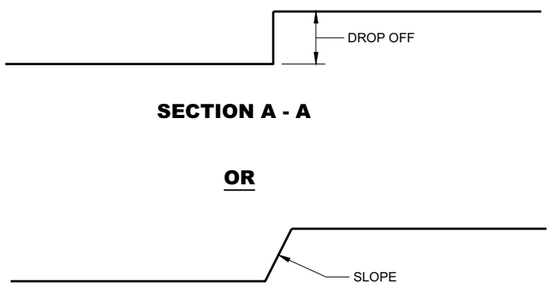


**SECTION A - A**

**SECTION A - A**

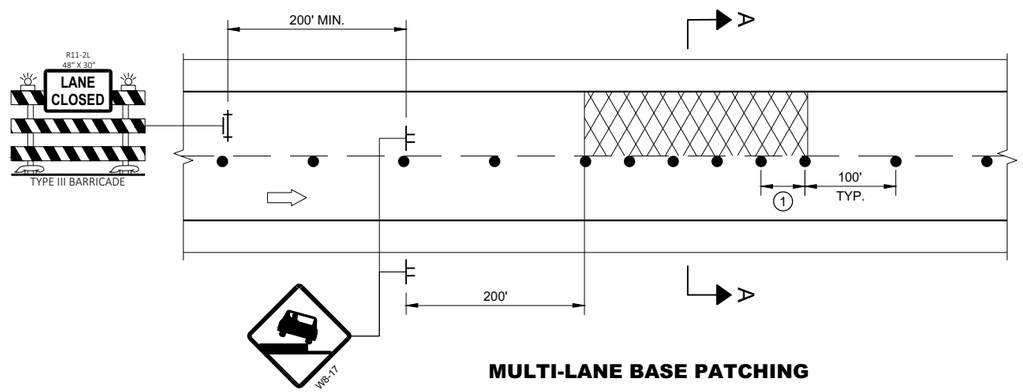


**MULTI-LANE BASE PATCHING**

**ADJACENT LANE DROP-OFFS**

## GENERAL NOTES

FOR SPOT LOCATIONS USE ENGINEERING JUDGEMENT WHEN PLACING ADDITIONAL SIGNS.

ALL SIGNS ARE 48" X 48" UNLESS OTHERWISE NOTED.

"WO" SIGNS ARE THE SAME AS "W" SIGNS EXCEPT THE BACKGROUND IS ORANGE.

WARNING LIGHTS ARE NOT REQUIRED IF THE LANE CLOSURE IS A DAYTIME ONLY OPERATION.

* IF THE DROP-OFF IS CONTINUOUS ALONG THE PROJECT, PLACE ADDITIONAL SIGNS EVERY 1 MILE AND AFTER EVERY ENTRANCE RAMP.

(1) USE CLOSER SPACING WHEN DELINEATING DROP-OFF.

## LEGEND

- SIGN ON TEMPORARY SUPPORT
- TRAFFIC CONTROL DRUM
- TYPE III BARRICADE WITH ATTACHED SIGN
- TYPE "A" WARNING LIGHT (FLASHING)
- DIRECTION OF TRAFFIC
- WORK AREA WITH DROP-OFF
- MILLED SURFACE

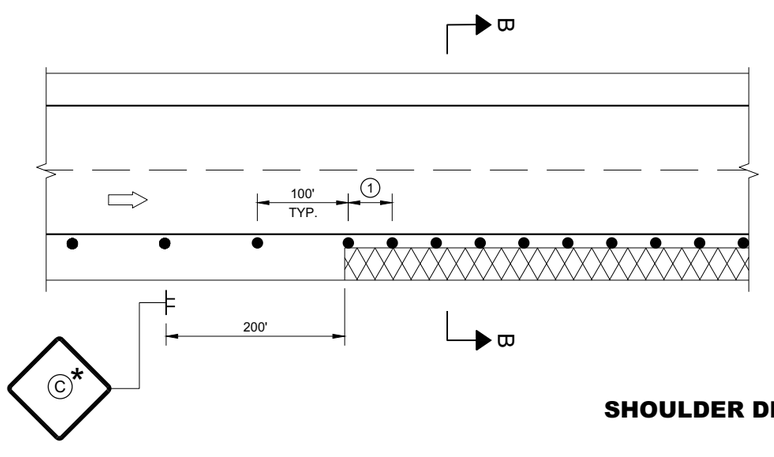


**SHOULDER DROP-OFFS**

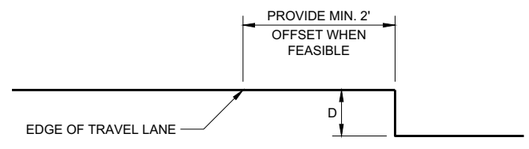


**SECTION B - B**

| D | SIGN (C) |
|---|---|
| < 2" WITH A SLOPE STEEPER THAN 3:1 | LOW SHOULDER<br>WO8-9 |
| 2" < 6" WITH A SLOPE STEEPER THAN 3:1 | SHOULDER DROP - OFF<br>W8-9A<br>PROVIDE A 3:1 OR FLATTER SLOPE OF MATERIAL ADJACENT TO THE PAVEMENT |

**TRAFFIC CONTROL, DROP-OFF SIGNING**

STATE OF WISCONSIN
DEPARTMENT OF TRANSPORTATION

APPROVED
March 2018 — DATE
/S/ Andrew Heidtke — WORK ZONE ENGINEE
FHWA

## GENERAL NOTES

DRAWING NOT TO SCALE. ALL SIGNS AND POSTS ON THIS SHEET SHALL BE PAID FOR WITH 'TRAFFIC CONTROL SIGNS' BID ITEM. ALL SIDE ROADS WHICH ARE UNDER CONSTRUCTION OF CURB AND GUTTER AND/OR GRADING SHALL BE ADEQUATELY SIGNED.

ALL SIGNS AND DEVICES SHALL BE IN CONFORMANCE WITH THE WISCONSIN MANUAL OF UNIFORM TRAFFIC CONTROL DEVICES (WMUTCD). SIGN LAYOUTS SHALL BE IN ACCORDANCE WITH THE WISDOT STANDARD SIGN PLATES.

"WO" SIGNS ARE THE SAME AS "W" SIGNS EXCEPT THAT THE BACKGROUND IS ORANGE.

ALL SIGNS ARE 48" X 48" UNLESS OTHERWISE NOTED.

THE EXACT NUMBER, LOCATION AND SPACING OF ALL SIGNS AND DEVICES SHALL BE ADJUSTED TO FIT FIELD CONDITIONS AS DIRECTED BY THE ENGINEER.

ALL SIGNS INAPPROPRIATE TO THE STATUS OF THE CONTROL ZONE, INCLUDING PRE-EXISTING SIGNS IN THE VICINITY, SHALL BE COVERED OR REMOVED AS DIRECTED BY THE ENGINEER.

SEE 15C34 FOR ADDITIONAL TRAFFIC CONTROL SIGNING WHEN CENTERLINE PAVEMENT MAKINGS ARE MISSING. 'DO NOT PASS' SIGNS MUST BE INSTALLED ON THE SAME DAY AS MILLING OPERATIONS.

(1) PLACE SIGNS 350' IN ADVANCE OF MILLED SURFACES AND AT 1 MILE INTERVALS, OR AS DIRECTED BY THE ENGINEER.

(2) PLACE SIGN 200' MIN. FROM INTERSECTION AND 200' MIN. AFTER ADVANCE WARNING SIGN SHOWN IN SDD 15C04.

## LEGEND

SIGN ON TEMPORARY SUPPORT

DIRECTION OF TRAFFIC

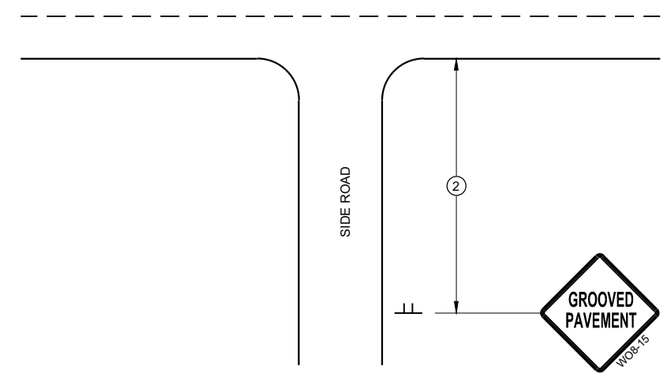


**TYPICAL SIDE ROAD APPROACH SIGN DETAIL**

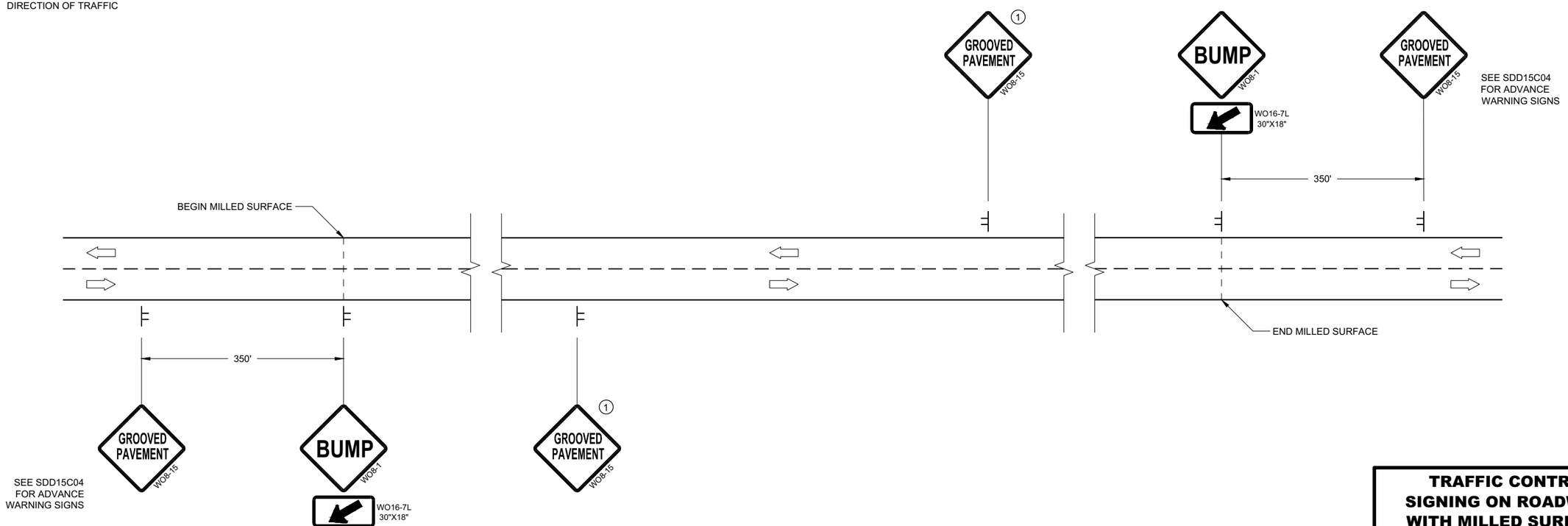


**DETAIL FOR SIGNING ON MILLED SURFACES**

**TRAFFIC CONTROL, SIGNING ON ROADWAYS WITH MILLED SURFACES**

STATE OF WISCONSIN
DEPARTMENT OF TRANSPORTATION

APPROVED
February 2020 — DATE
/S/ Andrew Heidtke — WORK ZONE ENGINEE
FHWA

6

SDD 15D44 - 02

6

SDD 15D44 - 02

## GENERAL NOTES

DRAWING NOT TO SCALE. ALL SIGNS AND POSTS ON THIS SHEET SHALL BE PAID FOR WITH 'TRAFFIC CONTROL SIGNS' BID ITEM. ALL SIDE ROADS WHICH ARE UNDER CONSTRUCTION OF CURB AND GUTTER AND/OR GRADING SHALL BE ADEQUATELY SIGNED.

ALL SIGNS AND DEVICES SHALL BE IN CONFORMANCE WITH THE WISCONSIN MANUAL OF UNIFORM TRAFFIC CONTROL DEVICES (WMUTCD). SIGN LAYOUTS SHALL BE IN ACCORDANCE WITH THE WISDOT STANDARD SIGN PLATES.

"WO" SIGNS ARE THE SAME AS "W" SIGNS EXCEPT THAT THE BACKGROUND IS ORANGE.

ALL SIGNS ARE 48" X 48" UNLESS OTHERWISE NOTED.

THE EXACT NUMBER, LOCATION AND SPACING OF ALL SIGNS AND DEVICES SHALL BE ADJUSTED TO FIT FIELD CONDITIONS AS DIRECTED BY THE ENGINEER.

ALL SIGNS INAPPROPRIATE TO THE STATUS OF THE CONTROL ZONE, INCLUDING PRE-EXISTING SIGNS IN THE VICINITY, SHALL BE COVERED OR REMOVED AS DIRECTED BY THE ENGINEER.

SEE 15C34 FOR ADDITIONAL TRAFFIC CONTROL SIGNING WHEN CENTERLINE PAVEMENT MAKINGS ARE MISSING. 'DO NOT PASS' SIGNS MUST BE INSTALLED ON THE SAME DAY AS MILLING OPERATIONS.

1. PLACE SIGNS 350' IN ADVANCE OF CHIP SEALED OR LOOSE GRAVEL SURFACES AND AT 1 MILE INTERVALS, OR AS DIRECTED BY THE ENGINEER.
2. PLACE SIGN 200' MIN. FROM INTERSECTION AND 200' MIN. AFTER ADVANCE WARNING SIGN SHOWN IN SDD 15C04.
3. ADD WO8-1 OR WO8-2 SIGN WHEN THE CONDITION IS PRESENT.

## LEGEND

SIGN ON TEMPORARY SUPPORT

DIRECTION OF TRAFFIC

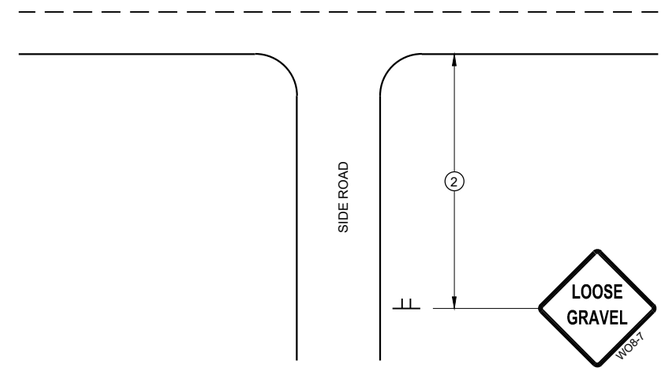


**TYPICAL SIDE ROAD APPROACH SIGN DETAIL**

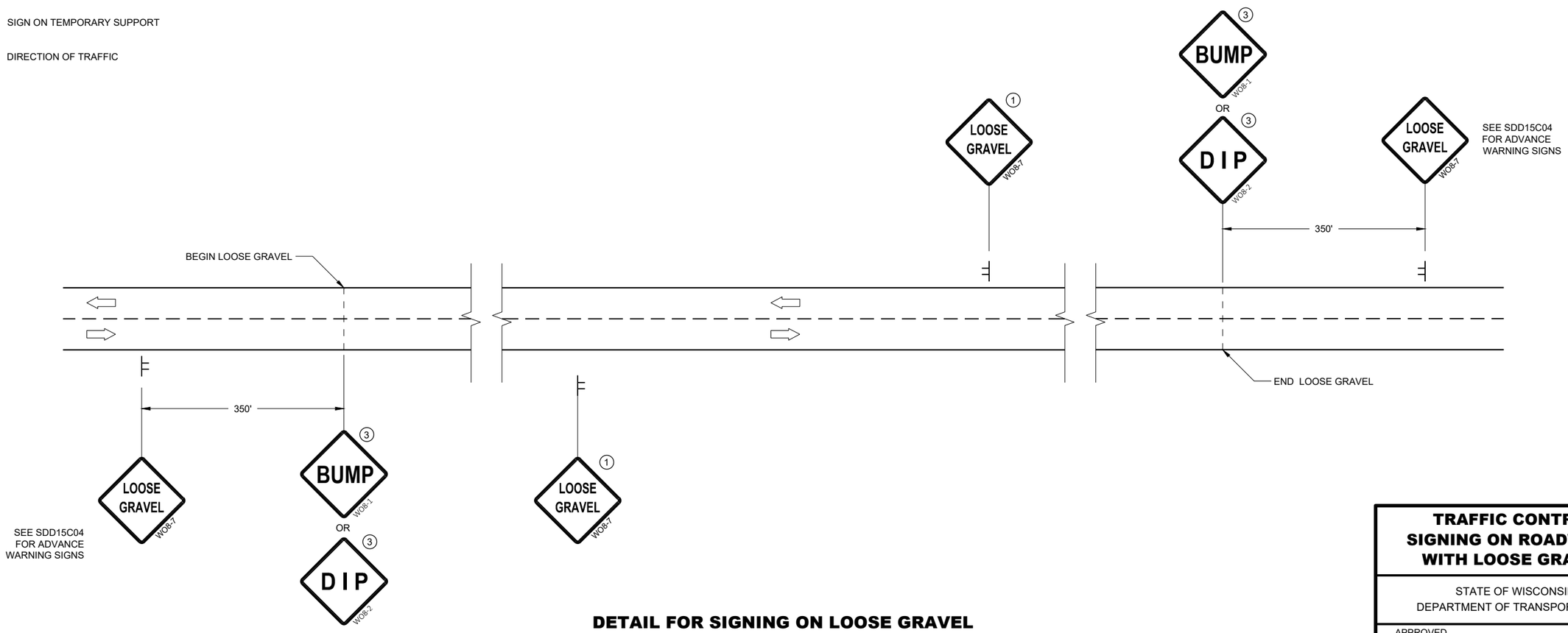


**DETAIL FOR SIGNING ON LOOSE GRAVEL OR CHIP SEALED SURFACES**

**TRAFFIC CONTROL SIGNING ON ROADWAYS WITH LOOSE GRAVEL**

STATE OF WISCONSIN
DEPARTMENT OF TRANSPORTATION

APPROVED
February 2021 /S/ Andrew Heidtke
DATE WORK ZONE ENGINEE
FHWA




6


SDD 15D45 - 03

## URBAN AREA

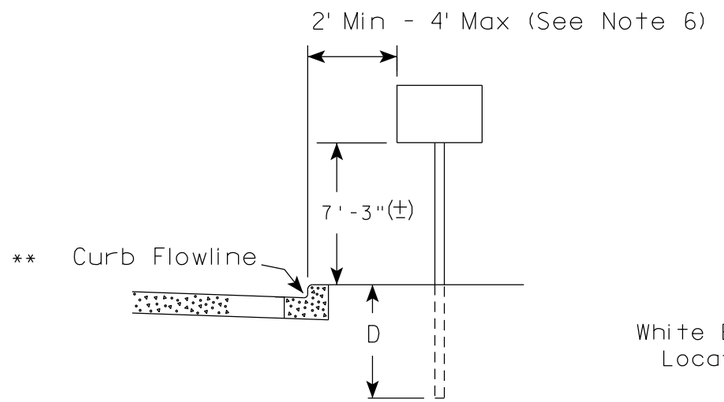


## RURAL AREA (See Note 2)

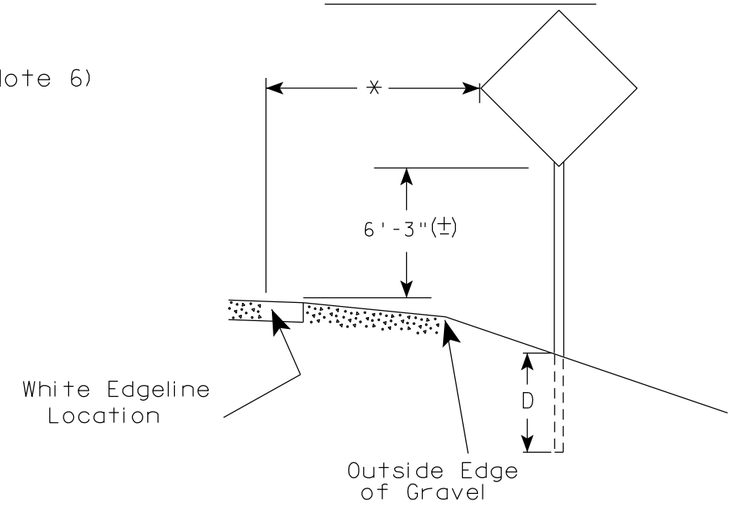


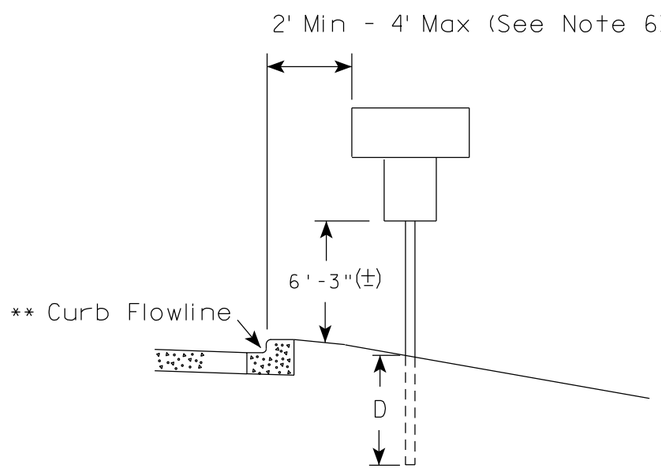


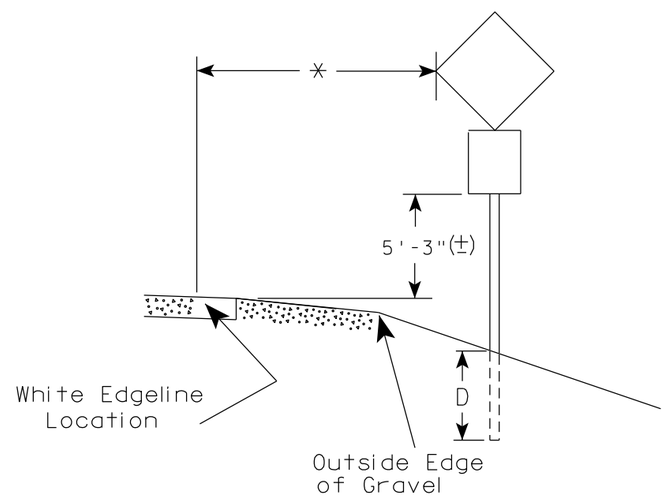


** The existence of curb and gutter does not in itself mandate the vertical clearance illustrated. That height is typically measured where there is sidewalk adjacent to the roadway or parking is permitted. In the absence of sidewalk vertical clearance is measured from the top of the curb. Offset of signs is measured from the flow line.

* 6 feet from edge of a paved shoulder or 12 feet from the edge of pavement (edge line location) or 2 feet from outside edge of gravel, whichever is greater unless directed by project engineer.

## GENERAL NOTES

1. Signs wider than 4 feet or 20 sq.ft or larger, shall be mounted on multiple posts. Refer to plate A4-4.
2. If signs are mounted on or behind barrier wall, see A4-10 sign plate.
   The Double Arrow sign (W12-1D) shall be mounted at a height of 2'-3" (±). The Chevron sign (W1-8), Roundabout Chevron panel (R6-4B), Enhanced Reference Markers, Clearance Markers (W5-52), Mile Markers (D10 series), In Road Object Markers (W5-54) & End of Road Markers (W5-56) shall be mounted at a height of 4'-3" (±).
3. For expressways and freeways, mounting height is 7'- 3" (±) or 6'-3" (±) depending upon existence of a sub-sign.
4. Minimum mounting height for signs mounted on traffic signal poles is 5'- 3" (±).
5. Offset distance shall be consistent with existing signs or consistent throughout length of project.
6. The (±) tolerance for mounting height is 3 inches.
7. Folding signs shall be mounted at a height of 5'-3" (±) or as directd by the Engineer.

### POST EMBEDMENT DEPTH

| Area of Sign Installation ( Sq.Ft.) | D ( Min ) |
|---|---|
| 20 or Less | 4' |
| Greater than 20 | 5' |

TYPICAL INSTALLATION OF PERMANENT TYPE II SIGNS ON SINGLE POSTS

WISCONSIN DEPT OF TRANSPORTATION

APPROVED Matthew R Rauch for State Traffic Engineer

DATE 5/13/2020 PLATE NO. A4-3.22

7 7

| PROJECT NO: | HWY: | COUNTY: | | SHEET NO: 132 | E |
|---|---|---|---|---|---|

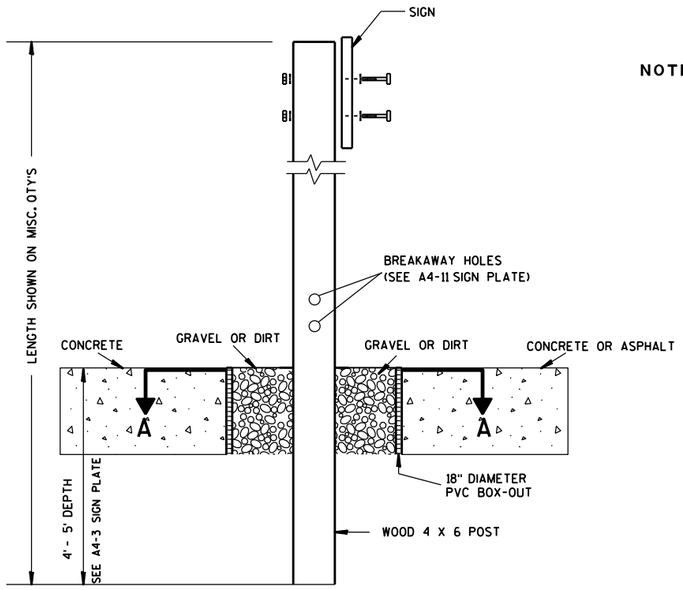


**ELEVATION VIEW**

**DETAIL OF WOOD 4 X 6 SIGN POST IN BOX-OUT**

NOTES:
1. ALL MATERIAL TO BE APPROVED BY ENGINEER PRIOR TO INSTALLATION
2. SEE SIGN PLATE A4-8 FOR SIGN HARDWARE REQUIREMENTS
3. 18 INCH X 18 INCH SQUARE BOX-OUTS MAY BE USED FOR INSTALLATIONS IN EXISTING CONCRETE OR ASPHALT LOCATIONS.

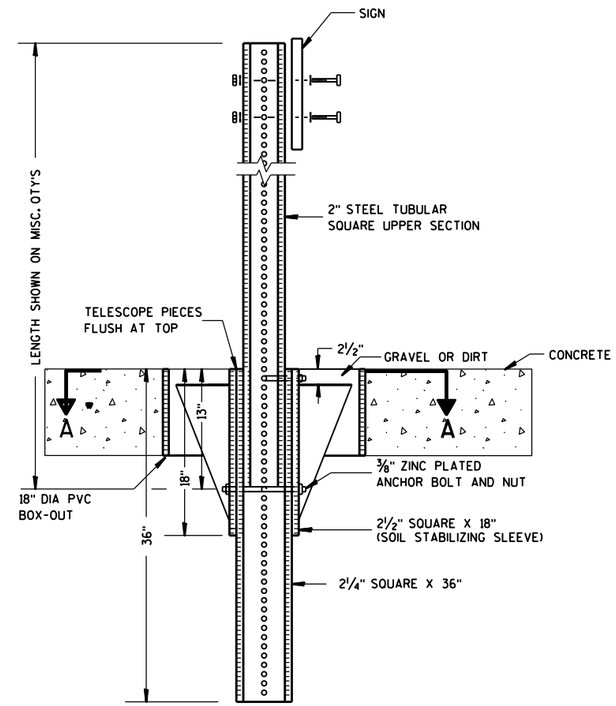


**ELEVATION VIEW**

**DETAIL OF STEEL 2 X 2 SIGN POST IN BOX-OUT**

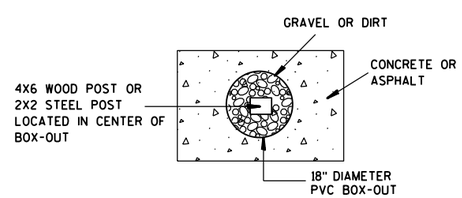


**PLAN VIEW**

**FOR NEW CONCRETE/ASPHALT INSTALLATIONS**

SIGN POST
BOX-OUTS
A4-3B

WISCONSIN DEPT OF TRANSPORTATION

APPROVED Matthew R Rauch
for State Traffic Engineer

DATE 1/27/14 PLATE NO. A4-3B.1

| PROJECT NO: | HWY: | COUNTY: | | SHEET NO: | E |
|---|---|---|---|---|---|

## URBAN AREA

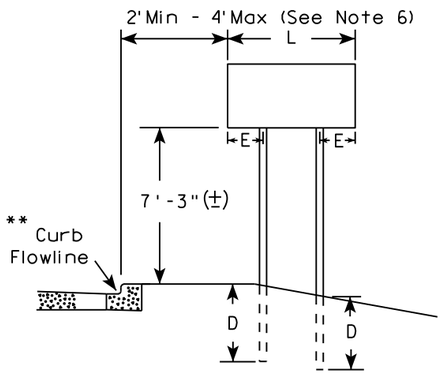


## RURAL AREA (See Note 3)

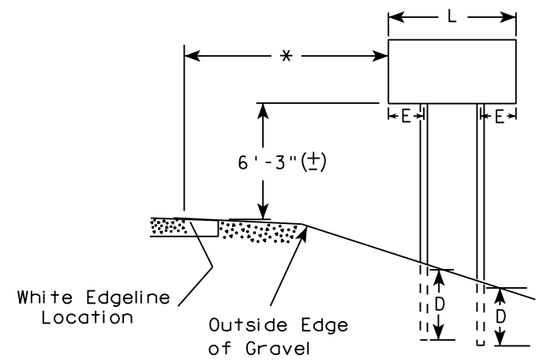


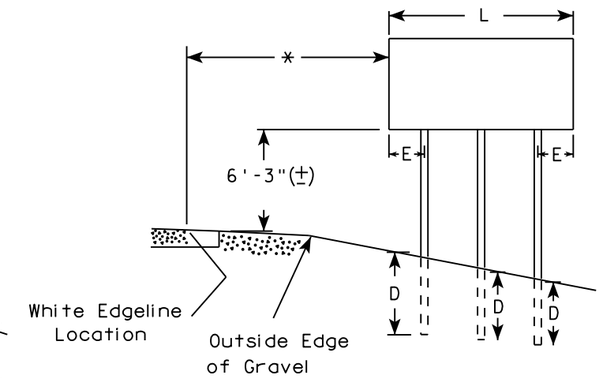


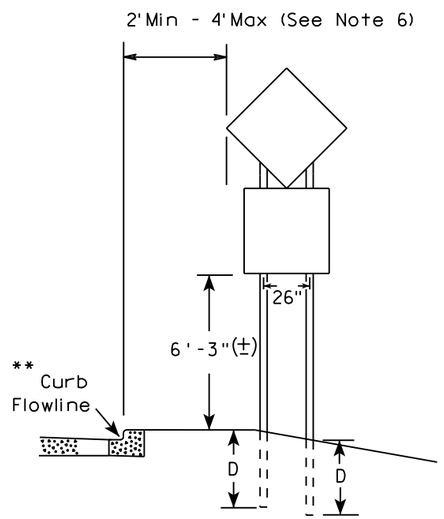


48" DIAMOND WARNING SIGN

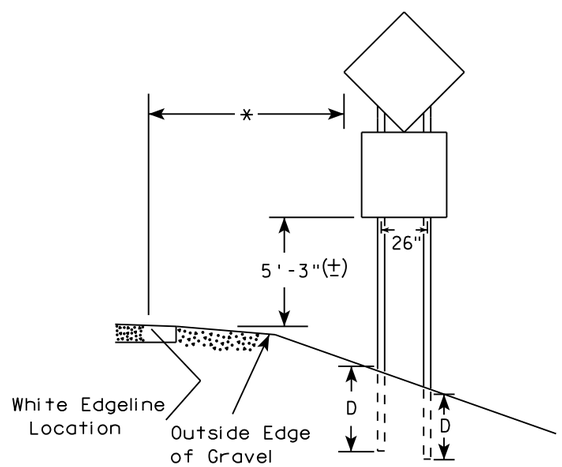


48" DIAMOND WARNING SIGN

| SIGN SHAPE OTHER THAN DIAMOND (TWO POSTS REQUIRED) | |
|---|---|
| L | E |
| *** Greater than 48" Less than 60" | 12" |
| 60" to 108" | L/5 |

| SIGN SHAPE OTHER THAN DIAMOND (THREE POSTS REQUIRED) | |
|---|---|
| L | E |
| Greater than 108" to 144" | 12" |

### GENERAL NOTES

1. For 3 or 4 post installations, individual post spacing shall be greater than 3'-6".
2. See tables below for required number of posts.
3. For expressways and freeways, mounting height is 7'-3" (±) or 6'-3" (±) depending upon existence of sub-sign.
4. The (±) tolerance for mounting height is 3 inches.
5. J-Assemblies are considered to be one sign for mounting height.
6. Offset distance shall be consistent with existing signs or consistent throughout length of project.
7. Folding signs shall be mounted at a height of 5'-3" (±) or as directed by the engineer.
8. The Double Arrow sign (W12-1) shall be mounted at a height of 2'-3" (±). The Chevron sign (W1-8), Roundabout Chevron panel (R6-4B), Clearance Markers (W5-52), Mile Markers (D10 series), In Road Object Markers (W5-54) & End of Road Markers (W5-56) shall be mounted at a height of 4"-3" (±).

* 6 feet from edge of a paved shoulder or 12 feet from the edge of pavement (edge line location) or 2 feet from outside edge of gravel, whichever is greater unless directed by project engineer.

** The existence of curb and gutter does not in itself mandate the vertical clearance illustrated. That height is typically measured where there is sidewalk adjacent to the roadway or parking is permitted. In the absence of sidewalk vertical clearance is measured from the top of the curb. Offset of signs is measured from the flow line.

*** See A4-3 sign plate for signs 4' or less in width and less than 20 S.F. in area.

### POST EMBEDMENT DEPTH

| Area of Sign Installation ( Sq. Ft. ) | D ( Min ) |
|---|---|
| 20 or Less | 4' |
| Greater than 20 | 5' |

TYPICAL INSTALLATION OF TYPE II SIGNS ON MULTIPLE POSTS

*WISCONSIN DEPT OF TRANSPORTATION*

APPROVED Matthew R Rauch
For State Traffic Engineer

DATE 8/21/17 PLATE NO. A4-4.15

7

7

| PROJECT NO: | HWY: | COUNTY: | | SHEET NO: 134 | E |
|---|---|---|---|---|---|

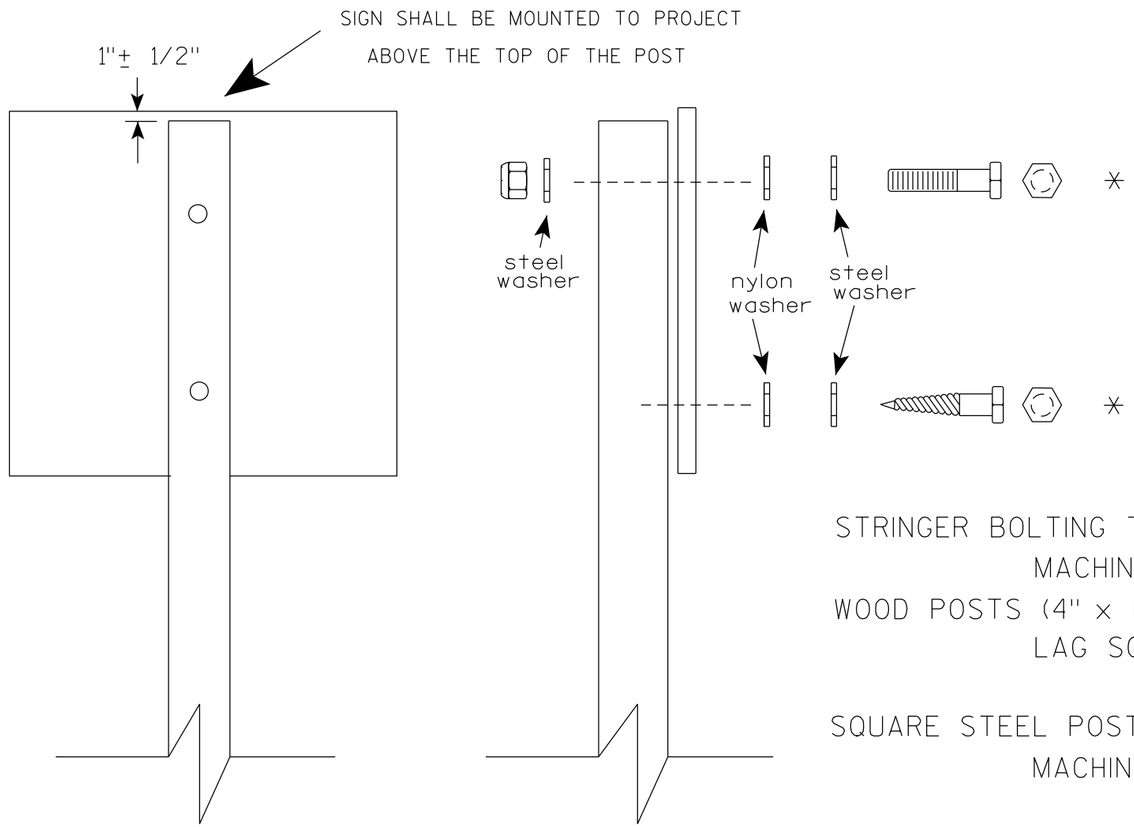


Nuts, bolts and lags used for mounting signs shall have hexagonal heads and shall be either :

a. Hot dip galvanized in accordance with ASTM Designation: A 153, Class D, or SC 3

b. Electro-galvanized in accordance with ASTM Designation : B 633, TYPE III, SC 3.

Threads on bolts and nuts shall be manufactured with sufficient allowance for the cadmium plate or galvanized coating to permit the nuts to run freely on the bolts.

STRINGER BOLTING TO ALUMINUM SIGNS (SEE SIGN PLATE A4-18)

MACHINE BOLTS - 5/16" X 1-3/4" Length w/ lock nuts

WOOD POSTS (4" x 6")

LAG SCREWS - 3/8" X 3" (NO STRINGERS ON BACK OF SIGN)
3/8" X 4" (STRINGERS ON BACK OF SIGN)

SQUARE STEEL POSTS (2" x 2")

MACHINE BOLTS - 3/8" X 3-1/4" Length w/ nuts (NO STRINGER ON BACK OF SIGN)
3/8" X 5" Length w/ nuts (STRINGERS ON BACK OF SIGN)

RIVETS - 9/32 " (6605-9-6) BULB-TITE, TRI-FOLD, ALUMINUM BODY/MANDREL
O.D. FLANGE .720-.765 INCH, GRIP RANGE .042-.375 INCH

WASHERS (ALL POSTS) -

1-1/4" O.D. X 3/8" I.D. X 1/16" STEEL
1-1/4" O.D. X 3/8" I.D. X .080 NYLON

* Two different fastening systems are shown for illustration purposes. On any individual sign, either one or the other system shall be used. Actual number of fasteners per sign varies with the sign area, but normally there are two. For a single post installation, all signs greater than 9 sq. ft. require the use of 3 fasteners.

ATTACHMENT OF SIGNS TO POSTS

WISCONSIN DEPT OF TRANSPORTATION

APPROVED Matthew R Rauch
for State Traffic Engineer

DATE 4/1/2020 PLATE NO. A4-8.9

## TELESCOPIC TUBING ANCHORS
## TWO PIECE SYSTEM

**2 1/4" SQUARE**
**12 GAUGE**
**PERFORATED**
**GALVANIZED FINISH**

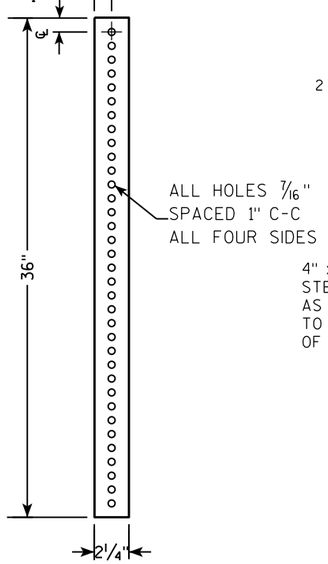


**2 1/2" SQUARE**
**12 GAUGE**
**OMNI-DIRECTIONAL**
**PERFORATED**
**SOIL STABILIZING SLEEVE**
**GALVANIZED FINISH**

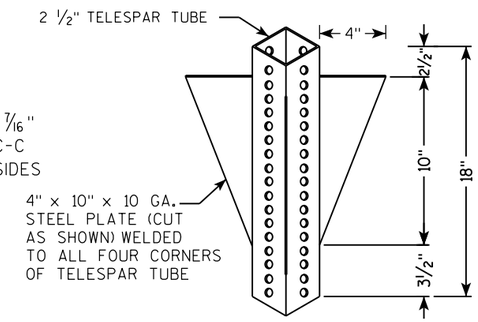


## DETAIL OF TUBULAR STEEL SIGN POST
**(IN POURED CONCRETE OR ASPHALT)**

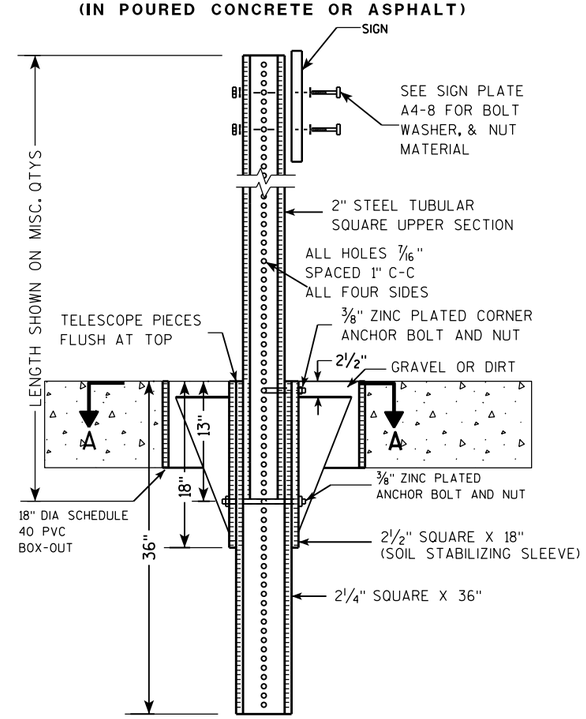


## DETAIL OF TUBULAR STEEL SIGN POST
**(IN LOCATIONS OTHER THAN POURED CONCRETE OR ASPHALT)**

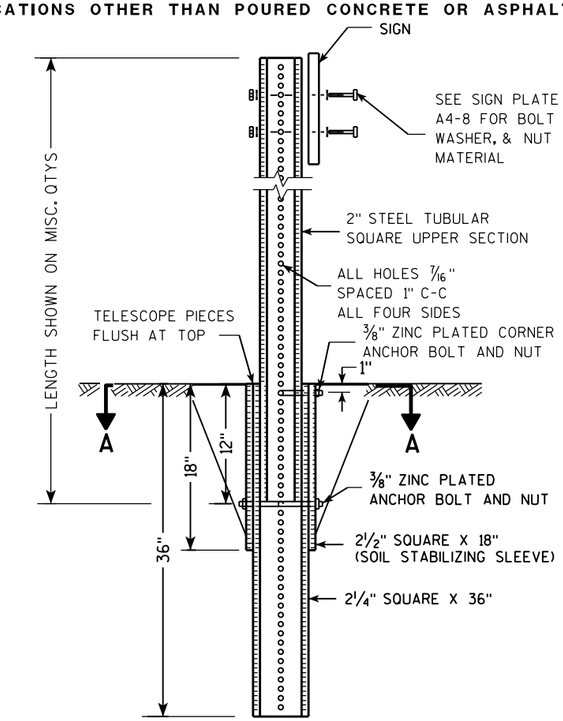


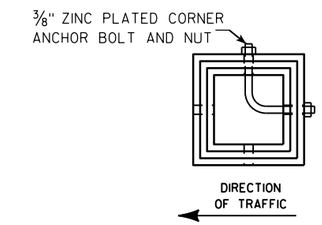


**SECTION A-A**

| Area of Sign Installation (Sq. Ft.) | Number of Required Posts |
|---|---|
| 9 or less | 1 |
| Greater than 9 less than or equal to 18 | 2 |
| Greater than 18 less than or equal to 27 | 3 |

**Signs wider than 3 feet or larger than 9 sq. ft shall be mounted on multiple posts (see above table).**

TUBULAR STEEL
SIGN POST
A4-9

*WISCONSIN DEPT OF TRANSPORTATION*

APPROVED Matthew R Rauch
*for* State Traffic Engineer

DATE 2/05/15 PLATE A4-9.9

7 7

| PROJECT NO: | HWY: | COUNTY: | | SHEET NO: | E |
|---|---|---|---|---|---|

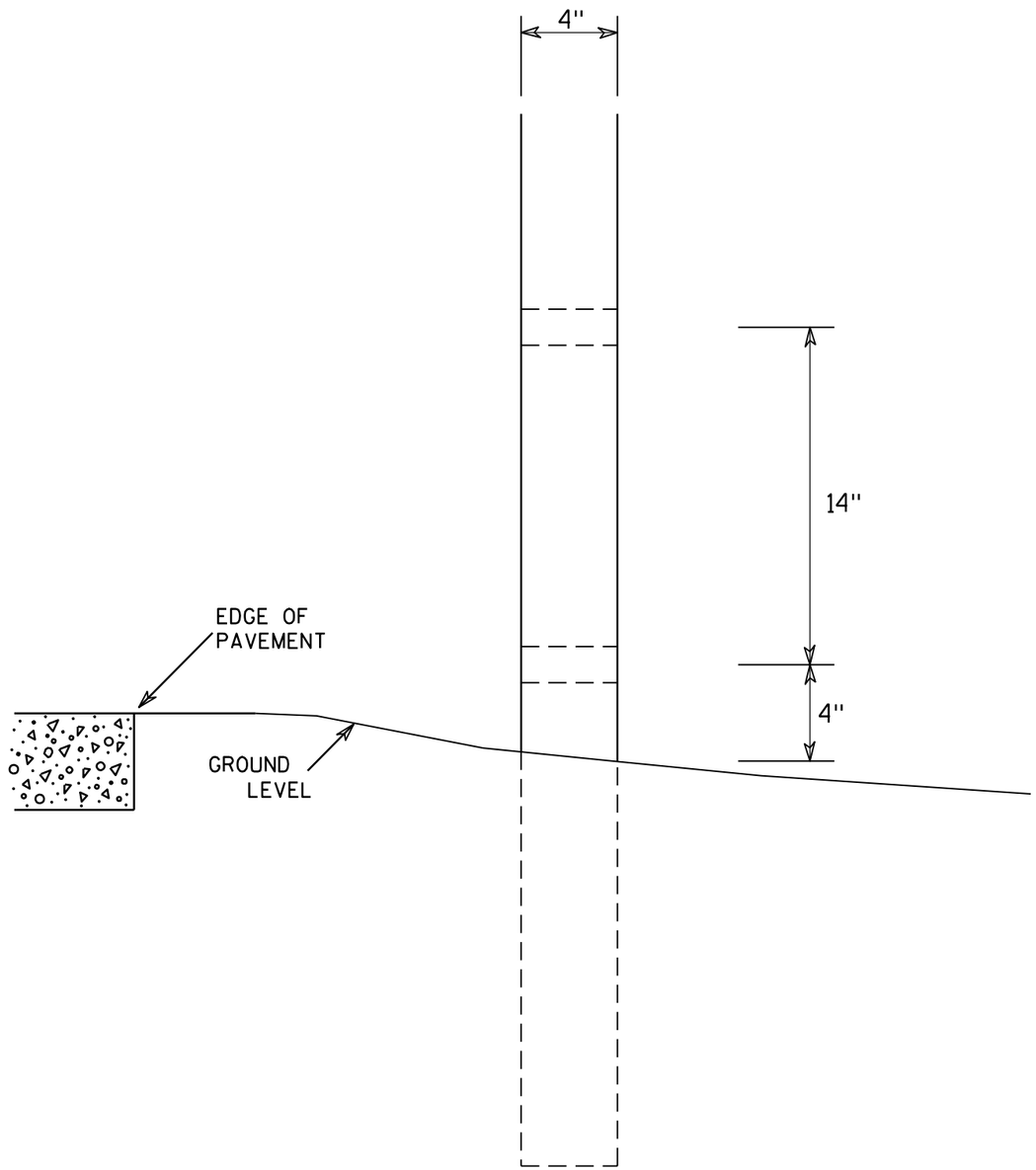


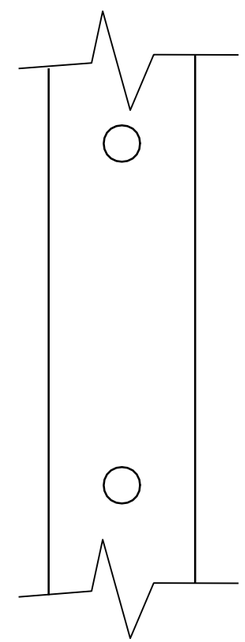

SIDE VIEW

GENERAL NOTES

1. All 4 x 6 Wood Posts shall be modified by having two 1½" diameter holes drilled perpendicular to the roadway centerline.

# 4 X 6 WOOD POST MODIFICATIONS

WISCONSIN DEPT OF TRANSPORTATION

APPROVED Chester J Spang for State Traffic Engineer

DATE 3/27/97 PLATE NO. A4-11.2

| PROJECT NO: | HWY: | COUNTY: | | SHEET NO: 137 | E |
|---|---|---|---|---|---|

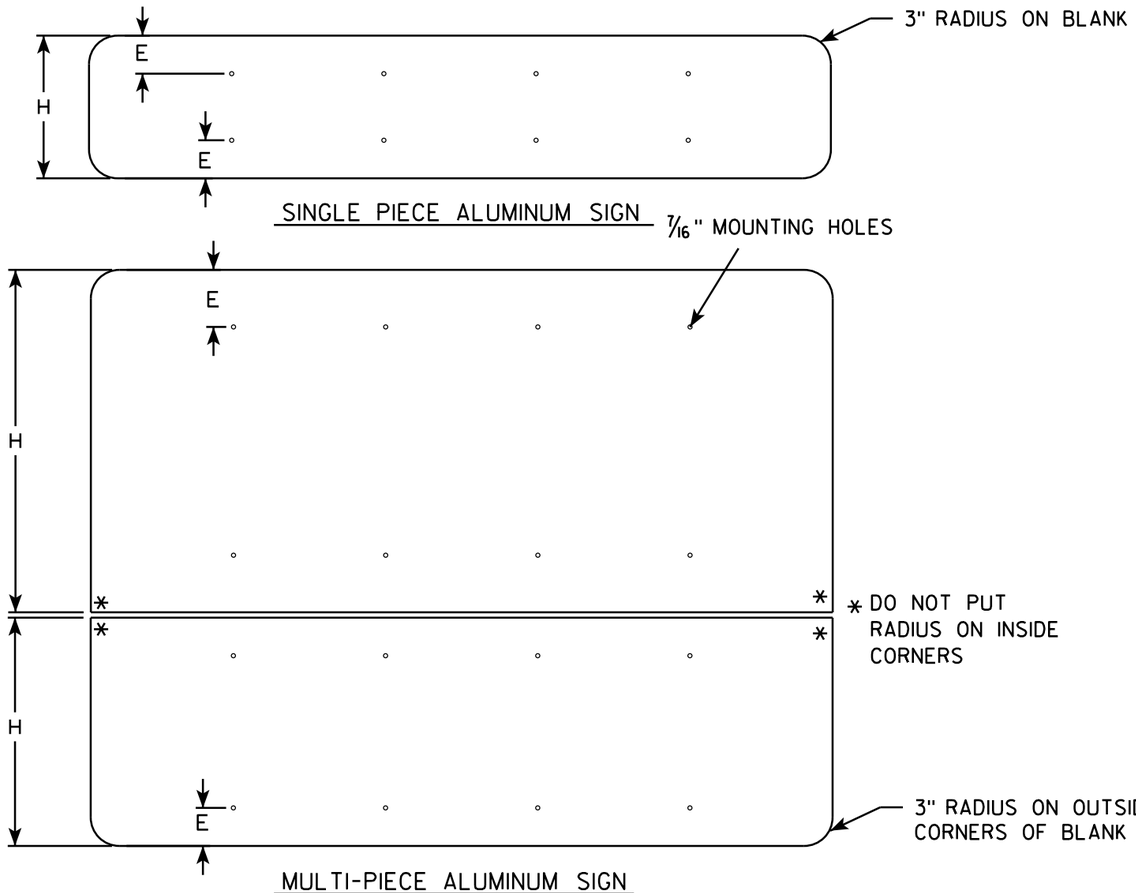


# GENERAL NOTES

- ALL SIGNS OVER 60" IN WIDTH SHALL HAVE A 3" RADIUS ON THE OUTSIDE CORNERS OF THE ALUMINUM BLANK.
- MOUNTING HOLES SHALL BE 7/16" DIAMETER.
- SEE CHART FOR HOLE SPACING REQUIREMENTS
- FOR SIGN PANELS WITH DIMENSION (H) 36" AND OVER, DIMENSION E SHALL BE 6"
- FOR SIGN PANELS WITH DIMENSION (H) UNDER 36", DIMENSION E SHALL BE 4"
- SIGN STRINGER MATERIAL SHALL CONSIST OF STEEL CHANNEL POST SECTIONS, WEIGHING 1.12 LBS/FT IN ACCORDANCE WITH SECTION 633.2.1 OF THE STANDARD SPECIFICATIONS FOR HIGHWAY AND STRUCTURE CONSTRUCTION.
- SEE SIGN PLATE A4-8 FOR SIGN STRINGER BOLTING REQUIREMENTS.

| SIGN WIDTH | STRINGER WIDTH | POSTS | HOLE SPACING | MOUNTING HOLES | | | | | | |
|---|---|---|---|---|---|---|---|---|---|---|
| 78" | 72" | 2 | 16" | 15" | 31" | 47" | 63" | | | |
| 84" | 72" | 2 | 17" | 16 1/2" | 33 1/2" | 50 1/2" | 67 1/2" | | | |
| 90" | 72" | 2 | 18" | 18" | 36" | 54" | 72" | | | |
| 96" | 90" | 2 | 19" | 19 1/2" | 38 1/2" | 57 1/2" | 76 1/2" | | | |
| 102" | 90" | 2 | 20" | 21" | 41" | 61" | 81" | | | |
| 108" | 90" | 2 | 21" | 22 1/2" | 43 1/2" | 64 1/2" | 85 1/2" | | | |
| 114" | 108" | 3 | 15" | 12" | 27" | 42" | 57" | 72" | 87" | 102" |
| 120" | 108" | 3 | 16" | 12" | 28" | 44" | 60" | 76" | 92" | 108" |
| 126" | 108" | 3 | 17" | 12" | 29" | 46" | 63" | 80" | 97" | 114" |
| 132" | 126" | 3 | 18" | 12" | 30" | 48" | 66" | 84" | 102" | 120" |
| 138" | 126" | 3 | 19" | 12" | 31" | 50" | 69" | 88" | 107" | 126" |
| 144" | 126" | 3 | 20" | 12" | 32" | 52" | 72" | 92" | 112" | 132" |

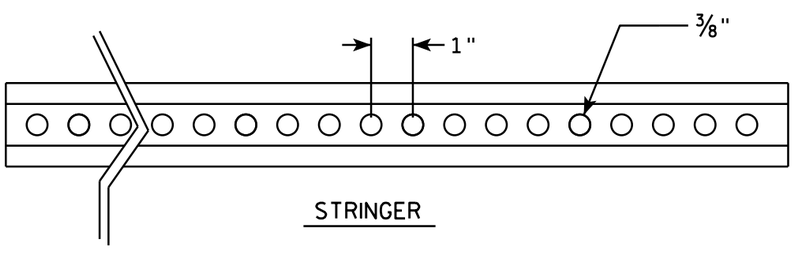


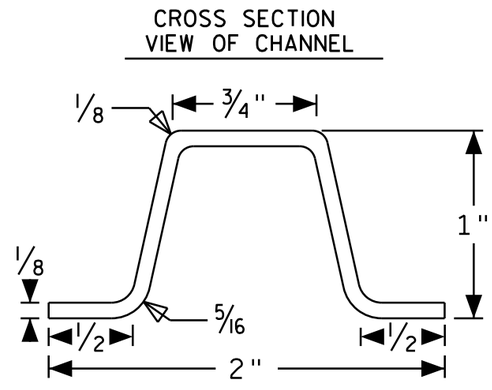


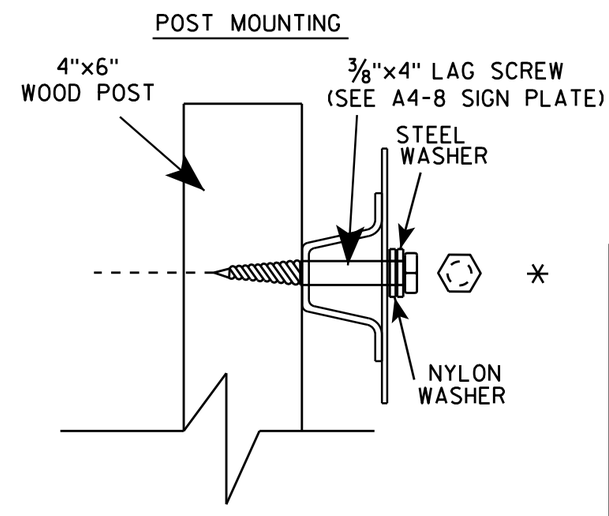


## SIGN STRINGER MOUNTING REQUIREMENTS

WISCONSIN DEPT OF TRANSPORTATION

APPROVED Matthew R Rauch
for State Traffic Engineer

DATE 4/26/16 PLATE NO A4-18.1

| PROJECT NO: | HWY: | COUNTY: | | SHEET NO: | E |
|---|---|---|---|---|---|

# BANDING

SINGLE SIGN

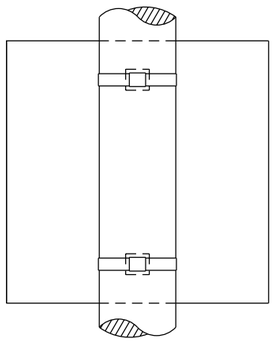

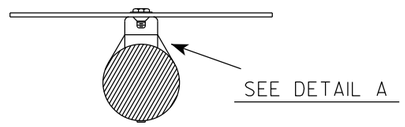


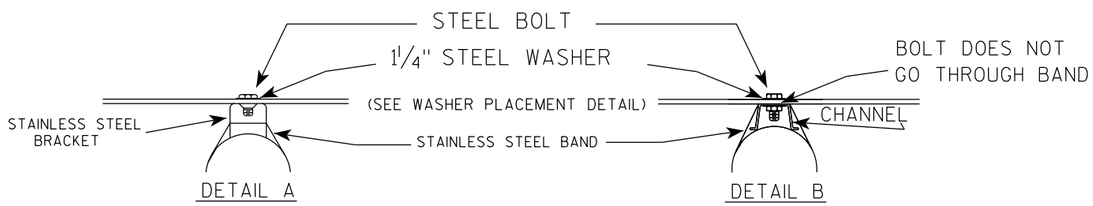


WASHER PLACEMENT

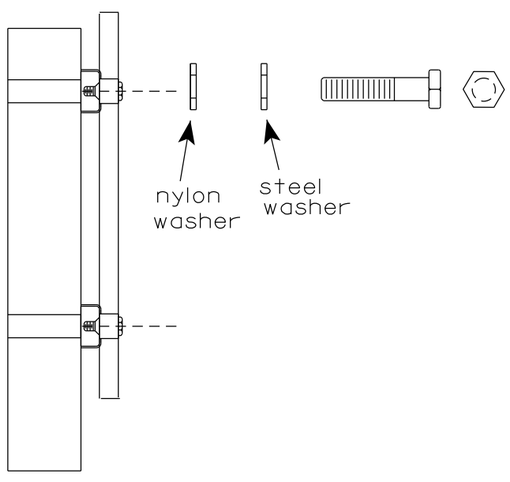


WASHERS (ALL POSTS) -
1-1/4" O.D. X 3/8" I.D. X 1/16" STEEL
1-1/4" O.D. X 3/8" I.D. X .080 NYLON
FOR ALL TYPE H SIGNS

GENERAL NOTES

1. Any sign over 3 feet in width shall use the V-Block banding method. See A5-10 standard plate.
2. Signs 3 feet or greater in height shall have three bracket bands installed. Signs less than 3 feet in height shall have two bracket bands installed.
3. Banding and assembly bracket shall be stainless steel. All bands shall be ¾" in width and 0.025" thickness.
4. ALL SIGN MOUNTING BOLTS AND WASHERS SHALL BE EITHER:
   a. Hot dip or mechanically galvanized in accordance with ASTM Designation: A 153, Class D
   b. Electro-galvanized in accordance with ASTM designation: B 633, Type III, SC 3

"J" ASSEMBLY

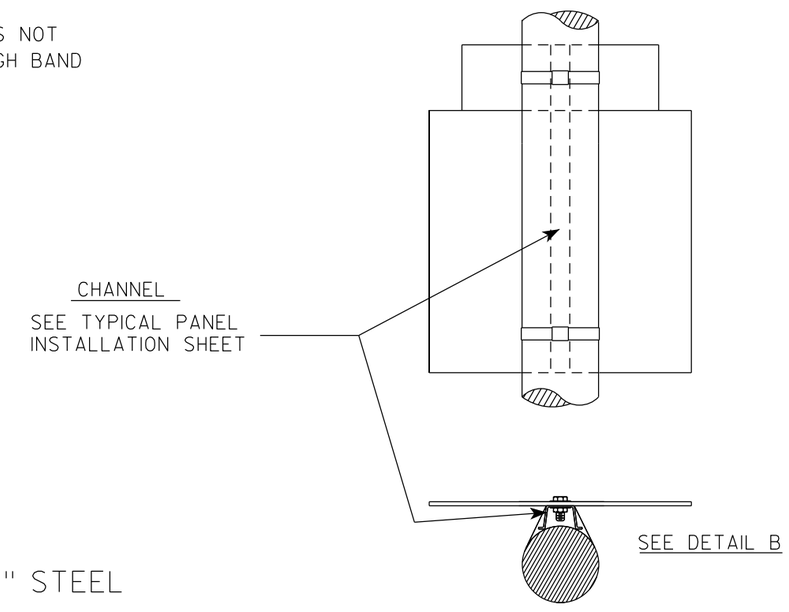


STANDARD SIGN
SIGN BANDING DETAILS

WISCONSIN DEPT OF TRANSPORTATION

APPROVED Matthew R Rauch for State Traffic Engineer

DATE 6/10/19 PLATE NO. A5-9.4

| PROJECT NO: | HWY: | COUNTY: | | SHEET NO: 139 | E |
|---|---|---|---|---|---|

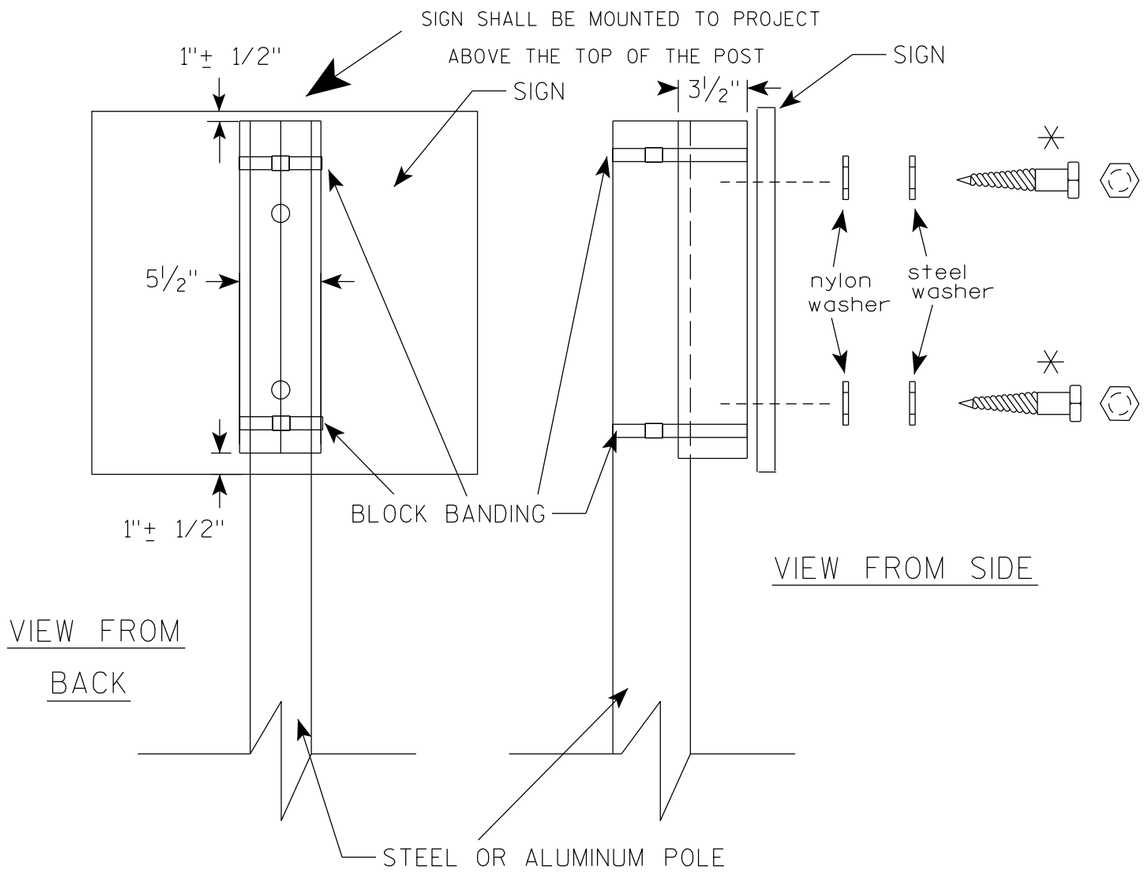


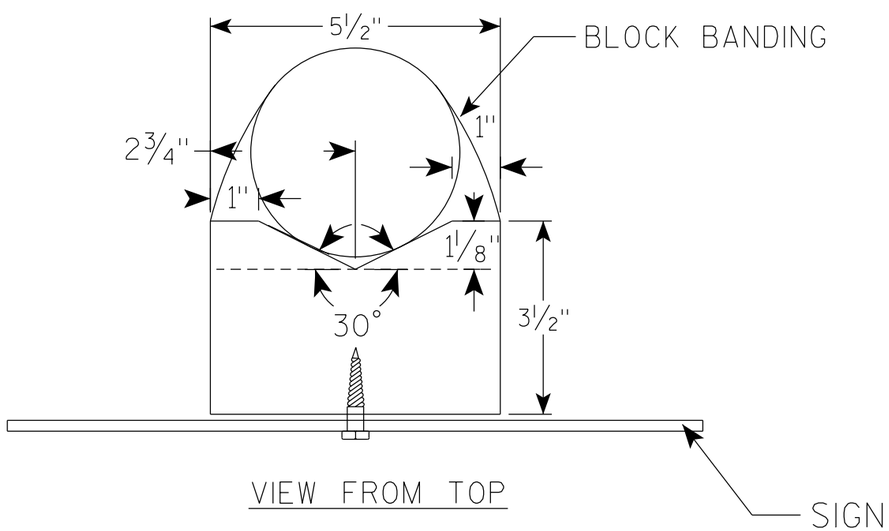


## GENERAL NOTES

1. WOOD 4"X6" POST MATERIAL SHALL CONFORM TO 507.2.2 OF THE WisDOT STANDARD SPECIFICATIONS
2. BLOCK BANDING AND CLIPS SHALL BE STAINLESS STEEL, 3/4" WIDTH AND 0.025" THICKNESS
3. SIGNS 3' OR GREATER IN HEIGHT SHALL UTILIZE 3 BLOCK BANDS. SIGNS UNDER 3' IN HEIGHT SHALL UTILIZE 2 BLOCK BANDS
4. ACTUAL NUMBER OF FASTENERS PER SIGN VARIES WITH THE SIGN AREA, BUT NORNALLY THERE ARE TWO. FOR SIGNS GREATER THAN 9 S.F. 3 FASTENERS SHALL BE USED.
5. ALL SIGN MOUNTING BOLTS AND WASHERS SHALL BE EITHER:
   a. Hot dip or mechanically galvanized in accordance with ASTM Designation: A 153, Class D
   b. Electro-galvanized in accordance with ASTM Designation : B 633, TYPE III, SC 3
6. ALL BOLTS SHALL HAVE HEXAGONAL HEADS.
7. STEEL WASHERS SHALL BE 1 1/4" O.D. X 3/8" I.D. X 1/16"
8. NYLON WASHERS SHALL BE 1 1/4" O.D. X 3/8" I.D. X .080 FOR TYPE H OR TYPE F FACE SIGN

✳ LAG BOLTS SHALL BE 3/8" X 2 1/2"

7

7

BLOCK BANDING DETAIL
( V-BLOCK OPTION )

WISCONSIN DEPT OF TRANSPORTATION

APPROVED Matthew R Rauch
for State Traffic Engineer

DATE 4/19/2022 PLATE NO. A5-10.3

| PROJECT NO: | | | | SHEET NO: 140 | E |
|---|---|---|---|---|---|

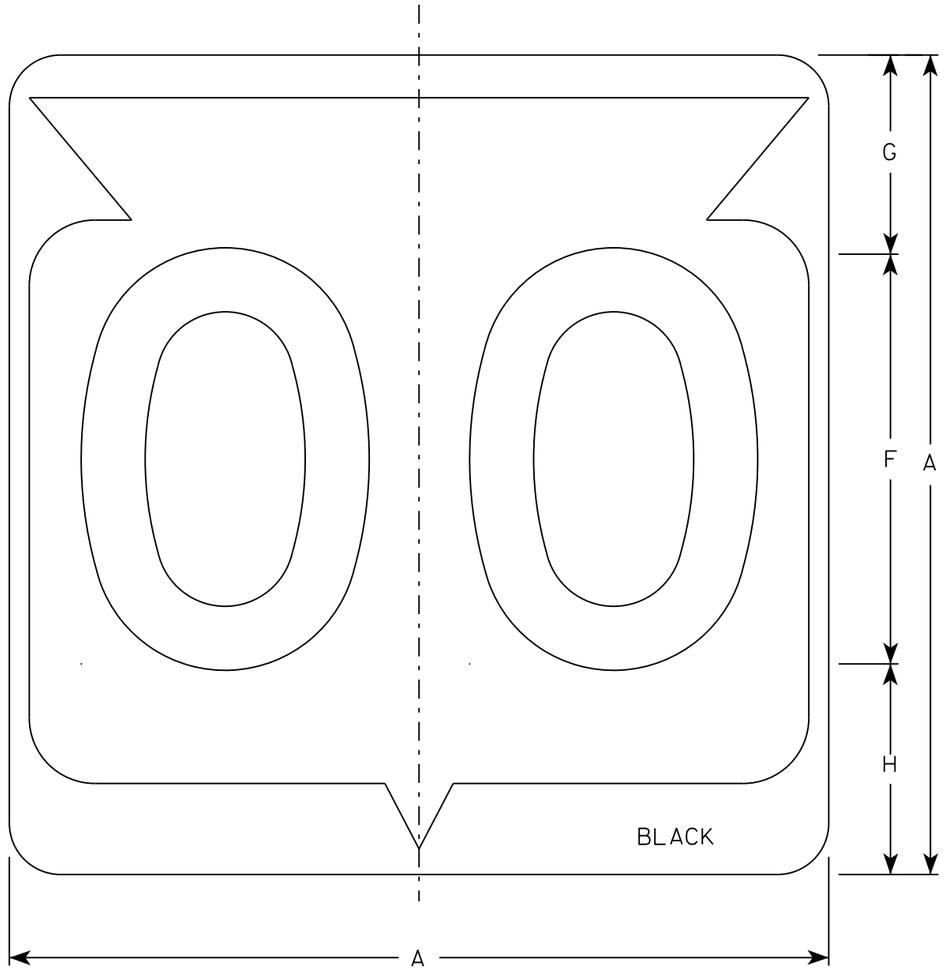


M1-6

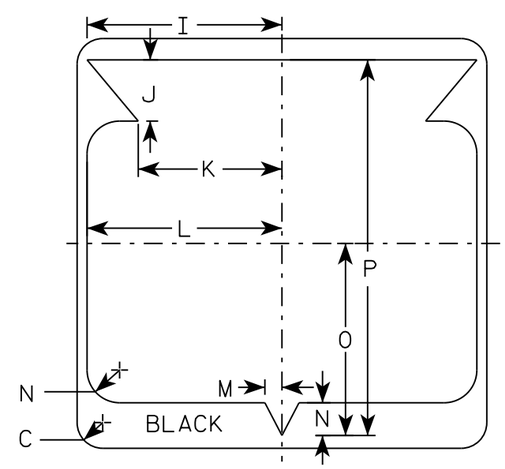


NOTES

1. Sign is Type II - Type H Reflective
2. Color:
   Background - White
   Message - Black
3. Message Series - D except 3 number signs Series C
4. Corners may be square or rounded when base material is plywood but borders shall be rounded as shown. When base material is metal, the corners and borders shall be rounded.

| SIZE | A | B | C | D | E | F | G | H | I | J | K | L | M | N | O | P | Q | R | S | T | U | V | W | X | Y | Z | Area sq. ft. |
|---|---|---|---|---|---|---|---|---|---|---|---|---|---|---|---|---|---|---|---|---|---|---|---|---|---|---|---|
| 1 | | | | | | | | | | | | | | | | | | | | | | | | | | | |
| 2 | 24 | | 1 1/2 | | | 12 | 5 1/2 | 6 1/2 | 10 1/4 | 2 1/2 | 8 7/8 | 11 1/2 | 1 | 1 7/8 | 11 1/4 | 21 7/8 | | | | | | | | | | | 4.0 |
| 3 | 36 | | 2 1/4 | | | 18 | 8 3/4 | 9 1/4 | 15 3/8 | 5 3/8 | 12 5/8 | 17 1/8 | 1 1/2 | 2 7/8 | 16 7/8 | 33 | | | | | | | | | | | 9.0 |
| 4 | 36 | | 2 1/4 | | | 18 | 8 3/4 | 9 1/4 | 15 3/8 | 5 3/8 | 12 5/8 | 17 1/8 | 1 1/2 | 2 7/8 | 16 7/8 | 33 | | | | | | | | | | | 9.0 |
| 5 | 36 | | 2 1/4 | | | 18 | 8 3/4 | 9 1/4 | 15 3/8 | 5 3/8 | 12 5/8 | 17 1/8 | 1 1/2 | 2 7/8 | 16 7/8 | 33 | | | | | | | | | | | 9.0 |

STATE ROUTE MARKER
M1-6 FOR ASSEMBLIES

WISCONSIN DEPT OF TRANSPORTATION

APPROVED Matthew R Rauch
for State Traffic Engineer

DATE 3/16/18 PLATE NO. M1-6.10

PROJECT NO: | HWY: | COUNTY: | SHEET NO: 141 | E

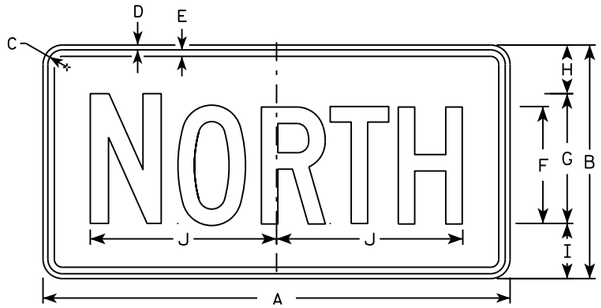


M3-1
MM3-1
MP3-1

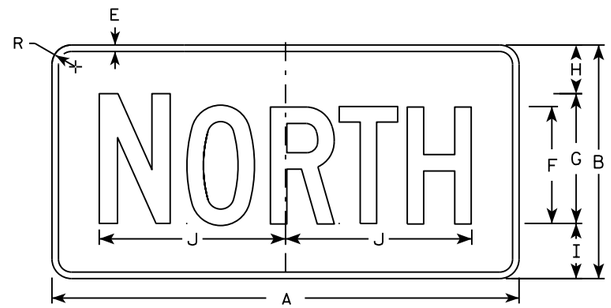


MB3-1
MK3-1
MN3-1


M3-2
MM3-2
MP3-2

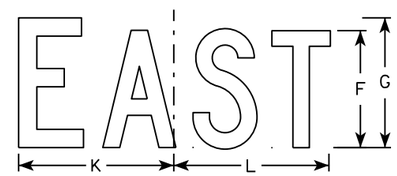


MB3-2
MK3-2
MN3-2

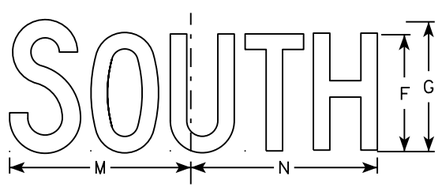


M3-3
MM3-3
MP3-3

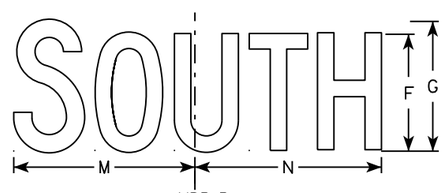


MB3-3
MK3-3
MN3-3

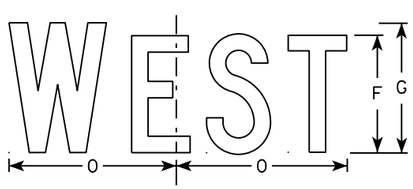


M3-4
MM3-4
MP3-4

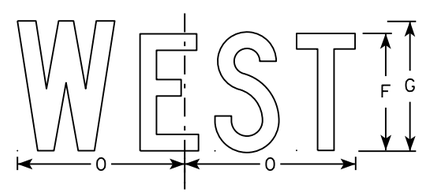


MB3-4
MK3-4
MN3-4

## NOTES

1. All Signs Type II - Type H
2. Color:
   Background - See note 5
   Message - See note 5
3. Message Series - C
4. Corners may be square or rounded when base material is plywood but borders shall be rounded as shown. When base material is metal, the corners and borders shall be rounded.
5. M3-1 thru M3-4 Background - White
   Message - Black
   MB3-1 thru MB3-4 Background - Blue
   Message - White
   MK3-1 thru MK3-4 Background - Green
   Message - White
   MM3-1 thru MM3-4 Background - White
   Message - Green
   MN3-1 thru MN3-4 Background - Brown
   Message - White
   MP3-1 thru MP3-4 Background - White
   Message - Blue
6. Note the first letter of each direction is larger than the remainder of the message.

| SIZE | A | B | C | D | E | F | G | H | I | J | K | L | M | N | O | P | Q | R | S | T | U | V | W | X | Y | Z | Area sq. ft. |
|---|---|---|---|---|---|---|---|---|---|---|---|---|---|---|---|---|---|---|---|---|---|---|---|---|---|---|---|
| 1 | | | | | | | | | | | | | | | | | | | | | | | | | | | |
| 2 | 24 | 12 | 1 1/8 | 3/8 | 3/8 | 6 | 7 | 2 1/4 | 2 3/4 | 10 1/4 | 7 7/8 | 8 3/8 | 10 1/4 | 9 3/4 | 8 3/4 | | | 1 1/2 | | | | | | | | | 2.00 |
| 3 | 36 | 18 | 1 1/8 | 3/8 | 1/2 | 9 | 10 | 3 3/4 | 4 1/4 | 14 3/8 | 12 | 12 1/8 | 14 | 14 1/8 | 13 | | | 1 1/2 | | | | | | | | | 4.5 |
| 4 | 36 | 18 | 1 1/8 | 3/8 | 1/2 | 9 | 10 | 3 3/4 | 4 1/4 | 14 3/8 | 12 | 12 1/8 | 14 | 14 1/8 | 13 | | | 1 1/2 | | | | | | | | | 4.5 |
| 5 | 36 | 18 | 1 1/8 | 3/8 | 1/2 | 9 | 10 | 3 3/4 | 4 1/4 | 14 3/8 | 12 | 12 1/8 | 14 | 14 1/8 | 13 | | | 1 1/2 | | | | | | | | | 4.5 |

STANDARD SIGNS
M3-1 thur M3-4
SERIES

WISCONSIN DEPT OF TRANSPORTATION

APPROVED Matthew R Rauch
for State Traffic Engineer

DATE 10/15/15 PLATE NO M3-1.14

PROJECT NO: | HWY: | COUNTY: | SHEET NO: | E

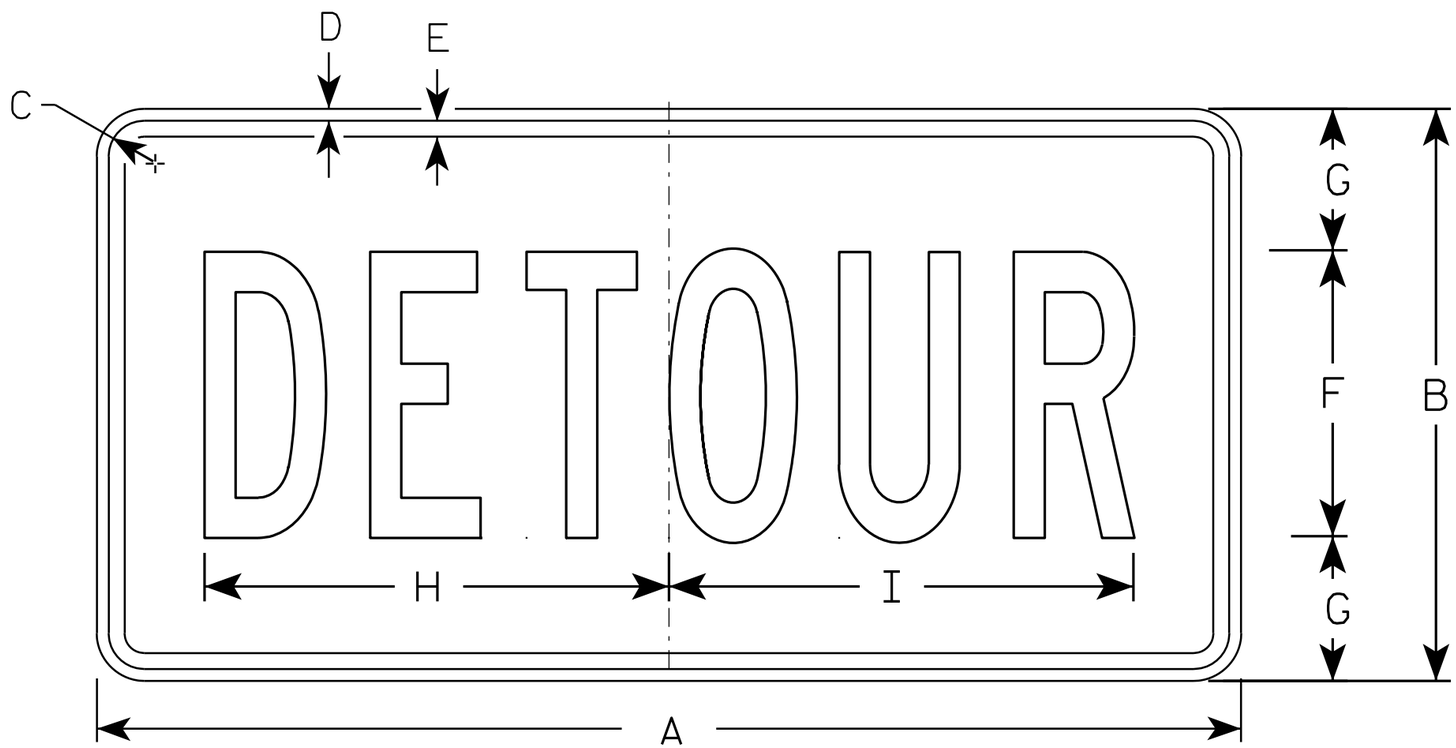


M4-8

NOTES

1. Sign is Type II - Type F Reflective - reference WIS DOT Standard Specification for HIGHWAY and STRUCTURE CONSTRUCTION latest edition.
2. Color:
   Background - Orange
   Message - Black
3. Message Series - B
4. Corners may be square or rounded when base material is plywood but borders shall be rounded as shown. When base material is metal, the corners and borders shall be rounded.

| SIZE | A | B | C | D | E | F | G | H | I | J | K | L | M | N | O | P | Q | R | S | T | U | V | W | X | Y | Z | Area sq. ft. |
|---|---|---|---|---|---|---|---|---|---|---|---|---|---|---|---|---|---|---|---|---|---|---|---|---|---|---|---|
| 1 | | | | | | | | | | | | | | | | | | | | | | | | | | | |
| 2 | 24 | 12 | 1 1/8 | 3/8 | 3/8 | 6 | 3 | 10 | 10 1/4 | | | | | | | | | | | | | | | | | | 2.0 |
| 3 | 36 | 18 | 1 1/8 | 3/8 | 1/2 | 9 | 4 1/2 | 14 5/8 | 14 1/2 | | | | | | | | | | | | | | | | | | 4.5 |
| 4 | | | | | | | | | | | | | | | | | | | | | | | | | | | |
| 5 | | | | | | | | | | | | | | | | | | | | | | | | | | | |

STANDARD SIGN
M4-8

WISCONSIN DEPT OF TRANSPORTATION

APPROVED Matthew R Rauch
for State Traffic Engineer

DATE 11/10/10 PLATE NO. M4-8.2

PROJECT NO: | HWY: | COUNTY: | SHEET NO: 143 | E

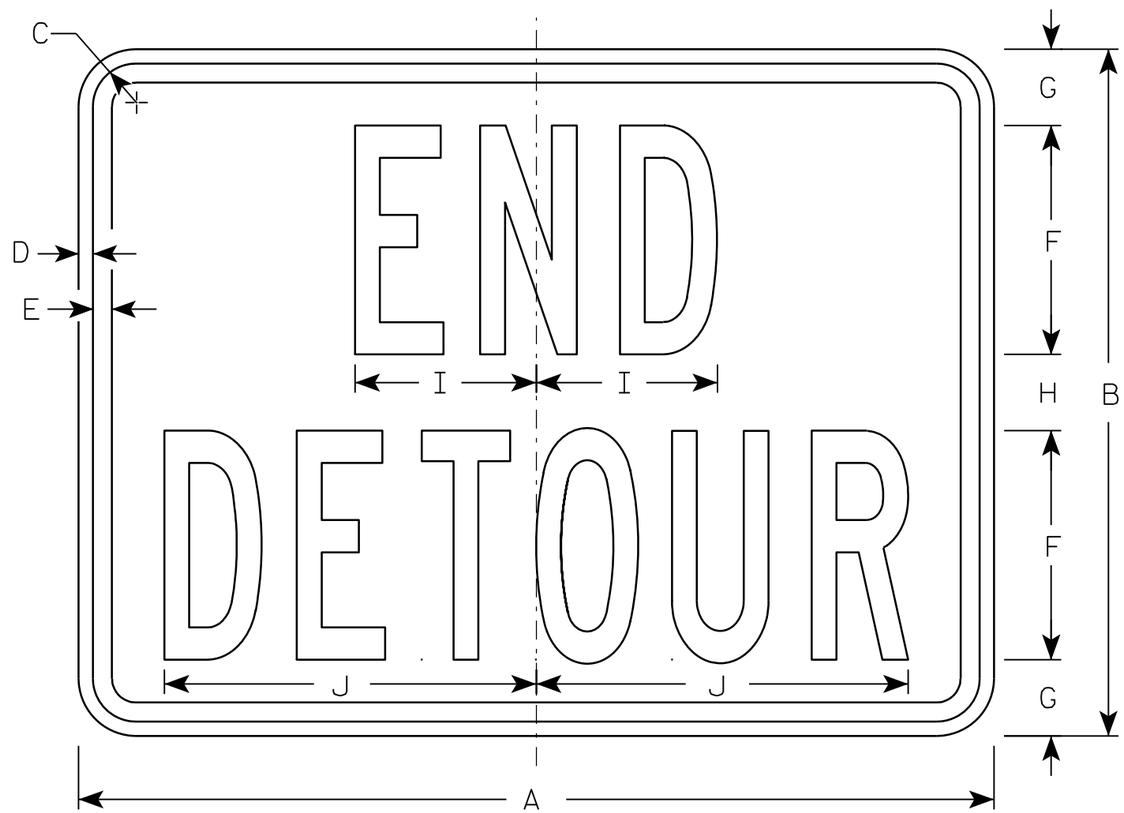


M4-8A

NOTES

1. Sign is Type II - Type F Reflective - reference WIS DOT Standard Specification for HIGHWAY and STRUCTURE CONSTRUCTION latest edition.
2. Color:
   Background - Orange
   Message - Black
3. Message Series - B
4. Corners may be square or rounded when base material is plywood but borders shall be rounded as shown. When base material is metal, the corners and borders shall be rounded.

| SIZE | A | B | C | D | E | F | G | H | I | J | K | L | M | N | O | P | Q | R | S | T | U | V | W | X | Y | Z | Area sq. ft. |
|---|---|---|---|---|---|---|---|---|---|---|---|---|---|---|---|---|---|---|---|---|---|---|---|---|---|---|---|
| 1 | | | | | | | | | | | | | | | | | | | | | | | | | | | |
| 2 | 24 | 18 | 1 1/8 | 3/8 | 1/2 | 6 | 2 | 2 | 4 3/4 | 9 3/4 | | | | | | | | | | | | | | | | | 3.0 |
| 3 | 30 | 24 | 1 1/8 | 3/8 | 1/2 | 8 | 2 1/2 | 3 | 6 3/4 | 13 | | | | | | | | | | | | | | | | | 5.0 |
| 4 | | | | | | | | | | | | | | | | | | | | | | | | | | | |
| 5 | | | | | | | | | | | | | | | | | | | | | | | | | | | |

STANDARD SIGN
M4-8A

WISCONSIN DEPT OF TRANSPORTATION

APPROVED Matthew R Rauch
for State Traffic Engineer

DATE 3/9/11 PLATE NO. M4-8A.2

PROJECT NO: | HWY: | COUNTY: | SHEET NO: 144 | E

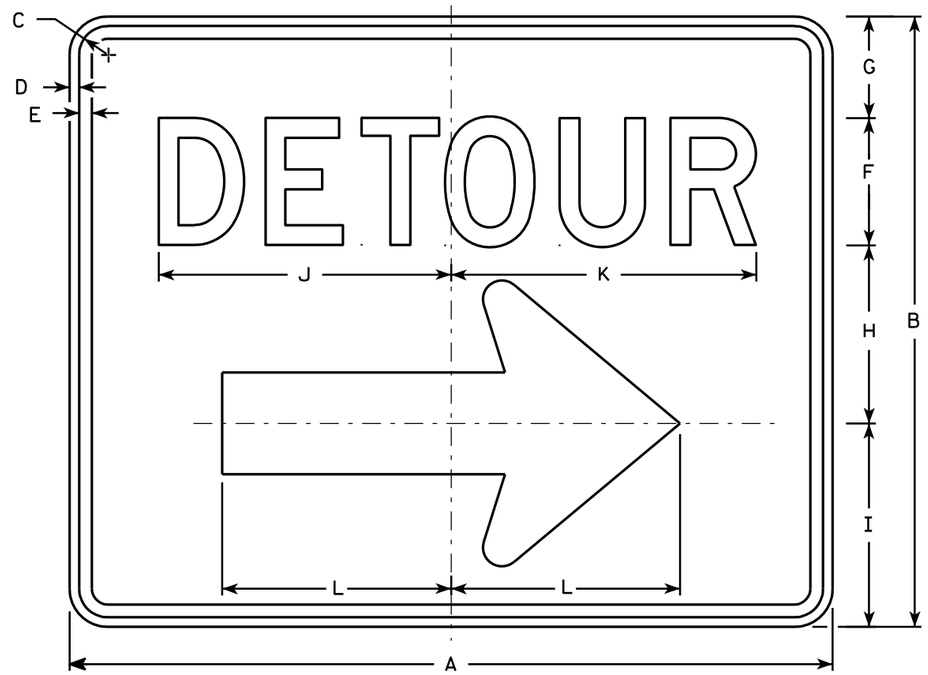


M4-9R

## NOTES

1. Sign is Type II - Type F Reflective - reference WIS DOT Standard Specification for HIGHWAY and STRUCTURE CONSTRUCTION latest edition.
2. Color:
   Background - Orange
   Message - Black
3. Message Series - D
4. Corners may be square or rounded when base material is plywood but borders shall be rounded as shown. When base material is metal, the corners and borders shall be rounded.
5. M4-9L is the same as M4-9R except the arrow is reversed.

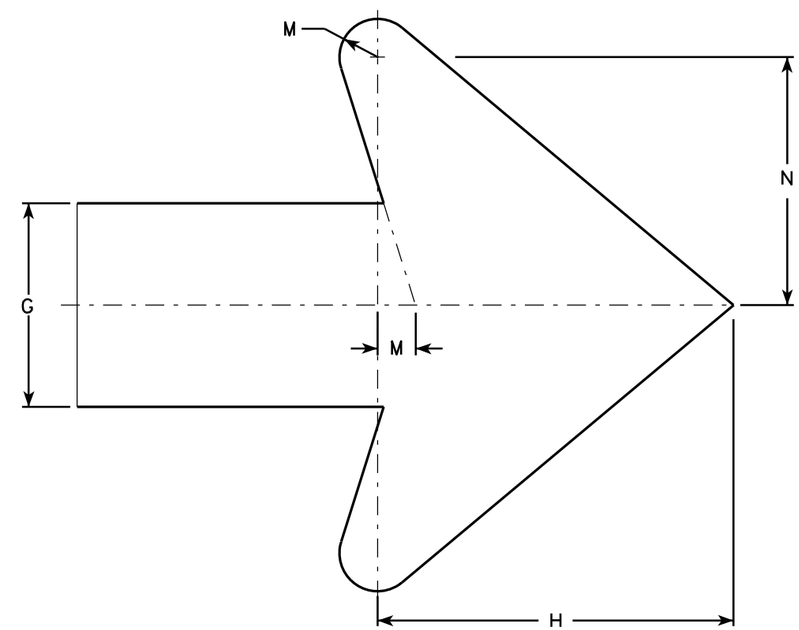


Arrow Detail

| SIZE | A | B | C | D | E | F | G | H | I | J | K | L | M | N | O | P | Q | R | S | T | U | V | W | X | Y | Z | Area sq. ft. |
|---|---|---|---|---|---|---|---|---|---|---|---|---|---|---|---|---|---|---|---|---|---|---|---|---|---|---|---|
| 1 | | | | | | | | | | | | | | | | | | | | | | | | | | | |
| 2 | 30 | 24 | 1 1/8 | 3/8 | 1/2 | 5 | 4 | 7 | 8 | 11 1/2 | 12 | 9 | 3/4 | 4 7/8 | | | | | | | | | | | | | 5.00 |
| 3 | 30 | 24 | 1 1/8 | 3/8 | 1/2 | 5 | 4 | 7 | 8 | 11 1/2 | 12 | 9 | 3/4 | 4 7/8 | | | | | | | | | | | | | 5.00 |
| 4 | 48 | 36 | 1 3/8 | 1/2 | 5/8 | 8 | 6 | 10 1/2 | 11 5/8 | 20 5/8 | 20 1/2 | 13 1/4 | 1 1/8 | 6 7/8 | | | | | | | | | | | | | 12.0 |
| 5 | 48 | 36 | 1 3/8 | 1/2 | 5/8 | 8 | 6 | 10 1/2 | 11 5/8 | 20 5/8 | 20 1/2 | 13 1/4 | 1 1/8 | 6 7/8 | | | | | | | | | | | | | 12.0 |

STANDARD SIGN
M4-9 R & L

WISCONSIN DEPT OF TRANSPORTATION

APPROVED Matthew R Rauch
for State Traffic Engineer

DATE 3/9/11 PLATE NO. M4-9R.4

PROJECT NO: | HWY: | COUNTY: | SHEET NO: 145 | E

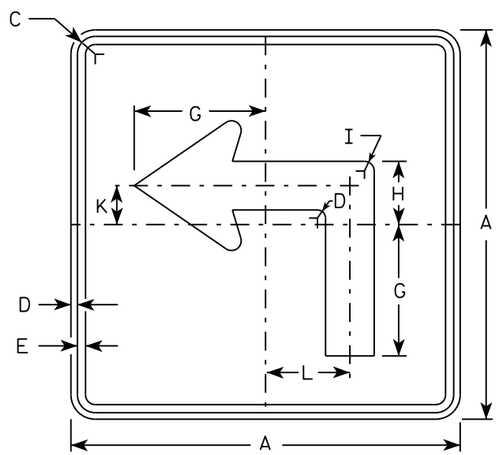


M5-1L
MM5-1L
MO5-1L
MP5-1L

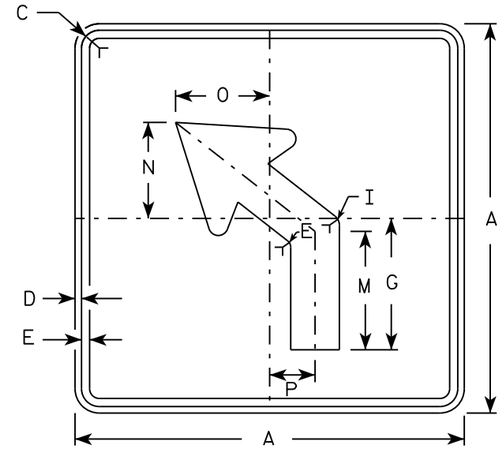


M5-2L
MM5-2L
MO5-2L
MP5-2L

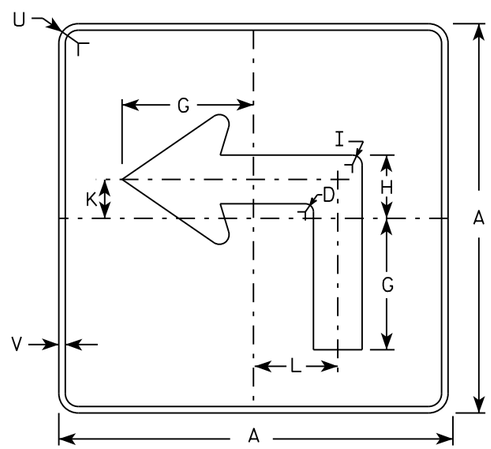


MB5-1L
MK5-1L
MN5-1L
MR5-1L

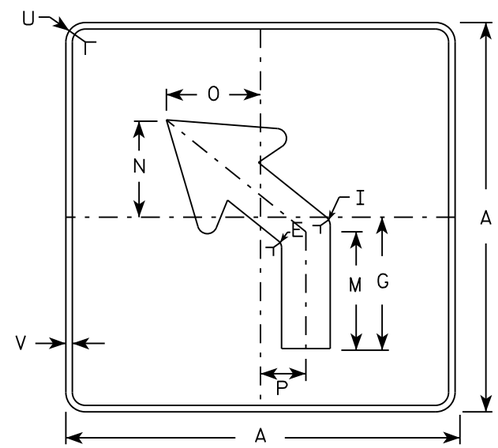


MB5-2L
MK5-2L
MN5-2L
MR5-2L

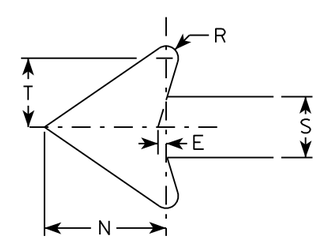


NOTES

1. Signs are Type II - Type H reflective except as shown
2. Color:
   Background - See note 4
   Message - See note 4
3. Corners may be square or rounded when base material is plywood but borders shall be rounded as shown. When base material is metal, the corners and borders shall be rounded.
4. M5-1 and M5-2 Background - White
   Message - Black
   MB5-1 and MB5-2 Background - Blue
   Message - White
   MK5-1 and MK5-2 Background - Green
   Message - White
   MM5-1 and MM5-2 Background - White
   Message - Green
   MN5-1 and MN5-2 Background - Brown
   Message - White
   MO5-1 and MO5-2 Background - Orange - Type F Reflective
   Message - Black
   MP5-1 and MP5-2 Background - White - Type H Reflective
   Message - Blue
   MR5-1 and MR5-2 Background - Brown
   Message - Yellow
5. M5-1R same as M5-1L except arrow points right.
6. M5-2R same as M5-2L except arrow tilts right.

| SIZE | A | B | C | D | E | F | G | H | I | J | K | L | M | N | O | P | Q | R | S | T | U | V | W | X | Y | Z | Area sq. ft. |
|---|---|---|---|---|---|---|---|---|---|---|---|---|---|---|---|---|---|---|---|---|---|---|---|---|---|---|---|
| 1 | | | | | | | | | | | | | | | | | | | | | | | | | | | |
| 2 | 21 | | 1 1/8 | 3/8 | 3/8 | | 7 | 3 3/8 | 5/8 | | 2 1/8 | 4 1/2 | 6 3/8 | 5 1/4 | 5 | 2 1/2 | | 1/2 | 2 5/8 | 3 | 1 1/2 | 1/2 | | | | | 3.06 |
| 3 | 30 | | 1 3/8 | 1/2 | 5/8 | | 10 1/8 | 4 7/8 | 7/8 | | 3 | 6 1/2 | 9 1/8 | 7 1/2 | 7 1/4 | 3 1/2 | | 3/4 | 3 3/4 | 4 1/4 | 1 7/8 | 1/2 | | | | | 6.25 |
| 4 | 30 | | 1 3/8 | 1/2 | 5/8 | | 10 1/8 | 4 7/8 | 7/8 | | 3 | 6 1/2 | 9 1/8 | 7 1/2 | 7 1/4 | 3 1/2 | | 3/4 | 3 3/4 | 4 1/4 | 1 7/8 | 1/2 | | | | | 6.25 |
| 5 | 30 | | 1 3/8 | 1/2 | 5/8 | | 10 1/8 | 4 7/8 | 7/8 | | 3 | 6 1/2 | 9 1/8 | 7 1/2 | 7 1/4 | 3 1/2 | | 3/4 | 3 3/4 | 4 1/4 | 1 7/8 | 1/2 | | | | | 6.25 |

STANDARD SIGN
M5-1 & M5-2

WISCONSIN DEPT OF TRANSPORTATION

APPROVED Matthew R Rauch
for State Traffic Engineer

DATE 10/15/15 PLATE NO. M5-1.13

| PROJECT NO: | HWY: | COUNTY: | | SHEET NO: | E |
|---|---|---|---|---|---|

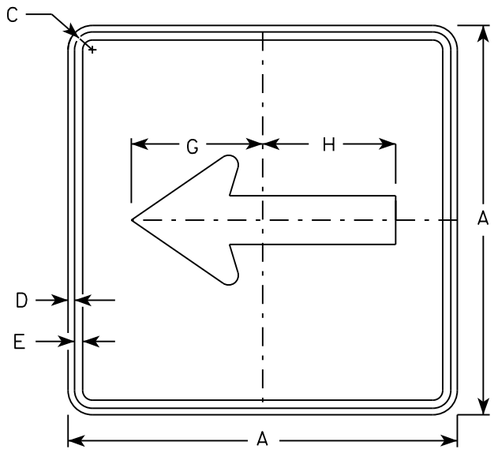


M6-1
MM6-1
MO6-1
MP6-1

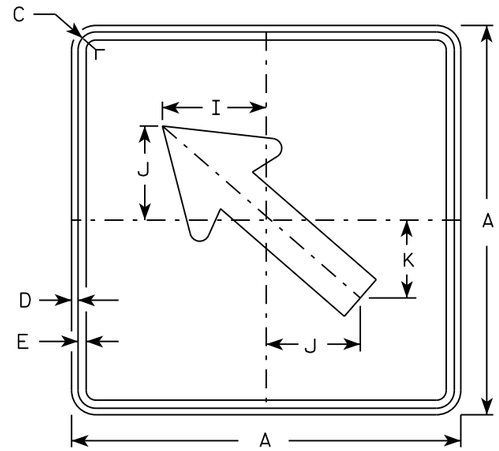


M6-2
MM6-2
MO6-2
MP6-2

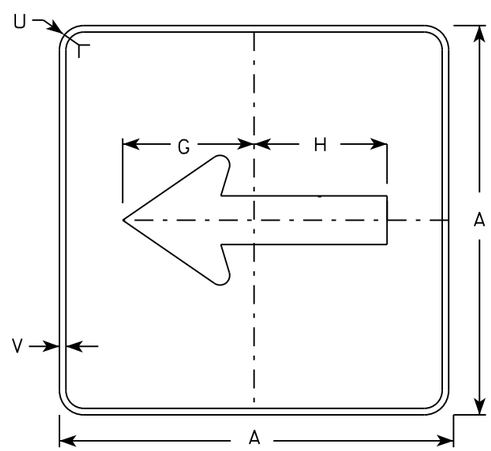


MB6-1
MK6-1
MN6-1
MR6-1

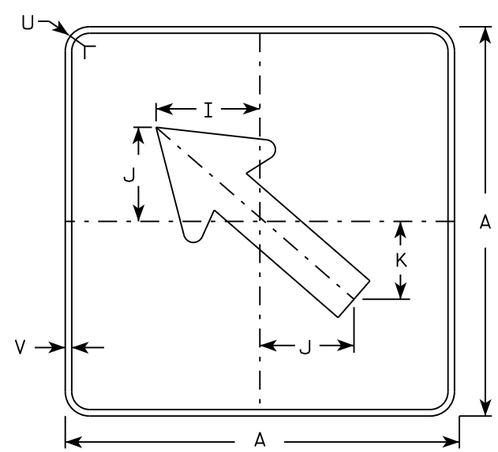


MB6-2
MK6-2
MN6-2
MR6-2

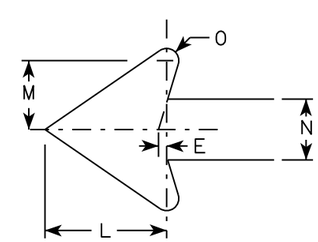


NOTES

1. Signs are Type II - Type H except as Shown
2. Color:
   Background - See note 4
   Message - See note 4
3. Corners may be square or rounded when base material is plywood but borders shall be rounded as shown. When base material is metal, the corners and borders shall be rounded.
4. M6-1 and M6-2 Background - White
   Message - Black
   MB6-1 and MB6-2 Background - Blue
   Message - White
   MK6-1 and MK6-2 Background - Green
   Message - White
   MM6-1 and MM6-2 Background - White
   Message - Green
   MN6-1 and MN6-2 Background - Brown
   Message - White
   MO6-1 and MO6-2 Background - Orange - Type F Reflective
   Message - Black
   MP6-1 and MP6-2 Background - White
   Message - Blue
   MR6-1 and MR6-2 Background - Brown
   Message - Yellow

| SIZE | A | B | C | D | E | F | G | H | I | J | K | L | M | N | O | P | Q | R | S | T | U | V | W | X | Y | Z | Area sq. ft. |
|---|---|---|---|---|---|---|---|---|---|---|---|---|---|---|---|---|---|---|---|---|---|---|---|---|---|---|---|
| 1 | | | | | | | | | | | | | | | | | | | | | | | | | | | |
| 2 | 21 | | 1 1/8 | 3/8 | 3/8 | | 7 1/2 | 7 1/8 | 5 5/8 | 5 | 4 1/4 | 5 1/4 | 3 | 2 5/8 | 1/2 | | | | | | 1 1/2 | 1/2 | | | | | 3.06 |
| 3 | 30 | | 1 3/8 | 1/2 | 5/8 | | 10 3/4 | 10 1/4 | 8 | 7 1/4 | 6 | 7 1/2 | 4 1/4 | 3 3/4 | 3/4 | | | | | | 1 7/8 | 1/2 | | | | | 6.25 |
| 4 | 30 | | 1 3/8 | 1/2 | 5/8 | | 10 3/4 | 10 1/4 | 8 | 7 1/4 | 6 | 7 1/2 | 4 1/4 | 3 3/4 | 3/4 | | | | | | 1 7/8 | 1/2 | | | | | 6.25 |
| 5 | 30 | | 1 3/8 | 1/2 | 5/8 | | 10 3/4 | 10 1/4 | 8 | 7 1/4 | 6 | 7 1/2 | 4 1/4 | 3 3/4 | 3/4 | | | | | | 1 7/8 | 1/2 | | | | | 6.25 |

STANDARD SIGN
M6-1 & M6-2
SERIES

WISCONSIN DEPT OF TRANSPORTATION

APPROVED Matthew R Rauch
for State Traffic Engineer

DATE 10/15/15 PLATE 147 M6-1.15

PROJECT NO: | HWY: | COUNTY: | SHEET NO: | E

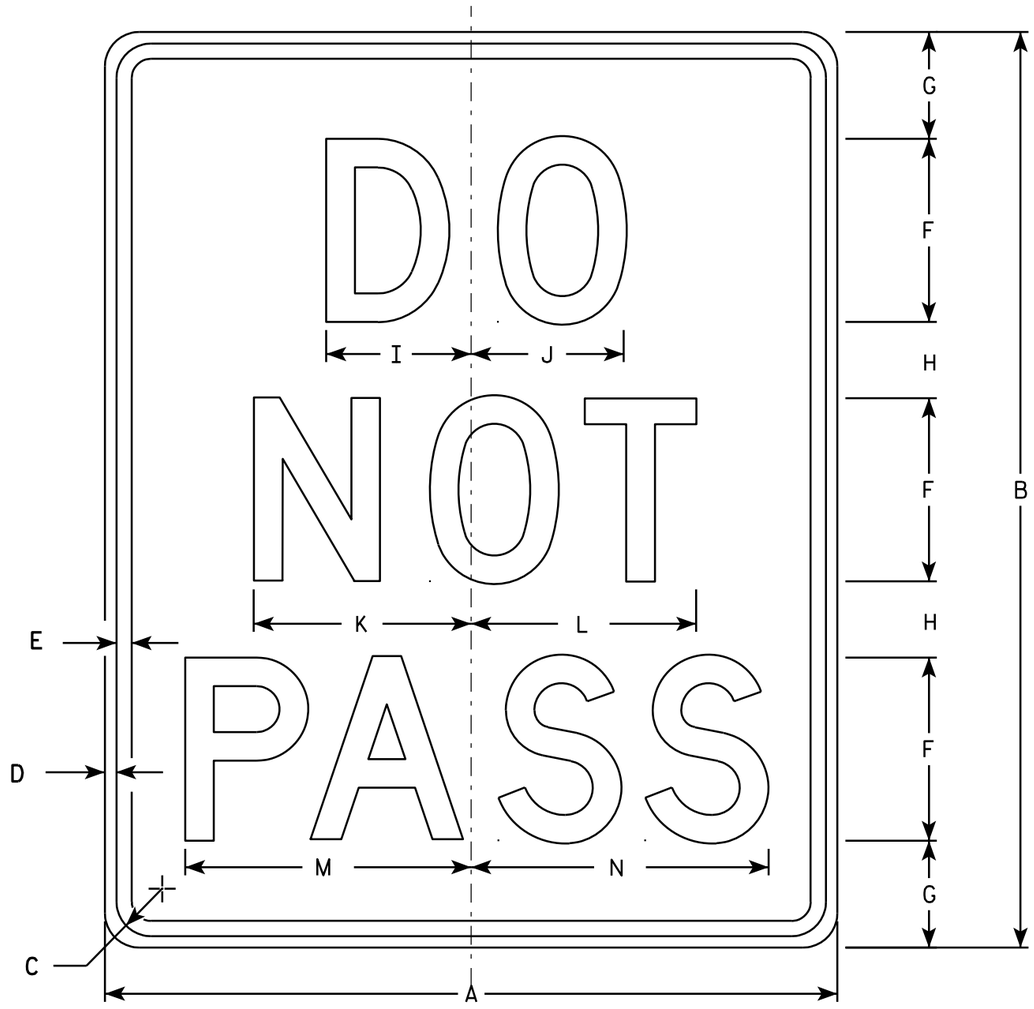


R4-1

NOTES

1. Sign is Type II - Type H Reflective - reference WIS DOT Standard Specification for HIGHWAY and STRUCTURE CONSTRUCTION latest edition.
2. Color:
   Background - White
   Message - Black
3. Message Series - D
4. Corners may be square or rounded when base material is plywood but borders shall be rounded as shown. When base material is metal, the corners and borders shall be rounded.

| SIZE | A | B | C | D | E | F | G | H | I | J | K | L | M | N | O | P | Q | R | S | T | U | V | W | X | Y | Z | Area sq. ft. |
|---|---|---|---|---|---|---|---|---|---|---|---|---|---|---|---|---|---|---|---|---|---|---|---|---|---|---|---|
| 1 | 18 | 24 | 1 1/8 | 3/8 | 1/2 | 4 | 3 1/2 | 2 1/2 | 3 1/8 | 3 1/4 | 4 3/4 | 4 7/8 | 6 1/4 | 6 1/2 | | | | | | | | | | | | | 3.0 |
| 2S | 24 | 30 | 1 1/8 | 3/8 | 1/2 | 6 | 3 1/2 | 2 1/2 | 4 3/4 | 5 | 7 1/8 | 7 3/8 | 9 3/8 | 9 3/4 | | | | | | | | | | | | | 5.0 |
| 2M | 24 | 30 | 1 1/8 | 3/8 | 1/2 | 6 | 3 1/2 | 2 1/2 | 4 3/4 | 5 | 7 1/8 | 7 3/8 | 9 3/8 | 9 3/4 | | | | | | | | | | | | | 5.0 |
| 3 | | | | | | | | | | | | | | | | | | | | | | | | | | | |
| 4 | 36 | 48 | 1 5/8 | 5/8 | 3/4 | 8 | 7 | 5 | 6 1/4 | 6 5/8 | 9 1/2 | 9 3/4 | 12 1/2 | 13 | | | | | | | | | | | | | 12.0 |
| 5 | 48 | 60 | 2 1/4 | 3/4 | 1 | 10 | 8 | 7 | 7 3/4 | 8 3/8 | 11 7/8 | 12 1/4 | 15 5/8 | 16 1/4 | | | | | | | | | | | | | 20.0 |

STANDARD SIGN
R4-1

WISCONSIN DEPT OF TRANSPORTATION

APPROVED Matthew R Rauch
for State Traffic Engineer

DATE 3/25/2011 PLATE NO. R4-1.7

PROJECT NO: | HWY: | COUNTY: | SHEET NO: 148 | E

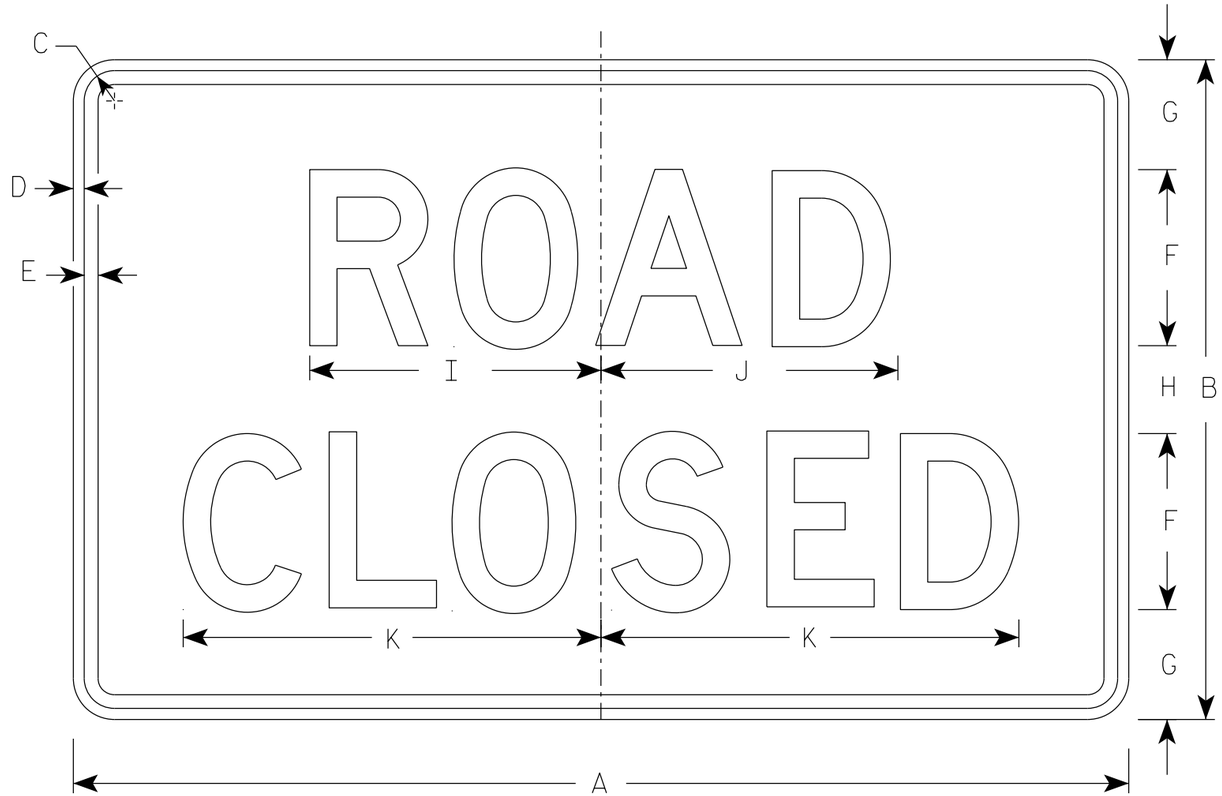


R11-2

NOTES

1. Sign is Type II - Type H Reflective
2. Color:
   Background - White
   Message - Black
3. Message Series - D
4. Corners may be square or rounded when base material is plywood but borders shall be rounded as shown. When base material is metal, the corners and borders shall be rounded.
5. Modify the message as required.

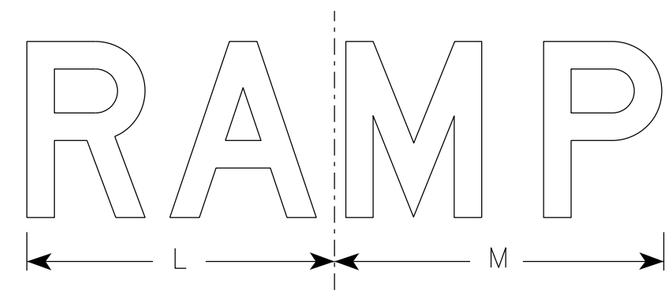


R11-2R

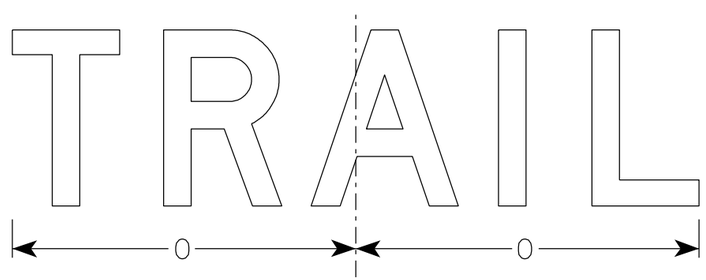


R11-2T

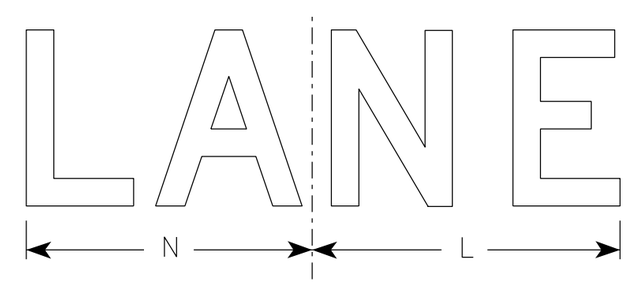


R11-2L

| SIZE | A | B | C | D | E | F | G | H | I | J | K | L | M | N | O | P | Q | R | S | T | U | V | W | X | Y | Z | Area sq. ft. |
|---|---|---|---|---|---|---|---|---|---|---|---|---|---|---|---|---|---|---|---|---|---|---|---|---|---|---|---|
| 1 | | | | | | | | | | | | | | | | | | | | | | | | | | | |
| 2S | 48 | 30 | 1 3/8 | 1/2 | 5/8 | 8 | 5 | 4 | 13 1/4 | 13 1/2 | 19 | 14 | 15 | 13 | 15 5/8 | | | | | | | | | | | | 10.0 |
| 2M | 48 | 30 | 1 3/8 | 1/2 | 5/8 | 8 | 5 | 4 | 13 1/4 | 13 1/2 | 19 | 14 | 15 | 13 | 15 5/8 | | | | | | | | | | | | 10.0 |
| 3 | 48 | 30 | 1 3/8 | 1/2 | 5/8 | 8 | 5 | 4 | 13 1/4 | 13 1/2 | 19 | 14 | 15 | 13 | 15 5/8 | | | | | | | | | | | | 10.0 |
| 4 | 48 | 30 | 1 3/8 | 1/2 | 5/8 | 8 | 5 | 4 | 13 1/4 | 13 1/2 | 19 | 14 | 15 | 13 | 15 5/8 | | | | | | | | | | | | 10.0 |
| 5 | 48 | 30 | 1 3/8 | 1/2 | 5/8 | 8 | 5 | 4 | 13 1/4 | 13 1/2 | 19 | 14 | 15 | 13 | 15 5/8 | | | | | | | | | | | | 10.0 |

STANDARD SIGN
R11-2

WISCONSIN DEPT OF TRANSPORTATION

APPROVED Matthew R Rauch
for State Traffic Engineer

DATE 3/29/2021 PLATE NO. R11-2.11

PROJECT NO: | HWY: | COUNTY: | SHEET NO: E






7

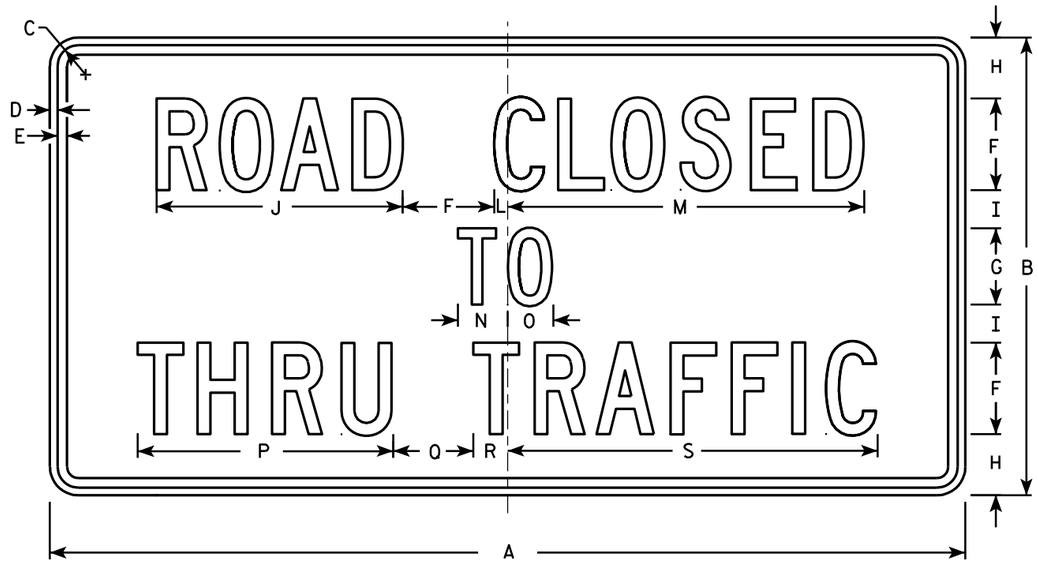


R11-4

## NOTES

1. Sign is Type II - Type H Reflective - reference WIS DOT Standard Specification for HIGHWAY and STRUCTURE CONSTRUCTION latest edition.
2. Color:
   Background - White
   Message - Black
3. Message Series - C
4. Corners may be square or rounded when base material is plywood but borders shall be rounded as shown. When base material is metal, the corners and borders shall be rounded.

| SIZE | A | B | C | D | E | F | G | H | I | J | K | L | M | N | O | P | Q | R | S | T | U | V | W | X | Y | Z | Area sq. ft. |
|---|---|---|---|---|---|---|---|---|---|---|---|---|---|---|---|---|---|---|---|---|---|---|---|---|---|---|---|
| 1 | | | | | | | | | | | | | | | | | | | | | | | | | | | |
| 2S | 60 | 30 | 1 3/8 | 1/2 | 5/8 | 6 | 5 | 4 | 2 1/2 | 16 1/8 | | 7/8 | 23 3/8 | 3 1/4 | 3 | 16 3/4 | 5 1/4 | 2 1/4 | 24 1/4 | | | | | | | | 12.5 |
| 2M | 60 | 30 | 1 3/8 | 1/2 | 5/8 | 6 | 5 | 4 | 2 1/2 | 16 1/8 | | 7/8 | 23 3/8 | 3 1/4 | 3 | 16 3/4 | 5 1/4 | 2 1/4 | 24 1/4 | | | | | | | | 12.5 |
| 3 | | | | | | | | | | | | | | | | | | | | | | | | | | | |
| 4 | | | | | | | | | | | | | | | | | | | | | | | | | | | |
| 5 | | | | | | | | | | | | | | | | | | | | | | | | | | | |

STANDARD SIGN
R11 - 4

WISCONSIN DEPT OF TRANSPORTATION

APPROVED Matthew R Rauch for State Traffic Engineer

DATE 4/1/11 PLATE NO. R11-4.3

PROJECT NO: | HWY: | COUNTY: | SHEET NO: 150 | E

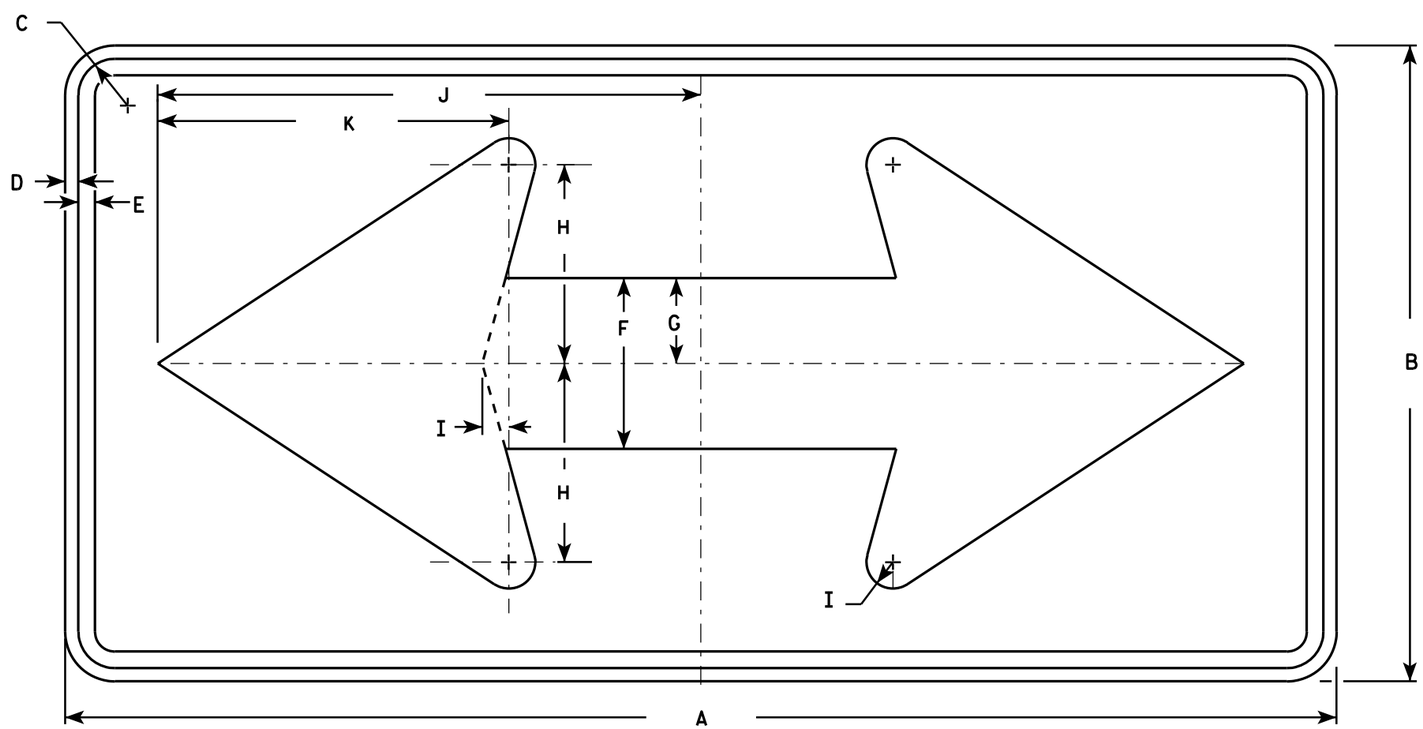


W1-7

NOTES

1. Sign is Type II - Type F Reflective - reference WIS DOT Standard Specification for HIGHWAY and STRUCTURE CONSTRUCTION latest edition.
2. Color:
   Background - Yellow
   Message - Black
3. Corners may be square or rounded when base material is plywood but borders shall be rounded as shown. When base material is metal, the corners and borders shall be rounded.

| SIZE | A | B | C | D | E | F | G | H | I | J | K | L | M | N | O | P | Q | R | S | T | U | V | W | X | Y | Z | Area sq. ft. |
|---|---|---|---|---|---|---|---|---|---|---|---|---|---|---|---|---|---|---|---|---|---|---|---|---|---|---|---|
| 1 | 36 | 18 | 1 1/8 | 3/8 | 1/2 | 5 | 2 1/2 | 5 3/4 | 3/4 | 15 5/8 | 10 1/8 | | | | | | | | | | | | | | | | 4.5 |
| 2S | 48 | 24 | 1 3/8 | 1/2 | 5/8 | 6 1/2 | 3 1/4 | 7 1/2 | 1 | 20 1/2 | 13 1/4 | | | | | | | | | | | | | | | | 8.0 |
| 2M | 48 | 24 | 1 3/8 | 1/2 | 5/8 | 6 1/2 | 3 1/4 | 7 1/2 | 1 | 20 1/2 | 13 1/4 | | | | | | | | | | | | | | | | 8.0 |
| 3 | 60 | 30 | 1 3/8 | 1/2 | 5/8 | 8 | 4 | 9 1/4 | 1 1/4 | 25 3/8 | 16 1/4 | | | | | | | | | | | | | | | | 12.5 |
| 4 | 60 | 30 | 1 3/8 | 1/2 | 5/8 | 8 | 4 | 9 1/4 | 1 1/4 | 25 3/8 | 16 1/4 | | | | | | | | | | | | | | | | 12.5 |
| 5 | 96 | 48 | 2 1/4 | 3/4 | 1 | 13 | 6 1/2 | 15 | 2 | 41 | 26 1/2 | | | | | | | | | | | | | | | | 32.0 |

STANDARD SIGN
W1-7

WISCONSIN DEPT OF TRANSPORTATION

APPROVED Matthew R Rauch
for State Traffic Engineer

DATE 6/7/10 PLATE NO. W1-7.7

PROJECT NO: | HWY: | COUNTY: | SHEET NO: 151 | E

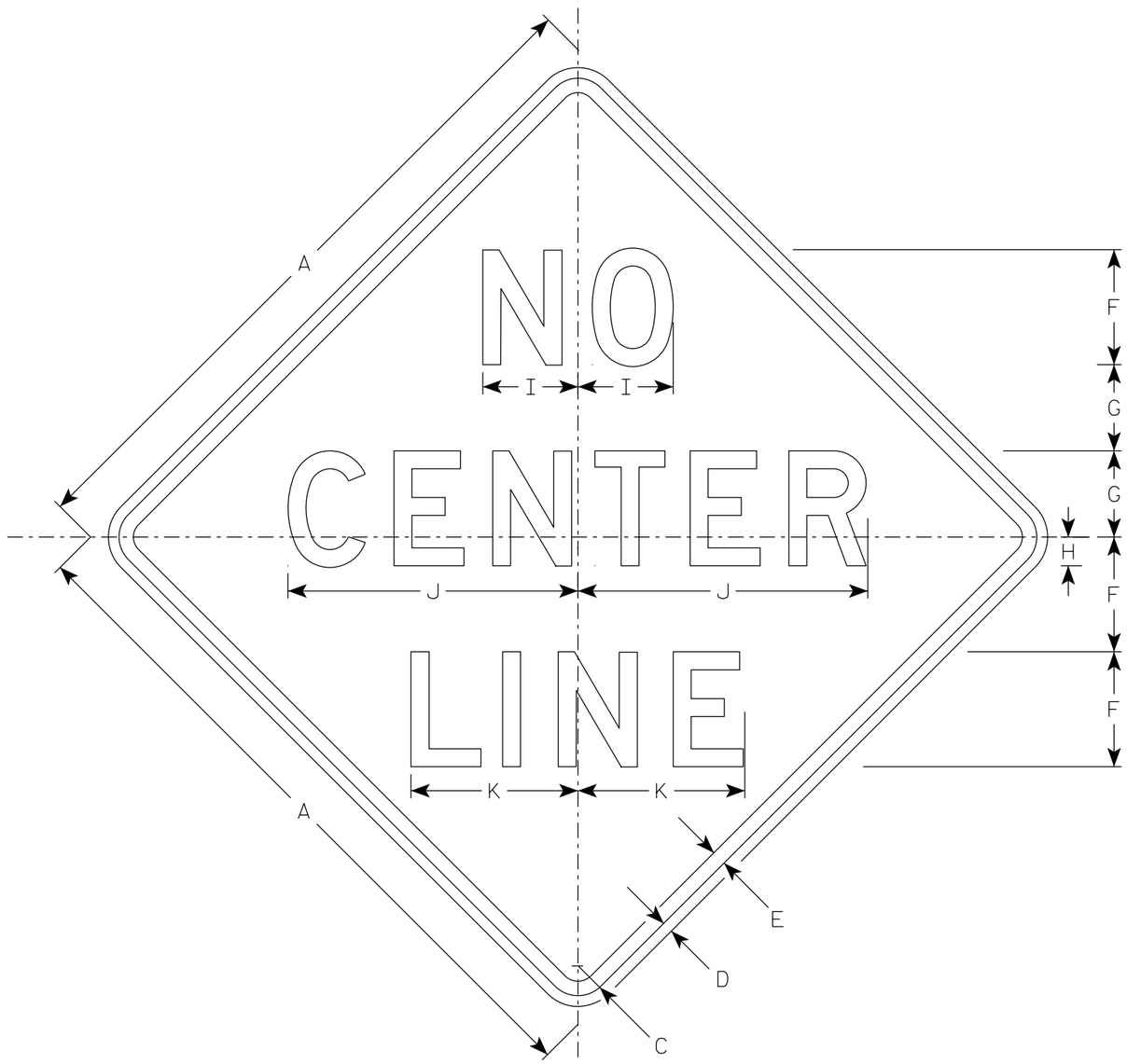


W8-12

NOTES

1. Sign is Type II - Type F Reflective
2. Color:
   Background - Orange
   Message - Black
3. Message Series - D
4. Corners may be square or rounded when base material is plywood but borders shall be rounded as shown. When base material is metal, the corners and borders shall be rounded.

| SIZE | A | B | C | D | E | F | G | H | I | J | K | L | M | N | O | P | Q | R | S | T | U | V | W | X | Y | Z | Area sq. ft. |
|---|---|---|---|---|---|---|---|---|---|---|---|---|---|---|---|---|---|---|---|---|---|---|---|---|---|---|---|
| 1 | 36 | | 1 5/8 | 5/8 | 3/4 | 6 | 4 1/2 | 1 1/2 | 5 1/8 | 16 | 9 | | | | | | | | | | | | | | | | 9.0 |
| 2S | 48 | | 2 1/4 | 3/4 | 1 | 8 | 6 | 2 | 6 5/8 | 20 1/4 | 11 5/8 | | | | | | | | | | | | | | | | 16.0 |
| 2M | 48 | | 2 1/4 | 3/4 | 1 | 8 | 6 | 2 | 6 5/8 | 20 1/4 | 11 5/8 | | | | | | | | | | | | | | | | 16.0 |
| 3 | 48 | | 2 1/4 | 3/4 | 1 | 8 | 6 | 2 | 6 5/8 | 20 1/4 | 11 5/8 | | | | | | | | | | | | | | | | 16.0 |
| 4 | 48 | | 2 1/4 | 3/4 | 1 | 8 | 6 | 2 | 6 5/8 | 20 1/4 | 11 5/8 | | | | | | | | | | | | | | | | 16.0 |
| 5 | 48 | | 2 1/4 | 3/4 | 1 | 8 | 6 | 2 | 6 5/8 | 20 1/4 | 11 5/8 | | | | | | | | | | | | | | | | 16.0 |

STANDARD SIGN
W8-12

WISCONSIN DEPT OF TRANSPORTATION

APPROVED Matthew R Rauch
for State Traffic Engineer

DATE 4/30/2020 PLATE NO. W8-12.4

PROJECT NO: | HWY: | COUNTY: | SHEET NO: 152 | E

NOTES

1. Sign is Type II - Type F Reflective
2. Color:
   Background - Yellow
   Message - Black
3. Message Series - C

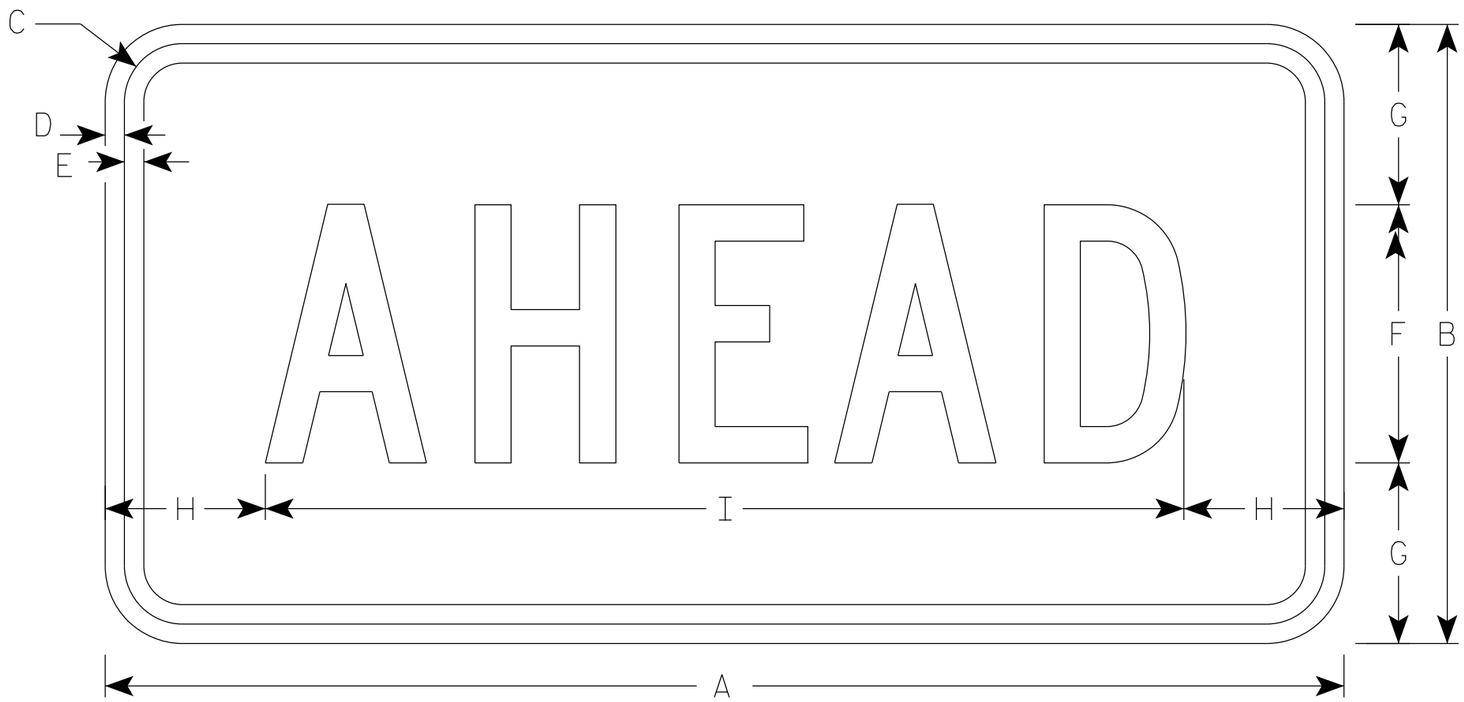


W16-9P

7

7

| SIZE | A | B | C | D | E | F | G | H | I | J | K | L | M | N | O | P | Q | R | S | T | U | V | W | X | Y | Z | Area sq. ft. |
|---|---|---|---|---|---|---|---|---|---|---|---|---|---|---|---|---|---|---|---|---|---|---|---|---|---|---|---|
| 1 | | | | | | | | | | | | | | | | | | | | | | | | | | | |
| 2S | 24 | 12 | 1 1/8 | 3/8 | 3/8 | 5 | 3 1/2 | 3 1/8 | 17 3/4 | | | | | | | | | | | | | | | | | | 2.0 |
| 2M | 30 | 18 | 1 1/8 | 3/8 | 1/2 | 7 | 5 1/2 | 2 3/4 | 24 1/2 | | | | | | | | | | | | | | | | | | 3.75 |
| 3 | 30 | 18 | 1 1/8 | 3/8 | 1/2 | 7 | 3 1/2 | 2 3/4 | 24 1/2 | | | | | | | | | | | | | | | | | | 3.75 |
| 4 | 48 | 24 | 1 3/8 | 1/2 | 5/8 | 10 | 7 | 6 1/8 | 35 3/4 | | | | | | | | | | | | | | | | | | 8.0 |
| 5 | | | | | | | | | | | | | | | | | | | | | | | | | | | |

STANDARD SIGN
W16-9P

WISCONSIN DEPT OF TRANSPORTATION

APPROVED Matthew R Rauch
for State Traffic Engineer

DATE 3/7/19 PLATE NO. W16-9P.7

PROJECT NO: | HWY: | COUNTY: | SHEET NO: 153 | E

NOTES

1. Sign is Type II - Type F Reflective
2. Color:
   Background - Orange
   Message - Black
3. Message Series - C
4. Corners may be square or rounded when base material is plywood but borders shall be rounded as shown. When base material is metal, the corners and borders shall be rounded.

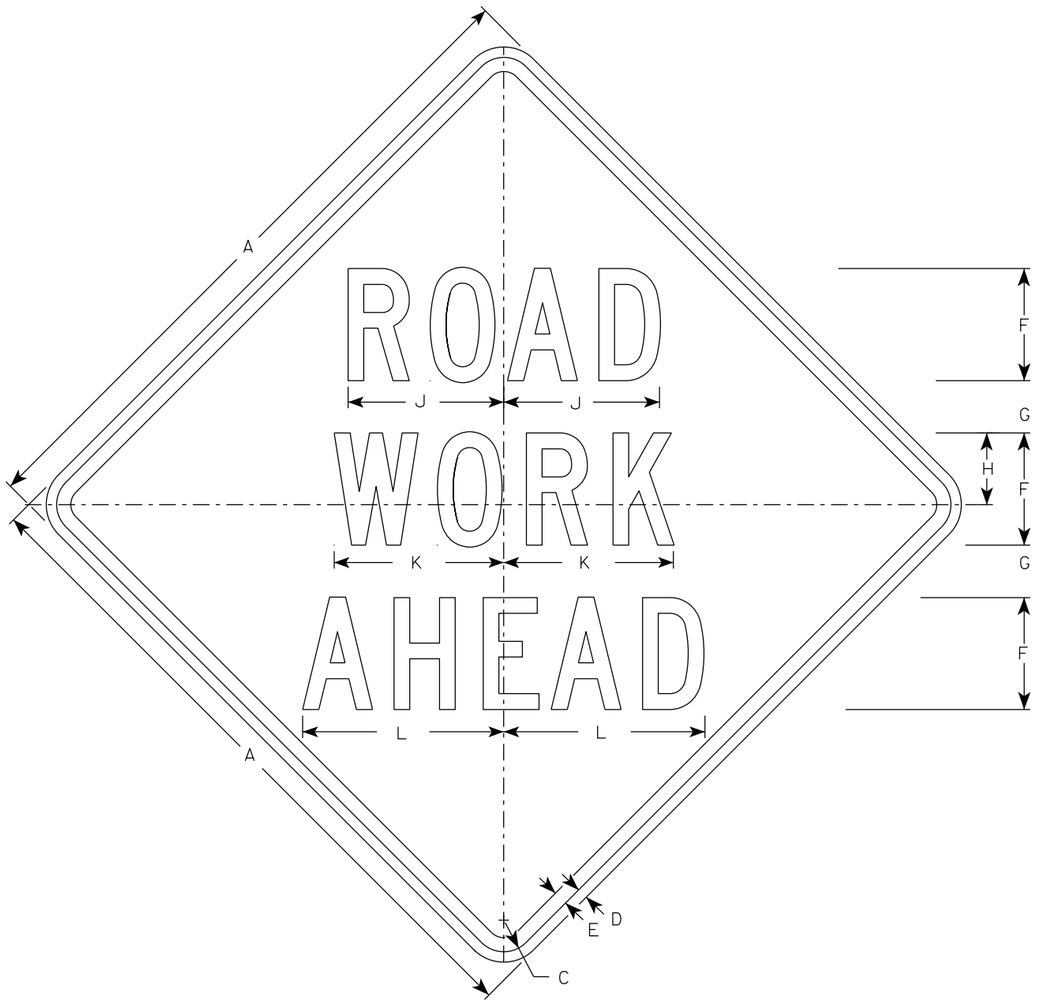


W20-1A

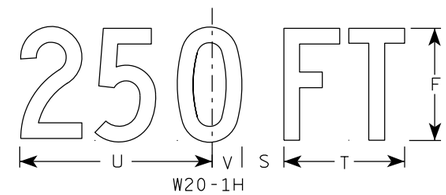


W20-1H

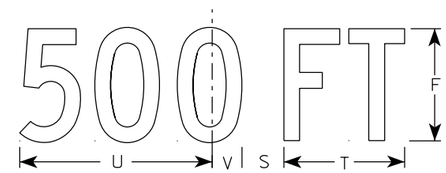


W20-1D

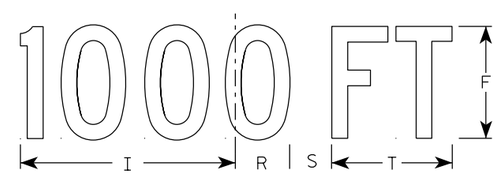


W20-1C

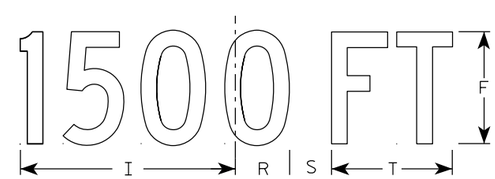


W20-1B

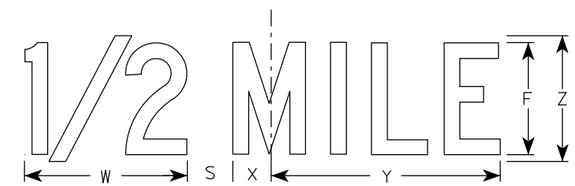


W20-1G

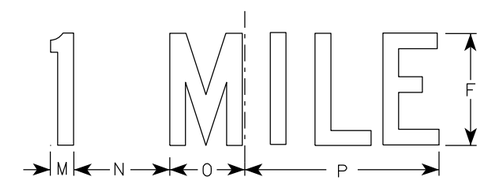


W20-1F

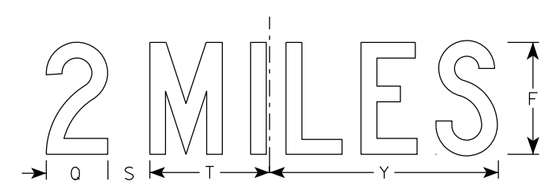


W20-1E

| SIZE | A | B | C | D | E | F | G | H | I | J | K | L | M | N | O | P | Q | R | S | T | U | V | W | X | Y | Z | Area sq. ft. |
|---|---|---|---|---|---|---|---|---|---|---|---|---|---|---|---|---|---|---|---|---|---|---|---|---|---|---|---|
| 1 | 36 | | 1 5/8 | 5/8 | 3/4 | 5 | 2 5/8 | 3 1/4 | 10 1/8 | 7 | 7 5/8 | 8 7/8 | 1 1/8 | 4 1/2 | 3 1/2 | 9 | 3 1/4 | 2 1/2 | 2 1/4 | 5 5/8 | 9 | 1 3/8 | 8 | 1 3/4 | 10 3/4 | 6 | 9.0 |
| 2S | 48 | | 2 1/4 | 3/4 | 1 | 8 | 3 3/4 | 5 1/8 | 15 3/8 | 11 1/8 | 12 1/8 | 14 3/8 | 1 5/8 | 6 7/8 | 5 3/8 | 13 7/8 | 4 3/8 | 3 7/8 | 3 | 8 5/8 | 13 3/4 | 2 1/8 | 11 7/8 | 2 3/4 | 16 3/8 | 9 | 16.0 |
| 2M | 48 | | 2 1/4 | 3/4 | 1 | 8 | 3 3/4 | 5 1/8 | 15 3/8 | 11 1/8 | 12 1/8 | 14 3/8 | 1 5/8 | 6 7/8 | 5 3/8 | 13 7/8 | 4 3/8 | 3 7/8 | 3 | 8 5/8 | 13 3/4 | 2 1/8 | 11 7/8 | 2 3/4 | 16 3/8 | 9 | 16.0 |
| 3 | 48 | | 2 1/4 | 3/4 | 1 | 8 | 3 3/4 | 5 1/8 | 15 3/8 | 11 1/8 | 12 1/8 | 14 3/8 | 1 5/8 | 6 7/8 | 5 3/8 | 13 7/8 | 4 3/8 | 3 7/8 | 3 | 8 5/8 | 13 3/4 | 2 1/8 | 11 7/8 | 2 3/4 | 16 3/8 | 9 | 16.0 |
| 4 | 48 | | 2 1/4 | 3/4 | 1 | 8 | 3 3/4 | 5 1/8 | 15 3/8 | 11 1/8 | 12 1/8 | 14 3/8 | 1 5/8 | 6 7/8 | 5 3/8 | 13 7/8 | 4 3/8 | 3 7/8 | 3 | 8 5/8 | 13 3/4 | 2 1/8 | 11 7/8 | 2 3/4 | 16 3/8 | 9 | 16.0 |
| 5 | 48 | | 2 1/4 | 3/4 | 1 | 8 | 3 3/4 | 5 1/8 | 15 3/8 | 11 1/8 | 12 1/8 | 14 3/8 | 1 5/8 | 6 7/8 | 5 3/8 | 13 7/8 | 4 3/8 | 3 7/8 | 3 | 8 5/8 | 13 3/4 | 2 1/8 | 11 7/8 | 2 3/4 | 16 3/8 | 9 | 16.0 |

STANDARD SIGN
W20-1A, B, C, D, E, F, G & H

WISCONSIN DEPT OF TRANSPORTATION

APPROVED Matthew R Rauch
For State Traffic Engineer
DATE 3/25/2020 PLATE NO. W20-1.11

PROJECT NO:

SHEET NO: 154 E

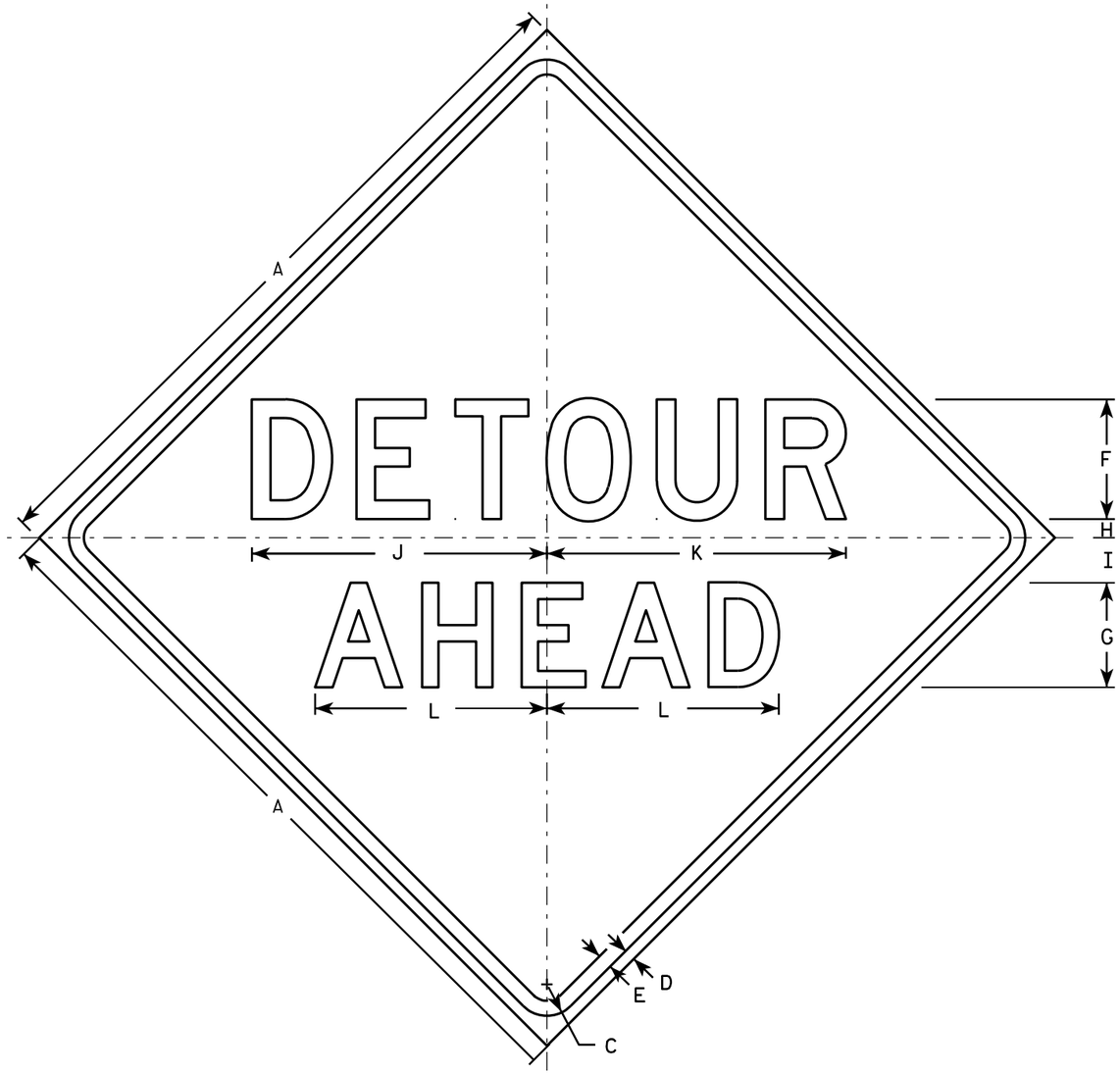


W20-2A

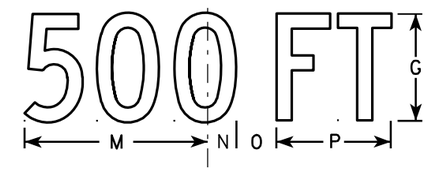


W20-2D

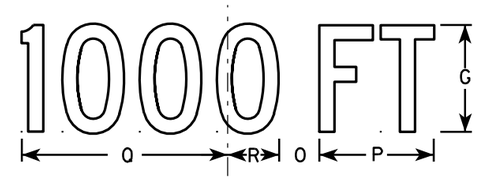


W20-2C

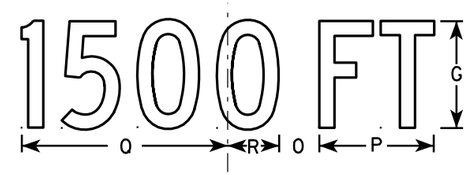


W20-2B

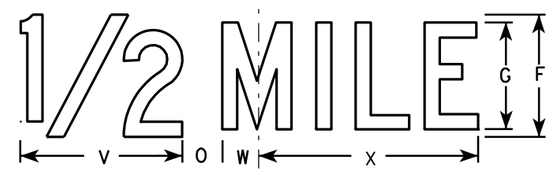


W20-2G


W20-2F

## NOTES

1. Sign is Type II - Type F Reflective - reference WIS DOT Standard Specification for HIGHWAY and STRUCTURE CONSTRUCTION latest edition.
2. Color:
   Background - Orange
   Message - Black
3. Message Series - See note 5
4. Corners may be square or rounded when base material is plywood but borders shall be rounded as shown. When base material is metal, the corners and borders shall be rounded.
5. Line 1 is Series D.
   Line 2 is Series D for AHEAD and Series C for all other distances.

| SIZE | A | B | C | D | E | F | G | H | I | J | K | L | M | N | O | P | Q | R | S | T | U | V | W | X | Y | Z | Area sq. ft. |
|---|---|---|---|---|---|---|---|---|---|---|---|---|---|---|---|---|---|---|---|---|---|---|---|---|---|---|---|
| 1 | 36 | | 1 5/8 | 5/8 | 3/4 | 6 | 5 | 1 | 2 1/4 | 14 3/4 | 15 | 11 5/8 | 9 | 1 3/8 | 1 7/8 | 5 5/8 | 10 1/8 | 2 1/2 | 1 1/8 | 4 1/2 | 3 1/2 | 8 | 1 3/4 | 10 3/4 | | | 9.0 |
| 2S | 48 | | 2 1/4 | 3/4 | 1 | 8 | 7 | 1 1/4 | 3 | 19 3/4 | 20 | 15 1/2 | 12 | 1 7/8 | 2 5/8 | 7 1/2 | 13 1/2 | 3 3/8 | 1 1/2 | 6 | 4 5/8 | 10 5/8 | 2 3/8 | 14 3/8 | | | 16.0 |
| 2M | 48 | | 2 1/4 | 3/4 | 1 | 8 | 7 | 1 1/4 | 3 | 19 3/4 | 20 | 15 1/2 | 12 | 1 7/8 | 2 5/8 | 7 1/2 | 13 1/2 | 3 3/8 | 1 1/2 | 6 | 4 5/8 | 10 5/8 | 2 3/8 | 14 3/8 | | | 16.0 |
| 3 | 48 | | 2 1/4 | 3/4 | 1 | 8 | 7 | 1 1/4 | 3 | 19 3/4 | 20 | 15 1/2 | 12 | 1 7/8 | 2 5/8 | 7 1/2 | 13 1/2 | 3 3/8 | 1 1/2 | 6 | 4 5/8 | 10 5/8 | 2 3/8 | 14 3/8 | | | 16.0 |
| 4 | 48 | | 2 1/4 | 3/4 | 1 | 8 | 7 | 1 1/4 | 3 | 19 3/4 | 20 | 15 1/2 | 12 | 1 7/8 | 2 5/8 | 7 1/2 | 13 1/2 | 3 3/8 | 1 1/2 | 6 | 4 5/8 | 10 5/8 | 2 3/8 | 14 3/8 | | | 16.0 |
| 5 | 48 | | 2 1/4 | 3/4 | 1 | 8 | 7 | 1 1/4 | 3 | 19 3/4 | 20 | 15 1/2 | 12 | 1 7/8 | 2 5/8 | 7 1/2 | 13 1/2 | 3 3/8 | 1 1/2 | 6 | 4 5/8 | 10 5/8 | 2 3/8 | 14 3/8 | | | 16.0 |

STANDARD SIGN
W20-2A,B,C,D,F & G

WISCONSIN DEPT OF TRANSPORTATION

APPROVED Matthew R Rauch
for State Traffic Engineer
DATE 3/18/11 PLATE NO. W20-2.6

| PROJECT NO: | HWY: | COUNTY: | | SHEET NO: 155 | E |
|---|---|---|---|---|---|

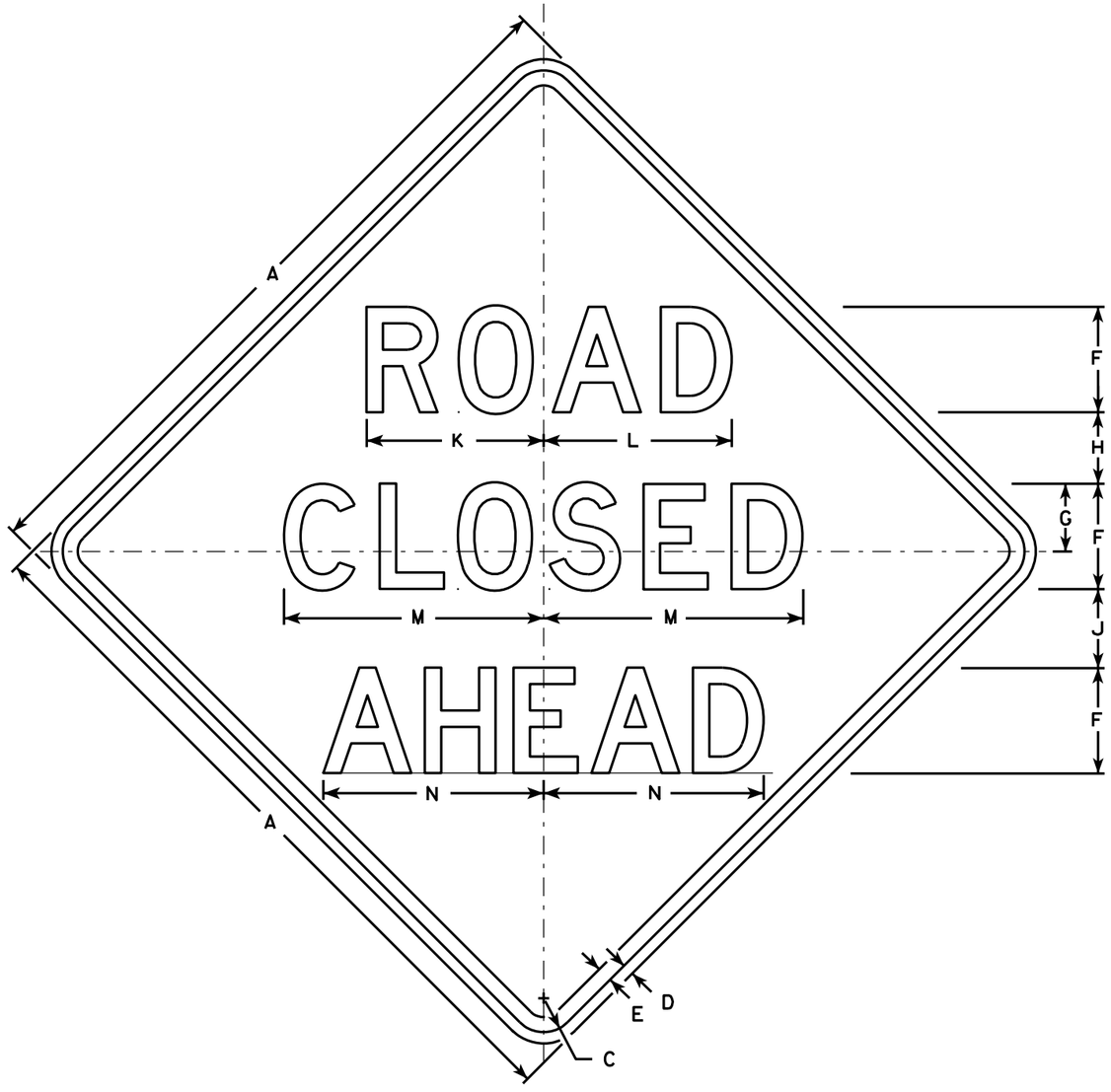


W20-3A

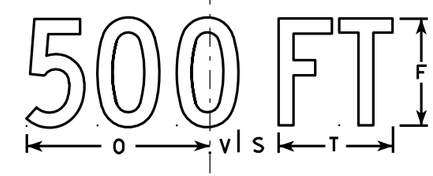


W20-3D

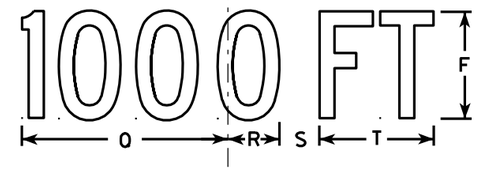


W20-3C

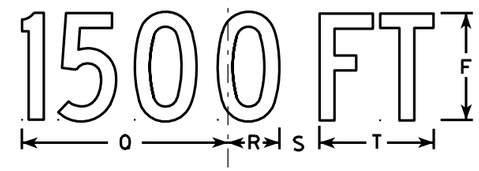


W20-3B

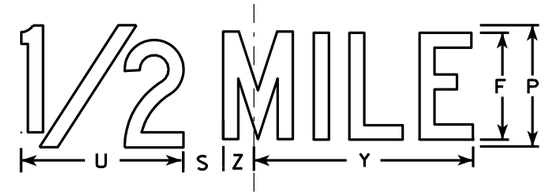


W20-3G

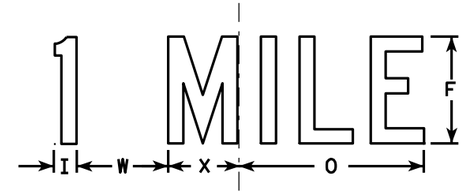


W20-3F

NOTES

1. Sign is Type II - Type F Reflective - reference WIS DOT Standard Specification for HIGHWAY and STRUCTURE CONSTRUCTION latest edition.
2. Color:
   Background - Orange
   Message - Black
3. Message Series - see note 5
4. Corners may be square or rounded when base material is plywood but borders shall be rounded as shown. When base material is metal, the corners and borders shall be rounded.
5. Lines 1 and 2 are Series D.
   Line 3 is Series D for AHEAD and Series C for all other distances.

| SIZE | A | B | C | D | E | F | G | H | I | J | K | L | M | N | O | P | Q | R | S | T | U | V | W | X | Y | Z | Area sq. ft. |
|---|---|---|---|---|---|---|---|---|---|---|---|---|---|---|---|---|---|---|---|---|---|---|---|---|---|---|---|
| 1 | 36 | | 1 5/8 | 5/8 | 3/4 | 5 | 3 3/8 | 3 1/2 | 1 1/8 | 4 | 8 3/8 | 8 7/8 | 12 1/2 | 11 | 9 | 6 | 10 1/8 | 2 1/2 | 1 7/8 | 5 5/8 | 8 | 1 3/8 | 4 1/2 | 3 1/2 | 10 3/4 | 1 3/4 | 9.0 |
| 2S | 48 | | 2 1/4 | 3/4 | 1 | 7 | 4 1/2 | 4 3/4 | 1 1/2 | 5 1/4 | 11 3/4 | 12 1/2 | 17 1/4 | 14 5/8 | 12 | 8 | 13 1/2 | 3 3/8 | 2 5/8 | 7 1/2 | 10 5/8 | 1 7/8 | 6 | 4 5/8 | 14 3/8 | 2 3/8 | 16.0 |
| 2M | 48 | | 2 1/4 | 3/4 | 1 | 7 | 4 1/2 | 4 3/4 | 1 1/2 | 5 1/4 | 11 3/4 | 12 1/2 | 17 1/4 | 14 5/8 | 12 | 8 | 13 1/2 | 3 3/8 | 2 5/8 | 7 1/2 | 10 5/8 | 1 7/8 | 6 | 4 5/8 | 14 3/8 | 2 3/8 | 16.0 |
| 3 | 48 | | 2 1/4 | 3/4 | 1 | 7 | 4 1/2 | 4 3/4 | 1 1/2 | 5 1/4 | 11 3/4 | 12 1/2 | 17 1/4 | 14 5/8 | 12 | 8 | 13 1/2 | 3 3/8 | 2 5/8 | 7 1/2 | 10 5/8 | 1 7/8 | 6 | 4 5/8 | 14 3/8 | 2 3/8 | 16.0 |
| 4 | 48 | | 2 1/4 | 3/4 | 1 | 7 | 4 1/2 | 4 3/4 | 1 1/2 | 5 1/4 | 11 3/4 | 12 1/2 | 17 1/4 | 14 5/8 | 12 | 8 | 13 1/2 | 3 3/8 | 2 5/8 | 7 1/2 | 10 5/8 | 1 7/8 | 6 | 4 5/8 | 14 3/8 | 2 3/8 | 16.0 |
| 5 | 48 | | 2 1/4 | 3/4 | 1 | 7 | 4 1/2 | 4 3/4 | 1 1/2 | 5 1/4 | 11 3/4 | 12 1/2 | 17 1/4 | 14 5/8 | 12 | 8 | 13 1/2 | 3 3/8 | 2 5/8 | 7 1/2 | 10 5/8 | 1 7/8 | 6 | 4 5/8 | 14 3/8 | 2 3/8 | 16.0 |

STANDARD SIGN
W20-3A, B, C, D, F & G

WISCONSIN DEPT OF TRANSPORTATION

APPROVED Matthew R Rauch
for State Traffic Engineer
DATE 3/18/11 PLATE NO. W20-3.7

PROJECT NO: | HWY: | COUNTY: | SHEET NO: 156 | E

NOTES

1. Fixed Message Signs Type II - Type F Reflective
2. Color:
   Background - Orange
   Message - Black
3. Message Series - D or as noted.

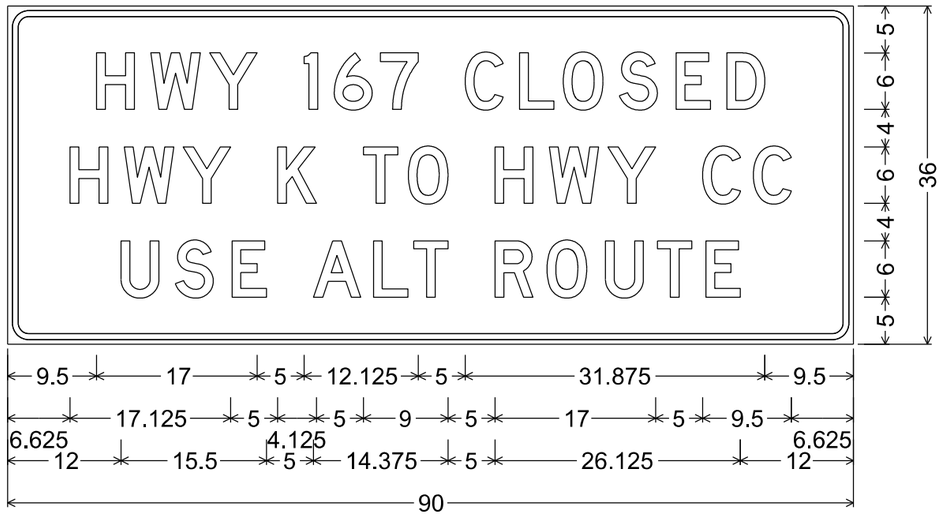


2.250" Radius, 0.625" Border, 0.500" Indent

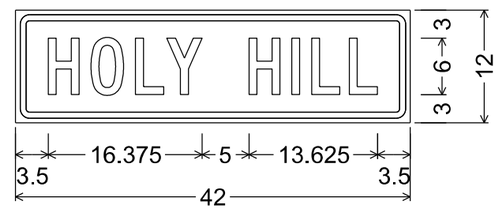


1.500" Radius, 0.625" Border, 0.500" Indent
"HOLY", C; "HILL", C;

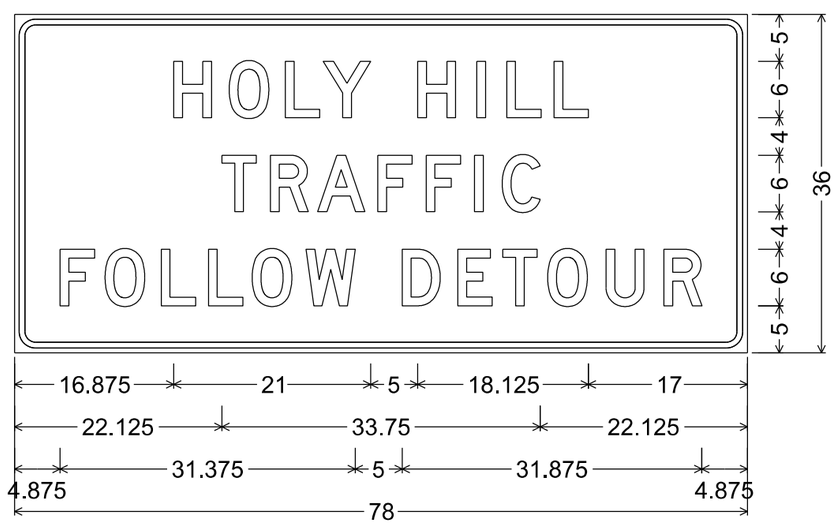


2.250" Radius, 0.625" Border, 0.500" Indent

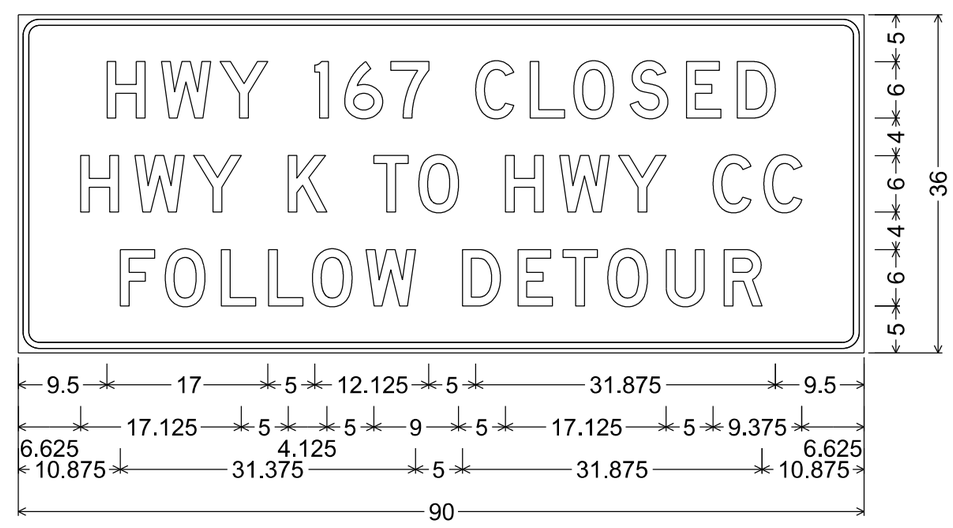


2.250" Radius, 0.625" Border, 0.500" Indent

7

7

STATE PROJECT NUMBER

**2300-06-70**

## GENERAL NOTES

DRAWINGS SHALL NOT BE SCALED.

THE UPPER LIMITS OF "EXCAVATION FOR STRUCTURES RETAINING WALLS R-66-85" SHALL BE THE BOTTOM OF WALL WHERE EXCAVATION BELOW SUBGRADE (EBS) IS REQUIRED.

ALL WALL STATIONING AND OFFSETS ARE GIVEN TO THE FRONT FACE OF WALL R-66-85.

THE UTILITY INFORMATION SHOWN ON THESE DRAWINGS CONCERNING TYPE AND LOCATION OF UNDERGROUND UTILITIES IS NOT GUARANTEED TO BE ACCURATE OR ALL-INCLUSIVE. THE CONTRACTOR IS RESPONSIBLE FOR MAKING THEIR OWN DETERMINATION AS TO TYPE AND LOCATION OF UNDERGROUND UTILITIES AS NECESSARY TO AVOID DAMAGE.

STRUCTURAL BACKFILL IS INCLUDED IN THE BID ITEM "GABION WALL R-66-85"

THE PLAN QUANTITY FOR THE BID ITEM "GABION WALL R-66-85" IS BASED ON A WALL HEIGHT MEASURED FROM THE TOP OF THE WALL TO A MINIMUM HEIGHT OF 1'-6" BELOW FINISHED GRADE.

THE RETAINING WALL IS DESIGNED FOR A LIVE LOAD SURCHARGE OF 240 PSF.

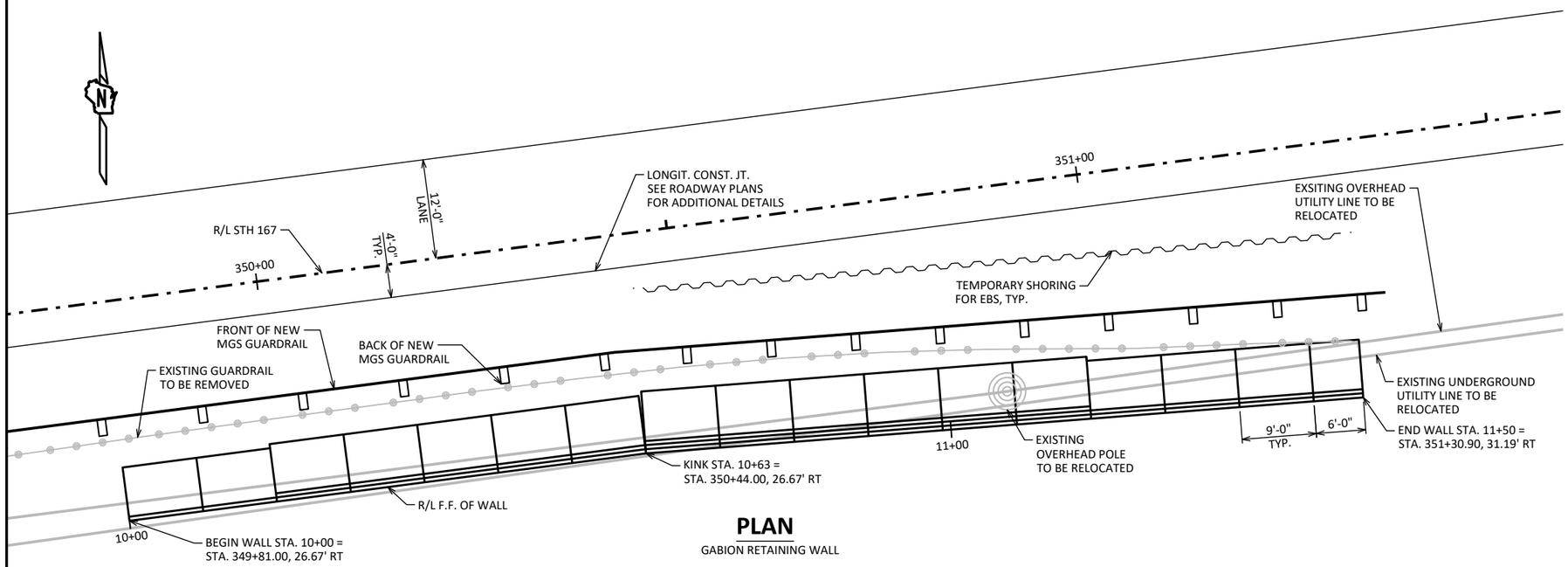


## PLAN

GABION RETAINING WALL

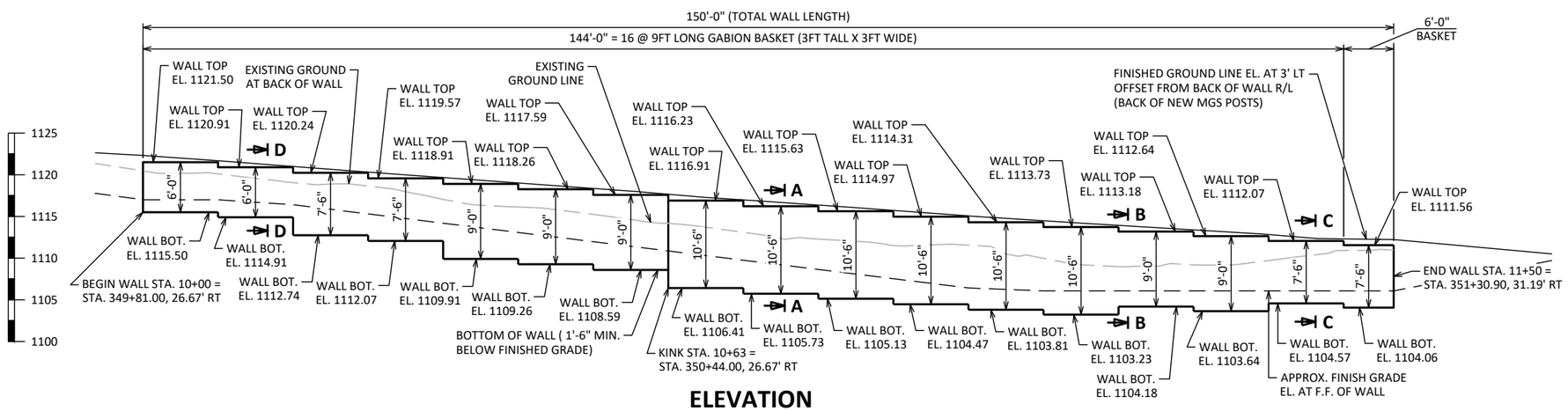


## ELEVATION

LOOKING NORTH AT F.F. OF WALL
(SEE WALL DETAILS SHEET FOR CROSS SECTION DETAILS)

## TRAFFIC DATA

**STH 167**
ADT = 3,200 (2047)
R.D.S. = 45 MPH

## LIST OF DRAWINGS:

1. GENERAL PLAN
2. WALL DETAILS
3. SUBSURFACE EXPLORATION

**STRUCTURE DESIGN CONTACTS:**

IAN LINDLOFF 608-261-2557
DOMINIQUE BECHLE 608-261-8205

## TOTAL ESTIMATED QUANTITIES

| BID ITEM NUMBER | BID ITEMS | UNIT | TOTALS |
|---|---|---|---|
| 206.3001 | EXCAVATION FOR STRUCTURES RETAINING WALLS (R-66-85) | EACH | 1 |
| 209.2500 | BACKFILL GRANULAR GRADE 2 | TON | 665 |
| 511.1200 | TEMPORARY SHORING R-66-85 | SF | 590 |
| SPV.0035 | GABION WALL R-66-85 | CY | 372 |
| | | | |
| | | | |

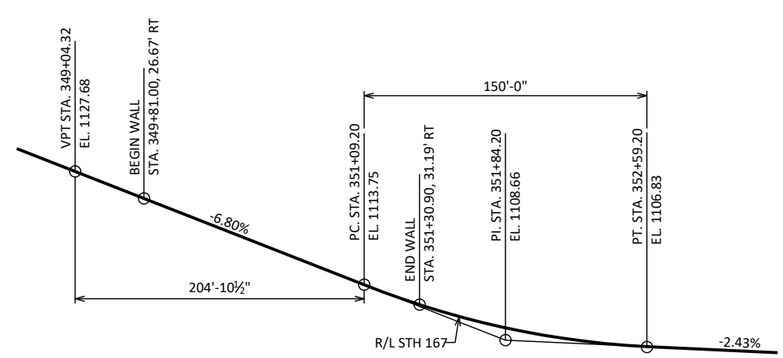


## PROFILE GRADE LINE - STH 167

| NO. | DATE | REVISION | BY |
|---|---|---|---|
| | | | |

BUREAU OF STRUCTURES

ACCEPTED DMB 11/03/23
CHIEF STRUCTURES DESIGN ENGINEER DATE

**STRUCTURE R-66-85**

GABION WALL ALONG STH 167

COUNTY WASHINGTON TOWN ERIN

DESIGN SPEC. AASHTO LRFD BRIDGE DESIGN SPECIFICATION

DESIGNED BY IDL DESIGNED CK'D WAH DRAWN BY IDL PLANS CK'D WAH

**GENERAL PLAN**

SHEET 1 OF 3
158

SCALE = 16.0

I.D. 2300-06-00A DATE: OCT 2023

8

8

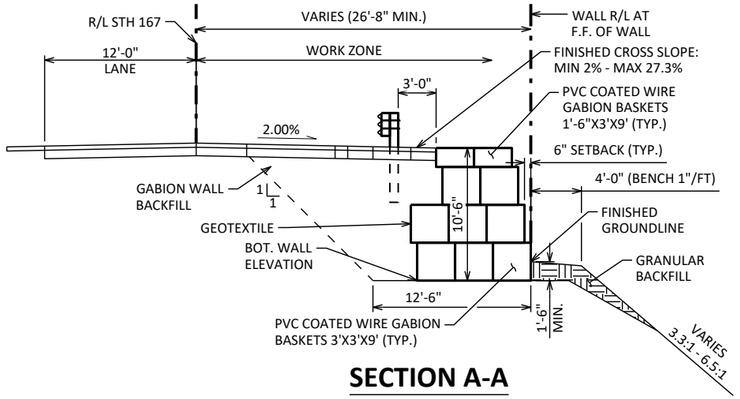


## SECTION A-A

**(HEIGHT = 10.5FT)**

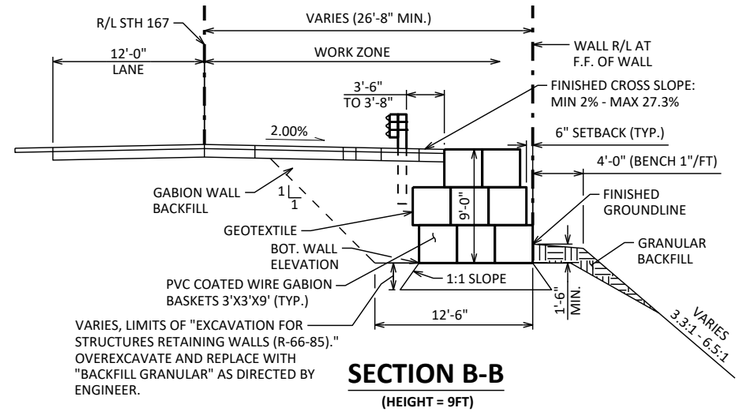


## SECTION B-B

**(HEIGHT = 9FT)**

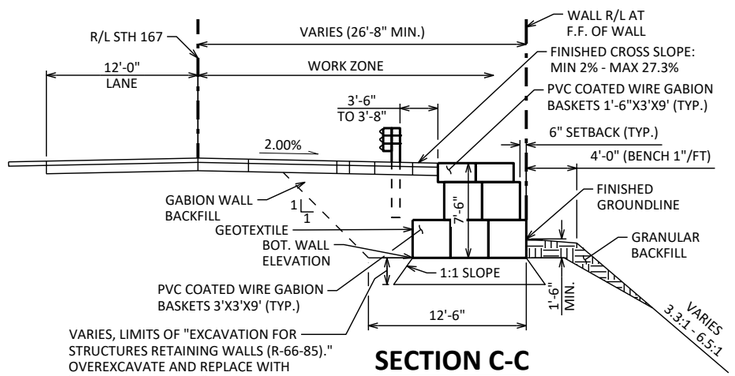


## SECTION C-C

**(HEIGHT = 7.5FT)**

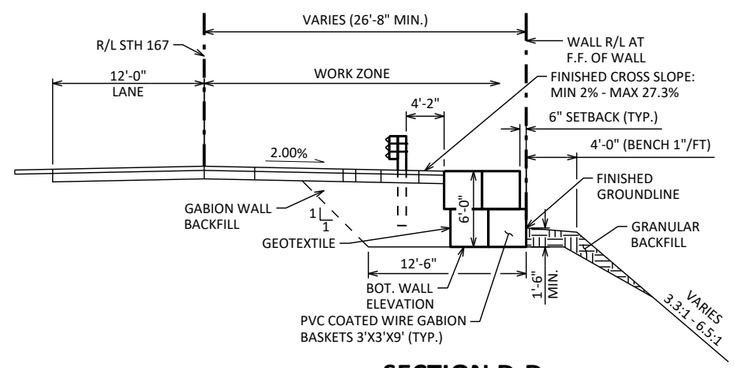


## SECTION D-D

**(HEIGHT = 6FT)**

## SOIL PARAMETERS

| SOIL DESCRIPTION | FRICTION ANGLE (DEGREES) | COHESION (PSF) | UNIT WEIGHT (PCF) |
|---|---|---|---|
| STRUCTURE BACKFILL (BEHIND GABION BASKETS) | 30 | 0 | 120 |
| FILL BEHIND THE STRUCTURE BACKFILL (RETAINED SOIL, EXISTING EMBANKMENT FILL): | | | |
| B-1: FINE TO MEDIUM SAND, BROWN, SOME GRAVEL, LITTLE SILT, TRACE CLAY (FILL), AND FINE TO COARSE GRAVELLY SAND, BROWN TRACE TO FEW SILT | 34 | 0 | 125 |
| B-2: LEAN CLAY, BROWN, LITTLE SAND, FEW GRAVEL (FILL) AND FINE TO COARSE SAND, BROWN, SOME GRAVEL, TRACE TO FEW SILT, FEW SILT POCKETS (POSSIBLE FILL) | 28 | 0 | 120 |
| B-3: FINE TO COARSE SAND, DARK BROWN/BROWN, SOME GRAVEL/ASPHALT, FEW SILT, INTERMIXED WITH CLAY (FILL) AND LEAN CLAY, BROWN/DARK BROWN, FEW SAND, TRACE GRAVEL (POSSIBLE FILL), AND SILT, BROWN, FEW CLAY, TRACE SAND AND GRAVEL | 27 | 0 | 120 |
| BORING 1 - (FOR WALL STA 10+19/STA 350+00 - STH 167 R/L) | | | |
| FINE TO MEDIUM SAND, BROWN, SOME GRAVEL, LITTLE SILT, TRACE CLAY (FILL) (ELEVATION 1115.5 FT - 1113.6 FT) | 34 | 0 | 125 |
| GRAVELLY FINE TO COARSE SAND, BROWN, TRACE TO FEW SILT, SC. SILT SEAMS (ELEVATION 1113.6 FT - 1106.2 FT) | 34 | 0 | 125 |
| FINE TO COARSE SAND, LIGHT BROWN, SOME GRAVEL, TRACE SILT (ELEVATION 1106.2 FT - 1098.6 FT) | 36 | 0 | 125 |
| SANDY FINE TO COARSE GRAVEL, LIGHT BROWN, TRACE SILT (ELEVATION 1098.6 FT - 1092.1 FT) | 35 | 0 | 125 |
| BORING 2 - (FOR WALL STA 10+69/STA 350+50 - STH 167 R/L) | | | |
| FINE TO COARSE SAND, BROWN, SOME GRAVEL, TRACE TO FEW SILT, FEW SILT POCKETS (POSSIBLE FILL) (ELEVATION 1109.3 FT - 1108.0 FT) | 32 | 0 | 120 |
| FINE TO COARSE SAND, LIGHT BROWN/BROWN, LITTLE TO SOME GRAVEL, TRACE SILT AND SANDY FINE TO COARSE GRAVEL, BROWN, TRACE SILT (ELEVATION 1108.0 FT - 1086.5 FT) | 35 | 0 | 125 |
| BORING 3 - (FOR WALL STA 11+21/STA351+00 - STH 167 R/L) | | | |
| EBS OF VERY SOFT TO MEDIUM SILT AND CLAY, AND BACKFILL WITH COMPACTED GRANULAR BACKFILL (ELEVATION 1104.6 FT - 1096.2 FT) | 32 | 0 | 120 |
| LEAN CLAY, BROWN, TRACE SAND (ELEVATION 1096.2 FT - 1091.2 FT) | 0 (ST)<br>30 (LT) | 4,500 (ST)<br>0 (LT) | 125 |
| SANDY FINE TO COARSE GRAVEL, BROWN, FEW SILT (ELEVATION 1091.2 FT - 1083.7 FT) | 35 | 0 | 125 |
| LEAN CLAY, BROWN, FEW SAND, TRACE TO LITTLE GRAVEL (ELEVATION 1083.7 FT - 1077.2 FT) | 0 (ST)<br>29 (LT) | 2,000 (ST)<br>0 (LT) | 125 |

NOTE: LT = LONG TERM STRENGTH PARAMETER; ST = SHORT TERM STRENGTH PARAMETER

## WALL EXTERNAL & OVERALL STABILITY EVALUATION

| DIMENSIONS | | | |
|---|---|---|---|
| TOTAL WALL HEIGHT (FEET) (1) | 7.5 | 10.5 | 9.0 |
| EXPOSED WALL HEIGHT (FEET) | 6.0 | 9.0 | 7.5 |
| SLOPE IN FRONT OF WALL | 3.9H:1V | 5H:1V | 6.5H:1V |
| ESTIMATED SLOPE HEIGHT (FEET) | 12 | 9.5 | 6 |
| BASE WIDTH (FEET) (2) | 9.0 | 9.0 | 9.0 |
| STH 167 STATION | 350+00 | 350+50 | 351+00 |
| WALL STATION | 10+19 | 10+69 | 11+21 |
| BORING USED | 1 | 2 | 3 |
| CAPACITY TO DEMAND RATIO (CDR) (6) | | | |
| SLIDING (CDR > 1.0) | 1.50 | 1.16 | 1.21 |
| ECCENTRICITY (CDR > 1.0) | 2.60 | 1.41 | 1.71 |
| GLOBAL STABILITY (CDR > 1.0) (3) | -- | -- | 1.41 (LT)<br>1.56 (ST) |
| BEARING RESISTANCE (CDR > 1.0) | 2.00 | 1.22 | 1.54 (5) |
| REQUIRED BEARING RESISTANCE (PSF) | 3,000 (4) | 3,000 (4) | 3,000 (4) |
| ESTIMATED SETTLEMENT (IN) | <1.0 | <1.0 | <1.0 |

1. THE TOTAL WALL HEIGHT INCLUDES AN EMBEDMENT OF 1.5 FEET.
2. THE BASE WIDTH WAS DETERMINED FROM THE PRELIMINARY PLAN.
3. CDR FOR GLOBAL STABILITY BASED ON RESISTANCE FACTOR (ϕ) OF 0.75.
4. REQUIRED BEARING RESISTANCE WAS REDUCED FROM MAXIMUM CALCULATED FACTORED BEARING RESISTANCE.
5. EBS OF SOFT TO MEDIUM SILT AND CLAY BELOW WALL IS REQUIRED TO SATISFY BEARING RESISTANCE. EBS EXCAVATION SHOULD BE BACKFILLED WITH ENGINEERED GRANULAR BACKFILL.
6. CDR REQUIREMENTS AND LOAD AND RESISTANCE FACTORS ARE PRESENTED IN CHAPTER 14 OF THE BRIDGE MANUAL.

## GEOMETRY TABLE

| WALL STATION | R/L STH 167 STATION | R/L STH 167 OFFSET TO F.F. OF WALL | TOP OF WALL EL. | FINISH GRADE EL. | BOTTOM OF WALL EL. | EXISTING GRADE EL. |
|---|---|---|---|---|---|---|
| 10+00.00 | 349+81.00 | 26.67' RT | 1121.50 | 1117.00 | 1115.50 | 1120.47 |
| 10+09.00 | 349+90.00 | 26.67' RT | 1120.91 | 1117.00 | 1114.91 | 1120.10 |
| 10+18.00 | 349+99.00 | 26.67' RT | 1120.24 | 1116.41 | 1112.74 | 1119.06 |
| 10+27.00 | 350+08.00 | 26.67' RT | 1119.57 | 1115.30 | 1112.07 | 1118.65 |
| 10+36.00 | 350+17.00 | 26.67' RT | 1118.91 | 1114.18 | 1109.91 | 1117.04 |
| 10+45.00 | 350+26.00 | 26.67' RT | 1118.26 | 1113.07 | 1109.26 | 1116.14 |
| 10+54.00 | 350+35.00 | 26.67' RT | 1117.59 | 1111.95 | 1108.59 | 1115.25 |
| 10+63.00 | 350+44.00 | 26.67' RT | 1116.91 | 1110.84 | 1106.41 | 1114.17 |
| 10+72.00 | 350+52.99 | 27.14' RT | 1116.23 | 1109.72 | 1105.73 | 1113.10 |
| 10+81.00 | 350+61.98 | 27.60' RT | 1115.63 | 1108.61 | 1105.13 | 1112.28 |
| 10+90.00 | 350+70.97 | 28.07' RT | 1114.97 | 1107.49 | 1104.47 | 1111.51 |
| 10+99.00 | 350+79.96 | 28.53' RT | 1114.31 | 1106.38 | 1103.81 | 1111.55 |
| 11+08.00 | 350+88.95 | 29.00' RT | 1113.73 | 1106.07 | 1103.23 | 1109.97 |
| 11+17.00 | 350+97.94 | 29.47' RT | 1113.18 | 1106.07 | 1104.18 | 1108.98 |
| 11+26.00 | 351+06.93 | 29.94' RT | 1112.64 | 1106.07 | 1103.64 | 1109.21 |
| 11+35.00 | 351+15.92 | 30.41' RT | 1112.07 | 1106.07 | 1104.57 | 1109.71 |
| 11+44.00 | 351+24.91 | 30.88' RT | 1111.56 | 1106.07 | 1104.06 | 1110.91 |
| 11+50.00 | 351+30.90 | 31.19' RT | 1111.56 | 1106.07 | 1104.06 | 1110.96 |

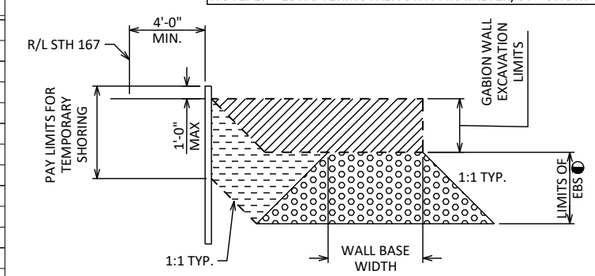


## TEMPORARY SHORING AND EXCAVATION DETAIL

LIMITS OF EXCAVATION AND GABION WALL BACKFILL INCLUDED IN BID ITEM "GABION WALL R-66-85."

LIMITS OF EXCAVATION INCLUDED IN BID ITEM "EXCAVATION FOR STRUCTURES RETAINING WALL R-66-85." LIMITS TO BE FILLED WITH "BACKFILL GRANULAR GRADE 2."

EXCAVATION BELOW SUBGRADE INCLUDED IN BID ITEM "EXCAVATION FOR STRUCTURES RETAINING WALLS R-66-85." LIMITS TO BE FILLED WITH "BACKFILL GRANULAR GRADE 2."

NOTE: ADDITIONAL EXCAVATION REQUIRED TO CONSTRUCT THE WALL, THAT IS NOT EXPLICITLY SHOWN, IS INCLUDED IN THE BID ITEM "EXCAVATION FOR STRUCTURES RETAINING WALLS R-66-85."

◐ ANTICIPATED DEPTH OF EBS RANGES FROM 0'-0" TO 8'-0"±.

| NO. | DATE | REVISION | BY |
|---|---|---|---|

STATE OF WISCONSIN
DEPARTMENT OF TRANSPORTATION
STRUCTURES DESIGN SECTION

**STRUCTURE R-66-85**

DRAWN BY IDL | PLANS CK'D WAH

**WALL DETAILS**

SHEET 2
159

SCALE = 12.0

8

8

| BORING # | DATE COMPLETED | NORTHING (Y) | EASTING (X) |
|---|---|---|---|
| 1 | 2/03/2022 | 121138.9 | 326627.3 |
| 2 | 2/03/2022 | 121148.3 | 326702.5 |
| 3 | 2/03/2022 | 121157.3 | 326769.2 |
| BORINGS COMPLETED BY: GESTRA | | | |
| REPORT COMPLETED BY: WISDOT | | | |
| ALL COORDINATES REFERENCED TO WCCS NAD 83 (91) WASHINGTON COUNTY | | | |
| COORDINATES COLLECTED USING NON-SURVEY GRADE EQUIPMENT | | | |

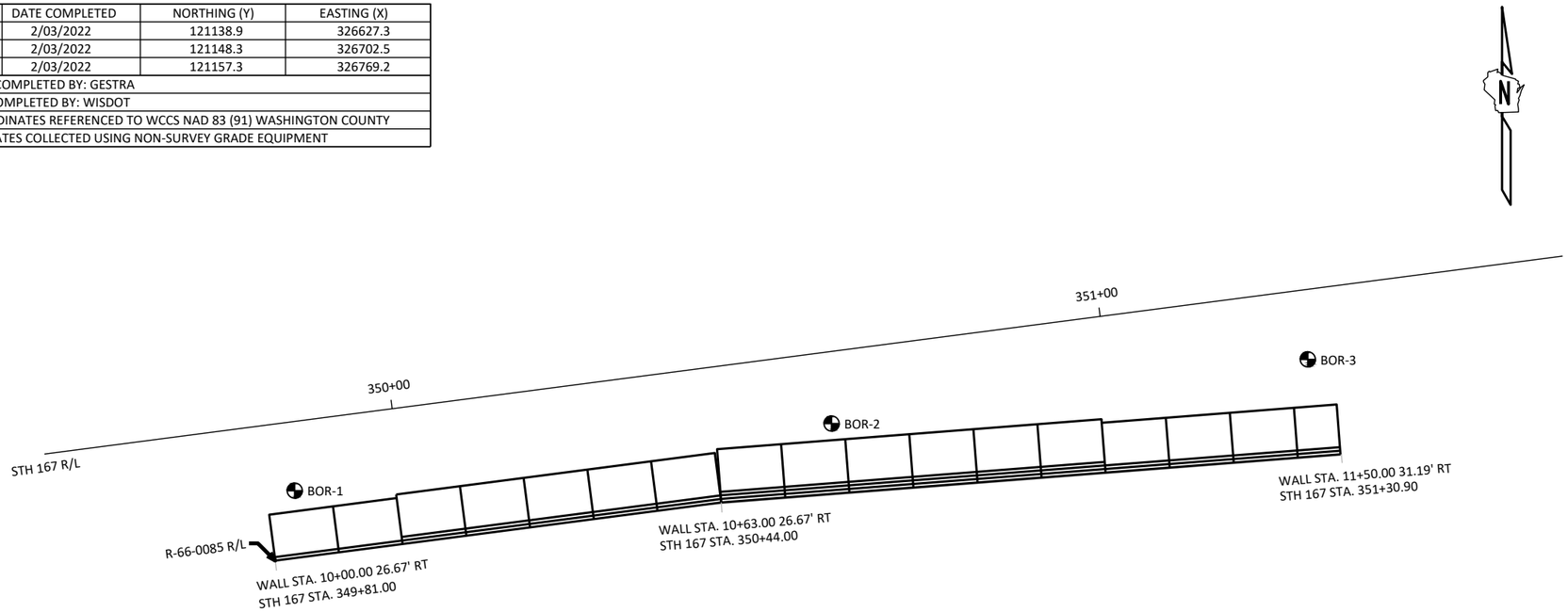


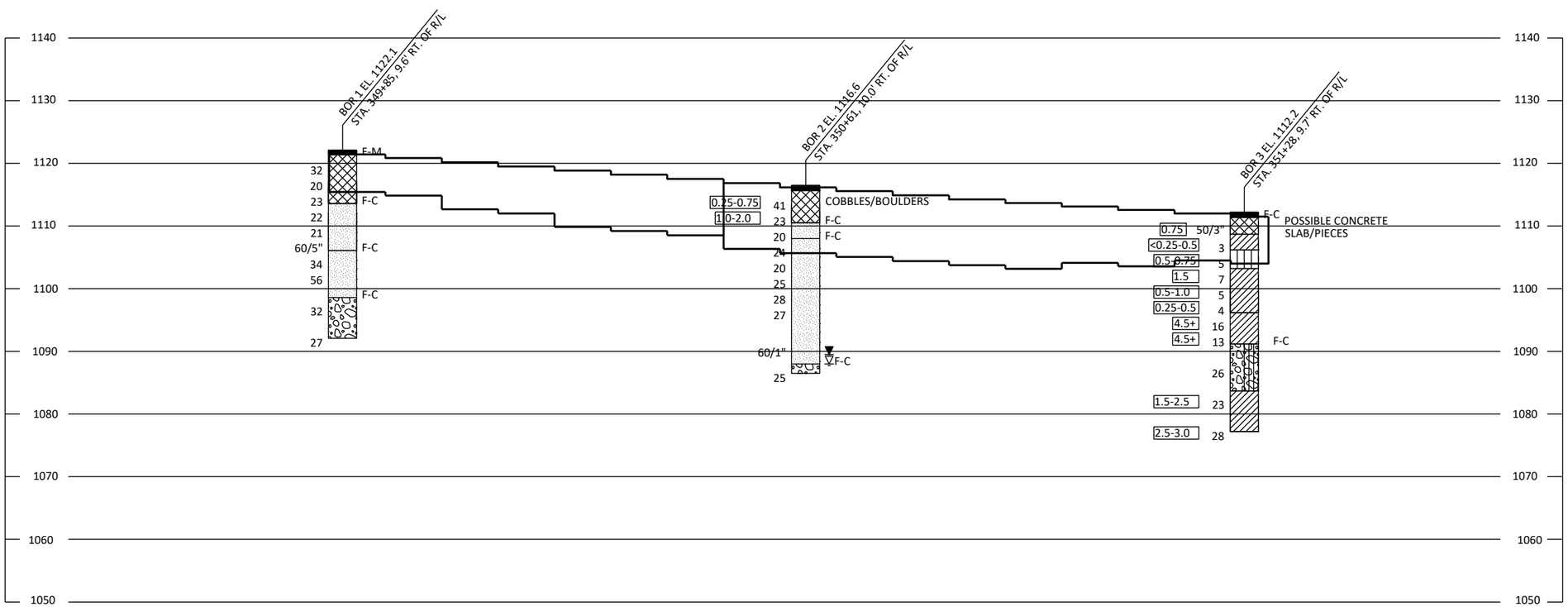


STATE PROJECT NUMBER

**2300-06-70**

**MATERIAL SYMBOLS**

ASPHALT, TOPSOIL, PEAT, CONCRETE, FILL, GRAVEL, SAND, CLAY, SILT, BOULDERS OR COBBLES, LIMESTONE, BEDROCK (UNKNOWN), SHALE, SANDSTONE, IGNEOUS/ META

**LEGEND OF BORING**

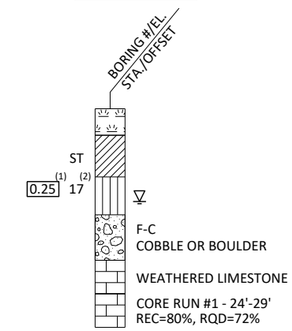


(1) UNCONFINED STRENGTH, AS DETERMINED BY A POCKET PENETROMETER (TSF)

(2) UNLESS OTHERWISE, SPECIFIED THE SPT 'N' VALUE IS BASED ON AASHTO T-206, STANDARD PENETRATION TEST. THE SPT 'N' VALUE PRESENTED HAS NOT BEEN CORRECTED FOR OVERBURDEN PRESSURE OR HAMMER EFFICIENCY.

**GROUND WATER ELEVATION**

AT TIME OF DRILLING

END OF DRILLING

AFTER DRILLING

**ABBREVIATIONS**

F-FINE M-MEDIUM C-COARSE ST-SHELBY TUBE

SUBSURFACE EXPLORATION FOR FOUNDATION DESIGN AND BIDDERS INFORMATION

BORINGS WERE COMPLETED AT POINTS APPROXIMATELY AS INDICATED ON THIS DRAWING TO OBTAIN INFORMATION CONCERNING THE CHARACTER OF SUBSURFACE MATERIALS FOUND AT THE SITE. BECAUSE THE INVESTIGATED DEPTHS ARE LIMITED AND THE AREA OF THE BORINGS IS VERY SMALL IN RELATION TO THE ENTIRE SITE, THE WISCONSIN DEPARTMENT OF TRANSPORTATION DOES NOT WARRANT SIMILAR SUBSURFACE CONDITIONS BELOW, BETWEEN, OR BEYOND THESE BORINGS. VARIATIONS IN SOIL CONDITIONS SHOULD BE EXPECTED AND FLUCTUATIONS IN GROUNDWATER LEVELS MAY OCCUR.

| NO. | DATE | REVISION | BY |
|---|---|---|---|

STATE OF WISCONSIN
DEPARTMENT OF TRANSPORTATION
STRUCTURES DESIGN SECTION

**STRUCTURE R-66-85**

DRAWN BY JJ/IDL PLANS CK'D WAH

**SUBSURFACE EXPLORATION**

SHEET 3
160

SCALE = 20.0

8

8

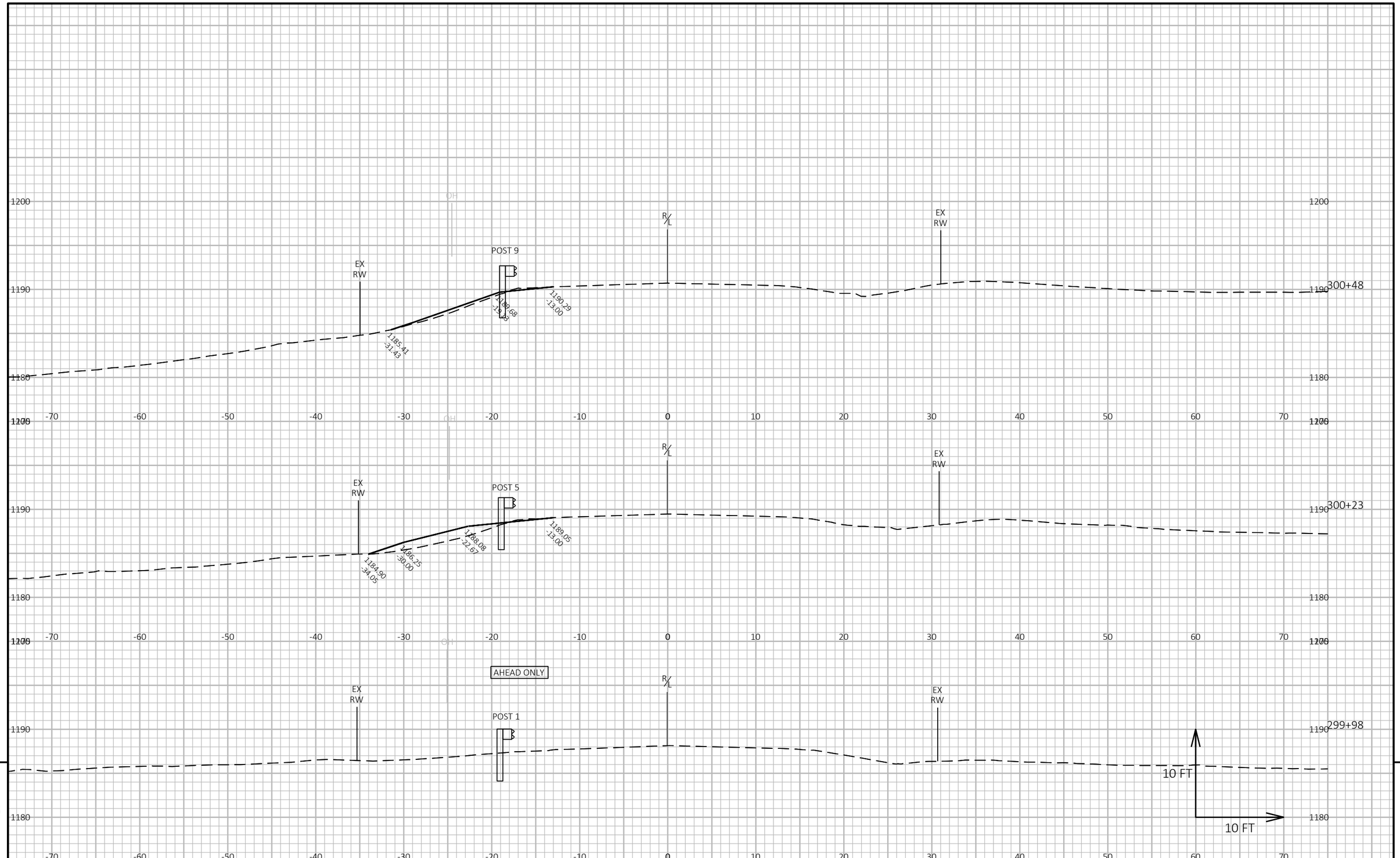


| PROJECT NO: 2300-06-70 | HWY: STH 167 | COUNTY: WASHINGTON | CROSS SECTIONS: CROSS SECTIONS | SHEET 161 | E |
|---|---|---|---|---|---|

FILE NAME : N:\PDS\C3D\23000600\SHEETSPLAN\090201-XS.DWG
LAYOUT NAME - 01
PLOT DATE : 10/27/2023 2:34 PM
PLOT BY : SKIFFINGTON, NICHOLA
PLOT NAME :
**PLOT SCALE :** 1 IN:10 FT HORZ. / 1 IN:10 FT VERT.
WISDOT/CADDS SHEET 49

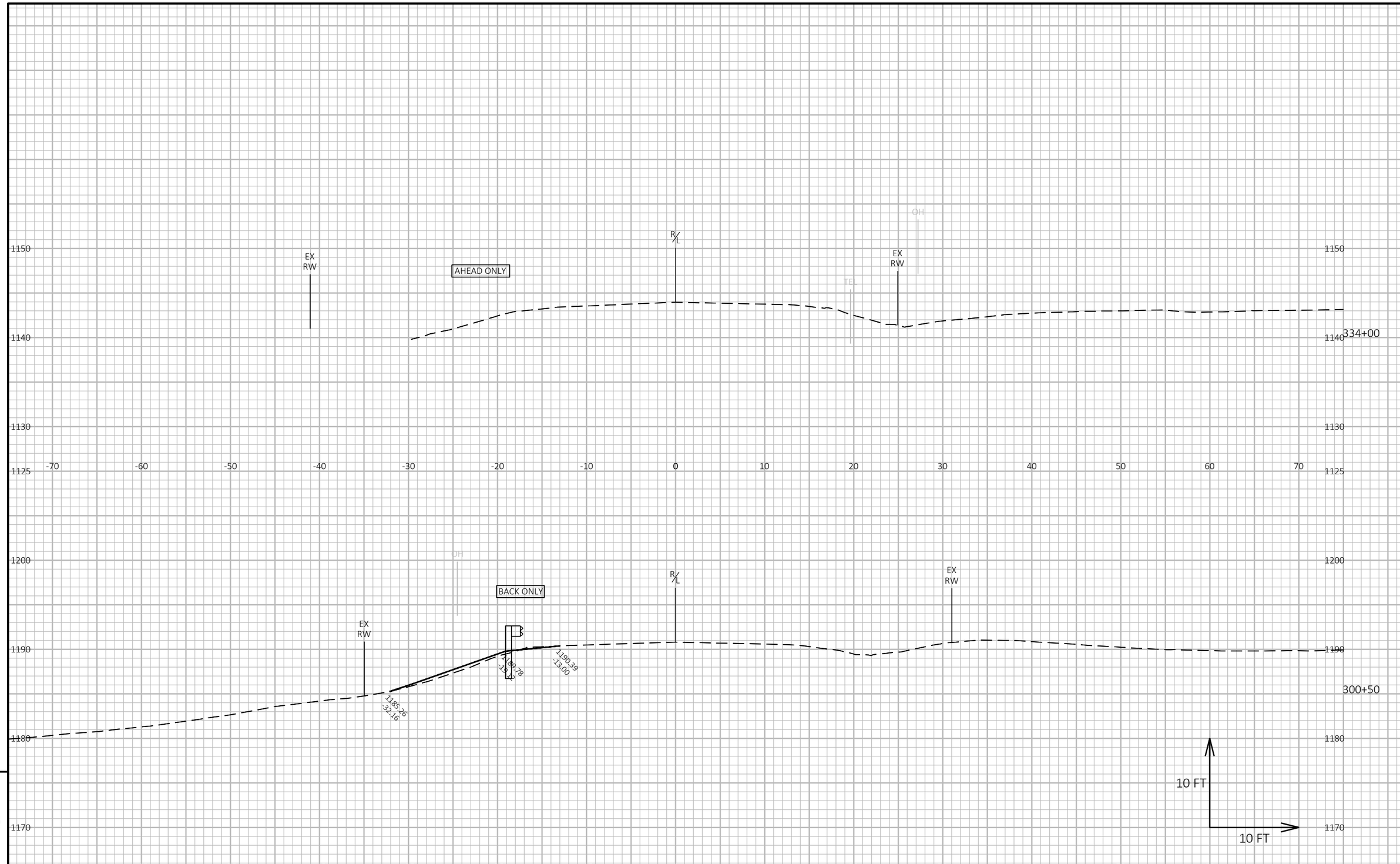


9

9

| PROJECT NO: 2300-06-70 | HWY: STH 167 | COUNTY: WASHINGTON | CROSS SECTIONS: CROSS SECTIONS | SHEET 162 | E |
|---|---|---|---|---|---|

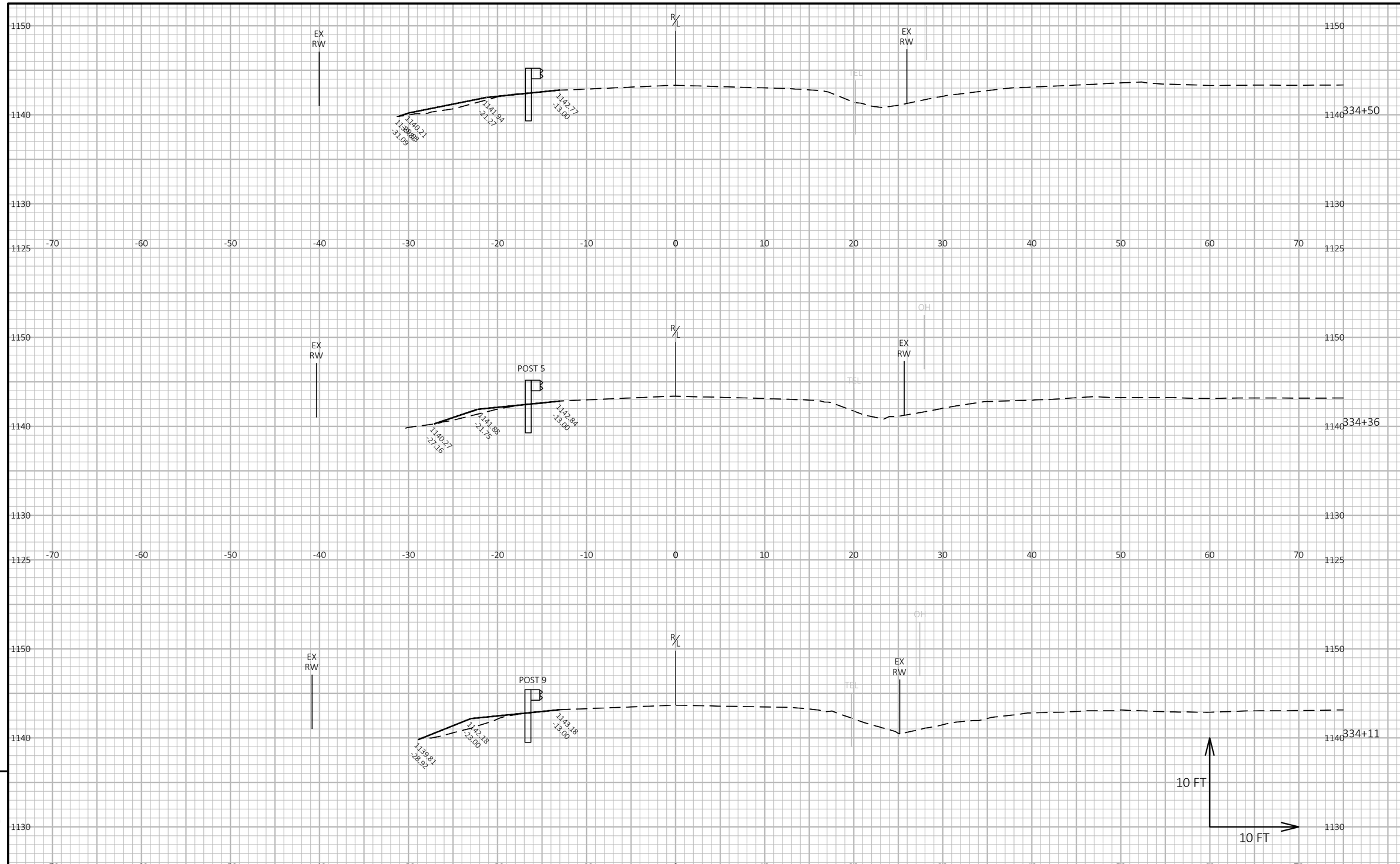


9

9

| PROJECT NO: 2300-06-70 | HWY: STH 167 | COUNTY: WASHINGTON | CROSS SECTIONS: CROSS SECTIONS | SHEET 163 | E |
|---|---|---|---|---|---|

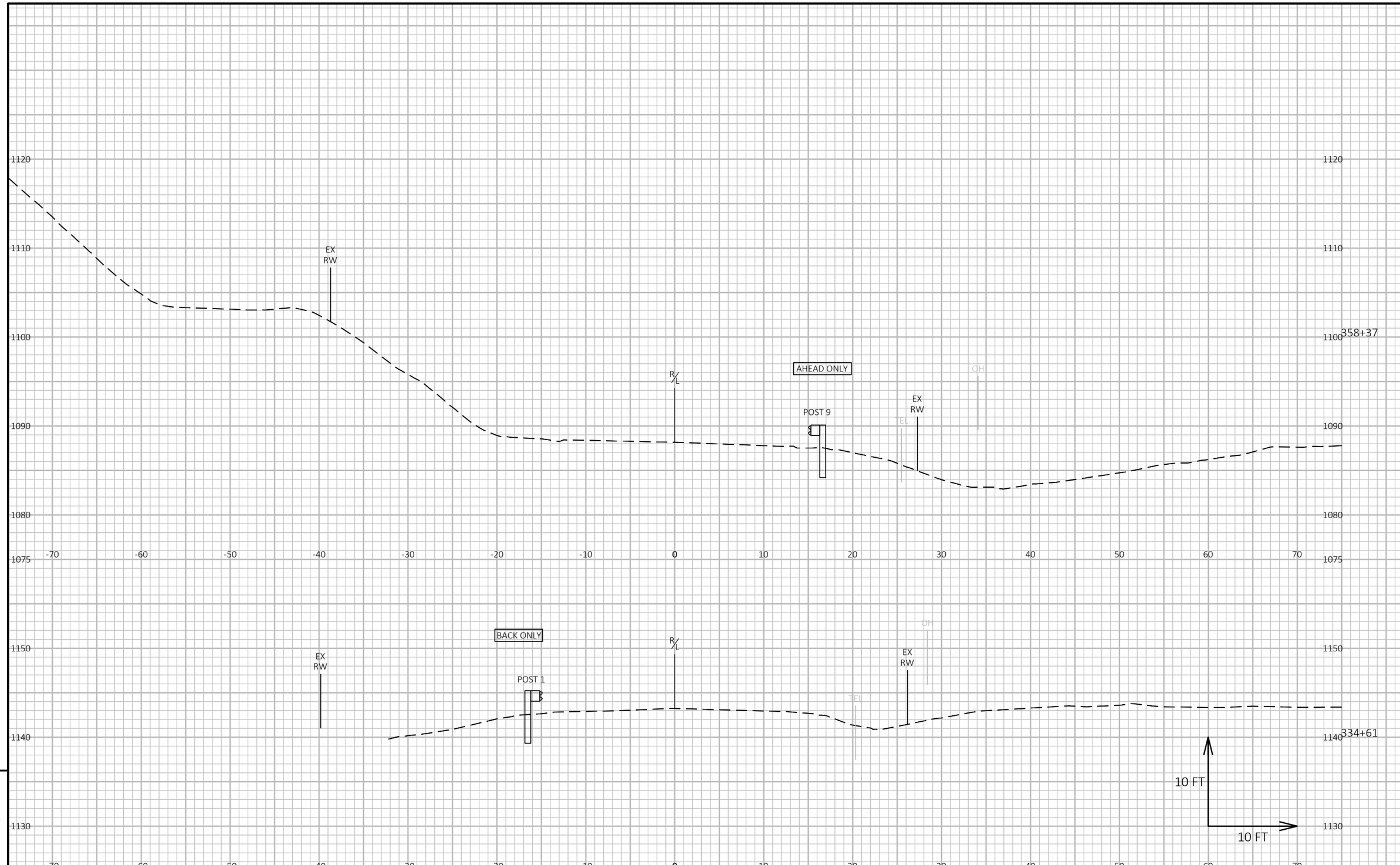


9

9

| PROJECT NO: 2300-06-70 | HWY: STH 167 | COUNTY: WASHINGTON | CROSS SECTIONS: CROSS SECTIONS | SHEET 164 | E |
|---|---|---|---|---|---|

FILE NAME : N:\PDS\C3D\23000600\SHEETSPLAN\090201-XS.DWG
LAYOUT NAME - 04
PLOT DATE : 10/27/2023 2:34 PM
PLOT BY : SKIFFINGTON, NICHOLA
PLOT NAME :
**PLOT SCALE :** 1 IN:10 FT HORZ. / 1 IN:10 FT VERT.
WISDOT/CADDS SHEET 49

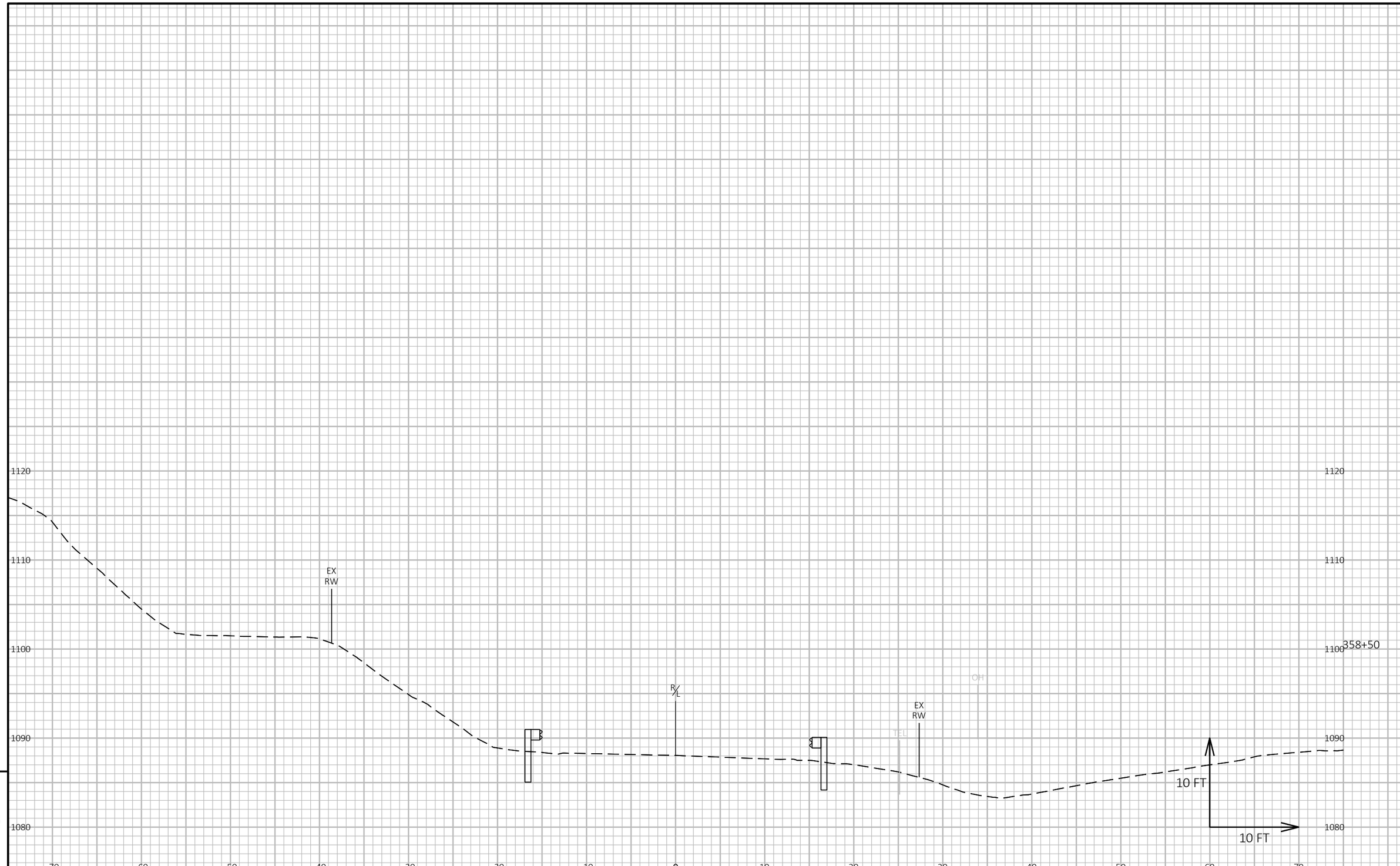


9

9

| PROJECT NO: 2300-06-70 | HWY: STH 167 | COUNTY: WASHINGTON | CROSS SECTIONS: CROSS SECTIONS | SHEET 165 | E |
|---|---|---|---|---|---|

FILE NAME : N:\PDS\C3D\23000600\SHEETSPLAN\090201-XS.DWG
LAYOUT NAME - 05
PLOT DATE : 10/27/2023 2:34 PM
PLOT BY : SKIFFINGTON, NICHOLA
PLOT NAME :
**PLOT SCALE :** 1 IN:10 FT HORZ. / 1 IN:10 FT VERT.
WISDOT/CADDS SHEET 49

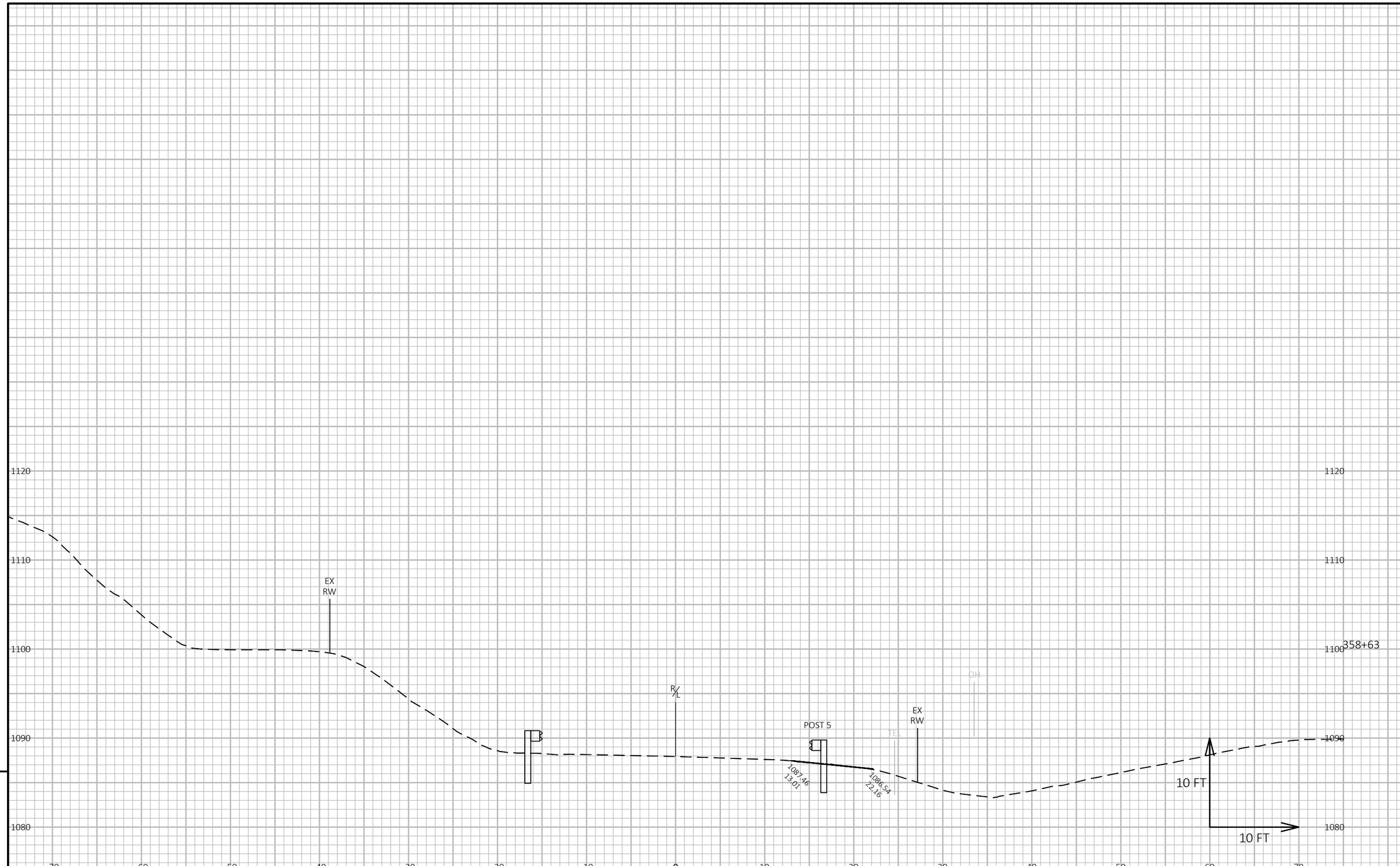


9

9

| PROJECT NO: 2300-06-70 | HWY: STH 167 | COUNTY: WASHINGTON | CROSS SECTIONS: CROSS SECTIONS | SHEET 166 | E |
|---|---|---|---|---|---|

FILE NAME : N:\PDS\C3D\23000600\SHEETSPLAN\090201-XS.DWG
LAYOUT NAME - 06
PLOT DATE : 10/27/2023 2:34 PM
PLOT BY : SKIFFINGTON, NICHOLA
PLOT NAME :
**PLOT SCALE :** 1 IN:10 FT HORZ. / 1 IN:10 FT VERT.
WISDOT/CADDS SHEET 49

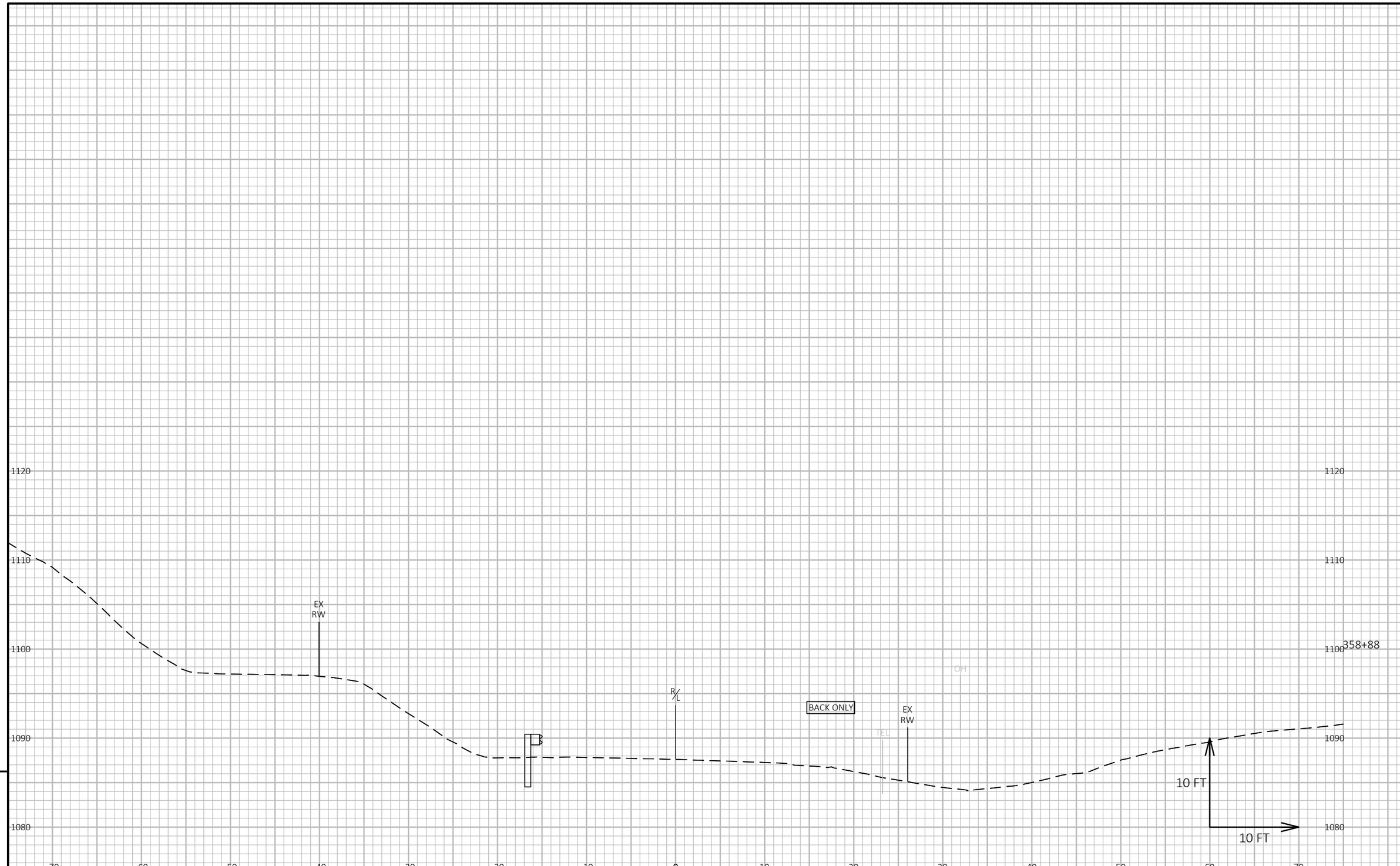


9

9

| PROJECT NO: 2300-06-70 | HWY: STH 167 | COUNTY: WASHINGTON | CROSS SECTIONS: CROSS SECTIONS | SHEET 167 | E |
|---|---|---|---|---|---|

FILE NAME : N:\PDS\C3D\23000600\SHEETSPLAN\090201-XS.DWG
LAYOUT NAME - 07
PLOT DATE : 10/27/2023 2:34 PM
PLOT BY : SKIFFINGTON, NICHOLA
PLOT NAME :
**PLOT SCALE :** 1 IN:10 FT HORZ. / 1 IN:10 FT VERT.
WISDOT/CADDS SHEET 49

**Wisconsin Department of Transportation**

Dedicated people creating transportation solutions through innovation and exceptional service.

http://www.dot.wisconsin.gov