RHI MARCH 2024

PROJECT ID: 9155-05-71

WITH: N/A

COUNTY: LANGLADE

STATE PROJECT	FEDERAL PROJECT	
	PROJECT	CONTRACT
9155-05-71	—	—

STATE OF WISCONSIN
DEPARTMENT OF TRANSPORTATION

PLAN OF PROPOSED IMPROVEMENT

LANGLADE - PICKEREL

NINE MILE CREEK B-34-0010

STH 55
LANGLADE COUNTY

STATE PROJECT NUMBER
9155-05-71

ORDER OF SHEETS

TOTAL SHEETS = 126

N

DESIGN DESIGNATION

A.A.D.T.	2025	=	980
A.A.D.T.	2045	=	1,120
D.H.V.		=	260
D.D.		=	67/33
T.		=	10.8%
DESIGN SPEED		=	60 MPH
ESALS		=	180,000

EXISTING STRUCTURE B-34-0010
PROPOSED STRUCTURE B-34-0059

BEGIN PROJECT
STA 101+25
Y= 378,232.681
X= 713,046.968

END PROJECT
STA 107+18

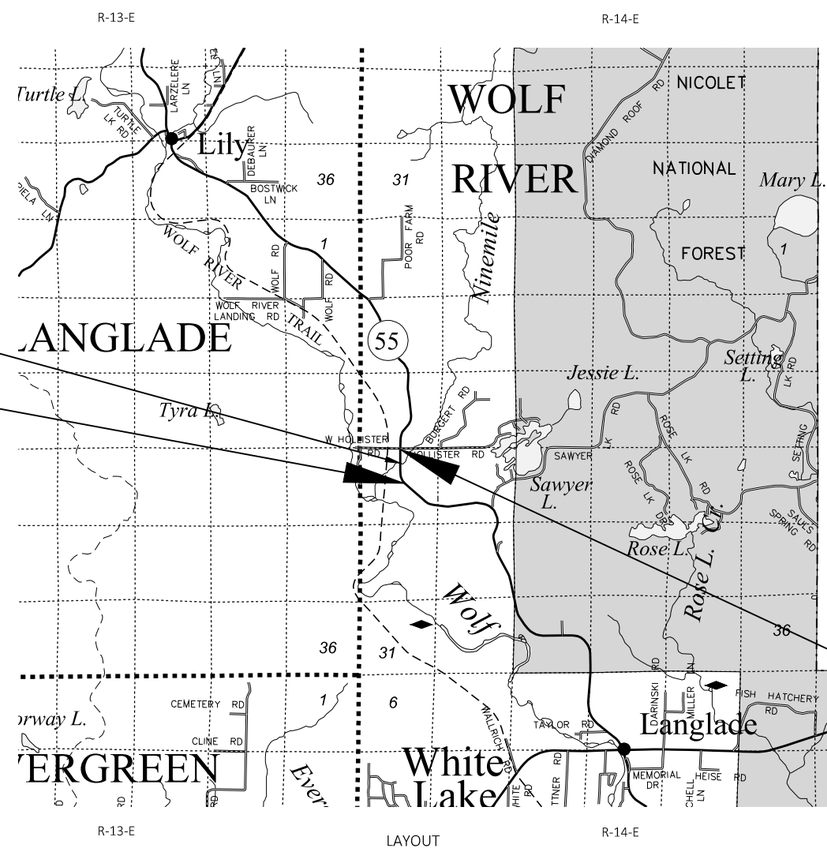

LAYOUT

SCALE 0 2 MI

TOTAL NET LENGTH OF CENTERLINE = 0.112 MILES

HORIZONTAL POSITIONS SHOWN ON THIS PLAN ARE WISCONSIN COORDINATE REFERENCE SYSTEM (WISCRS), LANGLADE COUNTY, NAD83 (2011), IN U.S. SURVEY FEET. POSITIONS SHOWN ARE GRID COORDINATES, GRID BEARINGS, AND GRID DISTANCES. GRID DISTANCES ARE THE SAME AS GROUND DISTANCES. ELEVATIONS ARE REFERENCED TO NAVD 88 (2011). GPS DERIVED ELEVATIONS ARE BASED ON GEOID 12A.

CONVENTIONAL SYMBOLS

PLAN
- CORPORATE LIMITS
- PROPERTY LINE
- LOT LINE
- LIMITED HIGHWAY EASEMENT
- EXISTING RIGHT OF WAY
- PROPOSED OR NEW R/W LINE
- SLOPE INTERCEPT
- REFERENCE LINE (300'FB')
- EXISTING CULVERT
- PROPOSED CULVERT (Box or Pipe)
- COMBUSTIBLE FLUIDS (CAUTION)
- MARSH AREA
- WOODED OR SHRUB AREA

PROFILE
- GRADE LINE
- ORIGINAL GROUND
- MARSH OR ROCK PROFILE (To be noted as such) (ROCK)
- SPECIAL DITCH (LABEL)
- GRADE ELEVATION (95.36)
- CULVERT (Profile View)

UTILITIES
- ELECTRIC (E)
- FIBER OPTIC (FO)
- GAS (G)
- SANITARY SEWER (SAN)
- STORM SEWER (SS)
- TELEPHONE (T)
- WATER (W)
- UTILITY PEDESTAL
- POWER POLE
- TELEPHONE POLE

ORIGINAL PLANS PREPARED BY

AECOM

WISCONSIN JESSICA L. LANCELLE E-44657 MILWAUKEE WISCONSIN PROFESSIONAL ENGINEER

DATE: 10/10/2023 (Professional Engineer Signature)

STATE OF WISCONSIN
DEPARTMENT OF TRANSPORTATION

PREPARED BY

Surveyor	AECOM
Designer	AECOM
Project Manager	ANDREW CASPER
Regional Examiner	FRED SCHUNKE
Regional Supervisor	KAI KILEN

APPROVED FOR THE DEPARTMENT

DATE: 10/13/2023 Andrew Casper (Signature)

E

GENERAL NOTES:

THE LOCATIONS OF EXISTING AND PROPOSED UTILITY INSTALLATIONS AS SHOWN ON THE PLANS ARE APPROXIMATE. THERE MAY BE OTHER UTILITY INSTALLATIONS WITHIN THE PROJECT AREA THAT ARE NOT SHOWN.

THE CONTRACTOR SHALL NOTIFY DIGGERS HOTLINE AND AFFECTED UTILTIIES PRIOR TO THE START OF WORK. ANY LOCAL MUNICIPAL UTILITY WHICH IS NOT A MEMBER OF DIGGERS HOTLINE MUST BE CONTACTED SEPARATELY.

RADII, ELEVATIONS, AND DIMENSIONS ARE GIVEN AT THE PAVEMENT EDGES, UNLESS OTHERWISE NOTED IN THE PLANS.

DISTURBED AREAS WITHIN THE RIGHT-OF-WAY, EXCEPT THE ARES WITHIN THE FINISHED SHOULDER POINTS, SHALL BE FERTILIZED, SEEDED, AND PLACE EROSION MAT.

SECTION 2 SHEETS

UTILITIES

ELECTRIC

WISCONSIN PUBLIC SERVICE CORPORATION - ELECTRIC
WENDY CHRIST
PO BOX 19001
GREEN BAY, WI 54307-9001
920-433-1703
UTILITIESRELOCATION@WISCONSINPUBLICSERVICE.COM

COMMUNICATIONS

FRONTIER COMMUNICATIONS OF WI LLC
CHRIS POLLACK
421 4TH STREET
WAUSAU, WI 54403
T: 715-847-1240
C: 715-297-4773
CHRISTOPHER.POLLACK@FTR.COM

WITTENBERG TELEPHONE COMPANY
MARCUS DAVIDSON
PO BOX 160
WITTENBERG, WI 54499
T: 715-253-2111
MARCUS@CIRRINITY.NET

RUNOFF COEFFICIENT TABLE

	HYDROLOGIC SOIL GROUP											
	A			B			C			D		
	SLOPE RANGE (PERCENT)			SLOPE RANGE (PERCENT)			SLOPE RANGE (PERCENT)			SLOPE RANGE (PERCENT)		
LAND USE:	0-2	2-6	6 & OVER	0-2	2-6	6 & OVER	0-2	2-6	6 & OVER	0-2	2-6	6 & OVER
ROW CROPS	.08 .22	.16 .30	.22 .38	.12 .26	.20 .34	.27 .44	.15 .30	.24 .37	.33 .50	.19 .34	.28 .41	.38 .56
MEDIAN STRIP- TURF	.19 .24	.20 .26	.24 .30	.19 .25	.22 .28	26 .33	.20 .26	.23 .30	.30 .37	.20 .27	.25 .32	.30 .40
SIDE SLOPE- TURF			.25 .32			.27 .34			.28 .36			.30 .38
PAVEMENT:												
ASPHALT	.70 - .95											
CONCRETE	.80 - .95											
BRICK	.70 - .80											
DRIVES, WALKS	.75 - .85											
ROOFS	.75 - .95											
GRAVEL ROADS, SHOULDER	.40 - .60											

TOTAL PROJECT AREA = 2.02 ACRES
TOTAL AREA EXPECTED TO BE DISTURBED BY CONSTRUCTION ACTIVITIES = 1.25 ACRES

PROJECT CONTACTS

WDNR

WENDY HENNIGES
107 SUTLIFF AVENUE
RHINELANDER, WI 54501
715-365-8916
WENDY.HENNIGES@WISCONSIN.GOV

DIGGERS HOTLINE
Dial 811 or (800)242-8511
www.DiggersHotline.com

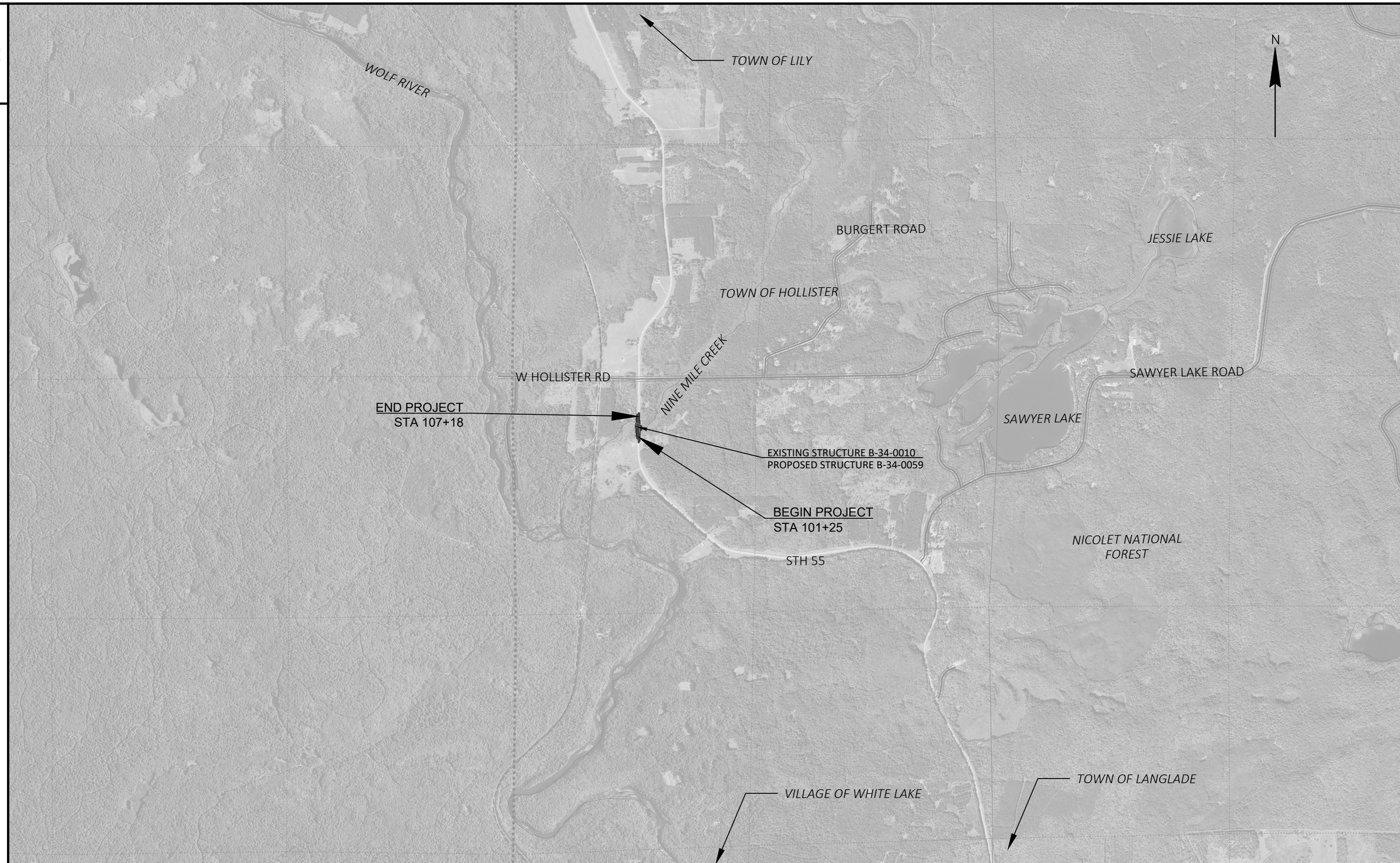

2

PROJECT NO: 9155-05-71	HWY: STH 55	COUNTY: LANGLADE	PROJECT OVERVIEW	SHEET 3	E

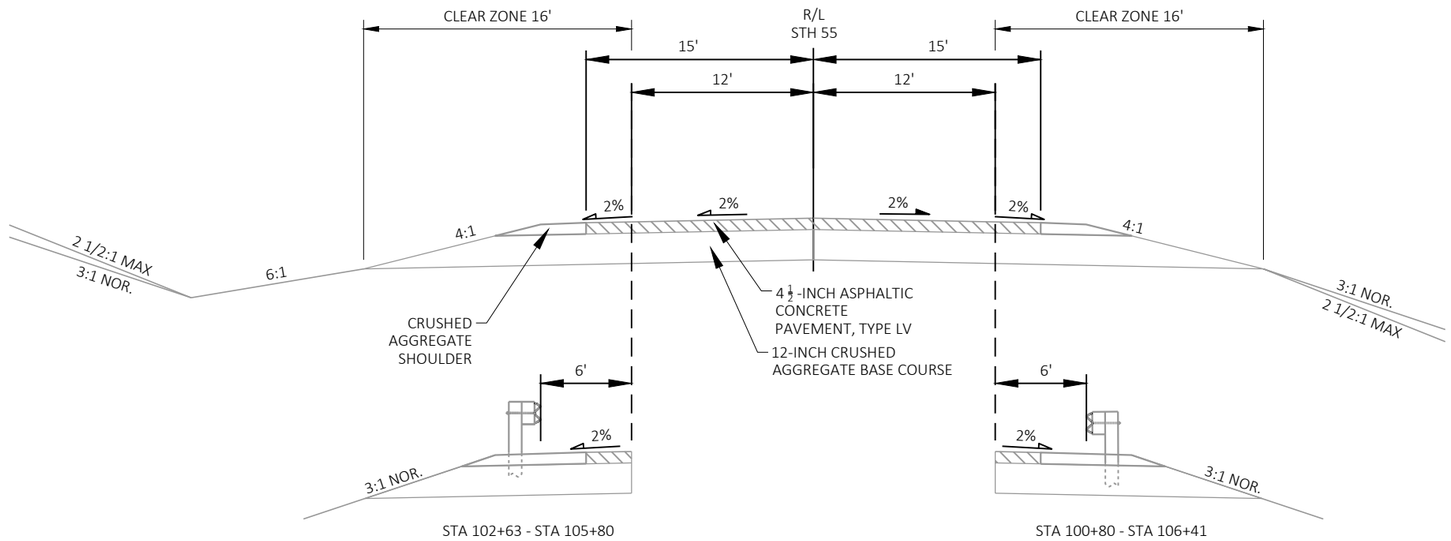

EXISTING TYPICAL SECTION

STA 101+25 - STA 101+18

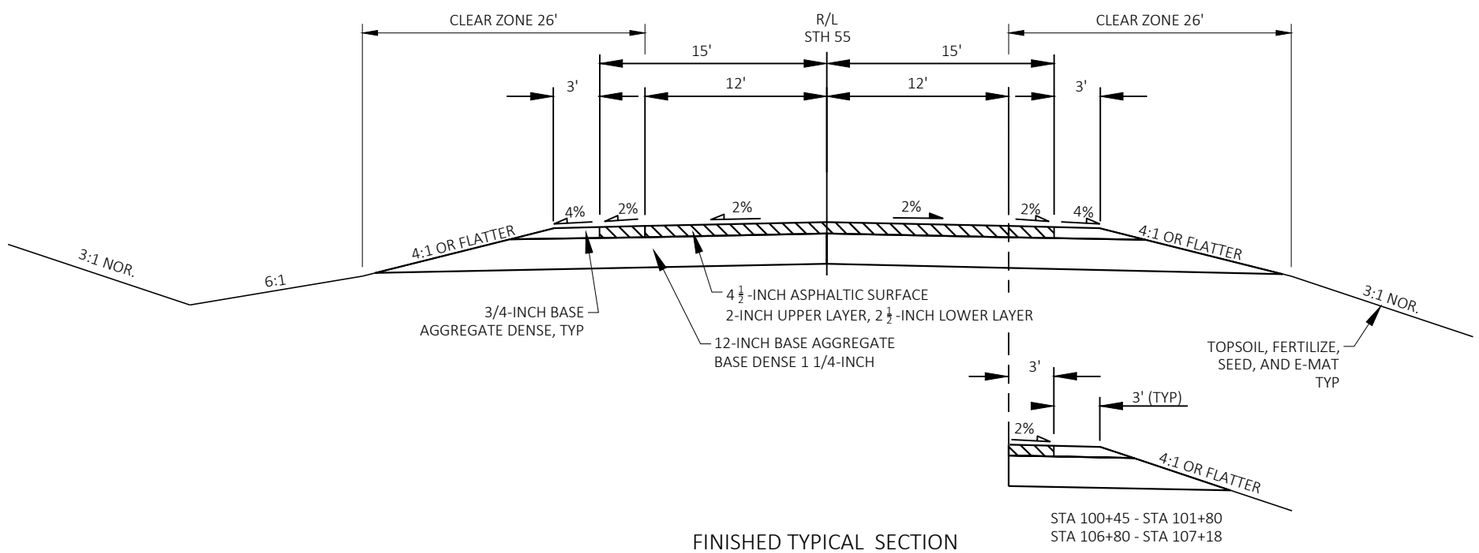

FINISHED TYPICAL SECTION

STA 101+25 - STA 107+18

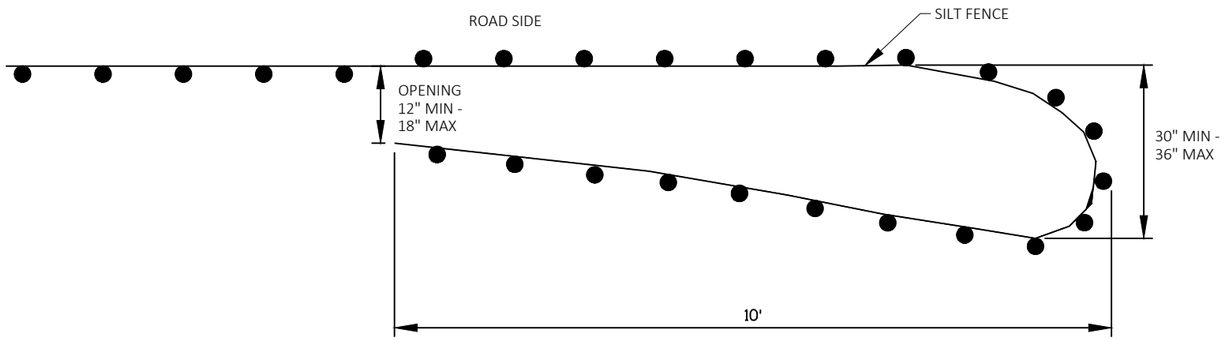

PLAN VIEW

NOTE:
SILT FENCE POSTS FOR THE TURN-AROUND SHOULD BE ON THE OUTSIDE OF THE TURN-AROUND. AND TRENCHED IN ACCORDING TO SILT FENCE REQUIREMENTS.

SEE EROSION CONTROL PLANS FOR SILT FENCE LOCATIONS. INSTALL TURN-AROUND AT END OF SHOWN FENCING.

ROADSIDE OFFSETS DEPENDENT ON LOCATION.

TEMPORARY SMALL ANIMAL TURN-AROUND

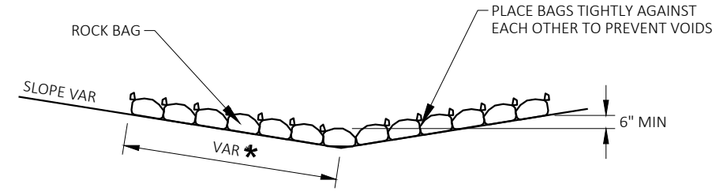

SIDE VIEW (SINGLE LAYER)

* LENGTH AND NUMBER OF BAGS MAY VARY
DEPENDING ON DESIRED DEPTH OF WATER POOL

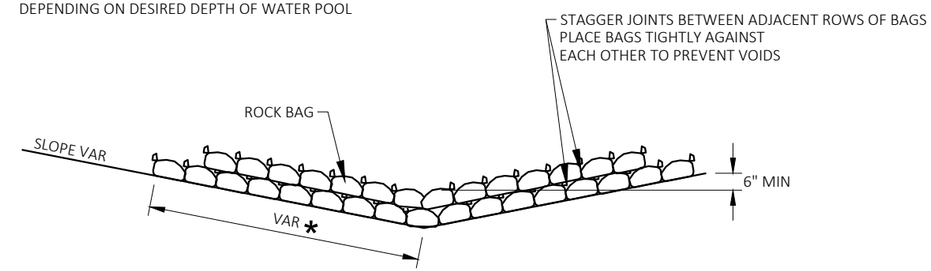

SIDE VIEW (MULTIPLE LAYER)

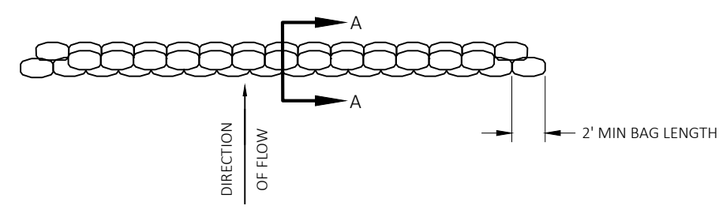

TOP VIEW (MULTIPLE LAYER)

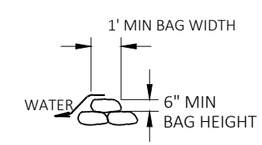

SECTION A-A

ROCK BAGS USED FOR DITCH CHECKS

DRIVEWAY CULVERT IN NW QUADRANT

2

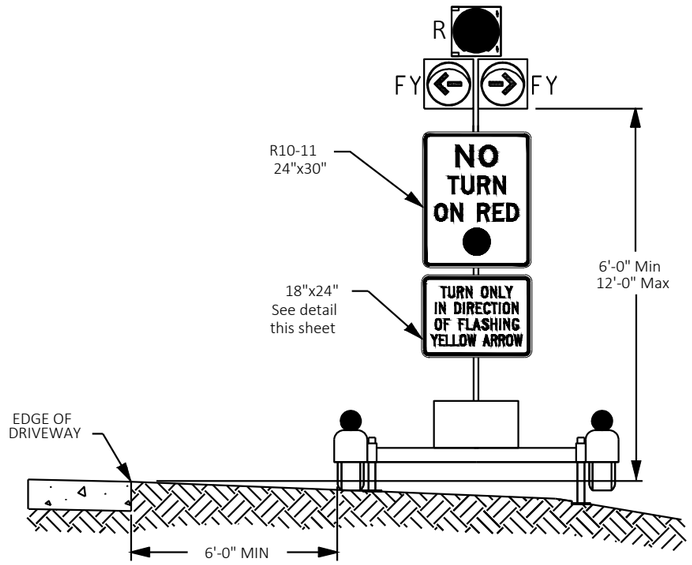

ELEVATION VIEW

DAD 3 HEAD DEVICE

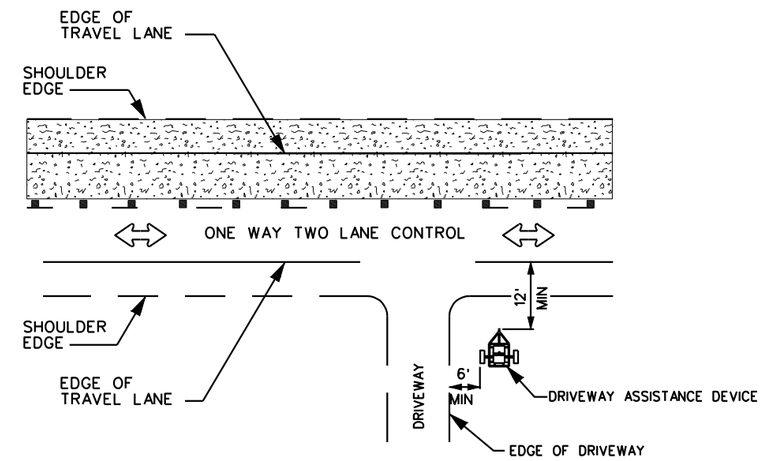

PLAN VIEW

TYPICAL DAD INSTALLATION

2

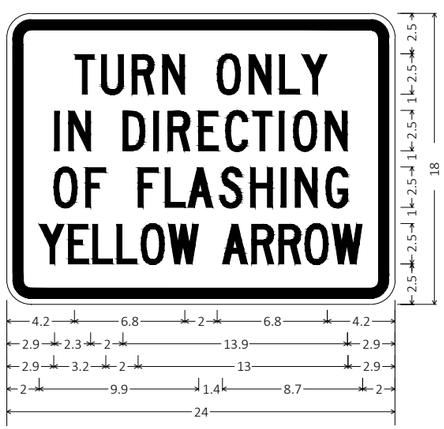

1.5" Radius, 0.6" Border, 0.4" Indent, Black on White;
"TURN", C; "ONLY", C; "IN", C;
"DIRECTION", C; "OF", C; "FLASHING", C;
"YELLOW ARROW", C specified length;

SIGN DETAILS

GENERAL NOTES

1. THREE HEAD UNIT. EACH DAD MUST HAVE ONE SIGNAL HEAD CONSISTING OF 3 LED INDICATIONS AS FOLLOWS; ONE 12 IN. DIAMETER STEADY RED BALL INDICATION CENTERED OVER ONE 12 IN. DIAMETER YELLOW FLASHING LEFT ARROW AND ONE 12 IN. DIAMETER YELLOW FLASHING RIGHT ARROW.

LEGEND	
⇨	TRAFFIC FLOW
FY	FLASHING YELLOW

DRIVEWAY ASSISTANCE DEVICE (D.A.D.) SYSTEM

PROJECT NO: 9155-05-71	HWY: STH 55	COUNTY: LANGLADE	CONSTRUCTION DETAILS	SHEET 6	E

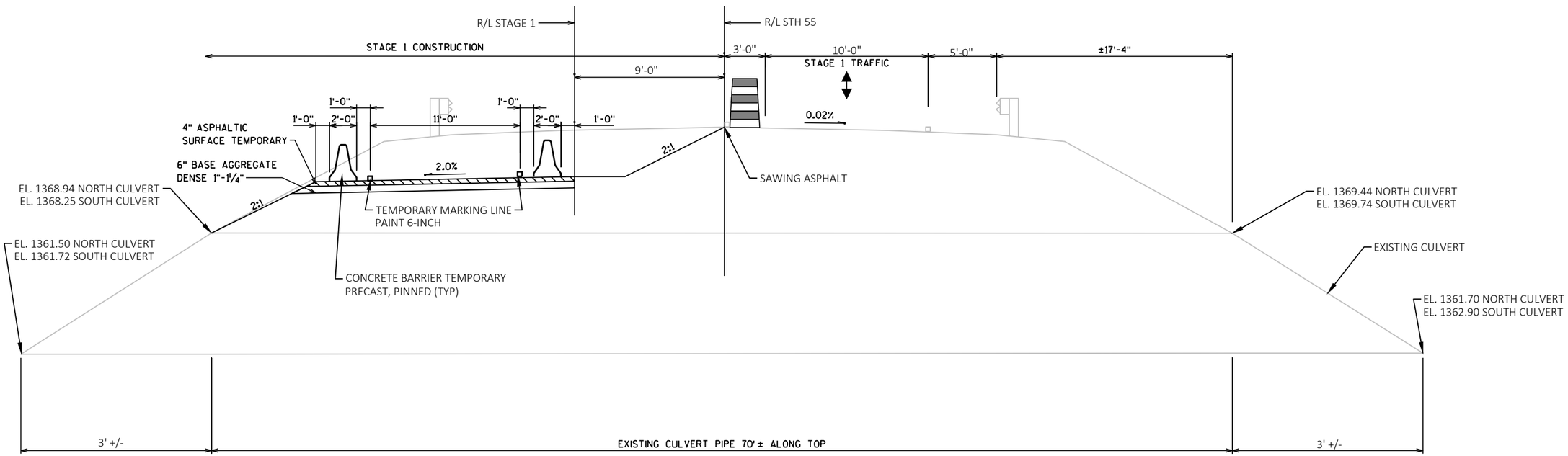

CROSS SECTION THRU ROADWAY

STAGE 1

LOOKING NORTH

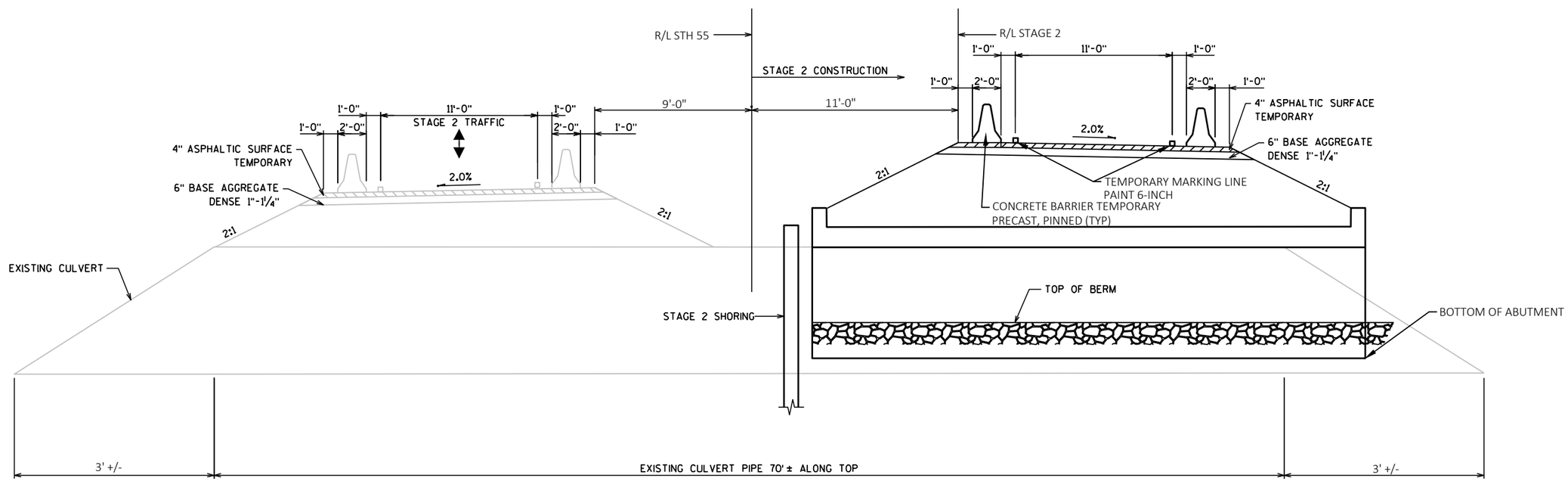

CROSS SECTION THRU ROADWAY

STAGE 2

LOOKING NORTH

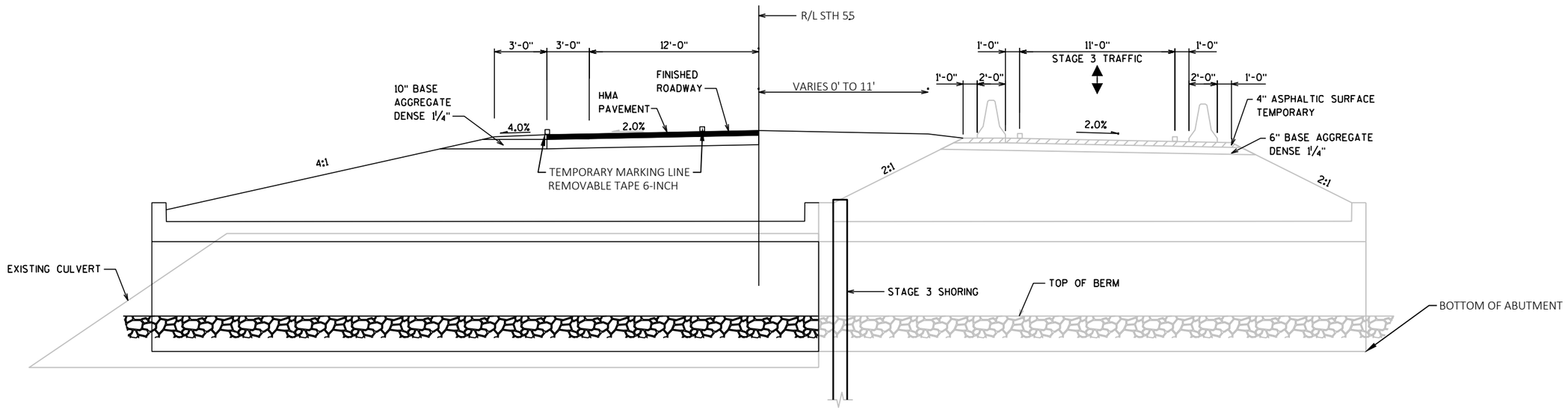

CROSS SECTION THRU ROADWAY

STAGE 3

LOOKING NORTH

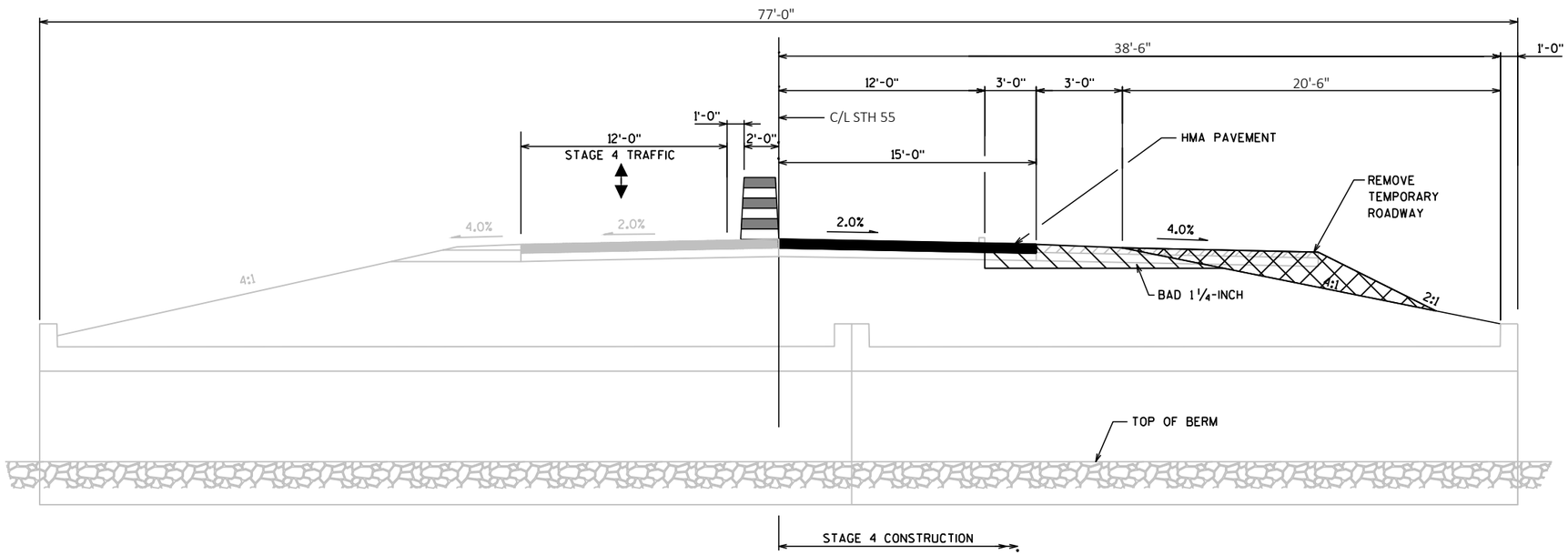

CROSS SECTION THRU ROADWAY

STAGE 4

LOOKING NORTH

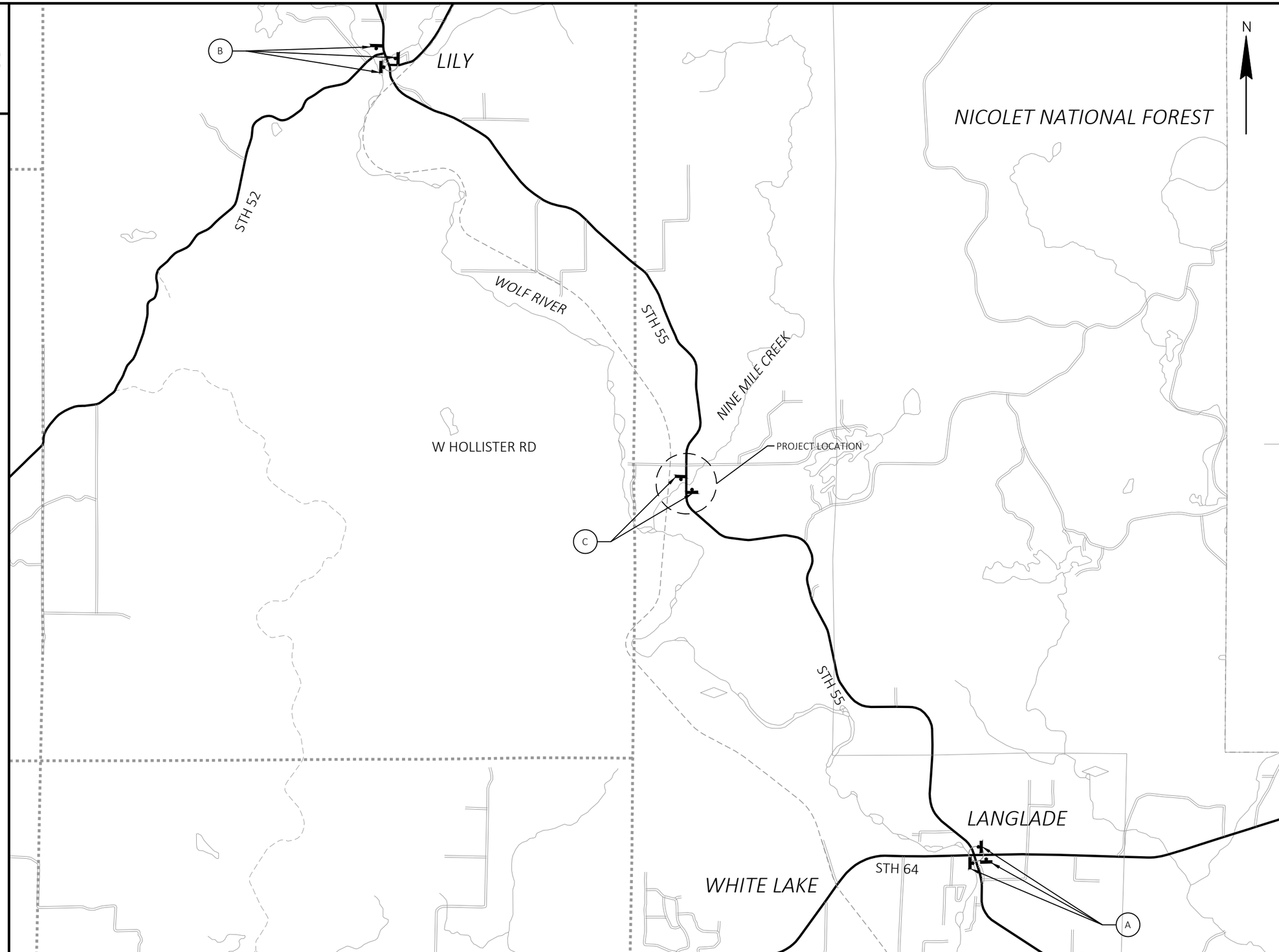

NOTE:
MAX. WIDTH 14' FOR STAGE 1.
MAX. WIDTH 12' FOR STAGE 2.
MAX. WIDTH 12' FOR STAGE 3.
MAX. WIDTH 12' FOR STAGE 4.

A

M3-1 24"X12" NORTH

M1-6 24"X24" 55

W12-52 48"X48" MAX. XX' WIDTH

W57-52 36"X24" 6 MILES AHEAD

B

M3-3 24"X12" SOUTH

M1-6 24"X24" 55

W12-52 48"X48" MAX. XX' WIDTH

W57-52 36"X24" 6 MILES AHEAD

C

HWY 55
BRIDGE WORK
BEGINS XXX-XX

G20-57B
72"X36"

PLACE 7 DAYS IN ADVANCE OF CONSTRUCTION SIGN TO BE REMOVED ONCE CONSTRUCTION BEGINS.

2

PROJECT NO: 9155-05-71	HWY: STH 55	COUNTY: LANGLADE	ADVANCE WIDTH RESTRICTION SIGNING	SHEET 11	E

2

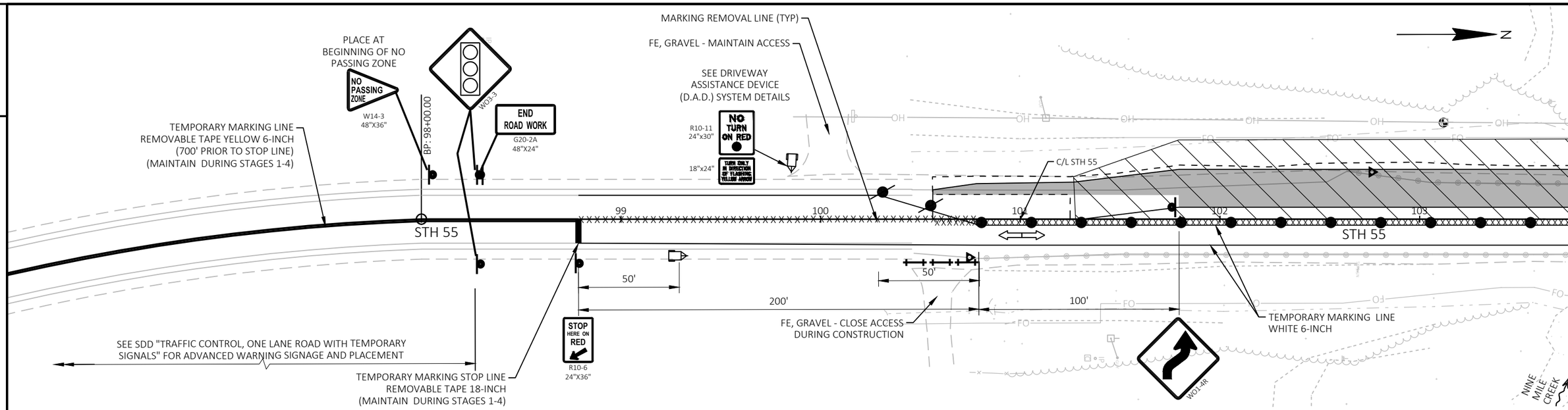

LEGEND

- TYPE III BARRICADE
- TYPE III BARRICADE WTH ATTACHED SIGN
- TRAFFIC CONTROL DRUM
- TRAFFIC CONTROL DRUM WITH TYPE C STEADY BURN LIGHT
- SIGN ON PERMANENT SUPPORT
- SIGN ON TEMPORARY SUPPORT
- CONCRETE BARRIER TEMPORARY PRECAST
- WORK AREA
- DIRECTION OF TRAFFIC
- TEMPORARY TRAFFIC SIGNAL FOR BRIDGES (INCIDENTAL TO D.A.D. SYSTEM)

NOTE: ALL SIGNS ARE 48" X 48" UNLESS OTHERWISE NOTED

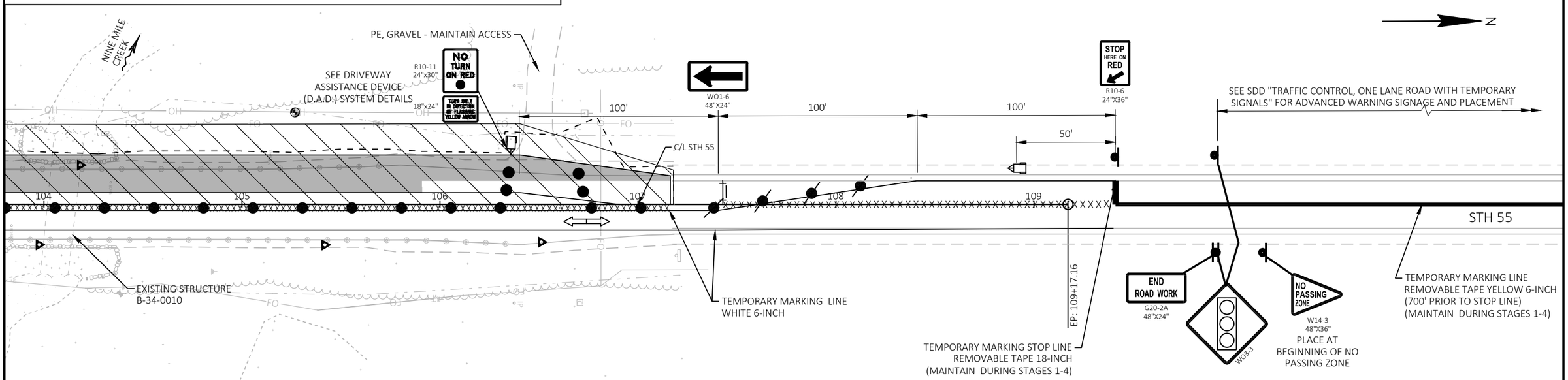

PROJECT NO: 9155-05-71	HWY: STH 55	COUNTY: LANGLADE	TRAFFIC CONTROL: STAGE 1	SHEET 12	E

2

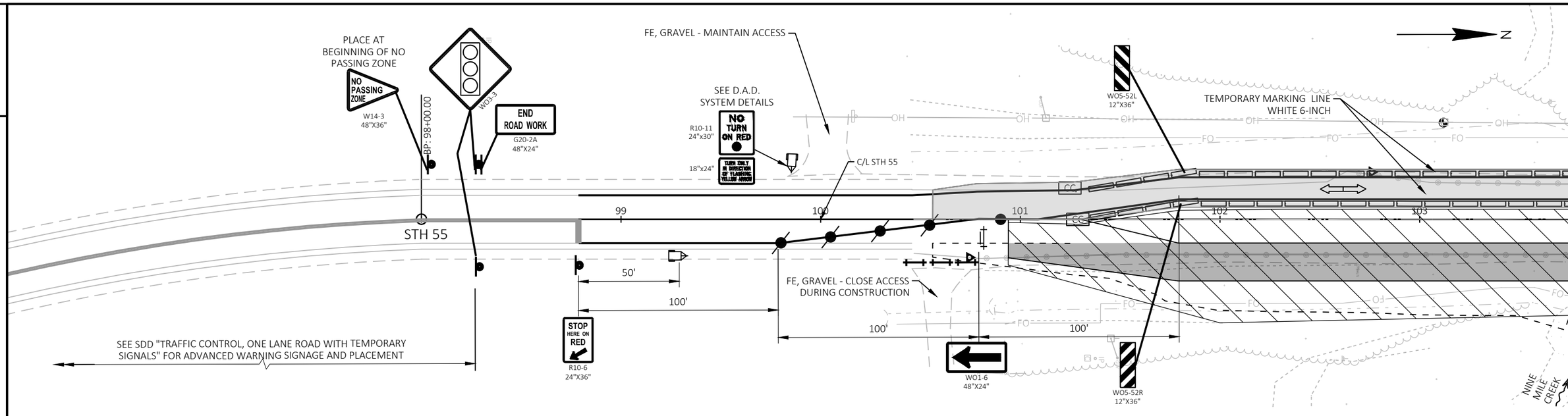

LEGEND

- TYPE III BARRICADE
- TYPE III BARRICADE WTH ATTACHED SIGN
- TRAFFIC CONTROL DRUM
- TRAFFIC CONTROL DRUM WITH TYPE C STEADY BURN LIGHT
- SIGN ON PERMANENT SUPPORT
- SIGN ON TEMPORARY SUPPORT
- CONCRETE BARRIER TEMPORARY PRECAST
- WORK AREA
- DIRECTION OF TRAFFIC
- TEMPORARY TRAFFIC SIGNAL FOR BRIDGES (INCIDENTAL TO D.A.D. SYSTEM)

NOTE: ALL SIGNS ARE 48" X 48" UNLESS OTHERWISE NOTED

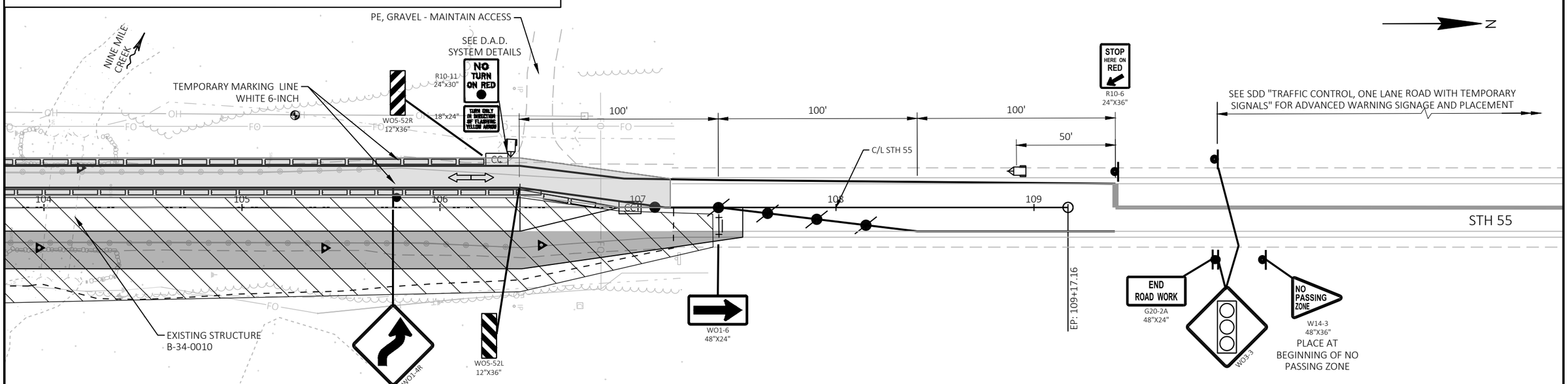

PROJECT NO: 9155-05-71	HWY: STH 55	COUNTY: LANGLADE	TRAFFIC CONTROL: STAGE 2	SHEET 13	E

2

PLACE AT BEGINNING OF NO PASSING ZONE

NO PASSING ZONE
W14-3
48"X36"

BP: 98+00.00

WO3-3

END ROAD WORK
G20-2A
48"X24"

STH 55

FE, GRAVEL - MAINTAIN ACCESS

SEE D.A.D. SYSTEM DETAILS

R10-11
24"x30"
NO TURN ON RED
18"x24"
TURN ONLY IN DIRECTION OF FLASHING YELLOW ARROW

C/L STH 55

WO5-52L
12"X36"

WO1-4R

99 100 101 102 103

CC

50' 100' 100' 50' 100'

STOP HERE ON RED
R10-6
24"X36"

FE, GRAVEL - CLOSE ACCESS DURING CONSTRUCTION

TEMPORARY MARKING LINE WHITE 6-INCH

WO5-52R
12"X36"

SEE SDD "TRAFFIC CONTROL, ONE LANE ROAD WITH TEMPORARY SIGNALS" FOR ADVANCED WARNING SIGNAGE AND PLACEMENT

NINE MILE CREEK

N

2

LEGEND

- TYPE III BARRICADE
- TYPE III BARRICADE WTH ATTACHED SIGN
- TRAFFIC CONTROL DRUM
- TRAFFIC CONTROL DRUM WITH TYPE C STEADY BURN LIGHT
- SIGN ON PERMANENT SUPPORT
- SIGN ON TEMPORARY SUPPORT
- CONCRETE BARRIER TEMPORARY PRECAST
- WORK AREA
- DIRECTION OF TRAFFIC
- TEMPORARY TRAFFIC SIGNAL FOR BRIDGES (INCIDENTAL TO D.A.D. SYSTEM)

NOTE: ALL SIGNS ARE 48" X 48" UNLESS OTHERWISE NOTED

NINE MILE CREEK

WO5-52R
12"X36"

R10-11
24"x30"
NO TURN ON RED
18"x24"
TURN ONLY IN DIRECTION OF FLASHING YELLOW ARROW

SEE D.A.D. SYSTEM DETAILS

PE, GRAVEL - MAINTAIN ACCESS

WO1-6
48"X24"

100' 100' 100' 50'

STOP HERE ON RED
R10-6
24"X36"

SEE SDD "TRAFFIC CONTROL, ONE LANE ROAD WITH TEMPORARY SIGNALS" FOR ADVANCED WARNING SIGNAGE AND PLACEMENT

C/L STH 55

104 105 106 107 108 109

STH 55

PROPOSED STRUCTURE
B-34-0059

EP: 109+17.16

END ROAD WORK
G20-2A
48"X24"

WO3-3

NO PASSING ZONE
W14-3
48"X36"

PLACE AT BEGINNING OF NO PASSING ZONE

WO5-52L
12"X36"

TEMPORARY MARKING LINE WHITE 6-INCH

N

PROJECT NO: 9155-05-71	HWY: STH 55	COUNTY: LANGLADE	TRAFFIC CONTROL: STAGE 3	SHEET 14	E

2

PLACE AT BEGINNING OF NO PASSING ZONE

NO PASSING ZONE
W14-3
48"X36"

BP: 98+00.00

W03-3

END ROAD WORK
G20-2A
48"X24"

STH 55

FE, GRAVEL - MAINTAIN ACCESS

SEE D.A.D. SYSTEM DETAILS

R10-11
24"x30"
NO TURN ON RED

18"x24"
TURN ONLY IN DIRECTION OF FLASHING YELLOW ARROW

C/L STH 55

TEMPORARY MARKING LINE WHITE 6-INCH

99 100 101 102 103

+80.00
0.59%

50'

100'

STOP HERE ON RED
R10-6
24"X36"

FE, GRAVEL - CLOSE ACCESS DURING CONSTRUCTION

100' 100'

WO1-6
48"X24"

SEE SDD "TRAFFIC CONTROL, ONE LANE ROAD WITH TEMPORARY SIGNALS" FOR ADVANCED WARNING SIGNAGE AND PLACEMENT

NINE MILE CREEK

N

2

LEGEND

- TYPE III BARRICADE
- TYPE III BARRICADE WTH ATTACHED SIGN
- TRAFFIC CONTROL DRUM
- TRAFFIC CONTROL DRUM WITH TYPE C STEADY BURN LIGHT
- SIGN ON PERMANENT SUPPORT
- SIGN ON TEMPORARY SUPPORT
- CONCRETE BARRIER TEMPORARY PRECAST
- WORK AREA
- DIRECTION OF TRAFFIC
- TEMPORARY TRAFFIC SIGNAL FOR BRIDGES (INCIDENTAL TO D.A.D. SYSTEM)

NOTE: ALL SIGNS ARE 48" X 48" UNLESS OTHERWISE NOTED

NINE MILE CREEK

SEE D.A.D. SYSTEM DETAILS

R10-11
24"x30"
NO TURN ON RED

18"x24"
TURN ONLY IN DIRECTION OF FLASHING YELLOW ARROW

PE, GRAVEL - MAINTAIN ACCESS

TEMPORARY MARKING LINE WHITE 6-INCH

100' 100' 100'

50'

C/L STH 55

STOP HERE ON RED
R10-6
24"X36"

SEE SDD "TRAFFIC CONTROL, ONE LANE ROAD WITH TEMPORARY SIGNALS" FOR ADVANCED WARNING SIGNAGE AND PLACEMENT

104 105 106 107 108 109

STH 55

EP: 109+17.16

END ROAD WORK
G20-2A
48"X24"

W03-3

NO PASSING ZONE
W14-3
48"X36"

PLACE AT BEGINNING OF NO PASSING ZONE

PROPOSED STRUCTURE B-34-0059

W01-4R

N

PROJECT NO: 9155-05-71	HWY: STH 55	COUNTY: LANGLADE	TRAFFIC CONTROL: STAGE 4	SHEET 15	E

2

Temporary Signal Timing

	Ø1 NB STH 55	Ø2 EB South PE	Ø3 SB STH 55	Ø4 EB North PE
MINIMUM GREEN TIME	9 sec	5 sec	9 sec	5 sec
MAXIMUM PASSAGE TIME DURING GREEN PHASE	5 sec	5 sec	5 sec	5 sec
MINIMUM PASSAGE TIME DURING GREEN PHASE	3 sec	-	3 sec	-
START OF REDUCTION OF PASSAGE FROM MAX. TO MIN. DURING GREEN PHASE	15 sec	-	15 sec	-
TIME TO REDUCE PASSAGE FROM MAX. TO MIN. DURING GREEN PHASE	0 sec	-	0 sec	-
MAXIMUM GREEN TIME	22 sec	7 sec	22 sec	7 sec
YELLOW	5 sec	3 sec	5 sec	3 sec
ALL-RED	6 sec	28 sec	12 sec	25 sec
RECALL MODE	MIN	MIN	MIN	MIN

PHASE 2 SHALL COME AFTER PHASE 1, PHASE 4 SHALL COME AFTER PHASE 3.

CONTRACTOR SHALL REVIEW SIGNALS AFTER PROGRAMMING TO ASSURE THERE ARE NOT CONFLICTING MOVEMENTS.

IF THERE ARE QUESTIONS REGARDING THE TIMINGS PLEASE CONTACT TRAFFIC ENGINEER

Estimate Of Quantities

9155-05-71

Line	Item	Item Description	Unit	Total	Qty
0002	201.0205	Grubbing	STA	12.000	12.000
0004	203.0220	Removing Structure (structure) 01. B-34-0010	EACH	1.000	1.000
0006	204.0165	Removing Guardrail	LF	878.000	878.000
0008	205.0100	Excavation Common	CY	1,797.000	1,797.000
0010	206.1001	Excavation for Structures Bridges (structure) 01. B-34-0059	EACH	1.000	1.000
0012	206.5001	Cofferdams (structure) 01. B-34-0059	EACH	1.000	1.000
0014	208.0100	Borrow	CY	1,385.000	1,385.000
0016	210.1500	Backfill Structure Type A	TON	1,696.000	1,696.000
0018	213.0100	Finishing Roadway (project) 01. 9155-05-71	EACH	1.000	1.000
0020	305.0110	Base Aggregate Dense 3/4-Inch	TON	183.000	183.000
0022	305.0120	Base Aggregate Dense 1 1/4-Inch	TON	2,770.000	2,770.000
0024	305.0500	Shaping Shoulders	STA	1.000	1.000
0026	455.0605	Tack Coat	GAL	176.000	176.000
0028	465.0105	Asphaltic Surface	TON	570.000	570.000
0030	465.0125	Asphaltic Surface Temporary	TON	595.000	595.000
0032	502.0100	Concrete Masonry Bridges	CY	342.000	342.000
0034	505.0400	Bar Steel Reinforcement HS Structures	LB	11,360.000	11,360.000
0036	505.0600	Bar Steel Reinforcement HS Coated Structures	LB	49,250.000	49,250.000
0038	505.0904	Bar Couplers No. 4	EACH	4.000	4.000
0040	505.0905	Bar Couplers No. 5	EACH	18.000	18.000
0042	505.0908	Bar Couplers No. 8	EACH	18.000	18.000
0044	511.1200	Temporary Shoring (structure) 01. B-34-0059	SF	640.000	640.000
0046	516.0500	Rubberized Membrane Waterproofing	SY	34.000	34.000
0048	516.0610.S	Sheet Membrane Waterproofing for Buried Structures 01. B-34-0059	SY	342.000	342.000
0050	550.2104	Piling CIP Concrete 10 3/4 X 0.25-Inch	LF	1,020.000	1,020.000
0052	603.8000	Concrete Barrier Temporary Precast Delivered	LF	2,255.000	2,255.000
0054	603.8125	Concrete Barrier Temporary Precast Installed	LF	2,255.000	2,255.000
0056	606.0300	Riprap Heavy	CY	291.000	291.000
0058	612.0406	Pipe Underdrain Wrapped 6-Inch	LF	260.000	260.000
0060	614.0905	Crash Cushions Temporary	EACH	8.000	8.000
0062	618.0100	Maintenance and Repair of Haul Roads (project) 01. 9155-05-71	EACH	1.000	1.000
0064	619.1000	Mobilization	EACH	1.000	1.000
0066	624.0100	Water	MGAL	30.000	30.000
0068	625.0100	Topsoil	SY	2,980.000	2,980.000
0070	628.1504	Silt Fence	LF	680.000	680.000
0072	628.1520	Silt Fence Maintenance	LF	680.000	680.000
0074	628.1905	Mobilizations Erosion Control	EACH	8.000	8.000
0076	628.1910	Mobilizations Emergency Erosion Control	EACH	4.000	4.000
0078	628.2006	Erosion Mat Urban Class I Type A	SY	3,800.000	3,800.000
0080	628.6005	Turbidity Barriers	SY	45.000	45.000
0082	628.7504	Temporary Ditch Checks	LF	90.000	90.000
0084	628.7570	Rock Bags	EACH	20.000	20.000
0086	629.0210	Fertilizer Type B	CWT	1.900	1.900
0088	630.0120	Seeding Mixture No. 20	LB	81.000	81.000
0090	630.0200	Seeding Temporary	LB	22.300	22.300
0092	630.0500	Seed Water	MGAL	103.000	103.000
0094	634.0614	Posts Wood 4x6-Inch X 14-FT	EACH	5.000	5.000
0096	638.2102	Moving Signs Type II	EACH	3.000	3.000
0098	642.5001	Field Office Type B	EACH	1.000	1.000
0100	643.0300	Traffic Control Drums	DAY	1,466.000	1,466.000

Estimate Of Quantities

9155-05-71

Line	Item	Item Description	Unit	Total	Qty
0102	643.0420	Traffic Control Barricades Type III	DAY	351.000	351.000
0104	643.0705	Traffic Control Warning Lights Type A	DAY	702.000	702.000
0106	643.0715	Traffic Control Warning Lights Type C	DAY	626.000	626.000
0108	643.0900	Traffic Control Signs	DAY	1,921.000	1,921.000
0110	643.3165	Temporary Marking Line Paint 6-Inch	LF	2,340.000	2,340.000
0112	643.3180	Temporary Marking Line Removable Tape 6-Inch	LF	8,980.000	8,980.000
0114	643.3850	Temporary Marking Stop Line Removable Tape 18-Inch	LF	24.000	24.000
0116	643.5000	Traffic Control	EACH	1.000	1.000
0118	645.0111	Geotextile Type DF Schedule A	SY	204.000	204.000
0120	645.0120	Geotextile Type HR	SY	490.000	490.000
0122	646.2020	Marking Line Epoxy 6-Inch	LF	2,530.000	2,530.000
0124	646.9000	Marking Removal Line 4-Inch	LF	400.000	400.000
0126	650.5000	Construction Staking Base	LF	2,665.000	2,665.000
0128	650.6501	Construction Staking Structure Layout (structure) 01. B-34-0059	EACH	1.000	1.000
0130	650.9911	Construction Staking Supplemental Control (project) 01. 9155-05-71	EACH	1.000	1.000
0132	650.9920	Construction Staking Slope Stakes	LF	2,665.000	2,665.000
0134	690.0150	Sawing Asphalt	LF	811.000	811.000
0136	715.0502	Incentive Strength Concrete Structures	DOL	2,050.000	2,050.000
0138	SPV.0045	Special 01. Temporary Traffic Signals with DAD System	DAY	80.000	80.000
0140	SPV.0060	Special 01. Temporary Vehicle Detection B-34-59	EACH	1.000	1.000

3

GRUBBING

STATION	-	STATION	SIDE	201.0205 GRUBBING STA
101+80		106+40	LT	5
100+45		107+18	RT	7
PROJECT 9155-05-71 TOTAL				**12**

REMOVALS

STAGE	STA	STA	SIDE	204.0165 REMOVING GUARDRAIL LF
1	102+63	105+80	LT	317
2	100+80	106+41	RT	561
4	101+30.00	101+80.00	-	-
4	106+40.00	106+90.00	-	-
PROJECT 9155-05-71 TOTAL				878

3

SHAPING SHOULDERS

LOCATION	305.0500 SHAPING SHOULDERS STA
107+18 - 107+53	1
PROJECT 9155-05-71 TOTAL	1

BASE AGGREGATE DENSE

STATION	-	STATION		LOCATION	305.0110 3/4-INCH TON	305.0120 1 1/4-INCH TON	624.0100 WATER MGAL
100+46		101+25	LT	SHOULDER PAVT	---	20	0.2
101+25		104+00	LT	SHOULDER PAVT	---	70	0.7
100+46		101+25	RT	SHOULDER PAVT	---	20	0.2
101+25		104+00	RT	SHOULDER PAVT	---	70	0.7
101+25		104+00	LT/RT	STH 55 MAINLINE	---	490	4.9
104+00		107+18	LT/RT	STH 55 MAINLINE	---	570	5.7
104+00		107+18	LT	SHOULDER PAVT	---	80	0.8
104+00		107+18	RT	SHOULDER PAVT	---	80	0.8
100+46		101+25	LT	SHOULDER AGG	10	30	0.4
101+25		104+00	LT	SHOULDER AGG	30	110	1.4
100+46		104+00	RT	SHOULDER AGG	37	140	1.8
104+00		107+18	RT	SHOULDER AGG	33	120	1.6
104+00		107+18	LT	SHOULDER AGG	33	120	1.6
				DRIVEWAYS	40	---	0.4
				STAGE 1 TEMP PAVEMENT	---	420	4.2
				STAGE 2 TEMP PAVEMENT	---	430	4.3
PROJECT 9155-05-71 TOTAL					**183**	**2,770**	**30.0**

ALL ITEMS ARE CATEGORY **0010** UNLESS OTHERWISE SPECIFIED.

3

EARTHWORK

DIVISION	FROM/TO STATION	COMMON EXCAVATION (1) CUT (2)	AVAILABLE MATERIAL (5)	UNEXPANDED FILL	EXPANDED FILL (13) FACTOR 1.25	MASS ORDINATE +/- (14)	WASTE	208.0100 BORROW (CY)	COMMENT
DIVISION 1									
STAGE 1	100+50.00/107+17.00	878	878	26	33	846	846	0	
STAGE 2	100+50.00/107+17.00	392	392	803	1,004	-612	0	0	
STAGE 3	100+50.00/107+17.00	145	145	1,411	1,764	-1,619	0	1,385	
STAGE 4	100+50.00/107+17.00	382	382	110	138	275	275	0	
SUBTOTAL		1,797	1,797	2,350	2,938	-1,111	1,120	1,385	
GRAND TOTAL		1,797	1,797	2,350	2,938	-1,111	1,120	1,385	
	TOTAL COMMON EXC	1,797							

NOTES:

(1) COMMON EXCAVATION IS THE SUM OF THE CUT AND EBS EXCAVATION COLUMNS. ITEM NUMBER 205.0100

(2) SALVAGED/UNUSABLE PAVEMENT MATERIAL IS INCLUDED IN CUT.

(5) AVAILABLE MATERIAL = CUT - SALVAGED/UNUSUABLE PAVEMENT MATERIAL

(13) EXPANDED FILL FACTOR = 1.25

(14) THE MASS ORDINATE + OR - QTY CALCULATED FOR THE DIVISION. PLUS QUANTITY INDICATES AN EXCESS OF MATERIAL WITHIN THE DIVISION. MINUS INDICATES A SHORTAGE OF MATERIAL WITHIN THE DIVISION.

ALL ITEMS ARE CATEGORY **0010** UNLESS OTHERWISE SPECIFIED.

3

ASPHALTIC ITEMS

STATION	-	STATION	LOCATION		455.0605 TACK COAT GAL	465.0105 ASPHALTIC SURFACE TON	465.0125 ASPHALTIC SURFACE TEMPORARY TON
100+46		101+25	LT	SHLDR	10	10	---
101+25		104+00	LT	SHLDR	10	30	---
100+46		101+25	RT	SHLDR	10	10	---
101+25		104+00	RT	SHLDR	10	30	---
101+25		104+00	LT/RT	MAINLINE	60	200	---
104+00		107+18	LT/RT	MAINLINE	60	230	---
104+00		107+18	LT	SHLDR	8	30	---
104+00		107+18	RT	SHLDR	8	30	---
			STAGE 1		--	--	295
			STAGE 2		---	---	300
PROJECT 9155-05-71 TOTAL					**176**	**570**	**595**

EROSION CONTROL MOBILIZATION

STAGE	628.1905 MOBILIZATIONS EROSION CONTROL EACH	628.1910 MOBILIZATIONS EMERGENCY EROSION CONTROL EACH
1	2	1
2	2	1
3	2	1
4	2	1
PROJECT 9155-05-71 TOTAL	**8**	**4**

3

CONCRETE BARRIER

STAGE	STA	603.8000 CONCRETE BARRIER TEMPORARY PRECAST DELIVERED LF	603.8125 CONCRETE BARRIER TEMPORARY PRECAST INSTALLED LF	614.0905 CRASH CUSHION TEMPORARY EACH	BACK WIDTH	OBJECT MARKING PATTERN	CRASH TEST LEVEL	TRAFFIC DIRECTION	TRAFFIC LOCATION	CRASH CUSHION SHIELDS	NOTES
1		-	-	-	-	-	-	-	-	-	-
2		1,070	1,070	-	-	-	-	-	-	-	-
	101+25	-	-	1	2	OM-3R (WO5-58R)	TL-3	UNIDIRECTIONAL	LT	TEMP BARRIER	PINNED
	101+25	-	-	1	2	OM-3L (WO5-58L)	TL-3	UNIDIRECTIONAL	RT	TEMP BARRIER	PINNED
	107+00	-	-	1	2	OM-3L (WO5-58L)	TL-3	UNIDIRECTIONAL	RT	TEMP BARRIER	PINNED
	106+25	-	-	1	2	OM-3R (WO5-58R)	TL-3	UNIDIRECTIONAL	LT	TEMP BARRIER	PINNED
3		1,185	1,185	-	-	-	-	-	-	-	-
	100+75	-	-	1	2	OM-3L (WO5-58L)	TL-3	UNIDIRECTIONAL	RT	TEMP BARRIER	PINNED
	101+00	-	-	1	2	OM-3R (WO5-58R)	TL-3	UNIDIRECTIONAL	LT	TEMP BARRIER	PINNED
	106+25	-	-	1	2	OM-3R (WO5-58R)	TL-3	UNIDIRECTIONAL	LT	TEMP BARRIER	PINNED
	107+50	-	-	1	2	OM-3L (WO5-58L)	TL-3	UNIDIRECTIONAL	RT	TEMP BARRIER	PINNED
4		-	-	-	-	-	-	-	-	-	-
PROJECT 9155-05-71 TOTAL		**2,255**	**2,255**	**8**							

ALL ITEMS ARE CATEGORY **0010** UNLESS OTHERWISE SPECIFIED.

3

LANDSCAPING

QUADRANT	625.0100 TOPSOIL SY	628.2006* EROSION MAT URBAN CLASS I TYPE A SY	629.0210 FERTILIZER TYPE B CWT	630.0120 SEEDING MIXTURE NO. 20 LB	630.0500 SEED WATER MGAL
SW	643	643	0.41	17.36	22
SE	800	800	0.50	21.59	27
NW	575	575	0.36	15.52	20
NE	686	686	0.43	18.50	24
UNDISTRIBUTED	271	271	0.18	8	10
PROJECT 9155-05-71 TOTAL	**2,980**	**2,980**	**1.9**	**81.0**	**103**

*DENOTES QUANTITIES FOUND ELSEWHERE

EROSION CONTROL

STAGE	QUADRANT	628.1504 SILT FENCE LF	628.1520 SILT FENCE MAINTENANCE LF	628.7504 TEMPORARY DITCH CHECKS LF	630.0200 SEEDING TEMPORARY LB	628.2006* EROSION MAT URBAN CLASS I TYPE A SY	628.6005 TURBIDITY BARRIERS SY	628.7570 ROCK BAGS EACH
1	SW	85	85	15	2.4	88	-	-
	NW	185	185	15	1.3	47	45	4
2	SE	150	150	30	10.8	397	-	-
	NE	260	260	30	7.8	286	-	-
	UNDISTRIBUTED	-	-	-	-	-	-	16
	PROJECT 9155-05-71	**680**	**680**	**90**	**22.3**	**820**	**45**	**20**

*DENOTES QUANTITIES FOUND ELSEWHERE

3

PERMANENT SIGNING

STATION	OFFSET	SIGN CODE	SIGN MESSAGE	SIZE IN	X	IN	634.0614 POSTS WOOD 4X6-INCH 14-FT EACH	638.2102 MOVING SIGNS TYPE II EACH
102+69	26' RT	I3-1	NINE MILE CREEK	VARIES	X	15	2	1
105+14	24' LT	I3-1	NINE MILE CREEK	VARIES	X	15	2	1
107+19	26' RT	W14-3	NO PASSING ZONE	48	X	36	1	1
PROJECT TOTAL							**5**	**3**

ALL ITEMS ARE CATEGORY **0010** UNLESS OTHERWISE SPECIFIED.

3

TRAFFIC CONTROL

STAGE	DAYS IN SERVICE	643.0300 TRAFFIC CONTROL DRUMS NO.	DAY	643.0420 TRAFFIC CONTROL BARRICADES TYPE III NO.	DAY	643.0705 TRAFFIC CONTROL WARNING LIGHTS TYPE A NO.	DAY	643.0715 TRAFFIC CONTROL WARNING LIGHTS TYPE C NO.	DAY	643.0900 TRAFFIC CONTROL SIGNS NO.	DAY
1	7	32	224	4	28	8	56	6	42	20	140
2	31	10	310	5	155	10	310	8	248	26	806
3	31	18	558	4	124	8	248	8	248	24	744
4	11	34	374	4	44	8	88	8	88	21	231
PROJECT 9155-05-71 TOTAL			**1,466**		**351**		**702**		**626**		**1,921**

3

PAVEMENT MARKING ITEMS

STATION	- STATION	TYPE	646.2020 MARKING LINE EPOXY 6-INCH YELLOW LF	WHITE LF
100+46	101+25	PERMANENT	---	158
101+25	107+18	PERMANENT	1,186	1,186
PROJECT 9155-05-71 TOTAL			**1,186**	**1,344**
			2,530	

TEMPORARY PAVEMENT MARKING ITEMS

STAGE	643.3165 TEMPORARY MARKING LINE PAINT 6-INCH YELLOW LF	WHITE LF	643.3180 TEMPORARY MARKING LINE REMOVABLE TAPE 6-INCH YELLOW LF	WHITE LF	643.3850 TEMPORARY MARKING STOP LINE REMOVABLE TAPE 18-INCH WHITE LF	646.9000 MARKING REMOVAL LINE 4-INCH LF
1	---	1,120	2,800	1,010	24	400
2	---	1,220	---	910	---	---
3	---	---	---	2,130	---	---
4	---	---	---	2,130	---	---
PROJECT 9155-05-71 TOTAL	**0**	**2,340**	**2,800**	**6,180**	**24**	**400**
	2,340		**8,980**			

NOTE: UTILIZE TEMPORARY PAINT ON ANY NON-FINAL SURFACES, REMOVABLE TAPE ON FINAL SURFACES OR EXISTING SURFACES TO REMAIN.

ALL ITEMS ARE CATEGORY **0010** UNLESS OTHERWISE SPECIFIED.

3

CONSTRUCTION STAKING

STAGE	STATION	- STATION	650.5000 CONSTRUCTION STAKING BASE LF	650.9911 CONSTRUCTION STAKING SUPPLEMENTAL CONTROL 9155-05-71 EACH	650.6501 CONSTRUCTION STAKING STRUCTURE LAYOUT B-34-0059 EACH	650.9920 CONSTRUCTION STAKING SLOPE STAKES LF
	PROJECT		-	1	1	-
1	100+56	107+18	662	-	-	662
2	100+94	107+53	659	-	-	659
3	100+46	107+18	672	-	-	672
4	100+46	107+18	672	-	-	672
	PROJECT 9155-05-71 TOTAL		**2,665**	**1**	**1**	**2,665**

CATEGORY 0020

SAWING

STA	STA	LOCATION	690.0150 SAWING ASPHALT LF
100+46	101+25	LT SHLDR	79
100+46	101+25	RT SHLDR	79
101+25	--	SOUTH LIMIT	30
101+25	107+18	CENTERLINE	593
107+18	--	NORTH LIMIT	30
PROJECT 9155-05-71 TOTAL			**811**

3

DRIVEWAY ASSISTANCE DEVICE SYSTEM

LOCATION	SPV.0045.01 DRIVEWAY ASSISTANCE DEVICE SYSTEM 9155-05-71 DAY
PROJECT	80
PROJECT 9155-05-71	**80**

TEMPORARY TRAFFIC SIGNALS

LOCATION	SPV.0045.01 TEMPORARY TRAFFIC SIGNALS WITH DAD SYSTEM DAY
PROJECT	80
PROJECT 9155-05-71	**80**

ALL ITEMS ARE CATEGORY **0010** UNLESS OTHERWISE SPECIFIED.

TRANSPORTATION PROJECT PLAT NO: 9155-05-21 - 4.01

THAT PART OF LOT 1 OF CSM, VOLUME 9, PAGE 118, AS DOCUMENT 345911, LOCATED IN THE NORTHWEST 1/4 OF THE NORTHEAST 1/4 OF SECTION 19, T 32 N, R 14 E, TOWN OF WOLF RIVER, LANGLADE COUNTY, WISCONSIN.

RELOCATION ORDER STH 55 LANGLADE - PICKEREL NINE MILE CREEK B-34-0010 LANGLADE COUNTY

TO PROPERLY ESTABLISH, LAY OUT, WIDEN, ENLARGE, EXTEND, CONSTRUCT, RECONSTRUCT, IMPROVE, OR MAINTAIN A PORTION OF THE HIGHWAY DESIGNATED ABOVE, THE STATE OF WISCONSIN DEPARTMENT OF TRANSPORTATION DEEMS IT NECESSARY TO RELOCATE OR CHANGE SAID HIGHWAY AND ACQUIRE CERTAIN LANDS AND INTERESTS OR RIGHTS IN LANDS FOR THE ABOVE PROJECT.

TO EFFECT THIS CHANGE, PURSUANT TO AUTHORITY GRANTED UNDER SECTION 84.02 (3), 84.09, AND 84.30, WISCONSIN STATUTES, THE DEPARTMENT OF TRANSPORTATION HEREBY ORDERS THAT:
1. THAT PORTION OF SAID HIGHWAY AS SHOWN ON THIS PLAT IS LAID OUT AND ESTABLISHED TO THE LINES AND WIDTHS AS SO SHOWN FOR THE ABOVE PROJECT.
2. THE LANDS OR INTERESTS OR RIGHTS IN LANDS AS SHOWN ON THIS PLAT ARE REQUIRED BY THE DEPARTMENT FOR THE ABOVE PROJECT AND SHALL BE ACQUIRED IN THE NAME OF THE STATE OF WISCONSIN, PURSUANT TO THE PROVISIONS OF SECTION 84.09 (1) OR (2), WISCONSIN STATUTES.

DOCUMENT: **465224**
LANGLADE COUNTY, WI
Recorded 08-17-2022 at 9:56 AM
Chet J. Haatvedt, Register of Deeds
Pages: 1 Fee Amount: $25.00

This document has been electronically recorded and returned to submitter

RESERVED FOR REGISTER OF DEEDS
PROJECT NUMBER: 9155-05-21-4.01
AMENDMENT NO:___

4

SCHEDULE OF LANDS & INTERESTS REQUIRED

OWNER'S NAMES ARE SHOWN FOR REFERENCE PURPOSES ONLY AND ARE SUBJECT TO CHANGE PRIOR TO THE TRANSFER OF LAND INTERESTS TO THE DEPARTMENT.

PARCEL NUMBER	OWNER(S)	INTEREST(S) REQUIRED	R/W SQ. FT. REQUIRED NEW	EXISTING	TOTAL	TLE SQ. FT.
1	BRIAN S. INGRAM AND GARRETT T. INGRAM	FEE	1187	-----	1187	-----

CONVENTIONAL SYMBOLS

SECTION LINE
QUARTER LINE
SIXTEENTH LINE
NEW REFERENCE LINE
NEW R/W LINE
EXISTING R/W OR HE LINE
PROPERTY LINE
LOT, TIE & OTHER MINOR LINES
SLOPE INTERCEPT
CORPORATE LIMITS
UNDERGROUND FACILITY (COMMUNICATIONS, ELECTRIC, ETC)
NEW R/W (FEE OR HE) (HATCHING VARIES BY OWNER)
TEMPORARY LIMITED EASEMENT AREA
EASEMENT AREA (PERMANENT LIMITED OR RESTRICTED DEVELOPMENT)
TRANSMISSION STRUCTURES
BUILDING
TO BE REMOVED
BRIDGE
PARALLEL OFFSETS

SECTION CORNER SYMBOL
SECTION CORNER MONUMENT
GEODETIC SURVEY MONUMENT
SIXTEENTH CORNER MONUMENT
SIGN
OFF-PREMISE SIGN
R/W MONUMENT (TO BE SET)
NON-MONUMENTED R/W POINT
FOUND IRON PIN (1-INCH UNLESS NOTED)

	COMPENSABLE	NON-COMPENSABLE
ELECTRIC POLE		
TELEPHONE POLE		
PEDESTAL (LABEL TYPE) (TV, TEL, ELEC, ETC.)		

ACCESS RESTRICTED BY ACQUISITION
NO ACCESS (BY STATUTORY AUTHORITY)
ACCESS RESTRICTED (BY PREVIOUS PROJECT OR CONTROL)
NO ACCESS (NEW HIGHWAY)
PARCEL NUMBER 25
UTILITY NUMBER 40
R/W BOUNDARY POINT 200
TLE BOUNDARY POINT 300

CONVENTIONAL ABBREVIATIONS

ACCESS RIGHTS	AR	POINT OF INTERSECTION	PI
ACRES	AC	PROPERTY LINE	PL
AHEAD	AH	RECORDED AS	(100')
ALUMINUM	ALUM	REEL / IMAGE	R/I
AND OTHERS	ET AL	REFERENCE LINE	R/L
BACK	BK	REMAINING	REM
BLOCK	BLK	RESTRICTIVE DEVELOPMENT EASEMENT	RDE
CENTERLINE	C/L	RIGHT	RT
CERTIFIED SURVEY MAP	CSM	RIGHT OF WAY	R/W
CONCRETE	CONC	SECTION	SEC
COUNTY	CO	SEPTIC VENT	SEPV
COUNTY TRUNK HIGHWAY	CTH	SQUARE FEET	SF
DISTANCE	DIST	STATE TRUNK HIGHWAY	STH
CORNER	COR	STATION	STA
DOCUMENT NUMBER	DOC	TELEPHONE PEDESTAL	TP
EASEMENT	EASE	TEMPORARY LIMITED EASEMENT	TLE
EXISTING	EX	TRANSPORTATION PROJECT PLAT	TPP
GAS VALVE	GV	UNITED STATES HIGHWAY	USH
GRID NORTH	GN	VOLUME	V
HIGHWAY EASEMENT	HE		
IDENTIFICATION	ID		
LAND CONTRACT	LC		
LEFT	LT		
MONUMENT	MON		
NATIONAL GEODETIC SURVEY	NGS		
NUMBER	NO		
OUTLOT	OL		
PAGE	P		
POINT OF TANGENCY	PT		
PERMANENT LIMITED EASEMENT	PLE		
POINT OF BEGINNING	POB		
POINT OF CURVATURE	PC		
POINT OF COMPOUND CURVE	PCC		

CURVE DATA

LONG CHORD	LCH
LONG CHORD BEARING	LCB
RADIUS	R
DEGREE OF CURVE	D
CENTRAL ANGLE	Δ/DELTA
LENGTH OF CURVE	L
TANGENT	T
DIRECTION AHEAD	DA
DIRECTION BACK	DB

CONVENTIONAL UTILITY SYMBOLS

W — WATER
G — GAS
T — TELEPHONE
OH — OVERHEAD TRANSMISSION LINES
E — ELECTRIC
TV — CABLE TELEVISION
FO — FIBER OPTIC
SAN — SANITARY SEWER
SS — STORM SEWER

RW COORDINATE TABLE

POINT	Y	X
200	378547.685	713044.142
201	378547.676	713047.710
202	378547.540	713105.452
203	378527.507	713119.662
204	378447.507	713119.474
205	378427.529	713109.936
206	378427.677	713047.427
207	378427.686	713043.578

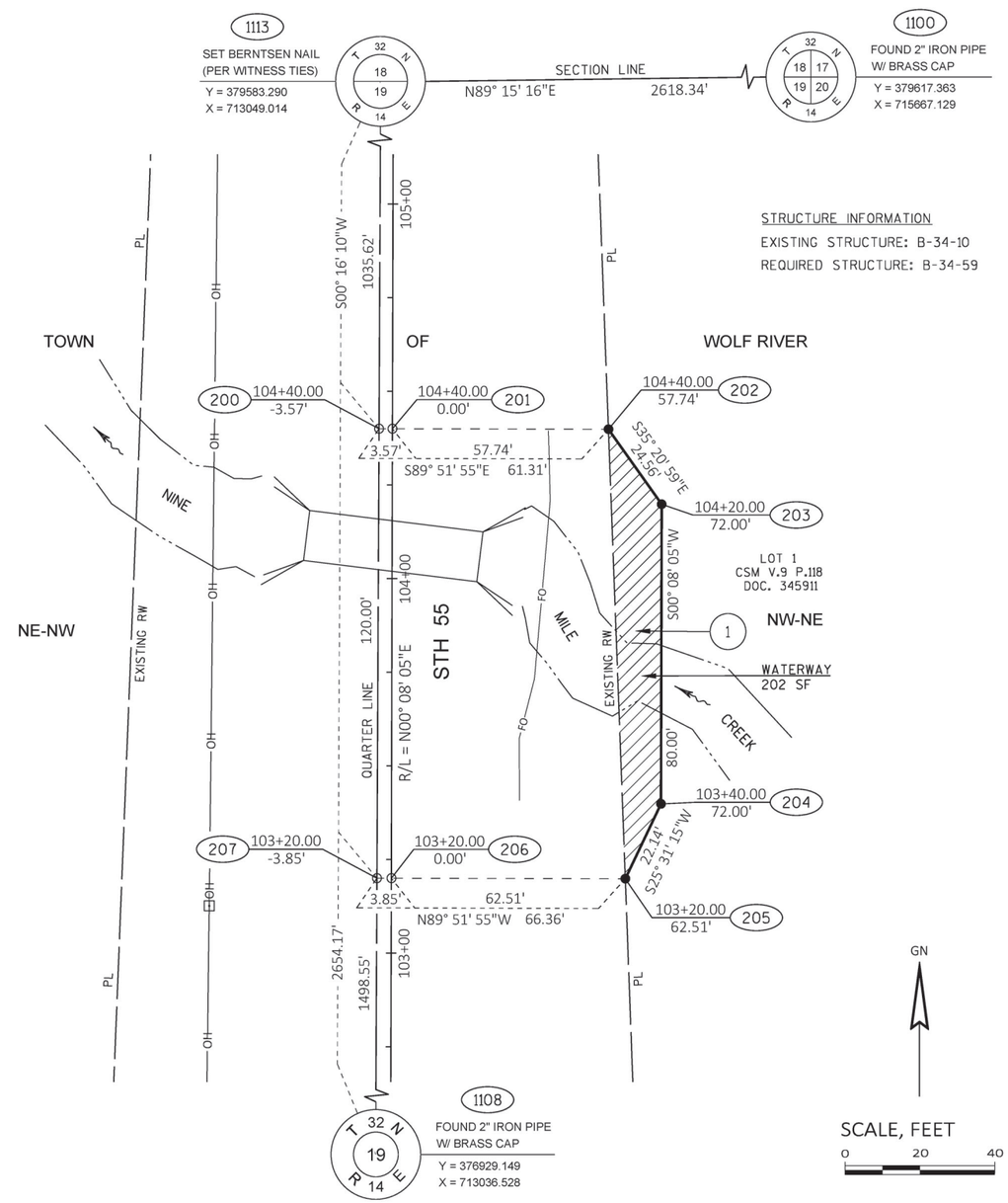

STRUCTURE INFORMATION
EXISTING STRUCTURE: B-34-10
REQUIRED STRUCTURE: B-34-59

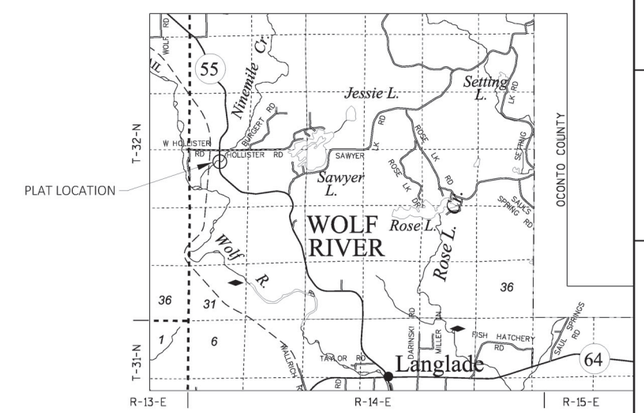

LOCATION MAP
NOT TO SCALE

NOTES:

POSITIONS SHOWN ON THIS PLAT ARE WISCONSIN COORDINATE REFERENCE SYSTEM COORDINATES (WISCRS, LANGLADE COUNTY, NAD83(2011), IN U.S. SURVEY FEET. VALUES ARE GRID COORDINATES, GRID BEARINGS, AND GRID DISTANCES. GRID DISTANCES MAY BE USED AS GROUND DISTANCES.

ALL NEW RIGHT-OF-WAY MONUMENTS WILL BE TYPE 2 (TYPICALLY ¾" X 24" IRON REBARS), UNLESS OTHERWISE NOTED, AND WILL BE PLACED PRIOR TO THE COMPLETION OF THE PROJECT.

ALL RIGHT-OF-WAY LINES DEPICTED IN THE NON-ACQUISITION AREAS ARE INTENDED TO RE-ESTABLISH EXISTING RIGHT-OF-WAY LINES AS DETERMINED FROM PREVIOUS PROJECTS, OTHER RECORDED DOCUMENTS, OR FROM CENTERLINE OF EXISTING PAVEMENTS.

RIGHT-OF-WAY BOUNDARIES ARE DEFINED WITH COURSES OF THE PERIMETER OF THE HIGHWAY LANDS REFERENCED TO THE U.S. PUBLIC LAND SURVEY SYSTEM OR OTHER "SURVEYS" OF PUBLIC RECORD.

DIMENSIONING FOR THE NEW RIGHT-OF-WAY IS MEASURED ALONG AND PERPENDICULAR TO THE NEW REFERENCE LINES.

PROPERTY LINES SHOWN ON THIS PLAT ARE DRAWN FROM DATA DERIVED FROM MAPS AND DOCUMENTS OF PUBLIC RECORD AND/OR EXISTING OCCUPATIONAL LINES. THIS PLAT MAY NOT BE A TRUE REPRESENTATION OF EXISTING PROPERTY LINES, EXCLUDING RIGHT-OF-WAY, AND SHOULD NOT BE USED AS A SUBSTITUTE FOR AN ACCURATE FIELD SURVEY.

FOR THE LATEST ACCESS/DRIVEWAY INFORMATION, CONTACT THE PLANNING UNIT OF THE WISCONSIN DEPARTMENT OF TRANSPORTATION OFFICE IN RHINELANDER, WI.

PARCEL IDENTIFICATION NUMBERS MAY NOT POINT TO ALL AREAS OF ACQUISITION, AS NOTED ON THE SCHEDULE OF LANDS & INTERESTS REQUIRED.

EXISTING HIGHWAY RIGHT-OF-WAY SHOWN HEREIN IS BASED ON THE FOLLOWING POINTS OF REFERENCE:
STATE RIGHT-OF-WAY PROJECT NUMBER 9155-10-22.

AECOM

I, DONALD J. BUZA, PROFESSIONAL LAND SURVEYOR, HEREBY CERTIFY THAT IN FULL COMPLIANCE WITH THE PROVISIONS OF SECTION 84.095 OF THE WISCONSIN STATUTES AND UNDER THE DIRECTION OF THE DEPARTMENT OF TRANSPORTATION, I HAVE SURVEYED AND MAPPED THIS TRANSPORTATION PROJECT PLAT AND SUCH PLAT CORRECTLY REPRESENTS ALL EXTERIOR BOUNDARIES OF THE SURVEYED LAND.

WISCONSIN DONALD J. BUZA S-2338 CUSTER, WI LAND SURVEYOR

SIGNATURE: Donald J. Buza DATE: 5/18/2022
PRINT NAME: DONALD J. BUZA
REGISTRATION NUMBER: S-2338

THIS PLAT AND RELOCATION ORDER ARE APPROVED FOR THE WISCONSIN DEPARTMENT OF TRANSPORTATION, NORTH CENTRAL REGION OFFICE.

SIGNATURE: Brent L. Stella DATE: 8/16/22
PRINT NAME: BRENT L. STELLA

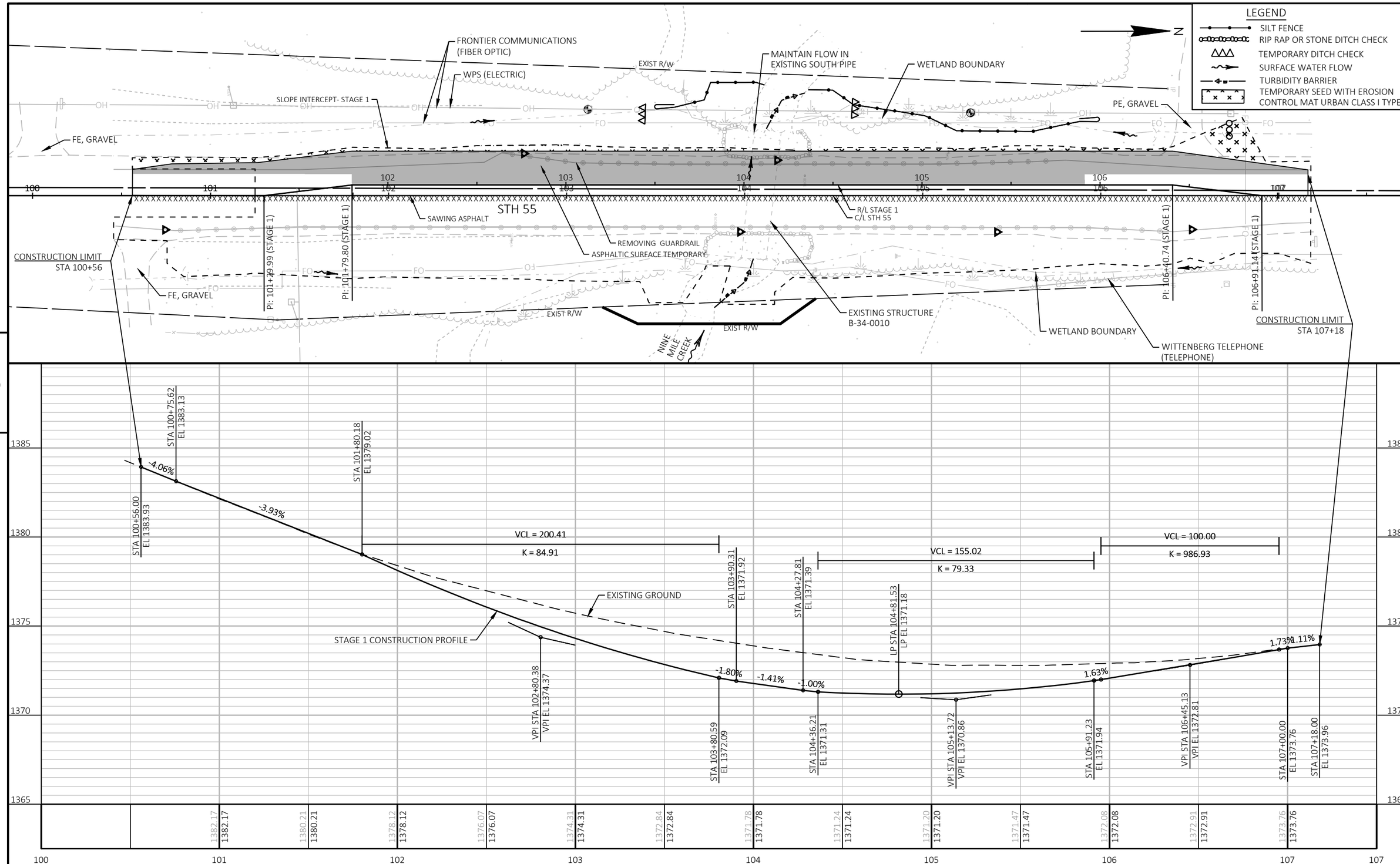

PROJECT NO: 9155-05-71	HWY: STH 55	COUNTY: LANGLADE	PLAN AND PROFILE: STH 55 - STAGE 1	SHEET 26	E

FILE NAME : C:\ONEDRIVE\AECOM DIRECTORY\9155-05-01, STH 55 OVER NINE MILE CREEK, LANGLADE CO - PROJECT FILES\900_CAD_GIS\910_CAD\91550501\SHEETSPLAN\050101-PP_S1.DWG PLOT DATE : 8/21/2023 9:43 AM PLOT BY : LANCELLE, JESSICA PLOT NAME : PLOT SCALE : 1 IN:50 FT
LAYOUT NAME - 01

WISDOT/CADDS SHEET 44

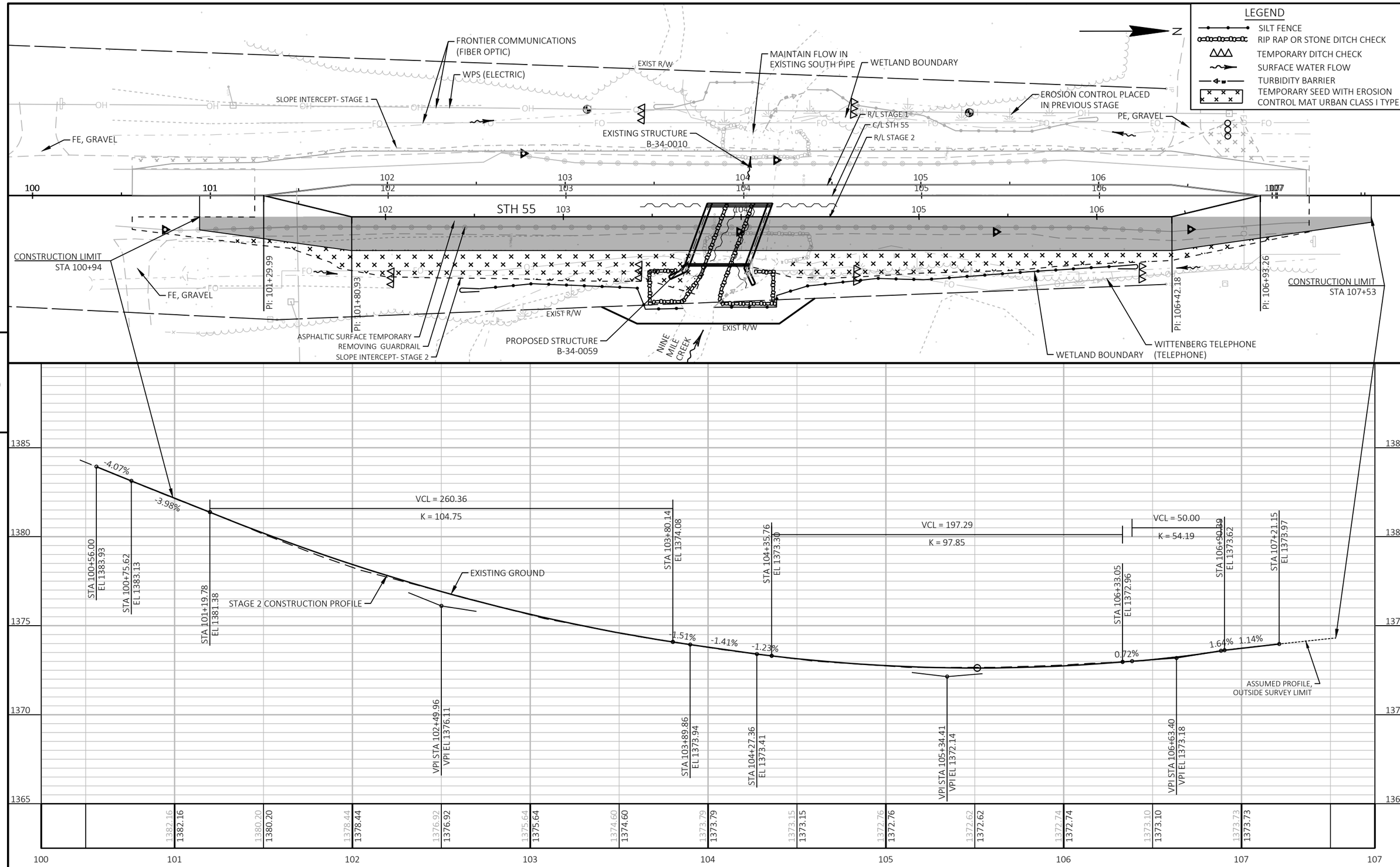

PROJECT NO: 9155-05-71	HWY: STH 55	COUNTY: LANGLADE	PLAN AND PROFILE: STH 55 - STAGE 2	SHEET 27	E

FILE NAME : C:\ONEDRIVE\AECOM DIRECTORY\9155-05-01, STH 55 OVER NINE MILE CREEK, LANGLADE CO - PROJECT FILES\900_CAD_GIS\910_CAD\91550501\SHEETSPLAN\050101-PP_S2.DWG PLOT DATE : 8/21/2023 9:42 AM PLOT BY : LANCELLE, JESSICA PLOT NAME : PLOT SCALE : 1 IN:50 FT
LAYOUT NAME - 01

WISDOT/CADDS SHEET 44

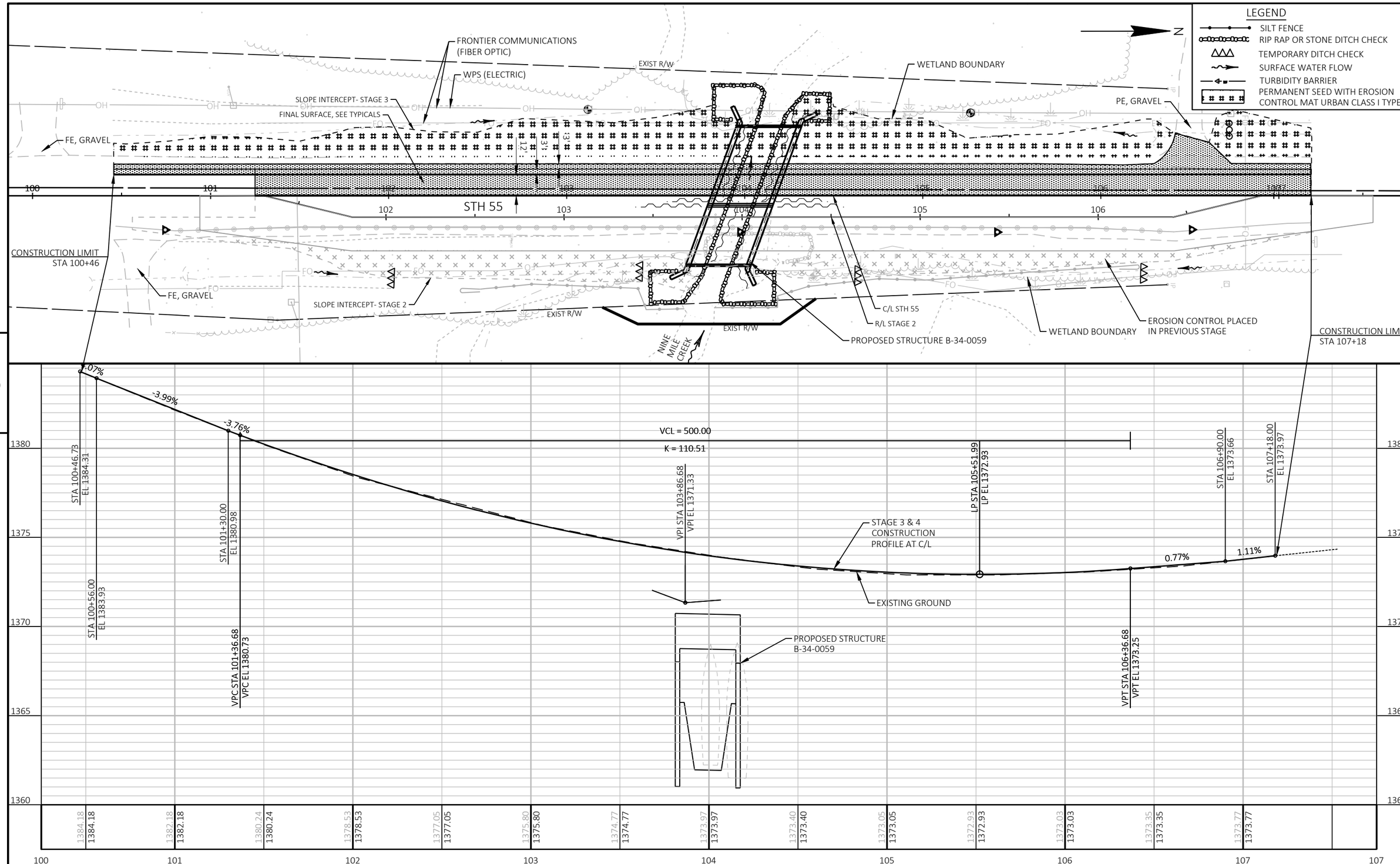

PROJECT NO: 9155-05-71	HWY: STH 55	COUNTY: LANGLADE	PLAN AND PROFILE: STH 55 - STAGE 3	SHEET 28	E

FILE NAME : C:\ONEDRIVE\AECOM DIRECTORY\9155-05-01, STH 55 OVER NINE MILE CREEK, LANGLADE CO - PROJECT FILES\900_CAD_GIS\910_CAD\91550501\SHEETSPLAN\050101-PP_S3.DWG PLOT DATE : 8/21/2023 9:41 AM PLOT BY : LANCELLE, JESSICA PLOT NAME : PLOT SCALE : 1 IN:50 FT
LAYOUT NAME - 01

WISDOT/CADDS SHEET 44

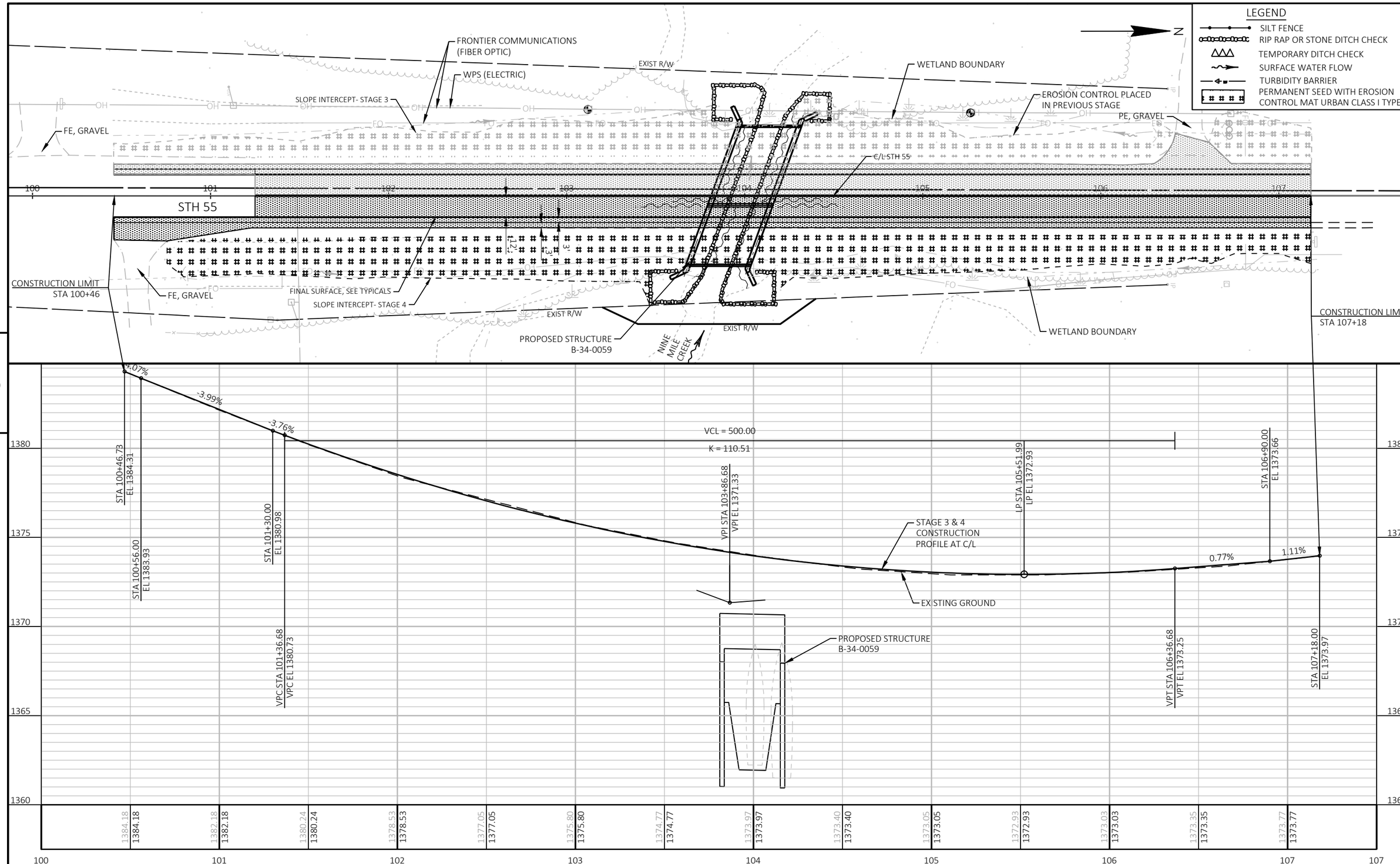

PROJECT NO: 9155-05-71	HWY: STH 55	COUNTY: LANGLADE	PLAN AND PROFILE: STH 55 - STAGE 4	SHEET 29	E

FILE NAME : C:\ONEDRIVE\AECOM DIRECTORY\9155-05-01, STH 55 OVER NINE MILE CREEK, LANGLADE CO - PROJECT FILES\900_CAD_GIS\910_CAD\91550501\SHEETSPLAN\050101-PP_S4.DWG PLOT DATE : 8/21/2023 9:39 AM PLOT BY : LANCELLE, JESSICA PLOT NAME : PLOT SCALE : 1 IN:50 FT
LAYOUT NAME - 01

WISDOT/CADDS SHEET 44

BENCHMARKS

NO.	STATION	ELEV.	DESCRIPTION	NORTHING	EASTING
BM #2	103+11.93, 48.4' LT	1370.021	SPIKE	378419.722	712998.966
BM #3	105+26.79, 46.5' LT	1367.634	SPIKE	378634.571	713001.443
CP #3	100+74.52, 19.2' RT	1382.780	MAG NAIL	378182.149	713066.030
CP #5	102+76.13, 23.7 LT	1375.732	SPIKE	378383.866	713023.606
CP #6	104+18.36, 20.0' LT	1372.971	SPIKE	378526.088	713027.697
CP #7	103+97.54, 20.3' LT	1373.399	SPIKE	378505.173	713067.915
CP #8	105+41.83, 20.4' RT	1372.029	SPIKE	378649.459	713068.366
CP #9	106+51.16, 19.0' RT	1373.012	MAG NAIL	378758.794	713067.219

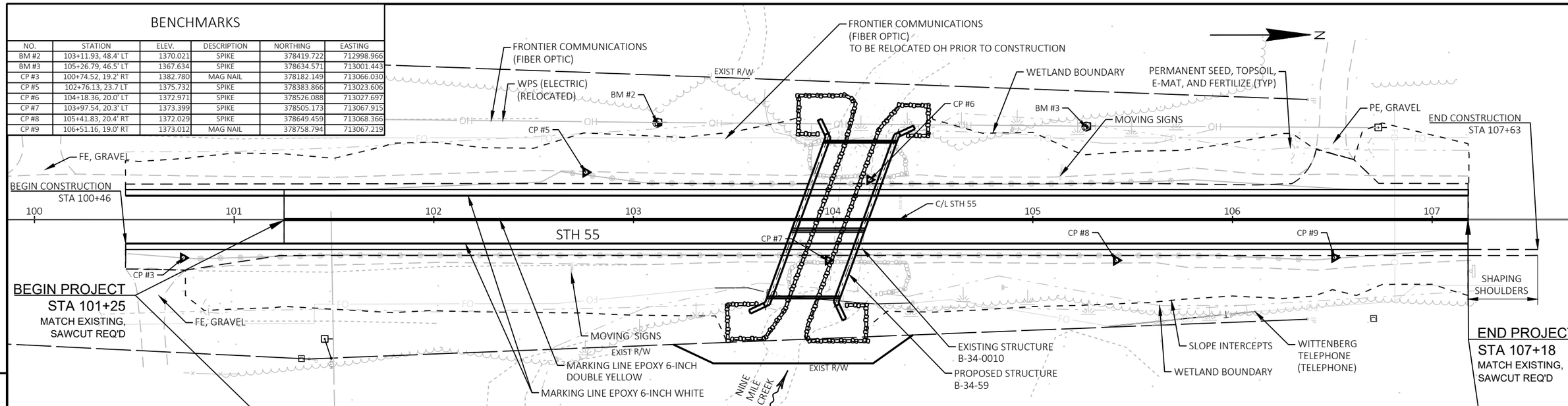

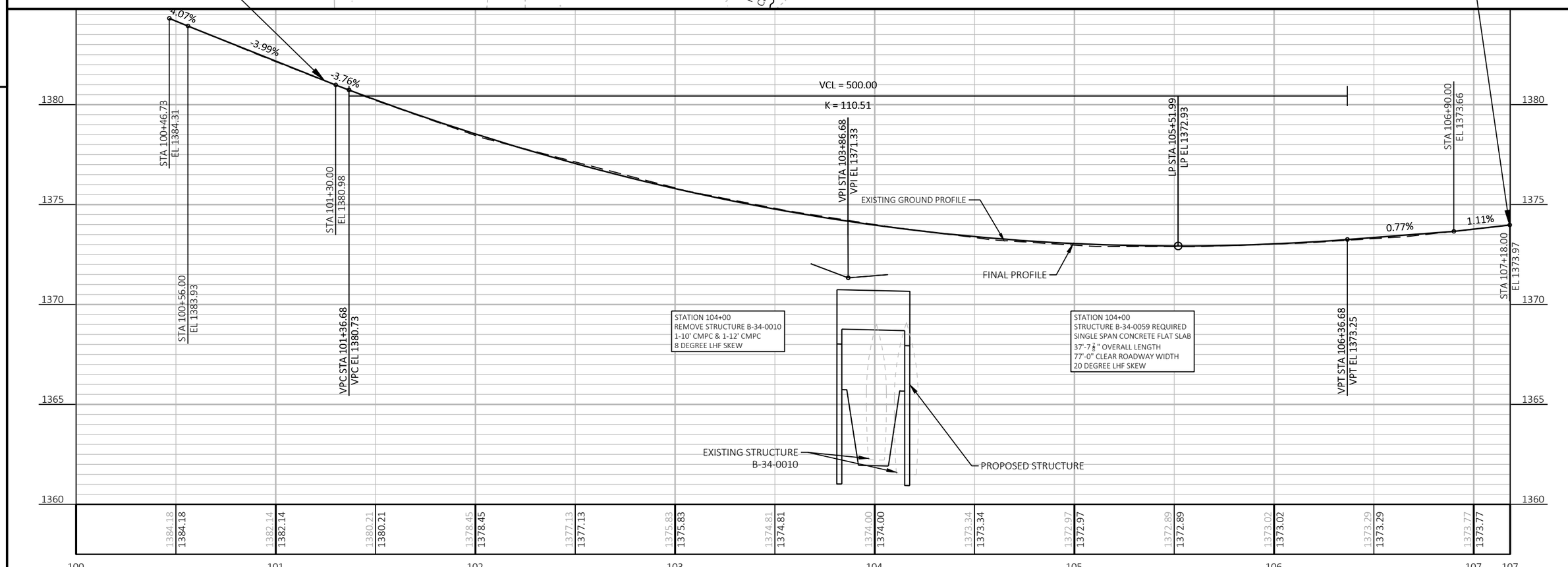

PROJECT NO: 9155-05-71	HWY: STH 55	COUNTY: LANGLADE	PLAN AND PROFILE: STH 55 - FINAL CONDITION (STAGE 3 & 4)	SHEET 30	E

Standard Detail Drawing List

08E08-03	TYPICAL INSTALLATIONS OF EROSION BALES / TEMPORARY DITCH CHECKS
08E09-06	SILT FENCE
08E11-02	TURBIDITY BARRIER
09G02-05A	BRIDGE TEMPORARY TRAFFIC SIGNAL INSTALLATION
09G02-05B	BRIDGE TEMPORARY TRAFFIC SIGNAL INSTALLATION
09G02-05C	BRIDGE TEMPORARY TRAFFIC SIGNAL INSTALLATION
12A03-10	NAME PLATE (STRUCTURES)
14B07-16A	CONCRETE BARRIER TEMPORARY PRECAST, 12'-6"
14B07-16B	CONCRETE BARRIER TEMPORARY PRECAST, 12'-6"
14B07-16C	CONCRETE BARRIER TEMPORARY PRECAST, 12'-6"
14B07-16D	CONCRETE BARRIER TEMPORARY PRECAST, 12'-6"
14B07-16E	CONCRETE BARRIER TEMPORARY PRECAST, 12'-6"
14B07-16F	CONCRETE BARRIER TEMPORARY PRECAST, 12'-6"
14B07-16G	CONCRETE BARRIER TEMPORARY PRECAST, 12'-6"
14B07-16H	CONCRETE BARRIER TEMPORARY PRECAST, 12'-6"
14B07-16I	CONCRETE BARRIER TEMPORARY PRECAST, 12'-6"
14B07-16J	CONCRETE BARRIER TEMPORARY PRECAST, 12'-6"
14B07-16K	CONCRETE BARRIER TEMPORARY PRECAST, 12'-6"
14B07-16L	CONCRETE BARRIER TEMPORARY PRECAST, 12'-6"
14B07-16M	CONCRETE BARRIER TEMPORARY PRECAST, 12'-6"
14B07-16N	CONCRETE BARRIER TEMPORARY PRECAST, 12'-6"
14B08-02A	CRASH CUSHION/SAND BARREL ARRAY AND OTHER TEMPORARY BARRIER LAYOUT DETAILS
14B08-02B	CRASH CUSHION/SAND BARREL ARRAY AND OTHER TEMPORARY BARRIER LAYOUT DETAILS
14B08-02C	CRASH CUSHION/SAND BARREL ARRAY AND OTHER TEMPORARY BARRIER LAYOUT DETAILS
14B08-02D	CRASH CUSHION/SAND BARREL ARRAY AND OTHER TEMPORARY BARRIER LAYOUT DETAILS
14B08-02E	CRASH CUSHION/SAND BARREL ARRAY AND OTHER TEMPORARY BARRIER LAYOUT DETAILS
14B29-01	SAFETY EDGE
15C02-09B	BARRICADES AND SIGNS FOR VARIOUS CLOSURES
15C08-23A	PERMANENT LONGITUDINAL PAVEMENT MARKINGS
15C08-23B	TEMPORARY LONGITUDINAL PAVEMENT MARKING
15C11-10B	CHANNELIZING DEVICES DRUMS, CONES, BARRICADES AND VERTICAL PANELS
15C19-08A	MOVING PAVEMENT MARKING OPERATION TWO-LANE TWO-WAY ROADWAY
15D33-09	TRAFFIC CONTROL, ONE LANE ROAD WITH TEMPORARY SIGNALS
15D51-01	TRAFFIC CONTROL, MOBILE OPERATIONS ON AN UNDIVIDED ROADWAY

6

6

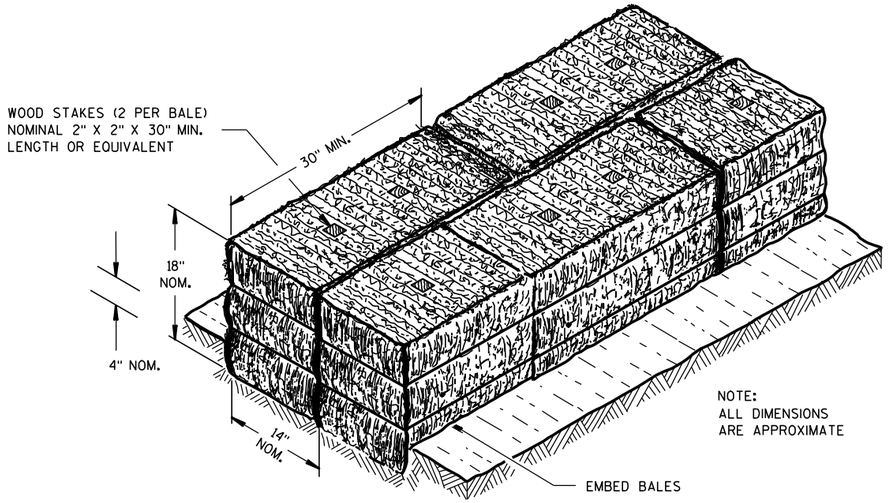

SECTION A-A

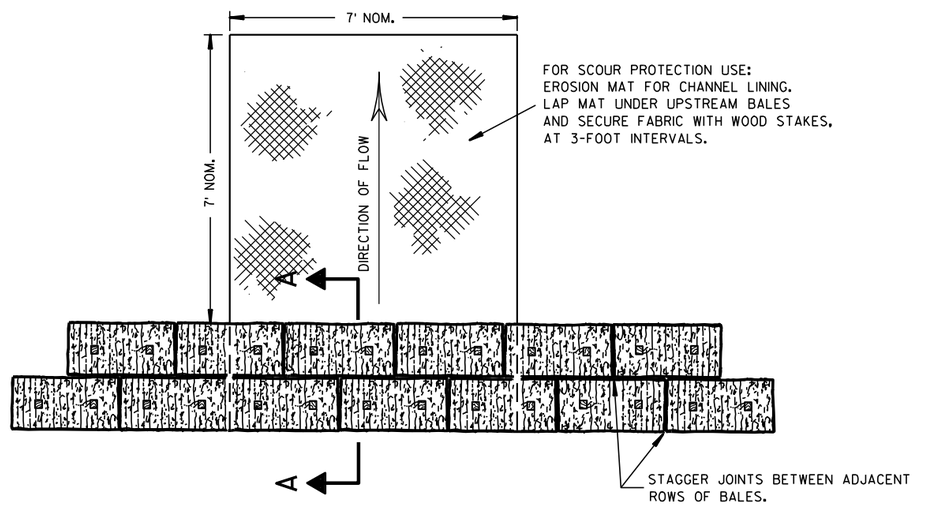

PLAN VIEW

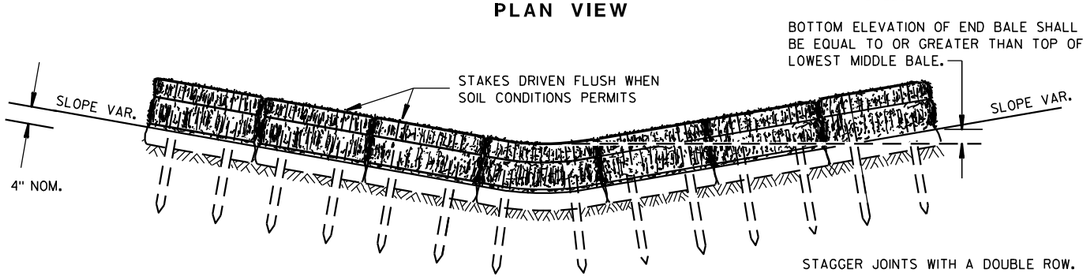

FRONT ELEVATION

TEMPORARY DITCH CHECK USING EROSION BALES ①

GENERAL NOTES

DETAILS OF CONSTRUCTION, MATERIALS AND WORKMANSHIP NOT SHOWN ON THIS DRAWING SHALL CONFORM TO THE PERTINENT REQUIREMENTS OF THE STANDARD SPECIFICATIONS AND THE APPLICABLE SPECIAL PROVISIONS.

① TEMPORARY DITCH CHECKS EITHER EROSION BALES OR MANUFACTURED SHALL BE PAID FOR UNDER THE BID ITEM OF TEMPORARY DITCH CHECK. THE DEPARTMENT WILL NOT PAY FOR TEMPORARY DITCH CHECKS CONSTRUCTED OF A SINGLE ROW OF EROSION BALES.

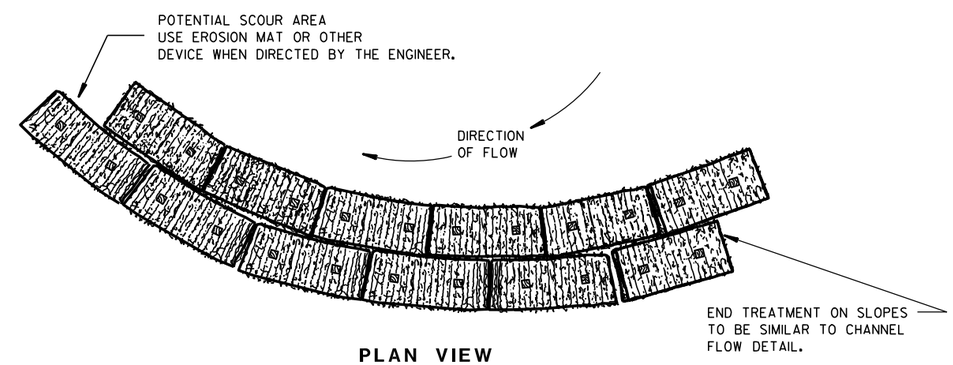

PLAN VIEW

WHEN ALTERING THE DIRECTION OF FLOW

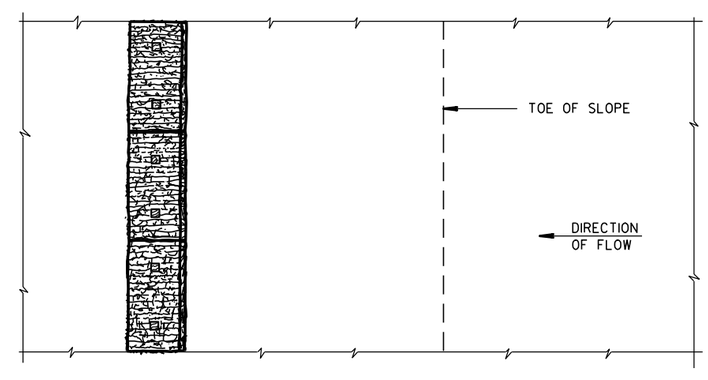

PLAN VIEW

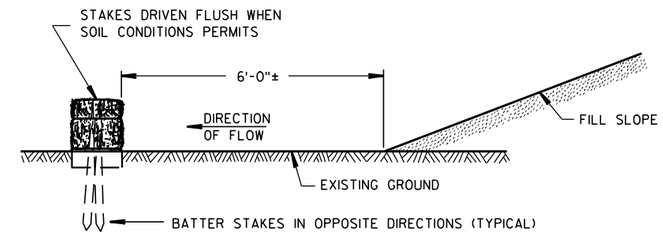

FRONT ELEVATION

WHEN EXISTING GROUND SLOPES AWAY FROM FILL SLOPE

EROSION BALES FOR SHEET FLOW

TYPICAL INSTALLATIONS OF EROSION BALES / TEMPORARY DITCH CHECKS

STATE OF WISCONSIN
DEPARTMENT OF TRANSPORTATION

APPROVED
6/04/02 — DATE
/S/ Beth Cann — CHIEF ROADWAY DEVELOPMENT ENGINEER
FHWA

6

6

S.D.D. 8 E 8-3

S.D.D. 8 E 8-3

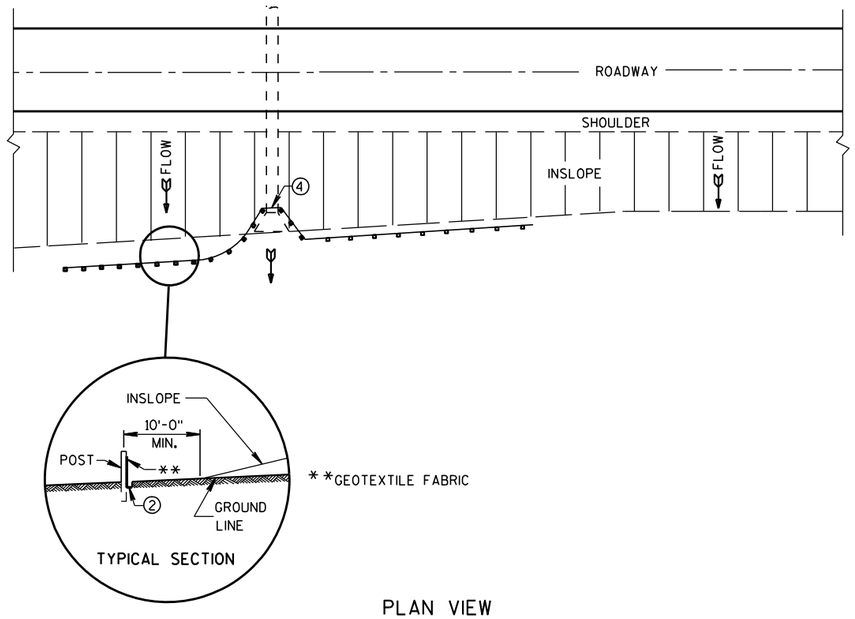

PLAN VIEW

TYPICAL APPLICATION OF SILT FENCE

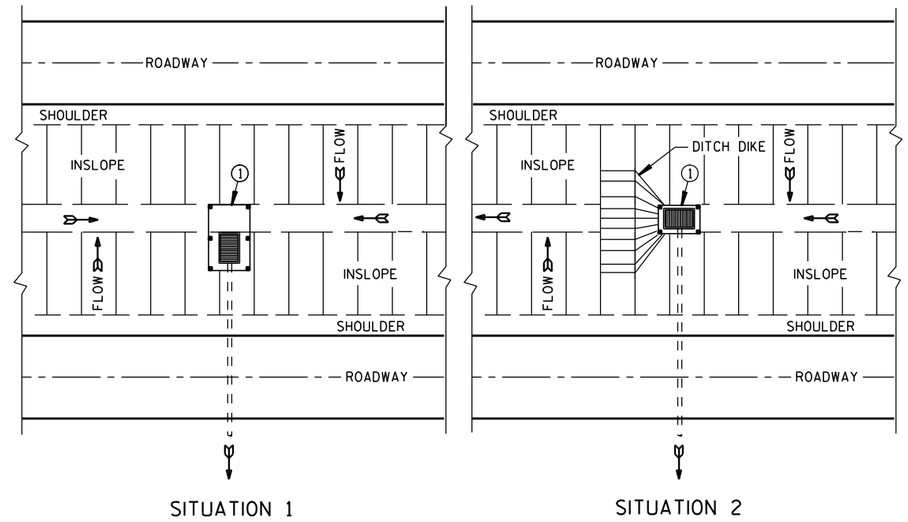

PLAN VIEW

SILT FENCE AT MEDIAN SURFACE DRAINS

GENERAL NOTES

DETAILS OF CONSTRUCTION NOT SHOWN ON THIS DRAWING SHALL CONFORM TO THE PERTINENT REQUIREMENTS OF THE STANDARD SPECIFICATIONS AND APPLICABLE SPECIAL PROVISIONS.

① HORIZONTAL BRACE REQUIRED WITH 2" X 4" WOODEN FRAME OR EQUIVALENT AT TOP OF POSTS.

② FOR MANUAL INSTALLATIONS THE TRENCH SHALL BE A MINIMUM OF 4" WIDE & 6" DEEP TO BURY AND ANCHOR THE GEOTEXTILE FABRIC. FOLD MATERIAL TO FIT TRENCH AND BACKFILL & COMPACT TRENCH WITH EXCAVATED SOIL.

③ WOOD POSTS SHALL BE A MINIMUM SIZE OF 1⅛" X 1⅛" OF OAK OR HICKORY.

④ SILT FENCE TO EXTEND ACROSS THE TOP OF THE PIPE.

⑤ CONSTRUCT SILT FENCE FROM A CONTINUOUS ROLL IF POSSIBLE BY CUTTING LENGTHS TO AVOID JOINTS. IF A JOINT IS NECESSARY USE ONE OF THE FOLLOWING TWO METHODS; A) OVERLAP THE END POSTS AND TWIST, OR ROTATE, AT LEAST 180 DEGREES. B) HOOK THE END OF EACH SILT FENCE LENGTH.

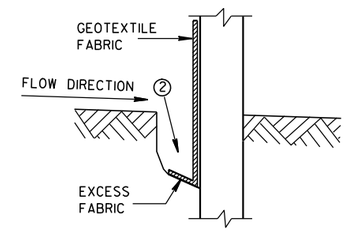

TRENCH DETAIL

NOTE: ADDITIONAL POST DEPTH OR TIE BACKS MAY BE REQUIRED IN UNSTABLE SOILS

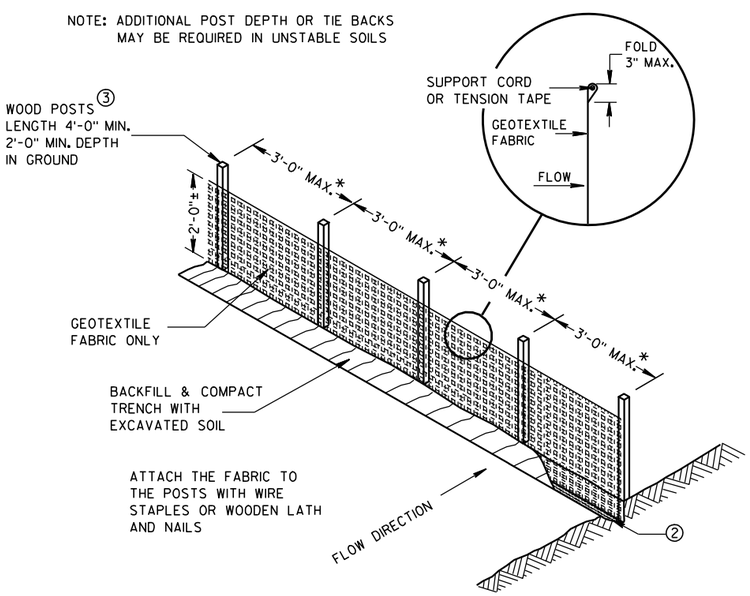

*NOTE: 8'-0" POST SPACING ALLOWED IF A WOVEN GEOTEXTILE FABRIC IS USED.

SILT FENCE

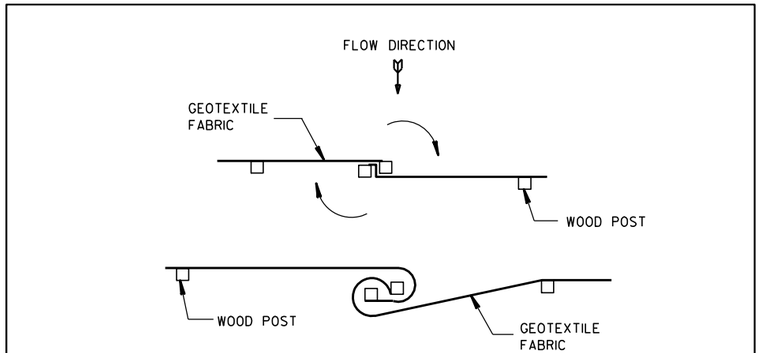

TWIST METHOD

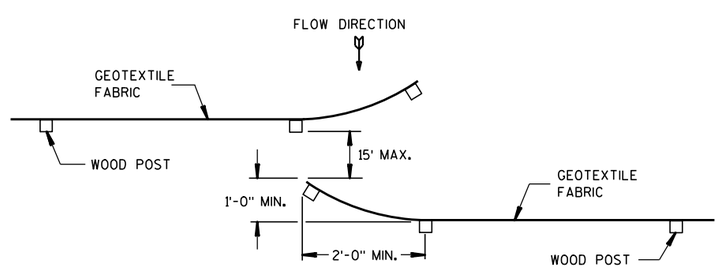

HOOK METHOD

JOINING TWO LENGTHS OF SILT FENCE ⑤

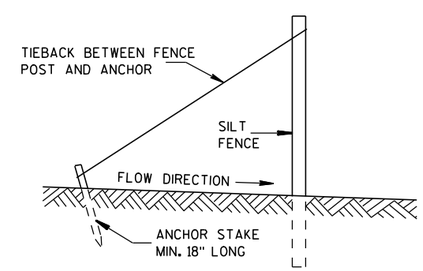

SILT FENCE TIE BACK

(WHEN REQUIRED BY THE ENGINEER)

SILT FENCE
STATE OF WISCONSIN DEPARTMENT OF TRANSPORTATION
APPROVED 4-29-05 /S/ Beth Cann----- DATE CHIEF ROADWAY DEVELOP ENGINEER FHWA

6

6

S.D.D. 8 E 9-6

S.D.D. 8 E 9-6

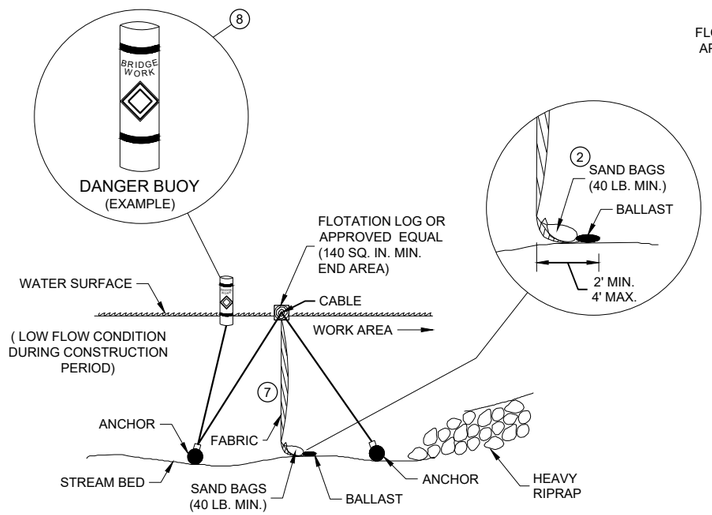

SECTION B - B

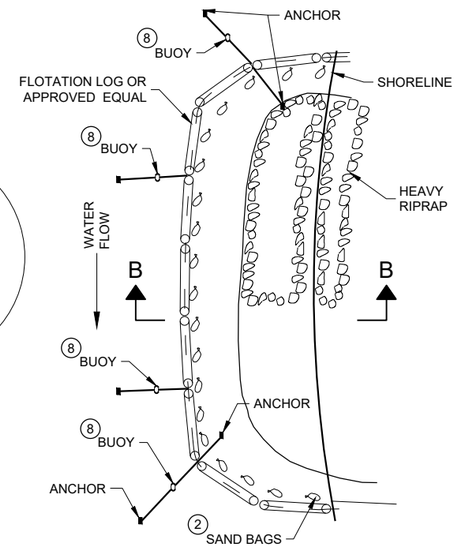

PLAN VIEW

TURBIDITY BARRIER - FLOAT ALTERNATIVE
CAUTION - SEE NOTE 6

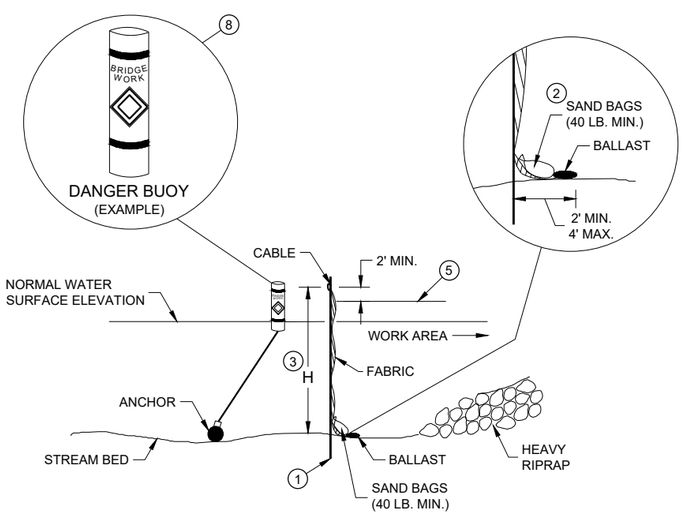

SECTION A - A

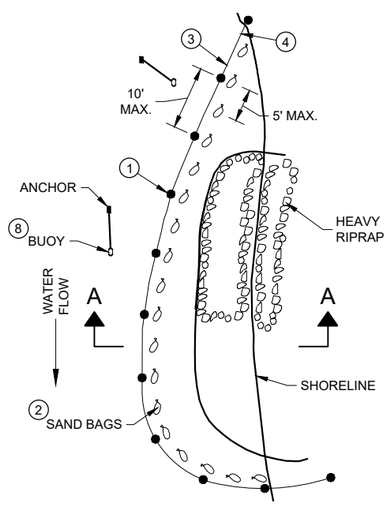

PLAN VIEW

TURBIDITY BARRIER - STANDARD POST INSTALLATION

TURBIDITY BARRIER PLACEMENT DETAILS

GENERAL NOTES

DETAILS OF CONSTRUCTION, MATERIALS AND WORKMANSHIP NOT SHOWN ON THIS DRAWING SHALL CONFORM TO THE PERTINENT REQUIREMENTS OF THE STANDARD SPECIFICATIONS AND THE APPLICABLE SPECIAL PROVISIONS.

TURBIDITY BARRIER MAY BE REMOVED AT THE ENGINEERS DISCRETION, WHEN PERMANENT EROSION CONTROL MEASURES HAVE BEEN ESTABLISHED.

1. DRIVEN STEEL POSTS, PIPES, OR CHANNELS. LENGTH SHALL BE SUFFICIENT TO SECURELY SUPPORT BARRIER AT HIGH WATER ELEVATIONS.
2. SAND BAGS TO BE USED AS ADDITIONAL BALLAST WHEN ORDERED BY THE ENGINEER TO MEET ADVERSE FIELD CONDITIONS. SPACE AS APPROPRIATE FOR SITE CONDITIONS.
3. WHEN BARRIER HEIGHT "H" EXCEEDS 8 FEET, POST SPACING MAY NEED TO BE DECREASED.
4. IN WATERWAYS SUBJECT TO FLUCTUATING WATER ELEVATIONS, PROVISIONS SHOULD BE MADE TO ALLOW THE WATER TO EQUALIZE ON EACH SIDE OF THE BARRIER. THIS MAY BE ACCOMPLISHED BY LEAVING A PORTION OF THE BARRIER OPEN ON THE UPSTREAM END.
5. ESTIMATED HIGH WATER ELEVATION DURING CONSTRUCTION PERIOD. MINIMUM BARRIER HEIGHT SHALL BE 2' GREATER THAN EITHER THE Q2 ELEVATION OR THE ESTIMATED HIGH WATER ELEVATION DURING CONSTRUCTION, WHICHEVER IS GREATER.
6. FLOAT ALTERNATIVE WILL ONLY BE ALLOWED WITH WRITTEN APPROVAL OF THE ENGINEER, AND IS MEANT FOR LOCATIONS WHERE BEDROCK PREVENTS THE INSTALLATION OF POSTS.
7. ALLOW SUFFICIENT SLACK VERTICALLY AND HORIZONTALLY SO THAT SEDIMENT BUILD UP WILL NOT SEPARATE OR LOWER THE TURBIDITY BARRIER.
8. USE AS DIRECTED BY COAST GUARD OR DNR PERMIT WHEN WORKING IN NAVIGABLE WATERWAYS.

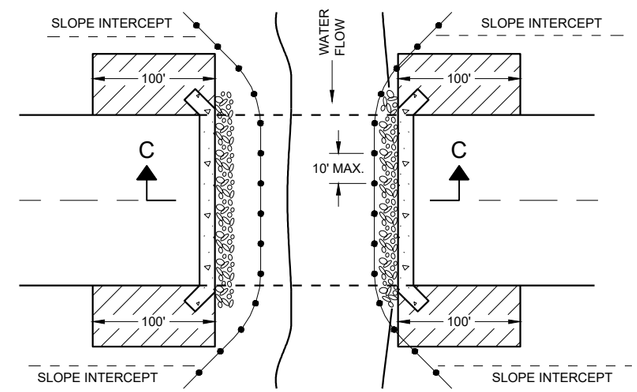

PLAN VIEW

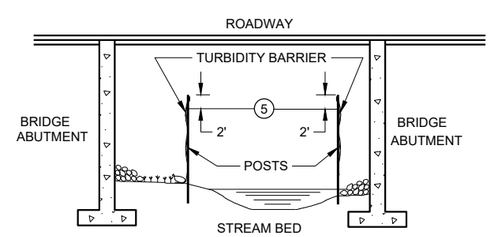

SECTION C - C

TURBIDITY BARRIER DETAIL SHOWING TYPICAL PLACEMENT AT STRUCTURES

TURBIDITY BARRIER

STATE OF WISCONSIN
DEPARTMENT OF TRANSPORTATION

APPROVED
6/4/02 — DATE
/S/ Beth Cannestra — CHIEF ROADWAY DEVELOPMENT ENGINEER
FHWA

6

SDD 08E11 - 02

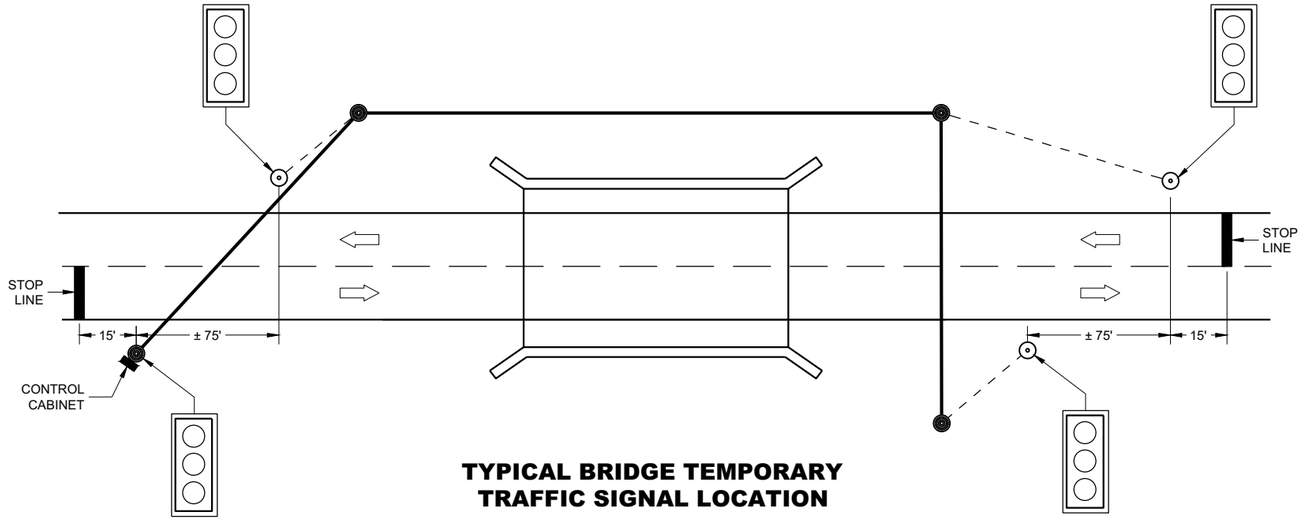

TYPICAL BRIDGE TEMPORARY TRAFFIC SIGNAL LOCATION

LEGEND

- WOOD POLE (NON-BREAKAWAY)
- WOOD POST (BREADAWAY)
- SIGNAL CABLE
- SIGNAL CABLE W/MESSENGER
- DIRECTION OF TRAFFIC
- LED TRAFFIC SIGNAL WITH BACKPLATE (3-12")

GENERAL NOTES

DETAILS OF CONSTRUCTION, MATERIALS AND WORKMANSHIP NOT SHOWN ON THIS DRAWING SHALL CONFORM TO THE PERTINENT REQUIREMENTS OF THE CONTRACT.

POLE MOUNTED TRAFFIC SIGNAL CONTROL CABINET MAY BE MOUNTED ON THE SERVICE POLE IF THE ELECTRICAL UTILITY ALLOWS THE INSTALLATION.

WHEN UTILITY POLES ARE USED TO SPAN THE TEMPORARY OVERHEAD CABLE, WRITTEN PERMISSION MUST BE OBTAINED FROM THE OWNER OF THE POLES AND GIVEN TO THE PROJECT MANAGER. ALL PERTINENT UTILITY AND CODE CLEARANCES SHALL BE MAINTAINED.

WOOD POLES (NON-BREAKAWAY) SHALL BE NO CLOSER TO EDGE OF PAVEMENT THAN OFFSET DISTANCE CHART ALLOWS OR 4 FEET BEHIND PROTECTIVE BARRIER (BEAM GUARD, ETC.).

WOOD POSTS (BREAKAWAY) SHALL BE NO CLOSER THAN 2 FEET OUTSIDE OF SHOULDER.

VERTICAL CLEARANCE ETC. PER NEC.

TRAFFIC SIGNAL FACES SHALL BE TYPICALLY PLACED 12 FEET FROM EDGE OF PAVEMENT.

EACH TRAFFIC SIGNAL SHALL HAVE A BACKPLATE.

SIGNING, PAVEMENT MARKING AND LANE CONTROL REQUIREMENTS SHALL CONFORM TO STANDARD DETAIL DRAWING 15D33.

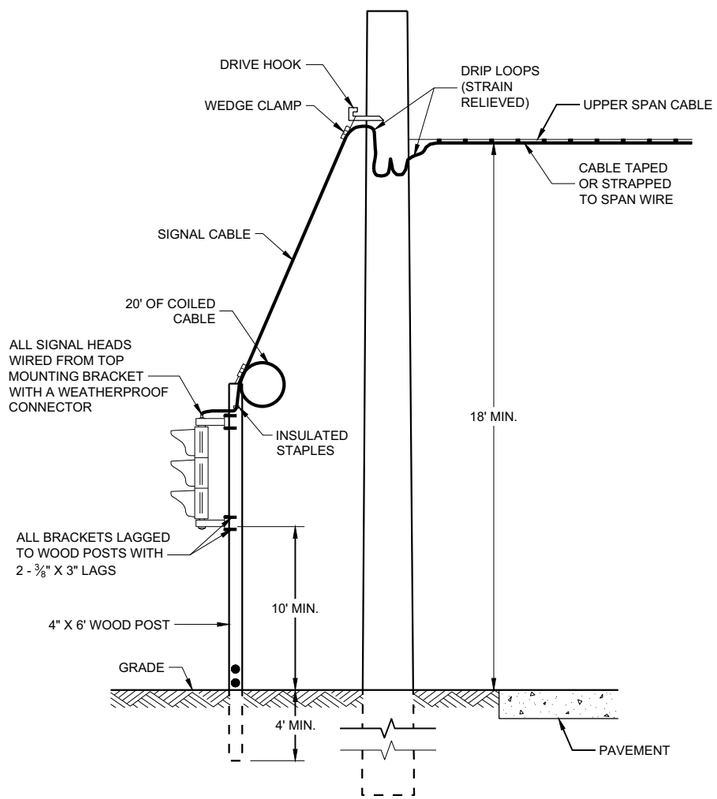

TYPICAL DROP TO TRAFFIC SIGNAL FACE

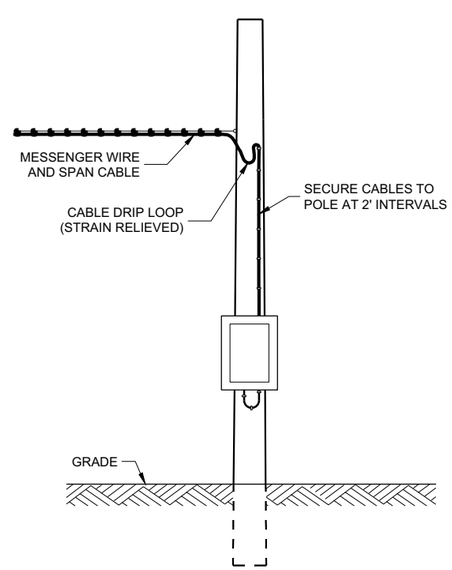

POLE MOUNT CABINET INSTALLATION

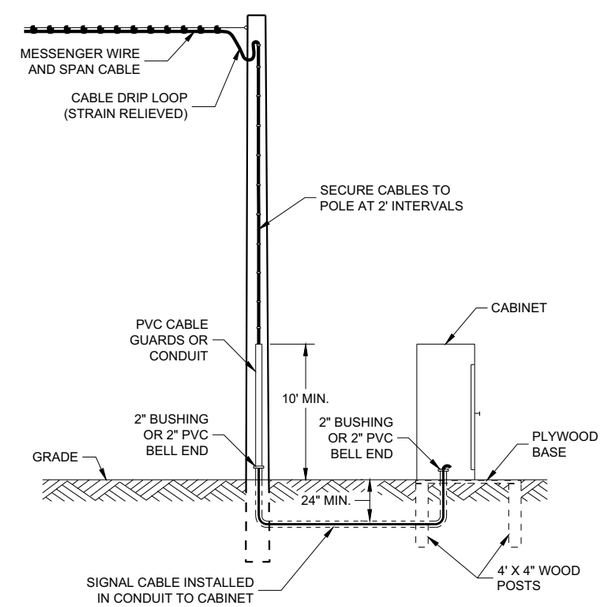

GROUND MOUNT CABINET INSTALLATION

MINIMUM POLE LENGTHS	CLASS	POLE BURIAL DEPTHS
25'	V	5'
30'	V	6'
35'	IV	7'
40'	IV	8'
45'	IV	9'

OFFSET DISTANCES FOR TEMPORARY NON-BREAKAWAY POLES	
SPEED LIMIT	OFFSET DISTANCE*
GREATER THAN 45 MPH	18 FT
45 MPH OR LESS	12 FT
45 MPH OR LESS W/CURBS	2 FT

* NOTE: OFFSET MEASURED FROM OUTER EDGE OF OUTSIDE THRU LANE.

BRIDGE TEMPORARY TRAFFIC SIGNAL INSTALLATION

STATE OF WISCONSIN
DEPARTMENT OF TRANSPORTATION

APPROVED
March 2018 — DATE
/S/ Ahmet Demirbilek — ROADWAY STANDARDS DEVE ENGINEER
FHWA

6

SDD09G02 - 05a

6

SDD09G02 - 05a

GENERAL NOTES

USE ¾" DRILL IN WOOD POLE TO PROVIDE FOR ⅝" BOLTS.

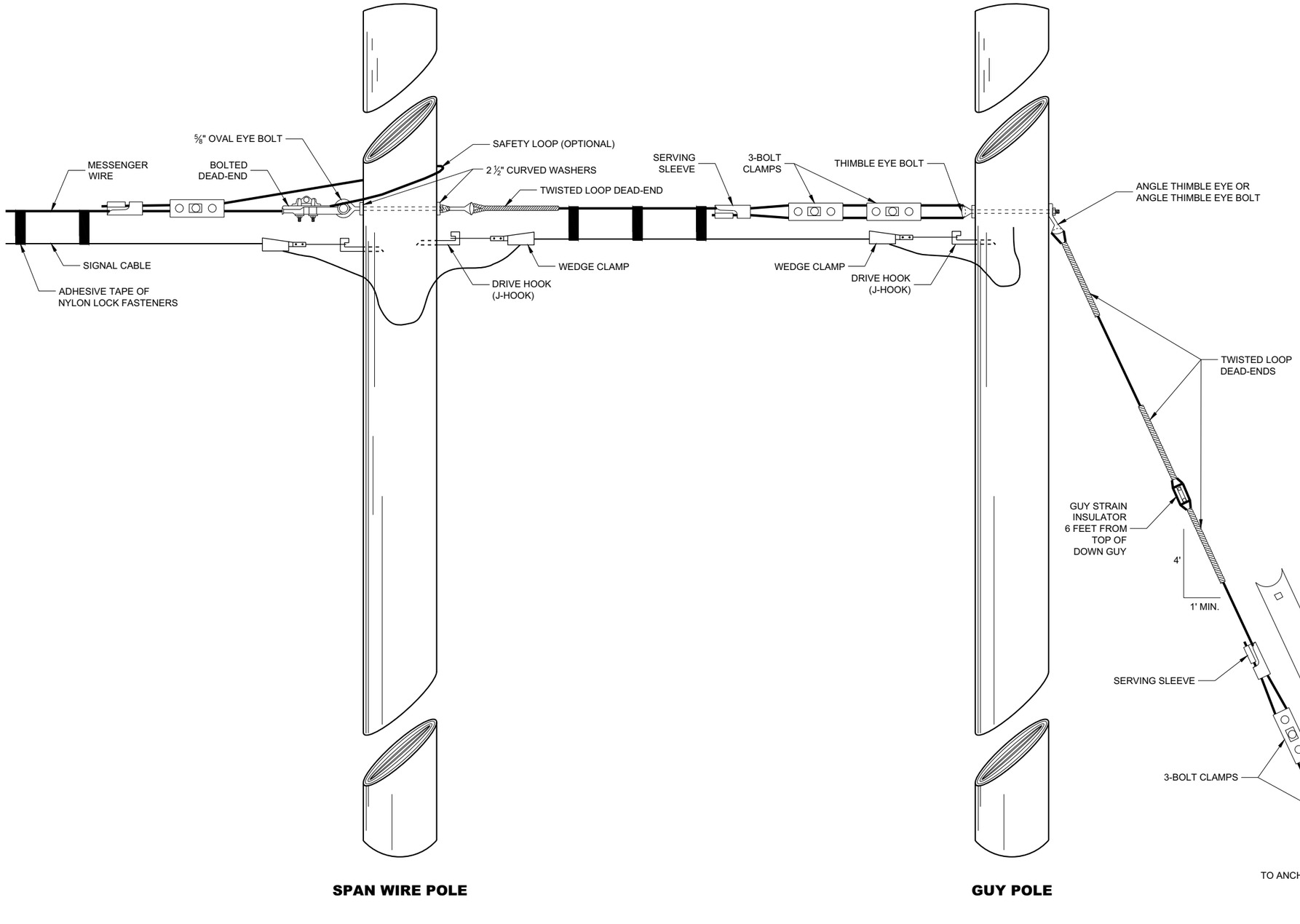

SPAN WIRE POLE

GUY POLE

TYPICAL DEAD-ENDINGS OR GUYING

BRIDGE TEMPORARY TRAFFIC SIGNAL INSTALLATION

STATE OF WISCONSIN
DEPARTMENT OF TRANSPORTATION

APPROVED
June 2015 — DATE
/S/ Ahmet Demerbilek — ROADWAY STANDARDS DEVE ENGINEER

FHWA

6

6

SDD09G02 - 05b

SDD09G02 - 05b

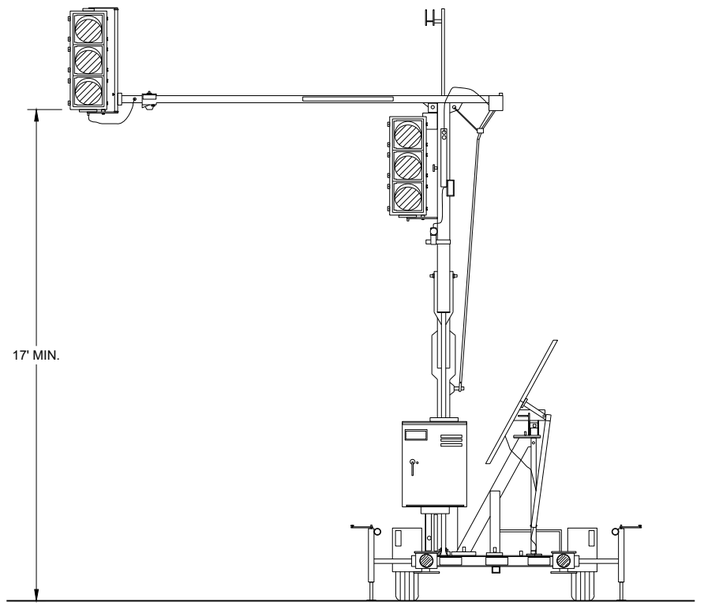

TRAILER MOUNTED TRAFFIC SIGNAL

GENERAL NOTES

DETAIL OF CONSTRUCTION, MATERIALS AND WORKMANSHIP NOT SHOWN ON THIS DRAWING SHALL CONFORM TO THE PERTINENT REQUIREMENTS OF THE CONTRACT.

SIGNING, PAVEMENT MARKING AND LANE CONTROL REQUIREMENTS SHALL CONFORM TO STANDARD DETAIL DRAWING 15D33.

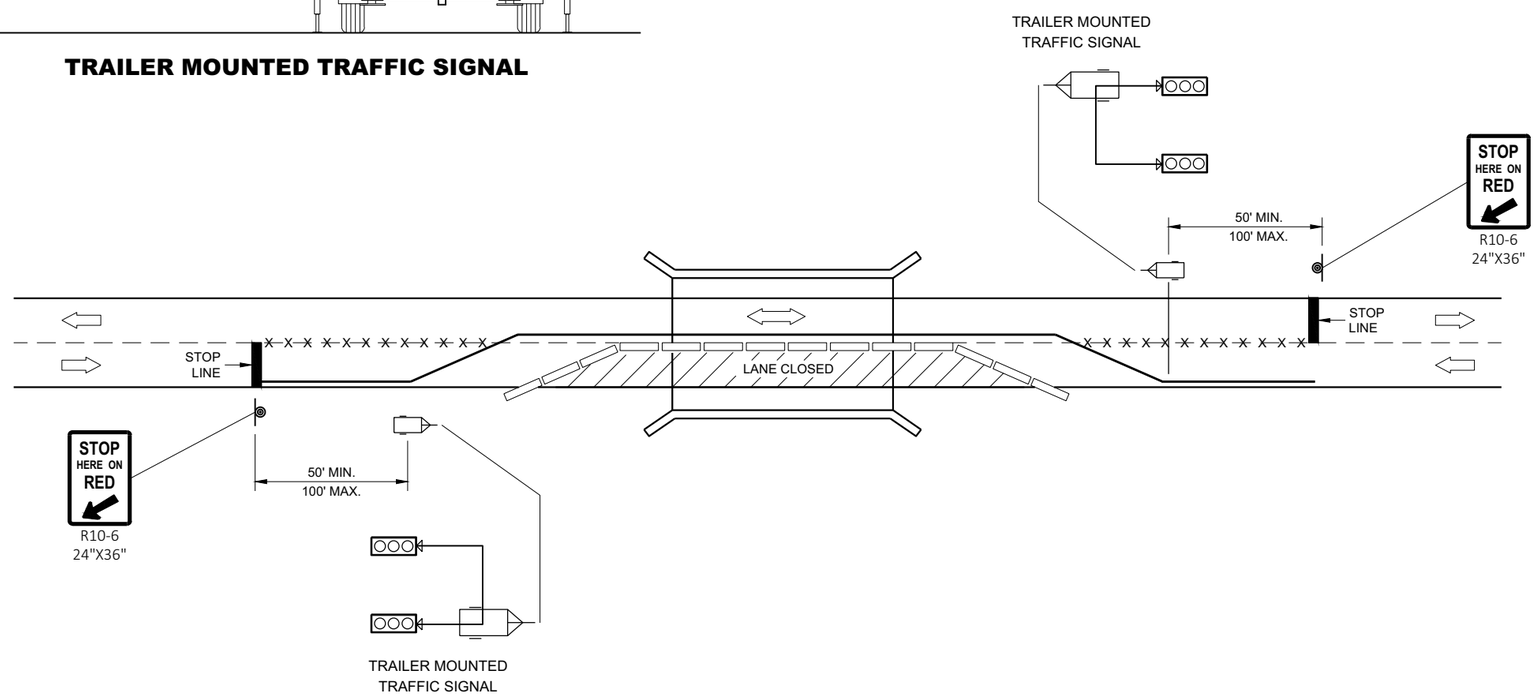

TYPICAL TRAILER MOUNTED TRAFFIC SIGNAL LOCATION

LEGEND

- POST MOUNTED SIGN
- TEMPORARY PRECAST CONCRETE BARRIER
- TRAILER MOUNTED TRAFFIC SIGNAL
- REMOVE PAVEMENT MARKINGS
- DIRECTION OF TRAFFIC

BRIDGE TEMPORARY TRAFFIC SIGNAL INSTALLATION

STATE OF WISCONSIN
DEPARTMENT OF TRANSPORTATION

APPROVED
June 2015 — DATE
/S/ Ahmet Demerbilek — ROADWAY STANDARDS DEVE ENGINEER
FHWA

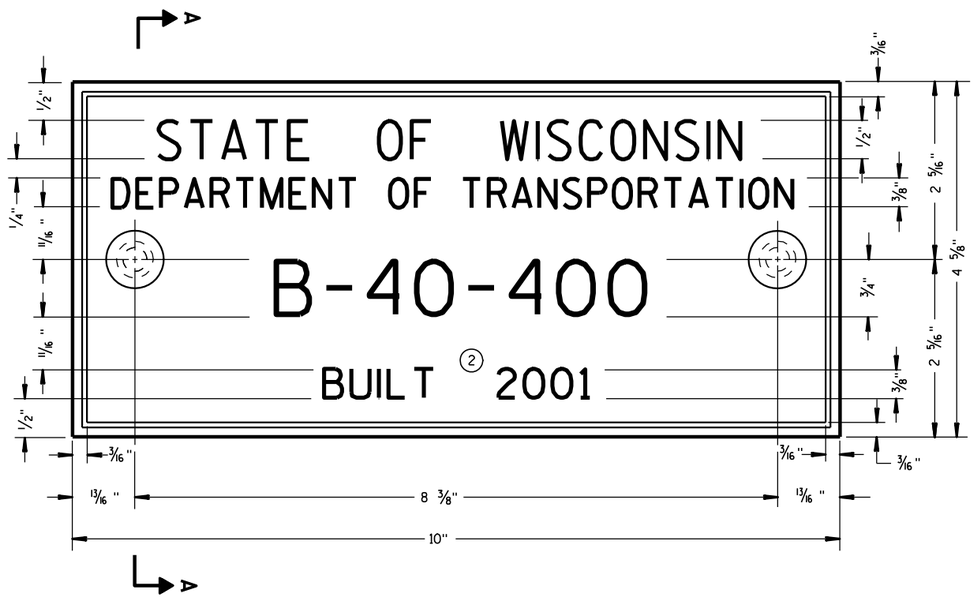

TYPICAL NAME PLATE
(BRIDGES, CULVERTS, AND RETAINING WALLS)

GENERAL NOTES

NAME PLATES TO BE INSTALLED ON BRIDGES, CULVERTS, AND RETAINING WALLS SHALL CONFORM TO THE REQUIREMENTS OF SECTION 502.3.11 OF THE STANDARD SPECIFICATIONS.

THE BRIDGE NUMBER AND YEAR BUILT SHOWN ON THIS DRAWING ARE EXAMPLES ONLY. SEE CONSTRUCTION PLANS FOR INDIVIDUAL NUMBERING AND YEAR BUILT.

(1) EPOXY RESIN SHALL BE FROM AN APPROVED MANUFACTURER AND USED IN ACCORDANCE WITH MANUFACTURER'S RECOMMENDATIONS.

(2) REHABILITATION OF AN EXISTING STRUCTURE SHOULD USE THE DATE OF ORIGINAL STRUCTURE CONSTRUCTION.

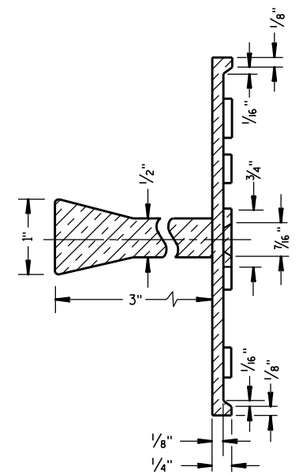

SECTION A-A

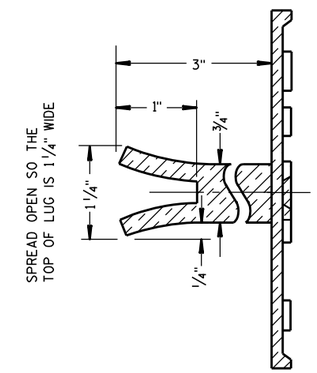

ALTERNATE LUG

FOR MULTI-UNIT STRUCTURES
LINE 3 ABOVE SHALL READ

B = BRIDGE
C = CULVERT
R = RETAINING WALL

COUNTY NO.

BRIDGE NO.

UNIT NO. FOR MULTIPLE
UNIT BRIDGE

B-40-400-1A

NUMBERING DESIGNATION
MULTI-UNIT STRUCTURES

(1) ADHERE ANCHOR LUG TO PRECAST RETAINING WALL WITH EPOXY RESIN.

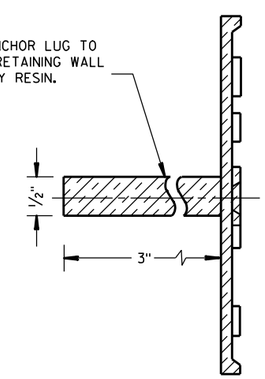

ALTERNATE LUG
(FOR ATTACHMENT TO PRECAST STRUCTURES)

NAME PLATE (STRUCTURES)
STATE OF WISCONSIN DEPARTMENT OF TRANSPORTATION
APPROVED 3/26/10 DATE — /S/ Scot Beck CHIEF STRUCTURAL DEVELOPER — FHWA

6

6

S.D.D. 12 A 3-10

S.D.D. 12 A 3-10

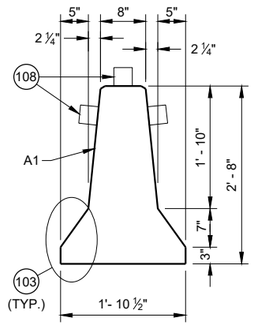

CROSS SECTION

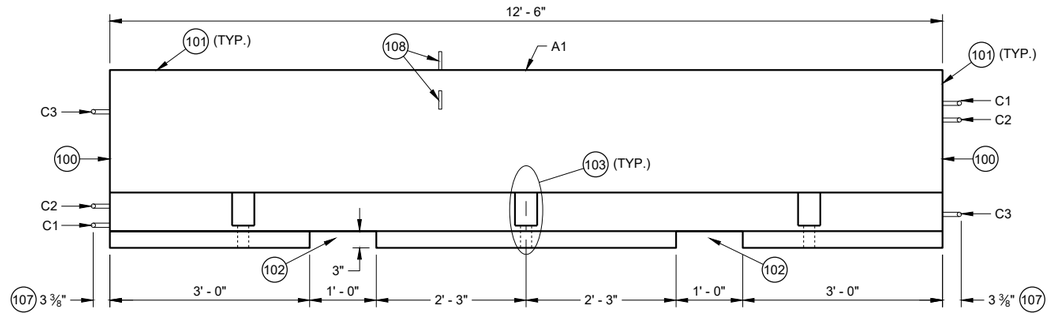

PROFILE VIEW

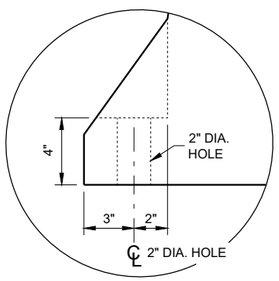

ANCHOR BLOCK DETAIL

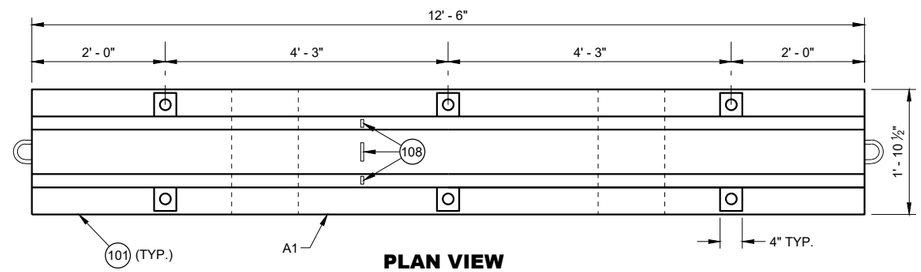

PLAN VIEW

TEMPORARY BARRIER

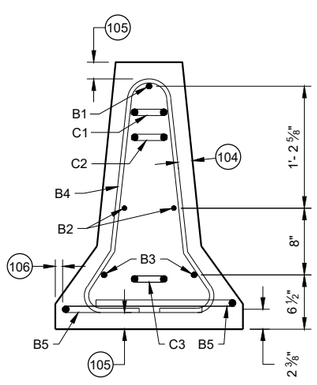

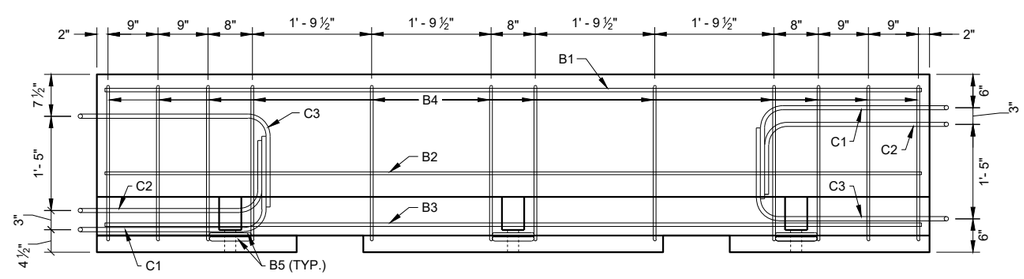

PROFILE VIEW

TEMPORARY BARRIER REINFORCEMENT

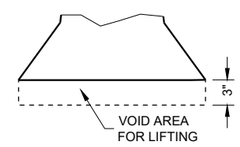

LIFTING SLOT DETAIL (TYP.)

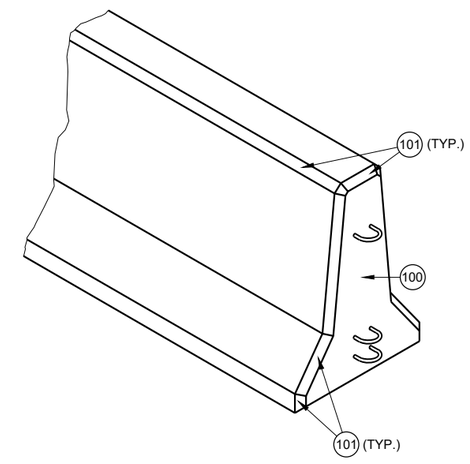

GENERAL NOTES

PLACE BARRIER ON PAVED SURFACE. BEFORE PLACEMENT OF TEMPORARY BARRIER, REMOVE ALL LOOSE MATERIAL FROM PAVED SURFACE.

LOOP BARS C1, C2 AND C3 ARE NOT FOR PLACEMENT OR MOVEMENT OF BARRIER.

100 PERMANENTLY FORM INTO ONE END OF BARRIER THE FOLLOWING INFORMATION:
- A. TYPE OF BARRIER: WI-CBTP
- B. MANUFACTURER
- C. DATE OF MANUFACTURE (MONTH AND YEAR)

101 1" OPTIONAL CHAMFER

102 SEE LIFTING SLOT DETAIL

103 SEE ANCHOR BLOCK DETAIL

104 1 ¾" MIN. CLEAR COVER

105 2" MIN. CLEAR COVER

106 1" MIN. CLEAR COVER

107 ± ⅛" MEASURED FROM FACE OF CONCRETE BARRIER TO OUTSIDE OF LOOP BAR (TYP.)

108 USE DELINEATORS CONFORMING TO SECTION 633 OF THE STANDARD SPECIFICATIONS. CONTRACTOR MY USE ALTERNATE SHAPES AND HOUSING. INSTALL DELINEATORS ACCORDING TO MANUFACTURERS INSTRUCTION. INSTALL YELLOW REFLECTORS WHEN BARRIER IS LOCATED LEFT OF TRAFFIC AND WHITE WHEN BARRIER IS LOCATED RIGHT OF TRAFFIC. SPACE DELINEATORS A MAXIMUM OF 25 FEET APART, PROVIDE TO MOUNTED DELINEATORS IN ADDITION TO SIDE MOUNTED DELINEATORS ON BARRIER INSTALLATIONS LOCATED ON A CURVED ALIGNMENT LONGER THAT 200 FEET AND ON BARRIERS USED TO SEPARATE OPPOSING TRAFFIC.

CONCRETE BARRIER TEMPORARY PRECAST, 12' - 6"

STATE OF WISCONSIN
DEPARTMENT OF TRANSPORTAT

6

SDD 14B07-16a

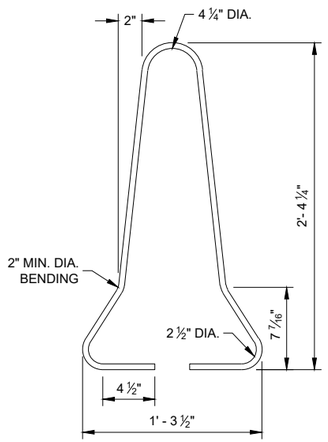

B4 BAR DETAIL

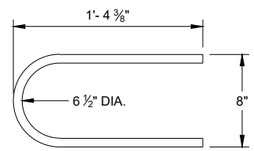

B5 BAR DETAIL

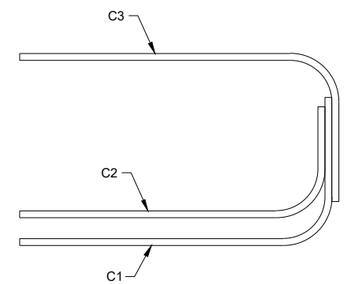

PROFILE VIEW

LOOP BAR ASSEMBLY

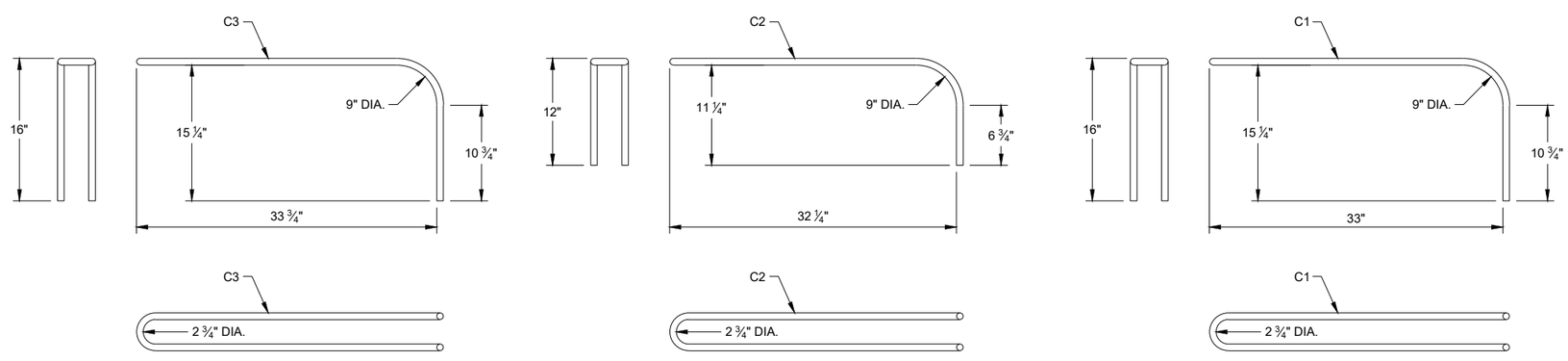

C BAR DETAILS

CONCRETE BARRIER TEMPORARY PRECAST, 12' - 6"

STATE OF WISCONSIN
DEPARTMENT OF TRANSPORTAT

6

SDD 14B07-16b

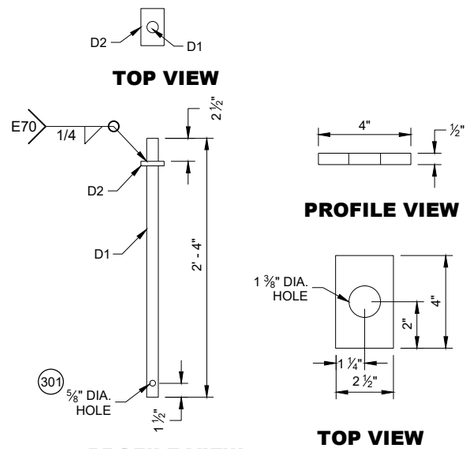

CONNECTOR PIN ASSEMBLY

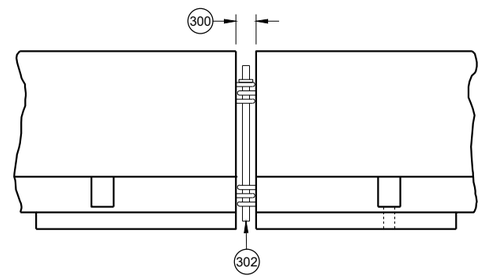

CONNECTING TEMPORARY BARRIER SECTIONS

GENERAL NOTES

300 SET WITH 3 ⅝" WOOD BLOCK.

301 HOLE IS OPTIONAL.

302 CONNECTOR PIN ASSEMBLY.

303 CONCRETE PAVEMENT, APPROACH SLAB, OR DECK.

304 CONCRETE DECK.

305 DO NOT USE ON CONCRETE BRIDGE DECK WITH ASPHALT OVERLAY OR CONCRETE PAVEMENT WITH ASPHALT OVERLAY.

306 MINIMUM OF 2" OF ASPHALT.

307 ASPHALT ANCHOR PIN ASSEMBLY

308 IF DRILLING A PILOT HOLE, THE MAX, DIA. OF THE HOLE IS 3/4"

309 WHEN THERE IS ASPHALT OVERLAYING CONCRETE PAVEMENT, A 1 5/8" DIA. PILOT HOLE CAN BE DRILLED INTO THE OVERLAY AND CONCRETE. IF NEEDED DRILL A 3/4" PILOT HOLE IN BASE COURSE.

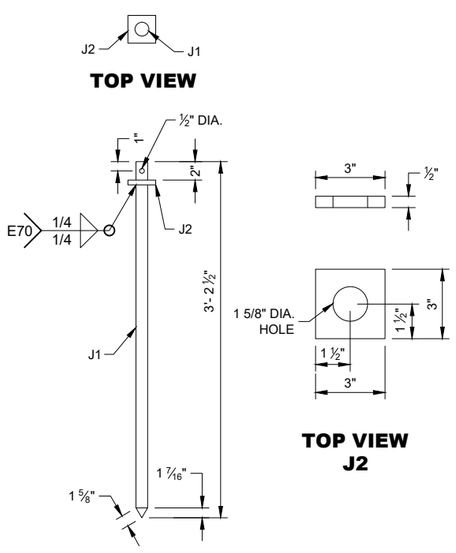

PROFILE VIEW

ASPHALT ANCHOR PIN ASSEMBLY

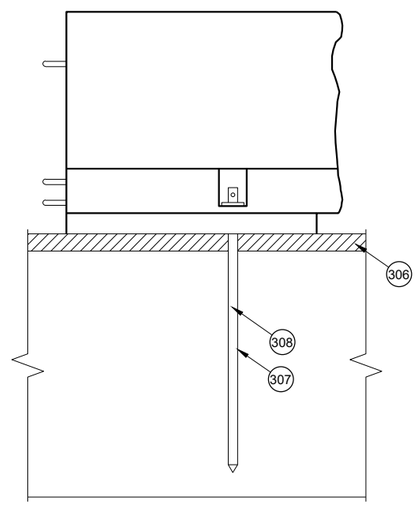

SIDE VIEW

ASPHALT ANCHOR INSTALLATION THROUGH ASPHALT PAVEMENT

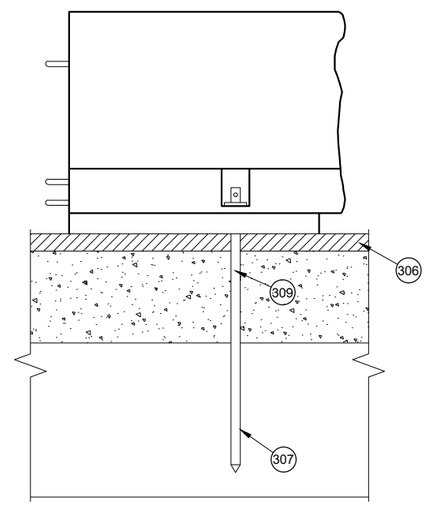

SIDE VIEW

ASPHALT ANCHOR INSTALLATION THROUGH ASPHALT OVERLAY ON TOP OF CONCRETE PAVEMENT

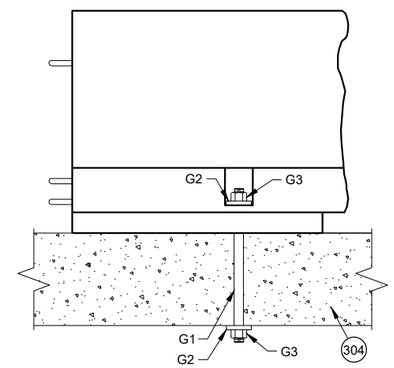

SIDE VIEW

THROUGH BOLT ANCHOR INSTALLATION 305

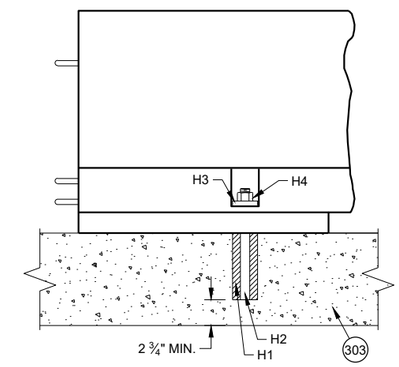

SIDE VIEW

ADHESIVE ANCHOR INSTALLATION 305

CONCRETE BARRIER TEMPORARY PRECAST, 12' - 6"

STATE OF WISCONSIN
DEPARTMENT OF TRANSPORTATION

6

SDD 14B07-16c

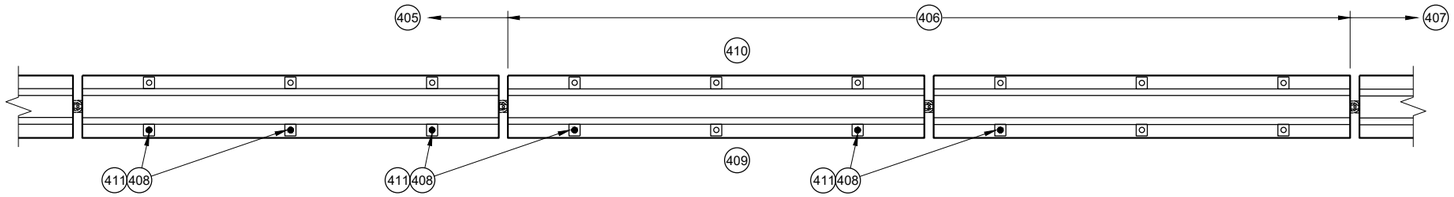

PLAN VIEW

TRANSITION FROM FREE STANDING TO ANCHORED BARRIER

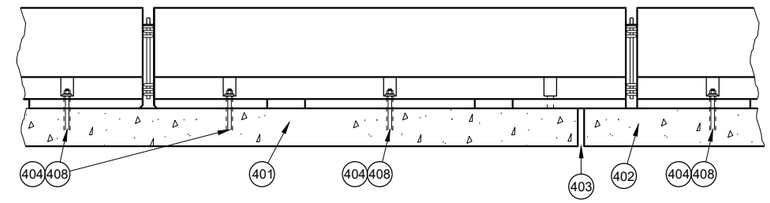

PROFILE VIEW

ANCHORED BARRIER NEAR EXPANSION JOINT (400)

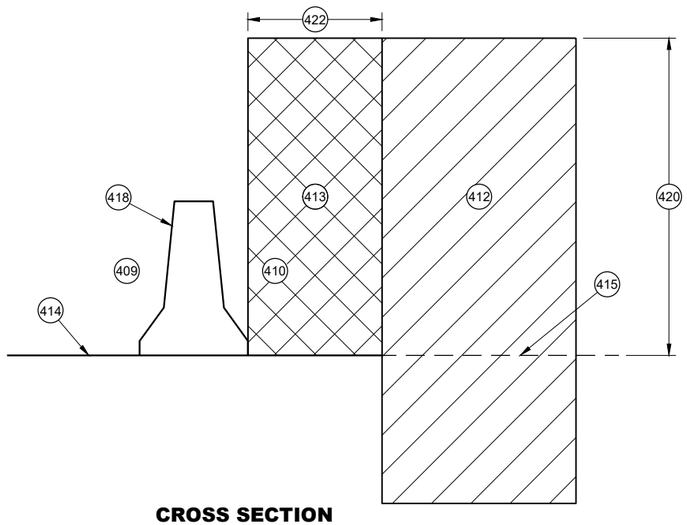

CROSS SECTION

FREE STANDING BARRIER

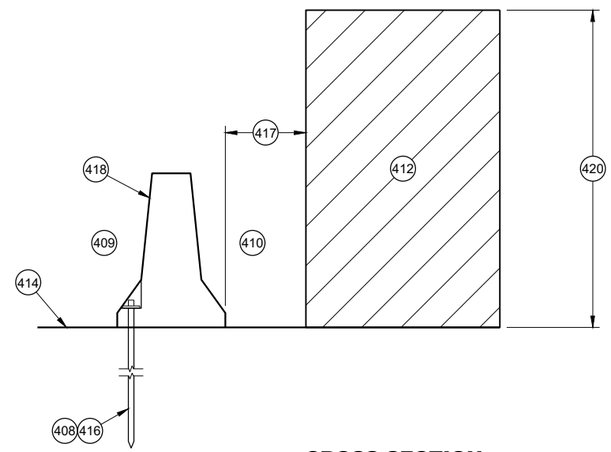

CROSS SECTION

ANCHORED BARRIER FOR OBJECTS ABOVE THE GRADE LINE AND NEAR THE BARRIER

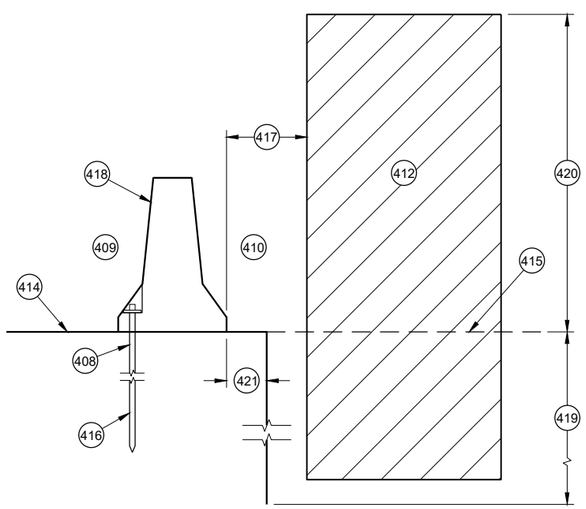

CROSS SECTION

ANCHORED BARRIER NEAR VERTICAL DROP OFF

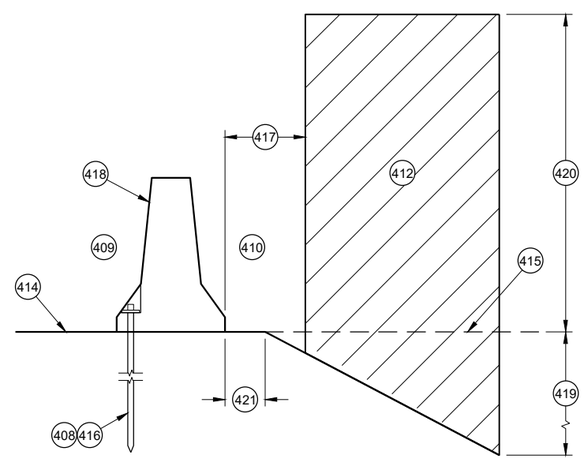

CROSS SECTION

ANCHORED BARRIER NEAR A SLOPE

GENERAL NOTES

(400) NO SINGLE CONCRETE BARRIER SECTION SHALL BE ANCHORED TO BOTH THE BRIDGE DECK AND THE APPROACH SLAB. ALL ANCHOR BOLT LOCATIONS SHALL BE ANCHORED TO THE DECK IN ACCORDANCE WITH THE DETAIL. NO MORE THAN ONE ANCHOR BOLT SHALL BE ELIMINATED FROM A BARRIER SECTION WHEN SPANNING AN EXPANSION JOINT.

(401) CONCRETE DECK

(402) CONCRETE DECK OR APPROACH SLAB.

(403) EXPANSION JOINT

(404) ADHESIVE ANCHOR SHOWN. SEE ANCHOR DETAILS.

(405) ANCHORED TEMPORARY BARRIER

(406) TRANSITION FROM ANCHORED TEMPORARY BARRIER TO FREE STANDING

(407) FREE STANDING BARRIER

(408) REMOVE ALL ANCHORS WHEN NO LONGER NEEDED. FILL CONCRETE PAVEMENTS, DECKS AND APPROACH SLABS WITH NON-SHRINK COMMERCIAL GROUT FROM THE APPROVED PRODUCT LIST. FILL ASPHALT PAVEMENTS WITH ASTM D6690 TYPE II RUBBERIZED CRACK FILLER.

(409) TRAFFIC SIDE

(410) NON-TRAFFIC SIDE

(411) ANCHOR LOCATION. SEE ANCHORING DETAILS.

(412) WORK AREA

(413) AREA FREE OF OBJECTS AND WORKERS

(414) GRADE LINE

(415) EXTENDED GRADE LINE

(416) ANCHORED TEMPORARY BARRIER. SEE BOLT THROUGH DECK, REMOVABLE ADHESIVE ANCHOR, OR AN ASPHALT ANCHOR ROD DETAILS FOR MORE INFORMATION. ASPHALT ANCHOR ROD SHOWN.

(417) WHEN OBJECTS EXTEND ABOVE THE GRADE. A MINIMUM OF 1 FOOT IS REQUIRED FROM BACK OF BARRIER TO OBJECT.

(418) OBJECTS ARE NOT TO BE PLACED ON, MOUNTED TO, OR ALLOWED TO LEAN AGAINST THE BARRIER WITHOUT WRITTEN PERMISSION OF THE PROJECT ENGINEER.

(419) DEPTHS OF 3 FEET OR MORE.

(420) Y = 6.5'

(421) OFFSET FROM BACK OF BARRIER EDGE:

CONCRETE PAVEMENT	0.5'
ASPHALT	0.5'

(422) POSTED SPEED (MPH):

45 OR GREATER	4.0'
40 OR LOWER	2.0'

CONCRETE BARRIER TEMPORARY PRECAST, 12' - 6"

STATE OF WISCONSIN
DEPARTMENT OF TRANSPORTAT

6

SDD 14B07-16d

GENERAL NOTES

500 EXISTING RIGID BARRIERS (VARIES)

501 TEMPORARY BARRIER

502 SEE OTHER DETAIL ON HOW TO ANCHOR TEMPORARY BARRIER (BARRIER ASPHALT ANCHOR SHOWN).

503 ANCHORS ARE REQUIRED ON BOTH SIDE OF THE TEMPORARY BARRIER.

504 NESTED RAILS ARE REQUIRED ON BOTH SIDES OF THE TEMPORARY BARRIER FOR ALL INSTALLATIONS.

505 TRAFFIC TRAVELS FROM PERMANENT BARRIER TO TEMPORARY BARRIER.

506 TRAFFIC TRAVELS FROM TEMPORARY BARRIER TO PERMANENT BARRIER.

507 VERTICAL BARRIER

508 SAFETY SHAPE BARRIER

509 SINGLE SLOPE BARRIER

510 CAP END PLATE PLACED FLUSH WITH UPSTREAM END OF RIGID BARRIER.

511 BENT THRIE BEAM TO FIT.

512 THRIE BEAM PIECES ARE OFFSET 15 ¼" TO PREVENT INTERFERENCE FROM THE ANCHORS ON OPPOSING SIDES.

513 TWO (2) P1, P2 AND P3 ARE REQUIRED

514 FIVE (5) N1, N2 AND N3 ARE REQUIRED

515 TWO (2) R1, R2 AND R3 ARE REQUIRED

516 CUT WOOD BLOCK TO FIT.

517 SEE THRIE BEAM RAIL TERMINAL CONNECTOR DETAIL ASSEMBLY.

518 CAP ASSEMBLY

519 4" MAX. GAP BETWEEN TEMPORARY BARRIER AND RIGID BARRIER.

520 ALL TWELVE SPLICE HOLES REQUIRE M1 AND M2

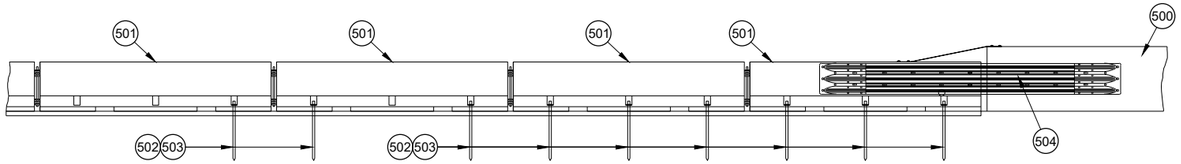

PROFILE VIEW

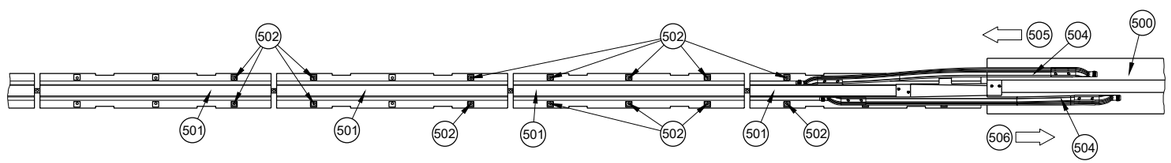

PLAN VIEW
TRANSITION TO RIGID BARRIER

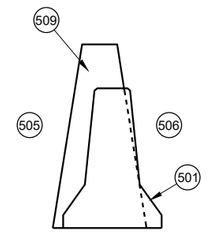

CROSS SECTION TEMPORARY BARRIER PLACEMENT SINGLE SLOPE

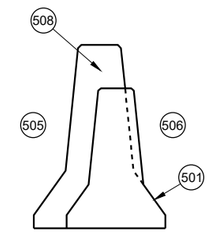

CROSS SECTION TEMPORARY BARRIER PLACEMENT SAFETY SHAPE

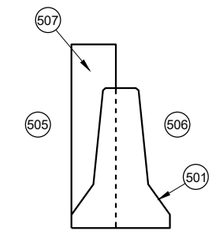

CROSS SECTION TEMPORARY BARRIER PLACEMENT VERTICAL

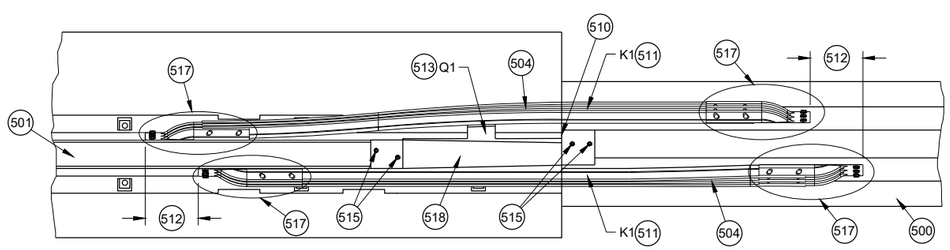

PLAN DETAIL VIEW
TRANSITION TO RIGID BARRIER

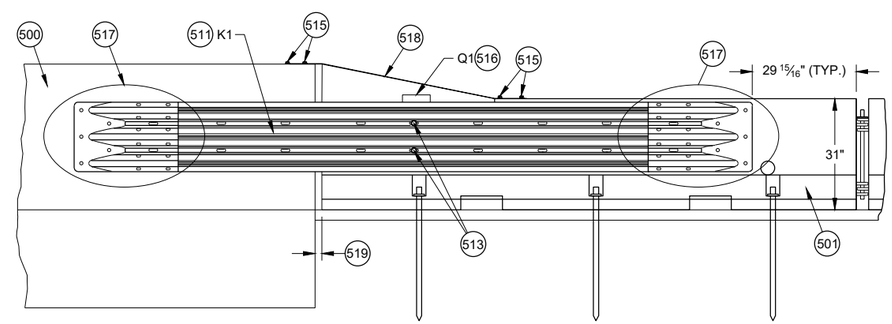

BACK DETAIL VIEW
TRANSITION TO RIGID BARRIER

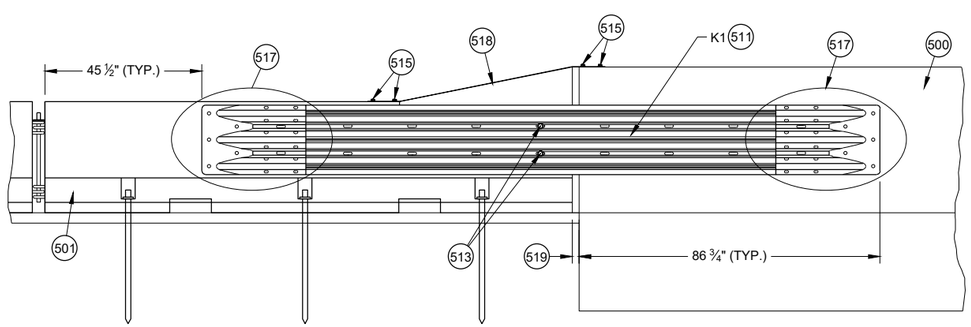

FRONT DETAIL VIEW
TRANSITION TO RIGID BARRIER

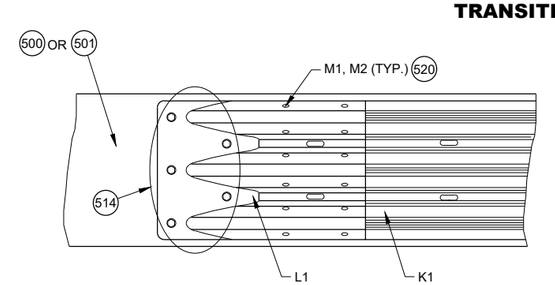

517 DETAIL PLAN VIEW
THRIE BEAM RAIL TERMINAL CONNECTOR ASSEMBLY

CONCRETE BARRIER TEMPORARY PRECAST, 12' - 6"

STATE OF WISCONSIN
DEPARTMENT OF TRANSPORTAT

6

SDD 14B07-16e

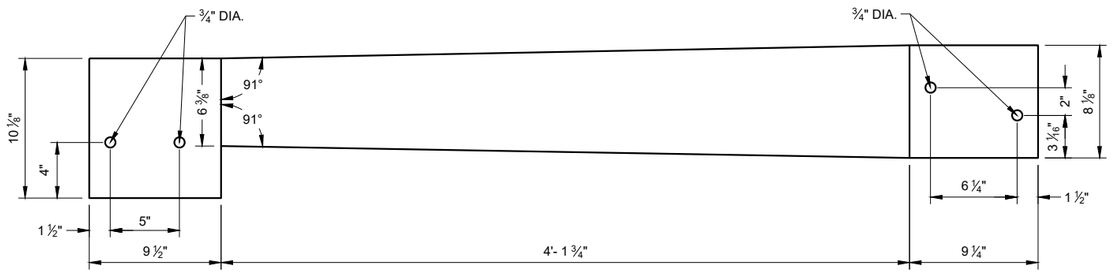

TOP VIEW
S1

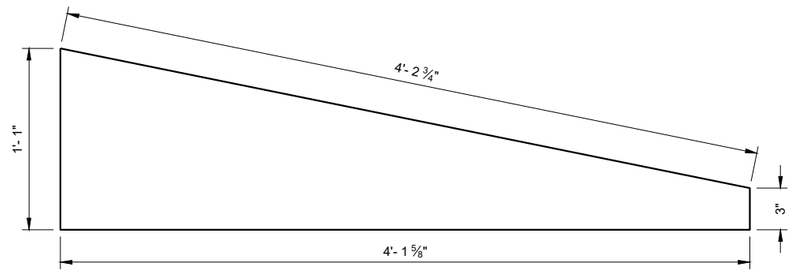

SIDE VIEW
S3

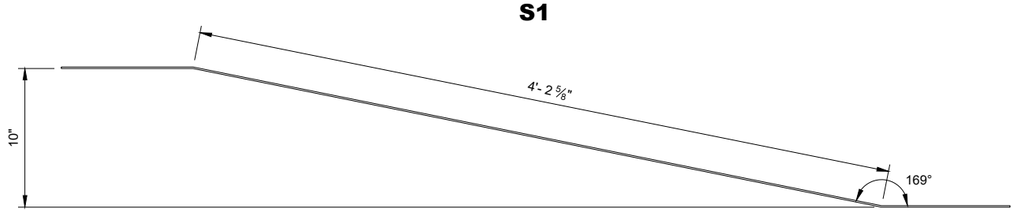

ELEVATION VIEW
S1

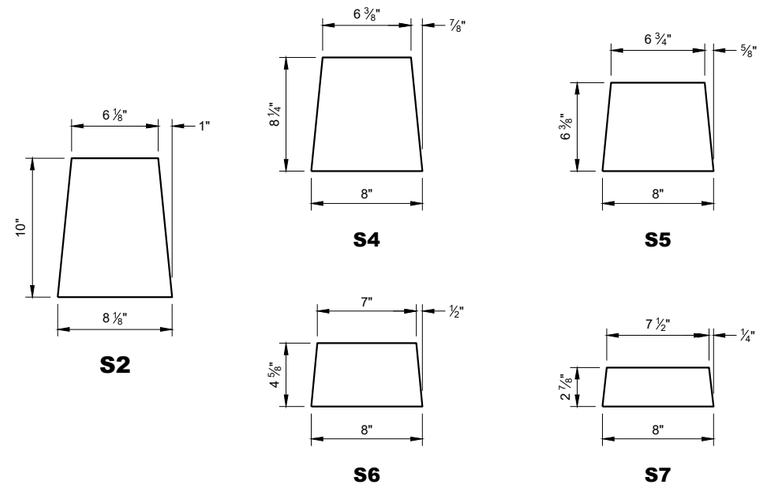

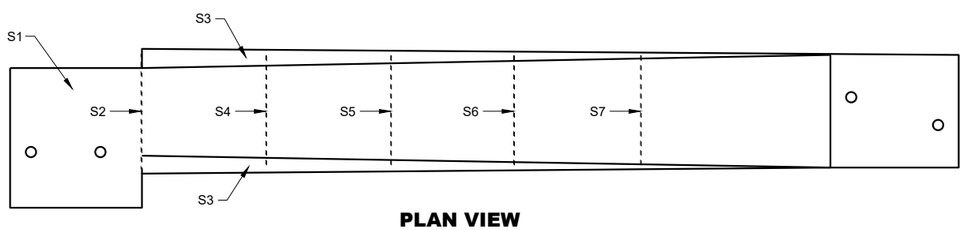

PLAN VIEW

GENERAL NOTES

STITCH WELD GUSSET PLATES AND END PLATES ON THREE SIDES

STITCH WELD TWO SIDE PLATES TO TOP PLATE, END PLATE AND GUSSETS.

600 SIDE PLATES (S3) NOT SHOWN FOR CLARITY.

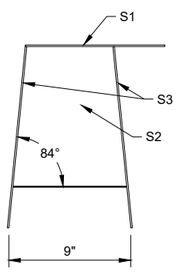

BACK VIEW

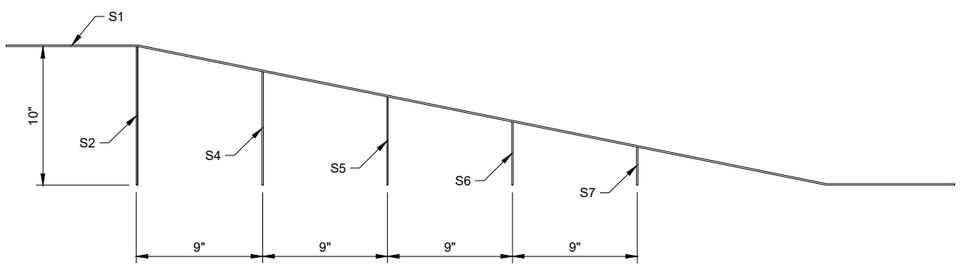

SIDE VIEW 600

42" TOP CAP ASSEMBLY

CONCRETE BARRIER TEMPORARY PRECAST, 12' - 6"

STATE OF WISCONSIN
DEPARTMENT OF TRANSPORTAT

6

SDD 14B07-16f

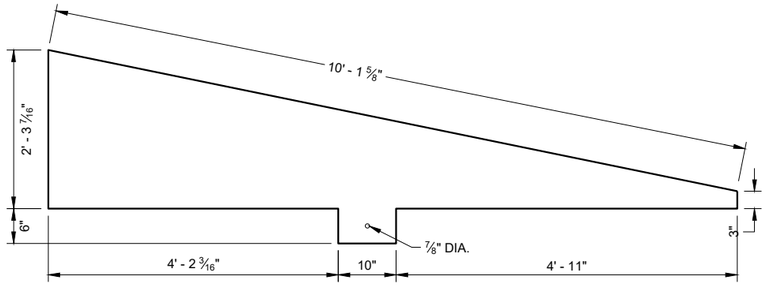

SIDE VIEW
T4

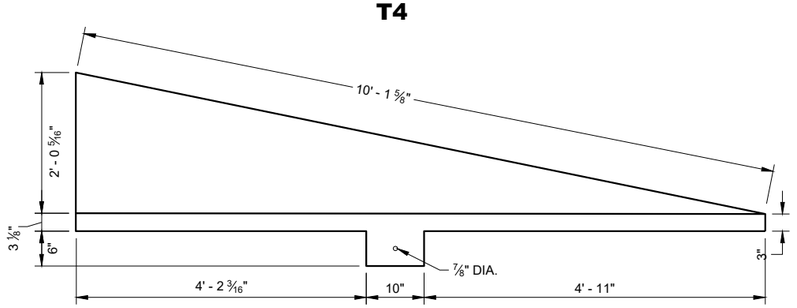

SIDE VIEW
T3

END VIEW

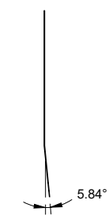

END VIEW

GENERAL NOTES

STITCH WELD GUSSET PLATES AND END PLATES ON THRIE SIDES

STITCH WELD TWO SIDE PLATES TO TOP PLATE, END PLATE AND GUSSETS.

SIDE PLATES, TOP PLATE, END PLATE AND GUSSETS ARE 12 GAUGE ASTM A36 GALVANIZED STEEL.

700 SIDE PLATES (T3 AND T4) NOT SHOWN FOR CLARITY.

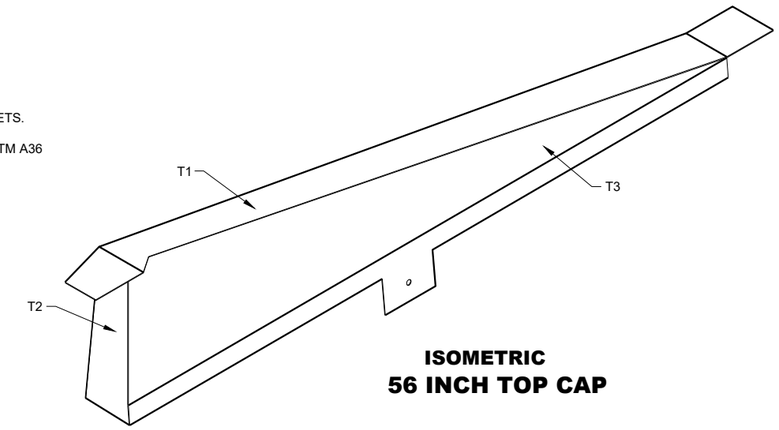

ISOMETRIC
56 INCH TOP CAP

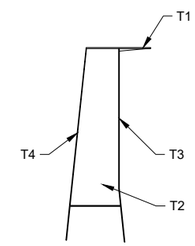

END VIEW
56 INCH TOP CAP

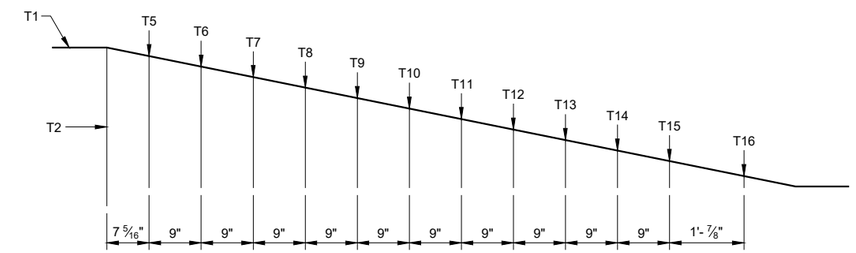

SIDE VIEW
56 INCH TOP CAP 700

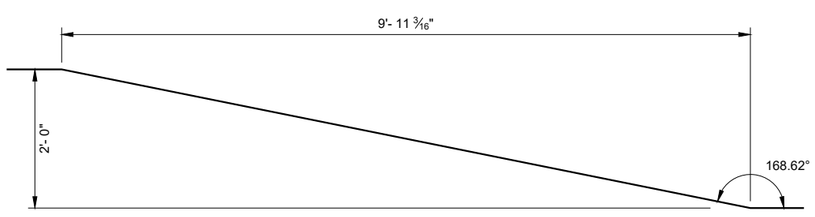

SIDE VIEW
TOP PLATE T1

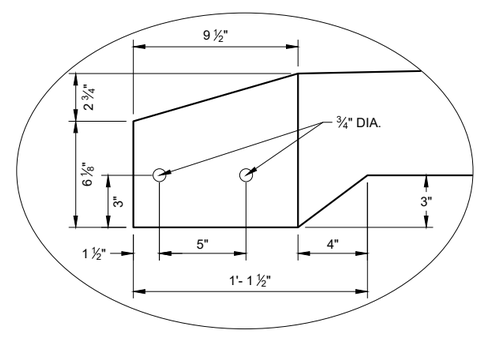

DETAIL "A"

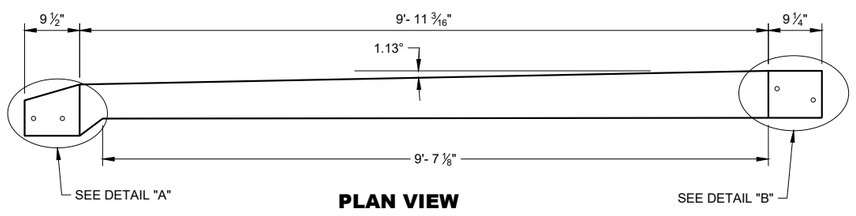

PLAN VIEW
TOP PLATE T1

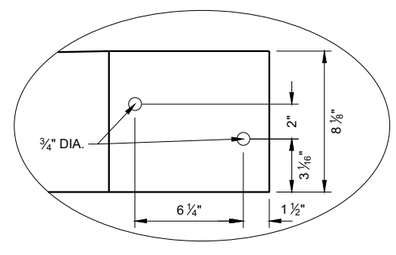

DETAIL "B"

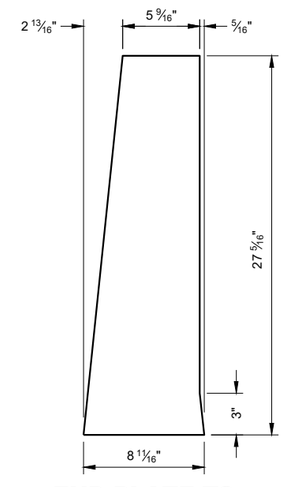

END PLATE T2

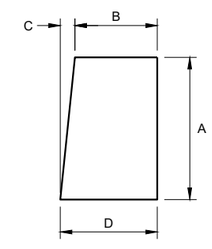

GUSSET PLATES
T5 - T16

GUSSET DIMENSIONS				
GUSSET NO.	A	B	C	D
T5	22 13/16"	5 11/16"	2 5/16"	8 1/16"
T6	21"	5 7/8"	2 3/16"	8 1/16"
T7	19 3/16"	6 1/16"	1 15/16"	8 1/16"
T8	17 3/8"	6 1/4"	1 13/16"	8 1/16"
T9	15 5/16"	6 7/16"	1 9/16"	8 1/16"
T10	13 3/4"	6 5/8"	1 7/16"	8 1/16"
T11	11 15/16"	6 13/16"	1 1/4"	8 1/16"
T12	10 1/8"	7"	1 1/16"	8 1/16"
T13	8 5/16"	7 3/16"	7/8"	8 1/16"
T14	6 1/2"	7 3/8"	11/16"	8 1/16"
T15	4 11/16"	7 9/16"	1/2"	8"
T16	2 7/8"	7 3/4"	1/4"	8"

CONCRETE BARRIER TEMPORARY PRECAST, 12' - 6"

STATE OF WISCONSIN
DEPARTMENT OF TRANSPORTATION

6

SDD 14B07-16g

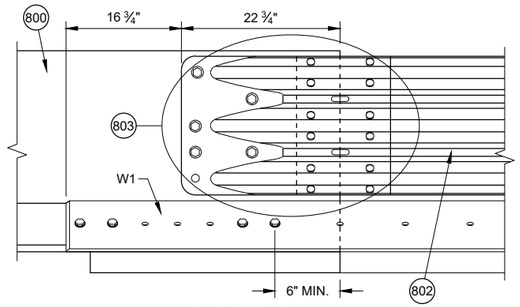

DETAIL D

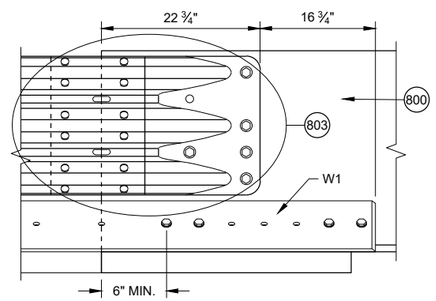

DETAIL E

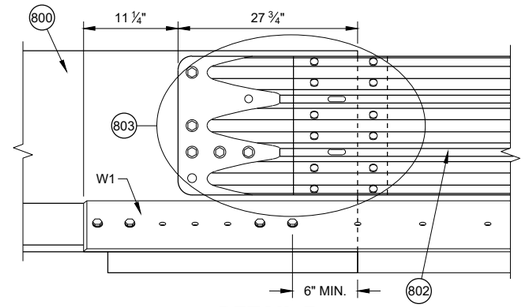

DETAIL F

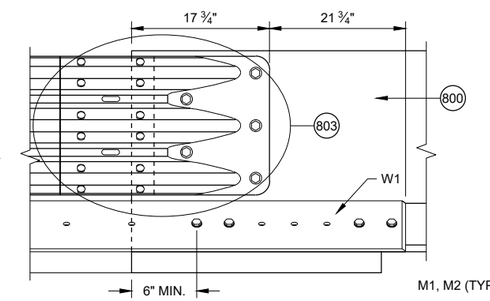

DETAIL G

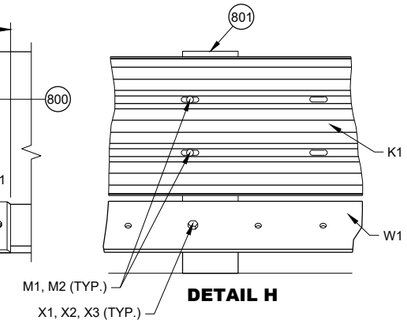

DETAIL H

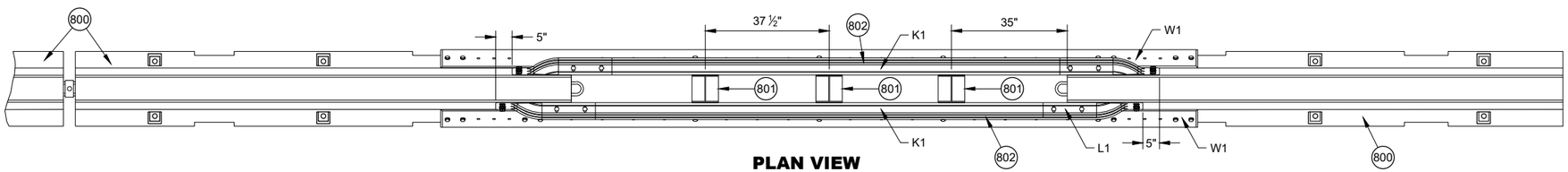

PLAN VIEW

GENERAL NOTES

(800) FREE STANDING TEMPORARY BARRIER

(801) GAP STIFFENER ASSEMBLY

(802) THRIE BEAMS ARE NESTED ON BOTH SIDES OF THE TEMPORARY BARRIER.

(803) SEE THRIE BEAM RAIL TERMINAL CONNECTOR DETAIL

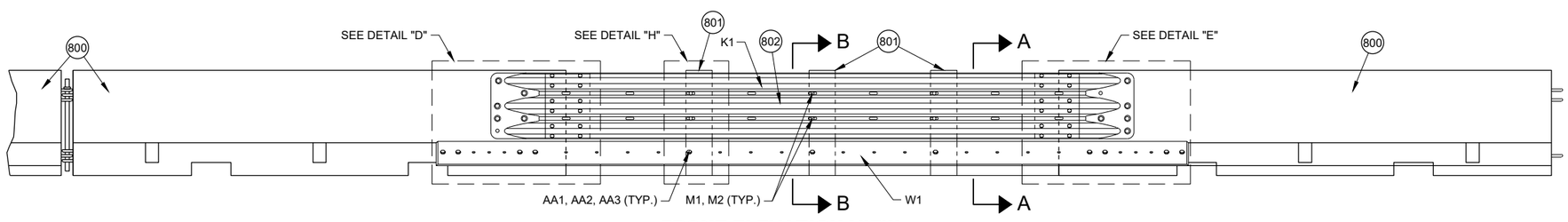

FRONT ELEVATION VIEW

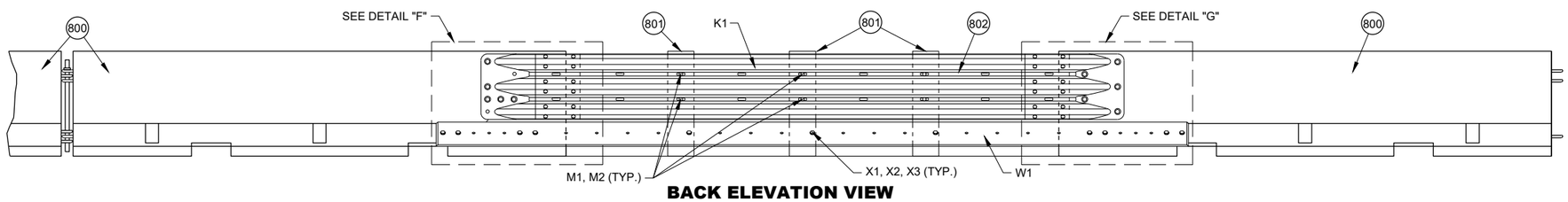

BACK ELEVATION VIEW

PORTABLE CONCRETE BARRIER GAP THRIE BEAM COVER

CONCRETE BARRIER TEMPORARY PRECAST, 12' - 6"

STATE OF WISCONSIN
DEPARTMENT OF TRANSPORTA

6

SDD 14B07-16h

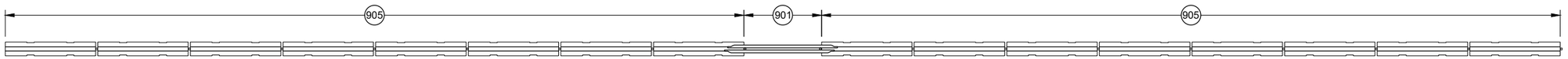

PLAN VIEW
GAP WITHIN SPACING

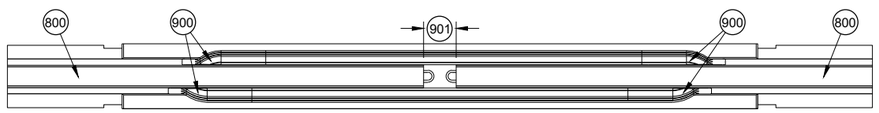

PLAN VIEW
TEMPORARY BARRIER GAP OVER 4" TO 1' MAX. (904)

GENERAL NOTES

(900) SEE OTHER DETAILS FOR TEMPORARY GAP HARDWARE (TYP.)

(901) TEMPORARY BARRIER GAP

(902) GAP STIFFENER ASSEMBLY CENTERED IN THE GAP.

(903) GAP STIFFENER ASSEMBLY IS OFFSET 18 ¾" FROM CENTER

(904) MINIMUM NUMBER OF GAP STIFFENERS SHOWN FOR THE GAP RANGE SHOWN.

(905) MINIMUM OF 8 CONTINUOUS FREE STANDING TEMPORARY BARRIERS

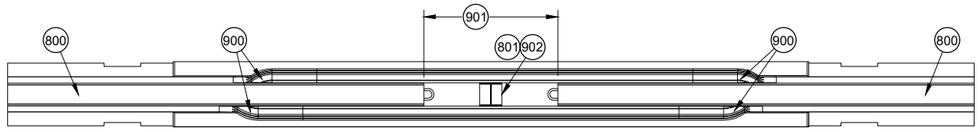

PLAN VIEW
TEMPORARY BARRIER GAP OVER 1' TO 4' MAX. (904)

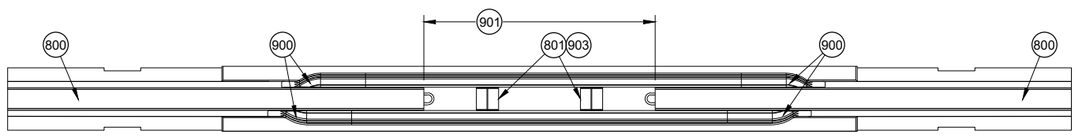

PLAN VIEW
TEMPORARY BARRIER GAP OVER 4' TO 7' MAX. (904)

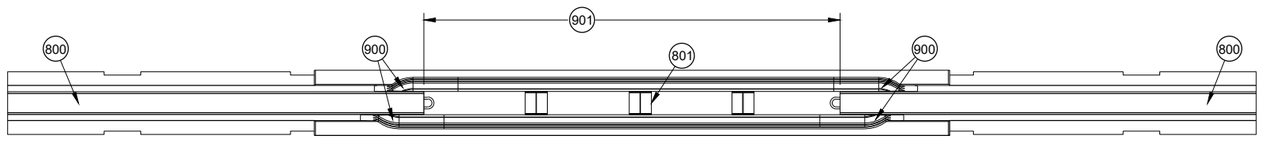

PLAN VIEW
TEMPORARY BARRIER GAP OVER 7' TO 12.5' MAX. (904)

CONCRETE BARRIER TEMPORARY PRECAST, 12' - 6"

STATE OF WISCONSIN
DEPARTMENT OF TRANSPORTAT

6

SDD 14B07-16i

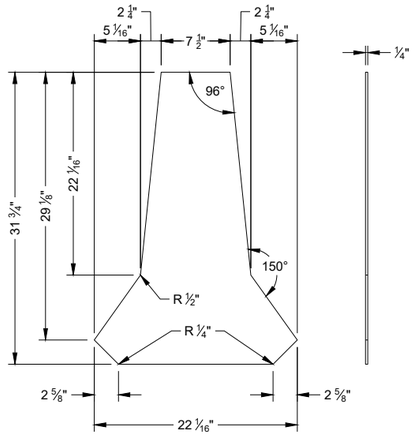

PROFILE VIEW

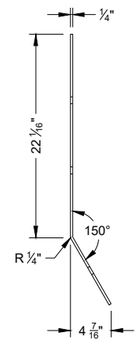

SIDE VIEW

STIFFENER ASSEMBLY CENTER PANEL U1

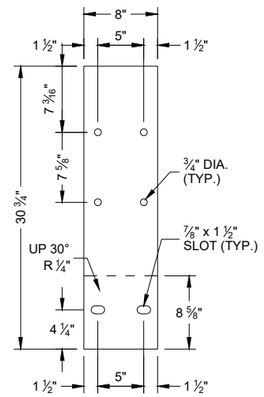

FLAT PATTERN

STIFFENER ASSEMBLY SIDE PANEL U2

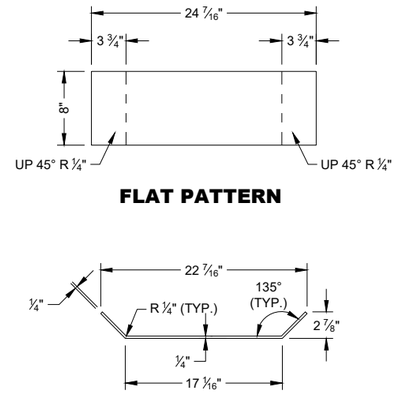

FLAT PATTERN

PROFILE VIEW

STIFFENER ASSEMBLY BOTTOM PANEL U3

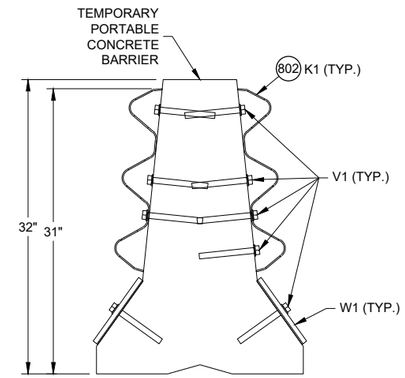

SECTION A - A

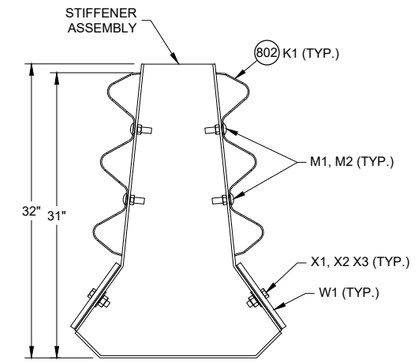

SECTION B - B

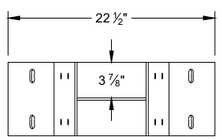

PLAN VIEW

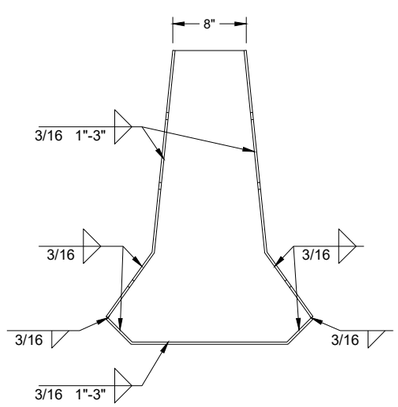

PROFILE VIEW

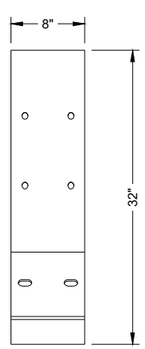

SIDE VIEW

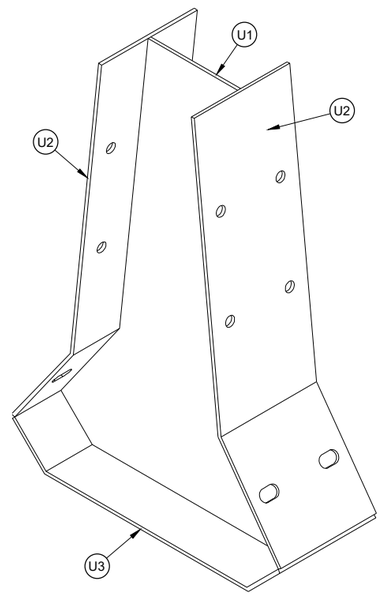

ISOMETRIC

GAP STIFFENER ASSEMBLY

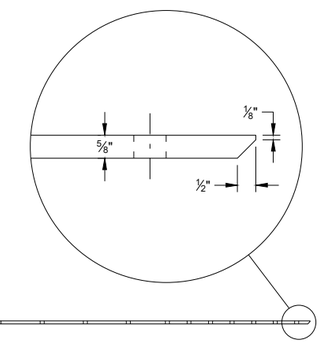

PLAN VIEW

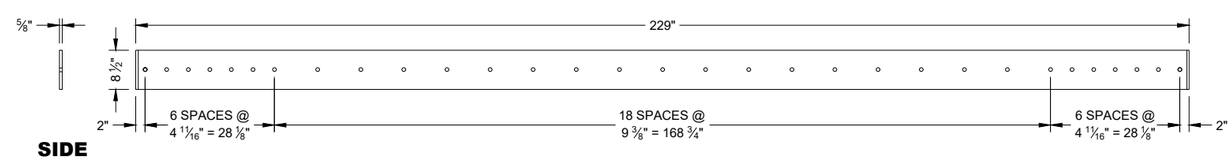

SIDE VIEW

ELEVATION VIEW

W1 TOE PLATE

6

6

SDD 14B07-16j

SDD 14B07-16j

CONCRETE BARRIER TEMPORARY PRECAST, 12' - 6"

STATE OF WISCONSIN
DEPARTMENT OF TRANSPORTAT

GENERAL NOTES

(1100) 1" DIA. HOLE

(1101) ¾" DIA. HOLE

(1102) PROVIDE HOLES IN THRIE BEAM TERMINAL CONNECTOR TO LIMIT STEEL REINFORCEMENT OR LOOP BAR CONFLICT. CONTRACTOR MAY FIELD DRILL ADDITIONAL HOLE OR PROVIDE THRIE BEAM TERMINAL CONNECTOR WITH ADDITIONAL HOLES FROM SUPPLIER.

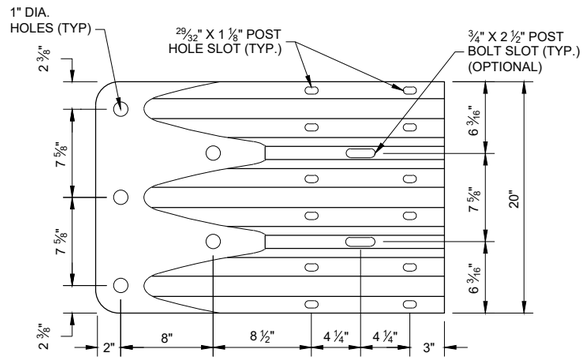

ELEVATION VIEW

THRIE BEAM TERMINAL CONNECTOR

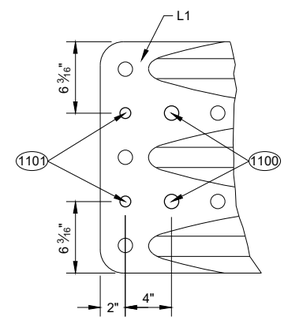

ELEVATION VIEW

ADDITIONAL THRIE BEAM (1102) TERMINAL CONNECTOR HOLE DETAIL

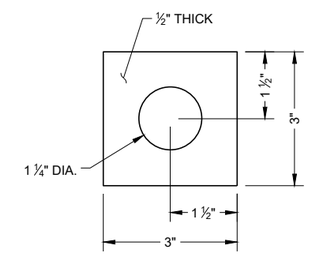

PLATE WASHER DETAIL G2, H3

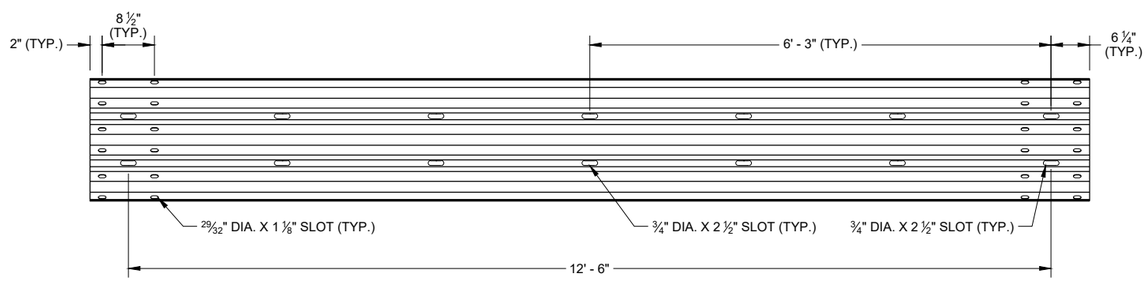

SLOTTED THRIE BEAM RAIL K1

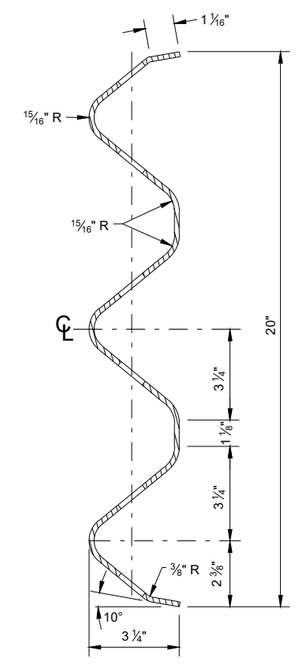

SECTION THROUGH BEAM K1

CONCRETE BARRIER TEMPORARY PRECAST, 12' - 6"

STATE OF WISCONSIN
DEPARTMENT OF TRANSPORTAT

6

SDD 14B07-16k

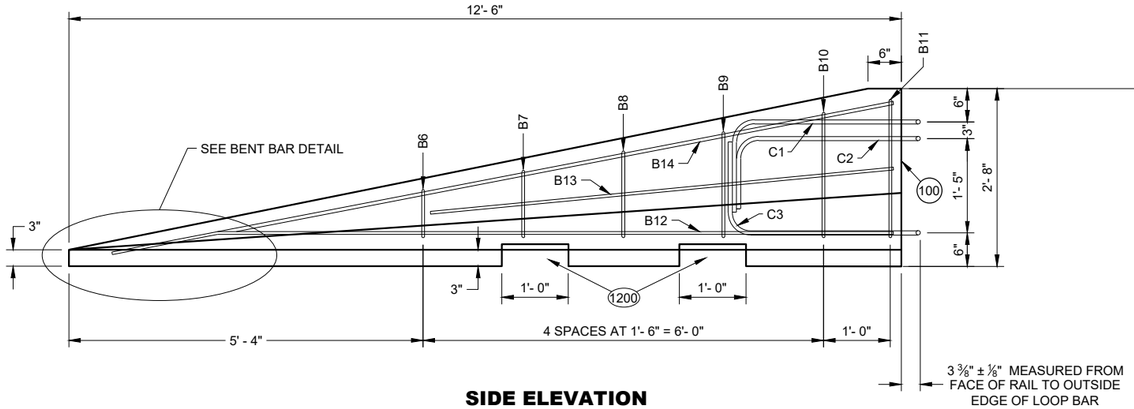

SIDE ELEVATION
(FOR CONNECTION TO LEFT END OF BARRIER)

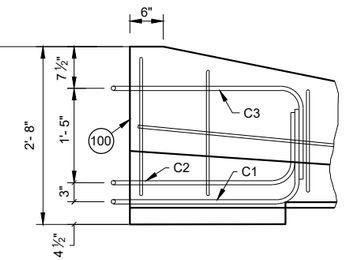

SIDE ELEVATION
LOOP BAR ASSEMBLY INVERTED FOR OPPOSITE END
(FOR CONNECTION TO RIGHT END OF BARRIER)

GENERAL NOTES

1200 SEE LIFTING SLOT DETAIL. LOCATION OF LIFTING SLOTS DETERMINED BY CONTRACTOR.

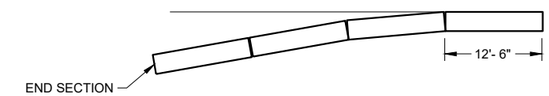

FLARE AT BARRIER END

POSTED SPEED, (MPH)	FLARE RATE
40 OR LESS	6:1
45 OR GREATER	8:1

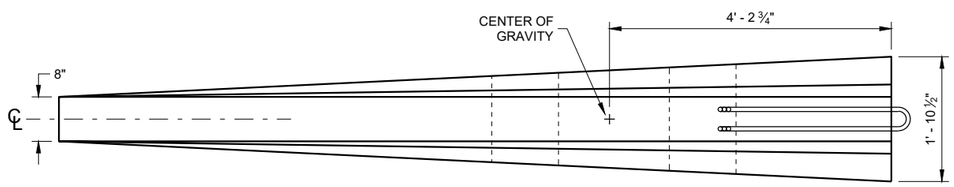

PLAN VIEW

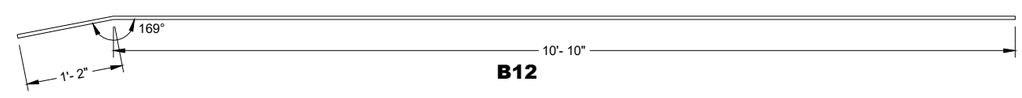

B12

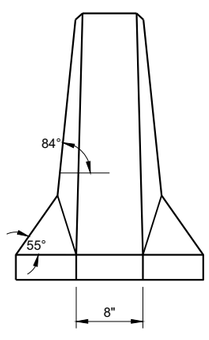

FRONT ELEVATION

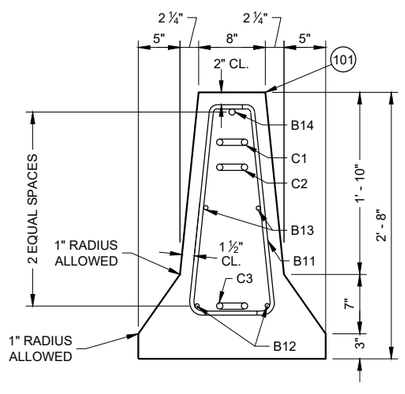

END SECTION

DETAILS OF BARRIER TAPER SECTION

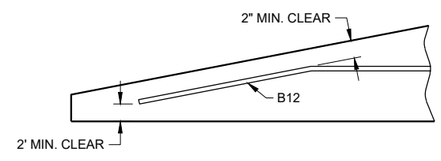

BENT BAR DETAIL

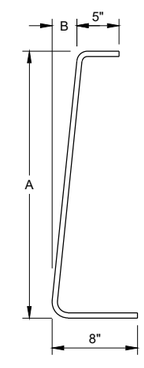

BAR	A	B
B6	10"	1"
B7	1'- 1"	1 ¼"
B8	1'- 5"	1 ⅝"
B9	1'- 8"	1 ⅞"
B10	2'- 0 ½"	2 ⅜"
B11	2'- 3"	2 ¾"

B BARS
2 OF EACH SIZE REQUIRED FOR STIRRUP ASSEMBLY

CONCRETE BARRIER TEMPORARY PRECAST, 12' - 6"

STATE OF WISCONSIN
DEPARTMENT OF TRANSPORTATION

6

SDD 14B07-16I

BILL OF MATERIALS - CONCRETE BARRIER PRECAST

PART	DESCRIPTION	MATERIALS SPECIFICATIONS	NOTES
A1	PRECAST TEMPORARY BARRIER - CONCRETE	MIN. = f'c 5000 PSI	
B1	REBAR	STANDARD SPEC. 505.2 GRADE 60 UNCOATED REBAR	#5 REBAR, LENGTH 12'-2"
B2	REBAR	STANDARD SPEC. 505.2 GRADE 60 UNCOATED REBAR	#4 REBAR, LENGTH 12'-2"
B3	REBAR	STANDARD SPEC. 505.2 GRADE 60 UNCOATED REBAR	#5 REBAR, LENGTH 12'-2"
B4	REBAR	STANDARD SPEC. 505.2 GRADE 60 UNCOATED REBAR	#4 REBAR, LENGTH 6'-0"
B5	REBAR	STANDARD SPEC. 505.2 GRADE 60 UNCOATED REBAR	#6 REBAR, LENGTH 2'-11"
B6	REBAR	STANDARD SPEC. 505.2 GRADE 60 UNCOATED REBAR	#4 REBAR, LENGTH 1'-11"
B7	REBAR	STANDARD SPEC. 505.2 GRADE 60 UNCOATED REBAR	#4 REBAR, LENGTH 2'-2"
B8	REBAR	STANDARD SPEC. 505.2 GRADE 60 UNCOATED REBAR	#4 REBAR, LENGTH 2'-6"
B9	REBAR	STANDARD SPEC. 505.2 GRADE 60 UNCOATED REBAR	#4 REBAR, LENGTH 2'-9"
B10	REBAR	STANDARD SPEC. 505.2 GRADE 60 UNCOATED REBAR	#4 REBAR, LENGTH 3'-2"
B11	REBAR	STANDARD SPEC. 505.2 GRADE 60 UNCOATED REBAR	#4 REBAR, LENGTH 3'-4"
B12	REBAR	STANDARD SPEC. 505.2 GRADE 60 UNCOATED REBAR	#4 REBAR, LENGTH 12'-0"
B13	REBAR	STANDARD SPEC. 505.2 GRADE 60 UNCOATED REBAR	#4 REBAR, LENGTH 7'-9"
B14	REBAR	STANDARD SPEC. 505.2 GRADE 60 UNCOATED REBAR	#5 REBAR, LENGTH 11'-9"
C1	LOOP BAR	ASTM A709 GRADE 70 SMOOTH BAR OR ASTM A706 GRADE 60 REBAR UNCOATED	¾" DIA.
C2	LOOP BAR	ASTM A709 GRADE 70 SMOOTH BAR OR ASTM A706 GRADE 60 REBAR UNCOATED	¾" DIA.
C3	LOOP BAR	ASTM A709 GRADE 70 SMOOTH BAR OR ASTM A706 GRADE 60 REBAR UNCOATED	¾" DIA.
D1	CONNECTION PIN - ROD	ASTM A36 MIN. STRENGTH 36 KSI / ASTM A529 MAX. STRENGTH 50 KSI / ASTM A572 MAX STRENGTH 50 KSI / ASTM A709 MAX STRENGTH 50 KSI / ASTM A992 MAX STRENGTH 50 KSI	1 ¼" DIA.
D2	CONNECTION PIN - TOP PLATE	ASTM A36 MIN. STRENGTH 36 KSI / ASTM A529 MAX. STRENGTH 50 KSI / ASTM A572 MAX STRENGTH 50 KSI / ASTM A709 MAX STRENGTH 50 KSI / ASTM A992 MAX STRENGTH 50 KSI	
G1	BOLT THROUGH ANCHOR - THREADED ROD	HOT DIP AASHTO M232 CLASS / ASTM A153 CLASS C / ASTM F2329 C OR MECHANICAL GALVANIZE TO AASHTO M298 CLASS 55 TYPE 2 / ASTM B695 CLASS 55 TYPE 2 A307 GRADE A OR SAE J429 GRADE 2 UNC	1 ⅛" DIA.
G2	BOLT THROUGH ANCHOR - WASHER, SQUARE	ASTM A36 MIN. STRENGTH 36 KSI / ASTM A529 MAX. STRENGTH 50 KSI / ASTM A572 MAX STRENGTH 50 KSI / ASTM A709 MAX STRENGTH 50 KSI / ASTM A992 MAX STRENGTH 50 KSI	
G3	BOLT THROUGH ANCHOR - NUT	HOT DIP AASHTO M232 CLASS / ASTM A153 CLASS C / ASTM F2329 C OR MECHANICAL GALVANIZE TO AASHTO M298 CLASS 55 TYPE 2 / ASTM B695 CLASS 55 UNC OVER TAP NUTS AS SPECIFIED IN AASHTO 291 / ASTM A 563 HEAVY HEX HEAD ASTM A563DH OR SAE J995 GRADE 5	
H1	ADHESIVE ANCHOR - ADHESIVE	ICC-ES-AC308 5 ¼" EMBEDMENT WITH A MIN. BOND STRENGTH OF 1,650 PSI. SEE 603.2 AND 603.3.1.2 OF THE WISCONSIN STANDARD SPECIFICATIONS FOR MORE INFORMATION ON ADHESIVE ANCHORS.	
H2	ADHESIVE ANCHOR - THREADED ROD	HOT DIP AASHTO M232 CLASS / ASTM A153 CLASS C / ASTM F2329 C OR MECHANICAL GALVANIZE TO AASHTO M298 CLASS 55 TYPE 2 / ASTM B695 CLASS 55 TYPE 2 A307 GRADE A / SAE J429 GRADE 2 UNC	1 ⅛" DIA.
H3	ADHESIVE ANCHOR - WASHER, SQUARE	ASTM A36 MIN. STRENGTH 36 KSI / ASTM A529 MAX. STRENGTH 50 KSI / ASTM A572 MAX STRENGTH 50 KSI / ASTM A709 MAX STRENGTH 50 KSI / ASTM A992 MAX STRENGTH 50 KSI	
H4	ADHESIVE ANCHOR - NUT	HOT DIP AASHTO M232 CLASS / ASTM A153 CLASS C / ASTM F2329 C OR MECHANICAL GALVANIZE TO AASHTO M298 CLASS 55 TYPE 2 / ASTM B695 CLASS 55 UNC OVER TAP NUTS AS SPECIFIED IN AASHTO 291 / ASTM A 563 HEAVY HEX HEAD ASTM A563DH OR SAE J995 GRADE 5	
J1	ASPHALT ANCHOR PIN - ROD	ASTM A36 MIN. STRENGTH 36 KSI / ASTM A529 MAX. STRENGTH 50 KSI / ASTM A572 MAX STRENGTH 50 KSI / ASTM A709 MAX STRENGTH 50 KSI / ASTM A992 MAX STRENGTH 50 KSI	1 ½" DIA.
J2	ASPHALT ANCHOR PIN - STOP PLATE	ASTM A36 MIN. STRENGTH 36 KSI / ASTM A529 MAX. STRENGTH 50 KSI / ASTM A572 MAX STRENGTH 50 KSI / ASTM A709 MAX STRENGTH 50 KSI / ASTM A992 MAX STRENGTH 50 KSI	
K1	THRIE BEAM RAIL	AASHTO M180 CLASS A TYPE 2 APPROVED PRODUCER	12 GAUGE
L1	THRIE BEAM RAIL - TERMINAL	AASHTO M180 CLASS A TYPE 2 APPROVED PRODUCER	12 GAUGE

PART	DESCRIPTION	MATERIALS SPECIFICATIONS	NOTES
M1	SPLICE BOLT	HOT DIP AASHTO M232 CLASS / ASTM A153 CLASS C / ASTM F2329 C OR MECHANICAL GAL. TO AASHTO M298 CLASS 55 TYPE 2 / ASTM B695 CLASS 55 TYPE 2 UNC AASHTO M180 HEAD ASTM A307 GRADE B OR SAE J429 GRADE 2 OR ASTM F1554 GRADE 36	⅝" DIA.
M2	SPLICE BOLT - NUT	HOT DIP AASHTO M232 CLASS / ASTM A153 CLASS C / ASTM F2329 C OR MECHANICAL GALVANIZE TO AASHTO M298 CLASS 55 TYPE 2 / ASTM B695 CLASS 55 UNC OVER TAP NUTS AS SPECIFIED IN AASHTO 291 / ASTM A 563 AASHTO M180 RECESSED HEAVY HEX HEAD ASTM A563DH OR SAE J995 GRADE 5	
N1	THRIE BEAM RAIL TERMINAL - MECHANICAL ANCHOR	HOT DIP AASHTO M232 CLASS / ASTM A153 CLASS C / ASTM F2329 C OR MECHANICAL GALVANIZE TO AASHTO M298 CLASS 55 TYPE 2 / ASTM B695 CLASS 55 UNC OVER TAP NUTS AS SPECIFIED IN AASHTO 291 / ASTM A 563 AASHTO M180 RECESSED HEAVY HEX HEAD ASTM A563DH OR SAE J995 GRADE 5	¾" DIA. LENGTH 6"
N2	THRIE BEAM RAIL TERMINAL - WASHER	HOT DIP AASHTO M232 CLASS / ASTM A153 CLASS C / ASTM F2329 C OR MECHANICAL GALVANIZE TO AASHTO M298 CLASS 55 TYPE 2 / ASTM B695 CLASS 55 TYPE 2 F436 TYPE 1	
N3	THRIE BEAM RAIL TERMINAL MECHANICAL OR ADHESIVE ANCHOR	MINIMUM MECHANICAL OR ADHESIVE ANCHOR STRENGTH REQUIREMENTS: ULTIMATE TENSILE LOAD 17.9 KIPS AND ULTIMATE SHEAR LOAD 21.96 KIPS. SEE 603.2 AND 603.3.1.2 OF THE WISCONSIN STANDARD SPECIFICATIONS FOR MORE INFORMATION ON ADHESIVE ANCHORS.	
P1	THRIE BEAM RAIL CONNECTION 1-BOLT	HOT DIP AASHTO M232 CLASS / ASTM A153 CLASS C / ASTM F2329 C OR MECHANICAL GALVANIZE TO AASHTO M298 CLASS 55 TYPE 2 / ASTM B695 CLASS 55 UNC OVER TAP NUTS AS SPECIFIED IN AASHTO 291 / ASTM A 563 AASHTO M180 RECESSED HEAVY HEX HEAD ASTM A563DH OR SAE J995 GRADE 5	¾" DIA.
P2	THRIE BEAM RAIL CONNECTION 1-WASHER	HOT DIP AASHTO M232 CLASS / ASTM A153 CLASS C / ASTM F2329 C OR MECHANICAL GAL. TO AASHTO M298 CLASS 55 TYPE 2 / ASTM B695 CLASS 55 TYPE 2 F436 TYPE 1	
P3	THRIE BEAM RAIL CONNETION 1- MECHANICAL OR ADHESIVE ANCHOR	MINIMUM MECHANICAL OR ADHESIVE ANCHOR STRENGTH REQUIREMENTS: ULTIMATE TENSILE LOAD 9.48 KIPS AND ULTIMATE SHEAR LOAD 10.48 KIPS. SEE 603.2 AND 603.3.1.2 OF THE WISCONSIN STANDARD SPECIFICATIONS FOR MORE INFORMATION ON ADHESIVE ANCHORS.	
Q1	BLOCK WOOD	SEE STANDARD SPEC. 614	
R1	CAP - BOLT	HOT DIP AASHTO M232 CLASS / ASTM A153 CLASS C / ASTM F2329 C OR MECHANICAL GALVANIZE TO AASHTO M298 CLASS 55 TYPE 2 / ASTM B695 CLASS 55 UNC OVER TAP NUTS AS SPECIFIED IN AASHTO 291 / ASTM A 563 AASHTO M180 RECESSED HEAVY HEX HEAD ASTM A563DH OR SAE J995 GRADE 5	⅝" DIA.
R2	CAP- BOLT - WASHER	HOT DIP AASHTO M232 CLASS / ASTM A153 CLASS C / ASTM F2329 C OR MECHANICAL GAL. TO AASHTO M298 CLASS 55 TYPE 2 / ASTM B695 CLASS 55 TYPE 2 F436 TYPE 1	
R3	CAP - BOLT - MECHANICAL ANCHOR	MINIMUM MECHANICAL OR ADHESIVE ANCHOR STRENGTH REQUIREMENTS ULTIMATE TENSILE LOAD 12.14 KIPS AND ULTIMATE SHEAR LOAD 17.5 KIPS.SEE 603.2 AND 603.3.1.2 OF THE WISCONSIN STANDARD SPECIFICATIONS FOR MORE INFORMATION ON ADHESIVE ANCHORS.	12 GAUGE
S1	CAP 42-INCH TOP PLATE	AASHTO M111 / ASTM A123 ASTM A36 MIN. STRENGTH 36 KSI, OR ASTM A529 MAX. STRENGTH 50 KSI, OR ASTM A572 MAX. STRENGTH 50 KSI, OR ASTM A709 MAX. STRENGTH 50 KSI, OR ASTM A992 MAX. STRENGTH 50 KSI	12 GAUGE
S2	CAP 42-INCH END PLATE	AASHTO M111 / ASTM A123 ASTM A36 MIN. STRENGTH 36 KSI, OR ASTM A529 MAX. STRENGTH 50 KSI, OR ASTM A572 MAX. STRENGTH 50 KSI, OR ASTM A709 MAX. STRENGTH 50 KSI, OR ASTM A992 MAX. STRENGTH 50 KSI	12 GAUGE
S3	CAP 42-INCH SIDE PLATE	AASHTO M111 / ASTM A123 ASTM A36 MIN. STRENGTH 36 KSI, OR ASTM A529 MAX. STRENGTH 50 KSI, OR ASTM A572 MAX. STRENGTH 50 KSI, OR ASTM A709 MAX. STRENGTH 50 KSI, OR ASTM A992 MAX. STRENGTH 50 KSI	12 GAUGE
S4	CAP 42-INCH GUSSET 1	AASHTO M111 / ASTM A123 ASTM A36 MIN. STRENGTH 36 KSI, OR ASTM A529 MAX. STRENGTH 50 KSI, OR ASTM A572 MAX. STRENGTH 50 KSI, OR ASTM A709 MAX. STRENGTH 50 KSI, OR ASTM A992 MAX. STRENGTH 50 KSI	12 GAUGE
S5	CAP 42-INCH GUSSET 2	AASHTO M111 / ASTM A123 ASTM A36 MIN. STRENGTH 36 KSI, OR ASTM A529 MAX. STRENGTH 50 KSI, OR ASTM A572 MAX. STRENGTH 50 KSI, OR ASTM A709 MAX. STRENGTH 50 KSI, OR ASTM A992 MAX. STRENGTH 50 KSI	12 GAUGE
S6	CAP 42-INCH GUSSET 3	AASHTO M111 / ASTM A123 ASTM A36 MIN. STRENGTH 36 KSI, OR ASTM A529 MAX. STRENGTH 50 KSI, OR ASTM A572 MAX. STRENGTH 50 KSI, OR ASTM A709 MAX. STRENGTH 50 KSI, OR ASTM A992 MAX. STRENGTH 50 KSI	12 GAUGE
S7	CAP 42-INCH GUSSET 4	AASHTO M111 / ASTM A123 ASTM A36 MIN. STRENGTH 36 KSI, OR ASTM A529 MAX. STRENGTH 50 KSI, OR ASTM A572 MAX. STRENGTH 50 KSI, OR ASTM A709 MAX. STRENGTH 50 KSI, OR ASTM A992 MAX. STRENGTH 50 KSI	12 GAUGE

CONCRETE BARRIER TEMPORARY PRECAST, 12' - 6"

STATE OF WISCONSIN
DEPARTMENT OF TRANSPORTAT

6

SDD 14B07-16m

BILL OF MATERIALS - CONCRETE BARRIER PRECAST

PART	DESCRIPTION	MATERIALS SPECIFICATIONS	NOTES
T1	CAP 56-INCH TOP PLATE	AASHTO M111 / ASTM A123 ASTM A36 MIN. STRENGTH 36 KSI, OR ASTM A529 MAX. STRENGTH 50 KSI, OR ASTM A572 MAX. STRENGTH 50 KSI, OR ASTM A709 MAX. STRENGTH 50 KSI, OR ASTM A992 MAX. STRENGTH 50 KSI	12 GAUGE
T2	CAP 56-INCH END PLATE	AASHTO M111 / ASTM A123 ASTM A36 MIN. STRENGTH 36 KSI, OR ASTM A529 MAX. STRENGTH 50 KSI, OR ASTM A572 MAX. STRENGTH 50 KSI, OR ASTM A709 MAX. STRENGTH 50 KSI, OR ASTM A992 MAX. STRENGTH 50 KSI	12 GAUGE
T3	CAP 56-INCH SIDE PLATE 1	AASHTO M111 / ASTM A123 ASTM A36 MIN. STRENGTH 36 KSI, OR ASTM A529 MAX. STRENGTH 50 KSI, OR ASTM A572 MAX. STRENGTH 50 KSI, OR ASTM A709 MAX. STRENGTH 50 KSI, OR ASTM A992 MAX. STRENGTH 50 KSI	12 GAUGE
T4	CAP 56-INCH SIDE PLATE 2	AASHTO M111 / ASTM A123 ASTM A36 MIN. STRENGTH 36 KSI, OR ASTM A529 MAX. STRENGTH 50 KSI, OR ASTM A572 MAX. STRENGTH 50 KSI, OR ASTM A709 MAX. STRENGTH 50 KSI, OR ASTM A992 MAX. STRENGTH 50 KSI	12 GAUGE
T5	CAP 56-INCH GUSSET 1	AASHTO M111 / ASTM A123 ASTM A36 MIN. STRENGTH 36 KSI, OR ASTM A529 MAX. STRENGTH 50 KSI, OR ASTM A572 MAX. STRENGTH 50 KSI, OR ASTM A709 MAX. STRENGTH 50 KSI, OR ASTM A992 MAX. STRENGTH 50 KSI	12 GAUGE
T6	CAP 56-INCH GUSSET 2	AASHTO M111 / ASTM A123 ASTM A36 MIN. STRENGTH 36 KSI, OR ASTM A529 MAX. STRENGTH 50 KSI, OR ASTM A572 MAX. STRENGTH 50 KSI, OR ASTM A709 MAX. STRENGTH 50 KSI, OR ASTM A992 MAX. STRENGTH 50 KSI	12 GAUGE
T7	CAP 56-INCH GUSSET 3	AASHTO M111 / ASTM A123 ASTM A36 MIN. STRENGTH 36 KSI, OR ASTM A529 MAX. STRENGTH 50 KSI, OR ASTM A572 MAX. STRENGTH 50 KSI, OR ASTM A709 MAX. STRENGTH 50 KSI, OR ASTM A992 MAX. STRENGTH 50 KSI	12 GAUGE
T8	CAP 42-INCH GUSSET 4	AASHTO M111 / ASTM A123 ASTM A36 MIN. STRENGTH 36 KSI, OR ASTM A529 MAX. STRENGTH 50 KSI, OR ASTM A572 MAX. STRENGTH 50 KSI, OR ASTM A709 MAX. STRENGTH 50 KSI, OR ASTM A992 MAX. STRENGTH 50 KSI	12 GAUGE
T9	CAP 42-INCH GUSSET 5	AASHTO M111 / ASTM A123 ASTM A36 MIN. STRENGTH 36 KSI, OR ASTM A529 MAX. STRENGTH 50 KSI, OR ASTM A572 MAX. STRENGTH 50 KSI, OR ASTM A709 MAX. STRENGTH 50 KSI, OR ASTM A992 MAX. STRENGTH 50 KSI	12 GAUGE
T10	CAP 42-INCH GUSSET 6	AASHTO M111 / ASTM A123 ASTM A36 MIN. STRENGTH 36 KSI, OR ASTM A529 MAX. STRENGTH 50 KSI, OR ASTM A572 MAX. STRENGTH 50 KSI, OR ASTM A709 MAX. STRENGTH 50 KSI, OR ASTM A992 MAX. STRENGTH 50 KSI	12 GAUGE
T11	CAP 42-INCH GUSSET 7	AASHTO M111 / ASTM A123 ASTM A36 MIN. STRENGTH 36 KSI, OR ASTM A529 MAX. STRENGTH 50 KSI, OR ASTM A572 MAX. STRENGTH 50 KSI, OR ASTM A709 MAX. STRENGTH 50 KSI, OR ASTM A992 MAX. STRENGTH 50 KSI	12 GAUGE
T12	CAP 42-INCH GUSSET 8	AASHTO M111 / ASTM A123 ASTM A36 MIN. STRENGTH 36 KSI, OR ASTM A529 MAX. STRENGTH 50 KSI, OR ASTM A572 MAX. STRENGTH 50 KSI, OR ASTM A709 MAX. STRENGTH 50 KSI, OR ASTM A992 MAX. STRENGTH 50 KSI	12 GAUGE
T13	CAP 42-INCH GUSSET 9	AASHTO M111 / ASTM A123 ASTM A36 MIN. STRENGTH 36 KSI, OR ASTM A529 MAX. STRENGTH 50 KSI, OR ASTM A572 MAX. STRENGTH 50 KSI, OR ASTM A709 MAX. STRENGTH 50 KSI, OR ASTM A992 MAX. STRENGTH 50 KSI	12 GAUGE
T14	CAP 42-INCH GUSSET 10	AASHTO M111 / ASTM A123 ASTM A36 MIN. STRENGTH 36 KSI, OR ASTM A529 MAX. STRENGTH 50 KSI, OR ASTM A572 MAX. STRENGTH 50 KSI, OR ASTM A709 MAX. STRENGTH 50 KSI, OR ASTM A992 MAX. STRENGTH 50 KSI	12 GAUGE
T15	CAP 42-INCH GUSSET 11	AASHTO M111 / ASTM A123 ASTM A36 MIN. STRENGTH 36 KSI, OR ASTM A529 MAX. STRENGTH 50 KSI, OR ASTM A572 MAX. STRENGTH 50 KSI, OR ASTM A709 MAX. STRENGTH 50 KSI, OR ASTM A992 MAX. STRENGTH 50 KSI	12 GAUGE
T16	CAP 42-INCH GUSSET 12	AASHTO M111 / ASTM A123 ASTM A36 MIN. STRENGTH 36 KSI, OR ASTM A529 MAX. STRENGTH 50 KSI, OR ASTM A572 MAX. STRENGTH 50 KSI, OR ASTM A709 MAX. STRENGTH 50 KSI, OR ASTM A992 MAX. STRENGTH 50 KSI	12 GAUGE
U1	GAP STIFFENER	AASHTO M111 / ASTM A123 ASTM A36 MIN. STRENGTH 36 KSI, OR ASTM A529 MAX. STRENGTH 50 KSI, OR ASTM A572 MAX. STRENGTH 50 KSI, OR ASTM A709 MAX. STRENGTH 50 KSI, OR ASTM A992 MAX. STRENGTH 50 KSI	
U2	GAP STIFFENER - CONNECTOR PLATE 1	AASHTO M111 / ASTM A123 ASTM A36 MIN. STRENGTH 36 KSI, OR ASTM A529 MAX. STRENGTH 50 KSI, OR ASTM A572 MAX. STRENGTH 50 KSI, OR ASTM A709 MAX. STRENGTH 50 KSI, OR ASTM A992 MAX. STRENGTH 50 KSI	
U3	GAP STIFFENER - CONNECTOR PLATE 2	AASHTO M111 / ASTM A123 ASTM A36 MIN. STRENGTH 36 KSI, OR ASTM A529 MAX. STRENGTH 50 KSI, OR ASTM A572 MAX. STRENGTH 50 KSI, OR ASTM A709 MAX. STRENGTH 50 KSI, OR ASTM A992 MAX. STRENGTH 50 KSI	

PART	DESCRIPTION	MATERIALS SPECIFICATIONS	NOTES
V1	THRIE BEAM RAIL TERMINAL MECHANICAL OR ADHESIVE ANCHOR	MINIMUM MECHANICAL OR ADHESIVE ANCHOR STRENGTH REQUIREMENTS ULTIMATE TENSILE LOAD 24.0 KIPS AND ULTIMATE SHEAR LOAD 21.5 KIPS. SEE 603.2 AND 603.3.1.2 OF THE WISCONSIN STANDARD SPECIFICATIONS FOR MORE INFORMATION ON ADHESIVE ANCHORS.	¾" DIA.
V2	GAP STIFFENER - BOLT - NUT	HOT DIP AASHTO M232 CLASS / ASTM A153 CLASS C / ASTM F2329 C O R MECHANICAL GALVANIZE TO AASHTO M298 CLASS 50 TYPE 1 / ASTM B695 CLASS 50 TYPE 1 UNC OVER TAP NUTS AS SPECIFIED IN AASHTO 291/ASTM A 563 HEAVY HEX HEAD ASTM A563DH OR SAE J995 GRADE 5	
W1	TOE PLATE	AASHTO M111/ASTM A123 ASTM A36 MIN STRENGTH 36 KSI, OR ASTM A529 MAX. STRENGTH 50 KSI, OR ASTM A572 MAX. STRENGTH 50 KSI, OR ASTM A709 MAX. STRENGTH 50 KSI, OR ASTM A992 MAX. STRENGTH 50 KSI	
X1	TOE PLATE - CONNECTION BOLT	HOT DIP AASHTO M232 CLASS / ASTM A153 CLASS C / ASTM F2329 C OR MECHANICAL GALVANIZE TO AASHTO M298 CLASS 55 TYPE 2 / ASTM B695 CLASS 55 TYPE 2 UNC HEAVY HEX HEAD OR AASTHO M180 HEAD, ASTM F3125 GRADE A325 TYPE 1 HEAVY HEX HEAD OR SAE J429 GRADE 5 HEAVY HEX HEAD / ASTM A449 TYPE 1 HEAVY HEX HEAD. BOLTS MAY BE FULLY THREADED. PROVIDE ENOUGH THREADING FOR PROPER TIGHTENING OF BOLT.	¾" DIA.
X2	TOE PLATE - CONNECTION BOLT - WASHER	HOT DIP AASHTO M232 CLASS / ASTM A153 CLASS C / ASTM F2329 C OR MECHANICAL GALVANIZE TO AASHTO M298 CLASS 55 TYPE 2 / ASTM B695 CLASS 55 TYPE 2 F436 TYPE 1 (HARDEN WASHER ONLY)	
X3	TOE PLATE - CONNECTION BOLT - NUT	HOT DIP AASHTO M232 CLASS / ASTM A153 CLASS C / ASTM F2329 C OR MECHANICAL GALVANIZE TO AASHTO M298 CLASS 55 TYPE 2 / ASTM B695 CLASS 55 UNC OVER TAP NUTS AS SPECIFIED IN AASHTO 291 / ASTM A 563 HEAVY HEX HEAD ASTM A563DH OR SAE J995 GRADE 5	

CONCRETE BARRIER TEMPORARY PRECAST, 12' - 6"

STATE OF WISCONSIN
DEPARTMENT OF TRANSPORTATION

APPROVED
February 2023 — DATE
/S/ Rodney Taylor — ROADWAY STANDARDS DEVE ENGINEER
FHWA

6
SDD 14B07-16n

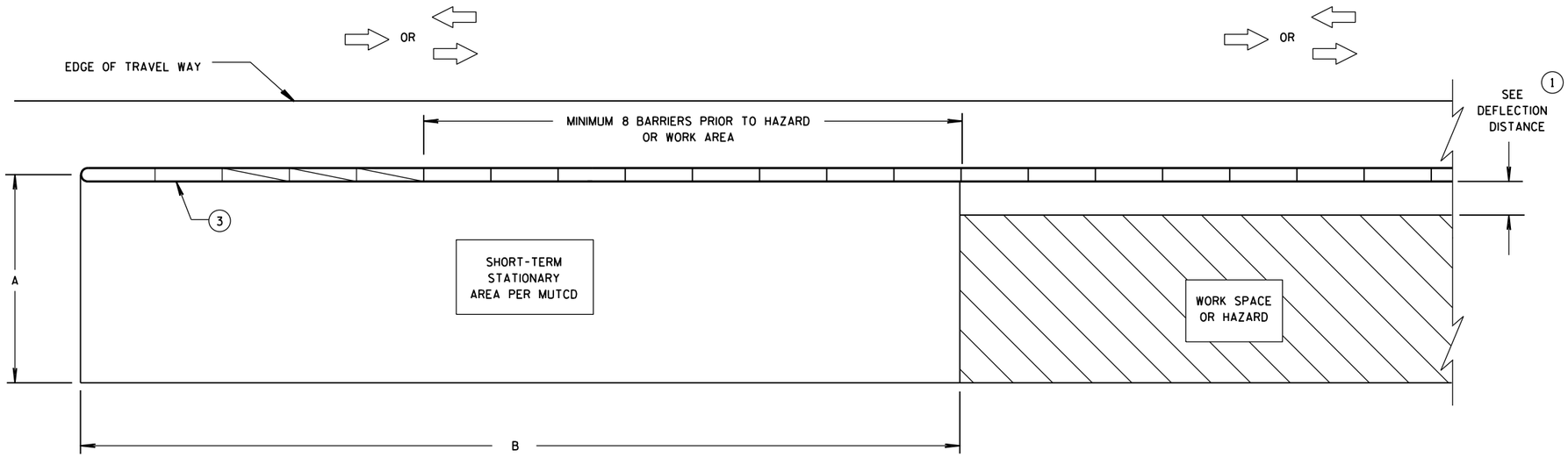

CRASH CUSHION/SAND BARREL ARRAY AND TEMPORARY BARRIER INSTALLATION FOR TRAFFIC ON ONE SIDE OF BARRIER

DIMENSION A TABLE (2)

FACILITY	POSTED SPEED MPH	DIMENSION A MIN. FT	DIMENSION A MAX. FT
FREEWAY/EXPRESSWAY	ALL	15	20
NON-FREEWAY/EXPRESSWAY	GREATER THAN OR EQUAL TO 45	10	15
NON-FREEWAY/EXPRESSWAY	LESS THAN 45	8	10
AADT LESS THAN 1,500	ALL	8	10

DIMENSION B TABLE (2)

POSTED SPEEDS MPH	DIMENSION B FT
20	115
25	155
30	200
35	250
40	305
45	360
50	425
55	495
60	570
65	645

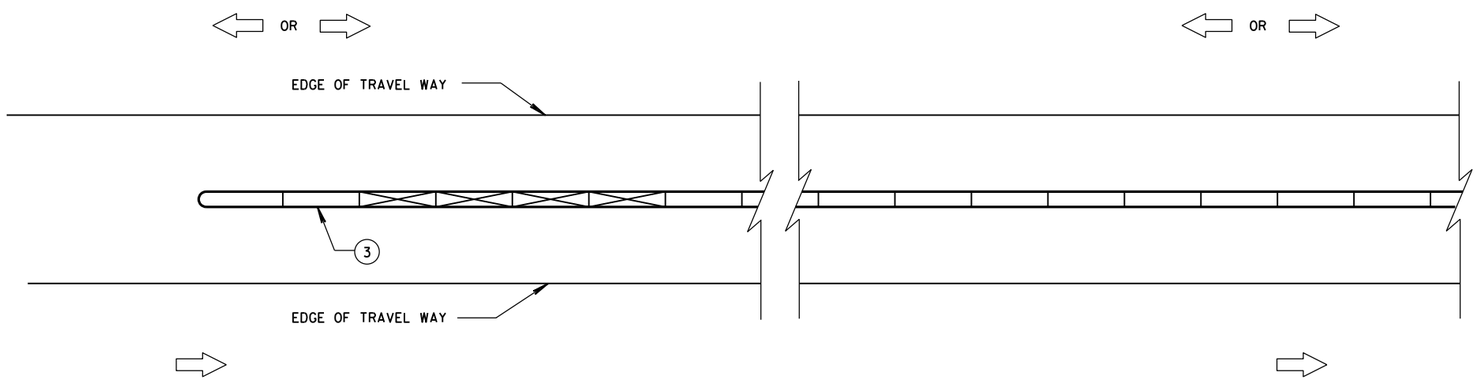

CRASH CUSHION/SAND BARREL ARRAY AND TEMPORARY BARRIER INSTALLATION FOR TRAFFIC ON BOTH SIDES OF BARRIER

LEGEND

- DIRECTION OF TRAVEL
- CRASH CUSHION OR SAND BARREL ARRAY
- SEE FREE STANDING TRANSITION TO TIED-DOWN SYSTEM DETAILS
- SEE BI-DIRECTIONAL TRANSITION TO TIED-DOWN SYSTEM DETAILS
- 3 PINS PLACED ON TRAFFIC SIDE OF BARRIER
- PERMANENT CONCRETE BARRIER OR CONCRETE PARAPET
- FREE STANDING TEMPORARY BARRIER

GENERAL NOTES

SEE STANDARD DETAIL DRAWING 14B7 FOR MORE INFORMATION.

DETAILS PROVIDE A GENERAL LAYOUT OF TEMPORARY CONCRETE BARRIER, CRASH CUSHIONS, SAND BARREL ARRAYS AND TIE DOWN TRANSITIONS. DETAILS PROVIDED MAY NOT FIT ALL POSSIBLE SITUATIONS OR SITE CONDITIONS. SEE OTHER SECTIONS OF THE CONTRACT OR PROJECT ENGINEER FOR MORE DETAILS.

ADDITIONAL TEMPORARY BARRIER MAY BE REQUIRED TO PROTECT TRAVELING PUBLIC FROM HAZARDS, CONTRACTOR'S OPERATIONS OR TO CONTROL TRAFFIC.

TEMPORARY BARRIER MAY BE REQUIRED TO BE ANCHORED TO PAVEMENT OR BRIDGE DECK.

FOR DETAILS ON CRASH CUSHION OR SAND BARREL ARRAYS SEE OTHER SECTIONS OF THE PLAN AND MANUFACTURE'S DETAILS.

SLOPES LEADING TO TEMPORARY BARRIER, CRASH CUSHION OR SAND BARREL ARRAY ARE 10:1 OR LESS.

(1) FOR DEFLECTION INFORMATION SEE STANDARD DETAIL DRAWING 14B7.

(2) VALUES PROVIDED MAY NOT FIT ALL POSSIBLE SITUATIONS OR SITE CONDITIONS. SEE OTHER SECTIONS OF THE CONTRACT OR PROJECT ENGINEER FOR MORE DETAILS.

(3) ANCHOR TEMPORARY BARRIER ACCORDING TO CRASH CUSHION OR SAND BARREL MANUFACTURER'S RECOMMENDATIONS. IF MANUFACTURER'S RECOMMENDATIONS ARE NOT PROVIDED, ANCHOR 3 PINS ON TRAFFIC SIDE.

CRASH CUSHION/SAND BARREL ARRAY AND OTHER TEMPORARY BARRIER LAYOUT DETAILS

STATE OF WISCONSIN
DEPARTMENT OF TRANSPOR

6

S.D.D. 14 B 8-2a

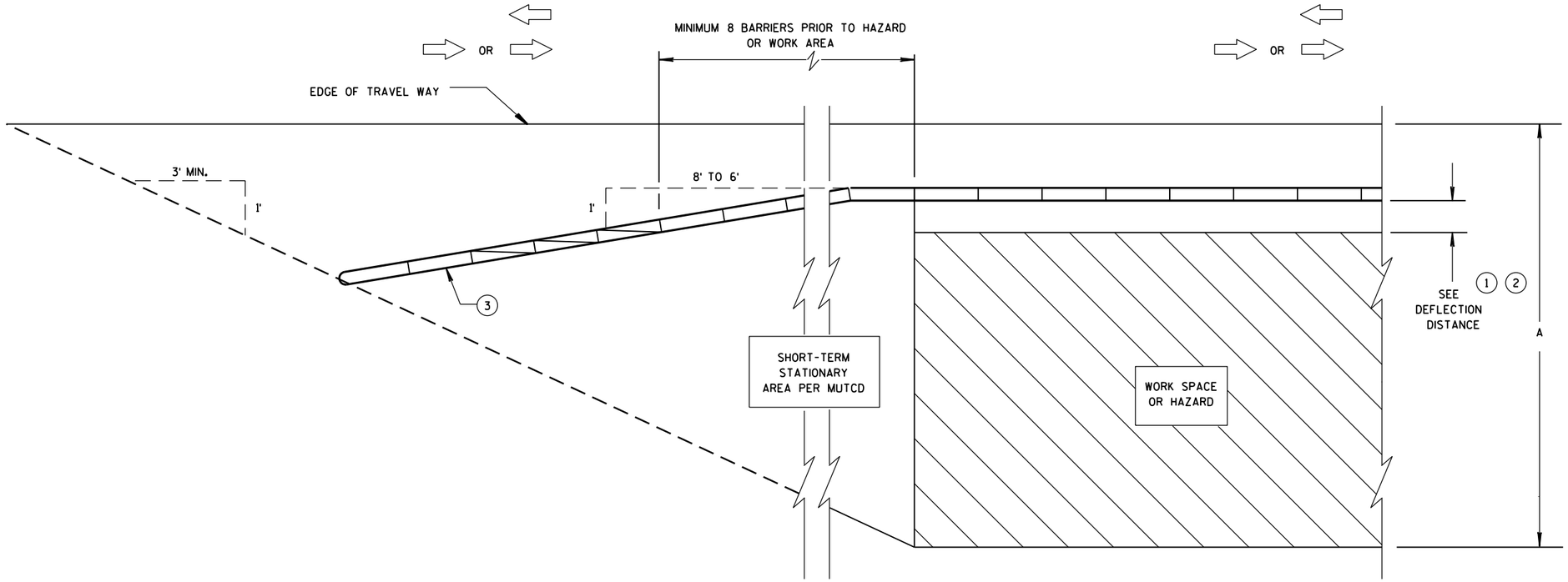

CRASH CUSHION/SAND BARREL ARRAY AND TEMPORARY BARRIER INSTALLATION FOR TRAFFIC ON ONE SIDE - FLARED INSTALLATION

6

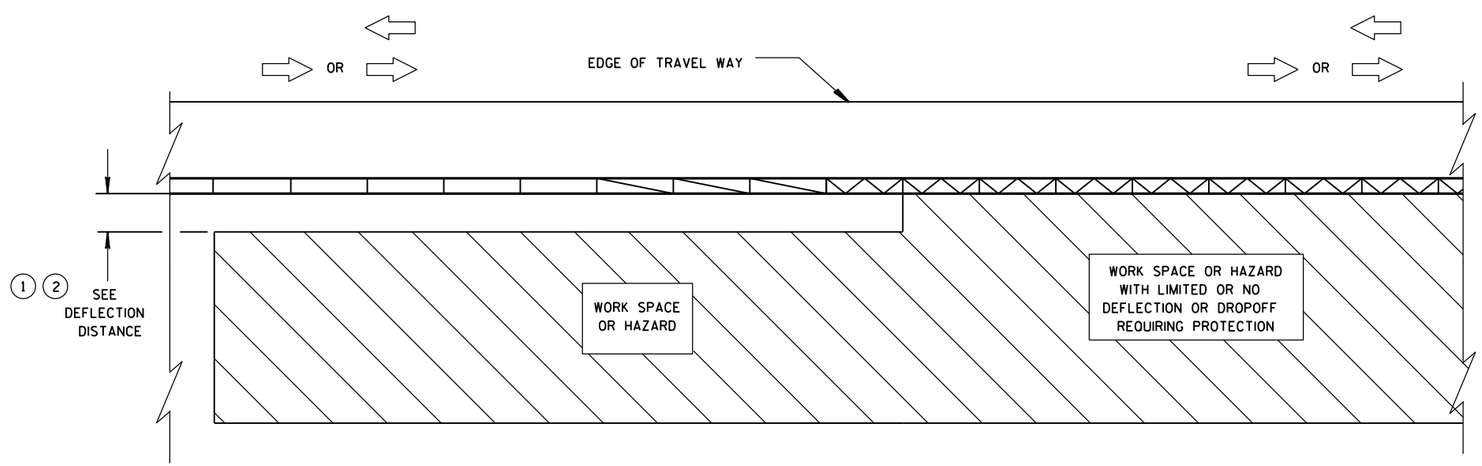

TRANSITION FROM FREE STANDING TEMPORARY BARRIER TO ANCHORED BARRIER

LEGEND

- DIRECTION OF TRAVEL
- CRASH CUSHION OR SAND BARREL ARRAY
- SEE FREE STANDING TRANSITION TO TIED-DOWN SYSTEM DETAILS
- SEE BI-DIRECTIONAL TRANSITION TO TIED-DOWN SYSTEM DETAILS
- 3 PINS PLACED ON TRAFFIC SIDE OF BARRIER
- PERMANENT CONCRETE BARRIER OR CONCRETE PARAPET
- FREE STANDING TEMPORARY BARRIER

CRASH CUSHION/SAND BARREL ARRAY AND OTHER TEMPORARY BARRIER LAYOUT DETAILS

STATE OF WISCONSIN
DEPARTMENT OF TRANSPOI

S.D.D. 14 B 8-2b

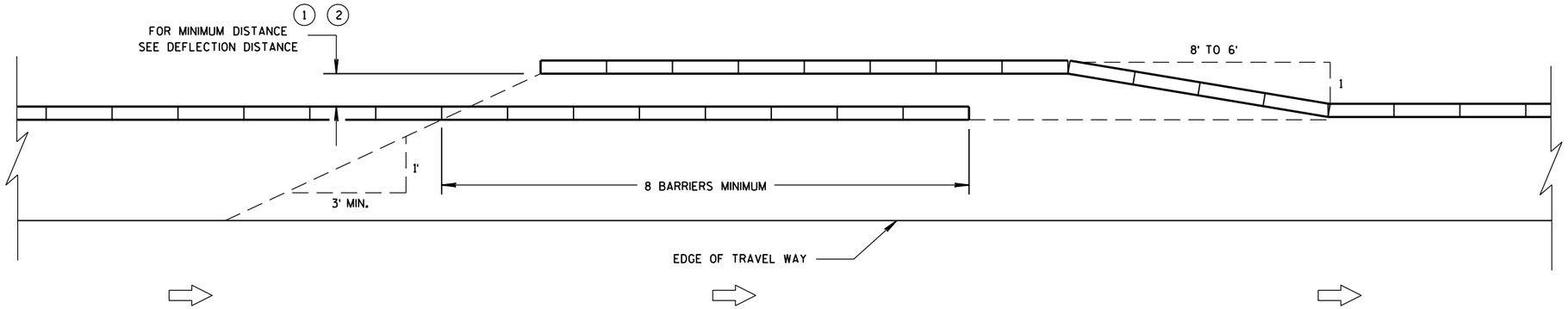

TEMPORARY BARRIER OVERLAP - ONE-WAY TRAFFIC

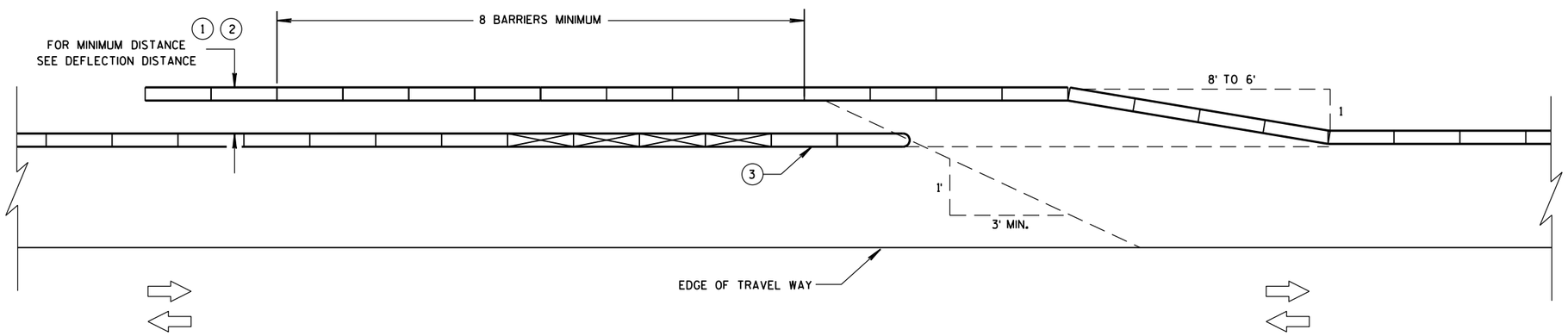

TEMPORARY BARRIER OVERLAP - TWO-WAY TRAFFIC

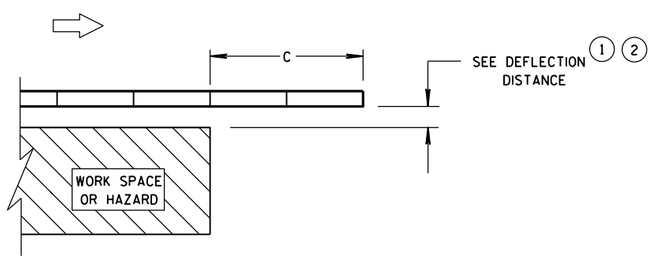

ENDING TEMPORARY BARRIER DOWNSTREAM - UNANCHORED

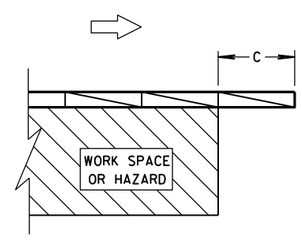

ENDING TEMPORARY BARRIER DOWNSTREAM - ANCHORED

LEGEND

- DIRECTION OF TRAVEL
- CRASH CUSHION OR SAND BARREL ARRAY
- SEE FREE STANDING TRANSITION TO TIED-DOWN SYSTEM DETAILS
- SEE BI-DIRECTIONAL TRANSITION TO TIED-DOWN SYSTEM DETAILS
- 3 PINS PLACED ON TRAFFIC SIDE OF BARRIER
- PERMANENT CONCRETE BARRIER OR CONCRETE PARAPET
- FREE STANDING TEMPORARY BARRIER

CRASH CUSHION/SAND BARREL ARRAY AND OTHER TEMPORARY BARRIER LAYOUT DETAILS

STATE OF WISCONSIN
DEPARTMENT OF TRANSPOR

6

S.D.D. 14 B 8-2c

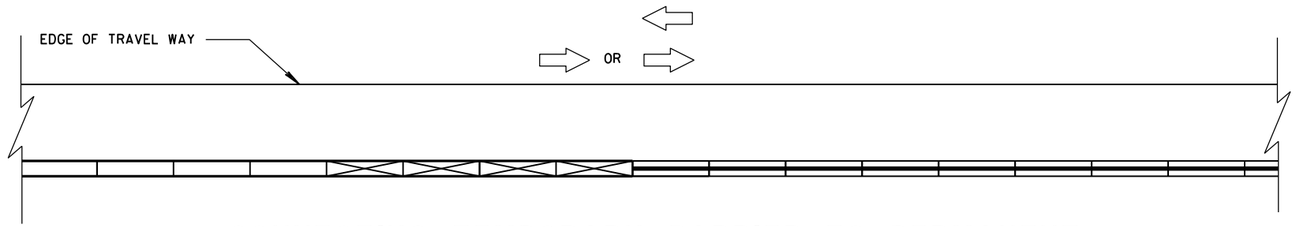

CONNECTING TEMPORARY BARRIER TO PERMANENT
CONCRETE BARRIER-TRAFFIC ON ONE SIDE

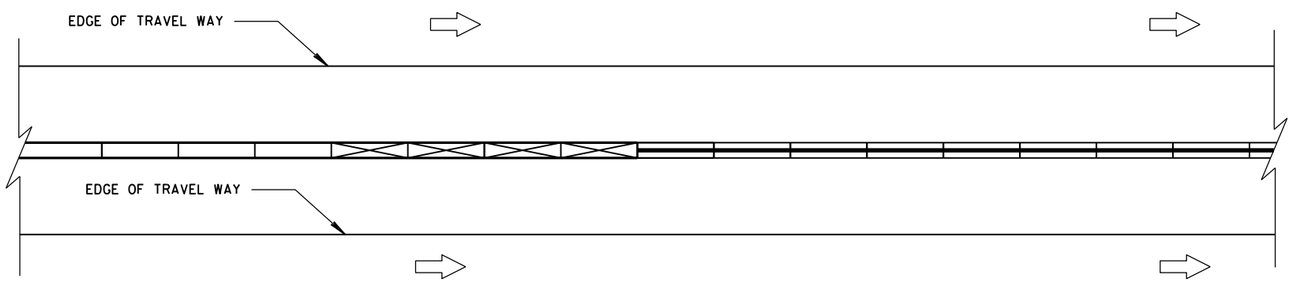

CONNECTING TEMPORARY BARRIER TO PERMANENT
CONCRETE BARRIER-TRAFFIC ON BOTH SIDES

LEGEND

DIRECTION OF TRAVEL

CRASH CUSHION OR
SAND BARREL ARRAY

SEE FREE STANDING TRANSITION
TO TIED-DOWN SYSTEM DETAILS

SEE BI-DIRECTIONAL TRANSITION
TO TIED-DOWN SYSTEM DETAILS

3 PINS PLACED ON
TRAFFIC SIDE OF BARRIER

PERMANENT CONCRETE BARRIER
OR CONCRETE PARAPET

FREE STANDING TEMPORARY
BARRIER

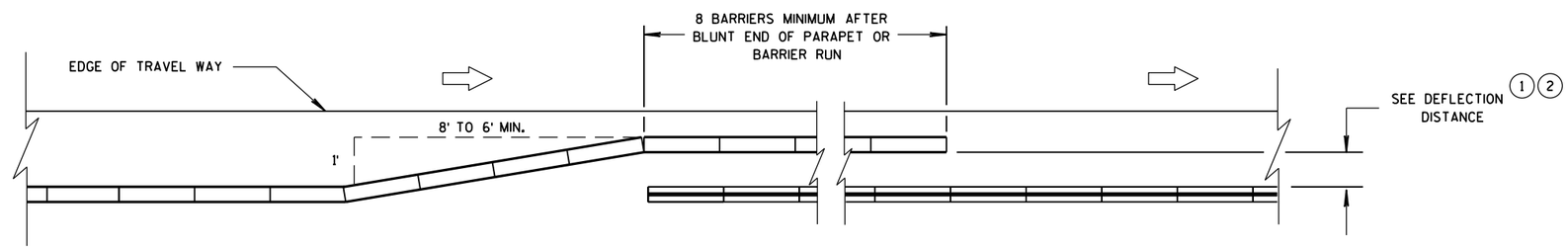

OVERLAPPING TEMPORARY BARRIER AND PERMANENT BARRIER -
ONE WAY TRAFFIC

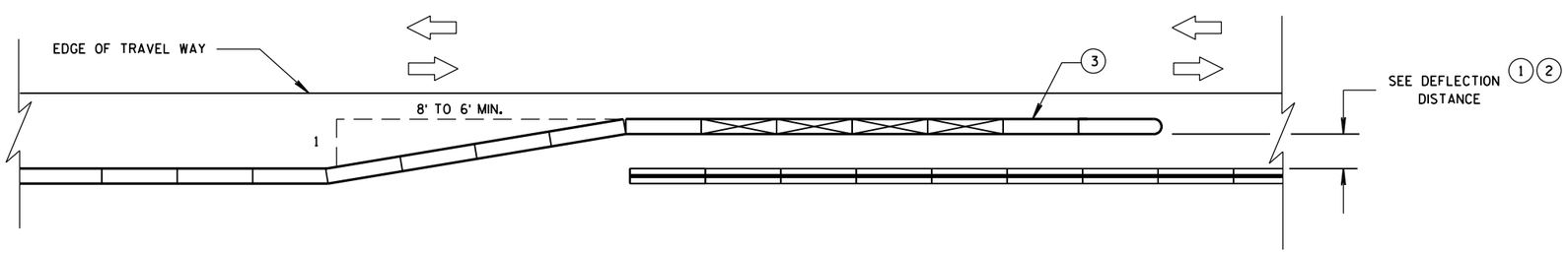

OVERLAPPING TEMPORARY BARRIER AND PERMANENT BARRIER -
TWO WAY TRAFFIC

CRASH CUSHION/SAND BARREL
ARRAY AND OTHER TEMPORARY
BARRIER LAYOUT DETAILS

STATE OF WISCONSIN
DEPARTMENT OF TRANSPOR

6

S.D.D. 14 B 8-2d

LEGEND

DIRECTION OF TRAVEL

CRASH CUSHION OR SAND BARREL ARRAY

SEE FREE STANDING TRANSITION TO TIED-DOWN SYSTEM DETAILS

SEE BI-DIRECTIONAL TRANSITION TO TIED-DOWN SYSTEM DETAILS

3 PINS PLACED ON TRAFFIC SIDE OF BARRIER

PERMANENT CONCRETE BARRIER OR CONCRETE PARAPET

FREE STANDING TEMPORARY BARRIER

DIMENSION C TABLE (2)

AVAILABLE DEFLECTION DISTANCE	MINIMUM LENGTH OF BARRIER BEYOND HAZARD FT
GREATER THAN 8'	12.5
LESS THAN OR EQUAL TO 8' BUT GREATER THAN 4'	50
LESS THAN OR EQUAL TO 4'	100

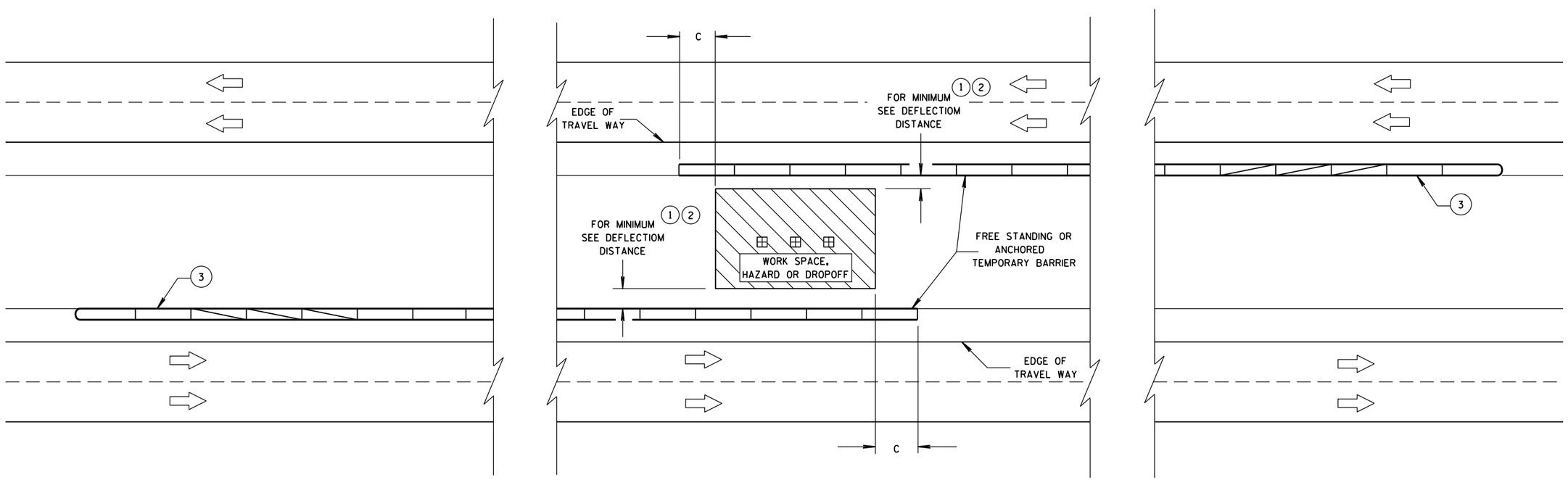

CRASH CUSHION/SAND BARREL ARRAY AND OTHER TEMPORARY BARRIER LAYOUT DETAILS

STATE OF WISCONSIN
DEPARTMENT OF TRANSPORTATION

APPROVED
June, 2015 — DATE
/S/ Jerry H. Zogg — ROADWAY STANDARDS DEVELOPMENT ENGINNER
FHWA

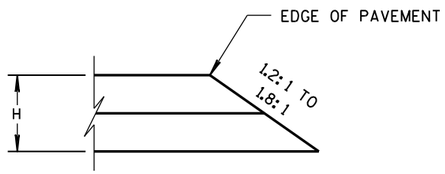

CONSTRUCTED WITH FINAL TWO LAYERS

FOR H 5" OR LESS

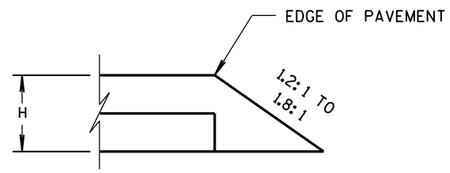

CONSTRUCTED WITH FINAL LAYER

FOR H 5" OR LESS

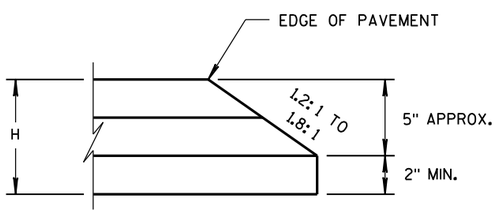

CONSTRUCTED WITH FINAL TWO LAYERS

FOR H GREATER THAN 5"

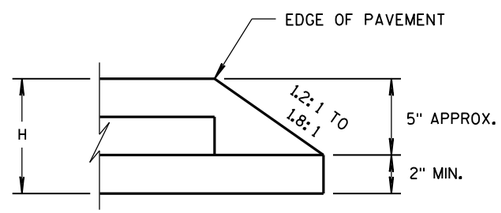

CONSTRUCTED WITH FINAL LAYER

FOR H GREATER THAN 5"

HMA PAVEMENT AND HMA OVERLAYS

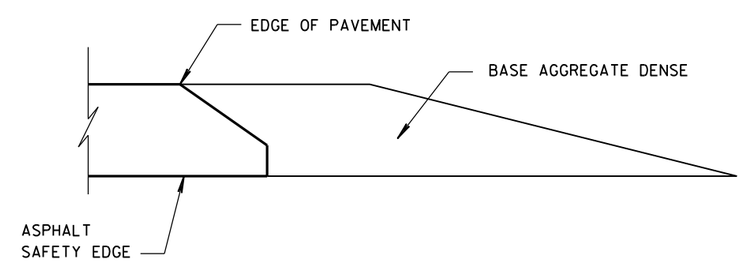

FINISHED SHOULDER AGGREGATE PLACEMENT

6

6

S.D.D. 14 B 29-1

S.D.D. 14 B 29-1

SAFETY EDGE SM

STATE OF WISCONSIN
DEPARTMENT OF TRANSPORTATION

APPROVED

11/30/2012 — DATE

/S/ Jerry H. Zogg — ROADWAY STANDARDS DEVELOPMENT ENGINEER

FHWA

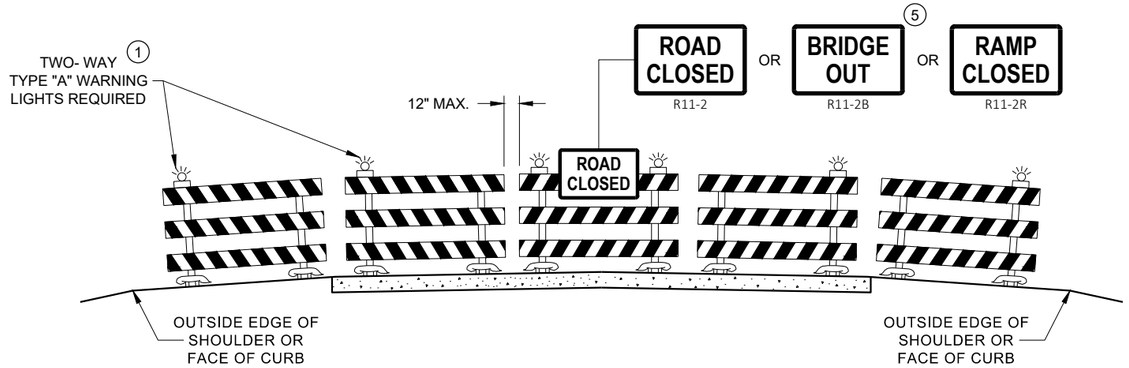

DETAIL D
ROAD CLOSURE BARRICADE DETAIL
APPROACH VIEW

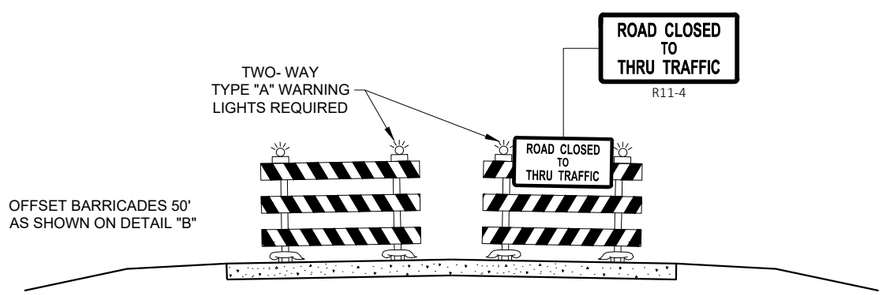

DETAIL E
LANE CLOSURE BARRICADE DETAIL
APPROACH VIEW

SEE SDD 15C2 - SHEET "a" FOR LEGEND

GENERAL NOTES

THE EXACT NUMBER, LOCATION, AND SPACING OF ALL SIGNS AND BARRICADES SHALL BE ADJUSTED TO FIT FIELD CONDITIONS AS APPROVED BY THE ENGINEER.

ANY SIGNS TEMPORARY OR EXISTING, WHICH CONFLICT WITH TRAFFIC CONTROL "IN USE", SHALL BE REMOVED OR COVERED AS NEEDED AND AS APPROVED BY THE ENGINEER.

THE SPACING BETWEEN TRAFFIC CONTROL SIGNS SHOULD BE ADJUSTED TO NOT CONFLICT WITH AND SHOULD PROVIDE A DESIRABLE MINIMUM OF 200 FEET CLEARANCE TO EXISTING SIGNS THAT WILL REMAIN IN PLACE.

BARRICADES THAT MUST BE MOVED FOR A WORK OPERATION SHALL BE IMMEDIATELY RE-ESTABLISHED UPON COMPLETION OF THE OPERATION, OR FOR CONTINUING OPERATIONS, AT THE END OF EACH WORKING DAY.

SIGNS THAT WILL BE IN PLACE LESS THAN 7 CONTINUOUS DAYS AND NIGHTS MAY BE MOUNTED ON PORTABLE SUPPORTS.

ALL TYPE III BARRICADES SHALL HAVE RAILS REFLECTORIZED ON BOTH FACES. STRIPES SHALL BE PROPERLY SLOPED DOWN TOWARD THE TRAFFIC SIDE OR AS SHOWN IN THE ROAD CLOSURE BARRICADE DETAIL "D" FOR FULL ROAD CLOSURES.

TYPE "A" LOW - INTENSITY FLASHING WARNING LIGHTS SHALL BE VISIBLE ON BOTH SIDES OF THE BARRICADE.

THE R11 - 2, R11 - 3, M4 - 9, R11 - 4, AND R10 - 61 SIGNS PLACED ON THE BARRICADES SHALL COVER NO MORE THAN THE TOP RAIL. THE SIGNS SHALL NOT COVER ANY PORTION OF THE MIDDLE RAIL OR BOTTOM RAILS.

"WO" AND "MO" SIGNS ARE THE SAME AS "W" AND "M" SIGNS EXCEPT THE BACKGROUND IS ORANGE.

ALL SIGNS SHALL BE 48" X 48" UNLESS OTHERWISE NOTED BELOW:
- R11 - 2 SHALL BE 48" X 30"
- R11 - 3 SHALL, R11 - 4 AND R10 - 61 SHALL BE 60 " X 30"
- M4 - 9 SHALL BE 30" X 24"
- M3 - X SHALL BE 24" X 12" (36" X 18" IF NEEDED TO MATCH EXISTING SIGNS)
- M4 - 8 SHALL BE 24" X 12" (36" X 18" IF NEEDED TO MATCH EXISTING SIGNS)
- M1 - 4, M1 - 5A AND M1 - 6 SHALL BE 24" X 24" (36" X 36" IF NEEDED TO MATCH EXISTING SIGNS)
- MO5 - 1 AND MO6 - 1 SHALL BE 21" X 21" (30" X 30" IF NEEDED TO MATCH EXISTING SIGNS)
- D1 - X SHALL BE AS SHOWN ON SPECIFIC PROJECT SIGNING DETAIL SHEETS.
- R1 - 1 SHALL BE 36" X 36"

1. TWO WARNING LIGHTS SHALL BE PROVIDED ON THE CENTER BARRICADE AND A MINIMUM OF ONE WARNING LIGHT SHALL BE PROVIDED ON EACH OF THE OTHER BARRICADES WITHIN THE ROADWAY LIMITS. SPACING OF THE WARNING LIGHTS SHALL BE UNIFORM TO THE EDGE OF ROADWAY AS SHOWN (APPROX. 8 FOOT LIGHT SPACING.
2. THESE SIGNS AND BARRICADES ARE NOT REQUIRED IF ROAD CLOSURE BEGINS AT AN INTERSECTION.
3. FOR ROAD CLOSURE WITHOUT LOCAL ACCESS TO PROJECT, SEE ROAD CLOSURE BARRICADE DETAIL "D".
4. FOR ROAD CLOSURE WITH LOCAL ACCESS TO PROJECT, SEE ROAD CLOSURE BARRICADE DETAIL "E".
5. FOR BRIDGE OR CULVERT REPLACEMENTS, SUBSTITUTE "BRIDGE OUT" INSTEAD OF "ROAD CLOSED" ON R11 - 2 AND R11 - 3 SIGNS.
6. INSTALL DETOUR AND COMMUNITY GUIDE SIGNS AND ARROWS ONLY IF SPECIFIED IN THE CONTRACT. IF THERE ARE EXISTING ROUTE MARKER ASSEMBLIES THAT WILL REMAIN IN PLACE, ADJUST THE LOCATION OF THE DETOUR ROUTE SIGNS TO CORRESPOND WITH THE EXISTING ASSEMBLIES. MODIFY EXISTING SIGNS WHERE POSSIBLE. SEE SPECIFIC PROJECT DETOUR SIGNING DETAIL SHEETS. IF DETOUR SIGNS ARE BEING INSTALLED BY OTHERS, PLACE THE CONTRACTED TRAFFIC CONTROL SIGNS TO ALLOW FOR PLACEMENT OF ALL WARNING, DETOUR AND GUIDE SIGNS AS SHOWN.
7. "EAST" CARDINAL DIRECTION MARKERS AND RIGHT TURN ARROWS ARE SHOWN. USE OTHER CARDINAL DIRECTIONS AND ARROWS AS APPROPRIATE.

BARRICADES AND SIGNS FOR VARIOUS CLOSURES

STATE OF WISCONSIN
DEPARTMENT OF TRANSPORTATION

APPROVED
May 2023 — DATE
/S/ Andrew Heidtke — WORK ZONE ENGINEE
FHWA

6
SDD 15C02 - 09b

GENERAL NOTES

DETAILS OF CONSTRUCTION NOT SHOWN ON THIS DRAWING SHALL CONFORM TO STANDARD SPECIFICATIONS AND SPECIAL PROVISIONS.

(1) LOCATE THE NO PASSING ZONE W14-3 SIGN WITHIN 50 FEET OF THE "T" MARKING

(2) MEASURE FROM EDGE OF MARKING TO JOINT LINE. THIS DOES NOT INCLUDE SPACE NEEDED FOR GROOVING OPERATIONS.

LEGEND

"T" MARKING

SIGN ON PERMANENT SUPPORT

DIRECTION OF TRAFFIC

* CONFIRM MARKING LINE WIDTH WITH THE MISCELLANEOUS QUANTITIES

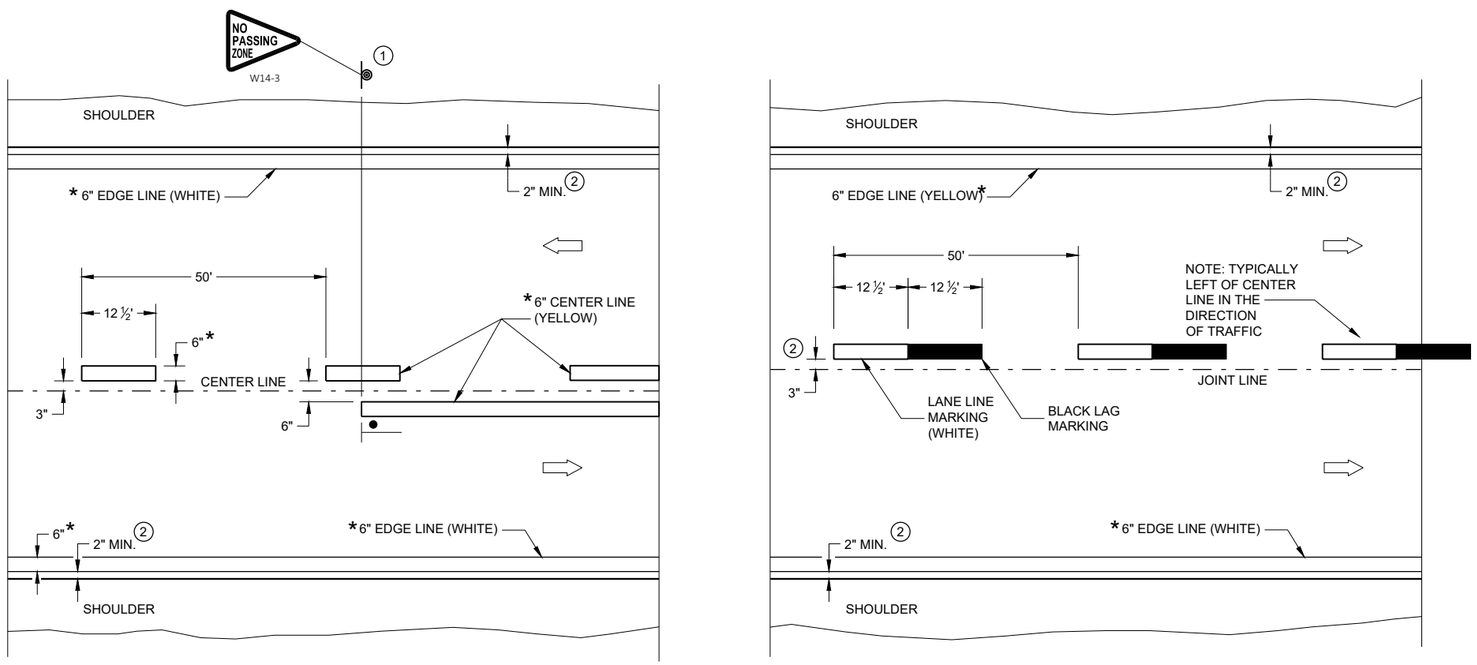

TWO WAY TRAFFIC

ONE WAY TRAFFIC

PERMANENT PAVEMENT MARKING

6

6

SDD 15C08-23a

SDD 15C08-23a

PERMANENT LONGITUDINAL PAVEMENT MARKINGS

STATE OF WISCONSIN
DEPARTMENT OF TRANSPORTATION

APPROVED

May 2023 — DATE

/S/ Jeannie Silver — STATEWIDE SIGNING AND M ENGINEER

FHWA

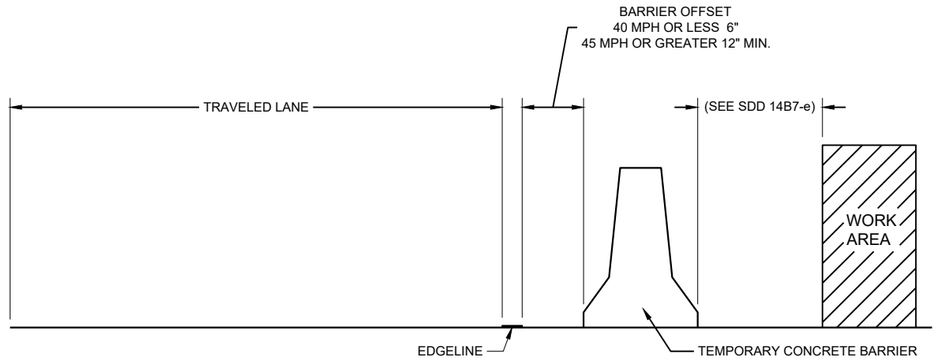

TEMPORARY BARRIER OFFSET FROM EDGELINE

GENERAL NOTES

DETAILS OF CONSTRUCTION NOT SHOWN ON THIS DRAWING SHALL CONFORM TO STANDARD SPECIFICATIONS AND SPECIAL PROVISIONS.

LEGEND

⇨ DIRECTION OF TRAFFIC

* CONFIRM MARKING LINE WIDTH WITH THE MISCELLANEOUS QUANTITIES

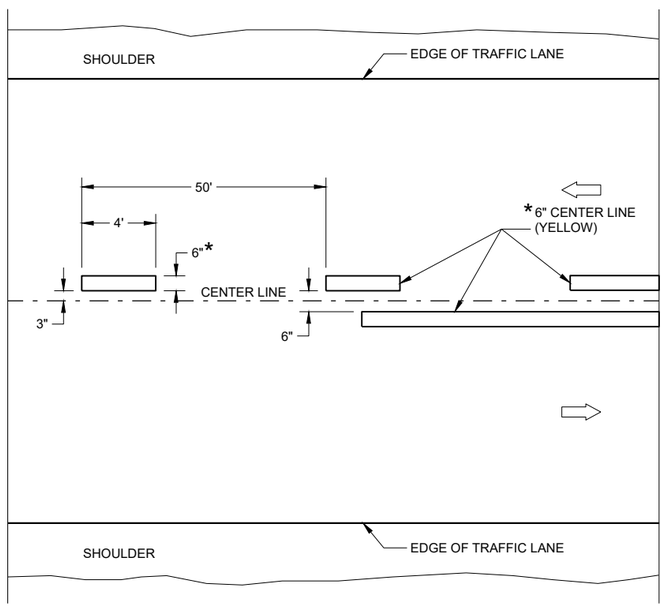

TWO WAY TRAFFIC

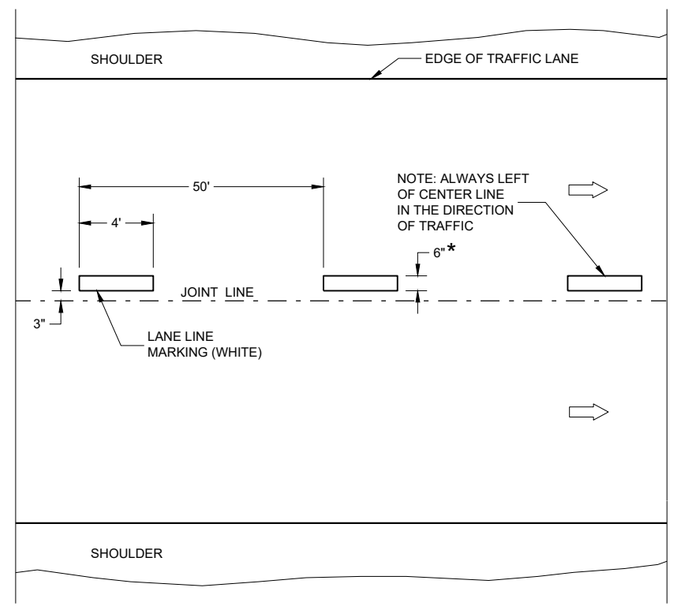

ONE WAY TRAFFIC

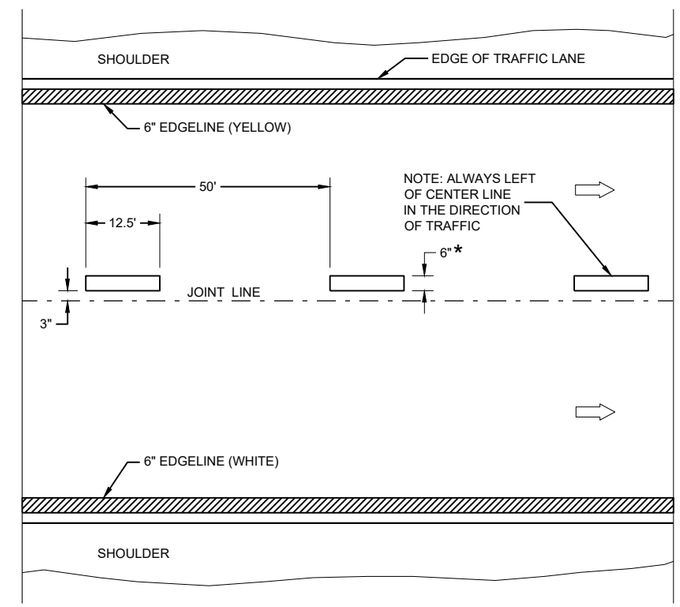

FREEWAYS AND EXPRESSWAYS

TEMPORARY PAVEMENT MARKING

TEMPORARY LONGITUDINAL PAVEMENT MARKING

STATE OF WISCONSIN
DEPARTMENT OF TRANSPORTATION

APPROVED
May 2023 — DATE
/S/ Jeannie Silver — STATEWIDE SIGNING AND M ENGINEER

FHWA

6

SDD 15C08-23b

GENERAL NOTES

1. REFLECTIVE SHEETING SHALL FOLLOW THE REQUIREMENTS IN THE APPROVED PRODUCTS LISTING FOR SIGN SHEETING.
2. LOCATION OF WARNING LIGHTS WHEN SHOWN ON THE PLAN.

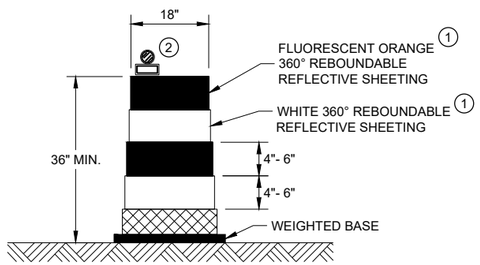

DRUM

BALLAST WIDTHS
RANGE FROM 24"-36"

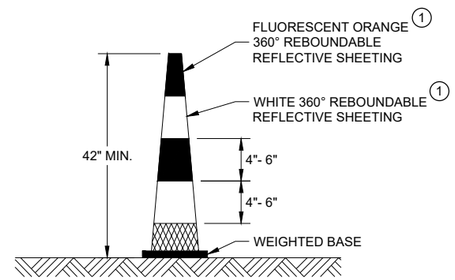

42" CONE

DO NOT USE IN TAPERS
½ SPACING OF DRUMS

BALLAST WIDTHS
RANGE FROM 14"-20"

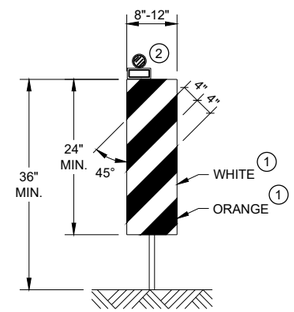

VERTICAL PANEL

THE STRIPES SHALL SLOPE DOWNWARD TO
THE TRAFFIC SIDE FOR CHANNELIZATION.

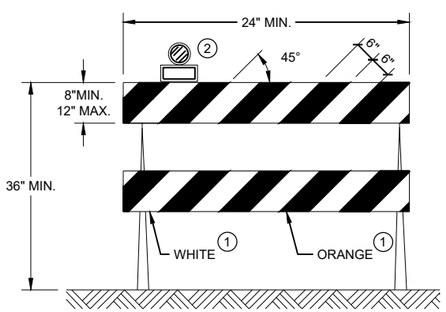

TYPE II BARRICADE

FOR RAILS LESS THAN 36" LONG, 4" WIDE STRIPES
MAY BE USED. ALL STRIPES SHALL SLOPE DOWNWARD
TO THE TRAFFIC SIDE FOR CHANNELIZATION.

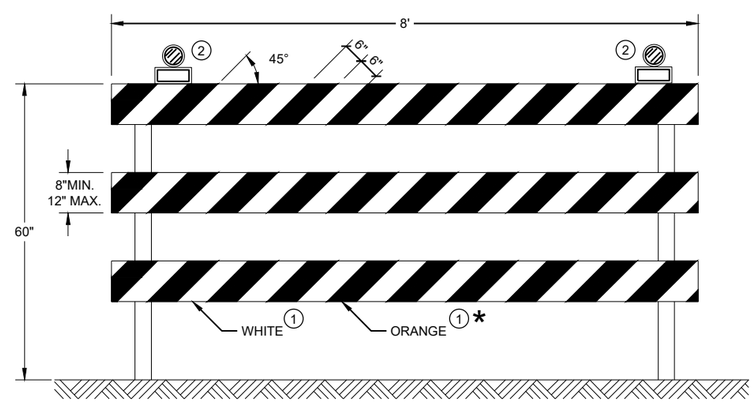

TYPE III BARRICADE

IF SIGN MOUNTED, DO NOT COVER MORE THAN 50% OF THE TOP
TWO RAILS OR 33% OF THE TOTAL AREA OF THE THREE RAILS.

* IF USED FOR A PERMANENT APPLICATION USE RED SHEETING.

CHANNELIZING DEVICES
DRUMS, CONES, BARRICADES
AND VERTICAL PANELS

STATE OF WISCONSIN
DEPARTMENT OF TRANSPORTATION

APPROVED
November 2022 — /S/ Andrew Heidtke
DATE — WORK ZONE ENGINEE
FHWA

6

6

SDD 15C11 - 10b

SDD 15C11 - 10b

LEGEND

V1 LEAD VEHICLE

V2 MARKING VEHICLE

V3 SHADOW VEHICLE

TRUCK MOUNTED ATTENUATOR (TMA)

SIGN ON TEMPORARY SUPPORT

DIRECTION OF TRAFFIC

FLASHING ARROW PANEL (CAUTION)

GENERAL NOTES

ALL VEHICLES SHALL BE EQUIPPED WITH TWO 360 DEGREE HIGH INTENSITY YELLOW FLASHING LIGHTS OR STROBE LIGHTS AND OPERATED WITH HEADLIGHTS TURNED ON.

ALL VEHICLES SHALL BE EQUIPPED WITH REAR FACING TYPE B OR C FLASHING ARROW PANEL OPERATING IN CAUTION MODE. SIGNS PLACED ON VEHICLES MUST NOT OBSCURE THE ARROW PANEL.

ALL SIGNS ARE 48" X 48" UNLESS OTHERWISE SPECIFIED.

DISTANCE BETWEEN VEHICLES MAY VARY ACCORDING TO TERRAIN, SIGHT DISTANCE, PAINT DRYING TIME, AND OTHER FACTORS. WHENEVER ADEQUATE STOPPING SIGHT DISTANCE EXISTS TO THE REAR, SHADOW VEHICLES SHOULD MAINTAIN THE MINIMUM DISTANCE FROM THE WORK VEHICLE AND PROCEED AT THE SAME SPEED AS THE WORK VEHICLE. SHADOW VEHICLES SHOULD SLOW DOWN IN ADVANCE OF VERTICAL AND HORIZONTAL CURVES THAT RESTRICT SIGHT DISTANCE.

THE WORK AND SHADOW VEHICLES SHOULD PULL OVER PERIODICALLY TO ALLOW TRAFFIC TO PASS.

WHEN NO WORK ACTIVITY IS TAKING PLACE, REMOVE OR LAY STATIONARY SIGNS AND SUPPORTS FLAT ON THE GRADE WITH UPRIGHTS ORIENTED PARALLEL TO AND DOWNSTREAM FROM TRAFFIC.

CONES SHOULD BE USED BETWEEN THE MARKING AND SHADOW VEHICLE AT 100 FOOT SPACING. CONES MAY BE OMITTED ON PAINTED LINE IF APPROVED BY THE ENGINEER. CONSIDER PAVEMENT MARKING DRY OR CURE TIMES AND TRAFFIC VOLUME.

CONES SHALL BE A MINIMUM OF 28" FOR WET PAVEMENT MARKING .

1. SIGNS SHALL BE REPEATED APPROXIMATELY EVERY THREE MILES.
2. IF CONSTRUCTION WORK ZONE SIGNS ARE IN PLACE, W20-1A OR W21-63 ARE NOT REQUIRED.
3. V1 AND V2 CAN BE SWITCHED SO THAT THE MARKER IS THE LEAD VEHICLE.

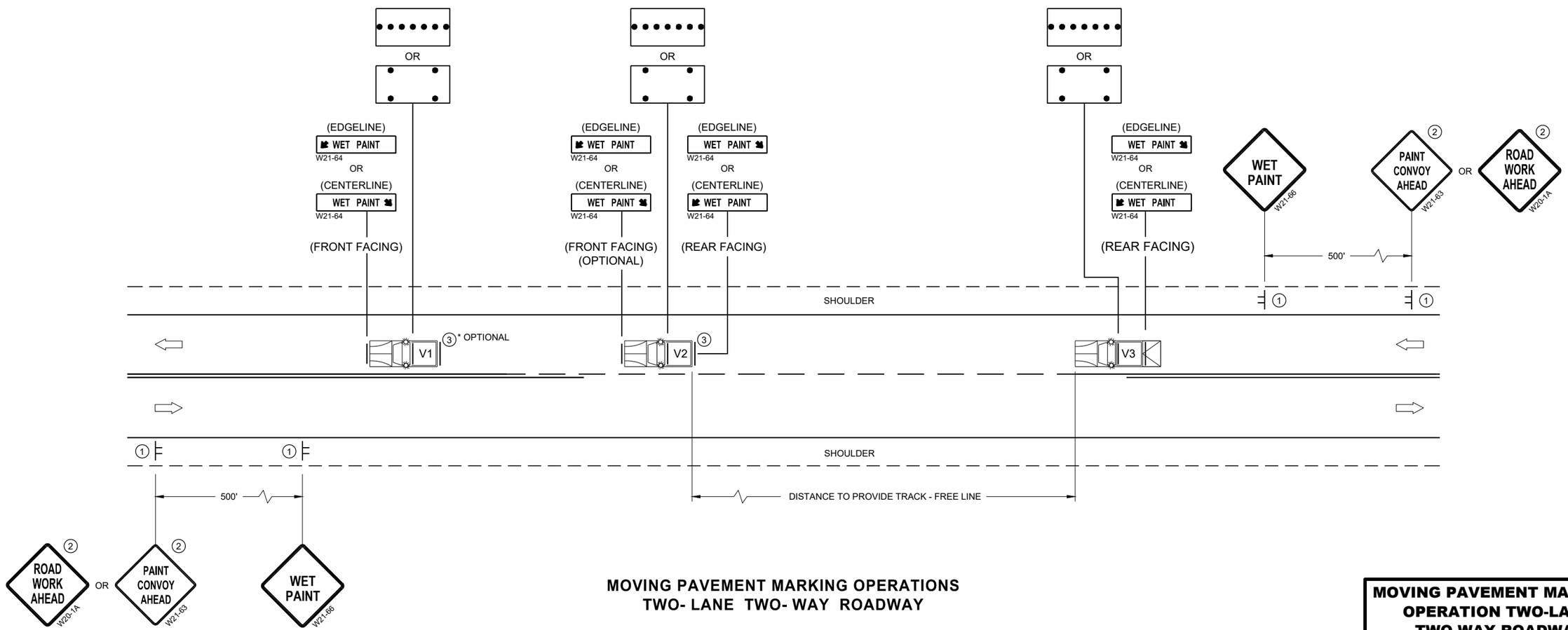

MOVING PAVEMENT MARKING OPERATIONS
TWO- LANE TWO- WAY ROADWAY

MOVING PAVEMENT MARKING OPERATION TWO-LANE TWO-WAY ROADWAY

STATE OF WISCONSIN
DEPARTMENT OF TRANSPORTATION

APPROVED
February 2023 — DATE
/S/ Andrew I — WORK ZONE EN
FHWA

6

SDD 15C19-08a

LEGEND

- TYPE III BARRICADE WITH ATTACHED SIGN
- SIGN ON PERMANENT SUPPORT
- TRAFFIC CONTROL DRUM WITH TYPE "C" STEADY BURN LIGHT
- TRAFFIC CONTROL DRUM
- FLAGS, 16" X 16" MIN. (ORANGE)
- REMOVING PAVEMENT MARKING
- DIRECTION OF TRAFFIC
- ASPHALTIC PAVEMENT WIDENING
- CONCRETE BARRIER TEMPORARY PRECAST
- TEMPORARY SIGNAL. SEE SDD 09G02 FOR EXACT PLACEMENT

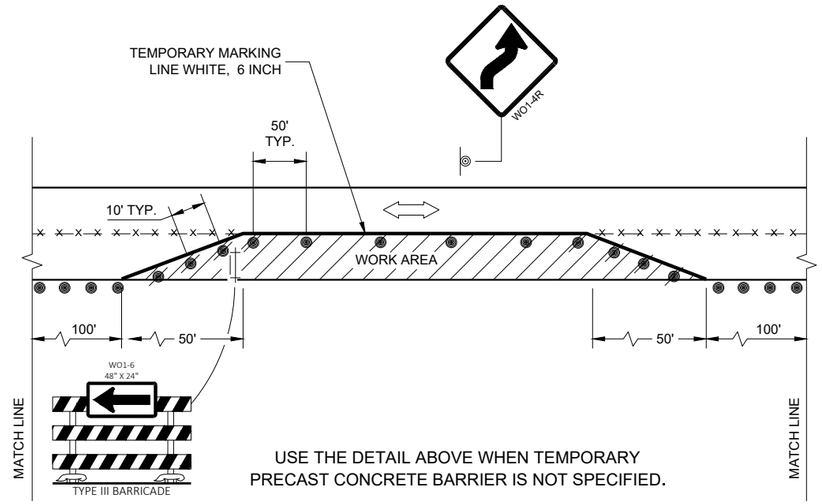

USE THE DETAIL ABOVE WHEN TEMPORARY PRECAST CONCRETE BARRIER IS NOT SPECIFIED.

GENERAL NOTES

THE EXACT NUMBER, LOCATION, AND SPACING OF ALL SIGNS AND DEVICES SHALL BE ADJUSTED TO FIT FIELD CONDITIONS AS APPROVED BY THE ENGINEER.

THE SPACING BETWEEN TRAFFIC CONTROL SIGNS SHOULD BE ADJUSTED TO NOT CONFLICT WITH AND TO PROVIDE A MINIMUM OF 200 FEET (500 FEET DESIRABLE) CLEARANCE TO EXISTING SIGNS THAT WILL REMAIN IN PLACE..

THIS LANE CLOSURE IS TYPICAL FOR CLOSING RIGHT LANE - REVERSE FOR CLOSING LEFT LANE.

ALL SIGNS ARE 48" x 48" UNLESS OTHERWISE NOTED.

"WO" IS THE SAME AS "W" EXCEPT THE BACKGROUND IS ORANGE.

ANY SIGNS TEMPORARY OR EXISTING, WHICH CONFLICT WITH TRAFFIC CONTROL "IN USE" SHALL BE REMOVED OR COVERED AS NEEDED OR AS APPROVED BY THE ENGINEER.

REMOVE PAVEMENT MARKING AND PLACE TEMPORARY PAVEMENT MARKING LINES IF THE CLOSURE IS TO BE IN PLACE FOR 4 OR MORE CONTINUOUS DAYS AND NIGHTS.

INSTALL OVERHEAD TEMPORARY SIGNAL HEADS ABOVE THE MIDDLE OF THE TRAVEL LANE THEY ARE CONTROLLING.

1. 500 FOOT SPACING SHOWN IS FOR ROADWAYS WITH A PRE-CONSTRUCTION REGULATORY SPEED LIMIT OF 45 MPH OR MORE. FOR 35 - 40 MPH, USE 350 FOOT TYPICAL SPACING. FOR 25 - 30 MPH, USE 200 FOOT TYPICAL SPACING.
2. USE 300 FOOT SPACING IF THE PRE - CONSTRUCTION REGULATORY SPEED IS 35 MPH OR LESS.
3. DIMENSION DETERMINED BY CBTP TAPER FROM EDGE LINE TO TANGENT SECTION OF THE ROAD.
4. TEMPORARY PAVEMENT MARKING LINE, 18 INCH WHITE STOP LINE.
5. 700 FOOT TEMPORARY PAVEMENT MARKING LINE, 6 INCH DOUBLE YELLOW . WHEN THE DISTANCE FOR THE PRECEDING NO - PASSING ZONE IS LESS THAN THE MINIMUM DISTANCE BETWEEN ZONES AS INDICATED IN THE SPECIFICATIONS, THE TWO ZONES SHALL BE CONNECTED.
6. SEE SDD 15C02 - SHEET "F" FOR ADVANCED WIDTH RESTRICTION SIGNING.

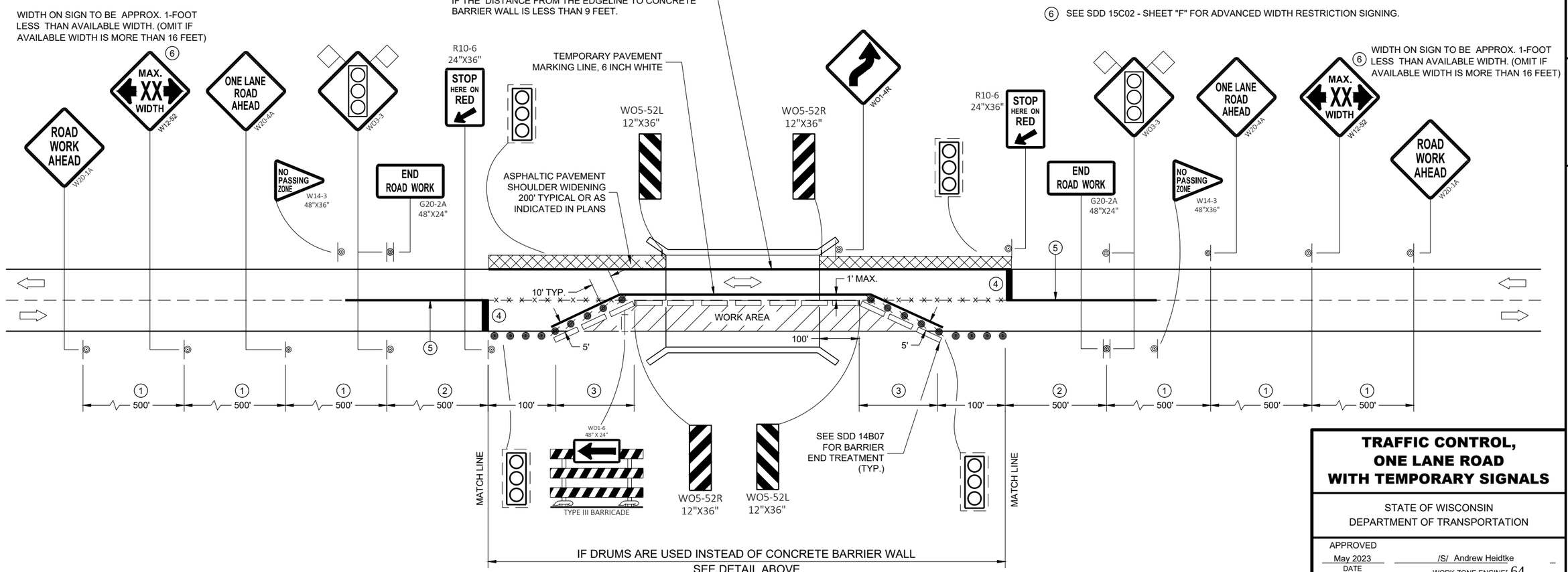

TRAFFIC CONTROL, ONE LANE ROAD WITH TEMPORARY SIGNALS

STATE OF WISCONSIN
DEPARTMENT OF TRANSPORTATION

APPROVED
May 2023 — DATE
/S/ Andrew Heidtke — WORK ZONE ENGINEE
FHWA

6

SDD 15D33-09

LEGEND

V1 WORK VEHICLE

V2 SHADOW VEHICLE

TRUCK MOUNTED ATTENUATOR (TMA)

FLASHING ARROW PANEL (CAUTION)

WORK AREA

DIRECTION OF TRAFFIC

POSTED SPEED PRIOR TO WORK STARTING (MPH)	DECISION SIGHT DISTANCE (D)
0 - 25	550'
30	550'
35	700'
40	700'
45	900'
50	900'
55	1200'

GENERAL NOTES

ALL SIGNS ARE 48"X48" UNLESS OTHERWISE NOTED.

MOBILE IS WORK THAT MOVES CONTINUOUSLY OR MOVES AT LEAST THE DECISION SIGHT DISTANCE EVERY 15 MINUTES.

ALL VEHICLES SHALL BE EQUIPPED WITH TWO 360 DEGREE HIGH INTENSITY YELLOW FLASHING LIGHTS OR STROBE LIGHTS AND OPERATED WITH HEADLIGHTS TURNED ON.

ALL ARROW PANELS SHALL BE REAR FACING, TYPE "B" OR "C", AND DISPLAYING THE FLASHING CAUTION MODE. SIGNS PLACED ON VEHICLES MUST NOT OBSCURE THE ARROW PANEL.

USE AN ATTENUATOR ON THE REARMOST VEHICLE THAT BLOCKS ALL OR PART OF THE TRAFFIC LANE.

1 DISTANCE BETWEEN VEHICLES MAY INCREASE FROM THE ATTENUATOR'S ROLL AHEAD BASED ON TERRAIN, SIGHT DISTANCE, AND OTHER FACTORS. WHENEVER ADEQUATE STOPPING SIGHT DISTANCE EXISTS TO THE REAR, SHADOW VEHICLES SHOULD MAINTAIN THE MINIMUM DISTANCE FROM THE WORK VEHICLE AND PROCEED AT THE SAME SPEED AS THE WORK VEHICLE. SHADOW VEHICLES SHOULD SLOW DOWN IN ADVANCE OF VERTICAL OR HORIZONTAL CURVES THAT RESTRICT SIGHT DISTANCE.

2 ALIGN LEFT SIDE OF SHADOW VEHICLE WITH EDGE OF WORK AREA.

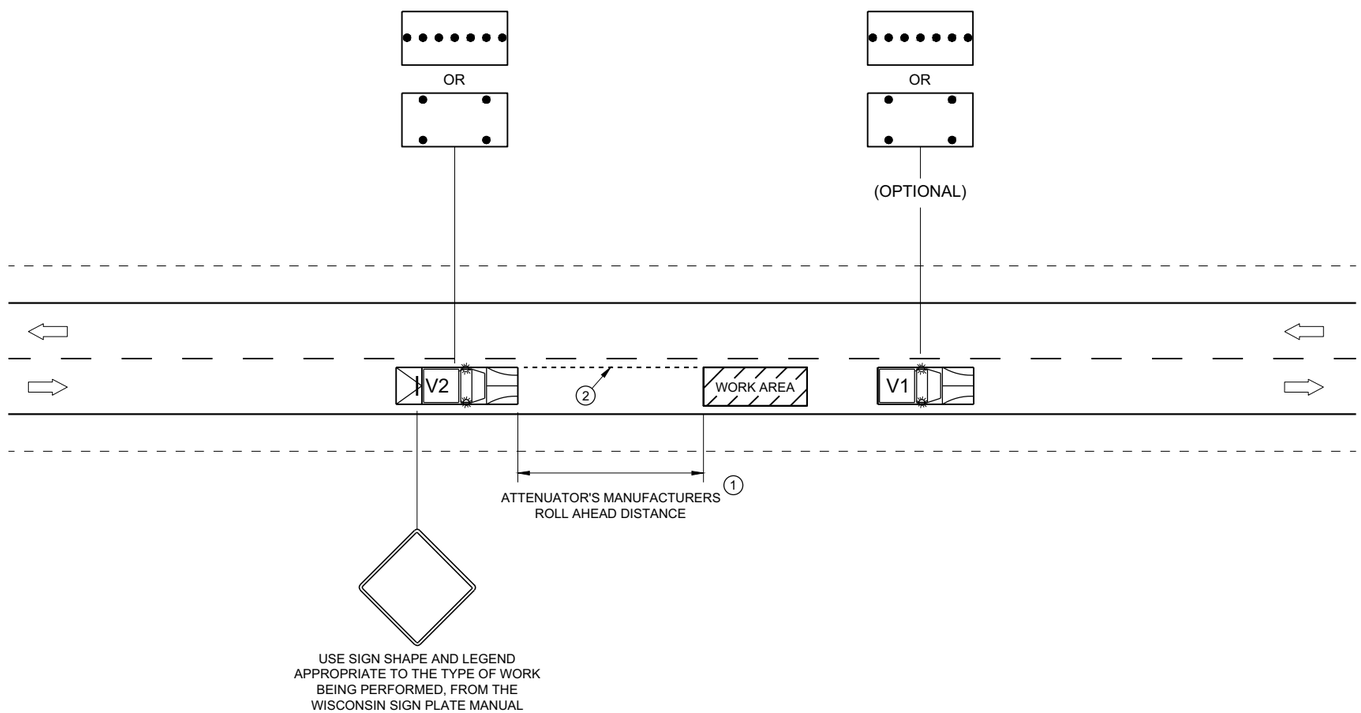

TRAFFIC CONTROL, MOBILE OPERATIONS ON AN UNDIVIDED ROADWAY

STATE OF WISCONSIN
DEPARTMENT OF TRANSPORTATION

APPROVED
February 2021 — DATE
/S/ Andrew Heidtke — STATEWIDE WORK ZONE T SAFETY ENGINEER
FHWA

URBAN AREA

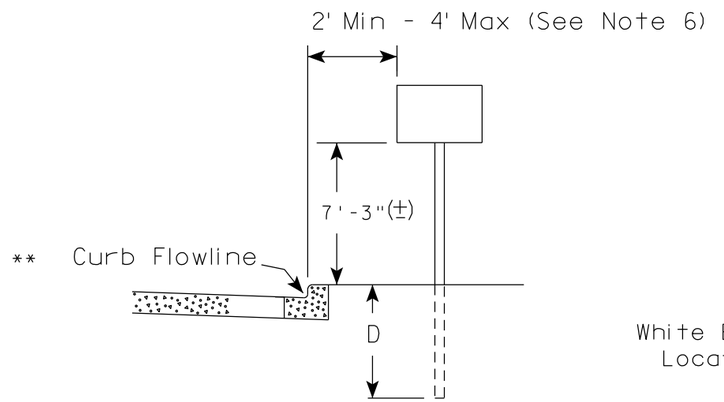

RURAL AREA (See Note 2)

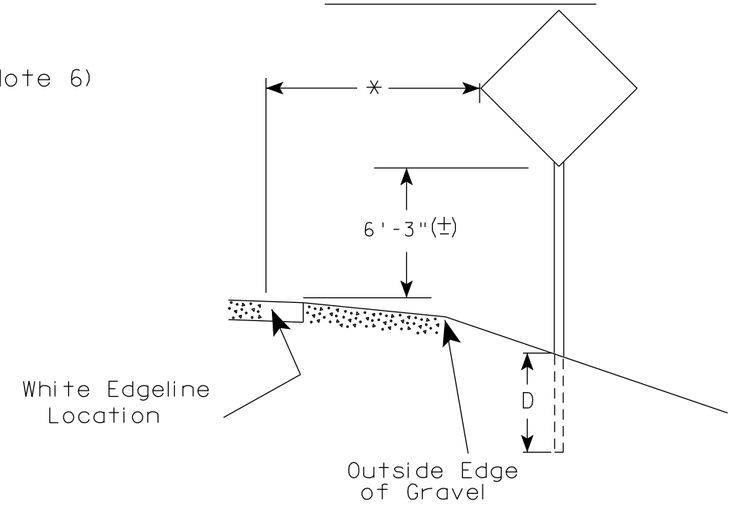

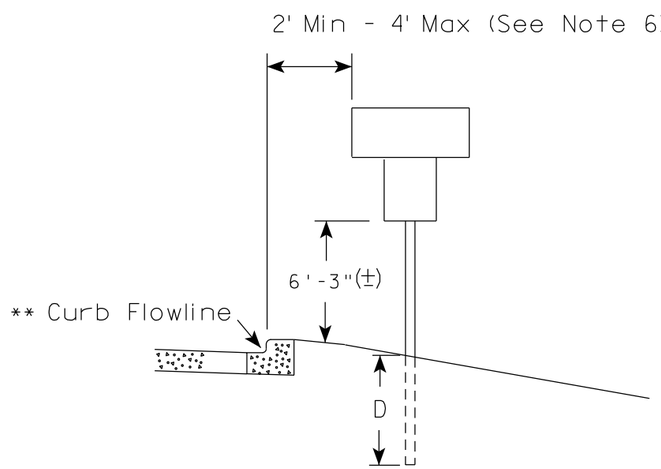

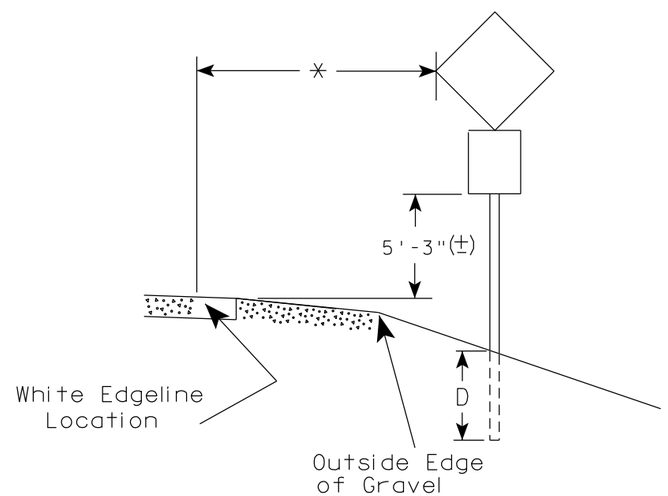

** The existence of curb and gutter does not in itself mandate the vertical clearance illustrated. That height is typically measured where there is sidewalk adjacent to the roadway or parking is permitted. In the absence of sidewalk vertical clearance is measured from the top of the curb. Offset of signs is measured from the flow line.

* 6 feet from edge of a paved shoulder or 12 feet from the edge of pavement (edge line location) or 2 feet from outside edge of gravel, whichever is greater unless directed by project engineer.

GENERAL NOTES

1. Signs wider than 4 feet or 20 sq.ft or larger, shall be mounted on multiple posts. Refer to plate A4-4.
2. If signs are mounted on or behind barrier wall, see A4-10 sign plate.
   The Double Arrow sign (W12-1D) shall be mounted at a height of 2'-3" (±). The Chevron sign (W1-8), Roundabout Chevron panel (R6-4B), Enhanced Reference Markers, Clearance Markers (W5-52), Mile Markers (D10 series), In Road Object Markers (W5-54) & End of Road Markers (W5-56) shall be mounted at a height of 4'-3" (±).
3. For expressways and freeways, mounting height is 7'- 3" (±) or 6'-3" (±) depending upon existence of a sub-sign.
4. Minimum mounting height for signs mounted on traffic signal poles is 5'- 3" (±).
5. Offset distance shall be consistent with existing signs or consistent throughout length of project.
6. The (±) tolerance for mounting height is 3 inches.
7. Folding signs shall be mounted at a height of 5'-3" (±) or as directd by the Engineer.

POST EMBEDMENT DEPTH

Area of Sign Installation (Sq.Ft.)	D (Min)
20 or Less	4'
Greater than 20	5'

TYPICAL INSTALLATION OF PERMANENT TYPE II SIGNS ON SINGLE POSTS

WISCONSIN DEPT OF TRANSPORTATION

APPROVED Matthew R Rauch for State Traffic Engineer

DATE 5/13/2020 PLATE NO. A4-3.22

7

7

PROJECT NO:	HWY:	COUNTY:		SHEET NO: 66	E

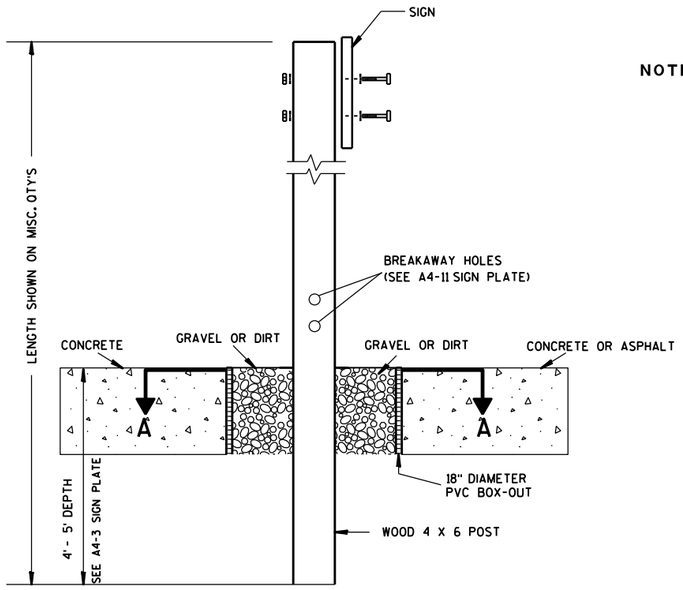

ELEVATION VIEW

DETAIL OF WOOD 4 X 6 SIGN POST IN BOX-OUT

NOTES:
1. ALL MATERIAL TO BE APPROVED BY ENGINEER PRIOR TO INSTALLATION
2. SEE SIGN PLATE A4-8 FOR SIGN HARDWARE REQUIREMENTS
3. 18 INCH X 18 INCH SQUARE BOX-OUTS MAY BE USED FOR INSTALLATIONS IN EXISTING CONCRETE OR ASPHALT LOCATIONS.

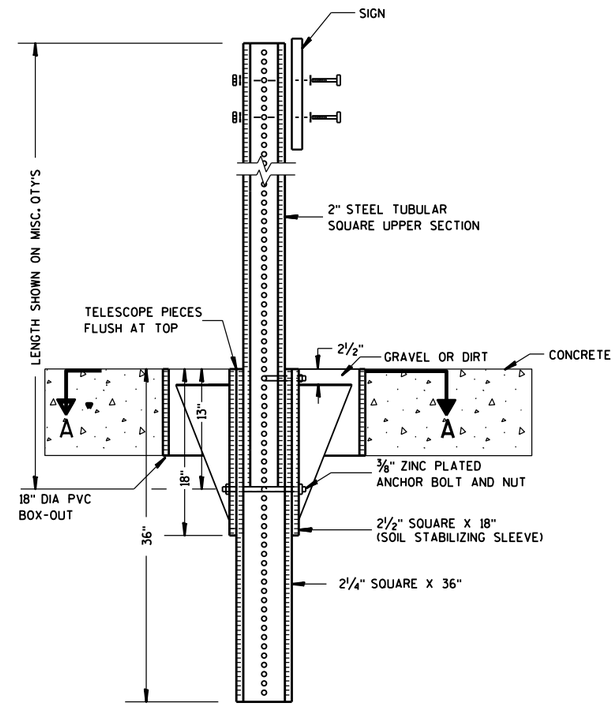

ELEVATION VIEW

DETAIL OF STEEL 2 X 2 SIGN POST IN BOX-OUT

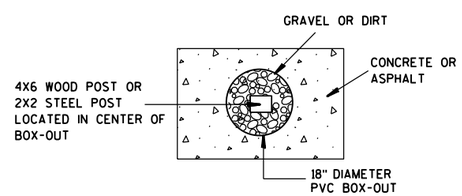

PLAN VIEW

FOR NEW CONCRETE/ASPHALT INSTALLATIONS

SIGN POST
BOX-OUTS
A4-3B

WISCONSIN DEPT OF TRANSPORTATION

APPROVED Matthew R Rauch
for State Traffic Engineer

DATE 1/27/14 PLATE NO. A4-3B.1

PROJECT NO:	HWY:	COUNTY:		SHEET NO:	E

URBAN AREA

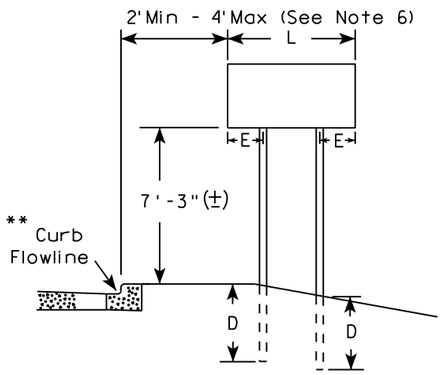

RURAL AREA (See Note 3)

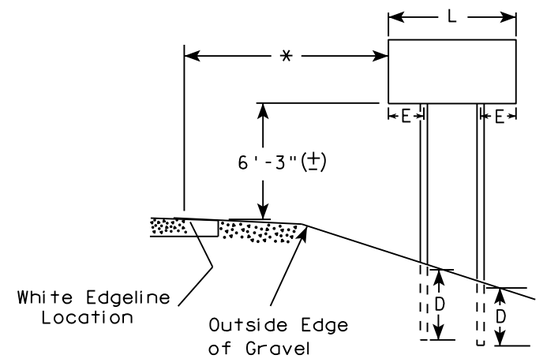

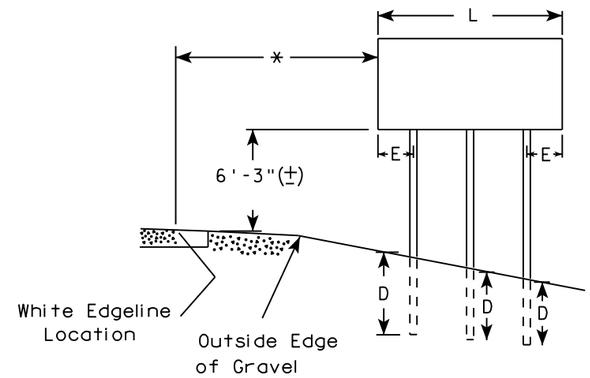

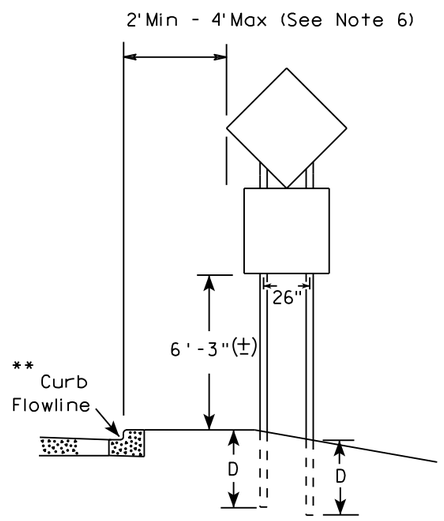

48" DIAMOND WARNING SIGN

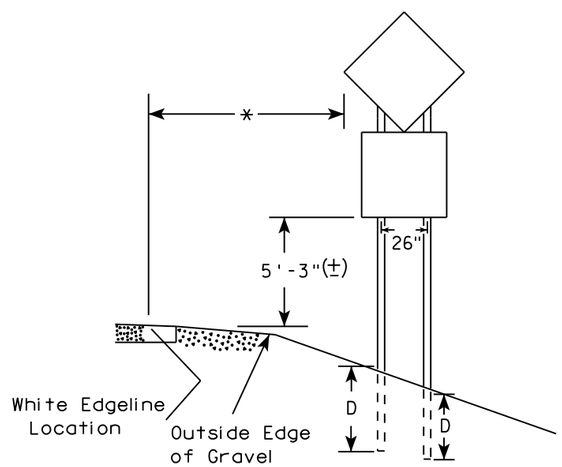

48" DIAMOND WARNING SIGN

SIGN SHAPE OTHER THAN DIAMOND (TWO POSTS REQUIRED)	
L	E
*** Greater than 48" Less than 60"	12"
60" to 108"	L/5

SIGN SHAPE OTHER THAN DIAMOND (THREE POSTS REQUIRED)	
L	E
Greater than 108" to 144"	12"

GENERAL NOTES

1. For 3 or 4 post installations, individual post spacing shall be greater than 3'-6".
2. See tables below for required number of posts.
3. For expressways and freeways, mounting height is 7'-3" (±) or 6'-3" (±) depending upon existence of sub-sign.
4. The (±) tolerance for mounting height is 3 inches.
5. J-Assemblies are considered to be one sign for mounting height.
6. Offset distance shall be consistent with existing signs or consistent throughout length of project.
7. Folding signs shall be mounted at a height of 5'-3" (±) or as directed by the engineer.
8. The Double Arrow sign (W12-1) shall be mounted at a height of 2'-3" (±). The Chevron sign (W1-8), Roundabout Chevron panel (R6-4B), Clearance Markers (W5-52), Mile Markers (D10 series), In Road Object Markers (W5-54) & End of Road Markers (W5-56) shall be mounted at a height of 4"-3" (±).

* 6 feet from edge of a paved shoulder or 12 feet from the edge of pavement (edge line location) or 2 feet from outside edge of gravel, whichever is greater unless directed by project engineer.

** The existence of curb and gutter does not in itself mandate the vertical clearance illustrated. That height is typically measured where there is sidewalk adjacent to the roadway or parking is permitted. In the absence of sidewalk vertical clearance is measured from the top of the curb. Offset of signs is measured from the flow line.

*** See A4-3 sign plate for signs 4' or less in width and less than 20 S.F. in area.

POST EMBEDMENT DEPTH

Area of Sign Installation (Sq. Ft.)	D (Min)
20 or Less	4'
Greater than 20	5'

TYPICAL INSTALLATION OF TYPE II SIGNS ON MULTIPLE POSTS

WISCONSIN DEPT OF TRANSPORTATION

APPROVED Matthew R Rauch
For State Traffic Engineer

DATE 8/21/17 PLATE NO. A4-4.15

7

7

PROJECT NO:	HWY:	COUNTY:		SHEET NO: 68	E

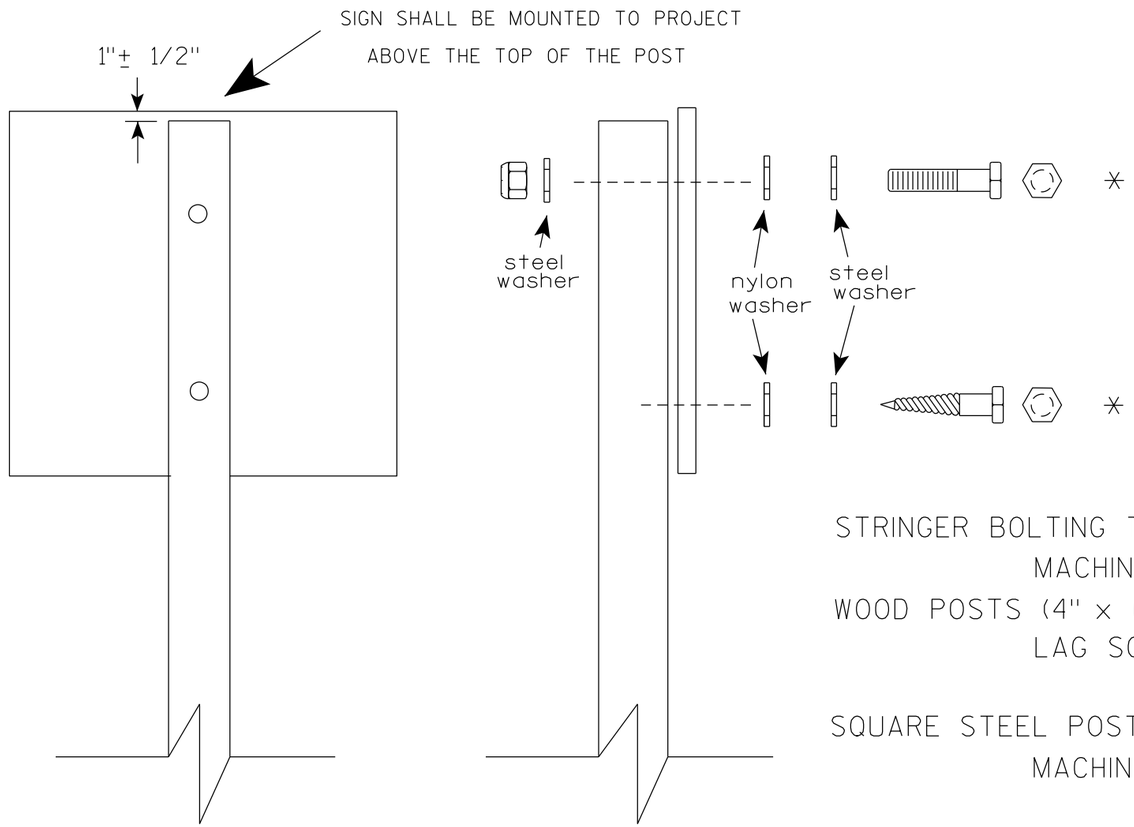

Nuts, bolts and lags used for mounting signs shall have hexagonal heads and shall be either :

a. Hot dip galvanized in accordance with ASTM Designation: A 153, Class D, or SC 3

b. Electro-galvanized in accordance with ASTM Designation : B 633, TYPE III, SC 3.

Threads on bolts and nuts shall be manufactured with sufficient allowance for the cadmium plate or galvanized coating to permit the nuts to run freely on the bolts.

STRINGER BOLTING TO ALUMINUM SIGNS (SEE SIGN PLATE A4-18)

MACHINE BOLTS - 5/16" X 1-3/4" Length w/ lock nuts

WOOD POSTS (4" x 6")

LAG SCREWS - 3/8" X 3" (NO STRINGERS ON BACK OF SIGN)
3/8" X 4" (STRINGERS ON BACK OF SIGN)

SQUARE STEEL POSTS (2" x 2")

MACHINE BOLTS - 3/8" X 3-1/4" Length w/ nuts (NO STRINGER ON BACK OF SIGN)
3/8" X 5" Length w/ nuts (STRINGERS ON BACK OF SIGN)

RIVETS - 9/32 " (6605-9-6) BULB-TITE, TRI-FOLD, ALUMINUM BODY/MANDREL
O.D. FLANGE .720-.765 INCH, GRIP RANGE .042-.375 INCH

WASHERS (ALL POSTS) -

1-1/4" O.D. X 3/8" I.D. X 1/16" STEEL
1-1/4" O.D. X 3/8" I.D. X .080 NYLON

* Two different fastening systems are shown for illustration purposes. On any individual sign, either one or the other system shall be used. Actual number of fasteners per sign varies with the sign area, but normally there are two. For a single post installation, all signs greater than 9 sq. ft. require the use of 3 fasteners.

ATTACHMENT OF SIGNS TO POSTS

WISCONSIN DEPT OF TRANSPORTATION

APPROVED Matthew R Rauch
for State Traffic Engineer

DATE 4/1/2020 PLATE NO. A4-8.9

TELESCOPIC TUBING ANCHORS
TWO PIECE SYSTEM

2 1/4" SQUARE
12 GAUGE
PERFORATED
GALVANIZED FINISH

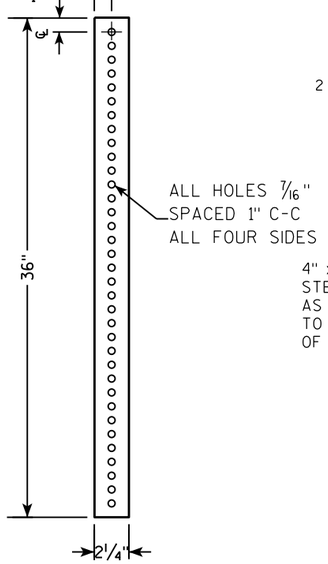

2 1/2" SQUARE
12 GAUGE
OMNI-DIRECTIONAL
PERFORATED
SOIL STABILIZING SLEEVE
GALVANIZED FINISH

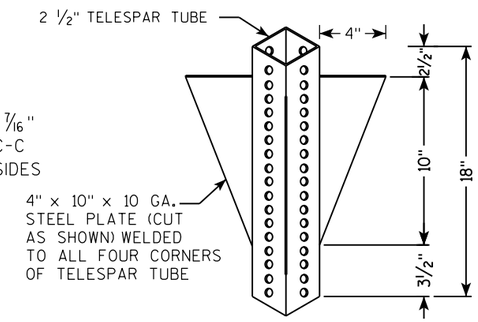

DETAIL OF TUBULAR STEEL SIGN POST
(IN POURED CONCRETE OR ASPHALT)

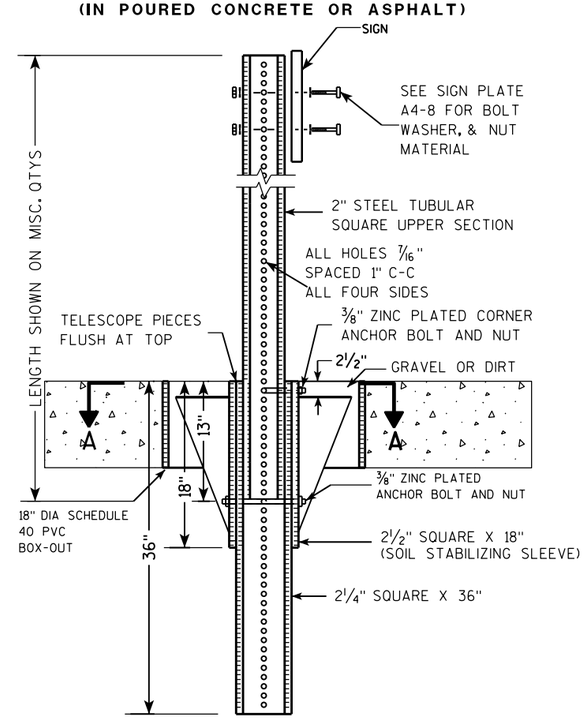

DETAIL OF TUBULAR STEEL SIGN POST
(IN LOCATIONS OTHER THAN POURED CONCRETE OR ASPHALT)

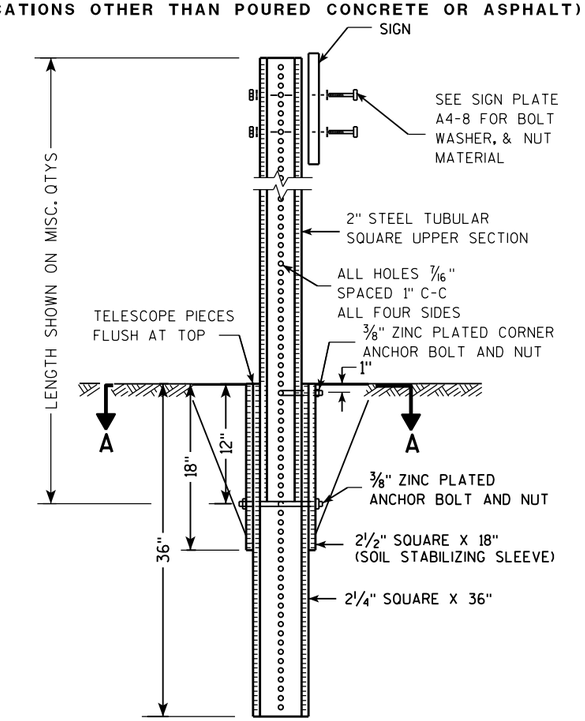

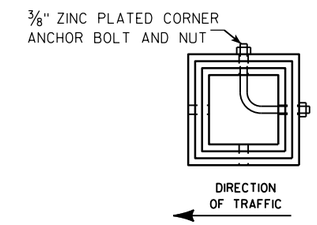

SECTION A-A

Area of Sign Installation (Sq. Ft.)	Number of Required Posts
9 or less	1
Greater than 9 less than or equal to 18	2
Greater than 18 less than or equal to 27	3

Signs wider than 3 feet or larger than 9 sq. ft shall be mounted on multiple posts (see above table).

TUBULAR STEEL
SIGN POST
A4-9

WISCONSIN DEPT OF TRANSPORTATION

APPROVED Matthew R Rauch
for State Traffic Engineer

DATE 2/05/15 PLATE A4-9.9

7 7

PROJECT NO:	HWY:	COUNTY:		SHEET NO:	E

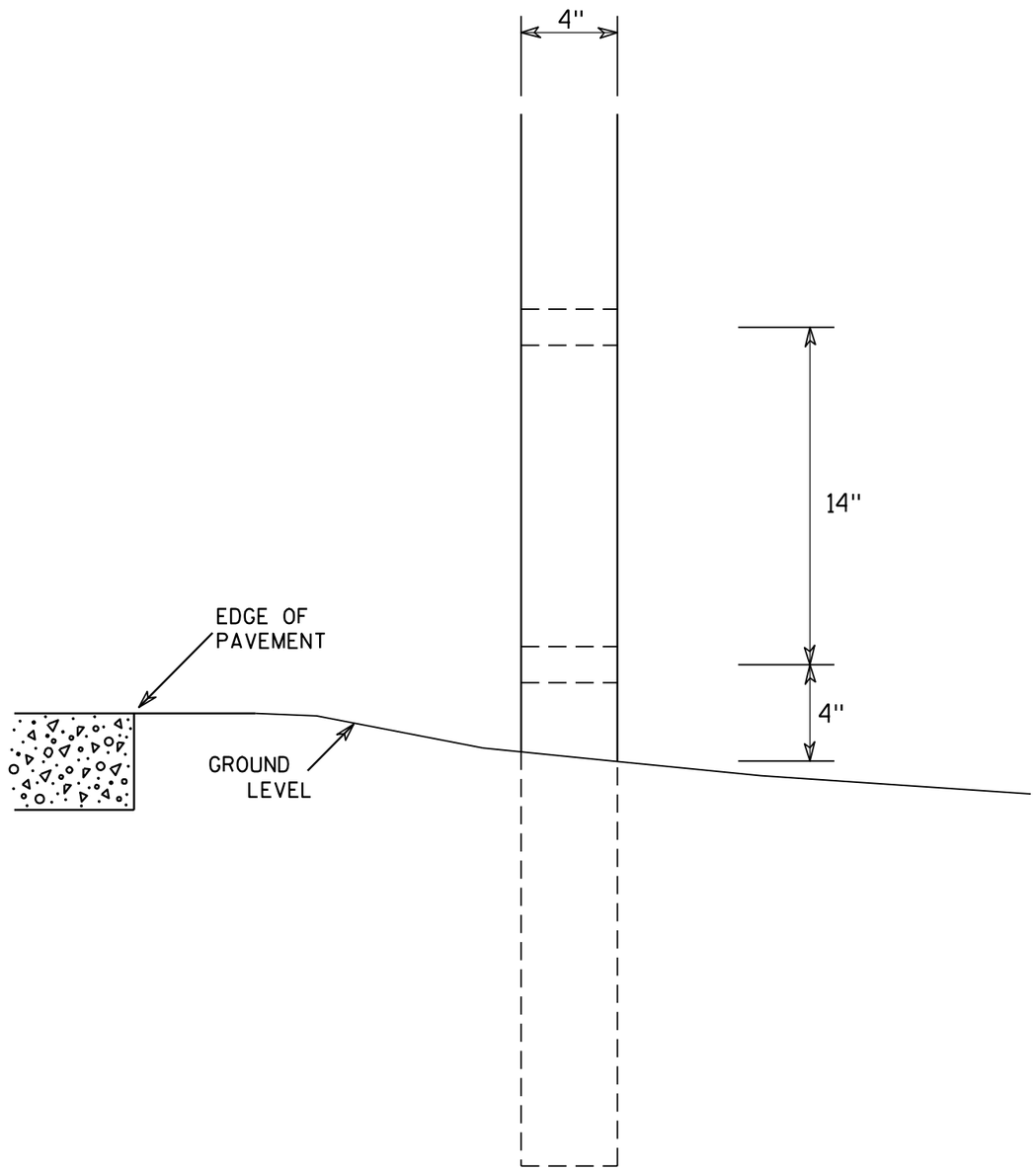

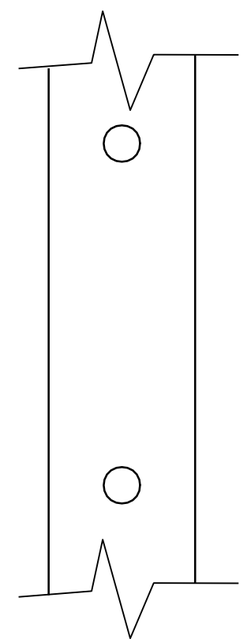

SIDE VIEW

GENERAL NOTES

1. All 4 x 6 Wood Posts shall be modified by having two 1½" diameter holes drilled perpendicular to the roadway centerline.

7

7

4 X 6 WOOD POST MODIFICATIONS

WISCONSIN DEPT OF TRANSPORTATION

APPROVED Chester J Spang for State Traffic Engineer

DATE 3/27/97 PLATE NO. A4-11.2

PROJECT NO:	HWY:	COUNTY:		SHEET NO: 71	E

BANDING

SINGLE SIGN

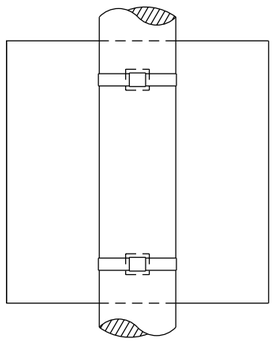

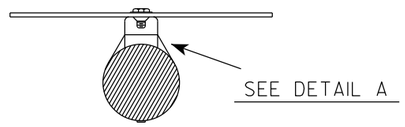

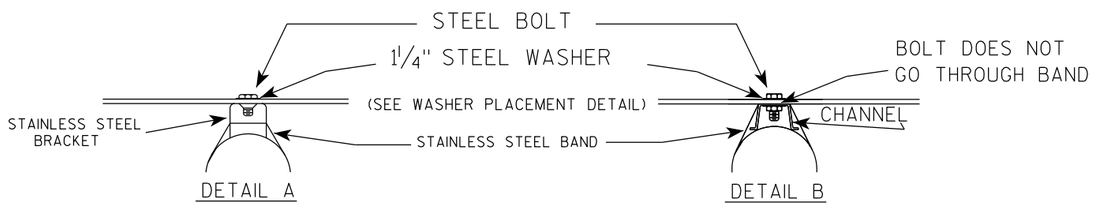

WASHER PLACEMENT

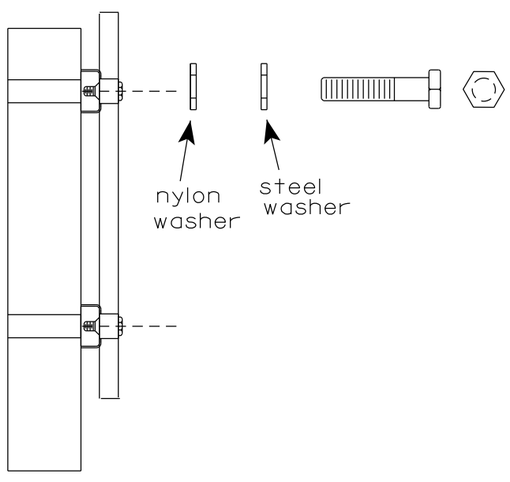

WASHERS (ALL POSTS) -
1-1/4" O.D. X 3/8" I.D. X 1/16" STEEL
1-1/4" O.D. X 3/8" I.D. X .080 NYLON
FOR ALL TYPE H SIGNS

GENERAL NOTES

1. Any sign over 3 feet in width shall use the V-Block banding method. See A5-10 standard plate.
2. Signs 3 feet or greater in height shall have three bracket bands installed. Signs less than 3 feet in height shall have two bracket bands installed.
3. Banding and assembly bracket shall be stainless steel. All bands shall be ¾" in width and 0.025" thickness.
4. ALL SIGN MOUNTING BOLTS AND WASHERS SHALL BE EITHER:
   a. Hot dip or mechanically galvanized in accordance with ASTM Designation: A 153, Class D
   b. Electro-galvanized in accordance with ASTM designation: B 633, Type III, SC 3

"J" ASSEMBLY

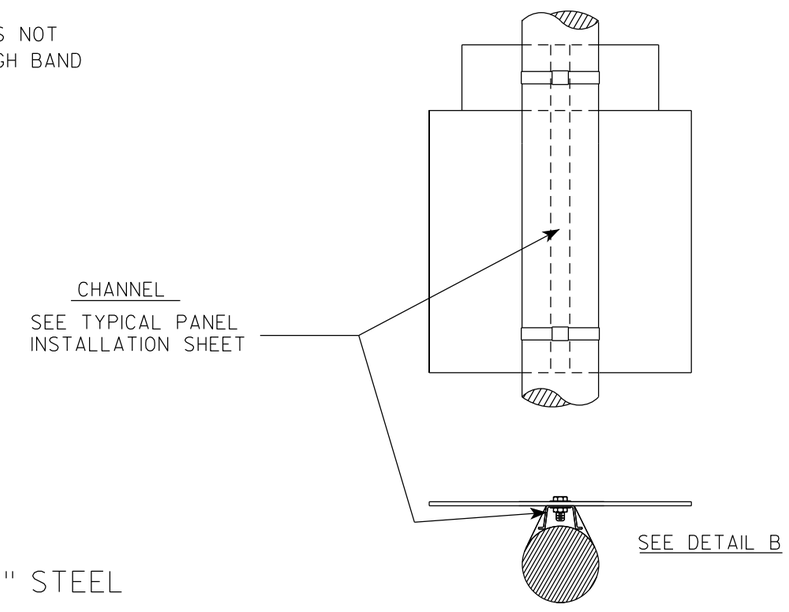

STANDARD SIGN
SIGN BANDING DETAILS

WISCONSIN DEPT OF TRANSPORTATION

APPROVED Matthew R Rauch for State Traffic Engineer

DATE 6/10/19 PLATE NO. A5-9.4

PROJECT NO:	HWY:	COUNTY:		SHEET NO: 72	E

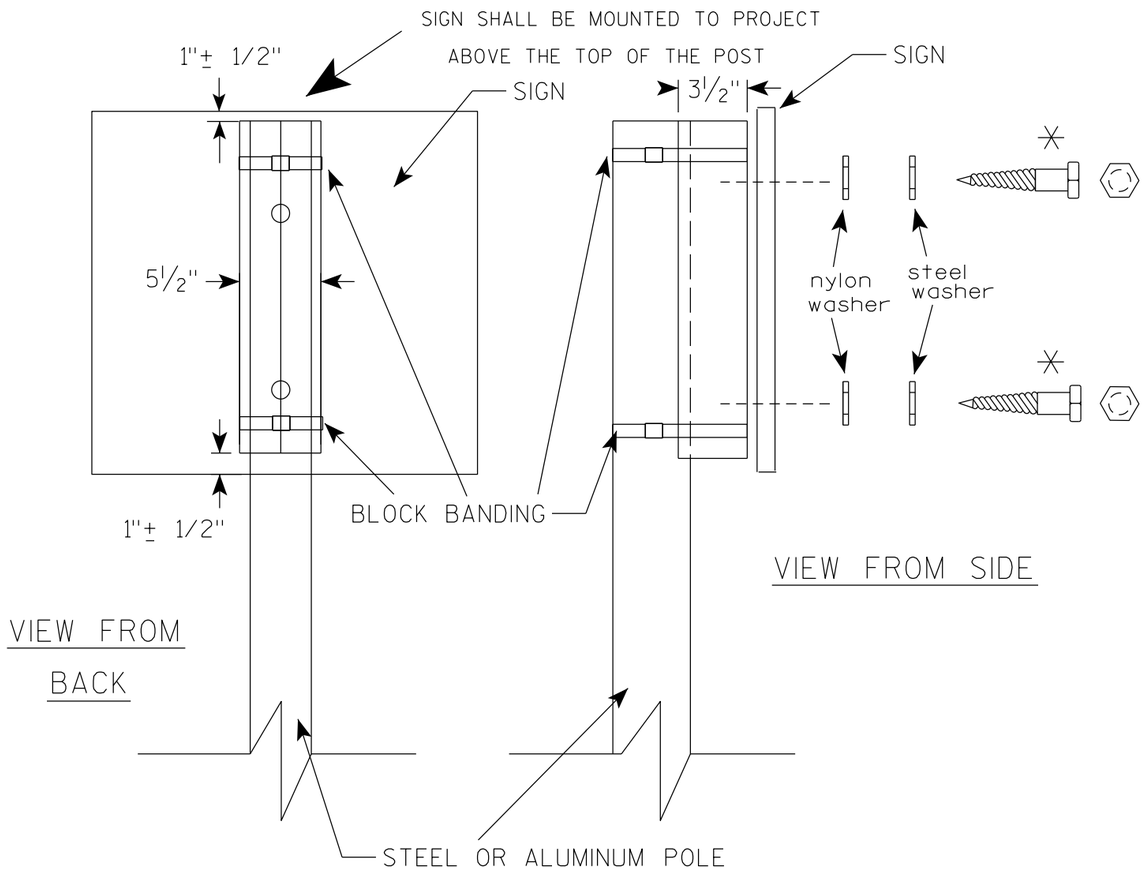

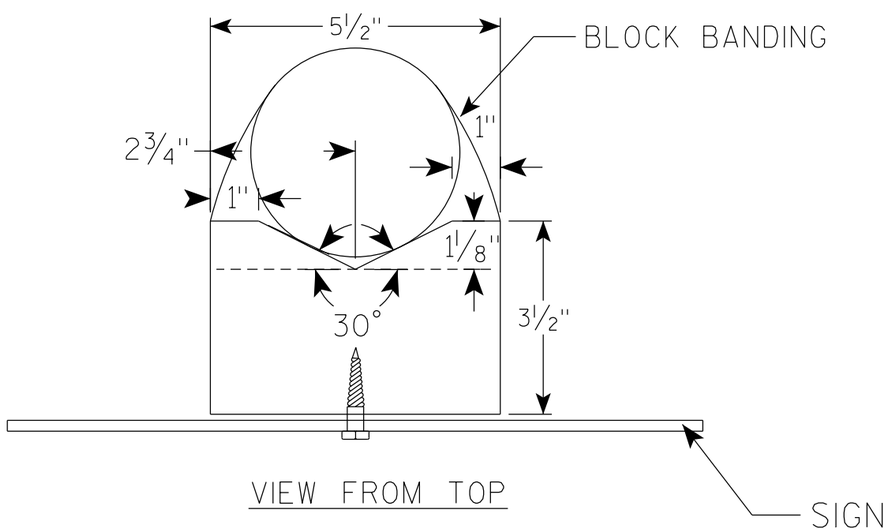

GENERAL NOTES

1. WOOD 4"X6" POST MATERIAL SHALL CONFORM TO 507.2.2 OF THE WisDOT STANDARD SPECIFICATIONS
2. BLOCK BANDING AND CLIPS SHALL BE STAINLESS STEEL, 3/4" WIDTH AND 0.025" THICKNESS
3. SIGNS 3' OR GREATER IN HEIGHT SHALL UTILIZE 3 BLOCK BANDS. SIGNS UNDER 3' IN HEIGHT SHALL UTILIZE 2 BLOCK BANDS
4. ACTUAL NUMBER OF FASTENERS PER SIGN VARIES WITH THE SIGN AREA, BUT NORNALLY THERE ARE TWO. FOR SIGNS GREATER THAN 9 S.F. 3 FASTENERS SHALL BE USED.
5. ALL SIGN MOUNTING BOLTS AND WASHERS SHALL BE EITHER:
   a. Hot dip or mechanically galvanized in accordance with ASTM Designation: A 153, Class D
   b. Electro-galvanized in accordance with ASTM Designation : B 633, TYPE III, SC 3
6. ALL BOLTS SHALL HAVE HEXAGONAL HEADS.
7. STEEL WASHERS SHALL BE 1 1/4" O.D. X 3/8" I.D. X 1/16"
8. NYLON WASHERS SHALL BE 1 1/4" O.D. X 3/8" I.D. X .080 FOR TYPE H OR TYPE F FACE SIGN

✳ LAG BOLTS SHALL BE 3/8" X 2 1/2"

7

7

BLOCK BANDING DETAIL
(V-BLOCK OPTION)

WISCONSIN DEPT OF TRANSPORTATION

APPROVED Matthew R Rauch
for State Traffic Engineer

DATE 4/19/2022 PLATE NO. A5-10.3

PROJECT NO:				SHEET NO: 73	E

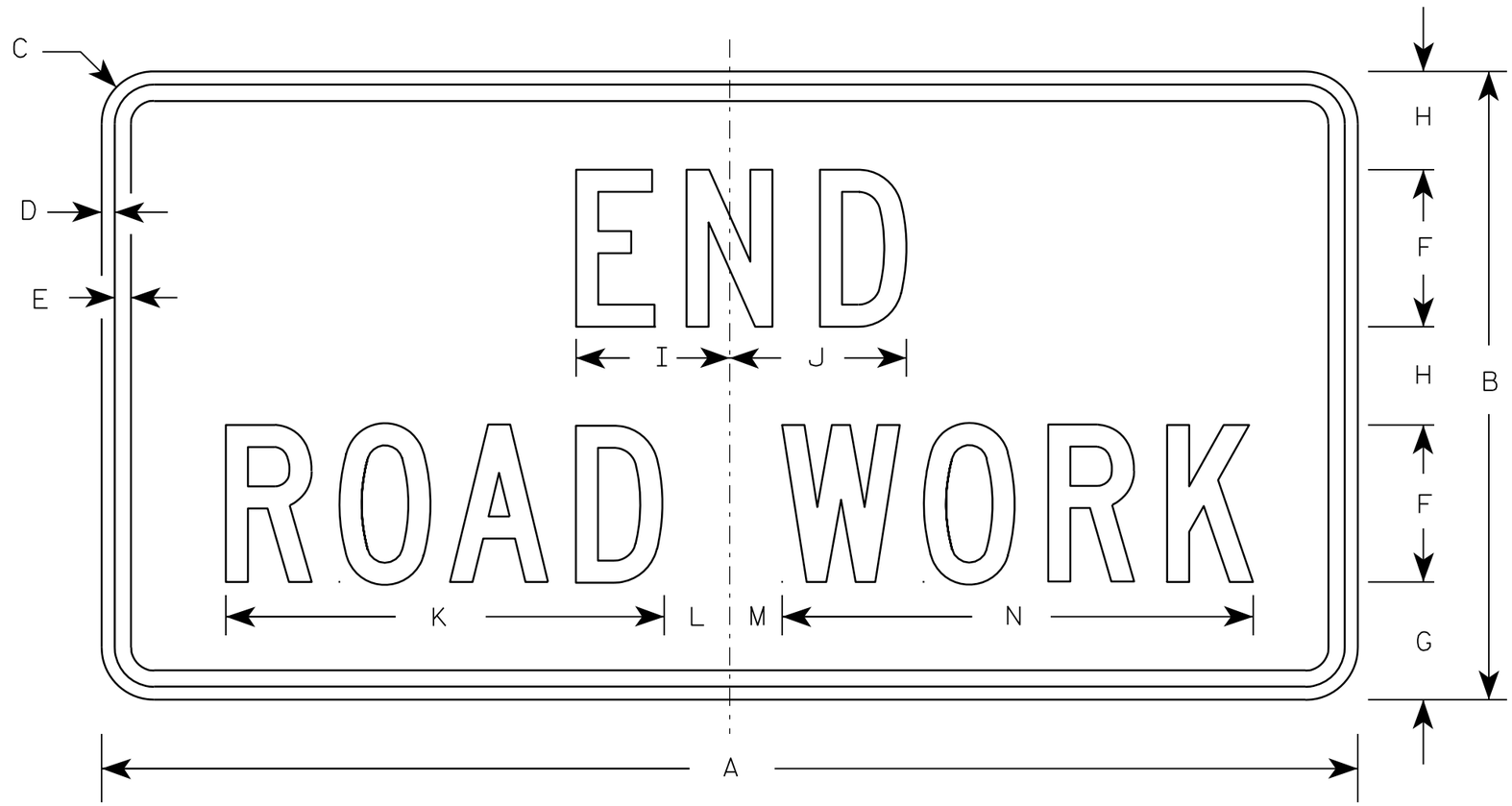

G20-2A

NOTES

1. Sign is Type II - Type F Reflective - reference WIS DOT Standard Specification for HIGHWAY and STRUCTURE CONSTRUCTION latest edition.
2. Color:
   Background - Orange
   Message - Black
3. Message Series - C
4. Corners may be square or rounded when base material is plywood but borders shall be rounded as shown. When base material is metal, the corners and borders shall be rounded.

Metric equivalent for this sign is:

SIZE	
1	900 mm X 450 mm
2	1200 mm X 600 mm
3	1200 mm X 600 mm
4	1200 mm X 600 mm
5	1200 mm X 600 mm

SIZE	A	B	C	D	E	F	G	H	I	J	K	L	M	N	O	P	Q	R	S	T	U	V	W	X	Y	Z	Area sq. ft.	Area m2
1	36	18	1 1/8	3/8	1/2	4	3 3/4	2 1/2	4 1/8	4 1/8	11 1/8	2	1	12 1/8													4.5	0.41
2	48	24	1 1/2	1/2	5/8	6	4 1/2	3 3/4	5 7/8	6 3/4	16 3/4	2 1/2	1 3/4	18 1/2													8.0	0.72
3	48	24	1 1/2	1/2	5/8	6	4 1/2	3 3/4	5 7/8	6 3/4	16 3/4	2 1/2	1 3/4	18 1/2													8.0	0.72
4	48	24	1 1/2	1/2	5/8	6	4 1/2	3 3/4	5 7/8	6 3/4	16 3/4	2 1/2	1 3/4	18 1/2													8.0	0.72
5	48	24	1 1/2	1/2	5/8	6	4 1/2	3 3/4	5 7/8	6 3/4	16 3/4	2 1/2	1 3/4	18 1/2													8.0	0.72

STANDARD SIGN

G20-2A

WISCONSIN DEPT OF TRANSPORTATION

APPROVED Matthew R Rauch
for State Traffic Engineer

DATE 9/30/09 PLATE NO. G20-2A.8

PROJECT NO:	HWY:	COUNTY:		SHEET NO: 74	E

NOTES

1. Sign is Type II - Type F Reflective
2. Color:
   Background - Orange
   Message - Black
3. Message Series - D
4. Substitute appropriate numeral and adjust spacing to achieve proper balance.

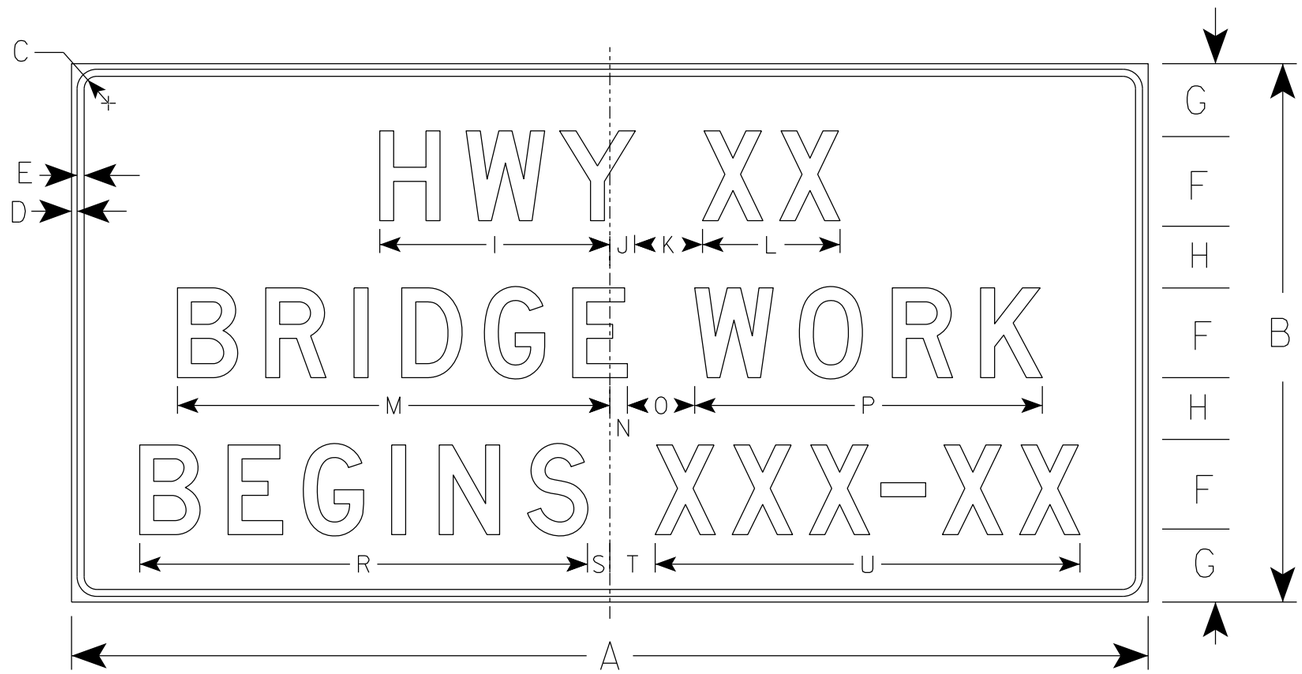

G20-57B

SIZE	A	B	C	D	E	F	G	H	I	J	K	L	M	N	O	P	Q	R	S	T	U	V	W	X	Y	Z	Area sq. ft.
1																											
2																											
3	72	36	1 1/8	1/2	5/8	6	5	4	15 5/8	1 5/8	5	9 1/4	29 1/8	7/8	5	23 1/4		29 7/8	1 3/4	3 1/4	28 1/2						18.0
4	96	48	2 1/4	3/4	1	8	6 1/2	5 1/2	20 5/8	2 1/4	6	12 1/4	38 1/2	1 1/2	6	31		39 1/4	2	4	37 7/8						32.0
5																											

STANDARD SIGN
G20-57B

WISCONSIN DEPT OF TRANSPORTATION

APPROVED Matthew R Rauch
for State Traffic Engineer

DATE 1/22/19 PLATE NO. G20-57B.1

PROJECT NO:	HWY:	COUNTY:		SHEET NO: 75	E

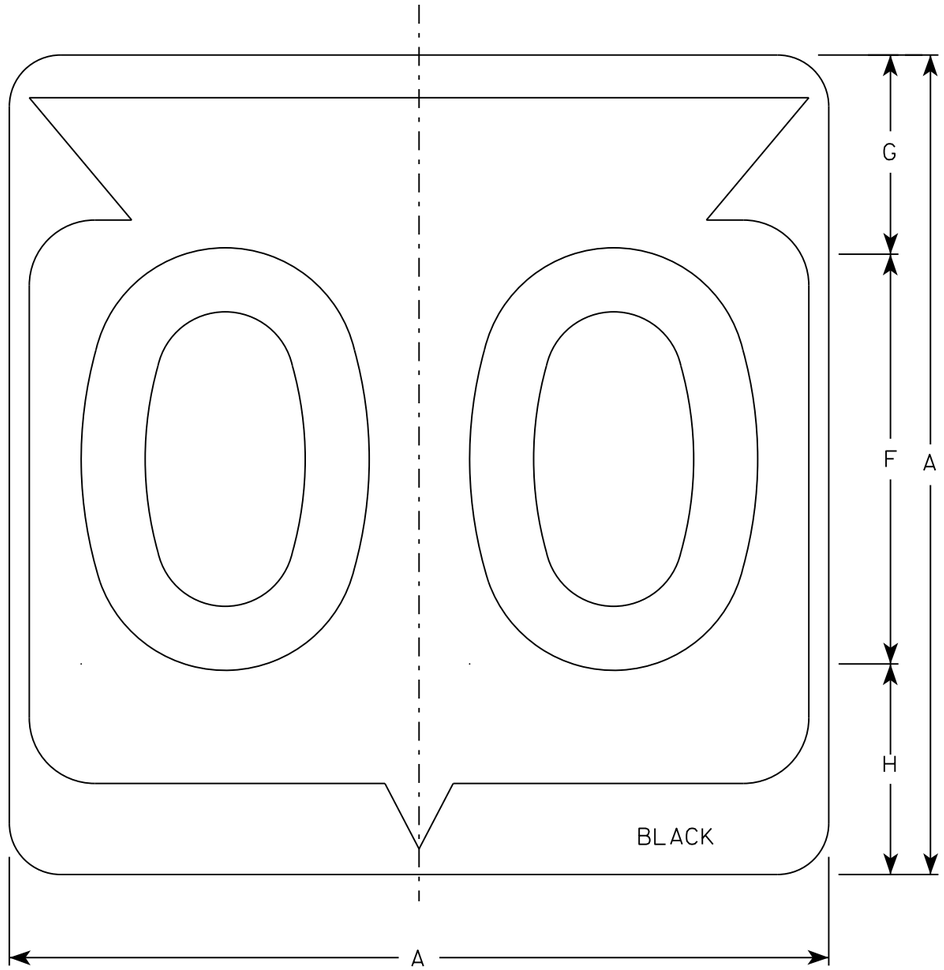

M1-6

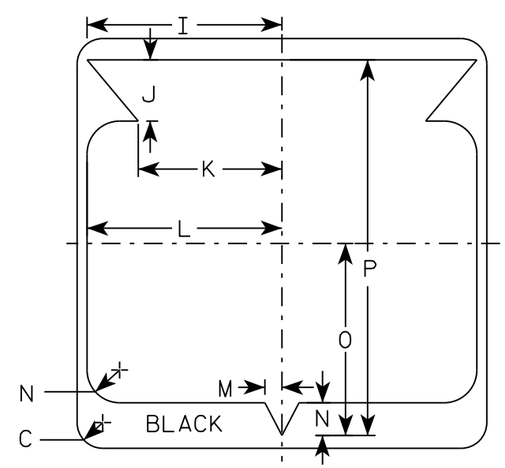

NOTES

1. Sign is Type II - Type H Reflective
2. Color:
   Background - White
   Message - Black
3. Message Series - D except 3 number signs Series C
4. Corners may be square or rounded when base material is plywood but borders shall be rounded as shown. When base material is metal, the corners and borders shall be rounded.

SIZE	A	B	C	D	E	F	G	H	I	J	K	L	M	N	O	P	Q	R	S	T	U	V	W	X	Y	Z	Area sq. ft.
1																											
2	24		1 1/2			12	5 1/2	6 1/2	10 1/4	2 1/2	8 7/8	11 1/2	1	1 7/8	11 1/4	21 7/8											4.0
3	36		2 1/4			18	8 3/4	9 1/4	15 3/8	5 3/8	12 5/8	17 1/8	1 1/2	2 7/8	16 7/8	33											9.0
4	36		2 1/4			18	8 3/4	9 1/4	15 3/8	5 3/8	12 5/8	17 1/8	1 1/2	2 7/8	16 7/8	33											9.0
5	36		2 1/4			18	8 3/4	9 1/4	15 3/8	5 3/8	12 5/8	17 1/8	1 1/2	2 7/8	16 7/8	33											9.0

STATE ROUTE MARKER
M1-6 FOR ASSEMBLIES

WISCONSIN DEPT OF TRANSPORTATION

APPROVED Matthew R Rauch
for State Traffic Engineer

DATE 3/16/18 PLATE NO. M1-6.10

PROJECT NO: | HWY: | COUNTY: | SHEET NO: 76 | E

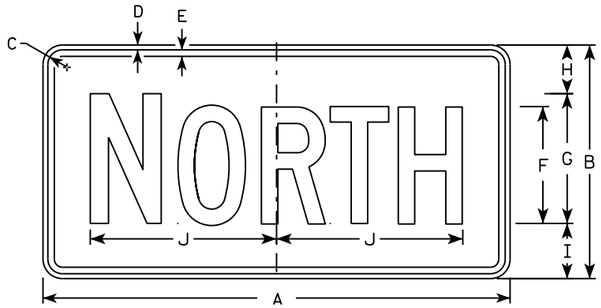

M3-1
MM3-1
MP3-1

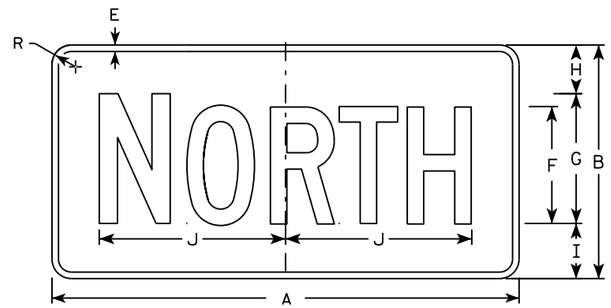

MB3-1
MK3-1
MN3-1

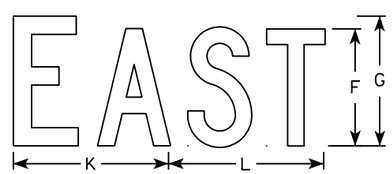

M3-2
MM3-2
MP3-2

MB3-2
MK3-2
MN3-2

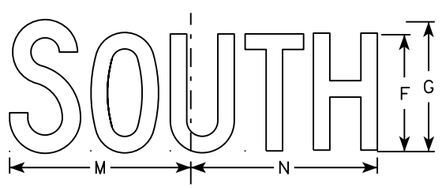

M3-3
MM3-3
MP3-3

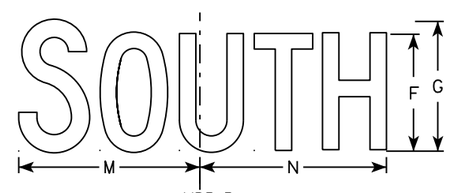

MB3-3
MK3-3
MN3-3

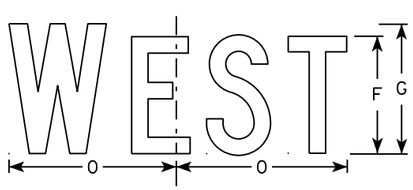

M3-4
MM3-4
MP3-4

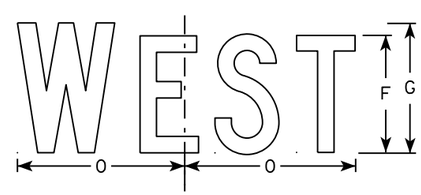

MB3-4
MK3-4
MN3-4

NOTES

1. All Signs Type II - Type H
2. Color:
   Background - See note 5
   Message - See note 5
3. Message Series - C
4. Corners may be square or rounded when base material is plywood but borders shall be rounded as shown. When base material is metal, the corners and borders shall be rounded.
5. M3-1 thru M3-4 Background - White
   Message - Black
   MB3-1 thru MB3-4 Background - Blue
   Message - White
   MK3-1 thru MK3-4 Background - Green
   Message - White
   MM3-1 thru MM3-4 Background - White
   Message - Green
   MN3-1 thru MN3-4 Background - Brown
   Message - White
   MP3-1 thru MP3-4 Background - White
   Message - Blue
6. Note the first letter of each direction is larger than the remainder of the message.

SIZE	A	B	C	D	E	F	G	H	I	J	K	L	M	N	O	P	Q	R	S	T	U	V	W	X	Y	Z	Area sq. ft.
1																											
2	24	12	1 1/8	3/8	3/8	6	7	2 1/4	2 3/4	10 1/4	7 7/8	8 3/8	10 1/4	9 3/4	8 3/4			1 1/2									2.00
3	36	18	1 1/8	3/8	1/2	9	10	3 3/4	4 1/4	14 3/8	12	12 1/8	14	14 1/8	13			1 1/2									4.5
4	36	18	1 1/8	3/8	1/2	9	10	3 3/4	4 1/4	14 3/8	12	12 1/8	14	14 1/8	13			1 1/2									4.5
5	36	18	1 1/8	3/8	1/2	9	10	3 3/4	4 1/4	14 3/8	12	12 1/8	14	14 1/8	13			1 1/2									4.5

STANDARD SIGNS
M3-1 thur M3-4
SERIES

WISCONSIN DEPT OF TRANSPORTATION

APPROVED Matthew R Rauch
for State Traffic Engineer

DATE 10/15/15 PLATE NO M3-1.14

PROJECT NO: | HWY: | COUNTY: | SHEET NO: | E

FILE NAME : C:\CAEfiles\Projects\tr_stdplate\M31.DGN PLOT DATE : 01-DEC-2015 17:54 PLOT BY : $$ plotuser $$ PLOT NAME : PLOT SCALE : 11.675051:1.000000

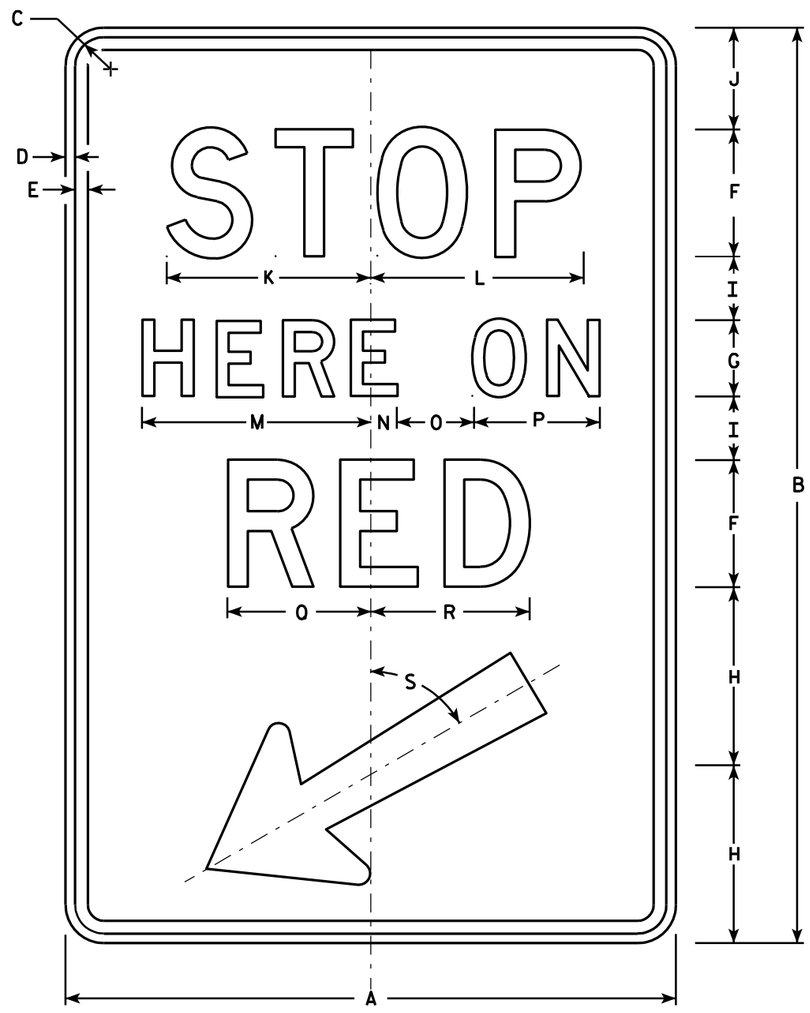

R10-6

NOTES

1. Sign is Type II - Type H Reflective - reference WIS DOT Standard Specification for HIGHWAY and STRUCTURE CONSTRUCTION latest edition.
2. Color:
   Background - White
   Message - Black
3. Message Series - D
4. Corners may be square or rounded when base material is plywood but borders shall be rounded as shown. When base material is metal, the corners and borders shall be rounded.

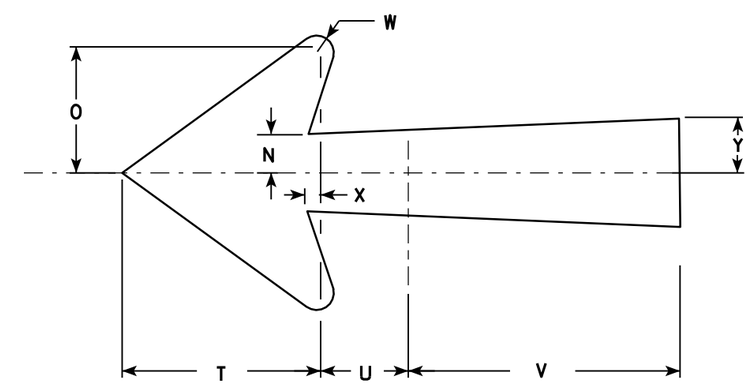

Arrow Detail

SIZE	A	B	C	D	E	F	G	H	I	J	K	L	M	N	O	P	Q	R	S	T	U	V	W	X	Y	Z	Area sq. ft.
1																											
2S	24	36	1 1/8	3/8	1/2	5	3	7	2 1/2	4	8	8 3/8	9	1	3	5	5 5/8	6 1/4	60°	5 1/4	2 1/4	7 1/8	1/2	3/8	1 3/8		6.0
2M	24	36	1 1/8	3/8	1/2	5	3	7	2 1/2	4	8	8 3/8	9	1	3	5	5 5/8	6 1/4	60°	5 1/4	2 1/4	7 1/8	1/2	3/8	1 3/8		6.0
3																											
4																											
5																											

STANDARD SIGN
R10-6

WISCONSIN DEPT OF TRANSPORTATION

APPROVED Matthew R Rauch
for State Traffic Engineer

DATE 4/5/11 PLATE NO. R10-6.6

PROJECT NO:	HWY:	COUNTY:		SHEET NO: 78	E

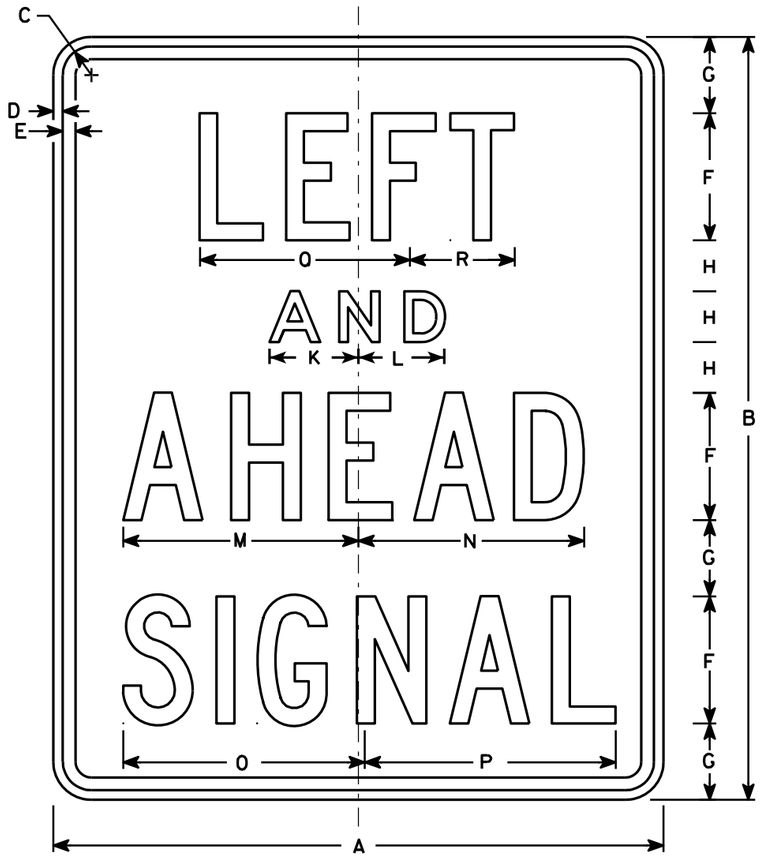

R10-11L

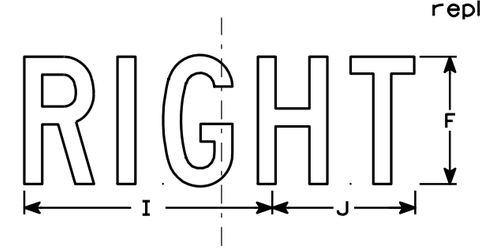

R10-11R

NOTES

1. Sign is Type II - Type H Reflective - reference WIS DOT Standard Specification for HIGHWAY and STRUCTURE CONSTRUCTION latest edition.
2. Color:
   Background - White
   Message - Black
3. Message Series - C except line 2 is Series E
4. Corners may be square or rounded when base material is plywood but borders shall be rounded as shown. When base material is metal, the corners and borders shall be rounded.
5. R10-11L is identical to R10-11R except LEFT replaces RIGHT.

SIZE	A	B	C	D	E	F	G	H	I	J	K	L	M	N	O	P	Q	R	S	T	U	V	W	X	Y	Z	Area sq. ft.
1																											
2S	24	30	1 1/8	3/8	1/2	5	3	2	7 3/4	7 5/8	3 1/2	3 3/8	9 1/4	8 7/8	9 1/2	9 7/8	6 1/4	6 1/8									5.0
2M	24	30	1 1/8	3/8	1/2	5	3	2	7 3/4	7 5/8	3 1/2	3 3/8	9 1/4	8 7/8	9 1/2	9 7/8	6 1/4	6 1/8									5.0
3																											
4																											
5																											

STANDARD SIGN
R10-11

WISCONSIN DEPT OF TRANSPORTATION

APPROVED Matthew R Rauch
for State Traffic Engineer

DATE 4/4/11 PLATE NO. R10-11.5

PROJECT NO:	HWY:	COUNTY:		SHEET NO: 79	E

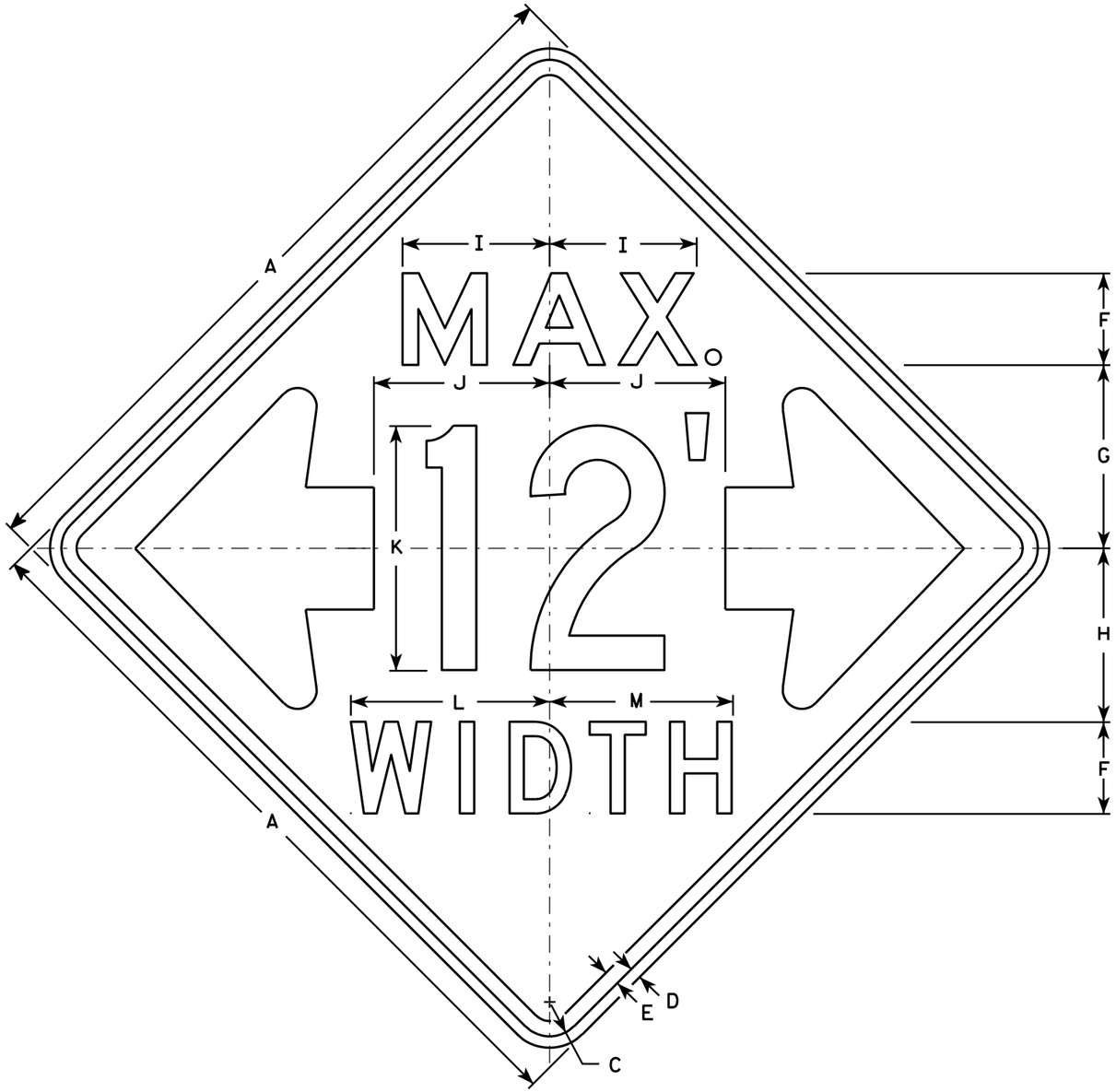

W12-52

NOTES

1. Sign is Type II - Type F Reflective - reference WIS DOT Standard Specification for HIGHWAY and STRUCTURE CONSTRUCTION latest edition.
2. Color:
   Background - Orange
   Message - Black
3. Message Series - See note 5
4. Corners may be square or rounded when base material is plywood but borders shall be rounded as shown. When base material is metal, the corners and borders shall be rounded.
5. The top line is series E, the numerals are series C, and the bottom line is series D.
6. Substitute appropriate numerals and adjust spacing as required.

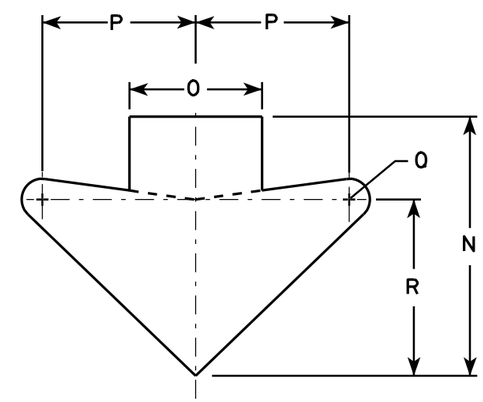

ARROW DETAIL

SIZE	A	B	C	D	E	F	G	H	I	J	K	L	M	N	O	P	Q	R	S	T	U	V	W	X	Y	Z	Area sq. ft.
1																											
2S	48		2 1/4	3/4	1	6	12	11 3/8	9 5/8	11 1/2	16	13	12	15 5/8	8	9 1/4	1 1/4	10 5/8									16.0
2M	48		2 1/4	3/4	1	6	12	11 3/8	9 5/8	11 1/2	16	13	12	15 5/8	8	9 1/4	1 1/4	10 5/8									16.0
3																											
4																											
5																											

STANDARD SIGN
W12-52

WISCONSIN DEPT OF TRANSPORTATION

APPROVED Matthew R Rauch
for State Traffic Engineer

DATE 3/16/11 PLATE NO. W12-52.7

PROJECT NO:	HWY:	COUNTY:		SHEET NO: 80	E

NOTES

1. Sign is Type II- Type F Reflective
2. Color:
   Background - Yellow
   Message - Black
3. Message Series - Lines 1 and 2 are Series D.
   Line 3 is series C.
4. Corners and borders shall be rounded on all base materials for this sign.

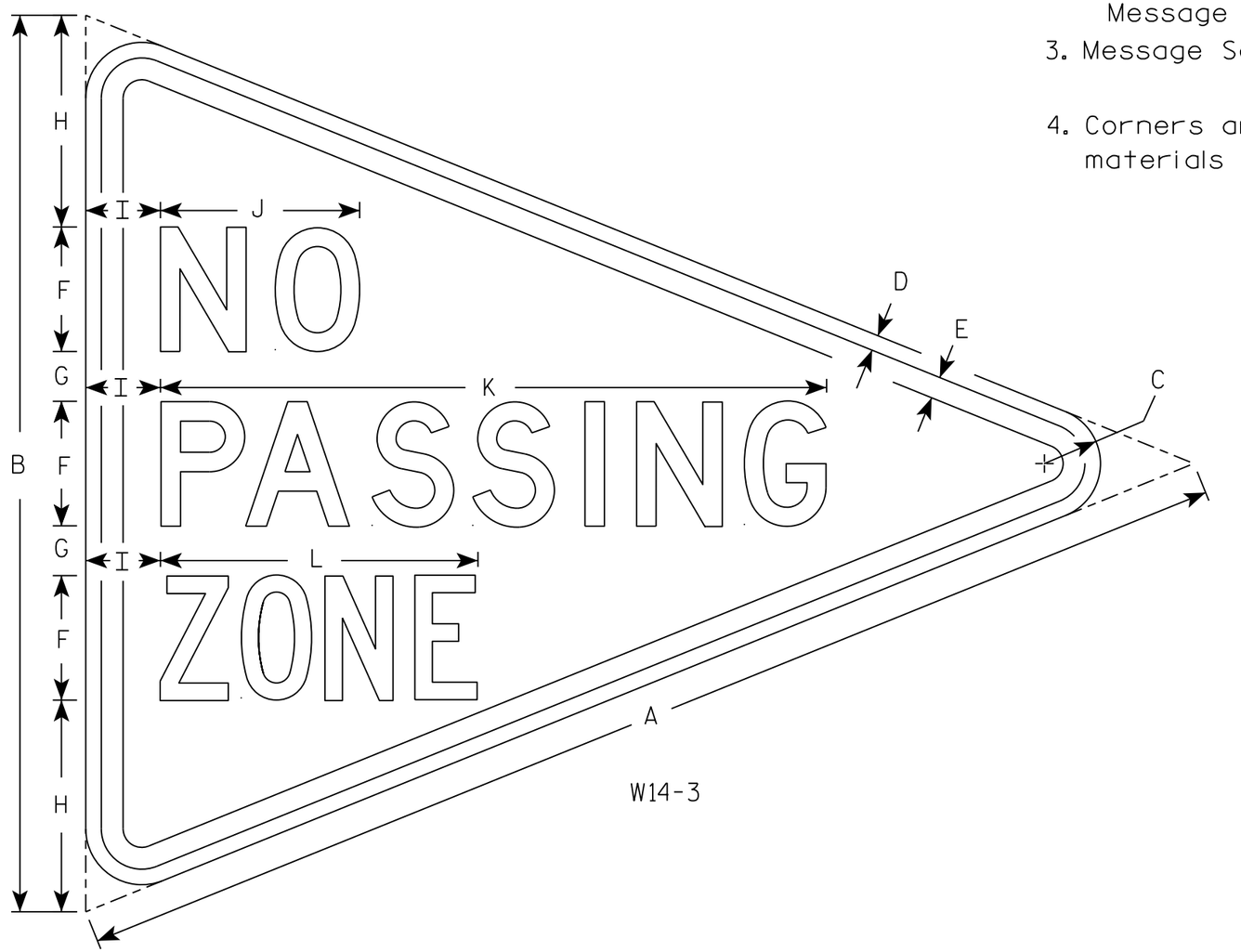

W14-3

SIZE	A	B	C	D	E	F	G	H	I	J	K	L	M	N	O	P	Q	R	S	T	U	V	W	X	Y	Z	Area sq. ft.
1																											
2S	48	36	2 1/4	5/8	7/8	5	2	8 1/2	3	8	26 3/4	12 3/4															5.56
2M																											
3																											
4																											
5																											

STANDARD SIGN
W14-3

WISCONSIN DEPT OF TRANSPORTATION

APPROVED Matthew R Rauch
for State Traffic Engineer
DATE 3/21/17 PLATE NO. W14-3.10

PROJECT NO: | HWY: | COUNTY: | SHEET NO: 81 | E

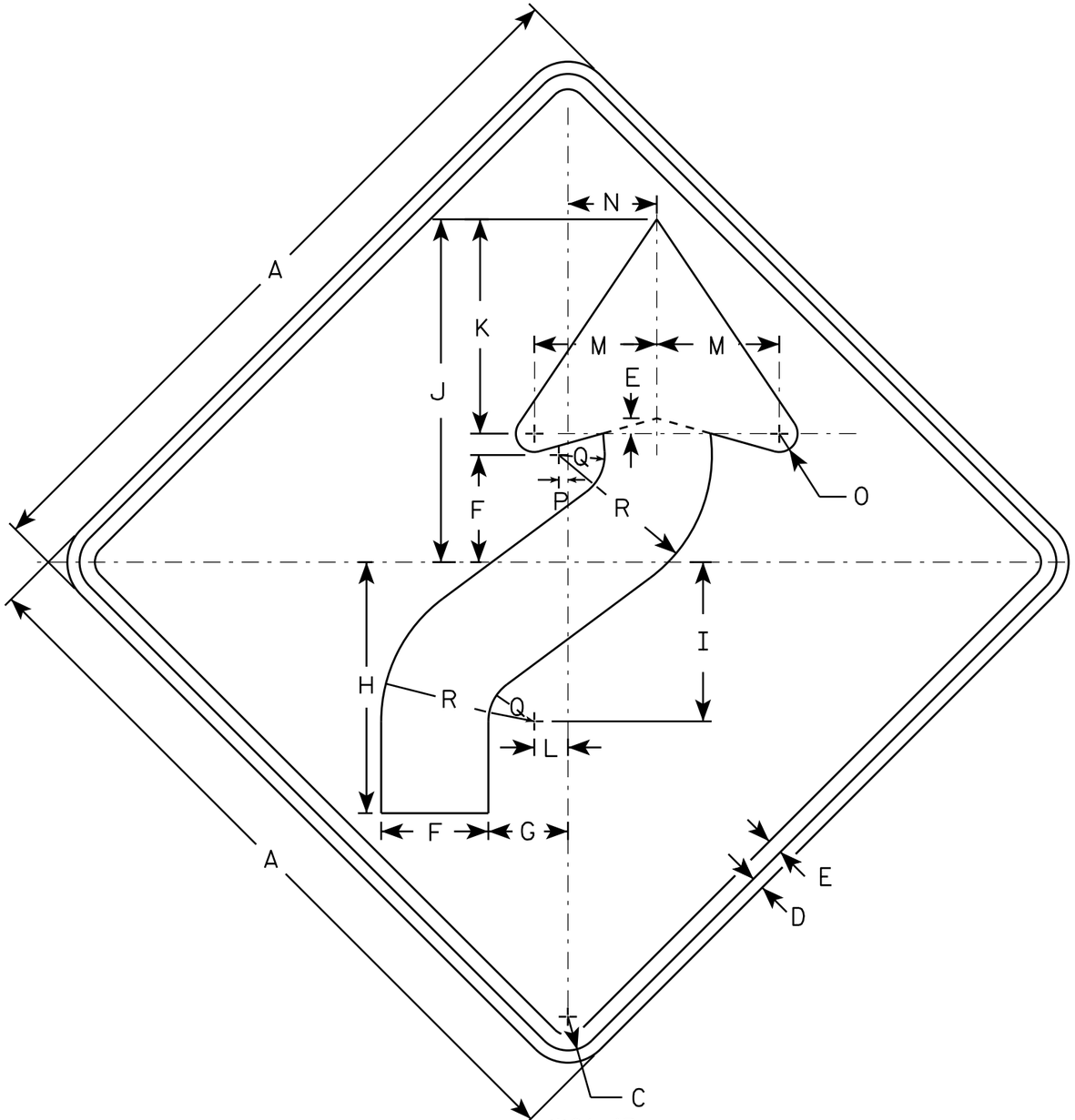

W01-4R

NOTES

1. Sign is Type II - Type F Reflective - reference WIS DOT Standard Specification for HIGHWAY and STRUCTURE CONSTRUCTION latest edition.
2. Color:
   Background - Orange
   Message - Black
3. Corners may be square or rounded when base material is plywood but borders shall be rounded as shown. When base material is metal, the corners and borders shall be rounded.
4. W01-4L is the same as W01-4R except the arrow is reversed along the vertical centerline.

SIZE	A	B	C	D	E	F	G	H	I	J	K	L	M	N	O	P	Q	R	S	T	U	V	W	X	Y	Z	Area sq. ft.
1	36		1 5/8	5/8	3/4	5 1/4	4	12 3/8	7 7/8	16 7/8	10 1/2	1 5/8	6	4 1/2	1	1/2	2 1/4	7 1/2									9.0
2S	48		2 1/4	3/4	1	7	5 1/4	16 1/2	10 1/2	22 1/2	14	2 1/4	8	6	1 1/4	5/8	3	10									16.0
2M	48		2 1/4	3/4	1	7	5 1/4	16 1/2	10 1/2	22 1/2	14	2 1/4	8	6	1 1/4	5/8	3	10									16.0
3	48		2 1/4	3/4	1	7	5 1/4	16 1/2	10 1/2	22 1/2	14	2 1/4	8	6	1 1/4	5/8	3	10									16.0
4	48		2 1/4	3/4	1	7	5 1/4	16 1/2	10 1/2	22 1/2	14	2 1/4	8	6	1 1/4	5/8	3	10									16.0
5	48		2 1/4	3/4	1	7	5 1/4	16 1/2	10 1/2	22 1/2	14	2 1/4	8	6	1 1/4	5/8	3	10									16.0

STANDARD SIGN
W01-4

WISCONSIN DEPT OF TRANSPORTATION

APPROVED Matthew R Rauch
for State Traffic Engineer

DATE 11/18/13 PLATE NO W01-4.1

PROJECT NO:	HWY:	COUNTY:		SHEET NO:	E

NOTES

1. Sign is Type II - Type F Reflective - reference WIS DOT Standard Specification for HIGHWAY and STRUCTURE CONSTRUCTION latest edition.
2. Color:
   Background - Orange
   Message - Black
3. Corners may be square or rounded when base material is plywood but borders shall be rounded as shown. When base material is metal, the corners and borders shall be rounded.

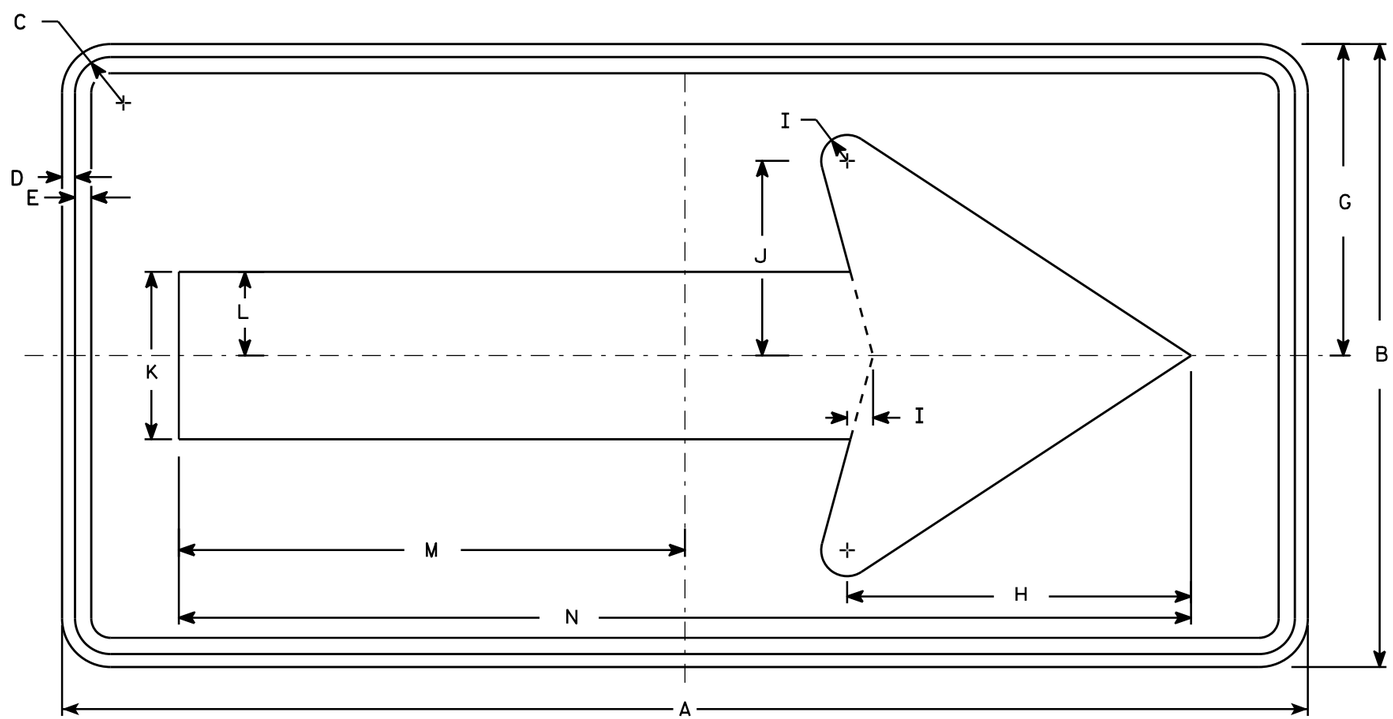

W01-6

SIZE	A	B	C	D	E	F	G	H	I	J	K	L	M	N	O	P	Q	R	S	T	U	V	W	X	Y	Z	Area sq. ft.
1																											
2S	48	24	1 3/8	1/2	5/8		12	13 1/4	1	7 1/2	6 1/2	3 1/4	19 1/2	39													8.0
2M	48	24	1 3/8	1/2	5/8		12	13 1/4	1	7 1/2	6 1/2	3 1/4	19 1/2	39													8.0
3	60	30	1 3/8	1/2	5/8		15	16 1/4	1 1/4	9 1/4	8	4	24 3/8	48 3/4													12.5
4	60	30	1 3/8	1/2	5/8		15	16 1/4	1 1/4	9 1/4	8	4	24 3/8	48 3/4													12.5
5	60	30	1 3/8	1/2	5/8		15	16 1/4	1 1/4	9 1/4	8	4	24 3/8	48 3/4													12.5

STANDARD SIGN
W01-6

WISCONSIN DEPT OF TRANSPORTATION

APPROVED Matthew R Rauch
for State Traffic Engineer

DATE 11/18/13 PLATE NO. W01-6.1

PROJECT NO: | HWY: | COUNTY: | SHEET NO: | E

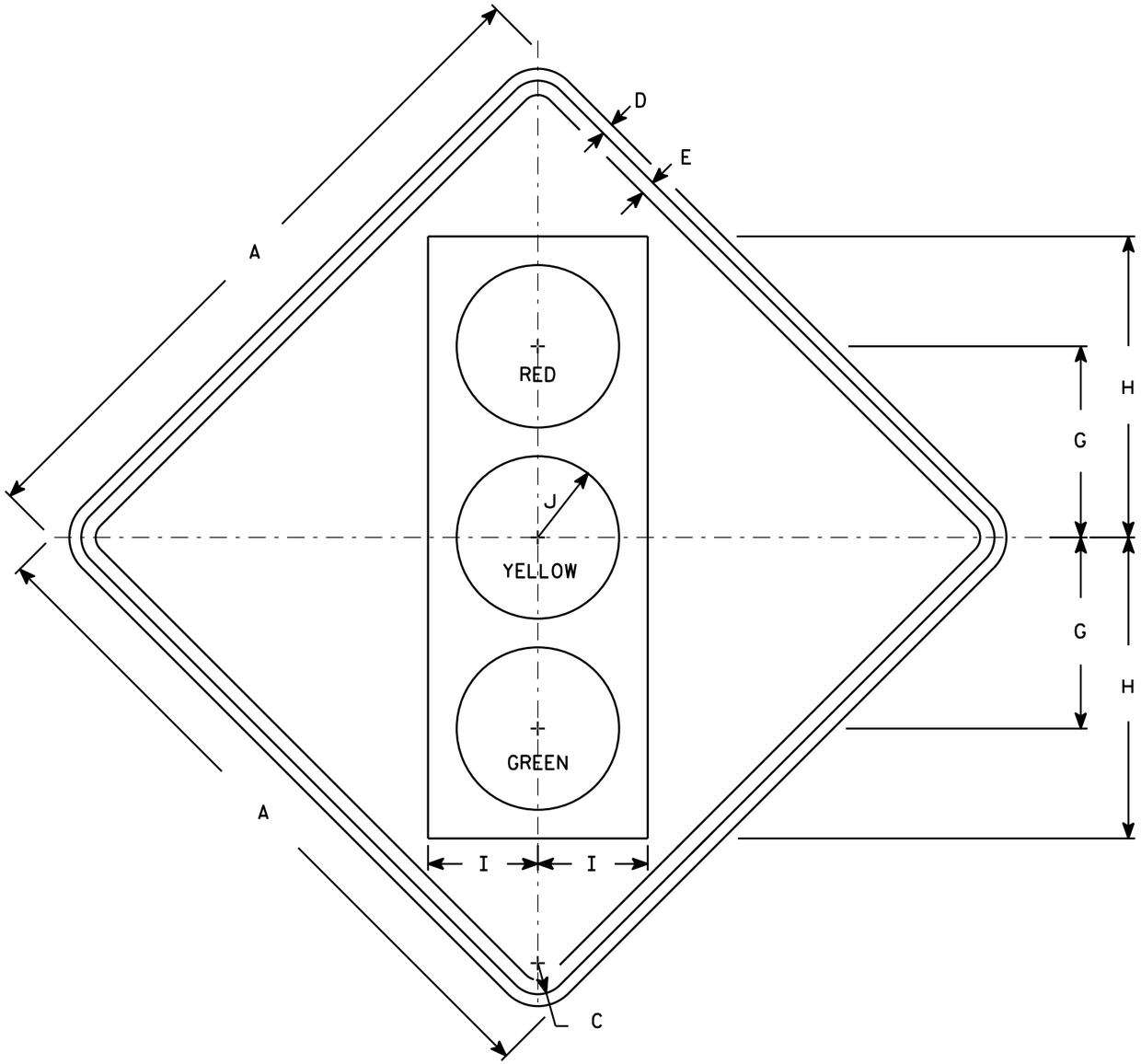

W03-3

NOTES

1. Sign is Type II - Type F Reflective - reference WIS DOT Standard Specification for HIGHWAY and STRUCTURE CONSTRUCTION latest edition.
2. Color:
   Background - Orange
   Message - See Note 4
3. Corners may be square or rounded when base material is plywood but borders shall be rounded as shown. When base material is metal, the corners and borders shall be rounded.
4. Symbol and border are non-reflective black.
   Top circle - Type H Reflectorized Red
   Center circle - Same as background
   Bottom circle - Type H Reflectorized Green

SIZE	A	B	C	D	E	F	G	H	I	J	K	L	M	N	O	P	Q	R	S	T	U	V	W	X	Y	Z	Area sq. ft.
1	36		1 5/8	5/8	3/4		10	15 3/4	5 3/4	4 1/4																	9.0
2S	48		2 1/4	3/4	1		12 1/2	20	7 1/2	5																	16.0
2M	48		2 1/4	3/4	1		12 1/2	20	7 1/2	5																	16.0
3	48		2 1/4	3/4	1		12 1/2	20	7 1/2	5																	16.0
4	48		2 1/4	3/4	1		12 1/2	20	7 1/2	5																	16.0
5	48		2 1/4	3/4	1		12 1/2	20	7 1/2	5																	16.0

STANDARD SIGN
W03-3

WISCONSIN DEPT OF TRANSPORTATION

APPROVED Matthew R Rauch
for State Traffic Engineer

DATE 11/20/13 PLATE 84 W03-3.1

PROJECT NO: | HWY: | COUNTY: | SHEET NO: E

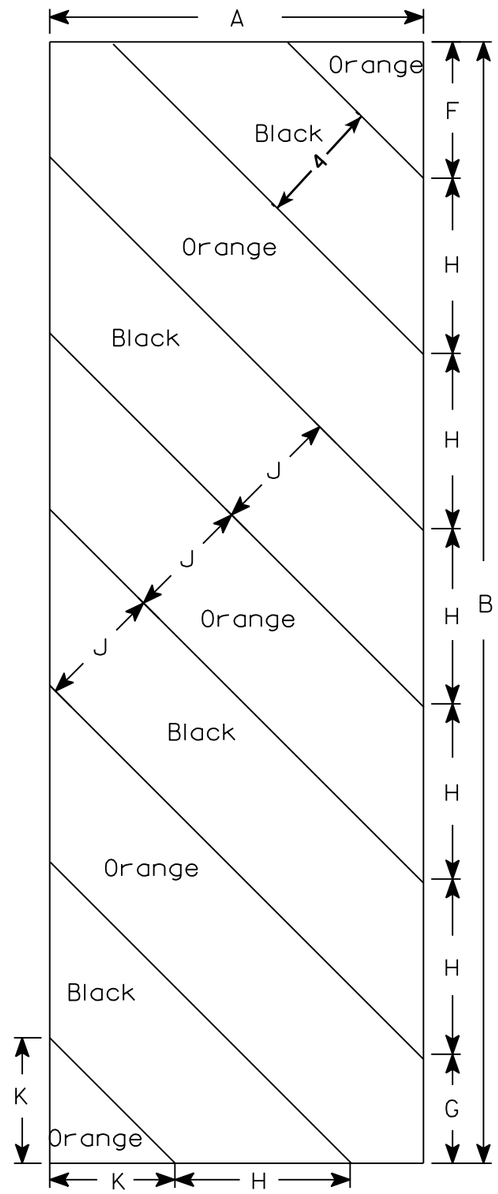

W05-52L

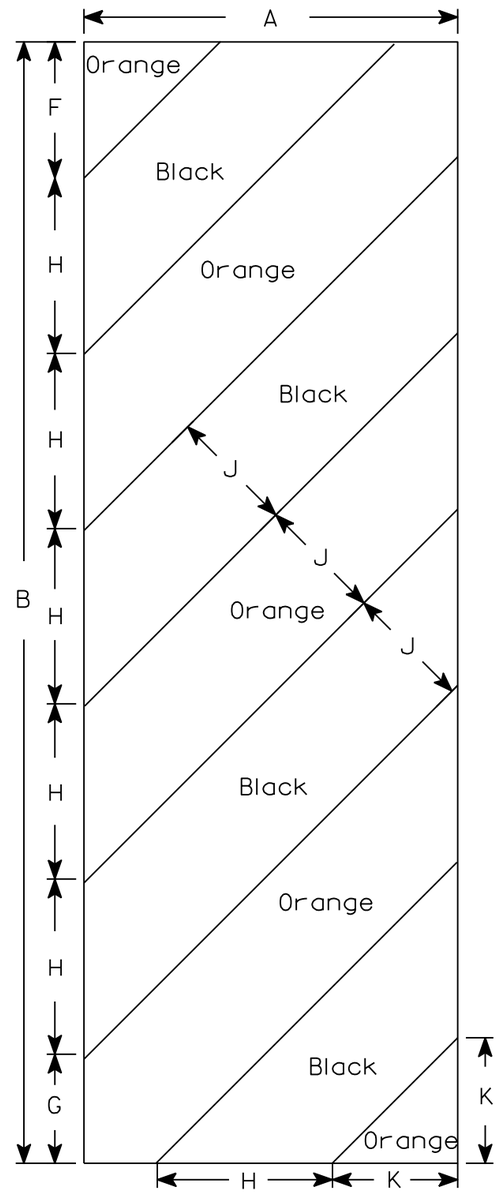

W05-52R

NOTES

1. Sign is Type II - Type F Reflective - reference WIS DOT Standard Specification for HIGHWAY and STRUCTURE CONSTRUCTION latest edition.
2. Color:
   Background - Orange
   Message - Black
3. Corners may be square or rounded when base material is plywood but borders shall be rounded as shown. When base material is metal, the corners and borders shall be rounded.
4. Alternate colors of stripes as shown.

SIZE	A	B	C	D	E	F	G	H	I	J	K	L	M	N	O	P	Q	R	S	T	U	V	W	X	Y	Z	Area sq. ft.
1																											
2S	12	36				4 3/8	3 1/2	5 5/8	45°	4	4																3.0
2M	12	36				4 3/8	3 1/2	5 5/8	45°	4	4																3.0
3	18	54				6	5 1/2	8 1/2	45°	6	6 9/16																6.75
4																											
5																											

STANDARD SIGN

W05-52L & W05-52R

WISCONSIN DEPT OF TRANSPORTATION

APPROVED Matthew R Rauch
for State Traffic Engineer

DATE 11/20/13 PLATE NO. W05-52.1

85

PROJECT NO:	HWY:	COUNTY:		SHEET NO:	E

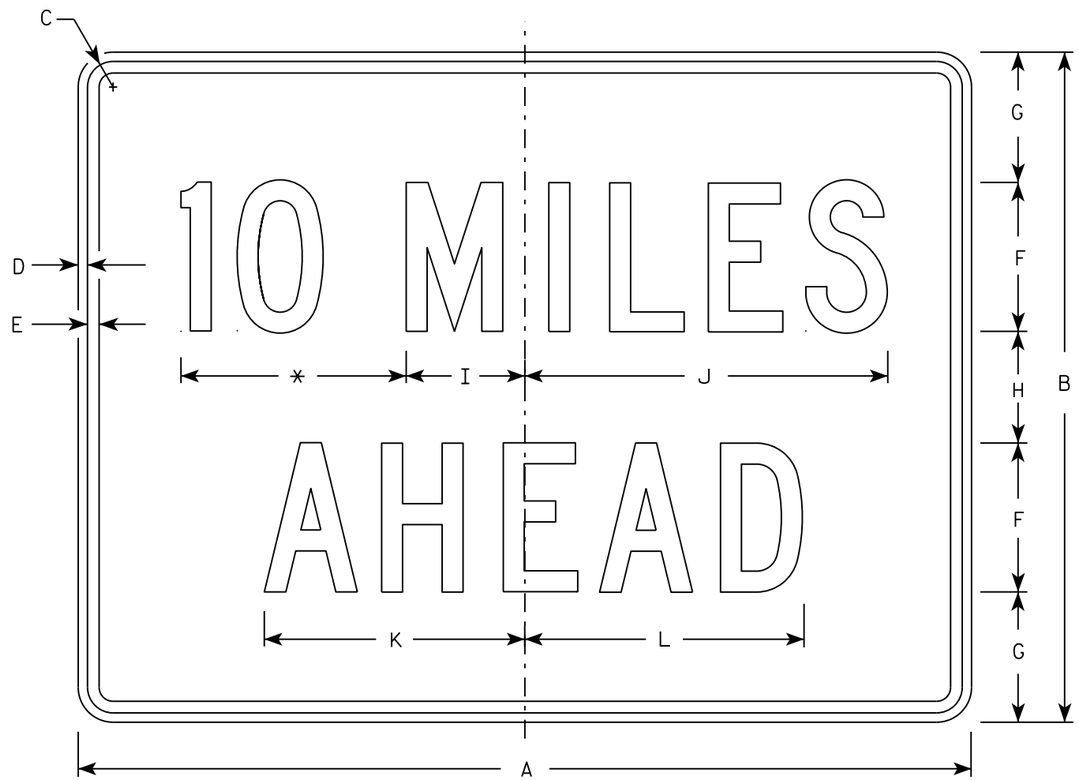

W057-52

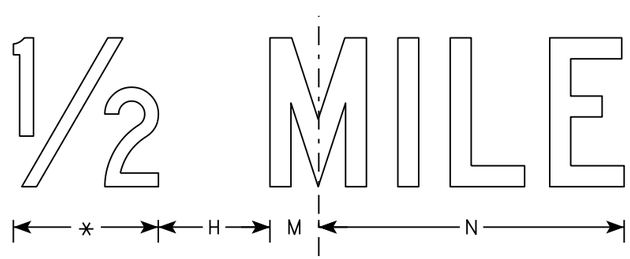

* See note 5

NOTES

1. Sign is Type II - Type F Reflective
2. Color:
   Background - Orange
   Message - Black
3. Message Series - C
4. Corners may be square or rounded when base material is plywood but borders shall be rounded as shown. When base material is metal, the corners and borders shall be rounded.
5. Substitute appropriate numerals to the nearest quarter mile and optically adjust spacing to achieve proper balance.

SIZE	A	B	C	D	E	F	G	H	I	J	K	L	M	N	O	P	Q	R	S	T	U	V	W	X	Y	Z	Area sq. ft.
1	36	24	1 1/8	3/8	1/2	6	4 1/2	3	4 3/4	14 5/8	10 5/8	11 3/8	2	12													6.0
2S	48	36	1 3/8	1/2	5/8	8	7	6	6 3/8	19 1/2	14	15	2 3/4	16 3/8													12.0
2M	48	36	1 3/8	1/2	5/8	8	7	6	6 3/8	19 1/2	14	15	2 3/4	16 3/8													12.0
3	48	36	1 3/8	1/2	5/8	8	7	6	6 3/8	19 1/2	14	15	2 3/4	16 3/8													12.0
4	48	36	1 3/8	1/2	5/8	8	7	6	6 3/8	19 1/2	14	15	2 3/4	16 3/8													12.0
5	48	36	1 3/8	1/2	5/8	8	7	6	6 3/8	19 1/2	14	15	2 3/4	16 3/8													12.0

STANDARD SIGN
W057-52

WISCONSIN DEPT OF TRANSPORTATION

APPROVED Matthew R Rauch
for State Traffic Engineer

DATE 3/21/17 PLATE NO. W057-52.2

PROJECT NO: | HWY: | COUNTY: | SHEET NO: 86 | E

(1) INDICATES WING NUMBER

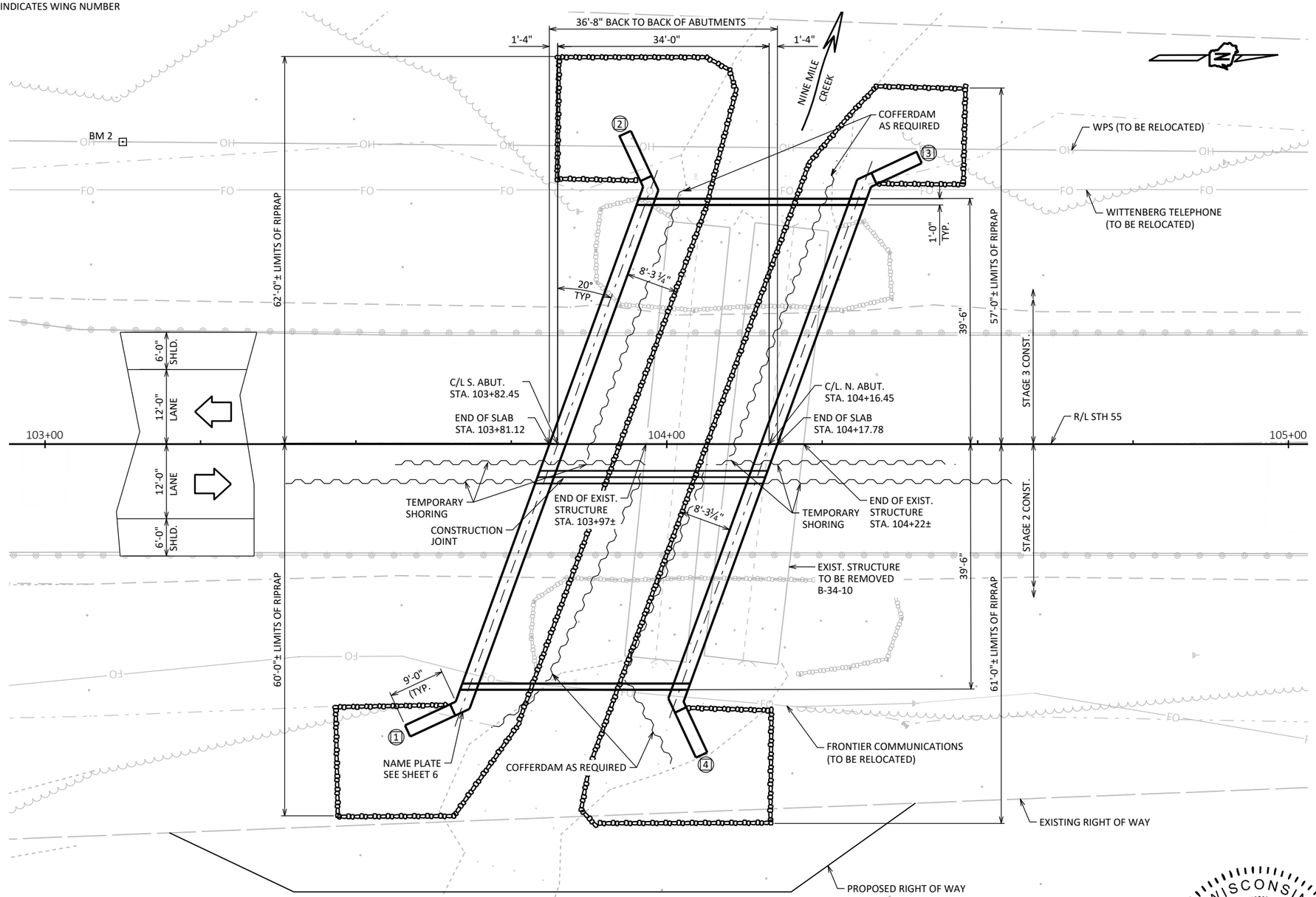

SPAN

SINGLE SPAN BURIED CONCRETE FLAT SLAB BRIDGE

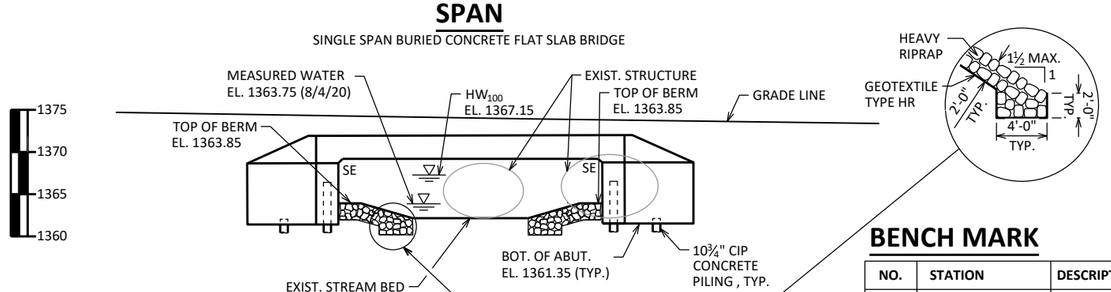

ELEVATION

BENCH MARK

NO.	STATION	DESCRIPTION	ELEV.
2	103+11.93, 48.4' LT.	SPIKE	1370.02
3	105+26.79, 46.5' LT.	SPIKE	1367.63

STATE PROJECT NUMBER

9155-05-71

DESIGN DATA

LIVE LOAD:

DESIGN LOADING: HL-93
INVENTORY RATING: RF = 1.54
OPERATING RATING: RF = 2.00
WISCONSIN STANDARD PERMIT VEHICLE (WIS-SPV): 250 (KIPS)

MATERIAL PROPERTIES:

CONCRETE MASONRY:
SUPERSTRUCTURE ——— f'_c = 4,000 PSI
ALL OTHER ——— f'_c = 3,500 PSI

BAR STEEL REINFORCEMENT
GRADE 60 ——— f_y = 60,000 PSI

EARTH LOAD:

DESIGNED FOR 2.0 FT TO 3.5 FT OF FILL.

FOUNDATION DATA

ABUTMENTS TO BE SUPPORTED ON CIP 10¾ X 0.25-INCH CONCRETE PILING DRIVEN TO A REQUIRED DRIVING RESISTANCE OF 130 TONS ** PER PILE AS DETERMINED BY THE MODIFIED GATES DYNAMIC FORMULA. ESTIMATED 30-'0" LONG.

**THE FACTORED AXIAL RESISTANCE OF PILES IN COMPRESSION USED FOR DESIGN IS THE REQUIRED DRIVING RESISTANCE MULTIPLIED BY A RESISTANCE FACTOR OF 0.5 USING MODIFIED GATES TO DETERMINE PILE CAPACITY.

HYDRAULIC DATA

100-YEAR FREQUENCY:

Q_{100}= 460 C.F.S.
V_{100}= 5.9 F.P.S.
HW_{100}= EL. 1367.15
WATERWAY AREA = 77 SQ. FT.
DRAINAGE AREA = 22.4 SQ. MI.
ROADWAY OVERTOPPING = N/A
SCOUR CRITICAL CODE = 5

2-YEAR FREQUENCY:

Q_2= 185 C.F.S.
V_2= 3.5 F.P.S.
HW_2= EL. 1365.50

TRAFFIC DATA

STH 55:

ADT = 980 (2025)
R.D.S. = 60 MPH

LIST OF DRAWINGS:

WISCONSIN JAMES A. RHOAD-DROGALIS E-47302 MADISON WI 9/25/2023 PROFESSIONAL ENGINEER

STRUCTURE DESIGN CONTACTS:
AARON BONK (608) 261-0261
JAMES RHOAD-DROGALIS (608) 828-8166

NO.	DATE	REVISION	BY

AECOM

STATE OF WISCONSIN
DEPARTMENT OF TRANSPORATION

ACCEPTED SDR 11/07/23
CHIEF STRUCTURES DESIGN ENGINEER DATE

STRUCTURE B-34-59

STH 55 OVER NINE MILE CREEK

COUNTY LANGLADE | TOWN WOLF RIVER

DESIGN SPEC. AASHTO LRFD BRIDGE DESIGN SPECIFICATION

DESIGNED BY NAR | DESIGNED CK'D JRD | DRAWN BY MES | PLANS CK'D JRD

GENERAL PLAN

SHEET 1 OF 13
87

SCALE =

I.D. 9155-07-01 DATE:

8

8

STATE PROJECT NUMBER

9155-05-71

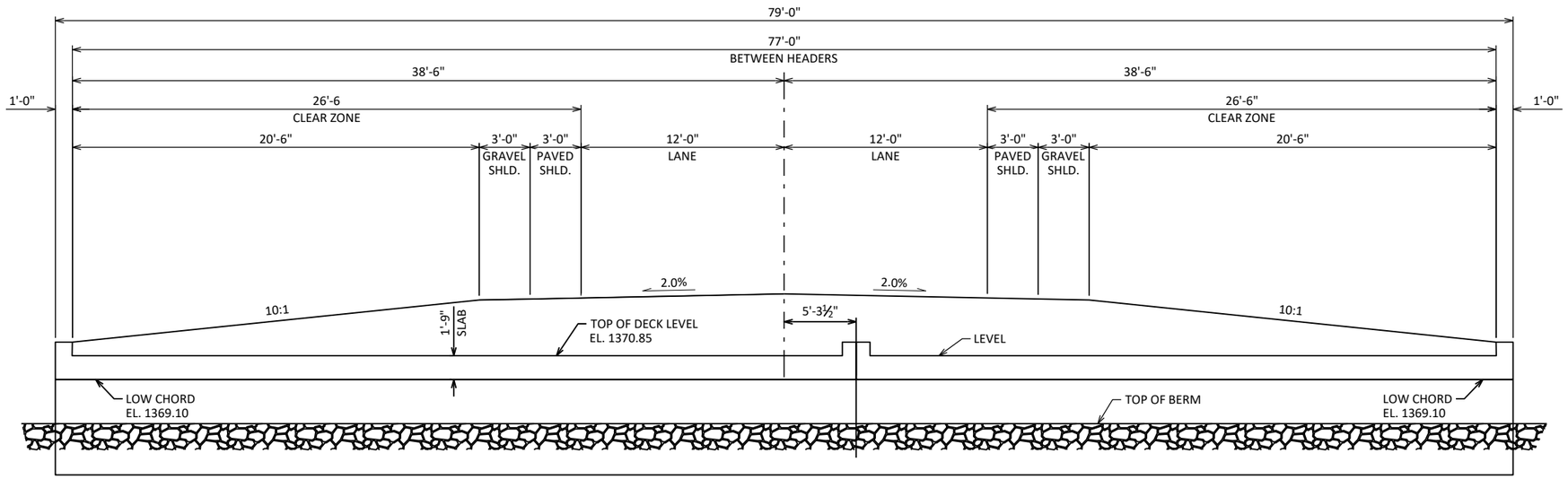

CROSS SECTION THRU ROADWAY

LOOKING NORTH

GENERAL NOTES

DRAWINGS SHALL NOT BE SCALED.

BAR STEEL REINFORCEMENT SHALL BE EMBEDDED 2" CLEAR UNLESS OTHERWISE SHOWN OR NOTED.

THE FIRST OR FIRST TWO DIGITS OF THE BAR MARK SIGNIFIES THE BAR SIZE.

BEVEL EXPOSED EDGES OF CONCRETE ¾" UNLESS OTHERWISE NOTED.

THE UPPER LIMITS OF "EXCAVATION FOR STRUCTURES B-34-59" SHALL BE 1' ABOVE THE TOP OF SLAB. EXCAVATION ABOVE SHALL BE PAID FOR AS COMMON EXCAVATION.

AT THE BACK FACE OF ABUTMENT ALL VOLUME WHICH CANNOT BE PLACED BEFORE ABUTMENT CONSTRUCTION AND IS NOT OCCUPIED BY THE NEW STRUCTURE SHALL BE BACKFILLED WITH STRUCTURE BACKFILL TYPE A.

EXCAVATION BELOW THE ABUTMENT AND ABUTMENT BEDDING MATERIALS REQUIRES ENGINEER APPROVAL. GEOTEXTILE SHALL BE SET AT THE BOTTOM OF EXCAVATION AND EXTEND 2'-0" ABOVE BOTTOM OF ABUTMENT.

THE QUANTITY FOR BACKFILL STRUCTURE IS CALCULATED BASED ON THE DETAIL SHOWN IN THE PLANS.

THE SLOPE OF THE FILL IN FRONT OF THE ABUTMENTS SHALL BE COVERED WITH HEAVY RIPRAP AND GEOTEXTILE TYPE "HR" TO THE EXTENT SHOWN ON SHEET 1 AND THE ABUTMENT DETAILS.

SLAB FALSEWORK SHALL BE SUPPORTED ON PILES OR THE SUBSTRUCTURE, UNLESS AN ALTERNATE METHOD IS APPROVED BY THE ENGINEER.

AT ABUTMENTS, CONCRETE POURED UNDER WATER WILL BE ALLOWED AND SHALL BE DONE IN ACCORDANCE WITH SECTION 502.3.5.3 OF THE STANDARD SPECIFICATIONS.

PLACE SHEET MEMBRANE WATERPROOFING ON ENTIRE TOP SLAB BETWEEN OUTSIDE HEADERS AND EXTEND 1'-0" DOWN AT ABUTMENT ENDS.

THIS BRIDGE WILL REPLACE THE EXISTING METAL PIPE CULVERTS THAT ARE APPROXIMATELY 11.5' WIDE X 7.5' HIGH X 70.5' LONG AND 9.5' WIDE X 6.5' HIGH X 70.5' LONG.

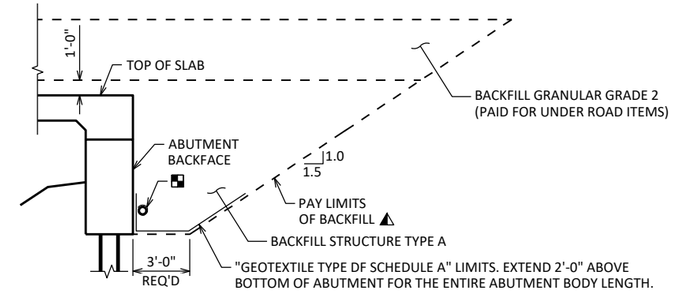

TYPICAL SECTION THRU ABUTMENT

▲ BACKFILL PAY LIMITS. BACKFILL BEYOND PAY LIMITS SHALL BE INCIDENTAL TO EXCAVATION FOR STRUCTURES. LIMITS OF EXCAVATION SHALL BE DETERMINED BY THE CONTRACTOR.

■ PIPE UNDERDRAIN WRAPPED (6-INCH). SLOPE 0.5% MIN. TO SUITABLE DRAINAGE. ATTACH RODENT SHIELD AT ENDS OF PIPE UNDERDRAIN.

TOTAL ESTIMATED QUANTITIES

BID ITEM NUMBER	BID ITEM	UNIT	SOUTH ABUTMENT	NORTH ABUTMENT	SUPER.	TOTALS
203.0220	REMOVING STRUCTURE B-34-10	EACH	———	———	———	1
206.1001	EXCAVATION FOR STRUCTURES BRIDGES B-34-59	EACH	———	———	———	1
206.5001	COFFERDAMS B-34-59	EACH	———	———	———	1
210.1500	BACKFILL STRUCTURE TYPE A	TON	746	746	204	1,696
502.0100	CONCRETE MASONRY BRIDGES	CY	69	69	204	342
505.0400	BAR STEEL REINFORCEMENT HS STRUCTURES	LB	5,680	5,680	———	11,360
505.0600	BAR STEEL REINFORCEMENT HS COATED STRUCTURES	LB	1,530	1,530	46,190	49,250
505.0904	BAR COUPLERS NO. 4	EACH	2	2	———	4
505.0905	BAR COUPLERS NO. 5	EACH	9	9	———	18
505.0908	BAR COUPLERS NO. 8	EACH	9	9	———	18
511.1200	TEMPORARY SHORING B-34-59	SF	———	———	640	640
516.0500	RUBBERIZED MEMBRANE WATERPROOFING	SY	17	17	———	34
516.0610.S	SHEET MEMBRANE WATERPROOFING FOR BURIED STRUCTURES B-34-59	SY	———	———	342	342
550.2104	PILING CIP CONCRETE 10 3/4 X 0.25-INCH	LF	510	510	———	1,020
606.0300	RIPRAP HEAVY	CY	154	137	———	291
612.0406	PIPE UNDERDRAIN WRAPPED 6-INCH	LF	130	130	———	260
645.0111	GEOTEXTILE TYPE DF SCHEDULE A	SY	102	102	———	204
645.0120	GEOTEXTILE TYPE HR	SY	260	230	———	490
	NON-BID ITEMS					
	FILLER	SIZE	———	———	———	1/2" & 3/4"

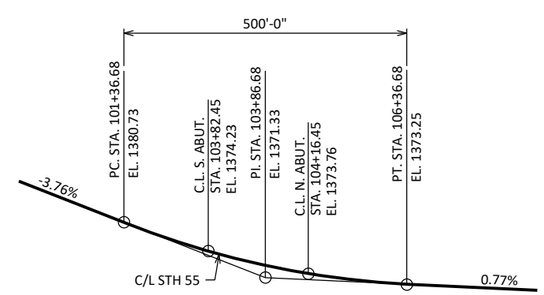

PROFILE GRADE LINE

NO.	DATE	REVISION	BY

STATE OF WISCONSIN
DEPARTMENT OF TRANSPORTATION

STRUCTURE B-34-59

DRAWN BY MES | PLANS CK'D JRD

CROSS SECTION & QUANTITIES

SHEET 2 OF 13

88

SCALE =

8

8

BORING #	DATE COMPLETED	NORTHING (Y)	EASTING (X)
1	7/29/20	378541.4739	713036.4804
2	7/29/20	378491.2272	713058.2186
3	7/30/20	378444.6462	712978.3416
4	7/30/20	378664.1094	713127.1634
BORINGS COMPLETED BY: AMERICAN ENGINEERING TESTING, INC.			
REPORT COMPLETED BY: AMERICAN ENGINEERING TESTING, INC.			
ALL COORDINATES REFERENCED TO WCCS NAD 83(91) LANGLADE COUNTY			

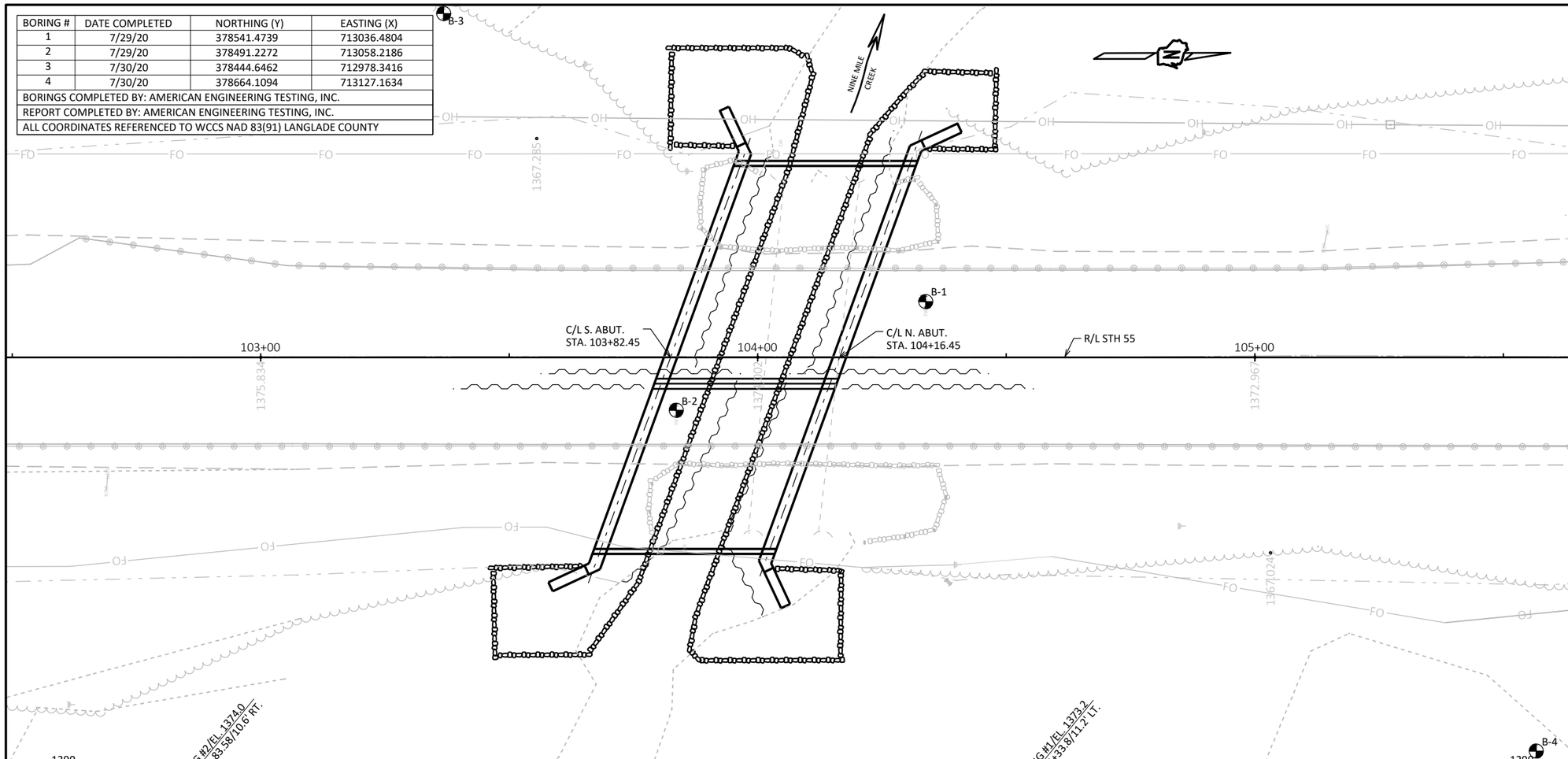

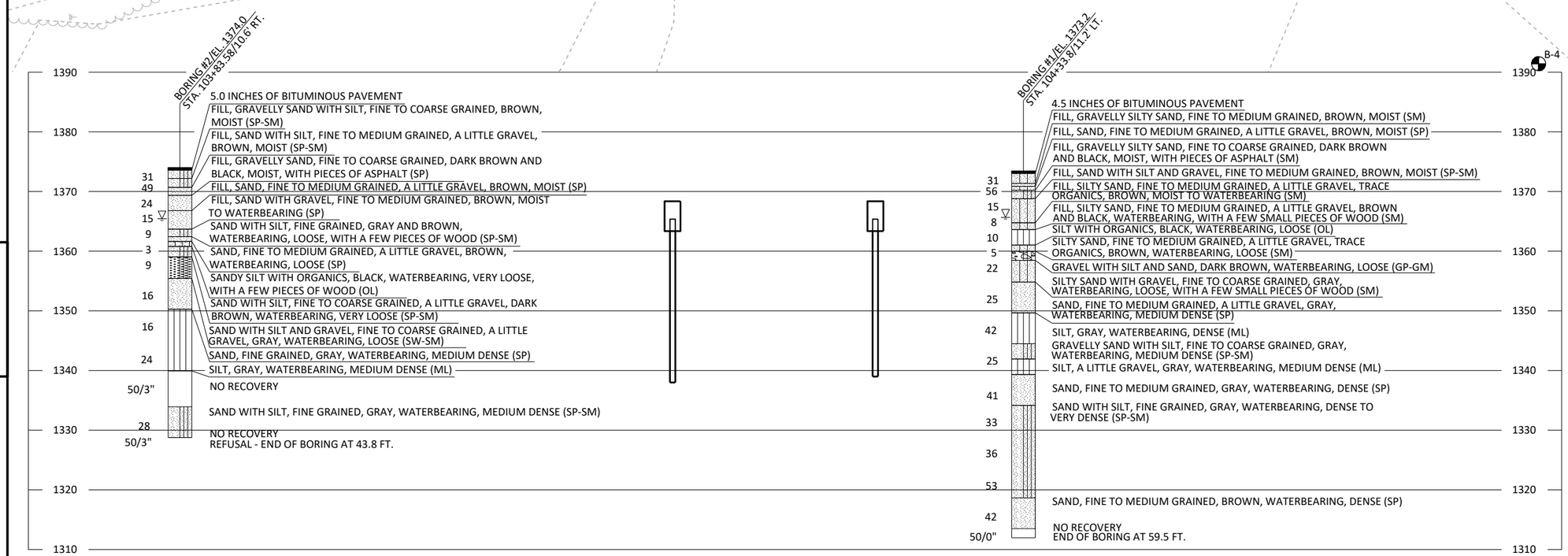

STATE PROJECT NUMBER

9155-05-71

MATERIAL SYMBOLS

ASPHALT, TOPSOIL, PEAT, CONCRETE, FILL, GRAVEL, SAND, CLAY, SILT, BOULDERS OR COBBLES, LIMESTONE, BEDROCK (UNKNOWN), SHALE, SANDSTONE, IGNEOUS/ META

LEGEND OF BORING

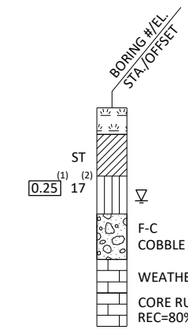

(1) UNCONFINED STRENGTH, AS DETERMINED BY A POCKET PENETROMETER (TSF)

(2) UNLESS OTHERWISE, SPECIFIED THE SPT 'N' VALUE IS BASED ON AASHTO T-206, STANDARD PENETRATION TEST. THE SPT 'N' VALUE PRESENTED HAS NOT BEEN CORRECTED FOR OVERBURDEN PRESSURE OR HAMMER EFFICIENCY.

GROUND WATER ELEVATION

AT TIME OF DRILLING
END OF DRILLING
AFTER DRILLING

ABBREVIATIONS

F-FINE M-MEDIUM C-COARSE ST-SHELBY TUBE

SUBSURFACE EXPLORATION FOR FOUNDATION DESIGN AND BIDDERS INFORMATION

BORINGS WERE COMPLETED AT POINTS APPROXIMATELY AS INDICATED ON THIS DRAWING TO OBTAIN INFORMATION CONCERNING THE CHARACTER OF SUBSURFACE MATERIALS FOUND AT THE SITE. BECAUSE THE INVESTIGATED DEPTHS ARE LIMITED AND THE AREA OF THE BORINGS IS VERY SMALL IN RELATION TO THE ENTIRE SITE, THE WISCONSIN DEPARTMENT OF TRANSPORTATION DOES NOT WARRANT SIMILAR SUBSURFACE CONDITIONS BELOW, BETWEEN, OR BEYOND THESE BORINGS. VARIATIONS IN SOIL CONDITIONS SHOULD BE EXPECTED AND FLUCTUATIONS IN GROUNDWATER LEVELS MAY OCCUR.

NO.	DATE	REVISION	BY

STATE OF WISCONSIN
DEPARTMENT OF TRANSPORTATION

STRUCTURE B-34-59

DRAWN BY MES PLANS CK'D JRD

SUBSURFACE EXPLORATION - 1

SHEET 3 OF 13
89

SCALE =

8

8

BORING #	DATE COMPLETED	NORTHING (Y)	EASTING (X)
1	7/29/20	378541.4739	713036.4804
2	7/29/20	378491.2272	713058.2186
3	7/30/20	378444.6462	712978.3416
4	7/30/20	378664.1094	713127.1634
BORINGS COMPLETED BY: AMERICAN ENGINEERING TESTING, INC.			
REPORT COMPLETED BY: AMERICAN ENGINEERING TESTING, INC.			
ALL COORDINATES REFERENCED TO WCCS NAD 83(91) LANGLADE COUNTY			

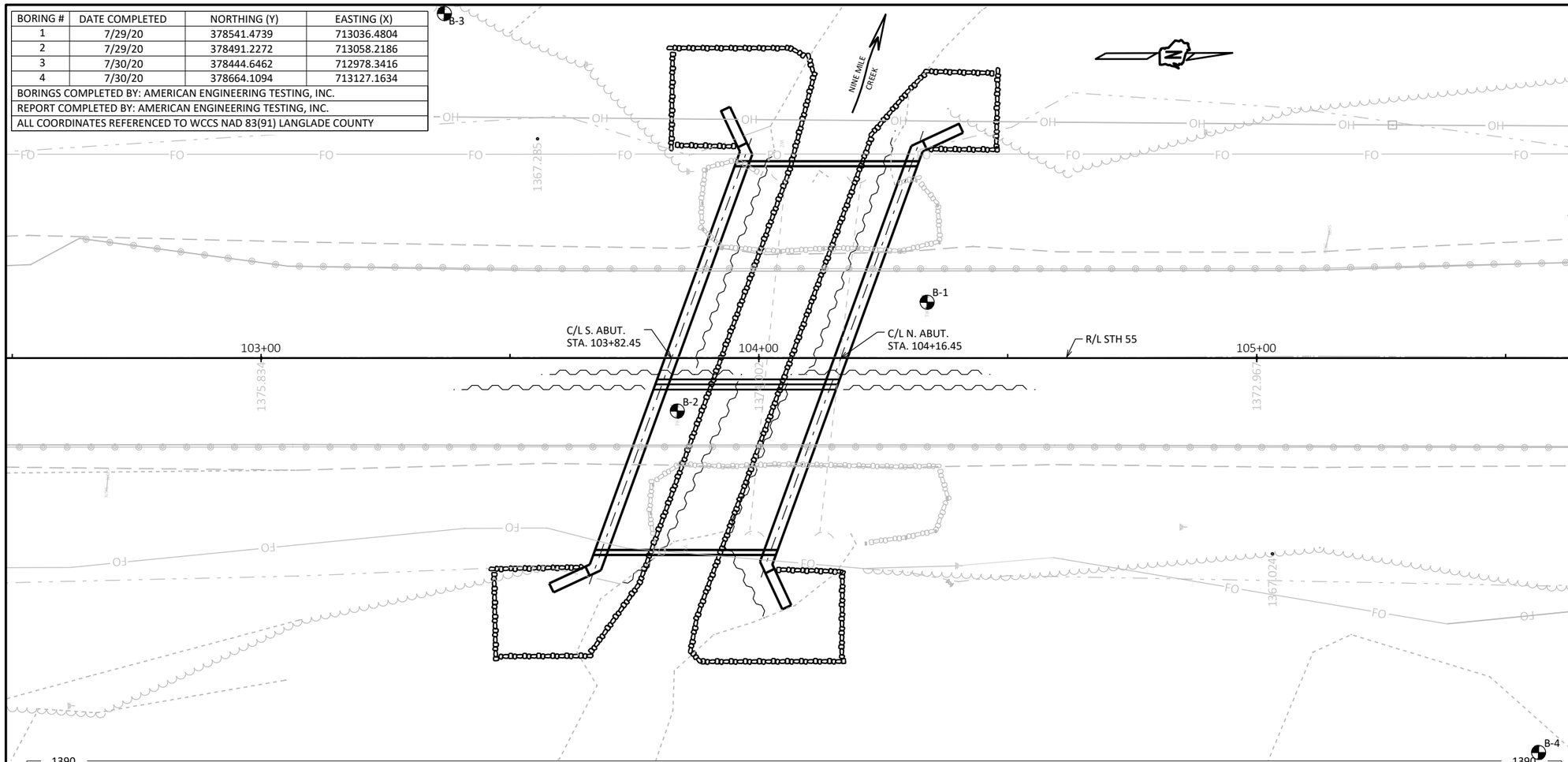

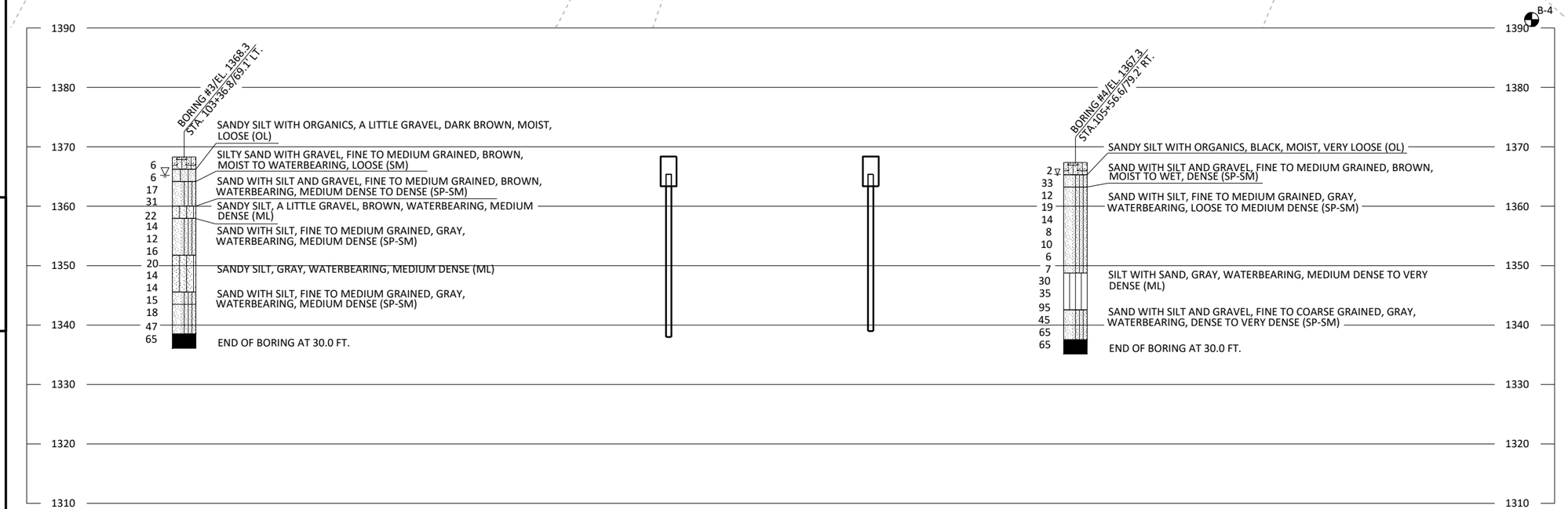

STATE PROJECT NUMBER

9155-05-71

MATERIAL SYMBOLS

ASPHALT, TOPSOIL, PEAT, CONCRETE, FILL, GRAVEL, SAND, CLAY, SILT, BOULDERS OR COBBLES, LIMESTONE, BEDROCK (UNKNOWN), SHALE, SANDSTONE, IGNEOUS/ META

LEGEND OF BORING

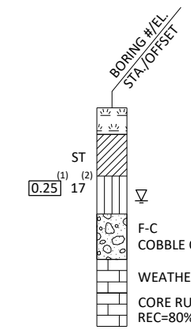

(1) UNCONFINED STRENGTH, AS DETERMINED BY A POCKET PENETROMETER (TSF)

(2) UNLESS OTHERWISE, SPECIFIED THE SPT 'N' VALUE IS BASED ON AASHTO T-206, STANDARD PENETRATION TEST. THE SPT 'N' VALUE PRESENTED HAS NOT BEEN CORRECTED FOR OVERBURDEN PRESSURE OR HAMMER EFFICIENCY.

GROUND WATER ELEVATION

AT TIME OF DRILLING
END OF DRILLING
AFTER DRILLING

ABBREVIATIONS

F-FINE M-MEDIUM C-COARSE ST-SHELBY TUBE

SUBSURFACE EXPLORATION FOR FOUNDATION DESIGN AND BIDDERS INFORMATION

BORINGS WERE COMPLETED AT POINTS APPROXIMATELY AS INDICATED ON THIS DRAWING TO OBTAIN INFORMATION CONCERNING THE CHARACTER OF SUBSURFACE MATERIALS FOUND AT THE SITE. BECAUSE THE INVESTIGATED DEPTHS ARE LIMITED AND THE AREA OF THE BORINGS IS VERY SMALL IN RELATION TO THE ENTIRE SITE, THE WISCONSIN DEPARTMENT OF TRANSPORTATION DOES NOT WARRANT SIMILAR SUBSURFACE CONDITIONS BELOW, BETWEEN, OR BEYOND THESE BORINGS. VARIATIONS IN SOIL CONDITIONS SHOULD BE EXPECTED AND FLUCTUATIONS IN GROUNDWATER LEVELS MAY OCCUR.

NO.	DATE	REVISION	BY

STATE OF WISCONSIN
DEPARTMENT OF TRANSPORTATION

STRUCTURE B-34-59

DRAWN BY MES PLANS CK'D JRD

SUBSURFACE EXPLORATION - 2

SHEET 4 OF 13

90

SCALE =

8

8

STATE PROJECT NUMBER

9155-05-71

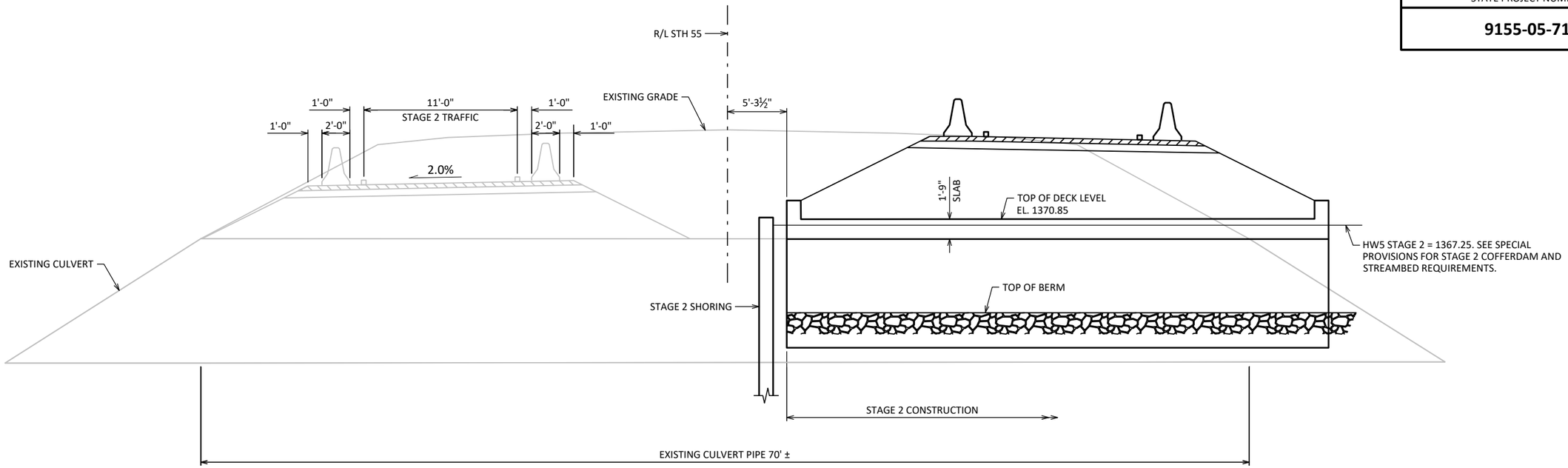

CROSS SECTION THRU ROADWAY

STAGE 2 CONSTRUCTION
LOOKING NORTH

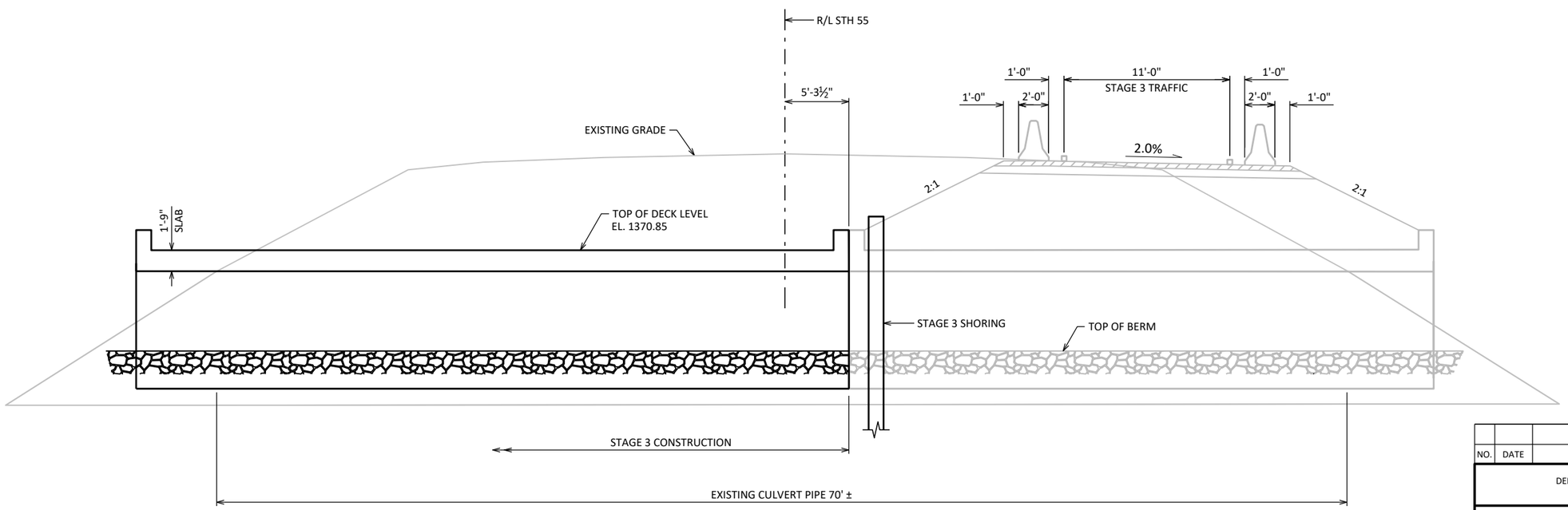

CROSS SECTION THRU ROADWAY

STAGE 3 CONSTRUCTION
LOOKING NORTH

8

8

NO.	DATE	REVISION	BY

STATE OF WISCONSIN
DEPARTMENT OF TRANSPORTATION

STRUCTURE B-34-59

DRAWN BY MES PLANS CK'D JRD

CONSTRUCTION STAGING

SHEET 5 OF 13

SCALE =

STATE PROJECT NUMBER

9155-05-71

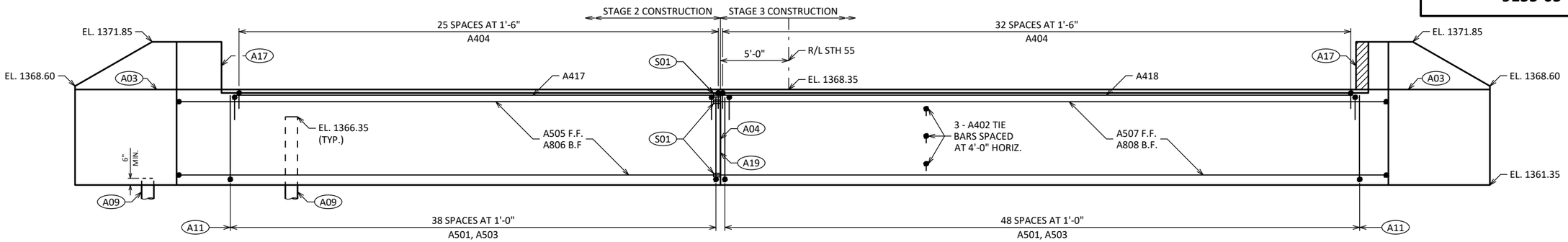

ELEVATION

(LOOKING SOUTH AT SOUTH ABUTMENT)

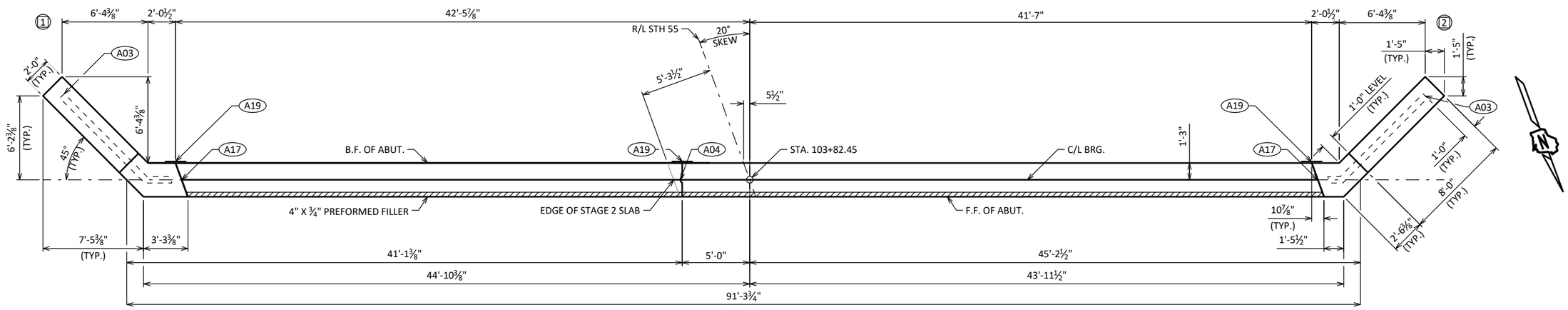

PLAN

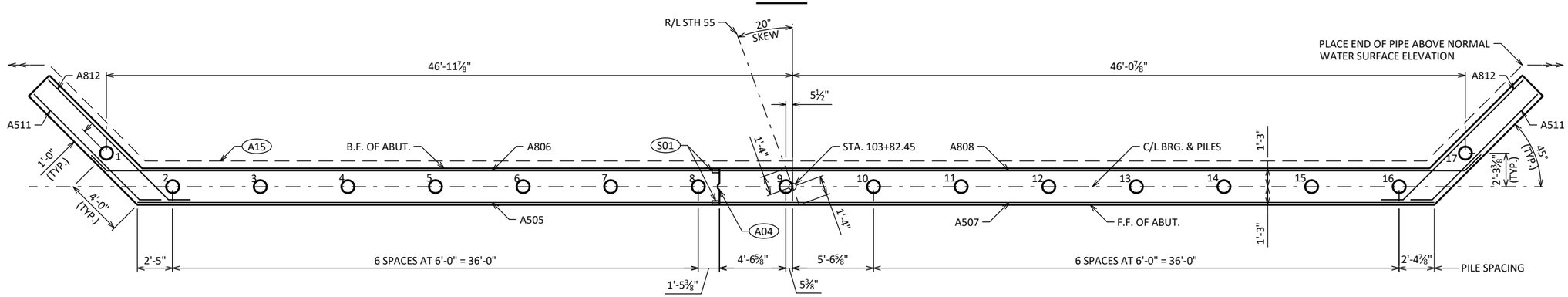

PILE PLAN

LEGEND

- (A03) OPTIONAL CONST. JOINT: KEYWAY FORMED BY BEVELED 2 x 6. (18" RMW AT BACK FACE & ¾" "V" GROOVE AT FRONT FACE IF JOINT IS USED).
- (A04) VERT. CONST. JOINT: KEYWAY FORMED BY A BEVELED 2 X 8. ¾" "V" GROOVE AT FRONT FACE AND 18" RMW AT BACK FACE.
- (A09) SUPPORT ABUTMENT ON 10¾" DIA. X .250" CIP CONCRETE PILING, ESTIMATED 30'-0" LONG WITH A REQUIRED DRIVING RESISTANCE OF 130 TONS PER PILE.
- (A11) ADJUST REBAR SPACING AS NECESSARY AROUND PILE LOCATIONS.
- (A15) PIPE UNDERDRAIN WRAPPED (6-INCH). SLOPE 0.5% MIN. TO SUITABLE DRAINAGE. RODENT SHIELD REQUIRED.
- (A17) SEAL ALL EXPOSED HORIZ. & VERT. SURFACES OF ½" FILLER WITH NON-STAINING GRAY NON-BITUMINOUS JOINT SEALER. (1" DEEP AND HOLD ⅛" BELOW SURFACE OF CONCRETE).
- (A19) 18" (RMW) RUBBERIZED MEMBRANE WATERPROOFING SEAL ALL HORIZ. & VERT. JOINTS AT BACKFACE.
- (S01) BAR COUPLERS USED. BAR LENGTH COMPUTED TO C/L OF CONSTRUCTION JOINT & SHALL BE MODIFIED IF REQ'D. TO THE BAR COUPLER MANUFACTURER RECOMMENDATIONS. PAY BASED ON BARS AS DETAILED.

NOTES

SEE SHEET 7 FOR WINGWALL DETAILS.

SEE SHEET 8 FOR SECTION VIEW, BILL OF BARS, CIP PILE DETAILS, AND RODENT SHIELD DETAILS.

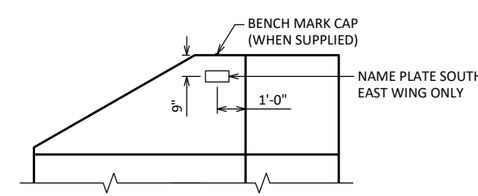

NAME PLATE LOCATION

NO.	DATE	REVISION	BY

STATE OF WISCONSIN
DEPARTMENT OF TRANSPORTATION

STRUCTURE B-34-59

DRAWN BY MAG | PLANS CK'D JRD

SOUTH ABUTMENT

SHEET 6 OF 13

SCALE =

8

8

STATE PROJECT NUMBER

9155-05-71

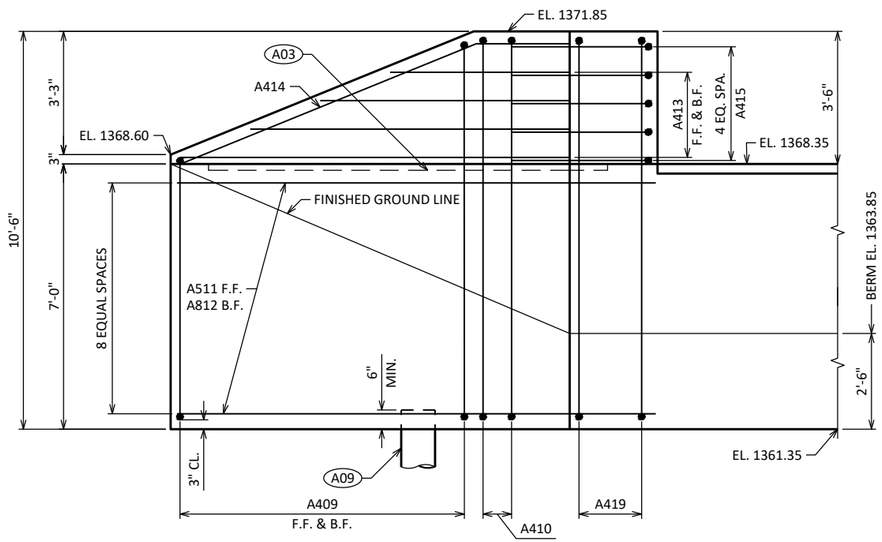

WING 1 ELEVATION

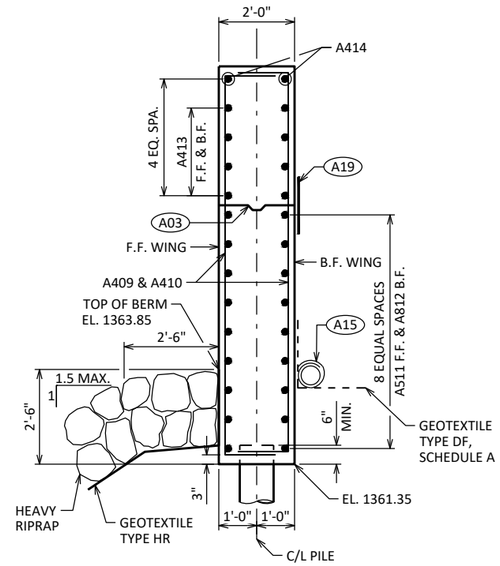

WINGS 1 & 2 SECTION

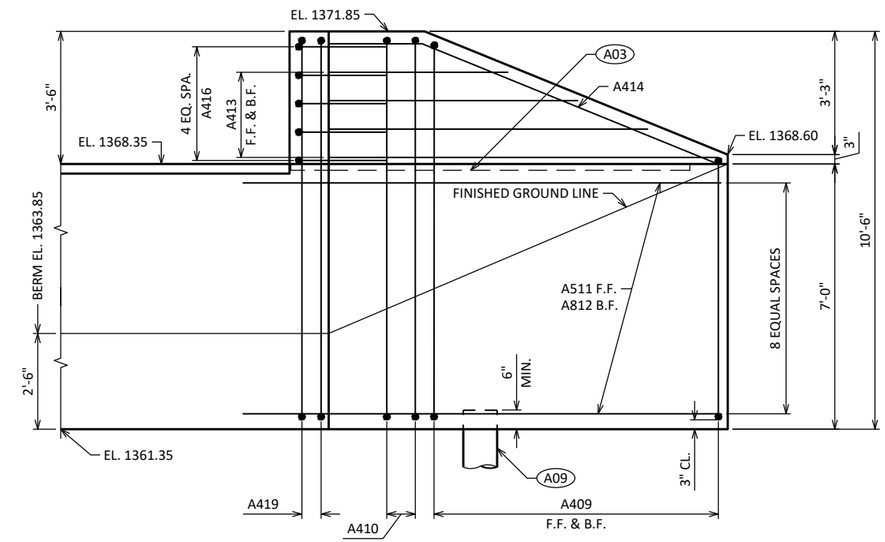

WING 2 ELEVATION

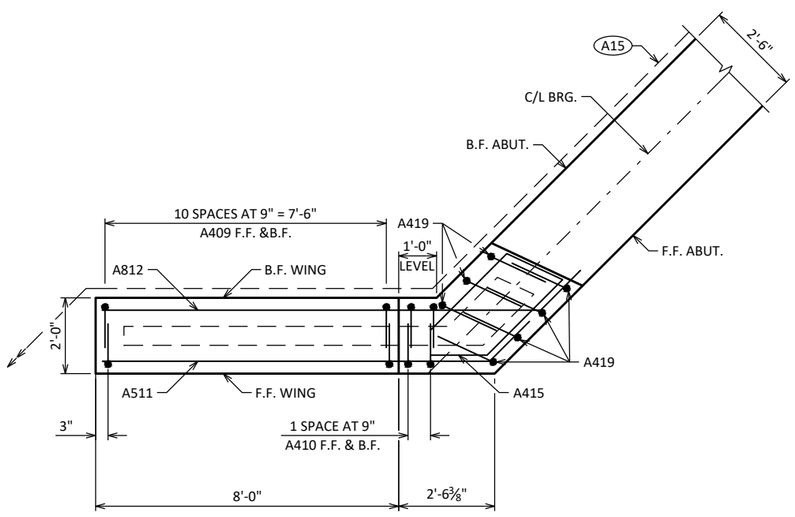

WING 1 PLAN

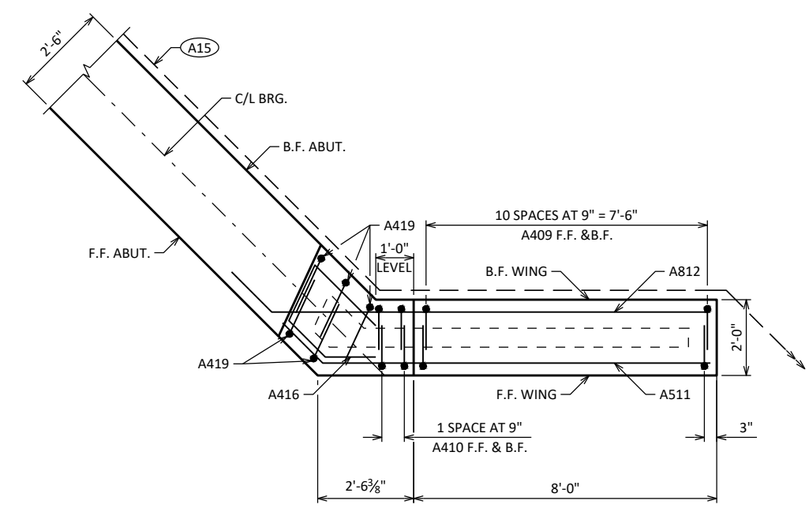

WING 2 PLAN

8

8

NOTES

SEE PAGE 6 FOR SYMBOL DESCRIPTIONS.

SEE SHEET 8 FOR SECTION VIEW, BILL OF BARS, CIP PILE DETAILS, AND RODENT SHIELD DETAILS.

NO.	DATE	REVISION	BY

STATE OF WISCONSIN
DEPARTMENT OF TRANSPORTATION

STRUCTURE B-34-59

DRAWN BY MAG | PLANS CK'D JRD

SOUTH ABUTMENT WING 1 & 2 DETAILS

SHEET 7 OF 13

SCALE =

STATE PROJECT NUMBER

9155-05-71

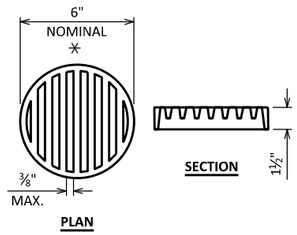

RODENT SHIELD DETAIL

✳ DIMENSIONS ARE APPROXIMATE. THE GRATE IS SIZED TO FIT INTO A PIPE COUPLING. ORIENT SO SLOTS ARE VERTICAL.

THE RODENT SHIELD, PIPE COUPLING AND SCREWS SHALL BE CONSIDERED INCIDENTAL TO THE BID ITEM "PIPE UNDERDRAIN WRAPPED 6-INCH".

THE RODENT SHIELD SHALL BE A PVC GRATE SIMILAR TO THIS DETAIL. THE GRATE IS COMMERCIALLY AVAILABLE AS A FLOOR STRAINER. A PIPE COUPLING IS REQUIRED FOR THE ATTACHMENT OF THIS SHIELD TO THE EXPOSED END OF THE PIPE UNDERDRAIN. THE SHIELD SHALL BE FASTENED TO THE PIPE COUPLING WITH TWO OR MORE NO. 10 X 1-INCH STAINLESS STEEL SHEET METAL SCREWS.

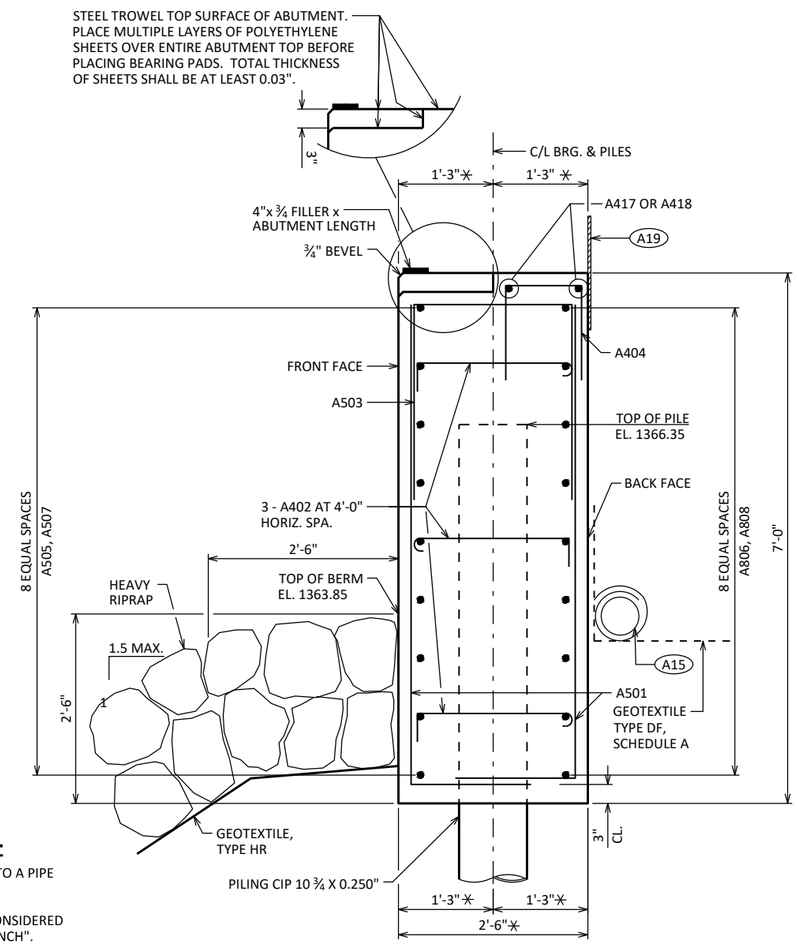

SECTION THRU BODY

✳ DIMENSIONS MEASURED NORMAL TO C/L OF SUBSTRUCTURE UNITS

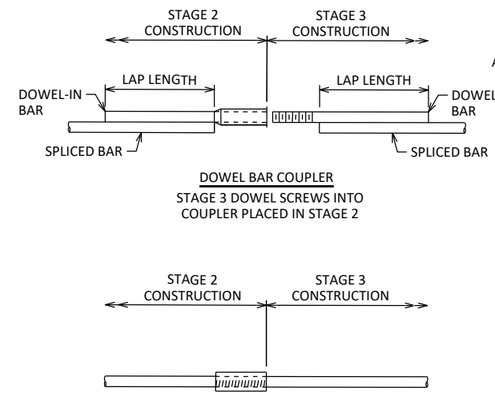

BAR COUPLER ALTERNATIVES

NOTE: FOR DOWEL BAR COUPLERS, ALL DOWEL BARS SHALL BE LAPPED AND TIED TO THE REINFORCEMENT BARS.

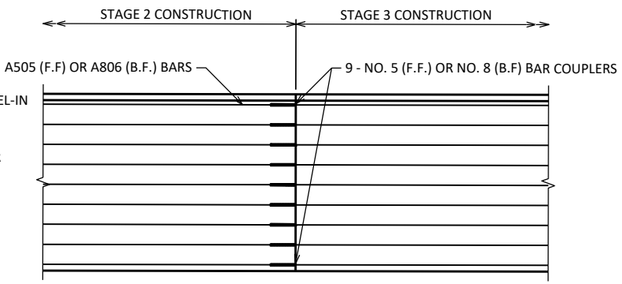

ELEVATION

ONE-PIECE THREADED COUPLER SHOWN
(A417 NO. 4 BAR COUPLER SIMILAR)

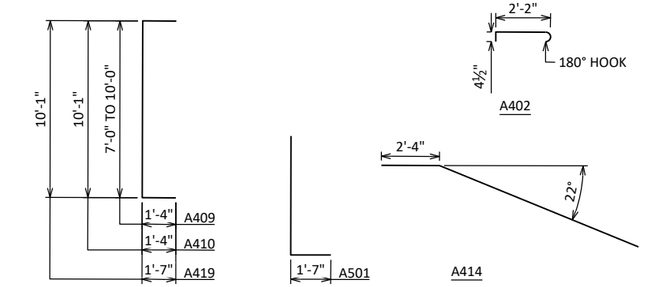

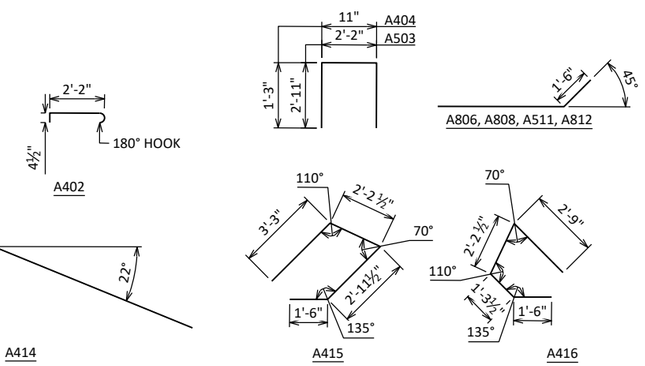

BAR SERIES TABLE

BUNDLE AND TAG EACH SERIES SEPARATELY.

MARK	NO. REQ'D	LENGTH
A409	4 SERIES OF 11	9'-6" TO 12'-6"
A413	4 SERIES OF 4	4'-9" TO 10'-3"

◭ LENGTH SHOWN FOR BAR IS AN AVERAGE AND SHOULD ONLY BE USED FOR BAR WEIGHT CALCULATIONS. SEE BAR SERIES TABLE FOR ACTUAL LENGTHS.

◪ CONTRACTOR TO DETERMINE ACTUAL BAR LENGTH BASED UPON BAR COUPLER MANUFACTURE RECOMMENDATIONS.

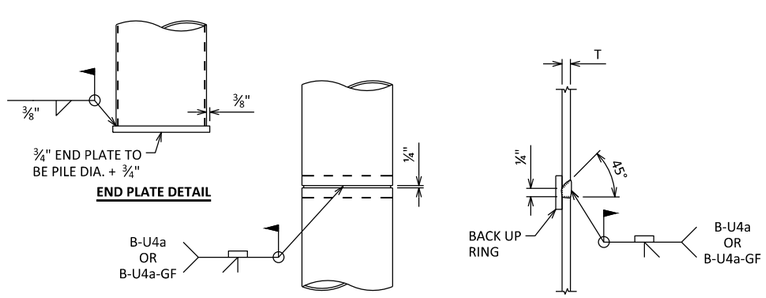

CIP PILE DETAILS

BILL OF BARS

NOTE: THE FIRST OR FIRST TWO DIGITS OF THE BAR MARK SIGNIFIES THE BAR SIZE.

MARK	NO. REQ'D STAGE 2	NO. REQ'D STAGE 3	LENGTH	BENT	BAR SERIES	LOCATION	
NON-COATED BARS						TOTAL WEIGHT =	5680 LBS
A501	78	98	7'-10"	X		BODY - F.F., B.F.	VERT.
A402	33	39	3'-0"	X		BODY - TIES	HORIZ.
A503	39	49	7'-9"	X		BODY- TOP	VERT.
A404	26	33	3'-3"	X		BODY - TOP	VERT.
◪ A505	9	0	39'-9"			BODY - F.F., EAST-COUPLER ON END	HORIZ.
◪ A806	9	0	43'-9"	X		BODY - B.F., EAST-COUPLER ON END	HORIZ.
A507	0	9	48'-11"			BODY - F.F., WEST	HORIZ.
A808	0	9	52'-6"	X		BODY - B.F, WEST	HORIZ.
◪ A417	2	0	36'-11"			BODY - TOP-COUPLER ON END	HORIZ.
A418	0	2	46'-5"			BODY - TOP	HORIZ.
COATED BARS						TOTAL WEIGHT =	1530 LBS
A409	22	22	11'-0"	X	◭	WINGS	VERT.
A410	4	4	12'-7"	X		WINGS	VERT.
A511	9	9	11'-10"	X		WINGS - F.F.	HORIZ.
A812	9	9	13'-3"	X		WINGS - B.F.	HORIZ.
A413	8	8	7'-6"		◭	WINGS	HORIZ.
A414	2	2	10'-8"	X		WINGS - TOP	HORIZ.
A415	5	0	9'-8"	X		WINGS - W1	HORIZ.
A416	0	5	7'-6"	X		WING2 - W2	HORIZ.
A419	7	5	13'-1"	X		WINGS	VERT.

NOTES

SEE PAGE 6 FOR SYMBOL DESCRIPTIONS.

NO.	DATE	REVISION	BY

STATE OF WISCONSIN
DEPARTMENT OF TRANSPORTATION

STRUCTURE B-34-59

DRAWN BY MAG PLANS CK'D JRD

SOUTH ABUTMENT DETAILS

SHEET 8 OF 13

94

SCALE =

8

8

STATE PROJECT NUMBER

9155-05-71

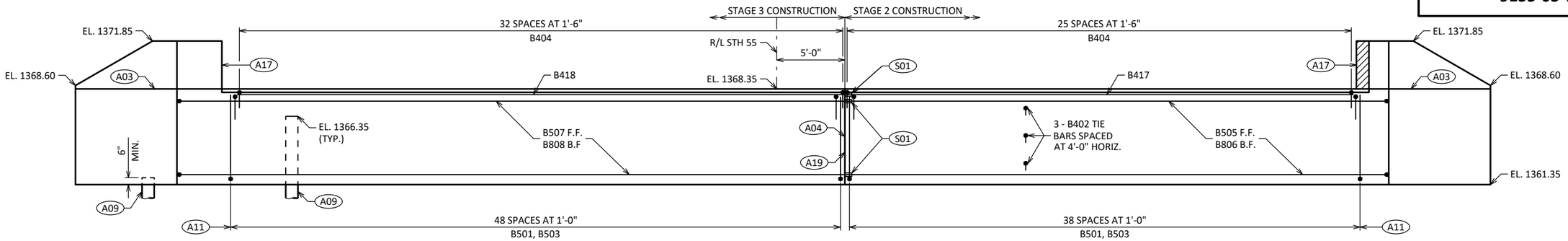

ELEVATION

(LOOKING NORTH AT NORTH ABUTMENT)

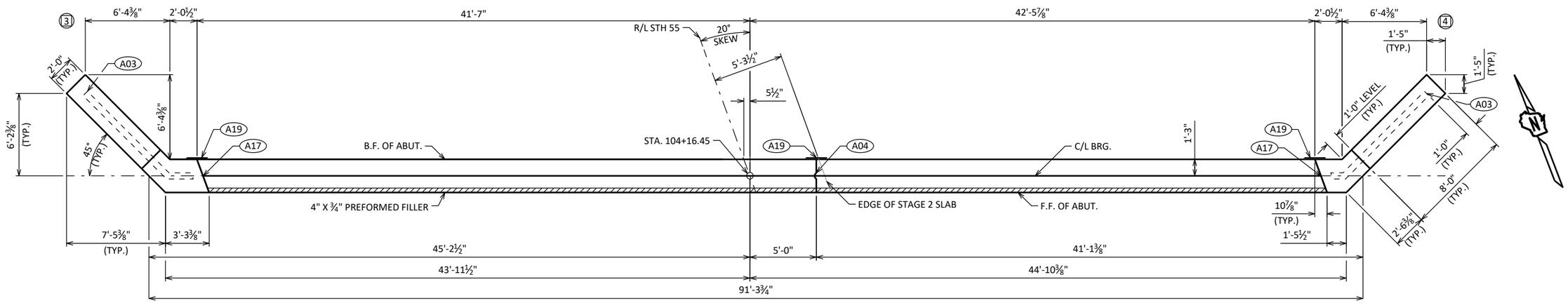

PLAN

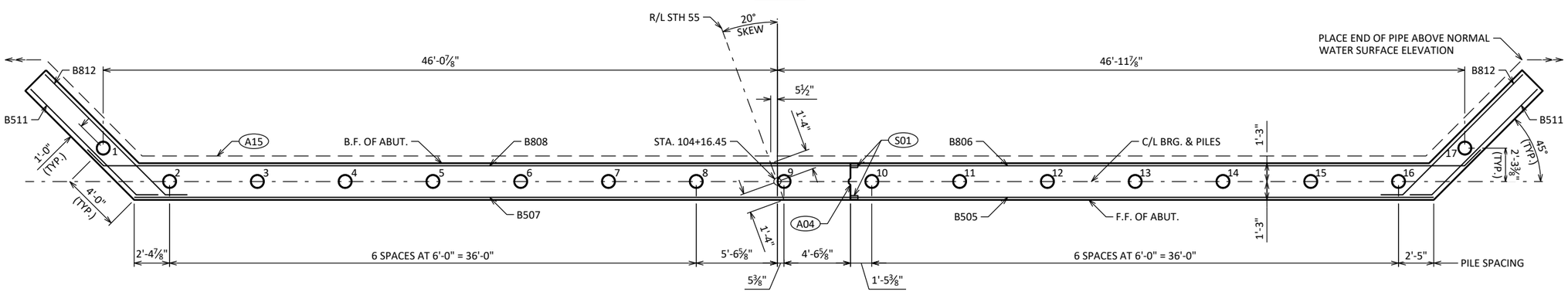

PILE PLAN

8

8

NOTES

SEE SHEET 6 FOR SYMBOL DESCRIPTIONS.

NO.	DATE	REVISION	BY

STATE OF WISCONSIN
DEPARTMENT OF TRANSPORTATION

STRUCTURE B-34-59

DRAWN BY MAG | PLANS CK'D JRD

NORTH ABUTMENT

SHEET 9 OF 13

SCALE =

STATE PROJECT NUMBER

9155-05-71

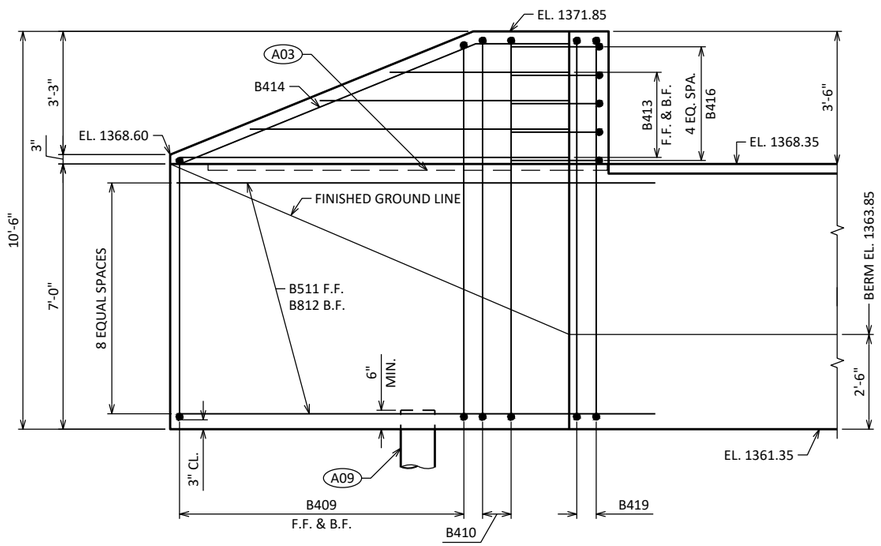

WING 3 ELEVATION

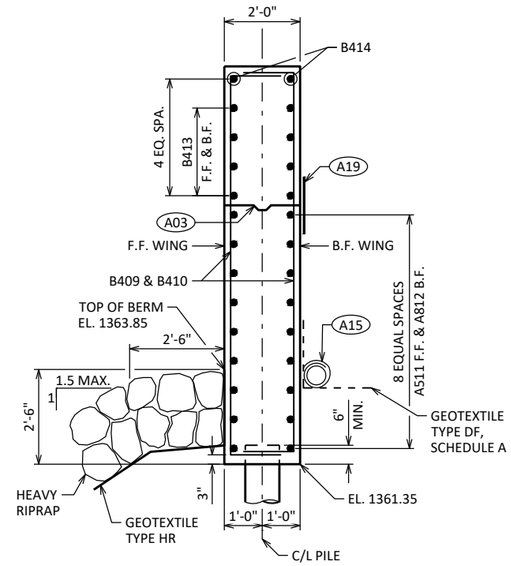

WINGS 3 & 4 SECTION

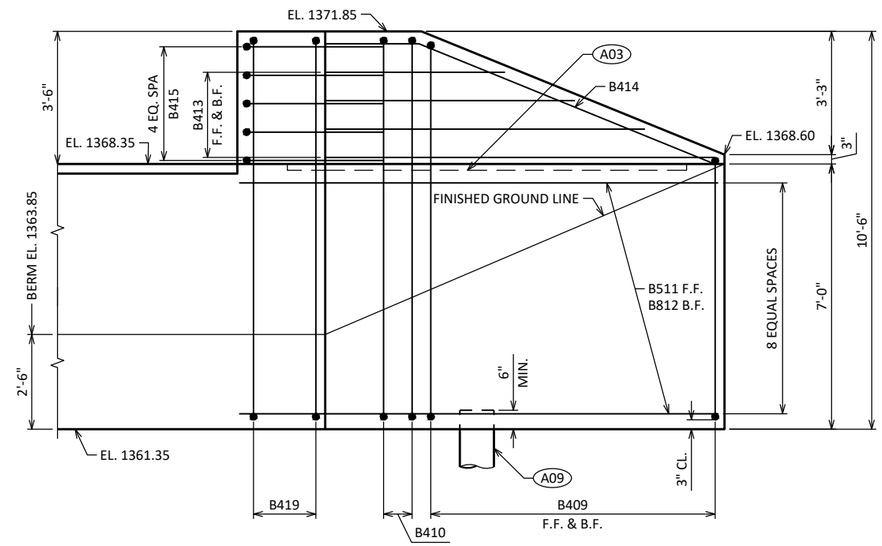

WING 4 ELEVATION

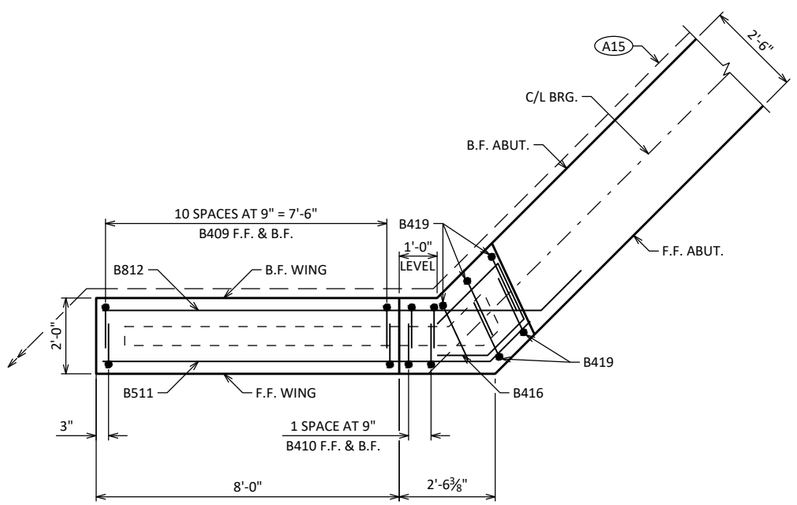

WING 3 PLAN

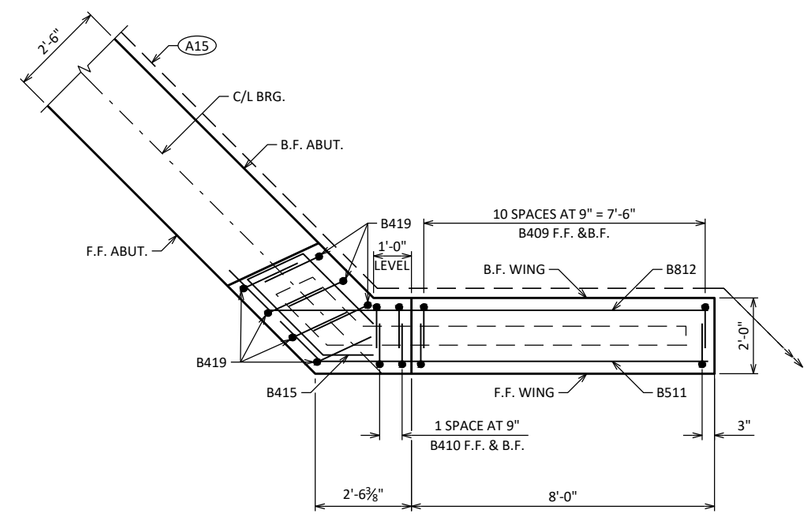

WING 4 PLAN

8

8

NOTES

SEE PAGE 6 FOR SYMBOL DESCRIPTIONS.

SEE SHEET 8 FOR CIP PILE DETAILS AND RODENT SHIELD DETAILS.

SEE SHEET 11 FOR BILL OF BARS.

NO.	DATE	REVISION	BY

STATE OF WISCONSIN
DEPARTMENT OF TRANSPORTATION

STRUCTURE B-34-59

DRAWN BY MAG | PLANS CK'D JRD

NORTH ABUTMENT WING 3 & 4 DETAILS

SHEET 10 OF 13

SCALE =

STATE PROJECT NUMBER

9155-05-71

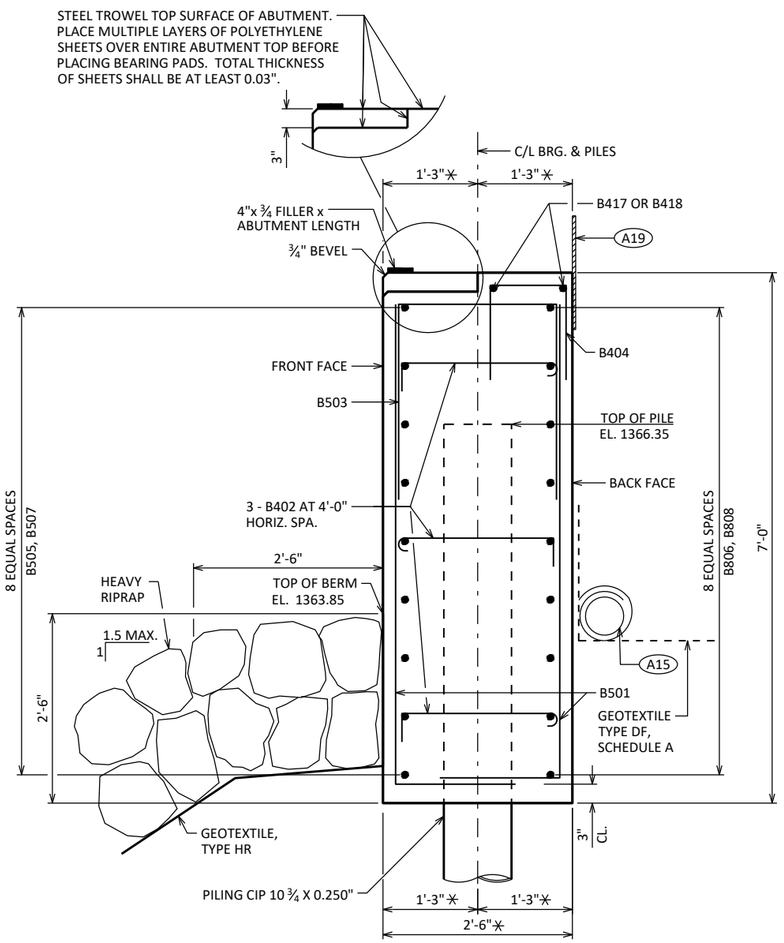

SECTION THRU BODY

DIMENSIONS MEASURED NORMAL TO ℄/L OF SUBSTRUCTURE UNITS

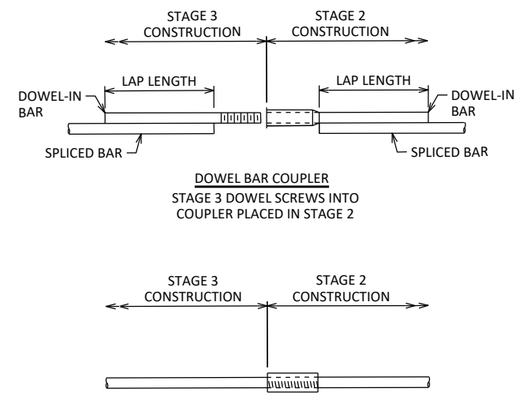

BAR COUPLER ALTERNATIVES

NOTE: FOR DOWEL BAR COUPLERS, ALL DOWEL BARS SHALL BE LAPPED AND TIED TO THE REINFORCEMENT BARS.

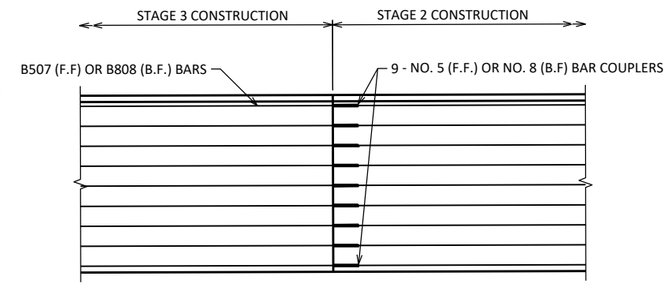

ELEVATION

LOOKING NORTH AT NORTH ABUTMENT
(B417 NO. 4 BAR COUPLER SIMILAR)

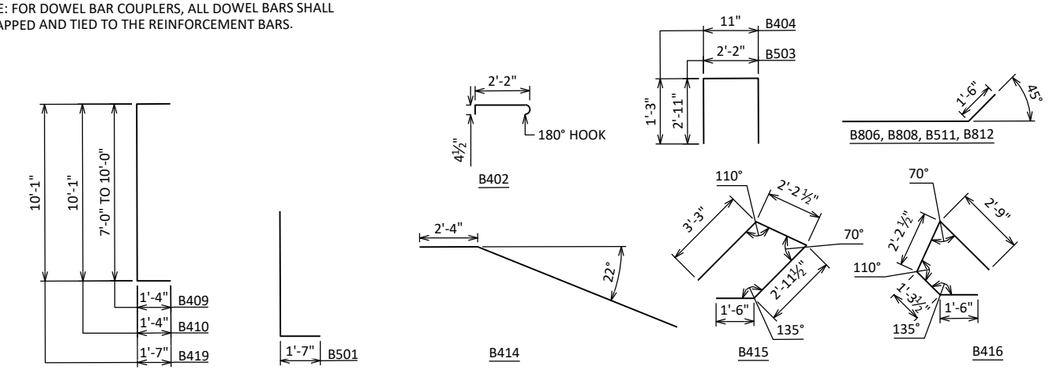

BILL OF BARS

NOTE: THE FIRST OR FIRST TWO DIGITS OF THE BAR MARK SIGNIFIES THE BAR SIZE.

MARK	NO. REQ'D STAGE 2	NO. REQ'D STAGE 3	LENGTH	BENT	BAR SERIES	LOCATION	
NON-COATED BARS						TOTAL WEIGHT =	5680 LBS
B501	78	98	7'-10"	X		BODY - F.F., B.F.	VERT.
B402	33	39	3'-0"	X		BODY - TIES	HORIZ.
B503	39	49	7'-9"	X		BODY- TOP	VERT.
B404	26	33	3'-3"	X		BODY - TOP	VERT.
◆ B505	9	0	39'-9"			BODY - F.F., EAST-COUPLER ON END	HORIZ.
◆ B806	9	0	43'-9"	X		BODY - B.F., EAST-COUPLER ON END	HORIZ.
B507	0	9	48'-11"			BODY - F.F., WEST	HORIZ.
B808	0	9	52'-6"	X		BODY - B.F, WEST	HORIZ.
◆ B417	2	0	36'-11"			BODY - TOP-COUPLER ON END	HORIZ.
B418	0	2	46'-5"			BODY - TOP	HORIZ.
COATED BARS						TOTAL WEIGHT =	1530 LBS
B409	22	22	11'-0"	X	◭	WINGS	VERT.
B410	4	4	12'-7"	X		WINGS	VERT.
B511	9	9	11'-10"	X		WINGS - F.F.	HORIZ.
B812	9	9	13'-3"	X		WINGS - B.F.	HORIZ.
B413	8	8	7'-6"		◭	WINGS	HORIZ.
B414	2	2	10'-8"	X		WINGS - TOP	HORIZ.
B415	5	0	9'-8"	X		WINGS - W4	HORIZ.
B416	0	5	7'-6"	X		WINGS - W3	HORIZ.
B419	7	5	13'-1"	X		WINGS	VERT.

BAR SERIES TABLE

BUNDLE AND TAG EACH SERIES SEPARATELY.

MARK	NO. REQ'D	LENGTH
B409	4 SERIES OF 11	9'-6" TO 12'-6"
B413	4 SERIES OF 4	4'-9" TO 10'-3"

◭ LENGTH SHOWN FOR BAR IS AN AVERAGE AND SHOULD ONLY BE USED FOR BAR WEIGHT CALCULATIONS. SEE BAR SERIES TABLE FOR ACTUAL LENGTHS.

◆ CONTRACTOR TO DETERMINE ACTUAL BAR LENGTH BASED UPON BAR COUPLER MANUFACTURE RECOMMENDATIONS.

NOTES

SEE PAGE 6 FOR SYMBOL DESCRIPTIONS.

8

8

NO.	DATE	REVISION	BY

STATE OF WISCONSIN
DEPARTMENT OF TRANSPORTATION

STRUCTURE B-34-59

DRAWN BY MAG PLANS CK'D JRD

NORTH ABUTMENT DETAILS

SHEET 11 OF 13

SCALE =

STATE PROJECT NUMBER

9155-05-71

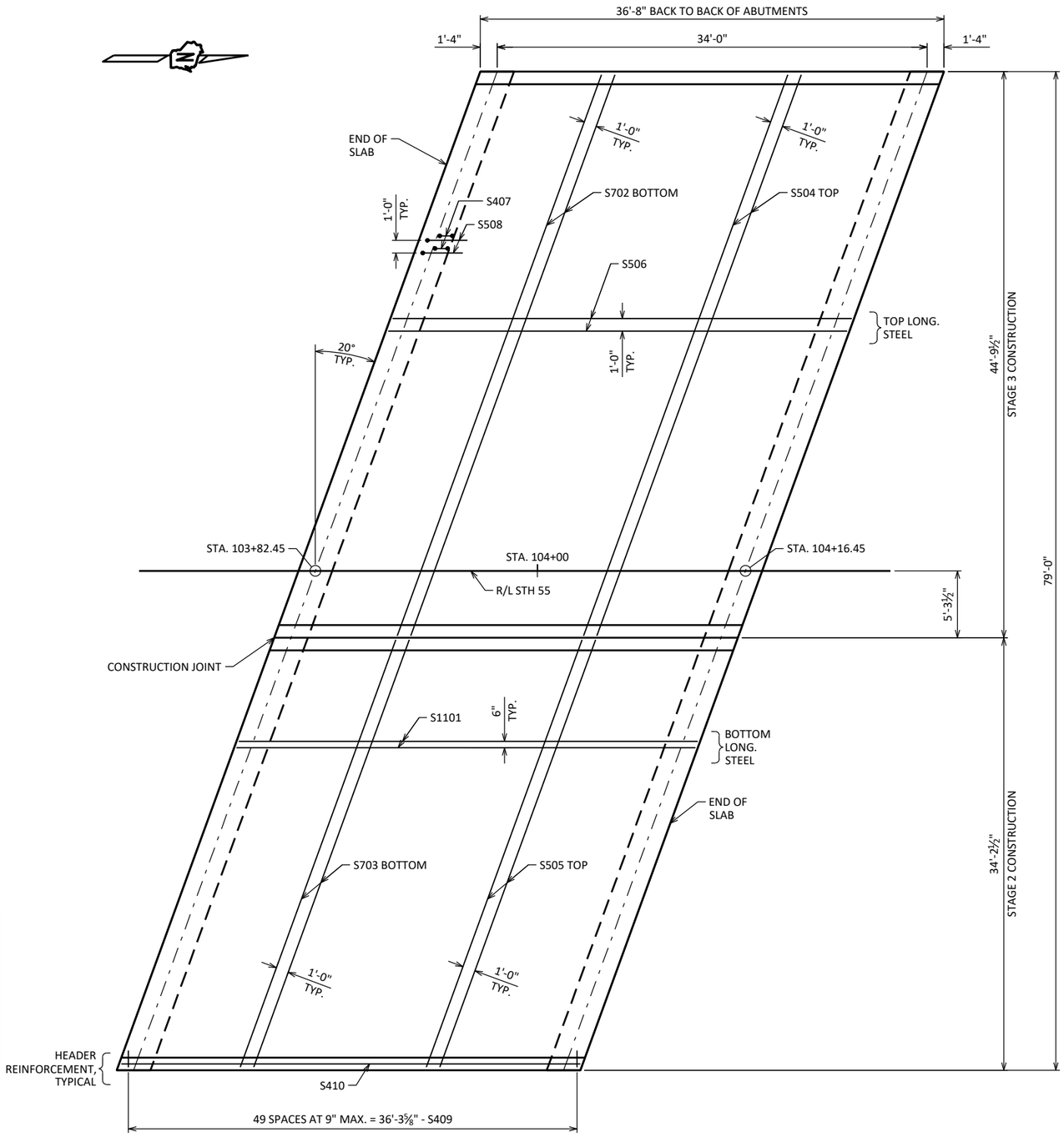

PLAN

LEGEND

◪ STEEL TROWEL TOP SURFACE OF ABUTMENT. PLACE MULTIPLE LAYERS OF POLYETHYLENE SHEETS OVER ENTIRE ABUTMENT TOP BEFORE PLACING BEARING PADS. TOTAL THICKNESS OF SHEETS SHALL BE AT LEAST 0.03".

TRANSVERSE BARS SHALL BE PLACED PARALLEL TO THE C/L OF SUBSTRUCTURE UNITS.

TOP TRANSVERSE BARS IN SLAB SHALL BE SUPPORTED BY INDIVIDUAL BAR CHAIRS AT APPROXIMATELY 3'-0" CENTERS EACH WAY. BOTTOM LONGITUDINAL BARS SHALL BE SUPPORTED BY CONTINUOUS BAR CHAIR AT APPROXIMATELY 4'-0" CENTERS.

ALL SLAB THICKNESS DIMENSIONS ARE MINIMUM. ANY TOLERANCES NECESSARY TO CORRECT CONSTRUCTION DISCREPANCIES ARE TO BE PLUS (+).

PRIOR TO RELEASING SLAB FALSEWORK, TAKE TOP OF SLAB ELEVATIONS AT THE C/L OF ABUTMENTS, AND AT 5/10 PTS. TO VERIFY CAMBER. TAKE ELEVATIONS ALONG GUTTER LINES AND CROWN OR C/L.

◐ MEASURED NORMAL TO THE C/L OF ABUTMENT. DIMENSIONS ARE TYPICAL FOR BOTH ABUTMENTS.

(A19) 18" (RMW) RUBBERIZED MEMBRANE WATERPROOFING SEAL ALL HORIZ. & VERT. JOINTS AT BACKFACE.

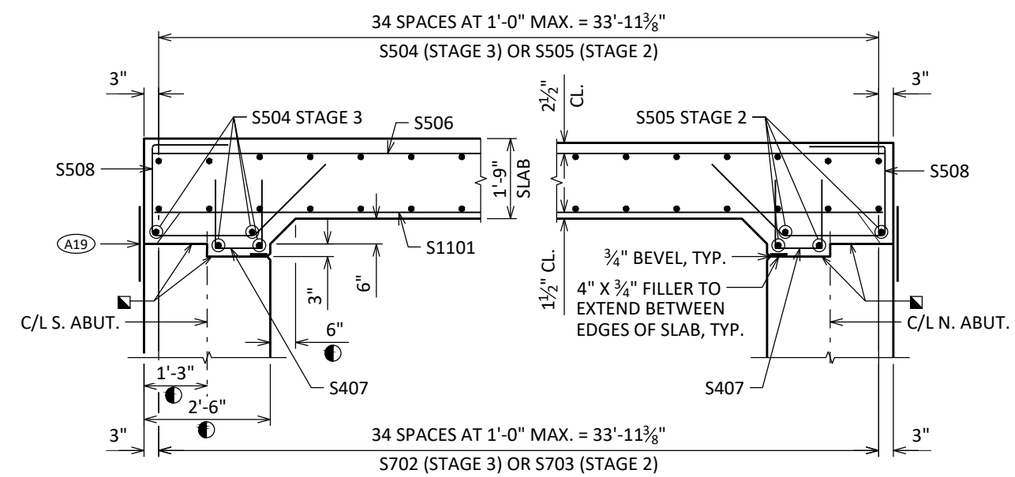

LONGITUDINAL SECTION

DIMENSIONS ARE GIVEN PARALLEL TO C/L ROADWAY UNLESS OTHERWISE NOTED.

8

8

NO.	DATE	REVISION	BY

STATE OF WISCONSIN
DEPARTMENT OF TRANSPORTATION

STRUCTURE B-34-59

DRAWN BY MAG | PLANS CK'D JRD

SUPERSTRUCTURE

SHEET 12 OF 13

98

SCALE =

STATE PROJECT NUMBER

9155-05-05

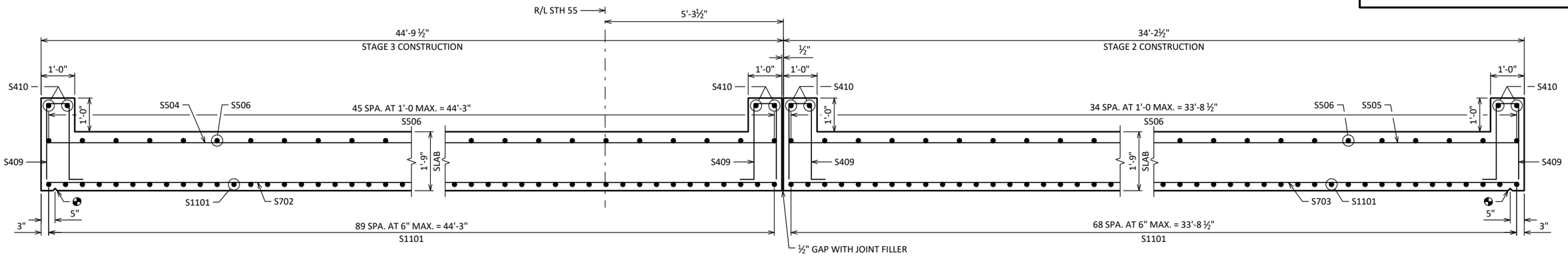

CROSS SECTION THRU ROADWAY

(LOOKING NORTH)

BILL OF BARS

NOTE: THE FIRST OR FIRST TWO DIGITS OF THE BAR MARK SIGNIFIES THE BAR SIZE.

MARK	NO. REQ'D STAGE 2	NO. REQ'D STAGE 3	LENGTH	BENT	BAR SERIES	LOCATION	
COATED BARS						TOTAL WEIGHT =	46190 LBS
S1101	69	90	36 - 4			BOTTOM	LONG.
S702	0	35	47 - 3			BOTTOM	TRANS.
S703	35	0	36 - 1			BOTTOM	TRANS.
S504	0	43	47 - 3			TOP	TRANS.
S505	43	0	36 - 1			TOP	TRANS.
S506	35	46	36 - 4			TOP	LONG.
S407	70	92	4 - 4	X		END OF SLAB	VERT.
S508	70	92	7 - 9	X		END OF SLAB	HORIZ.
S409	100	100	5 - 7	X		HEADERS	VERT.
S410	4	4	36 - 4			HEADERS	LONG.

SURVEY TOP OF SLAB ELEVATIONS

STAGE 2

LOCATION	SOUTH ABUTMENT	5/10 PT.	NORTH ABUTMENT
WEST GUTTER			
C/L OF SLAB			
EAST GUTTER			

STAGE 3

LOCATION	SOUTH ABUTMENT	5/10 PT.	NORTH ABUTMENT
WEST GUTTER			
C/L OF SLAB			
EAST GUTTER			

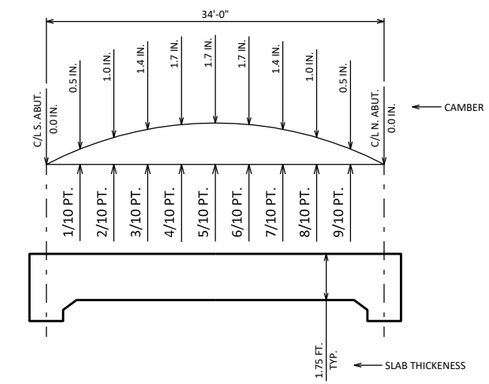

CAMBER AND SLAB THICKNESS DIAGRAM

CAMBER SHOWN IS BASED ON 3 TIMES DEAD LOAD DEFLECTIONS. CAMBER SPANS AS SHOWN TO PROVIDE FOR DEAD LOAD DEFLECTION AND FUTURE CREEP. CAMBER DOES NOT INCLUDE ALLOWANCE FOR FORM SETTLEMENT.

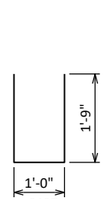

S407

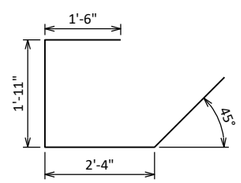

S508

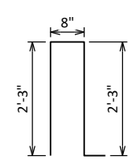

S409

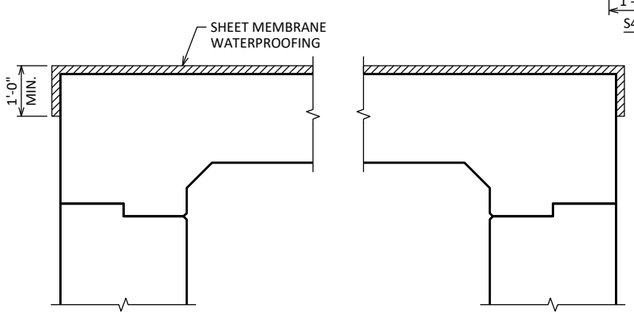

ELEVATION THRU STRUCTURE

SHOWING SHEET MEMBRANE WATERPROOFING LIMITS

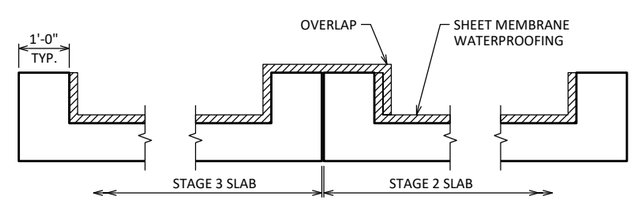

CROSS SECTION THRU STRUCTURE

SHOWING SHEET MEMBRANE WATERPROOFING LIMITS

LEGEND

⊕ ¾" V-GROOVE. EXTEND V-GROOVE TO 6" FROM FRONT FACE OF ABUTMENT DIAPHRAGM.

TO DETERMINE FALSEWORK ELEVATION AT EDGE OF SLAB, CROWN OR REFERENCE LINE FOLLOW THIS PROCEDURE:

	TOP OF SLAB ELEVATION AT FINAL GRADE (1370.85 - SLAB IS LEVEL)
LESS	SLAB THICKNESS
PLUS	CAMBER
PLUS	FORM SETTLEMENT/DEFLECTION DUE TO PLACEMENT OF SLAB CONCRETE (TO BE COMPUTED BY THE CONTRACTOR)
EQUALS	TOP OF SLAB FALSEWORK ELEVATION

8

8

NO.	DATE	REVISION	BY

STATE OF WISCONSIN
DEPARTMENT OF TRANSPORTATION

STRUCTURE B-34-59

DRAWN BY MAG PLANS CK'D JRD

SUPERSTRUCTURE DETAILS

SHEET 13 OF 13

99

SCALE =

STAGE 1

STATION	REAL STATION	DISTANCE	AREA (SF)			INCREMENTAL VOL (CY) (UNADJUSTED)			CUMULATIVE VOL (CY)		
			CUT	SALVAGED/UNUSABLE PAVEMENT MATERIAL	FILL	CUT	SALVAGED/UNUSABLE PAVEMENT MATERIAL	FILL	CUT	EXPANDED FILL	MASS ORDINATE
									1.00	1.25	
						NOTE 1	NOTE 2	NOTE 3	NOTE 1		NOTE 8
100+50.00	10050.00	0.00	5.93	0.00	0.00	0	0	0	0	0	0
101+00.00	10100.00	50.00	15.72	0.00	0.07	20	0	0	20	0	20
101+50.00	10150.00	50.00	15.49	0.00	0.20	29	0	0	49	0	49
102+00.00	10200.00	50.00	22.77	0.00	0.01	35	0	0	84	0	84
102+50.00	10250.00	50.00	35.41	0.00	0.00	54	0	0	138	0	138
103+00.00	10300.00	50.00	45.15	0.00	0.00	75	0	0	213	0	213
103+50.00	10350.00	50.00	52.20	0.00	0.00	90	0	0	303	0	303
103+75.00	10375.00	25.00	60.06	0.00	0.00	52	0	0	355	0	355
104+25.00	10425.00	50.00	59.79	0.00	0.06	111	0	0	466	0	466
104+50.00	10450.00	25.00	55.33	0.00	0.00	53	0	0	519	0	519
105+00.00	10500.00	50.00	47.79	0.00	0.00	95	0	0	614	0	614
105+50.00	10550.00	50.00	44.78	0.00	0.00	86	0	0	700	0	700
106+00.00	10600.00	50.00	36.10	0.00	0.00	75	0	0	775	0	775
106+50.00	10650.00	50.00	23.61	0.00	0.02	55	0	0	830	0	830
107+00.00	10700.00	50.00	16.65	0.00	20.12	37	0	19	867	24	843
107+17.00	10717.00	17.00	16.70	0.00	0.99	11	0	7	878	33	846

STAGE 2

STATION	REAL STATION	DISTANCE	AREA (SF)			INCREMENTAL VOL (CY) (UNADJUSTED)			CUMULATIVE VOL (CY)		
			CUT	SALVAGED/UNUSABLE PAVEMENT MATERIAL	FILL	CUT	SALVAGED/UNUSABLE PAVEMENT MATERIAL	FILL	CUT	EXPANDED FILL	MASS ORDINATE
									1.00	1.25	
						NOTE 1	NOTE 2	NOTE 3	NOTE 1		NOTE 8
100+50.00	10050.00	0.00	0.00	0.00	0.38	0	0	0	0	0	0
101+00.00	10100.00	50.00	5.68	0.00	2.04	5	0	2	5	3	3
101+50.00	10150.00	50.00	4.34	0.00	2.17	9	0	4	14	8	7
102+00.00	10200.00	50.00	9.00	0.00	29.23	12	0	29	26	44	-18
102+50.00	10250.00	50.00	12.58	0.00	32.08	20	0	57	46	115	-69
103+00.00	10300.00	50.00	12.31	0.00	47.94	23	0	74	69	208	-139
103+50.00	10350.00	50.00	33.17	0.00	61.94	42	0	102	111	335	-224
103+75.00	10375.00	25.00	58.82	0.00	91.33	43	0	71	154	424	-270
104+25.00	10425.00	50.00	51.59	0.00	112.09	102	0	188	256	659	-403
104+50.00	10450.00	25.00	24.15	0.00	40.50	35	0	71	291	748	-457
105+00.00	10500.00	50.00	11.75	0.00	28.13	33	0	64	324	828	-504
105+50.00	10550.00	50.00	3.45	0.00	40.27	14	0	63	338	906	-568
106+00.00	10600.00	50.00	15.00	0.00	10.31	17	0	47	355	965	-610
106+50.00	10650.00	50.00	11.29	0.00	3.42	24	0	13	379	981	-602
107+00.00	10700.00	50.00	2.07	0.00	10.44	12	0	13	391	998	-607
107+17.00	10717.00	17.00	0.65	0.00	4.48	1	0	5	392	1,004	-612

9

9

STAGE 3

STATION	REAL STATION	DISTANCE	AREA (SF)			INCREMENTAL VOL (CY) (UNADJUSTED)			CUMULATIVE VOL (CY)		
			CUT	SALVAGED/UNUSABLE PAVEMENT MATERIAL	FILL	CUT	SALVAGED/UNUSABLE PAVEMENT MATERIAL	FILL	CUT 1.00	EXPANDED FILL 1.25	MASS ORDINATE
						NOTE 1	NOTE 2	NOTE 3	NOTE 1		NOTE 8
100+50.00	10050.00	0.00	29.19	0.00	0.21	0	0	0	0	0	0
101+00.00	10100.00	50.00	7.13	0.00	10.81	34	0	10	34	13	22
101+50.00	10150.00	50.00	0.40	0.00	23.42	7	0	32	41	53	-12
102+00.00	10200.00	50.00	0.93	0.00	33.40	1	0	53	42	119	-77
102+50.00	10250.00	50.00	2.60	0.00	43.97	3	0	72	45	209	-164
103+00.00	10300.00	50.00	0.00	0.00	65.11	2	0	101	47	335	-288
103+50.00	10350.00	50.00	5.61	0.00	84.27	5	0	138	52	508	-456
103+75.00	10375.00	25.00	6.04	0.00	139.43	5	0	104	57	638	-581
104+25.00	10425.00	50.00	0.02	0.00	193.75	6	0	308	63	1,023	-960
104+50.00	10450.00	25.00	0.00	0.00	110.90	0	0	141	63	1,199	-1,136
105+00.00	10500.00	50.00	0.00	0.00	60.95	0	0	159	63	1,398	-1,335
105+50.00	10550.00	50.00	7.68	0.00	42.21	7	0	96	70	1,518	-1,448
106+00.00	10600.00	50.00	6.34	0.00	45.86	13	0	82	83	1,620	-1,537
106+50.00	10650.00	50.00	0.25	0.00	27.03	6	0	67	89	1,704	-1,615
107+00.00	10700.00	50.00	41.37	0.00	14.65	39	0	39	128	1,753	-1,625
107+17.00	10717.00	17.00	12.42	0.00	14.29	17	0	9	145	1,764	-1,619

STAGE 4

STATION	REAL STATION	DISTANCE	AREA (SF)			INCREMENTAL VOL (CY) (UNADJUSTED)			CUMULATIVE VOL (CY)		
			CUT	SALVAGED/UNUSABLE PAVEMENT MATERIAL	FILL	CUT	SALVAGED/UNUSABLE PAVEMENT MATERIAL	FILL	CUT 1.00	EXPANDED FILL 1.25	MASS ORDINATE
						NOTE 1	NOTE 2	NOTE 3	NOTE 1		NOTE 8
100+50.00	10050.00	0.00	4.11	0.00	0.00	0	0	0	0	0	0
101+00.00	10100.00	50.00	6.89	0.00	0.79	10	0	1	10	1	9
101+50.00	10150.00	50.00	2.57	0.00	8.54	9	0	9	19	13	7
102+00.00	10200.00	50.00	21.95	0.00	6.49	23	0	14	42	30	12
102+50.00	10250.00	50.00	20.57	0.00	7.27	39	0	13	81	46	35
103+00.00	10300.00	50.00	20.32	0.00	7.20	38	0	13	119	63	57
103+50.00	10350.00	50.00	22.98	0.00	5.68	40	0	12	159	78	82
103+75.00	10375.00	25.00	41.93	0.00	0.77	30	0	3	189	81	108
104+25.00	10425.00	50.00	7.64	0.00	5.32	46	0	6	205	89	146
104+50.00	10450.00	25.00	21.95	0.00	5.42	14	0	5	219	95	154
105+00.00	10500.00	50.00	22.17	0.00	5.59	41	0	10	260	108	183
105+50.00	10550.00	50.00	35.50	0.00	0.91	53	0	6	313	115	228
106+00.00	10600.00	50.00	10.85	0.00	4.98	43	0	5	356	121	265
106+50.00	10650.00	50.00	7.20	0.00	4.50	17	0	9	373	133	271
107+00.00	10700.00	50.00	0.98	0.00	0.16	8	0	4	381	138	274
107+17.00	10717.00	17.00	1.41	0.00	0.01	1	0	0	382	138	275

9

9

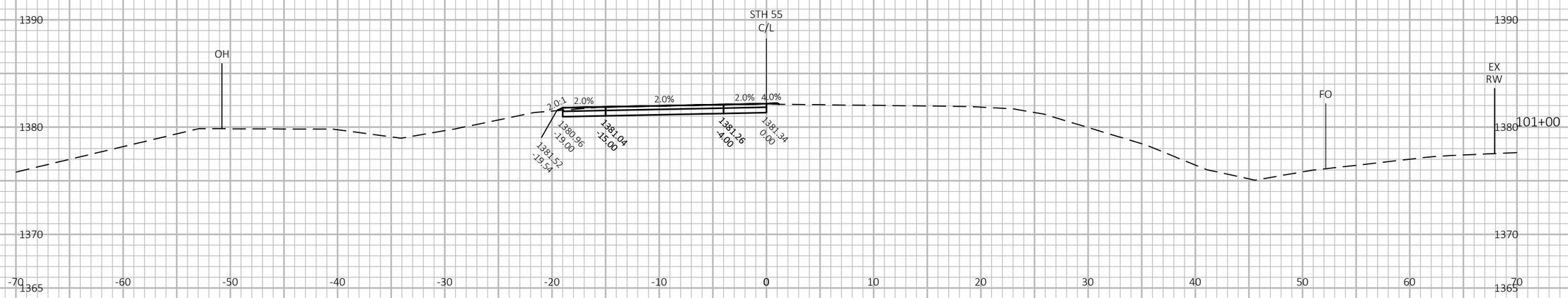

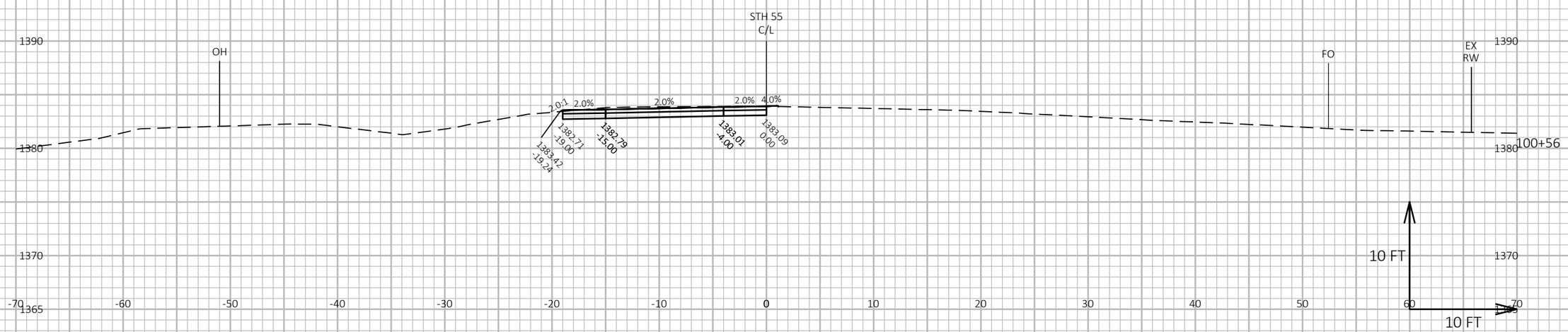

9

9

PROJECT NO: 9155-05-71	HWY: STH 55	COUNTY: LANGLADE	CROSS SECTIONS: STH 55 - STAGE 1	SHEET 102	E

FILE NAME : C:\ONEDRIVE\AECOM DIRECTORY\9155-05-01, STH 55 OVER NINE MILE CREEK, LANGLADE CO - PROJECT FILES\900_CAD_GIS\910_CAD\91550501\SHEETSPLAN\090201-XS_S1-S2.DWG PLOT DATE : 8/9/2023 3:19 PM PLOT BY : LANCELLE, JESSICA PLOT NAME : **PLOT SCALE :** 1 IN:10 FT HORZ. / 1 IN:10 FT VERT.
LAYOUT NAME - 01

WISDOT/CADDS SHEET 49

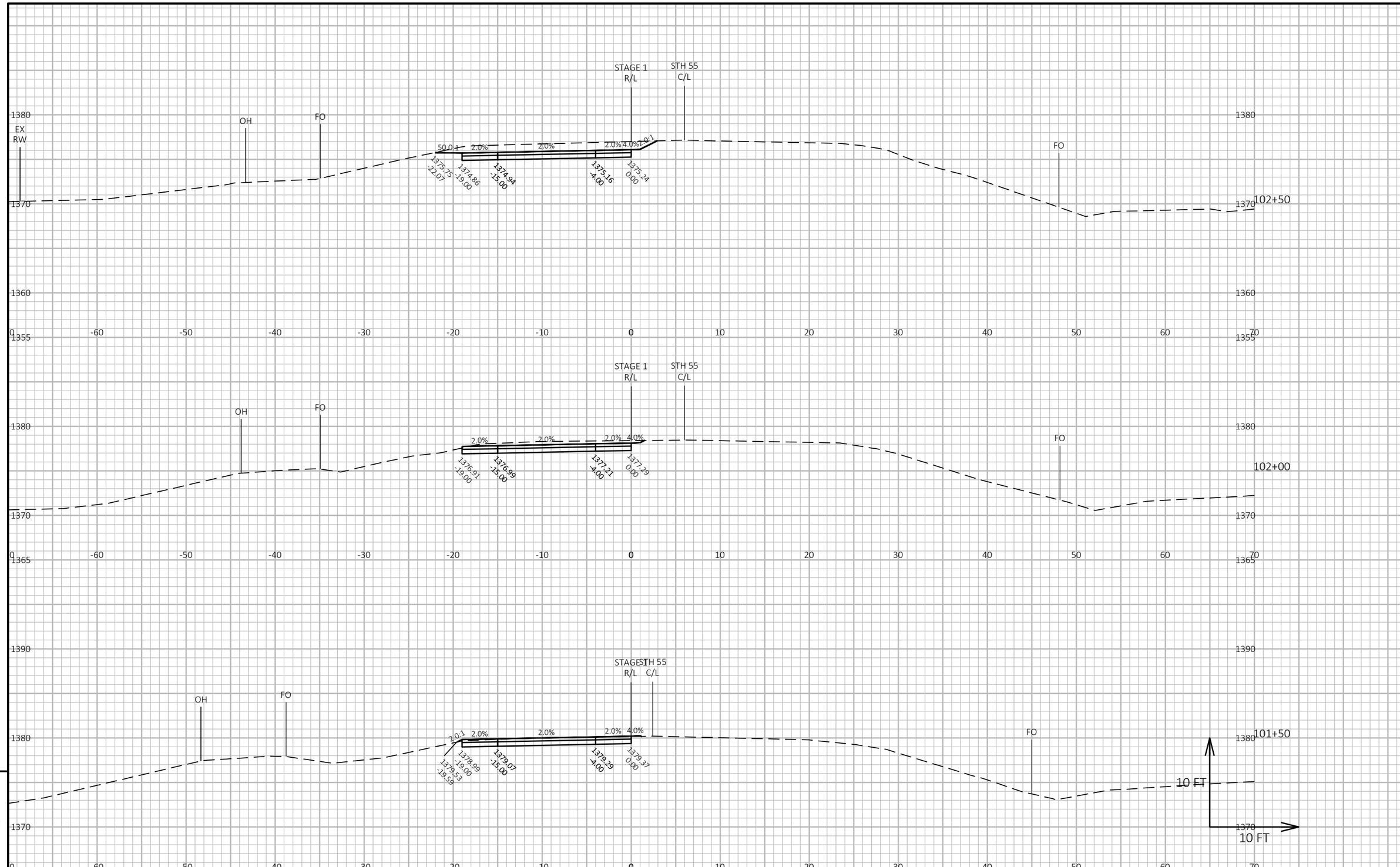

9

9

PROJECT NO: 9155-05-71	HWY: STH 55	COUNTY: LANGLADE	CROSS SECTIONS: STH 55 - STAGE 1	SHEET 103	E

FILE NAME : C:\ONEDRIVE\AECOM DIRECTORY\9155-05-01, STH 55 OVER NINE MILE CREEK, LANGLADE CO - PROJECT FILES\900_CAD_GIS\910_CAD\91550501\SHEETSPLAN\090201-XS_S1-S2.DWG PLOT DATE : 8/9/2023 3:19 PM PLOT BY : LANCELLE, JESSICA PLOT NAME : **PLOT SCALE :** 1 IN:10 FT HORZ. / 1 IN:10 FT VERT.
LAYOUT NAME - 02

WISDOT/CADDS SHEET 49

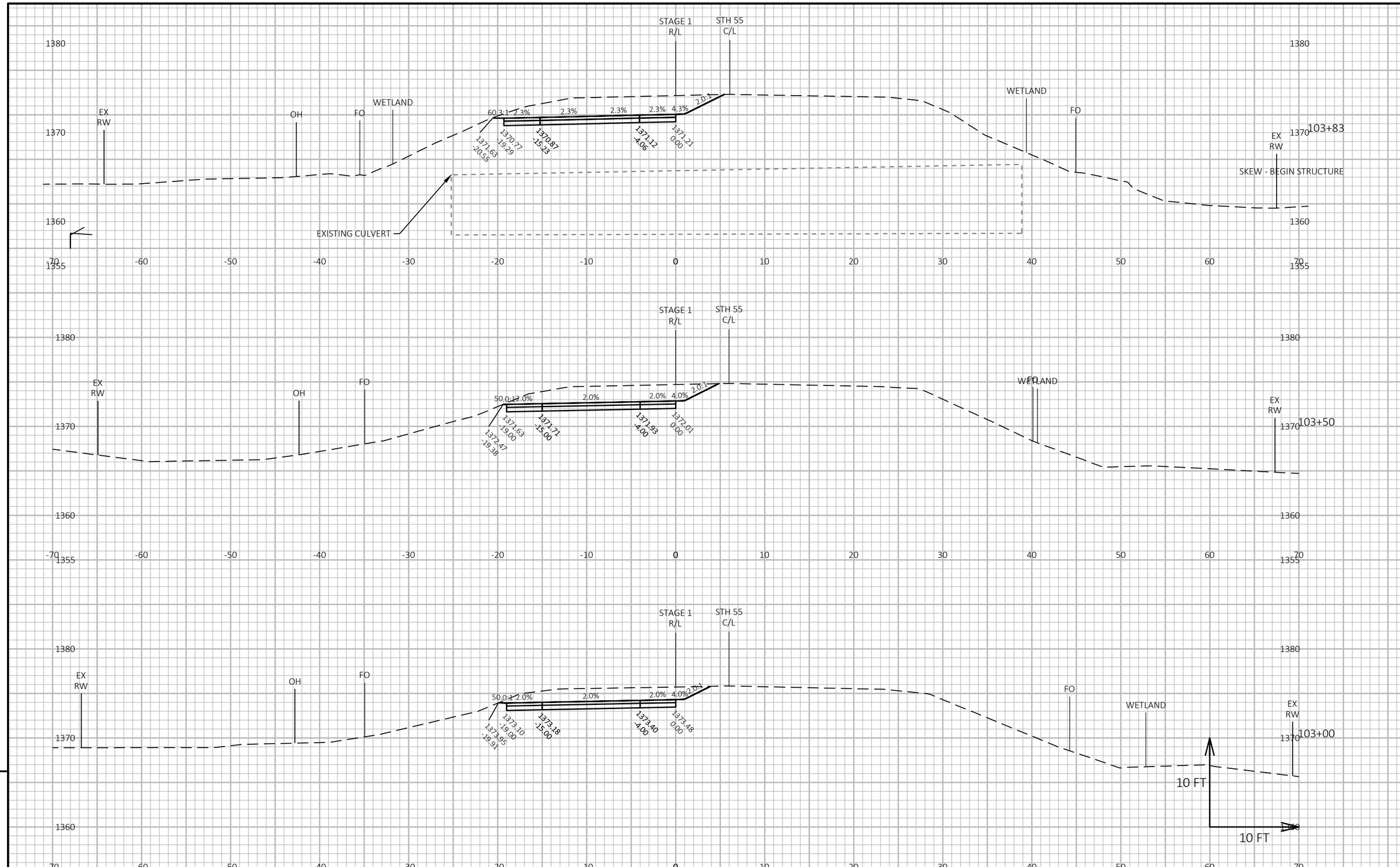

PROJECT NO: 9155-05-71	HWY: STH 55	COUNTY: LANGLADE	CROSS SECTIONS: STH 55 - STAGE 1	SHEET 104	E

FILE NAME : C:\ONEDRIVE\AECOM DIRECTORY\9155-05-01, STH 55 OVER NINE MILE CREEK, LANGLADE CO - PROJECT FILES\900_CAD_GIS\910_CAD\91550501\SHEETSPLAN\090201-XS_S1-S2.DWG PLOT DATE : 8/9/2023 3:19 PM PLOT BY : LANCELLE, JESSICA PLOT NAME : PLOT SCALE : 1 IN:10 FT HORZ. / 1 IN:10 FT VERT.
LAYOUT NAME - 03

WISDOT/CADDS SHEET 49

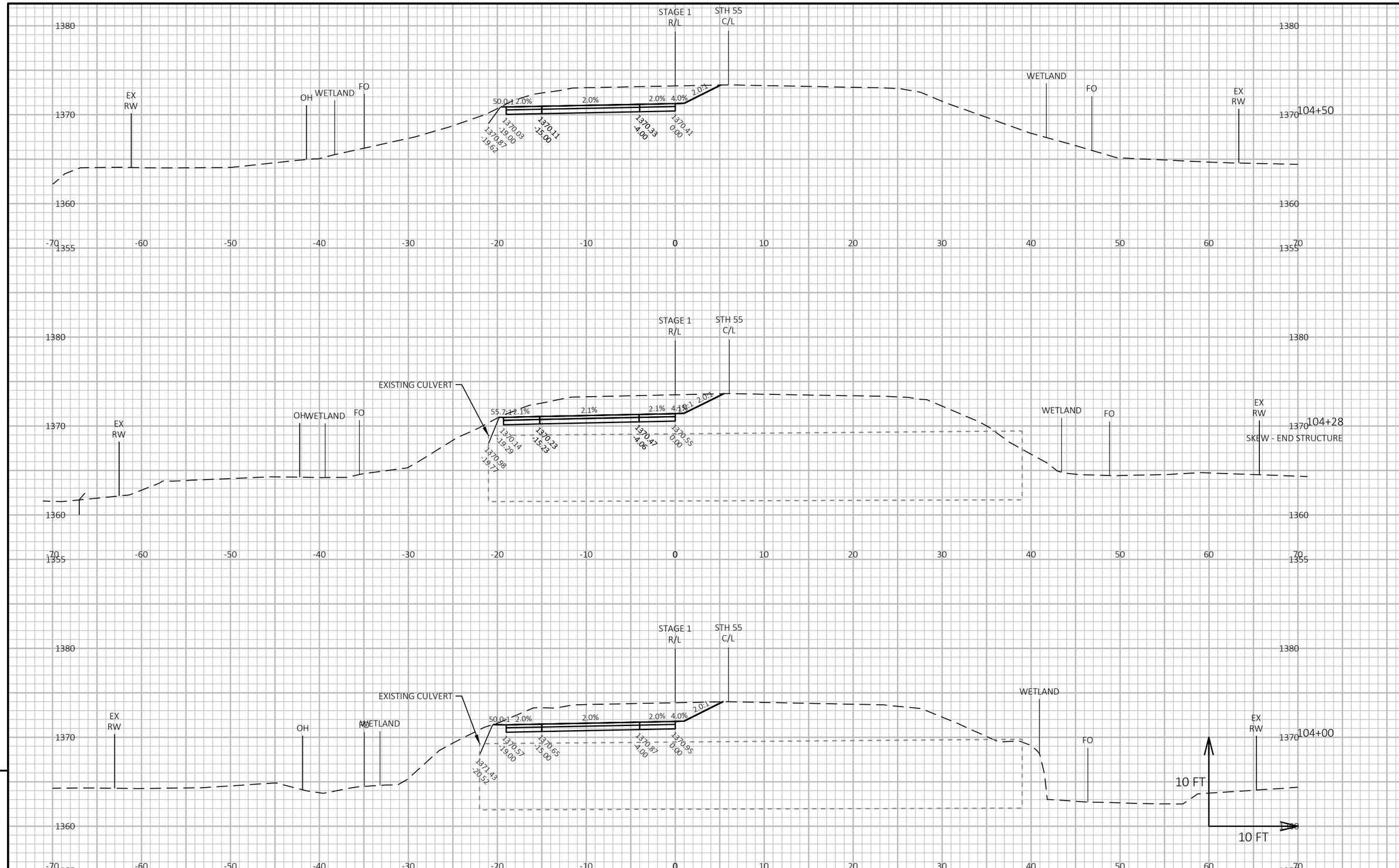

PROJECT NO: 9155-05-71	HWY: STH 55	COUNTY: LANGLADE	CROSS SECTIONS: STH 55 - STAGE 1	SHEET 105	E

FILE NAME : C:\ONEDRIVE\AECOM DIRECTORY\9155-05-01, STH 55 OVER NINE MILE CREEK, LANGLADE CO - PROJECT FILES\900_CAD_GIS\910_CAD\91550501\SHEETSPLAN\090201-XS_S1-S2.DWG PLOT DATE : 8/9/2023 3:19 PM PLOT BY : LANCELLE, JESSICA PLOT NAME : **PLOT SCALE :** 1 IN:10 FT HORZ. / 1 IN:10 FT VERT.
LAYOUT NAME - 04

WISDOT/CADDS SHEET 49

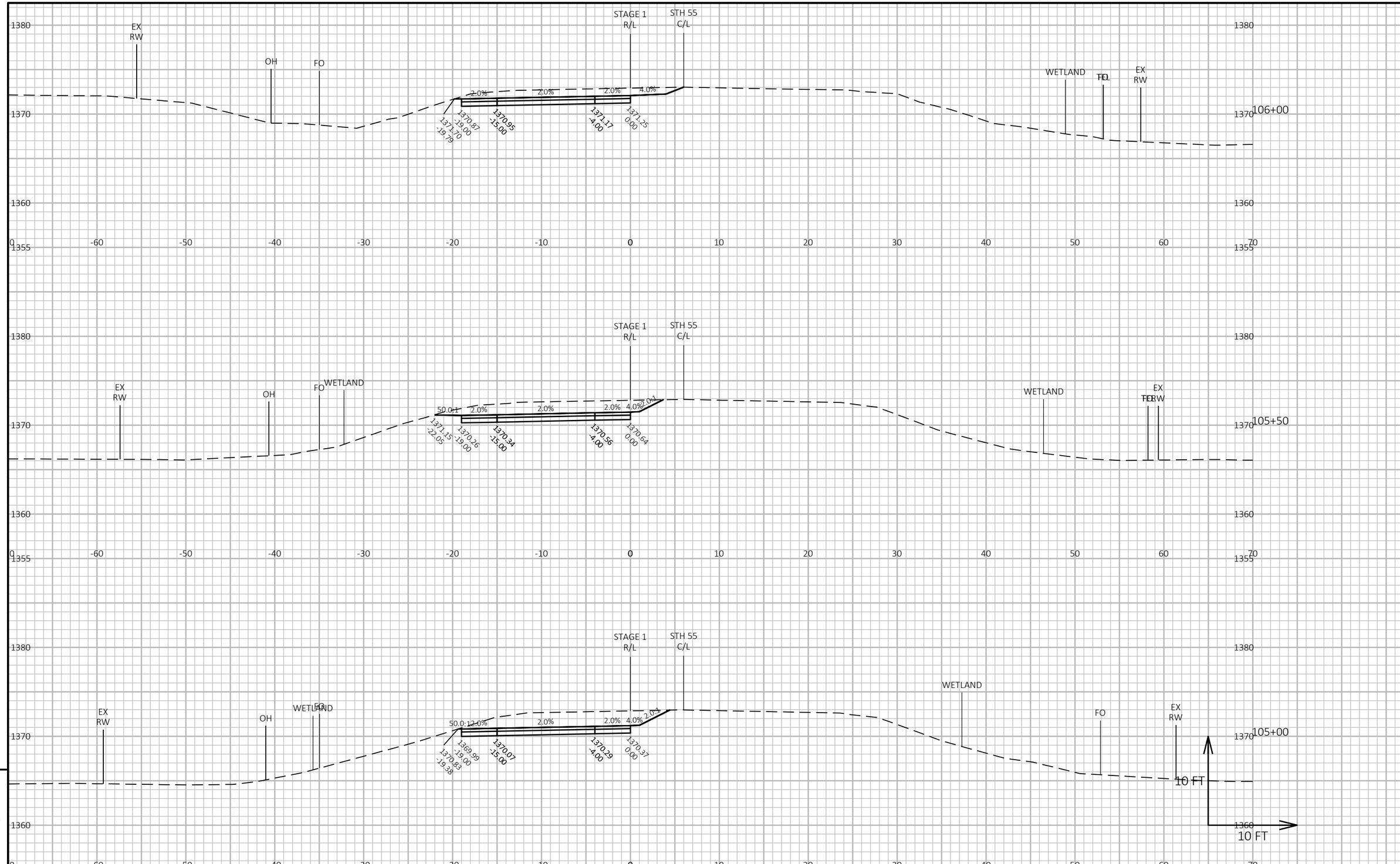

9

9

PROJECT NO: 9155-05-71	HWY: STH 55	COUNTY: LANGLADE	CROSS SECTIONS: STH 55 - STAGE 1	SHEET 106	E

FILE NAME : C:\ONEDRIVE\AECOM DIRECTORY\9155-05-01, STH 55 OVER NINE MILE CREEK, LANGLADE CO - PROJECT FILES\900_CAD_GIS\910_CAD\91550501\SHEETSPLAN\090201-XS_S1-S2.DWG PLOT DATE : 8/9/2023 3:19 PM PLOT BY : LANCELLE, JESSICA PLOT NAME : **PLOT SCALE :** 1 IN:10 FT HORZ. / 1 IN:10 FT VERT.
LAYOUT NAME - 05

WISDOT/CADDS SHEET 49

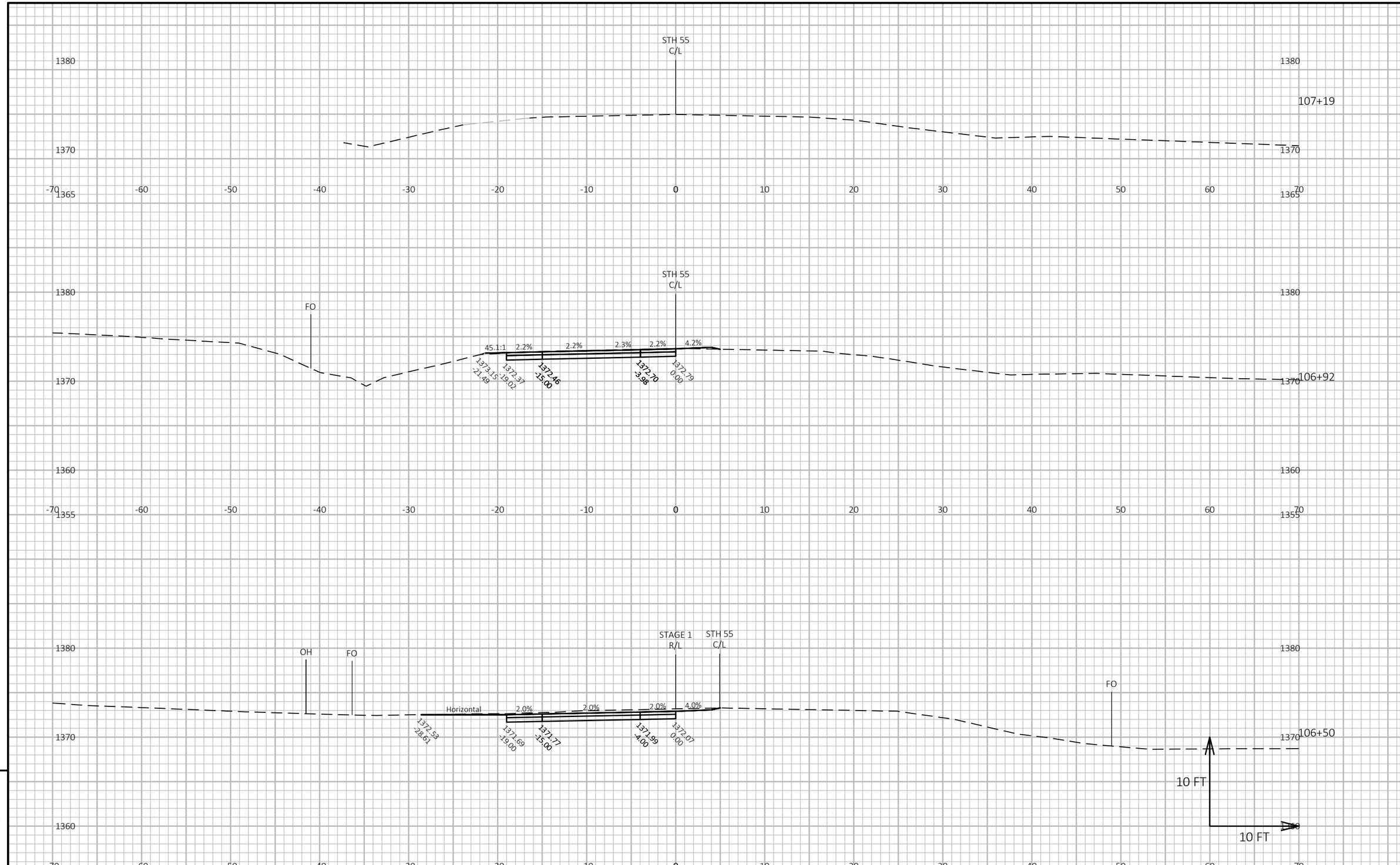

PROJECT NO: 9155-05-71	HWY: STH 55	COUNTY: LANGLADE	CROSS SECTIONS: STH 55 - STAGE 1	SHEET 107	E

FILE NAME : C:\ONEDRIVE\AECOM DIRECTORY\9155-05-01, STH 55 OVER NINE MILE CREEK, LANGLADE CO - PROJECT FILES\900_CAD_GIS\910_CAD\91550501\SHEETSPLAN\090201-XS_S1-S2.DWG PLOT DATE : 8/9/2023 3:19 PM PLOT BY : LANCELLE, JESSICA PLOT NAME : **PLOT SCALE :** 1 IN:10 FT HORZ. / 1 IN:10 FT VERT.
LAYOUT NAME - 05 (2)

WISDOT/CADDS SHEET 49

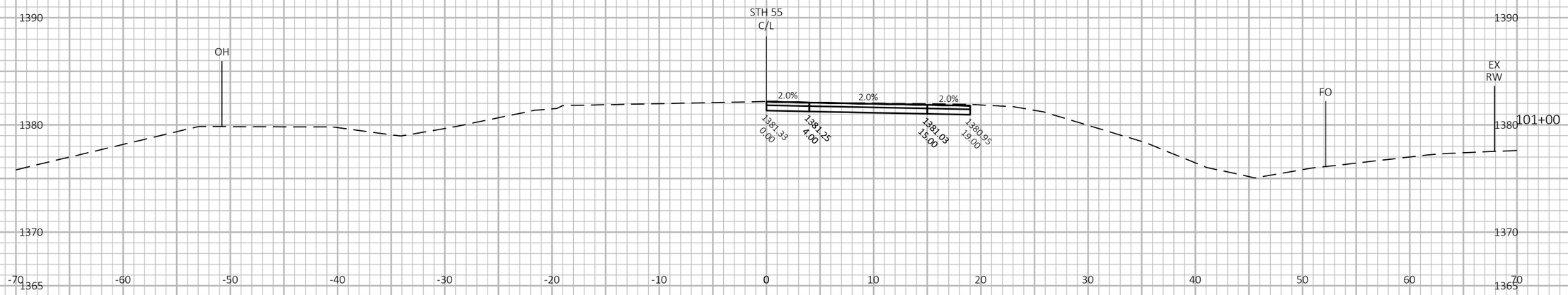

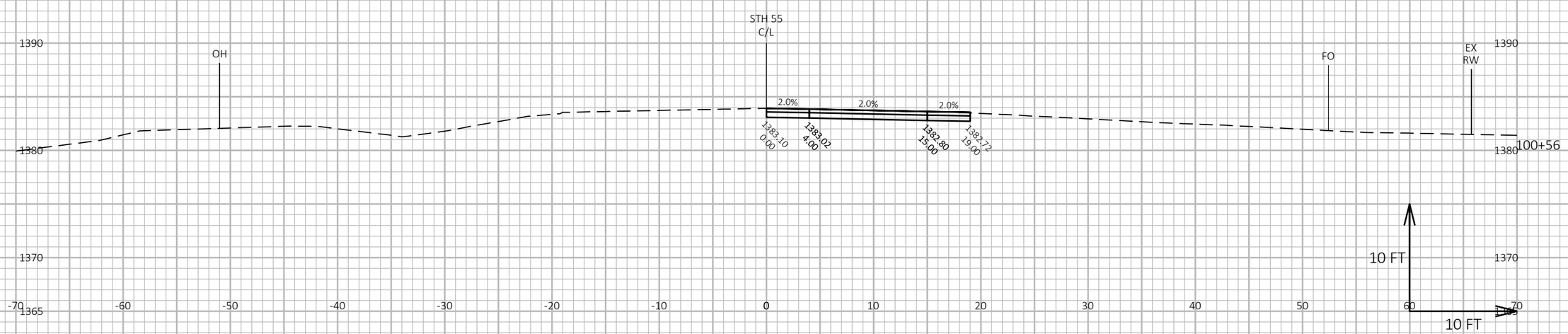

9

9

PROJECT NO: 9155-05-71	HWY: STH 55	COUNTY: LANGLADE	CROSS SECTIONS: STH 55 - STAGE 2	SHEET 108	E

FILE NAME : C:\ONEDRIVE\AECOM DIRECTORY\9155-05-01, STH 55 OVER NINE MILE CREEK, LANGLADE CO - PROJECT FILES\900_CAD_GIS\910_CAD\91550501\SHEETSPLAN\090201-XS_S1-S2.DWG PLOT DATE : 8/9/2023 3:19 PM PLOT BY : LANCELLE, JESSICA PLOT NAME : **PLOT SCALE :** 1 IN:10 FT HORZ. / 1 IN:10 FT VERT.
LAYOUT NAME - 06

WISDOT/CADDS SHEET 49

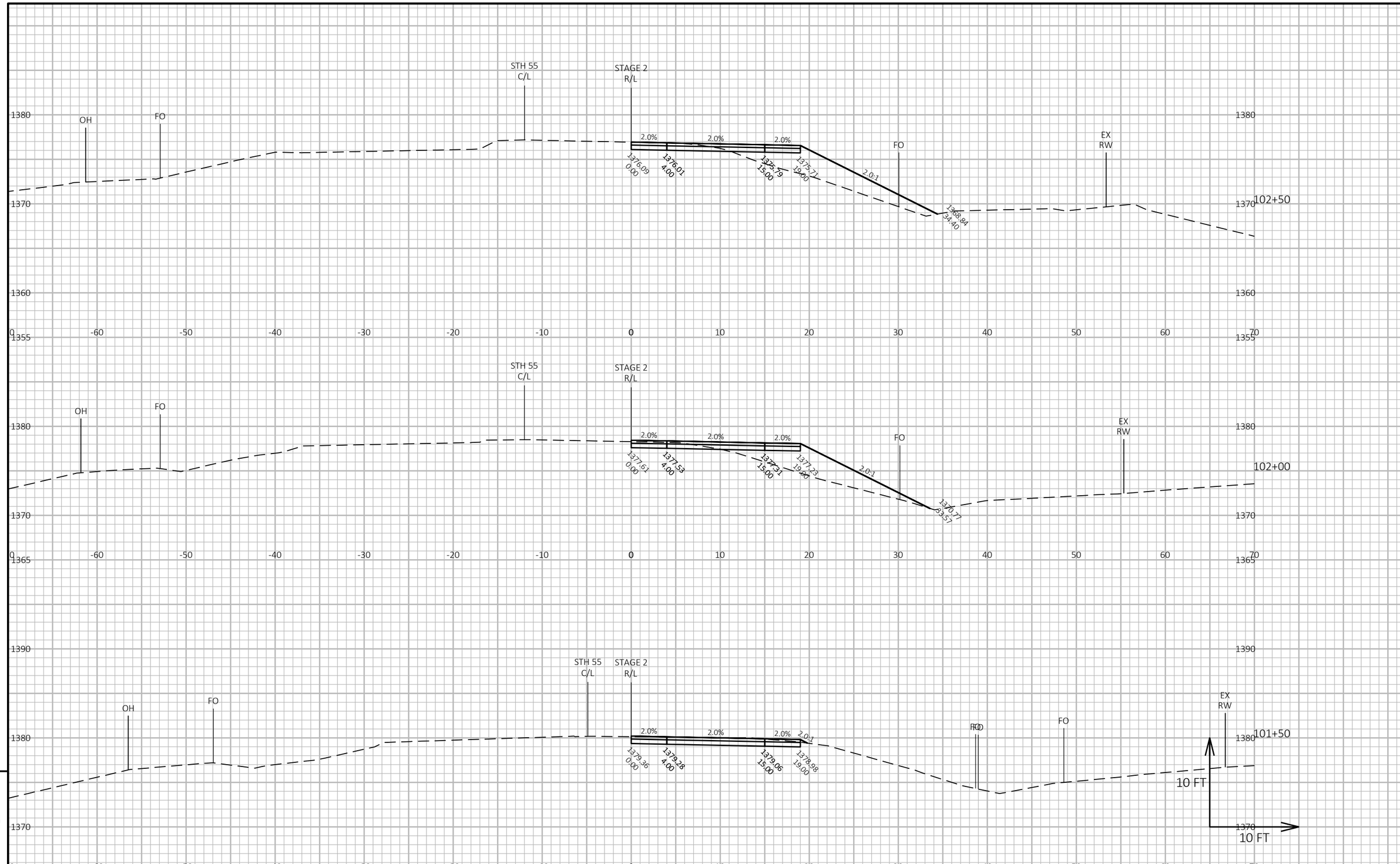

9

9

PROJECT NO: 9155-05-71	HWY: STH 55	COUNTY: LANGLADE	CROSS SECTIONS: STH 55 - STAGE 2	SHEET 109	E

FILE NAME : C:\ONEDRIVE\AECOM DIRECTORY\9155-05-01, STH 55 OVER NINE MILE CREEK, LANGLADE CO - PROJECT FILES\900_CAD_GIS\910_CAD\91550501\SHEETSPLAN\090201-XS_S1-S2.DWG PLOT DATE : 8/9/2023 3:19 PM PLOT BY : LANCELLE, JESSICA PLOT NAME : PLOT SCALE : 1 IN:10 FT HORZ. / 1 IN:10 FT VERT.
LAYOUT NAME - 07

WISDOT/CADDS SHEET 49

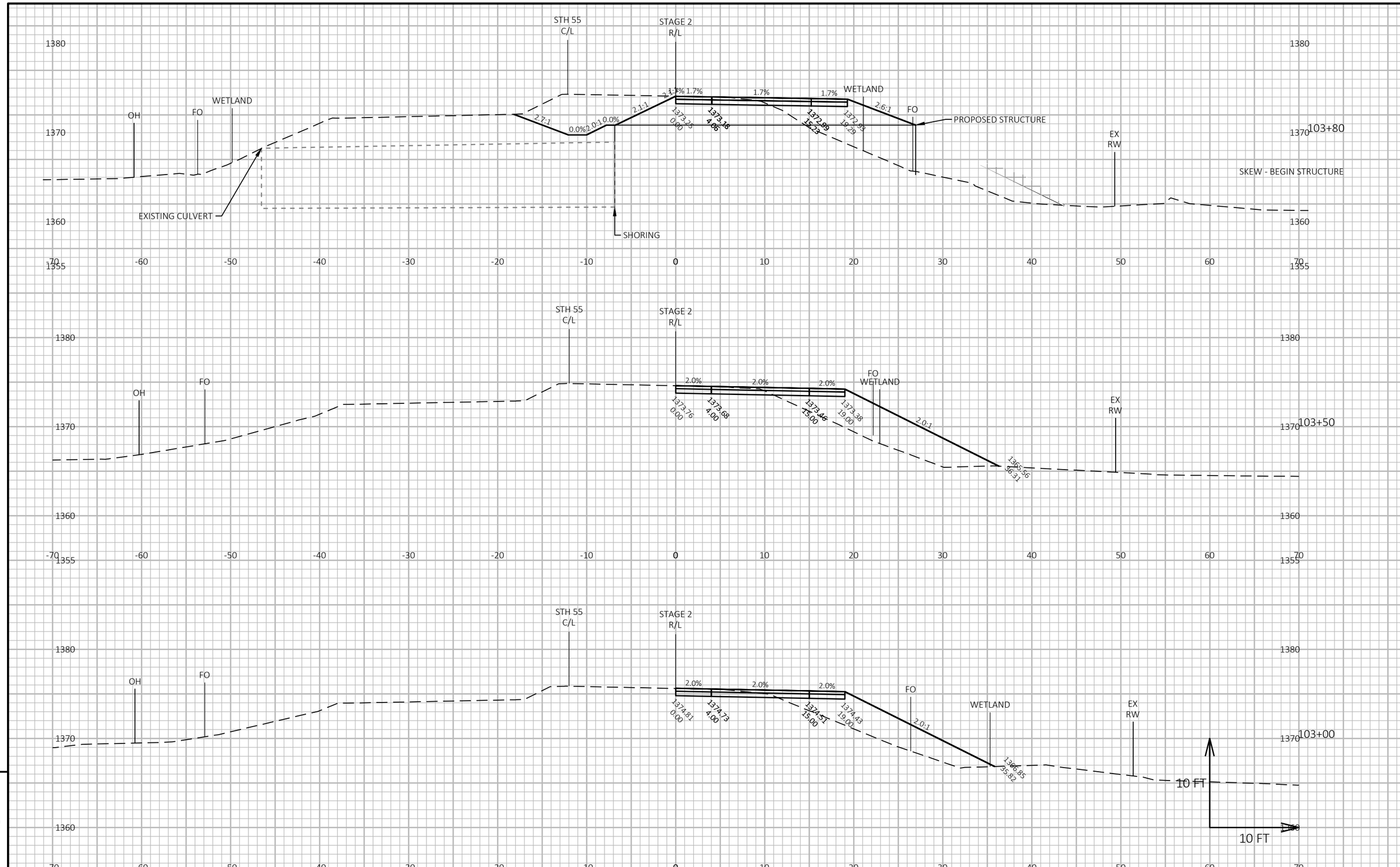

PROJECT NO: 9155-05-71	HWY: STH 55	COUNTY: LANGLADE	CROSS SECTIONS: STH 55 - STAGE 2	SHEET 110	E

FILE NAME : C:\ONEDRIVE\AECOM DIRECTORY\9155-05-01, STH 55 OVER NINE MILE CREEK, LANGLADE CO - PROJECT FILES\900_CAD_GIS\910_CAD\91550501\SHEETSPLAN\090201-XS_S1-S2.DWG PLOT DATE : 8/9/2023 3:19 PM PLOT BY : LANCELLE, JESSICA PLOT NAME : **PLOT SCALE :** 1 IN:10 FT HORZ. / 1 IN:10 FT VERT.
LAYOUT NAME - 08

WISDOT/CADDS SHEET 49

PROJECT NO: 9155-05-71	HWY: STH 55	COUNTY: LANGLADE	CROSS SECTIONS: STH 55 - STAGE 2	SHEET 111	E

FILE NAME : C:\ONEDRIVE\AECOM DIRECTORY\9155-05-01, STH 55 OVER NINE MILE CREEK, LANGLADE CO - PROJECT FILES\900_CAD_GIS\910_CAD\91550501\SHEETSPLAN\090201-XS_S1-S2.DWG PLOT DATE : 8/9/2023 3:20 PM PLOT BY : LANCELLE, JESSICA PLOT NAME : **PLOT SCALE :** 1 IN:10 FT HORZ. / 1 IN:10 FT VERT.
LAYOUT NAME - 09

WISDOT/CADDS SHEET 49

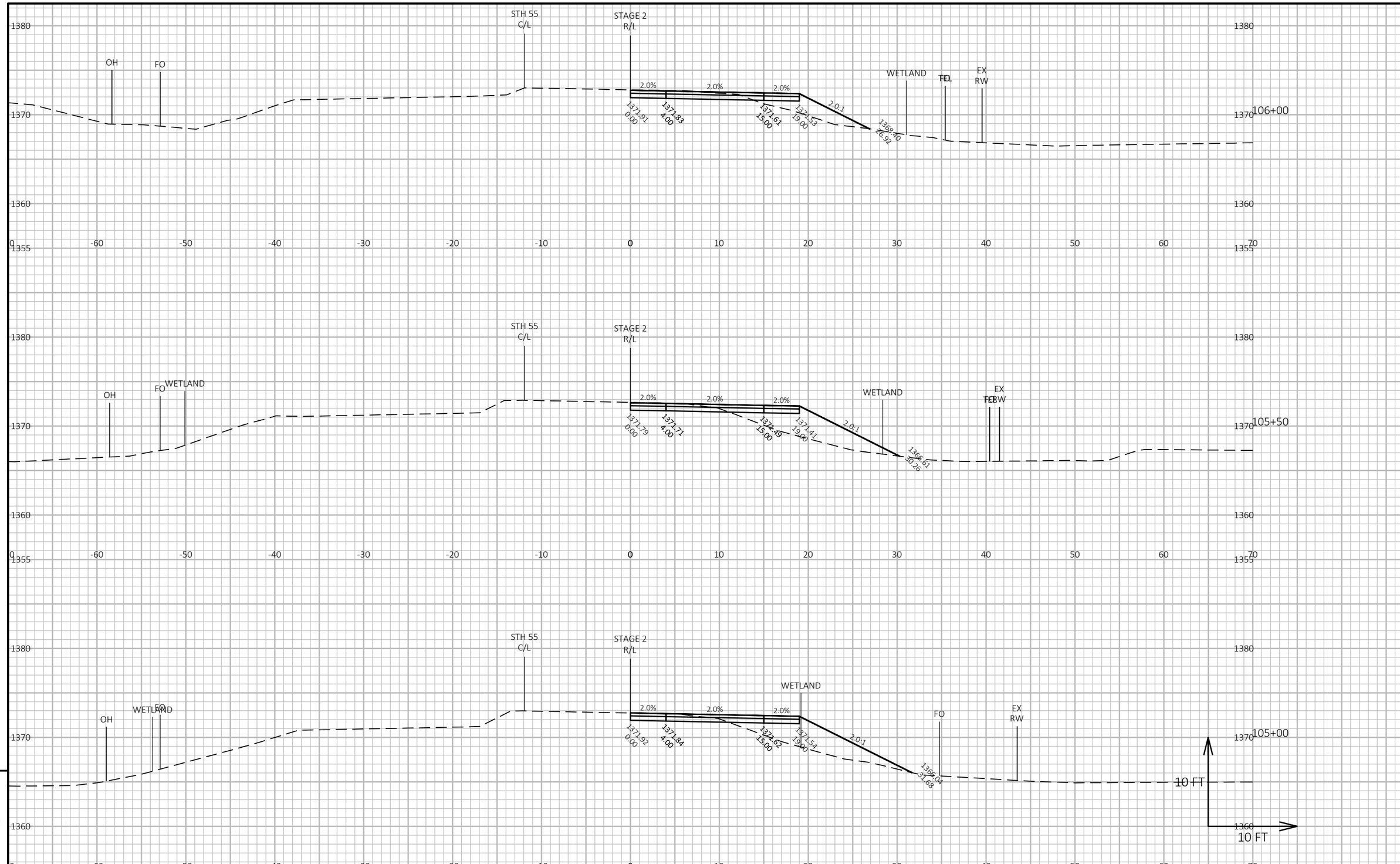

9

9

PROJECT NO: 9155-05-71	HWY: STH 55	COUNTY: LANGLADE	CROSS SECTIONS: STH 55 - STAGE 2	SHEET 112	E

FILE NAME : C:\ONEDRIVE\AECOM DIRECTORY\9155-05-01, STH 55 OVER NINE MILE CREEK, LANGLADE CO - PROJECT FILES\900_CAD_GIS\910_CAD\91550501\SHEETSPLAN\090201-XS_S1-S2.DWG PLOT DATE : 8/9/2023 3:20 PM PLOT BY : LANCELLE, JESSICA PLOT NAME : **PLOT SCALE :** 1 IN:10 FT HORZ. / 1 IN:10 FT VERT.
LAYOUT NAME - 10

WISDOT/CADDS SHEET 49

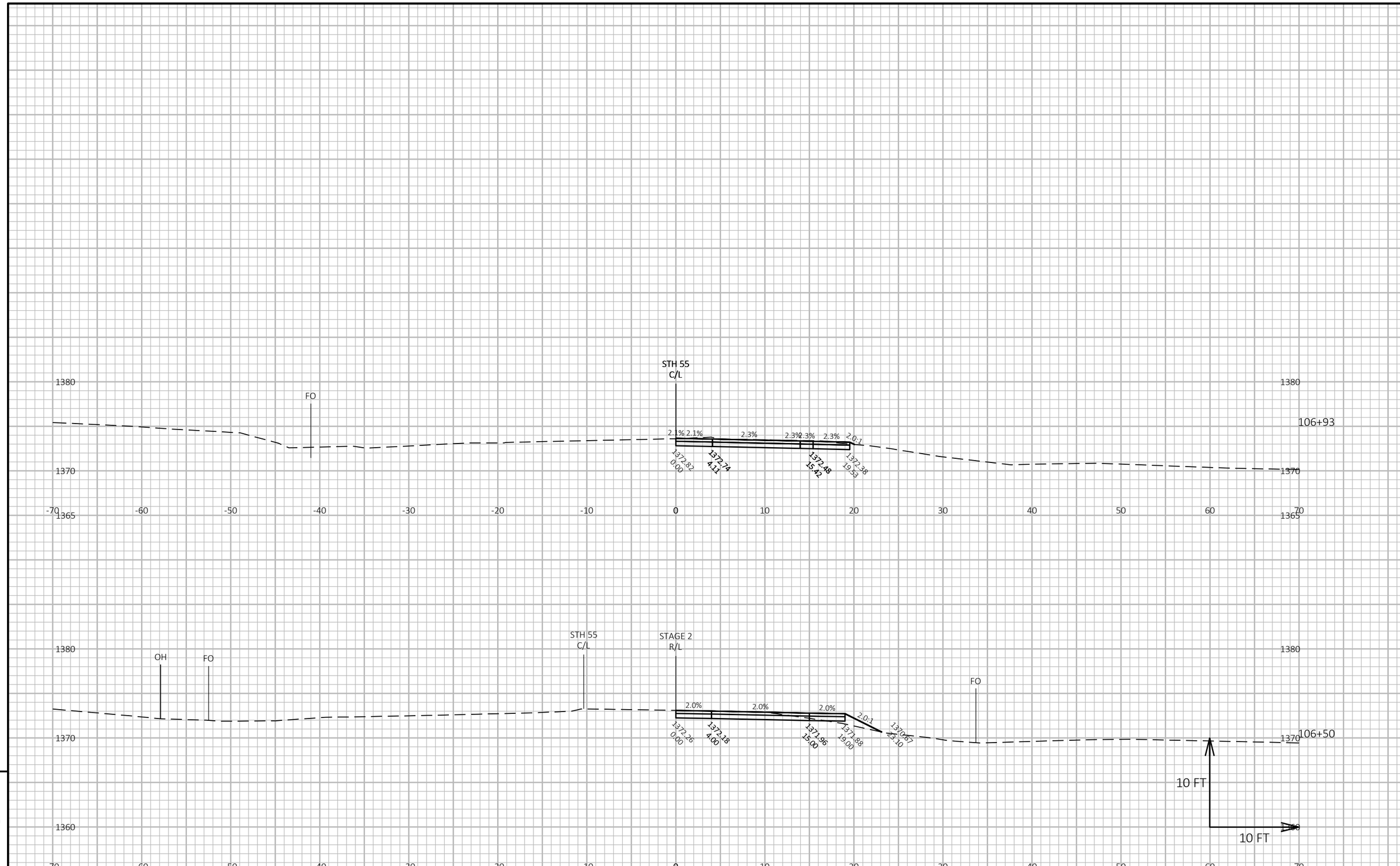

PROJECT NO: 9155-05-71	HWY: STH 55	COUNTY: LANGLADE	CROSS SECTIONS: STH 55 - STAGE 2	SHEET 113	E

FILE NAME : C:\ONEDRIVE\AECOM DIRECTORY\9155-05-01, STH 55 OVER NINE MILE CREEK, LANGLADE CO - PROJECT FILES\900_CAD_GIS\910_CAD\91550501\SHEETSPLAN\090201-XS_S1-S2.DWG PLOT DATE : 8/9/2023 3:20 PM PLOT BY : LANCELLE, JESSICA PLOT NAME : PLOT SCALE : 1 IN:10 FT HORZ. / 1 IN:10 FT VERT.
LAYOUT NAME - 10 (2)

WISDOT/CADDS SHEET 49

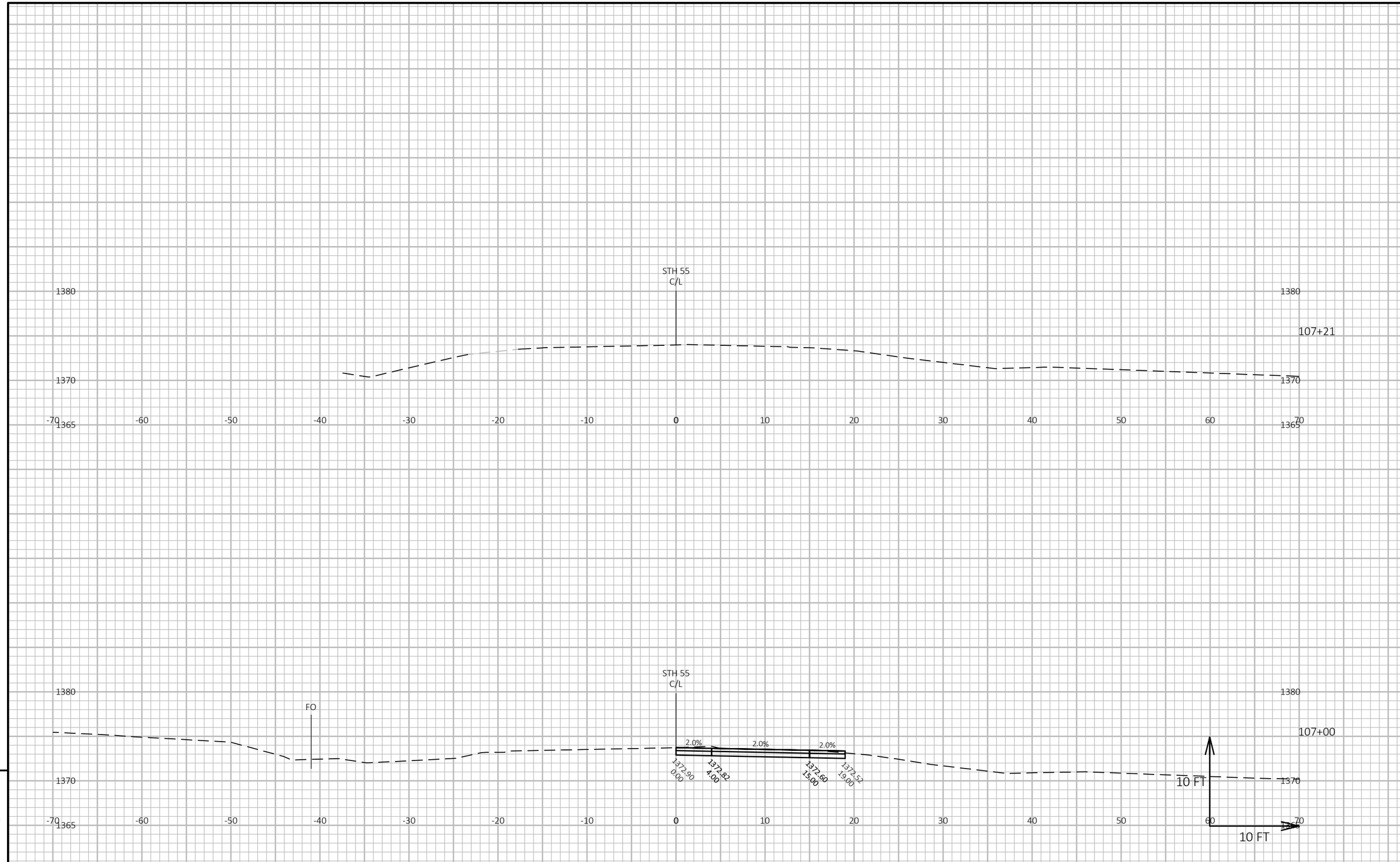

9

9

PROJECT NO: 9155-05-71	HWY: STH 55	COUNTY: LANGLADE	CROSS SECTIONS: STH 55 - STAGE 2	SHEET 114	E

FILE NAME : C:\ONEDRIVE\AECOM DIRECTORY\9155-05-01, STH 55 OVER NINE MILE CREEK, LANGLADE CO - PROJECT FILES\900_CAD_GIS\910_CAD\91550501\SHEETSPLAN\090201-XS_S1-S2.DWG PLOT DATE : 8/9/2023 3:20 PM PLOT BY : LANCELLE, JESSICA PLOT NAME : PLOT SCALE : 1 IN:10 FT HORZ. / 1 IN:10 FT VERT.
LAYOUT NAME - 10 (3)

WISDOT/CADDS SHEET 49

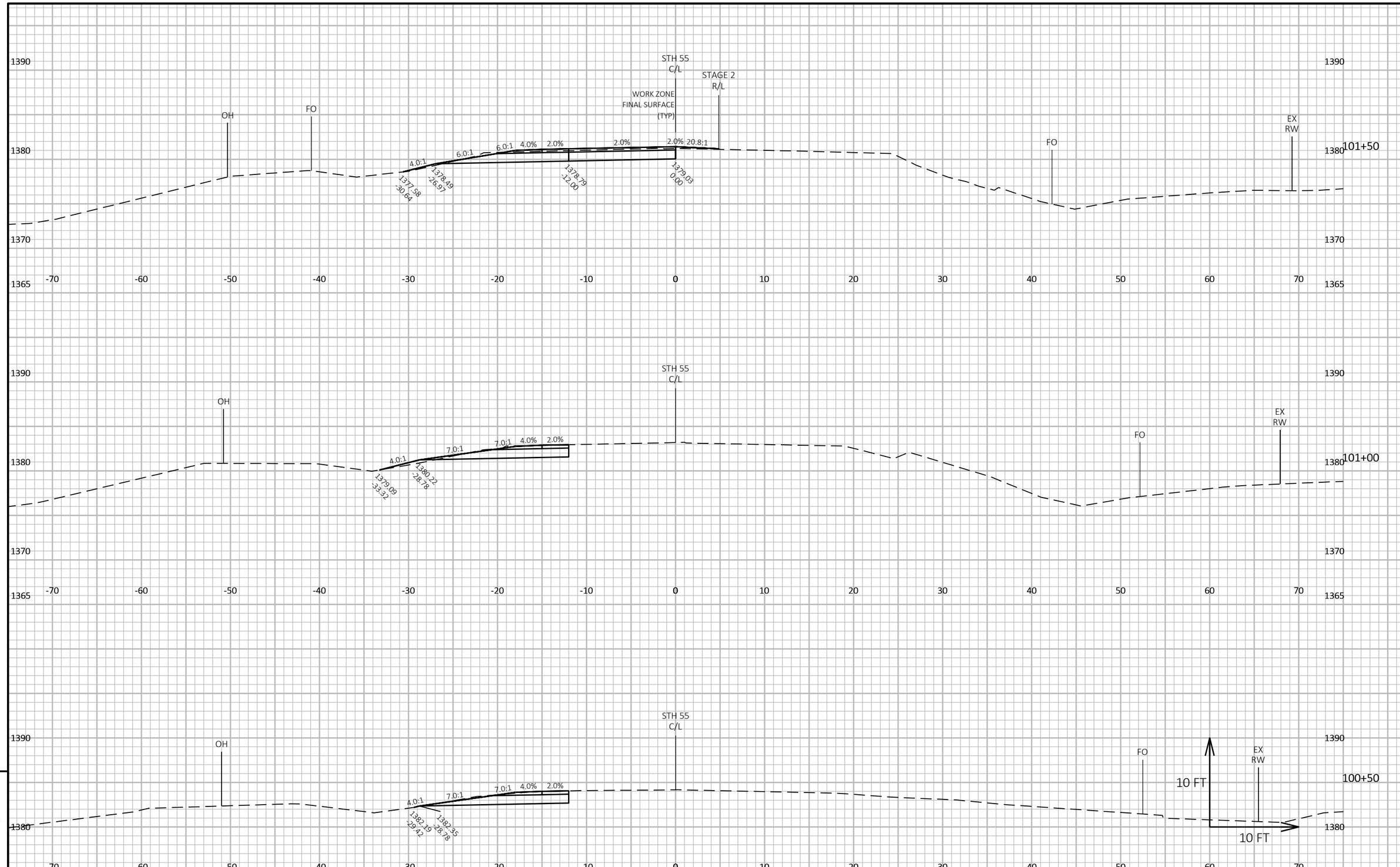

9

9

PROJECT NO: 9155-05-71	HWY: STH 55	COUNTY: LANGLADE	CROSS SECTIONS: STH 55 - STAGE 3	SHEET 115	E

FILE NAME : C:\ONEDRIVE\AECOM DIRECTORY\9155-05-01, STH 55 OVER NINE MILE CREEK, LANGLADE CO - PROJECT FILES\900_CAD_GIS\910_CAD\91550501\SHEETSPLAN\090201-XS_S3.DWG PLOT DATE : 8/21/2023 8:17 AM PLOT BY : LANCELLE, JESSICA PLOT NAME : PLOT SCALE : 1 IN:10 FT HORZ. / 1 IN:10 FT VERT.
LAYOUT NAME - 00

WISDOT/CADDS SHEET 49

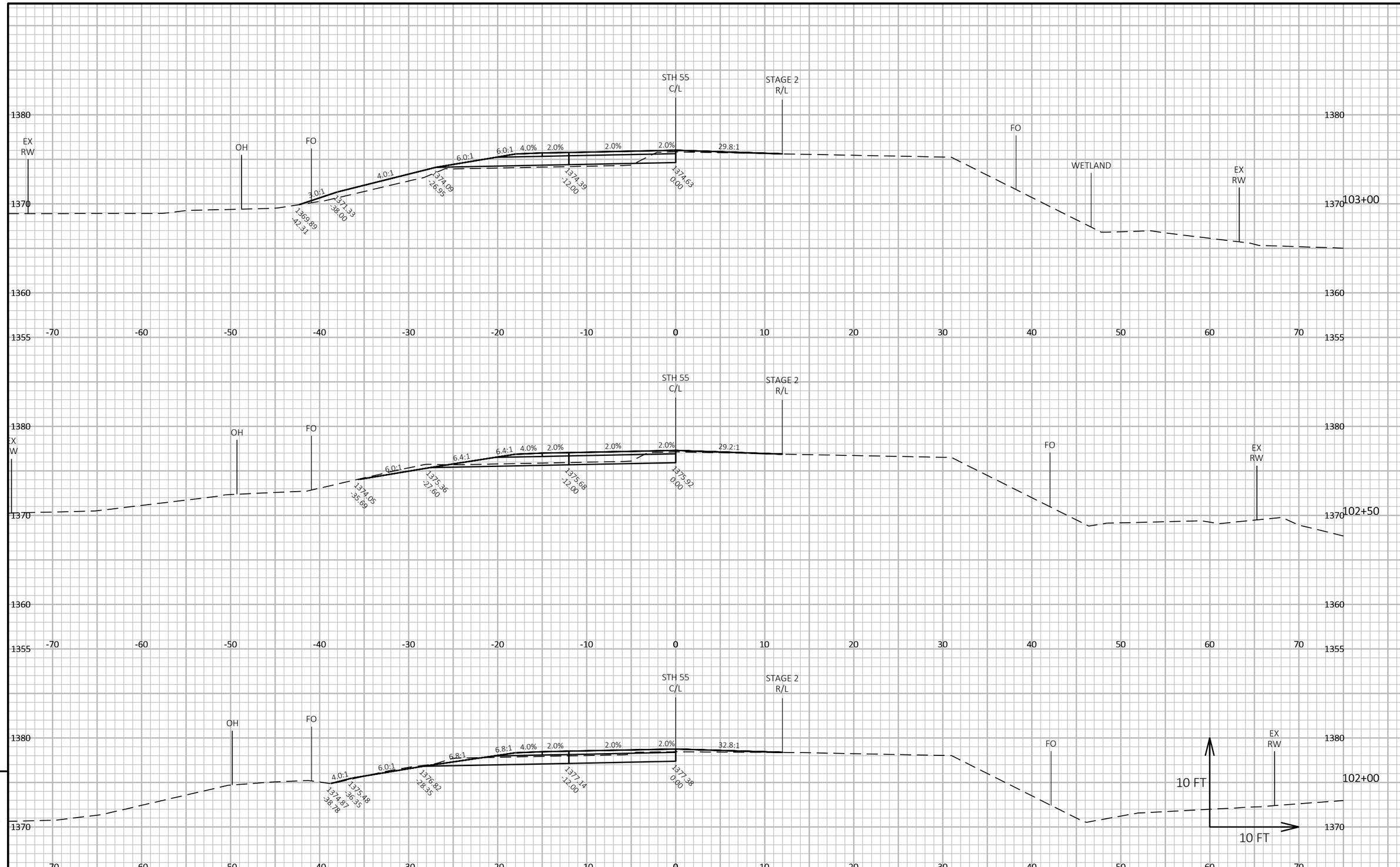

9

9

PROJECT NO: 9155-05-71	HWY: STH 55	COUNTY: LANGLADE	CROSS SECTIONS: STH 55 - STAGE 3	SHEET 116	E

FILE NAME : C:\ONEDRIVE\AECOM DIRECTORY\9155-05-01, STH 55 OVER NINE MILE CREEK, LANGLADE CO - PROJECT FILES\900_CAD_GIS\910_CAD\91550501\SHEETSPLAN\090201-XS_S3.DWG PLOT DATE : 8/9/2023 3:20 PM PLOT BY : LANCELLE, JESSICA PLOT NAME : PLOT SCALE : 1 IN:10 FT HORZ. / 1 IN:10 FT VERT.
LAYOUT NAME - 01

WISDOT/CADDS SHEET 49

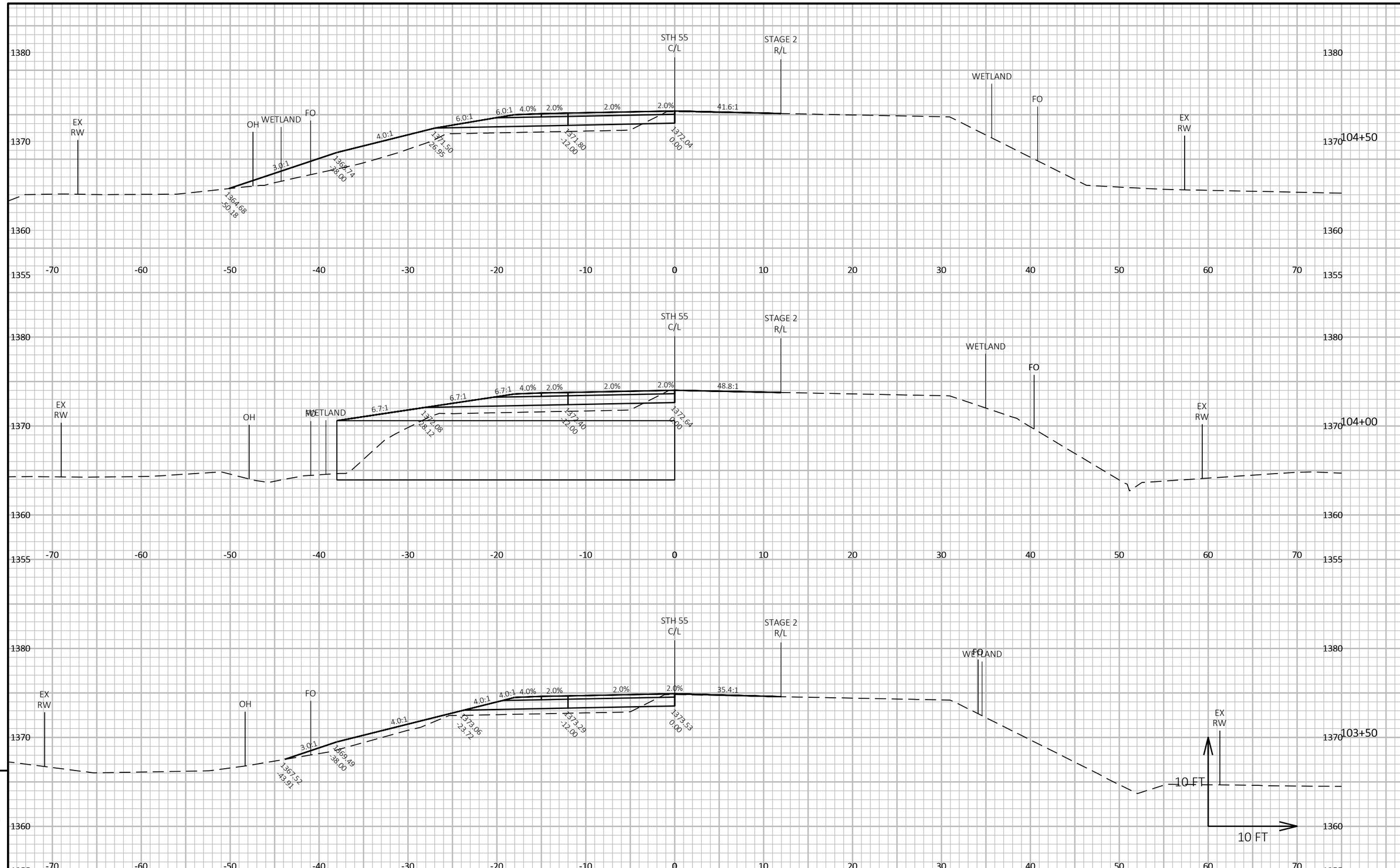

9

9

PROJECT NO: 9155-05-71	HWY: STH 55	COUNTY: LANGLADE	CROSS SECTIONS: STH 55 - STAGE 3	SHEET 117	E

FILE NAME : C:\ONEDRIVE\AECOM DIRECTORY\9155-05-01, STH 55 OVER NINE MILE CREEK, LANGLADE CO - PROJECT FILES\900_CAD_GIS\910_CAD\91550501\SHEETSPLAN\090201-XS_S3.DWG
LAYOUT NAME - 02
PLOT DATE : 8/9/2023 3:20 PM
PLOT BY : LANCELLE, JESSICA
PLOT NAME :
PLOT SCALE : 1 IN:10 FT HORZ. / 1 IN:10 FT VERT.
WISDOT/CADDS SHEET 49

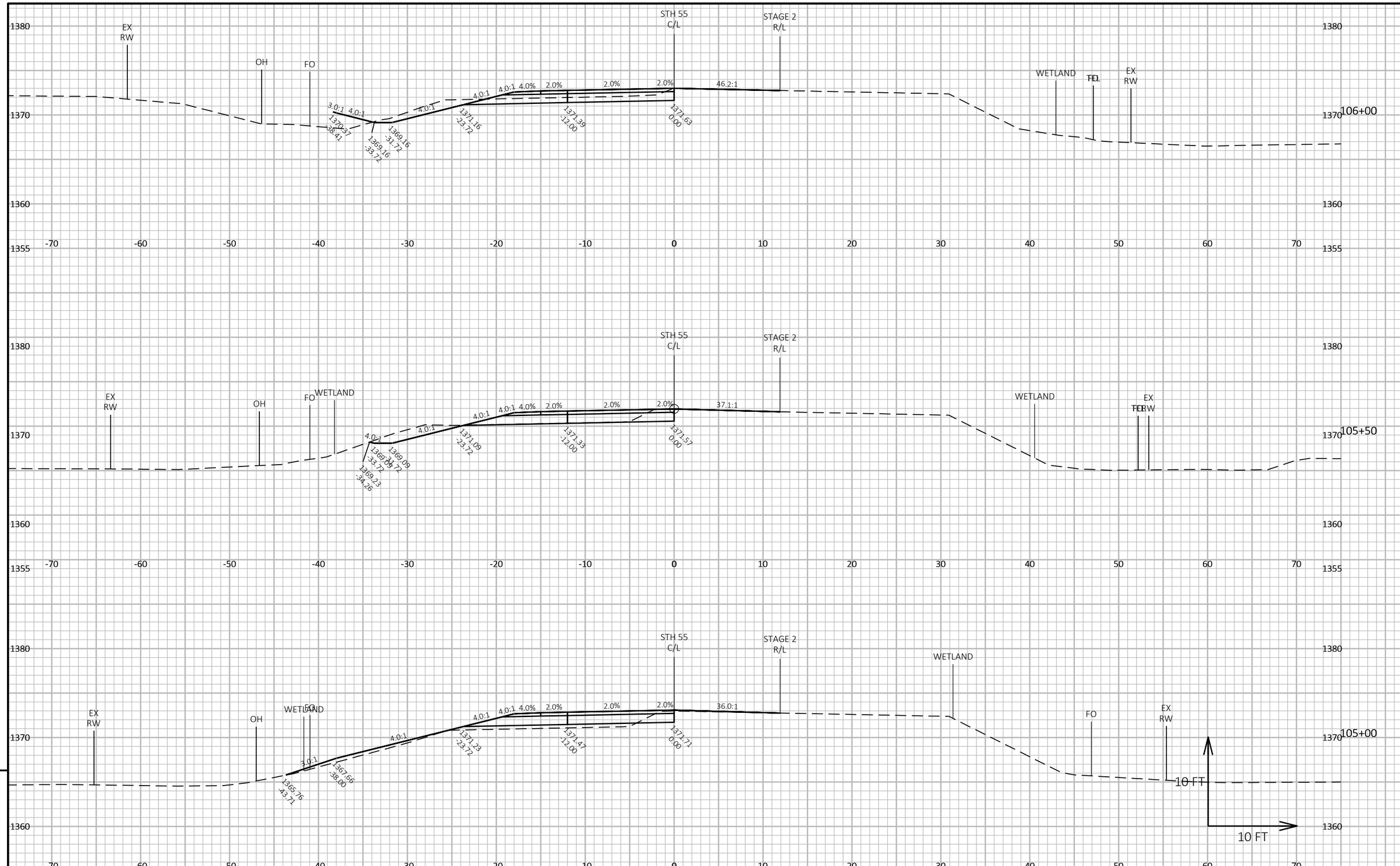

PROJECT NO: 9155-05-71	HWY: STH 55	COUNTY: LANGLADE	CROSS SECTIONS: STH 55 - STAGE 3	SHEET 118	E

FILE NAME : C:\ONEDRIVE\AECOM DIRECTORY\9155-01-01, STH 55 OVER NINE MILE CREEK, LANGLADE CO - PROJECT FILES\900_CAD_GIS\910_CAD\91550501\SHEETSPLAN\090201-XS_S3.DWG
LAYOUT NAME - 03
PLOT DATE : 8/9/2023 3:21 PM
PLOT BY : LANCELLE, JESSICA
PLOT NAME :
PLOT SCALE : 1 IN:10 FT HORZ. / 1 IN:10 FT VERT.
WISDOT/CADDS SHEET 49

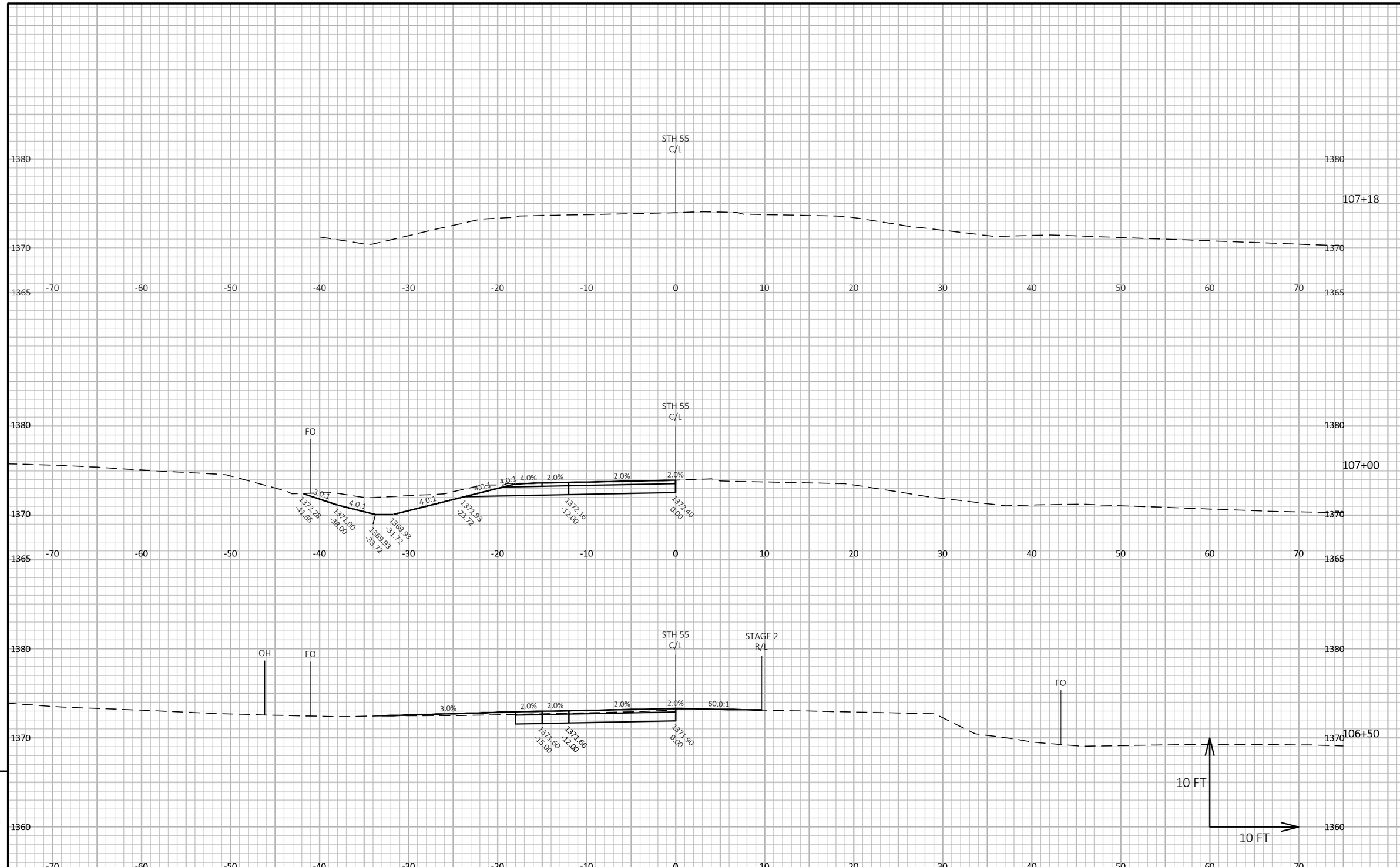

9

9

PROJECT NO: 9155-05-71	HWY: STH 55	COUNTY: LANGLADE	CROSS SECTIONS: STH 55 - STAGE 3	SHEET 119	E

FILE NAME : C:\ONEDRIVE\AECOM DIRECTORY\9155-05-01, STH 55 OVER NINE MILE CREEK, LANGLADE CO - PROJECT FILES\900_CAD_GIS\910_CAD\91550501\SHEETSPLAN\090201-XS_S3.DWG
LAYOUT NAME - 03 (2)
PLOT DATE : 8/9/2023 3:21 PM
PLOT BY : LANCELLE, JESSICA
PLOT NAME :
PLOT SCALE : 1 IN:10 FT HORZ. / 1 IN:10 FT VERT.
WISDOT/CADDS SHEET 49

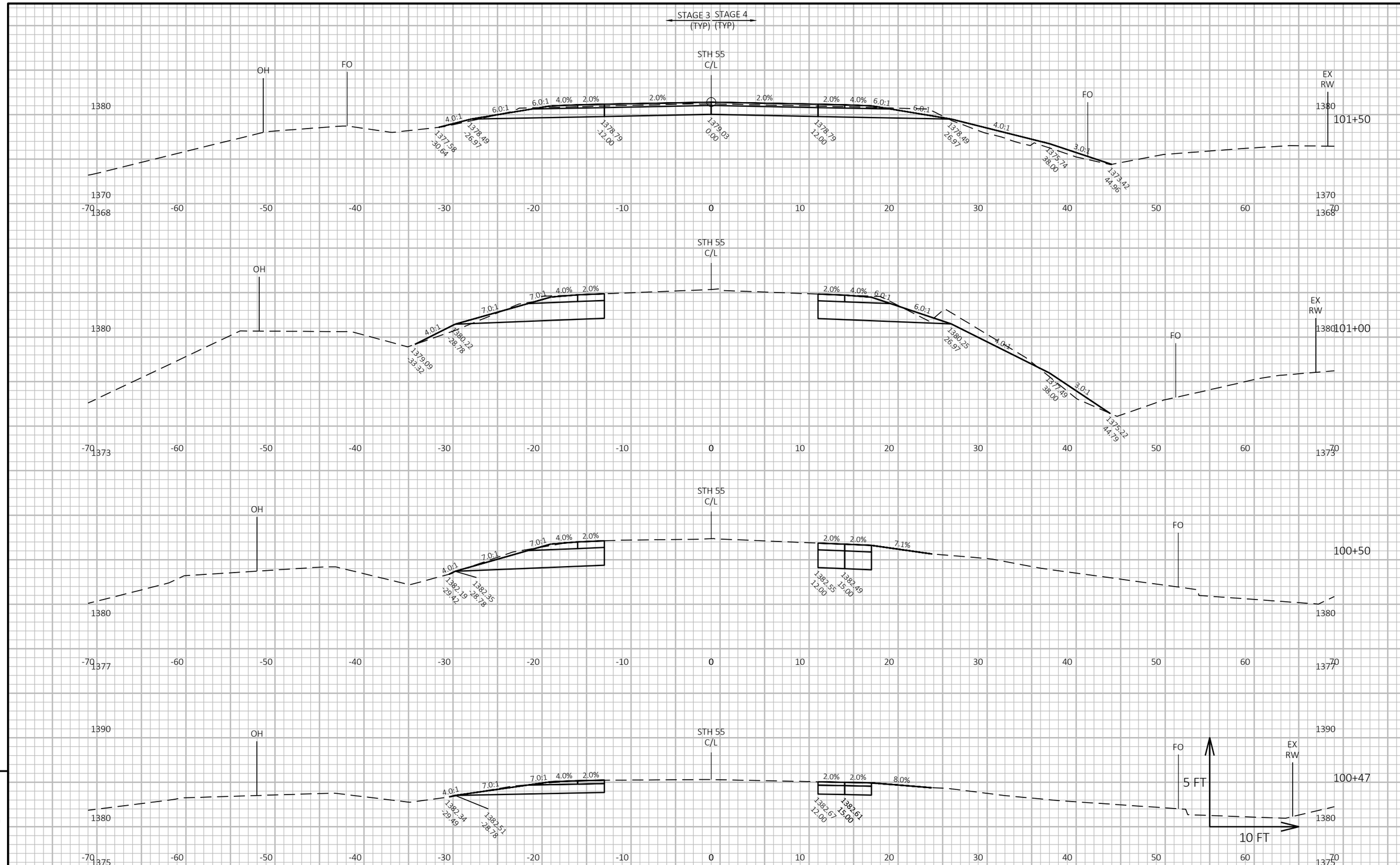

9

9

PROJECT NO: 9155-05-71	HWY: STH 55	COUNTY: LANGLADE	CROSS SECTIONS: STH 55 - FINAL CONDITION	SHEET 120	E

FILE NAME : C:\ONEDRIVE\AECOM DIRECTORY\9155-05-01, STH 55 OVER NINE MILE CREEK, LANGLADE CO - PROJECT FILES\900_CAD_GIS\910_CAD\91550501\SHEETSPLAN\090201-XS - NOMGS.DWG PLOT DATE : 8/21/2023 8:50 AM PLOT BY : LANCELLE, JESSICA PLOT NAME : PLOT SCALE : 1 IN:10 FT HORZ. / 1 IN:10 FT VERT.
LAYOUT NAME - 01

WISDOT/CADDS SHEET 49

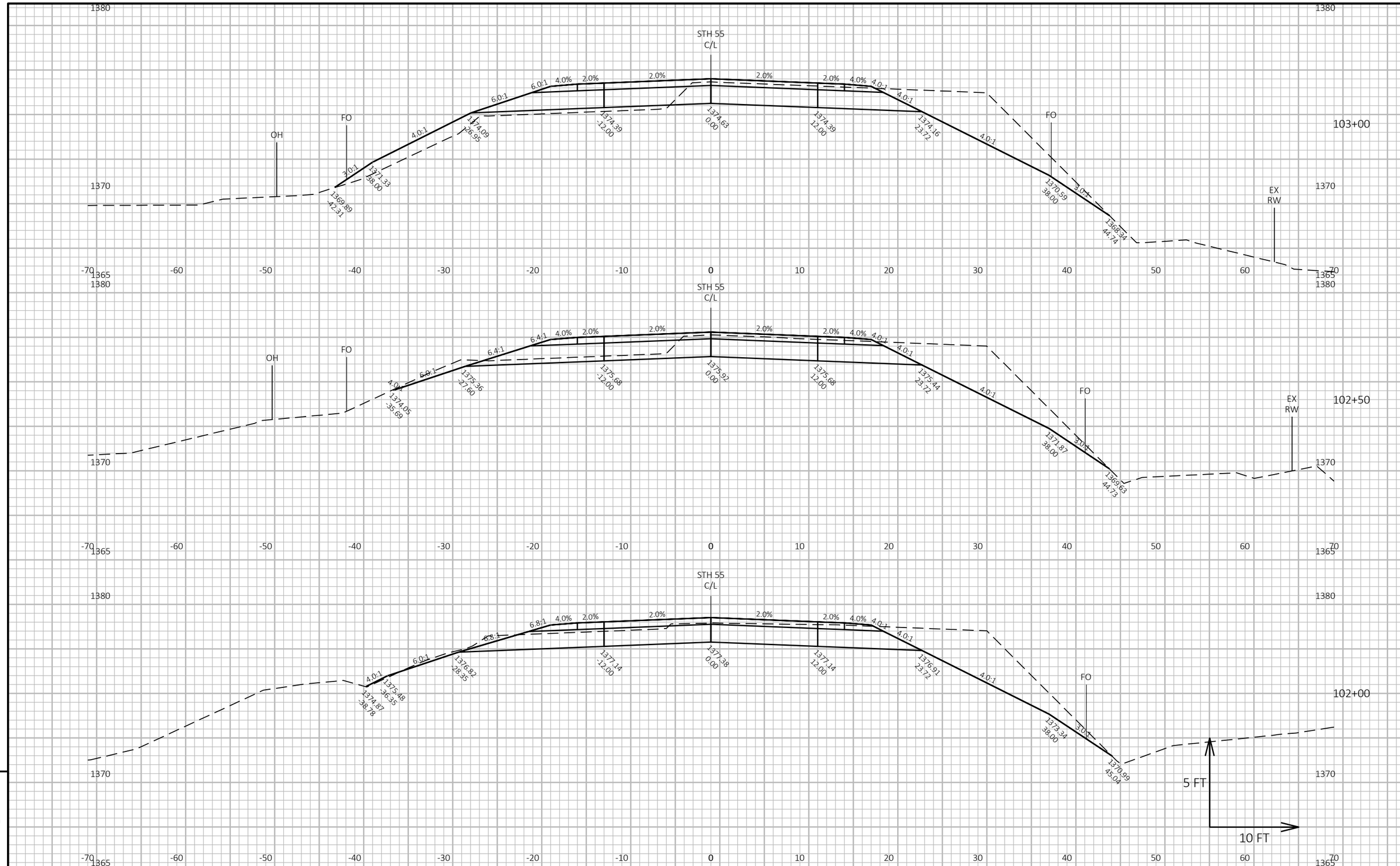

9

9

PROJECT NO: 9155-05-71	HWY: STH 55	COUNTY: LANGLADE	CROSS SECTIONS: STH 55 - FINAL CONDITION	SHEET 121	E

FILE NAME : C:\ONEDRIVE\AECOM DIRECTORY\9155-05-01, STH 55 OVER NINE MILE CREEK, LANGLADE CO - PROJECT FILES\900_CAD_GIS\910_CAD\91550501\SHEETSPLAN\090201-XS - NOMGS.DWG PLOT DATE : 8/21/2023 8:38 AM PLOT BY : LANCELLE, JESSICA PLOT NAME : PLOT SCALE : 1 IN:10 FT HORZ. / 1 IN:10 FT VERT.
LAYOUT NAME - 02

WISDOT/CADDS SHEET 49

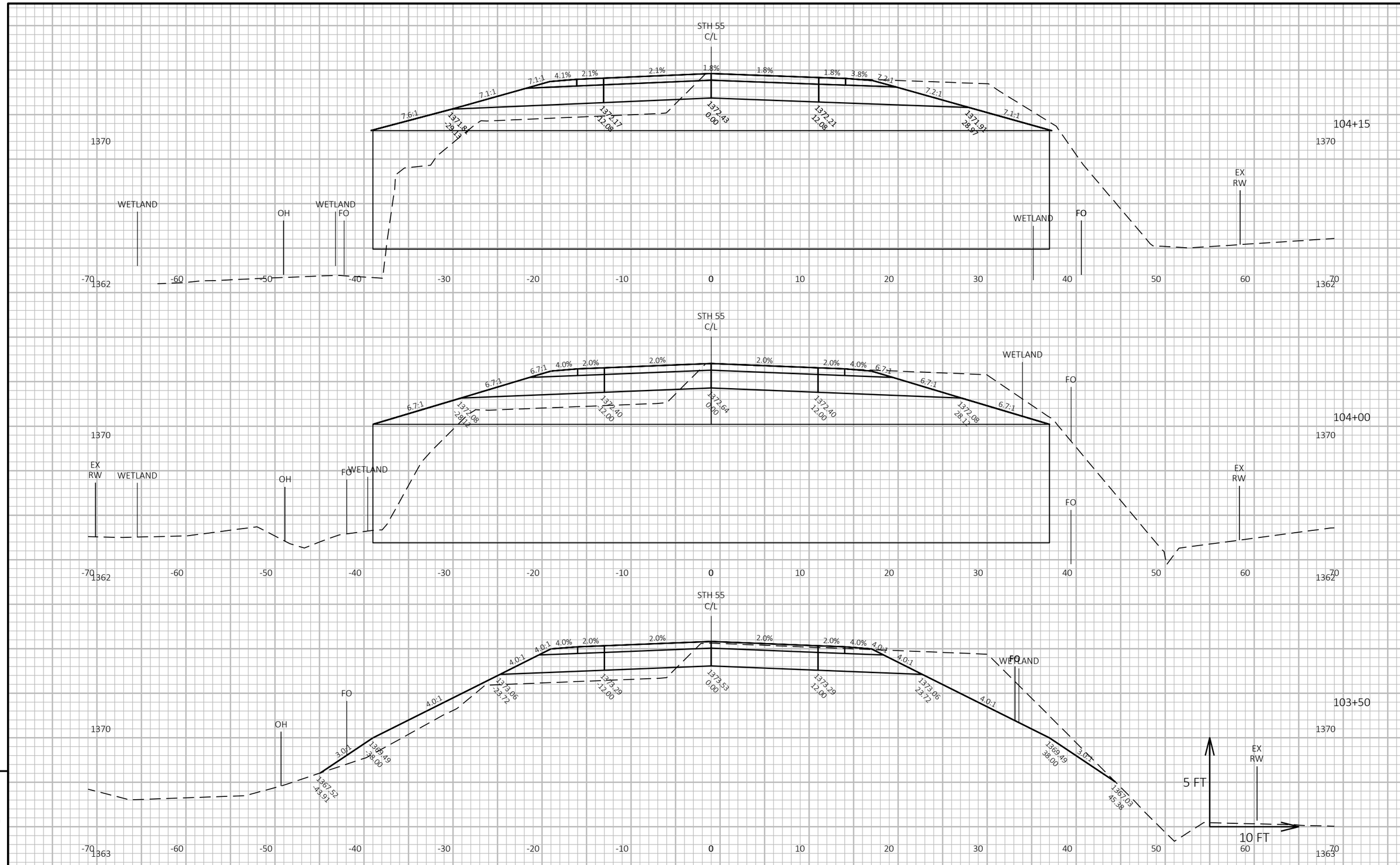

9

9

PROJECT NO: 9155-05-71	HWY: STH 55	COUNTY: LANGLADE	CROSS SECTIONS: STH 55 - FINAL CONDITION	SHEET 122	E

FILE NAME : C:\ONEDRIVE\AECOM DIRECTORY\9155-05-01, STH 55 OVER NINE MILE CREEK, LANGLADE CO - PROJECT FILES\900_CAD_GIS\910_CAD\91550501\SHEETSPLAN\090201-XS - NOMGS.DWG PLOT DATE : 8/21/2023 8:38 AM PLOT BY : LANCELLE, JESSICA PLOT NAME : PLOT SCALE : 1 IN:10 FT HORZ. / 1 IN:10 FT VERT.
LAYOUT NAME - 03

WISDOT/CADDS SHEET 49

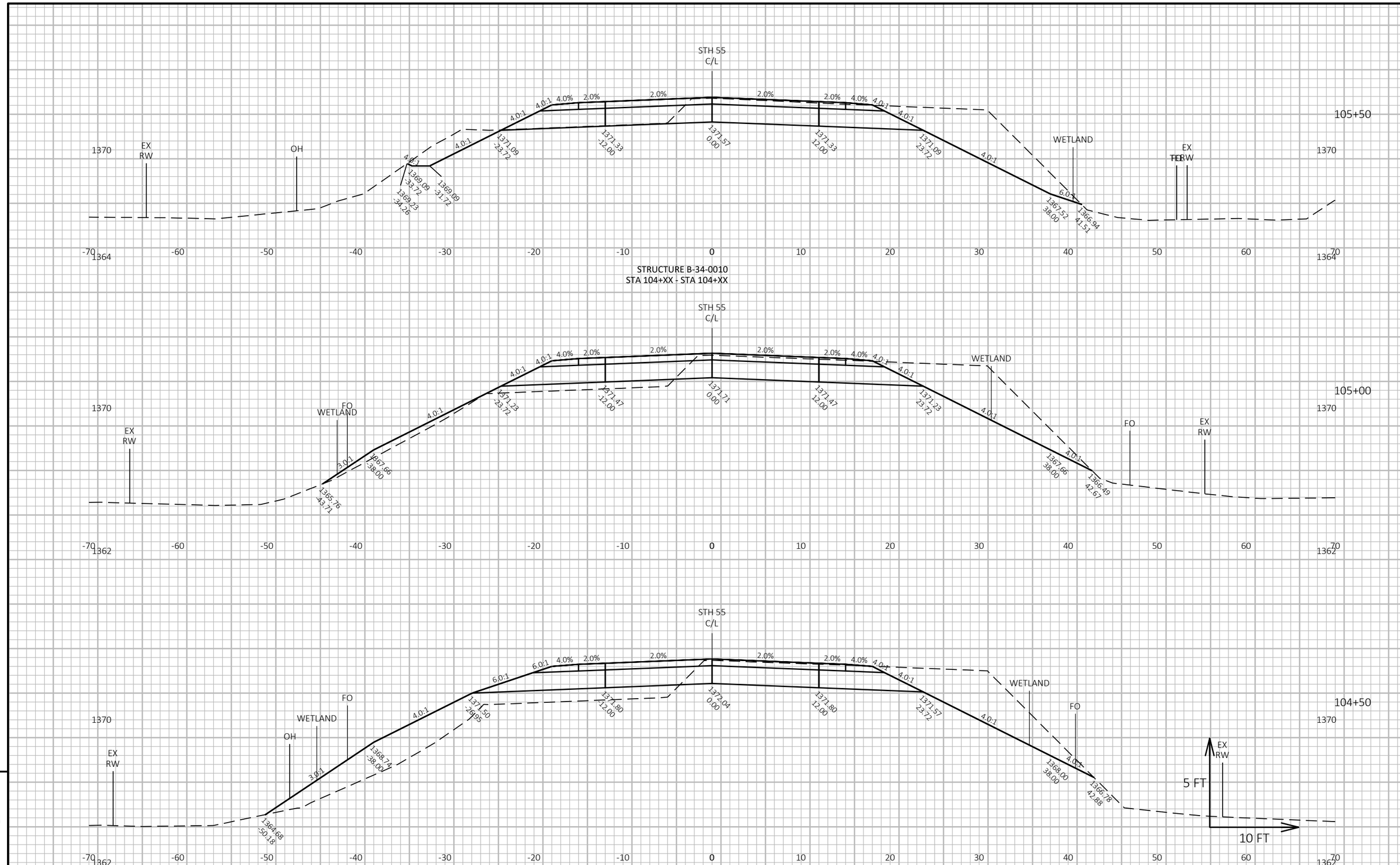

9

9

PROJECT NO: 9155-05-71	HWY: STH 55	COUNTY: LANGLADE	CROSS SECTIONS: STH 55 - FINAL CONDITION	SHEET 123	E

FILE NAME : C:\ONEDRIVE\AECOM DIRECTORY\9155-05-01, STH 55 OVER NINE MILE CREEK, LANGLADE CO - PROJECT FILES\900_CAD_GIS\910_CAD\91550501\SHEETSPLAN\090201-XS - NOMGS.DWG PLOT DATE : 8/21/2023 8:38 AM PLOT BY : LANCELLE, JESSICA PLOT NAME : PLOT SCALE : 1 IN:10 FT HORZ. / 1 IN:10 FT VERT.
LAYOUT NAME - 04

WISDOT/CADDS SHEET 49

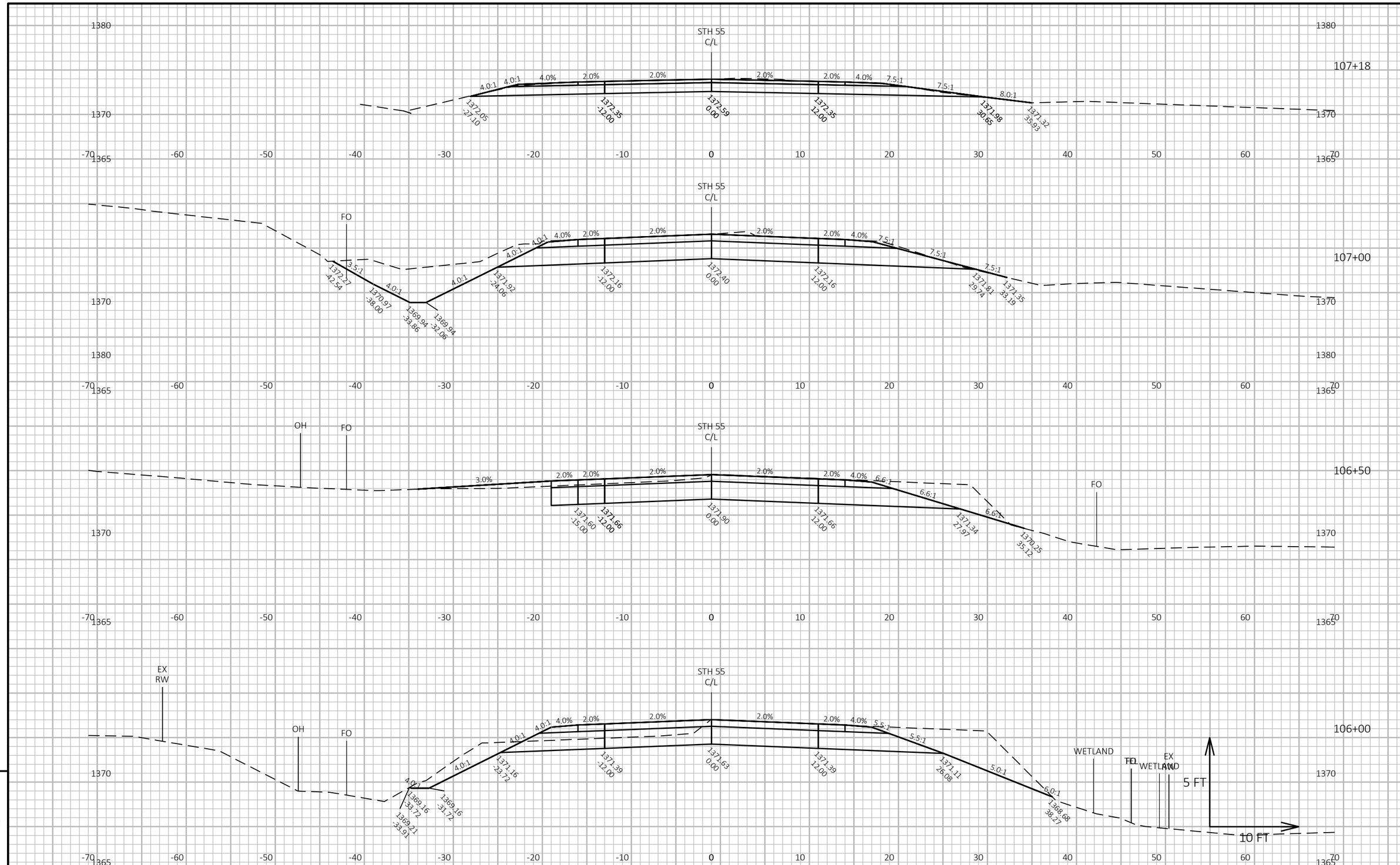

PROJECT NO: 9155-05-71	HWY: STH 55	COUNTY: LANGLADE	CROSS SECTIONS: STH 55 - FINAL CONDITION	SHEET 124	E

FILE NAME : C:\ONEDRIVE\AECOM DIRECTORY\9155-05-01, STH 55 OVER NINE MILE CREEK, LANGLADE CO - PROJECT FILES\900_CAD_GIS\910_CAD\91550501\SHEETSPLAN\090201-XS - NOMGS.DWG PLOT DATE : 8/30/2023 1:31 PM PLOT BY : LANCELLE, JESSICA PLOT NAME : PLOT SCALE : 1 IN:10 FT HORZ. / 1 IN:10 FT VERT.
LAYOUT NAME - 05

WISDOT/CADDS SHEET 49

Notes

Wisconsin Department of Transportation

Dedicated people creating transportation solutions through innovation and exceptional service.

http://www.dot.wisconsin.gov