GRE MARCH 2024

PROJECT ID: 1120-63-71

WITH: N/A

COUNTY: WINNEBAGO

STATE OF WISCONSIN
DEPARTMENT OF TRANSPORTATION

PLAN OF PROPOSED IMPROVEMENT

OSHKOSH - APPLETON

IH 41 LAKE BUTTE DES MORTS

IH 41

WINNEBAGO COUNTY

STATE PROJECT	FEDERAL PROJECT	
	PROJECT	CONTRACT
1120-63-71	WISC 2024285	1

STATE PROJECT NUMBER

1120-63-71

ORDER OF SHEETS

TOTAL SHEETS = 226

N

DESIGN DESIGNATION

			IH 41
A.A.D.T.	2021	=	81,601
A.A.D.T.	2041	=	93,090
D.H.V.		=	9,792
D.D.		=	50-50
T.		=	9.4%
DESIGN SPEED		=	70 MPH
ESALS		=	N/A

CONVENTIONAL SYMBOLS

PLAN

CORPORATE LIMITS
PROPERTY LINE
LOT LINE
LIMITED HIGHWAY EASEMENT
EXISTING RIGHT OF WAY
PROPOSED OR NEW R/W LINE
SLOPE INTERCEPT
REFERENCE LINE (300'EB')
EXISTING CULVERT
PROPOSED CULVERT (Box or Pipe)
COMBUSTIBLE FLUIDS (CAUTION)
MARSH AREA
WOODED OR SHRUB AREA

PROFILE

GRADE LINE
ORIGINAL GROUND
MARSH OR ROCK PROFILE (To be noted as such) (ROCK)
SPECIAL DITCH (LABEL)
GRADE ELEVATION (95.36)
CULVERT (Profile View)

UTILITIES

ELECTRIC — E —
FIBER OPTIC — FO —
GAS — G —
SANITARY SEWER — SAN —
STORM SEWER — SS —
TELEPHONE — T —
WATER — W —
UTILITY PEDESTAL
POWER POLE
TELEPHONE POLE

R-16-E

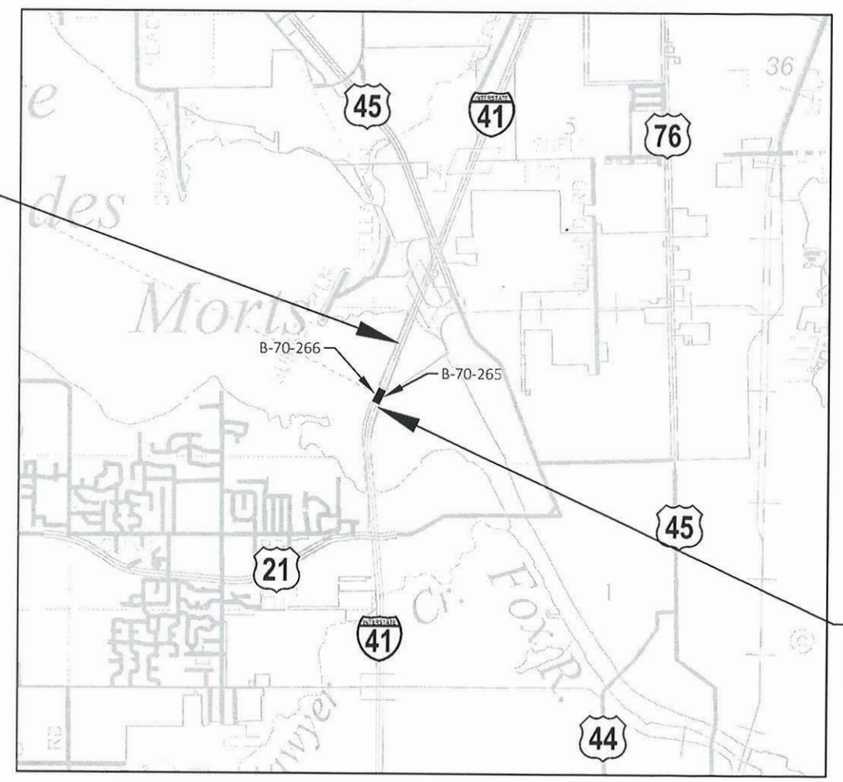

T-19-N

T-18-N

END CONSTRUCTION
STA 624+09.22'NOA'

BEGIN CONSTRUCTION
STA 598+94.99'NOA'
Y = 483,079.454
X = 781,342.263

LAYOUT

SCALE 0 — 1 MI

TOTAL NET LENGTH OF CENTERLINE = 0.000 MI.

HORIZONTAL POSITIONS SHOWN ON THIS PLAN ARE WISCONSIN COORDINATE REFERENCE SYSTEM (WISCRS), WINNEBAGO COUNTY, NAD83 (2011), IN U.S. SURVEY FEET. POSITIONS SHOWN ARE GRID COORDINATES, GRID BEARINGS, AND GRID DISTANCES. GRID DISTANCES ARE THE SAME AS GROUND DISTANCES.

ELEVATIONS ARE REFERENCED TO NAVD 88 (2012). GPS DERIVED ELEVATIONS ARE BASED ON GEOID 12A

ORIGINAL PLANS PREPARED BY

STRAND ASSOCIATES®

WISCONSIN
SARA J. GRIMME
E-36643
VERONA
WI
PROFESSIONAL ENGINEER

DATE: 9-12-23 Sara Grimme
(Professional Engineer Signature)

STATE OF WISCONSIN
DEPARTMENT OF TRANSPORTATION

PREPARED BY

Surveyor	STRAND ASSOCIATES, INC.
Designer	STRAND ASSOCIATES, INC.
Project Manager	WILLIAM BERTRAND
Regional Examiner	
Regional Supervisor	TAMMY RABE

APPROVED FOR THE DEPARTMENT

DATE: 9-13-23 Bill Bertrand, P.E.
(Signature)

E

2

GENERAL NOTES

NO TREES OR SHRUBS ARE TO BE REMOVED WITHOUT APPROVAL OF THE ENGINEER.

DISTURBED AREAS WITHIN THE RIGHT OF WAY SHALL BE RESTORED AS DIRECTED BY THE ENGINEER.

ALL EXISTING SIGNS SHALL REMAIN IN PLACE UNLESS THE ENGINEER APPROVES THEIR REMOVAL. ANY SIGNS REMOVED DUE TO CONTRACTOR MEANS AND METHODS SHALL BE REPLACED BY THE CONTRACTOR AT THEIR EXPENSE.

THE LOCATIONS OF EXISTING AND PROPOSED UTILITY INSTALLATIONS AS SHOWN ON THE PLANS ARE APPROXIMATE. THERE MAY BE OTHER UTILITY INSTALLATIONS WITHIN THE PROJECT AREA THAT ARE NOT SHOWN.

ORDER OF SECTION 2 SHEETS

DNR LIAISON

JAY SCHIEFELBEIN
2984 SHAWANO AVE.
GREEN BAY, WI 54313
(920) 360-3784
jeremiah.schiefelbein@wisconsin.gov

COUNTY HIGHWAY COMMISSIONER

ROBERT DOEMEL
901 W COUNTY RD Y
OSHKOSH, WI 54901
(920) 232-1700
hwy@co.winnebago.wi.us

NE REGION SURVEY COORDINATOR

MICHAEL ANDRASCHKO
944 VANDERPERREN WAY
GREEN BAY, WI 54304
(920) 492-4166
michael.andraschko@dot.wi.gov

NE REGION DESIGN PROJECT MANAGER

WILLIAM BERTRAND
944 VANDERPERREN WAY
GREEN BAY, WI 54304
(920) 360-3124
william.bertrand@dot.wi.gov

DESIGN CONSULTANT

SARA GRIMME
STRAND ASSOCIATES, INC.
910 WEST WINGRA DRIVE
MADISON, WI 53715
(608) 251-4843
sara.grimme@strand.com

UTILITIES CONTACTS

*ATC MANAGEMENT, INC.

TONY MARCINIAK
801 O'KEEFE ROAD
DEPERE, WI 54115
PHONE: (920) 338-6582
EMAIL: DL-ATCDOTNOTIFICATIONS@ATCLLC.COM

*NET LEC LLC

RICK VINCENT
450 SECURITY BOULEVARD
PO BOX 19079
GREEN BAY, WI 54307-9079
PHONE:(920) 617-7316 (DESK)
(920) 660-6644 (CELL)
EMAIL: RICK.VINCENT@NSIGHT.COM

* DENOTES DIGGERS HOTLINE MEMBER

DIGGERS HOTLINE
Dial 811 or (800)242-8511
www.DiggersHotline.com

2

RUNOFF COEFFICIENT TABLE

	HYDROLOGIC SOIL GROUP											
	A			B			C			D		
	SLOPE RANGE (PERCENT)			SLOPE RANGE (PERCENT)			SLOPE RANGE (PERCENT)			SLOPE RANGE (PERCENT)		
LAND USE:	0-2	2-6	6 & OVER	0-2	2-6	6 & OVER	0-2	2-6	6 & OVER	0-2	2-6	6 & OVER
ROW CROPS	.08 .22	.16 .30	.22 .38	.12 .26	.20 .34	.27 .44	.15 .30	.24 .37	.33 .50	.19 .34	.28 .41	.38 .56
MEDIAN STRIP-TURF	.19 .24	.20 .26	.24 .30	.19 .25	.22 .28	.26 .33	.20 .26	.23 .30	.30 .37	.20 .27	.25 .32	.30 .40
SIDE SLOPE-TURF			.25 .32			.27 .34			.28 .36			.30 .38
PAVEMENT:												
ASPHALT	.70 - .95											
CONCRETE	.80 - .95											
BRICK	.70 - .80											
DRIVES, WALKS	.75 - .85											
ROOFS	.75 - .95											
GRAVEL ROADS, SHOULDERS	.40 - .60											

TOTAL PROJECT AREA = 20.68 ACRES
TOTAL AREA EXPECTED TO BE DISTURBED BY CONSTRUCTION ACTIVITIES = .07 ACRES

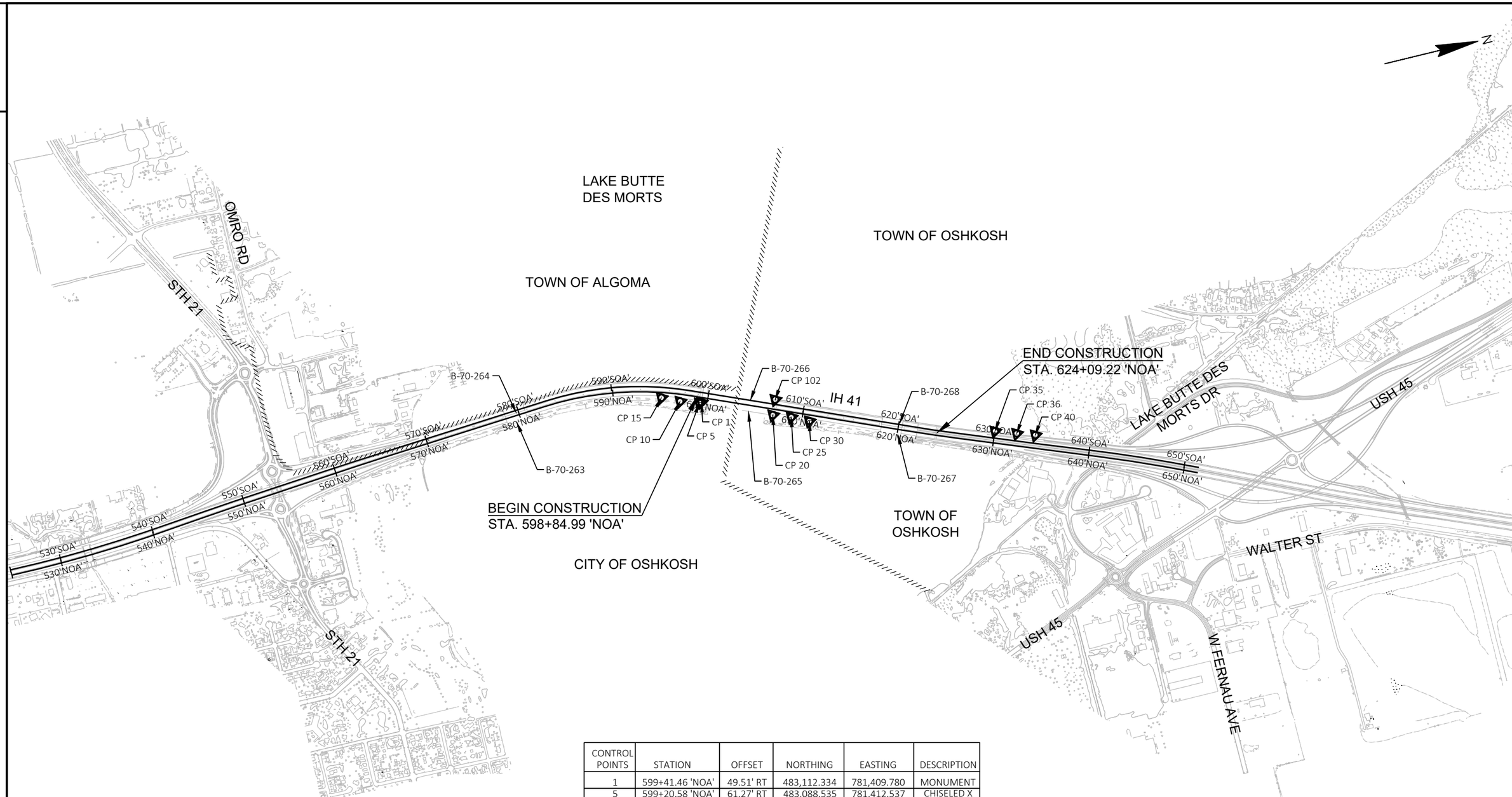

CONTROL POINTS	STATION	OFFSET	NORTHING	EASTING	DESCRIPTION
1	599+41.46 'NOA'	49.51' RT	483,112.334	781,409.780	MONUMENT
5	599+20.58 'NOA'	61.27' RT	483,088.535	781,412.537	CHISELED X
10	597+09.35 'NOA'	74.72' RT	482,898.198	781,349.020	3/4" REBAR
15	595+08.49 'NOA'	52.30' RT	482,718.646	781,265.976	3/4" REBAR
20	606+93.87 'NOA'	61.48' RT	483,801.364	781,712.276	CHISELED X
25	608+86.26 'NOA'	52.80' RT	483,982.094	781,778.799	3/4" REBAR
30	610+77.91 'NOA'	61.89' RT	484,155.261	781,861.427	3/4" REBAR
35	630+02.63 'NOA'	122.84' LT	486,005.209	782,416.819	3/4" REBAR
36	632+29.79 'NOA'	127.52' LT	486,218.931	782,493.935	CHISELED X
40	634+23.19 'NOA'	137.05' LT	486,402.876	782554.410	3/4" REBAR
102	606+92.01 'NOA'	100.62' LT	483,862.441	781,562.113	MONUMENT

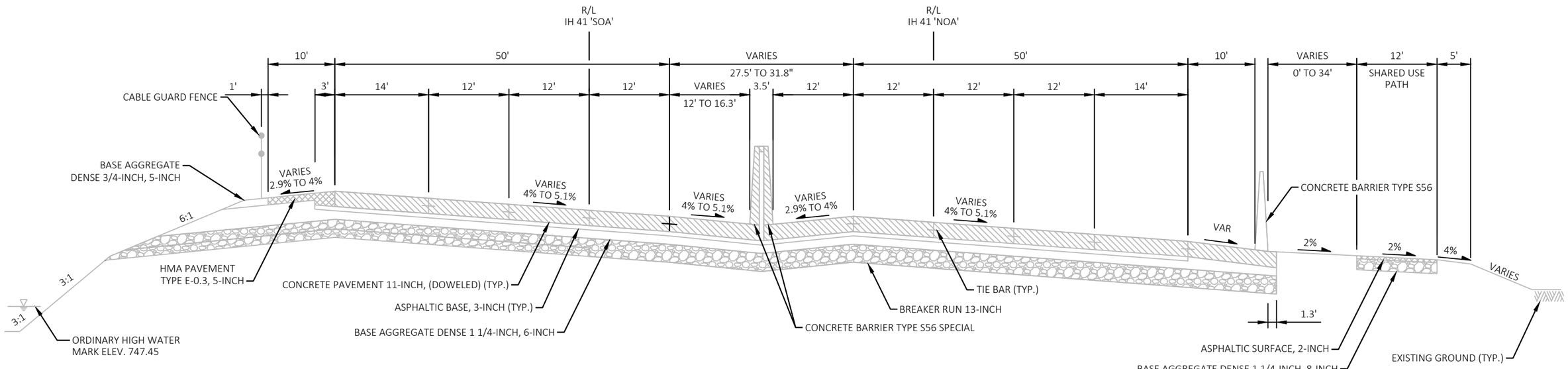

EXISTING TYPICAL SECTION - IH 41

STA. 598+84.99 'NOA' - STA. 599+16.06 'NOA'
STA. 599+16.06 'NOA' - STA. 606+98.59 'NOA' (B-70-265)

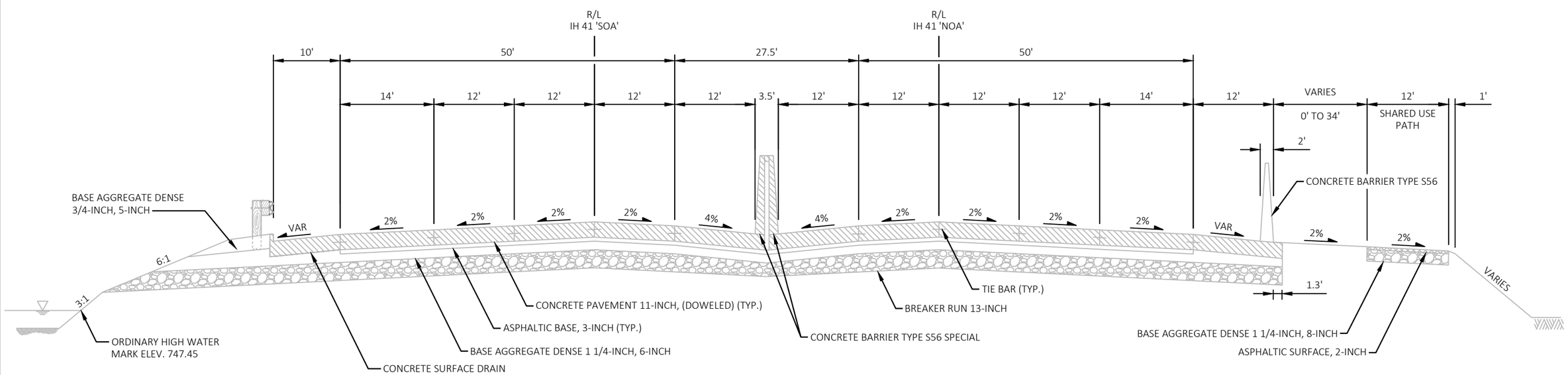

EXISTING TYPICAL SECTION - IH 41

STA. 606+98.59 'NOA' - STA. 618+23.00 'NOA'
STA. 618+23.00 'NOA' - STA. 620+41.00 'NOA' (B-70-267)
STA 620+41.00 'NOA' - STA. 624+09.22 'NOA'

PROJECT NO: 1120-63-71	HWY: IH 41	COUNTY: WINNEBAGO	TYPICAL SECTIONS	SHEET 4	E

2

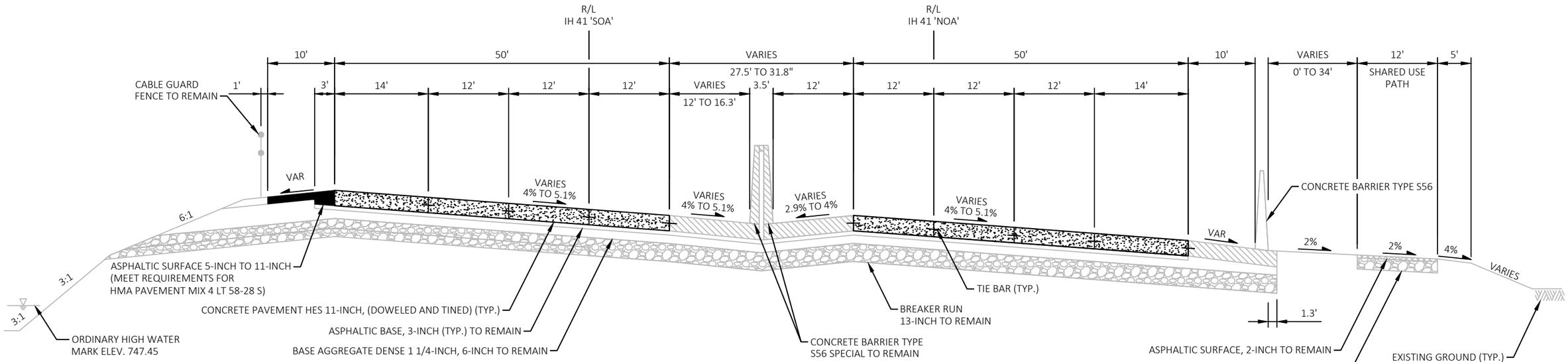

PROPOSED TYPICAL SECTION - IH 41

STA. 598+84.99 'NOA' - STA. 598+99.95 'NOA'

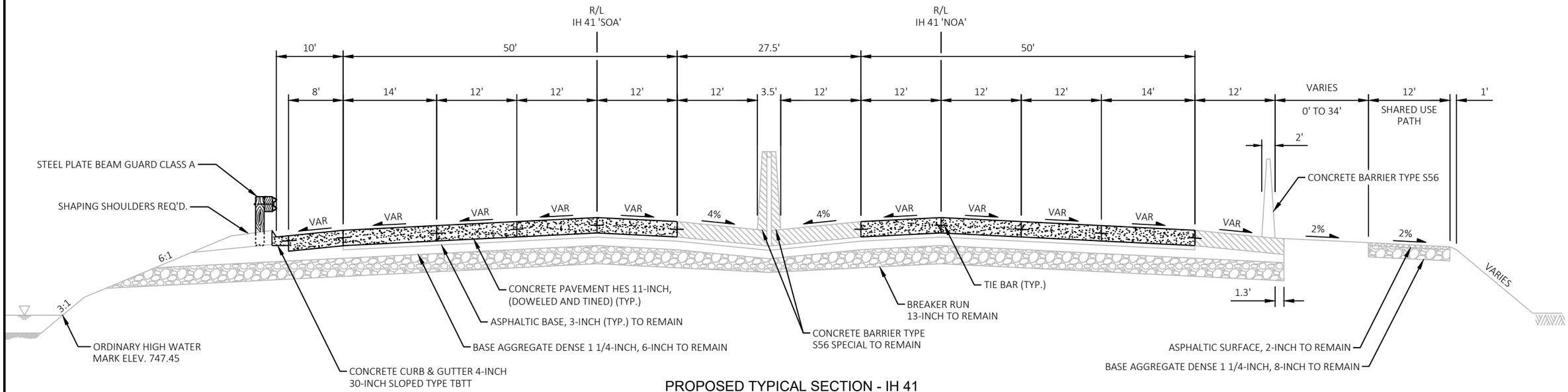

PROPOSED TYPICAL SECTION - IH 41

STA. 607+13.82 'NOA' - STA. 607+28.77 'NOA'

2

PROJECT NO: 1120-63-71	HWY: IH 41	COUNTY: WINNEBAGO	TYPICAL SECTIONS	SHEET 5	E

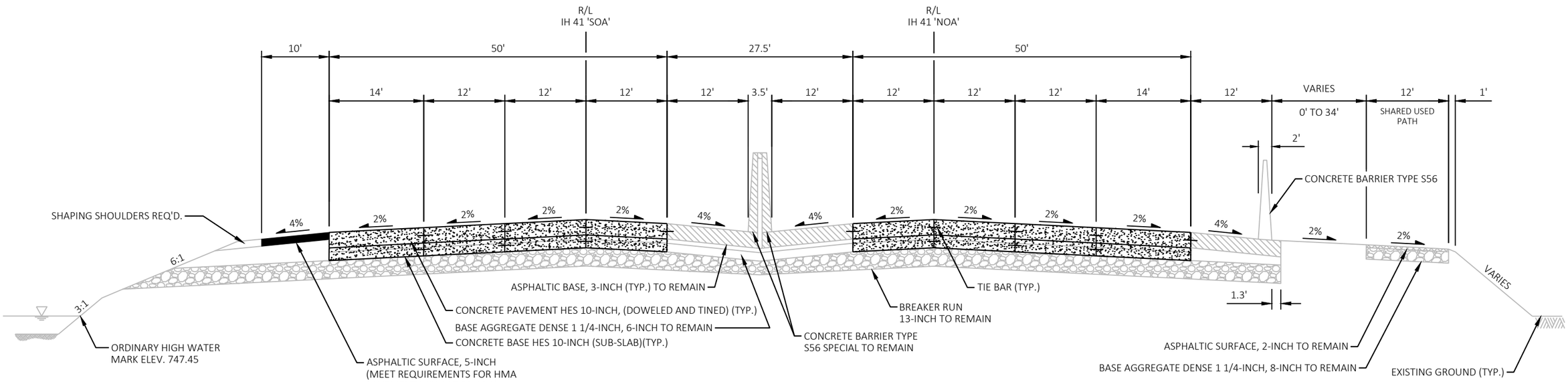

PROPOSED TYPICAL SECTION - IH 41

STA. 623+94.21 'NOA' - STA. 624+09.22 'NOA'

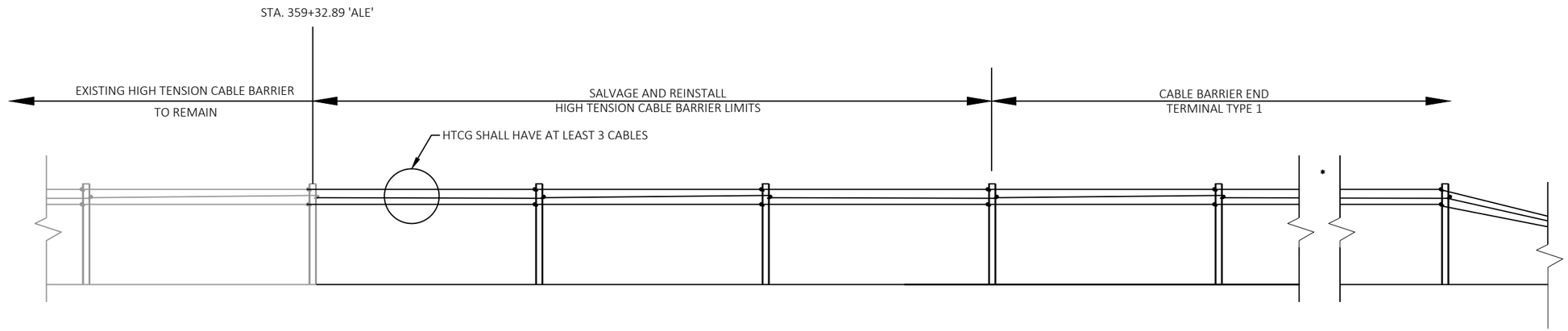

*AS DETERMINED BY MANUFACTURER

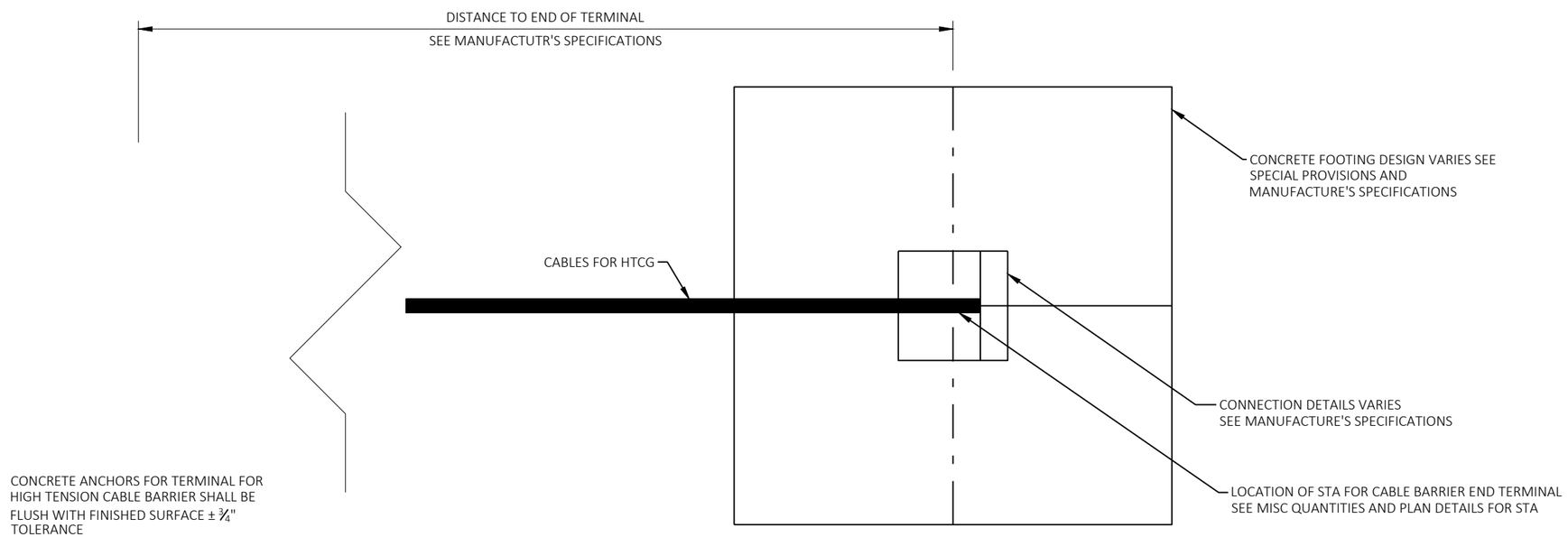

PLAN VIEW OF CONCRETE ANCHOR

HIGH TENSION CABLE BARRIER

STA. 360+00'ALE'

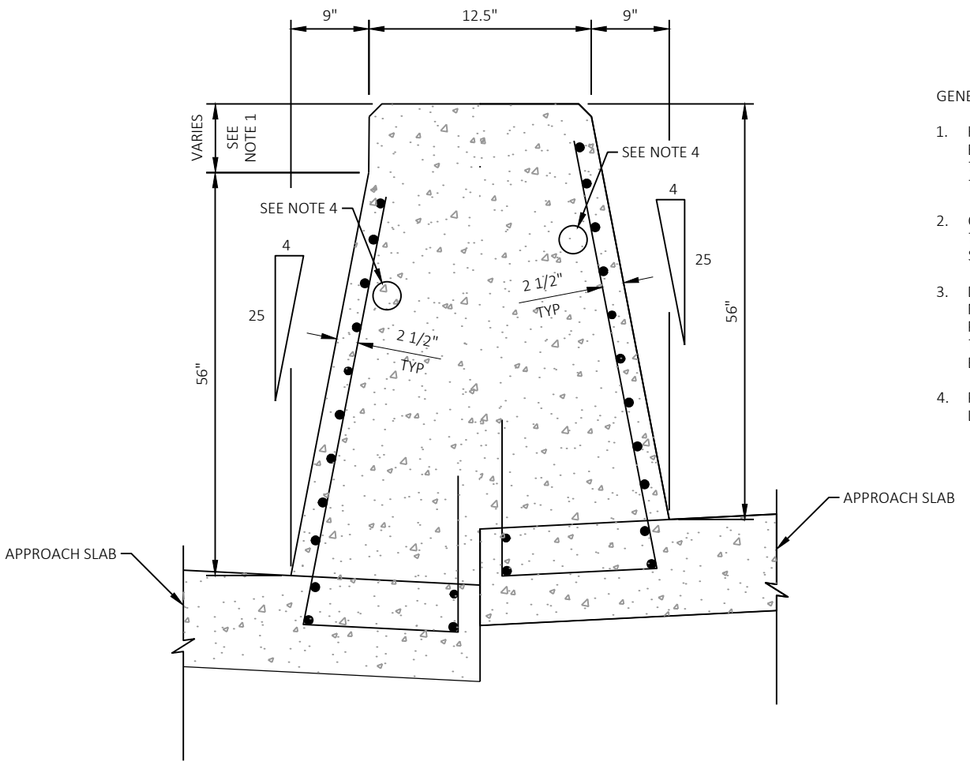

*SEE ELEVATION VIEW

SECTION A-A

GENERAL NOTES:

1. HEIGHT VARIES FOR IH 41 SB BARRIER ADJACENT TO THE NORTH END OF STRUCTURES B-70-265 AND B-70-266. TOP OF BARRIER TO MATCH TOP OF CONCRETE BASE MEDIAN BARRIER AND TRANSITION TO MATCH TOP OF BRIDGE PARAPETS.

2. CONCRETE BARRIER TYPE S56 SPECIAL SHORT RUN SHALL BE THE LENGTH OF THE APPROACH SLAB ADJACENT TO STRUCTURES B-70-265 AND B-70-266.

3. DETAILS OF CONSTRUCTION MATERIALS AND WORKMANSHIP NOT SHOWN ON THIS DRAWING SHALL CONFORM TO THE PERTINENT REQUIREMENTS OF THE STANDARD SPECIFICATION, THE APPLICABLE SPECIAL PROVISIONS AND THE CONCRETE BARRIER TO SINGLE SLOPE STANDARDS DETAILS DRAWINGS.

4. PROPOSED CONDUIT LOCATIONS TO MATCH EXISTING LOCATIONS. FIELD VERIFY EXISTING CONDUIT LOCATIONS.

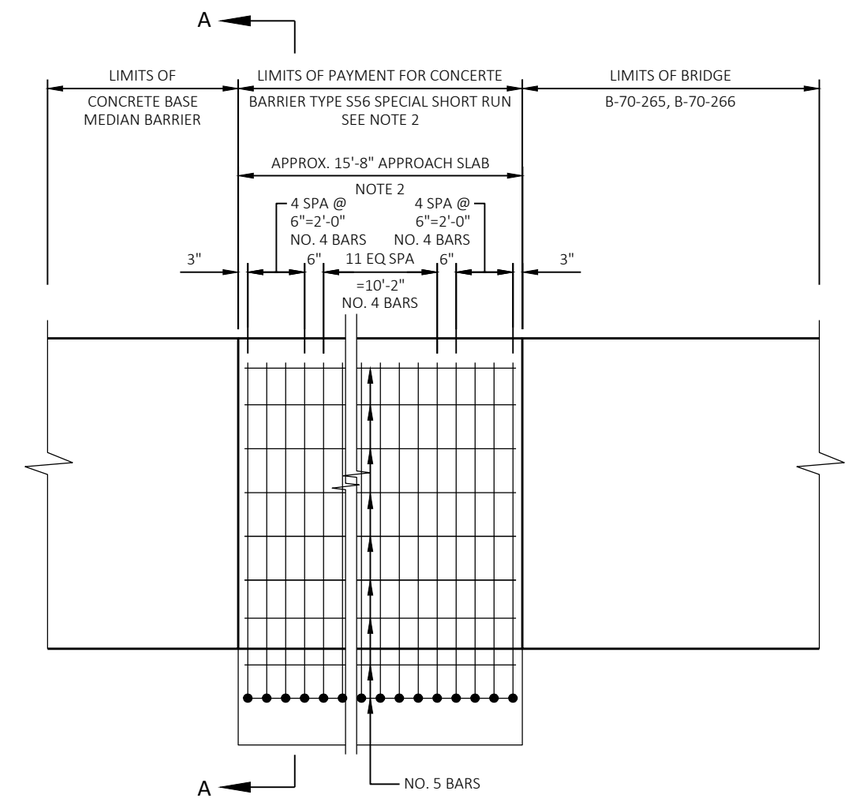

ELEVATION

CONCRETE BARRIER TYPE S56 SPECIAL SHORT RUN

STA 598+99.82'NOA' - 599+16.12'NOA'
STA 606+97.79'NOA' - 607+13.64'NOA'

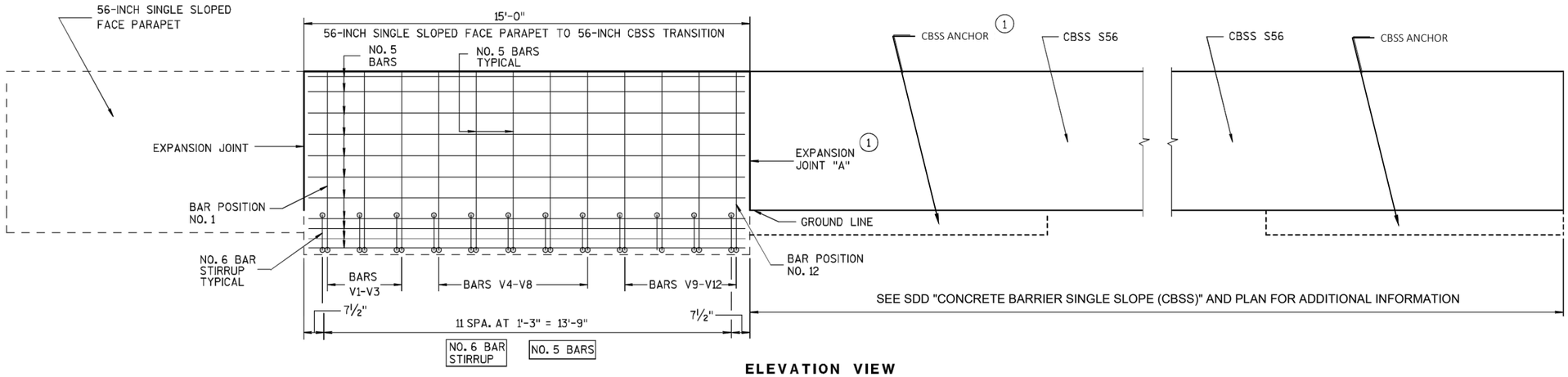

ELEVATION VIEW

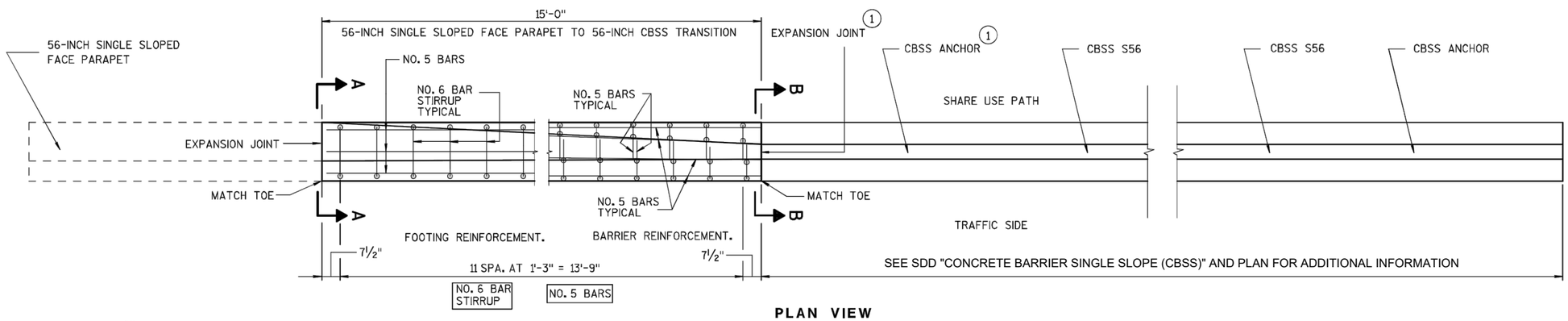

PLAN VIEW

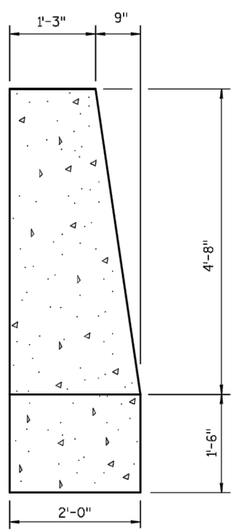

SECTION A-A

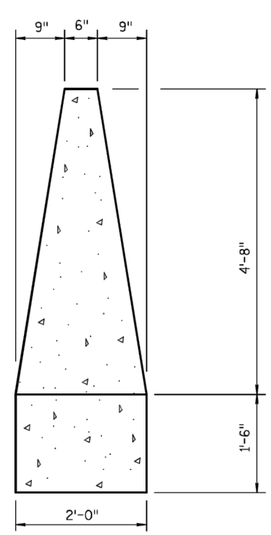

SECTION B-B

GENERAL NOTES

CONSTRUCT PER STANDARD SPECIFICATION 603.

SPLICES OF LONGITUDINAL BARS TO BE 2' LONG AND FIRMLY TIED AND FASTENED TOGETHER UNLESS NOTED OTHERWISE.

4000 PSI CONCRETE AIR ENTRAINMENT PER STANDARD SPECIFICATIONS 501.

USE ¾" BEVEL OR 1" RADIUS ON ALL EXPOSED SHARP EDGES UNLESS NOTED OTHERWISE.

THE NUMBER IN BAR DESIGNATION REPRESENTS THE BARS LOCATION.

2" CLEAR COVER TYPICAL.

(1) EXPANSION JOINT "A" MAY BE REPLACED WITH A COLD-JOINT PROVIDED THAT 3 FEET OF LAP OF LONGITUDINAL STEEL IS PROVIDED. IF COLD-JOINT IS USED ANCHOR NOT REQUIRED.

56-INCH SINGLE SLOPED FACE PARAPET
T0 56-INCH SINGLE SLOPE CONCRETE
BARRIER TRANSITION

STA 599+01.03'NOA' - 599+16.03'NOA'
STA 606+97.99'NOA' - 607+12.99'NOA'

2

BAR CHART
BAR POSITIONS V1 - V3

BAR	A
V1	89°-41'
V2	88°-55'
V3	88°-9'

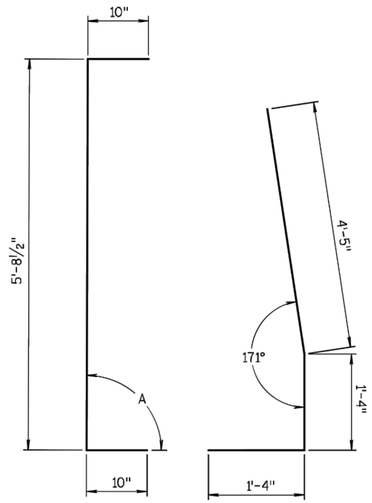

BARS BENDING DETAIL FOR V1 - V3

BAR CHART
BAR POSITIONS V4 - V8

BAR	A	B	C
V4	177°-23'	4'-5 1/4"	8"
V5	176°-37'	4'-5 1/4"	8"
V6	175°-51'	4'-5 3/8"	8"
V7	175°-5'	4'-5 1/2"	6"
V8	174°-19'	4'-5 1/2"	6"

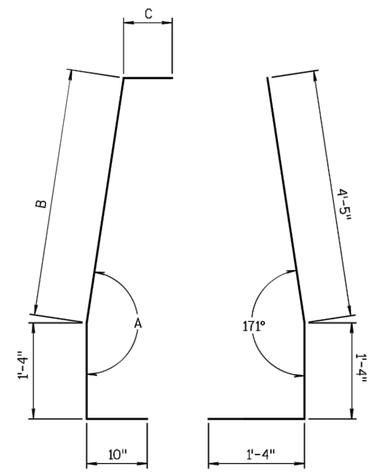

BARS BENDING DETAIL FOR V4 - V8

BAR CHART
BAR POSITIONS V9 - V12

BAR	A	B
V9	173°-30'	4'-5 1/2"
V10	172°-48'	4'-5 5/8"
V11	172°-3'	4'-5 3/4"
V12	171°-18'	4'-5 7/8"

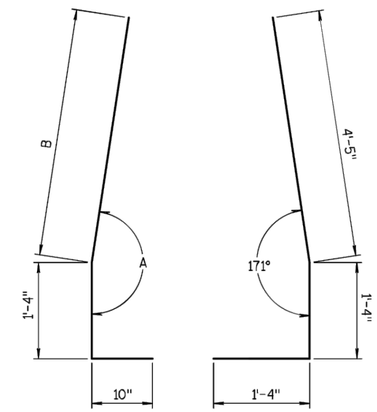

BARS BENDING DETAIL FOR V9 - V12

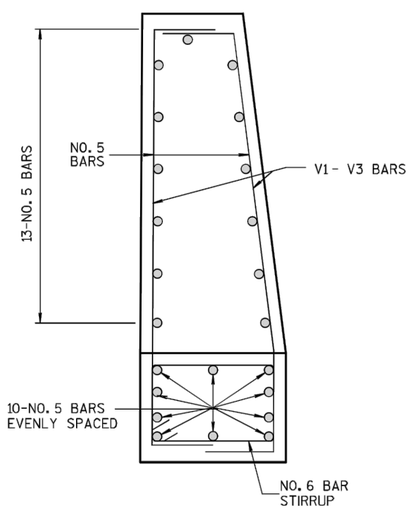

BAR DETAIL
BAR POSITION V1-V3

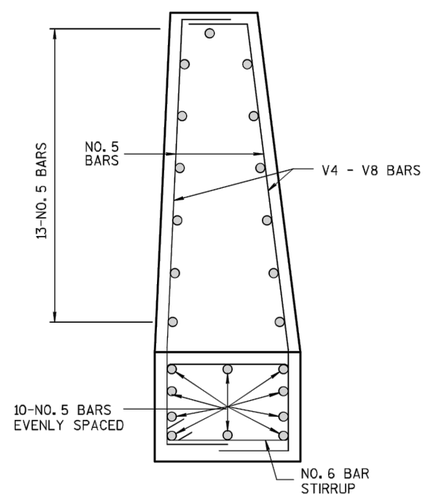

BAR DETAIL
BAR POSITION V4-V8

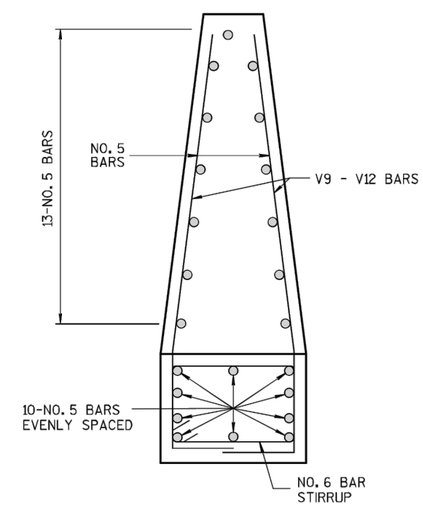

BAR DETAIL
BAR POSITION V9-V12

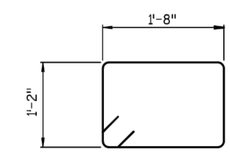

STIRRUP BAR
BENDING DETAIL

56-INCH SINGLE SLOPED FACE PARAPET
T0 56-INCH SINGLE SLOPE CONCRETE
BARRIER TRANSITION

2

NOTES:
1. EXISTING RUMBLE STRIP REMOVAL PAID FOR UNDER BID ITEM REMOVING RUMBLE STRIPS.
2. NEW ASPHALT PAID FOR UNDER BID ITEM ASPHALTIC SURFACE.
3. ASPHALTIC RUMBLE STRIPS REESTABLISHED DURING STAGE 3 WHEN SHOULDER IS NO LONGER NEEDED TO HANDLE THRU TRAFFIC (PAID FOR SEPARATELY)

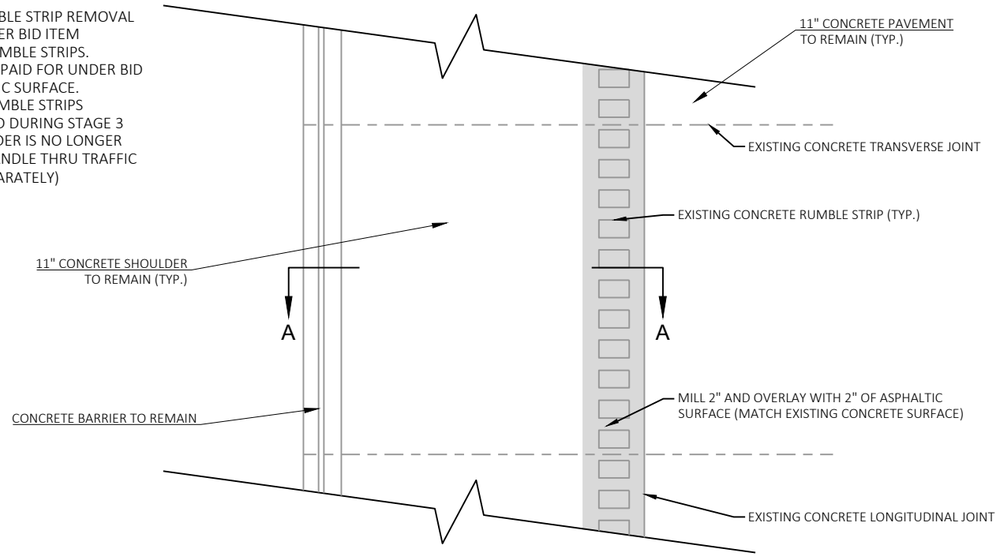

PLAN VIEW

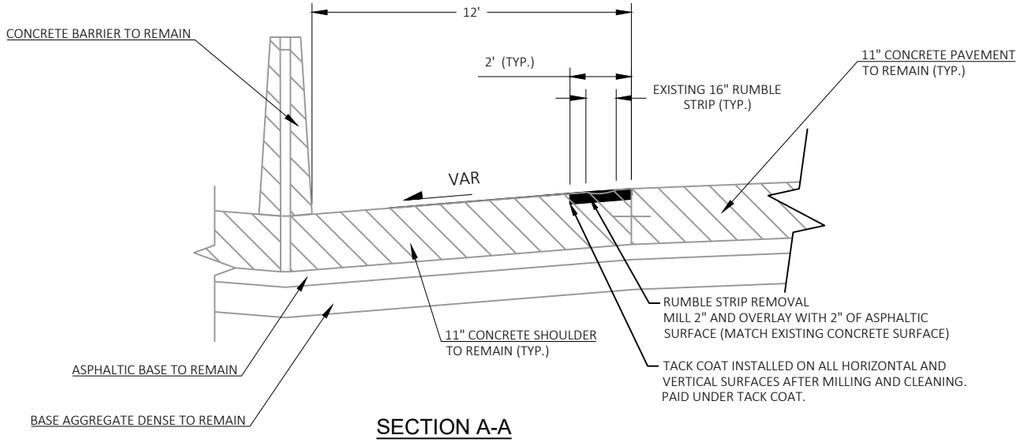

SECTION A-A

RUMBLE STRIP REMOVAL - CONCRETE SHOULDER W/ CONTINUOUS RUMBLE STRIP

STA 587+10.00'NOA' TO STA 598+70.00'NOA', LT
STA 607+43.00'NOA' TO STA 617+77.00'NOA', LT
STA 620+87.00'NOA' TO STA 629+70.00'NOA', LT
STA 594+15.00'SOA' TO STA 598+71.00'SOA', RT
STA 607+43.00'SOA' TO STA 617+77.00'SOA', RT
STA 620+87.00'SOA' TO STA 634+04.00'SOA', RT

2

NOTES:
1. EXISTING RUMBLE STRIP REMOVAL PAID FOR UNDER BID ITEM REMOVING ASPHALTIC SURFACE MILLING.
2. NEW ASPHALT PAID FOR UNDER BID ITEM ASPHALTIC SURFACE.
3. ASPHALTIC RUMBLE STRIPS REESTABLISHED DURING STAGE 2 WHEN SHOULDER IS NO LONGER NEEDED TO HANDLE THRU TRAFFIC (PAID FOR SEPARATELY)

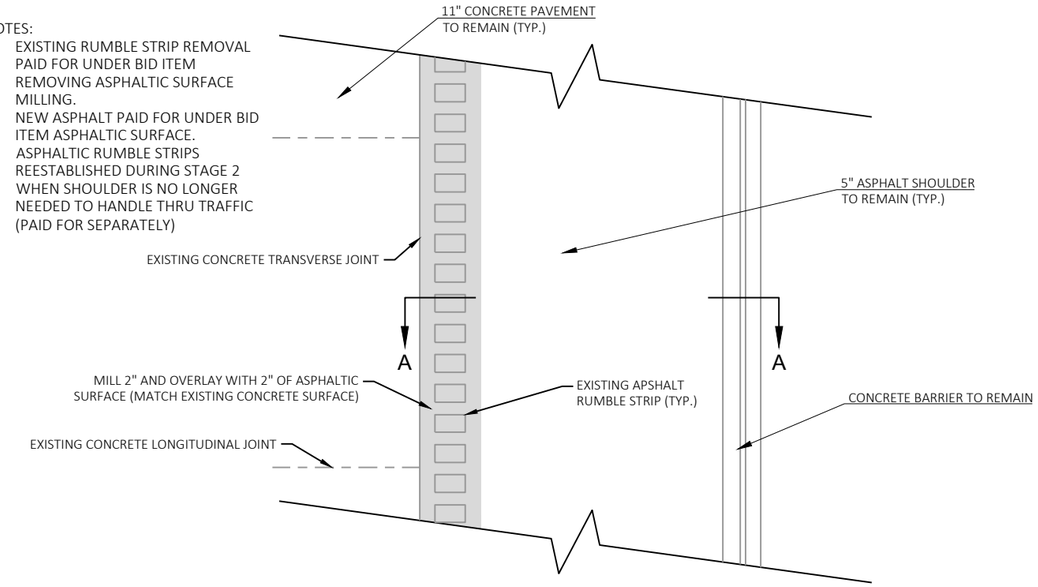

PLAN VIEW

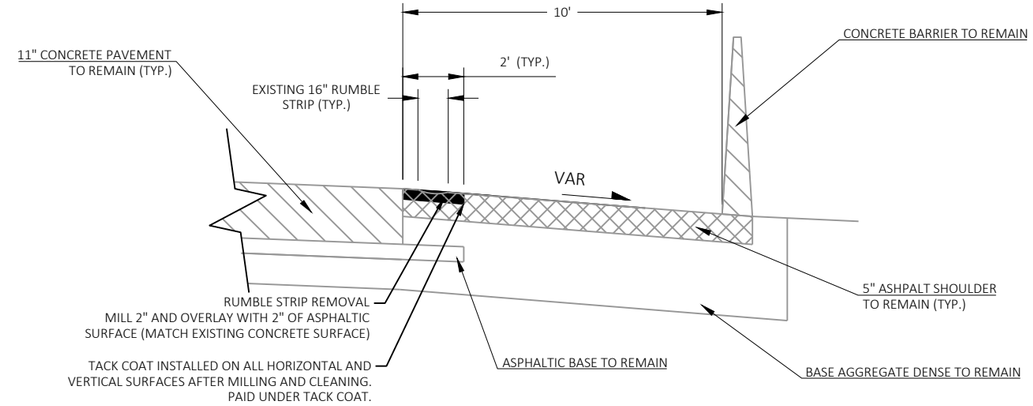

SECTION A-A

RUMBLE STRIP REMOVAL - ASPHALT SHOULDER W/ CONTINUOUS RUMBLE STRIP

STA 586+90.00'NOA' TO STA 598+70.00'NOA', RT
STA 607+43.00'NOA' TO STA 618+07.00'NOA', RT
STA 620+57.00'NOA' TO STA 628+96.00'NOA', RT
STA 635+19.00'SOA' TO STA 645+25.00'SOA', LT

2

NOTES:
1. EXISTING RUMBLE STRIP REMOVAL PAID FOR UNDER BID ITEM REMOVING ASPHALTIC SURFACE MILLING.
2. NEW ASPHALT PAID FOR UNDER BID ITEM ASPHALTIC SURFACE.
3. ASPHALTIC RUMBLE STRIPS REESTABLISHED DURING STAGE 2 WHEN SHOULDER IS NO LONGER NEEDED TO HANDLE THRU TRAFFIC (PAID FOR SEPARATELY)

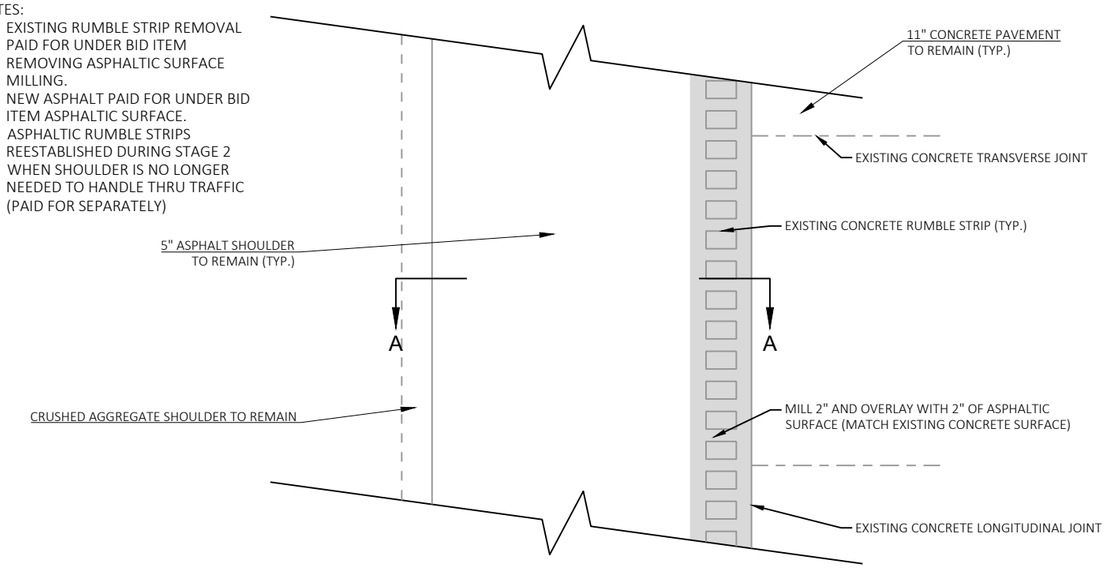

PLAN VIEW

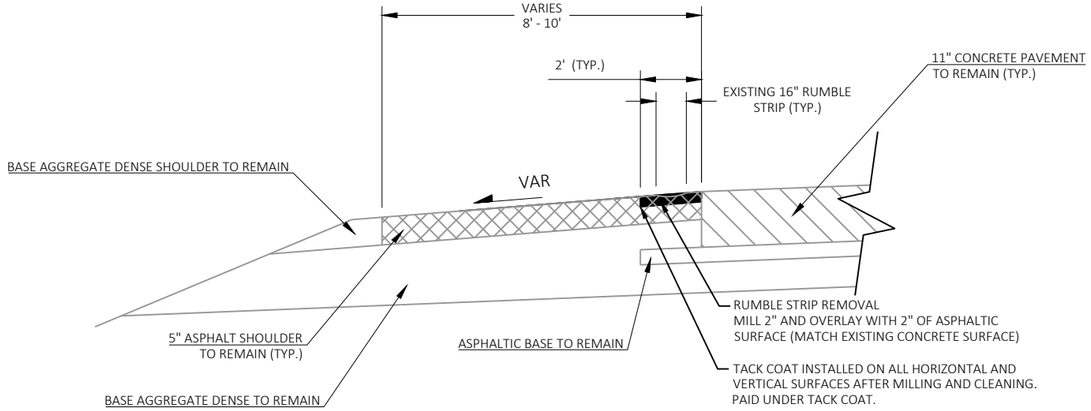

SECTION A-A

RUMBLE STRIP REMOVAL - ASPHALT SHOULDER W/ CONTINUOUS RUMBLE STRIP

STA 593+40.00'SOA' TO STA 598+86.00'SOA', LT
STA 607+29.00'SOA' TO STA 618+07.00'SOA', LT
STA 620+73.00'SOA' TO STA 623+50.00'SOA', LT

2

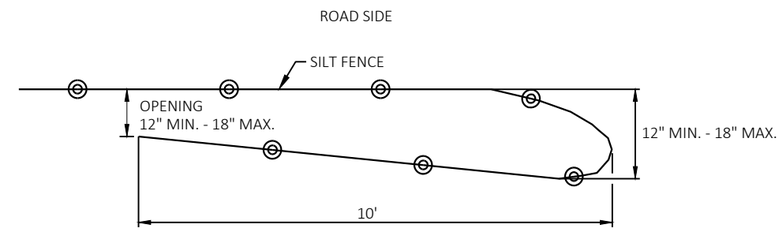

TEMPORARY SMALL ANIMAL TURN-AROUND

STA. 597+62 'NOA' RT
STA. 598+36 'SOA' LT
STA. 607+74 'NOA' RT
STA. 608+05 'SOA' LT
STA. 359+30 'ALE' LT
STA. 360+65 'ALE' LT

NOTE:
SILT FENCE POSTS FOR THE TURN-AROUND SHOULD BE ON THE OUTSIDE OF THE TURN-AROUND AND TRENCHED IN ACCORDING TO SILT FENCE STANDARD SPECIFICATIONS.

2

LEGEND

- SIGN ON PERMANENT SUPPORT
- TRAFFIC CONTROL DRUM
- TRAFFIC CONTROL DRUM WITH TYPE "C" STEADY BURN LIGHT
- TYPE III BARRICADE WITH ATTACHED SIGN
- TYPE "A" WARNING LIGHT (FLASHING)
- REMOVING PAVEMENT MARKINGS
- DIRECTION OF TRAFFIC
- WORK AREA
- FLASHING CONNECTED ARROW BOARD
- (S) PORTABLE TRAFFIC SENSOR (PTS)
- FBS FLASHING BEACON SIGN
- (S) WZ START LOCATION MARKER
- (E) WZ END LOCATION MARKER

GENERAL NOTES

THE EXACT NUMBER, LOCATION, AND SPACING OF ALL SIGNS, INCLUDING FBS AND DEVICES SHALL BE ADJUSTED TO FIT FIELD CONDITIONS AS APPROVED BY THE ENGINEER.

THE SPACING BETWEEN SIGNS SHOULD BE ADJUSTED TO NOT CONFLICT WITH AND TO PROVIDE A MINIMUM OF 200 FEET (500 FEET DESIRABLE) CLEARANCE TO EXISTING SIGNS.

THIS LANE CLOSURE IS TYPICAL FOR CLOSING RIGHT LANE - REVERSE FOR CLOSING LEFT LANE.

ALL SIGNS ARE 48" x 48" UNLESS OTHERWISE NOTED.

"WO" SIGNS ARE THE SAME AS "W" SIGNS EXCEPT THE BACKGROUND IS ORANGE.

ANY SIGNS TEMPORARY OR EXISTING, WHICH CONFLICT WITH TRAFFIC CONTROL "IN USE" SHALL BE REMOVED OR COVERED AS NEEDED OR AS APPROVED BY THE ENGINEER. NO WARNING LIGHTS SHALL BE WORKING ON "COVERED" OR "DOWNED SIGNS.

FOR A LANE CLOSURE THAT IS IN PLACE LESS THAN 7 CONTINUOUS DAYS AND NIGHTS, THE ADVANCED WARNING SIGNS MAY BE MOUNTED ON PORTABLE SUPPORTS.

REMOVE PAVEMENT MARKINGS AND PLACE TEMPORARY PAVEMENT MARKING LINE IF LANE CLOSURE IS TO BE IN PLACE 4 OR MORE CONTINUOUS DAYS AND NIGHTS. WARNING LIGHTS ARE NOT REQUIRED IF THE LANE CLOSURE IS A DAYTIME ONLY OPERATION.

IF THE HORIZONTAL ALIGNMENT IS SUCH THAT A CURVE MAY REQUIRE ADDITIONAL DELINEATION, THE DEVICE SPACING MAY BE DECREASED TO 50 FEET.

ADJUSTMENTS IN BUFFER SPACE NEED TO BE INCORPORATED WHEN THE LANE CLOSURE OCCURS NEAR AN INTERCHANGE EXIT OR ENTRANCE RAMP OR INTERSECTION. THE LANE CLOSURE MUST TAKE PLACE FAR ENOUGH IN ADVANCE OF AN EXIT OR ENTRANCE RAMP TO STILL ALLOW FOR ADEQUATE BUFFER SPACE. THE MINIMUM LENGTH OF THE BUFFER SPACE BEFORE AN EXIT RAMP SHOULD BE ONE HALF THE LENGTH OF THE TRANSITION AREA. THE ENTRANCE RAMP SHOULD BE FOLLOWED BY THE ORIGINAL BUFFER SPACE LENGTH OF 800 FEET DESIRABLE PRIOR TO ANOTHER TRAFFIC CONTROL CHANGE SUCH AS A CROSSOVER MANEUVER.

CONSIDER ROADWAY GEOMETRICS WHEN LOCATING SIGNS AND ARROW BOARD SO THE DRIVER HAS A CLEAR VIEW OF THE ARROW BOARD AND LANE CLOSURE DRUMS.

PORTABLE TRAFFIC SENSOR (PTS) MAY BE MOUNTED ON THE FBS, ARROW BOARD OR OTHER TRAILER DEVICES.

1. 5 DRUMS SPACED AT 10 FOOT INTERVALS AS NEEDED.
2. IF THERE ARE MORE THAN TWO LANES OR IF SPECIFIED IN THE PLANS, PLACE FBS ON BOTH SIDES OF THE ROADWAY.
3. IF THERE IS AN APPROVED TEMPORARY SPEED DECLARATION, ADD WO-3-5 SIGNS 400 FEET AFTER THE W20-5G SIGNS AND ADD R2-1 SIGNS (48"x60") 700 FEET AFTER THE WO3-5 SIGNS. A SPEED LIMIT SIGN SHALL BE LOCATED 1500 FEET BEYOND THE END OF THE ACCELERATION LANE OF EACH ENTRANCE RAMP. PLACE A SPEED LIMIT SIGN A MINIMUM OF EVERY 3 MILES. INCLUDE A "RESUME SPEED LIMIT" SIGN 200 FEET MINIMUM (800 FEET DESIRABLE) BEYOND THE G30-3A "END ROAD WORK" SIGN.

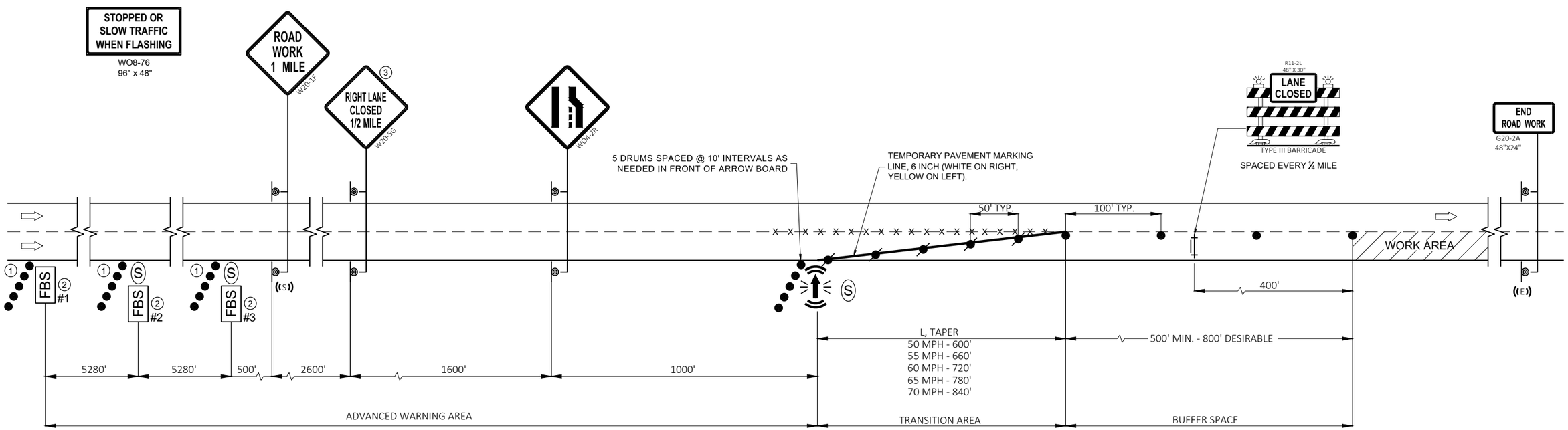

TRAFFIC CONTROL, LANE CLOSURE, BASIC QUEUE WARNING SYSTEM

2

PROJECT NO: 1120-63-71	HWY: IH 41	COUNTY: WINNEBAGO	CONSTRUCTION DETAILS	SHEET 13	E

LEGEND

- XXXXXX SAWING ASPHALT
- ΛΛΛΛΛΛ SAWING CONCRETE
- 1 EXISTING INLET TO REMAIN
- 2 EXISTING LIGHT POLE TO REMAIN
- 3 ADJUSTING INLETS COVERS
- REMOVING HMA PAVEMENT 5-INCH (PAID FOR AS REMOVING ASPHALTIC SURFACE)
- REMOVING HMA PAVEMENT 2-INCH (PAID FOR AS REMOVING ASPHALTIC SURFACE)
- REMOVING CONCRETE PAVEMENT APPROACH SLAB (PAID FOR AS REMOVING CONCRETE PAVEMENT)
- REMOVING STRUCTURAL PAVEMENT APPROACH SLAB (SEE STRUCTURE PLANS FOR BRIDGE REMOVALS)
- REMOVING CONCRETE 11-INCH DOWELED (PAID FOR AS REMOVING CONCRETE PAVEMENT)

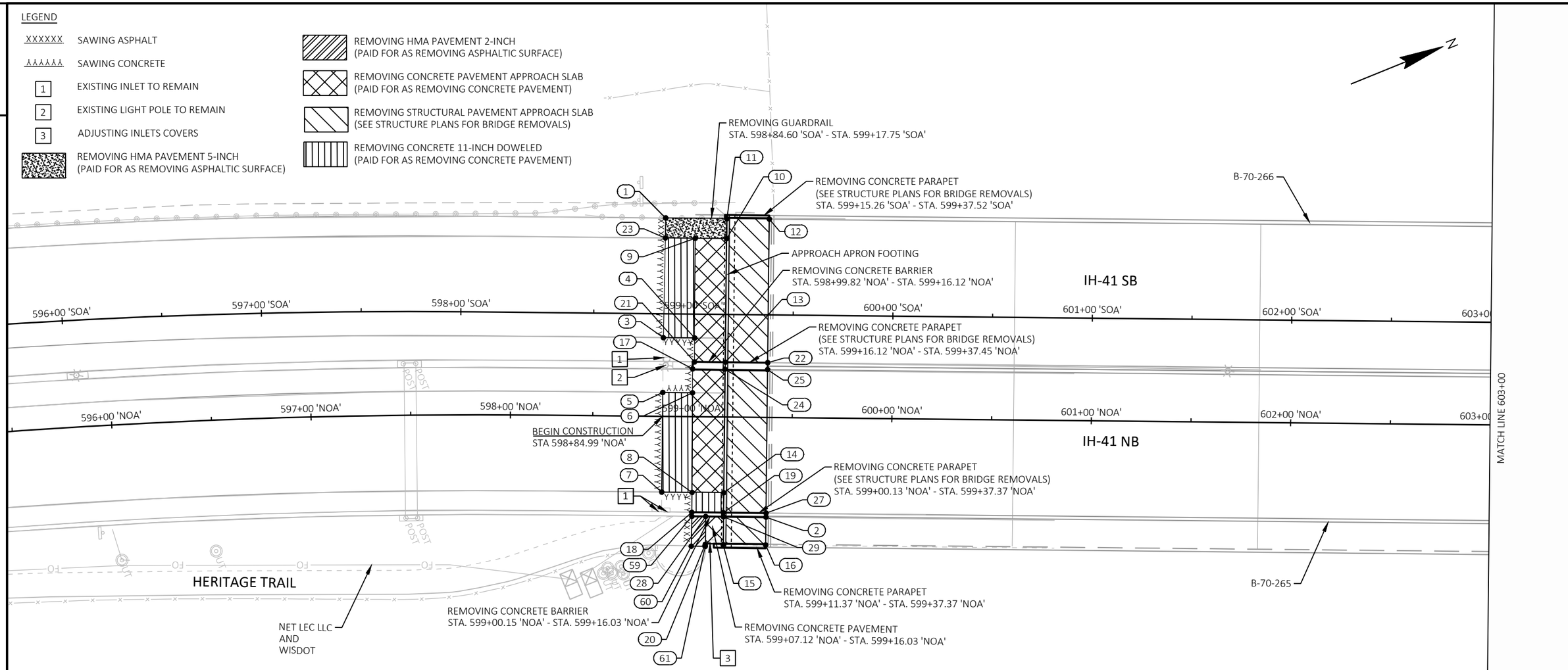

STATION & OFFSET TABLE

POINT	STATION	OFFSET	Y COORDS	X COORDS
1	598+85.56 'SOA'	48.0' LT	483118.54	781250.71
2	599+37.37 'NOA'	50.0' RT	483108.38	781408.65
3	598+85.03 'SOA'	12.0' RT	483094.79	781305.86
4	599+00.68 'SOA'	12.0' RT	483109.22	781311.93
5	598+84.99 'NOA'	12.0' LT	483084.10	781331.20
6	598+99.88 'NOA'	12.0' LT	483097.83	781336.97
7	598+84.98 'NOA'	38.0' RT	483064.72	781377.29
8	599+00.15 'NOA'	38.0' RT	483078.71	781383.17

STATION & OFFSET TABLE

POINT	STATION	OFFSET	Y COORDS	X COORDS
9	599+00.48 'SOA'	38.0' LT	483128.41	781265.75
10	599+16.29 'SOA'	38.0' LT	483142.98	781271.88
11	599+16.29 'SOA'	48.0' LT	483146.85	781262.66
12	599+37.52 'SOA'	48.0' LT	483166.43	781270.88
13	599+16.23 'SOA'	24.0' RT	483118.90	781329.01
14	599+16.12 'NOA'	38.0' RT	483093.43	781389.35
15	599+16.03 'NOA'	64.0' RT	483083.28	781413.29
16	599+37.37 'NOA'	64.0' RT	483102.95	781421.56

STATION & OFFSET TABLE

POINT	STATION	OFFSET	Y COORDS	X COORDS
17	598+99.82 'NOA'	24.0' LT	483102.43	781325.88
18	599+00.15 'NOA'	48.0' RT	483074.84	781392.39
19	599+16.03 'NOA'	48.0' RT	483089.48	781398.54
20	599+07.06 'NOA'	64.0' RT	483075.01	781409.82
21	599+00.71 'SOA'	24.0' RT	483104.60	781323.00
22	599+37.45 'SOA'	24.0' RT	483138.47	781337.23
23	598+85.50 'SOA'	38.0' LT	483114.60	781259.95
24	599+16.12 'NOA'	24.0' LT	483117.45	781332.19

STATION & OFFSET TABLE

POINT	STATION	OFFSET	Y COORDS	X COORDS
25	599+37.44 'NOA'	24.0' LT	483137.11	781340.45
27	599+37.37 'NOA'	48.0' RT	483109.15	781406.80
28	599+07.12 'NOA'	50.0' RT	483080.48	781396.93
29	599+16.03 'NOA'	50.0' RT	483088.70	781400.41
59	599+00.21 'NOA'	50.0' RT	483074.12	781394.25
60	599+00.06 'NOA'	65.0' RT	483068.17	781408.03
61	599+07.08 'NOA'	65.0' RT	483074.64	781410.75

2

LEGEND

- XXXXXX SAWING ASPHALT
- SAWING CONCRETE
- 1 EXISTING INLET TO REMAIN
- 2 EXISTING LIGHT POLE TO REMAIN
- 3 ADJUSTING INLETS COVERS
- REMOVING HMA PAVEMENT 5-INCH (PAID FOR AS REMOVING ASPHALTIC SURFACE)
- REMOVING HMA PAVEMENT 2-INCH (PAID FOR AS REMOVING ASPHALTIC SURFACE)
- REMOVING CONCRETE PAVEMENT APPROACH SLAB (PAID FOR AS REMOVING CONCRETE PAVEMENT)
- REMOVING STRUCTURAL PAVEMENT APPROACH SLAB (SEE STRUCTURE PLANS FOR BRIDGE REMOVALS)
- REMOVING CONCRETE 11-INCH DOWELED (PAID FOR AS REMOVING CONCRETE PAVEMENT)

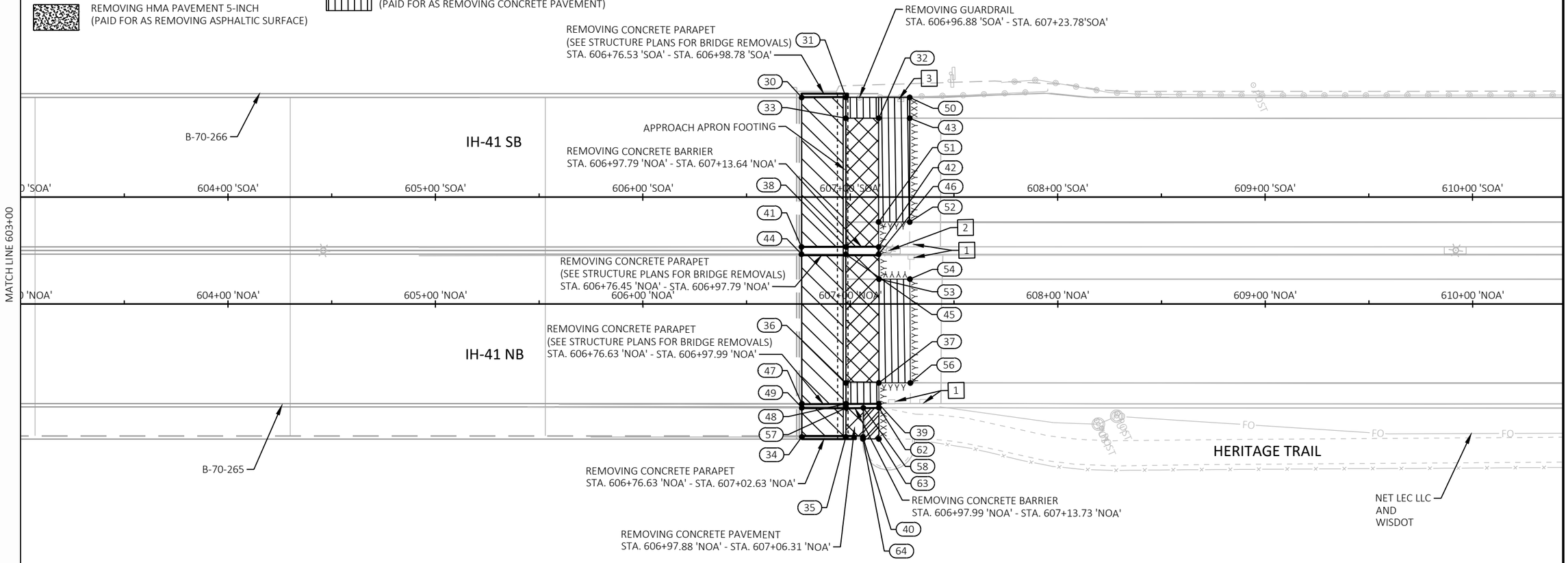

STATION & OFFSET TABLE				
POINT	STATION	OFFSET	Y COORDS	X COORDS
30	606+76.53 'SOA'	48.0' LT	483847.73	781557.15
31	606+97.86 'SOA'	48.0' LT	483867.42	781565.39
32	607+13.67 'SOA'	38.0' LT	483878.11	781580.76
33	606+97.88 'SOA'	38.0' LT	483863.55	781574.64
34	606+76.63 'NOA'	64.0' RT	483784.49	781707.92
35	606+97.88 'NOA'	64.0' RT	483804.08	781716.16
36	606+97.94 'NOA'	38.0' RT	483814.21	781692.21
37	607+13.75 'NOA'	38.0' RT	483828.78	781698.33

STATION & OFFSET TABLE				
POINT	STATION	OFFSET	Y COORDS	X COORDS
38	606+98.02 'SOA'	24.0' RT	483839.66	781631.86
39	607+13.73 'NOA'	48.0' RT	483824.89	781707.55
40	607+06.08 'NOA'	64.0' RT	483811.65	781719.34
41	606+76.44 'SOA'	24.0' RT	483819.77	781623.50
42	607+13.64 'SOA'	24.0' RT	483854.06	781637.91
43	607+28.63 'SOA'	38.0' LT	483891.89	781586.55
44	606+76.45 'NOA'	24.0' LT	483818.41	781626.73
45	606+97.79 'NOA'	24.0' LT	483838.09	781634.99

STATION & OFFSET TABLE				
POINT	STATION	OFFSET	Y COORDS	X COORDS
46	607+13.64 'NOA'	24.0' LT	483852.70	781641.13
47	606+76.63 'NOA'	48.0' RT	483790.69	781693.17
48	606+98.00 'NOA'	48.0' RT	483810.39	781701.45
49	606+76.63 'NOA'	50.0' RT	483789.91	781695.02
50	607+28.63 'SOA'	48.0' LT	483895.77	781577.34
51	607+13.64 'SOA'	12.0' RT	483858.71	781626.84
52	607+28.65 'SOA'	12.0' RT	483872.54	781632.66
53	607+13.84 'NOA'	12.0' LT	483848.24	781652.27

STATION & OFFSET TABLE				
POINT	STATION	OFFSET	Y COORDS	X COORDS
54	607+28.72 'NOA'	12.0' LT	483861.96	781658.04
56	607+28.95 'NOA'	38.0' RT	483842.80	781704.22
57	606+97.99 'NOA'	50.0' RT	483809.61	781703.29
58	607+06.31 'NOA'	50.0' RT	483817.28	781706.52
62	607+13.76 'NOA'	50.0' RT	483824.15	781709.38
63	607+13.76 'NOA'	65.0' RT	483818.35	781723.21
64	607+06.08 'NOA'	65.0' RT	483811.28	781720.21

2

LEGEND

XXXXXX SAWING ASPHALT

SAWING CONCRETE

REMOVING CONCRETE 20-INCH DOWELED
(PAID FOR AS REMOVING CONCRETE PAVEMENT)

REMOVING HMA PAVEMENT 5-INCH
(PAID FOR AS REMOVING ASPHALTIC SURFACE)

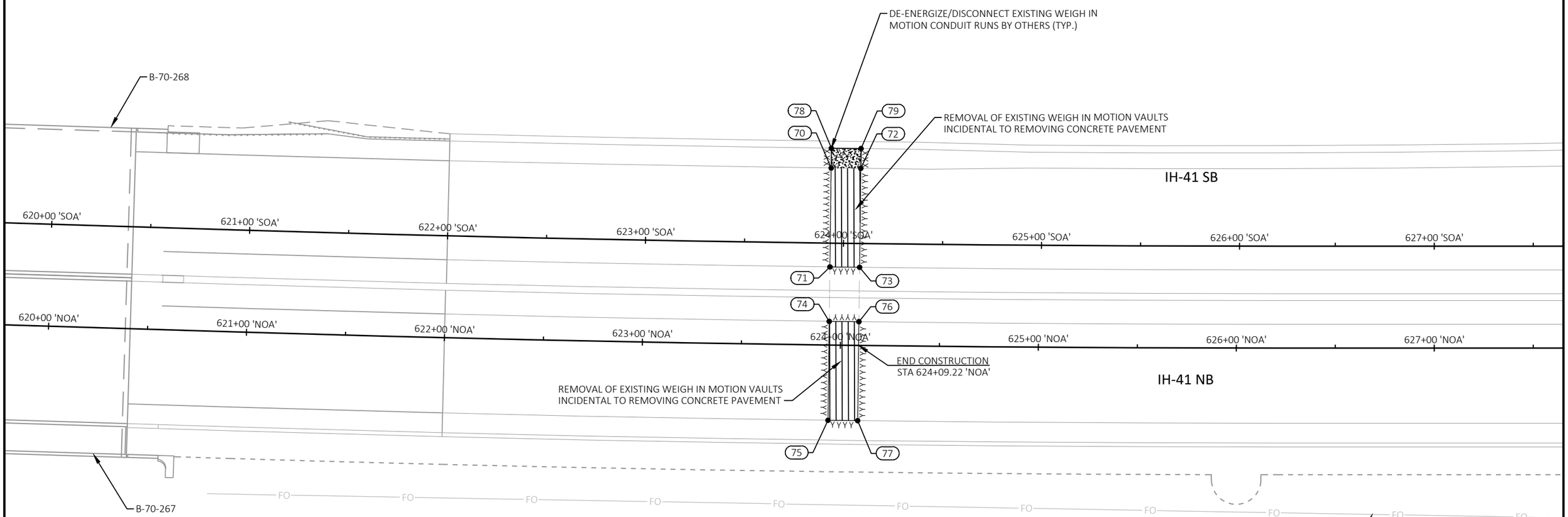

STATION & OFFSET TABLE				
POINT	STATION	OFFSET	Y COORDS	X COORDS
70	623+93.24 'SOA'	38.0' LT	485426.92	782228.71
71	623+93.28 'SOA'	12.0' RT	485408.40	782275.15
72	624+08.27 'SOA'	38.0' LT	485440.85	782234.27
73	624+08.27 'SOA'	12.0' RT	485422.33	782280.71
74	623+94.21 'NOA'	12.0' LT	485398.22	782300.70
75	623+94.25 'NOA'	38.0' RT	485379.70	782347.14
76	624+09.22 'NOA'	12.0' LT	485412.15	782306.26
77	624+09.22 'NOA'	38.0' RT	485393.64	782352.70
78	623+93.24 'SOA'	48.0' LT	485430.63	782219.43
79	624+08.27 'SOA'	48.0' LT	485444.55	782224.98

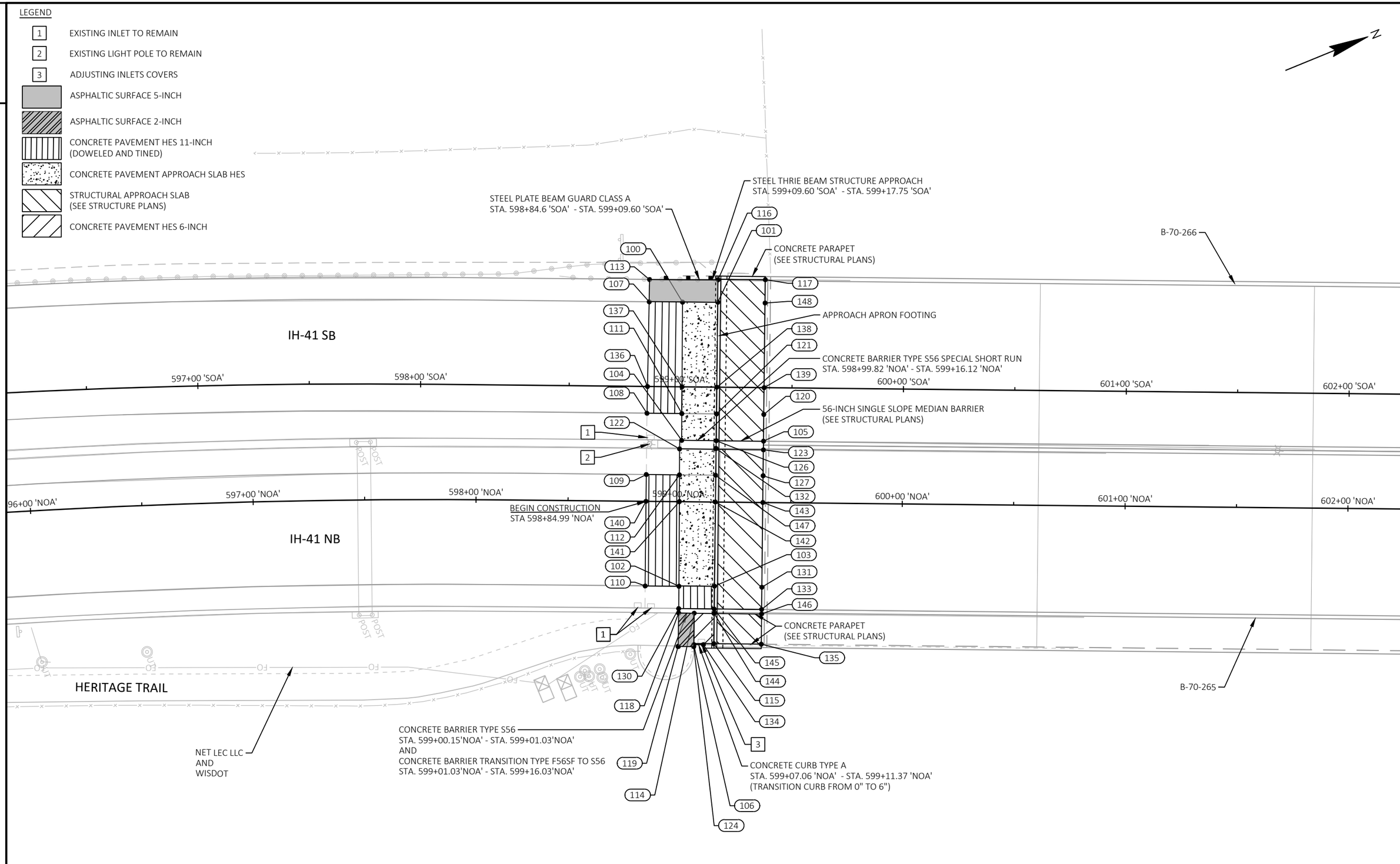

PROJECT NO: 1120-63-71	HWY: IH 41	COUNTY: WINNEBAGO	PLAN DETAILS	SHEET 17	E

FILE NAME : S:\MAD\2000--2099\2089\008\DRAWINGS\CAD\CIVIL 3D\SHEETS\021201-PD.DWG
LAYOUT NAME - 021201-pd
PLOT DATE : 1/25/2024 11:29 AM PLOT BY : GRIMME, SARA PLOT NAME : PLOT SCALE : 1 IN:40 FT
WISDOT/CADDS SHEET 42

LEGEND

- 1 EXISTING INLET TO REMAIN
- 2 EXISTING LIGHT POLE TO REMAIN
- 3 ADJUSTING INLETS COVERS
- ASPHALTIC SURFACE 5-INCH
- ASPHALTIC SURFACE 2-INCH
- CONCRETE PAVEMENT HES 11-INCH (DOWELED AND TINED)
- CONCRETE PAVEMENT APPROACH SLAB HES
- STRUCTURAL APPROACH SLAB (SEE STRUCTURE PLANS)
- CONCRETE PAVEMENT HES 6-INCH

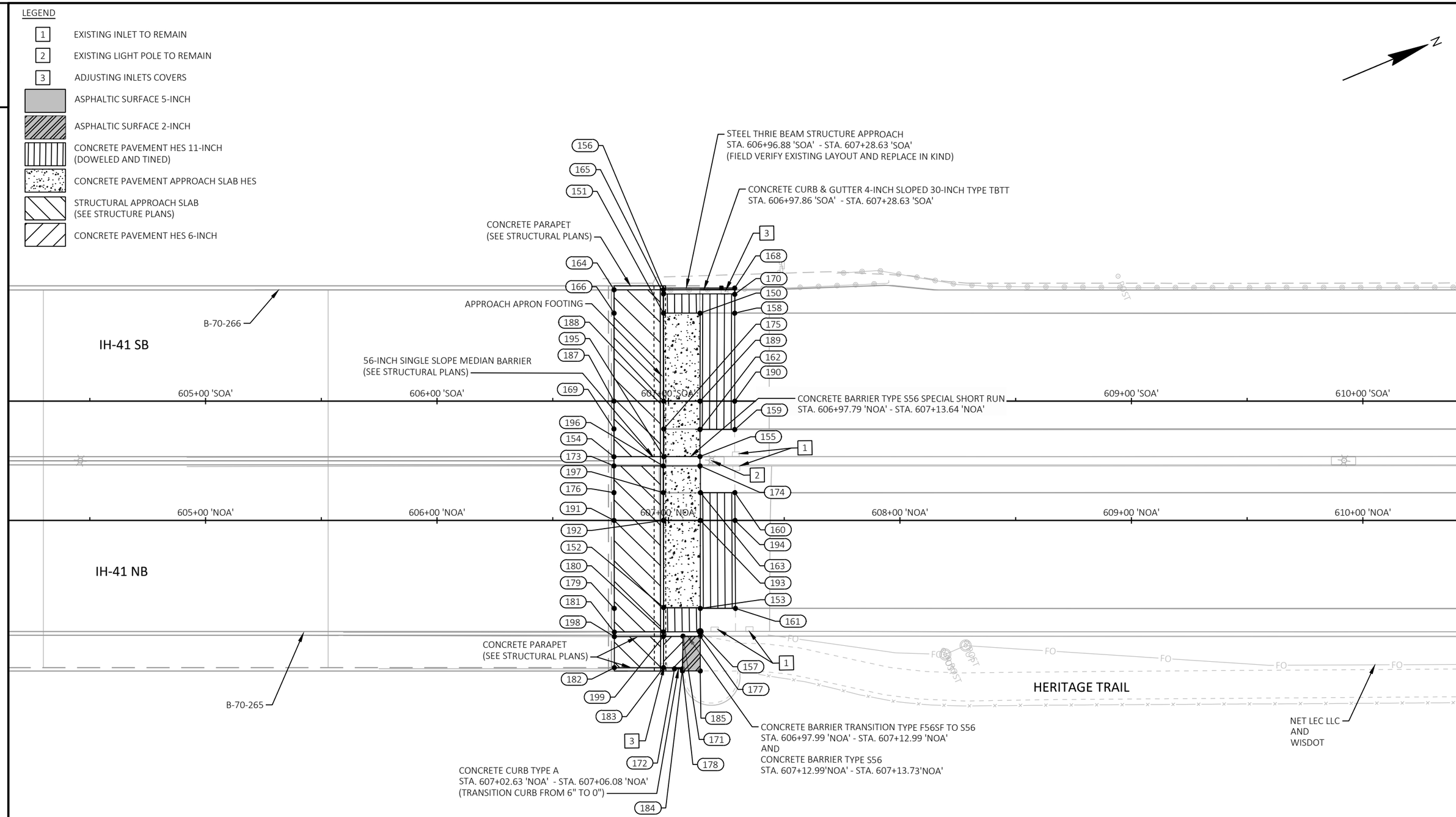

PROJECT NO: 1120-63-71	HWY: IH 41	COUNTY: WINNEBAGO	PLAN DETAILS	SHEET 18	E

STATION & OFFSET TABLE					
POINT	STATION	OFFSET	Y COORDS	X COORDS	ELEVATION
100	599+00.48 'SOA'	38.00 LT	483128.408	781265.753	780.72
101	599+16.29 'SOA'	38.13 LT	483143.029	781271.751	780.72
102 *	599+00.15 'NOA'	38.00 RT	483078.713	781383.168	779.37
103	599+16.12 'NOA'	37.74 RT	483093.528	781389.117	779.45
104 *	599+00.71 'SOA'	24.00 RT	483104.602	781322.998	780.22
105 *	599+37.45 'SOA'	24.00 RT	483138.467	781337.230	780.43
106	599+07.06 'NOA'	64.00 RT	483075.006	781409.886	778.84
107 *	598+85.50 'SOA'	38.00 LT	483114.596	781259.950	780.72
108 *	598+85.01 'SOA'	12.00 RT	483094.774	781305.855	780.25
109 *	598+84.99 'NOA'	12.00 LT	483084.102	781331.199	780.10
110 *	598+84.99 'NOA'	38.00 RT	483064.738	781377.296	779.24
111 *	599+00.67 'SOA'	12.00 RT	483109.209	781311.920	780.33
112 *	598+99.89 'NOA'	12.00 LT	483097.834	781336.969	780.20
113 *	598+85.56 'SOA'	48.00 LT	483118.523	781250.753	781.00
114	599+07.12 'NOA'	50.00 RT	483080.484	781396.929	779.14
115	599+16.03 'NOA'	63.58 RT	483083.445	781412.903	778.99

STATION & OFFSET TABLE					
POINT	STATION	OFFSET	Y COORDS	X COORDS	ELEVATION
116	599+16.29 'SOA'	48.20 LT	483146.930	781262.469	780.74
117*	599+37.52 'SOA'	48.47 LT	483166.612	781270.444	780.73
118*	599+00.15 'NOA'	50.00 RT	483074.065	781394.231	779.07
119*	599+00.06 'NOA'	65.00 RT	483068.169	781408.027	778.79
120*	599+37.46 'SOA'	12.00 RT	483143.127	781326.172	780.69
121	599+16.24 'SOA'	12.00 RT	483123.563	781317.952	780.47
122*	598+99.82 'NOA'	23.63 LT	483102.283	781326.220	780.22
123*	599+37.44 'NOA'	23.60 LT	483136.953	781340.823	780.43
124*	599+07.08 'NOA'	65.00 RT	483074.643	781410.747	778.82
126	599+16.23 'SOA'	24.00 RT	483118.905	781329.013	780.36
127*	599+37.43 'NOA'	12.00 LT	483132.447	781351.514	780.59
130*	599+00.15 'NOA'	48.00 RT	483074.838	781392.389	779.15
131*	599+37.38 'NOA'	38.00 RT	483113.034	781397.591	779.84
132	599+16.12 'NOA'	24.00 LT	483117.447	781332.194	780.36
133*	599+37.37 'NOA'	48.00 RT	483109.147	781406.804	779.65
134	599+11.37 'NOA'	64.08 RT	483078.955	781411.557	778.92

STATION & OFFSET TABLE					
POINT	STATION	OFFSET	Y COORDS	X COORDS	ELEVATION
135*	599+37.37 'NOA'	63.58 RT	483103.110	781421.171	779.36
136*	598+85.13 'SOA'	0.00 LT	483099.533	781294.839	780.57
137	599+00.62 'SOA'	0.00 RT	483113.817	781300.841	780.65
138	599+16.25 'SOA'	0.00 LT	483128.222	781306.890	780.70
139*	599+37.47 'SOA'	0.00 RT	483147.787	781315.114	780.97
140*	598+84.99 'NOA'	0.00 RT	483079.454	781342.263	780.01
141	598+99.95 'NOA'	0.00 RT	483093.245	781348.058	780.19
142	599+16.06 'NOA'	0.00 RT	483108.098	781354.299	780.39
143*	599+37.42 'NOA'	0.00 RT	483127.787	781362.572	780.62
144	599+16.03 'NOA'	50.00 RT	483088.706	781400.383	779.26
145	599+16.03 'NOA'	48.00 RT	483089.480	781398.541	779.26
146*	599+37.37 'NOA'	50.00 RT	483108.378	781408.651	779.58
147	599+16.07 'NOA'	12.00 LT	483112.753	781343.238	780.37
148*	599+37.51 'SOA'	38.00 LT	483162.545	781280.097	780.94

STATION & OFFSET TABLE					
POINT	STATION	OFFSET	Y COORDS	X COORDS	ELEVATION
150	607+13.67 'SOA'	38.00 LT	483878.106	781580.760	776.10
151	606+97.88 'SOA'	38.00 LT	483863.542	781574.642	776.37
152	606+97.94 'NOA'	37.63 RT	483814.350	781691.869	776.89
153*	607+13.75 'NOA'	38.00 RT	483828.785	781698.334	776.64
154*	606+76.44 'SOA'	24.00 RT	483819.766	781623.498	777.13
155*	607+13.64 'SOA'	23.90 RT	483854.098	781637.809	776.49
156	606+97.86 'SOA'	48.17 LT	483867.469	781565.260	776.15
157*	607+13.73 'NOA'	48.00 RT	483824.894	781707.546	776.42
158*	607+28.63 'SOA'	38.00 LT	483891.898	781586.555	775.85
159*	607+28.65 'SOA'	12.27 RT	483872.437	781632.906	776.58
160*	607+28.70 'NOA'	12.00 LT	483861.939	781658.031	776.82
161*	607+28.95 'NOA'	38.00 RT	483842.797	781704.222	776.40
162*	607+13.65 'SOA'	12.26 RT	483858.612	781627.085	776.77
163*	607+13.84 'NOA'	12.00 LT	483848.237	781652.273	777.09
164*	606+76.53 'SOA'	48.10 LT	483847.774	781557.057	776.64
165	606+97.87 'SOA'	46.32 LT	483866.754	781566.970	776.19

* MATCH EXISTING ELEVATION

STATION & OFFSET TABLE					
POINT	STATION	OFFSET	Y COORDS	X COORDS	ELEVATION
166*	606+76.53 'SOA'	38.00 LT	483843.860	781566.372	776.86
168*	607+28.63 'SOA'	48.82 LT	483896.084	781576.575	775.76
169*	606+76.46 'SOA'	12.00 RT	483824.427	781612.439	777.32
170*	607+28.63 'SOA'	46.17 LT	483895.060	781579.025	775.73
171	607+06.31 'SOA'	101.50 RT	483817.279	781706.516	776.56
172	607+02.63 'NOA'	64.08 RT	483808.427	781718.073	776.38
173*	606+76.45 'NOA'	23.53 LT	483818.232	781627.161	777.68
174*	607+13.64 'NOA'	23.53 LT	483852.519	781641.568	776.96
175	606+97.99 'SOA'	12.00 RT	483844.281	781620.782	776.95
176*	606+76.47 'NOA'	12.00 LT	483813.782	781637.796	777.82
177*	607+13.76 'NOA'	50.06 RT	483824.120	781709.456	776.49
178*	607+06.07 'NOA'	65.00 RT	483811.246	781720.251	776.15
179*	606+76.60 'NOA'	38.00 RT	483794.538	781683.944	777.34
180	606+97.86 'NOA'	48.12 RT	483810.221	781701.507	776.72
181*	606+76.63 'NOA'	48.22 RT	483790.602	781693.377	777.14
182*	606+76.63 'NOA'	63.58 RT	483784.651	781707.541	776.81

STATION & OFFSET TABLE					
POINT	STATION	OFFSET	Y COORDS	X COORDS	ELEVATION
183	606+97.88 'NOA'	63.58 RT	483804.242	781715.772	776.45
184	607+06.09 'NOA'	64.08 RT	483811.625	781719.409	776.18
185*	607+13.76 'NOA'	65.00 RT	483818.336	781723.230	776.10
187*	606+76.47 'SOA'	0.00 LT	483829.089	781601.380	777.50
188	606+97.97 'SOA'	0.00 RT	483848.905	781609.708	777.15
189	607+13.65 'SOA'	0.00 RT	483863.367	781615.785	776.98
190*	607+28.64 'SOA'	0.00 RT	483877.186	781621.591	776.78
191*	606+76.51 'NOA'	0.00 RT	483809.172	781648.875	778.06
192	606+97.88 'NOA'	0.00 RT	483828.872	781657.153	777.65
193	607+13.82 'NOA'	0.00 LT	483843.569	781663.327	777.35
194*	607+28.77 'NOA'	0.00 RT	483857.351	781669.119	777.08
195	606+98.02 'SOA'	24.00 RT	483839.657	781631.856	776.73
196	606+97.79 'NOA'	23.53 LT	483837.906	781635.427	777.20
197	606+97.82 'NOA'	12.00 LT	483833.471	781646.068	777.42
198*	606+76.63 'NOA'	50.16 RT	483789.852	781695.163	776.95
199	606+97.88 'NOA'	50.10 RT	483809.464	781703.344	776.64

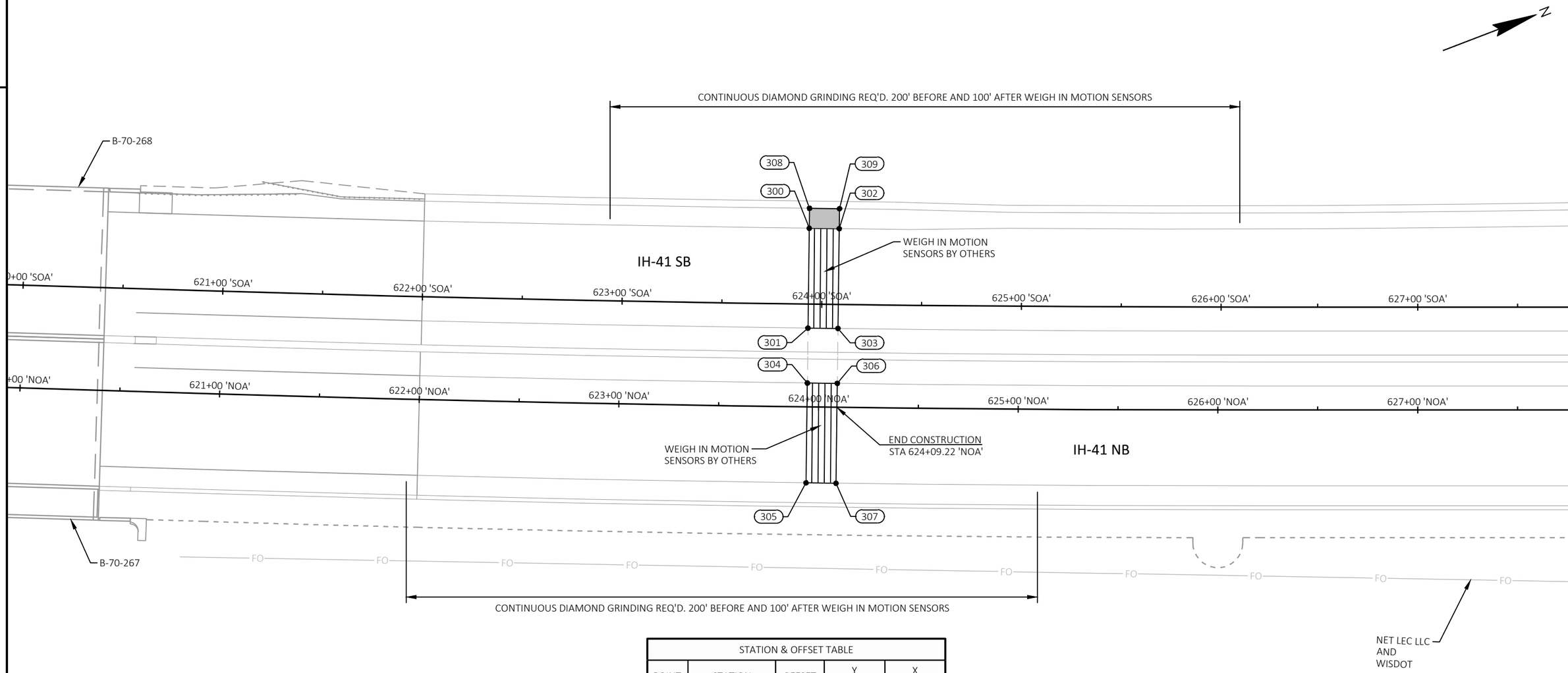

STATION & OFFSET TABLE				
POINT	STATION	OFFSET	Y COORDS	X COORDS
300 *	623+93.24 'SOA'	38.0' LT	485426.92	782228.71
301 *	623+93.24 'SOA'	12.0' RT	485408.36	782275.14
302 *	624+08.27 'SOA'	38.0' LT	485440.85	782234.27
303 *	624+08.27 'SOA'	12.0' RT	485422.33	782280.71
304*	623+94.21 'NOA'	12.0' LT	485398.22	782300.70
305 *	623+94.21 'NOA'	38.0' RT	485379.66	782347.13
306 *	624+09.22 'NOA'	12.0' LT	485412.15	782306.26
307 *	624+09.23 'NOA'	38.0' RT	485393.64	782352.70
308 *	623+93.24 'SOA'	48.0' LT	485430.63	782219.42
309 *	624+08.27 'SOA'	48.0' LT	485444.55	782224.98

* MATCH EXISTING ELEVATION

LEGEND

CONCRETE PAVEMENT HES 10-INCH (DOWELED AND TINED) OVER CONCRETE BASE HES 10-INCH (SUB-SLAB)

ASPHALTIC SURFACE 5-INCH

2

LEGEND

BARRIER SYSTEM LIMITS OF BASE AGGREGATE DENSE 3/4-INCH (6:1 MAX SLOPE)

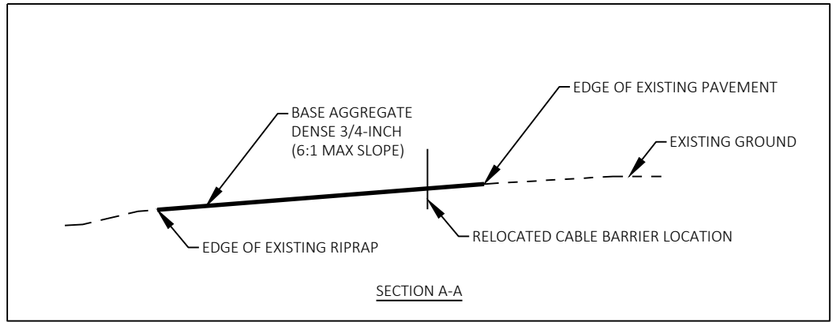

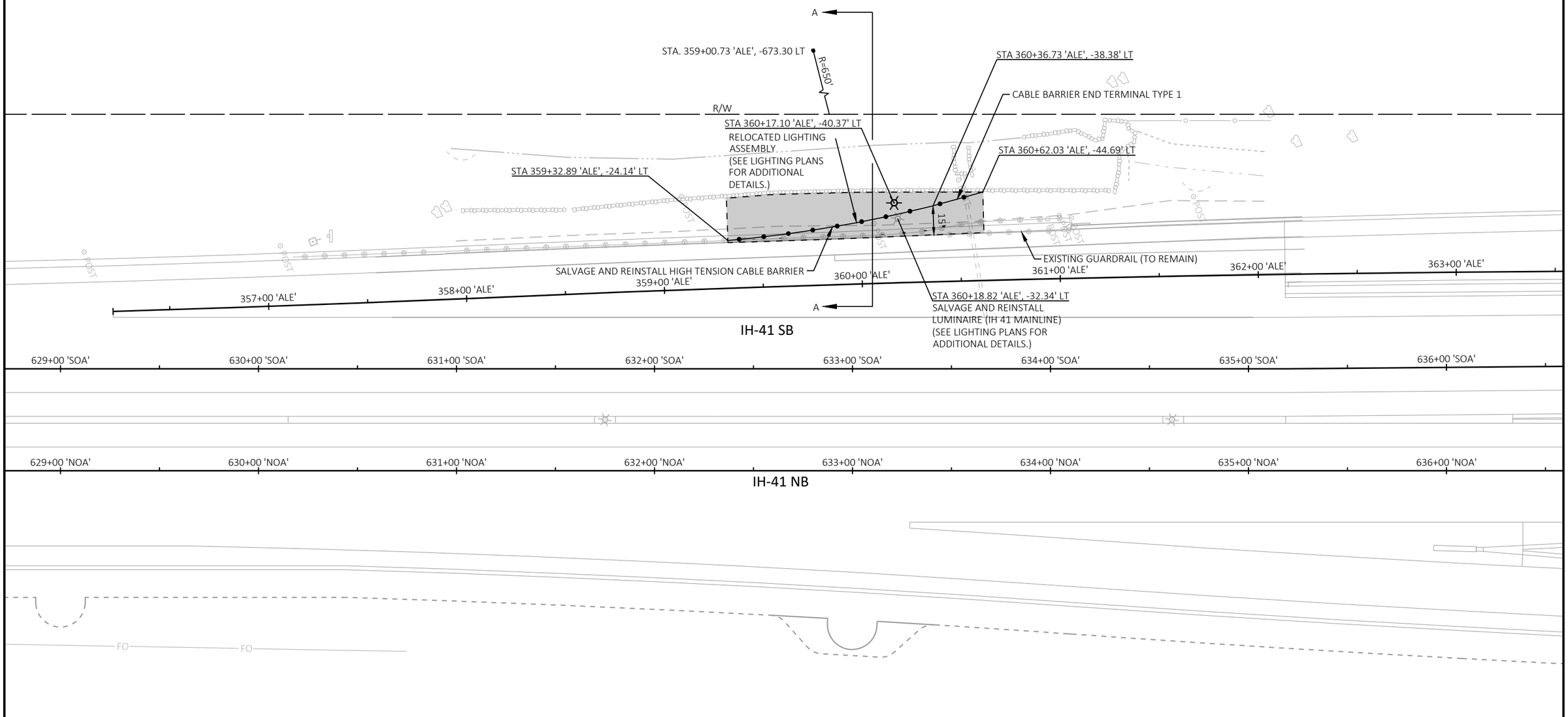

PROJECT NO: 1120-63-71	HWY: IH 41	COUNTY: WINNEBAGO	PLAN DETAILS	SHEET 21	E

2

LEGEND

SILT FENCE

TA SMALL ANIMAL TURN-AROUND

INLET PROTECTION

B D INLET PROTECTION TYPE

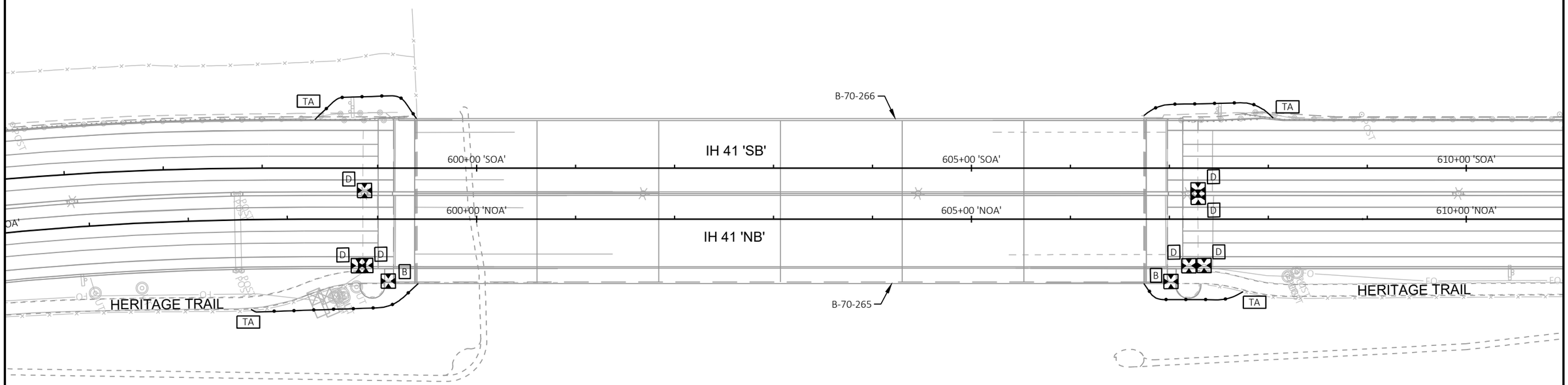

2

PROJECT NO: 1120-63-71	HWY: IH 41	COUNTY: WINNEBAGO	EROSION CONTROL	SHEET 22	E

FILE NAME : S:\MAD\2000--2099\2089\008\DRAWINGS\CAD\CIVIL 3D\SHEETS\022001-EC.DWG
LAYOUT NAME - 022001-ec

PLOT DATE : 7/20/2023 9:16 AM PLOT BY : SCHMIDT, BRAD PLOT NAME : PLOT SCALE : 1 IN:100 FT

WISDOT/CADDS SHEET 42

2

2

SIGN
REPLACEMENT
LOCATIONS

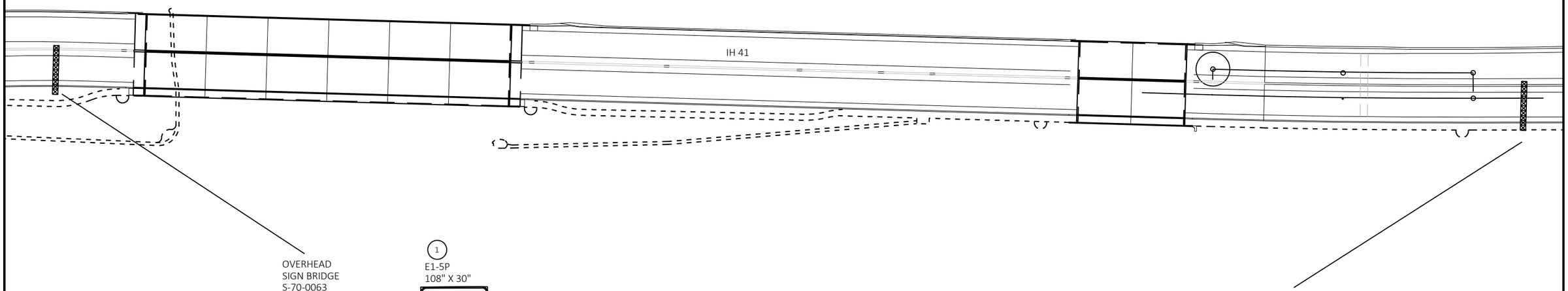

OVERHEAD
SIGN BRIDGE
S-70-0063

1
E1-5P
108" X 30"

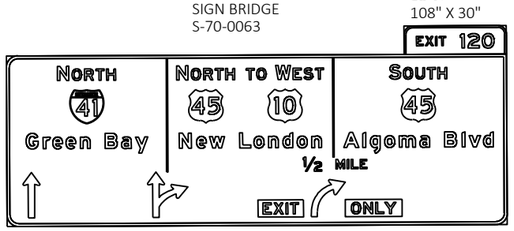

2
E7-3
528" X 180"
CENTER MIDDLE ARROW OVER LANE 3
18'-3" CLEARANCE

OVERHEAD
SIGN BRIDGE
S-70-0065

3
E1-5P
108" X 30"

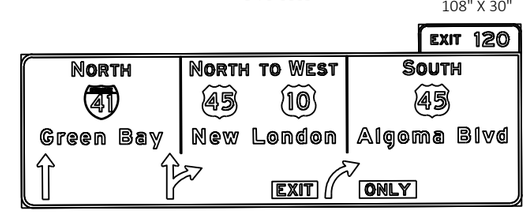

4
E7-3
528" X 162"
CENTER MIDDLE
ARROW OVER LANE 3
18'-3" CLEARANCE

PROJECT NO: 1120-63-71	HWY: IH 41	COUNTY: WINNEBAGO	SIGNING	SHEET 23	E

FILE NAME : C:\BOXDRV\BOX\DTSD\DTSD-NER\OPS\TRAFFIC\SIGNING\SIGNING - ERIC\PROJECTS\1120-63-71 41 45 SIGN CHANGE\11206371_SIGNPLAN.DWG
LAYOUT NAME - Plan 1 IN 200 FT
PLOT DATE : 10/5/2023 4:26 PM PLOT BY : SIKORSKI, ERIC T PLOT NAME : PLOT SCALE : 1 IN:200 FT
WISDOT/CADDS SHEET 42

2

NOTES:

WISCONSIN DOT NORTHEAST REGION ELECTRICAL UNIT SHALL APPROVE FINAL LOCATIONS FOR ALL CONCRETE BASES IN THE FIELD PRIOR TO CONSTRUCTION. CONTACT THEM 3 DAYS IN ADVANCE AT (920) 360-4749.

THE LOCATION OF EXISTING AND PROPOSED UTILITIES AS SHOWN ON THE PLANS ARE APPROXIMATE. IN ADDITION, THERE MAY BE OTHER UTILITIES WITHIN THE PROJECT AREA WHICH ARE NOT SHOWN. THE CONTRACTOR SHALL VERIFY THE LOCATIONS OF ALL UTILITIES PRIOR TO CONSTRUCTION.

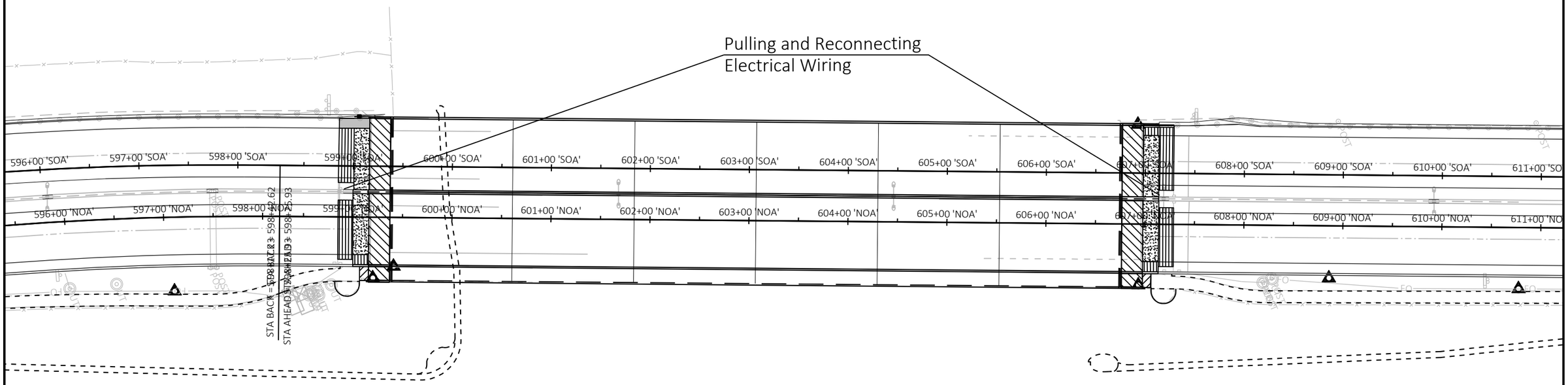

LEGEND

2" CONDUIT, NON-METALLIC (unless otherwise noted)	
LIGHTING UNIT	
PULL BOX 24" X 42"	
UTILITY POLE	
ELECTRIC, UNDERGROUND	— E —
ELECTRIC, OVERHEAD	— OH —

IH 41 MAINLINE
CITY OF OSHKOSH
WINNEBAGO COUNTY

LIGHTING NO. L70-0796

DESIGNER: WISDOT NE REGION TRAFFIC UNIT

DATE: 5/5/2023 SHEET NO. 1 OF 2

PROJECT NO: 1120-63-71	HWY: IH 41	COUNTY: WINNEBAGO	CONSTRUCTION DETAIL - L70-796	SHEET 24	E

2

NOTES:

WISCONSIN DOT NORTHEAST REGION ELECTRICAL UNIT SHALL APPROVE FINAL LOCATIONS FOR ALL CONCRETE BASES IN THE FIELD PRIOR TO CONSTRUCTION. CONTACT THEM 3 DAYS IN ADVANCE AT (920) 360-4749.

THE LOCATION OF EXISTING AND PROPOSED UTILITIES AS SHOWN ON THE PLANS ARE APPROXIMATE. IN ADDITION, THERE MAY BE OTHER UTILITIES WITHIN THE PROJECT AREA WHICH ARE NOT SHOWN. THE CONTRACTOR SHALL VERIFY THE LOCATIONS OF ALL UTILITIES PRIOR TO CONSTRUCTION.

2

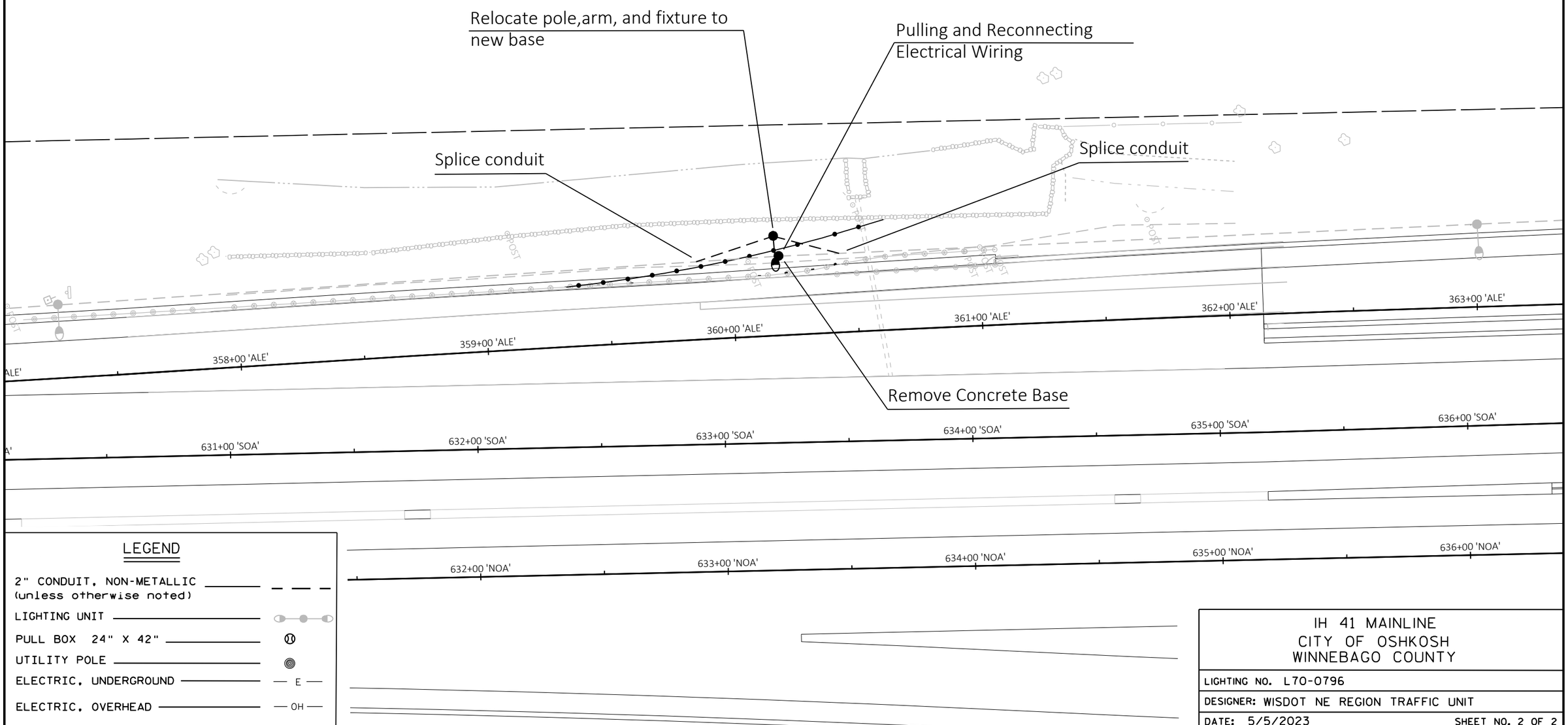

LEGEND

2" CONDUIT, NON-METALLIC (unless otherwise noted)	
LIGHTING UNIT	
PULL BOX 24" X 42"	
UTILITY POLE	
ELECTRIC, UNDERGROUND	E
ELECTRIC, OVERHEAD	OH

IH 41 MAINLINE
CITY OF OSHKOSH
WINNEBAGO COUNTY

LIGHTING NO. L70-0796

DESIGNER: WISDOT NE REGION TRAFFIC UNIT

DATE: 5/5/2023 SHEET NO. 2 OF 2

PROJECT NO: 1120-63-71	HWY: IH 41	COUNTY: WINNEBAGO	CONSTRUCTION DETAIL - L70-796	SHEET 25	E

2

LEGEND

PM1	MARKING LINE EPOXY 4-INCH (WHITE)
PM2	MARKING LINE EPOXY 4-INCH (YELLOW)
PM3	MARKING LINE GROOVED CONTRAST PERMANENT TAPE 4-INCH (DASHED WHITE) (12.5 FT LINE, 37.5 FT GAP)
PM4	MARKING LINE GROOVED CONTRAST PERMANENT TAPE 8-INCH (WHITE)
PM5	MARKING LINE GROOVED CONTRAST PERMANENT TAPE 8-INCH (DASHED WHITE) (3 FT LINE, 9 FT GAP)

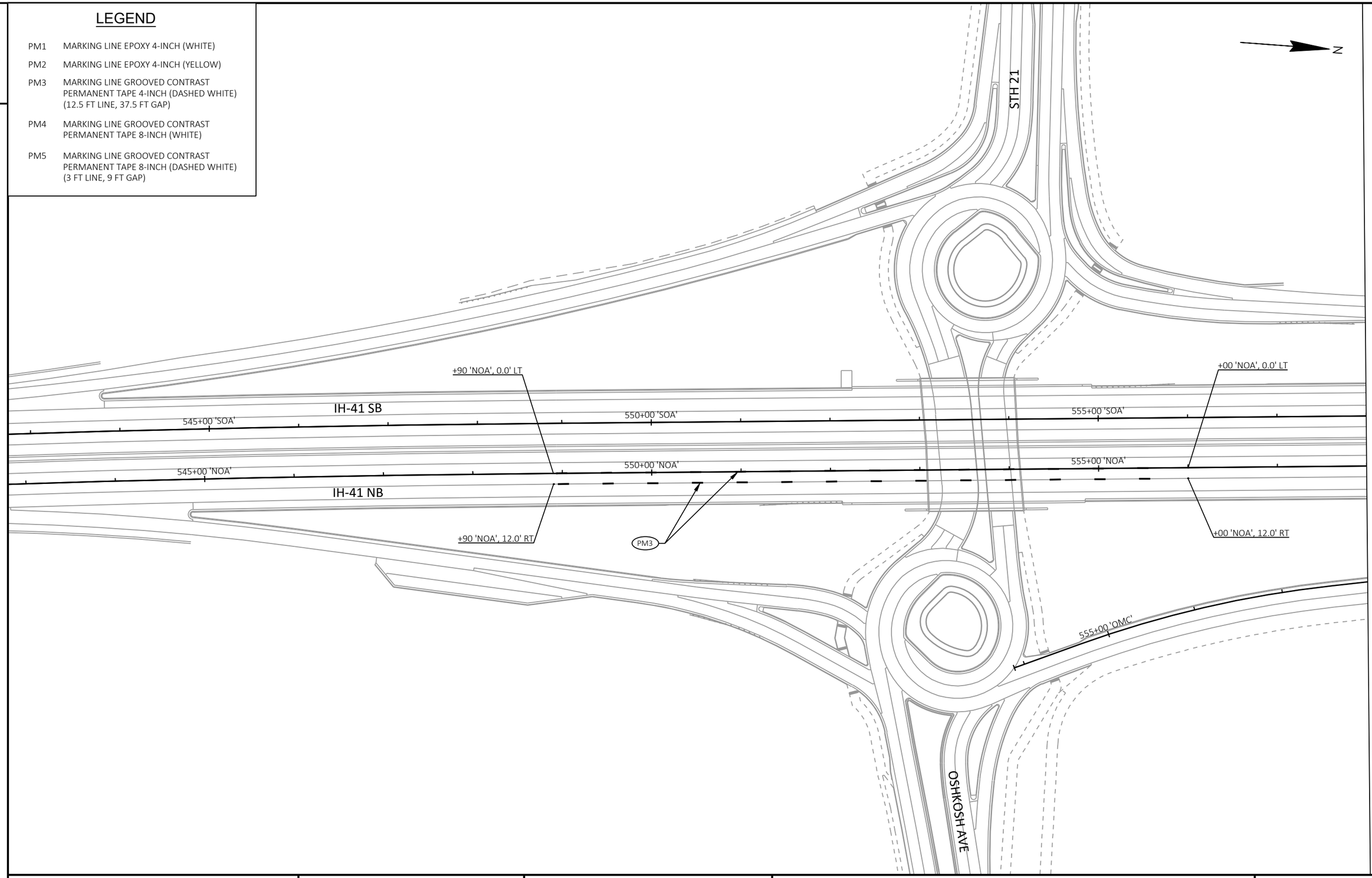

2

PROJECT NO: 1120-63-71	HWY: IH 41	COUNTY: WINNEBAGO	PAVEMENT MARKING	SHEET 26	E

2

LEGEND

PM1	MARKING LINE EPOXY 4-INCH (WHITE)
PM2	MARKING LINE EPOXY 4-INCH (YELLOW)
PM3	MARKING LINE GROOVED CONTRAST PERMANENT TAPE 4-INCH (DASHED WHITE) (12.5 FT LINE, 37.5 FT GAP)
PM4	MARKING LINE GROOVED CONTRAST PERMANENT TAPE 8-INCH (WHITE)
PM5	MARKING LINE GROOVED CONTRAST PERMANENT TAPE 8-INCH (DASHED WHITE) (3 FT LINE, 9 FT GAP)

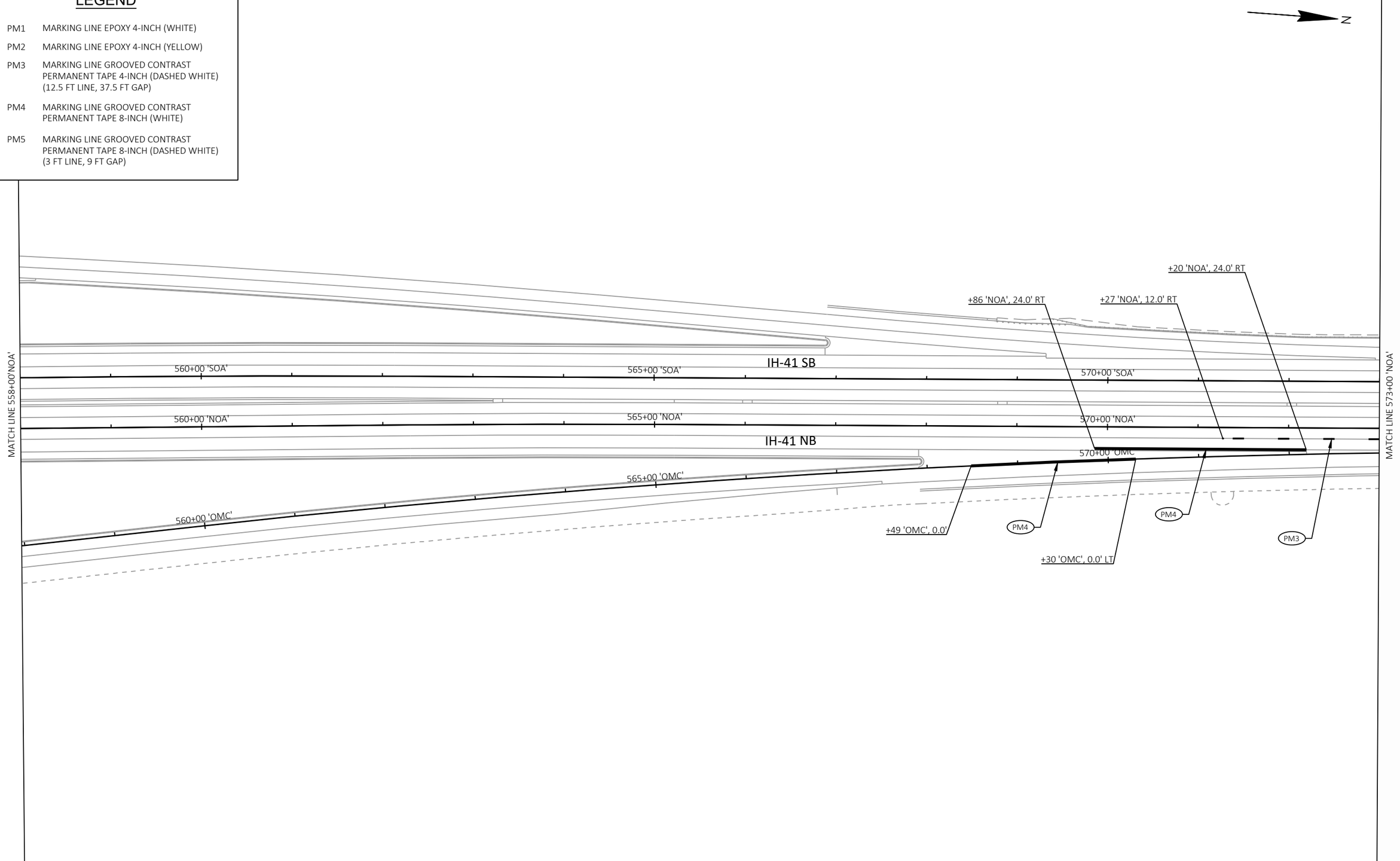

2

PROJECT NO: 1120-63-71	HWY: IH 41	COUNTY: WINNEBAGO	PAVEMENT MARKING	SHEET 27	E

FILE NAME : S:\MAD\2000--2099\2089\008\DRAWINGS\CAD\CIVIL 3D\SHEETS\024501-PM.DWG
LAYOUT NAME - 024502-pm
PLOT DATE : 9/13/2023 12:42 PM PLOT BY : SCHMIDT, BRAD PLOT NAME : PLOT SCALE : 1 IN:100 FT

LEGEND

PM1	MARKING LINE EPOXY 4-INCH (WHITE)
PM2	MARKING LINE EPOXY 4-INCH (YELLOW)
PM3	MARKING LINE GROOVED CONTRAST PERMANENT TAPE 4-INCH (DASHED WHITE) (12.5 FT LINE, 37.5 FT GAP)
PM4	MARKING LINE GROOVED CONTRAST PERMANENT TAPE 8-INCH (WHITE)
PM5	MARKING LINE GROOVED CONTRAST PERMANENT TAPE 8-INCH (DASHED WHITE) (3 FT LINE, 9 FT GAP)

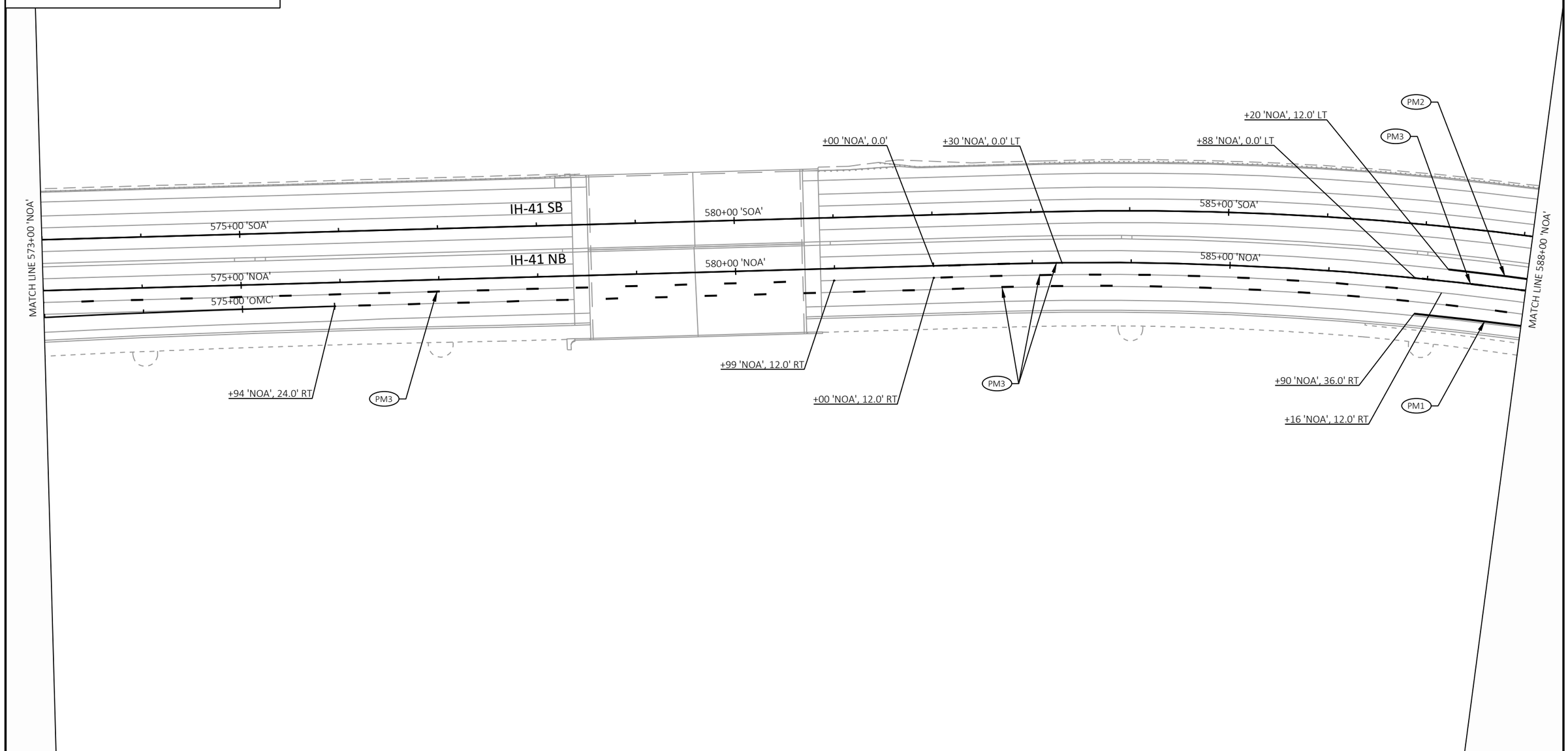

2

LEGEND

PM1	MARKING LINE EPOXY 4-INCH (WHITE)
PM2	MARKING LINE EPOXY 4-INCH (YELLOW)
PM3	MARKING LINE GROOVED CONTRAST PERMANENT TAPE 4-INCH (DASHED WHITE) (12.5 FT LINE, 37.5 FT GAP)
PM4	MARKING LINE GROOVED CONTRAST PERMANENT TAPE 8-INCH (WHITE)
PM5	MARKING LINE GROOVED CONTRAST PERMANENT TAPE 8-INCH (DASHED WHITE) (3 FT LINE, 9 FT GAP)

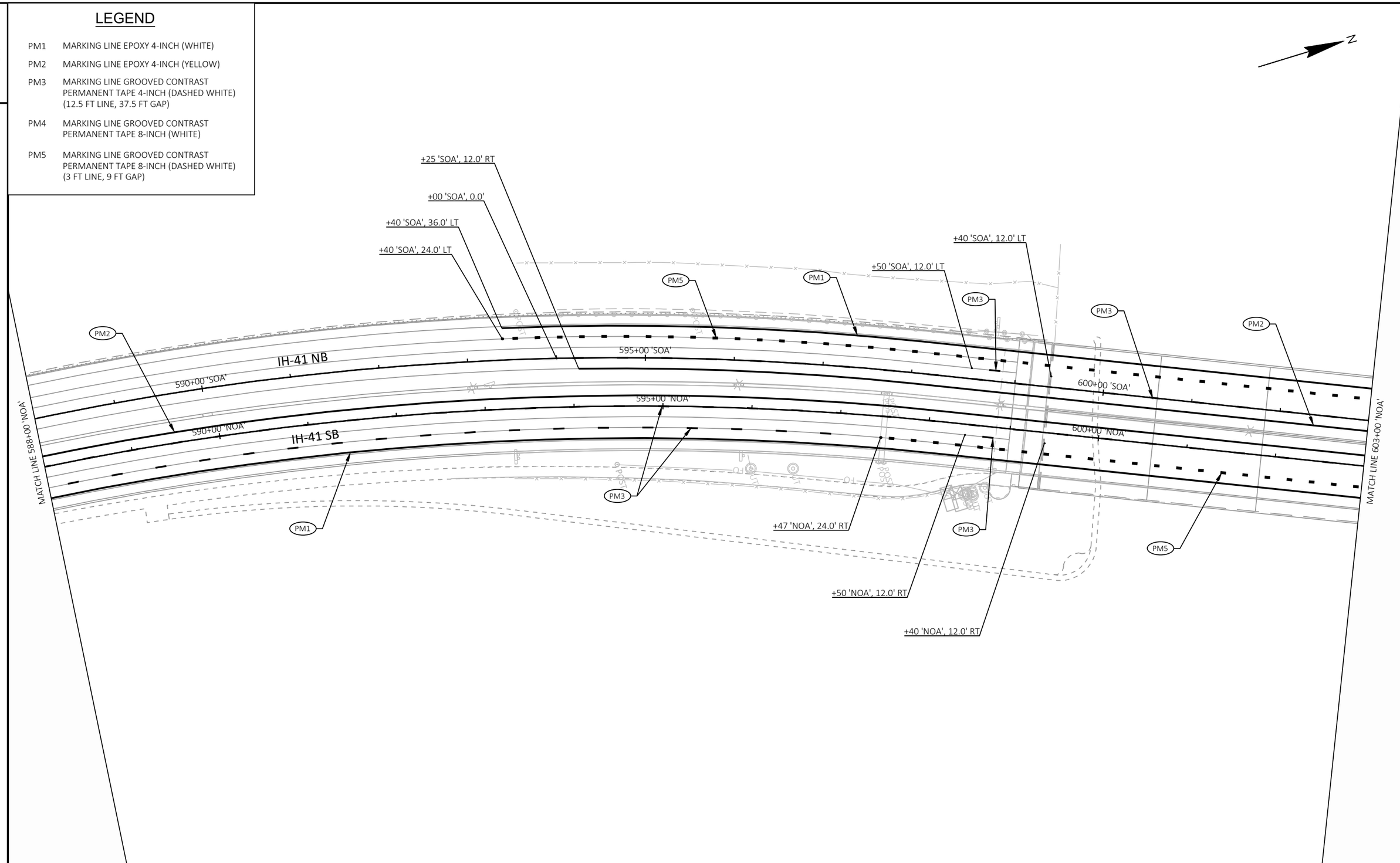

2

PROJECT NO: 1120-63-71	HWY: IH 41	COUNTY: WINNEBAGO	PAVEMENT MARKING	SHEET 29	E

FILE NAME : S:\MAD\2000--2099\2089\008\DRAWINGS\CAD\CIVIL 3D\SHEETS\024501-PM.DWG
LAYOUT NAME - 024504-pm
PLOT DATE : 9/13/2023 12:42 PM PLOT BY : SCHMIDT, BRAD PLOT NAME : PLOT SCALE : 1 IN:100 FT
WISDOT/CADDS SHEET 42

2

LEGEND

PM1	MARKING LINE EPOXY 4-INCH (WHITE)
PM2	MARKING LINE EPOXY 4-INCH (YELLOW)
PM3	MARKING LINE GROOVED CONTRAST PERMANENT TAPE 4-INCH (DASHED WHITE) (12.5 FT LINE, 37.5 FT GAP)
PM4	MARKING LINE GROOVED CONTRAST PERMANENT TAPE 8-INCH (WHITE)
PM5	MARKING LINE GROOVED CONTRAST PERMANENT TAPE 8-INCH (DASHED WHITE) (3 FT LINE, 9 FT GAP)

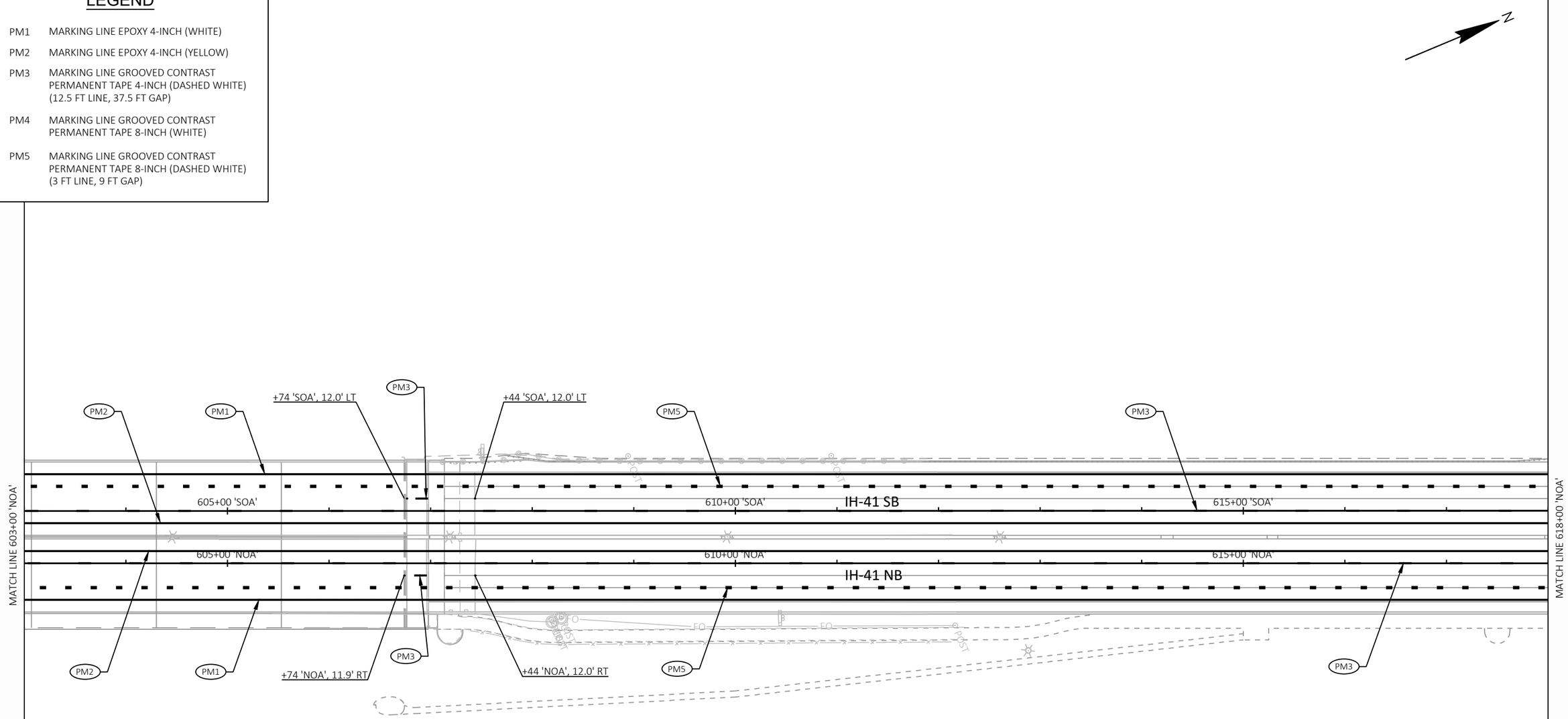

2

PROJECT NO: 1120-63-71	HWY: IH 41	COUNTY: WINNEBAGO	PAVEMENT MARKING	SHEET 30	E

2

LEGEND

PM1	MARKING LINE EPOXY 4-INCH (WHITE)
PM2	MARKING LINE EPOXY 4-INCH (YELLOW)
PM3	MARKING LINE GROOVED CONTRAST PERMANENT TAPE 4-INCH (DASHED WHITE) (12.5 FT LINE, 37.5 FT GAP)
PM4	MARKING LINE GROOVED CONTRAST PERMANENT TAPE 8-INCH (WHITE)
PM5	MARKING LINE GROOVED CONTRAST PERMANENT TAPE 8-INCH (DASHED WHITE) (3 FT LINE, 9 FT GAP)

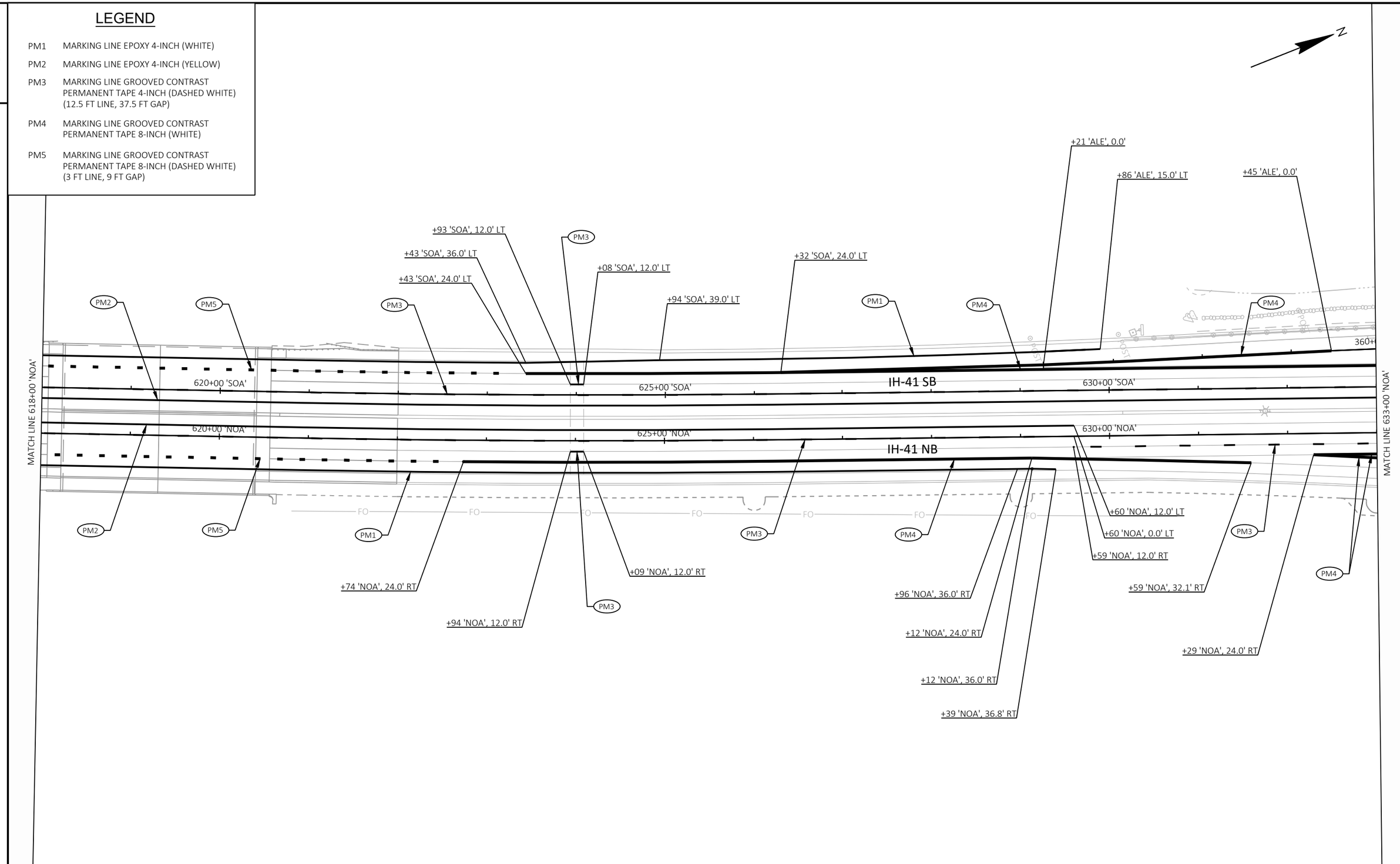

2

PROJECT NO: 1120-63-71	HWY: IH 41	COUNTY: WINNEBAGO	PAVEMENT MARKING	SHEET 31	E

FILE NAME : S:\MAD\2000--2099\2089\008\DRAWINGS\CAD\CIVIL 3D\SHEETS\024501-PM.DWG
LAYOUT NAME - 024506-pm
PLOT DATE : 9/13/2023 12:42 PM PLOT BY : SCHMIDT, BRAD PLOT NAME : PLOT SCALE : 1 IN:100 FT
WISDOT/CADDS SHEET 42

LEGEND

PM1	MARKING LINE EPOXY 4-INCH (WHITE)
PM2	MARKING LINE EPOXY 4-INCH (YELLOW)
PM3	MARKING LINE GROOVED CONTRAST PERMANENT TAPE 4-INCH (DASHED WHITE) (12.5 FT LINE, 37.5 FT GAP)
PM4	MARKING LINE GROOVED CONTRAST PERMANENT TAPE 8-INCH (WHITE)
PM5	MARKING LINE GROOVED CONTRAST PERMANENT TAPE 8-INCH (DASHED WHITE) (3 FT LINE, 9 FT GAP)

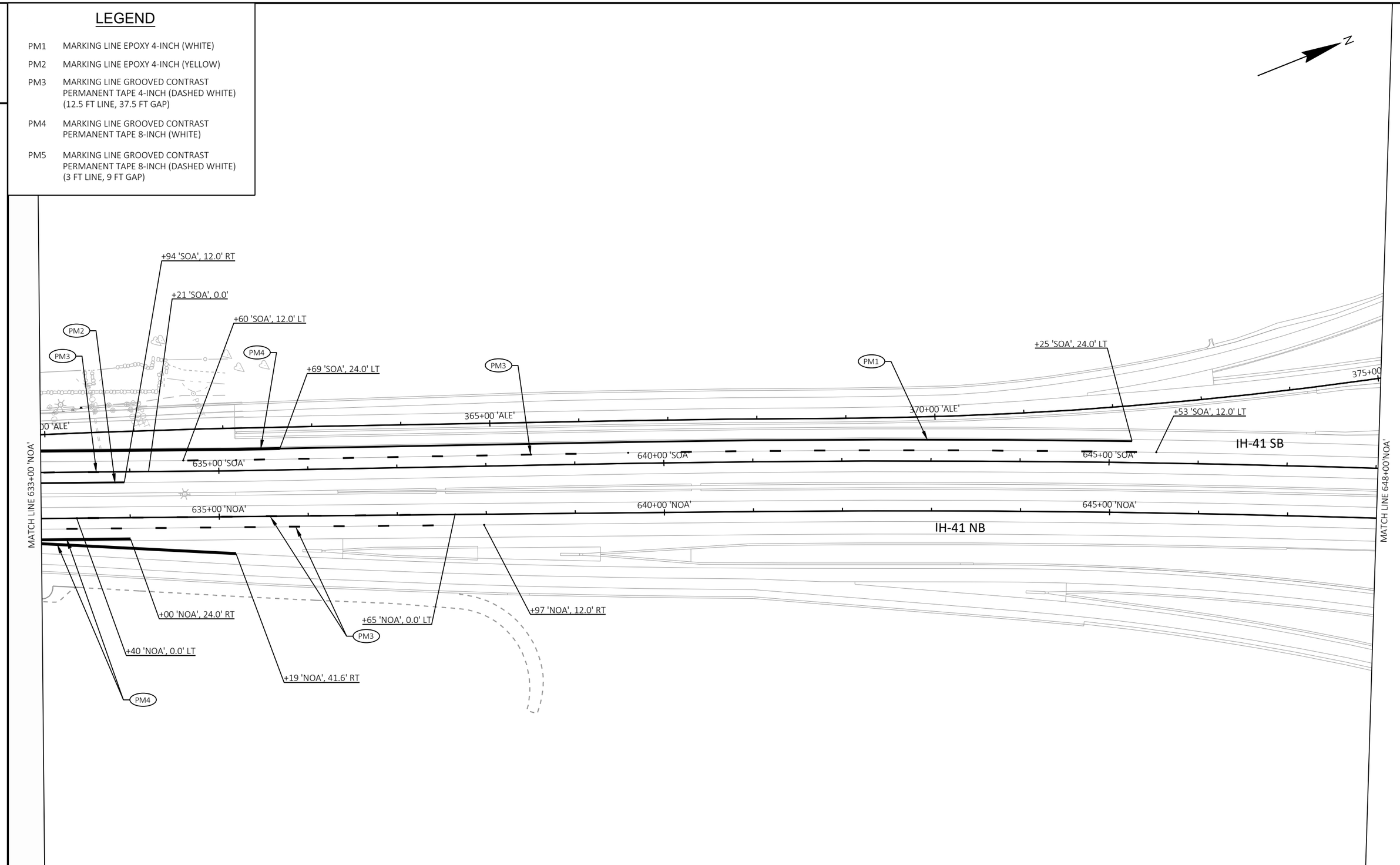

2

LEGEND

PM1	MARKING LINE EPOXY 4-INCH (WHITE)
PM2	MARKING LINE EPOXY 4-INCH (YELLOW)
PM3	MARKING LINE GROOVED CONTRAST PERMANENT TAPE 4-INCH (DASHED WHITE) (12.5 FT LINE, 37.5 FT GAP)
PM4	MARKING LINE GROOVED CONTRAST PERMANENT TAPE 8-INCH (WHITE)
PM5	MARKING LINE GROOVED CONTRAST PERMANENT TAPE 8-INCH (DASHED WHITE) (3 FT LINE, 9 FT GAP)

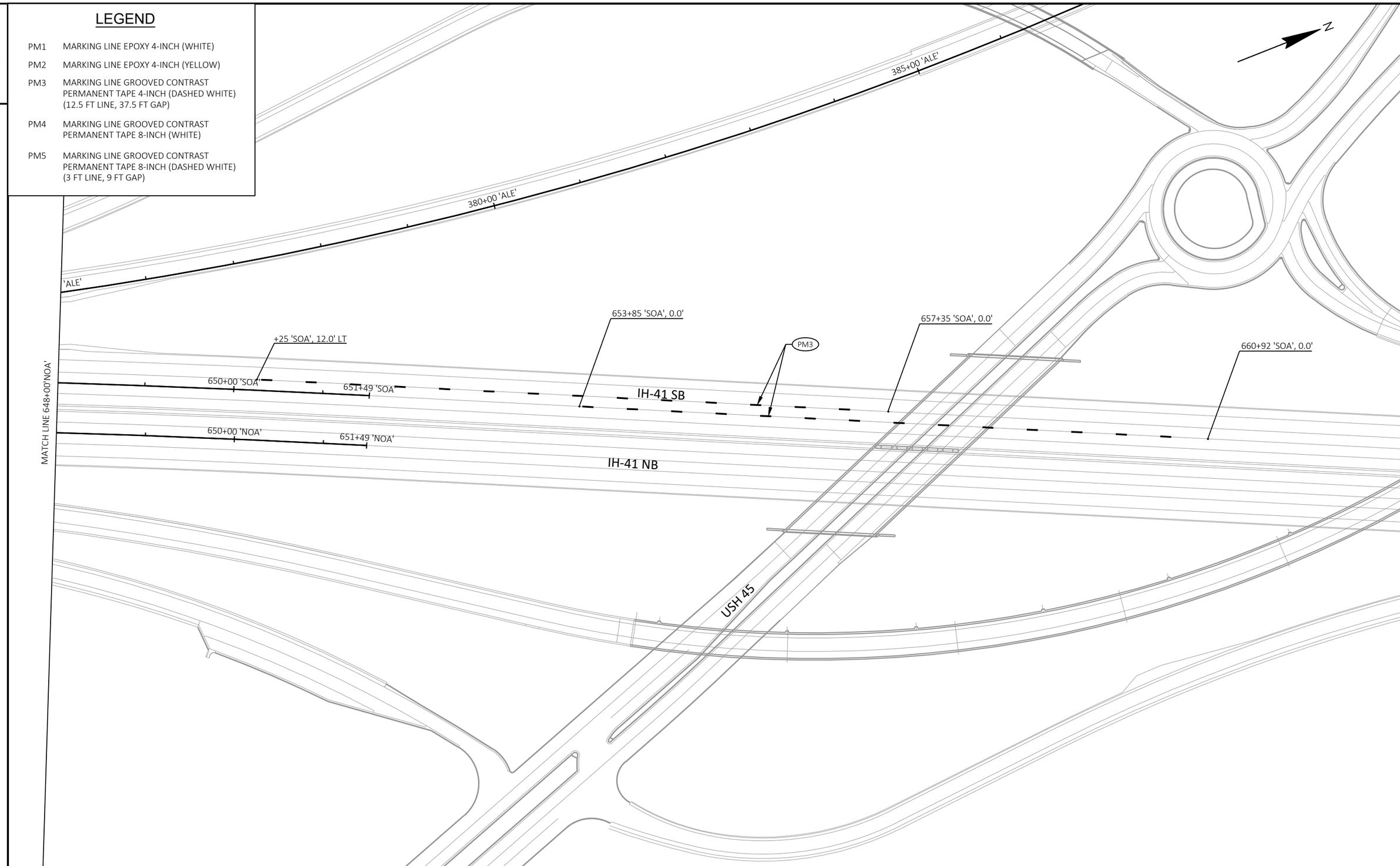

2

PROJECT NO: 1120-63-71	HWY: IH 41	COUNTY: WINNEBAGO	PAVEMENT MARKING	SHEET 33	E

FILE NAME : S:\MAD\2000--2099\2089\008\DRAWINGS\CAD\CIVIL 3D\SHEETS\024501-PM.DWG
LAYOUT NAME - 024508-pm
PLOT DATE : 9/13/2023 12:43 PM PLOT BY : SCHMIDT, BRAD PLOT NAME : PLOT SCALE : 1 IN:100 FT
WISDOT/CADDS SHEET 42

2

LEGEND

TYPE III BARRICADE

TYPE III BARRICADE WITH ATTACHED SIGN

2

PROJECT NO: 1120-63-71	HWY: IH 41	COUNTY: WINNEBAGO	ADVANCED WARNING - HERITAGE TRAIL	SHEET 34	E

FILE NAME : S:\MAD\2000--2099\2089\008\DRAWINGS\CAD\CIVIL 3D\SHEETS\025000-AW.DWG
LAYOUT NAME - 025000-aw

PLOT DATE : 7/20/2023 9:18 AM PLOT BY : SCHMIDT, BRAD PLOT NAME : PLOT SCALE : ##########

WISDOT/CADDS SHEET 42

2

NOTES:

1. DETOUR ROUTE MARKER SIGNING TO BE INSTALLED AND MAINTAINED BY CONTRACTOR.
2. THE EXACT LOCATION AND SPACING OF ALL SIGNS AND DEVICES SHALL BE ADJUSTED TO FIT FIELD CONDITIONS AS APPROVED BY THE ENGINEER.
3. REMOVE OR COVER ANY SIGN, TEMPORARY OR EXISTING, WHICH CONFLICTS WITH TRAFFIC CONTROL "IN USE", OR AS APPROVED BY THE ENGINEER.
4. "WO" AND "W" SIGNS SHALL BE 48"x48" UNLESS OTHERWISE NOTED.
5. "WO" SIGNS ARE THE SAME AS "W" SIGNS EXCEPT THE BACKGROUND IS ORANGE.
6. "MO" SIGNS ARE THE SAME AS "M" SIGNS EXCEPT THE BACKGROUND IS ORANGE.
7. TRAFFIC CONTROL SIGNS PORTABLE CHANGEABLE MESSAGE FOR PRE-WARNING TO BE INSTALLED ONE WEEK PRIOR TO IMPLEMENTATION OF DETOUR ROUTE.

LEGEND

DETOUR ROUTE

TRAFFIC CONTROL SIGN ON POST

2

PROJECT NO: 1120-63-71	HWY: IH 41	COUNTY: WINNEBAGO	DETOUR	SHEET 35	E

FILE NAME : S:\MAD\2000--2099\2089\008\DRAWINGS\CAD\CIVIL 3D\SHEETS\027001-DT.DWG
LAYOUT NAME - 027001-dt
PLOT DATE : 7/20/2023 9:19 AM
PLOT BY : SCHMIDT, BRAD
PLOT NAME :
PLOT SCALE : ##########
WISDOT/CADDS SHEET 42

2

NOTES:

1. DETOUR ROUTE MARKER SIGNING TO BE INSTALLED AND MAINTAINED BY CONTRACTOR.
2. THE EXACT LOCATION AND SPACING OF ALL SIGNS AND DEVICES SHALL BE ADJUSTED TO FIT FIELD CONDITIONS AS APPROVED BY THE ENGINEER.
3. REMOVE OR COVER ANY SIGN, TEMPORARY OR EXISTING, WHICH CONFLICTS WITH TRAFFIC CONTROL "IN USE", OR AS APPROVED BY THE ENGINEER.
4. "WO" AND "W" SIGNS SHALL BE 48"x48" UNLESS OTHERWISE NOTED.
5. "WO" SIGNS ARE THE SAME AS "W" SIGNS EXCEPT THE BACKGROUND IS ORANGE.
6. "MO" SIGNS ARE THE SAME AS "M" SIGNS EXCEPT THE BACKGROUND IS ORANGE.
7. TRAFFIC CONTROL SIGNS PORTABLE CHANGEABLE MESSAGE FOR PRE-WARNING TO BE INSTALLED ONE WEEK PRIOR TO IMPLEMENTATION OF DETOUR ROUTE.

LEGEND

- DETOUR ROUTE
- TRAFFIC CONTROL SIGN ON POST
- TRAFFIC CONTROL COVERING SIGNS
- PCMS — TRAFFIC CONTROL SIGNS PCMS
- TRAFFIC CONTROL BARRICADES TYPE III WITH/WITHOUT ATTACHED SIGN

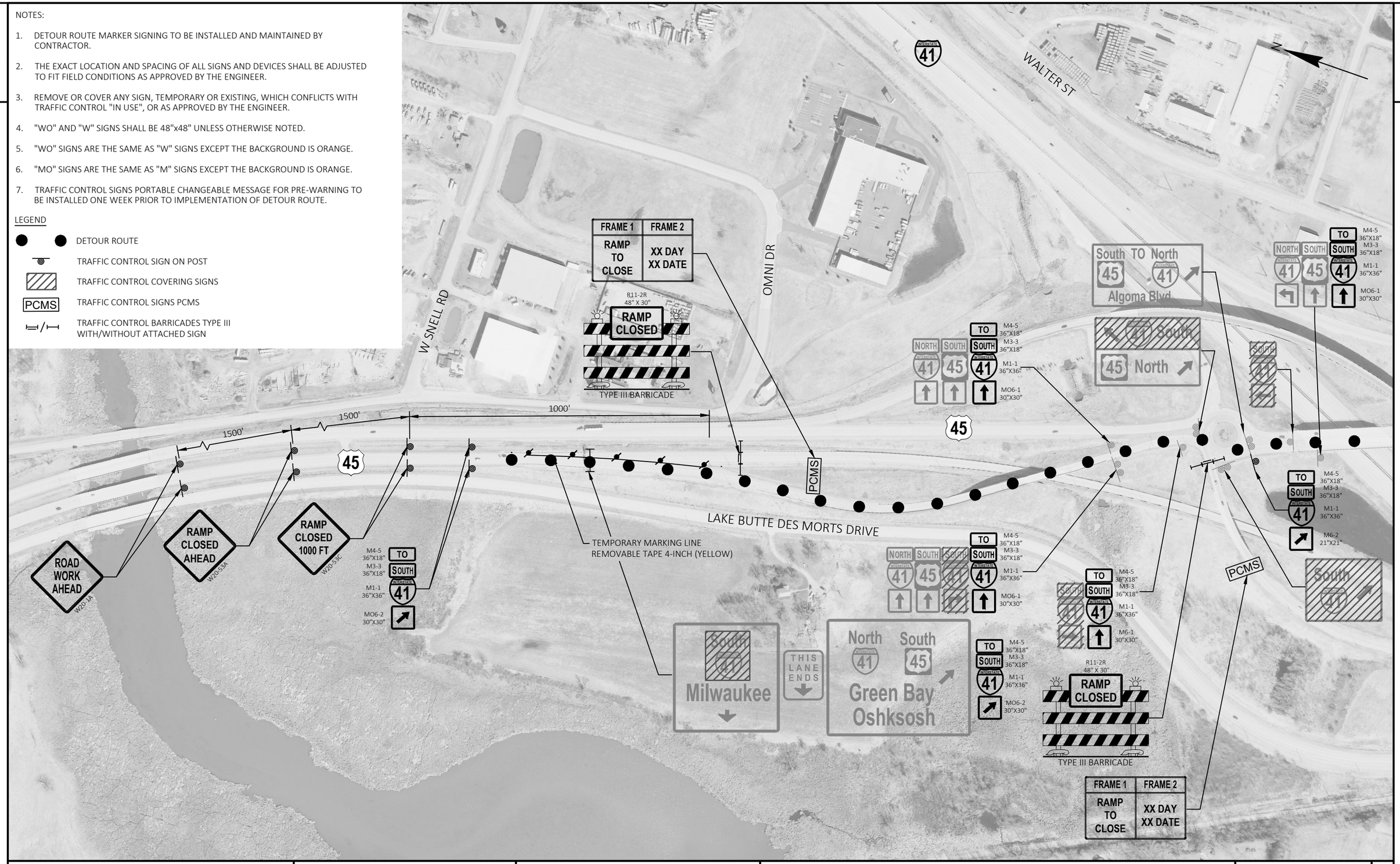

PROJECT NO: 1120-63-71	HWY: IH 41	COUNTY: WINNEBAGO	DETOUR - DETAIL A	SHEET 36	E

FILE NAME : S:\MAD\2000--2099\2089\008\DRAWINGS\CAD\CIVIL 3D\SHEETS\027001-DT.DWG
LAYOUT NAME - 027002-dt
PLOT DATE : 7/20/2023 9:19 AM PLOT BY : SCHMIDT, BRAD PLOT NAME : PLOT SCALE : ##########

2

NOTES:

1. DETOUR ROUTE MARKER SIGNING TO BE INSTALLED AND MAINTAINED BY CONTRACTOR.
2. THE EXACT LOCATION AND SPACING OF ALL SIGNS AND DEVICES SHALL BE ADJUSTED TO FIT FIELD CONDITIONS AS APPROVED BY THE ENGINEER.
3. REMOVE OR COVER ANY SIGN, TEMPORARY OR EXISTING, WHICH CONFLICTS WITH TRAFFIC CONTROL "IN USE", OR AS APPROVED BY THE ENGINEER.
4. "WO" AND "W" SIGNS SHALL BE 48"x48" UNLESS OTHERWISE NOTED.
5. "WO" SIGNS ARE THE SAME AS "W" SIGNS EXCEPT THE BACKGROUND IS ORANGE.
6. "MO" SIGNS ARE THE SAME AS "M" SIGNS EXCEPT THE BACKGROUND IS ORANGE.
7. TRAFFIC CONTROL SIGNS PORTABLE CHANGEABLE MESSAGE FOR PRE-WARNING TO BE INSTALLED ONE WEEK PRIOR TO IMPLEMENTATION OF DETOUR ROUTE.

LEGEND

DETOUR ROUTE

TRAFFIC CONTROL SIGN ON POST

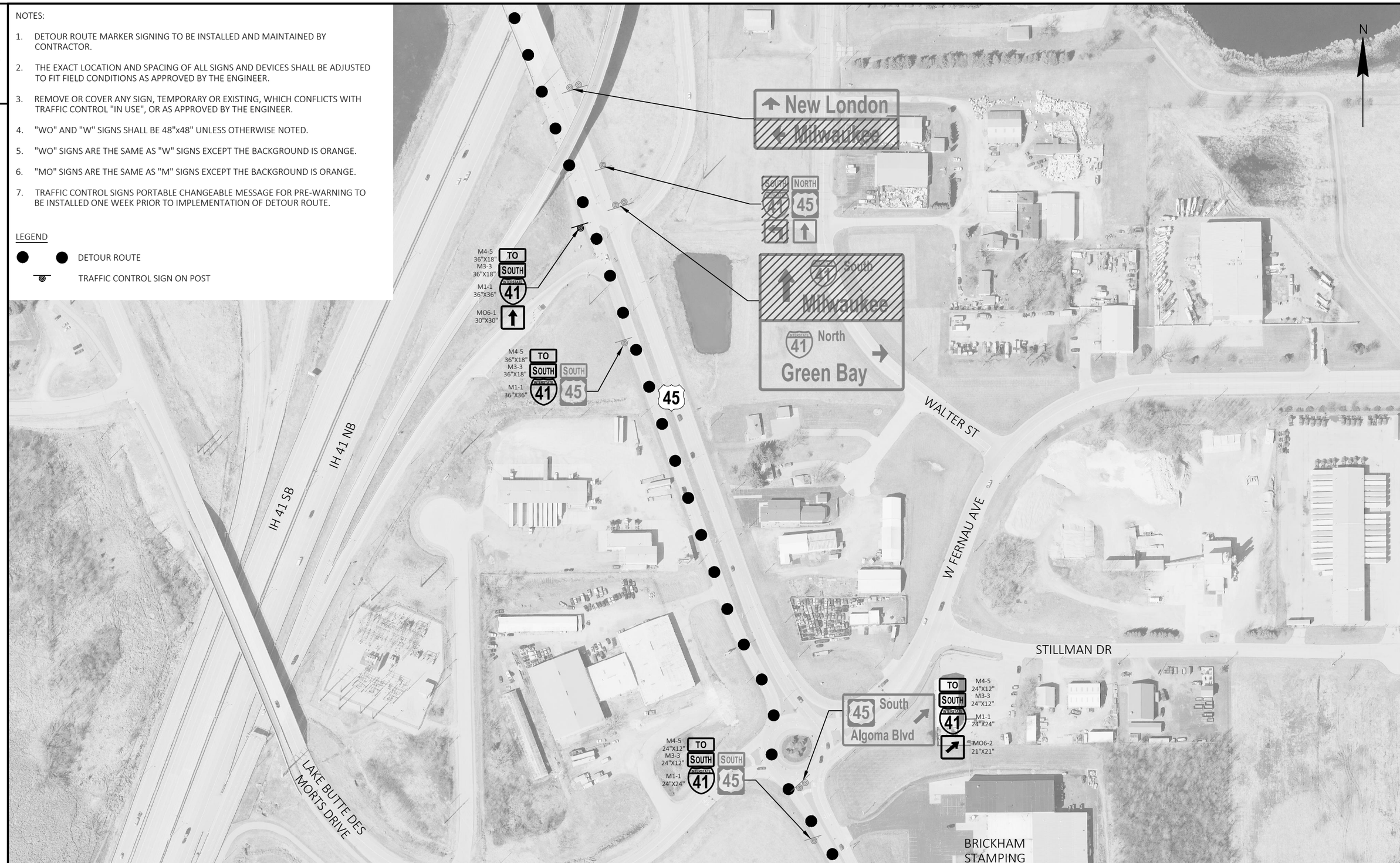

2

PROJECT NO: 1120-63-71	HWY: IH 41	COUNTY: WINNEBAGO	DETOUR - DETAIL B	SHEET 37	E

FILE NAME : S:\MAD\2000--2099\2089\008\DRAWINGS\CAD\CIVIL 3D\SHEETS\027001-DT.DWG
LAYOUT NAME - 027003-dt
PLOT DATE : 7/20/2023 9:19 AM PLOT BY : SCHMIDT, BRAD PLOT NAME : PLOT SCALE : ##########

2

NOTES:

1. DETOUR ROUTE MARKER SIGNING TO BE INSTALLED AND MAINTAINED BY CONTRACTOR.
2. THE EXACT LOCATION AND SPACING OF ALL SIGNS AND DEVICES SHALL BE ADJUSTED TO FIT FIELD CONDITIONS AS APPROVED BY THE ENGINEER.
3. REMOVE OR COVER ANY SIGN, TEMPORARY OR EXISTING, WHICH CONFLICTS WITH TRAFFIC CONTROL "IN USE", OR AS APPROVED BY THE ENGINEER.
4. "WO" AND "W" SIGNS SHALL BE 48"x48" UNLESS OTHERWISE NOTED.
5. "WO" SIGNS ARE THE SAME AS "W" SIGNS EXCEPT THE BACKGROUND IS ORANGE.
6. "MO" SIGNS ARE THE SAME AS "M" SIGNS EXCEPT THE BACKGROUND IS ORANGE.
7. TRAFFIC CONTROL SIGNS PORTABLE CHANGEABLE MESSAGE FOR PRE-WARNING TO BE INSTALLED ONE WEEK PRIOR TO IMPLEMENTATION OF DETOUR ROUTE.

LEGEND

DETOUR ROUTE

TRAFFIC CONTROL SIGN ON POST

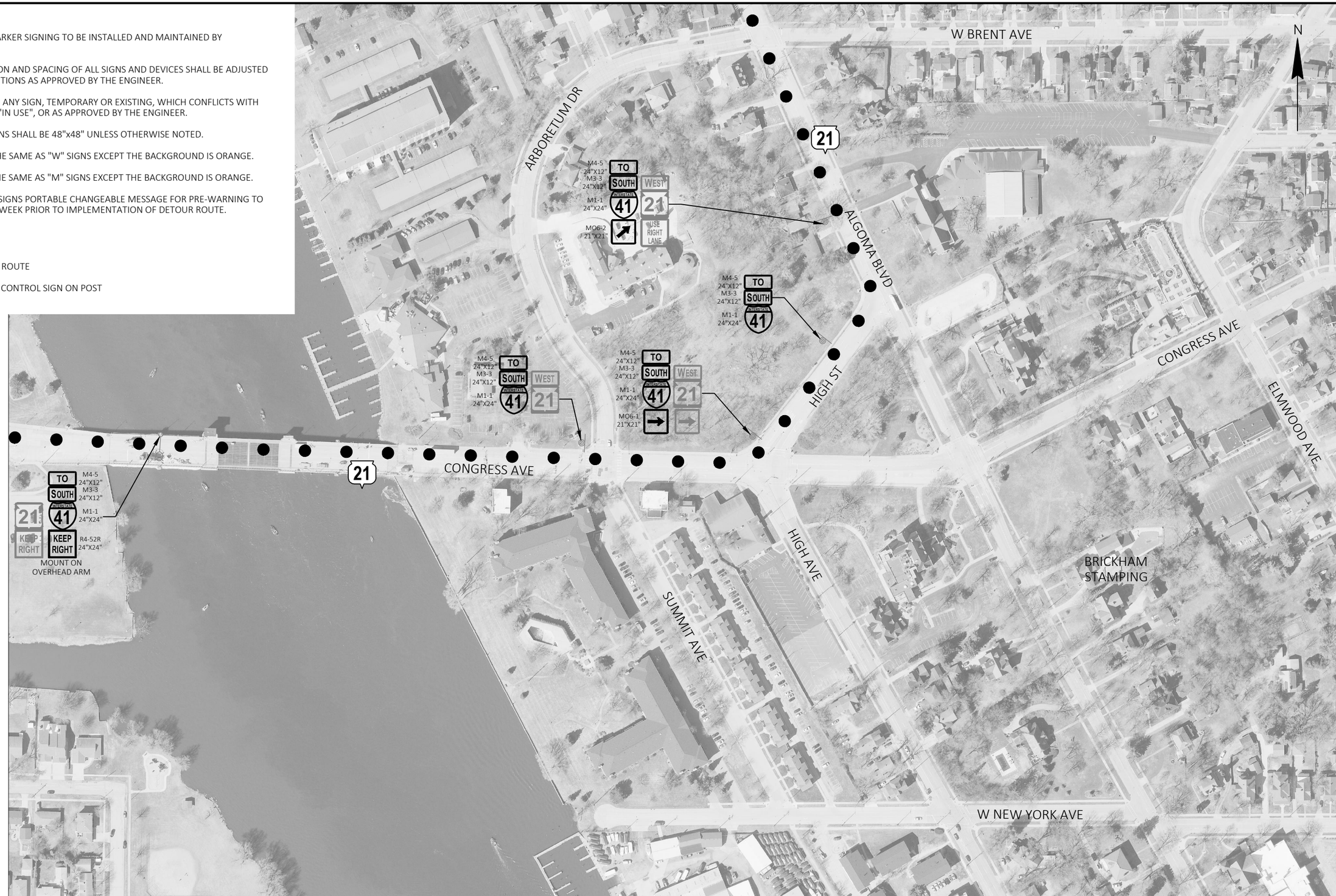

2

PROJECT NO: 1120-63-71	HWY: IH 41	COUNTY: WINNEBAGO	DETOUR - DETAIL C	SHEET 38	E

FILE NAME : S:\MAD\2000--2099\2089\008\DRAWINGS\CAD\CIVIL 3D\SHEETS\027001-DT.DWG
LAYOUT NAME - 027004-dt
PLOT DATE : 7/20/2023 9:20 AM PLOT BY : SCHMIDT, BRAD PLOT NAME : PLOT SCALE : ##########

2

NOTES:

1. DETOUR ROUTE MARKER SIGNING TO BE INSTALLED AND MAINTAINED BY CONTRACTOR.
2. THE EXACT LOCATION AND SPACING OF ALL SIGNS AND DEVICES SHALL BE ADJUSTED TO FIT FIELD CONDITIONS AS APPROVED BY THE ENGINEER.
3. REMOVE OR COVER ANY SIGN, TEMPORARY OR EXISTING, WHICH CONFLICTS WITH TRAFFIC CONTROL "IN USE", OR AS APPROVED BY THE ENGINEER.
4. "WO" AND "W" SIGNS SHALL BE 48"x48" UNLESS OTHERWISE NOTED.
5. "WO" SIGNS ARE THE SAME AS "W" SIGNS EXCEPT THE BACKGROUND IS ORANGE.
6. "MO" SIGNS ARE THE SAME AS "M" SIGNS EXCEPT THE BACKGROUND IS ORANGE.
7. TRAFFIC CONTROL SIGNS PORTABLE CHANGEABLE MESSAGE FOR PRE-WARNING TO BE INSTALLED ONE WEEK PRIOR TO IMPLEMENTATION OF DETOUR ROUTE.

LEGEND

DETOUR ROUTE

TRAFFIC CONTROL SIGN ON POST

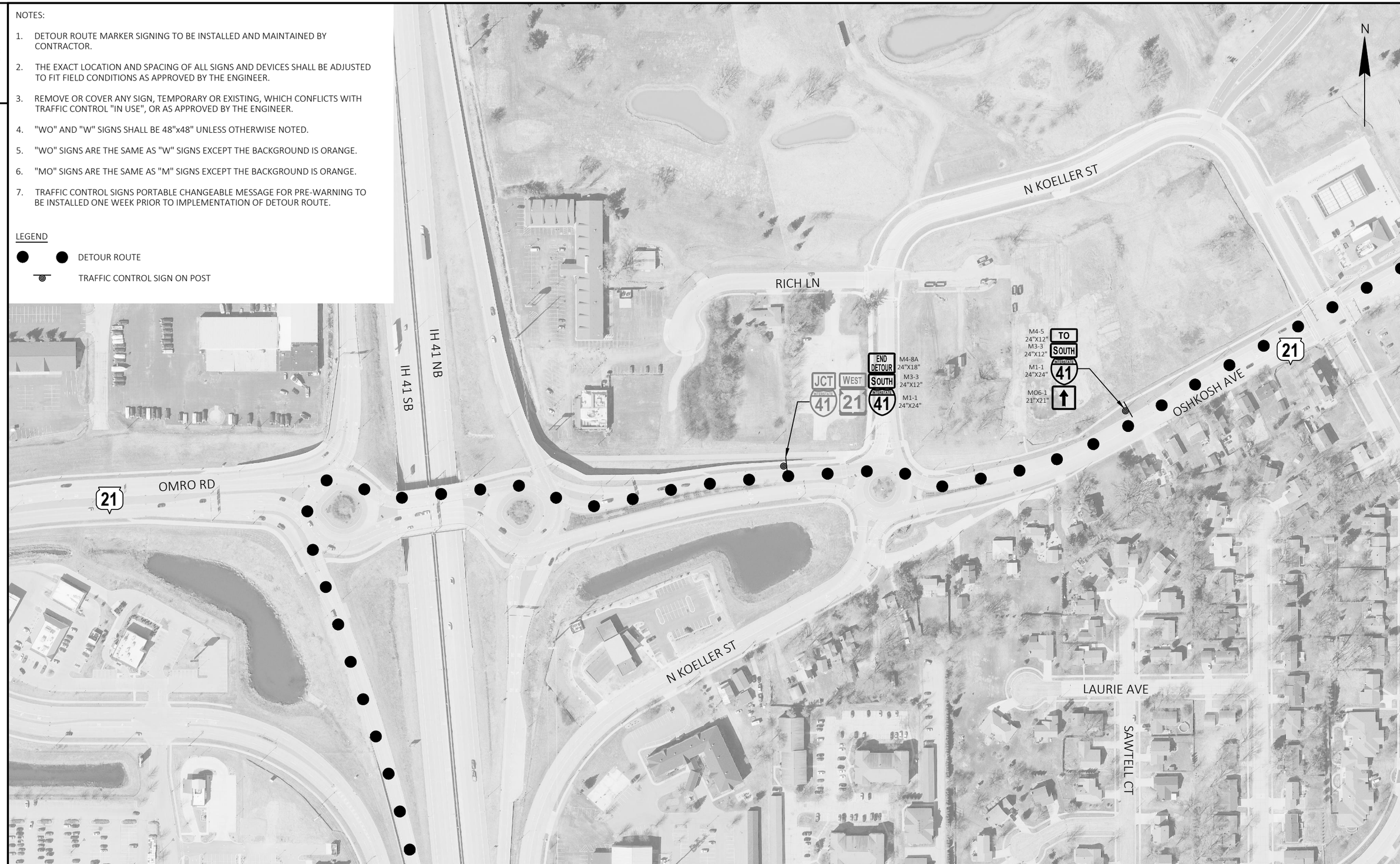

2

PROJECT NO: 1120-63-71	HWY: IH 41	COUNTY: WINNEBAGO	DETOUR - DETAIL D	SHEET 39	E

FILE NAME : S:\MAD\2000--2099\2089\008\DRAWINGS\CAD\CIVIL 3D\SHEETS\027001-DT.DWG
LAYOUT NAME - 027005-dt
PLOT DATE : 7/20/2023 9:20 AM PLOT BY : SCHMIDT, BRAD PLOT NAME : PLOT SCALE : ##########

WISDOT/CADDS SHEET 42

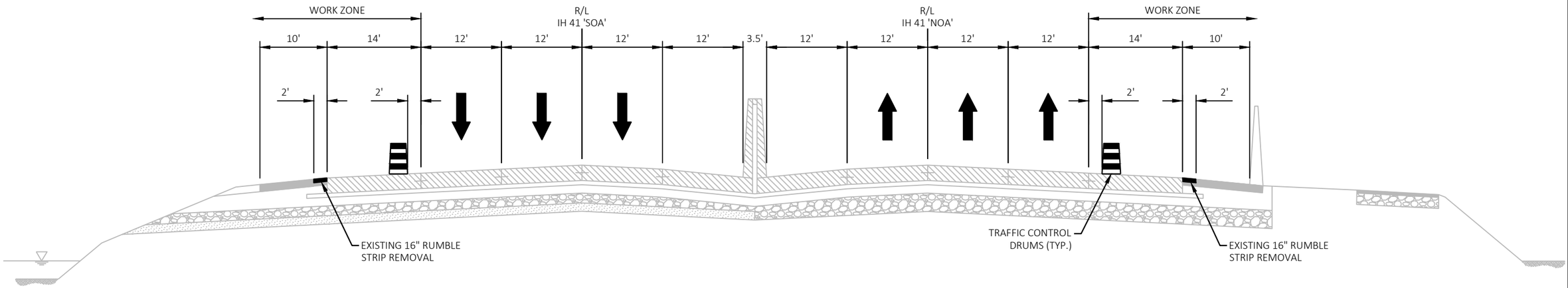

PROPOSED TYPICAL SECTION - PRE STAGE 1

STA 586+90 'NOA' - 628+96 'NOA'
STA 593+40 'SOA' - 645+25 'SOA'

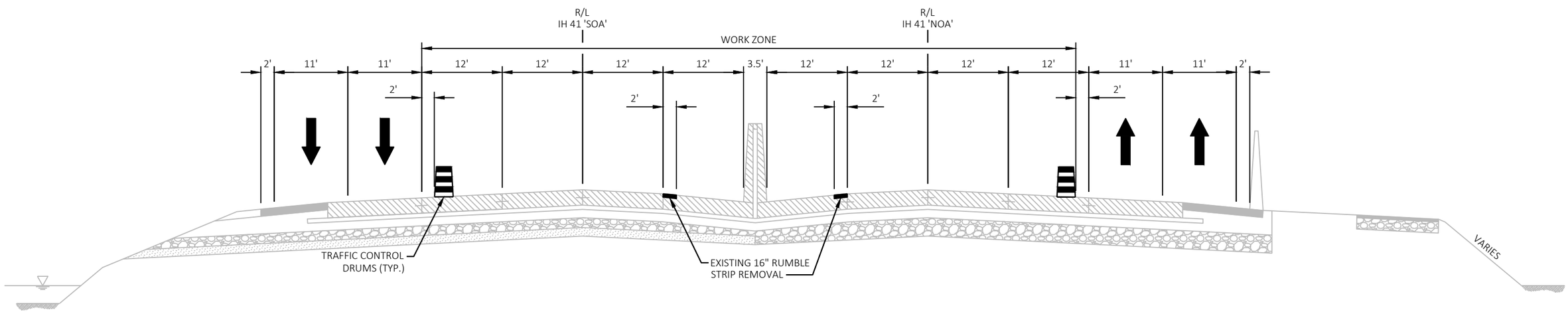

PROPOSED TYPICAL SECTION - STAGE 1

STA 587+10.00 'NOA' - 598+84.99 'NOA'
STA 607+28.70 'NOA' - 629+70.00 'NOA'
STA 594+15.00 'SOA' - 598+85.12 'SOA'
STA 607+28.65 'SOA' - 634+04.00 'SOA'

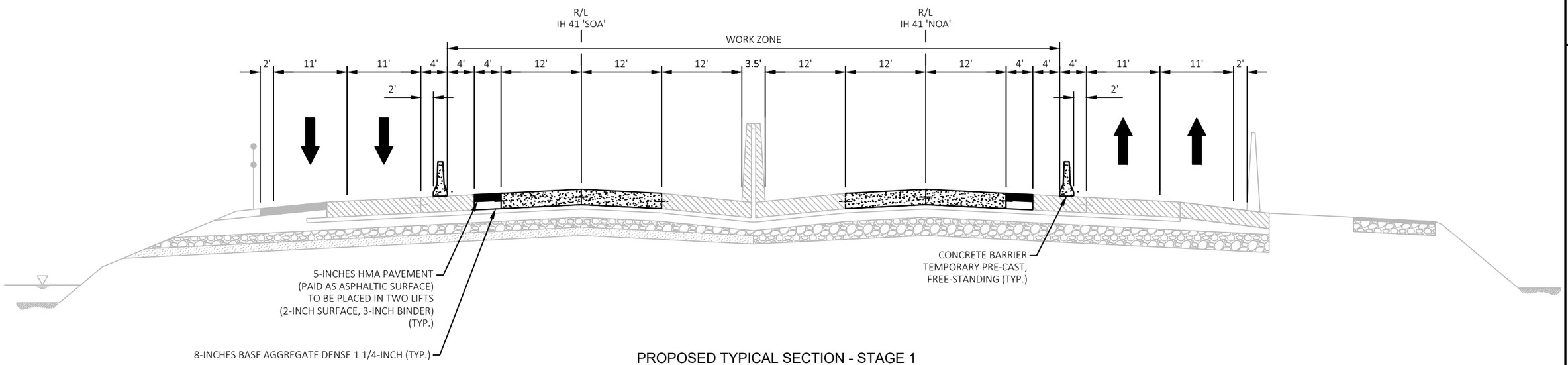

PROPOSED TYPICAL SECTION - STAGE 1

STA 598+84.99 'NOA' - 607+28.77 'NOA'
STA 598+85.12 'SOA' - 607+28.64 'SOA'

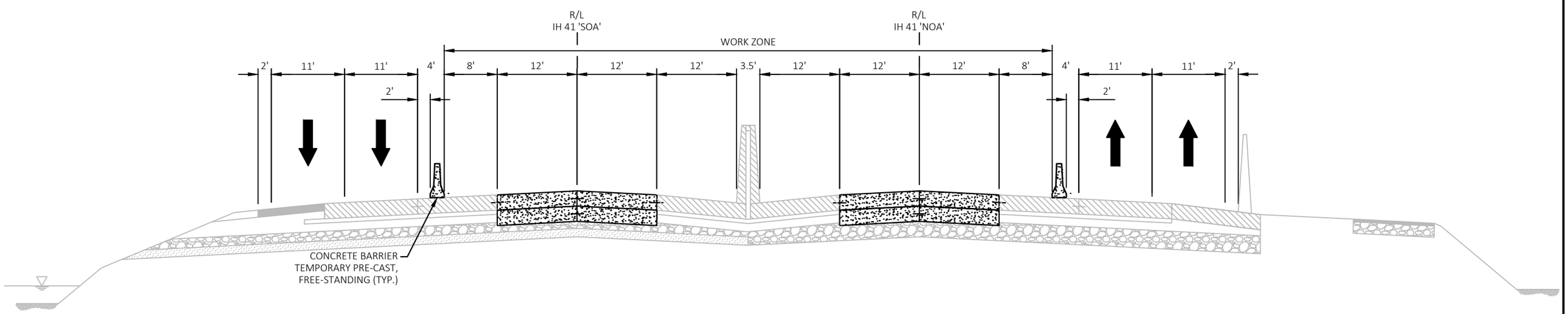

PROPOSED TYPICAL SECTION - STAGE 1

STA 623+94.21 'NOA' - 624+09.22 'NOA'
STA 623+93.24 'SOA' - 624+08.27 'SOA'

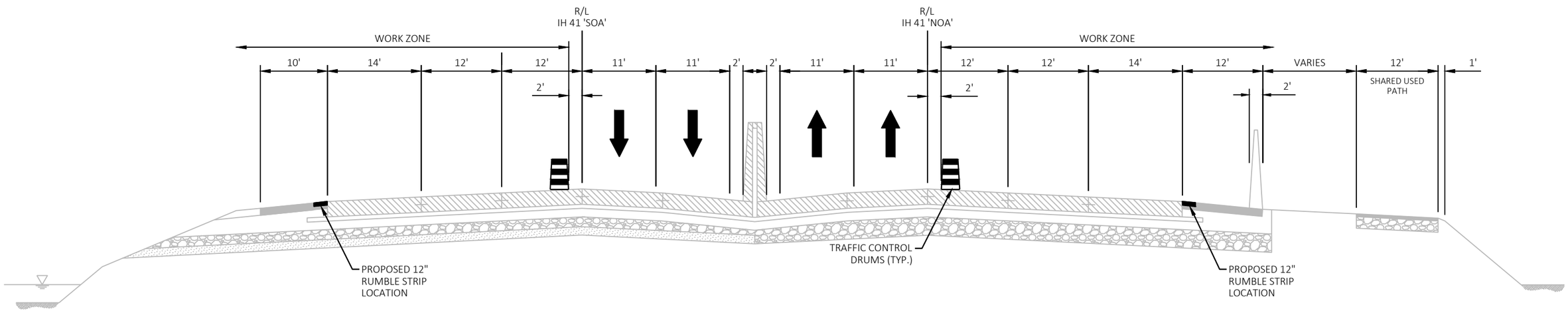

PROPOSED TYPICAL SECTION - STAGE 2

STA 586+90.00 'NOA' - 598+84.99 'NOA'
STA 607+28.77 'NOA' - 628+96.00 'NOA'
STA 593+40.00 'SOA' - 598+85.12 'SOA'
STA 607+28.65 'SOA' - 645+25.00 'SOA'

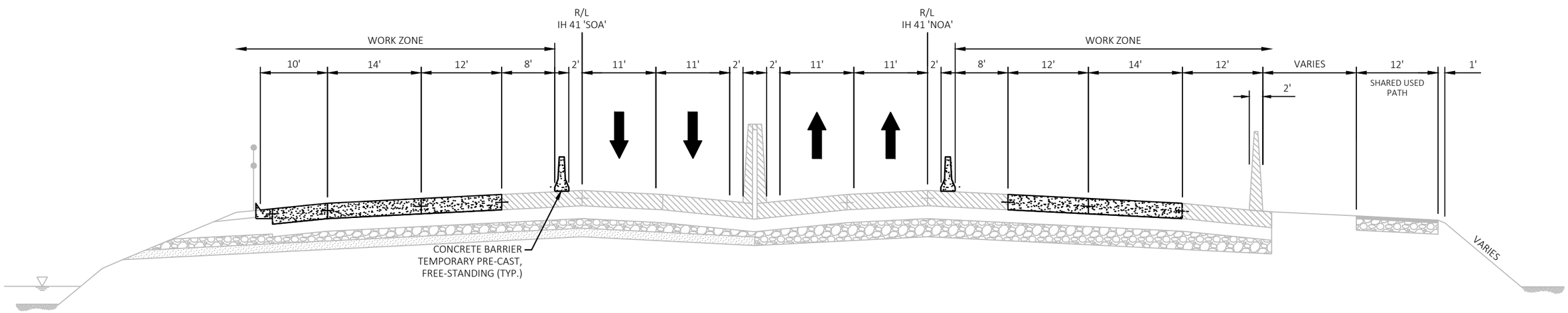

PROPOSED TYPICAL SECTION - STAGE 2

STA 598+84.99 'NOA' - 607+28.77 'NOA'
STA 598+85.12 'SOA' - 607+28.64 'SOA'

2

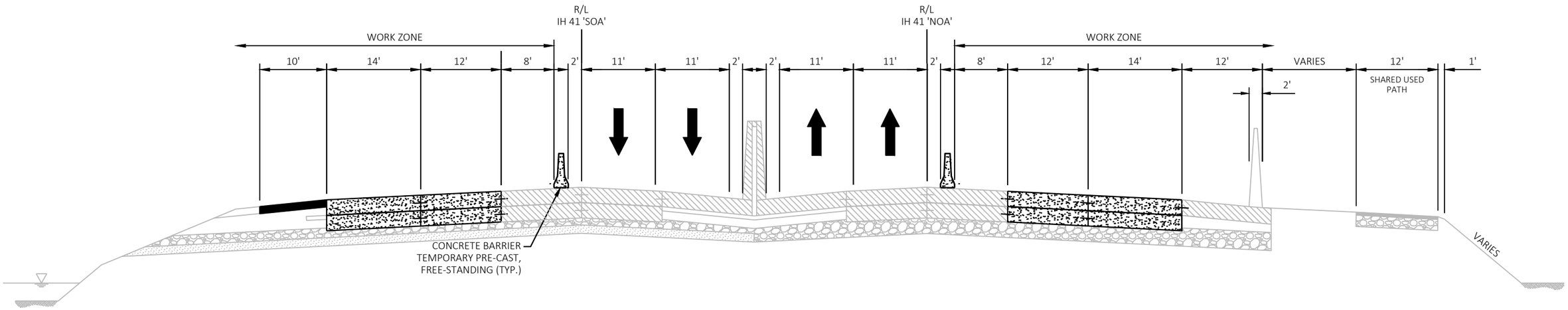

PROPOSED TYPICAL SECTION - STAGE 2

STA 623+94.21 'NOA' - 624+09.22 'NOA'
STA 623+93.24 'SOA' - 624+08.27 'SOA'

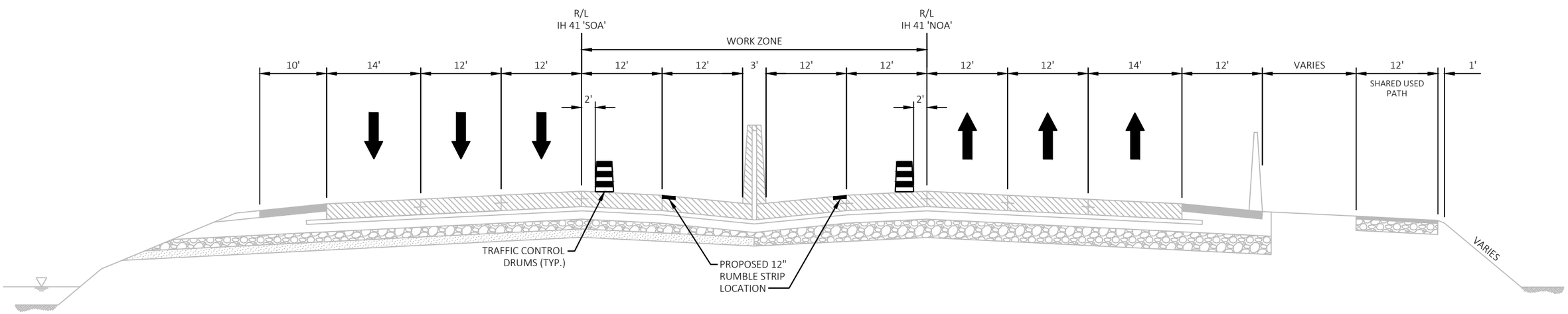

PROPOSED TYPICAL SECTION - STAGE 3

STA 587+10 'NOA' - 629+70 'NOA'
STA 594+15 'SOA' - 634+04 'SOA'

2

LEGEND

- WORK ZONE
- TRAFFIC CONTROL BARRICADES TYPE III WITH/WITHOUT ATTACHED SIGN
- TRAFFIC CONTROL SIGNS
- TRAFFIC CONTROL SIGNS ON TEMPORARY SUPPORT
- TRAFFIC CONTROL DRUMS WITH/WITHOUT TYPE C LIGHT
- TRAFFIC CONTROL FLEXIBLE TUBULAR MARKER (POSTS & BASES)
- DIRECTION OF TRAFFIC
- TRAFFIC CONTROL ARROW BOARDS
- XXXX SAWING CONCRETE
- SAWING ASPHALT
- CONCRETE BARRIER TEMPORARY PRECAST
- MARKING REMOVAL

- 6WT TEMPORARY MARKING LINE REMOVABLE TAPE 6-INCH (WHITE)
- 6YT TEMPORARY MARKING LINE REMOVABLE TAPE 6-INCH (YELLOW)
- 10WT TEMPORARY MARKING LINE REMOVABLE TAPE 10-INCH (WHITE)
- 6W TEMPORARY MARKING LINE PAINT 6-INCH (WHITE)
- 6Y TEMPORARY MARKING LINE PAINT 6-INCH (YELLOW)
- 6WGT TEMPORARY MARKING LINE REMOVABLE TAPE 6-INCH (WHITE)(3' LINE, 9' GAP)
- 6WG TEMPORARY MARKING LINE PAINT 6-INCH (WHITE)(3' LINE, 9' GAP)
- FBS FLASHING BEACON SIGN — STOPPED OR SLOW TRAFFIC WHEN FLASHING — WO8-76 120"X60"
- S PORTABLE TRAFFIC SENSOR (PTS)

NOTES

1. THE EXACT LOCATION AND SPACING OF ALL SIGNS AND DEVICES SHALL BE ADJUSTED TO FIT FIELD CONDITIONS AS APPROVED BY THE ENGINEER.
2. REMOVE OR COVER ANY SIGN, TEMPORARY OR EXISTING, WHICH CONFLICTS WITH TRAFFIC CONTROL "IN USE", OR AS APPROVED BY THE ENGINEER.
3. "WO" AND "W" SIGNS SHALL BE 48"x48" UNLESS OTHERWISE NOTED.
4. "WO" SIGNS ARE THE SAME AS "W" SIGNS EXCEPT THE BACKGROUND IS ORANGE.
5. "MO" SIGNS ARE THE SAME AS "M" SIGNS EXCEPT THE BACKGROUND IS ORANGE.
6. TRAFFIC CONTROL SIGNS PORTABLE CHANGEABLE MESSAGE FOR PRE-WARNING TO BE INSTALLED ONE WEEK PRIOR TO IMPLEMENTATION OF DETOUR ROUTE.
7. INSTALL TEMPORARY MARKING LINE TAPE ON LANE SHIFTS/TAPERS. INSTALL TEMPORARY MARKING LINE PAINT ON TANGENT SECTIONS.
8. STATION/OFFSETS FOR CONCRETE BARRIER WALL TEMPORARY PRECAST ARE PROVIDED TO CENTER OF WALL.

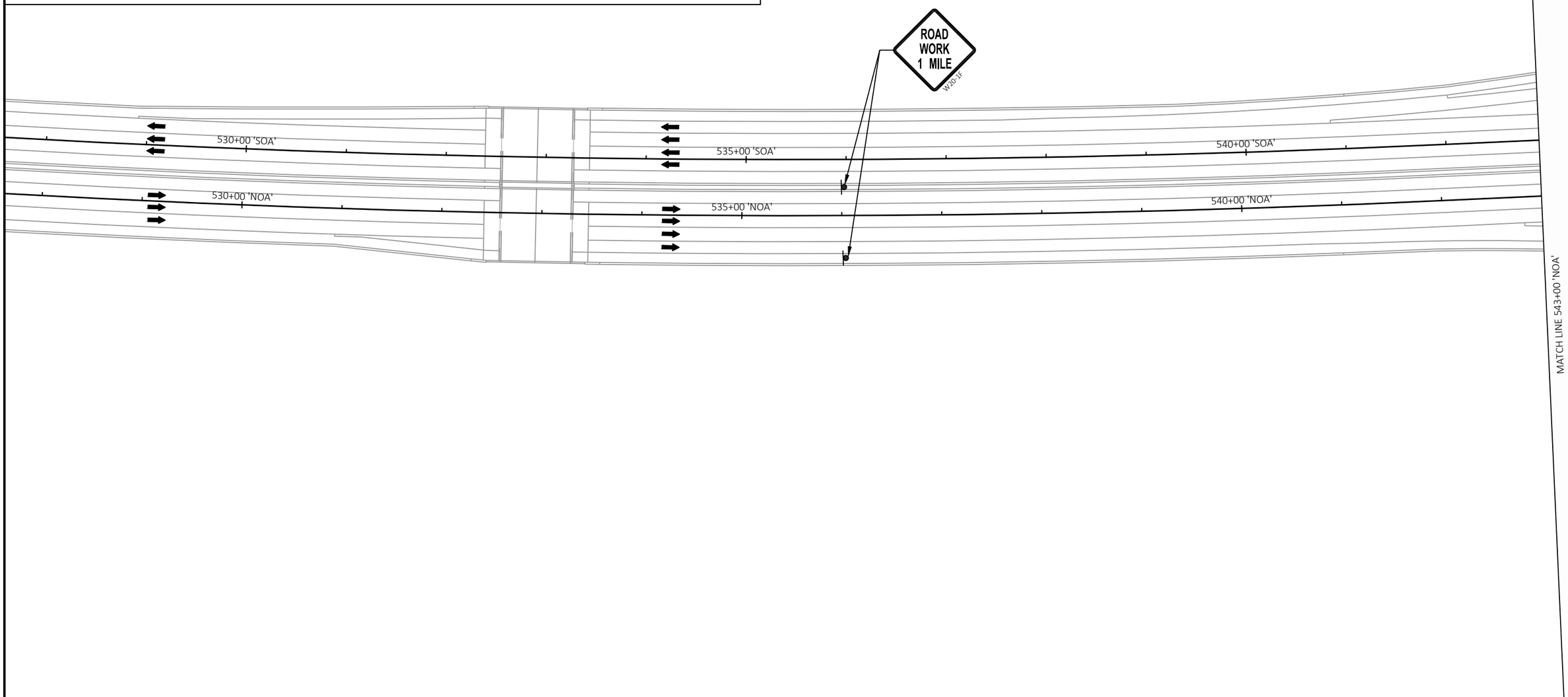

2

PROJECT NO: 1120-63-71	HWY: IH 41	COUNTY: WINNEBAGO	TRAFFIC CONTROL - PRE-STAGE 1	SHEET 44	E

2

LEGEND

- WORK ZONE
- TRAFFIC CONTROL BARRICADES TYPE III WITH/WITHOUT ATTACHED SIGN
- TRAFFIC CONTROL SIGNS
- TRAFFIC CONTROL SIGNS ON TEMPORARY SUPPORT
- TRAFFIC CONTROL DRUMS WITH/WITHOUT TYPE C LIGHT
- TRAFFIC CONTROL FLEXIBLE TUBULAR MARKER (POSTS & BASES)
- DIRECTION OF TRAFFIC
- TRAFFIC CONTROL ARROW BOARDS
- XXXX SAWING CONCRETE
- SAWING ASPHALT
- CONCRETE BARRIER TEMPORARY PRECAST
- MARKING REMOVAL

6WT	TEMPORARY MARKING LINE REMOVABLE TAPE 6-INCH (WHITE)
6YT	TEMPORARY MARKING LINE REMOVABLE TAPE 6-INCH (YELLOW)
10WT	TEMPORARY MARKING LINE REMOVABLE TAPE 10-INCH (WHITE)
6W	TEMPORARY MARKING LINE PAINT 6-INCH (WHITE)
6Y	TEMPORARY MARKING LINE PAINT 6-INCH (YELLOW)
6WGT	TEMPORARY MARKING LINE REMOVABLE TAPE 6-INCH (WHITE)(3' LINE, 9' GAP)
6WG	TEMPORARY MARKING LINE PAINT 6-INCH (WHITE)(3' LINE, 9' GAP)
FBS	FLASHING BEACON SIGN — STOPPED OR SLOW TRAFFIC WHEN FLASHING (WO8-76 120"X60")
S	PORTABLE TRAFFIC SENSOR (PTS)

NOTES

1. THE EXACT LOCATION AND SPACING OF ALL SIGNS AND DEVICES SHALL BE ADJUSTED TO FIT FIELD CONDITIONS AS APPROVED BY THE ENGINEER.
2. REMOVE OR COVER ANY SIGN, TEMPORARY OR EXISTING, WHICH CONFLICTS WITH TRAFFIC CONTROL "IN USE", OR AS APPROVED BY THE ENGINEER.
3. "WO" AND "W" SIGNS SHALL BE 48"x48" UNLESS OTHERWISE NOTED.
4. "WO" SIGNS ARE THE SAME AS "W" SIGNS EXCEPT THE BACKGROUND IS ORANGE.
5. "MO" SIGNS ARE THE SAME AS "M" SIGNS EXCEPT THE BACKGROUND IS ORANGE.
6. TRAFFIC CONTROL SIGNS PORTABLE CHANGEABLE MESSAGE FOR PRE-WARNING TO BE INSTALLED ONE WEEK PRIOR TO IMPLEMENTATION OF DETOUR ROUTE.
7. INSTALL TEMPORARY MARKING LINE TAPE ON LANE SHIFTS/TAPERS. INSTALL TEMPORARY MARKING LINE PAINT ON TANGENT SECTIONS.
8. STATION/OFFSETS FOR CONCRETE BARRIER WALL TEMPORARY PRECAST ARE PROVIDED TO CENTER OF WALL.

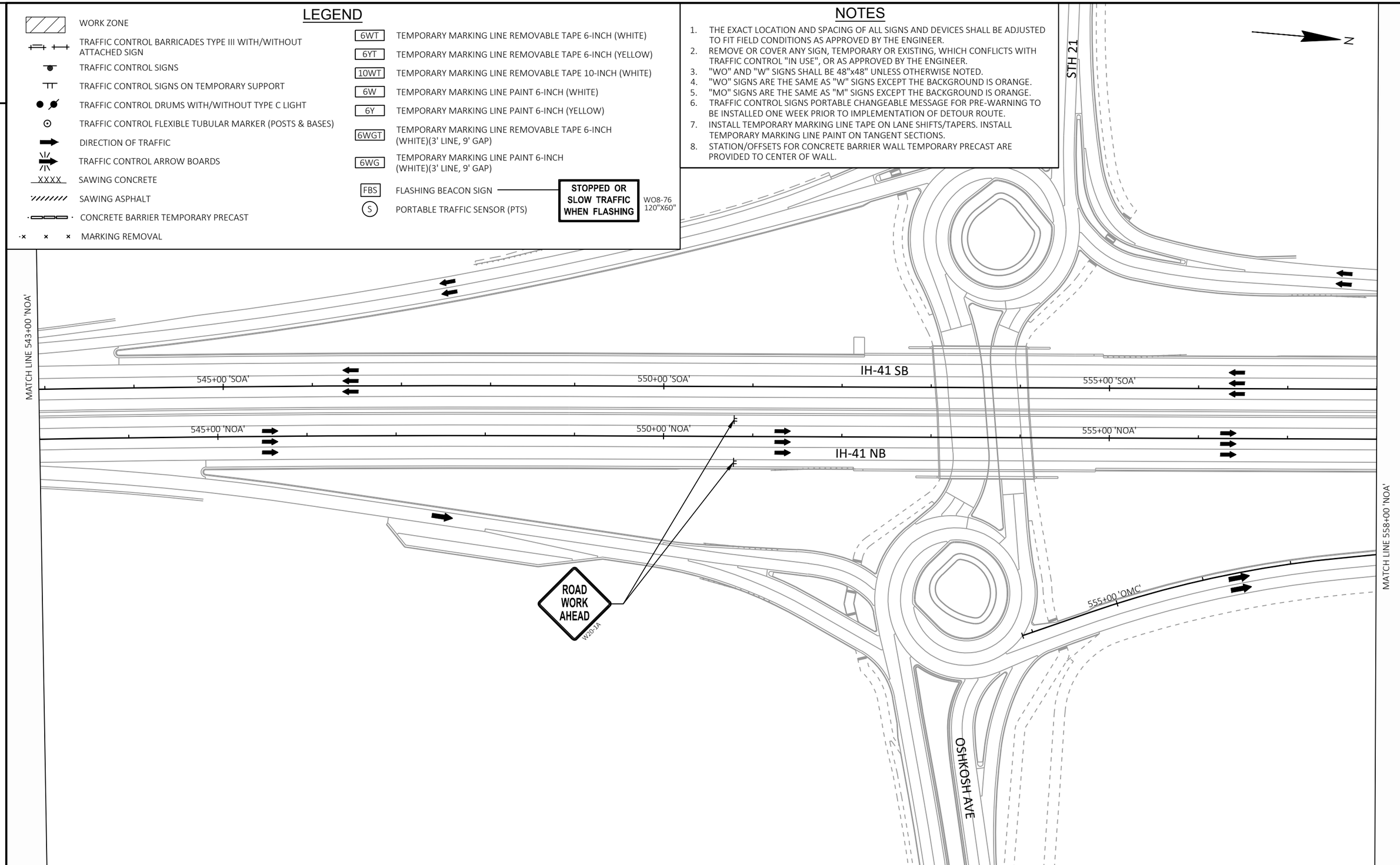

2

PROJECT NO: 1120-63-71	HWY: IH 41	COUNTY: WINNEBAGO	TRAFFIC CONTROL - PRE-STAGE 1	SHEET 45	E

FILE NAME : S:\MAD\2000--2099\2089\008\DRAWINGS\CAD\CIVIL 3D\SHEETS\026001-PS1_1.DWG
LAYOUT NAME - 026002-ps1
PLOT DATE : 1/4/2024 7:50 AM PLOT BY : GRIMME, SARA PLOT NAME : PLOT SCALE : 1 IN:100 FT

WISDOT/CADDS SHEET 42

2

LEGEND

- WORK ZONE
- TRAFFIC CONTROL BARRICADES TYPE III WITH/WITHOUT ATTACHED SIGN
- TRAFFIC CONTROL SIGNS
- TRAFFIC CONTROL SIGNS ON TEMPORARY SUPPORT
- TRAFFIC CONTROL DRUMS WITH/WITHOUT TYPE C LIGHT
- TRAFFIC CONTROL FLEXIBLE TUBULAR MARKER (POSTS & BASES)
- DIRECTION OF TRAFFIC
- TRAFFIC CONTROL ARROW BOARDS
- XXXX SAWING CONCRETE
- SAWING ASPHALT
- CONCRETE BARRIER TEMPORARY PRECAST
- MARKING REMOVAL
- 6WT TEMPORARY MARKING LINE REMOVABLE TAPE 6-INCH (WHITE)
- 6YT TEMPORARY MARKING LINE REMOVABLE TAPE 6-INCH (YELLOW)
- 10WT TEMPORARY MARKING LINE REMOVABLE TAPE 10-INCH (WHITE)
- 6W TEMPORARY MARKING LINE PAINT 6-INCH (WHITE)
- 6Y TEMPORARY MARKING LINE PAINT 6-INCH (YELLOW)
- 6WGT TEMPORARY MARKING LINE REMOVABLE TAPE 6-INCH (WHITE)(3' LINE, 9' GAP)
- 6WG TEMPORARY MARKING LINE PAINT 6-INCH (WHITE)(3' LINE, 9' GAP)
- FBS FLASHING BEACON SIGN — STOPPED OR SLOW TRAFFIC WHEN FLASHING — WO8-76 120"X60"
- S PORTABLE TRAFFIC SENSOR (PTS)

NOTES

1. THE EXACT LOCATION AND SPACING OF ALL SIGNS AND DEVICES SHALL BE ADJUSTED TO FIT FIELD CONDITIONS AS APPROVED BY THE ENGINEER.
2. REMOVE OR COVER ANY SIGN, TEMPORARY OR EXISTING, WHICH CONFLICTS WITH TRAFFIC CONTROL "IN USE", OR AS APPROVED BY THE ENGINEER.
3. "WO" AND "W" SIGNS SHALL BE 48"x48" UNLESS OTHERWISE NOTED.
4. "WO" SIGNS ARE THE SAME AS "W" SIGNS EXCEPT THE BACKGROUND IS ORANGE.
5. "MO" SIGNS ARE THE SAME AS "M" SIGNS EXCEPT THE BACKGROUND IS ORANGE.
6. TRAFFIC CONTROL SIGNS PORTABLE CHANGEABLE MESSAGE FOR PRE-WARNING TO BE INSTALLED ONE WEEK PRIOR TO IMPLEMENTATION OF DETOUR ROUTE.
7. INSTALL TEMPORARY MARKING LINE TAPE ON LANE SHIFTS/TAPERS. INSTALL TEMPORARY MARKING LINE PAINT ON TANGENT SECTIONS.
8. STATION/OFFSETS FOR CONCRETE BARRIER WALL TEMPORARY PRECAST ARE PROVIDED TO CENTER OF WALL.

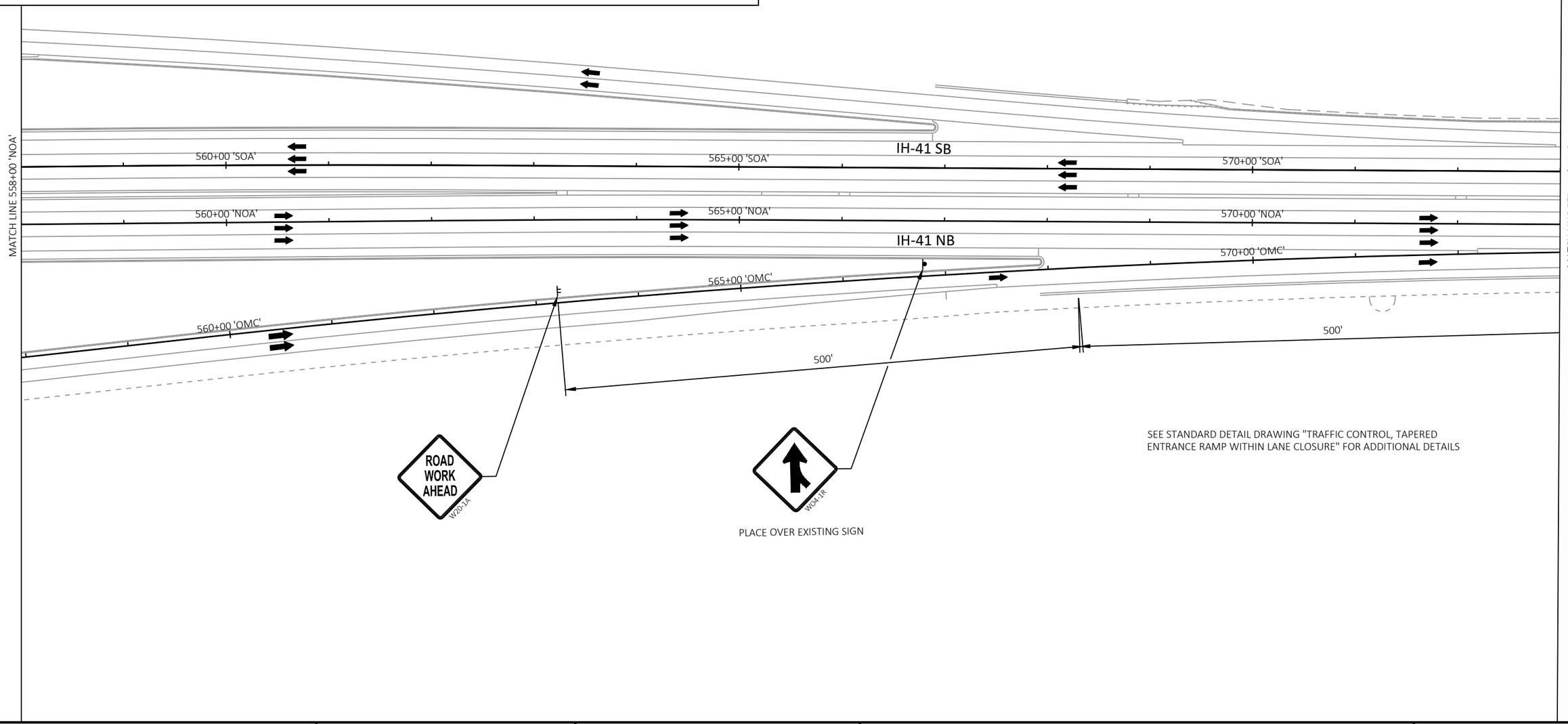

2

PROJECT NO: 1120-63-71	HWY: IH 41	COUNTY: WINNEBAGO	TRAFFIC CONTROL - PRE-STAGE 1	SHEET 46	E

FILE NAME : S:\MAD\2000--2099\2089\008\DRAWINGS\CAD\CIVIL 3D\SHEETS\026001-PS1_2.DWG
LAYOUT NAME - 026003-ps1
PLOT DATE : 1/4/2024 7:52 AM PLOT BY : GRIMME, SARA PLOT NAME : PLOT SCALE : 1 IN:100 FT
WISDOT/CADDS SHEET 42

2

LEGEND

- WORK ZONE
- TRAFFIC CONTROL BARRICADES TYPE III WITH/WITHOUT ATTACHED SIGN
- TRAFFIC CONTROL SIGNS
- TRAFFIC CONTROL SIGNS ON TEMPORARY SUPPORT
- TRAFFIC CONTROL DRUMS WITH/WITHOUT TYPE C LIGHT
- TRAFFIC CONTROL FLEXIBLE TUBULAR MARKER (POSTS & BASES)
- DIRECTION OF TRAFFIC
- TRAFFIC CONTROL ARROW BOARDS
- XXXX SAWING CONCRETE
- SAWING ASPHALT
- CONCRETE BARRIER TEMPORARY PRECAST
- MARKING REMOVAL
- 6WT TEMPORARY MARKING LINE REMOVABLE TAPE 6-INCH (WHITE)
- 6YT TEMPORARY MARKING LINE REMOVABLE TAPE 6-INCH (YELLOW)
- 10WT TEMPORARY MARKING LINE REMOVABLE TAPE 10-INCH (WHITE)
- 6W TEMPORARY MARKING LINE PAINT 6-INCH (WHITE)
- 6Y TEMPORARY MARKING LINE PAINT 6-INCH (YELLOW)
- 6WGT TEMPORARY MARKING LINE REMOVABLE TAPE 6-INCH (WHITE)(3' LINE, 9' GAP)
- 6WG TEMPORARY MARKING LINE PAINT 6-INCH (WHITE)(3' LINE, 9' GAP)
- FBS FLASHING BEACON SIGN — STOPPED OR SLOW TRAFFIC WHEN FLASHING (WO8-76 120"X60")
- S PORTABLE TRAFFIC SENSOR (PTS)

NOTES

1. THE EXACT LOCATION AND SPACING OF ALL SIGNS AND DEVICES SHALL BE ADJUSTED TO FIT FIELD CONDITIONS AS APPROVED BY THE ENGINEER.
2. REMOVE OR COVER ANY SIGN, TEMPORARY OR EXISTING, WHICH CONFLICTS WITH TRAFFIC CONTROL "IN USE", OR AS APPROVED BY THE ENGINEER.
3. "WO" AND "W" SIGNS SHALL BE 48"x48" UNLESS OTHERWISE NOTED.
4. "WO" SIGNS ARE THE SAME AS "W" SIGNS EXCEPT THE BACKGROUND IS ORANGE.
5. "MO" SIGNS ARE THE SAME AS "M" SIGNS EXCEPT THE BACKGROUND IS ORANGE.
6. TRAFFIC CONTROL SIGNS PORTABLE CHANGEABLE MESSAGE FOR PRE-WARNING TO BE INSTALLED ONE WEEK PRIOR TO IMPLEMENTATION OF DETOUR ROUTE.
7. INSTALL TEMPORARY MARKING LINE TAPE ON LANE SHIFTS/TAPERS. INSTALL TEMPORARY MARKING LINE PAINT ON TANGENT SECTIONS.
8. STATION/OFFSETS FOR CONCRETE BARRIER WALL TEMPORARY PRECAST ARE PROVIDED TO CENTER OF WALL.

N

2

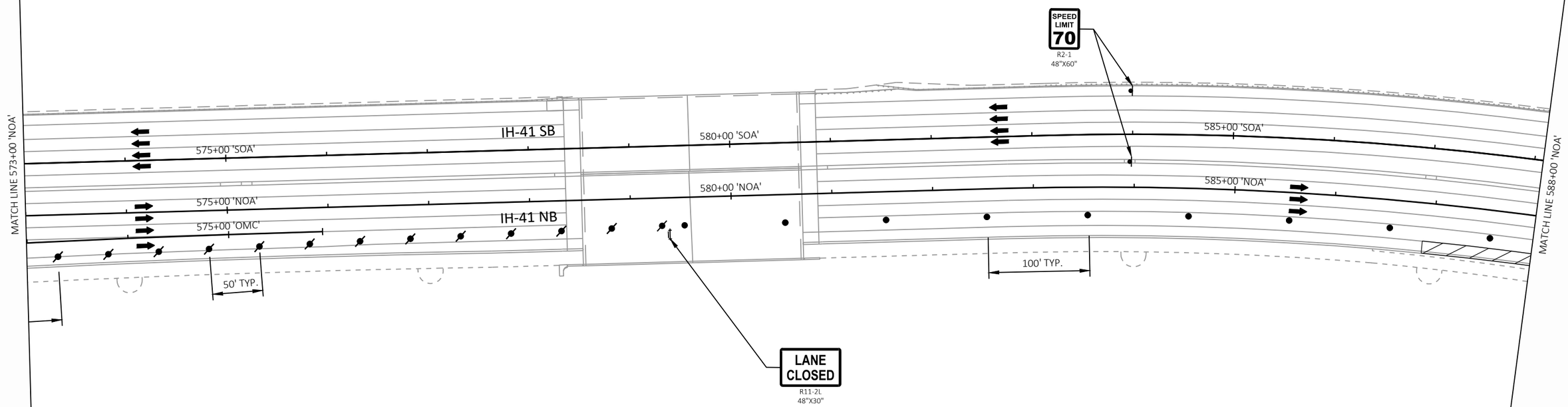

SEE STANDARD DETAIL DRAWING "TRAFFIC CONTROL, TAPERED ENTRANCE RAMP WITHIN LANE CLOSURE" FOR ADDITIONAL DETAILS

PROJECT NO: 1120-63-71	HWY: IH 41	COUNTY: WINNEBAGO	TRAFFIC CONTROL - PRE-STAGE 1	SHEET 47	E

2

LEGEND

- WORK ZONE
- TRAFFIC CONTROL BARRICADES TYPE III WITH/WITHOUT ATTACHED SIGN
- TRAFFIC CONTROL SIGNS
- TRAFFIC CONTROL SIGNS ON TEMPORARY SUPPORT
- TRAFFIC CONTROL DRUMS WITH/WITHOUT TYPE C LIGHT
- TRAFFIC CONTROL FLEXIBLE TUBULAR MARKER (POSTS & BASES)
- DIRECTION OF TRAFFIC
- TRAFFIC CONTROL ARROW BOARDS
- XXXX SAWING CONCRETE
- SAWING ASPHALT
- CONCRETE BARRIER TEMPORARY PRECAST
- MARKING REMOVAL
- 6WT TEMPORARY MARKING LINE REMOVABLE TAPE 6-INCH (WHITE)
- 6YT TEMPORARY MARKING LINE REMOVABLE TAPE 6-INCH (YELLOW)
- 10WT TEMPORARY MARKING LINE REMOVABLE TAPE 10-INCH (WHITE)
- 6W TEMPORARY MARKING LINE PAINT 6-INCH (WHITE)
- 6Y TEMPORARY MARKING LINE PAINT 6-INCH (YELLOW)
- 6WGT TEMPORARY MARKING LINE REMOVABLE TAPE 6-INCH (WHITE)(3' LINE, 9' GAP)
- 6WG TEMPORARY MARKING LINE PAINT 6-INCH (WHITE)(3' LINE, 9' GAP)
- FBS FLASHING BEACON SIGN — STOPPED OR SLOW TRAFFIC WHEN FLASHING — WO8-76 120"X60"
- (S) PORTABLE TRAFFIC SENSOR (PTS)

NOTES

1. THE EXACT LOCATION AND SPACING OF ALL SIGNS AND DEVICES SHALL BE ADJUSTED TO FIT FIELD CONDITIONS AS APPROVED BY THE ENGINEER.
2. REMOVE OR COVER ANY SIGN, TEMPORARY OR EXISTING, WHICH CONFLICTS WITH TRAFFIC CONTROL "IN USE", OR AS APPROVED BY THE ENGINEER.
3. "WO" AND "W" SIGNS SHALL BE 48"x48" UNLESS OTHERWISE NOTED.
4. "WO" SIGNS ARE THE SAME AS "W" SIGNS EXCEPT THE BACKGROUND IS ORANGE.
5. "MO" SIGNS ARE THE SAME AS "M" SIGNS EXCEPT THE BACKGROUND IS ORANGE.
6. TRAFFIC CONTROL SIGNS PORTABLE CHANGEABLE MESSAGE FOR PRE-WARNING TO BE INSTALLED ONE WEEK PRIOR TO IMPLEMENTATION OF DETOUR ROUTE.
7. INSTALL TEMPORARY MARKING LINE TAPE ON LANE SHIFTS/TAPERS. INSTALL TEMPORARY MARKING LINE PAINT ON TANGENT SECTIONS.
8. STATION/OFFSETS FOR CONCRETE BARRIER WALL TEMPORARY PRECAST ARE PROVIDED TO CENTER OF WALL.

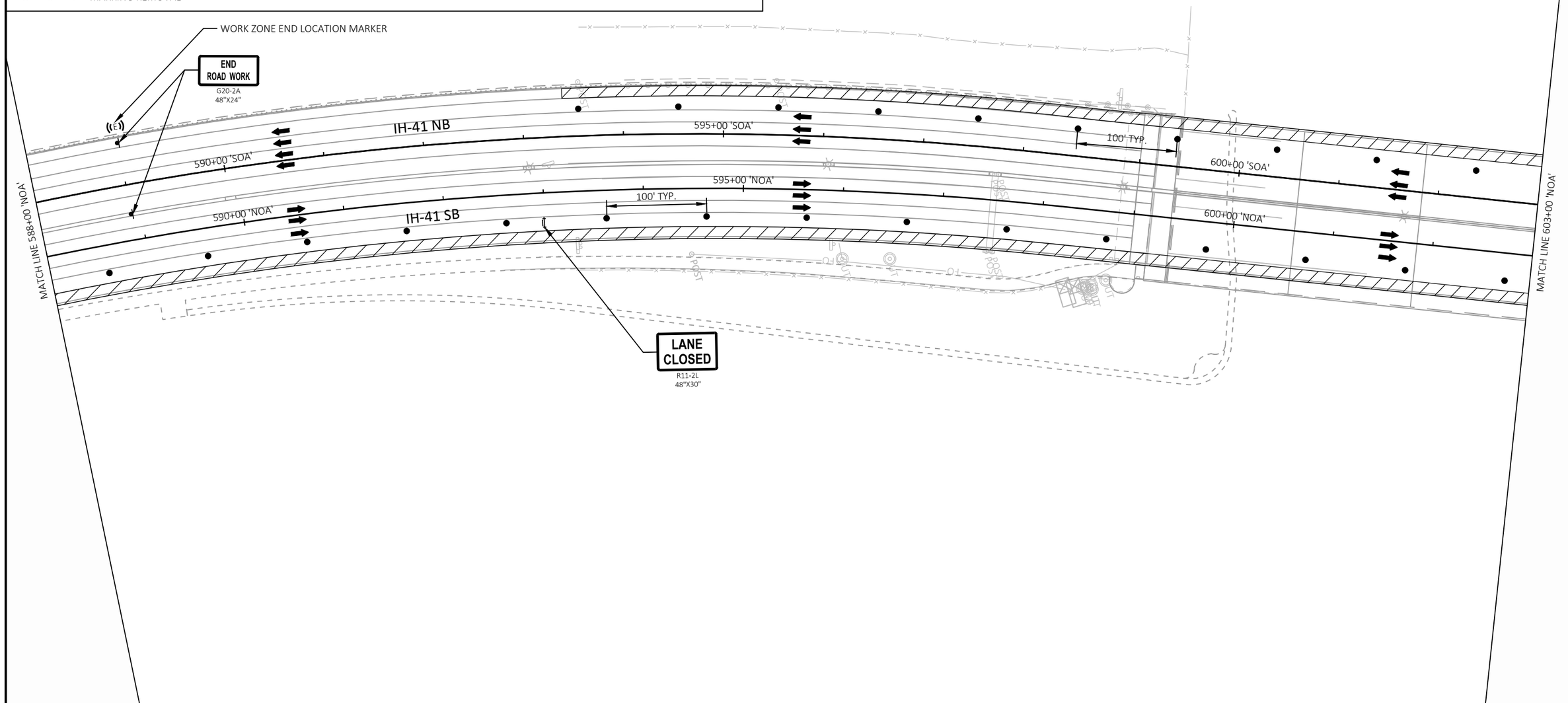

2

PROJECT NO: 1120-63-71	HWY: IH 41	COUNTY: WINNEBAGO	TRAFFIC CONTROL - PRE-STAGE 1	SHEET 48	E

FILE NAME : S:\MAD\2000--2099\2089\008\DRAWINGS\CAD\CIVIL 3D\SHEETS\026001-PS1_2.DWG
LAYOUT NAME - 026005-ps1
PLOT DATE : 1/4/2024 7:53 AM PLOT BY : GRIMME, SARA PLOT NAME : PLOT SCALE : 1 IN:100 FT

2

LEGEND

- WORK ZONE
- TRAFFIC CONTROL BARRICADES TYPE III WITH/WITHOUT ATTACHED SIGN
- TRAFFIC CONTROL SIGNS
- TRAFFIC CONTROL SIGNS ON TEMPORARY SUPPORT
- TRAFFIC CONTROL DRUMS WITH/WITHOUT TYPE C LIGHT
- TRAFFIC CONTROL FLEXIBLE TUBULAR MARKER (POSTS & BASES)
- DIRECTION OF TRAFFIC
- TRAFFIC CONTROL ARROW BOARDS
- XXXX SAWING CONCRETE
- SAWING ASPHALT
- CONCRETE BARRIER TEMPORARY PRECAST
- MARKING REMOVAL

- 6WT TEMPORARY MARKING LINE REMOVABLE TAPE 6-INCH (WHITE)
- 6YT TEMPORARY MARKING LINE REMOVABLE TAPE 6-INCH (YELLOW)
- 10WT TEMPORARY MARKING LINE REMOVABLE TAPE 10-INCH (WHITE)
- 6W TEMPORARY MARKING LINE PAINT 6-INCH (WHITE)
- 6Y TEMPORARY MARKING LINE PAINT 6-INCH (YELLOW)
- 6WGT TEMPORARY MARKING LINE REMOVABLE TAPE 6-INCH (WHITE)(3' LINE, 9' GAP)
- 6WG TEMPORARY MARKING LINE PAINT 6-INCH (WHITE)(3' LINE, 9' GAP)
- FBS FLASHING BEACON SIGN — STOPPED OR SLOW TRAFFIC WHEN FLASHING — WO8-76 120"X60"
- (S) PORTABLE TRAFFIC SENSOR (PTS)

NOTES

1. THE EXACT LOCATION AND SPACING OF ALL SIGNS AND DEVICES SHALL BE ADJUSTED TO FIT FIELD CONDITIONS AS APPROVED BY THE ENGINEER.
2. REMOVE OR COVER ANY SIGN, TEMPORARY OR EXISTING, WHICH CONFLICTS WITH TRAFFIC CONTROL "IN USE", OR AS APPROVED BY THE ENGINEER.
3. "WO" AND "W" SIGNS SHALL BE 48"x48" UNLESS OTHERWISE NOTED.
4. "WO" SIGNS ARE THE SAME AS "W" SIGNS EXCEPT THE BACKGROUND IS ORANGE.
5. "MO" SIGNS ARE THE SAME AS "M" SIGNS EXCEPT THE BACKGROUND IS ORANGE.
6. TRAFFIC CONTROL SIGNS PORTABLE CHANGEABLE MESSAGE FOR PRE-WARNING TO BE INSTALLED ONE WEEK PRIOR TO IMPLEMENTATION OF DETOUR ROUTE.
7. INSTALL TEMPORARY MARKING LINE TAPE ON LANE SHIFTS/TAPERS. INSTALL TEMPORARY MARKING LINE PAINT ON TANGENT SECTIONS.
8. STATION/OFFSETS FOR CONCRETE BARRIER WALL TEMPORARY PRECAST ARE PROVIDED TO CENTER OF WALL.

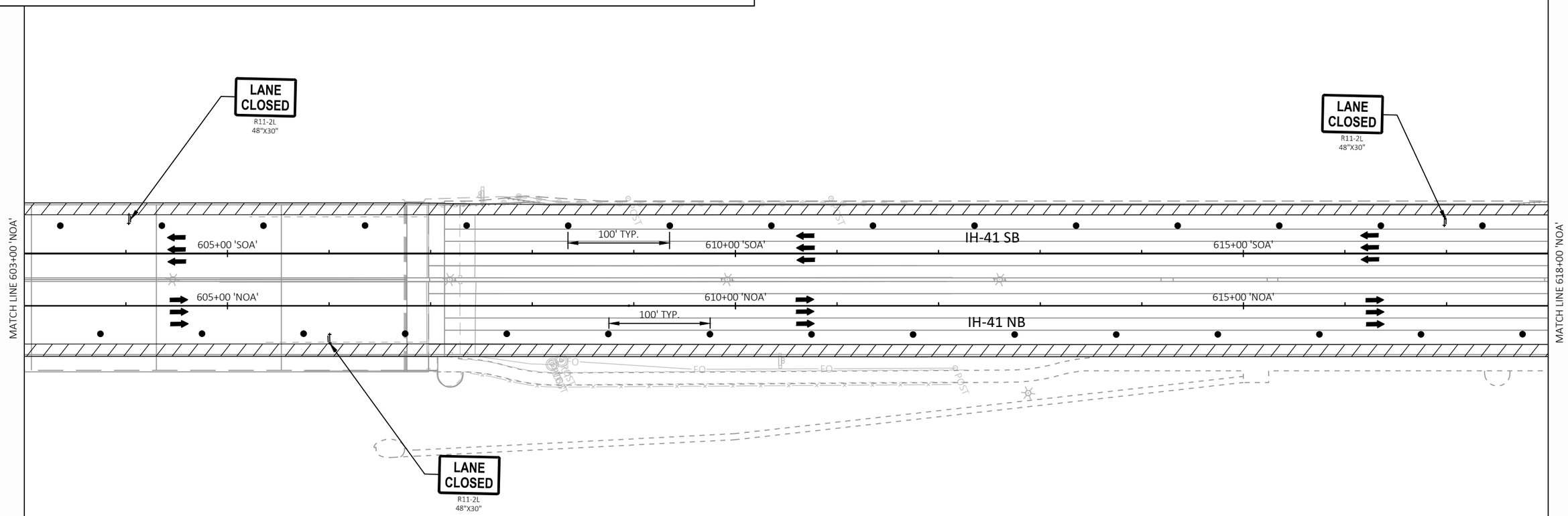

2

PROJECT NO: 1120-63-71	HWY: IH 41	COUNTY: WINNEBAGO	TRAFFIC CONTROL - PRE-STAGE 1	SHEET 49	E

2

LEGEND

- WORK ZONE
- TRAFFIC CONTROL BARRICADES TYPE III WITH/WITHOUT ATTACHED SIGN
- TRAFFIC CONTROL SIGNS
- TRAFFIC CONTROL SIGNS ON TEMPORARY SUPPORT
- TRAFFIC CONTROL DRUMS WITH/WITHOUT TYPE C LIGHT
- TRAFFIC CONTROL FLEXIBLE TUBULAR MARKER (POSTS & BASES)
- DIRECTION OF TRAFFIC
- TRAFFIC CONTROL ARROW BOARDS
- XXXX SAWING CONCRETE
- SAWING ASPHALT
- CONCRETE BARRIER TEMPORARY PRECAST
- MARKING REMOVAL
- 6WT TEMPORARY MARKING LINE REMOVABLE TAPE 6-INCH (WHITE)
- 6YT TEMPORARY MARKING LINE REMOVABLE TAPE 6-INCH (YELLOW)
- 10WT TEMPORARY MARKING LINE REMOVABLE TAPE 10-INCH (WHITE)
- 6W TEMPORARY MARKING LINE PAINT 6-INCH (WHITE)
- 6Y TEMPORARY MARKING LINE PAINT 6-INCH (YELLOW)
- 6WGT TEMPORARY MARKING LINE REMOVABLE TAPE 6-INCH (WHITE)(3' LINE, 9' GAP)
- 6WG TEMPORARY MARKING LINE PAINT 6-INCH (WHITE)(3' LINE, 9' GAP)
- FBS FLASHING BEACON SIGN — STOPPED OR SLOW TRAFFIC WHEN FLASHING — WO8-76 120"X60"
- S PORTABLE TRAFFIC SENSOR (PTS)

NOTES

1. THE EXACT LOCATION AND SPACING OF ALL SIGNS AND DEVICES SHALL BE ADJUSTED TO FIT FIELD CONDITIONS AS APPROVED BY THE ENGINEER.
2. REMOVE OR COVER ANY SIGN, TEMPORARY OR EXISTING, WHICH CONFLICTS WITH TRAFFIC CONTROL "IN USE", OR AS APPROVED BY THE ENGINEER.
3. "WO" AND "W" SIGNS SHALL BE 48"x48" UNLESS OTHERWISE NOTED.
4. "WO" SIGNS ARE THE SAME AS "W" SIGNS EXCEPT THE BACKGROUND IS ORANGE.
5. "MO" SIGNS ARE THE SAME AS "M" SIGNS EXCEPT THE BACKGROUND IS ORANGE.
6. TRAFFIC CONTROL SIGNS PORTABLE CHANGEABLE MESSAGE FOR PRE-WARNING TO BE INSTALLED ONE WEEK PRIOR TO IMPLEMENTATION OF DETOUR ROUTE.
7. INSTALL TEMPORARY MARKING LINE TAPE ON LANE SHIFTS/TAPERS. INSTALL TEMPORARY MARKING LINE PAINT ON TANGENT SECTIONS.
8. STATION/OFFSETS FOR CONCRETE BARRIER WALL TEMPORARY PRECAST ARE PROVIDED TO CENTER OF WALL.

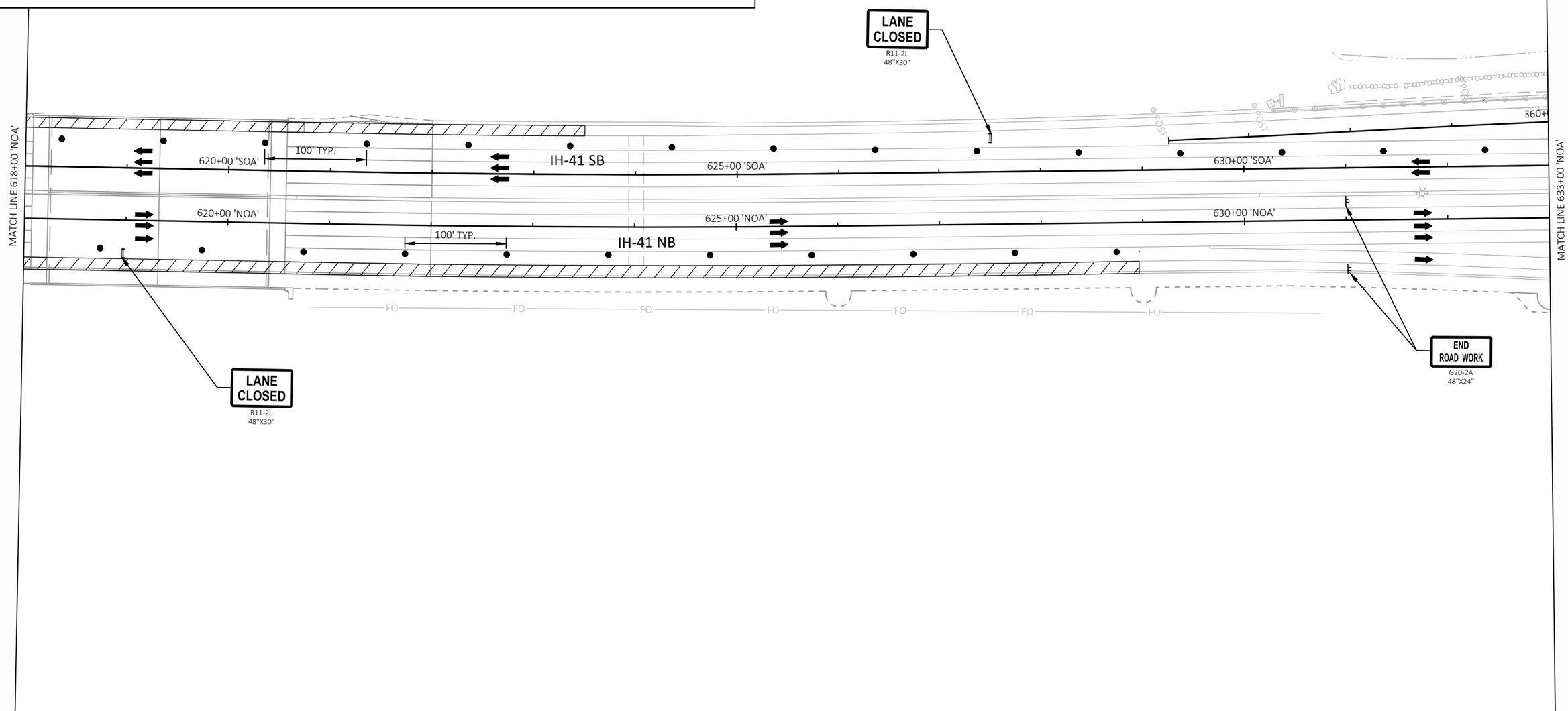

2

PROJECT NO: 1120-63-71	HWY: IH 41	COUNTY: WINNEBAGO	TRAFFIC CONTROL - PRE-STAGE 1	SHEET 50	E

2

LEGEND

- WORK ZONE
- TRAFFIC CONTROL BARRICADES TYPE III WITH/WITHOUT ATTACHED SIGN
- TRAFFIC CONTROL SIGNS
- TRAFFIC CONTROL SIGNS ON TEMPORARY SUPPORT
- TRAFFIC CONTROL DRUMS WITH/WITHOUT TYPE C LIGHT
- TRAFFIC CONTROL FLEXIBLE TUBULAR MARKER (POSTS & BASES)
- DIRECTION OF TRAFFIC
- TRAFFIC CONTROL ARROW BOARDS
- XXXX SAWING CONCRETE
- SAWING ASPHALT
- CONCRETE BARRIER TEMPORARY PRECAST
- MARKING REMOVAL

- 6WT TEMPORARY MARKING LINE REMOVABLE TAPE 6-INCH (WHITE)
- 6YT TEMPORARY MARKING LINE REMOVABLE TAPE 6-INCH (YELLOW)
- 10WT TEMPORARY MARKING LINE REMOVABLE TAPE 10-INCH (WHITE)
- 6W TEMPORARY MARKING LINE PAINT 6-INCH (WHITE)
- 6Y TEMPORARY MARKING LINE PAINT 6-INCH (YELLOW)
- 6WGT TEMPORARY MARKING LINE REMOVABLE TAPE 6-INCH (WHITE)(3' LINE, 9' GAP)
- 6WG TEMPORARY MARKING LINE PAINT 6-INCH (WHITE)(3' LINE, 9' GAP)
- FBS FLASHING BEACON SIGN — STOPPED OR SLOW TRAFFIC WHEN FLASHING — WO8-76 120"X60"
- (S) PORTABLE TRAFFIC SENSOR (PTS)

NOTES

1. THE EXACT LOCATION AND SPACING OF ALL SIGNS AND DEVICES SHALL BE ADJUSTED TO FIT FIELD CONDITIONS AS APPROVED BY THE ENGINEER.
2. REMOVE OR COVER ANY SIGN, TEMPORARY OR EXISTING, WHICH CONFLICTS WITH TRAFFIC CONTROL "IN USE", OR AS APPROVED BY THE ENGINEER.
3. "WO" AND "W" SIGNS SHALL BE 48"x48" UNLESS OTHERWISE NOTED.
4. "WO" SIGNS ARE THE SAME AS "W" SIGNS EXCEPT THE BACKGROUND IS ORANGE.
5. "MO" SIGNS ARE THE SAME AS "M" SIGNS EXCEPT THE BACKGROUND IS ORANGE.
6. TRAFFIC CONTROL SIGNS PORTABLE CHANGEABLE MESSAGE FOR PRE-WARNING TO BE INSTALLED ONE WEEK PRIOR TO IMPLEMENTATION OF DETOUR ROUTE.
7. INSTALL TEMPORARY MARKING LINE TAPE ON LANE SHIFTS/TAPERS. INSTALL TEMPORARY MARKING LINE PAINT ON TANGENT SECTIONS.
8. STATION/OFFSETS FOR CONCRETE BARRIER WALL TEMPORARY PRECAST ARE PROVIDED TO CENTER OF WALL.

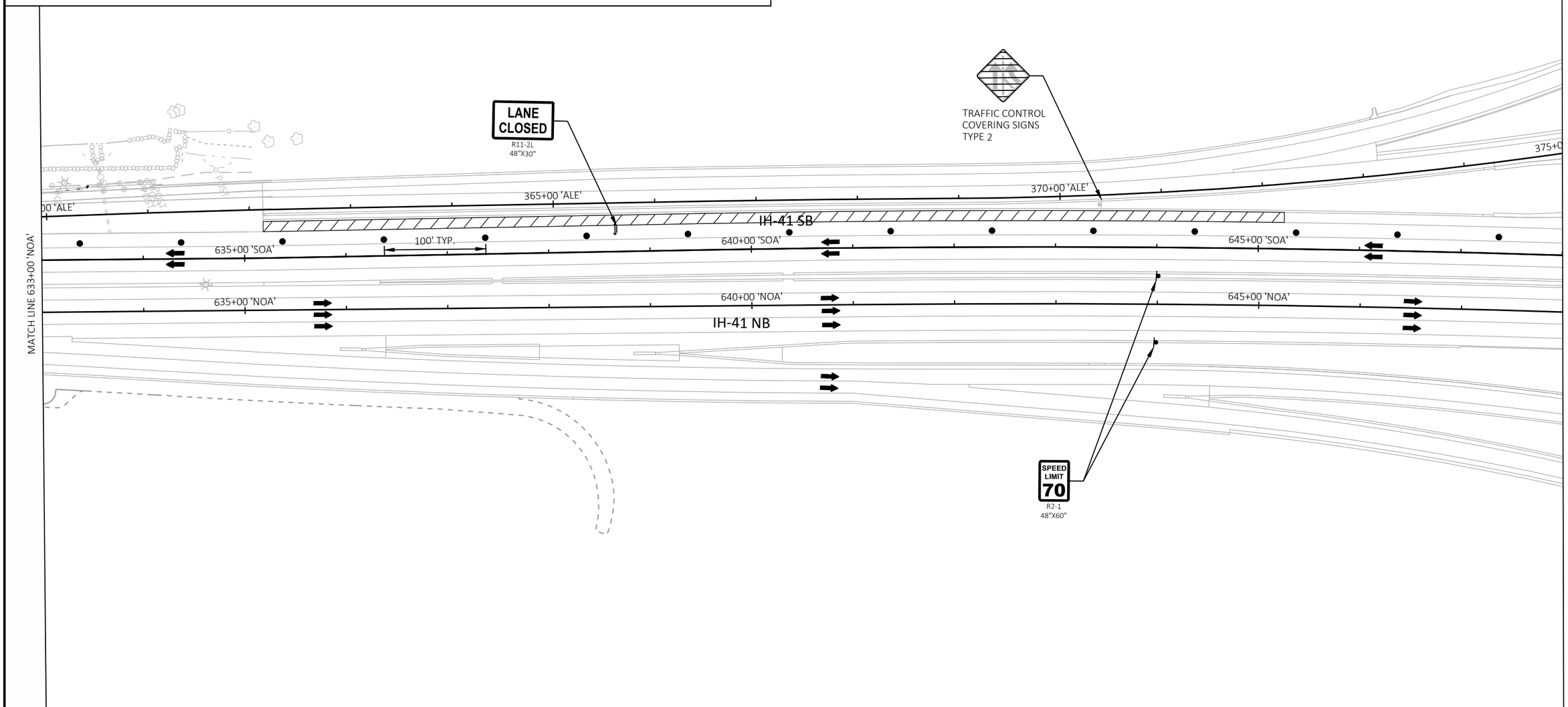

2

PROJECT NO: 1120-63-71	HWY: IH 41	COUNTY: WINNEBAGO	TRAFFIC CONTROL - PRE-STAGE 1	SHEET 51	E

FILE NAME : S:\MAD\2000--2099\2089\008\DRAWINGS\CAD\CIVIL 3D\SHEETS\026001-PS1_2.DWG
LAYOUT NAME - 026008-ps1
PLOT DATE : 1/4/2024 7:54 AM PLOT BY : GRIMME, SARA PLOT NAME : PLOT SCALE : 1 IN:100 FT

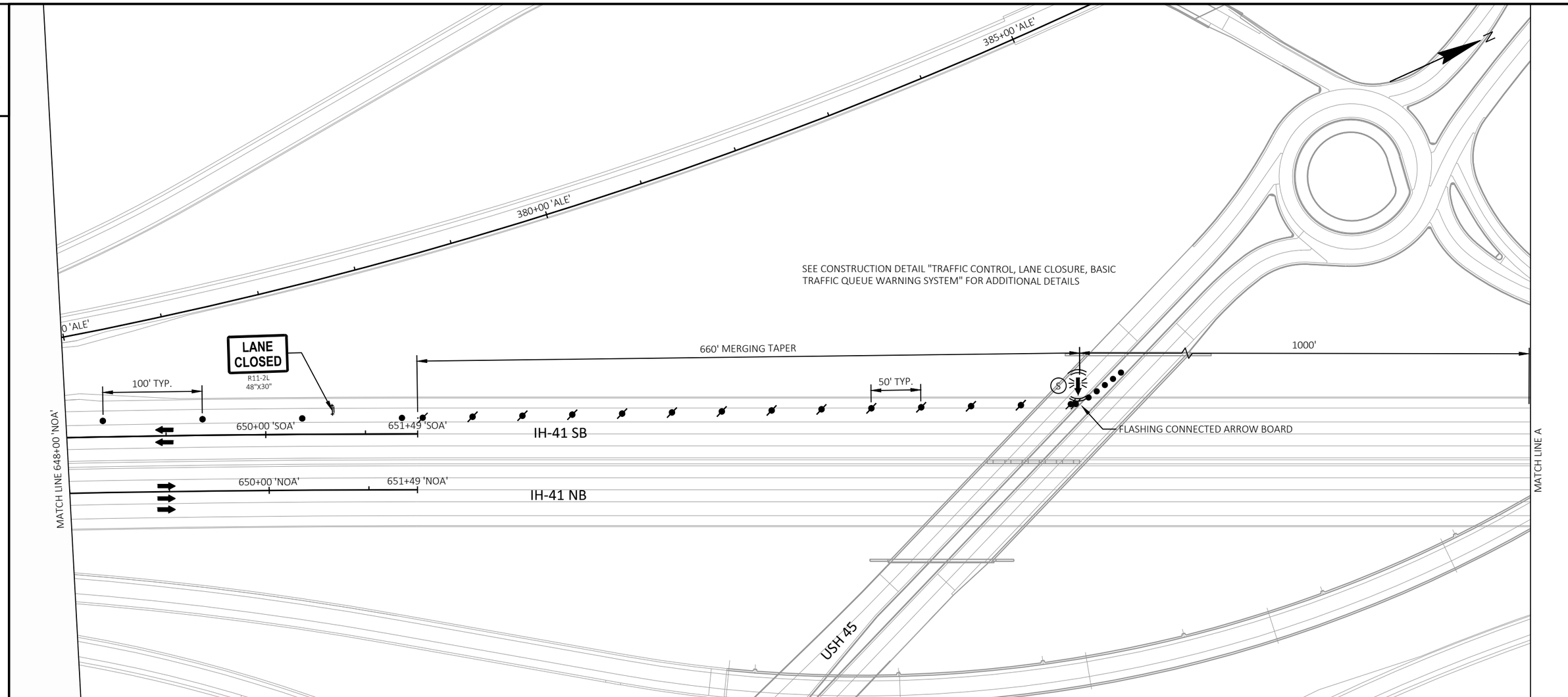

LEGEND

- WORK ZONE
- TRAFFIC CONTROL BARRICADES TYPE III WITH/WITHOUT ATTACHED SIGN
- TRAFFIC CONTROL SIGNS
- TRAFFIC CONTROL SIGNS ON TEMPORARY SUPPORT
- TRAFFIC CONTROL DRUMS WITH/WITHOUT TYPE C LIGHT
- TRAFFIC CONTROL FLEXIBLE TUBULAR MARKER (POSTS & BASES)
- DIRECTION OF TRAFFIC
- TRAFFIC CONTROL ARROW BOARDS
- XXXX SAWING CONCRETE
- SAWING ASPHALT
- CONCRETE BARRIER TEMPORARY PRECAST
- MARKING REMOVAL

- 6WT TEMPORARY MARKING LINE REMOVABLE TAPE 6-INCH (WHITE)
- 6YT TEMPORARY MARKING LINE REMOVABLE TAPE 6-INCH (YELLOW)
- 10WT TEMPORARY MARKING LINE REMOVABLE TAPE 10-INCH (WHITE)
- 6W TEMPORARY MARKING LINE PAINT 6-INCH (WHITE)
- 6Y TEMPORARY MARKING LINE PAINT 6-INCH (YELLOW)
- 6WGT TEMPORARY MARKING LINE REMOVABLE TAPE 6-INCH (WHITE)(3' LINE, 9' GAP)
- 6WG TEMPORARY MARKING LINE PAINT 6-INCH (WHITE)(3' LINE, 9' GAP)
- FBS FLASHING BEACON SIGN — STOPPED OR SLOW TRAFFIC WHEN FLASHING — W08-76 120"X60"
- S PORTABLE TRAFFIC SENSOR (PTS)

NOTES

1. THE EXACT LOCATION AND SPACING OF ALL SIGNS AND DEVICES SHALL BE ADJUSTED TO FIT FIELD CONDITIONS AS APPROVED BY THE ENGINEER.
2. REMOVE OR COVER ANY SIGN, TEMPORARY OR EXISTING, WHICH CONFLICTS WITH TRAFFIC CONTROL "IN USE", OR AS APPROVED BY THE ENGINEER.
3. "WO" AND "W" SIGNS SHALL BE 48"x48" UNLESS OTHERWISE NOTED.
4. "WO" SIGNS ARE THE SAME AS "W" SIGNS EXCEPT THE BACKGROUND IS ORANGE.
5. "MO" SIGNS ARE THE SAME AS "M" SIGNS EXCEPT THE BACKGROUND IS ORANGE.
6. TRAFFIC CONTROL SIGNS PORTABLE CHANGEABLE MESSAGE FOR PRE-WARNING TO BE INSTALLED ONE WEEK PRIOR TO IMPLEMENTATION OF DETOUR ROUTE.
7. INSTALL TEMPORARY MARKING LINE TAPE ON LANE SHIFTS/TAPERS. INSTALL TEMPORARY MARKING LINE PAINT ON TANGENT SECTIONS.
8. STATION/OFFSETS FOR CONCRETE BARRIER WALL TEMPORARY PRECAST ARE PROVIDED TO CENTER OF WALL.

PROJECT NO: 1120-63-71	HWY: IH 41	COUNTY: WINNEBAGO	TRAFFIC CONTROL - PRE-STAGE 1	SHEET 52	E

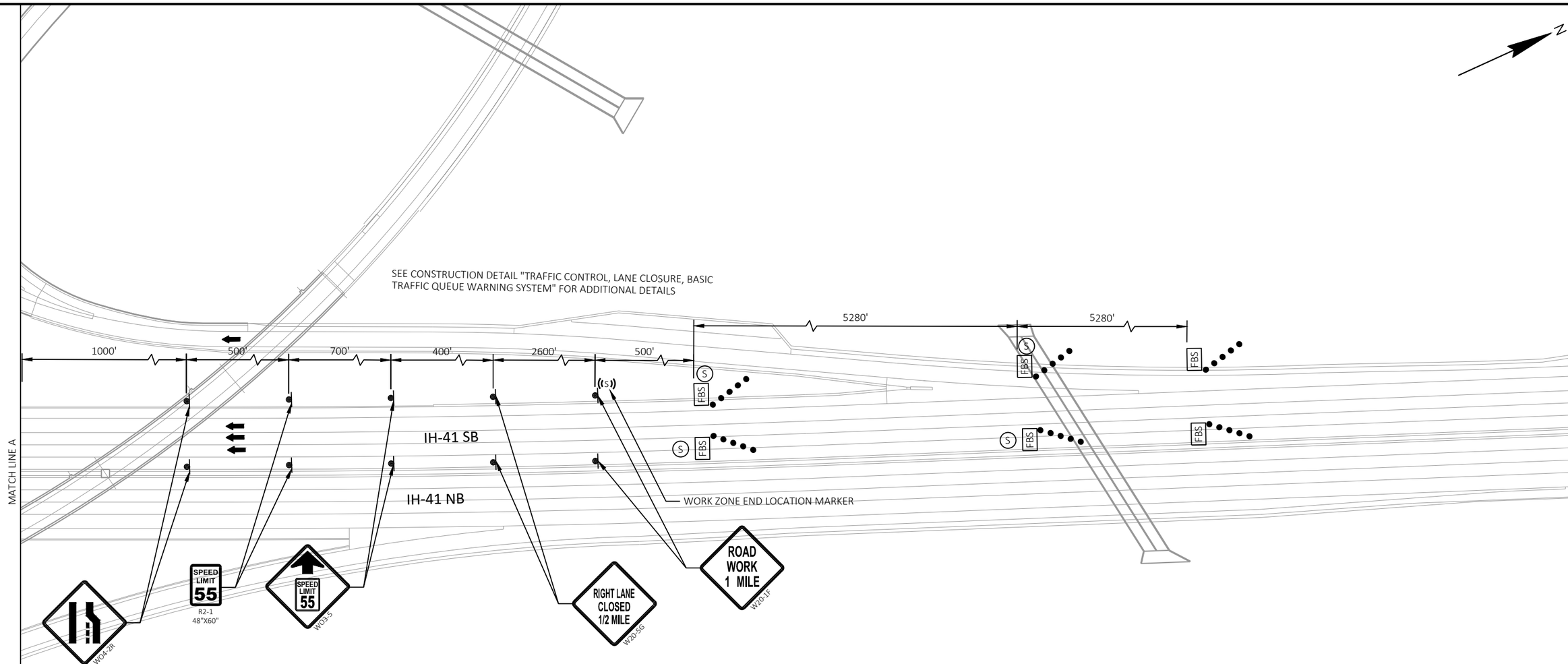

LEGEND

- WORK ZONE
- TRAFFIC CONTROL BARRICADES TYPE III WITH/WITHOUT ATTACHED SIGN
- TRAFFIC CONTROL SIGNS
- TRAFFIC CONTROL SIGNS ON TEMPORARY SUPPORT
- TRAFFIC CONTROL DRUMS WITH/WITHOUT TYPE C LIGHT
- TRAFFIC CONTROL FLEXIBLE TUBULAR MARKER (POSTS & BASES)
- DIRECTION OF TRAFFIC
- TRAFFIC CONTROL ARROW BOARDS
- XXXX SAWING CONCRETE
- SAWING ASPHALT
- CONCRETE BARRIER TEMPORARY PRECAST
- MARKING REMOVAL
- 6WT TEMPORARY MARKING LINE REMOVABLE TAPE 6-INCH (WHITE)
- 6YT TEMPORARY MARKING LINE REMOVABLE TAPE 6-INCH (YELLOW)
- 10WT TEMPORARY MARKING LINE REMOVABLE TAPE 10-INCH (WHITE)
- 6W TEMPORARY MARKING LINE PAINT 6-INCH (WHITE)
- 6Y TEMPORARY MARKING LINE PAINT 6-INCH (YELLOW)
- 6WGT TEMPORARY MARKING LINE REMOVABLE TAPE 6-INCH (WHITE)(3' LINE, 9' GAP)
- 6WG TEMPORARY MARKING LINE PAINT 6-INCH (WHITE)(3' LINE, 9' GAP)
- FBS FLASHING BEACON SIGN — STOPPED OR SLOW TRAFFIC WHEN FLASHING — W08-76 120"X60"
- S PORTABLE TRAFFIC SENSOR (PTS)

NOTES

1. THE EXACT LOCATION AND SPACING OF ALL SIGNS AND DEVICES SHALL BE ADJUSTED TO FIT FIELD CONDITIONS AS APPROVED BY THE ENGINEER.
2. REMOVE OR COVER ANY SIGN, TEMPORARY OR EXISTING, WHICH CONFLICTS WITH TRAFFIC CONTROL "IN USE", OR AS APPROVED BY THE ENGINEER.
3. "WO" AND "W" SIGNS SHALL BE 48"x48" UNLESS OTHERWISE NOTED.
4. "WO" SIGNS ARE THE SAME AS "W" SIGNS EXCEPT THE BACKGROUND IS ORANGE.
5. "MO" SIGNS ARE THE SAME AS "M" SIGNS EXCEPT THE BACKGROUND IS ORANGE.
6. TRAFFIC CONTROL SIGNS PORTABLE CHANGEABLE MESSAGE FOR PRE-WARNING TO BE INSTALLED ONE WEEK PRIOR TO IMPLEMENTATION OF DETOUR ROUTE.
7. INSTALL TEMPORARY MARKING LINE TAPE ON LANE SHIFTS/TAPERS. INSTALL TEMPORARY MARKING LINE PAINT ON TANGENT SECTIONS.
8. STATION/OFFSETS FOR CONCRETE BARRIER WALL TEMPORARY PRECAST ARE PROVIDED TO CENTER OF WALL.

2

LEGEND

- WORK ZONE
- TRAFFIC CONTROL BARRICADES TYPE III WITH/WITHOUT ATTACHED SIGN
- TRAFFIC CONTROL SIGNS
- TRAFFIC CONTROL SIGNS ON TEMPORARY SUPPORT
- TRAFFIC CONTROL DRUMS WITH/WITHOUT TYPE C LIGHT
- TRAFFIC CONTROL FLEXIBLE TUBULAR MARKER (POSTS & BASES)
- DIRECTION OF TRAFFIC
- TRAFFIC CONTROL ARROW BOARDS
- XXXX SAWING CONCRETE
- SAWING ASPHALT
- CONCRETE BARRIER TEMPORARY PRECAST
- MARKING REMOVAL

6WT	TEMPORARY MARKING LINE REMOVABLE TAPE 6-INCH (WHITE)
6YT	TEMPORARY MARKING LINE REMOVABLE TAPE 6-INCH (YELLOW)
10WT	TEMPORARY MARKING LINE REMOVABLE TAPE 10-INCH (WHITE)
6W	TEMPORARY MARKING LINE PAINT 6-INCH (WHITE)
6Y	TEMPORARY MARKING LINE PAINT 6-INCH (YELLOW)
6WGT	TEMPORARY MARKING LINE REMOVABLE TAPE 6-INCH (WHITE)(3' LINE, 9' GAP)
6WG	TEMPORARY MARKING LINE PAINT 6-INCH (WHITE)(3' LINE, 9' GAP)
FBS	FLASHING BEACON SIGN — STOPPED OR SLOW TRAFFIC WHEN FLASHING (WO8-76 120"X60")
S	PORTABLE TRAFFIC SENSOR (PTS)

NOTES

1. THE EXACT LOCATION AND SPACING OF ALL SIGNS AND DEVICES SHALL BE ADJUSTED TO FIT FIELD CONDITIONS AS APPROVED BY THE ENGINEER.
2. REMOVE OR COVER ANY SIGN, TEMPORARY OR EXISTING, WHICH CONFLICTS WITH TRAFFIC CONTROL "IN USE", OR AS APPROVED BY THE ENGINEER.
3. "WO" AND "W" SIGNS SHALL BE 48"x48" UNLESS OTHERWISE NOTED.
4. "WO" SIGNS ARE THE SAME AS "W" SIGNS EXCEPT THE BACKGROUND IS ORANGE.
5. "MO" SIGNS ARE THE SAME AS "M" SIGNS EXCEPT THE BACKGROUND IS ORANGE.
6. TRAFFIC CONTROL SIGNS PORTABLE CHANGEABLE MESSAGE FOR PRE-WARNING TO BE INSTALLED ONE WEEK PRIOR TO IMPLEMENTATION OF DETOUR ROUTE.
7. INSTALL TEMPORARY MARKING LINE TAPE ON LANE SHIFTS/TAPERS. INSTALL TEMPORARY MARKING LINE PAINT ON TANGENT SECTIONS.
8. STATION/OFFSETS FOR CONCRETE BARRIER WALL TEMPORARY PRECAST ARE PROVIDED TO CENTER OF WALL.

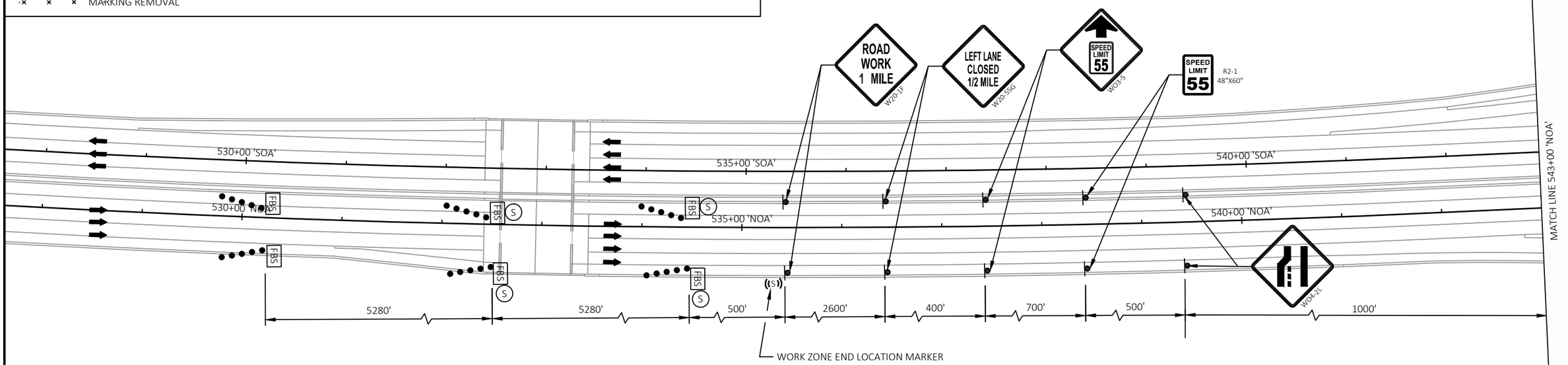

SEE CONSTRUCTION DETAIL "TRAFFIC CONTROL, LANE CLOSURE, BASIC TRAFFIC QUEUE WARNING SYSTEM" FOR ADDITIONAL DETAILS

2

PROJECT NO: 1120-63-71	HWY: IH 41	COUNTY: WINNEBAGO	TRAFFIC CONTROL - STAGE 1	SHEET 54	E

2

LEGEND

- WORK ZONE
- TRAFFIC CONTROL BARRICADES TYPE III WITH/WITHOUT ATTACHED SIGN
- TRAFFIC CONTROL SIGNS
- TRAFFIC CONTROL SIGNS ON TEMPORARY SUPPORT
- TRAFFIC CONTROL DRUMS WITH/WITHOUT TYPE C LIGHT
- TRAFFIC CONTROL FLEXIBLE TUBULAR MARKER (POSTS & BASES)
- DIRECTION OF TRAFFIC
- TRAFFIC CONTROL ARROW BOARDS
- XXXX SAWING CONCRETE
- SAWING ASPHALT
- CONCRETE BARRIER TEMPORARY PRECAST
- MARKING REMOVAL
- 6WT TEMPORARY MARKING LINE REMOVABLE TAPE 6-INCH (WHITE)
- 6YT TEMPORARY MARKING LINE REMOVABLE TAPE 6-INCH (YELLOW)
- 10WT TEMPORARY MARKING LINE REMOVABLE TAPE 10-INCH (WHITE)
- 6W TEMPORARY MARKING LINE PAINT 6-INCH (WHITE)
- 6Y TEMPORARY MARKING LINE PAINT 6-INCH (YELLOW)
- 6WGT TEMPORARY MARKING LINE REMOVABLE TAPE 6-INCH (WHITE)(3' LINE, 9' GAP)
- 6WG TEMPORARY MARKING LINE PAINT 6-INCH (WHITE)(3' LINE, 9' GAP)
- FBS FLASHING BEACON SIGN — STOPPED OR SLOW TRAFFIC WHEN FLASHING (WO8-76 120"X60")
- (S) PORTABLE TRAFFIC SENSOR (PTS)

NOTES

1. THE EXACT LOCATION AND SPACING OF ALL SIGNS AND DEVICES SHALL BE ADJUSTED TO FIT FIELD CONDITIONS AS APPROVED BY THE ENGINEER.
2. REMOVE OR COVER ANY SIGN, TEMPORARY OR EXISTING, WHICH CONFLICTS WITH TRAFFIC CONTROL "IN USE", OR AS APPROVED BY THE ENGINEER.
3. "WO" AND "W" SIGNS SHALL BE 48"x48" UNLESS OTHERWISE NOTED.
4. "WO" SIGNS ARE THE SAME AS "W" SIGNS EXCEPT THE BACKGROUND IS ORANGE.
5. "MO" SIGNS ARE THE SAME AS "M" SIGNS EXCEPT THE BACKGROUND IS ORANGE.
6. TRAFFIC CONTROL SIGNS PORTABLE CHANGEABLE MESSAGE FOR PRE-WARNING TO BE INSTALLED ONE WEEK PRIOR TO IMPLEMENTATION OF DETOUR ROUTE.
7. INSTALL TEMPORARY MARKING LINE TAPE ON LANE SHIFTS/TAPERS. INSTALL TEMPORARY MARKING LINE PAINT ON TANGENT SECTIONS.
8. STATION/OFFSETS FOR CONCRETE BARRIER WALL TEMPORARY PRECAST ARE PROVIDED TO CENTER OF WALL.

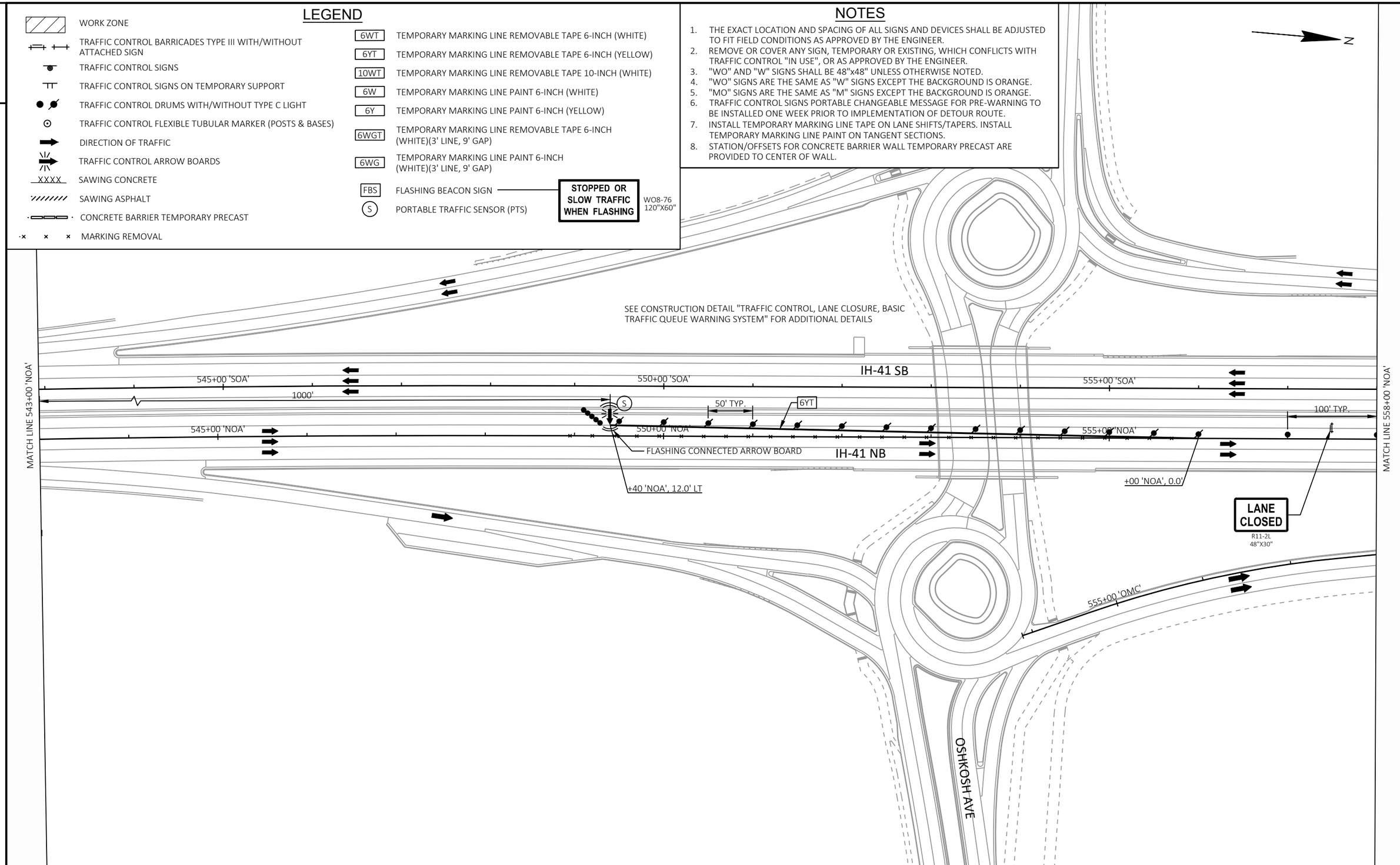

2

PROJECT NO: 1120-63-71	HWY: IH 41	COUNTY: WINNEBAGO	TRAFFIC CONTROL - STAGE 1	SHEET 55	E

2

LEGEND

- WORK ZONE
- TRAFFIC CONTROL BARRICADES TYPE III WITH/WITHOUT ATTACHED SIGN
- TRAFFIC CONTROL SIGNS
- TRAFFIC CONTROL SIGNS ON TEMPORARY SUPPORT
- TRAFFIC CONTROL DRUMS WITH/WITHOUT TYPE C LIGHT
- TRAFFIC CONTROL FLEXIBLE TUBULAR MARKER (POSTS & BASES)
- DIRECTION OF TRAFFIC
- TRAFFIC CONTROL ARROW BOARDS
- XXXX SAWING CONCRETE
- SAWING ASPHALT
- CONCRETE BARRIER TEMPORARY PRECAST
- MARKING REMOVAL

- 6WT TEMPORARY MARKING LINE REMOVABLE TAPE 6-INCH (WHITE)
- 6YT TEMPORARY MARKING LINE REMOVABLE TAPE 6-INCH (YELLOW)
- 10WT TEMPORARY MARKING LINE REMOVABLE TAPE 10-INCH (WHITE)
- 6W TEMPORARY MARKING LINE PAINT 6-INCH (WHITE)
- 6Y TEMPORARY MARKING LINE PAINT 6-INCH (YELLOW)
- 6WGT TEMPORARY MARKING LINE REMOVABLE TAPE 6-INCH (WHITE)(3' LINE, 9' GAP)
- 6WG TEMPORARY MARKING LINE PAINT 6-INCH (WHITE)(3' LINE, 9' GAP)
- FBS FLASHING BEACON SIGN — STOPPED OR SLOW TRAFFIC WHEN FLASHING (WO8-76 120"X60")
- S PORTABLE TRAFFIC SENSOR (PTS)

NOTES

1. THE EXACT LOCATION AND SPACING OF ALL SIGNS AND DEVICES SHALL BE ADJUSTED TO FIT FIELD CONDITIONS AS APPROVED BY THE ENGINEER.
2. REMOVE OR COVER ANY SIGN, TEMPORARY OR EXISTING, WHICH CONFLICTS WITH TRAFFIC CONTROL "IN USE", OR AS APPROVED BY THE ENGINEER.
3. "WO" AND "W" SIGNS SHALL BE 48"x48" UNLESS OTHERWISE NOTED.
4. "WO" SIGNS ARE THE SAME AS "W" SIGNS EXCEPT THE BACKGROUND IS ORANGE.
5. "MO" SIGNS ARE THE SAME AS "M" SIGNS EXCEPT THE BACKGROUND IS ORANGE.
6. TRAFFIC CONTROL SIGNS PORTABLE CHANGEABLE MESSAGE FOR PRE-WARNING TO BE INSTALLED ONE WEEK PRIOR TO IMPLEMENTATION OF DETOUR ROUTE.
7. INSTALL TEMPORARY MARKING LINE TAPE ON LANE SHIFTS/TAPERS. INSTALL TEMPORARY MARKING LINE PAINT ON TANGENT SECTIONS.
8. STATION/OFFSETS FOR CONCRETE BARRIER WALL TEMPORARY PRECAST ARE PROVIDED TO CENTER OF WALL.

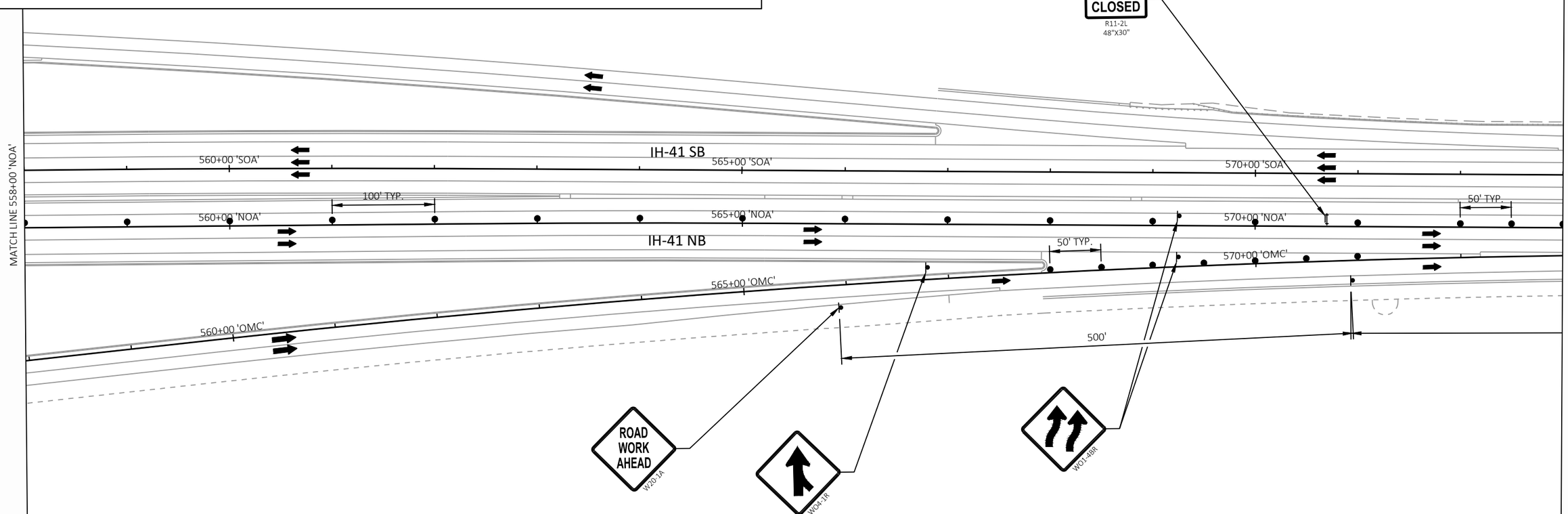

PLACE OVER EXISTING SIGN

SEE STANDARD DETAIL DRAWING "TRAFFIC CONTROL, TAPERED ENTRANCE RAMP WITHIN LANE CLOSURE" FOR ADDITIONAL DETAILS

2

PROJECT NO: 1120-63-71	HWY: IH 41	COUNTY: WINNEBAGO	TRAFFIC CONTROL - STAGE 1	SHEET 56	E

FILE NAME : S:\MAD\2000--2099\2089\008\DRAWINGS\CAD\CIVIL 3D\SHEETS\026001-S1.DWG
LAYOUT NAME - 026003-s1
PLOT DATE : 1/4/2024 7:59 AM PLOT BY : GRIMME, SARA PLOT NAME : PLOT SCALE : 1 IN:100 FT
WISDOT/CADDS SHEET 42

2

LEGEND

- WORK ZONE
- TRAFFIC CONTROL BARRICADES TYPE III WITH/WITHOUT ATTACHED SIGN
- TRAFFIC CONTROL SIGNS
- TRAFFIC CONTROL SIGNS ON TEMPORARY SUPPORT
- TRAFFIC CONTROL DRUMS WITH/WITHOUT TYPE C LIGHT
- TRAFFIC CONTROL FLEXIBLE TUBULAR MARKER (POSTS & BASES)
- DIRECTION OF TRAFFIC
- TRAFFIC CONTROL ARROW BOARDS
- XXXX SAWING CONCRETE
- SAWING ASPHALT
- CONCRETE BARRIER TEMPORARY PRECAST
- MARKING REMOVAL
- 6WT TEMPORARY MARKING LINE REMOVABLE TAPE 6-INCH (WHITE)
- 6YT TEMPORARY MARKING LINE REMOVABLE TAPE 6-INCH (YELLOW)
- 10WT TEMPORARY MARKING LINE REMOVABLE TAPE 10-INCH (WHITE)
- 6W TEMPORARY MARKING LINE PAINT 6-INCH (WHITE)
- 6Y TEMPORARY MARKING LINE PAINT 6-INCH (YELLOW)
- 6WGT TEMPORARY MARKING LINE REMOVABLE TAPE 6-INCH (WHITE)(3' LINE, 9' GAP)
- 6WG TEMPORARY MARKING LINE PAINT 6-INCH (WHITE)(3' LINE, 9' GAP)
- FBS FLASHING BEACON SIGN — STOPPED OR SLOW TRAFFIC WHEN FLASHING — WO8-76 120"X60"
- S PORTABLE TRAFFIC SENSOR (PTS)

NOTES

1. THE EXACT LOCATION AND SPACING OF ALL SIGNS AND DEVICES SHALL BE ADJUSTED TO FIT FIELD CONDITIONS AS APPROVED BY THE ENGINEER.
2. REMOVE OR COVER ANY SIGN, TEMPORARY OR EXISTING, WHICH CONFLICTS WITH TRAFFIC CONTROL "IN USE", OR AS APPROVED BY THE ENGINEER.
3. "WO" AND "W" SIGNS SHALL BE 48"x48" UNLESS OTHERWISE NOTED.
4. "WO" SIGNS ARE THE SAME AS "W" SIGNS EXCEPT THE BACKGROUND IS ORANGE.
5. "MO" SIGNS ARE THE SAME AS "M" SIGNS EXCEPT THE BACKGROUND IS ORANGE.
6. TRAFFIC CONTROL SIGNS PORTABLE CHANGEABLE MESSAGE FOR PRE-WARNING TO BE INSTALLED ONE WEEK PRIOR TO IMPLEMENTATION OF DETOUR ROUTE.
7. INSTALL TEMPORARY MARKING LINE TAPE ON LANE SHIFTS/TAPERS. INSTALL TEMPORARY MARKING LINE PAINT ON TANGENT SECTIONS.
8. STATION/OFFSETS FOR CONCRETE BARRIER WALL TEMPORARY PRECAST ARE PROVIDED TO CENTER OF WALL.

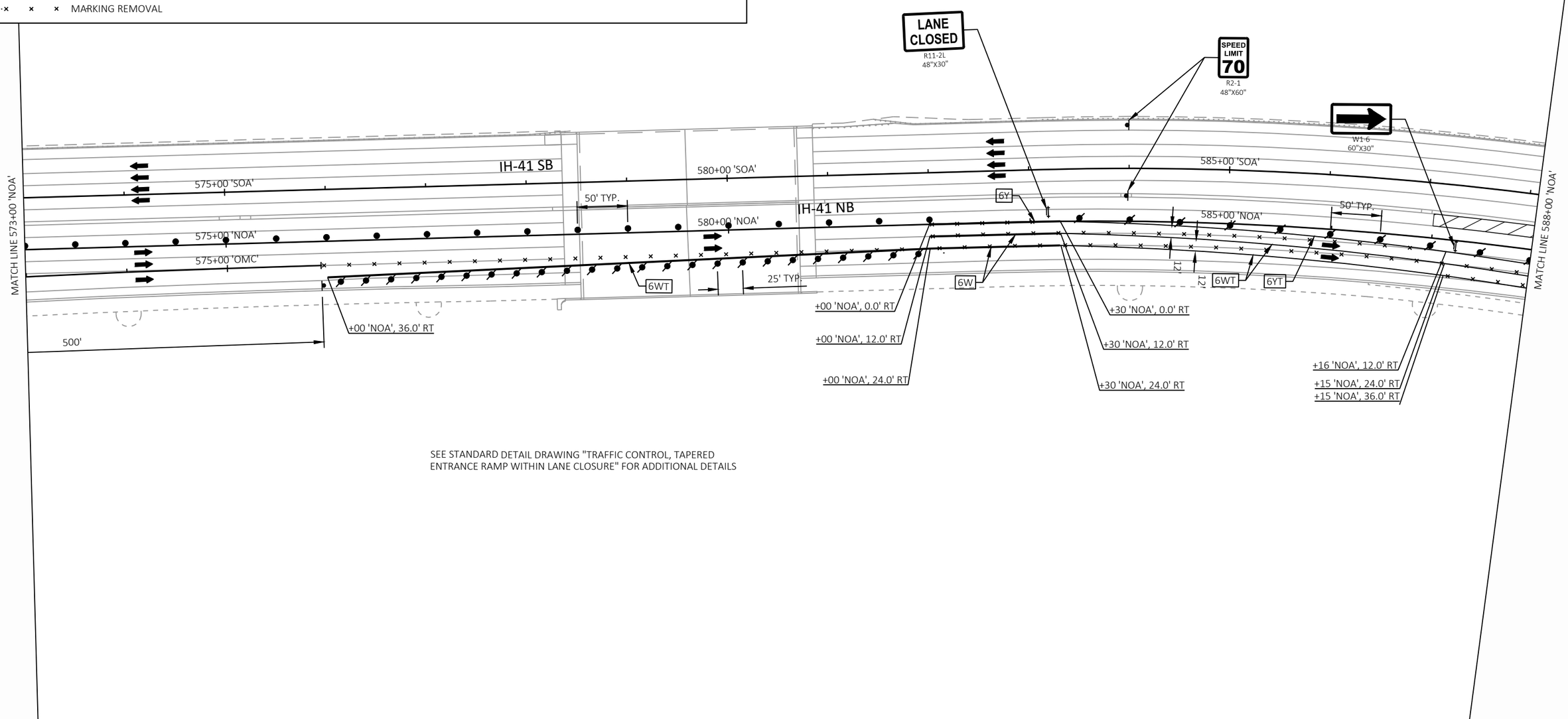

SEE STANDARD DETAIL DRAWING "TRAFFIC CONTROL, TAPERED ENTRANCE RAMP WITHIN LANE CLOSURE" FOR ADDITIONAL DETAILS

2

PROJECT NO: 1120-63-71	HWY: IH 41	COUNTY: WINNEBAGO	TRAFFIC CONTROL - STAGE 1	SHEET 57	E

2

LEGEND

- WORK ZONE
- TRAFFIC CONTROL BARRICADES TYPE III WITH/WITHOUT ATTACHED SIGN
- TRAFFIC CONTROL SIGNS
- TRAFFIC CONTROL SIGNS ON TEMPORARY SUPPORT
- TRAFFIC CONTROL DRUMS WITH/WITHOUT TYPE C LIGHT
- TRAFFIC CONTROL FLEXIBLE TUBULAR MARKER (POSTS & BASES)
- DIRECTION OF TRAFFIC
- TRAFFIC CONTROL ARROW BOARDS
- XXXX SAWING CONCRETE
- SAWING ASPHALT
- CONCRETE BARRIER TEMPORARY PRECAST
- MARKING REMOVAL

6WT	TEMPORARY MARKING LINE REMOVABLE TAPE 6-INCH (WHITE)
6YT	TEMPORARY MARKING LINE REMOVABLE TAPE 6-INCH (YELLOW)
10WT	TEMPORARY MARKING LINE REMOVABLE TAPE 10-INCH (WHITE)
6W	TEMPORARY MARKING LINE PAINT 6-INCH (WHITE)
6Y	TEMPORARY MARKING LINE PAINT 6-INCH (YELLOW)
6WGT	TEMPORARY MARKING LINE REMOVABLE TAPE 6-INCH (WHITE)(3' LINE, 9' GAP)
6WG	TEMPORARY MARKING LINE PAINT 6-INCH (WHITE)(3' LINE, 9' GAP)
FBS	FLASHING BEACON SIGN — STOPPED OR SLOW TRAFFIC WHEN FLASHING (WO8-76 120"X60")
S	PORTABLE TRAFFIC SENSOR (PTS)

NOTES

1. THE EXACT LOCATION AND SPACING OF ALL SIGNS AND DEVICES SHALL BE ADJUSTED TO FIT FIELD CONDITIONS AS APPROVED BY THE ENGINEER.
2. REMOVE OR COVER ANY SIGN, TEMPORARY OR EXISTING, WHICH CONFLICTS WITH TRAFFIC CONTROL "IN USE", OR AS APPROVED BY THE ENGINEER.
3. "WO" AND "W" SIGNS SHALL BE 48"x48" UNLESS OTHERWISE NOTED.
4. "WO" SIGNS ARE THE SAME AS "W" SIGNS EXCEPT THE BACKGROUND IS ORANGE.
5. "MO" SIGNS ARE THE SAME AS "M" SIGNS EXCEPT THE BACKGROUND IS ORANGE.
6. TRAFFIC CONTROL SIGNS PORTABLE CHANGEABLE MESSAGE FOR PRE-WARNING TO BE INSTALLED ONE WEEK PRIOR TO IMPLEMENTATION OF DETOUR ROUTE.
7. INSTALL TEMPORARY MARKING LINE TAPE ON LANE SHIFTS/TAPERS. INSTALL TEMPORARY MARKING LINE PAINT ON TANGENT SECTIONS.
8. STATION/OFFSETS FOR CONCRETE BARRIER WALL TEMPORARY PRECAST ARE PROVIDED TO CENTER OF WALL.

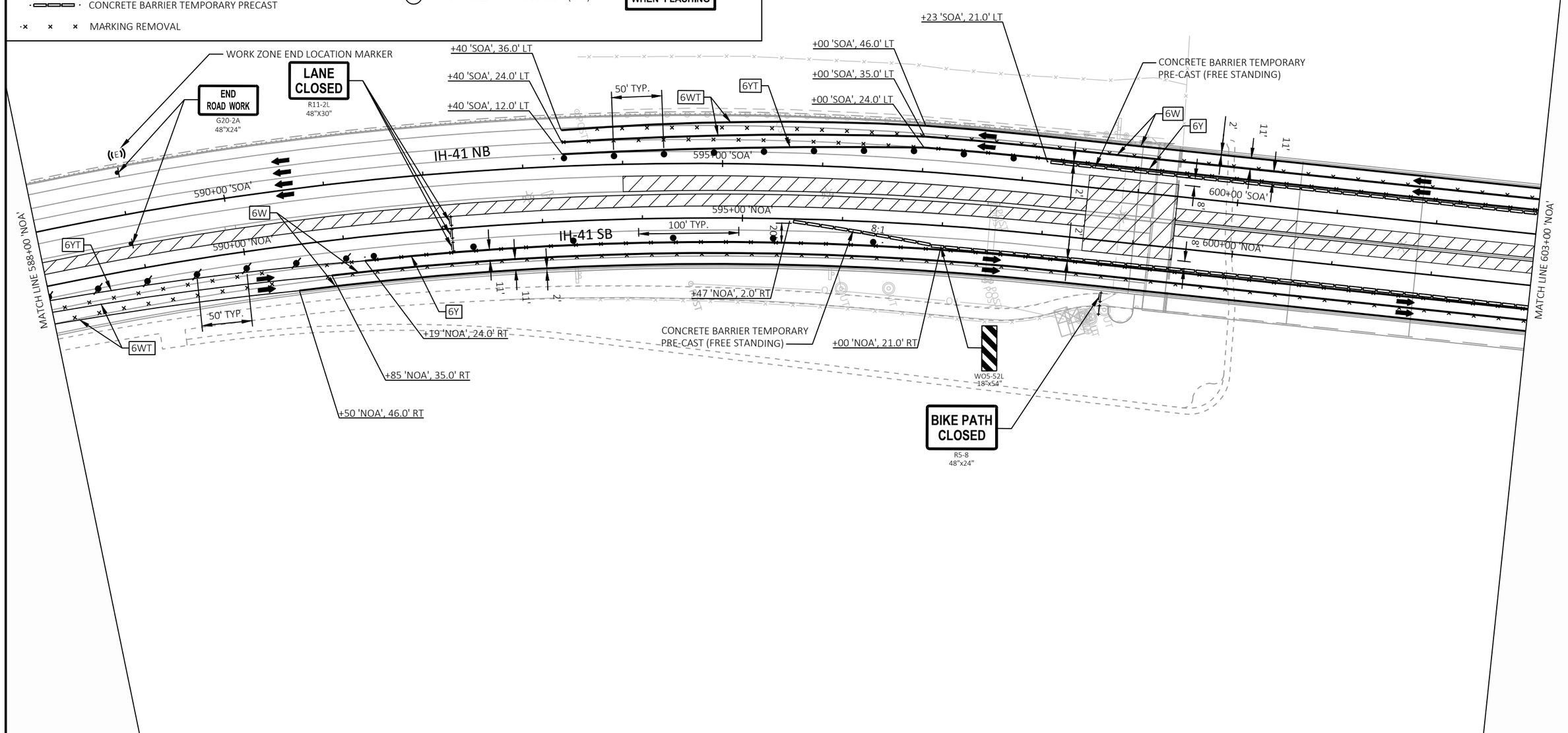

PROJECT NO: 1120-63-71	HWY: IH 41	COUNTY: WINNEBAGO	TRAFFIC CONTROL - STAGE 1	SHEET 58	E

FILE NAME : S:\MAD\2000--2099\2089\008\DRAWINGS\CAD\CIVIL 3D\SHEETS\026001-S1.DWG
LAYOUT NAME - 026005-s1
PLOT DATE : 1/4/2024 8:02 AM PLOT BY : GRIMME, SARA PLOT NAME : PLOT SCALE : 1 IN:100 FT
WISDOT/CADDS SHEET 42

2

LEGEND

- WORK ZONE
- TRAFFIC CONTROL BARRICADES TYPE III WITH/WITHOUT ATTACHED SIGN
- TRAFFIC CONTROL SIGNS
- TRAFFIC CONTROL SIGNS ON TEMPORARY SUPPORT
- TRAFFIC CONTROL DRUMS WITH/WITHOUT TYPE C LIGHT
- TRAFFIC CONTROL FLEXIBLE TUBULAR MARKER (POSTS & BASES)
- DIRECTION OF TRAFFIC
- TRAFFIC CONTROL ARROW BOARDS
- XXXX SAWING CONCRETE
- SAWING ASPHALT
- CONCRETE BARRIER TEMPORARY PRECAST
- MARKING REMOVAL
- 6WT TEMPORARY MARKING LINE REMOVABLE TAPE 6-INCH (WHITE)
- 6YT TEMPORARY MARKING LINE REMOVABLE TAPE 6-INCH (YELLOW)
- 10WT TEMPORARY MARKING LINE REMOVABLE TAPE 10-INCH (WHITE)
- 6W TEMPORARY MARKING LINE PAINT 6-INCH (WHITE)
- 6Y TEMPORARY MARKING LINE PAINT 6-INCH (YELLOW)
- 6WGT TEMPORARY MARKING LINE REMOVABLE TAPE 6-INCH (WHITE)(3' LINE, 9' GAP)
- 6WG TEMPORARY MARKING LINE PAINT 6-INCH (WHITE)(3' LINE, 9' GAP)
- FBS FLASHING BEACON SIGN — STOPPED OR SLOW TRAFFIC WHEN FLASHING — WO8-76 120"X60"
- S PORTABLE TRAFFIC SENSOR (PTS)

NOTES

1. THE EXACT LOCATION AND SPACING OF ALL SIGNS AND DEVICES SHALL BE ADJUSTED TO FIT FIELD CONDITIONS AS APPROVED BY THE ENGINEER.
2. REMOVE OR COVER ANY SIGN, TEMPORARY OR EXISTING, WHICH CONFLICTS WITH TRAFFIC CONTROL "IN USE", OR AS APPROVED BY THE ENGINEER.
3. "WO" AND "W" SIGNS SHALL BE 48"x48" UNLESS OTHERWISE NOTED.
4. "WO" SIGNS ARE THE SAME AS "W" SIGNS EXCEPT THE BACKGROUND IS ORANGE.
5. "MO" SIGNS ARE THE SAME AS "M" SIGNS EXCEPT THE BACKGROUND IS ORANGE.
6. TRAFFIC CONTROL SIGNS PORTABLE CHANGEABLE MESSAGE FOR PRE-WARNING TO BE INSTALLED ONE WEEK PRIOR TO IMPLEMENTATION OF DETOUR ROUTE.
7. INSTALL TEMPORARY MARKING LINE TAPE ON LANE SHIFTS/TAPERS. INSTALL TEMPORARY MARKING LINE PAINT ON TANGENT SECTIONS.
8. STATION/OFFSETS FOR CONCRETE BARRIER WALL TEMPORARY PRECAST ARE PROVIDED TO CENTER OF WALL.

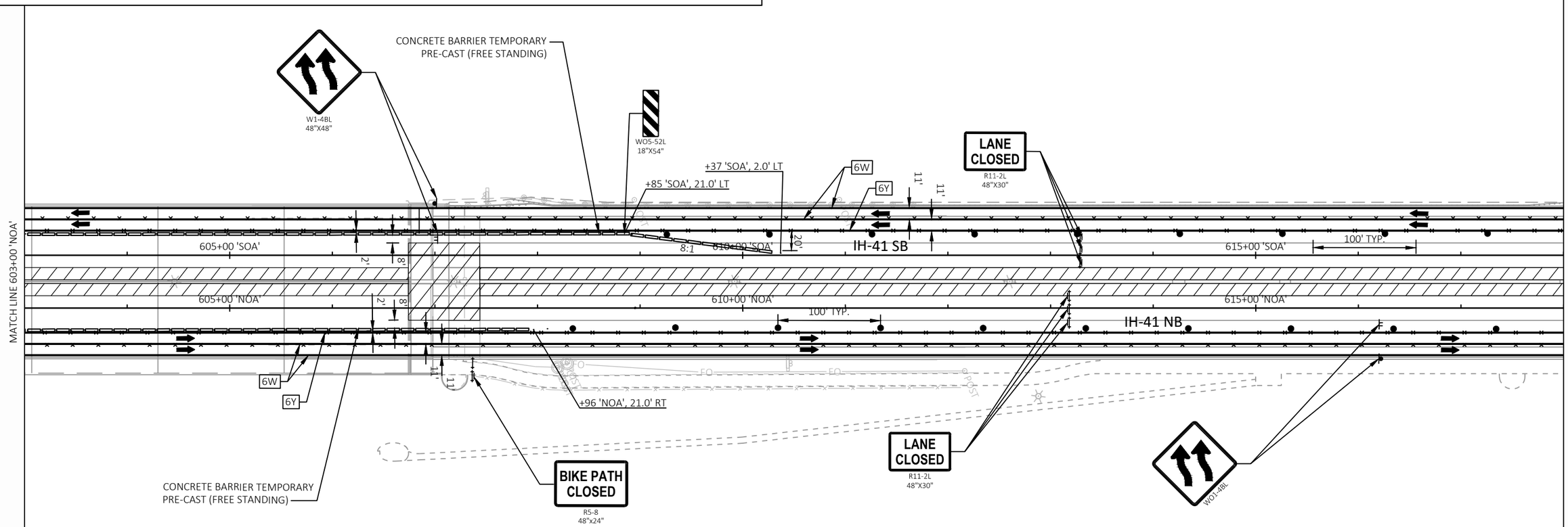

2

PROJECT NO: 1120-63-71	HWY: IH 41	COUNTY: WINNEBAGO	TRAFFIC CONTROL - STAGE 1	SHEET 59	E

FILE NAME : S:\MAD\2000--2099\2089\008\DRAWINGS\CAD\CIVIL 3D\SHEETS\026001-S1.DWG
LAYOUT NAME - 026006-s1
PLOT DATE : 1/4/2024 8:03 AM PLOT BY : GRIMME, SARA PLOT NAME : PLOT SCALE : 1 IN:100 FT

2

LEGEND

- WORK ZONE
- TRAFFIC CONTROL BARRICADES TYPE III WITH/WITHOUT ATTACHED SIGN
- TRAFFIC CONTROL SIGNS
- TRAFFIC CONTROL SIGNS ON TEMPORARY SUPPORT
- TRAFFIC CONTROL DRUMS WITH/WITHOUT TYPE C LIGHT
- TRAFFIC CONTROL FLEXIBLE TUBULAR MARKER (POSTS & BASES)
- DIRECTION OF TRAFFIC
- TRAFFIC CONTROL ARROW BOARDS
- XXXX SAWING CONCRETE
- SAWING ASPHALT
- CONCRETE BARRIER TEMPORARY PRECAST
- MARKING REMOVAL
- 6WT TEMPORARY MARKING LINE REMOVABLE TAPE 6-INCH (WHITE)
- 6YT TEMPORARY MARKING LINE REMOVABLE TAPE 6-INCH (YELLOW)
- 10WT TEMPORARY MARKING LINE REMOVABLE TAPE 10-INCH (WHITE)
- 6W TEMPORARY MARKING LINE PAINT 6-INCH (WHITE)
- 6Y TEMPORARY MARKING LINE PAINT 6-INCH (YELLOW)
- 6WGT TEMPORARY MARKING LINE REMOVABLE TAPE 6-INCH (WHITE)(3' LINE, 9' GAP)
- 6WG TEMPORARY MARKING LINE PAINT 6-INCH (WHITE)(3' LINE, 9' GAP)
- FBS FLASHING BEACON SIGN — STOPPED OR SLOW TRAFFIC WHEN FLASHING — WO8-76 120"X60"
- (S) PORTABLE TRAFFIC SENSOR (PTS)

NOTES

1. THE EXACT LOCATION AND SPACING OF ALL SIGNS AND DEVICES SHALL BE ADJUSTED TO FIT FIELD CONDITIONS AS APPROVED BY THE ENGINEER.
2. REMOVE OR COVER ANY SIGN, TEMPORARY OR EXISTING, WHICH CONFLICTS WITH TRAFFIC CONTROL "IN USE", OR AS APPROVED BY THE ENGINEER.
3. "WO" AND "W" SIGNS SHALL BE 48"x48" UNLESS OTHERWISE NOTED.
4. "WO" SIGNS ARE THE SAME AS "W" SIGNS EXCEPT THE BACKGROUND IS ORANGE.
5. "MO" SIGNS ARE THE SAME AS "M" SIGNS EXCEPT THE BACKGROUND IS ORANGE.
6. TRAFFIC CONTROL SIGNS PORTABLE CHANGEABLE MESSAGE FOR PRE-WARNING TO BE INSTALLED ONE WEEK PRIOR TO IMPLEMENTATION OF DETOUR ROUTE.
7. INSTALL TEMPORARY MARKING LINE TAPE ON LANE SHIFTS/TAPERS. INSTALL TEMPORARY MARKING LINE PAINT ON TANGENT SECTIONS.
8. STATION/OFFSETS FOR CONCRETE BARRIER WALL TEMPORARY PRECAST ARE PROVIDED TO CENTER OF WALL.

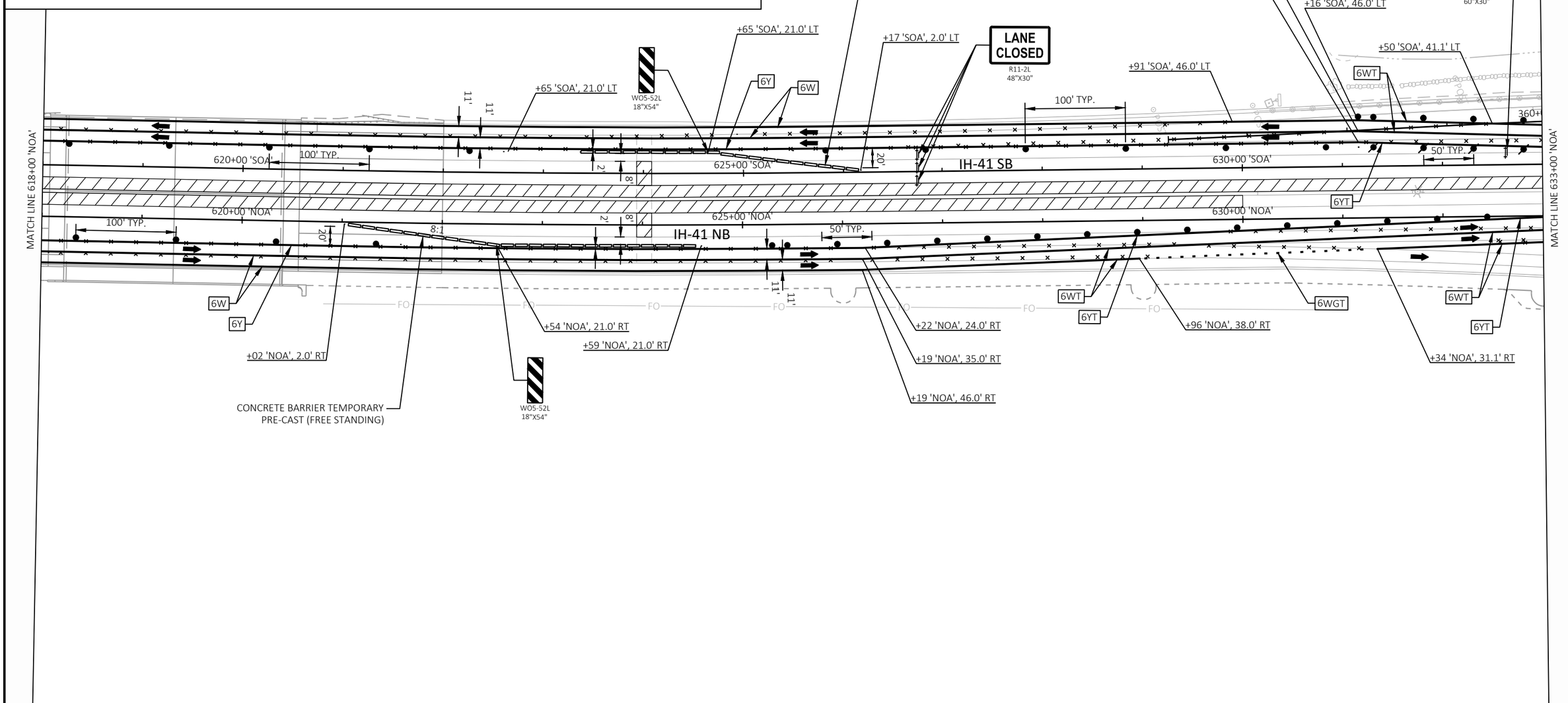

2

PROJECT NO: 1120-63-71	HWY: IH 41	COUNTY: WINNEBAGO	TRAFFIC CONTROL - STAGE 1	SHEET 60	E

FILE NAME : S:\MAD\2000--2099\2089\008\DRAWINGS\CAD\CIVIL 3D\SHEETS\026001-S1.DWG
LAYOUT NAME - 026007-s1
PLOT DATE : 1/4/2024 8:04 AM
PLOT BY : GRIMME, SARA
PLOT NAME :
PLOT SCALE : 1 IN:100 FT
WISDOT/CADDS SHEET 42

2

LEGEND

- WORK ZONE
- TRAFFIC CONTROL BARRICADES TYPE III WITH/WITHOUT ATTACHED SIGN
- TRAFFIC CONTROL SIGNS
- TRAFFIC CONTROL SIGNS ON TEMPORARY SUPPORT
- TRAFFIC CONTROL DRUMS WITH/WITHOUT TYPE C LIGHT
- TRAFFIC CONTROL FLEXIBLE TUBULAR MARKER (POSTS & BASES)
- DIRECTION OF TRAFFIC
- TRAFFIC CONTROL ARROW BOARDS
- XXXX SAWING CONCRETE
- SAWING ASPHALT
- CONCRETE BARRIER TEMPORARY PRECAST
- MARKING REMOVAL
- 6WT TEMPORARY MARKING LINE REMOVABLE TAPE 6-INCH (WHITE)
- 6YT TEMPORARY MARKING LINE REMOVABLE TAPE 6-INCH (YELLOW)
- 10WT TEMPORARY MARKING LINE REMOVABLE TAPE 10-INCH (WHITE)
- 6W TEMPORARY MARKING LINE PAINT 6-INCH (WHITE)
- 6Y TEMPORARY MARKING LINE PAINT 6-INCH (YELLOW)
- 6WGT TEMPORARY MARKING LINE REMOVABLE TAPE 6-INCH (WHITE)(3' LINE, 9' GAP)
- 6WG TEMPORARY MARKING LINE PAINT 6-INCH (WHITE)(3' LINE, 9' GAP)
- FBS FLASHING BEACON SIGN — STOPPED OR SLOW TRAFFIC WHEN FLASHING — WO8-76 120"X60"
- S PORTABLE TRAFFIC SENSOR (PTS)

NOTES

1. THE EXACT LOCATION AND SPACING OF ALL SIGNS AND DEVICES SHALL BE ADJUSTED TO FIT FIELD CONDITIONS AS APPROVED BY THE ENGINEER.
2. REMOVE OR COVER ANY SIGN, TEMPORARY OR EXISTING, WHICH CONFLICTS WITH TRAFFIC CONTROL "IN USE", OR AS APPROVED BY THE ENGINEER.
3. "WO" AND "W" SIGNS SHALL BE 48"x48" UNLESS OTHERWISE NOTED.
4. "WO" SIGNS ARE THE SAME AS "W" SIGNS EXCEPT THE BACKGROUND IS ORANGE.
5. "MO" SIGNS ARE THE SAME AS "M" SIGNS EXCEPT THE BACKGROUND IS ORANGE.
6. TRAFFIC CONTROL SIGNS PORTABLE CHANGEABLE MESSAGE FOR PRE-WARNING TO BE INSTALLED ONE WEEK PRIOR TO IMPLEMENTATION OF DETOUR ROUTE.
7. INSTALL TEMPORARY MARKING LINE TAPE ON LANE SHIFTS/TAPERS. INSTALL TEMPORARY MARKING LINE PAINT ON TANGENT SECTIONS.
8. STATION/OFFSETS FOR CONCRETE BARRIER WALL TEMPORARY PRECAST ARE PROVIDED TO CENTER OF WALL.

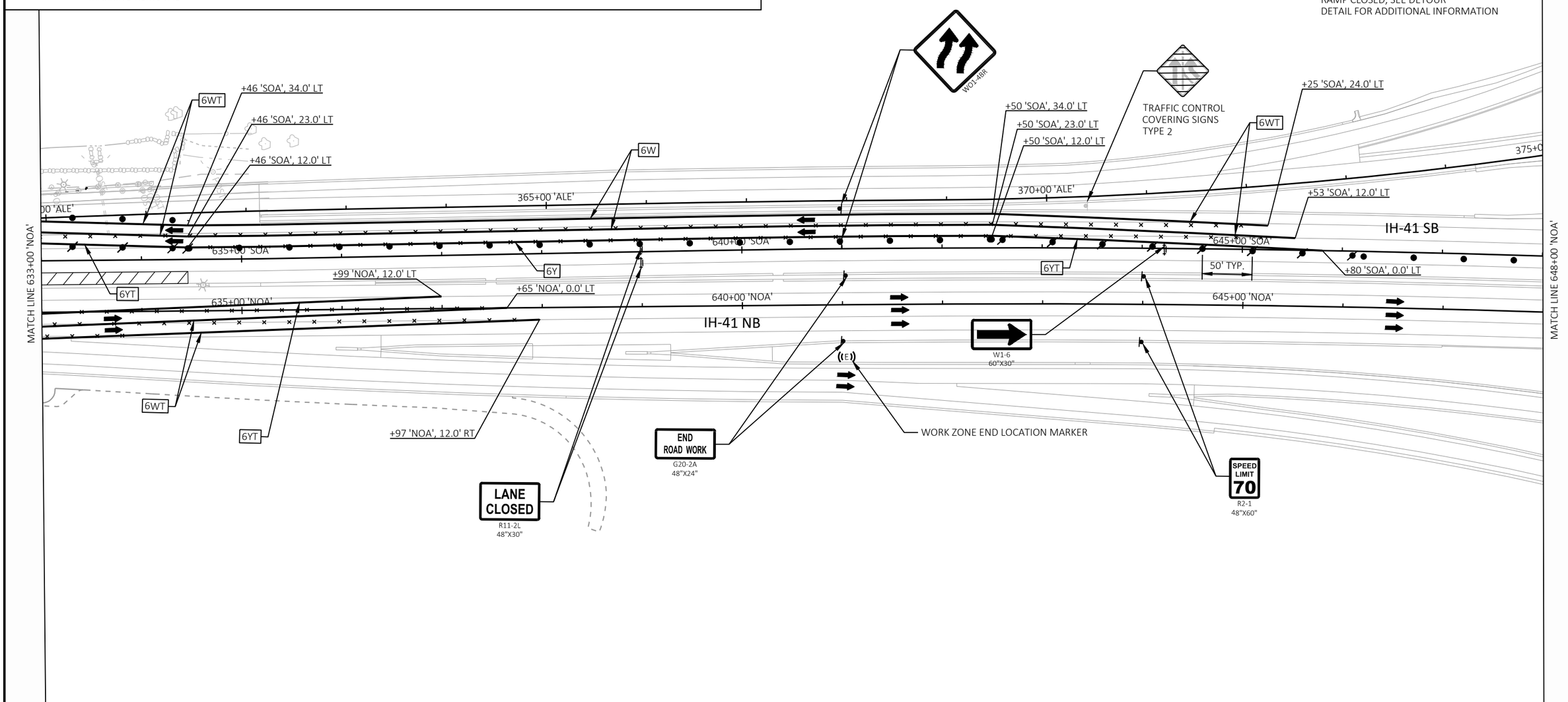

2

PROJECT NO: 1120-63-71	HWY: IH 41	COUNTY: WINNEBAGO	TRAFFIC CONTROL - STAGE 1	SHEET 61	E

FILE NAME : S:\MAD\2000--2099\2089\008\DRAWINGS\CAD\CIVIL 3D\SHEETS\026001-S1.DWG
LAYOUT NAME - 026008-s1
PLOT DATE : 1/4/2024 8:05 AM PLOT BY : GRIMME, SARA PLOT NAME : PLOT SCALE : 1 IN:100 FT

2

LEGEND

- WORK ZONE
- TRAFFIC CONTROL BARRICADES TYPE III WITH/WITHOUT ATTACHED SIGN
- TRAFFIC CONTROL SIGNS
- TRAFFIC CONTROL SIGNS ON TEMPORARY SUPPORT
- TRAFFIC CONTROL DRUMS WITH/WITHOUT TYPE C LIGHT
- TRAFFIC CONTROL FLEXIBLE TUBULAR MARKER (POSTS & BASES)
- DIRECTION OF TRAFFIC
- TRAFFIC CONTROL ARROW BOARDS
- XXXX SAWING CONCRETE
- SAWING ASPHALT
- CONCRETE BARRIER TEMPORARY PRECAST
- MARKING REMOVAL
- 6WT TEMPORARY MARKING LINE REMOVABLE TAPE 6-INCH (WHITE)
- 6YT TEMPORARY MARKING LINE REMOVABLE TAPE 6-INCH (YELLOW)
- 10WT TEMPORARY MARKING LINE REMOVABLE TAPE 10-INCH (WHITE)
- 6W TEMPORARY MARKING LINE PAINT 6-INCH (WHITE)
- 6Y TEMPORARY MARKING LINE PAINT 6-INCH (YELLOW)
- 6WGT TEMPORARY MARKING LINE REMOVABLE TAPE 6-INCH (WHITE)(3' LINE, 9' GAP)
- 6WG TEMPORARY MARKING LINE PAINT 6-INCH (WHITE)(3' LINE, 9' GAP)
- FBS FLASHING BEACON SIGN — STOPPED OR SLOW TRAFFIC WHEN FLASHING — WO8-76 120"X60"
- S PORTABLE TRAFFIC SENSOR (PTS)

NOTES

1. THE EXACT LOCATION AND SPACING OF ALL SIGNS AND DEVICES SHALL BE ADJUSTED TO FIT FIELD CONDITIONS AS APPROVED BY THE ENGINEER.
2. REMOVE OR COVER ANY SIGN, TEMPORARY OR EXISTING, WHICH CONFLICTS WITH TRAFFIC CONTROL "IN USE", OR AS APPROVED BY THE ENGINEER.
3. "WO" AND "W" SIGNS SHALL BE 48"x48" UNLESS OTHERWISE NOTED.
4. "WO" SIGNS ARE THE SAME AS "W" SIGNS EXCEPT THE BACKGROUND IS ORANGE.
5. "MO" SIGNS ARE THE SAME AS "M" SIGNS EXCEPT THE BACKGROUND IS ORANGE.
6. TRAFFIC CONTROL SIGNS PORTABLE CHANGEABLE MESSAGE FOR PRE-WARNING TO BE INSTALLED ONE WEEK PRIOR TO IMPLEMENTATION OF DETOUR ROUTE.
7. INSTALL TEMPORARY MARKING LINE TAPE ON LANE SHIFTS/TAPERS. INSTALL TEMPORARY MARKING LINE PAINT ON TANGENT SECTIONS.
8. STATION/OFFSETS FOR CONCRETE BARRIER WALL TEMPORARY PRECAST ARE PROVIDED TO CENTER OF WALL.

SEE CONSTRUCTION DETAIL "TRAFFIC CONTROL, LANE CLOSURE, BASIC TRAFFIC QUEUE WARNING SYSTEM" FOR ADDITIONAL DETAILS

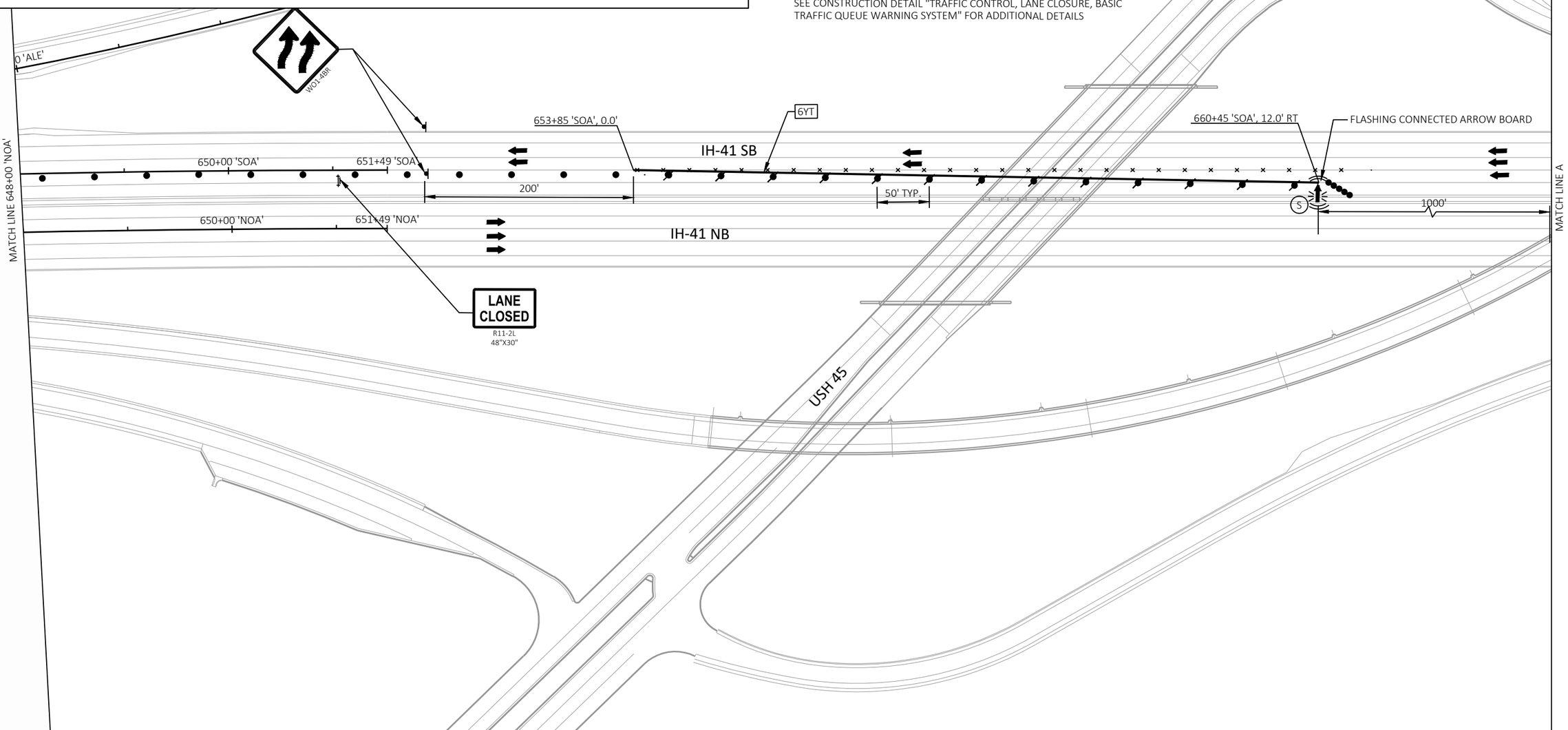

2

PROJECT NO: 1120-63-71	HWY: IH 41	COUNTY: WINNEBAGO	TRAFFIC CONTROL - STAGE 1	SHEET 62	E

FILE NAME : S:\MAD\2000--2099\2089\008\DRAWINGS\CAD\CIVIL 3D\SHEETS\026001-S1.DWG
LAYOUT NAME - 026009-s1
PLOT DATE : 1/4/2024 8:06 AM PLOT BY : GRIMME, SARA PLOT NAME : PLOT SCALE : 1 IN:100 FT

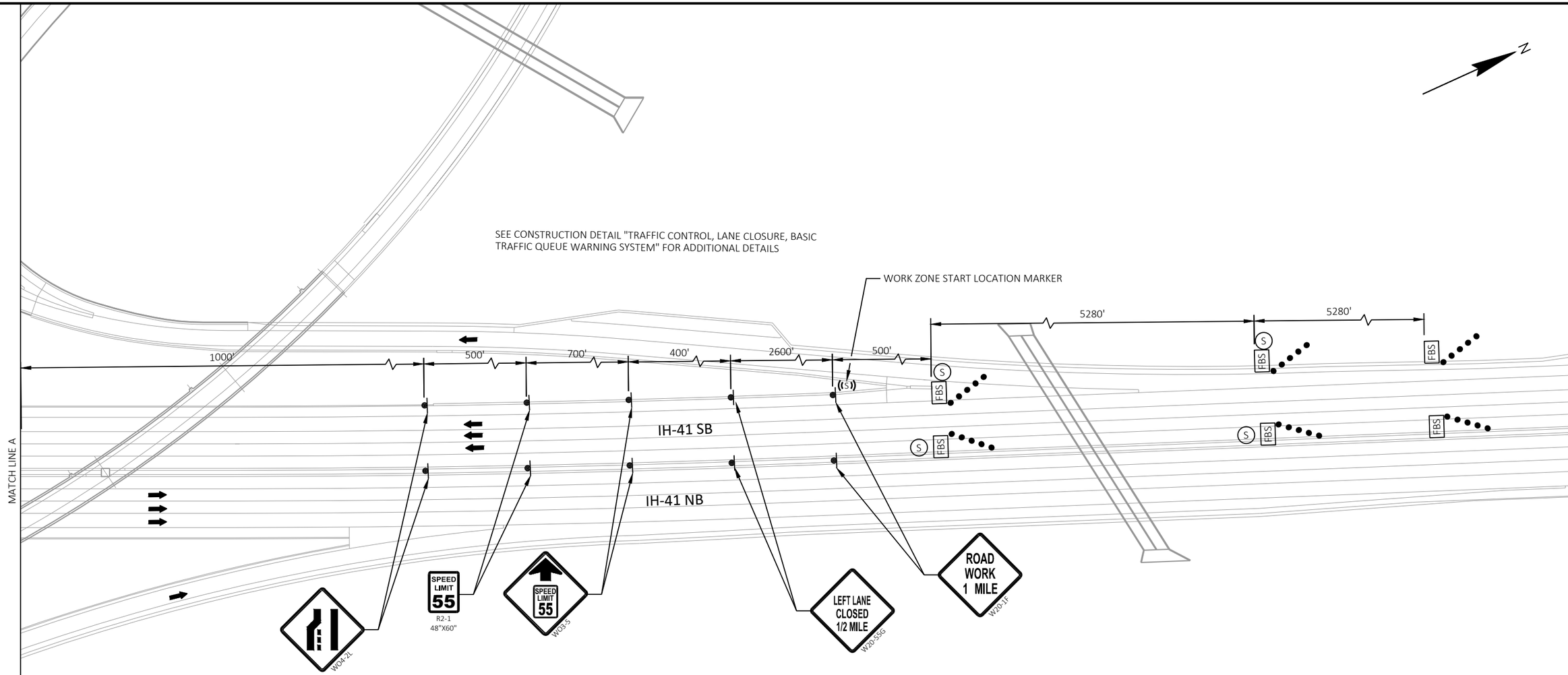

NOTES

1. THE EXACT LOCATION AND SPACING OF ALL SIGNS AND DEVICES SHALL BE ADJUSTED TO FIT FIELD CONDITIONS AS APPROVED BY THE ENGINEER.
2. REMOVE OR COVER ANY SIGN, TEMPORARY OR EXISTING, WHICH CONFLICTS WITH TRAFFIC CONTROL "IN USE", OR AS APPROVED BY THE ENGINEER.
3. "WO" AND "W" SIGNS SHALL BE 48"x48" UNLESS OTHERWISE NOTED.
4. "WO" SIGNS ARE THE SAME AS "W" SIGNS EXCEPT THE BACKGROUND IS ORANGE.
5. "MO" SIGNS ARE THE SAME AS "M" SIGNS EXCEPT THE BACKGROUND IS ORANGE.
6. TRAFFIC CONTROL SIGNS PORTABLE CHANGEABLE MESSAGE FOR PRE-WARNING TO BE INSTALLED ONE WEEK PRIOR TO IMPLEMENTATION OF DETOUR ROUTE.
7. INSTALL TEMPORARY MARKING LINE TAPE ON LANE SHIFTS/TAPERS. INSTALL TEMPORARY MARKING LINE PAINT ON TANGENT SECTIONS.
8. STATION/OFFSETS FOR CONCRETE BARRIER WALL TEMPORARY PRECAST ARE PROVIDED TO CENTER OF WALL.

LEGEND

- WORK ZONE
- TRAFFIC CONTROL BARRICADES TYPE III WITH/WITHOUT ATTACHED SIGN
- TRAFFIC CONTROL SIGNS
- TRAFFIC CONTROL SIGNS ON TEMPORARY SUPPORT
- TRAFFIC CONTROL DRUMS WITH/WITHOUT TYPE C LIGHT
- TRAFFIC CONTROL FLEXIBLE TUBULAR MARKER (POSTS & BASES)
- DIRECTION OF TRAFFIC
- TRAFFIC CONTROL ARROW BOARDS
- XXXX SAWING CONCRETE
- SAWING ASPHALT
- CONCRETE BARRIER TEMPORARY PRECAST
- MARKING REMOVAL
- 6WT TEMPORARY MARKING LINE REMOVABLE TAPE 6-INCH (WHITE)
- 6YT TEMPORARY MARKING LINE REMOVABLE TAPE 6-INCH (YELLOW)
- 10WT TEMPORARY MARKING LINE REMOVABLE TAPE 10-INCH (WHITE)
- 6W TEMPORARY MARKING LINE PAINT 6-INCH (WHITE)
- 6Y TEMPORARY MARKING LINE PAINT 6-INCH (YELLOW)
- 6WGT TEMPORARY MARKING LINE REMOVABLE TAPE 6-INCH (WHITE)(3' LINE, 9' GAP)
- 6WG TEMPORARY MARKING LINE PAINT 6-INCH (WHITE)(3' LINE, 9' GAP)
- FBS FLASHING BEACON SIGN — STOPPED OR SLOW TRAFFIC WHEN FLASHING WO8-76 120"X60"
- S PORTABLE TRAFFIC SENSOR (PTS)

PROJECT NO: 1120-63-71	HWY: IH 41	COUNTY: WINNEBAGO	TRAFFIC CONTROL - STAGE 1	SHEET 63	E

2

LEGEND

6W	TEMPORARY MARKING LINE PAINT 6-INCH (WHITE)
6Y	TEMPORARY MARKING LINE PAINT 6-INCH (YELLOW)
10W	TEMPORARY MARKING LINE PAINT 10-INCH (WHITE)
6WG	TEMPORARY MARKING LINE PAINT 6-INCH (WHITE)(12.5' LINE, 37.5' GAP)
10WG	TEMPORARY MARKING LINE PAINT 10-INCH (WHITE)(3' LINE, 9' GAP)

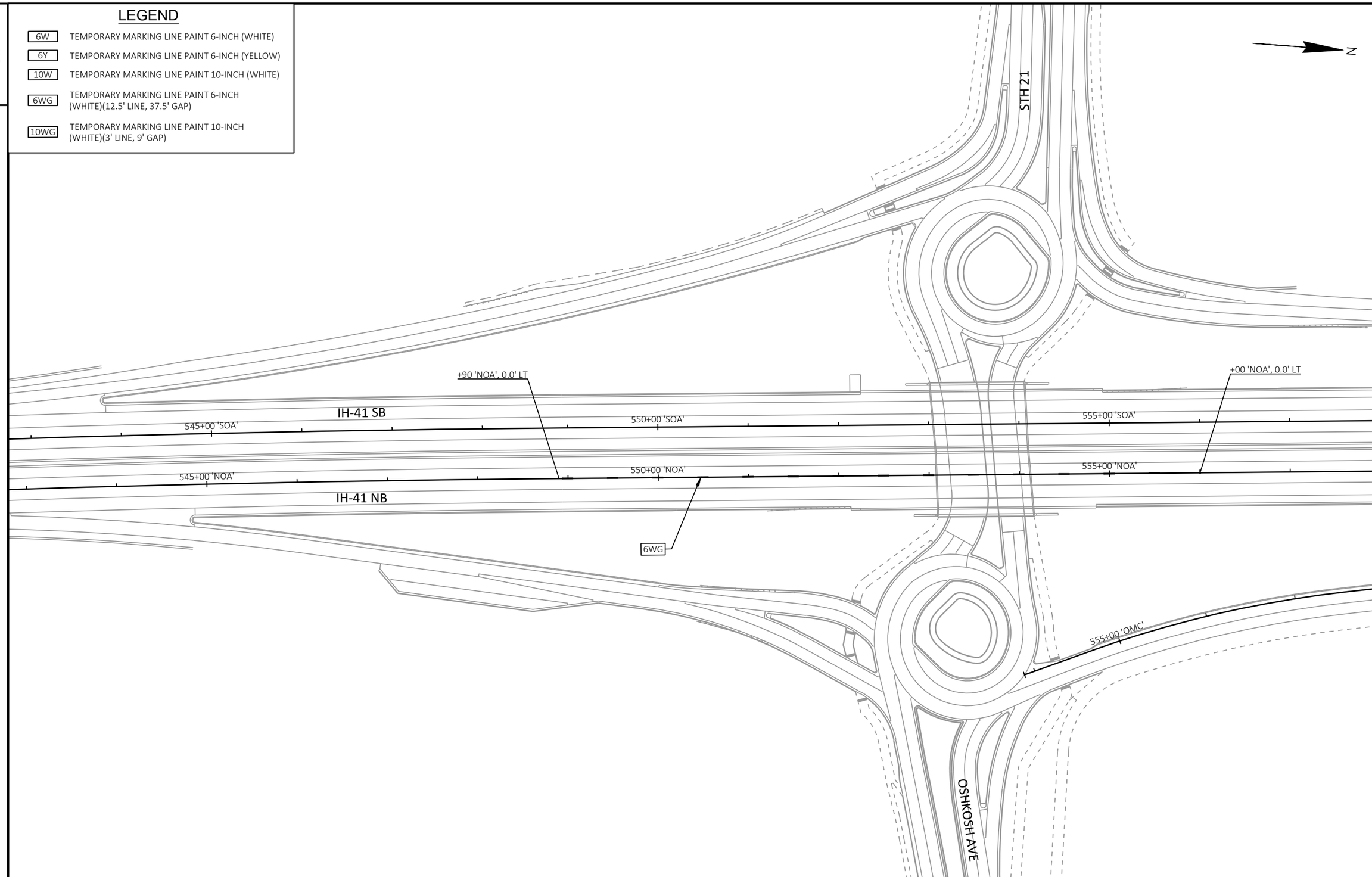

2

PROJECT NO: 1120-63-71	HWY: IH 41	COUNTY: WINNEBAGO	EAA TEMPORARY PAVEMENT MARKING	SHEET 64	E

FILE NAME : S:\MAD\2000--2099\2089\008\DRAWINGS\CAD\CIVIL 3D\SHEETS\026001-EAAPM.DWG
LAYOUT NAME - 026001-eaapm
PLOT DATE : 1/4/2024 8:12 AM PLOT BY : GRIMME, SARA PLOT NAME : PLOT SCALE : 1 IN:100 FT

WISDOT/CADDS SHEET 42

2

LEGEND

6W	TEMPORARY MARKING LINE PAINT 6-INCH (WHITE)
6Y	TEMPORARY MARKING LINE PAINT 6-INCH (YELLOW)
10W	TEMPORARY MARKING LINE PAINT 10-INCH (WHITE)
6WG	TEMPORARY MARKING LINE PAINT 6-INCH (WHITE)(12.5' LINE, 37.5' GAP)
10WG	TEMPORARY MARKING LINE PAINT 10-INCH (WHITE)(3' LINE, 9' GAP)

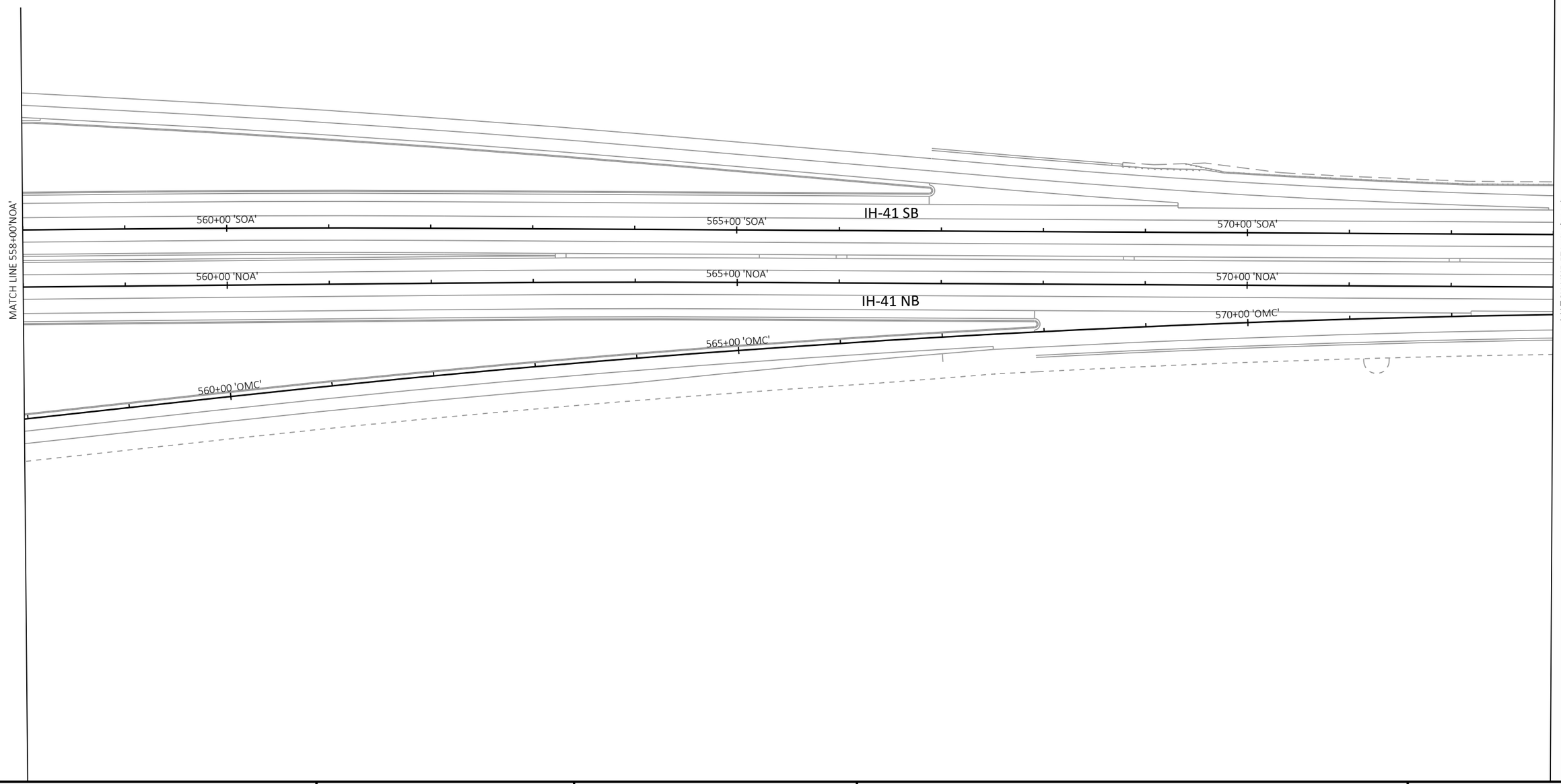

2

PROJECT NO: 1120-63-71	HWY: IH 41	COUNTY: WINNEBAGO	EAA TEMPORARY PAVEMENT MARKING	SHEET 65	E

FILE NAME : S:\MAD\2000--2099\2089\008\DRAWINGS\CAD\CIVIL 3D\SHEETS\026001-EAAPM.DWG
LAYOUT NAME - 026002-eaapm
PLOT DATE : 1/4/2024 8:13 AM PLOT BY : GRIMME, SARA PLOT NAME : PLOT SCALE : 1 IN:100 FT

WISDOT/CADDS SHEET 42

2

LEGEND

6W	TEMPORARY MARKING LINE PAINT 6-INCH (WHITE)
6Y	TEMPORARY MARKING LINE PAINT 6-INCH (YELLOW)
10W	TEMPORARY MARKING LINE PAINT 10-INCH (WHITE)
6WG	TEMPORARY MARKING LINE PAINT 6-INCH (WHITE)(12.5' LINE, 37.5' GAP)
10WG	TEMPORARY MARKING LINE PAINT 10-INCH (WHITE)(3' LINE, 9' GAP)

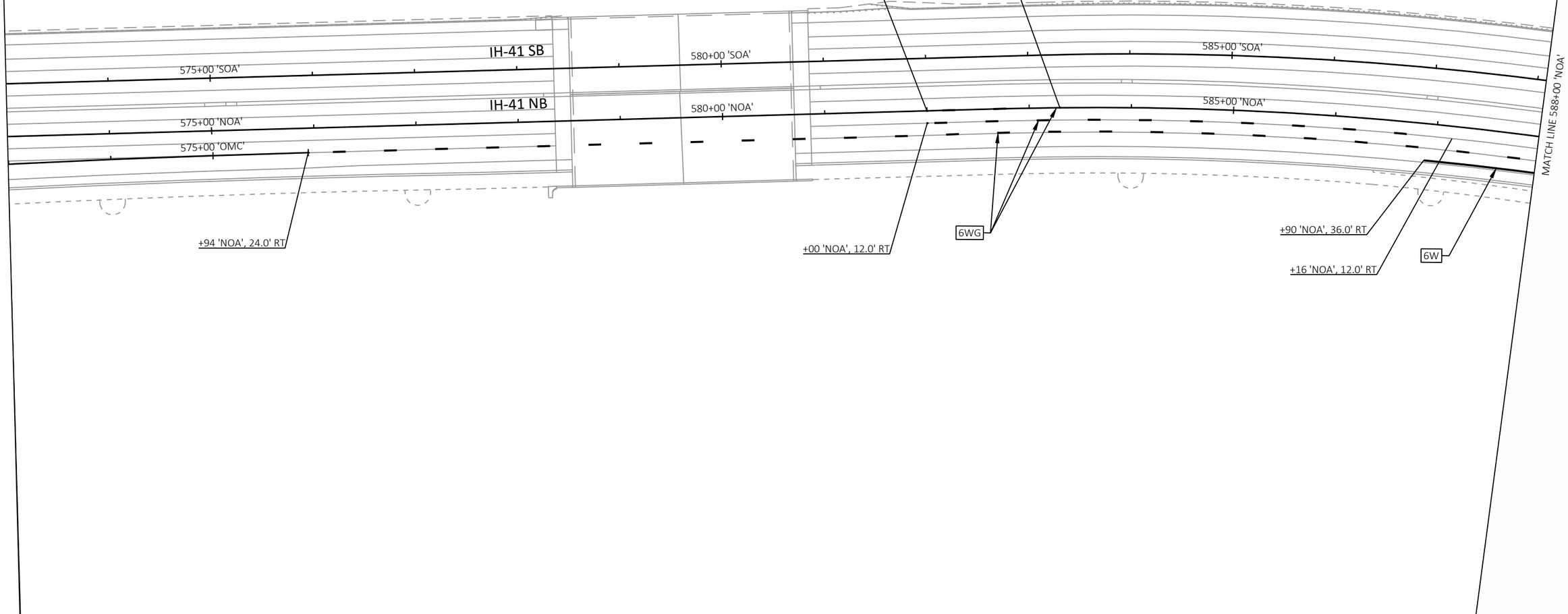

2

PROJECT NO: 1120-63-71	HWY: IH 41	COUNTY: WINNEBAGO	EAA TEMPORARY PAVEMENT MARKING	SHEET 66	E

FILE NAME : S:\MAD\2000--2099\2089\008\DRAWINGS\CAD\CIVIL 3D\SHEETS\026001-EAAPM.DWG
LAYOUT NAME - 026003-eaapm
PLOT DATE : 1/4/2024 8:13 AM PLOT BY : GRIMME, SARA PLOT NAME : PLOT SCALE : 1 IN:100 FT

WISDOT/CADDS SHEET 42

2

LEGEND

6W	TEMPORARY MARKING LINE PAINT 6-INCH (WHITE)
6Y	TEMPORARY MARKING LINE PAINT 6-INCH (YELLOW)
10W	TEMPORARY MARKING LINE PAINT 10-INCH (WHITE)
6WG	TEMPORARY MARKING LINE PAINT 6-INCH (WHITE)(12.5' LINE, 37.5' GAP)
10WG	TEMPORARY MARKING LINE PAINT 10-INCH (WHITE)(3' LINE, 9' GAP)

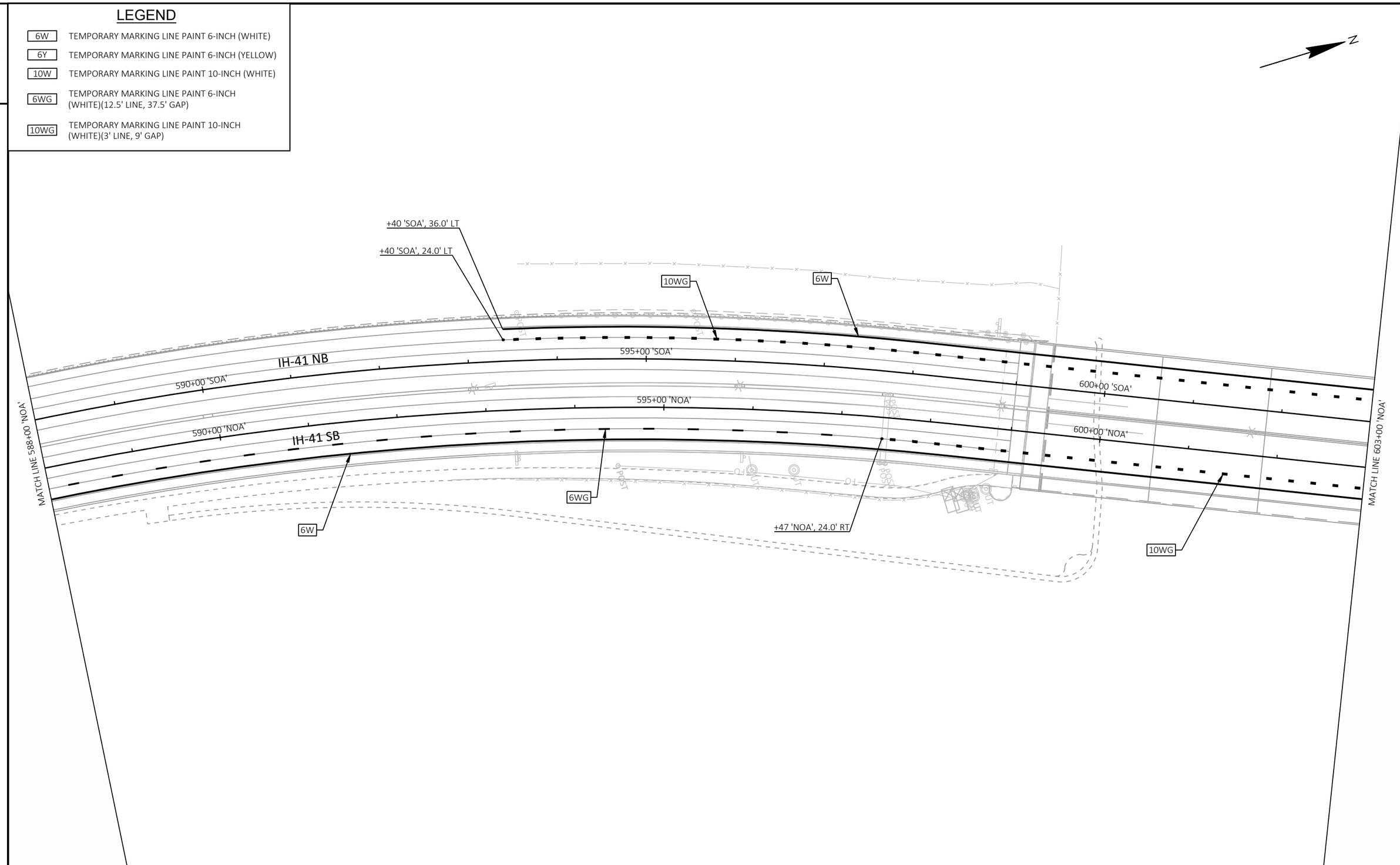

2

PROJECT NO: 1120-63-71	HWY: IH 41	COUNTY: WINNEBAGO	EAA TEMPORARY PAVEMENT MARKING	SHEET 67	E

FILE NAME : S:\MAD\2000--2099\2089\008\DRAWINGS\CAD\CIVIL 3D\SHEETS\026001-EAAPM.DWG
LAYOUT NAME - 026004-eaapm
PLOT DATE : 1/4/2024 8:14 AM PLOT BY : GRIMME, SARA PLOT NAME : PLOT SCALE : 1 IN:100 FT

WISDOT/CADDS SHEET 42

2

LEGEND

6W	TEMPORARY MARKING LINE PAINT 6-INCH (WHITE)
6Y	TEMPORARY MARKING LINE PAINT 6-INCH (YELLOW)
10W	TEMPORARY MARKING LINE PAINT 10-INCH (WHITE)
6WG	TEMPORARY MARKING LINE PAINT 6-INCH (WHITE)(12.5' LINE, 37.5' GAP)
10WG	TEMPORARY MARKING LINE PAINT 10-INCH (WHITE)(3' LINE, 9' GAP)

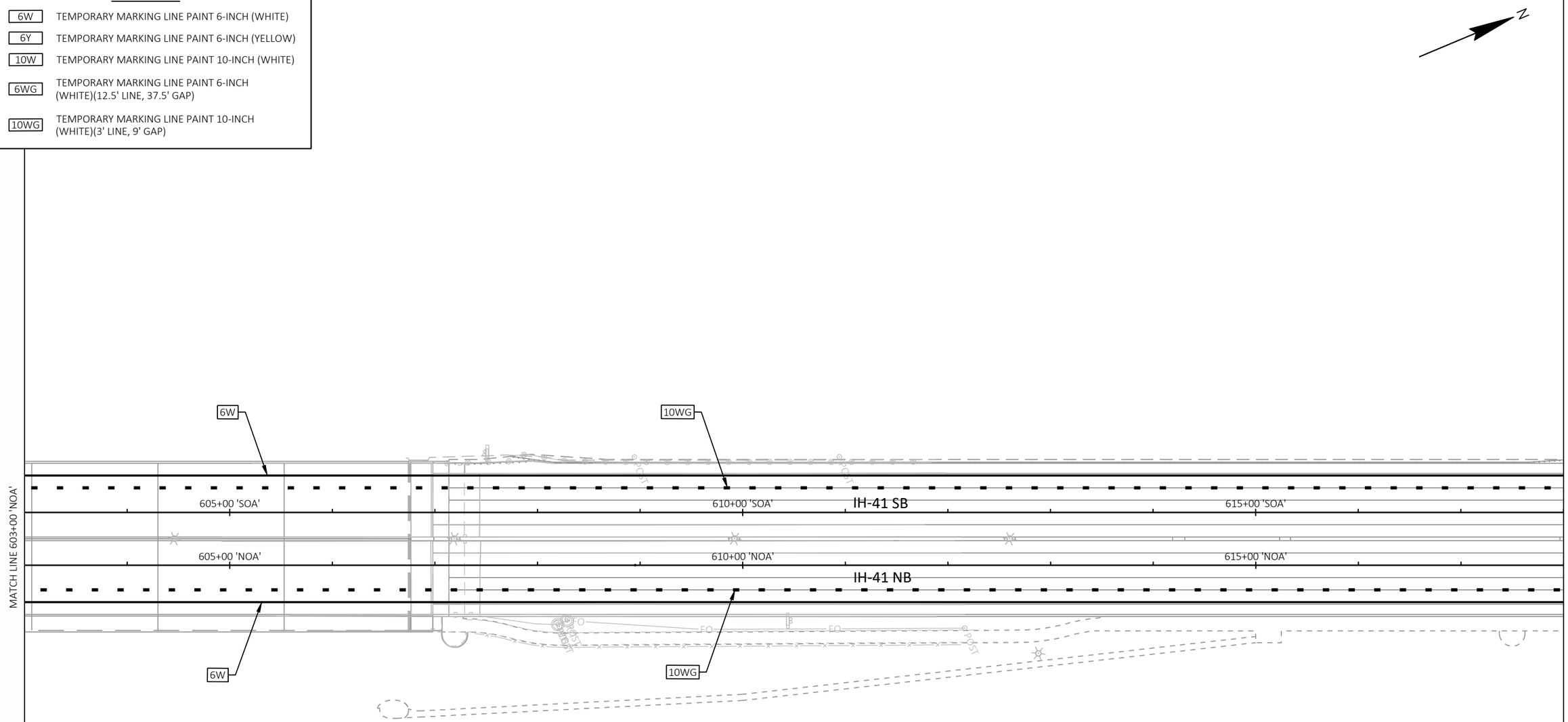

2

PROJECT NO: 1120-63-71	HWY: IH 41	COUNTY: WINNEBAGO	EAA TEMPORARY PAVEMENT MARKING	SHEET 68	E

LEGEND

6W	TEMPORARY MARKING LINE PAINT 6-INCH (WHITE)
6Y	TEMPORARY MARKING LINE PAINT 6-INCH (YELLOW)
10W	TEMPORARY MARKING LINE PAINT 10-INCH (WHITE)
6WG	TEMPORARY MARKING LINE PAINT 6-INCH (WHITE)(12.5' LINE, 37.5' GAP)
10WG	TEMPORARY MARKING LINE PAINT 10-INCH (WHITE)(3' LINE, 9' GAP)

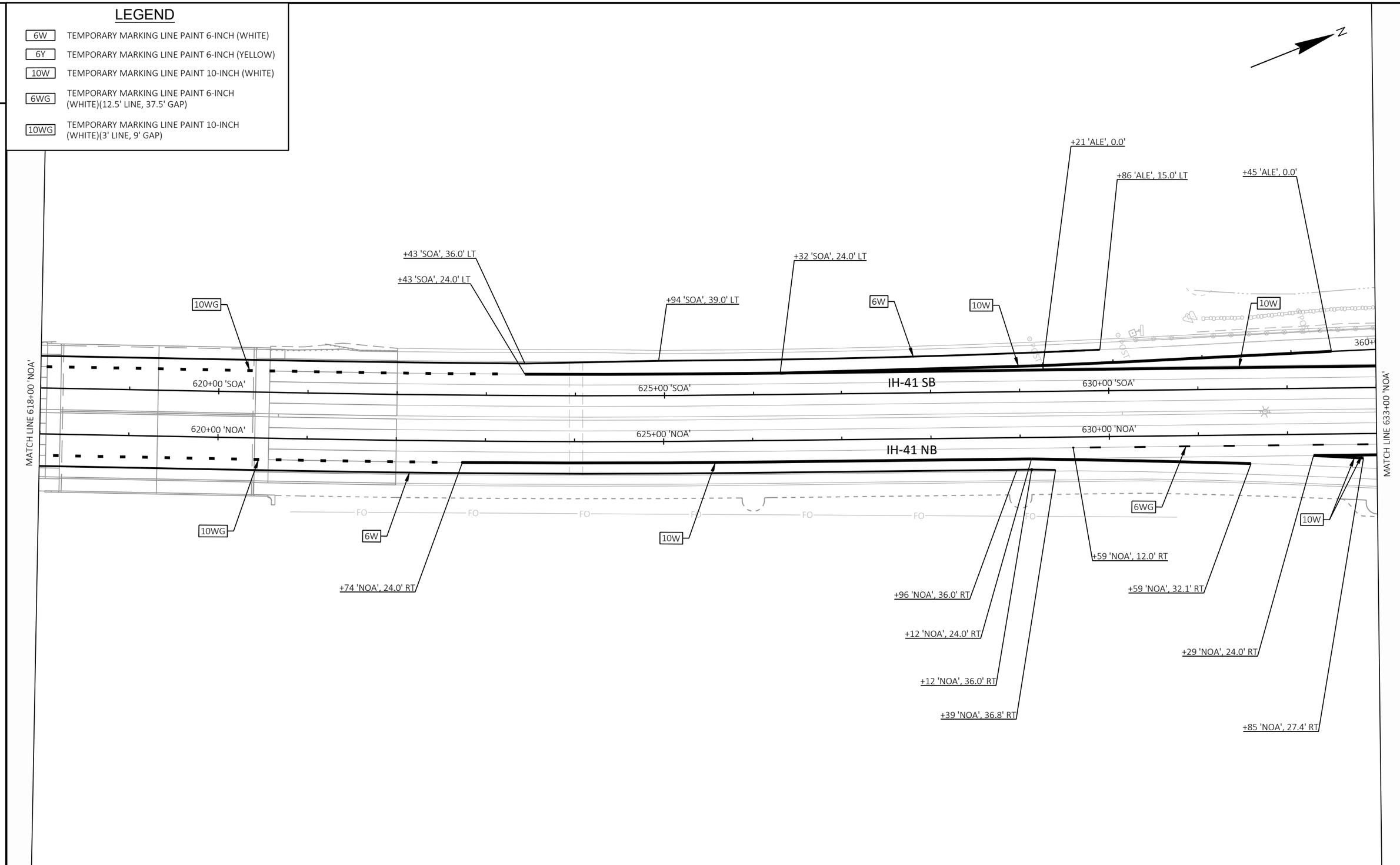

PROJECT NO: 1120-63-71	HWY: IH 41	COUNTY: WINNEBAGO	EAA TEMPORARY PAVEMENT MARKING	SHEET 69	E

LEGEND

6W	TEMPORARY MARKING LINE PAINT 6-INCH (WHITE)
6Y	TEMPORARY MARKING LINE PAINT 6-INCH (YELLOW)
10W	TEMPORARY MARKING LINE PAINT 10-INCH (WHITE)
6WG	TEMPORARY MARKING LINE PAINT 6-INCH (WHITE)(12.5' LINE, 37.5' GAP)
10WG	TEMPORARY MARKING LINE PAINT 10-INCH (WHITE)(3' LINE, 9' GAP)

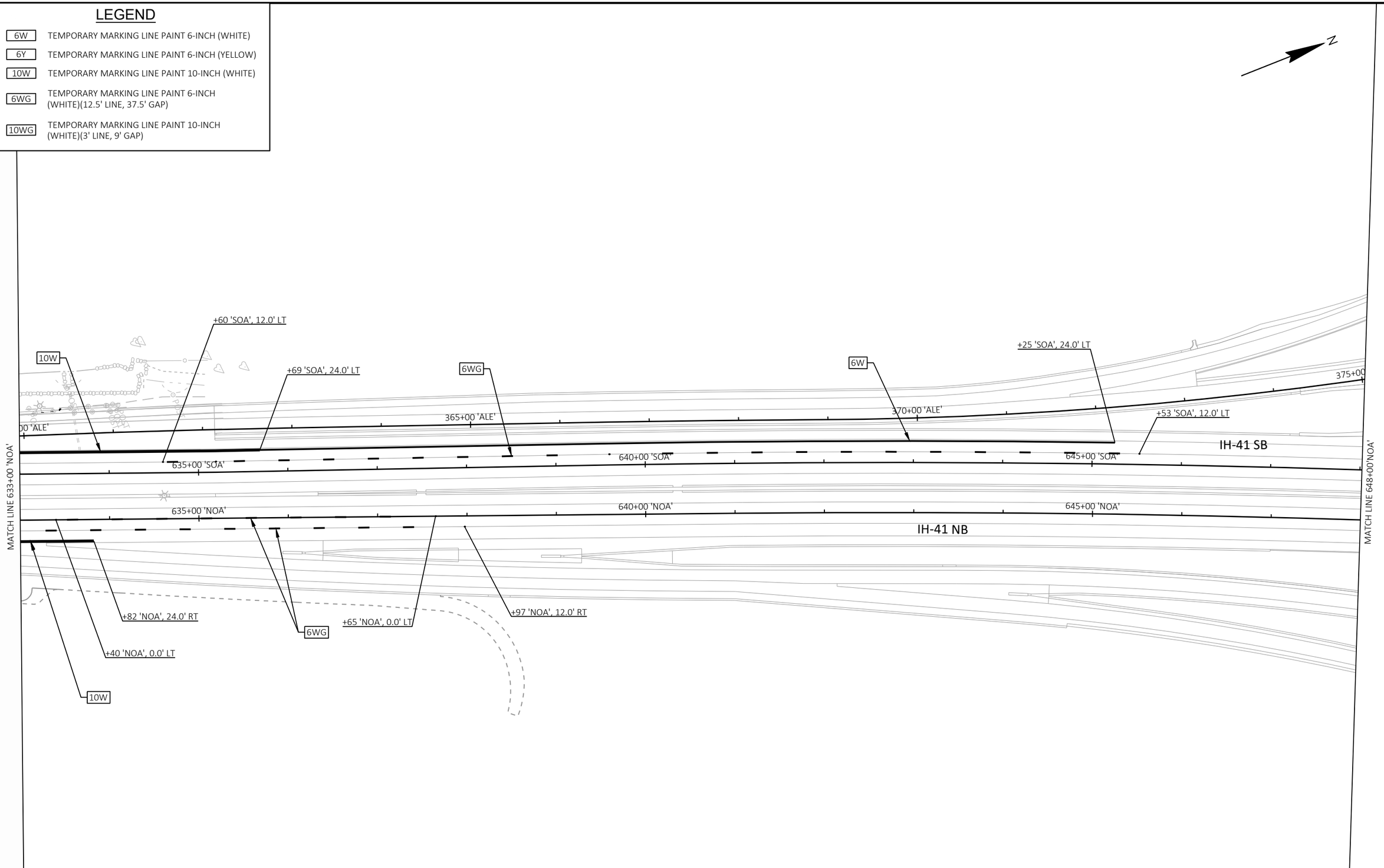

PROJECT NO: 1120-63-71	HWY: IH 41	COUNTY: WINNEBAGO	EAA TEMPORARY PAVEMENT MARKING	SHEET 70	E

LEGEND

6W	TEMPORARY MARKING LINE PAINT 6-INCH (WHITE)
6Y	TEMPORARY MARKING LINE PAINT 6-INCH (YELLOW)
10W	TEMPORARY MARKING LINE PAINT 10-INCH (WHITE)
6WG	TEMPORARY MARKING LINE PAINT 6-INCH (WHITE)(12.5' LINE, 37.5' GAP)
10WG	TEMPORARY MARKING LINE PAINT 10-INCH (WHITE)(3' LINE, 9' GAP)

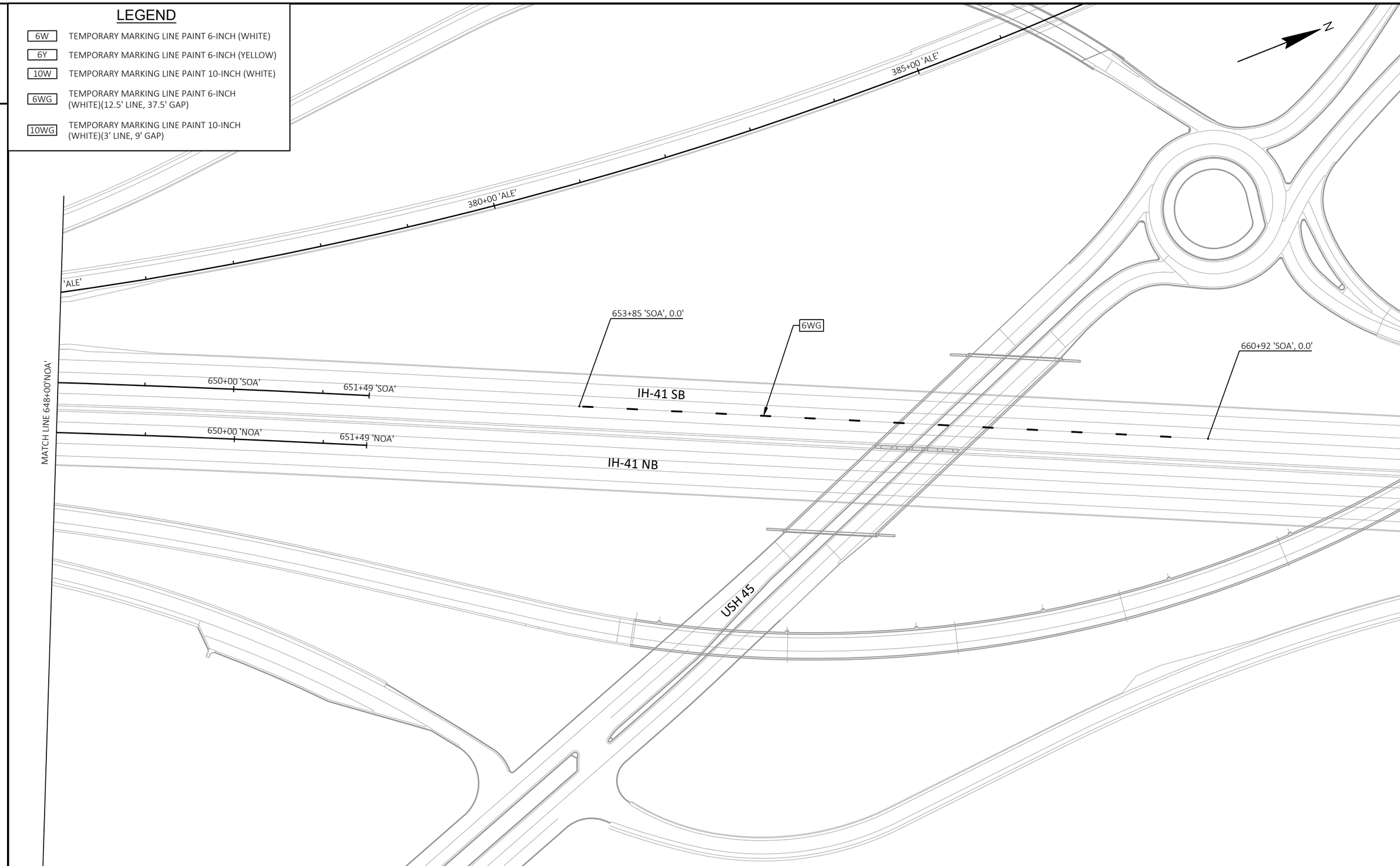

PROJECT NO: 1120-63-71	HWY: IH 41	COUNTY: WINNEBAGO	EAA TEMPORARY PAVEMENT MARKING	SHEET 71	E

FILE NAME : S:\MAD\2000--2099\2089\008\DRAWINGS\CAD\CIVIL 3D\SHEETS\026001-EAAPM.DWG
LAYOUT NAME - 026008-eaapm
PLOT DATE : 1/4/2024 8:19 AM PLOT BY : GRIMME, SARA PLOT NAME : PLOT SCALE : 1 IN:100 FT
WISDOT/CADDS SHEET 42

2

LEGEND

- WORK ZONE
- TRAFFIC CONTROL BARRICADES TYPE III WITH/WITHOUT ATTACHED SIGN
- TRAFFIC CONTROL SIGNS
- TRAFFIC CONTROL SIGNS ON TEMPORARY SUPPORT
- TRAFFIC CONTROL DRUMS WITH/WITHOUT TYPE C LIGHT
- TRAFFIC CONTROL FLEXIBLE TUBULAR MARKER (POSTS & BASES)
- DIRECTION OF TRAFFIC
- TRAFFIC CONTROL ARROW BOARDS
- XXXX SAWING CONCRETE
- SAWING ASPHALT
- CONCRETE BARRIER TEMPORARY PRECAST
- MARKING REMOVAL
- 6WT TEMPORARY MARKING LINE REMOVABLE TAPE 6-INCH (WHITE)
- 6YT TEMPORARY MARKING LINE REMOVABLE TAPE 6-INCH (YELLOW)
- 10WT TEMPORARY MARKING LINE REMOVABLE TAPE 10-INCH (WHITE)
- 6W TEMPORARY MARKING LINE PAINT 6-INCH (WHITE)
- 6Y TEMPORARY MARKING LINE PAINT 6-INCH (YELLOW)
- 6WGT TEMPORARY MARKING LINE REMOVABLE TAPE 6-INCH (WHITE)(3' LINE, 9' GAP)
- 6WG TEMPORARY MARKING LINE PAINT 6-INCH (WHITE)(3' LINE, 9' GAP)
- FBS FLASHING BEACON SIGN — STOPPED OR SLOW TRAFFIC WHEN FLASHING — WO8-76 120"X60"
- S PORTABLE TRAFFIC SENSOR (PTS)

NOTES

1. THE EXACT LOCATION AND SPACING OF ALL SIGNS AND DEVICES SHALL BE ADJUSTED TO FIT FIELD CONDITIONS AS APPROVED BY THE ENGINEER.
2. REMOVE OR COVER ANY SIGN, TEMPORARY OR EXISTING, WHICH CONFLICTS WITH TRAFFIC CONTROL "IN USE", OR AS APPROVED BY THE ENGINEER.
3. "WO" AND "W" SIGNS SHALL BE 48"x48" UNLESS OTHERWISE NOTED.
4. "WO" SIGNS ARE THE SAME AS "W" SIGNS EXCEPT THE BACKGROUND IS ORANGE.
5. "MO" SIGNS ARE THE SAME AS "M" SIGNS EXCEPT THE BACKGROUND IS ORANGE.
6. TRAFFIC CONTROL SIGNS PORTABLE CHANGEABLE MESSAGE FOR PRE-WARNING TO BE INSTALLED ONE WEEK PRIOR TO IMPLEMENTATION OF DETOUR ROUTE.
7. INSTALL TEMPORARY MARKING LINE TAPE ON LANE SHIFTS/TAPERS. INSTALL TEMPORARY MARKING LINE PAINT ON TANGENT SECTIONS.
8. STATION/OFFSETS FOR CONCRETE BARRIER WALL TEMPORARY PRECAST ARE PROVIDED TO CENTER OF WALL.

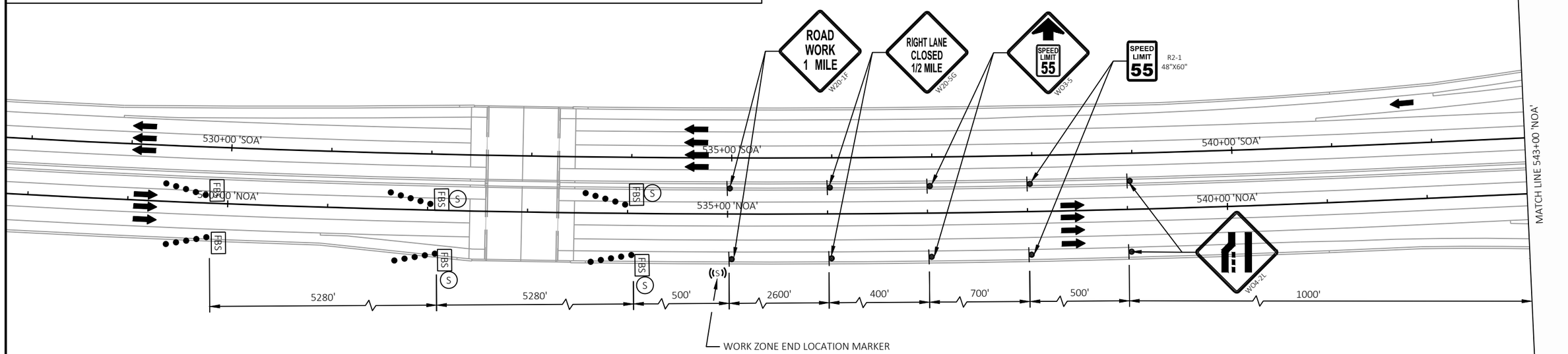

SEE CONSTRUCTION DETAIL "TRAFFIC CONTROL, LANE CLOSURE, BASIC TRAFFIC QUEUE WARNING SYSTEM" FOR ADDITIONAL DETAILS

2

PROJECT NO: 1120-63-71	HWY: IH 41	COUNTY: WINNEBAGO	TRAFFIC CONTROL - STAGE 2	SHEET 72	E

2

LEGEND

- WORK ZONE
- TRAFFIC CONTROL BARRICADES TYPE III WITH/WITHOUT ATTACHED SIGN
- TRAFFIC CONTROL SIGNS
- TRAFFIC CONTROL SIGNS ON TEMPORARY SUPPORT
- TRAFFIC CONTROL DRUMS WITH/WITHOUT TYPE C LIGHT
- TRAFFIC CONTROL FLEXIBLE TUBULAR MARKER (POSTS & BASES)
- DIRECTION OF TRAFFIC
- TRAFFIC CONTROL ARROW BOARDS
- XXXX SAWING CONCRETE
- SAWING ASPHALT
- CONCRETE BARRIER TEMPORARY PRECAST
- MARKING REMOVAL
- 6WT TEMPORARY MARKING LINE REMOVABLE TAPE 6-INCH (WHITE)
- 6YT TEMPORARY MARKING LINE REMOVABLE TAPE 6-INCH (YELLOW)
- 10WT TEMPORARY MARKING LINE REMOVABLE TAPE 10-INCH (WHITE)
- 6W TEMPORARY MARKING LINE PAINT 6-INCH (WHITE)
- 6Y TEMPORARY MARKING LINE PAINT 6-INCH (YELLOW)
- 6WGT TEMPORARY MARKING LINE REMOVABLE TAPE 6-INCH (WHITE)(3' LINE, 9' GAP)
- 6WG TEMPORARY MARKING LINE PAINT 6-INCH (WHITE)(3' LINE, 9' GAP)
- FBS FLASHING BEACON SIGN — STOPPED OR SLOW TRAFFIC WHEN FLASHING — WO8-76 120"X60"
- S PORTABLE TRAFFIC SENSOR (PTS)

NOTES

1. THE EXACT LOCATION AND SPACING OF ALL SIGNS AND DEVICES SHALL BE ADJUSTED TO FIT FIELD CONDITIONS AS APPROVED BY THE ENGINEER.
2. REMOVE OR COVER ANY SIGN, TEMPORARY OR EXISTING, WHICH CONFLICTS WITH TRAFFIC CONTROL "IN USE", OR AS APPROVED BY THE ENGINEER.
3. "WO" AND "W" SIGNS SHALL BE 48"x48" UNLESS OTHERWISE NOTED.
4. "WO" SIGNS ARE THE SAME AS "W" SIGNS EXCEPT THE BACKGROUND IS ORANGE.
5. "MO" SIGNS ARE THE SAME AS "M" SIGNS EXCEPT THE BACKGROUND IS ORANGE.
6. TRAFFIC CONTROL SIGNS PORTABLE CHANGEABLE MESSAGE FOR PRE-WARNING TO BE INSTALLED ONE WEEK PRIOR TO IMPLEMENTATION OF DETOUR ROUTE.
7. INSTALL TEMPORARY MARKING LINE TAPE ON LANE SHIFTS/TAPERS. INSTALL TEMPORARY MARKING LINE PAINT ON TANGENT SECTIONS.
8. STATION/OFFSETS FOR CONCRETE BARRIER WALL TEMPORARY PRECAST ARE PROVIDED TO CENTER OF WALL.

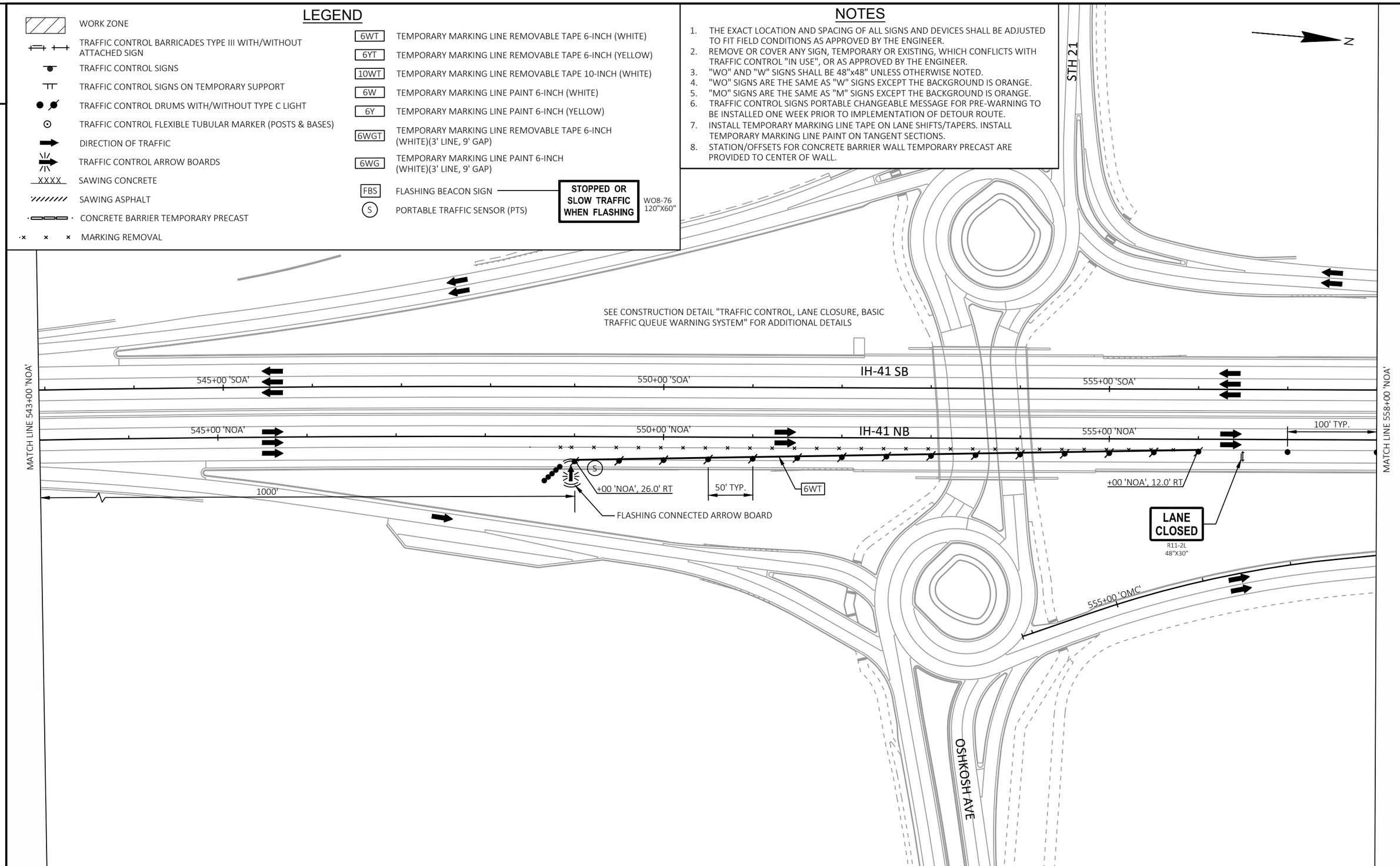

2

PROJECT NO: 1120-63-71	HWY: IH 41	COUNTY: WINNEBAGO	TRAFFIC CONTROL - STAGE 2	SHEET 73	E

2

LEGEND

- WORK ZONE
- TRAFFIC CONTROL BARRICADES TYPE III WITH/WITHOUT ATTACHED SIGN
- TRAFFIC CONTROL SIGNS
- TRAFFIC CONTROL SIGNS ON TEMPORARY SUPPORT
- TRAFFIC CONTROL DRUMS WITH/WITHOUT TYPE C LIGHT
- TRAFFIC CONTROL FLEXIBLE TUBULAR MARKER (POSTS & BASES)
- DIRECTION OF TRAFFIC
- TRAFFIC CONTROL ARROW BOARDS
- XXXX SAWING CONCRETE
- SAWING ASPHALT
- CONCRETE BARRIER TEMPORARY PRECAST
- MARKING REMOVAL
- 6WT TEMPORARY MARKING LINE REMOVABLE TAPE 6-INCH (WHITE)
- 6YT TEMPORARY MARKING LINE REMOVABLE TAPE 6-INCH (YELLOW)
- 10WT TEMPORARY MARKING LINE REMOVABLE TAPE 10-INCH (WHITE)
- 6W TEMPORARY MARKING LINE PAINT 6-INCH (WHITE)
- 6Y TEMPORARY MARKING LINE PAINT 6-INCH (YELLOW)
- 6WGT TEMPORARY MARKING LINE REMOVABLE TAPE 6-INCH (WHITE)(3' LINE, 9' GAP)
- 6WG TEMPORARY MARKING LINE PAINT 6-INCH (WHITE)(3' LINE, 9' GAP)
- FBS FLASHING BEACON SIGN — STOPPED OR SLOW TRAFFIC WHEN FLASHING — WO8-76 120"X60"
- S PORTABLE TRAFFIC SENSOR (PTS)

NOTES

1. THE EXACT LOCATION AND SPACING OF ALL SIGNS AND DEVICES SHALL BE ADJUSTED TO FIT FIELD CONDITIONS AS APPROVED BY THE ENGINEER.
2. REMOVE OR COVER ANY SIGN, TEMPORARY OR EXISTING, WHICH CONFLICTS WITH TRAFFIC CONTROL "IN USE", OR AS APPROVED BY THE ENGINEER.
3. "WO" AND "W" SIGNS SHALL BE 48"x48" UNLESS OTHERWISE NOTED.
4. "WO" SIGNS ARE THE SAME AS "W" SIGNS EXCEPT THE BACKGROUND IS ORANGE.
5. "MO" SIGNS ARE THE SAME AS "M" SIGNS EXCEPT THE BACKGROUND IS ORANGE.
6. TRAFFIC CONTROL SIGNS PORTABLE CHANGEABLE MESSAGE FOR PRE-WARNING TO BE INSTALLED ONE WEEK PRIOR TO IMPLEMENTATION OF DETOUR ROUTE.
7. INSTALL TEMPORARY MARKING LINE TAPE ON LANE SHIFTS/TAPERS. INSTALL TEMPORARY MARKING LINE PAINT ON TANGENT SECTIONS.
8. STATION/OFFSETS FOR CONCRETE BARRIER WALL TEMPORARY PRECAST ARE PROVIDED TO CENTER OF WALL.

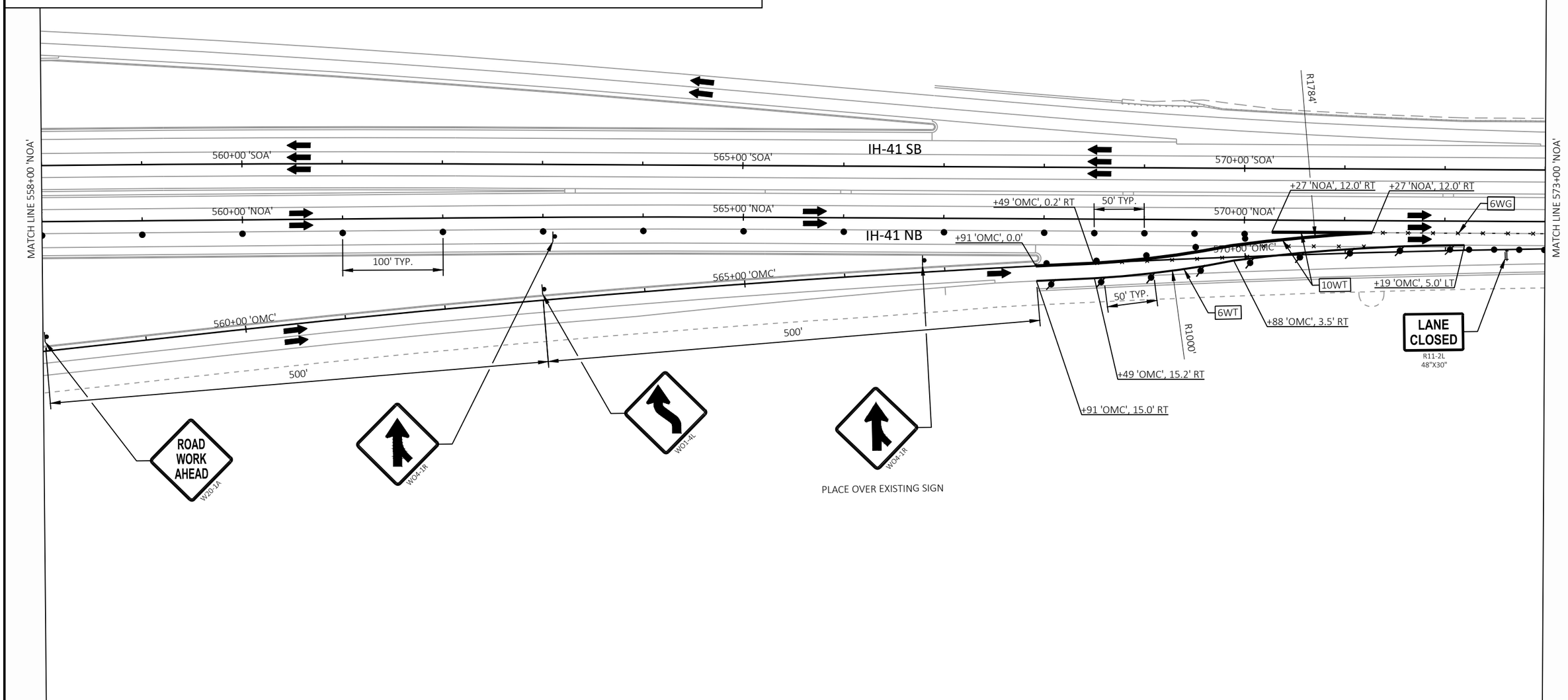

2

PROJECT NO: 1120-63-71	HWY: IH 41	COUNTY: WINNEBAGO	TRAFFIC CONTROL - STAGE 2	SHEET 74	E

FILE NAME : S:\MAD\2000--2099\2089\008\DRAWINGS\CAD\CIVIL 3D\SHEETS\026001-S2.DWG
LAYOUT NAME - 026003-s2
PLOT DATE : 1/4/2024 8:21 AM PLOT BY : GRIMME, SARA PLOT NAME : PLOT SCALE : 1 IN:100 FT
WISDOT/CADDS SHEET 42

2

LEGEND

- WORK ZONE
- TRAFFIC CONTROL BARRICADES TYPE III WITH/WITHOUT ATTACHED SIGN
- TRAFFIC CONTROL SIGNS
- TRAFFIC CONTROL SIGNS ON TEMPORARY SUPPORT
- TRAFFIC CONTROL DRUMS WITH/WITHOUT TYPE C LIGHT
- TRAFFIC CONTROL FLEXIBLE TUBULAR MARKER (POSTS & BASES)
- DIRECTION OF TRAFFIC
- TRAFFIC CONTROL ARROW BOARDS
- XXXX SAWING CONCRETE
- SAWING ASPHALT
- CONCRETE BARRIER TEMPORARY PRECAST
- MARKING REMOVAL
- 6WT TEMPORARY MARKING LINE REMOVABLE TAPE 6-INCH (WHITE)
- 6YT TEMPORARY MARKING LINE REMOVABLE TAPE 6-INCH (YELLOW)
- 10WT TEMPORARY MARKING LINE REMOVABLE TAPE 10-INCH (WHITE)
- 6W TEMPORARY MARKING LINE PAINT 6-INCH (WHITE)
- 6Y TEMPORARY MARKING LINE PAINT 6-INCH (YELLOW)
- 6WGT TEMPORARY MARKING LINE REMOVABLE TAPE 6-INCH (WHITE)(3' LINE, 9' GAP)
- 6WG TEMPORARY MARKING LINE PAINT 6-INCH (WHITE)(3' LINE, 9' GAP)
- FBS FLASHING BEACON SIGN — STOPPED OR SLOW TRAFFIC WHEN FLASHING — WO8-76 120"X60"
- S PORTABLE TRAFFIC SENSOR (PTS)

NOTES

1. THE EXACT LOCATION AND SPACING OF ALL SIGNS AND DEVICES SHALL BE ADJUSTED TO FIT FIELD CONDITIONS AS APPROVED BY THE ENGINEER.
2. REMOVE OR COVER ANY SIGN, TEMPORARY OR EXISTING, WHICH CONFLICTS WITH TRAFFIC CONTROL "IN USE", OR AS APPROVED BY THE ENGINEER.
3. "WO" AND "W" SIGNS SHALL BE 48"x48" UNLESS OTHERWISE NOTED.
4. "WO" SIGNS ARE THE SAME AS "W" SIGNS EXCEPT THE BACKGROUND IS ORANGE.
5. "MO" SIGNS ARE THE SAME AS "M" SIGNS EXCEPT THE BACKGROUND IS ORANGE.
6. TRAFFIC CONTROL SIGNS PORTABLE CHANGEABLE MESSAGE FOR PRE-WARNING TO BE INSTALLED ONE WEEK PRIOR TO IMPLEMENTATION OF DETOUR ROUTE.
7. INSTALL TEMPORARY MARKING LINE TAPE ON LANE SHIFTS/TAPERS. INSTALL TEMPORARY MARKING LINE PAINT ON TANGENT SECTIONS.
8. STATION/OFFSETS FOR CONCRETE BARRIER WALL TEMPORARY PRECAST ARE PROVIDED TO CENTER OF WALL.

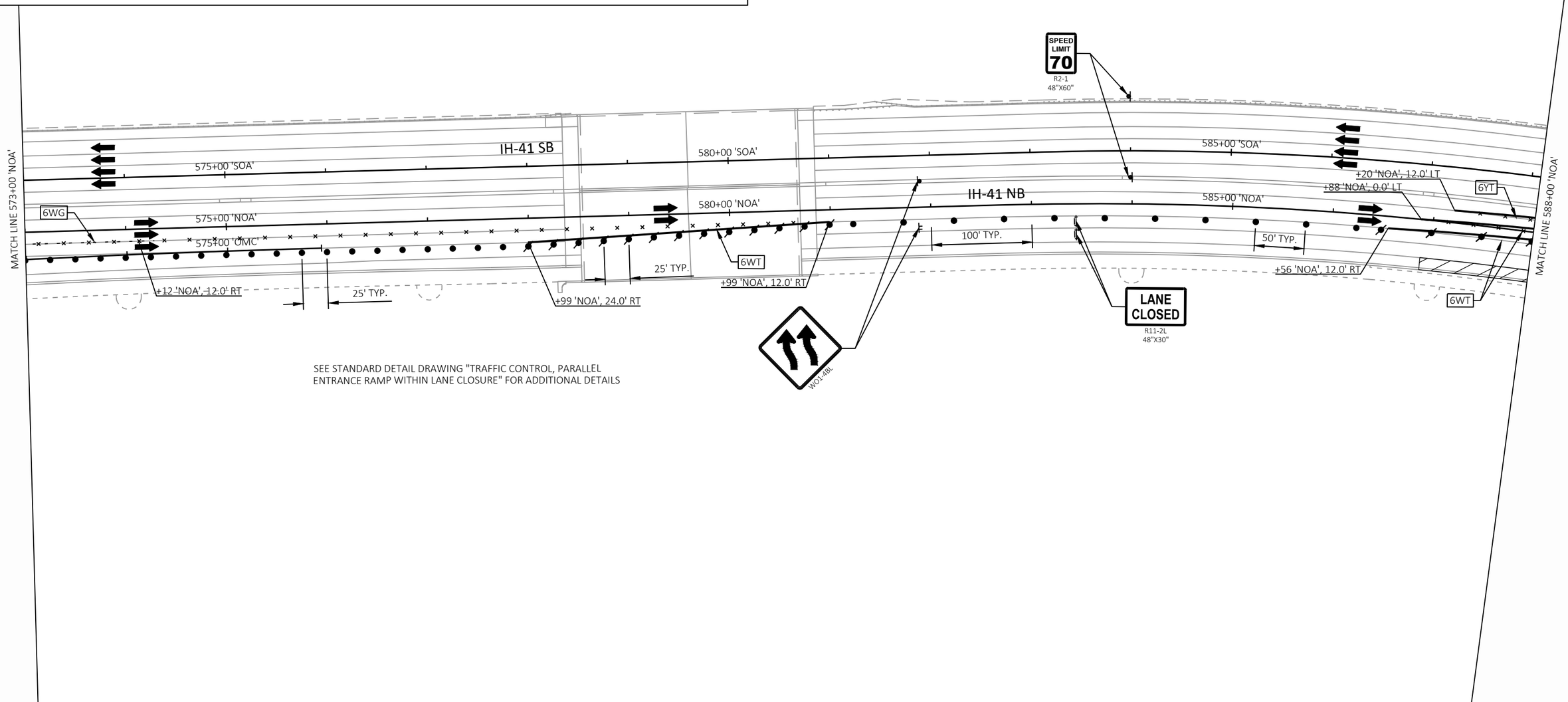

2

PROJECT NO: 1120-63-71	HWY: IH 41	COUNTY: WINNEBAGO	TRAFFIC CONTROL - STAGE 2	SHEET 75	E

2

LEGEND

- WORK ZONE
- TRAFFIC CONTROL BARRICADES TYPE III WITH/WITHOUT ATTACHED SIGN
- TRAFFIC CONTROL SIGNS
- TRAFFIC CONTROL SIGNS ON TEMPORARY SUPPORT
- TRAFFIC CONTROL DRUMS WITH/WITHOUT TYPE C LIGHT
- TRAFFIC CONTROL FLEXIBLE TUBULAR MARKER (POSTS & BASES)
- DIRECTION OF TRAFFIC
- TRAFFIC CONTROL ARROW BOARDS
- XXXX SAWING CONCRETE
- SAWING ASPHALT
- CONCRETE BARRIER TEMPORARY PRECAST
- MARKING REMOVAL
- 6WT TEMPORARY MARKING LINE REMOVABLE TAPE 6-INCH (WHITE)
- 6YT TEMPORARY MARKING LINE REMOVABLE TAPE 6-INCH (YELLOW)
- 10WT TEMPORARY MARKING LINE REMOVABLE TAPE 10-INCH (WHITE)
- 6W TEMPORARY MARKING LINE PAINT 6-INCH (WHITE)
- 6Y TEMPORARY MARKING LINE PAINT 6-INCH (YELLOW)
- 6WGT TEMPORARY MARKING LINE REMOVABLE TAPE 6-INCH (WHITE)(3' LINE, 9' GAP)
- 6WG TEMPORARY MARKING LINE PAINT 6-INCH (WHITE)(3' LINE, 9' GAP)
- FBS FLASHING BEACON SIGN — STOPPED OR SLOW TRAFFIC WHEN FLASHING — WO8-76 120"X60"
- S PORTABLE TRAFFIC SENSOR (PTS)

NOTES

1. THE EXACT LOCATION AND SPACING OF ALL SIGNS AND DEVICES SHALL BE ADJUSTED TO FIT FIELD CONDITIONS AS APPROVED BY THE ENGINEER.
2. REMOVE OR COVER ANY SIGN, TEMPORARY OR EXISTING, WHICH CONFLICTS WITH TRAFFIC CONTROL "IN USE", OR AS APPROVED BY THE ENGINEER.
3. "WO" AND "W" SIGNS SHALL BE 48"x48" UNLESS OTHERWISE NOTED.
4. "WO" SIGNS ARE THE SAME AS "W" SIGNS EXCEPT THE BACKGROUND IS ORANGE.
5. "MO" SIGNS ARE THE SAME AS "M" SIGNS EXCEPT THE BACKGROUND IS ORANGE.
6. TRAFFIC CONTROL SIGNS PORTABLE CHANGEABLE MESSAGE FOR PRE-WARNING TO BE INSTALLED ONE WEEK PRIOR TO IMPLEMENTATION OF DETOUR ROUTE.
7. INSTALL TEMPORARY MARKING LINE TAPE ON LANE SHIFTS/TAPERS. INSTALL TEMPORARY MARKING LINE PAINT ON TANGENT SECTIONS.
8. STATION/OFFSETS FOR CONCRETE BARRIER WALL TEMPORARY PRECAST ARE PROVIDED TO CENTER OF WALL.

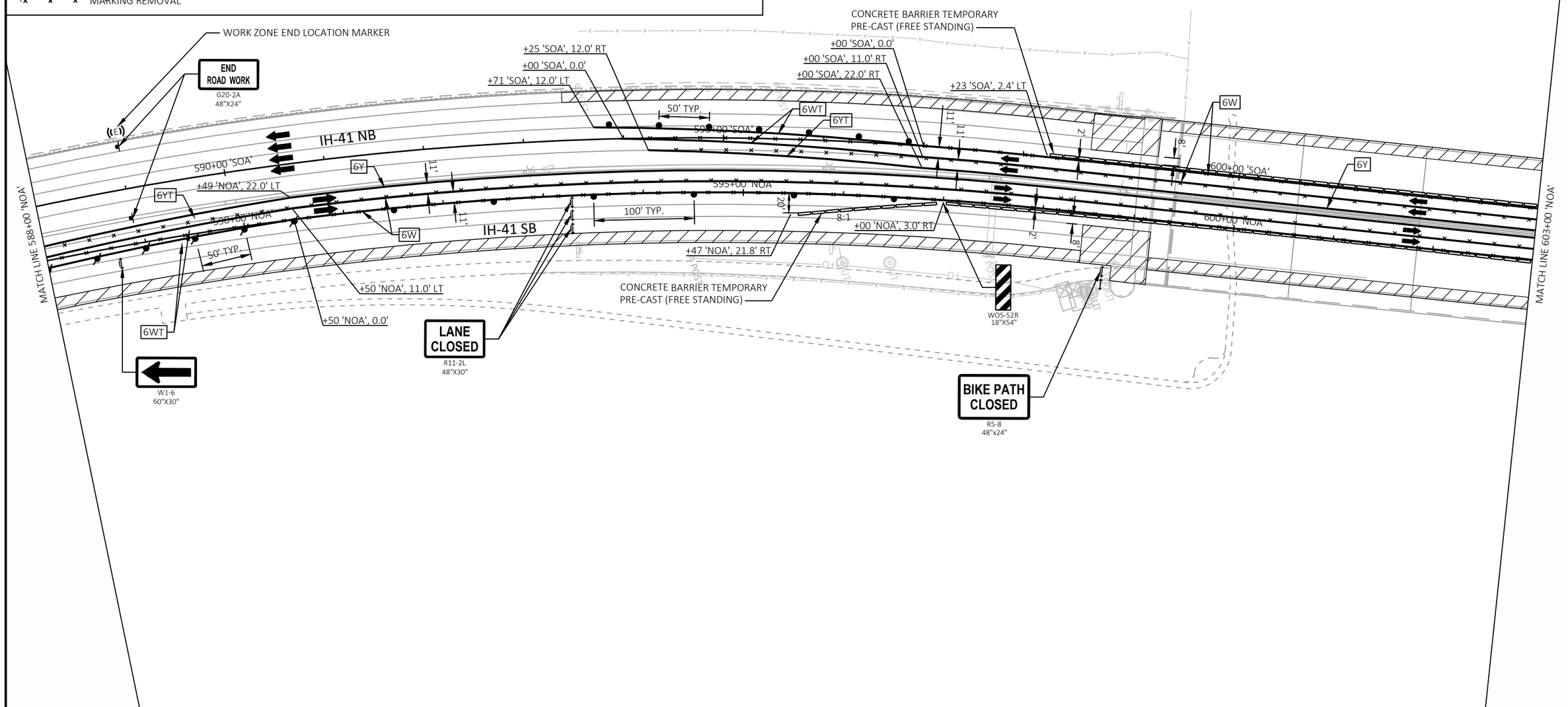

PROJECT NO: 1120-63-71	HWY: IH 41	COUNTY: WINNEBAGO	TRAFFIC CONTROL - STAGE 2	SHEET 76	E

2

LEGEND

- WORK ZONE
- TRAFFIC CONTROL BARRICADES TYPE III WITH/WITHOUT ATTACHED SIGN
- TRAFFIC CONTROL SIGNS
- TRAFFIC CONTROL SIGNS ON TEMPORARY SUPPORT
- TRAFFIC CONTROL DRUMS WITH/WITHOUT TYPE C LIGHT
- TRAFFIC CONTROL FLEXIBLE TUBULAR MARKER (POSTS & BASES)
- DIRECTION OF TRAFFIC
- TRAFFIC CONTROL ARROW BOARDS
- XXXX SAWING CONCRETE
- SAWING ASPHALT
- CONCRETE BARRIER TEMPORARY PRECAST
- MARKING REMOVAL
- 6WT TEMPORARY MARKING LINE REMOVABLE TAPE 6-INCH (WHITE)
- 6YT TEMPORARY MARKING LINE REMOVABLE TAPE 6-INCH (YELLOW)
- 10WT TEMPORARY MARKING LINE REMOVABLE TAPE 10-INCH (WHITE)
- 6W TEMPORARY MARKING LINE PAINT 6-INCH (WHITE)
- 6Y TEMPORARY MARKING LINE PAINT 6-INCH (YELLOW)
- 6WGT TEMPORARY MARKING LINE REMOVABLE TAPE 6-INCH (WHITE)(3' LINE, 9' GAP)
- 6WG TEMPORARY MARKING LINE PAINT 6-INCH (WHITE)(3' LINE, 9' GAP)
- FBS FLASHING BEACON SIGN — STOPPED OR SLOW TRAFFIC WHEN FLASHING WO8-76 120"X60"
- S PORTABLE TRAFFIC SENSOR (PTS)

NOTES

1. THE EXACT LOCATION AND SPACING OF ALL SIGNS AND DEVICES SHALL BE ADJUSTED TO FIT FIELD CONDITIONS AS APPROVED BY THE ENGINEER.
2. REMOVE OR COVER ANY SIGN, TEMPORARY OR EXISTING, WHICH CONFLICTS WITH TRAFFIC CONTROL "IN USE", OR AS APPROVED BY THE ENGINEER.
3. "WO" AND "W" SIGNS SHALL BE 48"x48" UNLESS OTHERWISE NOTED.
4. "WO" SIGNS ARE THE SAME AS "W" SIGNS EXCEPT THE BACKGROUND IS ORANGE.
5. "MO" SIGNS ARE THE SAME AS "M" SIGNS EXCEPT THE BACKGROUND IS ORANGE.
6. TRAFFIC CONTROL SIGNS PORTABLE CHANGEABLE MESSAGE FOR PRE-WARNING TO BE INSTALLED ONE WEEK PRIOR TO IMPLEMENTATION OF DETOUR ROUTE.
7. INSTALL TEMPORARY MARKING LINE TAPE ON LANE SHIFTS/TAPERS. INSTALL TEMPORARY MARKING LINE PAINT ON TANGENT SECTIONS.
8. STATION/OFFSETS FOR CONCRETE BARRIER WALL TEMPORARY PRECAST ARE PROVIDED TO CENTER OF WALL.

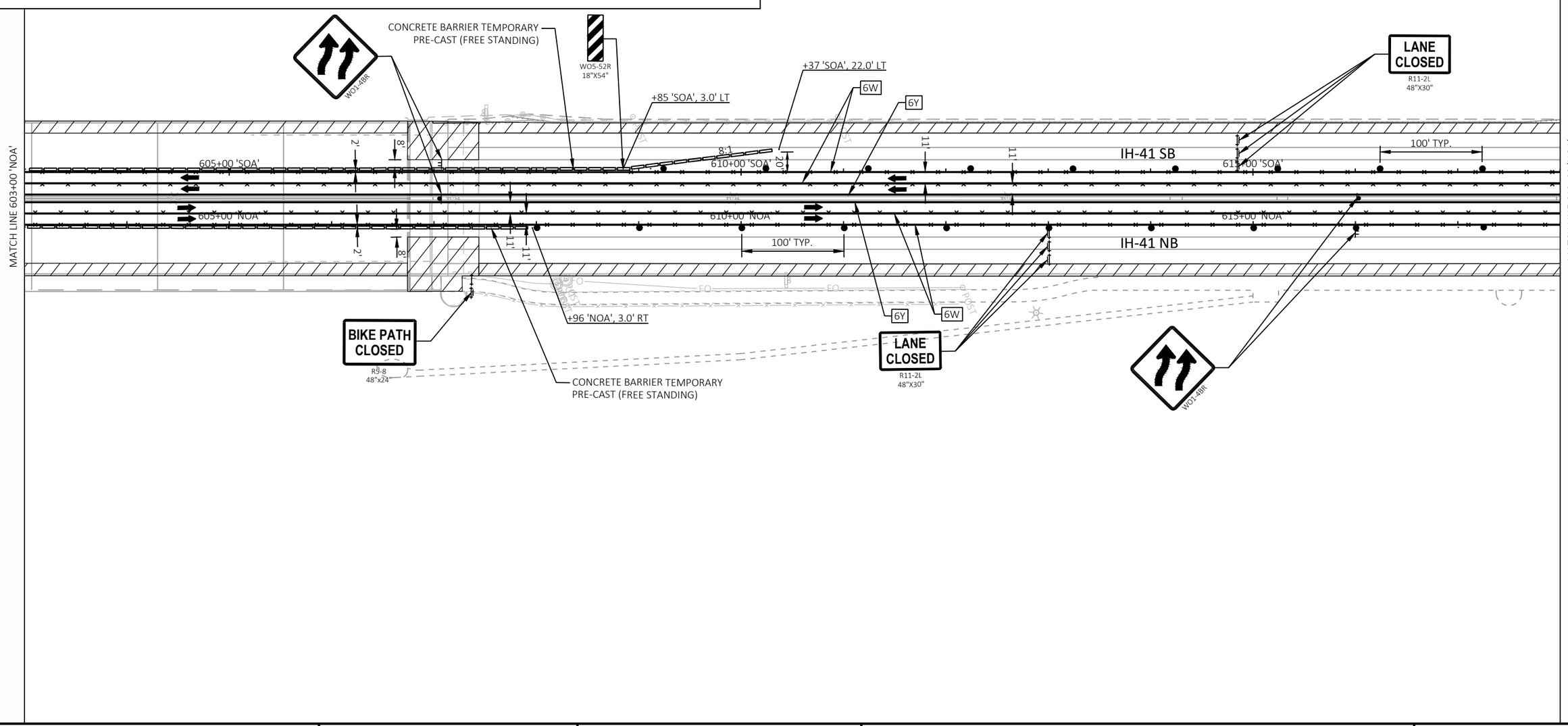

2

PROJECT NO: 1120-63-71	HWY: IH 41	COUNTY: WINNEBAGO	TRAFFIC CONTROL - STAGE 2	SHEET 77	E

FILE NAME : S:\MAD\2000--2099\2089\008\DRAWINGS\CAD\CIVIL 3D\SHEETS\026001-S2.DWG
LAYOUT NAME - 026006-s2
PLOT DATE : 1/4/2024 8:26 AM PLOT BY : GRIMME, SARA PLOT NAME : PLOT SCALE : 1 IN:100 FT

2

LEGEND

- WORK ZONE
- TRAFFIC CONTROL BARRICADES TYPE III WITH/WITHOUT ATTACHED SIGN
- TRAFFIC CONTROL SIGNS
- TRAFFIC CONTROL SIGNS ON TEMPORARY SUPPORT
- TRAFFIC CONTROL DRUMS WITH/WITHOUT TYPE C LIGHT
- TRAFFIC CONTROL FLEXIBLE TUBULAR MARKER (POSTS & BASES)
- DIRECTION OF TRAFFIC
- TRAFFIC CONTROL ARROW BOARDS
- XXXX SAWING CONCRETE
- SAWING ASPHALT
- CONCRETE BARRIER TEMPORARY PRECAST
- MARKING REMOVAL
- 6WT TEMPORARY MARKING LINE REMOVABLE TAPE 6-INCH (WHITE)
- 6YT TEMPORARY MARKING LINE REMOVABLE TAPE 6-INCH (YELLOW)
- 10WT TEMPORARY MARKING LINE REMOVABLE TAPE 10-INCH (WHITE)
- 6W TEMPORARY MARKING LINE PAINT 6-INCH (WHITE)
- 6Y TEMPORARY MARKING LINE PAINT 6-INCH (YELLOW)
- 6WGT TEMPORARY MARKING LINE REMOVABLE TAPE 6-INCH (WHITE)(3' LINE, 9' GAP)
- 6WG TEMPORARY MARKING LINE PAINT 6-INCH (WHITE)(3' LINE, 9' GAP)
- FBS FLASHING BEACON SIGN — STOPPED OR SLOW TRAFFIC WHEN FLASHING — WO8-76 120"X60"
- S PORTABLE TRAFFIC SENSOR (PTS)

NOTES

1. THE EXACT LOCATION AND SPACING OF ALL SIGNS AND DEVICES SHALL BE ADJUSTED TO FIT FIELD CONDITIONS AS APPROVED BY THE ENGINEER.
2. REMOVE OR COVER ANY SIGN, TEMPORARY OR EXISTING, WHICH CONFLICTS WITH TRAFFIC CONTROL "IN USE", OR AS APPROVED BY THE ENGINEER.
3. "WO" AND "W" SIGNS SHALL BE 48"x48" UNLESS OTHERWISE NOTED.
4. "WO" SIGNS ARE THE SAME AS "W" SIGNS EXCEPT THE BACKGROUND IS ORANGE.
5. "MO" SIGNS ARE THE SAME AS "M" SIGNS EXCEPT THE BACKGROUND IS ORANGE.
6. TRAFFIC CONTROL SIGNS PORTABLE CHANGEABLE MESSAGE FOR PRE-WARNING TO BE INSTALLED ONE WEEK PRIOR TO IMPLEMENTATION OF DETOUR ROUTE.
7. INSTALL TEMPORARY MARKING LINE TAPE ON LANE SHIFTS/TAPERS. INSTALL TEMPORARY MARKING LINE PAINT ON TANGENT SECTIONS.
8. STATION/OFFSETS FOR CONCRETE BARRIER WALL TEMPORARY PRECAST ARE PROVIDED TO CENTER OF WALL.

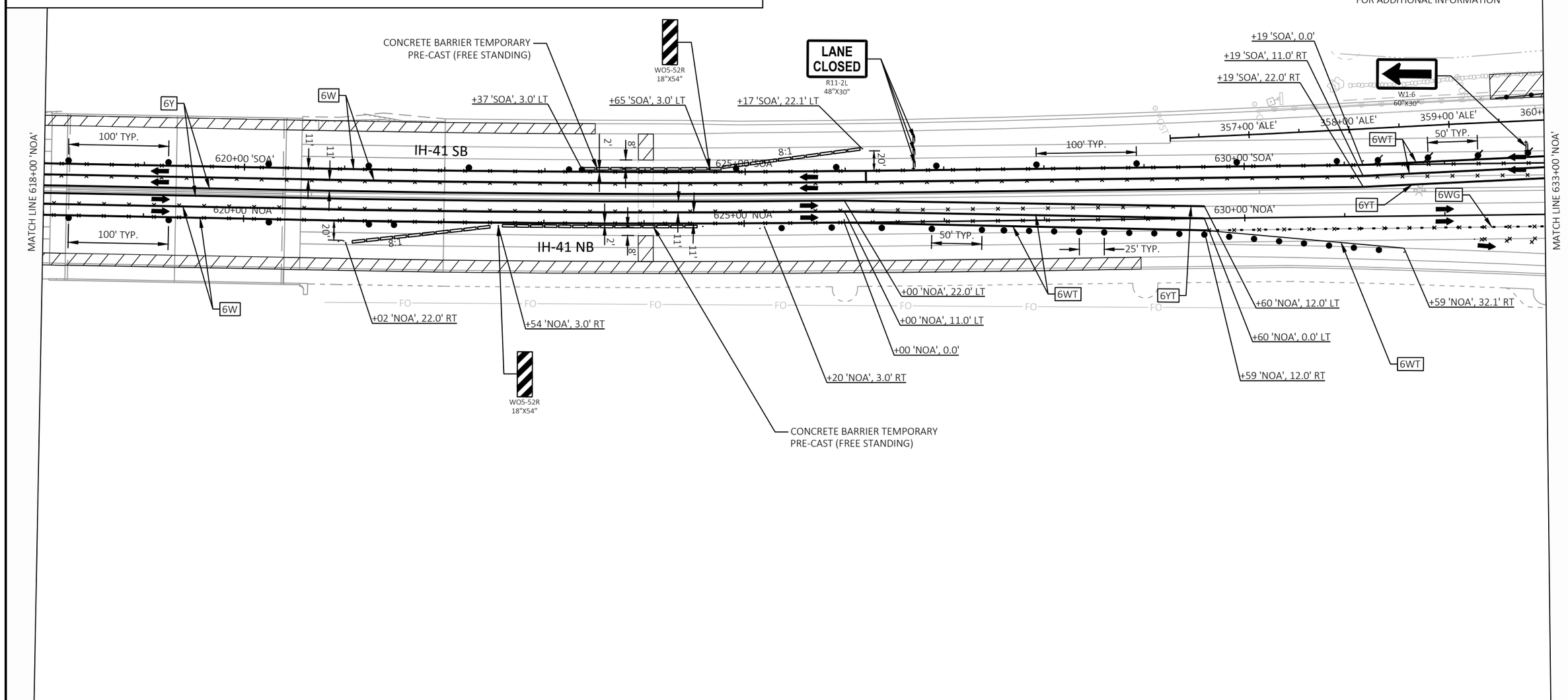

2

PROJECT NO: 1120-63-71	HWY: IH 41	COUNTY: WINNEBAGO	TRAFFIC CONTROL - STAGE 2	SHEET 78	E

FILE NAME : S:\MAD\2000--2099\2089\008\DRAWINGS\CAD\CIVIL 3D\SHEETS\026001-S2.DWG
LAYOUT NAME - 026007-s2
PLOT DATE : 1/4/2024 8:28 AM PLOT BY : GRIMME, SARA PLOT NAME : PLOT SCALE : 1 IN:100 FT
WISDOT/CADDS SHEET 42

2

LEGEND

- WORK ZONE
- TRAFFIC CONTROL BARRICADES TYPE III WITH/WITHOUT ATTACHED SIGN
- TRAFFIC CONTROL SIGNS
- TRAFFIC CONTROL SIGNS ON TEMPORARY SUPPORT
- TRAFFIC CONTROL DRUMS WITH/WITHOUT TYPE C LIGHT
- TRAFFIC CONTROL FLEXIBLE TUBULAR MARKER (POSTS & BASES)
- DIRECTION OF TRAFFIC
- TRAFFIC CONTROL ARROW BOARDS
- XXXX SAWING CONCRETE
- SAWING ASPHALT
- CONCRETE BARRIER TEMPORARY PRECAST
- MARKING REMOVAL
- 6WT TEMPORARY MARKING LINE REMOVABLE TAPE 6-INCH (WHITE)
- 6YT TEMPORARY MARKING LINE REMOVABLE TAPE 6-INCH (YELLOW)
- 10WT TEMPORARY MARKING LINE REMOVABLE TAPE 10-INCH (WHITE)
- 6W TEMPORARY MARKING LINE PAINT 6-INCH (WHITE)
- 6Y TEMPORARY MARKING LINE PAINT 6-INCH (YELLOW)
- 6WGT TEMPORARY MARKING LINE REMOVABLE TAPE 6-INCH (WHITE)(3' LINE, 9' GAP)
- 6WG TEMPORARY MARKING LINE PAINT 6-INCH (WHITE)(3' LINE, 9' GAP)
- FBS FLASHING BEACON SIGN — STOPPED OR SLOW TRAFFIC WHEN FLASHING — WO8-76 120"X60"
- S PORTABLE TRAFFIC SENSOR (PTS)

NOTES

1. THE EXACT LOCATION AND SPACING OF ALL SIGNS AND DEVICES SHALL BE ADJUSTED TO FIT FIELD CONDITIONS AS APPROVED BY THE ENGINEER.
2. REMOVE OR COVER ANY SIGN, TEMPORARY OR EXISTING, WHICH CONFLICTS WITH TRAFFIC CONTROL "IN USE", OR AS APPROVED BY THE ENGINEER.
3. "WO" AND "W" SIGNS SHALL BE 48"x48" UNLESS OTHERWISE NOTED.
4. "WO" SIGNS ARE THE SAME AS "W" SIGNS EXCEPT THE BACKGROUND IS ORANGE.
5. "MO" SIGNS ARE THE SAME AS "M" SIGNS EXCEPT THE BACKGROUND IS ORANGE.
6. TRAFFIC CONTROL SIGNS PORTABLE CHANGEABLE MESSAGE FOR PRE-WARNING TO BE INSTALLED ONE WEEK PRIOR TO IMPLEMENTATION OF DETOUR ROUTE.
7. INSTALL TEMPORARY MARKING LINE TAPE ON LANE SHIFTS/TAPERS. INSTALL TEMPORARY MARKING LINE PAINT ON TANGENT SECTIONS.
8. STATION/OFFSETS FOR CONCRETE BARRIER WALL TEMPORARY PRECAST ARE PROVIDED TO CENTER OF WALL.

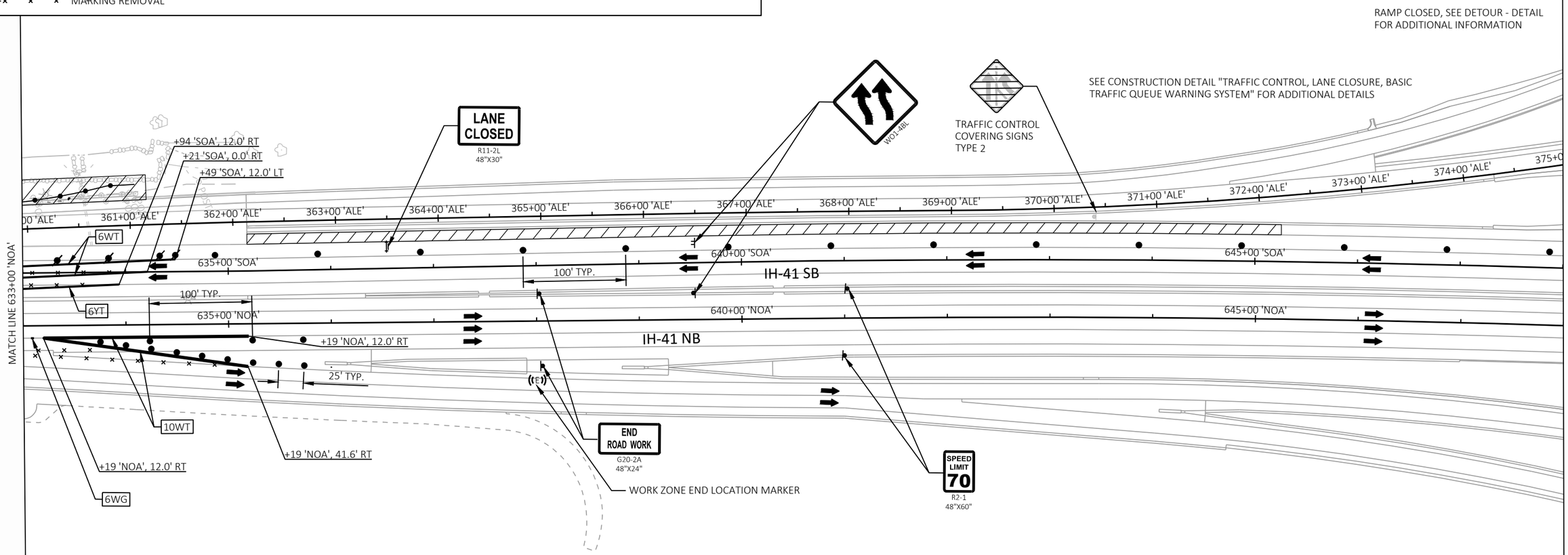

2

PROJECT NO: 1120-63-71	HWY: IH 41	COUNTY: WINNEBAGO	TRAFFIC CONTROL - STAGE 2	SHEET 79	E

FILE NAME : S:\MAD\2000--2099\2089\008\DRAWINGS\CAD\CIVIL 3D\SHEETS\026001-S2.DWG
LAYOUT NAME - 026008-s2
PLOT DATE : 1/4/2024 8:29 AM PLOT BY : GRIMME, SARA PLOT NAME : PLOT SCALE : 1 IN:100 FT
WISDOT/CADDS SHEET 42

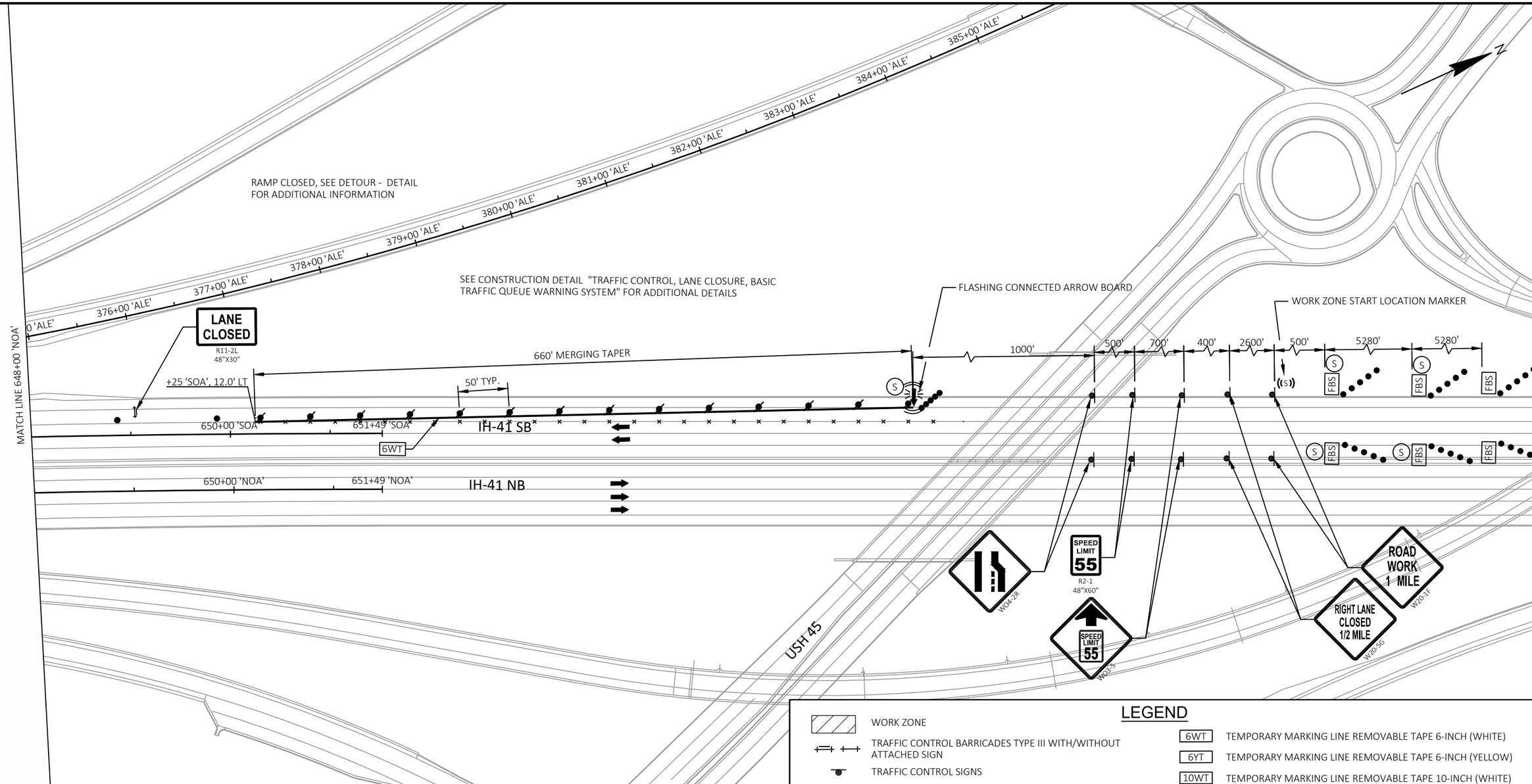

NOTES

1. THE EXACT LOCATION AND SPACING OF ALL SIGNS AND DEVICES SHALL BE ADJUSTED TO FIT FIELD CONDITIONS AS APPROVED BY THE ENGINEER.
2. REMOVE OR COVER ANY SIGN, TEMPORARY OR EXISTING, WHICH CONFLICTS WITH TRAFFIC CONTROL "IN USE", OR AS APPROVED BY THE ENGINEER.
3. "WO" AND "W" SIGNS SHALL BE 48"x48" UNLESS OTHERWISE NOTED.
4. "WO" SIGNS ARE THE SAME AS "W" SIGNS EXCEPT THE BACKGROUND IS ORANGE.
5. "MO" SIGNS ARE THE SAME AS "M" SIGNS EXCEPT THE BACKGROUND IS ORANGE.
6. TRAFFIC CONTROL SIGNS PORTABLE CHANGEABLE MESSAGE FOR PRE-WARNING TO BE INSTALLED ONE WEEK PRIOR TO IMPLEMENTATION OF DETOUR ROUTE.
7. INSTALL TEMPORARY MARKING LINE TAPE ON LANE SHIFTS/TAPERS. INSTALL TEMPORARY MARKING LINE PAINT ON TANGENT SECTIONS.
8. STATION/OFFSETS FOR CONCRETE BARRIER WALL TEMPORARY PRECAST ARE PROVIDED TO CENTER OF WALL.

LEGEND

- WORK ZONE
- TRAFFIC CONTROL BARRICADES TYPE III WITH/WITHOUT ATTACHED SIGN
- TRAFFIC CONTROL SIGNS
- TRAFFIC CONTROL SIGNS ON TEMPORARY SUPPORT
- TRAFFIC CONTROL DRUMS WITH/WITHOUT TYPE C LIGHT
- TRAFFIC CONTROL FLEXIBLE TUBULAR MARKER (POSTS & BASES)
- DIRECTION OF TRAFFIC
- TRAFFIC CONTROL ARROW BOARDS
- XXXX SAWING CONCRETE
- SAWING ASPHALT
- CONCRETE BARRIER TEMPORARY PRECAST
- MARKING REMOVAL
- 6WT TEMPORARY MARKING LINE REMOVABLE TAPE 6-INCH (WHITE)
- 6YT TEMPORARY MARKING LINE REMOVABLE TAPE 6-INCH (YELLOW)
- 10WT TEMPORARY MARKING LINE REMOVABLE TAPE 10-INCH (WHITE)
- 6W TEMPORARY MARKING LINE PAINT 6-INCH (WHITE)
- 6Y TEMPORARY MARKING LINE PAINT 6-INCH (YELLOW)
- 6WGT TEMPORARY MARKING LINE REMOVABLE TAPE 6-INCH (WHITE)(3' LINE, 9' GAP)
- 6WG TEMPORARY MARKING LINE PAINT 6-INCH (WHITE)(3' LINE, 9' GAP)
- FBS FLASHING BEACON SIGN — STOPPED OR SLOW TRAFFIC WHEN FLASHING WO8-76 120"X60"
- S PORTABLE TRAFFIC SENSOR (PTS)

PROJECT NO: 1120-63-71	HWY: IH 41	COUNTY: WINNEBAGO	TRAFFIC CONTROL - STAGE 2	SHEET 80	E

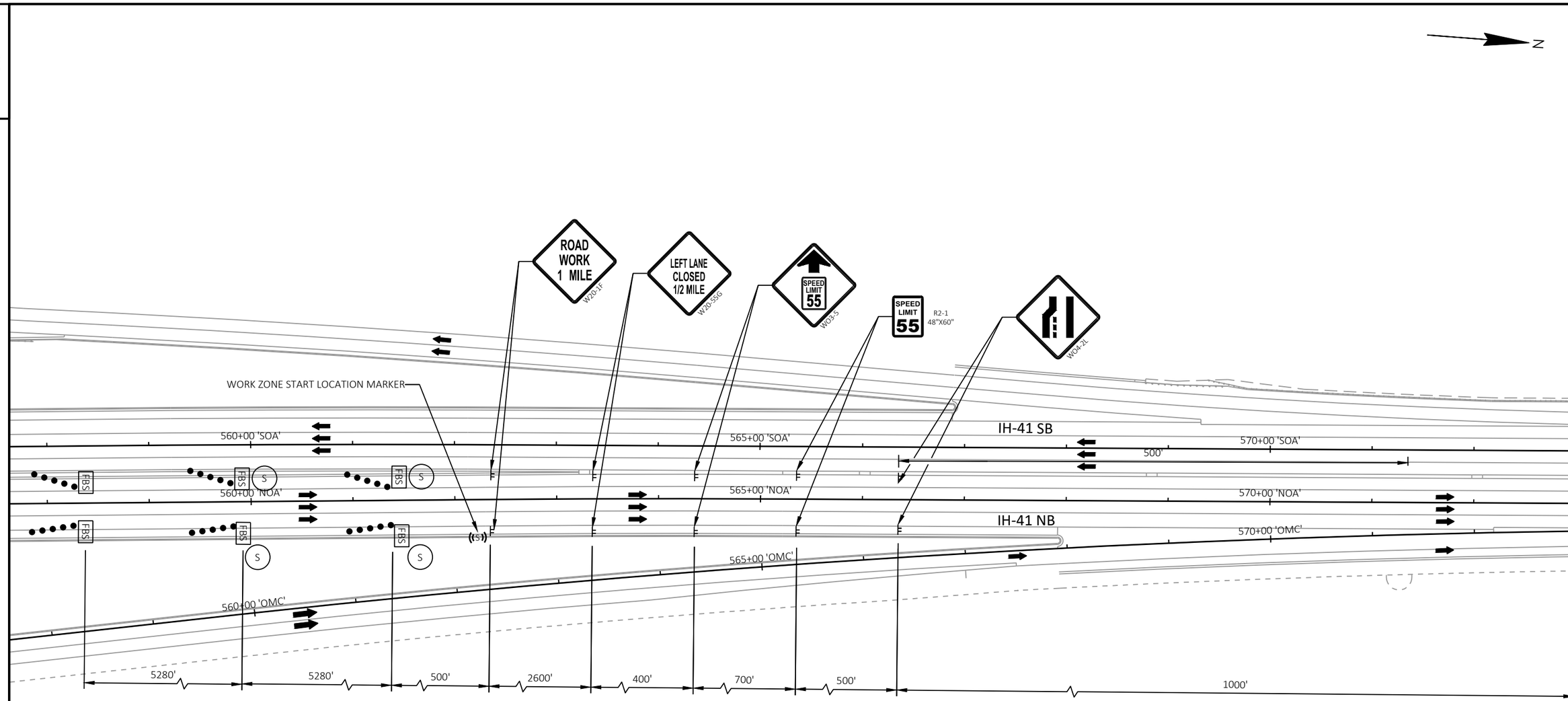

LEGEND

- WORK ZONE
- TRAFFIC CONTROL BARRICADES TYPE III WITH/WITHOUT ATTACHED SIGN
- TRAFFIC CONTROL SIGNS
- TRAFFIC CONTROL SIGNS ON TEMPORARY SUPPORT
- TRAFFIC CONTROL DRUMS WITH/WITHOUT TYPE C LIGHT
- TRAFFIC CONTROL FLEXIBLE TUBULAR MARKER (POSTS & BASES)
- DIRECTION OF TRAFFIC
- TRAFFIC CONTROL ARROW BOARDS
- XXXX SAWING CONCRETE
- SAWING ASPHALT
- CONCRETE BARRIER TEMPORARY PRECAST
- MARKING REMOVAL

6WT	TEMPORARY MARKING LINE REMOVABLE TAPE 6-INCH (WHITE)
6YT	TEMPORARY MARKING LINE REMOVABLE TAPE 6-INCH (YELLOW)
10WT	TEMPORARY MARKING LINE REMOVABLE TAPE 10-INCH (WHITE)
6W	TEMPORARY MARKING LINE PAINT 6-INCH (WHITE)
6Y	TEMPORARY MARKING LINE PAINT 6-INCH (YELLOW)
6WGT	TEMPORARY MARKING LINE REMOVABLE TAPE 6-INCH (WHITE)(3' LINE, 9' GAP)
6WG	TEMPORARY MARKING LINE PAINT 6-INCH (WHITE)(3' LINE, 9' GAP)
FBS	FLASHING BEACON SIGN — STOPPED OR SLOW TRAFFIC WHEN FLASHING (WO8-76 120"X60")
S	PORTABLE TRAFFIC SENSOR (PTS)

SEE CONSTRUCTION DETAIL "TRAFFIC CONTROL, LANE CLOSURE, BASIC TRAFFIC QUEUE WARNING SYSTEM" FOR ADDITIONAL DETAILS

NOTES

1. THE EXACT LOCATION AND SPACING OF ALL SIGNS AND DEVICES SHALL BE ADJUSTED TO FIT FIELD CONDITIONS AS APPROVED BY THE ENGINEER.
2. REMOVE OR COVER ANY SIGN, TEMPORARY OR EXISTING, WHICH CONFLICTS WITH TRAFFIC CONTROL "IN USE", OR AS APPROVED BY THE ENGINEER.
3. "WO" AND "W" SIGNS SHALL BE 48"x48" UNLESS OTHERWISE NOTED.
4. "WO" SIGNS ARE THE SAME AS "W" SIGNS EXCEPT THE BACKGROUND IS ORANGE.
5. "MO" SIGNS ARE THE SAME AS "M" SIGNS EXCEPT THE BACKGROUND IS ORANGE.
6. TRAFFIC CONTROL SIGNS PORTABLE CHANGEABLE MESSAGE FOR PRE-WARNING TO BE INSTALLED ONE WEEK PRIOR TO IMPLEMENTATION OF DETOUR ROUTE.
7. INSTALL TEMPORARY MARKING LINE TAPE ON LANE SHIFTS/TAPERS. INSTALL TEMPORARY MARKING LINE PAINT ON TANGENT SECTIONS.
8. STATION/OFFSETS FOR CONCRETE BARRIER WALL TEMPORARY PRECAST ARE PROVIDED TO CENTER OF WALL.

2

LEGEND

- WORK ZONE
- TRAFFIC CONTROL BARRICADES TYPE III WITH/WITHOUT ATTACHED SIGN
- TRAFFIC CONTROL SIGNS
- TRAFFIC CONTROL SIGNS ON TEMPORARY SUPPORT
- TRAFFIC CONTROL DRUMS WITH/WITHOUT TYPE C LIGHT
- TRAFFIC CONTROL FLEXIBLE TUBULAR MARKER (POSTS & BASES)
- DIRECTION OF TRAFFIC
- TRAFFIC CONTROL ARROW BOARDS
- XXXX SAWING CONCRETE
- SAWING ASPHALT
- CONCRETE BARRIER TEMPORARY PRECAST
- MARKING REMOVAL
- 6WT TEMPORARY MARKING LINE REMOVABLE TAPE 6-INCH (WHITE)
- 6YT TEMPORARY MARKING LINE REMOVABLE TAPE 6-INCH (YELLOW)
- 10WT TEMPORARY MARKING LINE REMOVABLE TAPE 10-INCH (WHITE)
- 6W TEMPORARY MARKING LINE PAINT 6-INCH (WHITE)
- 6Y TEMPORARY MARKING LINE PAINT 6-INCH (YELLOW)
- 6WGT TEMPORARY MARKING LINE REMOVABLE TAPE 6-INCH (WHITE)(3' LINE, 9' GAP)
- 6WG TEMPORARY MARKING LINE PAINT 6-INCH (WHITE)(3' LINE, 9' GAP)
- FBS FLASHING BEACON SIGN — STOPPED OR SLOW TRAFFIC WHEN FLASHING — WO8-76 120"X60"
- S PORTABLE TRAFFIC SENSOR (PTS)

NOTES

1. THE EXACT LOCATION AND SPACING OF ALL SIGNS AND DEVICES SHALL BE ADJUSTED TO FIT FIELD CONDITIONS AS APPROVED BY THE ENGINEER.
2. REMOVE OR COVER ANY SIGN, TEMPORARY OR EXISTING, WHICH CONFLICTS WITH TRAFFIC CONTROL "IN USE", OR AS APPROVED BY THE ENGINEER.
3. "WO" AND "W" SIGNS SHALL BE 48"x48" UNLESS OTHERWISE NOTED.
4. "WO" SIGNS ARE THE SAME AS "W" SIGNS EXCEPT THE BACKGROUND IS ORANGE.
5. "MO" SIGNS ARE THE SAME AS "M" SIGNS EXCEPT THE BACKGROUND IS ORANGE.
6. TRAFFIC CONTROL SIGNS PORTABLE CHANGEABLE MESSAGE FOR PRE-WARNING TO BE INSTALLED ONE WEEK PRIOR TO IMPLEMENTATION OF DETOUR ROUTE.
7. INSTALL TEMPORARY MARKING LINE TAPE ON LANE SHIFTS/TAPERS. INSTALL TEMPORARY MARKING LINE PAINT ON TANGENT SECTIONS.
8. STATION/OFFSETS FOR CONCRETE BARRIER WALL TEMPORARY PRECAST ARE PROVIDED TO CENTER OF WALL.

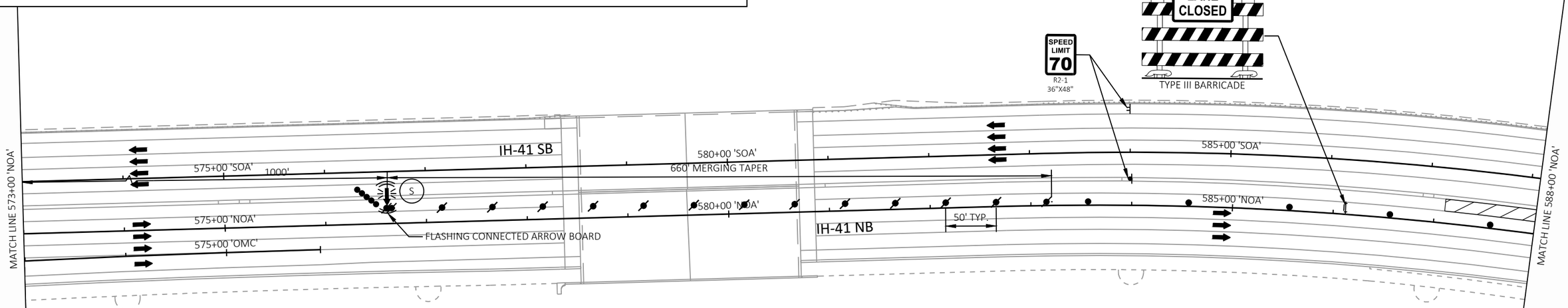

SEE CONSTRUCTION DETAIL "TRAFFIC CONTROL, LANE CLOSURE, BASIC TRAFFIC QUEUE WARNING SYSTEM" FOR ADDITIONAL DETAILS

2

PROJECT NO: 1120-63-71	HWY: IH 41	COUNTY: WINNEBAGO	TRAFFIC CONTROL - STAGE 3	SHEET 82	E

2

LEGEND

- WORK ZONE
- TRAFFIC CONTROL BARRICADES TYPE III WITH/WITHOUT ATTACHED SIGN
- TRAFFIC CONTROL SIGNS
- TRAFFIC CONTROL SIGNS ON TEMPORARY SUPPORT
- TRAFFIC CONTROL DRUMS WITH/WITHOUT TYPE C LIGHT
- TRAFFIC CONTROL FLEXIBLE TUBULAR MARKER (POSTS & BASES)
- DIRECTION OF TRAFFIC
- TRAFFIC CONTROL ARROW BOARDS
- XXXX SAWING CONCRETE
- SAWING ASPHALT
- CONCRETE BARRIER TEMPORARY PRECAST
- MARKING REMOVAL
- 6WT TEMPORARY MARKING LINE REMOVABLE TAPE 6-INCH (WHITE)
- 6YT TEMPORARY MARKING LINE REMOVABLE TAPE 6-INCH (YELLOW)
- 10WT TEMPORARY MARKING LINE REMOVABLE TAPE 10-INCH (WHITE)
- 6W TEMPORARY MARKING LINE PAINT 6-INCH (WHITE)
- 6Y TEMPORARY MARKING LINE PAINT 6-INCH (YELLOW)
- 6WGT TEMPORARY MARKING LINE REMOVABLE TAPE 6-INCH (WHITE)(3' LINE, 9' GAP)
- 6WG TEMPORARY MARKING LINE PAINT 6-INCH (WHITE)(3' LINE, 9' GAP)
- FBS FLASHING BEACON SIGN — STOPPED OR SLOW TRAFFIC WHEN FLASHING — WO8-76 120"X60"
- S PORTABLE TRAFFIC SENSOR (PTS)

NOTES

1. THE EXACT LOCATION AND SPACING OF ALL SIGNS AND DEVICES SHALL BE ADJUSTED TO FIT FIELD CONDITIONS AS APPROVED BY THE ENGINEER.
2. REMOVE OR COVER ANY SIGN, TEMPORARY OR EXISTING, WHICH CONFLICTS WITH TRAFFIC CONTROL "IN USE", OR AS APPROVED BY THE ENGINEER.
3. "WO" AND "W" SIGNS SHALL BE 48"x48" UNLESS OTHERWISE NOTED.
4. "WO" SIGNS ARE THE SAME AS "W" SIGNS EXCEPT THE BACKGROUND IS ORANGE.
5. "MO" SIGNS ARE THE SAME AS "M" SIGNS EXCEPT THE BACKGROUND IS ORANGE.
6. TRAFFIC CONTROL SIGNS PORTABLE CHANGEABLE MESSAGE FOR PRE-WARNING TO BE INSTALLED ONE WEEK PRIOR TO IMPLEMENTATION OF DETOUR ROUTE.
7. INSTALL TEMPORARY MARKING LINE TAPE ON LANE SHIFTS/TAPERS. INSTALL TEMPORARY MARKING LINE PAINT ON TANGENT SECTIONS.
8. STATION/OFFSETS FOR CONCRETE BARRIER WALL TEMPORARY PRECAST ARE PROVIDED TO CENTER OF WALL.

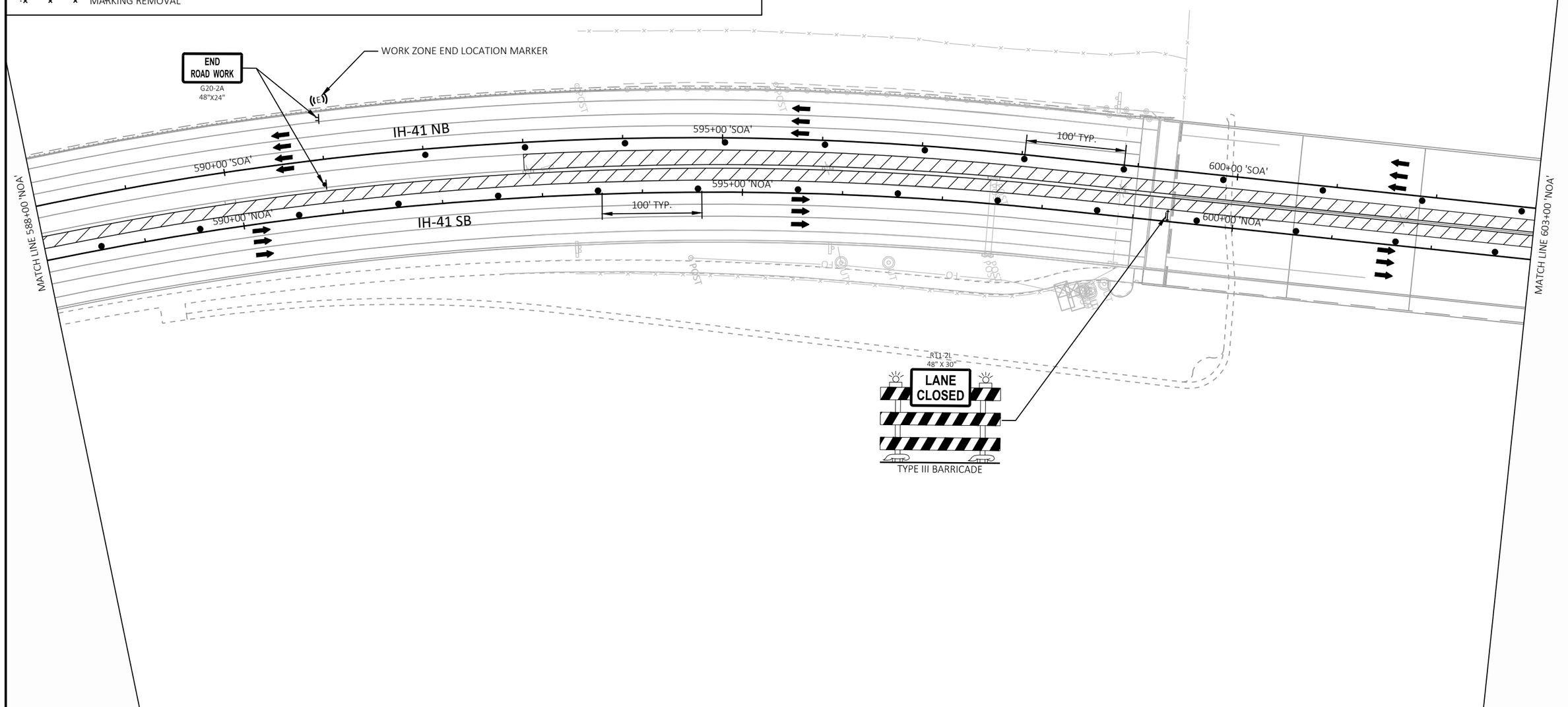

2

PROJECT NO: 1120-63-71	HWY: IH 41	COUNTY: WINNEBAGO	TRAFFIC CONTROL - STAGE 3	SHEET 83	E

2

LEGEND

- WORK ZONE
- TRAFFIC CONTROL BARRICADES TYPE III WITH/WITHOUT ATTACHED SIGN
- TRAFFIC CONTROL SIGNS
- TRAFFIC CONTROL SIGNS ON TEMPORARY SUPPORT
- TRAFFIC CONTROL DRUMS WITH/WITHOUT TYPE C LIGHT
- TRAFFIC CONTROL FLEXIBLE TUBULAR MARKER (POSTS & BASES)
- DIRECTION OF TRAFFIC
- TRAFFIC CONTROL ARROW BOARDS
- XXXX SAWING CONCRETE
- SAWING ASPHALT
- CONCRETE BARRIER TEMPORARY PRECAST
- MARKING REMOVAL
- 6WT TEMPORARY MARKING LINE REMOVABLE TAPE 6-INCH (WHITE)
- 6YT TEMPORARY MARKING LINE REMOVABLE TAPE 6-INCH (YELLOW)
- 10WT TEMPORARY MARKING LINE REMOVABLE TAPE 10-INCH (WHITE)
- 6W TEMPORARY MARKING LINE PAINT 6-INCH (WHITE)
- 6Y TEMPORARY MARKING LINE PAINT 6-INCH (YELLOW)
- 6WGT TEMPORARY MARKING LINE REMOVABLE TAPE 6-INCH (WHITE)(3' LINE, 9' GAP)
- 6WG TEMPORARY MARKING LINE PAINT 6-INCH (WHITE)(3' LINE, 9' GAP)
- FBS FLASHING BEACON SIGN — STOPPED OR SLOW TRAFFIC WHEN FLASHING — WO8-76 120"X60"
- S PORTABLE TRAFFIC SENSOR (PTS)

NOTES

1. THE EXACT LOCATION AND SPACING OF ALL SIGNS AND DEVICES SHALL BE ADJUSTED TO FIT FIELD CONDITIONS AS APPROVED BY THE ENGINEER.
2. REMOVE OR COVER ANY SIGN, TEMPORARY OR EXISTING, WHICH CONFLICTS WITH TRAFFIC CONTROL "IN USE", OR AS APPROVED BY THE ENGINEER.
3. "WO" AND "W" SIGNS SHALL BE 48"x48" UNLESS OTHERWISE NOTED.
4. "WO" SIGNS ARE THE SAME AS "W" SIGNS EXCEPT THE BACKGROUND IS ORANGE.
5. "MO" SIGNS ARE THE SAME AS "M" SIGNS EXCEPT THE BACKGROUND IS ORANGE.
6. TRAFFIC CONTROL SIGNS PORTABLE CHANGEABLE MESSAGE FOR PRE-WARNING TO BE INSTALLED ONE WEEK PRIOR TO IMPLEMENTATION OF DETOUR ROUTE.
7. INSTALL TEMPORARY MARKING LINE TAPE ON LANE SHIFTS/TAPERS. INSTALL TEMPORARY MARKING LINE PAINT ON TANGENT SECTIONS.
8. STATION/OFFSETS FOR CONCRETE BARRIER WALL TEMPORARY PRECAST ARE PROVIDED TO CENTER OF WALL.

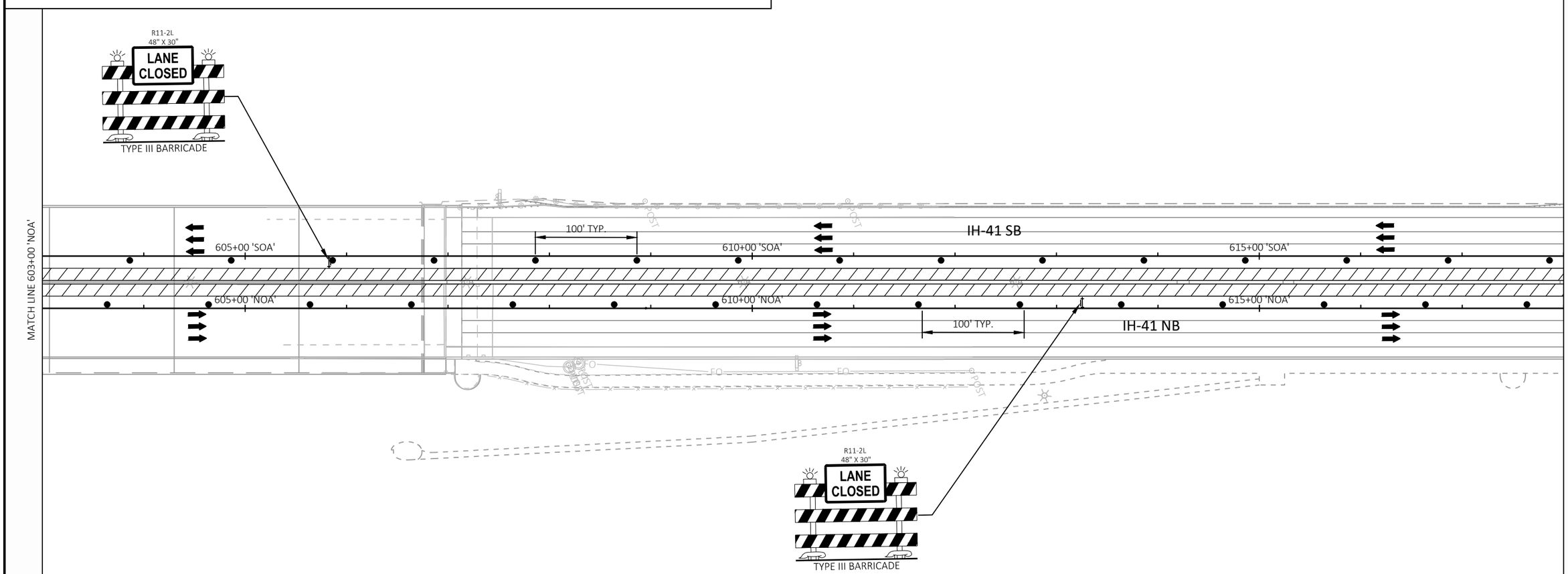

2

PROJECT NO: 1120-63-71	HWY: IH 41	COUNTY: WINNEBAGO	TRAFFIC CONTROL - STAGE 3	SHEET 84	E

2

LEGEND

- WORK ZONE
- TRAFFIC CONTROL BARRICADES TYPE III WITH/WITHOUT ATTACHED SIGN
- TRAFFIC CONTROL SIGNS
- TRAFFIC CONTROL SIGNS ON TEMPORARY SUPPORT
- TRAFFIC CONTROL DRUMS WITH/WITHOUT TYPE C LIGHT
- TRAFFIC CONTROL FLEXIBLE TUBULAR MARKER (POSTS & BASES)
- DIRECTION OF TRAFFIC
- TRAFFIC CONTROL ARROW BOARDS
- XXXX SAWING CONCRETE
- SAWING ASPHALT
- CONCRETE BARRIER TEMPORARY PRECAST
- MARKING REMOVAL
- 6WT TEMPORARY MARKING LINE REMOVABLE TAPE 6-INCH (WHITE)
- 6YT TEMPORARY MARKING LINE REMOVABLE TAPE 6-INCH (YELLOW)
- 10WT TEMPORARY MARKING LINE REMOVABLE TAPE 10-INCH (WHITE)
- 6W TEMPORARY MARKING LINE PAINT 6-INCH (WHITE)
- 6Y TEMPORARY MARKING LINE PAINT 6-INCH (YELLOW)
- 6WGT TEMPORARY MARKING LINE REMOVABLE TAPE 6-INCH (WHITE)(3' LINE, 9' GAP)
- 6WG TEMPORARY MARKING LINE PAINT 6-INCH (WHITE)(3' LINE, 9' GAP)
- FBS FLASHING BEACON SIGN — STOPPED OR SLOW TRAFFIC WHEN FLASHING — WO8-76 120"X60"
- S PORTABLE TRAFFIC SENSOR (PTS)

NOTES

1. THE EXACT LOCATION AND SPACING OF ALL SIGNS AND DEVICES SHALL BE ADJUSTED TO FIT FIELD CONDITIONS AS APPROVED BY THE ENGINEER.
2. REMOVE OR COVER ANY SIGN, TEMPORARY OR EXISTING, WHICH CONFLICTS WITH TRAFFIC CONTROL "IN USE", OR AS APPROVED BY THE ENGINEER.
3. "WO" AND "W" SIGNS SHALL BE 48"x48" UNLESS OTHERWISE NOTED.
4. "WO" SIGNS ARE THE SAME AS "W" SIGNS EXCEPT THE BACKGROUND IS ORANGE.
5. "MO" SIGNS ARE THE SAME AS "M" SIGNS EXCEPT THE BACKGROUND IS ORANGE.
6. TRAFFIC CONTROL SIGNS PORTABLE CHANGEABLE MESSAGE FOR PRE-WARNING TO BE INSTALLED ONE WEEK PRIOR TO IMPLEMENTATION OF DETOUR ROUTE.
7. INSTALL TEMPORARY MARKING LINE TAPE ON LANE SHIFTS/TAPERS. INSTALL TEMPORARY MARKING LINE PAINT ON TANGENT SECTIONS.
8. STATION/OFFSETS FOR CONCRETE BARRIER WALL TEMPORARY PRECAST ARE PROVIDED TO CENTER OF WALL.

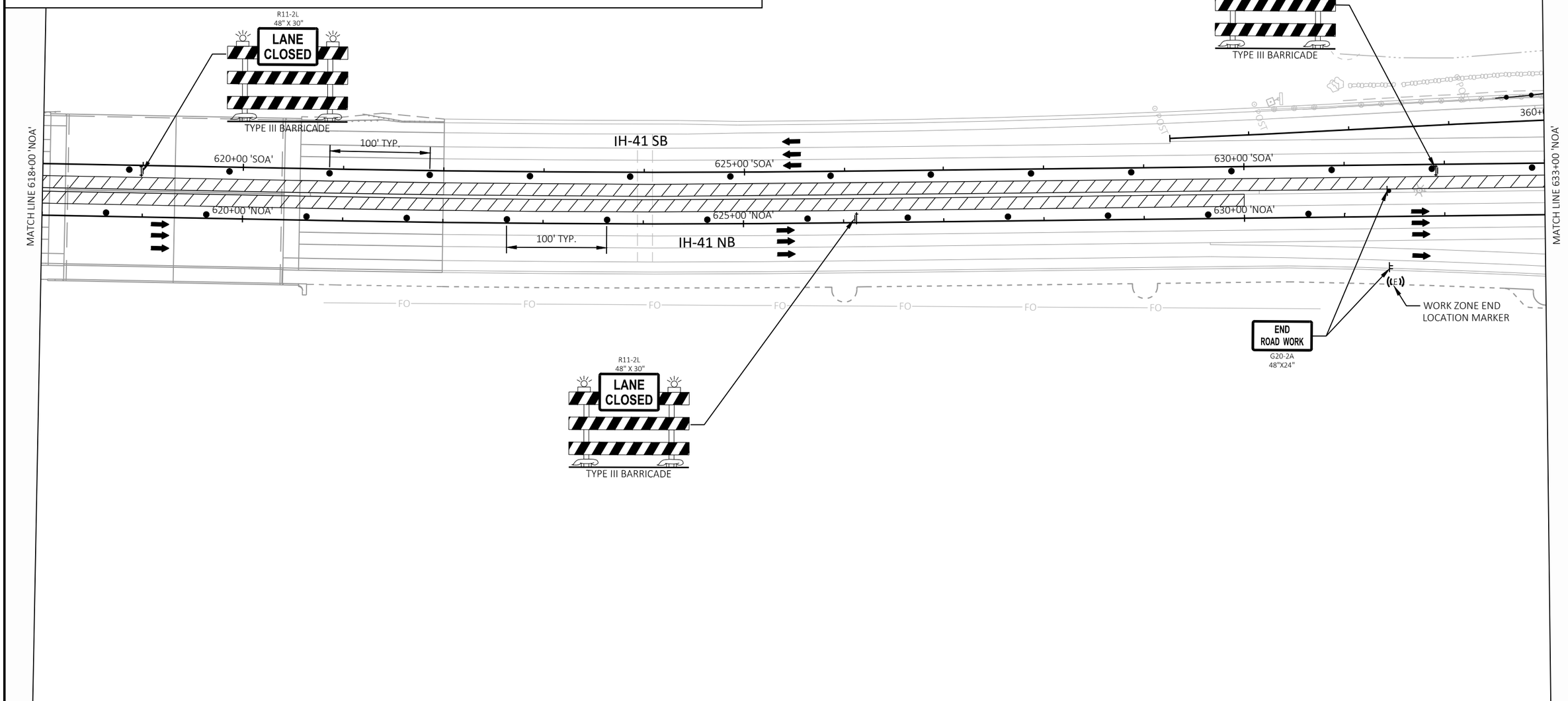

2

PROJECT NO: 1120-63-71	HWY: IH 41	COUNTY: WINNEBAGO	TRAFFIC CONTROL - STAGE 3	SHEET 85	E

FILE NAME : S:\MAD\2000--2099\2089\008\DRAWINGS\CAD\CIVIL 3D\SHEETS\026001-S3.DWG
LAYOUT NAME - 026005-s3
PLOT DATE : 1/4/2024 8:33 AM PLOT BY : GRIMME, SARA PLOT NAME : PLOT SCALE : 1 IN:100 FT
WISDOT/CADDS SHEET 42

2

LEGEND

- WORK ZONE
- TRAFFIC CONTROL BARRICADES TYPE III WITH/WITHOUT ATTACHED SIGN
- TRAFFIC CONTROL SIGNS
- TRAFFIC CONTROL SIGNS ON TEMPORARY SUPPORT
- TRAFFIC CONTROL DRUMS WITH/WITHOUT TYPE C LIGHT
- TRAFFIC CONTROL FLEXIBLE TUBULAR MARKER (POSTS & BASES)
- DIRECTION OF TRAFFIC
- TRAFFIC CONTROL ARROW BOARDS
- XXXX SAWING CONCRETE
- SAWING ASPHALT
- CONCRETE BARRIER TEMPORARY PRECAST
- MARKING REMOVAL
- 6WT TEMPORARY MARKING LINE REMOVABLE TAPE 6-INCH (WHITE)
- 6YT TEMPORARY MARKING LINE REMOVABLE TAPE 6-INCH (YELLOW)
- 10WT TEMPORARY MARKING LINE REMOVABLE TAPE 10-INCH (WHITE)
- 6W TEMPORARY MARKING LINE PAINT 6-INCH (WHITE)
- 6Y TEMPORARY MARKING LINE PAINT 6-INCH (YELLOW)
- 6WGT TEMPORARY MARKING LINE REMOVABLE TAPE 6-INCH (WHITE)(3' LINE, 9' GAP)
- 6WG TEMPORARY MARKING LINE PAINT 6-INCH (WHITE)(3' LINE, 9' GAP)
- FBS FLASHING BEACON SIGN — STOPPED OR SLOW TRAFFIC WHEN FLASHING — WO8-76 120"X60"
- S PORTABLE TRAFFIC SENSOR (PTS)

NOTES

1. THE EXACT LOCATION AND SPACING OF ALL SIGNS AND DEVICES SHALL BE ADJUSTED TO FIT FIELD CONDITIONS AS APPROVED BY THE ENGINEER.
2. REMOVE OR COVER ANY SIGN, TEMPORARY OR EXISTING, WHICH CONFLICTS WITH TRAFFIC CONTROL "IN USE", OR AS APPROVED BY THE ENGINEER.
3. "WO" AND "W" SIGNS SHALL BE 48"x48" UNLESS OTHERWISE NOTED.
4. "WO" SIGNS ARE THE SAME AS "W" SIGNS EXCEPT THE BACKGROUND IS ORANGE.
5. "MO" SIGNS ARE THE SAME AS "M" SIGNS EXCEPT THE BACKGROUND IS ORANGE.
6. TRAFFIC CONTROL SIGNS PORTABLE CHANGEABLE MESSAGE FOR PRE-WARNING TO BE INSTALLED ONE WEEK PRIOR TO IMPLEMENTATION OF DETOUR ROUTE.
7. INSTALL TEMPORARY MARKING LINE TAPE ON LANE SHIFTS/TAPERS. INSTALL TEMPORARY MARKING LINE PAINT ON TANGENT SECTIONS.
8. STATION/OFFSETS FOR CONCRETE BARRIER WALL TEMPORARY PRECAST ARE PROVIDED TO CENTER OF WALL.

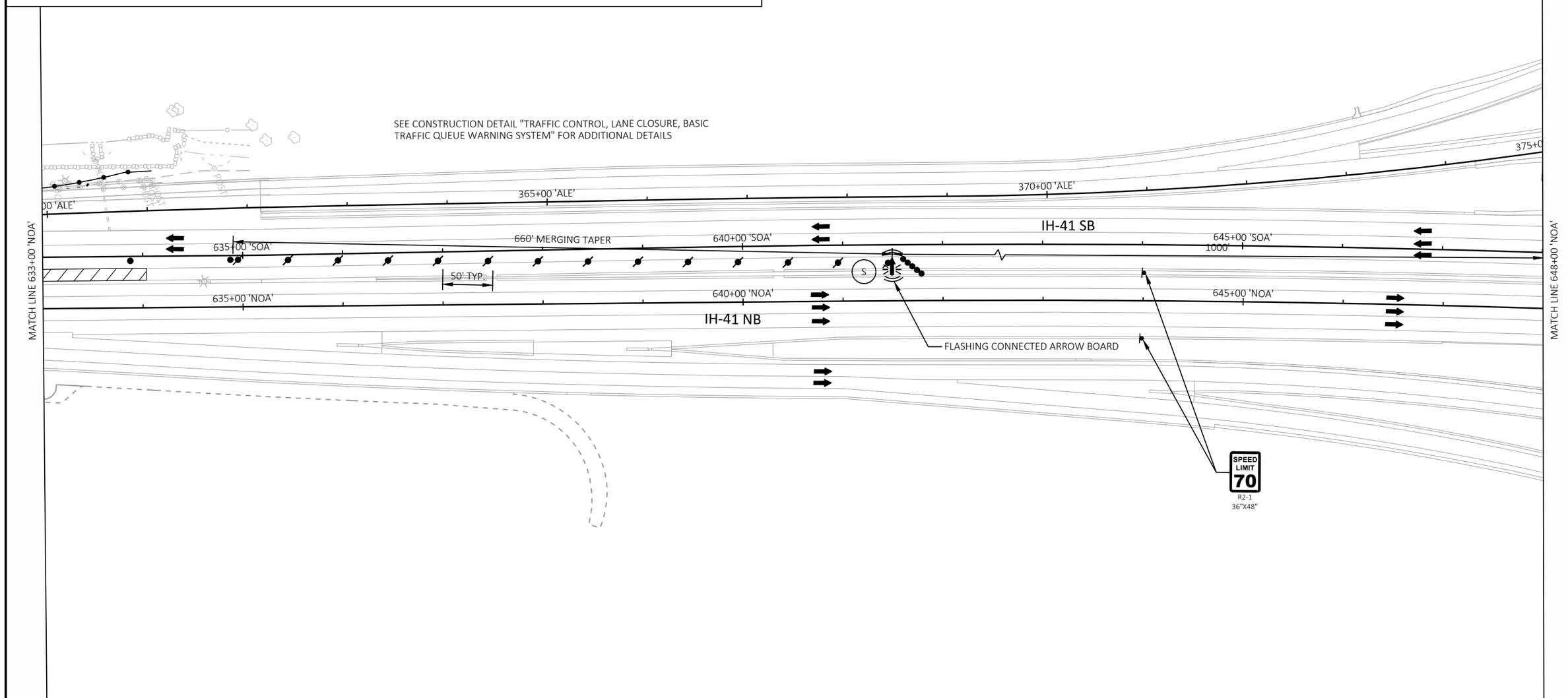

2

PROJECT NO: 1120-63-71	HWY: IH 41	COUNTY: WINNEBAGO	TRAFFIC CONTROL - STAGE 3	SHEET 86	E

FILE NAME : S:\MAD\2000--2099\2089\008\DRAWINGS\CAD\CIVIL 3D\SHEETS\026001-S3.DWG
LAYOUT NAME - 026006-s3
PLOT DATE : 1/4/2024 8:34 AM PLOT BY : GRIMME, SARA PLOT NAME : PLOT SCALE : 1 IN:100 FT

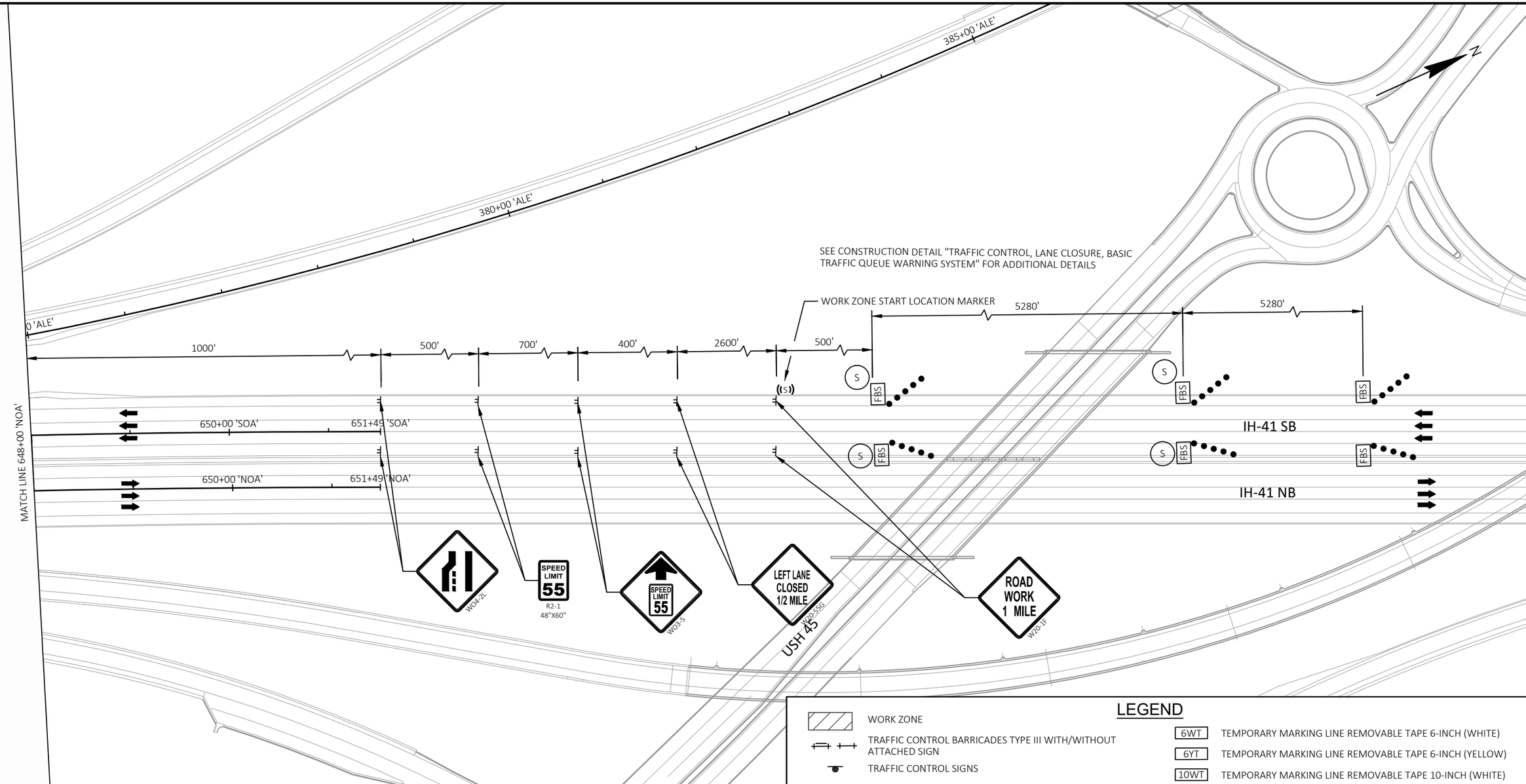

NOTES

1. THE EXACT LOCATION AND SPACING OF ALL SIGNS AND DEVICES SHALL BE ADJUSTED TO FIT FIELD CONDITIONS AS APPROVED BY THE ENGINEER.
2. REMOVE OR COVER ANY SIGN, TEMPORARY OR EXISTING, WHICH CONFLICTS WITH TRAFFIC CONTROL "IN USE", OR AS APPROVED BY THE ENGINEER.
3. "WO" AND "W" SIGNS SHALL BE 48"x48" UNLESS OTHERWISE NOTED.
4. "WO" SIGNS ARE THE SAME AS "W" SIGNS EXCEPT THE BACKGROUND IS ORANGE.
5. "MO" SIGNS ARE THE SAME AS "M" SIGNS EXCEPT THE BACKGROUND IS ORANGE.
6. TRAFFIC CONTROL SIGNS PORTABLE CHANGEABLE MESSAGE FOR PRE-WARNING TO BE INSTALLED ONE WEEK PRIOR TO IMPLEMENTATION OF DETOUR ROUTE.
7. INSTALL TEMPORARY MARKING LINE TAPE ON LANE SHIFTS/TAPERS. INSTALL TEMPORARY MARKING LINE PAINT ON TANGENT SECTIONS.
8. STATION/OFFSETS FOR CONCRETE BARRIER WALL TEMPORARY PRECAST ARE PROVIDED TO CENTER OF WALL.

LEGEND

- WORK ZONE
- TRAFFIC CONTROL BARRICADES TYPE III WITH/WITHOUT ATTACHED SIGN
- TRAFFIC CONTROL SIGNS
- TRAFFIC CONTROL SIGNS ON TEMPORARY SUPPORT
- TRAFFIC CONTROL DRUMS WITH/WITHOUT TYPE C LIGHT
- TRAFFIC CONTROL FLEXIBLE TUBULAR MARKER (POSTS & BASES)
- DIRECTION OF TRAFFIC
- TRAFFIC CONTROL ARROW BOARDS
- XXXX SAWING CONCRETE
- SAWING ASPHALT
- CONCRETE BARRIER TEMPORARY PRECAST
- MARKING REMOVAL
- 6WT TEMPORARY MARKING LINE REMOVABLE TAPE 6-INCH (WHITE)
- 6YT TEMPORARY MARKING LINE REMOVABLE TAPE 6-INCH (YELLOW)
- 10WT TEMPORARY MARKING LINE REMOVABLE TAPE 10-INCH (WHITE)
- 6W TEMPORARY MARKING LINE PAINT 6-INCH (WHITE)
- 6Y TEMPORARY MARKING LINE PAINT 6-INCH (YELLOW)
- 6WGT TEMPORARY MARKING LINE REMOVABLE TAPE 6-INCH (WHITE)(3' LINE, 9' GAP)
- 6WG TEMPORARY MARKING LINE PAINT 6-INCH (WHITE)(3' LINE, 9' GAP)
- FBS FLASHING BEACON SIGN — STOPPED OR SLOW TRAFFIC WHEN FLASHING — WO8-76 120"X60"
- S PORTABLE TRAFFIC SENSOR (PTS)

PROJECT NO: 1120-63-71	HWY: IH 41	COUNTY: WINNEBAGO	TRAFFIC CONTROL - STAGE 3	SHEET 87	E

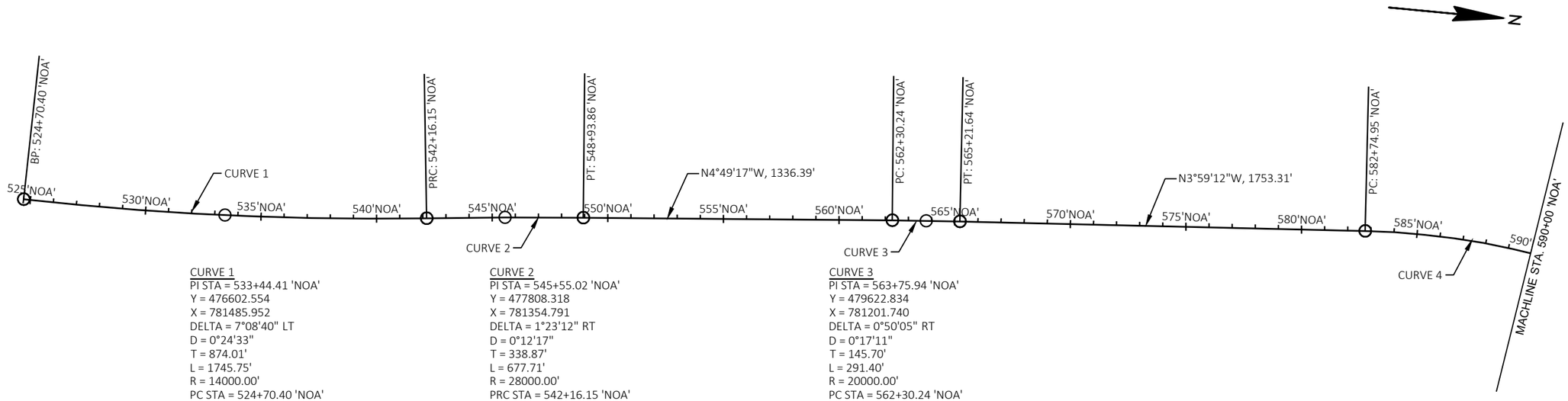

CURVE 1
PI STA = 533+44.41 'NOA'
Y = 476602.554
X = 781485.952
DELTA = 7°08'40" LT
D = 0°24'33"
T = 874.01'
L = 1745.75'
R = 14000.00'
PC STA = 524+70.40 'NOA'
Y = 475728.664
X = 781471.668
PRC STA = 542+16.15 'NOA'
Y = 477471.435
X = 781391.436
BK = N00°56'11"E
AH = N06°12'29"W

CURVE 2
PI STA = 545+55.02 'NOA'
Y = 477808.318
X = 781354.791
DELTA = 1°23'12" RT
D = 0°12'17"
T = 338.87'
L = 677.71'
R = 28000.00'
PRC STA = 542+16.15 'NOA'
Y = 477471.435
X = 781391.436
PT STA = 548+93.86 'NOA'
Y = 478145.990
X = 781326.309
BK = N06°12'29"W
AH = N04°49'17"W

CURVE 3
PI STA = 563+75.94 'NOA'
Y = 479622.834
X = 781201.740
DELTA = 0°50'05" RT
D = 0°17'11"
T = 145.70'
L = 291.40'
R = 20000.00'
PC STA = 562+30.24 'NOA'
Y = 479477.648
X = 781213.986
PT STA = 565+21.64 'NOA'
Y = 479768.183
X = 781191.610
BK = N04°49'17"W
AH = N03°59'12"W

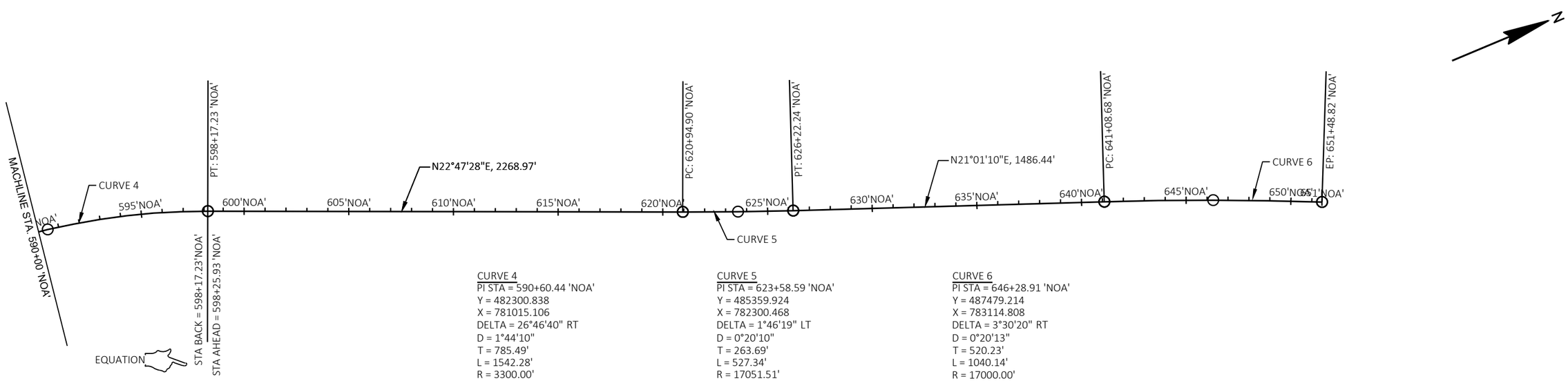

CURVE 4
PI STA = 590+60.44 'NOA'
Y = 482300.838
X = 781015.106
DELTA = 26°46'40" RT
D = 1°44'10"
T = 785.49'
L = 1542.28'
R = 3300.00'
PC STA = 582+74.95 'NOA'
Y = 481517.247
X = 781069.716
PT STA = 598+17.23 'NOA'
Y = 483025.000
X = 781319.383
BK = N03°59'12"W
AH = N22°47'28"E

CURVE 5
PI STA = 623+58.59 'NOA'
Y = 485359.924
X = 782300.468
DELTA = 1°46'19" LT
D = 0°20'10"
T = 263.69'
L = 527.34'
R = 17051.51'
PC STA = 620+94.90 'NOA'
Y = 485116.820
X = 782198.320
PT STA = 626+22.24 'NOA'
Y = 485606.070
X = 782395.050
BK = N22°47'28"E
AH = N21°01'10"E

CURVE 6
PI STA = 646+28.91 'NOA'
Y = 487479.214
X = 783114.808
DELTA = 3°30'20" RT
D = 0°20'13"
T = 520.23'
L = 1040.14'
R = 17000.00'
PC STA = 641+08.68 'NOA'
Y = 486993.600
X = 782928.210
PT STA = 651+48.82 'NOA'
Y = 487952.510
X = 783330.750
BK = N21°01'10"E
AH = N24°31'30"E

PROJECT NO: 1120-63-71	HWY: IH 41	COUNTY: WINNEBAGO	ALIGNMENT DETAILS 'NOA'	SHEET 88	E

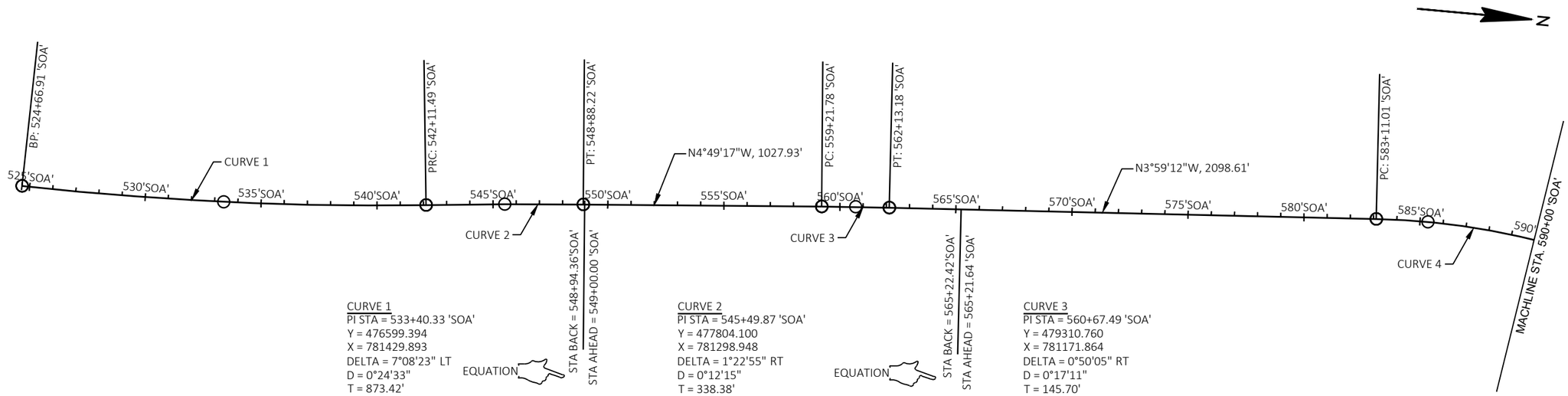

CURVE 1
PI STA = 533+40.33 'SOA'
Y = 476599.394
X = 781429.893
DELTA = 7°08'23" LT
D = 0°24'33"
T = 873.42'
L = 1744.58'
R = 14000.00'
PC STA = 524+66.91 'SOA'
Y = 475726.090
X = 781415.618
PRC STA = 542+11.49 'SOA'
Y = 477467.701
X = 781335.512
BK = N00°56'11"E
AH = N06°12'12"W

CURVE 2
PI STA = 545+49.87 'SOA'
Y = 477804.100
X = 781298.948
DELTA = 1°22'55" RT
D = 0°12'15"
T = 338.38'
L = 676.73'
R = 28056.00'
PRC STA = 542+11.49 'SOA'
Y = 477467.701
X = 781335.512
PT STA = 548+88.22 'SOA'
Y = 478141.283
X = 781270.507
BK = N06°12'12"W
AH = N04°49'17"W

CURVE 3
PI STA = 560+67.49 'SOA'
Y = 479310.760
X = 781171.864
DELTA = 0°50'05" RT
D = 0°17'11"
T = 145.70'
L = 291.40'
R = 20000.00'
PC STA = 559+21.78 'SOA'
Y = 479165.574
X = 781184.110
PT STA = 562+13.18 'SOA'
Y = 479456.109
X = 781161.734
BK = N04°49'17"W
AH = N03°59'12"W

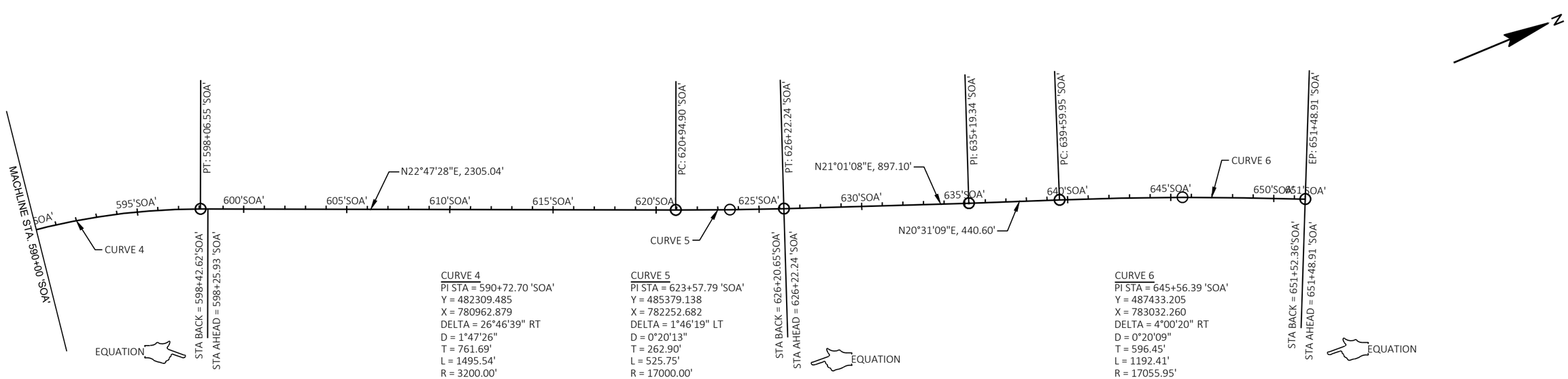

CURVE 4
PI STA = 590+72.70 'SOA'
Y = 482309.485
X = 780962.879
DELTA = 26°46'39" RT
D = 1°47'26"
T = 761.69'
L = 1495.54'
R = 3200.00'
PC STA = 583+11.01 'SOA'
Y = 481549.641
X = 781015.833
PT STA = 598+06.55 'SOA'
Y = 483011.703
X = 781257.935
BK = N03°59'12"W
AH = N22°47'28"E

CURVE 5
PI STA = 623+57.79 'SOA'
Y = 485379.138
X = 782252.682
DELTA = 1°46'19" LT
D = 0°20'13"
T = 262.90'
L = 525.75'
R = 17000.00'
PC STA = 620+94.90 'SOA'
Y = 485136.770
X = 782150.840
PT STA = 626+22.24 'SOA'
Y = 485624.540
X = 782346.980
BK = N22°47'28"E
AH = N21°01'08"E

CURVE 6
PI STA = 645+56.39 'SOA'
Y = 487433.205
X = 783032.260
DELTA = 4°00'20" RT
D = 0°20'09"
T = 596.45'
L = 1192.41'
R = 17055.95'
PC STA = 639+59.95 'SOA'
Y = 486874.600
X = 782823.190
PT STA = 651+48.91 'SOA'
Y = 487975.840
X = 783279.840
BK = N20°31'09"E
AH = N24°31'30"E

PROJECT NO: 1120-63-71	HWY: IH 41	COUNTY: WINNEBAGO	ALIGNMENT DETAILS 'SOA'	SHEET 89	E

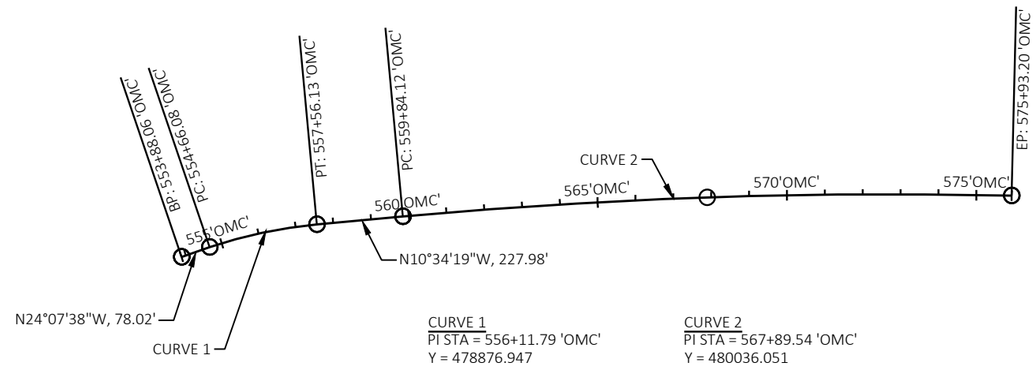

CURVE 1
PI STA = 556+11.79 'OMC'
Y = 478876.947
X = 781413.330
DELTA = 13°33'19" RT
D = 4°40'24"
T = 145.71'
L = 290.05'
R = 1226.00'
PC STA = 554+66.08 'OMC'
Y = 478743.968
X = 781472.890
PT STA = 557+56.13 'OMC'
Y = 479020.181
X = 781386.597
BK = N24°07'38"W
AH = N10°34'19"W

CURVE 2
PI STA = 567+89.54 'OMC'
Y = 480036.051
X = 781196.999
DELTA = 6°35'07" RT
D = 0°24'33"
T = 805.43'
L = 1609.08'
R = 14000.00'
PC STA = 559+84.12 'OMC'
Y = 479244.296
X = 781344.769
PT STA = 575+93.20 'OMC'
Y = 480839.528
X = 781141.004
BK = N10°34'19"W
AH = N03°59'12"W

CURVE 3
PI STA = 357+14.48 'ALE'
Y = 486006.900
X = 782459.989
DELTA = 0°53'23" LT
D = 0°28'39"
T = 93.16'
L = 186.32'
R = 12000.00'
PC STA = 356+21.32 'ALE'
Y = 485919.020
X = 782429.060
PRC STA = 358+07.64 'ALE'
Y = 486095.250
X = 782489.550
BK = N19°23'22"E
AH = N18°29'56"E

CURVE 4
PI STA = 360+54.52 'ALE'
Y = 486329.374
X = 782567.882
DELTA = 2°01'14" RT
D = 0°24'33"
T = 246.88'
L = 493.71'
R = 14000.00'
PRC STA = 358+07.64 'ALE'
Y = 486095.250
X = 782489.550
PT STA = 363+01.35 'ALE'
Y = 486560.590
X = 782654.420
BK = N18°29'56"E
AH = N20°31'08"E

CURVE 5
PI STA = 367+70.14 'ALE'
Y = 486999.639
X = 782818.741
DELTA = 0°46'27" RT
D = 0°20'06"
T = 115.54'
L = 231.08'
R = 17104.00'
PC STA = 366+54.60 'ALE'
Y = 486891.430
X = 782778.240
PRC STA = 368+85.68 'ALE'
Y = 487107.290
X = 782860.700
BK = N20°31'08"E
AH = N21°17'39"E

CURVE 6
PI STA = 385+64.45 'ALE'
Y = 488671.456
X = 783470.332
DELTA = 40°55'01" LT
D = 1°16'24"
T = 1678.77'
L = 3213.62'
R = 4500.00'
PRC STA = 368+85.68 'ALE'
Y = 487107.290
X = 782860.700
PT STA = 400+99.29 'ALE'
Y = 490252.720
X = 782906.530
BK = N21°17'39"E
AH = N19°37'26"W

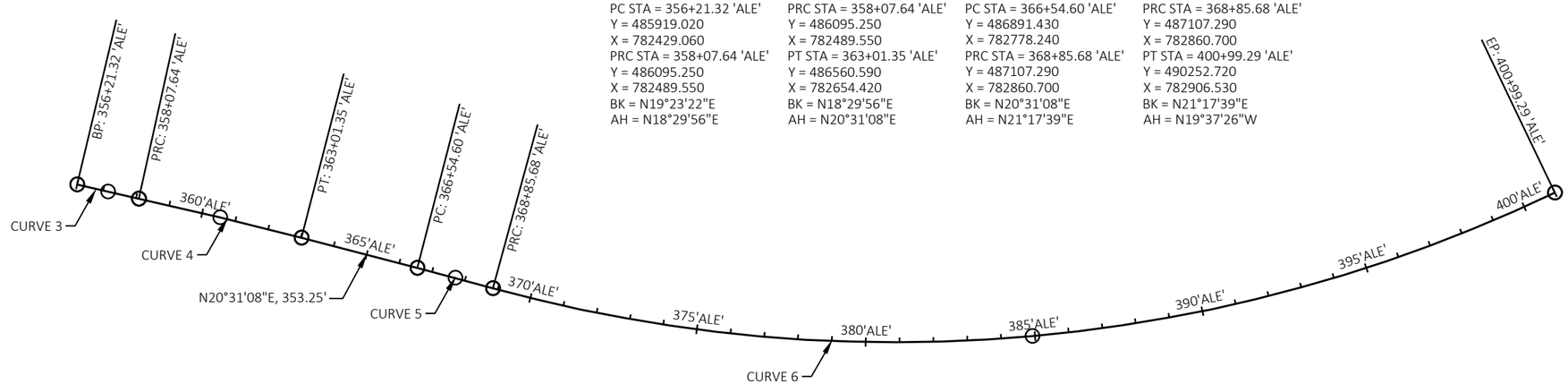

PROJECT NO: 1120-63-71	HWY: IH 41	COUNTY: WINNEBAGO	ALIGNMENT DETAILS 'OMC' AND 'ALE'	SHEET 90	E

Estimate Of Quantities

1120-63-71

Line	Item	Item Description	Unit	Total	Qty
0002	203.0220	Removing Structure (structure) 01. B-70-265	EACH	1.000	1.000
0004	203.0220	Removing Structure (structure) 02. B-70-266	EACH	1.000	1.000
0006	204.0100	Removing Concrete Pavement	SY	1,045.000	1,045.000
0008	204.0110	Removing Asphaltic Surface	SY	76.000	76.000
0010	204.0120	Removing Asphaltic Surface Milling	SY	1,325.000	1,325.000
0012	204.0157	Removing Concrete Barrier	LF	64.000	64.000
0014	204.0165	Removing Guardrail	LF	66.000	66.000
0016	204.0195	Removing Concrete Bases	EACH	11.000	11.000
0018	204.9060.S	Removing (item description) 01. Removing Cable Barrier Terminal	EACH	1.000	1.000
0020	206.1001	Excavation for Structures Bridges (structure) 01. B-70-265	EACH	1.000	1.000
0022	206.1001	Excavation for Structures Bridges (structure) 02. B-70-266	EACH	1.000	1.000
0024	211.0201	Prepare Foundation for Concrete Pavement (project) 01. 1120-63-71	EACH	1.000	1.000
0026	213.0100	Finishing Roadway (project) 01. 1120-63-71	EACH	1.000	1.000
0028	305.0110	Base Aggregate Dense 3/4-Inch	TON	33.000	33.000
0030	305.0120	Base Aggregate Dense 1 1/4-Inch	TON	1,118.000	1,118.000
0032	305.0500	Shaping Shoulders	STA	3.000	3.000
0034	315.0100	Asphaltic Base	TON	40.000	40.000
0036	320.0365	Concrete Base HES 10-Inch	SY	166.000	166.000
0038	415.1100	Concrete Pavement HES 10-Inch	SY	166.000	166.000
0040	415.1110	Concrete Pavement HES 11-Inch	SY	405.000	405.000
0042	415.1410	Concrete Pavement Approach Slab HES	SY	437.000	437.000
0044	416.0610	Drilled Tie Bars	EACH	52.000	52.000
0046	416.0620	Drilled Dowel Bars	EACH	318.000	318.000
0048	420.1000	Continuous Diamond Grinding Concrete Pavement	SY	3,700.000	3,700.000
0050	455.0605	Tack Coat	GAL	213.000	213.000
0052	465.0105	Asphaltic Surface	TON	326.000	326.000
0054	465.0125	Asphaltic Surface Temporary	TON	36.000	36.000
0056	465.0510	Asphaltic Rumble Strips, Shoulder Divided Roadway	LF	11,875.000	11,875.000
0058	502.3101	Expansion Device	LF	340.000	340.000
0060	502.3200	Protective Surface Treatment	SY	836.000	836.000
0062	502.3210	Pigmented Surface Sealer	SY	112.000	112.000
0064	505.0600	Bar Steel Reinforcement HS Coated Structures	LB	72,980.000	72,980.000
0066	505.0905	Bar Couplers No. 5	EACH	84.000	84.000
0068	505.0908	Bar Couplers No. 8	EACH	64.000	64.000
0070	517.1010.S	Concrete Staining (structure) 01. B-70-265	SF	676.000	676.000
0072	517.1010.S	Concrete Staining (structure) 02. B-70-266	SF	204.000	204.000
0074	517.1050.S	Architectural Surface Treatment (structure) 01. B-70-265	SF	296.000	296.000
0076	517.1050.S	Architectural Surface Treatment (structure) 02. B-70-266	SF	74.000	74.000
0078	550.1100	Piling Steel HP 10-Inch X 42 Lb	LF	2,400.000	2,400.000
0080	601.0105	Concrete Curb Type A	LF	8.000	8.000
0082	601.0586	Concrete Curb & Gutter 4-Inch Sloped 30-Inch Type TBTT	LF	31.000	31.000
0084	603.1156	Concrete Barrier Type S56	LF	2.000	2.000
0086	603.8000	Concrete Barrier Temporary Precast Delivered	LF	6,198.000	6,198.000
0088	603.8125	Concrete Barrier Temporary Precast Installed	LF	6,198.000	6,198.000
0090	611.8115	Adjusting Inlet Covers	EACH	2.000	2.000
0092	613.1200.S	Cable Barrier End Terminal Type 1	EACH	1.000	1.000
0094	614.0150	Anchor Assemblies for Steel Plate Beam Guard	EACH	2.000	2.000
0096	614.0200	Steel Thrie Beam Structure Approach	LF	41.000	41.000
0098	614.0305	Steel Plate Beam Guard Class A	LF	25.000	25.000
0100	618.0100	Maintenance and Repair of Haul Roads (project) 01. 1120-63-71	EACH	1.000	1.000

Estimate Of Quantities

1120-63-71

Line	Item	Item Description	Unit	Total	Qty
0102	619.1000	Mobilization	EACH	1.000	1.000
0104	628.1504	Silt Fence	LF	765.000	765.000
0106	628.1520	Silt Fence Maintenance	LF	765.000	765.000
0108	628.1905	Mobilizations Erosion Control	EACH	2.000	2.000
0110	628.1910	Mobilizations Emergency Erosion Control	EACH	2.000	2.000
0112	628.7010	Inlet Protection Type B	EACH	2.000	2.000
0114	628.7020	Inlet Protection Type D	EACH	7.000	7.000
0116	637.1220	Signs Type I Reflective SH	SF	1,299.000	1,299.000
0118	638.2601	Removing Signs Type I	EACH	2.000	2.000
0120	642.5201	Field Office Type C	EACH	1.000	1.000
0122	643.0300	Traffic Control Drums	DAY	33,189.000	33,189.000
0124	643.0420	Traffic Control Barricades Type III	DAY	3,793.000	3,793.000
0126	643.0705	Traffic Control Warning Lights Type A	DAY	3,982.000	3,982.000
0128	643.0715	Traffic Control Warning Lights Type C	DAY	8,433.000	8,433.000
0130	643.0900	Traffic Control Signs	DAY	23,424.000	23,424.000
0132	643.0910	Traffic Control Covering Signs Type I	EACH	5.000	5.000
0134	643.0920	Traffic Control Covering Signs Type II	EACH	16.000	16.000
0136	643.1050	Traffic Control Signs PCMS	DAY	28.000	28.000
0138	643.1205.S	Basic Traffic Queue Warning System	DAY	280.000	280.000
0140	643.3165	Temporary Marking Line Paint 6-Inch	LF	55,259.000	55,259.000
0142	643.3180	Temporary Marking Line Removable Tape 6-Inch	LF	16,665.000	16,665.000
0144	643.3265	Temporary Marking Line Paint 10-Inch	LF	4,320.000	4,320.000
0146	643.3280	Temporary Marking Line Removable Tape 10-Inch	LF	835.000	835.000
0148	643.5000	Traffic Control	EACH	1.000	1.000
0150	646.1020	Marking Line Epoxy 4-Inch	LF	17,064.000	17,064.000
0152	646.1555	Marking Line Grooved Contrast Permanent Tape 4-Inch	LF	4,410.000	4,410.000
0154	646.3555	Marking Line Grooved Contrast Permanent Tape 8-Inch	LF	4,990.000	4,990.000
0156	646.9000	Marking Removal Line 4-Inch	LF	17,435.000	17,435.000
0158	646.9010	Marking Removal Line Water Blasting 4-Inch	LF	4,785.000	4,785.000
0160	646.9100	Marking Removal Line 8-Inch	LF	4,830.000	4,830.000
0162	646.9110	Marking Removal Line Water Blasting 8-Inch	LF	530.000	530.000
0164	650.6501	Construction Staking Structure Layout (structure) 01. B-70-0265	EACH	1.000	1.000
0166	650.6501	Construction Staking Structure Layout (structure) 02. B-70-0266	EACH	1.000	1.000
0168	650.7000	Construction Staking Concrete Pavement	LF	245.000	245.000
0170	650.8501	Construction Staking Electrical Installations (project) 01. 1120-63-71	EACH	1.000	1.000
0172	650.9911	Construction Staking Supplemental Control (project) 01. 1120-63-71	EACH	1.000	1.000
0174	652.0125	Conduit Rigid Metallic 2-Inch	LF	220.000	220.000
0176	652.0225	Conduit Rigid Nonmetallic Schedule 40 2-Inch	LF	60.000	60.000
0178	652.0235	Conduit Rigid Nonmetallic Schedule 40 3-Inch	LF	200.000	200.000
0180	654.0107	Concrete Bases Type 7	EACH	1.000	1.000
0182	690.0150	Sawing Asphalt	LF	260.000	260.000
0184	690.0250	Sawing Concrete	LF	1,460.000	1,460.000
0186	715.0502	Incentive Strength Concrete Structures	DOL	3,114.000	3,114.000
0188	740.0440	Incentive IRI Ride	DOL	960.000	960.000
0190	999.2000.S	Installing and Maintaining Bird Deterrent System (station) 01. Station 601+00'NOA'	EACH	1.000	1.000
0192	999.2000.S	Installing and Maintaining Bird Deterrent System (station) 02. Station 601+00'SOA'	EACH	1.000	1.000
0194	ASP.1T0A	On-the-Job Training Apprentice at $5.00/HR	HRS	2,000.000	2,000.000
0196	ASP.1T0G	On-the-Job Training Graduate at $5.00/HR	HRS	1,200.000	1,200.000
0198	SPV.0035	Special 01. HPC Masonry Structures	CY	519.000	519.000
0200	SPV.0045	Special 01. Connected Work Zone Notification System	DAY	238.000	238.000

Estimate Of Quantities

1120-63-71

Line	Item	Item Description	Unit	Total	Qty
0202	SPV.0060	Special 01. Pulling and Reconnecting Electrical Wiring	EACH	3.000	3.000
0204	SPV.0060	Special 02. Salvage and Reinstall Luminaire (IH 41 Mainline)	EACH	1.000	1.000
0206	SPV.0060	Special 03. Concrete Barrier Transition Type F56SF to S56	EACH	2.000	2.000
0208	SPV.0090	Special 01. Salvage and Reinstall High Tension Cable Barrier	LF	105.000	105.000
0210	SPV.0090	Special 02. Concrete Barrier Type S56 Special Short Run	LF	32.000	32.000
0212	SPV.0090	Special 03. Removing and Resetting Ornamental Protective Screening	LF	88.000	88.000
0214	SPV.0165	Special 01. Longitudinal Grooving Bridge Deck	SF	5,760.000	5,760.000
0216	SPV.0180	Special 01. Concrete Pavement HES 6-Inch	SY	26.000	26.000
0218	SPV.0180	Special 02. Removing Rumble Strips	SY	1,310.000	1,310.000

3

REMOVING CONCRETE PAVEMENT

CATEGORY	STAGE	STATION - STATION	LOCATION	204.0100 SY
0010	1	598+85'NOA' - 599+16'NOA'	LT/RT	110
		606+98'NOA' - 607+29'NOA'	RT	110
		623+94'NOA' - 624+09'NOA'	RT	40
		598+86'SOA' - 599+16'SOA'	LT/RT	110
		606+98'SOA' - 607+29'SOA'	LT	110
		623+93'SOA' - 624+08'SOA'	LT	40
			SUBTOTAL (STAGE 1)	520
	2	598+85'NOA' - 599+16'NOA'	LT & RT	110
		606+98'NOA' - 607+29'NOA'	LT & RT	110
		623+94'NOA' - 624+09'NOA'	LT & RT	45
		598+85'SOA' - 599+16'SOA'	LT & RT	90
		606+98'SOA' - 607+29'SOA'	LT & RT	125
		623+94'SOA' - 624+08'SOA'	LT & RT	45
			SUBTOTAL (STAGE 2)	525
			TOTAL	1,045

REMOVING CONCRETE BARRIER

CATEGORY	STAGE	STATION - STATION	LOCATION	204.0157 LF
0010	1	599+00'NOA' - 599+16'NOA'	LT	16
		606+98'NOA' - 607+14'NOA'	LT	16
			SUBTOTAL (STAGE 1)	32
	2	599+00'NOA' - 599+16'NOA'	RT	16
		606+98'NOA' - 607+14'NOA'	RT	16
			SUBTOTAL (STAGE 2)	32
			TOTAL	64

REMOVING GUARDRAIL

CATEGORY	STAGE	STATION - STATION	LOCATION	204.0165 LF
0010	2	598+85'SOA' - 599+18'SOA'	LT	33
		606+98'SOA' - 609+22'SOA'	LT	33
			TOTAL	66

REMOVING ASPHALTIC SURFACE

CATEGORY	STAGE	STATION - STATION	LOCATION	204.0110 SY
0010	2	599+00'NOA' - 599+08'NOA'	RT	12
		607+06'NOA' - 607+14'NOA'	RT	13
		598+86'SOA' - 599+17'SOA'	LT	34
		623+93'SOA' - 624+09'SOA'	LT	17
			TOTAL	76

PREPARE FOUNDATION FOR CONCRETE PAVEMENT

CATEGORY	PROJECT	211.0201 EACH
0010	1120-63-71	1

FINISHING ROADWAY

CATEGORY	PROJECT	213.0100 EACH
0010	1120-63-71	1

BASE AGGREGATE DENSE 3/4-INCH

CATEGORY	STATION - STATION	LOCATION	305.0110 TON	REMARKS
0010	359+33'ALE' - 360+62'ALE'	LT	33	CABLE BARRIER PLACEMENT

REMOVING ASPHALTIC SURFACE MILLING

CATEGORY	STAGE	STATION - STATION	LOCATION	204.0120 SY
0010	PRE STAGE 1	586+90'NOA' - 598+70'NOA'	RT, RUMBLE STRIP	260
		607+43'NOA' - 618+07'NOA'	RT, RUMBLE STRIP	235
		620+57'NOA' - 628+96'NOA'	RT, RUMBLE STRIP	185
		593+40'SOA' - 598+86'SOA'	LT, RUMBLE STRIP	120
		607+29'SOA' - 618+07'SOA'	LT, RUMBLE STRIP	240
		620+73'SOA' - 623+50'SOA'	LT, RUMBLE STRIP	60
		635+19'SOA' - 645+25'SOA'	LT, RUMBLE STRIP	225
			TOTAL	1,325

SHAPING SHOULDERS

CATEGORY	STAGE	STATION - STATION	LOCATION	305.0500 STA
0010	2	598+86'SOA' - 599+16'SOA'	LT	1
		606+98'SOA' - 607+29'SOA'	LT	1
		623+93'SOA' - 624+08'SOA'	LT	1
			TOTAL	3

3

ASPHALTIC BASE

CATEGORY	STAGE	STATION - STATION	LOCATION	315.0100 TON
0010	1/2	598+85'NOA' - 607+29'NOA'	UNDISTRIBUTED	40

CONTINUOUS DIAMOND GRINDING CONCRETE PAVEMENT

CATEGORY	STATION - STATION	420.1000 SY
0010	621+94'NOA' - 625+10'NOA'	1,850
	622+93'SOA' - 626+09'SOA'	1,850
	TOTALS	3,700

3

CONCRETE PAVEMENT SUMMARY

				CONCRETE BASE	CONCRETE PAVEMENT					
CATEGORY	STAGE	STATION - STATION	LOCATION	320.0365 HES 10-INCH SY	415.1100 HES 10-INCH SY	415.1110 HES 11-INCH SY	SPV.0180.01 HES 6-INCH SY	416.0610 DRILLED TIE BARS EACH	416.0620 DRILLED DOWEL BARS EACH *	REMARKS
0010	1	598+85'NOA' - 599+00'NOA'	LT & RT	---	---	40	---	7	16	
		607+14'NOA' - 607+29'NOA'	LT & RT	---	---	46	---	7	16	
		623+94'NOA' - 624+09'NOA'	LT & RT	---	40	---	---	5	32	
		623+94'NOA' - 624+09'NOA'	LT & RT	40	---	---	---	---	---	SUB SLAB
		598+85'SOA' - 599+01'SOA'	LT & RT	---	---	41	---	7	16	
		607+14'SOA' - 607+29'SOA'	LT & RT	---	---	40	---	7	16	
		623+93'SOA' - 624+08'SOA'	LT & RT	---	40	---	---	5	32	
		623+93'SOA' - 624+08'SOA'	LT & RT	40	---	---	---	---	---	SUB SLAB
		SUBTOTALS (STAGE 1)		80	80	167	0	38	128	
	2	598+85'NOA' - 599+00'NOA'	RT	---	---	43	---	7	16	
		599+00'NOA' - 599+16'NOA'	RT	---	---	18	---	---	9	
		599+07'NOA' - 599+16'NOA'	RT	---	---	---	14	---	---	
		606+98'NOA' - 607+06'NOA'	RT	---	---	---	12	---	---	
		606+98'NOA' - 607+14'NOA'	RT	---	---	18	---	---	9	
		607+14'NOA' - 607+29'NOA'	RT	---	---	44	---	7	16	
		623+94'NOA' - 624+09'NOA'	RT	---	43	---	---	---	32	
		623+94'NOA' - 624+09'NOA'	RT	43	---	---	---	---	---	SUB SLAB
		598+86'SOA' - 599+00'SOA'	LT	---	---	44	---	---	16	
		606+98'SOA' - 607+14'SOA'	LT	---	---	14	---	---		
		607+14'SOA' - 607+29'SOA'	LT	---	---	57	---	---	16	
		623+93'SOA' - 624+08'SOA'	LT	---	43	---	---	---	32	
		623+93'SOA' - 624+08'SOA'	LT	43	---	---	---	---	---	SUB SLAB
		SUBTOTALS (STAGE 2)		86	86	238	26	14	146	
		TOTALS		166	166	405	26	52	274	

* ADDITIONAL QUANTITIES LISTED ELSEWHERE

3

CONCRETE PAVEMENT APPROACH SLAB HES

CATEGORY	STAGE	STATION - STATION	LOCATION	415.1410 SY	416.0620 DRILLED DOWEL BARS EACH *	REMARKS
0010	1	599+00'NOA' - 599+16'NOA'	LT & RT	65	11	DOWELS W/ EXPANSION JOINT
		606+98'NOA' - 607+14'NOA'	LT & RT	64	11	DOWELS W/ EXPANSION JOINT
		599+01'SOA' - 599+16'SOA'	LT & RT	62	11	DOWELS W/ EXPANSION JOINT
		606+98'SOA' - 607+14'SOA'	LT & RT	63	11	DOWELS W/ EXPANSION JOINT
		SUBTOTALS (STAGE 2)		254	44	
	2	599+00'NOA' - 599+16'NOA'	RT	47	---	
		606+98'NOA' - 607+14'NOA'	RT	46	---	
		599+00'SOA' - 599+16'SOA'	LT	45	---	
		606+98'SOA' - 607+14'SOA'	LT	45	---	
		SUBTOTALS (STAGE 1)		183	0	
		TOTALS		437	44	

* ADDITIONAL QUANTITIES LISTED ELSEWHERE

ASPHALTIC RUMBLE STRIPS, SHOULDER DIVIDED ROADWAY

CATEGORY	STAGE	STATION - STATION	LOCATION	465.0510 LF
0010	2	586+90'NOA' - 598+70'NOA'	RT	1,180
		607+43'NOA' - 618+07'NOA'	RT	1,065
		620+57'NOA' - 628+96'NOA'	RT	840
		593+40'SOA' - 598+86'SOA'	LT	545
		607+29'SOA' - 618+07'SOA'	LT	1,080
		620+73'SOA' - 623+50'SOA'	LT	275
		635+19'SOA' - 645+25'SOA'	LT	1,005
		SUBTOTAL (STAGE 2)		5,990
	3	587+10'NOA' - 598+70'NOA'	LT	1,160
		607+43'NOA' - 617+77'NOA'	LT	1,035
		620+87'NOA' - 629+70'NOA'	LT	885
		594+15'SOA' - 598+71'SOA'	RT	455
		607+43'SOA' - 617+77'SOA'	RT	1,035
		620+87'SOA' - 634+04'SOA'	RT	1,315
		SUBTOTAL (STAGE 3)		5,885
			TOTAL	11,875

ASPHALTIC ITEMS

CATEGORY	STAGE	STATION - STATION	LOCATION	455.0605 TACK COAT GAL	465.0105 ASPHALTIC SURFACE TON
0010	PS 1	586+90'NOA' - 598+70'NOA'	RT	21	29
		607+43'NOA' - 618+07'NOA'	RT	19	26
		620+57'NOA' - 628+96'NOA'	RT	15	21
		593+40'SOA' - 598+86'SOA'	LT	10	14
		607+29'SOA' - 618+07'SOA'	LT	20	27
		620+73'SOA' - 623+50'SOA'	LT	5	7
		635+19'SOA' - 645+25'SOA'	LT	18	25
		SUBTOTAL (PRE-STAGE 1)		108	149
	1	587+10'NOA' - 598+70'NOA'	LT	20	29
		598+85'NOA' - 599+38'NOA'	RT	2	7
		606+76'NOA' - 607+29'NOA'	RT	2	7
		607+43'NOA' - 617+77'NOA'	LT	17	26
		620+87'NOA' - 629+70'NOA'	LT	15	22
		594+15'SOA' - 598+71'SOA'	RT	8	11
		607+43'SOA' - 617+77'SOA'	RT	17	26
		620+87'SOA' - 634+04'SOA'	RT	22	33
		SUBTOTAL (STAGE 1)		103	160
	2	599+00'NOA' - 599+08'NOA'	RT	---	1
		607+06'NOA' - 607+14'NOA'	RT	---	1
		598+86'SOA' - 599+17'SOA'	LT	2	10
		623+93'SOA' - 624+09'SOA'	LT	1	5
		SUBTOTAL (STAGE 2)		3	18
			TOTALS	213	326

CONCRETE CURB AND GUTTER SUMMARY

CATEGORY	STAGE	STATION - STATION	LOCATION	601.0105 CONCRETE CURB TYPE A LF	601.0586 CONCRETE CURB & GUTTER 4-INCH SLOPED 30-INCH TYPE TBTT LF
0010	2	599+07'NOA' - 599+12'SOA'	RT	4	---
		606+98'SOA' - 607+29'SOA'	LT	---	31
		607+02'NOA' - 607+07'SOA'	RT	4	---
		TOTALS		8	31

CONCRETE BARRIER SUMMARY

CATEGORY	STAGE	STATION - STATION	LOCATION	603.1156 TYPE S56 LF	SPV.0090.02 TYPE S56 SPECIAL SHORT RUN LF
0010	1	599+00'NOA' - 599+37'NOA'	LT	---	16
		606+76'NOA' - 607+14'NOA'	LT	---	16
		SUBTOTALS (STAGE 1)		0	32
	2	599+00'NOA' - 599+16'NOA'	RT	1	---
		606+98'NOA' - 607+14'NOA'	RT	1	---
		SUBTOTALS (STAGE 2)		2	0
		TOTALS		2	32

3

CABLE BARRIER ITEMS

CATEGORY	STATION	-	STATION	LOCATION	204.0195 REMOVING CONCRETE BASES EACH *	204.9060.S.01 REMOVING CABLE BARRIER TERMINAL EACH	613.1200.S CABLE BARRIER END TERMINAL TYPE 1 EACH	SPV.0090.01 SALVAGE AND REINSTALL HIGH TENSION CABLE BARRIER LF
0010	359+32.89'ALE'	-	360+36.73'ALE'	LT	10	---	---	105
	360+36.73'ALE'	-	360+62.03'ALE'	LT	---	1	1	---
				TOTAL	10	1	1	105

* ADDITIONAL QUANTITIES LISTED ELSEWHERE

CONCRETE BARRIER TEMPORARY PRECAST

CATEGORY	STAGE	STATION	-	STATION	LOCATION	603.8000 DELIVERED LF	603.8125 INSTALLED LF
0010	1	595'NOA'+47	-	607'NOA'+96	RT	1,243.0	1,243.0
		621'NOA'+02	-	624'NOA'+59	RT	362.5	362.5
		598'SOA'+23	-	610'SOA'+37	LT	1,218.0	1,218.0
		623'SOA'+37	-	626'SOA'+17	LT	275.0	275.0
				SUBTOTALS (STAGE 1)		3098.5	3098.5
	2	595'NOA'+47	-	607'NOA'+96	RT	1,244.0	1,244.0
		621'NOA'+02	-	624'NOA'+59	RT	362.5	362.5
		598'SOA'+23	-	610'SOA'+37	LT	1,218.0	1,218.0
		623'SOA'+37	-	626'SOA'+17	LT	275.0	275.0
				SUBTOTALS (STAGE 2)		3099.5	3099.5
				TOTALS		6,198.0	6,198.0

BEAM GUARD SUMMARY

CATEGORY	STAGE	STATION	-	STATION	LOCATION	614.0200 STEEL THRIE BEAM STRUCTURE APPROACH LF	614.0305 STEEL PLATE BEAM GUARD CLASS A LF
0010	2	598+84.6'SOA'	-	599+09.6'SOA'	LT	---	25
		599+09.6'SOA'	-	599+17.75'SOA'	LT	8	---
		606+97.9'SOA'	-	607+09.80'SOA'	LT	33	---
					TOTALS	41	25

ADJUSTING INLET COVERS

CATEGORY	STATION	LOCATION	611.8115 EACH
0010	599+35'NOA'	64' RT	1
	606+98'NOA'	64' RT	1
		TOTAL	2

MAINTENANCE AND REPAIR OF HAUL ROADS

CATEGORY	PROJECT	618.0100 EACH
0010	1120-63-71	1

MOBILIZATION

CATEGORY	PROJECT	619.1000 EACH
0010	1120-63-71	1

3

SILT FENCE

CATEGORY	STATION	-	STATION	LOCATION	628.1504 SILT FENCE LF	628.1520 SILT FENCE MAINTENANCE LF
0010	597+62'NOA'	-	599+41'NOA'	RT	190	190
	606+74'NOA'	-	607+74'NOA'	RT	120	120
	598+36'SOA'	-	599+40'SOA'	LT	130	130
	606+74'SOA'	-	608+05'SOA'	LT	150	150
	359+30'ALE	-	360+65 'ALE'	LT	175	175
				TOTALS	765	765

INLET PROTECTION

CATEGORY	STATION	LOCATION	628.7010 TYPE B EACH	628.7020 TYPE D EACH
0010	598+82'NOA'	RT	---	1
	598+88'NOA'	RT	---	1
	599+11'NOA'	RT	1	---
	606+98'NOA'	RT	1	---
	607+20'NOA'	RT	---	1
	607+29'NOA'	LT	---	1
	607+35'NOA'	RT	---	1
	598+87'SOA'	RT	---	1
	607+29'SOA'	RT	---	1
		TOTAL	2	7

3

MOBILIZATIONS EROSION CONTROL

CATEGORY	STAGE	628.1905 MOBILIZATIONS EROSION CONTROL EACH	628.1910 MOBILIZATIONS EMERGENCY EROSION CONTROL EACH
0010	1	1	1
	2	1	1
	TOTALS	2	2

FIELD OFFICE TYPE C

CATEGORY	PROJECT	642.5201 EACH
0010	1120-63-71	1

ERECTION & REMOVAL OF PERMANENT SIGNING, TYPE I

CATEGORY	SIGN NO.	LOCATION	SIGN CODE	W X H	637.1220 SIGNS TYPE I REFLECTIVE TYPE SH S.F.	638.2601 REMOVING SIGNS TYPE I EACH	REMARKS
0010	1	IH 41 NB	E1-5P	108" X 30"	22.5	---	MOUNT ABOVE SIGN 2
	2	IH 41 NB	E7-3	528" X 180"	660.0	1	S-70-0063
	3	IH 41 NB	E1-5P	108" X 30"	22.5	---	MOUNT ABOVE SIGN 4
	4	IH 41 NB	E7-3	528" X 162"	594.0	1	S-70-0065
				TOTALS	1299.0	2	

TRAFFIC CONTROL

CATEGORY	PROJECT	643.5000 EACH
0010	1120-63-71	1

3

TRAFFIC CONTROL SUMMARY

CATEGORY	STAGE	DURATION DAYS	LOCATION	643.0300 DRUMS EACH	643.0300 DRUMS DAY	643.0420 BARRICADES TYPE III EACH	643.0420 BARRICADES TYPE III DAY	643.0705 WARNING LIGHTS TYPE A EACH	643.0705 WARNING LIGHTS TYPE A DAY	643.0715 WARNING LIGHTS TYPE C EACH	643.0715 WARNING LIGHTS TYPE C DAY	643.0900 SIGNS EACH	643.0900 SIGNS DAY	643.0910 COVERING SIGNS TYPE I EACH	643.0910 COVERING SIGNS TYPE I CYCLES	643.0910 COVERING SIGNS TYPE I EACH	643.0920 COVERING SIGNS TYPE II EACH	643.0920 COVERING SIGNS TYPE II CYCLES	643.0920 COVERING SIGNS TYPE II EACH	643.1050 SIGNS PCMS EACH	643.1050 SIGNS PCMS DAY	SPV.0045.01 CONNECTED WORK ZONE NOTIFICATION SYSTEM EACH	SPV.0045.01 CONNECTED WORK ZONE NOTIFICATION SYSTEM DAY
0010	ALL	121	HERITAGE TRAIL	0	0	4	484	0	0	0	0	2	242	0	0	0	0	0	0	0	0	0	0
	ALL	121	DETOUR	0	0	6	726	0	0	0	0	97	11,737	5	1	5	12	1	12	2	14	0	0
	PRE-WARN	7	IH 41	10	70	0	0	0	0	0	0	0	0	0	0	0	0	0	0	2	14	0	0
	PRE-1	2	IH 41	169	338	9	18	18	36	27	54	25	50	0	0	0	2	1	2	0	0	1	2
	1	54	IH 41	280	15,120	25	1,350	39	2,106	82	4,428	125	6,750	0	0	0	1	1	1	0	0	2	108
	2	59	IH 41	284	16,756	20	1,180	30	1,770	64	3,776	75	4,425	0	0	0	1	1	1	0	0	2	118
	3	5	IH 41	181	905	7	35	14	70	35	175	44	220	0	0	0	0	0	0	0	0	2	10
			TOTALS		33,189		3,793		3,982		8,433		23,424			5			16		28		238

BASIC TRAFFIC QUEUE WARNING SYSTEM (QWS ITEM 643.1205.S)

CATEGORY	LOCATION	STAGE	FLASHING BEACON SIGNS (FBS)	PORTABLE TRAFFIC SENSORS (PTS)	643.1205.S DAY
0010	IH 41 NB	PRE-STAGE	6	3	2
	IH 41 NB	1	6	3	65
	IH 41 NB	2	6	3	68
	IH 41 NB	3	6	3	5
		SUBTOTAL (NB)	6	3	140
	IH 41 SB	PRE-STAGE	6	3	2
	IH 41 SB	1	6	3	65
	IH 41 SB	2	6	3	68
	IH 41 SB	3	6	3	5
		SUBTOTAL (SB)	6	3	140
		TOTAL	12	6	280

* THESE ITEMS ARE PART OF THE QWS AND ARE PAID FOR ONE COMPLETE SYSTEM PER ROADWAY

3

TEMPORARY MARKING LINE

CATEGORY	STAGE	STATION - STATION	LOCATION	643.3165 PAINT 6-INCH (WHITE) LF	643.3165 PAINT 6-INCH (YELLOW) LF	643.3165 PAINT 6-INCH (WHITE) (3'SEG, 9'GAP) LF	643.3165 PAINT 6-INCH (WHITE) (12.5'SEG, 37.5'GAP) LF	643.3265 PAINT 10-INCH (WHITE) LF	643.3265 PAINT 10-INCH (WHITE) (3'SEG, 9'GAP) LF	643.3180 REMOVABLE TAPE 6-INCH (WHITE) LF	643.3180 REMOVABLE TAPE 6-INCH (YELLOW) LF	643.3180 REMOVABLE TAPE 6-INCH (WHITE) (3'SEG, 9'GAP) LF	643.3280 REMOVABLE TAPE 10-INCH (WHITE) LF
0010	1	549+40'NOA' - 556+00'NOA'	LT	---	---	---	---	---	---	---	660	---	---
		576+00'NOA' - 637+97'NOA'	LT/RT	7,330	3,620	---	---	---	---	4,150	1,870	60	---
		593+40'SOA' - 646+21'SOA'	LT	8,470	4,240	---	---	---	---	1,970	1,020	---	---
		653+85'SOA' - 660+45'SOA'	RT	---	---	---	---	---	---	---	655	---	---
		SUBTOTALS (STAGE 1)		15,800	7,860	0	0	0	0	6,120	4,205	60	0
	EAA	548+90'NOA' - 556+00'NOA'	LT/RT	---	---	---	180	---	---	---	---	---	---
		575+94'NOA' - 637+97'NOA'	LT/RT	4,230	---	---	1,010	1,090	630	---	---	---	---
		593+40'SOA' - 645+53'SOA'	LT	4,560	---	---	275	1,520	755	---	---	---	---
		356+21'ALE' - 359+45'ALE'	LT/RT	64	---	---	---	325	---	---	---	---	---
		653+85'SOA' - 660+92'SOA'	LT/RT	---	---	---	175	---	---	---	---	---	---
		SUBTOTALS (STAGE EAA)		8,854	0	0	1,640	2,935	1,385	0	0	0	0
	2	549+00'NOA' - 556+00'NOA'	RT	---	---	---	---	---	---	700	---	---	---
		567+91'OMC' - 574+12'NOA'	LT/RT	---	---	75	---	---	---	---	---	---	100
		578+99'NOA' - 580+99'NOA'	RT	---	---	---	---	---	---	300	---	---	---
		586+56'NOA' - 635+19'NOA'	LT/RT	7,090	3,550	90	---	---	---	1,680	690	---	400
		567+91'OMC' - 572+19'OMC'	LT/RT	---	---	---	---	---	---	430	---	---	335
		593+71'SOA' - 634+49'SOA'	LT/RT	6,870	3,430	---	---	---	---	1,270	550	---	---
		650+25'SOA' - 656+85'SOA'	LT	---	---	---	---	---	---	660	---	---	---
		SUBTOTALS (STAGE 2)		13,960	6,980	165	0	0	0	5,040	1,240	0	835
		TOTALS				55,259		4,320		16,665			835

MARKING LINE

CATEGORY	STATION - STATION	LOCATION	646.1020 EPOXY 4-INCH (WHITE) LF	646.1020 EPOXY 4-INCH (YELLOW) LF	646.1555 GROOVED CONTRAST PERMANENT TAPE 4-INCH (WHITE) (12.5'SEG, 37.5'GAP) LF	646.3555 GROOVED CONTRAST PERMANENT TAPE 8-INCH (WHITE) LF	646.3555 GROOVED CONTRAST PERMANENT TAPE 8-INCH (WHITE) (3'SEG, 9'GAP) LF
0010	548+90'NOA' - 556+00'NOA'	IH 41 NB	---	---	355	---	---
	569+86'NOA' - 637+97'NOA'	IH 41 NB	4,230	4,230	2,370	1,580	630
	593+40'SOA' - 645+53'SOA'	IH 41 SB	4,560	3,980	1,330	1,520	755
	650+25'SOA' - 660+92'SOA'	IH 41 SB	---	---	355	---	---
	568+49'OMC' - 570+30'OMC'	OMC RAMP	---	---	---	180	---
	356+21'ALE' - 359+45'ALE'	ALE RAMP	64	---	---	325	---
	SUBTOTALS		8,854	8,210	4,410	3,605	1,385
	TOTALS		17,064		4,410	4,990	

3

3

MARKING REMOVAL LINE

CATEGORY	STAGE	STATION - STATION	LOCATION	646.9000 MARKING REMOVAL LINE 4-INCH LF	646.9010 MARKING REMOVAL LINE WATER BLASTING 4-INCH LF	646.9100 MARKING REMOVAL LINE 8-INCH LF	646.9110 MARKING REMOVAL LINE WATER BLASTING 8-INCH LF
0010	1	548+90'NOA' - 556+00'NOA'	IH 41 NB	175	---	---	---
		582+00'NOA' - 637+97'NOA'	IH 41 NB	3,915	1,000	1,450	250
		593+40'SOA' - 645+53'SOA'	IH 41 SB	3,905	1,000	2,345	250
		653+85'SOA' - 660+92'SOA'	IH 41 SB	175	---	---	---
		SUBTOTALS (STAGE 1)		8,170	2,000	3,795	500
	2	548+50'NOA' - 556+00'NOA'	IH 41 NB	190	---	---	---
		569+85'NOA' - 580+99'NOA'	IH 41 NB	190	55	165	---
		586+88'NOA' - 635+19'NOA'	IH 41 NB	4,135	1,250	460	---
		568+49'OMC' - 570+30'OMC'	OMC RAMP	---	---	180	---
		594+00'SOA' - 634+21'SOA'	IH 41 SB	3,740	1,250	---	---
		650+25'SOA' - 657+35'SOA'	IH 41 SB	180	---	---	---
		SUBTOTALS (STAGE 2)		8,435	2,555	805	0
		UNDISTRIBUTED		830	230	230	30
		TOTALS		17,435	4,785	4,830	530

CONSTRUCTION STAKING STRUCTURE LAYOUT

CATEGORY	STRUCTURE	EACH	REMARKS
0010	B-70-0265	1	650.6501.01
	B-70-0266	1	650.6501.02

CONSTRUCTION STAKING

CATEGORY	PROJECT	650.8501 ELECTRICAL INSTALLATIONS EACH	650.9911 SUPPLEMENTAL CONTROL EACH
0010	1120-63-71	1	1

CONSTRUCTION STAKING CONCRETE PAVEMENT

CATEGORY	STAGE	STATION - STATION	LOCATION	650.7000 LF
0010	1	598+85'NOA' - 599+00'NOA'	LT & RT	15
		607+14'NOA' - 607+29'NOA'	LT & RT	15
		623+94'NOA' - 624+09'NOA'	LT & RT	15
		598+85'SOA' - 599+01'SOA'	LT & RT	16
		607+14'SOA' - 607+29'SOA'	LT & RT	15
		623+93'SOA' - 624+08'SOA'	LT & RT	15
		SUBTOTALS (STAGE 1)		91
	2	598+85'NOA' - 599+00'NOA'	RT	15
		599+00'NOA' - 599+16'NOA'	RT	16
		599+07'NOA' - 599+16'NOA'	RT	9
		606+98'NOA' - 607+06'NOA'	RT	8
		606+98'NOA' - 607+14'NOA'	RT	16
		607+14'NOA' - 607+29'NOA'	RT	15
		623+94'NOA' - 624+09'NOA'	RT	15
		598+86'SOA' - 599+00'SOA'	LT	14
		606+98'SOA' - 607+14'SOA'	LT	16
		607+14'SOA' - 607+29'SOA'	LT	15
		623+93'SOA' - 624+08'SOA'	LT	15
		SUBTOTALS (STAGE 2)		154
			TOTALS	245

CONDUIT RIGID NONMETALLIC SCHEDULE 40

CATEGORY	LOCATION	FROM	TO	652.0225 2-INCH LF	652.0235 3-INCH LF
0010	L70-796	SPLICE	NEW LB	30	---
	(41 & 21)	NEW LB	SPLICE	30	---
	MAINLINE	SOUTH SIDE BRIDGE	SPLICE	---	50
		SOUTH SIDE BRIDGE	SPLICE	---	50
		NORTH SIDE BRIDGE	SPLICE	---	50
		NORTH SIDE BRIDGE	SPLICE	---	50
			TOTAL	60	200

LIGHTING SUMMARY

CATEGORY	LOCATION	204.0195 REMOVING CONCRETE BASES EACH *	654.0107 CONCRETE BASES TYPE 7 EACH	SPV.0060.01 PULLING AND RECONNECTING ELECTRICAL WIRING EACH	SPV.0060.02 SALVAGE AND REINSTALL LUMINAIRE (IH 41 MAINLINE) EACH
0010	L70-796 (41 & 21) MAINLINE	1	1	3	1

* ADDITIONAL QUANTITIES LISTED ELSEWHERE

3

SAWING SUMMARY

CATEGORY	STAGE	STATION - STATION	LOCATION	690.0150 ASPHALT LF	690.0250 CONCRETE LF
0010	1	598+85'NOA' - 599+37'NOA'	LT & RT	---	155
		606+77'NOA' - 607+29'NOA'	LT & RT	---	155
		623+94'NOA' - 624+09'NOA'	LT & RT	---	80
		598+85'SOA' - 599+37'SOA'	LT & RT	---	155
		606+77'SOA' - 607+29'SOA'	LT & RT	---	155
		623+93'SOA' - 624+08'SOA'	LT & RT	---	80
			SUB TOTALS (STAGE 1)	0	780
	2	598+85'NOA' - 599+37'NOA'	RT	15	130
		606+77'NOA' - 607+29'NOA'	RT	15	130
		623+94'NOA' - 624+09'NOA'	RT	---	80
		598+85'SOA' - 599+37'SOA'	LT	10	65
		606+77'SOA' - 607+29'SOA'	LT	---	75
		623+93'SOA' - 624+08'SOA'	LT	20	65
			SUB TOTALS (STAGE 2)	60	545
		UNDISTRIBUTED		200	135
			TOTALS	260	1,460

CONCRETE BARRIER TRANSITION

CATEGORY	STAGE	STATION - STATION	LOCATION	SPV.0060.03 TYPE F56SF TO S56 EACH
0010	2	599'NOA'+00 - 599'NOA'+16	RT	1
		606'NOA'+98 - 607'NOA'+13	RT	1
			TOTALS	2

REMOVING RUMBLE STRIPS

CATEGORY	STATION - STATION	LOCATION	SPV.0180.02 SY
0010	587+10'NOA' - 598+70'NOA'	LT	260
	607+43'NOA' - 617+77'NOA'	LT	230
	620+87'NOA' - 629+70'NOA'	LT	195
	594+15'SOA' - 598+71'SOA'	RT	100
	607+43'SOA' - 617+77'SOA'	RT	230
	620+87'SOA' - 634+04'SOA'	RT	295
		TOTAL	1,310

INSTALLING AND MAINTAINING BIRD DETERRENT SYSTEM

CATEGORY	STATION	999.2000.S.01 EACH	999.2000.S.02 EACH
0010	601+00'NOA'	1	---
	601+00'SOA'	---	1
	TOTALS	1	1

3

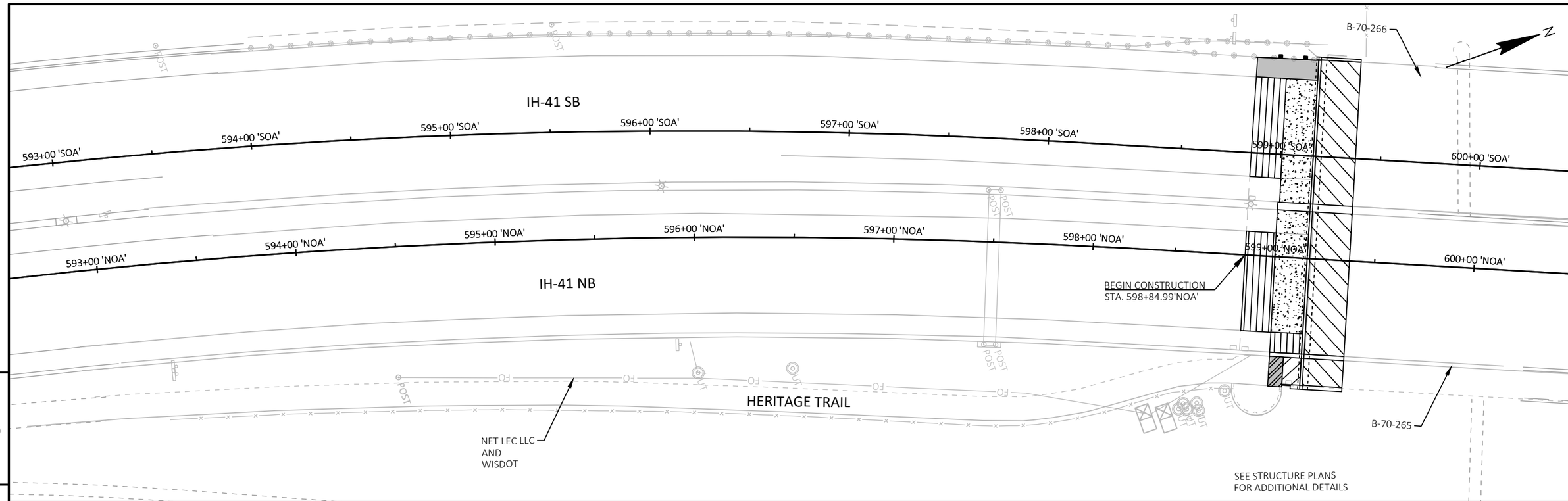

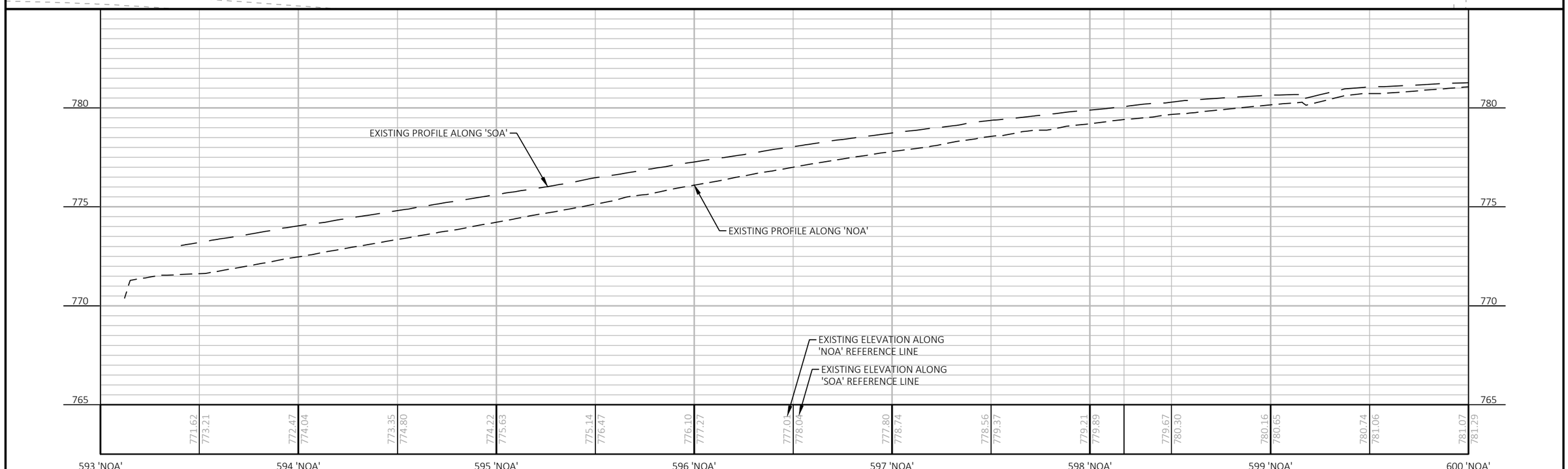

PROJECT NO: 1120-63-71	HWY: IH 41	COUNTY: WINNEBAGO	PLAN AND PROFILE: 'NOA' & 'SOA'	SHEET 103	E

FILE NAME : S:\MAD\2000--2099\2089\008\DRAWINGS\CAD\CIVIL 3D\SHEETS\050101-PP.DWG
LAYOUT NAME - 050101-pp
PLOT DATE : 7/20/2023 9:25 AM
PLOT BY : SCHMIDT, BRAD
PLOT NAME :
PLOT SCALE : 1 IN:50 FT
WISDOT/CADDS SHEET 44

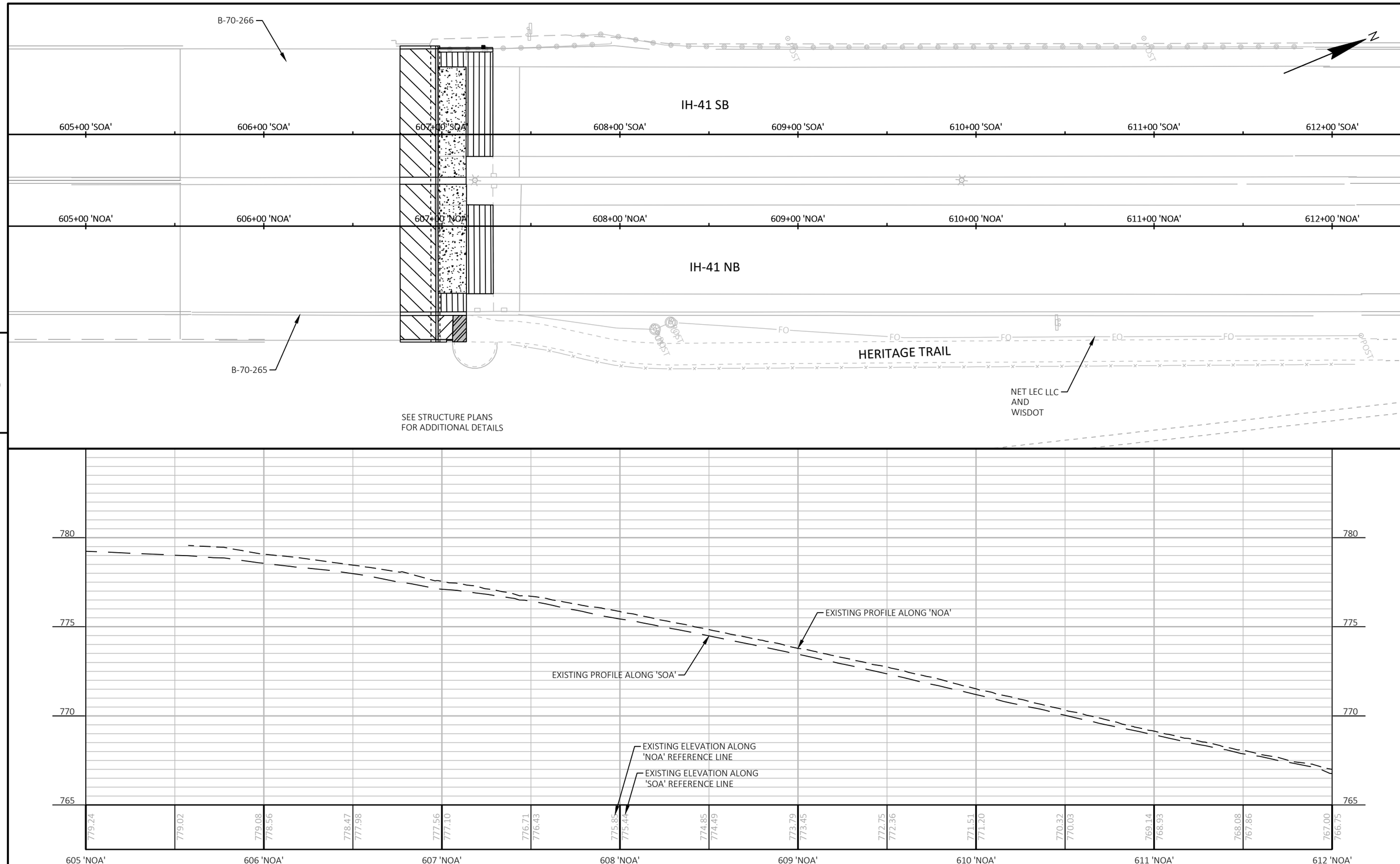

PROJECT NO: 1120-63-71	HWY: IH 41	COUNTY: WINNEBAGO	PLAN AND PROFILE: 'NOA' & 'SOA'	SHEET 104	E

FILE NAME : S:\MAD\2000--2099\2089\008\DRAWINGS\CAD\CIVIL 3D\SHEETS\050101-PP.DWG
LAYOUT NAME - 050102-pp
PLOT DATE : 7/20/2023 9:25 AM
PLOT BY : SCHMIDT, BRAD
PLOT NAME :
PLOT SCALE : 1 IN:50 FT

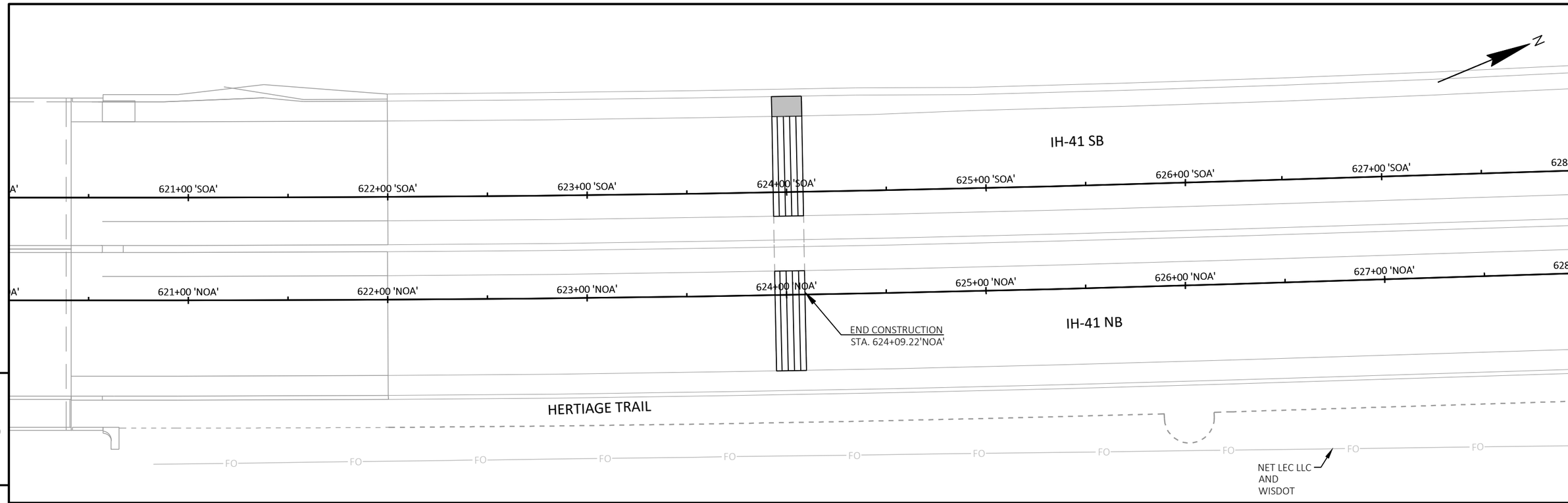

5

5

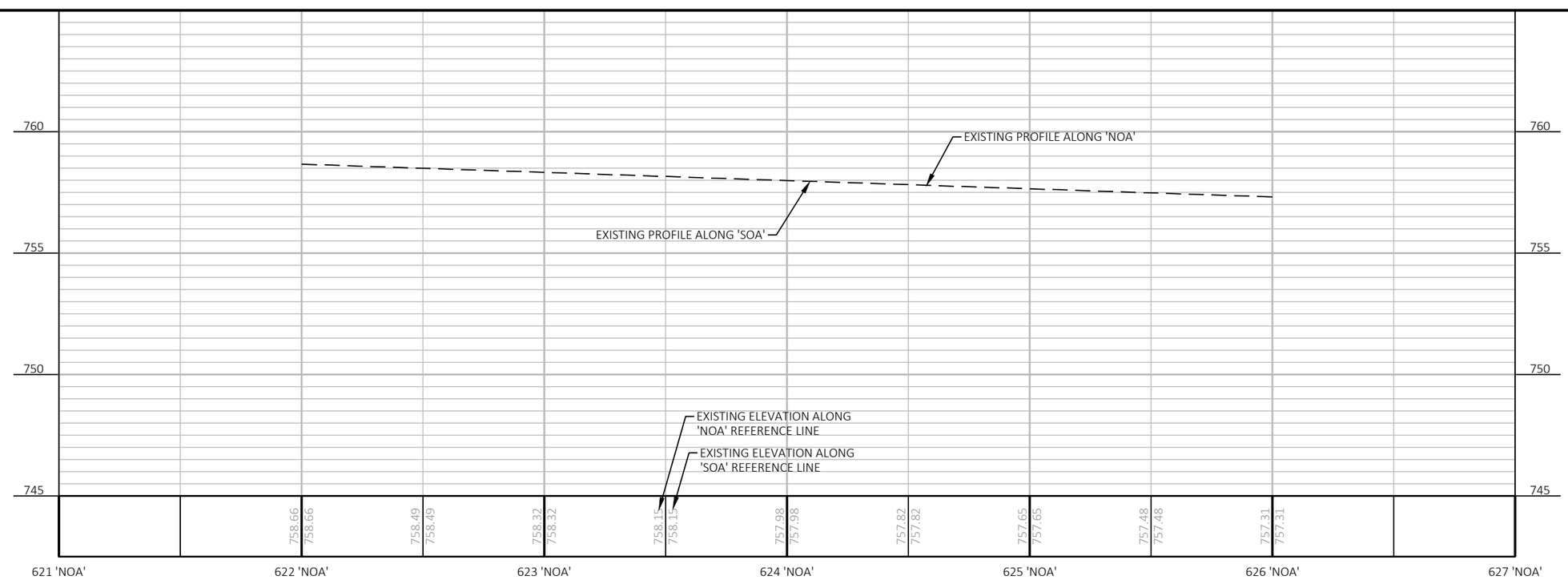

PROJECT NO: 1120-63-71	HWY: IH 41	COUNTY: WINNEBAGO	PLAN AND PROFILE: 'NOA' & 'SOA'	SHEET 105	E

Standard Detail Drawing List

08D01-23A	CONCRETE CURB & GUTTER
08D01-23B	CONCRETE CURB, TIES AND CURB AND GUTTER APPLICATIONS
08E09-06	SILT FENCE
08E10-02	INLET PROTECTION TYPE A, B, C AND D
09C08-06	CONCRETE BASE, TYPE 7
13A05-06A	SHOULDER RUMBLE STRIPS, DIVIDED ROADWAY
13A05-06B	SHOULDER RUMBLE STRIPS, DIVIDED ROADWAY
13B02-09A	CONCRETE PAVEMENT APPROACH SLAB
13B02-09B	STRUCTURAL APPROACH SLAB AND CONCRETE PAVEMENT APPROACH SLAB
13C01-19	CONCRETE PAVEMENT LONGITUDINAL JOINTS AND TIES
13C13-11	URBAN DOWELED CONCRETE PAVEMENT
13C15-08A	CONCRETE BASE
13C15-08B	CONCRETE BASE
13C18-08A	CONCRETE PAVEMENT JOINTING
13C18-08B	CONCRETE PAVEMENT STEEL REINFORCEMENT
13C18-08C	CONCRETE PAVEMENT JOINT TYPES
13C18-08D	CONCRETE PAVEMENT JOINTING AT UTILITY FIXTURES
13C18-08F	CONCRETE PAVEMENT INTERSECTION BOXOUT FOR INTEGRAL CURB AND GUTTER
13C18-08G	CONCRETE PAVEMENT JOINTING ACCELERATION/DECELERATION LANE
14B07-16A	CONCRETE BARRIER TEMPORARY PRECAST, 12'-6"
14B07-16B	CONCRETE BARRIER TEMPORARY PRECAST, 12'-6"
14B07-16C	CONCRETE BARRIER TEMPORARY PRECAST, 12'-6"
14B07-16D	CONCRETE BARRIER TEMPORARY PRECAST, 12'-6"
14B07-16E	CONCRETE BARRIER TEMPORARY PRECAST, 12'-6"
14B07-16F	CONCRETE BARRIER TEMPORARY PRECAST, 12'-6"
14B07-16G	CONCRETE BARRIER TEMPORARY PRECAST, 12'-6"
14B07-16H	CONCRETE BARRIER TEMPORARY PRECAST, 12'-6"
14B07-16I	CONCRETE BARRIER TEMPORARY PRECAST, 12'-6"
14B07-16J	CONCRETE BARRIER TEMPORARY PRECAST, 12'-6"
14B07-16K	CONCRETE BARRIER TEMPORARY PRECAST, 12'-6"
14B07-16L	CONCRETE BARRIER TEMPORARY PRECAST, 12'-6"
14B07-16M	CONCRETE BARRIER TEMPORARY PRECAST, 12'-6"
14B07-16N	CONCRETE BARRIER TEMPORARY PRECAST, 12'-6"
14B15-11A	STEEL PLATE BEAM GUARD, CLASS "A" INSTALLATION & ELEMENTS
14B15-11B	STEEL PLATE BEAM GUARD, CLASS "A" INSTALLATION & ELEMENTS
14B15-11C	STEEL PLATE BEAM GUARD, CLASS "A", INSTALLATION & ELEMENTS
14B20-12A	STEEL THRIE BEAM STRUCTURE APPROACH
14B20-12B	STEEL THRIE BEAM STRUCTURE APPROACH, CONNECTION TO SQUARE END PARAPETS
14B32-10A	CONCRETE BARRIER SINGLE SLOPE (CBSS)
14B32-10B	CONCRETE BARRIER SINGLE SLOPE (CBSS)
14B52-03A	CABLE BARRIER TYPE 1 LAYOUT
14B52-03B	CABLE BARRIER TYPE 1 LAYOUT
14B52-03C	CABLE BARRIER TYPE 1 LAYOUT
15C02-09A	BARRICADES AND SIGNS FOR MAINLINE CLOSURES
15C02-09B	BARRICADES AND SIGNS FOR VARIOUS CLOSURES
15C02-09C	DETOUR SIGNING FOR MAINLINE CLOSURES
15C02-09D	ON RAMP LANE CLOSURE
15C04-05	TRAFFIC CONTROL, ADVANCE WARNING SIGNS 45 M.P.H. OR GREATER TWO-WAY UNDIVIDED ROAD OPEN TO TRAFFIC
15C08-23A	PERMANENT LONGITUDINAL PAVEMENT MARKINGS
15C08-23B	TEMPORARY LONGITUDINAL PAVEMENT MARKING
15C11-10B	CHANNELIZING DEVICES DRUMS, CONES, BARRICADES AND VERTICAL PANELS
15C19-08C	MOVING PAVEMENT MARKING OPERATION MULTI-LANE DIVIDED ROADWAY
15C31-05A	PAVEMENT MARKING EXIT RAMP AND PARALLEL EXIT RAMP
15C31-05B	PAVEMENT MARKING MAJOR SPLIT FREEWAY TO FREEWAY
15C31-05C	PAVEMENT MARKING ENTRANCE RAMP AND PARALLEL ENTRANCE RAMP
15C31-05D	PAVEMENT MARKING LANE DROP AND LANE REDUCTION
15D15-07A	TRAFFIC CONTROL, PARALLEL ENTRANCE RAMP WITHIN LANE CLOSURE
15D15-07C	TRAFFIC CONTROL, TAPERED ENTRANCE RAMP WITHIN LANE CLOSURE
15D15-07D	TRAFFIC CONTROL, TAPERED ENTRANCE RAMP WITHIN LANE CLOSURE
15D40-05B	TRAFFIC CONTROL, FULL LANE SHIFT MULTILANE DIVIDED 50 MPH AND OVER
15D41-03	TRAFFIC CONTROL, MULTIPLE LANE SHIFT, MULTILANE DIVIDED ROAD

6

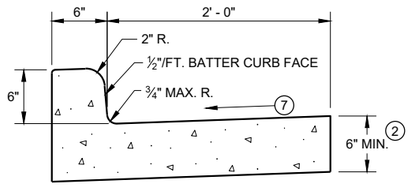

TYPES A(1) & D

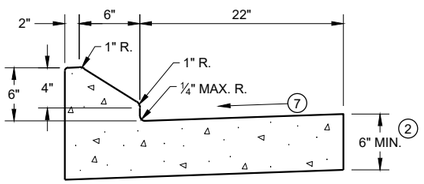

6" SLOPED CURB TYPES G(1) & J

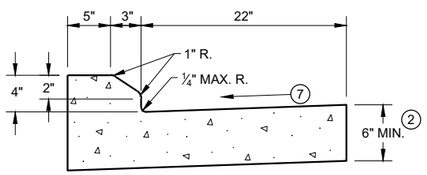

4" SLOPED CURB TYPES G(1) & J

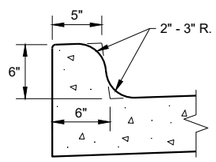

TYPES K(1) & L
(OPTIONAL CURB SHAPE)

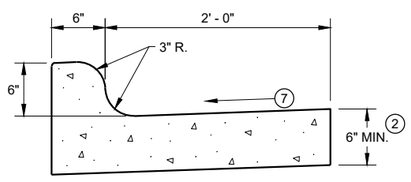

TYPES K(1) & L

CONCRETE CURB AND GUTTER 30"

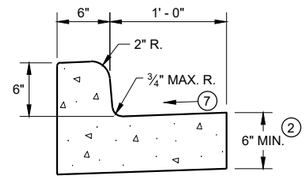

TYPES A(1) & D

CONCRETE CURB AND GUTTER 18"

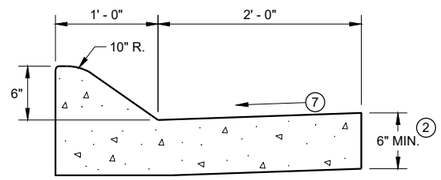

6" SLOPED CURB TYPES A(1) & D

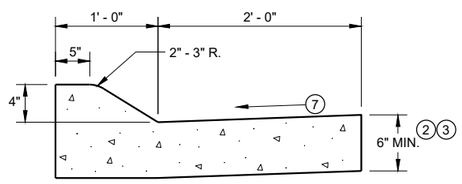

4" SLOPED CURB TYPES A(1) & D

CONCRETE CURB AND GUTTER 36"

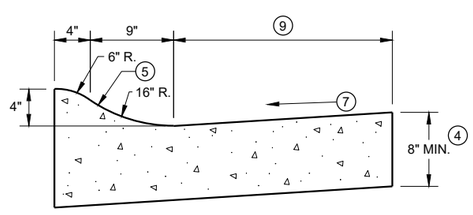

4" SLOPED CURB TYPES R(1) & T

TBT & TBTT	X
30"	22"
36"	28"

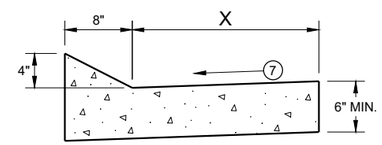

TYPES TBT & TBTT(1)

CONCRETE CURB AND GUTTER

PAVEMENT THICKNESS AND MAXIMUM CONCRETE PANEL WIDTH TABLE

PAVEMENT THICKNESS	MAXIMUM PANEL WIDTH
LESS THAN 10"	12'
10" & ABOVE	15'

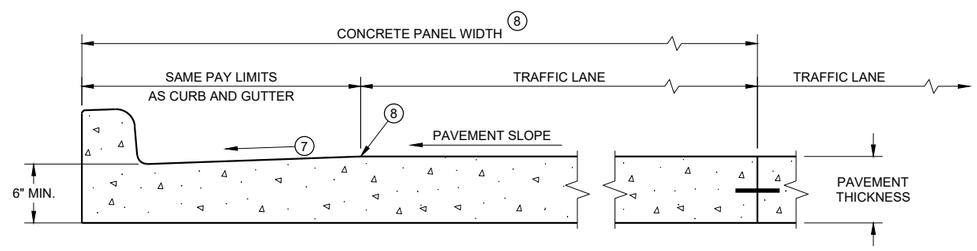

PARTIAL SECTION OF PAVEMENT* WITH INTEGRAL CURB AND GUTTER

* BIKE LANE IS NOT SHOWN

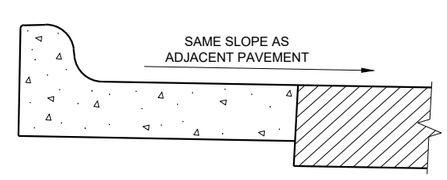

REVERSE SLOPE GUTTER(6)
(TYPICAL FOR ALL CURB & GUTTER TYPES)

GENERAL NOTES

DETAILS OF CONSTRUCTION AND WORKMANSHIP NOT SHOWN ON THIS DRAWING SHALL CONFORM TO THE PERTINENT REQUIREMENTS OF THE CONTRACT.

PAVEMENT TIES AND TIE BARS SHALL BE EPOXY COATED IN CONFORMANCE WITH SUBSECTION 505.2.6.2 OF THE STANDARD SPECIFICATIONS.

INTEGRAL CURB AND GUTTER SHALL CONFORM TO THE DETAILS SHOWN FOR CONCRETE CURB AND GUTTER INCLUDING THE TRANSVERSE GUTTER SLOPE.

UNLESS OTHERWISE SHOWN ON THE TYPICAL CROSS SECTIONS, THE BASE AGGREGATE AND COMMON EXCAVATION LIMITS ARE 2' - 0" BEHIND THE BACK OF CURBS.

1. TIE BARS ARE REQUIRED FOR CURB AND GUTTERS TYPES A, G, K, R, AND TBTT.
2. THE BOTTOM OF CURB AND GUTTER MAY BE CONSTRUCTED EITHER LEVEL OR PARALLEL TO THE SLOPE OF THE SUBGRADE OR BASE AGGREGATE PROVIDED A 6" MINIMUM GUTTER THICKNESS IS MAINTAINED.
3. USE 8" MINIMUM GUTTER THICKNESS WHEN USED WITH AN ADJACENT CONCRETE TRUCK APRON PLACED BEHIND BACK OF CURB.
4. THE BOTTOM OF CURB AND GUTTER MAY BE CONSTRUCTED EITHER LEVEL OR PARALLEL TO THE SLOPE OF THE SUBGRADE OR BASE AGGREGATE PROVIDED A 8" MINIMUM GUTTER THICKNESS IS MAINTAINED.
5. UNLESS OTHERWISE NOTED, FOR STAKING PURPOSES THE FACE OF CURB IS 6" FROM THE BACK OF CURB.
6. WHEN REVERSE SLOPE GUTTER IS REQUIRED, THE LOCATION(S) WILL BE SHOWN ELSEWHERE IN THE PLAN.
7. USE 4% GUTTER CROSS SLOPE UNLESS OTHERWISE NOTED IN THE PLANS.
8. INCLUDE LONGITUDINAL JOINT AND TIE BARS ALONG LANE EDGE WHEN CONCRETE PANEL WIDTH EXCEEDS THE MAXIMUM WIDTH PER TABLE BELOW. LONGITUDINAL JOINT(S) ARE NOT ALLOWED WITHIN TRAFFIC LANES AND BIKE LANES. LONGITUDINAL JOINT MAY BE SAWED.
9. CONCRETE CURB AND GUTTER 4-INCH SLOPED 30-INCH TYPE "R" AND "T" = 17 INCHES
   CONCRETE CURB AND GUTTER 4-INCH SLOPED 36-INCH TYPE "R" AND "T" = 23 INCHES

CONCRETE CURB AND GUTTER

STATE OF WISCONSIN
DEPARTMENT OF TRANSPORTAT

6

SDD 08D01 - 23a

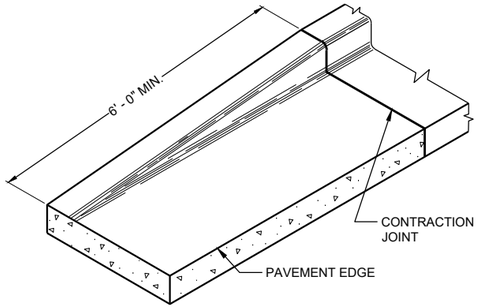

END SECTIONCURB AND GUTTER

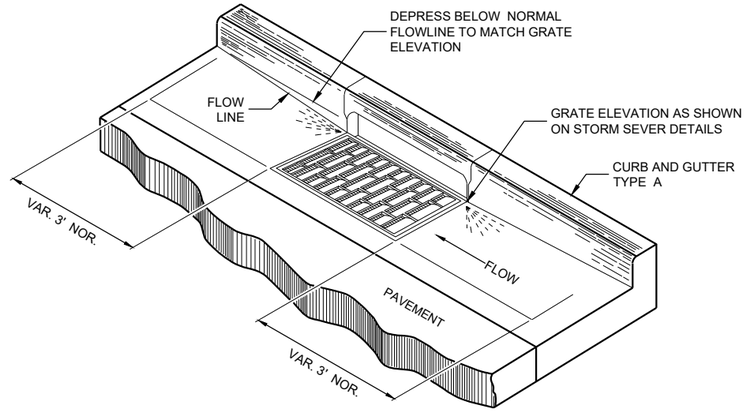

DETAIL OF CURB AND GUTTER AT INLETS

(TYPICAL H INLET COVER SHOWN)

GENERAL NOTES

DETAILS OF CONSTRUCTION AND WORKMANSHIP NOT SHOWN ON THIS DRAWING SHALL CONFORM TO THE PERTINENT REQUIREMENTS OF THE CONTRACT.

PAVEMENT TIES AND TIE BARS SHALL BE EPOXY COATED IN CONFORMANCE WITH SUBSECTION 505.2.6.2 OF THE STANDARD SPECIFICATIONS.

UNLESS OTHERWISE SHOWN ON THE TYPICAL CROSS SECTIONS, THE BASE AGGREGATE AND COMMON EXCAVATION LIMITS ARE 2' - 0" BEHIND THE BACK OF CURBS.

(1) TIE BARS ARE REQUIRED FOR CURB AND GUTTERS TYPES A, G, K, R, AND TBTT.

(2) THE BOTTOM OF CURB AND GUTTER MAY BE CONSTRUCTED EITHER LEVEL OR PARALLEL TO THE SLOPE OF THE SUBGRADE OR BASE AGGREGATE PROVIDED A 6" MINIMUM GUTTER THICKNESS IS MAINTAINED.

(10) REFER TO SDD 08D18 AND 08D19 FOR ADDITIONAL DRIVEWAY ENTRANCE CURB DETAILS.

(11) PLACE 1" THICK EXPANSION JOINT MATERIAL BETWEEN VERTICAL FACE CURB TYPES EXTENDING FROM THE TOP OF CURB TO 1 INCH BELOW THE ADJOINING CONCRETE SURFACE. RIGID CONCRETE STRUCTURES INCLUDE RAISED CONCRETE MEDIANS, CONCRETE SAFETY ISLANDS, SPLITTER ISLANDS, OR LOCATIONS IDENTIFIED ON THE PLANS.

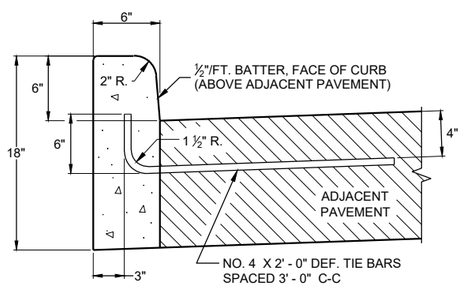

TYPES A(1) & D

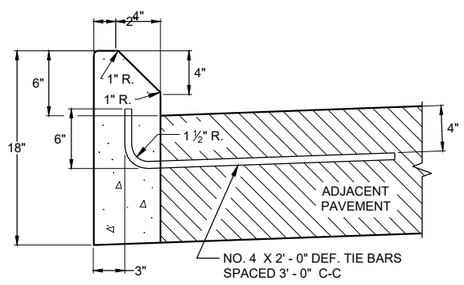

TYPES G(1) & J

CONCRETE CURB

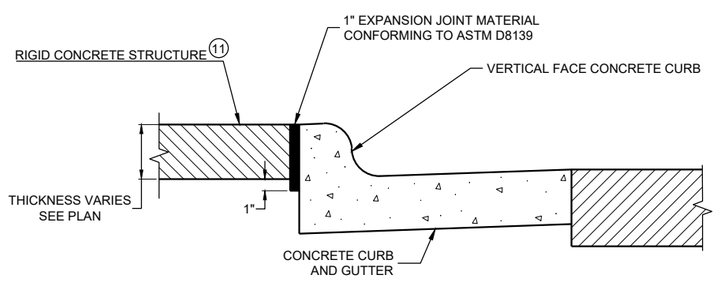

EXPANSION JOINT DETAIL FOR VERTICAL CURB ABUTTING A RIGID STRUCTURE(11)

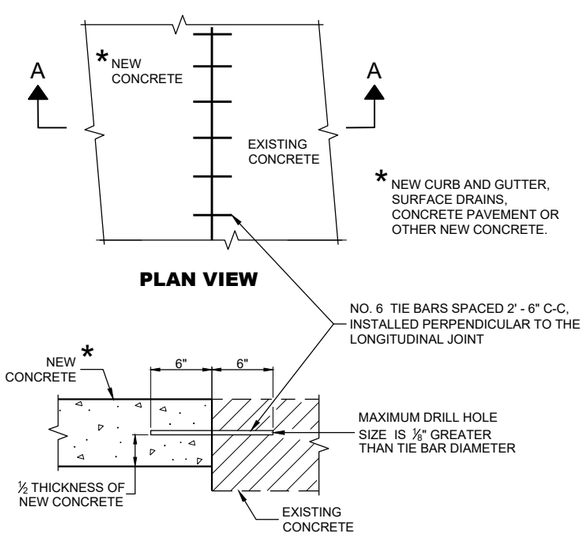

PLAN VIEW

SECTION A - A

TIE BARS DRILLED INTO EXISTING PAVEMENT

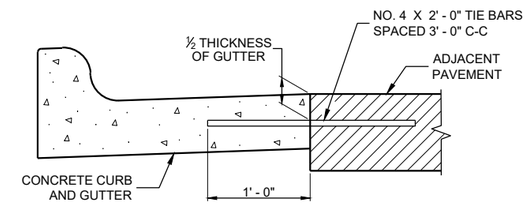

TYPICAL TIE BAR LOCATION(1)

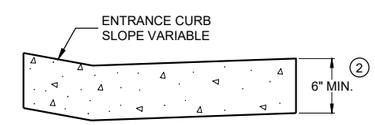

DRIVEWAY ENTRANCE CURB(10)

(WHEN DIRECTED BY THE ENGINEER)

CONCRETE CURB, TIES AND CURB AND GUTTER APPLICATIONS

STATE OF WISCONSIN
DEPARTMENT OF TRANSPORTATION

APPROVED
May 2023 — DATE
/S/ Rodnery Taylor — ROADWAY STANDARDS DEVE ENGINEER
FHWA

6

SDD 08D01 - 23b

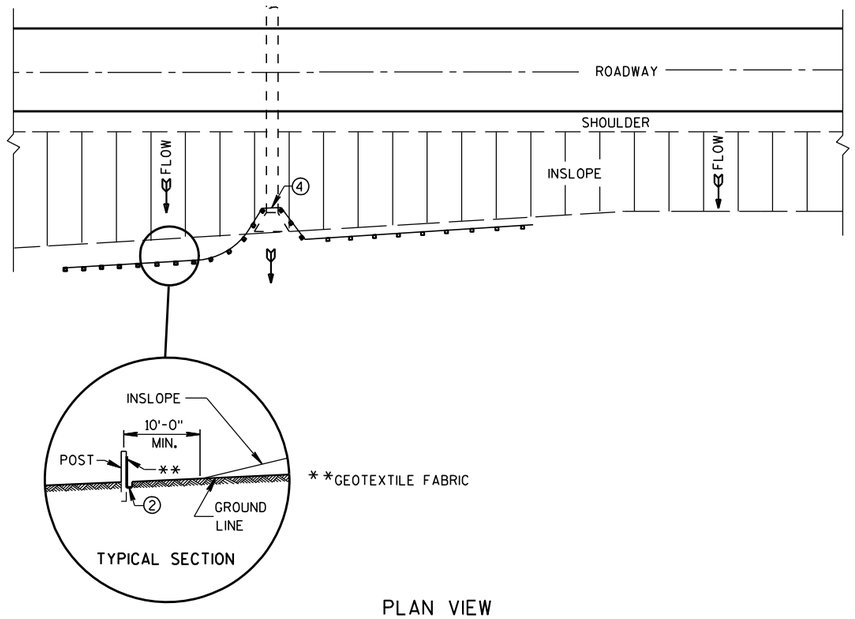

PLAN VIEW

TYPICAL APPLICATION OF SILT FENCE

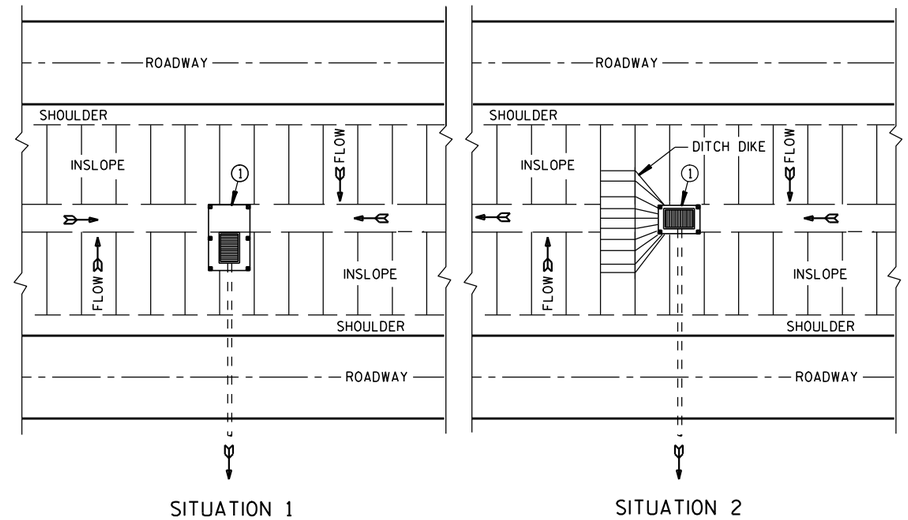

PLAN VIEW

SILT FENCE AT MEDIAN SURFACE DRAINS

GENERAL NOTES

DETAILS OF CONSTRUCTION NOT SHOWN ON THIS DRAWING SHALL CONFORM TO THE PERTINENT REQUIREMENTS OF THE STANDARD SPECIFICATIONS AND APPLICABLE SPECIAL PROVISIONS.

① HORIZONTAL BRACE REQUIRED WITH 2" X 4" WOODEN FRAME OR EQUIVALENT AT TOP OF POSTS.

② FOR MANUAL INSTALLATIONS THE TRENCH SHALL BE A MINIMUM OF 4" WIDE & 6" DEEP TO BURY AND ANCHOR THE GEOTEXTILE FABRIC. FOLD MATERIAL TO FIT TRENCH AND BACKFILL & COMPACT TRENCH WITH EXCAVATED SOIL.

③ WOOD POSTS SHALL BE A MINIMUM SIZE OF 1⅛" X 1⅛" OF OAK OR HICKORY.

④ SILT FENCE TO EXTEND ACROSS THE TOP OF THE PIPE.

⑤ CONSTRUCT SILT FENCE FROM A CONTINUOUS ROLL IF POSSIBLE BY CUTTING LENGTHS TO AVOID JOINTS. IF A JOINT IS NECESSARY USE ONE OF THE FOLLOWING TWO METHODS; A) OVERLAP THE END POSTS AND TWIST, OR ROTATE, AT LEAST 180 DEGREES. B) HOOK THE END OF EACH SILT FENCE LENGTH.

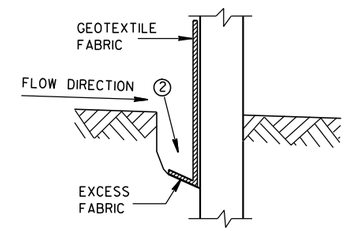

TRENCH DETAIL

NOTE: ADDITIONAL POST DEPTH OR TIE BACKS MAY BE REQUIRED IN UNSTABLE SOILS

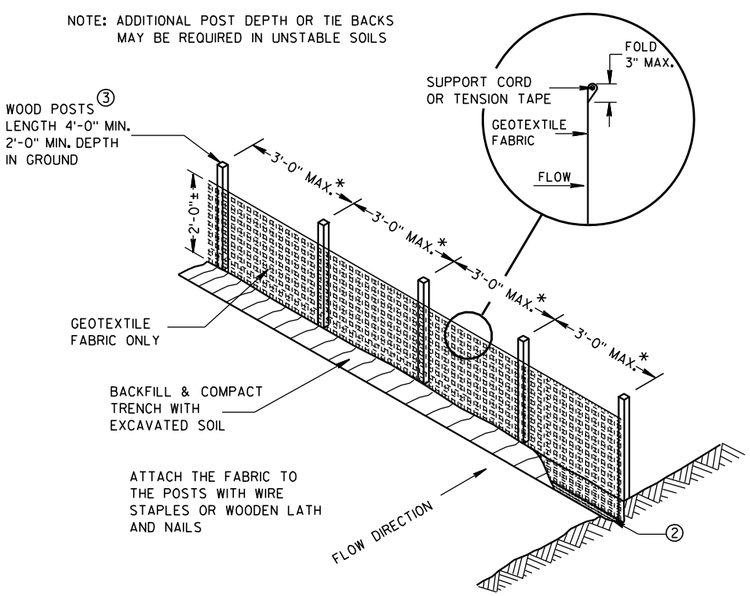

*NOTE: 8'-0" POST SPACING ALLOWED IF A WOVEN GEOTEXTILE FABRIC IS USED.

SILT FENCE

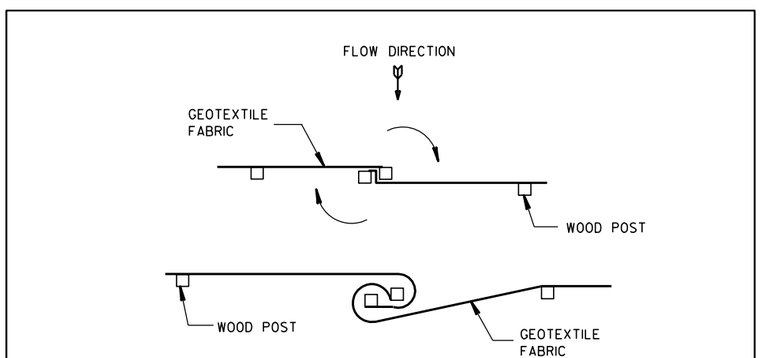

TWIST METHOD

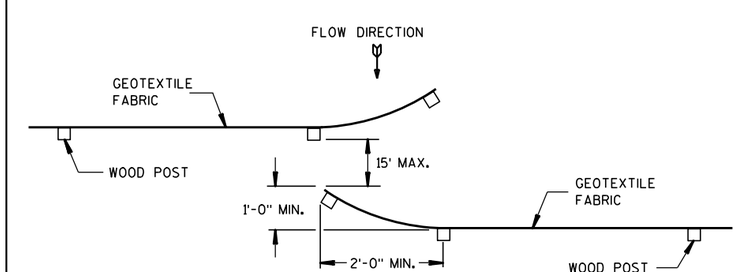

HOOK METHOD

JOINING TWO LENGTHS OF SILT FENCE ⑤

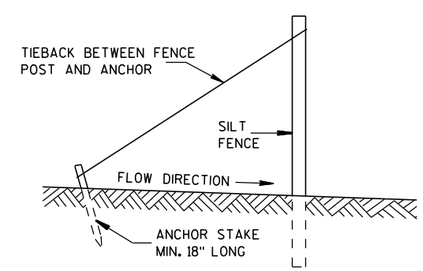

SILT FENCE TIE BACK

(WHEN REQUIRED BY THE ENGINEER)

SILT FENCE
STATE OF WISCONSIN DEPARTMENT OF TRANSPORTATION
APPROVED 4-29-05 DATE — /S/ Beth Cann-- CHIEF ROADWAY DEVELOP ENGINEER FHWA

6

6

S.D.D. 8 E 9-6

S.D.D. 8 E 9-6

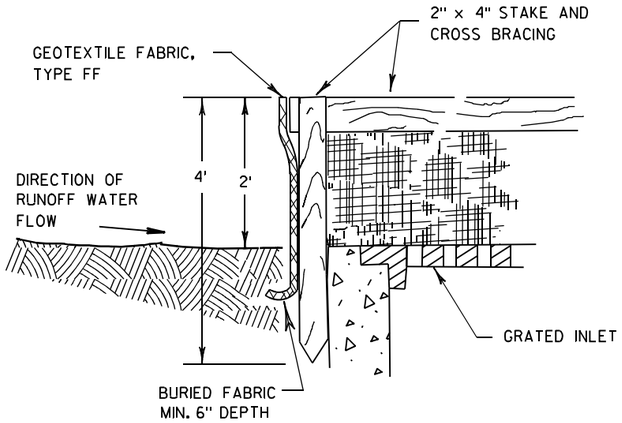

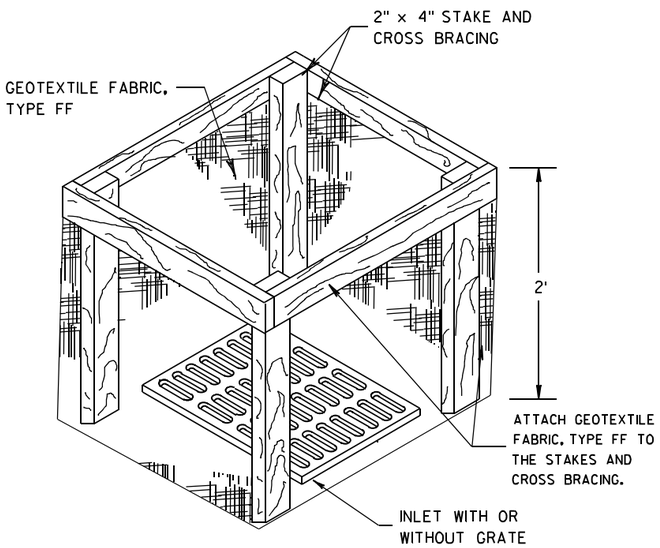

INLET PROTECTION, TYPE A

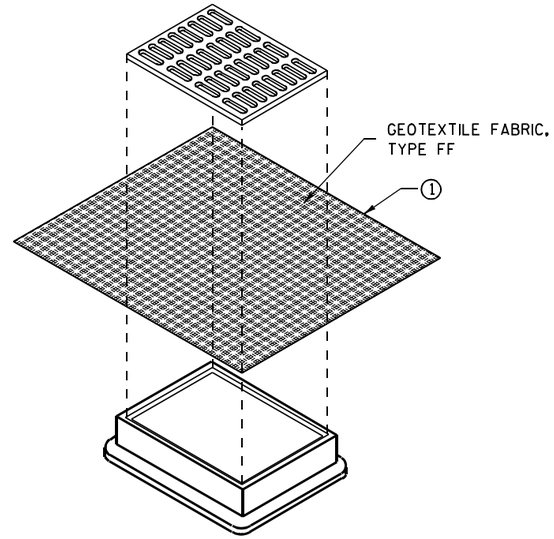

INLET PROTECTION, TYPE B
(WITHOUT CURB BOX)

(CAN BE INSTALLED IN ANY INLET WITHOUT A CURB BOX)

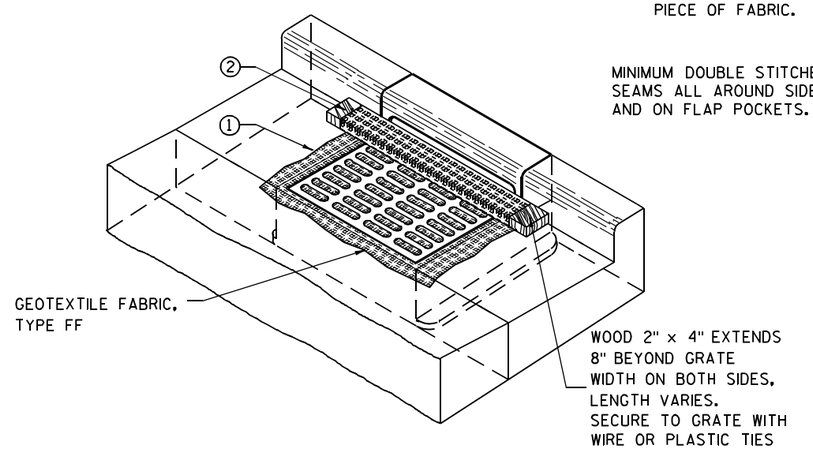

INLET PROTECTION, TYPE C (WITH CURB BOX)

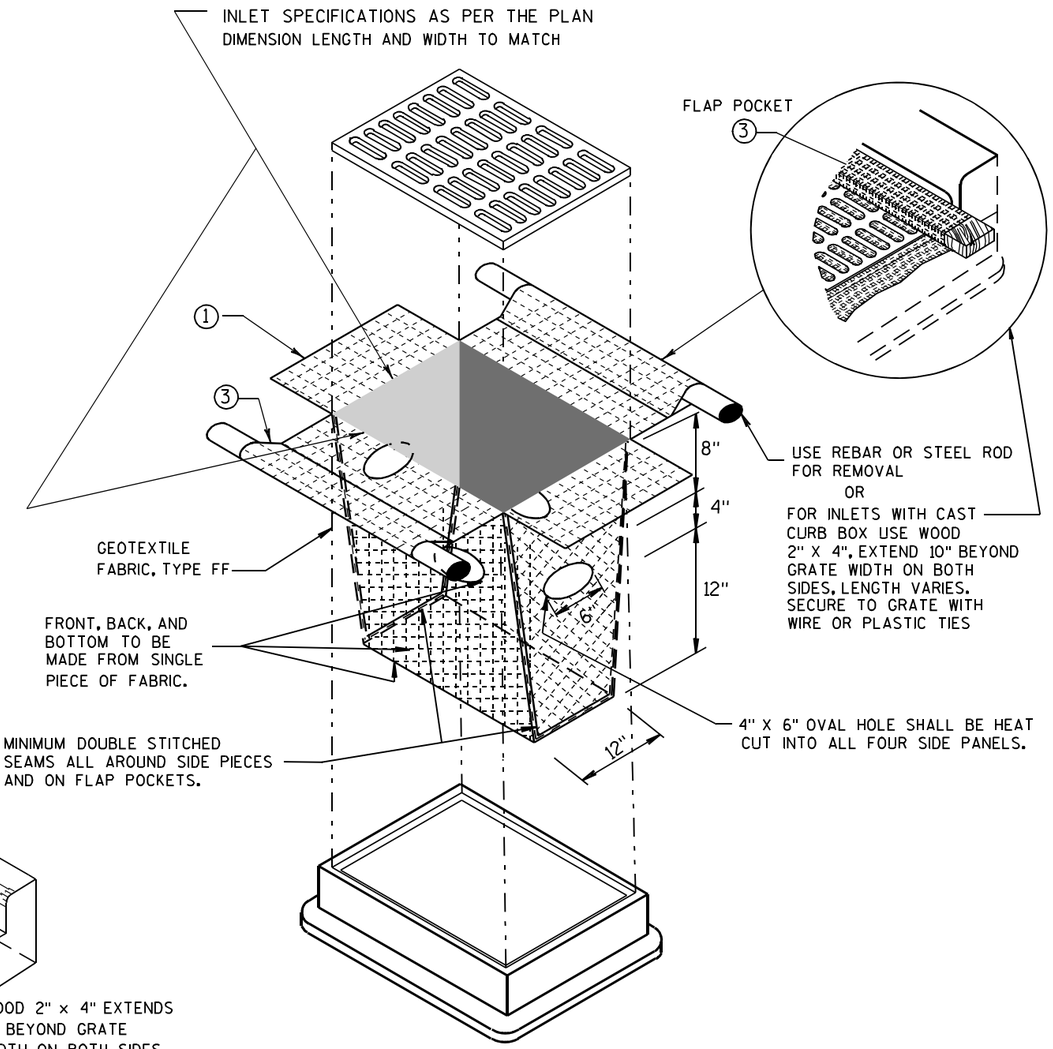

INLET PROTECTION, TYPE D

(CAN BE INSTALLED IN ANY INLET TYPE WITH
OR WITHOUT A CURB BOX AS PER NOTE ②)

GENERAL NOTES

INLET PROTECTION DEVICES SHALL BE MAINTAINED OR REPLACED AT THE DIRECTION OF THE ENGINEER.

MANUFACTURED ALTERNATIVES APPROVED AND LISTED ON THE DEPARTMENT'S EROSION CONTROL PRODUCT ACCEPTABILITY LIST MAY BE SUBSTITUTED.

WHEN REMOVING OR MAINTAINING INLET PROTECTION, CARE SHALL BE TAKEN SO THAT THE SEDIMENT TRAPPED ON THE GEOTEXTILE FABRIC DOES NOT FALL INTO THE INLET. ANY MATERIAL FALLING INTO THE INLET SHALL BE REMOVED IMMEDIATELY.

① FINISHED SIZE, INCLUDING FLAP POCKETS WHERE REQUIRED, SHALL EXTEND A MINIMUM OF 10" AROUND THE PERIMETER TO FACILITATE MAINTENANCE OR REMOVAL.

② FOR INLET PROTECTION, TYPE C (WITH CURB BOX), AN ADDITIONAL 18" OF FABRIC IS WRAPPED AROUND THE WOOD AND SECURED WITH STAPLES. THE WOOD SHALL NOT BLOCK THE ENTIRE HEIGHT OF THE CURB BOX OPENING.

③ FLAP POCKETS SHALL BE LARGE ENOUGH TO ACCEPT WOOD 2X4.

INSTALLATION NOTES

TYPE B & C

TRIM EXCESS FABRIC IN THE FLOW LINE TO WITHIN 3" OF THE GRATE.

THE CONTRACTOR SHALL DEMONSTRATE A METHOD OF MAINTENANCE, USING A SEWN FLAP, HAND HOLDS OR OTHER METHOD TO PREVENT ACCUMULATED SEDIMENT FROM ENTERING THE INLET.

TYPE D

DO NOT INSTALL INLET PROTECTION TYPE D IN INLETS SHALLOWER THAN 30", MEASURED FROM THE BOTTOM OF THE INLET TO THE TOP OF THE GRATE.

TRIM EXCESS FABRIC IN THE FLOW LINE TO WITHIN 3" OF THE GRATE.

THE INSTALLED BAG SHALL HAVE A MINIMUM SIDE CLEARANCE, BETWEEN THE INLET WALLS AND THE BAG, MEASURED AT THE BOTTOM OF THE OVERFLOW HOLES, OF 3". WHERE NECESSARY THE CONTRACTOR SHALL CINCH THE BAG, USING PLASTIC ZIP TIES, TO ACHIEVE THE 3" CLEARANCE. THE TIES SHALL BE PLACED AT A MAXIMUM OF 4" FROM THE BOTTOM OF THE BAG.

INLET PROTECTION
TYPE A, B, C, AND D

STATE OF WISCONSIN
DEPARTMENT OF TRANSPORTATION

APPROVED
10/16/02 — DATE
/S/ Beth Cannatine
CHIEF ROADWAY DEVELOPMENT ENGINEER
FHWA

6

S.D.D. 8 E 10-2

GENERAL NOTES

DETAILS OF CONSTRUCTION, MATERIALS AND WORKMANSHIP NOT SHOWN ON THIS DRAWING SHALL CONFORM TO THE PERTINENT REQUIREMENTS OF THE CONTRACT.

BASES (SHAFT) SHALL BE EXCAVATED BY THE USE OF A CIRCULAR AUGER.

IF BASE REQUIRES A DEEP FORM BECAUSE OF LOOSE SOIL, THE FORM SHALL BE REMOVED BEFORE BACKFILLING. BACKFILL SHALL BE TAMPED TIGHT AGAINST THE BASE IN LAYERS OF ONE FOOT OR LESS.

TOP SURFACE OF THE CONCRETE BASE SHALL BE TROWEL FINISHED SMOOTH AND LEVEL.

ANCHOR RODS SHALL BE INSTALLED WITH MISALIGNMENTS OF LESS THAN 1:40 FROM VERTICAL.

BAR STEEL REINFORCEMENT SHALL BE COATED WITH POWDERED EPOXY RESIN IN ACCORDANCE WITH SECTION 505 OF THE STANDARD SPECIFICATIONS (LATEST EDITION).

ANCHOR RODS SHALL BE THREADED 12" IN LENGTH ON EACH END OF THE ROD. ANCHOR RODS SHALL BE MANUFACTURED IN ACCORDANCE WITH SECTION 654.2 OF THE STANDARD SPECIFICATIONS.

WELDING OF ANCHOR RODS TO THE CAGE IS UNACCEPTABLE. TIE WIRES SHALL BE USED.

ANCHOR RODS SHALL BE 1" X 60".

WHEN ANCHOR RODS USING THE ALTERNATE "L" BEND ARE FURNISHED, THE 4" "L" BEND SHALL BE IN ADDITION TO THE SPECIFIED ANCHOR ROD BAR LENGTH. THE "L" BEND END SHALL NOT BE THREADED.

CONDUIT SIZES AND LOCATIONS SHALL BE SHOWN ON THE PLANS.

MINIMUM BENDING RADIUS OF CONDUIT IS EQUAL TO 6 TIMES THE DIAMETER.

CONDUIT HEIGHT ABOVE CONCRETE BASES SHALL BE 1" INCH. ALL METALLIC CONDUIT ENDS SHALL BE REAMED AND THREADED.

ALL CONDUIT ENDS AT THE TOP OF CONCRETE BASES SHALL BE CAPPED IF METALLIC OR PLUGGED IF NON-METALLIC IMMEDIATELY AFTER PLACEMENT AND BEFORE CONCRETE IS POURED. CONDUITS IN WHICH WIRE OR CABLE IS NOT INSTALLED SHALL REMAIN CAPPED OR PLUGGED.

BELL ENDS SHALL BE INSTALLED ON ALL PVC CONDUIT EXPOSED AT THE TOP OF CONCRETE BASES BEFORE INSTALLATION OF CABLE OR WIRE.

ENDS OF CONDUIT INSTALLED BELOW GRADE FOR FUTURE USE SHALL BE CAPPED IF METALLIC OR PLUGGED IF NONMETALLIC.

WHEN REQUIRED TO CONNECT NON-METALLIC CONDUIT TO METALLIC CONDUIT, ONLY ADAPTER FITTINGS, U.L. LISTED FOR ELECTRICAL USE, SHALL BE USED.

A NO. 4 AWG STRANDED COPPER EQUIPMENT GROUNDING CONDUCTOR SHALL BE EXOTHERMICALLY WELDED TO THE EQUIPMENT GROUNDING ELECTRODE (GROUND ROD).

THE EQUIPMENT GROUNDING CONDUCTOR SHALL BE FURNISHED AND INSTALLED TO ENTER THE BASE THROUGH A 1 INCH CONDUIT INSTALLED FOR GROUNDING PURPOSES, LEAVING A 4 FOOT COIL OF WIRE ABOVE THE CONCRETE BASE. THE EQUIPMENT GROUNDING CONDUCTOR SHALL BE NEATLY COILED AND THE COILS TIED TOGETHER.

THE FINAL OR TERMINATING CONCRETE BASE IN A CONDUIT RUN SHALL HAVE A 6" EXIT STUB INSTALLED FOR FUTURE CABLING USE. THE EXIT STUB SHALL BE SIZED AS USED THROUGHOUT THE CONDUIT RUN AS SHOWN A THE ENTRANCE OF THE BASE.

FOR USE WITH TYPE 7 AND TYPE 17 POLES.

(1) THE MINIMUM DEPTH OF CONDUIT EXITING THE CONCRETE BASE AND INSTALLED BELOW THE TRAVELED WAY SHALL BE 24 INCHES. THE MINIMUM DEPTH OF CONDUIT EXITING THE CONCRETE BASE THAT IS NOT INSTALLED BELOW THE TRAVELED WAY SHALL BE 18 INCHES. THE MAXIMUM DEPTH OF ALL CONDUIT SHALL BE 36 INCHES EXCEPT WITH WRITTEN APPROVAL OF THE ENGINEER.

(2) (4) 1" DIA. X 5'-0" ANCHOR RODS.

(3) (6) NO. 6 X 6'-8" BAR STEEL REINFORCEMENT.

(4) (7) NO. 4 X 6'-2" BAR STEEL REINFORCEMENT @ 1'-0" C-C.

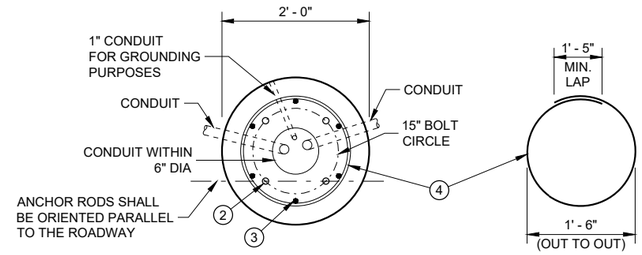

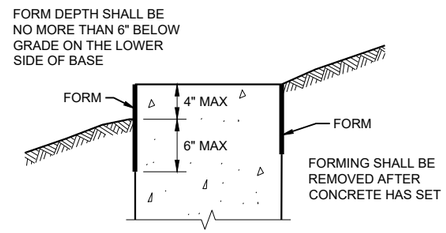

FORMING DETAIL

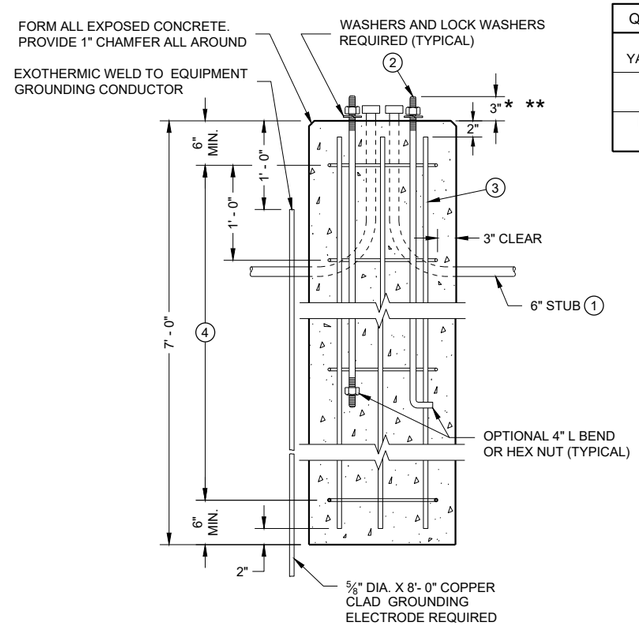

CONCRETE BASE, TYPE 7

QUANTITY REQUIREMENTS	
APPROX. CUBIC YARDS OF CONCRETE	0.8
LBS. OF HOOP BAR STEEL	29
LBS. OF VERTICAL BAR STEEL	60

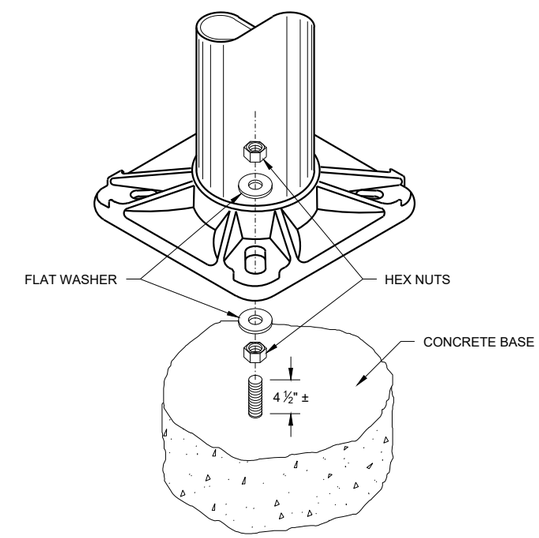

NON-BREAKAWAY INSTALLATION
(LEVELING NUT)

* ANY ANCHOR ROD PROJECTION SHORTER THAN 2 ¾" OR LONGER THAN 3 ¼" SHALL REQUIRE THE BASE TO BE REMOVED AND REPLACED AT THE CONTRACTORS EXPENSE.

** FOR NON-BREAKAWAY INSTALLATIONS, 4 ½"± ANCHOR ROD PROJECTION WITH THE USE OF LEVELING NUTS. RODENT SCREEN REQUIRED.

CONCRETE BASE
TYPE 17

STATE OF WISCONSIN
DEPARTMENT OF TRANSPORTATION

APPROVED
May 2022 — DATE
/S/ Alex Crabtree — WIND LOADED STRUCTU PROGRAM LEADER
FHWA

6

SDD 09C08 - 05

GENERAL NOTES

SDD 13A5, SHEET "b" SHOWS THE LOCATION OF THE RUMBLE STRIPS AT RAMP AND GORE LOCATIONS.

RUMBLE STRIPS ON EXPRESSWAYS:
DO NOT INSTALL SHOULDER RUMBLE STRIPS ACROSS SIDE ROAD INTERSECTIONS, COMMERCIAL AND PRIVATE DRIVEWAYS, ADJACENT TO RIGHT TURN LANES, LEFT TURN LANES, TURN LANE TAPERS, 25' IN ADVANCE OF BRIDGE DECKS, 25' IN ADVANCE OF BRIDGE APPROACHES, OR 100 FEET IN ADVANCE OF RAILROAD CROSSINGS.

(1) CONCRETE PAVEMENT - RUMBLE STRIPS SHALL BE A MINIMUM OF 6 INCHES AWAY FROM TRANSVERSE JOINTS.

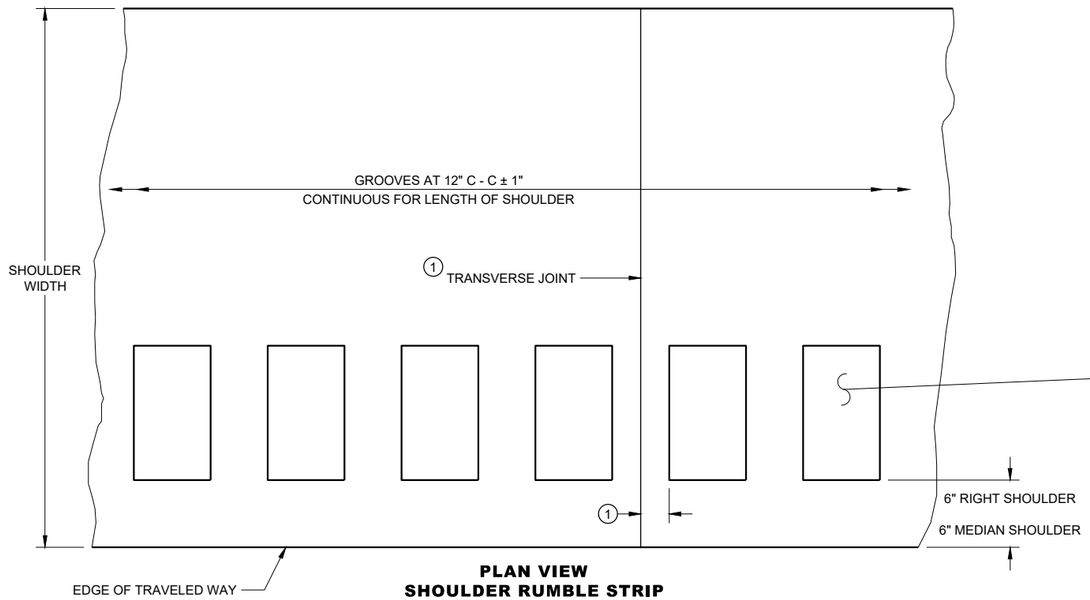

PLAN VIEW
SHOULDER RUMBLE STRIP

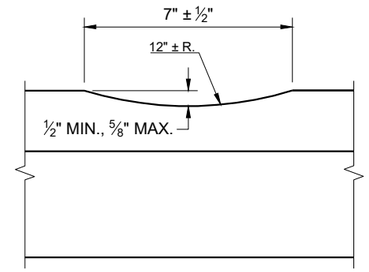

SECTION A - A

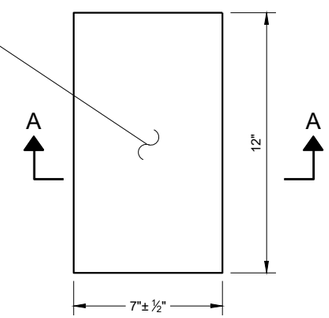

PLAN VIEW
(SINGLE GROOVE)

PLACEMENT DETAIL FOR RUMBLE STRIP

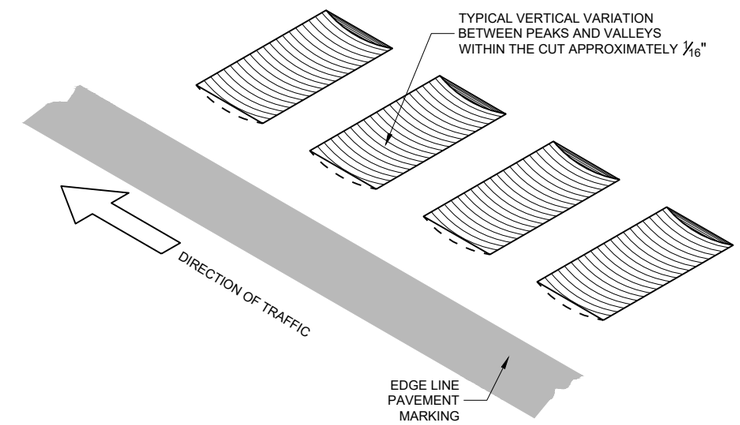

ISOMETRIC

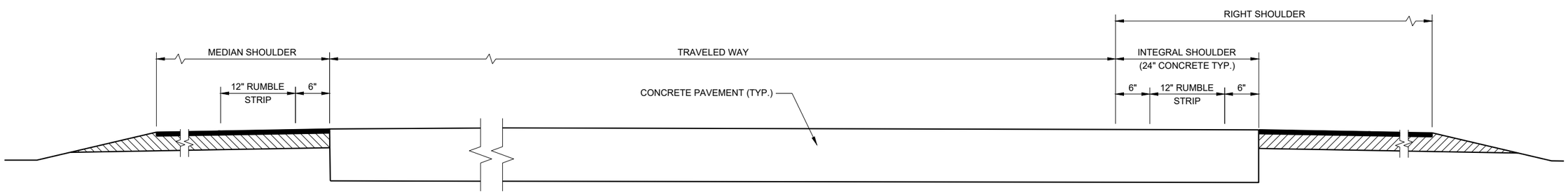

SECTION VIEW

TYPICAL SHOULDER RUMBLE STRIPS
(ONE ROADWAY IS SHOWN)

SHOULDER RUMBLE STRIPS, DIVIDED ROADWAY

STATE OF WISCONSIN
DEPARTMENT OF TRANSPORTATION

6
SDD 13A05-06a

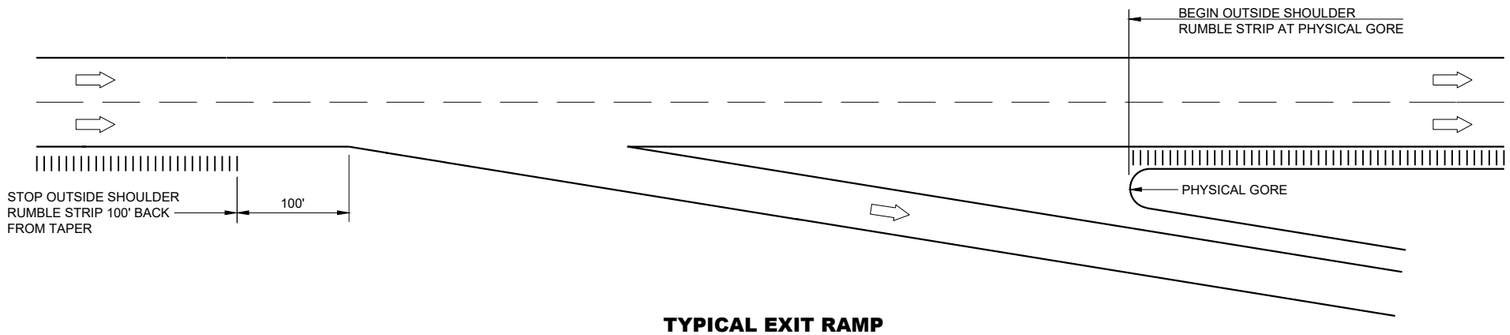

TYPICAL EXIT RAMP

GENERAL NOTES

NO RUMBLE STRIP ON EXIT, DIRECTIONAL OR ENTRANCE RAMPS, EXCEPT NEAR THE ENTRANCE TAPER END AND ALONG THE PARALLEL RAMP AREA AS SHOWN.

RUMBLE STRIPS ON EXPRESSWAYS:
DO NOT INSTALL SHOULDER RUMBLE STRIPS ACROSS SIDE ROAD INTERSECTIONS, COMMERCIALAND PRIVATE DRIVEWAYS, ADJACENT TO RIGHT TURN LANES, LEFT TURN LANES, TURN LANE TAPERS, 25' IN ADVANCE OF BRIDGE DECKS, 25' IN ADVANCE OF BRIDGE APPROACHES, OR 100 FEET IN ADVANCE OF RAILROAD CROSSINGS.

LEGEND

DIRECTION OF TRAFFIC

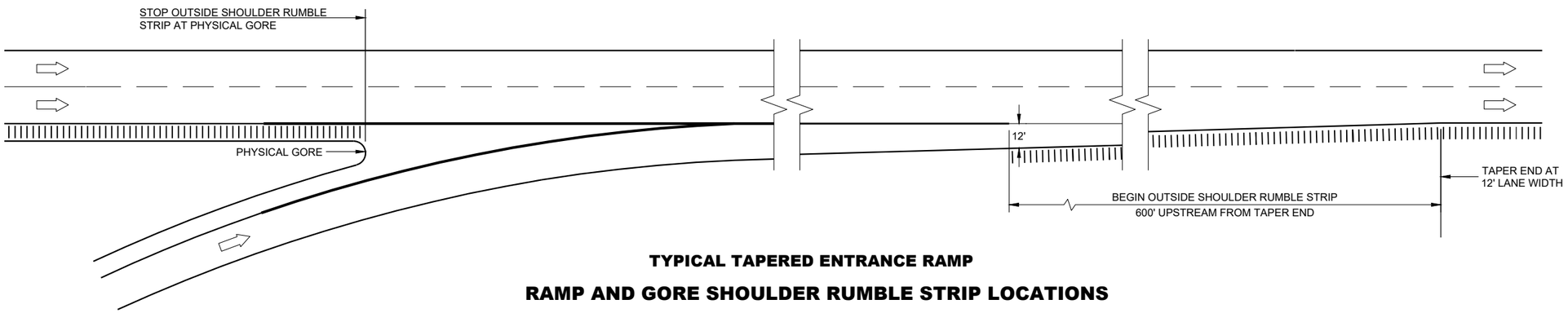

TYPICAL TAPERED ENTRANCE RAMP

RAMP AND GORE SHOULDER RUMBLE STRIP LOCATIONS

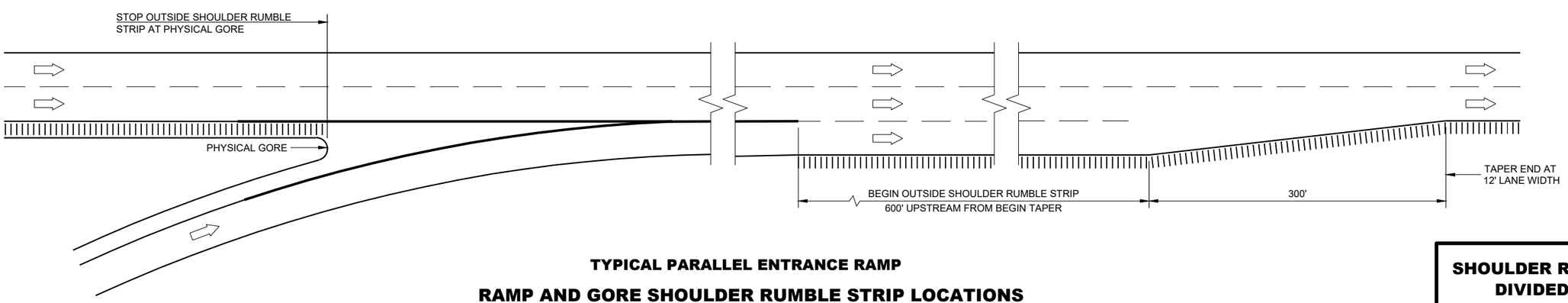

TYPICAL PARALLEL ENTRANCE RAMP

RAMP AND GORE SHOULDER RUMBLE STRIP LOCATIONS

SHOULDER RUMBLE STRIPS, DIVIDED ROADWAY

STATE OF WISCONSIN
DEPARTMENT OF TRANSPORTATION

APPROVED
May 2023 — DATE
/S/ Rodney Taylor — ROADWAY DESIGN STAND UNIT SUPERVISOR
FHWA

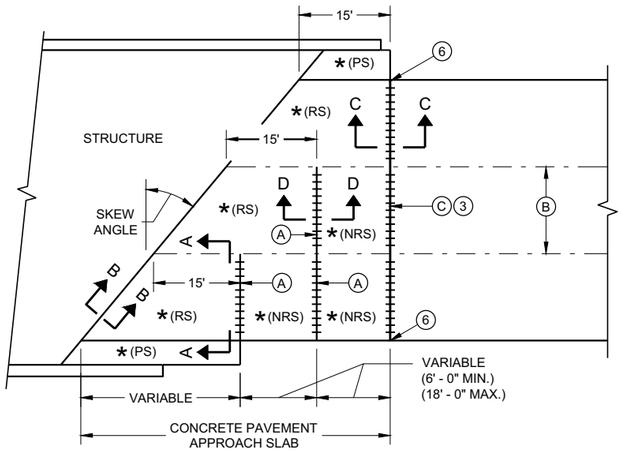

SKEWED APPROACH
(PAVEMENT MORE THAN TWO LANES)

* (RS) = REINFORCED CONCRETE SLAB

* (PS) = PAVED CONCRETE SHOULDER OR CONCRETE DRAINAGE SLAB

* (NRS) - NON - REINFORCED CONCRETE SLAB

*** STANDARD DOWEL BAR DIAMETER (SEE SDD 13C11 AND SDD 13C13)

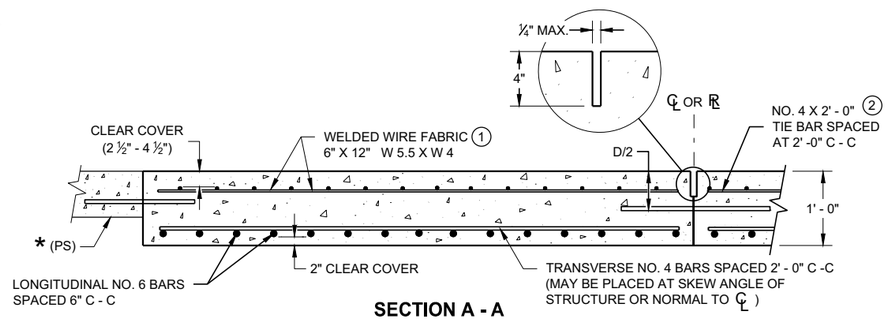

SECTION A - A
REINFORCEMENT POSITIONING DETAIL

GENERAL NOTES

THE CONTRACTOR MAY SPLICE NO. 6 BARS IN THE APPROACH SLAB FOR SKEWED STRUCTURES ONLY. STAGGER SPLICES WITH A MAXIMUM OF ONE SPLICE PER BAR. THE LENGTH OF LAP IS 20 INCHES.

TACK WELD DOWEL BARS TO THE BASKETS ON ALTERNATE ENDS.

1. THE CONTRACTOR MAY USE NO. 4 BARS SPACED AT 2' - 0 " C - C IN BOTH THE LONGITUDINAL AND TRANSVERSE DIRECTIONS FOR TOP REINFORCEMENT AS AN ALTERNATIVE TO THE WELDED WIRE FABRIC.
2. THE CONTRACTOR MAY OMIT THE BARS BETWEEN REINFORCED SLABS WHERE SLAB REINFORCEMENT BARS EXTEND ACROSS THE CENTERLINE OR REFERENCE LINE.
3. DO NOT CONSTRUCT AN EXPANSION JOINT OR INSTALL DOWEL BARS WHEN ABUTTING AN HMA PAVEMENT.
4. USE A JOINT SEALANT CONFORMING TO STANDARD SPECIFICATION 415.2.6.
5. PLACE EXPANSION CAP ON THE END OF THE DOWEL THAT IS NOT TACK WELDED TO THE BASKET. DO NOT FORCE DOWEL BAR PAST THE DOWEL STOP.
6. EXTEND EXPANSION JOINT THROUGH ANY ADJACENT TIED CONCRETE.

A. STANDARD CONTRACTION JOINT NORMAL TO ℄ OR ℞.

B. STANDARD LONGITUDINAL JOINT WITH TIE BARS.

C. 1 ½" EXPANSION JOINT WITH DOWEL BARS NORMAL TO ℄ OR ℞ .

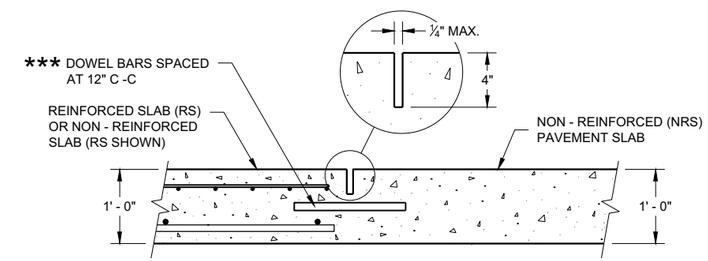

SECTION D - D
CONTRACTION JOINT

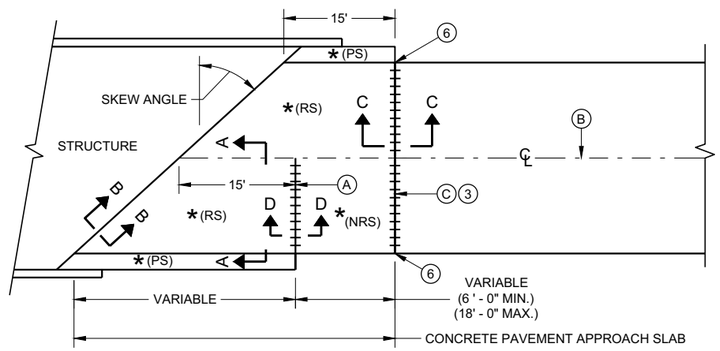

SKEWS > 20°
(PAVEMENT WIDTH ≤ 30')

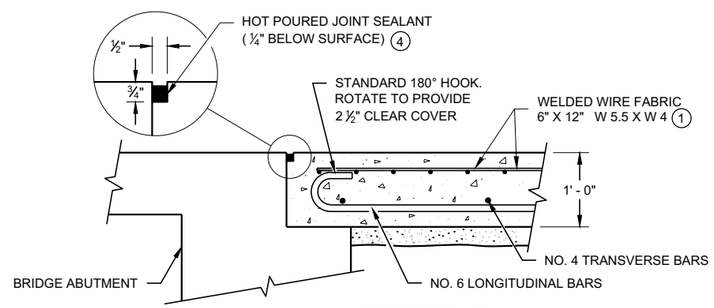

SECTION B - B
BEND DETAIL
BOTTOM REINFORCEMENT

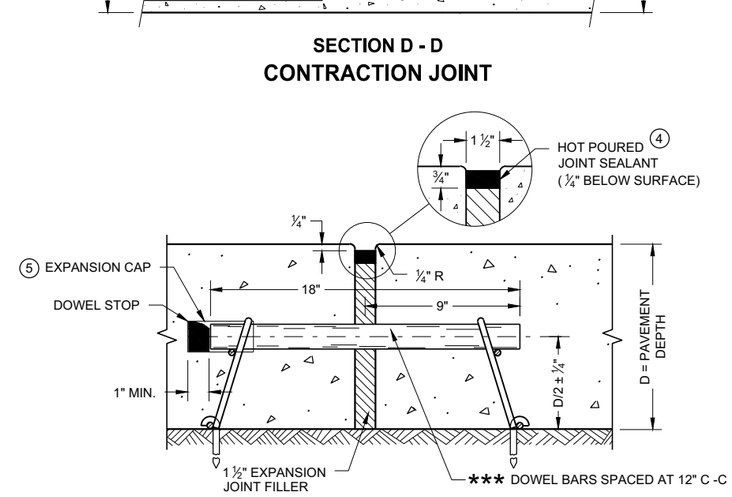

EXPANSION JOINT DETAIL

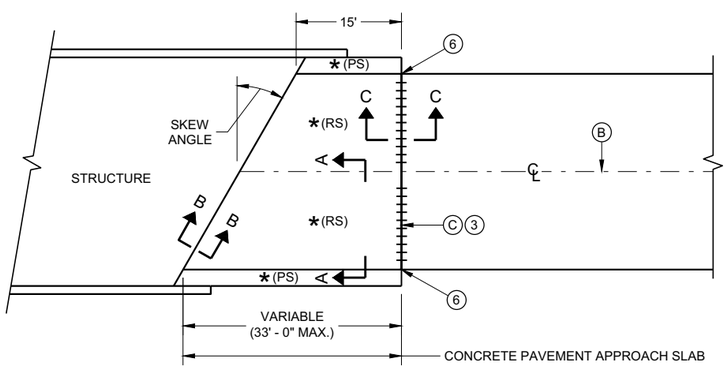

SKEWS ≤ 20°
(PAVEMENT WIDTH ≤ 30')

APPROACH SLAB AND ADJACENT PAVEMENT

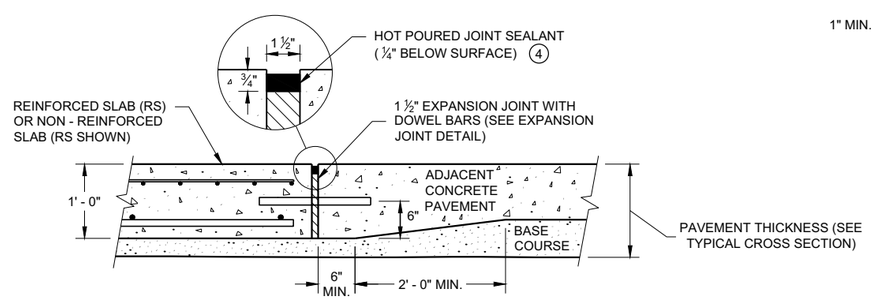

SECTION C - C
TRANSITION DETAIL
APPROACH SLAB TO ADJACENT PAVEMENT

CONCRETE PAVEMENT APPROACH SLAB

STATE OF WISCONSIN
DEPARTMENT OF TRANSPORTATION

APPROVED
November 2018 /S/ Peter Kemp, P.E.
DATE PAVEMENT SUPERVISOR

FHWA

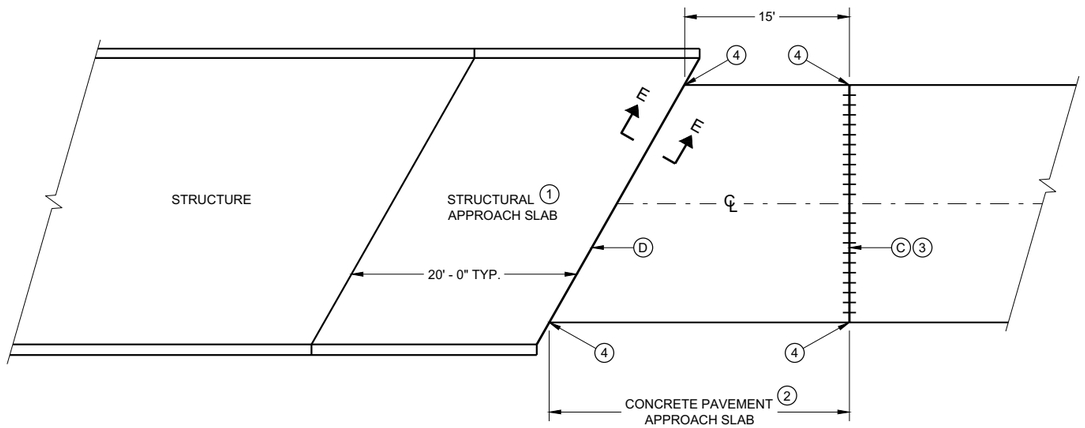

BRIDGE APPROACHES

GENERAL NOTES

ALL PROJECTS THAT INVOLVE A STRUCTURAL APPROACH SLAB WILL ALSO HAVE A CONCRETE PAVEMENT APPROACH SLAB.

1. SEE BRIDGE PLAN.
2. CONFORM TO SDD 13B02 SHEET A FOR CONCRETE PAVEMENT APPROACH SLAB DETAILS
3. DO NOT CONSTRUCT AN EXPANSION JOINT OR INSTALL DOWEL BARS WHEN ABUTTING AN HMA PAVEMENT.
4. EXTEND EXPANSION JOINT THROUGH ANY ADJACENT TIED CONCRETE.

C. 1 ½" EXPANSION JOINT WITH DOWEL BARS NORMAL TO ℄ OR ℞.

D. 1 ½" EXPANSION JOINT (NO DOWELS)

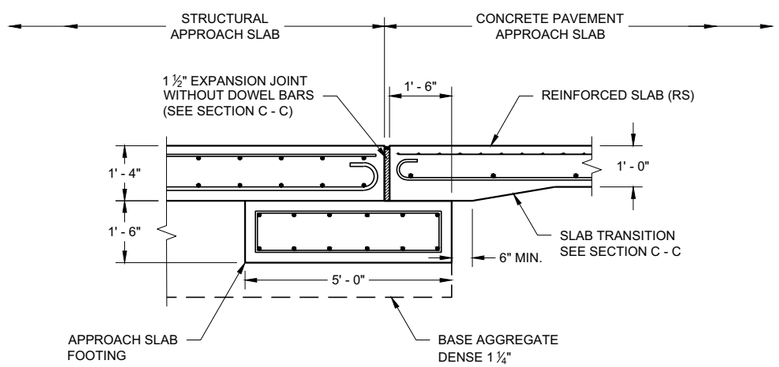

SECTION E - E
FOOTING DETAIL
STRUCTURAL APPROACH SLAB TO CONCRETE BRIDGE APPROACH

STRUCTURAL APPROACH SLAB AND CONCRETE PAVEMENT APPROACH SLAB

STATE OF WISCONSIN
DEPARTMENT OF TRANSPORTATION

APPROVED
November 2018 /S/ Peter Kemp P.E.
DATE PAVEMENT SUPERVISOR
FHWA

6

SDD 13B02 - 09b

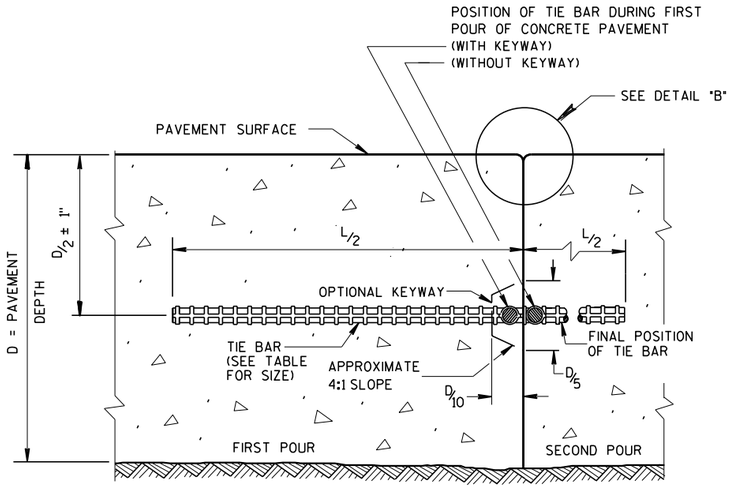

CONSTRUCTION JOINT

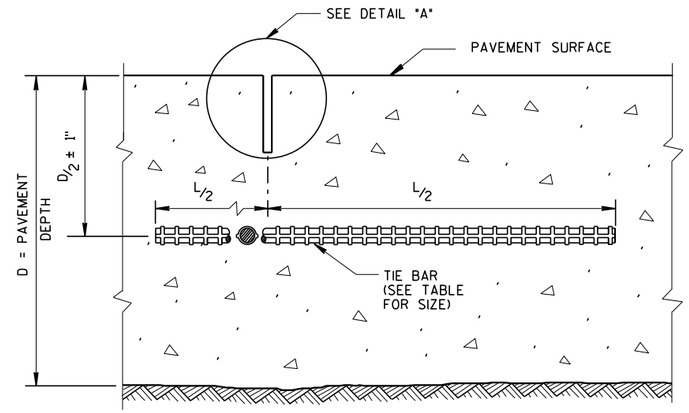

SAWED JOINT

GENERAL NOTES

CREATE A LONGITUDINAL JOINT FOR PAVEMENT WIDTHS GREATER THAN 15 FEET.

CORRELATE LONGITUDINAL JOINTS WITH LANE LINES WHEN POSSIBLE.

1. ANCHOR TIE BARS INTO DRILLED HOLES WITH AN EPOXY.
2. PAVEMENT THAT WAS IN PLACE PRIOR TO THE CONTRACT.

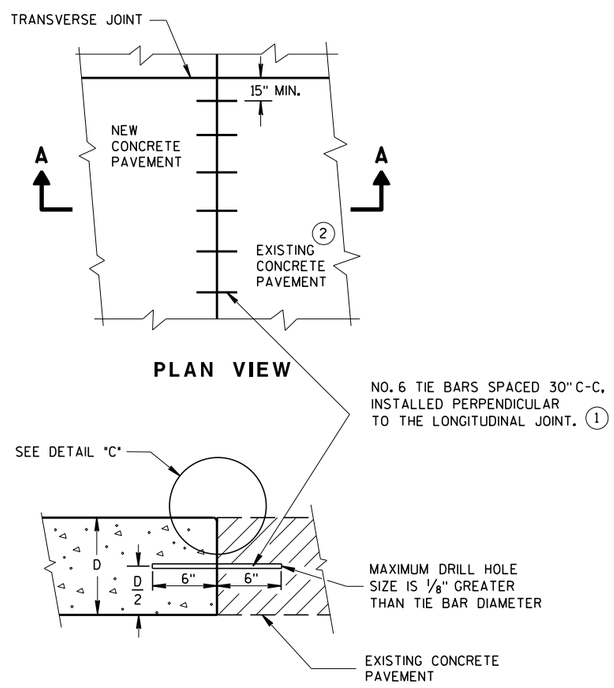

PLAN VIEW

SECTION A-A

LONGITUDINAL CONSTRUCTION JOINT TIE BARS ANCHORED INTO EXISTING PAVEMENT

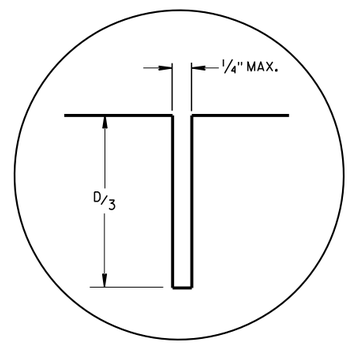

DETAIL "A"

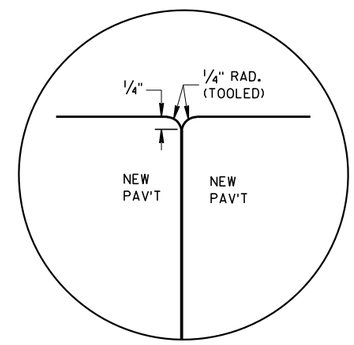

DETAIL "B"

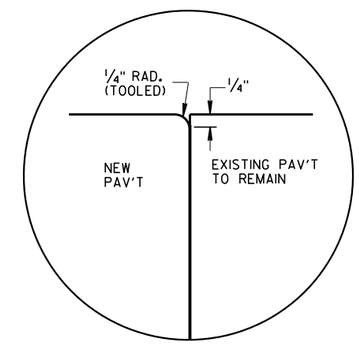

DETAIL "C"

TIE BAR TABLE

PAVEMENT DEPTH (D)	TIE BAR SIZE	TIE BAR LENGTH (L)	MAX. TIE BAR SPACING
< 10 1/2"	NO. 4	30"	36"
≥ 10 1/2"	NO. 5	36"	36"
	NO. 4 *	30"	24" **

* SUBSTITUTE BENT BARS AT LONGITUDINAL JOINTS WHEN EQUIPMENT LIMITATIONS DURING CONSTRUCTION WARRANT (e.g. AUXILIARY LANES OR TURN LANES)

** CONFORM TO 15" MINUMUM SPACING FROM TRANSVERSE JOINTS; SPACING BETWEEN TIE BARS WILL BE 30" AT TRANSVERSE JOINTS.

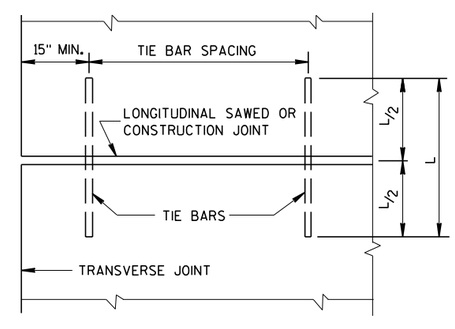

PLAN VIEW

SHOWING LOCATION OF TIE BARS

CONCRETE PAVEMENT LONGITUDINAL JOINTS AND TIES

STATE OF WISCONSIN
DEPARTMENT OF TRANSPORTATION

APPROVED

March 2018 — DATE

/S/ Peter Kerr — PAVEMENT SUPE

FHWA

6

6

S.D.D. 13 C 1-19

S.D.D. 13 C 1-19

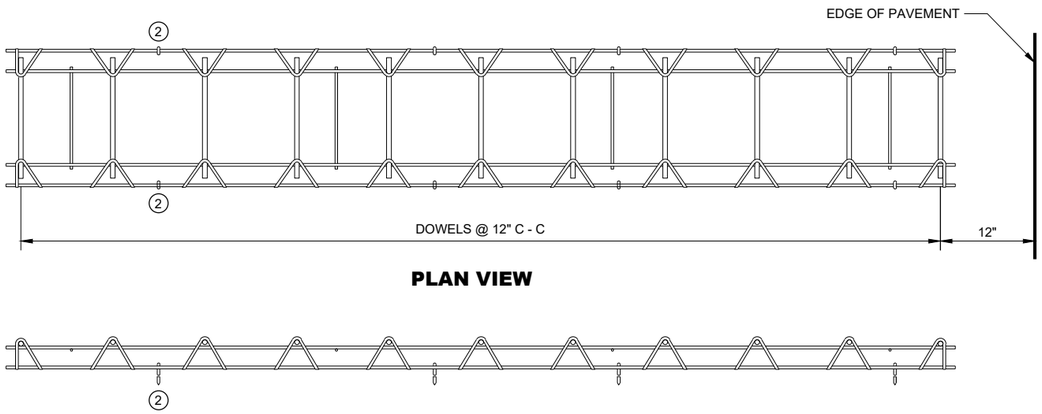

PLAN VIEW

SIDE VIEW

CONTRACTION JOINT DOWEL ASSEMBLY (1)

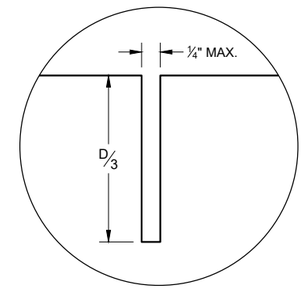

JOINT DETAIL

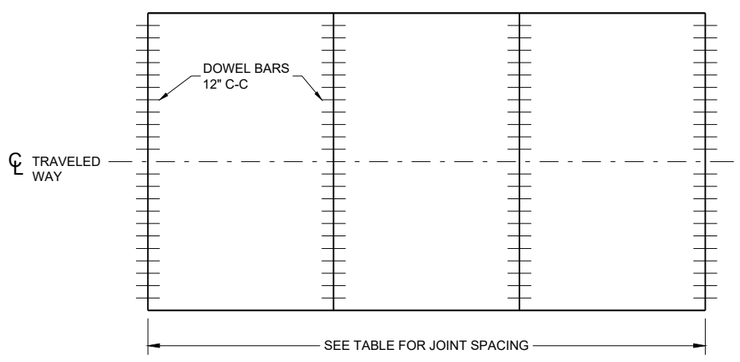

CONTRACTION JOINT LOCATIONS

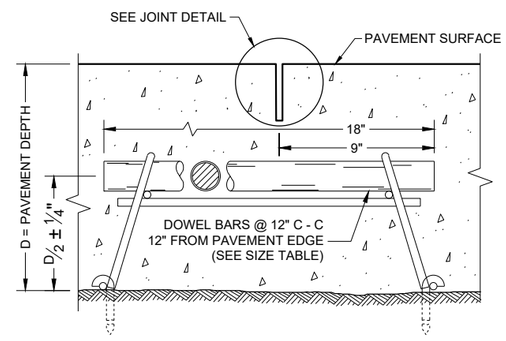

DOWELED CONTRACTION JOINT

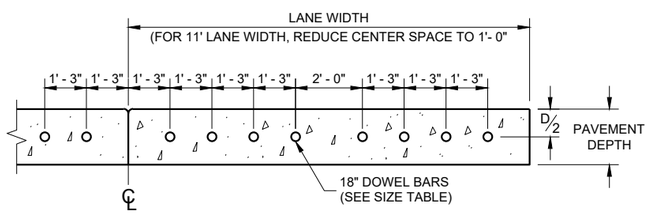

DRILLED DOWEL BAR CONSTRUCTION JOINT (7)

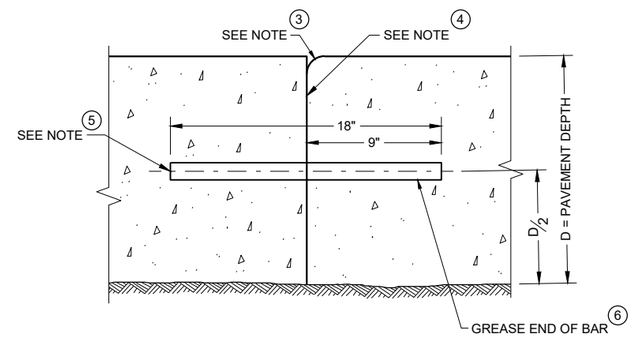

TRANSVERSE CONSTRUCTION JOINT

GENERAL NOTES

CONTRACTION JOINTS

CONSTRUCT TRANSVERSE CONTRACTION JOINTS NORMAL TO THE CENTERLINE. SHOW THE LOCATION OF CONTRACTION JOINTS THROUGH INTERSECTIONS ON THE PLANS OR AS DIRECTED BY THE ENGINEER.

INSTALL DOWEL BARS PARALLEL TO THE PAVEMENT CENTERLINE AND PAVEMENT SURFACE.

FOR PAVEMENT SLABS OF VARYING WIDTHS, LOCATE THE OUTER MOST DOWEL BAR SO THAT THE CENTER OF THE BAR IS A MINIMUM OF 6 INCHES FROM AND A MAXIMUM OF 18 INCHES FROM THE FREE EDGE OF PAVEMENT.

CONSTRUCTION JOINTS

LOCATE CONSTRUCTION JOINTS A MINIMUM OF 6 FEET FROM THE NEAREST CONTRACTION JOINT AND ALIGN PARALLEL TO THE CONTRACTION JOINTS.

1. OBTAIN THE ENGINEER'S APPROVAL FOR THE USE OF ALTERNATIVE DESIGNS OF THE DOWEL ASSEMBLY. USE MECHANICAL DOWEL BAR INSERTERS OR DOWEL ASSEMBLIES WHEN CONSTRUCTION CONTRACTION JOINTS.
2. SECURE BASKETS WITH ANCHORS TO HOLD DOWEL BARS IN THE CORRECT POSITION AND ALIGNMENT. TYPE, LOCATION, NUMBER AND LENGTH OF ANCHORS ARE DEPENDENT UPON FIELD CONDITIONS.
3. FORM OR SAW CONSTRUCTION JOINTS. PROVIDE A ¼" RADIUS AT FORMED JOINTS.
4. PROVIDE A SMOOTH VERTICAL FACE FOR THE ENTIRE DEPTH OF THE PAVEMENT WHEN FORMING CONSTRUCTION JOINTS.
5. INSTALL DOWEL BARS AT CONSTRUCTION JOINTS BY FORMING OR DRILLING. INSTALL FORMED DOWEL BARS 12 INCHES C - C AND 12 INCHES FROM PAVEMENT EDGE. REMOVE EXCESS CONCRETE FROM THE FREE END OF THE DOWEL BAR IF DOWEL BARS ARE FORMED THROUGH A HEADER BOARD. INSTALL DRILLED DOWEL BARS ACCORDING TO THE "DRILLED DOWEL BAR CONSTRUCTION JOINT" DETAIL.
6. APPLY A THIN UNIFORM COATING OF SURFACE TREATMENT TO THE FREE END OF DOWEL BARS TO PREVENT BONDING.
7. ANCHOR DOWEL BARS AND TIE BARS INTO DRILLED HOLES WITH AN EPOXY. MAXIMUM DRILLED HOLE SIZE IS ⅛" GREATER THAN DOWEL BAR DIAMETER, 9 INCHES IN LENGTH.

PAVEMENT DEPTH, DOWEL BAR SIZE AND JOINT SPACING TABLE

PAVEMENT DEPTH (D)	DOWEL BAR DIAMETER	CONTRACTION JOINT SPACING
6", 6 ½"	NONE	12'
7", 7 ½"	1"	14'
8" & ABOVE	1 ¼"	15'

URBAN DOWELED CONCRETE PAVEMENT

STATE OF WISCONSIN
DEPARTMENT OF TRANSPORTATION

APPROVED
November 2022 /S/ Peter Kemp P.E.
DATE PAVEMENT SUPERVISOR
FHWA

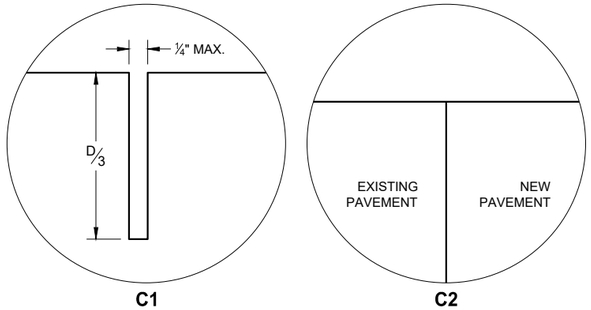

TRANSVERSE JOINTS

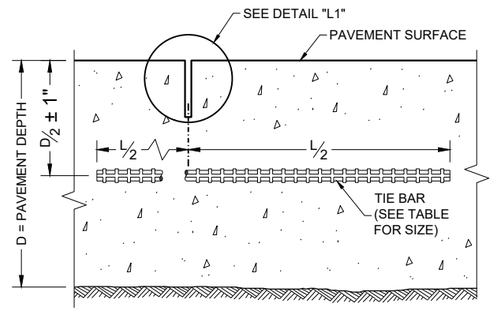

SECTION C - C
SAWED JOINT

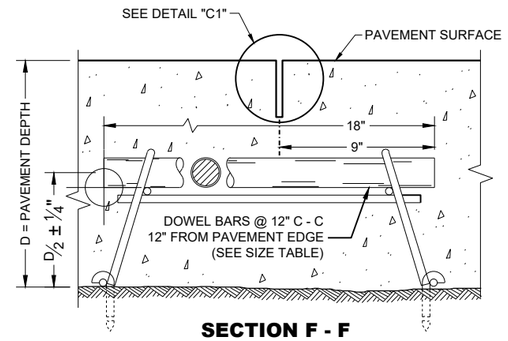

SECTION F - F
CONTRACTION JOINT

GENERAL NOTES

ANCHOR DOWEL BARS AND TIE BARS INTO DRILLED HOLES WITH AN EPOXY.

PROVIDE A MIMIMUM DISTANCE OF 15 INCHES FROM AN EXISTING TRANSVERSE JOINT OR EDGE OF REPLACEMENT TO THE CENTER OF THE TIE BAR NEAREST THAT JOINT OR EDGE.

1. INSTALL DOWEL BARS PARALLEL TO THE PAVEMENT CENTERLINE AND PAVEMENT SURFACE.
2. APPLY A THIN UNIFORM COATING OF SURFACE TREATMENT TO THE FREE END OF DOWEL BARS TO PREVENT BONDING.

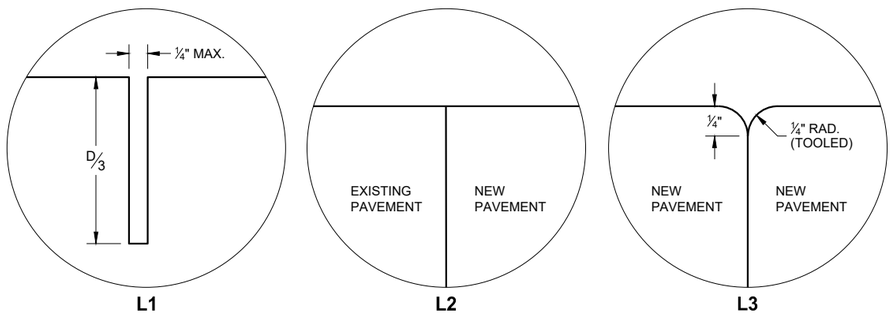

LONGITUDINAL JOINTS

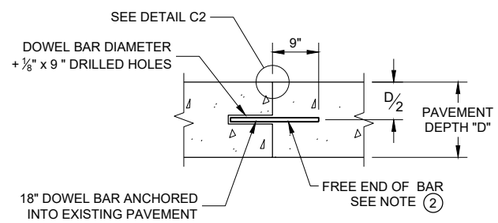

SECTION D - D

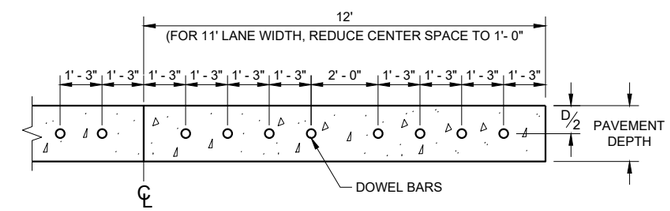

SECTION E - E
SPACING OF DOWEL BARS ANCHORED INTO EXISTING PAVEMENT

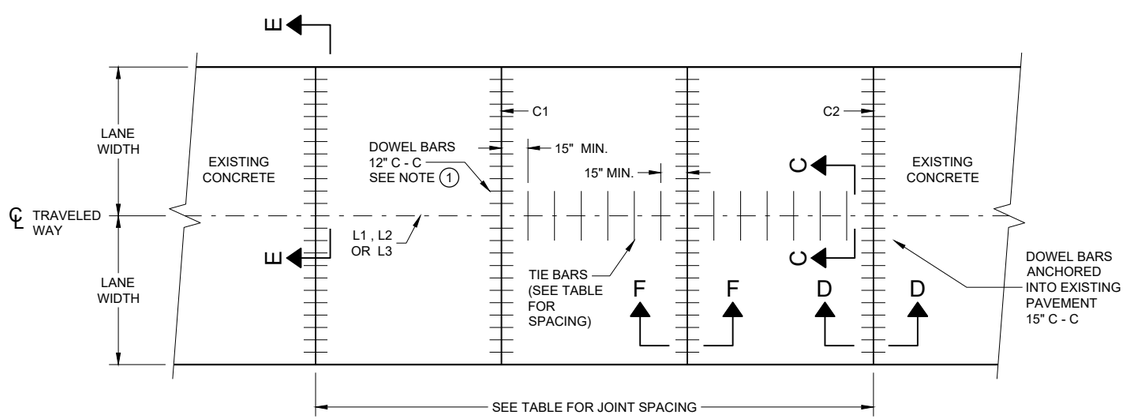

PLAN VIEW
CONCRETE BASE
CONTRACTION JOINT LOCATIONS

TIE BAR TABLE

PAVEMENT DEPTH (D)	TIE BAR SIZE	TIE BAR LENGTH (L)	MAX. TIE BAR SPACING
< 10 ½"	NO. 4	30"	36"
≥ 10 ½"	NO. 5	36"	36"
	NO. 4*	30"	24"**

* SUBSTITUTE BENT BARS AT LONGITUDINAL JOINTS WHEN EQUIPMENT LIMITATIONS DURING CONSTRUCTION WARRANT (e.g. AUXILIARY LANES OR TURN LANES)

** CONFORM TO 15" MINIMUM SPACING FROM TRANSVERSE JOINTS; SPACING BETWEEN TIE BARS WILL BE 30" AT TRANSVERSE JOINTS.

PAVEMENT DEPTH, DOWEL BAR SIZE AND JOINT SPACING TABLE

PAVEMENT DEPTH (D)	DOWEL BAR DIAMETER	CONTRACTION JOINT SPACING
6", 6 ½"	NONE	12'
7", 7 ½"	1"	14'
8" & ABOVE	1 ¼"	15'

CONCRETE BASE

STATE OF WISCONSIN
DEPARTMENT OF TRANSPORTA

6

SDD 13C15 - 08a

GENERAL NOTES

1. USE AN ENGINEER APPROVED BOND BREAKER (E.G. RELEASE AGENT, CURING COMPOUND) AT THE LONGITUDINAL JOINT IN LIEU OF TIE BARS FOR SINGLE LANE CONCRETE BASE REPAIRS UP TO 15 FEET IN LENGTH.
2. ANCHOR TIE BARS INTO DRILLED HOLES WITH AN EPOXY.
3. PAVEMENT THAT WAS IN PLACE PRIOR TO THE CONTRACT.

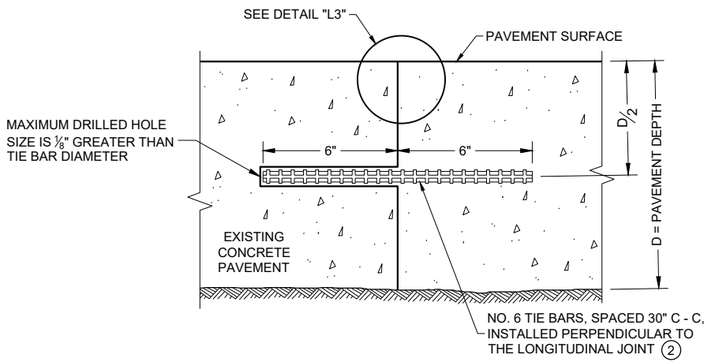

SECTION G - G

TIE BARS ANCHORED INTO EXISTING PAVEMENT

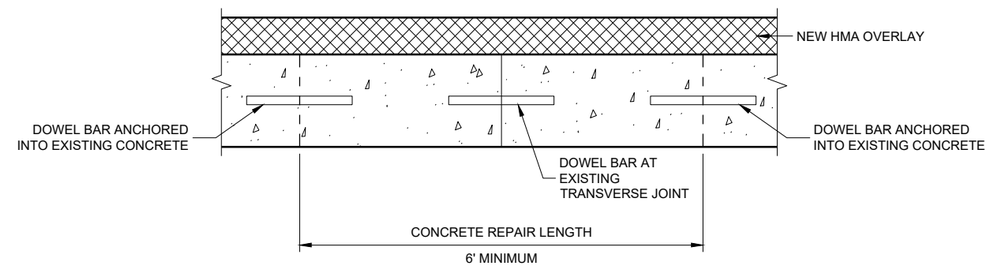

SECTION H - H

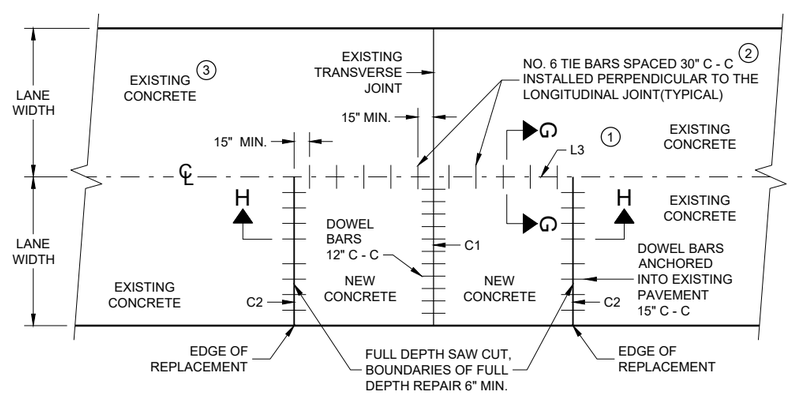

PLAN VIEW

SINGLE LANE CONCRETE BASE REPAIR

6

6

SDD 13C15 - 08b

SDD 13C15 - 08b

CONCRETE BASE

STATE OF WISCONSIN
DEPARTMENT OF TRANSPORTATION

APPROVED
November 2022 /S/ Peter Kemp P.E.
DATE PAVEMENT SUPERVISO
FHWA

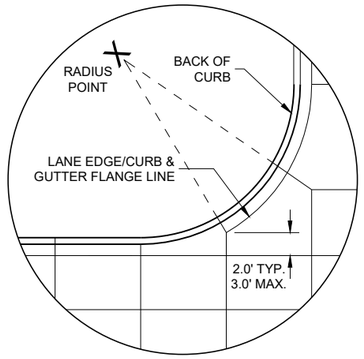

DETAIL "A"

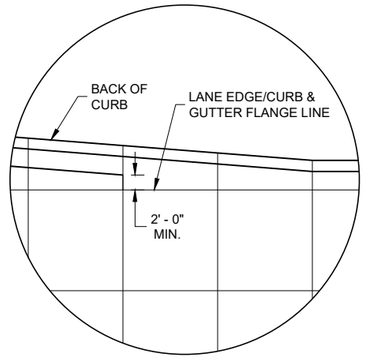

DETAIL "B"

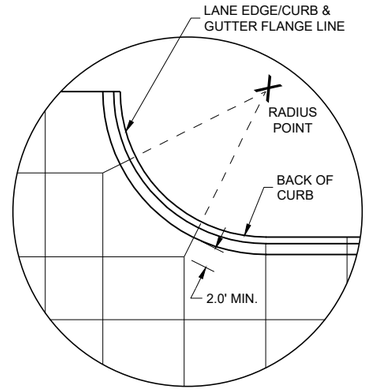

DETAIL "C"

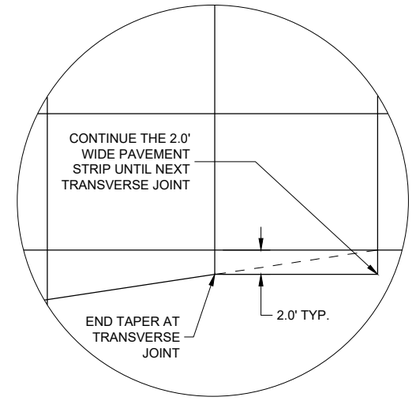

DETAIL "D"

GENERAL NOTES

THE PRIMARY ROADWAY CONTROLS THE TRANSVERSE JOINT PATTERN.

ALIGN NEW JOINTS WITH EXISTING JOINTS OR CRACKS.

CONSTRUCT TRANSVERSE JOINTS PERPENDICULAR TO THE ROADWAY.

ADJUST TRANSVERSE JOINTS TO ALIGN WITH UTILITY FIXTURES (E.G MANHOLES AND INLETS) IN THE PAVEMENT STRUCTURE WHEN POSSIBLE. WATER VALVES DO NOT REQUIRE JOINT ADJUSTMENT.

AVOID SLABS LESS THAN 2 FEET WIDE OR GREATER THAN 15 FEET WIDE.

SEE TABLE FOR TRANSVERSE JOINT SPACING. JOINT SPACING SPECIFIED IS MAXIMUM AND ACTUAL SPACING CAN BE ADJUSTED TO ACCOMMODATE INTERSECTIONS.

AVOID ANGLES LESS THAN 60° BY DOGLEGGING JOINTS THROUGH CURVE RADIUS POINTS. USE 90° ANGLES WHEN POSSIBLE.

CORRELATE LONGITUDINAL JOINTS WITH LANE LINES WHEN POSSIBLE.

1. PROVIDE TRANSVERSE JOINTS AT ALL PAVEMENT WIDTH CHANGES.
2. CONSTRUCT DOWELED EXPANSION JOINT ON THE SIDE ROAD OF AN INTERSECTION IF THE SIDE ROAD IS CONCRETE PAVEMENT AND GREATER THAN 300 FEET IN LENGTH. ALIGN EXPANSION JOINT WITH EDGE OF RADIUS.
3. THE ENGINEER MAY APPROVE SLIGHT VARIATIONS FROM THESE JOINTING DETAILS.

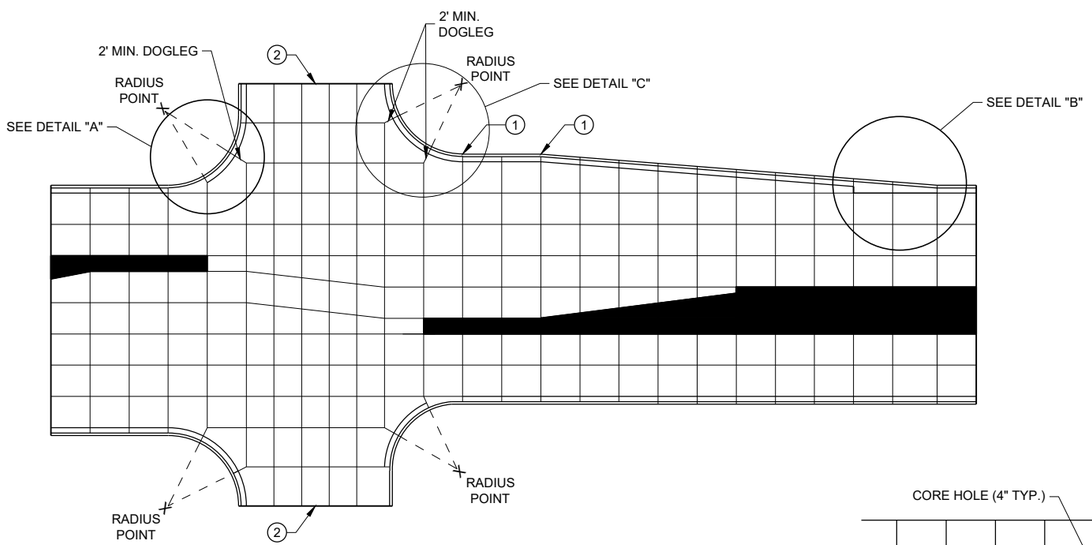

STANDARD INTERSECTION

PAVEMENT DEPTH AND JOINT SPACING TABLE

PAVEMENT DEPTH (D)	CONTRACTION JOINT SPACING
6", 6 ½"	12'
7", 7 ½"	14'
8" & ABOVE	15'

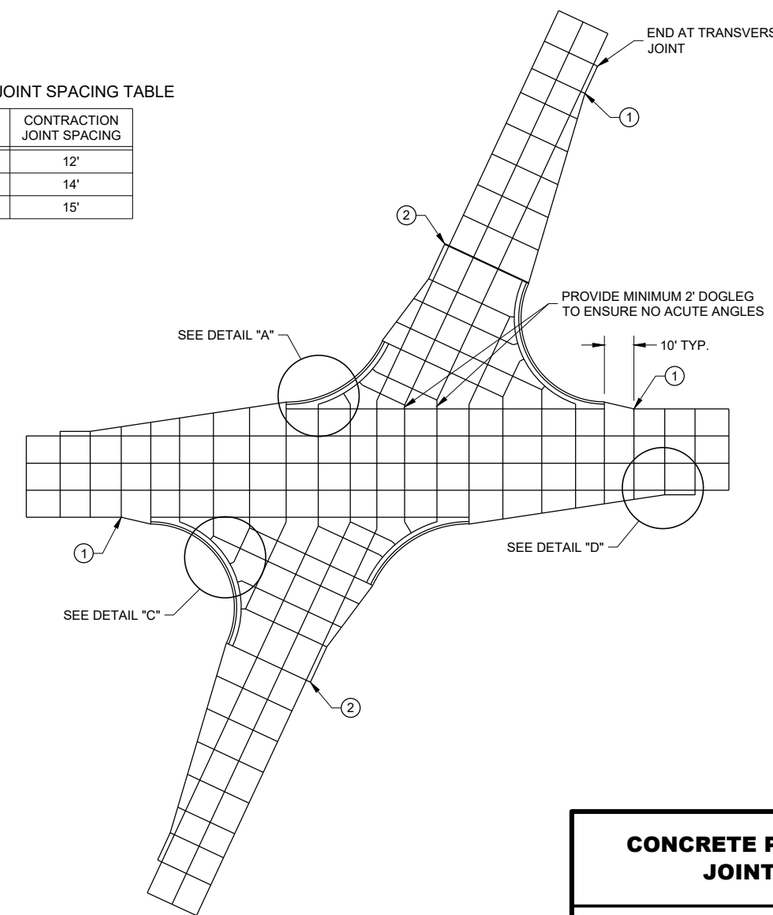

SKEWED INTERSECTION

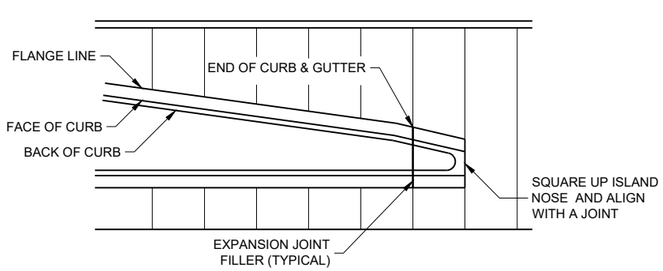

APPROACH TO MEDIAN

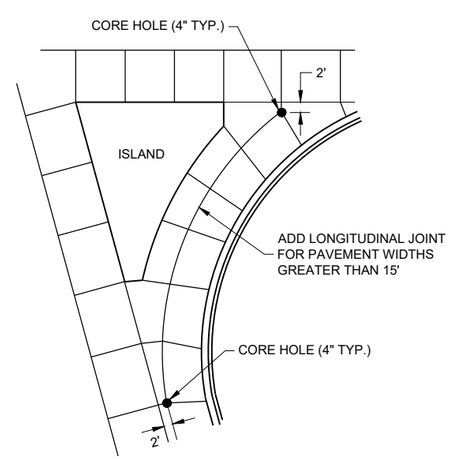

LARGE RIGHT TURN

CONCRETE PAVEMENT JOINTING

STATE OF WISCONSIN
DEPARTMENT OF TRANSPORTA

6

SDD 13C18 - 08a

LEGEND

POTENTIAL DOWELED EXPANSION JOINT

DOWELED JOINT

TIED JOINT

GENERAL NOTES

USE AN EXPANSION JOINT FILLER MEETING THE REQUIREMENTS OF STANDARD SPECIFICATION 415.

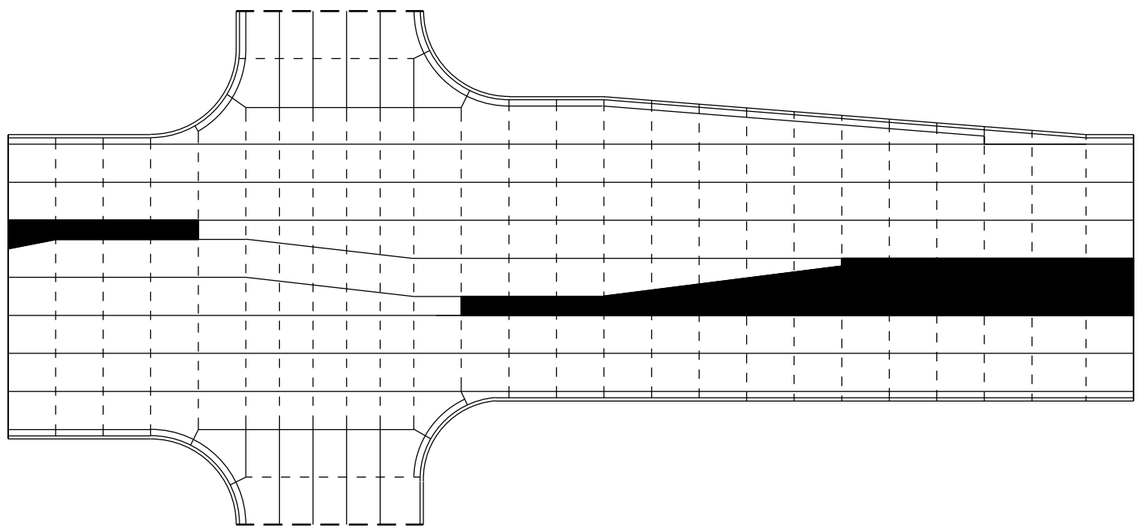

STANDARD INTERSECTION

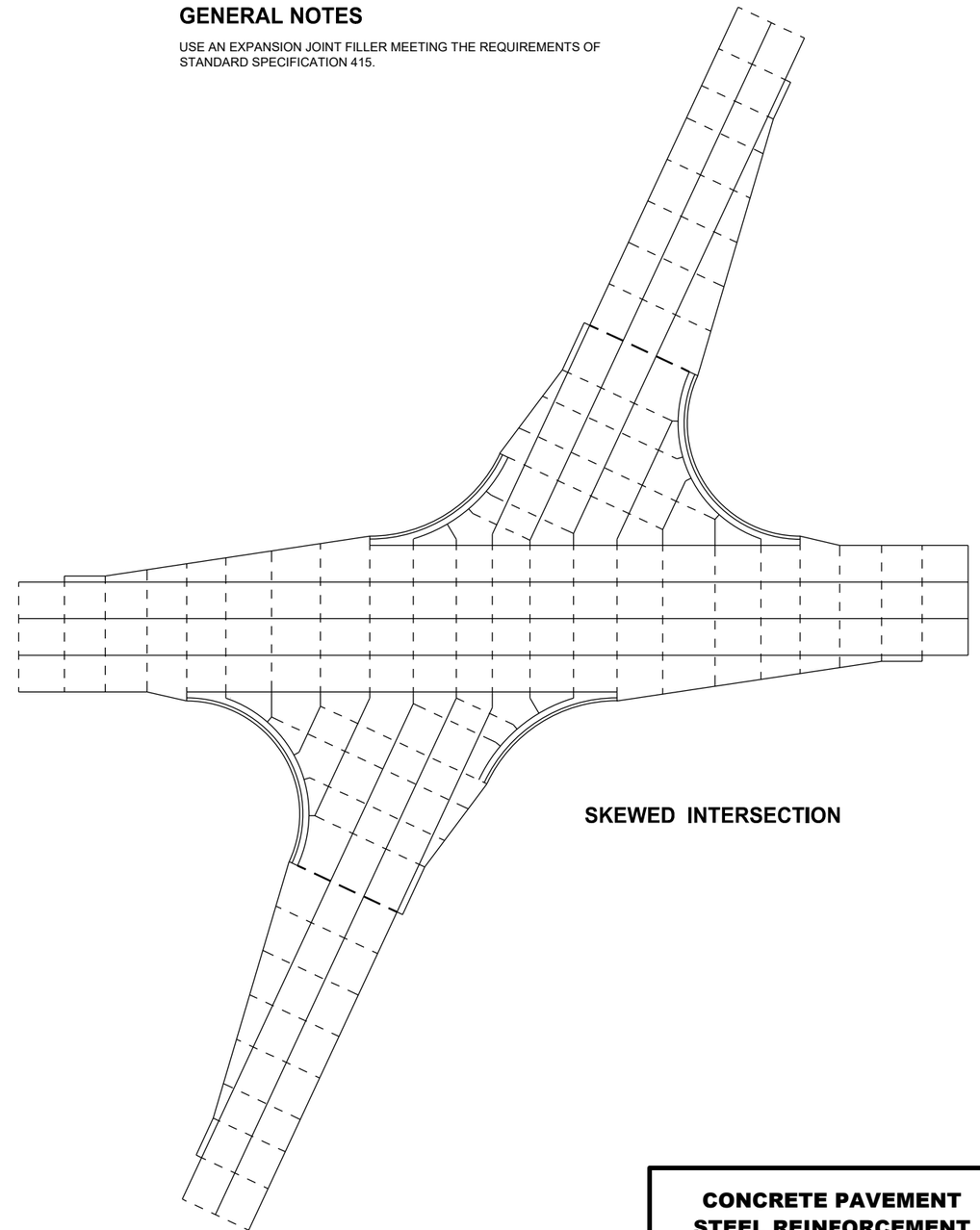

SKEWED INTERSECTION

CONCRETE PAVEMENT STEEL REINFORCEMENT

STATE OF WISCONSIN
DEPARTMENT OF TRANSPORTA

6

SDD 13C18 - 08b

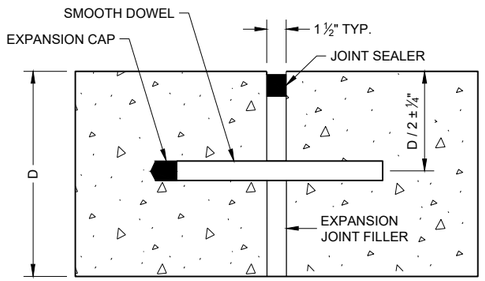

DOWELED TRANSVERSE (1)

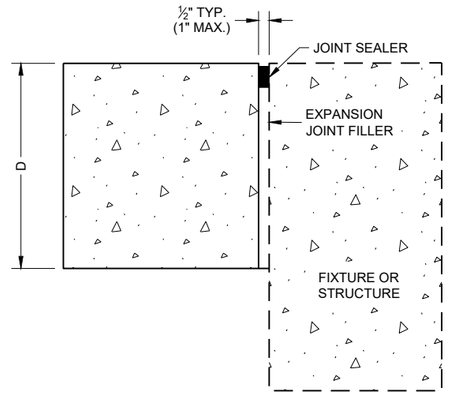

UNTIED - LONGITUDINAL

EXPANSION JOINTS

TIE BAR TABLE

PAVEMENT DEPTH (D)	TIE BAR SIZE	TIE BAR LENGTH (L)	MAX. TIE BAR SPACING
< 10 ½"	NO. 4	30"	36"
≥ 10 ½"	NO. 5	36"	36"
	NO. 4 *	30"	24" **

* SUBSTITUTE BENT BARS AT LONGITUDINAL JOINTS WHEN EQUIPMENT LIMITATIONS DURING CONSTRUCTION WARRANT (e.g. AUXILIARY LANES OR TURN LANES)

** CONFORM TO 15" MINIMUM SPACING FROM TRANSVERSE JOINTS; SPACING BETWEEN TIE BARS WILL BE 30" AT TRANSVERSE JOINTS.

GENERAL NOTES

1. USE DOWELED EXPANSION JOINTS ON SIDE ROADS AT INTERSECTIONS (TO ISOLATETHE SIDE ROAD FROM THE THROUGH STREET) IF THE SIDE ROAD IS CONCRETE PAVEMENT AND GREATER THAN 300 FEET IN LENGTH.
2. SPACE CONTRACTION JOINTS IN ACCORDANCE WITH SDD 13C4, 13C11 OR 13C13.
3. LOCATE CONSTRUCTION JOINTS A MINIMUM OF 6 FEET FROM THE NEAREST CONTRACTION JOINT AND ALIGN PARALLEL TO CONTRACTION JOINTS.
4. CONSTRUCTION JOINTS CAN BE FORMED OR SAWED.
5. IF JOINT IS FORMED, PROVIDE A ¼" RADIUS.
6. ANCHOR TIE BARS INTO DRILLED HOLES WITH AN EPOXY.

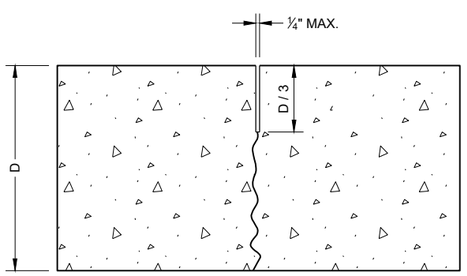

UNDOWELED TRANSVERSE

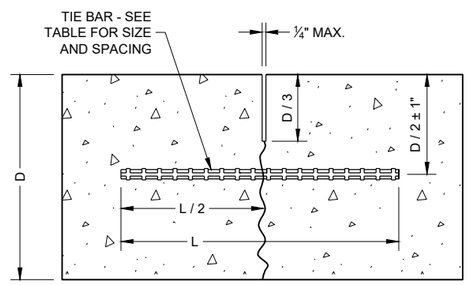

TIED LONGITUDINAL

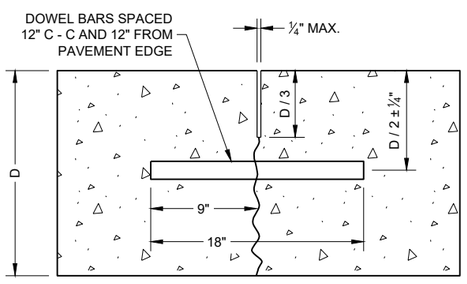

DOWELED TRANSVERSE

CONTRACTION JOINTS (2)

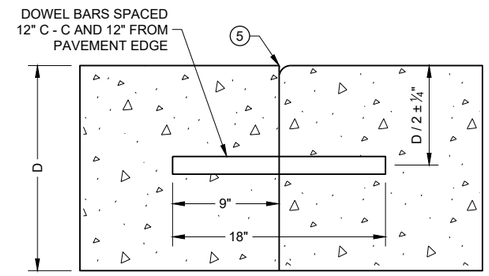

DOWELED TRANSVERSE (3)

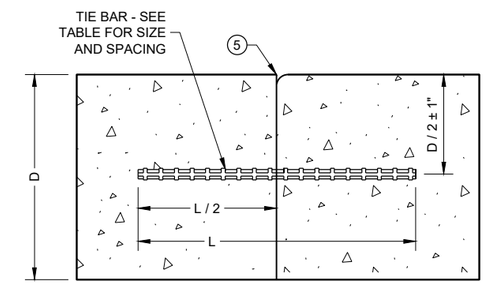

TIED LONGITUDINAL

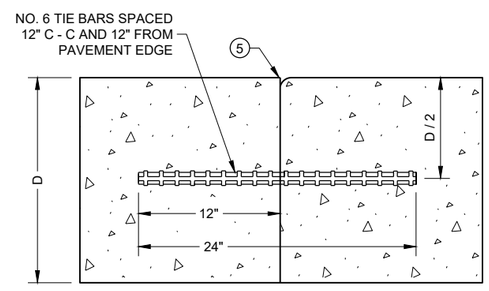

TIED TRANSVERSE (3)

(FOR USE ON NON-DOWELED PAVEMENTS ONLY)

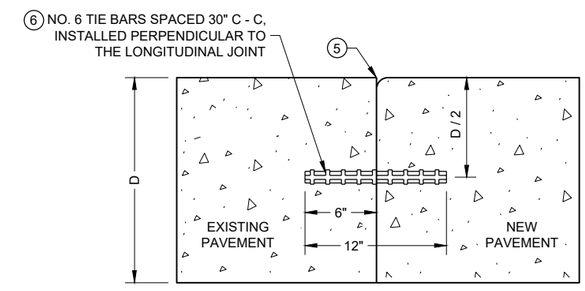

TIED LONGITUDINAL TO EXISTING

CONSTRUCTION JOINTS (4)

CONCRETE PAVEMENT JOINT TYPES

STATE OF WISCONSIN
DEPARTMENT OF TRANSPORTAT

6
SDD 13C18 - 08c

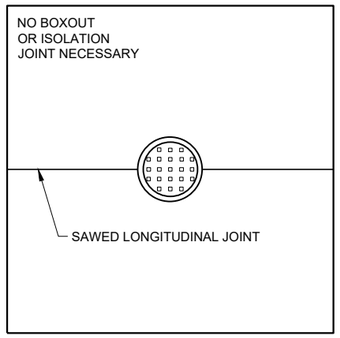

MANHOLE WITH LONGITUDINAL JOINT

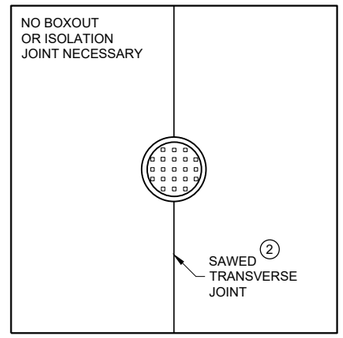

MANHOLE WITH TRANSVERSE JOINT

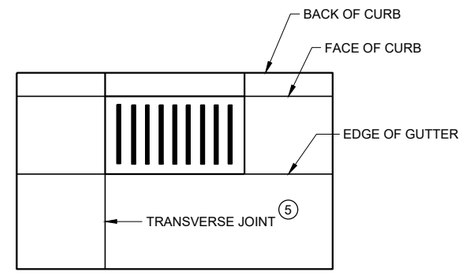

INLET WITH TRANSVERSE JOINT

GENERAL NOTES

1. USE BOXOUTS WHEN UTILITY STRUCTURE IS IN THE PATH OF CONSTRUCTION JOINTS. PROVIDE A 1 FOOT MINIMUM CLEARANCE BETWEEN THE EXTERIOR LIMIT OF THE STRUCTURE TO THE DIAMOND BOXOUT.
2. ADJUST TRANSVERSE JOINT TO INTERSECT MANHOLE IF POSSIBLE.
3. IF DISTANCE BETWEEN THE LONGITUDINAL JOINT AND THE EDGE OF MANHOLE IS 2 FEET OR LESS, DIVERT THE LONGITUDINAL JOINT AT A 2:1 TAPER RATE TO THE CENTER OF THE MANHOLE. IF THE DISTANCE IS GREATER THAN 2 FEET, DO NOT DIVERT THE JOINT AND SAW AS NORMAL. PLACE REINFORCEMENT REBAR AROUND THE MANHOLE.
4. IF THE DISTANCE FROM THE EDGE OF THE MANHOLE TO THE NEAREST TRANSVERSE JOINT IS LESS 4 FEET OR LESS, REDIRECT JOINT TO INTERSECT THE CENTER OF THE MANHOLE. IF DISTANCE IS GREATER THAN 4 FEET, DO NOT DIVERT THE JOINT AND SAW AS NORMAL. PLACE REINFORCEMENT REBAR AROUND THE MANHOLE.
5. ALIGN TRANSVERSE JOINT WITH ONE EDGE OF INLET WHEN PRACTICAL.

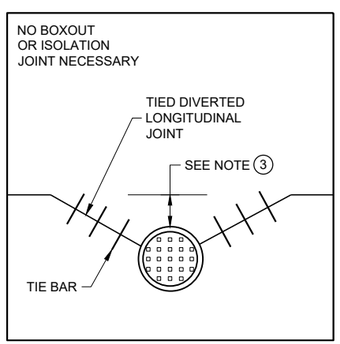

MANHOLE WITH DIVERTED LONGITUDINAL CONTRACTION JOINT

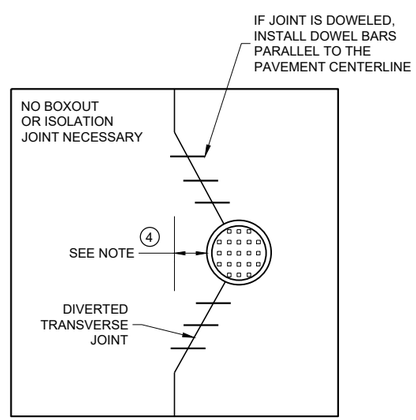

MANHOLE WITH DIVERTED TRANSVERSE CONTRACTION JOINT

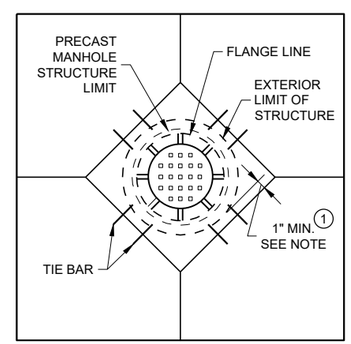

DIAGONAL MANHOLE BOXOUT FOR CONSTRUCTION JOINTS

CONCRETE PAVEMENT JOINTING AT UTILITY FIXTURES

STATE OF WISCONSIN
DEPARTMENT OF TRANSPORTATION

APPROVED
May 2023 — DATE
/S/ Peter Kemp P.E. — PAVEMENT SUPERVISO
FHWA

6

SDD 13C18 - 08d

LEGEND

- - - - - - DOWELED JOINT
——— TIED JOINT
EXPANSION JOINT
— — POTENTIAL DOWELED EXPANSION JOINT (1)
DIRECTION OF TRAFFIC

GENERAL NOTES

(1) CONSTRUCT DOWELED EXPANSION JOINT ON THE SIDE ROAD OF AN INTERSECTION IF THE SIDE ROAD IS CONCRETE PAVEMENT AND GREATER THAN 300 FEET IN LENGTH. ALIGN EXPANSION JOINT WITH THE EDGE OF RADIUS.

(2) PROVIDE TIED JOINT AT THE FLANGE OF SCAB ON CURB IF SCAB ON CURB AND GUTTER IS USE.

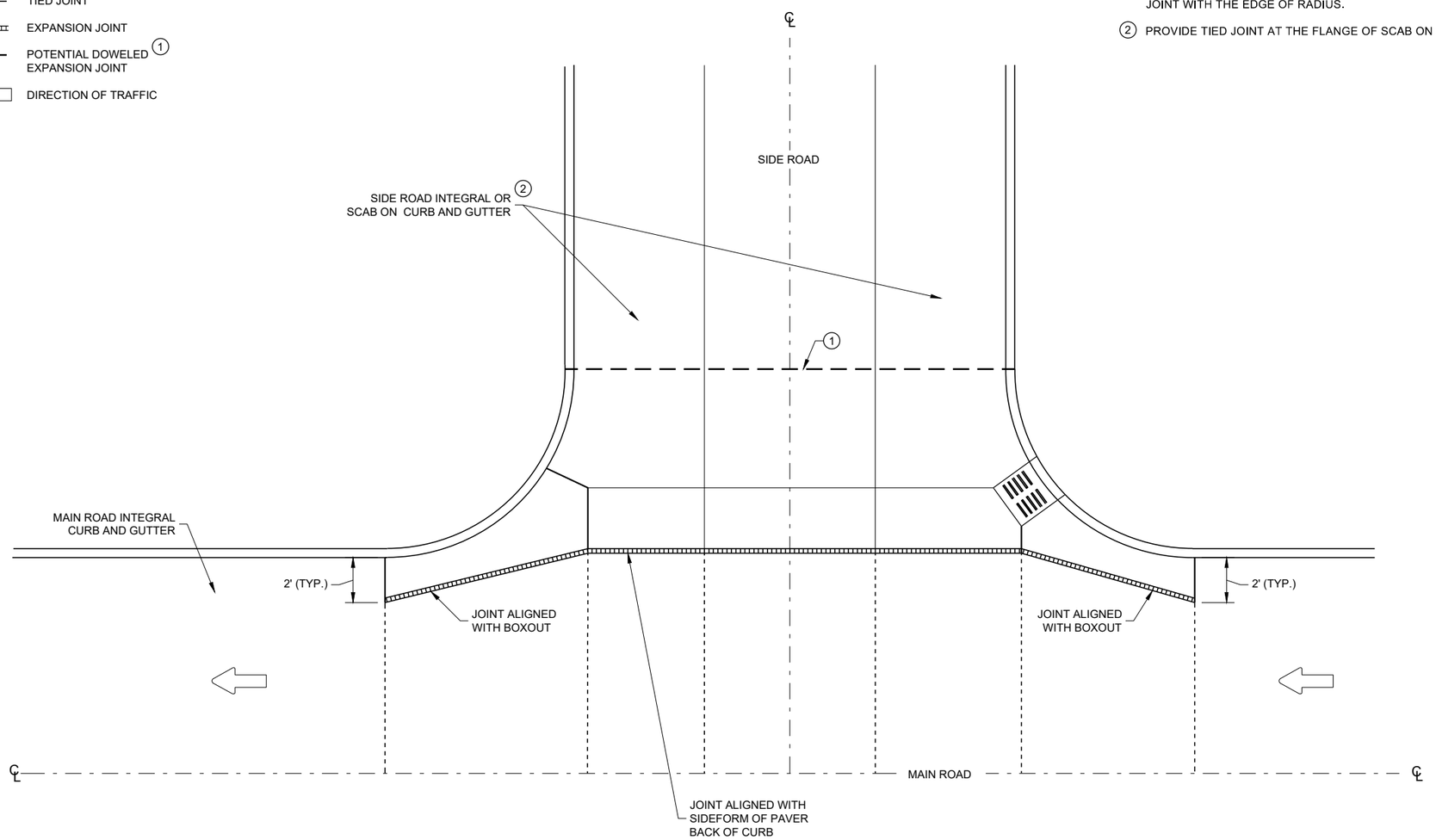

INTERSECTION BOXOUT FOR INTEGRAL CURB AND GUTTER

CONCRETE PAVEMENT INTERSECTION BOXOUT FOR INTEGRAL CURB AND GUTTER

STATE OF WISCONSIN
DEPARTMENT OF TRANSPORTATION

APPROVED
May 2023 — DATE
/S/ Peter Kemp P.E. — PAVEMENT SUPERVISOR
FHWA

6
SDD 13C18 - 08f

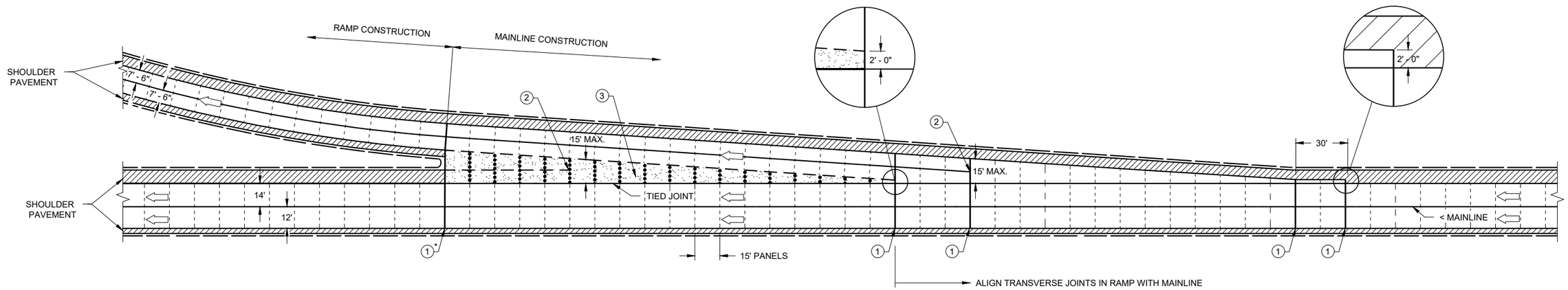

DECELERATION LANE

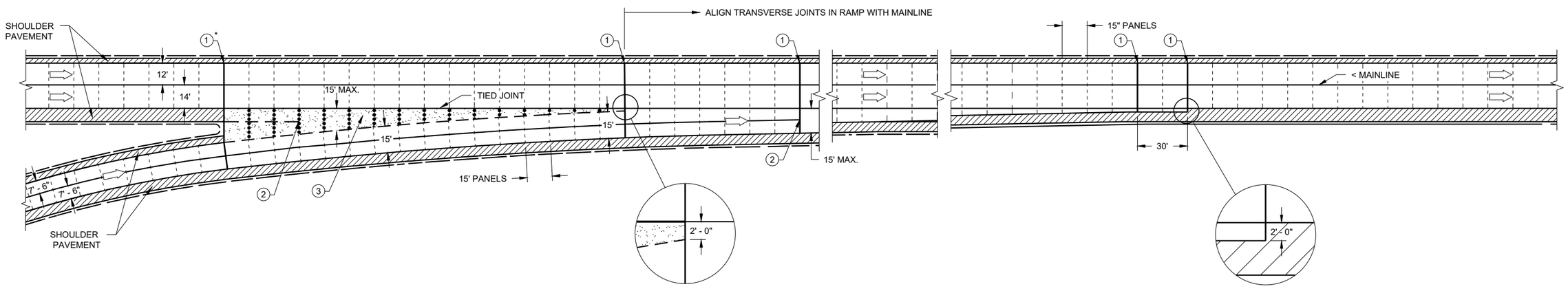

ACCELERATION LANE

GENERAL NOTES

PAVEMENT AND BASE THICKNESS, PANEL LENGTHS, JOINTS AND REINFORCEMENT FOR THE DECELERATION AND ACCELERATION LANES, INCLUDING TAPERS, SHALL BE THE SAME AS THE MAINLINE, EXCEPT WHERE OTHERWISE NOTED.

ALL REINFORCEMENT BARS SHALL BE EPOXY COATED CONFORMING TO SUBSECTION 505.2.6 OF THE STANDARD SPECIFICATIONS.

LANE AND SHOULDER WIDTHS MAY VARY FROM SHOWN. SEE CONSTRUCTION PLANS FOR ACTUAL PROPOSED WIDTHS.

(1) CRITICAL TRANSVERSE JOINT LOCATIONS AT PAVEMENT WIDTH CHANGES. ((1)* IS NOT A CRITICAL TRANSVERSE JOINT WHEN ASPHALTIC GORE IS INSTALLED).

(2) STOP LONGITUDINAL JOINT WITH CORE HOLE (2" TYP.) WHEN IT MEETS THE FIRST TRANSVERSE JOINT LESS THAN 15' WIDE OR STOP LONGITUDINAL JOINT WHEN IT MEETS 2' AWAY FROM THE TIED JOINT OF THE MAINLINE.

(3) DISREGARD THE JOINT DETAILS IN AND AROUND THE GORE WHEN ASPHALTIC GORE IS INSTALLED.

LEGEND

- DOWELED JOINT
- UNDOWELED JOINT
- TIED JOINT
- UNTIED JOINT
- GORE
- DIRECTION OF TRAVEL

CONCRETE PAVEMENT JOINTING ACCELERATION/ DECELERATION LANE

STATE OF WISCONSIN
DEPARTMENT OF TRANSPORTATION

APPROVED
May 2023 — DATE
/S/ Peter Kemp P.E. — PAVEMENT SUPERVIS
FHWA

6

SDD 13C18 - 08g

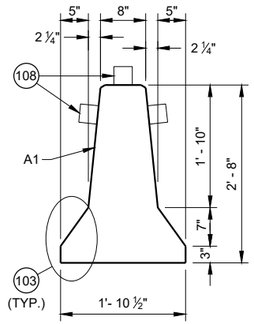

CROSS SECTION

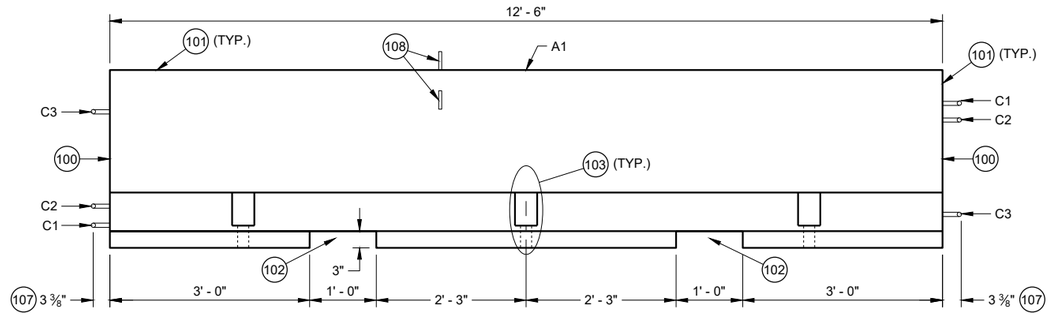

PROFILE VIEW

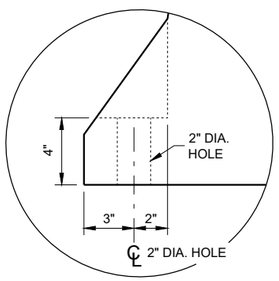

ANCHOR BLOCK DETAIL

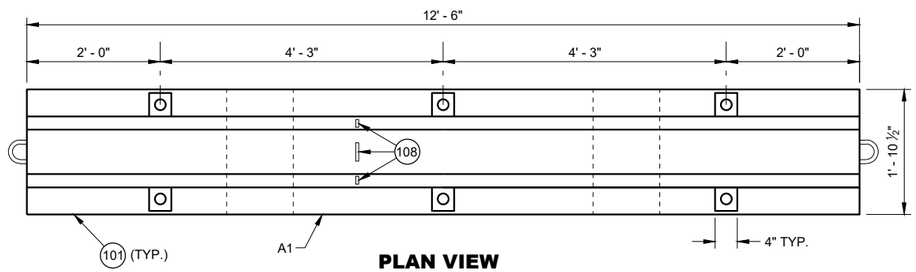

PLAN VIEW

TEMPORARY BARRIER

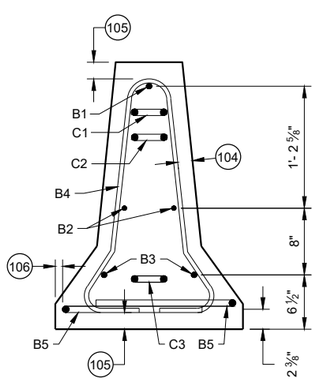

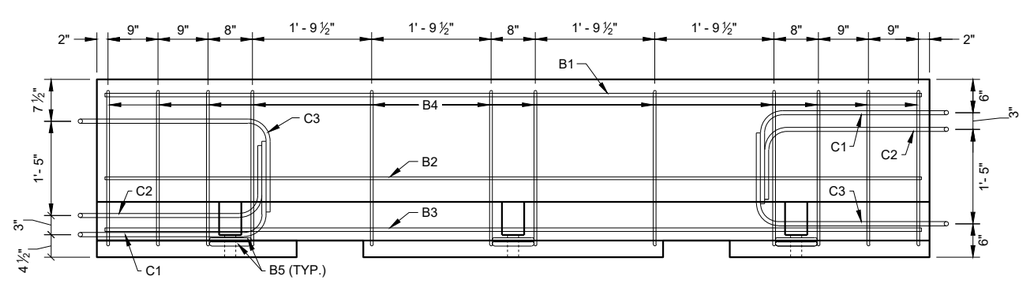

PROFILE VIEW

TEMPORARY BARRIER REINFORCEMENT

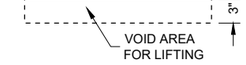

LIFTING SLOT DETAIL (TYP.)

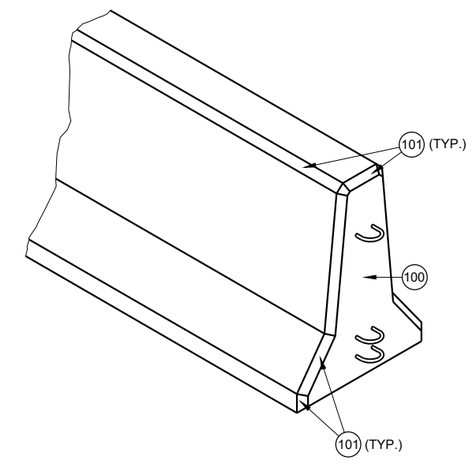

GENERAL NOTES

PLACE BARRIER ON PAVED SURFACE. BEFORE PLACEMENT OF TEMPORARY BARRIER, REMOVE ALL LOOSE MATERIAL FROM PAVED SURFACE.

LOOP BARS C1, C2 AND C3 ARE NOT FOR PLACEMENT OR MOVEMENT OF BARRIER.

100 PERMANENTLY FORM INTO ONE END OF BARRIER THE FOLLOWING INFORMATION:
- A. TYPE OF BARRIER: WI-CBTP
- B. MANUFACTURER
- C. DATE OF MANUFACTURE (MONTH AND YEAR)

101 1" OPTIONAL CHAMFER

102 SEE LIFTING SLOT DETAIL

103 SEE ANCHOR BLOCK DETAIL

104 1 ¾" MIN. CLEAR COVER

105 2" MIN. CLEAR COVER

106 1" MIN. CLEAR COVER

107 ± ⅛" MEASURED FROM FACE OF CONCRETE BARRIER TO OUTSIDE OF LOOP BAR (TYP.)

108 USE DELINEATORS CONFORMING TO SECTION 633 OF THE STANDARD SPECIFICATIONS. CONTRACTOR MY USE ALTERNATE SHAPES AND HOUSING. INSTALL DELINEATORS ACCORDING TO MANUFACTURERS INSTRUCTION. INSTALL YELLOW REFLECTORS WHEN BARRIER IS LOCATED LEFT OF TRAFFIC AND WHITE WHEN BARRIER IS LOCATED RIGHT OF TRAFFIC. SPACE DELINEATORS A MAXIMUM OF 25 FEET APART, PROVIDE TO MOUNTED DELINEATORS IN ADDITION TO SIDE MOUNTED DELINEATORS ON BARRIER INSTALLATIONS LOCATED ON A CURVED ALIGNMENT LONGER THAT 200 FEET AND ON BARRIERS USED TO SEPARATE OPPOSING TRAFFIC.

CONCRETE BARRIER TEMPORARY PRECAST, 12' - 6"

STATE OF WISCONSIN
DEPARTMENT OF TRANSPORTAT

6

SDD 14B07-16a

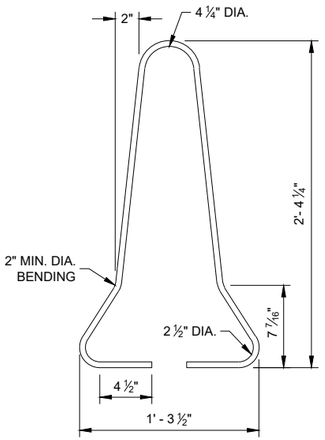

B4 BAR DETAIL

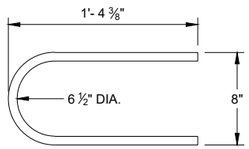

B5 BAR DETAIL

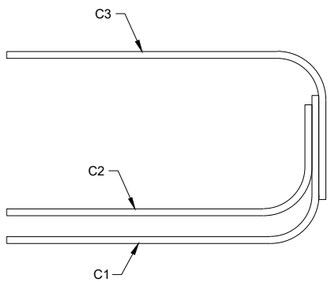

PROFILE VIEW

LOOP BAR ASSEMBLY

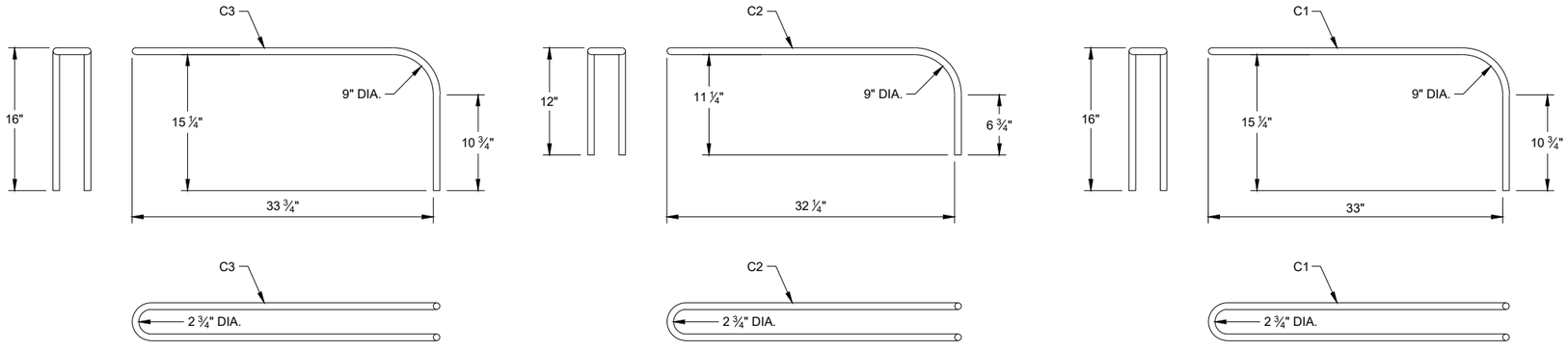

C BAR DETAILS

CONCRETE BARRIER TEMPORARY PRECAST, 12' - 6"

STATE OF WISCONSIN
DEPARTMENT OF TRANSPORTAT

6

SDD 14B07-16b

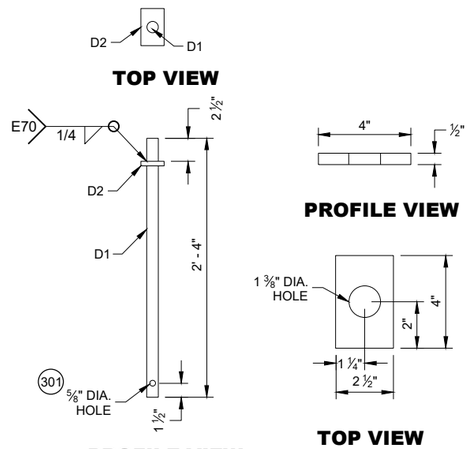

CONNECTOR PIN ASSEMBLY

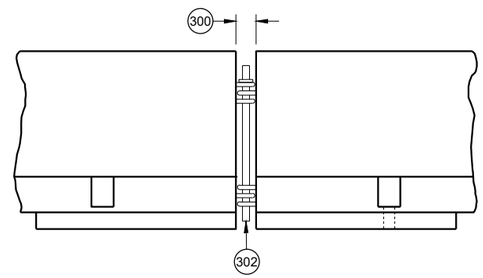

CONNECTING TEMPORARY BARRIER SECTIONS

GENERAL NOTES

300 SET WITH 3 ⅝" WOOD BLOCK.

301 HOLE IS OPTIONAL.

302 CONNECTOR PIN ASSEMBLY.

303 CONCRETE PAVEMENT, APPROACH SLAB, OR DECK.

304 CONCRETE DECK.

305 DO NOT USE ON CONCRETE BRIDGE DECK WITH ASPHALT OVERLAY OR CONCRETE PAVEMENT WITH ASPHALT OVERLAY.

306 MINIMUM OF 2" OF ASPHALT.

307 ASPHALT ANCHOR PIN ASSEMBLY

308 IF DRILLING A PILOT HOLE, THE MAX, DIA. OF THE HOLE IS 3/4"

309 WHEN THERE IS ASPHALT OVERLAYING CONCRETE PAVEMENT, A 1 5/8" DIA. PILOT HOLE CAN BE DRILLED INTO THE OVERLAY AND CONCRETE. IF NEEDED DRILL A 3/4" PILOT HOLE IN BASE COURSE.

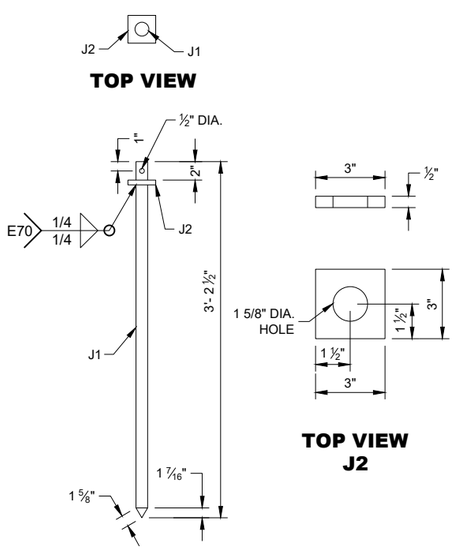

PROFILE VIEW

ASPHALT ANCHOR PIN ASSEMBLY

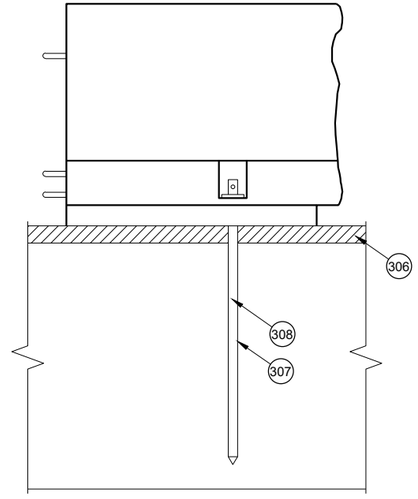

SIDE VIEW

ASPHALT ANCHOR INSTALLATION THROUGH ASPHALT PAVEMENT

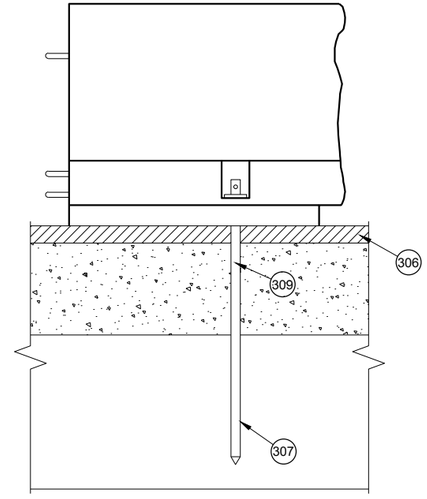

SIDE VIEW

ASPHALT ANCHOR INSTALLATION THROUGH ASPHALT OVERLAY ON TOP OF CONCRETE PAVEMENT

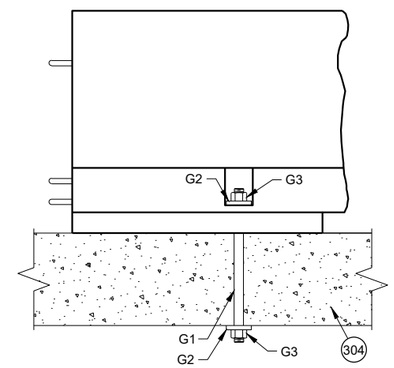

SIDE VIEW

THROUGH BOLT ANCHOR INSTALLATION 305

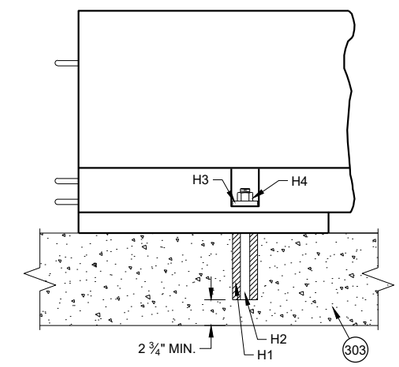

SIDE VIEW

ADHESIVE ANCHOR INSTALLATION 305

CONCRETE BARRIER TEMPORARY PRECAST, 12' - 6"

STATE OF WISCONSIN
DEPARTMENT OF TRANSPORTAT

6

SDD 14B07-16c

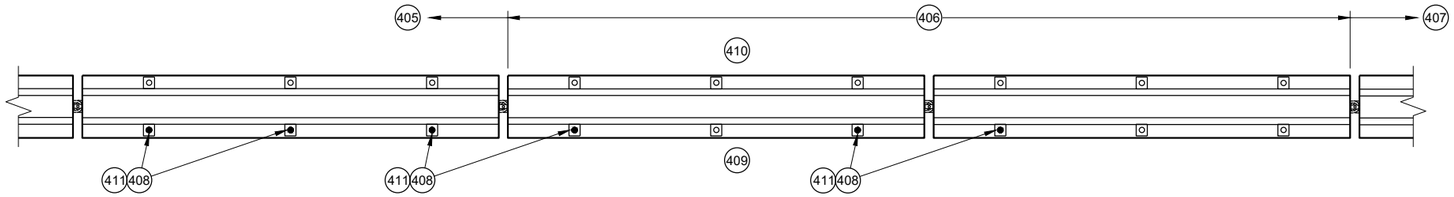

PLAN VIEW

TRANSITION FROM FREE STANDING TO ANCHORED BARRIER

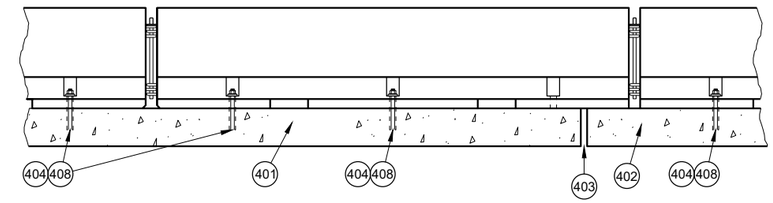

PROFILE VIEW

ANCHORED BARRIER NEAR EXPANSION JOINT (400)

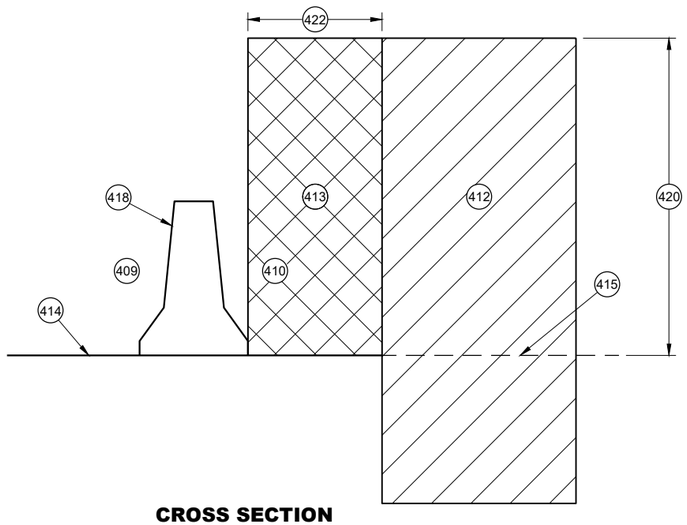

CROSS SECTION

FREE STANDING BARRIER

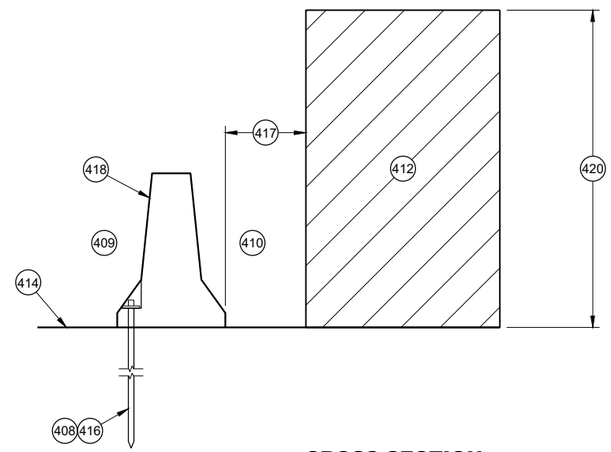

CROSS SECTION

ANCHORED BARRIER FOR OBJECTS ABOVE THE GRADE LINE AND NEAR THE BARRIER

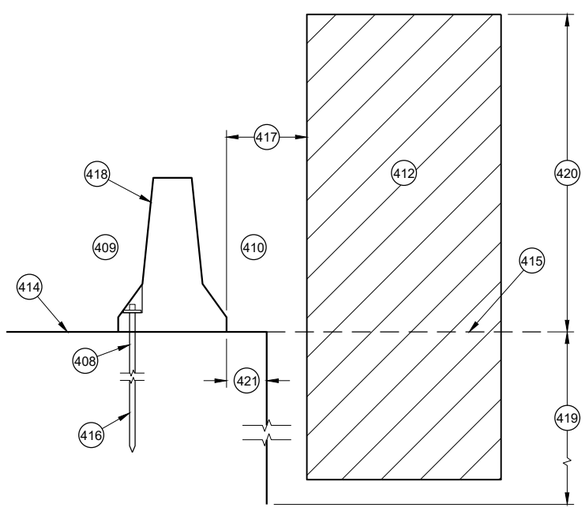

CROSS SECTION

ANCHORED BARRIER NEAR VERTICAL DROP OFF

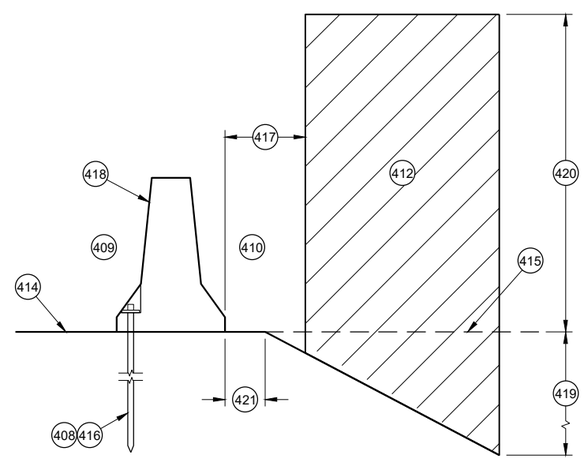

CROSS SECTION

ANCHORED BARRIER NEAR A SLOPE

GENERAL NOTES

(400) NO SINGLE CONCRETE BARRIER SECTION SHALL BE ANCHORED TO BOTH THE BRIDGE DECK AND THE APPROACH SLAB. ALL ANCHOR BOLT LOCATIONS SHALL BE ANCHORED TO THE DECK IN ACCORDANCE WITH THE DETAIL. NO MORE THAN ONE ANCHOR BOLT SHALL BE ELIMINATED FROM A BARRIER SECTION WHEN SPANNING AN EXPANSION JOINT.

(401) CONCRETE DECK

(402) CONCRETE DECK OR APPROACH SLAB.

(403) EXPANSION JOINT

(404) ADHESIVE ANCHOR SHOWN. SEE ANCHOR DETAILS.

(405) ANCHORED TEMPORARY BARRIER

(406) TRANSITION FROM ANCHORED TEMPORARY BARRIER TO FREE STANDING

(407) FREE STANDING BARRIER

(408) REMOVE ALL ANCHORS WHEN NO LONGER NEEDED. FILL CONCRETE PAVEMENTS, DECKS AND APPROACH SLABS WITH NON-SHRINK COMMERCIAL GROUT FROM THE APPROVED PRODUCT LIST. FILL ASPHALT PAVEMENTS WITH ASTM D6690 TYPE II RUBBERIZED CRACK FILLER.

(409) TRAFFIC SIDE

(410) NON-TRAFFIC SIDE

(411) ANCHOR LOCATION. SEE ANCHORING DETAILS.

(412) WORK AREA

(413) AREA FREE OF OBJECTS AND WORKERS

(414) GRADE LINE

(415) EXTENDED GRADE LINE

(416) ANCHORED TEMPORARY BARRIER. SEE BOLT THROUGH DECK, REMOVABLE ADHESIVE ANCHOR, OR AN ASPHALT ANCHOR ROD DETAILS FOR MORE INFORMATION. ASPHALT ANCHOR ROD SHOWN.

(417) WHEN OBJECTS EXTEND ABOVE THE GRADE. A MINIMUM OF 1 FOOT IS REQUIRED FROM BACK OF BARRIER TO OBJECT.

(418) OBJECTS ARE NOT TO BE PLACED ON, MOUNTED TO, OR ALLOWED TO LEAN AGAINST THE BARRIER WITHOUT WRITTEN PERMISSION OF THE PROJECT ENGINEER.

(419) DEPTHS OF 3 FEET OR MORE.

(420) Y = 6.5'

(421) OFFSET FROM BACK OF BARRIER EDGE:

CONCRETE PAVEMENT	0.5'
ASPHALT	0.5'

(422) POSTED SPEED (MPH):

45 OR GREATER	4.0'
40 OR LOWER	2.0'

CONCRETE BARRIER TEMPORARY PRECAST, 12' - 6"

STATE OF WISCONSIN
DEPARTMENT OF TRANSPORTAT

6
SDD 14B07-16d

GENERAL NOTES

500 EXISTING RIGID BARRIERS (VARIES)

501 TEMPORARY BARRIER

502 SEE OTHER DETAIL ON HOW TO ANCHOR TEMPORARY BARRIER (BARRIER ASPHALT ANCHOR SHOWN).

503 ANCHORS ARE REQUIRED ON BOTH SIDE OF THE TEMPORARY BARRIER.

504 NESTED RAILS ARE REQUIRED ON BOTH SIDES OF THE TEMPORARY BARRIER FOR ALL INSTALLATIONS.

505 TRAFFIC TRAVELS FROM PERMANENT BARRIER TO TEMPORARY BARRIER.

506 TRAFFIC TRAVELS FROM TEMPORARY BARRIER TO PERMANENT BARRIER.

507 VERTICAL BARRIER

508 SAFETY SHAPE BARRIER

509 SINGLE SLOPE BARRIER

510 CAP END PLATE PLACED FLUSH WITH UPSTREAM END OF RIGID BARRIER.

511 BENT THRIE BEAM TO FIT.

512 THRIE BEAM PIECES ARE OFFSET 15 ¼" TO PREVENT INTERFERENCE FROM THE ANCHORS ON OPPOSING SIDES.

513 TWO (2) P1, P2 AND P3 ARE REQUIRED

514 FIVE (5) N1, N2 AND N3 ARE REQUIRED

515 TWO (2) R1, R2 AND R3 ARE REQUIRED

516 CUT WOOD BLOCK TO FIT.

517 SEE THRIE BEAM RAIL TERMINAL CONNECTOR DETAIL ASSEMBLY.

518 CAP ASSEMBLY

519 4" MAX. GAP BETWEEN TEMPORARY BARRIER AND RIGID BARRIER.

520 ALL TWELVE SPLICE HOLES REQUIRE M1 AND M2

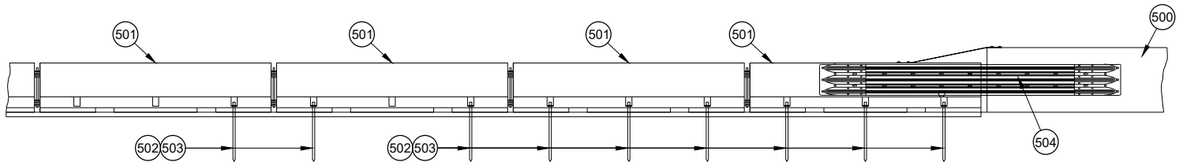

PROFILE VIEW

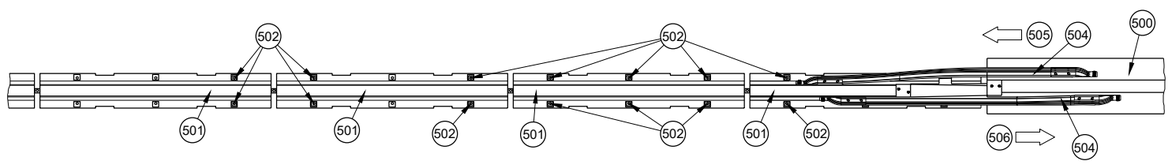

PLAN VIEW
TRANSITION TO RIGID BARRIER

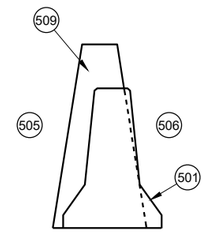

CROSS SECTION TEMPORARY BARRIER PLACEMENT SINGLE SLOPE

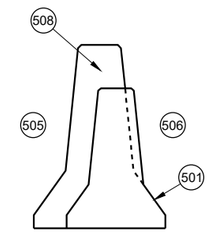

CROSS SECTION TEMPORARY BARRIER PLACEMENT SAFETY SHAPE

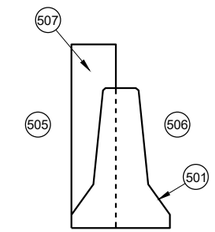

CROSS SECTION TEMPORARY BARRIER PLACEMENT VERTICAL

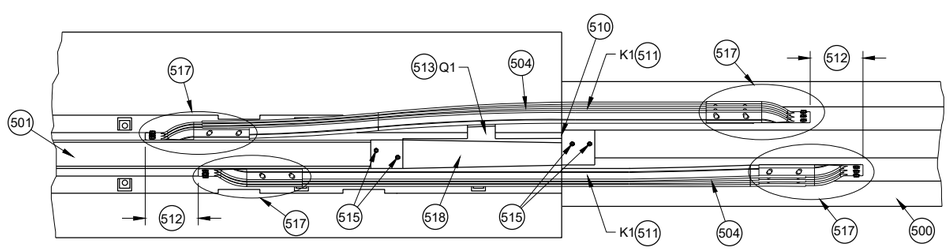

PLAN DETAIL VIEW
TRANSITION TO RIGID BARRIER

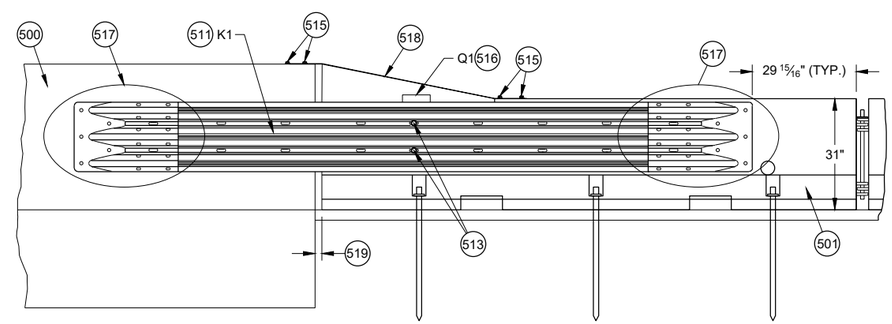

BACK DETAIL VIEW
TRANSITION TO RIGID BARRIER

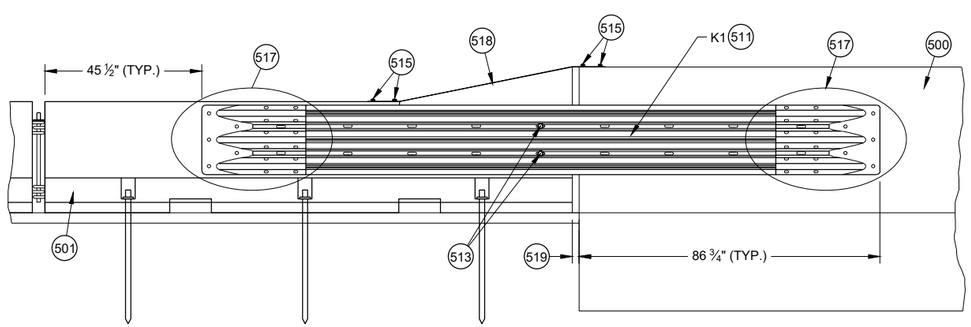

FRONT DETAIL VIEW
TRANSITION TO RIGID BARRIER

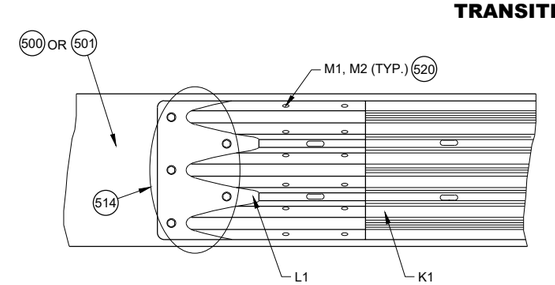

517 DETAIL PLAN VIEW
THRIE BEAM RAIL TERMINAL CONNECTOR ASSEMBLY

CONCRETE BARRIER TEMPORARY PRECAST, 12' - 6"

STATE OF WISCONSIN
DEPARTMENT OF TRANSPORTAT

6

SDD 14B07-16e

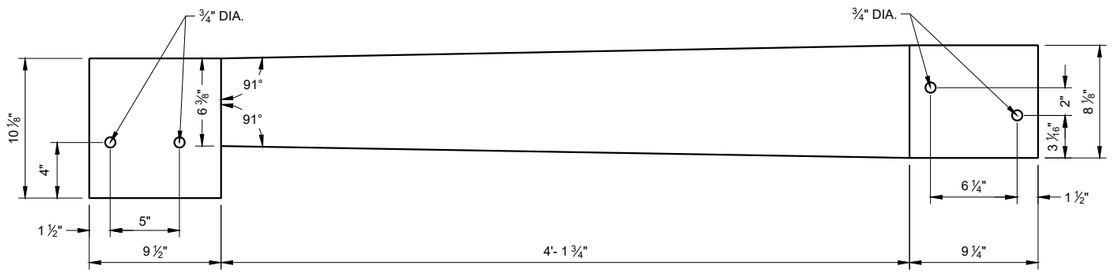

TOP VIEW
S1

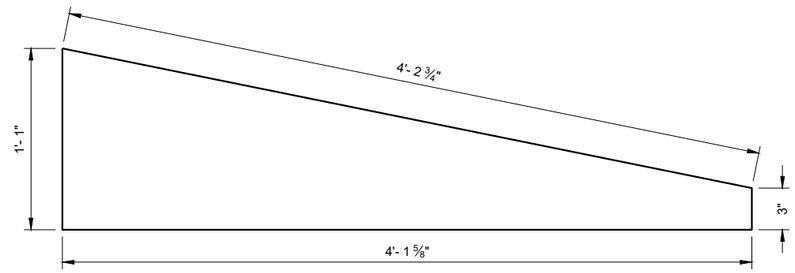

SIDE VIEW
S3

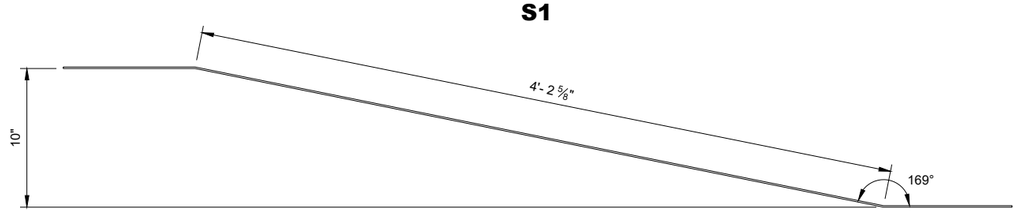

ELEVATION VIEW
S1

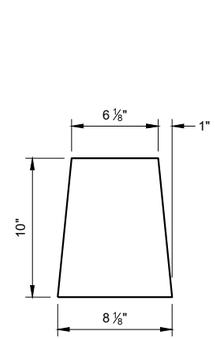

S2

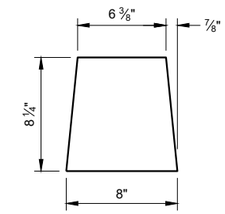

S4

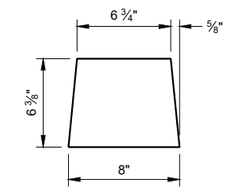

S5

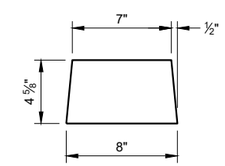

S6

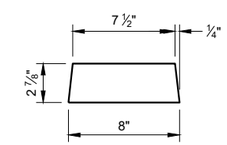

S7

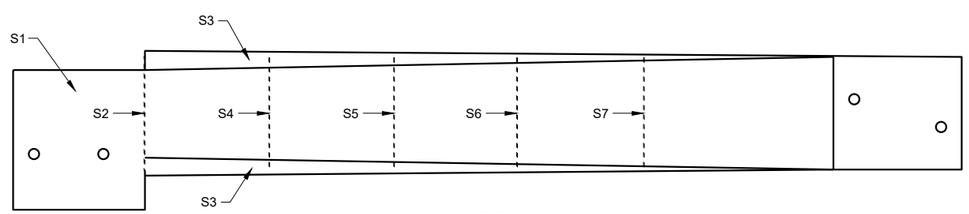

PLAN VIEW

GENERAL NOTES

STITCH WELD GUSSET PLATES AND END PLATES ON THREE SIDES

STITCH WELD TWO SIDE PLATES TO TOP PLATE, END PLATE AND GUSSETS.

600 SIDE PLATES (S3) NOT SHOWN FOR CLARITY.

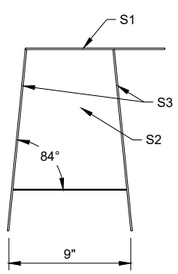

BACK VIEW

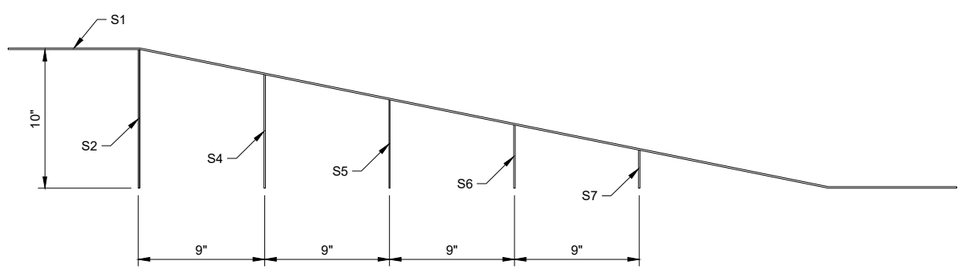

SIDE VIEW 600

42" TOP CAP ASSEMBLY

CONCRETE BARRIER TEMPORARY PRECAST, 12' - 6"

STATE OF WISCONSIN
DEPARTMENT OF TRANSPORTA

6

SDD 14B07-16f

6

SDD 14B07-16f

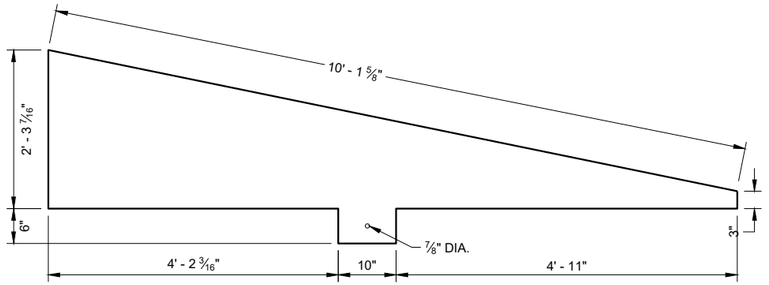

SIDE VIEW
T4

END VIEW

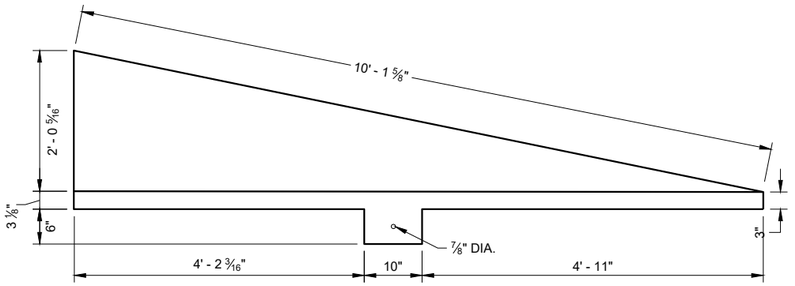

SIDE VIEW
T3

END VIEW

GENERAL NOTES

STITCH WELD GUSSET PLATES AND END PLATES ON THRIE SIDES

STITCH WELD TWO SIDE PLATES TO TOP PLATE, END PLATE AND GUSSETS.

SIDE PLATES, TOP PLATE, END PLATE AND GUSSETS ARE 12 GAUGE ASTM A36 GALVANIZED STEEL.

700 SIDE PLATES (T3 AND T4) NOT SHOWN FOR CLARITY.

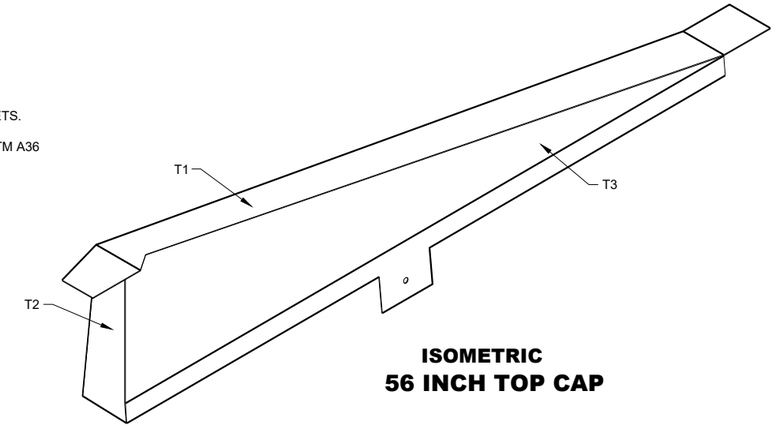

ISOMETRIC
56 INCH TOP CAP

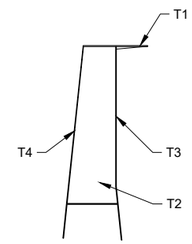

END VIEW
56 INCH TOP CAP

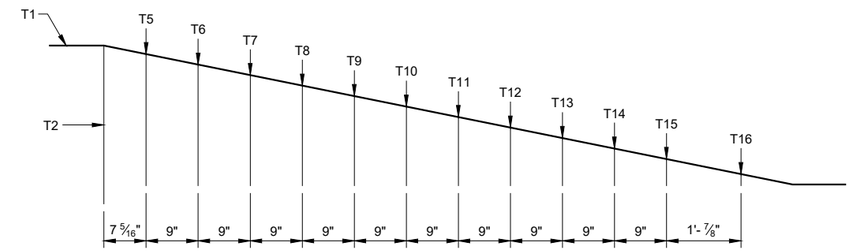

SIDE VIEW
56 INCH TOP CAP 700

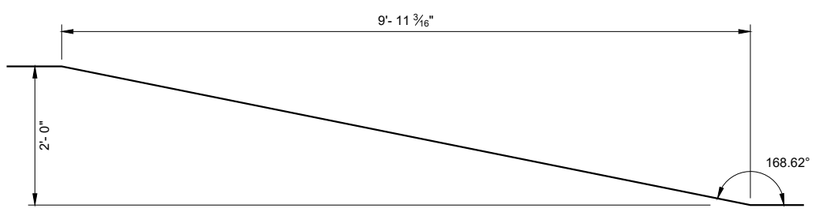

SIDE VIEW
TOP PLATE T1

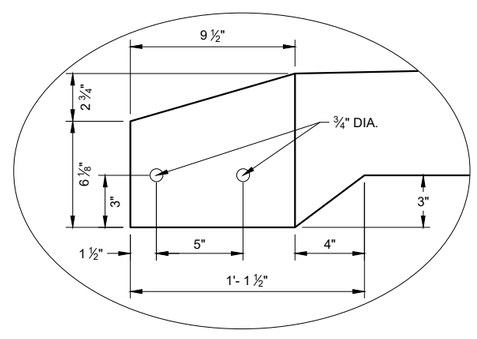

DETAIL "A"

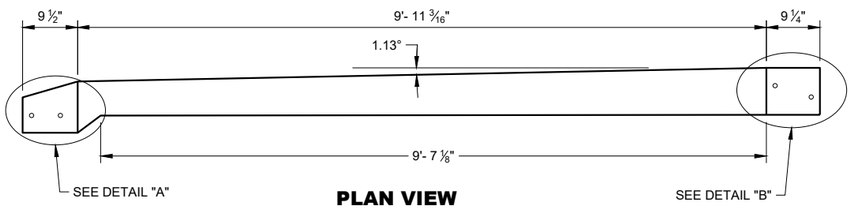

PLAN VIEW
TOP PLATE T1

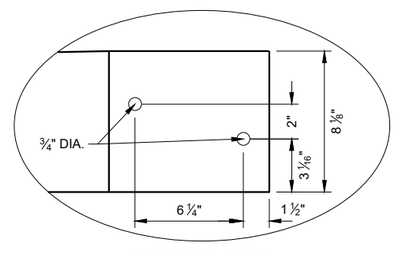

DETAIL "B"

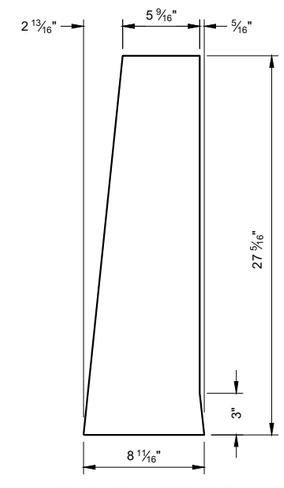

END PLATE T2

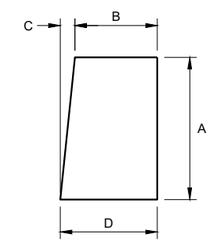

GUSSET PLATES
T5 - T16

GUSSET DIMENSIONS				
GUSSET NO.	A	B	C	D
T5	22 13/16"	5 11/16"	2 5/16"	8 1/16"
T6	21"	5 7/8"	2 3/16"	8 1/16"
T7	19 3/16"	6 1/16"	1 15/16"	8 1/16"
T8	17 3/8"	6 1/4"	1 13/16"	8 1/16"
T9	15 5/16"	6 7/16"	1 9/16"	8 1/16"
T10	13 3/4"	6 5/8"	1 7/16"	8 1/16"
T11	11 15/16"	6 13/16"	1 1/4"	8 1/16"
T12	10 1/8"	7"	1 1/16"	8 1/16"
T13	8 5/16"	7 3/16"	7/8"	8 1/16"
T14	6 1/2"	7 3/8"	11/16"	8 1/16"
T15	4 11/16"	7 9/16"	1/2"	8"
T16	2 7/8"	7 3/4"	1/4"	8"

CONCRETE BARRIER TEMPORARY PRECAST, 12' - 6"

STATE OF WISCONSIN
DEPARTMENT OF TRANSPORTATION

6

SDD 14B07-16g

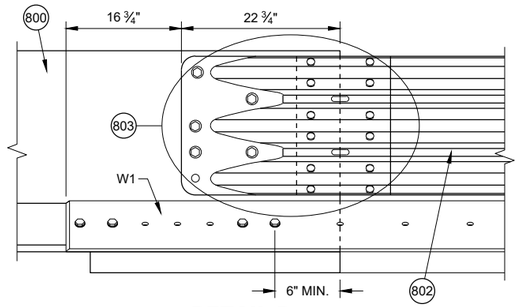

DETAIL D

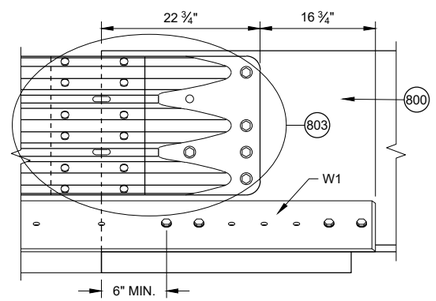

DETAIL E

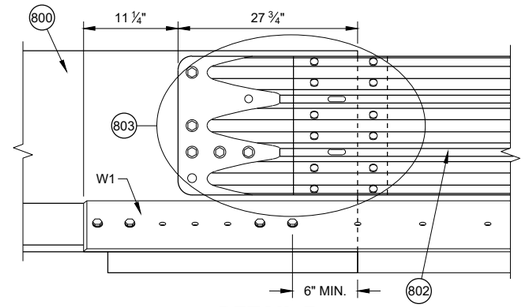

DETAIL F

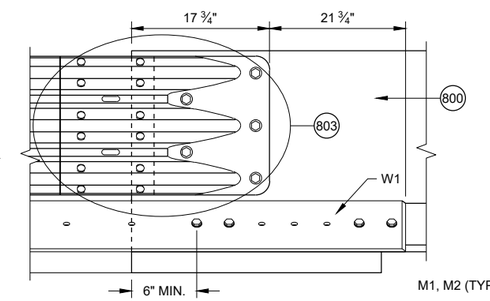

DETAIL G

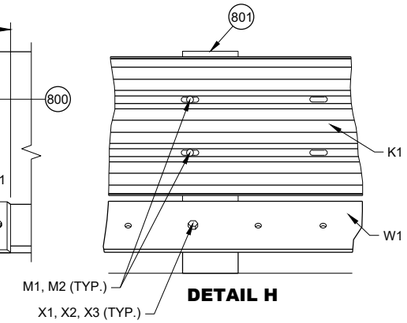

DETAIL H

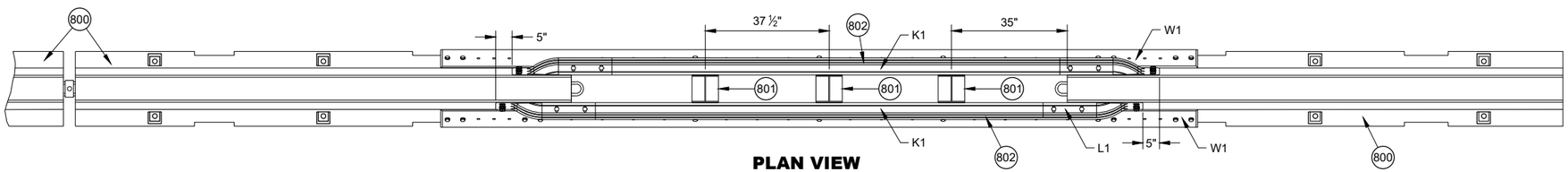

PLAN VIEW

GENERAL NOTES

800 FREE STANDING TEMPORARY BARRIER

801 GAP STIFFENER ASSEMBLY

802 THRIE BEAMS ARE NESTED ON BOTH SIDES OF THE TEMPORARY BARRIER.

803 SEE THRIE BEAM RAIL TERMINAL CONNECTOR DETAIL

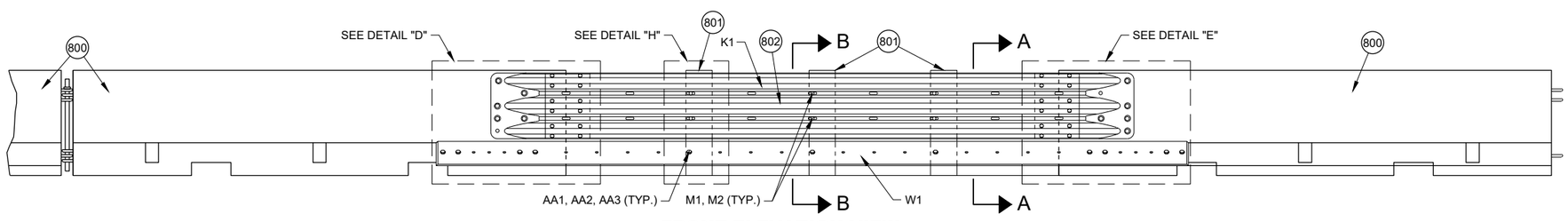

FRONT ELEVATION VIEW

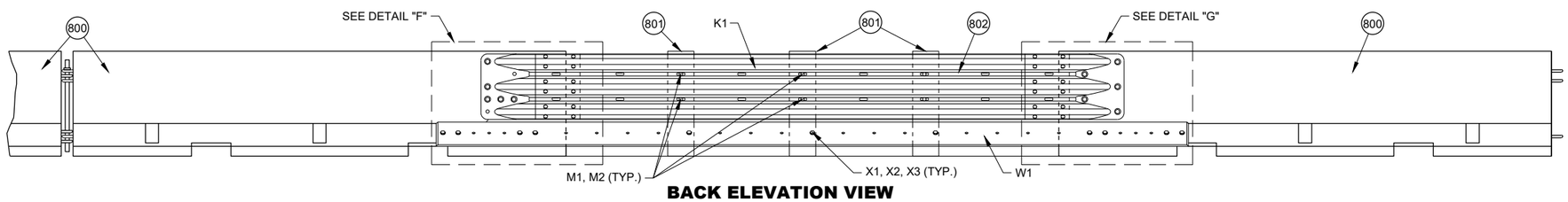

BACK ELEVATION VIEW

PORTABLE CONCRETE BARRIER GAP THRIE BEAM COVER

CONCRETE BARRIER TEMPORARY PRECAST, 12' - 6"

STATE OF WISCONSIN
DEPARTMENT OF TRANSPORTA

6

SDD 14B07-16h

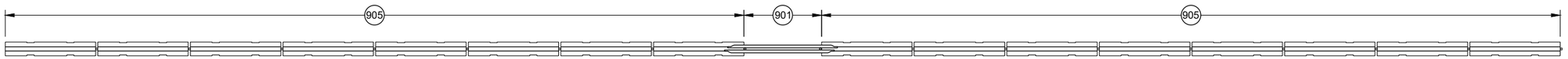

PLAN VIEW
GAP WITHIN SPACING

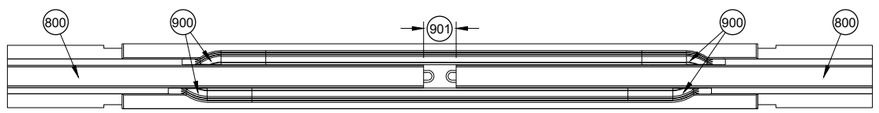

PLAN VIEW
TEMPORARY BARRIER GAP OVER 4" TO 1' MAX. (904)

GENERAL NOTES

(900) SEE OTHER DETAILS FOR TEMPORARY GAP HARDWARE (TYP.)

(901) TEMPORARY BARRIER GAP

(902) GAP STIFFENER ASSEMBLY CENTERED IN THE GAP.

(903) GAP STIFFENER ASSEMBLY IS OFFSET 18 ¾" FROM CENTER

(904) MINIMUM NUMBER OF GAP STIFFENERS SHOWN FOR THE GAP RANGE SHOWN.

(905) MINIMUM OF 8 CONTINUOUS FREE STANDING TEMPORARY BARRIERS

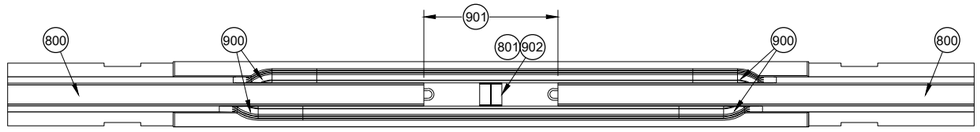

PLAN VIEW
TEMPORARY BARRIER GAP OVER 1' TO 4' MAX. (904)

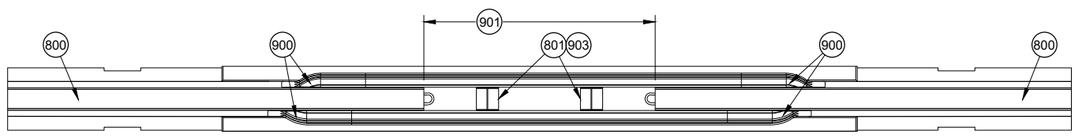

PLAN VIEW
TEMPORARY BARRIER GAP OVER 4' TO 7' MAX. (904)

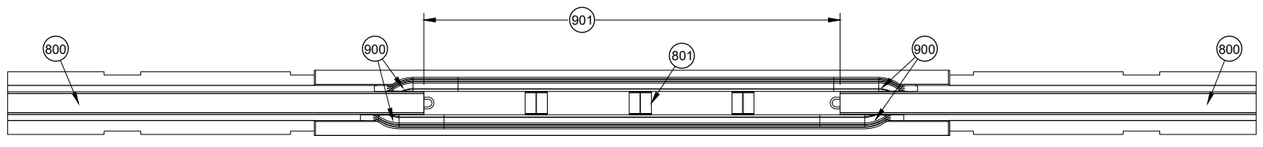

PLAN VIEW
TEMPORARY BARRIER GAP OVER 7' TO 12.5' MAX. (904)

CONCRETE BARRIER TEMPORARY PRECAST, 12' - 6"

STATE OF WISCONSIN
DEPARTMENT OF TRANSPORTAT

6

SDD 14B07-16i

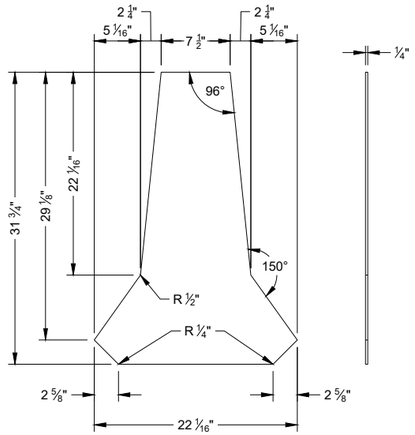

PROFILE VIEW

SIDE VIEW

STIFFENER ASSEMBLY CENTER PANEL U1

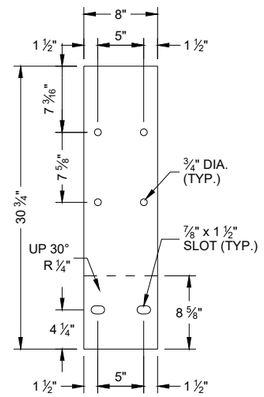

FLAT PATTERN

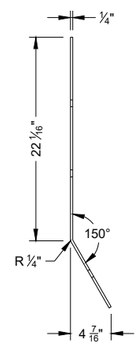

SIDE VIEW

STIFFENER ASSEMBLY SIDE PANEL U2

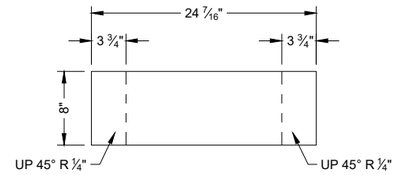

FLAT PATTERN

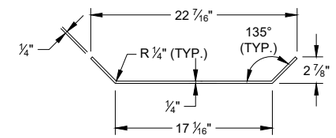

PROFILE VIEW

STIFFENER ASSEMBLY BOTTOM PANEL U3

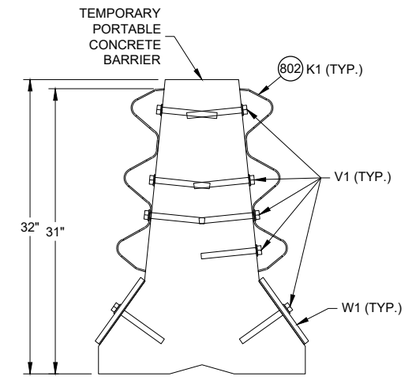

SECTION A - A

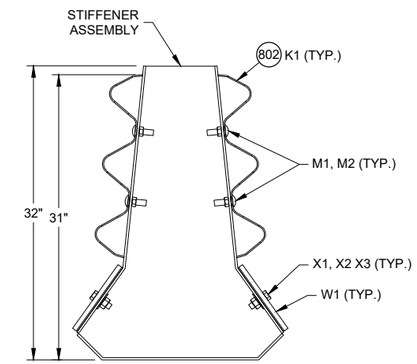

SECTION B - B

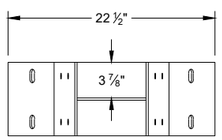

PLAN VIEW

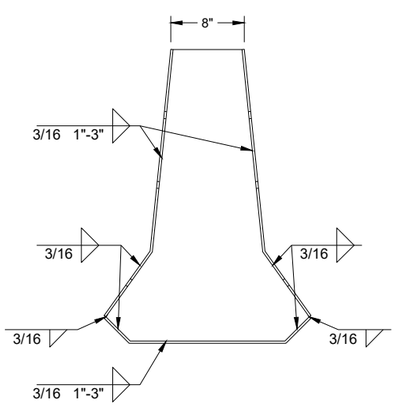

PROFILE VIEW

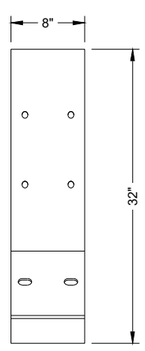

SIDE VIEW

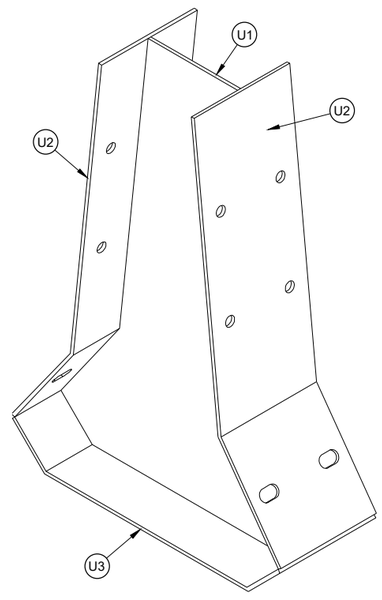

ISOMETRIC

GAP STIFFENER ASSEMBLY

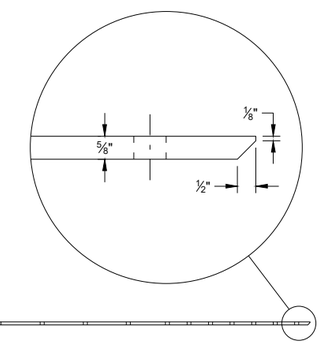

PLAN VIEW

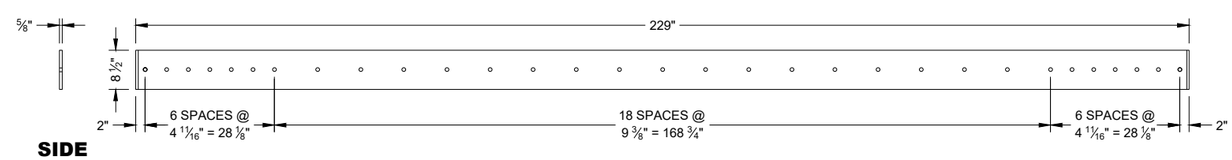

SIDE VIEW

ELEVATION VIEW

W1 TOE PLATE

CONCRETE BARRIER TEMPORARY PRECAST, 12' - 6"

STATE OF WISCONSIN
DEPARTMENT OF TRANSPORTAT

6

SDD 14B07-16j

GENERAL NOTES

1100 1" DIA. HOLE

1101 ¾" DIA. HOLE

1102 PROVIDE HOLES IN THRIE BEAM TERMINAL CONNECTOR TO LIMIT STEEL REINFORCEMENT OR LOOP BAR CONFLICT. CONTRACTOR MAY FIELD DRILL ADDITIONAL HOLE OR PROVIDE THRIE BEAM TERMINAL CONNECTOR WITH ADDITIONAL HOLES FROM SUPPLIER.

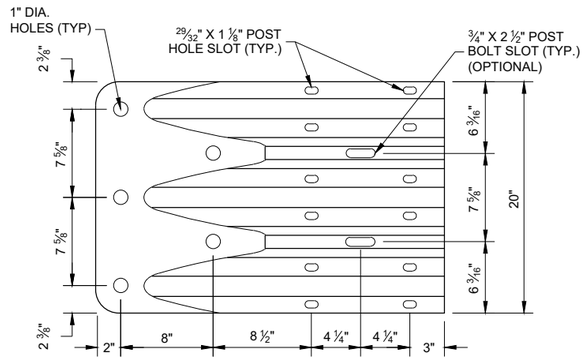

ELEVATION VIEW

THRIE BEAM TERMINAL CONNECTOR

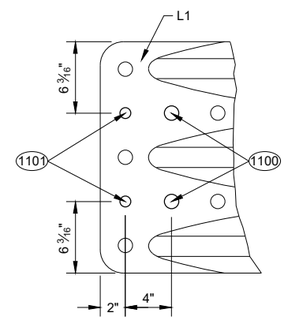

ELEVATION VIEW

ADDITIONAL THRIE BEAM 1102 TERMINAL CONNECTOR HOLE DETAIL

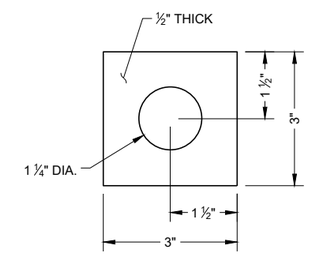

PLATE WASHER DETAIL G2, H3

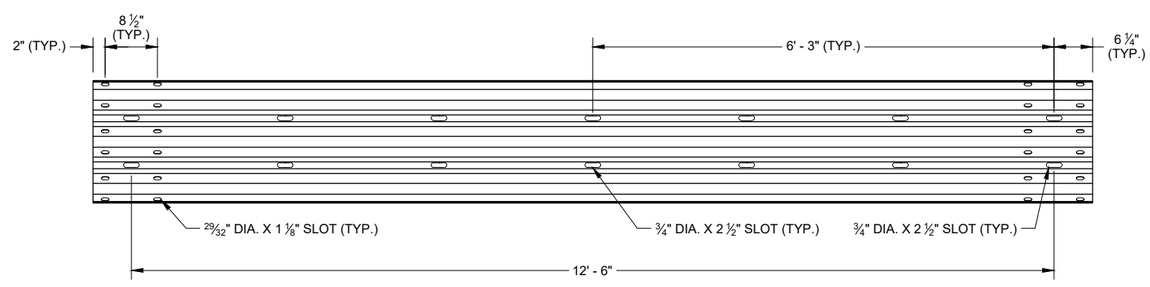

SLOTTED THRIE BEAM RAIL K1

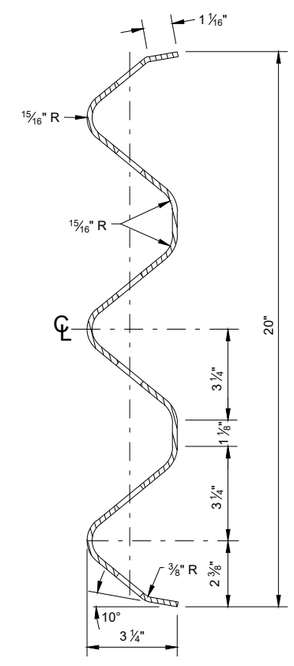

SECTION THROUGH BEAM K1

CONCRETE BARRIER TEMPORARY PRECAST, 12' - 6"

STATE OF WISCONSIN
DEPARTMENT OF TRANSPORTAT

6

SDD 14B07-16k

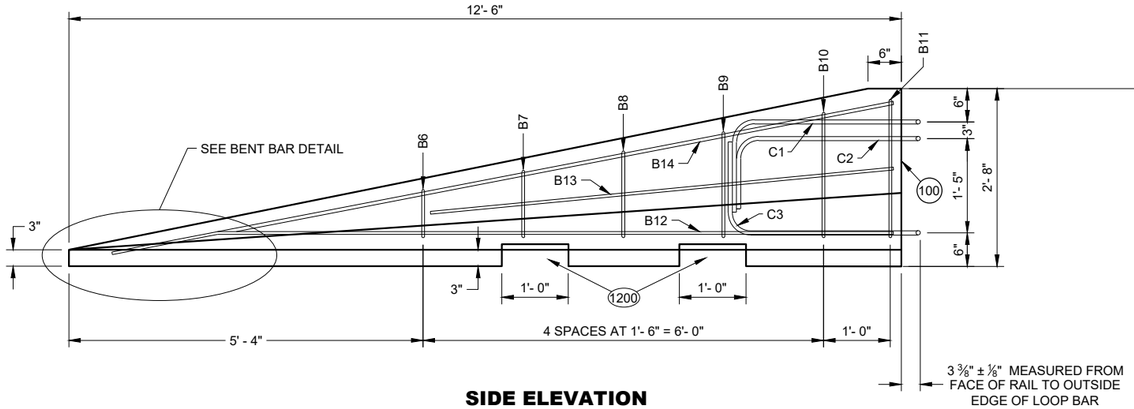

SIDE ELEVATION
(FOR CONNECTION TO LEFT END OF BARRIER)

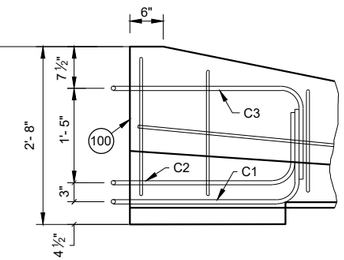

SIDE ELEVATION
LOOP BAR ASSEMBLY INVERTED FOR OPPOSITE END
(FOR CONNECTION TO RIGHT END OF BARRIER)

GENERAL NOTES

1200 SEE LIFTING SLOT DETAIL. LOCATION OF LIFTING SLOTS DETERMINED BY CONTRACTOR.

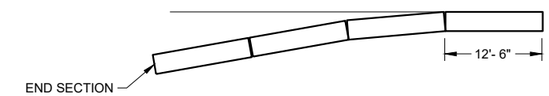

FLARE AT BARRIER END

POSTED SPEED, (MPH)	FLARE RATE
40 OR LESS	6:1
45 OR GREATER	8:1

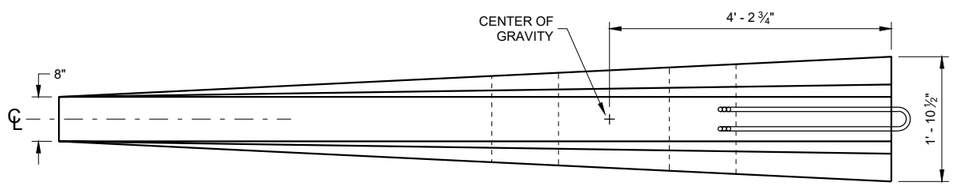

PLAN VIEW

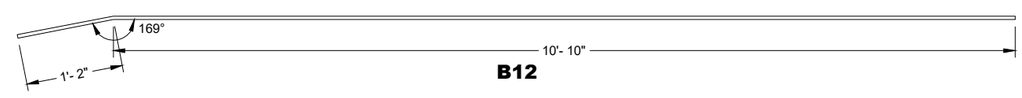

B12

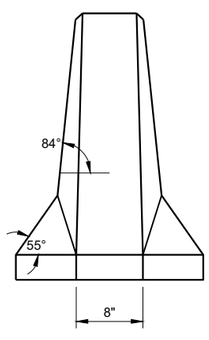

FRONT ELEVATION

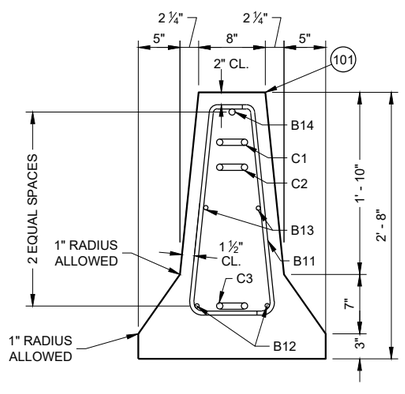

END SECTION

DETAILS OF BARRIER TAPER SECTION

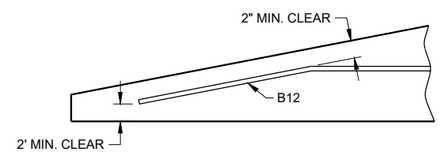

BENT BAR DETAIL

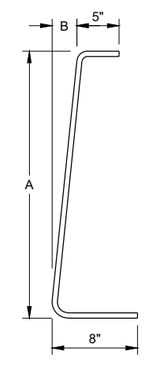

BAR	A	B
B6	10"	1"
B7	1'- 1"	1 ¼"
B8	1'- 5"	1 ⅝"
B9	1'- 8"	1 ⅞"
B10	2'- 0 ½"	2 ⅜"
B11	2'- 3"	2 ¾"

B BARS
2 OF EACH SIZE REQUIRED FOR STIRRUP ASSEMBLY

CONCRETE BARRIER TEMPORARY PRECAST, 12' - 6"

STATE OF WISCONSIN
DEPARTMENT OF TRANSPORTAT

6

SDD 14B07-16I

BILL OF MATERIALS - CONCRETE BARRIER PRECAST

PART	DESCRIPTION	MATERIALS SPECIFICATIONS	NOTES
A1	PRECAST TEMPORARY BARRIER - CONCRETE	MIN. = f'c 5000 PSI	
B1	REBAR	STANDARD SPEC. 505.2 GRADE 60 UNCOATED REBAR	#5 REBAR, LENGTH 12'-2"
B2	REBAR	STANDARD SPEC. 505.2 GRADE 60 UNCOATED REBAR	#4 REBAR, LENGTH 12'-2"
B3	REBAR	STANDARD SPEC. 505.2 GRADE 60 UNCOATED REBAR	#5 REBAR, LENGTH 12'-2"
B4	REBAR	STANDARD SPEC. 505.2 GRADE 60 UNCOATED REBAR	#4 REBAR, LENGTH 6'-0"
B5	REBAR	STANDARD SPEC. 505.2 GRADE 60 UNCOATED REBAR	#6 REBAR, LENGTH 2'-11"
B6	REBAR	STANDARD SPEC. 505.2 GRADE 60 UNCOATED REBAR	#4 REBAR, LENGTH 1'-11"
B7	REBAR	STANDARD SPEC. 505.2 GRADE 60 UNCOATED REBAR	#4 REBAR, LENGTH 2'-2"
B8	REBAR	STANDARD SPEC. 505.2 GRADE 60 UNCOATED REBAR	#4 REBAR, LENGTH 2'-6"
B9	REBAR	STANDARD SPEC. 505.2 GRADE 60 UNCOATED REBAR	#4 REBAR, LENGTH 2'-9"
B10	REBAR	STANDARD SPEC. 505.2 GRADE 60 UNCOATED REBAR	#4 REBAR, LENGTH 3'-2"
B11	REBAR	STANDARD SPEC. 505.2 GRADE 60 UNCOATED REBAR	#4 REBAR, LENGTH 3'-4"
B12	REBAR	STANDARD SPEC. 505.2 GRADE 60 UNCOATED REBAR	#4 REBAR, LENGTH 12'-0"
B13	REBAR	STANDARD SPEC. 505.2 GRADE 60 UNCOATED REBAR	#4 REBAR, LENGTH 7'-9"
B14	REBAR	STANDARD SPEC. 505.2 GRADE 60 UNCOATED REBAR	#5 REBAR, LENGTH 11'-9"
C1	LOOP BAR	ASTM A709 GRADE 70 SMOOTH BAR OR ASTM A706 GRADE 60 REBAR UNCOATED	¾" DIA.
C2	LOOP BAR	ASTM A709 GRADE 70 SMOOTH BAR OR ASTM A706 GRADE 60 REBAR UNCOATED	¾" DIA.
C3	LOOP BAR	ASTM A709 GRADE 70 SMOOTH BAR OR ASTM A706 GRADE 60 REBAR UNCOATED	¾" DIA.
D1	CONNECTION PIN - ROD	ASTM A36 MIN. STRENGTH 36 KSI / ASTM A529 MAX. STRENGTH 50 KSI / ASTM A572 MAX STRENGTH 50 KSI / ASTM A709 MAX STRENGTH 50 KSI / ASTM A992 MAX STRENGTH 50 KSI	1 ¼" DIA.
D2	CONNECTION PIN - TOP PLATE	ASTM A36 MIN. STRENGTH 36 KSI / ASTM A529 MAX. STRENGTH 50 KSI / ASTM A572 MAX STRENGTH 50 KSI / ASTM A709 MAX STRENGTH 50 KSI / ASTM A992 MAX STRENGTH 50 KSI	
G1	BOLT THROUGH ANCHOR - THREADED ROD	HOT DIP AASHTO M232 CLASS / ASTM A153 CLASS C / ASTM F2329 C OR MECHANICAL GALVANIZE TO AASHTO M298 CLASS 55 TYPE 2 / ASTM B695 CLASS 55 TYPE 2 A307 GRADE A OR SAE J429 GRADE 2 UNC	1 ⅛" DIA.
G2	BOLT THROUGH ANCHOR - WASHER, SQUARE	ASTM A36 MIN. STRENGTH 36 KSI / ASTM A529 MAX. STRENGTH 50 KSI / ASTM A572 MAX STRENGTH 50 KSI / ASTM A709 MAX STRENGTH 50 KSI / ASTM A992 MAX STRENGTH 50 KSI	
G3	BOLT THROUGH ANCHOR - NUT	HOT DIP AASHTO M232 CLASS / ASTM A153 CLASS C / ASTM F2329 C OR MECHANICAL GALVANIZE TO AASHTO M298 CLASS 55 TYPE 2 / ASTM B695 CLASS 55 UNC OVER TAP NUTS AS SPECIFIED IN AASHTO 291 / ASTM A 563 HEAVY HEX HEAD ASTM A563DH OR SAE J995 GRADE 5	
H1	ADHESIVE ANCHOR - ADHESIVE	ICC-ES-AC308 5 ¼" EMBEDMENT WITH A MIN. BOND STRENGTH OF 1,650 PSI. SEE 603.2 AND 603.3.1.2 OF THE WISCONSIN STANDARD SPECIFICATIONS FOR MORE INFORMATION ON ADHESIVE ANCHORS.	
H2	ADHESIVE ANCHOR - THREADED ROD	HOT DIP AASHTO M232 CLASS / ASTM A153 CLASS C / ASTM F2329 C OR MECHANICAL GALVANIZE TO AASHTO M298 CLASS 55 TYPE 2 / ASTM B695 CLASS 55 TYPE 2 A307 GRADE A / SAE J429 GRADE 2 UNC	1 ⅛" DIA.
H3	ADHESIVE ANCHOR - WASHER, SQUARE	ASTM A36 MIN. STRENGTH 36 KSI / ASTM A529 MAX. STRENGTH 50 KSI / ASTM A572 MAX STRENGTH 50 KSI / ASTM A709 MAX STRENGTH 50 KSI / ASTM A992 MAX STRENGTH 50 KSI	
H4	ADHESIVE ANCHOR - NUT	HOT DIP AASHTO M232 CLASS / ASTM A153 CLASS C / ASTM F2329 C OR MECHANICAL GALVANIZE TO AASHTO M298 CLASS 55 TYPE 2 / ASTM B695 CLASS 55 UNC OVER TAP NUTS AS SPECIFIED IN AASHTO 291 / ASTM A 563 HEAVY HEX HEAD ASTM A563DH OR SAE J995 GRADE 5	
J1	ASPHALT ANCHOR PIN - ROD	ASTM A36 MIN. STRENGTH 36 KSI / ASTM A529 MAX. STRENGTH 50 KSI / ASTM A572 MAX STRENGTH 50 KSI / ASTM A709 MAX STRENGTH 50 KSI / ASTM A992 MAX STRENGTH 50 KSI	1 ½" DIA.
J2	ASPHALT ANCHOR PIN - STOP PLATE	ASTM A36 MIN. STRENGTH 36 KSI / ASTM A529 MAX. STRENGTH 50 KSI / ASTM A572 MAX STRENGTH 50 KSI / ASTM A709 MAX STRENGTH 50 KSI / ASTM A992 MAX STRENGTH 50 KSI	
K1	THRIE BEAM RAIL	AASHTO M180 CLASS A TYPE 2 APPROVED PRODUCER	12 GAUGE
L1	THRIE BEAM RAIL - TERMINAL	AASHTO M180 CLASS A TYPE 2 APPROVED PRODUCER	12 GAUGE

PART	DESCRIPTION	MATERIALS SPECIFICATIONS	NOTES
M1	SPLICE BOLT	HOT DIP AASHTO M232 CLASS / ASTM A153 CLASS C / ASTM F2329 C OR MECHANICAL GAL. TO AASHTO M298 CLASS 55 TYPE 2 / ASTM B695 CLASS 55 TYPE 2 UNC AASHTO M180 HEAD ASTM A307 GRADE B OR SAE J429 GRADE 2 OR ASTM F1554 GRADE 36	⅝" DIA.
M2	SPLICE BOLT - NUT	HOT DIP AASHTO M232 CLASS / ASTM A153 CLASS C / ASTM F2329 C OR MECHANICAL GALVANIZE TO AASHTO M298 CLASS 55 TYPE 2 / ASTM B695 CLASS 55 UNC OVER TAP NUTS AS SPECIFIED IN AASHTO 291 / ASTM A 563 AASHTO M180 RECESSED HEAVY HEX HEAD ASTM A563DH OR SAE J995 GRADE 5	
N1	THRIE BEAM RAIL TERMINAL - MECHANICAL ANCHOR	HOT DIP AASHTO M232 CLASS / ASTM A153 CLASS C / ASTM F2329 C OR MECHANICAL GALVANIZE TO AASHTO M298 CLASS 55 TYPE 2 / ASTM B695 CLASS 55 UNC OVER TAP NUTS AS SPECIFIED IN AASHTO 291 / ASTM A 563 AASHTO M180 RECESSED HEAVY HEX HEAD ASTM A563DH OR SAE J995 GRADE 5	¾" DIA. LENGTH 6"
N2	THRIE BEAM RAIL TERMINAL - WASHER	HOT DIP AASHTO M232 CLASS / ASTM A153 CLASS C / ASTM F2329 C OR MECHANICAL GALVANIZE TO AASHTO M298 CLASS 55 TYPE 2 / ASTM B695 CLASS 55 TYPE 2 F436 TYPE 1	
N3	THRIE BEAM RAIL TERMINAL MECHANICAL OR ADHESIVE ANCHOR	MINIMUM MECHANICAL OR ADHESIVE ANCHOR STRENGTH REQUIREMENTS: ULTIMATE TENSILE LOAD 17.9 KIPS AND ULTIMATE SHEAR LOAD 21.96 KIPS. SEE 603.2 AND 603.3.1.2 OF THE WISCONSIN STANDARD SPECIFICATIONS FOR MORE INFORMATION ON ADHESIVE ANCHORS.	
P1	THRIE BEAM RAIL CONNECTION 1-BOLT	HOT DIP AASHTO M232 CLASS / ASTM A153 CLASS C / ASTM F2329 C OR MECHANICAL GALVANIZE TO AASHTO M298 CLASS 55 TYPE 2 / ASTM B695 CLASS 55 UNC OVER TAP NUTS AS SPECIFIED IN AASHTO 291 / ASTM A 563 AASHTO M180 RECESSED HEAVY HEX HEAD ASTM A563DH OR SAE J995 GRADE 5	¾" DIA.
P2	THRIE BEAM RAIL CONNECTION 1-WASHER	HOT DIP AASHTO M232 CLASS / ASTM A153 CLASS C / ASTM F2329 C OR MECHANICAL GAL. TO AASHTO M298 CLASS 55 TYPE 2 / ASTM B695 CLASS 55 TYPE 2 F436 TYPE 1	
P3	THRIE BEAM RAIL CONNETION 1- MECHANICAL OR ADHESIVE ANCHOR	MINIMUM MECHANICAL OR ADHESIVE ANCHOR STRENGTH REQUIREMENTS: ULTIMATE TENSILE LOAD 9.48 KIPS AND ULTIMATE SHEAR LOAD 10.48 KIPS. SEE 603.2 AND 603.3.1.2 OF THE WISCONSIN STANDARD SPECIFICATIONS FOR MORE INFORMATION ON ADHESIVE ANCHORS.	
Q1	BLOCK WOOD	SEE STANDARD SPEC. 614	
R1	CAP - BOLT	HOT DIP AASHTO M232 CLASS / ASTM A153 CLASS C / ASTM F2329 C OR MECHANICAL GALVANIZE TO AASHTO M298 CLASS 55 TYPE 2 / ASTM B695 CLASS 55 UNC OVER TAP NUTS AS SPECIFIED IN AASHTO 291 / ASTM A 563 AASHTO M180 RECESSED HEAVY HEX HEAD ASTM A563DH OR SAE J995 GRADE 5	⅝" DIA.
R2	CAP- BOLT - WASHER	HOT DIP AASHTO M232 CLASS / ASTM A153 CLASS C / ASTM F2329 C OR MECHANICAL GAL. TO AASHTO M298 CLASS 55 TYPE 2 / ASTM B695 CLASS 55 TYPE 2 F436 TYPE 1	
R3	CAP - BOLT - MECHANICAL ANCHOR	MINIMUM MECHANICAL OR ADHESIVE ANCHOR STRENGTH REQUIREMENTS ULTIMATE TENSILE LOAD 12.14 KIPS AND ULTIMATE SHEAR LOAD 17.5 KIPS.SEE 603.2 AND 603.3.1.2 OF THE WISCONSIN STANDARD SPECIFICATIONS FOR MORE INFORMATION ON ADHESIVE ANCHORS.	12 GAUGE
S1	CAP 42-INCH TOP PLATE	AASHTO M111 / ASTM A123 ASTM A36 MIN. STRENGTH 36 KSI, OR ASTM A529 MAX. STRENGTH 50 KSI, OR ASTM A572 MAX. STRENGTH 50 KSI, OR ASTM A709 MAX. STRENGTH 50 KSI, OR ASTM A992 MAX. STRENGTH 50 KSI	12 GAUGE
S2	CAP 42-INCH END PLATE	AASHTO M111 / ASTM A123 ASTM A36 MIN. STRENGTH 36 KSI, OR ASTM A529 MAX. STRENGTH 50 KSI, OR ASTM A572 MAX. STRENGTH 50 KSI, OR ASTM A709 MAX. STRENGTH 50 KSI, OR ASTM A992 MAX. STRENGTH 50 KSI	12 GAUGE
S3	CAP 42-INCH SIDE PLATE	AASHTO M111 / ASTM A123 ASTM A36 MIN. STRENGTH 36 KSI, OR ASTM A529 MAX. STRENGTH 50 KSI, OR ASTM A572 MAX. STRENGTH 50 KSI, OR ASTM A709 MAX. STRENGTH 50 KSI, OR ASTM A992 MAX. STRENGTH 50 KSI	12 GAUGE
S4	CAP 42-INCH GUSSET 1	AASHTO M111 / ASTM A123 ASTM A36 MIN. STRENGTH 36 KSI, OR ASTM A529 MAX. STRENGTH 50 KSI, OR ASTM A572 MAX. STRENGTH 50 KSI, OR ASTM A709 MAX. STRENGTH 50 KSI, OR ASTM A992 MAX. STRENGTH 50 KSI	12 GAUGE
S5	CAP 42-INCH GUSSET 2	AASHTO M111 / ASTM A123 ASTM A36 MIN. STRENGTH 36 KSI, OR ASTM A529 MAX. STRENGTH 50 KSI, OR ASTM A572 MAX. STRENGTH 50 KSI, OR ASTM A709 MAX. STRENGTH 50 KSI, OR ASTM A992 MAX. STRENGTH 50 KSI	12 GAUGE
S6	CAP 42-INCH GUSSET 3	AASHTO M111 / ASTM A123 ASTM A36 MIN. STRENGTH 36 KSI, OR ASTM A529 MAX. STRENGTH 50 KSI, OR ASTM A572 MAX. STRENGTH 50 KSI, OR ASTM A709 MAX. STRENGTH 50 KSI, OR ASTM A992 MAX. STRENGTH 50 KSI	12 GAUGE
S7	CAP 42-INCH GUSSET 4	AASHTO M111 / ASTM A123 ASTM A36 MIN. STRENGTH 36 KSI, OR ASTM A529 MAX. STRENGTH 50 KSI, OR ASTM A572 MAX. STRENGTH 50 KSI, OR ASTM A709 MAX. STRENGTH 50 KSI, OR ASTM A992 MAX. STRENGTH 50 KSI	12 GAUGE

CONCRETE BARRIER TEMPORARY PRECAST, 12' - 6"

STATE OF WISCONSIN
DEPARTMENT OF TRANSPORTAT

6

SDD 14B07-16m

BILL OF MATERIALS - CONCRETE BARRIER PRECAST

PART	DESCRIPTION	MATERIALS SPECIFICATIONS	NOTES
T1	CAP 56-INCH TOP PLATE	AASHTO M111 / ASTM A123 ASTM A36 MIN. STRENGTH 36 KSI, OR ASTM A529 MAX. STRENGTH 50 KSI, OR ASTM A572 MAX. STRENGTH 50 KSI, OR ASTM A709 MAX. STRENGTH 50 KSI, OR ASTM A992 MAX. STRENGTH 50 KSI	12 GAUGE
T2	CAP 56-INCH END PLATE	AASHTO M111 / ASTM A123 ASTM A36 MIN. STRENGTH 36 KSI, OR ASTM A529 MAX. STRENGTH 50 KSI, OR ASTM A572 MAX. STRENGTH 50 KSI, OR ASTM A709 MAX. STRENGTH 50 KSI, OR ASTM A992 MAX. STRENGTH 50 KSI	12 GAUGE
T3	CAP 56-INCH SIDE PLATE 1	AASHTO M111 / ASTM A123 ASTM A36 MIN. STRENGTH 36 KSI, OR ASTM A529 MAX. STRENGTH 50 KSI, OR ASTM A572 MAX. STRENGTH 50 KSI, OR ASTM A709 MAX. STRENGTH 50 KSI, OR ASTM A992 MAX. STRENGTH 50 KSI	12 GAUGE
T4	CAP 56-INCH SIDE PLATE 2	AASHTO M111 / ASTM A123 ASTM A36 MIN. STRENGTH 36 KSI, OR ASTM A529 MAX. STRENGTH 50 KSI, OR ASTM A572 MAX. STRENGTH 50 KSI, OR ASTM A709 MAX. STRENGTH 50 KSI, OR ASTM A992 MAX. STRENGTH 50 KSI	12 GAUGE
T5	CAP 56-INCH GUSSET 1	AASHTO M111 / ASTM A123 ASTM A36 MIN. STRENGTH 36 KSI, OR ASTM A529 MAX. STRENGTH 50 KSI, OR ASTM A572 MAX. STRENGTH 50 KSI, OR ASTM A709 MAX. STRENGTH 50 KSI, OR ASTM A992 MAX. STRENGTH 50 KSI	12 GAUGE
T6	CAP 56-INCH GUSSET 2	AASHTO M111 / ASTM A123 ASTM A36 MIN. STRENGTH 36 KSI, OR ASTM A529 MAX. STRENGTH 50 KSI, OR ASTM A572 MAX. STRENGTH 50 KSI, OR ASTM A709 MAX. STRENGTH 50 KSI, OR ASTM A992 MAX. STRENGTH 50 KSI	12 GAUGE
T7	CAP 56-INCH GUSSET 3	AASHTO M111 / ASTM A123 ASTM A36 MIN. STRENGTH 36 KSI, OR ASTM A529 MAX. STRENGTH 50 KSI, OR ASTM A572 MAX. STRENGTH 50 KSI, OR ASTM A709 MAX. STRENGTH 50 KSI, OR ASTM A992 MAX. STRENGTH 50 KSI	12 GAUGE
T8	CAP 42-INCH GUSSET 4	AASHTO M111 / ASTM A123 ASTM A36 MIN. STRENGTH 36 KSI, OR ASTM A529 MAX. STRENGTH 50 KSI, OR ASTM A572 MAX. STRENGTH 50 KSI, OR ASTM A709 MAX. STRENGTH 50 KSI, OR ASTM A992 MAX. STRENGTH 50 KSI	12 GAUGE
T9	CAP 42-INCH GUSSET 5	AASHTO M111 / ASTM A123 ASTM A36 MIN. STRENGTH 36 KSI, OR ASTM A529 MAX. STRENGTH 50 KSI, OR ASTM A572 MAX. STRENGTH 50 KSI, OR ASTM A709 MAX. STRENGTH 50 KSI, OR ASTM A992 MAX. STRENGTH 50 KSI	12 GAUGE
T10	CAP 42-INCH GUSSET 6	AASHTO M111 / ASTM A123 ASTM A36 MIN. STRENGTH 36 KSI, OR ASTM A529 MAX. STRENGTH 50 KSI, OR ASTM A572 MAX. STRENGTH 50 KSI, OR ASTM A709 MAX. STRENGTH 50 KSI, OR ASTM A992 MAX. STRENGTH 50 KSI	12 GAUGE
T11	CAP 42-INCH GUSSET 7	AASHTO M111 / ASTM A123 ASTM A36 MIN. STRENGTH 36 KSI, OR ASTM A529 MAX. STRENGTH 50 KSI, OR ASTM A572 MAX. STRENGTH 50 KSI, OR ASTM A709 MAX. STRENGTH 50 KSI, OR ASTM A992 MAX. STRENGTH 50 KSI	12 GAUGE
T12	CAP 42-INCH GUSSET 8	AASHTO M111 / ASTM A123 ASTM A36 MIN. STRENGTH 36 KSI, OR ASTM A529 MAX. STRENGTH 50 KSI, OR ASTM A572 MAX. STRENGTH 50 KSI, OR ASTM A709 MAX. STRENGTH 50 KSI, OR ASTM A992 MAX. STRENGTH 50 KSI	12 GAUGE
T13	CAP 42-INCH GUSSET 9	AASHTO M111 / ASTM A123 ASTM A36 MIN. STRENGTH 36 KSI, OR ASTM A529 MAX. STRENGTH 50 KSI, OR ASTM A572 MAX. STRENGTH 50 KSI, OR ASTM A709 MAX. STRENGTH 50 KSI, OR ASTM A992 MAX. STRENGTH 50 KSI	12 GAUGE
T14	CAP 42-INCH GUSSET 10	AASHTO M111 / ASTM A123 ASTM A36 MIN. STRENGTH 36 KSI, OR ASTM A529 MAX. STRENGTH 50 KSI, OR ASTM A572 MAX. STRENGTH 50 KSI, OR ASTM A709 MAX. STRENGTH 50 KSI, OR ASTM A992 MAX. STRENGTH 50 KSI	12 GAUGE
T15	CAP 42-INCH GUSSET 11	AASHTO M111 / ASTM A123 ASTM A36 MIN. STRENGTH 36 KSI, OR ASTM A529 MAX. STRENGTH 50 KSI, OR ASTM A572 MAX. STRENGTH 50 KSI, OR ASTM A709 MAX. STRENGTH 50 KSI, OR ASTM A992 MAX. STRENGTH 50 KSI	12 GAUGE
T16	CAP 42-INCH GUSSET 12	AASHTO M111 / ASTM A123 ASTM A36 MIN. STRENGTH 36 KSI, OR ASTM A529 MAX. STRENGTH 50 KSI, OR ASTM A572 MAX. STRENGTH 50 KSI, OR ASTM A709 MAX. STRENGTH 50 KSI, OR ASTM A992 MAX. STRENGTH 50 KSI	12 GAUGE
U1	GAP STIFFENER	AASHTO M111 / ASTM A123 ASTM A36 MIN. STRENGTH 36 KSI, OR ASTM A529 MAX. STRENGTH 50 KSI, OR ASTM A572 MAX. STRENGTH 50 KSI, OR ASTM A709 MAX. STRENGTH 50 KSI, OR ASTM A992 MAX. STRENGTH 50 KSI	
U2	GAP STIFFENER - CONNECTOR PLATE 1	AASHTO M111 / ASTM A123 ASTM A36 MIN. STRENGTH 36 KSI, OR ASTM A529 MAX. STRENGTH 50 KSI, OR ASTM A572 MAX. STRENGTH 50 KSI, OR ASTM A709 MAX. STRENGTH 50 KSI, OR ASTM A992 MAX. STRENGTH 50 KSI	
U3	GAP STIFFENER - CONNECTOR PLATE 2	AASHTO M111 / ASTM A123 ASTM A36 MIN. STRENGTH 36 KSI, OR ASTM A529 MAX. STRENGTH 50 KSI, OR ASTM A572 MAX. STRENGTH 50 KSI, OR ASTM A709 MAX. STRENGTH 50 KSI, OR ASTM A992 MAX. STRENGTH 50 KSI	

PART	DESCRIPTION	MATERIALS SPECIFICATIONS	NOTES
V1	THRIE BEAM RAIL TERMINAL MECHANICAL OR ADHESIVE ANCHOR	MINIMUM MECHANICAL OR ADHESIVE ANCHOR STRENGTH REQUIREMENTS ULTIMATE TENSILE LOAD 24.0 KIPS AND ULTIMATE SHEAR LOAD 21.5 KIPS. SEE 603.2 AND 603.3.1.2 OF THE WISCONSIN STANDARD SPECIFICATIONS FOR MORE INFORMATION ON ADHESIVE ANCHORS.	¾" DIA.
V2	GAP STIFFENER - BOLT - NUT	HOT DIP AASHTO M232 CLASS / ASTM A153 CLASS C / ASTM F2329 C O R MECHANICAL GALVANIZE TO AASHTO M298 CLASS 50 TYPE 1 / ASTM B695 CLASS 50 TYPE 1 UNC OVER TAP NUTS AS SPECIFIED IN AASHTO 291/ASTM A 563 HEAVY HEX HEAD ASTM A563DH OR SAE J995 GRADE 5	
W1	TOE PLATE	AASHTO M111/ASTM A123 ASTM A36 MIN STRENGTH 36 KSI, OR ASTM A529 MAX. STRENGTH 50 KSI, OR ASTM A572 MAX. STRENGTH 50 KSI, OR ASTM A709 MAX. STRENGTH 50 KSI, OR ASTM A992 MAX. STRENGTH 50 KSI	
X1	TOE PLATE - CONNECTION BOLT	HOT DIP AASHTO M232 CLASS / ASTM A153 CLASS C / ASTM F2329 C OR MECHANICAL GALVANIZE TO AASHTO M298 CLASS 55 TYPE 2 / ASTM B695 CLASS 55 TYPE 2 UNC HEAVY HEX HEAD OR AASTHO M180 HEAD, ASTM F3125 GRADE A325 TYPE 1 HEAVY HEX HEAD OR SAE J429 GRADE 5 HEAVY HEX HEAD / ASTM A449 TYPE 1 HEAVY HEX HEAD. BOLTS MAY BE FULLY THREADED. PROVIDE ENOUGH THREADING FOR PROPER TIGHTENING OF BOLT.	¾" DIA.
X2	TOE PLATE - CONNECTION BOLT - WASHER	HOT DIP AASHTO M232 CLASS / ASTM A153 CLASS C / ASTM F2329 C OR MECHANICAL GALVANIZE TO AASHTO M298 CLASS 55 TYPE 2 / ASTM B695 CLASS 55 TYPE 2 F436 TYPE 1 (HARDEN WASHER ONLY)	
X3	TOE PLATE - CONNECTION BOLT - NUT	HOT DIP AASHTO M232 CLASS / ASTM A153 CLASS C / ASTM F2329 C OR MECHANICAL GALVANIZE TO AASHTO M298 CLASS 55 TYPE 2 / ASTM B695 CLASS 55 UNC OVER TAP NUTS AS SPECIFIED IN AASHTO 291 / ASTM A 563 HEAVY HEX HEAD ASTM A563DH OR SAE J995 GRADE 5	

CONCRETE BARRIER TEMPORARY PRECAST, 12' - 6"

STATE OF WISCONSIN
DEPARTMENT OF TRANSPORTATION

APPROVED
February 2023 — DATE
/S/ Rodney Taylor — ROADWAY STANDARDS DEVE ENGINEER
FHWA

GENERAL NOTES

1. W6 X 9 OR W6 X 8.5 STEEL POSTS AND NOTCHED PLASTIC BLOCKOUTS ARE ACCEPTABLE ALTERNATIVES FOR 6" X 8" WOOD POSTS WITH WOOD OR PLASTIC BLOCKOUTS. USE APPROVED NOTCHED PLASTIC BLOCKOUTS WITH STEEL POSTS. APPROVED PLASTIC BLOCKOUT DESIGNS MAY VARY FROM THIS TYPICAL DETAIL WHEN USED IN CONJUNCTION WITH STEEL POSTS.

   DO NOT MIX STEEL POSTS AND WOOD POSTS IN A SINGLE INSTALLATION.
2. USE STRUCTURAL STEEL POSTS CONFORMING TO ASTM A 36. GALVANIZED POSTS ACCORDING TO AASHTO M 111. EITHER SET THE POSTS IN DRILLED HOLES OR DRIVE TO GRADE. REMOVE MUSHROOMING CAUSED BY DRIVING AND REPAIR DAMAGED SPELTER COATING ON GALVANIZED POSTS.
3. INSTALL STEEL POSTS WITH HOLES ON APPROACHING TRAFFIC SIDE.
4. USE EITHER WOOD OR APPROVED PLASTIC BLOCKOUTS ON WOOD POSTS.
5. IF THE DISTANCE FROM BACK OF POST TO SHOULDER HINGE POINT IS LESS THAN 2 FEET INSTALL LONGER POST AT HALF POST SPACING, W BEAM (LHW).
6. IF ROCK IS ENCOUNTERED DURING EXCAVATION, THE ENGINEER MAY APPROVE USING A 12 INCH DIAMETER POST HOLE EXTENDING 20 INCHES DEEP INTO THE ROCK. PLACE GRANULAR MATERIAL IN THE BOTTOM OF THE HOLE APPROXIMATELY 2½ INCHES DEEP. CUT THE POSTS TO LENGTH AND PLACE IN YHE HOLE. BACKFILL WITH MATERIAL EXCAVATED FROM THE HOLE AND COMPACT ADEQUATEY.
7. WHEN USING STEEL POSTS AND WOOD BLOCKOUTS INSTALL FOUR 16D GALVANIZED NAILS. INSTALL NAILS AT THE BACK CORNERS OF THE BLOCK AND BEND THE NAILS OVER THE FLANGE OF THE STEEL POST.

INSTALL BEAM GUARD SECTIONS AND ALL NECESSARY HARDWARE ACCORDING TO THE APPLICABLE PLAN AND CURRENT STANDARD AND SUPPLEMENTAL SPECIFICATIONS.

ALL DIMENSIONS ARE SUBJECT TO MANUFACTURER'S TOLERANCES EXCEPT WHERE ALLOWABLE TOLERANCES ARE SHOWN.

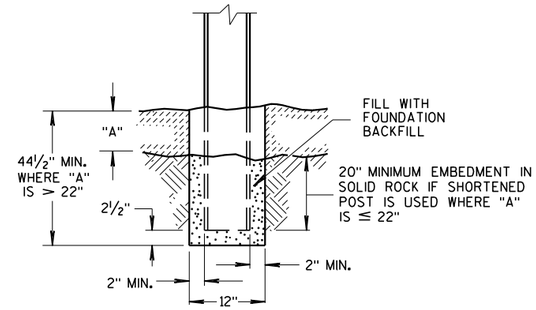

END VIEW
SETTING STEEL OR WOOD POST IN ROCK (6)

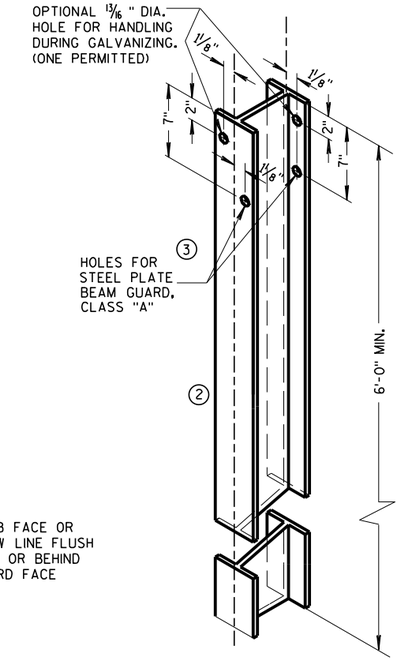

STEEL POST &
HOLE PUNCHING DETAIL
(W6 X 9) (1)

ALL HOLES 13/16" DIAMETER EXCEPT AS NOTED

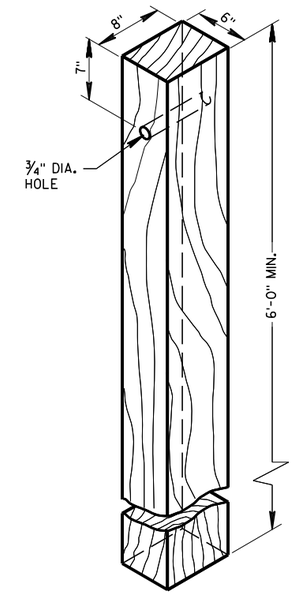

WOOD POST
(6"X8") NOMINAL

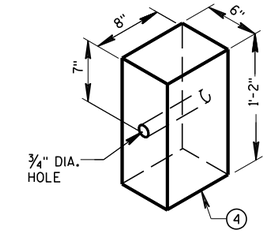

WOOD OR PLASTIC
BLOCKOUT FOR
WOOD POSTS

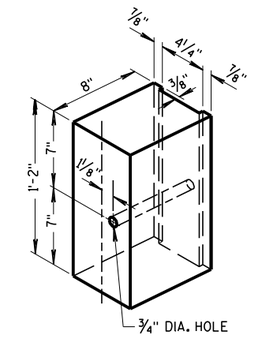

TYPICAL NOTCHED (1)
PLASTIC BLOCKOUT
FOR STEEL POSTS

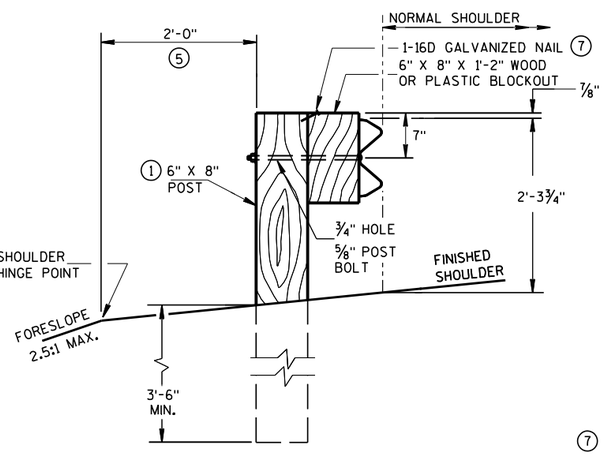

END VIEW
LOCATED ALONG A ROADWAY SHOULDER
STANDARD INSTALLATION

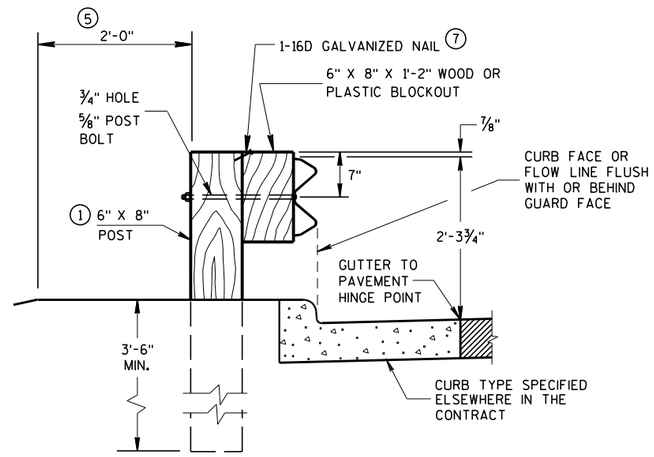

END VIEW
LOCATED ALONG A CURBED ROADWAY

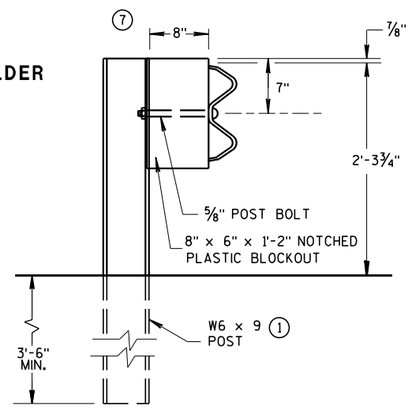

END VIEW
STEEL POST & NOTCHED
PLASTIC BLOCKOUT ALTERNATIVE
STANDARD INSTALLATION

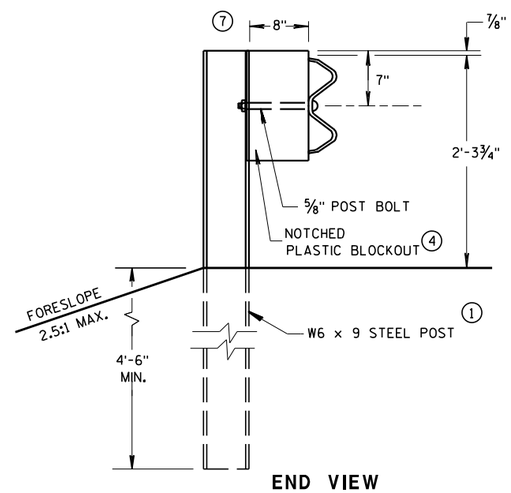

END VIEW
LONGER POST AT HALF
POST SPACING W BEAM
(LHW)

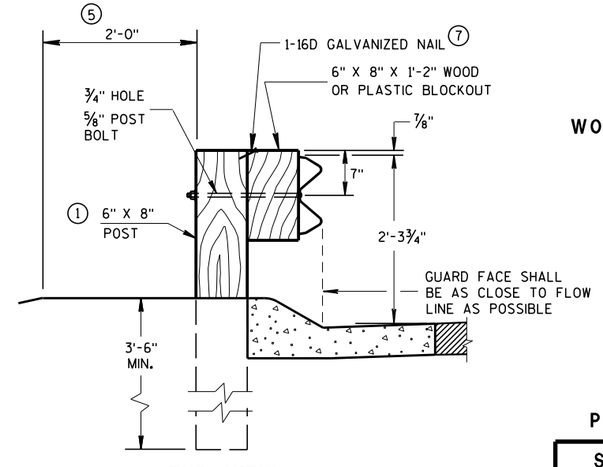

END VIEW
LOCATED ALONG A
MOUNTABLE CURBED ROADWAY

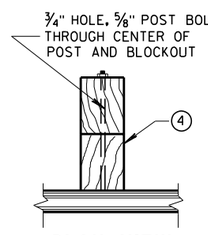

PLAN VIEW
WOOD POST, BLOCKOUT & BEAM

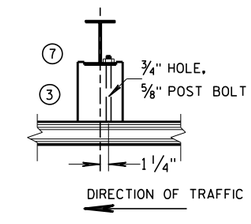

PLAN VIEW
STEEL POST, NOTCHED
PLASTIC BLOCKOUT & BEAM

TYPICAL INSTALLATION OF STEEL PLATE BEAM GUARD

STEEL PLATE BEAM GUARD,
CLASS "A"
INSTALLATION & ELEMENTS

STATE OF WISCONSIN
DEPARTMENT OF TRANSPORTATION

6

6

S.D.D. 14 B 15-11a

S.D.D. 14 B 15-11a

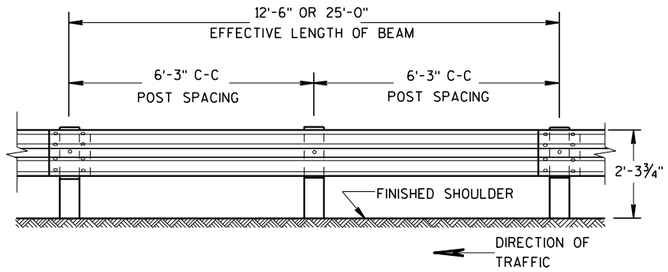

FRONT VIEW

POST SPACING STANDARD INSTALLATION

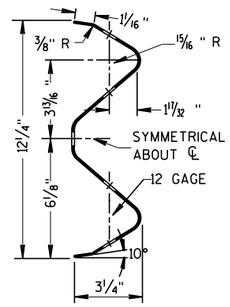

SECTION THRU W BEAM

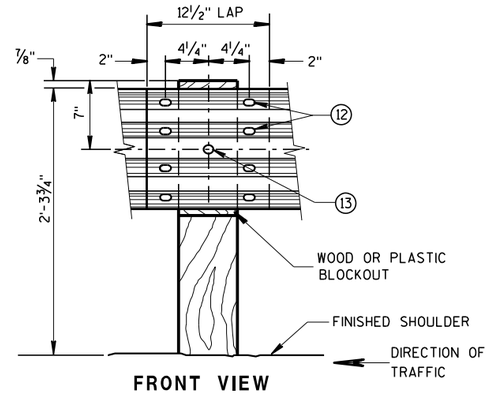

FRONT VIEW

BEAM SPLICE AT WOOD POST AND POST MOUNTING DETAIL

GENERAL NOTES

FURNISH GUARDRAIL DEFLECTORS FROM APPROVED PRODUCTS LIST.

(9) DO NOT INSTALL REFLECTORS ON THE FIRST 50 FEET OF THE APPROACH END OF THE ENERGY ABSORBING TERMINA. START REFLECTORS AT POST #9 AND SPACE EVENLY EVERY 100 FEET (MAX.) TO THE END OF GUARDRAIL RUN, USING A MINIMUM OF 3 REFLECTORS.

(12) 8 -5/8" Φ X 2" BUTTON HEAD BOLTS WITH OVAL SHOULDERS & RECESS NUTS.

(13) 5/8" DIA. BUTTON HEAD BOLT AND RECESS NUT WITH 5/8" DIA. F844 FLAT WASHER UNDER NUT.

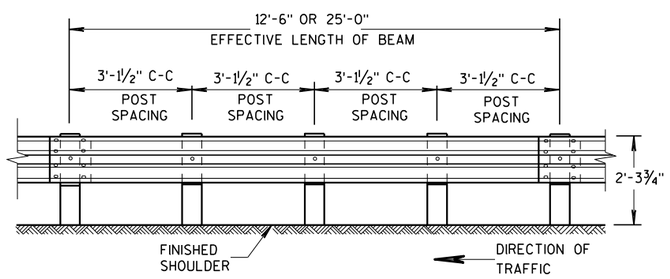

FRONT VIEW

POST SPACING FOR LONGER POST AT HALF POST SPACING W BEAM (LHW)

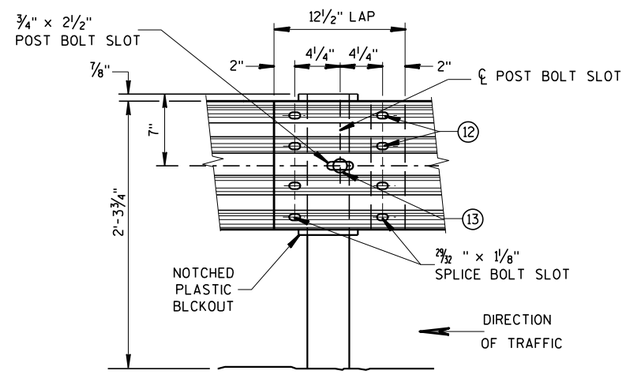

FRONT VIEW
BEAM SPLICE AT STEEL POST

TYPICAL SPLICING DETAILS OF STEEL PLATE BEAM GUARD

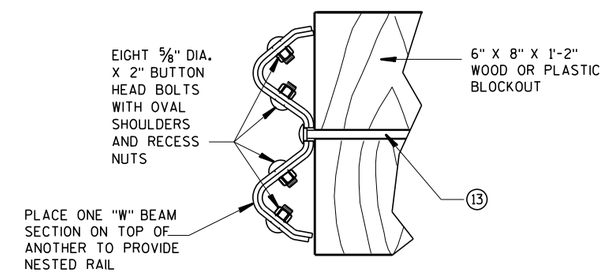

NESTED W BEAM (NW)

USE ALL OTHER STANDARD BEAM GUARD DETAILS FOR CONSTRUCTING NESTED W BEAM (NW)

* USE DOUBLE SIDED WHITE GUADRAIL REFLECTORS ON ROADWAYS WITH BI-DIRECTIONAL TRAFFIC (NO MEDIAN). USE SINGLE SIDED WHITE (RIGHT SIDE) AND SINGLE SIDED YELLOW (LEFT SIDE) ON ROADWAYS WITH MEDIAN SEPARATION.

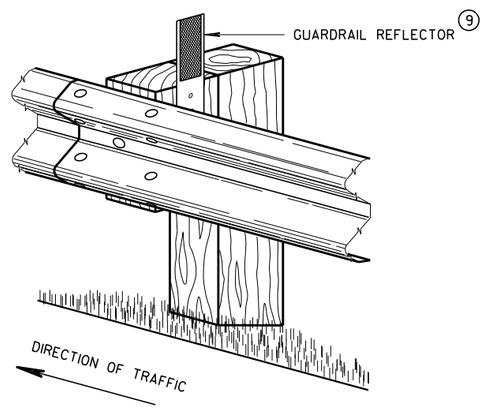

4" X 12" GUARDRAIL REFLECTOR DETAIL AND TYPICAL INSTALLATION *

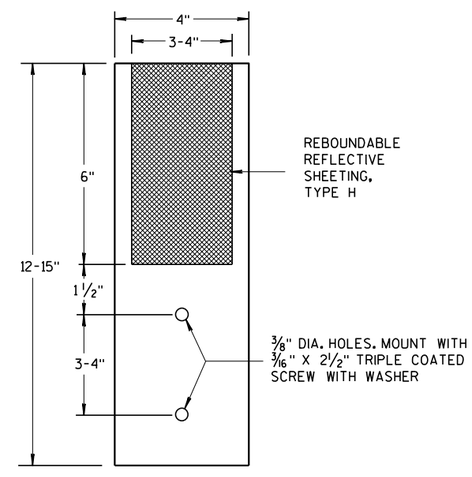

4"x 12" GUARDRAIL REFLECTOR

STEEL PLATE BEAM GUARD, CLASS "A", INSTALLATION & ELEMENTS

STATE OF WISCO 141
DEPARTMENT OF TRANSPORTATION

6

6

S.D.D. 14 B 15-11b

S.D.D. 14 B 15-11b

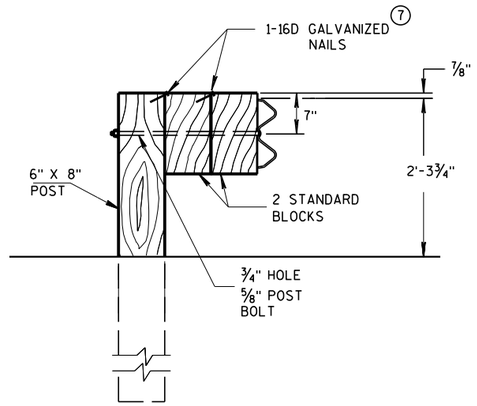

DETAIL FOR DOUBLE BLOCKS

THE NUMBER OF DOUBLE BLOCK POSTS WITHIN A BARRIER RUN IS UNLIMITED

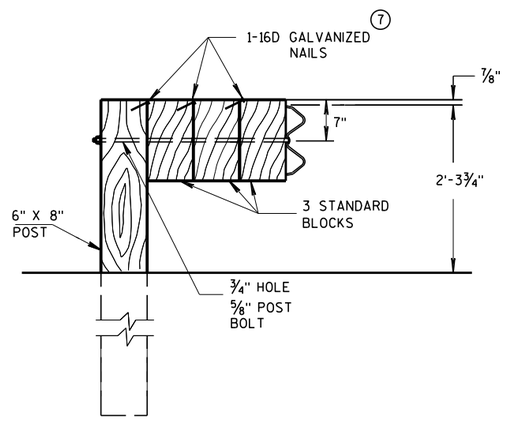

DETAIL FOR TRIPLE BLOCKS

TRIPLE BLOCK DETAIL IS LIMITED TO ONE LOCATION WITHIN A BEAM GUARD RUN.

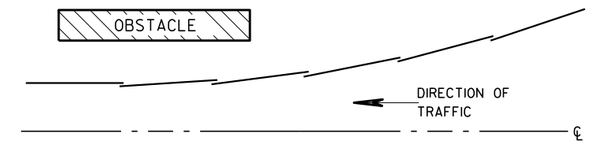

PLAN VIEW
BEAM LAPPING DETAIL

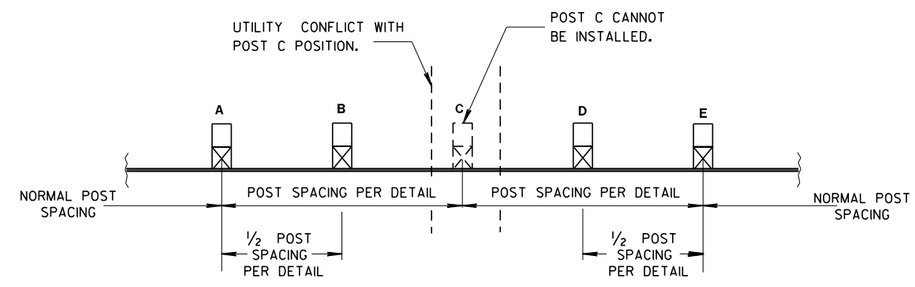

POST DRIVING FOR CONTINUOUS UNDERGROUND OBSTRUCTION

NOTES: USE DOUBLE OR TRIPLE BLOCKS WHEN UNDERGROUND OBSTACLES PREVENT THE POST FROM BEING INSTALLED.

DO NOT USE EXTRA BLOCKOUTS IF IT CAUSES THE POST TO BE DRIVEN BEYOND SHOULDER HINGE POINT OR CAUSES A FIXED OBJECT TO BE WITHIN THE DEFLECTION DISTANCE OF THE BARRIER.

STEEL PLATE BEAM GUARD, CLASS "A", INSTALLATION & ELEMENTS

STATE OF WISCONSIN
DEPARTMENT OF TRANSPORTATION

APPROVED
June 2017 — DATE
/S/ Rodney Taylor — ROADWAY STANDARDS UNIT SUPERVISOR
FHWA

6

S.D.D. 14 B 15-11c

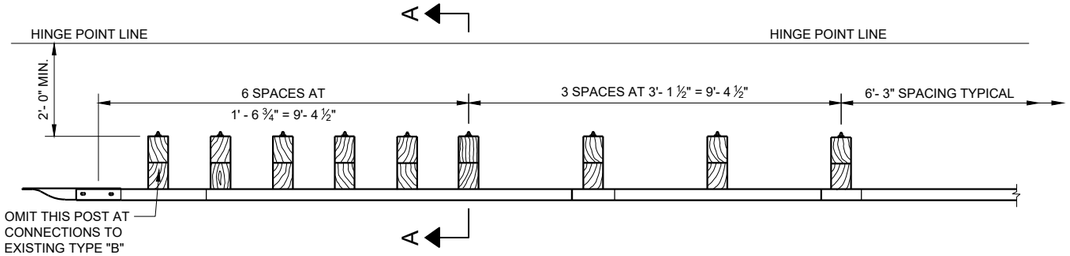

PLAN VIEW

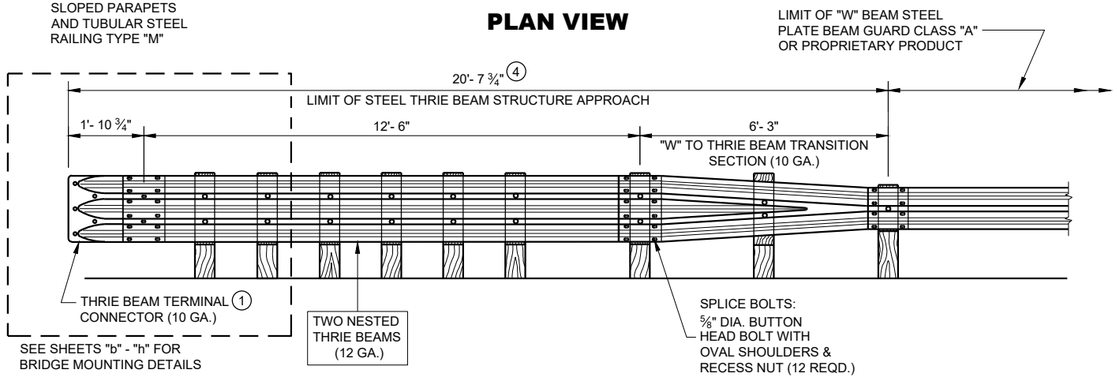

FRONT VIEW

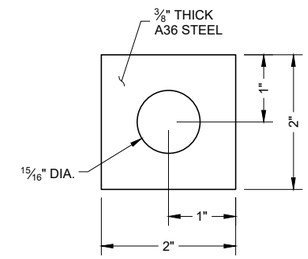

PLATE WASHER DETAIL

GENERAL NOTES

BOLT THE THRIE BEAM TO ALL POSTS AND BLOCKOUTS. DRILL OR PUNCH BOLT HOLES IN THE BEAM IF THE POST SPACING IS LESS THAN 6'-3".

DO NOT USE STEEL POSTS AND NOTCHED PLASTIC BLOCKOUTS IN THE STEEL THRIE BEAM STRUCTURAL APPROACH AND THE TRANSITION SECTION OF STEEL PLATE BEAM GUARD, CLASS "A" INSTALLATIONS.

IF ROCK IS ENCOUNTERED, REMOVE ROCK TO FULL DEPTH OF POST PLUS 2 ½", AND 12" DIAMETER AROUND POST. SEE 14B15 FOR MORE DETAILS.

1. BRIDGE RAILING TYPE "W" DOES NOT REQUIRE A TERMINAL CONNECTOR.
2. MINIMUM EMBEDMENT SHALL BE 4'- 0".
3. POST BOLTS ARE ⅝" DIAMETER ASTM A307 BUTTON HEAD BOLT. A POST BOLT REQUIRES A ⅝" DIAMETER A563A DOUBLE RECESSED (DR) HEAVY HEX AND A ⅝" DIAMETER F844 FLAT WASHER. LENGTH OF POST BOLT MAY VARY.
4. ALL WOOD POSTS MUST BE 6" X 8" AND AT LEAST 7'-0" LONG.

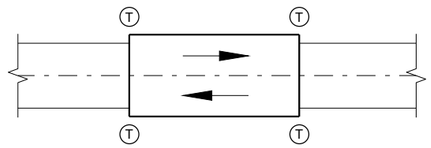

TWO WAY TRAFFIC

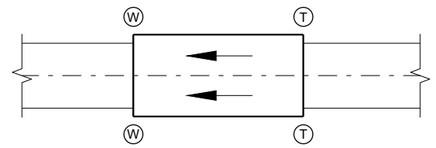

ONE WAY TRAFFIC

T THRIE BEAM CONNECTION

W W-BEAM CONNECTION WHEN REQUIRED

TYPICAL LOCATIONS OF THRIE BEAM AND W-BEAM CONNECTIONS TO BRIDGE

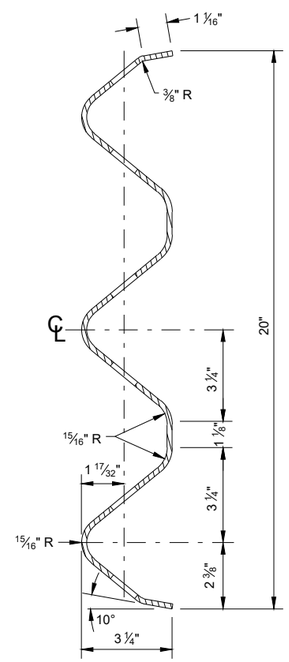

SECTION THRU BEAM RAIL ELEMENT

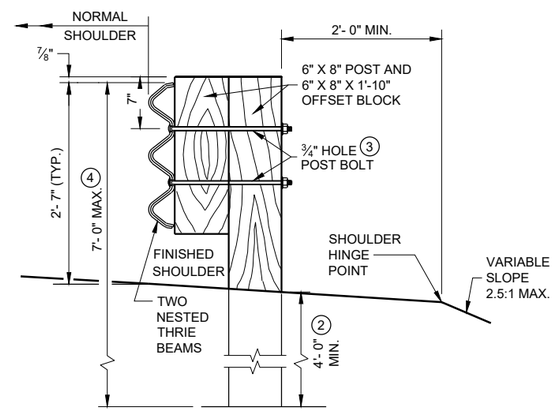

SECTION A-A

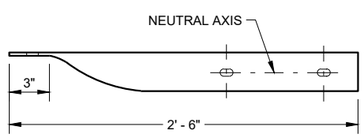

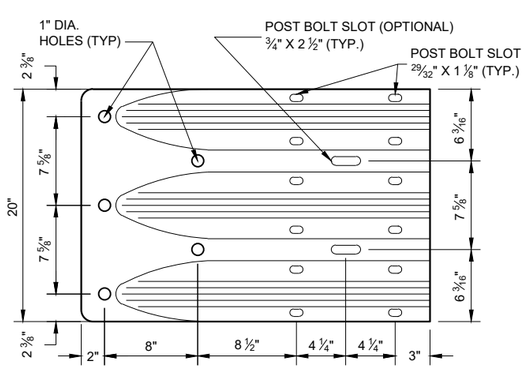

THRIE BEAM TERMINAL CONNECTOR

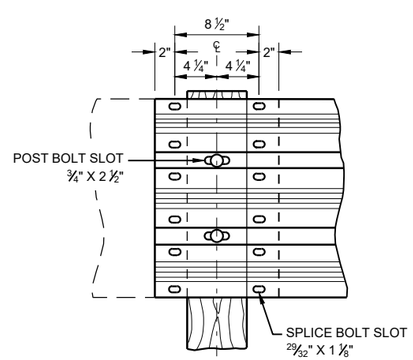

THRIE BEAM SPLICE

STEEL THRIE BEAM STRUCTURE APPROACH

STATE OF WISCONSIN
DEPARTMENT OF TRANSPORTATION

APPROVED
November 2022 — DATE
/S/ Rodney Taylor — ROADWAY STANDARDS DEVE ENGINEER
FHWA

6

SDD 14B20 - 12a

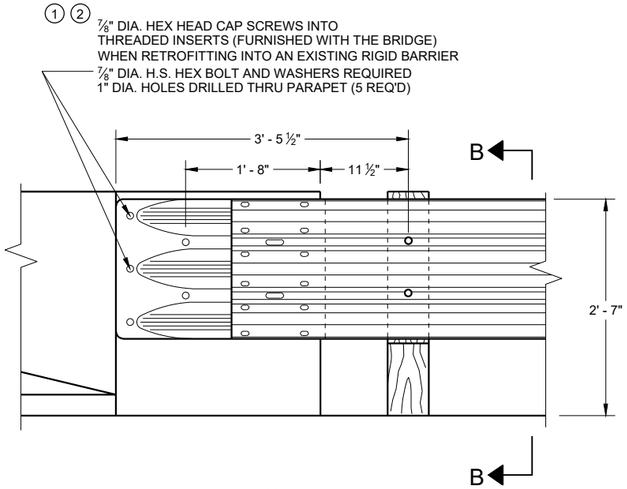

FRONT VIEW

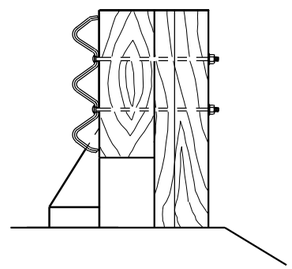

SECTION B - B

THRIE BEAM CONNECTION TO BRIDGE PARAPET WITH SQUARE ENDS

GENERAL NOTES

THESE ARE TYPICAL CONNECTION DETAILS. ADJUST THE POSITION OF CONNECTIONS TO EXISTING BRIDGES TO FIT THE ACTUAL BRIDGE AND SITE DIMENSIONS.

BOLTS, NUTS AND WASHERS SHALL CONFORM TO ASTM A325, A449 AND GALVANIZED PER STANDARD SPECIFICATIONS 614.

① DRILLING BOLT HOLES THROUGH THE PARAPET, BOLTS, NUTS, WASHERS AND REPAIRING DAMAGED CONCRETE ARE INCIDENTAL TO THE CONTRACT.

② BOLTS MAY BE A325 BOLTS OR A449 BOLTS. BOLT LENGTH AND THREADING LENGTH ARE TO ALLOW FOR A TIGHT CONNECTION BETWEEN RIGID BARRIER AND THRIE BEAM CONNECTION PLATE. CONTRACTOR IS TO FIELD VERIFY BOLT LENGTH AND THREAD LENGTH. ONE ROUND WASHER REQUIRED BETWEEN BOLT HEAD AND THRIE BEAM TERMINAL CONNECTOR. BOLTS THAT EXTEND THROUGH THE PARAPET AND OUT THE BACK FACE REQUIRE A HARDENED ROUND STEEL WASHER THAT IS 2" O.D. X 5/8" THICK AND ONE PLATE WASHER. REPAIR ANY DAMAGED CONCRETE FROM BOLT INSTALLATION.

③ THE RECESS FOR A W-BEAM CONNECTION, WHICH EXISTS ON SOME PARAPETS OF THIS TYPE, SHALL BE FILLED WITH A TREATED TIMBER BLOCKOUT. BLOCKOUT SIZE IS 1'-6" X 2'-0" X 3 ½".

④ W6 X 9 OR W6 X 8.5 STEEL POSTS AND NOTCHED PLASTIC BLOCKOUTS ARE ACCEPTABLE ALTERNATIVES FOR 6" X 8" WOOD POST WITH WOOD OR PLASTIC BLOCKOUTS. USE APPROVED NOTCHED PLASTIC BLOCKOUTS WITH STEEL POSTS.

DO NOT USE STEEL POSTS AND NOTCHED PLASTIC BLOCKOUTS IN THE STEEL THRIE BEAM STRUCTURAL APPROACH AND THE TRANSITION SECTION OF STEEL PLATE BEAM GUARD, CLASS "A" INSTALLATIONS.

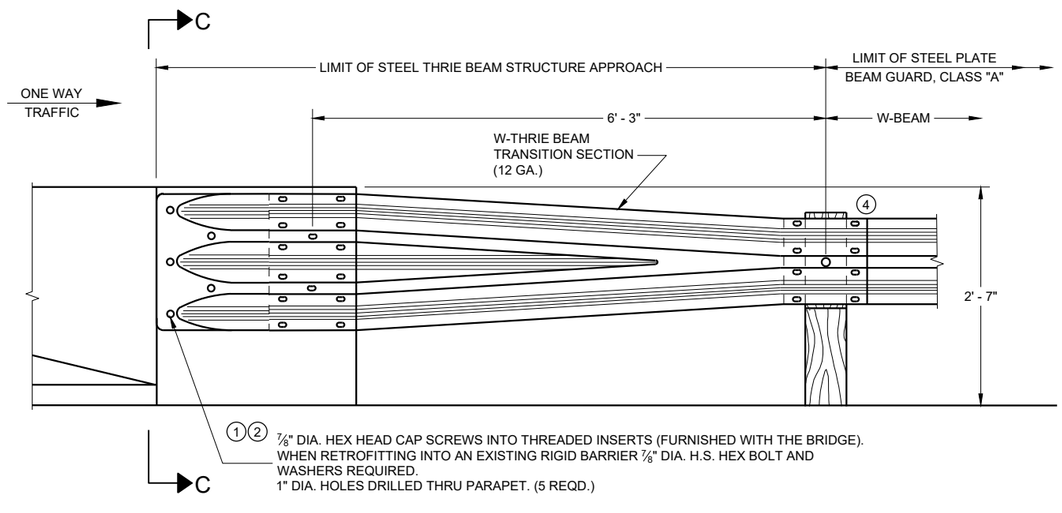

FRONT VIEW

W BEAM TRANSITION AND CONNECTION TO BRIDGE PARAPETS WITH SQUARE ENDS

(USE ONLY ON THE TRAFFIC EXIT END OF ONE WAY BRIDGE)

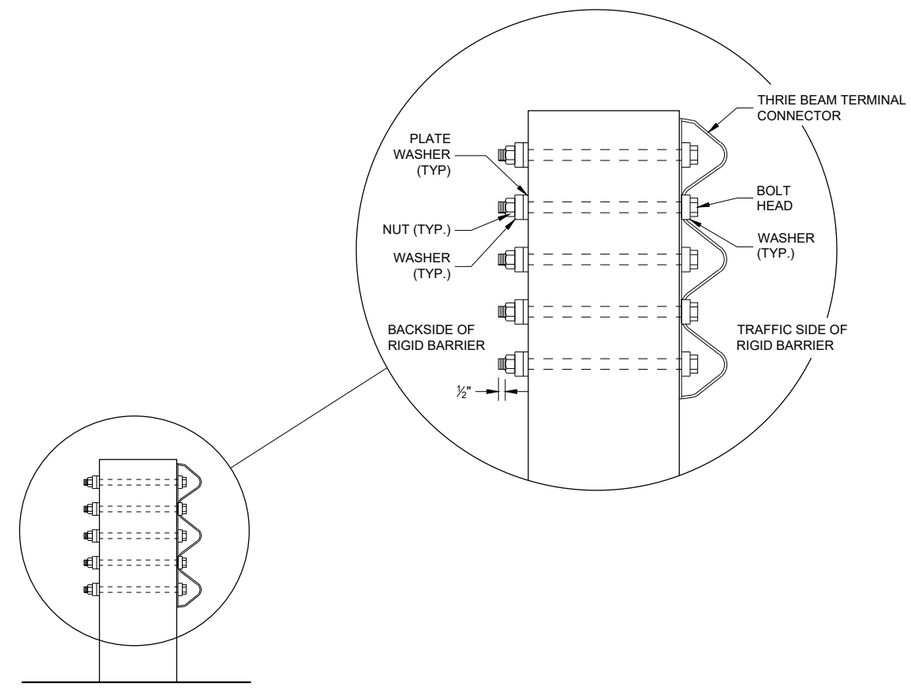

SECTION C - C

6

6

SDD 14B20 - 12b

SDD 14B20 - 12b

STEEL THRIE BEAM STRUCTURE APPROACH, CONNECTION TO SQUARE END PARAPETS

STATE OF WISCONSIN
DEPARTMENT OF TRANSPORTATION

APPROVED
November 2022 — DATE
/S/ Rodney Taylor — ROADWAY STANDARDS DEVE ENGINEER

FHWA

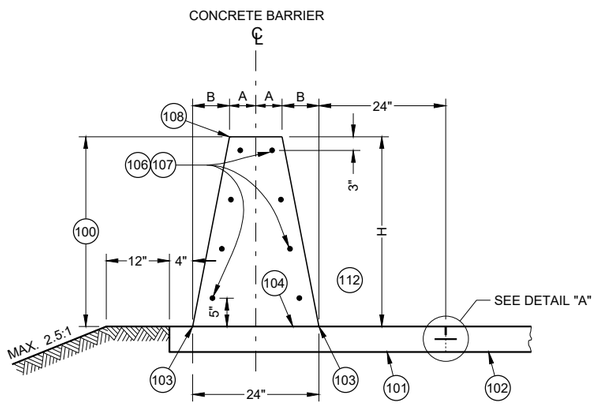

32 - INCH, 36 - INCH OR 42 - INCH SINGLE SLOPE CONCRETE BARRIER
(TYPE S32, TYPE S36, TYPE S42)

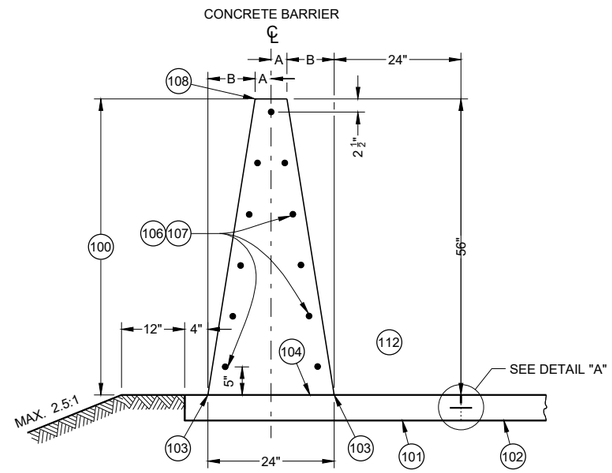

56 - INCH SINGLE SLOPE CONCRETE BARRIER
(TYPE S56)

TABLE "A"

BARRIER HEIGHT H INCHES	A INCHES	B INCHES	NUMBER OF NO. 5 BARS EACH
32	7	5	8
36	6 ¼	5 ¾	8
42	5 ¼	6 ¾	10
56	3	9	11

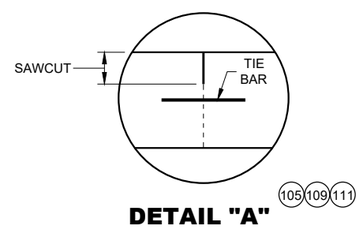

DETAIL "A"

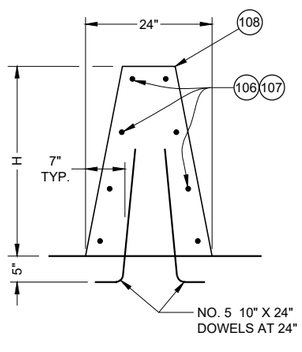

SINGLE SLOPE CONCRETE BARRIER ON BRIDGE
(NON OUTER PARAPET APPLICATION)

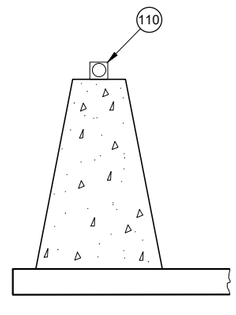

DELINEATION

GENERAL NOTES

WHERE THE CONCRETE BARRIER IS ADDED TO THE FACE OF EXISTING CONCRETE STRUCTURE, MATCH EXISTING WEEP HOLES.

LOCATE EXPANSION JOINTS IN CONCRETE BARRIER SHALL AT ALL DECK AND PRINCIPAL WALL JOINTS. FILL EXPANSION JOINT WITH EXPANSION JOINT MATERIAL. SEAL THE EXPANSION JOINT CONFORMING TO STANDARD SPECIFICATION 415.2.6.

PLACE BARRIER PERPENDICULAR TO SHOULDER GRADE, UNLESS INDICATED IN PLAN.

4000 PSI CONCRETE AIR ENTRAINMENT PER STANDARD SPECIFICATION 501.

2" CLEAR COVER TYPICAL

ANCHORS ARE REQUIRED AT CONCRETE BARRIER ENDS AND AT INTERRUPTIONS IN CONCRETE BARRIER. ANCHOR MAY BE AS SHOWN IN THIS SDD OR DETAIL SHOWN ON SDD 14B33. ANCHORS INCIDENTAL TO CBSS.

PROVIDE A 1" DEEP CONTRACTION JOINT IN BARRIER PAD AND BARRIER. JOINT IS TO MATCH ADJACENT CONCRETE JOINTS. NO DOWEL BARS ARE REQUIRED FOR BARRIER PAD. IF ADJACENT TO ASPHALT, CONTRACTION JOINT IS REQUIRED EVERY 15'.

ALL REBAR SHALL BE EPOXY COATED M31 TYPE S. SEE STANDARD SPECIFICATION 505.

CONCRETE BARRIER, UPPER CONCRETE BARRIER, LOWER CONCRETE BARRIER, CONCRETE BARRIER PAD, AND FOOTINGS ARE TERMS USED TO DESCRIBE PARTS OF SINGLE SLOPE CONCRETE BARRIER BID ITEMS. THESE PARTS ARE INCIDENTAL TO THE SINGLE SLOPE CONCRETE BARRIER BID ITEMS.

100 CONCRETE BARRIER

101 CONCRETE BARRIER PAD

102 PAVEMENT

103 WHERE VERTICAL ROADWAY OFFSET IS GREATER THAN 1 ½", USE TYPE A SINGLE SLOPE BARRIER.

104 OPTIONAL CONSTRUCTION JOINT.

105 CONSTRUCTION JOINTS MAY BE ELIMINATED WHEN CONCRETE SHOULDER IS LESS THAT 10'.

106 STAGGER LAPPING OF LONGITUDINAL STEEL. MINIMUM OVERLAP OF STEEL IS 2' BARS AT LAPS TO BE FIRMLY TIED OR CONNECTED.

107 NO. 5 CONTINUOUS BARS EVENLY SPACED (SEE TABLE "A").

108 USE ¾" BEVEL OR 1" RADIUS ON ALL EXPOSED SHARP EDGES UNLESS OTHERWISE NOTED.

109 CONCRETE BARRIER PAD UNDER CBSS MAY BE PLACED SEPARATELY OR PLACED WITH CONCRETE SHOULDER AND SAWED ⅓ DEPTH. CONCRETE BARRIER PAD AND SAWING OF CONCRETE SHOULDER IS INCIDENTAL TO CONCRETE BARRIER BID ITEM. CONCRETE BARRIER PAD MINIMUM DEPTH IS 6", OR EQUAL TO THE DEPTH OF THE CONCRETE SHOULDER.

110 SEE SDD 15A04 FOR DELINEATOR DETAILS AND SPACING.

111 SEE SDD 13C01 FOR DETAILS TYPING CONCRETE BARRIER TO ADJACENT CONCRETE

112 TRAFFIC SIDE

CONCRETE BARRIER SINGLE SLOPE (CBSS)

STATE OF WISCONSIN
DEPARTMENT OF TRANSPORTAT

6

SDD 14B32 - 10a

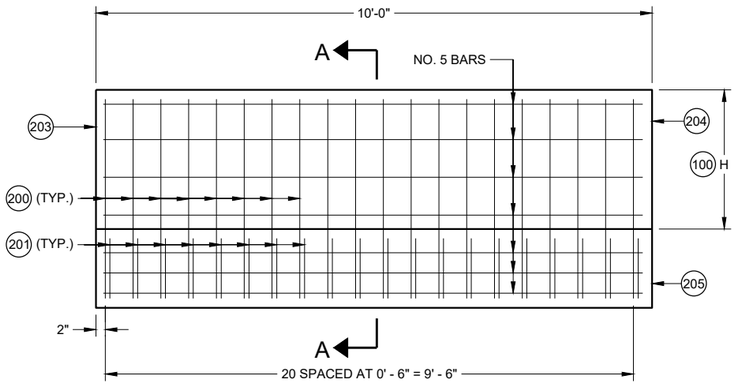

END ANCHOR SINGLE SLOPE CONCRETE BARRIER

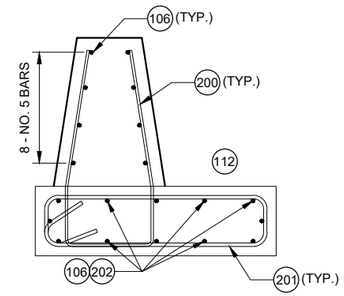

32" AND 36" CBSS

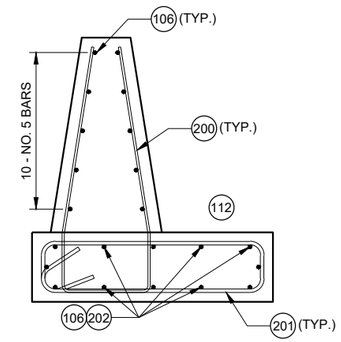

42" CBSS

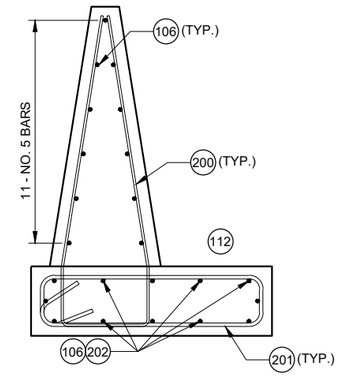

56" CBSS

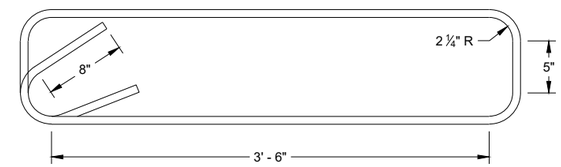

STIRRUP BAR BENDING DETAIL

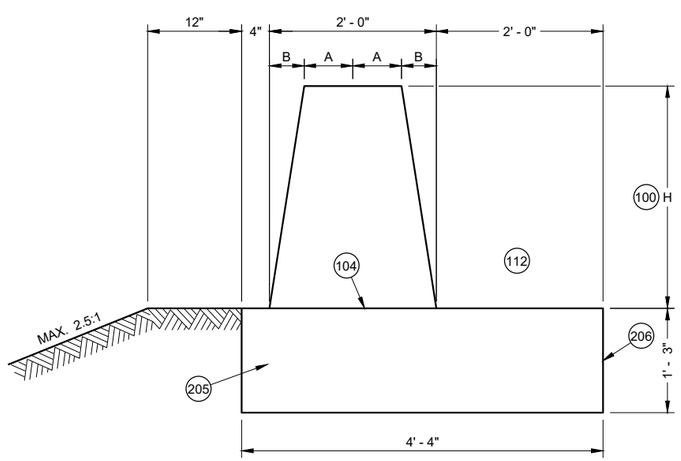

SECTION A - A

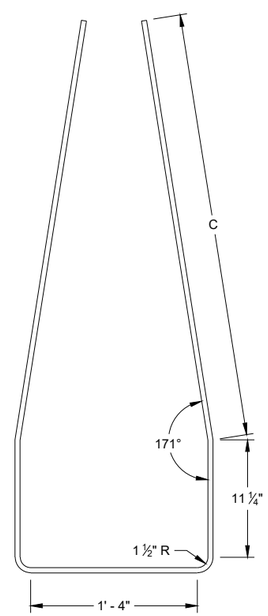

V1 BAR BENDING DETAIL

TABLE "B"

BARRIER HEIGHT H INCHES	C INCHES
32	2' - 6"
36	2' - 11"
42	3' - 4"
56	4' - 6 ½"

GENERAL NOTES

200 V1 BARS ARE NO. 5 BARS. (SEE BAR BENDING DETAIL)

201 STIRRUPS ARE NO. 6 BARS. (SEE BAR BENDING DETAIL)

202 TWELVE (12) NO. 5 BARS EVENLY SPACED

203 END OF INSTALLATION OR EXPANSION JOINT.

204 SEE COLD JOINT DETAIL TO CONNECT END ANCHOR SINGLE SLOPE CONCRETE BARRIER TO SINGLE SLOPE CONCRETE BARRIER.

205 FOOTING

206 DO NOT TIE TO FOOTING TO ADJACENT PAVEMENT.

CONCRETE BARRIER SINGLE SLOPE (CBSS)

STATE OF WISCONSIN
DEPARTMENT OF TRANSPORTAT

6

SDD 14B32 - 10b

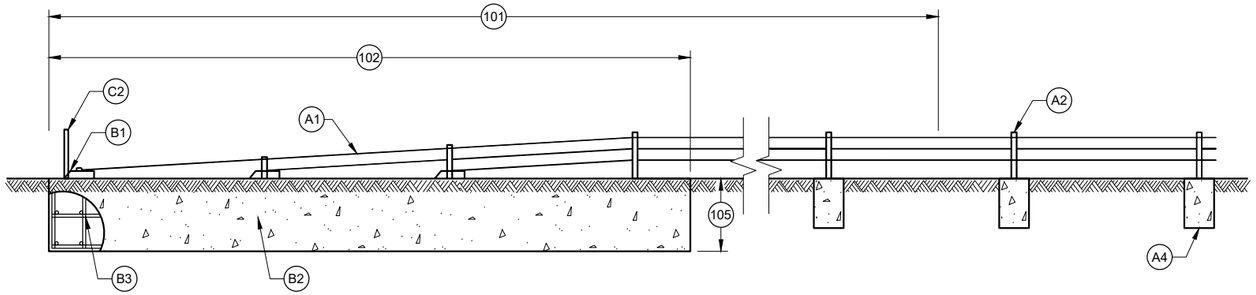

PROFILE VIEW

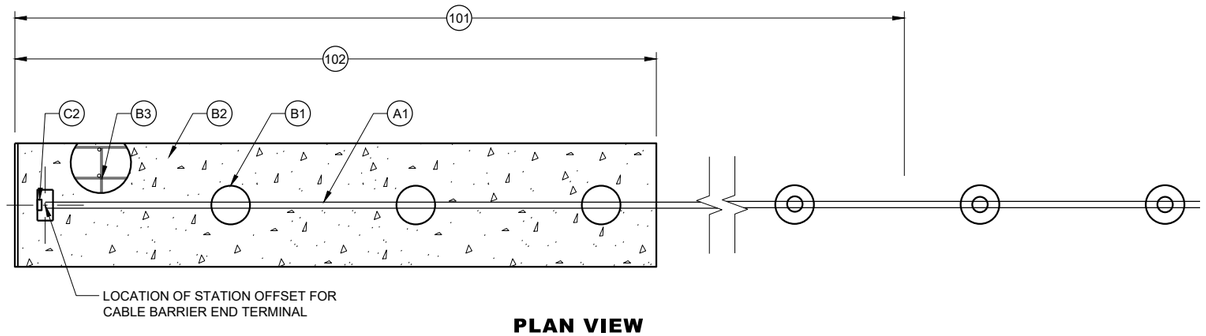

PLAN VIEW

TRANSITION FROM CABLE BARRIER TERMINAL TO CABLE BARRIER LINE POSTS

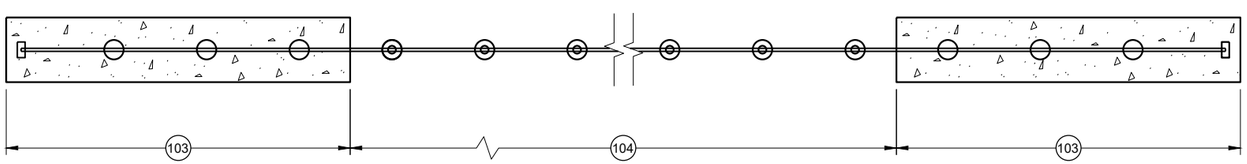

TYPICAL PLAN VIEW

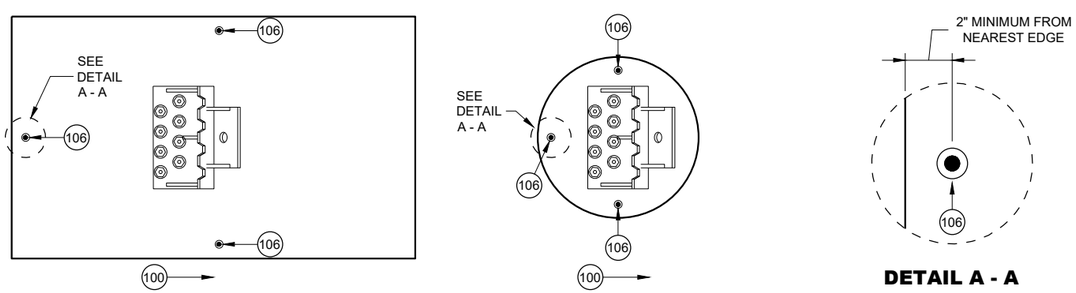

DETAIL A - A

ANCHOR MONITOR POINTS FOR CABLE BARRIER END TERMINAL ANCHORS

GENERAL NOTES

DRAWINGS ARE GENERAL IN NATURE. SEE MANUFACTURER'S INFORMATION FOR MORE DETAIL.

PROVIDE 2 INCH CLEAR COVER FROM OUTER EDGE OF CONCRETE FOOTINGS TO REINFORCEMENT.

INSTALL LINE POSTS PLUMB. LINE POSTS ARE TO BE EASILY REMOVED BY HAND AND HOLD CABLES AT THE PROPER ELEVATION.

PROVIDE CABLE BARRIER SYSTEM FROM APPROVED PRODUCT LIST.

PROVIDE A SYSTEM TO HAVE THE WORKING WIDTH INDICATED IN PLAN.

PROVIDE DOCUMENTATION HOW POST SPACING, RADIUS OF CURVE AND ANCHOR SPACING INFLUENCES WORKING WIDTH TO CONSTRUCTION STAFF.

CONSTRUCT SHAFTS VERTICALLY. VERTICAL TOLERANCE OF SHAFT IS $\frac{1}{8}$" PER FOOT OF DEPTH. SHAFTS ARE TO MINIMIZE DISTURBANCE TO ADJACENT SOILS.

SECURE STEEL REINFORCEMENT AND STEEL SLEEVE PRIOR TO PLACEMENT OF CONCRETE. MAINTAIN CLEAR DISTANCE BETWEEN SOIL AND REINFORCEMENT CAGE.

PLACE CONCRETE IN ONE CONTINUOUS POUR FOR EACH FOOTING. USE VIBRATION TO CONSOLIDATE CONCRETE.

PROVIDE CASING AS NECESSARY TO PREVENT INTRUSION OF UNCONSOLIDATED MATERIALS OR WATER. USE CASINGS WHEN THERE IS 3 OR MORE INCHES OF WATER IN EXCAVATION.

PROVIDE WISCONSIN PROFESSIONAL ENGINEER SIGNED AND APPROVED FOOTING DESIGN USING A CASING AND CONSTRUCTION SEQUENCE. PROJECT ENGINEER WILL REVIEW AND APPROVED CASING DESIGN AND CONSTRUCTION SEQUENCE. CASING IS TO HAVE INTIMATE CONTACT WITH SHAFT SIDEWALL. CASING IT TO WITHSTAND INSERTION STRESS, REMOVAL STRESS, CONCRETE PRESSURE AND SOIL PRESSURE. REMOVE CASING DURING CONCRETE PLACEMENT OR IMMEDIATELY AFTER CONCRETE PLACEMENT. NO TEMPORARY CASING MAY REMAIN IN-PLACE.

PROVIDE WISCONSIN PROFESSIONAL ENGINEER SIGNED AND APPROVED FOOTING DESIGN AND CONSTRUCTION SEQUENCE WHEN OVER EXCAVATION IS REQUIRED NEAR A FOOTING. PROJECT ENGINEER WILL REVIEW AND APPROVED DESIGN AND CONSTRUCTION SEQUENCE.

FINISH TOP OF FOOTINGS TO THE DIMENSIONS INDICATED IN PLAN. REMOVE EXCESS CONCRETE.

DESIGN POST FOOTINGS SO THAT LINE POST FOOTING MOVE LESS THAN 1 INCH WHEN LINE POST IS IMPACTED BY A NCHRP 350 TL-3 SMALL CAR.

USE MARINE GRADE ANTI-SEIZE LUBRICANT FOR THREADING FITTINGS THAT IS ACCEPTABLE FOR USE ON GALVANIZED STEEL.

100 DIRECTION THAT THE CABLE PULLS THE END ANCHOR FOOTING

101 LOCATION OF LENGTH OF NEED POINT FOR CABLE BARRIER END TERMINAL VARIES. (SEE MANUFACTURER'S INFORMATION)

102 PAY LIMIT FOR CABLE BARRIER END TERMINAL. LENGTH OF CABLE BARRIER END TERMINAL VARIES. (SEE MANUFACTURER'S INFORMATION)

103 CABLE BARRIER END TERMINAL

104 CABLE BARRIER AND LINE POSTS

105 IN SOIL MINIMUM DEPTH OF CABLE BARRIER END TERMINAL FOOTING IS 60 INCHES. DEEPER FOOTINGS PER MANUFACTURER'S RECOMMENDATION ARE ACCEPTABLE.

106 ANCHOR MONITOR POINTS ARE GALVANIZED SURVEY NAIL, OR MASONRY NAIL, PLACED INTO CONCRETE FOOTING BEFORE HARDENING. IF THERE ARE MULTIPLE ANCHOR POINTS WITHIN A PAY LIMIT FOR A CABLE BARRIER END TERMINAL, EACH ANCHOR POINT NEEDS THREE ANCHOR MONITOR POINTS.

CABLE BARRIER TYPE 1 LAYOUT

STATE OF WISCONSIN
DEPARTMENT OF TRANSPORTAT

6

SDD 14B52 - 03a

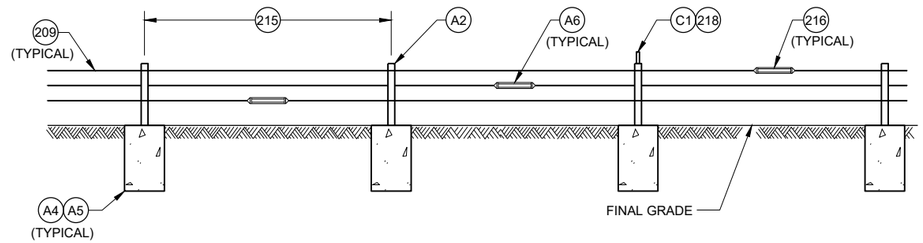

PROFILE VIEW
LINE POST INSTALLATION

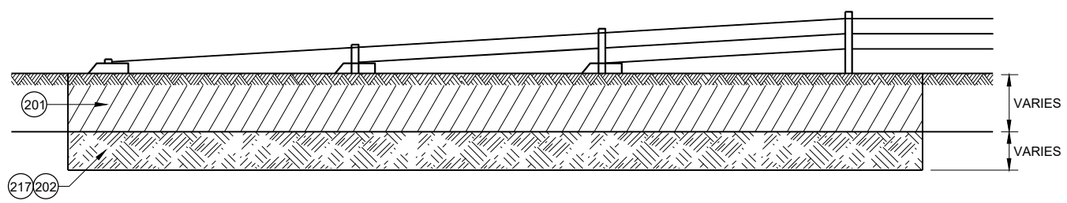

CABLE BARRIER END TERMINAL ROCK EXCAVATION DETAIL

GENERAL NOTES

201 SOIL TO BE EXCAVATED FOR CABLE BARRIER END TERMINAL (VARIES)

202 ROCK TO BE EXCAVATED FOR CABLE BARRIER END TERMINAL (VARIES)

203 SOIL TO BE EXCAVATED FOR LINE POST (VARIES)

204 ROCK TO BE EXCAVATED FOR LINE POST (VARIES)

205 EXCAVATE AND GRADE LINE FOR LINE POST FOOTINGS. INSTALL LINE POST FOOTING TO MINIMIZE 4 INCH TALL OBJECT ON 5 FOOT CHORD.

206 2 INCHES OF CLEAR COVER FROM EDGE OF CONCRETE TO REINFORCEMENT.

207 DIAMETER OF LINE POST FOOTING VARIES. SEE MANUFACTURERS' INFORMATION.

208 MINIMUM DEPTH OF LINE POST FOOTING IS 4' - 0" IN SOIL. DEEPER FOOTINGS PER MANUFACTURER'S RECOMMENDATION ARE ACCEPTABLE.

209 NUMBER AND LOCATION OF CABLES VARY. SEE MANUFACTURERS' INFORMATION.

210 LINE POST DIMENSIONS AND CONNECTION HARDWARE VARY. SEE MANUFACTURERS' INFORMATION.

211 LANE OF ROADWAY (VARIES). SEE PLAN FOR MORE INFORMATION.

212 PAVED SHOULDER (VARIES). SEE PLAN FOR MORE INFORMATION.

213 GRAVEL SHOULDER (VARIES). SEE PLAN FOR MORE INFORMATION.

214 CABLE BARRIER OFFSET FROM CENTERLINE OF MEDIAN DITCH (8 FOOT MINIMUM). SEE PLAN FOR MORE INFORMATION.

215 MAXIMUM POST SPACING IS 15 FEET.

216 STAGGER TURNBUCKLES (TYPICAL).

217 SEE MANUFACTURER'S DESIGN WHEN ROCK IS ENCOUNTERED.

218 LINE POST DELINEATOR SPACING IS 100 FEET.

219 MINIMUM LINE POST FOOTING REINFORCEMENT SHOWN. MANUFACTURER IS TO INDICATE REINFORCEMENT IS ADEQUATE FOR THEIR SYSTEM. IF REINFORCEMENT IS NOT ADEQUATE, PROVIDE FOOTING DESIGN WITH A ADEQUATE REINFORCEMENT.

6

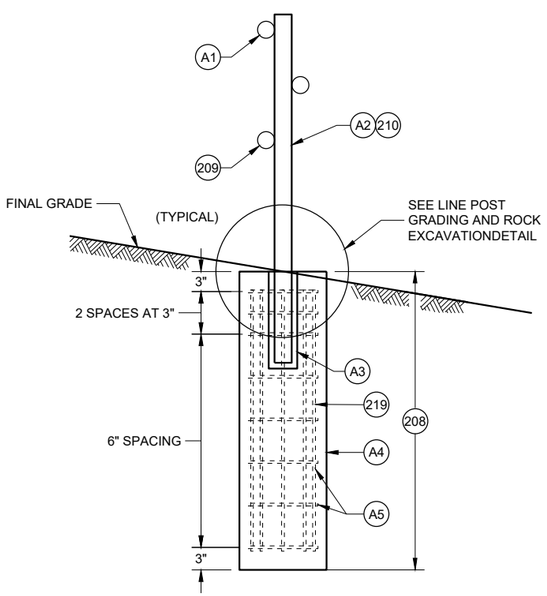

CROSS SECTION

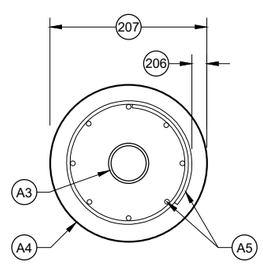

PROFILE VIEW
(LINE POSTS AND CABLES NOT SHOWN)

LINE POST DETAILS

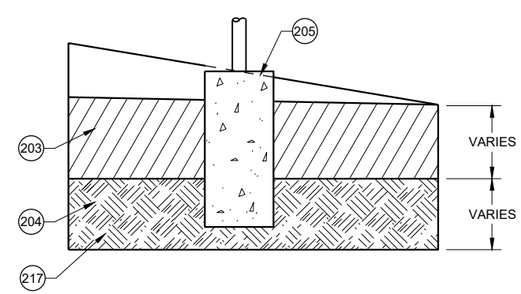

LINE POST GRADING AND ROCK EXCAVATION DETAIL

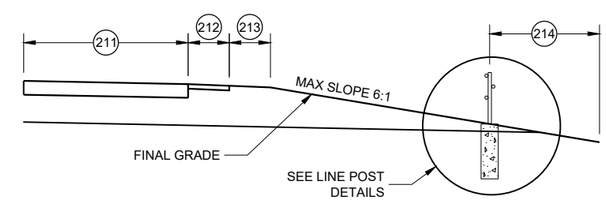

CABLE BARRIER OFFSET FROM DITCH LINE

6

CABLE BARRIER TYPE 1 LAYOUT

STATE OF WISCONSIN
DEPARTMENT OF TRANSPORTAT

SDD 14B52 - 03b

SDD 14B52 - 03b

BILL OF MATERIALS

PART NUMBER	QTY.	DESCRIPTION	MATERIALS SPECIFICATIONS
A1	3 OR 4	¾" 3x7 PRESTRECHED GALVANIZED STEEL WIRE ROPE	AASHTO M30 TYPE 1 CLASS A OR ASTM A741 TYPE 1 CLASS A WITH MINIMUM BREAKING STRENGTH = 39 KIPS (173.5 KN)
A2	1 PER LINE POST	GALVANIZED REMOVABLE STEEL LINE POST	SEE MANUFACTURER'S INFORMATION ON DIMENSIONS AND MATERIAL REQUIREMENTS.
			ASTM A123 (GALVANIZATION).
A3	1 PER LINE POST	GALVANIZED STEEL SLEEVE	SEE MANUFACTURER'S INFORMATION ON DIMENSIONS AND MATERIAL REQUIREMENTS.
			ASTM A123 (GALVANIZATION).
A4	VARIES	CONCRETE FOR LINE POST FOOTING	A, A-FA.A-T, OR A-IP OF STANDARD SPECIFICATION 501.2 OR AS MANUFACTURER SPECIFIES.
			STANDARD SPECIFICATION 716 QMP FOR CLASS II ANCILLARY CONCRETE
			SEE MANUFACTURER'S INFORMATION ON DIMENSIONS.
A5	MINIMUM REINFORCEMENT: 8 HORIZONTAL LOOP BARS 8 VERTICAL BARS	EPOXY COATED STEEL REINFORCEMENT	STANDARD SPECIFICATION 505.
			ALL BARS ARE NO. 4 BARS
A6	VARIES	TURNBUCKLES AND OTHER CABLE CONNECTING HARDWARE	SEE MANUFACTURER'S INFORMATION ON DIMENSIONS.
			MINIMUM BREAKING STRENGTH OF TURNBUCKLES AND CONNECTION HARDWARE IS EQUAL TO CABLE.
			TURNBUCKLES AND OTHER CABLE CONNECTION HARDWARE IS FIELD SWAGED PER MANUFACTURER'S RECOMMENDATION AND DETAILS.
			PROVIDE DOCUMENTATION THAT THE FITTINGS ARE STRONGER THAN THE CABLE BARRIER. DOCUMENTATION IS TO INCLUDE: MANUFACTURER NAME, TESTING RESULTS, AND DATE OF TESTING.
B1	VARIES	CABLE CONNECTION TO CABLE BARRIER END TERMINAL	SEE MANUFACTURER'S INFORMATION ON DIMENSIONS AND MATERIAL REQUIREMENTS.
B2	VARIES	CONCRETE FOR CABLE BARRIER END TERMINAL	A, A-FA.A-T, OR A-IP OF STANDARD SPECIFICATION 501.2.
			STANDARD SPECIFICATION 716 QMP FOR CLASS II ANCILLARY CONCRETE
B3	VARIES	EPOXY COATED STEEL REINFORCEMENT	STANDARD SPECIFICATION 505.
C1	VARIES	LINE POST DELINEATOR	REFLECTIVE SHEETING TYPE SH. SEE APPROVED PRODUCT LIST YELLOW.
C2	VARIES	CABLE BARRIER END TERMINAL DELINEATOR	REFLECTIVE SHEETING TYPE SH. SEE APPROVED PRODUCT LIST OBJECT MARKER TYPE 3 PATTERN

6

6

SDD 14B52 - 03c

CABLE BARRIER TYPE 1 LAYOUT

STATE OF WISCONSIN
DEPARTMENT OF TRANSPORTATION

APPROVED
May 2022 — DATE
/S/ Rodney Taylor — ROADWAY STANDARDS DEVE ENGINEER

FHWA

SDD 14B52 - 03c

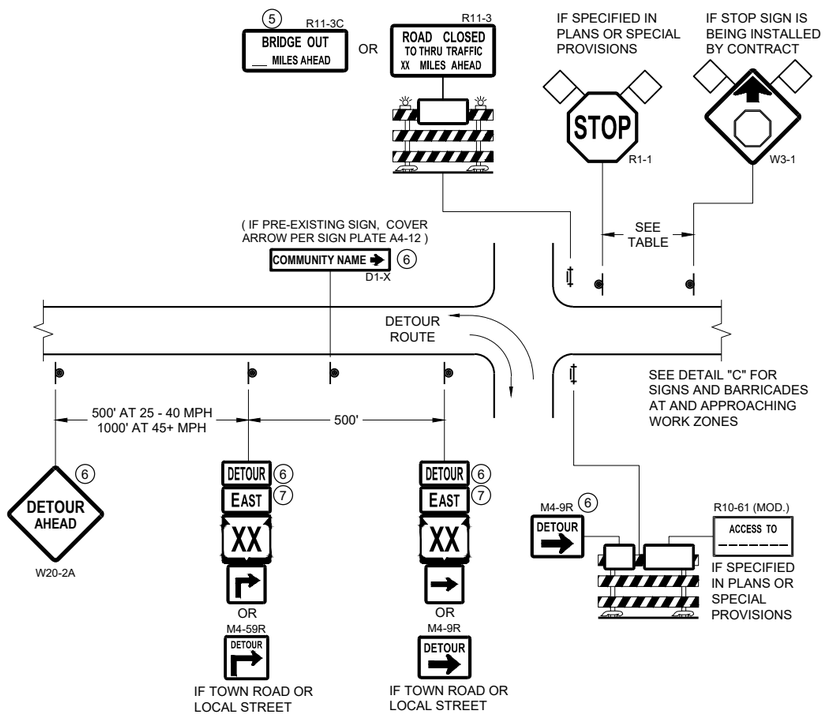

DETAIL A
MAINLINE CLOSURE WITH POSTED DETOUR
WORK ZONE GREATER THAN OR EQUAL TO ½ MILE FROM DETOUR ROUTE (1000 FEET IF URBAN)

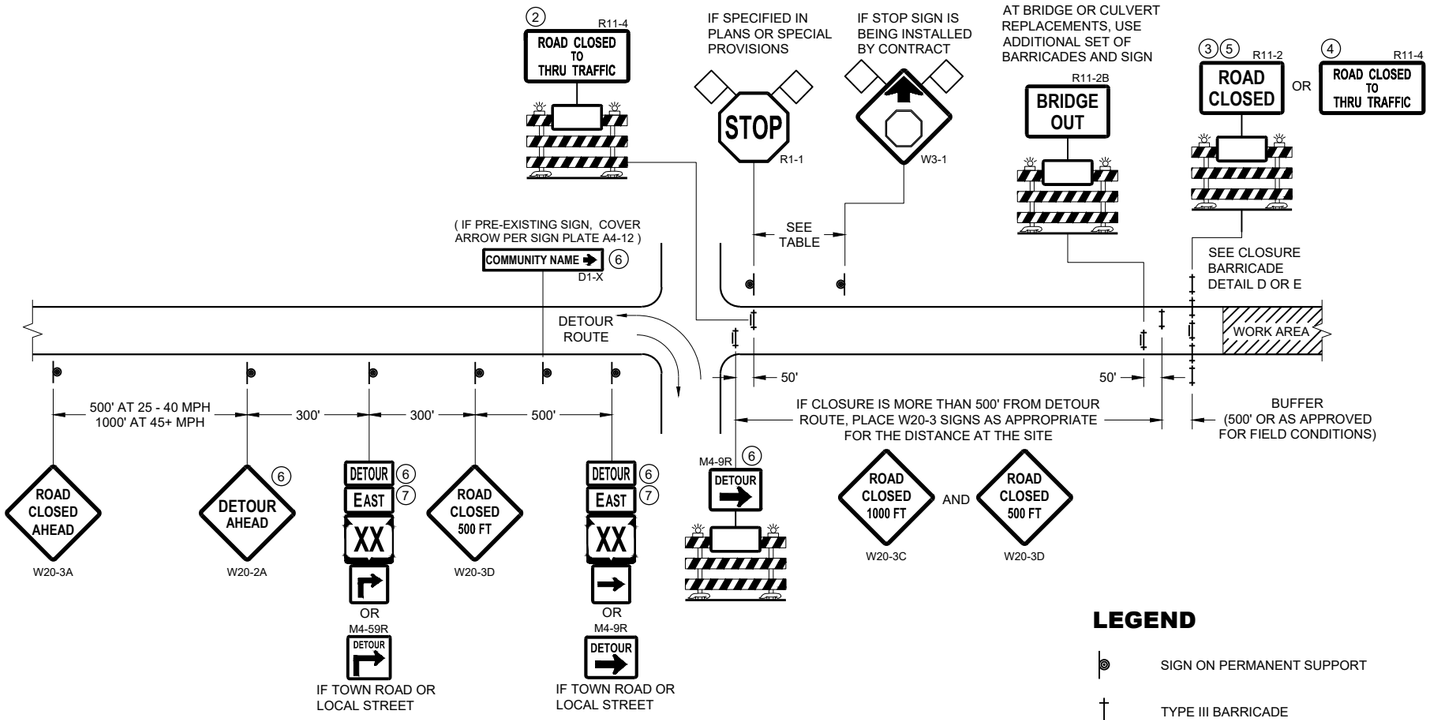

DETAIL B
MAINLINE CLOSURE WITH POSTED DETOUR
WORK ZONE LESS THAN ½ MILE FROM DETOUR ROUTE (1000 FEET IF URBAN)

LEGEND

- SIGN ON PERMANENT SUPPORT
- TYPE III BARRICADE
- TYPE III BARRICADE WITH ATTACHED SIGN
- TYPE "A" WARNING LIGHT (FLASHING)
- WORK AREA
- FLAGS, 16" X 16" MIN. (ORANGE)
- DETOUR M4 - 8
- EAST M3 - X
- XX (M1 - 4) OR XX (M1 - 6) OR COUNTY X (M1 - 5A)
- M05 - 1 OR M06 - 1

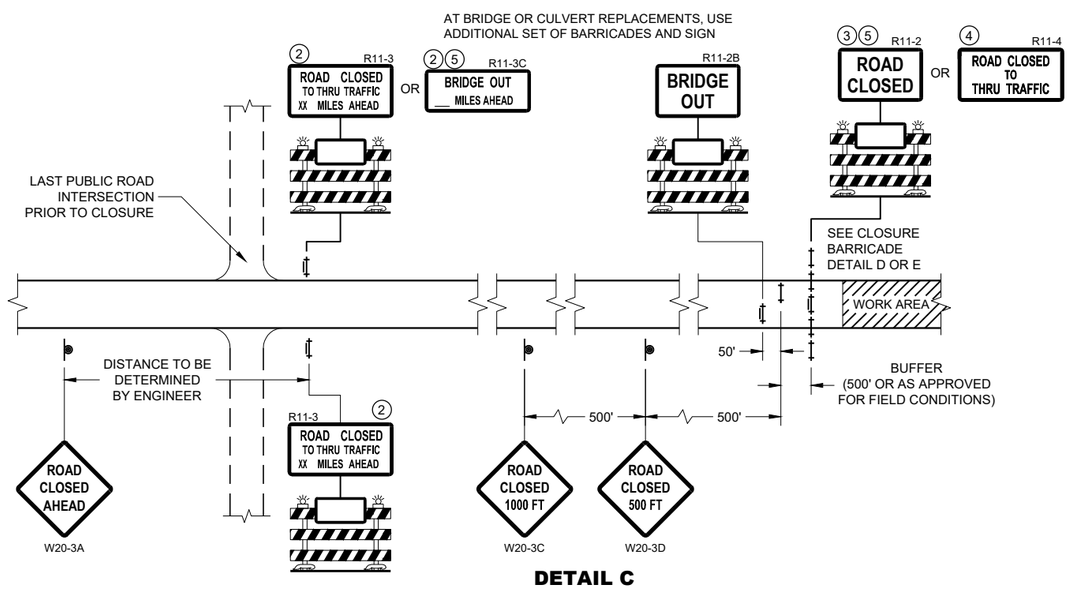

DETAIL C
MAINLINE CLOSURE, NO POSTED DETOUR

SPEED LIMIT (MPH)	"STOP AHEAD" ADVANCE WARNING DISTANCE (FT)
25	200
30	200
35	350
40	350
45	500
50	550
55	750

SEE SDD 15C2-SHEET "b" FOR GENERAL NOTES AND FOOTNOTES 1 THROUGH 7

BARRICADES AND SIGNS FOR MAINLINE CLOSURES

STATE OF WISCONSIN
DEPARTMENT OF TRANSPORTATION

APPROVED
May 2023 — DATE
/S/ Andrew Heidtke — WORK ZONE ENGINEER

FHWA

6

SDD 15C02 - 09a

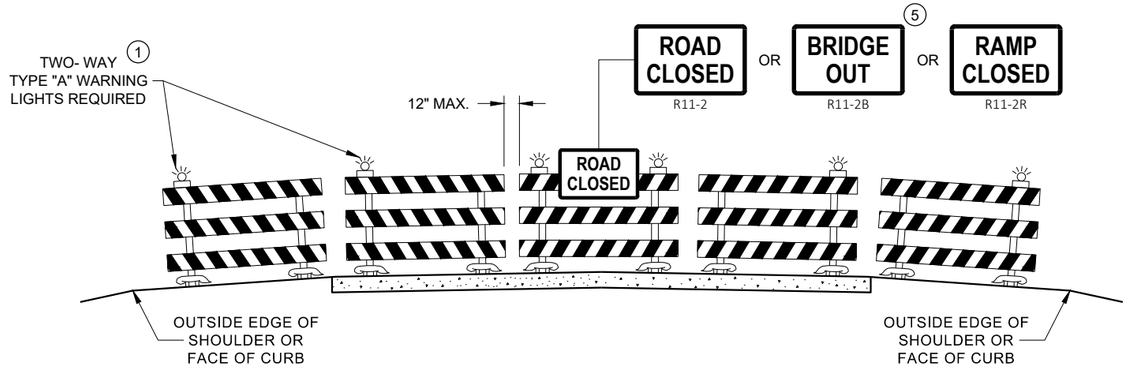

DETAIL D
ROAD CLOSURE BARRICADE DETAIL
APPROACH VIEW

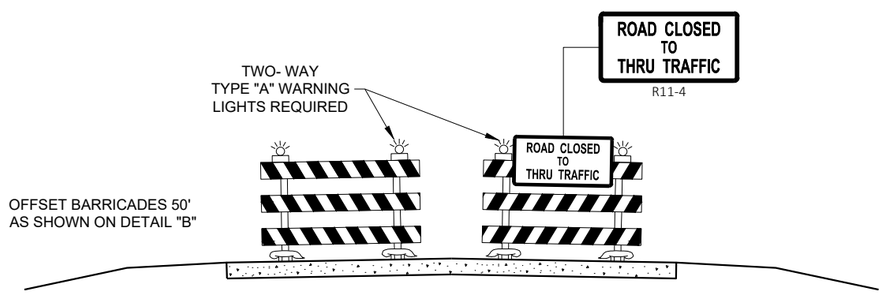

DETAIL E
LANE CLOSURE BARRICADE DETAIL
APPROACH VIEW

SEE SDD 15C2 - SHEET "a" FOR LEGEND

GENERAL NOTES

THE EXACT NUMBER, LOCATION, AND SPACING OF ALL SIGNS AND BARRICADES SHALL BE ADJUSTED TO FIT FIELD CONDITIONS AS APPROVED BY THE ENGINEER.

ANY SIGNS TEMPORARY OR EXISTING, WHICH CONFLICT WITH TRAFFIC CONTROL "IN USE", SHALL BE REMOVED OR COVERED AS NEEDED AND AS APPROVED BY THE ENGINEER.

THE SPACING BETWEEN TRAFFIC CONTROL SIGNS SHOULD BE ADJUSTED TO NOT CONFLICT WITH AND SHOULD PROVIDE A DESIRABLE MINIMUM OF 200 FEET CLEARANCE TO EXISTING SIGNS THAT WILL REMAIN IN PLACE.

BARRICADES THAT MUST BE MOVED FOR A WORK OPERATION SHALL BE IMMEDIATELY RE-ESTABLISHED UPON COMPLETION OF THE OPERATION, OR FOR CONTINUING OPERATIONS, AT THE END OF EACH WORKING DAY.

SIGNS THAT WILL BE IN PLACE LESS THAN 7 CONTINUOUS DAYS AND NIGHTS MAY BE MOUNTED ON PORTABLE SUPPORTS.

ALL TYPE III BARRICADES SHALL HAVE RAILS REFLECTORIZED ON BOTH FACES. STRIPES SHALL BE PROPERLY SLOPED DOWN TOWARD THE TRAFFIC SIDE OR AS SHOWN IN THE ROAD CLOSURE BARRICADE DETAIL "D" FOR FULL ROAD CLOSURES.

TYPE "A" LOW - INTENSITY FLASHING WARNING LIGHTS SHALL BE VISIBLE ON BOTH SIDES OF THE BARRICADE.

THE R11 - 2, R11 - 3, M4 - 9, R11 - 4, AND R10 - 61 SIGNS PLACED ON THE BARRICADES SHALL COVER NO MORE THAN THE TOP RAIL. THE SIGNS SHALL NOT COVER ANY PORTION OF THE MIDDLE RAIL OR BOTTOM RAILS.

"WO" AND "MO" SIGNS ARE THE SAME AS "W" AND "M" SIGNS EXCEPT THE BACKGROUND IS ORANGE.

ALL SIGNS SHALL BE 48" X 48" UNLESS OTHERWISE NOTED BELOW:
- R11 - 2 SHALL BE 48" X 30"
- R11 - 3 SHALL, R11 - 4 AND R10 - 61 SHALL BE 60 " X 30"
- M4 - 9 SHALL BE 30" X 24"
- M3 - X SHALL BE 24" X 12" (36" X 18" IF NEEDED TO MATCH EXISTING SIGNS)
- M4 - 8 SHALL BE 24" X 12" (36" X 18" IF NEEDED TO MATCH EXISTING SIGNS)
- M1 - 4, M1 - 5A AND M1 - 6 SHALL BE 24" X 24" (36" X 36" IF NEEDED TO MATCH EXISTING SIGNS)
- MO5 - 1 AND MO6 - 1 SHALL BE 21" X 21" (30" X 30" IF NEEDED TO MATCH EXISTING SIGNS)
- D1 - X SHALL BE AS SHOWN ON SPECIFIC PROJECT SIGNING DETAIL SHEETS.
- R1 - 1 SHALL BE 36" X 36"

1. TWO WARNING LIGHTS SHALL BE PROVIDED ON THE CENTER BARRICADE AND A MINIMUM OF ONE WARNING LIGHT SHALL BE PROVIDED ON EACH OF THE OTHER BARRICADES WITHIN THE ROADWAY LIMITS. SPACING OF THE WARNING LIGHTS SHALL BE UNIFORM TO THE EDGE OF ROADWAY AS SHOWN (APPROX. 8 FOOT LIGHT SPACING.
2. THESE SIGNS AND BARRICADES ARE NOT REQUIRED IF ROAD CLOSURE BEGINS AT AN INTERSECTION.
3. FOR ROAD CLOSURE WITHOUT LOCAL ACCESS TO PROJECT, SEE ROAD CLOSURE BARRICADE DETAIL "D".
4. FOR ROAD CLOSURE WITH LOCAL ACCESS TO PROJECT, SEE ROAD CLOSURE BARRICADE DETAIL "E".
5. FOR BRIDGE OR CULVERT REPLACEMENTS, SUBSTITUTE "BRIDGE OUT" INSTEAD OF "ROAD CLOSED" ON R11 - 2 AND R11 - 3 SIGNS.
6. INSTALL DETOUR AND COMMUNITY GUIDE SIGNS AND ARROWS ONLY IF SPECIFIED IN THE CONTRACT. IF THERE ARE EXISTING ROUTE MARKER ASSEMBLIES THAT WILL REMAIN IN PLACE, ADJUST THE LOCATION OF THE DETOUR ROUTE SIGNS TO CORRESPOND WITH THE EXISTING ASSEMBLIES. MODIFY EXISTING SIGNS WHERE POSSIBLE. SEE SPECIFIC PROJECT DETOUR SIGNING DETAIL SHEETS. IF DETOUR SIGNS ARE BEING INSTALLED BY OTHERS, PLACE THE CONTRACTED TRAFFIC CONTROL SIGNS TO ALLOW FOR PLACEMENT OF ALL WARNING, DETOUR AND GUIDE SIGNS AS SHOWN.
7. "EAST" CARDINAL DIRECTION MARKERS AND RIGHT TURN ARROWS ARE SHOWN. USE OTHER CARDINAL DIRECTIONS AND ARROWS AS APPROPRIATE.

BARRICADES AND SIGNS FOR VARIOUS CLOSURES

STATE OF WISCONSIN
DEPARTMENT OF TRANSPORTATION

APPROVED
May 2023 — DATE
/S/ Andrew Heidtke — WORK ZONE ENGINEE
FHWA

THIS DRAWING PROVIDES GENERAL GUIDANCE ON TYPICAL DETOUR SIGN LAYOUT AND SPACING. SEE PROJECT DETOUR SIGNING SHEETS FOR SPECIFIC DETAILS FOR EACH PROJECT.

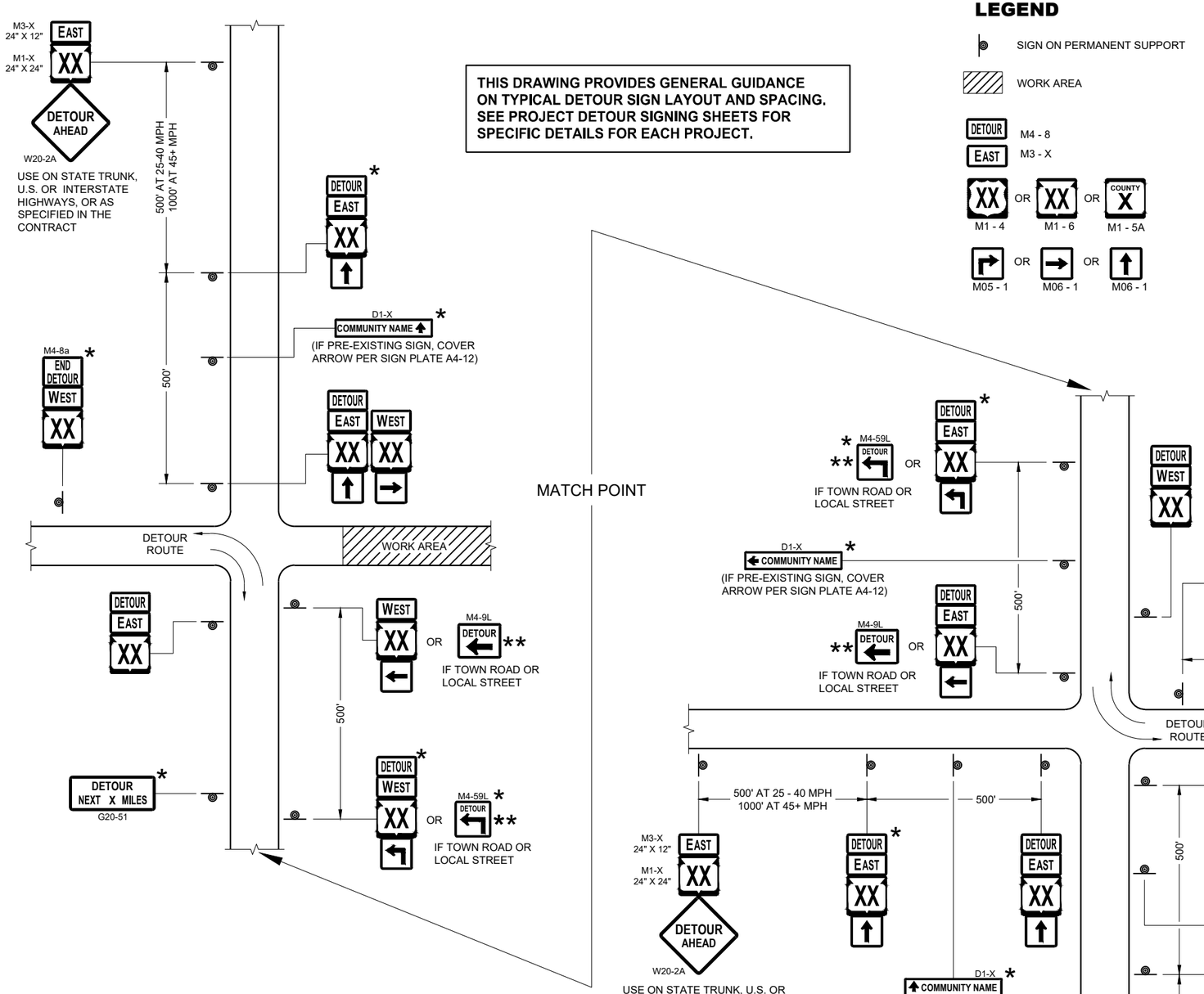

LEGEND

- SIGN ON PERMANENT SUPPORT
- WORK AREA
- DETOUR — M4 - 8
- EAST — M3 - X
- XX — M1 - 4 OR XX — M1 - 6 OR COUNTY X — M1 - 5A
- M05 - 1 OR M06 - 1 OR M06 - 1

GENERAL NOTES

THE EXACT NUMBER, LOCATION AND SPACING OF ALL SIGNS SHALL BE ADJUSTED TO FIT FIELD CONDITIONS AS APPROVED BY THE ENGINEER.

IF THERE ARE EXISTING ROUTE MARKER ASSEMBLIES THAT WILL REMAIN IN PLACE, ADJUST THE LOCATION OF THE DETOUR ROUTE SIGNS TO CORRESPOND WITH THE EXISTING ASSEMBLIES. SEE SPECIFIC PROJECT DETOUR SIGNING DETAIL SHEETS. MODIFY EXISTING SIGNS WHERE POSSIBLE.

THE SPACING BETWEEN TRAFFIC CONTROL AND DETOUR SIGNS SHOULD BE ADJUSTED TO NOT CONFLICT WITH AND TO PROVIDE A DESIRABLE MINIMUM OF 200 FEET CLEARANCE TO EXISTING SIGNS THAT WILL REMAIN IN PLACE.

ANY SIGNS TEMPORARY OR EXISTING, WHICH CONFLICT WITH TRAFFIC CONTROL "IN USE" SHALL BE REMOVED OR COVERED AS NEEDED AND AS APPROVED BY THE ENGINEER.

SIGNS THAT WILL BE IN PLACE LESS THAN 7 CONTINUOUS DAYS AND NIGHTS MAY BE MOUNTED ON PORTABLE SUPPORTS.

"MO" SIGNS ARE THE SAME AS "M" SIGNS EXCEPT THE BACKGROUND IS ORANGE.

SIGN SIZES SHALL BE AS FOLLOWS:

M3-X SHALL BE 24" X 12" (36" X 18" IF NEEDED TO MATCH EXISTING SIGNS)
M4-8 SHALL BE 24" X 12" (36" X 18" IF NEEDED TO MATCH EXISTING SIGNS)
M1-4, M1-5A AND M1-6 SHALL BE 24" X 24" (36" X 36" IF NEEDED TO MATCH EXISTING SIGNS)
M05-1 AND M06-1 SHALL BE 21" X 21" (30" X 30" IF NEEDED TO MATCH EXISTING SIGNS)
M4-9 AND M4-59 SHALL BE 30" X 24"
M4-8a SHALL BE 24" X 18"
G20-51 SHALL BE 60" X 24"
W20-2A SHALL BE 48" X 48"
D1-X SHALL BE AS SHOWN ON SPECIFIC PROJECT SIGNING DETAIL SHEETS.

* OPTIONAL SIGNS. SEE SPECIFIC PROJECT DETOUR SIGNING DETAIL SHEETS.

** FOR A TOWN ROAD OR LOCAL STREET DETOURED ONTO A STATE TRUNK HIGHWAY, PLACE A ROAD NAME PLAQUE ABOVE THE M4-9 SIGN AS SPECIFIED IN THE CONTRACT.

SEE SPECIFIC PROJECT DETOUR SIGNING DETAIL SHEETS AND DETAIL A OR B ON SDD SHEET 15C02 - SHEET "a"

DETAIL F
DETOUR SIGNING

DETOUR SIGNING FOR MAINLINE CLOSURES

STATE OF WISCONSIN
DEPARTMENT OF TRANSPORTATION

APPROVED
May 2023 — DATE
/S/ Andrew Heidtke — WORK ZONE ENGINEER
FHWA

SDD 15C02 - 09c
6

THIS DRAWING PROVIDES GENERAL GUIDANCE ON TYPICAL TO SIGN LAYOUT AND SPACING. SEE PROJECT TO SIGNING SHEETS FOR SPECIFIC DETAILS FOR EACH PROJECT.

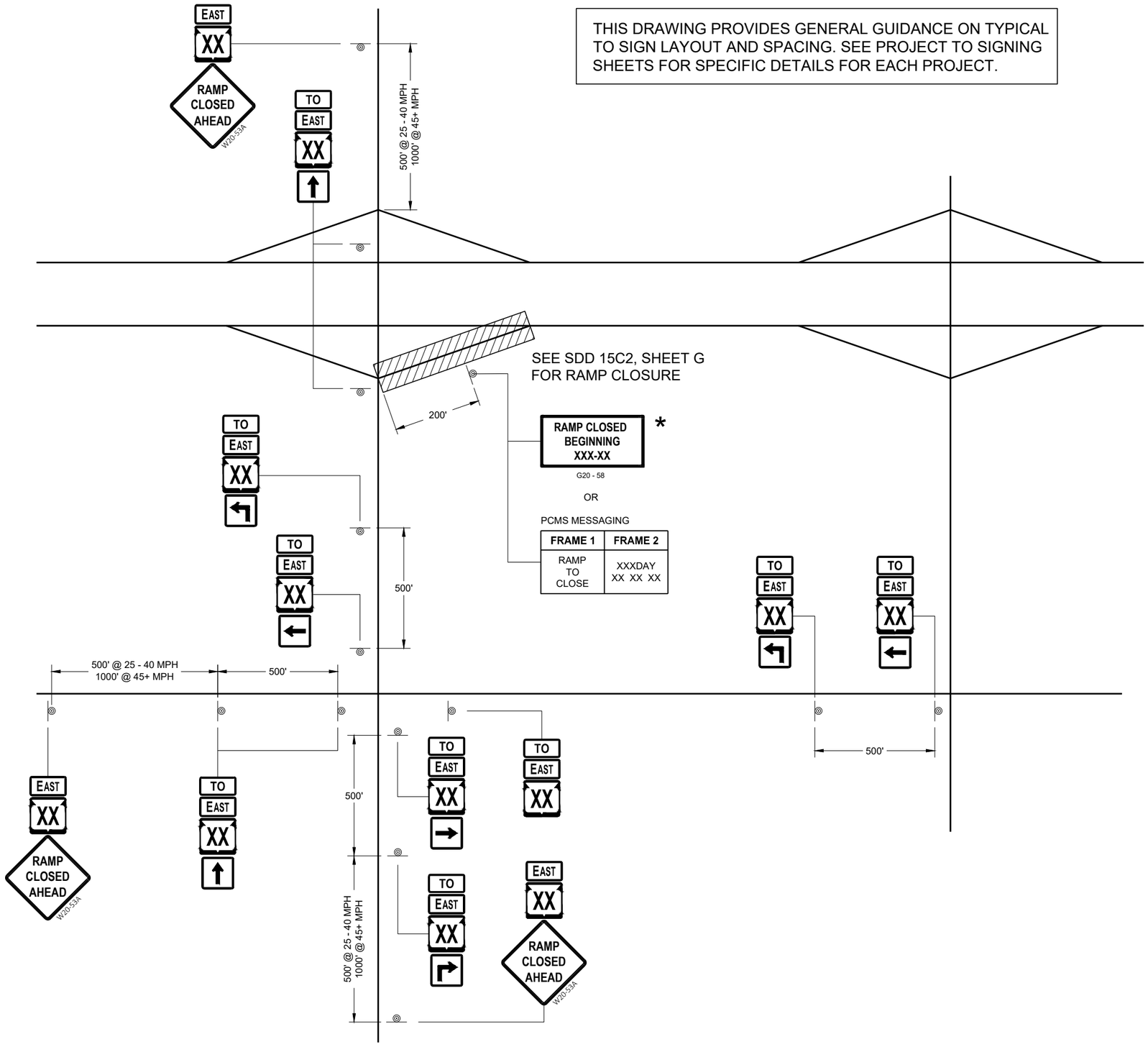

LEGEND

SIGN ON PERMANENT SUPPORT

TO / EAST — MO4 - 5, M3 - X

XX M1 - 6 OR XX M1 - 4 OR INTERSTATE XX M1 - 1

M05 - 1 OR M06 - 1 OR M06 - 1

GENERAL NOTES

THE EXACT NUMBER, LOCATION AND SPACING OF ALL SIGNS SHALL BE ADJUSTED TO FIT FIELD CONDITIONS AS APPROVED BY THE ENGINEER.

IF THERE ARE ANY ROUTE MARKER ASSEMBLIES THAT WILL REMAIN IN PLACE, ADJUST THE LOCATION OF THE TO ROUTE SIGNS TO CORRESPOND WITH THE EXISTING ASSEMBLIES. SEE SPECIFIC PROJECT TO SIGNING DETAIL SHEETS. MODIFY EXISTING SIGNS WHERE POSSIBLE.

THE SPACING BETWEEN TRAFFIC CONTROL AND TO SIGNS SHOULD BE ADJUSTED TO NOT CONFLICT WITH AND TO PROVIDE A DESIRABLE MINIMUM OF 200 FEET CLEARANCE TO EXISTING SIGNS THAT WILL REMAIN IN PLACE.

ANY SIGNS TEMPORARY OR EXISTING, WHICH CONFLICT WITH TRAFFIC CONTROL " IN USE" SHALL BE REMOVED OR COVERED AS NEEDED AND AS APPROVED BY THE ENGINEER.

SIGNS THAT SHALL BE IN PLACE LESS THAN 7 CONTINUOUS DAYS AND NIGHTS MAY BE MOUNTED ON PORTABLE SUPPORTS.

"MO" SIGNS ARE THE SAME AS "M" SIGNS EXCEPT THE BACKGROUND IS ORANGE.

SIGN SIZES SHALL BE AS FOLLOW:
- M3 - X SHALL BE 24" X 12". (36" X 18" IF NEEDED TO MATCH EXISTING SIGNS).
- MO4 - 5 SHALL BE 24" X 12". (36" X 18" IF NEEDED TO MATCH EXISTING SIGNS).
- M1 - 1, M1 - 4, AND M1 - 6 SHALL BE 24" X 24" (36" X 36" IF NEEDED TO MATCH EXISTING SIGNS).
- MO5 - 1, MO5 - 2, AND MO6 - 1, SHALL BE 21" X 21". (30" X 30" IF NEEDED TO MATCH EXISTING SIGNS).
- W20 - 53A SHALL BE 48" X 48"

* PLACE "RAMP CLOSED BEGINNING" SIGN 7 CALENDAR DAYS PRIOR TO CLOSURE OR AS DIRECTED BY THE ENGINEER. SEE WISCONSIN STANDARD SIGN PLATES FOR LAYOUT.

ON RAMP LANE CLOSURE

STATE OF WISCONSIN
DEPARTMENT OF TRANSPORTATION

APPROVED
May 2023 — DATE
/S/ Andrew Heidtke — WORK ZONE ENGINEE
FHWA

GENERAL NOTES

THE EXACT NUMBER, LOCATION, AND SPACING OF ALL SIGNS AND DEVICES SHALL BE ADJUSTED TO FIT FIELD CONDITIONS.

THE SPACING BETWEEN TRAFFIC CONTROL SIGNS SHOULD BE ADJUSTED TO NOT CONFLICT WITH AND SHOULD PROVIDE A MINIMUM OF 200 FEET (500 FEET DESIRABLE) CLEARANCE TO EXISTING SIGNS THAT WILL REMAIN IN PLACE.

ALL SIGNS ARE 48" X 48" UNLESS OTHERWISE NOTED.

SIGNS THAT WILL BE IN PLACE LESS THAN SEVEN CONTINUOUS DAYS AND NIGHTS MAY BE MOUNTED ON PORTABLE SUPPORTS.

IF A "STOP" SIGN MUST BE REMOVED FOR A WORK OPERATION, A TEMPORARY "STOP" SIGN SHALL BE PLACED PRIOR TO THE SIGN REMOVAL, OR A FLAGGER SHALL BE PROVIDED UNTIL THE SIGN IS REESTABLISHED.

* OMIT G20-1 SIGNS IF LENGTH OF WORK AREA IS 2 MILES OR LESS

** PLACE AN ADDITIONAL W20-1A "ROAD WORK AHEAD" SIGN IF WORK AREA WITHIN THE PROJECT IS SEPARATED BY MORE THAN 2 MILES FROM PREVIOUS WORK AREA.

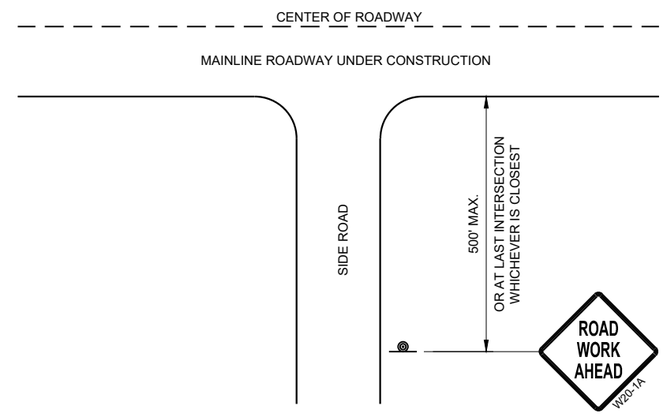

TYPICAL SIDE ROAD APPROACH WARNING SIGN DETAIL

LEGEND

- SIGN ON PERMANENT SUPPORT
- DIRECTION OF TRAFFIC
- WORK AREA

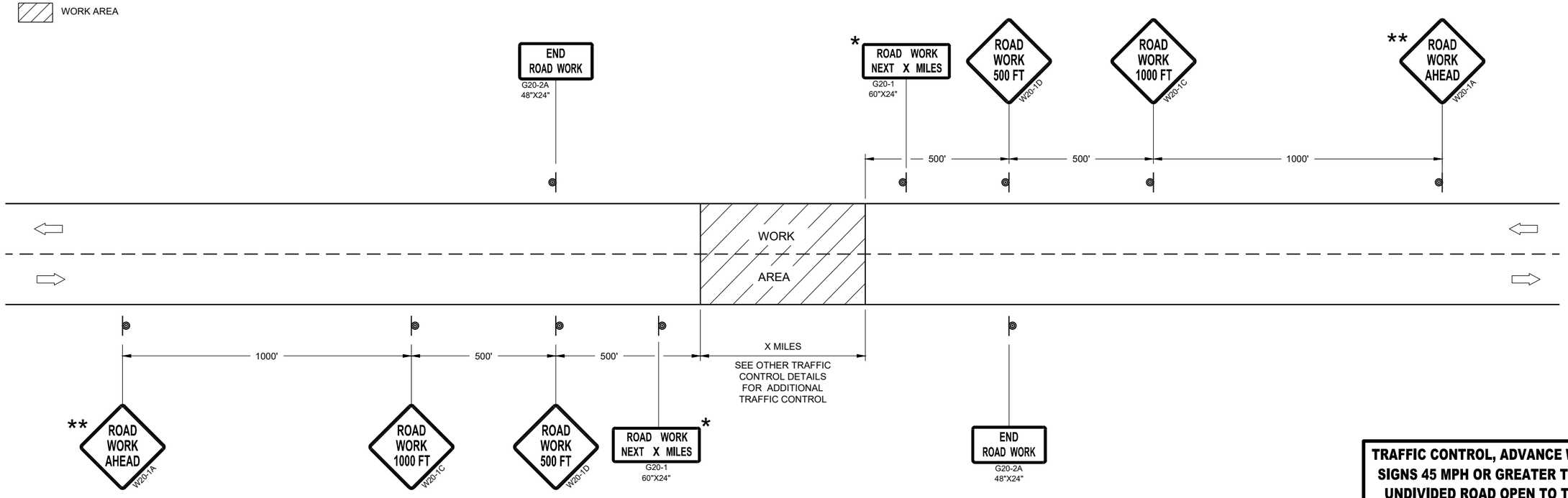

TRAFFIC CONTROL, ADVANCE WARNING SIGNS 45MPH OR GREATER

TRAFFIC CONTROL, ADVANCE WARNING SIGNS 45 MPH OR GREATER TWO-WAY UNDIVIDED ROAD OPEN TO TRAFFIC

STATE OF WISCONSIN
DEPARTMENT OF TRANSPORTATION

APPROVED
July 2018 — DATE
/S/ Andrew Heidtke — WORK ZONE ENGINEE
FHWA

6

SDD 15C04 - 05

GENERAL NOTES

DETAILS OF CONSTRUCTION NOT SHOWN ON THIS DRAWING SHALL CONFORM TO STANDARD SPECIFICATIONS AND SPECIAL PROVISIONS.

(1) LOCATE THE NO PASSING ZONE W14-3 SIGN WITHIN 50 FEET OF THE "T" MARKING

(2) MEASURE FROM EDGE OF MARKING TO JOINT LINE. THIS DOES NOT INCLUDE SPACE NEEDED FOR GROOVING OPERATIONS.

LEGEND

"T" MARKING

SIGN ON PERMANENT SUPPORT

DIRECTION OF TRAFFIC

* CONFIRM MARKING LINE WIDTH WITH THE MISCELLANEOUS QUANTITIES

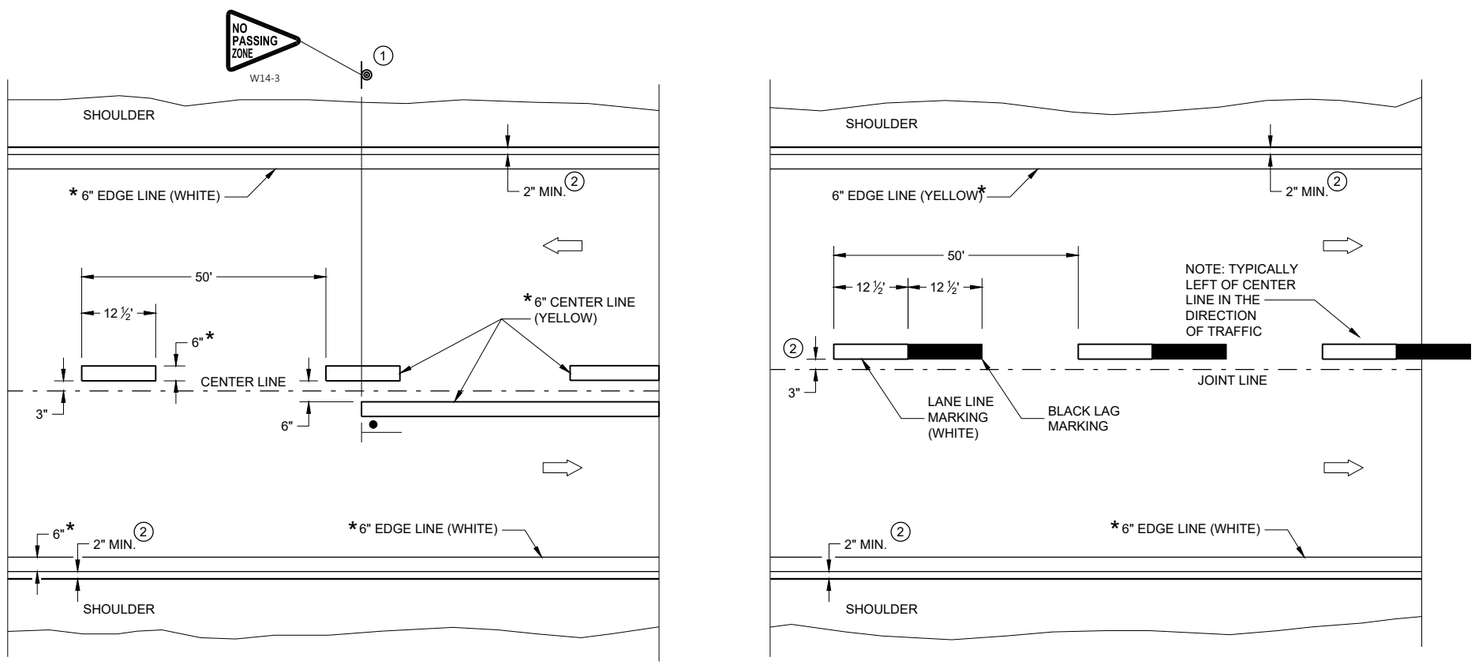

TWO WAY TRAFFIC

ONE WAY TRAFFIC

PERMANENT PAVEMENT MARKING

6

6

PERMANENT LONGITUDINAL PAVEMENT MARKINGS

STATE OF WISCONSIN
DEPARTMENT OF TRANSPORTATION

APPROVED

May 2023 — DATE

/S/ Jeannie Silver — STATEWIDE SIGNING AND M ENGINEER

FHWA

SDD 15C08-23a

SDD 15C08-23a

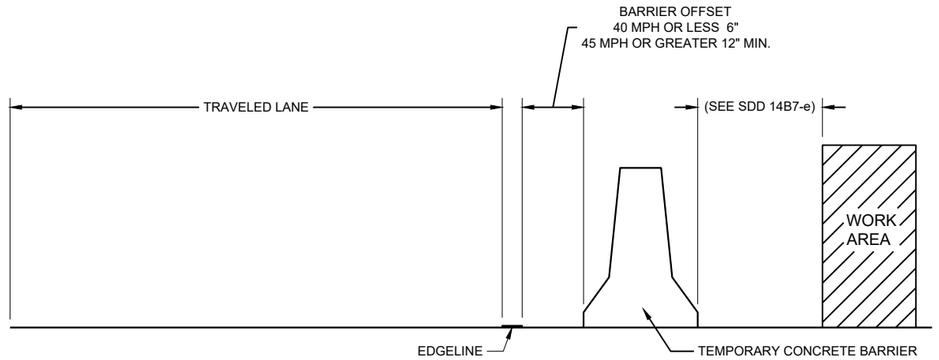

TEMPORARY BARRIER OFFSET FROM EDGELINE

GENERAL NOTES

DETAILS OF CONSTRUCTION NOT SHOWN ON THIS DRAWING SHALL CONFORM TO STANDARD SPECIFICATIONS AND SPECIAL PROVISIONS.

LEGEND

⇨ DIRECTION OF TRAFFIC

* CONFIRM MARKING LINE WIDTH WITH THE MISCELLANEOUS QUANTITIES

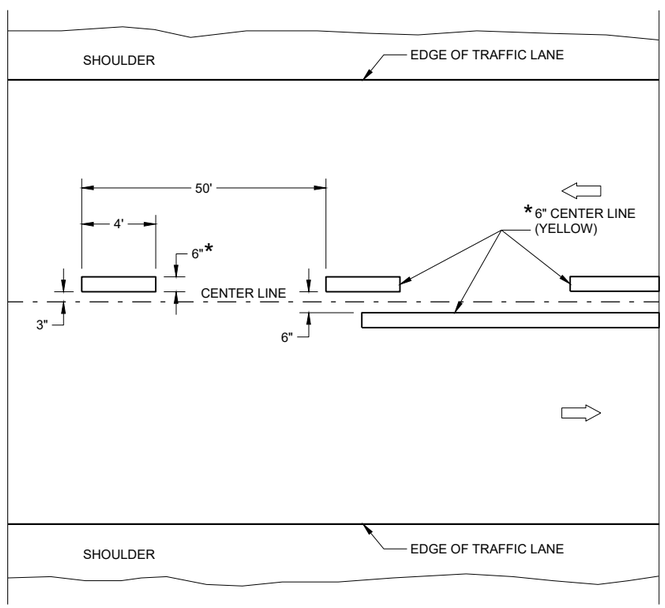

TWO WAY TRAFFIC

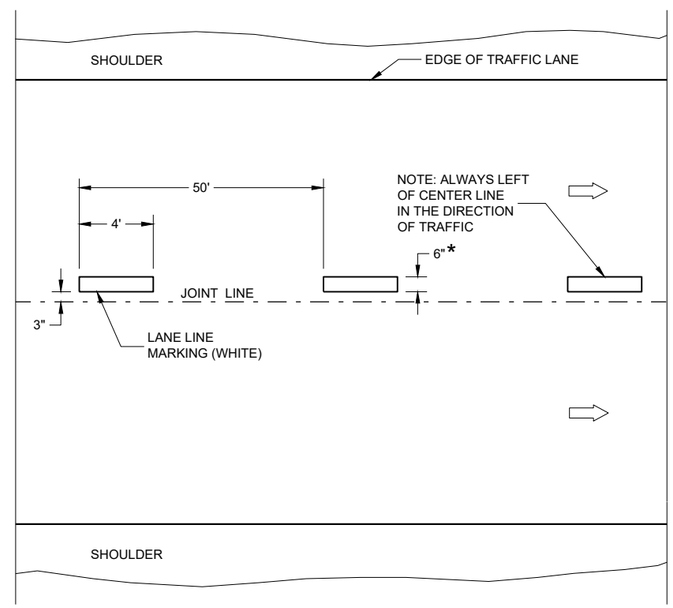

ONE WAY TRAFFIC

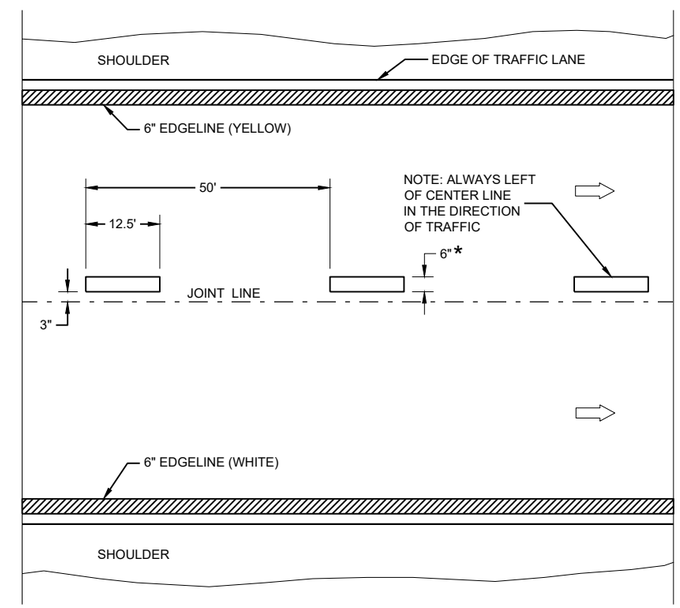

FREEWAYS AND EXPRESSWAYS

TEMPORARY PAVEMENT MARKING

TEMPORARY LONGITUDINAL PAVEMENT MARKING

STATE OF WISCONSIN
DEPARTMENT OF TRANSPORTATION

APPROVED
May 2023 — DATE
/S/ Jeannie Silver — STATEWIDE SIGNING AND M ENGINEER
FHWA

6

SDD 15C08-23b

GENERAL NOTES

1. REFLECTIVE SHEETING SHALL FOLLOW THE REQUIREMENTS IN THE APPROVED PRODUCTS LISTING FOR SIGN SHEETING.
2. LOCATION OF WARNING LIGHTS WHEN SHOWN ON THE PLAN.

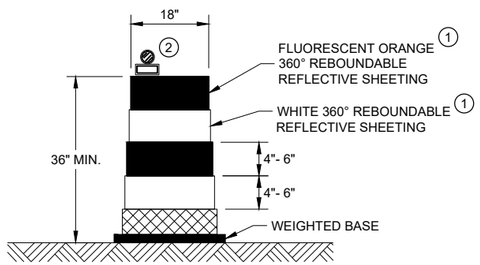

DRUM

BALLAST WIDTHS
RANGE FROM 24"-36"

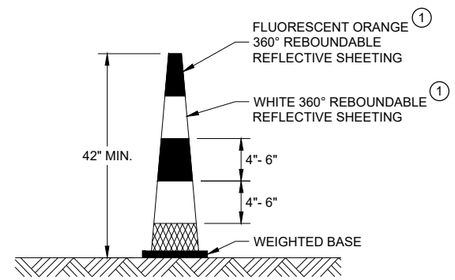

42" CONE

DO NOT USE IN TAPERS
½ SPACING OF DRUMS

BALLAST WIDTHS
RANGE FROM 14"-20"

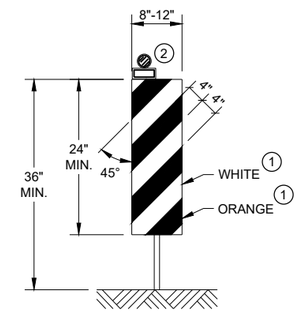

VERTICAL PANEL

THE STRIPES SHALL SLOPE DOWNWARD TO
THE TRAFFIC SIDE FOR CHANNELIZATION.

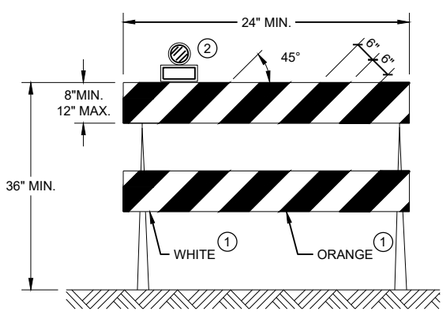

TYPE II BARRICADE

FOR RAILS LESS THAN 36" LONG, 4" WIDE STRIPES
MAY BE USED. ALL STRIPES SHALL SLOPE DOWNWARD
TO THE TRAFFIC SIDE FOR CHANNELIZATION.

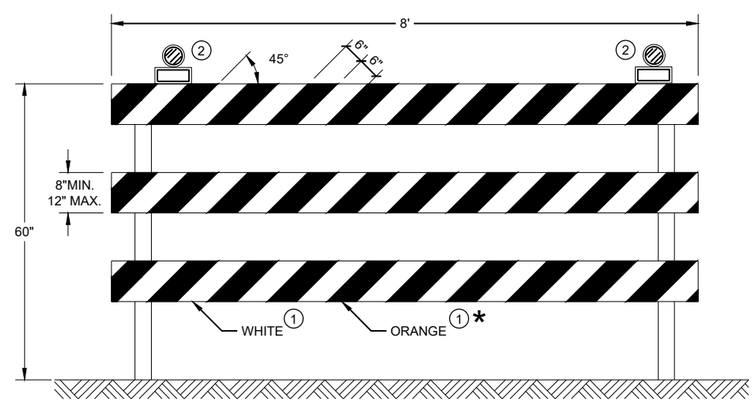

TYPE III BARRICADE

IF SIGN MOUNTED, DO NOT COVER MORE THAN 50% OF THE TOP
TWO RAILS OR 33% OF THE TOTAL AREA OF THE THREE RAILS.

* IF USED FOR A PERMANENT APPLICATION USE RED SHEETING.

CHANNELIZING DEVICES DRUMS, CONES, BARRICADES AND VERTICAL PANELS

STATE OF WISCONSIN
DEPARTMENT OF TRANSPORTATION

APPROVED
November 2022 — /S/ Andrew Heidtke
DATE — WORK ZONE ENGINEE
FHWA

6

6

SDD 15C11 - 10b

SDD 15C11 - 10b

LEGEND

V1 MARKING VEHICLE

V2 SHADOW VEHICLE

V3 TRAIL VEHICLE

TRUCK MOUNTED ATTENUATOR (TMA)

SIGN ON TEMPORARY SUPPORT

DIRECTION OF TRAFFIC

FLASHING ARROW PANEL (MERGE)

FLASHING ARROW PANEL (CAUTION)

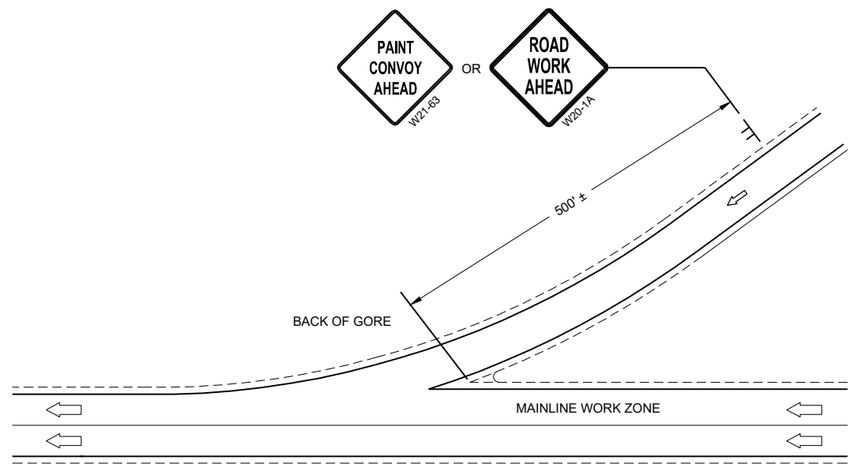

GENERAL NOTES

ALL VEHICLES SHALL BE EQUIPPED WITH TWO 360 DEGREE HIGH INTENSITY YELLOW FLASHING LIGHTS OR STROBE LIGHTS AND OPERATED WITH HEADLIGHTS TURNED ON.

ALL VEHICLES SHALL BE EQUIPPED WITH REAR FACING TYPE B OR C FLASHING ARROW PANEL. SIGNS PLACED ON VEHICLES MUST NOT OBSCURE THE ARROW PANEL.

ALL SIGNS ARE 48" X 48" UNLESS OTHERWISE SPECIFIED.

DISTANCE BETWEEN VEHICLES MAY VARY ACCORDING TO TERRAIN, SIGHT DISTANCE, PAINT DRYING TIME, AND OTHER FACTORS. WHENEVER ADEQUATE STOPPING SIGHT DISTANCE EXISTS TO THE REAR, SHADOW VEHICLES SHOULD MAINTAIN THE MINIMUM DISTANCE FROM THE WORK VEHICLE AND PROCEED AT THE SAME SPEED AS THE WORK VEHICLE. SHADOW VEHICLES SHOULD SLOW DOWN IN ADVANCE OF VERTICAL AND HORIZONTAL CURVES THAT RESTRICT SIGHT DISTANCE.

WHEN WORK ACTIVITY BLOCKS THE LEFT LANE, REVERSE TRAFFIC CONTROL.

WHEN A RAMP INTERSECTS THE FACILITY ON WHICH THE WORK IS BEING PERFORMED, PROVIDE ADDITIONAL TRAFFIC CONTROLS AS SPECIFIED IN THE CONTRACT OR AS APPROVED BY THE ENGINEER.

USE AN ATTENUATOR ON THE REARMOST VEHICLE THAT BLOCKS ALL OR PART OF THE TRAFFIC LANE.

IF THE SHOULDER IS TOO NARROW TO ACCOMMODATE THE LAST TRAILING VEHICLE, THE VEHICLE SHOULD STRADDLE THE EDGE LINE.

WHEN NO WORK ACTIVITY IS TAKING PLACE, REMOVE OR LAY STATIONARY SIGNS AND SUPPORTS FLAT ON THE GRADE WITH UPRIGHTS ORIENTED PARALLEL TO AND DOWNSTREAM FROM TRAFFIC

CONES SHOULD BE USED BETWEEN THE MARKING AND SHADOW VEHICLE AT 100 FOOT SPACING. CONES MAY BE OMITTED ON PAINTED LINE IF APPROVED BY THE ENGINEER. CONSIDER PAVEMENT MARKING DRY OR CURE TIMES AND TRAFFIC VOLUME.

CONES SHALL BE A MINIMUM HEIGHT OF 28" FOR WET PAVEMENT MARKINGS

(1) SIGNS SHALL BE REPEATED APPROXIMATELY EVERY THREE MILES AND AFTER EVERY ON RAMP.

(2) IF CONSTRUCTION WORK ZONE SIGNS ARE IN PLACE, W20-1A OR W21-63 ARE NOT REQUIRED.

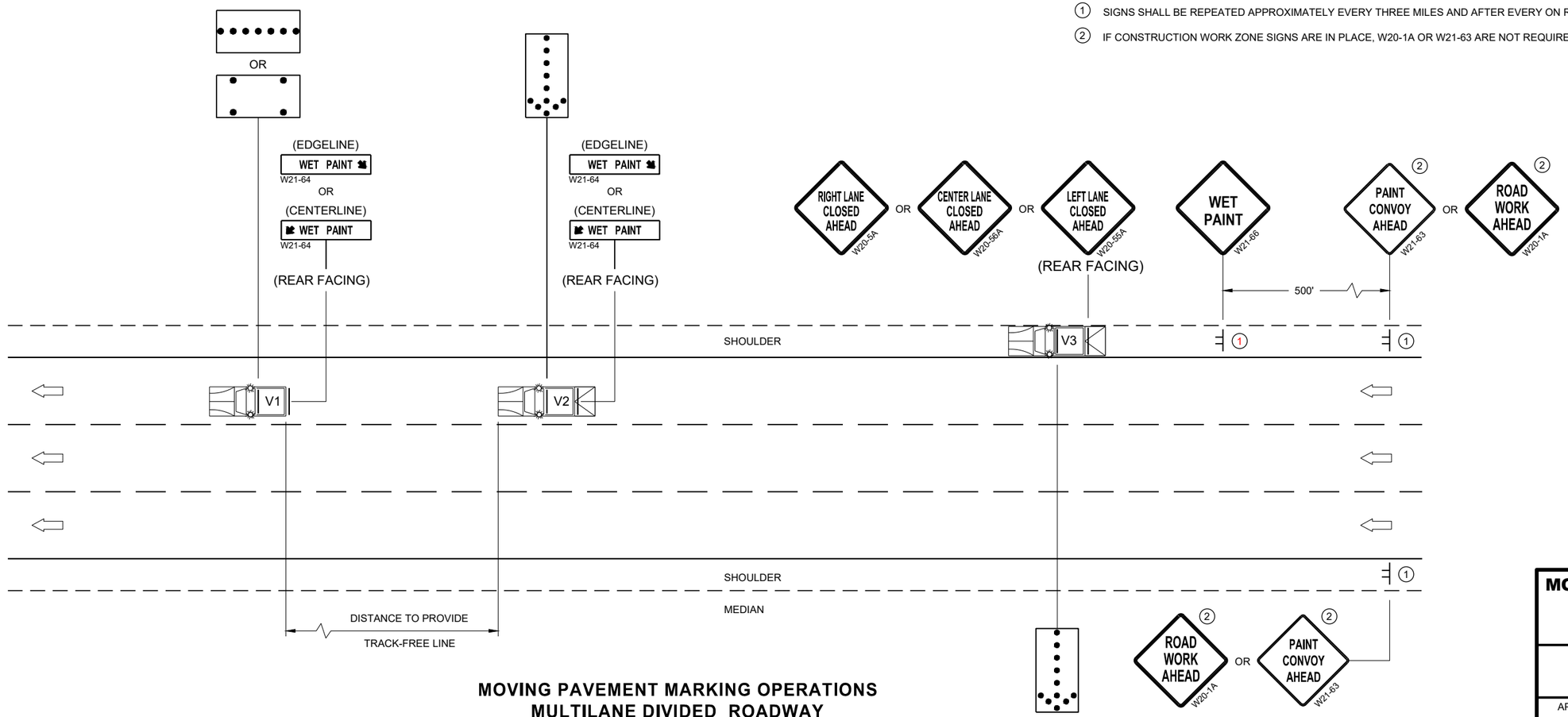

MOVING PAVEMENT MARKING OPERATIONS
MULTILANE DIVIDED ROADWAY

MOVING PAVEMENT MARKING OPERATION MULTI-LANE DIVIDED ROADWAY

STATE OF WISCONSIN
DEPARTMENT OF TRANSPORTATION

APPROVED
February 2023 — DATE
/S/ Andrew I — WORK ZONE EN
FHWA

6

SDD 15C19-08c

GENERAL NOTES

PLACE GROOVE 3 INCHES LEFT OF JOINT.

LEGEND

SIGN ON PERMANENT SUPPORT

DIRECTION OF TRAVEL

* CONFIRM MARKING LINE WIDTH WITH THE MISCELLANEOUS QUANTITIES

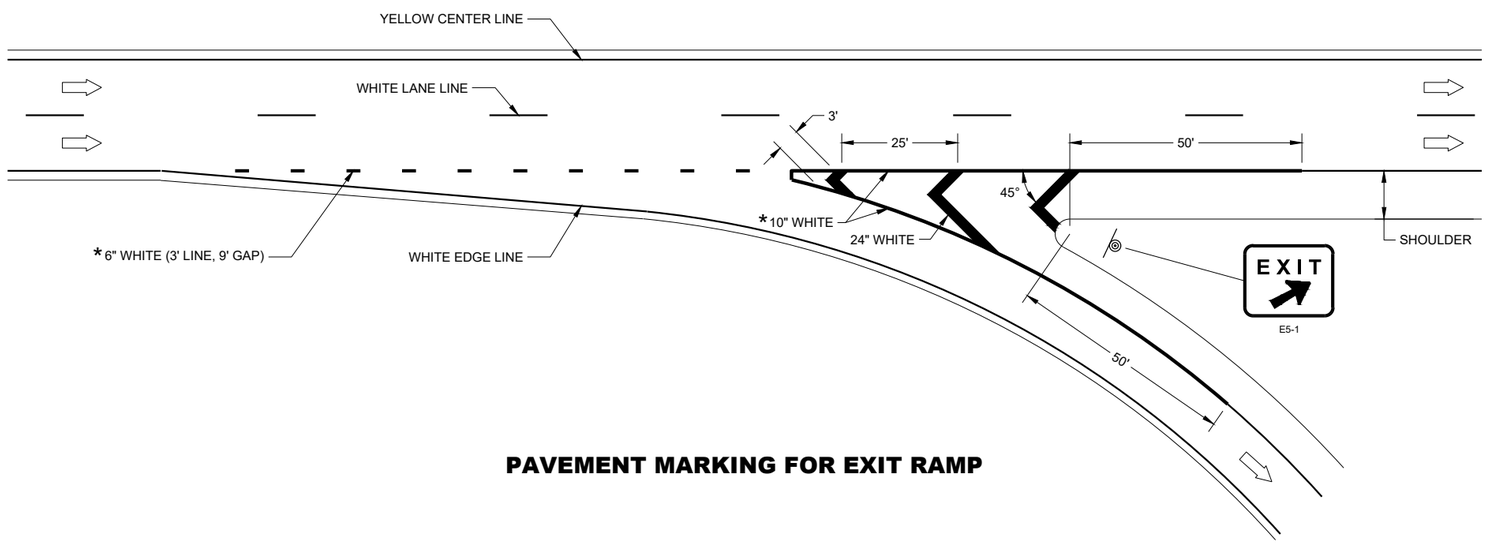

PAVEMENT MARKING FOR EXIT RAMP

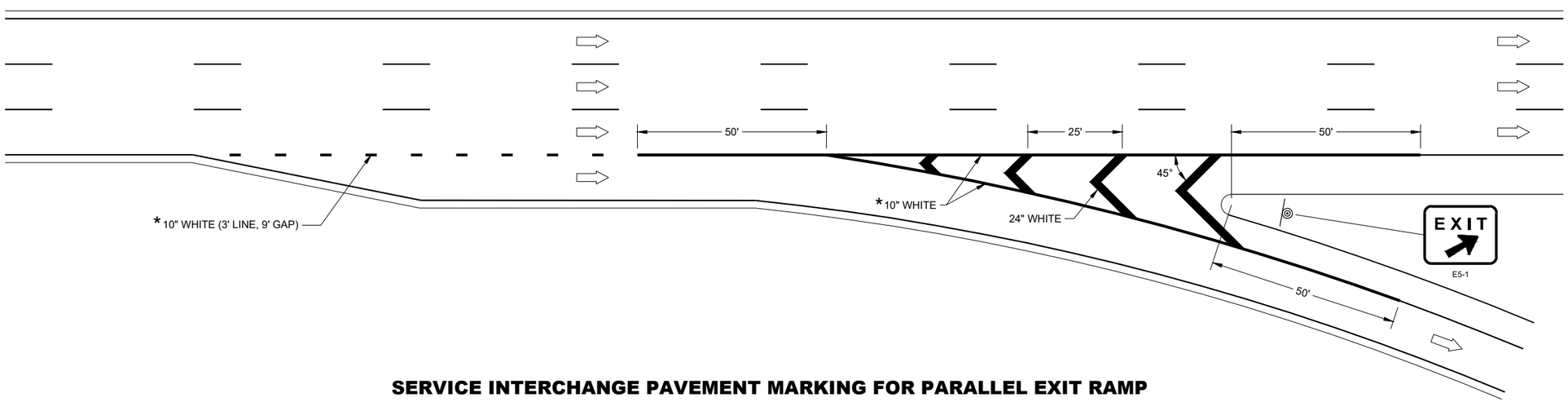

SERVICE INTERCHANGE PAVEMENT MARKING FOR PARALLEL EXIT RAMP

PAVEMENT MARKING, EXIT RAMP AND PARALLEL EXIT RAMP

STATE OF WISCONSIN
DEPARTMENT OF TRANSPORTA

6

SDD 15C31-05a

GENERAL NOTES

PLACE GROOVE 3 INCHES LEFT OF JOINT.

LEGEND

SIGN ON PERMANENT SUPPORT

DIRECTION OF TRAVEL

* CONFIRM MARKING LINE WIDTH WITH THE MISCELLANEOUS QUANTITIES

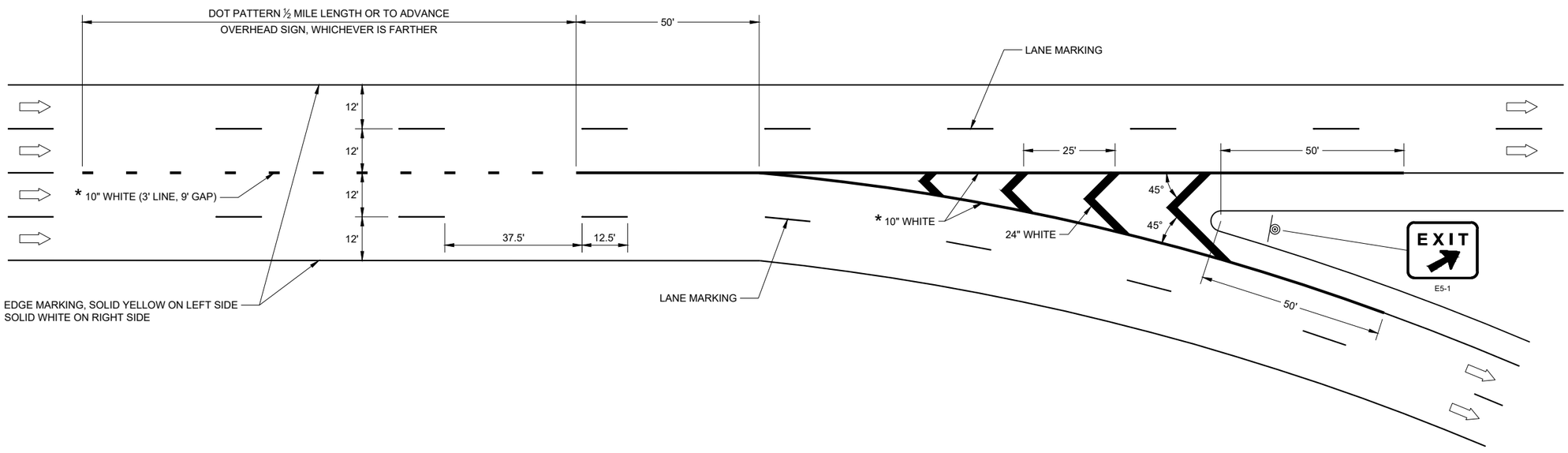

PAVEMENT MARKING, MAJOR SPLIT FREEWAY TO FREEWAY

STATE OF WISCONSIN
DEPARTMENT OF TRANSPORTAT

6

SDD 15C31-05b

GENERAL NOTES

PLACE GROOVE 3 INCHES LEFT OF JOINT.

(1) ½ LENGTH OF FULL WIDTH ACCELERATION LANE.

LEGEND

DIRECTION OF TRAVEL

* CONFIRM MARKING LINE WIDTH WITH THE MISCELLANEOUS QUANTITIES

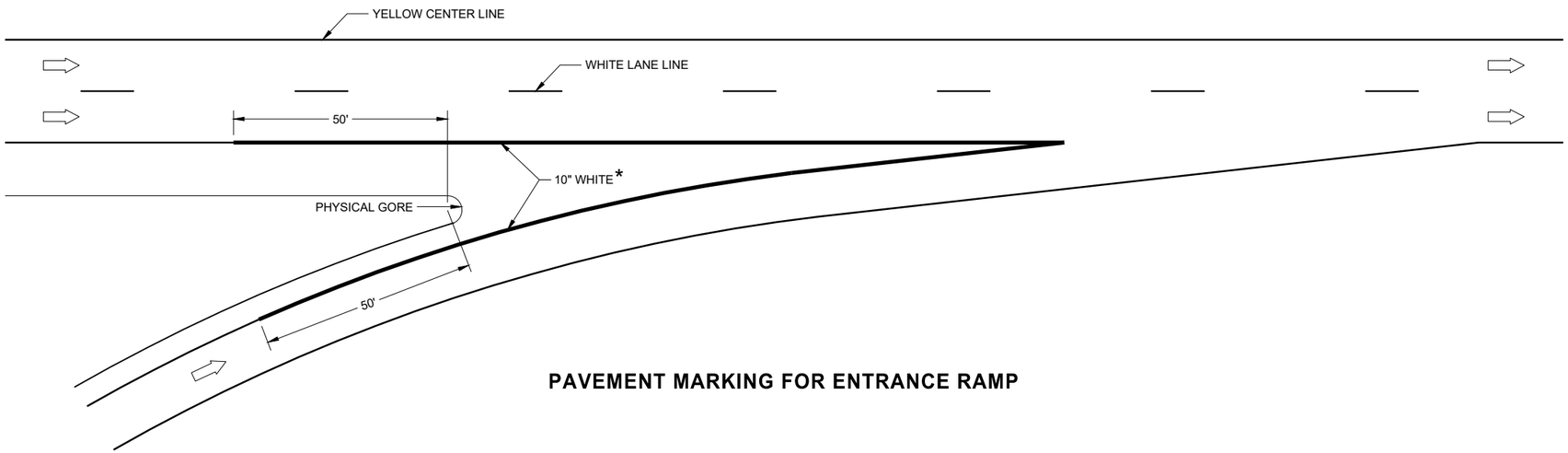

PAVEMENT MARKING FOR ENTRANCE RAMP

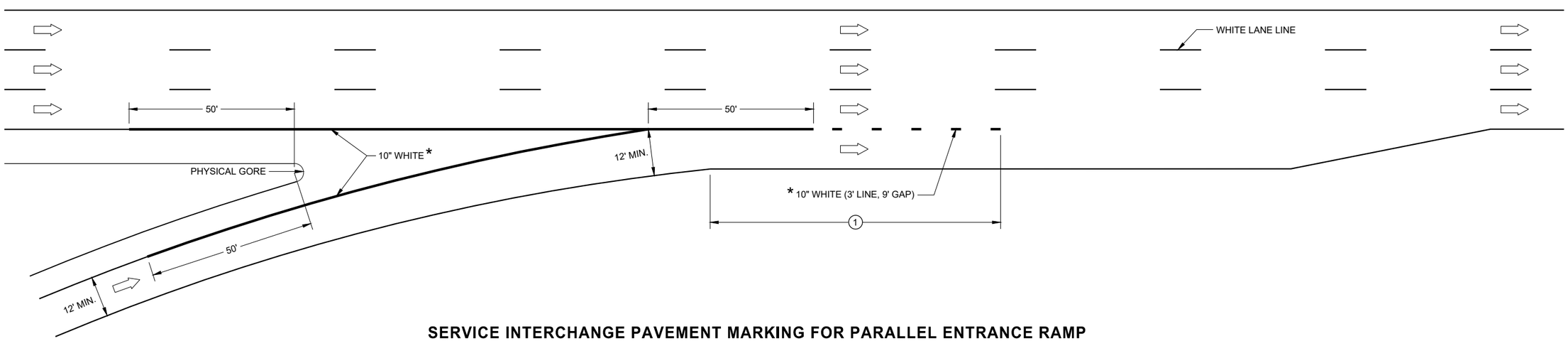

SERVICE INTERCHANGE PAVEMENT MARKING FOR PARALLEL ENTRANCE RAMP

PAVEMENT MARKING, ENTRANCE RAMP AND PARALLEL ENTRANCE RAMP

STATE OF WISCONSIN
DEPARTMENT OF TRANSPORTAT

6

SDD 15C31-05c

LEGEND

DIRECTION OF TRAVEL

* CONFIRM MARKING LINE WIDTH WITH THE MISCELLANEOUS QUANTITIES

GENERAL NOTES

PLACE GROOVE 3 INCHES LEFT OF JOINT.

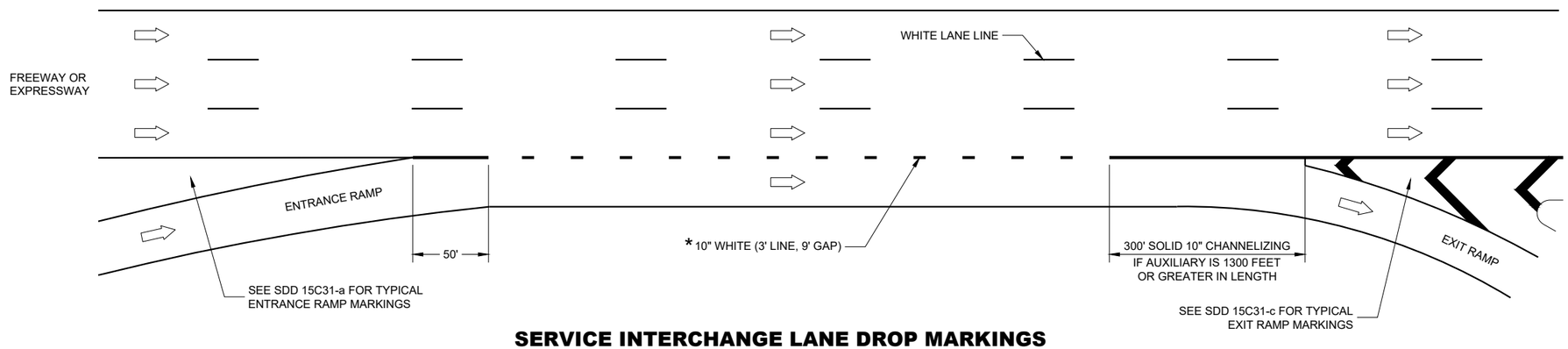

SERVICE INTERCHANGE LANE DROP MARKINGS

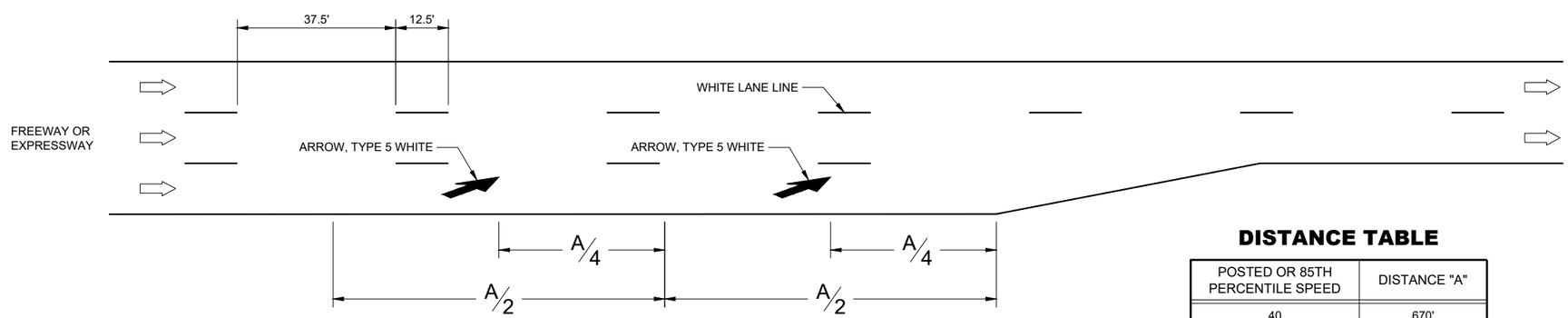

LANE REDUCTION MARKINGS

DISTANCE TABLE

POSTED OR 85TH PERCENTILE SPEED	DISTANCE "A"
40	670'
45	775'
50	885'
55	990'
60	1100'
65	1200'
70	1250'

PAVEMENT MARKING, LANE DROP AND LANE REDUCTION

STATE OF WISCONSIN
DEPARTMENT OF TRANSPORTATION

APPROVED
May 2023 — DATE
/S/ Matthew Rauch — STATE MARKING AND SIG ENGINEER
FHWA

6

SDD 15C31-05d

LEGEND

- SIGN ON PERMANENT SUPPORT
- SIGN ON TEMPORARY SUPPORT
- TRAFFIC CONTROL DRUM
- TRAFFIC CONTROL DRUM WITH TYPE "C" STEADY BURN LIGHT
- REMOVING PAVEMENT MARKING (SEE GENERAL NOTES)
- TYPE III BARRICADE WITH ATTACHED SIGN
- DIRECTION OF TRAFFIC

GENERAL NOTES

THE INSTALLATIONS SHOWN ON THIS SHEET ARE TYPICAL EXAMPLES AND ARE NOT INTENDED TO REPRESENT ANY PARTICULAR RAMP. AT SPECIFIC FIELD LOCATIONS, SIMILAR INSTALLATIONS SHALL BE USED AND ADJUSTED TO THE GEOMETRICS OF THE RAMP AS COORDINATED WITH THE ENGINEER.

THE EXACT NUMBER, LOCATION, AND SPACING OF ALL SIGNS AND DEVICES SHALL BE ADJUSTED TO FIT FIELD CONDITIONS AS APPROVED BY THE ENGINEER.

THE SPACING BETWEEN TRAFFIC CONTROL SIGNS SHOULD BE ADJUSTED TO NOT CONFLICT WITH AND SHOULD PROVIDE A MINIMUM OF 200 FEET (500 FEET DESIRABLE) CLEARANCE TO EXISTING SIGNS THAT WILL REMAIN IN PLACE.

ALL SIGNS ARE 48" X 48" UNLESS OTHERWISE NOTED.

"WO" IS THE SAME AS "W" EXCEPT THE BACKGROUND IS ORANGE.

SEE SEPARATE LANE CLOSURE DETAIL FOR TYPICAL SPACING OF TYPE III BARRICADES AND R11-2L "LANE CLOSED" SIGNS.

SIGNS THAT WILL BE IN PLACE LESS THAN 7 CONSECUTIVE DAYS AND NIGHTS OR THAT WILL BE PLACED IN A CLOSED LANE, MAY BE MOUNTED ON PORTABLE SUPPORTS. USE SUPPORTS THAT PROVIDE A MINIMUM OF 5 FEET FROM THE BOTTOM OF THE SIGN TO THE PAVEMENT.

IF INDICATED IN MISCELLANEOUS QUANTITIES, SUBSTITUTE FLEXIBLE TUBULAR MARKERS FOR DRUMS IN THE GORE BETWEEN THE ENTRANCE RAMP AND MAINLINE TRAFFIC.

ANY SIGNS TEMPORARY OR EXISTING, WHICH CONFLICT WITH TRAFFIC CONTROL "IN USE" SHALL BE REMOVED OR COVERED AS NEEDED AND AS APPROVED BY THE ENGINEER.

REMOVE PAVEMENT MARKINGS AND PLACE TEMPORARY PAVEMENT MARKING LINES IF LANE CLOSURE IS TO BE IN PLACE FOR 4 OR MORE CONTINUOUS DAYS AND NIGHTS.

WARNING LIGHTS ARE NOT REQUIRED IF THE LANE CLOSURE IS A DAYTIME ONLY OPERATION.

(1) EXTEND THE LENGTH OF THE MERGE ARE IF THE ENTERING (DESIGN) SPEED IS LESS THAN 50MPH OR IF THE MAINLINE GRADE EXCEEDS ±2.2%.

(2) END TEMPORARY PAVEMENT MARKING LINE AT ½ THE LENGTH OF FULL WIDTH OF THE ACCELERATION LANE.

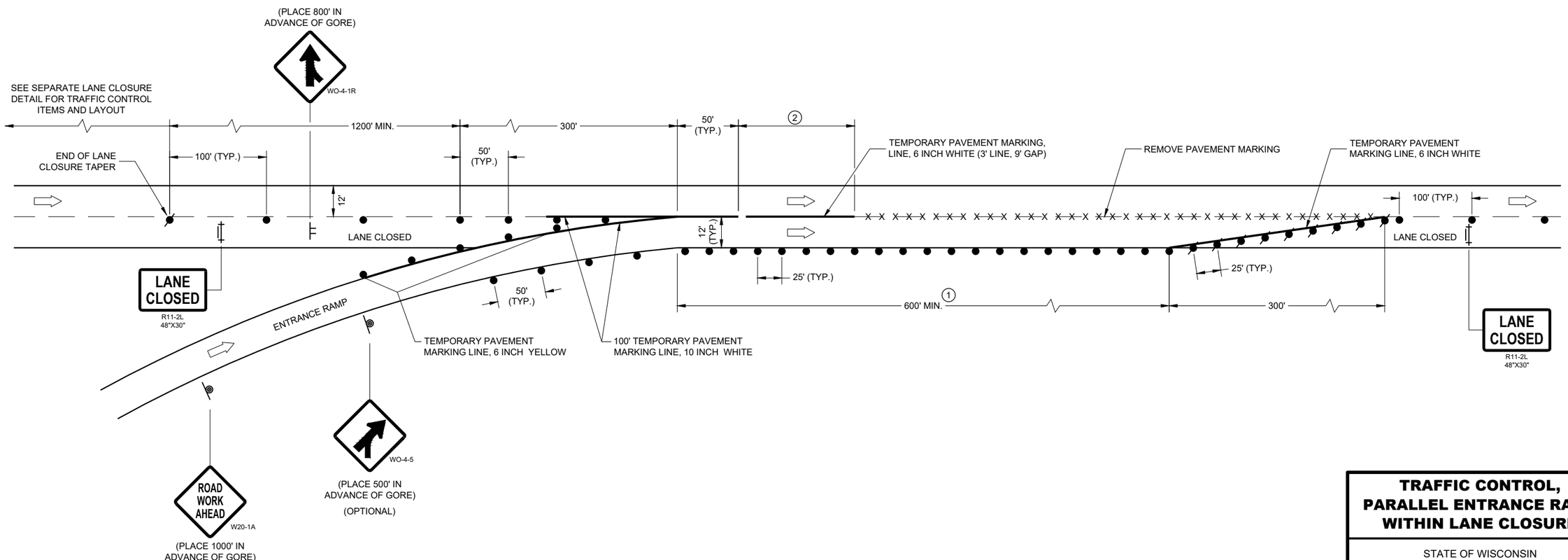

TRAFFIC CONTROL, PARALLEL ENTRANCE RAMP WITHIN LANE CLOSURE

STATE OF WISCONSIN
DEPARTMENT OF TRANSPORTATION

APPROVED
May 2023 — DATE
/S/ Andrew Heidtke — WORK ZONE ENGINEE
FHWA

6

SDD 15D15-07a

LEGEND

SIGN ON PERMANENT SUPPORT

SIGN ON TEMPORARY SUPPORT

TRAFFIC CONTROL DRUM

TRAFFIC CONTROL DRUM WITH TYPE "C" STEADY BURN LIGHT

REMOVING PAVEMENT MARKING (SEE GENERAL NOTES)

TYPE III BARRICADE WITH ATTACHED SIGN

FLAGS, 16" X 16" MIN., ORANGE

DIRECTION OF TRAFFIC

GENERAL NOTES

THE INSTALLATIONS SHOWN ON THIS SHEET ARE TYPICAL EXAMPLES AND ARE NOT INTENDED TO REPRESENT ANY PARTICULAR RAMP. AT SPECIFIC FIELD LOCATIONS, SIMILAR INSTALLATIONS SHALL BE USED AND ADJUSTED TO THE GEOMETRICS OF THE RAMP AS COORDINATED WITH THE ENGINEER.

THE EXACT NUMBER, LOCATION, AND SPACING OF ALL SIGNS AND DEVICES SHALL BE ADJUSTED TO FIT FIELD CONDITIONS AS APPROVED BY THE ENGINEER.

THE SPACING BETWEEN TRAFFIC CONTROL SIGNS SHOULD BE ADJUSTED TO NOT CONFLICT WITH AND SHOULD PROVIDE A MINIMUM OF 200 FEET (500 FEET DESIRABLE) CLEARANCE TO EXISTING SIGNS THAT WILL REMAIN IN PLACE.

ALL SIGNS ARE 48" X 48" UNLESS OTHERWISE NOTED.

"WO" IS THE SAME AS "W" EXCEPT THE BACKGROUND IS ORANGE.

SEE SEPARATE LANE CLOSURE DETAIL FOR TYPICAL SPACING OF TYPE III BARRICADES AND R11-2L "LANE CLOSED" SIGNS.

YIELD SIGN AND WARNING SIGNS ON ENTRANCE RAMP ARE ALSO APPROPRIATE FOR CLOSURE OF THE MAINLINE LEFT LANE. OMIT THE YIELD SIGN IF MORE THAN ONE LANE REMAINS OPEN ON THE MAINLINE AND THE RAMP TAPER IS AT LEAST AS LONG AS THE NORMAL ENTRANCE RAMP TAPER AT THE SITE.

SIGNS THAT WILL BE IN PLACE LESS THAN 7 CONSECUTIVE DAYS AND NIGHTS OR THAT WILL BE PLACED IN A CLOSED LANE, MAY BE MOUNTED ON PORTABLE SUPPORTS. USE SUPPORTS THAT PROVIDE A MINIMUM OF 5 FEET FROM THE BOTTOM OF THE SIGN TO THE PAVEMENT.

IF INDICATED IN MISCELLANEOUS QUANTITIES, SUBSTITUTE FLEXIBLE TUBULAR MARKERS FOR DRUMS IN THE GORE BETWEEN THE ENTRANCE RAMP AND MAINLINE TRAFFIC.

ANY SIGNS TEMPORARY OR EXISTING, WHICH CONFLICT WITH TRAFFIC CONTROL "IN USE" SHALL BE REMOVED OR COVERED AS NEEDED AND AS APPROVED BY THE ENGINEER.

REMOVE PAVEMENT MARKINGS AND PLACE TEMPORARY PAVEMENT MARKING LINES IF LANE CLOSURE IS TO BE IN PLACE FOR 4 OR MORE CONTINUOUS DAYS AND NIGHTS.

WARNING LIGHTS ARE NOT REQUIRED IF THE LANE CLOSURE IS A DAYTIME ONLY OPERATION.

(1) CONSULT WITH REGIONAL WORK ZONE ENGINEER IF NEED TO REDUCE LENGTH EXISTS.

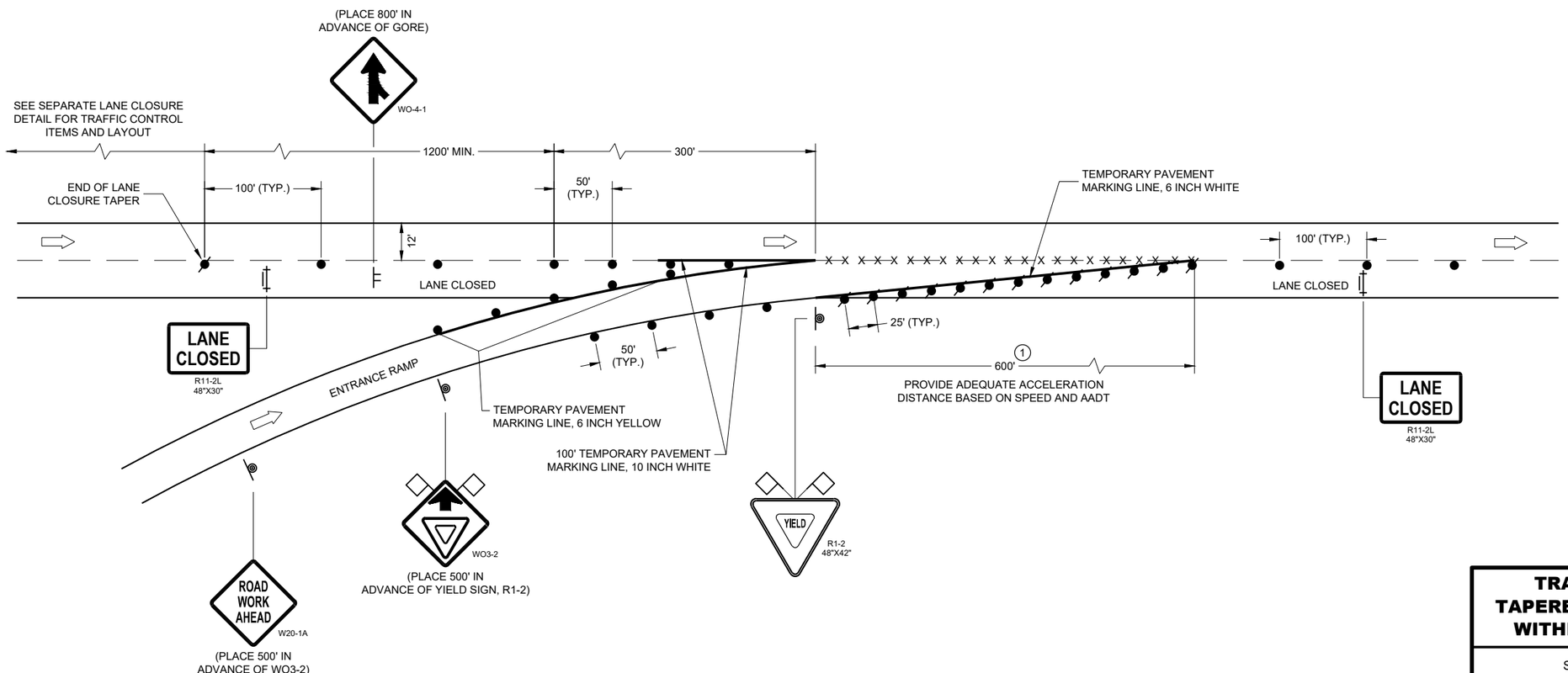

TRAFFIC CONTROL, TAPERED ENTRANCE RAMP WITHIN LANE CLOSURE

STATE OF WISCONSIN
DEPARTMENT OF TRANSPORTATION

APPROVED
May 2023 — DATE
/S/ Andrew Heidtke — WORK ZONE ENGINEER
FHWA

6
SDD 15D15-07c

LEGEND

SIGN ON PERMANENT SUPPORT

SIGN ON TEMPORARY SUPPORT

TRAFFIC CONTROL DRUM

TRAFFIC CONTROL DRUM WITH TYPE "C" STEADY BURN LIGHT

TYPE III BARRICADE WITH ATTACHED SIGN

FLAGS, 16" X 16" MIN., ORANGE

DIRECTION OF TRAFFIC

GENERAL NOTES

THE INSTALLATIONS SHOWN ON THIS SHEET ARE TYPICAL EXAMPLES AND ARE NOT INTENDED TO REPRESENT ANY PARTICULAR RAMP. AT SPECIFIC FIELD LOCATIONS, SIMILAR INSTALLATIONS SHALL BE USED AND ADJUSTED TO THE GEOMETRICS OF THE RAMP AS COORDINATED WITH THE ENGINEER.

THE EXACT NUMBER, LOCATION, AND SPACING OF ALL SIGNS AND DEVICES SHALL BE ADJUSTED TO FIT FIELD CONDITIONS AS APPROVED BY THE ENGINEER.

THE SPACING BETWEEN TRAFFIC CONTROL SIGNS SHOULD BE ADJUSTED TO NOT CONFLICT WITH AND SHOULD PROVIDE A MINIMUM OF 200 FEET (500 FEET DESIRABLE) CLEARANCE TO EXISTING SIGNS THAT WILL REMAIN IN PLACE.

ALL SIGNS ARE 48" X 48" UNLESS OTHERWISE NOTED.

"WO" IS THE SAME AS "W" EXCEPT THE BACKGROUND IS ORANGE.

SEE SEPARATE LANE CLOSURE DETAIL FOR TYPICAL SPACING OF TYPE III BARRICADES AND R11-2L "LANE CLOSED" SIGNS.

YIELD SIGN AND WARNING SIGNS ON ENTRANCE RAMP ARE ALSO APPROPRIATE FOR CLOSURE OF THE MAINLINE LEFT LANE. OMIT THE YIELD SIGN IF MORE THAN ONE LANE REMAINS OPEN ON THE MAINLINE AND THE RAMP TAPER IS AT LEAST AS LONG AS THE NORMAL ENTRANCE RAMP TAPER AT THE SITE.

SIGNS THAT WILL BE IN PLACE LESS THAN 7 CONSECUTIVE DAYS AND NIGHTS OR THAT WILL BE PLACED IN A CLOSED LANE, MAY BE MOUNTED ON PORTABLE SUPPORTS. USE SUPPORTS THAT PROVIDE A MINIMUM OF 5 FEET FROM THE BOTTOM OF THE SIGN TO THE PAVEMENT.

IF INDICATED IN MISCELLANEOUS QUANTITIES, SUBSTITUTE FLEXIBLE TUBULAR MARKERS FOR DRUMS IN THE GORE BETWEEN THE ENTRANCE RAMP AND MAINLINE TRAFFIC.

ANY SIGNS TEMPORARY OR EXISTING, WHICH CONFLICT WITH TRAFFIC CONTROL "IN USE" SHALL BE REMOVED OR COVERED AS NEEDED AND AS APPROVED BY THE ENGINEER.

WARNING LIGHTS ARE NOT REQUIRED IF THE LANE CLOSURE IS A DAYTIME ONLY OPERATION.

(1) PLACE YIELD SIGN TO PROVIDE ADEQUATE SIGHT DISTANCE AND ACCELERATION DISTANCE.

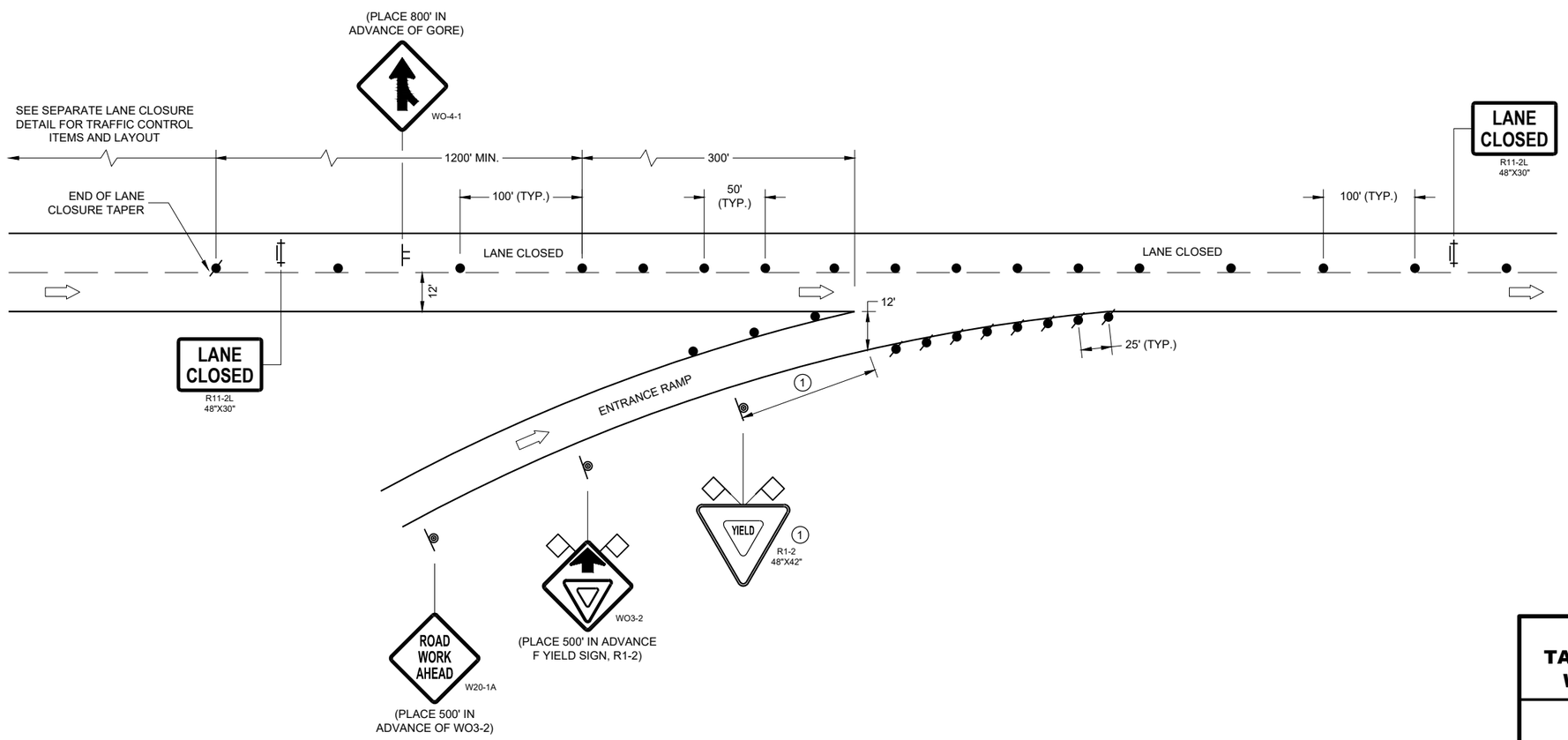

TRAFFIC CONTROL, TAPERED ENTRANCE RAMP WITHIN LANE CLOSURE

STATE OF WISCONSIN
DEPARTMENT OF TRANSPORTATION

APPROVED
May 2023 — DATE
/S/ Andrew Heidtke — WORK ZONE ENGINEE
FHWA

6
SDD 15D15-07d

LEGEND

- TYPE III BARRICADE WITH ATTACHED SIGN
- SIGN ON PERMANENT SUPPORT
- TRAFFIC CONTROL DRUM
- TRAFFIC CONTROL DRUM WITH TYPE "C" STEADY BURN LIGHT
- TYPE "A" WARNING LIGHT (FLASHING)
- DIRECTION OF TRAFFIC
- WORK AREA
- REMOVING PAVEMENT MARKING (SEE GENERAL NOTES)
- CONCRETE BARRIER TEMPORARY PRECAST

GENERAL NOTES

THE EXACT NUMBER, LOCATION, AND SPACING OF ALL SIGNS AND DEVICES SHALL BE ADJUSTED TO FIT FIELD CONDITIONS AS APPROVED BY THE ENGINEER.

THE SPACING BETWEEN SIGNS SHOULD BE ADJUSTED TO NOT CONFLICT WITH AND TO PROVIDE A MINIMUM OF 200 FEET, (500 FEET DESIRABLE) DISTANCE TO EXISTING SIGNS.

THIS LANE CLOSURE IS TYPICAL FOR LANE SHIFT RIGHT - REVERSE FOR SHIFTING LEFT.

ALL SIGNS ARE 48"x48" UNLESS OTHERWISE NOTED.

"WO" IS THE SAME AS "W" EXCEPT THE BACKGROUND IS ORANGE.

ANY SIGNS TEMPORARY OR EXISTING, WHICH CONFLICT WITH TRAFFIC CONTROL "IN USE" SHALL BE REMOVED OR COVERED AS NEEDED AND AS APPROVED BY THE ENGINEER. NO WARNING LIGHTS SHALL BE WORKING ON ANY "COVERED" OR "DOWNED" SIGNS.

CONSIDER GEOMETRICS WHEN LOCATING SIGNS AND ARROW BOARDS SO THE DRIVER HAS A CLEAR VIEW OF THE ARROW BOARD AND LANE CLOSURE DRUMS FOR A MINIMUM 1500 FEET IN FRONT OF DRUMS.

FOR A LANE CLOSURE THAT IS IN PLACE LESS THAN 7 CONTINUOUS DAYS AND NIGHTS, THE ADVANCED WARNING SIGNS MAY BE MOUNTED ON PORTABLE SUPPORTS.

REMOVE PAVEMENT MARKINGS AND PLACE TEMPORARY PAVEMENT MARKING LINES IF LANE CLOSURE IS TO BE IN PLACE FOR 4 OR MORE CONTINUOUS DAYS AND NIGHTS.

WARNING LIGHTS ARE NOT REQUIRED IF THE LANE CLOSURE IS A DAYTIME ONLY OPERATION.

IF THE HORIZONTAL ALIGNMENT IS SUCH THAT A CURVE MAY REQUIRE ADDITIONAL DELINEATION, THE DEVICE SPACING MAY BE DECREASED TO 50 FEET.

ADJUSTMENTS IN BUFFER SPACE NEED TO BE INCORPORATED WHEN THE LANE SHIFT OCCURS NEAR AN INTERCHANGE EXIT OR ENTRANCE RAMP. THE LANE SHIFT MUST TAKE PLACE FAR ENOUGH IN ADVANCE OF AN EXIT OR ENTRANCE RAMP TO STILL ALLOW FOR ADEQUATE BUFFER SPACE. THE MINIMUM LENGTH OF THE BUFFER SPACE BEFORE AN EXIT RAMP SHOULD BE ½ THE LENGTH OF THE TRANSITION AREA. THE ENTRANCE RAMP SHOULD BE FOLLOWED BY THE ORIGINAL BUFFER SPACE LENGTH OF 800 FEET DESIRABLE PRIOR TO ANOTHER TRAFFIC CONTROL CHANGE SUCH AS A CROSSOVER MANEUVER.

1. USE ONLY IF DESIGN SPEED IS 10 MPH BELOW POSTED SPEED.
2. IF BEGINNING OF LANE SHIFT IS 1200' OF LESS FROM THE END OF THE LANE CLOSURE TAPER, PLACE THE WO1-4L SIGN 200 FEET AFTER THE END OF THE LANE CLOSURE TAPER.

POSTED SPEED LIMIT PRIOR TO WORK STARTING (MPH)	SHIFTING TAPER L/2 W, LATERAL OFFSET (FT)				
	10	11	12	13	14
50	250	275	300	325	350
55	275	303	330	358	385
60	300	330	360	390	420
65	325	358	390	423	455
70	350	385	420	455	490

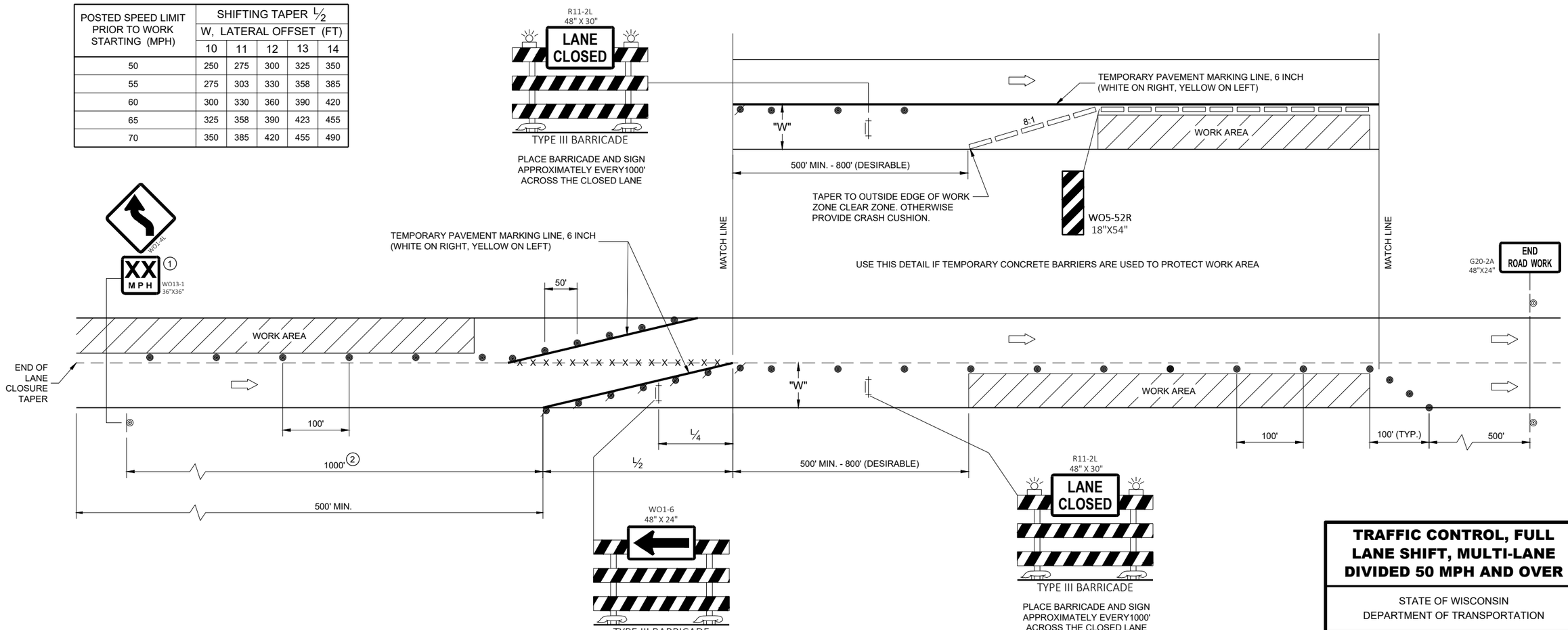

TRAFFIC CONTROL, FULL LANE SHIFT, MULTI-LANE DIVIDED 50 MPH AND OVER

STATE OF WISCONSIN
DEPARTMENT OF TRANSPORTATION

APPROVED
May 2023 — DATE
/S/ Andrew Heidtke — WORK ZONE ENGINEE
FHWA

6

SDD 15D40-05b

LEGEND

- TYPE III BARRICADE WITH ATTACHED SIGN
- SIGN ON PERMANENT SUPPORT
- TRAFFIC CONTROL DRUM
- DIRECTION OF TRAFFIC
- CONCRETE BARRIER TEMPORARY PRECAST
- TYPE "A" WARNING LIGHT (FLASHING)
- WORK AREA

OR

LOCATED
3000 FEET BEYOND THE
"ROAD WORK 1 MILE"
(W20-1F) SIGN

R2-1
48"X60"

OR

R2-1
48"X60"

(BLACK AND WHITE)
LOCATED
700 FEET BEYOND THE
W03-5 SIGN

IF THE REGULATORY SPEED HAS BEEN REDUCED, A SPEED LIMIT SIGN SHALL BE LOCATED 1500 FEET BEYOND THE END OF THE ACCELERATION LANE OF EACH ENTRANCE RAMP. PLACE A SPEED LIMIT SIGN INCORPORATED A MINIMUM OF EVERY 3 MILES.

L, TAPER LENGTH (MPH)							
SPEED (MPH)	W, LATERAL OFFSET (FT)						
	10	11	12	13	14	15	16
45	450	495	540	585	630	675	720
50	500	550	600	650	700	750	800
55	550	605	660	715	770	825	880
60	600	660	720	780	840	900	960
65	650	715	780	845	910	975	1040
70	700	770	840	910	980	1050	1120

GENERAL NOTES

THE EXACT NUMBER, LOCATION, AND SPACING OF ALL SIGNS AND DEVICES SHALL BE ADJUSTED TO FIT FIELD CONDITIONS AS APPROVED BY THE ENGINEER.

THE SPACING BETWEEN SIGNS SHOULD BE ADJUSTED TO NOT CONFLICT WITH AND TO PROVIDE A MINIMUM OF 200 FEET, (500 FEET DESIRABLE) DISTANCE TO EXISTING SIGNS.

THIS LANE CLOSURE IS TYPICAL FOR LANE SHIFT RIGHT - REVERSE FOR SHIFTING LEFT.

ALL SIGNS ARE 48"x48" UNLESS OTHERWISE NOTED.

"WO" IS THE SAME AS "W" EXCEPT THE BACKGROUND IS ORANGE.

ANY SIGNS TEMPORARY OR EXISTING, WHICH CONFLICT WITH TRAFFIC CONTROL "IN USE" SHALL BE REMOVED OR COVERED AS NEEDED AND AS APPROVED BY THE ENGINEER.

FOR A LANE CLOSURE THAT IS IN PLACE LESS THAN 7 CONTINUOUS DAYS AND NIGHTS, THE ADVANCED WARNING SIGNS MAY BE MOUNTED ON PORTABLE SUPPORTS.

REMOVE PAVEMENT MARKINGS AND PLACE TEMPORARY PAVEMENT MARKING LINES IF LANE CLOSURE IS TO BE IN PLACE FOR 4 OR MORE CONTINUOUS DAYS AND NIGHTS.

IF THE HORIZONTAL ALIGNMENT IS SUCH THAT A CURVE MAY REQUIRE ADDITIONAL DELINEATION, THE DEVICE SPACING MAY BE DECREASED TO 50 FEET.

ADJUSTMENTS IN BUFFER SPACE NEED TO BE INCORPORATED WHEN THE LANE SHIFT OCCURS NEAR AN INTERCHANGE EXIT OR ENTRANCE RAMP. THE LANE SHIFT MUST TAKE PLACE FAR ENOUGH IN ADVANCE OF AN EXIT OR ENTRANCE RAMP TO STILL ALLOW FOR ADEQUATE BUFFER SPACE. THE MINIMUM LENGTH OF THE BUFFER SPACE BEFORE AN EXIT RAMP SHOULD BE 1/2 THE LENGTH OF THE TRANSITION AREA. THE ENTRANCE RAMP SHOULD BE FOLLOWED BY THE ORIGINAL BUFFER SPACE LENGTH OF 800 FEET DESIRABLE PRIOR TO ANOTHER TRAFFIC CONTROL CHANGE SUCH AS A CROSSOVER MANEUVER.

(1) USE ONLY WHEN T < 600', OMIT WO1-4C.

(2) IF NEEDED, USE ONLY IF DESIGN SPEED IS 10 MPH BELOW POSTED SPEED.

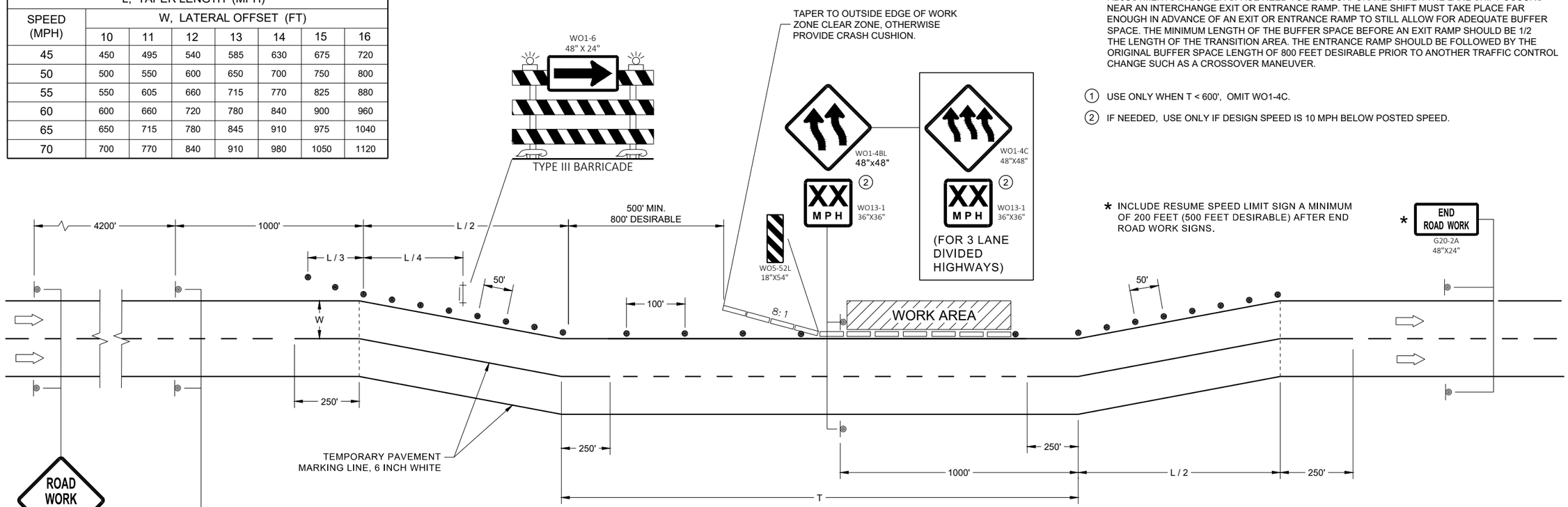

TRAFFIC CONTROL
MULTIPLE LANE SHIFT
MULTILANE DIVIDED ROAD

STATE OF WISCONSIN
DEPARTMENT OF TRANSPORTATION

APPROVED
May 2023 — DATE
/S/ Andrew Heidtke — WORK ZONE ENGINEE
FHWA

6
SDD 15D41-03

NOTES

1. Sign is Type I - Type SH Reflective
2. Color:
   Background - Green
   Message - White
3. Message Series - E Modified except all CAP words Series E
4. EXIT and ONLY plaque background is Yellow Type F Reflective and Black Non-Reflective message

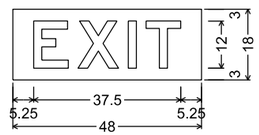

No border, Black on Fluorescent yellow;

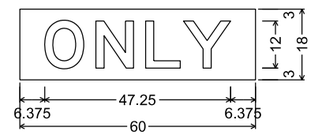

No border, Black on Fluorescent yellow;

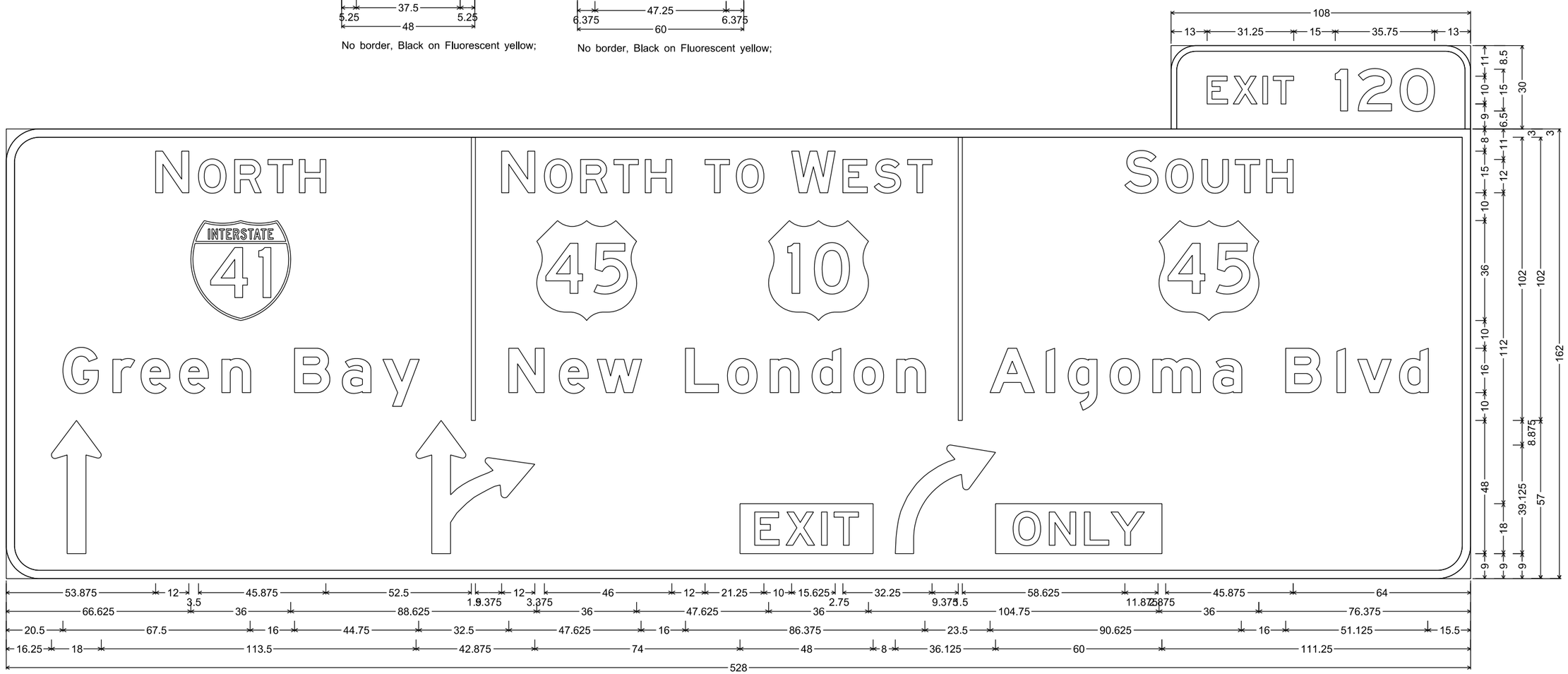

E1-5P; 9.000" Radius, 2.000" Border,
E7-3; 12.000" Radius, 3.000" Border

7

7

PROJECT: 1120-63-71	HWY: IH 41	COUNTY: WINNEBAGO	PERMANENT SIGNING	SHEET NO: 168	E

NOTES

1. Sign is Type I - Type SH Reflective
2. Color:
   Background - Green
   Message - White
3. Message Series - E Modified except all CAP words Series E
4. EXIT and ONLY plaque background is Yellow Type F Reflective and Black Non-Reflective message

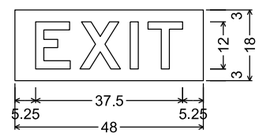

No border, Black on Fluorescent yellow;

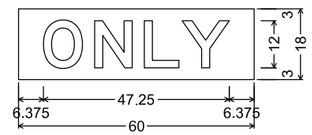

No border, Black on Fluorescent yellow;

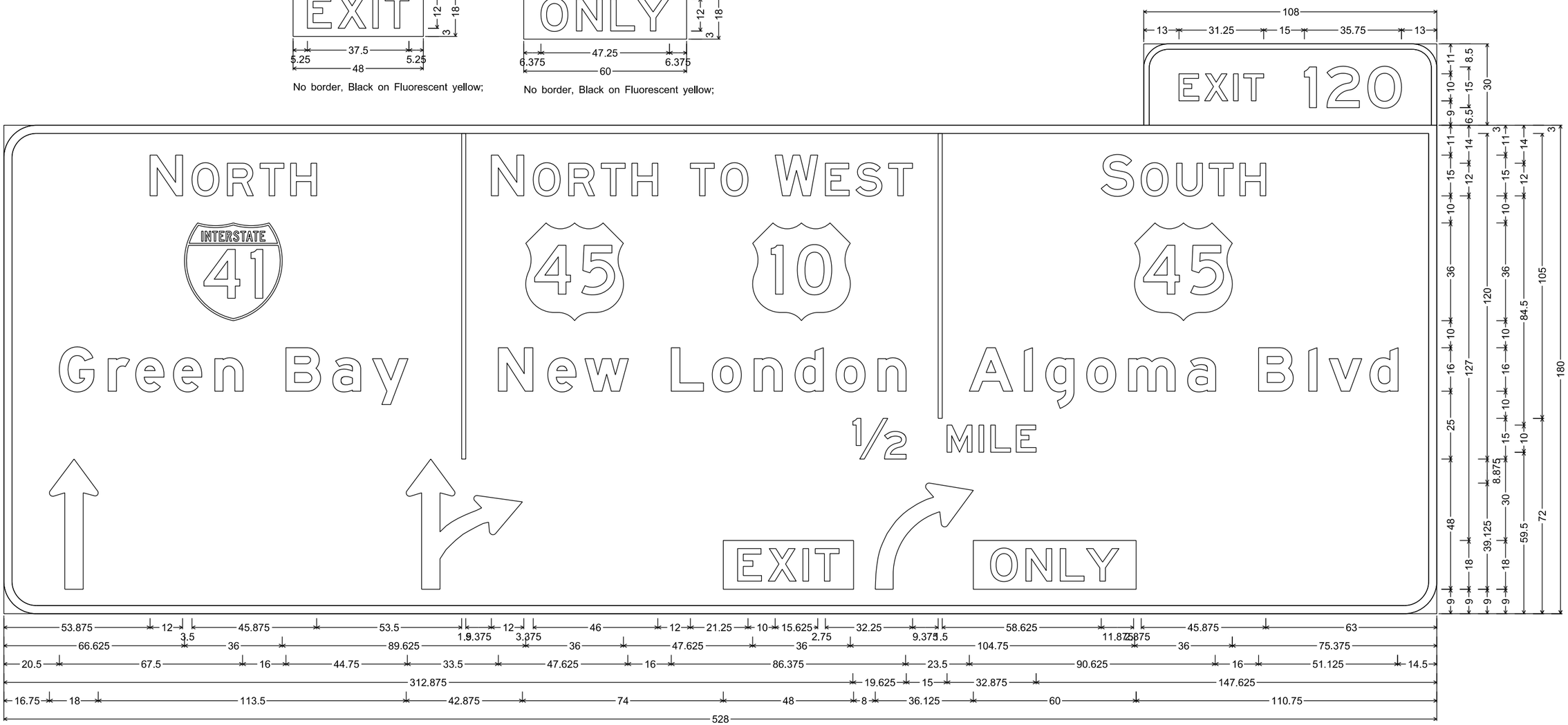

PROJECT: 1120-63-71	HWY: IH 41	COUNTY: WINNEBAGO	PERMANENT SIGNING	SHEET NO: 169	E

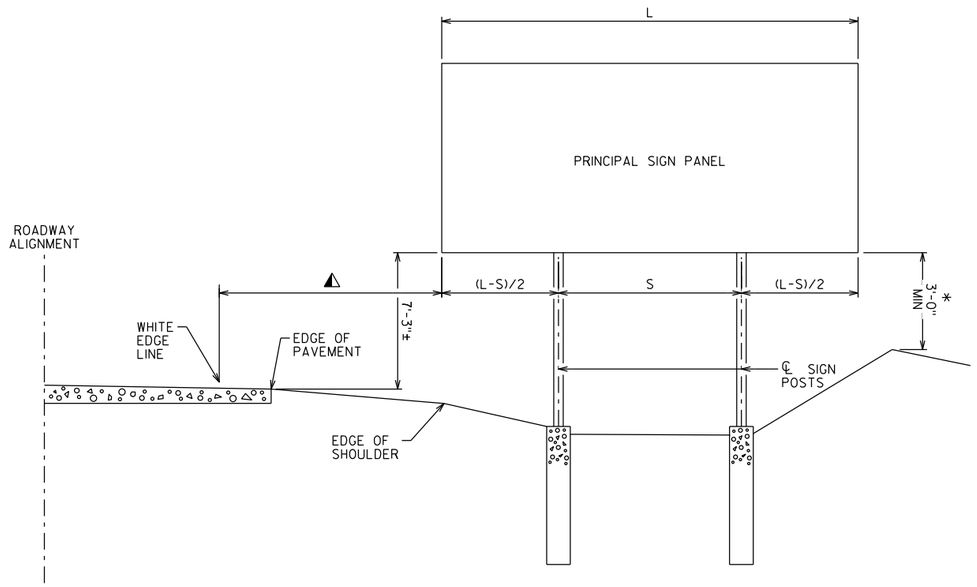

INSTALLATION WITHOUT SECONDARY SIGN

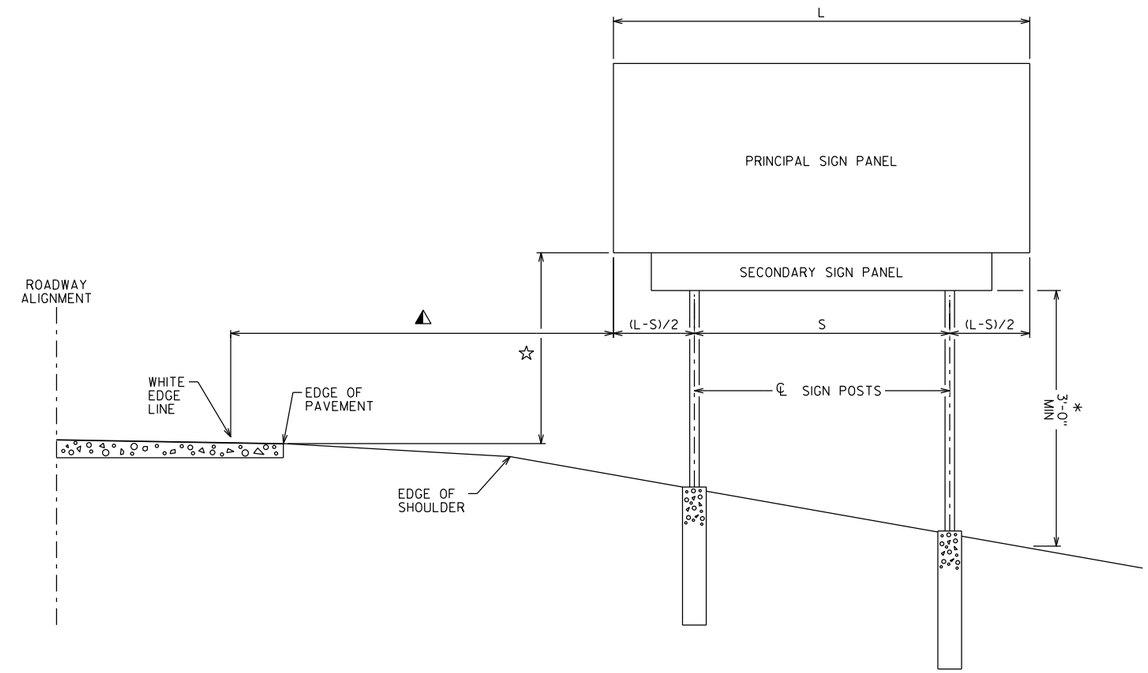

INSTALLATION WITH SECONDARY SIGN

TYPE 1 SIGN INSTALLATION NOTES:

FOR A 2-POST INSTALLATION, "S" EQUALS 3L/5, BUT SHALL NOT BE LESS THAN 6'-0".

FOR A 3-POST INSTALLATION, "S" EQUALS 5L/7, BUT SHALL NOT BE LESS THAN 12'-0". THE SPACING BETWEEN ANY TWO POSTS SHALL NOT BE LESS THAN 6'-0".

◭ UNLESS NOTED IN THE PLANS, THE SIGN OFFSET DISTANCE SHALL BE A MINIMUM OF 17'-6" FROM THE WHITE EDGE LINE, DESIRABLE 30'-0".

THE ± TOLERANCE SHOWN ON THIS SHEETS IS 3".

THE VERTICAL SIGN HEIGHT CLEARANCES SHOWN ON THIS SHEET ARE MEASURED FROM THE BOTTOM OF THE SIGN PANEL TO THE NEAR EDGE OF PAVEMENT.

☆ THE VERTICAL CLEARANCE SHALL BE 8'-3"± WHEN THE SECONDARY SIGN HEIGHT IS 3'-0" OR LESS. FOR SECONDARY SIGN HEIGHTS LARGER THAN 3'-0", THE VERTICAL CLEARANCE TO THE BOTTOM OF THE SECONDARY SIGN PANEL SHALL BE 5'-3"±.

* THE VERTICAL SIGN GROUND CLEARANCE ON RIGHT END OF SIGN SHALL BE A MINIMUM OF 3'-0"±.

POST LENGTHS SHOWN IN THE MISCELLANEOUS QUANTITIES ARE ESTIMATED LENGTHS. THE CONTRACTOR SHALL VERIFY POST LENGTHS AT THE TIME OF FINAL GRADING.

REFER TO THE TRAFFIC ENGINEERING OPERATIONS AND SAFETY MANUAL FOR FURTHER GUIDANCE ON MINIMUM VERTICAL CLEARANCE REQUIREMENTS.

NO.	DATE	REVISION	BY

STATE OF WISCONSIN
DEPARTMENT OF TRANSPORTATION
STRUCTURES DESIGN SECTION

STRUCTURE BTO TYPE I SIGNS

DRAWN BY | PLANS CK'D.

TYPICAL TYPE I SIGN INSTALLATION

SHEET A4-1.10

PROJECT NO: | HWY: | COUNTY: | SHEET NO: 170 | E

URBAN AREA

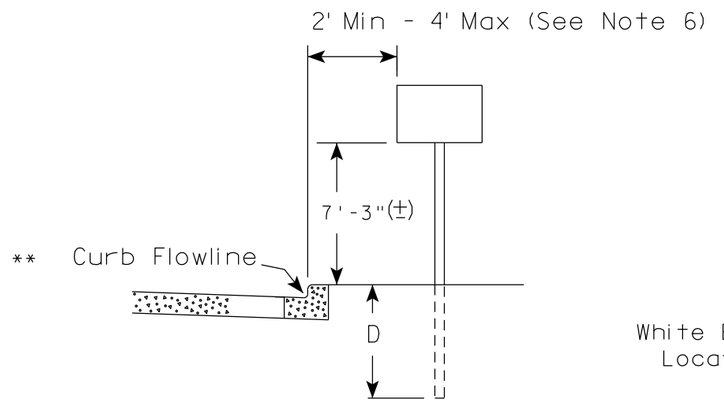

RURAL AREA (See Note 2)

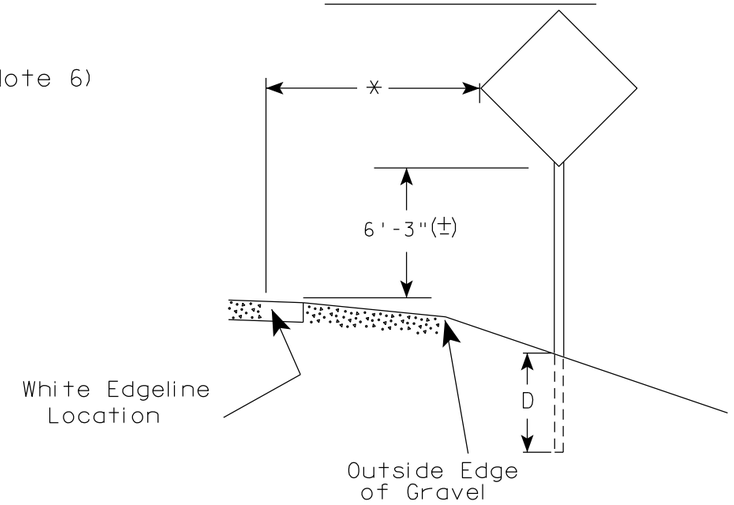

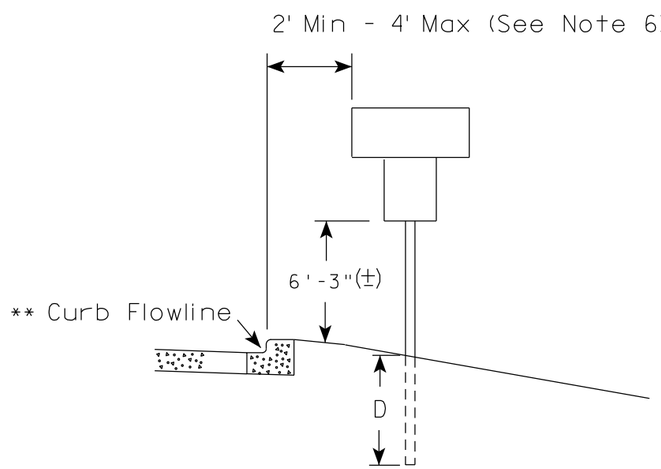

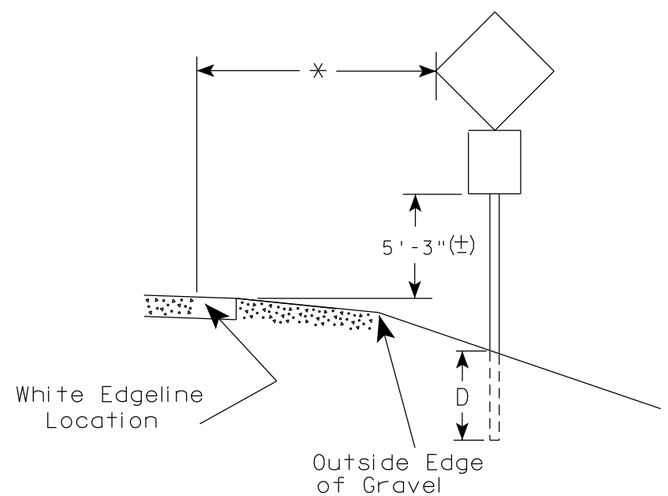

** The existence of curb and gutter does not in itself mandate the vertical clearance illustrated. That height is typically measured where there is sidewalk adjacent to the roadway or parking is permitted. In the absence of sidewalk vertical clearance is measured from the top of the curb. Offset of signs is measured from the flow line.

* 6 feet from edge of a paved shoulder or 12 feet from the edge of pavement (edge line location) or 2 feet from outside edge of gravel, whichever is greater unless directed by project engineer.

GENERAL NOTES

1. Signs wider than 4 feet or 20 sq.ft or larger, shall be mounted on multiple posts. Refer to plate A4-4.
2. If signs are mounted on or behind barrier wall, see A4-10 sign plate.
   The Double Arrow sign (W12-1D) shall be mounted at a height of 2'-3" (±). The Chevron sign (W1-8), Roundabout Chevron panel (R6-4B), Enhanced Reference Markers, Clearance Markers (W5-52), Mile Markers (D10 series), In Road Object Markers (W5-54) & End of Road Markers (W5-56) shall be mounted at a height of 4'-3" (±).
3. For expressways and freeways, mounting height is 7'- 3" (±) or 6'-3" (±) depending upon existence of a sub-sign.
4. Minimum mounting height for signs mounted on traffic signal poles is 5'- 3" (±).
5. Offset distance shall be consistent with existing signs or consistent throughout length of project.
6. The (±) tolerance for mounting height is 3 inches.
7. Folding signs shall be mounted at a height of 5'-3" (±) or as directd by the Engineer.

POST EMBEDMENT DEPTH

Area of Sign Installation (Sq.Ft.)	D (Min)
20 or Less	4'
Greater than 20	5'

TYPICAL INSTALLATION OF PERMANENT TYPE II SIGNS ON SINGLE POSTS

WISCONSIN DEPT OF TRANSPORTATION

APPROVED Matthew R Rauch for State Traffic Engineer

DATE 5/13/2020 PLATE NO. A4-3.22

7

7

PROJECT NO:	HWY:	COUNTY:		SHEET NO: 171	E

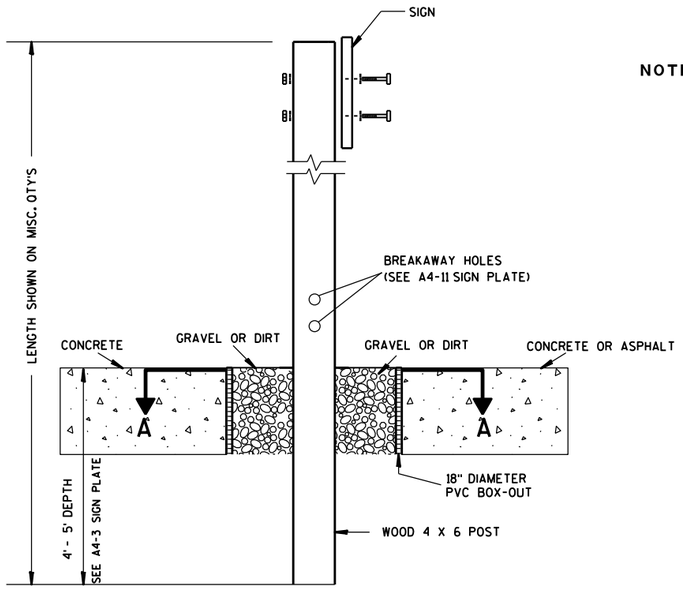

ELEVATION VIEW

DETAIL OF WOOD 4 X 6 SIGN POST IN BOX-OUT

NOTES:
1. ALL MATERIAL TO BE APPROVED BY ENGINEER PRIOR TO INSTALLATION
2. SEE SIGN PLATE A4-8 FOR SIGN HARDWARE REQUIREMENTS
3. 18 INCH X 18 INCH SQUARE BOX-OUTS MAY BE USED FOR INSTALLATIONS IN EXISTING CONCRETE OR ASPHALT LOCATIONS.

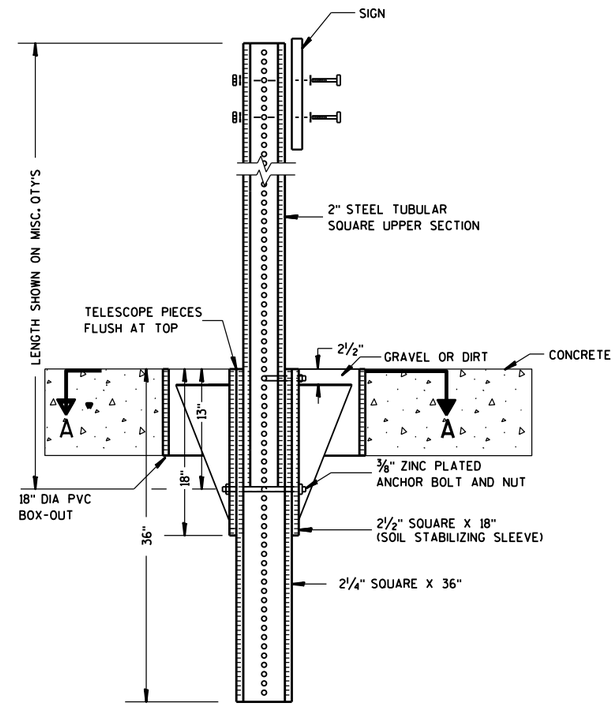

ELEVATION VIEW

DETAIL OF STEEL 2 X 2 SIGN POST IN BOX-OUT

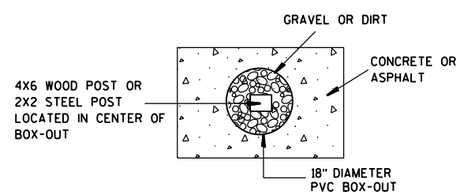

PLAN VIEW

FOR NEW CONCRETE/ASPHALT INSTALLATIONS

SIGN POST
BOX-OUTS
A4-3B

WISCONSIN DEPT OF TRANSPORTATION

APPROVED Matthew R Rauch
for State Traffic Engineer

DATE 1/27/14 PLATE NO. A4-3B.1

PROJECT NO:	HWY:	COUNTY:		SHEET NO:	E

GROUND MOUNTED SIGN

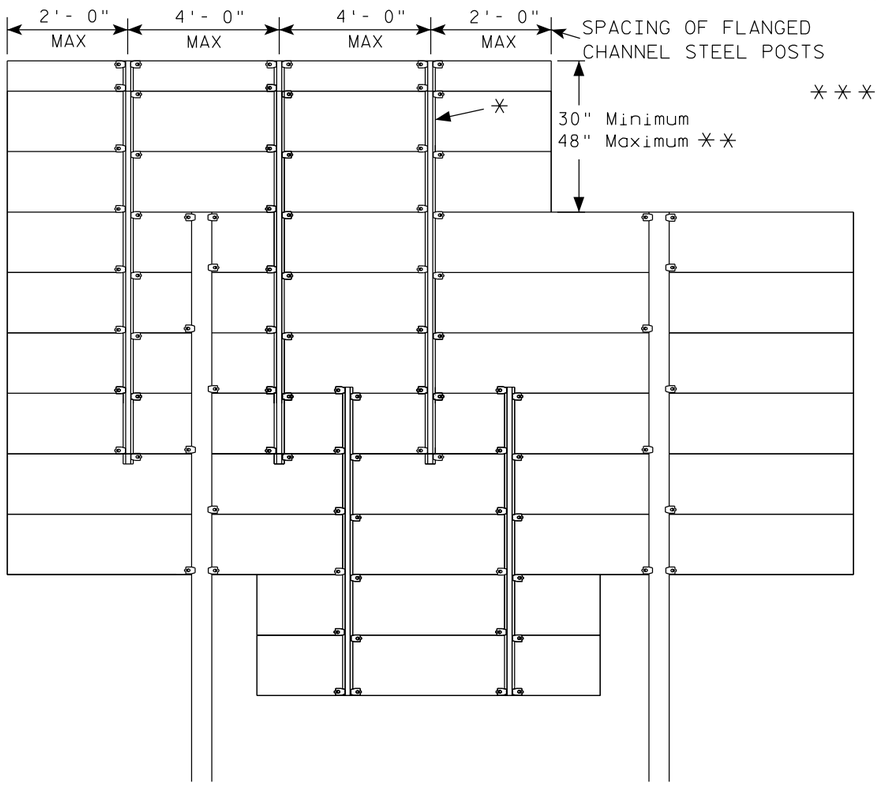

✳=2.00 lb/ft AND 4.00 lb/ft FLANGED CHANNEL, MIN. YIELD STRENGTH = 60,000 PSI (GRADE 60) GALVANIZED

✳✳=FOR 48" HEIGHT PANELS ON OVERHEAD STRUCTURES, ENTIRE SIGN SHALL BE CENTERED VERTICALLY ABOUT THE DEPTH OF THE TRUSS.

✳✳✳ THESE SPACING DISTANCES SHALL ONLY BE USED WHEN THE MAIN SIGN HAS A MAXIMUM HEIGHT (DIMENSION H) OF 15 FT OR LESS. FOR SIGNS WITH A HEIGHT OF GREATER THAN 15 FT, STRUCTURAL CALCULATIONS SHALL BE PERFORMED.

FLANGE CHANNEL DETAILS

NOT TO SCALE

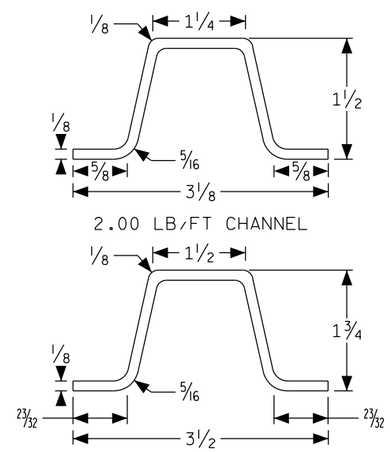

SIGN BRIDGE MOUNTED SIGN

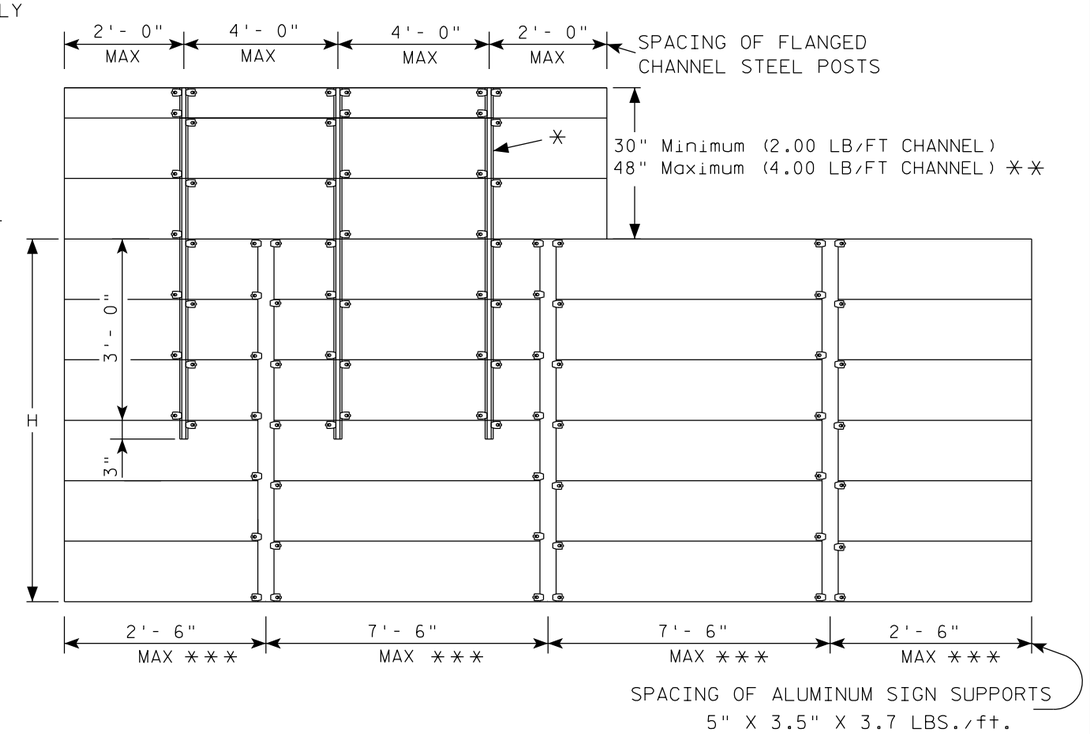

GENERAL NOTES

1. Flanged channel steel posts shall conform to size and material above, and shall be considered as incidental to other items in the contract.

2. Number of Flanged channel steel supports varies with length of panel and shall be spaced as shown:

   PANEL LENGTH 8'-0" OR LESS = 2 CHANNELS
   PANEL LENGTH 9'- 0" - 12'- 0" = 3 CHANNELS
   PANEL LENGTH 13'- 0" OR MORE = 4 CHANNELS

   If the flanged channel steel posts can not be horizontally spaced as shown, they can be moved so as to securely hold the sign.

3. The EXIT NUMBER PANEL shall normally be positioned above the guide sign aligned with the right edge of the guide sign. If the guide sign indicates a left exit, the EXIT NUMBER PANEL shall be aligned with the left edge of the guide sign.

4. If the bolt holes in the top panel (EXIT NUMBER), or sub panel (NEXT EXIT) line up with holes in main sign panel, stitch bolts shall be used in addition to the channels.

5. Provide post clips for each sign as shown. (Please note the differences between a ground mounted versus Sign bridge mounted sign as far as number of clips required on the main supports or beams)

6. Structural steel sign supports shall extend to the top of the main signs, as shown on the above details.

ATTACHMENT OF GUIDE SIGNS TO SUPPORTS

WISCONSIN DEPT OF TRANSPORTATION

APPROVED Matthew R Rauch
For State Traffic Engineer

DATE 1/07/20 PLATE NO. A4-6.12

GENERAL NOTES

1. USE STAINLESS STEEL U-BOLTS, WASHERS, AND NUTS.
2. USE CLIPS ON EVERY EXTRUDED PANEL JOINT PER SIGN PLATE A4-6.
3. USE ALUMINUM VERTICAL SIGN SUPPORT BEAMS HAVING A 5 INCH BEAM DEPTH AND WEIGHT OF 3.7 LBS PER FOOT.
4. U-BOLTS SHALL BE STAINLESS STEEL AND MANUFACTURED TO THE PROPER SIZE TO FIT THE CHORDS OF THE OVERHEAD SIGN STRUCTURE.
5. DIAMETER OF U-BOLTS SHALL BE AS SHOWN.
6. THE LENGTH OF THE ALUMINUM VERTICAL SIGN SUPPORT BEAMS SHALL BE THE SAME AS THE HEIGHT OF THE SIGN THEY ARE SUPPORTING. BEAM LENGTHS MAY BE LONGER FOR PROPER ATTACHMENT TO CHORDS.
7. MINIMUM NUMBER OF BRACKETS PER SIGN IS TWO. SEE DETAIL BELOW FOR SPACING OF ALUMINUM VERTICAL SIGN SUPPORTS
8. MATERIAL NOTES:
   STAINLESS STEEL U-BOLTS AND LOCKWASHERS ASTM 304.
   STAINLESS STEEL HEX NUTS ASTM A276.
   ALUMINUM I-BEAMS ARE 6061-T6.
9. SLOTTED HOLES IN I-BEAMS ARE NOT ALLOWED

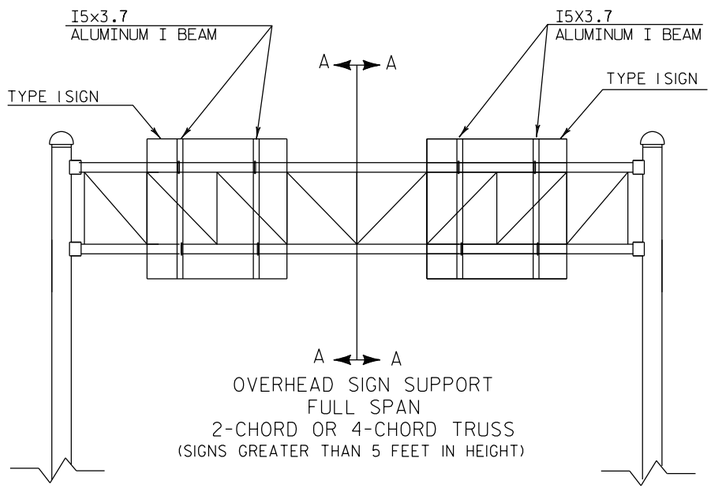

OVERHEAD SIGN SUPPORT
FULL SPAN
2-CHORD OR 4-CHORD TRUSS
(SIGNS GREATER THAN 5 FEET IN HEIGHT)

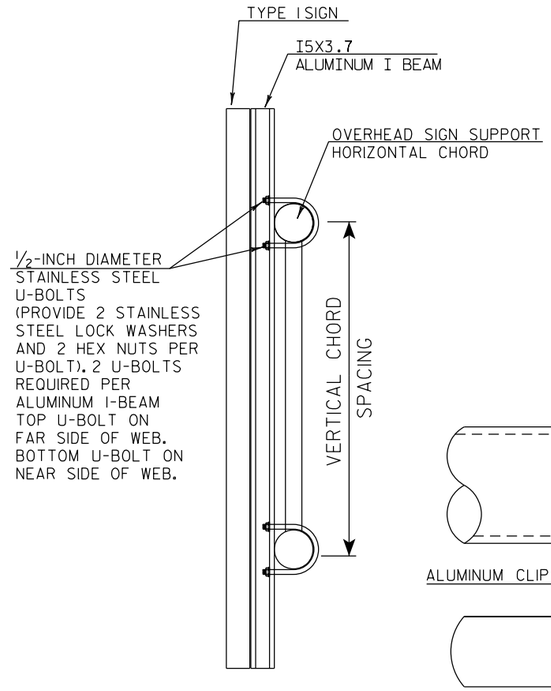

CUT SECTION A-A

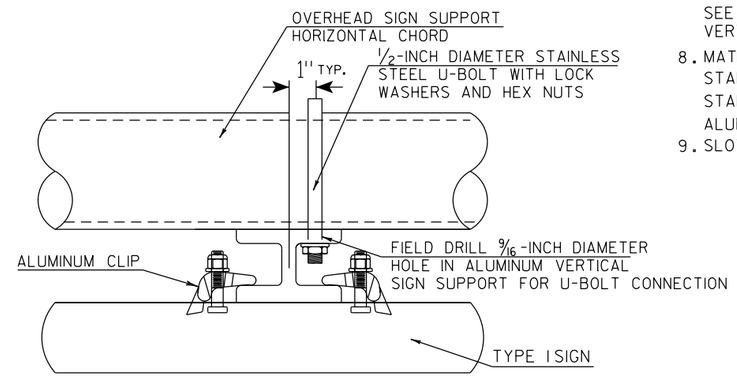

TYPICAL SIGN CONNECTION FOR
2-CHORD OR 4-CHORD TRUSS
PLAN VIEW

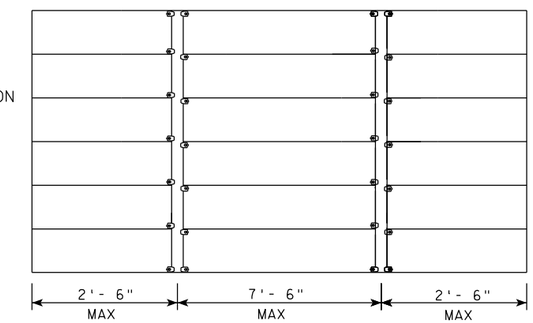

SPACING OF I5X3.7 ALUMINUM
VERTICAL SIGN SUPPORT

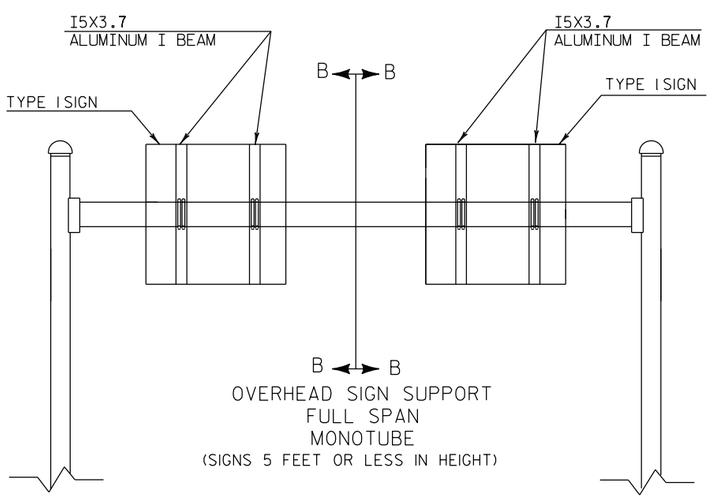

OVERHEAD SIGN SUPPORT
FULL SPAN
MONOTUBE
(SIGNS 5 FEET OR LESS IN HEIGHT)

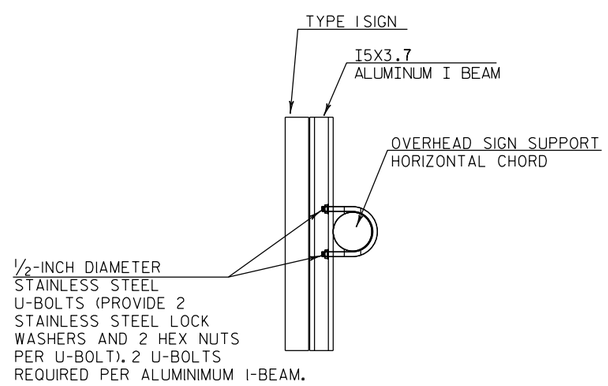

CUT SECTION B-B

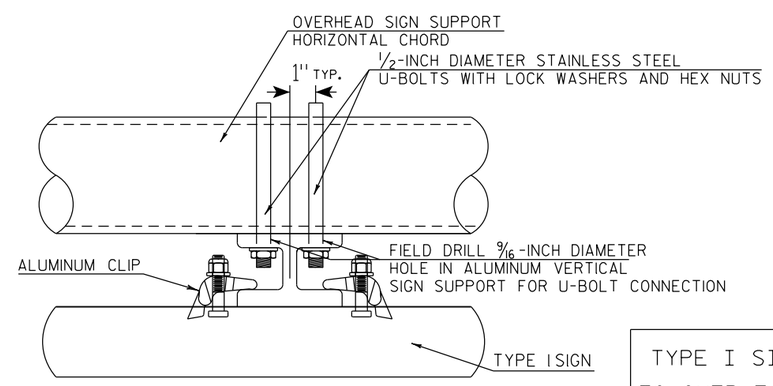

TYPICAL SIGN CONNECTION FOR
MONOTUBE
PLAN VIEW

TYPE I SIGN CONNECTION
TO OVERHEAD SIGN SUPPORT

WISCONSIN DEPT OF TRANSPORTATION

APPROVED Matthew R Rauch
State Traffic Engineer

DATE 1/07/20 PLATE NO. A4-7A.1

PROJECT NO:	HWY:	COUNTY:		SHEET NO: 174	E

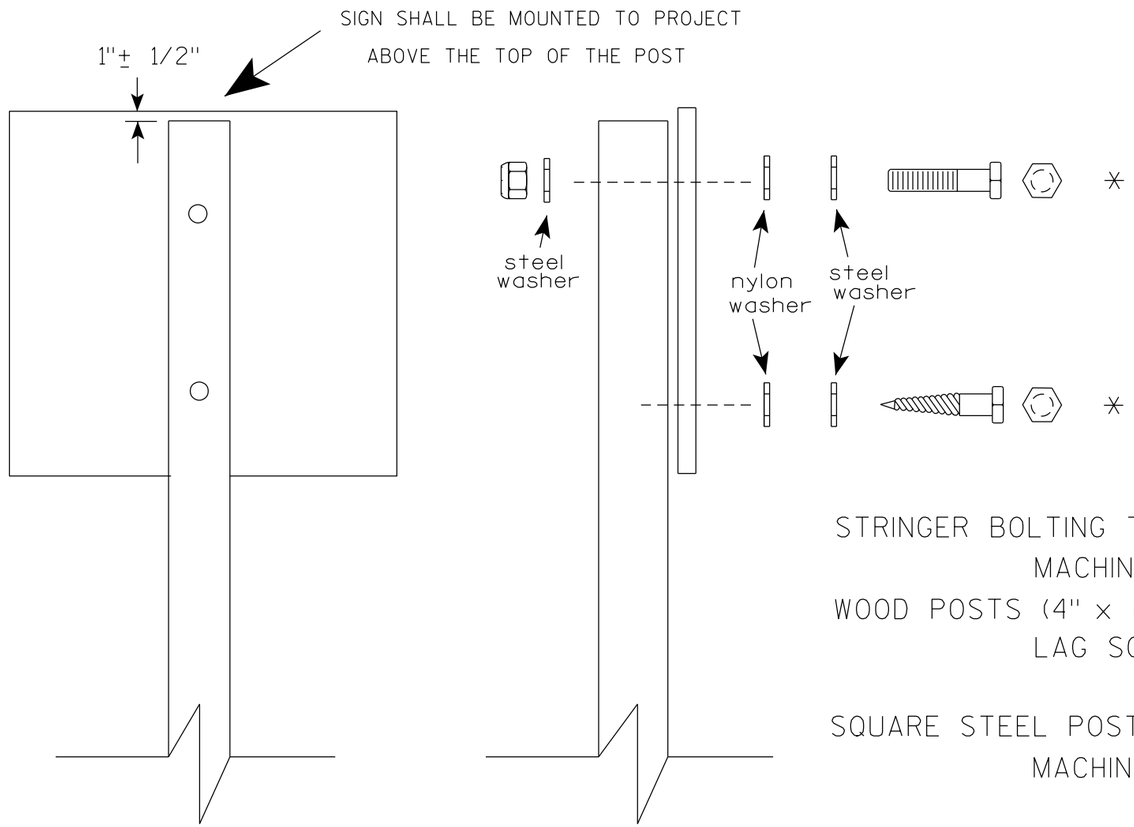

Nuts, bolts and lags used for mounting signs shall have hexagonal heads and shall be either :

a. Hot dip galvanized in accordance with ASTM Designation: A 153, Class D, or SC 3

b. Electro-galvanized in accordance with ASTM Designation : B 633, TYPE III, SC 3.

Threads on bolts and nuts shall be manufactured with sufficient allowance for the cadmium plate or galvanized coating to permit the nuts to run freely on the bolts.

STRINGER BOLTING TO ALUMINUM SIGNS (SEE SIGN PLATE A4-18)

MACHINE BOLTS - 5/16" X 1-3/4" Length w/ lock nuts

WOOD POSTS (4" x 6")

LAG SCREWS - 3/8" X 3" (NO STRINGERS ON BACK OF SIGN)
3/8" X 4" (STRINGERS ON BACK OF SIGN)

SQUARE STEEL POSTS (2" x 2")

MACHINE BOLTS - 3/8" X 3-1/4" Length w/ nuts (NO STRINGER ON BACK OF SIGN)
3/8" X 5" Length w/ nuts (STRINGERS ON BACK OF SIGN)

RIVETS - 9/32 " (6605-9-6) BULB-TITE, TRI-FOLD, ALUMINUM BODY/MANDREL
O.D. FLANGE .720-.765 INCH, GRIP RANGE .042-.375 INCH

WASHERS (ALL POSTS) -

1-1/4" O.D. X 3/8" I.D. X 1/16" STEEL
1-1/4" O.D. X 3/8" I.D. X .080 NYLON

* Two different fastening systems are shown for illustration purposes. On any individual sign, either one or the other system shall be used. Actual number of fasteners per sign varies with the sign area, but normally there are two. For a single post installation, all signs greater than 9 sq. ft. require the use of 3 fasteners.

ATTACHMENT OF SIGNS TO POSTS

WISCONSIN DEPT OF TRANSPORTATION

APPROVED Matthew R Rauch
for State Traffic Engineer

DATE 4/1/2020 PLATE NO. A4-8.9

TELESCOPIC TUBING ANCHORS
TWO PIECE SYSTEM

2 1/4 " SQUARE
12 GAUGE
PERFORATED
GALVANIZED FINISH

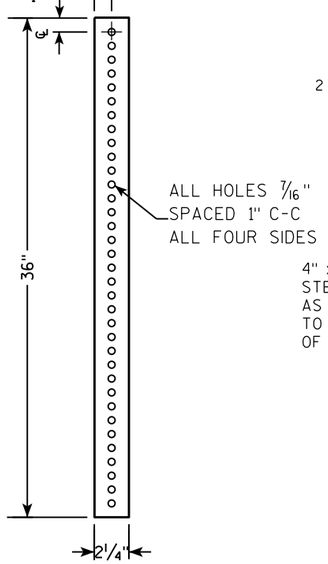

2 1/2 " SQUARE
12 GAUGE
OMNI-DIRECTIONAL
PERFORATED
SOIL STABILIZING SLEEVE
GALVANIZED FINISH

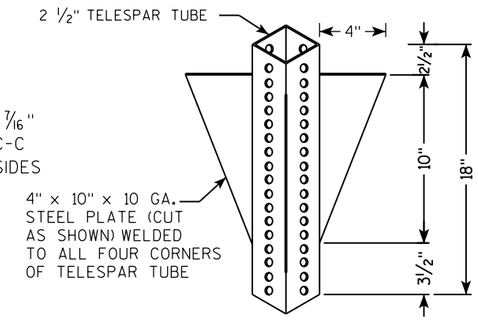

DETAIL OF TUBULAR STEEL SIGN POST
(IN POURED CONCRETE OR ASPHALT)

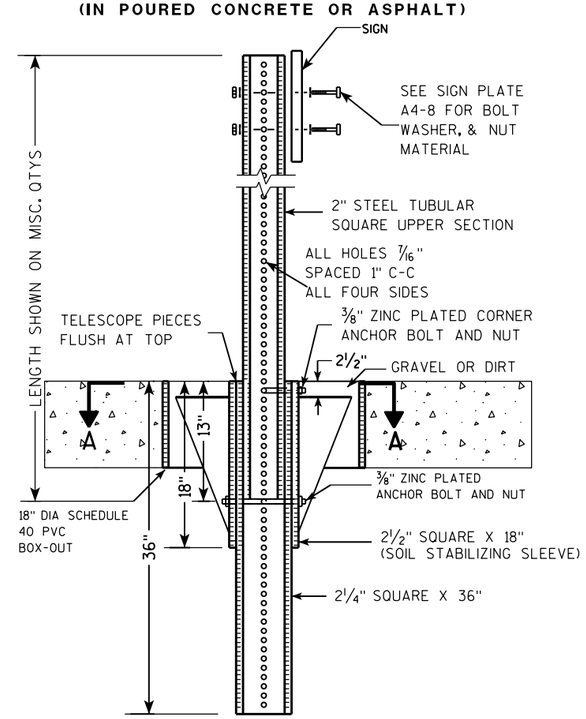

DETAIL OF TUBULAR STEEL SIGN POST
(IN LOCATIONS OTHER THAN POURED CONCRETE OR ASPHALT)

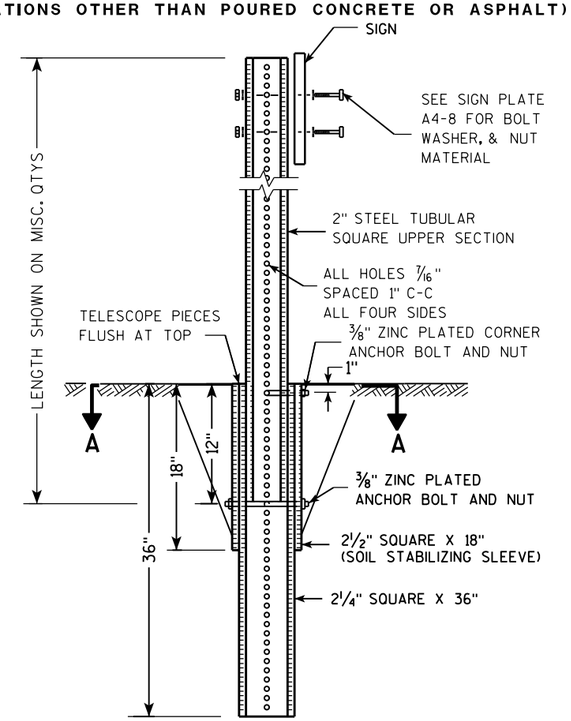

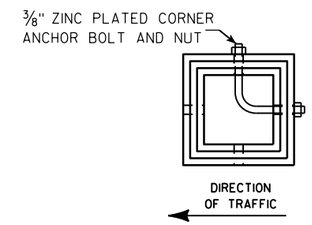

SECTION A-A

Area of Sign Installation (Sq. Ft.)	Number of Required Posts
9 or less	1
Greater than 9 less than or equal to 18	2
Greater than 18 less than or equal to 27	3

Signs wider than 3 feet or larger than 9 sq. ft shall be mounted on multiple posts (see above table).

TUBULAR STEEL
SIGN POST
A4-9

WISCONSIN DEPT OF TRANSPORTATION

APPROVED Matthew R Rauch
for State Traffic Engineer

DATE 2/05/15 PLATE A4-9.9

7 7

PROJECT NO:	HWY:	COUNTY:		SHEET NO:	E

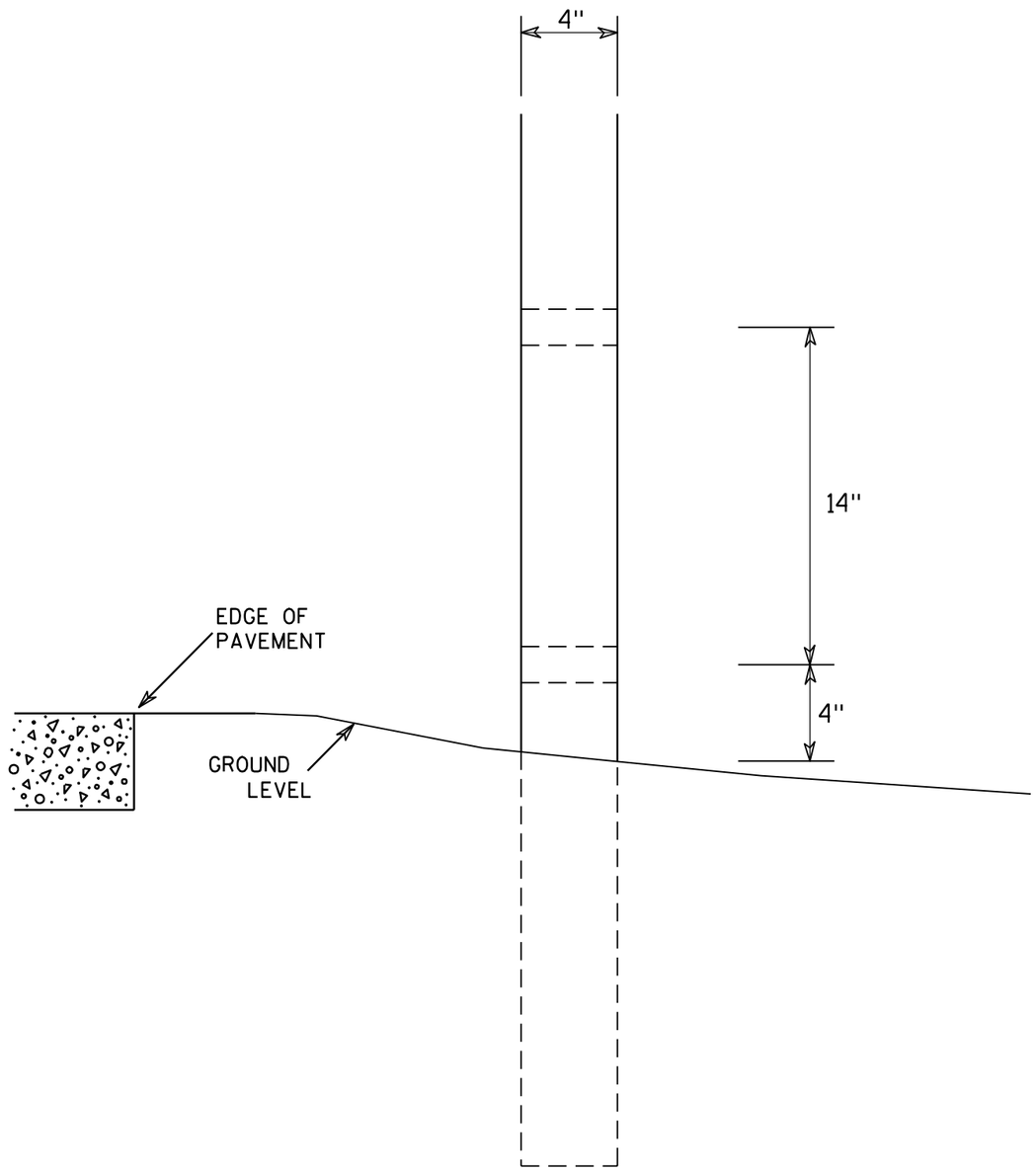

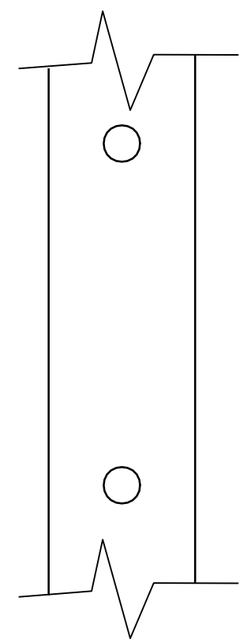

SIDE VIEW

GENERAL NOTES

1. All 4 x 6 Wood Posts shall be modified by having two 1½" diameter holes drilled perpendicular to the roadway centerline.

4 X 6 WOOD POST MODIFICATIONS

WISCONSIN DEPT OF TRANSPORTATION

APPROVED Chester J Spang for State Traffic Engineer

DATE 3/27/97 PLATE NO. A4-11.2

PROJECT NO:	HWY:	COUNTY:		SHEET NO: 177	E

Extruded Shape

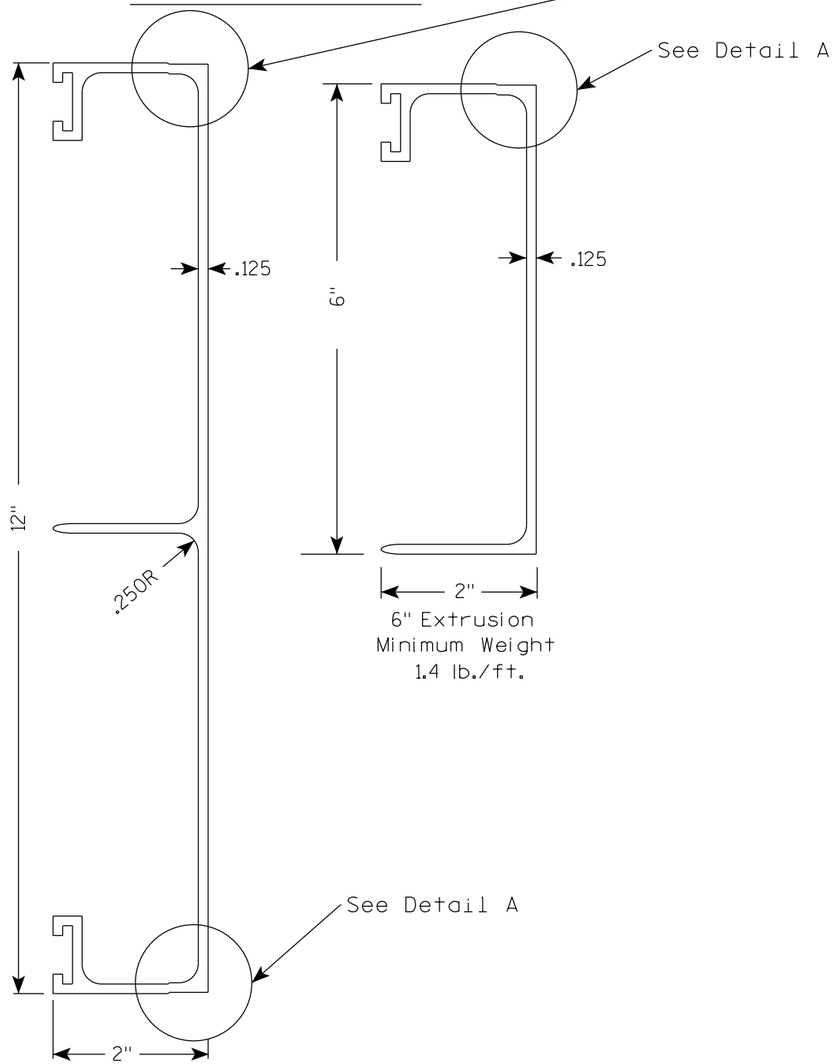

Hardware

STITCH BOLT, WASHER & NUT

The hardware includes:

3/8 " - 16 X 3/4 " Economy Bolt 2024-T4 alloy
3/8 " - Stainless steel stop nut
3/8" X .064 Flat Washers, Alclad 2024-T4 alloy

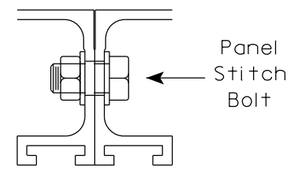

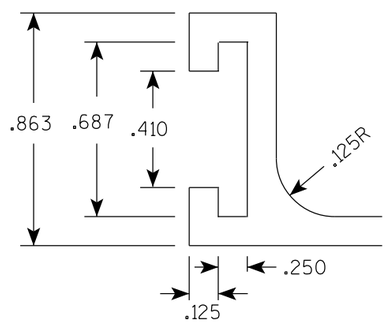

POST CLIP, POST CLIP BOLT, WASHER & NUT

Post Clip shall be Alum. Alloy 356-T6
Post Clip Bolt shall be Stainless Steel.
Flat washer shall be 3/8" X .091, Stainless Steel.
Stop nut shall be stainless steel.

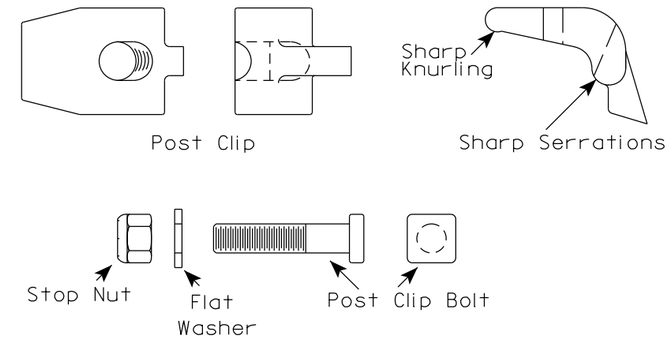

NOTES

1. The contractor may select any brand of extrusion that conforms to the illustrations or meets with the approval of the engineer, but all extrusions used on this contract shall be of the same brand.
2. Panel Stitch Bolts shall be used to assemble adjacent panels. Maximum stitch bolt spacing shall be 24" C-C, and a minimum of 4 bolts shall be used to connect any two extrusions.
3. Post Clips shall be used to attach the sign panel to the sign support.
4. Edge wrapping of sign sheeting required on all extrusions joints shown in Detail A.

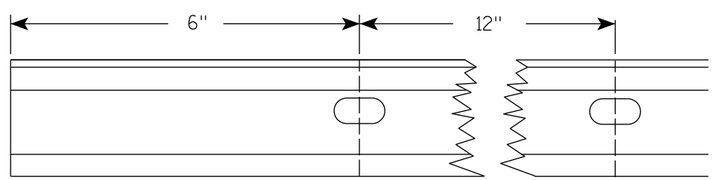

Punch 7/16" x 7/8" oval holes beginning 6" in from end of extrusion 12" CC on both edges of 6" and 12" panels.

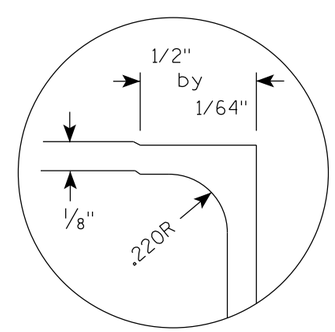

DETAIL A (EDGE WRAP JOINT)

ALUMINUM EXTRUSIONS FOR TYPE I SIGNS

WISCONSIN DEPT OF TRANSPORTATION

APPROVED Matthew R Rauch
For State Traffic Engineer
DATE 1/07/20 PLATE NO. A5-2.10

PROJECT NO:

SHEET NO: 178 E

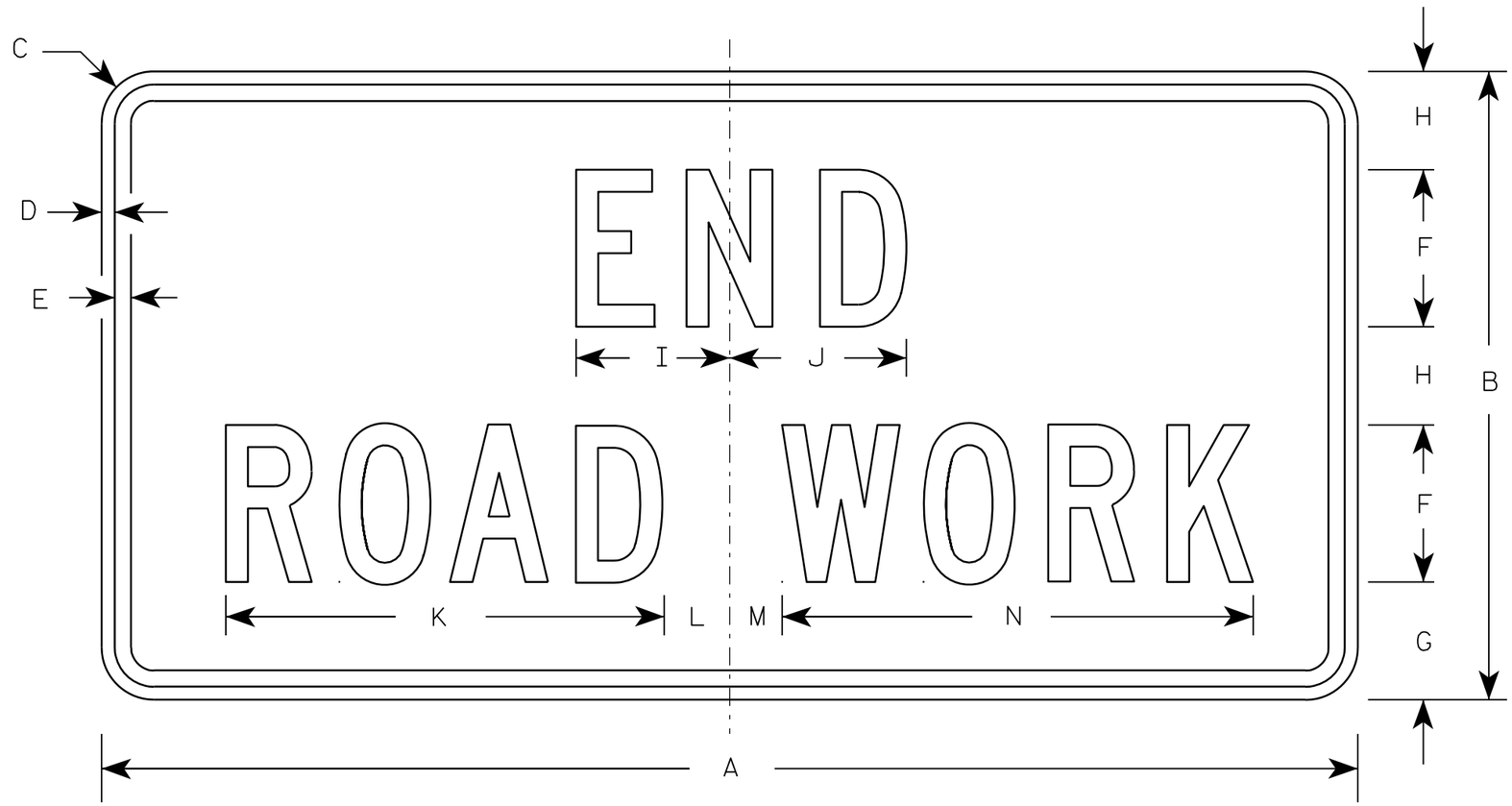

G20-2A

NOTES

1. Sign is Type II - Type F Reflective - reference WIS DOT Standard Specification for HIGHWAY and STRUCTURE CONSTRUCTION latest edition.
2. Color:
   Background - Orange
   Message - Black
3. Message Series - C
4. Corners may be square or rounded when base material is plywood but borders shall be rounded as shown. When base material is metal, the corners and borders shall be rounded.

Metric equivalent for this sign is:

SIZE	
1	900 mm X 450 mm
2	1200 mm X 600 mm
3	1200 mm X 600 mm
4	1200 mm X 600 mm
5	1200 mm X 600 mm

SIZE	A	B	C	D	E	F	G	H	I	J	K	L	M	N	O	P	Q	R	S	T	U	V	W	X	Y	Z	Area sq. ft.	Area m2
1	36	18	1 1/8	3/8	1/2	4	3 3/4	2 1/2	4 1/8	4 1/8	11 1/8	2	1	12 1/8													4.5	0.41
2	48	24	1 1/2	1/2	5/8	6	4 1/2	3 3/4	5 7/8	6 3/4	16 3/4	2 1/2	1 3/4	18 1/2													8.0	0.72
3	48	24	1 1/2	1/2	5/8	6	4 1/2	3 3/4	5 7/8	6 3/4	16 3/4	2 1/2	1 3/4	18 1/2													8.0	0.72
4	48	24	1 1/2	1/2	5/8	6	4 1/2	3 3/4	5 7/8	6 3/4	16 3/4	2 1/2	1 3/4	18 1/2													8.0	0.72
5	48	24	1 1/2	1/2	5/8	6	4 1/2	3 3/4	5 7/8	6 3/4	16 3/4	2 1/2	1 3/4	18 1/2													8.0	0.72

STANDARD SIGN
G20-2A

WISCONSIN DEPT OF TRANSPORTATION

APPROVED Matthew R Rauch
for State Traffic Engineer

DATE 9/30/09 PLATE NO. G20-2A.8

PROJECT NO:	HWY:	COUNTY:		SHEET NO: 179	E

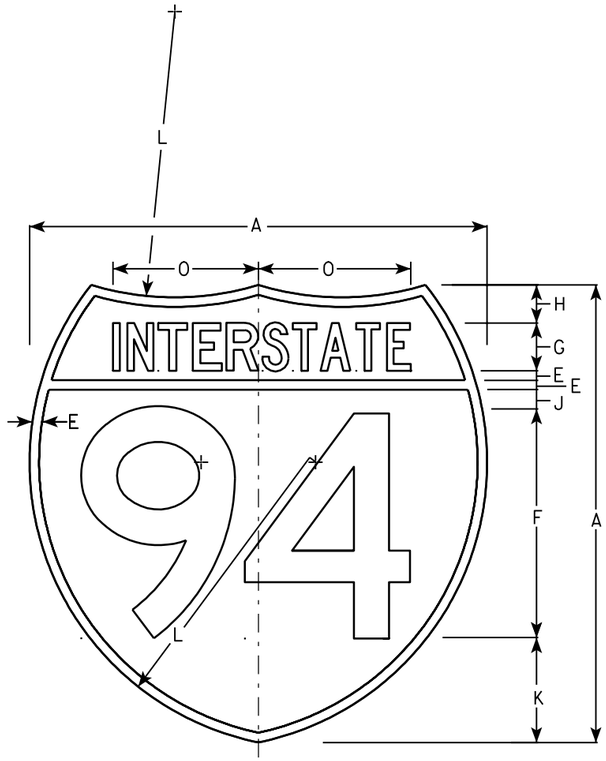

M1-1

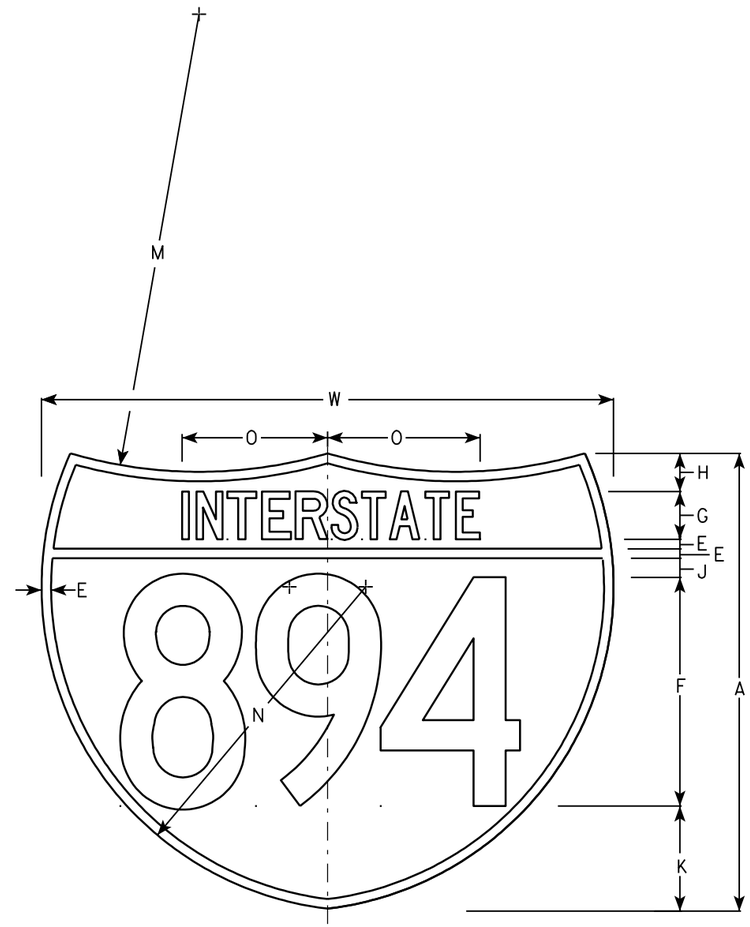

M1-1A

NOTES

1. Sign is Type II - See Note 6 - reference WIS DOT Standard Specification for HIGHWAY and STRUCTURE CONSTRUCTION latest edition.
2. Color:
   Background - Top Red - Bottom Blue (See Note 6)
   Message - White - See Note 6
3. Message Series - See note 5
4. Substitute appropriate numerals & ajust spacing as per plate A10-1.
5. M1-1 - Numerals - D
   Interstate - C
   M1-1A - All copy - C
6. Permanent Signs
   Message - Type H Reflective
   Detour or other temporary signs
   Background - Reflective
   Message - Reflective

7

Metric equivalent for these signs are:

SIZE	M1-1	SIZE	M1-1A
1			
2	600 mm X 600 mm	2	600 mm X 750 mm
3	900 mm X 900 mm	3	900 mm X 1125 mm
4	900 mm X 900 mm	4	900 mm X 1125 mm
5	900 mm X 900 mm	5	900 mm X 1125 mm

SIZE	A	B	C	D	E	F	G	H	I	J	K	L	M	N	O	P	Q	R	S	T	U	V	W	X	Y	M1-1 Area sq. ft.	M1-1A Area sq. ft.	M1-1 Area m2	M1-1A Area m2
1																													
2	24				1/2	12	2 1/2	2		1	5 1/2	15	24	17	7 7/8								30			3.13	3.91	.36	.46
3	36				3/4	18	3 3/4	3		1 1/2	8 1/4	22 1/2	36	25 1/2	11 3/4								45			7.03	8.79	.81	1.05
4	36				3/4	18	3 3/4	3		1 1/2	8 1/4	22 1/2	36	25 1/2	11 3/4								45			7.03	8.79	.81	1.05
5	36				3/4	18	3 3/4	3		1 1/2	8 1/4	22 1/2	36	25 1/2	11 3/4								45			7.03	8.79	.81	1.05

INTERSTATE ROUTE MARKER
M1-1 FOR ASSEMBLIES

WISCONSIN DEPT OF TRANSPORTATION

APPROVED Matthew R Rauch
for State Traffic Engineer

DATE 08/23/05 PLATE NO. M1-1.8

PROJECT NO:	HWY:	COUNTY:		SHEET NO: 180	E

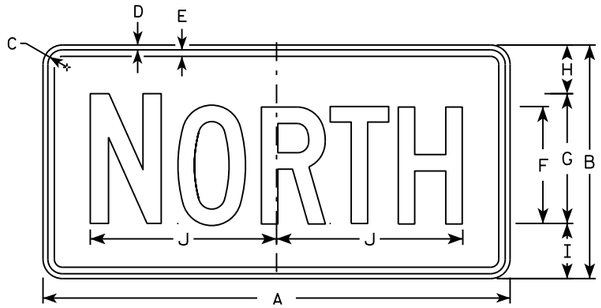

M3-1
MM3-1
MP3-1

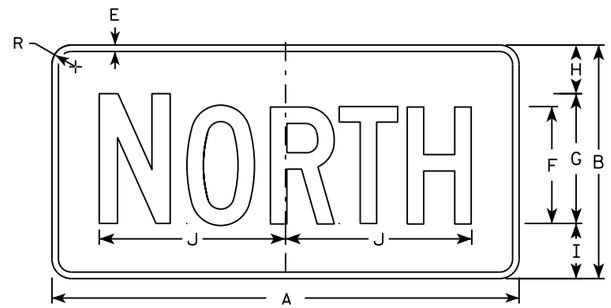

MB3-1
MK3-1
MN3-1

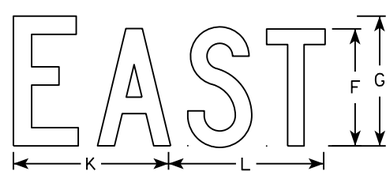

M3-2
MM3-2
MP3-2

MB3-2
MK3-2
MN3-2

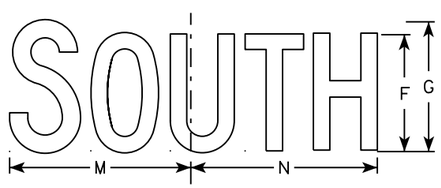

M3-3
MM3-3
MP3-3

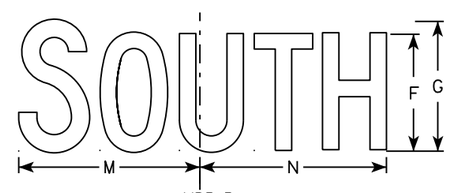

MB3-3
MK3-3
MN3-3

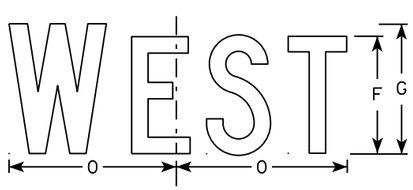

M3-4
MM3-4
MP3-4

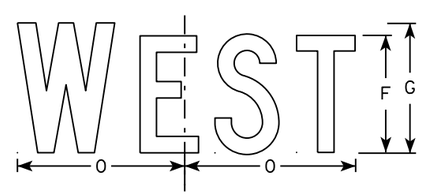

MB3-4
MK3-4
MN3-4

NOTES

1. All Signs Type II - Type H
2. Color:
   Background - See note 5
   Message - See note 5
3. Message Series - C
4. Corners may be square or rounded when base material is plywood but borders shall be rounded as shown. When base material is metal, the corners and borders shall be rounded.
5. M3-1 thru M3-4 Background - White
   Message - Black
   MB3-1 thru MB3-4 Background - Blue
   Message - White
   MK3-1 thru MK3-4 Background - Green
   Message - White
   MM3-1 thru MM3-4 Background - White
   Message - Green
   MN3-1 thru MN3-4 Background - Brown
   Message - White
   MP3-1 thru MP3-4 Background - White
   Message - Blue
6. Note the first letter of each direction is larger than the remainder of the message.

SIZE	A	B	C	D	E	F	G	H	I	J	K	L	M	N	O	P	Q	R	S	T	U	V	W	X	Y	Z	Area sq. ft.
1																											
2	24	12	1 1/8	3/8	3/8	6	7	2 1/4	2 3/4	10 1/4	7 7/8	8 3/8	10 1/4	9 3/4	8 3/4			1 1/2									2.00
3	36	18	1 1/8	3/8	1/2	9	10	3 3/4	4 1/4	14 3/8	12	12 1/8	14	14 1/8	13			1 1/2									4.5
4	36	18	1 1/8	3/8	1/2	9	10	3 3/4	4 1/4	14 3/8	12	12 1/8	14	14 1/8	13			1 1/2									4.5
5	36	18	1 1/8	3/8	1/2	9	10	3 3/4	4 1/4	14 3/8	12	12 1/8	14	14 1/8	13			1 1/2									4.5

STANDARD SIGNS
M3-1 thur M3-4
SERIES

WISCONSIN DEPT OF TRANSPORTATION

APPROVED Matthew R Rauch
for State Traffic Engineer

DATE 10/15/15 PLATE NO M3-1.14

PROJECT NO: | HWY: | COUNTY: | SHEET NO: | E

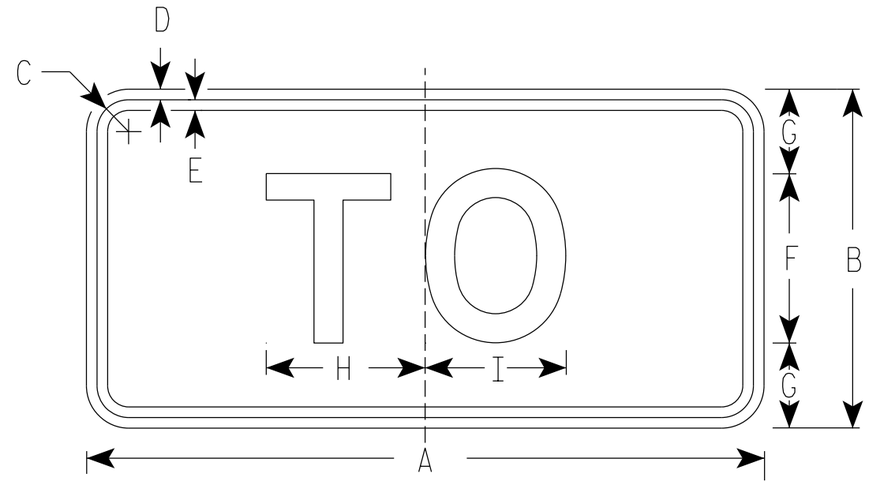

M4-5
MM4-5
MP4-5
MO4-5

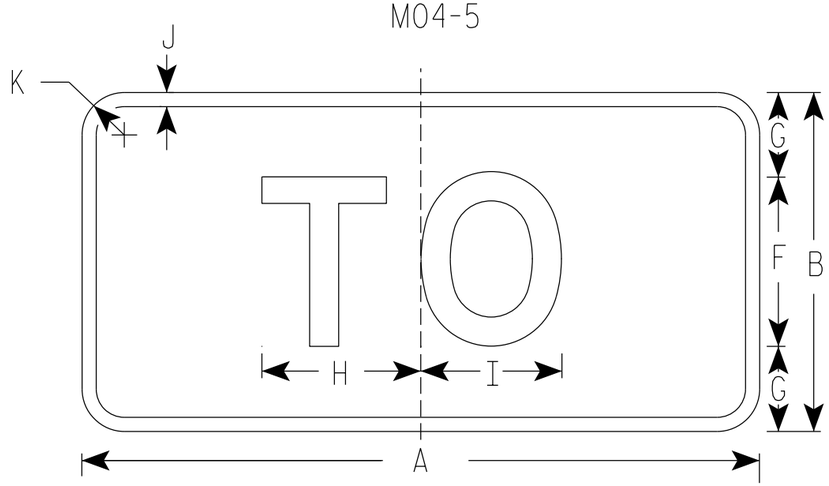

MB4-5
MK4-5
MN4-5

NOTES

1. Sign is Type II - Type H Reflective
2. Color:
   Background - See note 5
   Message - See note 5
3. Message Series - E
4. Corners may be square or rounded when base material is plywood but borders shall be rounded as shown. When base material is metal, the corners and borders shall be rounded.
5. M4-5 Background - White
   Message - Black

   MB4-5 Background - Blue
   Message - White

   MK4-5 Background - Green
   Message - White

   MM4-5 Background - White
   Message - Green

   MN4-5 Background - Brown
   Message - White

   MP4-5 Background - White
   Message - Blue

   MO4-5 Background - Orange Type F Reflective
   Message - Black

SIZE	A	B	C	D	E	F	G	H	I	J	K	L	M	N	O	P	Q	R	S	T	U	V	W	X	Y	Z	Area sq. ft.
1																											
2	24	12	1 1/8	3/8	3/8	6	3	5 3/8	5 1/4	1/2	1 1/2																2.00
3	36	18	1 3/8	3/8	1/2	9	4 1/2	8 1/4	8 3/8	1/2	1 1/2																4.5
4	36	18	1 3/8	3/8	1/2	9	4 1/2	8 1/4	8 3/8	1/2	1 1/2																4.5
5	36	18	1 3/8	3/8	1/2	9	4 1/2	8 1/4	8 3/8	1/2	1 1/2																4.5

STANDARD SIGN
M4-5

WISCONSIN DEPT OF TRANSPORTATION

APPROVED Matthew R Rauch
for State Traffic Engineer

DATE 03/7/19 PLATE NO. M4-5.9

PROJECT NO: | HWY: | COUNTY: | SHEET NO: 182 | E

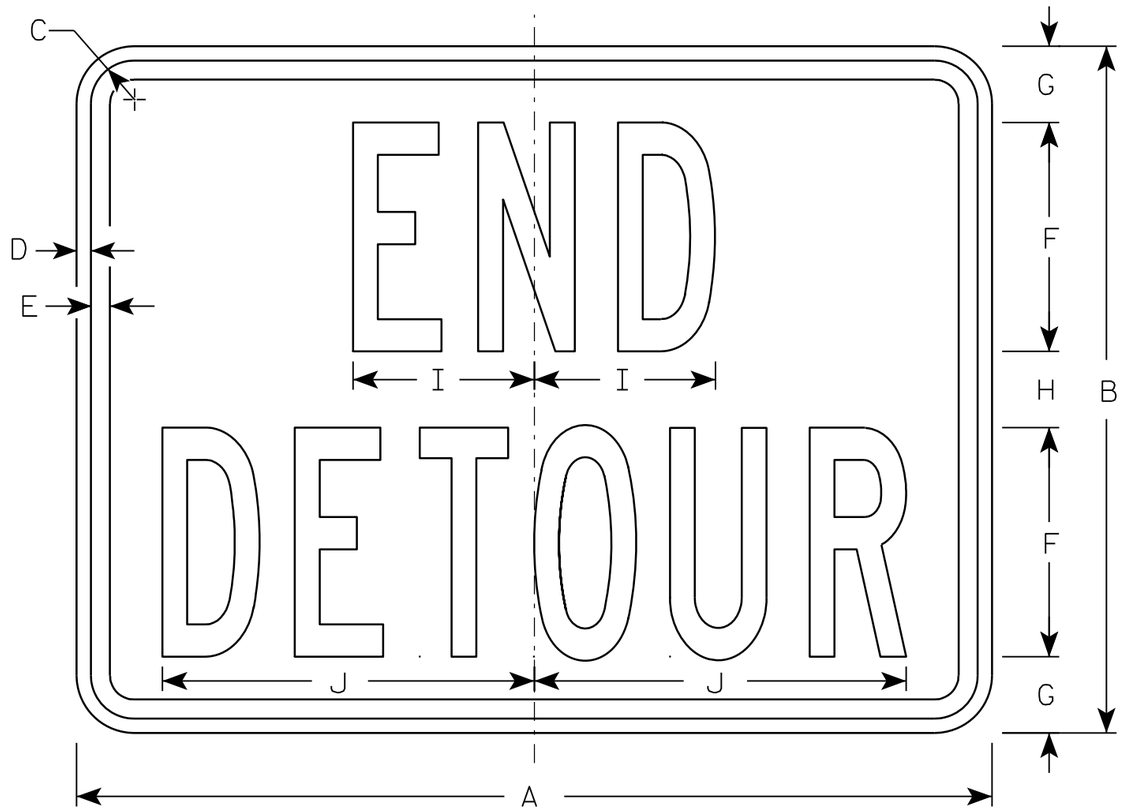

M4-8A

NOTES

1. Sign is Type II - Type F Reflective - reference WIS DOT Standard Specification for HIGHWAY and STRUCTURE CONSTRUCTION latest edition.
2. Color:
   Background - Orange
   Message - Black
3. Message Series - B
4. Corners may be square or rounded when base material is plywood but borders shall be rounded as shown. When base material is metal, the corners and borders shall be rounded.

SIZE	A	B	C	D	E	F	G	H	I	J	K	L	M	N	O	P	Q	R	S	T	U	V	W	X	Y	Z	Area sq. ft.
1																											
2	24	18	1 1/8	3/8	1/2	6	2	2	4 3/4	9 3/4																	3.0
3	30	24	1 1/8	3/8	1/2	8	2 1/2	3	6 3/4	13																	5.0
4																											
5																											

STANDARD SIGN
M4-8A

WISCONSIN DEPT OF TRANSPORTATION

APPROVED Matthew R Rauch
for State Traffic Engineer

DATE 3/9/11 PLATE NO. M4-8A.2

PROJECT NO: | HWY: | COUNTY: | SHEET NO: 183 | E

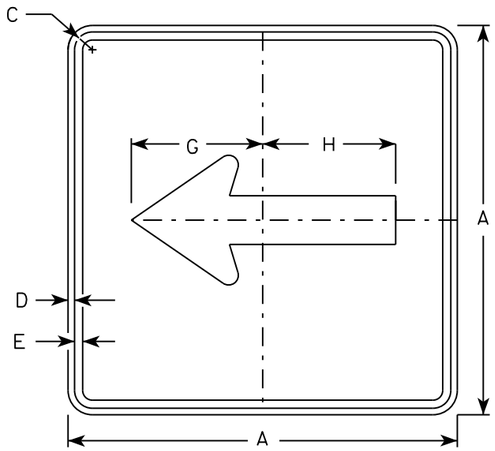

M6-1
MM6-1
MO6-1
MP6-1

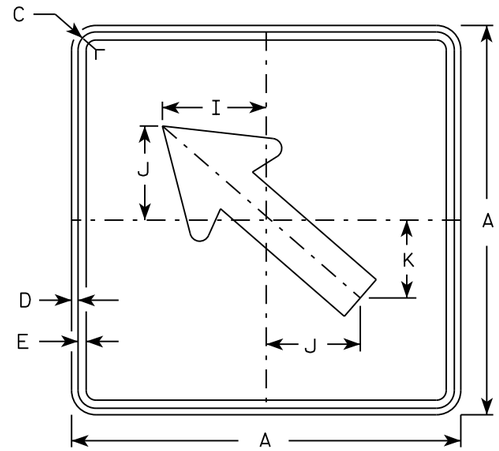

M6-2
MM6-2
MO6-2
MP6-2

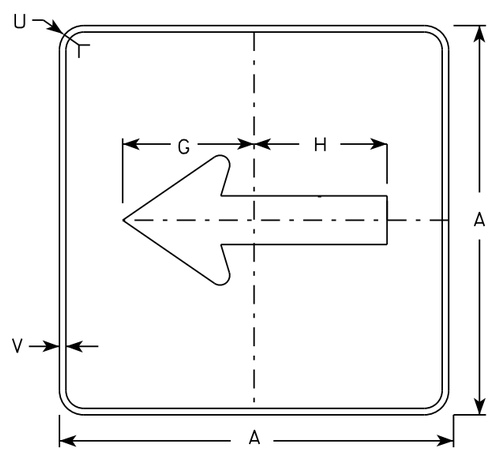

MB6-1
MK6-1
MN6-1
MR6-1

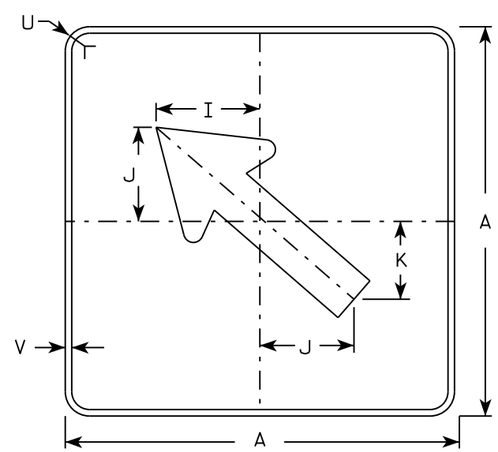

MB6-2
MK6-2
MN6-2
MR6-2

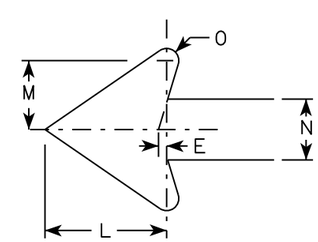

NOTES

1. Signs are Type II - Type H except as Shown
2. Color:
   Background - See note 4
   Message - See note 4
3. Corners may be square or rounded when base material is plywood but borders shall be rounded as shown. When base material is metal, the corners and borders shall be rounded.
4. M6-1 and M6-2 Background - White
   Message - Black
   MB6-1 and MB6-2 Background - Blue
   Message - White
   MK6-1 and MK6-2 Background - Green
   Message - White
   MM6-1 and MM6-2 Background - White
   Message - Green
   MN6-1 and MN6-2 Background - Brown
   Message - White
   MO6-1 and MO6-2 Background - Orange - Type F Reflective
   Message - Black
   MP6-1 and MP6-2 Background - White
   Message - Blue
   MR6-1 and MR6-2 Background - Brown
   Message - Yellow

SIZE	A	B	C	D	E	F	G	H	I	J	K	L	M	N	O	P	Q	R	S	T	U	V	W	X	Y	Z	Area sq. ft.
1																											
2	21		1 1/8	3/8	3/8		7 1/2	7 1/8	5 5/8	5	4 1/4	5 1/4	3	2 5/8	1/2						1 1/2	1/2					3.06
3	30		1 3/8	1/2	5/8		10 3/4	10 1/4	8	7 1/4	6	7 1/2	4 1/4	3 3/4	3/4						1 7/8	1/2					6.25
4	30		1 3/8	1/2	5/8		10 3/4	10 1/4	8	7 1/4	6	7 1/2	4 1/4	3 3/4	3/4						1 7/8	1/2					6.25
5	30		1 3/8	1/2	5/8		10 3/4	10 1/4	8	7 1/4	6	7 1/2	4 1/4	3 3/4	3/4						1 7/8	1/2					6.25

STANDARD SIGN
M6-1 & M6-2
SERIES

WISCONSIN DEPT OF TRANSPORTATION

APPROVED Matthew R Rauch
for State Traffic Engineer

DATE 10/15/15 PLATE 184 M6-1.15

PROJECT NO: | HWY: | COUNTY: | SHEET NO: | E

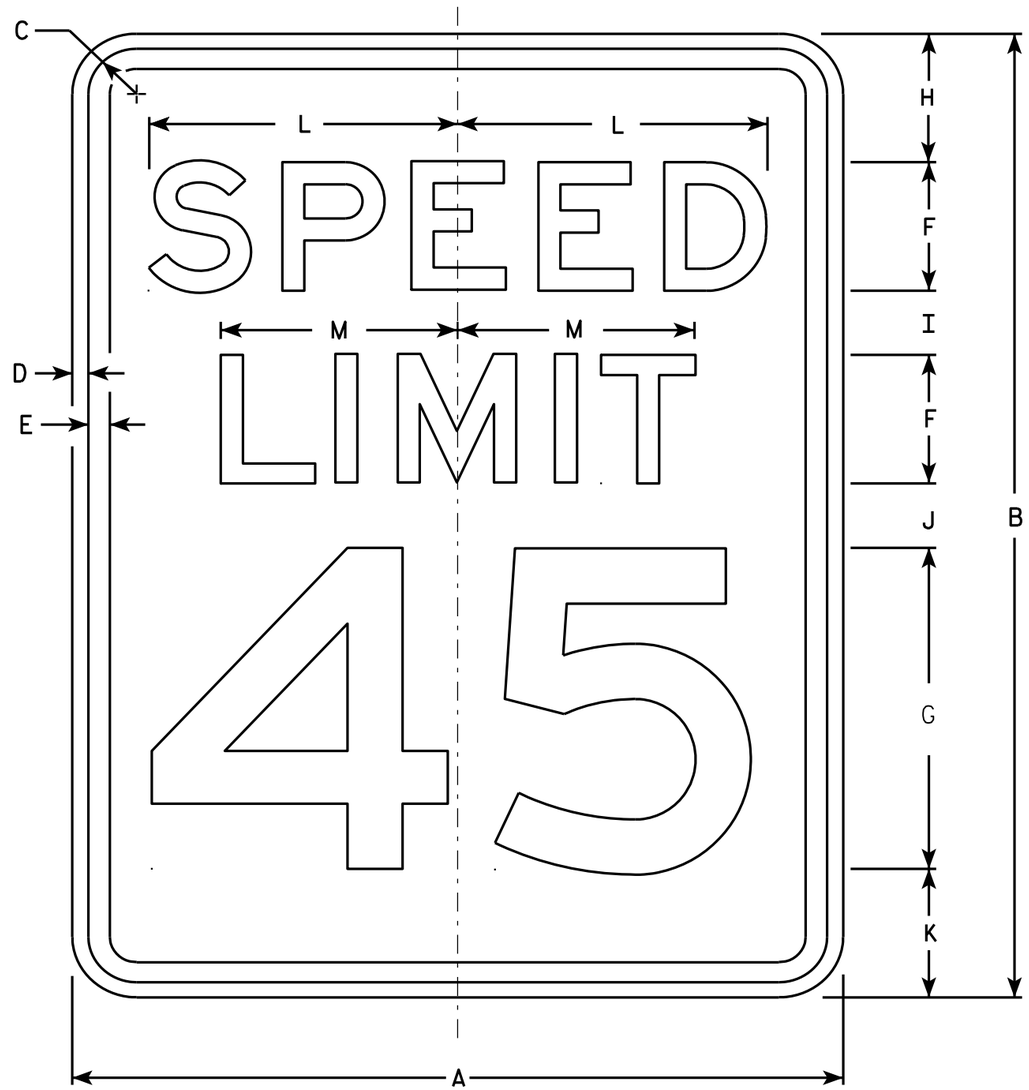

R2-1

NOTES

1. Sign is Type II - Type H Reflective - reference WIS DOT Standard Specification for HIGHWAY and STRUCTURE CONSTRUCTION latest edition.
2. Color:
   Background - White
   Message - Black
3. Message Series - E
4. Corners may be square or rounded when base material is plywood but borders shall be rounded as shown. When base material is metal, the corners and borders shall be rounded.
5. Substitute appropriate numerals and optically adjust spacing to achieve proper balance.

SIZE	A	B	C	D	E	F	G	H	I	J	K	L	M	N	O	P	Q	R	S	T	U	V	W	X	Y	Z	Area sq. ft.
1	18	24	1 1/8	3/8	1/2	3	8	3	2	2	3	7 1/4	5 1/2														3.0
2S	24	30	1 1/8	3/8	1/2	4	10	3	2 1/4	3 3/8	3 3/8	9 5/8	7 3/8														5.0
2M	30	36	1 3/8	1/2	5/8	5	12	5	2 1/2	2 1/2	4	12	9 1/4														7.5
3	36	48	1 3/8	1/2	5/8	6	14	6	5	5	6	14 3/8	11														12.0
4	36	48	1 3/8	1/2	5/8	6	14	6	5	5	6	14 3/8	11														12.0
5	48	60	2 1/4	3/4	1	8	20	6	4 1/2	6 3/4	6 3/4	19 1/4	14 5/8														20.0

STANDARD SIGN
R2-1

WISCONSIN DEPT OF TRANSPORTATION

APPROVED Matthew R Rauch
for State Traffic Engineer

DATE 5/26/10 PLATE NO. R2-1.13

PROJECT NO: | HWY: | COUNTY: | SHEET NO: 185 | E

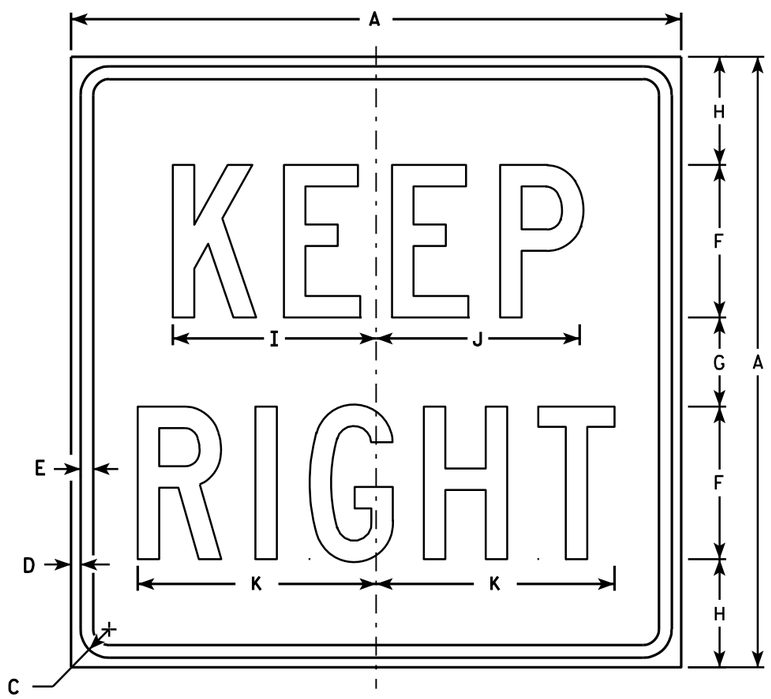

R4-52R

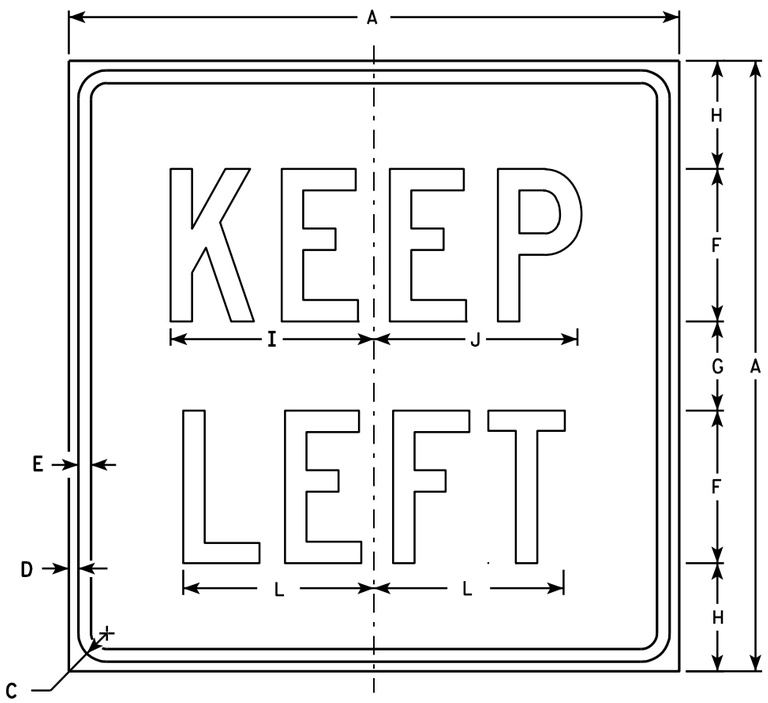

R4-52L

NOTES

1. Sign is Type II - Type H Reflective - reference WIS DOT Standard Specification for HIGHWAY and STRUCTURE CONSTRUCTION latest edition.
2. Color:
   Background - White
   Message - Black
3. Message Series - C
4. Corners may be square or rounded when base material is plywood but borders shall be rounded as shown. When base material is metal, the corners and borders shall be rounded.

SIZE	A	B	C	D	E	F	G	H	I	J	K	L	M	N	O	P	Q	R	S	T	U	V	W	X	Y	Z	Area sq. ft.
1	18		1 1/8	3/8	3/8	5	2	3	6 3/4	6 5/8	7 1/2	6 1/4															2.25
2S	24		1 1/8	3/8	1/2	6	3 1/2	4 1/4	8	8	9 3/8	7 1/2															4.0
2M	24		1 1/8	3/8	1/2	6	3 1/2	4 1/4	8	8	9 3/8	7 1/2															4.0
3	36		1 5/8	5/8	3/4	10	5	5 1/2	13 1/2	13 3/8	14 1/2	12 1/2															9.0
4																											
5																											

STANDARD SIGN
R4-52R & R4-52L

WISCONSIN DEPT OF TRANSPORTATION

APPROVED Matthew R Rauch
for State Traffic Engineer

DATE 3/29/2011 PLATE NO. R4-52.6

PROJECT NO: | HWY: | COUNTY: | SHEET NO: 186 | E

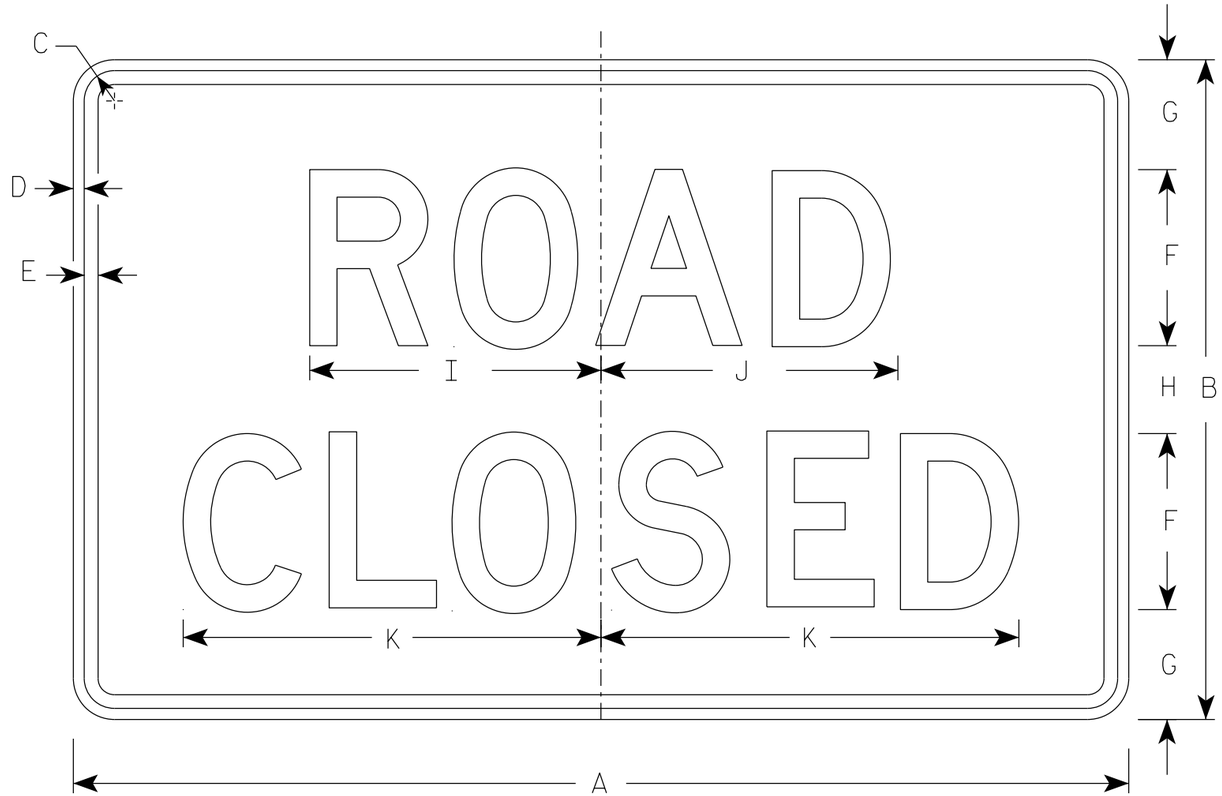

R11-2

NOTES

1. Sign is Type II - Type H Reflective
2. Color:
   Background - White
   Message - Black
3. Message Series - D
4. Corners may be square or rounded when base material is plywood but borders shall be rounded as shown. When base material is metal, the corners and borders shall be rounded.
5. Modify the message as required.

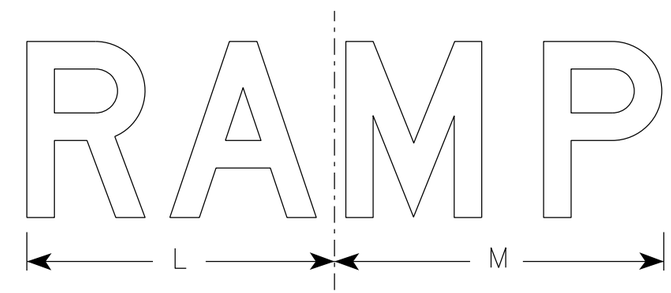

R11-2R

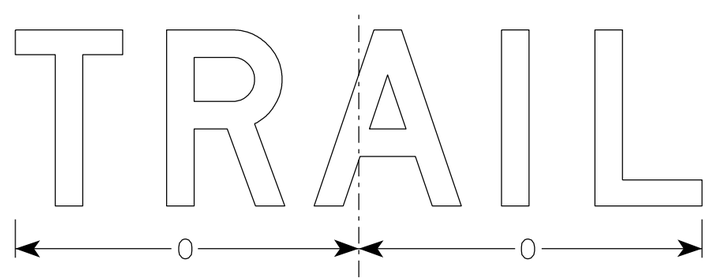

R11-2T

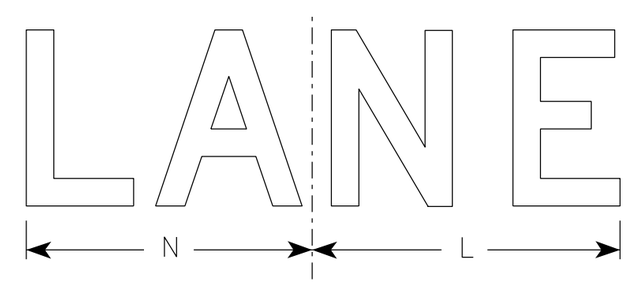

R11-2L

SIZE	A	B	C	D	E	F	G	H	I	J	K	L	M	N	O	P	Q	R	S	T	U	V	W	X	Y	Z	Area sq. ft.
1																											
2S	48	30	1 3/8	1/2	5/8	8	5	4	13 1/4	13 1/2	19	14	15	13	15 5/8												10.0
2M	48	30	1 3/8	1/2	5/8	8	5	4	13 1/4	13 1/2	19	14	15	13	15 5/8												10.0
3	48	30	1 3/8	1/2	5/8	8	5	4	13 1/4	13 1/2	19	14	15	13	15 5/8												10.0
4	48	30	1 3/8	1/2	5/8	8	5	4	13 1/4	13 1/2	19	14	15	13	15 5/8												10.0
5	48	30	1 3/8	1/2	5/8	8	5	4	13 1/4	13 1/2	19	14	15	13	15 5/8												10.0

STANDARD SIGN
R11-2

WISCONSIN DEPT OF TRANSPORTATION

APPROVED Matthew R Rauch
for State Traffic Engineer

DATE 3/29/2021 PLATE NO. R11-2.11

PROJECT NO: | HWY: | COUNTY: | SHEET NO: E

NOTES

1. Sign is Type II - Type F Reflective
2. Color:
   Background - Orange
   Message - Black
3. Message Series - C
4. Corners may be square or rounded when base material is plywood but borders shall be rounded as shown. When base material is metal, the corners and borders shall be rounded.

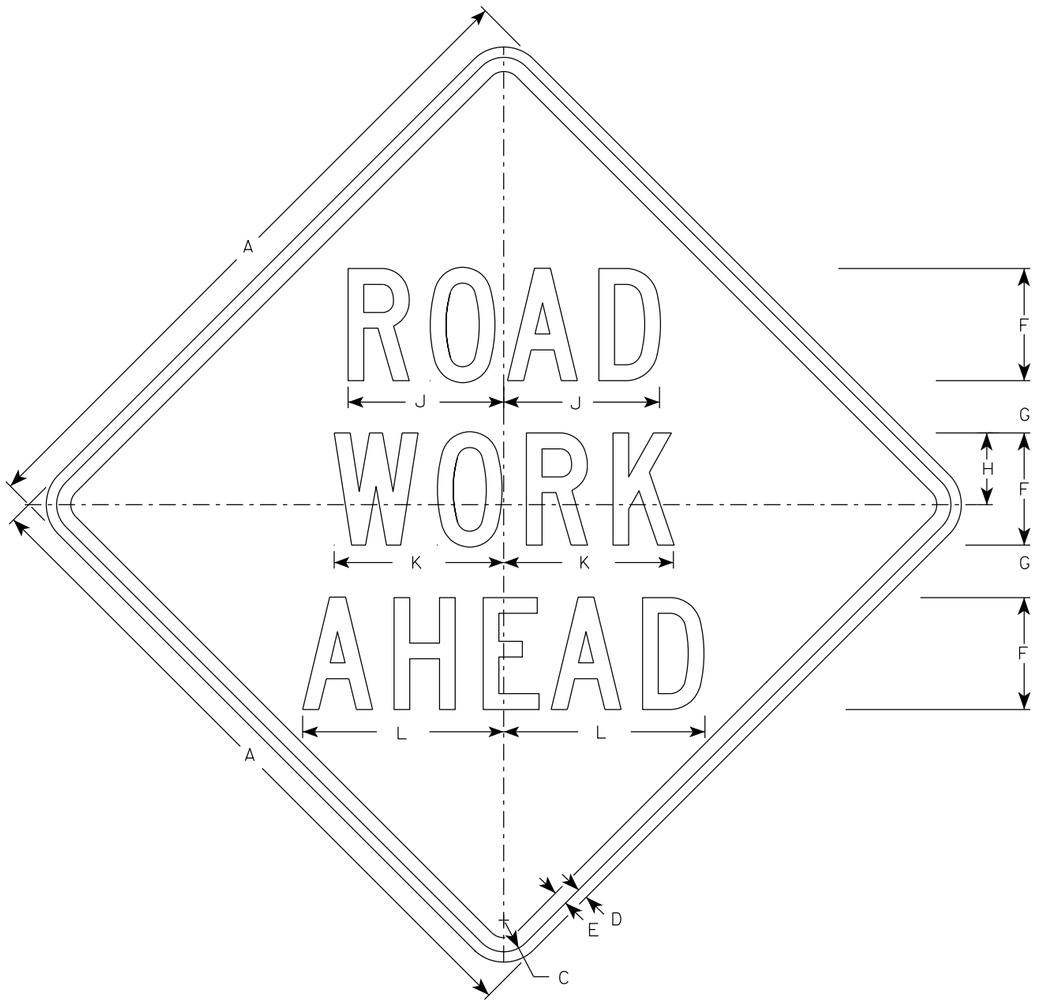

W20-1A

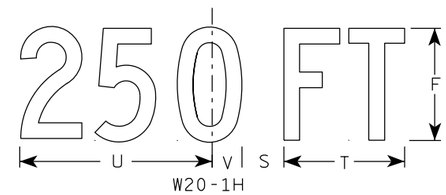

W20-1H

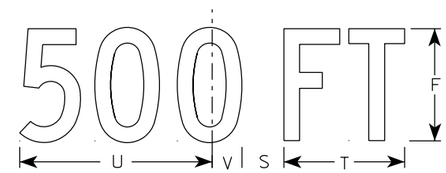

W20-1D

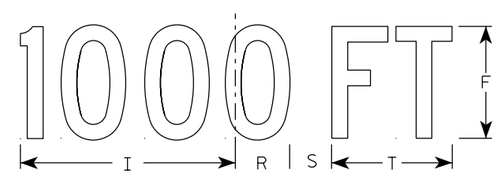

W20-1C

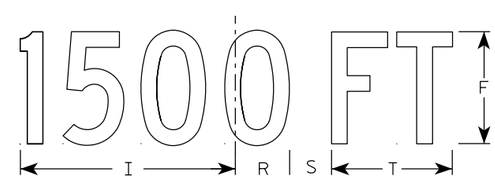

W20-1B

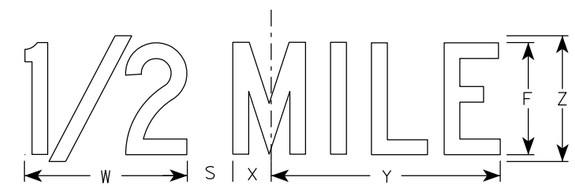

W20-1G

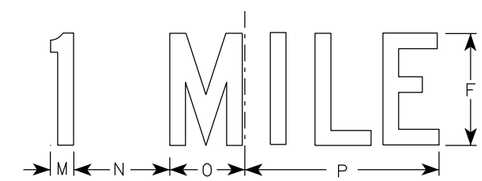

W20-1F

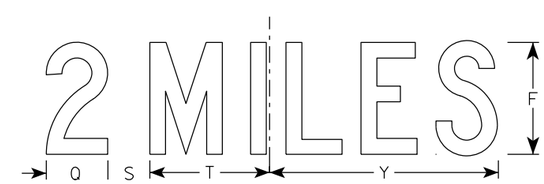

W20-1E

SIZE	A	B	C	D	E	F	G	H	I	J	K	L	M	N	O	P	Q	R	S	T	U	V	W	X	Y	Z	Area sq. ft.
1	36		1 5/8	5/8	3/4	5	2 5/8	3 1/4	10 1/8	7	7 5/8	8 7/8	1 1/8	4 1/2	3 1/2	9	3 1/4	2 1/2	2 1/4	5 5/8	9	1 3/8	8	1 3/4	10 3/4	6	9.0
2S	48		2 1/4	3/4	1	8	3 3/4	5 1/8	15 3/8	11 1/8	12 1/8	14 3/8	1 5/8	6 7/8	5 3/8	13 7/8	4 3/8	3 7/8	3	8 5/8	13 3/4	2 1/8	11 7/8	2 3/4	16 3/8	9	16.0
2M	48		2 1/4	3/4	1	8	3 3/4	5 1/8	15 3/8	11 1/8	12 1/8	14 3/8	1 5/8	6 7/8	5 3/8	13 7/8	4 3/8	3 7/8	3	8 5/8	13 3/4	2 1/8	11 7/8	2 3/4	16 3/8	9	16.0
3	48		2 1/4	3/4	1	8	3 3/4	5 1/8	15 3/8	11 1/8	12 1/8	14 3/8	1 5/8	6 7/8	5 3/8	13 7/8	4 3/8	3 7/8	3	8 5/8	13 3/4	2 1/8	11 7/8	2 3/4	16 3/8	9	16.0
4	48		2 1/4	3/4	1	8	3 3/4	5 1/8	15 3/8	11 1/8	12 1/8	14 3/8	1 5/8	6 7/8	5 3/8	13 7/8	4 3/8	3 7/8	3	8 5/8	13 3/4	2 1/8	11 7/8	2 3/4	16 3/8	9	16.0
5	48		2 1/4	3/4	1	8	3 3/4	5 1/8	15 3/8	11 1/8	12 1/8	14 3/8	1 5/8	6 7/8	5 3/8	13 7/8	4 3/8	3 7/8	3	8 5/8	13 3/4	2 1/8	11 7/8	2 3/4	16 3/8	9	16.0

STANDARD SIGN
W20-1A, B, C, D, E, F, G & H

WISCONSIN DEPT OF TRANSPORTATION

APPROVED Matthew R Rauch
For State Traffic Engineer
DATE 3/25/2020 PLATE NO. W20-1.11

PROJECT NO:

SHEET NO: 188 E

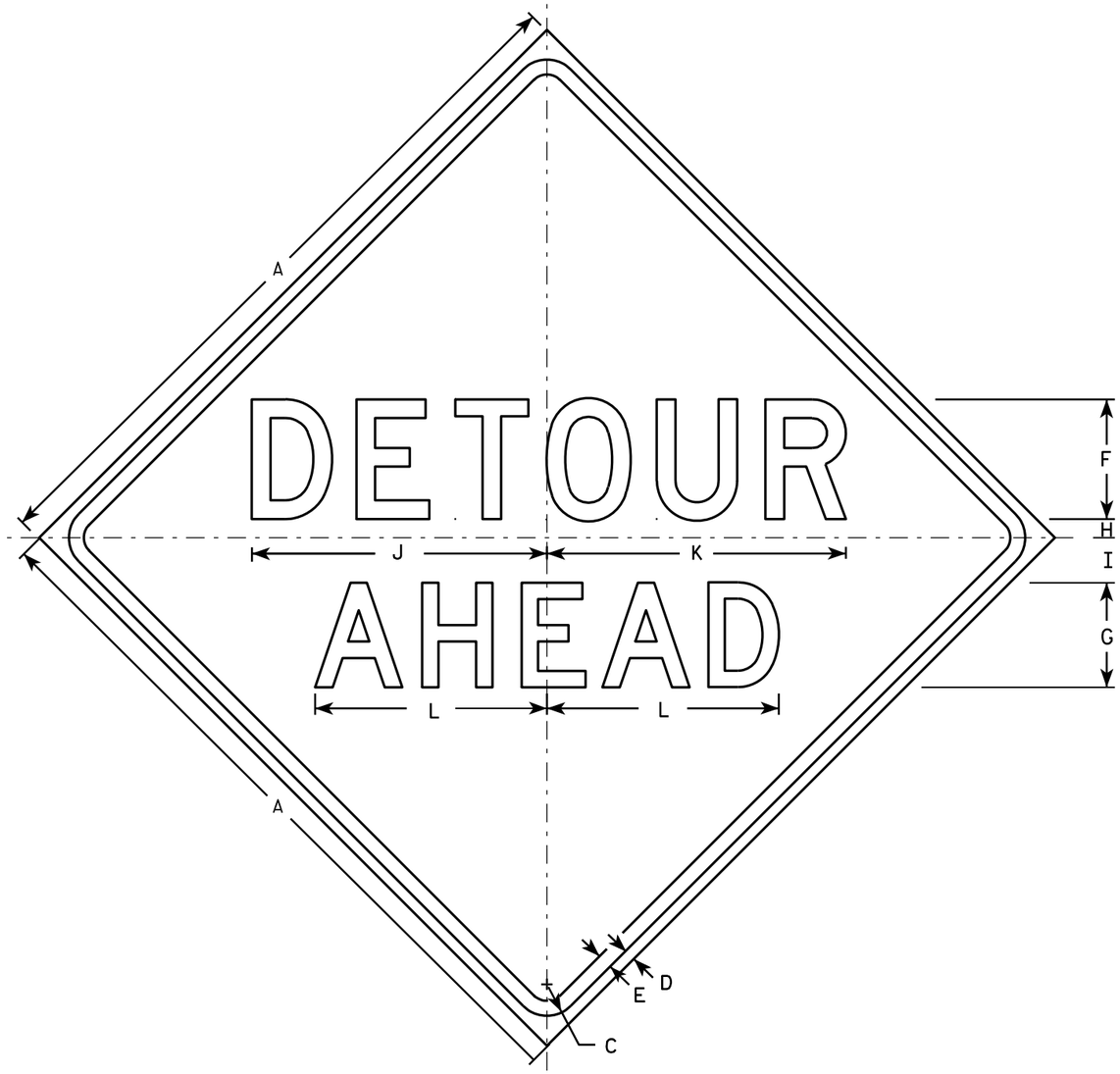

W20-2A

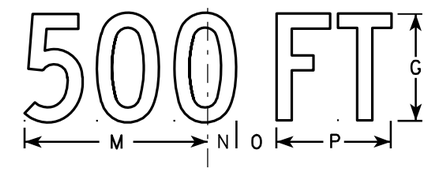

W20-2D

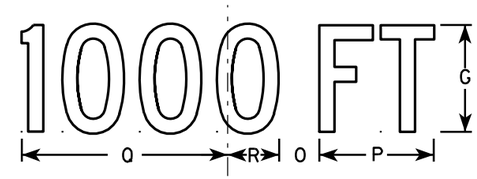

W20-2C

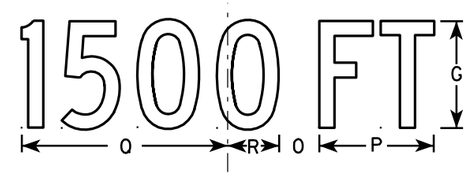

W20-2B

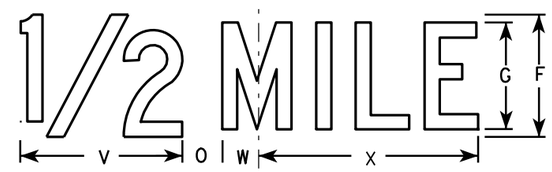

W20-2G

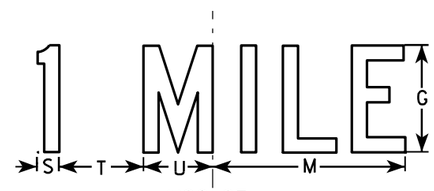

W20-2F

NOTES

1. Sign is Type II - Type F Reflective - reference WIS DOT Standard Specification for HIGHWAY and STRUCTURE CONSTRUCTION latest edition.
2. Color:
   Background - Orange
   Message - Black
3. Message Series - See note 5
4. Corners may be square or rounded when base material is plywood but borders shall be rounded as shown. When base material is metal, the corners and borders shall be rounded.
5. Line 1 is Series D.
   Line 2 is Series D for AHEAD and Series C for all other distances.

SIZE	A	B	C	D	E	F	G	H	I	J	K	L	M	N	O	P	Q	R	S	T	U	V	W	X	Y	Z	Area sq. ft.
1	36		1 5/8	5/8	3/4	6	5	1	2 1/4	14 3/4	15	11 5/8	9	1 3/8	1 7/8	5 5/8	10 1/8	2 1/2	1 1/8	4 1/2	3 1/2	8	1 3/4	10 3/4			9.0
2S	48		2 1/4	3/4	1	8	7	1 1/4	3	19 3/4	20	15 1/2	12	1 7/8	2 5/8	7 1/2	13 1/2	3 3/8	1 1/2	6	4 5/8	10 5/8	2 3/8	14 3/8			16.0
2M	48		2 1/4	3/4	1	8	7	1 1/4	3	19 3/4	20	15 1/2	12	1 7/8	2 5/8	7 1/2	13 1/2	3 3/8	1 1/2	6	4 5/8	10 5/8	2 3/8	14 3/8			16.0
3	48		2 1/4	3/4	1	8	7	1 1/4	3	19 3/4	20	15 1/2	12	1 7/8	2 5/8	7 1/2	13 1/2	3 3/8	1 1/2	6	4 5/8	10 5/8	2 3/8	14 3/8			16.0
4	48		2 1/4	3/4	1	8	7	1 1/4	3	19 3/4	20	15 1/2	12	1 7/8	2 5/8	7 1/2	13 1/2	3 3/8	1 1/2	6	4 5/8	10 5/8	2 3/8	14 3/8			16.0
5	48		2 1/4	3/4	1	8	7	1 1/4	3	19 3/4	20	15 1/2	12	1 7/8	2 5/8	7 1/2	13 1/2	3 3/8	1 1/2	6	4 5/8	10 5/8	2 3/8	14 3/8			16.0

STANDARD SIGN
W20-2A,B,C,D,F & G

WISCONSIN DEPT OF TRANSPORTATION

APPROVED Matthew R Rauch
for State Traffic Engineer
DATE 3/18/11 PLATE NO. W20-2.6

7

7

PROJECT NO: | HWY: | COUNTY: | SHEET NO: 189 | E

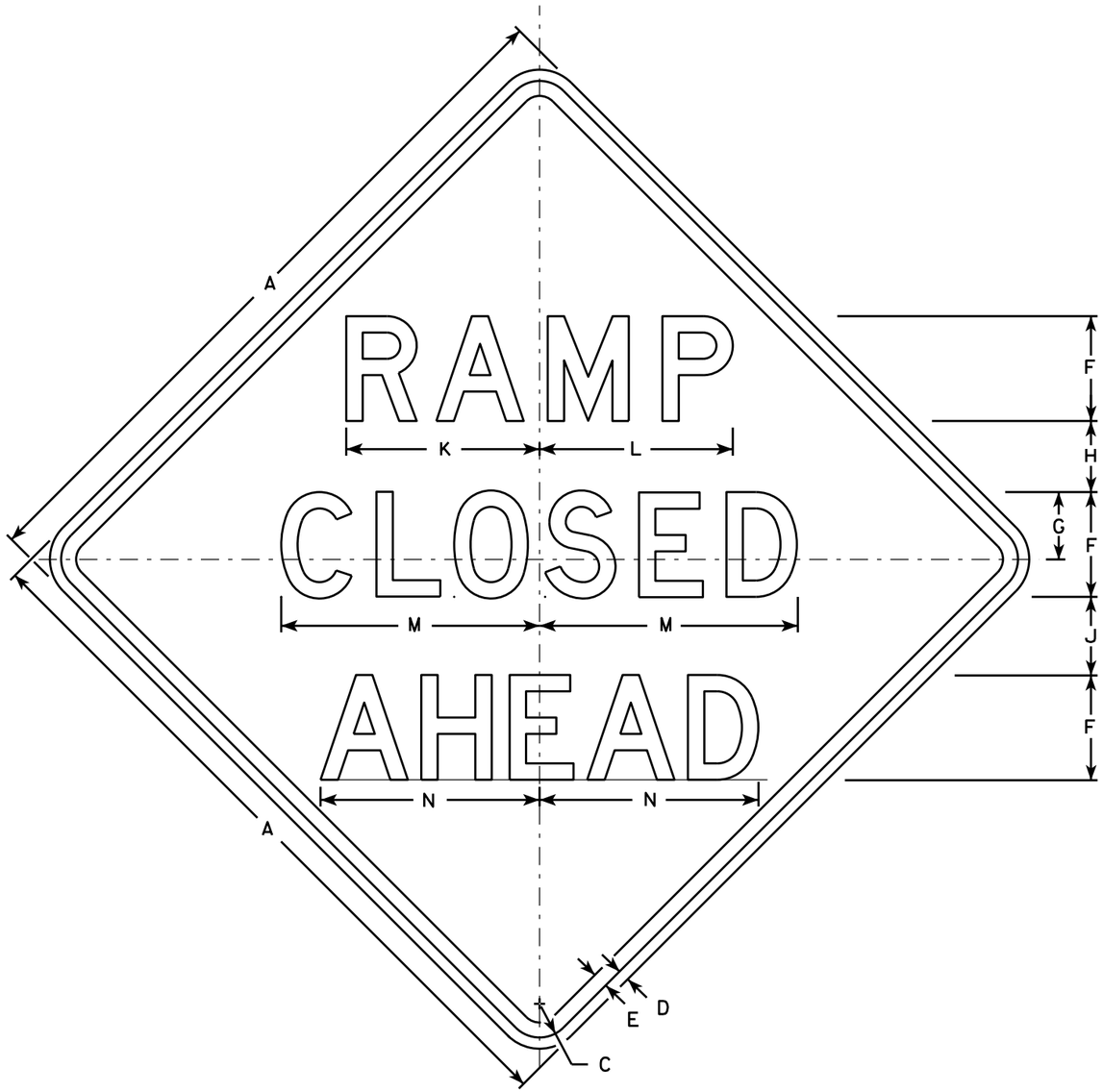

W20-53A

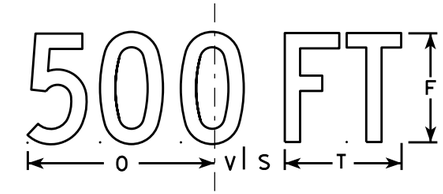

W20-53D

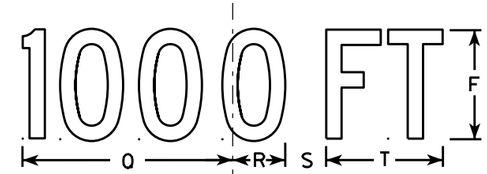

W20-53C

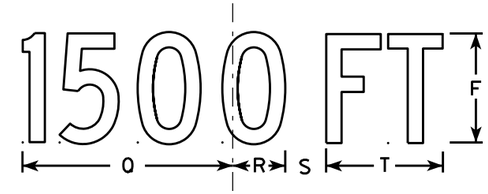

W20-53B

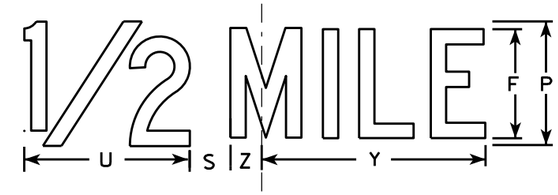

W20-53G

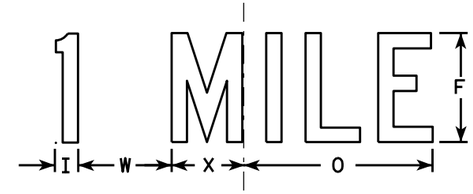

W20-53F

NOTES

1. Sign is Type II - Type F Reflective - reference WIS DOT Standard Specification for HIGHWAY and STRUCTURE CONSTRUCTION latest edition.
2. Color:
   Background - Orange
   Message - Black
3. Message Series - see note 5
4. Corners may be square or rounded when base material is plywood but borders shall be rounded as shown. When base material is metal, the corners and borders shall be rounded.
5. Lines 1 and 2 are Series D.
   Line 3 is Series D for AHEAD and Series C for all other distances.

SIZE	A	B	C	D	E	F	G	H	I	J	K	L	M	N	O	P	Q	R	S	T	U	V	W	X	Y	Z	Area sq. ft.
1	36		1 5/8	5/8	3/4	5	3 3/8	3 1/2	1 1/8	4	9 1/4	9 1/4	12 1/2	11	9	6	10 1/8	2 1/2	1 7/8	5 5/8	8	1 3/8	4 1/2	3 1/2	10 3/4	1 3/4	9.0
2S	48		2 1/4	3/4	1	7	4 1/2	4 3/4	1 1/2	5 1/4	12 7/8	12 7/8	17 1/4	14 5/8	12	8	13 1/2	3 3/8	2 5/8	7 1/2	10 5/8	1 7/8	6	4 5/8	14 3/8	2 3/8	16.0
2M	48		2 1/4	3/4	1	7	4 1/2	4 3/4	1 1/2	5 1/4	12 7/8	12 7/8	17 1/4	14 5/8	12	8	13 1/2	3 3/8	2 5/8	7 1/2	10 5/8	1 7/8	6	4 5/8	14 3/8	2 3/8	16.0
3	48		2 1/4	3/4	1	7	4 1/2	4 3/4	1 1/2	5 1/4	12 7/8	12 7/8	17 1/4	14 5/8	12	8	13 1/2	3 3/8	2 5/8	7 1/2	10 5/8	1 7/8	6	4 5/8	14 3/8	2 3/8	16.0
4	48		2 1/4	3/4	1	7	4 1/2	4 3/4	1 1/2	5 1/4	12 7/8	12 7/8	17 1/4	14 5/8	12	8	13 1/2	3 3/8	2 5/8	7 1/2	10 5/8	1 7/8	6	4 5/8	14 3/8	2 3/8	16.0
5	48		2 1/4	3/4	1	7	4 1/2	4 3/4	1 1/2	5 1/4	12 7/8	12 7/8	17 1/4	14 5/8	12	8	13 1/2	3 3/8	2 5/8	7 1/2	10 5/8	1 7/8	6	4 5/8	14 3/8	2 3/8	16.0

STANDARD SIGN
W20-53A,B,C,D,F,G

WISCONSIN DEPT OF TRANSPORTATION

APPROVED Matthew R Rauch
for State Traffic Engineer
DATE 5/27/15 PLATE NO. W20-53.1

PROJECT NO: | HWY: | COUNTY: | SHEET NO: | E

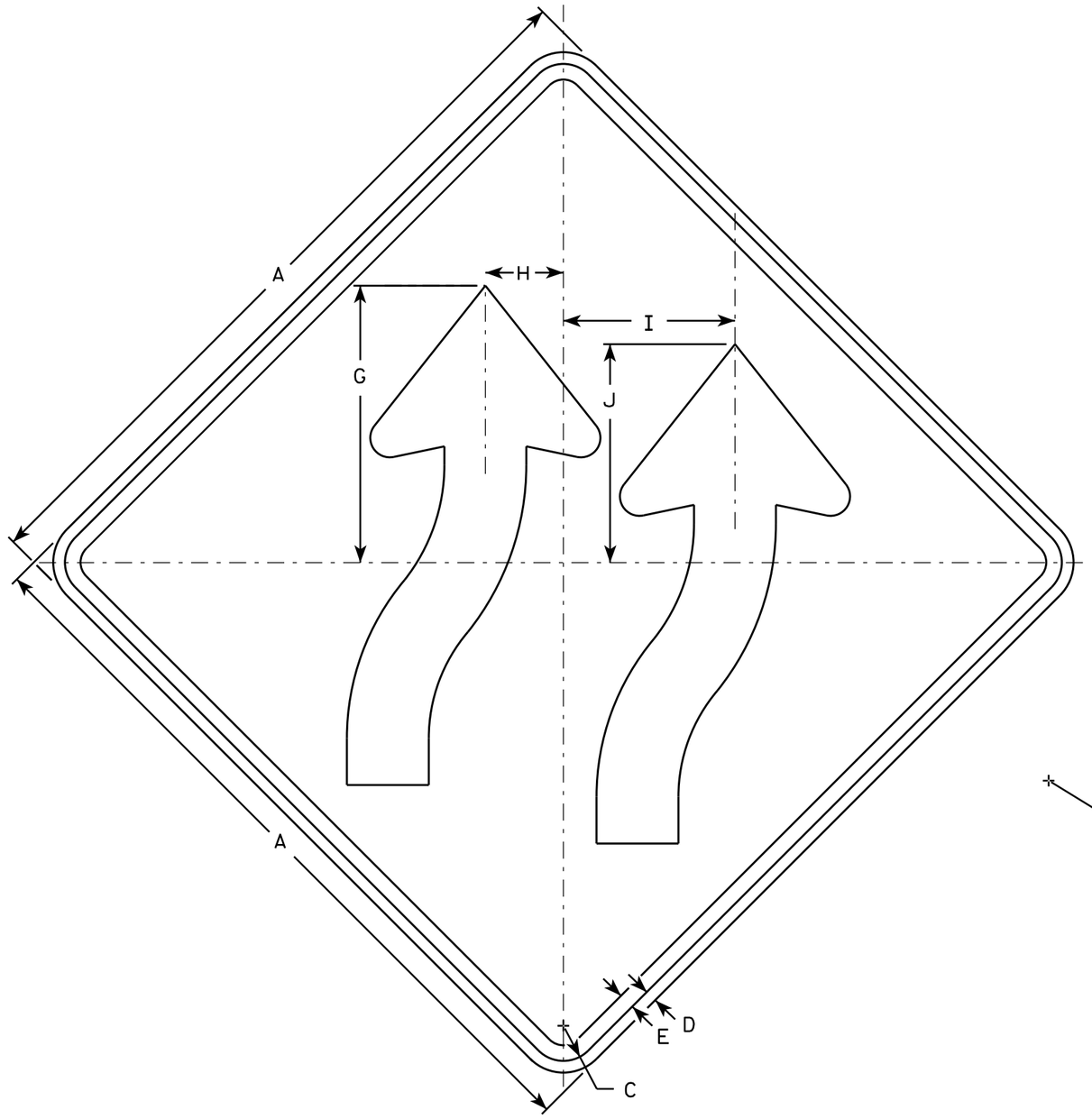

W01-4bR

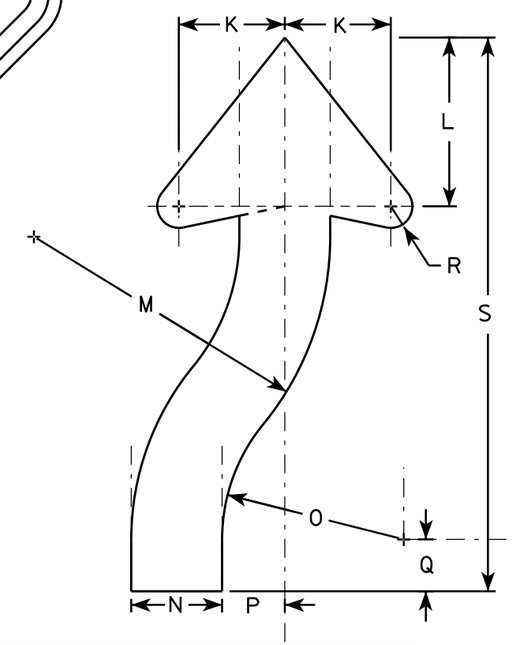

NOTES

1. Sign is Type II - Type F Reflective - reference WIS DOT Standard Specification for HIGHWAY and STRUCTURE CONSTRUCTION latest edition.
2. Color:
   Background - Orange
   Message - Black
3. Corners may be square or rounded when base material is plywood but borders shall be rounded as shown. When base material is metal, the corners and borders shall be rounded.
4. W01-4bL is the same as W014-bR exept arrows are reversed along the vertical centerline

SIZE	A	B	C	D	E	F	G	H	I	J	K	L	M	N	O	P	Q	R	S	T	U	V	W	X	Y	Z	Area sq. ft.
1	36		1 5/8	5/8	3/4		13 3/8	3 3/4	8 1/4	10 1/2	4 5/8	7 3/8	12 7/8	3 7/8	7 7/8	2 3/4	2 1/4	7/8	24								9.0
2S	48		2 1/4	3/4	1		17 3/4	5	11	14	6 1/8	9 3/4	17 1/8	5 1/4	10 1/2	3 5/8	3	1 1/4	32								16.0
2M	48		2 1/4	3/4	1		17 3/4	5	11	14	6 1/8	9 3/4	17 1/8	5 1/4	10 1/2	3 5/8	3	1 1/4	32								16.0
3	48		2 1/4	3/4	1		17 3/4	5	11	14	6 1/8	9 3/4	17 1/8	5 1/4	10 1/2	3 5/8	3	1 1/4	32								16.0
4	48		2 1/4	3/4	1		17 3/4	5	11	14	6 1/8	9 3/4	17 1/8	5 1/4	10 1/2	3 5/8	3	1 1/4	32								16.0
5	48		2 1/4	3/4	1		17 3/4	5	11	14	6 1/8	9 3/4	17 1/8	5 1/4	10 1/2	3 5/8	3	1 1/4	32								16.0

STANDARD SIGN
W01-4b

WISCONSIN DEPT OF TRANSPORTATION

APPROVED Matthew R Rauch
for State Traffic Engineer

DATE 11/18/13 PLATE NO. W01-4b.1

PROJECT NO: | HWY: | COUNTY: | SHEET NO: E

NOTES

1. Sign is Type II - Type F Reflective - reference WIS DOT Standard Specification for HIGHWAY and STRUCTURE CONSTRUCTION latest edition.
2. Color:
   Background - Orange
   Message - Black
3. Corners may be square or rounded when base material is plywood but borders shall be rounded as shown. When base material is metal, the corners and borders shall be rounded.

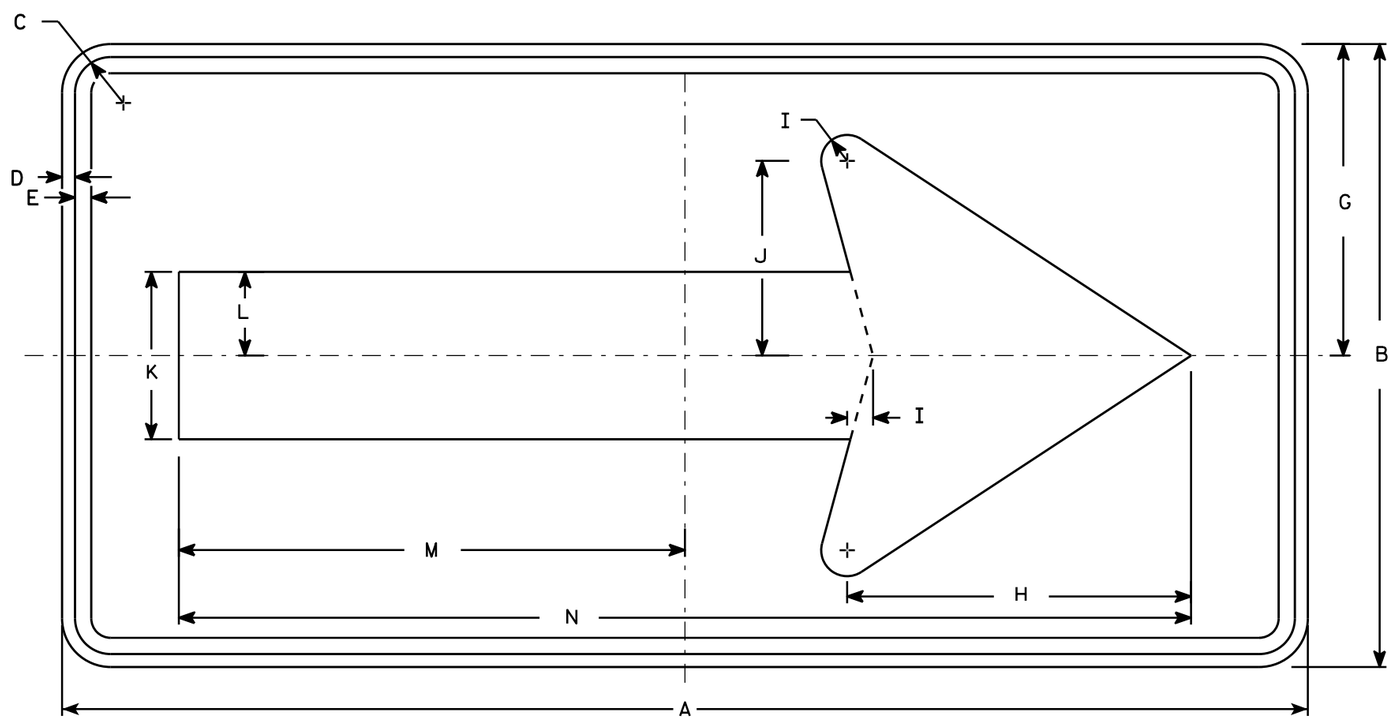

W01-6

SIZE	A	B	C	D	E	F	G	H	I	J	K	L	M	N	O	P	Q	R	S	T	U	V	W	X	Y	Z	Area sq. ft.
1																											
2S	48	24	1 3/8	1/2	5/8		12	13 1/4	1	7 1/2	6 1/2	3 1/4	19 1/2	39													8.0
2M	48	24	1 3/8	1/2	5/8		12	13 1/4	1	7 1/2	6 1/2	3 1/4	19 1/2	39													8.0
3	60	30	1 3/8	1/2	5/8		15	16 1/4	1 1/4	9 1/4	8	4	24 3/8	48 3/4													12.5
4	60	30	1 3/8	1/2	5/8		15	16 1/4	1 1/4	9 1/4	8	4	24 3/8	48 3/4													12.5
5	60	30	1 3/8	1/2	5/8		15	16 1/4	1 1/4	9 1/4	8	4	24 3/8	48 3/4													12.5

STANDARD SIGN
W01-6

WISCONSIN DEPT OF TRANSPORTATION

APPROVED Matthew R Rauch
for State Traffic Engineer

DATE 11/18/13 PLATE NO. W01-6.1

PROJECT NO: | HWY: | COUNTY: | SHEET NO: | E

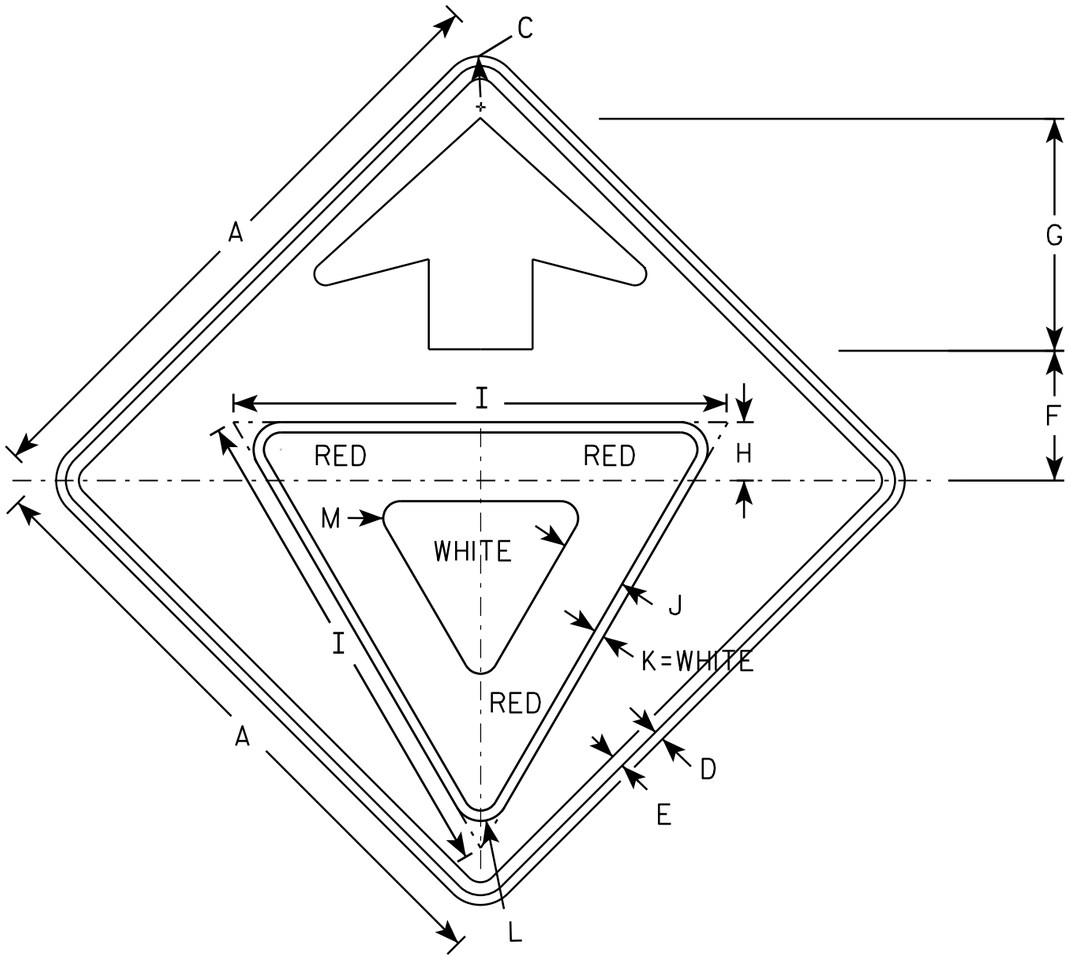

W03-2

NOTES

1. All Signs Type II - Type F Reflective - reference WIS DOT Standard Specification for HIGHWAY and STRUCTURE CONSTRUCTION latest edition.
2. Color:
   Background - ORANGE
   Arrow & Border - BLACK
   Yield Symbol - WHITE BORDER ON RED BACKGROUND

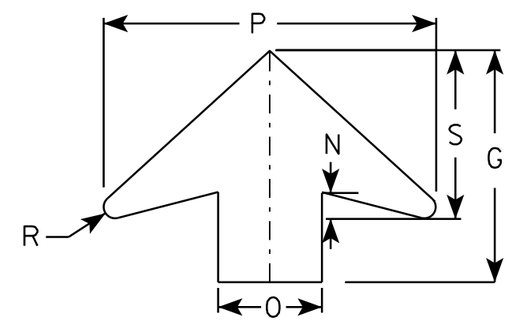

ARROW DETAIL

SIZE	A	B	C	D	E	F	G	H	I	J	K	L	M	N	O	P	Q	R	S	T	U	V	W	X	Y	Z	Area sq. ft.
1	36		1 5/8	5/8	3/4	7 1/2	13 1/2	3 3/8	28	3 3/4	5/8	1 1/2	1	1 5/8	6	19 1/4		5/8	9 3/4								9.0
2S	48		2 1/4	3/4	1	10	17 7/8	4 1/2	38	5	3/4	2 1/8	1 3/8	2	8	25 5/8		7/8	13								16.0
2M	48		2 1/4	3/4	1	10	17 7/8	4 1/2	38	5	3/4	2 1/8	1 3/8	2	8	25 5/8		7/8	13								16.0
3	48		2 1/4	3/4	1	10	17 7/8	4 1/2	38	5	3/4	2 1/8	1 3/8	2	8	25 5/8		7/8	13								16.0
4	48		2 1/4	3/4	1	10	17 7/8	4 1/2	38	5	3/4	2 1/8	1 3/8	2	8	25 5/8		7/8	13								16.0
5	48		2 1/4	3/4	1	10	17 7/8	4 1/2	38	5	3/4	2 1/8	1 3/8	2	8	25 5/8		7/8	13								16.0

STANDARD SIGN
W03-2

WISCONSIN DEPT OF TRANSPORTATION

APPROVED Matthew R Rauch
for State Traffic Engineer

DATE 11/20/13 PLATE NO. W03-2.1

PROJECT NO:

SHEET NO: E

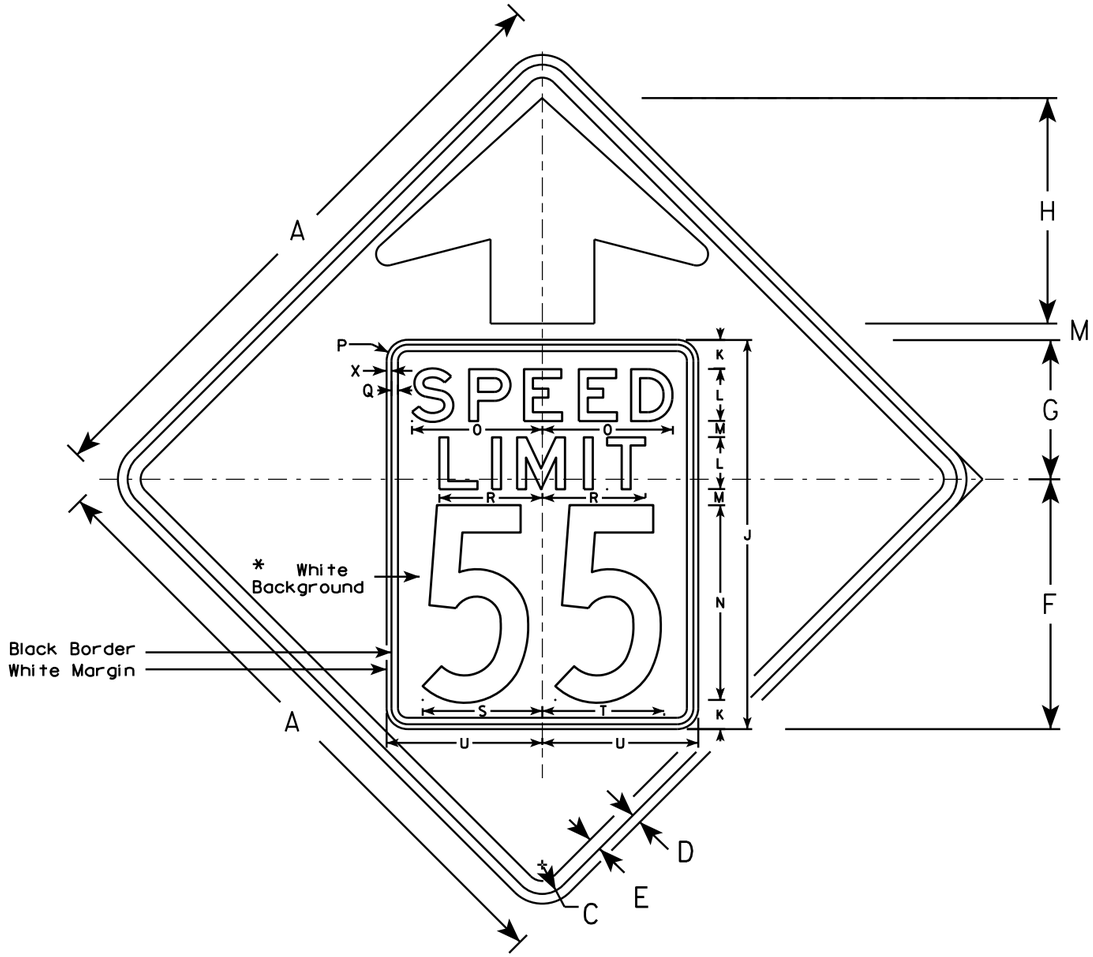

W03-5

NOTES

1. Sign is Type II - Type F Reflective - reference WIS DOT Standard Specification for HIGHWAY and STRUCTURE CONSTRUCTION latest edition.
2. Color: *
   Background - ORANGE*
   Message - BLACK
3. Message Series - C for numbers Series E for wording
4. Substitute appropriate numerals and optically adjust spacing to achieve proper balance

*Speed Limit Sign shall have a White Background

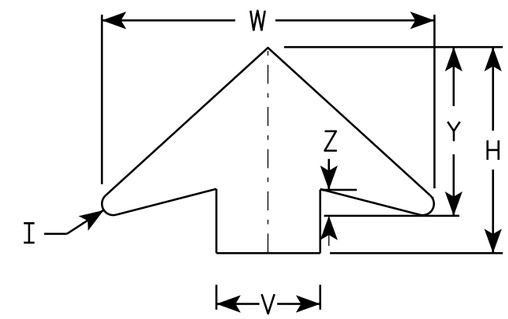

ARROW DETAIL

SIZE	A	B	C	D	E	F	G	H	I	J	K	L	M	N	O	P	Q	R	S	T	U	V	W	X	Y	Z	Area sq. ft.
1	36		1 5/8	5/8	3/4	14 1/2	9 1/2	11 1/2	5/8	24	2	3	1	12	7 1/8	1 1/2	3/8	5 3/4	7 1/4	7 1/8	9	6	19 1/4	3/8	9 3/4	1 5/8	9.0
2S	48		2 1/4	3/4	1	19 1/4	10 3/4	17 3/8	7/8	30	2 1/4	4	1 1/4	15	10	1 5/8	1/2	8	9 1/4	9 3/8	12	8	25 5/8	3/8	13	2	16.0
2M	48		2 1/4	3/4	1	19 1/4	10 3/4	17 3/8	7/8	30	2 1/4	4	1 1/4	15	10	1 5/8	1/2	8	9 1/4	9 3/8	12	8	25 5/8	3/8	13	2	16.0
3	48		2 1/4	3/4	1	19 1/4	10 3/4	17 3/8	7/8	30	2 1/4	4	1 1/4	15	10	1 5/8	1/2	8	9 1/4	9 3/8	12	8	25 5/8	3/8	13	2	16.0
4	48		2 1/4	3/4	1	19 1/4	10 3/4	17 3/8	7/8	30	2 1/4	4	1 1/4	15	10	1 5/8	1/2	8	9 1/4	9 3/8	12	8	25 5/8	3/8	13	2	16.0
5	48		2 1/4	3/4	1	19 1/4	10 3/4	17 3/8	7/8	30	2 1/4	4	1 1/4	15	10	1 5/8	1/2	8	9 1/4	9 3/8	12	8	25 5/8	3/8	13	2	16.0

STANDARD SIGN
W03-5

WISCONSIN DEPT OF TRANSPORTATION

APPROVED Matthew R Rauch
for State Traffic Engineer

DATE 11/20/13 PLATE W03-5.1

PROJECT NO: SHEET NO: E

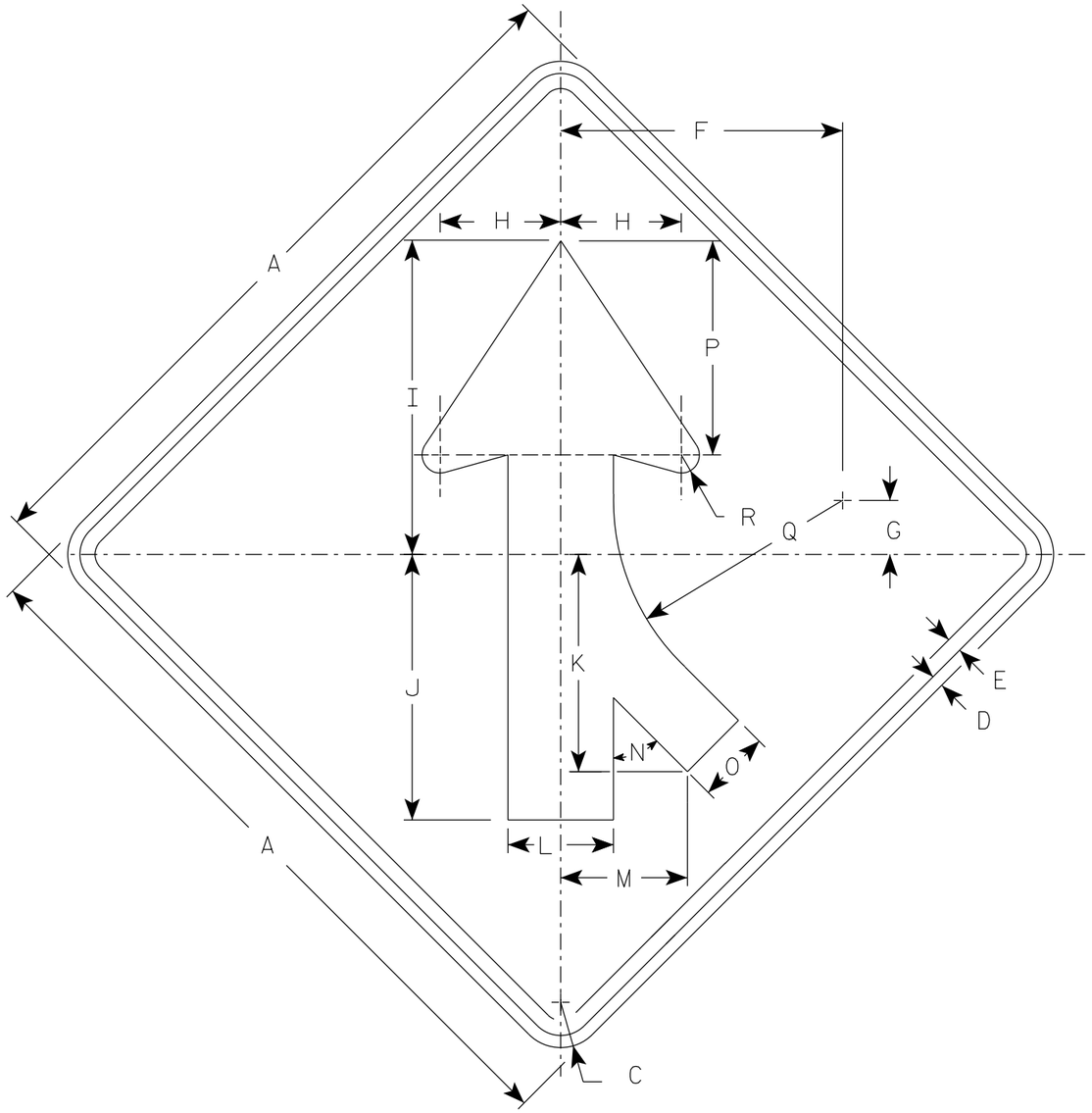

W04-1R

NOTES

1. Sign is Type II - Type F Reflective
2. Color:
   Background - Orange
   Message - Black
3. Corners may be square or rounded when base material is plywood but borders shall be rounded as shown. When base material is metal, the corners and borders shall be rounded.
4. W04-1L is the same as W04-1R except the arrow is reversed along the vertical centerline.

SIZE	A	B	C	D	E	F	G	H	I	J	K	L	M	N	O	P	Q	R	S	T	U	V	W	X	Y	Z	Area sq. ft.
1	36		1 5/8	5/8	3/4	14	2 3/4	6	15 3/4	13 1/4	10 1/4	5 1/4	6 3/8	45°	3 5/8	10 5/8	11 3/8	7/8									9.0
2S	48		2 1/4	3/4	1	18 3/4	3 5/8	8	20 1/2	17 1/2	14 3/8	7	8 3/8	45°	4 3/4	14 1/4	15 1/4	1 1/4									16.0
2M	48		2 1/4	3/4	1	18 3/4	3 5/8	8	20 1/2	17 1/2	14 3/8	7	8 3/8	45°	4 3/4	14 1/4	15 1/4	1 1/4									16.0
3	48		2 1/4	3/4	1	18 3/4	3 5/8	8	20 1/2	17 1/2	14 3/8	7	8 3/8	45°	4 3/4	14 1/4	15 1/4	1 1/4									16.0
4	48		2 1/4	3/4	1	18 3/4	3 5/8	8	20 1/2	17 1/2	14 3/8	7	8 3/8	45°	4 3/4	14 1/4	15 1/4	1 1/4									16.0
5	48		2 1/4	3/4	1	18 3/4	3 5/8	8	20 1/2	17 1/2	14 3/8	7	8 3/8	45°	4 3/4	14 1/4	15 1/4	1 1/4									16.0

STANDARD SIGN
W04-1

WISCONSIN DEPT OF TRANSPORTATION

APPROVED Matthew R Rauch
For State Traffic Engineer

DATE 3/31/2021 PLATE NO. W04-1.2

PROJECT NO: | HWY: | COUNTY: | SHEET NO: | E

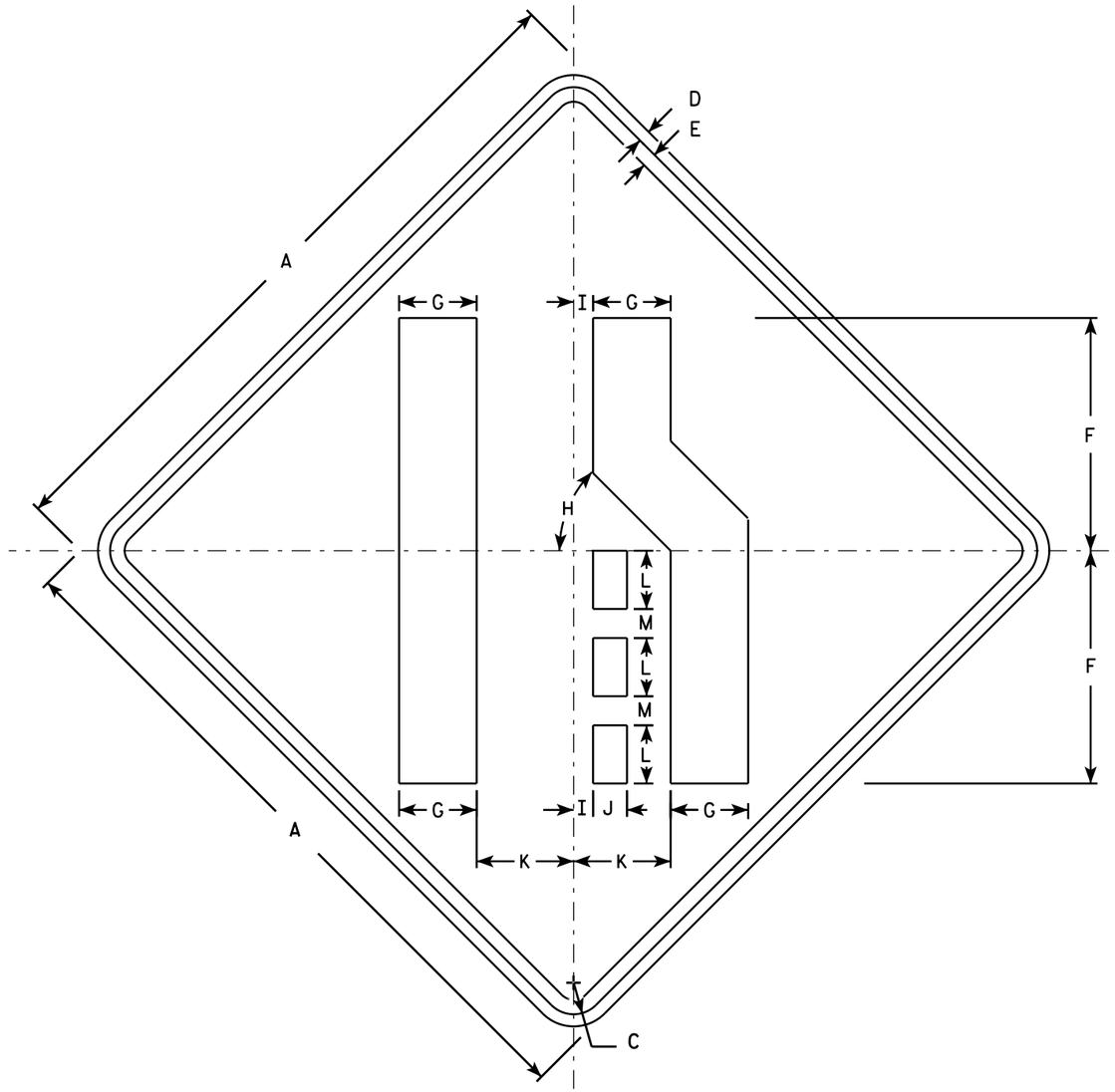

W04-2R

NOTES

1. Sign is Type II - Type F Reflective - reference WIS DOT Standard Specification for HIGHWAY and STRUCTURE CONSTRUCTION latest edition.
2. Color:
   Background - Orange
   Message - Black
3. Corners may be square or rounded when base material is plywood but borders shall be rounded as shown. When base material is metal, the corners and borders shall be rounded.
4. W04-2L is the same as W04-2R except the symbol is reversed along the vertical centerline.

SIZE	A	B	C	D	E	F	G	H	I	J	K	L	M	N	O	P	Q	R	S	T	U	V	W	X	Y	Z	Area sq. ft.
1	36		1 5/8	5/8	3/4	12	4	45°	1	1 3/4	5	3	1 1/2														9.0
2S	48		2 1/4	3/4	1	16	5 3/8	45°	1 1/4	2 3/8	6 3/4	4	2														16.0
2M	48		2 1/4	3/4	1	16	5 3/8	45°	1 1/4	2 3/8	6 3/4	4	2														16.0
3	48		2 1/4	3/4	1	16	5 3/8	45°	1 1/4	2 3/8	6 3/4	4	2														16.0
4	48		2 1/4	3/4	1	16	5 3/8	45°	1 1/4	2 3/8	6 3/4	4	2														16.0
5	48		2 1/4	3/4	1	16	5 3/8	45°	1 1/4	2 3/8	6 3/4	4	2														16.0

STANDARD SIGN
W04-2

WISCONSIN DEPT OF TRANSPORTATION

APPROVED Matthew R Rauch
for State Traffic Engineer

DATE 11/20/13 PLATE W04-2.1

PROJECT NO:

SHEET NO: E

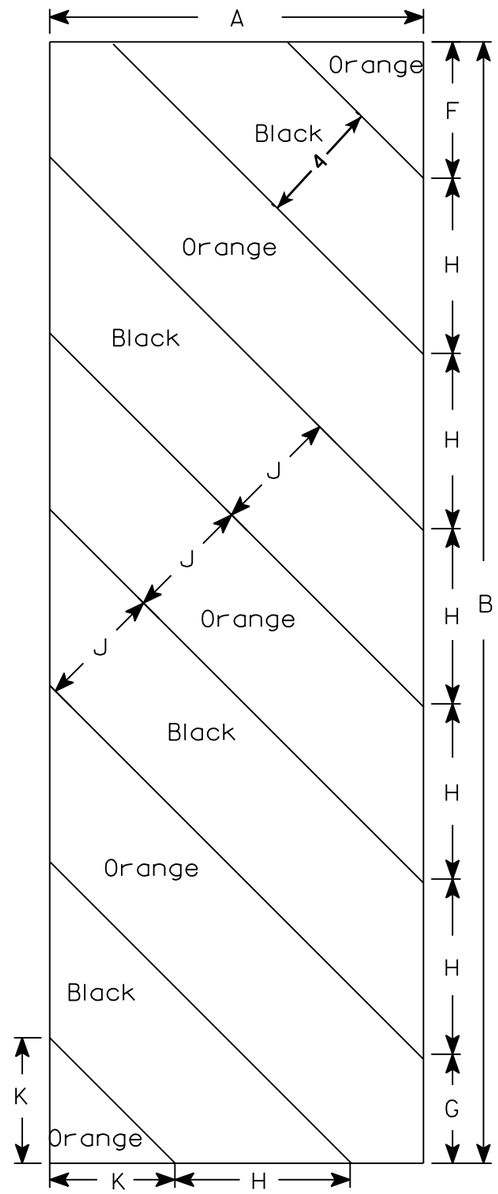

W05-52L

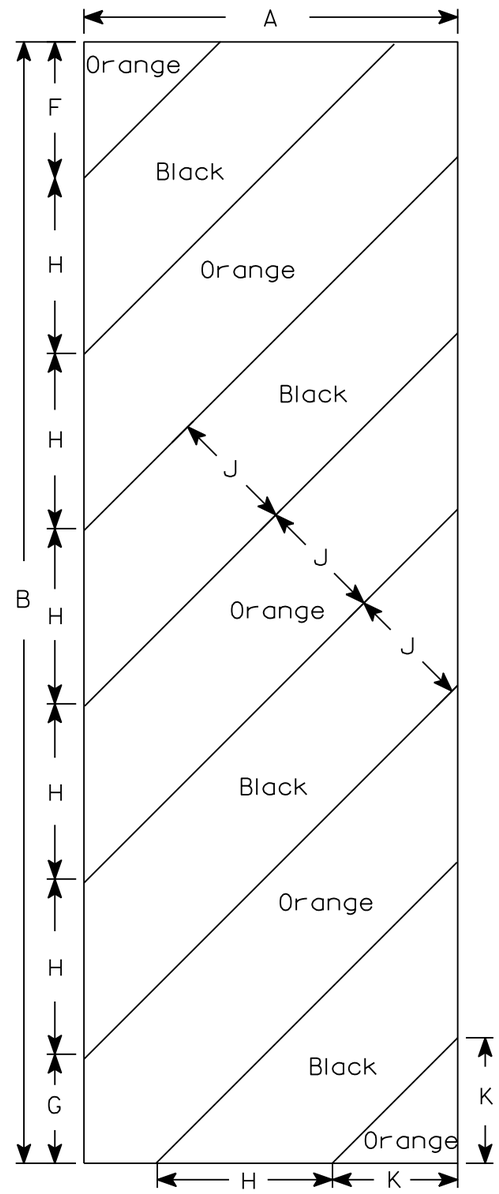

W05-52R

NOTES

1. Sign is Type II - Type F Reflective - reference WIS DOT Standard Specification for HIGHWAY and STRUCTURE CONSTRUCTION latest edition.
2. Color:
   Background - Orange
   Message - Black
3. Corners may be square or rounded when base material is plywood but borders shall be rounded as shown. When base material is metal, the corners and borders shall be rounded.
4. Alternate colors of stripes as shown.

SIZE	A	B	C	D	E	F	G	H	I	J	K	L	M	N	O	P	Q	R	S	T	U	V	W	X	Y	Z	Area sq. ft.
1																											
2S	12	36				4 3/8	3 1/2	5 5/8	45°	4	4																3.0
2M	12	36				4 3/8	3 1/2	5 5/8	45°	4	4																3.0
3	18	54				6	5 1/2	8 1/2	45°	6	6 9/16																6.75
4																											
5																											

STANDARD SIGN

W05-52L & W05-52R

WISCONSIN DEPT OF TRANSPORTATION

APPROVED Matthew R Rauch
for State Traffic Engineer

DATE 11/20/13 PLATE No. W05-52.1

PROJECT NO: | HWY: | COUNTY: | SHEET NO: E

NOTES

1. Sign is Type II - Type F Reflective
2. Color:
   Background - Orange
   Message - Black
3. Message Series - Lines 1 and 2 are series D
   Line 3 is series C
4. Corners may be square or rounded when base material is plywood but borders shall be rounded as shown. When base material is metal, the corners and borders shall be rounded.

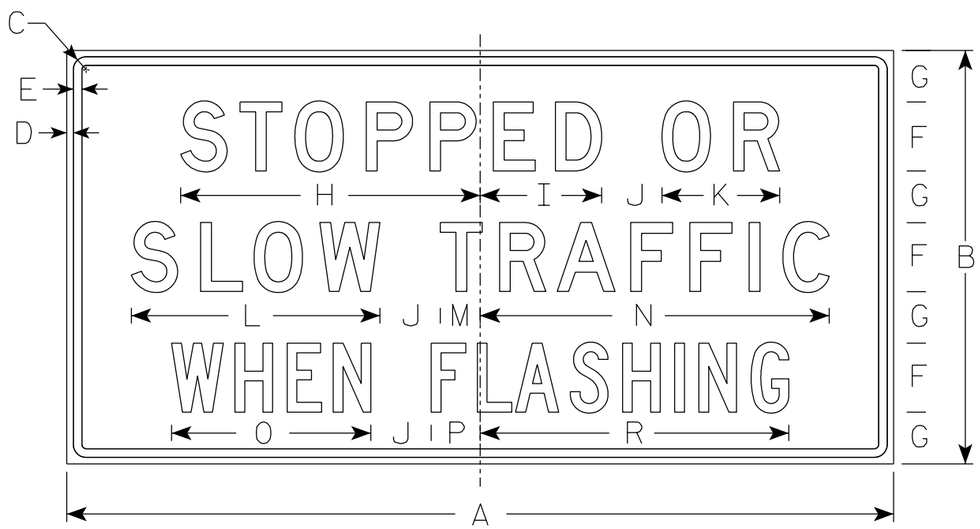

W08-76

SIZE	A	B	C	D	E	F	G	H	I	J	K	L	M	N	O	P	Q	R	S	T	U	V	W	X	Y	Z	Area sq. ft.
1																											
2																											
3																											
4	96	48	2 1/4	3/4	1	8	6	34 3/4	14 1/8	7	13 5/8	28 7/8	4 5/8	40 1/2	23 1/8	5 3/4		35 7/8									32.0
5																											

STANDARD SIGN
W08-76

WISCONSIN DEPT OF TRANSPORTATION

APPROVED Matthew R Rauch
For State Traffic Engineer

DATE 4/8/2021 PLATE NO. W08-76.2

PROJECT NO: | HWY: | COUNTY: | SHEET NO: 198 | E

(#) INDICATES WING NUMBER

STATE PROJECT NUMBER

1120-63-71

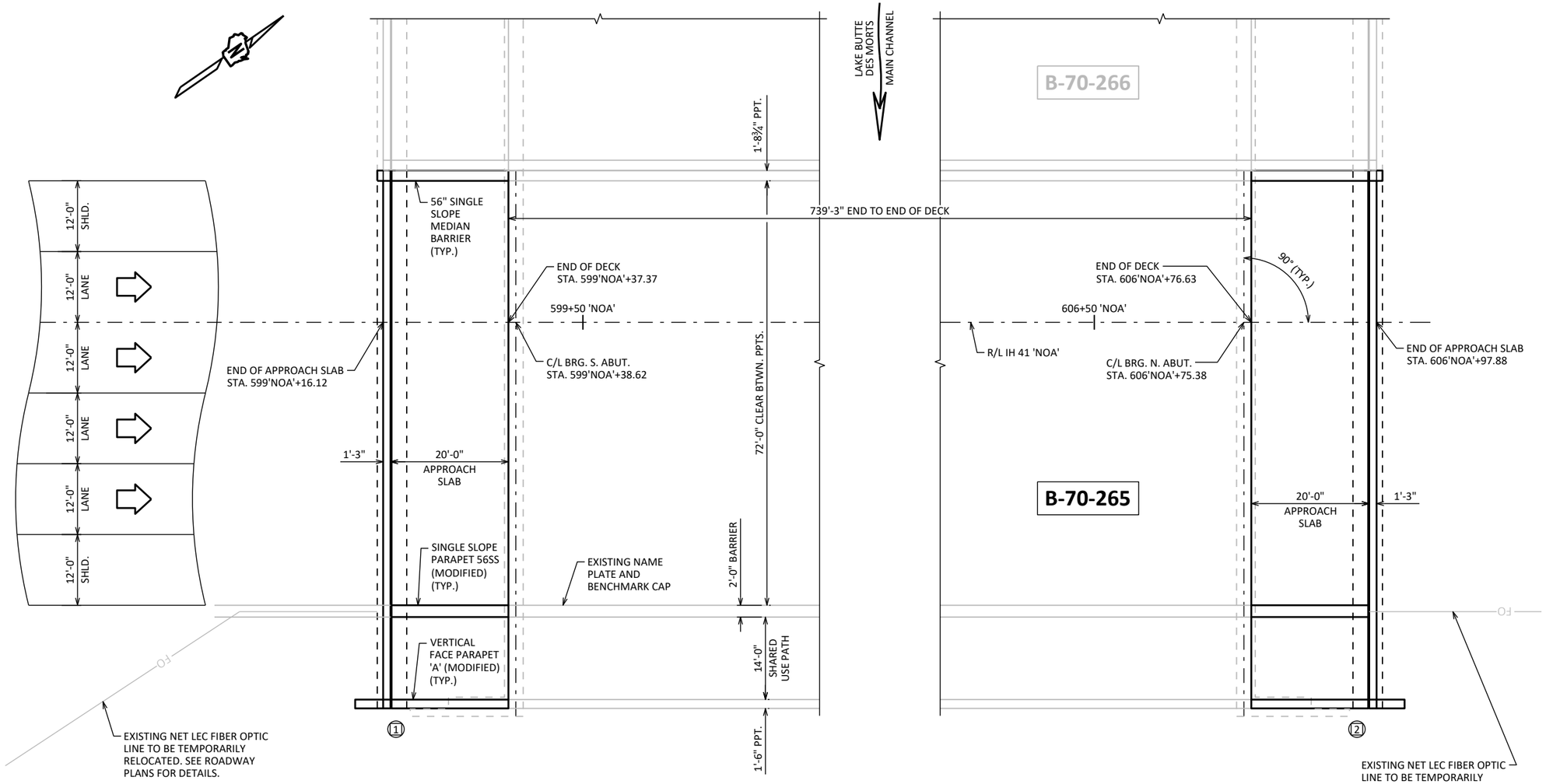

PLAN

6 SPAN - 54W" PRESTRESSED CONCRETE GIRDER
STRUCTURAL APPROACH SLAB REPLACEMENT

STRUCTURE DESIGN CONTACTS:

MICAH BROOKS	608-266-5080
KYLE BUSCH	608-267-0465

DESIGN DATA

LIVE LOAD:

TAKEN FROM HSIS, 06/16/2023
DESIGN LOADING: HL-93
INVENTORY RATING: RF = 1.30
OPERATING RATING: RF = 1.69
WISCONSIN STANDARD PERMIT VEHICLE (WIS-SPV): 250 (KIPS)

MATERIAL PROPERTIES:

CONCRETE MASONRY (HPC):
SUPERSTRUCTURE &
STRUCTURAL APPROACH SLABS (INCL. FOOTINGS) ——— f'_c = 4,000 PSI

BAR STEEL REINFORCEMENT
GRADE 60 ——— f_y = 60,000 PSI

FOUNDATION DATA

APPROACH SLAB FOOTINGS TO BE SUPPORTED ON HP 10 X 42 STEEL PILING DRIVEN TO A REQUIRED DRIVING RESISTANCE OF 70 TONS ** PER PILE AS DETERMINED BY THE MODIFIED GATES DYNAMIC FORMULA.
ESTIMATED 50-'0" LONG AT BOTH APPROACHES.

**THE FACTORED AXIAL RESISTANCE OF PILES IN COMPRESSION USED FOR DESIGN IS THE REQUIRED DRIVING RESISTANCE MULTIPLIED BY A RESISTANCE FACTOR OF 0.5 USING MODIFIED GATES TO DETERMINE PILE CAPACITY.

TRAFFIC DATA

IH 41:
ADT = 94,900 (2044)
R.D.S. = 70 MPH

LIST OF DRAWINGS:

NO.	DATE	REVISION	BY

WISCONSIN DEPARTMENT OF TRANSPORTATION
BUREAU OF STRUCTURES
ACCEPTED KHB 10/27/23
CHIEF STRUCTURES DESIGN ENGINEER DATE

STRUCTURE B-70-265

IH 41 NB OVER LAKE BUTTE DES MORTS

COUNTY WINNEBAGO | CITY OSHKOSH

DESIGN SPEC. AASHTO LRFD BRIDGE DESIGN SPECIFICATION

DESIGNED BY	DESIGNED CK'D	DRAWN BY	PLANS CK'D
MWB	DLM	MWB	DLM

GENERAL PLAN

SHEET 1 OF 12
199

SCALE = 20

I.D. 1120-63-00A DATE: OCT. 2023

8

8

STATE PROJECT NUMBER

1120-63-71

GENERAL NOTES

DRAWINGS SHALL NOT BE SCALED.

BAR STEEL REINFORCEMENT SHALL BE EMBEDDED 2" CLEAR UNLESS OTHERWISE SHOWN OR NOTED.

THE FIRST OR FIRST TWO DIGITS OF THE BAR MARK SIGNIFIES THE BAR SIZE.

BEVEL EXPOSED EDGES OF CONCRETE ¾" UNLESS OTHERWISE NOTED.

THE UPPER LIMITS OF "EXCAVATION FOR STRUCTURES BRIDGES B-70-265" SHALL BE THE EXISTING GROUNDLINE.

PROTECTIVE SURFACE TREATMENT TO BE APPLIED TO THE ENTIRE EXPOSED TOP OF APPROACH SLAB SURFACES AND TO THE VERTICAL AND HORIZONTAL SURFACES OF THE PAVING NOTCHES AT ABUTMENT DIAPHRAGMS.

PIGMENTED SURFACE SEALER TO BE APPLIED TO THE FRONT FACE AND THE TOP OF THE PARAPETS. DO NOT APPLY PIGMENTED SURFACE SEALER TO AREAS WITH CONCRETE STAINING.

DIMENSIONS, STATIONING, AND ELEVATIONS SHOWN ARE BASED ON THE ORIGINAL STRUCTURE PLANS.

SALVAGE EXISTING ORNAMENTAL PROTECTIVE SCREENING AND REPLACE IN EXISTING CONFIGURATION DURING CONSTRUCTION OF NEW PARAPETS UNDER BID ITEM "REMOVING AND RESETTING ORNAMENTAL PROTECTIVE SCREENING".

DEFINE ALL AREAS OF CONCRETE REMOVAL WITH A 1" SAWCUT.

HPC MASONRY STRUCTURES SHALL BE USED FOR PARAPETS, STRUCTURAL APPROACH SLABS, AND STRUCTURAL APPROACH SLAB FOOTINGS.

"LONGITUDINAL GROOVING BRIDGE DECK" SHALL BE APPLIED TO THE TRAFFIC LANES AND SHOULDERS ON THE STRUCTURAL APPROACH SLABS. DO NOT APPLY TO SHARED USE PATH.

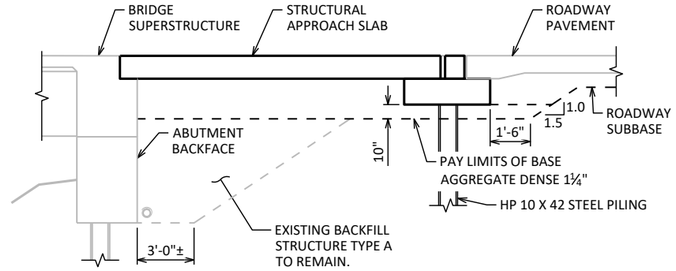

TYPICAL SECTION THRU ABUTMENT

ALL EXCAVATION REQUIRED TO PLACE BASE AGGREGATE AND STRUCTURAL APPROACH SLAB AS SHOWN ARE INCLUDED IN THE BID ITEM "EXCAVATION FOR STRUCTURES BRIDGES". RESTORE ANY STRUCTURE BACKFILL DISTURBED DURING EXCAVATION WITH BACKFILL STRUCTURE TYPE A, INCLUDED WITH BID ITEM "EXCAVATION FOR STRUCTURES BRIDGES".

TOTAL ESTIMATED QUANTITIES

BID ITEM NUMBER	BID ITEMS	UNIT	S. STRUCT. APP. SLAB	N. STRUCT. APP. SLAB	TOTALS
203.0220	REMOVING STRUCTURE (B-70-265)	EACH	---	---	1
206.1001	EXCAVATION FOR STRUCTURES BRIDGES (B-70-265)	EACH	---	---	1
305.0120	BASE AGGREGATE DENSE 1 1/4-INCH	TON	305	305	610
465.0125	ASPHALTIC SURFACE TEMPORARY	TON	9	9	18
502.3101	EXPANSION DEVICE	LF	93	93	186
502.3200	PROTECTIVE SURFACE TREATMENT	SY	228	228	456
502.3210	PIGMENTED SURFACE SEALER	SY	31	31	62
505.0600	BAR STEEL REINFORCEMENT HS COATED STRUCTURES	LB	20,330	20,330	40,660
505.0905	BAR COUPLERS NO. 5	EACH	21	21	42
505.0908	BAR COUPLERS NO. 8	EACH	16	16	32
517.1010.S	CONCRETE STAINING B-70-265	SF	338	338	676
517.1050.S	ARCHITECTURAL SURFACE TREATMENT B-70-265	SF	148	148	296
550.1100	PILING STEEL HP 10-INCH X 42 LB	LF	650	650	1,300
652.0125	CONDUIT RIGID METALLIC 2-INCH	LF	66	66	132
SPV.0035	HPC MASONRY STRUCTURES	CY	143.8	143.8	288
SPV.0090	REMOVING AND RESETTING ORNAMENTAL PROTECTIVE SCREENING	LF	22	22	44
SPV.0165	LONGITUDINAL GROOVING BRIDGE DECK	SF	1,440	1,440	2,880
	NON-BID ITEMS				
	FILLER	SIZE	---	---	½", ¾", 1½"

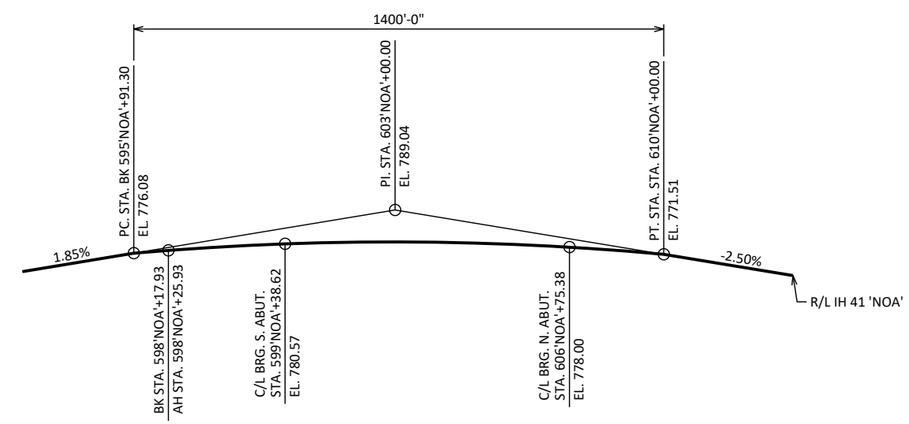

PROFILE GRADE LINE - IH 41 'NOA'

8

8

NO.	DATE	REVISION	BY

STATE OF WISCONSIN
DEPARTMENT OF TRANSPORTATION
STRUCTURES DESIGN SECTION

STRUCTURE B-70-265

DRAWN BY MWB PLANS CK'D DLM

GENERAL NOTES & QUANTITIES

SHEET 2

200

SCALE = 1

STATE PROJECT NUMBER

1120-63-71

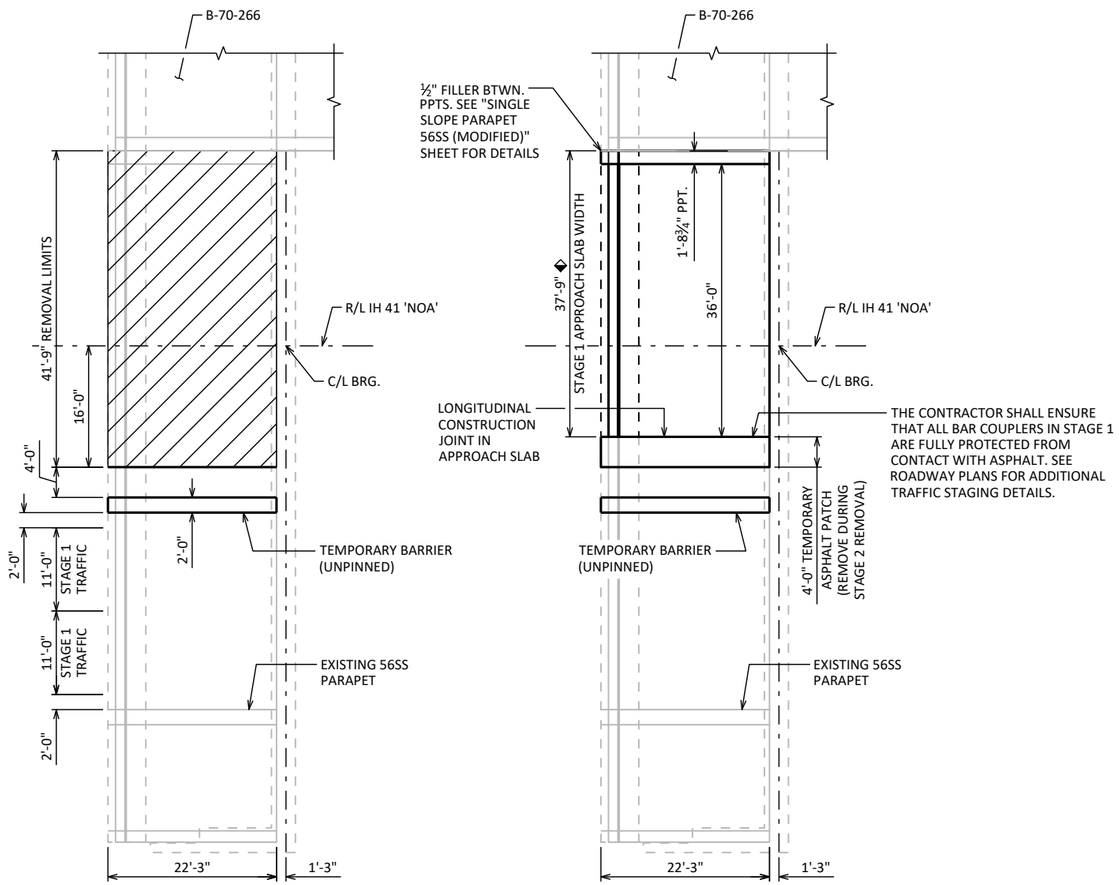

SHOWING REMOVAL **SHOWING CONSTRUCTION**

STAGE 1

SOUTH APPROACH SHOWN, NORTH APPROACH SIMILAR

◆ DIMENSION INCLUDES ½" FILLER

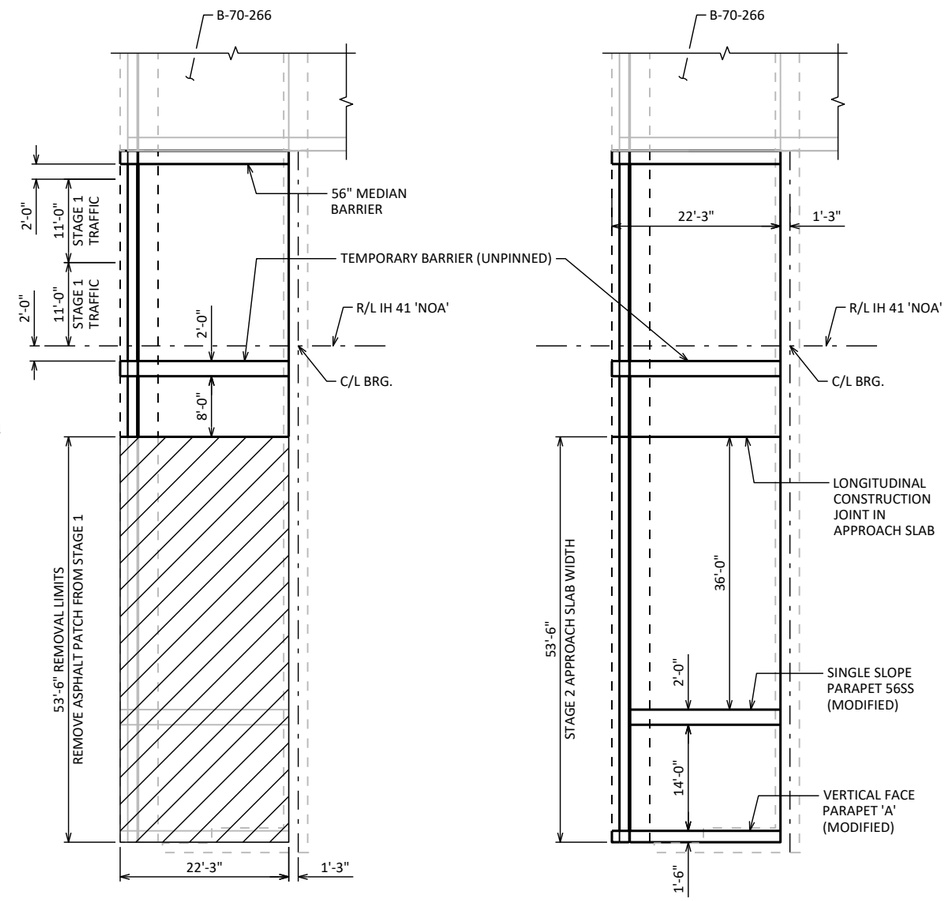

SHOWING REMOVAL **SHOWING CONSTRUCTION**

STAGE 2

SOUTH APPROACH SHOWN, NORTH APPROACH SIMILAR

8

8

NO.	DATE	REVISION	BY

STATE OF WISCONSIN
DEPARTMENT OF TRANSPORTATION
STRUCTURES DESIGN SECTION

STRUCTURE B-70-265

DRAWN BY MWB PLANS CK'D DLM

STAGING PLAN

SHEET 3
201

SCALE = 20

STATE PROJECT NUMBER
1120-63-71

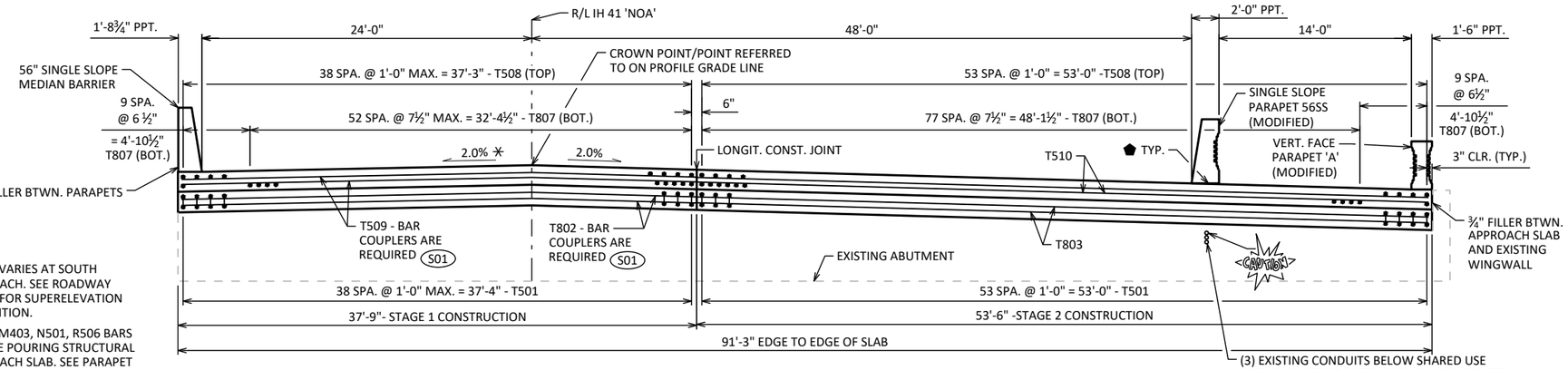

✳ SLOPE VARIES AT SOUTH APPROACH. SEE ROADWAY PLANS FOR SUPERELEVATION TRANSITION.

⬟ PLACE M403, N501, R506 BARS BEFORE POURING STRUCTURAL APPROACH SLAB. SEE PARAPET AND BARRIER SHEETS FOR DETAILS.

CROSS SECTION THRU APPROACH SLAB

LOOKING NORTH

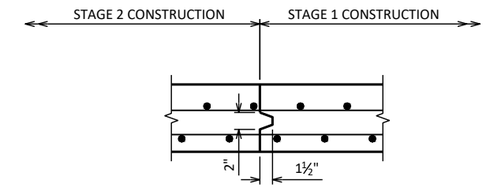

SECTION THRU LONGIT. JOINT

BAR COUPLERS NOT SHOWN

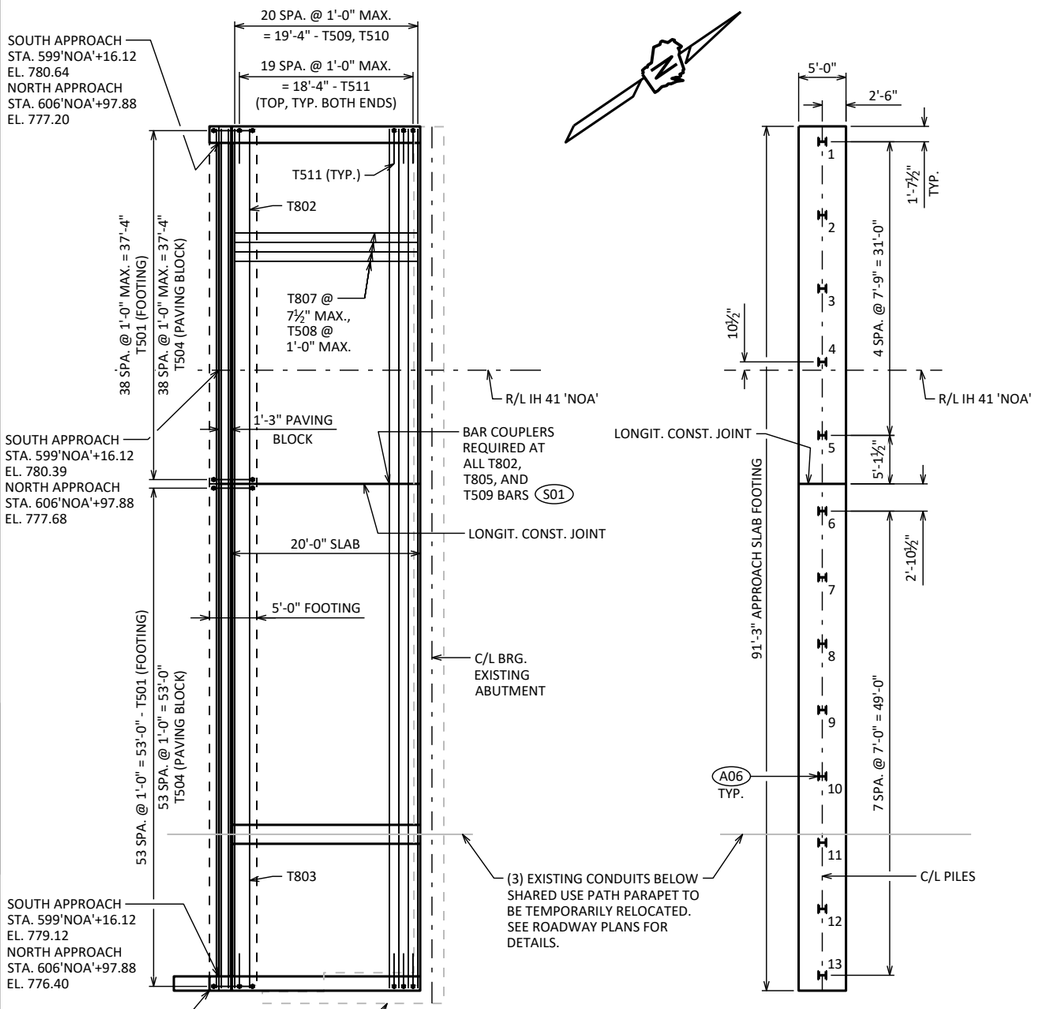

PLAN

SOUTH SLAB SHOWN, NORTH SLAB SIMILAR

PILE PLAN

A06 SUPPORT SLAB FOOTING ON HP 10 x 42 STEEL PILING, ESTIMATED 50'-0" LONG WITH A REQUIRED DRIVING RESISTANCE OF 70 TONS PER PILE.

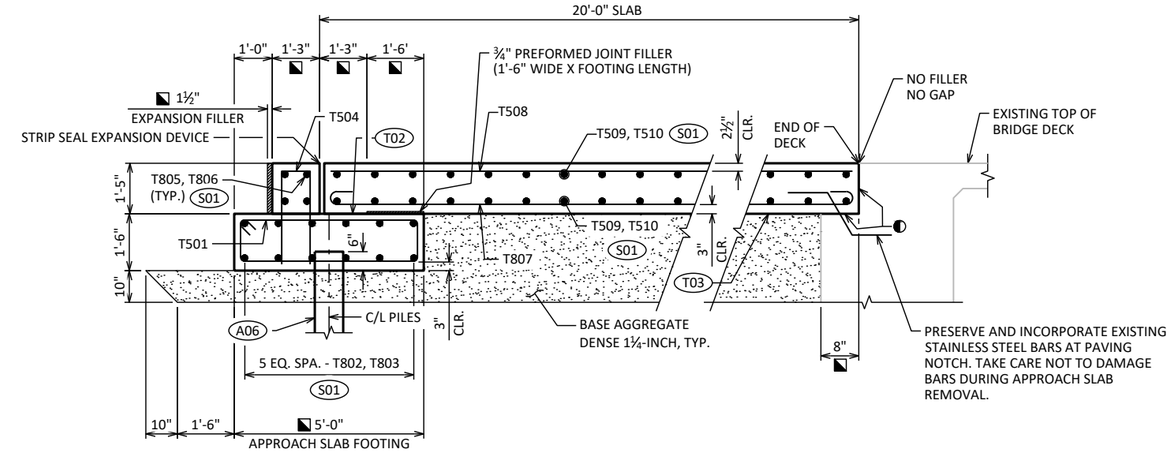

SECTION THRU APPROACH SLAB

◐ APPLY PROTECTIVE SURFACE TREATMENT TO PAVING NOTCH SURFACES PRIOR TO POURING STRUCTURAL APPROACH SLAB.

◪ MEASURED NORMAL TO ABUTMENT.

T02 STEEL TROWEL TOP SURFACE OF FOOTING AND PLACE MULTIPLE LAYERS (0.03" MIN. TOTAL THK.) OF POLYETHYLENE SHEETS OVER THE ENTIRE LENGTH OF THE FOOTING.

T03 PLACE MULTIPLE LAYERS (0.03" MIN. TOTAL THK.) OF POLYETHYLENE SHEETS OVER THE ENTIRE TOP OF SUBGRADE BENEATH SLAB.

S01 BAR COUPLERS USED. BAR LENGTH COMPUTED TO CL OF LONGIT. JOINT & SHALL BE MODIFIED IF REQ'D. TO THE BAR COUPLER MANUFACTURER RECOMMENDATIONS. PAY BASED ON BARS AS DETAILED.

8

8

NO.	DATE	REVISION	BY

STATE OF WISCONSIN
DEPARTMENT OF TRANSPORTATION
STRUCTURES DESIGN SECTION

STRUCTURE B-70-265

DRAWN BY MWB | PLANS CK'D DLM

STRUCTURAL APPROACH SLABS

SHEET 4
202

SCALE = 16

STATE PROJECT NUMBER

1120-63-71

BILL OF BARS

NOTE: THE FIRST OR FIRST TWO DIGITS OF THE BAR MARK SIGNIFIES THE BAR SIZE.

	BAR MARK	COAT	NO. REQ'D	LENGTH	BENT	BAR SERIES	LOCATION
	T501	X	186	12'-0"	X		APPROACH SLAB FTG. - STIRRUP
S01	T802	X	24	37'-6"			APPROACH SLAB FTG. - TRANS. - STAGE 1
	T803	X	24	53'-3"			APPROACH SLAB FTG. - TRANS. - STAGE 2
	T504	X	186	5'-8"	X		PAVING BLOCK - VERT.
S01	T805	X	8	37'-6"			PAVING BLOCK - TRANS. - STAGE 1
	T806	X	8	53'-3"			PAVING BLOCK - TRANS. - STAGE 2
	T807	X	298	21'-4"	X		APPROACH SLAB - LONGIT. - BOT.
	T508	X	186	19'-6"			APPROACH SLAB - LONGIT. - TOP
S01	T509	X	42	37'-6"			APPROACH SLAB - TRANS. - TOP & BOT. - STAGE 1
	T510	X	42	53'-3"			APPROACH SLAB - TRANS. - TOP & BOT. - STAGE 2
	T511	X	80	4'-1"	X		APPROACH SLAB - TRANS. - TOP

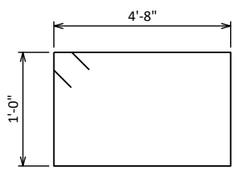

T501

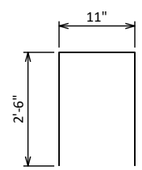

T504

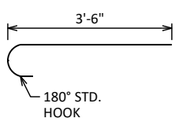

T511

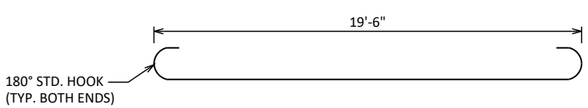

T807

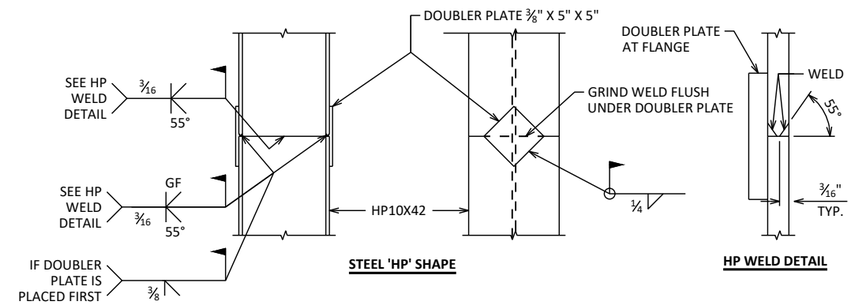

'HP' PILE DETAILS

S01 BAR COUPLERS USED. BAR LENGTH COMPUTED TO CL OF LONGIT. JOINT & SHALL BE MODIFIED IF REQ'D. TO THE BAR COUPLER MANUFACTURER RECOMMENDATIONS. PAY BASED ON BARS AS DETAILED.

NO.	DATE	REVISION	BY

STATE OF WISCONSIN
DEPARTMENT OF TRANSPORTATION
STRUCTURES DESIGN SECTION

STRUCTURE B-70-265

DRAWN BY MWB PLANS CK'D DLM

STRUCTURAL APPROACH SLAB DETAILS

SHEET 5
203

SCALE = 1

8

8

STATE PROJECT NUMBER

1120-63-71

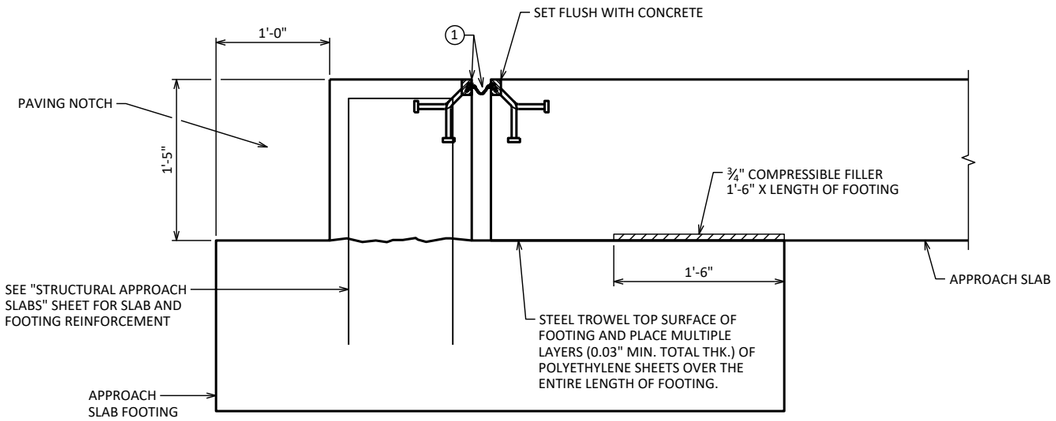

SECTION THRU JOINT AT APPROACH SLAB

FOOTING PILE NOT SHOWN

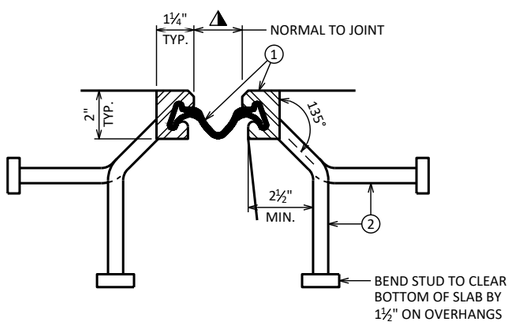

SECTION THRU JOINT

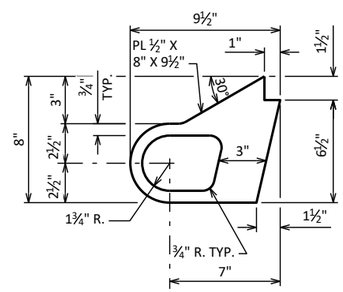

ALTERNATE STRIP SEAL ANCHOR

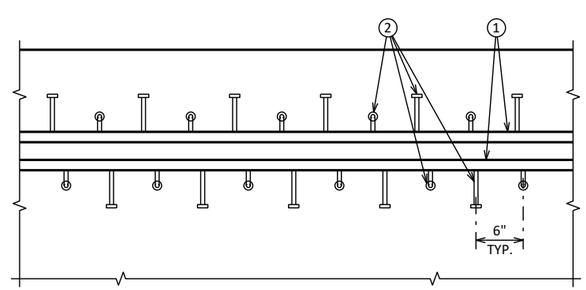

PART PLAN

LEGEND

1. NEOPRENE STRIP SEAL (5 - INCH) AND STEEL EXTRUSIONS.
2. STUDS ⅝" DIA. X 6⅜" LONG AT 6" ALTERNATE CENTERS. WELD TO EXTRUSIONS AND BEND AS SHOWN AFTER WELDING.
6. GALVANIZED PLATE ⅜" X 10" X 2'-2" LONG WITH HOLES FOR NO.7.
7. ¾" DIA. X 1½" STAINLESS STEEL SOCKET FLAT HEAD SCREWS WITH ANTI-SEIZE LUBRICANT. PLACE IN COUNTERSUNK HOLE. RECESS 1/16" BELOW PLATE SURFACE.
8. ¾" DIA. X 4" GALVANIZED HEX HEAD BOLT. BEND 45°.
9. ¾" DIA. X 2¼" GALVANIZED THREADED COUPLING.
10. SHARED USE PATH COVER PLATE ⅜" X 2'-0" WIDE X LIMITS SHOWN. GALVANIZE PLATE AFTER SLIP-RESISTANT SURFACE IS APPLIED.
11. 1" X 5" SLOTTED COUNTERSUNK HOLE FOR NO. 7. PLACE SLOT PARALLEL TO DIRECTION OF MOVEMENT.

◮ TEMPERATURE TABLE

SHADED UNDERSIDE DECK TEMP. (°F)	JOINT OPENING (NORMAL TO JT.)
85°	1⅜"
75°	1½"
65°	1⅝"
55°	1⅞"
45°	2"
35°	2¼"
25°	2½"
15°	2¾"
5°	3"

A SMALL JOINT OPENING DUE TO A HIGH TEMPERATURE AT TIME OF CONSTRUCTION MAY REQUIRE NEOPRENE STRIP SEAL INSTALLATION INTO STEEL EXTRUSIONS PRIOR TO SETTING THE EXPANSION JOINT.

NOTES

ONE FIELD SPLICE PERMITTED IN STEEL EXTRUSIONS, UNLESS MORE ARE REQUIRED FOR STAGED CONSTRUCTION, HANDLING OR GALVANIZING REQUIREMENTS. IF USED, ANCHOR PLATES SHALL BE PROVIDED 3" FROM EACH SIDE OF THE FIELD SPLICE. DETAILS SHALL BE SUBMITTED FOR APPROVAL. NO SPLICING PERMITTED IN NEOPRENE STRIP SEAL.

AFTER FABRICATION, BUT BEFORE SHIPMENT, STRAIGHTEN STEEL EXTRUSIONS SUCH THAT THEY SHALL BE FREE FROM WARP, TWIST AND SWEEP.

FABRICATOR SHALL PROVIDE MEANS OF KEEPING GALVANIZED EXTRUSIONS CLEAN AND SMOOTH DURING SHIPMENT AND PRIOR TO APPLYING LUBRICANT ADHESIVE FOR NEOPRENE GLAND INSTALLATION.

SANDBLAST PLATES, SUPPORTS AND EXTRUSIONS AFTER FABRICATION IN ACCORDANCE WITH SSPC SP. #6 "COMMERCIAL BLAST CLEANING". AFTER BLAST CLEANING, THE PLATES, SUPPORTS AND EXTRUSIONS SHALL BE HOT DIPPED GALVANIZED. SLIP-RESISTANT SURFACE IS APPLIED TO SHARED USE PATH COVER PLATES BY THE MANUFACTURER AND THEN HOT DIPPED GALVANIZED TO THEIR RECOMMENDATIONS TO MAINTAIN THE INTEGRITY OF THIS SURFACE.

ANCHOR SYSTEM NO. 8 AND NO. 9 SHALL CONFORM TO ASTM A307 AND SHALL BE GALVANIZED IN ACCORDANCE WITH ASTM A153 CLASS C AND D.

ALL MATERIAL IN THE EXPANSION JOINT ASSEMBLY, INCLUDING ANCHOR STUDS AND HARDWARE SHALL BE PAID AT THE UNIT PRICE BID FOR "EXPANSION DEVICE B-70-265".

8

8

NO.	DATE	REVISION	BY

STATE OF WISCONSIN
DEPARTMENT OF TRANSPORTATION
STRUCTURES DESIGN SECTION

STRUCTURE B-70-265

DRAWN BY MWB | PLANS CK'D DLM

EXPANSION DEVICE

SHEET 6
204

SCALE = 2.00

STATE PROJECT NUMBER

1120-63-71

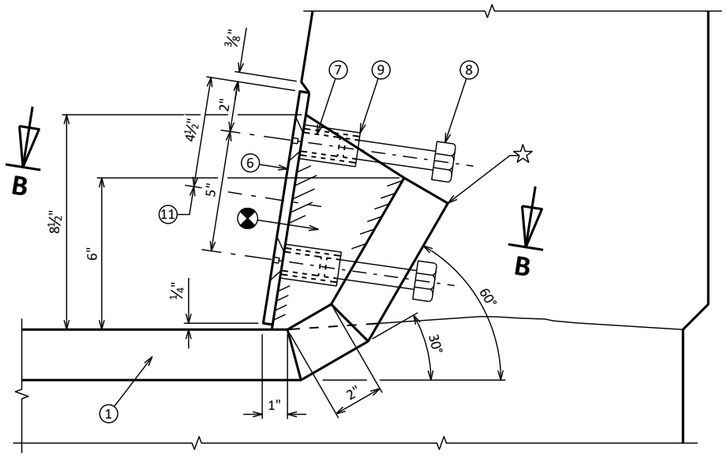

SECTION A-A

SINGLE SLOPE PARAPET SHOWN,
VERTICAL FACE PARAPET 'A' SIMILAR

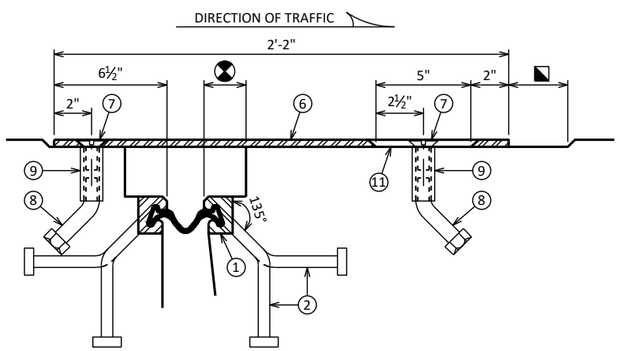

SECTION B-B

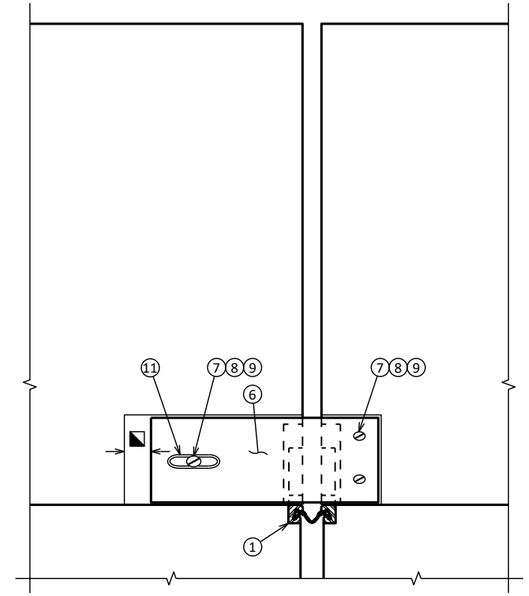

VIEW OF PARAPET PLATE FROM ROADWAY

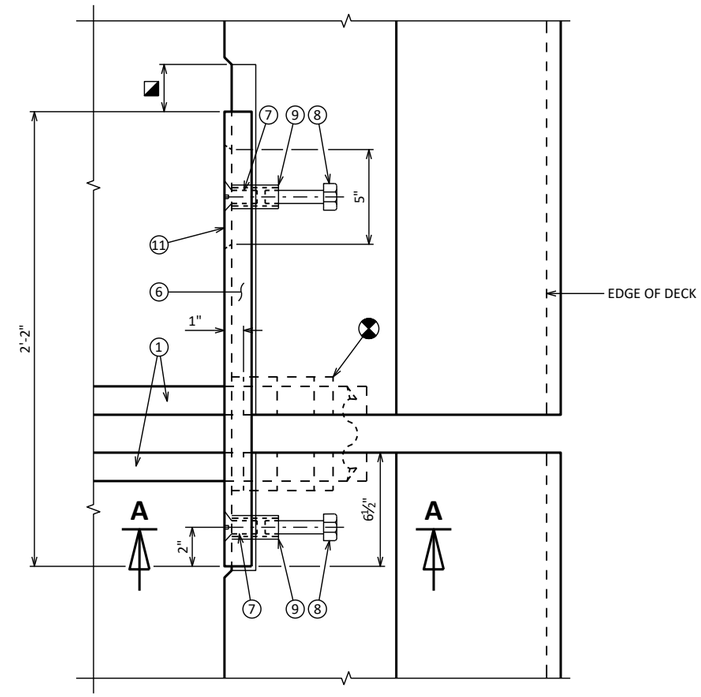

PLAN AT EXTERIOR PARAPETS

SINGLE SLOPE PARAPET SHOWN,
VERTICAL FACE PARAPET 'A' SIMILAR

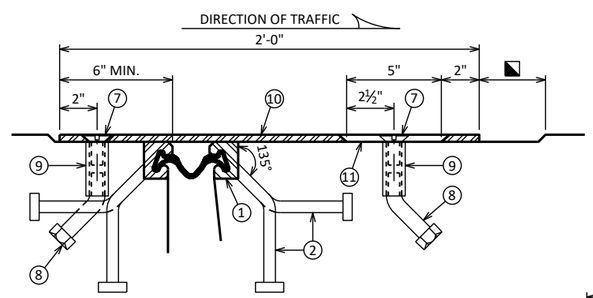

SECTION C-C

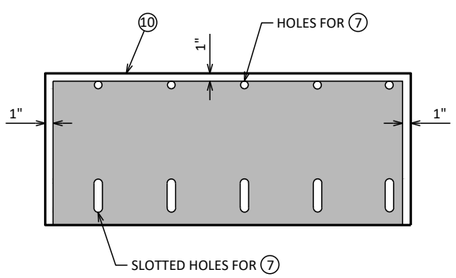

PLAN OF SHARED USE PATH COVER PLATE WITH SLIP-RESISTANT SURFACE

PLACE SLIP-RESISTANT SURFACE ON TOP
WALKING SURFACE IN SHADED AREA ONLY.

APPROVED SLIP-RESISTANT APPLIED SURFACES FOR STEEL PLATES		
PRODUCT	MANUFACTURER	CONTACT AT
SLIPNOT GRADE 2, STEEL	W. S. MOLNAR COMPANY	1-800-SLIPNOT
ALGRIP, STEEL	ROSS TECHNOLOGY CORP.	1-800-345-8170

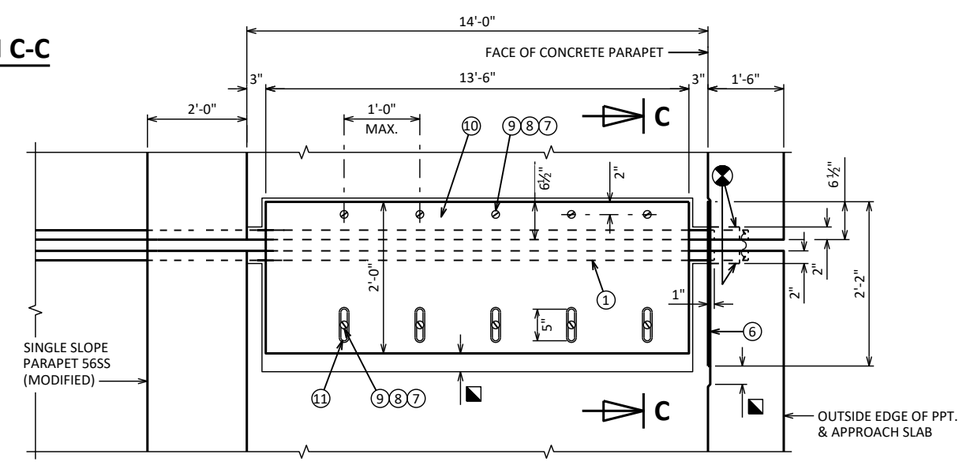

PLAN AT SHARED USE PATH

BLOCK OUT CONCRETE 2" EACH SIDE OF JOINT OPENING.

JOINT OPENING DIMENSION ALONG SKEW PLUS ½".

TURN STRIP SEAL UP INTO PARAPET AS SHOWN FOR PARAPETS AT EDGE OF DECK (MEDIAN BARRIER AND VERTICAL FACE PARAPET 'A'). CONTINUE THE STRIP SEAL STRAIGHT UNDERNEATH THE 56" SINGLE SLOPE PARAPET BETWEEN THE ROADWAY AND THE SHARED USED PATH.

NO.	DATE	REVISION	BY

STATE OF WISCONSIN
DEPARTMENT OF TRANSPORTATION
STRUCTURES DESIGN SECTION

STRUCTURE B-70-265

DRAWN BY MWB PLANS CK'D DLM

COVER PLATE DETAILS

SHEET 7
205

SCALE = 2.00

8

8

STATE PROJECT NUMBER

1120-63-71

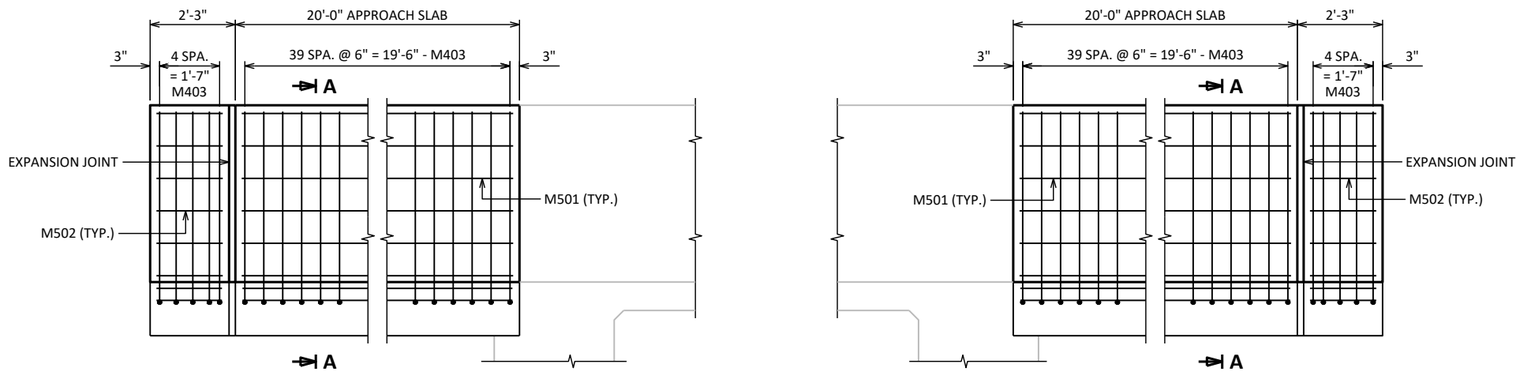

ELEVATION

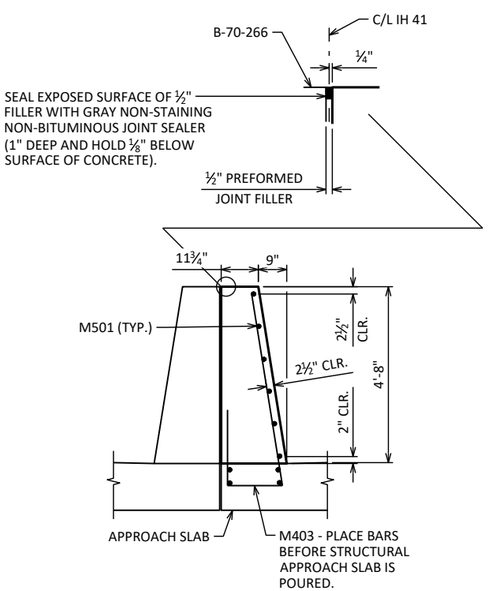

SECTION A-A

LOOKING NORTH

BILL OF BARS

NOTE: THE FIRST OR FIRST TWO DIGITS OF THE BAR MARK SIGNIFIES THE BAR SIZE.

BAR MARK	COAT	NO. REQ'D	LENGTH	BENT	BAR SERIES	LOCATION
M501	X	20	19'-8"			MEDIAN BARRIER - HORIZ.
M502	X	20	1'-9"			MEDIAN BARRIER - HORIZ.
M403	X	90	8'-2"	X		MEDIAN BARRIER & APP. SLAB - VERT.

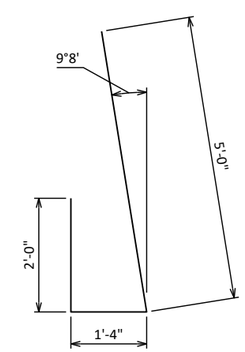

M403

NO.	DATE	REVISION	BY

STATE OF WISCONSIN
DEPARTMENT OF TRANSPORTATION
STRUCTURES DESIGN SECTION

STRUCTURE B-70-265

DRAWN BY MWB PLANS CK'D DLM

56" SINGLE SLOPE MEDIAN BARRIER

SHEET 8

206

SCALE = 1

8

8

STATE PROJECT NUMBER
1120-63-71

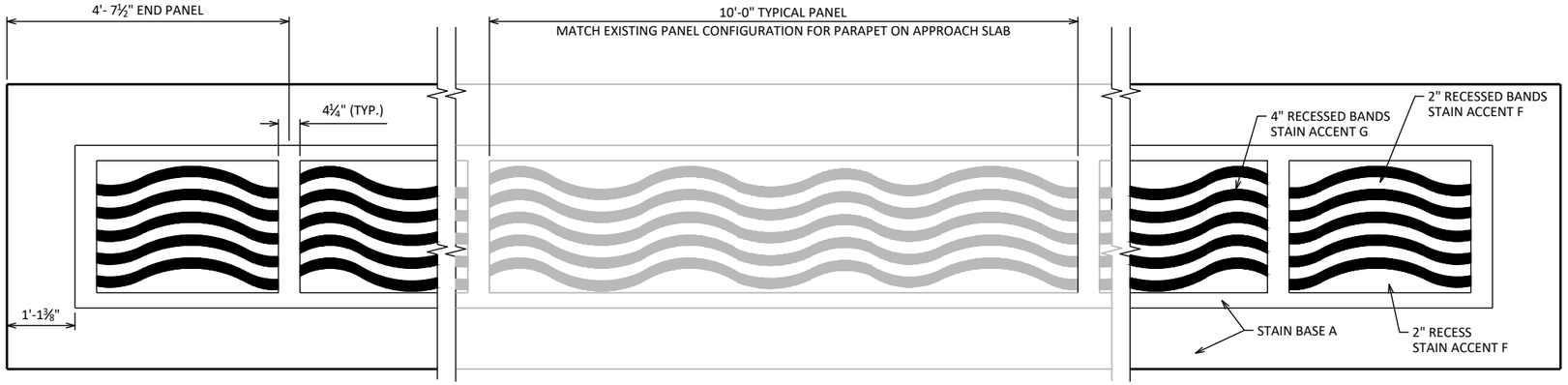

ELEVATION OF SHARED USE PATH FACE

CONCRETE STAINING SCHEDULE

COLOR	LOCATION
BASE A: TOTALLY TAN (SW6115)	-PARAPET
ACCENT F: BLUE PLATE (SW6796)	-PARAPET 2" RECESS
ACCENT G:FLYWAY (SW6794)	-PARAPET 4" RECESS
GENERAL NOTES: DESIGN COLORS ARE BASED ON SHERWIN WILLIAMS COLOR PALLET. ALL COLOR STAIN EQUIVALENTS TO MATCH COLORS SPECIFIED.	

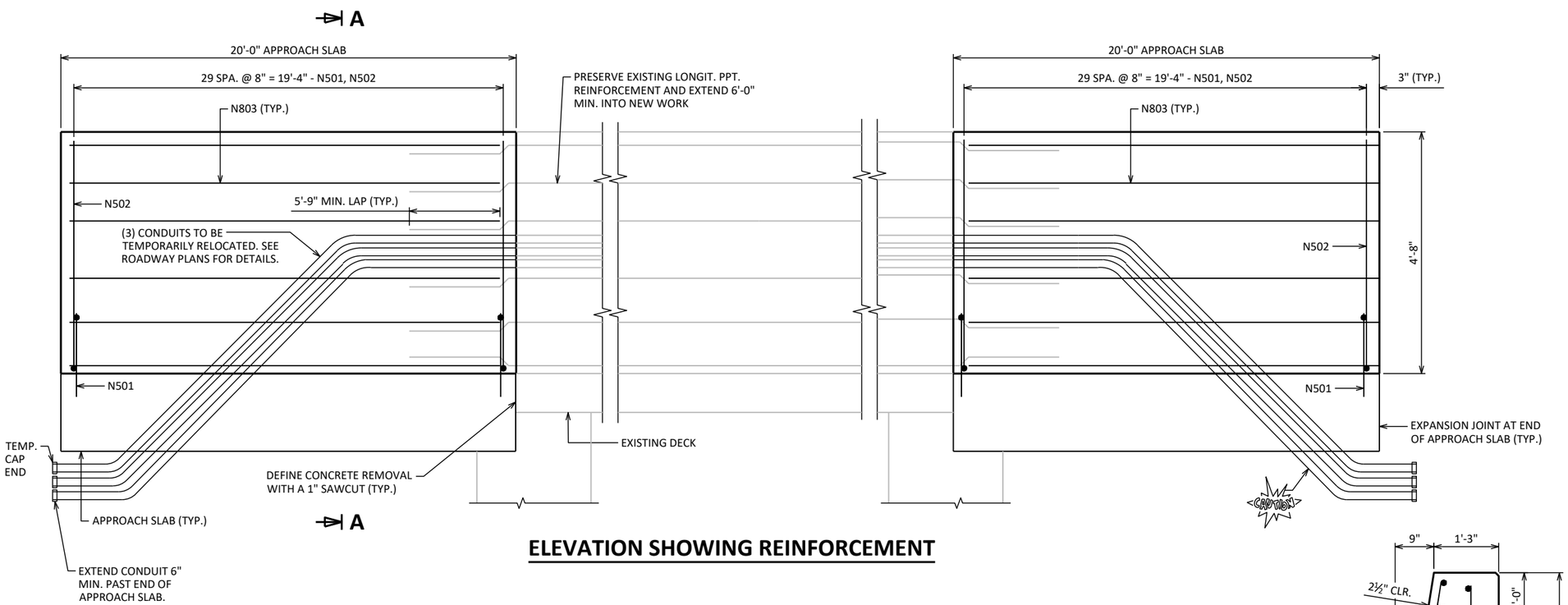

ELEVATION SHOWING REINFORCEMENT

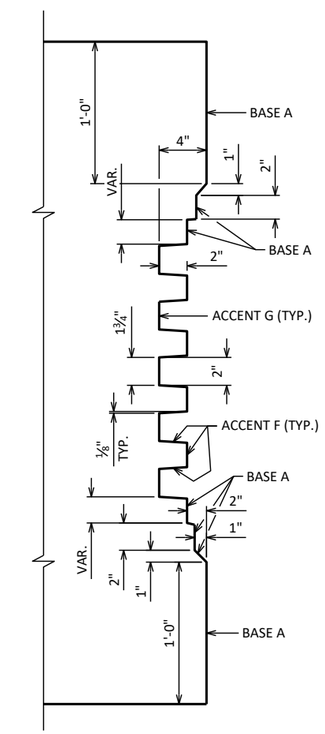

PARAPET FORMLINER DETAIL

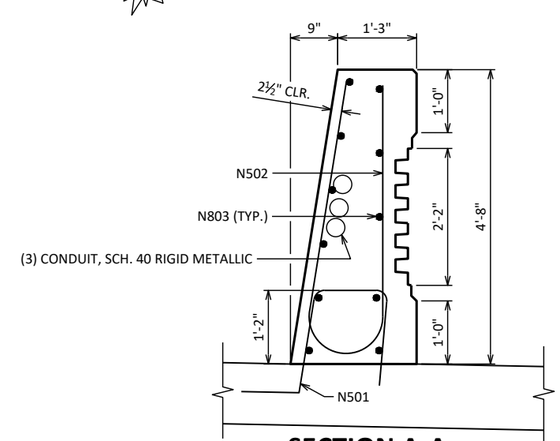

SECTION A-A

LOOKING NORTH

BILL OF BARS

NOTE: THE FIRST OR FIRST TWO DIGITS OF THE BAR MARK SIGNIFIES THE BAR SIZE.

BAR MARK	COAT	NO. REQ'D	LENGTH	BENT	BAR SERIES	LOCATION
N501	X	60	5'-1"	X		PPT. & APPROACH SLAB - VERT.
N502	X	60	9'-3"	X		PPT. - VERT.
N803	X	22	19'-6"			PPT. - HORIZ.

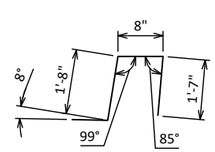

N501

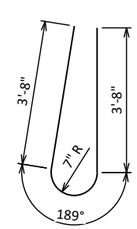

N502

NOTES

CONDUIT SHALL BE EMBEDDED 2" CLEAR.

EXPANSION FITTINGS, ADAPTER FITTINGS, AND CONDUIT BENDS ARE INCIDENTAL TO "CONDUIT RIGID METALLIC 2-INCH".

CONDUIT BENDS SHALL CONFORM TO THE NATIONAL ELECTRIC CODE.

2'-0" MIN. CONDUIT COVER UNDER ROADWAY.

NO.	DATE	REVISION	BY

STATE OF WISCONSIN
DEPARTMENT OF TRANSPORTATION
STRUCTURES DESIGN SECTION

STRUCTURE B-70-265

DRAWN BY MWB PLANS CK'D DLM

SINGLE SLOPE PARAPET 56SS (MODIFIED)

SHEET 9
207

SCALE = 1

8

8

STATE PROJECT NUMBER

1120-63-71

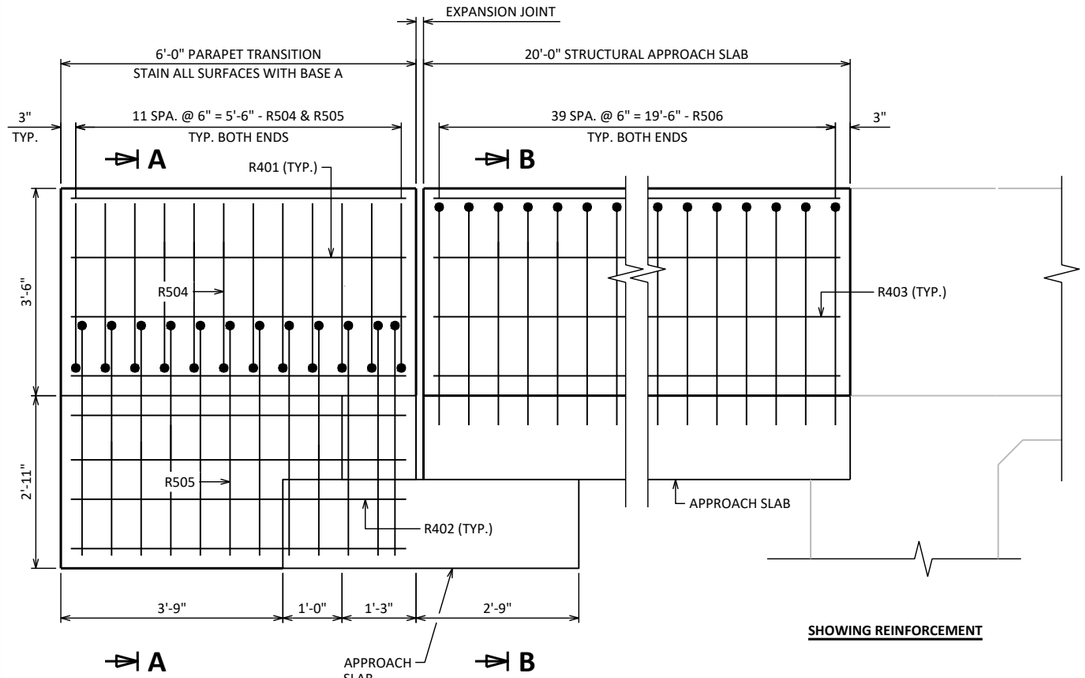

SHOWING REINFORCEMENT

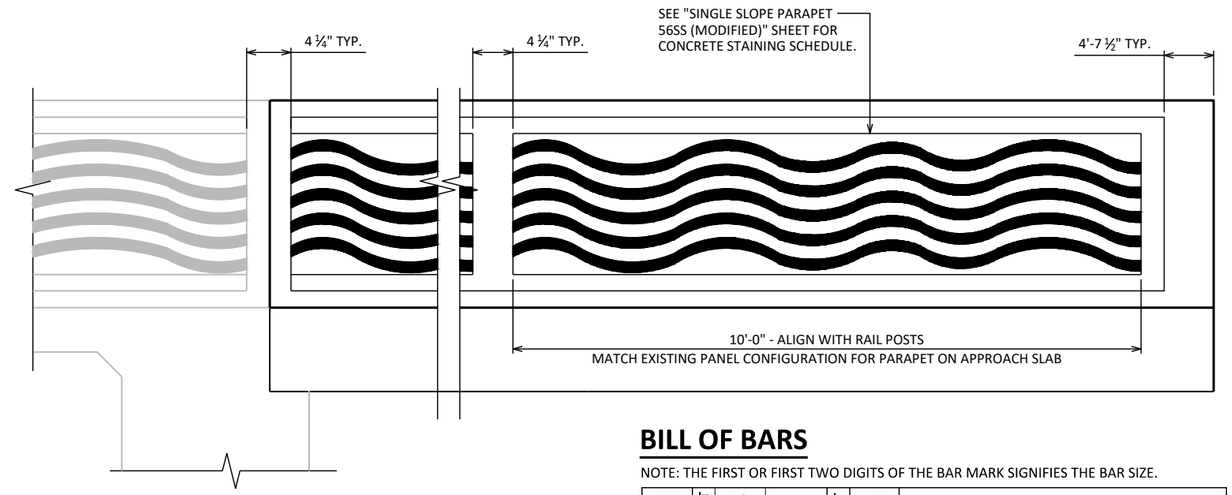

SHOWING AESTHETICS

ELEVATION

BILL OF BARS

NOTE: THE FIRST OR FIRST TWO DIGITS OF THE BAR MARK SIGNIFIES THE BAR SIZE.

BAR MARK	COAT	NO. REQ'D	LENGTH	BENT	BAR SERIES	LOCATION
R401	X	16	5'-8"			PPT. - HORIZ. - IN TRANSITION
R402	X	16	5'-8"			PPT. - HORIZ. - IN TRANSITION
R403	X	16	19'-6"			PPT. - HORIZ. - AT APP. SLAB
R504	X	24	7'-1"	X		PPT. - VERT. - IN TRANSITION
R505	X	24	8'-5"	X		PPT. - VERT. - IN TRANSITION
R506	X	80	8'-5"	X		PPT. - VERT. - AT APP. SLAB

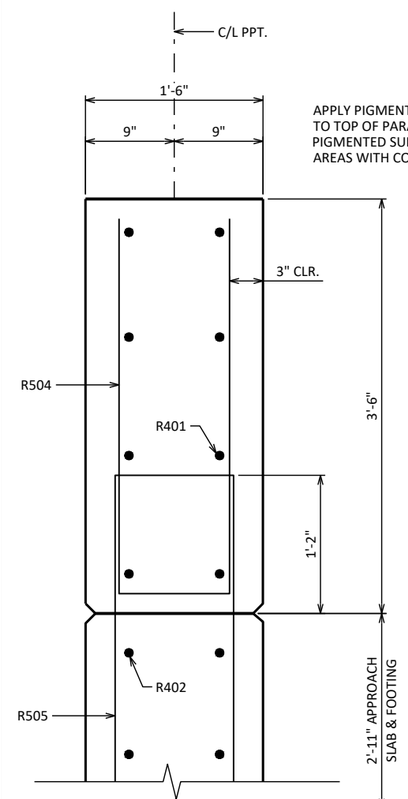

SECTION A-A

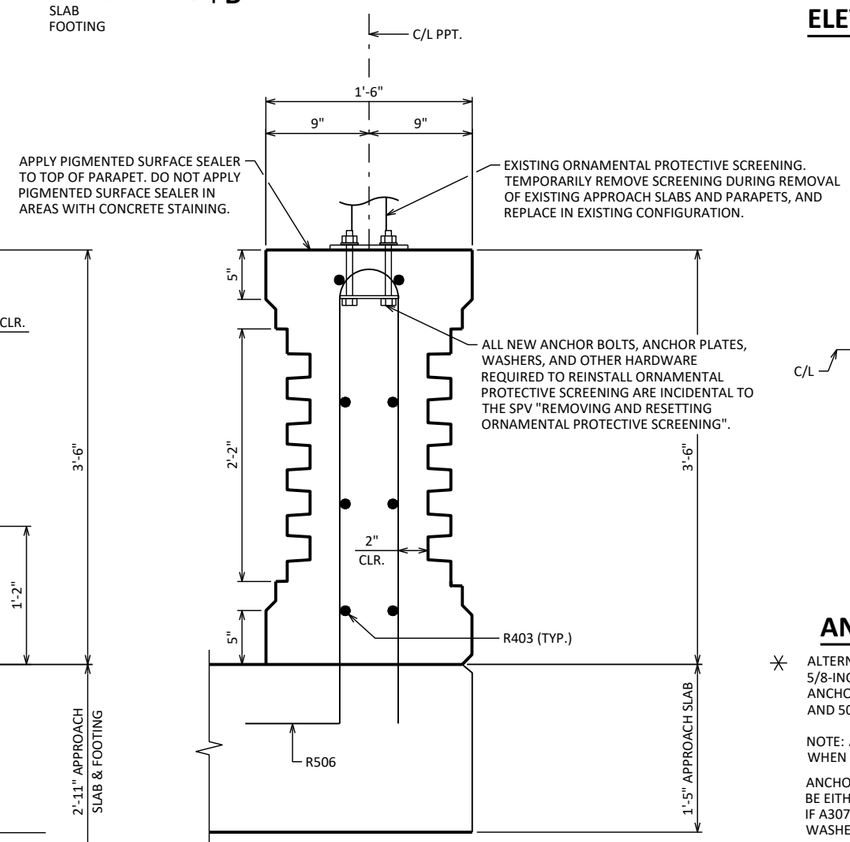

SECTION B-B

LOOKING NORTH

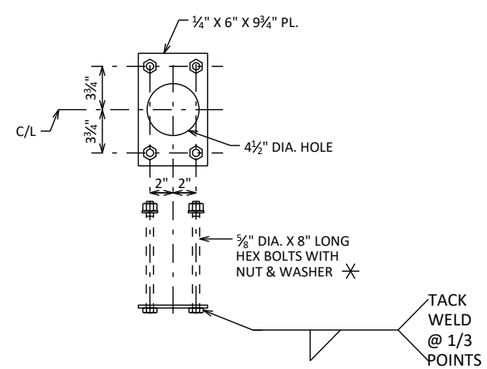

ANCHORAGE DETAILS

✳ ALTERNATIVE ANCHORAGE: ADHESIVE ANCHORS 5/8-INCH. EMBED 7" IN CONCRETE. ADHESIVE ANCHORS SHALL CONFORM TO SECTIONS 502.2.12 AND 502.3.14 OF THE STANDARD SPECIFICATIONS.

NOTE: ANCHOR PLATE NOT REQUIRED WHEN ADHESIVE ANCHORS ARE USED.

ANCHOR BOLTS, NUTS AND WASHERS SHALL BE EITHER STAINLESS STEEL OR ASTM A307. IF A307 IS USED, ANCHOR BOLTS, NUTS, AND WASHERS SHALL BE GALVANIZED.

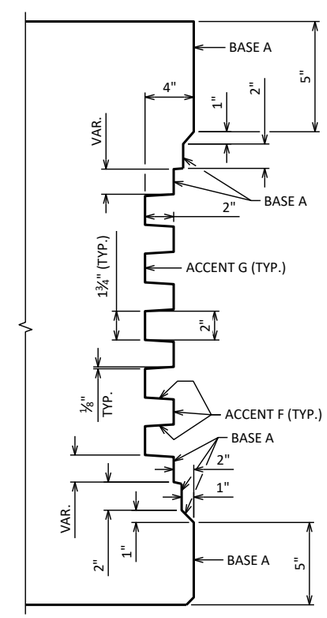

PARAPET FORMLINER DETAIL

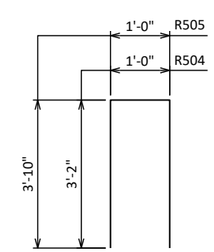

R504, R505

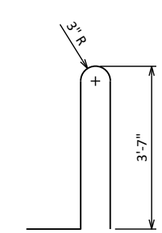

R506

8

8

NO.	DATE	REVISION	BY

STATE OF WISCONSIN
DEPARTMENT OF TRANSPORTATION
STRUCTURES DESIGN SECTION

STRUCTURE B-70-265

DRAWN BY MWB PLANS CK'D DLM

VERTICAL FACE PARAPET 'A' (MODIFIED)

SHEET 10

208

SCALE = 1

NOTE: SUBSURFACE SHEETS ARE BASED ON THE ORIGINAL SOIL BORINGS (DATED 04/28/2009) AND STRUCTURE PLANS AND ARE PROVIDED FOR INFORMATION ONLY.

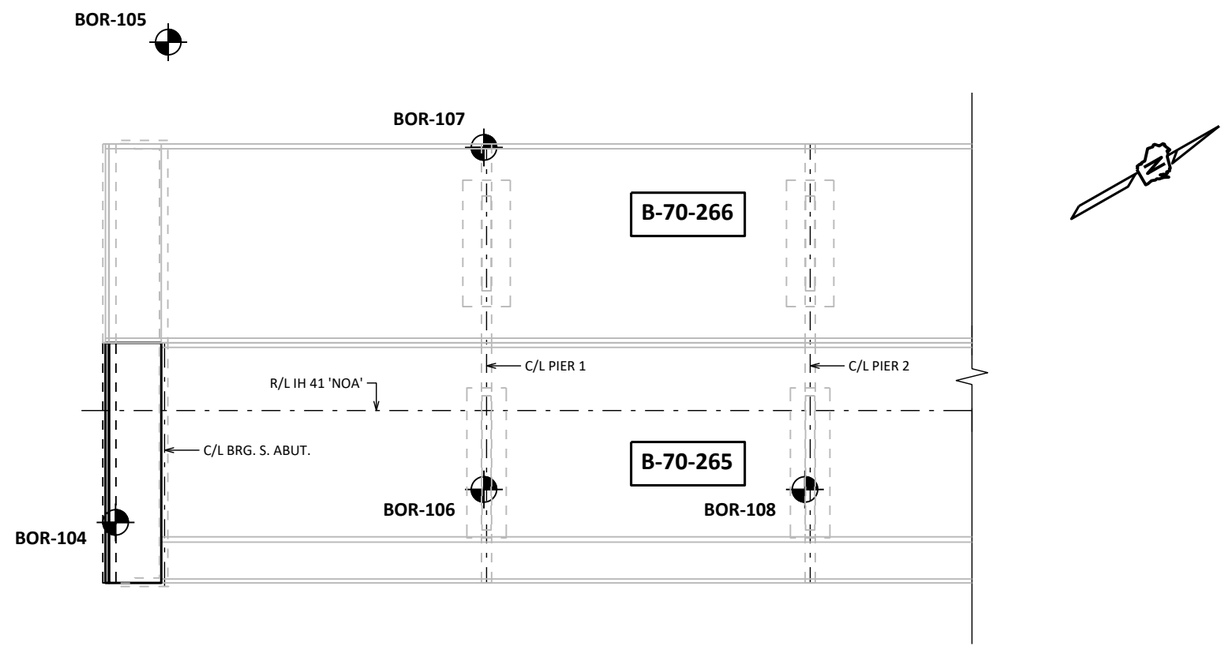

PLAN

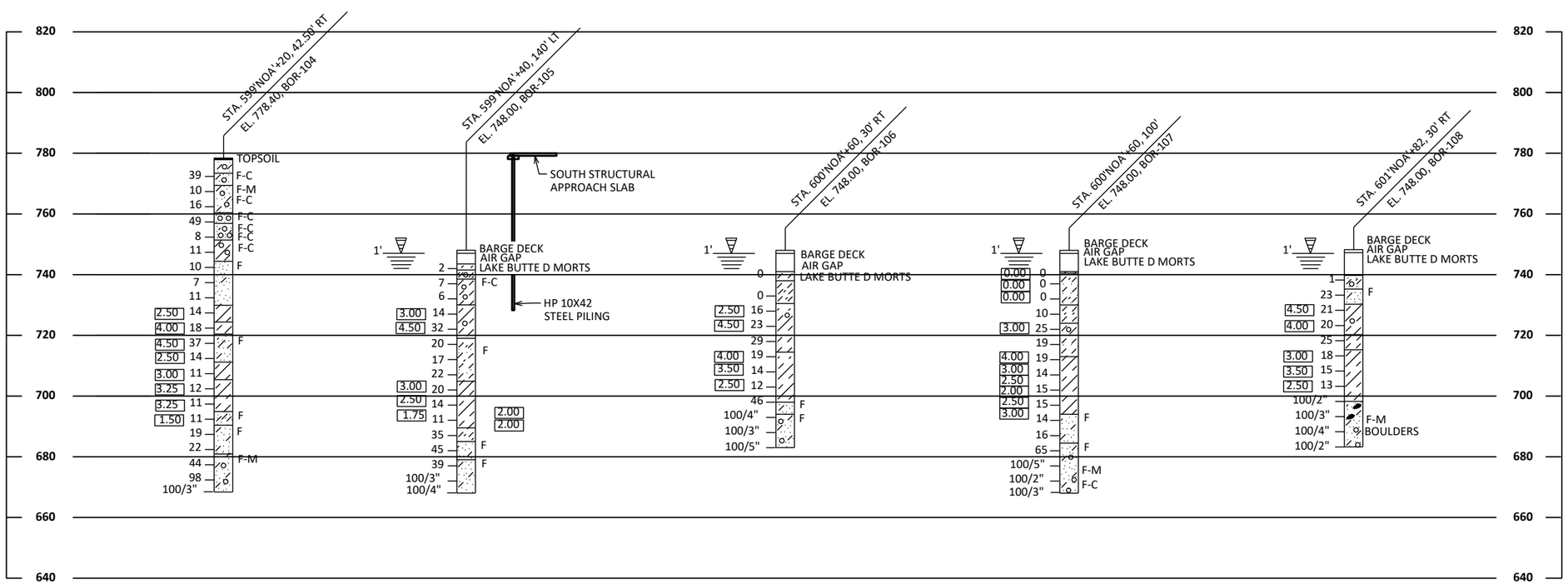

STATE PROJECT NUMBER

1120-63-71

ABBREVIATIONS

F FINE M MEDIUM C COARSE
WS WEATHERED SO SOUND

MATERIAL SYMBOLS

TOPSOIL, SILT, SANDSTONE
SAND, PEAT, LIMESTONE
GRAVEL, CLAY, IGNEOUS ROCK

LEGEND OF PROBING

95/6=95 BLOWS FOR 6" PENETRATION PROBING TAKEN WITH A 350# WT. FALLING 18" ON A 2" O.D. POINT.

PROBING NO.
STA.
ELEVATION
7 AVERAGE BLOWS PER FOOT
REFUSAL 95/6

LEGEND OF BORING

BORING NO.
ELEV. STA.
UNCONFINED STRENGTH (TSF) 7.7
BLOWS PER FT. USING 140# WT. FALLING 30" 7
WASH SAMPLE
SHELBY TUBE S.T.
GROUND WATER ELEVATION
NO GROUND WATER OBSERVED ABOVE THIS ELEVATION
SANDY GRAVEL
F. BOULDERS OR COBBLES
SAND
SILTY CLAY
SO LIMESTONE

UNLESS OTHERWISE SPECIFIED, THE BLOWS PER FOOT AT THE LOCATIONS INDICATED ARE BASED ON DRIVING A 2" O.D. X 1.4" I.D. SPLIT SPOON SAMPLER WITH A 140# HAMMER HAVING A FREE FALL OF 30". THE BLOW COUNT IS TAKEN IN UNDISTURBED SOIL IMMEDIATELY BELOW A CASED OR OPEN HOLE ELIMINATING SIDE FRICTION ON THE DRIVE PIPE.

SUBSURFACE EXPLORATION FOR FOUNDATION DESIGN AND BIDDERS INFORMATION

TO OBTAIN RELATIVE DATA CONCERNING THE CHARACTER OF MATERIAL IN AND UPON WHICH THE FOUNDATION MIGHT BE BUILT, BORINGS AND/OR SOUNDINGS WERE MADE AT POINTS APPROXIMATELY AS INDICATED ON THIS DRAWING. THE DATA PRESENTED HEREIN REPRESENTS THE FINDINGS OF THE SUBSURFACE EXPLORATIONS MADE. HOWEVER, BECAUSE THE DEPTHS INVESTIGATED ARE LIMITED AND THE AREA OF THE BORINGS AND/OR SOUNDINGS IS VERY SMALL IN RELATION TO THE ENTIRE AREA, THE WISCONSIN DEPARTMENT OF TRANSPORTATION DOES NOT WARRANT CONDITIONS BELOW THE DEPTHS INVESTIGATED OR THAT THE CLASSIFICATION OF MATERIAL ENCOUNTERED IN THESE INVESTIGATIONS IS NECESSARILY TYPICAL OF THE ENTIRE SITE.

NO.	DATE	REVISION	BY

STATE OF WISCONSIN
DEPARTMENT OF TRANSPORTATION
STRUCTURES DESIGN SECTION

STRUCTURE B-70-265

DRAWN BY MHM/MWB PLANS CK'D DLM

SUBSURFACE EXPLORATION 1

SHEET 11

8

8

NOTE: SUBSURFACE SHEETS ARE BASED ON THE ORIGINAL SOIL BORINGS (DATED 04/28/2009) AND STRUCTURE PLANS AND ARE PROVIDED FOR INFORMATION ONLY.

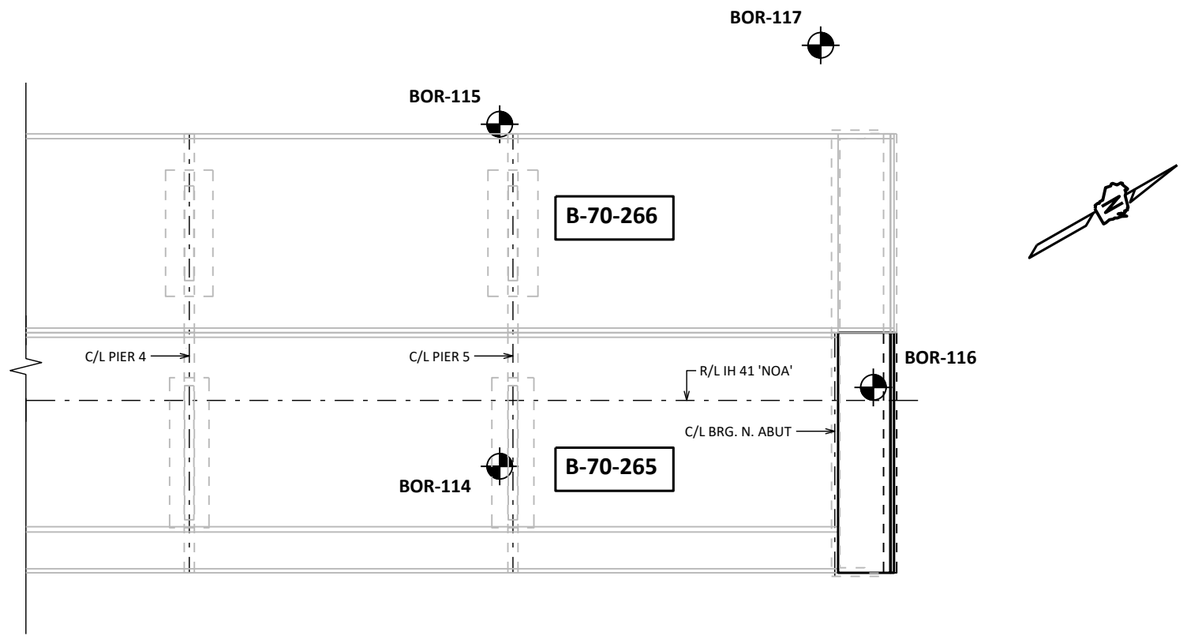

PLAN

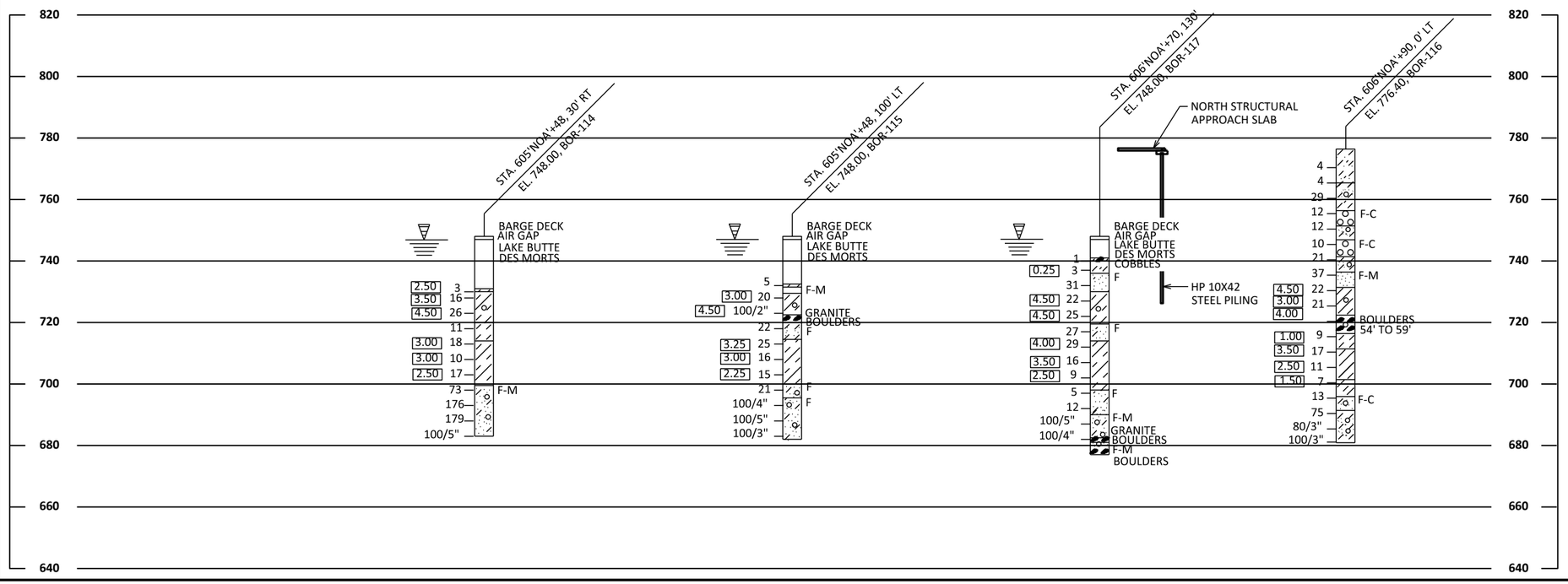

STATE PROJECT NUMBER

1120-63-71

ABBREVIATIONS

F FINE M MEDIUM C COARSE
WS WEATHERED SO SOUND

MATERIAL SYMBOLS

TOPSOIL, SILT, SANDSTONE, SAND, PEAT, LIMESTONE, GRAVEL, CLAY, IGNEOUS ROCK

LEGEND OF PROBING

95/6=95 BLOWS FOR 6" PENETRATION PROBING TAKEN WITH A 350# WT. FALLING 18" ON A 2" O.D. POINT.

PROBING NO.
STA.
ELEVATION
7 AVERAGE BLOWS PER FOOT
REFUSAL 95/6

LEGEND OF BORING

BORING NO.
ELEV. STA.
UNCONFINED STRENGTH (TSF) 7. 7
7
BLOWS PER FT. USING 140# WT. FALLING 30"
WASH SAMPLE
SHELBY TUBE ~~S.T.~~
GROUND WATER ELEVATION
NO GROUND WATER OBSERVED ABOVE THIS ELEVATION
SANDY GRAVEL
F. BOULDERS OR COBBLES
SAND
SILTY CLAY
SO LIMESTONE

UNLESS OTHERWISE SPECIFIED, THE BLOWS PER FOOT AT THE LOCATIONS INDICATED ARE BASED ON DRIVING A 2" O.D. X 1.4" I.D. SPLIT SPOON SAMPLER WITH A 140# HAMMER HAVING A FREE FALL OF 30". THE BLOW COUNT IS TAKEN IN UNDISTURBED SOIL IMMEDIATELY BELOW A CASED OR OPEN HOLE ELIMINATING SIDE FRICTION ON THE DRIVE PIPE.

SUBSURFACE EXPLORATION FOR FOUNDATION DESIGN AND BIDDERS INFORMATION

TO OBTAIN RELATIVE DATA CONCERNING THE CHARACTER OF MATERIAL IN AND UPON WHICH THE FOUNDATION MIGHT BE BUILT, BORINGS AND/OR SOUNDINGS WERE MADE AT POINTS APPROXIMATELY AS INDICATED ON THIS DRAWING. THE DATA PRESENTED HEREIN REPRESENTS THE FINDINGS OF THE SUBSURFACE EXPLORATIONS MADE. HOWEVER, BECAUSE THE DEPTHS INVESTIGATED ARE LIMITED AND THE AREA OF THE BORINGS AND/OR SOUNDINGS IS VERY SMALL IN RELATION TO THE ENTIRE AREA, THE WISCONSIN DEPARTMENT OF TRANSPORTATION DOES NOT WARRANT CONDITIONS BELOW THE DEPTHS INVESTIGATED OR THAT THE CLASSIFICATION OF MATERIAL ENCOUNTERED IN THESE INVESTIGATIONS IS NECESSARILY TYPICAL OF THE ENTIRE SITE.

NO.	DATE	REVISION	BY

STATE OF WISCONSIN
DEPARTMENT OF TRANSPORTATION
STRUCTURES DESIGN SECTION

STRUCTURE B-70-265

DRAWN BY MHM/MWB PLANS CK'D DLM

SUBSURFACE EXPLORATION 2

SHEET 12

8

8

STATE PROJECT NUMBER

1120-63-71

(#) INDICATES WING NUMBER

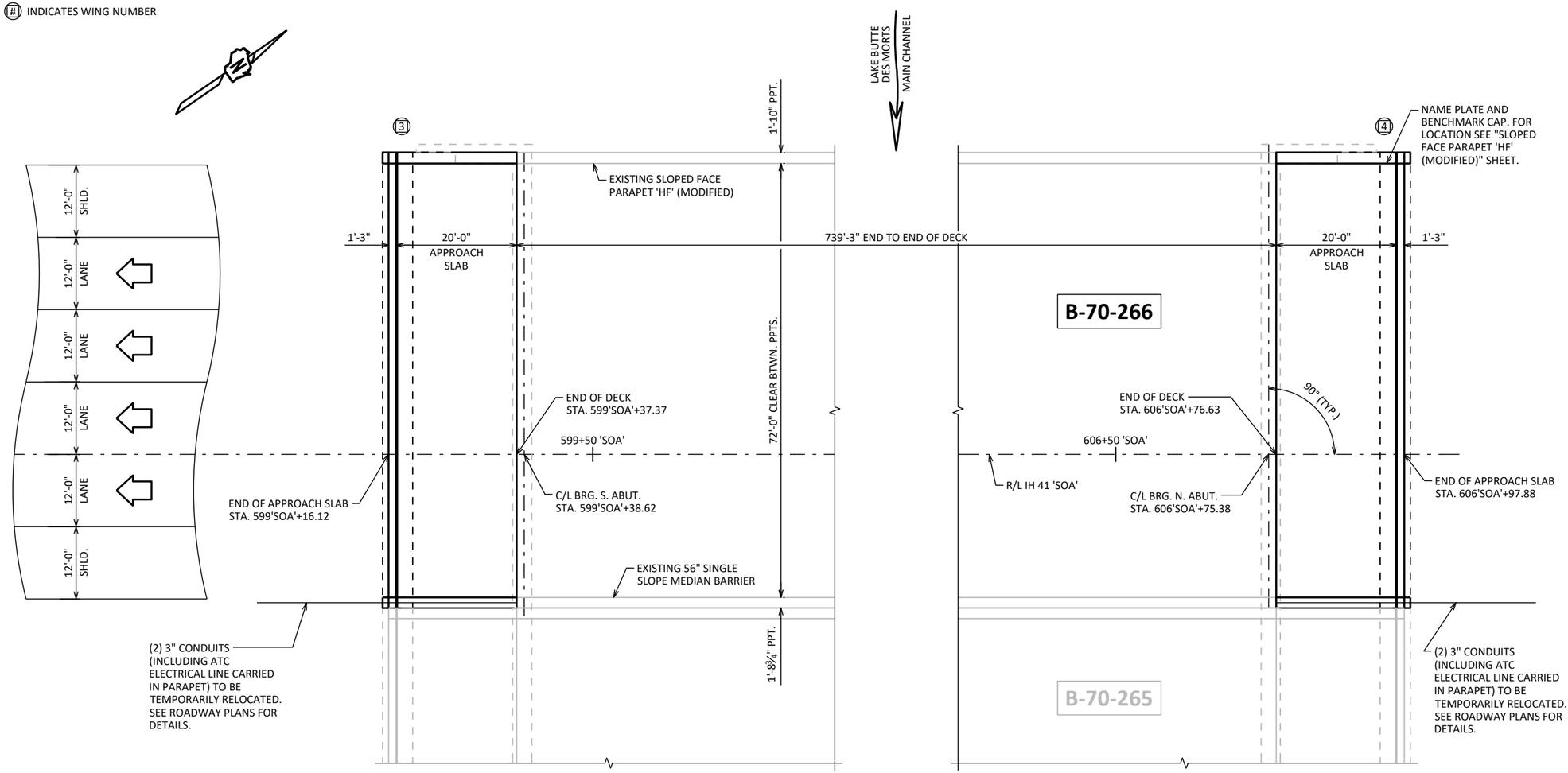

PLAN

6 SPAN - 54W" PRESTRESSED CONCRETE GIRDER
STRUCTURAL APPROACH SLAB REPLACEMENT

STRUCTURE DESIGN CONTACTS:

MICAH BROOKS	608-266-5080
KYLE BUSCH	608-267-0465

DESIGN DATA

LIVE LOAD:

TAKEN FROM HSIS, 06/16/2023
DESIGN LOADING: HL-93
INVENTORY RATING: RF = 1.25
OPERATING RATING: RF = 1.82
WISCONSIN STANDARD PERMIT VEHICLE (WIS-SPV): 250 (KIPS)

MATERIAL PROPERTIES:

CONCRETE MASONRY (HPC):
SUPERSTRUCTURE &
STRUCTURAL APPROACH SLABS (INCL. FOOTINGS) —— f'_c = 4,000 PSI

BAR STEEL REINFORCEMENT
GRADE 60 —— f_y = 60,000 PSI

FOUNDATION DATA

APPROACH SLAB FOOTINGS TO BE SUPPORTED ON HP 10 X 42 STEEL PILING DRIVEN TO A REQUIRED DRIVING RESISTANCE OF 70 TONS ** PER PILE AS DETERMINED BY THE MODIFIED GATES DYNAMIC FORMULA.
ESTIMATED 50'-0" LONG.

**THE FACTORED AXIAL RESISTANCE OF PILES IN COMPRESSION USED FOR DESIGN IS THE REQUIRED DRIVING RESISTANCE MULTIPLIED BY A RESISTANCE FACTOR OF 0.5 USING MODIFIED GATES TO DETERMINE PILE CAPACITY.

TRAFFIC DATA

IH 41:
ADT = 94,990 (2044)
R.D.S. = 70 MPH

LIST OF DRAWINGS:

NO.	DATE	REVISION	BY

BUREAU OF STRUCTURES
WISCONSIN DEPARTMENT OF TRANSPORTATION

ACCEPTED KHB 10/27/23
CHIEF STRUCTURES DESIGN ENGINEER DATE

STRUCTURE B-70-266

IH 41 SB OVER LAKE BUTTE DES MORTS

COUNTY WINNEBAGO | CITY OSHKOSH

DESIGN SPEC.
AASHTO LRFD BRIDGE DESIGN SPECIFICATION

DESIGNED BY MWB | DESIGNED CK'D DLM | DRAWN BY MWB | PLANS CK'D DLM

GENERAL PLAN

SHEET 1 OF 11
211

SCALE = 20

I.D. 1120-63-00B DATE: OCT. 2023

8

8

STATE PROJECT NUMBER

1120-63-71

GENERAL NOTES

DRAWINGS SHALL NOT BE SCALED.

BAR STEEL REINFORCEMENT SHALL BE EMBEDDED 2" CLEAR UNLESS OTHERWISE SHOWN OR NOTED.

THE FIRST OR FIRST TWO DIGITS OF THE BAR MARK SIGNIFIES THE BAR SIZE.

BEVEL EXPOSED EDGES OF CONCRETE ¾" UNLESS OTHERWISE NOTED.

THE UPPER LIMITS OF "EXCAVATION FOR STRUCTURES BRIDGES B-70-266" SHALL BE THE EXISTING GROUNDLINE.

PROTECTIVE SURFACE TREATMENT TO BE APPLIED TO THE ENTIRE EXPOSED TOP OF DECK AND APPROACH SLAB SURFACES AND TO THE VERTICAL AND HORIZONTAL SURFACES OF THE PAVING NOTCHES AT ABUTMENT DIAPHRAGMS.

PIGMENTED SURFACE SEALER TO BE APPLIED TO THE FRONT FACE AND THE TOP OF THE PARAPETS, INCLUDING PARAPETS ON APPROACH SLABS.

DIMENSIONS, STATIONING, AND ELEVATIONS SHOWN ARE BASED ON THE ORIGINAL STRUCTURE PLANS.

DEFINE ALL AREAS OF CONCRETE REMOVAL WITH A 1" SAWCUT.

THE CONTRACTOR SHALL SUPPLY A NEW NAME PLATE IN ACCORDANCE WITH SECTION 502.3.11 OF THE STANDARD SPECIFICATIONS AND THE STANDARD DETAIL DRAWINGS. NAME PLATE TO SHOW ORIGINAL CONSTRUCTION YEAR 2012.

HPC MASONRY SHALL BE USED ON PARAPETS, STRUCTURAL APPROACH SLABS, AND STRUCTURAL APPROACH SLAB FOOTINGS.

"LONGITUDINAL GROOVING BRIDGE DECK" SHALL BE APPLIED TO THE TRAFFIC LANES AND SHOULDERS ON THE STRUCTURAL APPROACH SLABS.

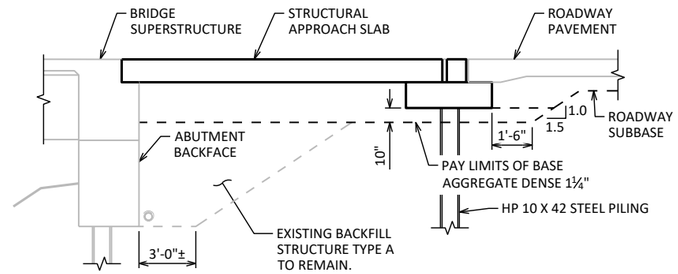

TYPICAL SECTION THRU ABUTMENT

ALL EXCAVATION REQUIRED TO PLACE BASE AGGREGATE AND STRUCTURAL APPROACH SLAB AS SHOWN ARE INCLUDED IN THE BID ITEM "EXCAVATION FOR STRUCTURES BRIDGES". RESTORE ANY STRUCTURE BACKFILL DISTURBED DURING EXCAVATION WITH BACKFILL STRUCTURE TYPE A, INCLUDED WITH BID ITEM "EXCAVATION FOR STRUCTURES BRIDGES".

TOTAL ESTIMATED QUANTITIES

BID ITEM NUMBER	BID ITEMS	UNIT	S. STRUCT. APP. SLAB	N. STRUCT. APP. SLAB	TOTALS
203.0220	REMOVING STRUCTURE (B-70-266)	EACH	---	---	1
206.1001	EXCAVATION FOR STRUCTURES BRIDGES (B-70-266)	EACH	---	---	1
305.0120	BASE AGGREGATE DENSE 1 1/4-INCH	TON	254	254	508
465.0125	ASPHALTIC SURFACE TEMPORARY	TON	9	9	18
502.3101	EXPANSION DEVICE	LF	77	77	154
502.3200	PROTECTIVE SURFACE TREATMENT	SY	190	190	380
502.3210	PIGMENTED SURFACE SEALER	SY	25	25	50
505.0600	BAR STEEL REINFORCEMENT HS COATED STRUCTURES	LB	16,160	16,160	32,320
505.0905	BAR COUPLERS NO. 5	EACH	21	21	42
505.0908	BAR COUPLERS NO. 8	EACH	16	16	32
517.1010.S	CONCRETE STAINING B-70-266	SF	102	102	204
517.1050.S	ARCHITECTURAL SURFACE TREATMENT B-70-266	SF	37	37	74
550.1100	PILING STEEL HP 10-INCH X 42 LB	LF	550	550	1,100
614.0150	ANCHOR ASSEMBLIES FOR STEEL PLATE BEAM GUARD	EACH	1	1	2
652.0125	CONDUIT RIGID METALLIC 2-INCH	LF	44	44	88
SPV.0035	HPC MASONRY STRUCTURES	CY	115.1	115.1	231
SPV.0090	REMOVING AND RESETTING ORNAMENTAL PROTECTIVE SCREENING	LF	22	22	44
SPV.0165	LONGITUDINAL GROOVING BRIDGE DECK	SF	1,440	1,440	2,880
	NON-BID ITEMS				
	FILLER	SIZE	---	---	½", ¾", 1½"

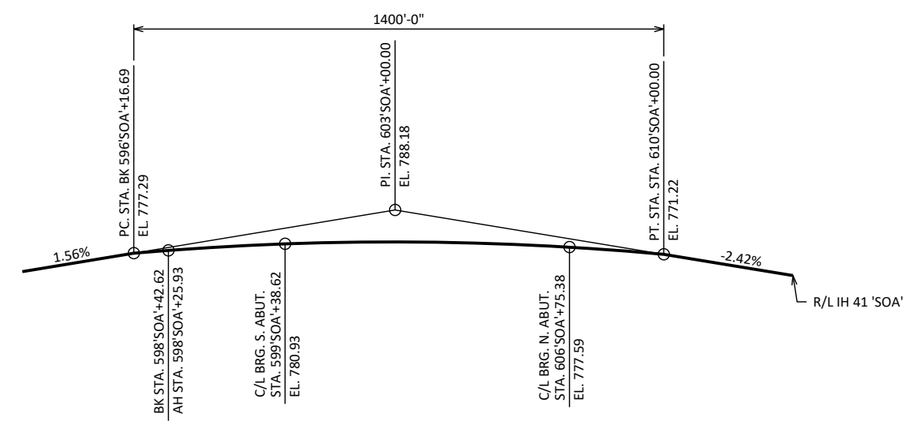

PROFILE GRADE LINE - IH 41 'SOA'

8

8

NO.	DATE	REVISION	BY

STATE OF WISCONSIN
DEPARTMENT OF TRANSPORTATION
STRUCTURES DESIGN SECTION

STRUCTURE B-70-266

DRAWN BY MWB PLANS CK'D DLM

GENERAL NOTES & QUANTITIES

SHEET 2

SCALE = 1

STATE PROJECT NUMBER

1120-63-71

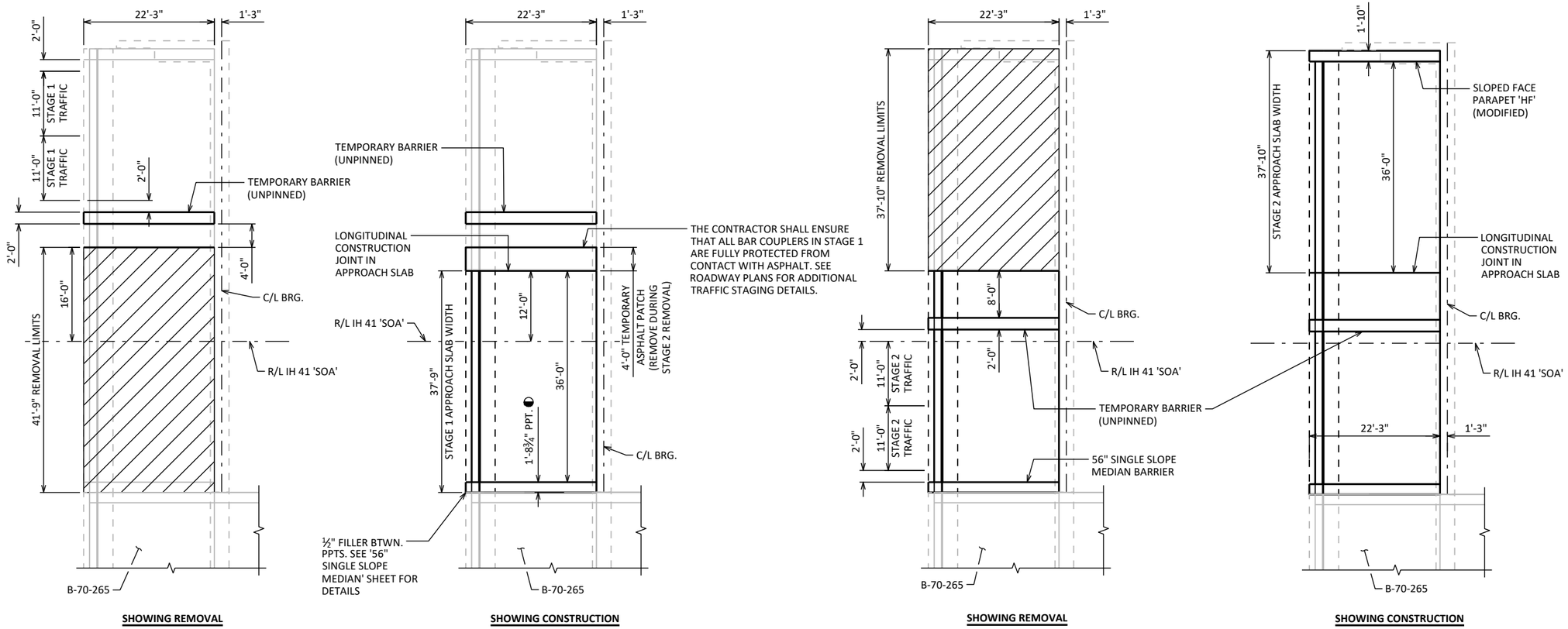

SHOWING REMOVAL **SHOWING CONSTRUCTION** **SHOWING REMOVAL** **SHOWING CONSTRUCTION**

STAGE 1

SOUTH APPROACH SHOWN, NORTH APPROACH SIMILAR
◐ DIMENSION DOES NOT INCLUDE ½" FILLER

STAGE 2

SOUTH APPROACH SHOWN, NORTH APPROACH SIMILAR

8

8

NO.	DATE	REVISION	BY

STATE OF WISCONSIN
DEPARTMENT OF TRANSPORTATION
STRUCTURES DESIGN SECTION

STRUCTURE B-70-266

DRAWN BY MWB PLANS CK'D DLM

STAGING PLAN

SHEET 3
213

SCALE = 20

STATE PROJECT NUMBER
1120-63-71

✳ SLOPE VARIES AT SOUTH APPROACH. SEE ROADWAY PLANS FOR SUPERELEVATION TRANSITION

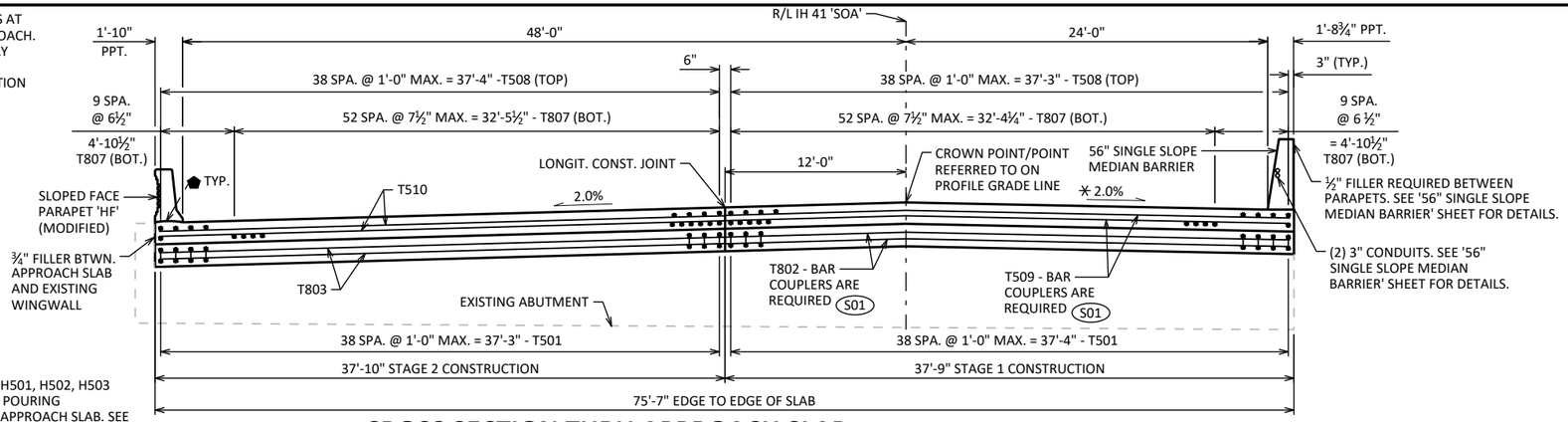

⬟ PLACE M403, H501, H502, H503 BARS BEFORE POURING STRUCTURAL APPROACH SLAB. SEE PARAPET AND BARRIER SHEETS FOR DETAILS.

CROSS SECTION THRU APPROACH SLAB

LOOKING NORTH

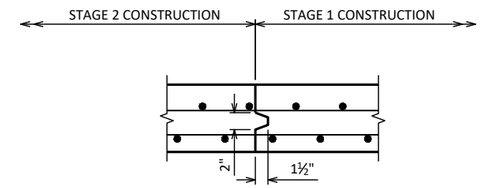

SECTION THRU LONGIT. JOINT

BAR COUPLERS NOT SHOWN

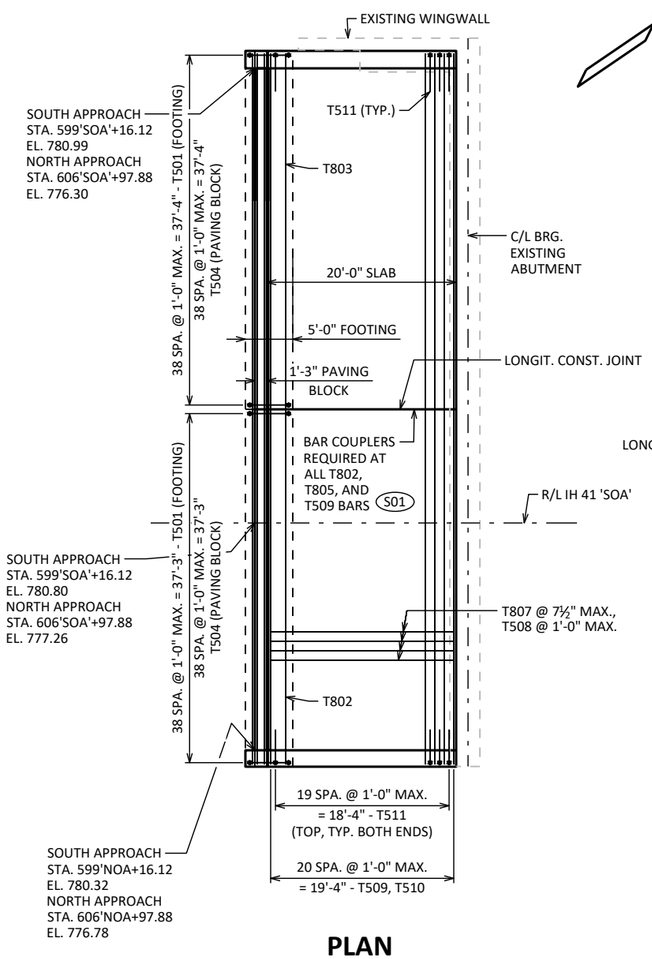

PLAN

SOUTH SLAB SHOWN, NORTH SLAB SIMILAR

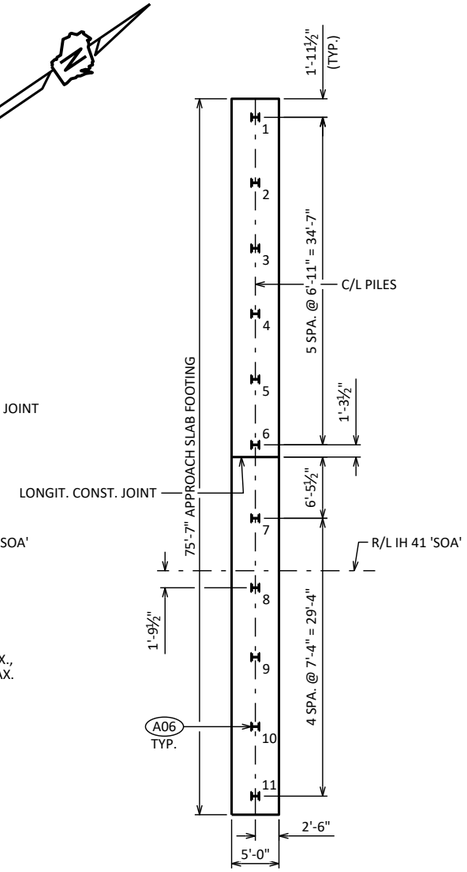

PILE PLAN

A06 SUPPORT SLAB FOOTING ON HP 10 x 42 STEEL PILING, ESTIMATED 50'-0" LONG WITH A REQUIRED DRIVING RESISTANCE OF 70 TONS PER PILE.

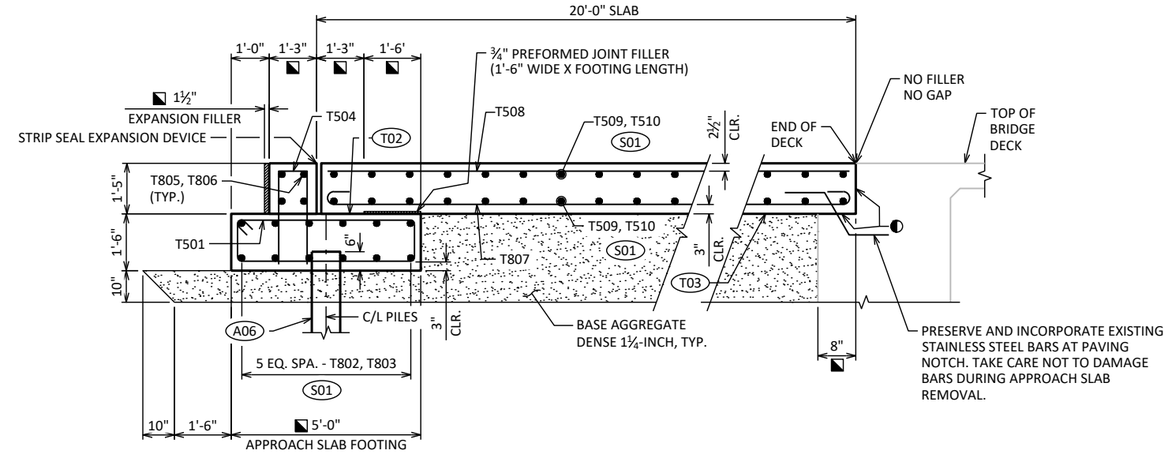

SECTION THRU APPROACH SLAB

◐ APPLY PROTECTIVE SURFACE TREATMENT TO PAVING NOTCH SURFACES PRIOR TO POURING STRUCTURAL APPROACH SLAB.

◪ MEASURED NORMAL TO ABUTMENT.

T02 STEEL TROWEL TOP SURFACE OF FOOTING AND PLACE MULTIPLE LAYERS (0.03" MIN. TOTAL THK.) OF POLYETHYLENE SHEETS OVER THE ENTIRE LENGTH OF THE FOOTING.

T03 PLACE MULTIPLE LAYERS (0.03" MIN. TOTAL THK.) OF POLYETHYLENE SHEETS OVER THE ENTIRE TOP OF SUBGRADE BENEATH SLAB.

S01 BAR COUPLERS USED. BAR LENGTH COMPUTED TO CL OF LONGIT. JOINT & SHALL BE MODIFIED IF REQ'D. TO THE BAR COUPLER MANUFACTURER RECOMMENDATIONS. PAY BASED ON BARS AS DETAILED.

NO.	DATE	REVISION	BY

STATE OF WISCONSIN
DEPARTMENT OF TRANSPORTATION
STRUCTURES DESIGN SECTION

STRUCTURE B-70-266

DRAWN BY MWB | PLANS CK'D DLM

STRUCTURAL APPROACH SLABS

SHEET 4
214

SCALE = 16

8

8

STATE PROJECT NUMBER

1120-63-71

BILL OF BARS

NOTE: THE FIRST OR FIRST TWO DIGITS OF THE BAR MARK SIGNIFIES THE BAR SIZE.

	BAR MARK	COAT	NO. REQ'D	LENGTH	BENT	BAR SERIES	LOCATION
	T501	X	156	12'-0"	X		APPROACH SLAB FTG. - STIRRUP
S01	T802	X	24	37'-6"			APPROACH SLAB FTG. - TRANS. - STAGE 1
	T803	X	24	37'-7"			APPROACH SLAB FTG. - TRANS. - STAGE 2
	T504	X	156	5'-8"	X		PAVING BLOCK - VERT.
S01	T805	X	8	37'-6"			PAVING BLOCK - TRANS. - STAGE 1
	T806	X	8	37'-7"			PAVING BLOCK - TRANS. - STAGE 2
	T807	X	248	20'-8"	X		APPROACH SLAB - LONGIT. - BOT.
	T508	X	156	19'-6"			APPROACH SLAB - LONGIT. - TOP
S01	T509	X	42	37'-6"			APPROACH SLAB - TRANS. - TOP & BOT. - STAGE 1
	T510	X	42	37'-7"			APPROACH SLAB - TRANS. - TOP & BOT. - STAGE 2
	T511	X	80	4'-1"	X		APPROACH SLAB - TRANS. - TOP

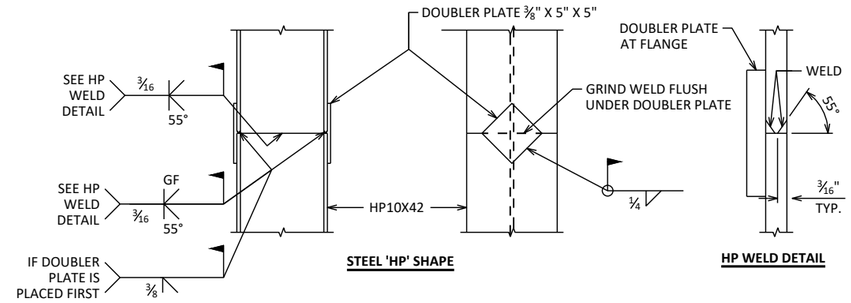

'HP' PILE DETAILS

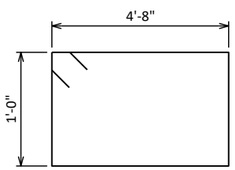

T501

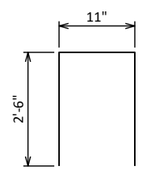

T504

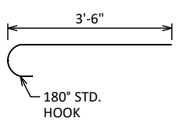

T511

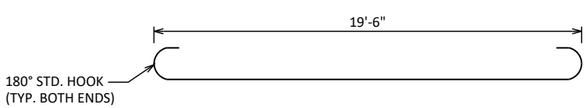

T807

S01 BAR COUPLERS USED. BAR LENGTH COMPUTED TO CL OF LONGIT. JOINT & SHALL BE MODIFIED IF REQ'D. TO THE BAR COUPLER MANUFACTURER RECOMMENDATIONS. PAY BASED ON BARS AS DETAILED.

NO.	DATE	REVISION	BY

STATE OF WISCONSIN
DEPARTMENT OF TRANSPORTATION
STRUCTURES DESIGN SECTION

STRUCTURE B-70-266

DRAWN BY MWB PLANS CK'D DLM

STRUCTURAL APPROACH SLAB DETAILS

SHEET 5

SCALE = 1

8

8

STATE PROJECT NUMBER

1120-63-71

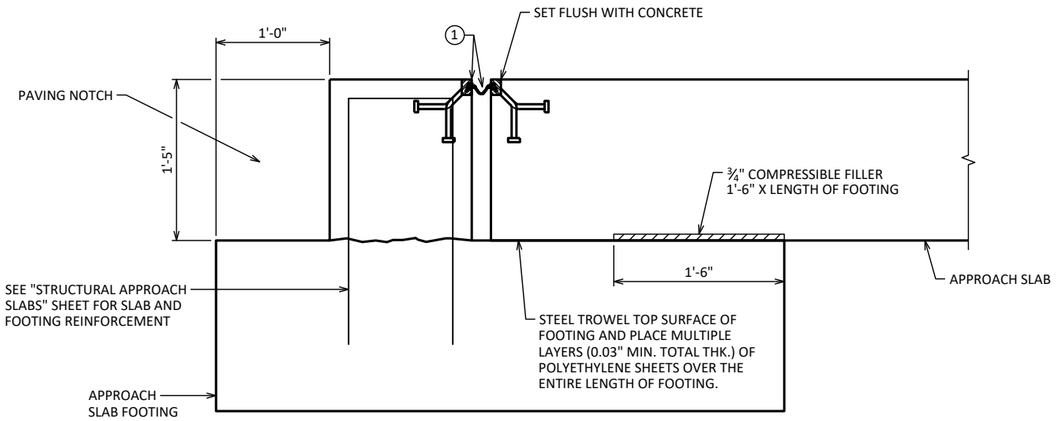

SECTION THRU JOINT AT APPROACH SLAB

FOOTING PILE NOT SHOWN

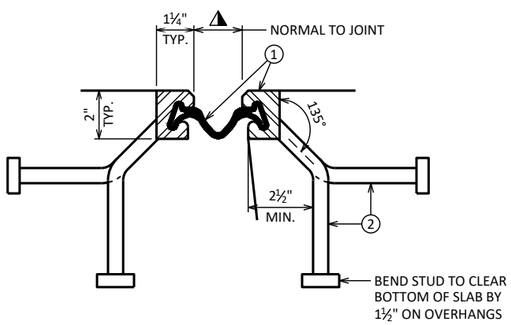

SECTION THRU JOINT

EXTERIOR GIRDER TO EDGE OF DECK AND AT PARAPETS

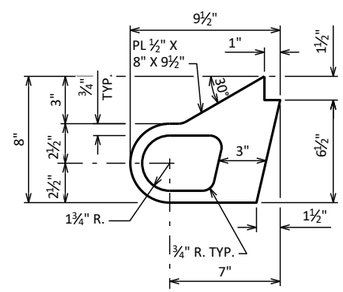

ALTERNATE STRIP SEAL ANCHOR

LEGEND

1. NEOPRENE STRIP SEAL (5 - INCH) AND STEEL EXTRUSIONS.
2. STUDS ⅝" DIA. X 6⅜" LONG AT 6" ALTERNATE CENTERS. WELD TO EXTRUSIONS AND BEND AS SHOWN AFTER WELDING.
6. GALVANIZED PLATE ⅜" X LIMITS SHOWN WITH HOLES FOR NO.7.
7. ¾" DIA. X 1½" STAINLESS STEEL SOCKET FLAT HEAD SCREWS WITH ANTI-SEIZE LUBRICANT. PLACE IN COUNTERSUNK HOLE. RECESS 1/16" BELOW PLATE SURFACE.
8. ¾" DIA. X 4" GALVANIZED HEX HEAD BOLT. BEND 45°.
9. ¾" DIA. X 2¼" GALVANIZED THREADED COUPLING.
11. 1" X 5" SLOTTED COUNTERSUNK HOLE FOR NO. 7. PLACE SLOT PARALLEL TO DIRECTION OF MOVEMENT.

◮ TEMPERATURE TABLE

SHADED UNDERSIDE DECK TEMP. (°F)	JOINT OPENING (NORMAL TO JT.)
85°	1⅜"
75°	1½"
65°	1⅝"
55°	1⅞"
45°	2"
35°	2¼"
25°	2½"
15°	2¾"
5°	3"

A SMALL JOINT OPENING DUE TO A HIGH TEMPERATURE AT TIME OF CONSTRUCTION MAY REQUIRE NEOPRENE STRIP SEAL INSTALLATION INTO STEEL EXTRUSIONS PRIOR TO SETTING THE EXPANSION JOINT.

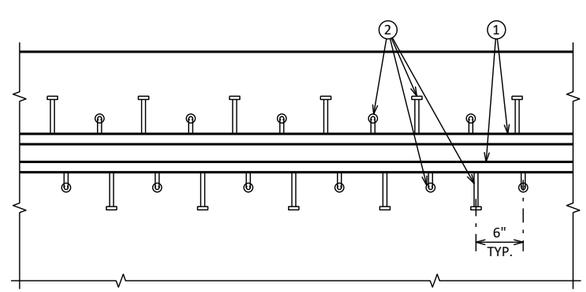

PART PLAN

NOTES

ONE FIELD SPLICE PERMITTED IN STEEL EXTRUSIONS, UNLESS MORE ARE REQUIRED FOR STAGED CONSTRUCTION, HANDLING OR GALVANIZING REQUIREMENTS. IF USED, ANCHOR PLATES SHALL BE PROVIDED 3" FROM EACH SIDE OF THE FIELD SPLICE. DETAILS SHALL BE SUBMITTED FOR APPROVAL. NO SPLICING PERMITTED IN NEOPRENE STRIP SEAL.

AFTER FABRICATION, BUT BEFORE SHIPMENT, STRAIGHTEN STEEL EXTRUSIONS SUCH THAT THEY SHALL BE FREE FROM WARP, TWIST AND SWEEP.

FABRICATOR SHALL PROVIDE MEANS OF KEEPING GALVANIZED EXTRUSIONS CLEAN AND SMOOTH DURING SHIPMENT AND PRIOR TO APPLYING LUBRICANT ADHESIVE FOR NEOPRENE GLAND INSTALLATION.

SANDBLAST PLATES, SUPPORTS AND EXTRUSIONS AFTER FABRICATION IN ACCORDANCE WITH SSPC SP. #6 "COMMERCIAL BLAST CLEANING". AFTER BLAST CLEANING, THE PLATES, SUPPORTS AND EXTRUSIONS SHALL BE HOT DIPPED GALVANIZED.

ANCHOR SYSTEM NO. 8 AND NO. 9 SHALL CONFORM TO ASTM A307 AND SHALL BE GALVANIZED IN ACCORDANCE WITH ASTM A153 CLASS C AND D.

ALL MATERIAL IN THE EXPANSION JOINT ASSEMBLY, INCLUDING ANCHOR STUDS AND HARDWARE SHALL BE PAID AT THE UNIT PRICE BID FOR "EXPANSION DEVICE B-70-266.

8

8

NO.	DATE	REVISION	BY

STATE OF WISCONSIN
DEPARTMENT OF TRANSPORTATION
STRUCTURES DESIGN SECTION

STRUCTURE B-70-266

DRAWN BY MWB | PLANS CK'D DLM

EXPANSION DEVICE

SHEET 6
216

SCALE = 2.00

STATE PROJECT NUMBER

1120-63-71

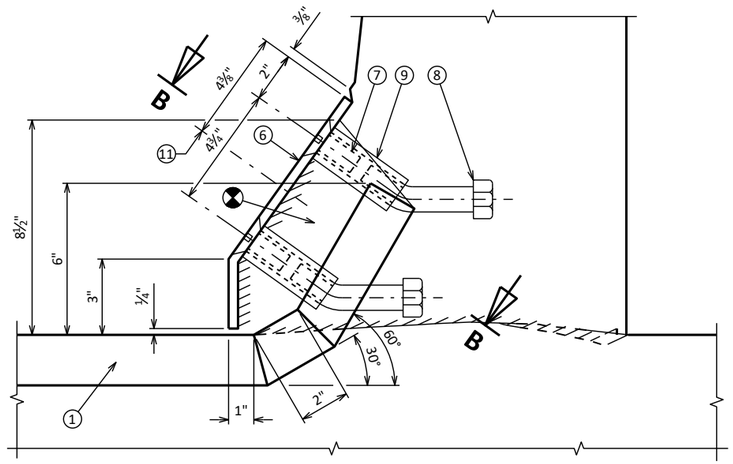

SECTION A-A

FOR TYPE 'HF' PARAPET

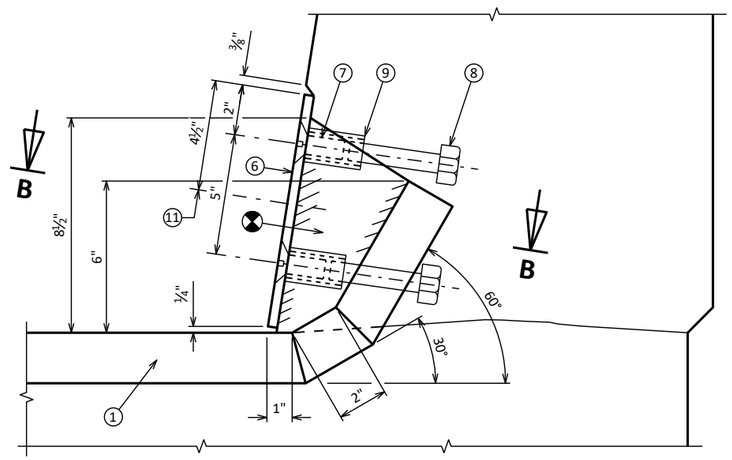

SECTION A-A

FOR 56" SINGLE SLOPE PARAPET

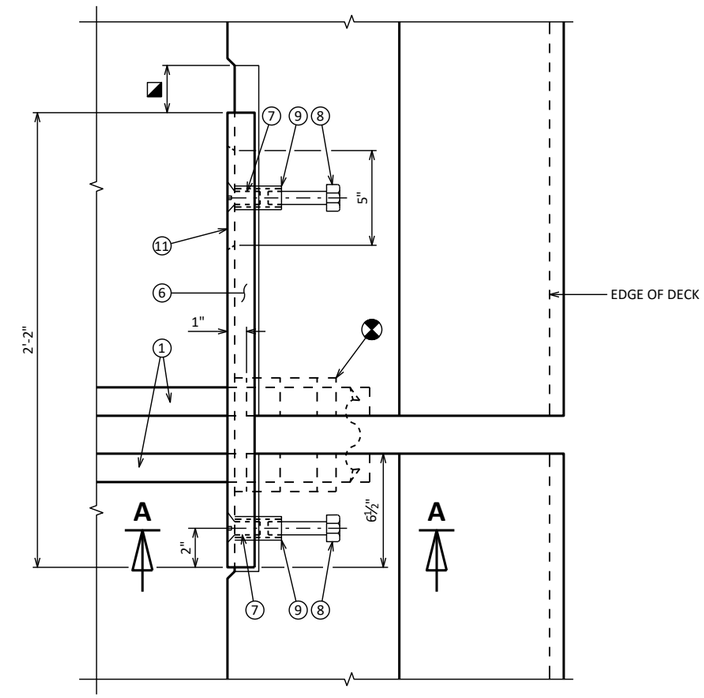

PLAN AT PARAPETS

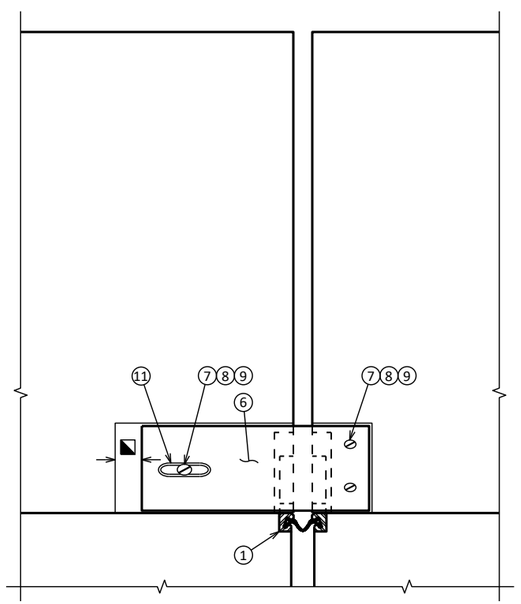

VIEW OF PARAPET PLATE FROM ROADWAY

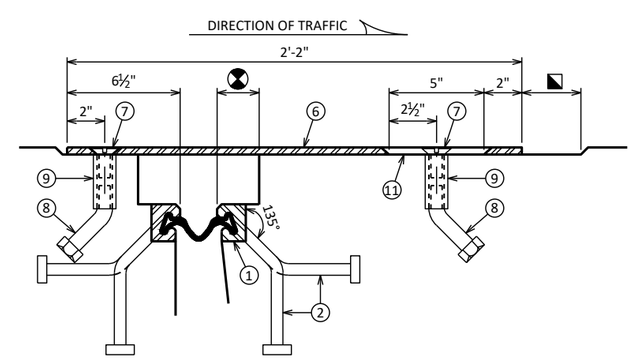

SECTION B-B

BLOCK OUT CONCRETE 2" EACH SIDE OF JOINT OPENING.

JOINT OPENING DIMENSION ALONG SKEW PLUS ½".

NO.	DATE	REVISION	BY

STATE OF WISCONSIN
DEPARTMENT OF TRANSPORTATION
STRUCTURES DESIGN SECTION

STRUCTURE B-70-266

DRAWN BY MWB | PLANS CK'D DLM

COVER PLATE DETAILS

SHEET 7

217

SCALE = 2.00

8

8

STATE PROJECT NUMBER

1120-63-71

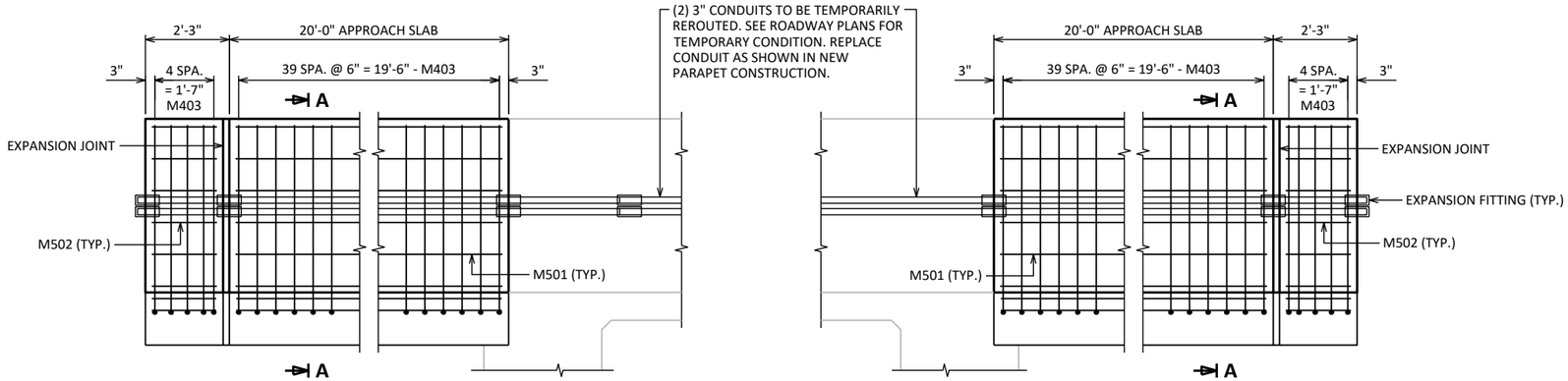

ELEVATION

NOTES

CONDUIT SHALL BE EMBEDDED 2" CLEAR.

EXPANSION FITTINGS, ADAPTER FITTINGS, AND CONDUIT BENDS ARE INCIDENTAL TO "CONDUIT RIGID METALLIC 2-INCH".

CONDUIT BENDS SHALL CONFORM TO THE NATIONAL ELECTRIC CODE.

2'-0" MIN. CONDUIT COVER UNDER ROADWAY.

BILL OF BARS

NOTE: THE FIRST OR FIRST TWO DIGITS OF THE BAR MARK SIGNIFIES THE BAR SIZE.

BAR MARK	COAT	NO. REQ'D	LENGTH	BENT	BAR SERIES	LOCATION
M501	X	20	19'-8"			MEDIAN BARRIER - HORIZ.
M502	X	20	1'-9"			MEDIAN BARRIER - HORIZ.
M403	X	90	8'-2"	X		MEDIAN BARRIER & APP. SLAB - VERT.

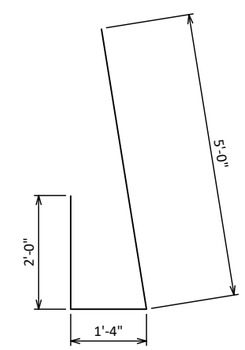

M403

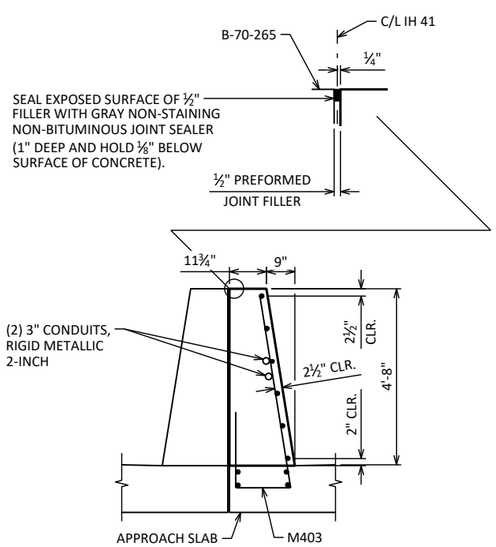

SECTION A-A

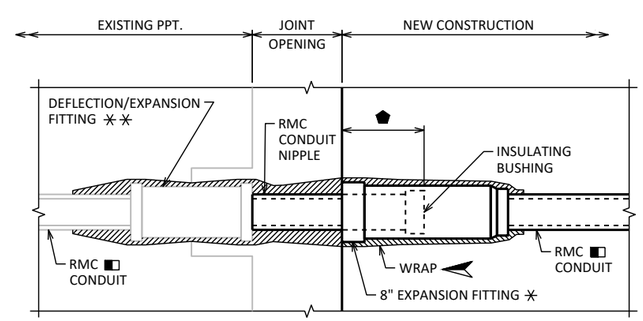

DEFLECTION/EXPANSION AND 8" EXPANSION FITTING

THIS DETAIL ACCOMMODATES A MAXIMUM OF 8" TOTAL MOVEMENT AND UP TO 30 DEGREES OF ANGULAR MISALIGNMENT IN ANY DIRECTION. BOND JUMPER NOT SHOWN FOR CLARITY.

LEGEND

- USE 2" DIA. RIGID METALLIC (RMC) CONDUIT AT FITTINGS.
- NONMETALLIC CONDUIT TO METALLIC CONDUIT ADAPTER FITTING (UL OR NRTL LISTED FOR ELECTRICAL USE SHALL BE USED).
- SPONGE RUBBER WRAP TO BE AASHTO M153, TYPE 1 OR EQUIVALENT - ¼" MINIMUM THICKNESS. PROVIDE WRAP FOR THE ENTIRE LENGTH OF THE FITTING OR AS SHOWN. SPONGE RUBBER WRAP INCIDENTAL TO "CONDUIT RIGID METALLIC 2-INCH".
- POSITION MOVABLE END OF CONDUIT INSIDE EXPANSION FITTING, SUCH THAT IT WILL HAVE THE SAME ALLOWANCE FOR MOVEMENT (EXPANSION/CONTRACTION) AS THE EXPANSION DEVICE SET IN PLACE IN THE DECK BELOW IT. TAKE CARE TO INSTALL EXPANSION FITTING AND CONDUIT EXACTLY PARALLEL TO BRIDGE MOVEMENT.
- ✳ EXPANSION FITTING REQUIREMENTS (IF USED):
  - 8" TOTAL MOVEMENT WITH BONDING JUMPER
- ✳✳ DEFLECTION/EXPANSION FITTING REQUIREMENTS (IF USED):
  - UP TO ¾" CONDUIT CONTRACTION OR EXPANSION AND UP TO 30° OF ANGULAR MISALIGNMENT IN ANY DIRECTION WITH BONDING JUMPER

8

8

NO.	DATE	REVISION	BY

STATE OF WISCONSIN
DEPARTMENT OF TRANSPORTATION
STRUCTURES DESIGN SECTION

STRUCTURE B-70-266

DRAWN BY MWB PLANS CK'D DLM

56" SINGLE SLOPE MEDIAN BARRIER

SHEET 8

SCALE =

STATE PROJECT NUMBER

1120-63-71

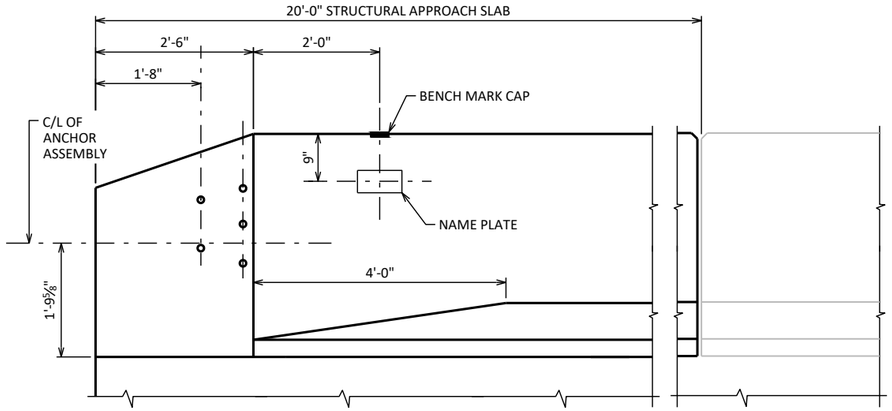

INSIDE ELEVATION

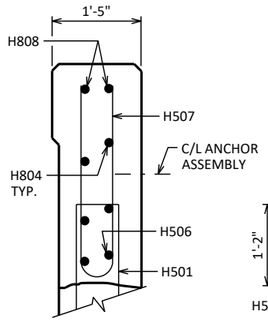

SECTION A-A

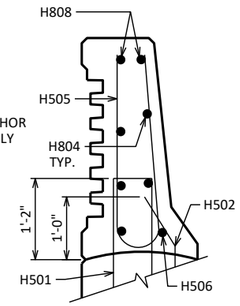

SECTION B-B

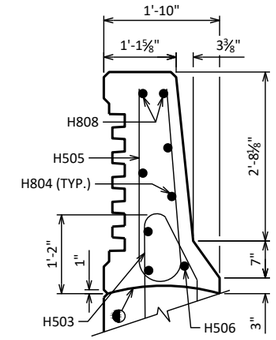

SECTION C-C

BILL OF BARS

NOTE: THE FIRST OR FIRST TWO DIGITS OF THE BAR MARK SIGNIFIES THE BAR SIZE.

BAR MARK	COAT	NO. REQ'D	LENGTH	BENT	BAR SERIES	LOCATION
H501	X	28	5'-3"	X		PPT. & SLAB - VERT.
H502	X	16	2'-4"	X		PPT. & SLAB - VERT.
H503	X	40	4'-7"	X		PPT. & SLAB - VERT.
H804	X	10	19'-5"			PPT. - HORIZ.
H505	X	56	6'-6"	X		PPT. - VERT.
H506	X	2	19'-5"	X		PPT. - HORIZ.
H507	X	12	5'-8"	X	◭	PPT. - VERT.
H808	X	4	19'-6"	X		PPT. - HORIZ. - TOP

◭ LENGTH SHOWN FOR BAR IS AN AVERAGE AND SHOULD ONLY BE USED FOR BAR WEIGHT CALCULATIONS. SEE BAR SERIES TABLE FOR ACTUAL LENGTHS.

BAR SERIES TABLE

BUNDLE AND TAG EACH SERIES SEPARATELY.

BAR MARK	NO. REQ'D	LENGTH
H507	2 SERIES OF 6	4'-10" TO 6'-6"

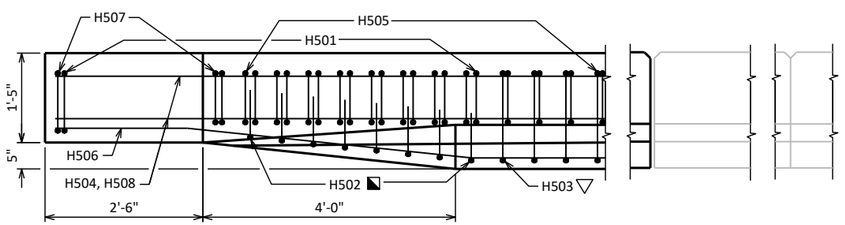

PLAN

◐ CONST. JOINT - STRIKE OFF AS SHOWN.

◪ H502 BARS MAY BE PLACED AFTER CONCRETE IS POURED BUT BEFORE INITIAL SET HAS TAKEN PLACE. USE CARE TO PLACE H502 BARS CORRECTLY ALONG TRANSITION OF PARAPET.

▽ H501 AND H503 BARS TO BE TIED TO STRUCTRUAL APPROACH SLAB STEEL BEFORE STRUCTURAL APPROACH SLAB IS POURED.

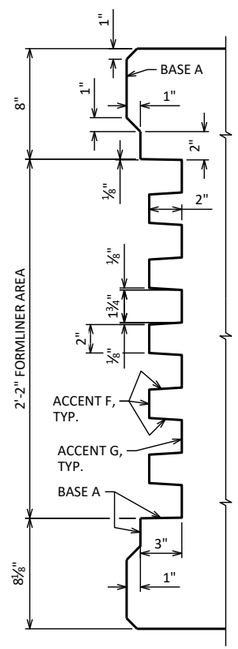

PARAPET FORMLINER DETAIL

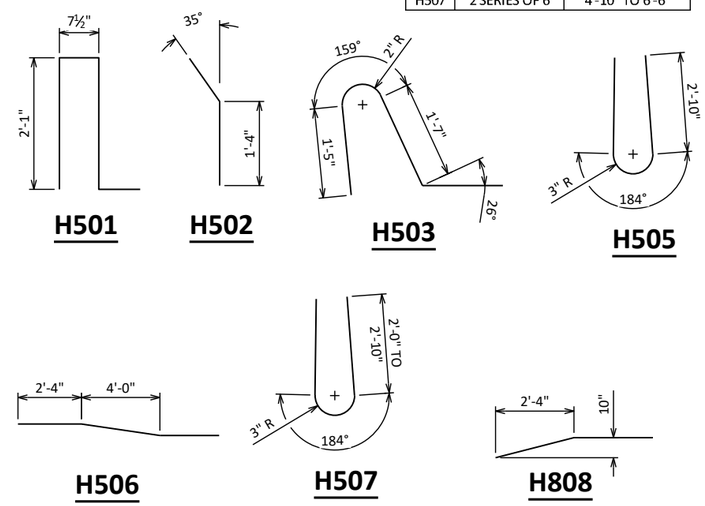

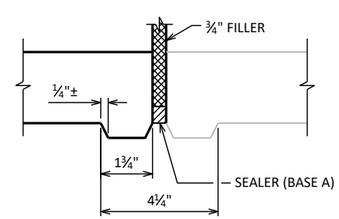

SECTION D-D

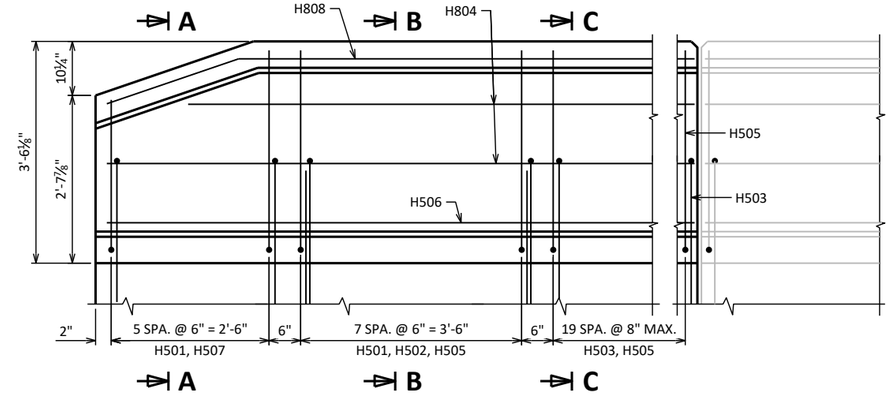

ELEVATION SHOWING REINFORCEMENT

COLOR	LOCATION
BASE A: TOTALLY TAN (SW6115)	PARAPET
ACCENT F: BLUE PLATE (SW6796)	PARAPET 2" RECESS
ACCENT G:FLYWAY (SW6794)	PARAPET 4" RECESS

GENERAL NOTES:

DESIGN COLORS ARE BASED ON SHERWIN WILLIAMS COLOR PALLET. ALL COLOR STAIN EQUIVALENTS TO MATCH COLORS SPECIFIED.

CONCRETE STAINING SCHEDULE

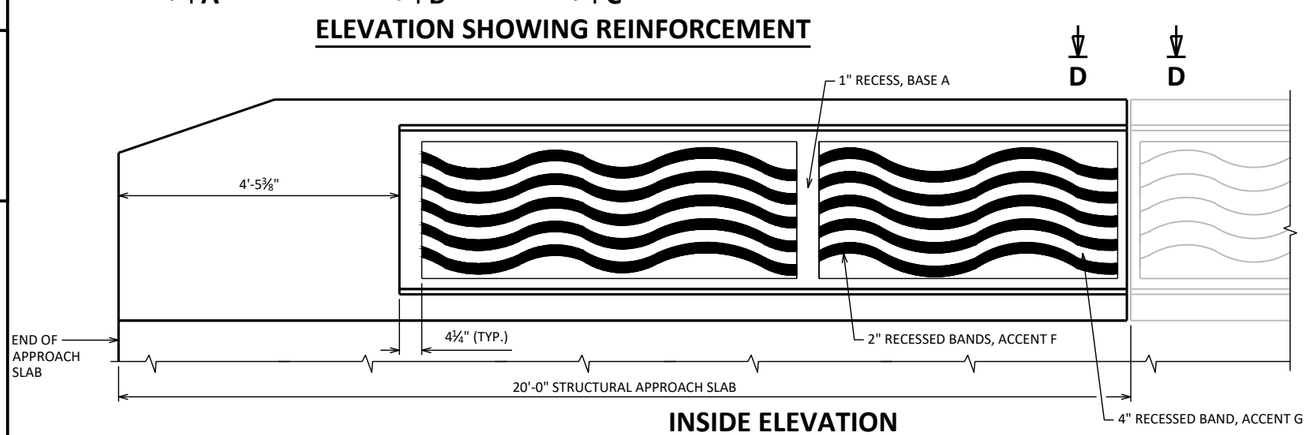

INSIDE ELEVATION

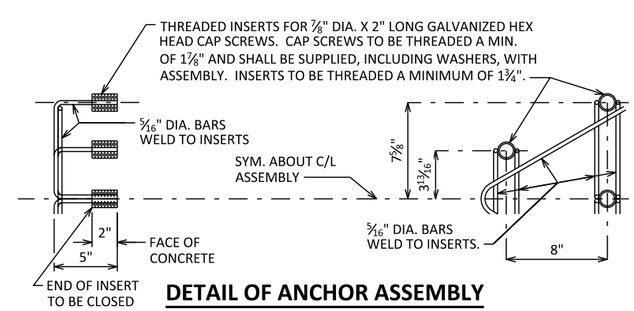

DETAIL OF ANCHOR ASSEMBLY

NOTE: HEX HEAD CAP SCREWS & WASHERS TO BE GALVANIZED IN ACCORDANCE WITH ASTM F2429.

ASSEMBLY SHALL BE BID ITEM "ANCHOR ASSEMBLIES FOR STEEL PLATE BEAM GUARD", EACH.

NO.	DATE	REVISION	BY

STATE OF WISCONSIN
DEPARTMENT OF TRANSPORTATION
STRUCTURES DESIGN SECTION

STRUCTURE B-70-266

DRAWN BY MWB PLANS CK'D DLM

SLOPED FACE PARAPET 'HF' (MODIFIED)

SHEET 9

219

SCALE =

8

8

NOTE: SUBSURFACE SHEETS ARE BASED ON THE ORIGINAL SOIL BORINGS (DATED 04/28/2009) AND STRUCTURE PLANS AND ARE PROVIDED FOR INFORMATION ONLY.

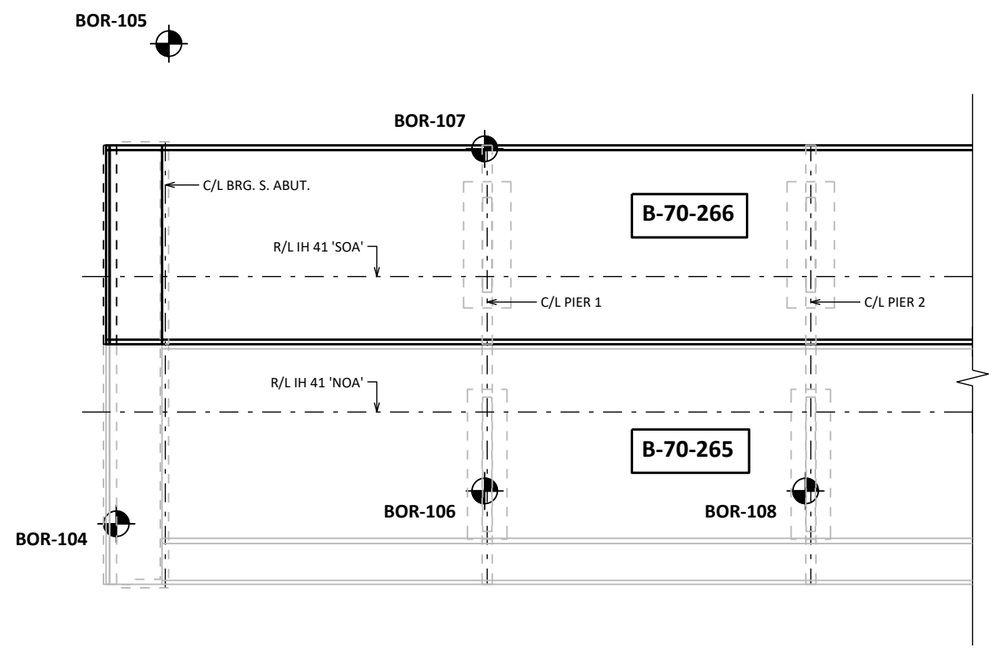

PLAN

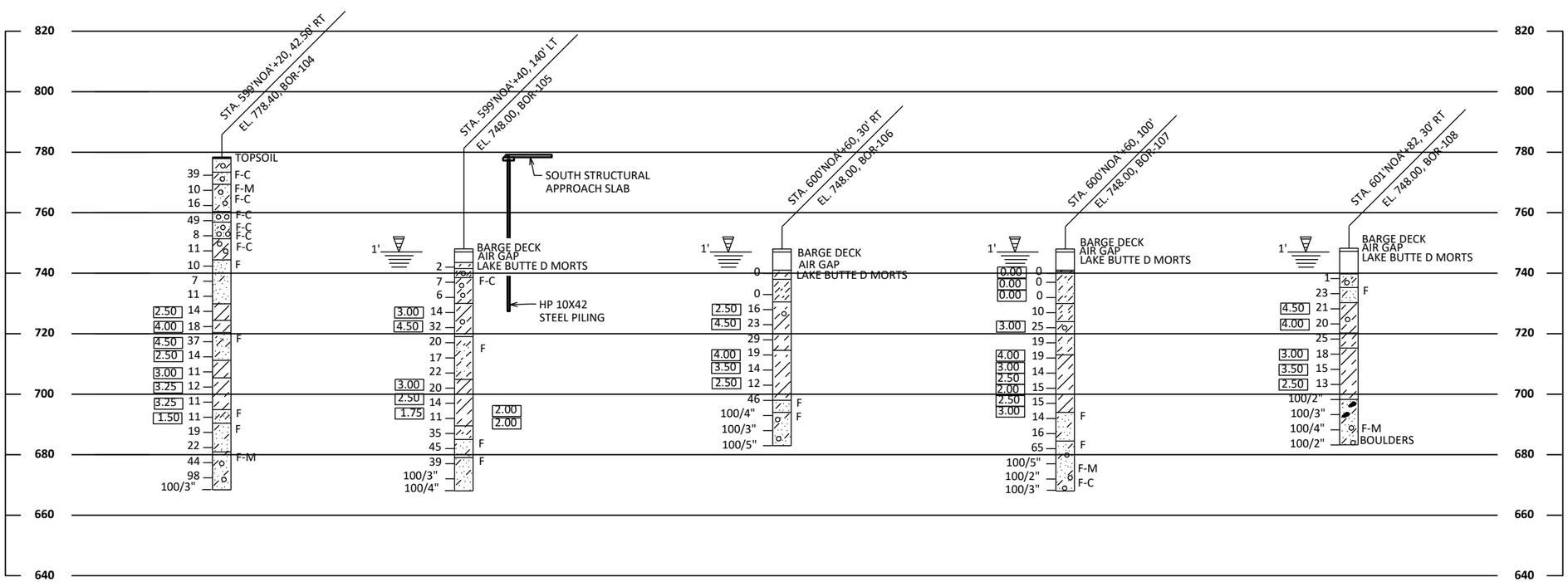

STATE PROJECT NUMBER

1120-63-71

ABBREVIATIONS

F FINE M MEDIUM C COARSE
WS WEATHERED SO SOUND

MATERIAL SYMBOLS

TOPSOIL, SILT, SANDSTONE, SAND, PEAT, LIMESTONE, GRAVEL, CLAY, IGNEOUS ROCK

LEGEND OF PROBING

95/6=95 BLOWS FOR 6" PENETRATION PROBING TAKEN WITH A 350# WT. FALLING 18" ON A 2" O.D. POINT.

PROBING NO.
STA.
ELEVATION
7 AVERAGE BLOWS PER FOOT
REFUSAL 95/6

LEGEND OF BORING

BORING NO.
ELEV. STA.
UNCONFINED STRENGTH (TSF) 7.7
7
BLOWS PER FT. USING 140# WT. FALLING 30"
WASH SAMPLE
SHELBY TUBE ~~S.T.~~
GROUND WATER ELEVATION
NO GROUND WATER OBSERVED ABOVE THIS ELEVATION
SANDY GRAVEL
F. BOULDERS OR COBBLES
SAND
SILTY CLAY
SO LIMESTONE

UNLESS OTHERWISE SPECIFIED, THE BLOWS PER FOOT AT THE LOCATIONS INDICATED ARE BASED ON DRIVING A 2" O.D. X 1.4" I.D. SPLIT SPOON SAMPLER WITH A 140# HAMMER HAVING A FREE FALL OF 30". THE BLOW COUNT IS TAKEN IN UNDISTURBED SOIL IMMEDIATELY BELOW A CASED OR OPEN HOLE ELIMINATING SIDE FRICTION ON THE DRIVE PIPE.

SUBSURFACE EXPLORATION FOR FOUNDATION DESIGN AND BIDDERS INFORMATION

TO OBTAIN RELATIVE DATA CONCERNING THE CHARACTER OF MATERIAL IN AND UPON WHICH THE FOUNDATION MIGHT BE BUILT, BORINGS AND/OR SOUNDINGS WERE MADE AT POINTS APPROXIMATELY AS INDICATED ON THIS DRAWING. THE DATA PRESENTED HEREIN REPRESENTS THE FINDINGS OF THE SUBSURFACE EXPLORATIONS MADE. HOWEVER, BECAUSE THE DEPTHS INVESTIGATED ARE LIMITED AND THE AREA OF THE BORINGS AND/OR SOUNDINGS IS VERY SMALL IN RELATION TO THE ENTIRE AREA, THE WISCONSIN DEPARTMENT OF TRANSPORTATION DOES NOT WARRANT CONDITIONS BELOW THE DEPTHS INVESTIGATED OR THAT THE CLASSIFICATION OF MATERIAL ENCOUNTERED IN THESE INVESTIGATIONS IS NECESSARILY TYPICAL OF THE ENTIRE SITE.

NO.	DATE	REVISION	BY

STATE OF WISCONSIN
DEPARTMENT OF TRANSPORTATION
STRUCTURES DESIGN SECTION

STRUCTURE B-70-266

DRAWN BY MHM/MWB PLANS CK'D DLM

SUBSURFACE EXPLORATION 1

SHEET 10
220

8

8

NOTE: SUBSURFACE SHEETS ARE BASED ON THE ORIGINAL SOIL BORINGS (DATED 04/28/2009) AND STRUCTURE PLANS AND ARE PROVIDED FOR INFORMATION ONLY.

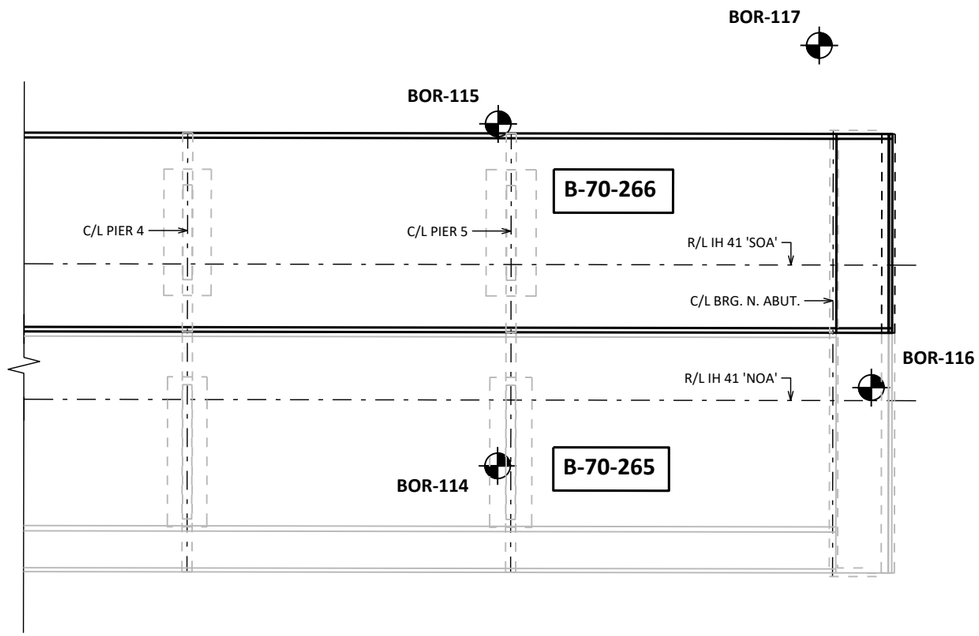

PLAN

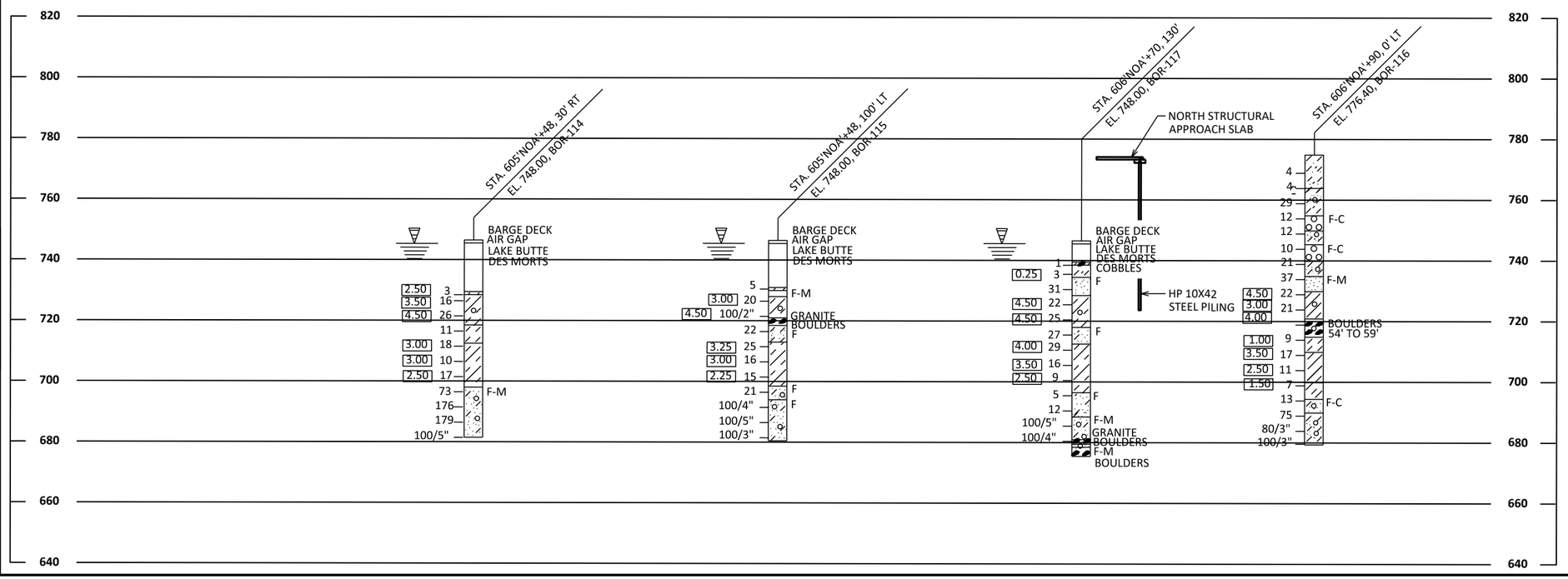

STATE PROJECT NUMBER

1120-63-71

ABBREVIATIONS

F FINE | M MEDIUM | C COARSE
WS WEATHERED | SO SOUND

MATERIAL SYMBOLS

TOPSOIL, SILT, SANDSTONE, SAND, PEAT, LIMESTONE, GRAVEL, CLAY, IGNEOUS ROCK

LEGEND OF PROBING

95/6=95 BLOWS FOR 6" PENETRATION PROBING TAKEN WITH A 350# WT. FALLING 18" ON A 2" O.D. POINT.

PROBING NO.
STA.
ELEVATION
7 AVERAGE BLOWS PER FOOT
REFUSAL 95/6

LEGEND OF BORING

BORING NO.
ELEV.
STA.
UNCONFINED STRENGTH (TSF) — 7. 7
BLOWS PER FT. USING 140# WT. FALLING 30" — 7
WASH SAMPLE
SHELBY TUBE ~~S.T.~~
GROUND WATER ELEVATION
NO GROUND WATER OBSERVED ABOVE THIS ELEVATION
SANDY GRAVEL
F. BOULDERS OR COBBLES
SAND
SILTY CLAY
SO LIMESTONE

UNLESS OTHERWISE SPECIFIED, THE BLOWS PER FOOT AT THE LOCATIONS INDICATED ARE BASED ON DRIVING A 2" O.D. X 1.4" I.D. SPLIT SPOON SAMPLER WITH A 140# HAMMER HAVING A FREE FALL OF 30". THE BLOW COUNT IS TAKEN IN UNDISTURBED SOIL IMMEDIATELY BELOW A CASED OR OPEN HOLE ELIMINATING SIDE FRICTION ON THE DRIVE PIPE.

SUBSURFACE EXPLORATION FOR FOUNDATION DESIGN AND BIDDERS INFORMATION

TO OBTAIN RELATIVE DATA CONCERNING THE CHARACTER OF MATERIAL IN AND UPON WHICH THE FOUNDATION MIGHT BE BUILT, BORINGS AND/OR SOUNDINGS WERE MADE AT POINTS APPROXIMATELY AS INDICATED ON THIS DRAWING. THE DATA PRESENTED HEREIN REPRESENTS THE FINDINGS OF THE SUBSURFACE EXPLORATIONS MADE. HOWEVER, BECAUSE THE DEPTHS INVESTIGATED ARE LIMITED AND THE AREA OF THE BORINGS AND/OR SOUNDINGS IS VERY SMALL IN RELATION TO THE ENTIRE AREA, THE WISCONSIN DEPARTMENT OF TRANSPORTATION DOES NOT WARRANT CONDITIONS BELOW THE DEPTHS INVESTIGATED OR THAT THE CLASSIFICATION OF MATERIAL ENCOUNTERED IN THESE INVESTIGATIONS IS NECESSARILY TYPICAL OF THE ENTIRE SITE.

NO.	DATE	REVISION	BY

STATE OF WISCONSIN
DEPARTMENT OF TRANSPORTATION
STRUCTURES DESIGN SECTION

STRUCTURE B-70-266

DRAWN BY MHM/MWB | PLANS CK'D DLM

SUBSURFACE EXPLORATION 2

SHEET 11

8

8

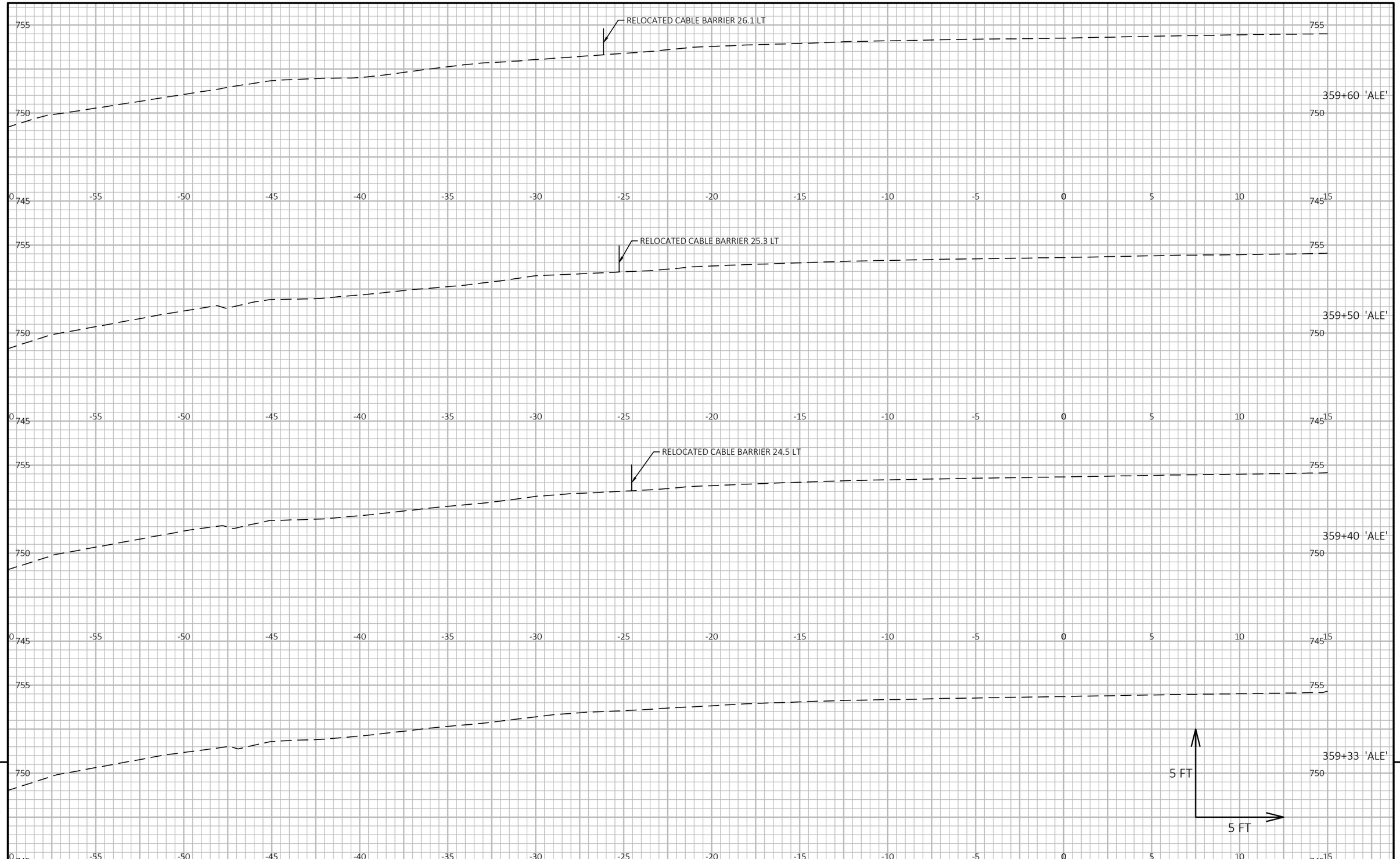

9

9

PROJECT NO: 1120-63-71	HWY: IH 41	COUNTY: WINNEBAGO	CROSS SECTIONS: GUARDRAIL	SHEET 222	E

FILE NAME : S:\MAD\2000--2099\2089\008\DRAWINGS\CAD\CIVIL 3D\SHEETS\OTHR\CABLE BARRIER XS.DWG
LAYOUT NAME - 090201-xs

PLOT DATE : 7/20/2023 9:25 AM PLOT BY : SCHMIDT, BRAD PLOT NAME : PLOT SCALE : 1 IN:5 FT HORZ. / 1 IN:5 FT VERT.

WISDOT/CADDS SHEET 49

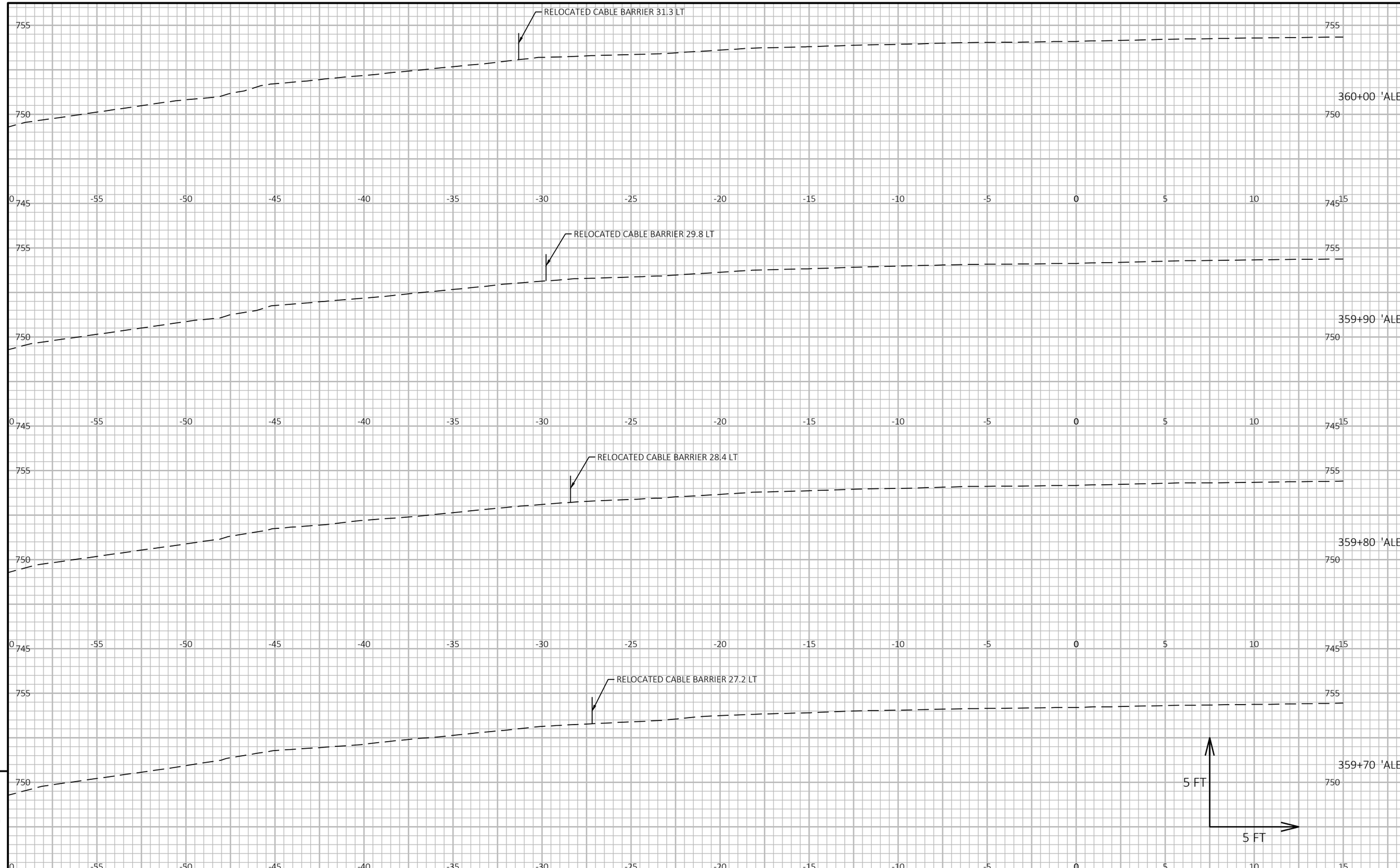

9

9

PROJECT NO: 1120-63-71	HWY: IH 41	COUNTY: WINNEBAGO	CROSS SECTIONS: GUARDRAIL	SHEET 223	E

FILE NAME : S:\MAD\2000--2099\2089\008\DRAWINGS\CAD\CIVIL 3D\SHEETS\OTHR\CABLE BARRIER XS.DWG
LAYOUT NAME - 090202-xs

PLOT DATE : 7/20/2023 9:25 AM PLOT BY : SCHMIDT, BRAD PLOT NAME : PLOT SCALE : 1 IN:5 FT HORZ. / 1 IN:5 FT VERT.

WISDOT/CADDS SHEET 49

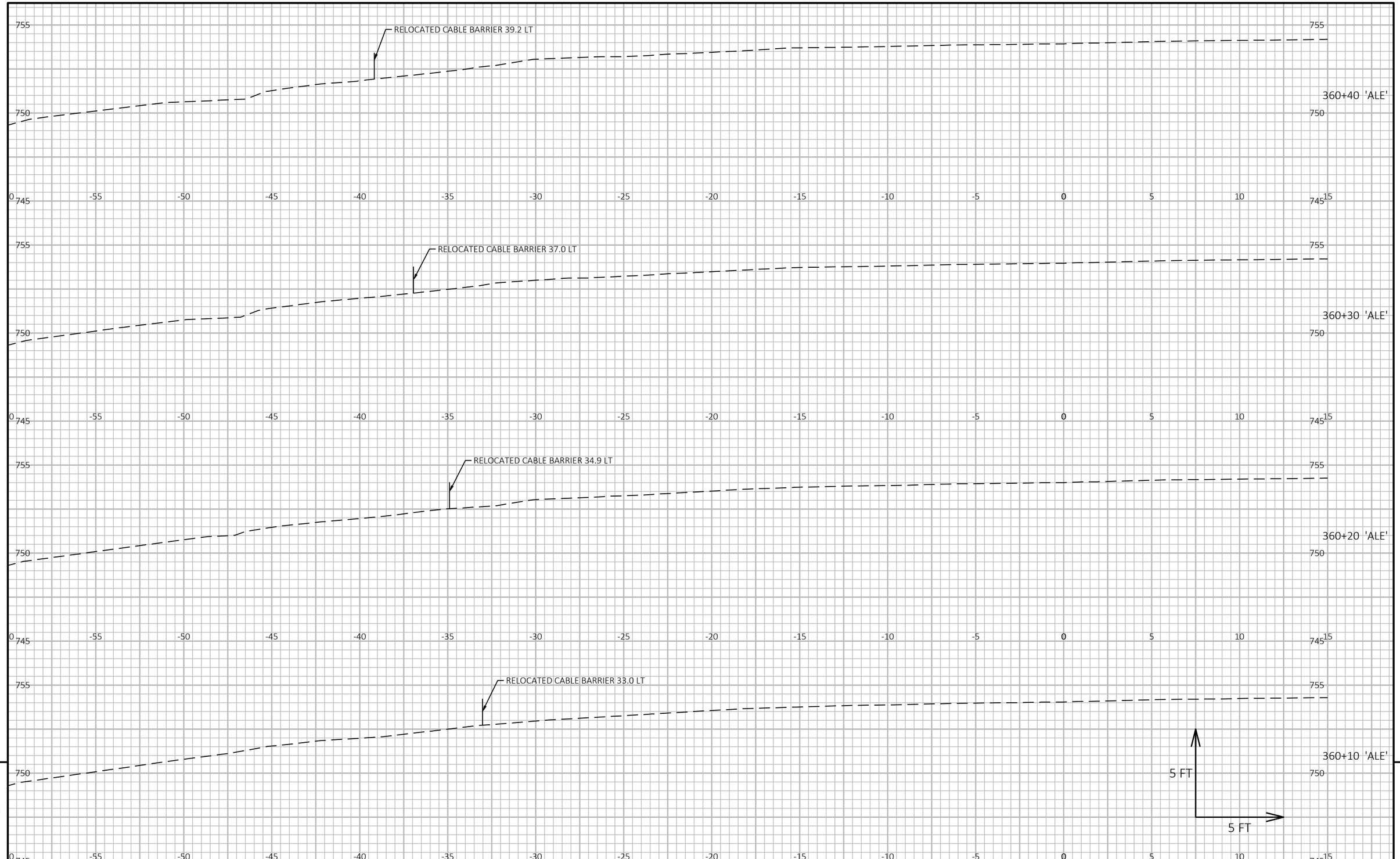

9

9

PROJECT NO: 1120-63-71	HWY: IH 41	COUNTY: WINNEBAGO	CROSS SECTIONS: GUARDRAIL	SHEET 224	E

FILE NAME : S:\MAD\2000--2099\2089\008\DRAWINGS\CAD\CIVIL 3D\SHEETS\OTHR\CABLE BARRIER XS.DWG
LAYOUT NAME - 090203-xs

PLOT DATE : 7/20/2023 9:25 AM PLOT BY : SCHMIDT, BRAD PLOT NAME : PLOT SCALE : 1 IN:5 FT HORZ. / 1 IN:5 FT VERT.

WISDOT/CADDS SHEET 49

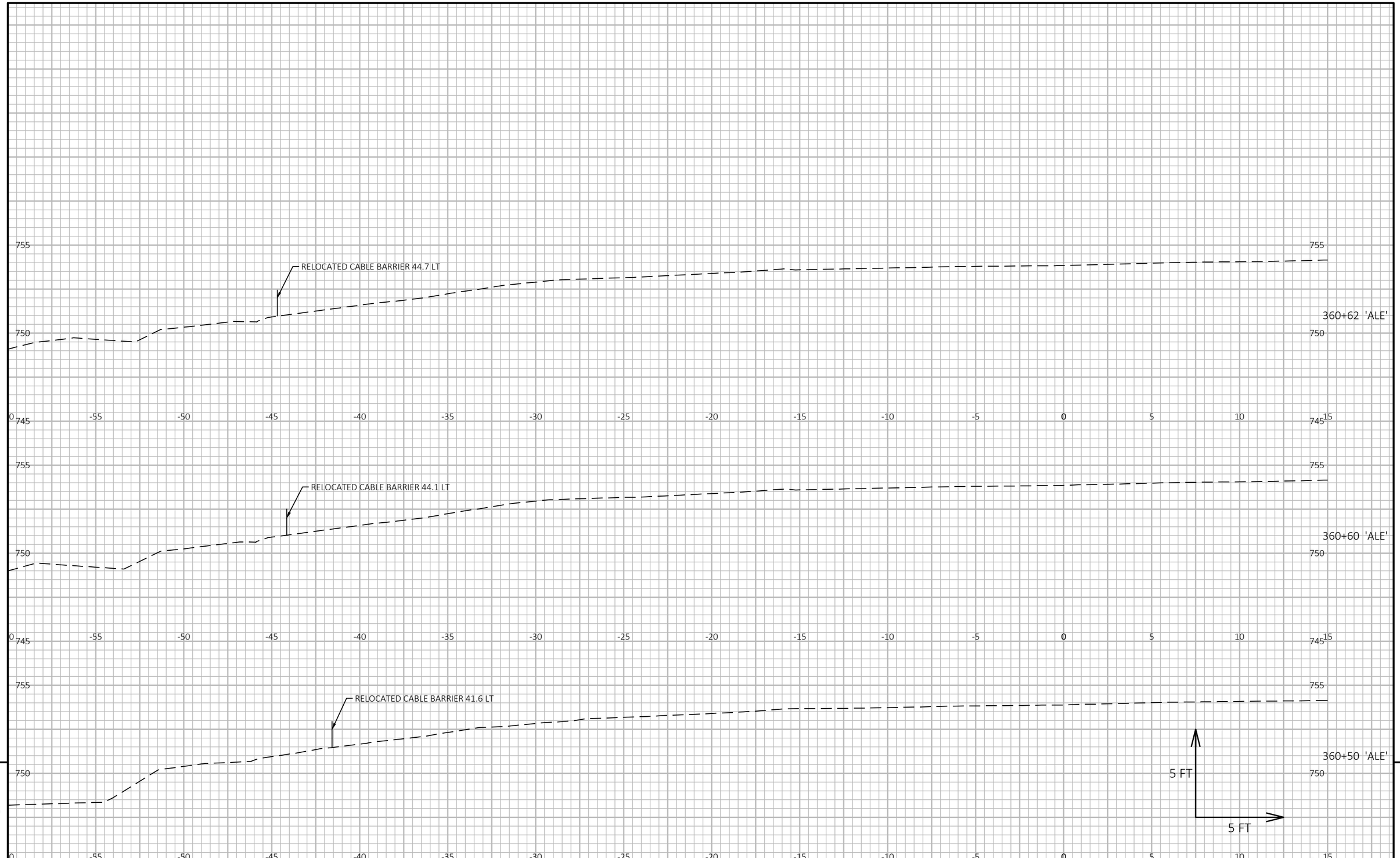

9

9

PROJECT NO: 1120-63-71	HWY: IH 41	COUNTY: WINNEBAGO	CROSS SECTIONS: GUARDRAIL	SHEET 225	E

FILE NAME : S:\MAD\2000--2099\2089\008\DRAWINGS\CAD\CIVIL 3D\SHEETS\OTHR\CABLE BARRIER XS.DWG
LAYOUT NAME - 090204-xs

PLOT DATE : 7/20/2023 9:25 AM PLOT BY : SCHMIDT, BRAD PLOT NAME : PLOT SCALE : 1 IN:5 FT HORZ. / 1 IN:5 FT VERT.

WISDOT/CADDS SHEET 49

Wisconsin Department of Transportation

Dedicated people creating transportation solutions through innovation and exceptional service.

http://www.dot.wisconsin.gov