wke Jan 09, 2024

PROJECT ID: 2265-10-71
WITH: N/A

COUNTY: MILWAUKEE

ORDER OF SHEETS

TOTAL SHEETS = 188

STATE OF WISCONSIN
DEPARTMENT OF TRANSPORTATION

PLAN OF PROPOSED IMPROVEMENT

OAK CREEK - MILWAUKEE

8 MILE RD TO ELM RD

STH 241
MILWAUKEE COUNTY

STATE PROJECT	FEDERAL PROJECT	
	PROJECT	CONTRACT
2265-10-71	WISC 20241156	1

STATE PROJECT NUMBER
2265-10-71

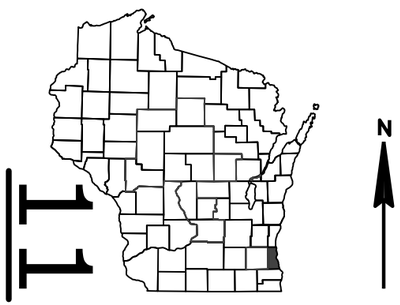

N

BEGIN CONSTRUCTION
STA 10'E'+95

END CONSTRUCTION
STA 808+95

BEGIN PROJECT
STA 785+50
X=594560.597
Y=228631.524

END PROJECT
STA 27'E'+90

STRUCTURE B-40-0954
STA. 786+11 - STA 787+29

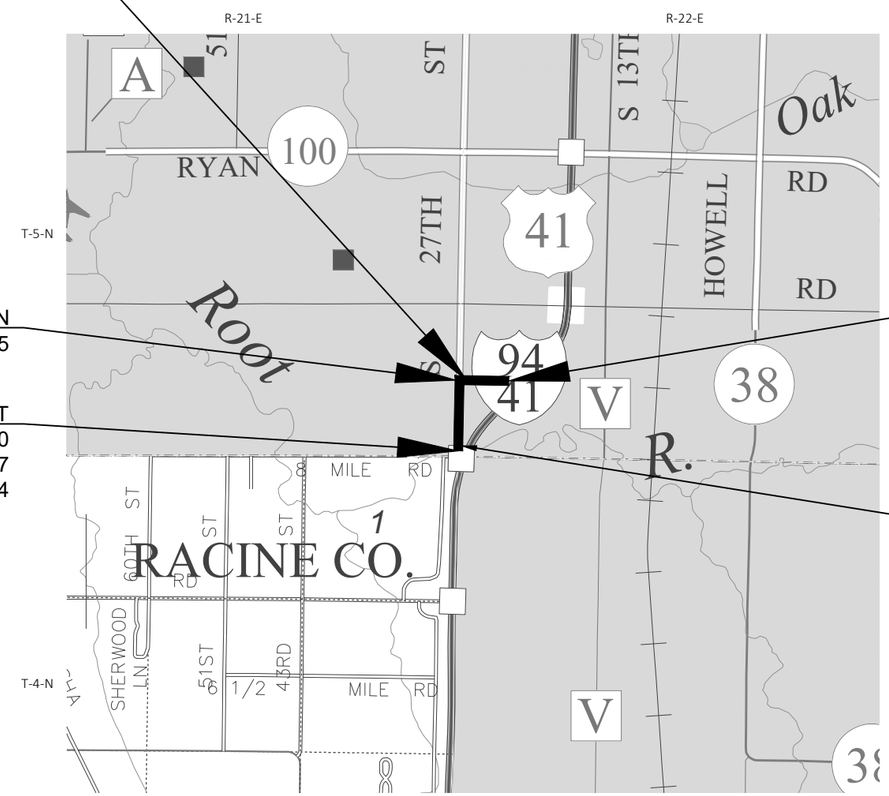

DESIGN DESIGNATION

(27TH STREET)				(ELM ROAD)			
A.A.D.T.	2024	=	1400	A.A.D.T.	2024	=	4900
A.A.D.T.	2044	=	1600	A.A.D.T.	2044	=	16,700
D.H.V.		=	210	D.H.V.		=	3190
D.D.		=	59/41	D.D.		=	56/44
T.		=	13.8%	T.		=	13.8%
DESIGN SPEED		=	50 MPH	DESIGN SPEED		=	40 MPH
ESALS		=	370,000	ESALS		=	1,700,000

CONVENTIONAL SYMBOLS

PLAN
- CORPORATE LIMITS
- PROPERTY LINE
- LOT LINE
- LIMITED HIGHWAY EASEMENT
- EXISTING RIGHT OF WAY
- PROPOSED OR NEW R/W LINE
- SLOPE INTERCEPT
- REFERENCE LINE (300'EB')
- EXISTING CULVERT
- PROPOSED CULVERT (Box or Pipe)
- COMBUSTIBLE FLUIDS (CAUTION)
- MARSH AREA
- WOODED OR SHRUB AREA

PROFILE
- GRADE LINE
- ORIGINAL GROUND
- MARSH OR ROCK PROFILE (To be noted as such) (ROCK)
- SPECIAL DITCH (LABEL)
- GRADE ELEVATION (95.36)
- CULVERT (Profile View)

UTILITIES
- ELECTRIC (E)
- FIBER OPTIC (FO)
- GAS (G)
- SANITARY SEWER (SAN)
- STORM SEWER (SS)
- TELEPHONE (T)
- WATER (W)
- UTILITY PEDESTAL
- POWER POLE
- TELEPHONE POLE

LAYOUT
SCALE 0 — 1 MI

TOTAL NET LENGTH OF CENTERLINE = 0.444 MI

HORIZONTAL POSITIONS SHOWN ON THIS PLAN ARE WISCONSIN COORDINATE REFERENCE SYSTEM (WISCRS), MILWAUKEE COUNTY, NAD83 (1997), IN U.S. SURVEY FEET. POSITIONS SHOWN ARE GRID COORDINATES, GRID BEARINGS, AND GRID DISTANCES. GRID DISTANCES ARE THE SAME AS GROUND DISTANCES.

ELEVATIONS ARE REFERENCED TO NAVD 88 (1991). GPS DERIVED ELEVATIONS ARE BASED ON GEOID 12A.

ORIGINAL PLANS PREPARED BY
CORRE ENGINEERING
MADISON | EAU CLAIRE | WAUKESHA | APPLETON | TOMAH| WITTENBERG

WISCONSIN JESSICA D. LEWIS E-37589 Lake Geneva, WI PROFESSIONAL ENGINEER

DATE: 11/3/23 Jessica Lewis (Professional Engineer Signature)

STATE OF WISCONSIN
DEPARTMENT OF TRANSPORTATION

PREPARED BY

Surveyor	WISDOT/CORRE, INC.
Designer	CORRE, INC.
Project Manager	DIEGO SILVA
Regional Examiner	STEVE CHOJNACKI
Regional Supervisor	MANOJOY NAG

APPROVED FOR THE DEPARTMENT
DATE: 11/3/2023 Diego Silva (Signature)

E

GENERAL NOTES

THE LOCATIONS OF EXISTING AND PROPOSED UTILITY INSTALLATIONS AS SHOWN ON THE PLANS ARE APPROXIMATE. THERE MAY BE OTHER UTILITY INSTALLATIONS WITHIN THE PROJECT AREA THAT ARE NOT SHOWN. COORDINATE CONSTRUCTION ACTIVITIES WITH A CALL TO DIGGERS HOTLINE AND/OR A DIRECT CALL TO THE UTILITIES THAT HAVE FACILITIES IN THE AREA. NOT ALL UTILITIES ARE MEMBERS OF DIGGERS HOTLINE.

D.O.T. BRIDGE BENCHMARK MONUMENT TO BE FURNISHED BY THE STATE AND PLACED BY THE CONTRACTOR AS DIRECTED BY THE ENGINEER.

CURB AND GUTTER GRADES ARE GIVEN TO THE FLANGE OF CURB AND GUTTER OR THEORETICAL FLANGE POINT OF INTEGRAL CURB AND GUTTER.

CURB AND GUTTER RADII ARE MEASURED TO THE FLANGE OF CURB AND GUTTER OR THEORETICAL FLANGE POINT OF INTEGRAL CURB AND GUTTER.

FOR INLET AND CATCH BASIN STRUCTURES LOCATED IN THE CURB OR IN FRONT OF BARRIER, STATION, OFFSET, AND ELEVATIONS ARE GIVEN TO THE CENTER OF STRUCTURE. MH STATION, OFFSET, AND ELEVATIONS ARE GIVEN TO THE CENTER OF STRUCTURE. SEE CONSTRUCTION DETAILS.

CONTACT THE PROJECT ENGINEER, THE COUNTY SURVEYOR, AND SEWRPC AT LEAST TWO WEEKS BEFORE WORKING NEAR ANY SECTION CORNER MONUMENT.

VERIFY EXISTING PAVEMENT ELEVATIONS AT ALL TIE-INS TO EXISTING PAVEMENT PRIOR TO CONSTRUCTION. NOTIFY ENGINEER IF A DISCREPANCY IS FOUND BETWEEN PROPOSED PLAN ELEVATIONS AND EXISTING PAVEMENT ELEVATIONS.

THE CONTRACTOR'S PAVING OPERATIONS SHALL BE CONSISTENT WITH THE PLAN TYPICAL SECTIONS AND CONSTRUCTED TO PREVENT HMA LONGITUDINAL JOINTS FROM BEING LOCATED WITHIN A DRIVING, TURNING, BIKE OR PARKING LANE.

SAWCUT EXISTING ASPHALT AND CONCRETE PAVEMENT AT THE MATCHLINE AS INDICATED ON THE PLAN OR AS DIRECTED BY THE ENGINEER.

TINE CONCRETE PAVEMENT LONGITUDINALLY UNLESS OTHERWISE IDENTIFIED IN THE PLAN OR DIRECTED BY THE ENGINEER.

RESHAPE, RESTORE AND FINISH ALL PREVIOUSLY GRASSED AREAS DISTURBED BY OPERATIONS OUTSIDE OF THE NORMAL CONSTRUCTION LIMITS AT NO EXPENSE TO THE DEPARTMENT

PLACE TOPSOIL 1 INCH BELOW THE TOP OF ADJACENT CONCRETE CURBS OR SIDEWALKS IN SOD AREAS.

DISTURBED AREAS WITHIN THE RIGHT OF WAY ARE TO BE TOPSOILED (SALVAGED), FERTILIZED, SEEDED, AND MULCHED OR EROSION MATTED WITHIN 5 DAYS OR AS DIRECTED BY THE ENGINEER.

PRIOR TO THE PLACEMENT OF STEEL PLATE BEAM GUARD OR MGS GUARDRAIL, THE SHOULDERS SHALL BE IN PLACE, SHAPED AND COMPACTED UNLESS SHOWN OTHERWISE.

WHEN DEFINING THE PAVEMENT STRUCTURE, THE BOTTOM OF THE BASE AGGREGATE DENSE IS CONSIDERED THE SUBGRADE LINE. THE SELECT CRUSHED MATERIAL LAYER IS A SUBGRADE IMPROVEMENT.

BACKFILL ALL OPENINGS AND HOLES LOCATED WITHIN THE ROADWAY RESULTING FROM REMOVALS OR ABANDONMENTS WITH GRANULAR BACKFILL GRADE 1 UNLESS THE PLANS PROVIDE FOR ALTERNATE BACKFILL.

DO NOT REMOVE ANY TREES OR SHRUBS WITHOUT APPROVAL OF THE ENGINEER.

THE EROSION CONTROL AND TRAFFIC CONTROL LOCATIONS SHOWN IN THE PLANS ARE SUGGESTED LOCATIONS. EXACT LOCATIONS WILL BE DETERMINED IN THE FIELD BY THE ENGINEER.

ALL SIGN LOCATIONS SHALL BE REVIEWED BY THE ENGINEER PRIOR TO INSTALLATION.

EXISTING DRIVEWAYS AND FIELD ENTRANCES SHALL BE RESTORED IN KIND AS DIRECTED BY THE ENGINEER IN THE FIELD AND AT THE LOCATION DETERMINED BY THE ENGINEER.

THE EXACT LOCATION OF PRIVATE ENTRANCES IS TO BE DETERMINED IN THE FIELD BY THE ENGINEER.

CROSS SECTIONS SHOWN INCLUDE THE THICKNESS OF TOPSOIL WHERE REQUIRED. TOPSOIL SHALL BE REPLACED WITH 4-INCH TYPICAL DEPTH.

INLET AND DISCHARGE ELEVATIONS FOR DRAINAGE STRUCTURES AND PIPES SHOWN ON THE PLANS MAY BE ADJUSTED BY THE ENGINEER TO FIT EXISTING FIELD CONDITIONS.

VERIFY THE EXISTING STORM SEWER SYSTEM CONNECTION LOCATIONS AND ELEVATIONS BEFORE ORDERING DRAINAGE STRUCTURES AND PIPES. NOTIFY THE ENGINEER OF ANY DEVIATIONS FROM THE INFORMATION SHOWN ON THE PLANS BEFORE INSTALLING THE PROPOSED STORM SEWER.

HMA LAYERS & THICKNESSES

1 3/4" HMA PAVEMENT	4 MT 58-28 S	1 3/4" UPPER
2" HMA PAVEMENT	4 MT 58-28 S	2" UPPER
5" HMA PAVEMENT	4 MT 58-28 S	2" UPPER
	3 MT 58-28 S	3" LOWER

ORDER OF SECTION 2 SHEETS

UTILITY CONTACTS

ELECTRICITY

ATC MANAGEMENT, INC.
CHRIS DAILEY
P.O. BOX 47
WAUKESHA, WI 53187-0047
(262) 506-6884
CDAILEY@ATCLLC.COM

COMMUNICATION

AT&T LEGACY
KENNETH NINE
110 N MAIN ST.
CULVER, IN 46511
(574) 842-8830
KNINE@JMCEAINC.COM

COMMUNICATION

AT&T WISCONSIN
MATTHEW DINNAUER
435 SOUTH 95TH STREET
MILWAUKEE, WI 53214-1226
(262) 237-0042
MD9542@ATT.COM

COMMUNICATION

LEVEL 3 COMMUNICATIONS, LLC
JASON BUSSE
3235 INTERTECH DR., SUITE 600
BROOKFIELD, WI 53045
(414) 224-6713
JASON.BUSSE@LUMEN.COM

COMMUNICATION

MIDWEST FIBER NETWORKS
CORY SCHMUKI
6070 NORTH FLINT RD
GLENDALE, WI 53209
(414) 459-3561
CSCHMUKI@MIDWESTFIBERNETWORKS.COM

COMMUNICATION

SPECTRUM
BEAU ABUYA
1320 N DR MARTIN LUTHER KING JR DR
MILWAUKEE, WI 53212
(414) 758-9241
BEAU.ABUYA@CHARTER.COM

ELECTRICITY

WE ENERGIES
DAN BANDOR
500 S 116TH STREET
WEST ALLIS, WI 53214
(414) 254-1865
WE-UTILITY-RELOCATIONS@WE-ENERGIES.COM
ELECTRIC DISPATCH: 1-800-662-4797

GAS

WE ENERGIES
TIMOTHY INGRAM
7665 NORTH PORT WASHINGTON RD.
GLENDALE, WI 53207
(414) 751-7273
GAS DISPATCH: 1-800-261-5325
TINGRAM@KAPURINC.COM

COMMUNICATION

JOHN MITTELSTADT
WISCONSIN DEPARTMENT OF TRANSPORTATION
433 W. ST. PAUL AVE.
MILWAUKEE, WI 53203
(608) 205-7859
JOHN.MITTELSTADT.COM@DOT.WI.GOV

SIGNALS

DAVID BRANTNER
WISCONSIN DEPARTMENT OF TRANSPORTATION
141 NW BARSTOW STREET
WAUKESHA, WI 53188
(262) 548-8736
DAVID.BRANTNER@DOT.WI.GOV)

LIGHTING

MR. ERIC PEREA (PRIMARY CONTACT)
WISCONSIN DEPARTMENT OF TRANSPORTATION
141 NW BARSTOW STREET
WAUKESHA, WI 53188
(262)-574-5422
ERIC.PEREA@DOT.WI.GOV

DIGGERS HOTLINE
Dial 811 or (800)242-8511
www.DiggersHotline.com

SOUTHEASTERN WISCONSIN REGIONAL PLANNING COMMISSION

SOUTHEASTERN REGIONAL PLANNING COMMISSION
ATTN:ROB MERRY
W239 N1812 ROCKWOOD DRIVE
P.O. BOX 1607
WAUKESHA, WI 53187-1607
PHONE: (262) 953-4289
CELL: (920) 912-1036
FAX: (262) 547-1103
EMAIL: RMERRY@SEWRPC.GOV

WDNR LIAISON

RYAN PAPPAS
2300 N MARTIN LUTHER KING JR DR.
MILWAUKEE, WI 53212
(414)-507-4946
RYAN.PAPPAS@WISCONSIN.GOV

WISDOT CONTACT

DIEGO SILVA
141 NW BARSTOW STREET
WAUKESHA, WI 53188
(262)-548-5683
DIEGO.SILVA@DOT.WI.GOV

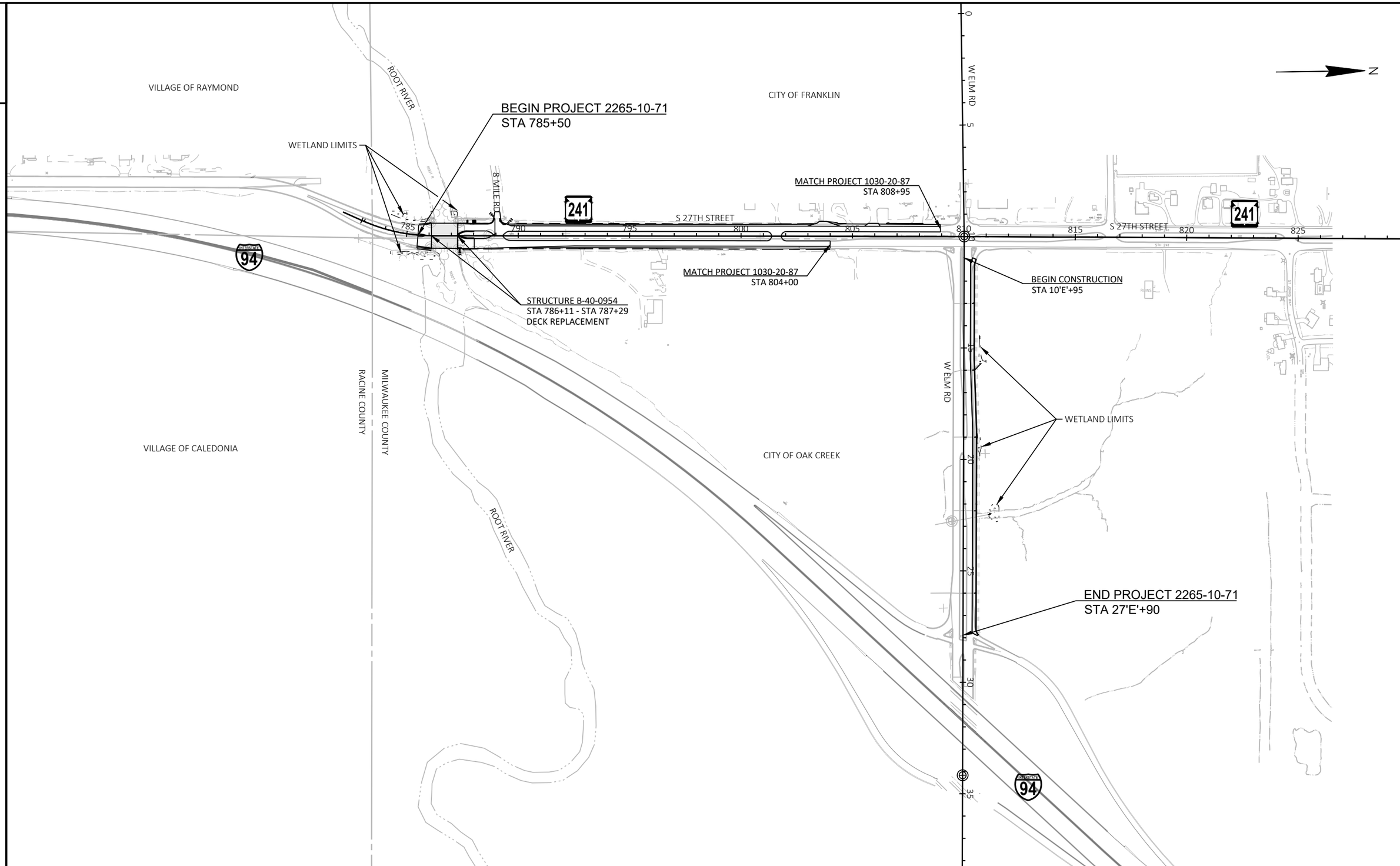

PROJECT NO: 2265-10-71	HWY: STH 241	COUNTY: MILWAUKEE	PROJECT OVERVIEW	SHEET 3	E

FILE NAME : C:\OD\CORRE, INC\PROJECTS - DOCUMENTS\WI - SE REGION\2265-10-02_STH 241_MILWAUKE CO\500_CADD\501_C3D_2018\22651002\SHEETSPLAN\020201-PO.DWG
LAYOUT NAME - 01
PLOT DATE : 1/31/2022 10:06 AM PLOT BY : TOM ORNER PLOT NAME : PLOT SCALE : 1 IN:400 FT

WISDOT/CADDS SHEET 42

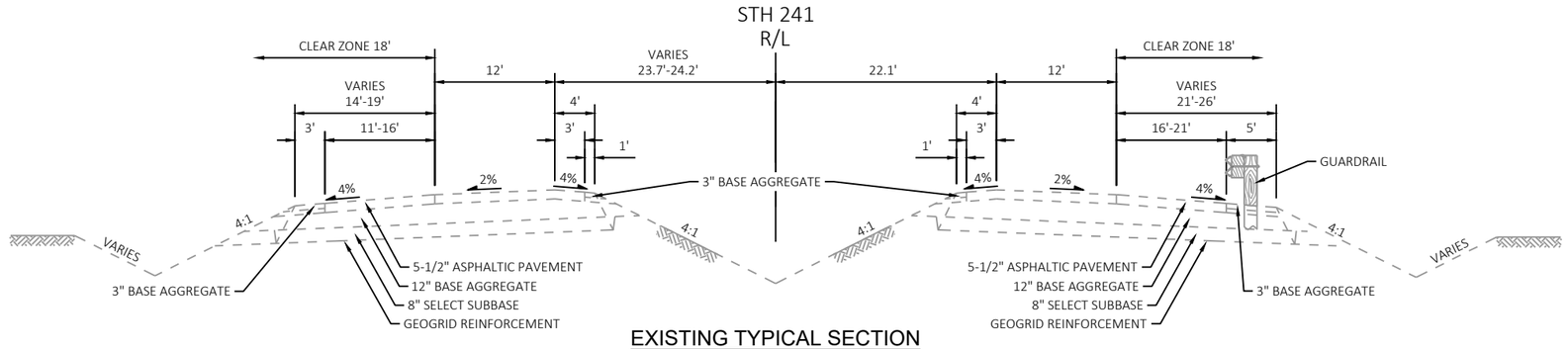

EXISTING TYPICAL SECTION

STH 241

STA 785+50 - STA 786+11

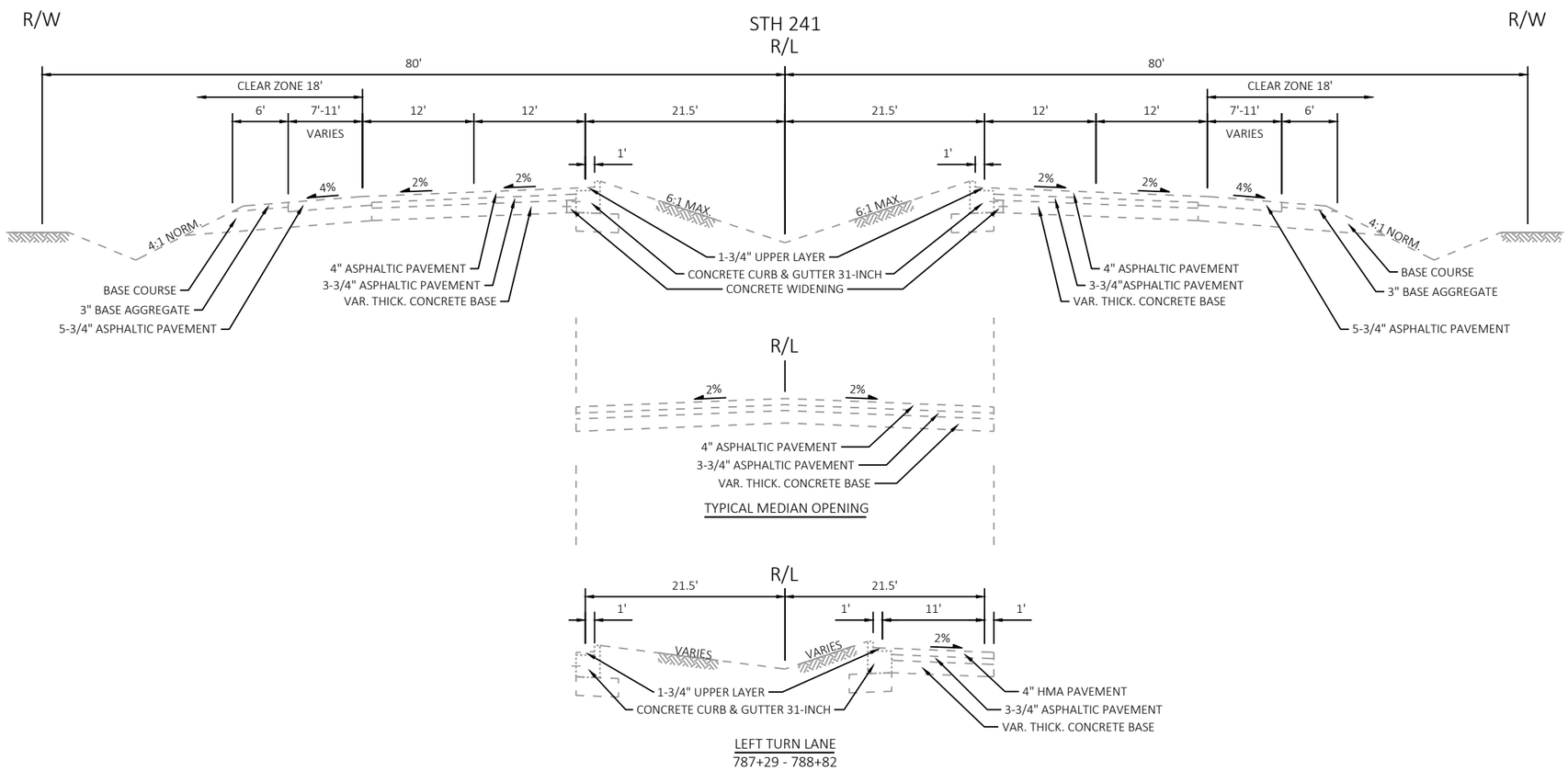

EXISTING TYPICAL SECTION

STH 241

STA 787+29 - STA 804+00 RT

STA 787+29 - STA 808+95 LT

PROJECT NO: 2265-10-71	HWY: STH 241	COUNTY: MILWAUKEE	TYPICAL SECTIONS	SHEET 4	E

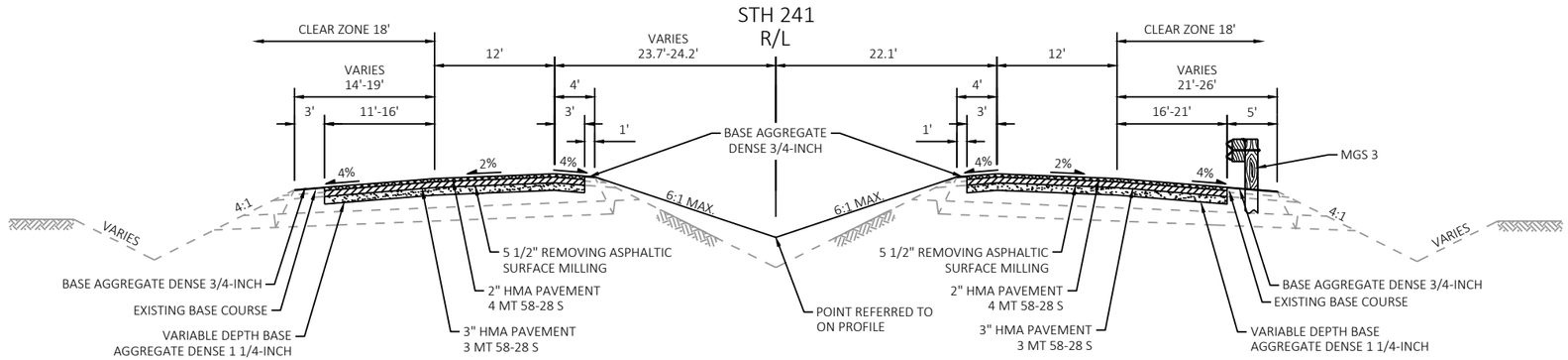

FINISHED TYPICAL SECTION
STH 241
STA 785+50 - STA 786+11

NOTES:
ECHELON PAVING REQUIRED BETWEEN SHOULDERS/TURN LANES AND ADJACENT TRAFFIC LANES.

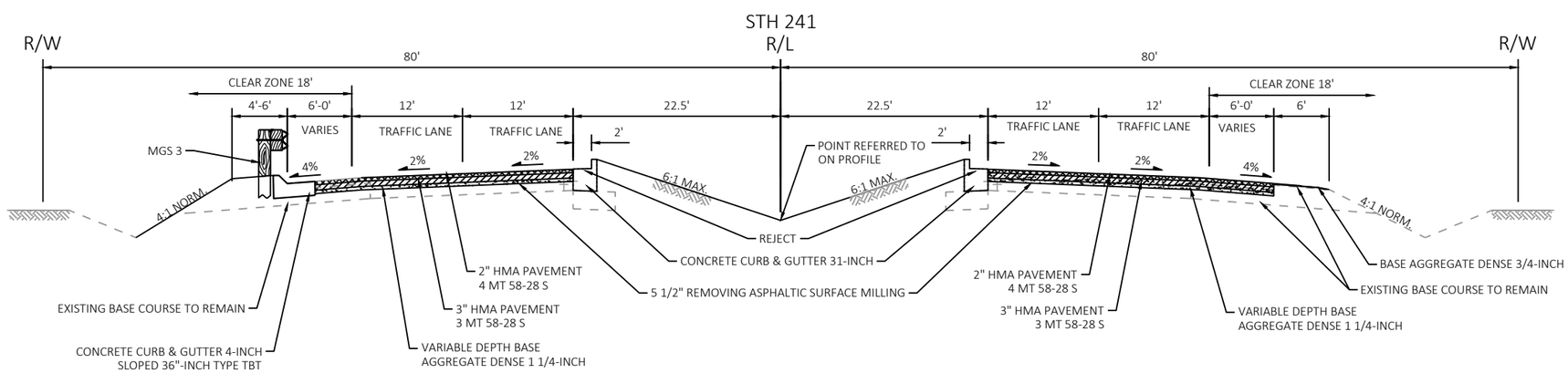

FINISHED TYPICAL SECTION
STH 241
STA 787+29 - STA 788+96 LT
STA 787+29 - STA 788+03 RT

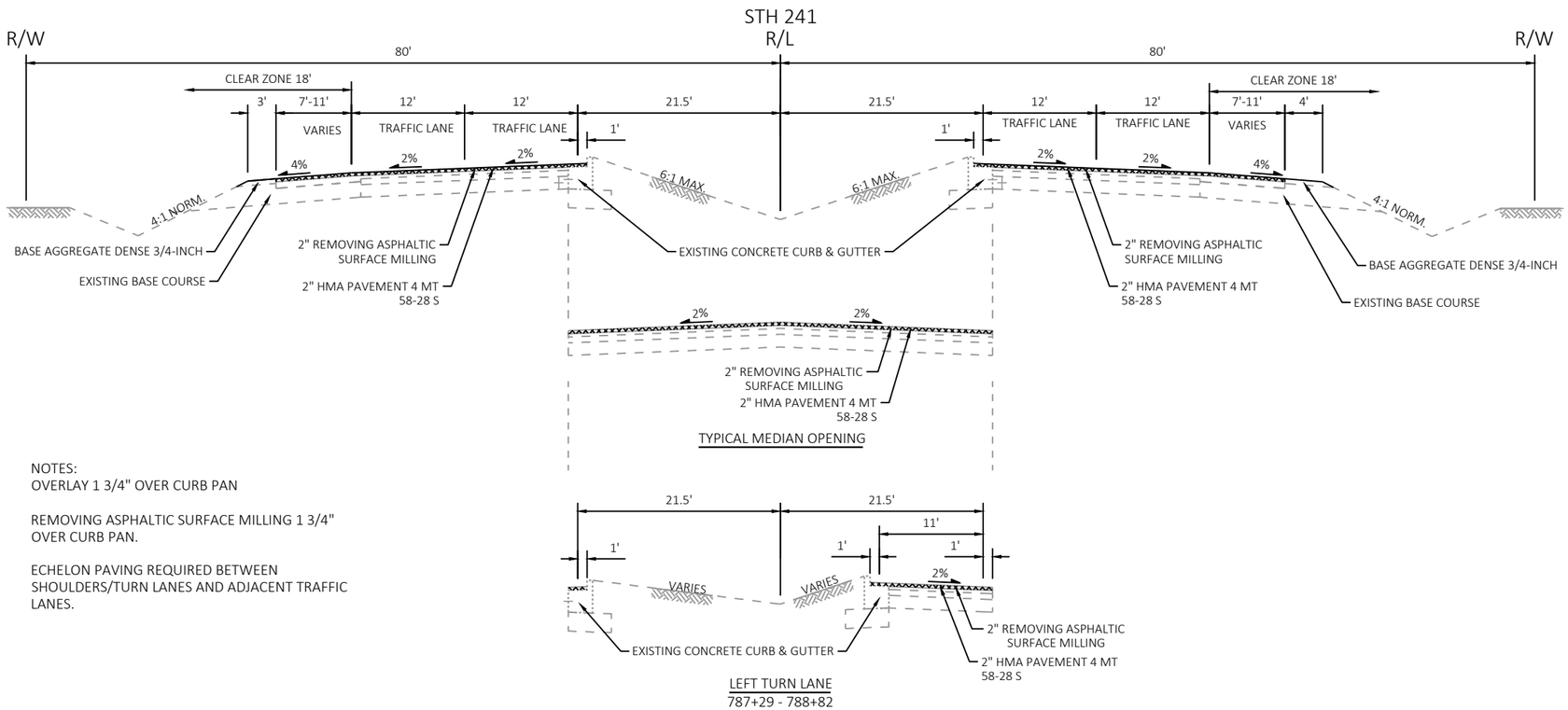

NOTES:
OVERLAY 1 3/4" OVER CURB PAN

REMOVING ASPHALTIC SURFACE MILLING 1 3/4" OVER CURB PAN.

ECHELON PAVING REQUIRED BETWEEN SHOULDERS/TURN LANES AND ADJACENT TRAFFIC LANES.

FINISHED TYPICAL SECTION

STH 241
STA 788+03 - STA 804+00 RT
STA 788+96 - STA 808+95 LT

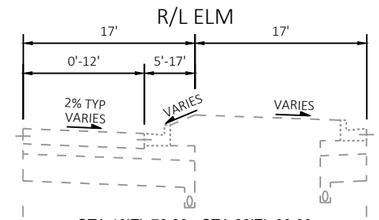

STA 19'E'+70.33 - STA 23'E'+00.00

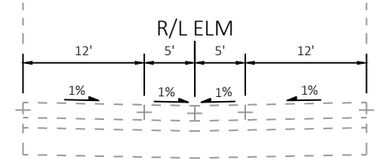

STA 19'E'+11.77 - 19'E'+70.33

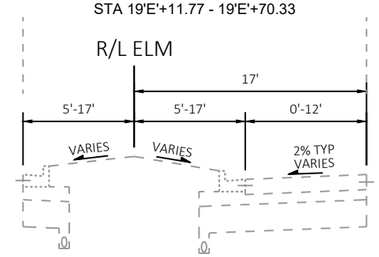

STA 15'E'+50.00 - STA 19'E'+11.77

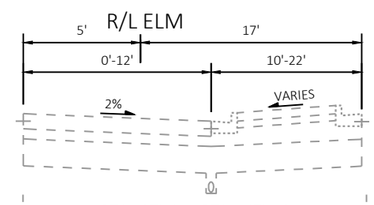

STA 10E'+95 - STA 15'E'+50

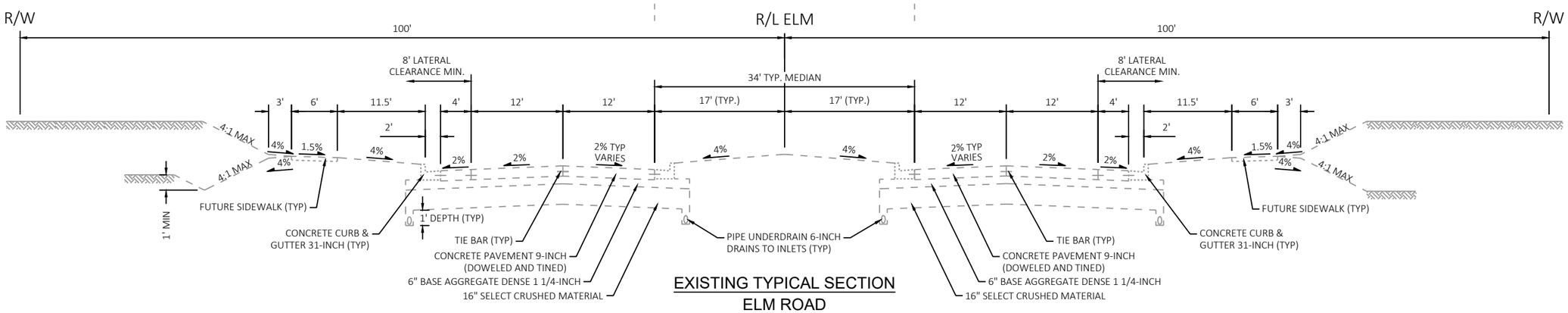

EXISTING TYPICAL SECTION
ELM ROAD
STA 10'E'+95 - STA 27'E'+90

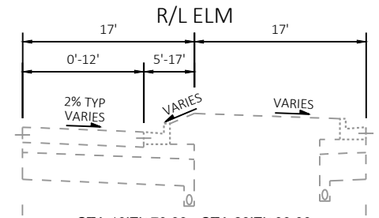

STA 19'E'+70.33 - STA 23'E'+00.00

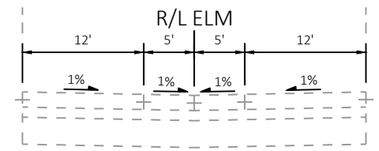

STA 19'E'+11.77 - 19'E'+70.33

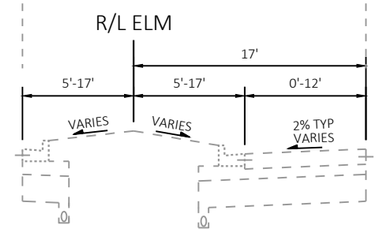

STA 15'E'+50.00 - STA 19'E'+11.77

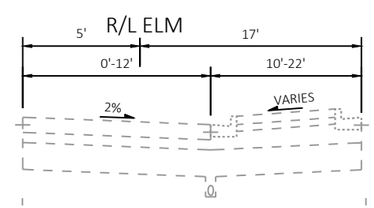

STA 10E'+95 - STA 15'E'+50

A: RESTORE WITH SALVAGED TOPSOIL,
SEED, FERTILIZER & MULCH

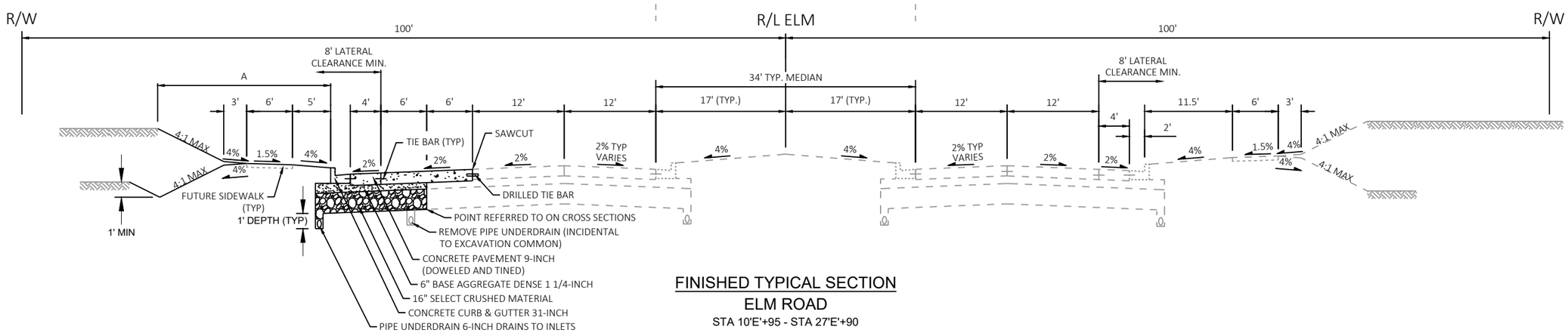

FINISHED TYPICAL SECTION
ELM ROAD
STA 10'E'+95 - STA 27'E'+90

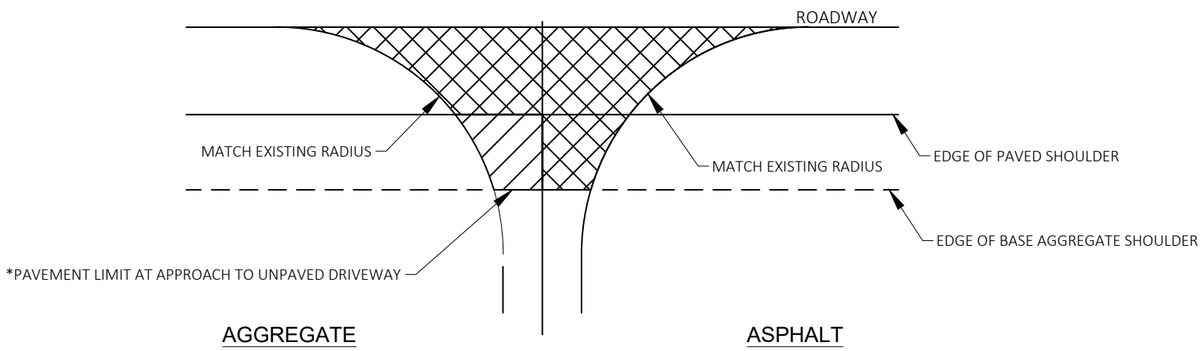

*WHERE DRIVEWAY IS PAVED, APPROACH PAVEMENT SHOULD BE EXTENDED TO MATCH DRIVEWAY PAVEMENT

REMOVING 2" ASPHALTIC SURFACE MILLING AND REPLACE WITH 2" HMA PAVEMENT

BASE AGGREGATE DENSE 3/4-INCH AS NECESSARY

DRIVEWAYS

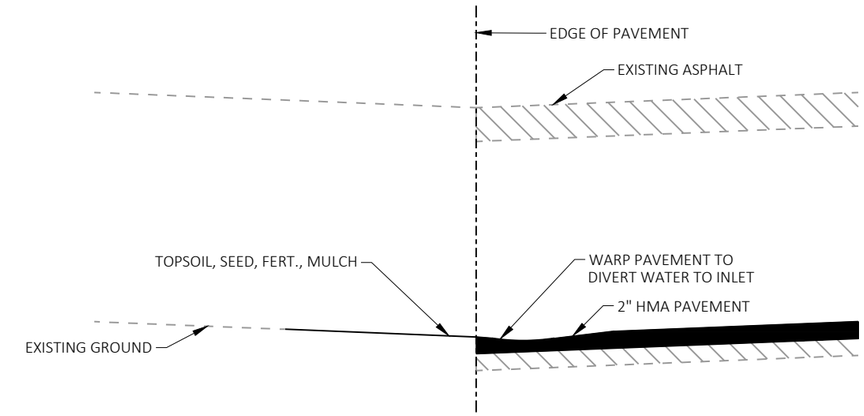

ENLARGED ASPHALTIC SHOULDER FLUME DETAIL

STA 804+30 - 805+70

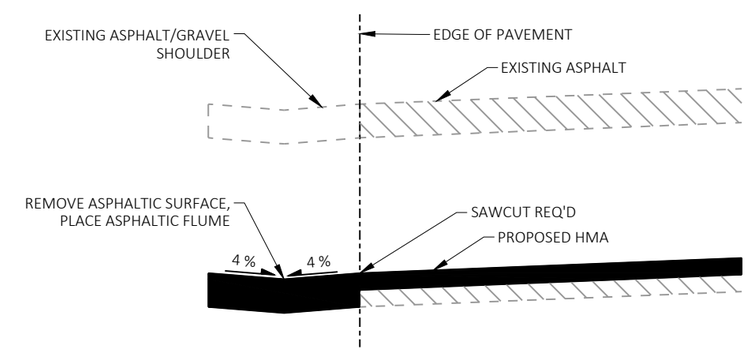

ENLARGED ASPHALTIC SHOULDER FLUME DETAIL

STA 806+50 - 808+20

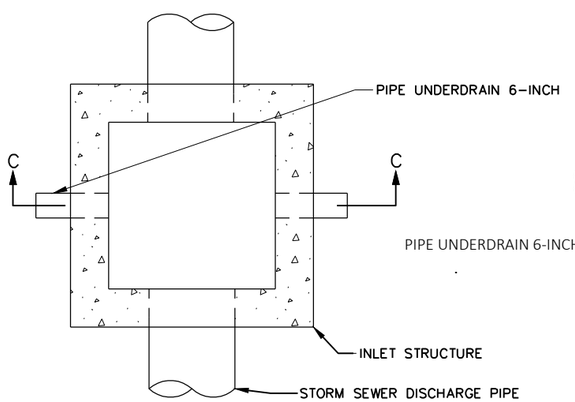

PLAN VIEW

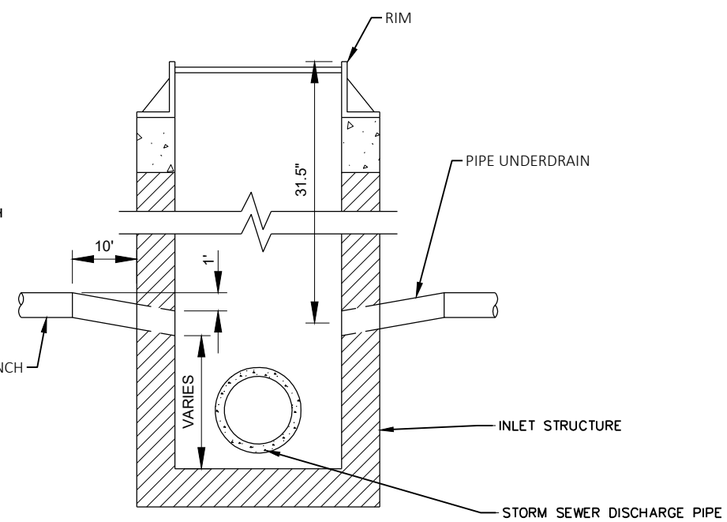

SECTION C–C

UNDERDRAIN OUTFALL AT DRAINAGE STRUCTURE

NOTES

1. SEE TYPICAL SECTIONS, STORM SEWER, AND UNDERDRAIN PLANS FOR PIPE UNDERDRAIN LOCATIONS.
2. DIMENSION SHOULD BE SHOWN ON MISCELLANEOUS QUANTITIES TABLE

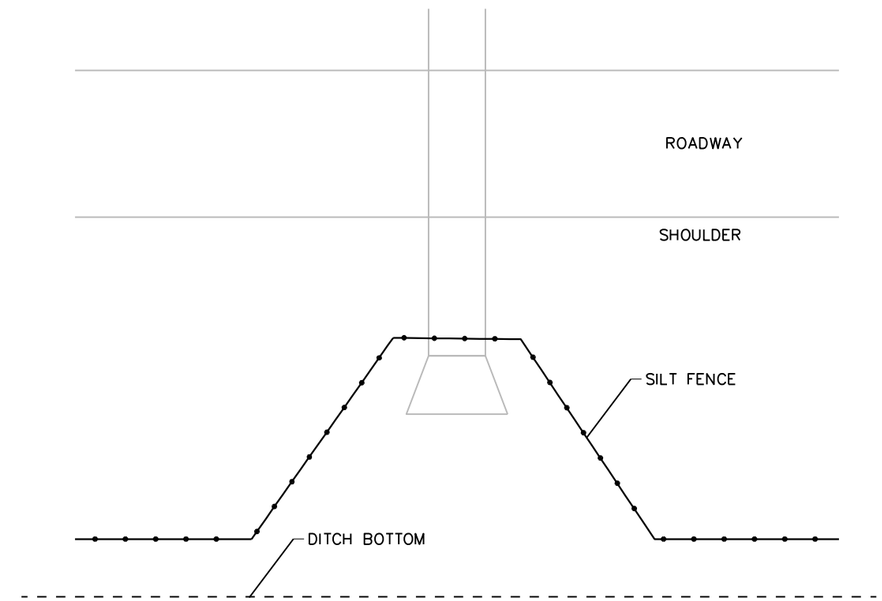

TYPICAL SILT FENCE DETAIL AT PIPE INLET

NOTE

SEE SILT FENCE SDD FOR ADDITIONAL INFORMATION.

LEGEND

ASPHALTIC REPAIR

SSSSSS VERTICAL MILLED EDGE
SAW CUTTING AT THE CONTRACTORS DISCRETION

tttttttt TACK COAT

GENERAL NOTES

1. EXACT LOCATION, DEPTH AND SIZE OF REPAIR TO BE DETERMINED BY THE ENGINEER IN THE FIELD.
2. MILL PAVEMENT PER PLAN PRIOR TO MAKING ASPHALTIC REPAIR.
3. LOCATE LONGITUDINAL REPAIR JOINTS OUTSIDE OF WHEEL PATH. 12-INCH MINIMUM (24-INCH RECOMMENDED) FROM THE CENTER OF THE WHEEL PATH.
4. ASPHALTIC REPAIR PAVING TO BE DONE ON THE SAME DAY AS REMOVAL.

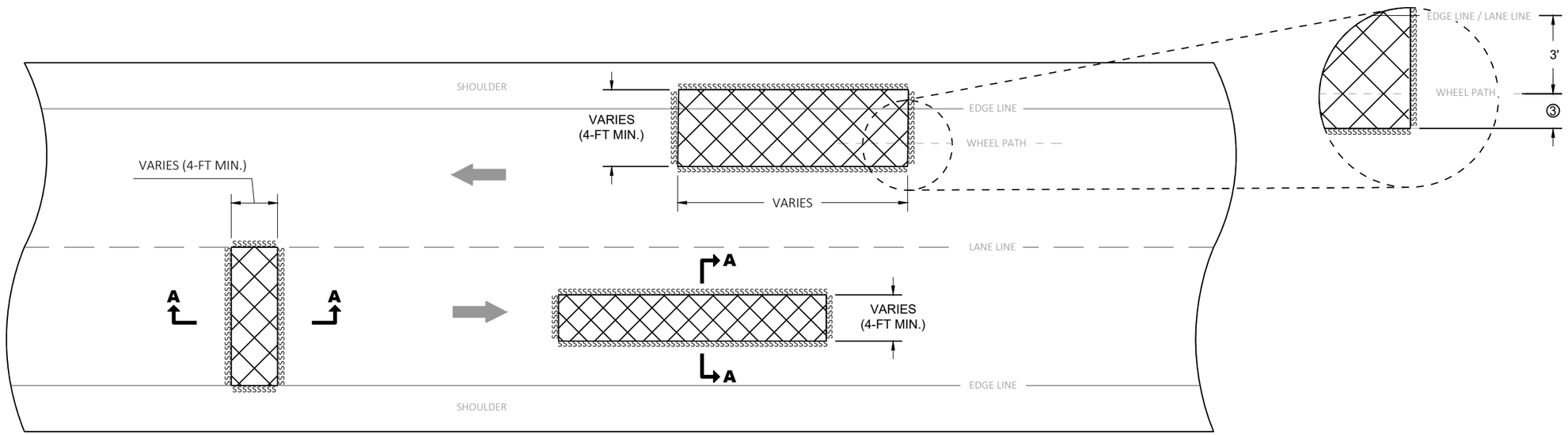

PLAN VIEW

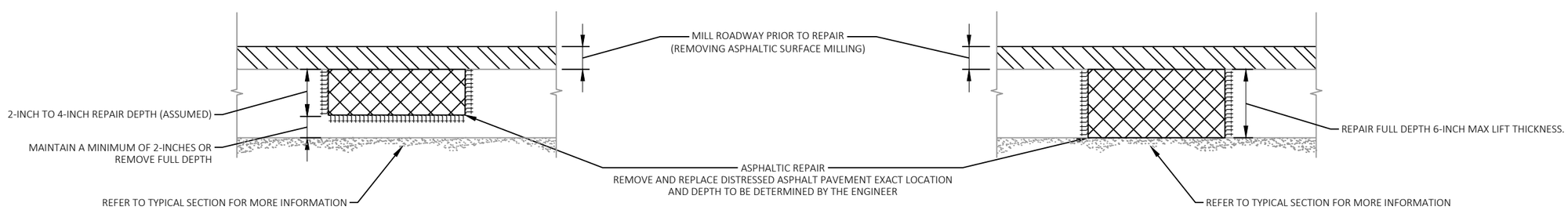

PARTIAL DEPTH **FULL DEPTH**

SECTION A-A

ASPHALTIC REPAIR

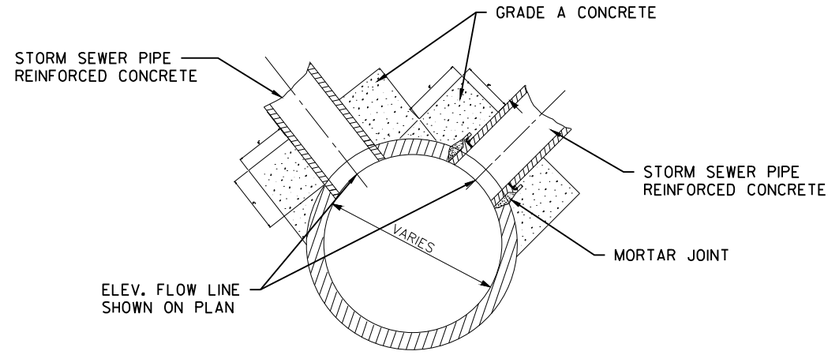

AT MANHOLE

INCIDENTAL TO NEW STRUCTURE ITEMS WHEN NEW PIPE CONNECTS TO NEW STRUCTURE

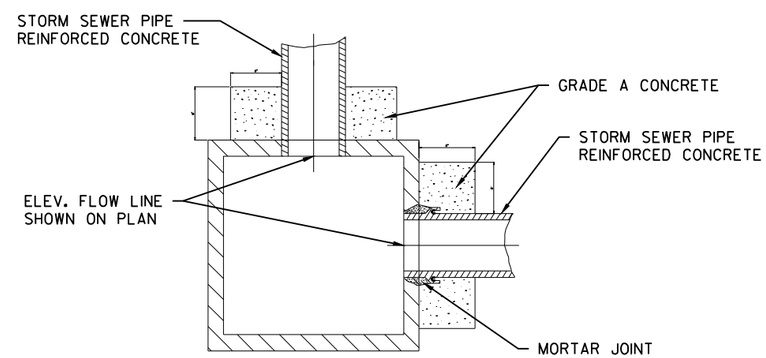

AT STORM SEWER INLET

INCIDENTAL TO NEW STRUCTURE ITEMS WHEN NEW PIPE CONNECTS TO NEW STRUCTURE

NOTES:

- CONCRETE COLLAR INCIDENTAL TO THE SPECIAL PROVISION "RECONNECT STORM SEWER LATERAL" WHEN CONNECTING AND EXISTING PIPE TO A NEW STRUCTURE.
- CONCRETE COLLAR TO BE PAID AS A BID ITEM WHEN CONNECTING A NEW PIPE TO AN EXISTING STRUCTURE

CONCRETE COLLAR DETAIL

FOR LOCATIONS SEE MISCELLANEOUS QUANTITY SHEETS

BENCH MARKS & CONTROL POINTS

NO.	STATION	NORTHING	EASTING	DESCRIPTION	ELEV.
BM 78610	786+10.63, 56.87' RT	228740.40	594627.75	CHISELED SQUARE TOP STEP NE BOX CULVERT	675.380
BM 78728	787+27.85, 58.98' RT	228857.73	594631.96	CHISELED SQUARE TOP STEP SE BOX CULVERT	674.738

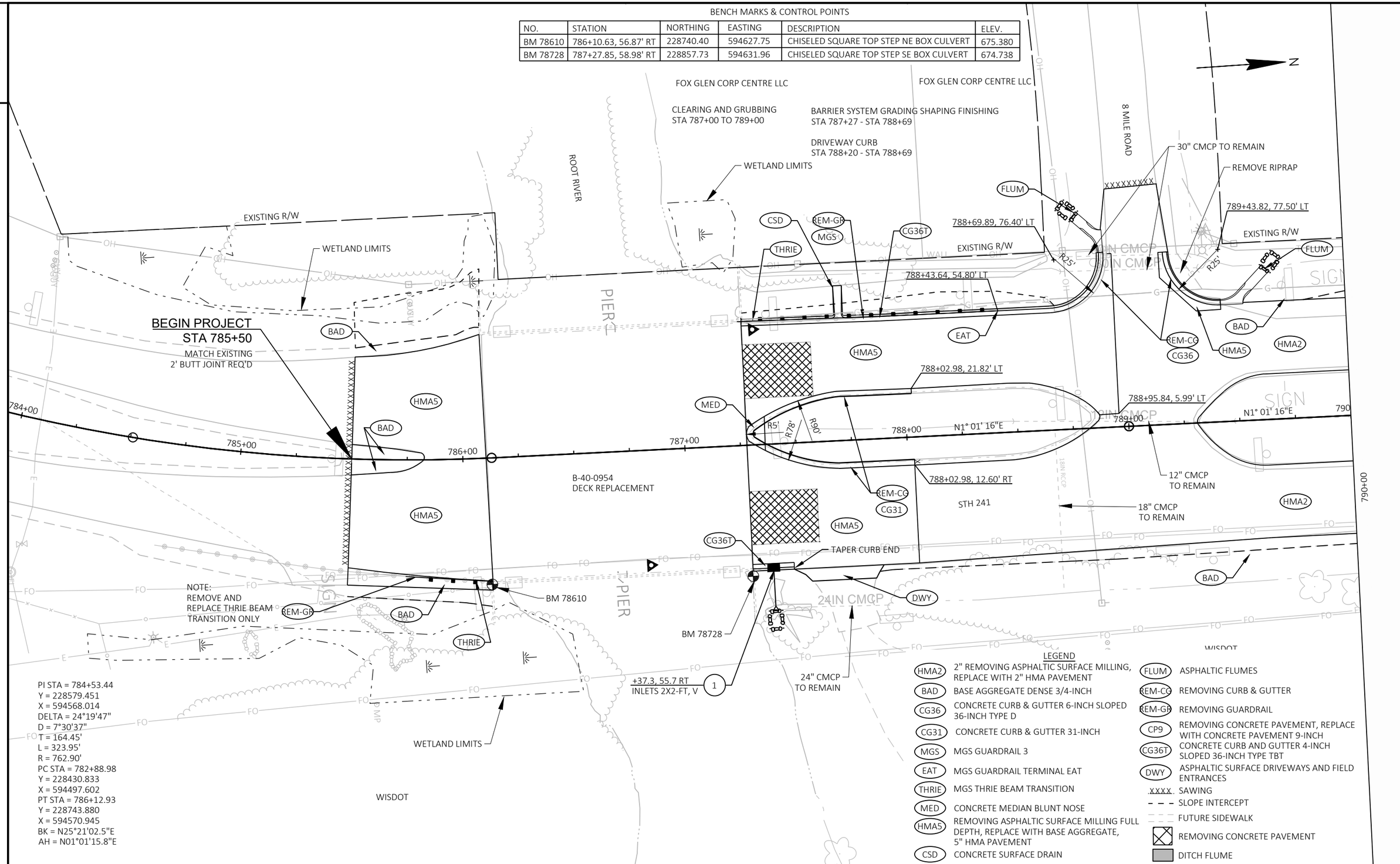

PROJECT NO: 2265-10-71	HWY: STH 241	COUNTY: MILWAUKEE	PLAN DETAILS - STH 241	SHEET 13	E

2

LEGEND

HMA2	2" REMOVING ASPHALTIC SURFACE MILLING, REPLACE WITH 2" HMA PAVEMENT
BAD	BASE AGGREGATE DENSE 3/4-INCH
CG36	CONCRETE CURB & GUTTER 6-INCH SLOPED 36-INCH TYPE D
CG31	CONCRETE CURB & GUTTER 31-INCH
MGS	MGS GUARDRAIL 3
EAT	MGS GUARDRAIL TERMINAL EAT
THRIE	MGS THRIE BEAM TRANSITION
MED	CONCRETE MEDIAN BLUNT NOSE
HMA5	REMOVING ASPHALTIC SURFACE MILLING FULL DEPTH, REPLACE WITH BASE AGGREGATE, 5" HMA PAVEMENT
CSD	CONCRETE SURFACE DRAIN
FLUM	ASPHALTIC FLUMES
REM-CG	REMOVING CURB & GUTTER
REM-GR	REMOVING GUARDRAIL
CP9	REMOVING CONCRETE PAVEMENT, REPLACE WITH CONCRETE PAVEMENT 9-INCH
CG36T	CONCRETE CURB AND GUTTER 4-INCH SLOPED 36-INCH TYPE TBT
DWY	ASPHALTIC SURFACE DRIVEWAYS AND FIELD ENTRANCES
XXXX	SAWING
	SLOPE INTERCEPT
	FUTURE SIDEWALK
	REMOVING CONCRETE PAVEMENT
	DITCH FLUME

BENCH MARKS & CONTROL POINTS

NO.	STATION	NORTHING	EASTING	DESCRIPTION	ELEV.
CP 906	792+13.89, 9.20' LT	229344.90	594572.46	FENO MONUMENT	673.604

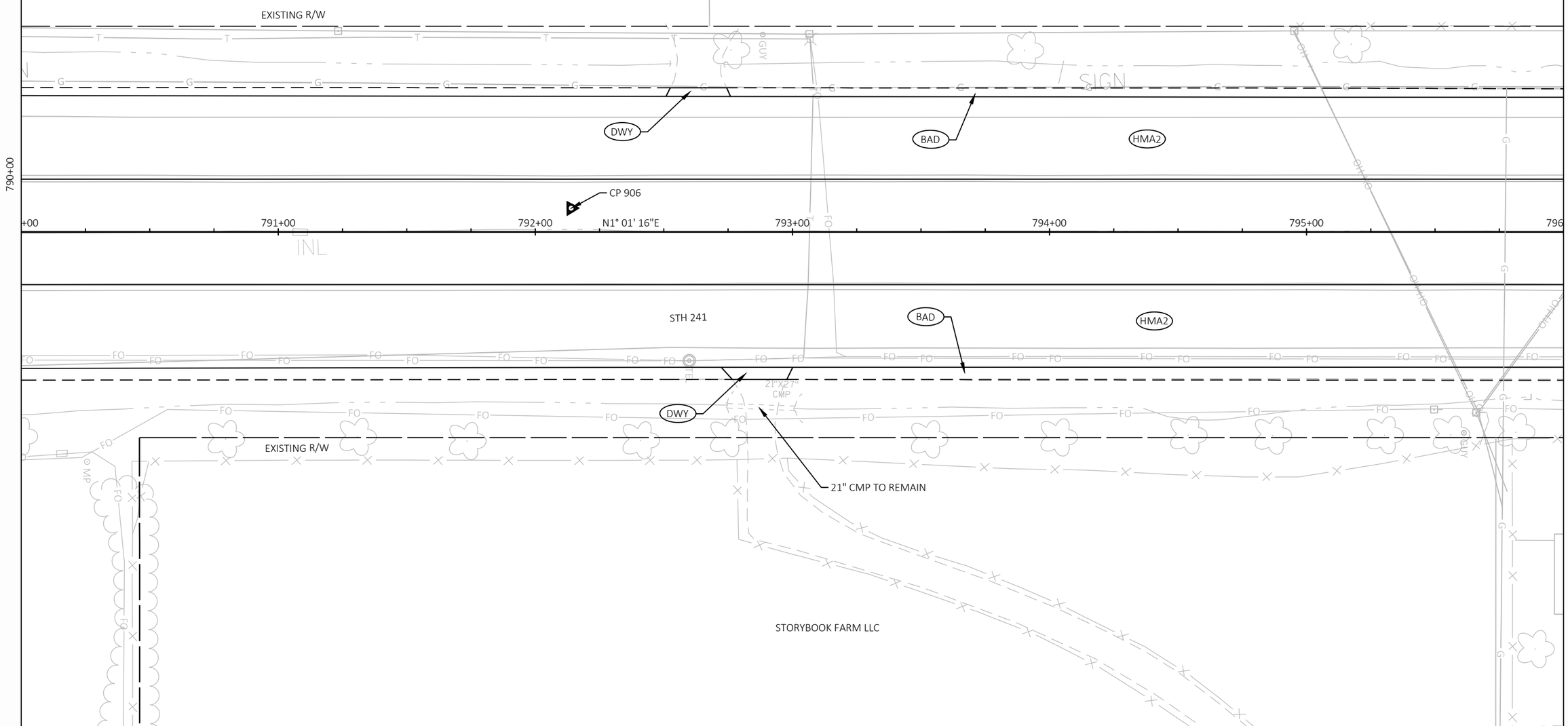

2

PROJECT NO: 2265-10-71	HWY: STH 241	COUNTY: MILWAUKEE	PLAN DETAILS - STH 241	SHEET 14	E

2

LEGEND

- HMA2 — 2" REMOVING ASPHALTIC SURFACE MILLING, REPLACE WITH 2" HMA PAVEMENT
- BAD — BASE AGGREGATE DENSE 3/4-INCH
- CG36 — CONCRETE CURB & GUTTER 6-INCH SLOPED 36-INCH TYPE D
- CG31 — CONCRETE CURB & GUTTER 31-INCH
- MGS — MGS GUARDRAIL 3
- EAT — MGS GUARDRAIL TERMINAL EAT
- THRIE — MGS THRIE BEAM TRANSITION
- MED — CONCRETE MEDIAN BLUNT NOSE
- HMA5 — REMOVING ASPHALTIC SURFACE MILLING FULL DEPTH, REPLACE WITH BASE AGGREGATE, 5" HMA PAVEMENT
- CSD — CONCRETE SURFACE DRAIN
- FLUM — ASPHALTIC FLUMES
- REM-CG — REMOVING CURB & GUTTER
- REM-GR — REMOVING GUARDRAIL
- CP9 — REMOVING CONCRETE PAVEMENT, REPLACE WITH CONCRETE PAVEMENT 9-INCH
- CG36T — CONCRETE CURB AND GUTTER 4-INCH SLOPED 36-INCH TYPE TBT
- DWY — ASPHALTIC SURFACE DRIVEWAYS AND FIELD ENTRANCES
- .XXXX. SAWING
- SLOPE INTERCEPT
- FUTURE SIDEWALK
- REMOVING CONCRETE PAVEMENT
- DITCH FLUME

BENCH MARKS & CONTROL POINTS

NO.	STATION	NORTHING	EASTING	DESCRIPTION	ELEV.
CP 80086	800+85.73, 5.05' RT	230216.31	594602.23	BERNTSTEN FENO 2" ALUM CAP	703.521

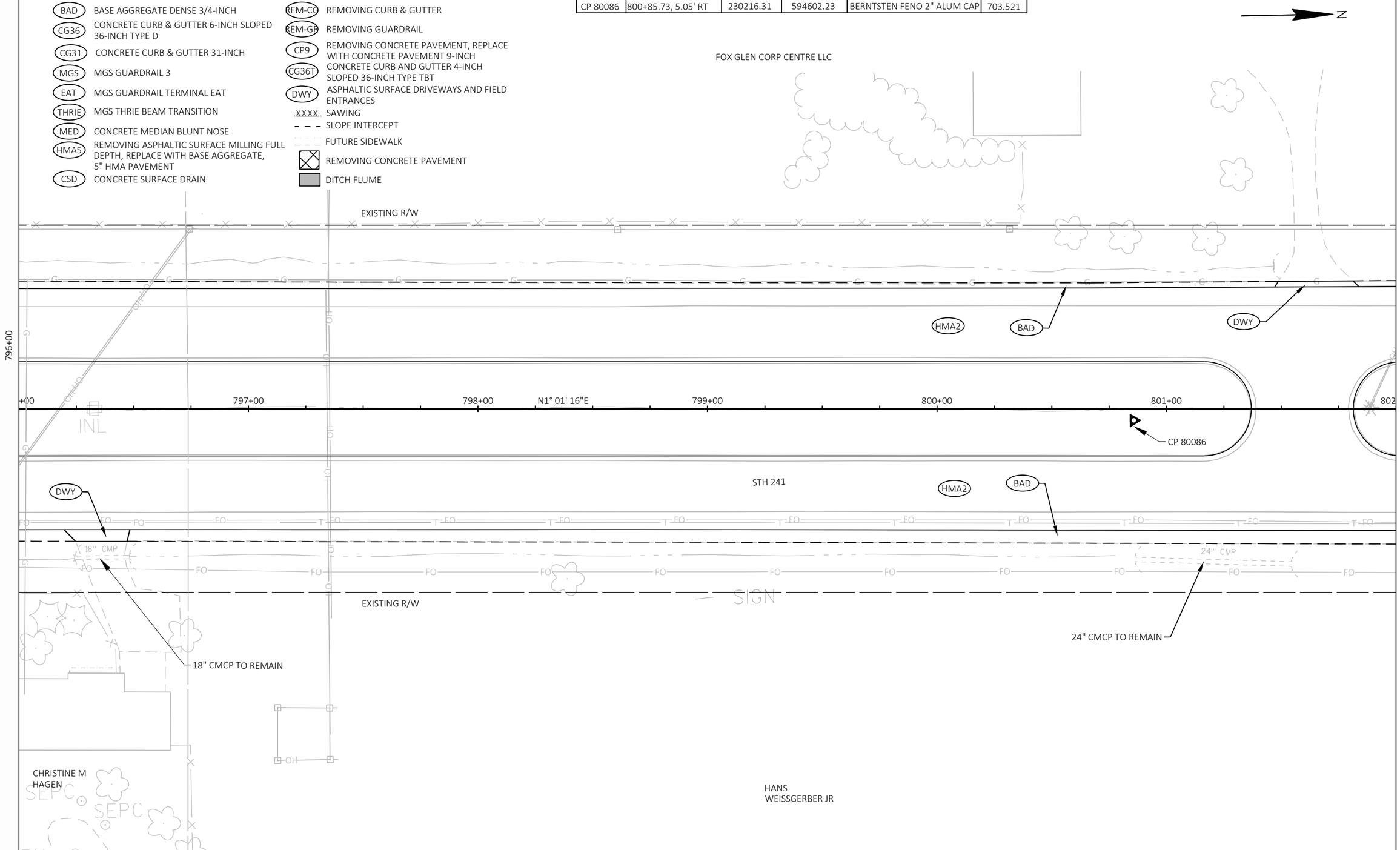

2

PROJECT NO: 2265-10-71	HWY: STH 241	COUNTY: MILWAUKEE	PLAN DETAILS - STH 241	SHEET 15	E

FILE NAME : C:\OD\CORRE, INC\PROJECTS - WI-SE REGION\2265-10-02_STH 241_MILWAUKE CO\500_CADD\501_C3D_2018\22651002\SHEETSPLAN\021201-PD.DWG
LAYOUT NAME - 03
PLOT DATE : 9/8/2022 11:23 AM PLOT BY : JESSICA LEWIS, PE PLOT NAME : PLOT SCALE : 1 IN:40 FT
WISDOT/CADDS SHEET 42

2

LEGEND

HMA2	2" REMOVING ASPHALTIC SURFACE MILLING, REPLACE WITH 2" HMA PAVEMENT	FLUM	ASPHALTIC FLUMES
BAD	BASE AGGREGATE DENSE 3/4-INCH	REM-CG	REMOVING CURB & GUTTER
CG36	CONCRETE CURB & GUTTER 6-INCH SLOPED 36-INCH TYPE D	REM-GR	REMOVING GUARDRAIL
CG31	CONCRETE CURB & GUTTER 31-INCH	CP9	REMOVING CONCRETE PAVEMENT, REPLACE WITH CONCRETE PAVEMENT 9-INCH
MGS	MGS GUARDRAIL 3	CG36T	CONCRETE CURB AND GUTTER 4-INCH SLOPED 36-INCH TYPE TBT
EAT	MGS GUARDRAIL TERMINAL EAT	DWY	ASPHALTIC SURFACE DRIVEWAYS AND FIELD ENTRANCES
THRIE	MGS THRIE BEAM TRANSITION	.XXXX.	SAWING
MED	CONCRETE MEDIAN BLUNT NOSE		SLOPE INTERCEPT
HMA5	REMOVING ASPHALTIC SURFACE MILLING FULL DEPTH, REPLACE WITH BASE AGGREGATE, 5" HMA PAVEMENT		FUTURE SIDEWALK
			REMOVING CONCRETE PAVEMENT
CSD	CONCRETE SURFACE DRAIN		DITCH FLUME

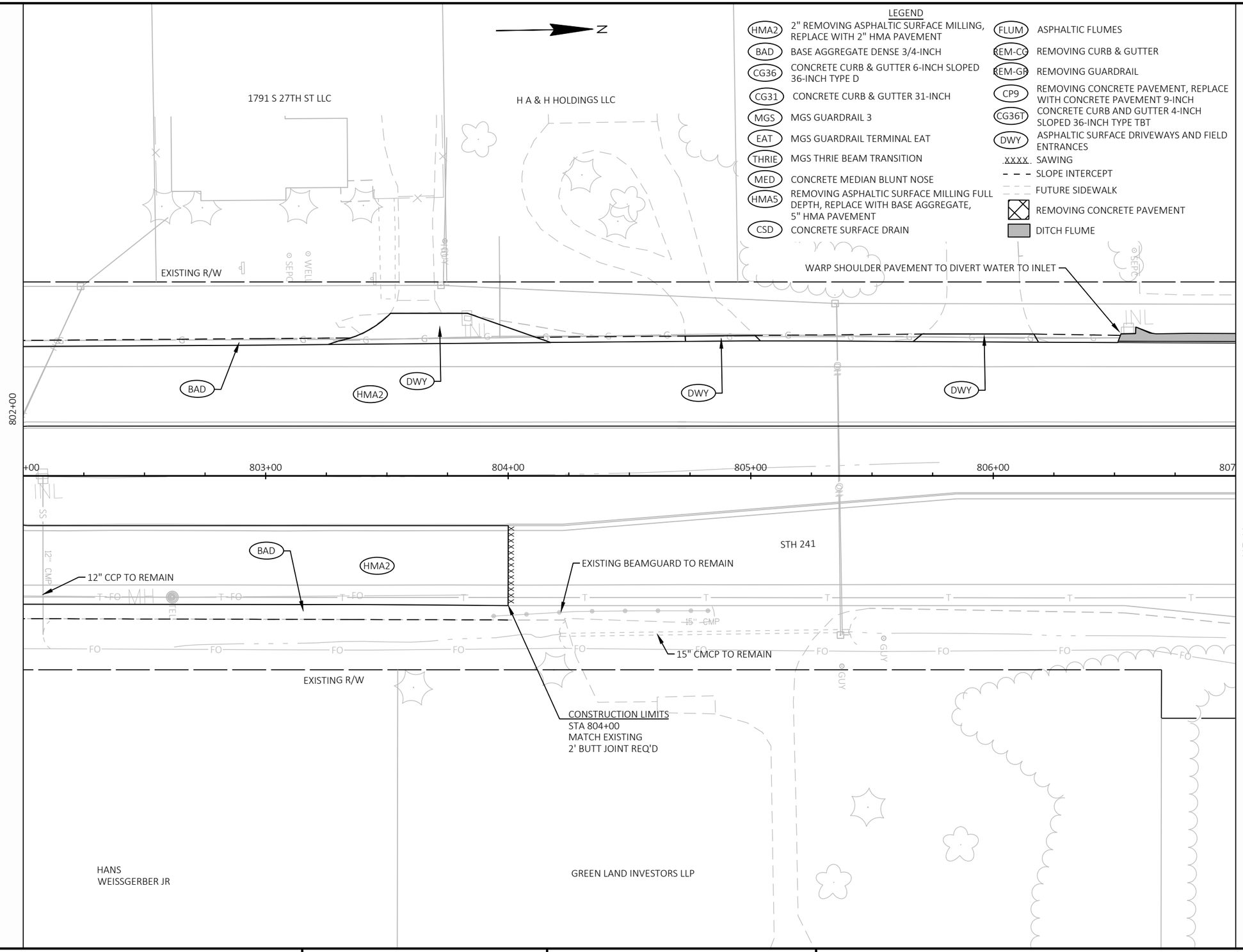

2

PROJECT NO: 2265-10-71	HWY: STH 241	COUNTY: MILWAUKEE	PLAN DETAILS - STH 241	SHEET 16	E

2

LEGEND

HMA2	2" REMOVING ASPHALTIC SURFACE MILLING, REPLACE WITH 2" HMA PAVEMENT
BAD	BASE AGGREGATE DENSE 3/4-INCH
CG36	CONCRETE CURB & GUTTER 6-INCH SLOPED 36-INCH TYPE D
CG31	CONCRETE CURB & GUTTER 31-INCH
MGS	MGS GUARDRAIL 3
EAT	MGS GUARDRAIL TERMINAL EAT
THRIE	MGS THRIE BEAM TRANSITION
MED	CONCRETE MEDIAN BLUNT NOSE
HMA5	REMOVING ASPHALTIC SURFACE MILLING FULL DEPTH, REPLACE WITH BASE AGGREGATE, 5" HMA PAVEMENT
CSD	CONCRETE SURFACE DRAIN
FLUM	ASPHALTIC FLUMES
REM-CG	REMOVING CURB & GUTTER
REM-GR	REMOVING GUARDRAIL
CP9	REMOVING CONCRETE PAVEMENT, REPLACE WITH CONCRETE PAVEMENT 9-INCH
CG36T	CONCRETE CURB AND GUTTER 4-INCH SLOPED 36-INCH TYPE TBT
DWY	ASPHALTIC SURFACE DRIVEWAYS AND FIELD ENTRANCES
XXXX	SAWING
	SLOPE INTERCEPT
	FUTURE SIDEWALK
	REMOVING CONCRETE PAVEMENT
	DITCH FLUME

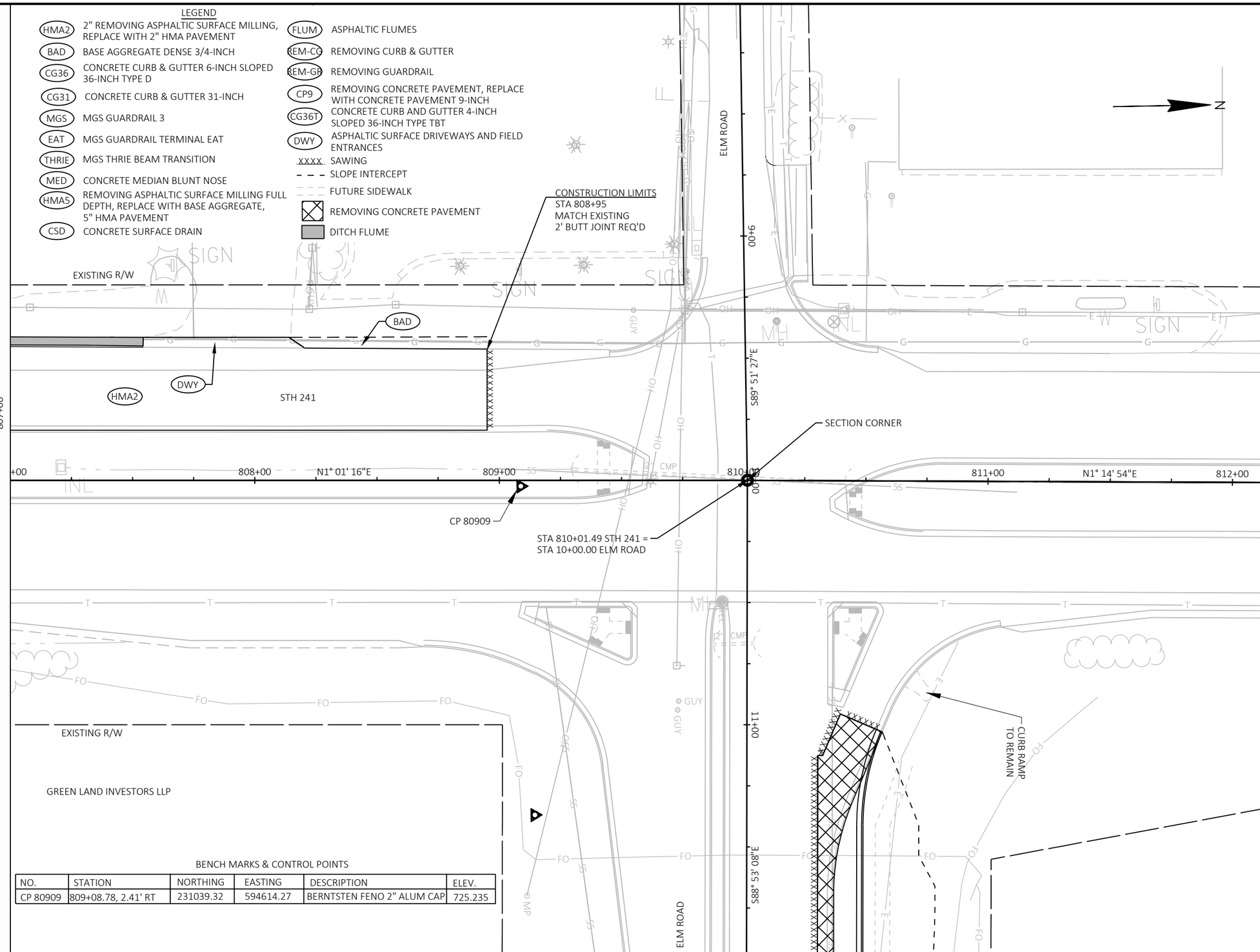

BENCH MARKS & CONTROL POINTS

NO.	STATION	NORTHING	EASTING	DESCRIPTION	ELEV.
CP 80909	809+08.78, 2.41' RT	231039.32	594614.27	BERNTSTEN FENO 2" ALUM CAP	725.235

2

PROJECT NO: 2265-10-71	HWY: STH 241	COUNTY: MILWAUKEE	PLAN DETAILS - STH 241	SHEET 17	E

2

BENCH MARKS & CONTROL POINTS

NO.	STATION	NORTHING	EASTING	DESCRIPTION	ELEV.
BM 80976	7+61.44, 20.87' LT	231153.53	594375.01	NAIL IN N. FACE OF PP 94-1230	726.434
CP 81018	7+88.54, 22.10' RT	231110.49	594402.00	BERNTSEN FENO 2" ALUM CAP	726.850
CP 907	11+37.07, 86.73' RT	231042.68	594748.86	FENO MONUMENT	723.962

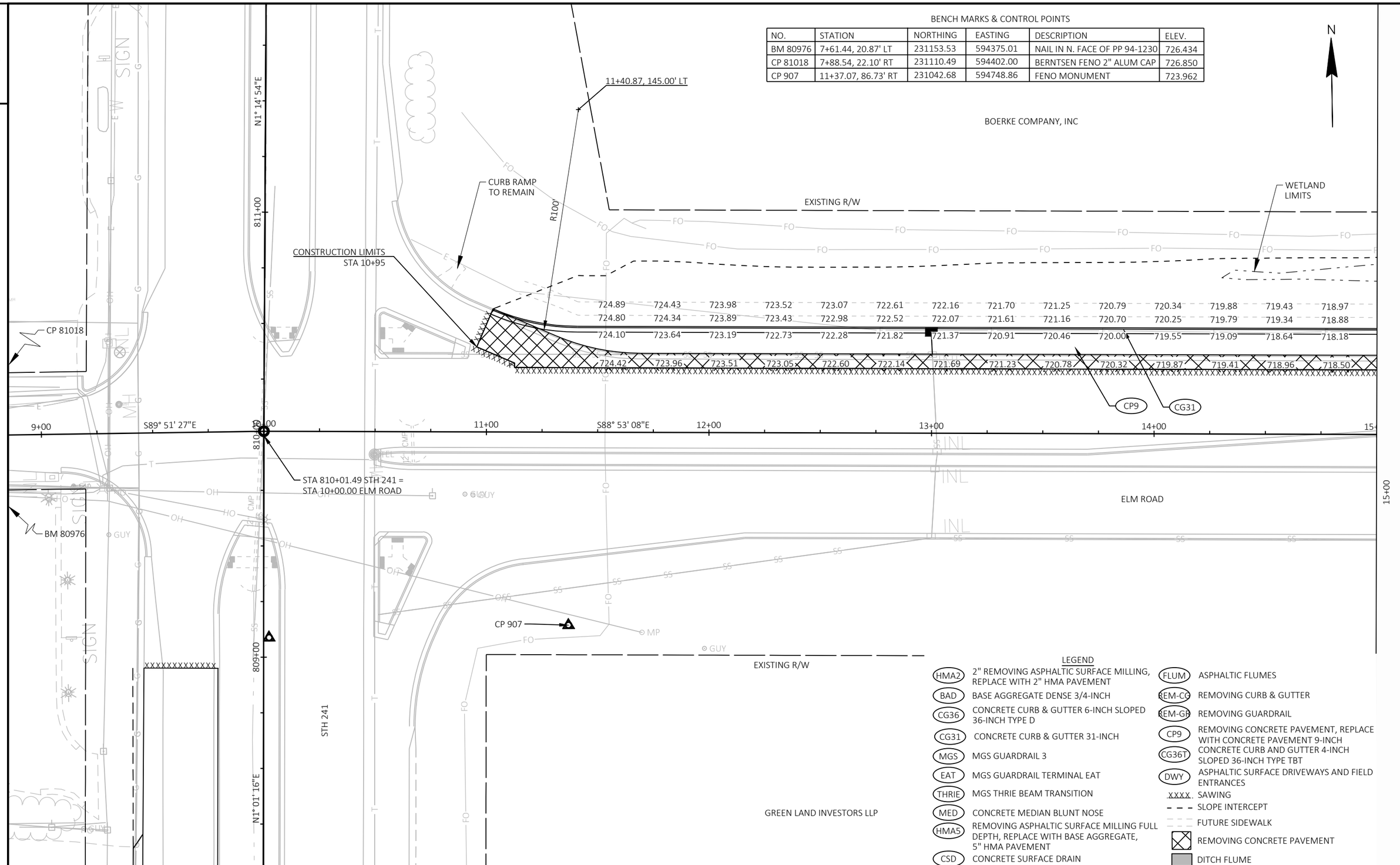

LEGEND

HMA2	2" REMOVING ASPHALTIC SURFACE MILLING, REPLACE WITH 2" HMA PAVEMENT	FLUM	ASPHALTIC FLUMES
BAD	BASE AGGREGATE DENSE 3/4-INCH	REM-CG	REMOVING CURB & GUTTER
CG36	CONCRETE CURB & GUTTER 6-INCH SLOPED 36-INCH TYPE D	REM-GR	REMOVING GUARDRAIL
CG31	CONCRETE CURB & GUTTER 31-INCH	CP9	REMOVING CONCRETE PAVEMENT, REPLACE WITH CONCRETE PAVEMENT 9-INCH
MGS	MGS GUARDRAIL 3	CG36T	CONCRETE CURB AND GUTTER 4-INCH SLOPED 36-INCH TYPE TBT
EAT	MGS GUARDRAIL TERMINAL EAT	DWY	ASPHALTIC SURFACE DRIVEWAYS AND FIELD ENTRANCES
THRIE	MGS THRIE BEAM TRANSITION	XXXX	SAWING
MED	CONCRETE MEDIAN BLUNT NOSE		SLOPE INTERCEPT
HMA5	REMOVING ASPHALTIC SURFACE MILLING FULL DEPTH, REPLACE WITH BASE AGGREGATE, 5" HMA PAVEMENT		FUTURE SIDEWALK
CSD	CONCRETE SURFACE DRAIN		REMOVING CONCRETE PAVEMENT
			DITCH FLUME

PROJECT NO: 2265-10-71	HWY: STH 241	COUNTY: MILWAUKEE	PLAN DETAILS - ELM ROAD	SHEET 18	E

BENCH MARKS & CONTROL POINTS

NO.	STATION	NORTHING	EASTING	DESCRIPTION	ELEV.
CP 908	19+74.19, 97.01' LT	23121.11	595589.41	FENO MONUMENT	713.091

BOERKE COMPANY, INC

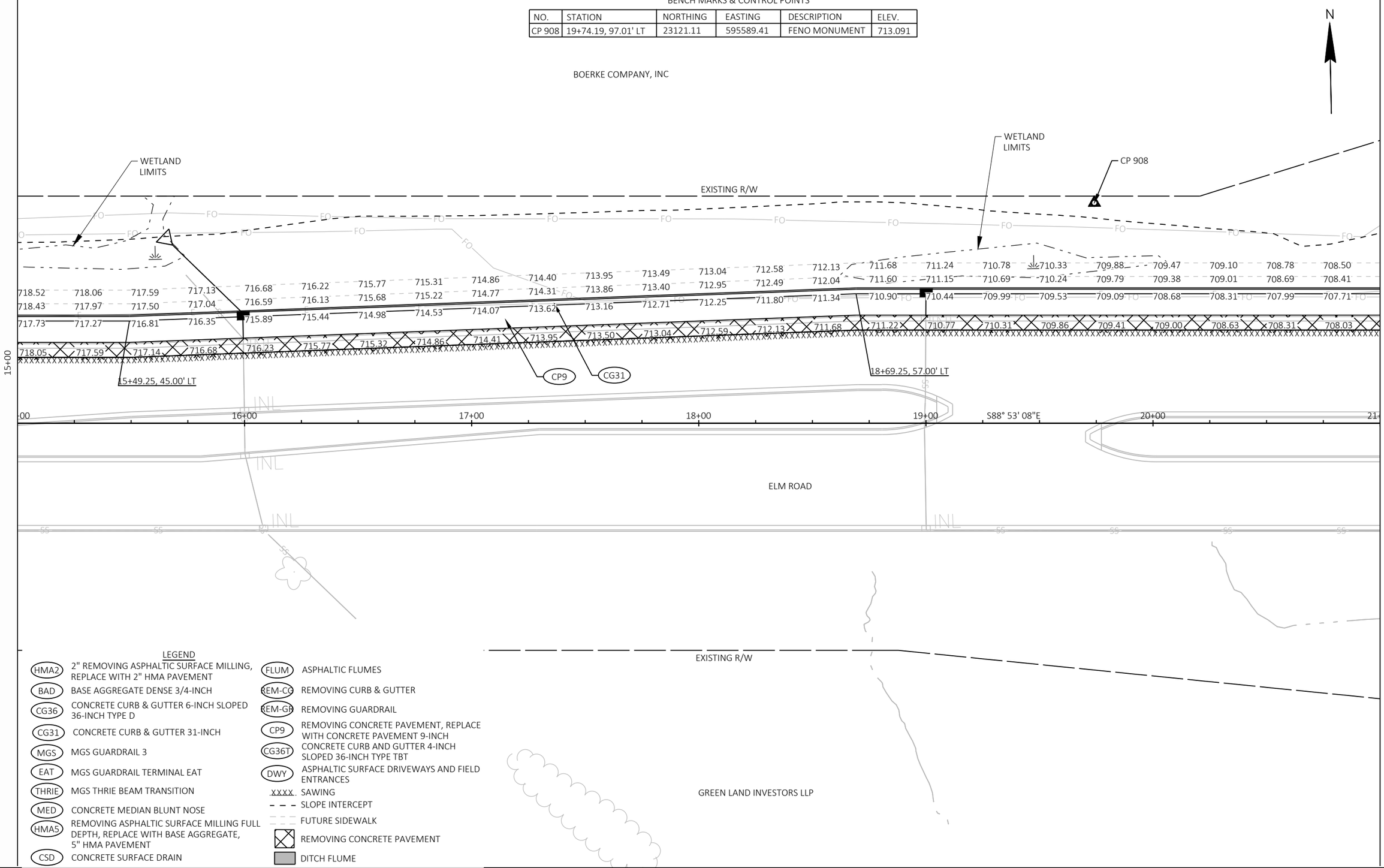

LEGEND

HMA2	2" REMOVING ASPHALTIC SURFACE MILLING, REPLACE WITH 2" HMA PAVEMENT
BAD	BASE AGGREGATE DENSE 3/4-INCH
CG36	CONCRETE CURB & GUTTER 6-INCH SLOPED 36-INCH TYPE D
CG31	CONCRETE CURB & GUTTER 31-INCH
MGS	MGS GUARDRAIL 3
EAT	MGS GUARDRAIL TERMINAL EAT
THRIE	MGS THRIE BEAM TRANSITION
MED	CONCRETE MEDIAN BLUNT NOSE
HMA5	REMOVING ASPHALTIC SURFACE MILLING FULL DEPTH, REPLACE WITH BASE AGGREGATE, 5" HMA PAVEMENT
CSD	CONCRETE SURFACE DRAIN
FLUM	ASPHALTIC FLUMES
REM-CG	REMOVING CURB & GUTTER
REM-GR	REMOVING GUARDRAIL
CP9	REMOVING CONCRETE PAVEMENT, REPLACE WITH CONCRETE PAVEMENT 9-INCH
CG36T	CONCRETE CURB AND GUTTER 4-INCH SLOPED 36-INCH TYPE TBT
DWY	ASPHALTIC SURFACE DRIVEWAYS AND FIELD ENTRANCES
XXXX	SAWING
- - -	SLOPE INTERCEPT
	FUTURE SIDEWALK
	REMOVING CONCRETE PAVEMENT
	DITCH FLUME

PROJECT NO: 2265-10-71	HWY: STH 241	COUNTY: MILWAUKEE	PLAN DETAILS - ELM ROAD	SHEET 19	E

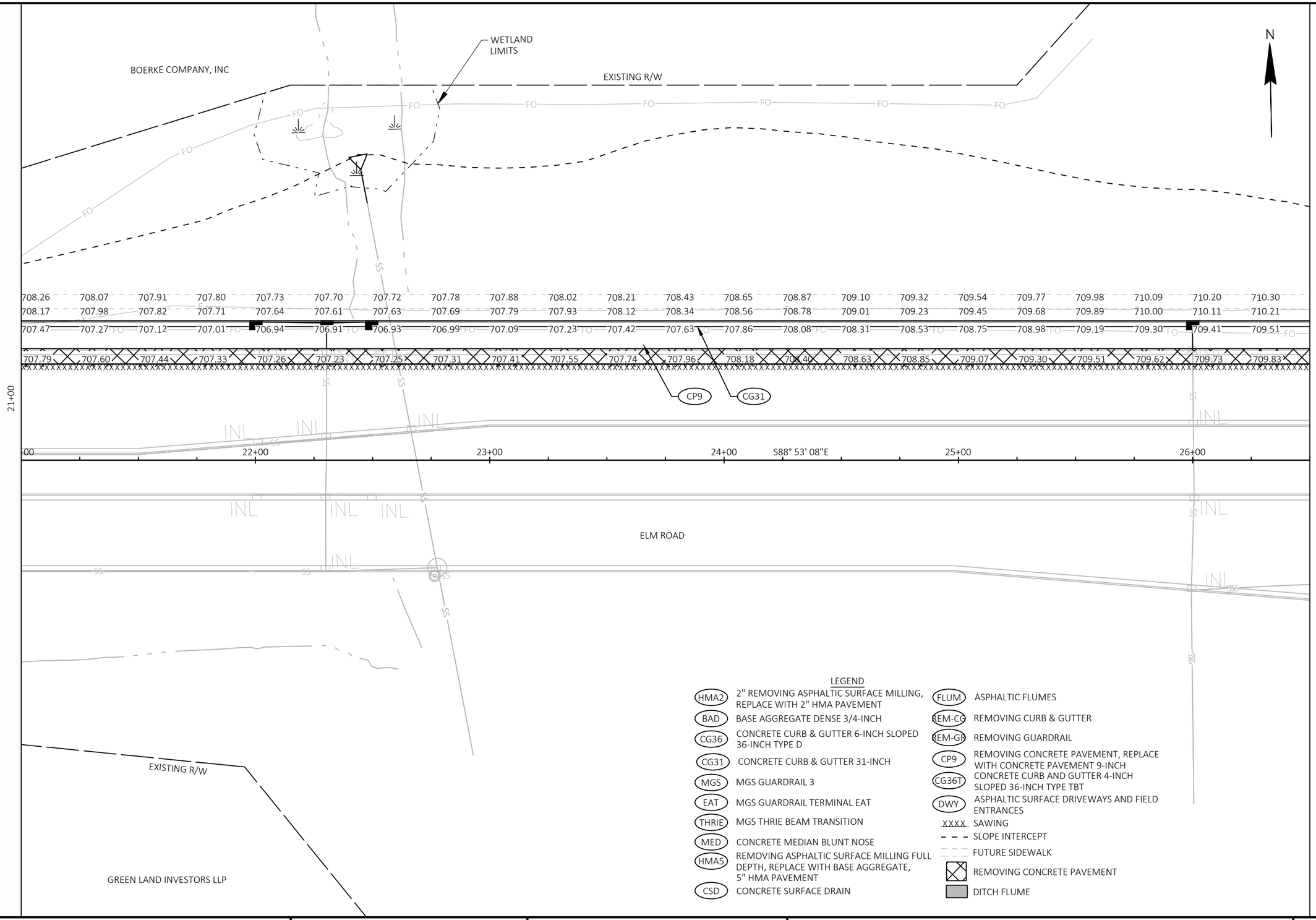

LEGEND

HMA2	2" REMOVING ASPHALTIC SURFACE MILLING, REPLACE WITH 2" HMA PAVEMENT	FLUM	ASPHALTIC FLUMES
BAD	BASE AGGREGATE DENSE 3/4-INCH	REM-CG	REMOVING CURB & GUTTER
CG36	CONCRETE CURB & GUTTER 6-INCH SLOPED 36-INCH TYPE D	REM-GR	REMOVING GUARDRAIL
CG31	CONCRETE CURB & GUTTER 31-INCH	CP9	REMOVING CONCRETE PAVEMENT, REPLACE WITH CONCRETE PAVEMENT 9-INCH
MGS	MGS GUARDRAIL 3	CG36T	CONCRETE CURB AND GUTTER 4-INCH SLOPED 36-INCH TYPE TBT
EAT	MGS GUARDRAIL TERMINAL EAT	DWY	ASPHALTIC SURFACE DRIVEWAYS AND FIELD ENTRANCES
THRIE	MGS THRIE BEAM TRANSITION	.XXXX.	SAWING
MED	CONCRETE MEDIAN BLUNT NOSE		SLOPE INTERCEPT
HMA5	REMOVING ASPHALTIC SURFACE MILLING FULL DEPTH, REPLACE WITH BASE AGGREGATE, 5" HMA PAVEMENT		FUTURE SIDEWALK
			REMOVING CONCRETE PAVEMENT
CSD	CONCRETE SURFACE DRAIN		DITCH FLUME

PROJECT NO: 2265-10-71	HWY: STH 241	COUNTY: MILWAUKEE	PLAN DETAILS - ELM ROAD	SHEET 20	E

2

BENCH MARKS & CONTROL POINTS

NO.	STATION	NORTHING	EASTING	DESCRIPTION	ELEV.
CP 909	26+67.36, 88.69' RT	231010.96	596278.83	FENO MONUMENT	708.229

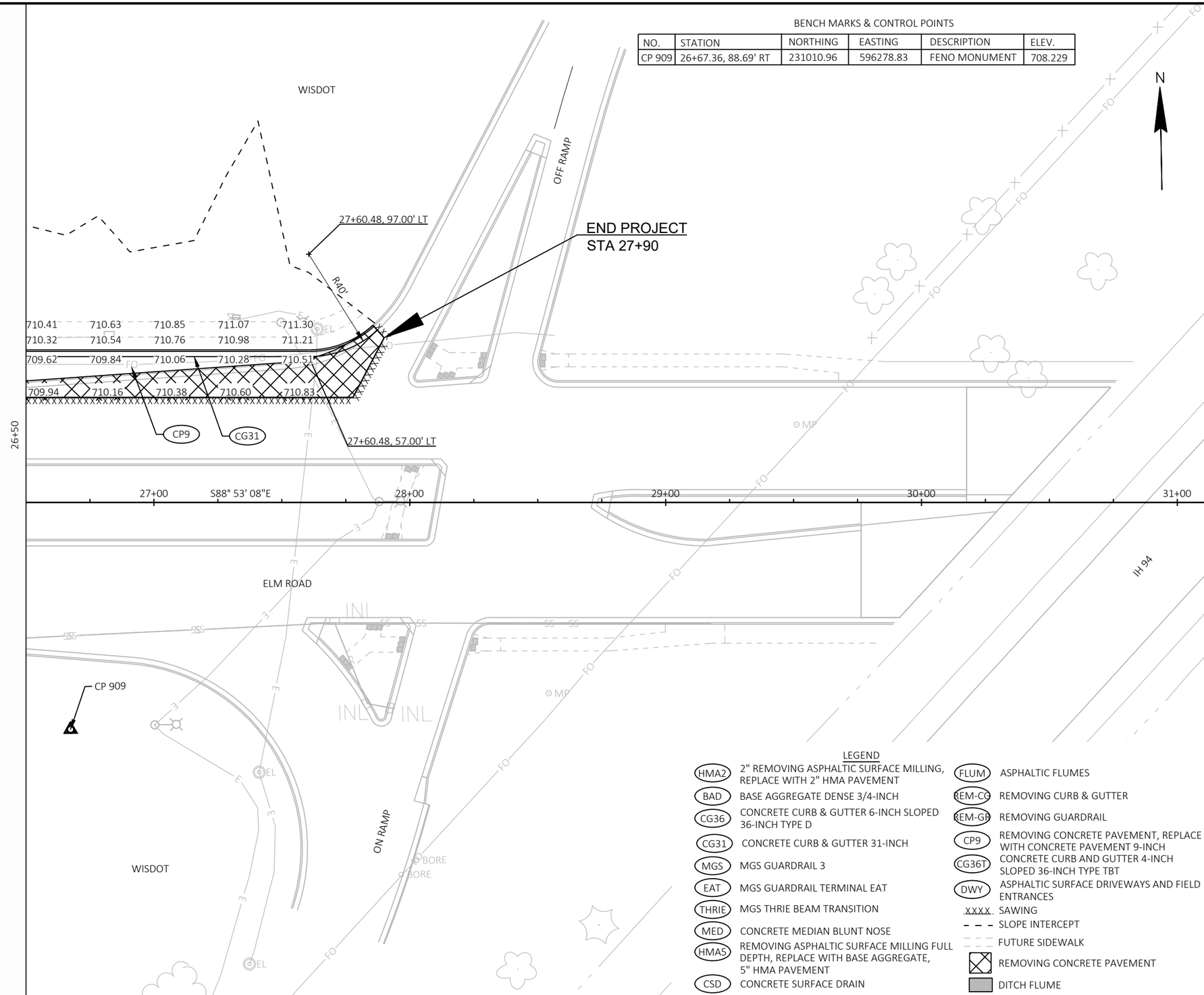

LEGEND

HMA2	2" REMOVING ASPHALTIC SURFACE MILLING, REPLACE WITH 2" HMA PAVEMENT
BAD	BASE AGGREGATE DENSE 3/4-INCH
CG36	CONCRETE CURB & GUTTER 6-INCH SLOPED 36-INCH TYPE D
CG31	CONCRETE CURB & GUTTER 31-INCH
MGS	MGS GUARDRAIL 3
EAT	MGS GUARDRAIL TERMINAL EAT
THRIE	MGS THRIE BEAM TRANSITION
MED	CONCRETE MEDIAN BLUNT NOSE
HMA5	REMOVING ASPHALTIC SURFACE MILLING FULL DEPTH, REPLACE WITH BASE AGGREGATE, 5" HMA PAVEMENT
CSD	CONCRETE SURFACE DRAIN
FLUM	ASPHALTIC FLUMES
REM-CG	REMOVING CURB & GUTTER
REM-GR	REMOVING GUARDRAIL
CP9	REMOVING CONCRETE PAVEMENT, REPLACE WITH CONCRETE PAVEMENT 9-INCH
CG36T	CONCRETE CURB AND GUTTER 4-INCH SLOPED 36-INCH TYPE TBT
DWY	ASPHALTIC SURFACE DRIVEWAYS AND FIELD ENTRANCES
XXXX	SAWING
- - -	SLOPE INTERCEPT
	FUTURE SIDEWALK
	REMOVING CONCRETE PAVEMENT
	DITCH FLUME

PROJECT NO: 2265-10-71	HWY: STH 241	COUNTY: MILWAUKEE	PLAN DETAILS - ELM ROAD	SHEET 21	E

2

THE IMMEDIATE RECEIVING WATER IS THE ROOT RIVER

LEGEND

- DITCH FLOW LINE
- SLOPE INTERCEPT
- SILT FENCE
- SURFACE WATER FLOW
- (X) INLET PROTECTION TYPE
- EROSION BALE, BARRIER
- TEMPORARY DITCH CHECK
- CULVERT PIPE CHECK
- RIPRAP MEDIUM
- (RES) RESTORE WITH SALVAGED TOPSOIL, SEED, FERTILIZER & MULCH

NOTE:
FERTILIZER CANNOT BE USED WITHIN 20' OF WETLANDS

RUNOFF COEFFICIENT TABLE

	HYDROLOGIC SOIL GROUP											
	A			B			C			D		
	SLOPE RANGE (PERCENT)			SLOPE RANGE (PERCENT)			SLOPE RANGE (PERCENT)			SLOPE RANGE (PERCENT)		
LAND USE:	0-2	2-6	6 & OVER	0-2	2-6	6 & OVER	0-2	2-6	6 & OVER	0-2	2-6	6 & OVER
ROW CROPS	.08 .22	.16 .30	.22 .38	.12 .26	.20 .34	.27 .44	.15 .30	.24 .37	.33 .50	.19 .34	.28 .41	.38 .56
MEDIAN STRIP-TURF	.19 .24	.20 .26	.24 .30	.19 .25	.22 .28	.26 .33	.20 .26	.23 .30	.30 .37	.20 .27	.25 .32	.30 .40
SIDE SLOPE-TURF			.25 .32			.27 .34			.28 .36			.30 .38
PAVEMENT:												
ASPHALT	.70 - .95											
CONCRETE	.80 - .95											
BRICK	.70 - .80											
DRIVES, WALKS	.75 - .85											
ROOFS	.75 - .95											
GRAVEL ROADS, SHOULDERS	.40 - .60											

TOTAL PROJECT AREA = 19.71 ACRES
TOTAL AREA EXPECTED TO BE DISTURBED BY CONSTRUCTION ACTIVITIES = 2.11 ACRES

BEGIN PROJECT
STA 785+50

WETLAND LIMITS

EXISTING R/W

WETLAND LIMITS

SOD EROSION CONTROL

8 MILE RD

SOD EROSION CONTROL

EXISTING R/W

STH 241

784 786 788 790 792 794 796 798

B-40-0954
DECK REPLACEMENT

A C

WETLAND LIMITS

EXISTING R/W

ROOT R

RIPRAP

SEPC SEPV SEPTIC

N

2

PROJECT NO: 2265-10-71	HWY: STH 241	COUNTY: MILWAUKEE	EROSION CONTROL - STH 241	SHEET 22	E

FILE NAME : C:\OD\CORRE, INC\PROJECTS - WI-SE REGION\2265-10-02_STH 241_MILWAUKE CO\500_CADD\501_C3D_2018\22651002\SHEETSPLAN\022001-EC.DWG
LAYOUT NAME - 01
PLOT DATE : 6/9/2023 7:17 AM PLOT BY : TOM ORNER PLOT NAME : PLOT SCALE : 1 IN:100 FT

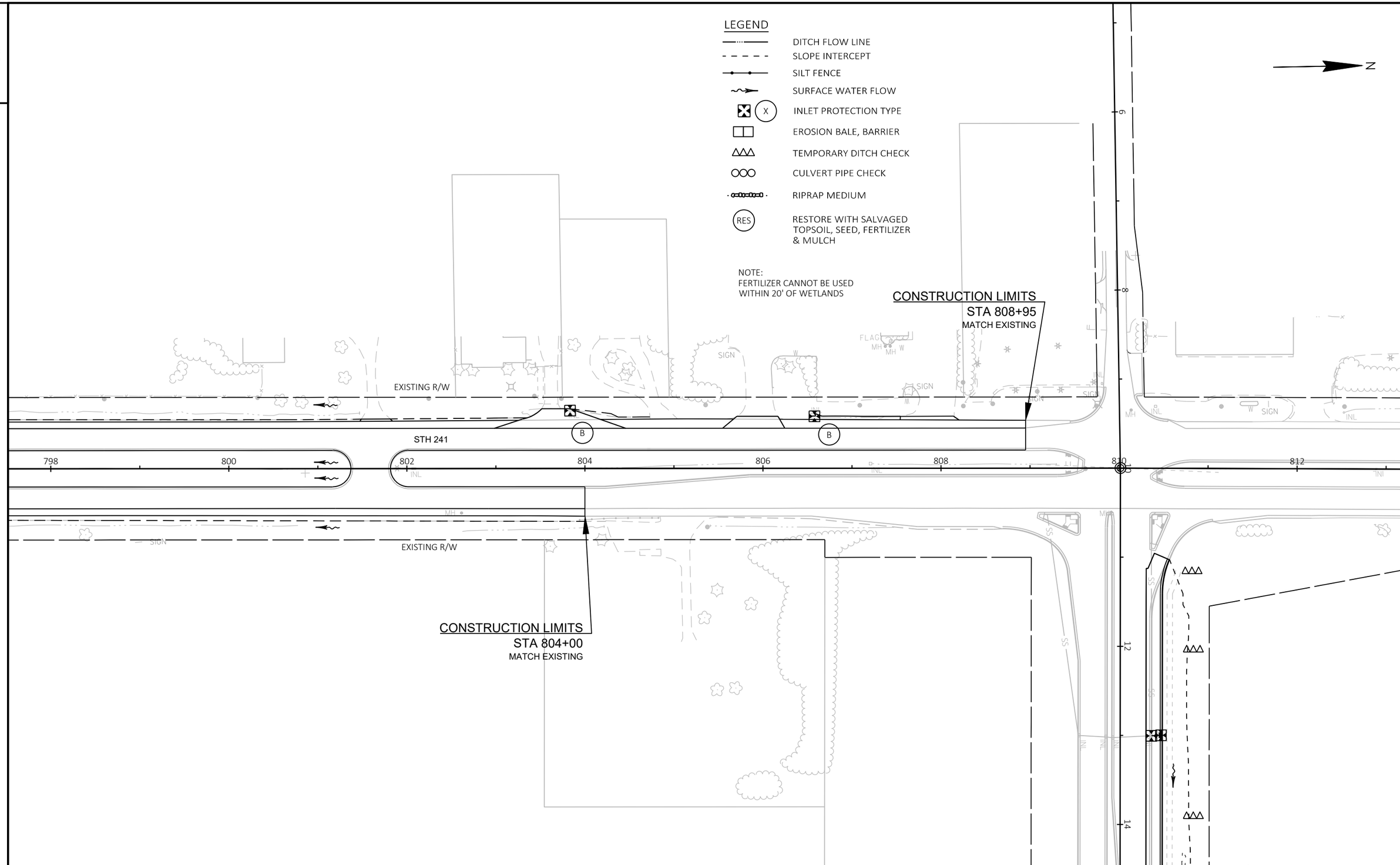
LEGEND
DITCH FLOW LINE
SLOPE INTERCEPT
SILT FENCE
SURFACE WATER FLOW
X
INLET PROTECTION TYPE
EROSION BALE, BARRIER
TEMPORARY DITCH CHECK
CULVERT PIPE CHECK
RIPRAP MEDIUM
RES
RESTORE WITH SALVAGED TOPSOIL, SEED, FERTILIZER & MULCH
NOTE:
FERTILIZER CANNOT BE USED WITHIN 20' OF WETLANDS
N
CONSTRUCTION LIMITS
STA 808+95
MATCH EXISTING
EXISTING R/W
STH 241
B
B
798
800
802
804
806
808
810
812
6
8
10
12
14
CONSTRUCTION LIMITS
STA 804+00
MATCH EXISTING
EXISTING R/W
SIGN
FLAG
MH
INL
SS

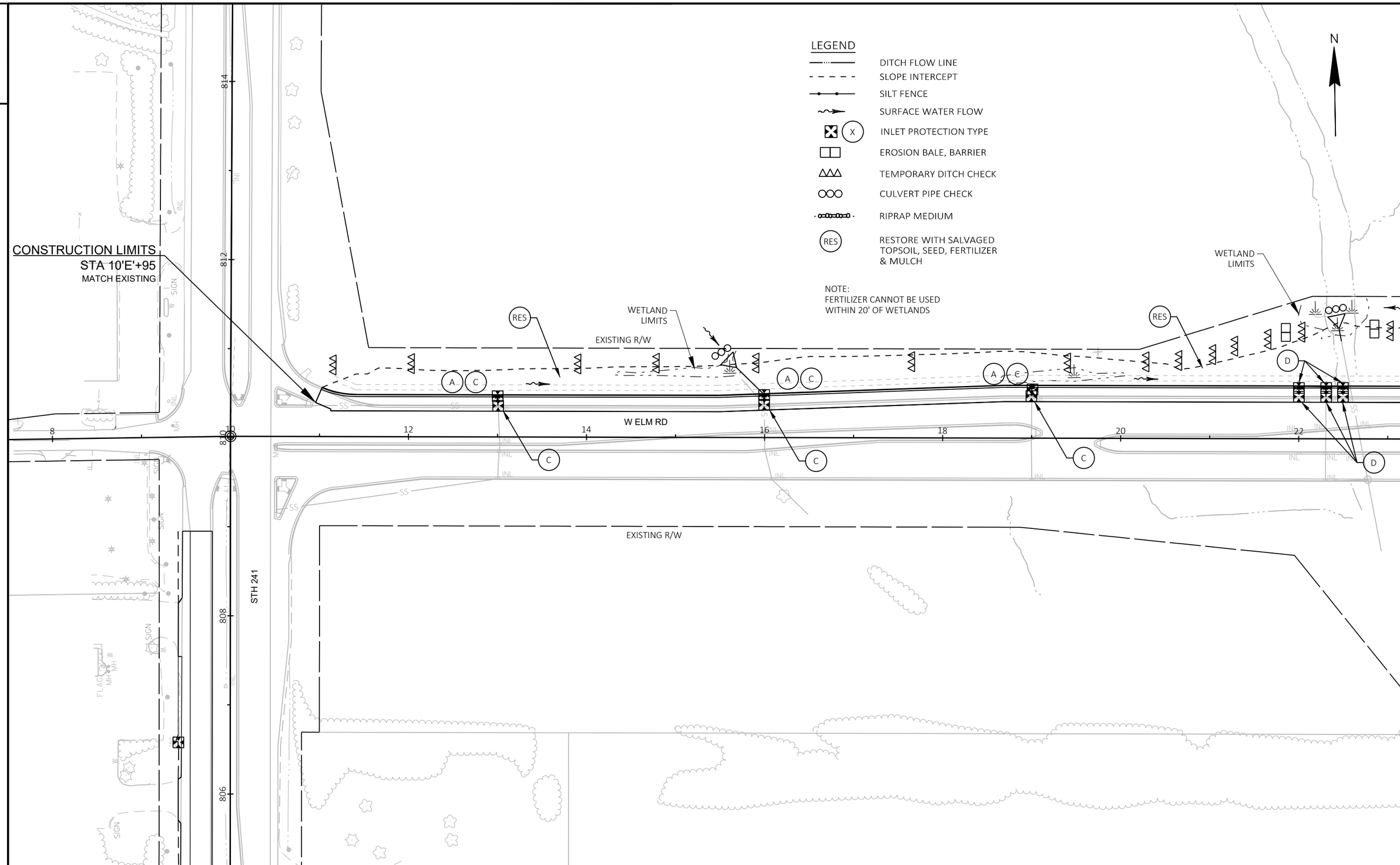
LEGEND
DITCH FLOW LINE
SLOPE INTERCEPT
SILT FENCE
SURFACE WATER FLOW
X
INLET PROTECTION TYPE
EROSION BALE, BARRIER
TEMPORARY DITCH CHECK
CULVERT PIPE CHECK
RIPRAP MEDIUM
RES
RESTORE WITH SALVAGED TOPSOIL, SEED, FERTILIZER & MULCH
NOTE:
FERTILIZER CANNOT BE USED WITHIN 20' OF WETLANDS
N
CONSTRUCTION LIMITS
STA 10'E'+95
MATCH EXISTING
WETLAND LIMITS
EXISTING R/W
W ELM RD
STH 241
814
812
810
808
806
8
10
12
14
16
18
20
22
A
C
D
SS
INL
SIGN
FLAG
MH
W

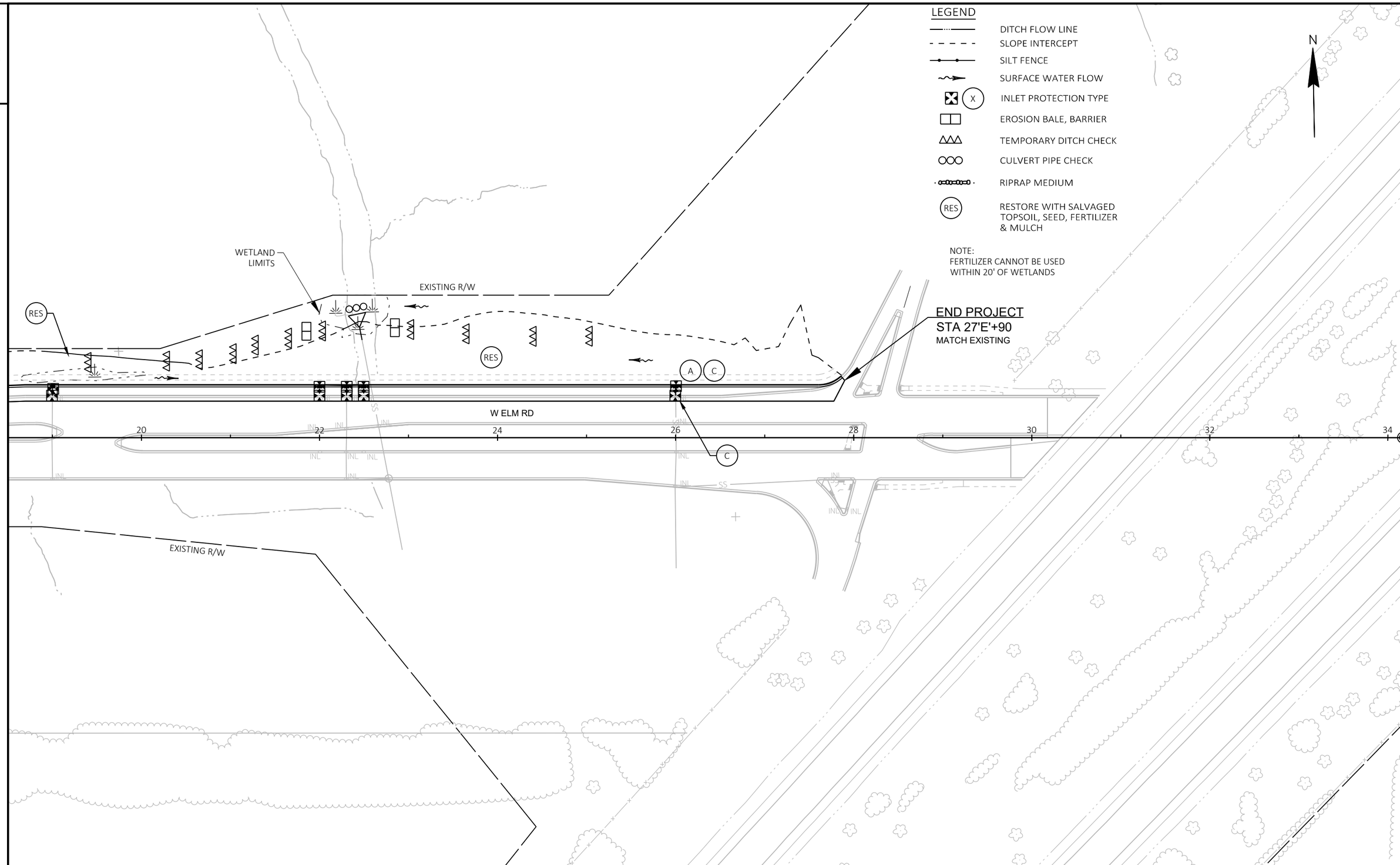

PROJECT NO: 2265-10-71	HWY: STH 241	COUNTY: MILWAUKEE	EROSION CONTROL - ELM ROAD	SHEET 25	E

FILE NAME : C:\OD\CORRE, INC\PROJECTS - DOCUMENTS\WI - SE REGION\2265-10-02_STH 241_MILWAUKE CO\500_CADD\501_C3D_2018\22651002\SHEETSPLAN\022001-EC.DWG
LAYOUT NAME - 04
PLOT DATE : 1/31/2022 10:18 AM
PLOT BY : TOM ORNER
PLOT NAME :
PLOT SCALE : 1 IN:100 FT

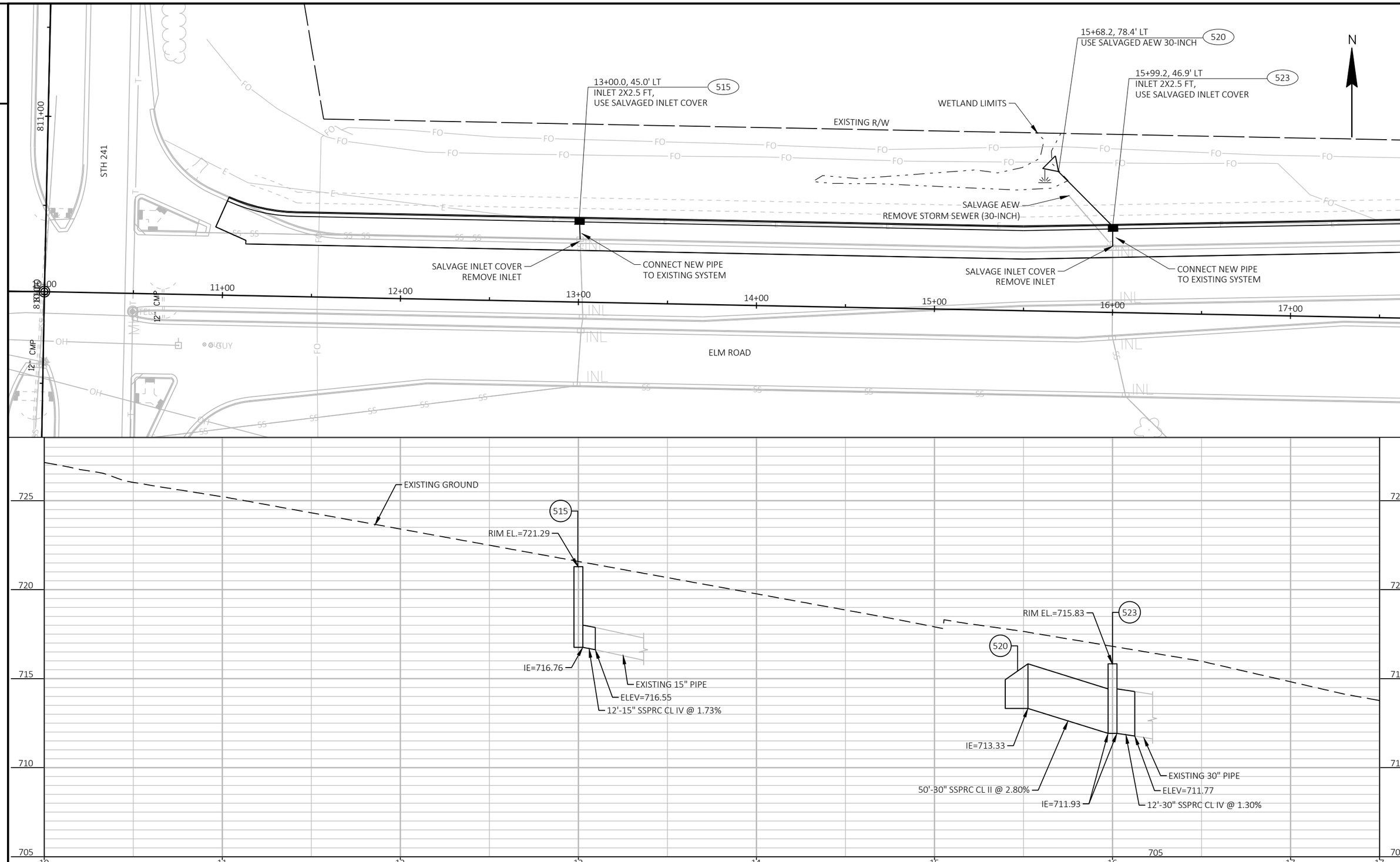

PROJECT NO: 2265-10-71	HWY: STH 241	COUNTY: MILWAUKEE	STORM SEWER	SHEET 26	E

FILE NAME : C:\OD\CORRE, INC\PROJECTS - WI-SE REGION\2265-10-02_STH 241_MILWAUKE CO\500_CADD\501_C3D_2018\22651002\SHEETSPLAN\022501-SS.DWG
LAYOUT NAME - 01
PLOT DATE : 11/6/2023 1:22 PM
PLOT BY : JESSICA LEWIS, PE
PLOT NAME :
PLOT SCALE : 1 IN:50 FT

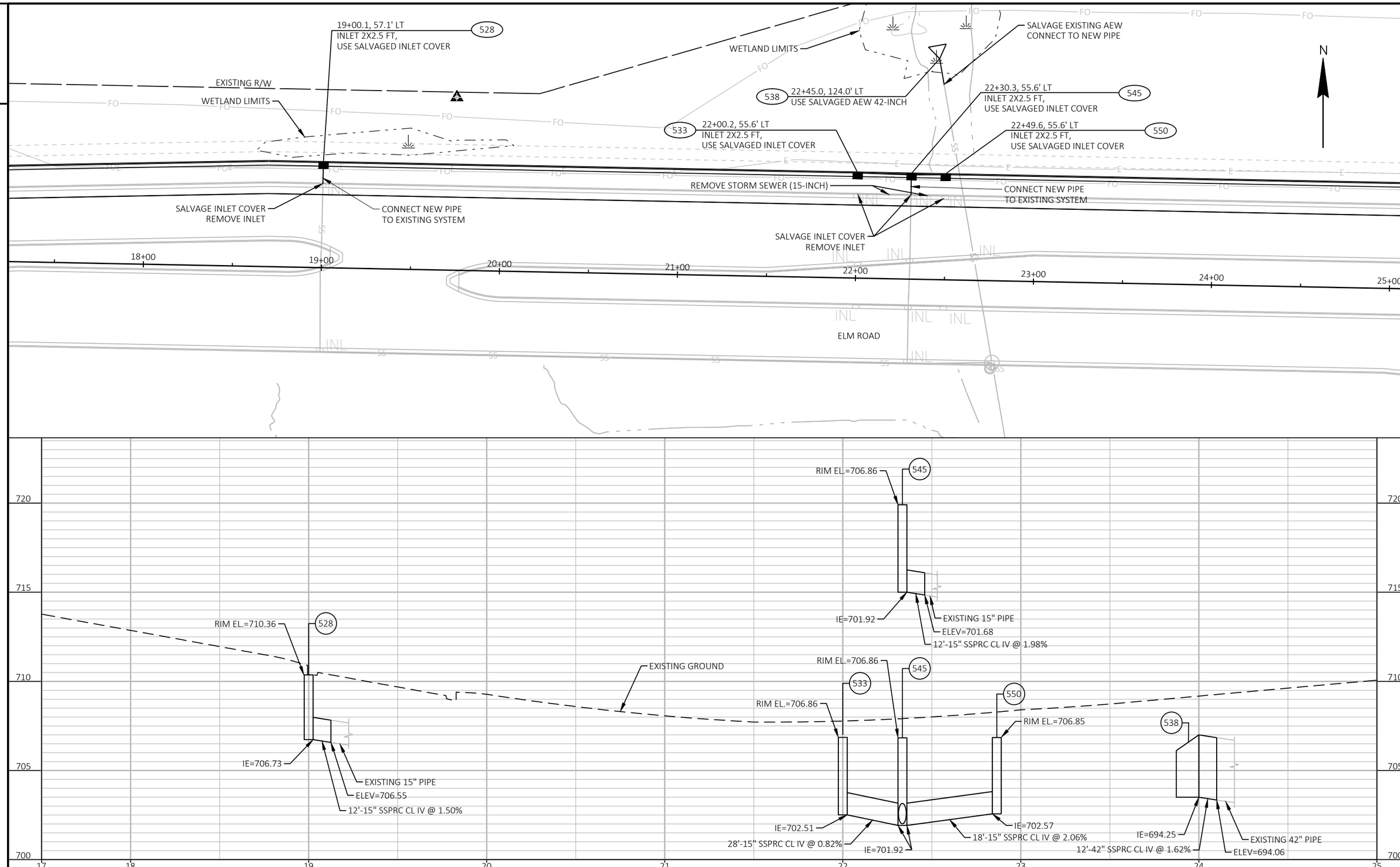

PROJECT NO: 2265-10-71	HWY: STH 241	COUNTY: MILWAUKEE	STORM SEWER	SHEET 27	E

FILE NAME : C:\OD\CORRE, INC\PROJECTS - WI-SE REGION\2265-10-02_STH 241_MILWAUKE CO\500_CADD\501_C3D_2018\22651002\SHEETSPLAN\022501-SS.DWG
LAYOUT NAME - 02
PLOT DATE : 11/6/2023 1:22 PM
PLOT BY : JESSICA LEWIS, PE
PLOT NAME :
PLOT SCALE : 1 IN:50 FT
WISDOT/CADDS SHEET 41

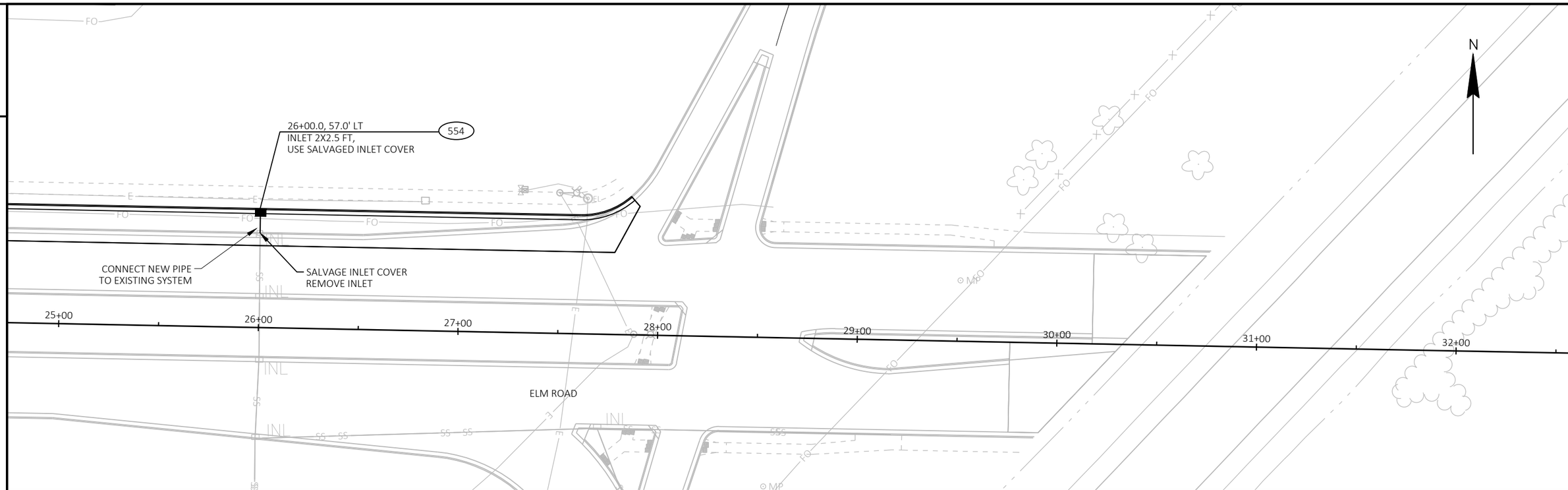

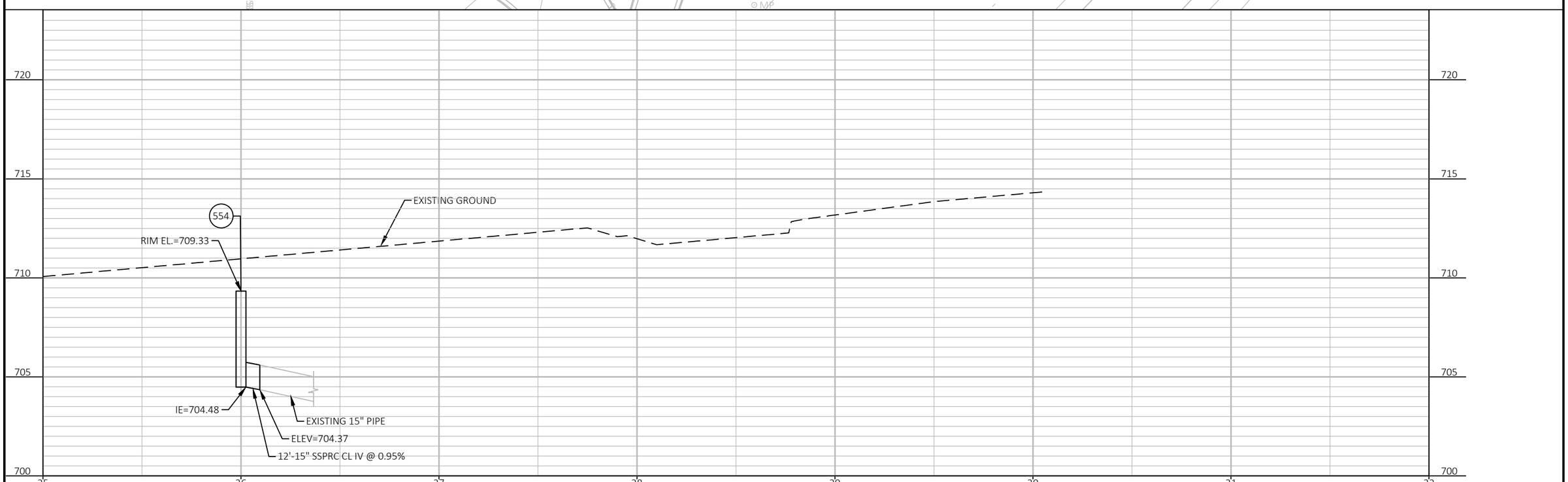

PROJECT NO: 2265-10-71	HWY: STH 241	COUNTY: MILWAUKEE	STORM SEWER	SHEET 28	E

2

LEGEND

- EXISTING SIGN MOUNTED ON POST(S)
- EXISTING SIGN MOUNTED ON BRIDGE OR SIGN BRIDGE
- PROPOSED SIGN MOUNTED ON POST(S)
- PROPOSED SIGN MOUNTED ON BRIDGE OR SIGN BRIDGE
- VMS VARIABLE MESSAGE SIGN
- EXISTING LIGHT OR SIGNAL POLE
- SIGN BRIDGE
- CANTILEVER SIGN BRIDGE
- XXX DENOTES SIGN NUMBER
- ESTR EXISTING SIGN TO REMAIN

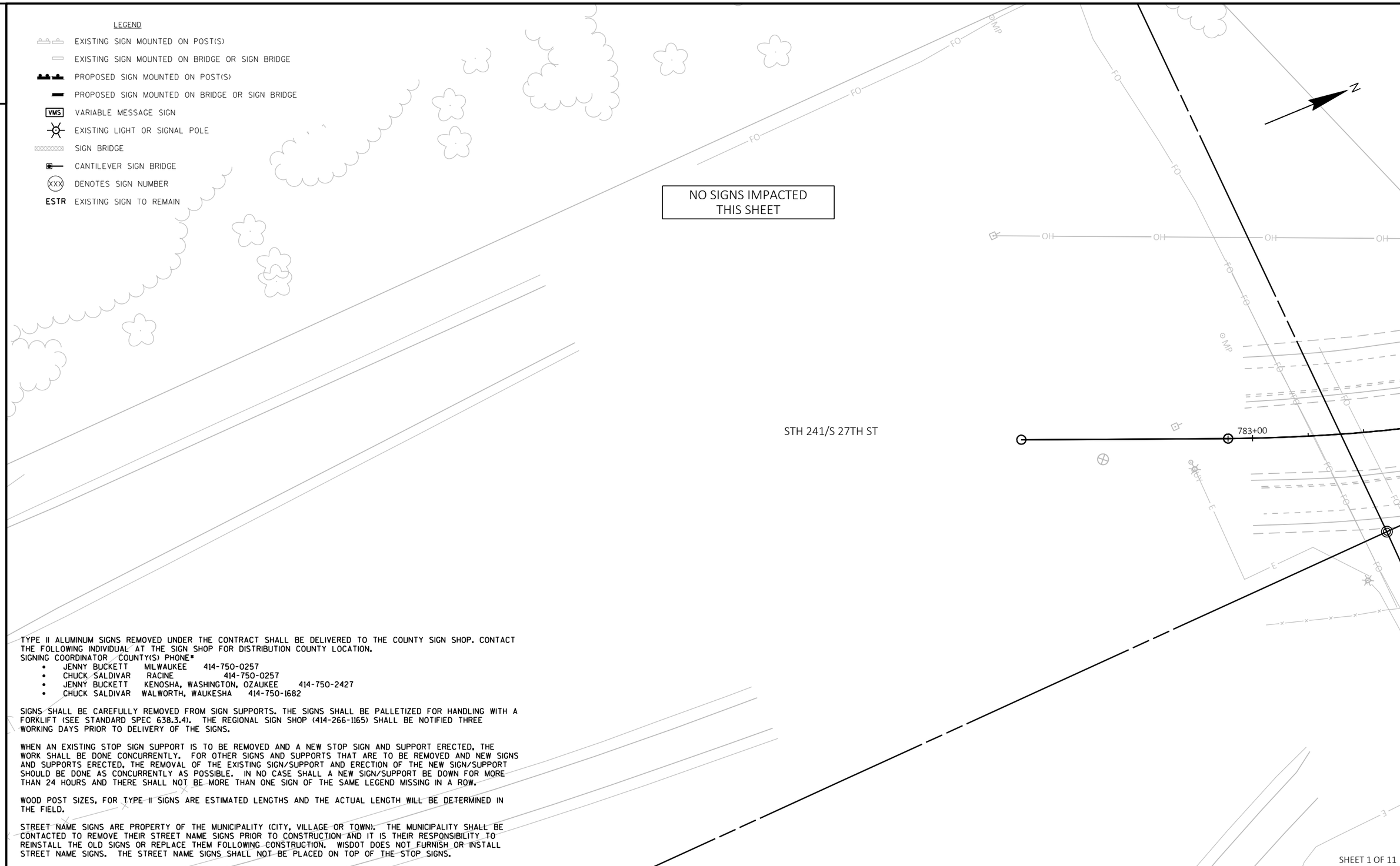

TYPE II ALUMINUM SIGNS REMOVED UNDER THE CONTRACT SHALL BE DELIVERED TO THE COUNTY SIGN SHOP. CONTACT THE FOLLOWING INDIVIDUAL AT THE SIGN SHOP FOR DISTRIBUTION COUNTY LOCATION.

SIGNING COORDINATOR COUNTY(S) PHONE#

- JENNY BUCKETT MILWAUKEE 414-750-0257
- CHUCK SALDIVAR RACINE 414-750-0257
- JENNY BUCKETT KENOSHA, WASHINGTON, OZAUKEE 414-750-2427
- CHUCK SALDIVAR WALWORTH, WAUKESHA 414-750-1682

SIGNS SHALL BE CAREFULLY REMOVED FROM SIGN SUPPORTS. THE SIGNS SHALL BE PALLETIZED FOR HANDLING WITH A FORKLIFT (SEE STANDARD SPEC 638.3.4). THE REGIONAL SIGN SHOP (414-266-1165) SHALL BE NOTIFIED THREE WORKING DAYS PRIOR TO DELIVERY OF THE SIGNS.

WHEN AN EXISTING STOP SIGN SUPPORT IS TO BE REMOVED AND A NEW STOP SIGN AND SUPPORT ERECTED, THE WORK SHALL BE DONE CONCURRENTLY. FOR OTHER SIGNS AND SUPPORTS THAT ARE TO BE REMOVED AND NEW SIGNS AND SUPPORTS ERECTED, THE REMOVAL OF THE EXISTING SIGN/SUPPORT AND ERECTION OF THE NEW SIGN/SUPPORT SHOULD BE DONE AS CONCURRENTLY AS POSSIBLE. IN NO CASE SHALL A NEW SIGN/SUPPORT BE DOWN FOR MORE THAN 24 HOURS AND THERE SHALL NOT BE MORE THAN ONE SIGN OF THE SAME LEGEND MISSING IN A ROW.

WOOD POST SIZES, FOR TYPE II SIGNS ARE ESTIMATED LENGTHS AND THE ACTUAL LENGTH WILL BE DETERMINED IN THE FIELD.

STREET NAME SIGNS ARE PROPERTY OF THE MUNICIPALITY (CITY, VILLAGE OR TOWN). THE MUNICIPALITY SHALL BE CONTACTED TO REMOVE THEIR STREET NAME SIGNS PRIOR TO CONSTRUCTION AND IT IS THEIR RESPONSIBILITY TO REINSTALL THE OLD SIGNS OR REPLACE THEM FOLLOWING CONSTRUCTION. WISDOT DOES NOT FURNISH OR INSTALL STREET NAME SIGNS. THE STREET NAME SIGNS SHALL NOT BE PLACED ON TOP OF THE STOP SIGNS.

SHEET 1 OF 11

PROJECT NO: 2265-10-71	HWY: STH 241	COUNTY: MILWAUKEE	PERMANENT SIGNING PLAN	SHEET 29	E

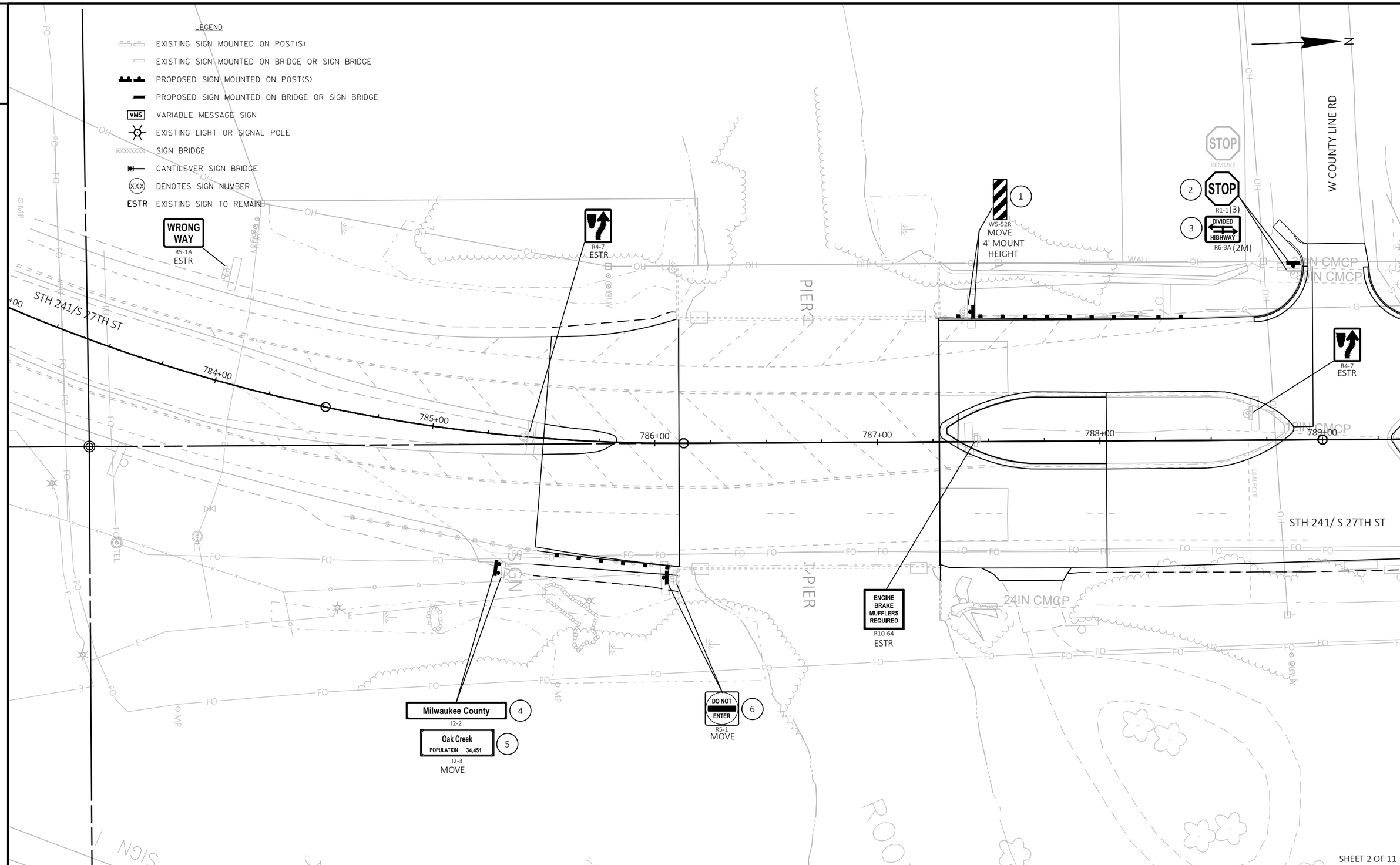

SHEET 2 OF 11

PROJECT NO: 2265-10-71	HWY: STH 241	COUNTY: MILWAUKEE	PERMANENT SIGNING PLAN	SHEET 30	E

FILE NAME : N:\PDS\C3D\CAD\22651002\SIGN\023201_PS_20.DWG
LAYOUT NAME - 023202_PS
PLOT DATE : 7/17/2023 10:06 AM
PLOT BY : MARTENS, KAREN L
PLOT NAME :
PLOT SCALE : 1 IN:40 FT
WISDOT/CADDS SHEET 42

LEGEND

- EXISTING SIGN MOUNTED ON POST(S)
- EXISTING SIGN MOUNTED ON BRIDGE OR SIGN BRIDGE
- PROPOSED SIGN MOUNTED ON POST(S)
- PROPOSED SIGN MOUNTED ON BRIDGE OR SIGN BRIDGE
- VMS — VARIABLE MESSAGE SIGN
- EXISTING LIGHT OR SIGNAL POLE
- SIGN BRIDGE
- CANTILEVER SIGN BRIDGE
- XXX — DENOTES SIGN NUMBER
- ESTR — EXISTING SIGN TO REMAIN

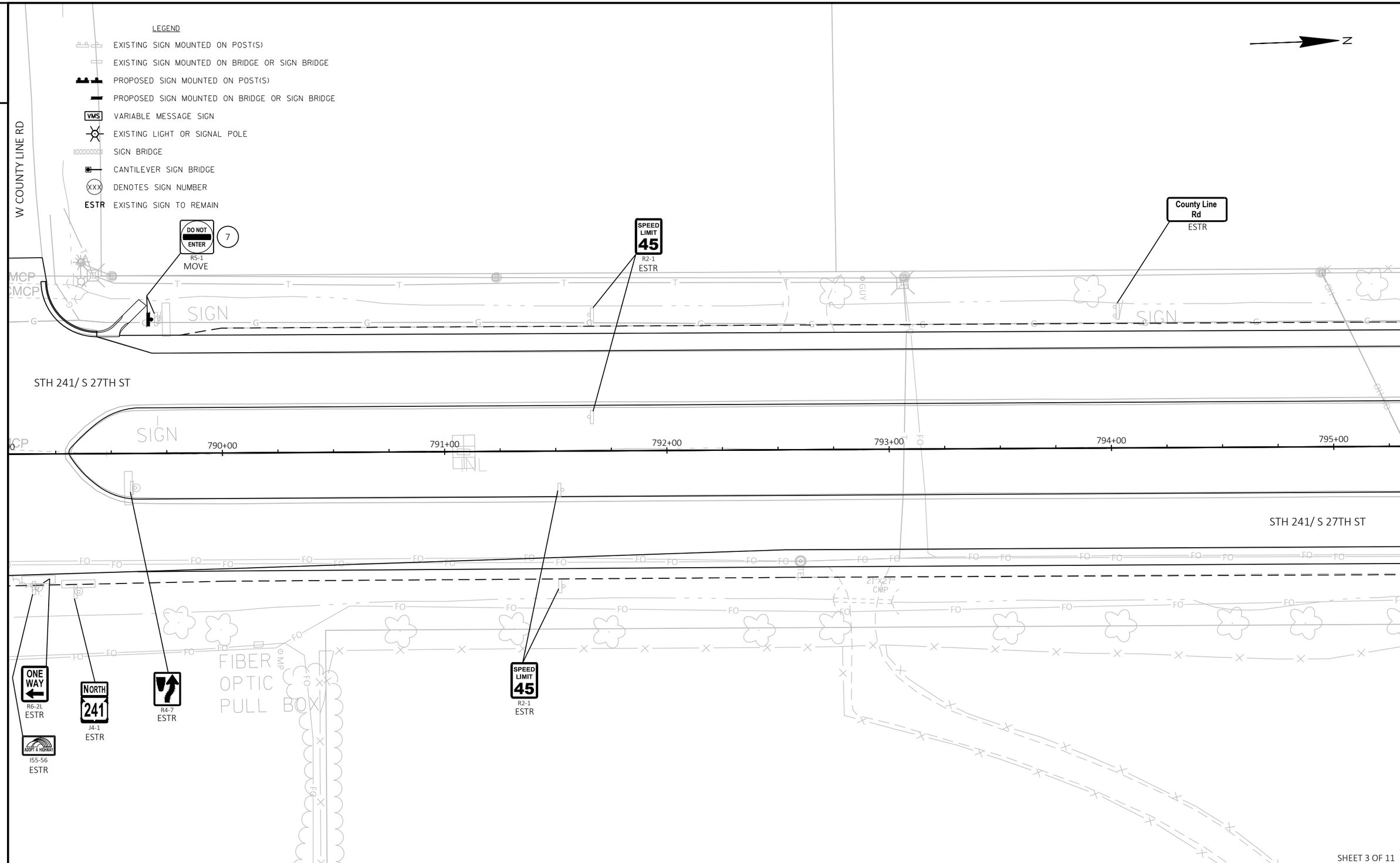

SHEET 3 OF 11

PROJECT NO: 2265-10-71	HWY: STH 241	COUNTY: MILWAUKEE	PERMANENT SIGNING PLAN	SHEET 31	E

FILE NAME : N:\PDS\C3D\CAD\22651002\SIGN\023201_PS_20.DWG
LAYOUT NAME - 023203_PS
PLOT DATE : 7/17/2023 10:06 AM
PLOT BY : MARTENS, KAREN L
PLOT NAME :
PLOT SCALE : 1 IN:40 FT
WISDOT/CADDS SHEET 42

2

LEGEND

- EXISTING SIGN MOUNTED ON POST(S)
- EXISTING SIGN MOUNTED ON BRIDGE OR SIGN BRIDGE
- PROPOSED SIGN MOUNTED ON POST(S)
- PROPOSED SIGN MOUNTED ON BRIDGE OR SIGN BRIDGE
- VMS VARIABLE MESSAGE SIGN
- EXISTING LIGHT OR SIGNAL POLE
- SIGN BRIDGE
- CANTILEVER SIGN BRIDGE
- XXX DENOTES SIGN NUMBER
- ESTR EXISTING SIGN TO REMAIN

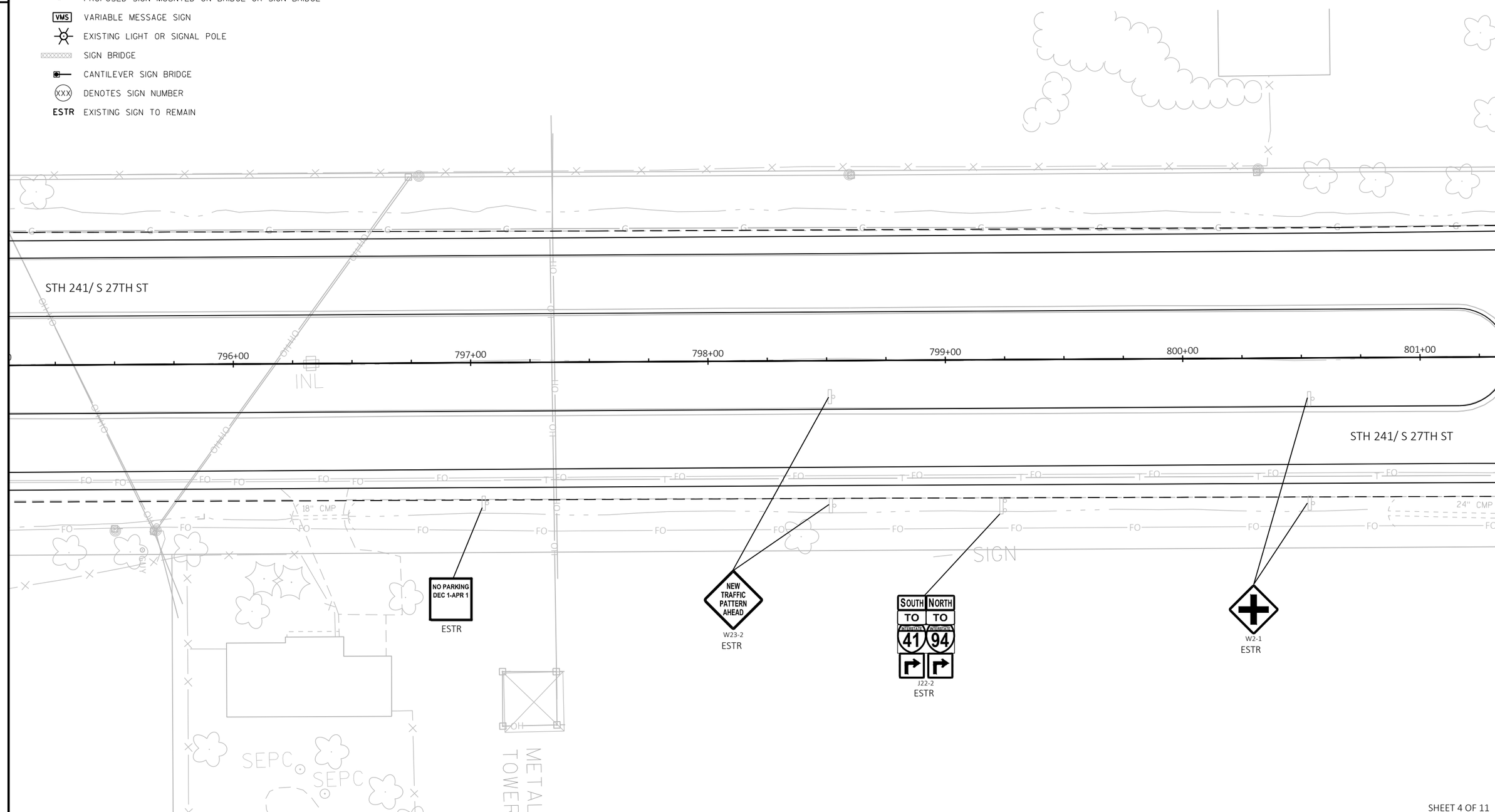

SHEET 4 OF 11

PROJECT NO: 2265-10-71	HWY: STH 241	COUNTY: MILWAUKEE	PERMANENT SIGNING PLAN	SHEET 32	E

FILE NAME : N:\PDS\C3D\CAD\22651002\SIGN\023201_PS_20.DWG
LAYOUT NAME - 023204_PS
PLOT DATE : 7/17/2023 10:06 AM PLOT BY : MARTENS, KAREN L PLOT NAME : PLOT SCALE : 1 IN:40 FT

WISDOT/CADDS SHEET 42

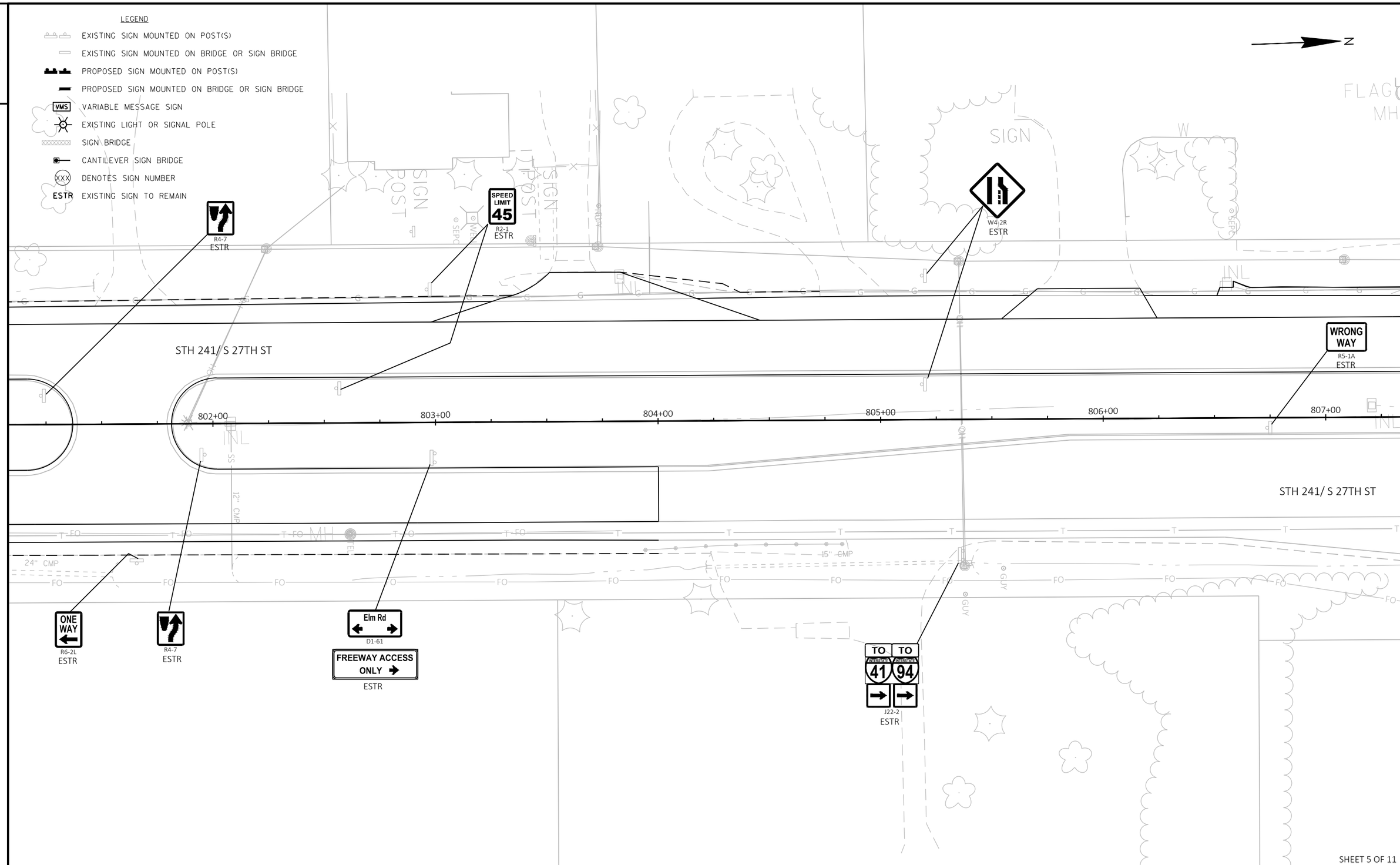

PROJECT NO: 2265-10-71	HWY: STH 241	COUNTY: MILWAUKEE	PERMANENT SIGNING PLAN	SHEET 33	E

FILE NAME : N:\PDS\C3D\CAD\22651002\SIGN\023201_PS_20.DWG
LAYOUT NAME - 023205_PS
PLOT DATE : 7/17/2023 10:06 AM
PLOT BY : MARTENS, KAREN L
PLOT NAME :
PLOT SCALE : 1 IN:40 FT
WISDOT/CADDS SHEET 42

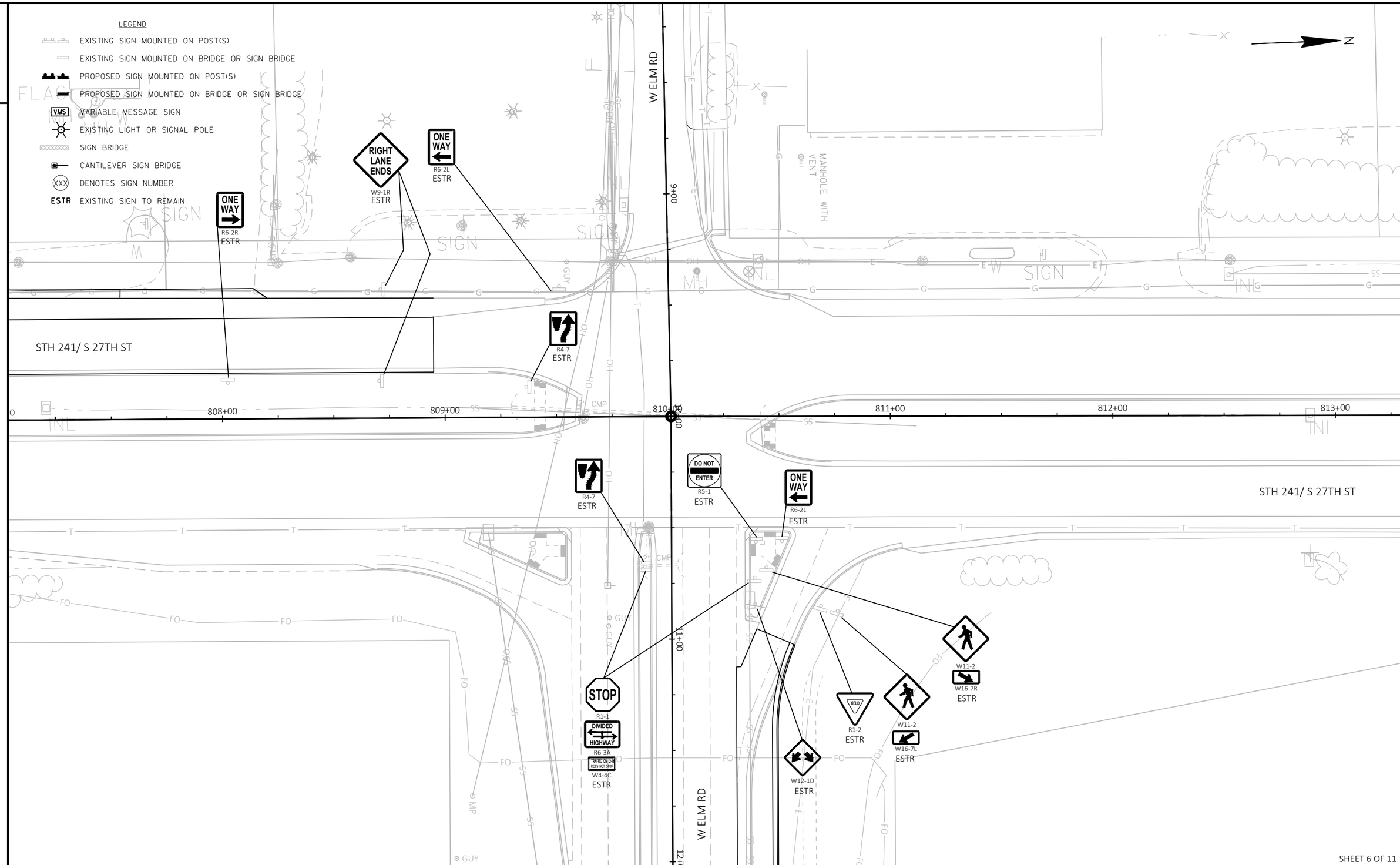
LEGEND
EXISTING SIGN MOUNTED ON POST(S)
EXISTING SIGN MOUNTED ON BRIDGE OR SIGN BRIDGE
PROPOSED SIGN MOUNTED ON POST(S)
PROPOSED SIGN MOUNTED ON BRIDGE OR SIGN BRIDGE
VMS VARIABLE MESSAGE SIGN
EXISTING LIGHT OR SIGNAL POLE
SIGN BRIDGE
CANTILEVER SIGN BRIDGE
XXX DENOTES SIGN NUMBER
ESTR EXISTING SIGN TO REMAIN
N
W ELM RD
STH 241/ S 27TH ST
808+00
809+00
810+00
811+00
812+00
813+00
9+00
11+00
12+00
RIGHT LANE ENDS
W9-1R
ESTR
ONE WAY
R6-2R
ESTR
ONE WAY
R6-2L
ESTR
R4-7
ESTR
DO NOT ENTER
R5-1
ESTR
STOP
R1-1
DIVIDED HIGHWAY
R6-3A
TRAFFIC ON 24th DOES NOT STOP
W4-4C
ESTR
W12-1D
ESTR
YIELD
R1-2
ESTR
W11-2
W16-7L
ESTR
W11-2
W16-7R
ESTR
MANHOLE WITH VENT
SIGN
SHEET 6 OF 11

2

LEGEND

- EXISTING SIGN MOUNTED ON POST(S)
- EXISTING SIGN MOUNTED ON BRIDGE OR SIGN BRIDGE
- PROPOSED SIGN MOUNTED ON POST(S)
- PROPOSED SIGN MOUNTED ON BRIDGE OR SIGN BRIDGE
- VMS VARIABLE MESSAGE SIGN
- EXISTING LIGHT OR SIGNAL POLE
- SIGN BRIDGE
- CANTILEVER SIGN BRIDGE
- XXX DENOTES SIGN NUMBER
- ESTR EXISTING SIGN TO REMAIN

NO SIGNS IMPACTED
THIS SHEET

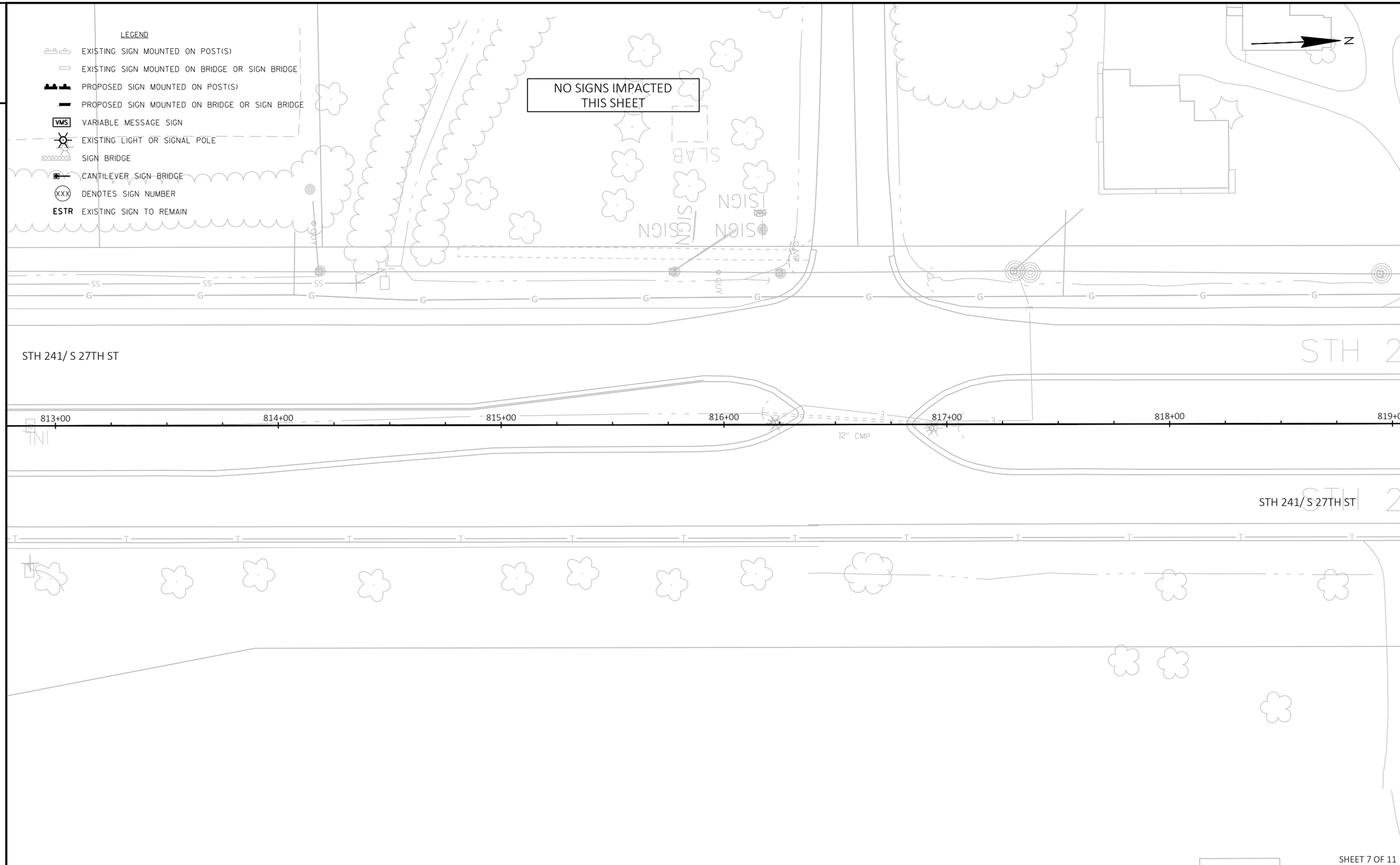

2

SHEET 7 OF 11

PROJECT NO: 2265-10-71	HWY: STH 241	COUNTY: MILWAUKEE	PERMANENT SIGNING PLAN	SHEET 35	E

FILE NAME : N:\PDS\C3D\CAD\22651002\SIGN\023201_PS_20.DWG
LAYOUT NAME - 023207_PS
PLOT DATE : 7/17/2023 10:06 AM
PLOT BY : MARTENS, KAREN L
PLOT NAME :
PLOT SCALE : 1 IN:40 FT
WISDOT/CADDS SHEET 42

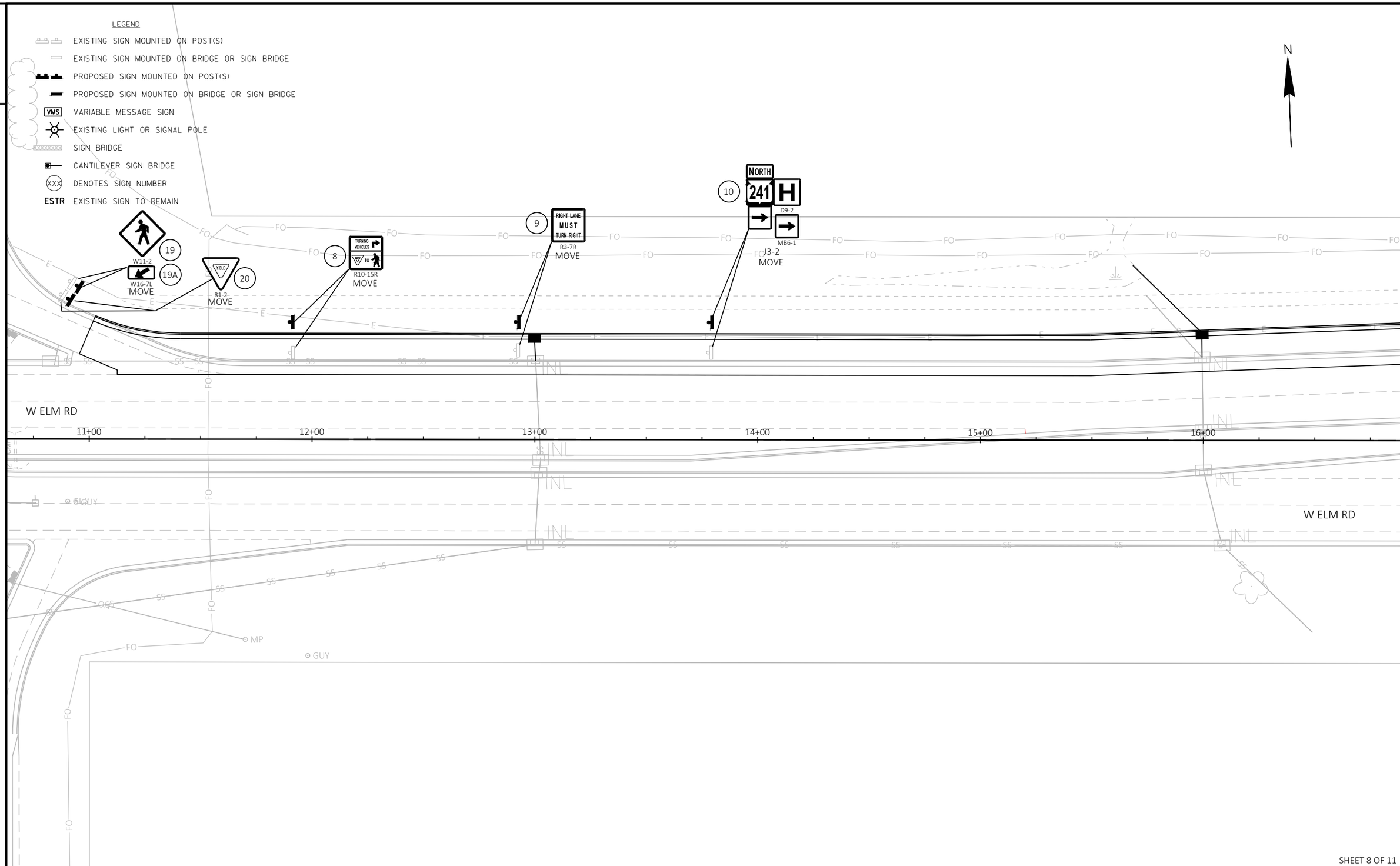

SHEET 8 OF 11

PROJECT NO: 2265-10-71	HWY: STH 241	COUNTY: MILWAUKEE	PERMANENT SIGNING PLAN	SHEET 36	E

FILE NAME : N:\PDS\C3D\CAD\22651002\SIGN\023201_PS_20.DWG
LAYOUT NAME - 023209_PS
PLOT DATE : 7/17/2023 10:06 AM
PLOT BY : MARTENS, KAREN L
PLOT NAME :
PLOT SCALE : 1 IN:40 FT
WISDOT/CADDS SHEET 42

LEGEND

- EXISTING SIGN MOUNTED ON POST(S)
- EXISTING SIGN MOUNTED ON BRIDGE OR SIGN BRIDGE
- PROPOSED SIGN MOUNTED ON POST(S)
- PROPOSED SIGN MOUNTED ON BRIDGE OR SIGN BRIDGE
- VMS — VARIABLE MESSAGE SIGN
- EXISTING LIGHT OR SIGNAL POLE
- SIGN BRIDGE
- CANTILEVER SIGN BRIDGE
- XXX — DENOTES SIGN NUMBER
- ESTR — EXISTING SIGN TO REMAIN

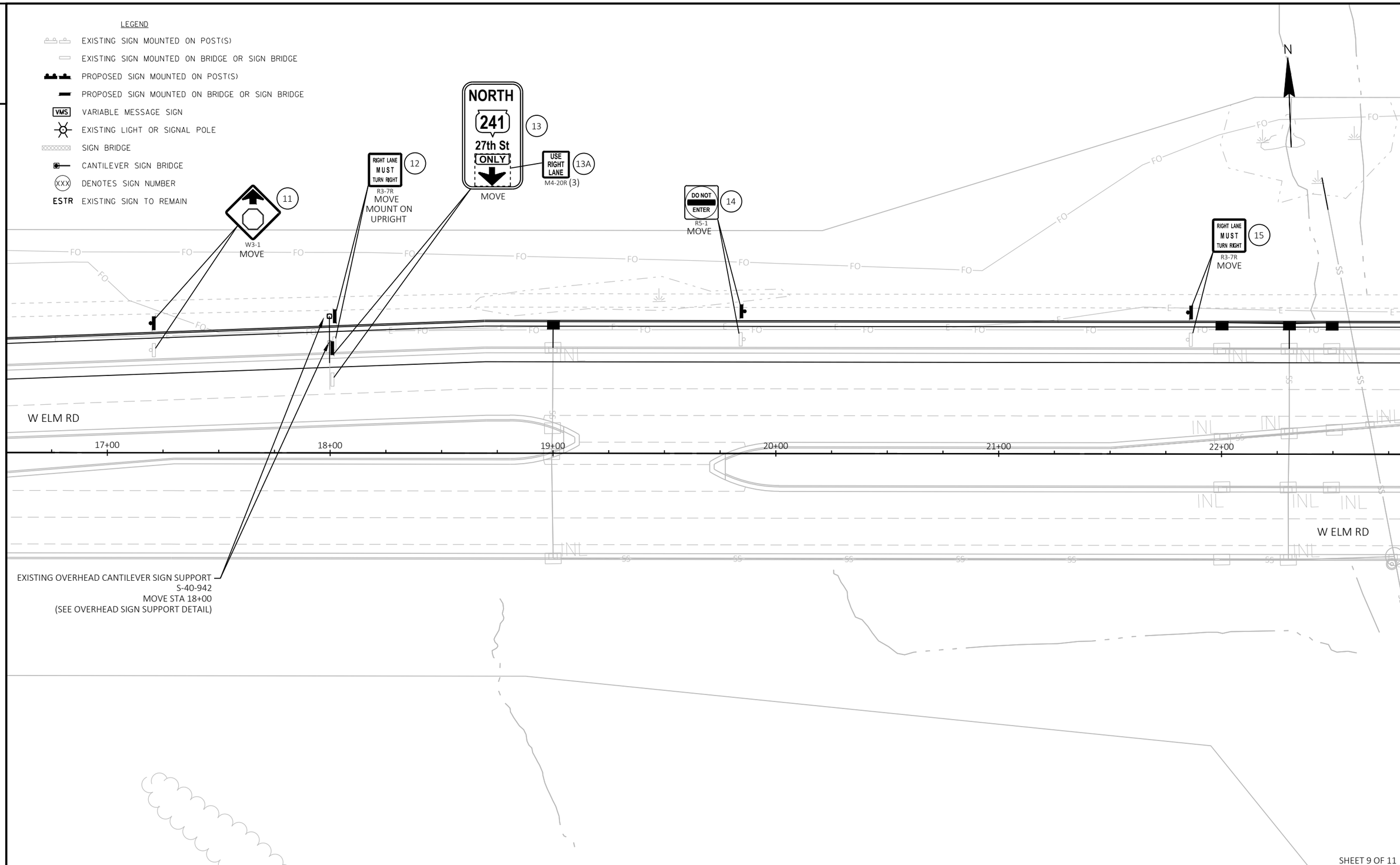

SHEET 9 OF 11

PROJECT NO: 2265-10-71	HWY: STH 241	COUNTY: MILWAUKEE	PERMANENT SIGNING PLAN	SHEET 37	E

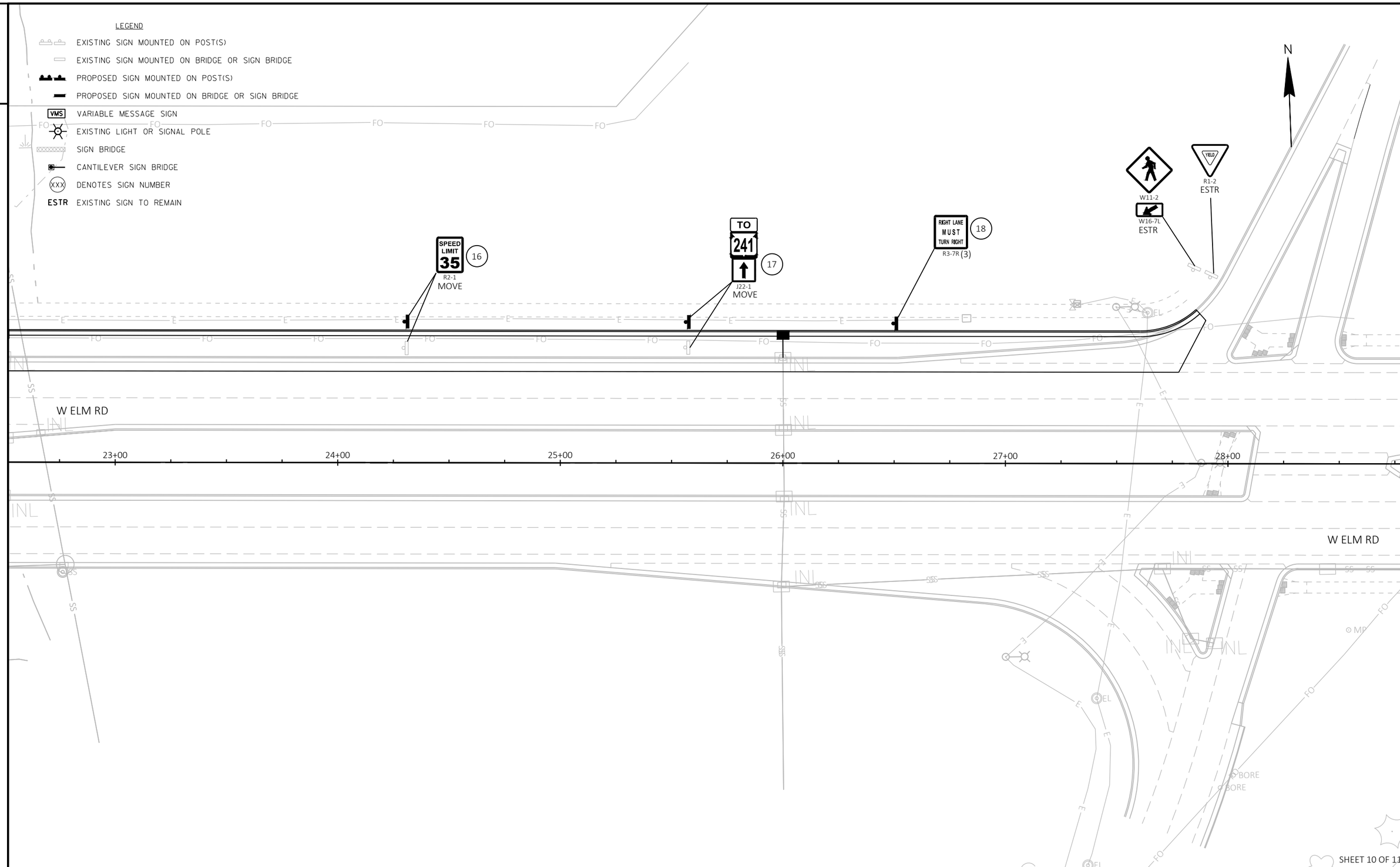

PROJECT NO: 2265-10-71	HWY: STH 241	COUNTY: MILWAUKEE	PERMANENT SIGNING PLAN	SHEET 38	E

FILE NAME : N:\PDS\C3D\CAD\22651002\SIGN\023201_PS_20.DWG
LAYOUT NAME - 023211_PS
PLOT DATE : 7/17/2023 10:07 AM
PLOT BY : MARTENS, KAREN L
PLOT NAME :
PLOT SCALE : 1 IN:40 FT
WISDOT/CADDS SHEET 42

2

LEGEND

- EXISTING SIGN MOUNTED ON POST(S)
- EXISTING SIGN MOUNTED ON BRIDGE OR SIGN BRIDGE
- PROPOSED SIGN MOUNTED ON POST(S)
- PROPOSED SIGN MOUNTED ON BRIDGE OR SIGN BRIDGE
- VMS VARIABLE MESSAGE SIGN
- EXISTING LIGHT OR SIGNAL POLE
- SIGN BRIDGE
- CANTILEVER SIGN BRIDGE
- XXX DENOTES SIGN NUMBER
- ESTR EXISTING SIGN TO REMAIN

NO SIGNS IMPACTED
THIS SHEET

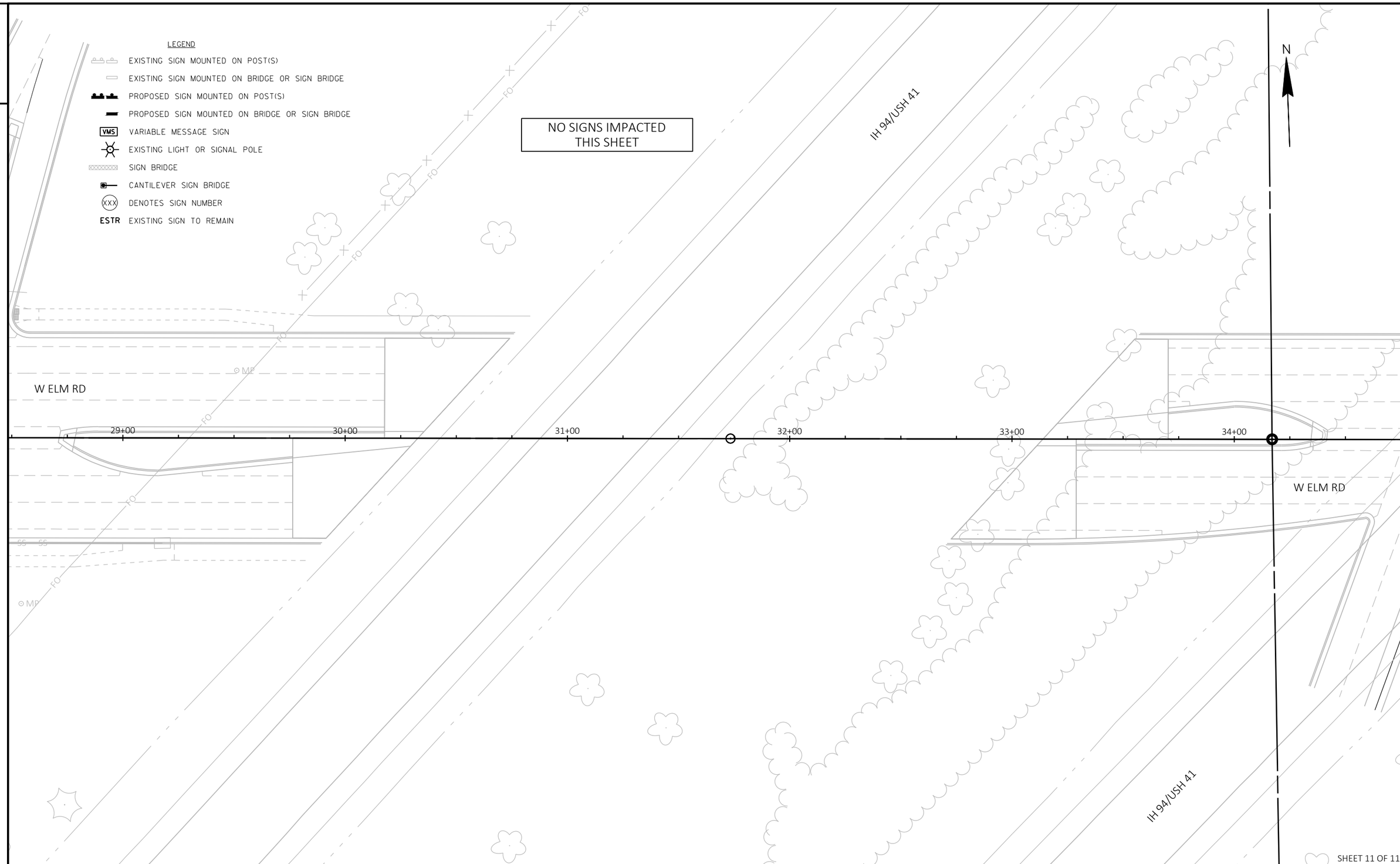

SHEET 11 OF 11

PROJECT NO: 2265-10-71	HWY: STH 241	COUNTY: MILWAUKEE	PERMANENT SIGNING PLAN	SHEET 39	E

FILE NAME : N:\PDS\C3D\CAD\22651002\SIGN\023201_PS_20.DWG
LAYOUT NAME - 023212_PS
PLOT DATE : 7/17/2023 10:07 AM PLOT BY : MARTENS, KAREN L PLOT NAME : PLOT SCALE : 1 IN:40 FT

WISDOT/CADDS SHEET 42

2

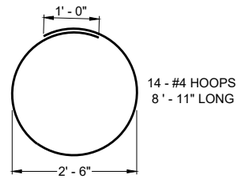

HOOP DETAIL

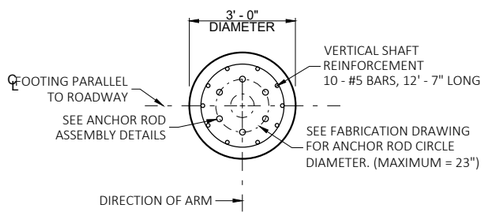

PLAN VIEW

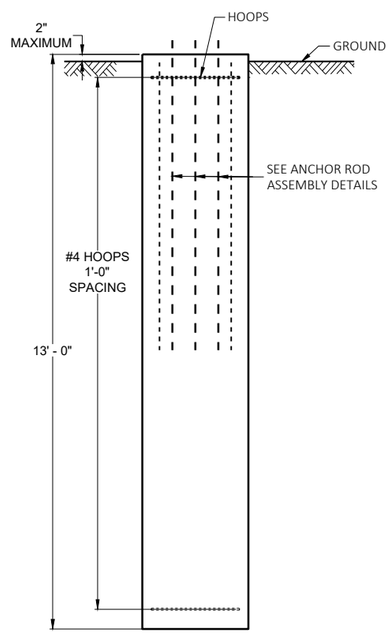

ELEVATION VIEW
(CONDUITS NOT SHOWN ON
THIS VIEW FOR CLARITY)

36" DIAMETER CANTILEVER OVERHEAD SIGN SUPPORT BASE

CONCRETE = 3.4 C.Y. PER FOOTING
H.S. REINFORCEMENT = 215 LBS. PER FOOTING

FOR OVERHEAD SIGN SUPPORTS THAT ARE INSTALLED ADJACENT TO SIDEWALKS, THE TOP OF THE BASE SHALL BE POURED FLUSH WITH THE GROUND.

GENERAL NOTES

ORIENT ANCHOR RODS IN FOOTING AND PROVIDE ANCHOR RODS STICK OUT ABOVE TOP OF CONCRETE FOOTING BASE PER THIS SHEET.

BENDING DIMENSIONS FOR REINFORCING BARS ARE OUT TO OUT.

USE 3" CLEAR FOR ALL REINFORCEMENT UNLESS NOTED OTHERWISE.

SIGN SUPPORTS SHALL BE LOCATED NORMAL TO ROADWAY.

THE CONTRACTOR IS RESPONSIBLE FOR MAKING THEIR OWN DETERMINATION AS TO THE TYPE AND LOCATION OF UNDERGROUND UTILITIES AS MAY BE NECESSARY TO AVOID DAMAGE THERETO.

WELDING OF ANCHOR RODS TO THE CAGE IS UNACCEPTABLE. TEMPLATES SHALL BE USED.

BAR CAGE TO BE ASSEMBLED USING TIE WIRES ONLY, NO WELDING.

BASES (SHAFT) SHALL BE EXCAVATED BY THE USE OF A CIRCULAR AUGER. IF A BASE REQUIRES A DEEP FORM BECAUSE OF LOOSE SOIL, THE FORM SHALL BE REMOVED BEFORE BACKFILLING AROUND THE BASE. ANY REQUIRED BACKFILL SHALL BE WELL COMPACTED IN LAYERS OF 1 FOOT OR LESS. COMPACTION SHALL BE BY MECHANICAL MEANS. CARE SHALL BE TAKEN SO NO DAMAGE OCCURS TO THE CONCRETE BASE DURING COMPACTION.

EXCAVATION OF MATERIALS NOT OCCUPIED BY CONCRETE SHALL BE MINIMIZED TO REDUCE DISTURBANCE OF THE SURROUNDING SOILS.

THE BOTTOM OF THE DRILLED HOLE SHALL BE FIRM AND THOROUGHLY CLEANED SO NO LOOSE OR COMPRESSIBLE MATERIALS ARE PRESENT AT THE TIME OF THE CONCRETE PLACEMENT.

IF THE DRILLED HOLE CONTAINS STANDING WATER, THE CONCRETE SHALL BE PLACED USING A TREMIE TO DISPLACE THE WATER.

THE REINFORCEMENT AND ANCHOR RODS SHALL BE ADEQUATELY SUPPORTED IN THE PROPER POSITIONS SO NO MOVEMENT OCCURS DURING CONCRETE PLACEMENT.

FOR ALL EXPOSED CONCRETE CORNERS WITH ¾" CHAMFER ALL AROUND. TOP OF THE CONCRETE BASE SHALL BE TROWEL FINISHED AND LEVEL.

ANY DAMAGE TO THE CONCRETE BASE AND ANCHOR RODS DURING CONSTRUCTION OPERATIONS SHALL BE REPAIRED AT THE ENGINEER'S DIRECTION, AT THE EXPENSE OF THE CONTRACTOR.

CONCRETE MASONRY.....fc = 3,500 p.s.i
HIGH STRENGTH BAR STEEL REINFORCEMENT, GRADE 60.....fy = 60,000 p.s.i.
ANCHOR RODS, ASTM F1554 GRADE 55 .....fy = 55,000 p.s.i.
ASTM A563A HEAVY HEX NUTS, AND ASTM F436 WASHERS.
PLATES, ASTM A709, GRADE 36.....fy = 36,000 p.s.i.

THIS FOOTING HAS BEEN DESIGNED FOR SITES WHERE SOILS EXHIBIT A PHI-ANGLE GREATER THAN OR EQUAL TO 20 DEGREES (GRANULAR SOILS), OR A COHESION VALUE GREATER THAN OR EQUAL TO 350 PSF (COHESIVE SOILS).

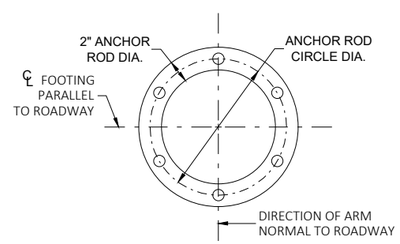

TOP TEMPLATE AND BOTTOM ANCHOR PLATE

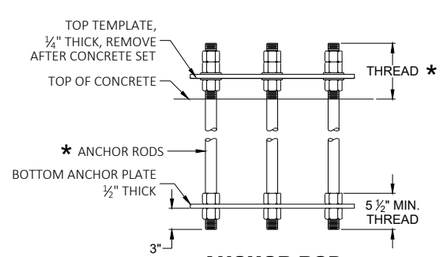

ANCHOR ROD ASSEMBLY DETAILS

* MINIMUM OF 6 ANCHOR RODS, EXACT NUMBER, SIZE, DIMENSION AND ORIENTATION AS SHOWN ON FABRICATION DRAWING.

GENERAL NOTES

1. DRAWINGS NOT TO SCALE.
2. BAR STEEL REINFORCEMENT SHALL BE EMBEDDED 3" CLEAR UNLESS DETAILED OTHERWISE.
3. REFER TO SIGN PLATE A4-7.4 FOR ATTACHMENT OF SIGNS TO OVERHEAD SIGN SUPPORT.

FOOTING SHALL BE PER "36" DIAMETER FULL SPAN OVERHEAD SIGN SUPPORT BASE" AND INCIDENTAL TO STRUCTURE.

W5X3.7 IBEAMS FOR MOUNTING SIGNS ARE INCIDENTAL TO TYPE I SIGNS.

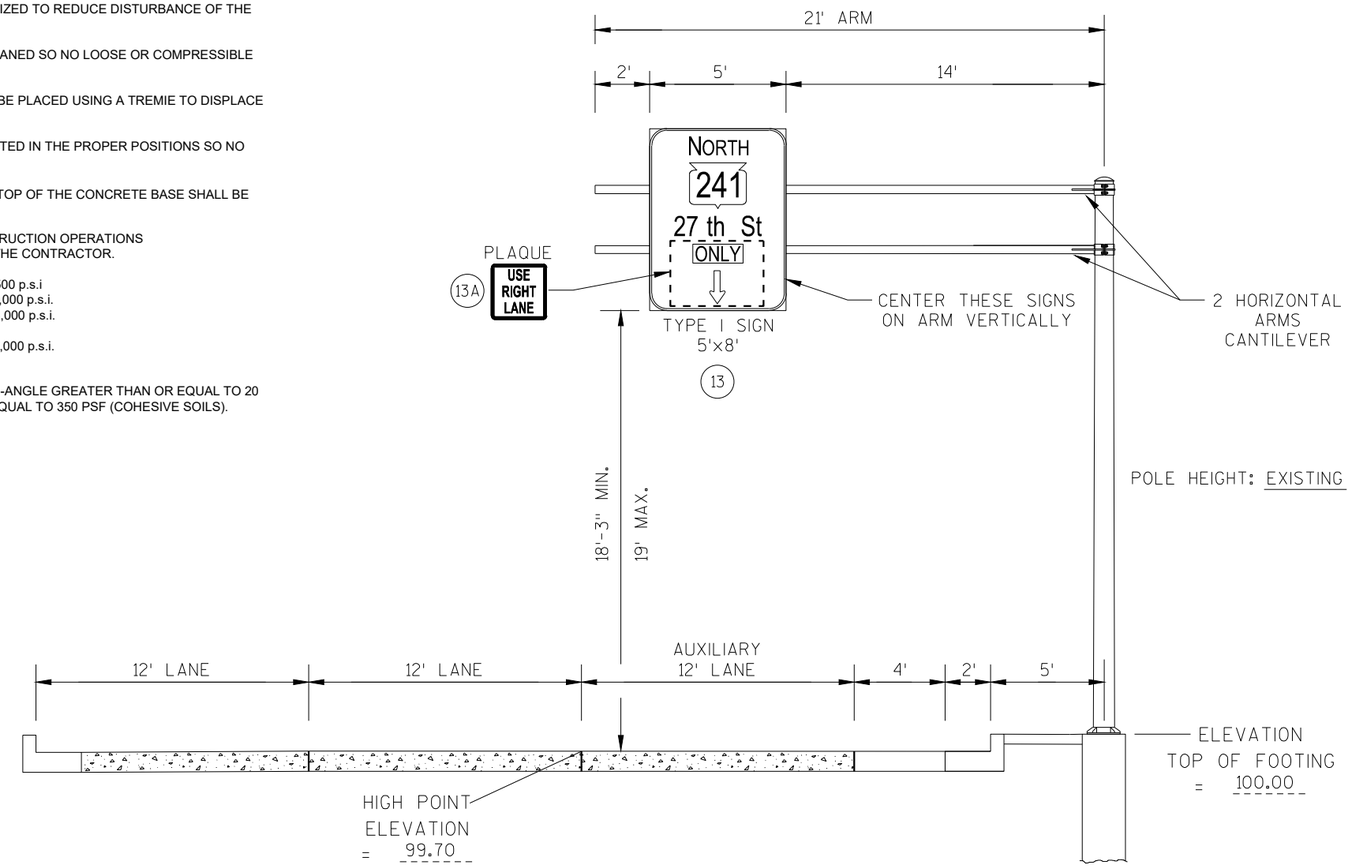

OVERHEAD SIGN SUPPORTS DETAIL
EXISTING S-40-942
ELM ROAD @ 27TH ST WB
STATION 18E+00
MOVE SIGN STRUCTURE

SHEET 1 OF 1

2

PROJECT NO: 2265-10-71	HWY: STH 241	COUNTY: MILWAUKEE	EXISTING OVERHEAD SIGN SUPPORT S-40-942	SHEET 40	E

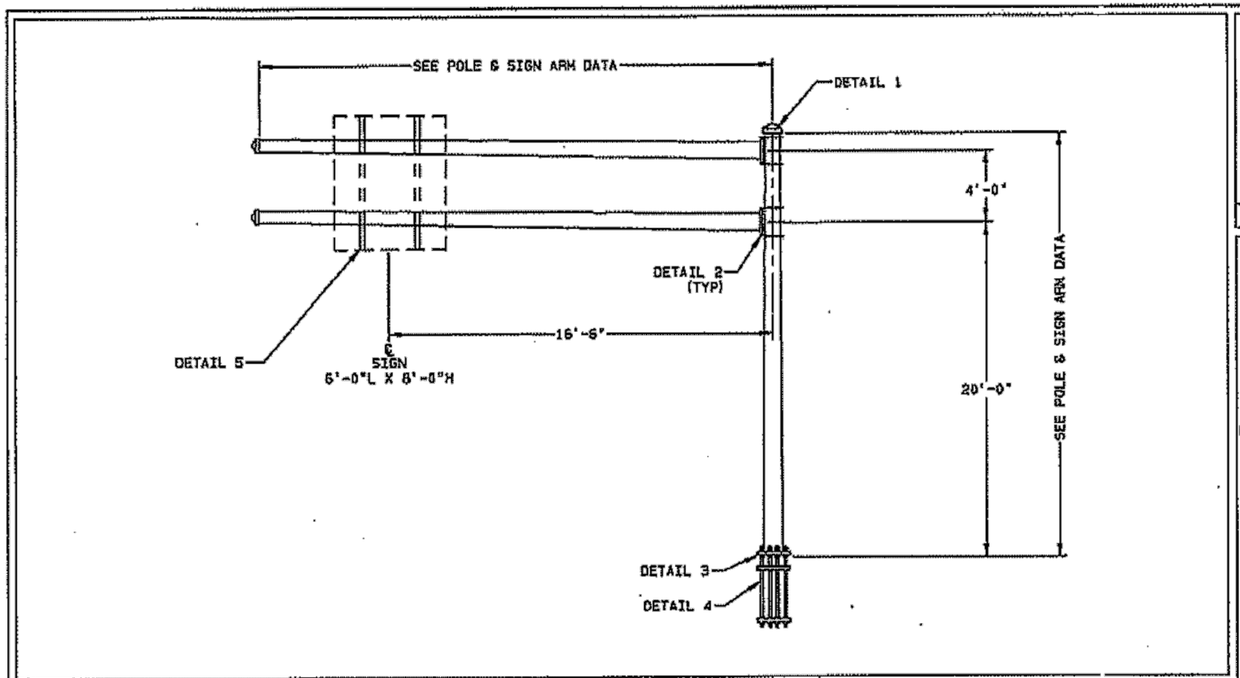

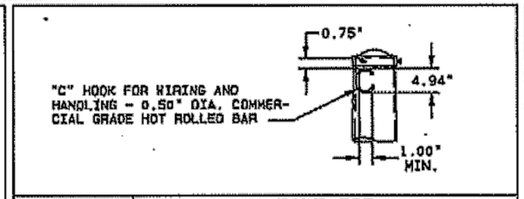

DETAIL 1 | POLE TOP

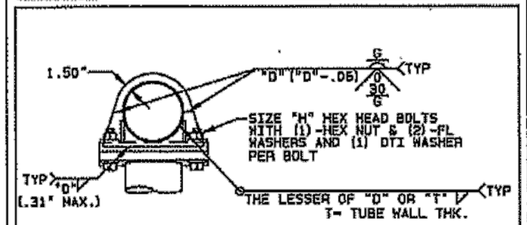

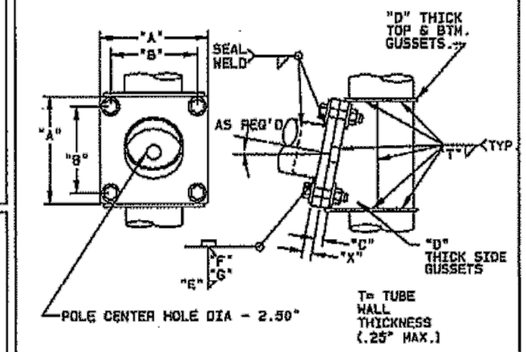

ARM TO PLATE WELD "E"	BEVEL SIZING "F"X"G"
(ARM THICK. + .25") X ARM THICK.	.19" X 30°

DETAIL 2 | SIGNAL ARM ATTACHMENT

(6) - FULLY GALVANIZED ANCHOR BOLTS WITH (5) HEX NUTS AND (4) WASHERS PER BOLT. MATERIAL WILL INCLUDE SUPPLEMENTARY REQUIREMENTS OF S4

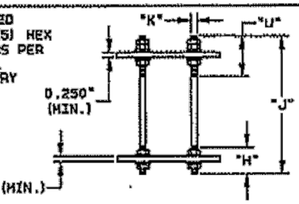

TEMPLATES TO BE FIELD ASSEMBLED

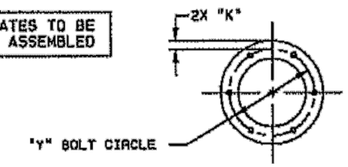

DETAIL 4 | ANCHOR BOLT ASSEMBLY

MATERIAL DATA

COMPONENT	ASTM DESIGNATION	MIN. YIELD (KSI)
TAPERED TUBES	A595 GR.A OR A572	55
POLE BASE	A36	36
ARM ATTACHMENT	A36	36
ANCHOR BOLTS	F1554 GR.55	55
GALVANIZING-HARDWARE	F2329/A153	
SIGN ARM CONN. BOLTS	A325*	

* LUBRICATE IN THE FIELD IF NECESSARY

FINISH DATA

SYSTEM: GALVANIZED (GV)
BASE COAT: HOT-DIP GALVANIZED TO ASTM A123
PRIME COAT: NONE
FINISH COAT: NONE
COLOR: NONE
SPEC: F-1

HARDWARE LESS THAN 0.63" DIAMETER TO BE STAINLESS STEEL.

ALL ANGLES MEASURED CLOCKWISE FROM MAST ARM AS VIEWED FROM SMALL END OF POLE

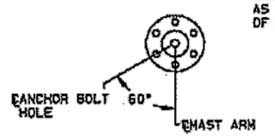

RADIAL INDEX

POLE AND SIGN ARM DATA

STRUCTURE NO.	QTY.	POLE TUBE BASE DIA. (IN)	POLE TUBE TOP DIA. (IN)	POLE TUBE LENGTH (FT)	POLE TUBE GAUGE OR THK. (IN)	POLE BASE DIA. "DI" (IN)	POLE BASE BOLT CIRCLE "Y" (IN)	POLE BASE THK. "M" (IN)	POLE BASE CENTER HOLE "P" (IN)	POLE BASE HOLE "Z" (IN)	ANCHOR BOLT DIA. "K" (IN)	ANCHOR BOLT LENGTH "J" (IN)	ANCHOR BOLT THREAD LENGTH "U" (IN)	ANCHOR BOLT THREAD LENGTH "H" (IN)	ANCHOR BOLT BOLT QTY	SIGN ARM TUBE FIXED END DIA. (IN)	SIGN ARM TUBE FREE END DIA. (IN)	SIGN ARM TUBE GAUGE OR THICK (IN)	SIGN ARM TUBE SPAN (FT)
S-40-942	1	12.00	8.50	25.00	7	20.00	16.00	2.00	9.75	1.50	1.25	48.00	10.00	5.50	6	9.00	6.06	7	21.00
																9.00	6.06	7	21.00

1. THE OVERHEAD SIGN STRUCTURES SHOWN ON THIS DRAWING HAVE BEEN DESIGNED IN ACCORDANCE WITH THE LOADING AND THE ALLOWABLE STRESS REQUIREMENTS OF THE 2013 AASHTO "STANDARD SPECIFICATIONS FOR STRUCTURAL SUPPORTS FOR HIGHWAY SIGNS, LUMINAIRES AND TRAFFIC SIGNALS", 6TH EDITION WITH 2015 INTERIM REVISIONS. THE WIND LOADS WERE CALCULATED FROM A BASIC WIND VELOCITY OF 90 MPH WITH A RECURRENCE INTERVAL OF 50 YEARS, AND A FATIGUE CATEGORY OF I. THE FATIGUE LOADS WERE CALCULATED ON THE REQUIREMENTS OF SECTION 11 OF THE CODE, AND THE FOLLOWING DESIGN CONDITIONS:

   - STRUCTURES ARE DESIGNED TO RESIST NATURAL WIND GUSTS BASED ON THE YEARLY MEAN WIND VELOCITY OF 11.2 MPH.

   - STRUCTURES ARE DESIGNED TO RESIST GALLOPING-INDUCED CYCLIC LOADS.

   - STRUCTURES ARE DESIGNED FOR TRUCK-INDUCED GUST LOADS, AS REQUIRED BY THE OWNER OF THE STRUCTURES.

2. ALTHOUGH RARE, VIBRATIONS SEVERE ENOUGH TO CAUSE DAMAGE CAN OCCASIONALLY OCCUR IN STRUCTURES OF ALL TYPES. BECAUSE THEY ARE INFLUENCED BY MANY INTERACTING VARIABLES, VIBRATIONS ARE GENERALLY UNPREDICTABLE. THE USER'S MAINTENANCE PROGRAM SHOULD INCLUDE OBSERVATION FOR EXCESSIVE VIBRATION AND EXAMINATION FOR ANY STRUCTURAL DAMAGE OR BOLT LOOSENING. THE VALMONT WARRANTY SPECIFICALLY EXCLUDES FATIGUE FAILURE OR SIMILAR PHENOMENA RESULTING FROM INDUCED VIBRATION, HARMONIC OSCILLATION OR RESONANCE ASSOCIATED WITH MOVEMENT OF AIR CURRENTS AROUND THE PRODUCT.

SIGNAL ARM ATTACHMENT DATA

"A" (IN)	"B" (IN)	"C" POLE THK (IN)	"X" ARM THK (IN)	"D" (IN)	ARM CENTER HOLE (IN)	"H" (IN)
16.00	13.50	2.00	2.25	0.375	6.50	1.00 X 6.25

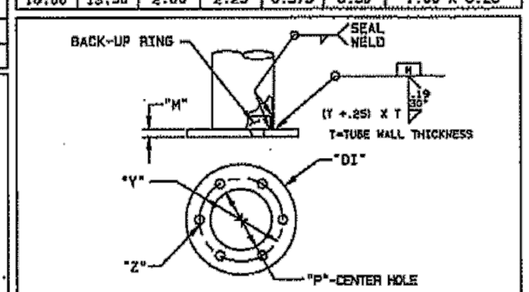

DETAIL 3 | POLE BASE

WISCONSIN PROFESSIONAL ENGINEER
NIZAM A QASSEM
E-41317
OMAHA NE

JOB: RACINE COUNTY, WISCONSIN
PROJECT NO. 1030-20-87

TITLE: OVERHEAD SIGN STRUCTURES

VALMONT INDUSTRIES, INC. RESERVES THE RIGHT TO INSTALL VARIOUS, ENGINEER APPROVED, MATERIAL HANDLING ACCOMMODATIONS TO FACILITATE THE MANUFACTURING PROCESS.

valmont
Valley, NE 68064
(402) 359-2201

ORDER NUMBER: 418262-P1
PAGE NUMBER: 5 OF 5
DRAWING NUMBER: WI418262P1
REV: A

LEGEND	PROPOSED	EXISTING
FTMS CONVENTIONAL SYMBOLS		
FTMS (ITS) CONDUIT		
COMMUNICATIONS VAULT, TYPE 1	V	V

FTMS STANDARD ABBREVIATIONS

CV — COMMUNICATIONS VAULT
EX — EXISTING

1. THESE PLANS AND THE ASSOCIATED SPECIAL PROVISIONS REFLECT CONDITIONS KNOWN DURING THE DEVELOPMENT OF THE PLANS AND TECHNICAL SPECIAL PROVISIONS. ALL SCALES, DIMENSIONS AND LOCATIONS SHOWN IN THESE PLANS ARE APPROXIMATE. ACTUAL PHYSICAL FIELD CONDITIONS SHALL PROVIDE THE BASIS FOR THE APPLICATION OF WORK SHOWN IN THE PLANS. THE CONTRACTOR IS FULLY RESPONSIBLE FOR THE APPLICATION OF ALL WORK SHOWN IN THE PLANS TO THE ACTUAL PHYSICAL FIELD CONDITIONS TO PROVIDE A COMPLETE AND ACCEPTED PROJECT. IN THE EVENT THAT ACTUAL PHYSICAL FIELD CONDITIONS AFFECT OR PREVENT THE APPLICATION OR PROGRESSION OF ANY WORK SHOWN IN THE PLANS OR TECHNICAL SPECIAL PROVISIONS, THE CONTRACTOR SHALL NOTIFY THE ENGINEER IMMEDIATELY, AND PRIOR TO ANY FURTHER WORK ACTIVITY. THE CONTRACTOR SHALL IMMEDIATELY NOTIFY THE ENGINEER OF ANY LOCATION CHANGES OTHER THAN MINOR ADJUSTMENTS.
2. BE AWARE THAT ALL EXISTING UNDERGROUND AND ABOVE GROUND STRUCTURES AND FACILITIES WITHIN THE SCOPE OF THIS PROJECT MAY NOT BE LOCATED IN THE PLANS. THE CONTRACTOR IS FULLY RESPONSIBLE FOR LOCATING AND AVOIDING ALL UNDERGROUND AND ABOVE GROUND STRUCTURES AND FACILITIES.
3. BE AWARE THAT NO TEST BORINGS WERE MADE WHERE CONDUITS, PULLBOXES, POLES, CABINET FOUNDATIONS, OR OTHER EQUIPMENT IS TO BE INSTALLED. THE CONTRACTOR IS FULLY RESPONSIBLE FOR EXAMINING THE JOB SITE CONDITIONS BEFORE SUBMITTING BID PROPOSALS.
4. NO TREES (AND/OR SHRUBS) SHALL BE REMOVED WITHOUT APPROVAL OF THE ENGINEER.
5. AREAS WITHIN THE RIGHT-OF-WAY DISTURBED SPECIFICALLY FOR FTMS CONSTRUCTION SHALL BE RESTORED TO THE ORIGINAL CONDITION WITH TOPSOIL, FERTILIZER, SEED, AND EROSION MAT, AND SHALL BE INCLUDED IN THE COST OF INSTALLING FTMS ITEMS. RESTORATION FOR AREAS DISTURBED FOR OTHER CONSTRUCTION OPERATIONS BUT ALSO CONTAINING FTMS CONSTRUCTION SHALL BE DONE ACCORDING TO REQUIREMENTS AND PAYMENT PROVISIONS FOR THE OTHER CONSTRUCTION OPERATIONS.
6. THE LOCATION OF EXISTING AND PROPOSED UTILITY INSTALLATIONS SHOWN ON THE PLANS ARE APPROXIMATE. THERE MAY BE OTHER UTILITY INSTALLATIONS WITHIN THE PROJECT AREA THAT ARE NOT SHOWN.
7. DUE TO RAMP, LANE, SHOULDER CLOSURE RESTRICTIONS, AND WORK UNDER OTHER CONTRACTS, SOME WORK MAY BE REQUIRED TO BE PERFORMED AT NIGHT.
8. THE CONTRACTOR IS FULLY RESPONSIBLE FOR COORDINATING RAMP, LANE, SHOULDER, AND ROADWAY CLOSURES WITH OTHER CONTRACTS IN THE AREA.
9. THE CONTRACTOR SHALL CONTACT THE WISDOT STATEWIDE TRAFFIC OPERATIONS CENTER AT (414)227-2166 FIVE (5) WORKING DAYS PRIOR TO ENTERING ANY EXISTING WISDOT FTMS OR ITS CABINET.
10. ALL LOOP DETECTORS ARE STATIONED TO CENTER OF LEADING EDGE AS APPROACHED BY NORMAL VEHICLE PATH.
11. HAND DIG TRENCHES CROSSING EXISTING CONDUIT CONTAINING FIBER OPTIC CABLE.
12. VISUALLY VERIFY DEPTHS OF EXISTING CONDUITS CONTAINING FIBER OPTIC CABLE PRIOR TO CROSSING BY DIRECTIONAL BORE OR SPECIAL METHOD.

2

EXCV0011
(1) INSTALL PROPOSED CONDUIT INTO
EXISTING VAULT

N

15+30.00

(3) 2-INCH HDPE DUCTS, DIRECTIONAL BORE
(1) WITH (1) NO. 10 AWG TRAFFIC SIGNAL WIRE

PI: 10+40.00

I.E.=724.90

PI: 810+01.49

10

I.E.=723.75

I.E.=723.19

15

I.E.=724.22

CV0011

(3) 2-INCH HDPE DUCTS
(1) WITH (1) NO. 10 AWG TRAFFIC SIGNAL WIRE

2

PROJECT NO: 2265-10-71	HWY: STH 241	COUNTY: MILWAUKEE	FTMS PLANS	SHEET 43	E

FILE NAME : I:\77532\BASE\MILWAUKEE\22651071_ELM_FM.DWG
LAYOUT NAME - Sheet - (4)

PLOT DATE : 7/6/2022 2:22 PM PLOT BY : PAUL KUTZ PLOT NAME : PLOT SCALE : 1 IN:40 FT

2

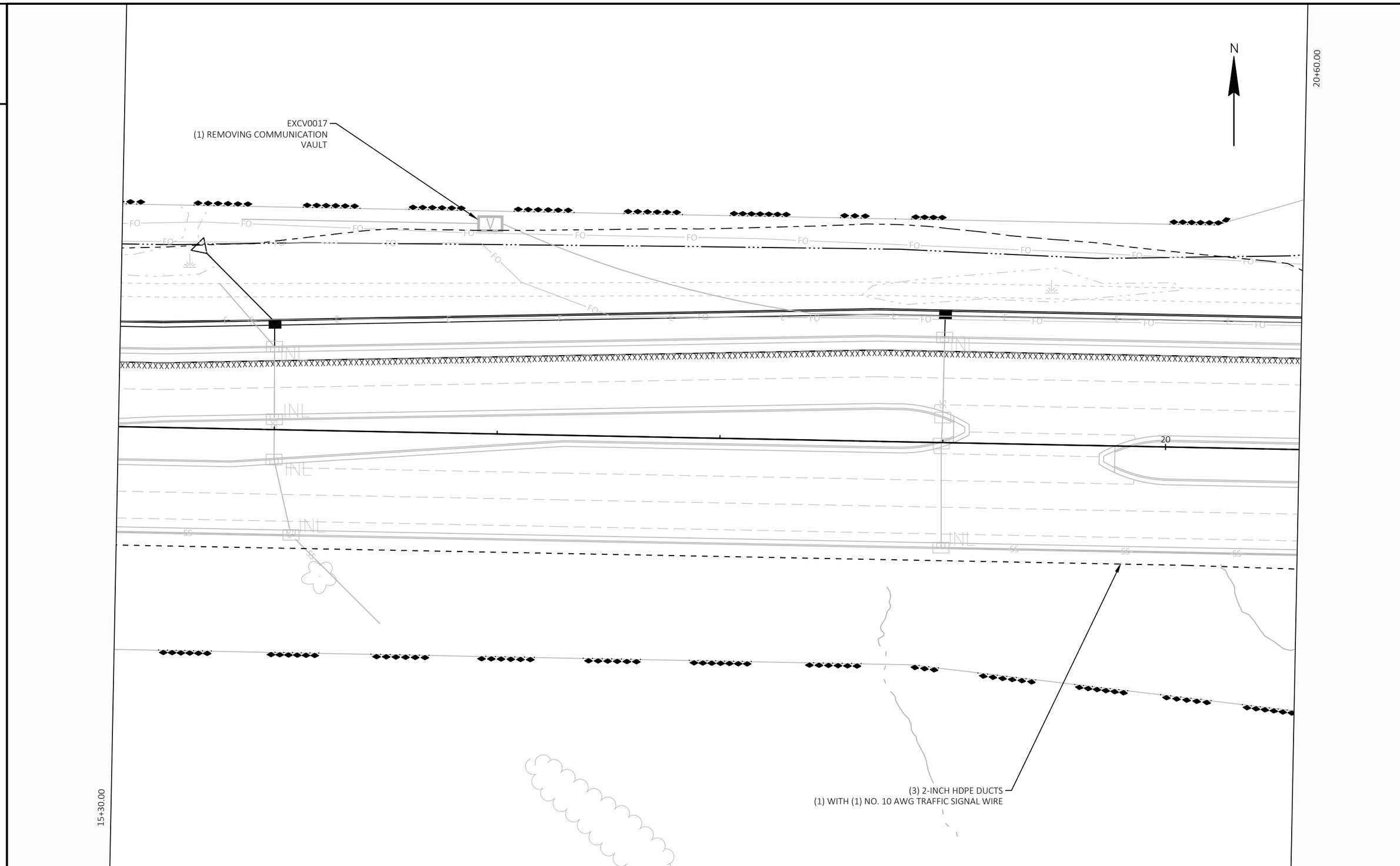

2

PROJECT NO: 2265-10-71	HWY: STH 241	COUNTY: MILWAUKEE	FTMS PLANS	SHEET 44	E

FILE NAME : I:\77532\BASE\MILWAUKEE\22651071_ELM_FM.DWG
LAYOUT NAME - Sheet - (5)
PLOT DATE : 7/6/2022 2:24 PM
PLOT BY : PAUL KUTZ
PLOT NAME :
PLOT SCALE : 1 IN:40 FT

2

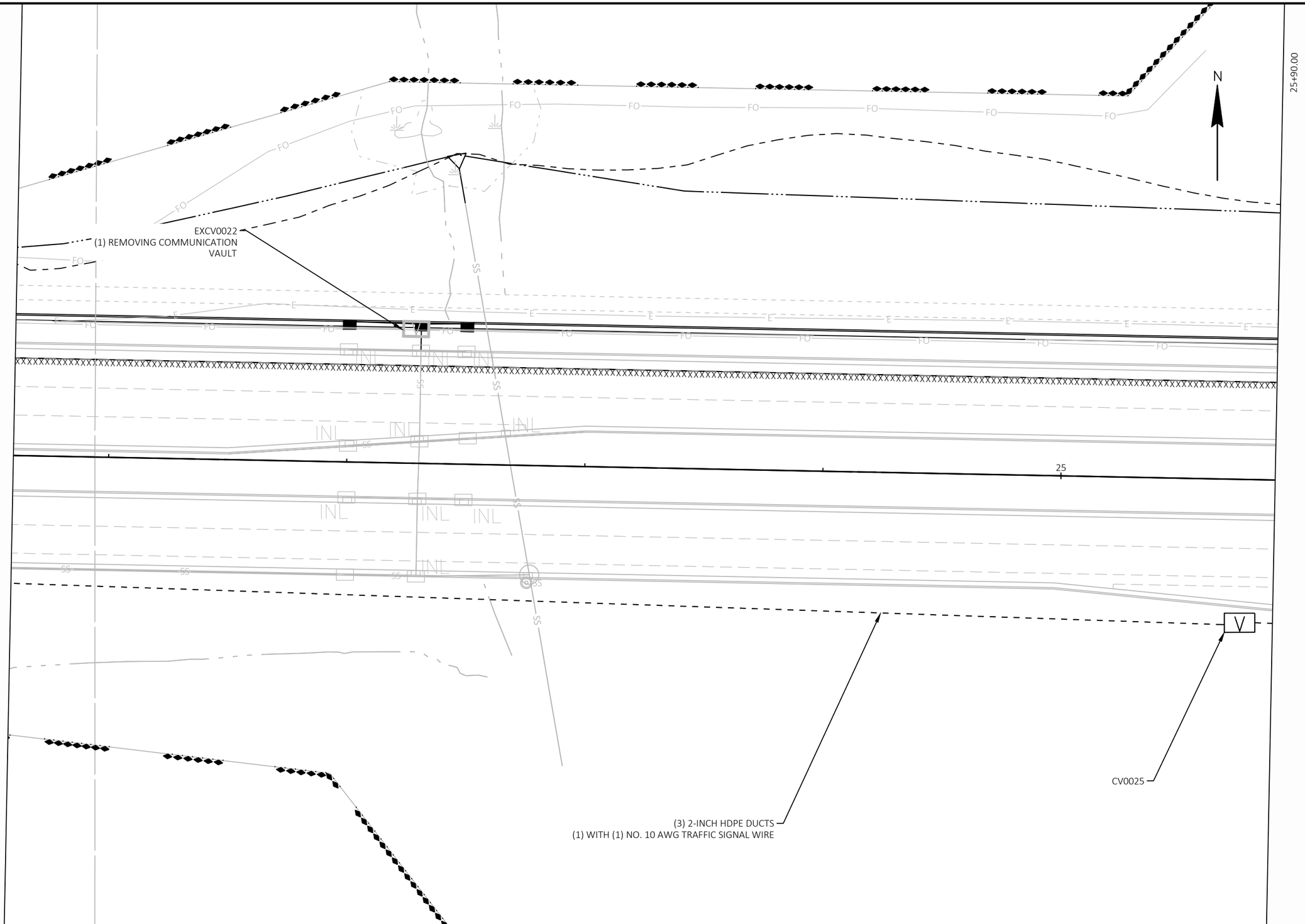

2

PROJECT NO: 2265-10-71	HWY: STH 241	COUNTY: MILWAUKEE	FTMS PLANS	SHEET 45	E

FILE NAME : I:\77532\BASE\MILWAUKEE\22651071_ELM_FM.DWG
LAYOUT NAME - Sheet - (6)
PLOT DATE : 7/6/2022 2:27 PM PLOT BY : PAUL KUTZ PLOT NAME : PLOT SCALE : 1 IN:40 FT

2

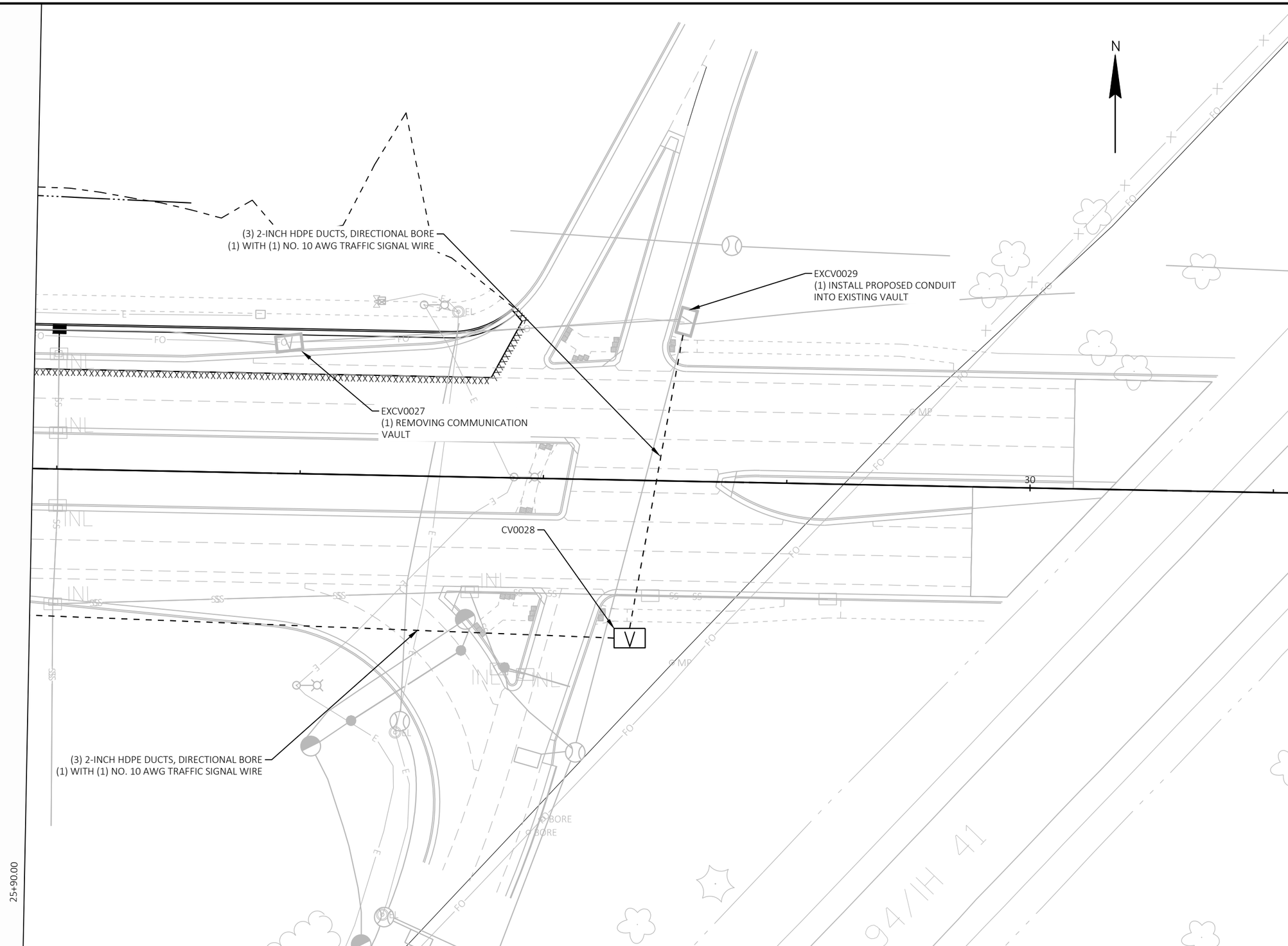

2

PROJECT NO: 2265-10-71	HWY: STH 241	COUNTY: MILWAUKEE	FTMS PLANS	SHEET 46	E

FILE NAME : I:\77532\BASE\MILWAUKEE\22651071_ELM_FM.DWG
LAYOUT NAME - Sheet - (7)
PLOT DATE : 7/6/2022 2:30 PM
PLOT BY : PAUL KUTZ
PLOT NAME :
PLOT SCALE : 1 IN:40 FT
WISDOT/CADDS SHEET 42

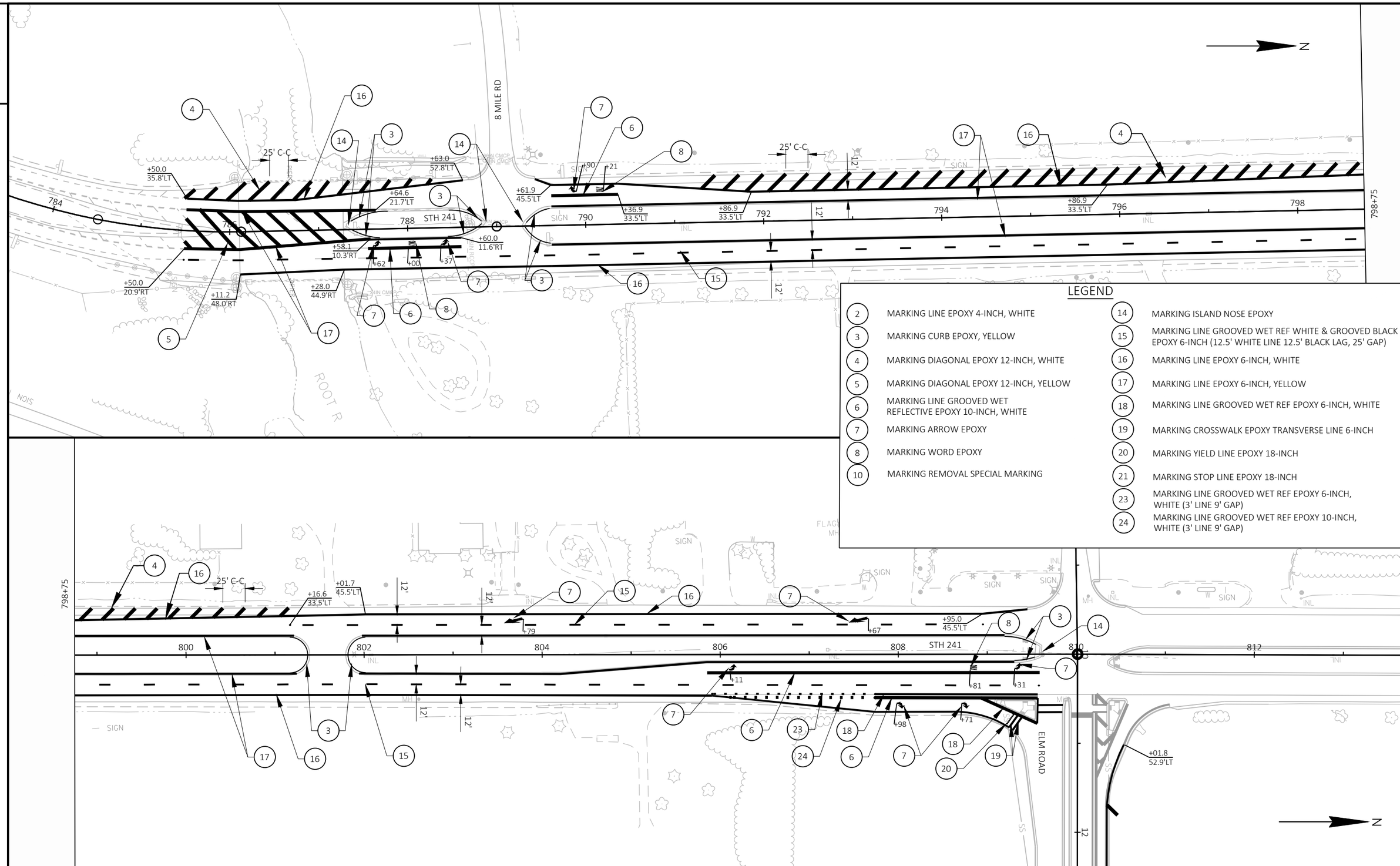

LEGEND

2	MARKING LINE EPOXY 4-INCH, WHITE	14	MARKING ISLAND NOSE EPOXY
3	MARKING CURB EPOXY, YELLOW	15	MARKING LINE GROOVED WET REF WHITE & GROOVED BLACK EPOXY 6-INCH (12.5' WHITE LINE 12.5' BLACK LAG, 25' GAP)
4	MARKING DIAGONAL EPOXY 12-INCH, WHITE	16	MARKING LINE EPOXY 6-INCH, WHITE
5	MARKING DIAGONAL EPOXY 12-INCH, YELLOW	17	MARKING LINE EPOXY 6-INCH, YELLOW
6	MARKING LINE GROOVED WET REFLECTIVE EPOXY 10-INCH, WHITE	18	MARKING LINE GROOVED WET REF EPOXY 6-INCH, WHITE
7	MARKING ARROW EPOXY	19	MARKING CROSSWALK EPOXY TRANSVERSE LINE 6-INCH
8	MARKING WORD EPOXY	20	MARKING YIELD LINE EPOXY 18-INCH
10	MARKING REMOVAL SPECIAL MARKING	21	MARKING STOP LINE EPOXY 18-INCH
		23	MARKING LINE GROOVED WET REF EPOXY 6-INCH, WHITE (3' LINE 9' GAP)
		24	MARKING LINE GROOVED WET REF EPOXY 10-INCH, WHITE (3' LINE 9' GAP)

PROJECT NO: 2265-10-71	HWY: STH 241	COUNTY: MILWAUKEE	PAVEMENT MARKING	SHEET 47	E

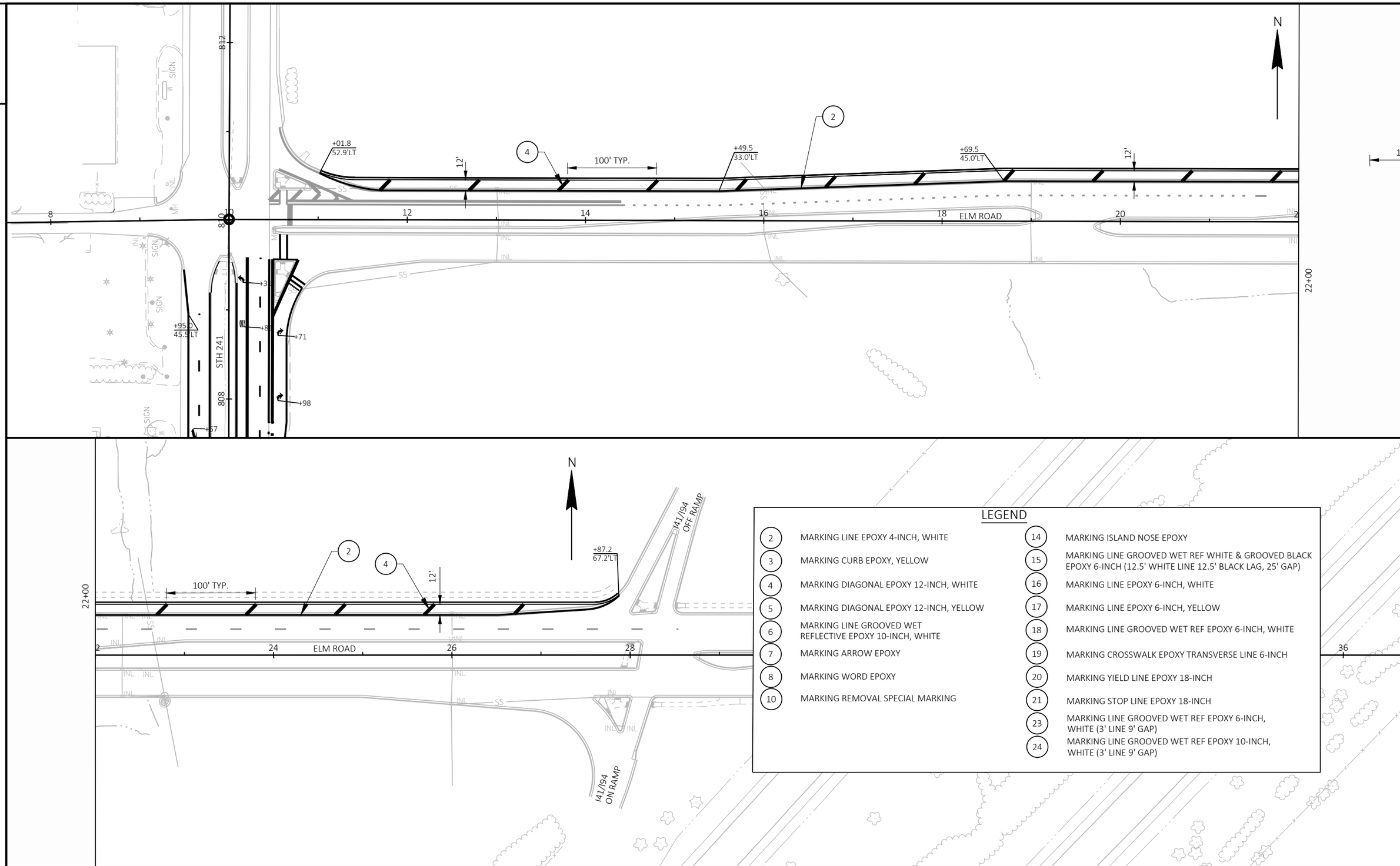

LEGEND

2	MARKING LINE EPOXY 4-INCH, WHITE	14	MARKING ISLAND NOSE EPOXY
3	MARKING CURB EPOXY, YELLOW	15	MARKING LINE GROOVED WET REF WHITE & GROOVED BLACK EPOXY 6-INCH (12.5' WHITE LINE 12.5' BLACK LAG, 25' GAP)
4	MARKING DIAGONAL EPOXY 12-INCH, WHITE	16	MARKING LINE EPOXY 6-INCH, WHITE
5	MARKING DIAGONAL EPOXY 12-INCH, YELLOW	17	MARKING LINE EPOXY 6-INCH, YELLOW
6	MARKING LINE GROOVED WET REFLECTIVE EPOXY 10-INCH, WHITE	18	MARKING LINE GROOVED WET REF EPOXY 6-INCH, WHITE
7	MARKING ARROW EPOXY	19	MARKING CROSSWALK EPOXY TRANSVERSE LINE 6-INCH
8	MARKING WORD EPOXY	20	MARKING YIELD LINE EPOXY 18-INCH
10	MARKING REMOVAL SPECIAL MARKING	21	MARKING STOP LINE EPOXY 18-INCH
		23	MARKING LINE GROOVED WET REF EPOXY 6-INCH, WHITE (3' LINE 9' GAP)
		24	MARKING LINE GROOVED WET REF EPOXY 10-INCH, WHITE (3' LINE 9' GAP)

PROJECT NO: 2265-10-71	HWY: STH 241	COUNTY: MILWAUKEE	PAVEMENT MARKING	SHEET 48	E

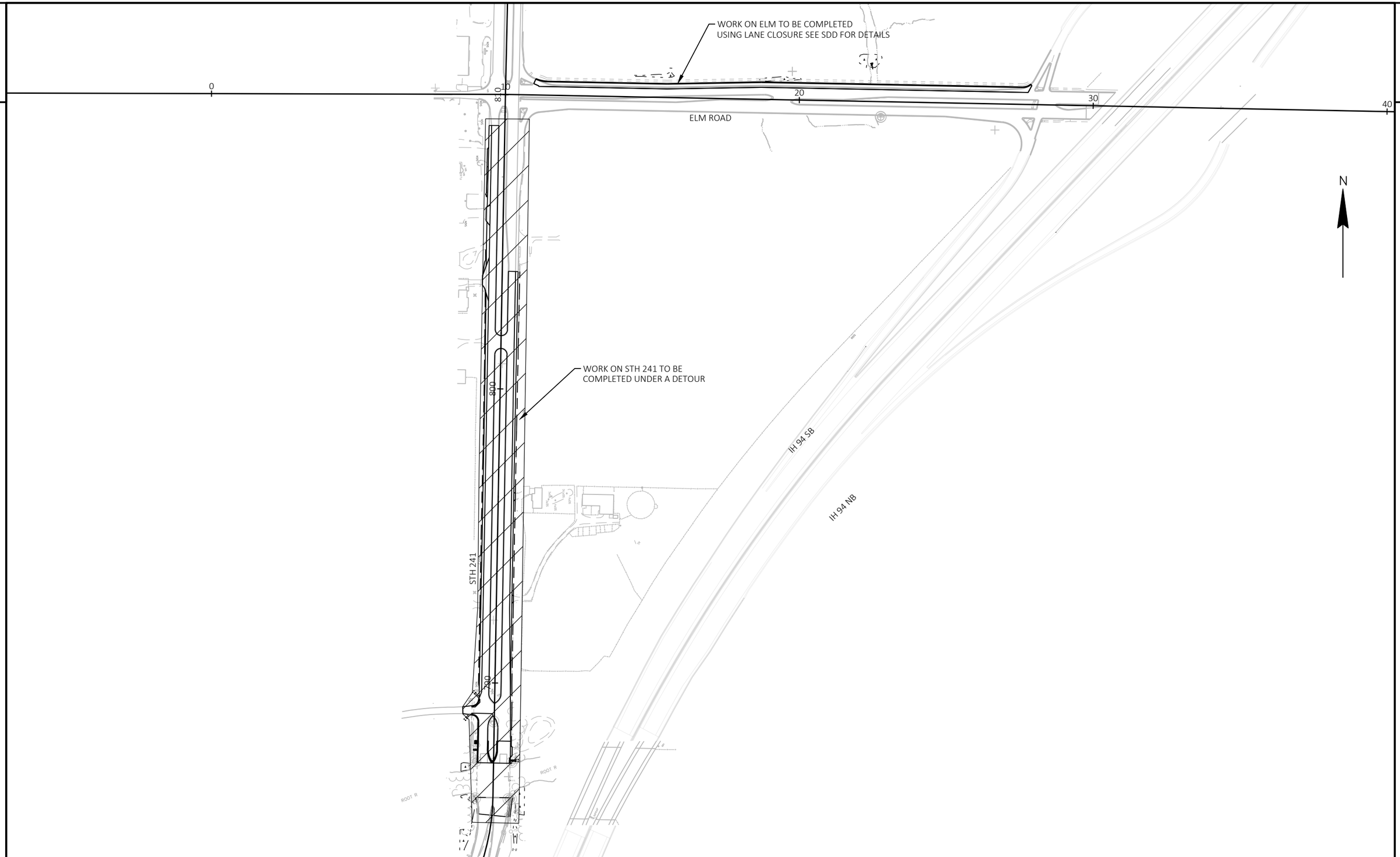

PROJECT NO: 2265-10-71	HWY: STH 241	COUNTY: MILWAUKEE	TRAFFIC CONTROL OVERVIEW	SHEET 49	E

FILE NAME : C:\OD\CORRE, INC\PROJECTS - WI-SE REGION\2265-10-02_STH 241_MILWAUKE CO\500_CADD\501_C3D_2018\22651002\SHEETSPLAN\026001-TCOV.DWG
LAYOUT NAME - 01
PLOT DATE : 6/27/2022 10:42 AM PLOT BY : TOM ORNER PLOT NAME : PLOT SCALE : 1 IN:300 FT

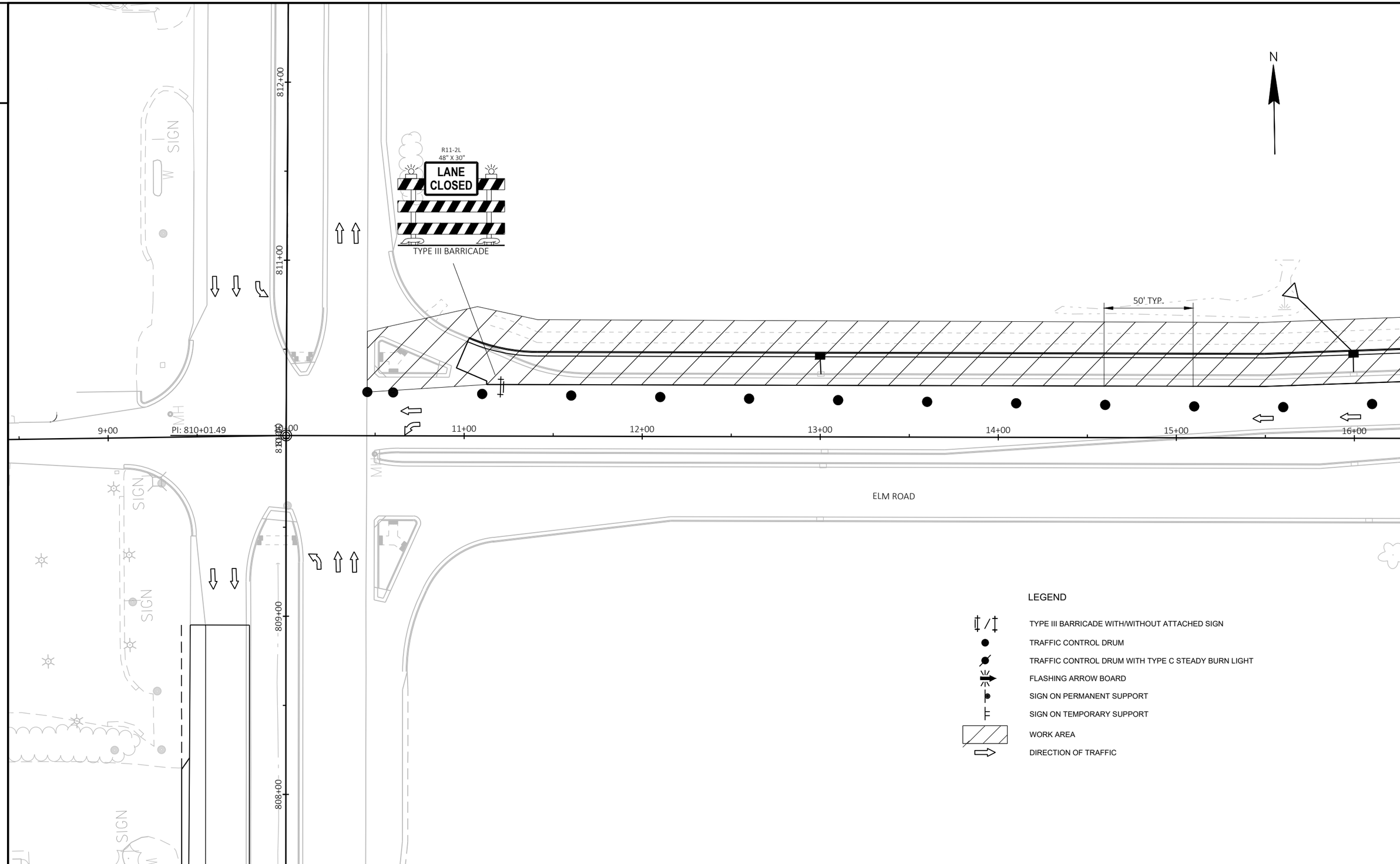
N
R11-2L
48" X 30"
LANE CLOSED
TYPE III BARRICADE
50' TYP.
812+00
811+00
809+00
808+00
9+00
PI: 810+01.49
10+00
11+00
12+00
13+00
14+00
15+00
16+00
SIGN
MH
ELM ROAD
LEGEND
TYPE III BARRICADE WITH/WITHOUT ATTACHED SIGN
TRAFFIC CONTROL DRUM
TRAFFIC CONTROL DRUM WITH TYPE C STEADY BURN LIGHT
FLASHING ARROW BOARD
SIGN ON PERMANENT SUPPORT
SIGN ON TEMPORARY SUPPORT
WORK AREA
DIRECTION OF TRAFFIC

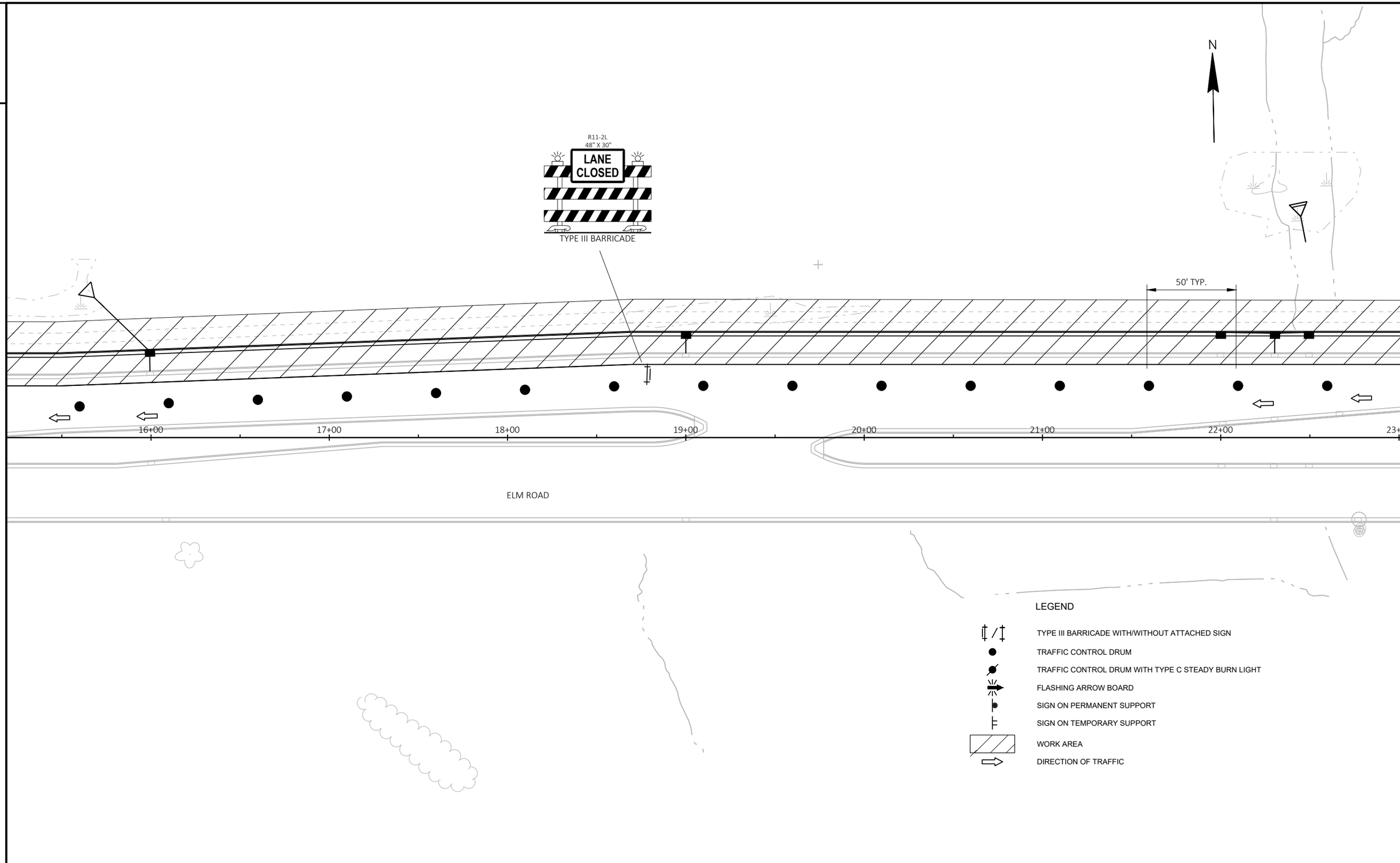
R11-2L
48" X 30"
LANE
CLOSED
TYPE III BARRICADE
N
50' TYP.
16+00
17+00
18+00
19+00
20+00
21+00
22+00
23+00
ELM ROAD
LEGEND
TYPE III BARRICADE WITH/WITHOUT ATTACHED SIGN
TRAFFIC CONTROL DRUM
TRAFFIC CONTROL DRUM WITH TYPE C STEADY BURN LIGHT
FLASHING ARROW BOARD
SIGN ON PERMANENT SUPPORT
SIGN ON TEMPORARY SUPPORT
WORK AREA
DIRECTION OF TRAFFIC

2

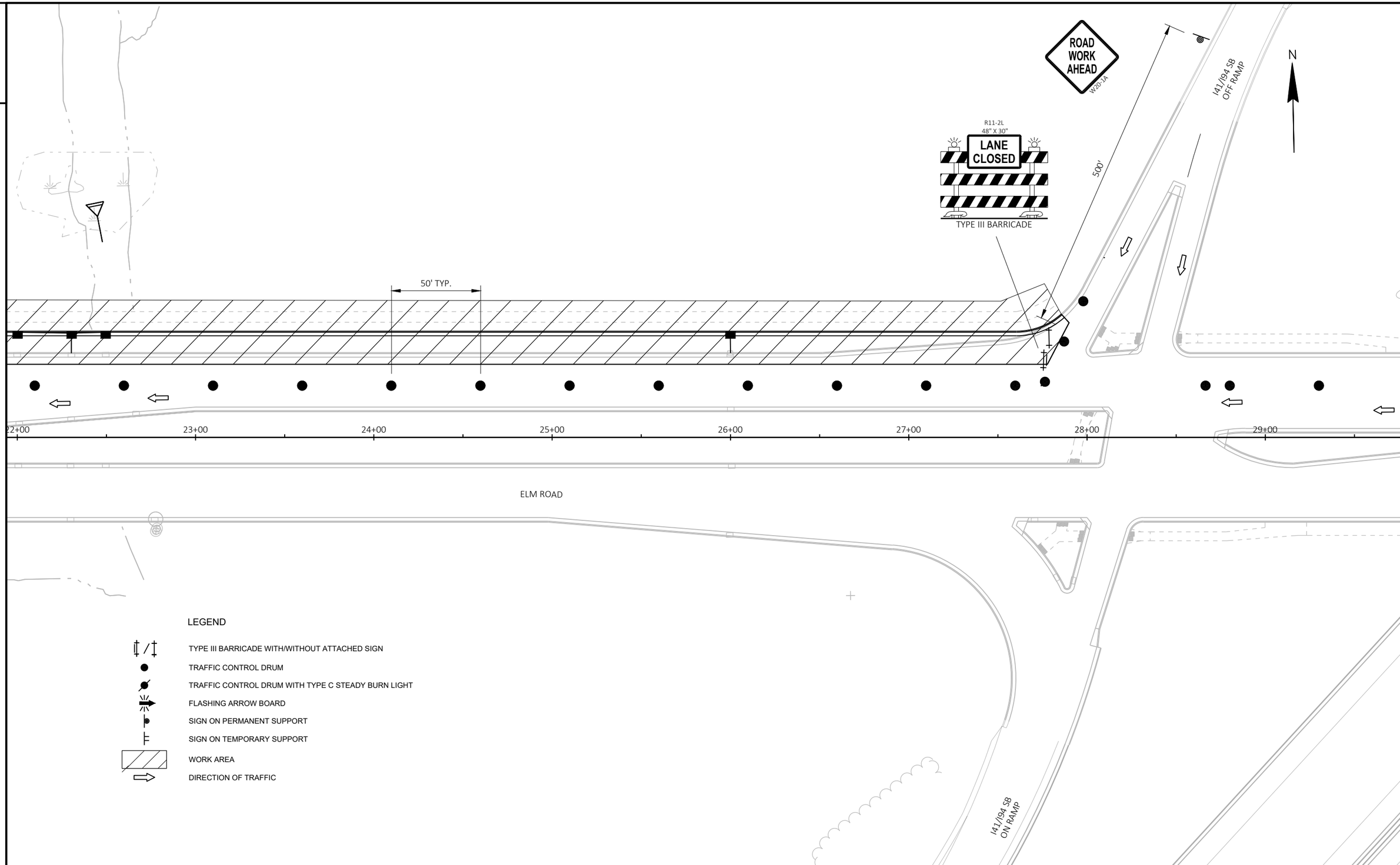

LEGEND

- TYPE III BARRICADE WITH/WITHOUT ATTACHED SIGN
- TRAFFIC CONTROL DRUM
- TRAFFIC CONTROL DRUM WITH TYPE C STEADY BURN LIGHT
- FLASHING ARROW BOARD
- SIGN ON PERMANENT SUPPORT
- SIGN ON TEMPORARY SUPPORT
- WORK AREA
- DIRECTION OF TRAFFIC

2

PROJECT NO: 2265-10-71	HWY: STH 241	COUNTY: MILWAUKEE	TRAFFIC CONTROL ELM STREET	SHEET 52	E

FILE NAME : C:\OD\CORRE, INC\PROJECTS - WI-SE REGION\2265-10-02_STH 241_MILWAUKE CO\500_CADD\501_C3D_2018\22651002\SHEETSPLAN\026301-TCELM.DWG
LAYOUT NAME - 03
PLOT DATE : 11/6/2023 1:39 PM
PLOT BY : JESSICA LEWIS, PE
PLOT NAME :
PLOT SCALE : 1 IN:50 FT

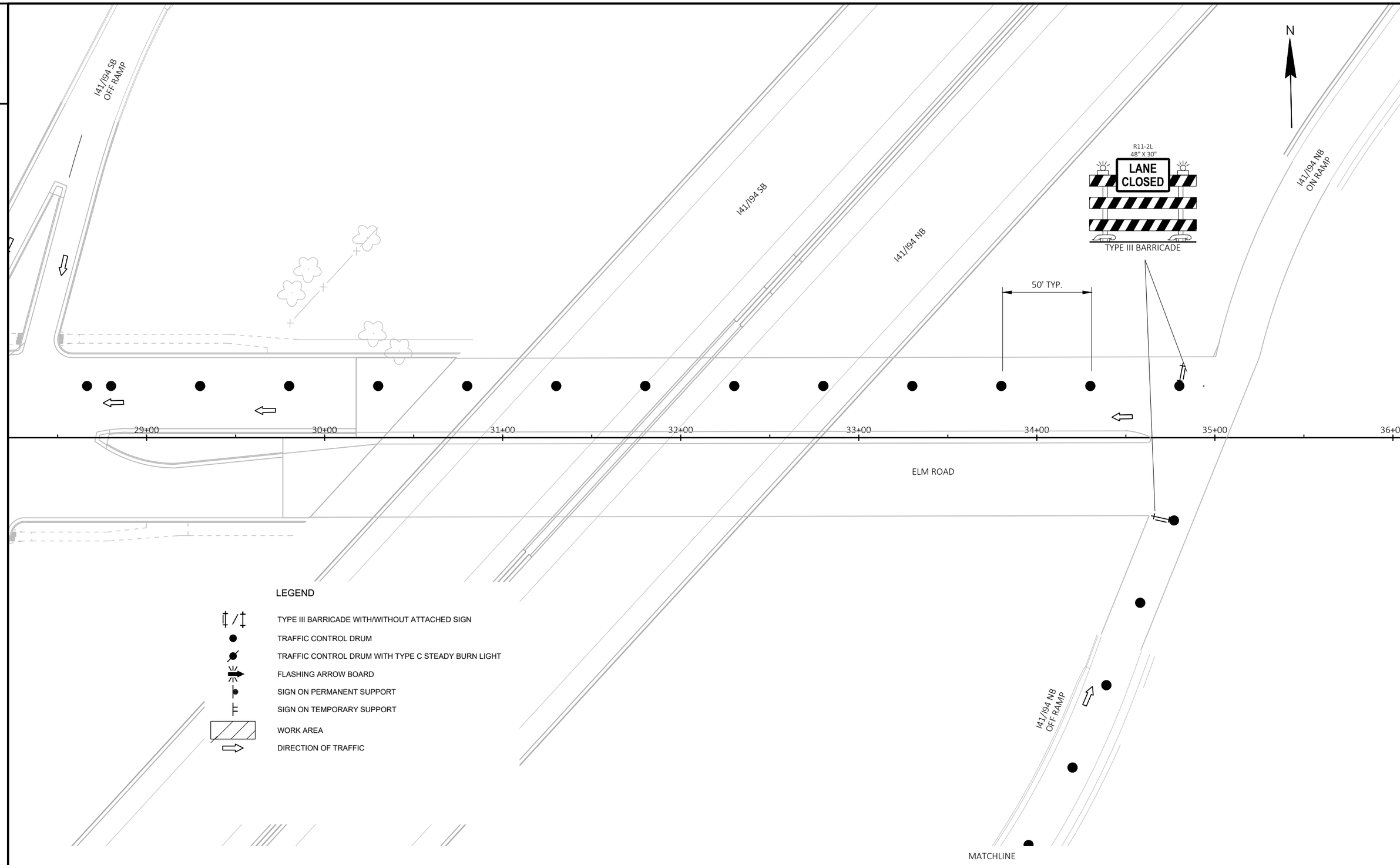
I41/I94 SB
OFF RAMP
I41/I94 SB
I41/I94 NB
I41/I94 NB
ON RAMP
N
R11-2L
48" X 30"
LANE
CLOSED
TYPE III BARRICADE
50' TYP.
29+00
30+00
31+00
32+00
33+00
34+00
35+00
36+00
ELM ROAD
I41/I94 NB
OFF RAMP
MATCHLINE
LEGEND
TYPE III BARRICADE WITH/WITHOUT ATTACHED SIGN
TRAFFIC CONTROL DRUM
TRAFFIC CONTROL DRUM WITH TYPE C STEADY BURN LIGHT
FLASHING ARROW BOARD
SIGN ON PERMANENT SUPPORT
SIGN ON TEMPORARY SUPPORT
WORK AREA
DIRECTION OF TRAFFIC

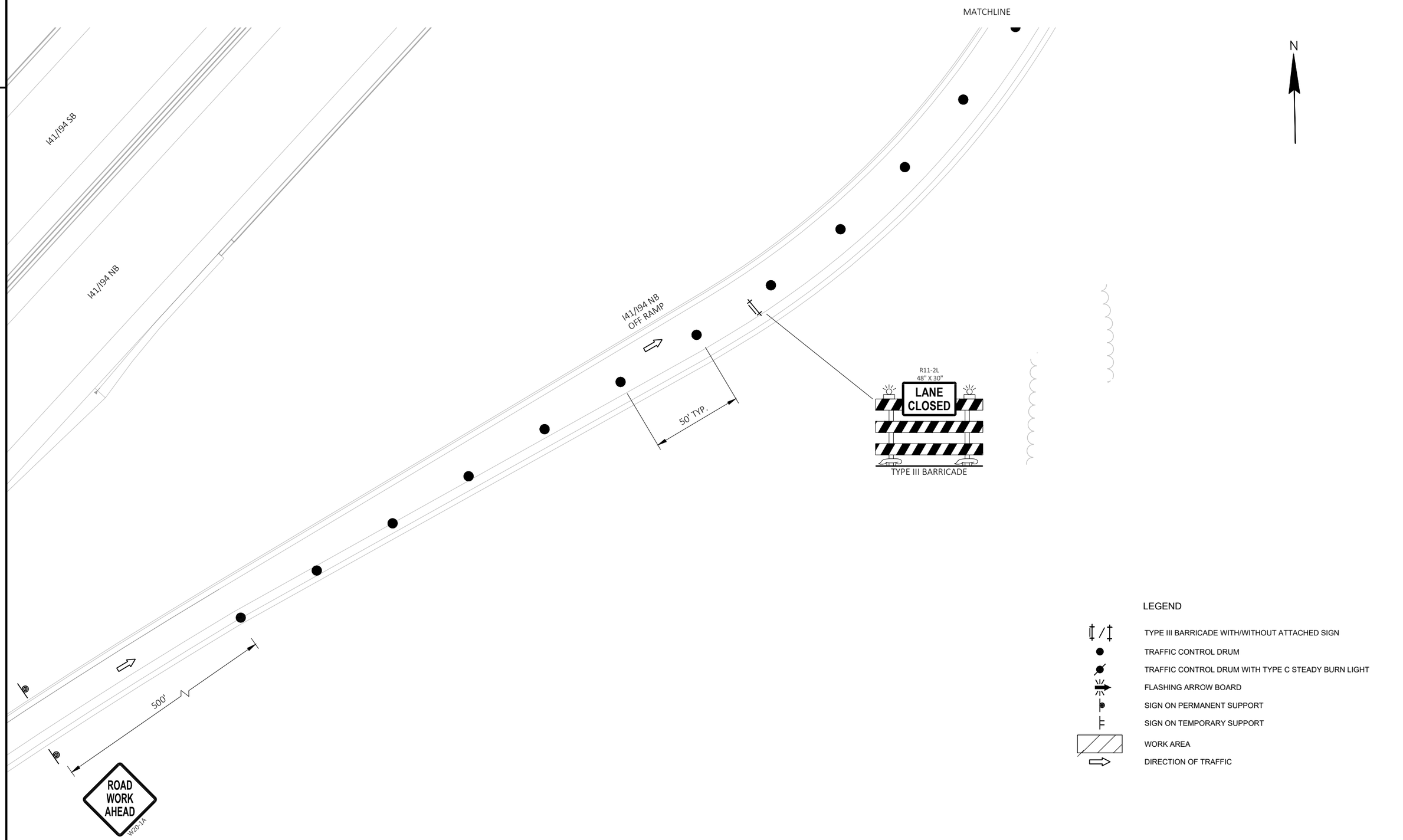
MATCHLINE
N
I41/I94 SB
I41/I94 NB
I41/I94 NB
OFF RAMP
50' TYP.
R11-2L
48" X 30"
LANE
CLOSED
TYPE III BARRICADE
500'
ROAD
WORK
AHEAD
W20-1A
LEGEND
TYPE III BARRICADE WITH/WITHOUT ATTACHED SIGN
TRAFFIC CONTROL DRUM
TRAFFIC CONTROL DRUM WITH TYPE C STEADY BURN LIGHT
FLASHING ARROW BOARD
SIGN ON PERMANENT SUPPORT
SIGN ON TEMPORARY SUPPORT
WORK AREA
DIRECTION OF TRAFFIC

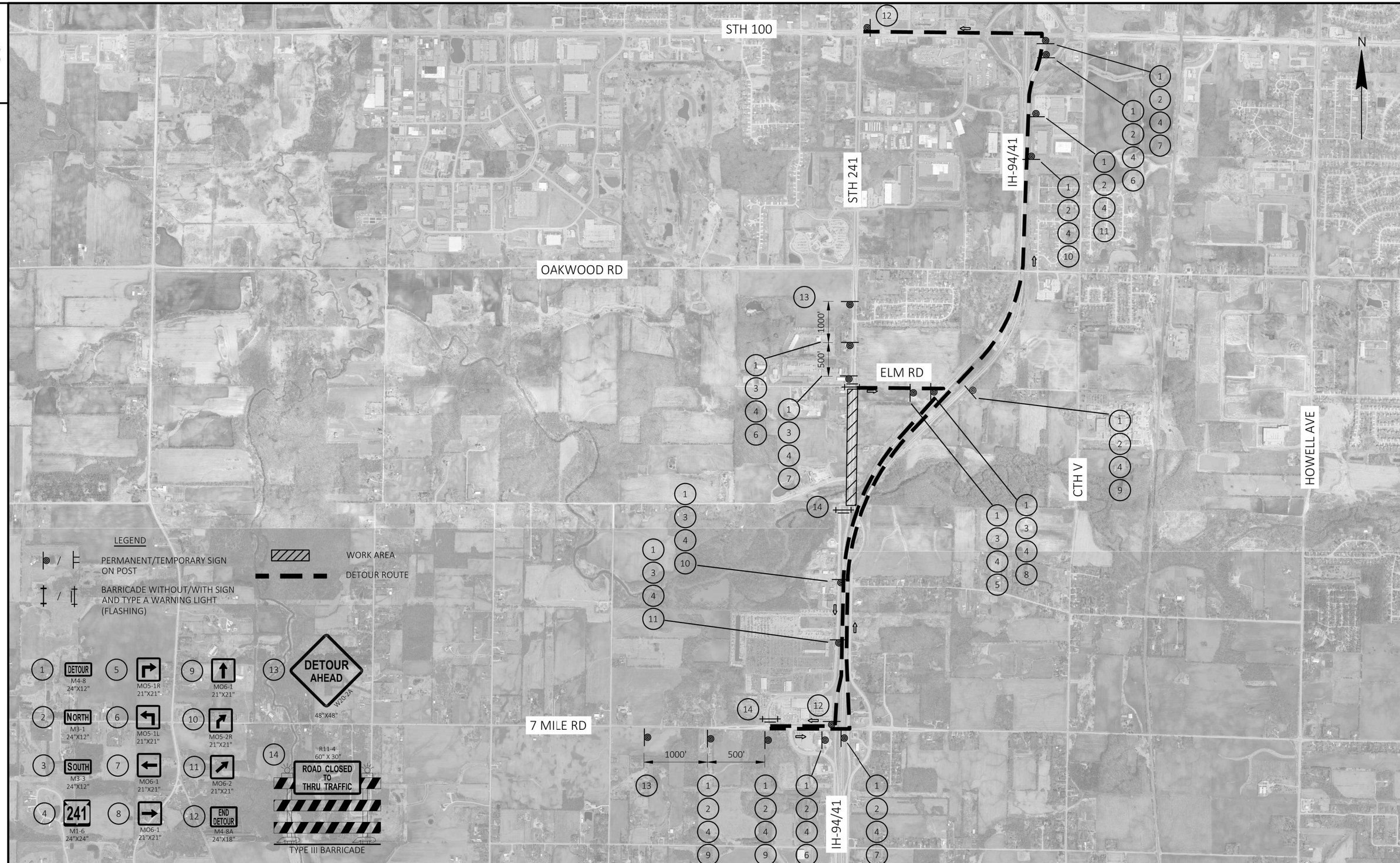

PROJECT NO: 2265-10-71	HWY: STH 241	COUNTY: MILWAUKEE	DETOUR PLAN	SHEET 55	E

FILE NAME : C:\OD\CORRE, INC\PROJECTS - WI-SE REGION\2265-10-02_STH 241_MILWAUKE CO\500_CADD\501_C3D_2018\22651002\SHEETSPLAN\027001-DT.DWG
LAYOUT NAME - 01
PLOT DATE : 6/27/2022 1:56 PM PLOT BY : TOM ORNER PLOT NAME : PLOT SCALE : 1 IN:2000 FT

Estimate Of Quantities

2265-10-71

Line	Item	Item Description	Unit	Total	Qty
0002	201.0105	Clearing	STA	2.000	2.000
0004	201.0205	Grubbing	STA	2.000	2.000
0006	203.0250	Removing Structure Over Waterway Remove Debris (structure) 01. B-40-954	EACH	1.000	1.000
0008	204.0100	Removing Concrete Pavement	SY	1,545.000	1,545.000
0010	204.0110	Removing Asphaltic Surface	SY	741.000	741.000
0012	204.0120	Removing Asphaltic Surface Milling	SY	15,349.000	15,349.000
0014	204.0150	Removing Curb & Gutter	LF	238.000	238.000
0016	204.0165	Removing Guardrail	LF	138.000	138.000
0018	204.0220	Removing Inlets	EACH	7.000	7.000
0020	204.0245	Removing Storm Sewer (size) 01. 15-Inch	LF	50.000	50.000
0022	204.0245	Removing Storm Sewer (size) 02. 30-Inch	LF	38.000	38.000
0024	204.9035.S	Removing (item description) 01. Riprap	CY	15.000	15.000
0026	204.9060.S	Removing (item description) 02. Communication Vault	EACH	4.000	4.000
0028	205.0100	Excavation Common	CY	3,961.000	3,961.000
0030	206.1001	Excavation for Structures Bridges (structure) 01. B-40-954	EACH	1.000	1.000
0032	210.1500	Backfill Structure Type A	TON	80.000	80.000
0034	213.0100	Finishing Roadway (project) 01. 2265-10-71	EACH	1.000	1.000
0036	305.0110	Base Aggregate Dense 3/4-Inch	TON	191.000	191.000
0038	305.0120	Base Aggregate Dense 1 1/4-Inch	TON	1,408.000	1,408.000
0040	310.0110	Base Aggregate Open-Graded	TON	320.000	320.000
0042	312.0110	Select Crushed Material	TON	2,990.000	2,990.000
0044	415.0090	Concrete Pavement 9-Inch	SY	3,020.000	3,020.000
0046	416.0610	Drilled Tie Bars	EACH	565.000	565.000
0048	455.0605	Tack Coat	GAL	1,252.000	1,252.000
0050	460.2000	Incentive Density HMA Pavement	DOL	1,410.000	1,410.000
0052	460.6223	HMA Pavement 3 MT 58-28 S	TON	315.000	315.000
0054	460.6224	HMA Pavement 4 MT 58-28 S	TON	1,841.000	1,841.000
0056	465.0105	Asphaltic Surface	TON	130.000	130.000
0058	465.0120	Asphaltic Surface Driveways and Field Entrances	TON	43.000	43.000
0060	465.0315	Asphaltic Flumes	SY	65.000	65.000
0062	502.0100	Concrete Masonry Bridges	CY	418.000	418.000
0064	502.3200	Protective Surface Treatment	SY	1,450.000	1,450.000
0066	502.3210	Pigmented Surface Sealer	SY	120.000	120.000
0068	502.4205	Adhesive Anchors No. 5 Bar	EACH	760.000	760.000
0070	505.0600	Bar Steel Reinforcement HS Coated Structures	LB	100,300.000	100,300.000
0072	506.4000	Steel Diaphragms (structure) 01. B-40-954	EACH	26.000	26.000
0074	509.1500	Concrete Surface Repair	SF	450.000	450.000
0076	520.8000	Concrete Collars for Pipe	EACH	6.000	6.000
0078	521.1012	Apron Endwalls for Culvert Pipe Steel 12-Inch	EACH	1.000	1.000
0080	524.0630	Apron Endwalls for Culvert Pipe Salvaged 30-Inch	EACH	1.000	1.000
0082	524.0642	Apron Endwalls for Culvert Pipe Salvaged 42-Inch	EACH	1.000	1.000
0084	530.0112	Culvert Pipe Corrugated Polyethylene 12-Inch	LF	16.000	16.000
0086	531.2036	Drilling Shaft 36-Inch	LF	13.000	13.000
0088	601.0331	Concrete Curb & Gutter 31-Inch	LF	1,847.000	1,847.000
0090	601.0557	Concrete Curb & Gutter 6-Inch Sloped 36-Inch Type D	LF	36.000	36.000
0092	601.0588	Concrete Curb & Gutter 4-Inch Sloped 36-Inch Type TBT	LF	194.000	194.000
0094	602.3010	Concrete Surface Drains	CY	1.000	1.000
0096	606.0200	Riprap Medium	CY	10.000	10.000
0098	608.0415	Storm Sewer Pipe Reinforced Concrete Class IV 15-Inch	LF	94.000	94.000
0100	608.0430	Storm Sewer Pipe Reinforced Concrete Class IV 30-Inch	LF	62.000	62.000

Estimate Of Quantities

2265-10-71

Line	Item	Item Description	Unit	Total	Qty
0102	608.0442	Storm Sewer Pipe Reinforced Concrete Class IV 42-Inch	LF	12.000	12.000
0104	611.0654	Inlet Covers Type V	EACH	1.000	1.000
0106	611.0660	Inlet Covers Type WM	EACH	2.000	2.000
0108	611.3220	Inlets 2x2-FT	EACH	1.000	1.000
0110	611.3225	Inlets 2x2.5-FT	EACH	7.000	7.000
0112	611.9710	Salvaged Inlet Covers	EACH	7.000	7.000
0114	612.0106	Pipe Underdrain 6-Inch	LF	1,690.000	1,690.000
0116	612.0406	Pipe Underdrain Wrapped 6-Inch	LF	400.000	400.000
0118	614.0010	Barrier System Grading Shaping Finishing	EACH	2.000	2.000
0120	614.0150	Anchor Assemblies for Steel Plate Beam Guard	EACH	2.000	2.000
0122	614.0397	Guardrail Mow Strip Emulsified Asphalt	SY	10.000	10.000
0124	614.2300	MGS Guardrail 3	LF	25.000	25.000
0126	614.2500	MGS Thrie Beam Transition	LF	78.800	78.800
0128	614.2610	MGS Guardrail Terminal EAT	EACH	1.000	1.000
0130	618.0100	Maintenance and Repair of Haul Roads (project) 01.2265-10-71	EACH	1.000	1.000
0132	619.1000	Mobilization	EACH	1.000	1.000
0134	620.0200	Concrete Median Blunt Nose	SF	84.000	84.000
0136	624.0100	Water	MGAL	42.240	42.240
0138	625.0100	Topsoil	SY	88.000	88.000
0140	625.0500	Salvaged Topsoil	SY	9,890.000	9,890.000
0142	627.0200	Mulching	SY	9,888.000	9,888.000
0144	628.1104	Erosion Bales	EACH	8.000	8.000
0146	628.1504	Silt Fence	LF	188.000	188.000
0148	628.1520	Silt Fence Maintenance	LF	188.000	188.000
0150	628.1905	Mobilizations Erosion Control	EACH	5.000	5.000
0152	628.1910	Mobilizations Emergency Erosion Control	EACH	5.000	5.000
0154	628.2008	Erosion Mat Urban Class I Type B	SY	88.000	88.000
0156	628.6505	Soil Stabilizer Type A	ACRE	2.050	2.050
0158	628.7005	Inlet Protection Type A	EACH	11.000	11.000
0160	628.7010	Inlet Protection Type B	EACH	3.000	3.000
0162	628.7015	Inlet Protection Type C	EACH	12.000	12.000
0164	628.7020	Inlet Protection Type D	EACH	8.000	8.000
0166	628.7504	Temporary Ditch Checks	LF	251.000	251.000
0168	628.7555	Culvert Pipe Checks	EACH	23.000	23.000
0170	628.7560	Tracking Pads	EACH	3.000	3.000
0172	628.7570	Rock Bags	EACH	35.000	35.000
0174	629.0210	Fertilizer Type B	CWT	9.000	9.000
0176	630.0130	Seeding Mixture No. 30	LB	180.000	180.000
0178	630.0200	Seeding Temporary	LB	271.000	271.000
0180	630.0500	Seed Water	MGAL	226.000	226.000
0182	631.1100	Sod Erosion Control	SY	24.000	24.000
0184	633.5200	Markers Culvert End	EACH	2.000	2.000
0186	634.0618	Posts Wood 4x6-Inch X 18-FT	EACH	17.000	17.000
0188	637.2210	Signs Type II Reflective H	SF	27.710	27.710
0190	638.2101	Moving Signs Type I	EACH	1.000	1.000
0192	638.2102	Moving Signs Type II	EACH	17.000	17.000
0194	638.2602	Removing Signs Type II	EACH	1.000	1.000
0196	638.3000	Removing Small Sign Supports	EACH	16.000	16.000
0198	642.5001	Field Office Type B	EACH	1.000	1.000
0200	643.0300	Traffic Control Drums	DAY	10,600.000	10,600.000

Estimate Of Quantities

2265-10-71

Line	Item	Item Description	Unit	Total	Qty
0202	643.0420	Traffic Control Barricades Type III	DAY	2,300.000	2,300.000
0204	643.0705	Traffic Control Warning Lights Type A	DAY	4,600.000	4,600.000
0206	643.0715	Traffic Control Warning Lights Type C	DAY	500.000	500.000
0208	643.0800	Traffic Control Arrow Boards	DAY	100.000	100.000
0210	643.0900	Traffic Control Signs	DAY	8,100.000	8,100.000
0212	643.1050	Traffic Control Signs PCMS	DAY	35.000	35.000
0214	643.5000	Traffic Control	EACH	1.000	1.000
0216	645.0111	Geotextile Type DF Schedule A	SY	1,320.000	1,320.000
0218	645.0120	Geotextile Type HR	SY	38.000	38.000
0220	646.1020	Marking Line Epoxy 4-Inch	LF	1,690.000	1,690.000
0222	646.2020	Marking Line Epoxy 6-Inch	LF	9,570.000	9,570.000
0224	646.2025	Marking Line Grooved Black Epoxy 6-Inch	LF	798.000	798.000
0226	646.2040	Marking Line Grooved Wet Ref Epoxy 6-Inch	LF	843.000	843.000
0228	646.4040	Marking Line Grooved Wet Ref Epoxy 10-Inch	LF	852.000	852.000
0230	646.5020	Marking Arrow Epoxy	EACH	9.000	9.000
0232	646.5120	Marking Word Epoxy	EACH	3.000	3.000
0234	646.6220	Marking Yield Line Epoxy 18-Inch	EACH	8.000	8.000
0236	646.7120	Marking Diagonal Epoxy 12-Inch	LF	2,547.000	2,547.000
0238	646.7420	Marking Crosswalk Epoxy Transverse Line 6-Inch	LF	36.000	36.000
0240	646.8120	Marking Curb Epoxy	LF	470.000	470.000
0242	646.8220	Marking Island Nose Epoxy	EACH	3.000	3.000
0244	650.4000	Construction Staking Storm Sewer	EACH	9.000	9.000
0246	650.4500	Construction Staking Subgrade	LF	1,690.000	1,690.000
0248	650.5500	Construction Staking Curb Gutter and Curb & Gutter	LF	2,077.000	2,077.000
0250	650.6000	Construction Staking Pipe Culverts	EACH	2.000	2.000
0252	650.6501	Construction Staking Structure Layout (structure) 01. B-40-954	EACH	1.000	1.000
0254	650.7000	Construction Staking Concrete Pavement	LF	1,695.000	1,695.000
0256	650.8000	Construction Staking Resurfacing Reference	LF	4,480.000	4,480.000
0258	650.9911	Construction Staking Supplemental Control (project) 01. 2265-10-71	EACH	1.000	1.000
0260	650.9920	Construction Staking Slope Stakes	LF	1,690.000	1,690.000
0262	652.0700.S	Install Conduit into Existing Item	EACH	2.000	2.000
0264	655.0515	Electrical Wire Traffic Signals 10 AWG	LF	1,950.000	1,950.000
0266	670.0201	ITS Documentation	EACH	1.000	1.000
0268	671.0132	Conduit HDPE 3-Duct 2-Inch	LF	1,675.000	1,675.000
0270	671.0232	Conduit HDPE Directional Bore 3-Duct 2-Inch	LF	275.000	275.000
0272	673.0105	Communication Vault Type 1	EACH	2.000	2.000
0274	690.0150	Sawing Asphalt	LF	270.000	270.000
0276	690.0250	Sawing Concrete	LF	1,750.000	1,750.000
0278	715.0502	Incentive Strength Concrete Structures	DOL	2,550.000	2,550.000
0280	740.0440	Incentive IRI Ride	DOL	3,940.000	3,940.000
0282	999.2000.S	Installing and Maintaining Bird Deterrent System (station) 01. 786+20	EACH	1.000	1.000
0284	ASP.1T0A	On-the-Job Training Apprentice at $5.00/HR	HRS	1,200.000	1,200.000
0286	ASP.1T0G	On-the-Job Training Graduate at $5.00/HR	HRS	2,280.000	2,280.000
0288	SPV.0060	Special 04. Moving Overhead Sign Support S-40-942	EACH	1.000	1.000
0290	SPV.0195	Special 01. Asphaltic Repair	TON	82.000	82.000

3

CLEARING AND GRUBBING ITEMS

CATEGORY	ROADWAY	STATION	TO	STATION	201.0105 CLEARING STA	201.0205 GRUBBING STA
0010	STH 241					
		787+00	-	789+00	2	2
	TOTALS				2	2

REMOVING ASPHALTIC SURFACE

CATEGORY	ROADWAY	STATION	TO	STATION	O/S	204.0110 REMOVING ASPHALTIC SURFACE SY	204.0120 REMOVING ASPHALTIC SURFACE MILING SY	SPV.0195.01 ASPHALTIC REPAIR TON
0010	STH 241							
		785+50	-	786+11	LT/RT	--	655	--
		787+28	-	788+96	LT	--	701	--
		787+28	-	788+03	RT	--	393	--
		788+96	-	808+95	LT	524	7,560	45
		788+03	-	804+00	RT	217	6,040	36
					SUBTOTAL	741	15,349	82
	TOTALS					741	15,349	82

REMOVING CONCRETE SURFACE

CATEGORY	ROADWAY	STATION	TO	STATION	O/S	204.0100 REMOVING CONCRETE PAVEMENT SY
0010	STH 241					
		787+28	-	788+96	LT	83
		787+28	-	788+03	RT	82
	TOTAL CATEGORY 0010					165
0030	ELM RD					
		10'E'+95	-	27'E'+90	LT	1,380
	TOTAL CATEGORY 0030					1,380
	PROJECT TOTALS					1,545

CURB AND GUTTER REMOVALS

CATEGORY	ROADWAY	STATION	TO	STATION	O/S	204.0150 REMOVING CURB & GUTTER LF
0010	STH 241					
		787+28	-	788+96	LT	119
		787+28	-	788+03	RT	80
		788+96	-	808+95	LT	39
	TOTALS					238

REMOVING MISC ITEMS

CATEGORY	ROADWAY	STATION	TO	STATION	O/S	204.0165 REMOVING GUARDRAIL LF	204.9165.S REMOVING RIPRAP CY
0010	STH 241						
		785+50	-	786+11	RT	40	--
		787+28	-	788+96	LT	98	--
		789+21	-	789+44	LT	--	15
	TOTALS					138	15

3

REMOVING INLETS

CATEGORY	ROADWAY	STATION	O/S	204.0220 REMOVING INLETS EACH
0030	ELM RD			
		13'E'+00	45' LT	1
		16'E'+00	46.8' LT	1
		19'E'+00	57' LT	1
		22'E'+00	57' LT	1
		22'E'+50	57' LT	1
		22'E'+30	57' LT	1
		26'E'+00	57' LT	1
	TOTAL			7

REMOVING STORM SEWER

CATEGORY	ROADWAY	STATION	TO	STATION	O/S	204.0245 REMOVING STORM SEWER 01. 15-INCH LF	204.0245 REMOVING STORM SEWER 02. 30-INCH LF
0030	ELM RD						
		15'E'+73	-	16'E'+00	LT	-	38
		22'E'+00	-	22'E'+50	LT	50	-
	TOTAL					50	38

3

CATEGORY	FROM/TO STATION	LOCATION	205.0100 COMMON EXCAVATION (1) CUT (2)	SALVAGED/UNUSABLE PAVEMENT MATERIAL (4)	AVAILABLE MATERIAL (5)	UNEXPANDED FILL	EXPANDED FILL (13) FACTOR 1.25	MASS ORDINATE +/- (14)	WASTE
0030									
	11+50 TO 27+50	ELM RD	3,961	288	3,673	1,192	1,490	2,183	2,183
TOTAL COMMON EXC			3,961						

NOTES:

(1) COMMON EXCAVATION IS THE SUM OF THE CUT AND EBS EXCAVATION COLUMNS. ITEM NUMBER 205.0100

(2) SALVAGED/UNSUABLE PAVEMENT MATERIAL IS INCLUDED IN CUT.

(4) SALVAGED/UNUSABLE PAVEMENT MATERIAL

(5) AVAILABLE MATERIAL = CUT - SALVAGED/UNUSUABLE PAVEMENT MATERIAL

(13) EXPANDED FILL FACTOR = 1.25

(14) THE MASS ORDINATE + OR - QTY CALCULATED FOR THE DIVISION. PLUS QUANTITY INDICATES AN EXCESS OF MATERIAL WITHIN THE DIVISION. MINUS INDICATES A SHORTAGE OF MATERIAL WITHIN THE DIVISION.

MOVING OVERHEAD SIGN SUPPORT S-40-942 2265-10-71

Category Code 0030 LOCATION	MOVING OVERHEAD SIGN SUPPORT S-40-942 SPV.0060.04 EACH	DRILLING SHAFT 36 INCH 531.2036 L.F.
ELM ROAD WESTBOUND APPROACHING STH 241	1	13
TOTAL	1	13

3

SHEET 1 OF 1

3

BASE AGGREGATE ITEMS

CATEGORY	ROADWAY	STATION	TO	STATION	O/S	305.0110 BASE AGGREGATE DENSE ¾-INCH TON	305.0120 BASE AGGREGATE DENSE 1¼-INCH TON	312.0110 SELECT CRUSHED MATERIAL TON	624.0100 WATER MGAL
0010	STH 241								
		785+50	-	786+11	LT/RT	7	134	--	1.29
		787+28	-	788+96	LT	--	137	--	1.32
		787+28	-	788+03	RT	7	83	--	0.80
		788+03	-	804+00	RT	91	--	--	--
		788+96	-	808+95	LT	86	4	--	0.04
					SUBTOTAL	191	358	--	3.44
	TOTAL CATEGORY 0010					191	358	--	3.44
0030	ELM RD								
		10'E'+95	-	27'E'+90	LT	--	1,050	2,990	38.8
	TOTAL CATEGORY 0030					--	1,050	2,990	38.8
	PROJECT TOTAL					191	1,408	2,990	42.2

CONCRETE ITEMS

CATEGORY	ROADWAY	STATION	TO	STATION	O/S	415.0090 CONCRETE PAVEMENT 9-INCH SY	416.0610 DRILLED TIE BARS EACH
0030	ELM RD						
		10'E'+95	-	27'E'+90	LT	3,020	565
	TOTALS					3,020	565

ASPHALTIC PAVING

CATEGORY	ROADWAY	STATION	TO	STATION	O/S	455.0605 TACK COAT GAL	460.6223 HMA PAVEMENT 3 MT 58-28 S TON	460.6224 HMA PAVEMENT 4 MT 58-28 S TON	465.0105 ASPHALTIC SURFACE TON	465.0120 ASPHALTIC SURFACE DRIVEWAYS AND FIELD ENTRANCES TON
0010	STH 241									
		785+50	-	786+11	LT/RT	105	125	83	--	--
		787+28	-	788+96	LT	93	120	80	--	--
		787+28	-	788+03	RT	54	70	47	--	--
		788+96	-	808+95	LT	556	--	907	72	37
		788+03	-	804+00	RT	444	--	724	58	6
	TOTALS					1,252	315	1,841	130	43

3

CONCRETE CURB & GUTTER ITEMS

CATEGORY	ROADWAY	STATION	TO	STATION	O/S	602.3010 CONCRETE SURFACE DRAINS CY	465.0315 ASPHALTIC FLUMES SY	601.0331 CONCRETE CURB & GUTTER 31-INCH LF	601.0557 CONCRETE CURB & GUTTER 6-INCH SLOPED 36-INCH TYPE D LF	601.0588 CONCRETE CURB & GUTTER 4-INCH SLOPED 36-INCH TYPE TBT LF	620.0200 CONCRETE MEDIAN BLUNT NOSE SF
0010	STH 241										
		787+28	-	788+96	LT	1	10	89	--	176	84
		787+28	-	788+03	RT	--	--	68	--	18	--
		788+96	-	808+95	LT	--	55	--	36	--	--
	TOTAL CATEGORY 0010					1	65	157	36	194	84
0030	ELM RD										
		10'E'+95	-	27'E'+90	LT	--	--	1,690	--	--	--
	TOTAL CATEGORY 0030					--	--	1,690	--	--	--
	PROJECT TOTALS					1	65	1,847	36	194	84

CONSTRUCTION STAKING

CATEGORY	ROADWAY	STATION	TO	STATION	O/S	650.4000 CONSTRUCTION STAKING STORM SEWER EA	650.4500 CONSTRUCTION STAKING SUBGRADE LF	650.5500 CONSTRUCTION STAKING CURB AND GUTTER LF	650.7000 CONSTRUCTION STAKING CONCRETE PAVEMENT LF	650.6000 CONSTRUCTION STAKING PIPE CULVERTS EA	650.8000 CONSTRUCTION STAKING RESURFACING REFERENCE LF	650.9911 CONSTRUCTION STAKING SUPPLEMENTAL CONTROL EA	650.9920 CONSTRUCTION STAKING SLOPES STAKES LF
0010	STH 241												
		785+50	-	786+11	LT/RT	--	--	--	--	--	140	--	--
		787+28	-	808+95	LT/RT	2	--	387	--	--	4,340	--	--
	TOTAL CATEGORY 0010					2	--	387	--	--	4,480	--	--
0030	ELM RD												
		10'E'+95	-	27'E'+90	LT	7	1,690	1,690	1,695	2	--	1	1,690
	TOTAL CATEGORY 0030					7	1,690	1,690	1,695	2	--	1	1,690
	PROJECT TOTALS					9	1,690	2,077	1,695	2	4,480	1	1,690

3

STORM SEWER

CATEGORY	ROADWAY	STRUCTURE NUMBER	STATION	O/S	COVER ELEV	530.0112 CULVERT PIPE CORRUGATED POLYETHYLENE 12-INCH LF	STORM SEWER PIPE REINFORCED CONCRETE CLASS IV 608.0415 15-INCH LF	608.0430 30-INCH LF	608.0442 42-INCH LF	% SLOPE	520.8000 CONCRETE COLLAR FOR PIPE EA	* PIPE TIES REQ'D EACH	521.1012 APRON ENDWALLS FOR CULVERT PIPE STEEL 12-INCH EACH	APRON ENDWALLS FOR CULVERT PIPE SALVAGED 524.0630 30-INCH EACH	524.0642 42-INCH EACH	611.3220 INLETS 2X2-FT EACH	611.3225 INLETS 2X2.5-FT EACH	611.0654 INLET COVERS TYPE V EACH	611.0660 INLET COVERS TYPE WM EACH	611.9710 SALVAGED INLET COVERS EACH	633.5200 MARKERS CULVERT END EACH	** DEPTH FT	FROM STRUCTURE	TO STRUCTURE	INLET ELEV	DISCH ELEV
0010	STH 241																									
		1	787+37	55.7' RT	674.69	16	--	--	--	--	--	--	1	--	--	1	--	1	--	--	--	3.75	1	DITCH	670.19	670.19
		SUBTOTAL 0010				16	--	--	--	--	--	--	1	--	--	1	--	1	--	--	--					
0030	ELM RD																									
		515	13'E'+00	45' LT	721.29	--	12	--	--	1.73	1	--	--	--	--	--	1	--	--	1	--	3.98	515	EXIST	716.56	716.76
		520	15"E"+68	78.4' LT	--	--	--	50	--	2.80	--	2	--	1	--	--	--	--	--	--	1	--	520	523	--	713.33
		523	15"E"+99	46.9' LT	715.83	--	--	12	--	1.30	1	--	--	--	--	--	1	--	--	1	--	3.44	523	EXIST	711.64	711.93
		528	19'E'+00	57.1' LT	710.36	--	12	--	--	1.50	1	--	--	--	--	--	1	--	--	1	--	3.08	528	EXIST	706.53	706.73
		533	22'E'+00	55.6' LT	706.86	--	28	--	--	0.82	--	--	--	--	--	--	1	--	--	1	--	3.80	533	545	702.31	702.51
		545	22'E'+30	55.6' LT	706.86	--	12	--	--	1.98	1	--	--	--	--	--	1	--	--	1	--	4.39	545	EXIST	701.72	701.92
		538	22'E'+45	124' LT	--	--	--	--	12	1.62	1	2	--	--	1	--	--	--	--	--	1	--	538	EXIST	--	694.25
		550	22'E'+50	55.6' LT	706.85	--	18	--	--	2.06	--	--	--	--	--	--	1	--	--	1	--	3.73	550	545	702.37	702.57
		554	26'E'+00	57' LT	709.33	--	12	--	--	0.95	1	--	--	--	--	--	1	--	--	1	--	4.30	554	EXIST	704.28	704.48
		UNDISTRIBUTED				--	--	--	--	--	--	--	--	--	--	--	--	--	2	--	--					
		SUBTOTAL 0030				--	94	62	12	15	6	4	--	1	1	--	7	--	2	7	2					
	PROJECT TOTAL					16	94	62	12	15	6	4	1	1	1	1	7	1	2	7	2					

*FOR INFORMATION ONLY

**DOES NOT INCLUDE 6" OF ADJUSTING RINGS

UNDERDRAIN

CATEGORY	ROADWAY	STATION		STATION	O/S	310.0110 BASE AGGREGATE OPEN-GRADED TON	612.0106 PIPE UNDERDRAIN 6-INCH LF	645.0111 GEOTEXTILE TYPE DF SCHEDULE A SY
0030	ELM RD							
		10'E'+95	-	27'E'+90	LT	320	1,690	1,180
	TOTALS					320	1,690	1,180

GUARDRAIL

CATEGORY	ROADWAY	STATION		STATION	O/S	614.0010 BARRIER SYSTEM GRADING SHAPING FINISHING EACH	FOR INFORMATION ONLY TOPSOIL SY	FERTILIZER TYPE B CWT	SEEDING MIXTURE #30 LB	SEED WATER MGAL	EROSION MAT CLASS I TYPE B SY	614.0397 MOW STRIP EMULSIFIED ASPHALT SY	614.2300 MGS GUARDRAIL 3 LF	614.2500 MGS THRIE BEAM TRANSITION LF	614.2610 MGS GUARDRAIL TERMINAL EAT EACH
0010	STH 241														
		785+50	-	786+11	LT/RT	1	28	1	1	6	28	3	--	39.4	--
		787+28	-	808+95	LT/RT	1	80	1	2	17	80	7	25	39.4	1
		TOTALS				2						10	25	78.8	1

3

RESTORATION

CATEGORY	ROADWAY	STATION	TO	STATION	O/S	625.0100 TOPSOIL SY	625.0500 SALVAGED TOPSOIL SY	627.0200 MULCHING SY	628.2008 EROSION MAT URBAN CLASS I TYPE B SY	628.6505 SOIL STABILIZER TYPE A ACRE	629.0210 FERTILIZER TYPE B CWT	630.0130 SEEDING MIXTURE NO. 30 LB	630.0200 SEEDING TEMPORARY LB	630.0500 SEED WATER MGAL	628.7560 TRACKING PADS EACH
0010	STH 241														
		804+30	-	805+70	LT	70	--	--	70	--	1	1	2	2	2
	SUBTOTAL					70	--	--	70	--	1	1	2	2	2
	UNDISTRIBUTED					18	--	--	18	--	1	1	1	1	--
	TOTAL CATEGORY 0010					88	--	--	88	--	2	2	3	3	2
0030	ELM RD														
		10'E'+95	-	27'E'+90	LT	--	7,910	7,910	--	1.64	5	142	214	178	1
	SUBTOTAL					--	7,910	7,910	--	1.64	5	142	214	178	1
	UNDISTRIBUTED					--	1,980	1,980	--	0.41	2	36	54	45	--
	TOTAL CATEGORY 0030					--	9,890	9,890	--	2.05	7	178	268	223	1
	PROJECT TOTALS					88	9,890	9,890	88	2.05	9	180	271	225	3

EROSION CONTROL

CATEGORY	ROADWAY	STATION	TO	STATION	O/S	628.1104 EROSION BALES EACH	628.1504 SILT FENCE LF	628.1520 SILT FENCE MAINTENANCE LF	628.1905 MOBILIZATIONS EROSION CONTROL EA	628.1910 MOBILIZATIONS EMERGENCY EROSION CONTROL EA	628.7005 INLET PROTECTION TYPE A EA	628.7010 INLET PROTECTION TYPE B EA	628.7015 INLET PROTECTION TYPE C EA	628.7020 INLET PROTECTION TYPE D EA	628.7504 TEMPORARY DITCH CHECKS LF	628.7555 CULVERT PIPE CHECKS EA	628.7570 ROCK BAGS EA	631.1100 SOD EROSION CONTROL SY
0010	STH 241																	
		787+28	-	808+95	LT/RT	--	150	150	2	2	1	2	1	--	10	12	10	19
	SUBTOTAL CATEGORY 0010					--	150	150	2	2	1	2	1	--	10	12	10	19
	UNDISTRIBUTED CATEGORY 0010					--	38	38	1	1	1	1	1	--	3	3	3	5
	TOTAL CATEGORY 0010					--	188	188	3	3	2	3	2	--	13	15	13	24
0030	ELM RD																	
		10'E'+95	-	27'E'+90	LT	6	--	--	1	1	7	--	8	6	190	6	17	--
					SUBTOTAL	6	--	--	1	1	7	--	8	6	190	6	17	--
	UNDISTRIBUTED CATEGORY 0030					2	--	--	1	1	2	--	2	2	48	2	5	--
	TOTOAL CATEGORY 0030					8	--	--	2	2	9	--	10	8	238	8	22	--
	PROJECT TOTALS					8	188	188	5	5	11	3	12	8	251	23	35	24

* ADDITIONAL QUANTITY SHOWN ELSEWHERE

RIPRAP

CATEGORY	ROADWAY	STATION	TO	STATION	O/S	606.0200 MEDIUM CY	645.0120 GEOTEXTILE FABRIC TYPE HR SY
0010	STH 241						
		787+28	-	808+95	LT/RT	8	30
					SUBTOTAL	8	30
	UNDISTRIBUTED CATEGORY 0010					2	8
	TOTALS					10	38

3

3

SIGN NO.	SIGN CODE & SIZE	SIGN TYPE	SIGN MESSAGE	TYPE II SIGN SIZE W [IN.]	x	H [IN.]	637.2210 SIGNS TYPE II REFLC H [SF]	638.2602 REMOVING SIGNS TYPE II [EA]	638.3000 REMOVING SMALL SIGN SUPPORTS [EA]	634.0618 POSTS WOOD 4"X 6"X18' [EA]	638.2102 MOVE SIGNS TYPE II [EA]	MOUNT ON SAME POST AS SIGN #	REMARKS / NEW SIGN LOCATION	638.2101 MOVING SIGNS TYPE I [EA]
CATEGORY 0010														
1	W5-52	II	--	--	x	--	--	--	1	1	1	--	4 FT MOUNT HEIGHT	--
2	R1-1(3)	II	--	36	x	36	7.460	1	1	1	--	--	--	--
3	R6-3A(2M)	II	--	30	x	24	5.000	--	--	--	--	2	--	--
4	I2-2	II	--	--	x	--	--	--	2	2	1	--	--	--
5	I2-3	II	--	--	x	--	--	--	--	--	1	4	--	--
6	R5-1	II	--	--	x	--	--	--	1	1	1	--	--	--
7	R5-1	II	--	--	x	--	--	--	1	1	1	--	--	--
	TOTALS						12.460	1	6	6	5			0

CATEGORY 0030														
8	R10-15R	II	--	--	x	--	--	--	1	1	1	--	--	--
9	R3-7R	II	--	--	x	--	--	--	1	1	1	--	--	--
10	J3-2	II	--	--	x	--	--	--	1	1	1	--	--	--
11	W3-1	II	--	--	x	--	--	--	1	1	1	--	--	--
12	R3-7R	II	--	--	x	--	--	--	--	--	1	--	INSTALL ON UPRIGHT FOR S-40-942	--
13	D16-1	I	--	--	x	--	--	--	--	--	--	--	INSTALL ON S-40-942 I-BEAMS INCIDENTAL	1
13A	M4-20R	--	MODIFIED	30	x	30	6.250	--	--	--	--	--	--	--
14	R5-1	II	--	--	x	--	--	--	1	1	1	--	--	--
15	R3-7R	II	--	--	x	--	--	--	1	1	1	--	--	--
16	R2-1	II	--	--	x	--	--	--	1	1	1	--	--	--
17	J22-1	II	--	--	x	--	--	--	1	1	1	--	--	--
18	R3-7R(3)	II	--	36	x	36	9.000	--	--	1	--	--	--	--
19	W11-2	II	--	--	x	--	--	--	1	1	1	--	MOVE IF NEEDED	--
19A	W16-7L	II	--	--	x	--	--	--	--	--	1	19	MOVE IF NEEDED	--
20	R1-2	II	--	--	x	--	--	--	1	1	1	--	MOVE IF NEEDED	--
--	--	--	--	--	x	--	--	--	--	--	--	--	--	--
	TOTALS						15.250	0	10	11	12			1

SHEET 1 OF 1

3

TRAFFIC CONTROL

CATEGORY	ROADWAY	ROADWAY	643.0300 DRUMS DAY	643.0420 BARRICADES TYPE III DAY	643.0705 WARNING LIGHTS TYPE A DAY	643.0715 WARNING LIGHTS TYPE C DAY	643.0800 ARROW BOARDS DAY	643.0900 SIGNS DAY	643.1050 SIGNS PCMS DAY
0010	STH 241								
			3,200	1,440	2,880	--	--	5,920	28
		SUBTOTAL 0010	3,200	1,440	2,880	--	--	5,920	28
		UNDISTRIBUTED CATEGORY 0010	800	360	720	--	--	1,480	7
		TOTAL CATEGORY 0010	4,000	1,800	3,600	--	--	7,400	35
0030	ELM RD								
			5,280	400	800	400	80	560	--
		SUBTOTAL	5,280	400	800	400	80	560	--
		UNDISTRIBUTED CATEGORY 0030	1,320	100	200	100	20	140	--
		TOTAL CATEGORY 0030	6,600	500	1,000	500	100	700	--
		PROJECT TOTALS	10,600	2,300	4,600	500	100	8,100	35

PAVEMENT MARKING

CATEGORY	ROADWAY	STATION TC STATION	O/S	646.1020 MARKING LINE EPOXY 4-INCH WHITE LF	646.2020 MARKING LINE EPOXY 6-INCH WHITE LF	646.2020 MARKING LINE EPOXY 6-INCH YELLOW LF	646.2025 MARKING LINE GROOVED BLACK EPOXY 6-INCH LF	646.2040 MARKING LINE GROOVED WET REF EPOXY 6-INCH WHITE LF	646.4040 MARKING LINE GROOVED WET REF EPOXY 10-INCH WHITE LF	646.5020 MARKING ARROW EPOXY TYPE 2 EA	646.5020 MARKING ARROW EPOXY TYPE 5 EA	646.5120 MARKING WORD EPOXY EA	646.6220 MARKING YIELD LINE EPOXY 18-INCH EA	646.7120 MARKING DIAGONAL EPOXY 12-INCH WHITE LF	646.7120 MARKING DIAGONAL EPOXY 12-INCH YELLOW LF	646.7420 MARKING CROSSWALK EPOXY TRANSVERSE LINE 6-INCH LF	646.8120 MARKING CURB EPOXY LF	646.8220 MARKING ISLAND NOSE EPOXY EA
0010	STH 241																	
		785+50 - 808+95	LT/RT	--	4,830	4,740	798	843	852	7	2	3	8	1,890	390	36	470	3
		TOTAL CATEGORY 0010		--	9,570		798	843	852	9		3	8	2,280		36	470	3
0030	ELM RD																	
		10'E'+95 - 27'E'+90	LT	1,690	--	--	--	--	--	--	--	--	--	267	--	--	--	--
		TOTAL CATEGORY 0030		1,690	--	--	--	--	--	--		--	--	267		--	--	--
		PROJECT TOTAL		1,690	9,570		798	843	852	9		3	8	2,547		36	470	3

SAWING EXISTING PAVEMENT

CATEGORY	ROADWAY	STATION	-	STATION		690.0150 ASPHALT LF	690.0250 CONCRETE LF
0010	STH 241						
		785+50	-	786+11	LT/RT	120	--
		787+28	-	808+95	LT/RT	150	10
		TOTAL CATEGORY 0010				270	10
0030	ELM RD						
		10'E'+95	-	27'E'+90	LT	--	1740
		TOTAL CATEGORY 0030				--	1740
		PROJECT TOTALS				270	1750

MISC STRUCTURE ITEMS

CATEGORY	ROADWAY	STATION	-	STATION		650.6501 CONSTRUCTION STAKING STRUCTURE LAYOUT 01. B-40-954 EA	999.2000.S INSTALLING AND MAINTAINING BIRD DETERRENT SYSTEM 01. 786+20 EA
0020	STH 241						
		786+11	-	787+28	LT/RT	1	1
		PROJECT TOTALS				1	1

3

3

FTMS EACH REMOVALS

CATEGORY	ROADWAY	ITEM ID.	204.9060.S REMOVING COMMUNICATION VAULT EACH
0030	STH 241		
		EXCV0011	1
		EXCV0017	1
		EXCV0022	1
		EXCV0027	1
		TOTALS	4

FTMS CONDUIT AND WIRE

CATEGORY	ROADWAY	ITEM ID	LOCATION STATION	LOCATION OFFSET	LINEAR DISTANCE	655.0515 ELECTRICAL WIRE TRAFFIC SIGNALS 10 AWG LF	652.0700.S INSTALL CONDUIT INTO EXISTING ITEM EACH	671.0132 CONDUIT HDPE 3-DUCT 2-INCH LF	671.0232 CONDUIT HDPE DIRECTIONAL BORE 3-DUCT 2-INCH LF	673.0105 COMMUNICATION VAULT TYPE 1 EACH
0030	STH 241									
		EXCV0011	--		--	--	1	--	--	--
		EXCV0011 - CV0011	--		145	145	--	--	145	--
		CV0011	11+65	60' RT	--	--	--	--	--	1
		CV0011 - CV0025	--		1,415	1,415	--	1,415	--	--
		CV0025	25+76	60' RT	--	--	--	--	--	1
		CV0025 - CV0028	--		260	260	--	260	--	--
		CV0028	28+37	65' RT		--	--	--	--	--
		CV0028 - EXCV0029	--		130	130	--	--	130	--
		EXCV0029	--		--	--	1	--	--	--
		TOTALS				1,950	2	1,675	275	2

MISCELLANEOUS ITEMS

CATEGORY	ROADWAY	670.0201 ITS DOCUMENTATION EA
0030	STH 241	
	PROJECT	1
	TOTALS	1

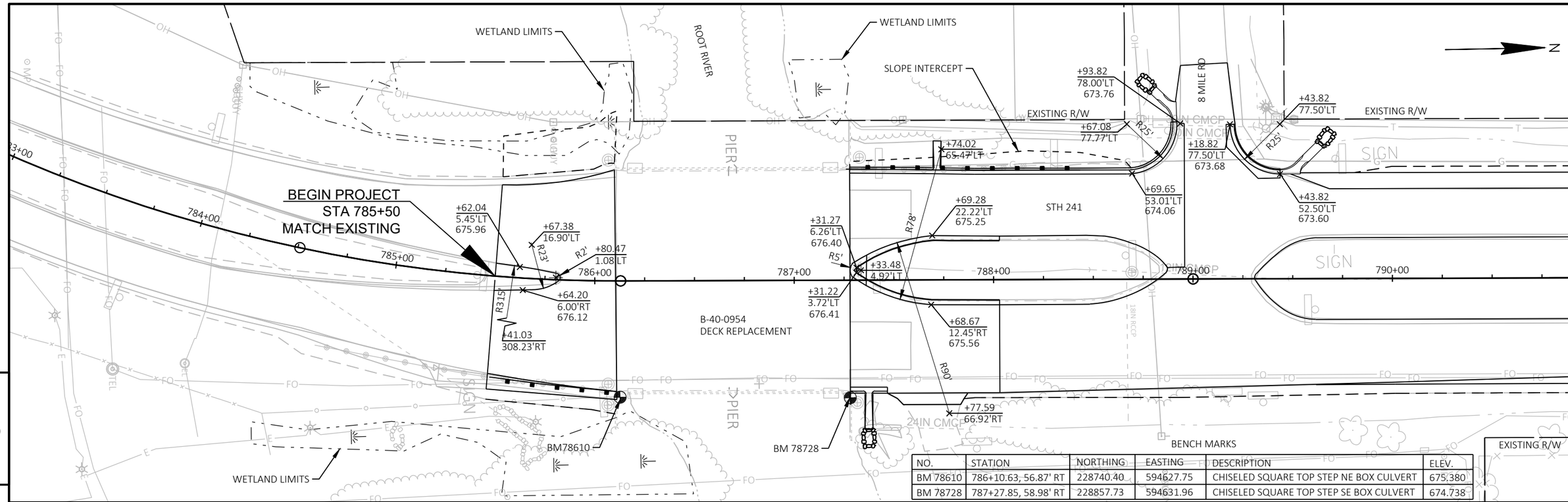

NO.	STATION	NORTHING	EASTING	DESCRIPTION	ELEV.
BM 78610	786+10.63, 56.87' RT	228740.40	594627.75	CHISELED SQUARE TOP STEP NE BOX CULVERT	675.380
BM 78728	787+27.85, 58.98' RT	228857.73	594631.96	CHISELED SQUARE TOP STEP SE BOX CULVERT	674.738

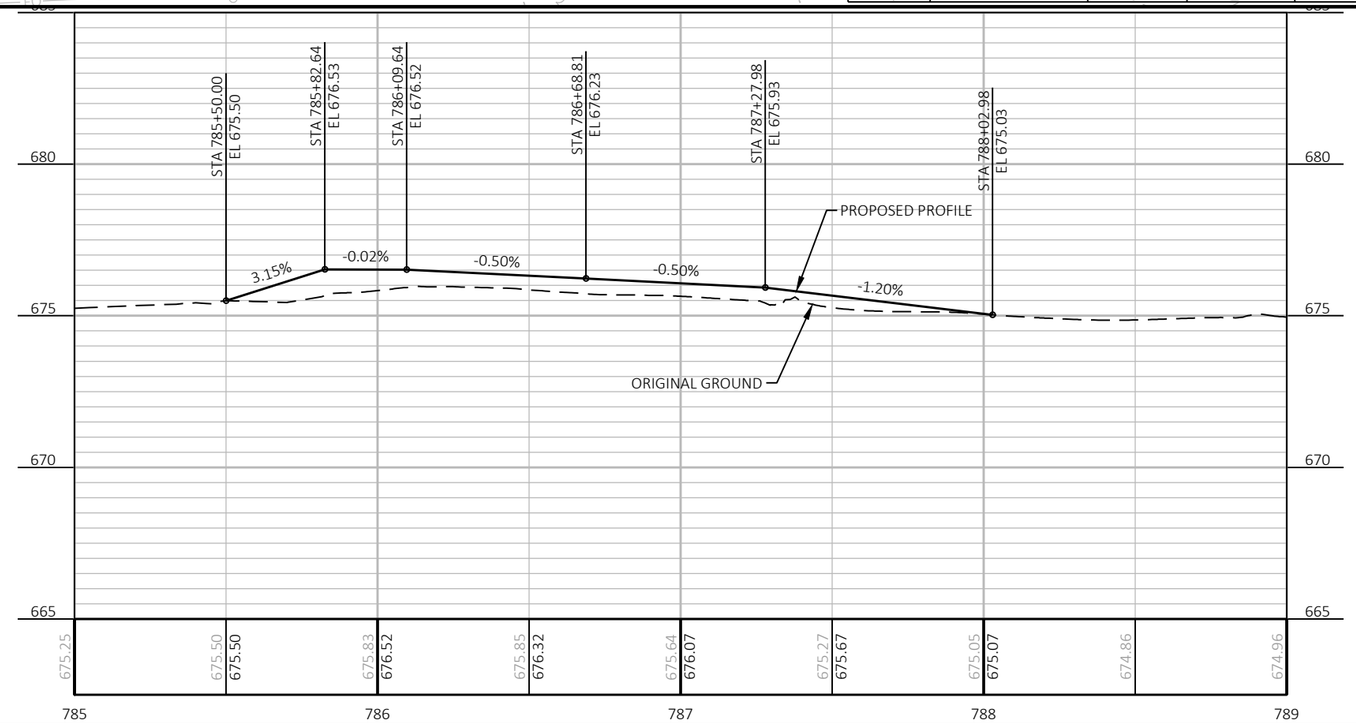

PROJECT NO: 2265-10-71	HWY: STH 241	COUNTY: MILWAUKEE	PLAN AND PROFILE: STH 241	SHEET 69	E

FILE NAME : C:\OD\CORRE, INC\PROJECTS - DOCUMENTS\WI - SE REGION\2265-10-02_STH 241_MILWAUKE CO\500_CADD\501_C3D_2018\22651002\SHEETSPLAN\050101-PP.DWG
LAYOUT NAME - 01
PLOT DATE : 1/31/2022 11:01 AM PLOT BY : TOM ORNER PLOT NAME : PLOT SCALE : 1 IN:50 FT

Standard Detail Drawing List

08A05-19B	INLET COVERS TYPE B, B-A, C, MS, MS-A, & WM
08A05-19C	INLET COVERS TYPE F, HM, HM-S, S, T, V, HM-GJ, & HM-GJ-S
08C07-02	INLETS 2X2-FT, 2X2.5-FT, 2X3-FT AND 2.5X3-FT
08D01-23A	CONCRETE CURB & GUTTER
08D01-23B	CONCRETE CURB, TIES AND CURB AND GUTTER APPLICATIONS
08D02-08A	CONCRETE SURFACE DRAINS FLUME TYPE AT STRUCTURES
08D02-08B	CONCRETE SURFACE DRAINS FLUME TYPE AT STRUCTURES
08D02-08C	CONCRETE SURFACE DRAINS FLUME TYPE AT STRUCTURES
08D03-09A	CONCRETE SURFACE DRAINS DROP INLET TYPE AT STRUCTURES
08D03-09B	CONCRETE SURFACE DRAINS DROP INLET TYPE AT STRUCTURES
08D04-07	CONCRETE SURFACE DRAINS & ASPHALTIC FLUMES
08D15-05A	EDGEDRAIN OUTLET AND OUTFALL MARKERS
08D15-05B	EDGEDRAIN AND BASE AGGREGATE OPEN GRADED
08D15-05C	EDGEDRAIN AND BASE AGGREGATE OPEN GRADED
08D16-11	CONCRETE GUTTER, CURB AND GUTTER AND PAVEMENT TIES
08E08-03	TYPICAL INSTALLATIONS OF EROSION BALES / TEMPORARY DITCH CHECKS
08E09-06	SILT FENCE
08E10-02	INLET PROTECTION TYPE A, B, C AND D
08E14-01	TRACKING PAD
08E15-01	CULVERT PIPE CHECK
08F01-11	APRON ENDWALLS FOR CULVERT PIPE
08F04-08	JOINT TIES FOR CONCRETE PIPE AND CONCRETE COLLAR DETAIL
09H09-02	COMMUNICATION VAULT TYPE 1
09H10-01	COMMUNICATION VAULT TYPE - ROUND
11B02-02	CONCRETE MEDIAN NOSE
12A03-10	NAME PLATE (STRUCTURES)
13C01-19	CONCRETE PAVEMENT LONGITUDINAL JOINTS AND TIES
13C13-11	URBAN DOWELED CONCRETE PAVEMENT
13C18-08A	CONCRETE PAVEMENT JOINTING
13C18-08B	CONCRETE PAVEMENT STEEL REINFORCEMENT
13C18-08C	CONCRETE PAVEMENT JOINT TYPES
13C18-08D	CONCRETE PAVEMENT JOINTING AT UTILITY FIXTURES
13C18-08F	CONCRETE PAVEMENT INTERSECTION BOXOUT FOR INTEGRAL CURB AND GUTTER
13C18-08G	CONCRETE PAVEMENT JOINTING ACCELERATION/DECELERATION LANE
13C19-03	HMA LONGITUDINAL JOINTS
14B28-04A	GUARDRAIL MOW STRIP
14B28-04B	GUARDRAIL MOW STRIP
14B42-07A	MIDWEST GUARDRAIL SYSTEM (MGS) GUARDRAIL
14B42-07B	MIDWEST GUARDRAIL SYSTEM (MGS) GUARDRAIL
14B42-07C	MIDWEST GUARDRAIL SYSTEM (MGS) GUARDRAIL
14B42-07D	MIDWEST GUARDRAIL SYSTEM (MGS) GUARDRAIL
14B44-04A	MIDWEST GUARDRAIL SYSTEM ENERGY ABSORBING TERMINAL (MGS)
14B44-04B	MIDWEST GUARDRAIL SYSTEM ENERGY ABSORBING TERMINAL (MGS)
14B44-04C	MIDWEST GUARDRAIL SYSTEM ENERGY ABSORBING TERMINAL (MGS)
14B45-05A	MIDWEST GUARDRAIL SYSTEM THRIE BEAM TRANSITION (MGS)
14B45-05B	MIDWEST GUARDRAIL SYSTEM THRIE BEAM TRANSITION (MGS)
14B45-05C	MIDWEST GUARDRAIL SYSTEM THRIE BEAM TRANSITION (MGS)
14B45-05D	MIDWEST GUARDRAIL SYSTEM THRIE BEAM TRANSITION (MGS)
14B45-05E	MIDWEST GUARDRAIL SYSTEM THRIE BEAM TRANSITION (MGS)
14B45-05F	MIDWEST GUARDRAIL SYSTEM THRIE BEAM TRANSITION (MGS)
14B45-05G	MIDWEST GUARDRAIL SYSTEM THRIE BEAM TRANSITION (MGS)
14B45-05H	MIDWEST GUARDRAIL SYSTEM THRIE BEAM TRANSITION (MGS)
14B45-05I	MIDWEST GUARDRAIL SYSTEM THRIE BEAM TRANSITION (MGS)
14B45-05J	MIDWEST GUARDRAIL SYSTEM THRIE BEAM TRANSITION (MGS)
14B45-05K	MIDWEST GUARDRAIL SYSTEM THRIE BEAM TRANSITION (MGS)
14B45-05L	MIDWEST GUARDRAIL SYSTEM THRIE BEAM TRANSITION (MGS)
15A03-02A	FLEXIBLE MARKER POST FOR CULVERT END
15A03-02B	FLEXIBLE MARKER POST FOR CULVERT END
15C02-08A	BARRICADES AND SIGNS FOR MAINLINE CLOSURES
15C02-08B	BARRICADES AND SIGNS FOR VARIOUS CLOSURES
15C02-08C	DETOUR SIGNING FOR MAINLINE CLOSURES
15C02-08E	OFF RAMP LANE CLOSURE
15C03-05	BARRICADES AND SIGNS FOR SIDEROAD CLOSURES
15C05-05	TRAFFIC CONTROL, ADVANCE WARNING SIGNS 40 M.P.H. OR LESS
15C07-15B	PAVEMENT MARKING WORDS
15C07-15C	PAVEMENT MARKING ARROWS
15C08-23A	PERMANENT LONGITUDINAL PAVEMENT MARKINGS

6

Standard Detail Drawing List

15C08-23C	PAVEMENT MARKING (TURN LANES)
15C08-23D	PAVEMENT MARKING (TURN LANES)
15C11-10B	CHANNELIZING DEVICES DRUMS, CONES, BARRICADES AND VERTICAL PANELS
15C18-08A	MEDIAN ISLAND MARKING PAVEMENT MARKINGS
15C18-08B	MEDIAN ISLAND MARKING MEDIAN ISLAND NOSE
15C20-02	YIELD MARKING
15C21-11	SIGNING AND MARKING FOR TWO LANE TO FOUR LANE DIVIDED TRANSITIONS
15C33-04	STOP LINE AND CROSSWALK PAVEMENT MARKING
15C35-06A	PAVEMENT MARKING (INTERSECTIONS)
15D12-11A	TRAFFIC CONTROL, LANE CLOSURE

6

6

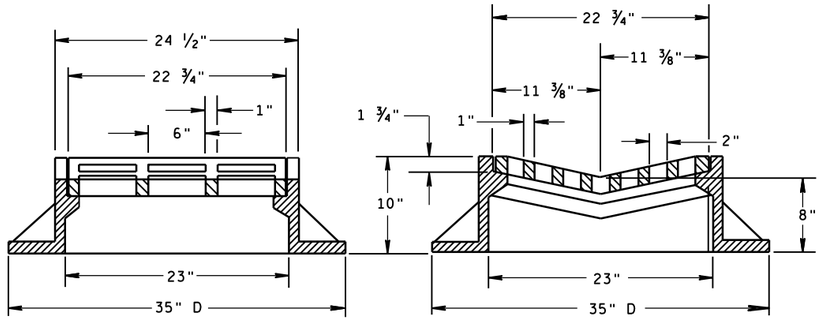

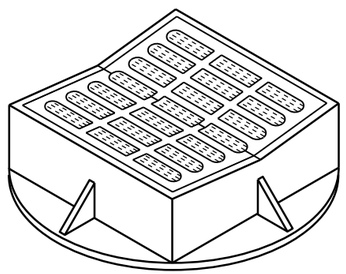

TYPE "B"

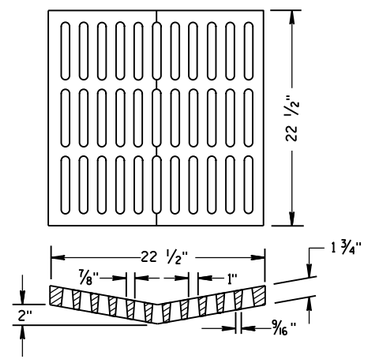

ALTERNATIVE GRATE FOR TYPE "B" COVER

USE WHERE PEDESTRIAN OR BICYCLE TRAFFIC IS POSSIBLE.

NOTED AS TYPE B-A ON THE DRAINAGE TABLE

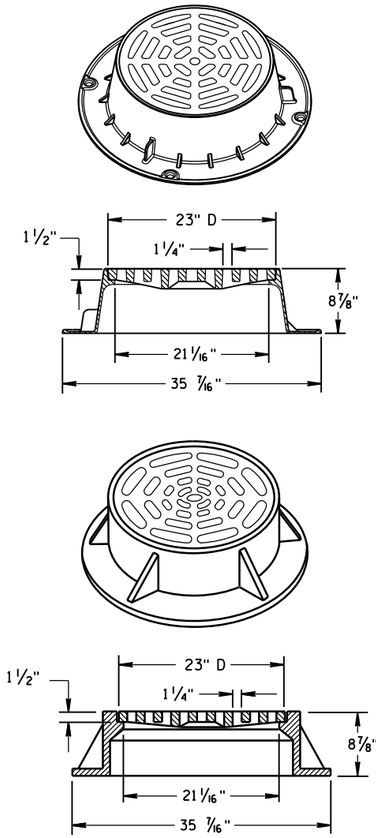

TYPE "C"

NOTE: EITHER CASTING IS ACCEPTABLE

GENERAL NOTES

DETAILS OF CONSTRUCTION, MATERIALS AND WORKMANSHIP NOT SHOWN ON THIS DRAWING SHALL CONFORM TO THE PERTINENT REQUIREMENTS OF THE STANDARD SPECIFICATIONS AND THE APPLICABLE SPECIAL PROVISIONS.

DETAIL DRAWINGS FOR PROPOSED ALTERNATE DESIGNS FOR CATCH BASIN, MANHOLE AND INLET COVERS SHALL BE SUBMITTED TO THE ENGINEER FOR APPROVAL PROVIDING THAT SUCH ALTERNATE DESIGNS MAKE PROVISION FOR EQUIVALENT CAPACITY AND STRENGTH.

ROUND FRAMES AND COVERS SHALL HAVE CONTINUOUSLY MACHINED BEARING SURFACES TO PREVENT ROCKING AND RATTLING.

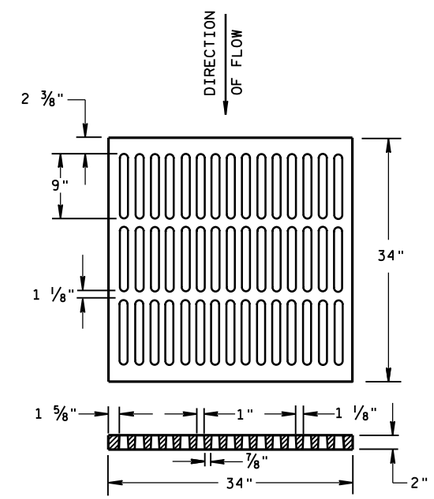

ALTERNATIVE TYPE "MS"

USE WHERE PEDESTRIAN OR BICYCLE TRAFFIC IS PERMITTED

NOTED AS TYPE MS-A ON THE DRAINAGE TABLE

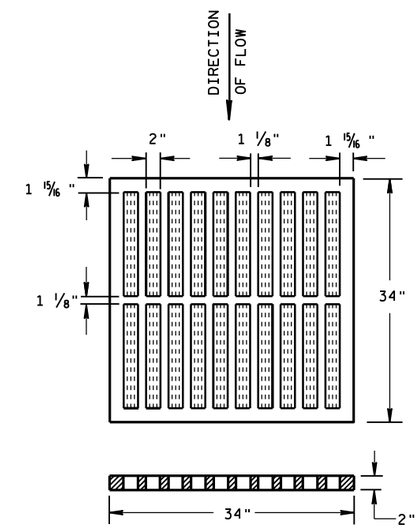

TYPE "MS"

USE ON FREEWAYS AND EXPRESSWAYS

NOTED AS TYPE MS ON DRAINAGE TABLE

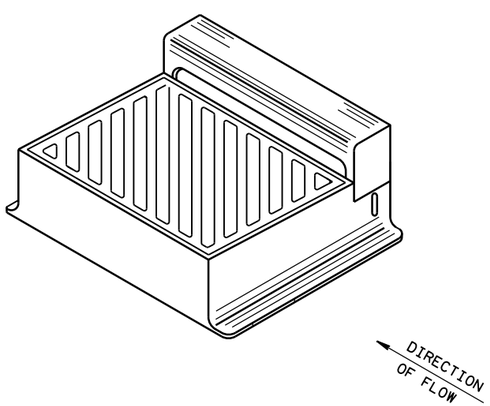

DIAGONAL SLOTS, SHALL BE ORIENTED TO THE DIRECTION OF FLOW AS ILLUSTRATED. GRATES ARE MANUFACTURED TO BE REVERSIBLE.

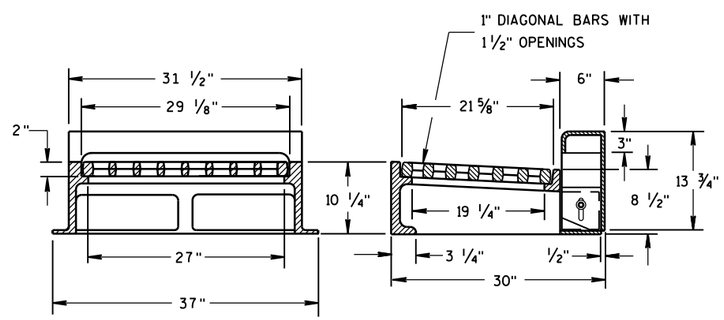

NOTE: CURB BOX HEIGHT ADJUSTABLE 6" TO 9"

TYPE "WM"

6

6

S.D.D. 8 A 5-19b

S.D.D. 8 A 5-19b

INLET COVERS
TYPE B, B-A, C,
MS, MS-A, & WM

STATE OF WISCONSIN
DEPARTMENT OF TRANSPORTATION

APPROVED

11/27/2013 — DATE

/S/ Jerry H. Zogg — ROADWAY STANDARDS DEVELOPMENT ENGINEER

FHWA

GENERAL NOTES

DETAILS OF CONSTRUCTION, MATERIALS AND WORKMANSHIP NOT SHOWN ON THIS DRAWING SHALL CONFORM TO THE PERTINENT REQUIREMENTS OF THE STANDARD SPECIFICATIONS AND THE APPLICABLE SPECIAL PROVISIONS.

DETAIL DRAWINGS FOR PROPOSED ALTERNATE DESIGNS FOR INLET COVERS SHALL BE SUBMITTED TO THE ENGINEER FOR APPROVAL PROVIDING THAT SUCH ALTERNATE DESIGNS MAKE PROVISION FOR EQUIVALENT CAPACITY AND STRENGTH.

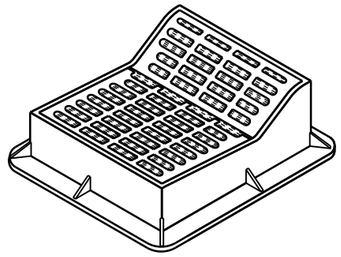

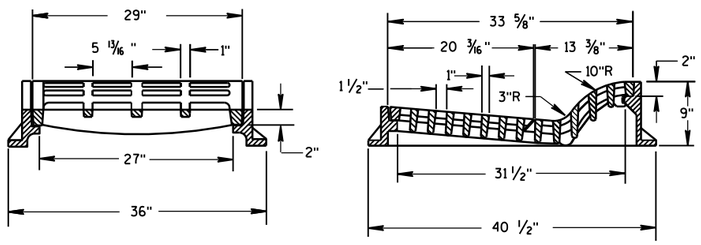

TYPE "F"

USE WITH TYPES A & D CONCRETE CURB & GUTTER, 36 INCH.

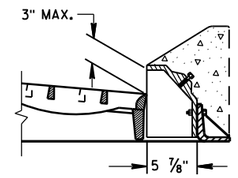

ALTERNATIVE CURB BOX FOR TYPE "HM" COVER

USE WITH TYPES G & J CONCRETE CURB & GUTTER, 30 INCH
NOTED AS TYPE HM-GJ ON DRAINAGE TABLE

NOTE:
SPECIAL GRATE FOR THE
TYPE "H" COVER MAY ALSO BE
USED FOR THE TYPE "HM-GJ" COVER
NOTED AS TYPE HM-GJ-S ON DRAINAGE TABLE

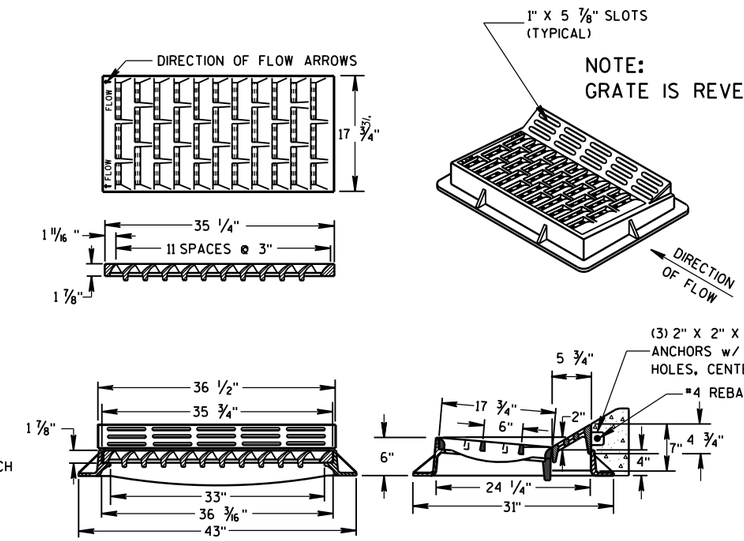

NOTE:
GRATE IS REVERSIBLE.

TYPE "HM"

USE WITH TYPES A & D CONCRETE CURB & GUTTER, 36 INCH.

NOTE:
SPECIAL GRATE FOR THE
TYPE "H" COVER MAY ALSO BE
USED FOR THE TYPE "HM" COVER
NOTED AS TYPE HM-S ON DRAINAGE TABLE

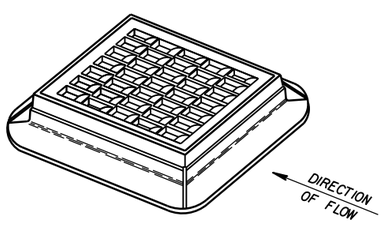

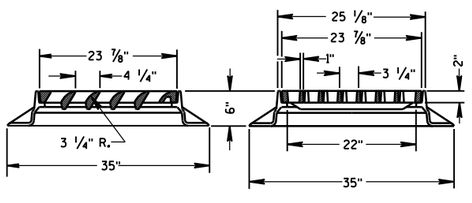

TYPE "S"

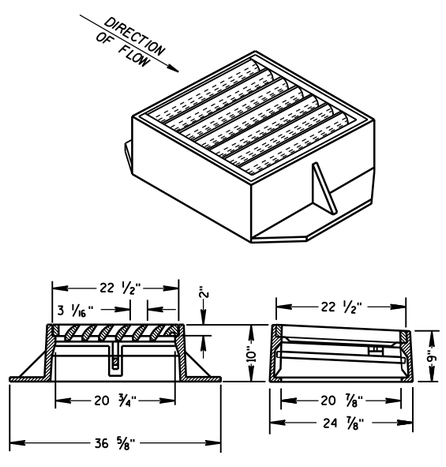

TYPE "V"

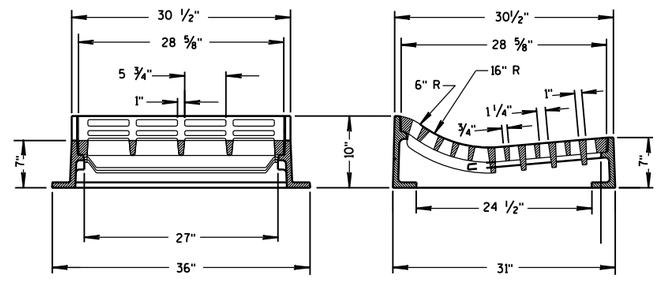

TYPE "T"

USE WITH TYPES R & T CONCRETE CURB & GUTTER, 36 INCH.

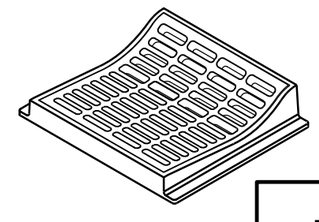

INLET COVERS
TYPE F, HM, HM-S, S, T, V, HM-GJ, & HM-GJ-S

STATE OF WISCONSIN
DEPARTMENT OF TRANSPORTATION

APPROVED
11/27/2013 — DATE
/S/ Jerry H. Zogg — ROADWAY STANDARDS DEVELOPMENT ENGINEER
FHWA

6

S.D.D. 8 A 5-19c

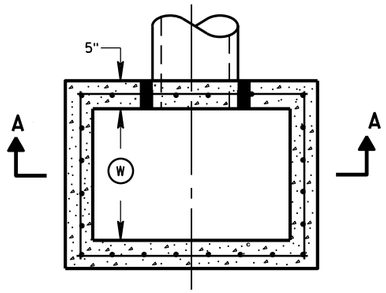

PLAN VIEW

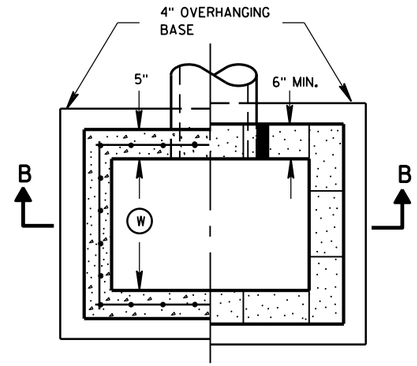

PLAN VIEW

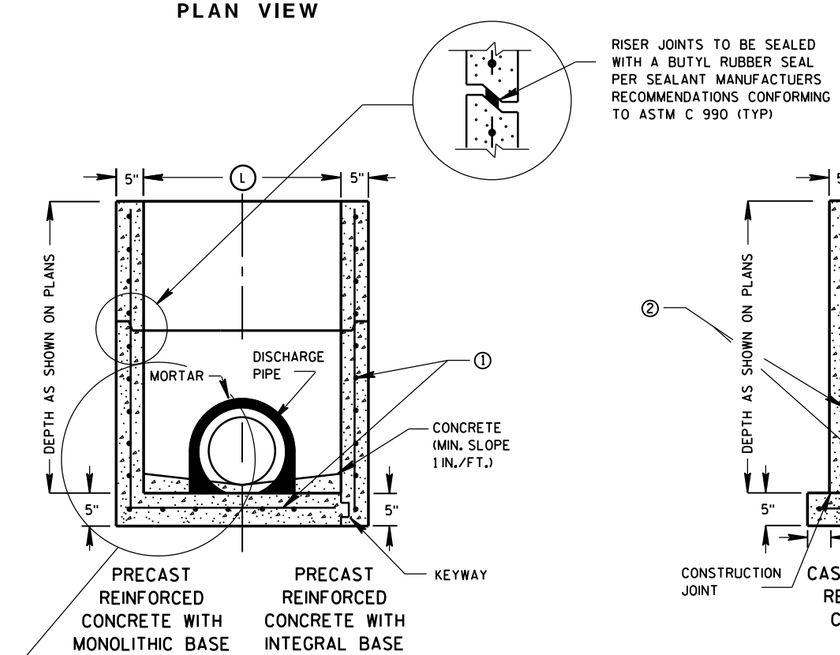

SECTION A-A

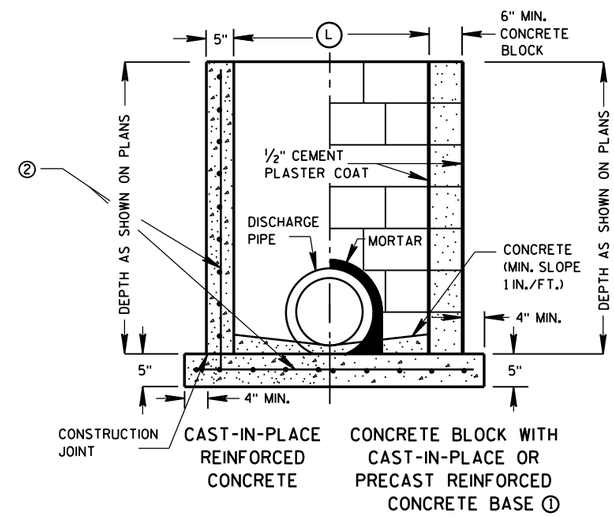

SECTION B-B

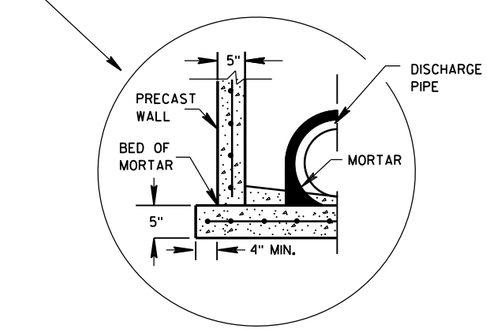

SEPARATE PRECAST REINFORCED CONCRETE BASE OPTION

GENERAL NOTES

DETAILS OF CONSTRUCTION, MATERIALS AND WORKMANSHIP NOT SHOWN ON THIS DRAWING SHALL CONFORM TO THE PERTINENT REQUIREMENTS OF THE STANDARD SPECIFICATIONS AND THE APPLICABLE SPECIAL PROVISIONS.

UNLESS OTHERWISE AUTHORIZED IN WRITING BY THE ENGINEER, THE CONTRACTOR SHALL NOT ORDER AND DELIVER PRECAST INLET UNITS REQUIRED FOR THE PROJECT UNTIL A LIST OF SIZES IS FURNISHED BY THE ENGINEER.

DETAILED DRAWINGS FOR PROPOSED ALTERNATE DESIGNS FOR UNDERGROUND DRAINAGE STRUCTURES SHALL BE SUBMITTED TO THE ENGINEER FOR APPROVAL PROVIDING THAT SUCH ALTERNATE DESIGNS MAKE PROVISION FOR EQUIVALENT CAPACITY AND STRENGTH.

ALL PRECAST INLET UNITS SHALL CONFORM TO THE PERTINENT REQUIREMENTS OF ASTM C 913.

ALL DRAINAGE STRUCTURES ARE DESIGNATED ON THE PLANS AS "MANHOLES 3X3-L", "CATCH BASINS 4-B", "INLETS 2X3-H", ETC. THE FIRST NUMBERS DESIGNATES THE SIZE OF THE STRUCTURE, AND THE FOLLOWING LETTER DESIGNATES THE TYPE OF COVER TO BE USED TO COMPRISE THE COMPLETE UNIT.

BASES SHALL BE PLACED ON A BED OF MATERIAL AT LEAST 6 INCHES IN DEPTH, WHICH MEETS THE REQUIREMENTS OF FOUNDATION BACKFILL. THIS BEDDING SHALL BE COMPACTED AND PROVIDE UNIFORM SUPPORT FOR THE ENTIRE AREA OF THE BASE.

ALL BAR STEEL REINFORCEMENT SHALL BE EMBEDDED 2 INCHES CLEAR UNLESS OTHERWISE SHOWN OR NOTED.

PRECAST REINFORCED RISERS SHALL HAVE A TONGUE AND GROOVE JOINT WITH TONGUE UP OR DOWN.

4" OVERHANGING BASES ARE REQUIRED FOR CAST-IN-PLACE REINFORCED CONCRETE AND CONCRETE BLOCK INSTALLATIONS.
4" OVERHANG IS REQUIRED WHEN SEPARATE PRECAST BASE IS PROVIDED.
OVERHANG IS NOT REQUIRED ON PRECAST STRUCTURES WITH AN INTEGRAL OR MONOLITHIC BASE.

MAXIMUM INSIDE PIPE DIAMETER DETERMINED BY 3 INCH CLEARANCE ON EACH SIDE OF THE OUTSIDE WALL OF THE PIPE. SEE DETAIL "A". ASSUMES PIPE ENTERS PERPENDICULAR TO THE STRUCTURE.

① FOR PRECAST INLETS PROVIDE REINFORCING STEEL IN ACCORDANCE TO ASTM C 913.

② CONTRACTOR TO PROVIDE DRAWING(S) STAMPED BY A PROFESSIONAL ENGINEER FOR STEEL REINFORCING DESIGN FOR CAST-IN-PLACE STRUCTURES.

INLET COVER MATRIX

INLET SIZE		INLET COVER TYPE	ALL A'S	ALL B'S	BW	F	ALL H'S	S	T	V	WM
	WIDTH Ⓦ (FT)	LENGTH Ⓛ (FT)									
2X2-FT	2	2	X	X				X		X	
2X2.5-FT	2	2.5			X			X	X	X	X
2X3-FT	2	3					X				
2.5X3-FT	2.5	3				X					

PIPE MATRIX

INLET SIZE	MAXIMUM INSIDE PIPE DIAMETER	
	WIDTH (IN)	LENGTH (IN)
2X2-FT	12	12
2X2.5-FT	12	18
2X3-FT	12	24
2.5X3-FT	18	24

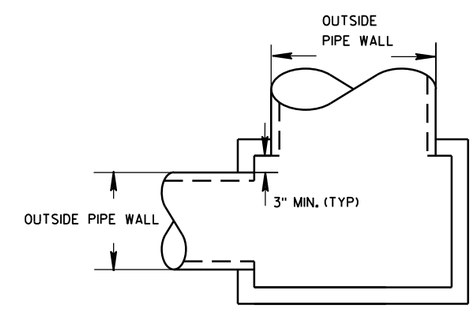

DETAIL "A"

INLETS 2X2-FT, 2X2.5-FT, 2X3-FT AND 2.5X3-FT

INLETS 2X2-FT, 2X2.5-FT, 2X3-FT AND 2.5X3-FT

STATE OF WISCONSIN
DEPARTMENT OF TRANSPORTATION

APPROVED
Sept., 2016 — DATE
/S/ Rodney Taylor
ROADWAY STANDARDS D IT UNIT SUPERVIS
FHWA

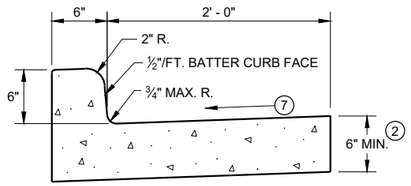

TYPES A(1) & D

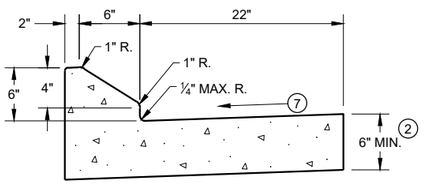

6" SLOPED CURB TYPES G(1) & J

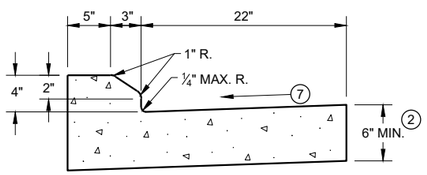

4" SLOPED CURB TYPES G(1) & J

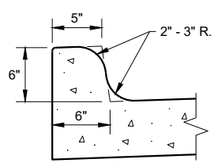

TYPES K(1) & L
(OPTIONAL CURB SHAPE)

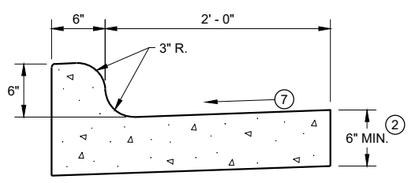

TYPES K(1) & L

CONCRETE CURB AND GUTTER 30"

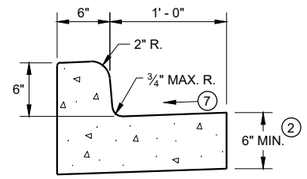

TYPES A(1) & D

CONCRETE CURB AND GUTTER 18"

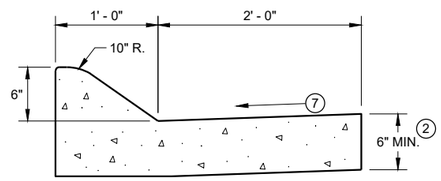

6" SLOPED CURB TYPES A(1) & D

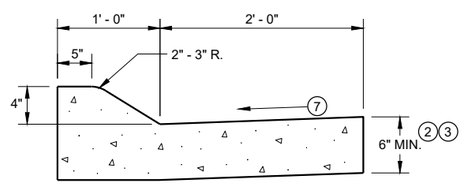

4" SLOPED CURB TYPES A(1) & D

CONCRETE CURB AND GUTTER 36"

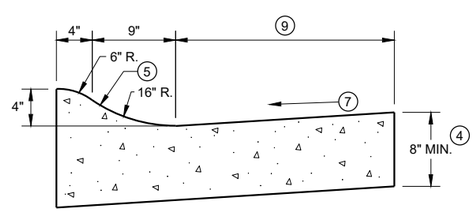

4" SLOPED CURB TYPES R(1) & T

TBT & TBTT	X
30"	22"
36"	28"

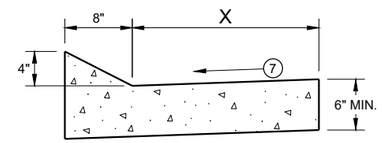

TYPES TBT & TBTT(1)

CONCRETE CURB AND GUTTER

PAVEMENT THICKNESS AND MAXIMUM CONCRETE PANEL WIDTH TABLE

PAVEMENT THICKNESS	MAXIMUM PANEL WIDTH
LESS THAN 10"	12'
10" & ABOVE	15'

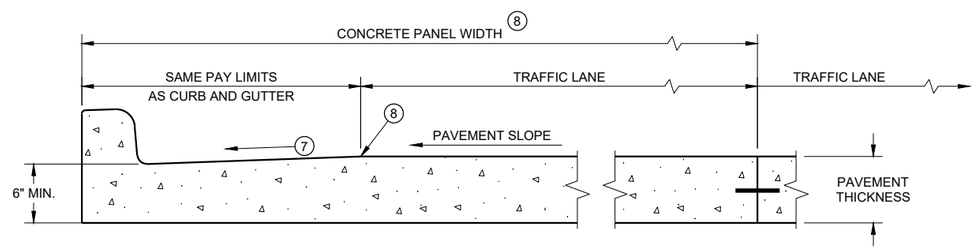

PARTIAL SECTION OF PAVEMENT * WITH INTEGRAL CURB AND GUTTER

* BIKE LANE IS NOT SHOWN

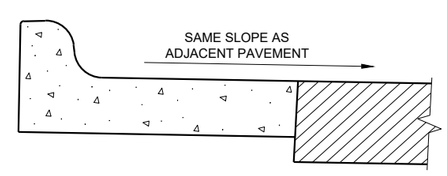

REVERSE SLOPE GUTTER(6)
(TYPICAL FOR ALL CURB & GUTTER TYPES)

GENERAL NOTES

DETAILS OF CONSTRUCTION AND WORKMANSHIP NOT SHOWN ON THIS DRAWING SHALL CONFORM TO THE PERTINENT REQUIREMENTS OF THE CONTRACT.

PAVEMENT TIES AND TIE BARS SHALL BE EPOXY COATED IN CONFORMANCE WITH SUBSECTION 505.2.6.2 OF THE STANDARD SPECIFICATIONS.

INTEGRAL CURB AND GUTTER SHALL CONFORM TO THE DETAILS SHOWN FOR CONCRETE CURB AND GUTTER INCLUDING THE TRANSVERSE GUTTER SLOPE.

UNLESS OTHERWISE SHOWN ON THE TYPICAL CROSS SECTIONS, THE BASE AGGREGATE AND COMMON EXCAVATION LIMITS ARE 2' - 0" BEHIND THE BACK OF CURBS.

(1) TIE BARS ARE REQUIRED FOR CURB AND GUTTERS TYPES A, G, K, R, AND TBTT.

(2) THE BOTTOM OF CURB AND GUTTER MAY BE CONSTRUCTED EITHER LEVEL OR PARALLEL TO THE SLOPE OF THE SUBGRADE OR BASE AGGREGATE PROVIDED A 6" MINIMUM GUTTER THICKNESS IS MAINTAINED.

(3) USE 8" MINIMUM GUTTER THICKNESS WHEN USED WITH AN ADJACENT CONCRETE TRUCK APRON PLACED BEHIND BACK OF CURB.

(4) THE BOTTOM OF CURB AND GUTTER MAY BE CONSTRUCTED EITHER LEVEL OR PARALLEL TO THE SLOPE OF THE SUBGRADE OR BASE AGGREGATE PROVIDED A 8" MINIMUM GUTTER THICKNESS IS MAINTAINED.

(5) UNLESS OTHERWISE NOTED, FOR STAKING PURPOSES THE FACE OF CURB IS 6" FROM THE BACK OF CURB.

(6) WHEN REVERSE SLOPE GUTTER IS REQUIRED, THE LOCATION(S) WILL BE SHOWN ELSEWHERE IN THE PLAN.

(7) USE 4% GUTTER CROSS SLOPE UNLESS OTHERWISE NOTED IN THE PLANS.

(8) INCLUDE LONGITUDINAL JOINT AND TIE BARS ALONG LANE EDGE WHEN CONCRETE PANEL WIDTH EXCEEDS THE MAXIMUM WIDTH PER TABLE BELOW. LONGITUDINAL JOINT(S) ARE NOT ALLOWED WITHIN TRAFFIC LANES AND BIKE LANES. LONGITUDINAL JOINT MAY BE SAWED.

(9) CONCRETE CURB AND GUTTER 4-INCH SLOPED 30-INCH TYPE "R" AND "T" = 17 INCHES
CONCRETE CURB AND GUTTER 4-INCH SLOPED 36-INCH TYPE "R" AND "T" = 23 INCHES

CONCRETE CURB AND GUTTER

STATE OF WISCONSIN
DEPARTMENT OF TRANSPORTATION

6

SDD 08D01 - 23a

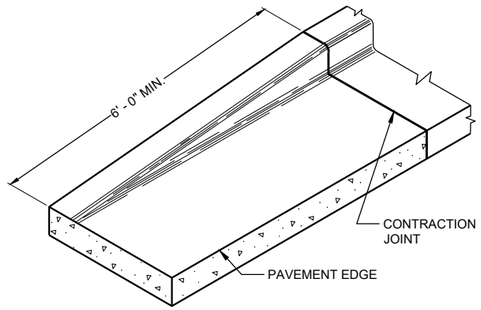

END SECTIONCURB AND GUTTER

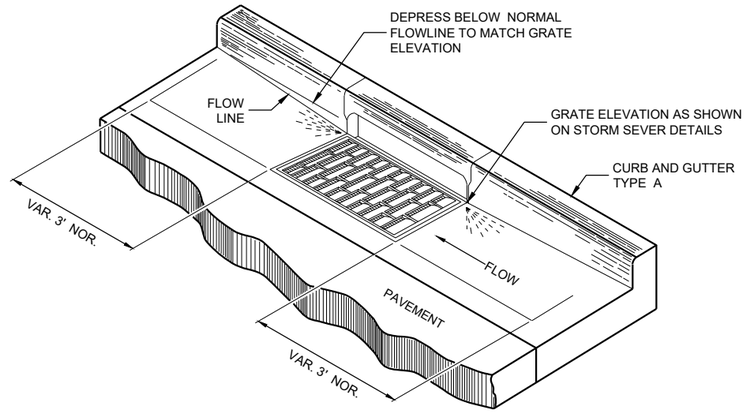

DETAIL OF CURB AND GUTTER AT INLETS

(TYPICAL H INLET COVER SHOWN)

GENERAL NOTES

DETAILS OF CONSTRUCTION AND WORKMANSHIP NOT SHOWN ON THIS DRAWING SHALL CONFORM TO THE PERTINENT REQUIREMENTS OF THE CONTRACT.

PAVEMENT TIES AND TIE BARS SHALL BE EPOXY COATED IN CONFORMANCE WITH SUBSECTION 505.2.6.2 OF THE STANDARD SPECIFICATIONS.

UNLESS OTHERWISE SHOWN ON THE TYPICAL CROSS SECTIONS, THE BASE AGGREGATE AND COMMON EXCAVATION LIMITS ARE 2' - 0" BEHIND THE BACK OF CURBS.

(1) TIE BARS ARE REQUIRED FOR CURB AND GUTTERS TYPES A, G, K, R, AND TBTT.

(2) THE BOTTOM OF CURB AND GUTTER MAY BE CONSTRUCTED EITHER LEVEL OR PARALLEL TO THE SLOPE OF THE SUBGRADE OR BASE AGGREGATE PROVIDED A 6" MINIMUM GUTTER THICKNESS IS MAINTAINED.

(10) REFER TO SDD 08D18 AND 08D19 FOR ADDITIONAL DRIVEWAY ENTRANCE CURB DETAILS.

(11) PLACE 1" THICK EXPANSION JOINT MATERIAL BETWEEN VERTICAL FACE CURB TYPES EXTENDING FROM THE TOP OF CURB TO 1 INCH BELOW THE ADJOINING CONCRETE SURFACE. RIGID CONCRETE STRUCTURES INCLUDE RAISED CONCRETE MEDIANS, CONCRETE SAFETY ISLANDS, SPLITTER ISLANDS, OR LOCATIONS IDENTIFIED ON THE PLANS.

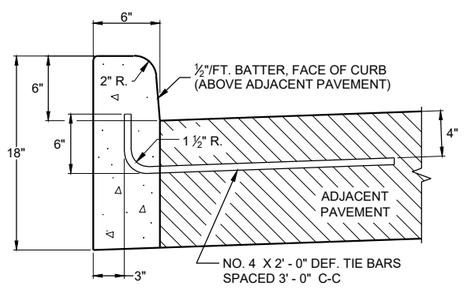

TYPES A(1) & D

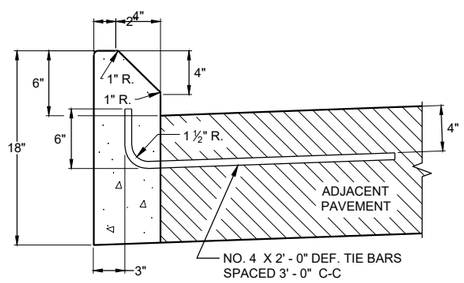

TYPES G(1) & J

CONCRETE CURB

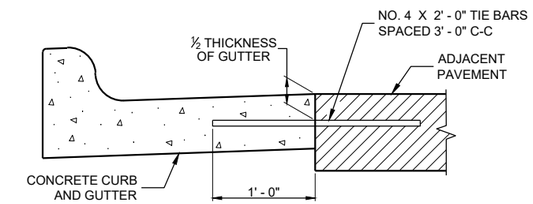

TYPICAL TIE BAR LOCATION(1)

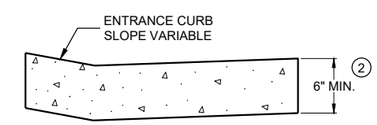

DRIVEWAY ENTRANCE CURB(10)

(WHEN DIRECTED BY THE ENGINEER)

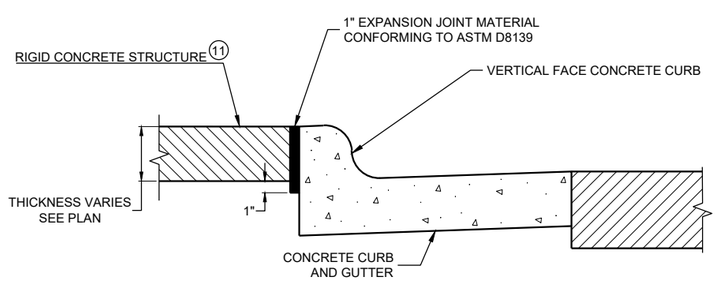

EXPANSION JOINT DETAIL FOR VERTICAL CURB ABUTTING A RIGID STRUCTURE(11)

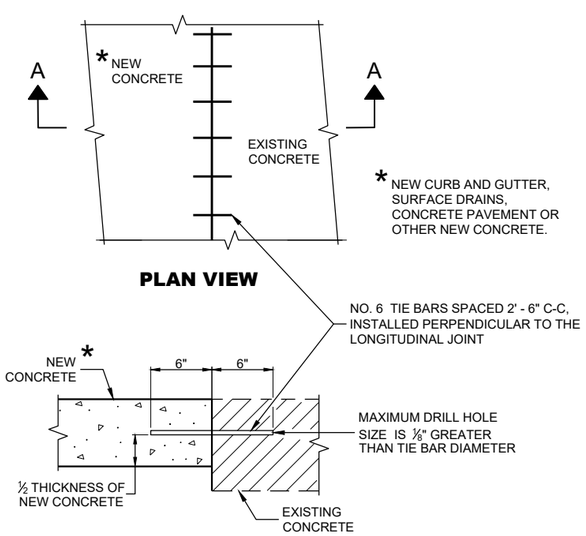

PLAN VIEW

SECTION A - A

TIE BARS DRILLED INTO EXISTING PAVEMENT

CONCRETE CURB, TIES AND CURB AND GUTTER APPLICATIONS

STATE OF WISCONSIN
DEPARTMENT OF TRANSPORTATION

APPROVED
May 2023 — DATE
/S/ Rodnery Taylor — ROADWAY STANDARDS DEVE ENGINEER
FHWA

6

SDD 08D01 - 23b

GENERAL NOTES

DETAILS OF CONSTRUCTION, MATERIALS AND WORKMANSHIP NOT SHOWN ON THIS DRAWING SHALL CONFORM TO THE PERTINENT REQUIREMENTS OF THE STANDARD SPECIFICATIONS AND THE APPLICABLE SPECIAL PROVISIONS.

ALL STEEL REINFORCEMENT SHALL BE EMBEDDED 2 INCHES CLEAR UNLESS OTHERWISE SHOWN OR NOTED.

1. USE A JOINT SEALANT CONFORMING TO STANDARD SPECIFICATION 415.2.6.
2. NO. 4 X 2' - 0" TIE BARS SPACED AT 12" C-C TO BE PLACED BY BRIDGE CONTRACTOR OR DRILLED TIE BARS PLACED AS DIRECTED BY THE ENGINEER.
3. PAVED CONCRETE SHOULDER (SDD 13A03) OR CONCRETE DRAINAGE SLAB.
4. CONCRETE PAVEMENT APPROACH SLAB (SHOWN) OR STRUCTURE APPROACH SLAB AND CONCRETE PAVEMENT APPROACH SLAB. SEE SDD 13B02.
5. PAVED CONCRETE SHOULDER (SDD 13A03) OR ASPHALT SHOULDER.
6. CONCRETE CURB AND GUTTER 4-INCH SLOPED 36-INCH TYPE TBT OR TBTT. USE TYPE TBTT CURB WITH NO. 4 X 2' -0" TIE BARS SPACED AT 3' - 0" C-C ONLY WHEN ADJACENT TO CONCRETE PAVEMENTS.
7. PLACE FLUME BEFORE MSG THRIE BEAM TRANSITION POST 1 (SEE SDD 14B45)
8. CENTER FLUME BETWEEN POSTS. 6-INCH MINIMUM SEPARATION FROM OUTSIDE EDGE OF FLUME TO POSTS.
9. MINIMUM REINFORCEMENT SHALL BE 4" X 4" - W3.0 X W3.0 OR NO. 3 BARS LONGITUDINAL AND TRANSVERSE SPACING 12" C -C.
10. SEE ROADWAY PLANS FOR FLUME LOCATION.
11. START CURB AND GUTTER TRANSITION OR END SECTION.
12. DEPRESS FLOW LINE (SEE DETAIL)

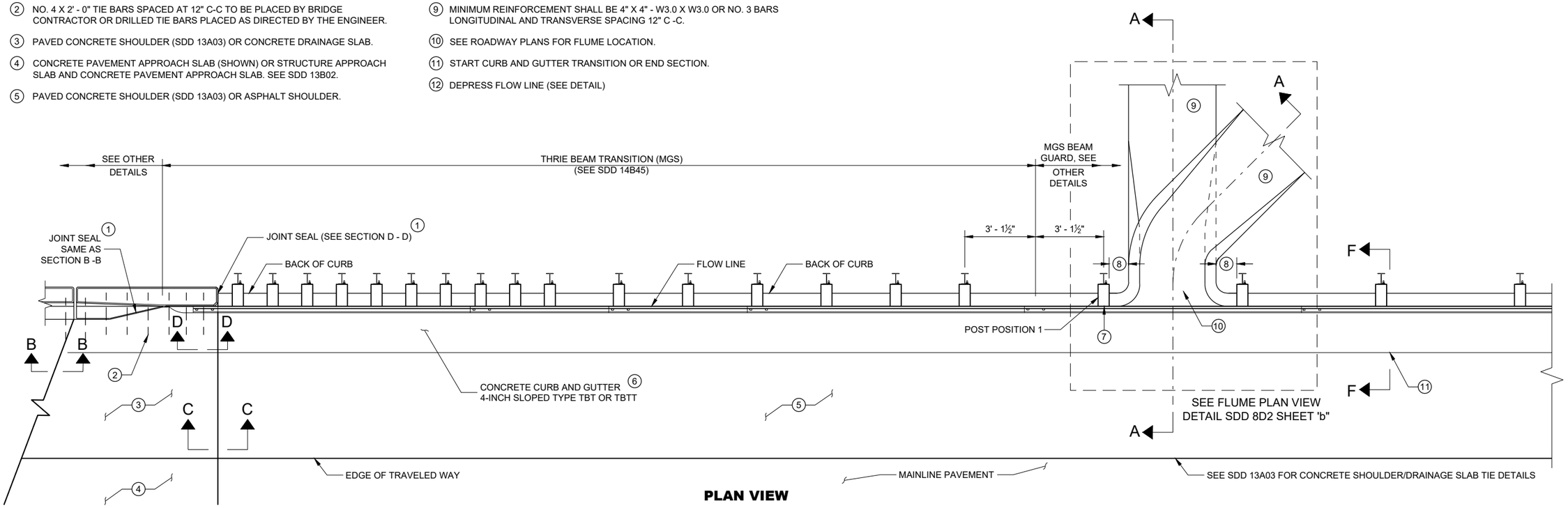

PLAN VIEW

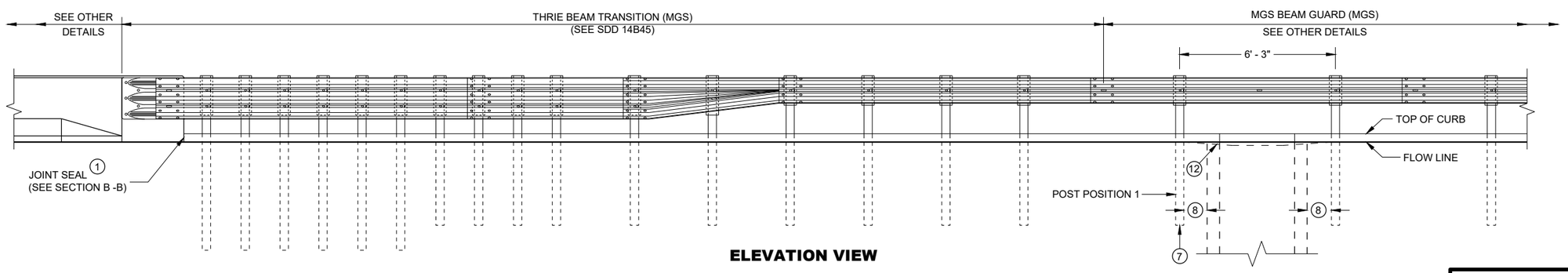

ELEVATION VIEW

CONCRETE SURFACE DRAINS FLUME TYPE AT STRUCTURES

STATE OF WISCONSIN
DEPARTMENT OF TRANSPORTAT

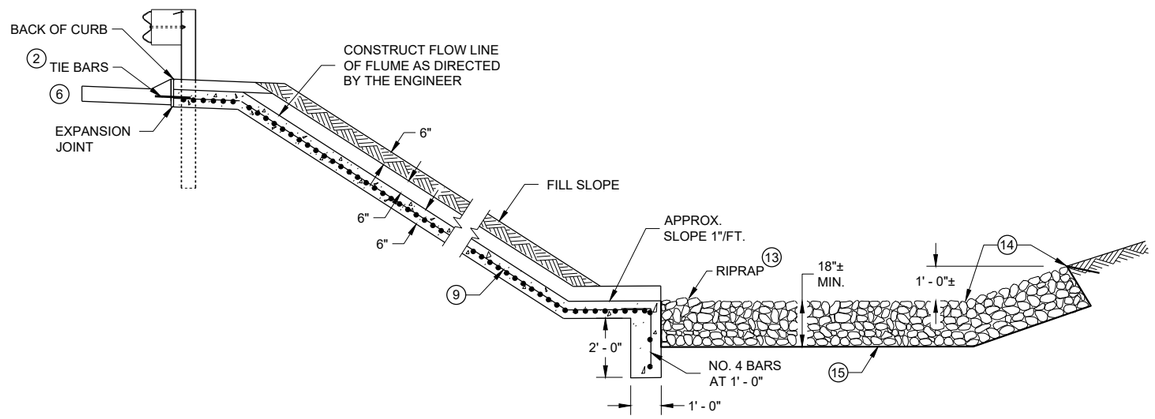

SECTION A - A

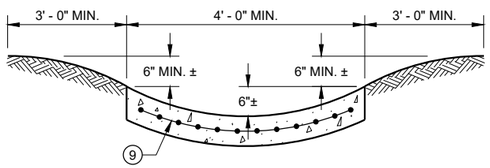

SECTION G - G

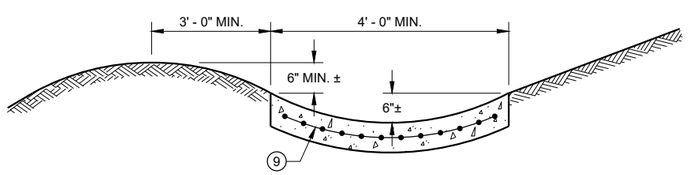

SECTION H - H

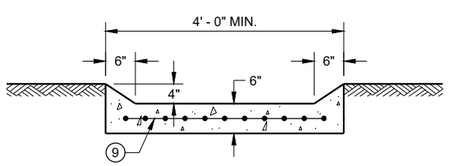

SECTION I - I

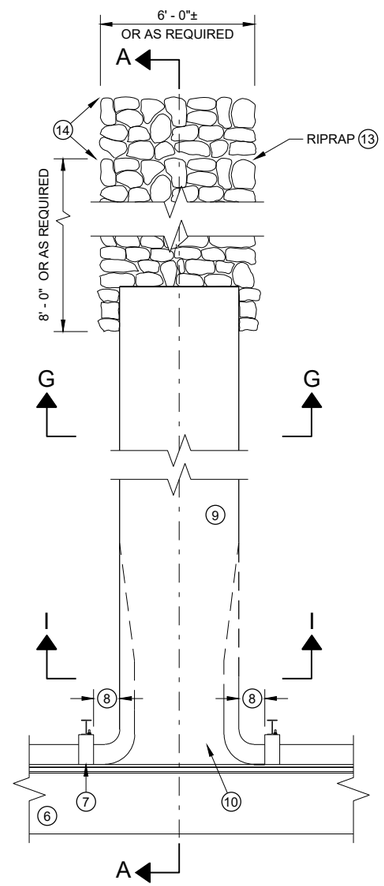

PLAN VIEW PERPENDICULAR FLUME

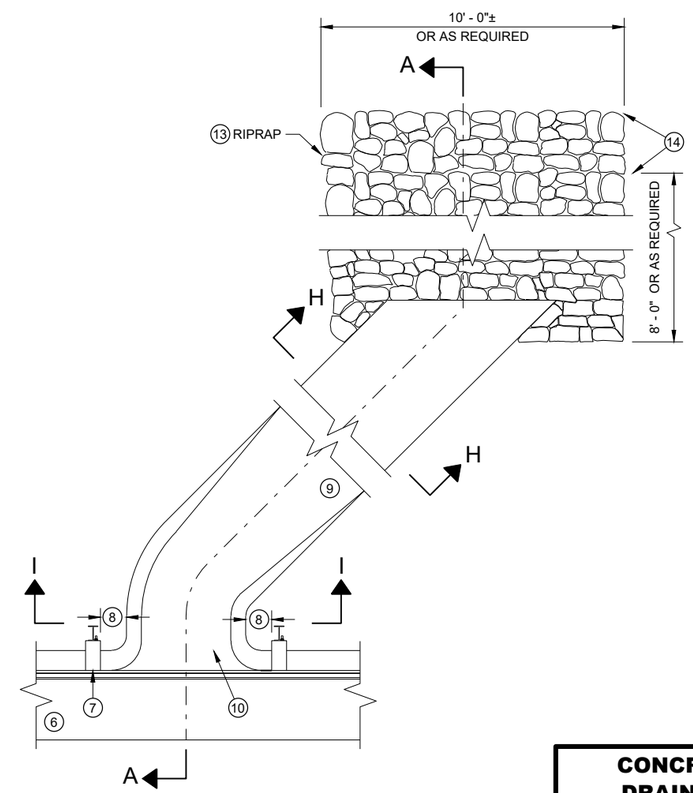

PLAN VIEW SKEWED FLUME

GENERAL NOTES

DETAILS OF CONSTRUCTION, MATERIALS AND WORKMANSHIP NOT SHOWN ON THIS DRAWING SHALL CONFORM TO THE PERTINENT REQUIREMENTS OF THE STANDARD SPECIFICATIONS AND THE APPLICABLE SPECIAL PROVISIONS.

ALL STEEL REINFORCEMENT SHALL BE EMBEDDED 2 INCHES CLEAR UNLESS OTHERWISE SHOWN OR NOTED.

1. USE A JOINT SEALANT CONFORMING TO STANDARD SPECIFICATION 415.2.6.
2. NO. 4 X 2' - 0" TIE BARS SPACED AT 12" C-C TO BE PLACED BY BRIDGE CONTRACTOR OR DRILLED TIE BARS PLACED AS DIRECTED BY THE ENGINEER.
3. PAVED CONCRETE SHOULDER (SDD 13A03) OR CONCRETE DRAINAGE SLAB.
4. CONCRETE PAVEMENT APPROACH SLAB (SHOWN) OR STRUCTURE APPROACH SLAB AND CONCRETE PAVEMENT APPROACH SLAB. SEE SDD 13B02 AND STRUCTURE PLANS.
5. PAVED CONCRETE SHOULDER (SDD 13A03) OR ASPHALT SHOULDER.
6. CONCRETE CURB AND GUTTER 4-INCH SLOPED 36-INCH TYPE TBT OR TBTT. USE TYPE TBTT CURB WITH NO. 4 X 2' -0" TIE BARS SPACED AT 3' - 0" C-C ONLY WHEN ADJACENT TO CONCRETE PAVEMENTS.
7. PLACE FLUME BEFORE MSG THRIE BEAM TRANSITION POST 1 (SEE SDD 14B45)
8. CENTER FLUME BETWEEN POSTS. 6-INCH MINIMUM SEPARATION FROM OUTSIDE EDGE OF FLUME TO POSTS.
9. MINIMUM REINFORCEMENT SHALL BE 4" X 4" - W3.0 X W3.0 OR NO. 3 BARS LONGITUDINAL AND TRANSVERSE SPACING 12" C -C.
10. SEE ROADWAY PLANS FOR FLUME LOCATION.
11. START CURB AND GUTTER TRANSITION OR END SECTION.
12. DEPRESS FLOW LINE (SEE DETAIL)
13. MEDIUM RIPRAP UNLESS OTHERWISE SPECIFIED.
14. LIMITS OF ADDITIONAL RIPRAP WHEN SPECIAL DITCH AS REQUIRED.
15. GEOTEXTILE TYPE HR.

CONCRETE SURFACE DRAINS FLUME TYPE AT STRUCTURES

STATE OF WISCONSIN
DEPARTMENT OF TRANSPORTAT

6

SDD 08D02 - 08b

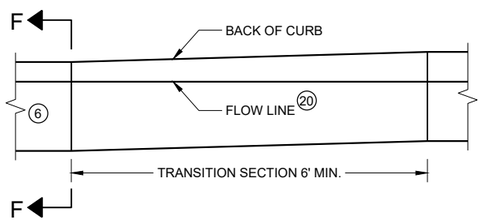

CURB AND GUTTER TRANSITION SECTION
CONCRETE CURB AND GUTTER 4-INCH SLOPED
36 INCH TYPE TBT OR TBTT

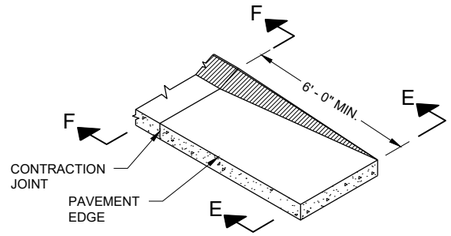

CURB AND GUTTER END SECTION
CONCRETE CURB AND GUTTER 4-INCH SLOPED
36 INCH TYPE TBT OR TBTT

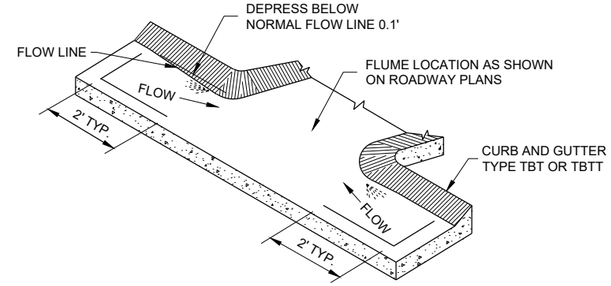

CURB AND GUTTER FLOW LINE DEPRESSION
AT FLUMES CONCRETE CURB AND GUTTER
4-INCH SLOPED 36 INCH TYPE TBT OR TBTT

GENERAL NOTES

DETAILS OF CONSTRUCTION, MATERIALS AND WORKMANSHIP NOT SHOWN ON THIS DRAWING SHALL CONFORM TO THE PERTINENT REQUIREMENTS OF THE STANDARD SPECIFICATIONS AND THE APPLICABLE SPECIAL PROVISIONS.

ALL STEEL REINFORCEMENT SHALL BE EMBEDDED 2 INCHES CLEAR UNLESS OTHERWISE SHOWN OR NOTED.

1. USE A JOINT SEALANT CONFORMING TO STANDARD SPECIFICATION 415.2.6.
2. NO. 4 X 2' - 0" TIE BARS SPACED AT 12" C-C TO BE PLACED BY BRIDGE CONTRACTOR OR DRILLED TIE BARS PLACED AS DIRECTED BY THE ENGINEER.
3. PAVED CONCRETE SHOULDER (SDD 13A03) OR CONCRETE DRAINAGE SLAB.
4. CONCRETE PAVEMENT APPROACH SLAB (SHOWN) OR STRUCTURE APPROACH SLAB AND CONCRETE PAVEMENT APPROACH SLAB. SEE SDD 13B02 AND STRUCTURE PLANS.
5. PAVED CONCRETE SHOULDER (SDD 13A03) OR ASPHALT SHOULDER.
6. CONCRETE CURB AND GUTTER 4-INCH SLOPED 36-INCH TYPE TBT OR TBTT. USE TYPE TBTT CURB WITH NO. 4 X 2' -0" TIE BARS SPACED AT 3' - 0" C-C ONLY WHEN ADJACENT TO CONCRETE PAVEMENTS.
7. PLACE FLUME BEFORE MSG THRIE BEAM TRANSITION POST 1 (SEE SDD 14B45)
8. CENTER FLUME BETWEEN POSTS. 6-INCH MINIMUM SEPARATION FROM OUTSIDE EDGE OF FLUME TO POSTS.
9. MINIMUM REINFORCEMENT SHALL BE 4" X 4" - W3.0 X W3.0 OR NO. 3 BARS LONGITUDINAL AND TRANSVERSE SPACING 12" C -C.
10. SEE ROADWAY PLANS FOR FLUME LOCATION.
11. START CURB AND GUTTER TRANSITION OR END SECTION.
12. DEPRESS FLOW LINE (SEE DETAIL)
13. MEDIUM RIPRAP UNLESS OTHERWISE SPECIFIED.
14. LIMITS OF ADDITIONAL RIPRAP WHEN SPECIAL DITCH IS REQUIRED.
15. GEOTEXTILE TYPE HR.
16. MINIMUM REINFORCEMENT SHALL BE 6" X 6" - W4.0 X W4.0 OR NO. 3 BARS LONGITUDINAL AND TRANSVERSE SPACING 12" C - C.
17. MSG THRIE BEAM TRANSITION POST 1. SEE SDD 14B45 FOR ADDITIONAL CONSTRUCTION DETAILS AND ACCEPTABLE MATERIALS.
18. MAINTAIN WIDTH, THICKNESS AND CROSS SLOPE OF ADJACENT TYPE TBT OR TBTT CURB. SEE NOTE 6 FOR TIE BAR SPACING.
19. ALIGN FACE OF POST BLOCK WITH FLOW LINE.
20. MAINTAIN FLOW LINE AT EDGE OF PAVEMENT/FACE OF BEAM GUARD AS APPLICABLE.
21. DO NOT CONSTRUCT AN EXPANSION JOINT OR INSTALL DOWEL BARS WHEN ABUTTING HMA PAVEMENTS.

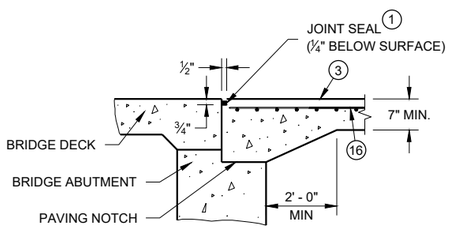

SECTION B-B 4

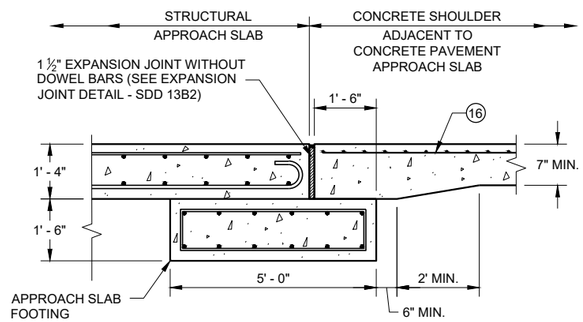

SECTION C - C
JOINT DETAIL FOR BRIDGE WITH STRUCTURAL APPROACH SLAB AND CONCRETE APPROACH SLAB

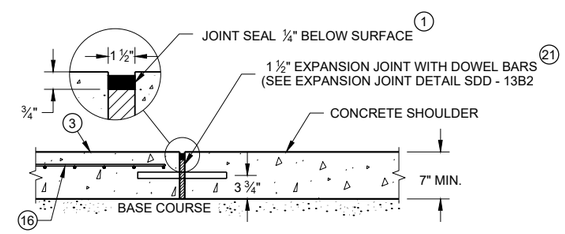

SECTION C - C
JOINT DETAIL FOR BRIDGE APPROACH WITH CONCRETE SHOULDERS

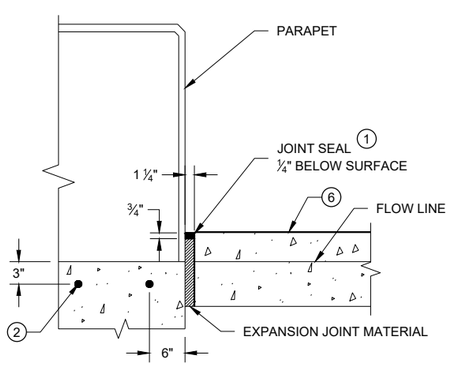

SECTION D - D

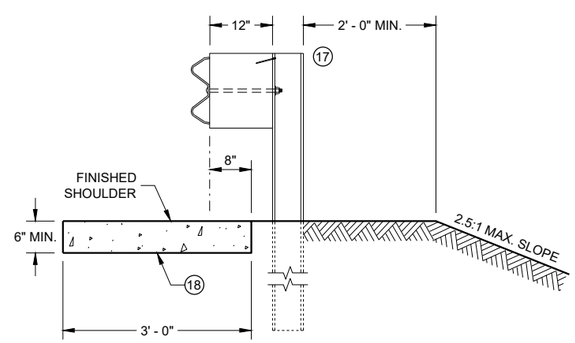

SECTION E - E

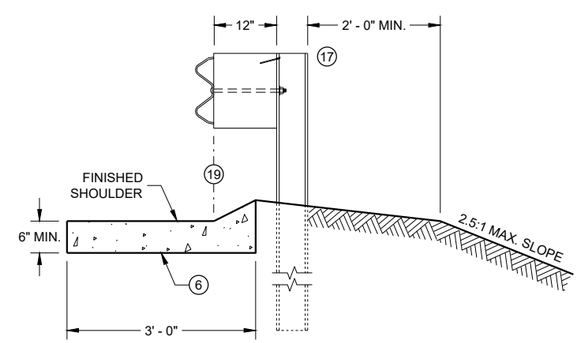

SECTION F - F

CONCRETE SURFACE DRAINS FLUME TYPE AT STRUCTURES

STATE OF WISCONSIN
DEPARTMENT OF TRANSPORTATION

APPROVED
May 2023 — DATE
/S/ Rodney Taylor — ROADWAY STANDARDS DEVE ENGINEER

FHWA

6

SDD 08D02 - 08c

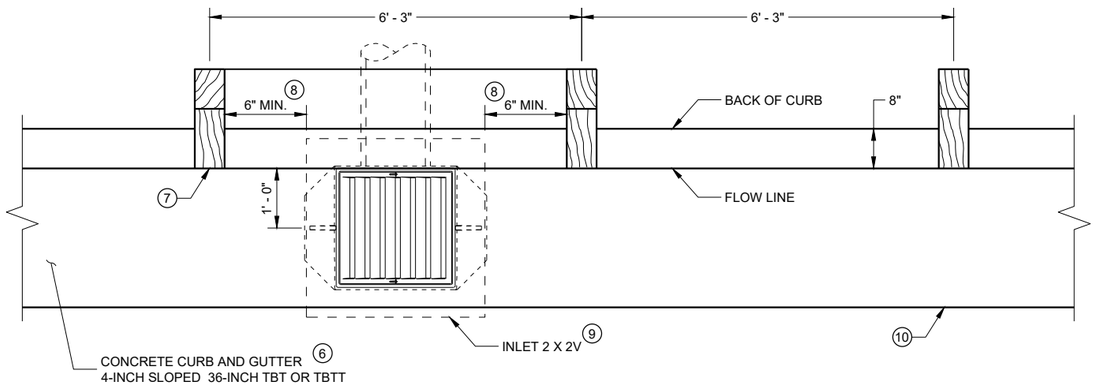

INLET PLAN VIEW

(NOTE: RAIL NOT SHOWN FOR CLARITY)

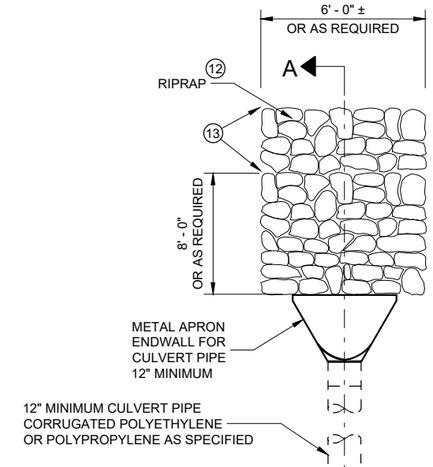

GENERAL NOTES

DETAILS OF CONSTRUCTION, MATERIALS AND WORKMANSHIP NOT SHOWN ON THIS DRAWING SHALL CONFORM TO THE PERTINENT REQUIREMENTS OF THE STANDARD SPECIFICATIONS AND THE APPLICABLE SPECIAL PROVISIONS.

ALL STEEL REINFORCEMENT SHALL BE EMBEDDED 2 INCHES CLEAR UNLESS OTHERWISE SHOWN OR NOTED.

1. USE A JOINT SEALANT CONFORMING TO STANDARD SPECIFICATION 415.2.6.
2. NO. 4 X 2' - 0" TIE BARS SPACED AT 12" C-C TO BE PLACED BY BRIDGE CONTRACTOR OR DRILLED TIE BARS PLACED AS DIRECTED BY THE ENGINEER.
3. PAVED CONCRETE SHOULDER (SDD 13A03) OR CONCRETE DRAINAGE SLAB.
4. CONCRETE PAVEMENT APPROACH SLAB (SHOWN) OR STRUCTURE APPROACH SLAB AND CONCRETE PAVEMENT APPROACH SLAB. SEE SDD 13B02.
5. PAVED CONCRETE SHOULDER (SDD 13A03) OR ASPHALT SHOULDER.
6. CONCRETE CURB AND GUTTER 4-INCH SLOPED 36-INCH TYPE TBT OR TBTT. USE TYPE TBTT CURB WITH NO. 4 X 2' -0" TIE BARS SPACED AT 3' - 0" C-C ONLY WHEN ADJACENT TO CONCRETE PAVEMENTS.
7. PLACE DRAINAGE STRUCTURE BEFORE MSG THRIE BEAM TRANSITION POST 1 (SEE SDD 14B45)
8. CENTER DRAINAGE STRUCTURE BETWEEN POSTS. 6-INCH MINIMUM SEPARATION FROM OUTSIDE WALL OF DRAINAGE STRUCTURE TO POSTS.
9. SEE SDD 08A05 AND 08C07 FOR DETAILS. SEE ROADWAY PLANS FOR LOCATION.
10. START CURB AND GUTTER TRANSITION OR END SECTION.
11. DEPRESS FLOW LINE (SEE DETAIL)
12. MEDIUM RIPRAP UNLESS OTHERWISE SPECIFIED.
13. LIMITS OF ADDITIONAL RIPRAP WHEN SPECIAL DITCH IS REQUIRED.

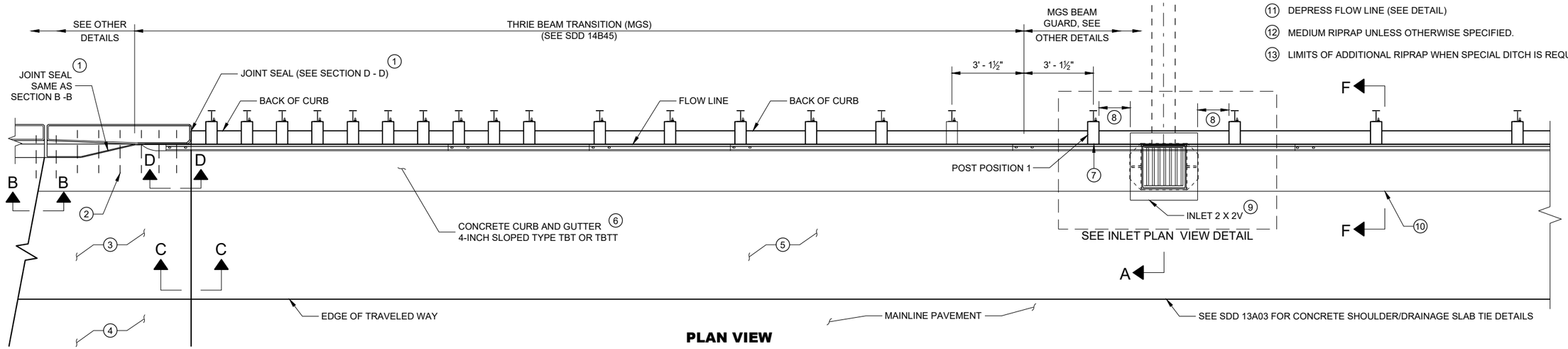

PLAN VIEW

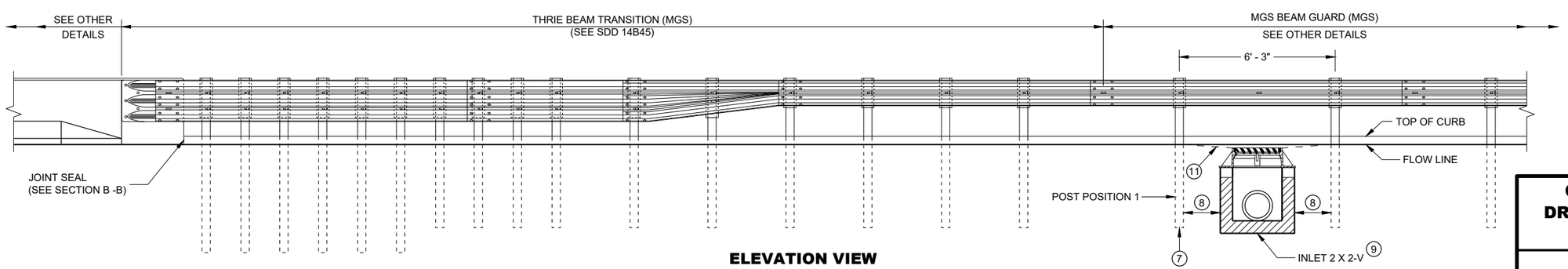

ELEVATION VIEW

CONCRETE SURFACE DRAINS DROP INLET TYPE AT STRUCTURES

STATE OF WISCONSIN
DEPARTMENT OF TRANSPORTATION

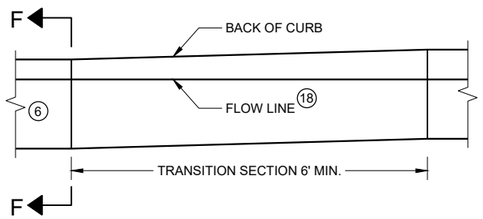

CURB AND GUTTER TRANSITION SECTION CONCRETE CURB AND GUTTER 4-INCH SLOPED 36 INCH TYPE TBT OR TBTT

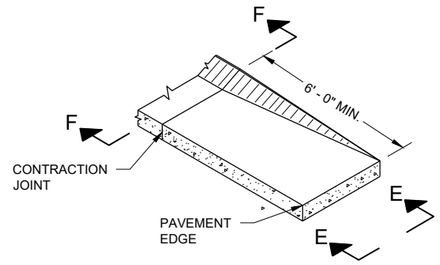

CURB AND GUTTER END SECTION CONCRETE CURB AND GUTTER 4-INCH SLOPED 36 INCH TYPE TBT OR TBTT

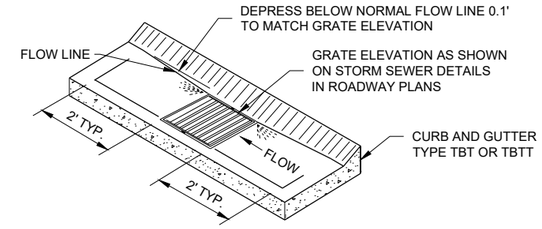

CURB AND GUTTER FLOW LINE DEPRESSION AT INLETS CONCRETE CURB AND GUTTER 4-INCH SLOPED 36 INCH TYPE TBT OR TBTT

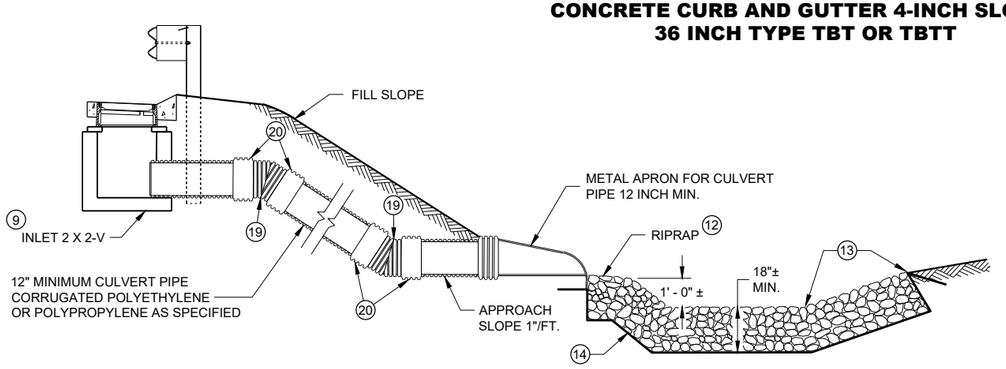

SECTION A - A

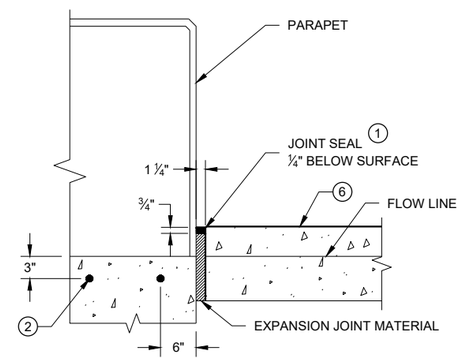

SECTION D - D

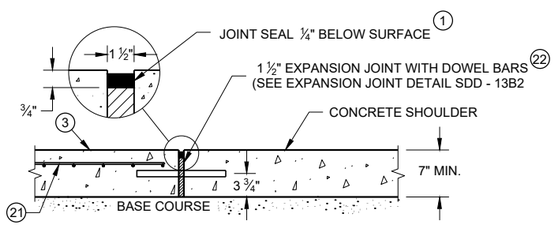

SECTION C - C

JOINT DETAIL FOR BRIDGE APPROACH WITH CONCRETE SHOULDERS

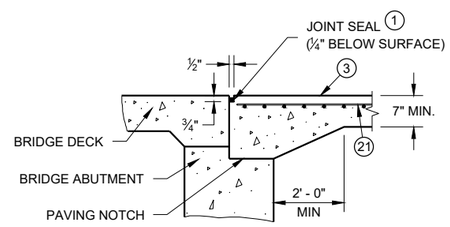

SECTION B-B 4

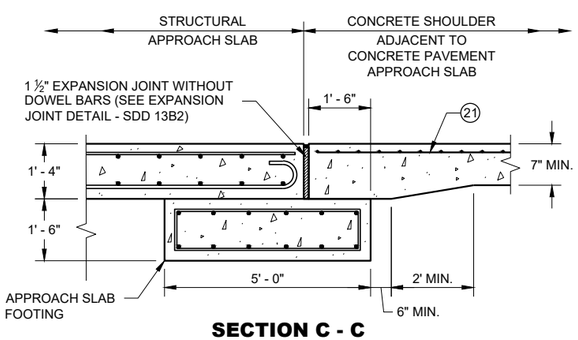

SECTION C - C

JOINT DETAIL FOR BRIDGE WITH STRUCTURAL APPROACH SLAB AND CONCRETE APPROACH SLAB

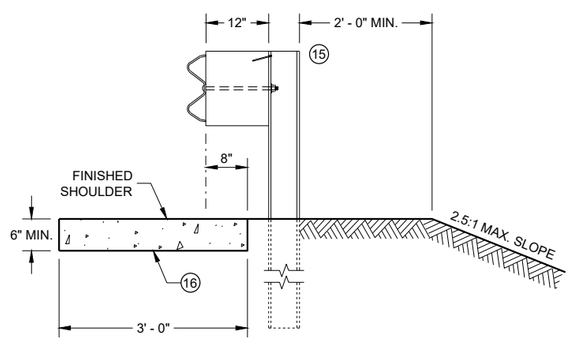

SECTION E - E

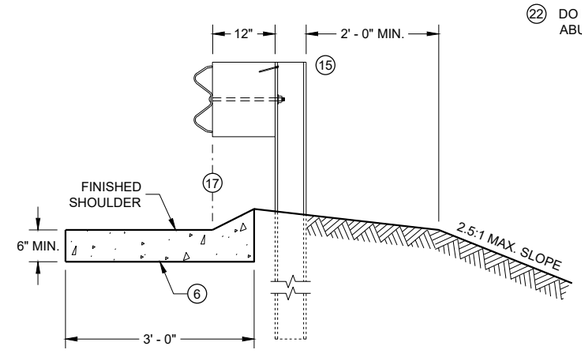

SECTION F - F

GENERAL NOTES

DETAILS OF CONSTRUCTION, MATERIALS AND WORKMANSHIP NOT SHOWN ON THIS DRAWING SHALL CONFORM TO THE PERTINENT REQUIREMENTS OF THE STANDARD SPECIFICATIONS AND THE APPLICABLE SPECIAL PROVISIONS.

ALL STEEL REINFORCEMENT SHALL BE EMBEDDED 2 INCHES CLEAR UNLESS OTHERWISE SHOWN OR NOTED.

1. USE A JOINT SEALANT CONFORMING TO STANDARD SPECIFICATION 415.2.6.
2. NO. 4 X 2' - 0" TIE BARS SPACED AT 12" C-C TO BE PLACED BY BRIDGE CONTRACTOR OR DRILLED TIE BARS PLACED AS DIRECTED BY THE ENGINEER.
3. PAVED CONCRETE SHOULDER (SDD 13A03) OR CONCRETE DRAINAGE SLAB.
4. CONCRETE PAVEMENT APPROACH SLAB (SHOWN) OR STRUCTURE APPROACH SLAB AND CONCRETE PAVEMENT APPROACH SLAB. SEE SDD 13B02 AND STRUCTURE PLANS.
5. PAVED CONCRETE SHOULDER (SDD 13A03) OR ASPHALT SHOULDER.
6. CONCRETE CURB AND GUTTER 4-INCH SLOPED 36-INCH TYPE TBT OR TBTT. USE TYPE TBTT CURB WITH NO. 4 X 2' -0" TIE BARS SPACED AT 3' - 0" C-C ONLY WHEN ADJACENT TO CONCRETE PAVEMENTS.
7. PLACE DRAINAGE STRUCTURE BEFORE MSG THRIE BEAM TRANSITION POST 1 (SEE SDD 14B45)
8. CENTER DRAINAGE STRUCTURE BETWEEN POSTS. 6-INCH MINIMUM SEPARATION FROM OUTSIDE WALL OF DRAINAGE STRUCTURE TO POSTS.
9. SEE SDD 08A05 AND 08C07 FOR DETAILS. SEE ROADWAY PLANS FOR LOCATION.
10. START CURB AND GUTTER TRANSITION OR END SECTION.
11. DEPRESS FLOW LINE (SEE DETAIL)
12. MEDIUM RIPRAP UNLESS OTHERWISE SPECIFIED.
13. LIMITS OF ADDITIONAL RIPRAP WHEN SPECIAL DITCH IS REQUIRED.
14. GEOTEXTILE TYPE HR.
15. MSG THRIE BEAM TRANSITION POST 1. SEE SDD 14B45 FOR ADDITIONAL CONSTRUCTION DETAILS AND ACCEPTABLE MATERIALS.
16. MAINTAIN WIDTH, THICKNESS AND CROSS SLOPE OF ADJACENT TYPE TBT OR TBTT CURB. SEE NOTE 6 FOR TIE BAR SPACING.
17. ALIGN FACE OF POST BLOCK WITH FLOW LINE.
18. MAINTAIN FLOW LINE AT EDGE OF PAVEMENT/FACE OF BEAM GUARD AS APPLICABLE.
19. MANUFACTURER SUPPLIED BEND.
20. MANUFACTURER SUPPLIED EXTERNAL MECHANICAL COUPLING OR A MANUFACTURER RECOMMENDED COUPLING WITH A MASTIC IMPREGNATED GEOTEXTILE WRAP AND MECHANICAL FASTENING BANDS.
21. MINIMUM REINFORCEMENT SHALL BE 6" X 6" - W4.0 X W4.0 OR NO. 3 BARS LONGITUDINAL AND TRANSVERSE SPACING 12" C - C.
22. DO NOT CONSTRUCT AN EXPANSION JOINT OR INSTALL DOWEL BARS WHEN ABUTTING HMA PAVEMENTS.

CONCRETE SURFACE DRAINS DROP INLET TYPE AT STRUCTURES

STATE OF WISCONSIN
DEPARTMENT OF TRANSPORTATION

APPROVED
May 2023 — DATE
/S/ Rodney Taylor — ROADWAY STANDARDS DEVE ENGINEER

FHWA

6

SDD 08D03 - 09b

NOTE: TAPER CURB ENDS TO GUTTER IN 1' - 0"

ASPHALTIC FLUME

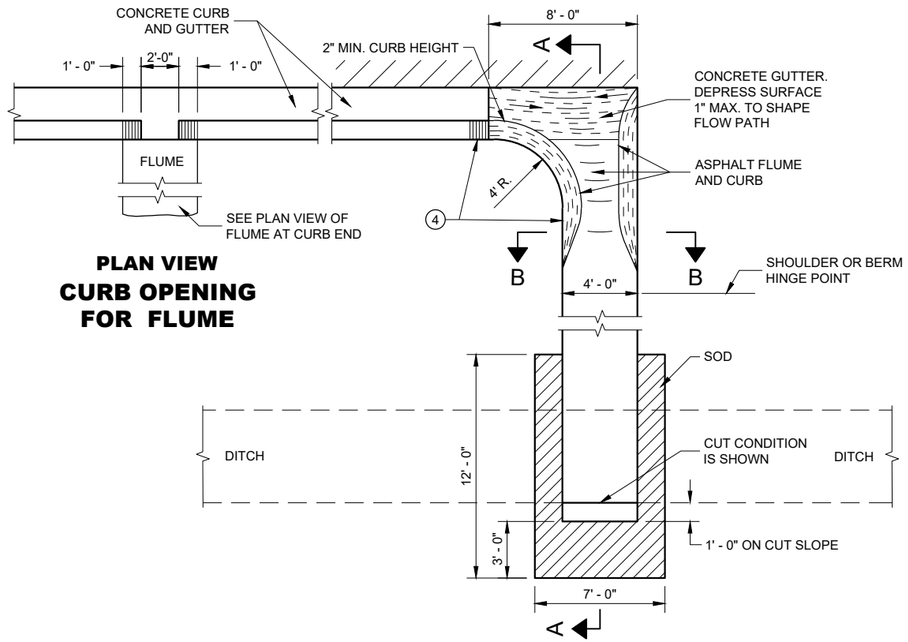

PLAN VIEW
CURB OPENING FOR FLUME

PLAN VIEW
FLUME AT CURB END

GENERAL NOTES

DETAILS OF CONSTRUCTION, MATERIALS AND WORKMANSHIP NOT SHOWN ON THIS DRAWING SHALL CONFORM TO PERTINENT REQUIREMENTS OF THE STANDARD SPECIFICATIONS AND APPLICABLE SPECIAL PROVISIONS.

4" X 4" - W3.0 X W3.0 CONCRETE REINFORCEMENT SHALL BE IN ACCORDANCE WITH AASHTO SPECIFICATION M55.

1. JOINTS SHALL BE ⅛" TO ¼" WIDE BY 1½" DEEP AND SPACED AT UNIFORM INTERVALS OF APPROXIMATELY 4 FEET.
2. GEOTEXTILE TYPE "R" SHALL UNDERLAY THE FULL LENGTH AND WIDTH OF THE CONCRETE SURFACE DRAIN AND RIPRAP.
3. CONCRETE SURFACE DRAIN WITHOUT CURB AND GUTTER MAY BE USED ON BACKSLOPES WHEN SPECIFIED.
4. ANGLE OF FLUME IN RELATION TO BACK OF CURB TO BE CONSTRUCTED PER THE PLAN DETAILS OR AS DIRECTED BY THE ENGINEER. ANGLE OF FLUME MAY BE OTHER THAN 90 DEGREES AS SHOWN.

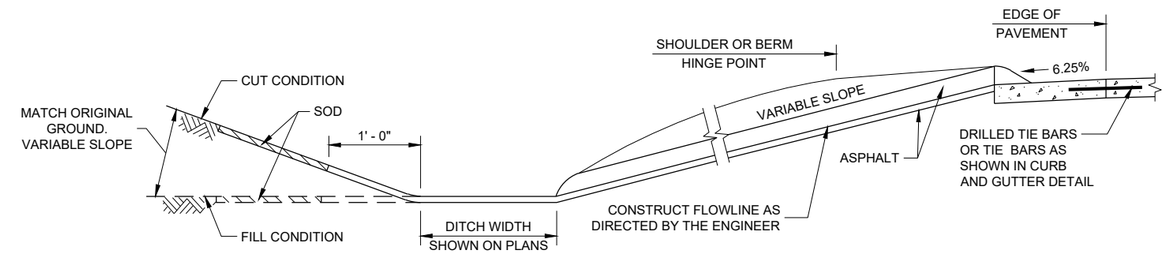

SECTION A - A

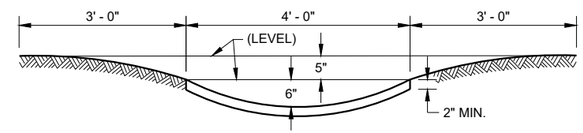

SECTION B - B

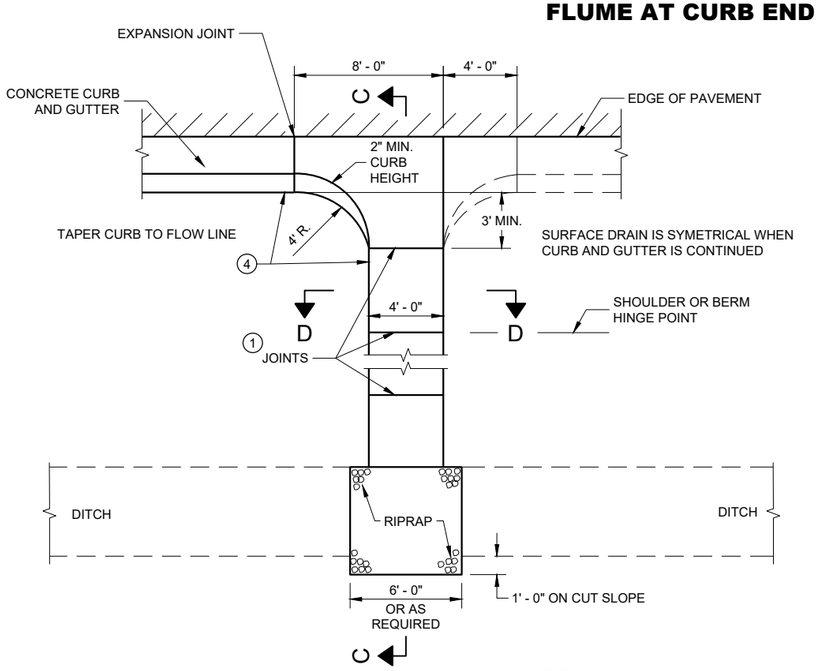

PLAN VIEW
CONCRETE SURFACE DRAIN

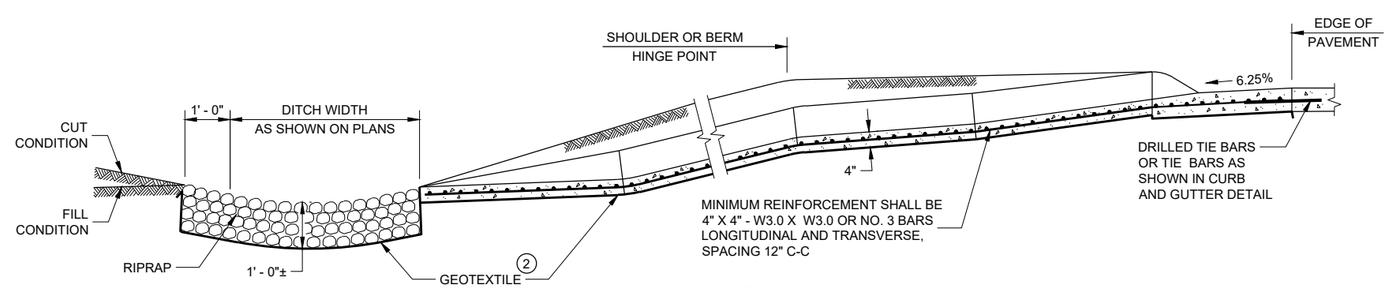

SECTION C - C

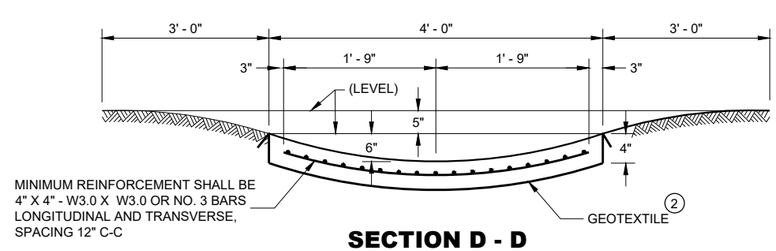

SECTION D - D

CONCRETE SURFACE DRAINS AND ASPHALTIC FLUMES

STATE OF WISCONSIN
DEPARTMENT OF TRANSPORTATION

APPROVED
May 2023 — DATE
/S/ Rodney Taylor — ROADWAY STANDARDS DEVE ENGINEER

FHWA

6

SDD 08D04 - 07

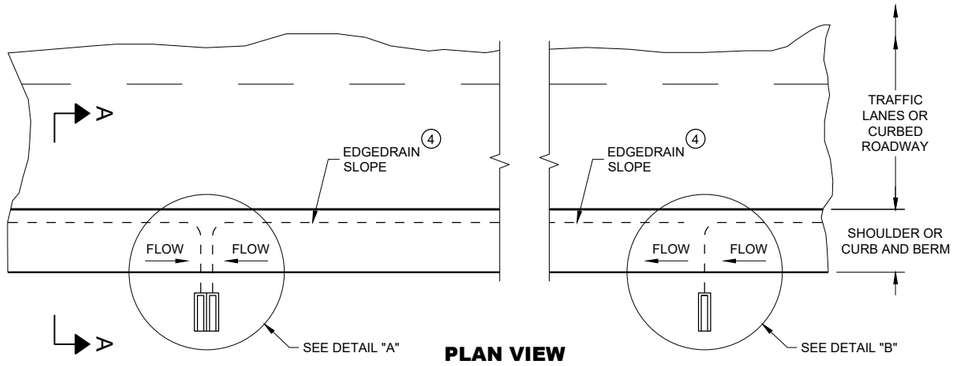

PLAN VIEW

ROADWAY WITH SHOULDERS OR CURBS
(EDGEDRAIN CONNECTS TO ROADSIDE) 2

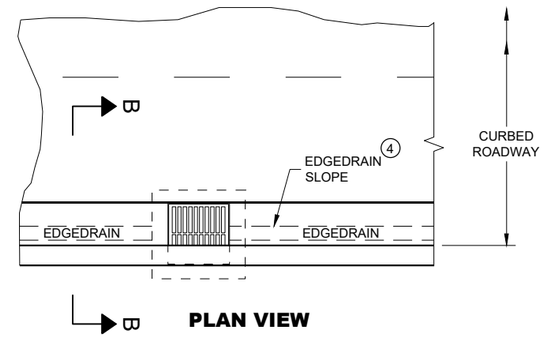

PLAN VIEW

ROADWAY WITH CURBS
(EDGEDRAIN CONNECTS INTO INLET STRUCTURE)

GENERAL NOTES

DETAILS OF CONSTRUCTION, MATERIALS AND WORKMANSHIP NOT SHOWN ON THIS DRAWING SHALL CONFORM TO THE PERTINENT REQUIREMENTS OF THE STANDARD SPECIFICATIONS AND THE APPLICABLE SPECIAL PROVISIONS.

1. UNPERFORATED PIPE UNDERDRAIN AND FITTINGS FURNISHED FOR OUTFALL PIPE SHALL MEET THE REQUIREMENTS OF ONE OF THE FOLLOWING SPECIFICATIONS:

   POLYVINYL CHLORIDE (PVC) PLASTIC DRAIN, WASTE, AND VENT PIPE AND FITTINGS, ASTM D 2665, SCHEDULE 40 PVC.

   TYPE PSM POLYVINYL CHLORIDE (PVC) SEWER PIPE AND FITTINGS, ASTM D 3034, SDR 23.5 PVC SEWER PIPE.

2. MAXIMUM SPACING OF EDGEDRAIN OUTLETS SHALL BE 250 FEET UNLESS OTHERWISE SPECIFIED IN THE CONTRACT OR DIRECTED BY THE ENGINEER.

3. EDGEDRAIN SHALL BE CONNECTED TO INLETS REGARDLESS OF FLOW DIRECTION FOR DRAINAGE AND MAINTENANCE ACCESS.

4. EDGEDRAIN SHALL BE LAID PARALLEL TO THE GRADE OF ROADWAY.

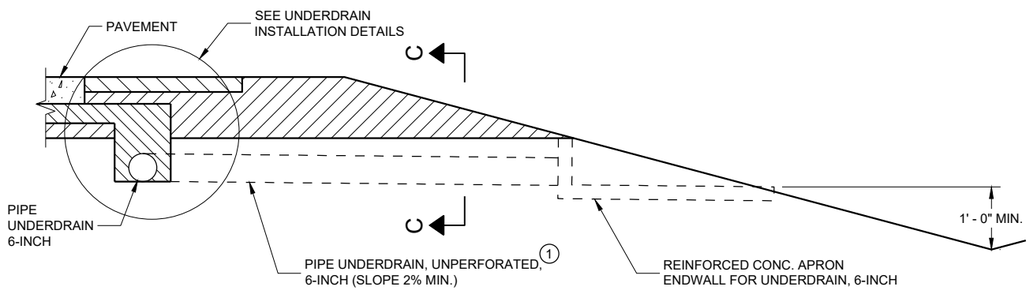

SECTION A - A

RURAL CROSS SECTION

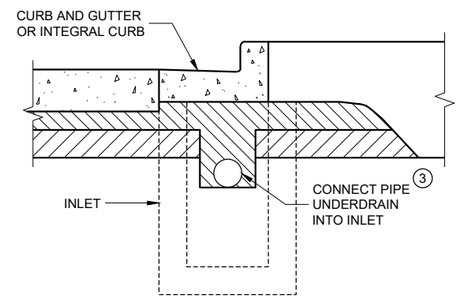

SECTION B - B

URBAN CROSS SECTION

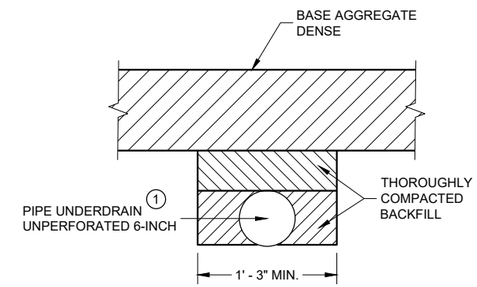

SECTION C - C

TRENCH FOR OUTFALL PIPE

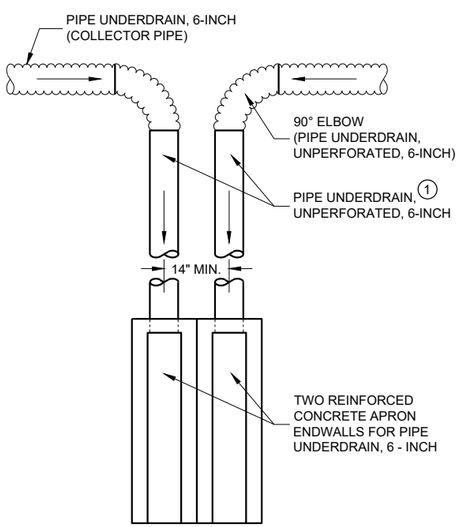

DETAIL "A"

TO BE USED AT LOW POINT LOCATIONS

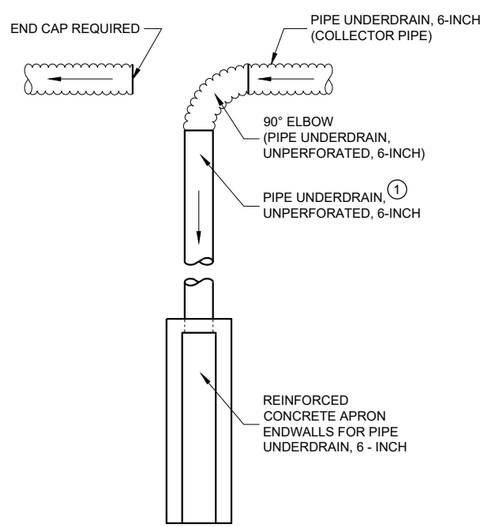

DETAIL "B"

TO BE USED AT INTERMEDIATE LOCATIONS

TYPICAL DRAIN OUT DETAILS

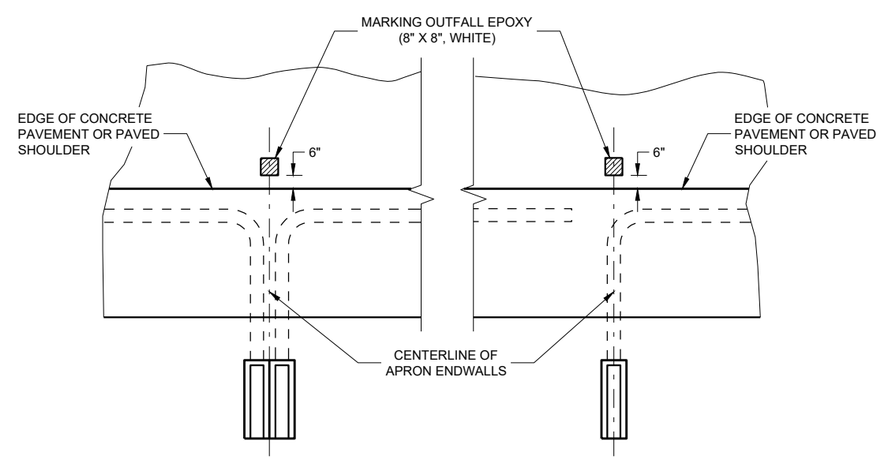

LOW POINT LOCATIONS

INTERMEDIATE LOCATIONS

PAVEMENT MARKINGS FOR OUTFALL MARKERS

EDGEDRAIN OUTLET AND OUTFALL MARKERS

STATE OF WISCONSIN
DEPARTMENT OF TRANSPORTATION

6

SDD 08D15 - 05a

6

SDD 08D15 - 05a

GENERAL NOTES

THE DIMENSIONS SHOWN ON THE TYPICAL CROSS SECTIONS WILL GOVERN IN THE EVENT THERE IS A CONFLICT WITH THE DETAILS SHOWN ON THIS DRAWING.

PIPE UNDERDRAIN SHALL BE LAID PARALLEL TO THE GRADE OF THE ROADWAY.

(1) FOLD OVER EXCESS GEOTEXTILE AT THIS LOCATION.

(2) TOTAL GEOTEXTILE WIDTH IS 6'-3" FOR PAYMENT.

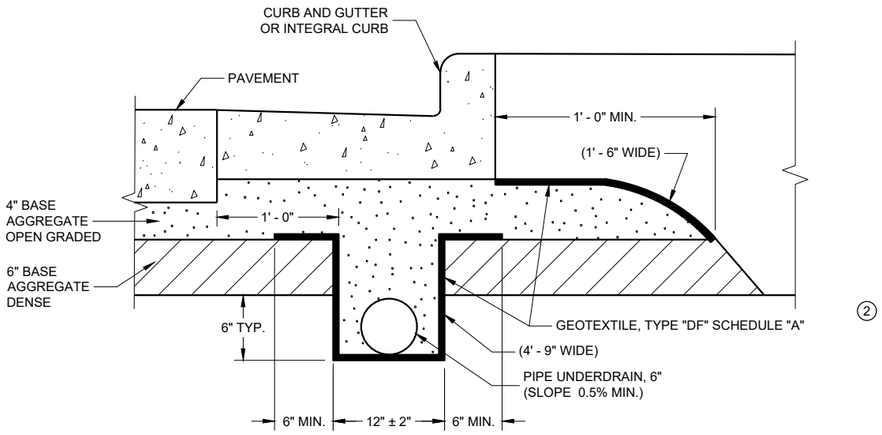

(2)

EDGEDRAIN IN URBAN ROADWAY

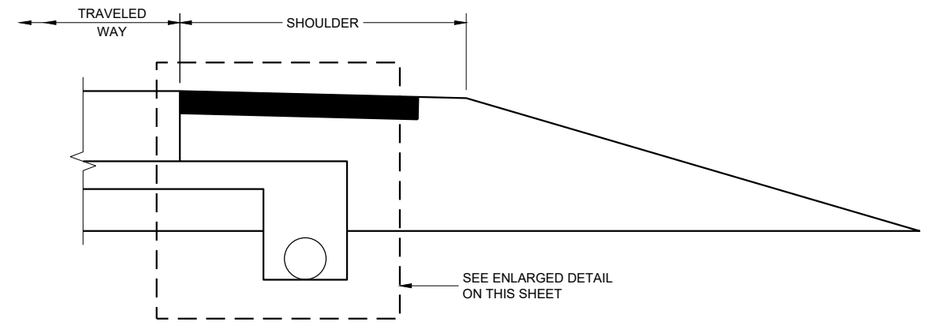

RURAL CROSS SECTION

6

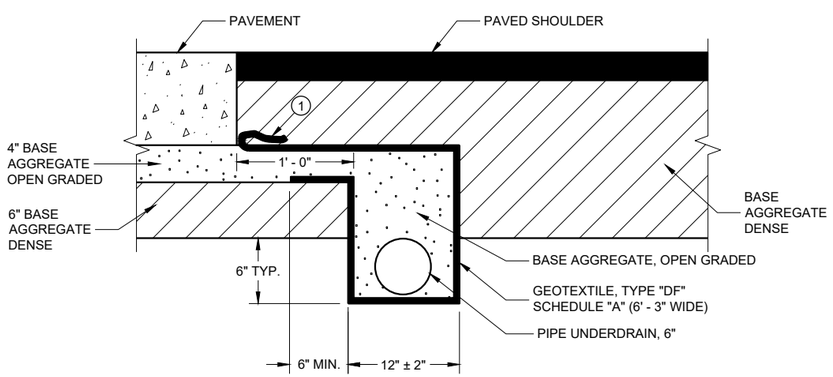

POST PAVING INSTALLATION

(QUANTITIES ARE BASED ON THIS DETAIL)

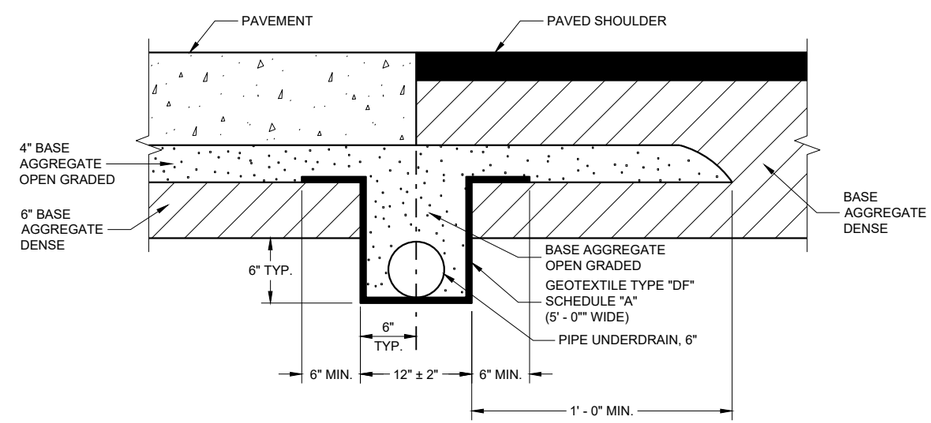

PRE-PAVING INSTALLATION ALTERNATIVE

EDGEDRAIN IN RURAL ROADWAY

EGEDRAIN AND BASE AGGREGATE OPEN GRADED

STATE OF WISCONSIN
DEPARTMENT OF TRANSPORTAT

6

SDD 08D15 - 05b

GENERAL NOTES

THE DIMENSIONS SHOWN ON THE TYPICAL CROSS SECTIONS WILL GOVERN IN THE EVENT THERE IS A CONFLICT WITH THE DETAILS SHOWN ON THIS DRAWING.

PIPE UNDERDRAIN SHALL BE LAID PARALLEL TO THE GRADE OF THE ROADWAY.

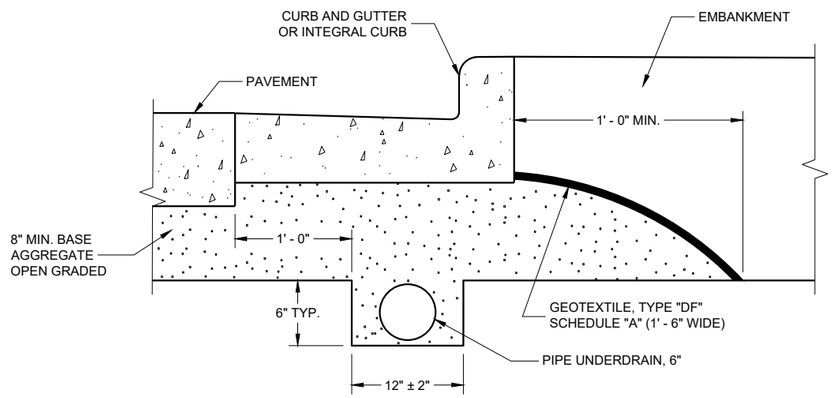

EDGEDRAIN IN URBAN ROADWAY

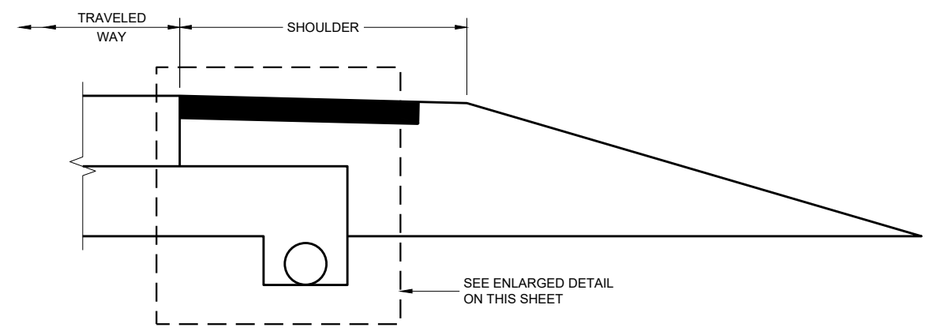

RURAL CROSS SECTION

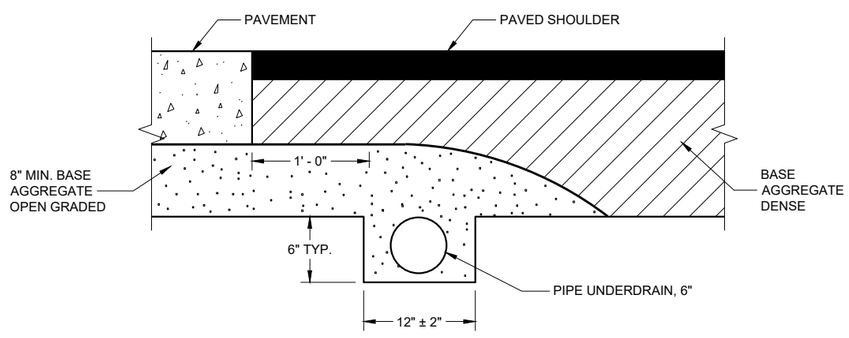

POST PAVING INSTALLATION

(QUANTITIES ARE BASED ON THIS DETAIL)

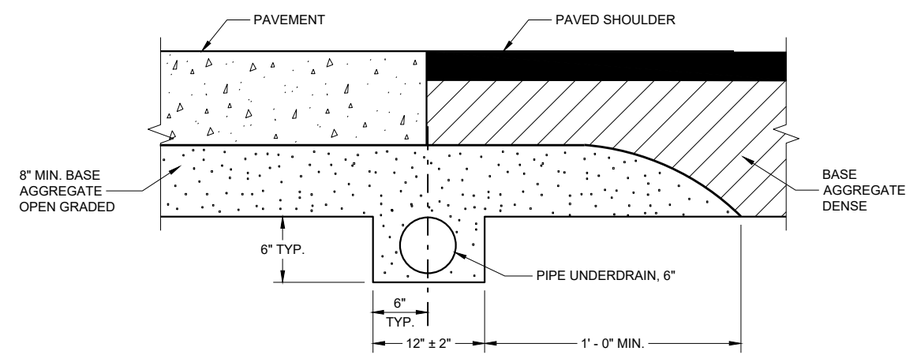

PRE-PAVING INSTALLATION ALTERNATIVE

EDGEDRAIN IN RURAL ROADWAY

EDGEDRAIN AND BASE AGGREGATE OPEN GRADED

STATE OF WISCONSIN
DEPARTMENT OF TRANSPORTATION

APPROVED
September 2015 /S/ Peter Kemp, P.E.
DATE PAVEMENT SUPERVISOR
FHWA

6

6

SDD 08D15 - 05c

SDD 08D15 - 05c

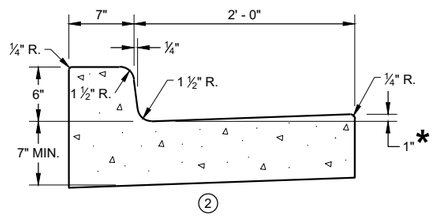

CONCRETE CURB AND GUTTER 31" ①

*TO BE MEASURED TO A MAXIMUM OF 3" WHERE DRAINAGE PROBLEMS EXIST.

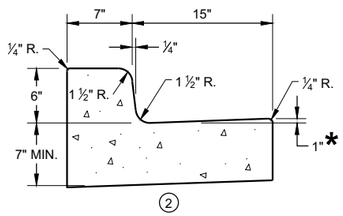

CONCRETE CURB AND GUTTER 22" ①

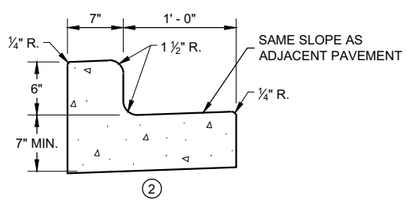

CONCRETE CURB AND GUTTER 19" ①

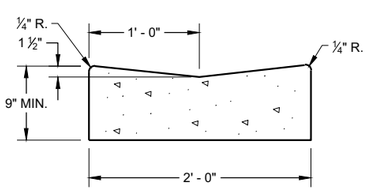

CONCRETE GUTTER 24" ①

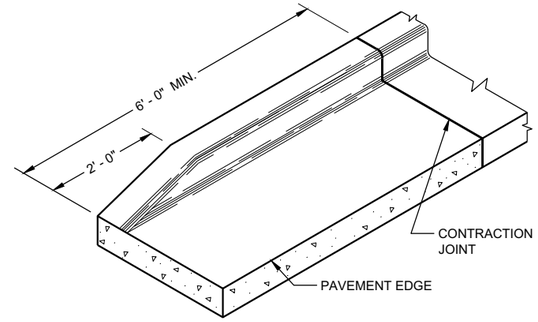

END SECTIONCURB AND GUTTER

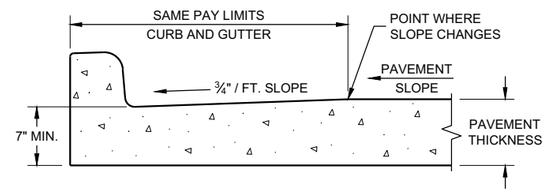

PARTIAL SECTION OF PAVEMENT WITH INTEGRAL CURB AND GUTTER

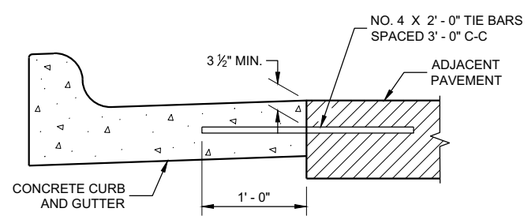

TYPICAL TIE BAR LOCATION ①

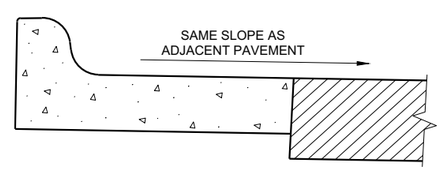

HIGH SIDE SECTION ③

(TYPICAL FOR ALL CURB & GUTTER TYPES)

GENERAL NOTES

DETAILS OF CONSTRUCTION AND WORKMANSHIP NOT SHOWN ON THIS DRAWING SHALL CONFORM TO THE PERTINENT REQUIREMENTS OF THE CONTRACT.

PAVEMENT TIES AND TIE BARS SHALL BE EPOXY COATED IN CONFORMANCE WITH SUBSECTION 505.2.6.2 OF THE STANDARD SPECIFICATIONS.

INTEGRAL CURB AND GUTTER SHALL CONFORM TO THE DETAILS SHOWN FOR CONCRETE CURB AND GUTTER INCLUDING THE TRANSVERSE GUTTER SLOPE. A LONGITUDINAL CONSTRUCTION JOINT IS NOT REQUIRED WITH INTEGRAL CURB AND GUTTER.

UNLESS OTHERWISE SHOWN ON THE TYPICAL CROSS SECTIONS, THE BASE COURSE AND UNCLASSIFIED EXCAVATION LIMITS ARE 2' - 0" BEHIND THE BACK OF CURBS.

① WHEN PLACED ADJACENT TO NEW CONCRETE, TIE BARS ARE REQUITED FOR CURB AND GUTTER 31", 22", 19" AND CONCRETE GUTTER 24".

② THE BOTTOM OF CURB AND GUTTER MAY BE CONSTRUCTED EITHER LEVEL OR PARALLEL TO THE SLOPE OF THE SUBGRADE OR BASE COURSE PROVIDED A 7" MINIMUM GUTTER THICKNESS IS MAINTAINED.

③ WHEN HIGH SIDE CURB SECTION IS REQUIRED, THE LOCATION(S) WILL BE NOTED ON THE PLANS

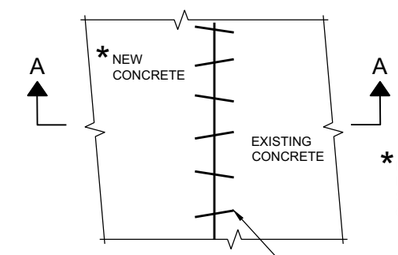

*EXISTING AND NEW CONCRETE MAY BE CURB AND GUTTER, SURFACE DRAINS, PAVEMENT OR OTHER CONCRETE STRUCTURE.

PLAN VIEW

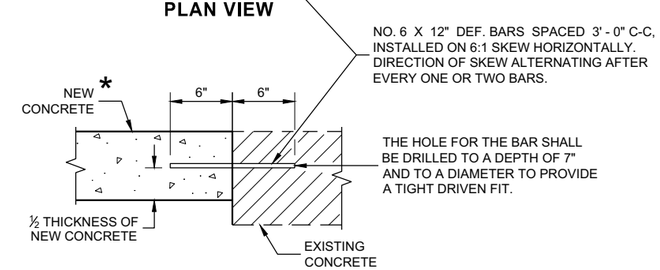

SECTION A - A

PAVEMENT TIES

CONCRETE GUTTER, CURB AND GUTTER AND PAVEMENT TIES

(For Optional use in Milwaukee Co. Only)

STATE OF WISCONSIN
DEPARTMENT OF TRANSPORTATION

APPROVED
February 2020 — DATE
/S/ Rodney Taylor — ROADWAY STANDARDS DEVE ENGINEER
FHWA

6

SDD 08D16 - 11

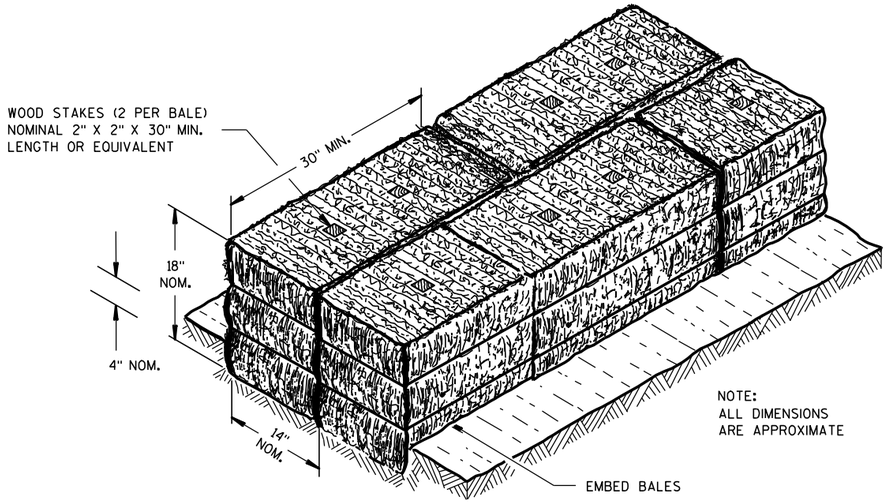

SECTION A-A

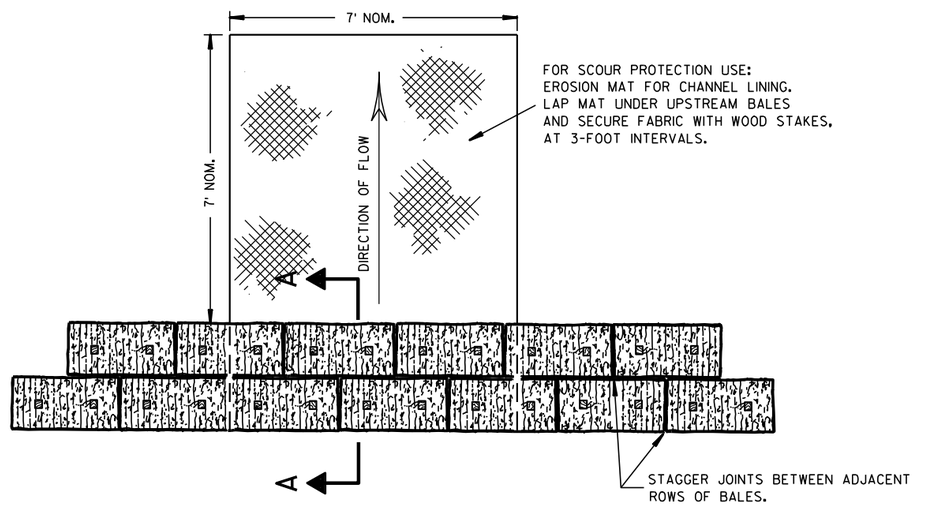

PLAN VIEW

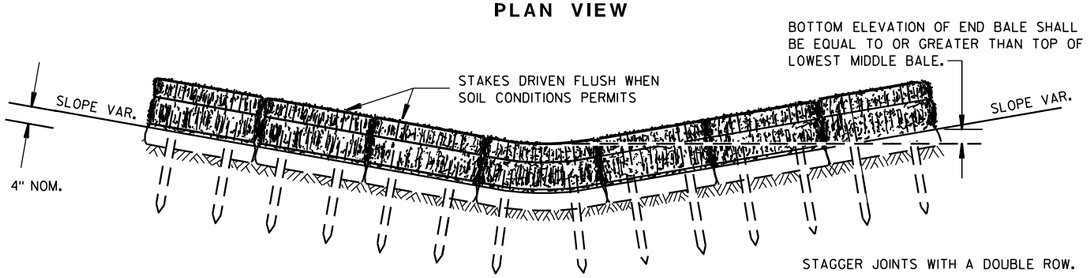

FRONT ELEVATION

TEMPORARY DITCH CHECK USING EROSION BALES ①

GENERAL NOTES

DETAILS OF CONSTRUCTION, MATERIALS AND WORKMANSHIP NOT SHOWN ON THIS DRAWING SHALL CONFORM TO THE PERTINENT REQUIREMENTS OF THE STANDARD SPECIFICATIONS AND THE APPLICABLE SPECIAL PROVISIONS.

① TEMPORARY DITCH CHECKS EITHER EROSION BALES OR MANUFACTURED SHALL BE PAID FOR UNDER THE BID ITEM OF TEMPORARY DITCH CHECK. THE DEPARTMENT WILL NOT PAY FOR TEMPORARY DITCH CHECKS CONSTRUCTED OF A SINGLE ROW OF EROSION BALES.

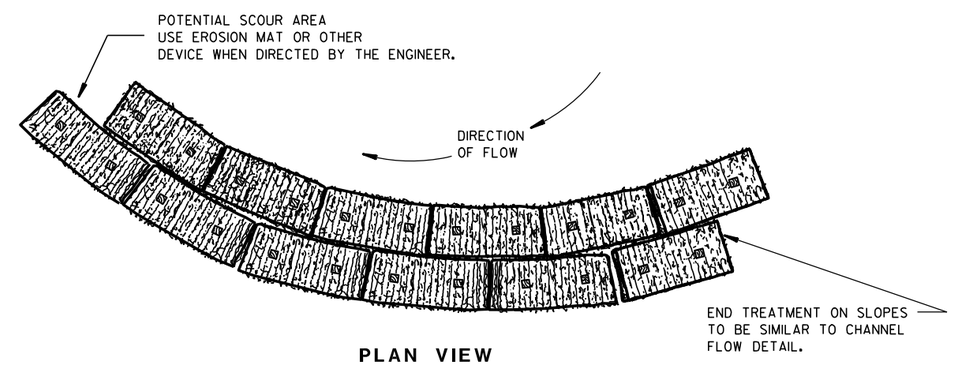

PLAN VIEW

WHEN ALTERING THE DIRECTION OF FLOW

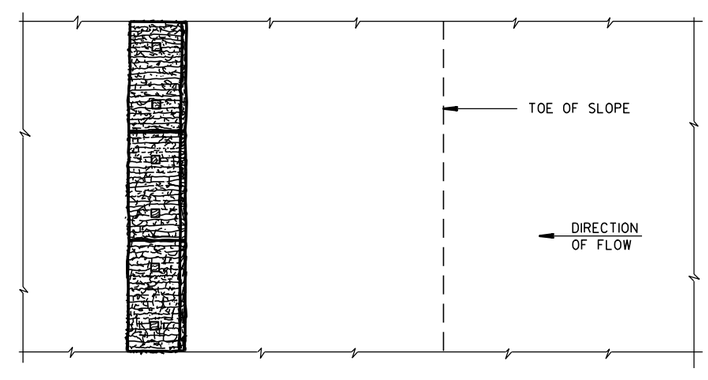

PLAN VIEW

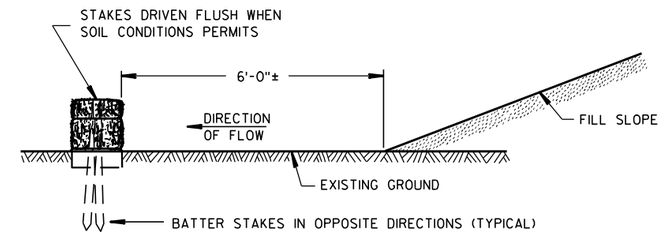

FRONT ELEVATION

WHEN EXISTING GROUND SLOPES AWAY FROM FILL SLOPE

EROSION BALES FOR SHEET FLOW

TYPICAL INSTALLATIONS OF EROSION BALES / TEMPORARY DITCH CHECKS

STATE OF WISCONSIN
DEPARTMENT OF TRANSPORTATION

APPROVED

6/04/02 — DATE

/S/ Beth Cann — CHIEF ROADWAY DEVELOPMENT ENGINEER

FHWA

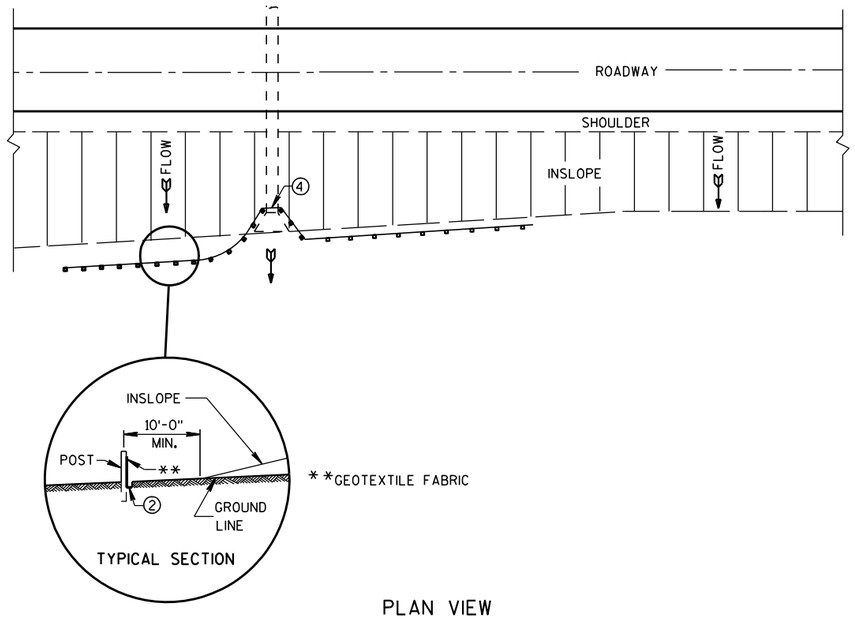

PLAN VIEW

TYPICAL APPLICATION OF SILT FENCE

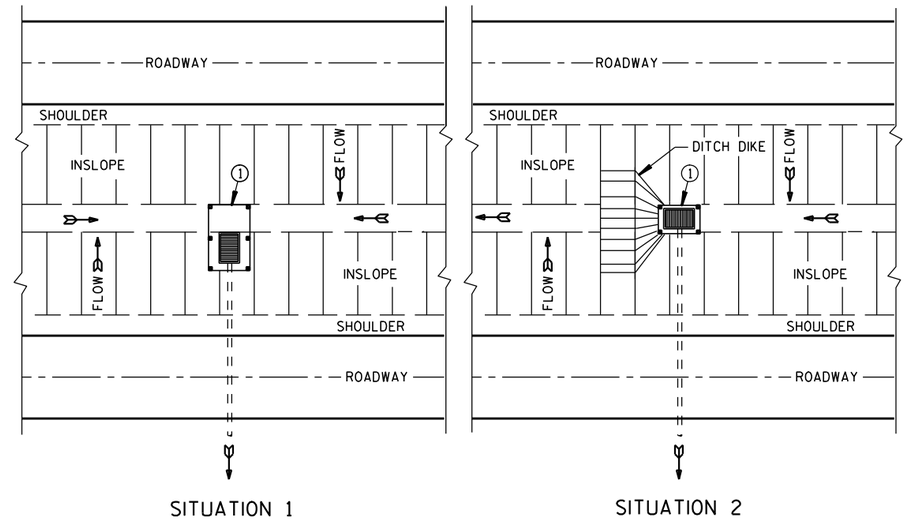

PLAN VIEW

SILT FENCE AT MEDIAN SURFACE DRAINS

GENERAL NOTES

DETAILS OF CONSTRUCTION NOT SHOWN ON THIS DRAWING SHALL CONFORM TO THE PERTINENT REQUIREMENTS OF THE STANDARD SPECIFICATIONS AND APPLICABLE SPECIAL PROVISIONS.

① HORIZONTAL BRACE REQUIRED WITH 2" X 4" WOODEN FRAME OR EQUIVALENT AT TOP OF POSTS.

② FOR MANUAL INSTALLATIONS THE TRENCH SHALL BE A MINIMUM OF 4" WIDE & 6" DEEP TO BURY AND ANCHOR THE GEOTEXTILE FABRIC. FOLD MATERIAL TO FIT TRENCH AND BACKFILL & COMPACT TRENCH WITH EXCAVATED SOIL.

③ WOOD POSTS SHALL BE A MINIMUM SIZE OF 1⅛" X 1⅛" OF OAK OR HICKORY.

④ SILT FENCE TO EXTEND ACROSS THE TOP OF THE PIPE.

⑤ CONSTRUCT SILT FENCE FROM A CONTINUOUS ROLL IF POSSIBLE BY CUTTING LENGTHS TO AVOID JOINTS. IF A JOINT IS NECESSARY USE ONE OF THE FOLLOWING TWO METHODS; A) OVERLAP THE END POSTS AND TWIST, OR ROTATE, AT LEAST 180 DEGREES. B) HOOK THE END OF EACH SILT FENCE LENGTH.

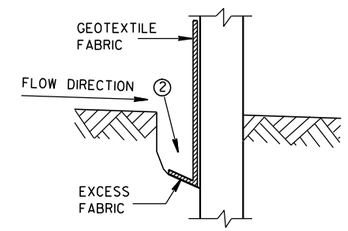

TRENCH DETAIL

NOTE: ADDITIONAL POST DEPTH OR TIE BACKS MAY BE REQUIRED IN UNSTABLE SOILS

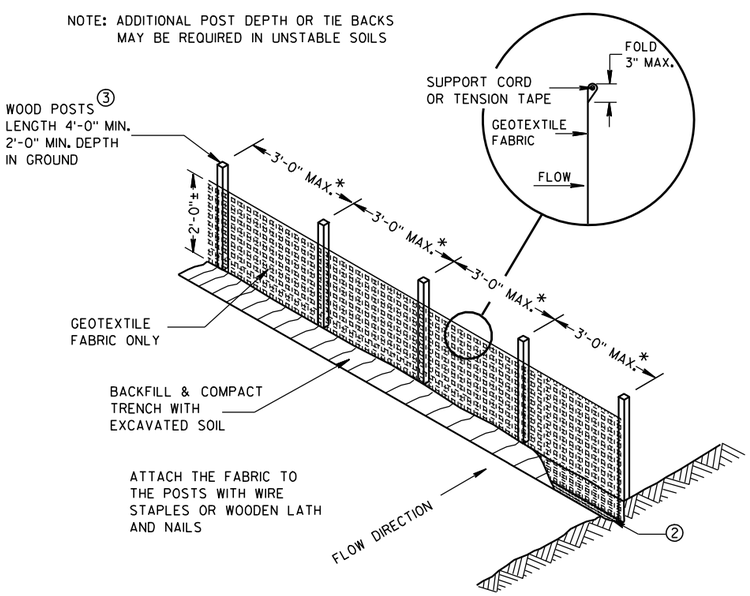

*NOTE: 8'-0" POST SPACING ALLOWED IF A WOVEN GEOTEXTILE FABRIC IS USED.

SILT FENCE

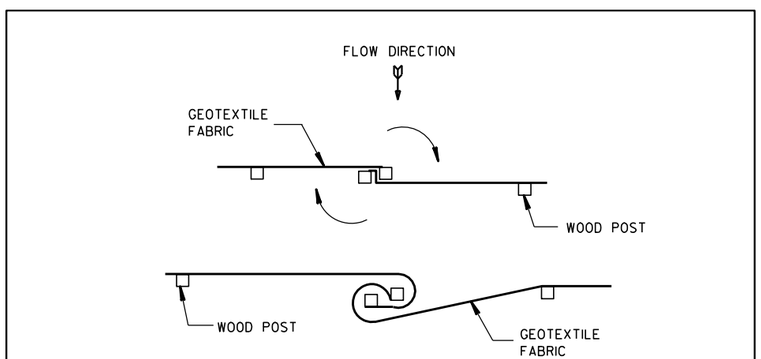

TWIST METHOD

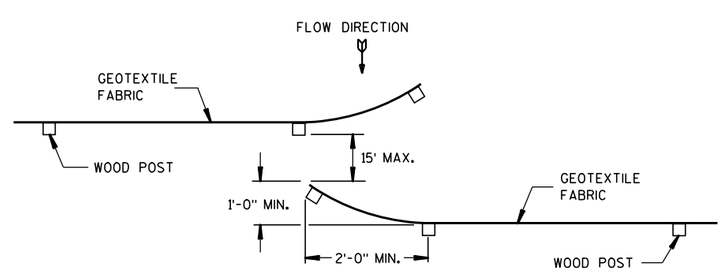

HOOK METHOD

JOINING TWO LENGTHS OF SILT FENCE ⑤

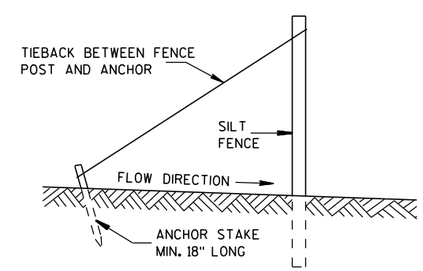

SILT FENCE TIE BACK

(WHEN REQUIRED BY THE ENGINEER)

SILT FENCE
STATE OF WISCONSIN DEPARTMENT OF TRANSPORTATION
APPROVED 4-29-05 DATE — /S/ Beth Cann-- CHIEF ROADWAY DEVELOP ENGINEER FHWA

6

6

S.D.D. 8 E 9-6

S.D.D. 8 E 9-6

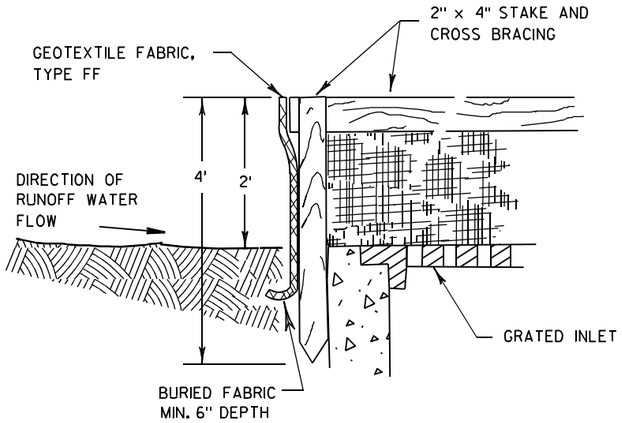

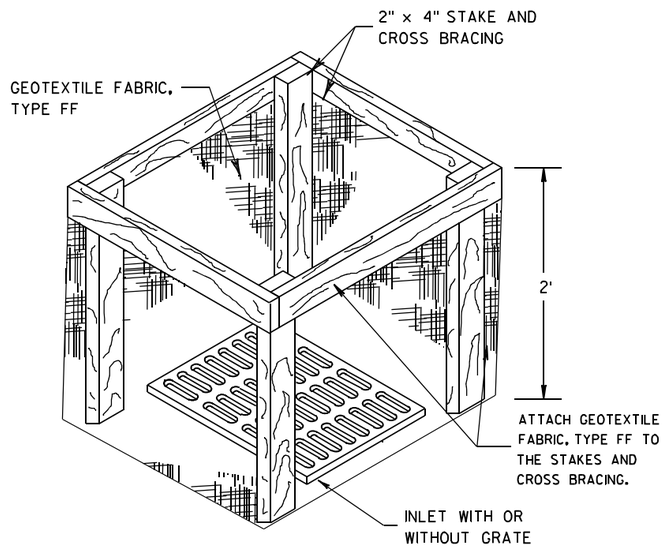

INLET PROTECTION, TYPE A

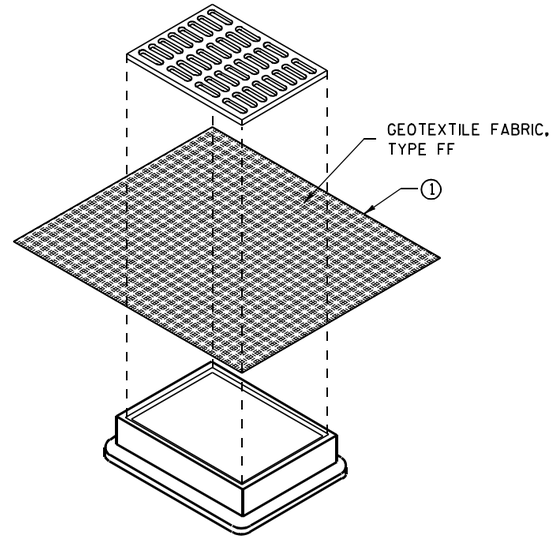

INLET PROTECTION, TYPE B (WITHOUT CURB BOX)

(CAN BE INSTALLED IN ANY INLET WITHOUT A CURB BOX)

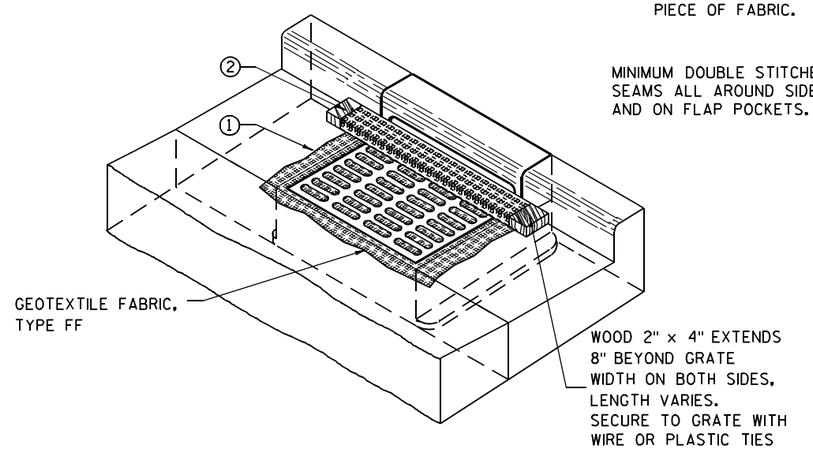

INLET PROTECTION, TYPE C (WITH CURB BOX)

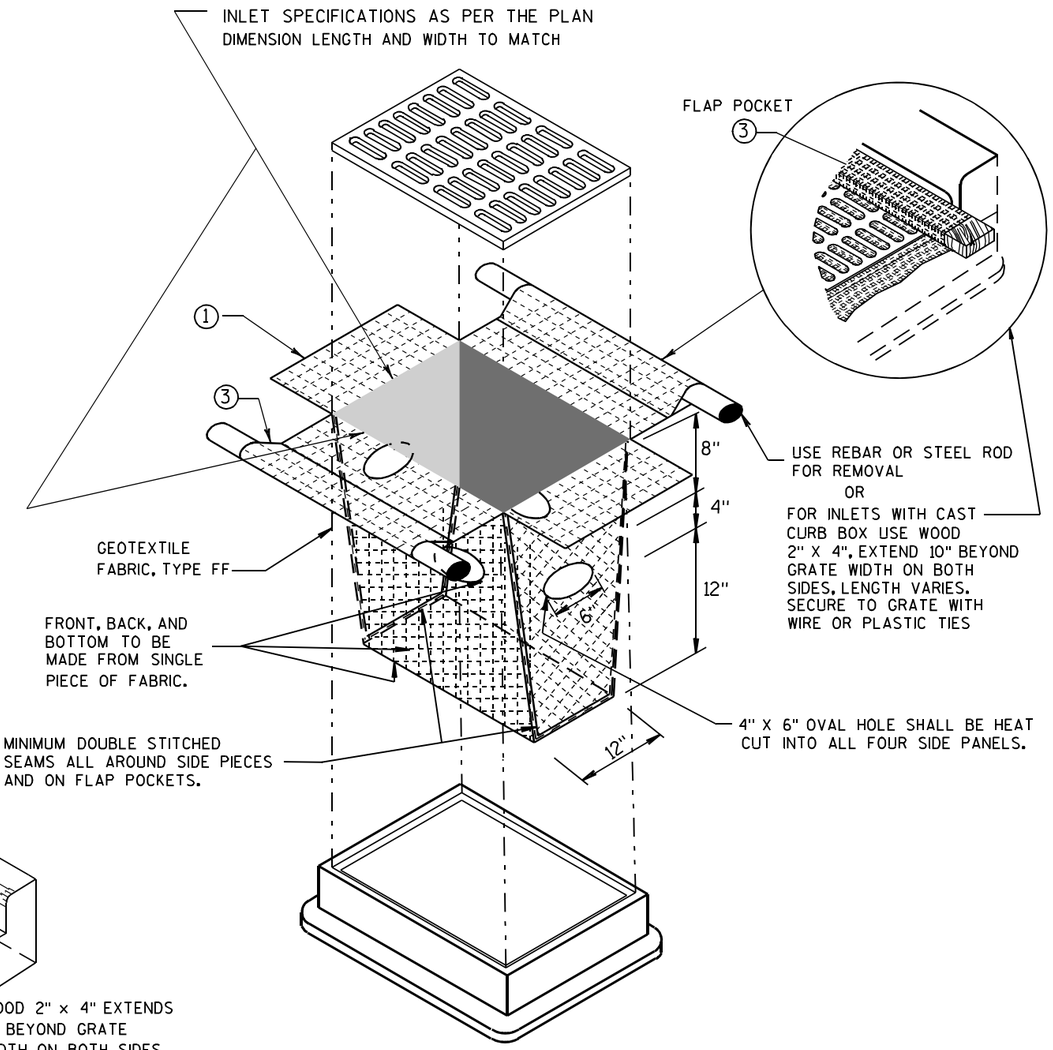

INLET PROTECTION, TYPE D

(CAN BE INSTALLED IN ANY INLET TYPE WITH OR WITHOUT A CURB BOX AS PER NOTE 2)

GENERAL NOTES

INLET PROTECTION DEVICES SHALL BE MAINTAINED OR REPLACED AT THE DIRECTION OF THE ENGINEER.

MANUFACTURED ALTERNATIVES APPROVED AND LISTED ON THE DEPARTMENT'S EROSION CONTROL PRODUCT ACCEPTABILITY LIST MAY BE SUBSTITUTED.

WHEN REMOVING OR MAINTAINING INLET PROTECTION, CARE SHALL BE TAKEN SO THAT THE SEDIMENT TRAPPED ON THE GEOTEXTILE FABRIC DOES NOT FALL INTO THE INLET. ANY MATERIAL FALLING INTO THE INLET SHALL BE REMOVED IMMEDIATELY.

1 FINISHED SIZE, INCLUDING FLAP POCKETS WHERE REQUIRED, SHALL EXTEND A MINIMUM OF 10" AROUND THE PERIMETER TO FACILITATE MAINTENANCE OR REMOVAL.

2 FOR INLET PROTECTION, TYPE C (WITH CURB BOX), AN ADDITIONAL 18" OF FABRIC IS WRAPPED AROUND THE WOOD AND SECURED WITH STAPLES. THE WOOD SHALL NOT BLOCK THE ENTIRE HEIGHT OF THE CURB BOX OPENING.

3 FLAP POCKETS SHALL BE LARGE ENOUGH TO ACCEPT WOOD 2X4.

INSTALLATION NOTES

TYPE B & C

TRIM EXCESS FABRIC IN THE FLOW LINE TO WITHIN 3" OF THE GRATE.

THE CONTRACTOR SHALL DEMONSTRATE A METHOD OF MAINTENANCE, USING A SEWN FLAP, HAND HOLDS OR OTHER METHOD TO PREVENT ACCUMULATED SEDIMENT FROM ENTERING THE INLET.

TYPE D

DO NOT INSTALL INLET PROTECTION TYPE D IN INLETS SHALLOWER THAN 30", MEASURED FROM THE BOTTOM OF THE INLET TO THE TOP OF THE GRATE.

TRIM EXCESS FABRIC IN THE FLOW LINE TO WITHIN 3" OF THE GRATE.

THE INSTALLED BAG SHALL HAVE A MINIMUM SIDE CLEARANCE, BETWEEN THE INLET WALLS AND THE BAG, MEASURED AT THE BOTTOM OF THE OVERFLOW HOLES, OF 3". WHERE NECESSARY THE CONTRACTOR SHALL CINCH THE BAG, USING PLASTIC ZIP TIES, TO ACHIEVE THE 3" CLEARANCE. THE TIES SHALL BE PLACED AT A MAXIMUM OF 4" FROM THE BOTTOM OF THE BAG.

INLET PROTECTION TYPE A, B, C, AND D

STATE OF WISCONSIN
DEPARTMENT OF TRANSPORTATION

APPROVED
10/16/02 — DATE
/S/ Beth Cannon — CHIEF ROADWAY DEVELOPMENT ENGINEER
FHWA

6

S.D.D. 8 E 10-2

GENERAL NOTES

DETAILS OF CONSTRUCTION, MATERIALS AND WORKMANSHIP NOT SHOWN ON THIS DRAWING SHALL CONFORM TO THE PERTINENT REQUIREMENTS OF THE STANDARD SPECIFICATIONS AND THE APPLICABLE SPECIAL PROVISIONS.

TRACKING PAD SHALL BE INSPECTED DAILY. DEFICIENT AREAS SHALL BE REPAIRED OR REPLACED IMMEDIATELY.

TRACKING PAD TO BE REMOVED AFTER CONSTRUCTION IS COMPLETED.

TRACKING PAD SHALL BE THE FULL WIDTH OF THE EGRESS POINT.

SURFACE WATER MUST BE PREVENTED FROM PASSING THROUGH THE TRACKING PAD. FLOWS SHALL BE DIVERTED AWAY, AROUND OR CONVEYED UNDER THE TRACKING PAD.

CULVERT PIPE OR OTHER BMP USED TO DIVERT WATER AWAY, AROUND OR UNDER THE TRACKING PAD SHALL BE DESIGNED TO CONVEY THE 2 YEAR - 24 HOUR EVENT.

THE COST OF ADDITIONAL BMP TO DIVERT WATER ARE INCIDENTAL TO THE TRACKING PAD BID ITEM.

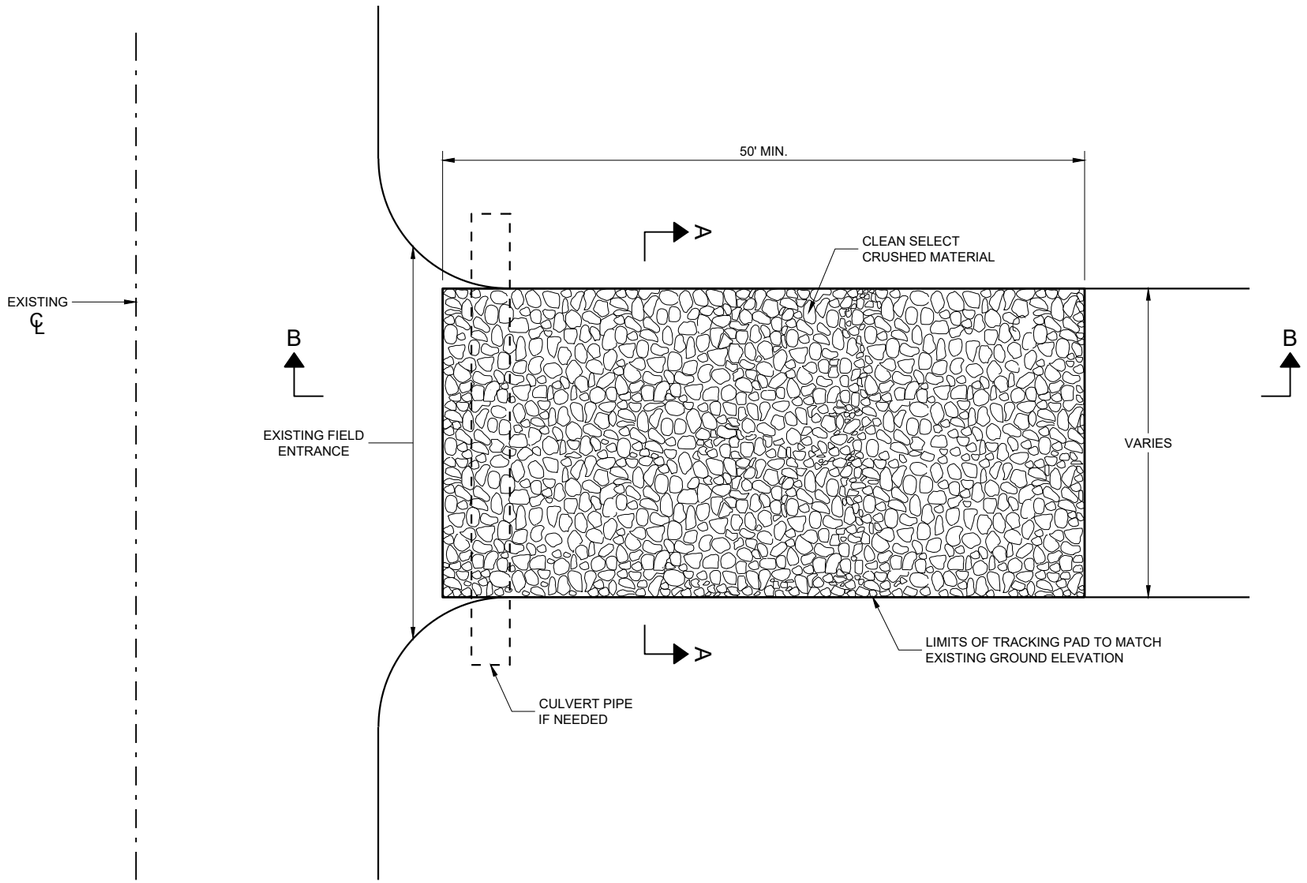

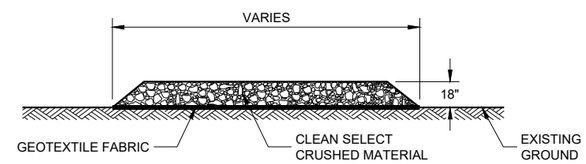

SECTION A - A

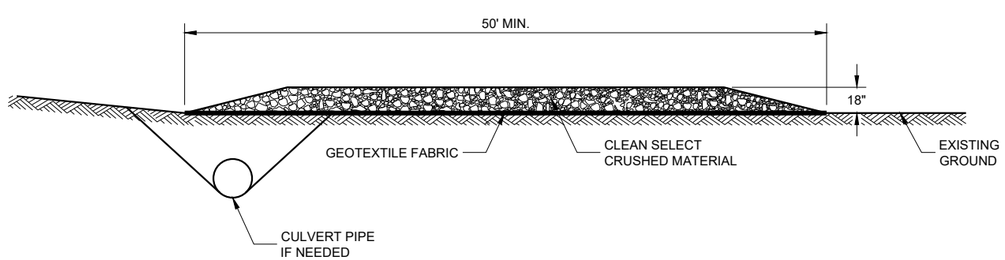

SECTION B - B

TRACKING PAD

STATE OF WISCONSIN
DEPARTMENT OF TRANSPORTATION

APPROVED
3/24/2011 — DATE
/S/ Jerry H. Zogg — ROADWAY STANDARDS DEVE ENGINEER
FHWA

6

6

SDD 08E14 - 01

SDD 08E14 - 01

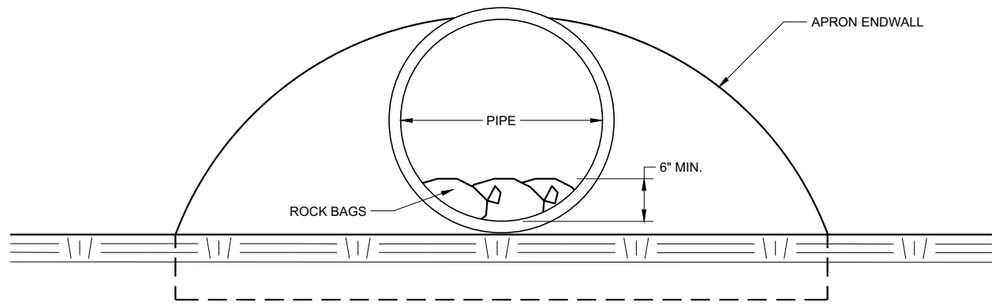

END VIEW

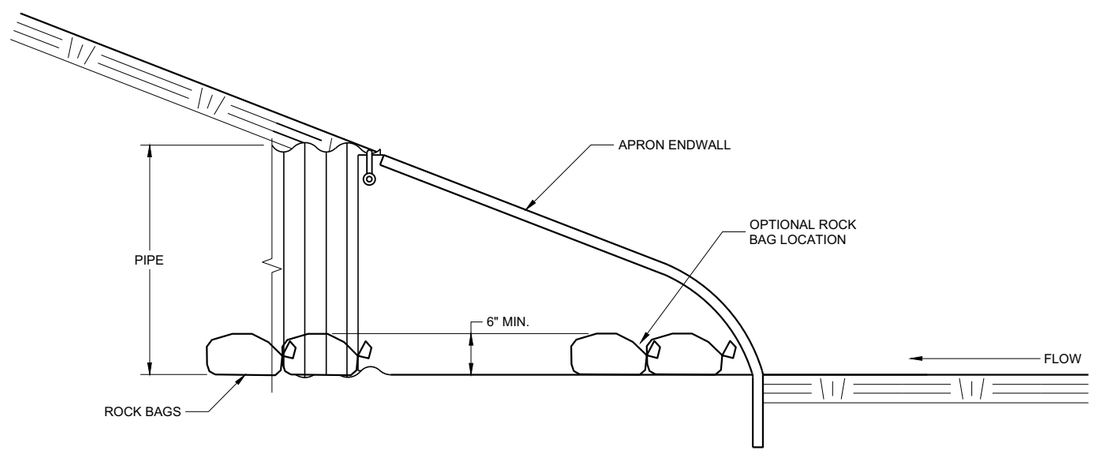

SIDE VIEW

CULVERT PIPE CHECK

(INSTALL ON INLET END ONLY)

CULVERT PIPE CHECK
STATE OF WISCONSIN DEPARTMENT OF TRANSPORTATION
APPROVED May 2019 — DATE /S/ Daniel Schave — EROSION CONTROL ENGI FHWA

6

6

SDD 08E15 - 01

SDD 08E15 - 01

METAL APRON ENDWALLS

PIPE DIA. (IN.)	MIN. THICK. (Inches) STEEL	MIN. THICK. (Inches) ALUM.	DIMENSIONS (Inches) A (±1")	B (MAX.)	H (±1")	L (±1 1/2")	L1 ①	L2 ①	W (±2")	APPROX. SLOPE	BODY
12	.064	.060	6	6	6	21	12	17 1/2	24	2 1/2 to 1	1 Pc.
15	.064	.060	7	8	6	26	14	21 3/4	30	2 1/2 to 1	1 Pc.
18	.064	.060	8	10	6	31	15	28 1/4	36	2 1/2 to 1	1 Pc.
21	.064	.060	9	12	6	36	18	29 5/8	42	2 1/2 to 1	1 Pc.
24	.064	.075	10	13	6	41	18	37 1/4	48	2 1/2 to 1	1 Pc.
30	.079	.075	12	16	8	51	18	52 1/4	60	2 1/2 to 1	1 Pc.
36	.079	.105	14	19	9	60	24	59 3/4	72	2 1/2 to 1	2 Pc.
42	.109	.105	16	22	11	69	24	75 5/8	84	2 1/2 to 1	2 Pc.
48	.109	.105	18	27	12	78	24	81	90	2 1/4 to 1	3 Pc.
54	.109	.105	18	30	12	84	30	85 1/2	102	2 1/4 to 1	3 Pc.
60	.109×	.105×	18	33	12	87	—	—	114	2 to 1	3 Pc.
66	.109×	.105×	18	36	12	87	—	—	120	2 to 1	3 Pc.
72	.109×	.105×	18	39	12	87	—	—	126	2 to 1	3 Pc.
78	.109×	.105×	18	42	12	87	—	—	132	1 1/2 to 1	3 Pc.
84	.109×	.105×	18	45	12	87	—	—	138	1 1/2 to 1	3 Pc.
90	.109×	.105×	18	37	12	87	—	—	144	1 1/2 to 1	3 Pc.
96	.109×	.105×	18	35	12	87	—	—	150	1 1/2 to 1	3 Pc.

× EXCEPT CENTER PANEL
SEE GENERAL NOTES

REINFORCED CONCRETE APRON ENDWALLS

PIPE DIA. (IN.)	DIMENSIONS (Inches) T	A	B	C	D	E	G	APPROX. SLOPE
12	2	4	24	48 7/8	72 7/8	24	2	3 to 1
15	2 1/4	6	27	46	73	30	2 1/4	3 to 1
18	2 1/2	9	27	46	73	36	2 1/2	3 to 1
21	2 3/4	9	36	37 1/2	73 1/2	42	2 3/4	3 to 1
24	3	9 1/2	43 1/2	30	73 1/2	48	3	3 to 1
27	3 1/4	10 1/2	49 1/2	24	73 1/2	54	3 1/4	3 to 1
30	3 1/2	12	54	19 3/4	73 1/2	60	3 1/2	3 to 1
36	4	15	63	34 3/4	97 3/4	72	4	3 to 1
42	4 1/2	21	63	35	98	78	4 1/2	3 to 1
48	5	24	72	26	98	84	5	3 to 1
54	5 1/2	27	65	*33 1/4-**35	*98 1/4-**100	90	5 1/2	2 2/5 to 1
60	6	*30-**35	60	39	99	96	5	2 to 1
66	6 1/2	*24-**30	*72-**78	*21-**27	99	102	5 1/2	2 to 1
72	7	*24-**36	78	21	99	108	6	2 to 1
78	7 1/2	*24-**36	78	21	99	114	6 1/2	2 to 1
84	8	36	90 1/2	21	111 1/2	120	6 1/2	1 1/2 to 1
90	8 1/2	41	87 1/2	24	111 1/2	132	6 1/2	1 1/2 to 1

*MINIMUM
**MAXIMUM

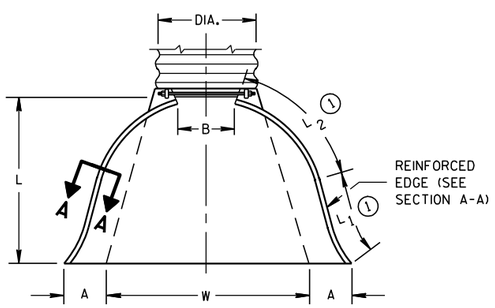

PLAN VIEW

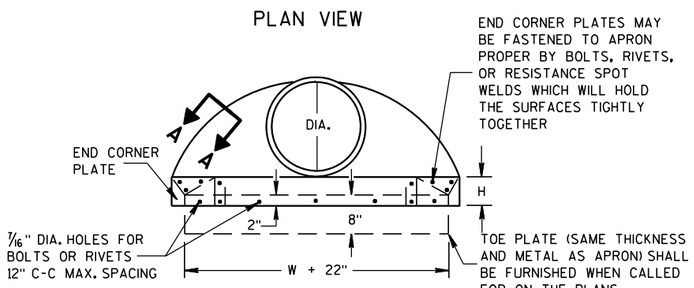

END VIEW

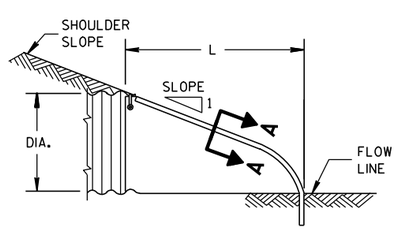

SIDE ELEVATION

METAL ENDWALLS

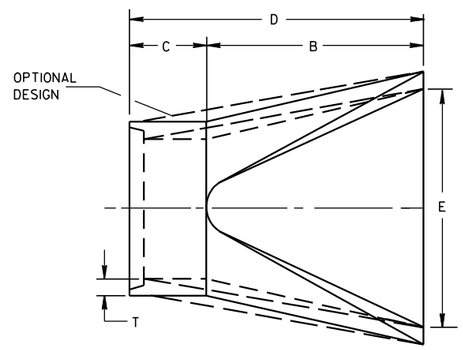

PLAN

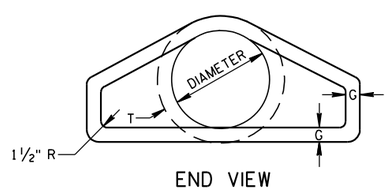

END VIEW

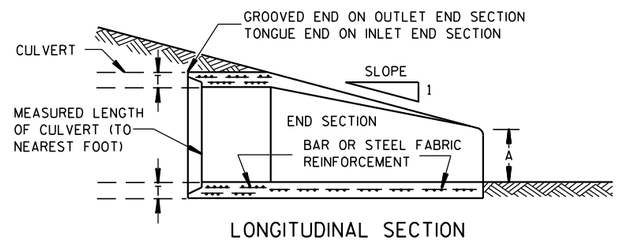

LONGITUDINAL SECTION

CONCRETE ENDWALLS

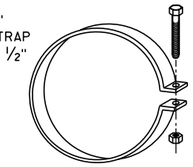

ALTERNATE FOR TYPE 1 CONNECTION

END SECTION CONNECTOR STRAP

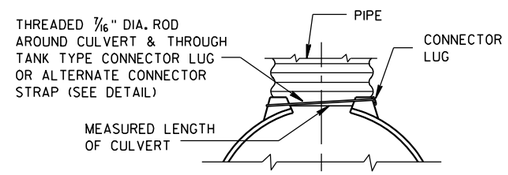

TYPE 1
FOR 12" THRU 24" CORR. PIPE

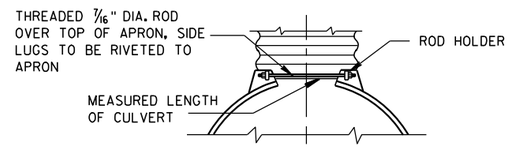

TYPE 2
FOR 30" THRU 96" CORR. PIPE

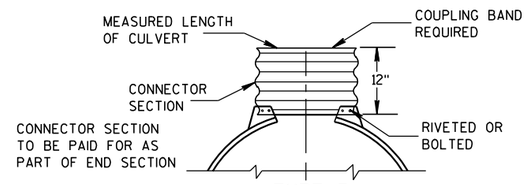

TYPE 3
FOR 42" THRU 96" CORR. PIPE

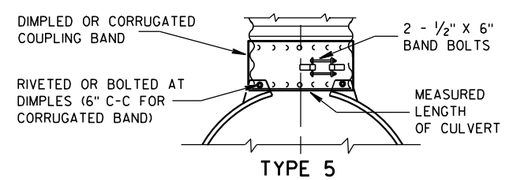

TYPE 5
ALTERNATE FOR:
ALL SIZES CORRUGATED CIRCULAR PIPE

NOTE: DIMPLED BAND FITS OVER OUTSIDE OF ENDWALL, AND CORRUGATED BAND FITS INSIDE ENDWALL. DIMPLED BAND MAY BE USED WITH HELICALLY CORRUGATED PIPE.

FOR CIRCUMFERENTIALLY CORRUGATED PIPE USE ENDWALL CONNECTION DETAILS 1, 2, 3 OR 5 AS APPLICABLE.

FOR HELICALLY CORRUGATED PIPE USE ENDWALL CONNECTION DETAILS 1, 2 OR 5.

FOR HELICALLY CORRUGATED PIPES WITH TWO CIRCUMFERENTIAL CORRUGATIONS AT EACH END USE ENDWALL CONNECTION DETAILS 1, 2 OR 3.

CONNECTION DETAILS

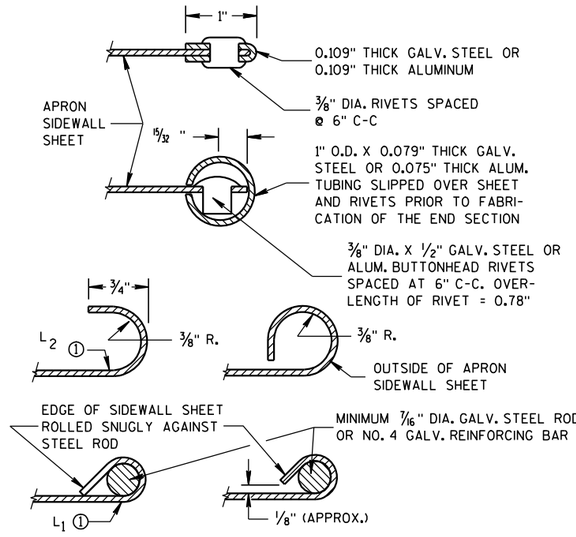

SECTION A-A

GENERAL NOTES

DETAILS OF CONSTRUCTION, MATERIALS AND WORKMANSHIP NOT SHOWN ON THIS DRAWING SHALL CONFORM TO THE PERTINENT REQUIREMENTS OF THE STANDARD SPECIFICATIONS AND THE APPLICABLE SPECIAL PROVISIONS.

CONCRETE CULVERT ENDWALLS MAY NOT BE USED WITH GALVANIZED STEEL OR ALUMINUM CULVERT PIPE OR VISE VERSA. GALVANIZED STEEL OR ALUMINUM ENDWALLS SHALL NORMALLY BE INSTALLED ON CULVERT PIPE OF THE SAME METAL.

ALL THREE PIECE STEEL APRON ENDWALLS FOR 60" DIAMETER PIPE AND LARGER SHALL HAVE 0.109" SIDES AND 0.138" CENTER PANELS. ALL THREE PIECE ALUMINUM APRON ENDWALLS FOR 60" DIAMETER PIPE AND LARGER SHALL HAVE 0.105" SIDES AND 0.134" CENTER PANELS. THE WIDTH OF CENTER PANELS SHALL BE GREATER THAN 20 PERCENT OF THE PIPE PERIMETER.

LAP SEAMS SHALL BE TIGHTLY JOINED BY GALVANIZED RIVETS OR BOLTS FOR STEEL UNITS AND ALUMINUM RIVETS AND BOLTS FOR ALUMINUM UNITS. FOR THE 60" THROUGH 96" DIAMETER APRON ENDWALL SIZES, THE REINFORCED EDGES AND CENTER PANEL SEAMS SHALL BE FURTHER REINFORCED WITH GALVANIZED STEEL OR ALUMINUM STIFFENER ANGLES. THE ANGLES SHALL BE ATTACHED BY GALVANIZED NUTS AND BOLTS FOR STEEL UNITS AND ALUMINUM NUTS AND BOLTS FOR ALUMINUM UNITS.

WHERE TWO OR MORE PIPES WITH APRON ENDWALLS ARE LAID ADJACENT TO EACH OTHER, THEY SHALL BE SEPARATED BY A DISTANCE SUFFICIENT TO PROVIDE A MINIMUM CLEARANCE OF 6 INCHES BETWEEN APRON ENDWALLS.

① FOR PIPE SIZES UP TO 60" DIAMETER, A 180° ROLLED EDGE MAY BE USED INSTEAD OF STEEL ROD REINFORCEMENT. SEE SECTION A-A.

APRON ENDWALLS FOR CULVERT PIPE

STATE OF WISCONSIN
DEPARTMENT OF TRANSPORTATION

APPROVED
11/30/94 — DATE
/S/ Rory L. Rhinesmith — CHIEF ROADWAY DEVELOPMENT ENGINEER
FHWA

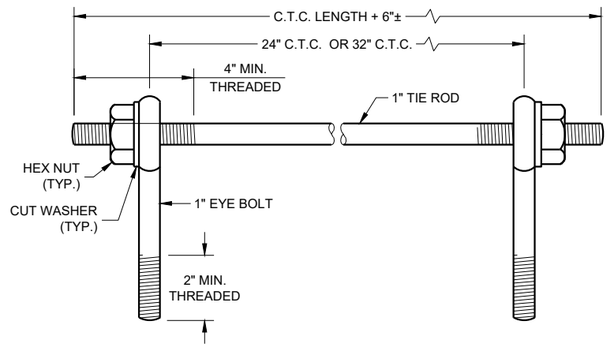

EYE BOLTS AND TIE ROD

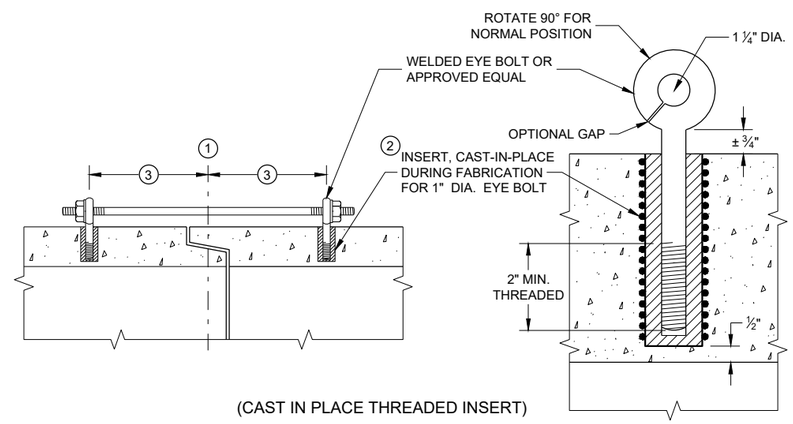

(CAST IN PLACE THREADED INSERT)

LONGITUDINAL SECTIONS

EYE BOLT AND TIE ROD ASSEMBLY (ALTERNATE NO. 1)

GENERAL NOTES

DETAILS OF CONSTRUCTION, MATERIALS, AND WORKMANSHIP NOT SHOWN ON THIS DRAWING SHALL CONFORM TO THE PERTINENT REQUIREMENTS OF THE STANDARD SPECIFICATIONS AND APPLICABLE SPECIAL PROVISIONS.

CONCRETE CULVERT AND STORM SEWER PIPE SHALL BE TIED TOGETHER IN THE MANNER ILLUSTRATED BY THIS DETAIL AT LOCATIONS DESIGNATED IN THE STANDARD SPECIFICATIONS AND THE PLAN. THE CONTRACTOR MAY USE EITHER ALTERNATE 1, 2 OR 3 FOR DRAINAGE STRUCTURES. ONLY ALTERNATE 1 AND 3 MAY BE USED FOR CATTLE PASSES, UNLESS OTHERWISE STATED IN THE CONTRACT. THE MATERIALS, FABRICATION AND WORK NECESSARY TO TIE THE PIPE BY THIS DETAIL WILL BE CONSIDERED INCIDENTAL TO THE PIPE AND APRON ENDWALLS IF REQUIRED.

DETAILED DRAWINGS FOR PROPOSED ALTERNATE DESIGNS FOR JOINT TIES SHALL BE SUBMITTED TO THE ENGINEER FOR APPROVAL.

JOINT TIES TO BE HOT-DIP GALVANIZED PER ASTM A 153.

1. CENTER LINE OF TONGUE AND GROOVE OR BELL AND SPIGOT JOINTS.
2. THE INSIDE OF THE THREADED INSERTS SHALL BE CLEAN TO ALLOW THE INSERTION OF THREADED EYE BOLTS.
3. HOLES SHALL BE CAST-IN-PLACE OR DRILLED PER THE APPLICABLE DETAIL, AND EQUAL DISTANCE FROM THE CENTERLINE OF THE JOINT.
4. BOLT PROJECTION INSIDE OF PIPE SHALL NOT EXCEED 2 INCHES.
5. OPENING TO BE ROD DIAMETER PLUS 1 INCH.
6. LENGTH ADEQUATE TO EXTEND TO WITHIN ½ INCH OF THE INNER SURFACE OF THE PIPE.
7. EYE BOLT LENGTH DETERMINED BY WALL THICKNESS, BELL THICKNESS AND BOLT PROJECTION INSIDE PIPE.

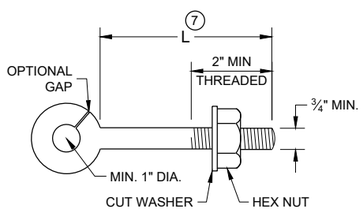

EYE BOLT 7

NOTE: TWO EYE BOLTS MAY BE USED WITH A 30" OR 38" LONG THREADED ROD IN LIEU OF THE 90° BENT TIE ROD.

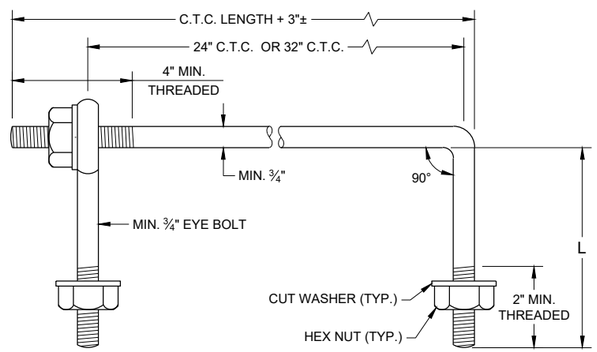

EYE BOLT AND TIE ROD

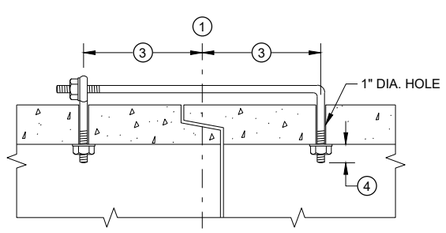

(TONGUE AND GROOVE PIPE)

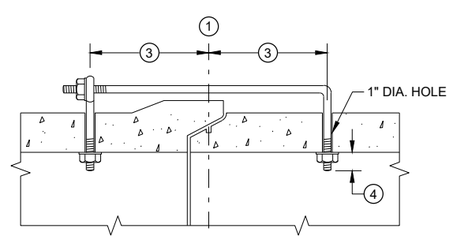

(MODIFIED BELL PIPE)

LONGITUDINAL SECTION

(JOINT TIES FOR 18" TO 66" DIA. CONCRETE PIPE)

EYE BOLT AND TIE ROD ASSEMBLY (ALTERNATE NO. 2)

ADJUSTABLE TIE ROD TABLE

PIPE DIAMETER	TIE ROD DIAMETER	D	L_1	N
12 - 60	⅝	⅝	5	½
66 - 84	¾	¾	5	½
90 - 144	1	1	7	1 7/16

DIMENSIONS SHOWN ARE IN INCHES

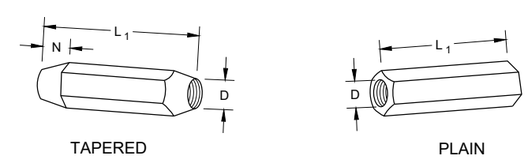

RIGHT AND LEFT THREADS

SLEEVE NUTS

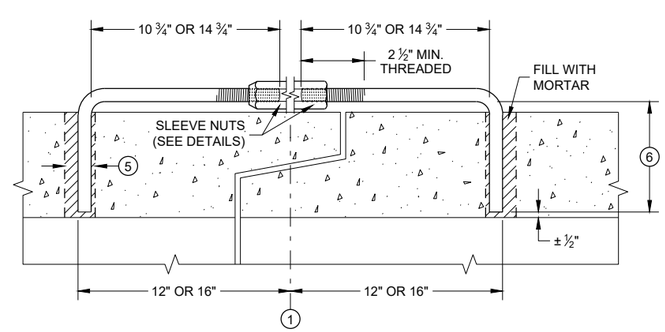

LONGITUDINAL SECTION

ADJUSTABLE TIE ROD (ALTERNATE NO. 3)

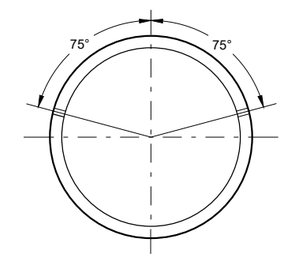

PLACEMENT OF (2) CAST-IN-PLACE INSERTS OR HOLES DURING FABRICATION FOR PIPE SECTIONS REQUIRING TIE RODS

TRANSVERSE SECTION

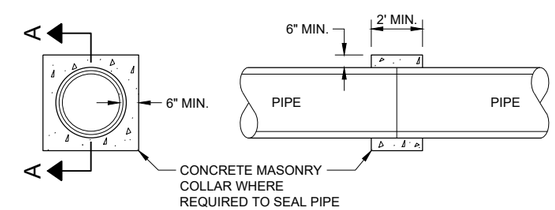

SECTION A - A

CONCRETE COLLAR DETAIL

JOINT TIES FOR CONCRETE PIPE AND CONCRETE COLLAR DETAIL

STATE OF WISCONSIN
DEPARTMENT OF TRANSPORTATION

APPROVED
November 2021 — DATE
/S/ Rodney Taylor — ROADWAY STANDARDS DEVE ENGINEER
FHWA

6

SDD 08F04 - 08

NOTE:
WHEN NOTED ON PLANS, INSTALL ONE TRACER MARKER POST WITH ONE 1" CONDUIT.

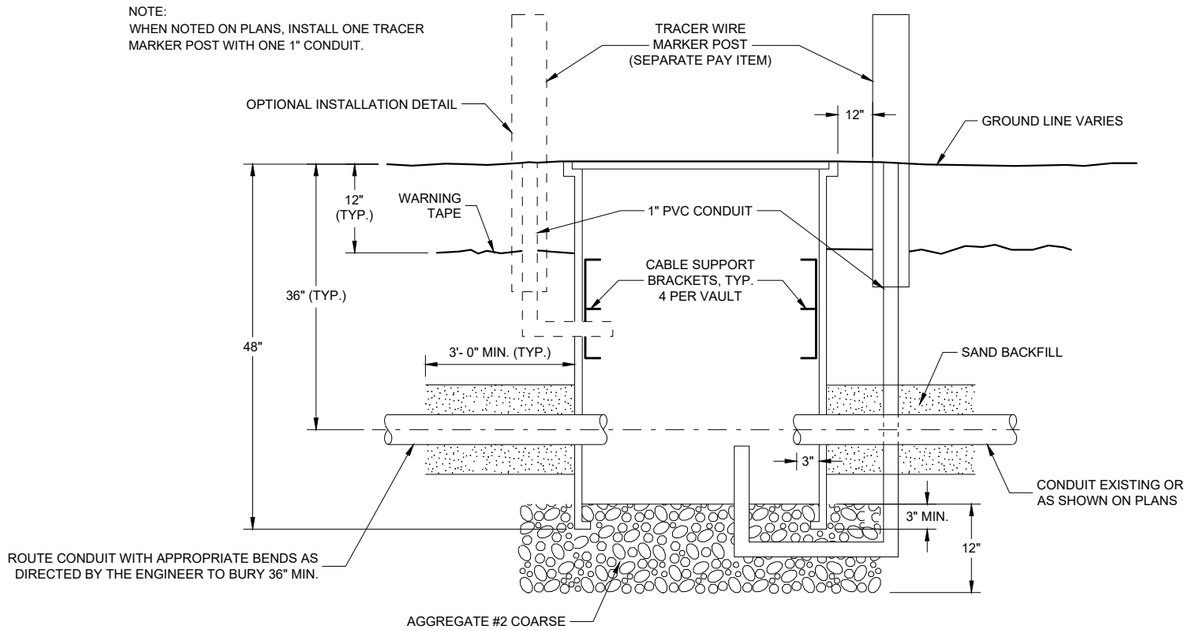

SECTION A - A

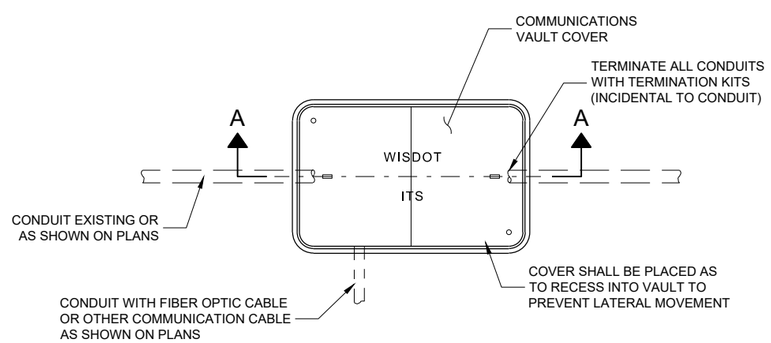

PLAN VIEW

COMMUNICATIONS VAULT TYPE 1

GENERAL NOTES

PROVIDE VAULT WITH OPEN BASE.

COVER SHALL HAVE A MINIMUM DESIGN LOAD OF 15,000 LBS AND SHALL LOCK.

ALL OPENINGS IN STRUCTURE MUST BE MACHINED AT TIME OF FABRICATION, OR PUNCH DRIVEN AT TIME OF PLACEMENT.

VAULTS SHALL BE OF ONE-PIECE CONSTRUCTION. TWO-PIECE/STACKABLE VAULTS WILL NOT BE PERMITTED.

FIELD PLACEMENT OF COMMUNICATIONS VAULTS SHALL BE AS DIRECTED BY THE ENGINEER.

FIBER TRACER MARKER POSTS SHALL BE CONSTRUCTED WITH HIGH-IMPACT PLASTIC MATERIAL WHICH IS FADE RESISTANT AND UV STABLE. ALL HARDWARE SHALL BE STAINLESS STEEL AND CONTAIN A MINIMUM OF FIVE STANDARD TERMINALS.

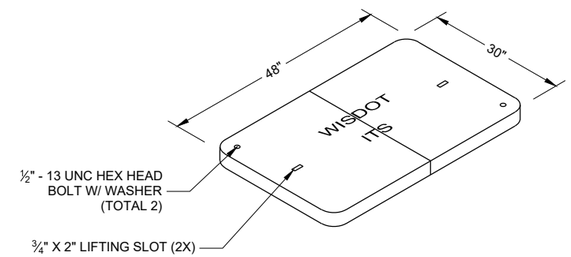

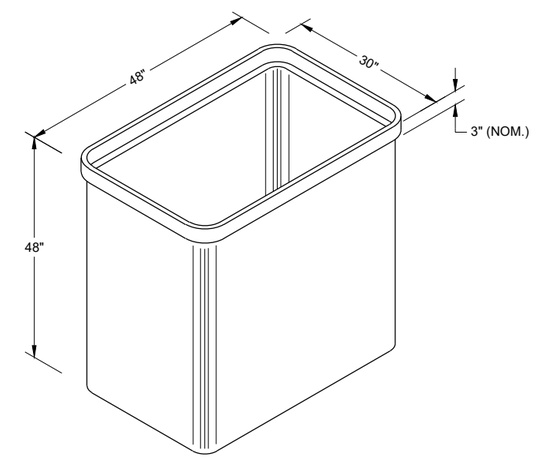

ISOMETRIC VIEW

6

6

SDD 09H09 - 02

SDD 09H09 - 02

COMMUNICATION VAULT TYPE 1

STATE OF WISCONSIN
DEPARTMENT OF TRANSPORTATION

APPROVED
May 2017 /S/ Ahmet Demirbilek
DATE STATE ELECTRICAL ENGI

FHWA

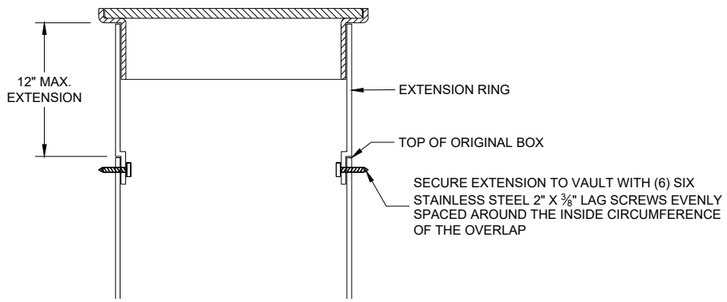

VAULT EXTENSION

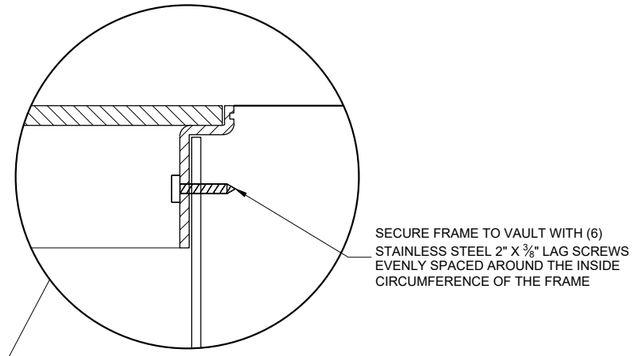

INSTALLED IN SOD OR CRUSHED AGGREGATE

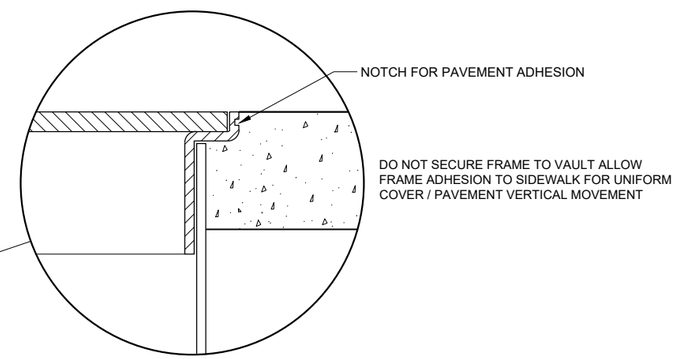

INSTALLED IN SIDEWALK

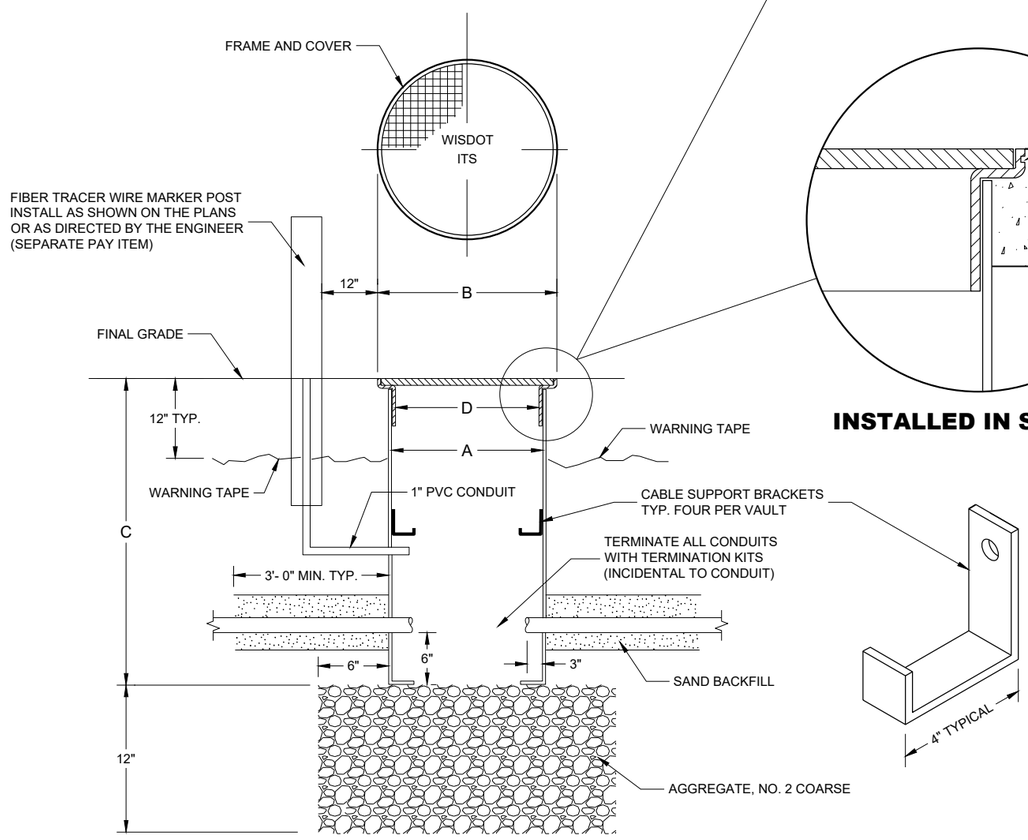

ROUND COMMUNICATIONS VAULT

GENERAL NOTES

DETAILS OF CONSTRUCTION, MATERIALS AND WORKMANSHIP NOT SHOWN ON THIS DRAWING SHALL CONFORM TO THE PERTINENT REQUIREMENTS OF THE CONTRACT.

ALL VAULTS, FRAMES AND COVERS SHALL BE SUITABLE FOR TIER 15 LOADING AS SPECIFIED IN ANSI/SCTE 77.

PROVIDE AN OPENING FOR TOOL ASSISTED COVER REMOVAL NOT LARGE ENOUGH TO PERMIT PASSAGE OF A SPHERE MORE THAN 1/2" DIAMETER.

ENSURE COVER SURFACE IS SKID RESISTANT WITH A COEFFICIENT OF FRICTION OF AT LEAST 0.5 AND VERTICAL SURFACE DISCONTINUITIES LESS THAN ¼".

COVER SHALL BE MAGNETICALLY LOCATABLE.

VAULTS AND EXTENSIONS ARE TRIMMABLE FOR CUSTOM LENGTHS. TRIMMED PIECES SHALL MAINTAIN A UNIFORM LENGTH.

ENTRANCE HOLES INTO VAULT SHALL BE FIELD CUT AT TIME OF PLACEMENT WITH A CIRCULAR HOLE SAW OR HYDRAULIC CONDUIT PUNCH. HOLE SIZE SHALL BE THE OUTSIDE DIAMETER OF THE CONDUIT THAT IS TO FIT IN THE OPENING PLUS NO MORE THAN ¼".

THE CONTRACTOR SHALL NOT INSTALL CABLE IN ANY VAULT UNTIL ITS INSTALLATION HAS BEEN INSPECTED AND ACCEPTED BY THE ENGINEER.

VAULT EXTENSION MAY ONLY BE USED IF DIRECTED BY THE ENGINEER.

CABLE SUPPORT BRACKETS SHALL BE STAINLESS STEEL AND FASTENED TO THE SIDE WALL WITH ⅜" STAINLESS STEEL BOLT AND NUT. BRACKETS SHALL BE LOCATED AS DIRECTED BY THE ENGINEER.

FIBER TRACER MARKER POSTS SHALL BE CONSTRUCTED WITH HIGH-IMPACT PLASTIC MATERIAL WHICH IS FADE RESISTANT AND UV STABLE. ALL HARDWARE SHALL BE STAINLESS STEEL AND CONTAIN A MINIMUM OF FIVE STANDARD TERMINALS.

TABLE OF NOMINAL DIMENSIONS AND WEIGHTS

DIMENSION IN INCHES		COMMUNICATIONS VAULT
VAULT DIAMETER (INSIDE)**	A	36
VAULT OVERALL OUTSIDE DIAMETER	B	39
VAULT LENGTH	C	42
FRAME OPENING	D	34 ½
WEIGHT IN POUNDS*		
COVER		95
VAULT ONLY		85

* THE ACTUAL WEIGHT OF THE COVER AND VAULT MAY VARY NOT TO EXCEED 100 LBS FOR THE COVER AND 100 LBS FOR THE VAULT ONLY.

** DIAMETER VARIES FROM TOP TO BOTTOM WITH THE DIAMETER LARGER AT THE BOTTOM TO PREVENT FROST HEAVE.

COMMUNICATION VAULT TYPE - ROUND

STATE OF WISCONSIN
DEPARTMENT OF TRANSPORTATION

APPROVED
May 2017 — DATE
/S/ Ahmet Demirbilek — STATE ELECTRICAL ENGI
FHWA

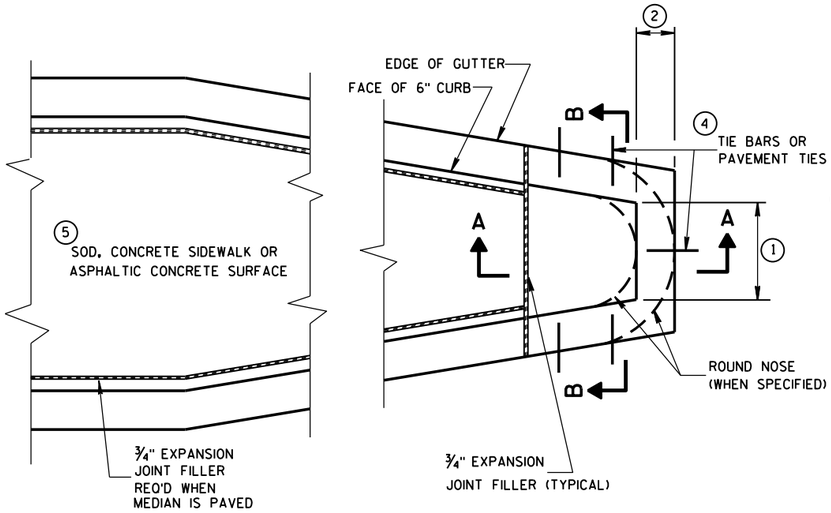

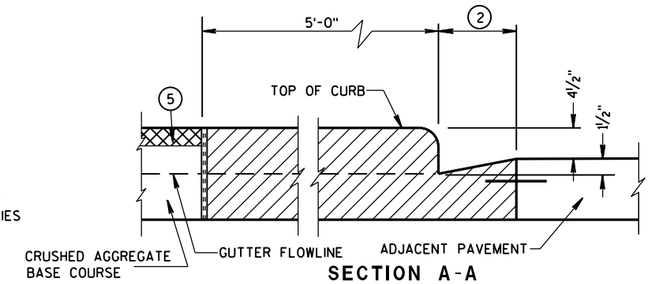

SECTION A-A

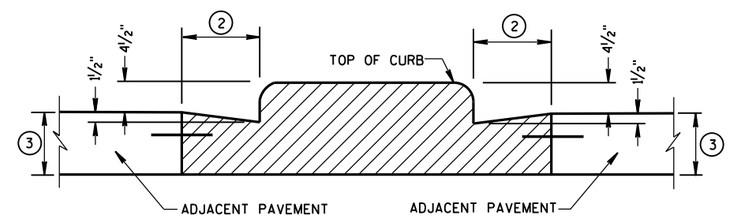

SECTION B-B

CONCRETE MEDIAN BLUNT NOSE DETAIL

GENERAL NOTES

DETAILS OF CONSTRUCTION, MATERIALS AND WORKMANSHIP NOT SHOWN ON THIS DRAWING SHALL CONFORM TO THE PERTINENT REQUIREMENTS OF THE STANDARD SPECIFICATIONS AND THE APPLICABLE SPECIAL PROVISIONS.

1. SEE PLAN FOR MEDIAN NOSE WIDTH AND RADIUS (FOR ROUND NOSE ALTERNATE).
2. WIDTH OF GUTTER TO MATCH EXISTING ADJACENT GUTTER OR AS SPECIFIED ELSEWHERE IN THE PLAN.
3. DEPTH EQUAL TO ADJACENT PAVEMENT. ADJACENT PAVEMENT STRUCTURE DETAILS ARE SHOWN ON THE PLAN. TYPICAL OPTIONS ARE:
   (1) NEW OR EXISTING CONCRETE PAVEMENT.
   (2) ASPHALTIC CONCRETE PAVEMENT OVER NEW OR EXISTING CONCRETE BASE COURSE.
   (3) ASPHALTIC CONCRETE PAVEMENT OVER CRUSHED AGGREGATE BASE COURSE.
4. TIE BARS OR PAVEMENT TIES REQUIRED IN NEW CONCRETE PAVEMENT OR CONCRETE BASE COURSE. TIE BARS SHALL BE NO. 4 X 2'-0" SPACED AT 2'-0" C-C.

   PAVEMENT TIES REQUIRED IN EXISTING CONCRETE BASE COURSE. PAVEMENT TIES SHALL BE NO. 6 X 1'-0" SPACED AT 3'-0" C-C INSTALLED ON A HORIZONTAL SKEW OF 6:1. THE DIRECTION OF SKEW SHALL ALTERNATE AFTER EVERY ONE OR TWO BARS.
5. SURFACE TYPE AND DETAILS ARE SHOWN ELSEWHERE IN THE PLAN.

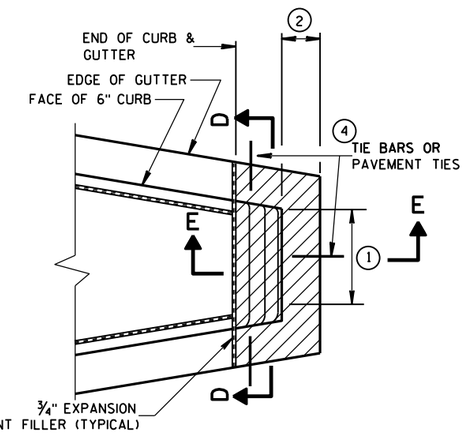

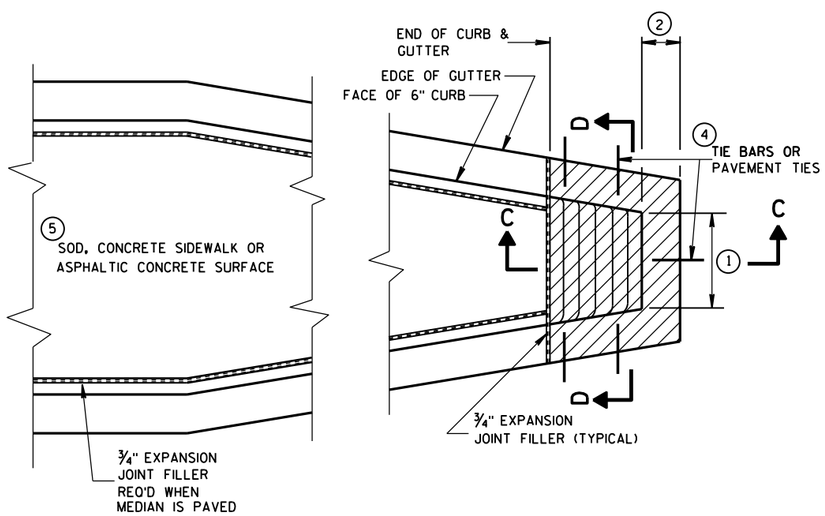

CONCRETE MEDIAN SLOPED NOSE TYPE 1

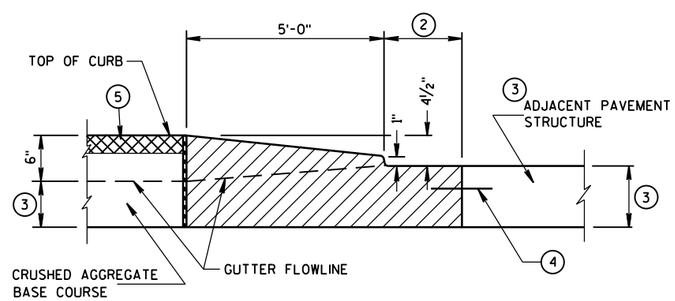

SECTION C-C

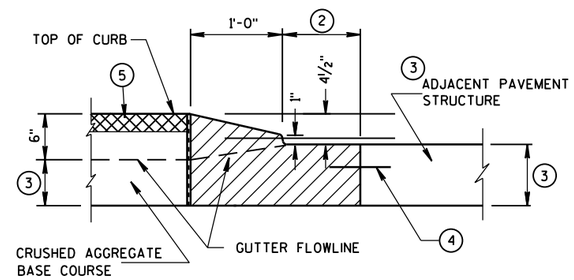

SECTION E-E

CONCRETE MEDIAN SLOPED NOSE TYPE 2

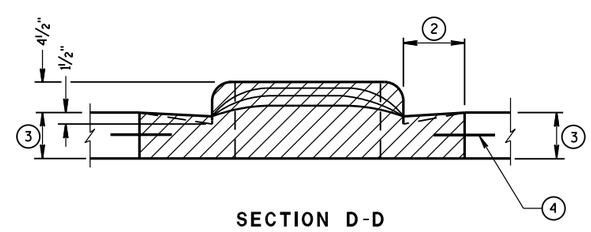

SECTION D-D

CONCRETE MEDIAN NOSE	
STATE OF WISCONSIN DEPARTMENT OF TRANSPORTATION	
APPROVED 6/8/2006 DATE	/S/ Jerry H. Zogg ROADWAY STANDARDS DEVELOPMENT ENGINEER
FHWA	

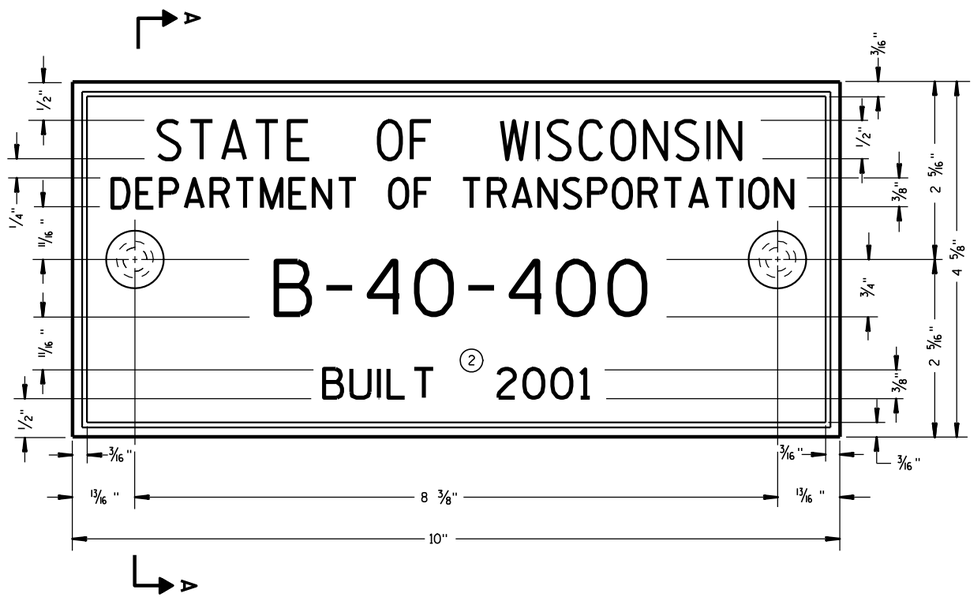

TYPICAL NAME PLATE

(BRIDGES, CULVERTS, AND RETAINING WALLS)

GENERAL NOTES

NAME PLATES TO BE INSTALLED ON BRIDGES, CULVERTS, AND RETAINING WALLS SHALL CONFORM TO THE REQUIREMENTS OF SECTION 502.3.11 OF THE STANDARD SPECIFICATIONS.

THE BRIDGE NUMBER AND YEAR BUILT SHOWN ON THIS DRAWING ARE EXAMPLES ONLY. SEE CONSTRUCTION PLANS FOR INDIVIDUAL NUMBERING AND YEAR BUILT.

① EPOXY RESIN SHALL BE FROM AN APPROVED MANUFACTURER AND USED IN ACCORDANCE WITH MANUFACTURER'S RECOMMENDATIONS.

② REHABILITATION OF AN EXISTING STRUCTURE SHOULD USE THE DATE OF ORIGINAL STRUCTURE CONSTRUCTION.

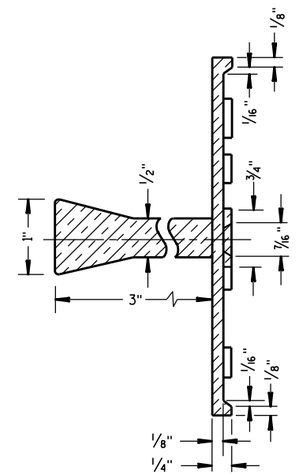

SECTION A-A

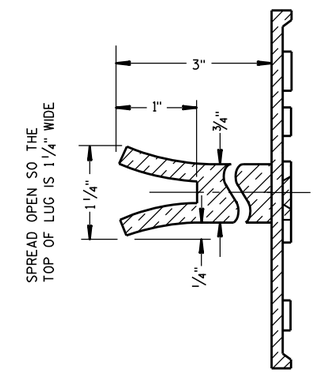

ALTERNATE LUG

6

FOR MULTI-UNIT STRUCTURES
LINE 3 ABOVE SHALL READ

B = BRIDGE
C = CULVERT
R = RETAINING WALL

COUNTY NO.

BRIDGE NO.

UNIT NO. FOR MULTIPLE
UNIT BRIDGE

B-40-400-1A

NUMBERING DESIGNATION
MULTI-UNIT STRUCTURES

① ADHERE ANCHOR LUG TO PRECAST RETAINING WALL WITH EPOXY RESIN.

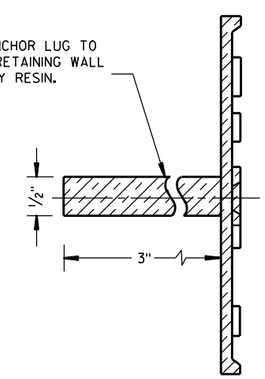

ALTERNATE LUG

(FOR ATTACHMENT TO PRECAST STRUCTURES)

NAME PLATE (STRUCTURES)		
STATE OF WISCONSIN DEPARTMENT OF TRANSPORTATION		
APPROVED		
3/26/10 DATE	/S/ Scot Beck-- CHIEF STRUCTURAL DEVELOP ENGINEER	
FHWA		

S.D.D. 12 A 3-10

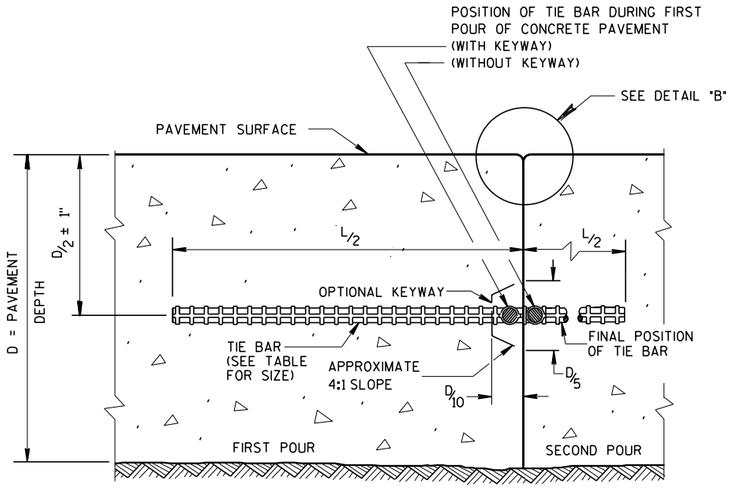

CONSTRUCTION JOINT

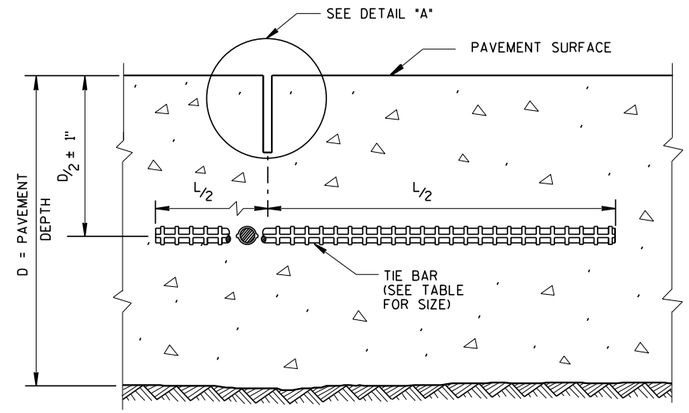

SAWED JOINT

GENERAL NOTES

CREATE A LONGITUDINAL JOINT FOR PAVEMENT WIDTHS GREATER THAN 15 FEET.

CORRELATE LONGITUDINAL JOINTS WITH LANE LINES WHEN POSSIBLE.

1. ANCHOR TIE BARS INTO DRILLED HOLES WITH AN EPOXY.
2. PAVEMENT THAT WAS IN PLACE PRIOR TO THE CONTRACT.

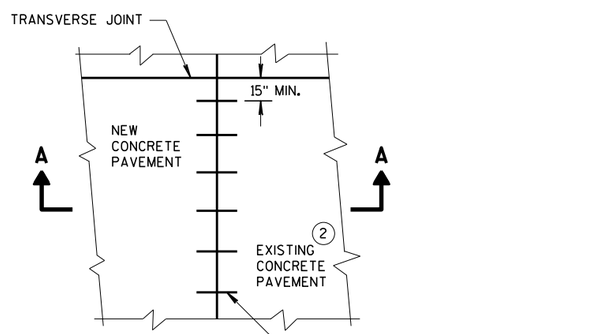

PLAN VIEW

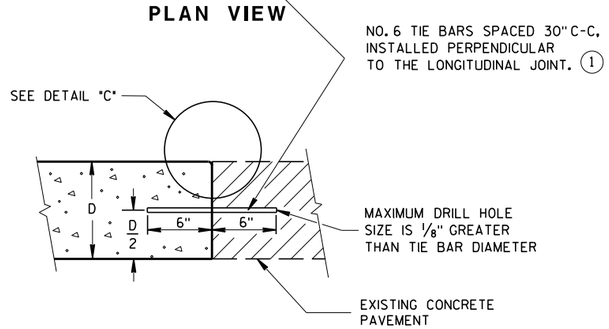

SECTION A-A
LONGITUDINAL CONSTRUCTION JOINT TIE BARS ANCHORED INTO EXISTING PAVEMENT

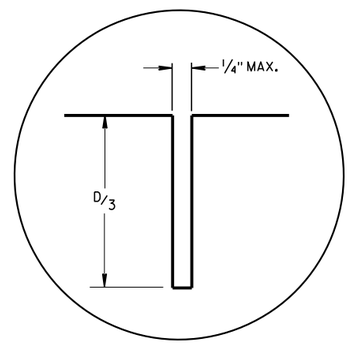

DETAIL "A"

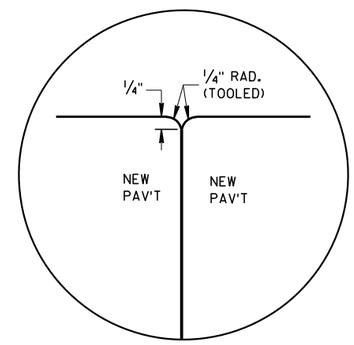

DETAIL "B"

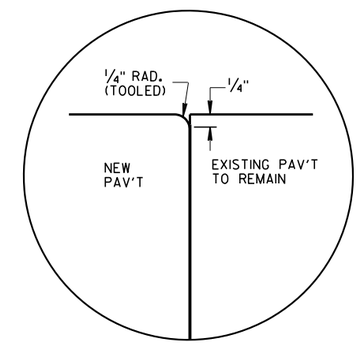

DETAIL "C"

TIE BAR TABLE

PAVEMENT DEPTH (D)	TIE BAR SIZE	TIE BAR LENGTH (L)	MAX. TIE BAR SPACING
< 10 1/2"	NO. 4	30"	36"
≥ 10 1/2"	NO. 5	36"	36"
	NO. 4 *	30"	24" **

* SUBSTITUTE BENT BARS AT LONGITUDINAL JOINTS WHEN EQUIPMENT LIMITATIONS DURING CONSTRUCTION WARRANT (e.g. AUXILIARY LANES OR TURN LANES)

** CONFORM TO 15" MINUMUM SPACING FROM TRANSVERSE JOINTS; SPACING BETWEEN TIE BARS WILL BE 30" AT TRANSVERSE JOINTS.

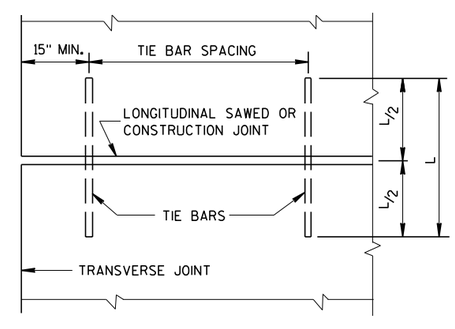

PLAN VIEW
SHOWING LOCATION OF TIE BARS

CONCRETE PAVEMENT
LONGITUDINAL JOINTS AND TIES

STATE OF WISCONSIN
DEPARTMENT OF TRANSPORTATION

APPROVED
March 2018 — DATE
/S/ Peter Kerr — PAVEMENT SUPE
FHWA

6

S.D.D. 13 C 1-19

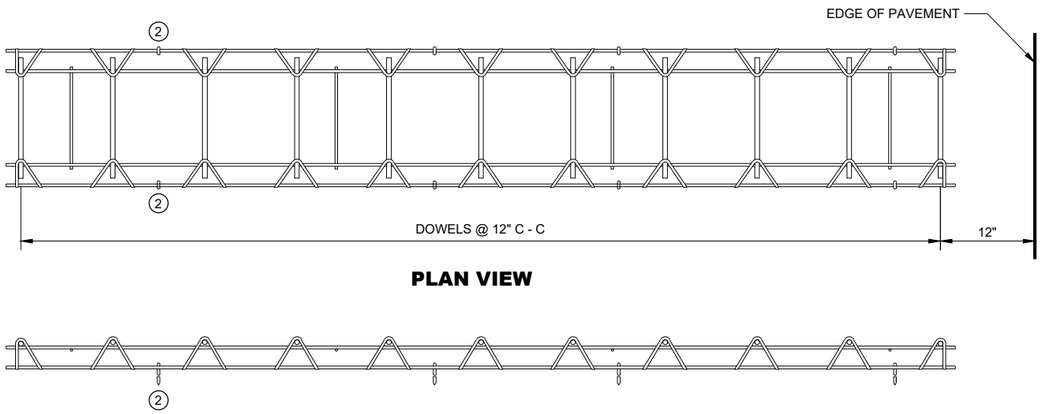

PLAN VIEW

SIDE VIEW

CONTRACTION JOINT DOWEL ASSEMBLY (1)

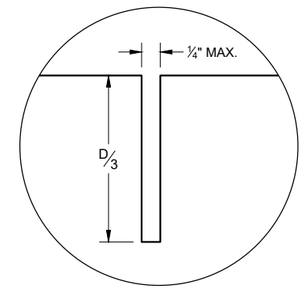

JOINT DETAIL

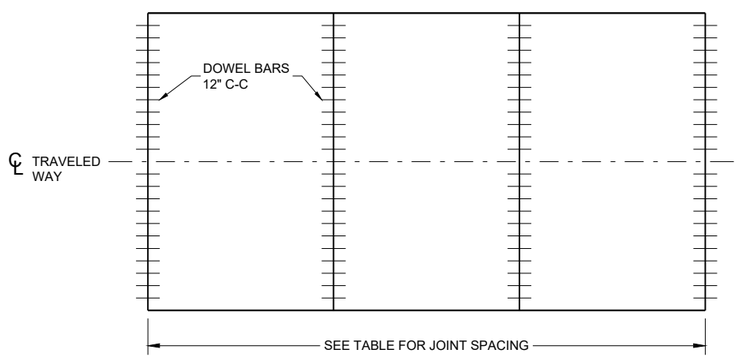

CONTRACTION JOINT LOCATIONS

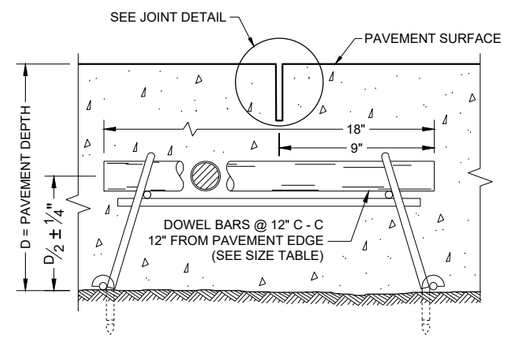

DOWELED CONTRACTION JOINT

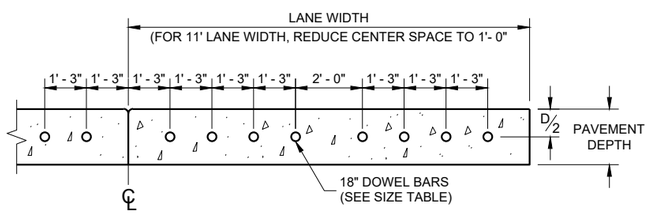

DRILLED DOWEL BAR CONSTRUCTION JOINT (7)

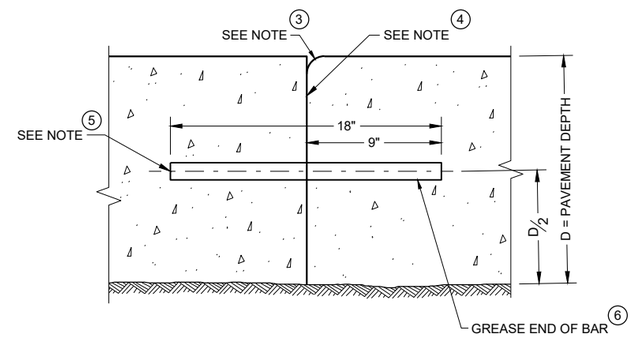

TRANSVERSE CONSTRUCTION JOINT

GENERAL NOTES

CONTRACTION JOINTS

CONSTRUCT TRANSVERSE CONTRACTION JOINTS NORMAL TO THE CENTERLINE. SHOW THE LOCATION OF CONTRACTION JOINTS THROUGH INTERSECTIONS ON THE PLANS OR AS DIRECTED BY THE ENGINEER.

INSTALL DOWEL BARS PARALLEL TO THE PAVEMENT CENTERLINE AND PAVEMENT SURFACE.

FOR PAVEMENT SLABS OF VARYING WIDTHS, LOCATE THE OUTER MOST DOWEL BAR SO THAT THE CENTER OF THE BAR IS A MINIMUM OF 6 INCHES FROM AND A MAXIMUM OF 18 INCHES FROM THE FREE EDGE OF PAVEMENT.

CONSTRUCTION JOINTS

LOCATE CONSTRUCTION JOINTS A MINIMUM OF 6 FEET FROM THE NEAREST CONTRACTION JOINT AND ALIGN PARALLEL TO THE CONTRACTION JOINTS.

1. OBTAIN THE ENGINEER'S APPROVAL FOR THE USE OF ALTERNATIVE DESIGNS OF THE DOWEL ASSEMBLY. USE MECHANICAL DOWEL BAR INSERTERS OR DOWEL ASSEMBLIES WHEN CONSTRUCTION CONTRACTION JOINTS.
2. SECURE BASKETS WITH ANCHORS TO HOLD DOWEL BARS IN THE CORRECT POSITION AND ALIGNMENT. TYPE, LOCATION, NUMBER AND LENGTH OF ANCHORS ARE DEPENDENT UPON FIELD CONDITIONS.
3. FORM OR SAW CONSTRUCTION JOINTS. PROVIDE A ¼" RADIUS AT FORMED JOINTS.
4. PROVIDE A SMOOTH VERTICAL FACE FOR THE ENTIRE DEPTH OF THE PAVEMENT WHEN FORMING CONSTRUCTION JOINTS.
5. INSTALL DOWEL BARS AT CONSTRUCTION JOINTS BY FORMING OR DRILLING. INSTALL FORMED DOWEL BARS 12 INCHES C - C AND 12 INCHES FROM PAVEMENT EDGE. REMOVE EXCESS CONCRETE FROM THE FREE END OF THE DOWEL BAR IF DOWEL BARS ARE FORMED THROUGH A HEADER BOARD. INSTALL DRILLED DOWEL BARS ACCORDING TO THE "DRILLED DOWEL BAR CONSTRUCTION JOINT" DETAIL.
6. APPLY A THIN UNIFORM COATING OF SURFACE TREATMENT TO THE FREE END OF DOWEL BARS TO PREVENT BONDING.
7. ANCHOR DOWEL BARS AND TIE BARS INTO DRILLED HOLES WITH AN EPOXY. MAXIMUM DRILLED HOLE SIZE IS ⅛" GREATER THAN DOWEL BAR DIAMETER, 9 INCHES IN LENGTH.

PAVEMENT DEPTH, DOWEL BAR SIZE AND JOINT SPACING TABLE

PAVEMENT DEPTH (D)	DOWEL BAR DIAMETER	CONTRACTION JOINT SPACING
6", 6 ½"	NONE	12'
7", 7 ½"	1"	14'
8" & ABOVE	1 ¼"	15'

URBAN DOWELED CONCRETE PAVEMENT

STATE OF WISCONSIN
DEPARTMENT OF TRANSPORTATION

APPROVED
November 2022 /S/ Peter Kemp P.E.
DATE PAVEMENT SUPERVISOR
FHWA

6

SDD 13C13 - 11

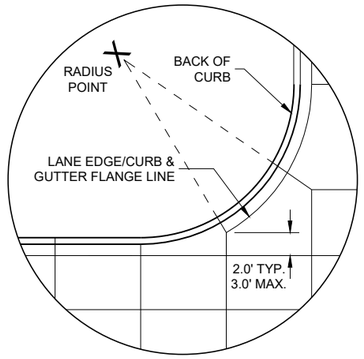

DETAIL "A"

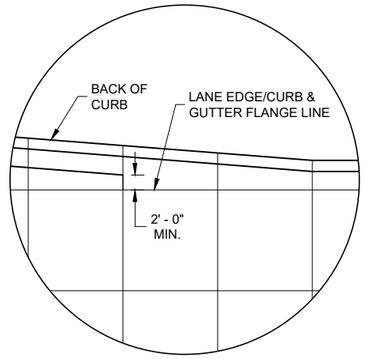

DETAIL "B"

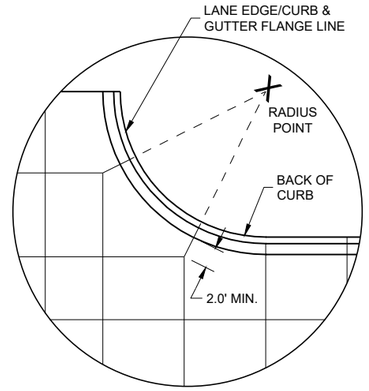

DETAIL "C"

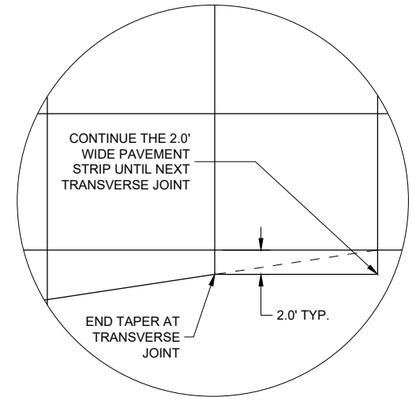

DETAIL "D"

GENERAL NOTES

THE PRIMARY ROADWAY CONTROLS THE TRANSVERSE JOINT PATTERN.

ALIGN NEW JOINTS WITH EXISTING JOINTS OR CRACKS.

CONSTRUCT TRANSVERSE JOINTS PERPENDICULAR TO THE ROADWAY.

ADJUST TRANSVERSE JOINTS TO ALIGN WITH UTILITY FIXTURES (E.G MANHOLES AND INLETS) IN THE PAVEMENT STRUCTURE WHEN POSSIBLE. WATER VALVES DO NOT REQUIRE JOINT ADJUSTMENT.

AVOID SLABS LESS THAN 2 FEET WIDE OR GREATER THAN 15 FEET WIDE.

SEE TABLE FOR TRANSVERSE JOINT SPACING. JOINT SPACING SPECIFIED IS MAXIMUM AND ACTUAL SPACING CAN BE ADJUSTED TO ACCOMMODATE INTERSECTIONS.

AVOID ANGLES LESS THAN 60° BY DOGLEGGING JOINTS THROUGH CURVE RADIUS POINTS. USE 90° ANGLES WHEN POSSIBLE.

CORRELATE LONGITUDINAL JOINTS WITH LANE LINES WHEN POSSIBLE.

1. PROVIDE TRANSVERSE JOINTS AT ALL PAVEMENT WIDTH CHANGES.
2. CONSTRUCT DOWELED EXPANSION JOINT ON THE SIDE ROAD OF AN INTERSECTION IF THE SIDE ROAD IS CONCRETE PAVEMENT AND GREATER THAN 300 FEET IN LENGTH. ALIGN EXPANSION JOINT WITH EDGE OF RADIUS.
3. THE ENGINEER MAY APPROVE SLIGHT VARIATIONS FROM THESE JOINTING DETAILS.

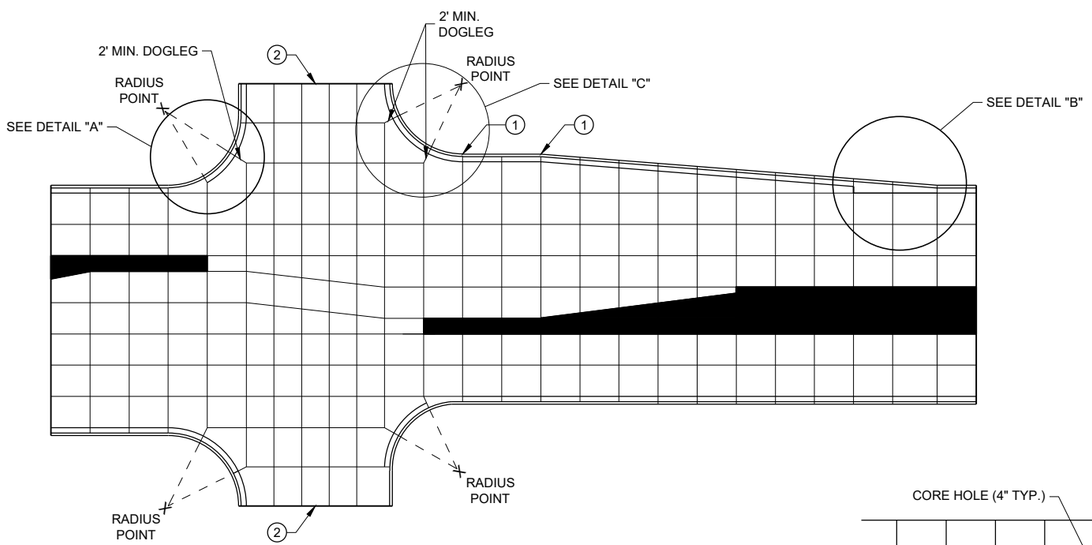

STANDARD INTERSECTION

PAVEMENT DEPTH AND JOINT SPACING TABLE

PAVEMENT DEPTH (D)	CONTRACTION JOINT SPACING
6", 6 ½"	12'
7", 7 ½"	14'
8" & ABOVE	15'

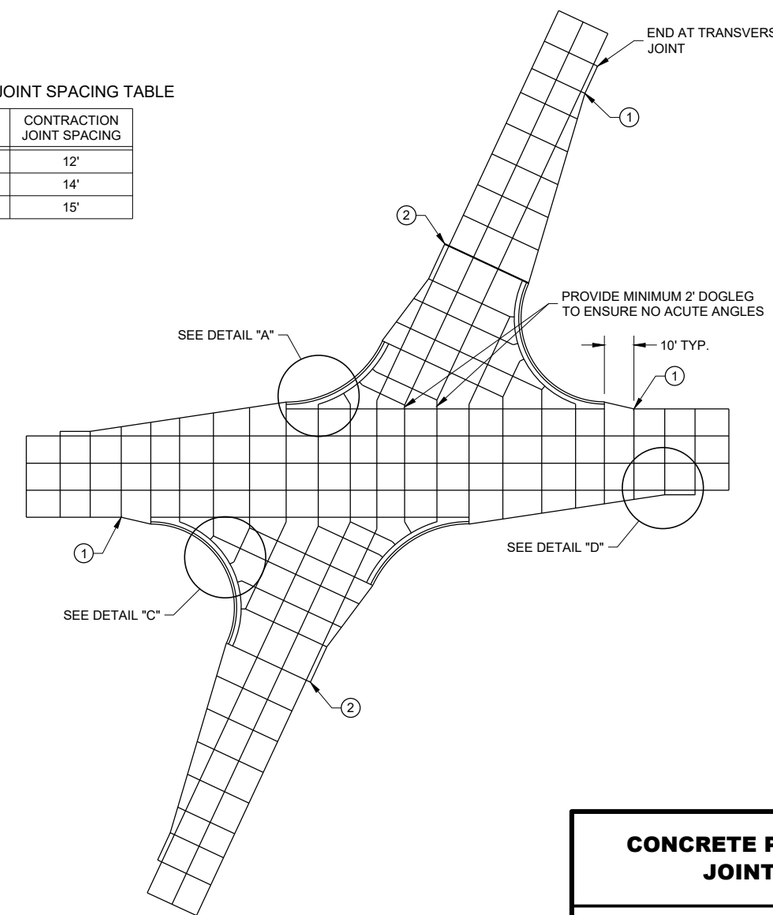

SKEWED INTERSECTION

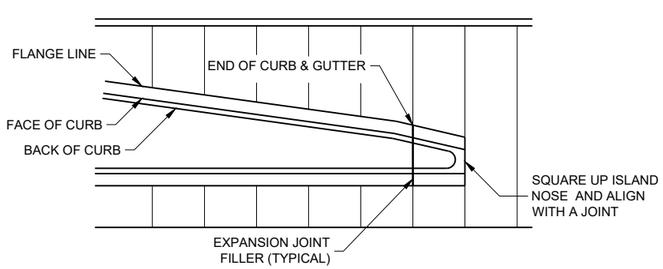

APPROACH TO MEDIAN

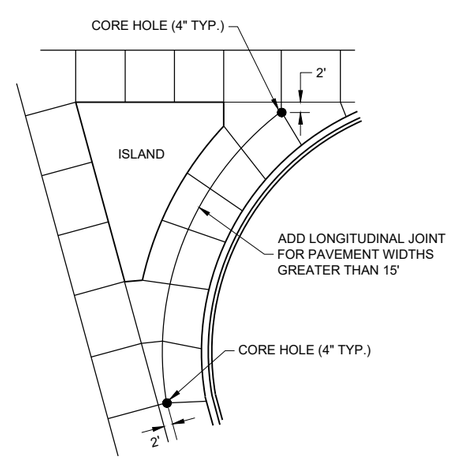

LARGE RIGHT TURN

CONCRETE PAVEMENT JOINTING

STATE OF WISCONSIN
DEPARTMENT OF TRANSPORTA

6

SDD 13C18 - 08a

LEGEND

POTENTIAL DOWELED EXPANSION JOINT

DOWELED JOINT

TIED JOINT

GENERAL NOTES

USE AN EXPANSION JOINT FILLER MEETING THE REQUIREMENTS OF STANDARD SPECIFICATION 415.

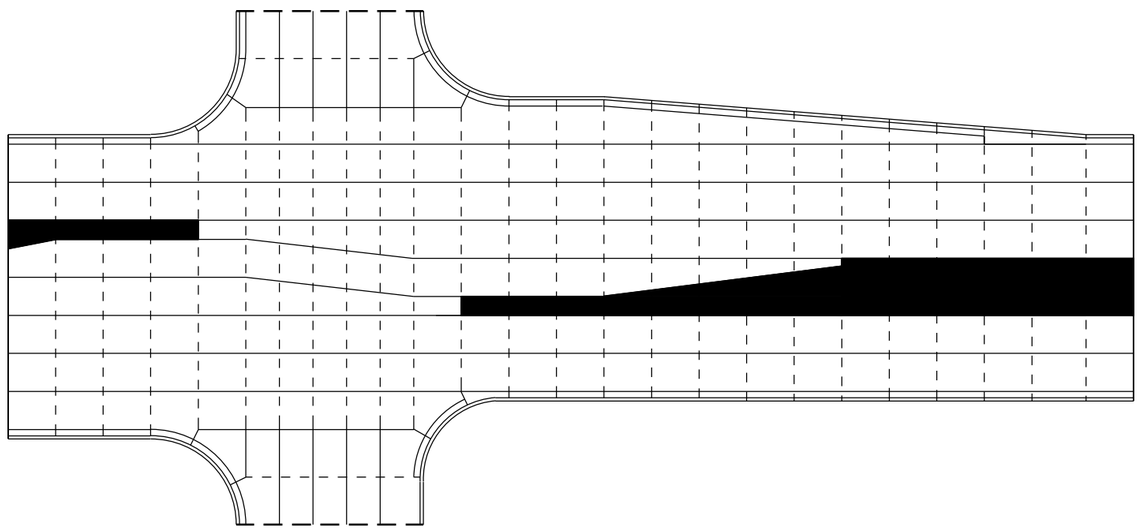

STANDARD INTERSECTION

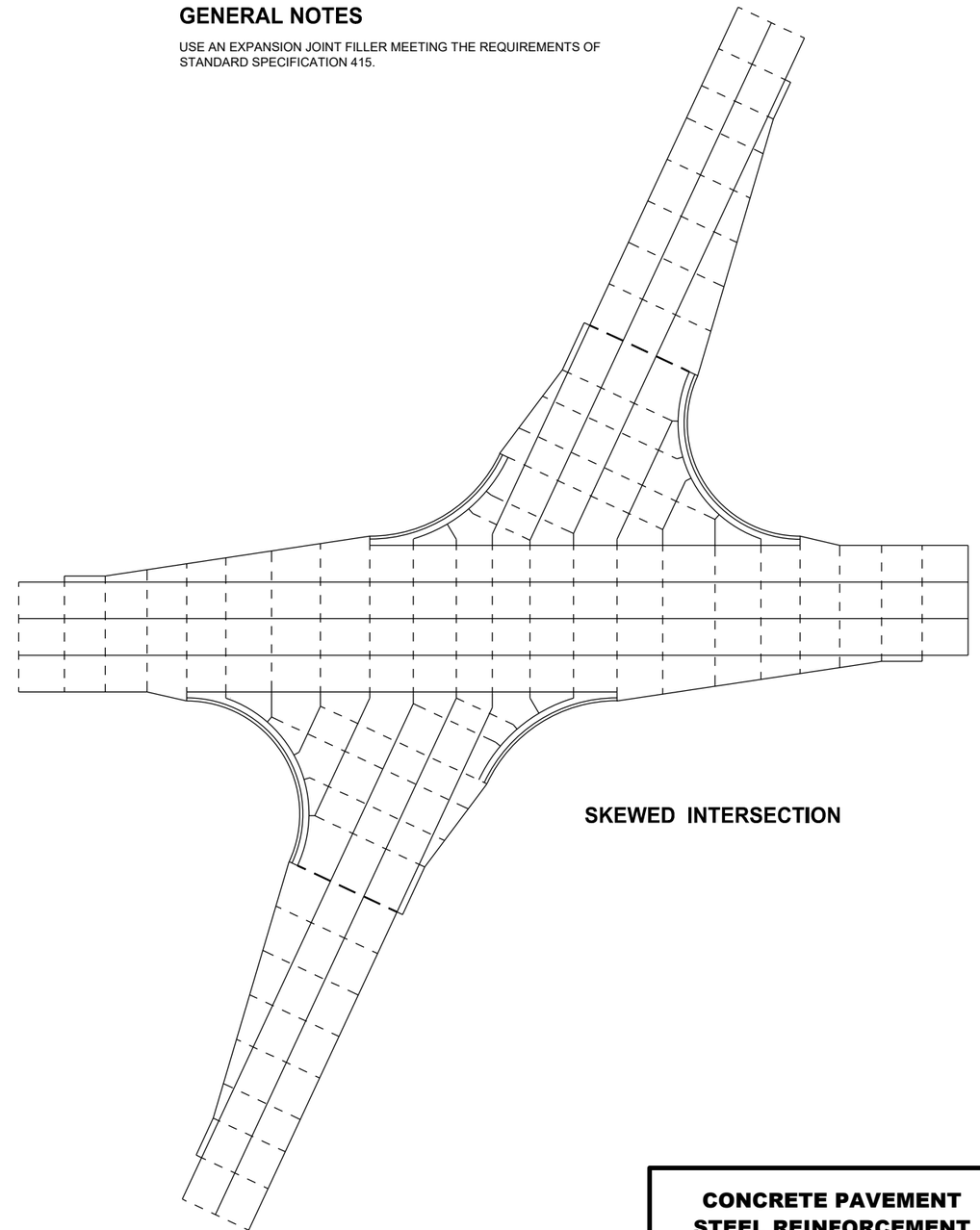

SKEWED INTERSECTION

CONCRETE PAVEMENT STEEL REINFORCEMENT

STATE OF WISCONSIN
DEPARTMENT OF TRANSPORTA

6

SDD 13C18 - 08b

6

SDD 13C18 - 08b

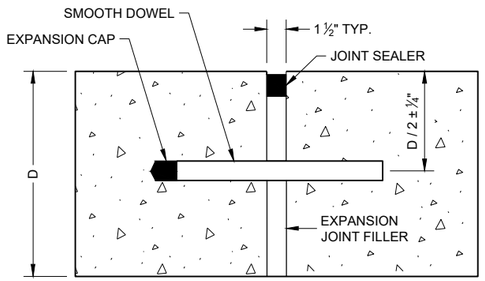

DOWELED TRANSVERSE (1)

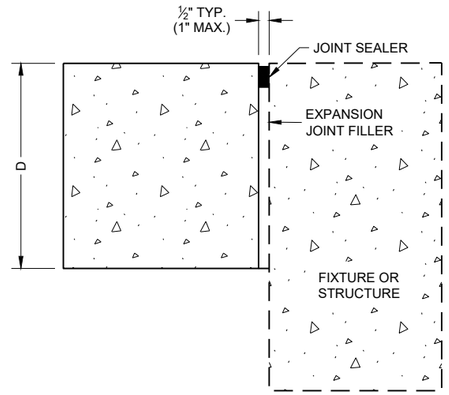

UNTIED - LONGITUDINAL

EXPANSION JOINTS

TIE BAR TABLE

PAVEMENT DEPTH (D)	TIE BAR SIZE	TIE BAR LENGTH (L)	MAX. TIE BAR SPACING
< 10 ½"	NO. 4	30"	36"
≥ 10 ½"	NO. 5	36"	36"
	NO. 4 *	30"	24" **

* SUBSTITUTE BENT BARS AT LONGITUDINAL JOINTS WHEN EQUIPMENT LIMITATIONS DURING CONSTRUCTION WARRANT (e.g. AUXILIARY LANES OR TURN LANES)

** CONFORM TO 15" MINIMUM SPACING FROM TRANSVERSE JOINTS; SPACING BETWEEN TIE BARS WILL BE 30" AT TRANSVERSE JOINTS.

GENERAL NOTES

1. USE DOWELED EXPANSION JOINTS ON SIDE ROADS AT INTERSECTIONS (TO ISOLATETHE SIDE ROAD FROM THE THROUGH STREET) IF THE SIDE ROAD IS CONCRETE PAVEMENT AND GREATER THAN 300 FEET IN LENGTH.
2. SPACE CONTRACTION JOINTS IN ACCORDANCE WITH SDD 13C4, 13C11 OR 13C13.
3. LOCATE CONSTRUCTION JOINTS A MINIMUM OF 6 FEET FROM THE NEAREST CONTRACTION JOINT AND ALIGN PARALLEL TO CONTRACTION JOINTS.
4. CONSTRUCTION JOINTS CAN BE FORMED OR SAWED.
5. IF JOINT IS FORMED, PROVIDE A ¼" RADIUS.
6. ANCHOR TIE BARS INTO DRILLED HOLES WITH AN EPOXY.

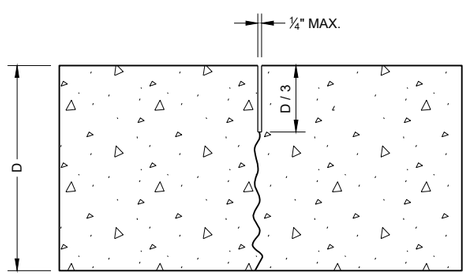

UNDOWELED TRANSVERSE

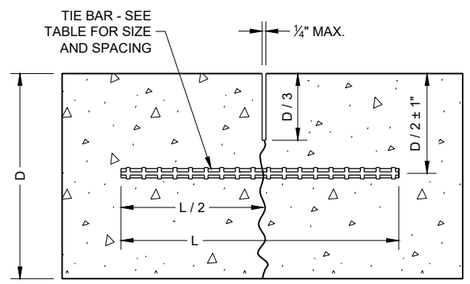

TIED LONGITUDINAL

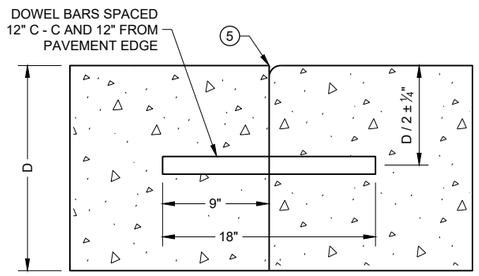

DOWELED TRANSVERSE (3)

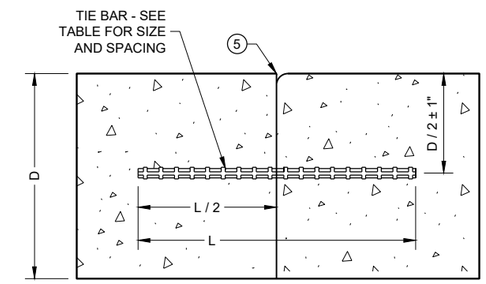

TIED LONGITUDINAL

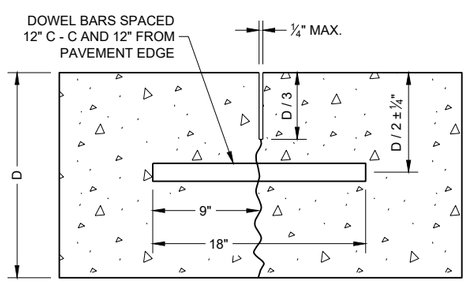

DOWELED TRANSVERSE

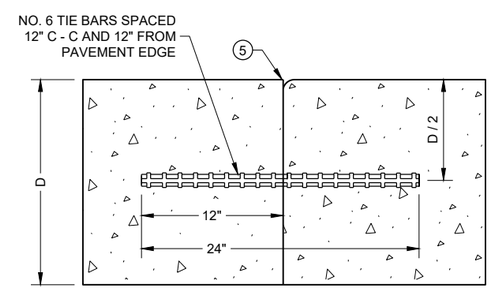

TIED TRANSVERSE (3)
(FOR USE ON NON-DOWELED PAVEMENTS ONLY)

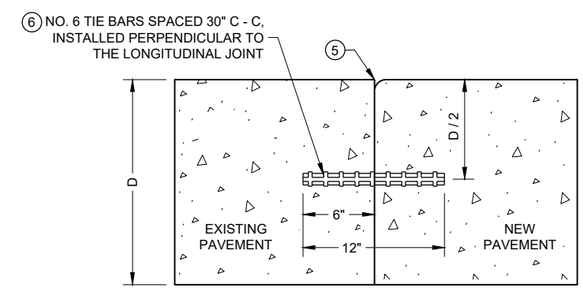

TIED LONGITUDINAL TO EXISTING

CONTRACTION JOINTS (2)

CONSTRUCTION JOINTS (4)

CONCRETE PAVEMENT JOINT TYPES

STATE OF WISCONSIN
DEPARTMENT OF TRANSPORTAT

6

SDD 13C18 - 08c

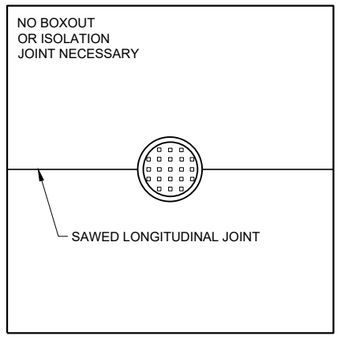

MANHOLE WITH LONGITUDINAL JOINT

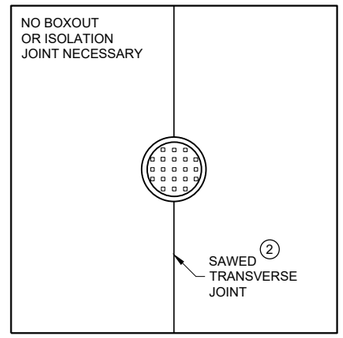

MANHOLE WITH TRANSVERSE JOINT

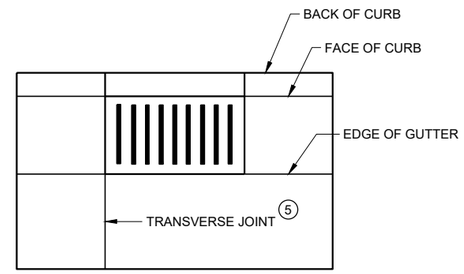

INLET WITH TRANSVERSE JOINT

GENERAL NOTES

1. USE BOXOUTS WHEN UTILITY STRUCTURE IS IN THE PATH OF CONSTRUCTION JOINTS. PROVIDE A 1 FOOT MINIMUM CLEARANCE BETWEEN THE EXTERIOR LIMIT OF THE STRUCTURE TO THE DIAMOND BOXOUT.
2. ADJUST TRANSVERSE JOINT TO INTERSECT MANHOLE IF POSSIBLE.
3. IF DISTANCE BETWEEN THE LONGITUDINAL JOINT AND THE EDGE OF MANHOLE IS 2 FEET OR LESS, DIVERT THE LONGITUDINAL JOINT AT A 2:1 TAPER RATE TO THE CENTER OF THE MANHOLE. IF THE DISTANCE IS GREATER THAN 2 FEET, DO NOT DIVERT THE JOINT AND SAW AS NORMAL. PLACE REINFORCEMENT REBAR AROUND THE MANHOLE.
4. IF THE DISTANCE FROM THE EDGE OF THE MANHOLE TO THE NEAREST TRANSVERSE JOINT IS LESS 4 FEET OR LESS, REDIRECT JOINT TO INTERSECT THE CENTER OF THE MANHOLE. IF DISTANCE IS GREATER THAN 4 FEET, DO NOT DIVERT THE JOINT AND SAW AS NORMAL. PLACE REINFORCEMENT REBAR AROUND THE MANHOLE.
5. ALIGN TRANSVERSE JOINT WITH ONE EDGE OF INLET WHEN PRACTICAL.

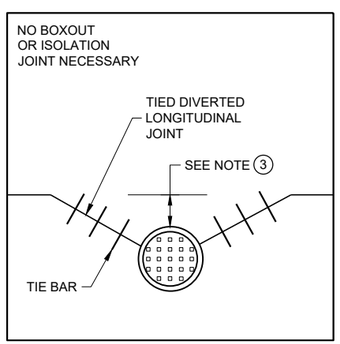

MANHOLE WITH DIVERTED LONGITUDINAL CONTRACTION JOINT

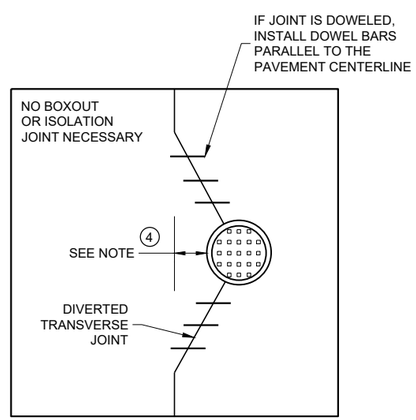

MANHOLE WITH DIVERTED TRANSVERSE CONTRACTION JOINT

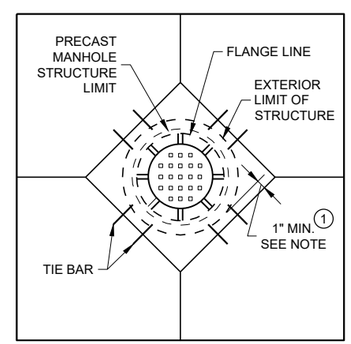

DIAGONAL MANHOLE BOXOUT FOR CONSTRUCTION JOINTS

CONCRETE PAVEMENT JOINTING AT UTILITY FIXTURES

STATE OF WISCONSIN
DEPARTMENT OF TRANSPORTATION

APPROVED
May 2023 — DATE
/S/ Peter Kemp P.E. — PAVEMENT SUPERVISO
FHWA

LEGEND

- - - - - - DOWELED JOINT
——— TIED JOINT
EXPANSION JOINT
— — POTENTIAL DOWELED EXPANSION JOINT (1)
DIRECTION OF TRAFFIC

GENERAL NOTES

(1) CONSTRUCT DOWELED EXPANSION JOINT ON THE SIDE ROAD OF AN INTERSECTION IF THE SIDE ROAD IS CONCRETE PAVEMENT AND GREATER THAN 300 FEET IN LENGTH. ALIGN EXPANSION JOINT WITH THE EDGE OF RADIUS.

(2) PROVIDE TIED JOINT AT THE FLANGE OF SCAB ON CURB IF SCAB ON CURB AND GUTTER IS USE.

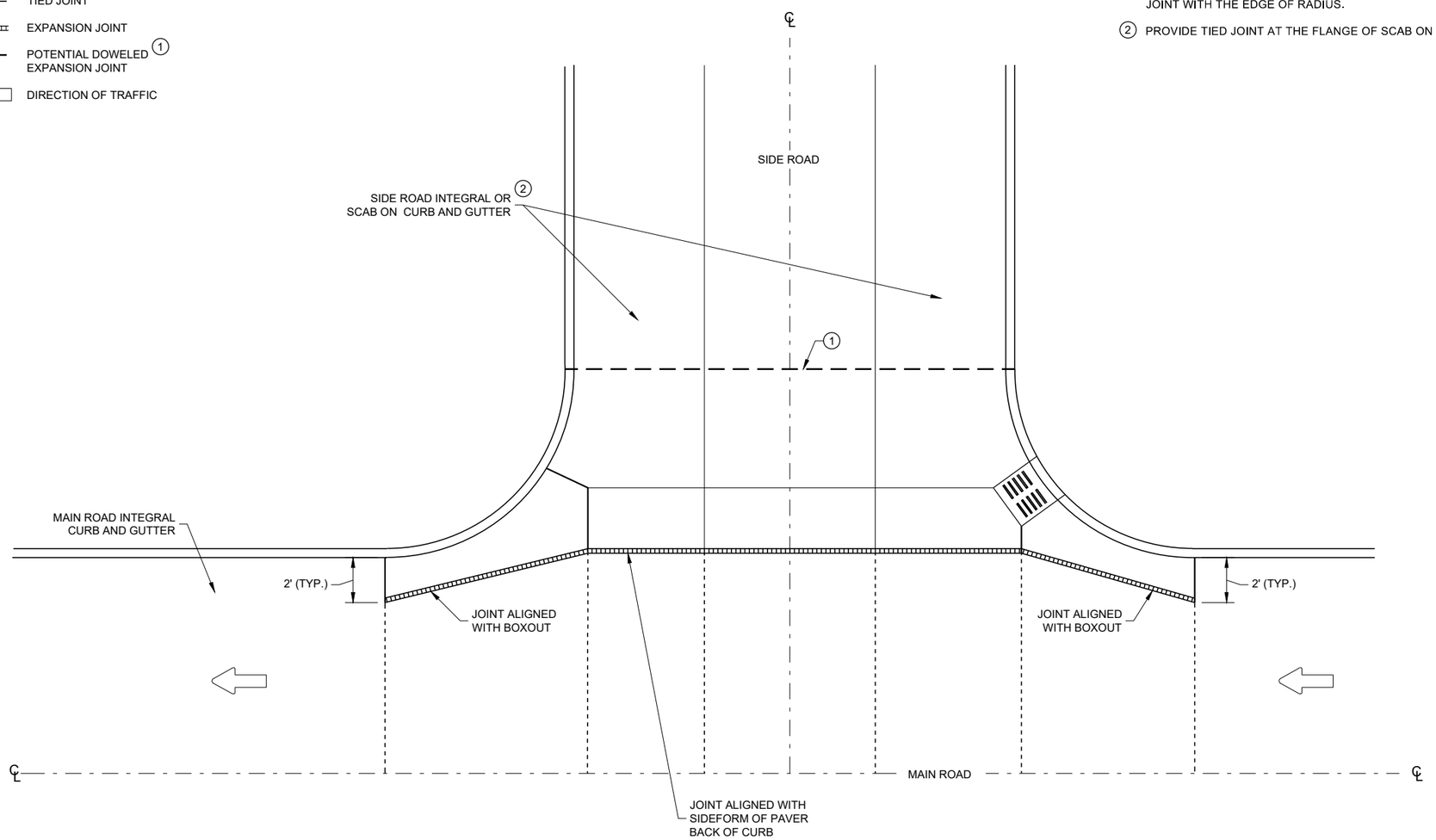

INTERSECTION BOXOUT FOR INTEGRAL CURB AND GUTTER

CONCRETE PAVEMENT INTERSECTION BOXOUT FOR INTEGRAL CURB AND GUTTER

STATE OF WISCONSIN
DEPARTMENT OF TRANSPORTATION

APPROVED
May 2023 — DATE
/S/ Peter Kemp P.E. — PAVEMENT SUPERVISOR
FHWA

6

SDD 13C18 - 08f

6

SDD 13C18 - 08f

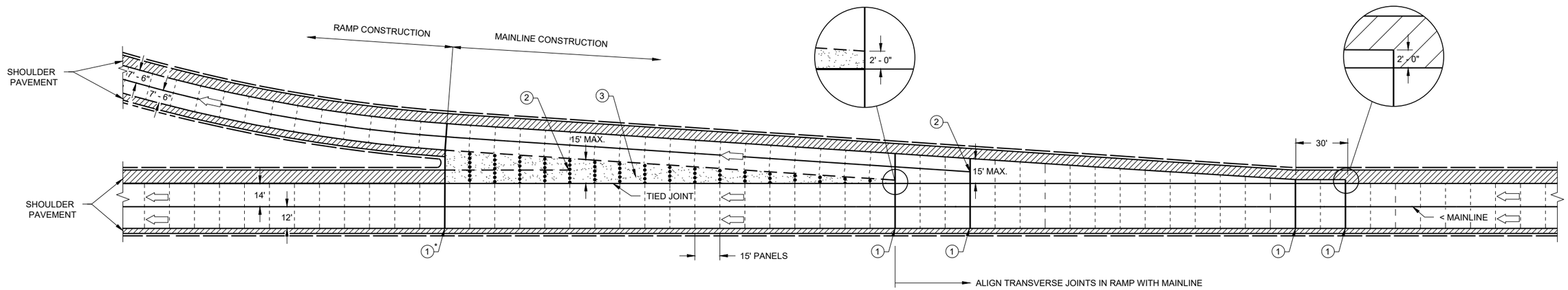

DECELERATION LANE

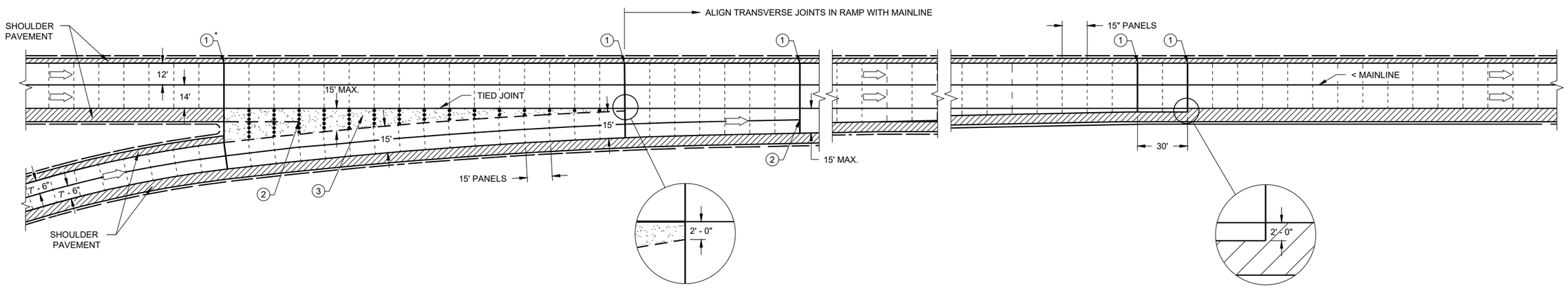

ACCELERATION LANE

GENERAL NOTES

PAVEMENT AND BASE THICKNESS, PANEL LENGTHS, JOINTS AND REINFORCEMENT FOR THE DECELERATION AND ACCELERATION LANES, INCLUDING TAPERS, SHALL BE THE SAME AS THE MAINLINE, EXCEPT WHERE OTHERWISE NOTED.

ALL REINFORCEMENT BARS SHALL BE EPOXY COATED CONFORMING TO SUBSECTION 505.2.6 OF THE STANDARD SPECIFICATIONS.

LANE AND SHOULDER WIDTHS MAY VARY FROM SHOWN. SEE CONSTRUCTION PLANS FOR ACTUAL PROPOSED WIDTHS.

(1) CRITICAL TRANSVERSE JOINT LOCATIONS AT PAVEMENT WIDTH CHANGES. ((1)* IS NOT A CRITICAL TRANSVERSE JOINT WHEN ASPHALTIC GORE IS INSTALLED).

(2) STOP LONGITUDINAL JOINT WITH CORE HOLE (2" TYP.) WHEN IT MEETS THE FIRST TRANSVERSE JOINT LESS THAN 15' WIDE OR STOP LONGITUDINAL JOINT WHEN IT MEETS 2' AWAY FROM THE TIED JOINT OF THE MAINLINE.

(3) DISREGARD THE JOINT DETAILS IN AND AROUND THE GORE WHEN ASPHALTIC GORE IS INSTALLED.

LEGEND

- DOWELED JOINT
- UNDOWELED JOINT
- TIED JOINT
- UNTIED JOINT
- GORE
- DIRECTION OF TRAVEL

CONCRETE PAVEMENT JOINTING ACCELERATION/ DECELERATION LANE

STATE OF WISCONSIN
DEPARTMENT OF TRANSPORTATION

APPROVED
May 2023 — DATE
/S/ Peter Kemp P.E. — PAVEMENT SUPERVIS
FHWA

6

SDD 13C18 - 08g

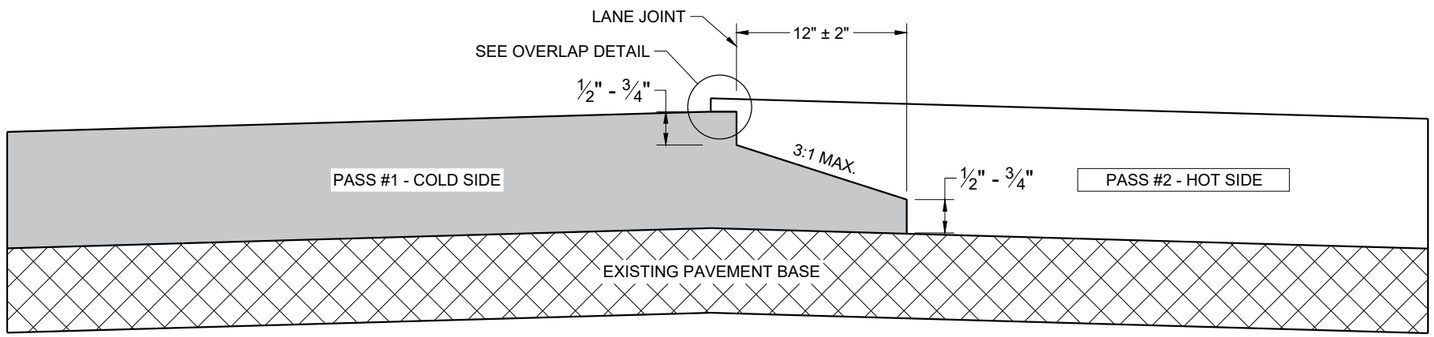

TYPICAL PAVEMENT CROSS SECTION
NOTCHED WEDGE JOINT

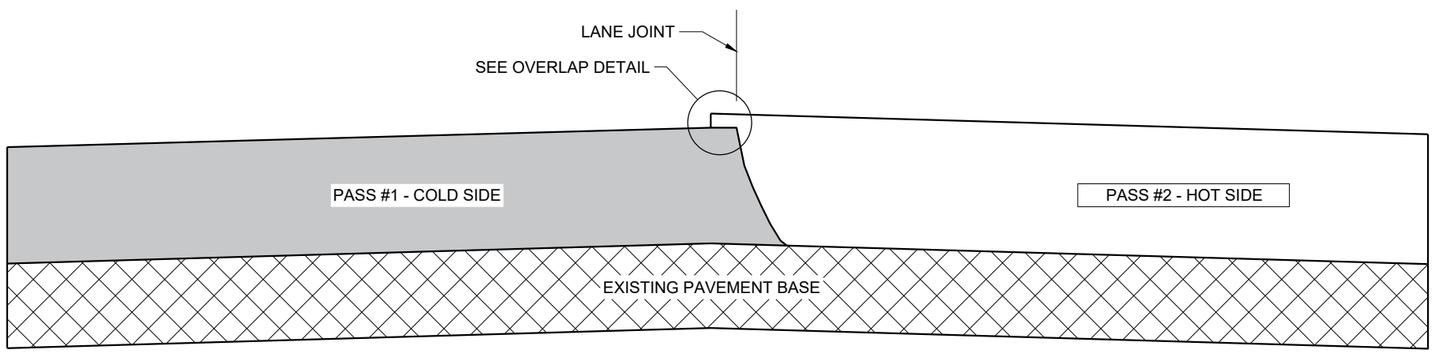

TYPICAL PAVEMENT CROSS SECTION
VERTICAL JOINT

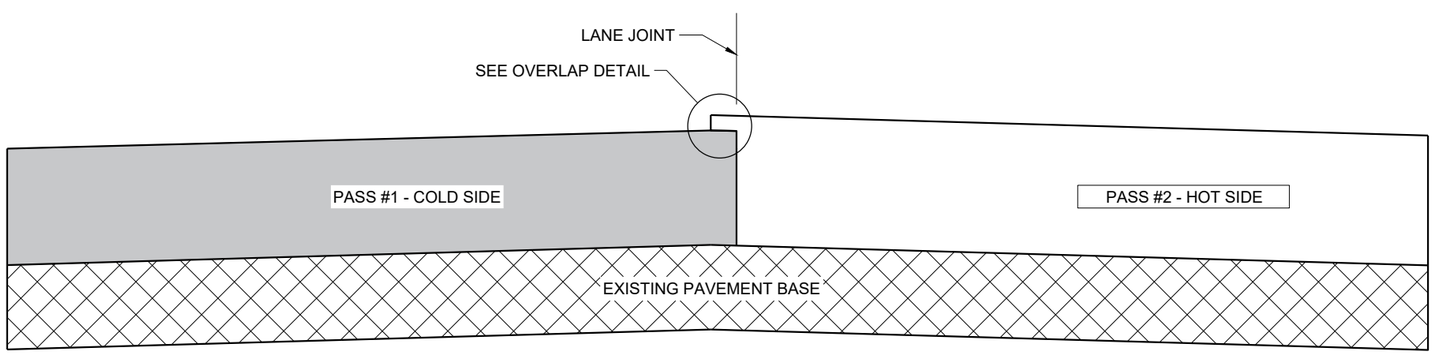

TYPICAL PAVEMENT CROSS SECTION
VERTICAL JOINT (MILLED)

GENERAL NOTES

IN ADDITION TO THE DETAILS PROVIDED IN THIS DRAWING, CONFORM TO STANDARD SPECIFICATION 450.3.2.8 FOR WHEN A NOTCHED WEDGE JOINT IS REQUIRED AND FOR GENERAL JOINT CONSTRUCTION REQUIREMENTS.

FOR ALL LONGITUDINAL JOINTS, ENSURE THE PAVER SCREED OVERLAPS THE PREVIOUSLY PLACED PAVEMENT BY 1" ± 0.5" AND THE HOT SIDE OF THE JOINT REMAINS HIGHER THAN THE COLD SIDE BY APPROXIMATELY 0.1" AFTER FINAL COMPACTION. (IT WILL BE FLUSH WHEN PAVING IN ECHELON.)

ONLY REMOVE THE LONGITUDINAL NOTCHED WEDGE JOINT FOR SMA PAVEMENT OR AS DIRECTED BY THE ENGINEER TO ADDRESS SPECIFIC LENGTHS OF JOINT DAMAGED BY TRAFFIC.

WHEN MILLING BACK OR REMOVING ANY LONGITUDINAL JOINT, LIMIT THE MATERIAL REMOVED TO 2" FROM THE TOP NOTCH OR FROM THE VERTICAL JOINT EDGE ON THE COLD SIDE OF THE JOINT.

USE LONGITUDINAL MILLED JOINT AS PLANS SHOW OR THE AS THE ENGINEER DIRECTS.

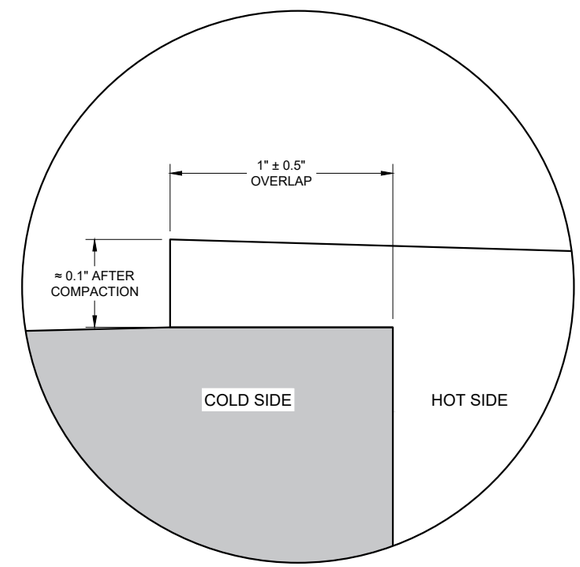

OVERLAP DETAIL (TYPICAL)

6

6

SDD 13C19 - 03

SDD 13C19 - 03

HMA LONGITUDINAL JOINTS

STATE OF WISCONSIN
DEPARTMENT OF TRANSPORTATION

APPROVED
November 2020 /S/ Steven Hefel
DATE HMA PAVEMENT ENGIN

FHWA

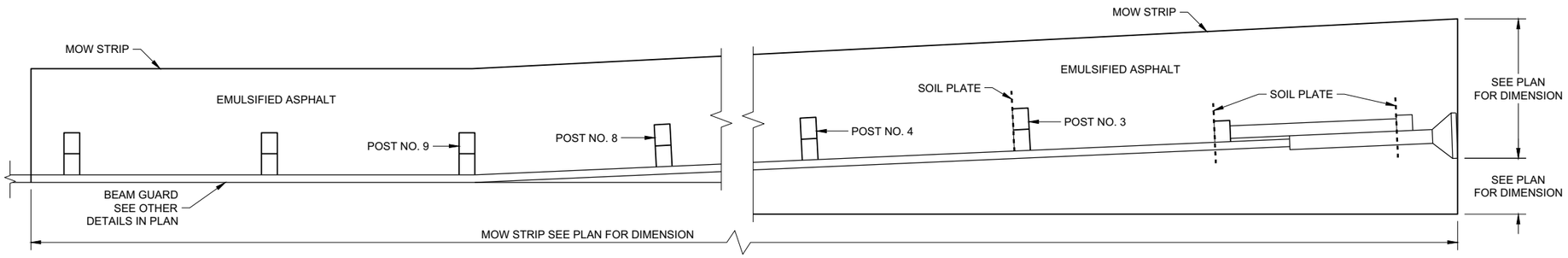

PLAN VIEW
MOW STRIP LAYOUT FOR ENERGY ABSORBING TERMINAL

GENERAL NOTES

ONLY USE STEEL POSTS IN CONCRETE AND ASPHALT MOW STRIPS.

1. CONTROLLED LOW-STRENGTH BACKFILL OR EMULSIFIED ASPHALT.
2. DEPTH OF MOW STRIP:
   ASPHALT - 4"
   CONCRETE - 4"
   EMULSIFIED ASPHALT - 1" OR LESS
3. FOR EMULSIFIED ASPHALT, MOW STRIP STRIP LEAVE OUTS NOT REQUIRED. (TYPICAL FOR ALL POSTS)

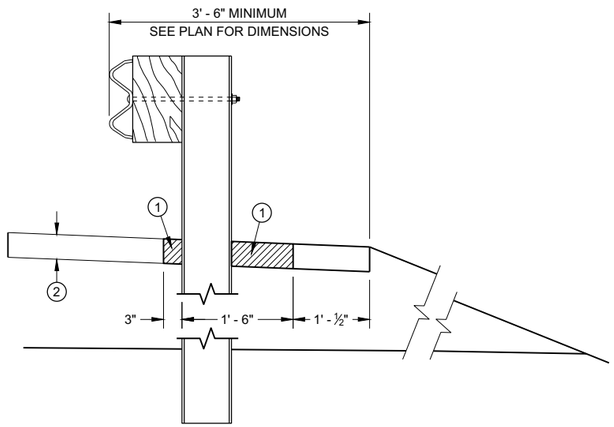

SECTION A - A

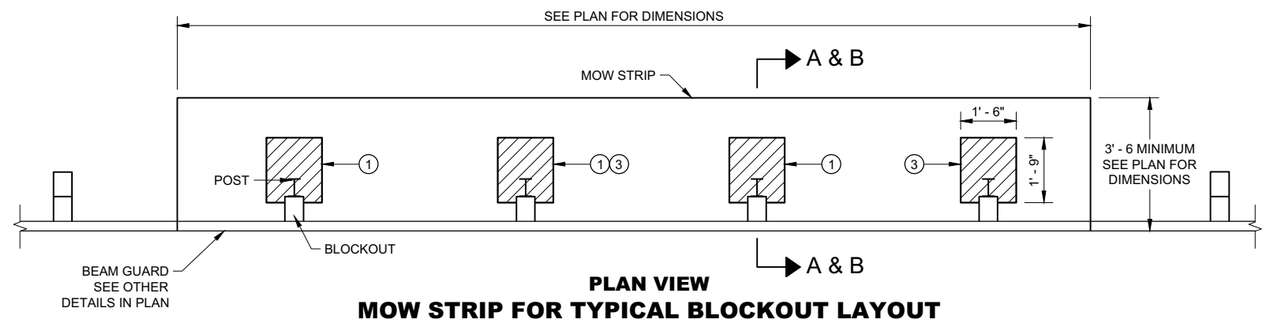

PLAN VIEW
MOW STRIP FOR TYPICAL BLOCKOUT LAYOUT

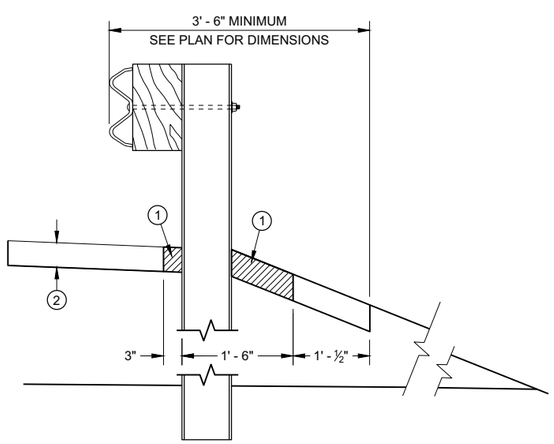

SECTION B - B

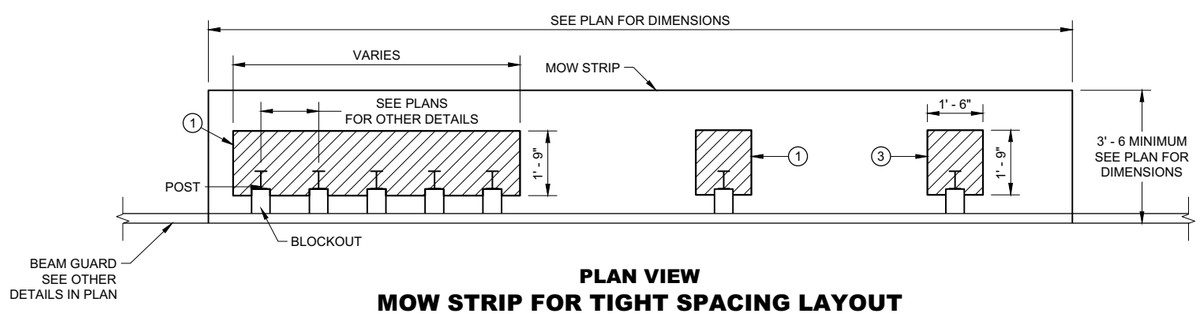

PLAN VIEW
MOW STRIP FOR TIGHT SPACING LAYOUT

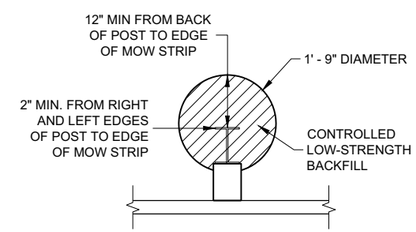

ALTERNATIVE HMA
MOW STRIP DESIGN

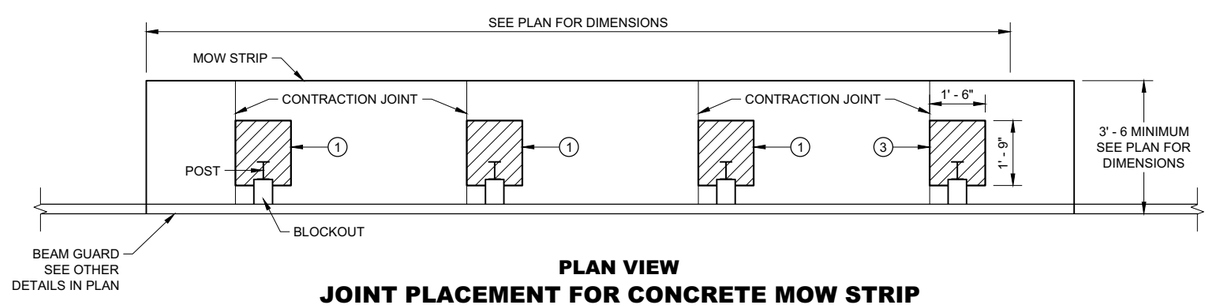

PLAN VIEW
JOINT PLACEMENT FOR CONCRETE MOW STRIP

GUARDRAIL MOW STRIP

STATE OF WISCONSIN
DEPARTMENT OF TRANSPORTA

6

SDD 14B28 - 04a

LEGEND

CONCRETE, ASPHALT, OR EMULSIFIED ASPHALT MOW STRIP (SEE OTHER DETAILS)

EMULSIFIED ASPHALT MOW STRIP (SEE OTHER DETAILS)

GENERAL NOTES

EXISTING THRIE BEAM BULLNOSES MAY HAVE WOOD POSTS. NEW THRIE BEAM BULLNOSE WILL HAVE STEEL POSTS.

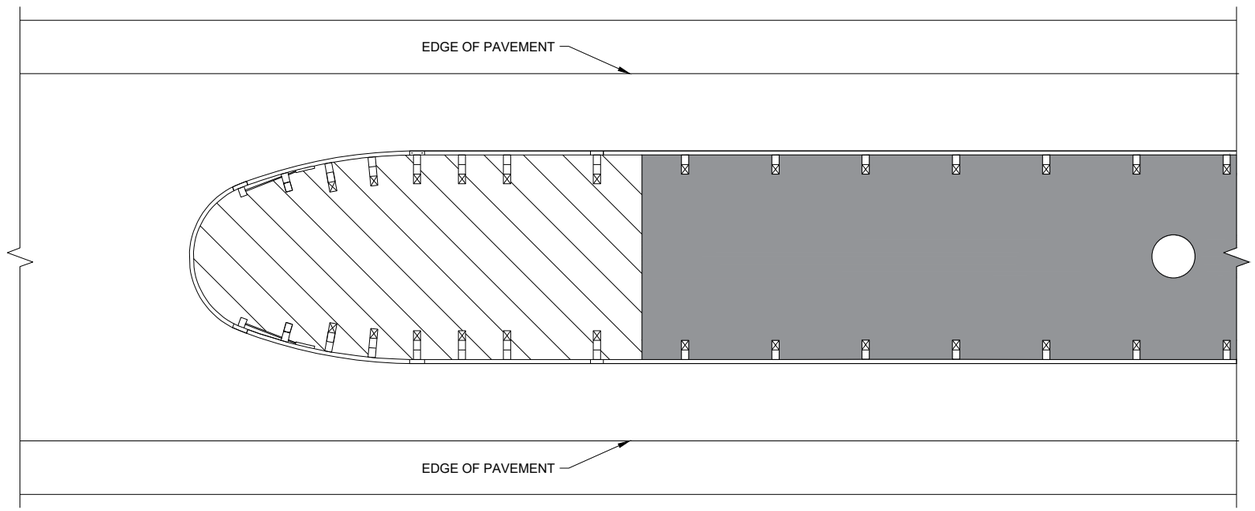

THRIE BEAM BULLNOSE

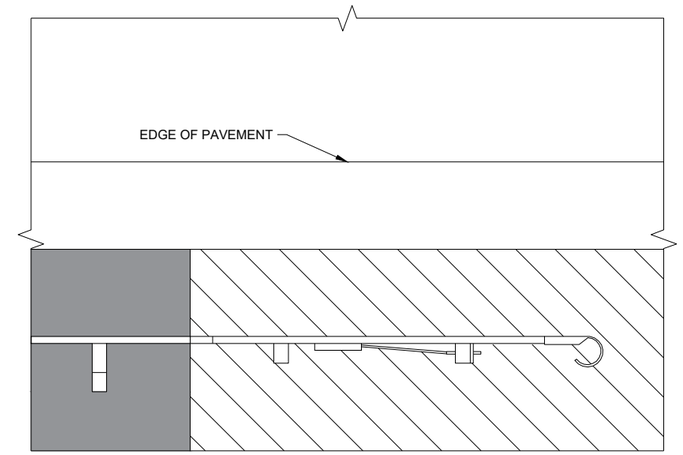

TYPE 2 TERMINAL

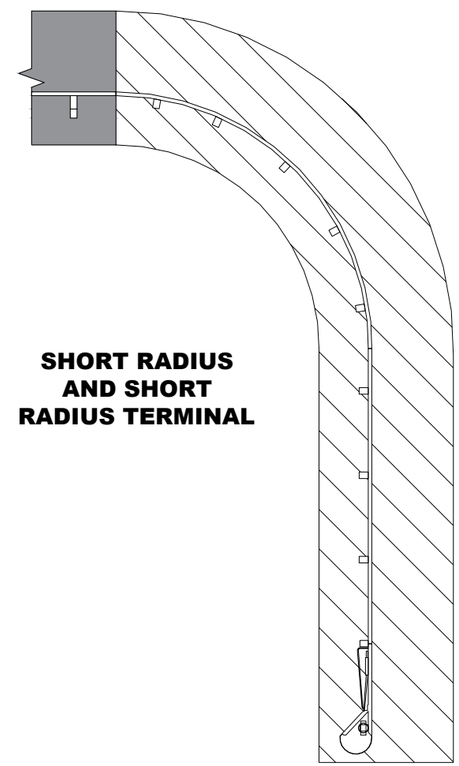

SHORT RADIUS AND SHORT RADIUS TERMINAL

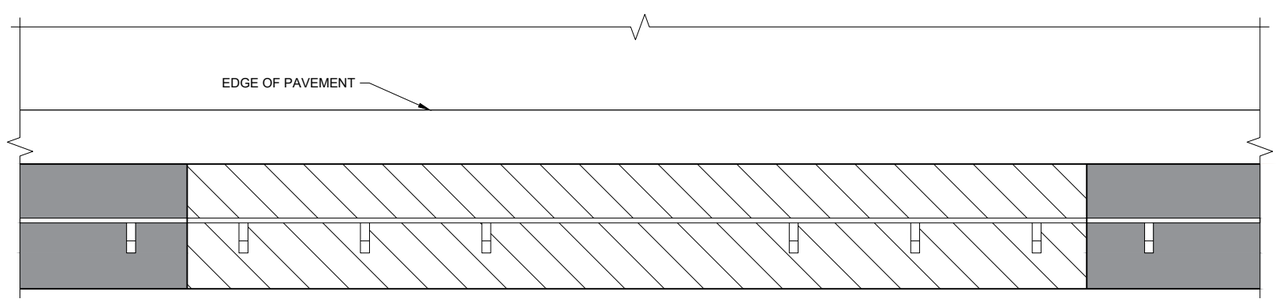

LONG - SPAN

6

6

SDD 14B28 - 04b

SDD 14B28 - 04b

GUARDRAIL MOW STRIP

STATE OF WISCONSIN
DEPARTMENT OF TRANSPORTATION

APPROVED
August 2020 — DATE
/S/ Rodney Taylor — ROADWAY STANDARDS DEVE ENGINEER
FHWA

1. WOOD OR STEEL POSTS (w6X9 OR w6X8.5) MAY BE USED. DO NOT INTERMIX WOOD AND STEEL POSTS. INSTALL STEEL POSTS WITH HOLES ON APPROACHING TRAFFIC SIDE.
2. USE WOOD OR APPROVED PLASTIC BLOCKOUTS. WOOD BLOCKOUTS MAY BE CONSTRUCTED OUT OF TWO OR MORE WOOD BLOCKOUTS. SEE ALTERNATE WOOD BLOCKOUT DETAIL. DIMENSIONS OF APPROVED PLASTIC BLOCKOUTS MAY VARY.
3. IF ROCK IS ENCOUNTERED DURING EXCAVATION, PROVIDE A HOLE 12 INCHES IN DIAMETER EXTENDING 20 INCHES DEEP INTO THE ROCK. PLACE APPROXIMATELY 2 1/2" INCHES OF GRANULAR MATERIAL IN THE BOTTOM OF THE HOLE. CUT THE POSTS THE TO LENGTH AMD INSTALL. BACKFILL WITH EXCAVATED MATERIAL AND COMPACT. BACKFILL IS TO BE FREE OF LARGE ROCKS.
4. WHEN THE DISTANCE FROM BACK OF POST TO SHOULDER HINGE POINT IS LESS THAN 2 FEET INSTALL LONGER POST AT HALF POST SPACING (K).
5. FOR NEW MGS INSTALLATION TOP OF W-BEAM RAIL TOLERANCE IS ±1". FOR EXISTING MGS INSTALLATION TOP OF W-BEAM IS BETWEEN 27 ¾" TO 32".
6. WHEN USING STEEL POST AND WOOD BLOCKOUTS INSTALL FOUR 16D GALVANIZED NAILS. INSTALL NAILS AT THE BACK CORNERS OF THE BLOCK AND BEND THE NAILS OVER THE FLANGE OF THE STEEL POST.
7. TOTAL POST LENGTH FOR TYPE K IS 7' - 0". TOTAL POST LENGTH FOR OTHER MGS TYPES IS 6' - 0".

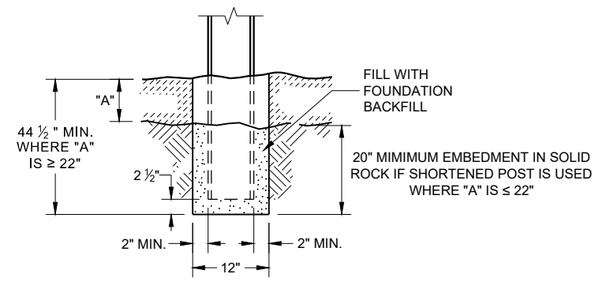

END VIEW
SETTING STEEL OR WOOD POST IN ROCK (3)

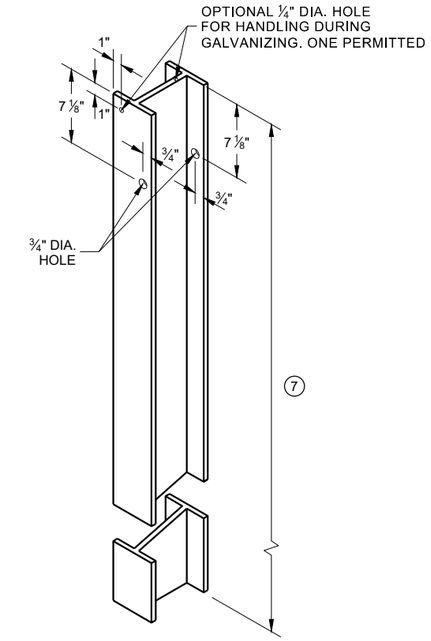

STEEL POST & HOLE PUNCHING DETAIL (W 6 X 9) (1)

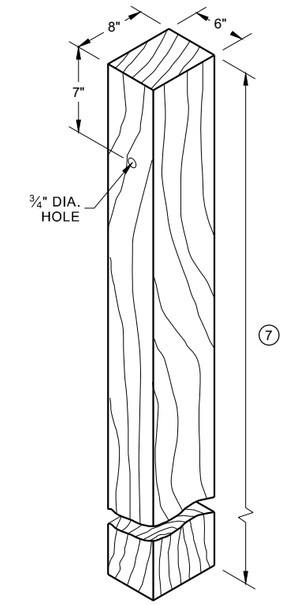

WOOD POST (6" X 8") NOMINAL (1)

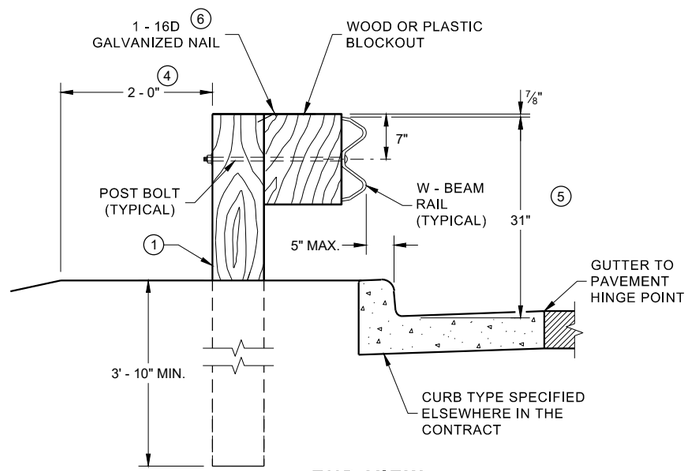

END VIEW
LOCATED ALONG A CURBED ROADWAY

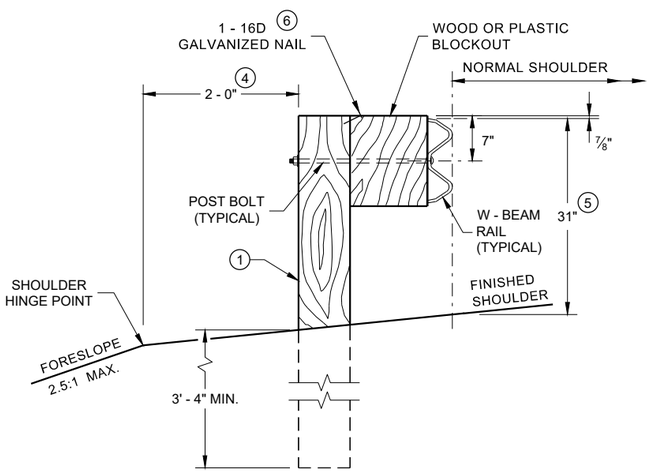

END VIEW
LOCATED ALONG A ROADWAY SHOULDER STANDARD INSTALLATION

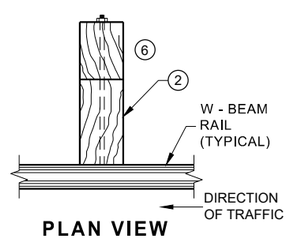

PLAN VIEW
WOOD POST, BLOCKOUT & BEAM

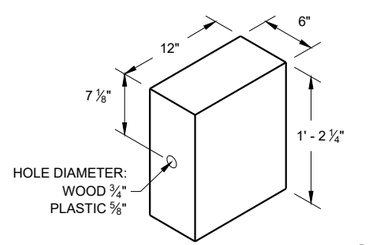

WOOD OR PLASTIC BLOCKOUT (2)

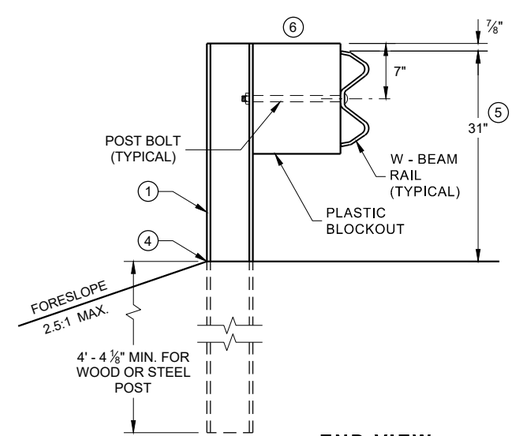

END VIEW
MGS LONGER POST AT HALFPOST SPACING W BEAM (K)

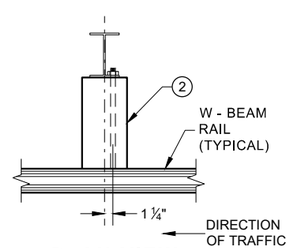

PLAN VIEW
STEEL POST, PLASTIC BLOCKOUT & BEAM

MIDWEST GUARDRAIL SYSTEM (MGS) GUARDRAIL

STATE OF WISCONSIN
DEPARTMENT OF TRANSPORTA

6

SDD 14B42 - 07a

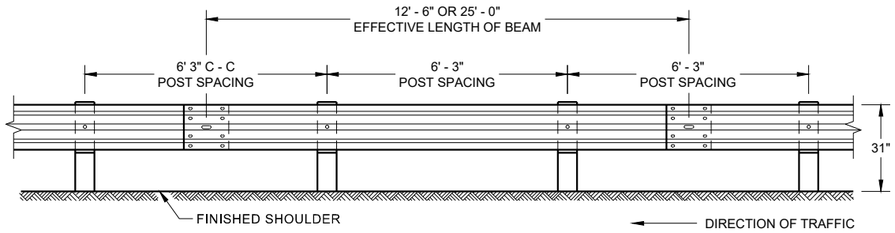

FRONT VIEW
POST SPACING STANDARD INSTALLATION

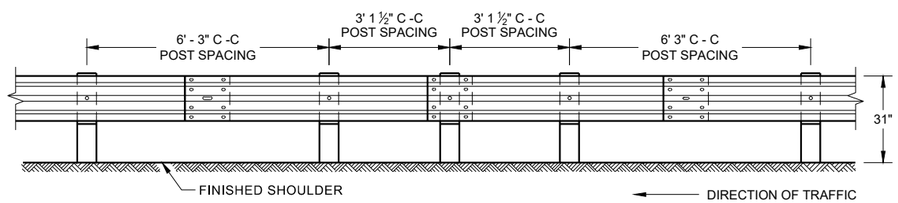

FRONT VIEW
HALF POST SPACING (HS) AND HALF POST SPACING WITH LONGER POSTS (K)

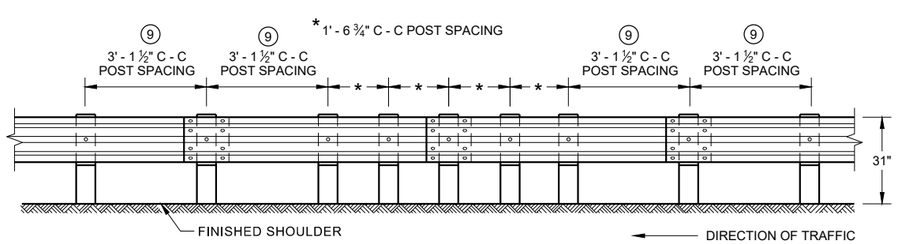

FRONT VIEW
QUARTER POST SPACING (QS)

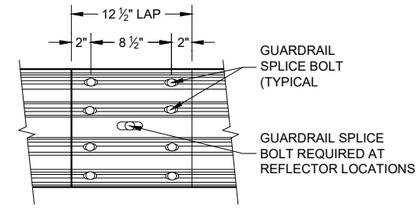

FRONT VIEW
MID-SPAN BEAM SPLICE

GENERAL NOTES

8 DO NOT INSTALL REFLECTORS ON THE FIRST 50 FEET OF THE APPROACH END OF THE ENERGY ABSORBING TERMINAL.

9 25 FEET OF HALF POST SPACING IS REQUIRED ON APPROACH AND DEPARTURE ENDS OF QUARTER POST SPACING.

POST BOLTS ARE A ⅝" DIAMETER ASTM A307 GUARDRAIL BOLT. A POST BOLT REQUIRES ⅝" DIAMETER A563A DOUBLE RECESSED (DR) HEAVY HEX NUT AND ⅝" DIAMETER F844 FLAT WASHER. POST BOLTS MAY BE LONGER IF MULTIPLE BLOCKOUTS ARE BEING USED.

GUARD RAIL SPLICE BOLTS ARE A ⅝" DIAMETER ASTM A307 GUARDRAIL HEAD BOLT. A GUARDRAIL SPLICE BOLT REQUIRES ⅝" DIAMETER A563A DOUBLE RECESSED (DR) HEAVY HEX NUT.

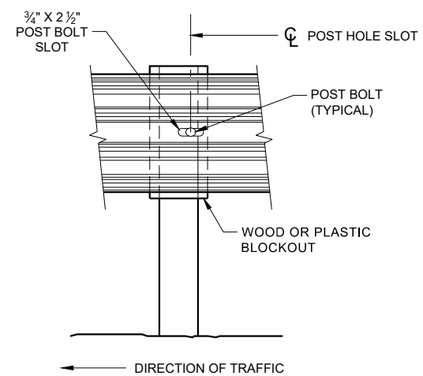

FRONT VIEW AT STEEL POST

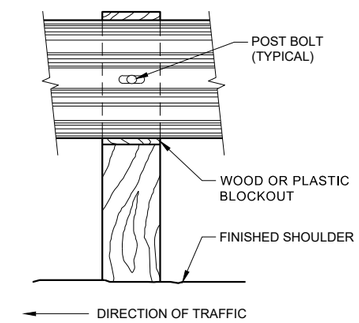

FRONT VIEW AT WOOD POST

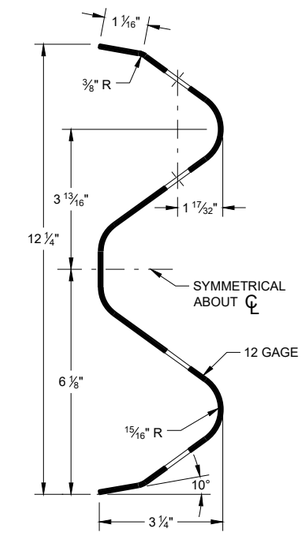

SECTION THRU W-BEAM RAIL

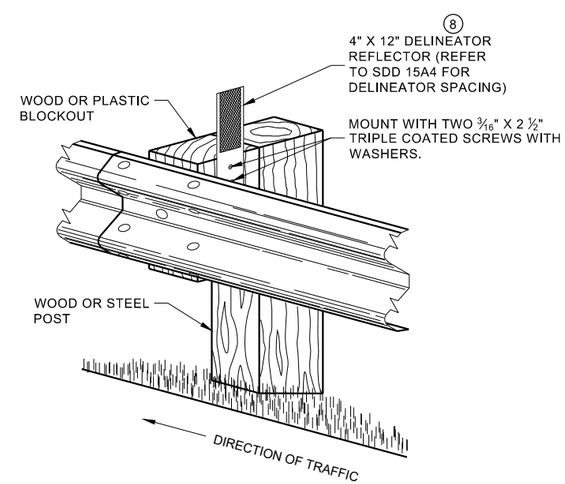

ONE SIDED REFLECTOR DETAIL AND TYPICAL INSTALLATION

MIDWEST GUARDRAIL SYSTEM (MGS) GUARDRAIL

STATE OF WISCONSIN
DEPARTMENT OF TRANSPORTA

6

6

SDD 14B42 - 07b

SDD 14B42 - 07b

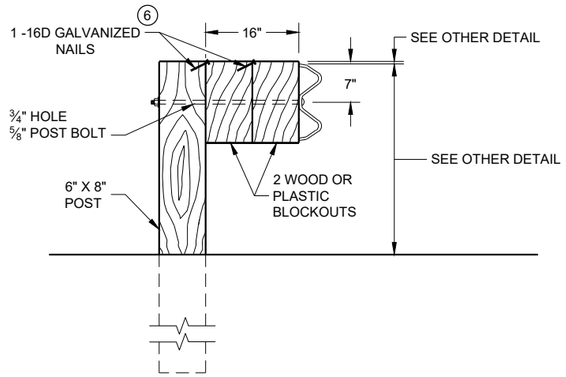

DETAIL FOR 16" BLOCKOUT DEPTH

IT IS ACCEPTABLE TO USE BLOCKOUTS UP TO 16" DEEP TO INCREASE THE POST OFFSET TO AVOID UNDERGROUND OBSTACLES. THERE IS NO LIMIT TO THE NUMBER OF POSTS THAT CAN HAVE ADDITIONAL BLOCKOUTS UP TO 16" DEEP.

NOTE:

1. ALL FILLETS SHALL HAVE A MINIMUM RADIUS OF 3/16".
2. IF THE BOLT EXTENDS MORE THAN ¼" FROM THE NUT THE BOLT SHOULD BE TRIMMED BACK.

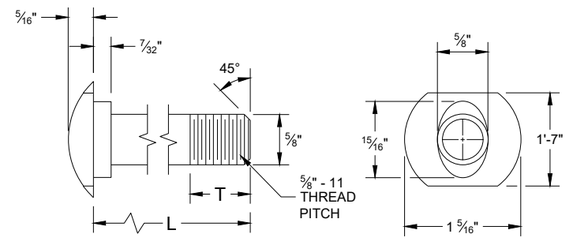

POST BOLT TABLE

L	T (MIN.)
1 ¼"	1 ⅛"
2"	1 ¾"
10"	4"
14"	4 1/16"
18"	4"
21"	4 1/16"
25"	4"

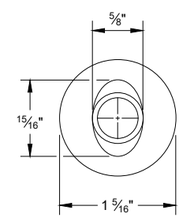

ALTERNATE BOLT HEAD

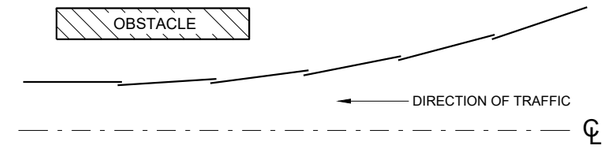

PLAN VIEW
BEAM LAPPING DETAIL

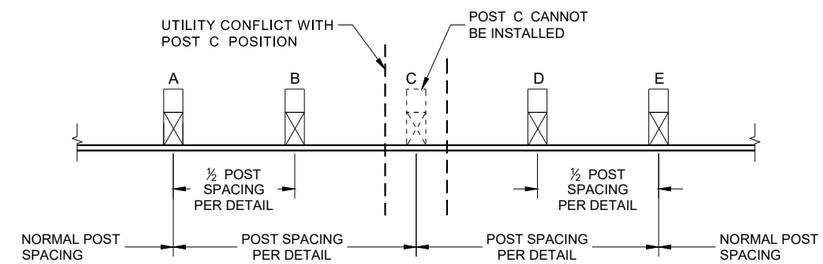

POST DRIVING FOR CONTINUOUS UNDERGROUND OBSTRUCTION

6

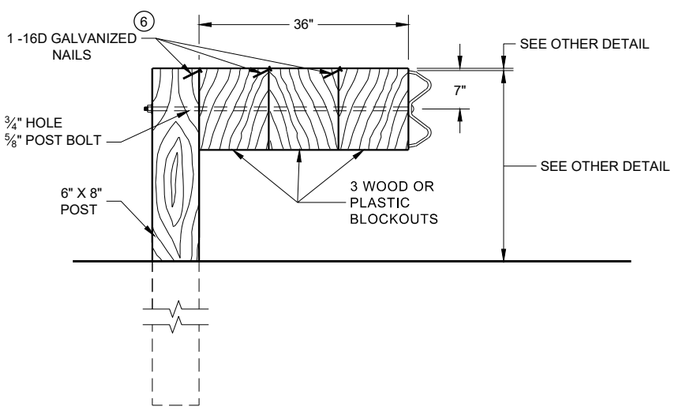

DETAIL FOR 36" BLOCKOUT DEPTH

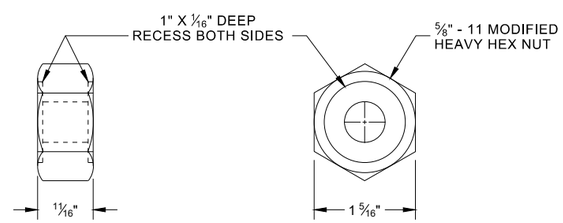

POST BOLT, SPLICE BOLT AND RECESS NUT

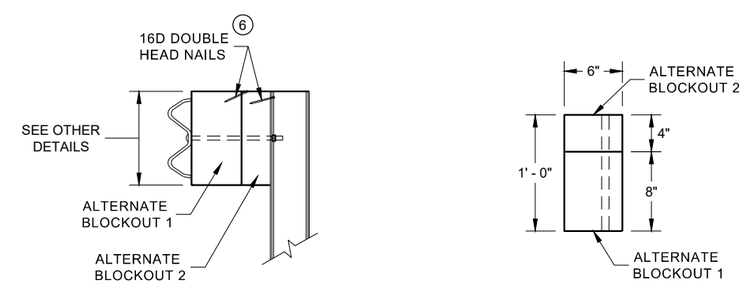

SIDE VIEW

PLAN VIEW

ALTERNATE WOOD BLOCKOUT DETAIL

NOTES: UNDER SPECIAL CIRCUMSTANCES, SUCH AS AVOIDING OBSTACLES THAT ARE NOT RELOCATED, IT IS ACCEPTABLE TO INSTALL ADDITIONAL BLOCKOUTS TO OBTAIN UP TO 36" DEPTH FOR ONE OR TWO POSTS IN A SECTION OF GUARDRAIL.

DO NOT USE 16" OR 36" BLOCKOUTS IF IT CAUSES THE POST TO BE DRIVEN BEYOND SHOULDER HINGE POINT OR CAUSES A FIXED OBJECT TO BE WITHIN THE DEFLECTION DISTANCE OF THE BARRIER.

(6) WHEN USING STEEL POST AD WOOD BLOCKOUTS, INSTALL FOUR 16D GALVANIZED NAILS. INSTALL NAILS AT THE BACK CORNERS OF THE BLOCK AND BEND THE NAILS OVER THE FLANGE OF THE STEEL POST.

MIDWEST GUARDRAIL SYSTEM (MGS) GUARDRAIL

STATE OF WISCONSIN
DEPARTMENT OF TRANSPORTA

SDD 14B42 - 07c

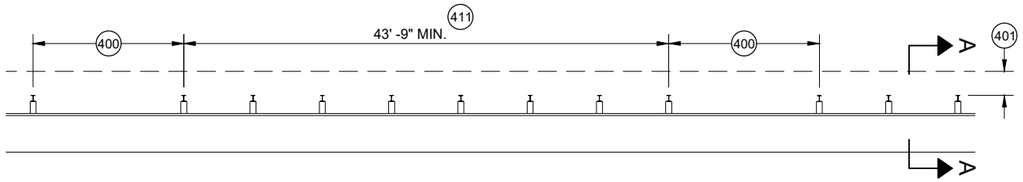

MISSING POST IN MGS GUARDRAIL

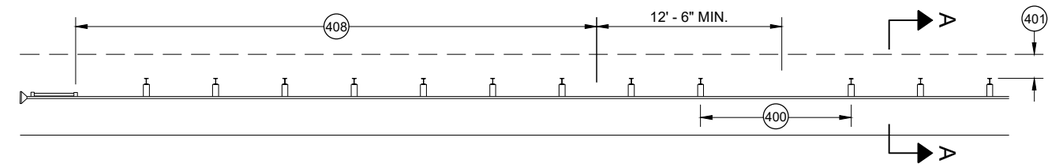

MISSING POST IN MGS GUARDRAIL NEAR EAT

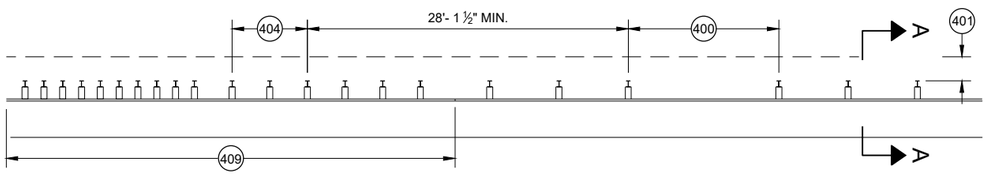

MISSING POST IN MGS GUARDRAIL NEAR AN APPROACH TRANSITION

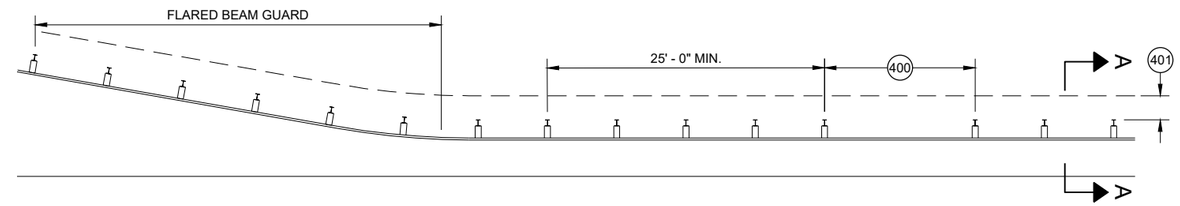

MISSING POST IN MGS GUARDRAIL NEAR FLARED BEAM GUARD

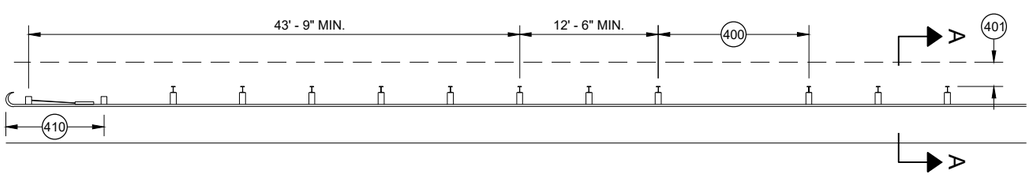

MISSING POST IN MGS GUARDRAIL NEAR A TYPE 2 END TERMINAL

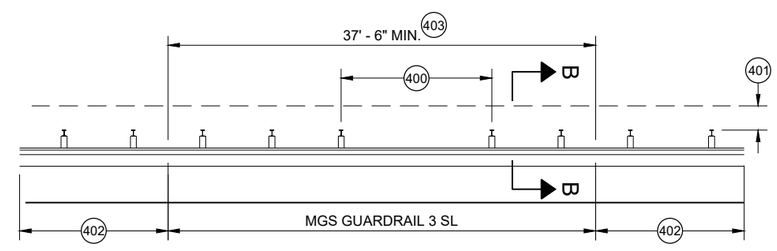

MISSING POST IN SHORT SPAN MGS GUARDRAIL NEAR CURB (SL) 407

400 MAX SPAN 12' - 6"
401 2' MIN.
402 MGS GUARDRAIL 3
403 NESTING BEAM GUARD
404 ASYMMETRIC TRANSITION
405 SOIL WELL DRAINED AND COMPACTED
406 SEE OTHER DRAWINGS IN THIS SDD
407 SEE OTHER DRAWINGS FOR MIN. SPACING BETWEEN SPANS
408 SEE SDD 14B44
409 SEE SDD 14B45
410 SEE SDD 14B47
411 MINIMUM DISTANCE BETWEEN MISSING POST SPANS.

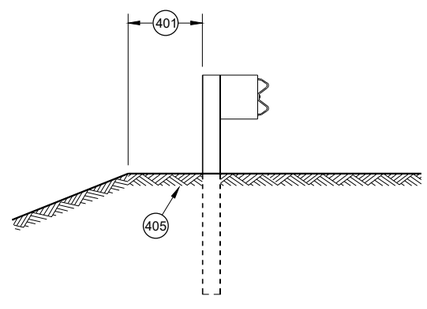

SECTION A - A 406

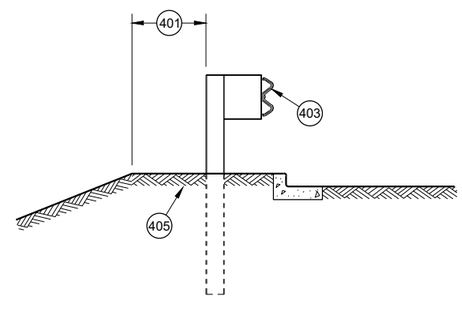

SECTION B - B 406

MIDWEST GUARDRAIL SYSTEM (MGS) GUARDRAIL

STATE OF WISCONSIN
DEPARTMENT OF TRANSPORTATION

APPROVED
May 2021 — DATE
/S/ Rodney Taylor — ROADWAY STANDARDS DEVE UNIT SUPERVISOR
FHWA

6

SDD 14B42 - 07d

GENERAL NOTES

(A) THE SLOPE IN THE AREA BOUNDED BY THE GRADELINE, THE HINGE POINT LINE (HPL) AND THE CLEAR ZONE LIMITS (CZL) SHALL BE 4:1 OR FLATTER.

(B) AFTER FINAL ASSEMBLY, RECHECK CABLE TO BE SURE IT IS TAUT AND HAS NOT RELAXED

(C) DIFFERENT MANUFACTURERS REQUIRE DIFFERENT PERFORATED W - BEAM RAIL END PANELS. SEE MANUFACTURER'S INFORMATION.

(D) ATTACH ALUMINUM SHEET TO E.A.T. HEAD USING 4 STAINLESS STEEL SELF - TAPPING SCREWS. ONE SCREW PER CORNER.

(E) HARDWARE MAY VARY BETWEEN MANUFACTURER. SEE MANUFACTURER'S DRAWING FOR INFORMATION.

DIMENSIONS MAY VARY, MANUFACTURER'S INFORMATION.

SEE SDD 14B42 FOR MORE INFORMATION.

* DO NOT ATTACH BLOCKOUTS TO POST 1 AND 2.

DO NOT INSTALL REFLECTORS ON THE FIRST 50 FEET OF THE APPROACH END OF THE ENERGY ABSORBING TERMINAL.

SEE MANUFACTURER'S DRAWING FOR SPLICE LOCATION, HARDWARE DIMENSIONS AND INSTALLATION INSTRUCTIONS.

THE CENTER OF THE UPPER 3 ½" DIAMETER HOLE ON POST NUMBER 3 THROUGH POST 9 IS TO BE FLUSH WITH THE GROUND LINE UP TO A MAXIMUM OF 2" ABOVE GROUND LINE. WOOD BLOCKS ON POSTS NUMBERED 3 THROUGH 9 MAY BE ADJUSTED UP TO 3" ABOVE THE TOP OF POST.

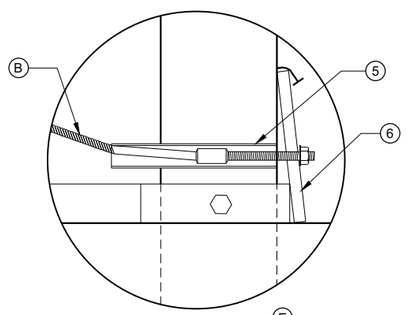

DETAIL "A" (E)

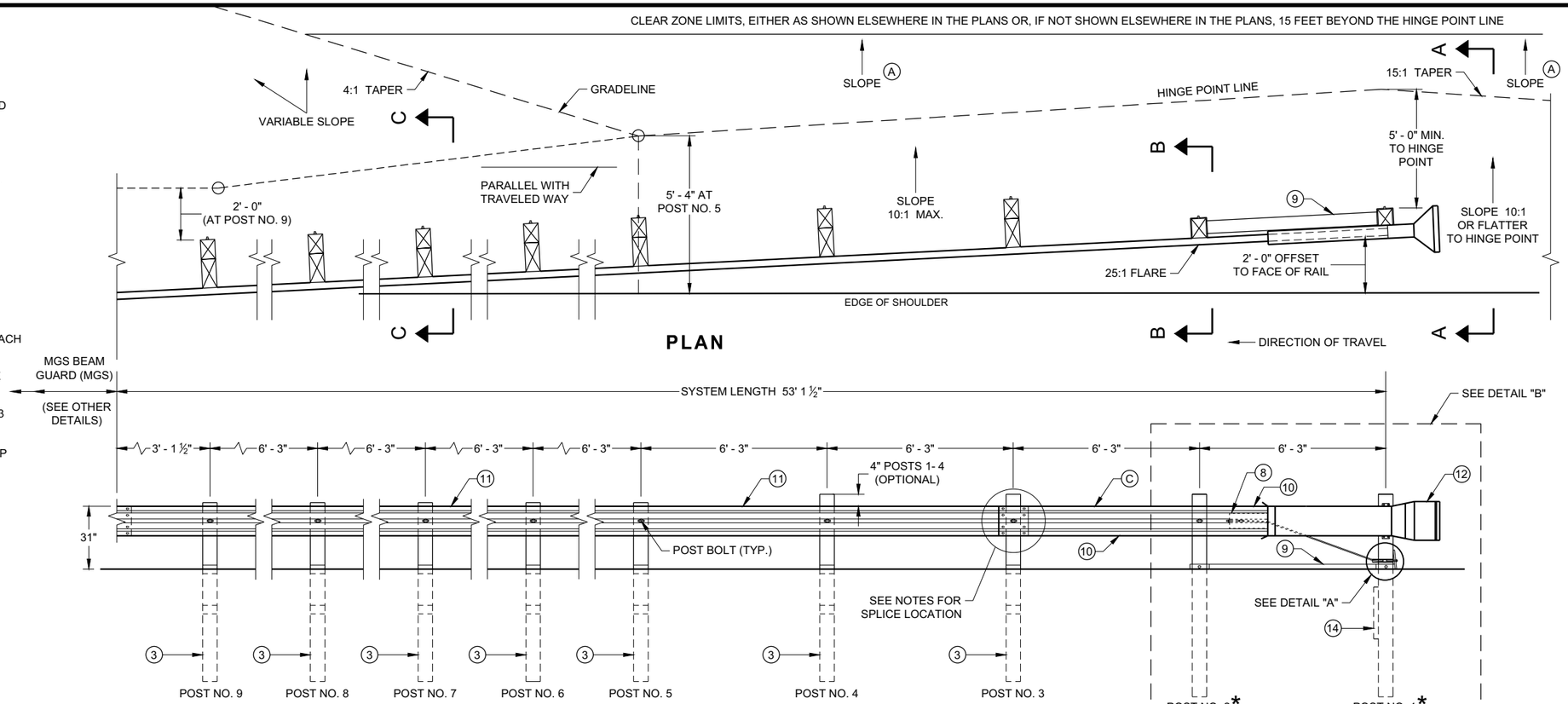

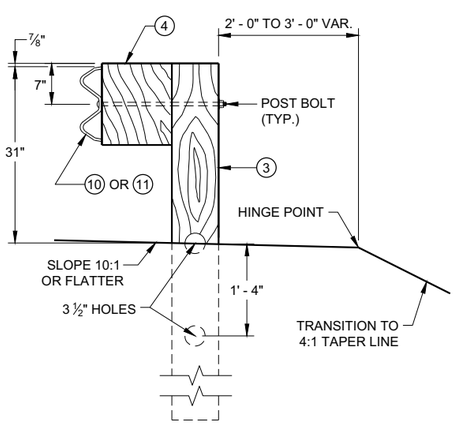

SECTION C - C
TYPICAL AT POST NOS. 3 - 9

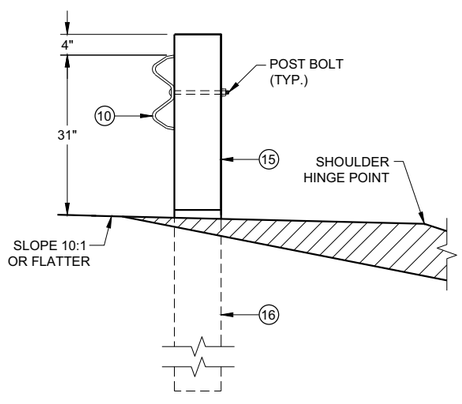

SECTION B - B
TYPICAL AT POST NO. 2*

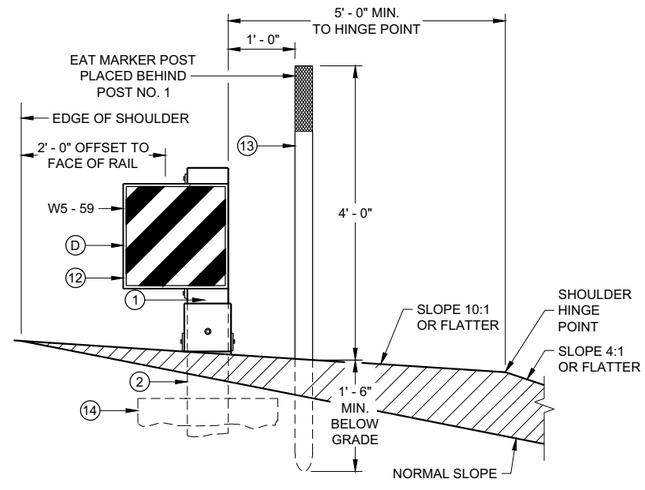

SECTION A - A
TYPICAL AT POST NO. 1*

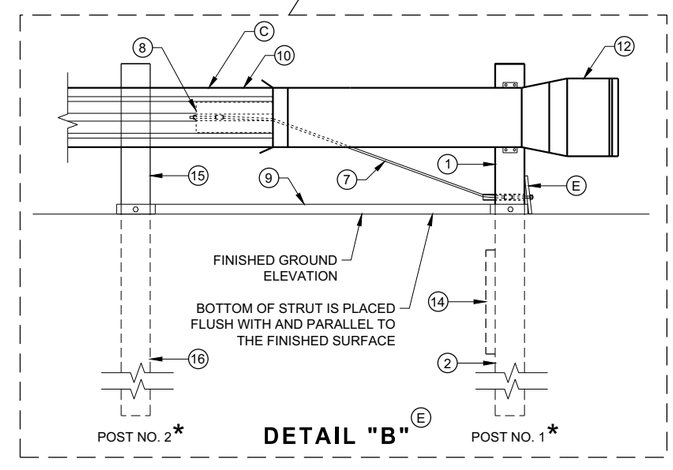

DETAIL "B" (E)

MIDWEST GUARDRAIL SYSTEM ENERGY ABSORBING TERMINAL (MGS)

STATE OF WISCONSIN
DEPARTMENT OF TRANSPORTATION

6

6

SDD 14B44 - 04a

SDD 14B44 - 04a

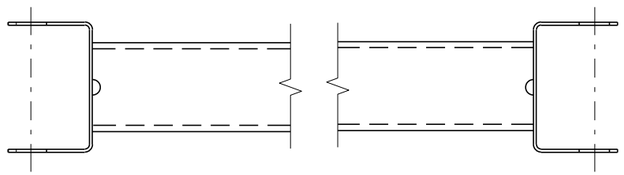

GENERIC GROUND STRUT (9)(E)

BILL OF MATERIALS

PART NO.	DESCRIPTION MATERIALS PROVIDED BY MGS EAT MANUFACTURER. SEE MANUGACTURER'S DETAILS FOR MORE INFORMATION.
1	UPPER POST NO. 1 6" X 6" TUBE
2	LOWER POST NO. 1
3	WOOD CRT
4	WOOD BLOCKOUT
5	PIPE SLEEVE
6	BEARING PLATE
7	BCT CABLE ASSEMBLY
8	ANCHOR CABLE BOX
9	GROUND STRUT
10	PERFORATED W-BEAM RAIL END PANEL, 12'-6" LONG.
11	STANDARD W-BEAM RAIL. MULTIPLE SECTIONS REQUIRED. SECTIONS VARY IN LENGTH.
12	IMPACT HEAD
13	EAT MARKER POST - YELLOW (SEE APPROVED PRODUCTS LIST)
14	SOIL PLATE
15	UPPER POST NO. 2
16	LOWER POST NO. 2

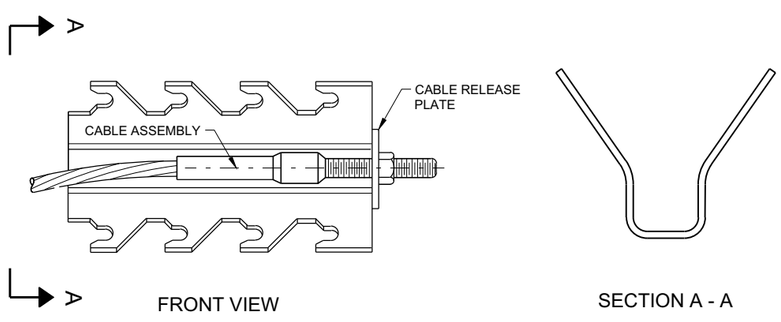

GENERIC ANCHOR CABLE BOX (9)(E)

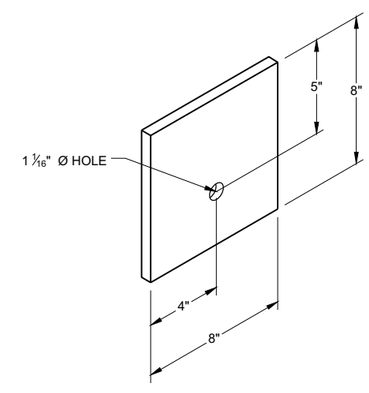

BEARING PLATE (6)(E)

6

6

SDD 14B44 - 04b

SDD 14B44 - 04b

MIDWEST GUARDRAIL SYSTEM ENERGY ABSORBING TERMINAL (MGS)

STATE OF WISCONSIN
DEPARTMENT OF TRANSPORTAT

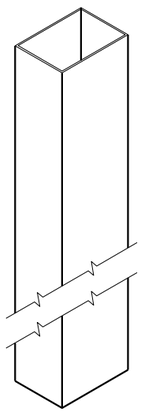

UPPER POST NO. 1 (1) (E)

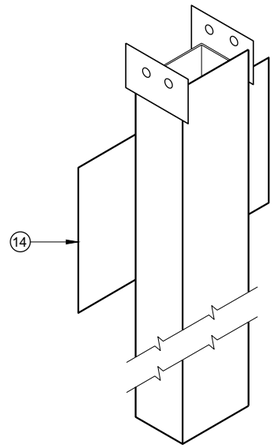

LOWER POST NO. 1 (2) (E)

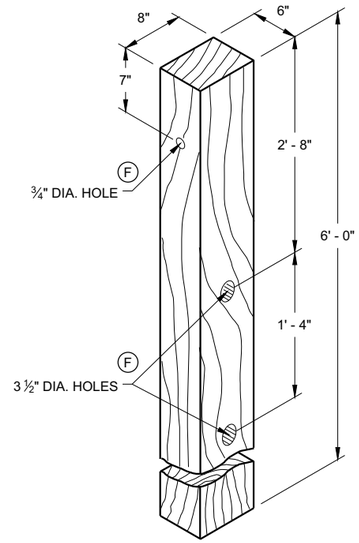

WOOD CRT POST (3) (E)

POSTS NUMBER 3-9

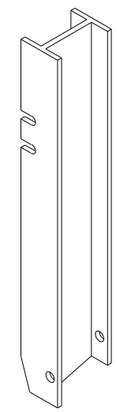

UPPER POST NO. 2 (15) (E)

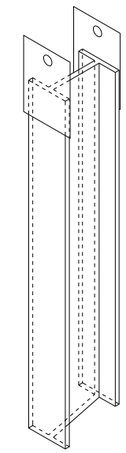

LOWER POST NO. 2 (16) (E)

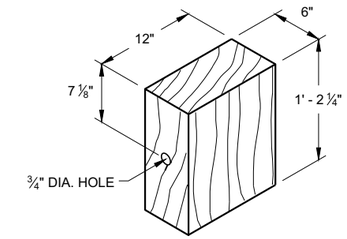

WOOD BLOCKOUT (4)

REQ'D. AT ALL POSTS EXCEPT POST NO'S 1 & 2

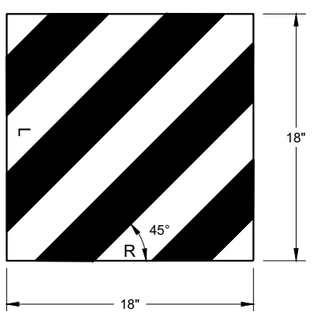

W5 - 59

REFLECTIVE SHEETING DETAIL (E)

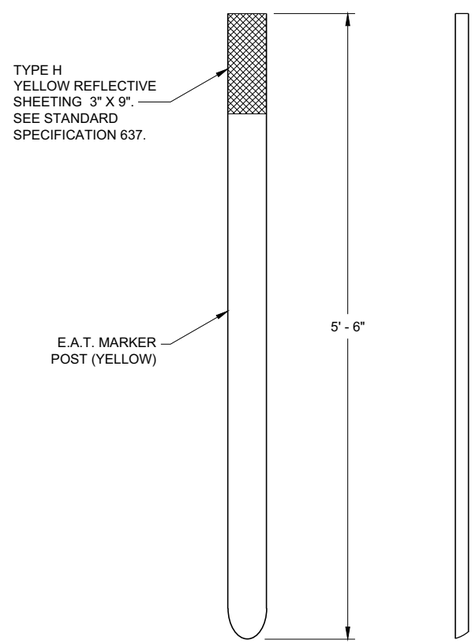

FRONT VIEW SIDE VIEW

E.A.T. MARKER POST (13)

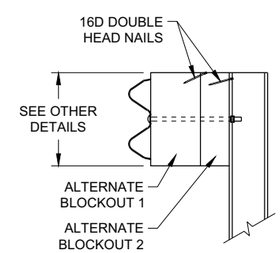

SIDE VIEW

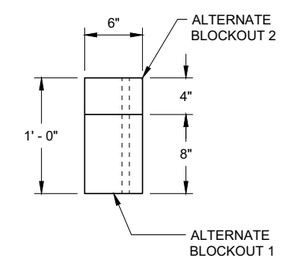

TOP VIEW

ALTERNATE WOOD BLOCKOUT DETAIL

MIDWEST GUARDRAIL SYSTEM ENERGY ABSORBING TERMINAL (MGS)

STATE OF WISCONSIN
DEPARTMENT OF TRANSPORTATION

APPROVED
7/2018 — DATE
/S/ Rodney Taylor — ROADWAY STANDARDS DEVE UNIT SUPERVISOR
FHWA

6

6

SDD 14B44 - 04c

SDD 14B44 - 04c

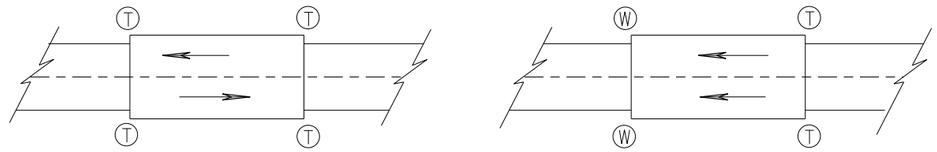

TWO WAY TRAFFIC **ONE WAY TRAFFIC**

(T) THRIE BEAM CONNECTION

(W) W-BEAM CONNECTION WHEN REQUIRED

TYPICAL LOCATIONS OF THRIE BEAM AND W-BEAM CONNECTIONS TO BRIDGE

GENERAL NOTES

IF ROCK IS ENCOUNTERED, REMOVE ROCK TO FULL DEPTH OF POST PLUS 2½", AND 12" DIAMETER AROUND POST. SEE 14B42 FOR MORE DETAILS.

TRANSITION USES STEEL POSTS ONLY.

SEE STANDARD DETAIL DRAWING 14 B 42 FOR MORE INFORMATION.

POST 2 THROUGH 17 USES STEEL POST ONLY

(1) BRIDGE RAILING TYPE "W" DOES NOT REQUIRE A TERMINAL CONNECTOR.

(2) OPTIONAL CURB AND GUTTER OR DRAINAGE FEATURE SEE PLAN FOR INFORMATION.

(13) STEEL OR WOOD POST IS ACCEPTABLE AT POST 1. SEE SDD14B42

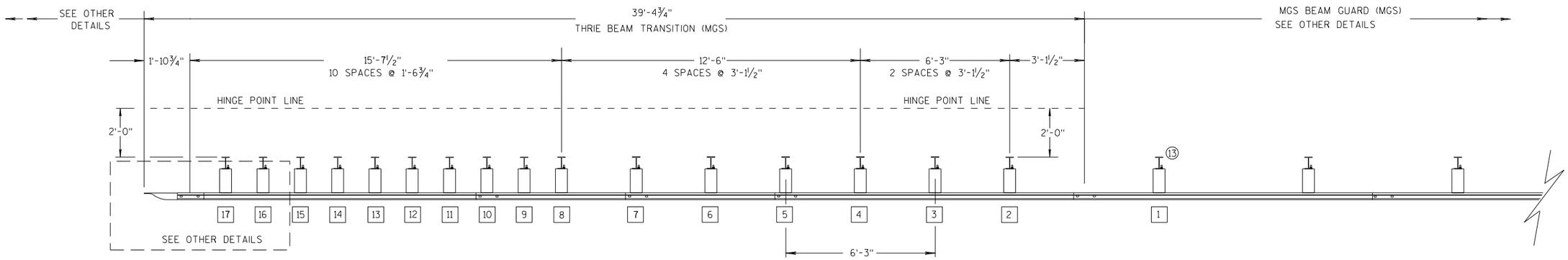

PLAN VIEW

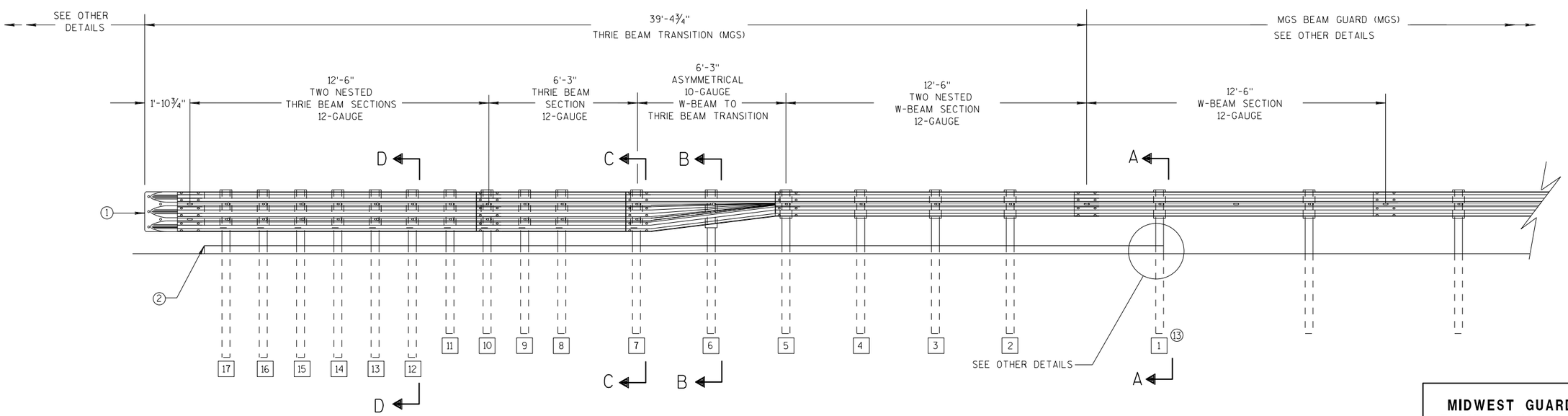

ELEVATION VIEW

MIDWEST GUARDRAIL SYSTEM THRIE BEAM TRANSITION

MIDWEST GUARDRAIL SYSTEM THRIE BEAM TRANSITION (MGS)

STATE OF WISCONSIN
DEPARTMENT OF TRANSPOR

6

S.D.D. 14 B 45-5a

GENERAL NOTES

(2) OPTIONAL CURB AND GUTTER OR DRAINAGE FEATURE SEE PLAN FOR INFORMATION.

(3) WHEN USING STEEL POSTS AND WOOD BLOCKOUTS INSTALL FOUR 10D GALVANIZED NAILS. INSTALL NAILS AT THE BACK CORNERS OF THE BLOCK AND BEND THE NAILS OVER THE FLANGE OF THE STEEL POST.

(4) TOLERANCE FOR TOP OF W-BEAM RAIL IS ± 1".

(13) STEEL OR WOOD POST IS ACCEPTABLE AT POST 1. SEE SDD 14B42

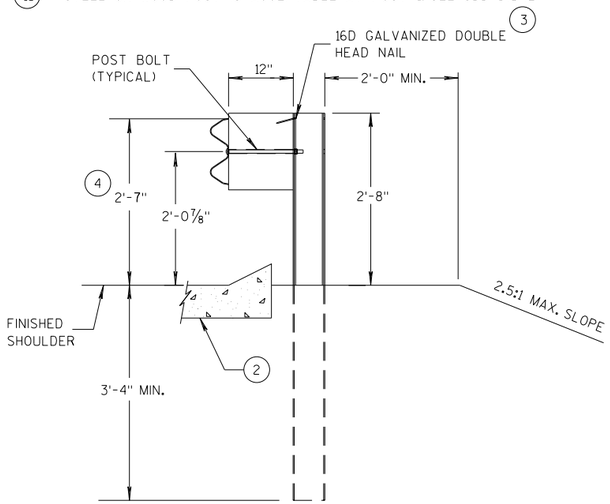

SECTION A-A (13)

POSTS 1-5

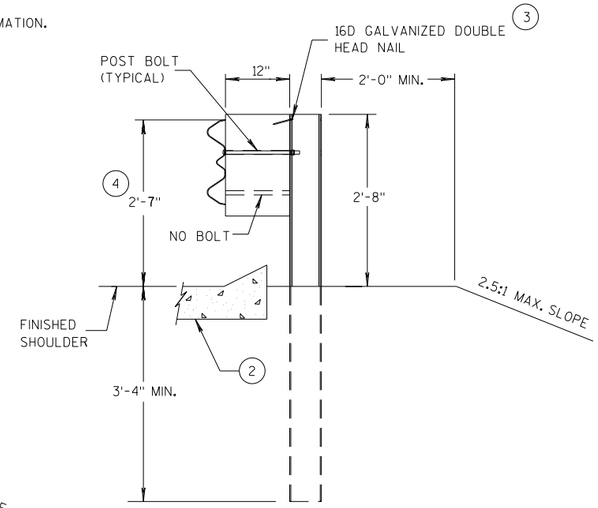

SECTION B-B

POST 6

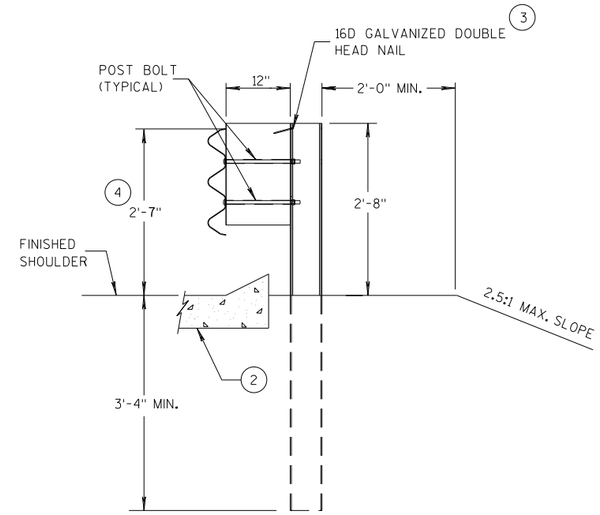

SECTION C-C

POSTS 7-11

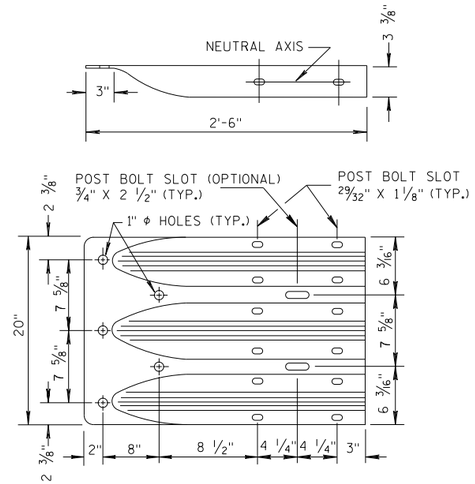

THRIE BEAM TERMINAL CONNECTOR

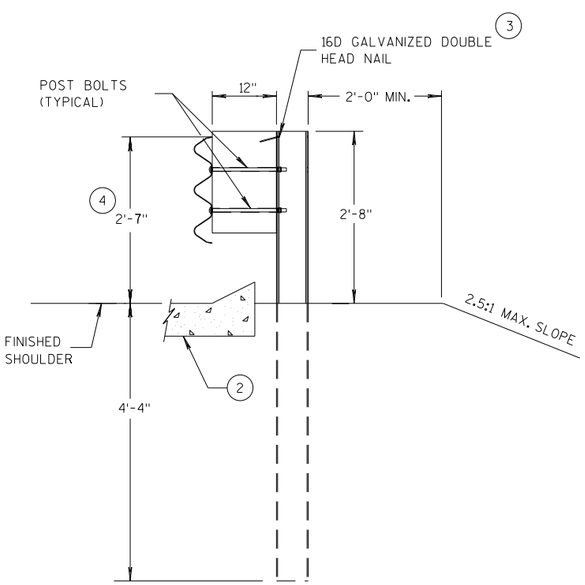

SECTION D-D

POSTS 12-17

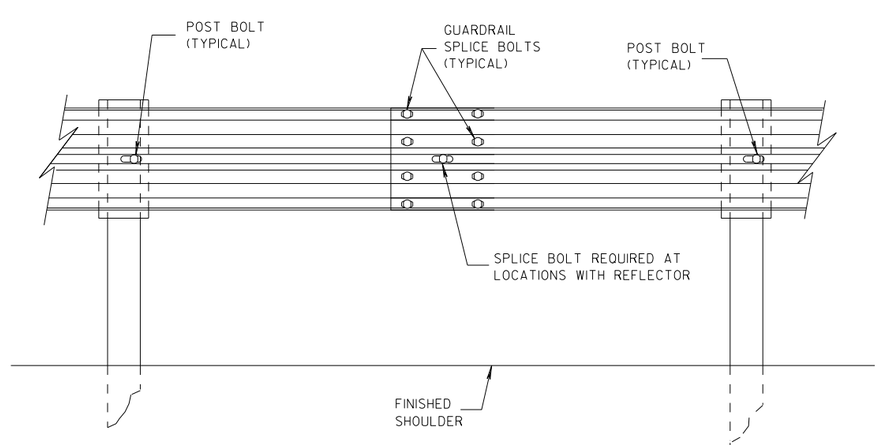

SPLICE DETAIL

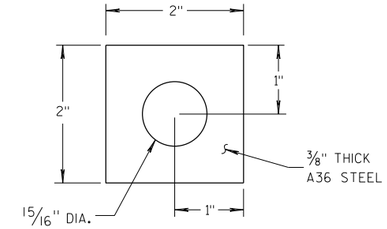

PLATE WASHER DETAIL

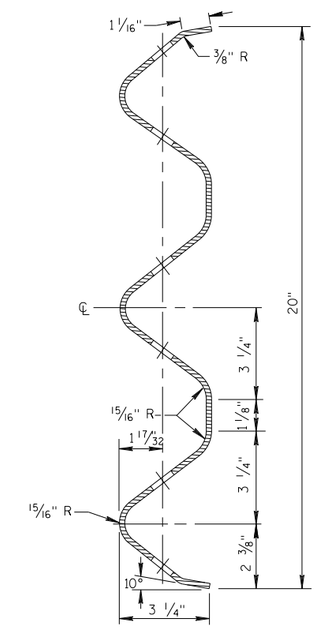

SECTION THRU THRIE BEAM RAIL ELEMENT

MIDWEST GUARDRAIL SYSTEM
THRIE BEAM TRANSITION (MGS)

STATE OF WISCONSIN
DEPARTMENT OF TRANSPOR

6

S.D.D. 14 B 45-5b

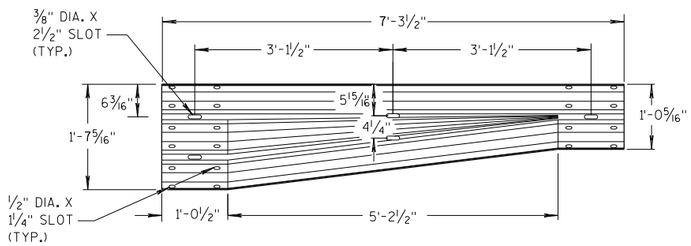

W-BEAM TO THRIE BEAM TRANSITION SECTION

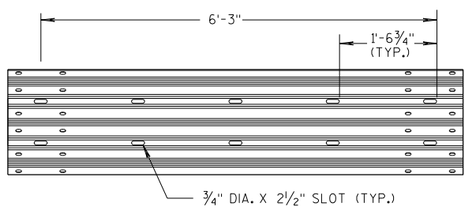

6'-3" THRIE BEAM SECTION

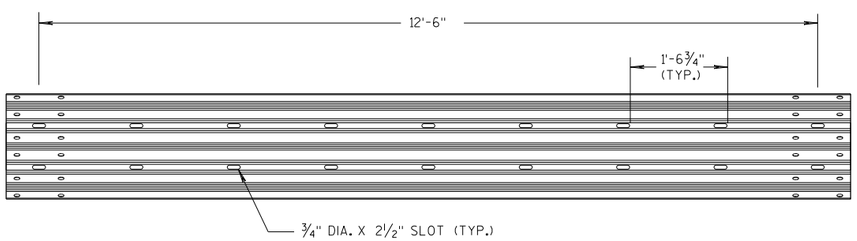

12'-6" THRIE BEAM SECTION

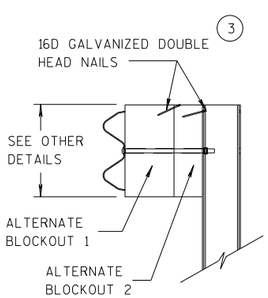

SIDE VIEW

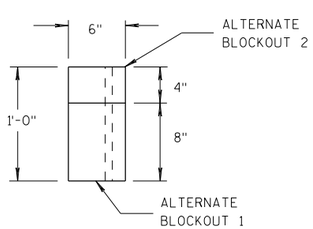

TOP VIEW

ALTERNATE WOOD BLOCKOUT DETAIL

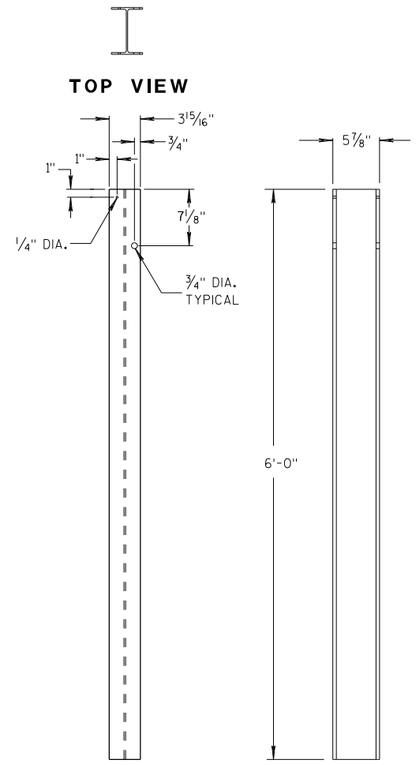

STEEL POSTS 1-5 (13)

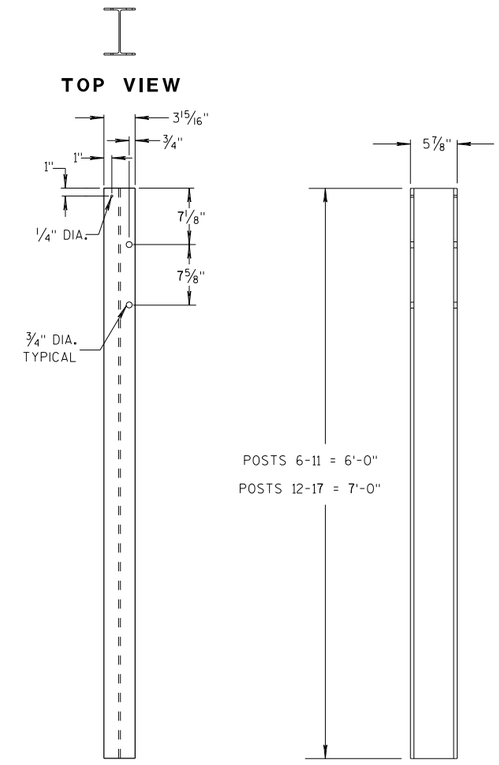

STEEL POSTS 6-17

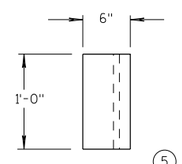

TOP VIEW (5)

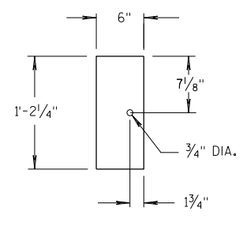

FRONT VIEW

BLOCKOUT POSTS 1-5

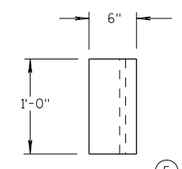

TOP VIEW (5)

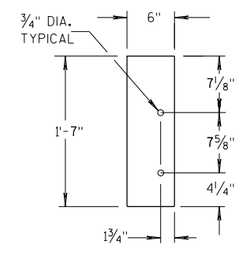

FRONT VIEW

BLOCKOUT POSTS 6-17

GENERAL NOTES

STEEL POSTS ARE W6X9 OR W6X8.5.

BOLT HOLES FOR POST ARE ON FRONT AND OF SIDE OF POST.

(3) WHEN USING STEEL POSTS AND WOOD BLOCKOUTS INSTALL FOUR 16D GALVANIZED NAILS. INSTALL NAILS AT THE BACK CORNERS OF THE BLOCK AND BEND THE NAILS OVER THE FLANGE OF THE STEEL POST.

(5) WOOD BLOCKS MAY BE CONSTRUCTED OUT OF 2 WOOD BLOCKS. SEE ALTERNATE WOOD BLOCK DETAIL.

(13) STEEL OR WOOD POST IS ACCEPTABLE AT POST 1. SEE SDD 14B42.

MIDWEST GUARDRAIL SYSTEM THRIE BEAM TRANSITION (MGS)

STATE OF WISCONSIN
DEPARTMENT OF TRANSPOR

6

S.D.D. 14 B 45-5c

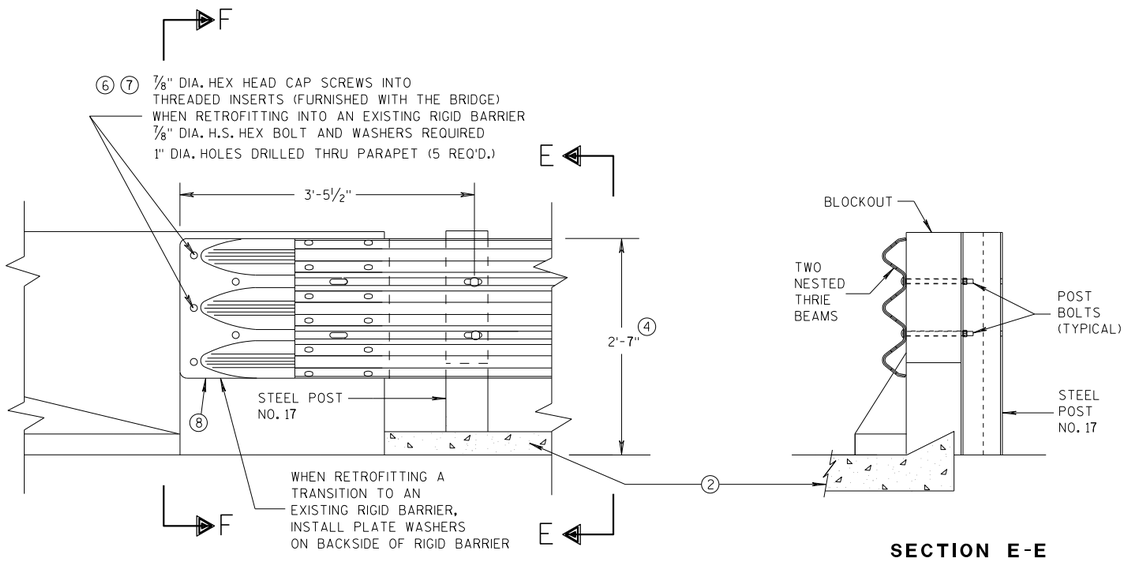

FRONT VIEW

SECTION E-E

THRIE BEAM CONNECTION TO BRIDGE PARAPET WITH SQUARE ENDS

GENERAL NOTES

THESE ARE TYPICAL CONNECTION DETAILS. ADJUST THE POSTION OF CONNECTIONS TO EXISTING BRIDGES TO FIT THE ACTUAL BRIDGE AND SITE DIMENSIONS.

② OPTIONAL CURB AND GUTTER OR DRAINAGE FEATURE SEE PLAN FOR INFORMATION.

④ TOLERANCE FOR TOP OF BEAM IS ± 1".

⑥ DRILLING BOLT HOLES THROUGH THE PARAPET, BOLTS, NUTS, WASHERS AND REPAIRING DAMAGED CONCRETE ARE INCIDENTAL TO THE CONTRACT.

⑦ BOLTS MAY BE A325 BOLTS OR A449 BOLTS. BOLT LENGTH AND THREADING LENGTH ARE TO ALLOW FOR A TIGHT CONNECTION BETWEEN RIGID BARRIER AND THRIE BEAM CONNECTION PLATE. CONTRACTOR IS TO FIELD VERIFY BOLT LENGTH AND THREAD LENGTH. ONE ROUND WASHER REQUIRED BETWEEN BOLT HEAD AND THRIE BEAM CONNECTOR PLATE. BOLTS THAT EXTEND THROUGH THE PARAPET AND OUT THE BACK FACE REQUIRE A HARDENED ROUND STEEL WASHER THAT IS 2" O.D. X 5/32" THICK AND ONE PLATE WASHER. REPAIR ANY DAMAGED CONCRETE FROM BOLT INSTALLATION.

⑧ THE RECESS FOR A W-BEAM CONNECTION, WHICH EXISTS ON SOME PARAPETS OF THIS TYPE, SHALL BE FILLED WITH A TREATED TIMBER BLOCKOUT. BLOCKOUT SIZE IS 1'-6" X 2'-0" X 3 1/2".

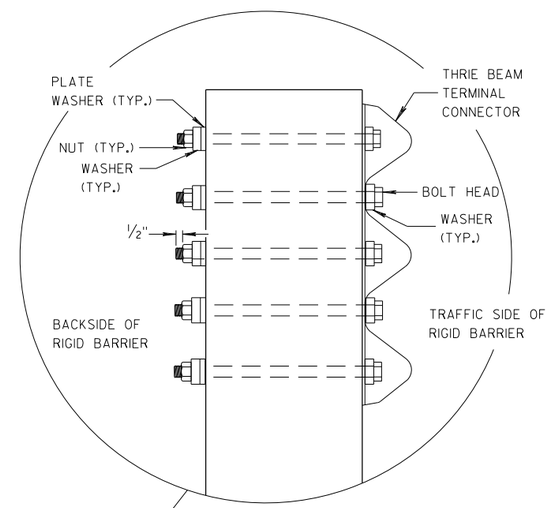

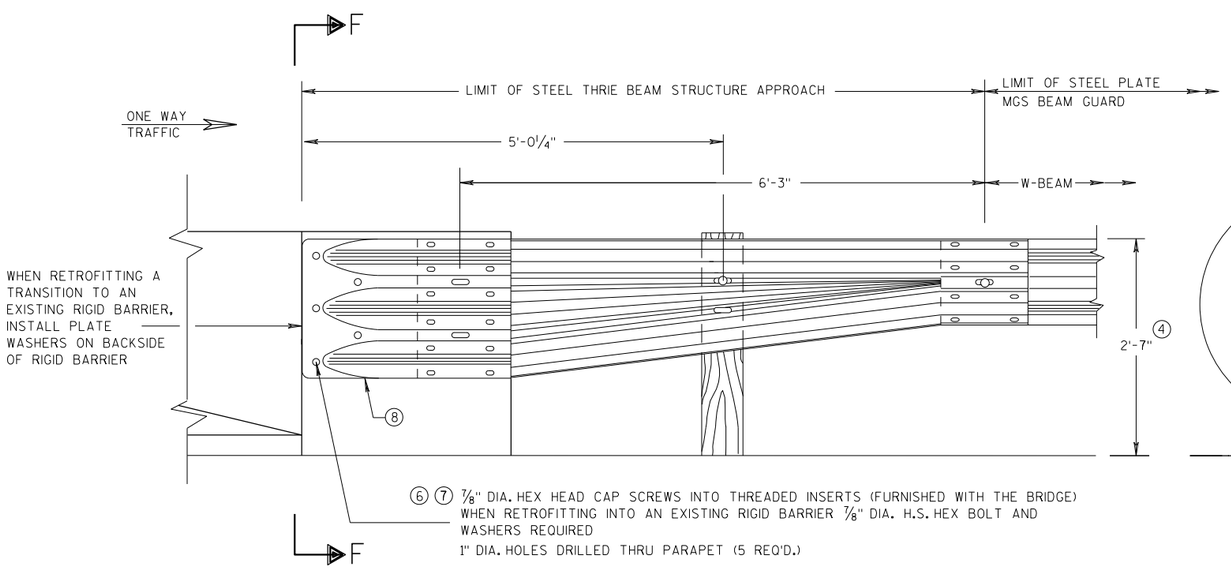

FRONT VIEW

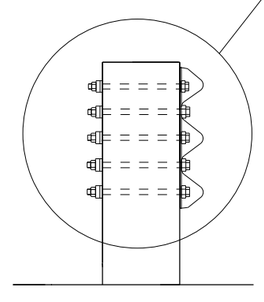

SECTION F-F

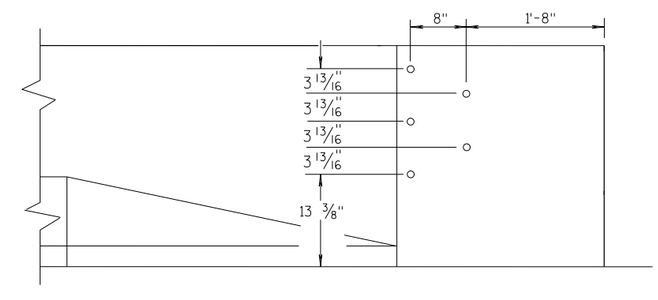

DRILL HOLE LOCATION

W BEAM TRANSITION AND CONNECTION TO BRIDGE PARAPETS WITH SQUARE ENDS

(USE ONLY ON THE TRAFFIC EXIT END OF ONE WAY BRIDGES)

MIDWEST GUARDRAIL SYSTEM THRIE BEAM TRANSITION (MGS)

STATE OF WISCONSIN
DEPARTMENT OF TRANSPORTATION

APPROVED
07/2018 — DATE
/S/ Rodney Taylor — ROADWAY STANDARDS D[illegible] UNIT SUPERVI[illegible]
FHWA

6

S.D.D. 14 B 45-5d

GENERAL NOTES

THESE ARE TYPICAL CONNECTION DETAILS. ADJUST THE POSTION OF CONNECTIONS TO EXISTING BRIDGES TO FIT THE ACTUAL BRIDGE AND SITE DIMENSIONS.

(2) OPTIONAL CURB AND GUTTER OR DRAINAGE FEATURE SEE PLAN FOR INFORMATION.

(4) TOLERANCE FOR TOP OF BEAM IS ± 1".

(6) DRILLING BOLT HOLES THROUGH THE PARAPET, BOLTS, NUTS, WASHERS AND REPAIRING DAMAGED CONCRETE ARE INCIDENTAL TO THE CONTRACT.

(7) BOLTS MAY BE A325 BOLTS OR A449 BOLTS. BOLT LENGTH AND THREADING LENGTH ARE TO ALLOW FOR A TIGHT CONNECTION BETWEEN RIGID BARRIER AND THRIE BEAM CONNECTION PLATE. CONTRACTOR IS TO FIELD VERIFY BOLT LENGTH AND THREAD LENGTH. ONE ROUND WASHER REQUIRED BETWEEN BOLT HEAD AND THRIE BEAM CONNECTOR PLATE. BOLTS THAT EXTEND THROUGH THE PARAPET AND OUT THE BACK FACE REQUIRE A HARDENED ROUND STEEL WASHER THAT IS 2" O.D. X 5/32" THICK AND ONE PLATE WASHER. REPAIR ANY DAMAGED CONCRETE FROM BOLT INSTALLATION.

(8) THE RECESS FOR A W-BEAM CONNECTION, WHICH EXISTS ON SOME PARAPETS OF THIS TYPE, SHALL BE FILLED WITH A TREATED TIMBER BLOCKOUT. BLOCKOUT SIZE IS 1'-6" X 2'-0" X 3 1/2".

(9) BOLT, NUT AND WASHERS NOT REQUIRED FOR THIS LOCATION WHEN RETROFITTING AN EXISTING PAPAPET AND THE HOLE IS EITHER ABOVE PARAPET OR WITHIN 4 INCHES OF THE EDGE OF PARAPET.

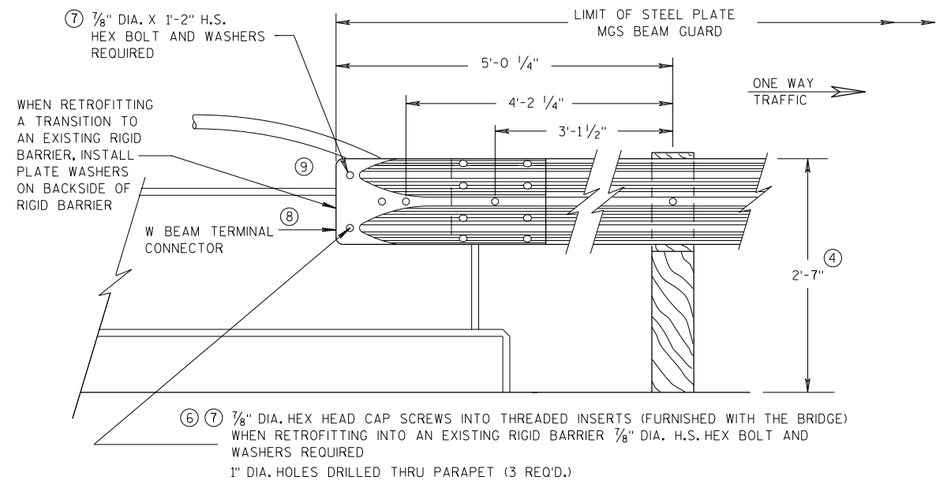

FRONT VIEW

W BEAM CONNECTION TO VERTICAL FACE PARAPET

(USE ONLY ON THE TRAFFIC EXIT END OF ONE WAY BRIDGES)

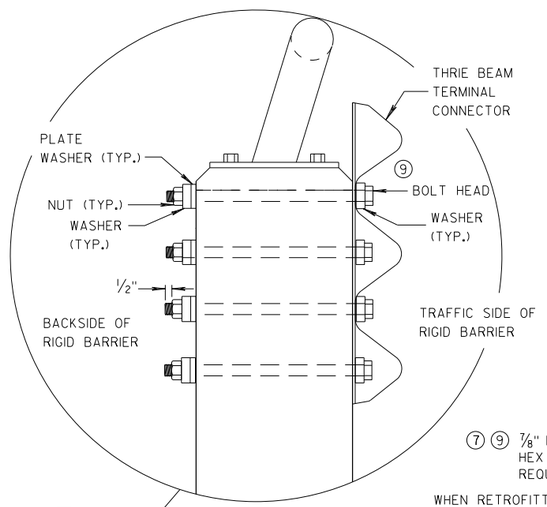

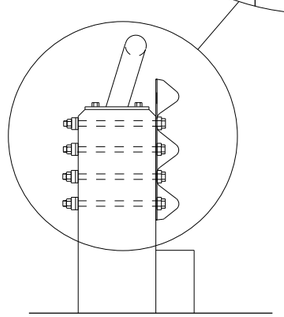

SECTION G-G

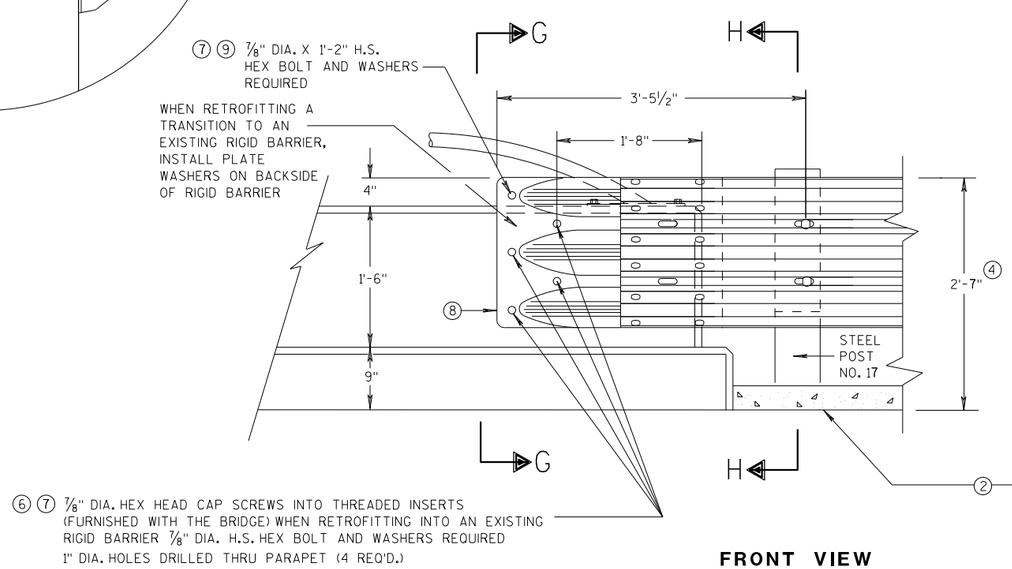

FRONT VIEW

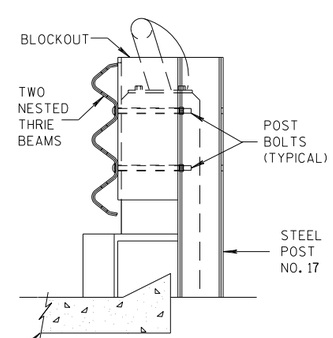

SECTION H-H

THRIE BEAM CONNECTION TO VERTICAL FACED PARAPETS

MIDWEST GUARDRAIL SYSTEM
THRIE BEAM TRANSITION (MGS)

STATE OF WISCONSIN
DEPARTMENT OF TRANSPORTATION

APPROVED
07/2018 — DATE
/S/ Rodney Taylor
ROADWAY STANDARDS D UNIT SUPERVIS
FHWA

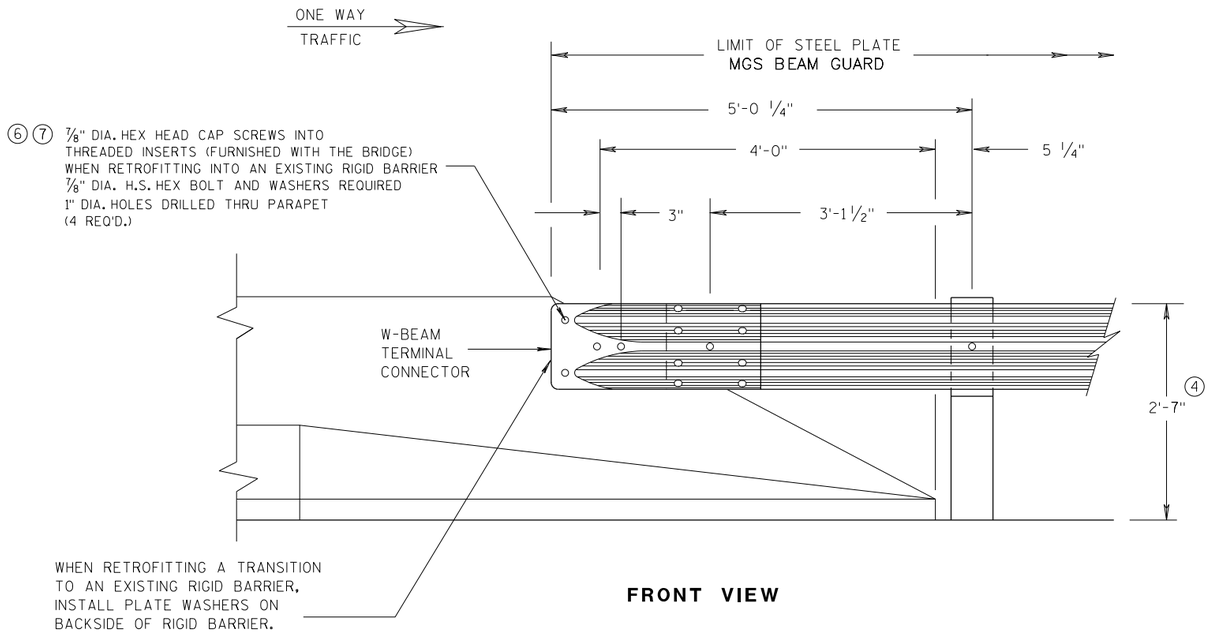

FRONT VIEW

W BEAM CONNECTION TO PARAPETS WITH SLOPED ENDS

(USE ONLY AT TRAFFIC EXIT END OF ONE WAY BRIDGE)

GENERAL NOTES

② OPTIONAL CURB AND GUTTER OR DRAINAGE FEATURE SEE PLAN FOR INFORMATION.

④ TOLERANCE FOR TOP OF BEAM IS ± 1".

⑥ DRILLING BOLT HOLES THROUGH THE PARAPET, BOLTS, NUTS, WASHERS AND REPAIRING DAMAGED CONCRETE ARE INCIDENTAL TO THE CONTRACT.

⑦ BOLTS MAY BE A325 BOLTS OR A449 BOLTS. BOLT LENGTH AND THREADING LENGTH ARE TO ALLOW FOR A TIGHT CONNECTION BETWEEN RIGID BARRIER AND THRIE BEAM CONNECTION PLATE. CONTRACTOR IS TO FIELD VERIFY BOLT LENGTH AND THREAD LENGTH. ONE ROUND WASHER REQUIRED BETWEEN BOLT HEAD AND THRIE BEAM CONNECTOR PLATE. BOLTS THAT EXTEND THROUGH THE PARAPET AND OUT THE BACK FACE REQUIRE A HARDENED ROUND STEEL WASHER THAT IS 2" O.D. X 5/32" THICK AND ONE PLATE WASHER. REPAIR ANY DAMAGED CONCRETE FROM BOLT INSTALLATION.

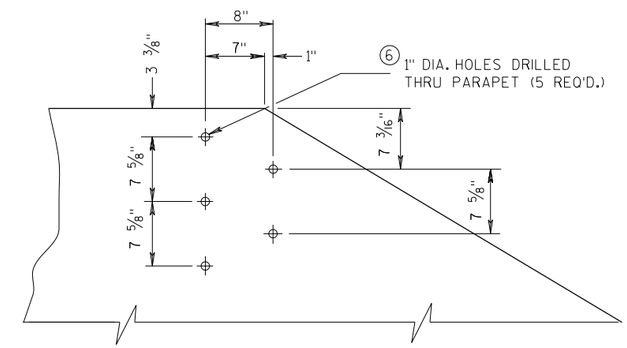

DRILL HOLE LOCATION AND PATTERN FOR THRIE BEAM CONNECTION

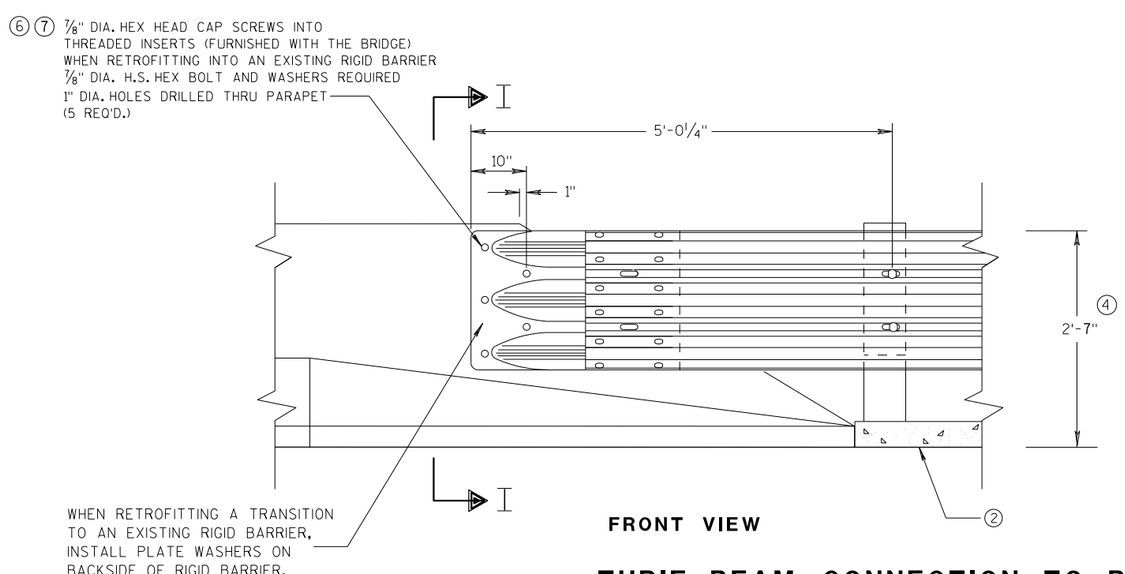

FRONT VIEW

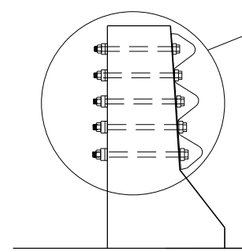

SECTION I-I

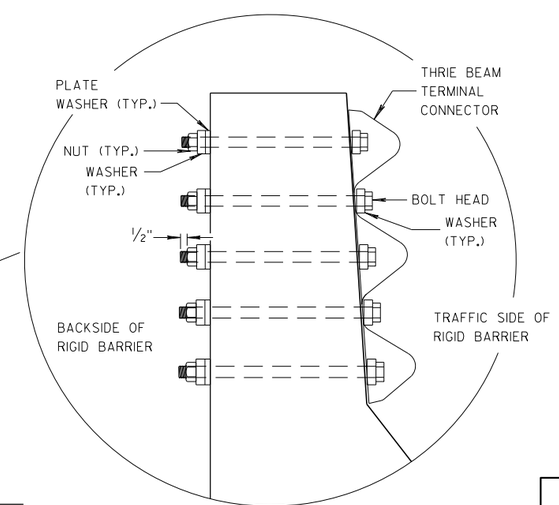

THRIE BEAM CONNECTION TO BRIDGE PARAPETS WITH SLOPED ENDS

MIDWEST GUARDRAIL SYSTEM THRIE BEAM TRANSITION (MGS)

STATE OF WISCONSIN
DEPARTMENT OF TRANSPORTATION

APPROVED
07/2018 — DATE
/S/ Rodney Taylor
ROADWAY STANDARDS DEVELOPMENT UNIT SUPERVISOR
FHWA

6

S.D.D. 14 B 45-5f

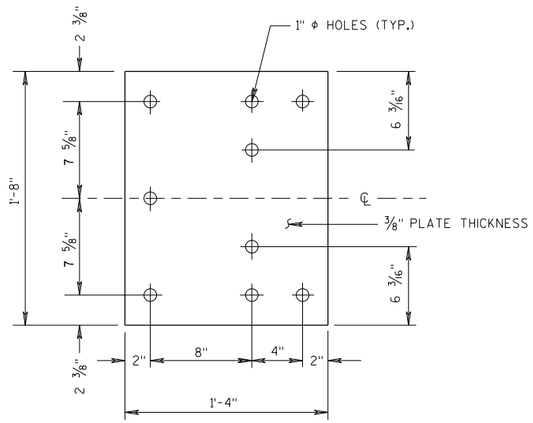

BACK-UP PLATE DETAIL

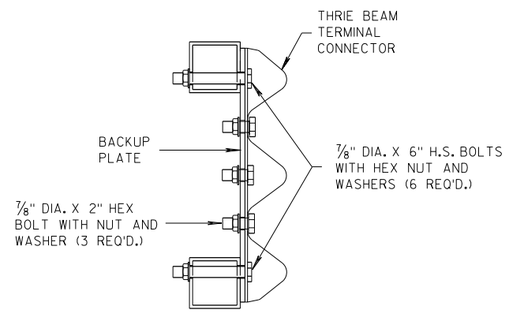

SECTION J-J

GENERAL NOTES

(4) TOLERANCE FOR TOP OF BEAM IS ± 1".

(6) DRILLING HOLES THROUGH THE PAPRPET, BOLTS, NUTS, WASHERS AND REPAIRING DAMAGED CONCRETE ARE INCIDENTAL TO THE CONTRACT.

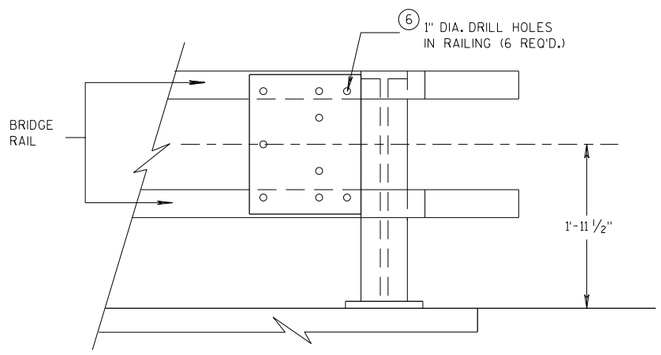

BACK-UP PLATE MOUNTING ONTO BRIDGE RAILING

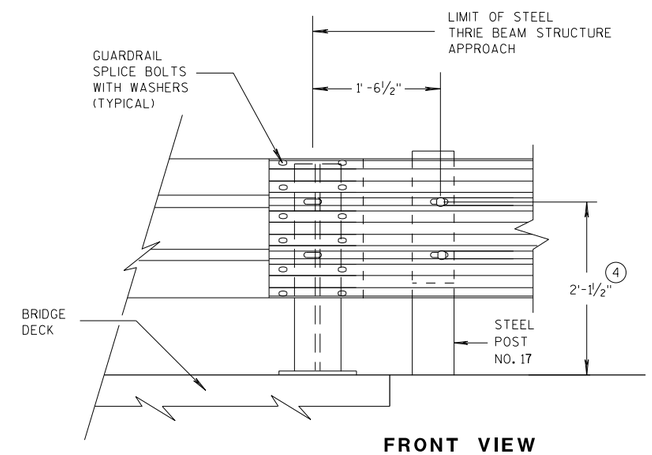

FRONT VIEW

THRIE BEAM CONNECTION TO STEEL RAILING TYPE "W"

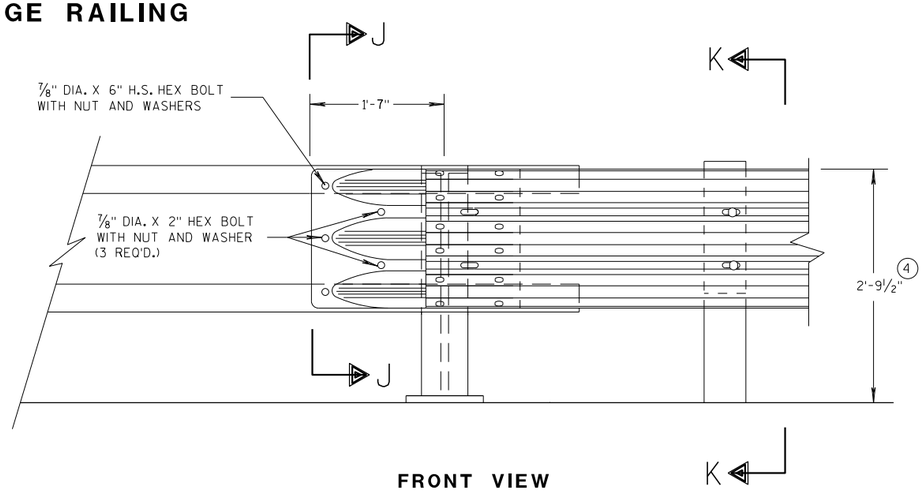

FRONT VIEW

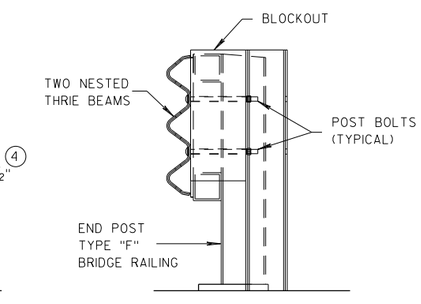

SECTION K-K

THRIE BEAM CONNECTION TO TUBULAR RAILING TYPE "F"

MIDWEST GUARDRAIL SYSTEM THRIE BEAM TRANSITION (MGS)

STATE OF WISCONSIN
DEPARTMENT OF TRANSPORTATION

APPROVED 07/2018 — DATE — FHWA

/S/ Rodney Taylor — ROADWAY STANDARDS DEVELOPMENT UNIT SUPERVISOR

6

S.D.D. 14 B 45-5g

GENERAL NOTES

(4) TOLERANCE FOR TOP OF W-BEAM RAIL IS ± 1".

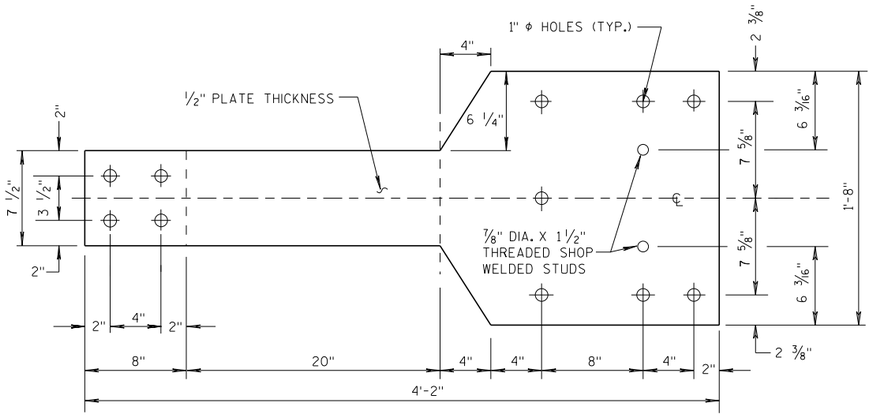

FRONT VIEW

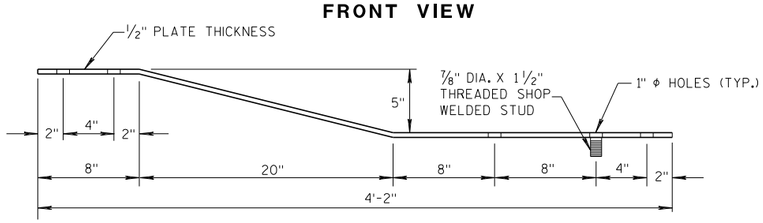

PLAN VIEW

BACK-UP PLATE DETAIL, TYPE "M"

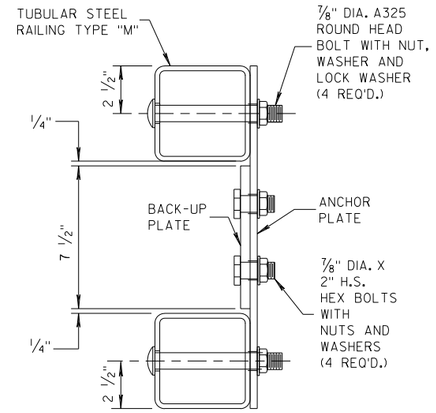

SECTION L-L

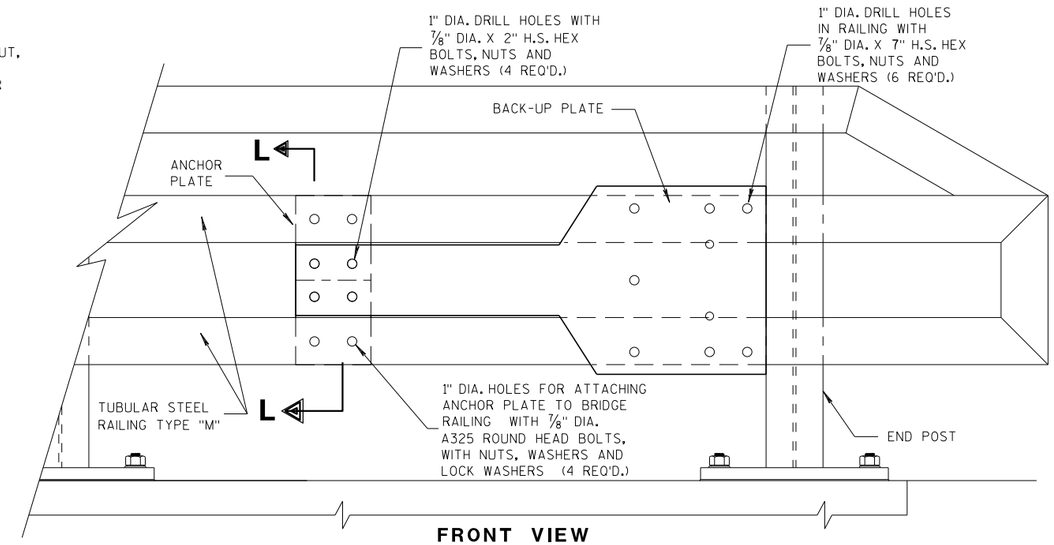

FRONT VIEW

ANCHOR AND BACK-UP PLATE MOUNTING TO BRIDGE RAILING, TYPE "M"

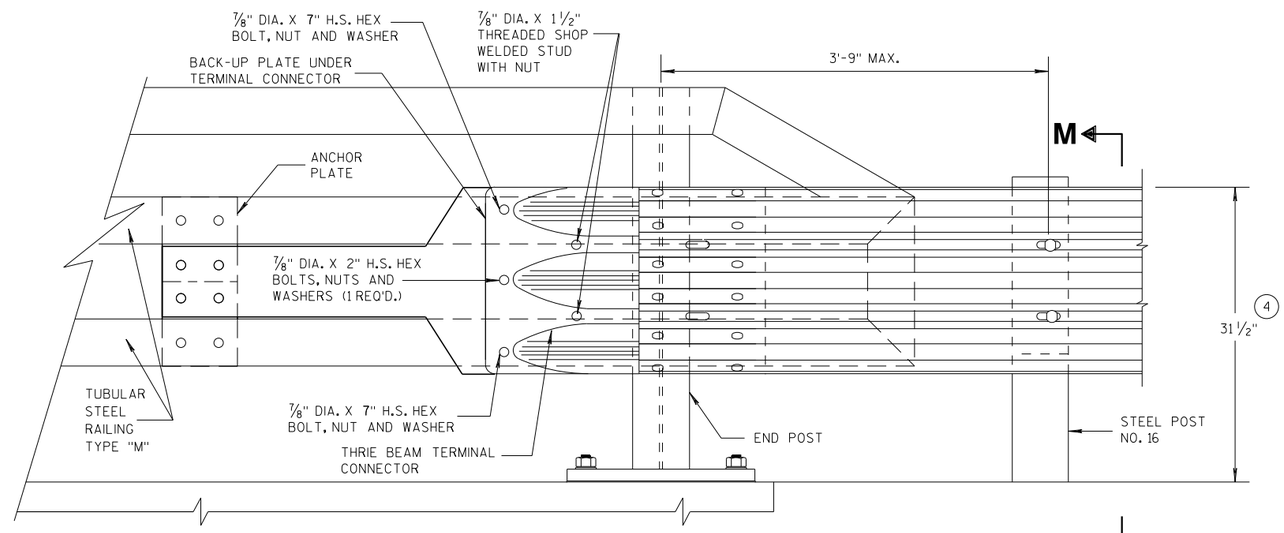

FRONT VIEW

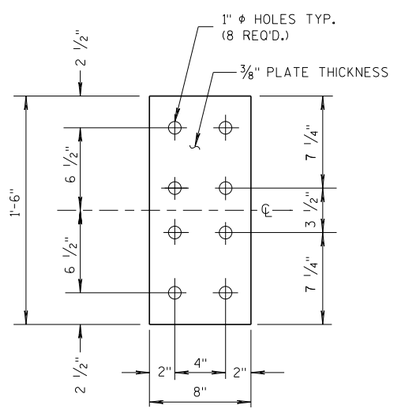

FRONT VIEW

ANCHOR PLATE DETAIL, TYPE "M"

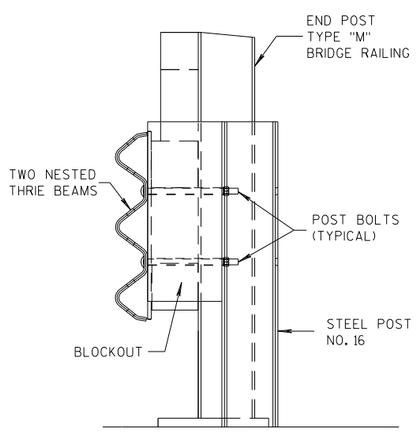

SECTION M-M

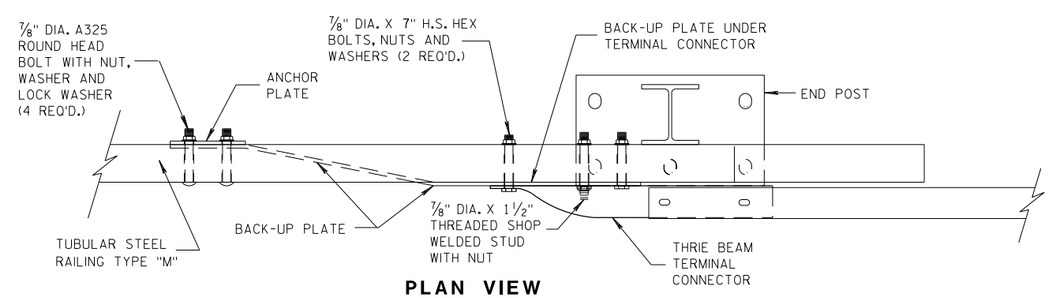

PLAN VIEW

THRIE BEAM CONNECTION TO TUBULAR RAILING, TYPE "M"

MIDWEST GUARDRAIL SYSTEM THRIE BEAM TRANSITION (MGS)

STATE OF WISCONSIN
DEPARTMENT OF TRANSPORTATION

APPROVED
07/2018 — DATE
/S/ Rodney Taylor — ROADWAY STANDARDS DEVELOPMENT UNIT SUPERVISOR
FHWA

6

S.D.D. 14 B 45-5h

GENERAL NOTES

COVER PLATE PANELS ARE 3/16" THICK.

ALL STIFFENERS ARE 1/4" THICK.

CONNECTOR PLATE SHALL BE FABRICATED FROM ASTM GRADE A36 STEEL AND GALVANIZED.

FOR GALVANIZED REQUIREMENTS, SEE SECTION 614 OF THE STANDARD SPECIFICATIONS.

ALL HOLE DIAMETERS SHALL BE 1".

FOR OPPOSITE SIDE INSTALLATION MIRROR DRAWINGS.

(10) STIFFENERS LOCATED AT THE OUTSIDE EDGES OF THE COVER PLATES SHALL BE WELDED AS FOLLOWS:
SINGLE BEVEL GROOVE WELD ON EXTERNAL SIDES AND 3/16" FILLET WELD BY 1" LONG SPACED AT 2" ON INTERNAL SIDES.

(11) STIFFENERS LOCATED ON THE INSIDE OF THE COVER PLATE SHALL BE WELDED AS FOLLOWS:
3/16" FILLET WELD BY 1" LONG SPACED AT 2".

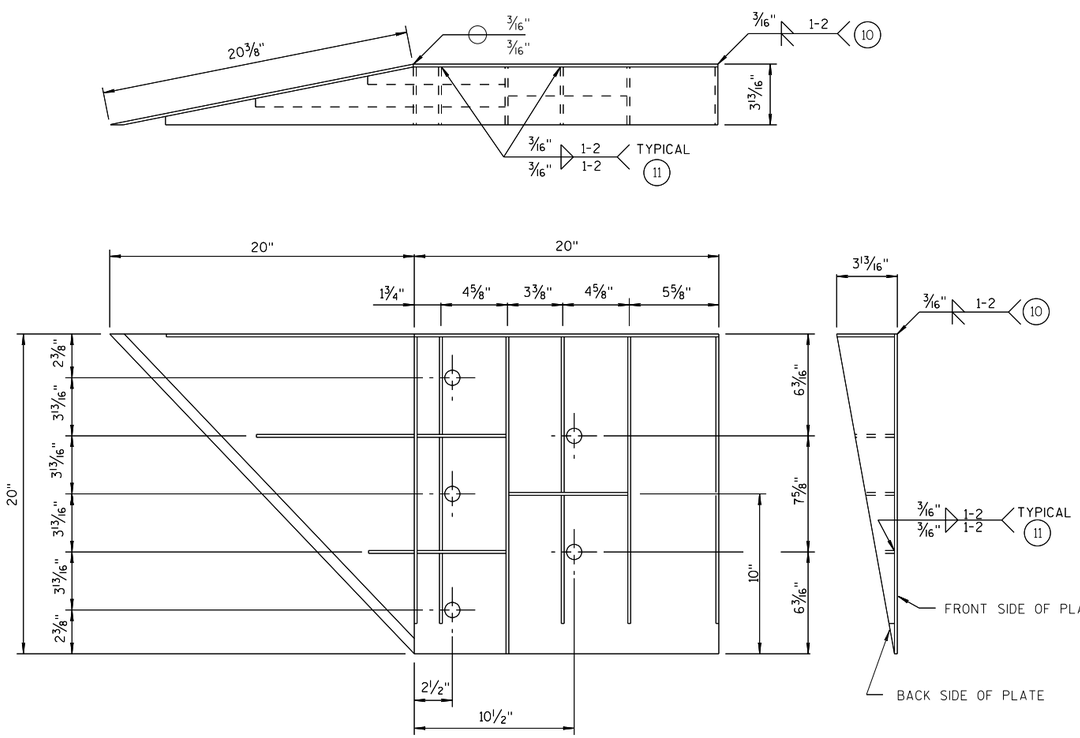

WELDING INSTRUCTION

(VIEWED FROM BACK SIDE OF PLATE)

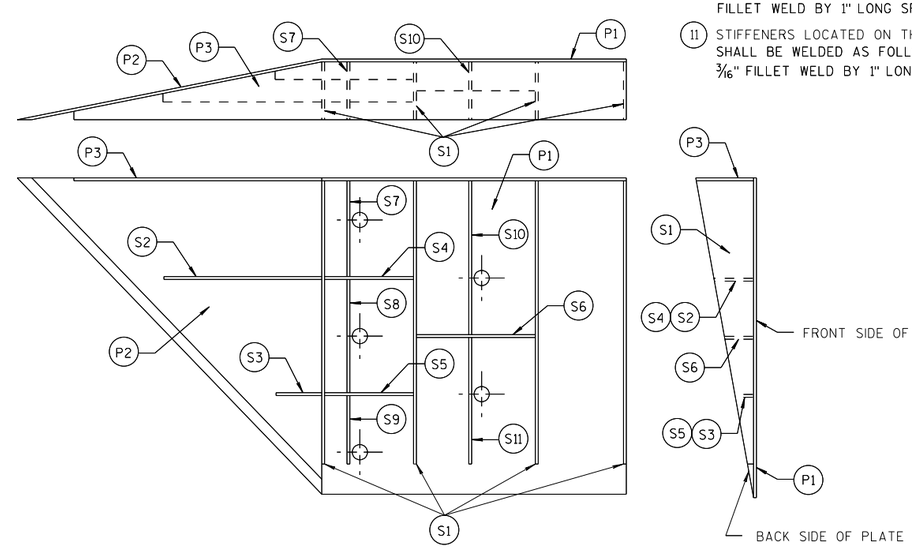

PLATE AND STIFFENER IDENTIFICATION

(VIEWED FROM BACK SIDE OF PLATE)

CONNECTOR PLATE DIMENSION (PER ASSEMBLY)

PLATE	QUANTITY	SHAPE	SIZE (A x B x C x D)	THICKNESS
P1	1		20" x 20"	3/16"
P2	1		20" x 20" x 28 9/16"	3/16"
P3	1		39" x 3 5/8" x 20" x 19 5/16"	3/16"
S1	4		18 7/16" x 3 5/8" x 18 3/4"	1/4"
S2	1		10 1/4" x 2 7/16" x 10 3/8" x 1/2"	1/4"
S3	1		3" x 1 1/16" x 3 1/8" x 1/2"	1/4"
S4	1		6 1/8" x 2 7/16"	1/4"
S5	1		6 1/8" x 1 1/16"	1/4"
S6	1		7 3/4" x 1 3/4"	1/4"
S7	1		2 9/16" x 6" x 3 5/8" x 5 7/8"	1/4"
S8	1		1 5/32" x 7 1/2" x 2 1/2" x 7 3/8"	1/4"
S9	1		6 1/16" x 6 3/16" x 1 3/32"	1/4"
S10	1		1 7/8" x 9 7/8" x 3 5/8" x 9 11/16"	1/4"
S11	1		8 1/2" x 8 3/4" x 1 13/16"	1/4"

SINGLE SLOPE CONNECTION PLATE

MIDWEST GUARDRAIL SYSTEM THRIE BEAM TRANSITION (MGS)

STATE OF WISCONSIN
DEPARTMENT OF TRANSPORTATION

APPROVED
7/2018 /S/ Rodney Taylor
DATE ROADWAY STANDARDS DEVELOPMENT UNIT SUPERVISOR
FHWA

6

S.D.D. 14 B 45-5i

GENERAL NOTES

CONNECTOR PLATE, DRILLING BOLT HOLES THROUGH THE PARAPET, BOLTS, NUTS, WASHERS AND REPAIRING DAMAGED CONCRETE ARE INCIDENTAL TO THE CONTRACT.

(2) OPTIONAL CURB AND GUTTER OR DRAINAGE FEATURE SEE PLAN FOR INFORMATION.

(7) BOLTS MAY BE A325 BOLTS OR A449 BOLTS. BOLT LENGTH AND THREADING LENGTH ARE TO ALLOW FOR A TIGHT CONNECTION BETWEEN RIGID BARRIER AND THRIE BEAM CONNECTION PLATE. CONTRACTOR IS TO FIELD VERIFY BOLT LENGTH AND THREAD LENGTH. ONE ROUND WASHER REQUIRED BETWEEN BOLT HEAD AND THRIE BEAM CONNECTOR PLATE. BOLTS THAT EXTEND THROUGH THE PARAPET AND OUT THE BACK FACE REQUIRE A HARDENED ROUND STEEL WASHER THAT IS 2" O.D. X 5/32" THICK AND ONE PLATE WASHER. REPAIR ANY DAMAGED CONCRETE FROM BOLT INSTALLATION.

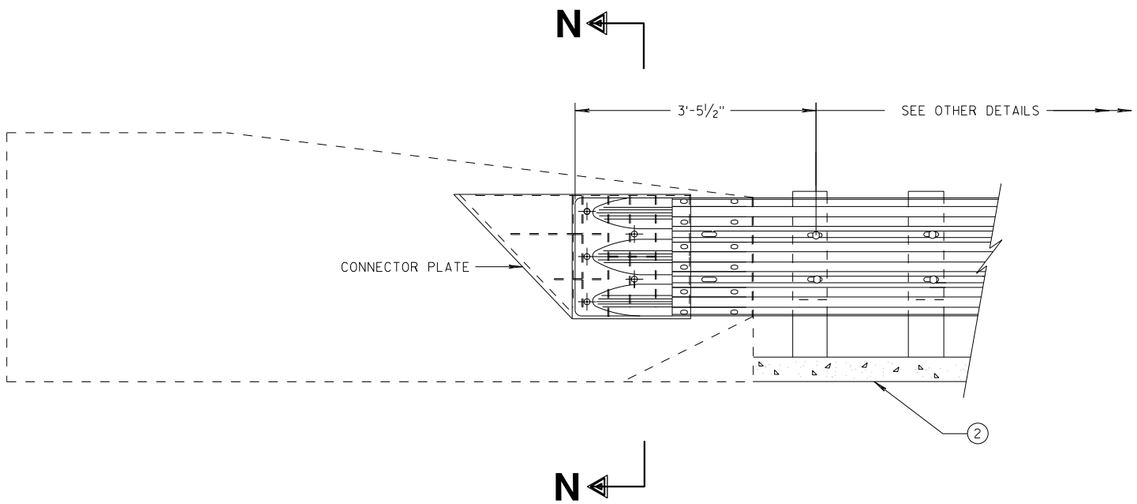

THRIE BEAM CONNECTION TO SINGLE SLOPE BARRIER

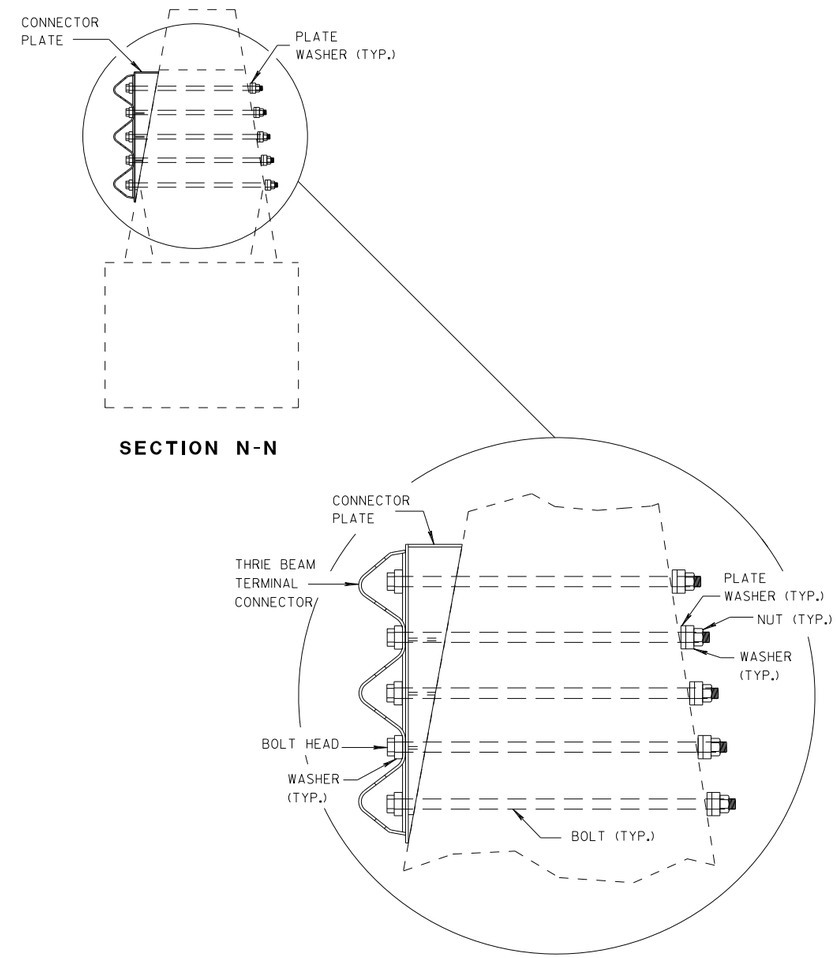

SECTION N-N

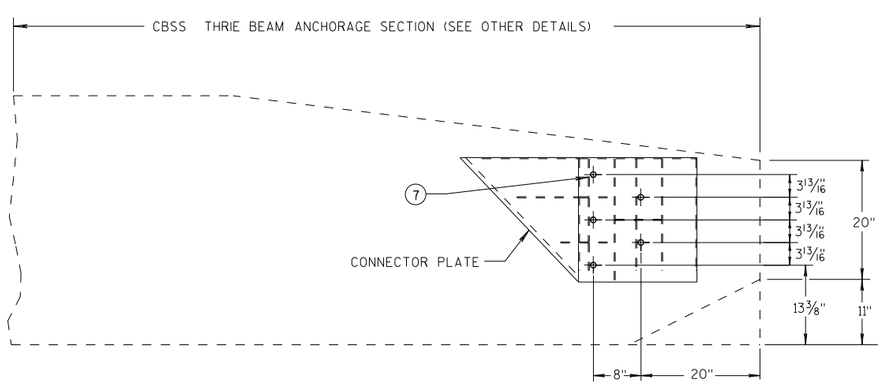

SINGLE SLOPE CONNECTION PLATE PLACEMENT

MIDWEST GUARDRAIL SYSTEM THRIE BEAM TRANSITION (MGS)

STATE OF WISCONSIN
DEPARTMENT OF TRANSPORTATION

APPROVED
7/2018 — DATE
/S/ Rodney Taylor — ROADWAY STANDARDS DI UNIT SUPERVIS NT
FHWA

6

S.D.D. 14 B 45-5j

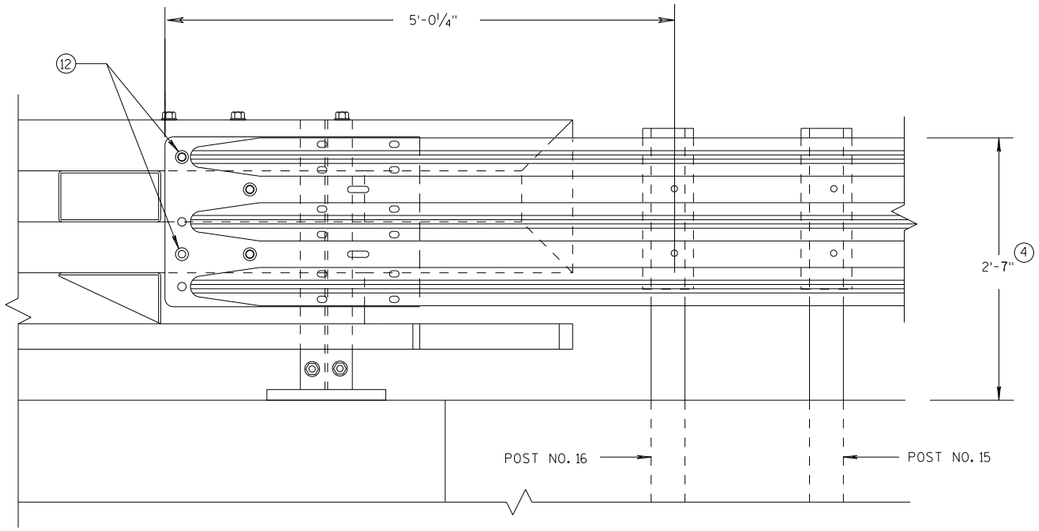

ELEVATION OF DETAIL AT NY3 END POST

THRIE BEAM RAIL ATTACHMENT

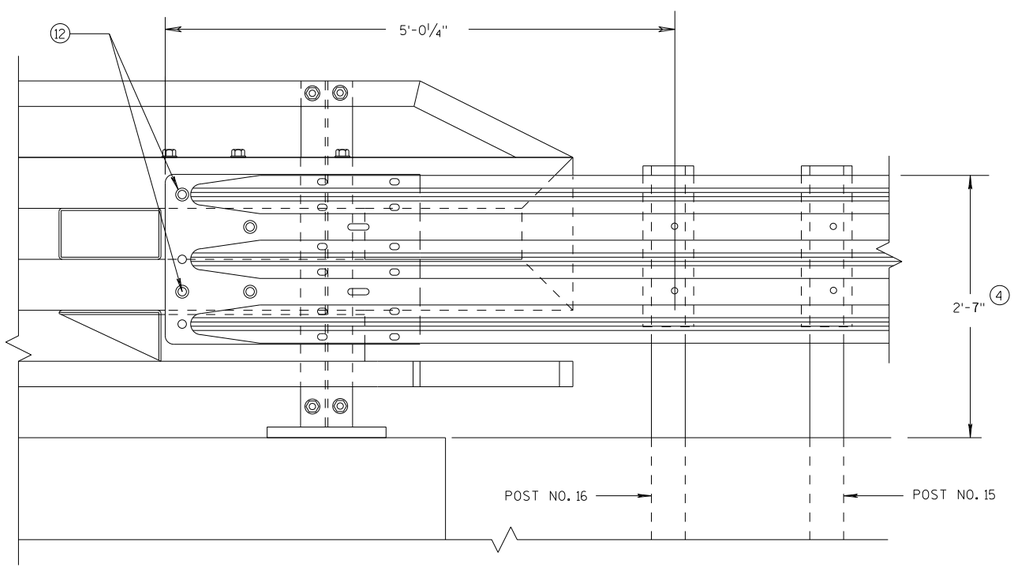

ELEVATION OF DETAIL AT NY4 END POST

THRIE BEAM RAIL ATTACHMENT

GENERAL NOTES

(4) TOLERANCE FOR TOP OF BEAM IS ± 1".

(12) BOLTS MAY BE A325 BOLTS OR A449 BOLTS. BOLT LENGTH AND THREADING LENGTH ARE TO ALLOW FOR A TIGHT CONNECTION BETWEEN RIGID BARRIER AND THRIE BEAM CONNECTION PLATE. CONTRACTOR IS TO FIELD VERIFY BOLT LENGTH AND THREAD LENGTH. ONE ROUND WASHER REQUIRED BETWEEN BOLT HEAD AND THRIE BEAM CONNECTOR PLATE. ON BACKSIDE OF PARAPET ONE ROUND WASHER, AND NUT REQUIRED. BOLT THREAD IS TO EXTEND ½-INCH BEYOND NUT.

MIDWEST GUARDRAIL SYSTEM
THRIE BEAM TRANSITION (MGS)

STATE OF WISCONSIN
DEPARTMENT OF TRANSPORTATION

APPROVED
7/2018
DATE
FHWA

/S/ Rodney Taylor
ROADWAY STANDARDS D
UNIT SUPERVIS

NT

6

S.D.D. 14 B 45-5k

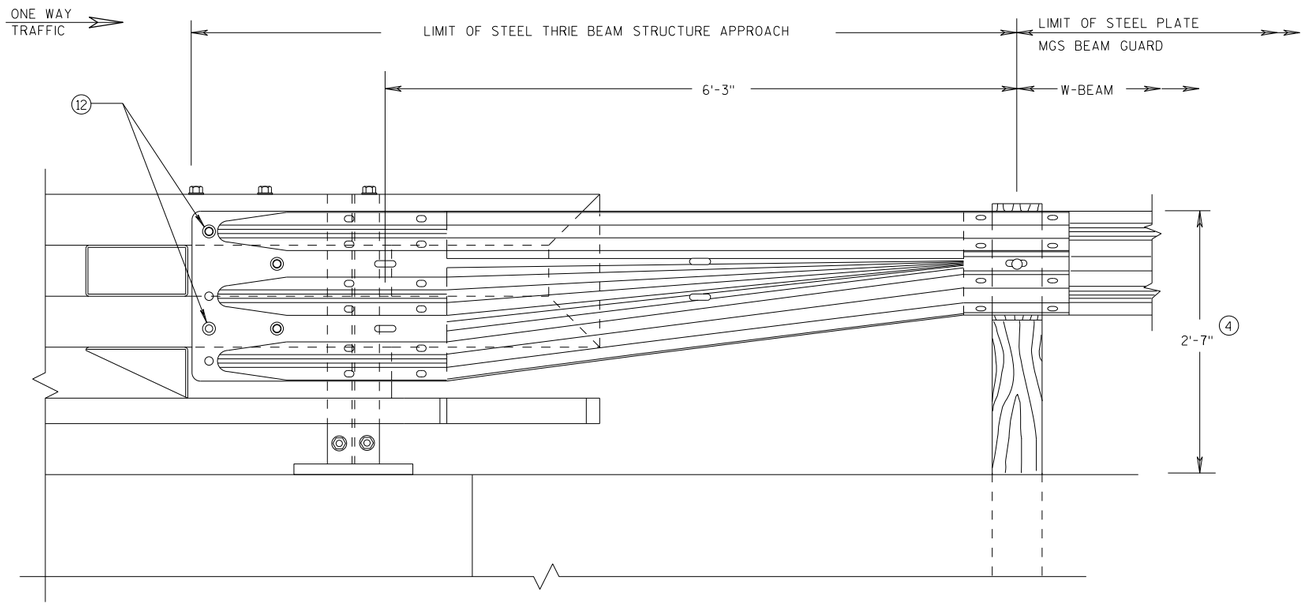

FRONT VIEW

W BEAM TRANSITION AND CONNECTION TO BRIDGE RAILING TYPE "NY3"

(USE ONLY ON THE TRAFFIC EXIT END OF ONE WAY BRIDGES)

GENERAL NOTES

(4) TOLERANCE FOR TOP OF BEAM IS ± 1".

(12) BOLTS MAY BE A325 BOLTS OR A449 BOLTS. BOLT LENGTH AND THREADING LENGTH ARE TO ALLOW FOR A TIGHT CONNECTION BETWEEN RIGID BARRIER AND THRIE BEAM CONNECTION PLATE. CONTRACTOR IS TO FIELD VERIFY BOLT LENGTH AND THREAD LENGTH. ONE ROUND WASHER REQUIRED BETWEEN BOLT HEAD AND THRIE BEAM CONNECTOR PLATE. ON BACKSIDE OF PARAPET ONE ROUND WASHER, AND NUT REQUIRED. BOLT THREAD IS TO EXTEND ½-INCH BEYOND NUT.

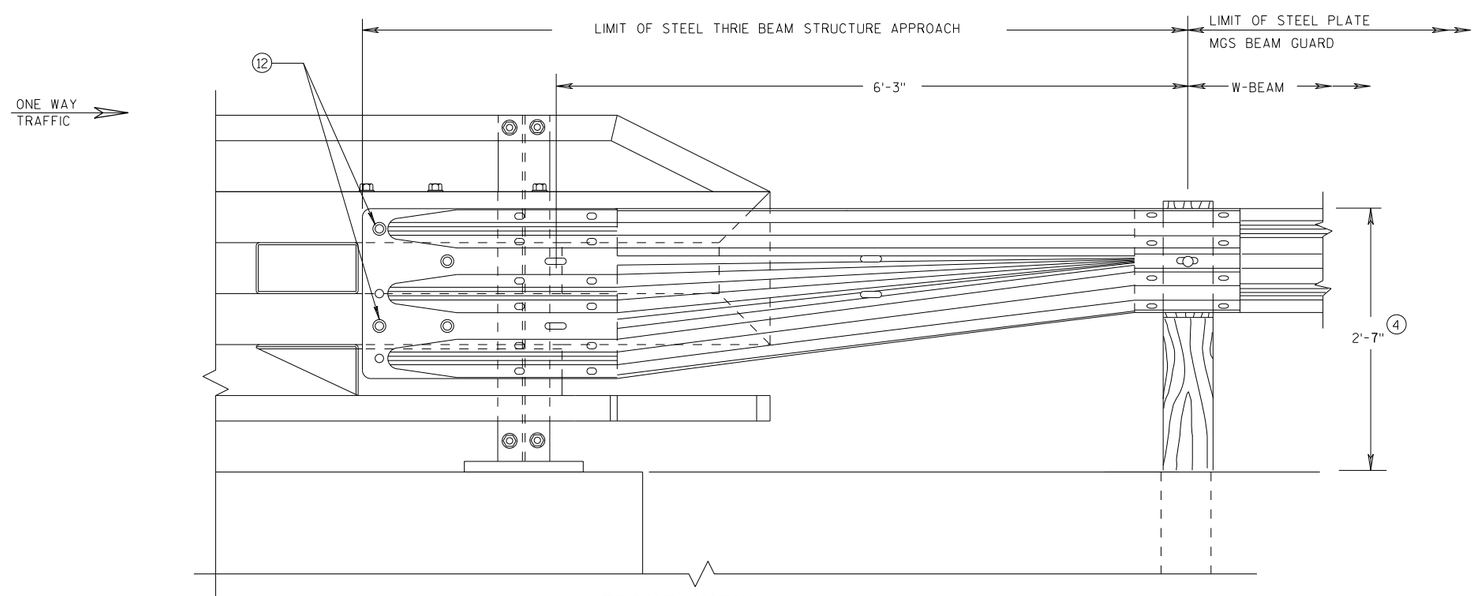

FRONT VIEW

W BEAM TRANSITION AND CONNECTION TO BRIDGE RAILING TYPE "NY4"

(USE ONLY ON THE TRAFFIC EXIT END OF ONE WAY BRIDGES)

MIDWEST GUARDRAIL SYSTEM THRIE BEAM TRANSITION (MGS)

STATE OF WISCONSIN
DEPARTMENT OF TRANSPORTATION

APPROVED
7/2018 — DATE
/S/ Rodney Taylor — ROADWAY STANDARDS DEVELOPMENT UNIT SUPERVISOR
FHWA

NT

6

S.D.D. 14 B 45-5L

GENERAL NOTES

DETAILS OF CONSTRUCTION, MATERIALS AND WORKMANSHIP NOT SHOWN ON THIS DRAWING SHALL CONFORM TO THE PERTINENT REQUIREMENTS OF THE STANDARD SPECIFICATIONS AND THE APPLICABLE SPECIAL PROVISIONS.

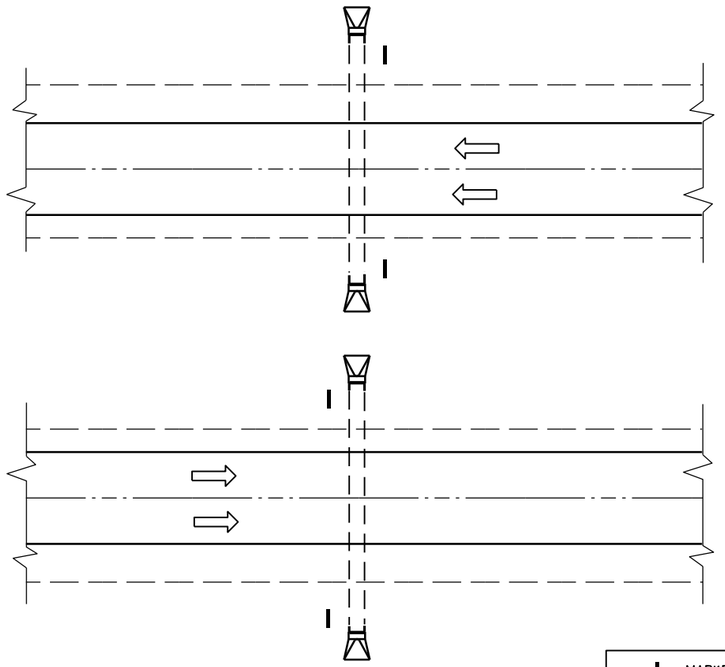

PLAN VIEW

DIVIDED HIGHWAY

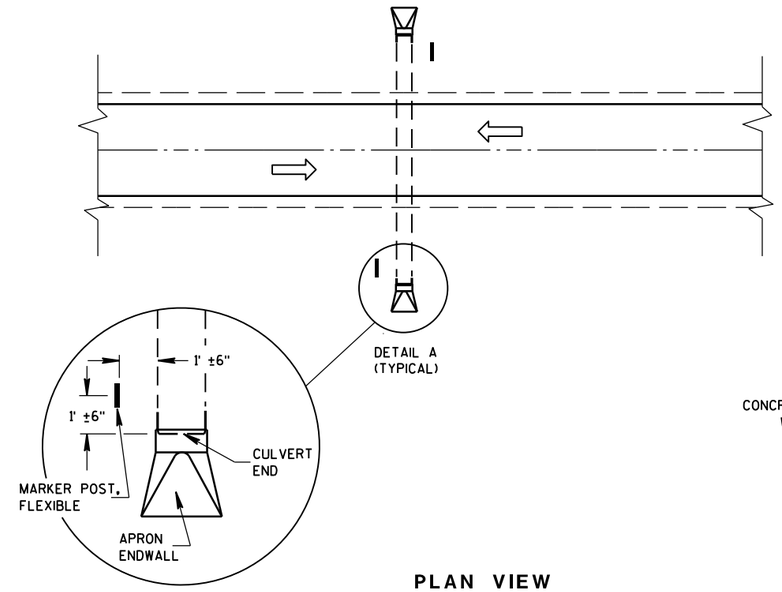

DETAIL A
(TYPICAL)

PLAN VIEW

UNDIVIDED HIGHWAY

MARKER POST, FLEXIBLE

DIRECTION OF TRAFFIC FLOW

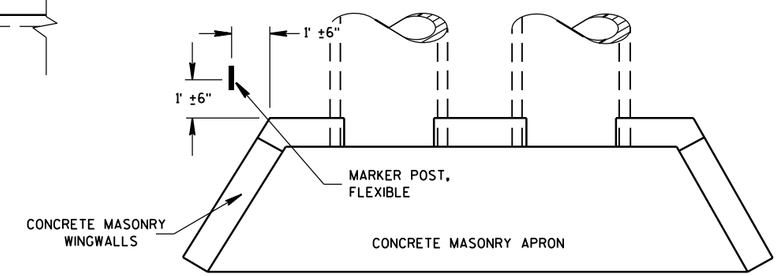

PLAN VIEW

CONCRETE MASONRY ENDWALLS FOR CULVERT PIPE AND PIPE ARCH

FLEXIBLE MARKER POST LOCATION

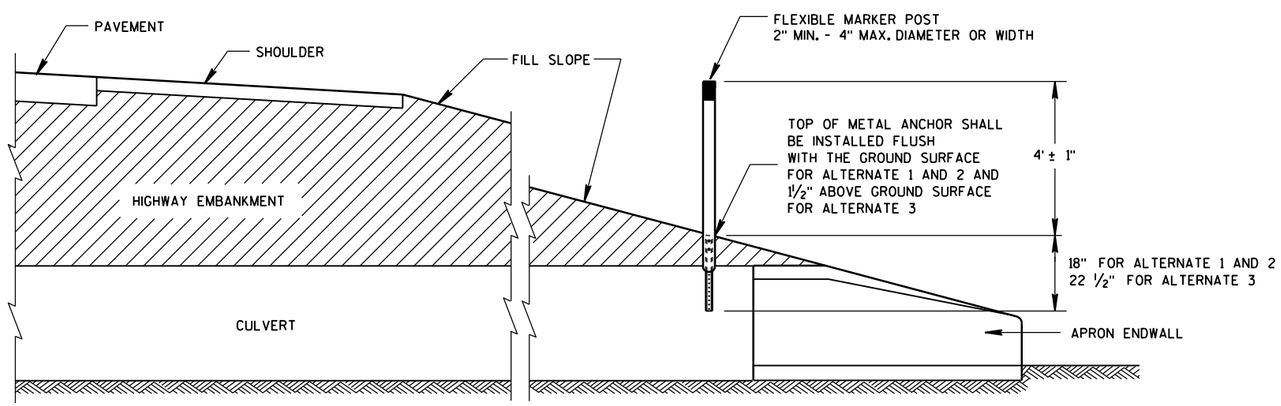

CROSS SECTION

FLEXIBLE MARKER POST

FLEXIBLE MARKER POST FOR CULVERT END

STATE OF WISCONSIN
DEPARTMENT OF TRANSPOR

6

S.D.D. 15 A 3-2a

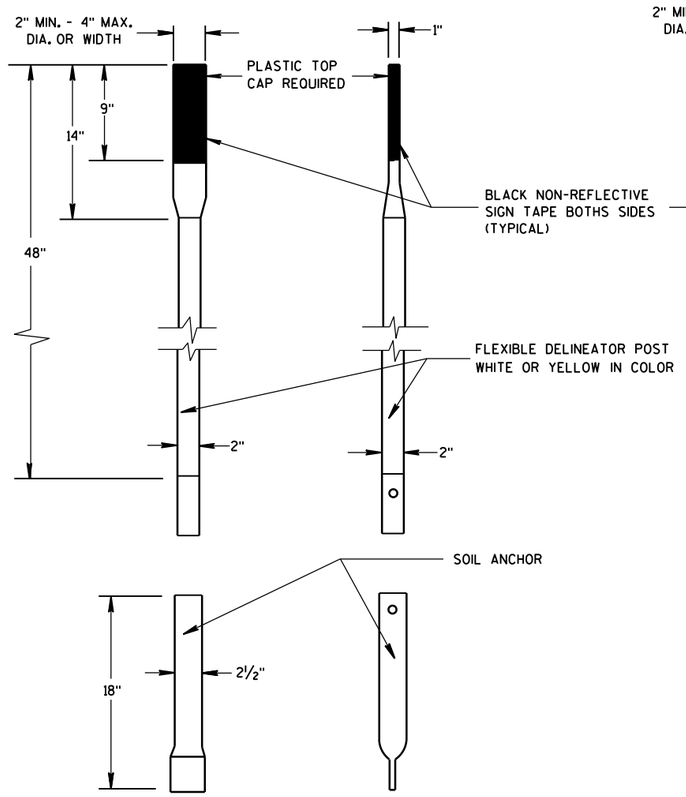

FRONT VIEW SIDE VIEW

ALTERNATE 1

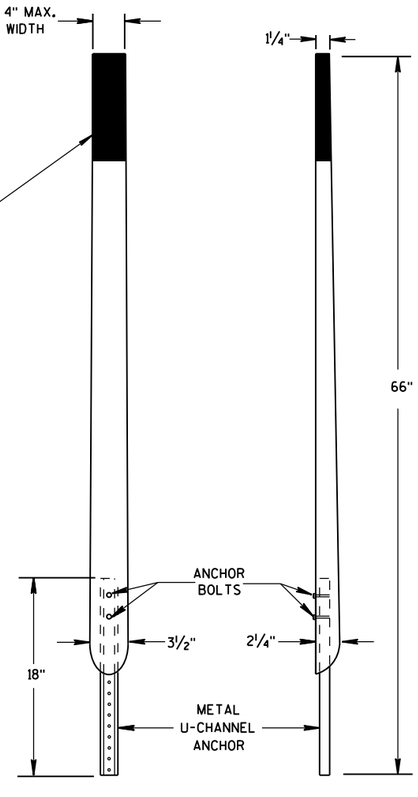

FRONT VIEW SIDE VIEW

ALTERNATE 2

FLEXIBLE MARKER POSTS

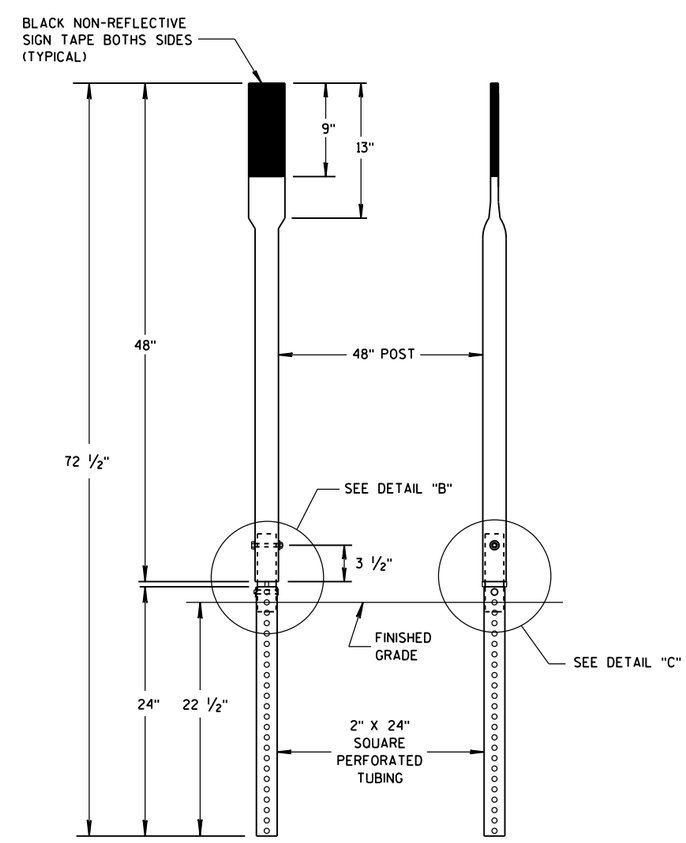

FRONT VIEW SIDE VIEW

ALTERNATE 3

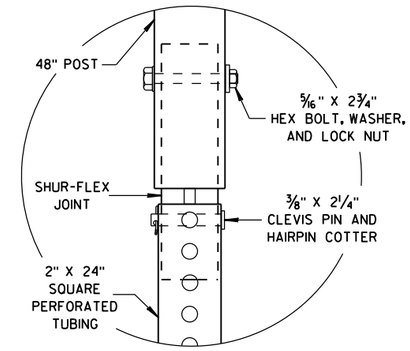

DETAIL B

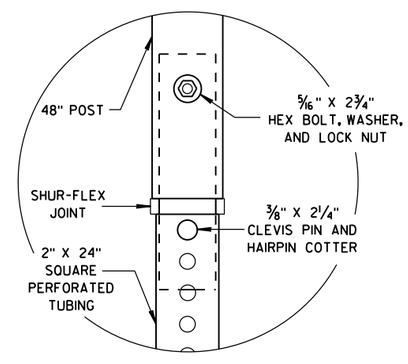

DETAIL C

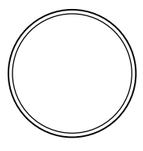

SECTION A-A

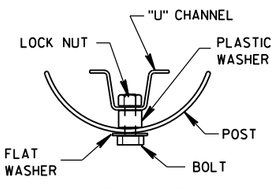

SECTION B-B

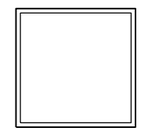

SECTION C-C

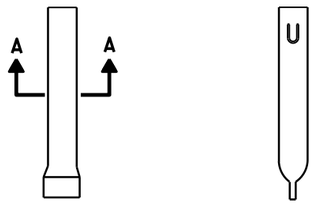

FRONT VIEW SIDE VIEW

ALTERNATE 1

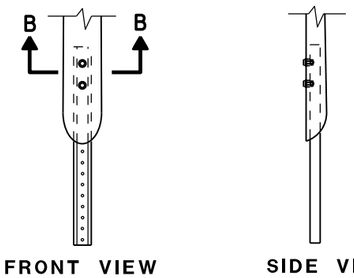

FRONT VIEW SIDE VIEW

ALTERNATE 2

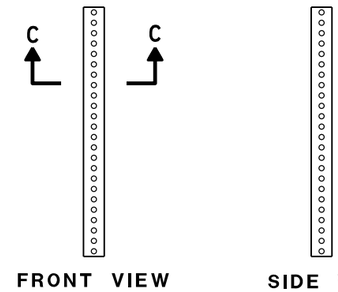

FRONT VIEW SIDE VIEW

ALTERNATE 3

FLEXIBLE MARKER POST ANCHORS

FLEXIBLE MARKER POST
FOR CULVERT END

STATE OF WISCONSIN
DEPARTMENT OF TRANSPORTATION

APPROVED
10/1/2012 /S/ Travis Feltes
DATE STATE TRAFFIC ENGINEER
FHWA

6

6

S.D.D. 15 A 3-2b

S.D.D. 15 A 3-2b

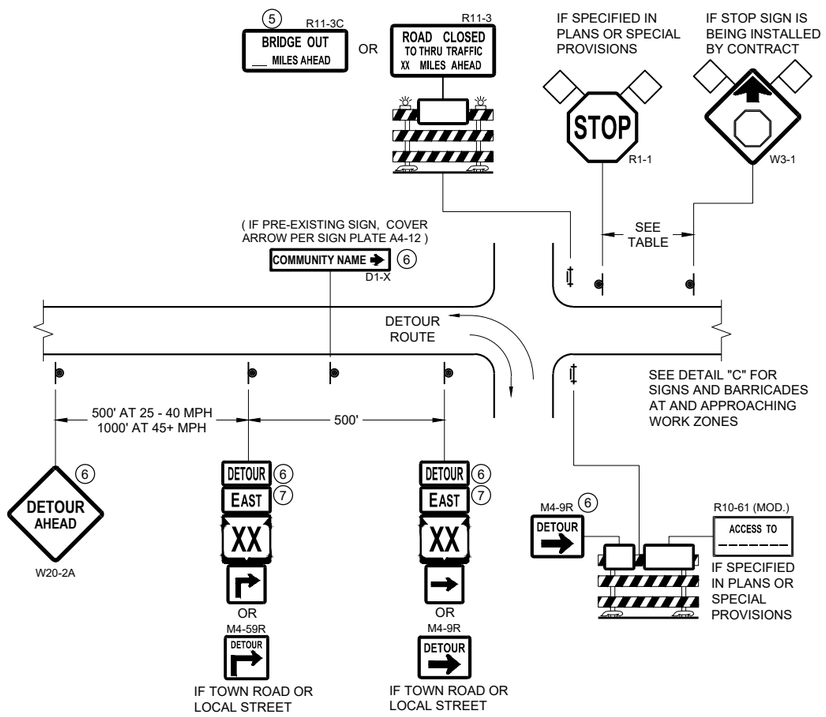

DETAIL A
MAINLINE CLOSURE WITH POSTED DETOUR

WORK ZONE GREATER THAN OR EQUAL TO ½ MILE FROM DETOUR ROUTE (1000 FEET IF URBAN)

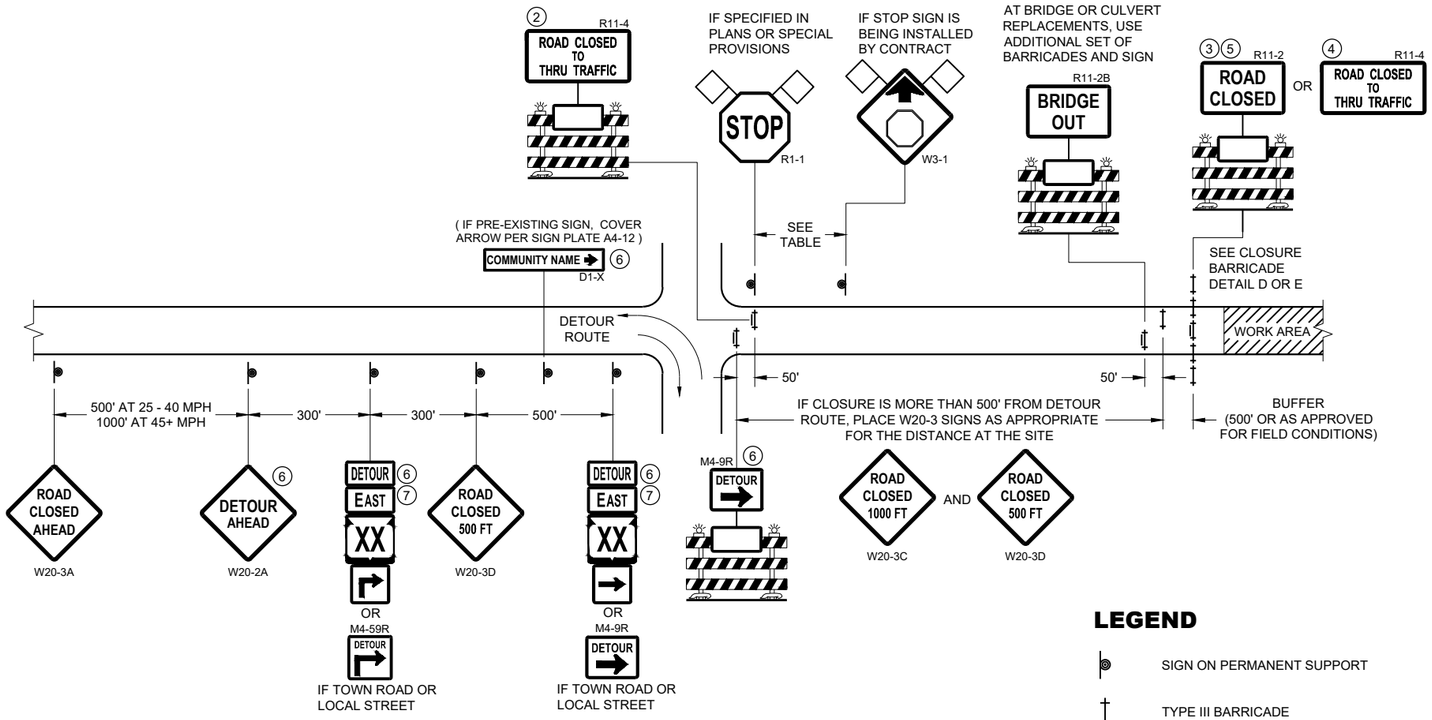

DETAIL B
MAINLINE CLOSURE WITH POSTED DETOUR

WORK ZONE LESS THAN ½ MILE FROM DETOUR ROUTE (1000 FEET IF URBAN)

LEGEND

- SIGN ON PERMANENT SUPPORT
- TYPE III BARRICADE
- TYPE III BARRICADE WITH ATTACHED SIGN
- TYPE "A" WARNING LIGHT (FLASHING)
- WORK AREA
- FLAGS, 16" X 16" MIN. (ORANGE)
- DETOUR M4 - 8
- EAST M3 - X
- XX M1 - 4 OR XX M1 - 6 OR COUNTY X M1 - 5A
- M05 - 1 OR M06 - 1

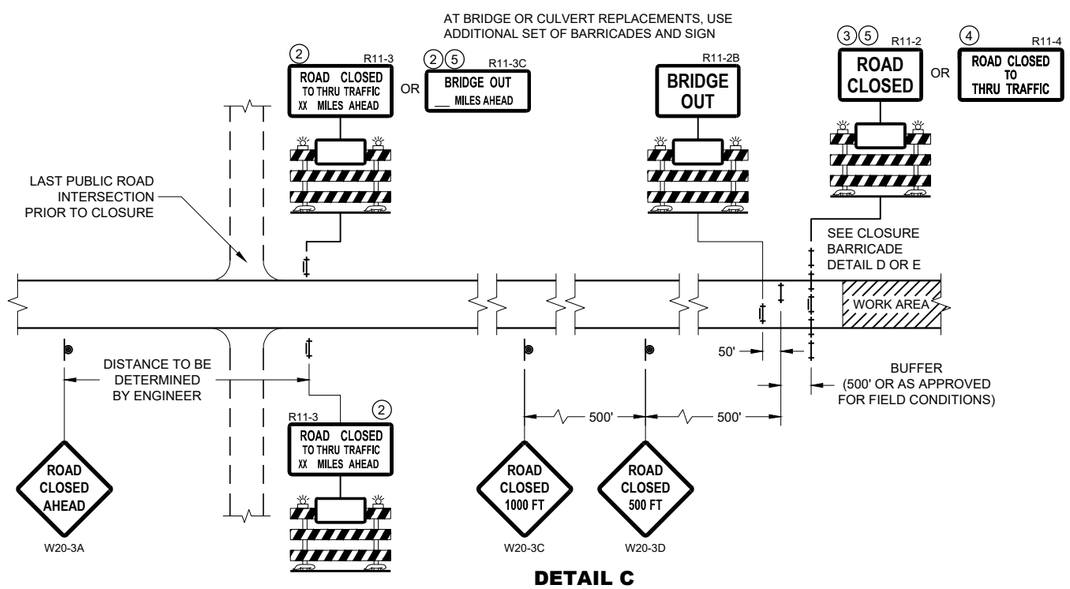

DETAIL C
MAINLINE CLOSURE, NO POSTED DETOUR

SPEED LIMIT (MPH)	"STOP AHEAD" ADVANCE WARNING DISTANCE (FT)
25	200
30	200
35	350
40	350
45	500
50	550
55	750

SEE SDD 15C2-SHEET "b" FOR GENERAL NOTES AND FOOTNOTES 1 THROUGH 7

BARRICADES AND SIGNS FOR MAINLINE CLOSURES

STATE OF WISCONSIN
DEPARTMENT OF TRANSPORTATION

APPROVED
February 2020 /S/ Andrew Heidtke
DATE WORK ZONE ENGINEER
FHWA

6

SDD 15C02 - 08a

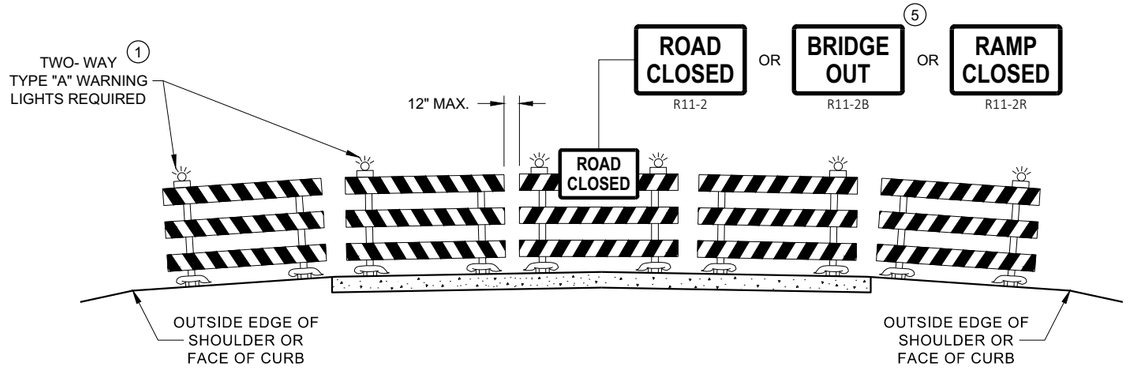

DETAIL D
ROAD CLOSURE BARRICADE DETAIL
APPROACH VIEW

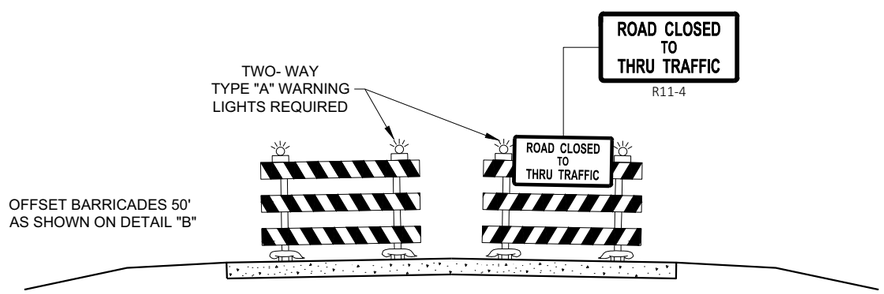

DETAIL E
LANE CLOSURE BARRICADE DETAIL
APPROACH VIEW

SEE SDD 15C2 - SHEET "a" FOR LEGEND

GENERAL NOTES

THE EXACT NUMBER, LOCATION, AND SPACING OF ALL SIGNS AND BARRICADES SHALL BE ADJUSTED TO FIT FIELD CONDITIONS AS APPROVED BY THE ENGINEER.

ANY SIGNS TEMPORARY OR EXISTING, WHICH CONFLICT WITH TRAFFIC CONTROL "IN USE", SHALL BE REMOVED OR COVERED AS NEEDED AND AS APPROVED BY THE ENGINEER.

THE SPACING BETWEEN TRAFFIC CONTROL SIGNS SHOULD BE ADJUSTED TO NOT CONFLICT WITH AND SHOULD PROVIDE A DESIRABLE MINIMUM OF 200 FEET CLEARANCE TO EXISTING SIGNS THAT WILL REMAIN IN PLACE.

BARRICADES THAT MUST BE MOVED FOR A WORK OPERATION SHALL BE IMMEDIATELY RE-ESTABLISHED UPON COMPLETION OF THE OPERATION, OR FOR CONTINUING OPERATIONS, AT THE END OF EACH WORKING DAY.

SIGNS THAT WILL BE IN PLACE LESS THAN 7 CONTINUOUS DAYS AND NIGHTS MAY BE MOUNTED ON PORTABLE SUPPORTS.

ALL TYPE III BARRICADES SHALL HAVE RAILS REFLECTORIZED ON BOTH FACES. STRIPES SHALL BE PROPERLY SLOPED DOWN TOWARD THE TRAFFIC SIDE OR AS SHOWN IN THE ROAD CLOSURE BARRICADE DETAIL "D" FOR FULL ROAD CLOSURES.

TYPE "A" LOW - INTENSITY FLASHING WARNING LIGHTS SHALL BE VISIBLE ON BOTH SIDES OF THE BARRICADE.

THE R11 - 2, R11 - 3, M4 - 9, R11 - 4, AND R10 - 61 SIGNS PLACED ON THE BARRICADES SHALL COVER NO MORE THAN THE TOP RAIL. THE SIGNS SHALL NOT COVER ANY PORTION OF THE MIDDLE RAIL OR BOTTOM RAILS.

"WO" AND "MO" SIGNS ARE THE SAME AS "W" AND "M" SIGNS EXCEPT THE BACKGROUND IS ORANGE.

ALL SIGNS SHALL BE 48" X 48" UNLESS OTHERWISE NOTED BELOW:
- R11 - 2 SHALL BE 48" X 30"
- R11 - 3 SHALL, R11 - 4 AND R10 - 61 SHALL BE 60 " X 30"
- M4 - 9 SHALL BE 30" X 24"
- M3 - X SHALL BE 24" X 12" (36" X 18" IF NEEDED TO MATCH EXISTING SIGNS)
- M4 - 8 SHALL BE 24" X 12" (36" X 18" IF NEEDED TO MATCH EXISTING SIGNS)
- M1 - 4, M1 - 5A AND M1 - 6 SHALL BE 24" X 24" (36" X 36" IF NEEDED TO MATCH EXISTING SIGNS)
- MO5 - 1 AND MO6 - 1 SHALL BE 21" X 21" (30" X 30" IF NEEDED TO MATCH EXISTING SIGNS)
- D1 - X SHALL BE AS SHOWN ON SPECIFIC PROJECT SIGNING DETAIL SHEETS.
- R1 - 1 SHALL BE 36" X 36"

1. TWO WARNING LIGHTS SHALL BE PROVIDED ON THE CENTER BARRICADE AND A MINIMUM OF ONE WARNING LIGHT SHALL BE PROVIDED ON EACH OF THE OTHER BARRICADES WITHIN THE ROADWAY LIMITS. SPACING OF THE WARNING LIGHTS SHALL BE UNIFORM TO THE EDGE OF ROADWAY AS SHOWN (APPROX. 8 FOOT LIGHT SPACING.
2. THESE SIGNS AND BARRICADES ARE NOT REQUIRED IF ROAD CLOSURE BEGINS AT AN INTERSECTION.
3. FOR ROAD CLOSURE WITHOUT LOCAL ACCESS TO PROJECT, SEE ROAD CLOSURE BARRICADE DETAIL "D".
4. FOR ROAD CLOSURE WITH LOCAL ACCESS TO PROJECT, SEE ROAD CLOSURE BARRICADE DETAIL "E".
5. FOR BRIDGE OR CULVERT REPLACEMENTS, SUBSTITUTE "BRIDGE OUT" INSTEAD OF "ROAD CLOSED" ON R11 - 2 AND R11 - 3 SIGNS.
6. INSTALL DETOUR AND COMMUNITY GUIDE SIGNS AND ARROWS ONLY IF SPECIFIED IN THE CONTRACT. IF THERE ARE EXISTING ROUTE MARKER ASSEMBLIES THAT WILL REMAIN IN PLACE, ADJUST THE LOCATION OF THE DETOUR ROUTE SIGNS TO CORRESPOND WITH THE EXISTING ASSEMBLIES. MODIFY EXISTING SIGNS WHERE POSSIBLE. SEE SPECIFIC PROJECT DETOUR SIGNING DETAIL SHEETS. IF DETOUR SIGNS ARE BEING INSTALLED BY OTHERS, PLACE THE CONTRACTED TRAFFIC CONTROL SIGNS TO ALLOW FOR PLACEMENT OF ALL WARNING, DETOUR AND GUIDE SIGNS AS SHOWN.
7. "EAST" CARDINAL DIRECTION MARKERS AND RIGHT TURN ARROWS ARE SHOWN. USE OTHER CARDINAL DIRECTIONS AND ARROWS AS APPROPRIATE.

BARRICADES AND SIGNS FOR VARIOUS CLOSURES

STATE OF WISCONSIN
DEPARTMENT OF TRANSPORTATION

APPROVED
February 2020 — DATE
/S/ Andrew Heidtke — WORK ZONE ENGINEE
FHWA

THIS DRAWING PROVIDES GENERAL GUIDANCE ON TYPICAL DETOUR SIGN LAYOUT AND SPACING. SEE PROJECT DETOUR SIGNING SHEETS FOR SPECIFIC DETAILS FOR EACH PROJECT.

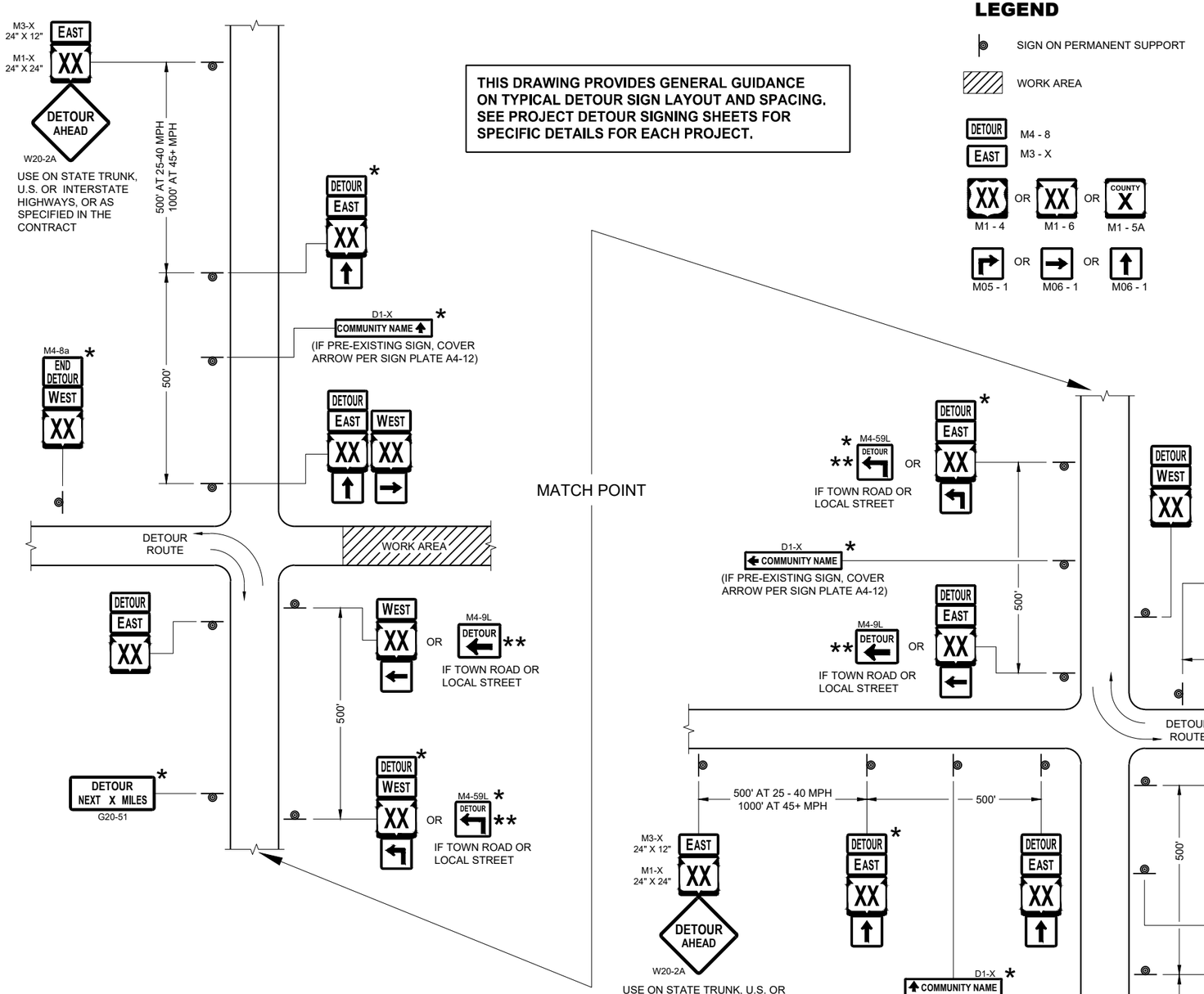

LEGEND

- SIGN ON PERMANENT SUPPORT
- WORK AREA
- DETOUR — M4 - 8
- EAST — M3 - X
- XX — M1 - 4 OR XX — M1 - 6 OR COUNTY X — M1 - 5A
- M05 - 1 OR M06 - 1 OR M06 - 1

GENERAL NOTES

THE EXACT NUMBER, LOCATION AND SPACING OF ALL SIGNS SHALL BE ADJUSTED TO FIT FIELD CONDITIONS AS APPROVED BY THE ENGINEER.

IF THERE ARE EXISTING ROUTE MARKER ASSEMBLIES THAT WILL REMAIN IN PLACE, ADJUST THE LOCATION OF THE DETOUR ROUTE SIGNS TO CORRESPOND WITH THE EXISTING ASSEMBLIES. SEE SPECIFIC PROJECT DETOUR SIGNING DETAIL SHEETS. MODIFY EXISTING SIGNS WHERE POSSIBLE.

THE SPACING BETWEEN TRAFFIC CONTROL AND DETOUR SIGNS SHOULD BE ADJUSTED TO NOT CONFLICT WITH AND TO PROVIDE A DESIRABLE MINIMUM OF 200 FEET CLEARANCE TO EXISTING SIGNS THAT WILL REMAIN IN PLACE.

ANY SIGNS TEMPORARY OR EXISTING, WHICH CONFLICT WITH TRAFFIC CONTROL "IN USE" SHALL BE REMOVED OR COVERED AS NEEDED AND AS APPROVED BY THE ENGINEER.

SIGNS THAT WILL BE IN PLACE LESS THAN 7 CONTINUOUS DAYS AND NIGHTS MAY BE MOUNTED ON PORTABLE SUPPORTS.

"MO" SIGNS ARE THE SAME AS "M" SIGNS EXCEPT THE BACKGROUND IS ORANGE.

SIGN SIZES SHALL BE AS FOLLOWS:

M3-X SHALL BE 24" X 12" (36" X 18" IF NEEDED TO MATCH EXISTING SIGNS)
M4-8 SHALL BE 24" X 12" (36" X 18" IF NEEDED TO MATCH EXISTING SIGNS)
M1-4, M1-5A AND M1-6 SHALL BE 24" X 24" (36" X 36" IF NEEDED TO MATCH EXISTING SIGNS)
M05-1 AND M06-1 SHALL BE 21" X 21" (30" X 30" IF NEEDED TO MATCH EXISTING SIGNS)
M4-9 AND M4-59 SHALL BE 30" X 24"
M4-8a SHALL BE 24" X 18"
G20-51 SHALL BE 60" X 24"
W20-2A SHALL BE 48" X 48"
D1-X SHALL BE AS SHOWN ON SPECIFIC PROJECT SIGNING DETAIL SHEETS.

* OPTIONAL SIGNS. SEE SPECIFIC PROJECT DETOUR SIGNING DETAIL SHEETS.

** FOR A TOWN ROAD OR LOCAL STREET DETOURED ONTO A STATE TRUNK HIGHWAY, PLACE A ROAD NAME PLAQUE ABOVE THE M4-9 SIGN AS SPECIFIED IN THE CONTRACT.

SEE SPECIFIC PROJECT DETOUR SIGNING DETAIL SHEETS AND DETAIL A OR B ON SDD SHEET 15C02 - SHEET "a"

DETAIL F
DETOUR SIGNING

DETOUR SIGNING FOR MAINLINE CLOSURES

STATE OF WISCONSIN
DEPARTMENT OF TRANSPORTATION

APPROVED
February 2020 — DATE
/S/ Andrew Heidtke — WORK ZONE ENGINEER
FHWA

6

SDD 15C02 - 08c

THIS DRAWING PROVIDES GENERAL GUIDANCE ON TYPICAL "TO" MO-4 SIGN LAYOUT AND SPACING. SEE PROJECT TO SIGNING SHEETS FOR SPECIFIC DETAILS FOR EACH PROJECT.

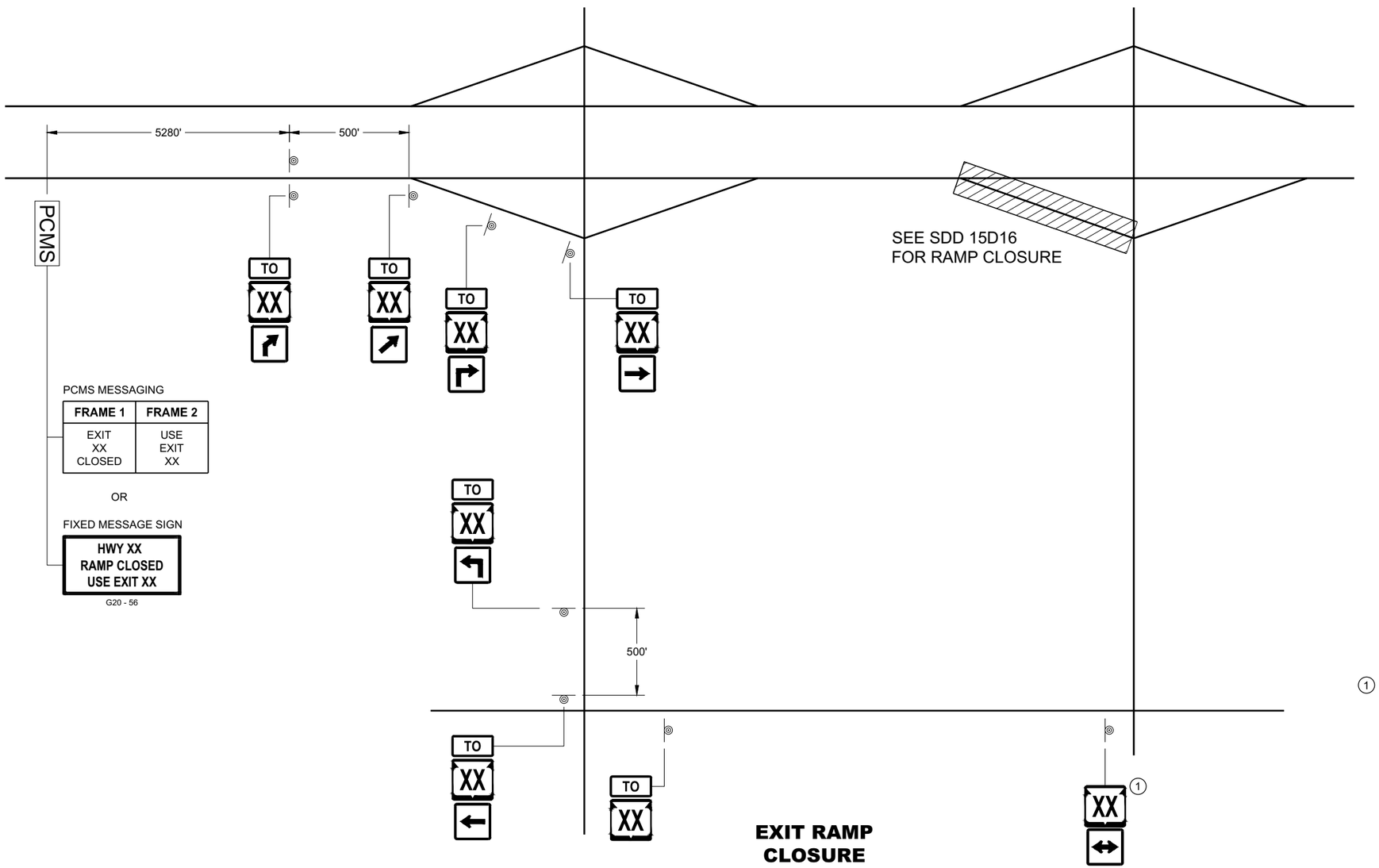

PCMS MESSAGING

FRAME 1	FRAME 2
EXIT XX CLOSED	USE EXIT XX

OR

FIXED MESSAGE SIGN

HWY XX
RAMP CLOSED
USE EXIT XX

G20 - 56

EXIT RAMP CLOSURE

LEGEND

SIGN ON PERMANENT SUPPORT

PCMS PORTABLE CHANGEABLE MESSAGE SIGN

TO MO4 - 5

M1 - 4 OR M1 - 6 OR M1 - 5A

M05 - 1 OR M05 - 2 OR M06 - 1 OR M06 - 2 OR M06 - 4

GENERAL NOTES

SEE SDD 15D16 "TRAFFIC CONTROL, EXIT RAMP CLOSURE" DETAIL FOR TRAFFIC CONTROL AT EXIT RAMP CLOSURE.

THE EXACT NUMBER, LOCATION AND SPACING OF ALL SIGNS SHALL BE ADJUSTED TO FIT FIELD CONDITIONS AS APPROVED BY THE ENGINEER.

IF THERE ARE ANY ROUTE MARKER ASSEMBLIES THAT WILL REMAIN IN PLACE, ADJUST THE LOCATION OF THE "TO" MO-4 ROUTE SIGNS TO CORRESPOND WITH THE EXISTING ASSEMBLIES. SEE SPECIFIC PROJECT TO SIGNING DETAIL SHEETS. MODIFY EXISTING SIGNS WHERE POSSIBLE.

THE SPACING BETWEEN TRAFFIC CONTROL AND "TO" MO-4 SIGNS SHOULD BE ADJUSTED TO NOT CONFLICT WITH AND TO PROVIDE A DESIRABLE MINIMUM OF 200 FEET CLEARANCE TO EXISTING SIGNS THAT WILL REMAIN IN PLACE.

ANY SIGNS TEMPORARY OR EXISTING, WHICH CONFLICT WITH TRAFFIC CONTROL " IN USE" SHALL BE REMOVED OR COVERED AS NEEDED AND AS APPROVED BY THE ENGINEER.

SIGNS THAT SHALL BE IN PLACE LESS THAN 7 CONTINUOUS DAYS AND NIGHTS MAY BE MOUNTED ON PORTABLE SUPPORTS.

"MO" SIGNS ARE THE SAME AS "M" SIGNS EXCEPT THE BACKGROUND IS ORANGE.

SIGN SIZES SHALL BE AS FOLLOW:
- MO4 - 5 SHALL BE 24" X 12". (36" X 18" IF NEEDED TO MATCH EXISTING SIGNS).
- M1 - 4, M1 - 5A, AND M1 - 6 SHALL BE 24" X 24" (36" X 36" IF NEEDED TO MATCH EXISTING SIGNS).
- MO5 - 1, MO5 - 2, AND MO6 - 1, SHALL BE 21" X 21". (30" X 30" IF NEEDED TO MATCH EXISTING SIGNS).

(1) ONLY ADD IF THERE ARE NO EXISTING ROUTE MARKERS FOR THE INTERSECTING ROADWAY.

OFF RAMP LANE CLOSURE

STATE OF WISCONSIN
DEPARTMENT OF TRANSPORTATION

APPROVED
February 2020 — DATE
/S/ Andrew Heidtke — WORK ZONE ENGINEE
FHWA

6

SDD 15C02 - 08e

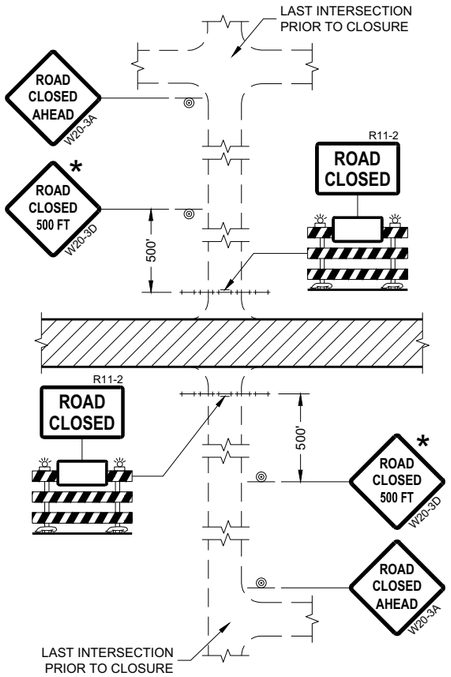

DETAIL 1
(NO ACCESS TO PROJECT)

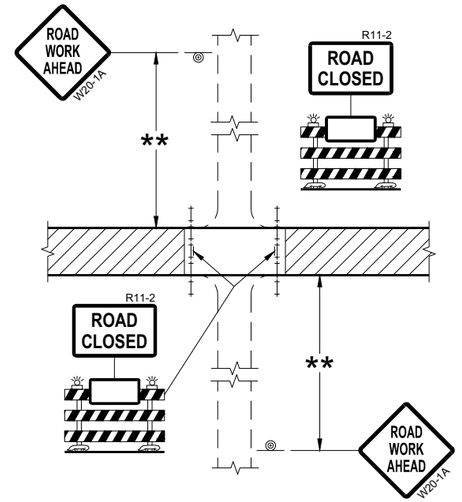

DETAIL 2
(PUBLIC CROSS-TRAFFIC MAINTAINED.
NO ACCESS TO PROJECT)

GENERAL NOTES

THE EXACT NUMBER, LOCATION, AND SPACING OF ALL SIGNS AND BARRICADES SHALL BE ADJUSTED TO FIT FIELD CONDITIONS AS APPROVED BY THE ENGINEER.

ANY SIGNS TEMPORARY OR EXISTING, WHICH CONFLICT WITH TRAFFIC CONTROL "IN USE" SHALL BE REMOVED OR COVERED AS NEEDED AND AS APPROVED BY THE ENGINEER.

THE SPACING BETWEEN TRAFFIC CONTROL SIGNS SHOULD BE ADJUSTED TO NOT CONFLICT WITH AND SHOULD PROVIDE A DESIRABLE MINIMUM OF 200 FEET CLEARANCE (500 FEET DESIRABLE) TO EXISTING SIGNS THAT WILL REMAIN IN PLACE.

IF A "STOP" SIGN MUST BE REMOVED FOR A WORK OPERATION, A TEMPORARY "STOP" SIGN SHALL BE PLACED PRIOR TO THE SIGN REMOVAL, OR A FLAGGER SHALL BE PROVIDED UNTIL THE SIGN IS REESTABLISHED.

BARRICADES THAT MUST BE MOVED FOR A WORK OPERATION SHALL BE IMMEDIATELY REESTABLISHED UPON COMPLETION OF THE OPERATION OR FOR CONTINUING OPERATIONS, AT THE END OF EACH WORKING DAY.

SIGNS THAT WILL BE IN PLACE LESS THAN SEVEN CONTINUOUS DAYS AND NIGHTS MAY BE MOUNTED ON PORTABLE SUPPORTS.

ALL TYPE III BARRICADES SHALL HAVE RAILS REFLECTORIZED ON BOTH FACES. STRIPES SHALL BE PROPERLY SLOPED DOWN TOWARD THE TRAFFIC SIDE OR AS SHOWN IN THE ROAD CLOSURE BARRICADE DETAIL "D" FOR FULL ROAD CLOSURES.

TYPE "A" LOW-INTENSITY FLASHING WARNING LIGHTS SHALL BE VISIBLE ON BOTH SIDES OF THE BARRICADE.

THE R11-2, R11-3, AND R11-4 SIGNS PLACED ON BARRICADES SHALL COVER NO MORE THAN THE TOP RAIL. THE SIGNS SHALL NOT COVER ANY PORTION OF THE MIDDLE OR BOTTOM RAILS.

ALL SIGNS SHALL BE 48" X 48" UNLESS OTHERWISE NOTED BELOW:
R11-2 SHALL BE 48" X 30".
R11-4 AND R11-3 SHALL BE 60" X 30".

* OMIT THE "ROAD CLOSED 500 FT." SIGN IF THE LAST INTERSECTION IS 500 FEET OR LESS FROM THE WORK ZONE.

** 500' MAX. OR AT LAST INTERSECTION, WHICHEVER IS CLOSEST.

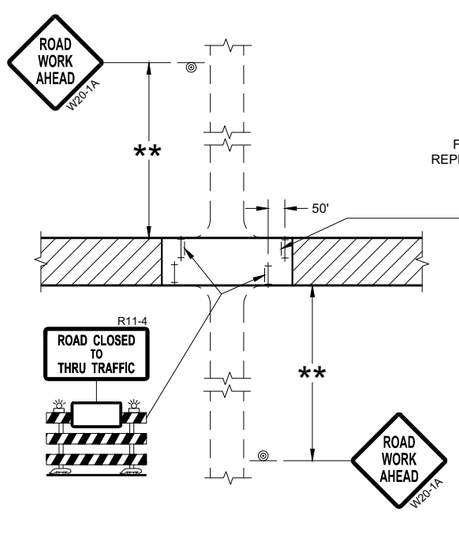

DETAIL 3
(PUBLIC CROSS-TRAFFIC MAINTAINED.
CONTRACTOR, LOCAL BUSINESS AND
RESIDENT ACCESS TO PROJECT)

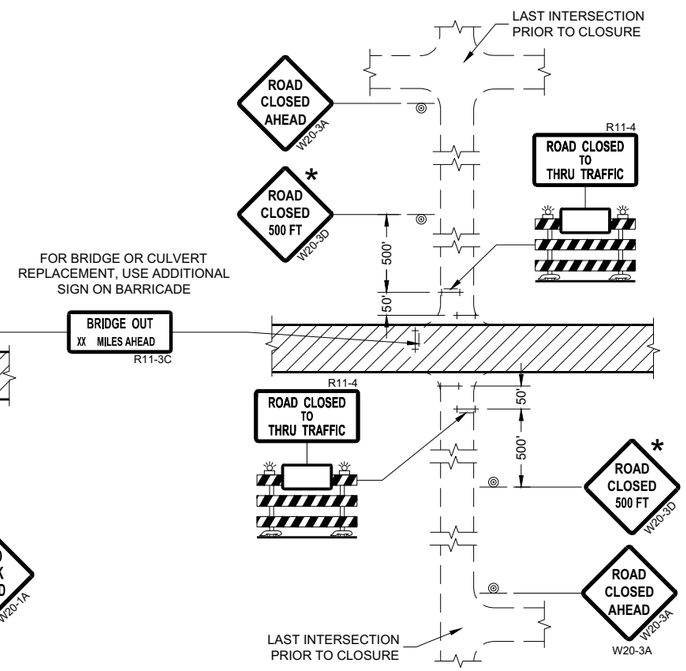

DETAIL 4
(CONTRACTOR, LOCAL BUSINESS AND
RESIDENT ACCESS TO PROJECT)

LEGEND

- SIGN ON PERMANENT SUPPORT
- TYPE III BARRICADE
- TYPE III BARRICADE WITH ATTACHED SIGN
- TYPE "A" WARNING LIGHT (FLASHING)
- WORK AREA

BARRICADES AND SIGNS FOR SIDEROAD CLOSURES

STATE OF WISCONSIN
DEPARTMENT OF TRANSPORTATION

APPROVED
July 2018 — DATE
/S/ Andrew Heidtke — WORK ZONE ENGINEE
FHWA

6

SDD 15C03 - 05

GENERAL NOTES

THE EXACT NUMBER, LOCATION, AND SPACING OF ALL SIGNS AND DEVICES SHALL BE ADJUSTED TO FIT FIELD CONDITIONS.

THE SPACING BETWEEN TRAFFIC CONTROL SIGNS SHOULD BE ADJUSTED TO NOT CONFLICT WITH AND SHOULD PROVIDE A MINIMUM OF 200 FEET (500 FEET DESIRABLE) CLEARANCE TO EXISTING SIGNS THAT WILL REMAIN IN PLACE.

ALL SIGNS ARE 48" X 48" UNLESS OTHERWISE NOTED. IF NECESSARY DUE TO SPACE CONSTRAINTS, 36"X36" SIGNS MAY BE USED INSTEAD OF 48" X 48" SIGNS.

SIGNS THAT WILL BE IN PLACE LESS THAN SEVEN CONTINUOUS DAYS AND NIGHTS MAY BE MOUNTED ON PORTABLE SUPPORTS.

IF A "STOP" SIGN MUST BE REMOVED FOR A WORK OPERATION, A TEMPORARY "STOP" SIGN SHALL BE PLACED PRIOR TO THE SIGN REMOVAL, OR A FLAGGER SHALL BE PROVIDED UNTIL THE SIGN IS REESTABLISHED.

* THE THIRD W20-1 SIGN IS REQUIRED ONLY IF THERE IS AN INTERSECTION BETWEEN THE "ROAD WORK 500 FEET" SIGN AND THE WORK ZONE. ADJUST THE PLACEMENT OF THIS SIGN BASED ON INTERSECTION LOCATION AND OTHER FIELD CONDITIONS.

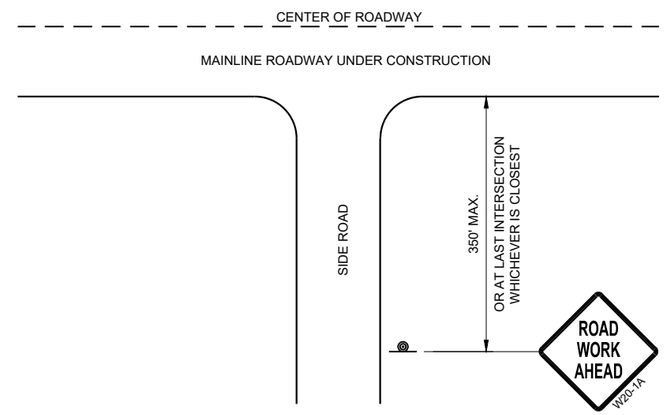

TYPICAL SIDE ROAD APPROACH WARNING SIGN DETAIL

LEGEND

- SIGN ON PERMANENT SUPPORT
- DIRECTION OF TRAFFIC
- WORK AREA

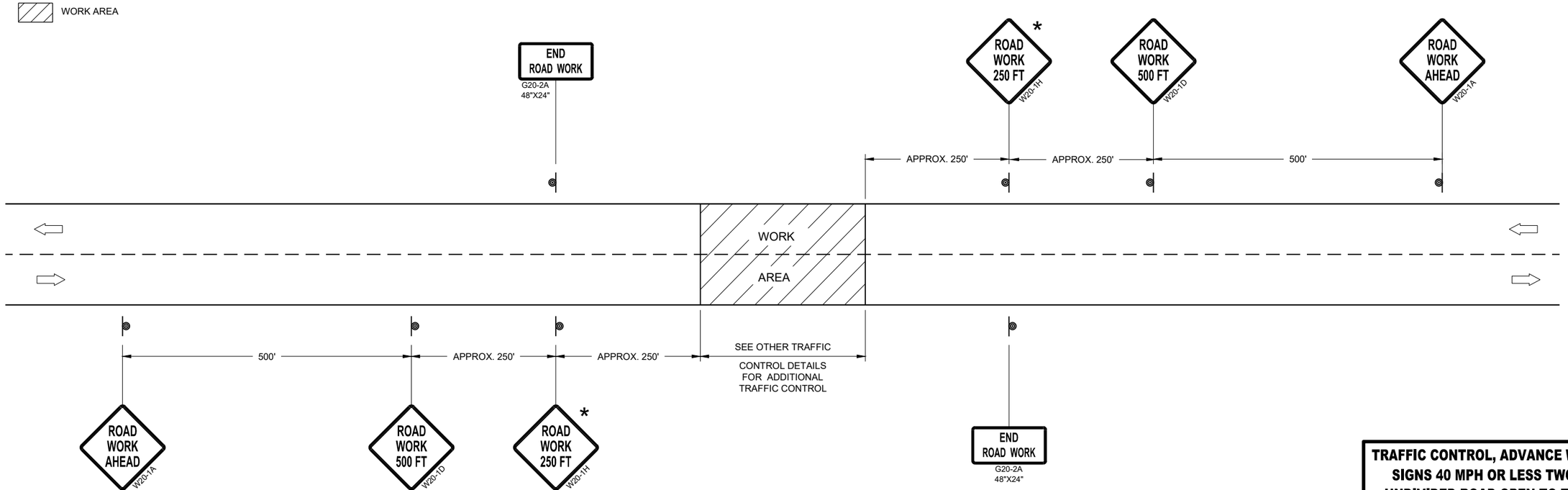

TRAFFIC CONTROL, ADVANCE WARNING SIGNS 40MPH OR LESS

TRAFFIC CONTROL, ADVANCE WARNING SIGNS 40 MPH OR LESS TWO-WAY UNDIVIDED ROAD OPEN TO TRAFFIC

STATE OF WISCONSIN
DEPARTMENT OF TRANSPORTATION

APPROVED
July 2018 — DATE
/S/ Andrew Heidtke — WORK ZONE ENGINEE
FHWA

6
SDD 15C05 - 05

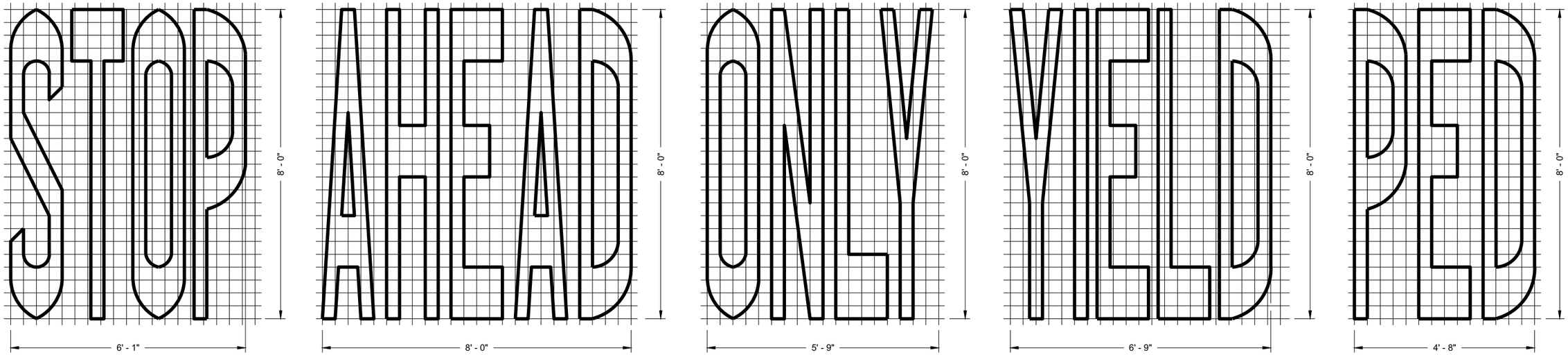

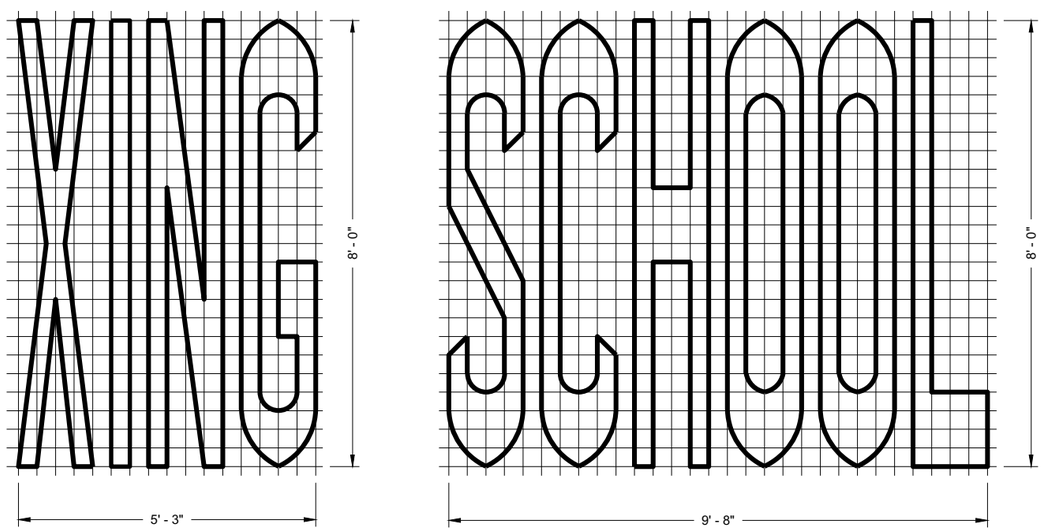

SINGLE LANE

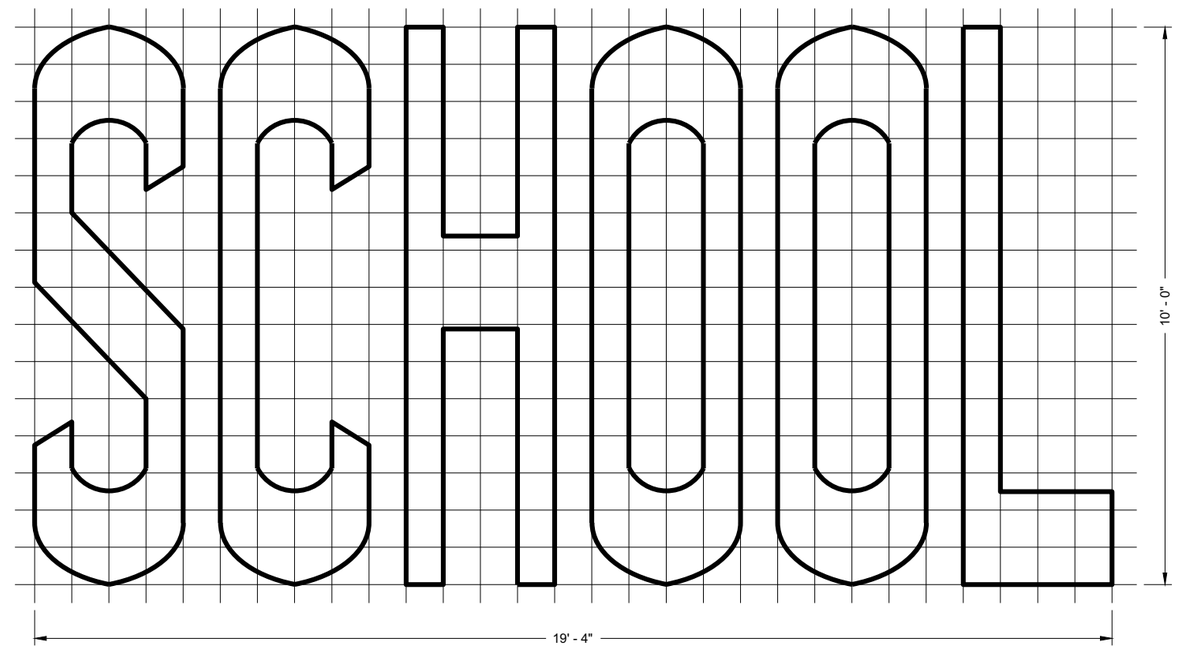

TWO - LANE

6

6

GENERAL NOTES

DETAILS OF INSTALLATION, MATERIALS AND WORKMANSHIP NOT SHOWN ON THIS DRAWING SHALL CONFORM TO THE PERTINENT REQUIREMENTS OF THE STANDARD SPECIFICATIONS AND APPLICABLE SPECIAL PROVISIONS.

PAVEMENT MARKING WORDS

STATE OF WISCONSIN
DEPARTMENT OF TRANSPORTATION

APPROVED
November 2019 — DATE
/S/ Matthew Rauch — STATE SIGNING AND MAR ENGINEER
FHWA

SDD 15C07 - 15b

SDD 15C07 - 15b

GENERAL NOTES

DETAILS OF INSTALLATION, MATERIALS AND WORKMANSHIP NOT SHOWN ON THIS DRAWING SHALL CONFORM TO THE PERTINENT REQUIREMENTS OF THE STANDARD SPECIFICATIONS AND APPLICABLE SPECIAL PROVISIONS.

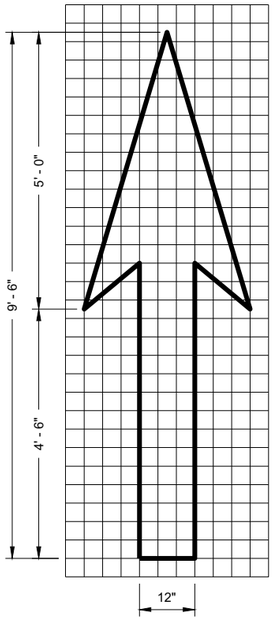

TYPE 1

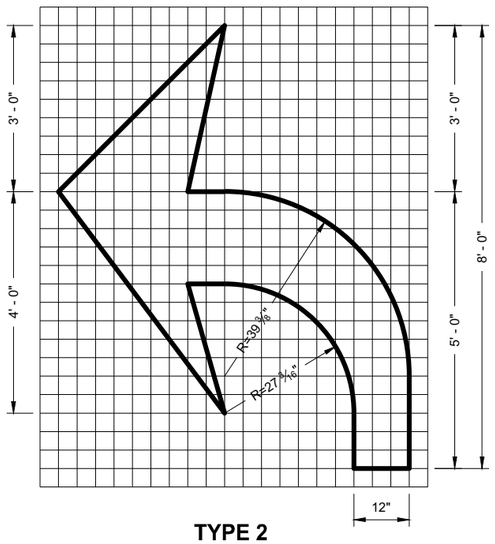

TYPE 2

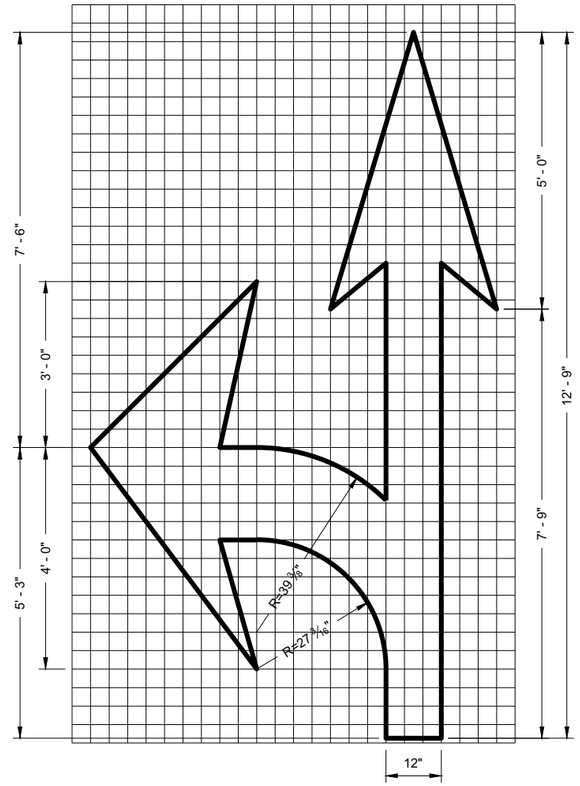

TYPE 3

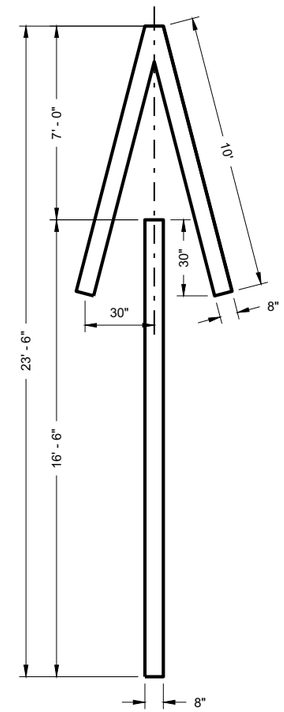

TYPE 4

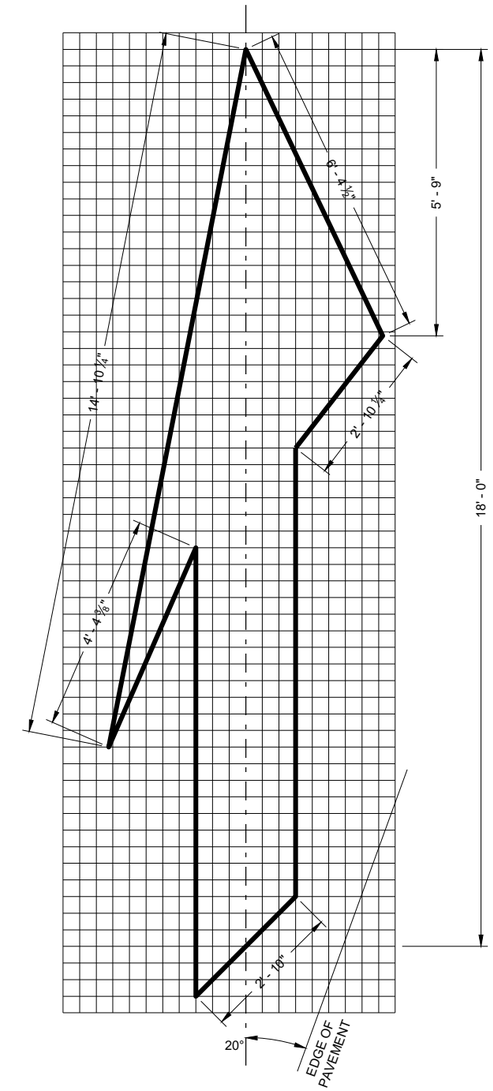

TYPE 5 LANE DROP ARROW

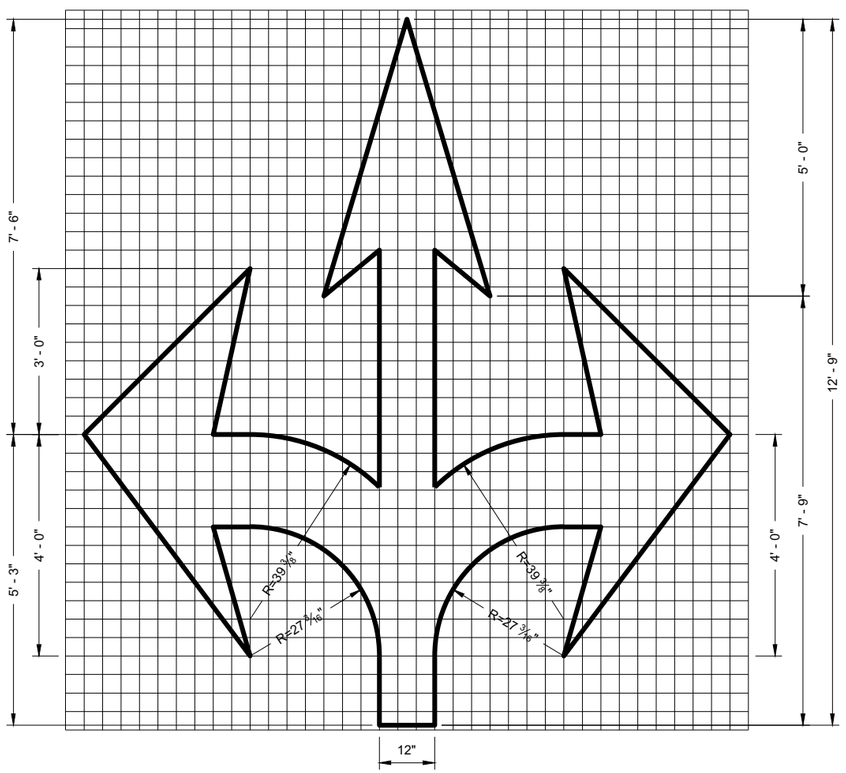

TYPE 6

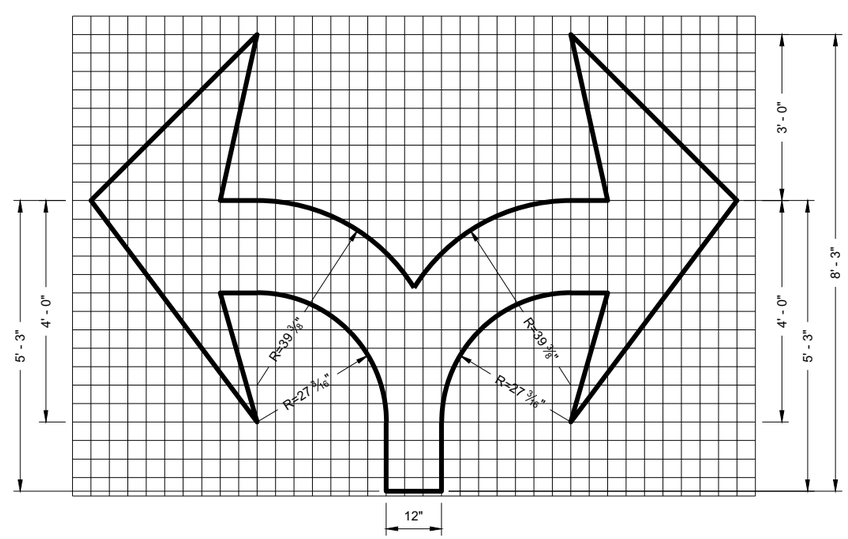

TYPE 7

6

6

PAVEMENT MARKING ARROWS

STATE OF WISCONSIN
DEPARTMENT OF TRANSPORTATION

APPROVED
November 2019 — DATE
/S/ Matthew Rauch — STATE SIGNING AND MAR ENGINEER
FHWA

SDD 15C07 - 15c

SDD 15C07 - 15c

GENERAL NOTES

DETAILS OF CONSTRUCTION NOT SHOWN ON THIS DRAWING SHALL CONFORM TO STANDARD SPECIFICATIONS AND SPECIAL PROVISIONS.

(1) LOCATE THE NO PASSING ZONE W14-3 SIGN WITHIN 50 FEET OF THE "T" MARKING

(2) MEASURE FROM EDGE OF MARKING TO JOINT LINE. THIS DOES NOT INCLUDE SPACE NEEDED FOR GROOVING OPERATIONS.

LEGEND

"T" MARKING

SIGN ON PERMANENT SUPPORT

DIRECTION OF TRAFFIC

* CONFIRM MARKING LINE WIDTH WITH THE MISCELLANEOUS QUANTITIES

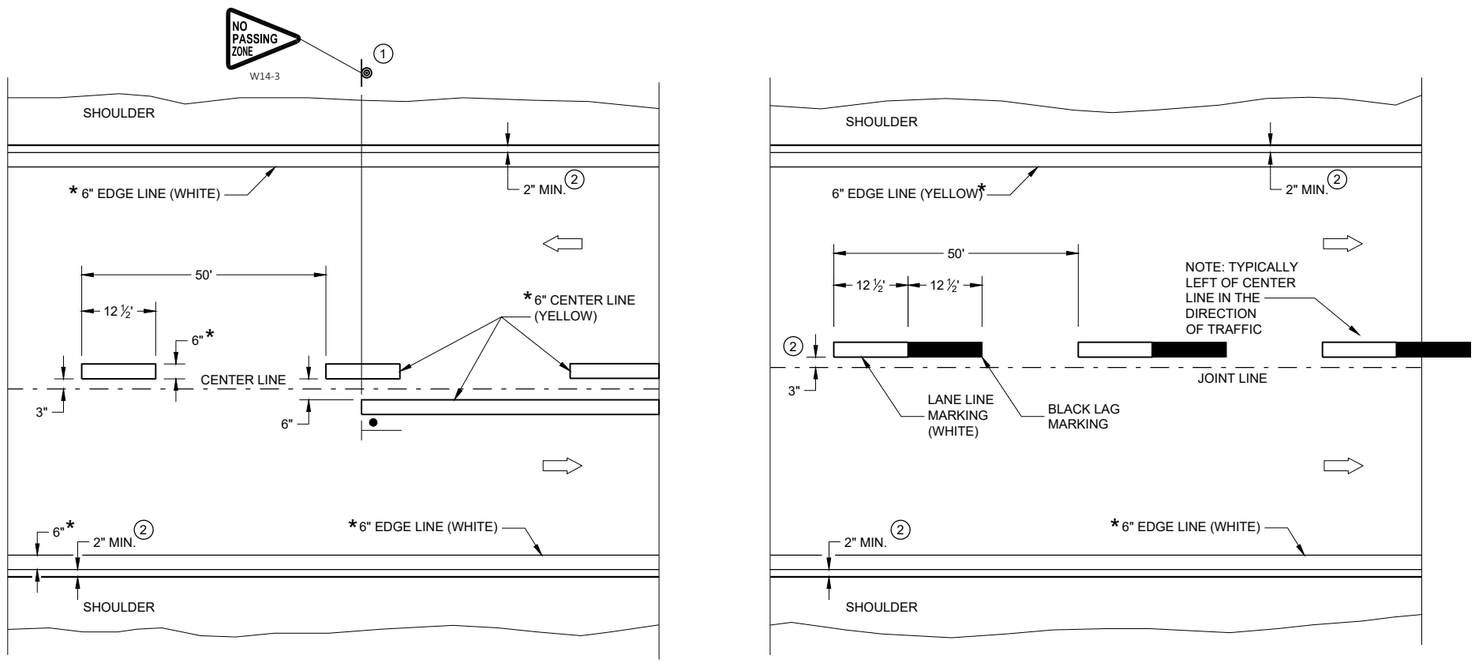

TWO WAY TRAFFIC

ONE WAY TRAFFIC

PERMANENT PAVEMENT MARKING

6

6

SDD 15C08-23a

SDD 15C08-23a

PERMANENT LONGITUDINAL PAVEMENT MARKINGS

STATE OF WISCONSIN
DEPARTMENT OF TRANSPORTATION

APPROVED

May 2023
DATE

/S/ Jeannie Silver
STATEWIDE SIGNING AND M
ENGINEER

FHWA

GENERAL NOTES

1. A SET OF ARROWS IS REQUIRED EVERY 400 FEET OR NEAR INTERSECTIONS OR DRIVEWAYS WITH TURNING TRAFFIC.
2. 10" WHITE
3. TURN BAY LENGTH OF LESS THAN 48' DOES NOT REQUIRE PAVEMENT ARROWS OR TEXT.

⇨ DIRECTION OF TRAFFIC

* CONFIRM MARKING LINE WIDTH WITH THE MISCELLANEOUS QUANTITIES

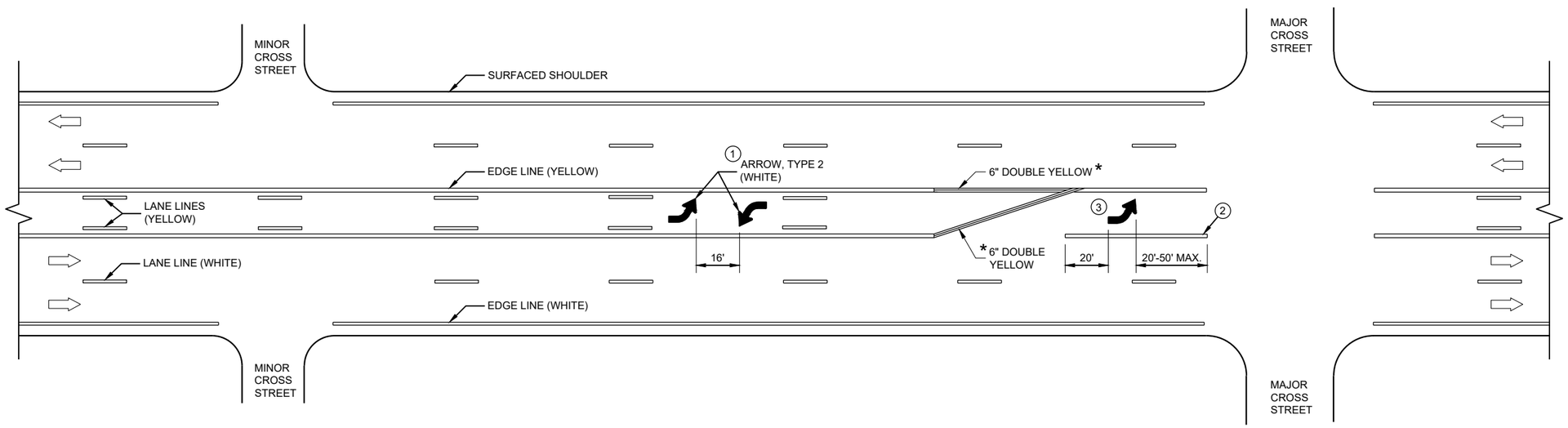

TWO WAY LEFT TURN LANE

PAVEMENT MARKING (TURN LANES)

STATE OF WISCONSIN
DEPARTMENT OF TRANSPORTA

6
SDD 15C08-23c

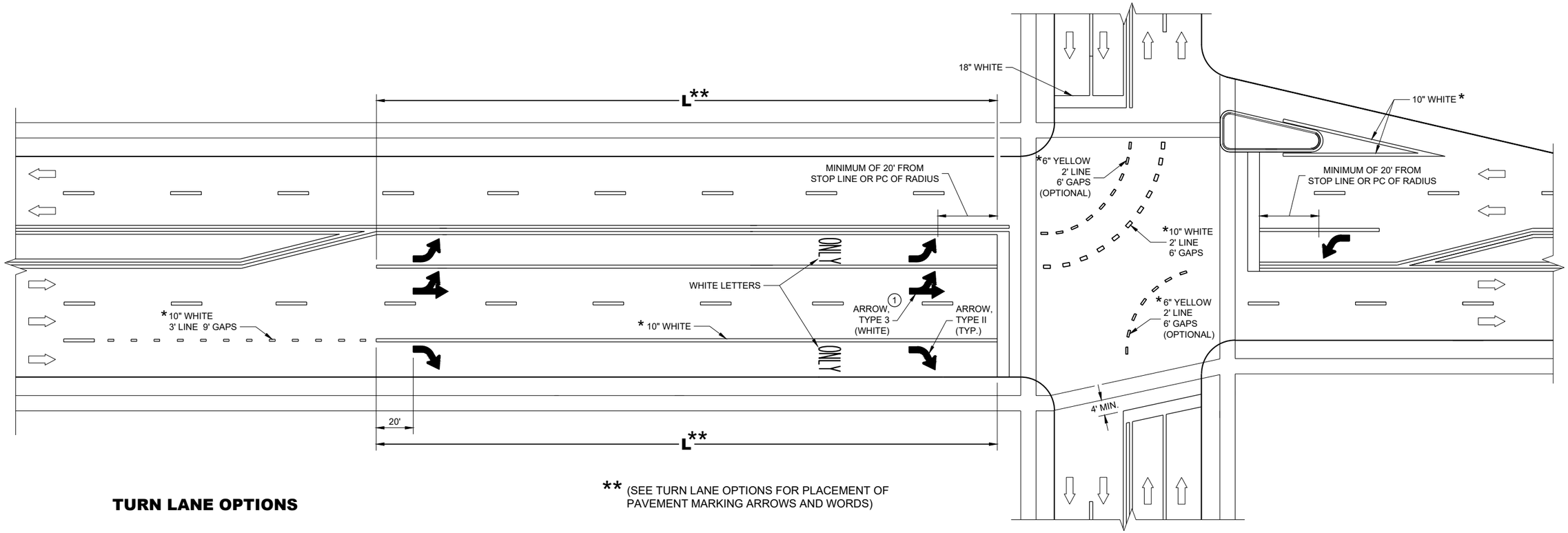

** (SEE TURN LANE OPTIONS FOR PLACEMENT OF PAVEMENT MARKING ARROWS AND WORDS)

TURN LANE OPTIONS

LENGTH OF TURN BAY (L) OF 0 - 47' DOES NOT REQUIRE PAVEMENT MARKING ARROWS OR WORDS

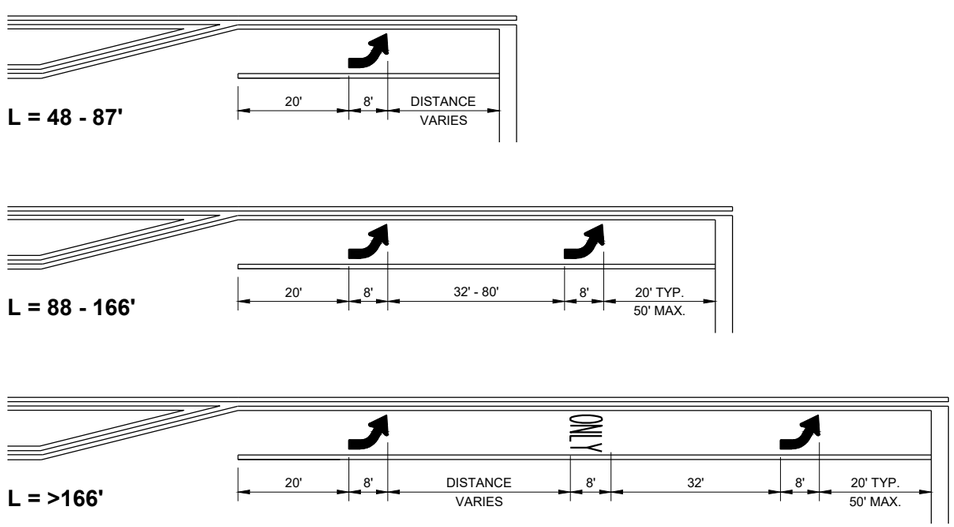

GENERAL NOTES

1. QUANTITY AND LOCATION OF TYPE 3 ARROWS ARE THE SAME AS THE TYPE II ARROWS IN THE ADJACENT TURN LANE. FOR TURN LANES WITH A PHYSICAL SEPARATION IN THE SAME DIRECTION OF TRAVEL, THE ARROWS AND "ONLY" MARKING MAY BE ELIMINATED.

⇨ DIRECTION OF TRAFFIC

L = LENGTH OF TURN BAY

* CONFIRM MARKING LINE WIDTH WITH THE MISCELLANEOUS QUANTITIES

PAVEMENT MARKING (TURN LANES)

STATE OF WISCONSIN
DEPARTMENT OF TRANSPORTAT

6

SDD 15C08-23d

GENERAL NOTES

1. REFLECTIVE SHEETING SHALL FOLLOW THE REQUIREMENTS IN THE APPROVED PRODUCTS LISTING FOR SIGN SHEETING.
2. LOCATION OF WARNING LIGHTS WHEN SHOWN ON THE PLAN.

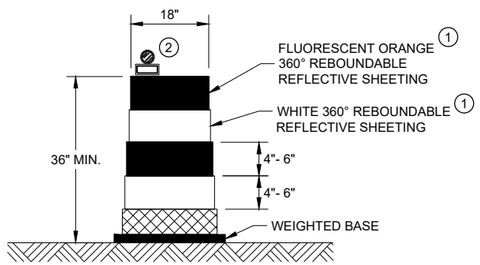

DRUM

BALLAST WIDTHS
RANGE FROM 24"-36"

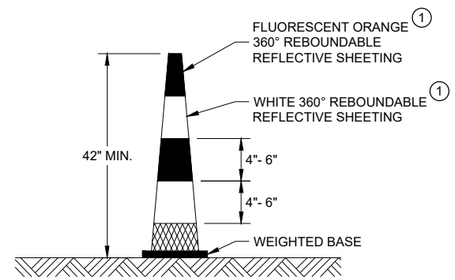

42" CONE

DO NOT USE IN TAPERS
½ SPACING OF DRUMS

BALLAST WIDTHS
RANGE FROM 14"-20"

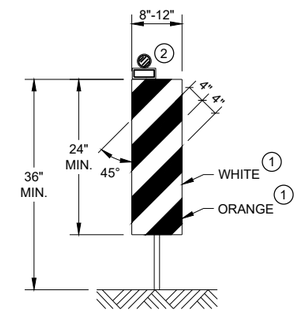

VERTICAL PANEL

THE STRIPES SHALL SLOPE DOWNWARD TO
THE TRAFFIC SIDE FOR CHANNELIZATION.

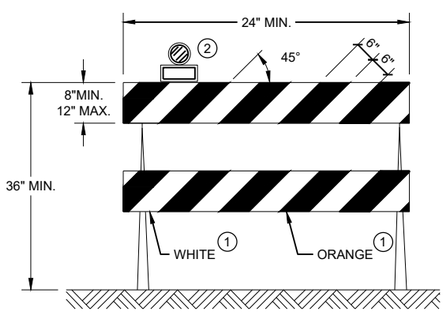

TYPE II BARRICADE

FOR RAILS LESS THAN 36" LONG, 4" WIDE STRIPES
MAY BE USED. ALL STRIPES SHALL SLOPE DOWNWARD
TO THE TRAFFIC SIDE FOR CHANNELIZATION.

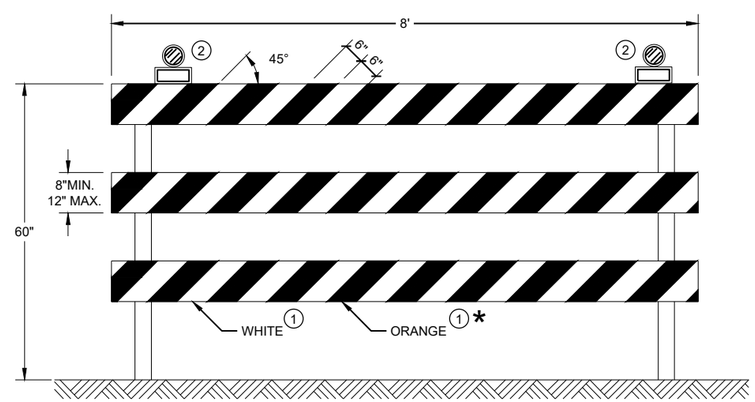

TYPE III BARRICADE

IF SIGN MOUNTED, DO NOT COVER MORE THAN 50% OF THE TOP
TWO RAILS OR 33% OF THE TOTAL AREA OF THE THREE RAILS.

* IF USED FOR A PERMANENT APPLICATION USE RED SHEETING.

CHANNELIZING DEVICES
DRUMS, CONES, BARRICADES
AND VERTICAL PANELS

STATE OF WISCONSIN
DEPARTMENT OF TRANSPORTATION

APPROVED
November 2022 /S/ Andrew Heidtke
DATE WORK ZONE ENGINEE
FHWA

6

6

SDD 15C11 - 10b

SDD 15C11 - 10b

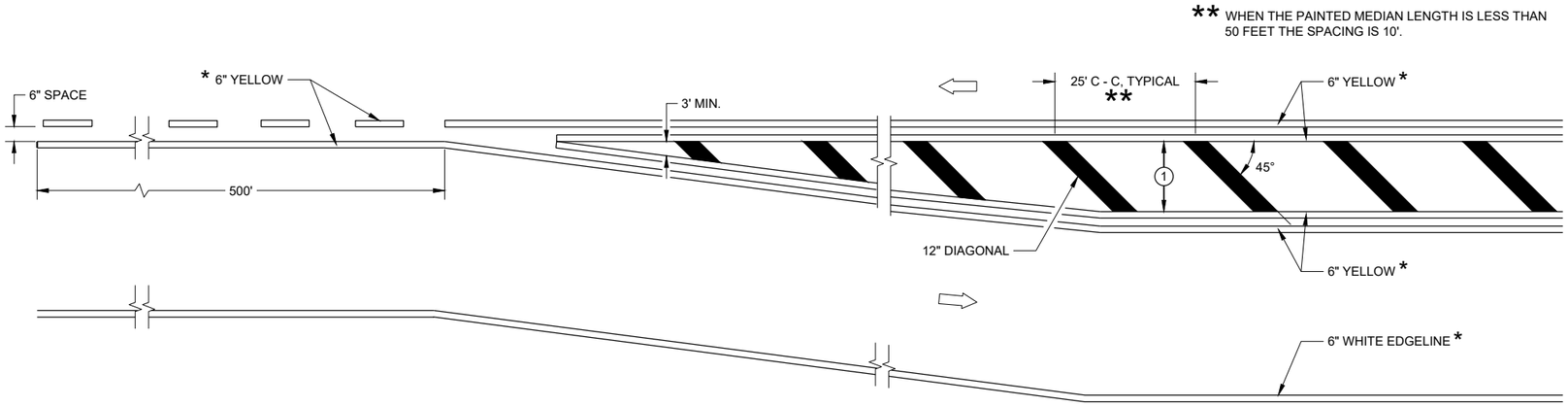

MEDIAN ISLAND DETAIL

GENERAL NOTES

1. DIAGONALS ARE OPTIONAL WHEN PAINTED ISLAND IS LESS THAN 6 FEET AT THE WIDEST POINT. OMIT DIAGONALS IF WIDTH IS LESS THAN 4 FEET.

⇨ DIRECTION OF TRAVEL

* CONFIRM MARKING LINE WIDTH WITH THE MISCELLANEOUS QUANTITIES

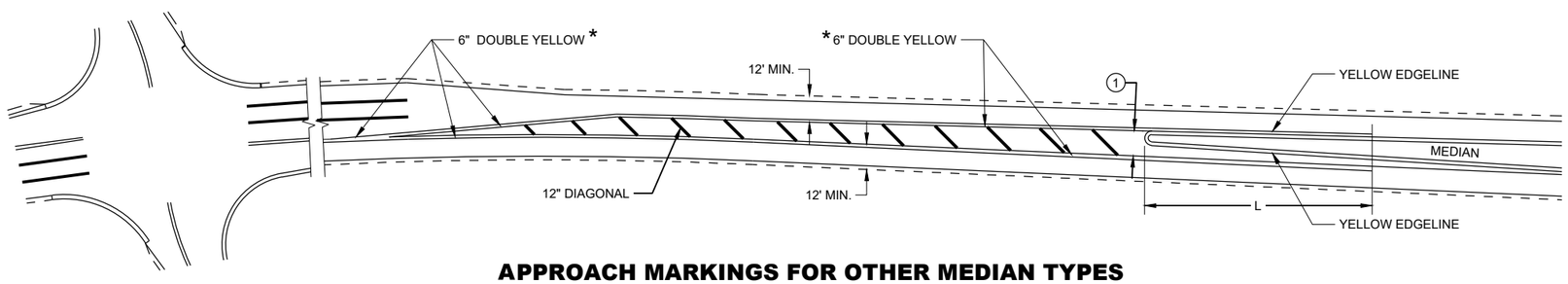

APPROACH MARKINGS FOR OTHER MEDIAN TYPES

SPEED LIMIT	L
<35 MPH	5'
35> MPH	50'

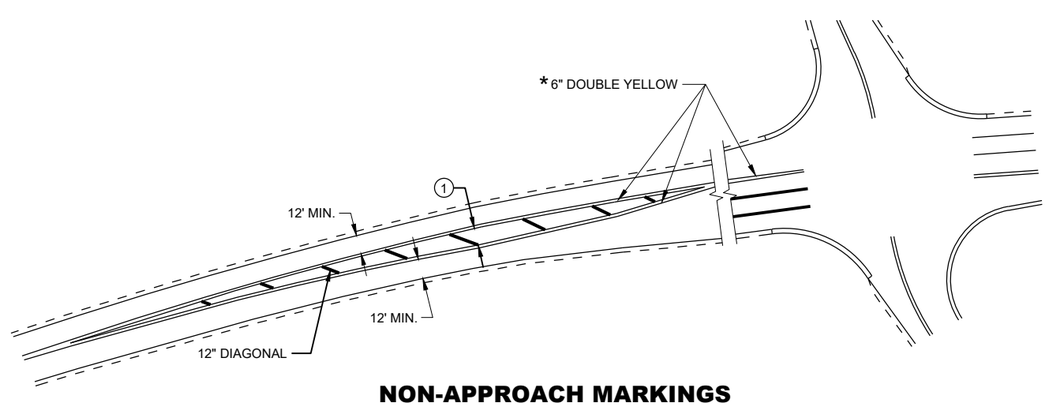

NON-APPROACH MARKINGS

MEDIAN ISLAND PAVEMENT MARKINGS

STATE OF WISCONSIN
DEPARTMENT OF TRANSPORTATION

APPROVED
May 2023 — DATE
/S/ Jeannie Silver — STATE SIGNING AND MAR ENGINEER
FHWA

6

SDD 15C18-08a

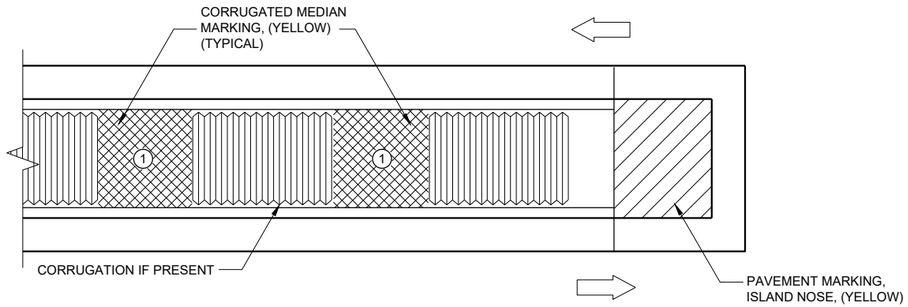

MEDIAN ISLAND WITH SQUARE BLUNT NOSE

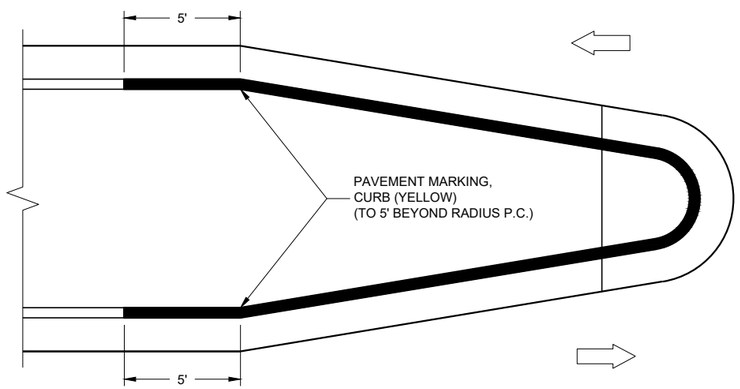

MEDIAN ISLAND WITH ROUND BLUNT NOSE

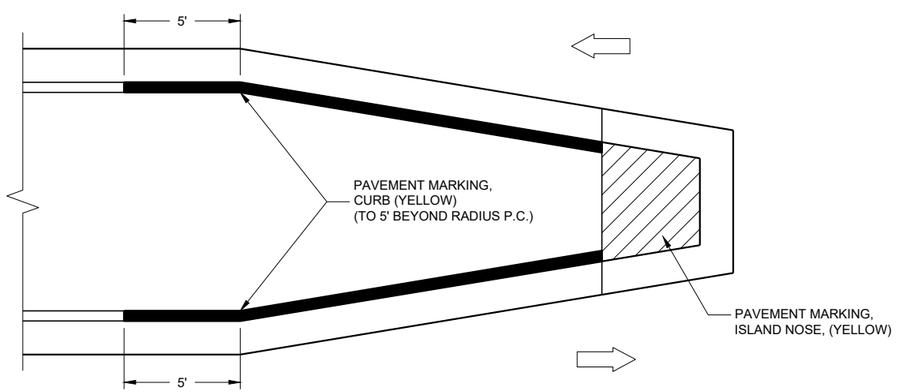

MEDIAN ISLAND WITH SLOPED NOSE

TYPICAL PLACEMENT OF
PAVEMENT MARKING ON MEDIAN ISLANDS

GENERAL NOTES

WHEN CONCRETE CORRUGATED MEDIAN IS CONSTRUCTED TO SEPARATE TRAFFIC OPERATING IN THE OPPOSING DIRECTION, YELLOW PAVEMENT MARKING SHALL BE APPLIED TO THE FLAT PORTION OF THE CONCRETE CORRUGATED MEDIAN. THE ITEM OF PAVEMENT MARKING, CONCRETE CORRUGATED MEDIAN, WILL BE MEASURED IN PLACE AND ACCEPTED IN ACCORDANCE WITH THE CONTRACT AND PAID FOR AT THE CONTRACT UNIT PRICE PER SQUARE FOOT.

(1) APPLY PAVEMENT MARKING TO THE FLAT PORTION OF CORRUGATED MEDIAN.

ISLAND NOSE MARKING

CURB MARKING

CORRUGATED MEDIAN MARKING

DIRECTION OF TRAVEL

PAVEMENT MARKINGS,
MEDIAN ISLAND NOSE

STATE OF WISCONSIN
DEPARTMENT OF TRANSPORTATION

APPROVED
May 2023 — DATE
/S/ Jeannie Silver — STATE SIGNING AND MAR ENGINEER
FHWA

6

SDD 15C18-08b

LEGEND

SIGN ON PERMANENT SUPPORT

DIRECTION OF TRAVEL

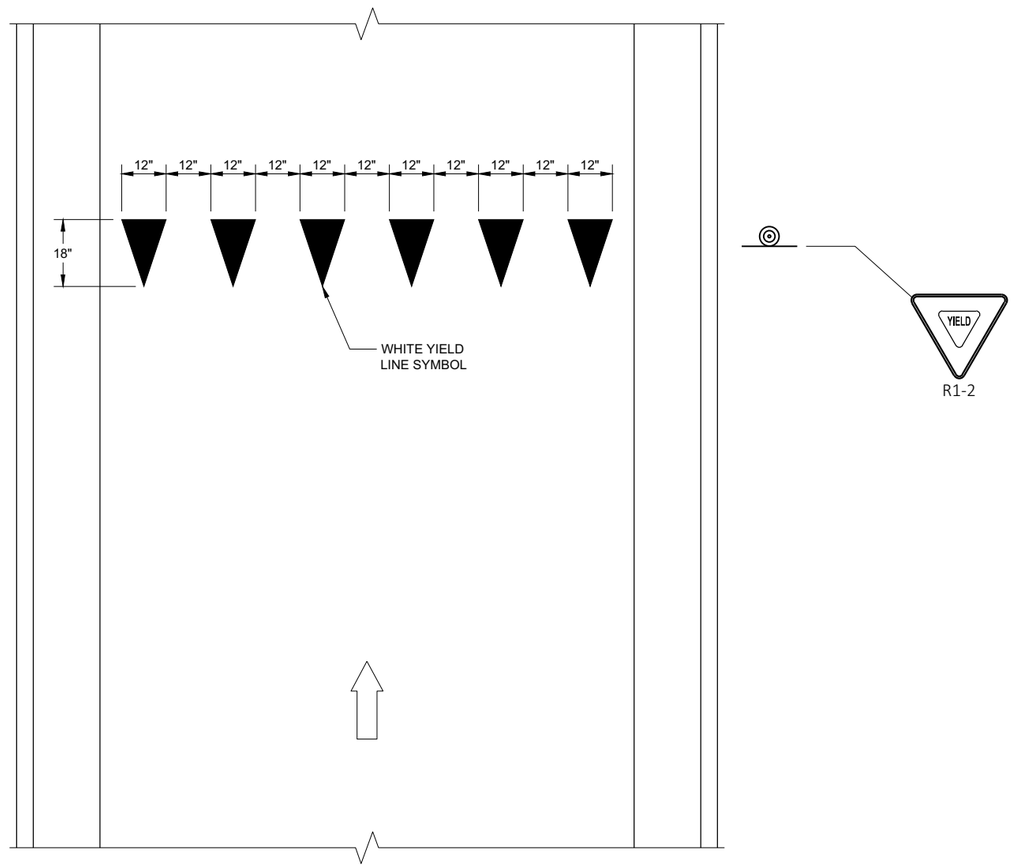

YIELD LINE

6

6

SDD 15C20 - 02

SDD 15C20 - 02

YIELD MARKINGS

STATE OF WISCONSIN
DEPARTMENT OF TRANSPORTATION

APPROVED

4-81-2016
DATE

/S/ Matthew R. Rauch
STATE SIGNING AND MAR
ENGINEER

FHWA

GENERAL NOTES

SIGNING AND MARKING IS SHOWN AS TYPICAL PLACEMENT. FIELD CONDITIONS MAY DICTATE CHANGES IN SIGNING AND MARKING PLACEMENT.

(1) USED ONLY WHEN APPROVED BY REGION TRAFFIC ENGINEER.

* CONFIRM MARKING LINE WIDTH WITH THE MISCELLANEOUS QUANTITIES

** SIGNS MAY BE OMITTED IF SPACE DOES NOT PERMIT PLACEMENT.

*** IF POSTED SPEED IS 45 MPH OR GREATER, PLACE W5-54 SIGN UNDER R4-7 SIGN. MOUNT W5-54 SIGN AT 4' MOUNTING HEIGHT (TOP OF ROADWAY TO BOTTOM OF SIGN).

LEGEND

A DISTANCE DEPENDENT ON SPEED (SEE TABLE)

SIGN MOUNTED ON PERMANENT SUPPORT

DIRECTION OF TRAFFIC

DISTANCE TABLE

POSTED OR 85TH PERCENTILE SPEED	DISTANCE "A"
25	325'
30	460'
35	565'
40	670'
45	775'
50	885'
55	990'
65	1200'
70	1250'

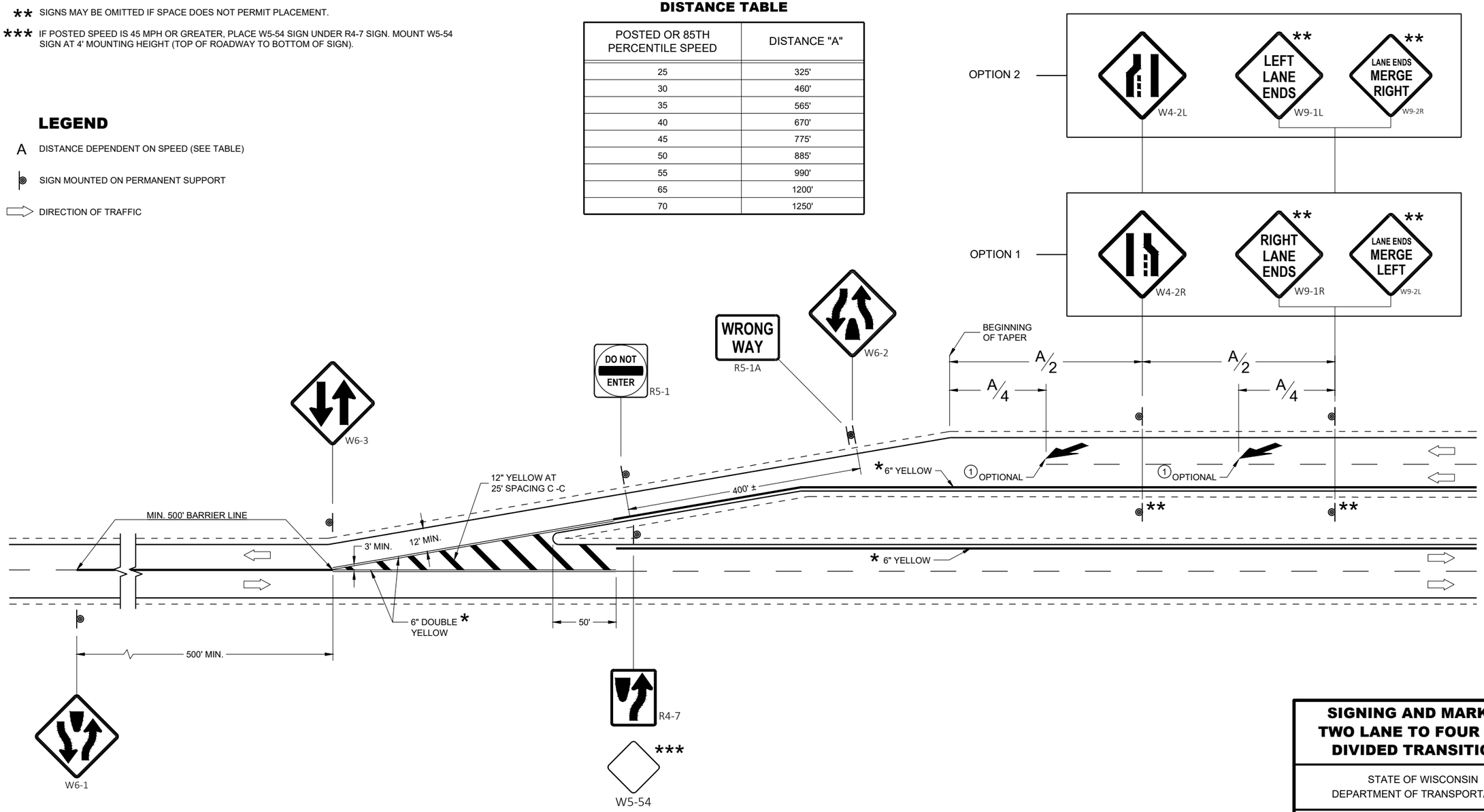

SIGNING AND MARKING TWO LANE TO FOUR LANE DIVIDED TRANSITIONS

STATE OF WISCONSIN
DEPARTMENT OF TRANSPORTATION

APPROVED
May 2023 — DATE
/S/ Matthew Rauch — STATE SIGNING AND MAR ENGINEER
FHWA

6

SDD 15C21-11

GENERAL NOTES

STOP SIGN SHALL BE PLACED A MINIMUM OF 6 FEET TO A MAXIMUM OF 50 FEET FROM THE EDGELINE LOCATION.

1. 18-INCH STOP LINES MAY BE DELETED OR ADDED BY THE REGION MARKING ENGINEER BASED ON VISIBILITY AND SIGHT LINES.
2. NO STOP LINE IS REQUIRED IF STOP SIGN IS LESS THAN OR EQUAL TO 40 FEET FROM THE EDGELINE.
3. NO STOP LINE IS REQUIRED IF STOP SIGN IS LESS THAN OR EQUAL TO 30 FEET FROM THE FLANGELINE EXTENSION.
4. MOVE CLOSER TO THE EDGE OF TRAVEL LINE AS NEEDED FOR VISIBILITY AND SIGHT LINES (NO CLOSER THAN 4 FEET).
5. LADDER BAR CROSSWALKS SHOULD ONLY BE USED FOR MID BLOCK CROSSINGS. USE 2 - 6" TRANSVERSE LINES INSTEAD.

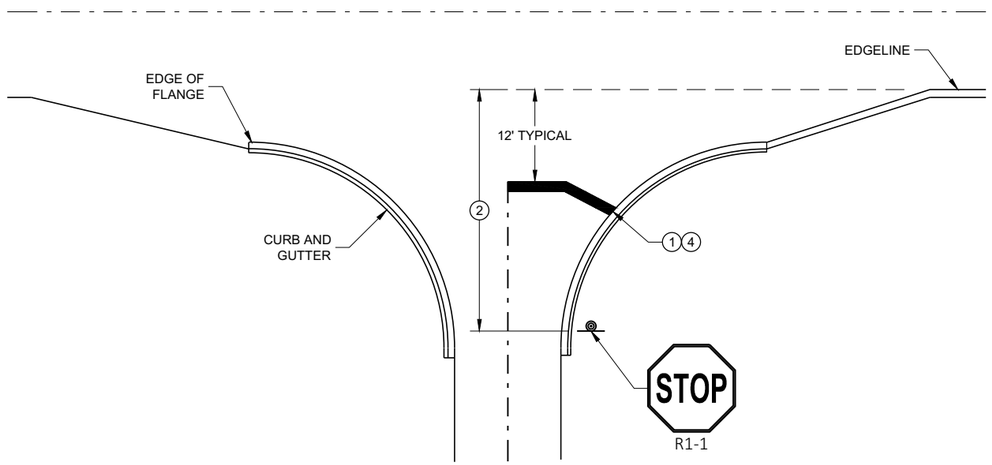

TYPICAL STOP LINE PAVEMENT MARKING WITH CURB AND GUTTER

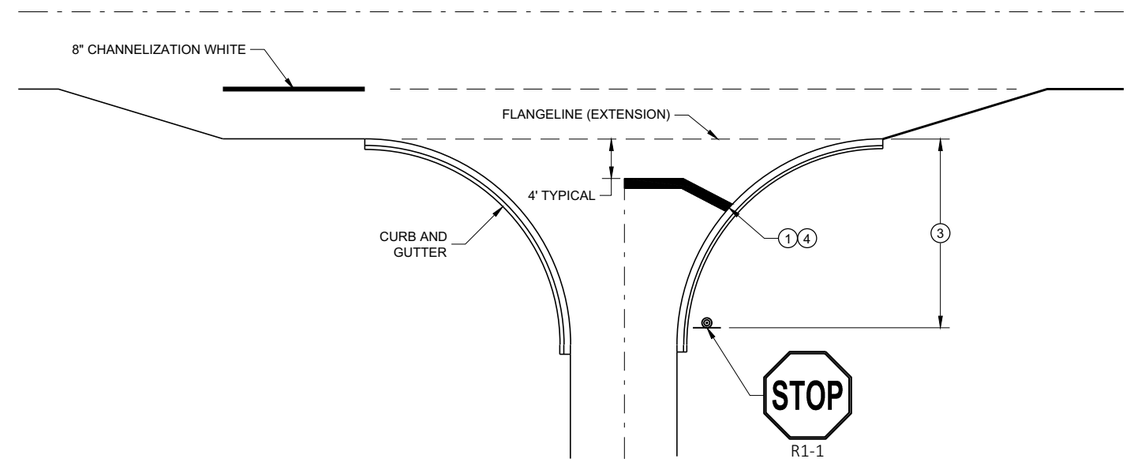

TYPICAL STOP LINE PAVEMENT MARKING FOR SIDEROADS WITH RIGHT TURN LANE

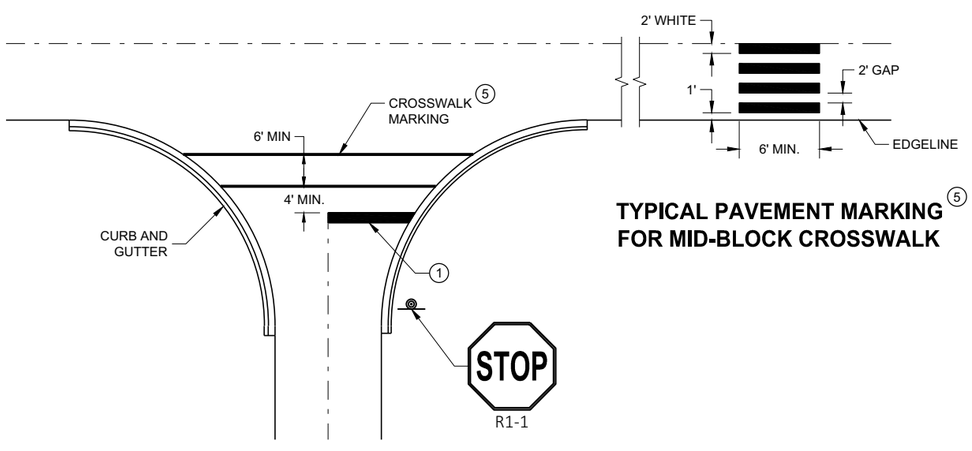

TYPICAL STOP LINE PAVEMENT MARKING FOR SIDEROADS WITH CROSSWALK MARKING

TYPICAL PAVEMENT MARKING 5 FOR MID-BLOCK CROSSWALK

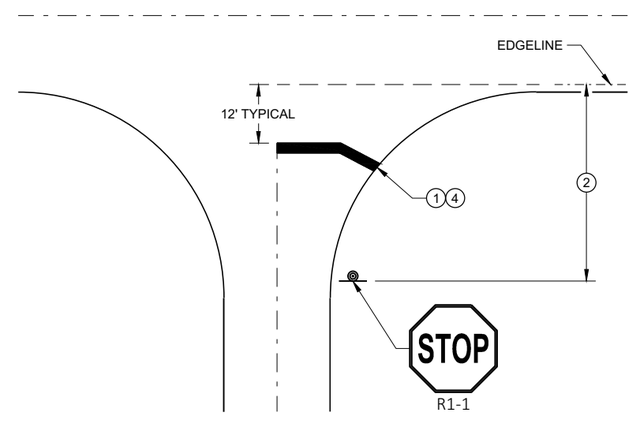

TYPICAL STOP LINE PAVEMENT MARKING WITHOUT CURB AND GUTTER

STOP LINE AND CROSSWALK PAVEMENT MARKING

STATE OF WISCONSIN
DEPARTMENT OF TRANSPORTATION

APPROVED
November 2019 — DATE
/S/ Matthew Rauch — STATE SIGNING AND MAF ENGINEER
FHWA

6

SDD 15C33 - 04

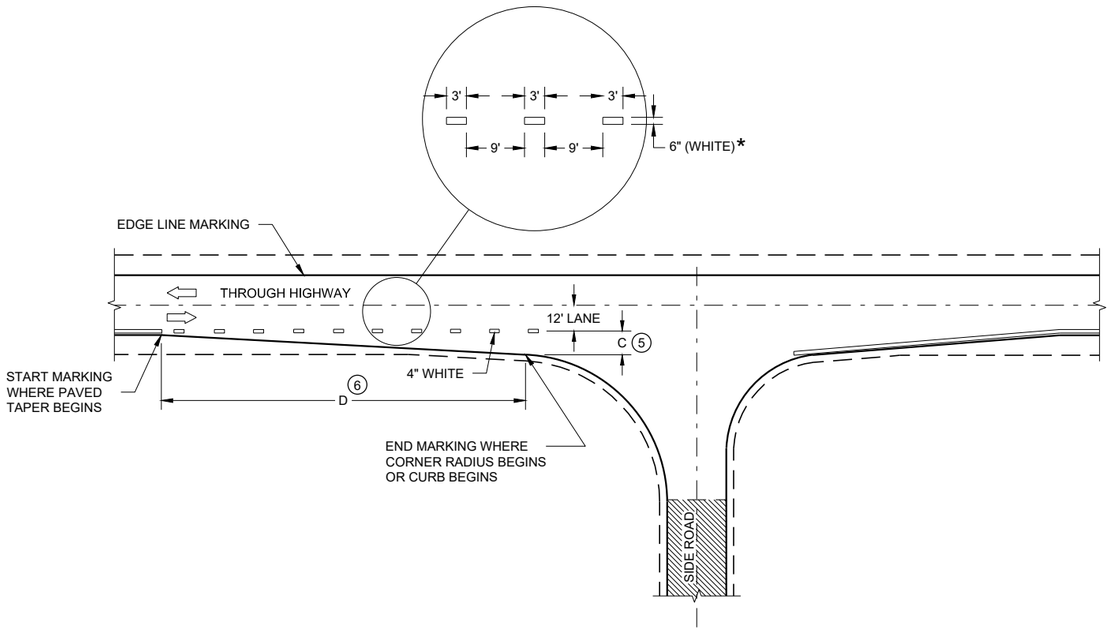

MINOR INTERSECTION

* CONFIRM MARKING LINE WIDTH WITH THE MISCELLANEOUS QUANTITIES

GENERAL NOTES

OMIT EDGE LINES THROUGH INTERSECTIONS. CONTINUE EDGE LINES THROUGH DRIVEWAYS.

1. WHEN DISTANCE "A" IS LESS THAN 250 FEET, OMIT LANE LINE.
2. WHEN DISTANCE "B" IS LESS THAN 100 FEET, OMIT CHANNELIZING LANE LINE.
3. BARRIER LINE ENDS AT SIDE ROAD PAVEMENT / SURFACE EDGE EXTENSION.
4. BARRIER LINE STARTS 500 FEET PRIOR TO THE BYPASS TAPER.
5. WHEN DISTANCE "C" IS LESS THAN 4 FEET, OMIT DOTTED EXTENSION.
6. WHEN DISTANCE "D" IS LESS THAN 50 FEET, OMIT DOTTED EXTENSION.

LEGEND

DIRECTION OF TRAVEL

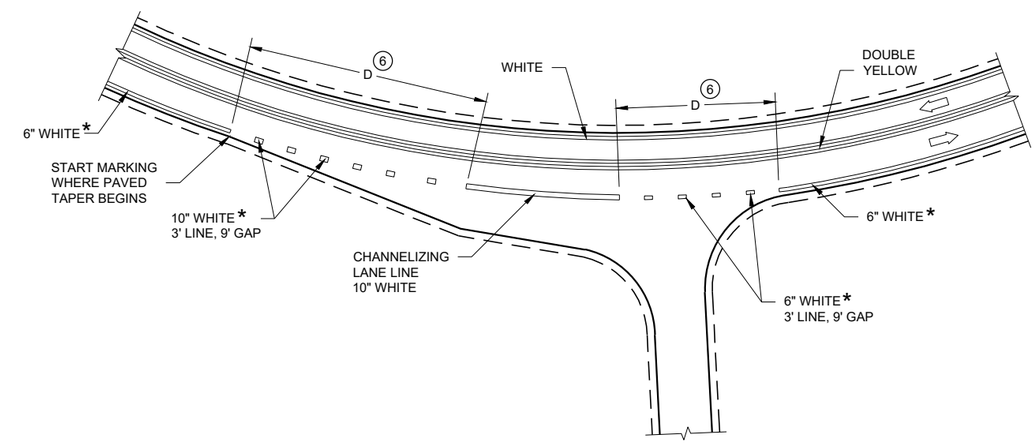

INTERSECTION ON OUTSIDE OF CURVE

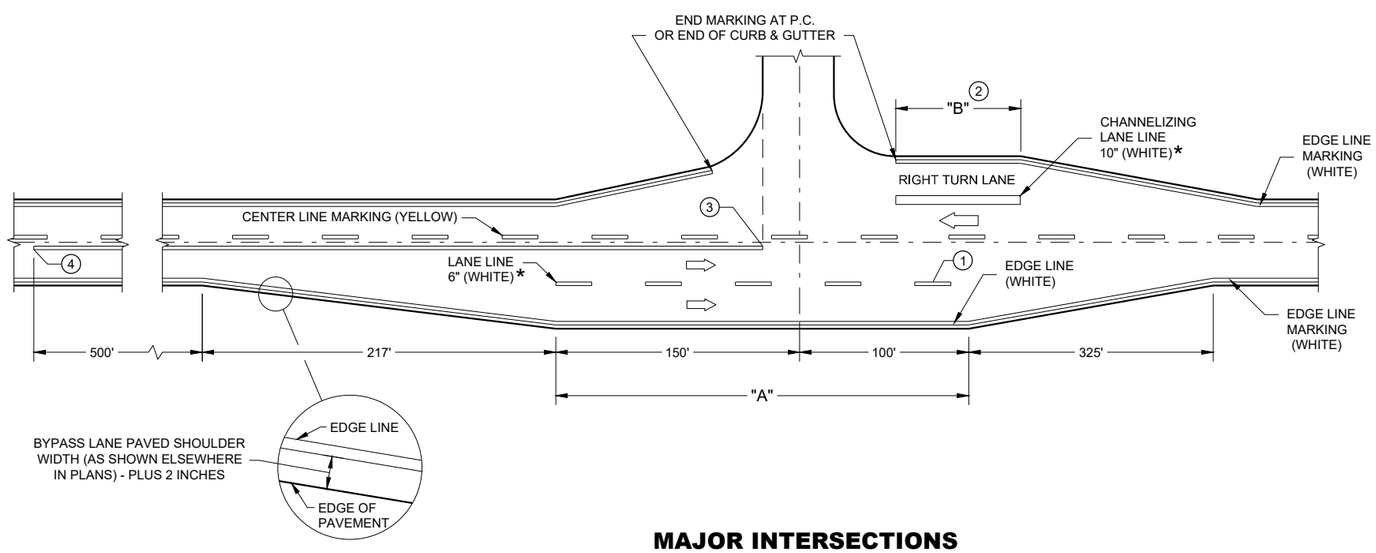

MAJOR INTERSECTIONS

(INTERSECTION WITH FULL RIGHT TURN LANE OR BYPASS LANE)

PAVEMENT MARKING (INTERSECTIONS)

STATE OF WISCONSIN
DEPARTMENT OF TRANSPORTA

6

SDD 15C35-06a

GENERAL NOTES

THE EXACT NUMBER, LOCATION, AND SPACING OF ALL SIGNS AND DEVICES SHALL BE ADJUSTED TO FIT FIELD CONDITIONS AS APPROVED BY THE ENGINEER.

THE SPACING BETWEEN SIGNS SHOULD BE ADJUSTED TO NOT CONFLICT WITH AND TO PROVIDE A MINIMUM OF 200 FEET (500 FEET DESIRABLE) CLEARANCE TO EXISTING SIGNS.

THIS LANE CLOSURE IS TYPICAL FOR CLOSING RIGHT LANE - REVERSE FOR CLOSING LEFT LANE.

ALL SIGNS ARE 48" x 48" UNLESS OTHERWISE NOTED.

"WO" IS THE SAME AS "W" EXCEPT THE BACKGROUND IS ORANGE.

ANY SIGNS TEMPORARY OR EXISTING, WHICH CONFLICT WITH TRAFFIC CONTROL "IN USE" SHALL BE REMOVED OR COVERED AS NEEDED OR AS APPROVED BY THE ENGINEER.

FOR A LANE CLOSURE THAT IS IN PLACE LESS THAN 7 CONTINUOUS DAYS AND NIGHTS, THE ADVANCED WARNING SIGNS MAY BE MOUNTED ON PORTABLE SUPPORTS.

REMOVE PAVEMENT MARKINGS AND PLACE TEMPORARY PAVEMENT MARKING LINE IF LANE CLOSURE IS TO BE IN PLACE 4 OR MORE CONTINUOUS DAYS AND NIGHTS.

IF THE HORIZONTAL ALIGNMENT IS SUCH THAT A CURVE MAY REQUIRE ADDITIONAL DELINEATION, THE DEVICE SPACING MAY BE DECREASED TO 50 FEET.

WARNING LIGHTS ARE NOT REQUIRED IF THE LANE CLOSURE IS A DAYTIME ONLY OPERATION.

ADJUSTMENTS IN BUFFER SPACE NEED TO BE INCORPORATED WHEN THE LANE CLOSURE OCCURS NEAR AN INTERCHANGE EXIT OR ENTRANCE RAMP OR INTERSECTION. THE LANE CLOSURE MUST TAKE PLACE FAR ENOUGH IN ADVANCE OF AN EXIT OR ENTRANCE RAMP TO STILL ALLOW FOR ADEQUATE BUFFER SPACE. THE MINIMUM LENGTH OF THE BUFFER SPACE BEFORE AN EXIT RAMP SHOULD BE ONE HALF THE LENGTH OF THE TRANSITION AREA. THE ENTRANCE RAMP SHOULD BE FOLLOWED BY THE ORIGINAL BUFFER SPACE LENGTH OF 800 FEET DESIRABLE PRIOR TO ANOTHER TRAFFIC CONTROL CHANGE SUCH AS A CROSSOVER MANEUVER.

CONSIDER ROADWAY GEOMETRICS WHEN LOCATING SIGNS AND ARROW BOARD SO THE DRIVER HAS A CLEAR VIEW OF THE ARROW BOARD AND LANE CLOSURE DRUMS.

LEGEND

- SIGN ON PERMANENT SUPPORT
- TRAFFIC CONTROL DRUM
- TRAFFIC CONTROL DRUM WITH TYPE "C" STEADY BURN LIGHT
- TYPE III BARRICADE WITH ATTACHED SIGN
- TYPE "A" WARNING LIGHT (FLASHING)
- REMOVING PAVEMENT MARKINGS
- DIRECTION OF TRAFFIC
- WORK AREA
- FLASHING ARROW BOARD

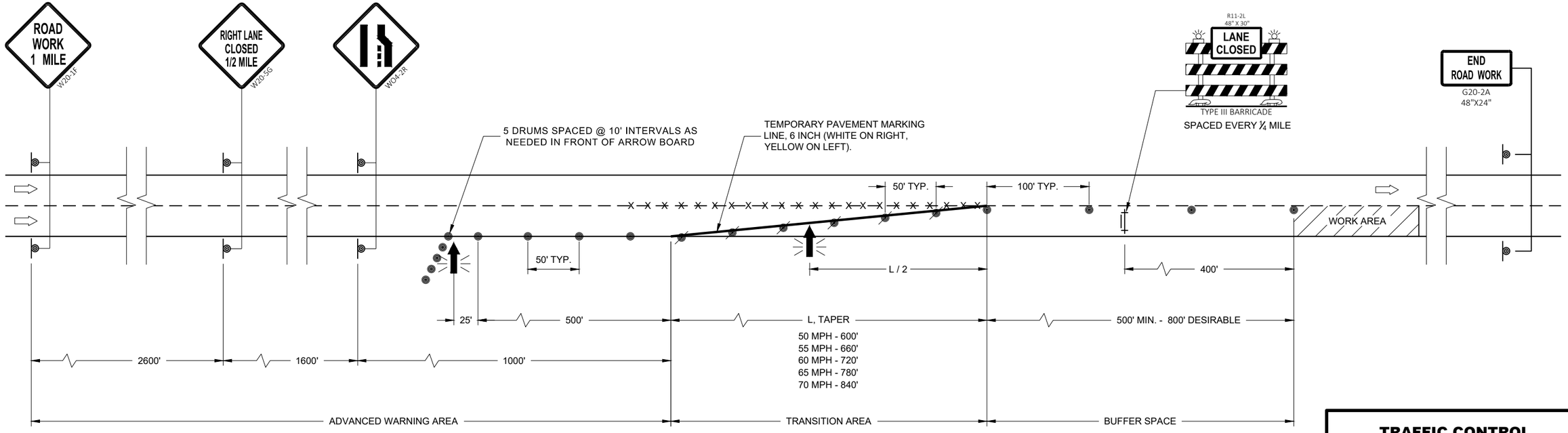

TRAFFIC CONTROL LANE CLOSURE

STATE OF WISCONSIN
DEPARTMENT OF TRANSPORTATION

APPROVED
May 2023 — DATE
/S/ Andrew Heidtke — WORK ZONE ENGINEE
FHWA

6

SDD 15D12 - 11a

URBAN AREA

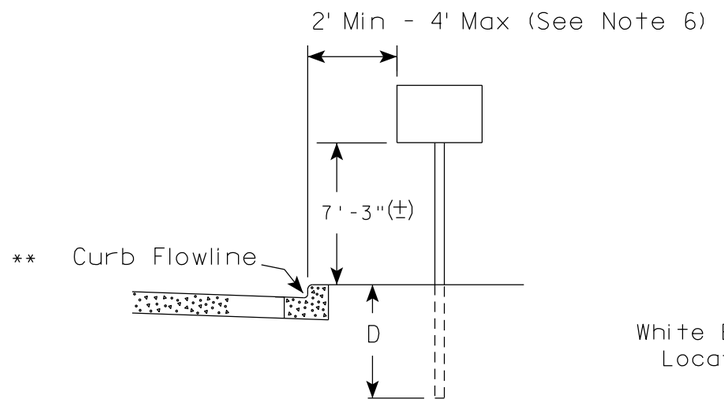

RURAL AREA (See Note 2)

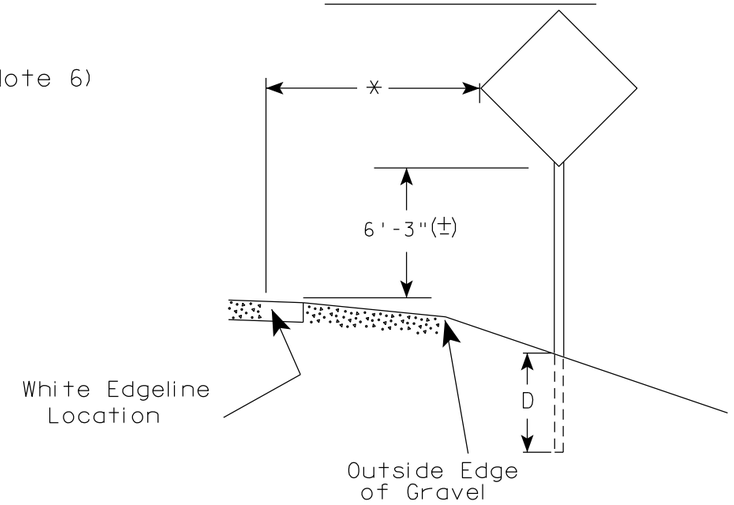

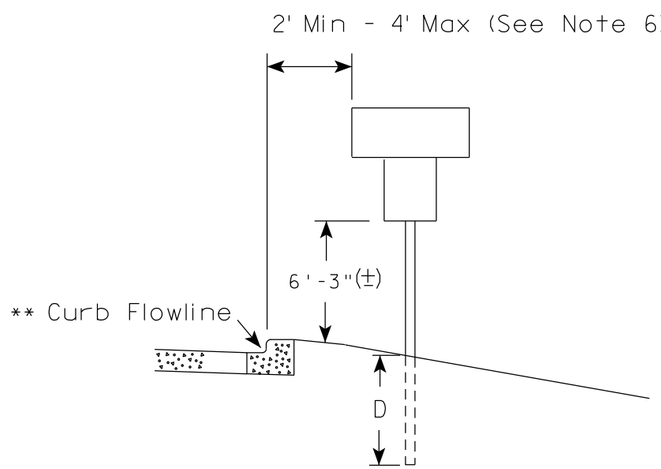

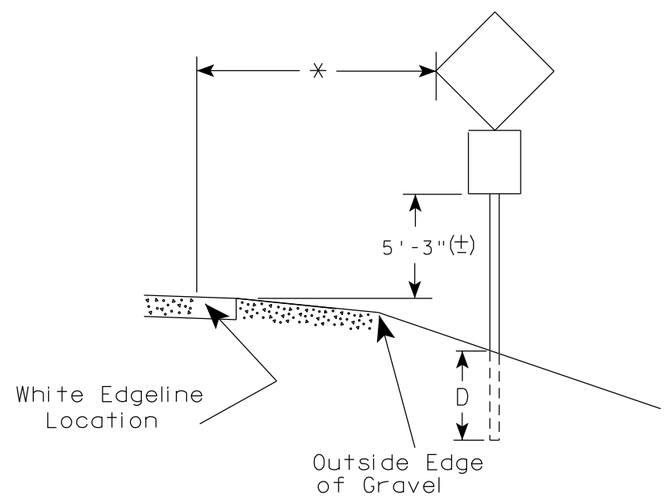

** The existence of curb and gutter does not in itself mandate the vertical clearance illustrated. That height is typically measured where there is sidewalk adjacent to the roadway or parking is permitted. In the absence of sidewalk vertical clearance is measured from the top of the curb. Offset of signs is measured from the flow line.

* 6 feet from edge of a paved shoulder or 12 feet from the edge of pavement (edge line location) or 2 feet from outside edge of gravel, whichever is greater unless directed by project engineer.

GENERAL NOTES

1. Signs wider than 4 feet or 20 sq.ft or larger, shall be mounted on multiple posts. Refer to plate A4-4.
2. If signs are mounted on or behind barrier wall, see A4-10 sign plate.
   The Double Arrow sign (W12-1D) shall be mounted at a height of 2'-3" (±). The Chevron sign (W1-8), Roundabout Chevron panel (R6-4B), Enhanced Reference Markers, Clearance Markers (W5-52), Mile Markers (D10 series), In Road Object Markers (W5-54) & End of Road Markers (W5-56) shall be mounted at a height of 4'-3" (±).
3. For expressways and freeways, mounting height is 7'- 3" (±) or 6'-3" (±) depending upon existence of a sub-sign.
4. Minimum mounting height for signs mounted on traffic signal poles is 5'- 3" (±).
5. Offset distance shall be consistent with existing signs or consistent throughout length of project.
6. The (±) tolerance for mounting height is 3 inches.
7. Folding signs shall be mounted at a height of 5'-3" (±) or as directd by the Engineer.

POST EMBEDMENT DEPTH

Area of Sign Installation (Sq. Ft.)	D (Min)
20 or Less	4'
Greater than 20	5'

TYPICAL INSTALLATION OF PERMANENT TYPE II SIGNS ON SINGLE POSTS

WISCONSIN DEPT OF TRANSPORTATION

APPROVED Matthew R Rauch for State Traffic Engineer

DATE 5/13/2020 PLATE NO. A4-3.22

7 7

PROJECT NO:	HWY:	COUNTY:		SHEET NO: 149	E

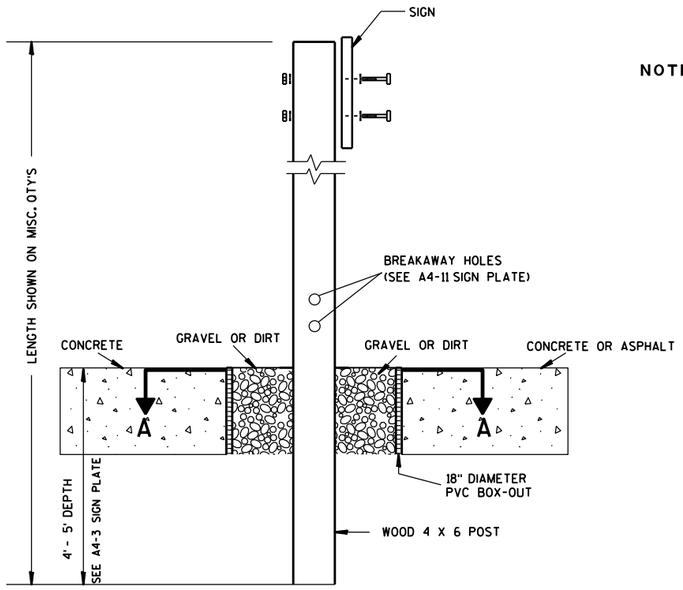

ELEVATION VIEW

DETAIL OF WOOD 4 X 6 SIGN POST IN BOX-OUT

NOTES:
1. ALL MATERIAL TO BE APPROVED BY ENGINEER PRIOR TO INSTALLATION
2. SEE SIGN PLATE A4-8 FOR SIGN HARDWARE REQUIREMENTS
3. 18 INCH X 18 INCH SQUARE BOX-OUTS MAY BE USED FOR INSTALLATIONS IN EXISTING CONCRETE OR ASPHALT LOCATIONS.

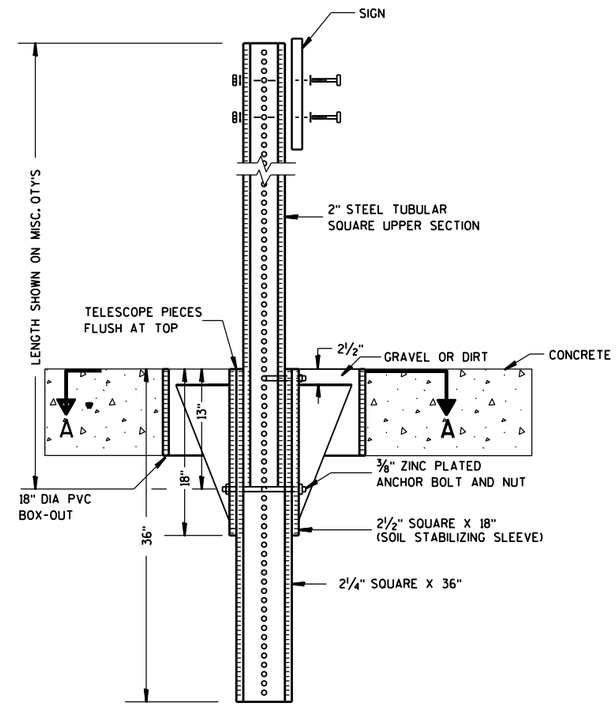

ELEVATION VIEW

DETAIL OF STEEL 2 X 2 SIGN POST IN BOX-OUT

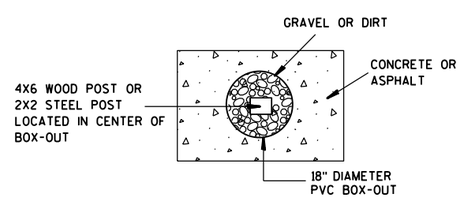

PLAN VIEW

FOR NEW CONCRETE/ASPHALT INSTALLATIONS

SIGN POST
BOX-OUTS
A4-3B

WISCONSIN DEPT OF TRANSPORTATION

APPROVED Matthew R Rauch
for State Traffic Engineer

DATE 1/27/14 PLATE NO. A4-3B.1

PROJECT NO:	HWY:	COUNTY:		SHEET NO:	E

URBAN AREA

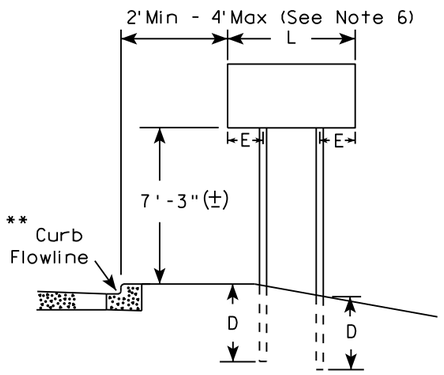

RURAL AREA (See Note 3)

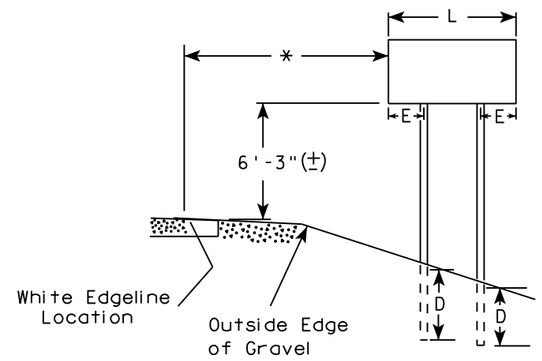

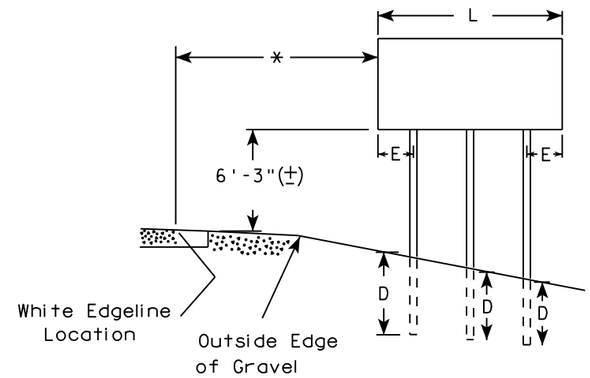

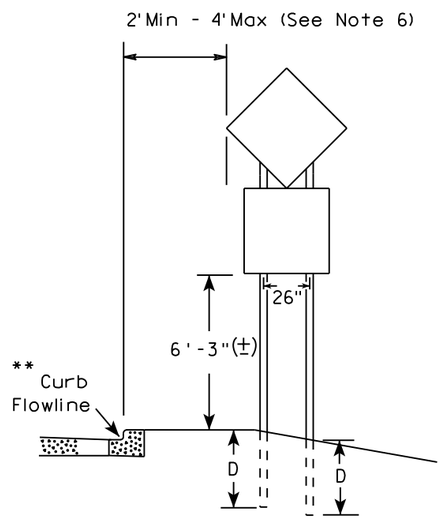

48" DIAMOND WARNING SIGN

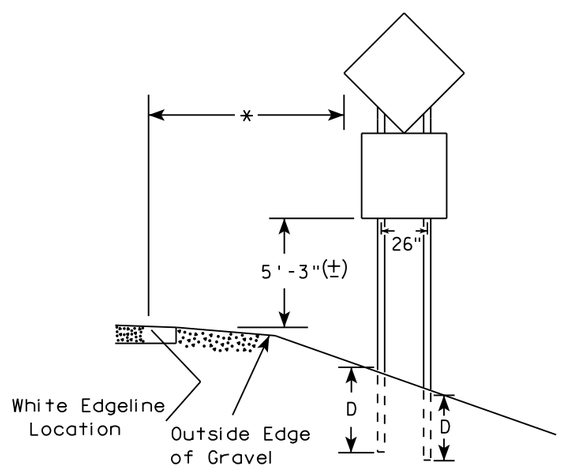

48" DIAMOND WARNING SIGN

SIGN SHAPE OTHER THAN DIAMOND (TWO POSTS REQUIRED)	
L	E
*** Greater than 48" Less than 60"	12"
60" to 108"	L/5

SIGN SHAPE OTHER THAN DIAMOND (THREE POSTS REQUIRED)	
L	E
Greater than 108" to 144"	12"

GENERAL NOTES

1. For 3 or 4 post installations, individual post spacing shall be greater than 3'-6".
2. See tables below for required number of posts.
3. For expressways and freeways, mounting height is 7'-3" (±) or 6'-3" (±) depending upon existence of sub-sign.
4. The (±) tolerance for mounting height is 3 inches.
5. J-Assemblies are considered to be one sign for mounting height.
6. Offset distance shall be consistent with existing signs or consistent throughout length of project.
7. Folding signs shall be mounted at a height of 5'-3" (±) or as directed by the engineer.
8. The Double Arrow sign (W12-1) shall be mounted at a height of 2'-3" (±). The Chevron sign (W1-8), Roundabout Chevron panel (R6-4B), Clearance Markers (W5-52), Mile Markers (D10 series), In Road Object Markers (W5-54) & End of Road Markers (W5-56) shall be mounted at a height of 4"-3" (±).

* 6 feet from edge of a paved shoulder or 12 feet from the edge of pavement (edge line location) or 2 feet from outside edge of gravel, whichever is greater unless directed by project engineer.

** The existence of curb and gutter does not in itself mandate the vertical clearance illustrated. That height is typically measured where there is sidewalk adjacent to the roadway or parking is permitted. In the absence of sidewalk vertical clearance is measured from the top of the curb. Offset of signs is measured from the flow line.

*** See A4-3 sign plate for signs 4' or less in width and less than 20 S.F. in area.

POST EMBEDMENT DEPTH

Area of Sign Installation (Sq. Ft.)	D (Min)
20 or Less	4'
Greater than 20	5'

TYPICAL INSTALLATION OF TYPE II SIGNS ON MULTIPLE POSTS

WISCONSIN DEPT OF TRANSPORTATION

APPROVED Matthew R Rauch
For State Traffic Engineer

DATE 8/21/17 PLATE NO. A4-4.15

7

7

PROJECT NO:	HWY:	COUNTY:		SHEET NO: 151	E

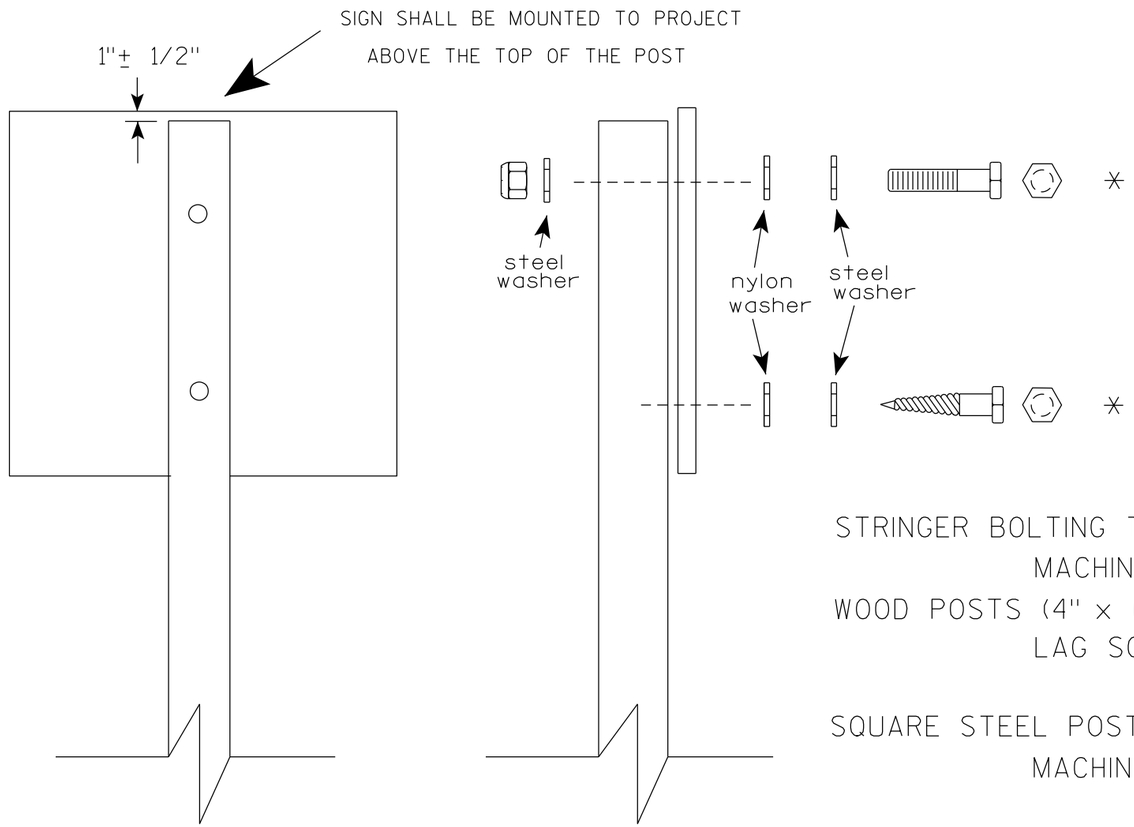

Nuts, bolts and lags used for mounting signs shall have hexagonal heads and shall be either :

a. Hot dip galvanized in accordance with ASTM Designation: A 153, Class D, or SC 3

b. Electro-galvanized in accordance with ASTM Designation : B 633, TYPE III, SC 3.

Threads on bolts and nuts shall be manufactured with sufficient allowance for the cadmium plate or galvanized coating to permit the nuts to run freely on the bolts.

STRINGER BOLTING TO ALUMINUM SIGNS (SEE SIGN PLATE A4-18)

MACHINE BOLTS - 5/16" X 1-3/4" Length w/ lock nuts

WOOD POSTS (4" x 6")

LAG SCREWS - 3/8" X 3" (NO STRINGERS ON BACK OF SIGN)
3/8" X 4" (STRINGERS ON BACK OF SIGN)

SQUARE STEEL POSTS (2" x 2")

MACHINE BOLTS - 3/8" X 3-1/4" Length w/ nuts (NO STRINGER ON BACK OF SIGN)
3/8" X 5" Length w/ nuts (STRINGERS ON BACK OF SIGN)

RIVETS - 9/32 " (6605-9-6) BULB-TITE, TRI-FOLD, ALUMINUM BODY/MANDREL
O.D. FLANGE .720-.765 INCH, GRIP RANGE .042-.375 INCH

WASHERS (ALL POSTS) -

1-1/4" O.D. X 3/8" I.D. X 1/16" STEEL
1-1/4" O.D. X 3/8" I.D. X .080 NYLON

* Two different fastening systems are shown for illustration purposes. On any individual sign, either one or the other system shall be used. Actual number of fasteners per sign varies with the sign area, but normally there are two. For a single post installation, all signs greater than 9 sq. ft. require the use of 3 fasteners.

ATTACHMENT OF SIGNS TO POSTS

WISCONSIN DEPT OF TRANSPORTATION

APPROVED Matthew R Rauch
for State Traffic Engineer

DATE 4/1/2020 PLATE NO. A4-8.9

TELESCOPIC TUBING ANCHORS
TWO PIECE SYSTEM

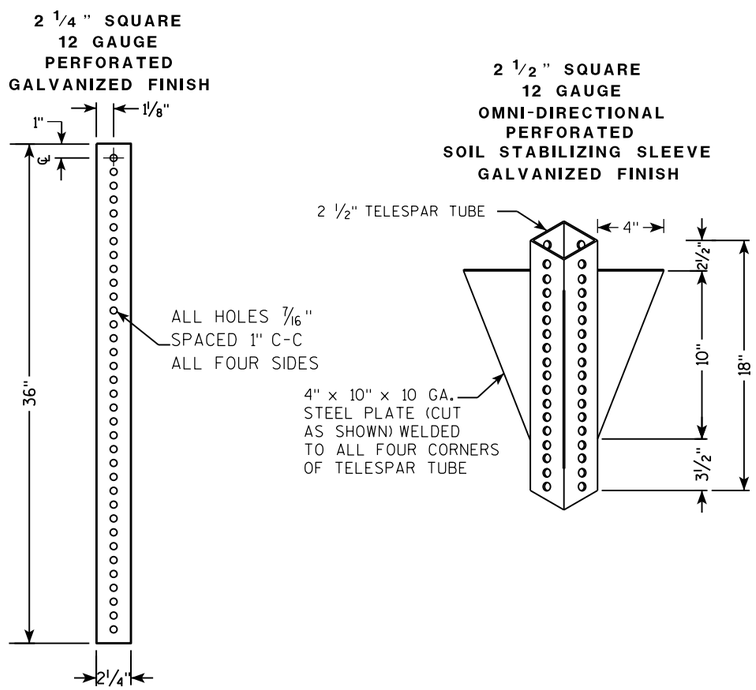

DETAIL OF TUBULAR STEEL SIGN POST
(IN POURED CONCRETE OR ASPHALT)

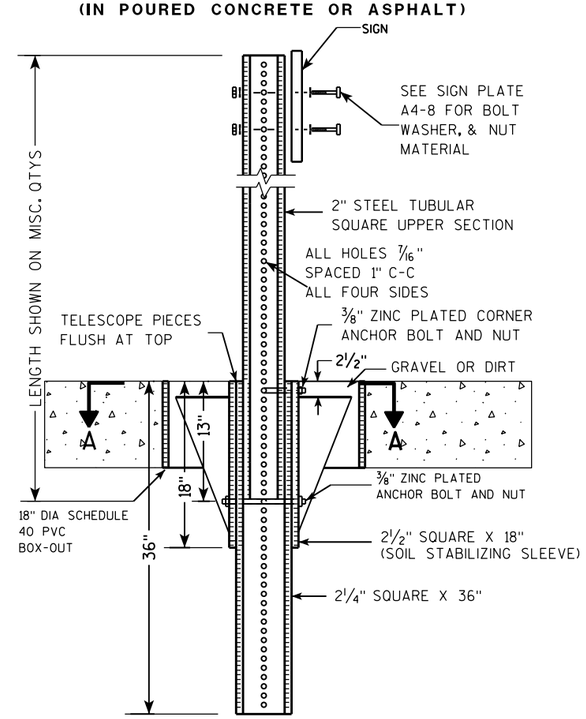

DETAIL OF TUBULAR STEEL SIGN POST
(IN LOCATIONS OTHER THAN POURED CONCRETE OR ASPHALT)

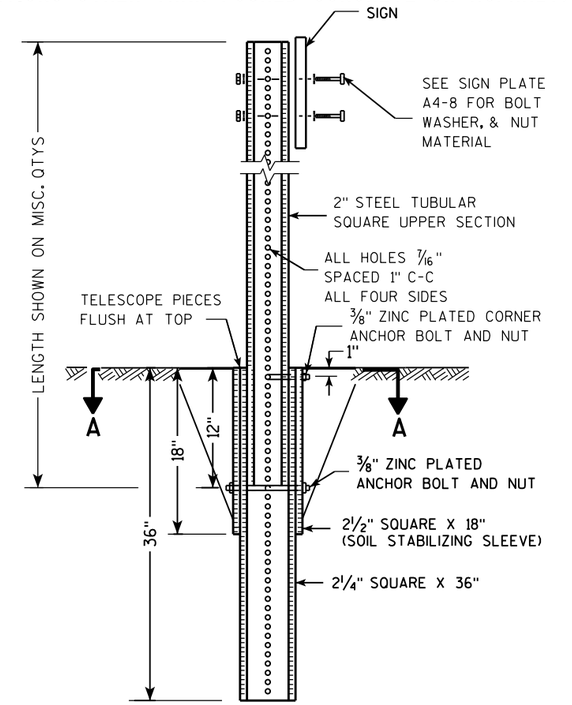

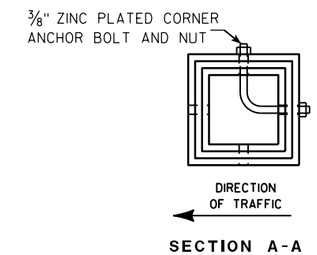

SECTION A-A

Area of Sign Installation (Sq. Ft.)	Number of Required Posts
9 or less	1
Greater than 9 less than or equal to 18	2
Greater than 18 less than or equal to 27	3

Signs wider than 3 feet or larger than 9 sq. ft shall be mounted on multiple posts (see above table).

TUBULAR STEEL
SIGN POST
A4-9

WISCONSIN DEPT OF TRANSPORTATION

APPROVED Matthew R Rauch
for State Traffic Engineer

DATE 2/05/15 PLATE A4-9.9

7

7

PROJECT NO:	HWY:	COUNTY:		SHEET NO:	E

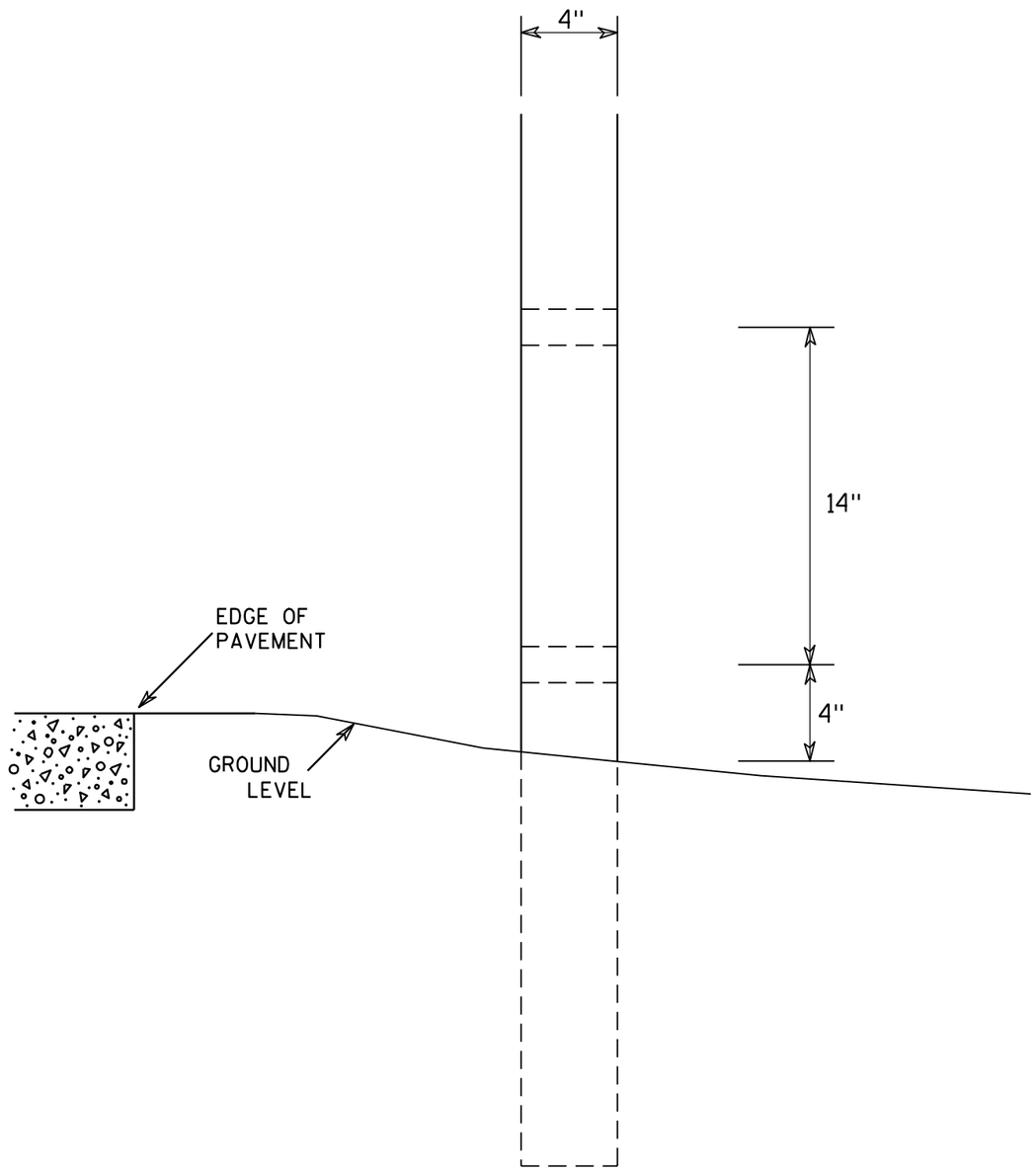

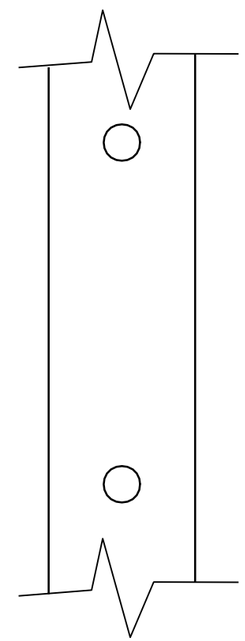

SIDE VIEW

GENERAL NOTES

1. All 4 x 6 Wood Posts shall be modified by having two 1½" diameter holes drilled perpendicular to the roadway centerline.

4 X 6 WOOD POST MODIFICATIONS

WISCONSIN DEPT OF TRANSPORTATION

APPROVED Chester J Spang for State Traffic Engineer

DATE 3/27/97 PLATE NO. A4-11.2

PROJECT NO:	HWY:	COUNTY:		SHEET NO: 154	E

BANDING

SINGLE SIGN

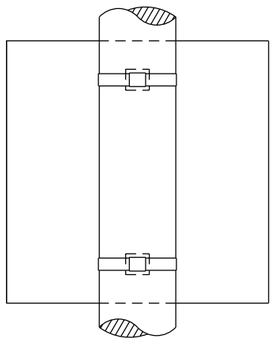

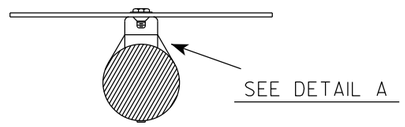

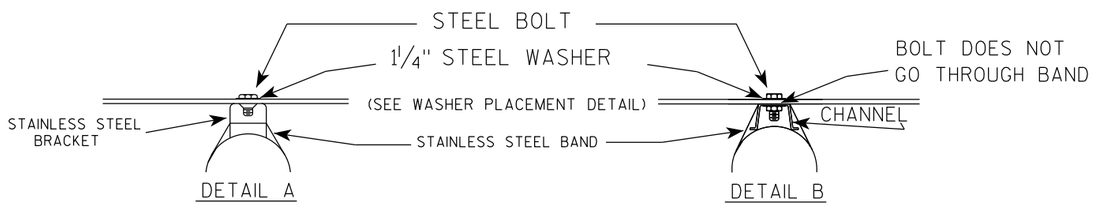

WASHER PLACEMENT

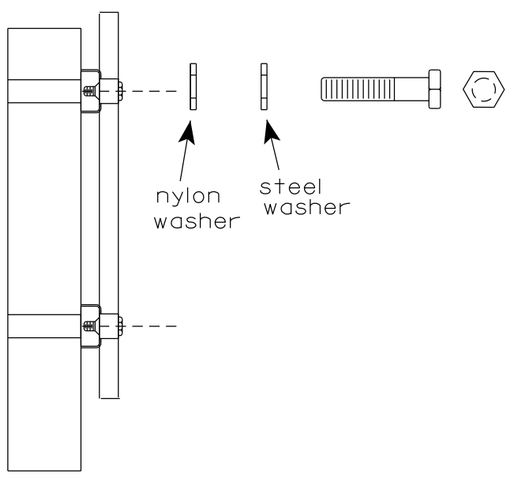

WASHERS (ALL POSTS) -
1-1/4" O.D. X 3/8" I.D. X 1/16" STEEL
1-1/4" O.D. X 3/8" I.D. X .080 NYLON
FOR ALL TYPE H SIGNS

GENERAL NOTES

1. Any sign over 3 feet in width shall use the V-Block banding method. See A5-10 standard plate.
2. Signs 3 feet or greater in height shall have three bracket bands installed. Signs less than 3 feet in height shall have two bracket bands installed.
3. Banding and assembly bracket shall be stainless steel. All bands shall be 3/4" in width and 0.025" thickness.
4. ALL SIGN MOUNTING BOLTS AND WASHERS SHALL BE EITHER:
   a. Hot dip or mechanically galvanized in accordance with ASTM Designation: A 153, Class D
   b. Electro-galvanized in accordance with ASTM designation: B 633, Type III, SC 3

"J" ASSEMBLY

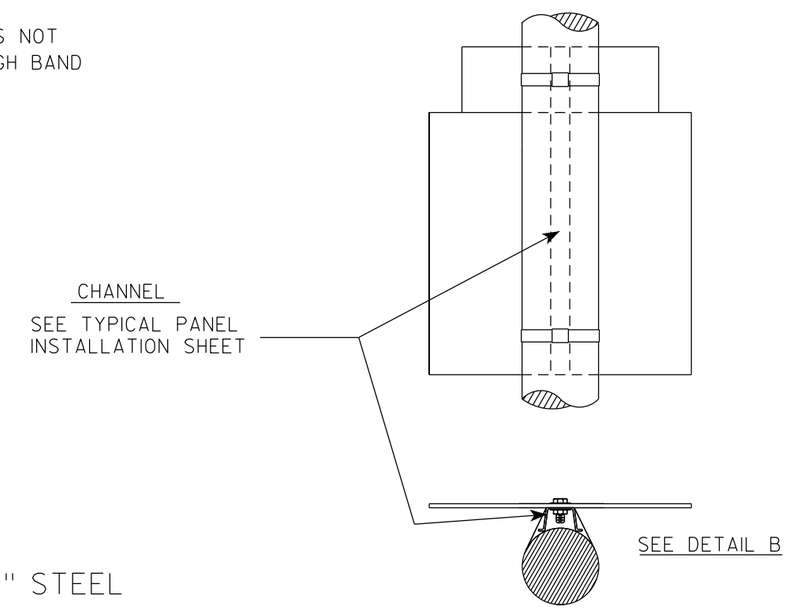

STANDARD SIGN
SIGN BANDING DETAILS

WISCONSIN DEPT OF TRANSPORTATION

APPROVED Matthew R Rauch for State Traffic Engineer

DATE 6/10/19 PLATE NO. A5-9.4

PROJECT NO:	HWY:	COUNTY:		SHEET NO: 155	E

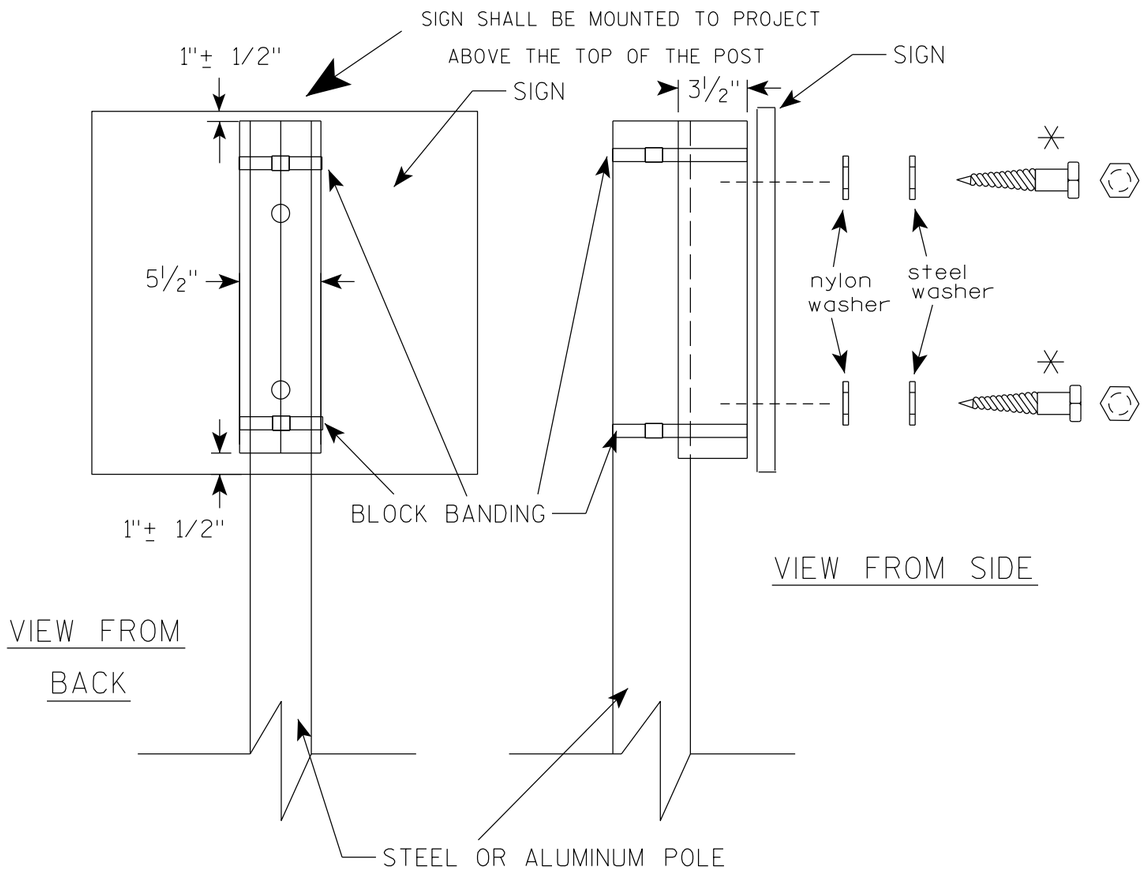

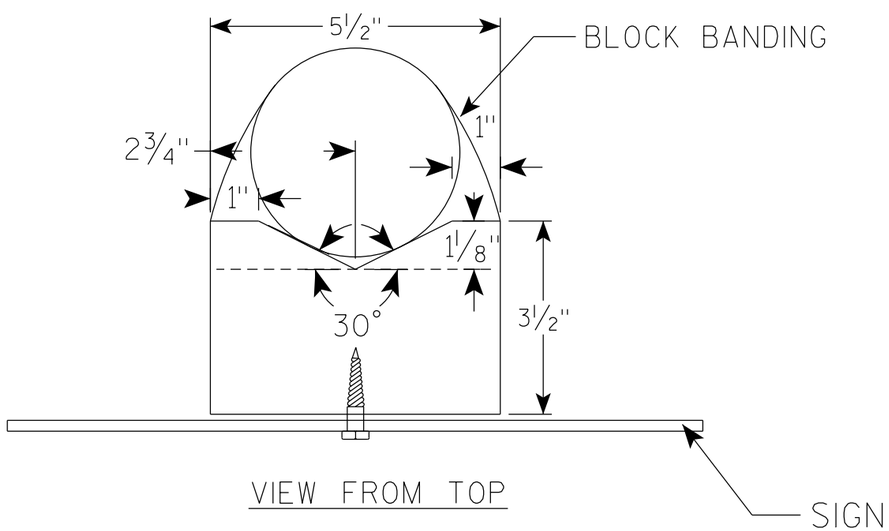

GENERAL NOTES

1. WOOD 4"X6" POST MATERIAL SHALL CONFORM TO 507.2.2 OF THE WisDOT STANDARD SPECIFICATIONS
2. BLOCK BANDING AND CLIPS SHALL BE STAINLESS STEEL, 3/4" WIDTH AND 0.025" THICKNESS
3. SIGNS 3' OR GREATER IN HEIGHT SHALL UTILIZE 3 BLOCK BANDS. SIGNS UNDER 3' IN HEIGHT SHALL UTILIZE 2 BLOCK BANDS
4. ACTUAL NUMBER OF FASTENERS PER SIGN VARIES WITH THE SIGN AREA, BUT NORNALLY THERE ARE TWO. FOR SIGNS GREATER THAN 9 S.F. 3 FASTENERS SHALL BE USED.
5. ALL SIGN MOUNTING BOLTS AND WASHERS SHALL BE EITHER:
   a. Hot dip or mechanically galvanized in accordance with ASTM Designation: A 153, Class D
   b. Electro-galvanized in accordance with ASTM Designation : B 633, TYPE III, SC 3
6. ALL BOLTS SHALL HAVE HEXAGONAL HEADS.
7. STEEL WASHERS SHALL BE 1 1/4" O.D. X 3/8" I.D. X 1/16"
8. NYLON WASHERS SHALL BE 1 1/4" O.D. X 3/8" I.D. X .080 FOR TYPE H OR TYPE F FACE SIGN

✳ LAG BOLTS SHALL BE 3/8" X 2 1/2"

7

7

BLOCK BANDING DETAIL
(V-BLOCK OPTION)

WISCONSIN DEPT OF TRANSPORTATION

APPROVED Matthew R Rauch
for State Traffic Engineer

DATE 4/19/2022 PLATE NO. A5-10.3

PROJECT NO:				SHEET NO: 156	E

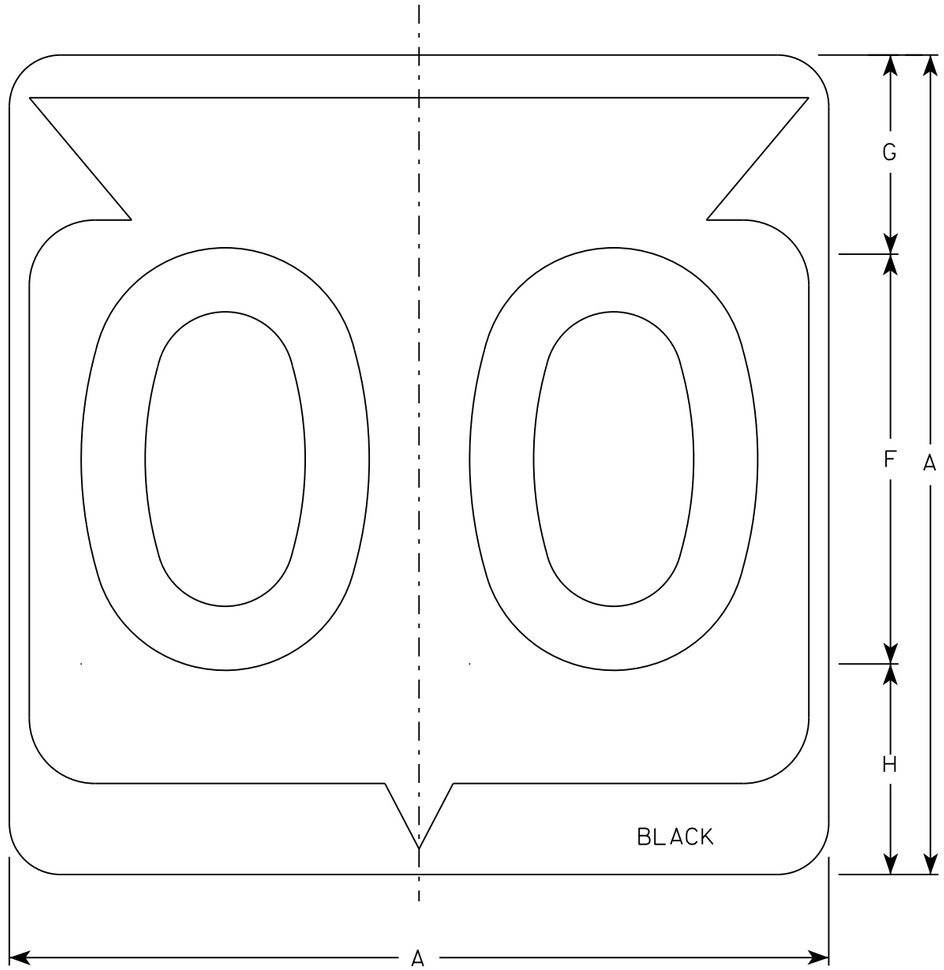

M1-6

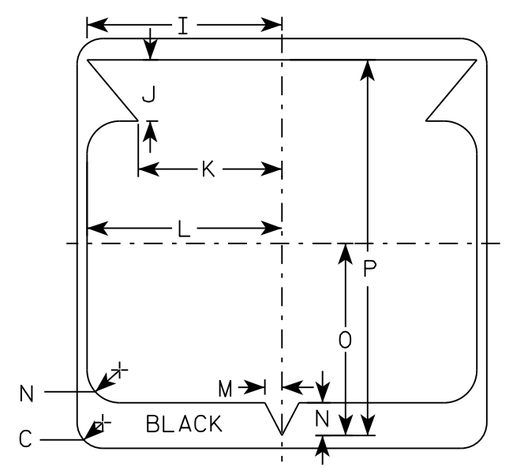

NOTES

1. Sign is Type II - Type H Reflective
2. Color:
   Background - White
   Message - Black
3. Message Series - D except 3 number signs Series C
4. Corners may be square or rounded when base material is plywood but borders shall be rounded as shown. When base material is metal, the corners and borders shall be rounded.

SIZE	A	B	C	D	E	F	G	H	I	J	K	L	M	N	O	P	Q	R	S	T	U	V	W	X	Y	Z	Area sq. ft.
1																											
2	24		1 1/2			12	5 1/2	6 1/2	10 1/4	2 1/2	8 7/8	11 1/2	1	1 7/8	11 1/4	21 7/8											4.0
3	36		2 1/4			18	8 3/4	9 1/4	15 3/8	5 3/8	12 5/8	17 1/8	1 1/2	2 7/8	16 7/8	33											9.0
4	36		2 1/4			18	8 3/4	9 1/4	15 3/8	5 3/8	12 5/8	17 1/8	1 1/2	2 7/8	16 7/8	33											9.0
5	36		2 1/4			18	8 3/4	9 1/4	15 3/8	5 3/8	12 5/8	17 1/8	1 1/2	2 7/8	16 7/8	33											9.0

STATE ROUTE MARKER
M1-6 FOR ASSEMBLIES

WISCONSIN DEPT OF TRANSPORTATION

APPROVED Matthew R Rauch
for State Traffic Engineer

DATE 3/16/18 PLATE NO. M1-6.10

PROJECT NO: | HWY: | COUNTY: | SHEET NO: 157 | E

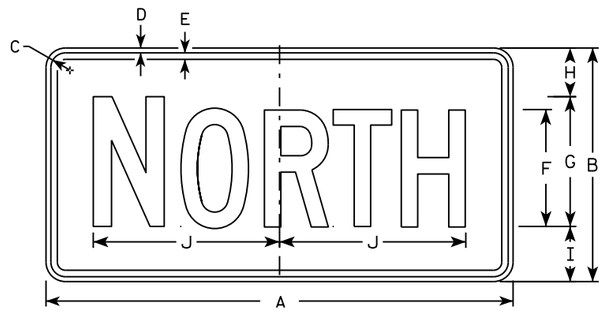

M3-1
MM3-1
MP3-1

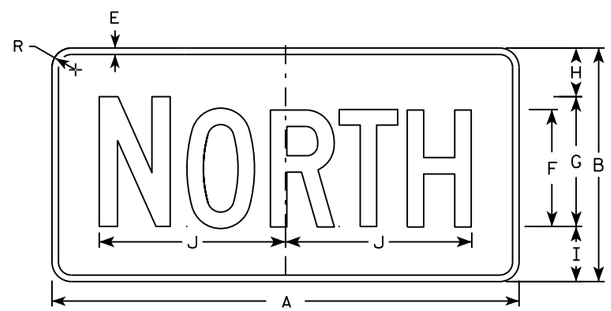

MB3-1
MK3-1
MN3-1

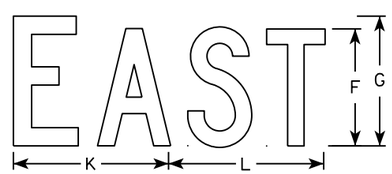

M3-2
MM3-2
MP3-2

MB3-2
MK3-2
MN3-2

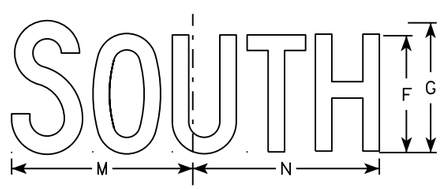

M3-3
MM3-3
MP3-3

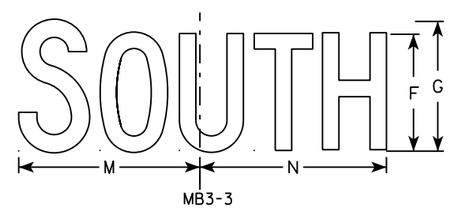

MB3-3
MK3-3
MN3-3

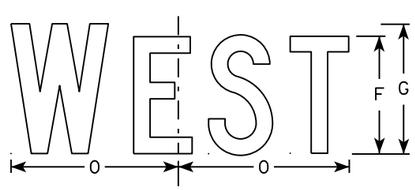

M3-4
MM3-4
MP3-4

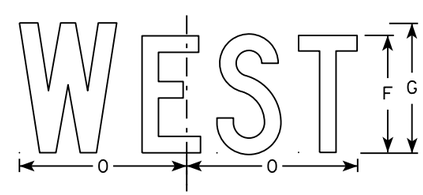

MB3-4
MK3-4
MN3-4

NOTES

1. All Signs Type II - Type H
2. Color:
   Background - See note 5
   Message - See note 5
3. Message Series - C
4. Corners may be square or rounded when base material is plywood but borders shall be rounded as shown. When base material is metal, the corners and borders shall be rounded.
5. M3-1 thru M3-4 Background - White
   Message - Black
   MB3-1 thru MB3-4 Background - Blue
   Message - White
   MK3-1 thru MK3-4 Background - Green
   Message - White
   MM3-1 thru MM3-4 Background - White
   Message - Green
   MN3-1 thru MN3-4 Background - Brown
   Message - White
   MP3-1 thru MP3-4 Background - White
   Message - Blue
6. Note the first letter of each direction is larger than the remainder of the message.

SIZE	A	B	C	D	E	F	G	H	I	J	K	L	M	N	O	P	Q	R	S	T	U	V	W	X	Y	Z	Area sq. ft.
1																											
2	24	12	1 1/8	3/8	3/8	6	7	2 1/4	2 3/4	10 1/4	7 7/8	8 3/8	10 1/4	9 3/4	8 3/4			1 1/2									2.00
3	36	18	1 1/8	3/8	1/2	9	10	3 3/4	4 1/4	14 3/8	12	12 1/8	14	14 1/8	13			1 1/2									4.5
4	36	18	1 1/8	3/8	1/2	9	10	3 3/4	4 1/4	14 3/8	12	12 1/8	14	14 1/8	13			1 1/2									4.5
5	36	18	1 1/8	3/8	1/2	9	10	3 3/4	4 1/4	14 3/8	12	12 1/8	14	14 1/8	13			1 1/2									4.5

STANDARD SIGNS
M3-1 thur M3-4
SERIES

WISCONSIN DEPT OF TRANSPORTATION

APPROVED Matthew R Rauch
for State Traffic Engineer

DATE 10/15/15 PLATE NO M3-1.14

PROJECT NO: | HWY: | COUNTY: | SHEET NO: | E

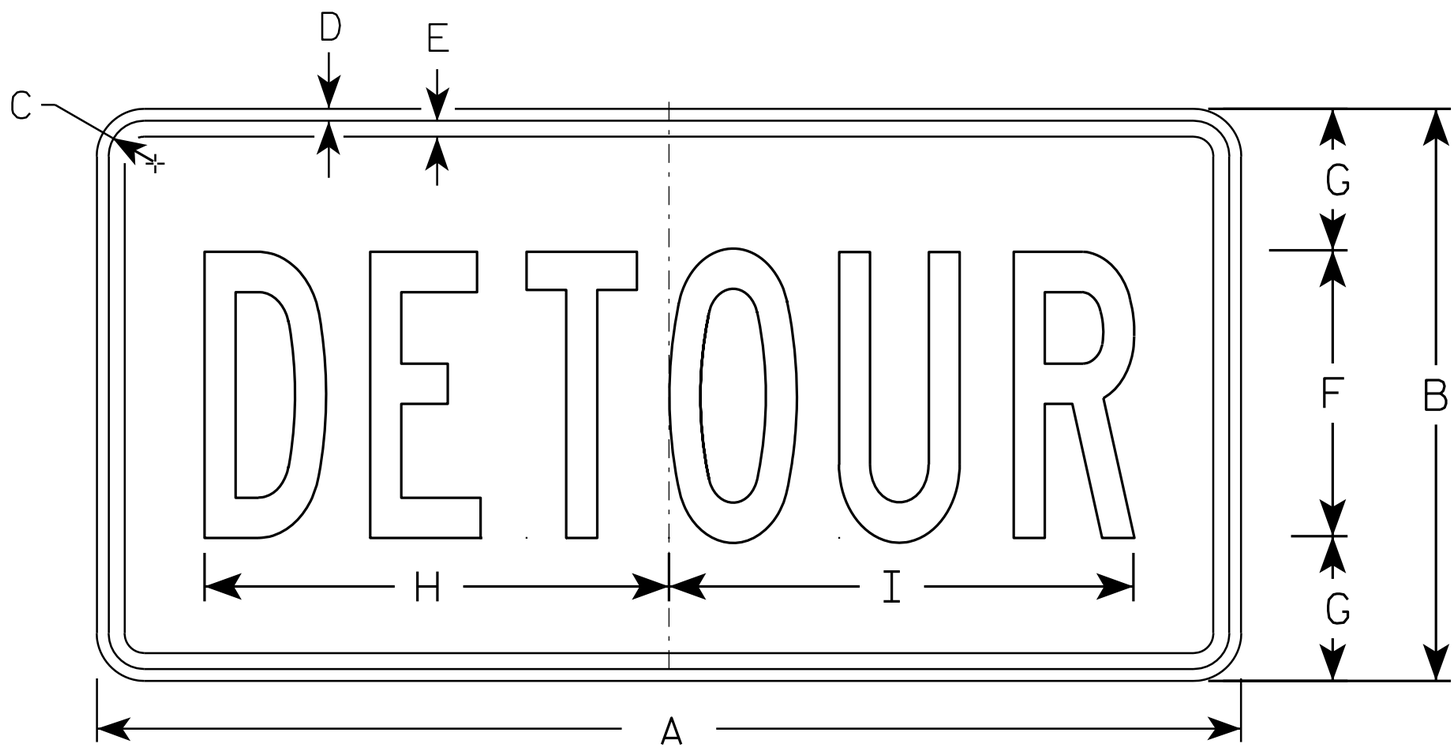

M4-8

NOTES

1. Sign is Type II - Type F Reflective - reference WIS DOT Standard Specification for HIGHWAY and STRUCTURE CONSTRUCTION latest edition.
2. Color:
   Background - Orange
   Message - Black
3. Message Series - B
4. Corners may be square or rounded when base material is plywood but borders shall be rounded as shown. When base material is metal, the corners and borders shall be rounded.

SIZE	A	B	C	D	E	F	G	H	I	J	K	L	M	N	O	P	Q	R	S	T	U	V	W	X	Y	Z	Area sq. ft.
1																											
2	24	12	1 1/8	3/8	3/8	6	3	10	10 1/4																		2.0
3	36	18	1 1/8	3/8	1/2	9	4 1/2	14 5/8	14 1/2																		4.5
4																											
5																											

STANDARD SIGN
M4-8

WISCONSIN DEPT OF TRANSPORTATION

APPROVED Matthew R Rauch
for State Traffic Engineer

DATE 11/10/10 PLATE NO. M4-8.2

PROJECT NO: | HWY: | COUNTY: | SHEET NO: 159 | E

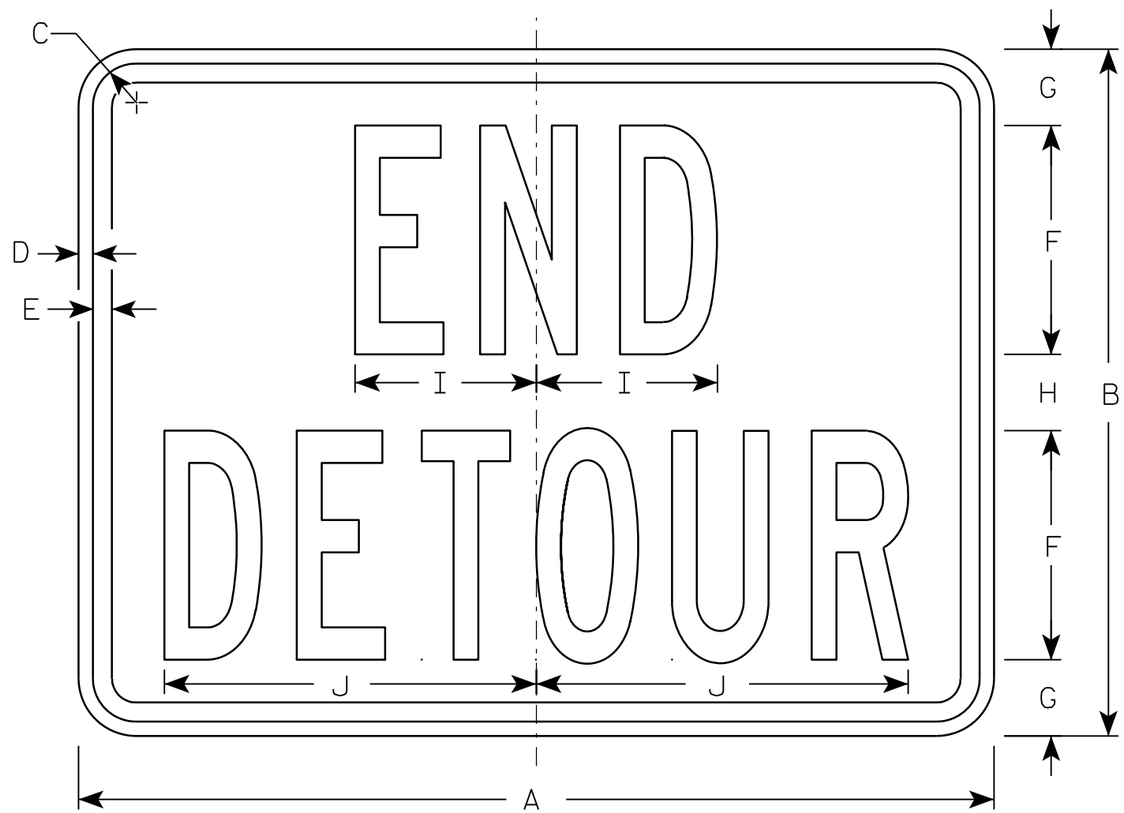

M4-8A

NOTES

1. Sign is Type II - Type F Reflective - reference WIS DOT Standard Specification for HIGHWAY and STRUCTURE CONSTRUCTION latest edition.
2. Color:
   Background - Orange
   Message - Black
3. Message Series - B
4. Corners may be square or rounded when base material is plywood but borders shall be rounded as shown. When base material is metal, the corners and borders shall be rounded.

SIZE	A	B	C	D	E	F	G	H	I	J	K	L	M	N	O	P	Q	R	S	T	U	V	W	X	Y	Z	Area sq. ft.
1																											
2	24	18	1 1/8	3/8	1/2	6	2	2	4 3/4	9 3/4																	3.0
3	30	24	1 1/8	3/8	1/2	8	2 1/2	3	6 3/4	13																	5.0
4																											
5																											

STANDARD SIGN
M4-8A

WISCONSIN DEPT OF TRANSPORTATION

APPROVED Matthew R Rauch
for State Traffic Engineer

DATE 3/9/11 PLATE NO. M4-8A.2

PROJECT NO: | HWY: | COUNTY: | SHEET NO: 160 | E

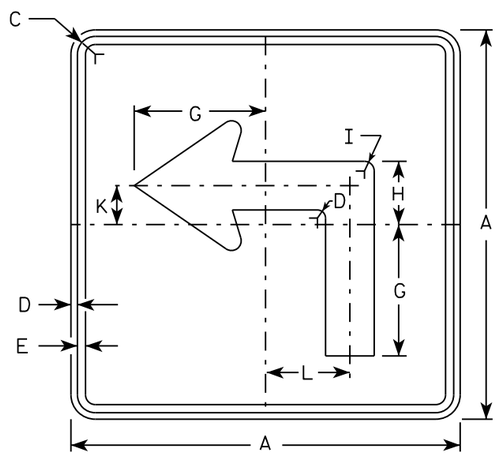

M5-1L
MM5-1L
MO5-1L
MP5-1L

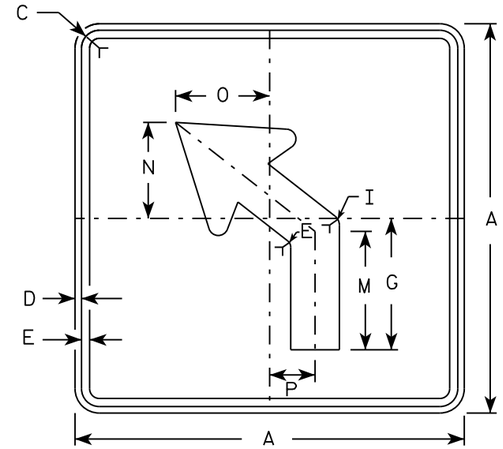

M5-2L
MM5-2L
MO5-2L
MP5-2L

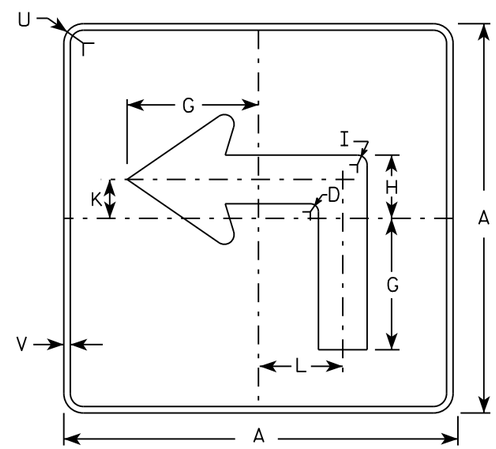

MB5-1L
MK5-1L
MN5-1L
MR5-1L

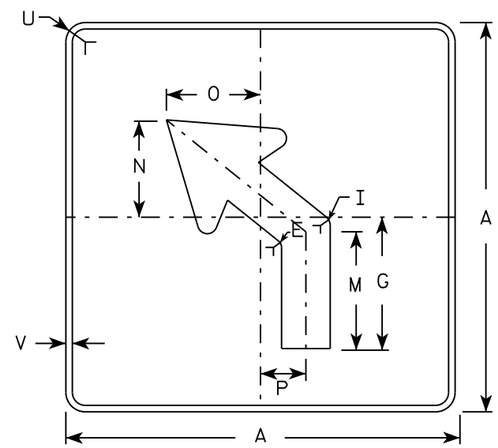

MB5-2L
MK5-2L
MN5-2L
MR5-2L

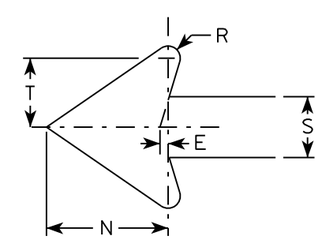

NOTES

1. Signs are Type II - Type H reflective except as shown
2. Color:
   Background - See note 4
   Message - See note 4
3. Corners may be square or rounded when base material is plywood but borders shall be rounded as shown. When base material is metal, the corners and borders shall be rounded.
4. M5-1 and M5-2 Background - White
   Message - Black
   MB5-1 and MB5-2 Background - Blue
   Message - White
   MK5-1 and MK5-2 Background - Green
   Message - White
   MM5-1 and MM5-2 Background - White
   Message - Green
   MN5-1 and MN5-2 Background - Brown
   Message - White
   MO5-1 and MO5-2 Background - Orange - Type F Reflective
   Message - Black
   MP5-1 and MP5-2 Background - White - Type H Reflective
   Message - Blue
   MR5-1 and MR5-2 Background - Brown
   Message - Yellow
5. M5-1R same as M5-1L except arrow points right.
6. M5-2R same as M5-2L except arrow tilts right.

SIZE	A	B	C	D	E	F	G	H	I	J	K	L	M	N	O	P	Q	R	S	T	U	V	W	X	Y	Z	Area sq. ft.
1																											
2	21		1 1/8	3/8	3/8		7	3 3/8	5/8		2 1/8	4 1/2	6 3/8	5 1/4	5	2 1/2		1/2	2 5/8	3	1 1/2	1/2					3.06
3	30		1 3/8	1/2	5/8		10 1/8	4 7/8	7/8		3	6 1/2	9 1/8	7 1/2	7 1/4	3 1/2		3/4	3 3/4	4 1/4	1 7/8	1/2					6.25
4	30		1 3/8	1/2	5/8		10 1/8	4 7/8	7/8		3	6 1/2	9 1/8	7 1/2	7 1/4	3 1/2		3/4	3 3/4	4 1/4	1 7/8	1/2					6.25
5	30		1 3/8	1/2	5/8		10 1/8	4 7/8	7/8		3	6 1/2	9 1/8	7 1/2	7 1/4	3 1/2		3/4	3 3/4	4 1/4	1 7/8	1/2					6.25

STANDARD SIGN
M5-1 & M5-2

WISCONSIN DEPT OF TRANSPORTATION

APPROVED Matthew R Rauch
for State Traffic Engineer

DATE 10/15/15 PLATE NO. M5-1.13

PROJECT NO: | HWY: | COUNTY: | SHEET NO: | E

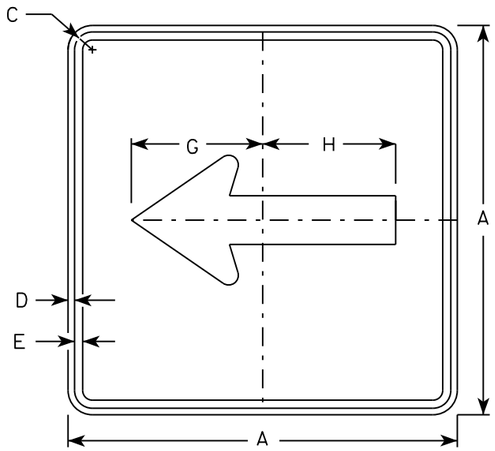

M6-1
MM6-1
MO6-1
MP6-1

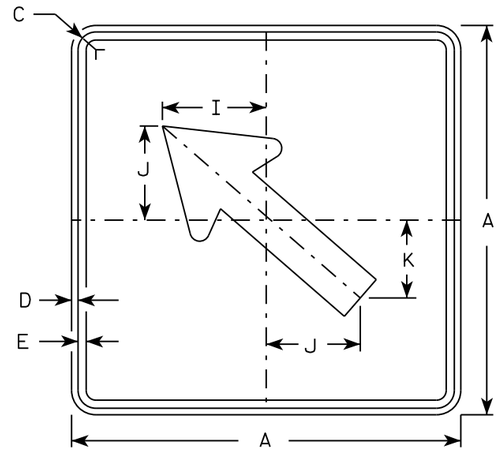

M6-2
MM6-2
MO6-2
MP6-2

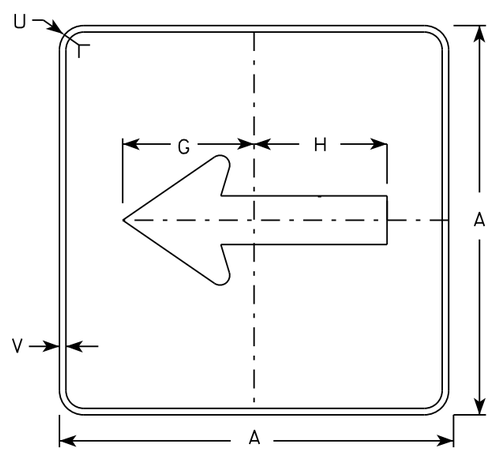

MB6-1
MK6-1
MN6-1
MR6-1

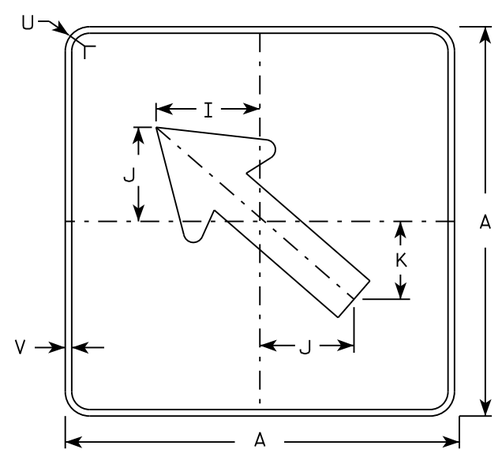

MB6-2
MK6-2
MN6-2
MR6-2

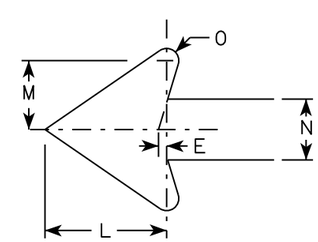

NOTES

1. Signs are Type II - Type H except as Shown
2. Color:
   Background - See note 4
   Message - See note 4
3. Corners may be square or rounded when base material is plywood but borders shall be rounded as shown. When base material is metal, the corners and borders shall be rounded.
4. M6-1 and M6-2 Background - White
   Message - Black
   MB6-1 and MB6-2 Background - Blue
   Message - White
   MK6-1 and MK6-2 Background - Green
   Message - White
   MM6-1 and MM6-2 Background - White
   Message - Green
   MN6-1 and MN6-2 Background - Brown
   Message - White
   MO6-1 and MO6-2 Background - Orange - Type F Reflective
   Message - Black
   MP6-1 and MP6-2 Background - White
   Message - Blue
   MR6-1 and MR6-2 Background - Brown
   Message - Yellow

SIZE	A	B	C	D	E	F	G	H	I	J	K	L	M	N	O	P	Q	R	S	T	U	V	W	X	Y	Z	Area sq. ft.
1																											
2	21		1 1/8	3/8	3/8		7 1/2	7 1/8	5 5/8	5	4 1/4	5 1/4	3	2 5/8	1/2						1 1/2	1/2					3.06
3	30		1 3/8	1/2	5/8		10 3/4	10 1/4	8	7 1/4	6	7 1/2	4 1/4	3 3/4	3/4						1 7/8	1/2					6.25
4	30		1 3/8	1/2	5/8		10 3/4	10 1/4	8	7 1/4	6	7 1/2	4 1/4	3 3/4	3/4						1 7/8	1/2					6.25
5	30		1 3/8	1/2	5/8		10 3/4	10 1/4	8	7 1/4	6	7 1/2	4 1/4	3 3/4	3/4						1 7/8	1/2					6.25

STANDARD SIGN
M6-1 & M6-2
SERIES

WISCONSIN DEPT OF TRANSPORTATION

APPROVED Matthew R Rauch
for State Traffic Engineer

DATE 10/15/15 PLATE 162 M6-1.15

PROJECT NO: | HWY: | COUNTY: | SHEET NO: | E

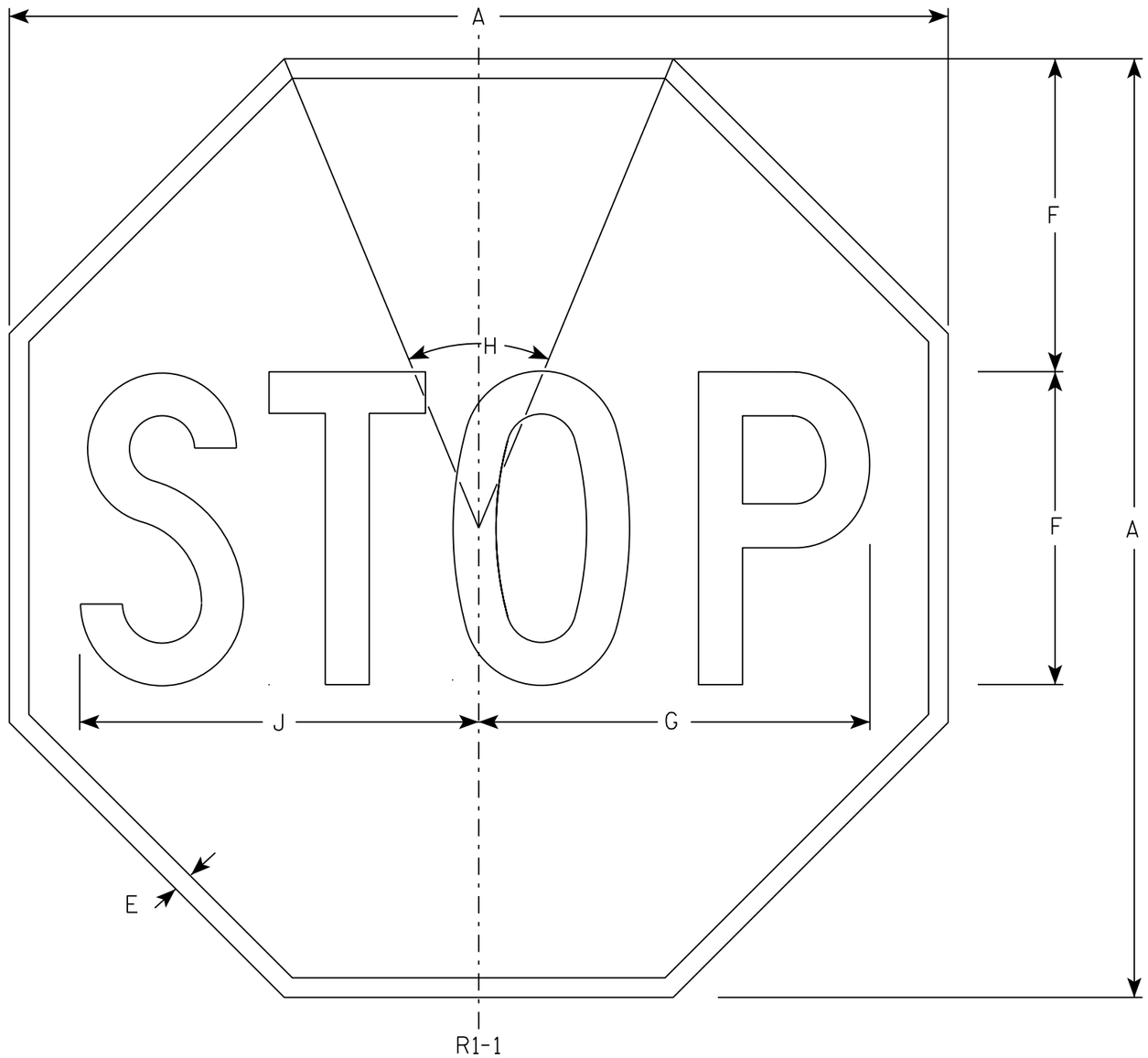

NOTES

1. Sign is Type II - Type H Reflective - reference WIS DOT Standard Specification for HIGHWAY and STRUCTURE CONSTRUCTION latest edition.
2. Color:
   Background - Red
   Message - White
3. Message Series - C

SIZE	A	B	C	D	E	F	G	H	I	J	K	L	M	N	O	P	Q	R	S	T	U	V	W	X	Y	Z	Area sq. ft.
1	30				5/8	10	12 1/2	45°		12 3/4																	5.18
2S	30				5/8	10	12 1/2	45°		12 3/4																	5.18
2M	36				3/4	12	15	45°		15 3/8																	7.46
3	36				3/4	12	15	45°		15 3/8																	7.46
4	48				1	16	20	45°		20 1/2																	13.25
5	48				1	16	20	45°		20 1/2																	13.25
6	18				3/8	6	7 3/4	45°		7 3/4																	1.86
7	12				1/4	4	5	45°		5 1/8																	0.78

STANDARD SIGN
R1-1

WISCONSIN DEPT OF TRANSPORTATION

APPROVED Matthew R Rauch
for State Traffic Engineer

DATE 11/12/15 PLATE NO. R1-1.13

PROJECT NO: | HWY: | COUNTY: | SHEET NO: 163 | E

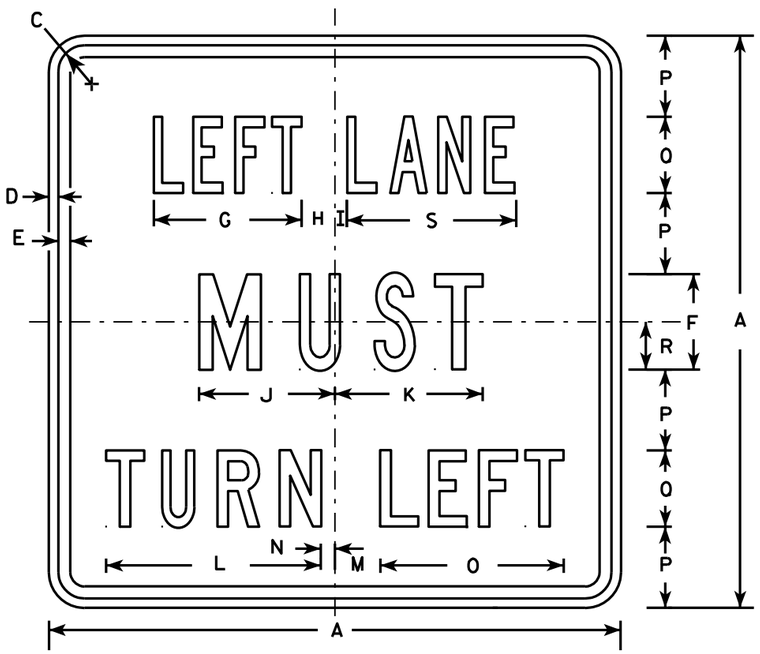

R3-7L

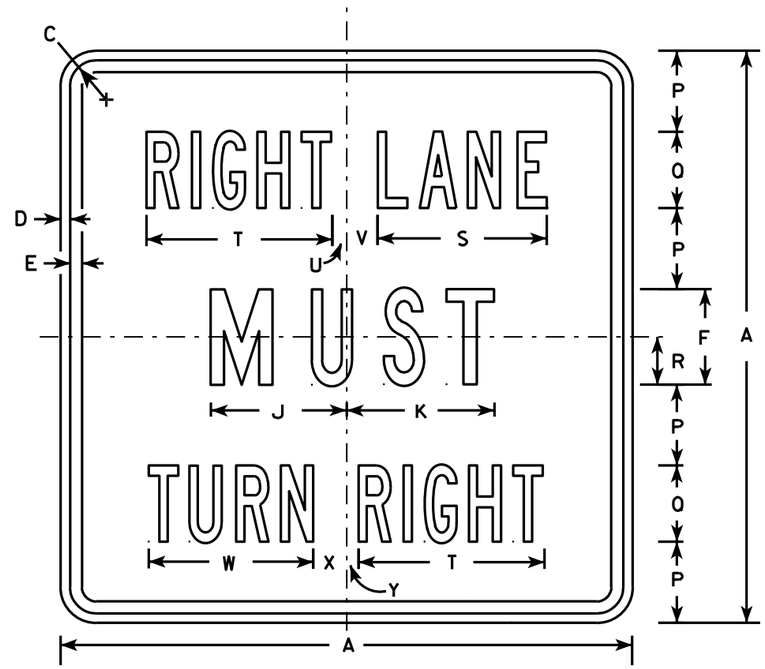

R3-7R

NOTES

1. Sign is Type II - Type H Reflective - reference WIS DOT Standard Specification for HIGHWAY and STRUCTURE CONSTRUCTION latest edition.
2. Color:
   Background - White
   Message - Black
3. Message Series - Line 1 is Series B.
   Line 2 is Series C.
   Line 3 on plate R3-7R is Series B and Series C on plate R3-7L.
4. Corners may be square or rounded when base material is plywood but borders shall be rounded as shown. When base material is metal, the corners and borders shall be rounded.

SIZE	A	B	C	D	E	F	G	H	I	J	K	L	M	N	O	P	Q	R	S	T	U	V	W	X	Y	Z	Area sq. ft.
1	30		1 3/8	1/2	5/8	5	7 3/4	1 3/4	5/8	7 1/8	7 3/4	11 1/4	2 3/8	3/4	9 5/8	4 1/4	4	2 1/2	8 7/8	9 3/4	3/4	1 5/8	8 5/8	1 5/8	5/8		6.25
2S	30		1 3/8	1/2	5/8	5	7 3/4	1 3/4	5/8	7 1/8	7 3/4	11 1/4	2 3/8	3/4	9 5/8	4 1/4	4	2 1/2	8 7/8	9 3/4	3/4	1 5/8	8 5/8	1 5/8	5/8		6.25
2M	30		1 3/8	1/2	5/8	5	7 3/4	1 3/4	5/8	7 1/8	7 3/4	11 1/4	2 3/8	3/4	9 5/8	4 1/4	4	2 1/2	8 7/8	9 3/4	3/4	1 5/8	8 5/8	1 5/8	5/8		6.25
3	36		1 5/8	5/8	3/4	6	9 5/8	2	1 1/8	8 3/4	9	13 1/2	3 7/8	1 1/2	12 1/2	5	5	3	10 5/8	12	7/8	2 1/4	10 5/8	2 1/8	1		9.00
4	48		2 1/4	3/4	1	8	13 1/2	2 3/8	1 1/2	11 1/2	11 7/8	17 3/4	3 5/8	2 1/2	16 3/8	6 1/2	7	4	14 3/8	16 7/8	5/8	3 1/4	15 1/8	2 3/4	1 1/8		16.00
5																											

STANDARD SIGN
R3-7L & R3-7R

WISCONSIN DEPT OF TRANSPORTATION

APPROVED Matthew R Rauch
for State Traffic Engineer

DATE 3/18/2011 PLATE NO. R3-7.3

PROJECT NO: | HWY: | COUNTY: | SHEET NO: 164 | E

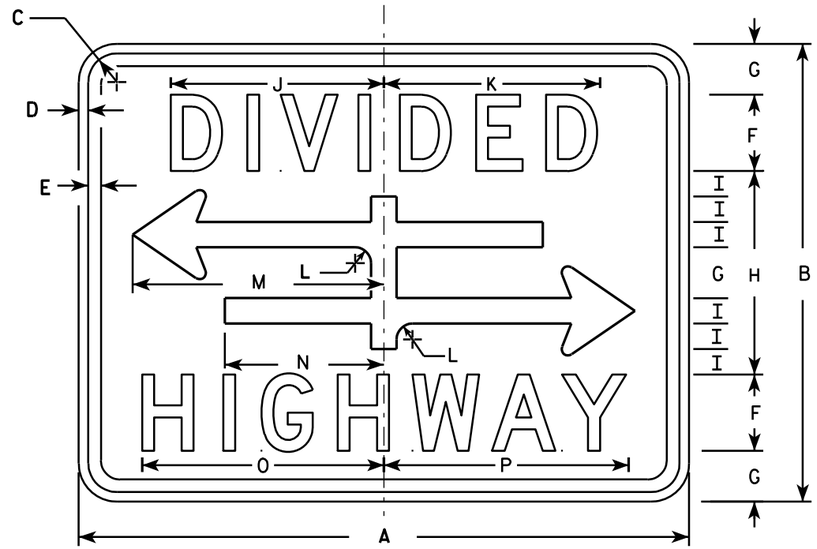

R6-3

NOTES

1. Sign is Type II - Type H Reflective - reference WIS DOT Standard Specification for HIGHWAY and STRUCTURE CONSTRUCTION latest edition.
2. Color:
   Background - White
   Message - Black
3. Message Series - D
4. Corners may be square or rounded when base material is plywood but borders shall be rounded as shown. When base material is metal, the corners and borders shall be rounded.

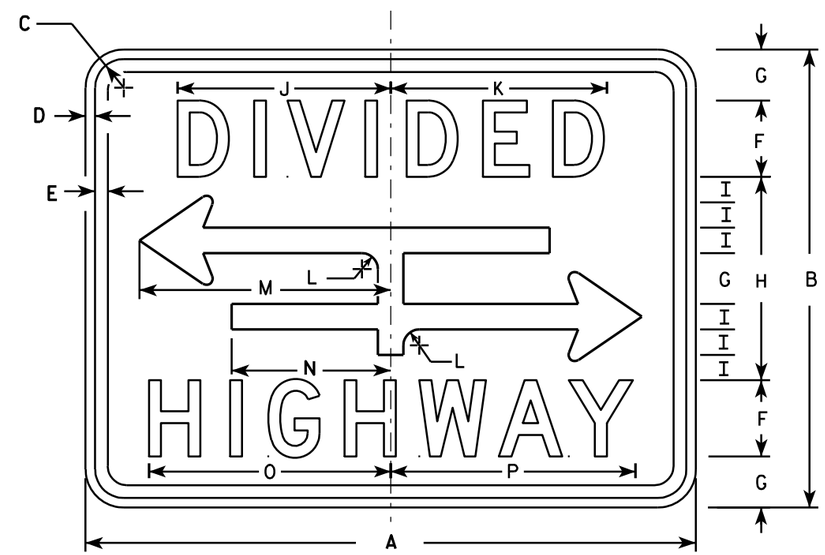

R6-3A

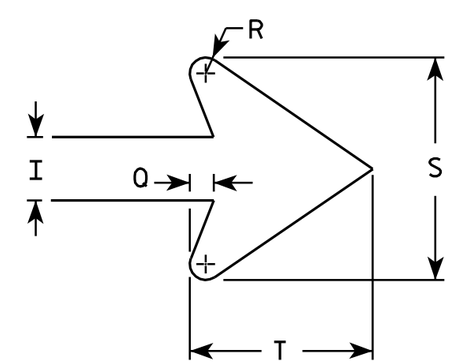

ARROW DETAIL

SIZE	A	B	C	D	E	F	G	H	I	J	K	L	M	N	O	P	Q	R	S	T	U	V	W	X	Y	Z	Area sq. ft.
1	24	18	1 1/8	3/8	3/8	3	2	8	1	8 3/8	8 1/2	5/8	9 7/8	6 1/4	9 1/2	9 5/8	3/8	1/4	3 1/2	2 3/4							3.0
2S	30	24	1 1/8	3/8	1/2	4	2 5/8	10 3/4	1 3/8	10 1/2	10 5/8	7/8	12 1/2	7 7/8	12 1/4	12 3/8	1/2	3/8	4 5/8	3 5/8							5.0
2M	30	24	1 1/8	3/8	1/2	4	2 5/8	10 3/4	1 3/8	10 1/2	10 5/8	7/8	12 1/2	7 7/8	12 1/4	12 3/8	1/2	3/8	4 5/8	3 5/8							5.0
3																											
4																											
5																											

STANDARD SIGN
R6-3 & R6-3A

WISCONSIN DEPT OF TRANSPORTATION

APPROVED Matthew R Rauch
for State Traffic Engineer

DATE 3/31/2011 PLATE NO. R6-3.5

PROJECT NO:

SHEET NO: 165 E

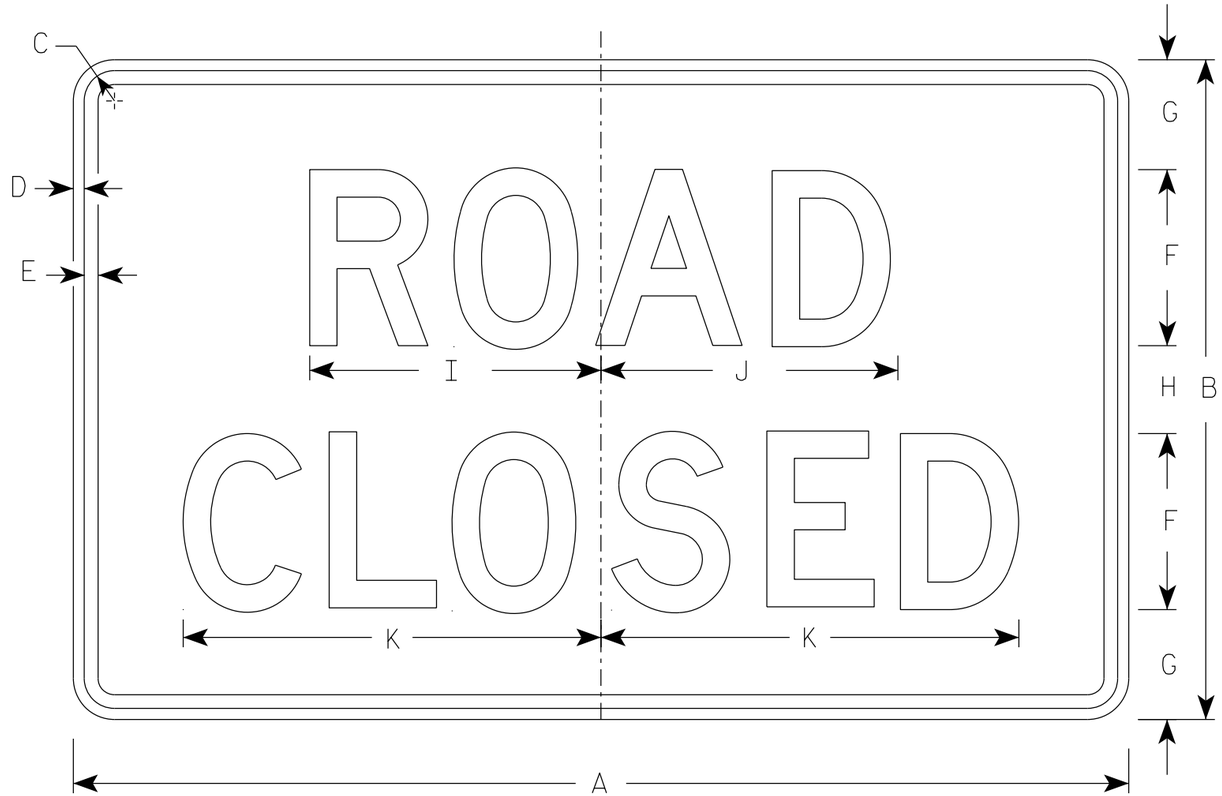

R11-2

NOTES

1. Sign is Type II - Type H Reflective
2. Color:
   Background - White
   Message - Black
3. Message Series - D
4. Corners may be square or rounded when base material is plywood but borders shall be rounded as shown. When base material is metal, the corners and borders shall be rounded.
5. Modify the message as required.

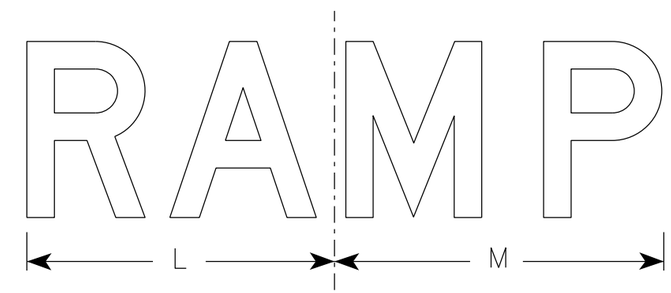

R11-2R

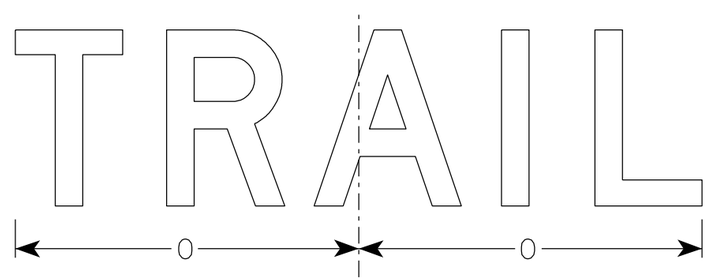

R11-2T

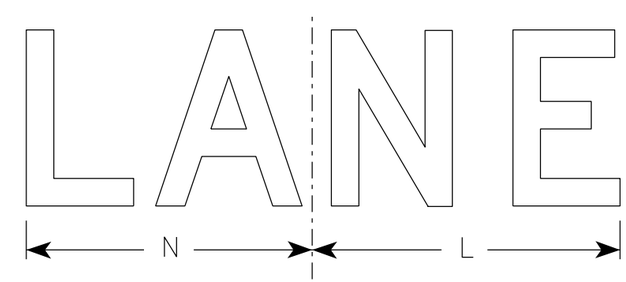

R11-2L

SIZE	A	B	C	D	E	F	G	H	I	J	K	L	M	N	O	P	Q	R	S	T	U	V	W	X	Y	Z	Area sq. ft.
1																											
2S	48	30	1 3/8	1/2	5/8	8	5	4	13 1/4	13 1/2	19	14	15	13	15 5/8												10.0
2M	48	30	1 3/8	1/2	5/8	8	5	4	13 1/4	13 1/2	19	14	15	13	15 5/8												10.0
3	48	30	1 3/8	1/2	5/8	8	5	4	13 1/4	13 1/2	19	14	15	13	15 5/8												10.0
4	48	30	1 3/8	1/2	5/8	8	5	4	13 1/4	13 1/2	19	14	15	13	15 5/8												10.0
5	48	30	1 3/8	1/2	5/8	8	5	4	13 1/4	13 1/2	19	14	15	13	15 5/8												10.0

STANDARD SIGN
R11-2

WISCONSIN DEPT OF TRANSPORTATION

APPROVED Matthew R Rauch
for State Traffic Engineer

DATE 3/29/2021 PLATE NO. R11-2.11

PROJECT NO: | HWY: | COUNTY: | SHEET NO: E

7

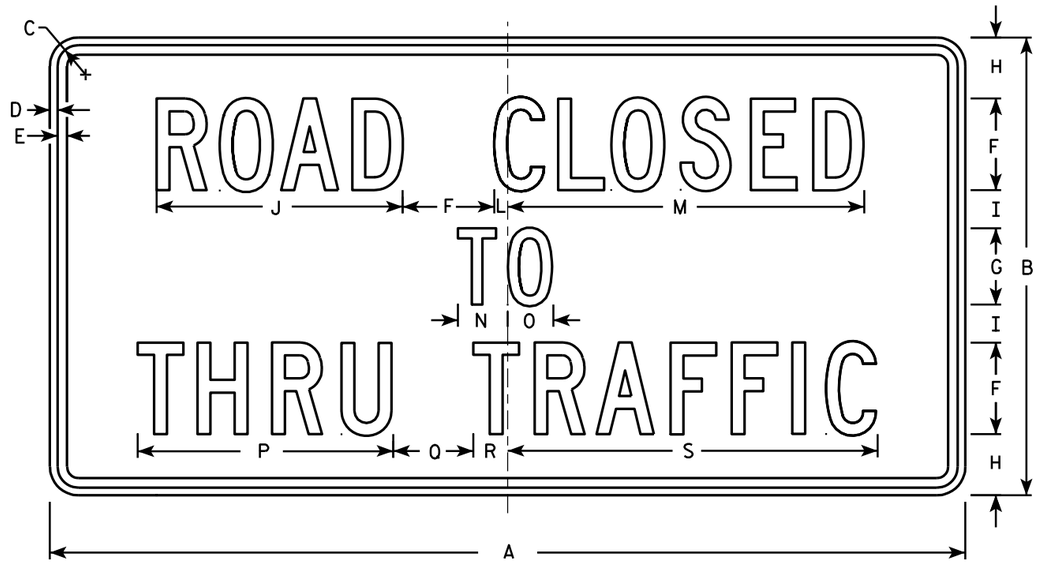

R11-4

NOTES

1. Sign is Type II - Type H Reflective - reference WIS DOT Standard Specification for HIGHWAY and STRUCTURE CONSTRUCTION latest edition.
2. Color:
   Background - White
   Message - Black
3. Message Series - C
4. Corners may be square or rounded when base material is plywood but borders shall be rounded as shown. When base material is metal, the corners and borders shall be rounded.

SIZE	A	B	C	D	E	F	G	H	I	J	K	L	M	N	O	P	Q	R	S	T	U	V	W	X	Y	Z	Area sq. ft.
1																											
2S	60	30	1 3/8	1/2	5/8	6	5	4	2 1/2	16 1/8		7/8	23 3/8	3 1/4	3	16 3/4	5 1/4	2 1/4	24 1/4								12.5
2M	60	30	1 3/8	1/2	5/8	6	5	4	2 1/2	16 1/8		7/8	23 3/8	3 1/4	3	16 3/4	5 1/4	2 1/4	24 1/4								12.5
3																											
4																											
5																											

STANDARD SIGN
R11 - 4

WISCONSIN DEPT OF TRANSPORTATION

APPROVED Matthew R Rauch for State Traffic Engineer

DATE 4/1/11 PLATE NO. R11-4.3

PROJECT NO: | HWY: | COUNTY: | SHEET NO: 167 | E

NOTES

1. Sign is Type II - Type F Reflective
2. Color:
   Background - Orange
   Message - Black
3. Message Series - C
4. Corners may be square or rounded when base material is plywood but borders shall be rounded as shown. When base material is metal, the corners and borders shall be rounded.

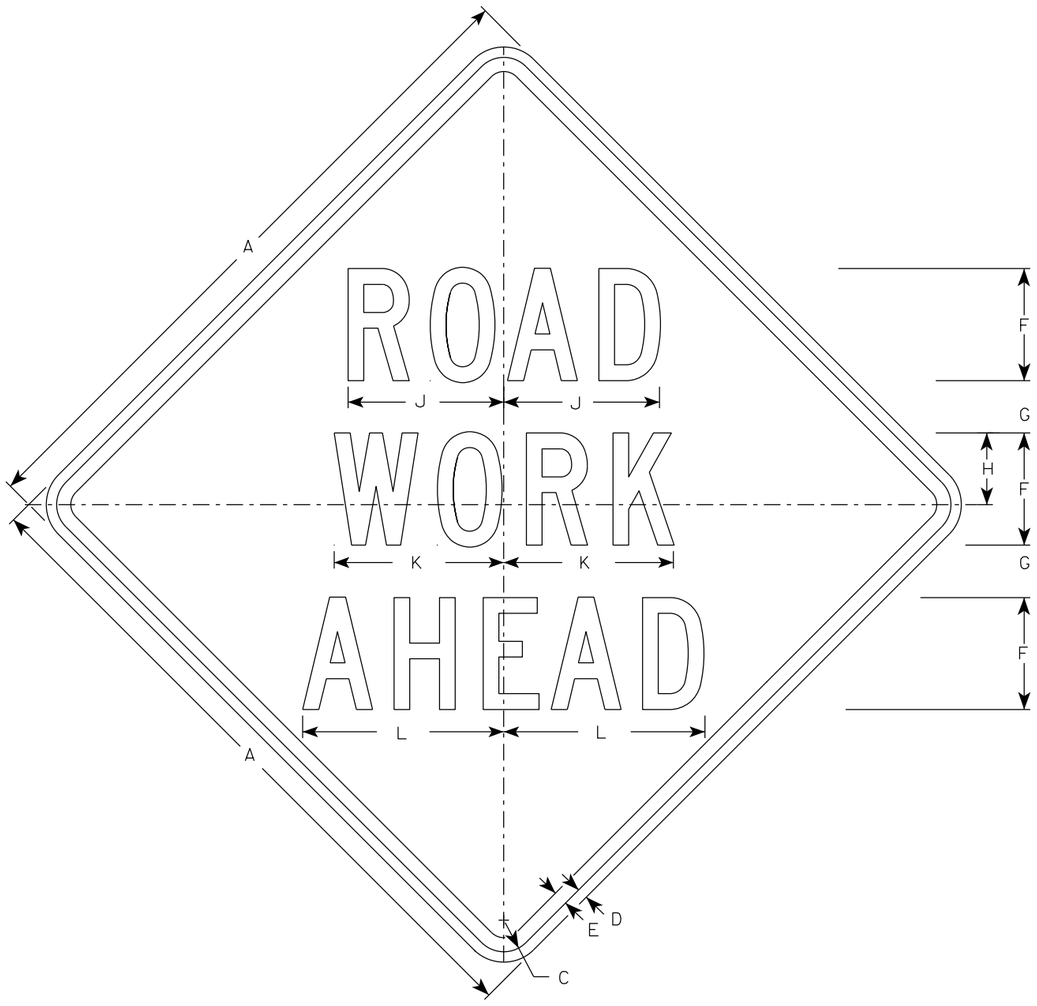

W20-1A

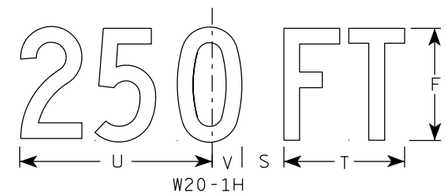

W20-1H

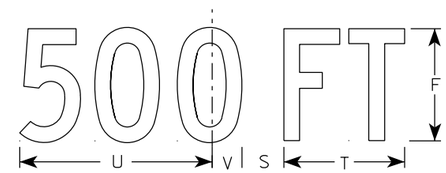

W20-1D

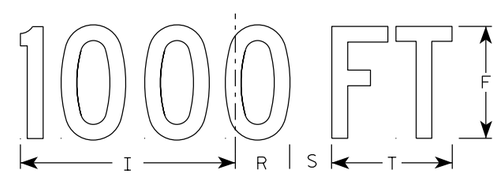

W20-1C

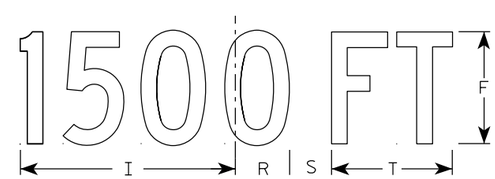

W20-1B

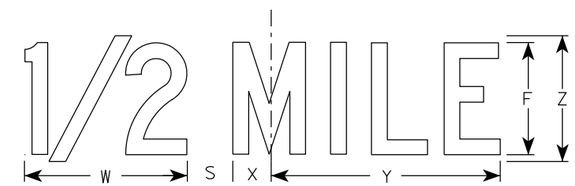

W20-1G

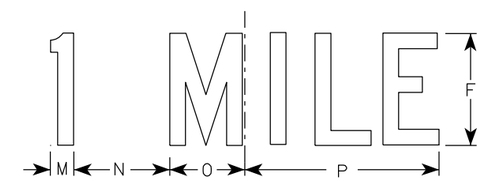

W20-1F

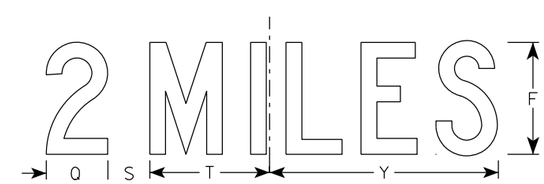

W20-1E

SIZE	A	B	C	D	E	F	G	H	I	J	K	L	M	N	O	P	Q	R	S	T	U	V	W	X	Y	Z	Area sq. ft.
1	36		1 5/8	5/8	3/4	5	2 5/8	3 1/4	10 1/8	7	7 5/8	8 7/8	1 1/8	4 1/2	3 1/2	9	3 1/4	2 1/2	2 1/4	5 5/8	9	1 3/8	8	1 3/4	10 3/4	6	9.0
2S	48		2 1/4	3/4	1	8	3 3/4	5 1/8	15 3/8	11 1/8	12 1/8	14 3/8	1 5/8	6 7/8	5 3/8	13 7/8	4 3/8	3 7/8	3	8 5/8	13 3/4	2 1/8	11 7/8	2 3/4	16 3/8	9	16.0
2M	48		2 1/4	3/4	1	8	3 3/4	5 1/8	15 3/8	11 1/8	12 1/8	14 3/8	1 5/8	6 7/8	5 3/8	13 7/8	4 3/8	3 7/8	3	8 5/8	13 3/4	2 1/8	11 7/8	2 3/4	16 3/8	9	16.0
3	48		2 1/4	3/4	1	8	3 3/4	5 1/8	15 3/8	11 1/8	12 1/8	14 3/8	1 5/8	6 7/8	5 3/8	13 7/8	4 3/8	3 7/8	3	8 5/8	13 3/4	2 1/8	11 7/8	2 3/4	16 3/8	9	16.0
4	48		2 1/4	3/4	1	8	3 3/4	5 1/8	15 3/8	11 1/8	12 1/8	14 3/8	1 5/8	6 7/8	5 3/8	13 7/8	4 3/8	3 7/8	3	8 5/8	13 3/4	2 1/8	11 7/8	2 3/4	16 3/8	9	16.0
5	48		2 1/4	3/4	1	8	3 3/4	5 1/8	15 3/8	11 1/8	12 1/8	14 3/8	1 5/8	6 7/8	5 3/8	13 7/8	4 3/8	3 7/8	3	8 5/8	13 3/4	2 1/8	11 7/8	2 3/4	16 3/8	9	16.0

STANDARD SIGN
W20-1A, B, C, D, E, F, G & H

WISCONSIN DEPT OF TRANSPORTATION

APPROVED Matthew R Rauch
For State Traffic Engineer
DATE 3/25/2020 PLATE NO. W20-1.11

PROJECT NO:

SHEET NO: 168 E

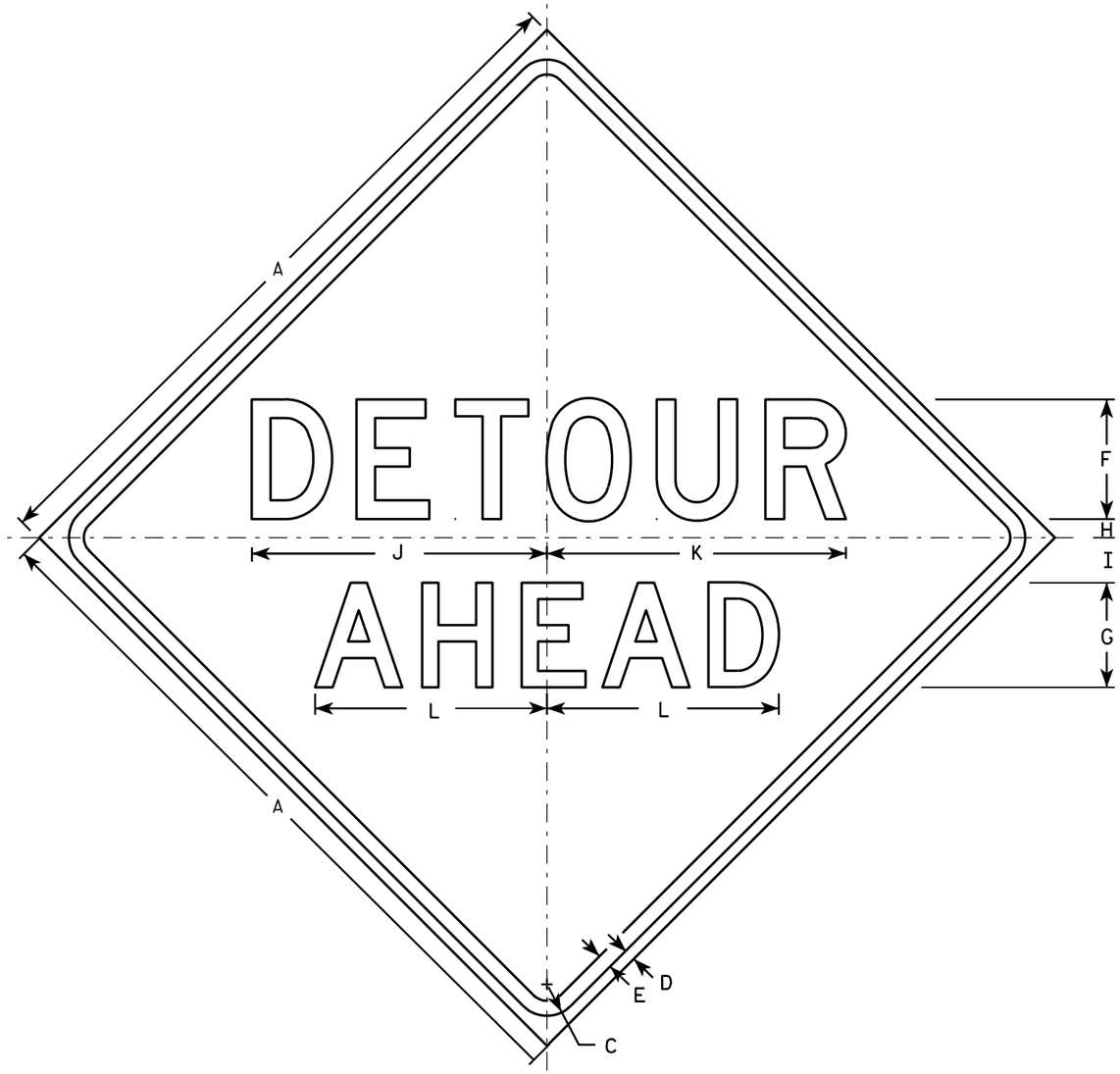

W20-2A

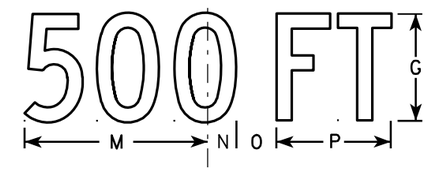

W20-2D

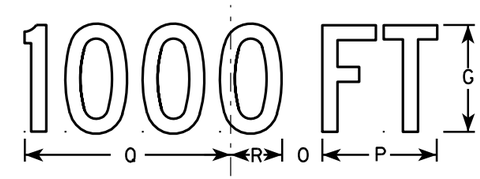

W20-2C

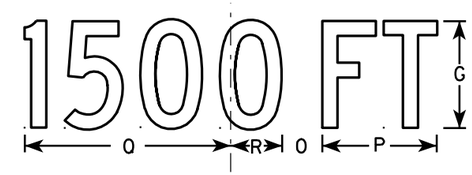

W20-2B

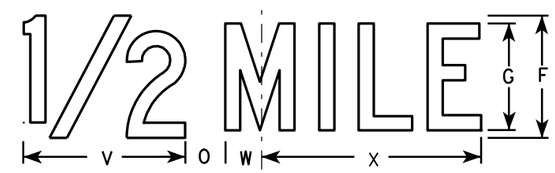

W20-2G

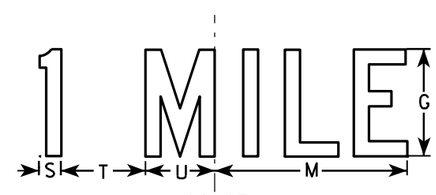

W20-2F

NOTES

1. Sign is Type II - Type F Reflective - reference WIS DOT Standard Specification for HIGHWAY and STRUCTURE CONSTRUCTION latest edition.
2. Color:
   Background - Orange
   Message - Black
3. Message Series - See note 5
4. Corners may be square or rounded when base material is plywood but borders shall be rounded as shown. When base material is metal, the corners and borders shall be rounded.
5. Line 1 is Series D.
   Line 2 is Series D for AHEAD and Series C for all other distances.

SIZE	A	B	C	D	E	F	G	H	I	J	K	L	M	N	O	P	Q	R	S	T	U	V	W	X	Y	Z	Area sq. ft.
1	36		1 5/8	5/8	3/4	6	5	1	2 1/4	14 3/4	15	11 5/8	9	1 3/8	1 7/8	5 5/8	10 1/8	2 1/2	1 1/8	4 1/2	3 1/2	8	1 3/4	10 3/4			9.0
2S	48		2 1/4	3/4	1	8	7	1 1/4	3	19 3/4	20	15 1/2	12	1 7/8	2 5/8	7 1/2	13 1/2	3 3/8	1 1/2	6	4 5/8	10 5/8	2 3/8	14 3/8			16.0
2M	48		2 1/4	3/4	1	8	7	1 1/4	3	19 3/4	20	15 1/2	12	1 7/8	2 5/8	7 1/2	13 1/2	3 3/8	1 1/2	6	4 5/8	10 5/8	2 3/8	14 3/8			16.0
3	48		2 1/4	3/4	1	8	7	1 1/4	3	19 3/4	20	15 1/2	12	1 7/8	2 5/8	7 1/2	13 1/2	3 3/8	1 1/2	6	4 5/8	10 5/8	2 3/8	14 3/8			16.0
4	48		2 1/4	3/4	1	8	7	1 1/4	3	19 3/4	20	15 1/2	12	1 7/8	2 5/8	7 1/2	13 1/2	3 3/8	1 1/2	6	4 5/8	10 5/8	2 3/8	14 3/8			16.0
5	48		2 1/4	3/4	1	8	7	1 1/4	3	19 3/4	20	15 1/2	12	1 7/8	2 5/8	7 1/2	13 1/2	3 3/8	1 1/2	6	4 5/8	10 5/8	2 3/8	14 3/8			16.0

STANDARD SIGN
W20-2A,B,C,D,F & G

WISCONSIN DEPT OF TRANSPORTATION

APPROVED Matthew R Rauch
for State Traffic Engineer
DATE 3/18/11 PLATE NO. W20-2.6

PROJECT NO:	HWY:	COUNTY:		SHEET NO: 169	E

STATE PROJECT NUMBER

2265-10-71

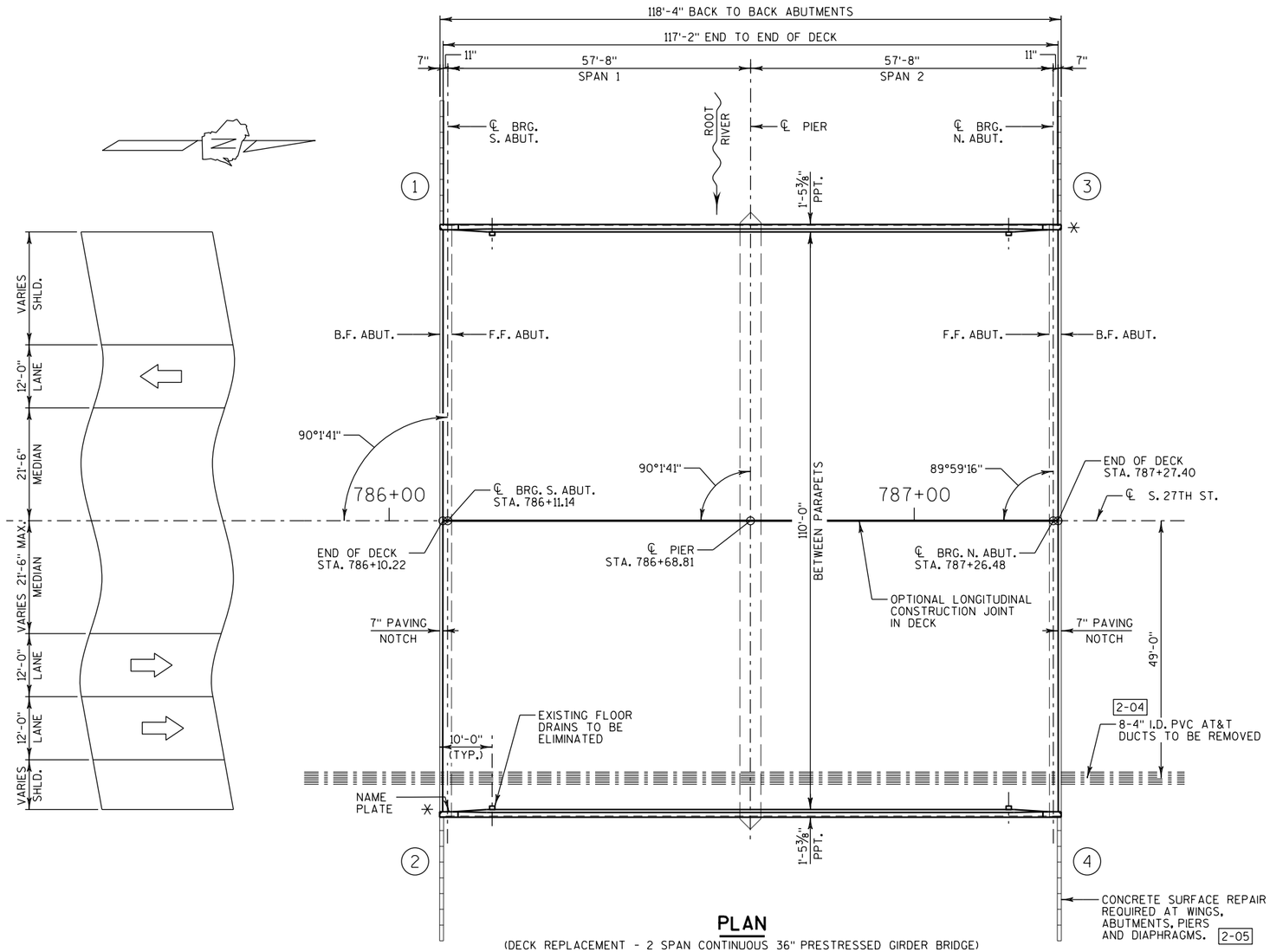

PLAN

(DECK REPLACEMENT - 2 SPAN CONTINUOUS 36" PRESTRESSED GIRDER BRIDGE)

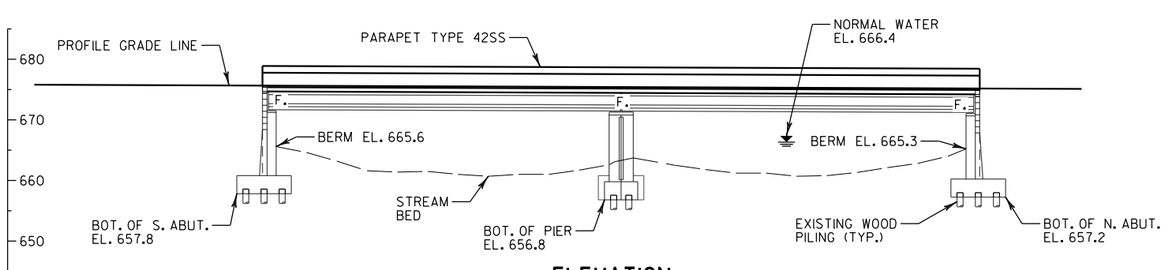

ELEVATION

BOTTOM OF SUBSTRUCTURE ELEVATIONS ESTIMATED FROM EXISTING PLANS. STREAM BED & WATER ELEVATIONS FROM INSPECTION REPORTS

DESIGN DATA

DESIGN LOADING — HS-20
INVENTORY RATING — HS-20
OPERATIONAL RATING — HS-34
WISCONSIN STANDARD PERMIT VEHICLE (WIS-SPV) — 250 KIPS

MATERIAL PROPERTIES

CONCRETE MASONRY, SUPERSTURCTURE — f'c = 4,000 PSI
ALL OTHER — f'c = 3,500 PSI
HIGH STRENGTH BAR STEEL REINFORCEMENT GRADE 60 — fy = 60,000 PSI

TRAFFIC DATA

ADT (2044) = 1600
DESIGN SPEED = 45 MPH

LEGEND

✳ ANCHOR ASSEMBLY FOR MGS THRIE BEAM ATTACHMENT

(X) INDICATES WING NUMBER

2-04 , 2-05 SEE SHEET 2 FOR DESCRIPTION.

LIST OF DRAWINGS

WISCONSIN PROFESSIONAL ENGINEER
WILLIAM A. HOVE
E-33600
MADISON, WI

7/28/2023

BRIDGE OFFICE CONTACT

AARON BONK, P.E.
TELEPHONE: (608) 261-0261

CONSULTANT CONTACT

BILL HOVE, P.E.
TELEPHONE: (262) 393-1260

NO.	DATE	REVISION	BY

CORRE

STATE OF WISCONSIN
DEPARTMENT OF TRANSPORTATION

ACCEPTED SDR 08/25/23
CHIEF STRUCTURES DESIGN ENGINEER DATE

STRUCTURE B-40-954

S. 27TH STREET OVER ROOT RIVER

COUNTY MILWAUKEE | ~~TOWN~~/CITY/~~VILLAGE~~ FRANKLIN

DESIGN SPEC. REHABILITATION N/A

DESIGNED BY	BH	DESIGN CK'D.	ETP	DRAWN BY	TKB	PLANS CK'D.	BH

GENERAL PLAN

SHEET 1 OF 8

8

8

FILE NAME : c:\OD\CORRE, Inc\Projects - WI-SE Region\2265-10-02_STH 241_Milwauke Co\500_CADD\503_Structures\B-40-954_01-GPE.dgn PLOT DATE : 7/28/2023 1:43:00 PM PLOT SCALE : 1:2

STATE PROJECT NUMBER

2265-10-71

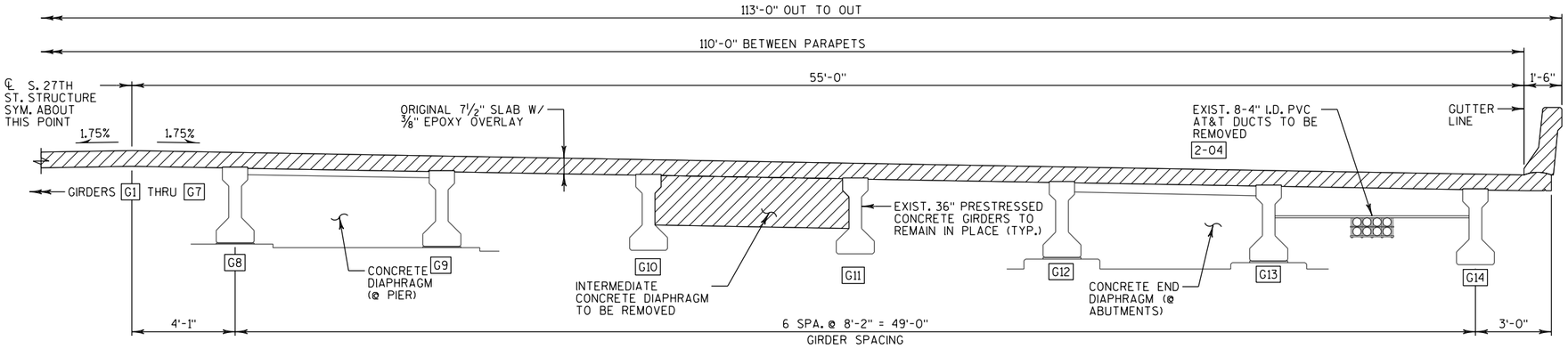

EXISTING CROSS SECTION

(LOOKING NORTH)

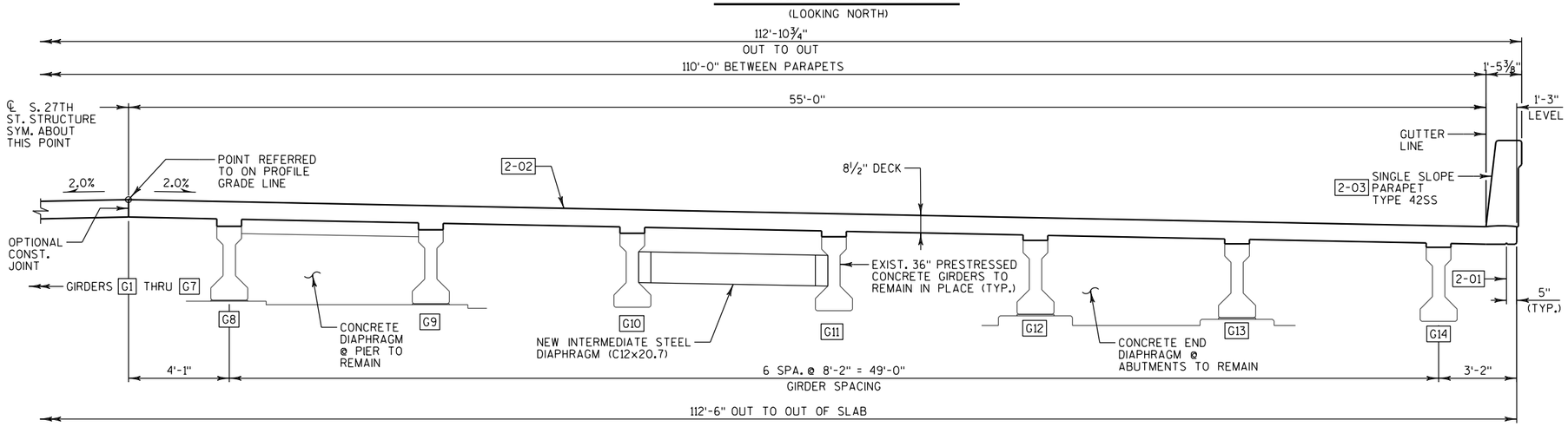

PROPOSED CROSS SECTION THRU ROADWAY

(LOOKING NORTH)

GENERAL NOTES

DRAWINGS SHALL NOT BE SCALED.

DIMENSIONS SHOWN ARE BASED ON THE ORIGINAL STRUCTURE PLANS.

THE EXISTING STRUCTURE, B-40-954, IS A 2-SPAN DECK GIRDER STRUCTURE WITH A CLEAR WIDTH OF 110'-0" AND END-OF-DECK TO END-OF-DECK LENGTH OF 117'-2"

BAR STEEL REINFORCEMENT SHALL BE EMBEDDED 2" CLEAR UNLESS OTHERWISE SHOWN OR NOTED.

THE FIRST DIGIT OF A THREE DIGIT BAR NO. AND THE FIRST TWO DIGITS OF A FOUR DIGIT BAR NO. SIGNIFIES THE BAR SIZE.

UTILIZE EXISTING BAR STEEL REINFORCEMENT WHERE SHOWN AND EXTEND 24 BAR DIAMETERS INTO NEW WORK, UNLESS SPECIFIED OTHERWISE.

THE TOP LAYER OF BAR STEEL REINFORCEMENT IN THE DECK SHALL BE PLACED WITH 2½" OF CLEAR COVER.

ALL CONCRETE REMOVAL SHALL BE DEFINED WITH A ½" DEEP SAW CUT.

BEVEL EXPOSED EDGES ¾" UNLESS OTHERWISE NOTED.

PROTECTIVE SURFACE TREATMENT TO BE APPLIED TO THE ENTIRE TOP OF DECK AND PAVING BLOCK SURFACE. PIGMENTED SURFACE SEALER TO BE APPLIED TO THE TOP AND ROADWAY FACE OF THE PARAPET.

VARIATIONS TO THE NEW GRADE LINE OVER ¼" MUST BE SUBMITTED BY THE FIELD ENGINEER TO THE STRUCTURES DESIGN SECTION FOR REVIEW.

THE SUPERSTRUCTURE CONCRETE QUANTITY INCLUDES VOLUME FOR THE AVERAGE ESTIMATED HAUNCH HEIGHT AND OVERHANG TRIANGULAR AREA.

AT THE BACKFACE OF ABUTMENT ALL VOLUME NOT OCCUPIED BY THE NEW STRUCTURE SHALL BE BACKFILLED WITH STRUCTURE BACKFILL.

THE CONTRACTOR SHALL SUPPLY A NEW NAME PLATE IN ACCORDANCE WITH SECTION 502.3.11 OF THE STANDARD SPECIFICATIONS AND THE STANDARD DETAIL DRAWINGS. NAME PLATE TO SHOW ORIGINAL CONSTRUCTION YEAR OF 1931.

PERFORM "CONCRETE SURFACE REPAIR" AS DIRECTED BY THE FIELD ENGINEER. QUANTITIES SHOWN ON THE PLANS ARE APPROXIMATE.

LEGEND

- DENOTES REMOVAL LIMITS.
- GX DENOTES GIRDER NUMBERS
- 2-01 ¾" V-GROOVE. TERMINATE 6" FROM FRONT FACE OF SUBSTRUCTURES.
- 2-02 COAT WITH "PROTECTIVE SURFACE TREATMENT" AS PER THE WISDOT STANDARD SPECIFICATION.
- 2-03 COAT FRONT FACE AND TOP OF PARAPETS WITH "PIGMENTED SURFACE SEALER".
- 2-04 REMOVING STRUCTURE ITEM INCLUDES REMOVAL OF EXISTING UTILITY DUCTS AND ATTACHMENT HARDWARE AND REMOVAL OF STREAM DEBRIS ON OR AGAINST BRIDGE COMPONENTS, AS DIRECTED BY THE ENGINEER.
- 2-05 CONCRETE SURFACE REPAIR QUANTITIES ARE APPROXIMATE. CONTRACTOR SHALL COORDINATE THE FIELD IDENTIFICATION AND DETERMINATION OF ALL REPAIR LOCATIONS WITH THE ENGINEER.

TOTAL ESTIMATED QUANTITIES

	BID ITEM NUMBER	BID ITEM	UNIT	SOUTH ABUTMENT	PIER	NORTH ABUTMENT	SUPER.	TOTALS
2-04	203.0250	REMOVING STRUCTURE OVER WATERWAY REMOVE DEBRIS B-40-954	EACH	--	--	--	--	1
	206.1001	EXCAVATION FOR STRUCTURES BRIDGES B-40-954	EACH	--	--	--	--	1
	210.1500	BACKFILL STRUCTURE TYPE A	TON	40	--	40	--	80
	502.0100	CONCRETE MASONRY BRIDGES	CY	--	--	--	418	418
	502.3200	PROTECTIVE SURFACE TREATMENT	SY	--	--	--	1,450	1,450
	502.3210	PIGMENTED SURFACE SEALER	SY	--	--	--	120	120
	502.4205	ADHESIVE ANCHORS NO. 5 BAR	EACH	--	--	--	760	760
	505.0600	BAR STEEL REINFORCEMENT HS COATED STRUCTURES	LB	--	--	--	100,300	100,300
	506.4000	STEEL DIAPHRAGMS B-40-954	EACH	--	--	--	26	26
2-05	509.1500	CONCRETE SURFACE REPAIR	SF	125	50	200	75	450
	612.0406	PIPE UNDERDRAIN WRAPPED 6-INCH	LF	200	--	200	--	400
	614.0150	ANCHOR ASSEMBLIES FOR STEEL PLATE BEAM GUARD	EACH	--	--	--	2	2
	645.0111	GEOTEXTILE TYPE DF SCHEDULE A	SY	70	--	70	--	140
		NON-BID ITEMS						
		NAME PLATE						
		FILLER	SIZE	--	--	--	--	1/2" & 3/4"

ALL ITEMS ARE CATEGORY 0020

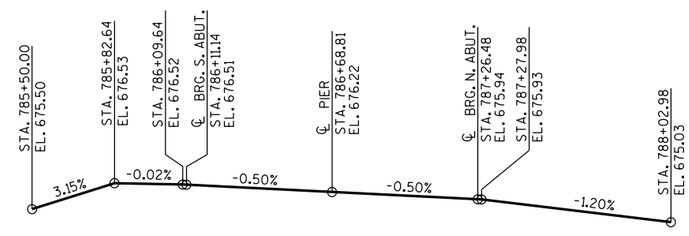

PROFILE GRADE LINE

(S. 27TH ST.)

ABBREVIATIONS:

ABUT.	ABUTMENT	JT.	JOINT
BTWN.	BETWEEN	LONG.	LONGITUDINAL
B.F.	BACK FACE	PPT.	PARAPET
BOT.	BOTTOM	PROJ.	PROJECTION
BRG.	BEARING	SPA.	SPACED
CL.	CLEAR	STD.	STANDARD
CONST.	CONSTRUCTION	SYMM.	SYMMETRICAL
DIA.	DIAMETER	T&B	TOP AND BOTTOM
E.F.	EACH FACE	TRANS.	TRANSVERSE
EXIST.	EXISTING	TYP.	TYPICAL
F.F.	FRONT FACE	VERT.	VERTICAL
HORIZ.	HORIZONTAL	U.N.O.	UNLESS NOTED OTHERWISE

NO.	DATE	REVISION	BY

STATE OF WISCONSIN
DEPARTMENT OF TRANSPORTATION

STRUCTURE B-40-954

DRAWN BY TKB | PLANS CK'D. BH

CROSS SECTION & QUANTITIES

SHEET 2 OF 8

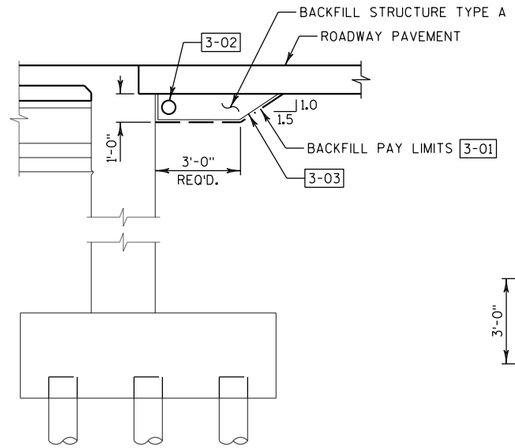

STRUCTURE BACKFILL LIMITS

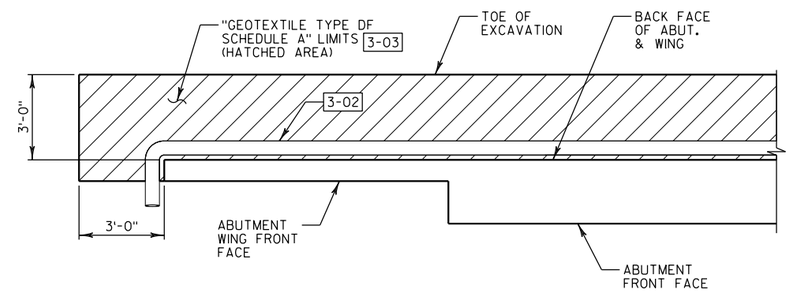

ABUTMENT PLAN WITH WING

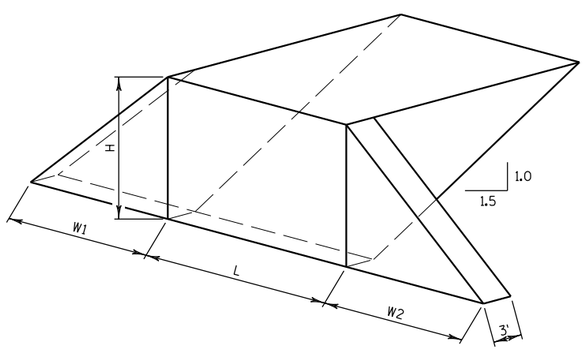

ABUTMENT BACKFILL PAY LIMIT DIAGRAM

L	=	OUT TO OUT OF ABUTMENT (FT)
H	=	AVERAGE ABUTMENT FILL HEIGHT (FT)
W1	=	WING 1 LENGTH (FT)
W2	=	WING 2 LENGTH (FT)
EF	=	EXPANSION FACTOR (1.20 FOR CY BID ITEMS AND 1.00 FOR TON BID ITEMS)
V_{CF}	=	(L)(3.0')(H) + (L)(0.5)(1.5H)(H)+(3.0')(0.5)(W1+W2)(H)
V_{CY}	=	V_{CF} (EF)/27
V_{TON}	=	V_{CY} (2.0)

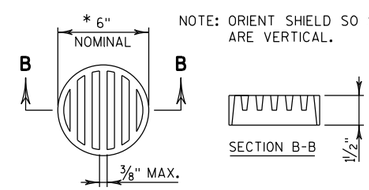

NOTE: ORIENT SHIELD SO SLOTS ARE VERTICAL.

* DIMENSION IS APPROXIMATE. THE GRATE IS SIZED TO FIT INTO A PIPE COUPLING.

RODENT SHIELD DETAIL

THE RODENT SHIELD, PIPE COUPLING AND SCREWS SHALL BE CONSIDERED INCIDENTAL TO THE BID ITEM "PIPE UNDERDRAIN WRAPPED 6-INCH".

THE RODENT SHIELD SHALL BE A PVC GRATE SIMILAR TO THIS DETAIL. THE GRATE IS COMMERCIALLY AVAILABLE AS A FLOOR STRAINER. A PIPE COUPLING IS REQUIRED FOR THE ATTACHMENT OF THIS SHIELD TO THE OUTFALL PIPE. THE SHIELD SHALL BE FASTENED TO THE PIPE COUPLING WITH TWO OR MORE NO. 10 X 1-INCH STAINLESS STEEL SHEET METAL SCREWS.

NOTE

THE BACKFILL QUANTITIES ARE BASED ON THE PAY LIMITS SHOWN ON THE PLANS AND MAY NOT REFLECT ACTUAL PLACED QUANTITIES. "BACKFILL STRUCTURE TYPE A" REQUIRED DIRECTLY BEHIND ABUTMENTS AND ABUTMENT WINGS FOR 3 FEET. BACKFILL PLACED BEYOND PAY LIMITS OR EXCEEDING PLAN QUANTITIES SHALL BE INCIDENTAL TO EXCAVATION FOR STRUCTURES.

LEGEND

3-01 BACKFILL PAY LIMITS. BACKFILL BEYOND BACKFILL PAY LIMITS SHALL BE INCIDENTAL TO EXCAVATION FOR STRUCTURES. LIMITS OF EXCAVATION SHALL BE DETERMINED BY THE CONTRACTOR.

3-02 PIPE UNDERDRAIN WRAPPED (6-INCH). SLOPE 0.5% MIN. TO SUITABLE DRAINAGE. ATTACH RODENT SHIELD AT ENDS OF PIPE UNDERDRAIN.

3-03 EXCAVATION BELOW THE ABUTMENT AND ABUTMENT BEDDING MATERIALS REQUIRES ENGINEER APPROVAL. "GEOTEXTILE TYPE DF SCHEDULE A" SHALL BE SET AT THE BOTTOM OF EXCAVATION AND EXTEND ABOVE BOTTOM OF EXCAVATION LIMITS AS SHOWN.

8

8

NO.	DATE	REVISION	BY

STATE OF WISCONSIN
DEPARTMENT OF TRANSPORTATION

STRUCTURE B-40-954

DRAWN BY TKB | PLANS CK'D. BH

MISCELLANEOUS DETAILS

SHEET 3 OF 8

STATE PROJECT NUMBER

2265-10-71

TABLE

GIRDER HEIGHT	DIM. "A"	DIM. "B"	DIM. "L"	* DIM. "X"
~~28"~~	~~1'-0 7/8"~~	~~5 7/8"~~	~~9 1/2"~~	~~2 1/4"~~
36"	1'-2 7/8"	9 7/8"	1'-1 1/2"	3 1/4"
~~45"~~	~~1'-5 3/8"~~	~~1'-1 7/8"~~	~~1'-5 1/2"~~	~~2 1/4"~~
~~45W"~~	~~1'-9 1/8"~~	~~8 7/8"~~	~~1'-0 1/2"~~	~~2 3/4"~~
~~54"~~	~~1'-7 7/8"~~	~~1'-5 7/8"~~	~~1'-9 1/2"~~	~~4 1/4"~~
~~54W"~~	~~1'-9 1/8"~~	~~1'-5 7/8"~~	~~1'-9 1/2"~~	~~4 1/4"~~

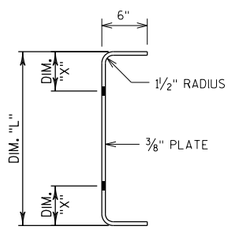

SECTION THRU ALTERNATE DIAPHRAGM

*DIM "X" = 2 1/2" FOR ALTERNATE PLATE DIAPHRAGM

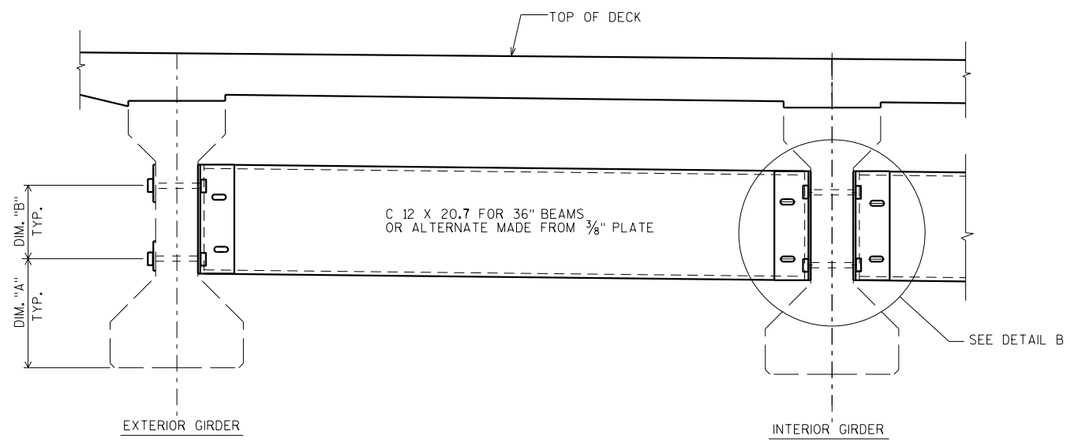

PART TRANSVERSE SECTION AT DIAPHRAGM

NOTES

REPLACE EXISTING INTERMEDIATE CONCRETE DIAPHRAGMS WITH STEEL DIAPHRAGMS PER THE DETAILS ON THIS SHEET.

ALL DIAPHRAGM MATERIAL NOT EMBEDDED IN THE CONCRETE GIRDER SHALL BE PAID FOR AT THE UNIT PRICE BID FOR "STEEL DIAPHRAGMS B-40-954", EACH.

EACH DIAPHRAGM BETWEEN GIRDERS SHALL CONSTITUTE ONE UNIT.

ALL DIAPHRAGM STRUCTURAL STEEL SHALL BE ASTM A709 GRADE 36.

ALL DIAPHRAGM MATERIAL INCLUDING BOLTS, NUTS AND WASHERS SHALL BE GALVANIZED AFTER FABRICATION.

STEEL DIAPHRAGM TO CONCRETE WEB CONNECTION SHALL BE SNUG-TIGHT PLUS 1/4 TURN, UNLESS NOTED OTHERWISE. HIGH STRENGTH BOLTS FOR WEB CONNECTION SHALL MEET THE REQUIREMENTS FOR ASTM A325 OR ASTM A449.

FIELD DRILLING OF 1 1/4" DIA. HOLES IN WEBS AND FIELD VERIFYING DIAPHRAGM LENGTHS PRIOR TO FABRICATION IS INCLUDED IN THE PRICE BID FOR "STEEL DIAPHRAGMS B-40-954".

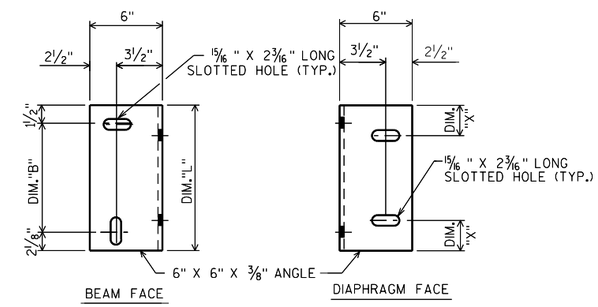

DIAPHRAGM SUPPORT

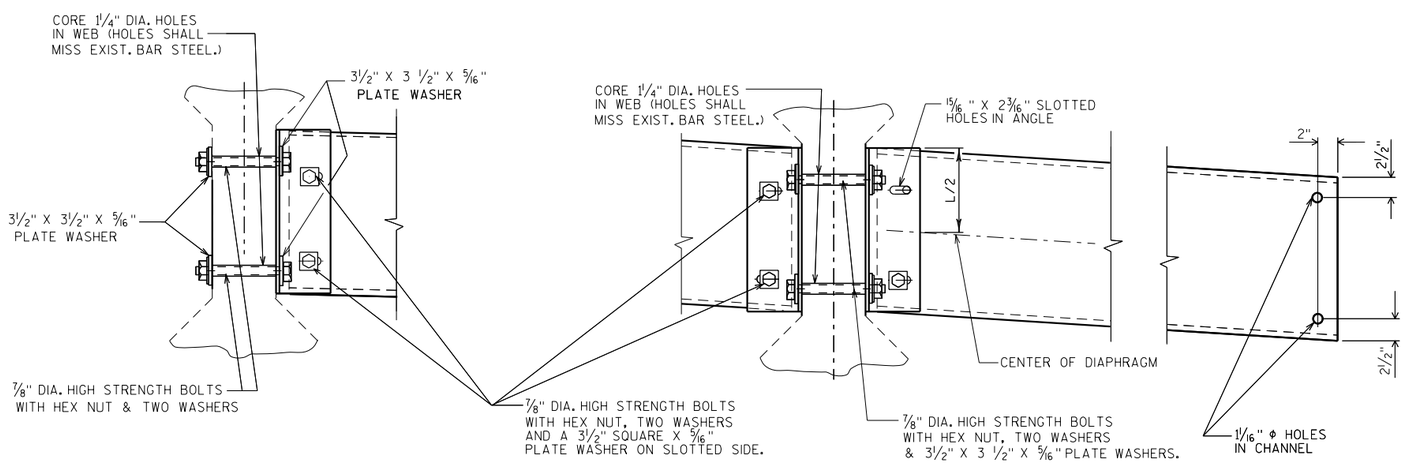

(FOR EXTERIOR GIRS. & STAGGERED DIAPHRAGMS)

(FOR CONTINUOUS LINE OF DIAPHRAGMS)

DETAIL B

8

8

NO.	DATE	REVISION	BY

STATE OF WISCONSIN
DEPARTMENT OF TRANSPORTATION

STRUCTURE B-40-954

DRAWN BY TKB | PLANS CK'D. BH

INTERMEDIATE STEEL DIAPHRAGM

SHEET 4 OF 8

STATE PROJECT NUMBER

2265-10-71

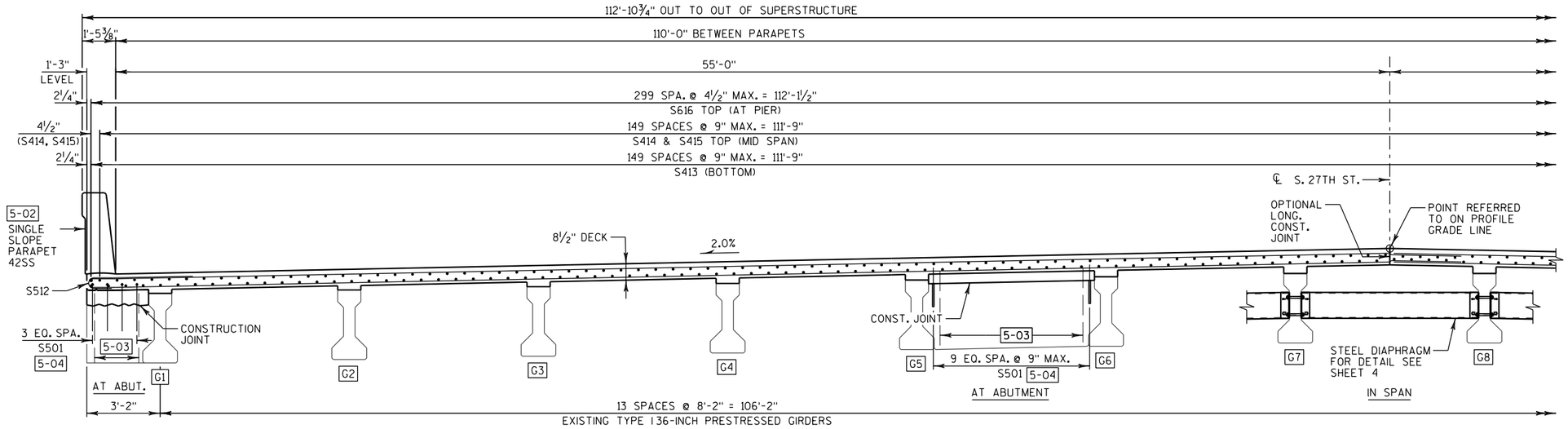

TYPICAL CROSS SECTION THRU ROADWAY

(LOOKING NORTH)

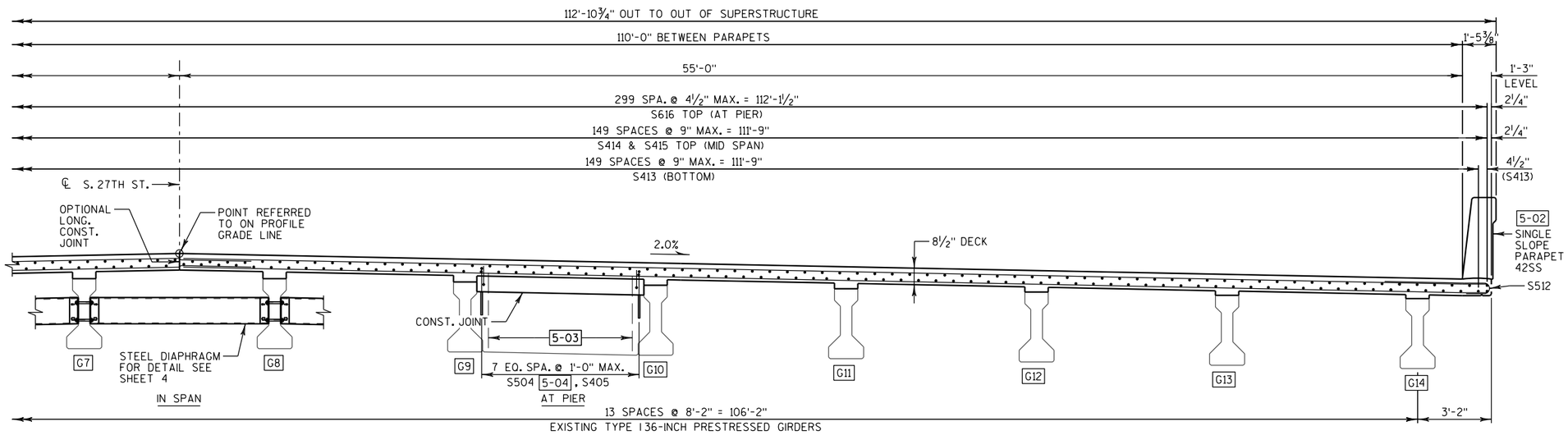

TYPICAL CROSS SECTION THRU ROADWAY

(LOOKING NORTH)

LEGEND

- 5-01 ¾" CONTINUOUS "V" DRIP GROOVE (TYP.) END 6" FROM FACE OF SUBSTRUCTURE UNITS.
- 5-02 SEE SHEET 8 FOR DETAILS.
- 5-03 INCORPORATE EXISTING REINFORCEMENT INTO NEW WORK.
- 5-04 ADHESIVE ANCHORS NO. 5 BAR. EMBED AS SHOWN ON SHEET 7. INCREASE EMBEDMENT IF REQUIRED TO MAINTAIN REQUIRED COVER.
- GX INDICATES GIRDER NUMBER.

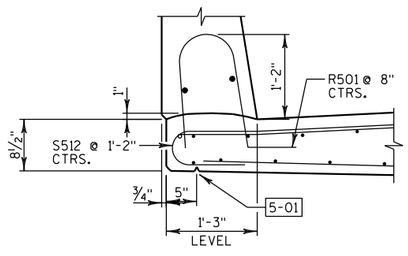

SECTION THRU PARAPET ON DECK

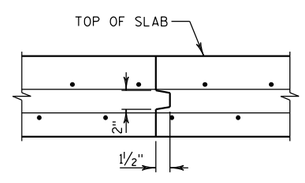

SECTION THRU LONGITUDINAL CONSTRUCTION JOINT

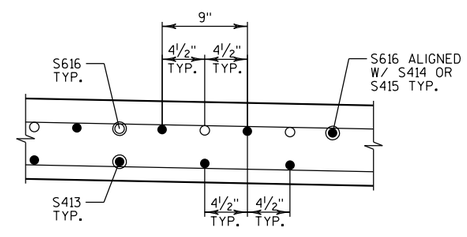

ADDITIONAL DECK REINFORCEMENT OVER PIER

NO.	DATE	REVISION	BY

STATE OF WISCONSIN
DEPARTMENT OF TRANSPORTATION

STRUCTURE B-40-954

DRAWN BY TKB | PLANS CK'D. BH

SUPERSTRUCTURE -1

SHEET 5 OF 8

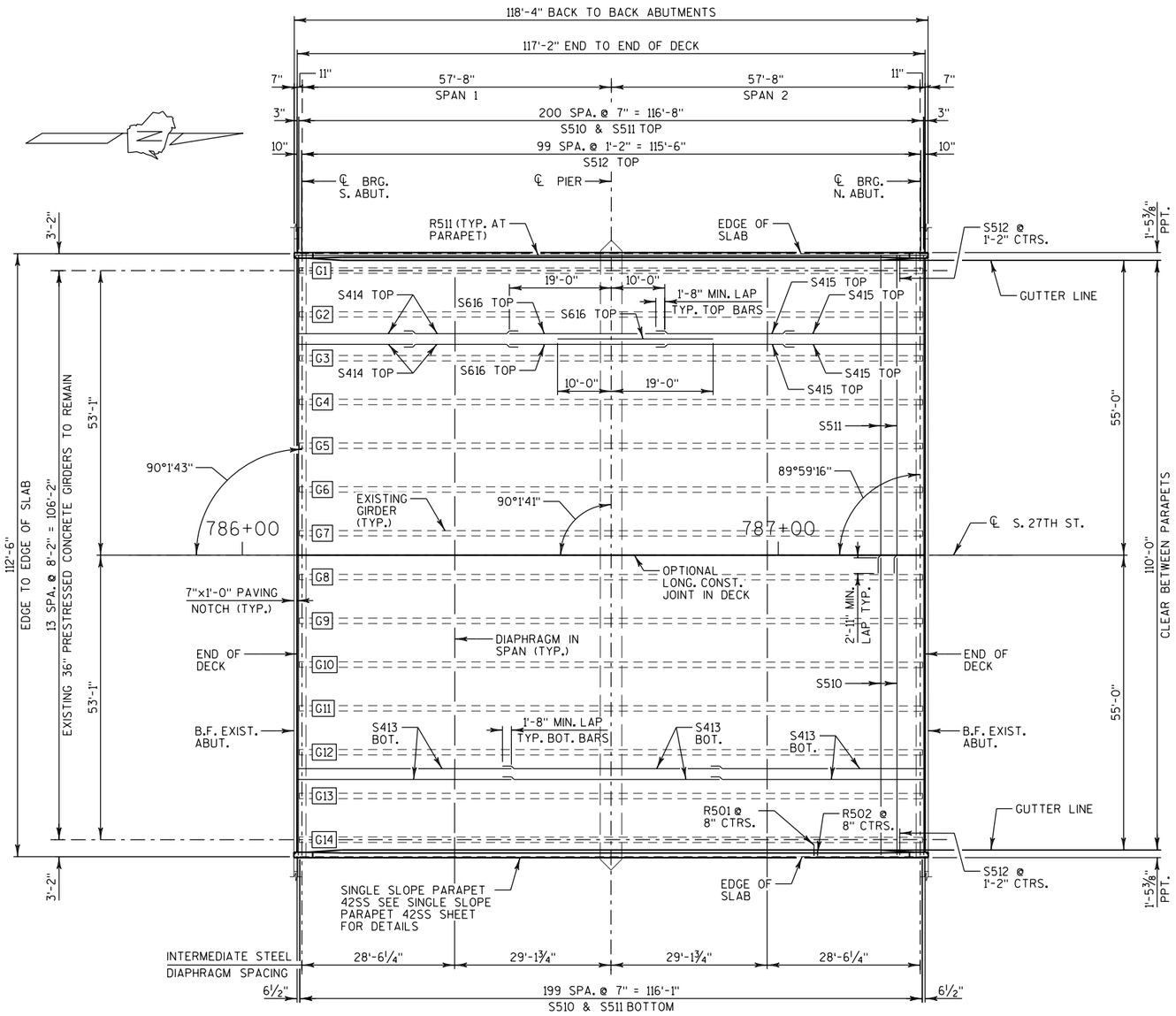

PLAN

LEGEND

XX FOR ADDITIONAL SYMBOL DESCRIPTIONS SEE SHEET 5.

NOTES:

THE BOTTOM TRANSVERSE BAR STEEL REINFORCEMENT SHALL BE SUPPORTED BY CONTINUOUS BAR CHARS WITH A CENTER TO CENTER SPACING NOT TO EXCEED 4'-0". ONE LINE OF CONTINUOUS BAR CHAIRS SHALL BE PLACED NEAR EACH EDGE OF SLAB TO SUPPORT THE ENDS OF THE BOTTOM TRANSVERSE BAR STEEL.

THE TOP LONGITUDINAL BAR STEEL REINFORCEMENT SHALL BE SUPPORTED BY CONTINUOUS BAR CHAIRS IN TRANSVERSE DIRECTION ON 4'-0" CENTERS.

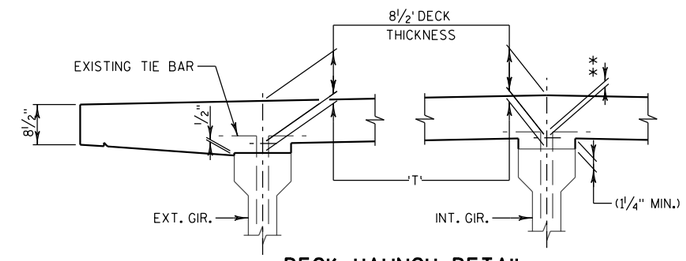

DECK HAUNCH DETAIL

IF 1 1/4" MINIMUM HAUNCH HEIGHT AT EDGE OF GIRDER CANNOT BE MAINTAINED. THE GRADE LINE MAY BE REVISED BY THE ENGINEER AT THE OPTION OF THE CONTRACTOR. THE PLAN DECK THICKNESS SHALL BE HELD. NOTIFY THE STRUCTURES SECTION IF THE GRADE LINE IS RAISED FROM THE PLAN PROFILE BY MORE THAN 1/2" OR.
** IF 3" MINIMUM DECK EMBEDMENT OF TIE BAR CANNOT BE OBTAINED.

TO DETERMINE 'T', ELEV. OF TOP OF GIR'S. AT ℄ OF SUBSTRUCTURE UNITS & AT 1/10 POINTS OF EACH SPAN SHALL BE TAKEN. THEN FOLLOW THIS PROCESS:

TOP OF DECK ELEVATIONS AT FINAL GRADE
- TOP OF GIRDER ELEVATION
+ DEAD LOAD DEFLECTION
- DECK THICKNESS
= HAUNCH HEIGHT "T"

NOTE: AN AVERAGE HAUNCH ('T') OF 3 1/2" WAS USED IN THE QUANTITY "CONCRETE MASONRY BRIDGES".

SEE SHEET 7 FOR DEADLOAD DEFLECTIONS.

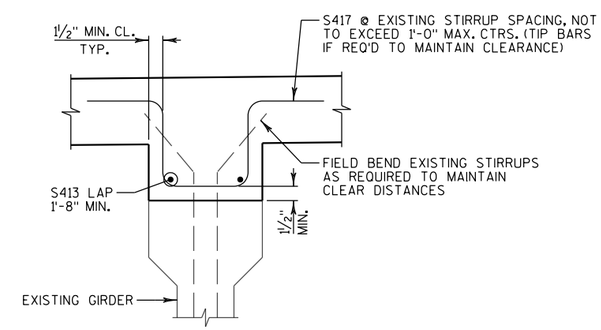

HAUNCH REINFORCEMENT DETAIL

8

8

NO.	DATE	REVISION	BY

STATE OF WISCONSIN
DEPARTMENT OF TRANSPORTATION

STRUCTURE B-40-954

DRAWN BY TKB | PLANS CK'D. BH

SUPERSTRUCTURE -2

SHEET 6 OF 8

STATE PROJECT NUMBER

2265-10-71

TOP OF DECK ELEVATIONS

LOCATION	S. ABUT.	0.1 PT.	0.2 PT.	0.3 PT.	0.4 PT.	0.5 PT.	0.6 PT.	0.7 PT.	0.8 PT.	0.9 PT.	C/L PIER	0.1 PT.	0.2 PT.	0.3 PT.	0.4 PT.	0.5 PT.	0.6 PT.	0.7 PT.	0.8 PT.	0.9 PT.	N. ABUT.
WEST FLOW LINE	675.41	675.38	675.35	675.33	675.30	675.27	675.24	675.21	675.18	675.15	675.12	675.10	675.07	675.04	675.01	674.98	674.95	674.92	674.89	674.87	674.84
GIRDER 1	675.45	675.42	675.39	675.36	675.34	675.31	675.28	675.25	675.22	675.19	675.16	675.13	675.11	675.08	675.05	675.02	674.99	674.96	674.93	674.90	674.88
GIRDER 2	675.61	675.59	675.56	675.53	675.50	675.47	675.44	675.41	675.38	675.36	675.33	675.30	675.27	675.24	675.21	675.18	675.15	675.13	675.10	675.07	675.04
GIRDER 3	675.78	675.75	675.72	675.69	675.66	675.63	675.60	675.58	675.55	675.52	675.49	675.46	675.43	675.40	675.37	675.35	675.32	675.29	675.26	675.23	675.20
GIRDER 4	675.94	675.91	675.88	675.85	675.83	675.80	675.77	675.74	675.71	675.68	675.65	675.62	675.60	675.57	675.54	675.51	675.48	675.45	675.42	675.39	675.37
GIRDER 5	676.10	676.08	676.05	676.02	675.99	675.96	675.93	675.90	675.87	675.85	675.82	675.79	675.76	675.73	675.70	675.67	675.64	675.62	675.59	675.56	675.53
GIRDER 6	676.27	676.24	676.21	676.18	676.15	676.12	676.09	676.07	676.04	676.01	675.98	675.95	675.92	675.89	675.86	675.84	675.81	675.78	675.75	675.72	675.69
GIRDER 7	676.43	676.40	676.37	676.34	676.32	676.29	676.26	676.23	676.20	676.17	676.14	676.11	676.09	676.06	676.03	676.00	675.97	675.94	675.91	675.88	675.86
CROWN	676.51	676.48	676.45	676.43	676.40	676.37	676.34	676.31	676.28	676.25	676.22	676.20	676.17	676.14	676.11	676.08	676.05	676.02	675.99	675.97	675.94
GIRDER 8	676.43	676.40	676.37	676.34	676.32	676.29	676.26	676.23	676.20	676.17	676.14	676.11	676.09	676.06	676.03	676.00	675.97	675.94	675.91	675.88	675.86
GIRDER 9	676.27	676.24	676.21	676.18	676.15	676.12	676.09	676.07	676.04	676.01	675.98	675.95	675.92	675.89	675.86	675.84	675.81	675.78	675.75	675.72	675.69
GIRDER 10	676.10	676.08	676.05	676.02	675.99	675.96	675.93	675.90	675.87	675.85	675.82	675.79	675.76	675.73	675.70	675.67	675.64	675.62	675.59	675.56	675.53
GIRDER 11	675.94	675.91	675.88	675.85	675.83	675.80	675.77	675.74	675.71	675.68	675.65	675.62	675.60	675.57	675.54	675.51	675.48	675.45	675.42	675.39	675.37
GIRDER 12	675.78	675.75	675.72	675.69	675.66	675.63	675.60	675.58	675.55	675.52	675.49	675.46	675.43	675.40	675.37	675.35	675.32	675.29	675.26	675.23	675.20
GIRDER 13	675.61	675.59	675.56	675.53	675.50	675.47	675.44	675.41	675.38	675.36	675.33	675.30	675.27	675.24	675.21	675.18	675.15	675.13	675.10	675.07	675.04
GIRDER 14	675.45	675.42	675.39	675.36	675.34	675.31	675.28	675.25	675.22	675.19	675.16	675.13	675.11	675.08	675.05	675.02	674.99	674.96	674.93	674.90	674.88
EAST FLOW LINE	675.41	675.38	675.36	675.33	675.30	675.27	675.24	675.21	675.18	675.15	675.12	675.10	675.07	675.04	675.01	674.98	674.95	674.92	674.89	674.87	674.84

ELEVATIONS SHOWN ARE FINISHED DECK AND DO NOT INCLUDE ALLOWANCES FOR DEAD LOAD DEFLECTION AND FUTURE CREEP.

DEADLOAD DEFLECTIONS

LOCATION	S. ABUT.	0.1 PT.	0.2 PT.	0.3 PT.	0.4 PT.	0.5 PT.	0.6 PT.	0.7 PT.	0.8 PT.	0.9 PT.	C/L PIER	0.1 PT.	0.2 PT.	0.3 PT.	0.4 PT.	0.5 PT.	0.6 PT.	0.7 PT.	0.8 PT.	0.9 PT.	N. ABUT.
SPANS 1 & 2	0.00	1/4"	1/2"	3/4"	7/8"	7/8"	7/8"	3/4"	1/2"	1/4"	0.00	1/4"	1/2"	3/4"	7/8"	7/8"	7/8"	3/4"	1/2"	1/4"	0.00

7-01 BILL OF BARS

BAR MARK	NO. REQ'D	LENGTH	BENT	BAR SERIES	LOCATION	
COATED BARS						TOTAL WEIGHT = 93,820 LBS
S501	552	2'-7"	X		DECK AT ABUTMENTS	VERT.
S602	4	59'-9"			DECK AT ABUTMENTS	TRANS.
S603	4	55'-11"			DECK AT ABUTMENTS	TRANS.
S504	208	2'-10"	X		DECK AT PIER	VERT.
S405	104	10'-3"	X		DECK AT PIER	LONG.
S406	78	6'-10"			DECK AT PIER	TRANS.
S510	401	59'-3"			DECK TOP AND BOTTOM	TRANS.
S511	401	55'-11"			DECK TOP AND BOTTOM	TRANS.
S512	200	5'-1"	X		DECK AT OVERHANGS	TRANS.
S413	537	40'-0"			DECK, BOTTOM AND OVER GIRDERS	LONG.
S414	302	21'-6"			DECK TOP	LONG.
S415	302	25'-11"			DECK TOP	LONG.
S616	300	29'-0"			DECK TOP OVER PIER	LONG.
S417	2100	2'-8"	X		DECK OVER GIRDERS	VERT.

THE FIRST DIGIT OR FIRST TWO DIGITS OF THE BAR MARK SIGNIFIES THE BAR SIZE.
DIMENSIONS IN BENDING DETAILS ARE OUT-TO-OUT OF BAR

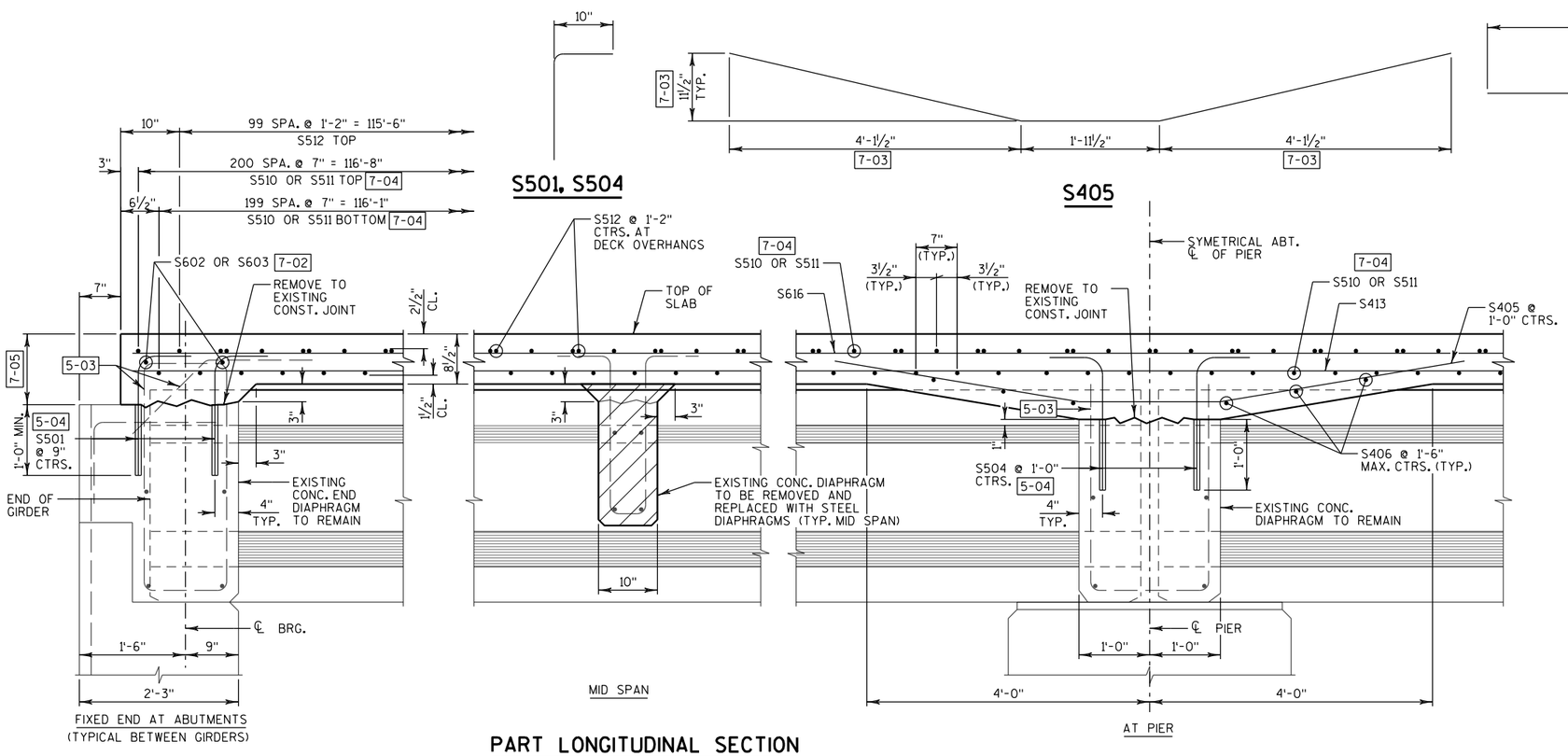

PART LONGITUDINAL SECTION

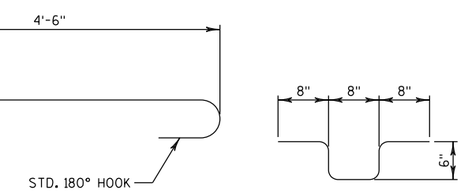

S512

S417

LEGEND

XX X-XX FOR ADDITIONAL SYMBOL DESCRIPTIONS SEE SHEET 5.

7-01 SEE PARAPET SHEET FOR PARAPET REINFORCEMENT IN DECK.

7-02 LAP S602 AND S603 BARS 3'-6" MIN. ONE LAP PER ROW.

7-03 HAUNCH SLOPE WILL VARY. FIELD BEND BARS PARALLEL TO HAUNCH SLOPES WHERE REQUIRED.

7-04 LAP S510 AND S511 BARS 2'-11" MIN. ONE LAP PER ROW.

7-05 VARIES FROM 1'-3"± TO 1'-4⅝"± AT THE SOUTH END AND 1'-1¾"± TO 1'-3½"± AT THE NORTH END.

NOTES:

ALL VERTICAL BAR STEEL REINFORCEMENT IN CONCRETE DIAPHRAGMS TO BE PLACED PARALLEL TO GIRDER.

NO.	DATE	REVISION	BY

STATE OF WISCONSIN
DEPARTMENT OF TRANSPORTATION

STRUCTURE B-40-954

DRAWN BY TKB | PLANS CK'D. BH

SUPERSTRUCTURE -3

SHEET 7 OF 8

STATE PROJECT NUMBER

2265-10-71

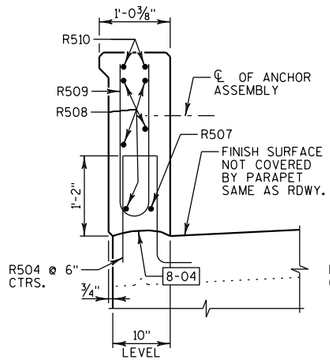

SECTION A-A

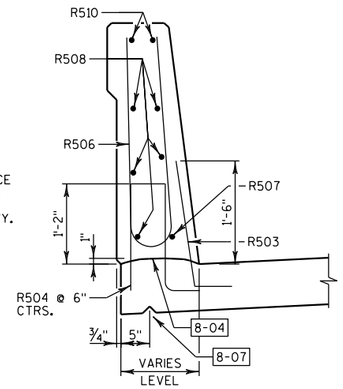

SECTION B-B

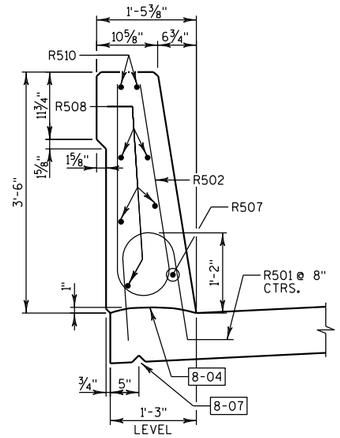

SECTION C-C

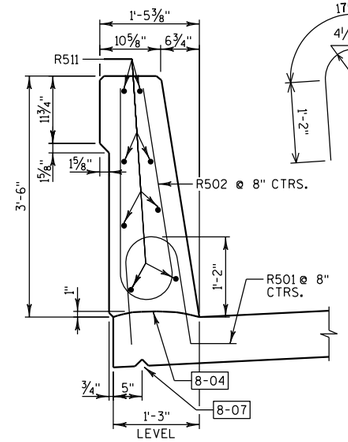

SECTION D-D

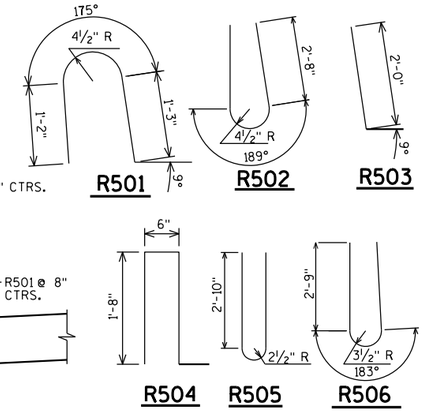

BILL OF BARS

	BAR MARK	NO. REQ'D	LENGTH	BENT	BAR SERIES	LOCATION	
	COATED BARS					TOTAL WEIGHT = 6,480 LBS	
8-03	R501	304	4'-5"	X		PARAPET	VERT.
	R502	304	6'-8"	X		PARAPET	VERT.
	R503	48	2'-9"	X		PARAPET	VERT.
8-03	R504	68	4'-4"	X		PARAPET	VERT.
	R505	20	6'-5"	X		PARAPET	VERT.
	R506	24	6'-6"	X		PARAPET	VERT.
	R507	4	20'-0"	X		PARAPET	HORIZ.
	R508	20	20'-0"			PARAPET	HORIZ.
8-05	R509	24	5'-5"	X	X	PARAPET	VERT.
	R510	8	20'-0"	X		PARAPET	HORIZ.
	R511	48	28'-4"			PARAPET	HORIZ.

THE FIRST DIGIT OR FIRST TWO DIGITS OF THE BAR MARK SIGNIFIES THE BAR SIZE.
DIMENSIONS IN BENDING DETAILS ARE OUT-TO-OUT OF BAR

BAR SERIES TABLE

BAR MARK	NO. REQ'D	LENGTH
R509	4 SERIES OF 6	4'-9" TO 6'-1"

BUNDLE & TAG EACH SERIES SEPARATELY.

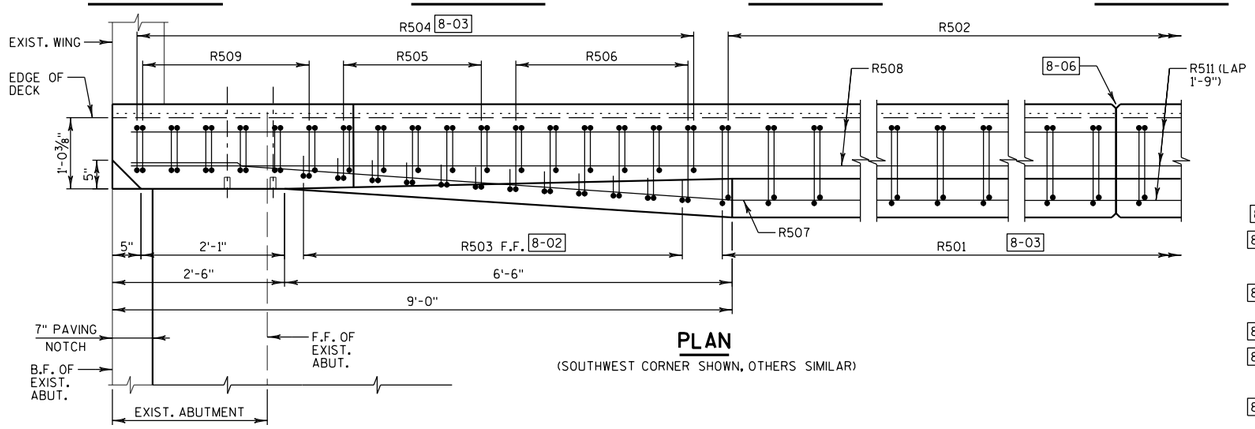

PLAN

(SOUTHWEST CORNER SHOWN, OTHERS SIMILAR)

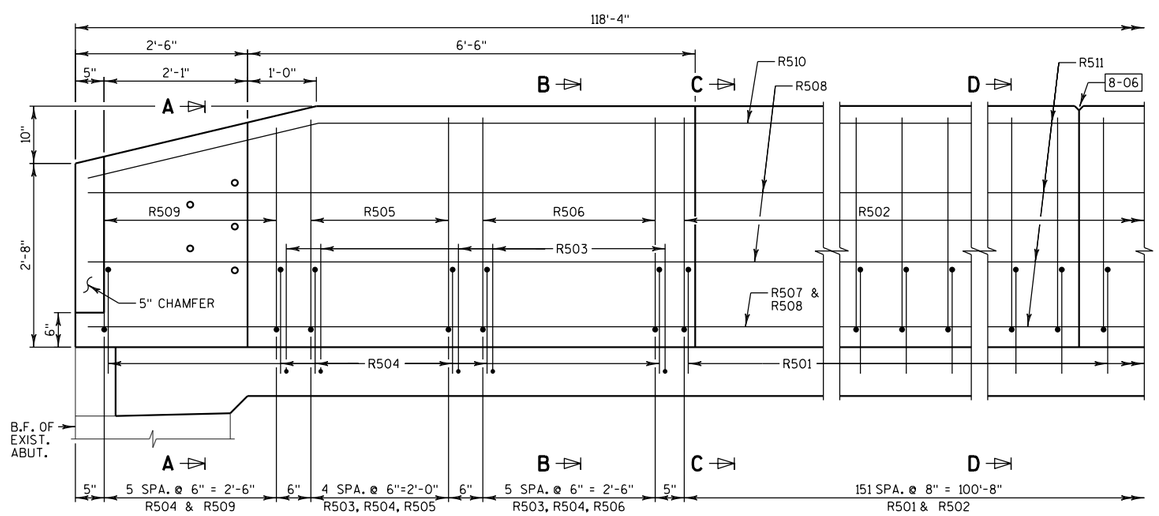

INSIDE ELEVATION

(SOUTHWEST CORNER SHOWN, OTHERS SIMILAR)

LEGEND

8-01 BENCH MARK CAP (WHEN SUPPLIED).

8-02 R503 BARS MAY BE PLACED AFTER CONCRETE IS POURED BUT BEFORE INITIAL SET HAS TAKEN PLACE. USE CARE TO PLACE R503 BARS CORRECTLY ALONG TRANSITION OF PARAPET.

8-03 R501 AND R504 BARS TO BE TIED TO DECK STEEL BEFORE DECK IS POURED.

8-04 CONSTRUCTION JOINT. STRIKE OFF AS SHOWN.

8-05 LENGTH SHOWN FOR BAR IS AN AVERAGE LENGTH AND SHOULD ONLY BE USED FOR BAR WEIGHT CALCULATIONS. SEE BAR SERIES TABLE FOR ACTUAL LENGTHS.

8-06 OPTIONAL CONSTRUCTION JOINTS IN THE PARAPETS MAY BE USED. RUN BAR REINF. THRU THE JOINT. LAP LONGIT. BARS A MIN. OF 1'-9". MIN. JOINT SPACING OF 80'-0". DEFINE CONST. JOINT WITH A ¾" - 'V' GROOVE.

8-07 ¾" V-GROOVE REQ'D. EXTEND TO 6" FROM F.F. OF ABUT. BODY.

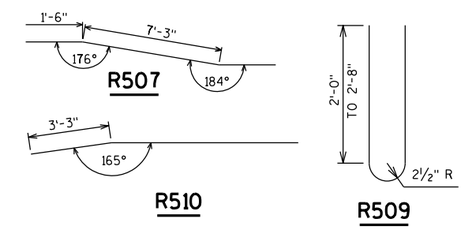

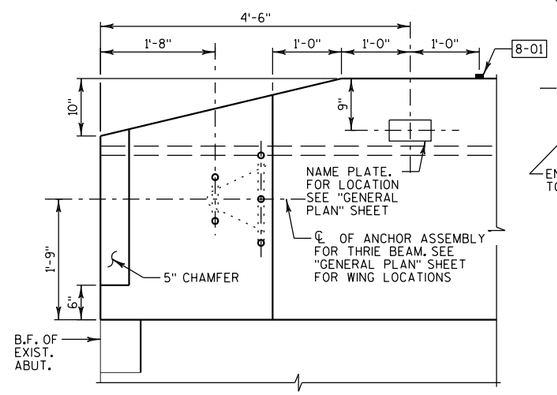

PARAPET END TREATMENT DETAIL

LOOKING AT INSIDE FACE OF PARAPET

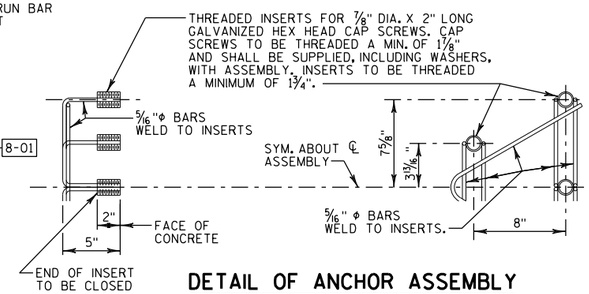

DETAIL OF ANCHOR ASSEMBLY

NOTE: HEX HEAD CAP SCREWS & WASHERS TO BE GALVANIZED IN ACCORDANCE WITH AASHTO M232 CLASS C.

ASSEMBLY SHALL BE BID ITEM "ANCHOR ASSEMBLIES FOR STEEL PLATE BEAM GUARD", EACH.

NO.	DATE	REVISION	BY

STATE OF WISCONSIN
DEPARTMENT OF TRANSPORTATION

STRUCTURE B-40-954

DRAWN BY TKB | PLANS CK'D. BH

SINGLE SLOPE PARAPET 42SS

SHEET 8 OF 8

8

8

DIVISION -- ALI-ELM

STATION	REAL STATION	DISTANCE	AREA (SF)			INCREMENTAL VOL (CY) (UNADJUSTED)			CUMULATIVE VOL (CY)		
			CUT	SALVAGED/UNUSABLE PAVEMENT MATERIAL	FILL	CUT	SALVAGED/UNUSABLE PAVEMENT MATERIAL	FILL	CUT	EXPANDED FILL	MASS ORDINATE
									1.00	1.25	
						NOTE 1	NOTE 2	NOTE 3	NOTE 1		NOTE 8
11+50	1150.00	0.00	52.54	4.94	3.63	0	0	0	0	0	0
12+00	1200.00	50.00	57.37	4.94	10.70	102	9	13	102	16	77
12+50	1250.00	50.00	54.23	4.94	12.60	103	9	22	205	44	143
13+00	1300.00	50.00	53.97	4.94	13.83	100	9	24	305	74	204
13+50	1350.00	50.00	54.73	4.94	14.41	101	9	26	406	106	264
14+00	1400.00	50.00	54.83	4.94	14.98	101	9	27	507	140	322
14+50	1450.00	50.00	55.89	4.94	15.55	103	9	28	610	175	381
15+00	1500.00	50.00	55.68	4.94	16.13	103	9	29	713	211	439
15+50	1550.00	50.00	59.41	4.94	16.64	107	9	30	820	249	499
16+00	1600.00	50.00	66.45	4.94	14.24	117	9	29	937	285	571
16+50	1650.00	50.00	71.75	4.94	12.07	128	9	24	1,065	315	660
17+00	1700.00	50.00	67.93	4.94	9.89	129	9	20	1,194	340	755
17+50	1750.00	50.00	63.99	4.94	7.72	122	9	16	1,316	360	848
18+00	1800.00	50.00	64.08	4.94	5.54	119	9	12	1,435	375	943
18+50	1850.00	50.00	85.85	4.94	3.36	139	9	8	1,574	385	1,063
19+00	1900.00	50.00	99.91	4.94	1.30	172	9	4	1,746	390	1,221
19+50	1950.00	50.00	80.34	4.94	2.37	167	9	3	1,913	394	1,375
20+00	2000.00	50.00	65.11	4.94	3.71	135	9	6	2,048	401	1,494
20+50	2050.00	50.00	54.38	4.94	5.80	111	9	9	2,159	413	1,585
21+00	2100.00	50.00	53.10	4.94	13.18	100	9	18	2,259	435	1,653
21+50	2150.00	50.00	53.10	4.94	26.34	98	9	37	2,357	481	1,696
22+00	2200.00	50.00	53.69	4.94	40.13	99	9	62	2,456	559	1,708
22+30	2230.00	30.00	57.87	4.94	48.68	62	5	49	2,518	620	1,704
22+50	2250.00	20.00	56.45	4.94	54.55	42	4	38	2,560	668	1,695
23+00	2300.00	50.00	65.78	4.94	44.80	113	9	92	2,673	783	1,684
23+50	2350.00	50.00	97.98	4.94	37.32	152	9	76	2,825	878	1,732
24+00	2400.00	50.00	116.66	4.94	37.03	199	9	69	3,024	964	1,835
24+50	2450.00	50.00	104.01	4.94	36.79	204	9	68	3,228	1,049	1,945
25+00	2500.00	50.00	86.87	4.94	36.55	177	9	68	3,405	1,134	2,028
25+50	2550.00	50.00	68.72	4.94	35.91	144	9	67	3,549	1,218	2,080
26+00	2600.00	50.00	61.87	4.94	35.00	121	9	66	3,670	1,300	2,109
26+50	2650.00	50.00	55.74	4.94	34.07	109	9	64	3,779	1,380	2,129
27+00	2700.00	50.00	47.74	4.94	21.29	96	9	51	3,875	1,444	2,152
27+50	2750.00	50.00	45.01	4.94	18.37	86	9	37	3,961	1,490	2,183

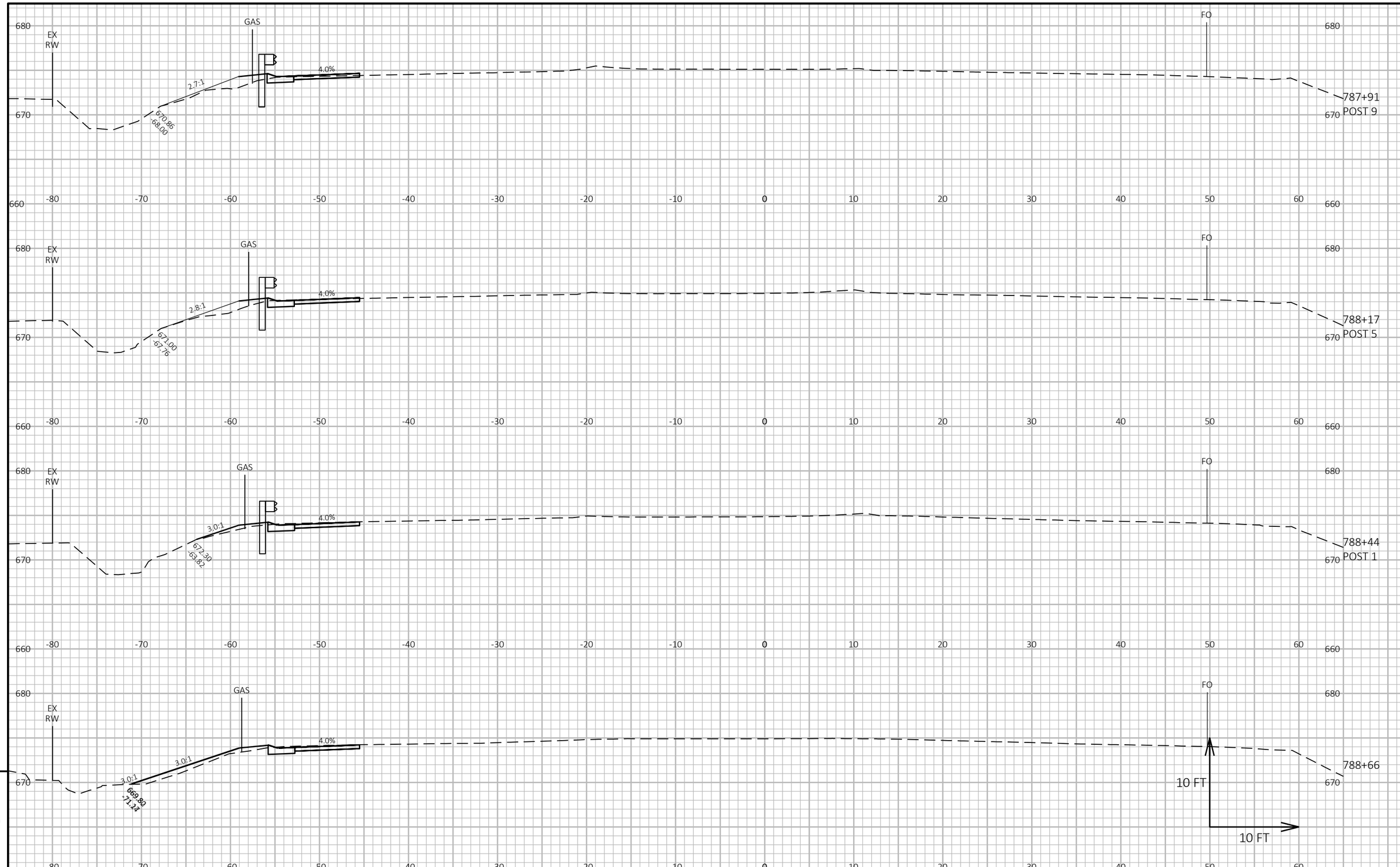

9

9

PROJECT NO: 2265-10-71	HWY: STH 241	COUNTY: MILWAUKEE	CROSS SECTIONS: STH 241	SHEET 179	E

FILE NAME : C:\OD\CORRE, INC\PROJECTS - DOCUMENTS\WI - SE REGION\2265-10-02_STH 241_MILWAUKE CO\500_CADD\501_C3D_2018\22651002\SHEETSPLAN\090201-XS_STH 241.DWG
LAYOUT NAME - XX
PLOT DATE : 1/31/2022 10:46 AM
PLOT BY : TOM ORNER
PLOT NAME :
PLOT SCALE : 1 IN:10 FT HORZ. / 1 IN:10 FT VERT.
WISDOT/CADDS SHEET 49

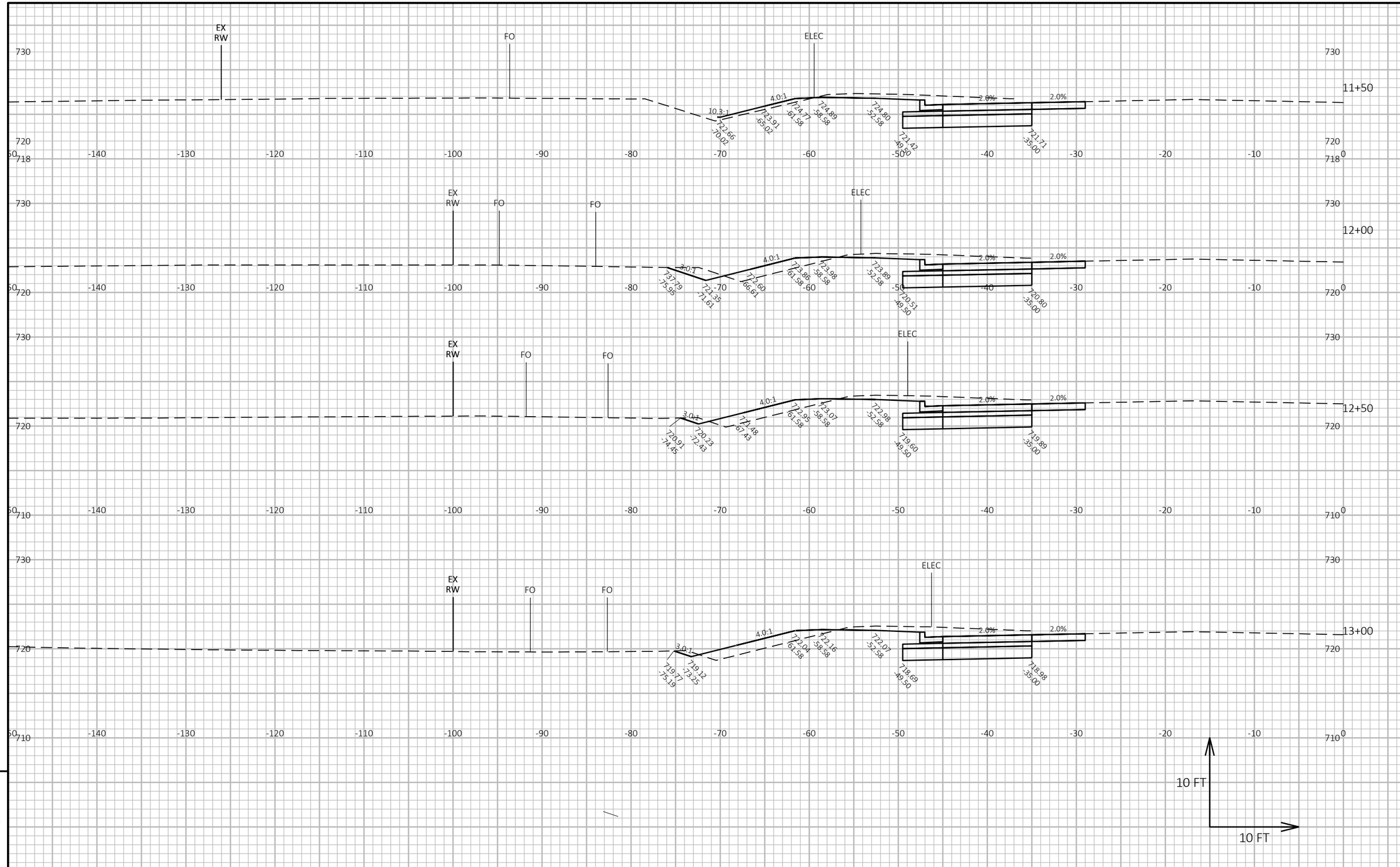

9

9

PROJECT NO: 2265-10-71	HWY: STH 241	COUNTY: MILWAUKEE	CROSS SECTIONS: ELM ROAD	SHEET 180	E

FILE NAME : C:\OD\CORRE, INC\PROJECTS - DOCUMENTS\WI - SE REGION\2265-10-02_STH 241_MILWAUKE CO\500_CADD\501_C3D_2018\22651002\SHEETSPLAN\090202-XS_ELM.DWG
LAYOUT NAME - 01
PLOT DATE : 1/31/2022 10:47 AM PLOT BY : TOM ORNER PLOT NAME : PLOT SCALE : 1 IN:10 FT HORZ. / 1 IN:10 FT VERT.

WISDOT/CADDS SHEET 49

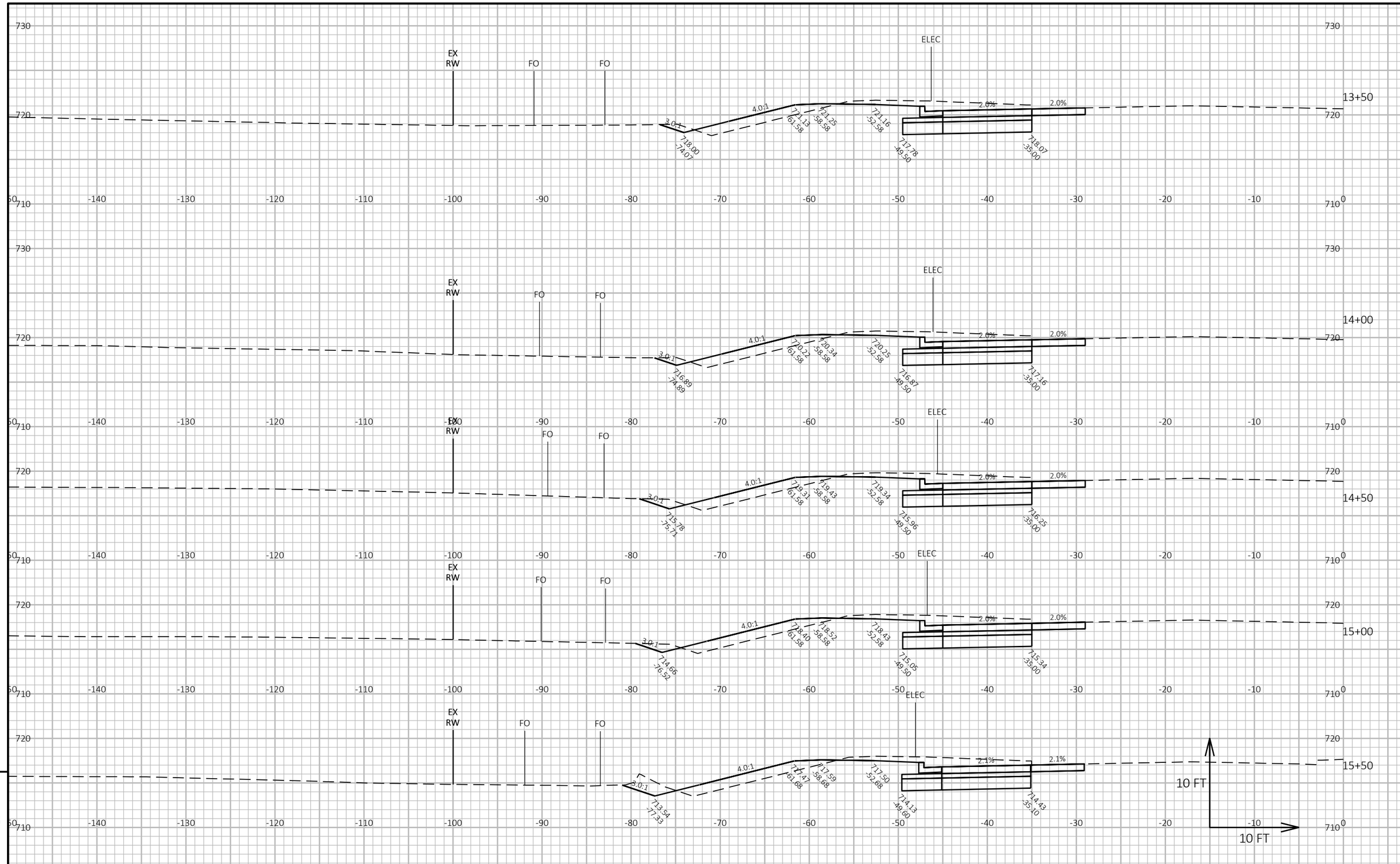

9

9

PROJECT NO: 2265-10-71	HWY: STH 241	COUNTY: MILWAUKEE	CROSS SECTIONS: ELM ROAD	SHEET 181	E

FILE NAME : C:\OD\CORRE, INC\PROJECTS - DOCUMENTS\WI - SE REGION\2265-10-02_STH 241_MILWAUKE CO\500_CADD\501_C3D_2018\22651002\SHEETSPLAN\090202-XS_ELM.DWG
LAYOUT NAME - 02
PLOT DATE : 1/31/2022 10:47 AM PLOT BY : TOM ORNER PLOT NAME : **PLOT SCALE :** 1 IN:10 FT HORZ. / 1 IN:10 FT VERT.

WISDOT/CADDS SHEET 49

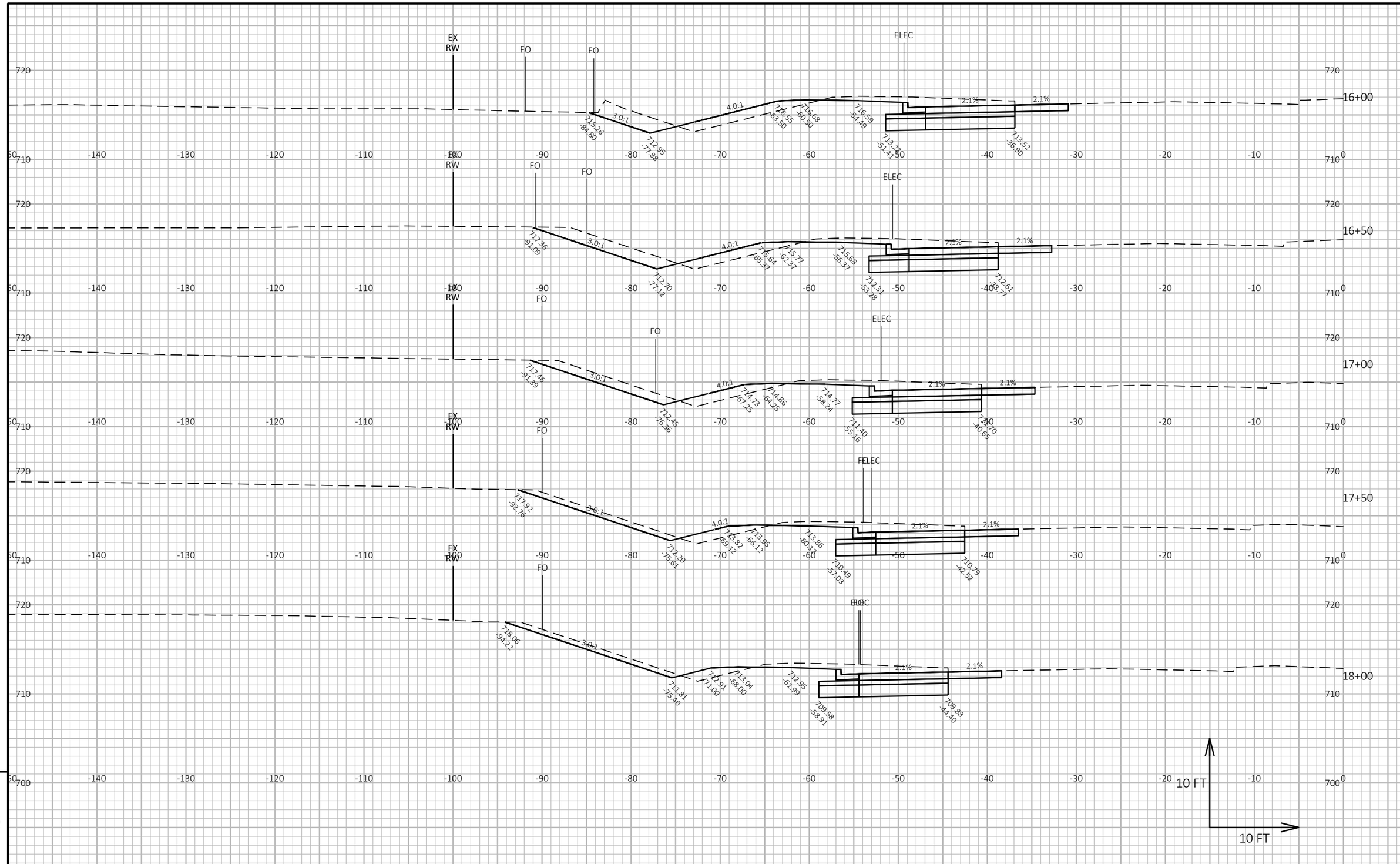

PROJECT NO: 2265-10-71	HWY: STH 241	COUNTY: MILWAUKEE	CROSS SECTIONS: ELM ROAD	SHEET 182	E

FILE NAME : C:\OD\CORRE, INC\PROJECTS - DOCUMENTS\WI - SE REGION\2265-10-02_STH 241_MILWAUKE CO\500_CADD\501_C3D_2018\22651002\SHEETSPLAN\090202-XS_ELM.DWG
LAYOUT NAME - 03
PLOT DATE : 1/31/2022 10:47 AM
PLOT BY : TOM ORNER
PLOT NAME :
PLOT SCALE : 1 IN:10 FT HORZ. / 1 IN:10 FT VERT.

WISDOT/CADDS SHEET 49

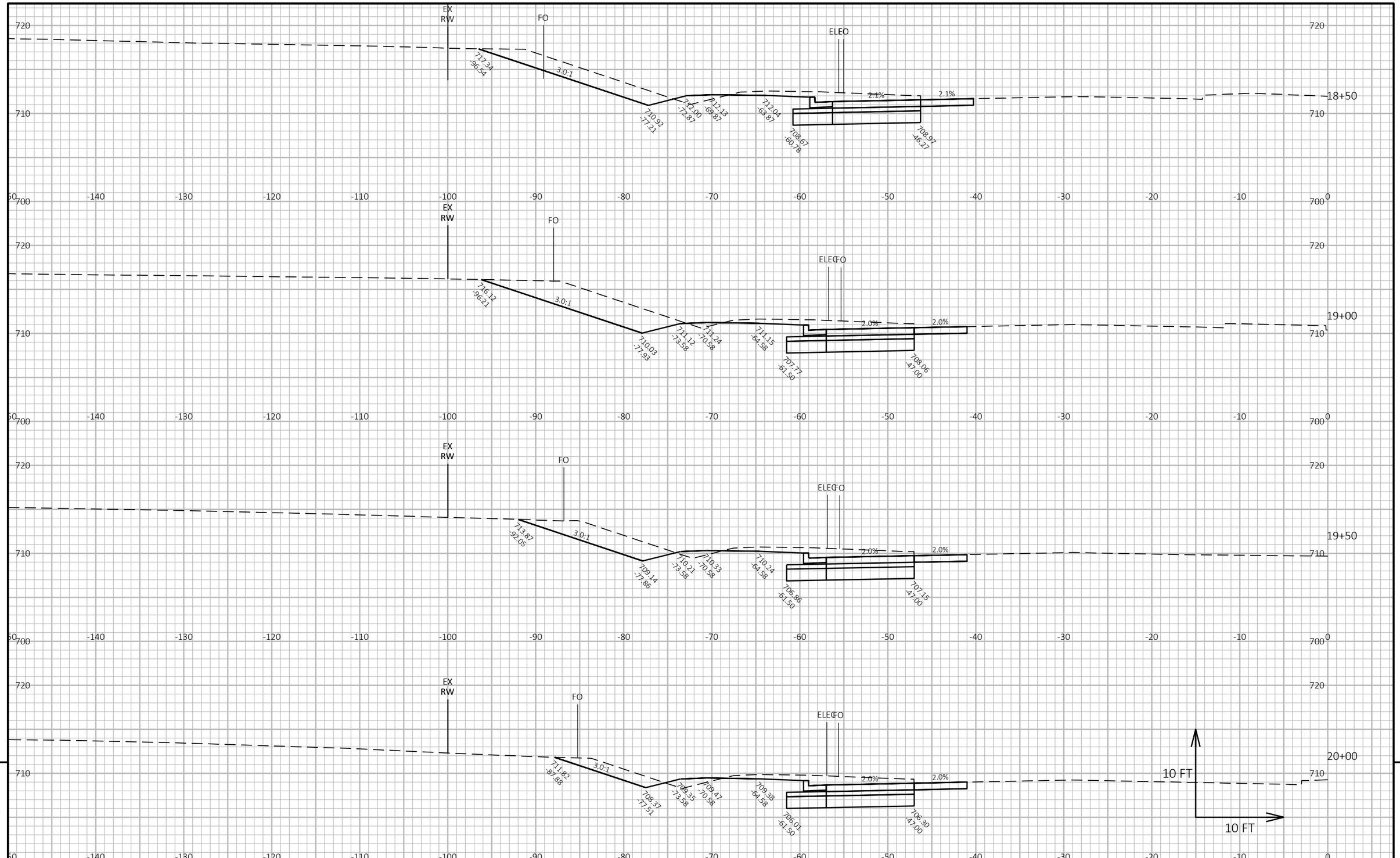

9

9

PROJECT NO: 2265-10-71	HWY: STH 241	COUNTY: MILWAUKEE	CROSS SECTIONS: ELM ROAD	SHEET 183	E

FILE NAME : C:\OD\CORRE, INC\PROJECTS - DOCUMENTS\WI - SE REGION\2265-10-02_STH 241_MILWAUKE CO\500_CADD\501_C3D_2018\22651002\SHEETSPLAN\090202-XS_ELM.DWG
LAYOUT NAME - 04
PLOT DATE : 1/31/2022 10:47 AM
PLOT BY : TOM ORNER
PLOT NAME :
PLOT SCALE : 1 IN:10 FT HORZ. / 1 IN:10 FT VERT.

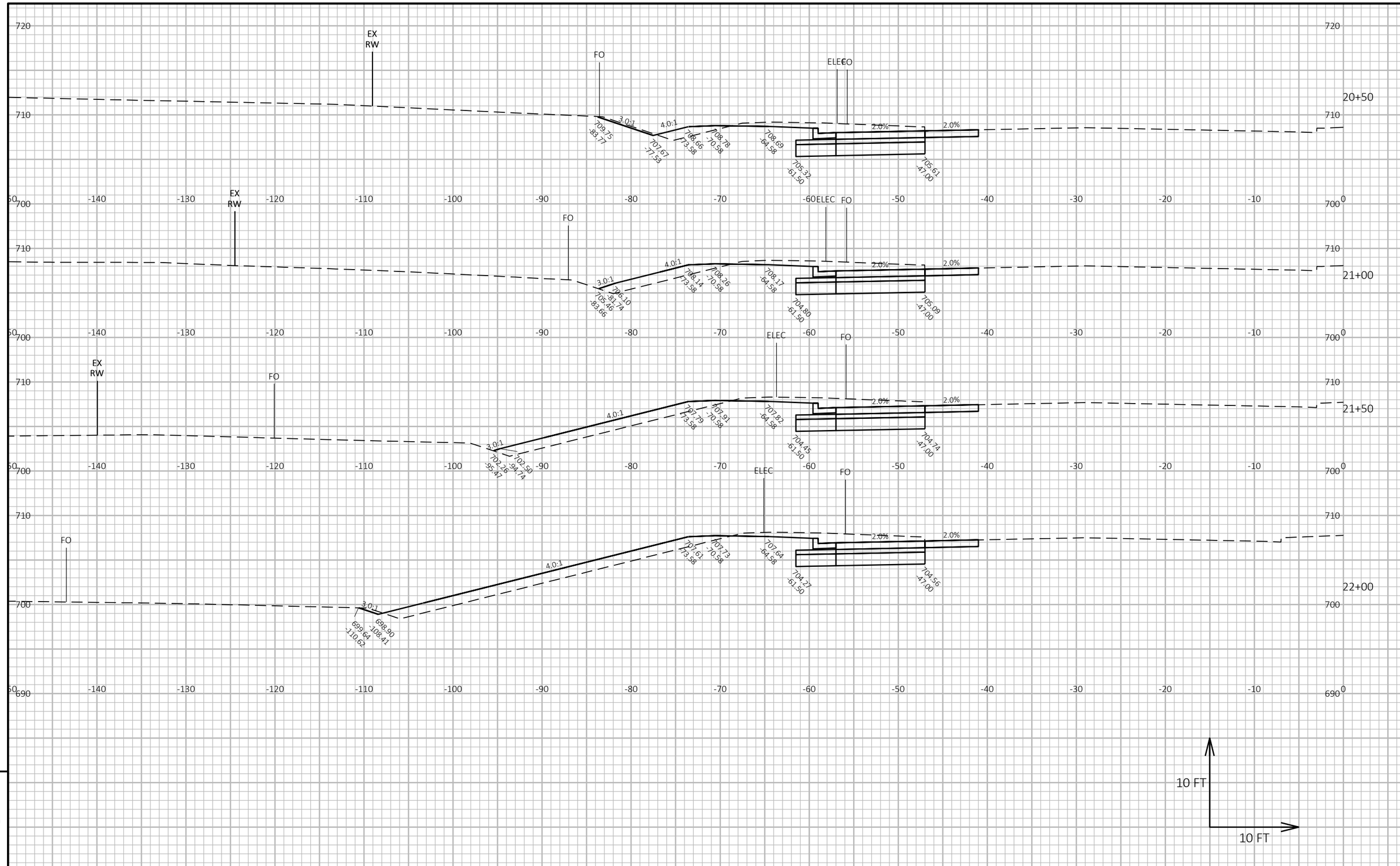

9

9

PROJECT NO: 2265-10-71	HWY: STH 241	COUNTY: MILWAUKEE	CROSS SECTIONS: ELM ROAD	SHEET 184	E

FILE NAME : C:\OD\CORRE, INC\PROJECTS - DOCUMENTS\WI - SE REGION\2265-10-02_STH 241_MILWAUKE CO\500_CADD\501_C3D_2018\22651002\SHEETSPLAN\090202-XS_ELM.DWG
LAYOUT NAME - 05
PLOT DATE : 1/31/2022 10:47 AM
PLOT BY : TOM ORNER
PLOT NAME :
PLOT SCALE : 1 IN:10 FT HORZ. / 1 IN:10 FT VERT.
WISDOT/CADDS SHEET 49

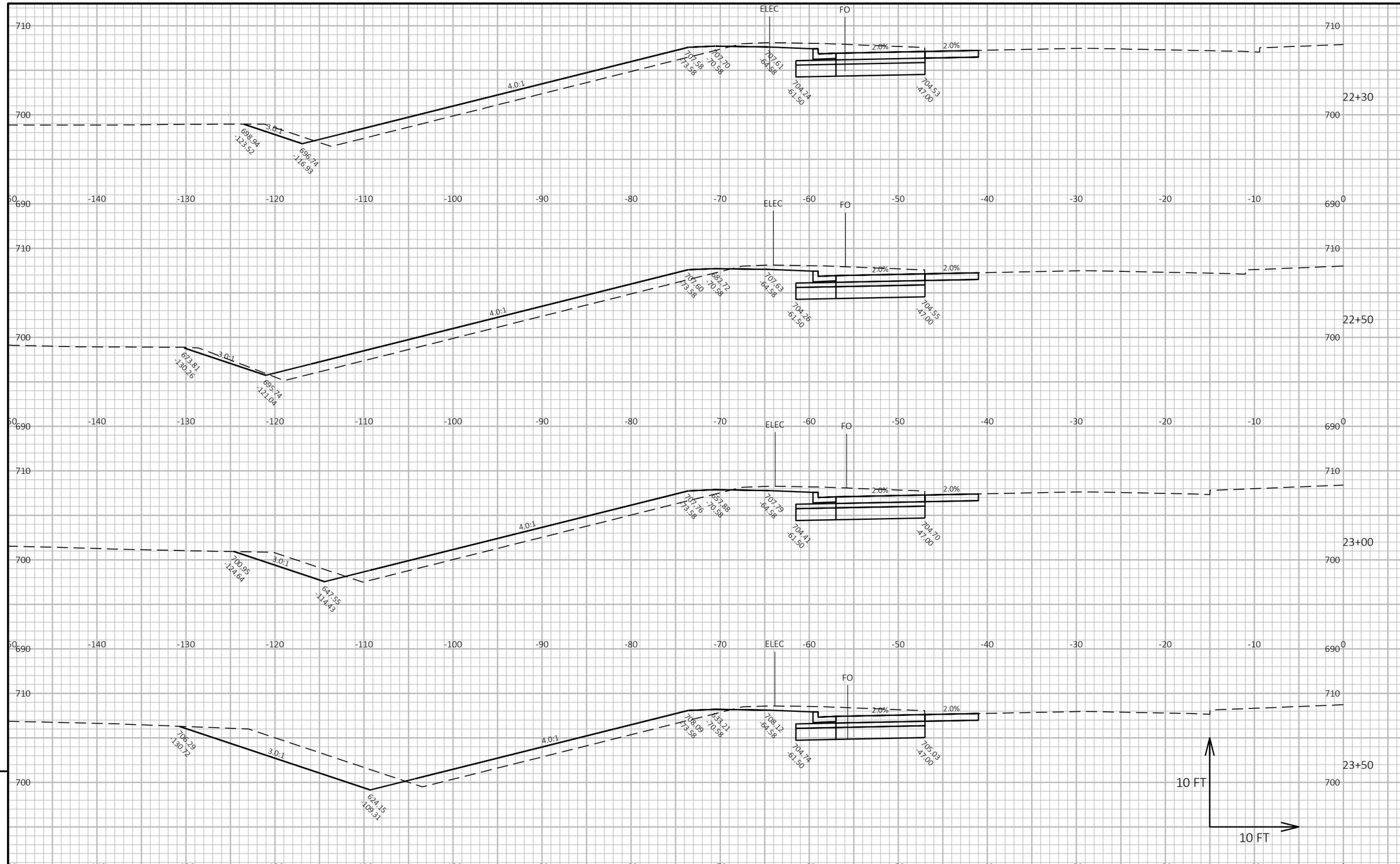

9

9

PROJECT NO: 2265-10-71	HWY: STH 241	COUNTY: MILWAUKEE	CROSS SECTIONS: ELM ROAD	SHEET 185	E

FILE NAME : C:\OD\CORRE, INC\PROJECTS - DOCUMENTS\WI - SE REGION\2265-10-02_STH 241_MILWAUKE CO\500_CADD\501_C3D_2018\22651002\SHEETSPLAN\090202-XS_ELM.DWG
LAYOUT NAME - 06
PLOT DATE : 1/31/2022 10:47 AM
PLOT BY : TOM ORNER
PLOT NAME :
PLOT SCALE : 1 IN:10 FT HORZ. / 1 IN:10 FT VERT.

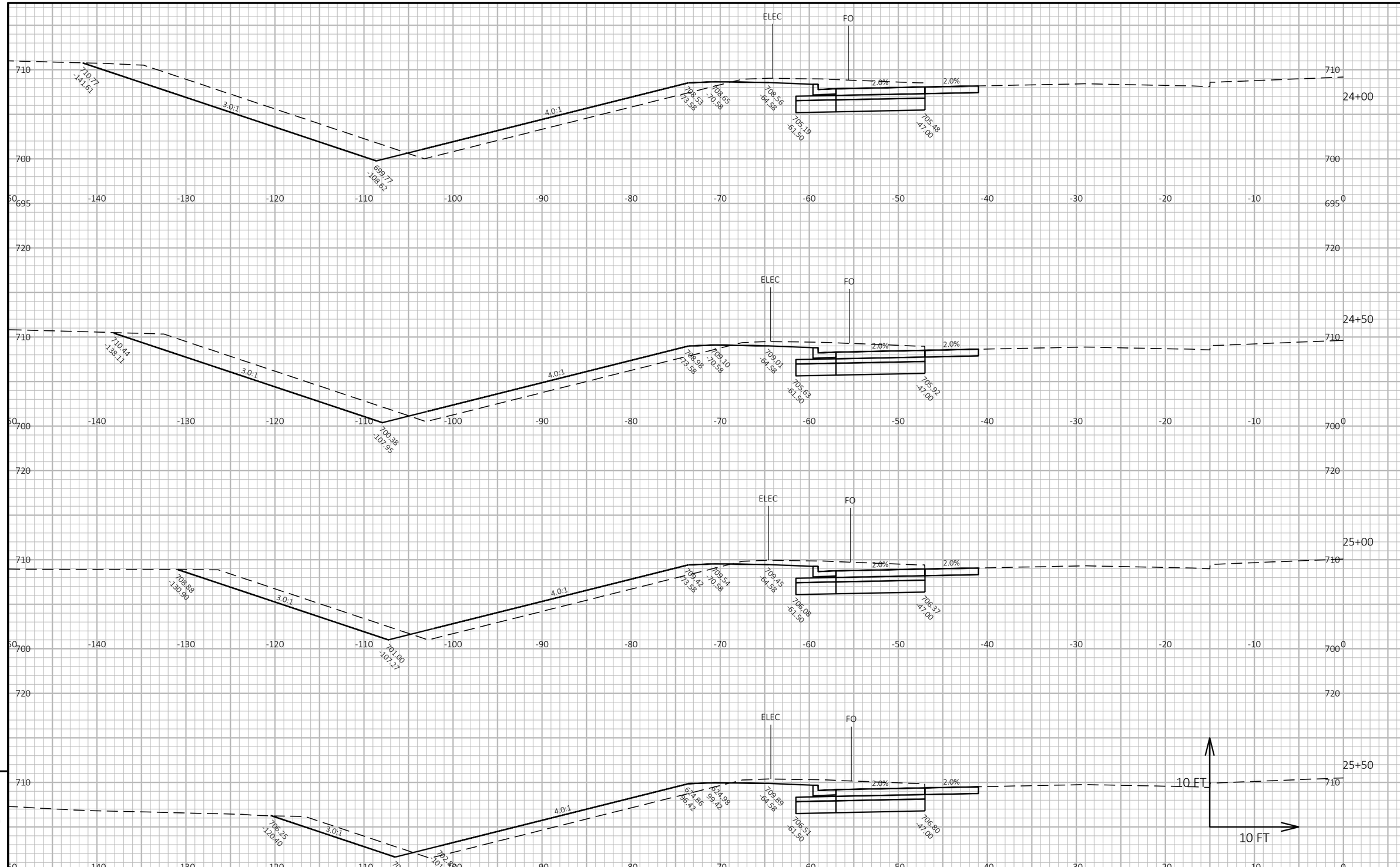

PROJECT NO: 2265-10-71	HWY: STH 241	COUNTY: MILWAUKEE	CROSS SECTIONS: ELM ROAD	SHEET 186	E

FILE NAME : C:\OD\CORRE, INC\PROJECTS - DOCUMENTS\WI - SE REGION\2265-10-02_STH 241_MILWAUKE CO\500_CADD\501_C3D_2018\22651002\SHEETSPLAN\090202-XS_ELM.DWG
LAYOUT NAME - 07
PLOT DATE : 1/31/2022 10:48 AM PLOT BY : TOM ORNER PLOT NAME : PLOT SCALE : 1 IN:10 FT HORZ. / 1 IN:10 FT VERT.

WISDOT/CADDS SHEET 49

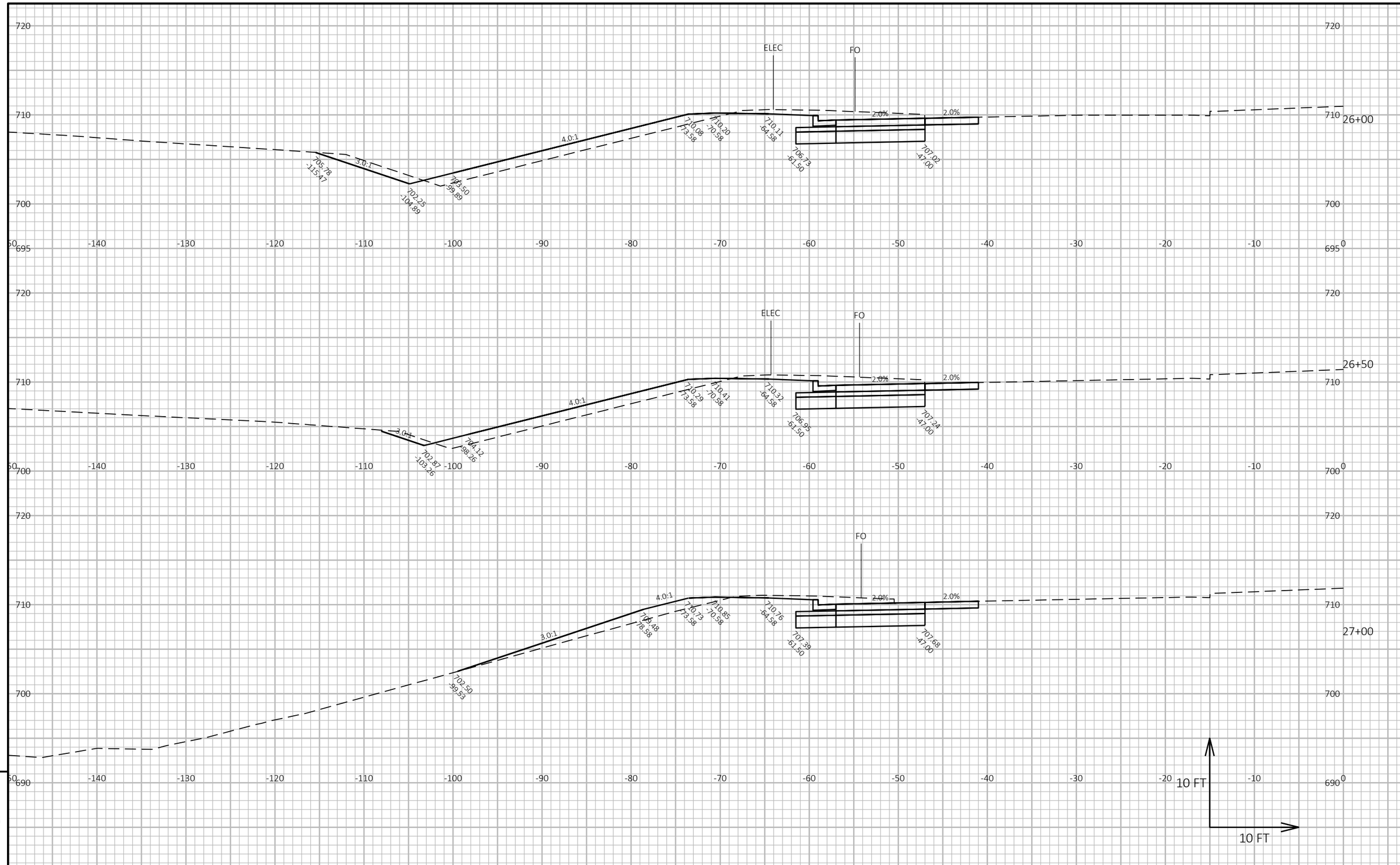

PROJECT NO: 2265-10-71	HWY: STH 241	COUNTY: MILWAUKEE	CROSS SECTIONS: ELM ROAD	SHEET 187	E

FILE NAME : C:\OD\CORRE, INC\PROJECTS - DOCUMENTS\WI - SE REGION\2265-10-02_STH 241_MILWAUKE CO\500_CADD\501_C3D_2018\22651002\SHEETSPLAN\090202-XS_ELM.DWG
LAYOUT NAME - 08
PLOT DATE : 1/31/2022 10:48 AM PLOT BY : TOM ORNER PLOT NAME : PLOT SCALE : 1 IN:10 FT HORZ. / 1 IN:10 FT VERT.

WISDOT/CADDS SHEET 49

Wisconsin Department of Transportation

Dedicated people creating transportation solutions through innovation and exceptional service.

http://www.dot.wisconsin.gov